RUTHZIL TRATOR COMERCIAL DE PEÇAS LTDA 11 97083-6812 ROLANDO

MAIO 2005

751

Bobcat®

Parts Manual

S/N 5157 11001 & Above
S/N 5156 11001 & Above

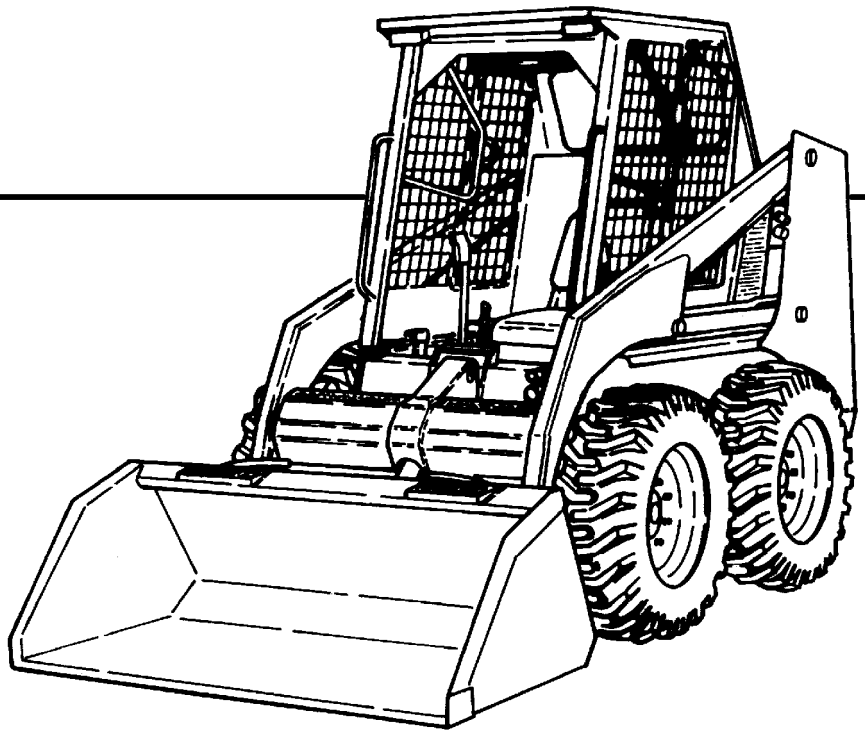

EQUIPPED WITH BOBCAT INTERLOCK CONTROL SYSTEM (BICS™)

An Ingersoll-Rand business

6900439 (12-01) Revised (05-05)

Printed in U.S.A.

© Bobcat Company 2005

Page 1 - OS$# 2060759 - All rights reserved by Bobcat Company, a business unit of Ingersoll-Rand - 05/22/2008 - 07:23:42 - Produced by Ken Cook Co. with mediaioff

GENERAL INFORMATION

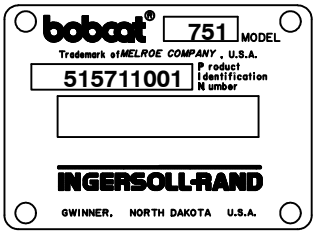

DOMESTIC

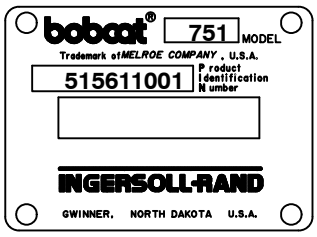

EXPORT

When using the machine serial number, use the complete number. When Serial Numbers do not appear below the page heading, parts information applies to all loaders.

This Model 751 is built with a Kubota Engine Model V1903. Pages in this book are labeled Model 751F in order to differentiate between prior 751 loaders built with Peugeot engines.

Some Serial Number breaks are not available at time of printing. These are listed as & Below or & Above.

The number shown in the quantity column in this manual is the number of parts needed for the illustration on the page. For some parts an "x" will be shown in the quantity column. This "x" indicates that the quantity to be used is "As Needed".

When references L.H. and R.H. are used in this manual, it is done from the operator's seat in the forward operating position.

Some of the illustrations and information found in this parts manual were supplied to Bobcat by machine component companies.

ABBREVIATIONS & SYMBOLS

SALES = Order from Gwinner Sales Department

NSS = Not Serviced Seperately

NAP = Not Available as Parts

*** = Changed or Added Sections, Pages or Part Number**

Disposition Code Definition
(Found in the Remarks Column)

[A] = Use Up

[B] = Use Up on Other Appplication (See PNI)

[C] = File PDR Report With Bobcat Parts Sales

[D] = Part Number Error

Page 2 - OSS# 2060759 - All rights reserved by Bobcat Company, a business unit of Ingersoll-Rand - 05/22/2008 - 07:23:42 - Produced by Ken Cook Co. with mediaoff

NOTE D'INFORMATION

Pour toute référence au numéro de série de l'engin, toujours donner le numéro complet.

Le chiffré apparaissant dans la colonne des quantités de ce manuel représentent le nombre de pièces nécessaires pour l'illustration reprise sur la page. Dans certains cas, on lira un "x" dans la colonne des quantités. Cet "x" indique que la quantité nécessaire est "selon besoin".

Pour toute référence vers la GAUCHE ou la DROITE dans ce manuel, considérer que la personne se trouve assise dans le siège de l'opérateur, en position de fonctionnement en marche avant.

Certaines illustrations et informations reprises dans ce manuel de pièces de rechange ont été fournies à Bobcat/Ingersoll–Rand par des fabricants de composants.

ABREVIATIONS & SYMBOLES

SALES	= Commander au Service Ventes à Bruxelles
NSS	= Pas vendu séparément
NAP	= Non disponible comme pièce de rechange
*****	= Chapitre, page ou numéro de pièce modifié ou supplémentaire
BTI	= Bobcat Technical Information Bulletin : voir à la fin de la microfiché du modèle concerné ou la microfiche générale reprenant l' ensemble des "BTI".
was 6535403	= était avant 6535403
adj. (adjustment)	= réglage
Assembly	= ensemble
available W/Ref.	= disponible avec réf.
bulk/sold per foot	= en vrac/vendu par pied
does not include	= ne comprend pas
included with	= compris dans
I.D.	= D.I. (diamètre intérieur)
O.D.	= D.E. (diamètre extérieur)
not in kit	= pas en kit
W/ – WO/	= inclus/ – non inclus/
Qty	= quantité requise
see page/ref.	= voir page/réf.
used with ref/	= utilisé avec réf.
0,05 inch thickness	= 0,05 pouce d'épaisseur (un pouce = 25.4 mm)
weld on	= à souder

Page 3 - OSS# 2060759 - All rights reserved by Bobcat Company, a business unit of Ingersoll-Rand - 05/22/2008 - 07:23:42 - Produced by Ken Cook Co. with mediaoff

ALLGEMEINE INFORMATIONEN

Bei Angabe der Maschinen-Seriennummer stets die komplette Nummer angeben.

Bei der in der Mengenspalte (Anzahl) in diesem Handbuch angegebenen Zahl handelt es sich um die Anzahl von Teilen, die für die Abbildung auf der betreffenden Seite benötigt werden. Bei manchen Teilen in der Mengenspalte ist ein “x” angegeben. Dieses “x” weist darauf hin, dass sich die Anzahl der verwendeten Teile auf den “Bedarf” bezieht.

Bei Verwendung der Seitenangaben links und rechts in diesem Handbuch gelten diese für die Blickrichtung vom Fahrersitz aus, und zwar in Vorwärts-Betriebsrichtung.

Einige der in diesem Ersatzteilhandbuch aufgeführten Abbildungen und Informationen wurden der Bobcat/Ingersoll-Rand von den Herstellern von Maschinenbauteilen zur Verfügung gestellt.

ABKÜRZUNGEN UND SYMBOLE

SALES	= Bestellung bei der Verkaufsabteilung in Brüssel
NSS	= Nicht einzeln erhältlich
NAP	= Nicht als Ersatzteil erhältlich
*****	= Geänderte oder hinzugefügte Abschnitte, Seiten oder Teilenummern
BTI	= Bobcat Technical Information Bulletin : Siehe am Ende der Mikrokarte des jeweiligen Modells oder der allgemeinen Mikrokarte der BTI.
was 6535403	= War 6535403
adj.	= Einstellung
Assembly	= Baugruppe
available W/Ref.	= erhältlich mit der Referenz
bulk/sold per foot	= Mengenabnahme / Verkauf pro Fuss
does not include	= beinhaltet nicht
included with	= enthalten in
I.D.	= Innendurchmesser
O.D.	= Aussendurchmesser
not in kit	= nicht in Bausatz
W/ - WO/	= mit/ - ohne/
Qty	= Anzahl
see page/ref.	= Siehe Seite / Referenz
used with ref.	= verwendet mit Referenz
0.05 inch thickness	= Dicke : 0.05 Zoll (ein Zoll = 25.4 mm)
weld on	= anschweissen

Page 4 - OSS# 2060759 - All rights reserved by Bobcat Company, a business unit of Ingersoll-Rand - 05/22/2008 - 07:23:42 - Produced by Ken Cook Co. with mediaoff

INFORMAZIONI GENERALI

Quando si usa il numero di serie della macchina usare il numero completo.

Il numero mostrato nella colonna della quantità di questo manuale corrisponde al numero di componenti necessari per l'illustrazione della pagina. Per alcuni componenti appare "X" nella colonna delle quantità. Questa "X" indica che la quantità da usare è "come necessario".

See in questo manuale si fa riferimento alla parte destra o sinistra, si intende dal sedile dell'operatore nella posizione in avanti di funzionamento.

Alcune delle illustrazioni e informazioni trovate in questo manuale di componenti sono state fornite alla Bobcat/Ingersoll–Rand da società di componenti di macchine.

SIMBOLI E ABBREVIAZIONI

SALES	= Ordinare al servizio vendite di Bruxelles
NSS	= Non vendute separatamente
NAP	= Non disponibile come componente
*****	= Sezioni, pagine o numeri di componente cambiati o aggiunti
BTI	= (Bobcat Technical information) Ved. al termine del microfiche del modello relativo oppure microfiche generale
was 6535403	= era 6535403
adj. (adjustment)	= regol. (regolazione)
Assembly	= Complessivo
available W/Ref.	= disponibile con rif.
bulk/sold per foot	= alla rinfusa/venduto al piede
does not include	= non comprende
Included with	= compreso con
I.D.	= d. i.
O.D.	= d. e.
not in kit	= non fa parte del kit
W/ – WO/	= con – senza
Qty	= Qtà
see page/ref	= ved. pagina/rif.
used with ref.	= usato con il rif.
0,05 inch thickness	= spessore 0,05 pollici (un pollice = 25,4 mm)
weld on	= a saldare

Page 5 - OSS# 2060759 - All rights reserved by Bobcat Company, a business unit of Ingersoll-Rand - 05/22/2008 - 07:23:42 - Produced by Ken Cook Co. with mediaioff

INFORMACION GENERAL

Al utilizar el número de serie de la máquina, debe emplearse el número completo.

El número que figura en la columna de “Unidades” en este manual es el número de piezas que se necesitan para la ilustración que consta en la página. En algunas piezas aparece una “x” en la columna de “Unidades”. Esta “x” indica que las unidades a utilizar son “según sea necesario”.

Cuando se empleen las referencias izq. y dcha., éstas se entienden mirando desde el asiento del conductor, en posición de marcha adelante.

Algunas de las ilustraciones y la información que figuran en este manual de piezas han sido facilitadas a Bobcat/Ingersoll–Rand por empresas de componentes de máquinas.

ABREVIATURAS Y SIMBOLOS

VENTAS	= Pedido al Departamento de Ventas de Bruselas
NSS	= No se vende por separado
NAP	= No disponible como pieza de repuesto
*****	= Secciones, páginas o referencias modificadas o añadidas
BTI	= (Bobcat Tecnical Information) Ver al final de la microficha del modelo afectado o en la microficha general “Boletín de Información Técnica Bobcat”.
was 6535403	= era anteriormente el 6535403
adj. (adjustment)	= ajuste
assembly	= conjunto
available W/Ref.	= disponible con la ref.
bulk/sold per foot	= a granel/vendido por pies
does not include	= no incluye
included with	= incluido en
I.D.	= diámetro interior
O.D.	= diámetro exterior
not in kit	= no en el kit
W/ – WO/	= con/ – sin
Qty	= Unidades
see page /ref.	= ver página/ref.
used with ref.	= empleado con la ref.
0,05 inch thickness	= 0,05 pulgadas de espesor (1 pulgada = 25,4 mm)
weld on	= debe ser soldado

Page 6 - OSS# 2060759 - All rights reserved by Bobcat Company, a business unit of Ingersoll-Rand - 05/22/2008 - 07:23:42 - Produced by Ken Cook Co. with mediaoff

ALGEMENE INFORMATIE

Als u het serienummer van de machine gebruikt, geef dan het gehele serienummer.

Het cijfer dat voorkomt in de kolom “Aantal”, in deze handleiding, is het aantal onderdelen dat nodig is van de illustratie op de pagina. Voor sommige onderdelen staat er een “x” in de kolom “Aantal”. Deze “x” betekent dat er een aantal “zoals nodig” vereist is.

Wanneer er in deze handleiding naar “links” en naar “rechts” gerefereerd wordt, moet dit verstaan worden voor een bestuurder die in de bestuurdersstoel zit in de voorwaartse bedrijfsstand.

Sommige van de illustraties en informatie in deze onderdelen-handleiding werden door firma’s van machine-componenten geleverd aan Bobcat/Ingersoll-Rand.

AFKORTINGEN EN SYMBOLEN

SALES	= Bestellen bij de Verkoopafdeling te Brussel
NSS	= Niet afzonderlijk te verkrijgen
NAP	= Niet beschikbaar als onderdeel
*****	= Gewijzigde of toegevoegde paragrafen, pagina’s of onderdeelnummers
BTI	= Bobcat Technical Information Bulletin : Zie einde van de microfiche van het desbetreffende model of einde van de algemene microfiche die het geheel van alle “BTI” herneemt.
was 6535403	= was vroeger 6535403
adj. (adjustment)	= afstelling
Assembly	= geheel
available W/Ref.	= beschikbaar met ref.
bulk/sold per foot	= bulk/aan de meter verkocht
does not include	= bevat niet
includes with	= is bevat in
I.D.	= ϕ inw. (inwendige diameter)
O.D.	= ϕ uitw. (uitwendige diameter)
not in kit	= niet in de kit
W/ - WO/	= met/ - zonder/
Qty	= vereiste aantal
see page/ref.	= zie pagina/ref.
used with ref/	= gebruikt met ref.
0,05 inch thickness	= 0.05 inch dik (een inch = 25.4 mm)
weld on	= te lassen

Page 7 - OSS# 2060759 - All rights reserved by Bobcat Company, a business unit of Ingersoll-Rand - 05/22/2008 - 07:23:42 - Produced by Ken Cook Co. with mediaioff

Use only Bobcat belts and hoses to maintain maximum service life.

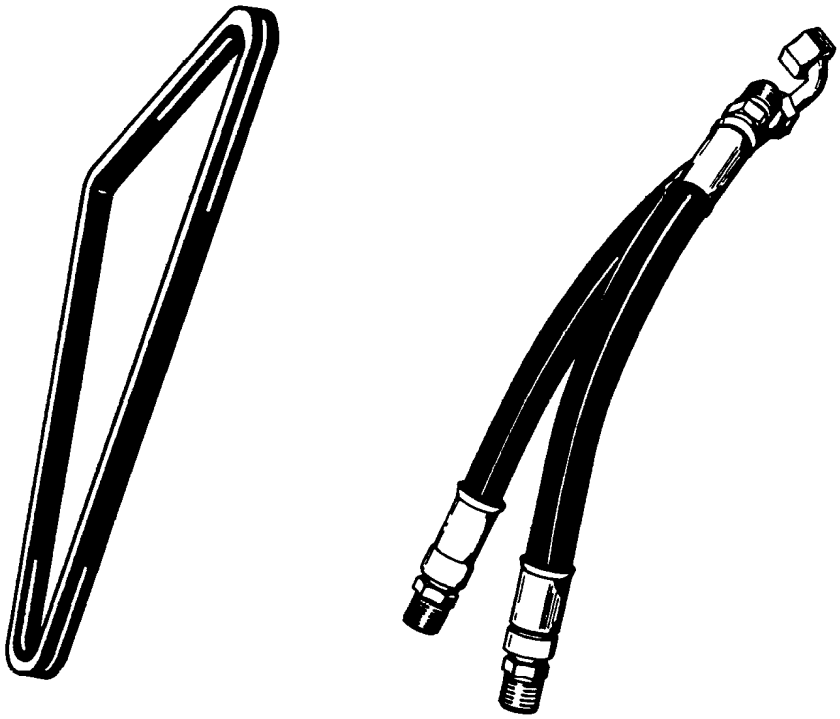

Available from Bobcat Parts.

Bobcat®

Page 8 - OSS# 2060759 - All rights reserved by Bobcat Company, a business unit of Ingersoll-Rand - 05/22/2008 - 07:23:42 - Produced by Ken Cook Co. with mediaioff

CONTENTS

MAINTENANCE ITEMS 1-2
MAINTENANCE ITEMS 1
MAIN FRAME 3-30
SEAT 13-16
REAR DOOR 17
LIFT ARM & BOB-TACH 19-22
BOB-TACH 23
PANELS 25
FUEL SYSTEM 27-30
MAIN FRAME 3
OPERATOR CAB 5-8
SEAT & SEAT BAR 9-12
DRIVE TRAIN 31-40
DRIVE TRAIN 31
MOTOR CARRIER 33
DISC BRAKE 35-38
AXLE 39
HYDRAULIC SYSTEM 41-82
HYDRAULIC CIRCUITRY 41-48
MANUAL LIFT RELEASE SYSTEM 49
AUXILIARY HYDRAULICS 51
TILT CYLINDER 53-56
LIFT CYLINDER 57
CONTROL PEDALS 59
HYDRAULIC CONTROL VALVE 61-76
BICS CONTROL VALVE 77
MANUAL LIFT RELEASE VALVE 79
BUCKET POSITIONING VALVE 81
HYDROSTATIC SYSTEM 83-110
GEAR PUMP (MODELS B5501-34727 & B5501-36006) 103
GEAR PUMP 105
HYDROSTATIC OIL FILTER 107-110
HYDROSTATIC CIRCUITRY 83-88
HAND CONTROLS 89-92
HYDROSTATIC MOTOR 93
HYDROSTATIC PUMP 95-102
ELECTRICAL SYSTEM 111-126
CAB ELECTRICAL CIRCUITRY 111
ENGINE ELECTRICAL CIRCUITRY 113-116
CONTROLS ELECTRICAL 117-122
ALTERNATOR 123
STARTER 125
POWER UNIT 127-186
COOLING SYSTEM 127-130
ENGINE & ATTACHING PARTS 131-138
THROTTLE 139
COOLING FAN DRIVE ASSY. 141-144
ENGINE & GASKET KITS 145
GEARCASE 147
CRANKCASE 149
ROCKER ARM COVER 151
VALVE ROCKER ARM 153

Page 9 - OSS# 2060759 - All rights reserved by Bobcat Company, a business unit of Ingersoll-Rand - 05/22/2008 - 07:23:42 - Produced by Ken Cook Co. with mediaioff

CONTENTS (Cont'd)

POWER UNIT

CYLINDER HEAD 155
OIL PAN 157
PISTON & CRANKSHAFT 159
FUEL CAMSHAFT 161
CAMSHAFT 163
WATER PUMP 165
WATER FLANGE & THERMOSTAT 167
MANIFOLDS 169
ENGINE STOP LEVER 171
GOVERNOR 173
SPEED CONTROL PLATE 175
FUEL & INJECTION PUMPS 177
INJECTION PUMP 179
INJECTOR NOZZLES 181
INJECTOR HOLDER 183
AIR CLEANER 185

REPLACEMENT ENGINE 187-222

ENGINE & GASKET KITS 187
GEARCASE 189
CRANKCASE 191
ROCKER ARM COVER 193
VALVE ROCKER ARM 195
CYLINDER HEAD 197
OIL PAN 199
PISTON & CRANKSHAFT 201
FUEL CAMSHAFT 203
CAMSHAFT 205
WATER PUMP 207
WATER FLANGE & THERMOSTAT 209
MANIFOLDS 211
GOVERNOR 213
ENGINE STOP LEVER 215
SPEED CONTROL PLATE 217
FUEL & INJECTION PUMPS 219
INJECTOR NOZZLES 221

ACCESSORIES & OPTIONS 223-390

ACCESS COVER 223-226
AIR DEFLECTOR KIT 227
AXLE SEAL KIT 229
BACK-UP ALARM 231
BEACON LIGHT 233
BLOCK HEATER 235
BOB-TACH LEVERS 237
BUCKET POSITION ON-OFF KIT 239
BUCKET POSITIONING VALVE KIT 241
CAB DOOR 243-246
CAB ENCLOSURE 247-252
CAB WINDOWS 253
CLOSED ALTERNATOR 255
COUNTERWEIGHT KIT 257
DECALS 259-262

Page 10 - OSS# 2060759 - All rights reserved by Bobcat Company, a business unit of Ingersoll-Rand - 05/22/2008 - 07:23:42 - Produced by Ken Cook Co. with media1off

CONTENTS (Cont'd)

ACCESSORIES & OPTIONS

ELECTRICAL CONTROLS KIT 263-266
ENGINE MOUNT KIT 267
EUROPEAN ACCESSORIES 269-286
FIRE EXTINGUISHER 287
FLASHER LIGHTS 289
FRONT AUXILIARY KIT 291
HAND CONTROL KIT 293-300
HANDLE KITS 301
HEATER KIT 303-310
HEATER 305-312
HEATER PLUMBING KIT 307-314
HORN KIT 315-318
HOURMETER KIT 319
KEYLESS IGNITION 321
LIFT KIT 323-328
LIGHT KIT 329
MUFFLER/PURIFIER KIT 331
PRESSURE RELEASE KIT 333
PRESSURE RELEASE VALVE 335
PUSH TO OPERATE KIT 337-340
RADIATOR SCREEN KIT 341
REAR AUXILIARY 343
REAR AUXILIARY VALVE 345
REAR AUX. IN-LINE FILTER 347
REAR DOOR LOCK 349
REAR WIPER KIT 351
RENTAL KIT 353
SEAT 355-360
SEAT BELT 361
SEAT BAR KIT 363
SEAT KIT 365
SEAT RAIL COVER KIT 367
SEAT SENSOR OVERRIDE 369-372
SIDE CONSOLE KIT 373
SOUND KIT 375
SOUND REDUCTION HARDHAT 377
STROBE LIGHT 379-382
TIRES & RIMS 383-388
BULK ITEMS 389

NUMERICAL INDEX 392-442

Page 11 - OSS# 2060759 - All rights reserved by Bobcat Company, a business unit of Ingersoll-Rand - 05/22/2008 - 07:23:42 - Produced by Ken Cook Co. with media1off

MAINTENANCE ITEMS

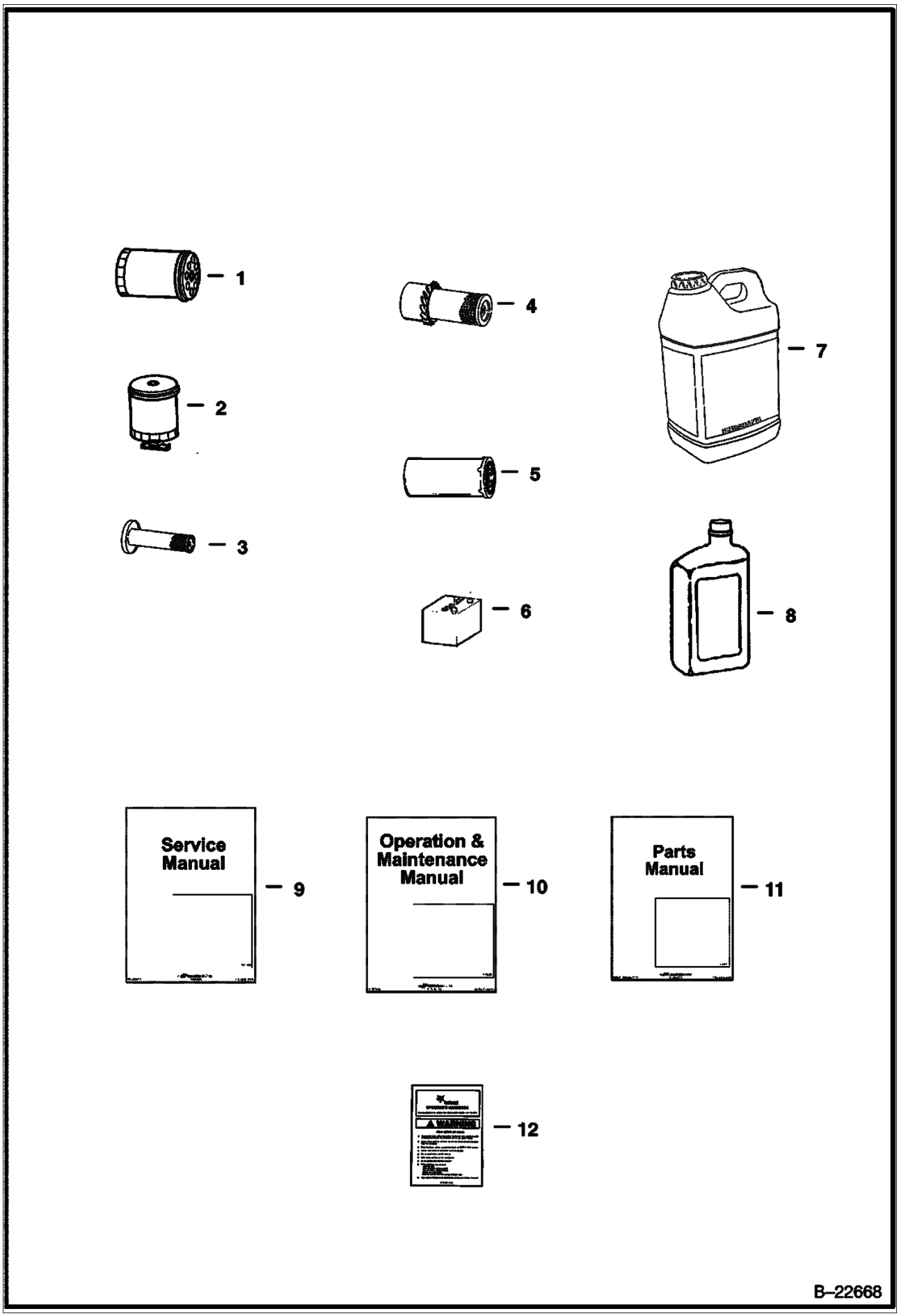

Page 12 - OSS# 2060759 - All rights reserved by Bobcat Company, a business unit of Ingersoll-Rand - 05/22/2008 - 07:23:42 - Produced by Ken Cook Co. with media1off

MAINTENANCE ITEMS (Cont'd)

Ref No	Part Number	Description	Remarks	Serial Number	Qty
1	6675517	FILTER	See Illustration GEARCASE/ B13160 ENGINE OIL (6 PACK)		x
2	6667352	FILTER FUEL	See Illustration FUEL SYSTEM/ B17193 FUEL		x
3	6598362	ELEMENT	See Illustration AIR CLEANER/ B17228 INNER AIR CLEANER		x
4	6598492	ELEMENT	See Illustration AIR CLEANER/ B17228 OUTER AIR CLEANER		x
5	6661248	ELEMENT	See Illustration HYDROSTATIC OIL FILTER/ C2818 HYDROSTATIC # 3 MEDIA		x
6	6674687	BATTERY	See Illustration ENGINE ELECTRICAL CIRCUITRY/ B17271		x
7	6903117	HYD FLUID 2.5 GAL.	Was 6563328 [A]		x
7	6903118	HYD. FLUID 5GAL	Was 6722344 [A]		x
7	6903119	HYD. FLUID 55GAL	Was 6563330 [A]		x
8	6903107	OIL 10W30 QT. 12	Was 6657301 [A]		x
8	6903108	OIL 10W30 GAL. 6	Was 6724557 [A]		x
8	6903112	OIL 10W30 2.5 GAL 2	Was 6674205 [A]		x
8	6903105	OIL 15W40 QT. 12	Was 6657299 [A]		x
8	6903106	OIL 15W40 GAL. 6	Was 6724558 [A]		x
8	6903113	OIL 15W40 2.5 GAL. 2	Was 6674204 [A]		x
8	6903109	OIL 30W QT. 12	Was 6657303 [A]		x
8	6903110	OIL 30W GAL. 6	Was 6724559 [A]		x
8	6903111	OIL 30W 2.5 GAL 2	Was 6674206 [A]		x
9	6900443	751 S/M	Service Manual		1
10	6900417	751 O/M	Operation & Maintenance Manual	5157 11001-16799	1
10	6900786	751 O/M	Operation & Maintenance Manual	5157 16800-29999	1
11	6900439	751F P/M	Parts Manual		1
12	6708154	KIT	See Illustration DECALS/ B17281 Operator Handbook		1

Page 13 - OSS# 2060759 - All rights reserved by Bobcat Company, a business unit of Ingersoll-Rand - 05/22/2008 - 07:23:42 - Produced by Ken Cook Co. with media1off

MAIN FRAME

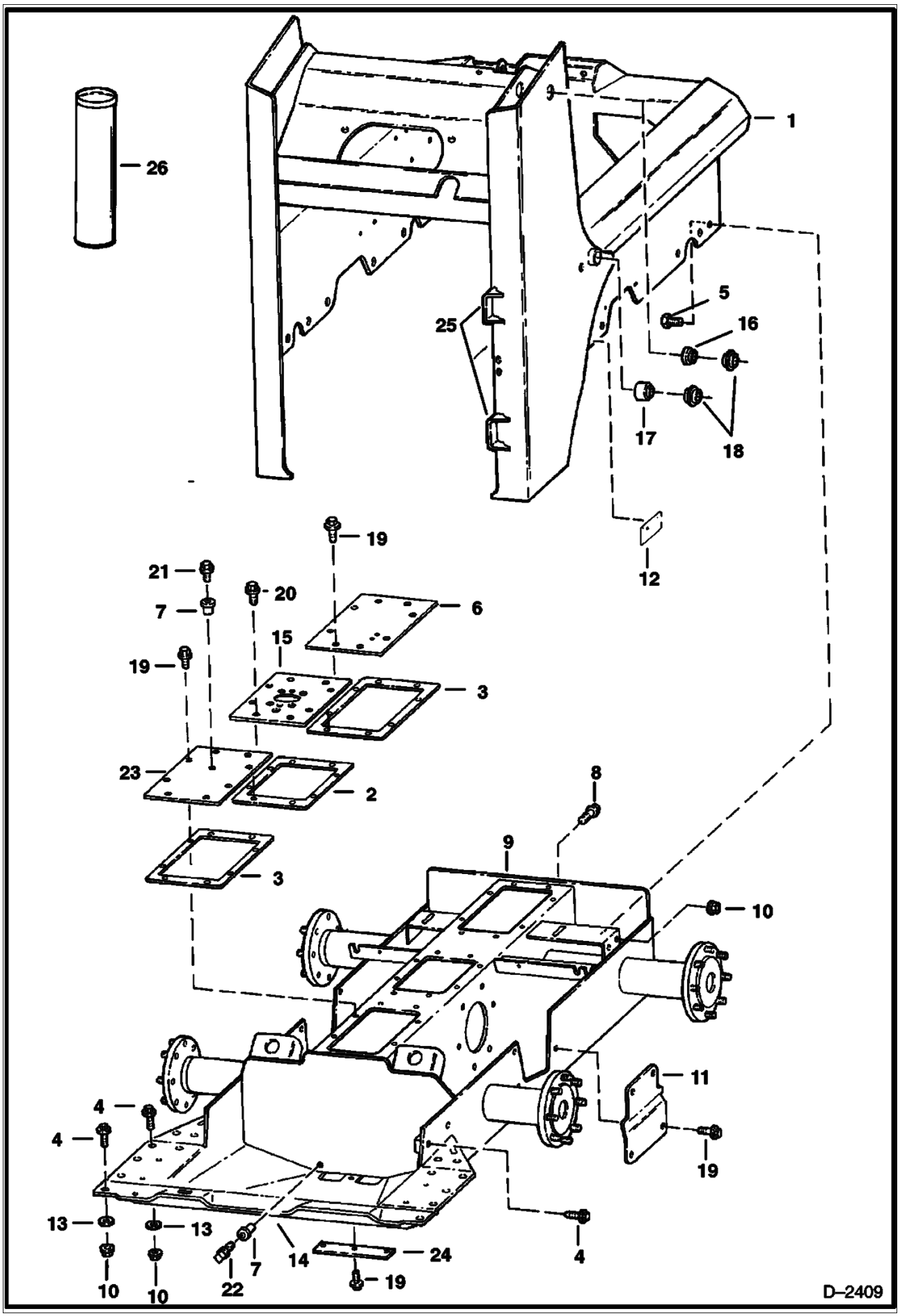

Page 14 - OSS# 2060759 - All rights reserved by Bobcat Company, a business unit of Ingersoll-Rand - 05/22/2008 - 07:23:42 - Produced by Ken Cook Co. with mediaioff

Ref No	Part Number	Description	Remarks	Serial Number	Qty
1		MAIN FRAME	Order 6737360 Mainframe, 6736359 Grill, 6736362 Radiator, 6736278 Seal, 6736379 Tank, 7101090 Hose, 6681945 Elbow, 6685625 Hose, 6732870 Mount, 6733429 Cap, 6736377 Oil Cooler, 6657376 Elbow, 6737365 Hose, 6577822 Hose (3ft.), 5HM-14 Clamp (2), 6734420 Cover (2) & 6676989 Filter Assy. - Was 6714590 [A]		1
1	6737360	MAINFRAME			1
2	6706968	GASKET			1
3	6703097	GASKET			2
4	31C000824B	BOLT		& Bel	12
5	31C000820B	BOLT		& Bel	16
5	31C000820B	BOLT		& Abv	28
6	6578505	COVER	See Illustration DISC BRAKE/ B17265		1
7	6553411	BUSHING			2
8	6731121	PLUG	chaincase fill - Was 11F-12 [A]		1
9		CHAINCASE	See Illustration DRIVE TRAIN/ D1886 See BTI359 NAP - Was 6712827 [A]		1
10	83D000008B	NUT			28
11	6733701	COVER	Was 6704695 [A]		2
12	6704680	COVER	See Illustration HYDROSTATIC CIRCUITRY/ B17267		1
13	6701097	WASHER			10
14	6706485	HOOK	tie down - weld on		2
15	6706042	COVER	See Illustration DISC BRAKE/ B17265		1
16	6702583	BUSHING	weld on		2
17	6555987	BUSHING	weld on		2
18	6702584	BUSHING	weld on		4
19	84G003712B	BOLT			x
20		BOLT	See Illustration DISC BRAKE/ B17265		x
21	6680970	BREATHER	See Illustration DISC BRAKE/ B17265 Was 6670627 [A]		1
22	6599645	PLUG	chaincase drain		1
23	6700330	COVER			1
24	6700182	COVER			1
25	6708987	HINGE	hinge - weld on		2
26	6633583	SEALANT	chaincase cover		x

Page 15 - OSS# 2060759 - All rights reserved by Bobcat Company, a business unit of Ingersoll-Rand - 05/22/2008 - 07:23:42 - Produced by Ken Cook Co. with media1off

OPERATOR CAB

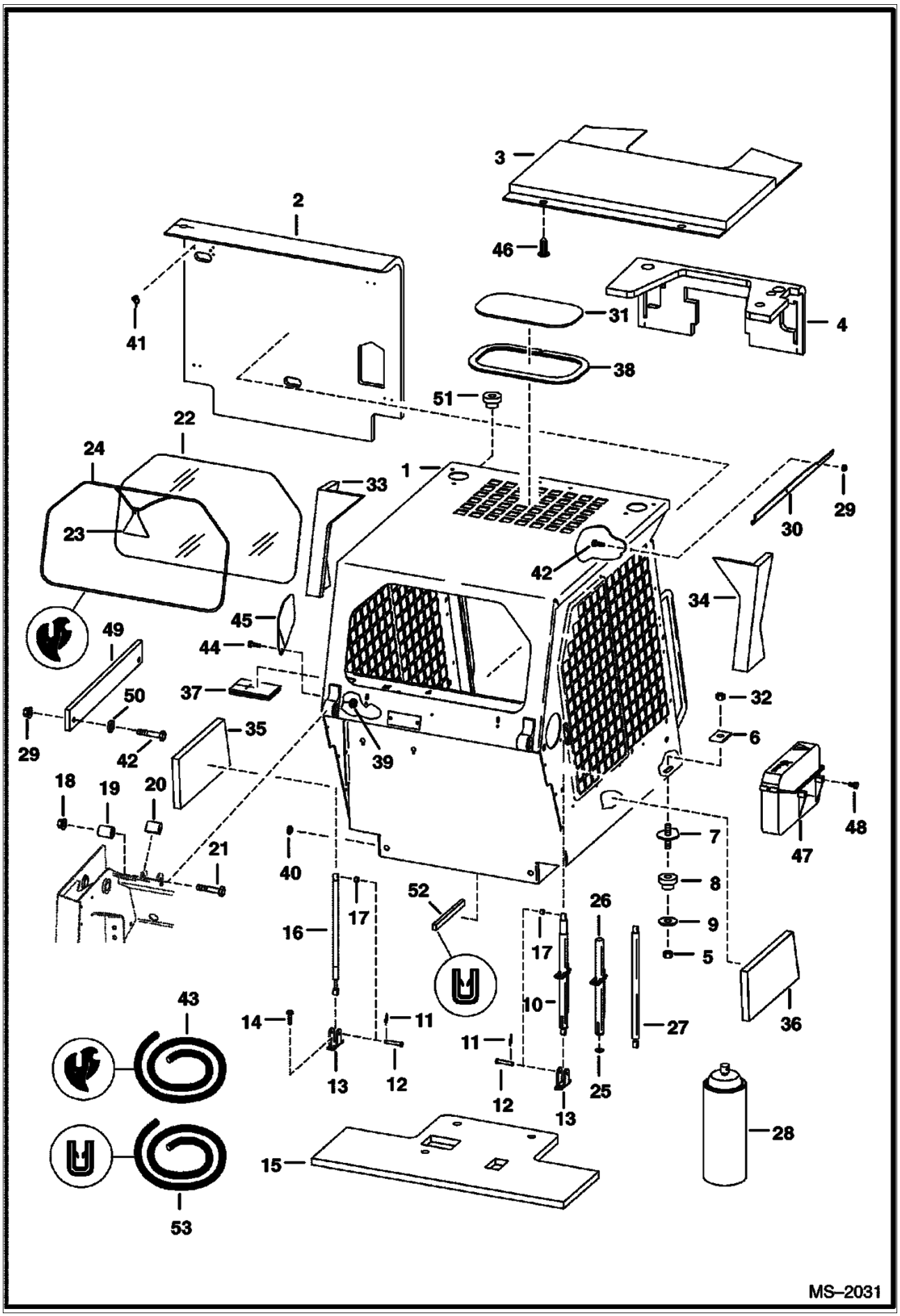

Page 16 - OSS# 2060759 - All rights reserved by Bobcat Company, a business unit of Ingersoll-Rand - 05/22/2008 - 07:23:42 - Produced by Ken Cook Co. with mediaioff

Ref No	Part Number	Description	Remarks	Serial Number	Qty
1	6701957	OPERATOR CAB	Does NOT include cab decals		1
2	6708682	INSULATION	Used W/Ref 41 seat back		1
3	6715094	INSULATION	Used W/Ref 46 cab top - Was 6712537 [A]		1
4	6718489	INSULATION	Used W/Ref 41 control panel - Was 6709020 [A]		1
5	85D000008B	NUT			2
6	6553709	WASHER			2
7	6702971	BOLT			2
8	6560633	DAMPENER			2
9	6515817	WASHER			2
10		GAS SPRING	Order Ref 25 Order Ref 26 Order Ref 27 NAP		1
11	6631418	PIN	ring		4
12	6567743	PIN			4
13	6706349	MOUNT			2
14	84G003112B	BOLT			4
15	6715095	INSULATION	Used W/Ref 28 seat pan - Was 6706982 [A]		1
16	6700171	GAS SPRING	W/O lock		1
16	6714062	KIT	W/O lock -heavy duty gas spring - SEE NOTE		1
16	91G000410B	SCREW	SEE NOTE		2
17	6567604	SPACER			2
18	53D000010B	NUT	Was 83D000010B [B]		2
19	6562602	BUSHING	rubber		2
20	6579613	STOP	cab tilt		2
21	17C001056B	BOLT			2
22	6701651	WINDOW	rear		1
23	6731478	EXIT TAG	Was 6559515 [A]		1
24		SEAL	Order Ref 43 NAP - 100''(2540 mm)long		1
24		CORD	Order Ref 43 NAP - 100''(2540 mm)long		1
25	6701174	WASHER			1
26	6708189	TUBE	stop		1
27	6664205	GAS SPRING			1
28	6652818	ADHESIVE	insulation - 24 oz. spray can		x
29	83D000004B	NUT			6
30	6703159	TRACK	R.H.		1
30	6703160	TRACK	L.H.		1
31	6705735	WINDOW			1
32	59D000008B	NUT			2
33	6715098	INSULATION	Used W/Ref 41 cab back - Was 6706156 [A]		1
34	6715097	INSULATION	Used W/Ref 41 cab back - Was 6706157 [A]		1
35	6703451	INSULATION	Used W/Ref 28 cab back		1
36	6703452	INSULATION	Used W/Ref 28 cab back		1
37	6703455	INSULATION	Used W/Ref 28 cab back		1
38	6664351	SEAL	Used W/ Cab Headliner		1
38	6665012	SEAL	Used W/O Cab Headliner		1
39	83D000005B	NUT			4
40	6664374	PLUG	heater hole		5
41	6664310	CLIP	insulation		7
42	35C000410B	BOLT			6
43	6665568	EXTRUSION	bulk - Sold Per Foot		x
43	6554149	CORD	bulk - Sold Per Foot		x
44	17C000512B	BOLT			1
45	6707879	COVER			1
46	6669308	RETAINER	snap in		2
47	6708827	CONTAINER	manuals		1
48	6702642	SCREW			2

Page 17 - OSS# 2060759 - All rights reserved by Bobcat Company, a business unit of Ingersoll-Rand - 05/22/2008 - 07:23:42 - Produced by Ken Cook Co. with media1off

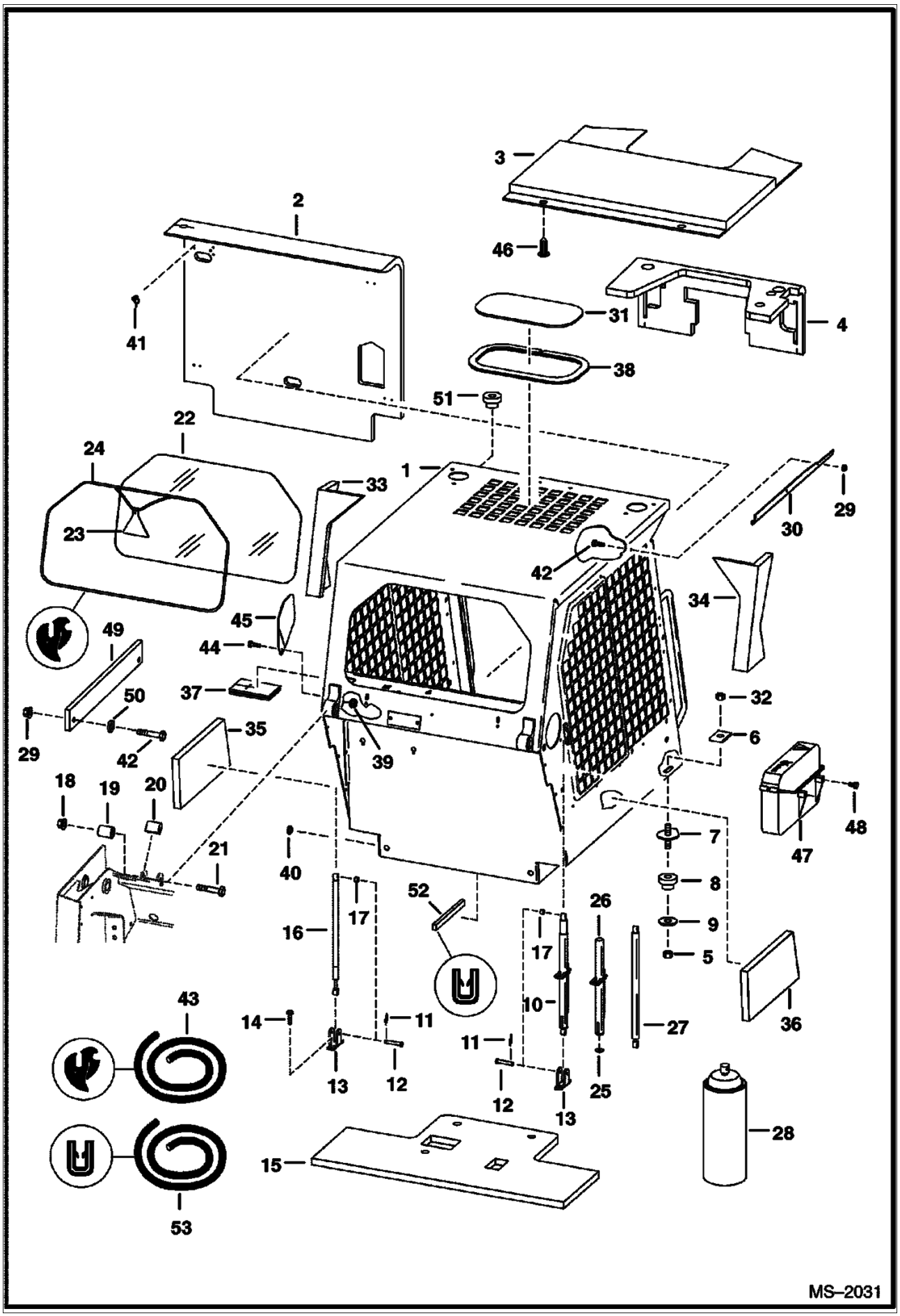

Page 18 - OSS# 2060759 - All rights reserved by Bobcat Company, a business unit of Ingersoll-Rand - 05/22/2008 - 07:23:42 - Produced by Ken Cook Co. with mediaioff

Ref No	Part Number	Description	Remarks	Serial Number	Qty
49	6736126	COVER			1
50	25E000013B	WASHER			2
51	6707674	PLUG	round - plugs 1.28"(32,5 mm) dia. hole in cab		2
52		MOULDING	NAP - 10.5" (266 mm) long - front corners cab seat pan - Order Ref. 53		2
53	6654139	MOULDING	bulk - Sold Per Print		x

Page 19 - OSS# 2060759 - All rights reserved by Bobcat Company, a business unit of Ingersoll-Rand - 05/22/2008 - 07:23:42 - Produced by Ken Cook Co. with media1off

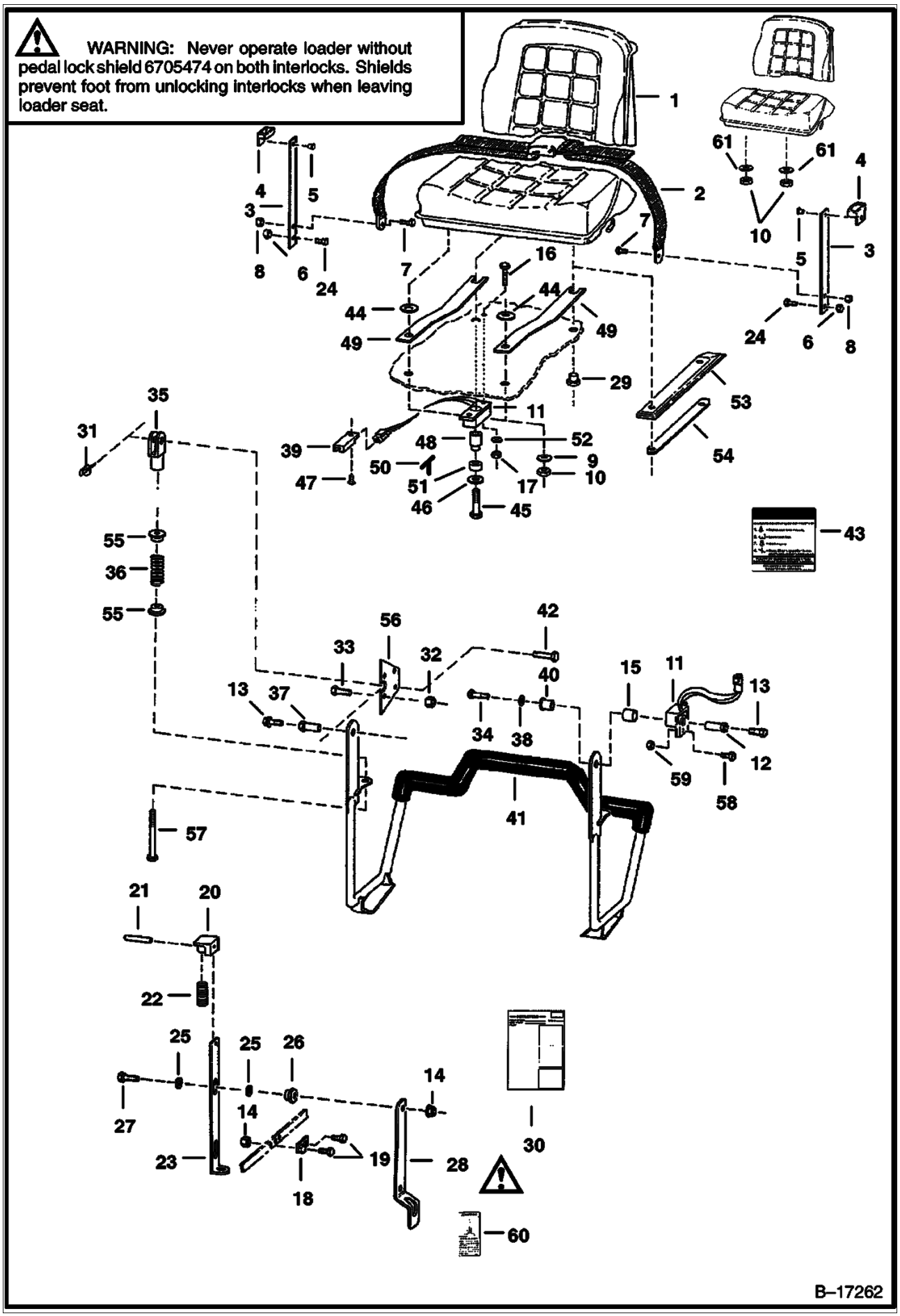

Page 20 - OSS# 2060759 - All rights reserved by Bobcat Company, a business unit of Ingersoll-Rand - 05/22/2008 - 07:23:42 - Produced by Ken Cook Co. with mediaoff

Ref No	Part Number	Description	Remarks	Serial Number	Qty
1		SEAT	Ref 49 See Illustration SEAT/ B7185 STANDARD SEAT REQUIRES (1) OF LOCATED ON R.H. SIDE - MILSCO SUSPENSION SEAT REQUIRES (2) OF LOCATED ONE EACH SIDE - GRAMMER SUSPENSION SEAT		1
2		SEAT BELT	Ref 3 NAP - Order 6675074 Seat Belt & (2) of (6725373 Spring Plate) - Was 6667875 [A]		1
2		SEAT BELT	Ref 3 NAP - W/spring plates - Order 6675074 Seat Belt & (2) of (6725373 Spring Plate) - Was 6725403 [A]		1
2	6675074	SEAT BELT	W/O spring plates		1
3		GUIDE ASSY.	NAP - Order 6711908 Spring Plate, & (2) of Ref. 5 - Was 6711907 [A]		2
3	6711908	SPRING PLATE	Used W/Ref 2 (NAP/6667875 Seat Belt)		2
3	6725373	SPRING PLATE	Used W/Ref 2 (6675074 Seat Belt)		2
4	6565355	GUIDE			2
5	6630207	RIVET			4
6	85D000006B	NUT			2
7	17C000716B	BOLT			2
8	85D000007B	NUT			2
9	6701174	WASHER			2
10	61D000005B	NUT			2
10	59D000005B	NUT	Was 61D-5 [B]	5157 16800 & Abv	4
10	59D000005B	NUT		5156 12800 & Abv	4
11	7105252	SENSOR	& Ref 50 Was 6680430 [A]		2
12	6706685	BUSHING			1
13	35C000612B	BOLT			2
14	83D000006B	NUT			8
15	6680473	BUSHING	magnetic - Was 6680442 [A]		1
16	17C000428B	BOLT	fastens thru body of Ref. 11- 1.75" (44,4 mm)long - Was 6710539 [A]		1
17	50D000012B	NUT			1
18	6563151	LINK			2
19	17C000616B	BOLT			4
20	6563148	BLOCK			2
21	14J002512B	ROLL PIN			2
22	6702430	SPRING			2
23	6578150	LOCK			2
24	17C000612B	BOLT			2
25	6700170	WASHER	plastic		8
26	6559479	NUT			4
27	6705489	BOLT			4
28	6705474	LOCK SHIELD	Never operate loader without pedal lock shield on both interlocks ... SEE WARNING ON PREVIOUS PAGE		2
29	6707319	NUT	spacer		1
30	6722392	INSTRUCTIONS	W/Ref 28		1
31	6631418	PIN	ring		2
32	91D000007B	NUT			2
33	17C000712B	BOLT			2
34	17C000608B	BOLT			2
35	6713589	CLEVIS			2
36	6701535	SPRING			2
37	6706962	BUSHING			1
38	25E000017B	WASHER			1
39	6665000	CLIP			1

Page 21 - OSS# 2060759 - All rights reserved by Bobcat Company, a business unit of Ingersoll-Rand - 05/22/2008 - 07:23:42 - Produced by Ken Cook Co. with media1off

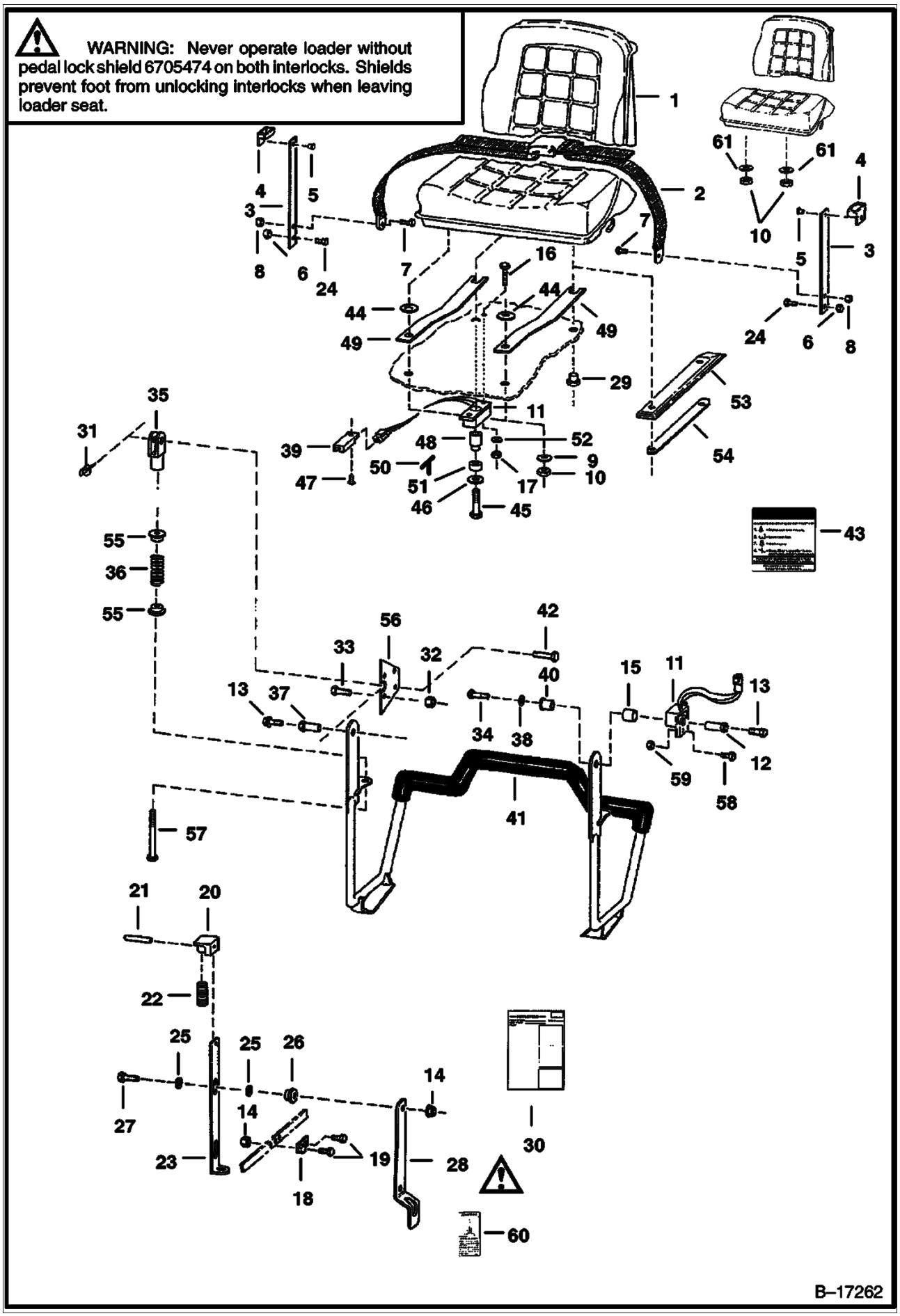

Page 22 - OSS# 2060759 - All rights reserved by Bobcat Company, a business unit of Ingersoll-Rand - 05/22/2008 - 07:23:42 - Produced by Ken Cook Co. with mediaoff

Ref No	Part Number	Description	Remarks	Serial Number	Qty
40	6680441	BUSHING	keyed - Was 6664882 [A]		1
41	6716777	SEAT BAR	for use W/Compression Springs- Was 6713609 [A]		1
42	4F006106B	PIN			2
43	6707134	DECAL	instruction for LCS		1
44	6706890	WASHER			2
45	17C000508B	BOLT			2
46	25E000016B	WASHER			1
47	6664221	RETAINER			1
48	6710751	BUSHING	spacer - 1.67"(42,4 mm) long		1
49	6706966	SPRING	plate		1
50	6680523	KEY,MAGNETIC	magnet bushing - Was 6664881 [A]		1
51	6680472	SENSOR	tapered magnetic - Was 6666608 [A]		1
52	25E000010B	WASHER			1
53	6711729	COVER			2
54	6711730	STRIP			2
55	6710659	BUSHING			4
56	6710660	MOUNT			2
57	6713887	BOLT			2
58	35C000410B	BOLT	Ref 11 fastens thru tab of 5/8"(15,9 mm) long		1
59	83D000004B	NUT			1
60	6705720	DECAL			1
61	6707318	GUIDE	Was 6571991 [A]	5157 16800 & Abv	2
61	6707318	GUIDE		5156 12800 & Abv	4

Page 23 - OSS# 2060759 - All rights reserved by Bobcat Company, a business unit of Ingersoll-Rand - 05/22/2008 - 07:23:42 - Produced by Ken Cook Co. with media1off

SEAT
(Milsco)

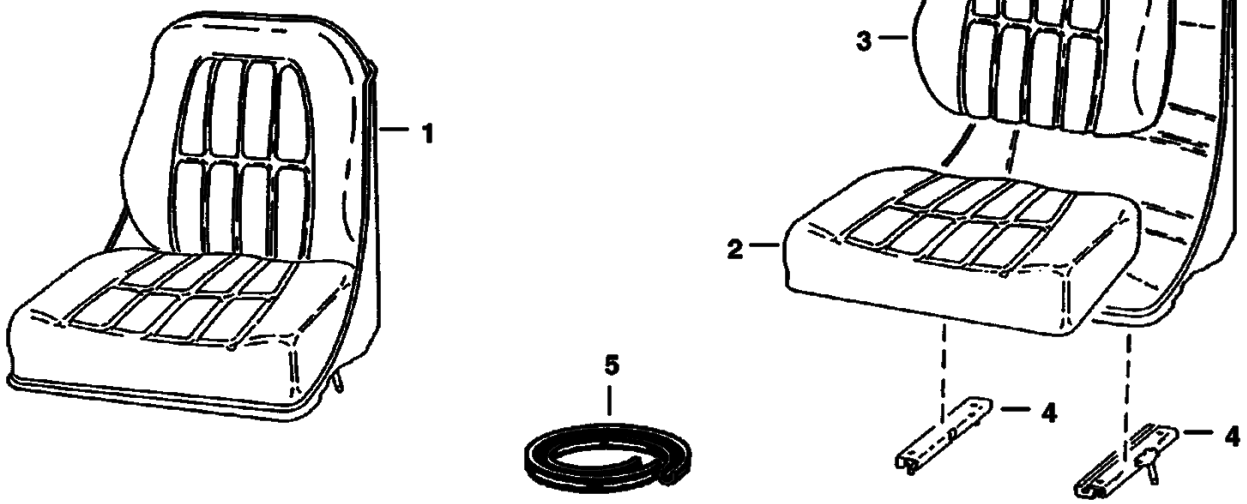

Page 24 - OSS# 2060759 - All rights reserved by Bobcat Company, a business unit of Ingersoll-Rand - 05/22/2008 - 07:23:42 - Produced by Ken Cook Co. with media1off

SEAT (Cont'd)
(Milsco)

Ref No	Part Number	Description	Remarks	Serial Number	Qty
1	6563140	SEAT	Was 6665401 [A]		1
2	6630468	CUSHION	seat		1
3	6630465	CUSHION	back		1
4	6630469	TRACK	W/ Latch		1
4	6599780	TRACK	W/O Latch		1
5	6652935	EDGING	96" (2,4 m) - For Ref. 2 & 3		x
5	6665656	CLIP	splice		1

Page 25 - OSS# 2060759 - All rights reserved by Bobcat Company, a business unit of Ingersoll-Rand - 05/22/2008 - 07:23:42 - Produced by Ken Cook Co. with media1off

SEAT
(Michigan)

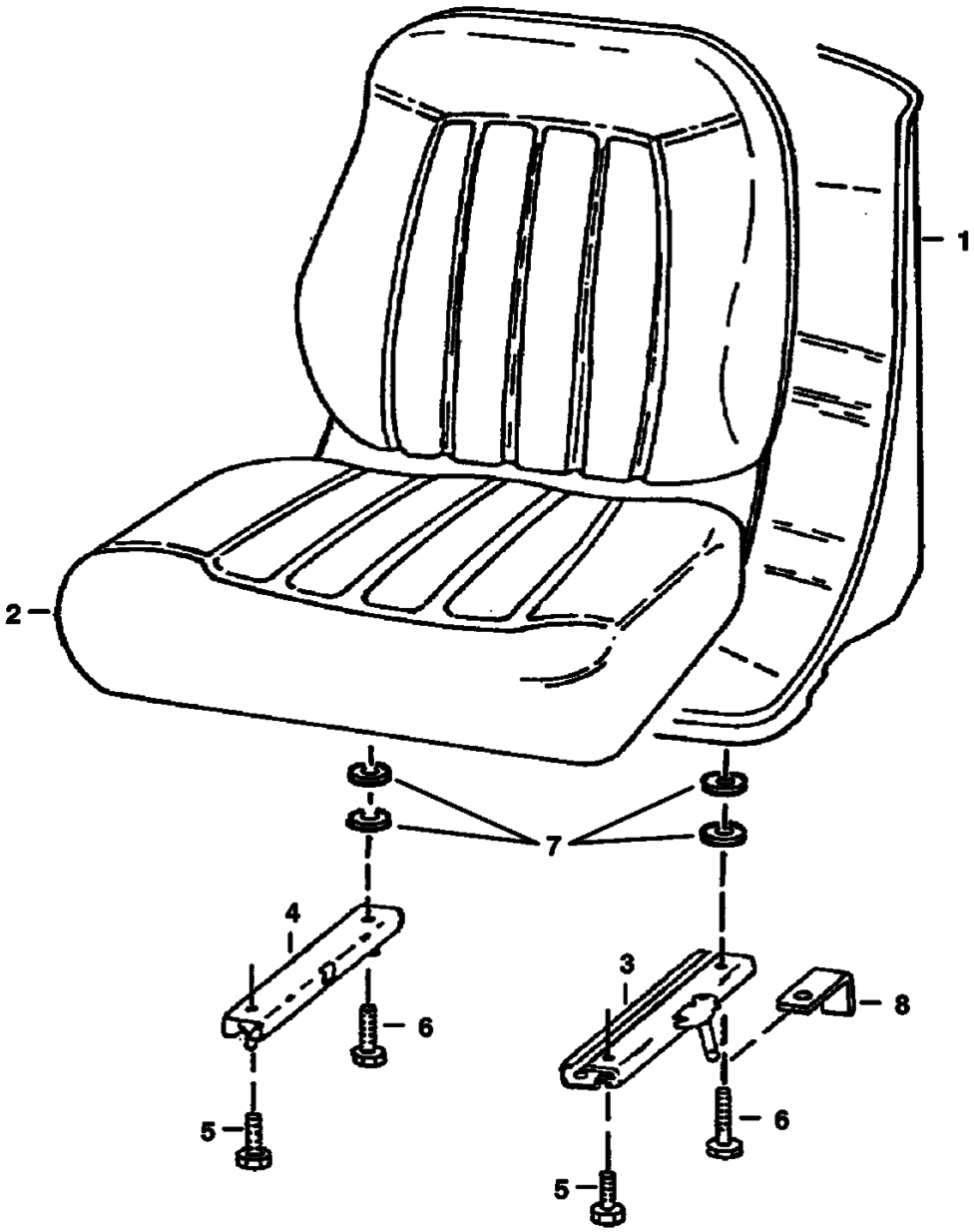

Page 26 - OSS# 2060759 - All rights reserved by Bobcat Company, a business unit of Ingersoll-Rand - 05/22/2008 - 07:23:42 - Produced by Ken Cook Co. with mediaioff

SEAT (Cont'd)
(Michigan)

Ref No	Part Number	Description	Remarks	Serial Number	Qty
1	6669135	SEAT	W/Ref. 2-7		1
2	6670160	CUSHION	W/edging, clip & (2) grommets		1
2		EDGING	NSS		1
2		CLIP	NSS		1
3		TRACK	NAP - L.H. - W/10" (254 mm) Latch Was 6669088 [A]		1
3	6674013	TRACK	L.H. - W/8" (203,2 mm) Latch		1
4	6669089	TRACK	R.H. - W/O Latch		1
5	25G000512B	BOLT	6669135 Seat uses (2) bolts		4
6	25G000520B	BOLT			2
7	6672715	SPACER	Was 7000010 [A]		4
8	6668953	BRACKET	See S/L Dated 16 April 1996		2

Page 27 - OSS# 2060759 - All rights reserved by Bobcat Company, a business unit of Ingersoll-Rand - 05/22/2008 - 07:23:42 - Produced by Ken Cook Co. with media1off

REAR DOOR

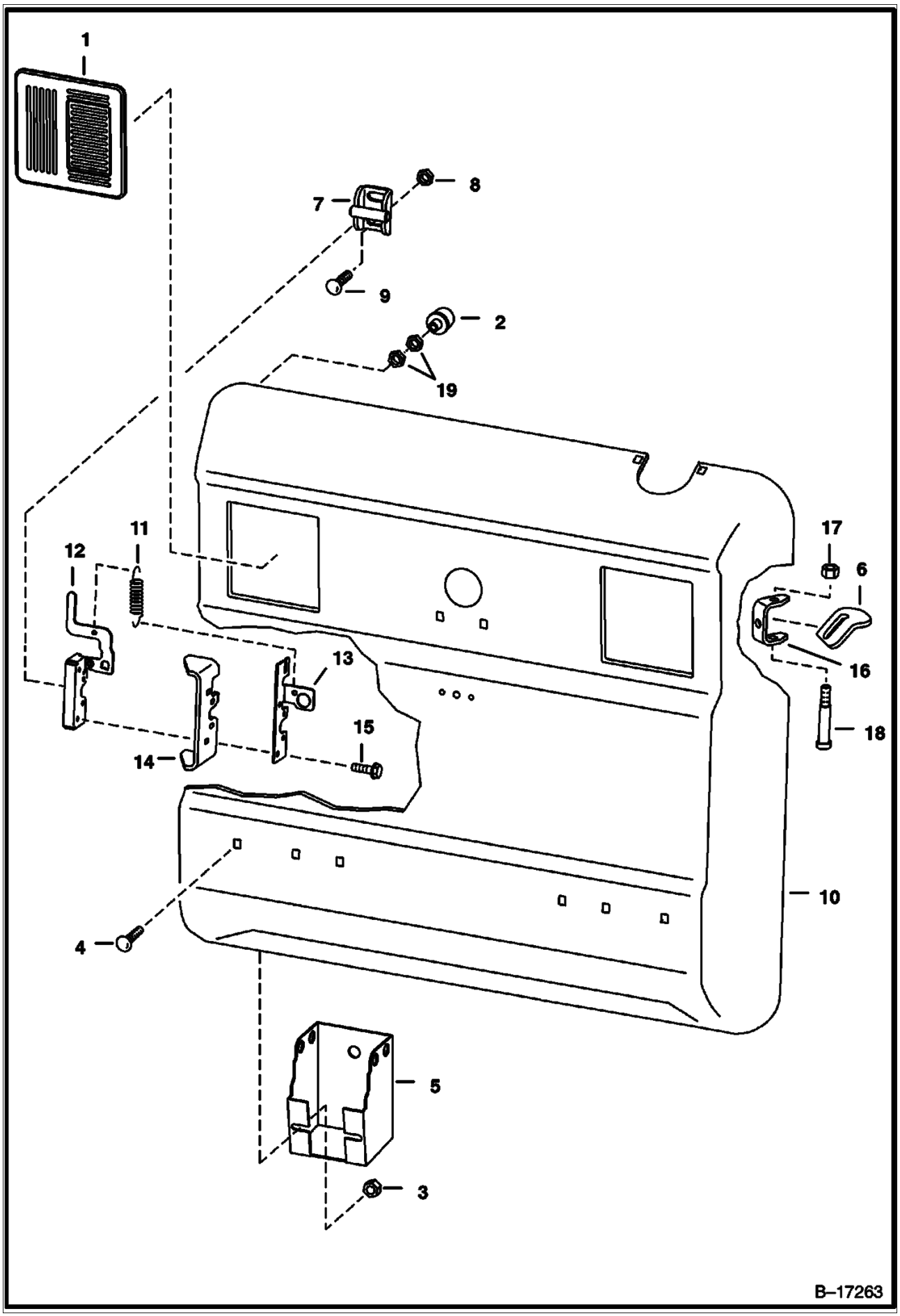

Page 28 - OSS# 2060759 - All rights reserved by Bobcat Company, a business unit of Ingersoll-Rand - 05/22/2008 - 07:23:42 - Produced by Ken Cook Co. with mediaioff

Ref No	Part Number	Description	Remarks	Serial Number	Qty
1	6670287	COVER	See Illustration LIGHT KIT/ D2405 FOR LIGHT MOUNT		2
2		BUMPER	Ref 19 NAP - Order 6655399 Bumper & (2) of - Was 6714454 [A]		2
2	6655399	BUMPER			2
3	55D000006B	NUT			2
4	37C000612B	BOLT			2
5	6715318	TOOL HOLDER	Was 6714064 [A]		1
6	6714126	DOOR STOP			1
7	6715157	STRIKER ASSY.	Was 6579969 [A]		1
8	57D000008B	NUT	Was 83D-8 [B]		2
9	37C000820B	BOLT	carriage		2
9	25G000820B	BOLT	hex socket		2
10		REAR DOOR	See BTI357 NAP - Was 6711524		1
11	6714210	SPRING			1
12	6670867	LATCH			1
13	6711664	GUIDE	latch		1
14	6711527	LATCH PLATE	weld-on		1
15	31C000420B	BOLT			3
16	6733575	HINGE	weld on - Was 6711526 [A]		2
17	59D000006B	NUT			2
18	38C000856B	SCREW			2
19	61D000005B	NUT			2

Page 29 - OSS# 2060759 - All rights reserved by Bobcat Company, a business unit of Ingersoll-Rand - 05/22/2008 - 07:23:42 - Produced by Ken Cook Co. with media1off

LIFT ARM & BOB-TACH

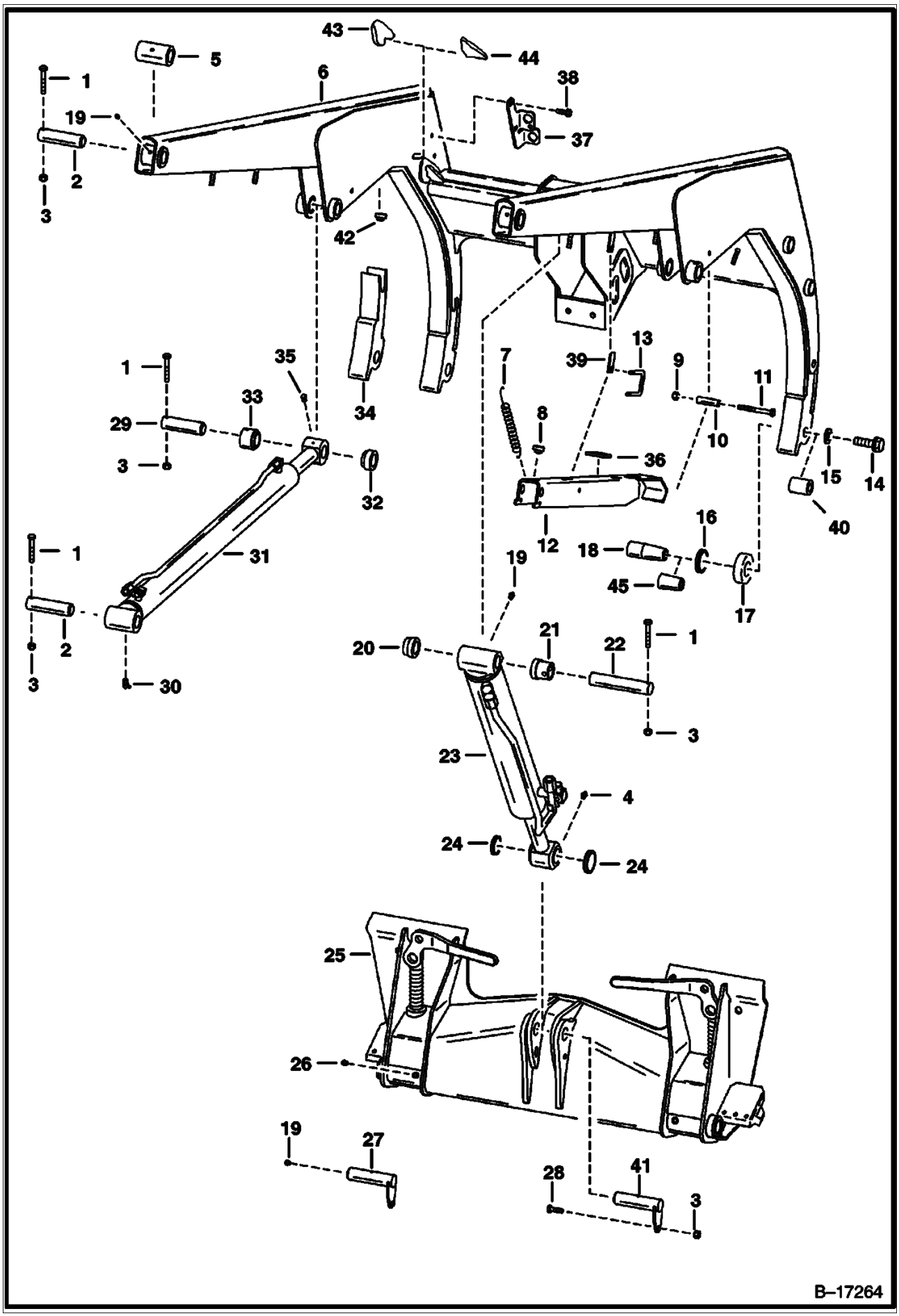

Page 30 - OSS# 2060759 - All rights reserved by Bobcat Company, a business unit of Ingersoll-Rand - 05/22/2008 - 07:23:42 - Produced by Ken Cook Co. with mediaoff

Ref No	Part Number	Description	Remarks	Serial Number	Qty
1	17C000640B	BOLT			8
2	6577954	PIN			4
3	85D000006B	NUT			9
4	10H000035B	GREASE ZERK			1
5	6578356	BUSHING	Weld On		2
6		LIFT ARM	Ref 15 & Ref 45 NAP - 1.25"(31,8 mm) dia. Bob-Tach pin - Order 6730797 Lift Arm & (2) ea. of (6560416 Washer) - Was 6703136 [A]		1
6	6730797	LIFT ARM	1.50"(38,1 mm) dia. Bob-Tach pin		1
7	6700743	SPRING			1
8	6519178	BUMPER	rubber		1
9	61D000006B	NUT			1
10	6700469	SPACER			1
11	17C000648B	BOLT			1
12	6705089	LIFT ARM STOP			1
13	6714810	PIN	retainer		1
14	31C001064B	BOLT	for 1.25"(31,8 mm) dia. Bob-tach pins - Was 17C001064B [B]		2
14	31C001264B	BOLT	for 1.50"(38,1 mm) dia. Bob-Tach pins		2
15	6555455	WASHER	for 1.25"(31,8 mm) dia. Bob-tach pins		2
15	6560416	WASHER	Used W/Ref 45 for 1.25"(31,8 mm) dia. Bob-tach pins		2
15	6718723	WASHER	for 1.50"(38,1 mm) dia. Bob-Tach pins		2
16	6651709	SEAL			2
17	6700039	CUP	seal - for 1.25"(31,8 mm) dia. Bob-tach pins		2
17	6700463	CUP	seal - for 1.50"(38,1 mm) dia. Bob-Tach pins		2
18		PIN	NAP - 1.25"(31,8 mm) dia. x 4.00" (101,6mm) long - Order 6732012 Pin - Was 6707042 [A]		2
18	6732012	PIN	1.25"(31,8 mm) dia. x 3.88"(98,6 mm) long		2
18	6730263	PIN	1.50"(38,1 mm) dia.		2
19	10H000025B	GREASE ZERK		& Bel	4
19	10H000025B	GREASE ZERK		& Abv	3
20	6703363	BUSHING	& Ref 22 Weld On		1
21	6704287	BUSHING	& Ref 22 Weld On		1
22	6704288	PIN	1.25"(31,8 mm) dia. - 7"(177,8 mm) long		1
23		CYLINDER	See Illustration TILT CYLINDER/ TS1127 See Illustration TILT CYLINDER/ TS1127A TILT		1
24	225855B	SEAL	Used W/Ref 41		2
25		BOB-TACH			1
26	743332B	GREASE ZERK			2
27	6705223	PIN	W/grease zerk hole		1
28	17C000620B	BOLT			1
29	6547593	PIN			2
30	11H000015B	GREASE ZERK			2
31		CYLINDER	See Illustration LIFT CYLINDER/ TS1097 LIFT		2
32	6555989	BUSHING	Weld On		2
33	6555987	BUSHING	Weld On		2
34		ARM	NAP - R.H. - Weld On		1
34		ARM	NAP - L.H. - Weld On		1
35	12H000015B	GREASE ZERK			2
36	6704436	PAD	foam - self adhesive		1
37		MOUNT	See Illustration AUXILIARY HYDRAULICS/ B17266		1
38		BOLT	See Illustration AUXILIARY HYDRAULICS/ B17266		2
39	6705091	TAB	weld on		1
40	6714874	BUSHING	weld on - W/tapered hole		2
41	6716601	PIN	W/O grease zerk hole		1

Page 31 - OSS# 2060759 - All rights reserved by Bobcat Company, a business unit of Ingersoll-Rand - 05/22/2008 - 07:23:42 - Produced by Ken Cook Co. with media1off

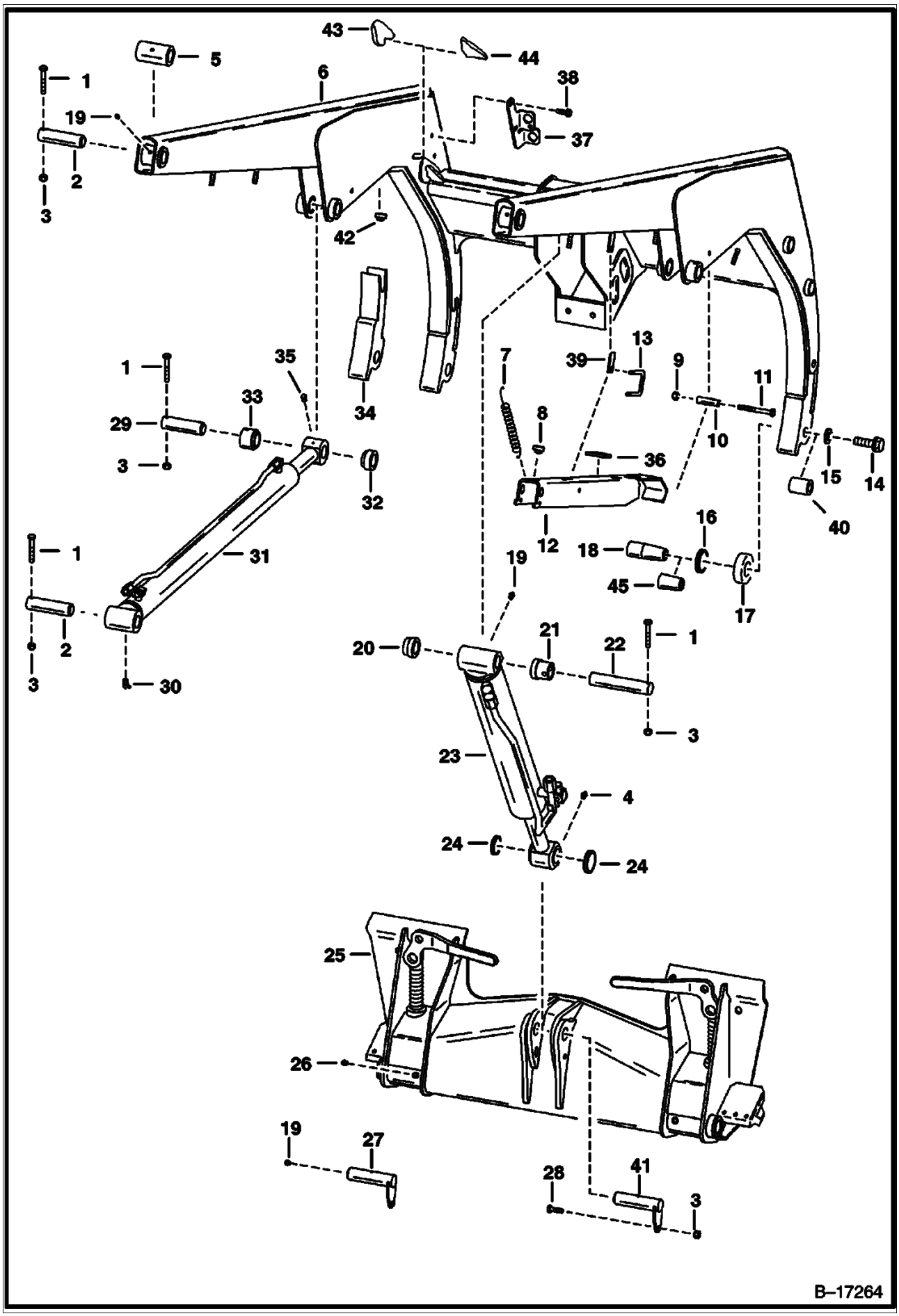

Page 32 - OSS# 2060759 - All rights reserved by Bobcat Company, a business unit of Ingersoll-Rand - 05/22/2008 - 07:23:42 - Produced by Ken Cook Co. with mediaoff

Ref No	Part Number	Description	Remarks	Serial Number	Qty
42	6704403	STOP	weld on		2
43	6727544	PLATE	weld on		2
44	6727545	PLATE	weld on		2
45	6731254	BUSHING	tapered - allows 1.25"(31,8 mm) dia. Bob-Tach pin to be used in 1.50"(38,1 mm) dia. Lift Arm hole		2

Page 33 - OSS# 2060759 - All rights reserved by Bobcat Company, a business unit of Ingersoll-Rand - 05/22/2008 - 07:23:42 - Produced by Ken Cook Co. with media1off

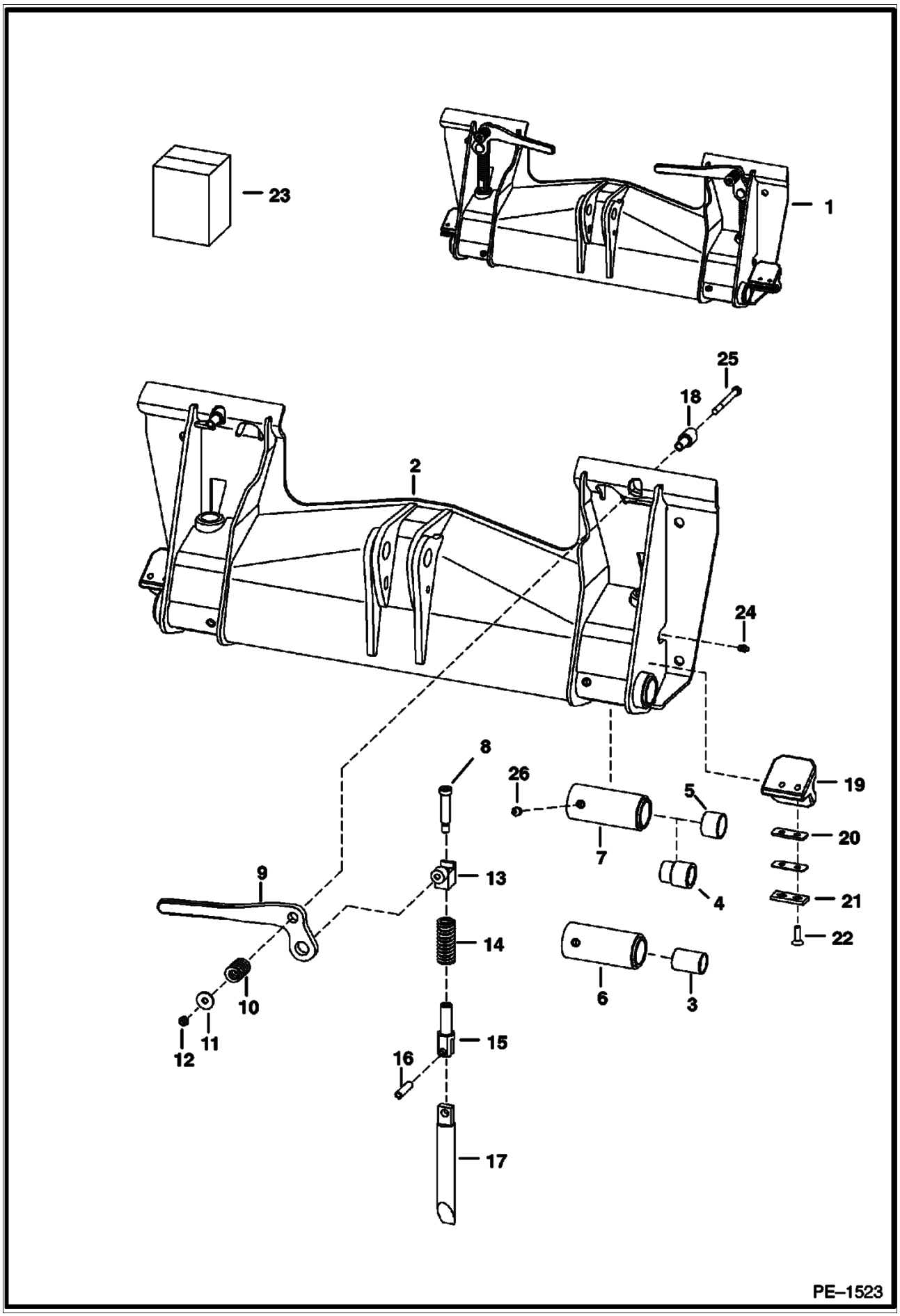

Page 34 - OSS# 2060759 - All rights reserved by Bobcat Company, a business unit of Ingersoll-Rand - 05/22/2008 - 07:23:42 - Produced by Ken Cook Co. with media1off

Ref No	Part Number	Description	Remarks	Serial Number	Qty
1		BOB-TACH	NAP - For 1.25 in. (31,8 mm) dia. lift arm pin - W/Ref. 6 (NAP/6577445 Bushing) - 2.25 in. (57,15 mm) O.D. weld on bushings - Order 6571744 Bob-Tach & (2) of Ref. 4 - Also Order 6561383 Decal		1
1	6571744	BOB-TACH	For 1.25 in. (31,8 mm) or 1.50 in. (38,1 mm) dia. lift arm pin - W/Ref. 7 - 2.50 in. (63.5 mm) O.D. weld on bushings - Also Order (2) of Ref. 4 or 5 - Also Order 6561383 Decal		1
1	6709215	BOB-TACH	For 1.50 in. (38,1 mm) dia. lift arm pin - W/Ref. 5 & 7 - 2.50 in. (63,5 mm) O.D. weld on bushings - Also Order 6561383 Decal		1
2		FRAME	NAP		1
3	6589665	BUSHING	press fit - 1.25 in. (31,8 mm) I.D. - straight O.D. - 2 in. (50,8 mm) long - Was 6534387 [A]		2
4	6732446	BUSHING	press fit - 1.25"(31,8 mm) I.D. - stepped O.D.		2
5	6730997	BUSHING	press fit - 1.50 in. (38,1 mm) I.D. - straight O.D. - 1.26 in. (32 mm) long		2
6		BUSHING	NAP - weld-on - W/Ref. 3 - for 1.25 in. (31,8 mm) dia. lift arm pin - 2.25 in. (57,15 mm) O.D. - Order 6577446 bushing & Ref. 3 - Was 6577445 [A]		2
6	6577446	BUSHING	weld on - W/O Ref. 3 - For 1.25 in. (31,8 mm) dia. lift arm pin - 2.25 in. (57,15 mm) O.D. - Also Order Ref. 3		2
7	6731979	BUSHING	weld on - W/O Ref. 4 or 5 - For 1.25 in. (31,8 mm) or 1.50 in. (38,1 mm) dia. lift arm pin - 2.50 in. (63,5 mm) O.D. - Also Order Ref. 4 or 5		2
8	6728473	BOLT	shoulder - Was 6578166 [A]		2
9	6702904	LEVER	R.H. - Was 6578855 [A]		1
9	6702903	LEVER	L.H. - Was 6578855 [A]		1
10	6704453	SPRING	Use W/Ref. 25 - (17C-644 Bolt) - Was 6578252 [C]		2
10	6713040	SPRING	Use W/Ref. 25 - (17C-660 Bolt)		2
11	6557831	WASHER	Use W/Ref. 25 - (17C-644 Bolt)		2
11	619021B	WASHER	Use W/Ref. 25 - (17C-660 Bolt)		2
12	85D000006B	NUT			2
13	6704240	PIVOT ASSY.	Was 6576456 [C]		2
14	6562018	SPRING	Was 6578253 [A]		2
15	6704248	PIVOT	wedge - Was 6576454 [A]		2
16	14J005032B	PIN			2
17	6737191	WEDGE	Was 6704242 [A]		2
18	6702958	BUSHING	weld on		2
19	6704600	STOP	R.H. - Was 6701451 [A]		1
19	6704601	STOP	L.H. - Was 6701468 [A]		1
20	6707514	SHIM	.060		2
20	6579106	SHIM	.125		2
21	6579104	SHIM	.250		2
22	9G000620B	BOLT			4
23	6724775	LEVER KIT	lever - R.H. - Ref. 8-17 & 25		1
23	6724776	LEVER KIT	lever - L.H. - Ref. 8-17 & 25		1
24	10H000035B	GREASE ZERK			2
25	17C000644B	BOLT	See Ref. 10 & 11 - 2.75 in. (69,9 mm) long		2
25	17C000660B	BOLT	See Ref. 10 & 11 - 3.75 in. (95,3 mm) long		2
26	743332B	GREASE ZERK			2

Page 35 - OSS# 2060759 - All rights reserved by Bobcat Company, a business unit of Ingersoll-Rand - 05/22/2008 - 07:23:42 - Produced by Ken Cook Co. with media1off

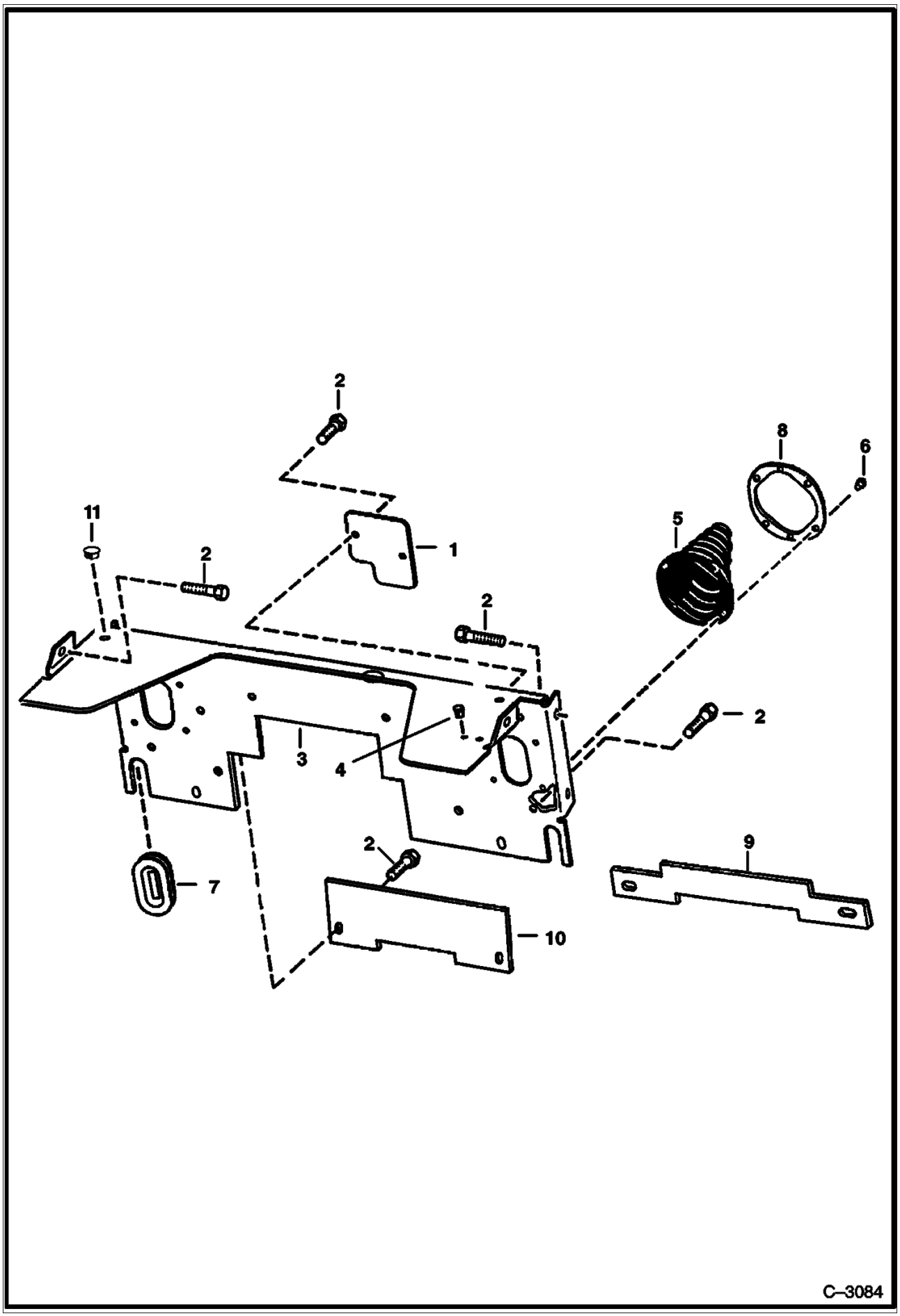

Page 36 - OSS# 2060759 - All rights reserved by Bobcat Company, a business unit of Ingersoll-Rand - 05/22/2008 - 07:23:42 - Produced by Ken Cook Co. with media1off

Ref No	Part Number	Description	Remarks	Serial Number	Qty
1	6707316	PLATE			1
2	84G003712B	BOLT			18
3		SHIELD	Ref 2 & Ref 10 NAP - Order (2) of & (1) ea. of 6717208 Shield Was 6706917 [A]		1
3	6717208	SHIELD			1
4	5289686B	PLUG			2
5	6532127	BOOT	W/Ref 8		2
6	6630207	RIVET			12
7	6577961	GROMMET			2
8		PLATE	Order Ref 5 NAP		2
9		COVER	Order Ref 10 NAP - - Was 6717890 [B]		1
10	6718446	COVER	5.25" x 13" (133,4 mm x 330,2 mm)		1
11	6657719	PLUG	for .75" dia. hole		2
11	6648348	PLUG	for .812" dia. hole		2

Page 37 - OSS# 2060759 - All rights reserved by Bobcat Company, a business unit of Ingersoll-Rand - 05/22/2008 - 07:23:42 - Produced by Ken Cook Co. with media1off

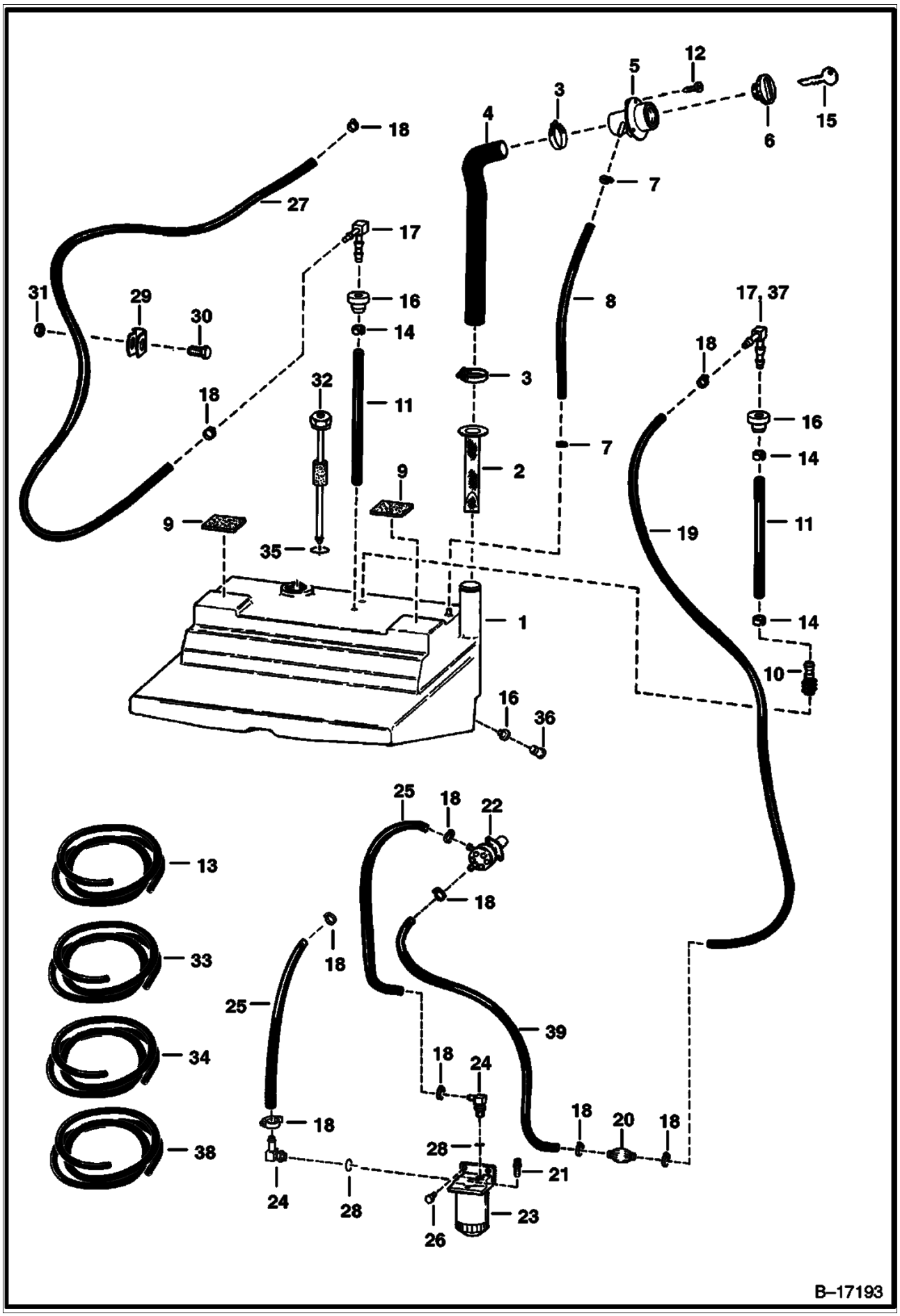

Page 38 - OSS# 2060759 - All rights reserved by Bobcat Company, a business unit of Ingersoll-Rand - 05/22/2008 - 07:23:42 - Produced by Ken Cook Co. with mediaIoff

Ref No	Part Number	Description	Remarks	Serial Number	Qty
1		TANK	Ref 16 & Ref 36 NAP - Order 6717572 Tank, (6717402 Bushing) (6717401 Plug) -Was 6575897 [A]		1
1	6717572	TANK			1
2	6569219	SCREEN			1
3	42H000032B	CLAMP			2
4	6706674	HOSE		& Bel	1
4	6710653	HOSE		& Abv	1
5	6701449	FILLER TUBE			1
6	6661114	CAP	green		1
6		CAP	W/Ref 15 NAP - locking - Code GC020		1
6	6661696	CAP	W/Ref 15 locking - Code PK510		1
7	42H000010B	CLAMP			2
8		HOSE	Order Ref 13 NAP - 25" (635,0 mm) long		1
9	6578278	PAD	self adhesive one side		2
10	6650239	SCREEN			1
11	6576386	HOSE	8.5"-9.5"(215,9 mm - 241,3 mm) long		2
12	6706517	SCREW			3
13	6578172	HOSE	bulk - Sold Per Foot		x
14	6661213	RING			3
15	6654374	KEY	Code GC020		1
15	6587458	KEY	Code PK510		1
16	6553411	BUSHING	.5" I.D.		3
16	6717402	BUSHING	.75" I.D.		1
17	6598908	ELBOW			1
18	6515575	CLAMP			10
19		HOSE	Order Ref 33 NAP - 35" (889,0 mm) long		1
20	6657734	PUMP	hand primer		1
21	6658180	BREATHER	breather		1
22	6674170	FUEL PUMP	See Illustration FUEL & INJECTION PUMPS/ B13157 WAS 6655216 [A]		1
23	6667353	FILTER ASSY			1
23	6667352	FILTER FUEL			1
23	72F000001B	DRAIN COCK			1
24	6657083	ELBOW	W/Ref 28 - flat boss face		2
24	6715183	ELBOW	W/Ref 28 - tapered boss face		2
25		HOSE	Ref 12 Order Ref 34 See Illustration FUEL & INJECTION PUMPS/ B13157 NAP - 13"(330,2 MM)LONG- - CONNECTS TO		2
26	17C000512B	BOLT			2
27		HOSE	Order Ref 38 NAP - 44"(1118 mm) long		1
28	79K000005B	O-RING	flat boss face		2
28	99K000005B	O-RING	tapered boss face		2
29	30H000036B	CLAMP			2
30	17C000612B	BOLT			2
31	61D000006B	NUT			1
32		SENS0R	W/Ref 35 See Illustration ENGINE ELECTRICAL CIRCUITRY/ B17271 FUEL		1
33	6577821	HOSE	bulk - Sold Per Foot		x
34	6577822	HOSE	bulk - Sold Per Foot		x
35	79K000014B	O-RING			1
35	6717579	GASKET	rubber		1
36	6599645	PLUG	fuel drain - .5" O.D.		1
36	6717401	PLUG	fuel drain - .75" O.D.		1
37	6661382	ELBOW			1
38	6578169	HOSE	bulk - Sold Per Foot		x

Page 39 - OSS# 2060759 - All rights reserved by Bobcat Company, a business unit of Ingersoll-Rand - 05/22/2008 - 07:23:42 - Produced by Ken Cook Co. with media1off

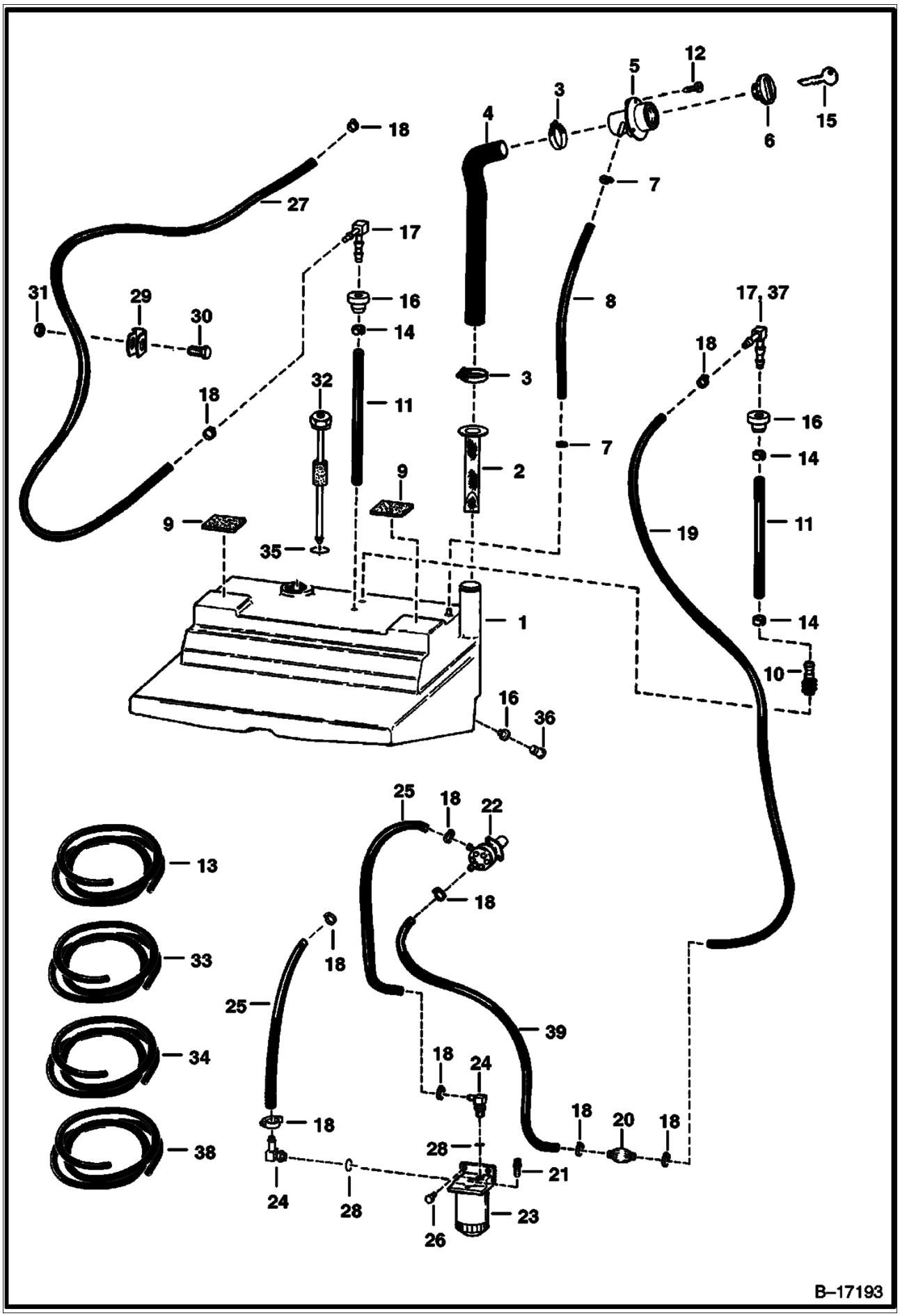

Page 40 - OSS# 2060759 - All rights reserved by Bobcat Company, a business unit of Ingersoll-Rand - 05/22/2008 - 07:23:42 - Produced by Ken Cook Co. with mediaIoff

Ref No	Part Number	Description	Remarks	Serial Number	Qty
39		HOSE	Order Ref 33 NAP - 18" (457,2 mm)		1

Page 41 - OSS# 2060759 - All rights reserved by Bobcat Company, a business unit of Ingersoll-Rand - 05/22/2008 - 07:23:42 - Produced by Ken Cook Co. with media1off

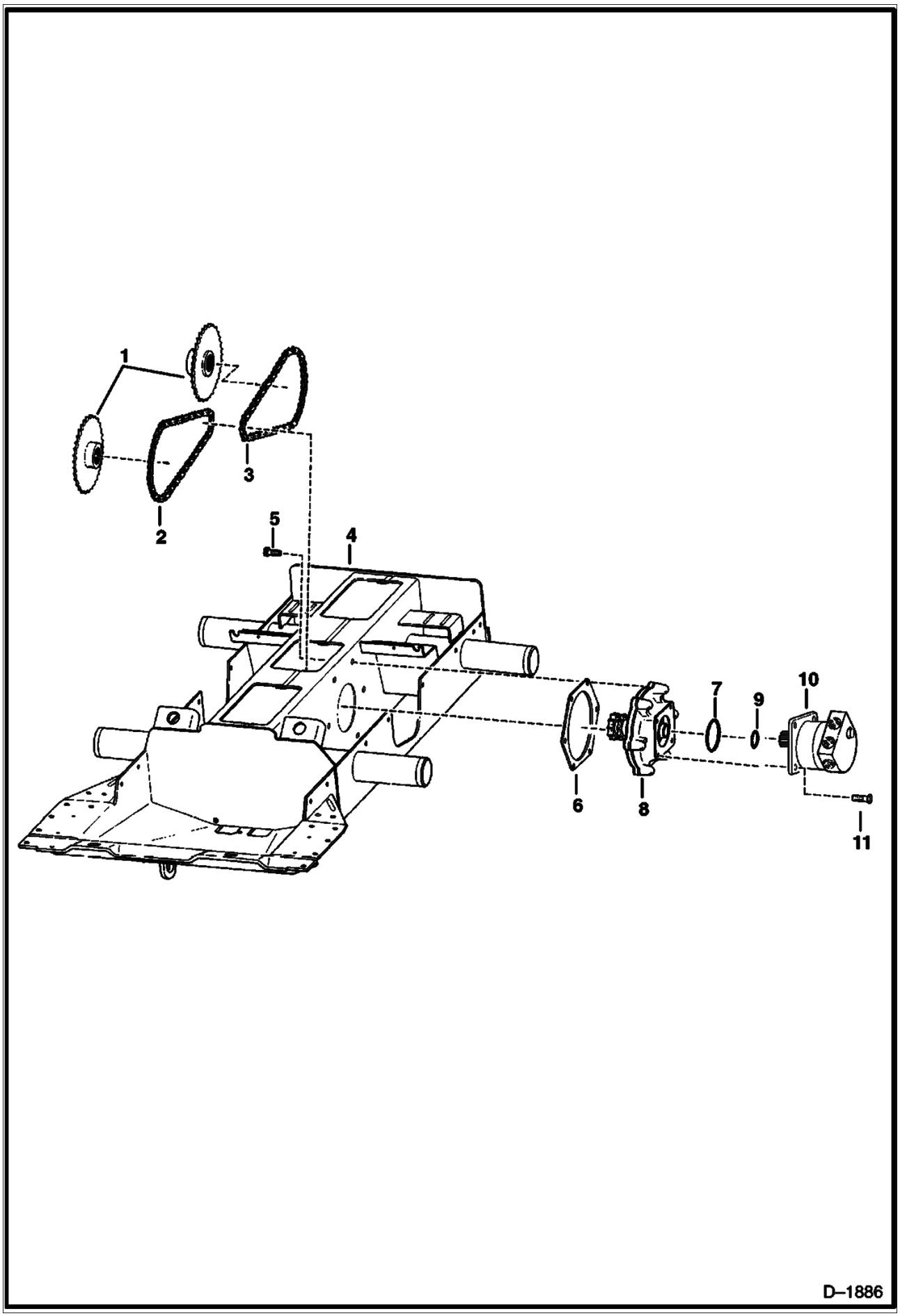

Page 42 - OSS# 2060759 - All rights reserved by Bobcat Company, a business unit of Ingersoll-Rand - 05/22/2008 - 07:23:42 - Produced by Ken Cook Co. with mediaioff

Ref No	Part Number	Description	Remarks	Serial Number	Qty
1	6577204	SPROCKET			4
2	6579126	CHAIN	58 pitches-hour glass shaped link		2
2	6731219	CHAIN	58 pitches - oval shaped link		2
3	6579127	CHAIN	62 pitches-hour glass shaped link		2
3	6731218	CHAIN	62 pitches - oval shaped link		2
3	6510171	LINK	conn. - hour glass shape		x
3	6675332	LINK	conn. - oval shape		x
4		CHAINCASE	See BTI359 NAP - Was 6712827 [A]		1
5	35C001032B	BOLT			12
6	6704878	GASKET	install W/Rib toward chaincase		2
7	25K030508B	O-RING			2
8	6705287	MOUNT ASSY.	See Illustration MOTOR CARRIER/ MC1937 DRIVE MOTOR		2
9	25K030202B	O-RING	Supplied W/Motor		2
10		MOTOR	W/Ref 9 See Illustration HYDROSTATIC MOTOR/ C3431		2
11	73G000824B	BOLT	Was 93G000824B [A]		8

Page 43 - OSS# 2060759 - All rights reserved by Bobcat Company, a business unit of Ingersoll-Rand - 05/22/2008 - 07:23:42 - Produced by Ken Cook Co. with media1off

MOTOR CARRIER
(Drive Motor Mount Assy.)

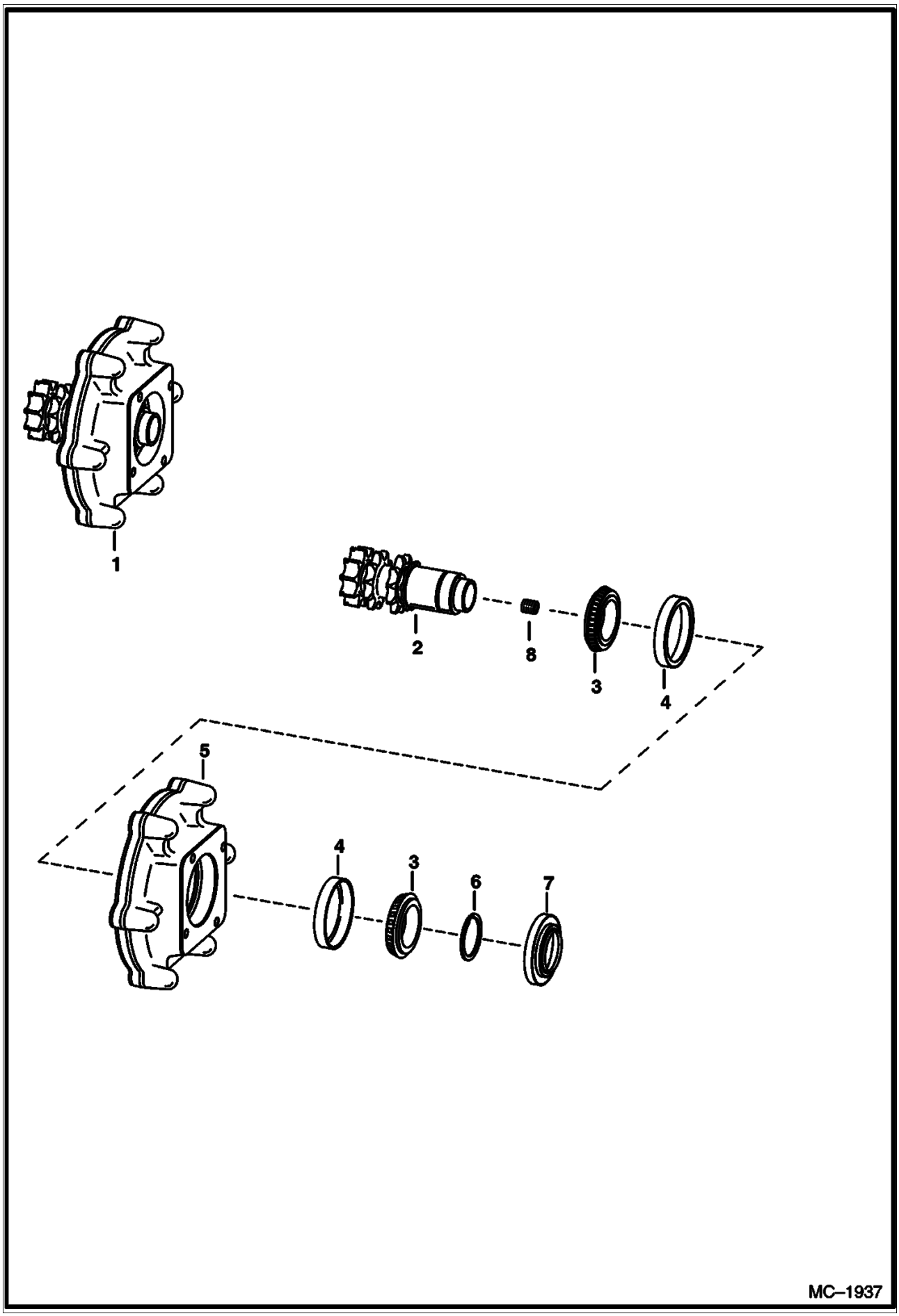

Page 44 - OSS# 2060759 - All rights reserved by Bobcat Company, a business unit of Ingersoll-Rand - 05/22/2008 - 07:23:42 - Produced by Ken Cook Co. with mediaioff

MOTOR CARRIER (Cont'd)
(Drive Motor Mount Assy.)

Ref No	Part Number	Description	Remarks	Serial Number	Qty
1	6712402	MOUNT ASSY.	drive motor - Ref. 2 - 7		1
2	6713456	SHAFT	W/double snap ring groove		1
3	6632218	BEARING			2
4	6632541	RACE			2
5	6704492	HOUSING			1
6	6571851	SNAP RING	.118" (3,0 mm) thickness		1
6	6571852	SNAP RING	.125" (3,2 mm) thickness		1
7	6705847	SEAL			1
8		PLUG	NSS - Was 16F000006B [B]		1

Page 45 - OSS# 2060759 - All rights reserved by Bobcat Company, a business unit of Ingersoll-Rand - 05/22/2008 - 07:23:42 - Produced by Ken Cook Co. with media1off

DISC BRAKE

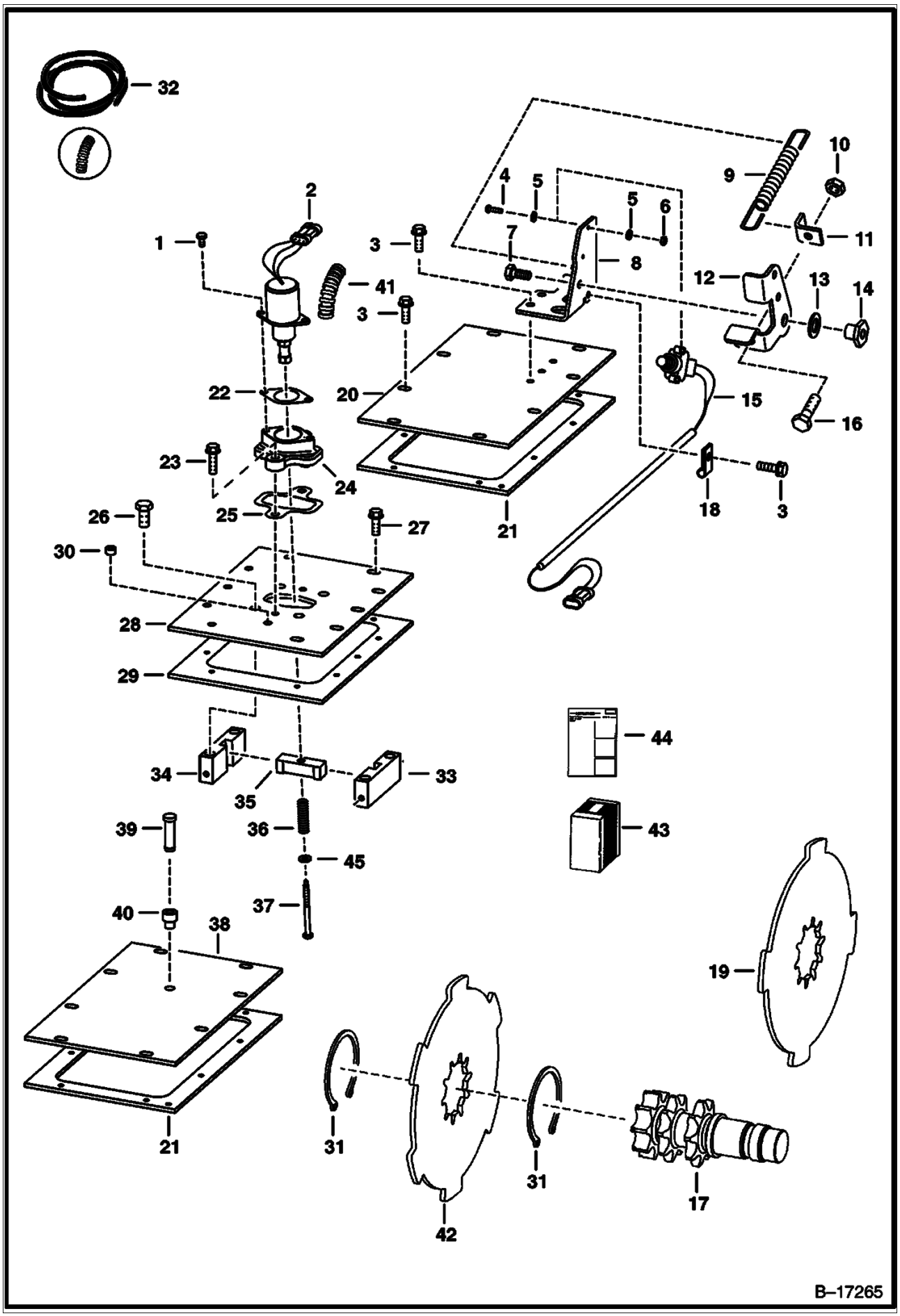

Page 46 - OSS# 2060759 - All rights reserved by Bobcat Company, a business unit of Ingersoll-Rand - 05/22/2008 - 07:23:42 - Produced by Ken Cook Co. with mediaioff

Ref No	Part Number	Description	Remarks	Serial Number	Qty
1	17C000412B	BOLT			2
2	6667992	SOLENOID	W/Ref 41 See S/L dated 18 April 1996		1
3	84G003712B	BOLT			18
4	23G000812B	SCREW			2
5	25E000008B	WASHER			4
6	12D000008B	NUT			2
7	17C000610B	BOLT			1
8	6707313	PEDAL MOUNT			1
9	6585860	SPRING			1
10	95D000006B	NUT	Was 91D000006B [A]		2
11	6707315	ANGLE			1
12	6707314	PEDAL	brake		1
13	6700170	WASHER	plastic		2
14	6559479	NUT			1
15	6707337	SWITCH			1
16	17C000620B	BOLT			2
17	6713456	SHAFT	See Illustration MOTOR CARRIER/ MC1937		2
18	30H000023B	CLAMP			1
19		BRAKE	Order Ref 43 NAP - disc - 4 lobe - Was 6707254 [A]		2
20	6578505	COVER			1
21	6703097	GASKET			2
22	6706737	GASKET			1
23	84G003720B	BOLT			2
24	6706718	MOUNT			1
25	6708016	GASKET			1
26	17C000820B	BOLT			4
27	84G003716B	BOLT			10
28	6706042	COVER			1
29	6706968	GASKET			1
30	6544654	BUSHING	spacer		1
31	6658672	SNAP RING			4
32	6584978	CONDUIT	bulk - Sold Per Foot		x
33	6719056	BLOCK	guide - R.H. - Was 6705898 [A]		1
34	6719057	BLOCK	guide - L.H. - Was 6705897 [A]		1
35	6705896	GUIDE	4 lobe brake disc		1
35	6714278	GUIDE	6 lobe brake disc		1
36	6708018	SPRING			1
37	6708267	BOLT			1
38	6700330	COVER			1
39	6680970	BREATHER	Was 6670627 [A]		1
40	6553411	BUSHING			1
41		CONDUIT	Order Ref 32 NAP - 5"(127 mm) long		1
42	6716228	BRAKE	disc - 6 lobe		2
43	6717734	KIT	6 lobe disc brake - Ref. 35 (6714278 Guide), Ref. 44 & (2) of Ref. 42		1
44	6900805	INSTRUCTIONS			1
45	25E000013B	WASHER			1

Page 47 - OSS# 2060759 - All rights reserved by Bobcat Company, a business unit of Ingersoll-Rand - 05/22/2008 - 07:23:42 - Produced by Ken Cook Co. with media1off

DISC BRAKE
(Flat Top Chaincase)

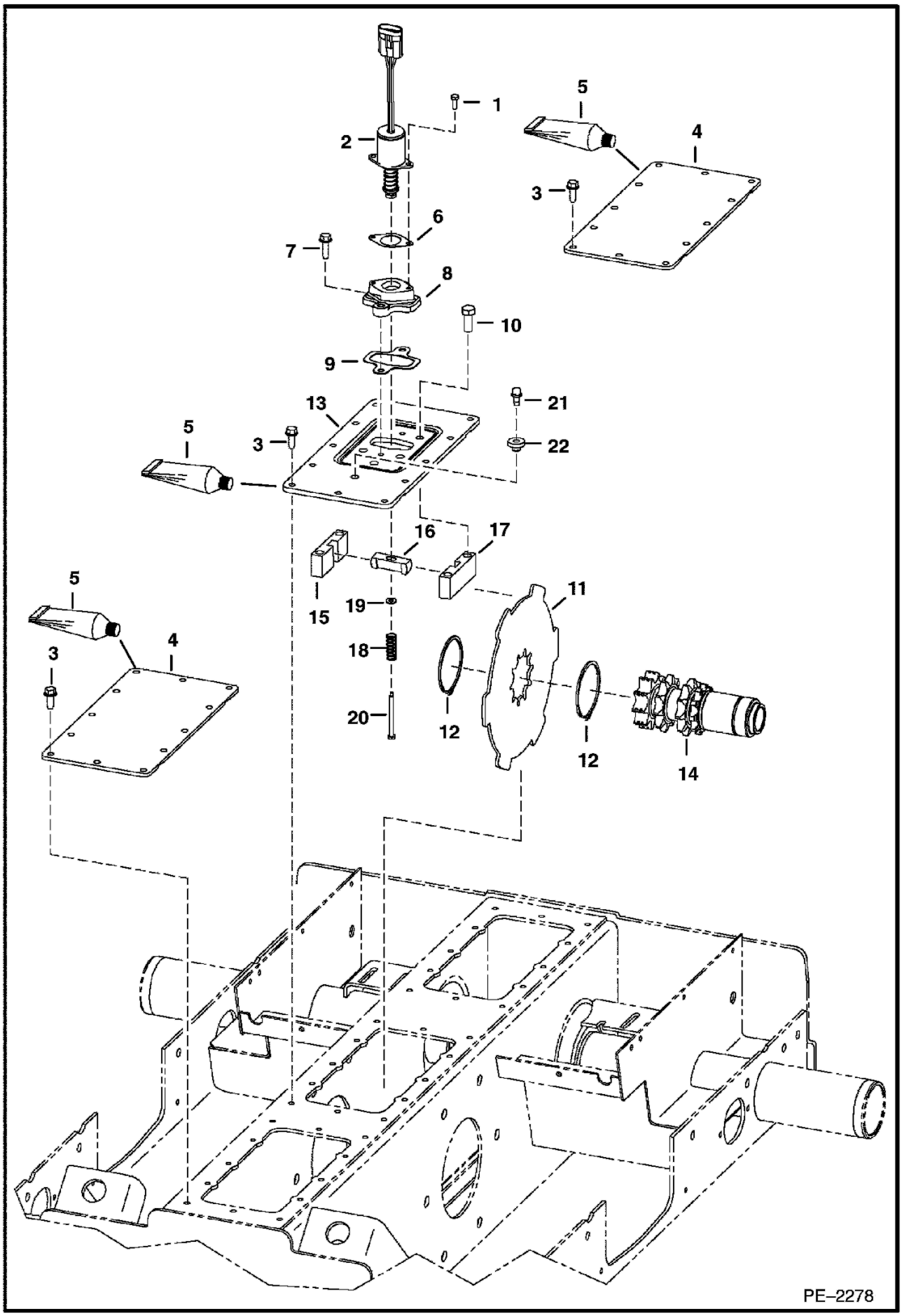

Page 48 - OSS# 2060759 - All rights reserved by Bobcat Company, a business unit of Ingersoll-Rand - 05/22/2008 - 07:23:42 - Produced by Ken Cook Co. with mediaioff

DISC BRAKE (Cont'd)
(Flat Top Chaincase)

Ref No	Part Number	Description	Remarks	Serial Number	Qty
1	17C000412B	BOLT			2
2	6681512	SOLENOID			1
3	84G003716B	BOLT			36
4	6733956	COVER			2
5	6685372	SEAL	liquid gasket - 20 oz. tube		x
6	6706737	GASKET			1
7	84G003720B	BOLT			2
8	6706718	MOUNT			1
9	6708016	GASKET			1
10	47C000820B	BOLT			4
11	6716228	BRAKE	disc		2
12	6658672	SNAP RING			4
13	6735316	COVER			1
14	6733621	SHAFT	DOUBLE SNAP RING GROOVE		2
15	6719056	BLOCK	guide - L.H.		1
16	6714278	GUIDE			1
17	6719057	BLOCK	guide - R.H.		1
18	6708018	SPRING			1
19	25E000013B	WASHER			1
20	6708267	BOLT			1
21	6680970	BREATHER			1
22	6553411	BUSHING			1

Page 49 - OSS# 2060759 - All rights reserved by Bobcat Company, a business unit of Ingersoll-Rand - 05/22/2008 - 07:23:42 - Produced by Ken Cook Co. with media1off

AXLE

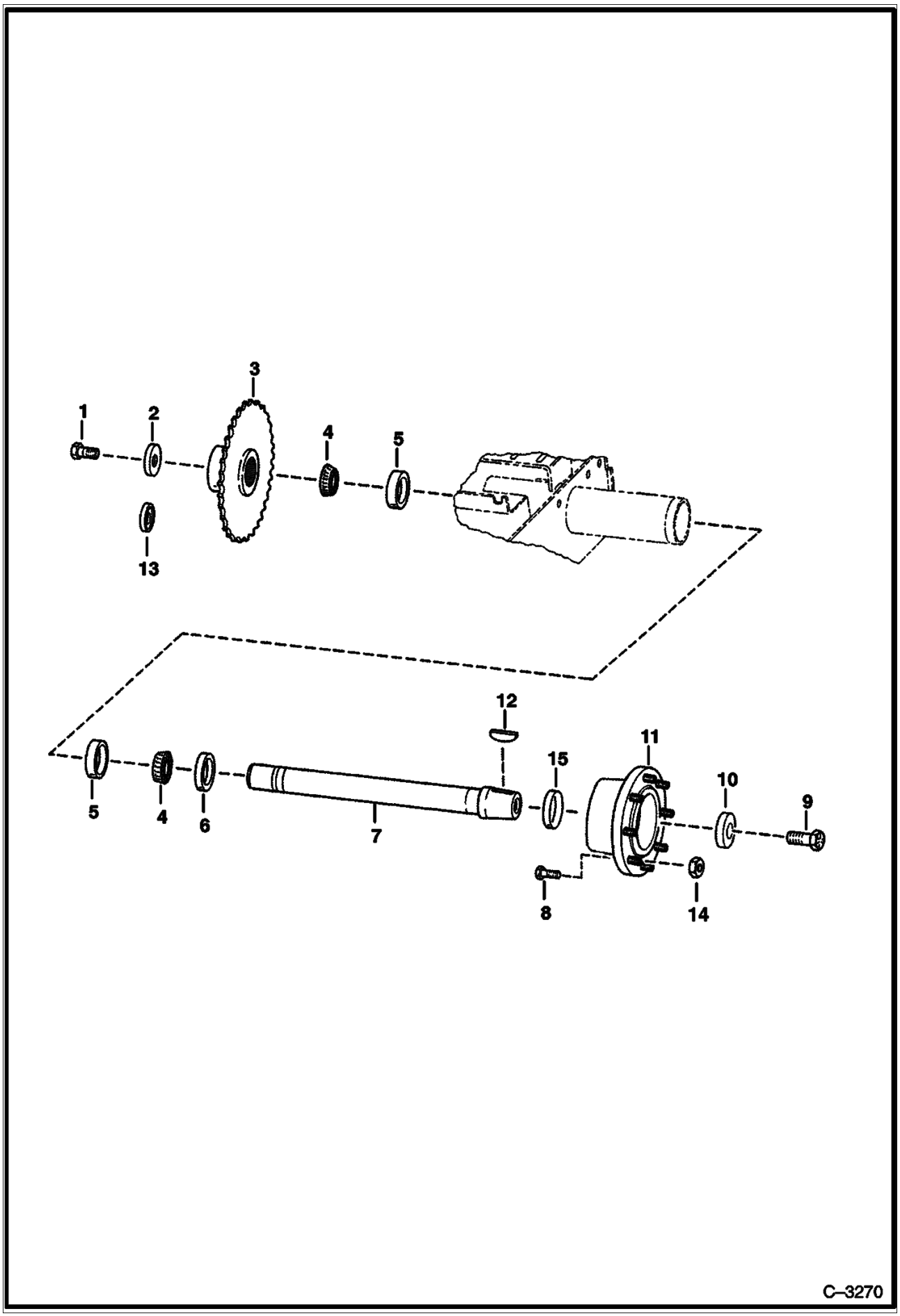

Page 50 - OSS# 2060759 - All rights reserved by Bobcat Company, a business unit of Ingersoll-Rand - 05/22/2008 - 07:23:42 - Produced by Ken Cook Co. with media1off

Ref No	Part Number	Description	Remarks	Serial Number	Qty
1	18C001224B	BOLT			1
2	6552871	WASHER			1
3	6577204	SPROCKET			1
4	6519925	BEARING	Was 6669050 [A]		2
5	6634609	RACE			2
6	6658228	SEAL			1
7	6569465	AXLE			1
8	6709170	STUD	wheel		8
9	18C001632B	BOLT	W/Ref 7 2"(50,8 mm) long - W/1.5"(38,1 mm) deep threads		1
9	18C001636B	BOLT	W/Ref 7 2.25"(57,2 mm) long - W/1.65"(41,9 mm) deep threads		1
10	6716843	WASHER	recessed - Was 6569461 [A]		1
11	6578689	HUB			1
12	6J001664B	WOODRUFF KEY			1
13	6662306	RING	wear - service part only		1
13	6722907	KIT	See Illustration AXLE SEAL KIT/ B4041 AXLE SEAL & WEAR SLEEVE		4
14	6564669	NUT	wheel		8
15	6563606	WASHER	recessed - Used to take up .005 or .010 end play on axle		1

Page 51 - OSS# 2060759 - All rights reserved by Bobcat Company, a business unit of Ingersoll-Rand - 05/22/2008 - 07:23:42 - Produced by Ken Cook Co. with media1off

HYDRAULIC CIRCUITRY
(W/O Bucket Positioning Valve)

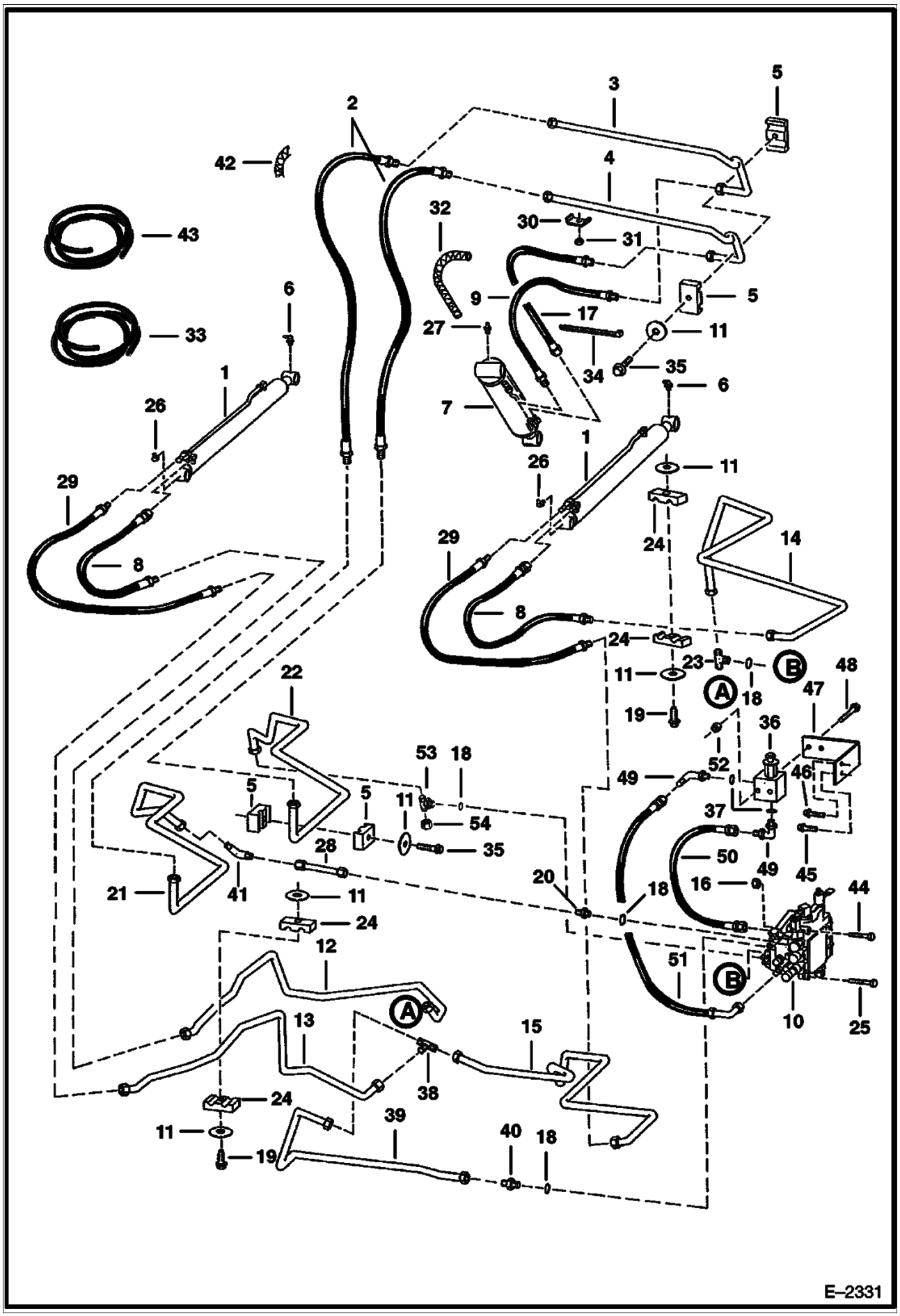

Page 52 - OSS# 2060759 - All rights reserved by Bobcat Company, a business unit of Ingersoll-Rand - 05/22/2008 - 07:23:42 - Produced by Ken Cook Co. with mediaIoff

HYDRAULIC CIRCUITRY (Cont'd)
(W/O Bucket Positioning Valve)

Ref No	Part Number	Description	Remarks	Serial Number	Qty
1		CYLINDER	See Illustration LIFT CYLINDER/ TS1097 LIFT		2
2	6577669	HOSE			2
3	6727840	TUBE	Was 6703608 [A]		1
4	6727841	TUBE	Was 6703609 [A]		1
5	6701893	CLAMP			4
6	12H000015B	GREASE ZERK			2
7		CYLINDER	See Illustration TILT CYLINDER/ TS1127 See Illustration TILT CYLINDER/ TS1127A TILT		1
8	6577671	HOSE			2
9	6704335	HOSE			1
10		VALVE	See Illustration HYDRAULIC CONTROL VALVE/ TS1454		1
11	872229	WASHER			8
12	6710582	TUBE			1
13	6710580	TUBE			1
14	6710581	TUBE			1
15	6710578	TUBE			1
16	85D000005B	NUT			3
17	6704336	HOSE			1
18	79K000010B	O-RING	flat boss face		x
18	99K000010B	O-RING	tapered boss face		x
19	84G003732B	BOLT			2
20	15K000007B	CONNECTOR	W/Ref 18		1
21	6710577	TUBE			1
22	6710576	TUBE			1
23	6711651	TEE	W/Ref 18 flat boss face		1
23	6715656	TEE	W/Ref 18 tapered boss face		1
23	97K000010B	O-RING	flared end		1
24	6701892	CLAMP			4
25	17C000532B	BOLT			2
26	11H000015B	GREASE ZERK			2
27	10H000025B	GREASE ZERK			1
28	6710573	TUBE			1
29	6718954	HOSE	Was 6578808 [A]		2
30	6502203	CLAMP			2
31	59D000006B	NUT			2
32		COVER	Order Ref 33 NAP - 18" (457,2 mm)		2
33	6656155	HOSE COVER	bulk-Sold Per Foot		x
34	6610510	TIE			4
35	84G003724B	BOLT			1
36		VALVE	See Illustration MANUAL LIFT RELEASE SYSTEM/ B17195 See Illustration MANUAL LIFT RELEASE VALVE/ C3422 LIFT LOCK		1
37	79K000006B	O-RING	flat boss face		x
37	99K000006B	O-RING	tapered boss face		x
38	10K000006B	TEE	flat boss face		1
38	10KN00006B	TEE	tapered boss face		1
38	97K000008B	O-RING	flared end		2
39	6710616	TUBE			1
40	731794B	FITTING	W/Ref 18 flat boss face		1
40	6715184	ADAPTER	W/Ref 18 tapered boss face		1
40	97K000008B	O-RING	flared end		1
41	77F000007B	ELBOW	flat boss face		1
41	77FN00007B	ELBOW	tapered boss face		1
41	97K000010B	O-RING	flared end		1
42		COVER	Order Ref 43 NAP - 36"(914,4 mm)		1

Page 53 - OSS# 2060759 - All rights reserved by Bobcat Company, a business unit of Ingersoll-Rand - 05/22/2008 - 07:23:42 - Produced by Ken Cook Co. with media1off

HYDRAULIC CIRCUITRY (Cont'd)
(W/O Bucket Positioning Valve)

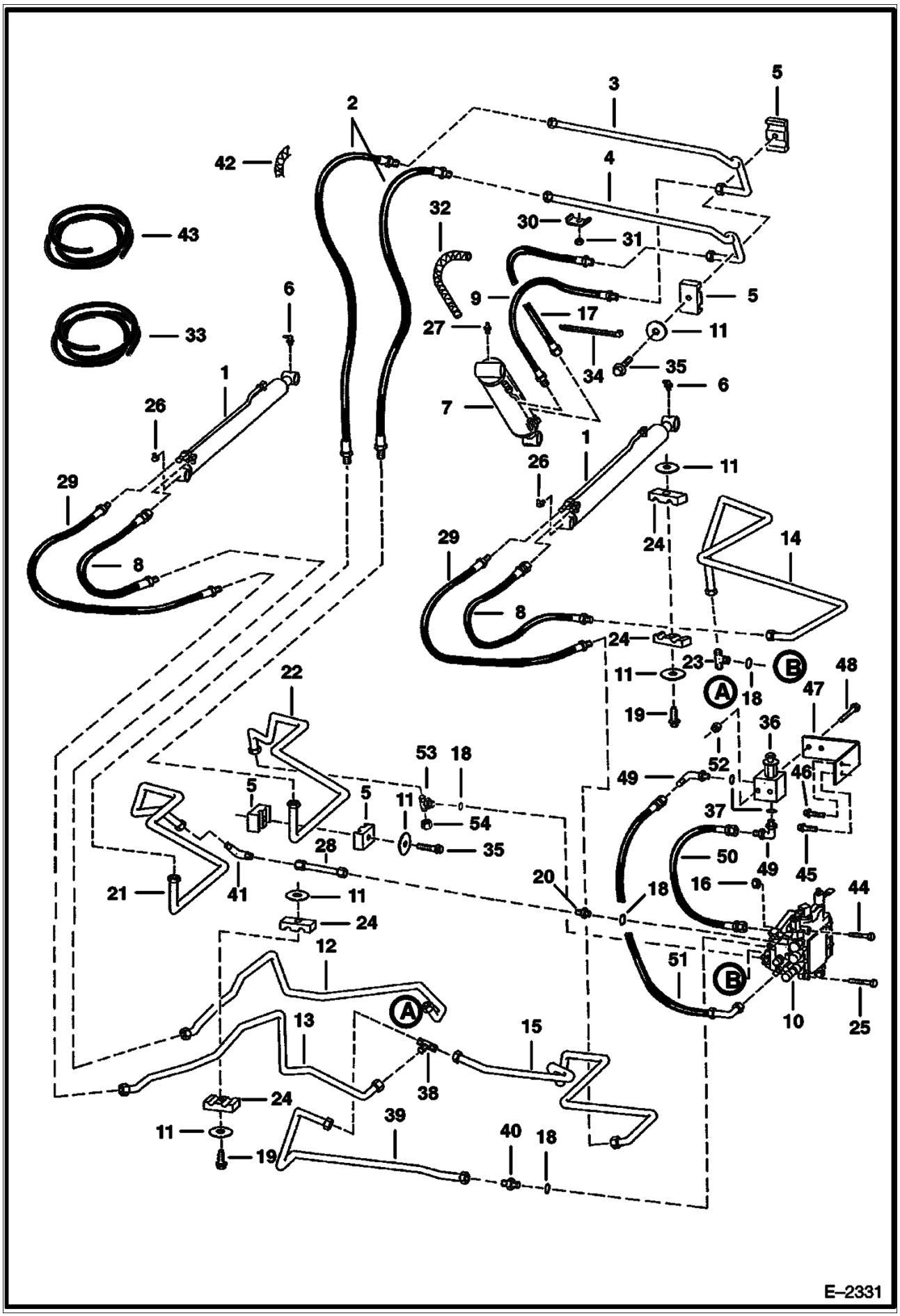

Page 54 - OSS# 2060759 - All rights reserved by Bobcat Company, a business unit of Ingersoll-Rand - 05/22/2008 - 07:23:42 - Produced by Ken Cook Co. with mediaioff

HYDRAULIC CIRCUITRY (Cont'd)
(W/O Bucket Positioning Valve)

Ref No	Part Number	Description	Remarks	Serial Number	Qty
43	6705749	SHIELD	bulk-Sold Per Foot		x
44	17C000540B	BOLT			2
45	84G003716B	BOLT			1
46	84G003712B	BOLT			1
47	6711280	MOUNT			1
48	17C000428B	BOLT			2
49	17K000005B	ELBOW	W/Ref 37 flat boss face		2
49	17KV00005B	ELBOW	W/Ref 37 tapered boss face		1
49	97K000006B	O-RING	flared end		1
50	6535451	HOSE			1
51	6578804	HOSE			1
52	83D000004B	NUT			2
53	19K000007B	TEE	W/Ref 18 flat boss face		1
53	19KN00007B	TEE	W/Ref 18 tapered boss face		1
53	97K000010B	O-RING	flared end		2
54	36K000007B	CAP			1

Page 55 - OSS# 2060759 - All rights reserved by Bobcat Company, a business unit of Ingersoll-Rand - 05/22/2008 - 07:23:42 - Produced by Ken Cook Co. with media1off

HYDRAULIC CIRCUITRY
(W/Bucket Positioning Valve)

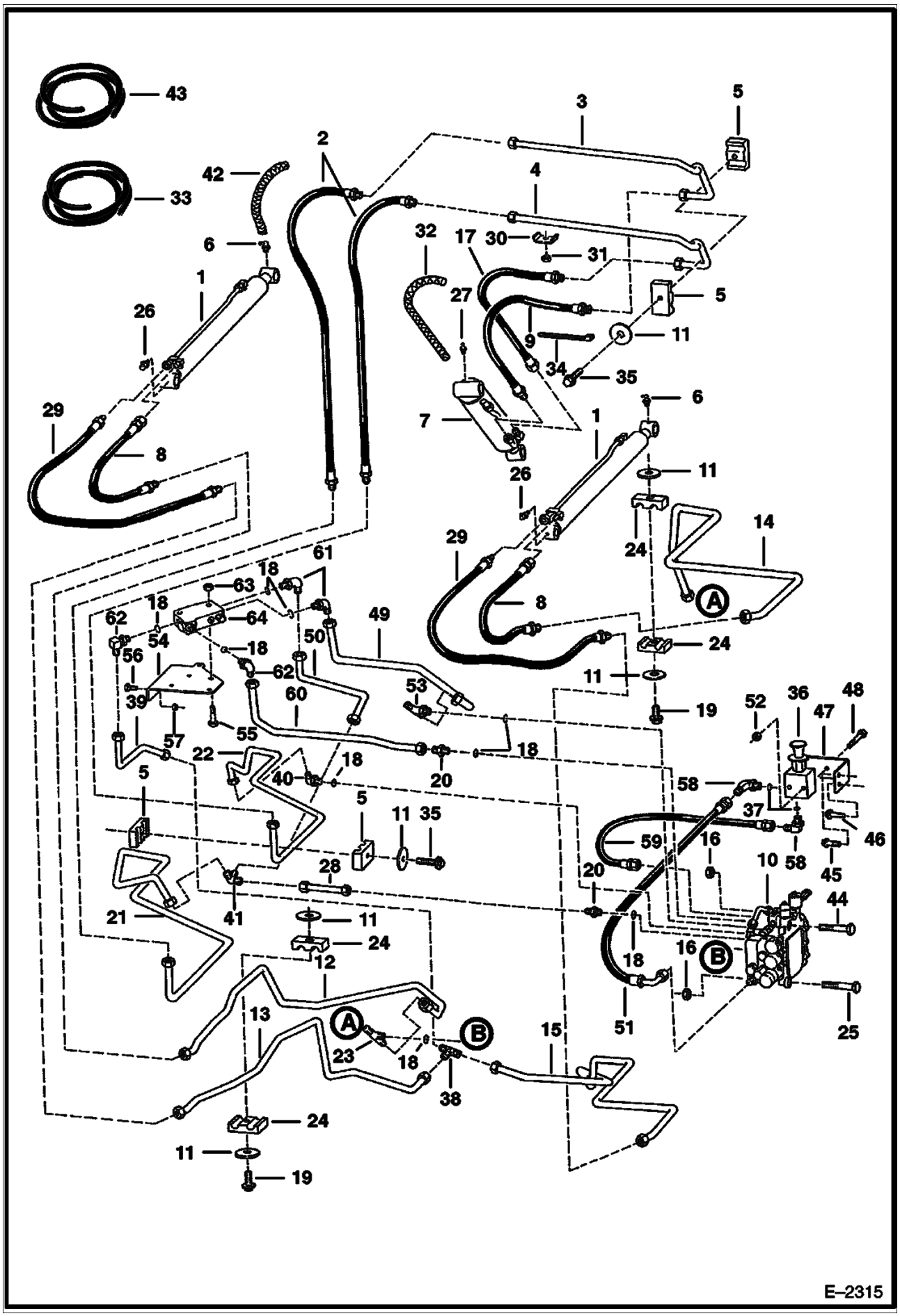

Page 56 - OSS# 2060759 - All rights reserved by Bobcat Company, a business unit of Ingersoll-Rand - 05/22/2008 - 07:23:42 - Produced by Ken Cook Co. with mediaioff

HYDRAULIC CIRCUITRY (Cont'd)
(W/Bucket Positioning Valve)

Ref No	Part Number	Description	Remarks	Serial Number	Qty
1		CYLINDER	See Illustration LIFT CYLINDER/ TS1097 LIFT		2
2	6577669	HOSE			2
3	6727840	TUBE	Was 6703608 [A]		1
4	6727841	TUBE	Was 6703609 [A]		1
5	6701893	CLAMP			4
6	12H000015B	GREASE ZERK			2
7		CYLINDER	See Illustration TILT CYLINDER/ TS1127 See Illustration TILT CYLINDER/ TS1127A TILT		1
8	6577671	HOSE			2
9	6704335	HOSE			1
10		VALVE	See Illustration HYDRAULIC CONTROL VALVE/ TS1454		1
11	872229	WASHER			8
12	6710582	TUBE			1
13	6710580	TUBE			1
14	6710581	TUBE			1
15	6710578	TUBE			1
16	85D000005B	NUT			3
17	6704336	HOSE			1
18	79K000010B	O-RING	flat boss face		x
18	99K000010B	O-RING	tapered boss face		x
19	84G003732B	BOLT			2
20	15K000007B	CONNECTOR	W/Ref 18		2
21	6710577	TUBE			1
22	6710576	TUBE			1
23	6711651	TEE	W/Ref 18 flat boss face		1
23	6715656	TEE	W/Ref 18 tapered boss face		1
23	97K000010B	O-RING	flared end		1
24	6701892	CLAMP			4
25	17C000532B	BOLT			2
26	11H000015B	GREASE ZERK			2
27	10H000025B	GREASE ZERK			1
28	6710573	TUBE			1
29	6718954	HOSE	Was 6578808 [A]		2
30	6502203	CLAMP			2
31	59D000006B	NUT			2
32		COVER	Order Ref 33 NAP - 18" (457,2 mm)		2
33	6656155	HOSE COVER	bulk - Sold Per Foot		x
34	6610510	TIE			4
35	84G003724B	BOLT			1
36		VALVE	See Illustration MANUAL LIFT RELEASE SYSTEM/ B17195 See Illustration MANUAL LIFT RELEASE VALVE/ C3422 MANUAL LIFT RELEASE		1
37	79K000006B	O-RING	flat boss face		x
37	99K000006B	O-RING	tapered boss face		x
38	10K000006B	TEE	flat boss face		1
38	10KN00006B	TEE	tapered boss face		1
38	97K000008B	O-RING	flared end		2
39	6705068	TUBE			1
40	731794B	FITTING	W/Ref 18 flat boss face		1
40	6715184	ADAPTER	W/Ref 18 tapered boss face		1
40	97K000008B	O-RING	flared end		1
41	6705070	TEE			1
42		COVER	Order Ref 43 NAP - 36"(914,4 mm)		1
43	6705749	SHIELD	bulk - Sold Per Foot		x
44	17C000540B	BOLT			2

Page 57 - OSS# 2060759 - All rights reserved by Bobcat Company, a business unit of Ingersoll-Rand - 05/22/2008 - 07:23:42 - Produced by Ken Cook Co. with media1off

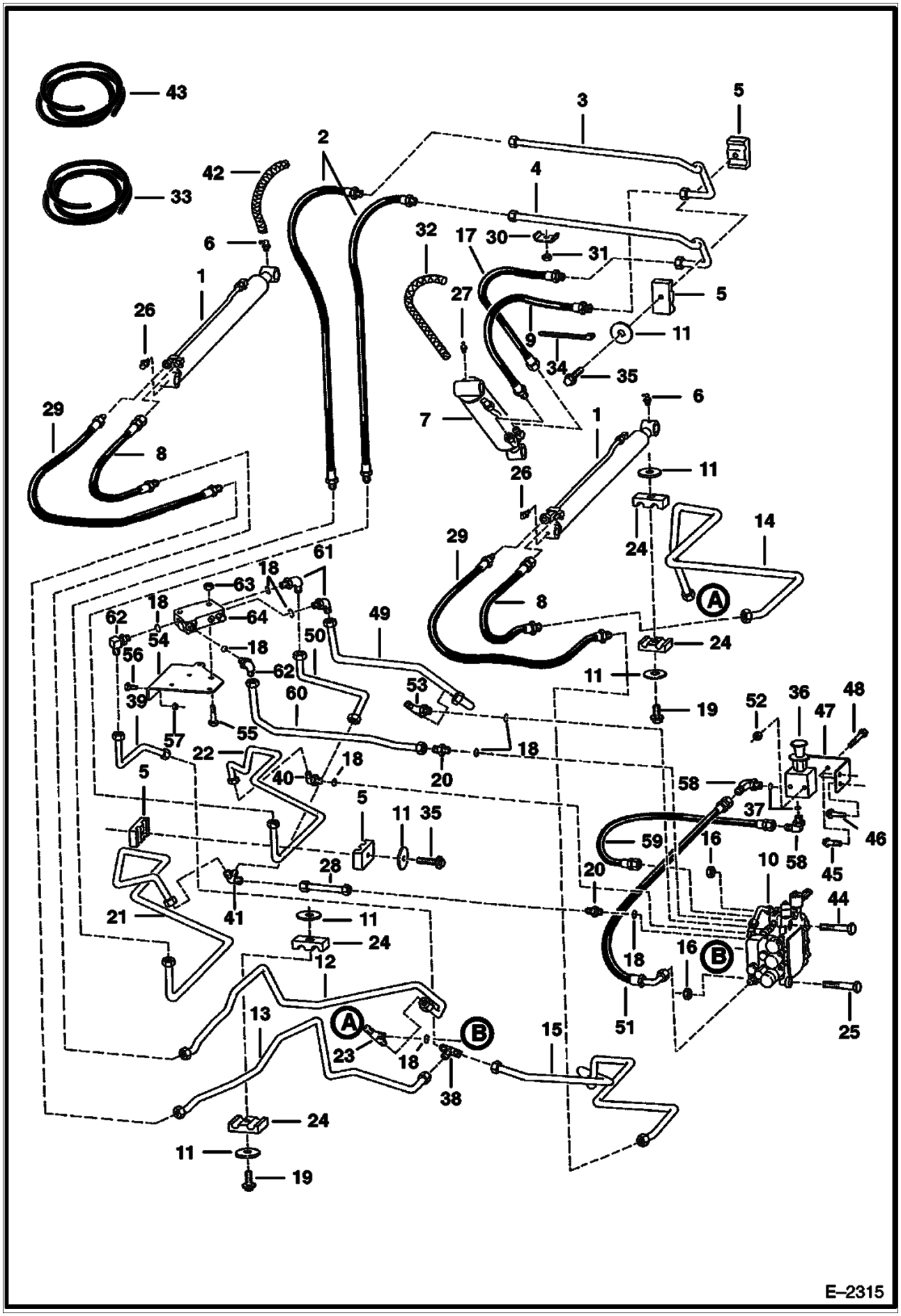

Page 58 - OSS# 2060759 - All rights reserved by Bobcat Company, a business unit of Ingersoll-Rand - 05/22/2008 - 07:23:42 - Produced by Ken Cook Co. with mediaioff

HYDRAULIC CIRCUITRY (Cont'd)
(W/Bucket Positioning Valve)

Ref No	Part Number	Description	Remarks	Serial Number	Qty
45	84G003716B	BOLT			1
46	84G003712B	BOLT			1
47	6711280	MOUNT			1
48	17C000428B	BOLT			2
49	6710583	TUBE			1
50	6704839	TUBE			1
51	6578804	HOSE			1
52	83D000004B	NUT			1
53	19K000007B	TEE	W/Ref 18 flat boss face		1
53	19KN00007B	TEE	W/Ref 18 tapered boss face		1
53	97K000010B	O-RING	flared end		2
54	6704833	BRACKET			1
55	35C000536B	BOLT			2
56	35C000412B	BOLT			2
57	57D000004B	NUT			2
58	17K000005B	ELBOW	W/Ref 37 flat boss face		2
58	17KV00005B	ELBOW	W/Ref 37 tapered boss face		2
58	97K000006B	O-RING	flared end		2
59	6535451	HOSE			1
60	6710584	TUBE			1
61	17K000007B	ELBOW	W/Ref 18 flat boss face		2
61	17KV00007B	ELBOW	W/Ref 18 tapered boss face		2
61	97K000010B	O-RING	flared end		2
62	784568B	ELBOW	W/Ref 18		2
63	57D000005B	NUT			2
64	6666341	VALVE	bucket pos.		1

Page 59 - OSS# 2060759 - All rights reserved by Bobcat Company, a business unit of Ingersoll-Rand - 05/22/2008 - 07:23:42 - Produced by Ken Cook Co. with media1off

MANUAL LIFT RELEASE SYSTEM

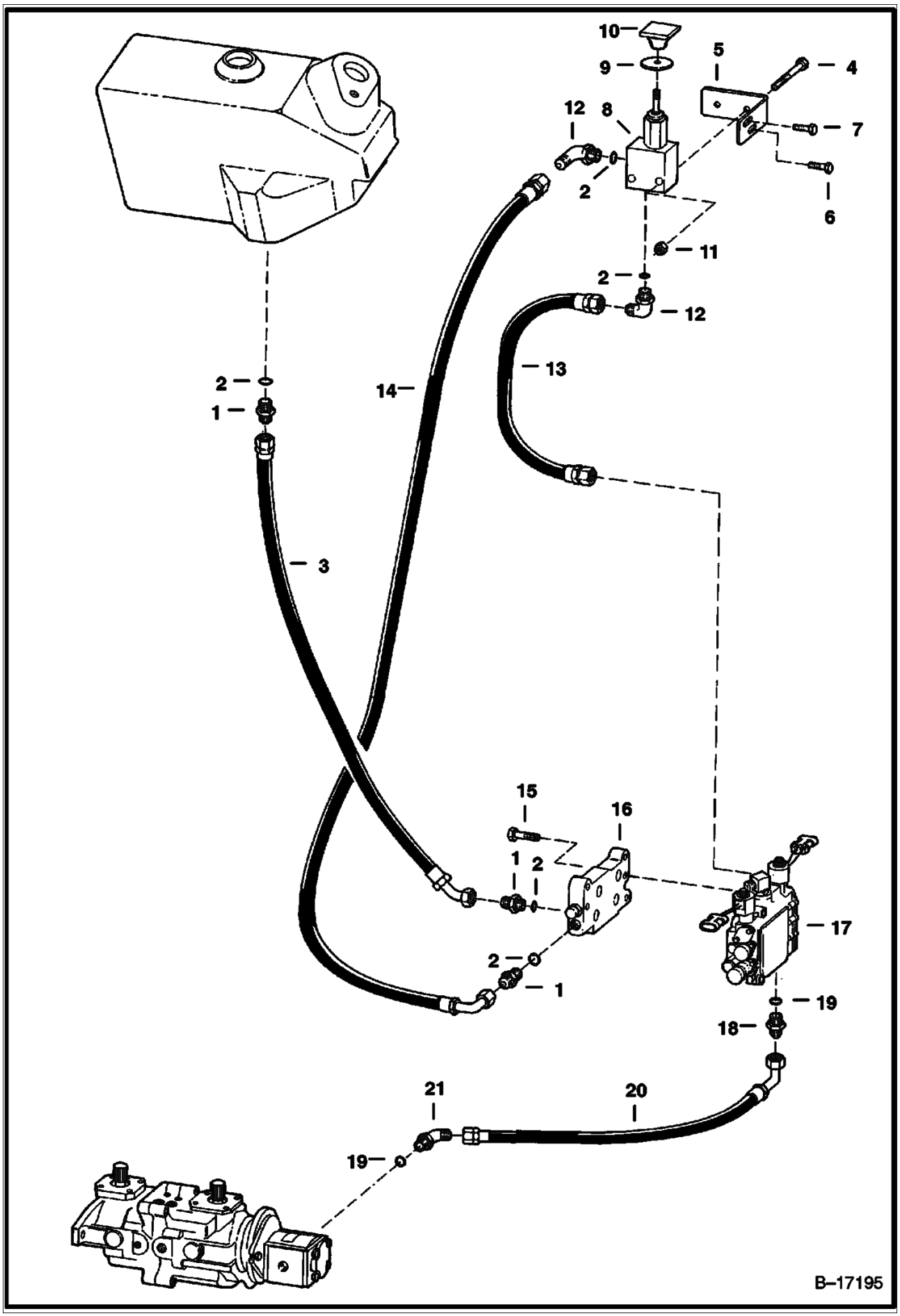

Page 60 - OSS# 2060759 - All rights reserved by Bobcat Company, a business unit of Ingersoll-Rand - 05/22/2008 - 07:23:42 - Produced by Ken Cook Co. with mediaioff

Ref No	Part Number	Description	Remarks	Serial Number	Qty
1	15K000005B	ADAPTER	W/Ref 2 flat boss face		3
1	15KV00005B	ADAPTER	W/Ref 2 tapered boss face		3
1	97K000006B	O-RING	flared end		3
2	79K000006B	O-RING	flat boss face		x
2	99K000006B	O-RING	tapered boss face		x
3	6711656	HOSE			1
4	17C000428B	BOLT			2
5	6711280	MOUNT			1
6	84G003716B	BOLT			1
7	84G003112B	BOLT			1
8	6667844	VALVE ASSY	See Illustration MANUAL LIFT RELEASE VALVE/ C3422 MANUAL LIFT RELEASE		1
9	6707101	SEAL	neoprene		1
10	6737524	KNOB	red square - Was 6668913 [A]		1
11	83D000004B	NUT			2
12	17K000005B	ELBOW	W/Ref 2 flat boss face		2
12	17KV00005B	ELBOW	W/Ref 2 tapered boss face		2
12	97K000006B	O-RING	flared end		2
13	6535451	HOSE			1
14	6578804	HOSE			1
15	43C000532B	BOLT			6
16	6628571	VALVE ASSY	See Illustration BICS CONTROL VALVE/ TS1365 BICS CONTROL		1
17		VALVE	See Illustration HYDRAULIC CONTROL VALVE/ TS1454 NSS - CONTROL - ORDER 6628394 VALVE		1
18	15K000008B	ADAPTER	W/Ref 19 flat boss face		2
18	15KN00008B	ADAPTER	W/Ref 19 tapered boss face		2
18	97K000012B	O-RING	flared end		2
19	79K000012B	O-RING	flat boss face		2
19	99K000012B	O-RING	tapered boss face		x
20	6714594	HOSE	Was 6712848 [B,D] [B,D]		1
21	18K000008B	ELBOW	W/Ref 19 flat boss face		1
21	18KV00008B	ELBOW	W/Ref 19 tapered boss face		1
21	97K000012B	O-RING	flared end		1

Page 61 - OSS# 2060759 - All rights reserved by Bobcat Company, a business unit of Ingersoll-Rand - 05/22/2008 - 07:23:42 - Produced by Ken Cook Co. with media1off

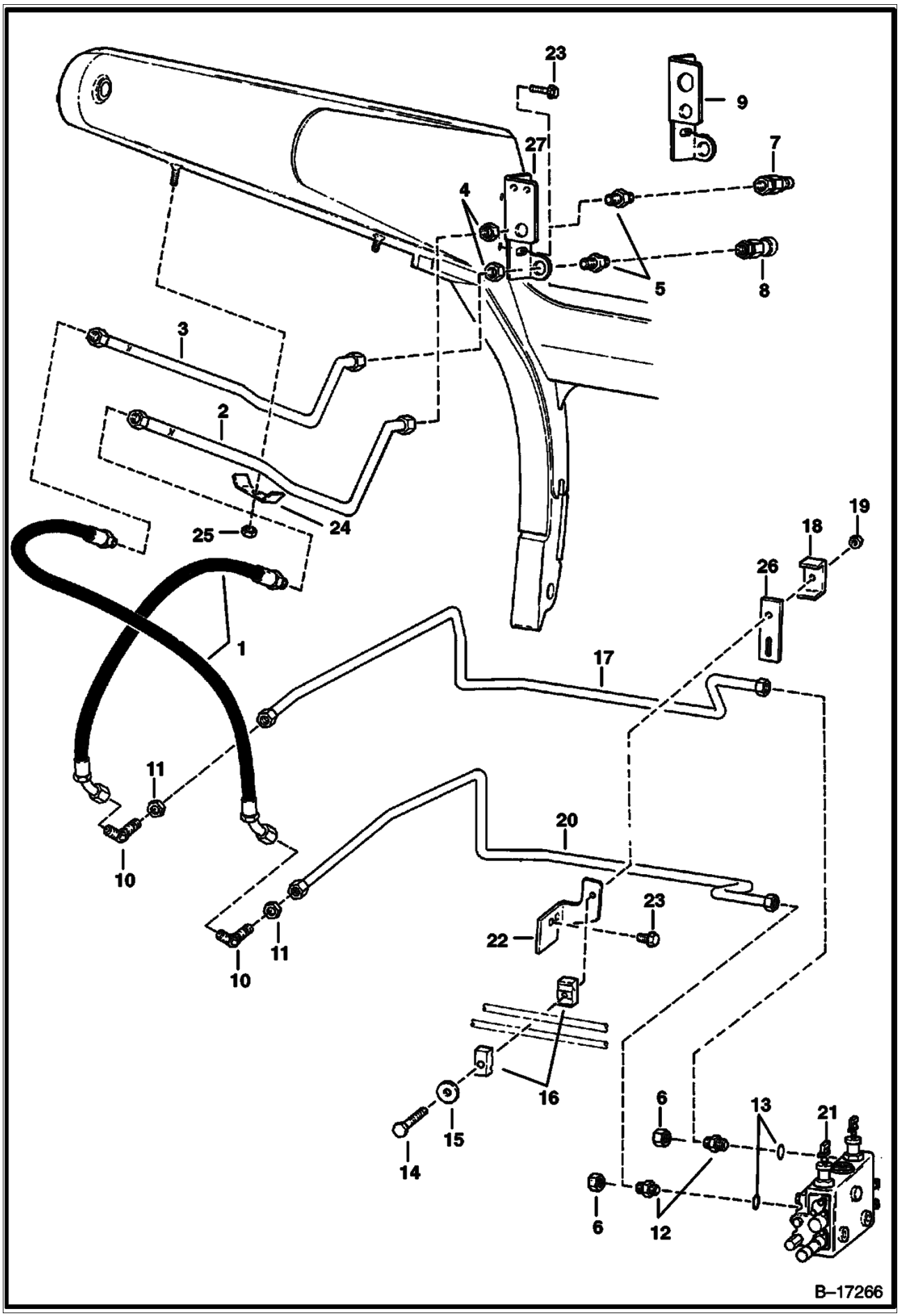

Page 62 - OSS# 2060759 - All rights reserved by Bobcat Company, a business unit of Ingersoll-Rand - 05/22/2008 - 07:23:42 - Produced by Ken Cook Co. with mediaioff

Ref No	Part Number	Description	Remarks	Serial Number	Qty
1	6729153	HOSE	Was 6714577 [A]		2
2	6711735	TUBE			1
3	6711736	TUBE			1
4	86F000007B	NUT			2
5	6711625	FITTING	W/Ref 13 flat boss face		2
5	6715185	CONNECTOR	W/Ref 13 tapered boss face		2
5	97K000010B	O-RING	flared end		2
6	36K000008B	CAP			2
7	6676488	VALVE	male - FF - Was 6667808 [A]		1
7	6672026	O-RING			1
8	6672960	COUPLER	female - FF - Was 6667807 [A]		1
9		MOUNT	Order Ref 27 NAP - for FF couplers - Was 6711672 [A]		1
10	46K000008B	ELBOW	flat boss face		2
10	46KN00008B	ELBOW	tapered boss face		2
10	97K000012B	O-RING	flared end		4
11	86F000008B	NUT			2
12	15K000008B	ADAPTER	W/Ref 13 flat boss face		2
12	15KN00008B	ADAPTER	W/Ref 13 tapered boss face		2
12	97K000012B	O-RING	flared end		2
13	79K000012B	O-RING	flat boss face		x
13	99K000012B	O-RING	tapered boss face		x
14	17C000552B	BOLT			1
15	872229	WASHER			1
16	6701892	CLAMP			2
17	6713754	TUBE			1
18	6568476	CLAMP			1
19	85D000005B	NUT			2
20	6713755	TUBE			1
21		VALVE	See Illustration HYDRAULIC CONTROL VALVE/ TS1454		1
22	6704619	MOUNT			1
23	84G003112B	BOLT			4
24	6502203	CLAMP			2
25	59D000006B	NUT			2
26	6702548	PAD			1
27	6713850	MOUNT			1

Page 63 - OSS# 2060759 - All rights reserved by Bobcat Company, a business unit of Ingersoll-Rand - 05/22/2008 - 07:23:42 - Produced by Ken Cook Co. with media1off

TILT CYLINDER
(W/O Rod Eye Grease Zerk Hole)

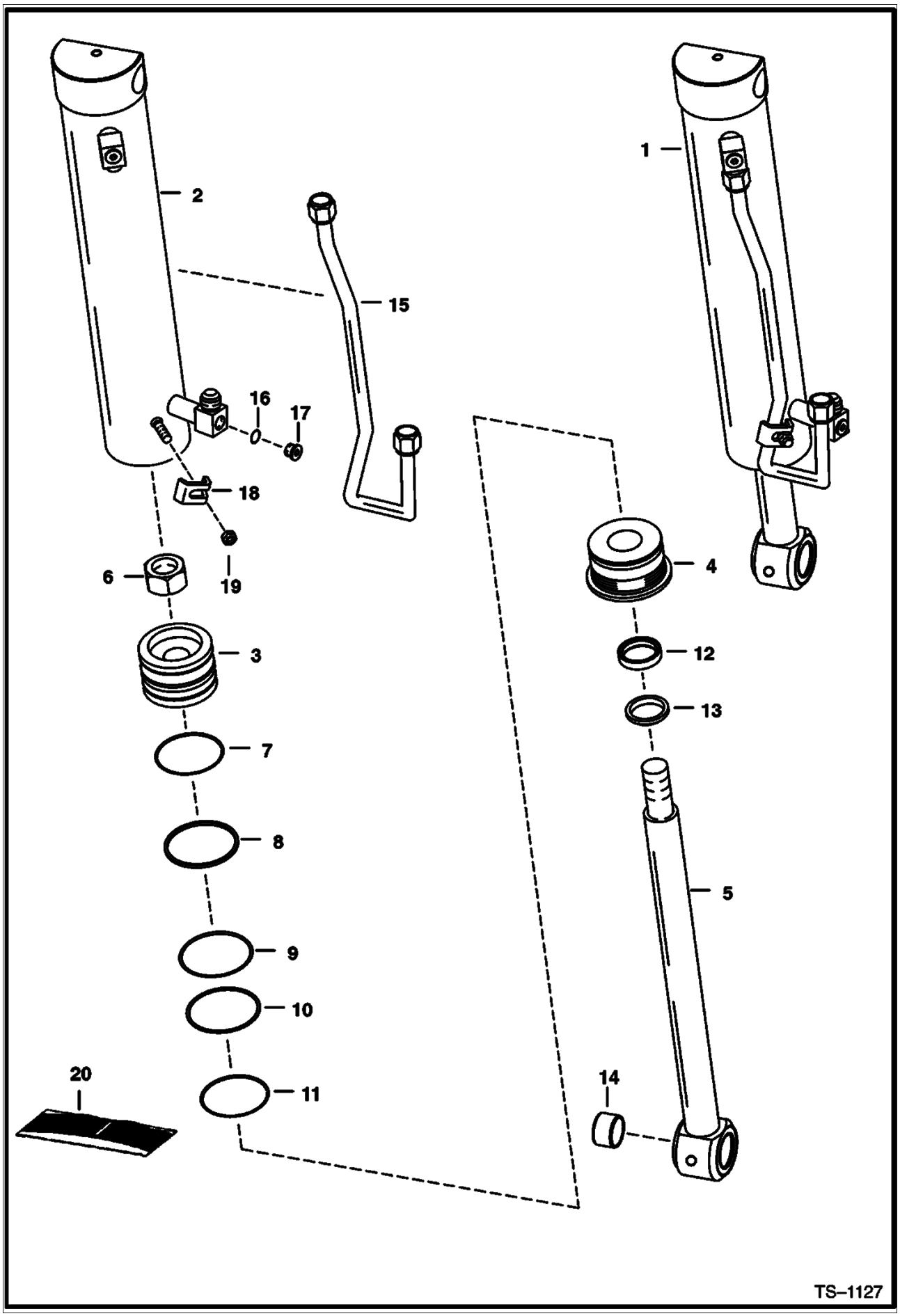

Page 64 - OSS# 2060759 - All rights reserved by Bobcat Company, a business unit of Ingersoll-Rand - 05/22/2008 - 07:23:42 - Produced by Ken Cook Co. with mediaioff

TILT CYLINDER (Cont'd)
(W/O Rod Eye Grease Zerk Hole)

Ref No	Part Number	Description	Remarks	Serial Number	Qty
1		CYLINDER	See Illustration TILT CYLINDER/ TS1127A NAP - TILT - REF. 2 - 19 - ORDER 6804692 CYLINDER - BEFORE ORDERING REPAIR PARTS, MAKE SURE THAT THIS IS THE CORRECT STYLE CYLINDER - NOTE THE DIFFERENCE IN THE BASE END OF THE CYLINDER AND THE INSIDE DIAMETER OF THE CASE - ALSO REF. TILT CYLINDER WAS 6586905 [A]		1
2		CASE	See Illustration TILT CYLINDER/ TS1127A NAP - 3.25"(82,6 MM) I.D. - ORDER 6804692 CYLINDER - WAS 6586907 [A]		1
3	6586906	PISTON	1.125" (28,6 mm) I.D.		1
4	6539185	HEAD			1
5	6586910	ROD	W/Ref 14 1.5"(38,1 mm) O.D. - W/O grease zerk hole		1
6	6804592	NUT	Was 92D000018B [A]		1
7	54K030226B	O-RING	Was 25K030226B [A]		1
8	6513466	SEAL			1
9	54K040300B	O-RING	Was 58K000234B [A]		1
10	80K000234B	RING	back-up - Was 73K000234B [B]		1
11	58K000236B	O-RING			1
12	6667326	SEAL	Was 6538141 [A]		1
13	6665086	SEAL	wiper		1
14	6589665	BUSHING	wear		1
15	6539144	TUBE			1
16	79K000006B	O-RING	flat boss face		1
16	95K000006B	O-RING	tapered boss face		1
17	90K000005B	PLUG	W/Ref 16 flat boss face		2
17	90KV00005B	PLUG	W/Ref 16 tapered boss face		2
18	6562266	CLAMP			1
19	95D000006B	NUT	Was 91D000006B [A]		1
20	6804605	SEAL KIT	Ref. 6 - 13 - Was 6589792 [A]		1

Page 65 - OSS# 2060759 - All rights reserved by Bobcat Company, a business unit of Ingersoll-Rand - 05/22/2008 - 07:23:42 - Produced by Ken Cook Co. with media1off

TILT CYLINDER
(W/ Rod Eye Grease Zerk Hole)

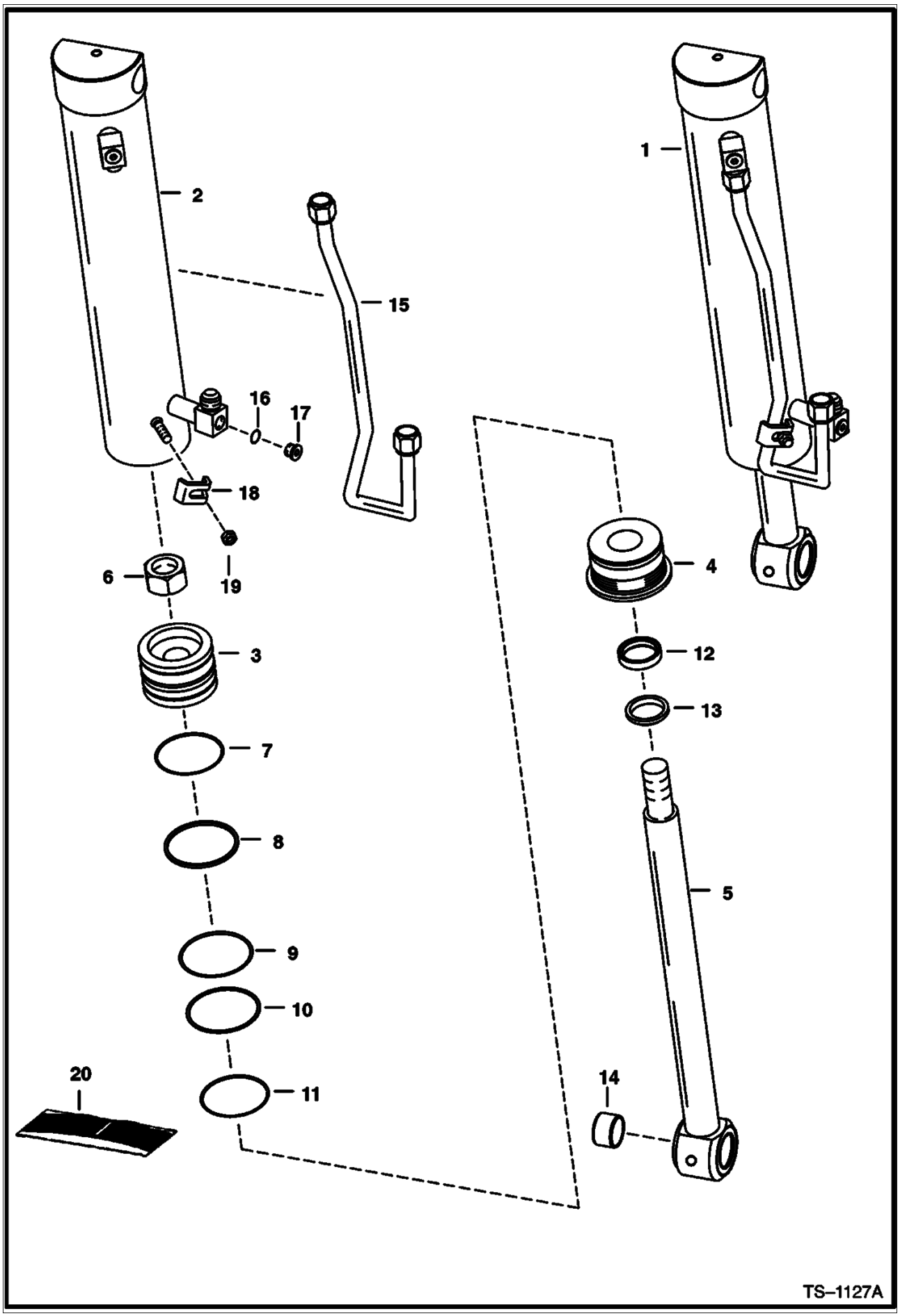

Page 66 - OSS# 2060759 - All rights reserved by Bobcat Company, a business unit of Ingersoll-Rand - 05/22/2008 - 07:23:42 - Produced by Ken Cook Co. with mediaioff

TILT CYLINDER (Cont'd)
(W/ Rod Eye Grease Zerk Hole)

Ref No	Part Number	Description	Remarks	Serial Number	Qty
1	6804692	CYLINDER	See Illustration TILT CYLINDER/ TS1127 TILT - REF. 2 - 19 - BEFORE ORDERING REPAIR PARTS, MAKE SURE THAT THIS IS THE CORRECT STYLE CYLINDER - NOTE THE DIFFERENCE IN THE BASE END OF THE CYLINDER AND THE INSIDE DIAMETER OF THE CASE - ALSO REF. TILT CYLINDER		1
2	6804703	CASE	3.25"(82,6 mm) I.D.		1
3	6804699	PISTON	1.125" (28,6 mm) I.D.		1
4	6539185	HEAD			1
5	6804704	ROD	W/Ref 14 1.5"(38,1 mm) O.D. - W/ grease zerk hole		1
6	6804592	NUT			1
7	54K030226B	O-RING			1
8	6513466	SEAL			1
9	54K040300B	O-RING			1
10	80K000234B	RING	back-up		1
11	58K000236B	O-RING			1
12	6667326	SEAL			1
13	6665086	SEAL	wiper		1
14	6805150	BUSHING	wear - W/ grease zerk hole		1
15	6539144	TUBE			1
16	95K000006B	O-RING	tapered boss face		1
17	90KV00005B	PLUG	W/Ref 16 tapered boss face		2
18	6562266	CLAMP			1
19	95D000006B	NUT	Was 91D000006B [A]		1
20	6804605	SEAL KIT	Ref. 6 - 13		1

Page 67 - OSS# 2060759 - All rights reserved by Bobcat Company, a business unit of Ingersoll-Rand - 05/22/2008 - 07:23:42 - Produced by Ken Cook Co. with media1off

LIFT CYLINDER

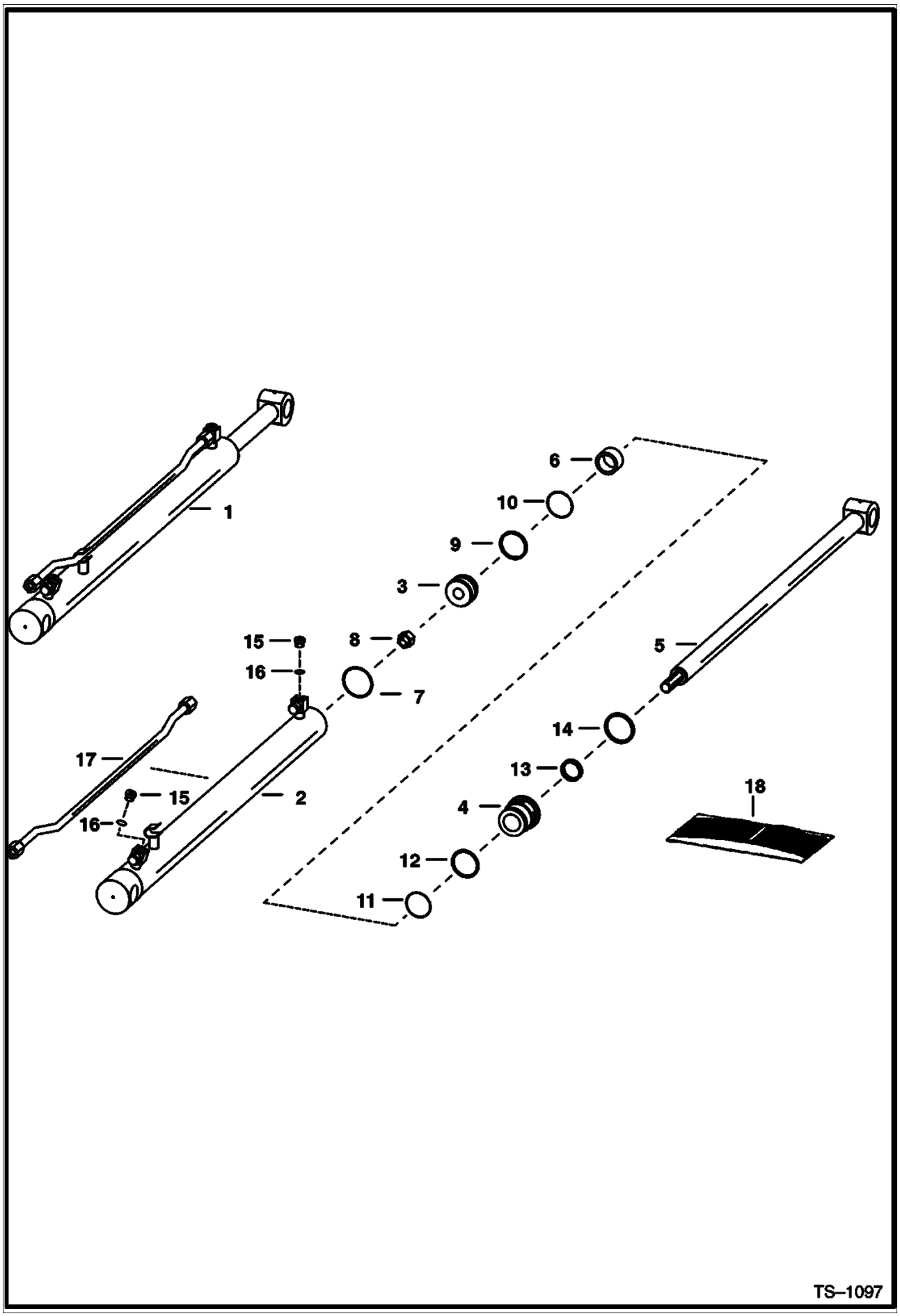

Page 68 - OSS# 2060759 - All rights reserved by Bobcat Company, a business unit of Ingersoll-Rand - 05/22/2008 - 07:23:42 - Produced by Ken Cook Co. with media1off

Ref No	Part Number	Description	Remarks	Serial Number	Qty
1	6586575	CYLINDER	Ref. 2 - 7		2
2	6586577	CASE			1
3	6661694	PISTON	W/Ref 9 W/Ref 10 W/Non- Replaceable wear sleeves		1
4	6539323	HEAD			1
5	6539304	ROD			1
6	6539299	SPACER			1
7	58K000136B	O-RING			1
8	92D000012B	NUT			1
9	6516231	RING			1
10	54K030118B	O-RING			1
11	54K040124B	O-RING	Was 25K040124B [A]		1
12	73K000224B	WASHER	back-up		1
13	6667324	SEAL	rod - Was 6665184 [A]		1
14	6665208	SEAL	wiper		1
15	90K000005B	PLUG	W/Ref 16 flat boss face		2
15	90KV00005B	PLUG	W/Ref 16 tapered boss face		2
16	79K000006B	O-RING	flat boss face		2
16	95K000006B	O-RING	tapered boss face		2
17	6586576	TUBE			1
18	6803329	SEAL KIT	Ref. 7 - 14 - Was 6589831 [A]		1

Page 69 - OSS# 2060759 - All rights reserved by Bobcat Company, a business unit of Ingersoll-Rand - 05/22/2008 - 07:23:42 - Produced by Ken Cook Co. with media1off

CONTROL PEDALS

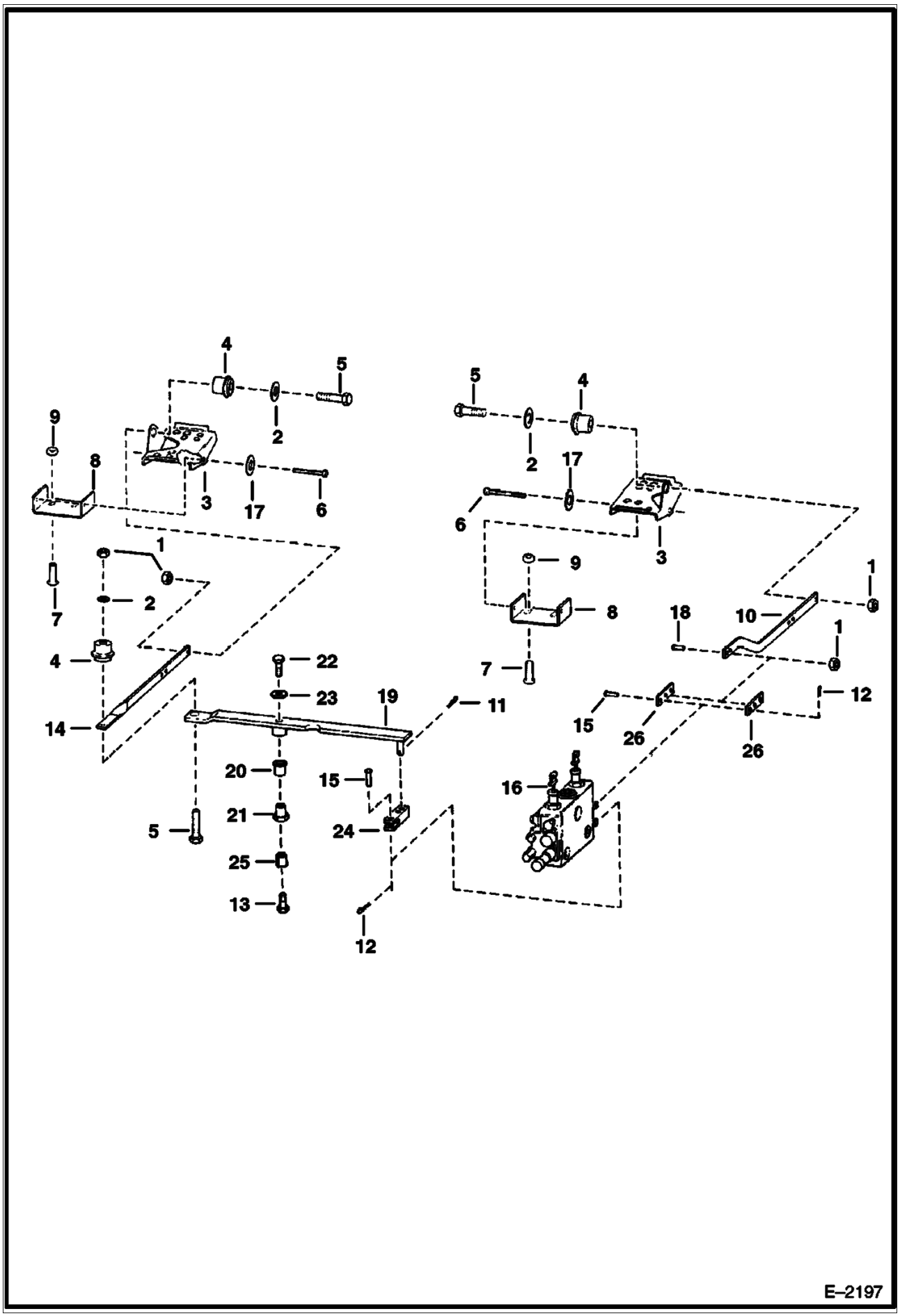

Page 70 - OSS# 2060759 - All rights reserved by Bobcat Company, a business unit of Ingersoll-Rand - 05/22/2008 - 07:23:42 - Produced by Ken Cook Co. with media1off

CONTROL PEDALS (Cont'd)

Ref No	Part Number	Description	Remarks	Serial Number	Qty
1	95D000006B	NUT	Was 91D000006B [A]		5
2	6563914	WASHER			3
3	6726680	PEDAL	Was 6564656 [A]		2
4	6665701	BUSHING			3
5	17C000624B	BOLT			3
6	6564657	PIN			2
7	7C000620B	BOLT	Was 6704349 [B]		4
8	6726679	MOUNT	Was 6564658 [A]		2
9	57D000006B	NUT			4
10	6577813	BAR			1
11	1306637B	PIN			1
12	6513495	COTTER PIN			2
13	35C000612B	BOLT			1
14	6576302	BAR			1
15		PIN	NAP - Was 6564654 [A]		2
16		VALVE	See Illustration HYDRAULIC CONTROL VALVE/ TS1454		1
17	25E000021B	WASHER	Used if serrations on pins are too long		2
18	17C000620B	BOLT			1
19	6706103	LEVER			1
20	6512026	BUSHING			1
21	6706104	RETAINING NUT			1
22	17C000612B	BOLT			1
23	619021B	WASHER			1
24	6706105	YOKE			1
25	6544654	BUSHING	spacer		1
26	6708009	LINK	2.69"(68,3 mm) long - Use W/short spool control valve		2

Page 71 - OSS# 2060759 - All rights reserved by Bobcat Company, a business unit of Ingersoll-Rand - 05/22/2008 - 07:23:42 - Produced by Ken Cook Co. with media1off

HYDRAULIC CONTROL VALVE
(W/BICS Valve)

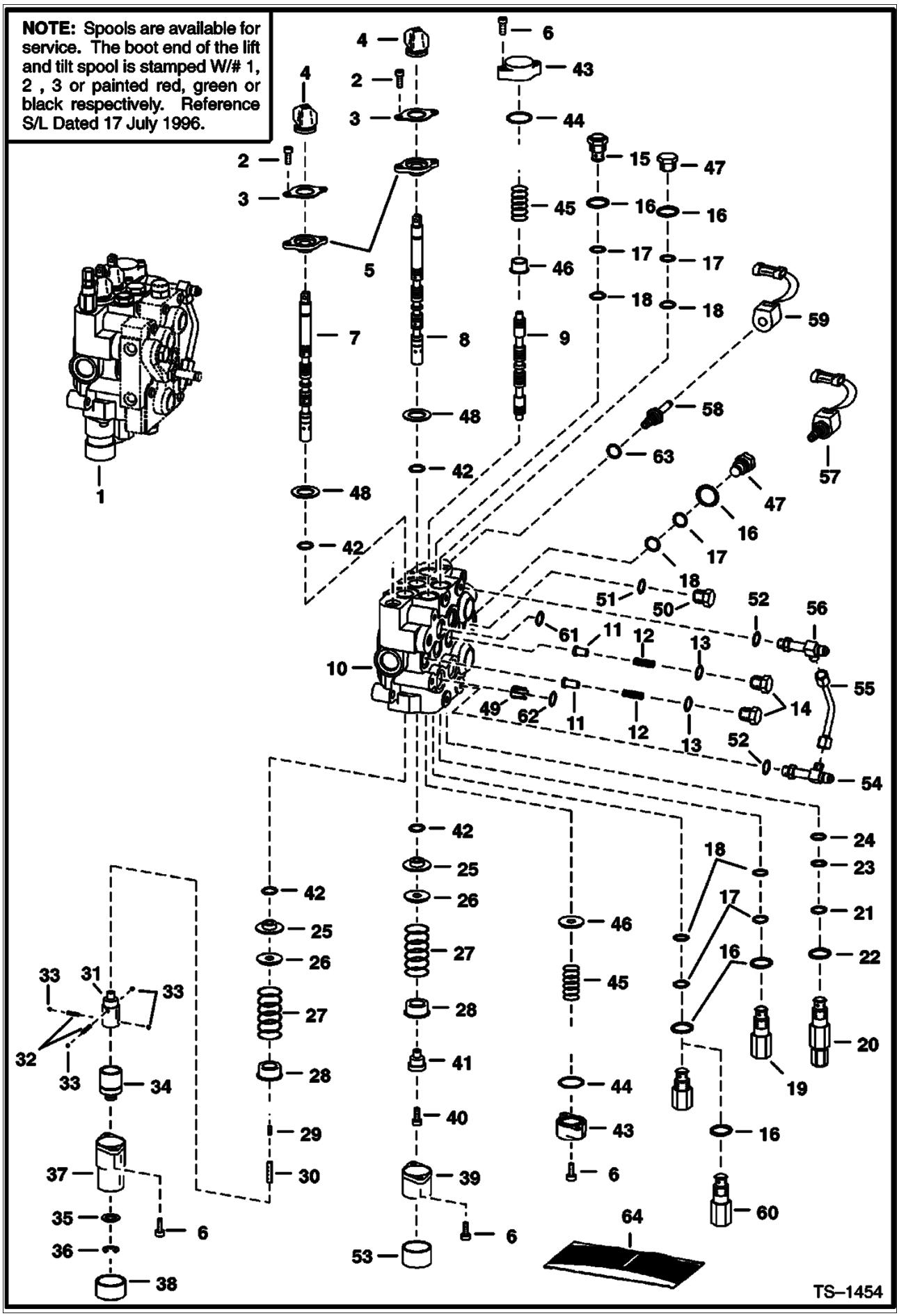

Page 72 - OSS# 2060759 - All rights reserved by Bobcat Company, a business unit of Ingersoll-Rand - 05/22/2008 - 07:23:42 - Produced by Ken Cook Co. with mediaoff

HYDRAULIC CONTROL VALVE (Cont'd)
(W/BICS Valve)

Ref No	Part Number	Description	Remarks	Serial Number	Qty
1		VALVE ASSY.	See Illustration HYDRAULIC CONTROL VALVE/ B17197 NAP - BICS COMBO - REF. 2 - 58 - W/FITTINGS - ORDER 6808046 SERVICE VALVE - WAS 6628394 [A]		1
1	6628571	VALVE ASSY	See Illustration BICS CONTROL VALVE/ TS1365 BICS CONTROL		1
2	29G000412B	SCREW			4
3	6589564	RETAINER			2
4	6587763	BOOT			2
5	6589565	BUSHING	seal		2
6	29G000416B	SCREW	1" long		8
7	6666588	SPOOL	lift - # 1 or Red - SEE NOTE		1
7	6666589	SPOOL	lift - # 2 or Green-SEE NOTE		1
7	6666590	SPOOL	lift - # 3 or Black - SEE NOTE		1
8	6666591	SPOOL	tilt - # 1 or Red - SEE NOTE		1
8	6666592	SPOOL	tilt - # 2 or Green - SEE NOTE		1
8	6666593	SPOOL	tilt - # 3 or Black - SEE NOTE		1
9	6588074	SPOOL	auxiliary - SEE NOTE		3
10		BODY	NSS		1
11	6592115	SEAT	load check		2
12	6592117	SPRING			2
13	79K000008B	O-RING			3
14	6592116	NUT	load check		3
15	6667549	VALVE	W/Ref 16 W/Ref 17 W/Ref 18 anti-cavity check		2
16	79K000010B	O-RING			x
17	80K000014B	RING	back-up		5
18	58K000014B	O-RING	back-up washer required		5
18	6677106	O-RING	back-up washer not required		5
19	6599161	RELIEF VALVE	W/Ref 16 W/Ref 17 W/Ref 18 port relief		1
20	6676196	VALVE	W/Ref 21 W/Ref 22 W/Ref 23 W/Ref 24 main relief - Was 6659328 [A]		1
21	58K000017B	O-RING			1
22	6665569	WASHER	back-up		1
23	25K020016B	O-RING			1
24	6665570	RING	glide		1
25	6595663	BUSHING			2
26	6587523	WASHER			2
27	6587580	SPRING			2
28	6592100	COLLAR			2
29	6596807	PLUG			1
30	6586918	SCREW			1
31	6587575	ADAPTER			1
32	6592107	SPRING			2
33	6592105	BALL			4
34	6531270	SLEEVE			1
35	6592098	WASHER			1
36	799119B	SNAP RING			1
37	6589226	BONNET	.625" flange		1
38	6660644	CAP			1
39	6587633	BONNET			1
40	30G000416B	BOLT			1
41	6592109	ADAPTER			1
42	6665846	SEAL			4
43	6588981	END CAP	.625" thick		2
44	58K000124B	O-RING			2
45	6588197	SPRING			2

Page 73 - OSS# 2060759 - All rights reserved by Bobcat Company, a business unit of Ingersoll-Rand - 05/22/2008 - 07:23:42 - Produced by Ken Cook Co. with media1off

HYDRAULIC CONTROL VALVE (Cont'd)
(W/BICS Valve)

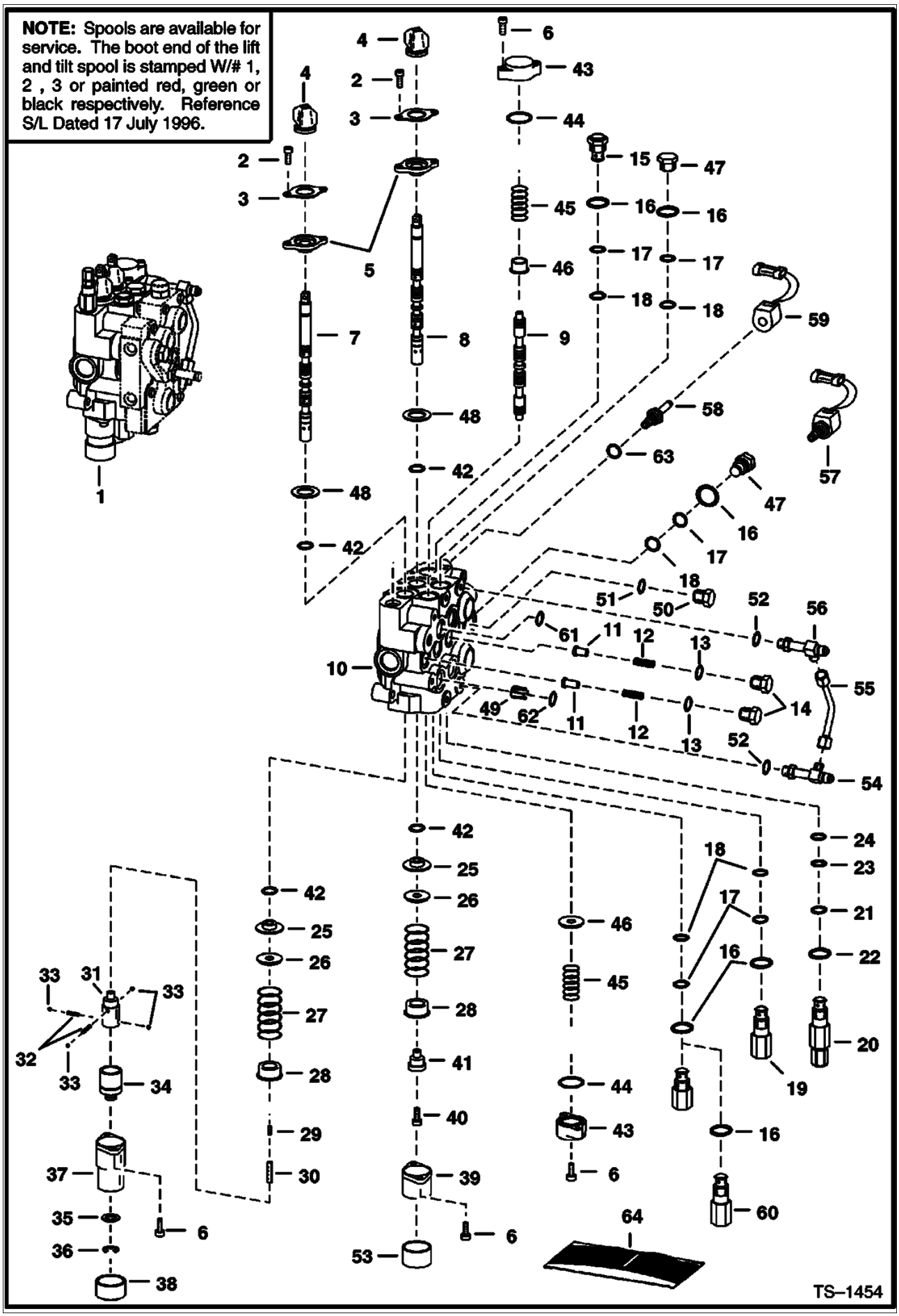

Page 74 - OSS# 2060759 - All rights reserved by Bobcat Company, a business unit of Ingersoll-Rand - 05/22/2008 - 07:23:42 - Produced by Ken Cook Co. with mediaoff

HYDRAULIC CONTROL VALVE (Cont'd)
(W/BICS Valve)

Ref No	Part Number	Description	Remarks	Serial Number	Qty
46	6537096	WASHER			2
47	6592720	PLUG	W/Ref 16 W/Ref 17 W/Ref 18		2
48	58K000127B	O-RING			2
49	6534630	RESTRICTOR	.134/.141		1
50	24K000008B	PLUG	W/Ref 51 flat boss face		1
50	24KN00008B	PLUG	W/Ref 51 tapered boss face		1
50	90KV00008B	PLUG	W/Ref 51 socket head - tapered boss face		1
51	79K000012B	O-RING	flat boss face		x
51	99K000012B	O-RING	tapered boss face		x
51	95K000012B	O-RING	socket head - tapered boss face		x
52	79K000006B	O-RING	flat boss face		x
52	99K000006B	O-RING	tapered boss face		x
53	6662848	CAP			1
54		TEE	W/Ref 52 NAP - W/O flared end O-ring - Was 6587888 [A]		1
54	6805696	TEE	W/Ref 52 W/flared end O-ring		1
54	97K000006B	O-RING	flared end		2
55	6577690	TUBE			1
56		CONNECTOR	W/Ref 52 NAP - flat boss face - W/O flared end O-ring - Was 6588188 [A]		1
56		CONNECTOR	W/Ref 52 NAP - tapered boss face - W/flared end O-ring Was 6715654 [A]		1
56	6805241	CROSS	W/Ref 52 flat boss face - W/flared end O-ring		1
56	97K000006B	O-RING	flared end		1
57	6653395	VALVE	W/Ref 58 W/Ref 59 solenoid		2
57	6534559	SEAL KIT			x
58	6665758	VALVE			1
59	6717708	COIL	14 volt - Was 6665759 [A]		1
60	6664373	VALVE	optional - port relief & anti-cav. - W/Ref. 16 - 2500 PSI - use in tilt cylinder base end port		1
61	55K000204B	O-RING			1
62	55K000212B	O-RING			4
63	79K000007B	O-RING			1
64	6803605	SEAL KIT	one spool - Ref. 4 & 42 - Was 6596310 [A]		x
64	6809448	SEAL KIT	complete - Ref. 4, 13, 16-18, 21-24, 42, 44, 61 & 62 - Was 6628835 [A]		x
64	6632279	SEAL KIT	Ref. 21-24		x
64	6809425	SEAL KIT	Ref. 13 & 16-18 - Was 6586461 [A]		x

Page 75 - OSS# 2060759 - All rights reserved by Bobcat Company, a business unit of Ingersoll-Rand - 05/22/2008 - 07:23:42 - Produced by Ken Cook Co. with media1off

HYDRAULIC CONTROL VALVE
(W/ BICS Control Valve)
(Service Valve - Minus Fittings)

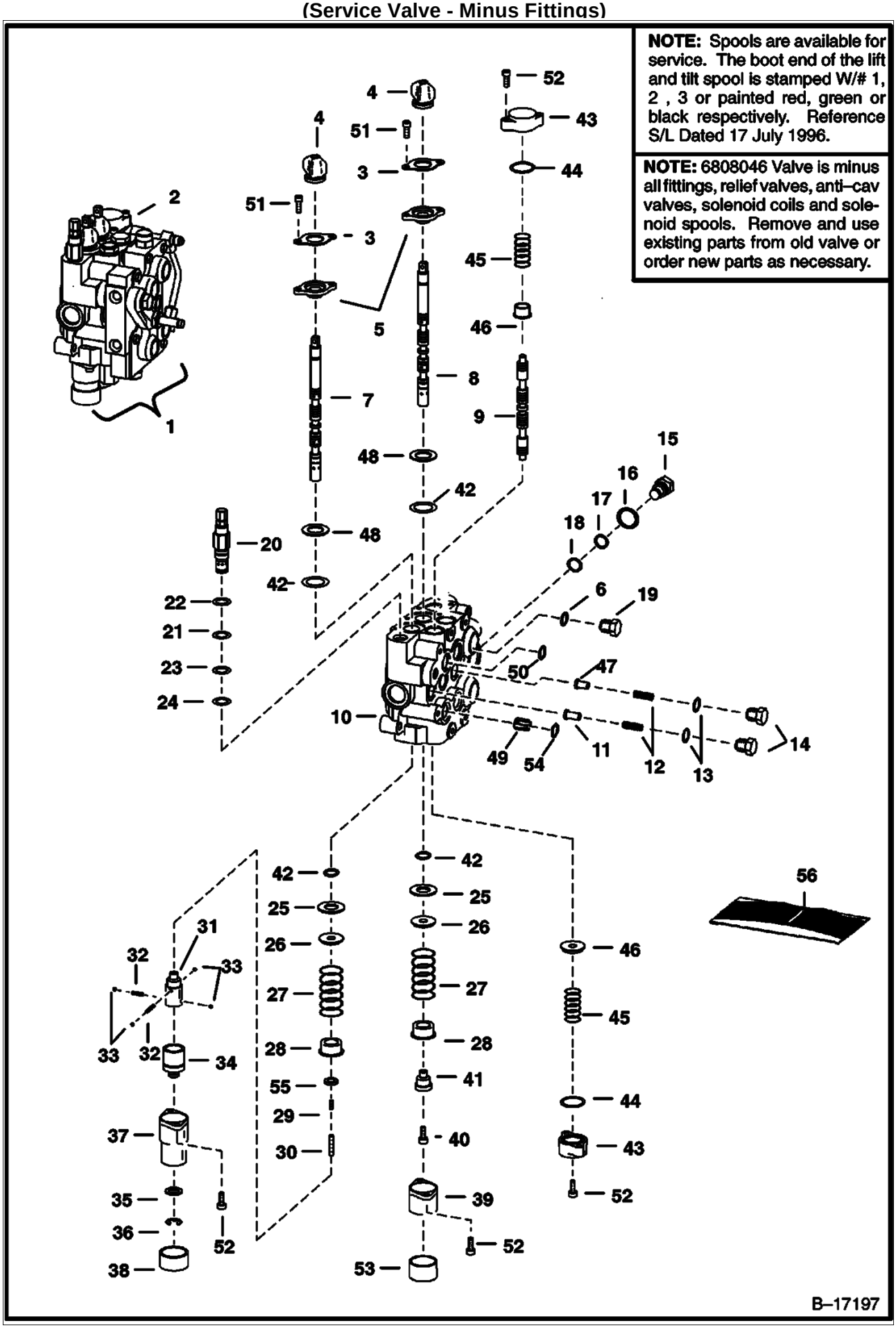

Page 76 - OSS# 2060759 - All rights reserved by Bobcat Company, a business unit of Ingersoll-Rand - 05/22/2008 - 07:23:42 - Produced by Ken Cook Co. with mediaIoff

HYDRAULIC CONTROL VALVE (Cont'd)
(W/ BICS Control Valve)
(Service Valve - Minus Fittings)

Ref No	Part Number	Description	Remarks	Serial Number	Qty
1	6808046	VALVE	W/Fittings - Ref. 2 - 55		1
2	6628571	VALVE ASSY	See Illustration BICS CONTROL VALVE/ TS1365 BICS CONTROL		1
3	6589564	RETAINER			2
4	6587763	BOOT			2
5	6589565	BUSHING			2
6	95K000012B	O-RING			x
7	6666588	SPOOL	lift - # 1 or Red - SEE NOTE		1
7	6666589	SPOOL	lift - # 2 or Green-SEE NOTE		1
7	6666590	SPOOL	lift - # 3 or Black - SEE NOTE		1
8	6666591	SPOOL	tilt - # 1 or Red - SEE NOTE		1
8	6666592	SPOOL	tilt - # 2 or Green - SEE NOTE		1
8	6666593	SPOOL	tilt - # 3 or Black - SEE NOTE		1
9	6588074	SPOOL	auxiliary - SEE NOTE		3
10		BODY	NSS		1
11	6592115	SEAT	load check		2
12	6592117	SPRING			3
13	79K000008B	O-RING			3
14	6592116	NUT	load check		3
15	6592720	PLUG	W/Ref 16 W/Ref 17 W/Ref 18		2
16	79K000010B	O-RING			2
17	80K000014B	RING	back-up		5
18	58K000014B	O-RING	back-up washer required		5
18	6677106	O-RING	back-up washer not required		5
19	90KV00008B	PLUG	W/Ref 6		1
20	6676196	VALVE	main relief		1
20	6676871	SEAL KIT			1
21		O-RING	NSS		1
22		WASHER	NSS - back-up		1
23		O-RING	NSS		1
24		RING	NSS - glide		1
25	6595663	BUSHING			2
26	6587523	WASHER			2
27	6587580	SPRING			2
28	6592100	COLLAR			2
29	6596807	PLUG			1
30	6586918	SCREW			1
31	6587575	ADAPTER			1
32	6592107	SPRING			2
33	6592105	BALL			4
34	6531270	SLEEVE			1
35	6592098	WASHER			1
36	799119B	SNAP RING			1
37	6589226	BONNET	.625" flange		1
38	6660644	CAP			1
39	6587633	BONNET			1
40	30G000416B	BOLT			1
41	6592109	ADAPTER			1
42	6665846	SEAL			4
43	6588781	END CAP	.87" thick		2
44	58K000124B	O-RING			2
45	6596332	SPRING			2
46	7108780	SLEEVE	Was 6595951 [A]		2
47	6596569	SEAT			1
48	58K000127B	O-RING			2

Page 77 - OSS# 2060759 - All rights reserved by Bobcat Company, a business unit of Ingersoll-Rand - 05/22/2008 - 07:23:42 - Produced by Ken Cook Co. with media1off

HYDRAULIC CONTROL VALVE (Cont'd)
(W/ BICS Control Valve)
(Service Valve - Minus Fittings)

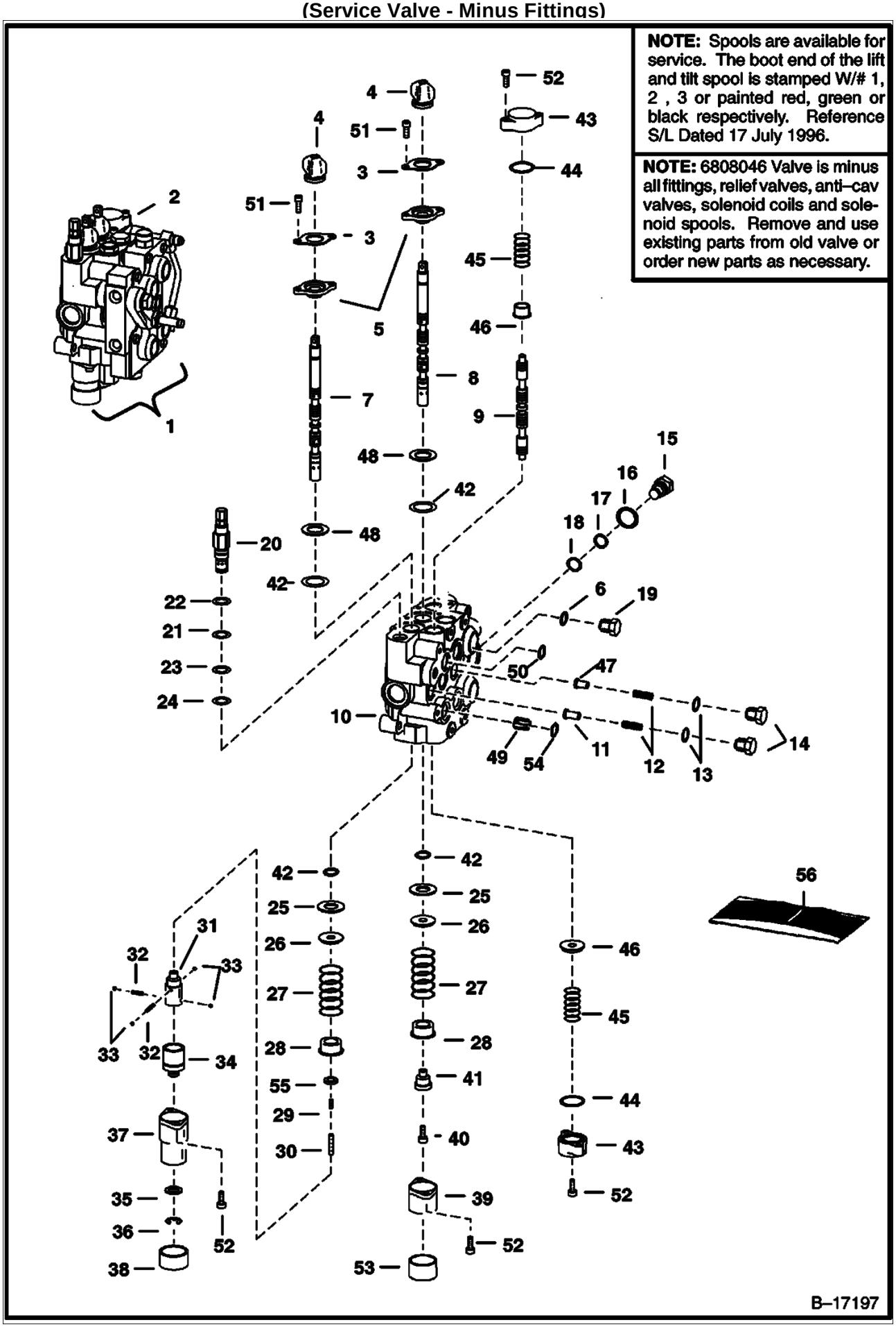

Page 78 - OSS# 2060759 - All rights reserved by Bobcat Company, a business unit of Ingersoll-Rand - 05/22/2008 - 07:23:42 - Produced by Ken Cook Co. with mediaIoff

HYDRAULIC CONTROL VALVE (Cont'd)
(W/ BICS Control Valve)
(Service Valve - Minus Fittings)

Ref No	Part Number	Description	Remarks	Serial Number	Qty
49	6534630	RESTRICTOR			1
50	55K000204B	O-RING			1
51	29G000412B	SCREW			4
52	29G000416B	SCREW	1" long		8
53	6662848	CAP			1
54	55K000212B	O-RING			4
55	54K020002B	O-RING			1
56	6803605	SEAL KIT	one spool - Ref. 4, 42 & 51		x
56	6809448	SEAL KIT	complete - Ref. 4, 13, 16-18, 21-24, 42, 44, 50 & 54		x
56	6632279	SEAL KIT	main relief - Ref. 21-24		x
56	6809425	SEAL KIT	Ref. 13 & 16-18		x

Page 79 - OSS# 2060759 - All rights reserved by Bobcat Company, a business unit of Ingersoll-Rand - 05/22/2008 - 07:23:42 - Produced by Ken Cook Co. with media1off

HYDRAULIC CONTROL VALVE
(Advanced Hand Controls) (W/BICS Valve)

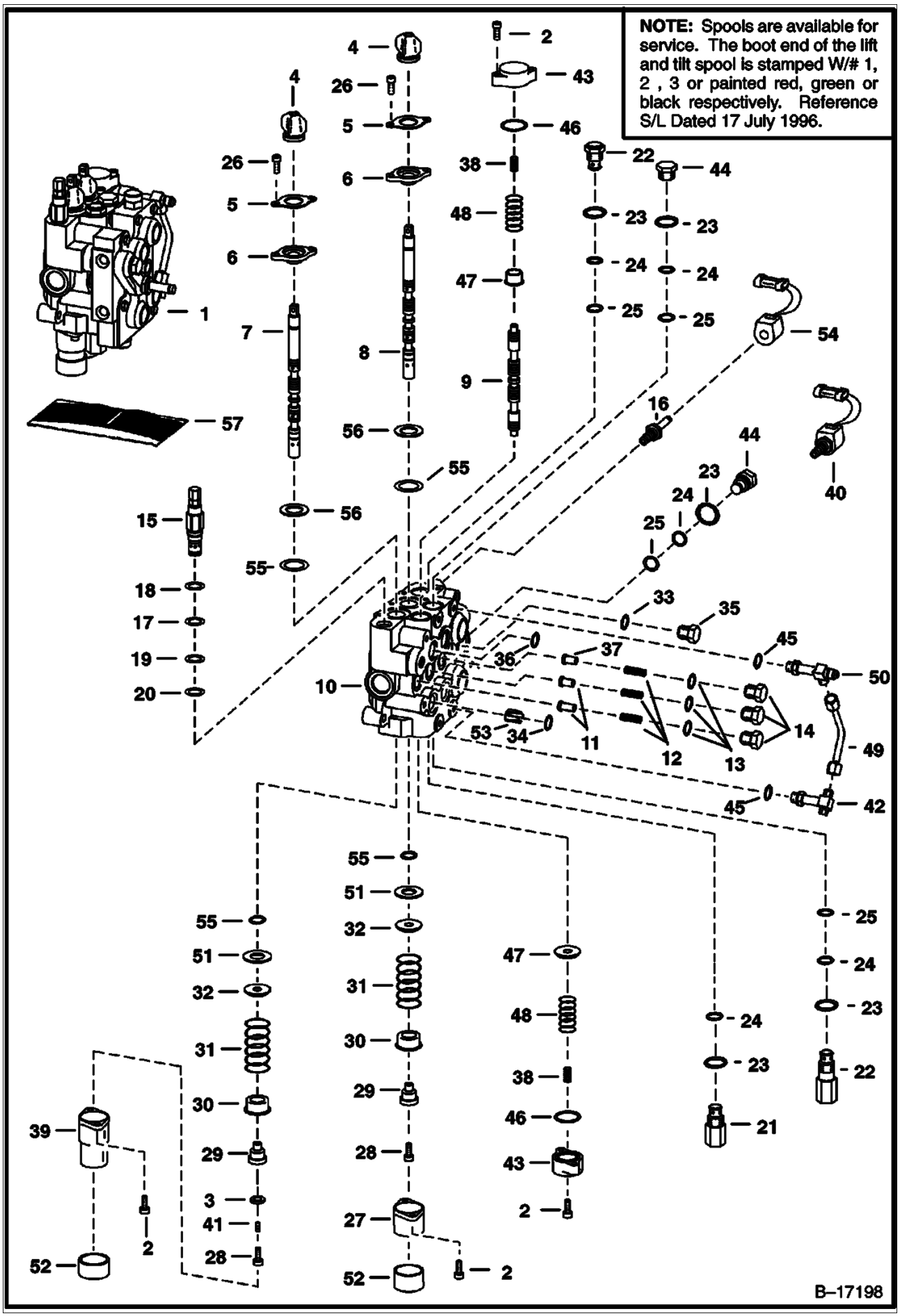

Page 80 - OSS# 2060759 - All rights reserved by Bobcat Company, a business unit of Ingersoll-Rand - 05/22/2008 - 07:23:42 - Produced by Ken Cook Co. with mediaoff

HYDRAULIC CONTROL VALVE (Cont'd)
(Advanced Hand Controls) (W/BICS Valve)

Ref No	Part Number	Description	Remarks	Serial Number	Qty
1		VALVE	See Illustration HYDRAULIC CONTROL VALVE/ B17199 NAP - W/FITTINGS - REF. 2-38, 39-53, 55 & 56 - ORDER 6808106 VALVE - WAS 6804599 [A]		1
1	6628571	VALVE ASSY	See Illustration BICS CONTROL VALVE/ TS1365 BICS CONTROL		1
2	29G000416B	SCREW			8
3	54K020002B	O-RING			1
4	6587763	BOOT			2
5	6589564	RETAINER			2
6	6589565	BUSHING	seal		2
7	6674297	SPOOL	lift - # 1 or Red - SEE NOTE		1
7	6674298	SPOOL	lift - # 2 or Green - SEE NOTE		1
7	6674299	SPOOL	lift - # 3 or Black - SEE NOTE		1
8	6674300	SPOOL	tilt - # 1 or Red - SEE NOTE		1
8	6674301	SPOOL	tilt - # 2 or Green - SEE NOTE		1
8	6674302	SPOOL	tilt - # 3 or Black - SEE NOTE		1
9	6588074	SPOOL	auxiliary - SEE NOTE		3
10		BODY	NSS		1
11	6592115	SEAT	load check		2
12	6592117	SPRING			3
13	79K000008B	O-RING			3
14	6592116	NUT	load check		3
15	6676196	VALVE	W/Ref 21 W/Ref 22 W/Ref 23 W/Ref 24 main relief - 2550-2600 PSI -Was 6659328 [A]		1
16	6666616	STEM			2
17	58K000017B	O-RING			1
18	6665569	WASHER	back-up		1
19	25K020016B	O-RING			1
20	6665570	RING	glide		1
21	6599161	RELIEF VALVE	W/Ref 16 W/Ref 17 W/Ref 18 port relief - 3400-3600 PSI		1
22	6667549	VALVE	W/Ref 23 W/Ref 24 W/Ref 25 anti-cavity check		2
23	79K000010B	O-RING			2
24	80K000014B	RING	back-up		5
25	58K000014B	O-RING	back-up washer required		5
25	6677106	O-RING	back-up washer not required		5
26	29G000412B	SCREW			4
27	6587633	BONNET			1
28	30G000416B	BOLT			1
29	6592109	ADAPTER			1
30	6592100	COLLAR			2
31	6587580	SPRING			2
32	6587523	WASHER			2
33	79K000012B	O-RING	flat boss face		x
33	99K000012B	O-RING	tapered boss face		x
33	95K000012B	O-RING	tapered boss face - socket head		x
34	55K000212B	O-RING	See Illustration BICS CONTROL VALVE/ TS1365		4
35	90KV00008B	PLUG	W/Ref 33 tapered boss face - socket head		1
36	55K000204B	O-RING	See Illustration BICS CONTROL VALVE/ TS1365		1
37	6596569	SEAT			1
38	6589045	SPRING	white		2
39	6803092	BONNET	.625" flange		1
40	6653395	VALVE	solenoid - W/Ref. 58 & 59		2
40	6586459	SEAL KIT			x
41	6801167	PLUG	plastic		1
42		TEE	W/Ref 6 NAP - W/O flared end O-ring - Was 6587888		1

Page 81 - OSS# 2060759 - All rights reserved by Bobcat Company, a business unit of Ingersoll-Rand - 05/22/2008 - 07:23:42 - Produced by Ken Cook Co. with media1off

HYDRAULIC CONTROL VALVE (Cont'd)
(Advanced Hand Controls) (W/BICS Valve)

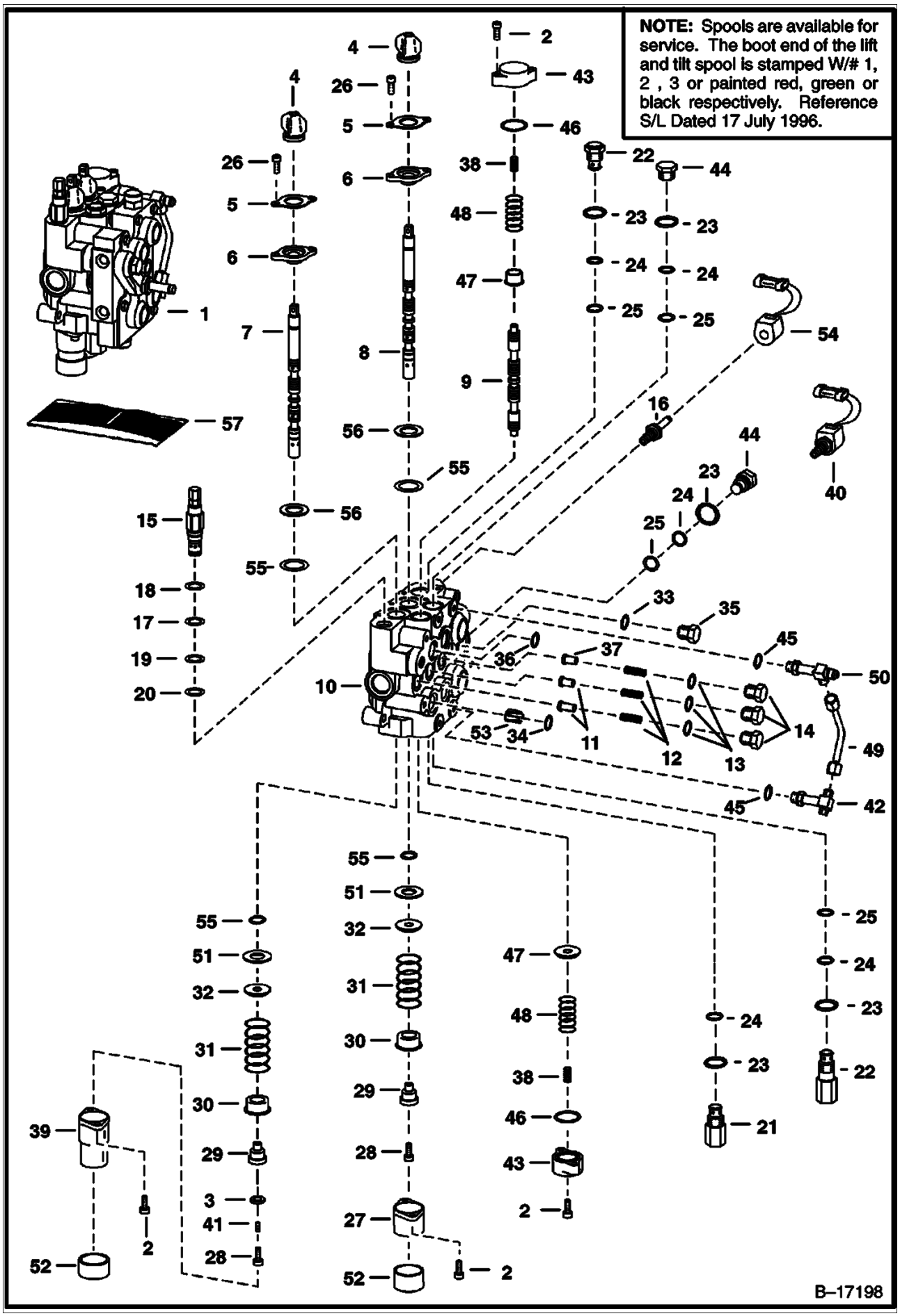

Page 82 - OSS# 2060759 - All rights reserved by Bobcat Company, a business unit of Ingersoll-Rand - 05/22/2008 - 07:23:42 - Produced by Ken Cook Co. with mediaioff

HYDRAULIC CONTROL VALVE (Cont'd)
(Advanced Hand Controls) (W/BICS Valve)

Ref No	Part Number	Description	Remarks	Serial Number	Qty
			[A]		
42	6805696	TEE	W/flared end O-ring		1
42	97K000006B	O-RING	flared end		2
43	6588781	END CAP			2
44	6592720	PLUG	W/Ref 16 W/Ref 17 W/Ref 18		1
45	79K000006B	O-RING	flat boss face		x
45	99K000006B	O-RING	tapered boss face		x
46	58K000124B	O-RING			2
47	7108780	SLEEVE	Was 6595951 [A]		2
48	6596332	SPRING			2
49	6577690	TUBE			1
50	6805241	CROSS	W/Ref 45		1
50	97K000006B	O-RING	flared end		1
51	6595663	BUSHING			2
52	6662848	CAP			1
53	6534630	RESTRICTOR	.183/.187		1
54	6717706	COIL	10 Volt - W/Nut - Was 6666547 [A]		2
55	6665846	SEAL			4
56	58K000127B	O-RING			2
57	6803605	SEAL KIT	one spool - Ref. 4, 26 & 42 - Was 6596310 [A]		x
57	6661328	SEAL KIT	main relief - Ref. 17-20 - main relief		x
57	6809425	SEAL KIT	Ref. 13 & 16-18 - Was 6586461 [A]		x
57	6596311	SEAL KIT	complete - Ref. 4, 13, 16-20, -18, 36, 6, 44 & 42		x

Page 83 - OSS# 2060759 - All rights reserved by Bobcat Company, a business unit of Ingersoll-Rand - 05/22/2008 - 07:23:42 - Produced by Ken Cook Co. with media1off

HYDRAULIC CONTROL VALVE
(Service Valve) (Advanced Control System)

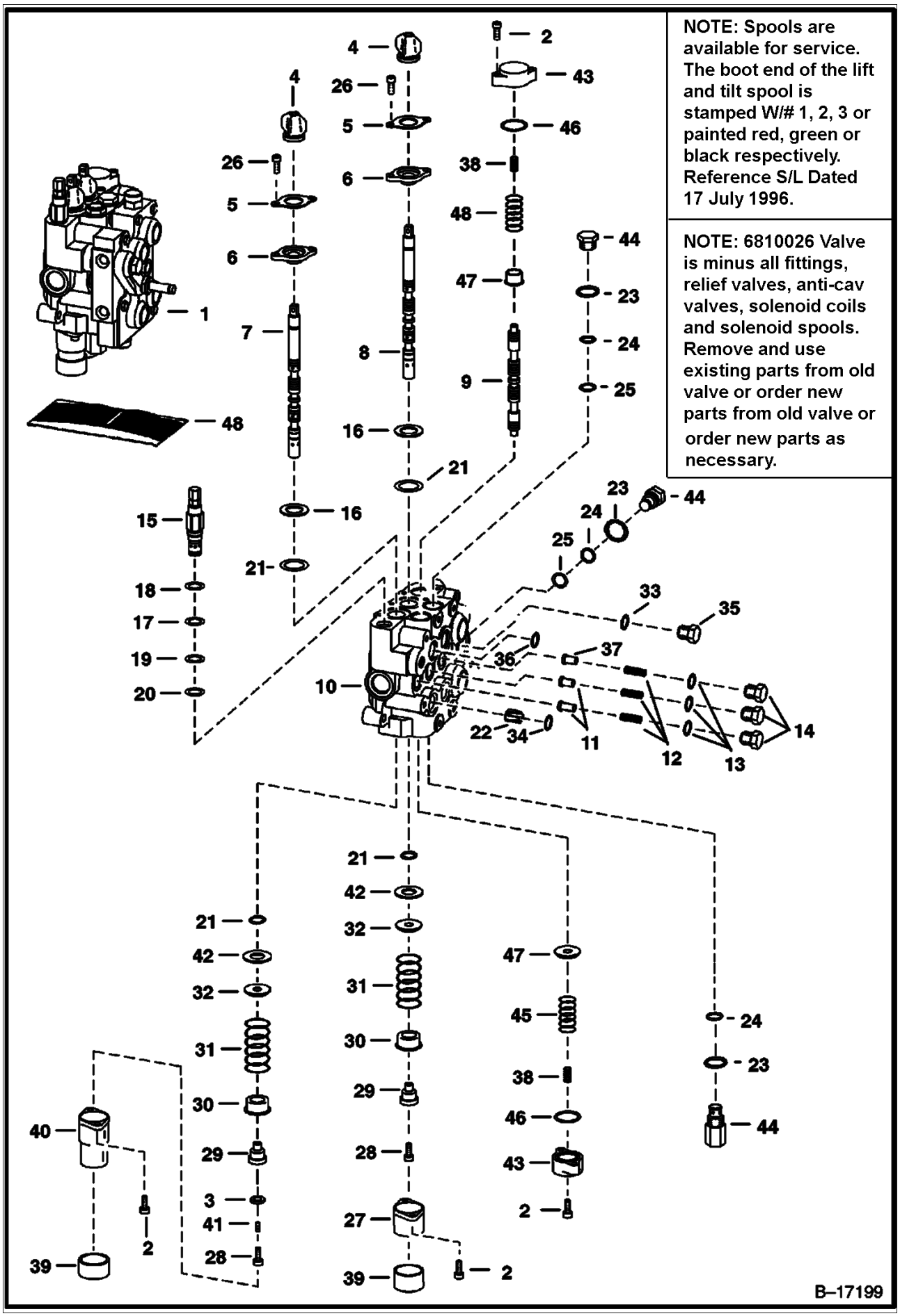

Page 84 - OSS# 2060759 - All rights reserved by Bobcat Company, a business unit of Ingersoll-Rand - 05/22/2008 - 07:23:42 - Produced by Ken Cook Co. with mediaoff

HYDRAULIC CONTROL VALVE (Cont'd)
(Service Valve) (Advanced Control System)

Ref No	Part Number	Description	Remarks	Serial Number	Qty
1	6810026	VALVE			1
1	6628571	VALVE ASSY	See Illustration BICS CONTROL VALVE/ TS1365 BICS CONTROL		1
2	29G000416B	SCREW			8
3	54K020002B	O-RING			1
4	6587763	BOOT			2
5	6589564	RETAINER			2
6	6589565	BUSHING	seal		2
7	6677660	SPOOL	lift - # 1 or Red		1
7	6677660	SPOOL	lift - # 2 or Green		1
8	6677660	SPOOL	tilt - # 1 or Red		1
8	6677660	SPOOL	tilt - # 2 or Green		1
9	6588074	SPOOL	auxiliary		3
10		BODY	NSS		1
11	6592115	SEAT	load check		2
12	6592117	SPRING			3
13	79K000008B	O-RING			3
14	6592116	NUT	load check		3
15	6676196	VALVE	W/Ref 17 W/Ref 18 W/Ref 19 W/Ref 20 main relief		1
16	58K000127B	O-RING			2
17	58K000017B	O-RING			1
18	6665569	WASHER	back-up		1
19	25K020016B	O-RING			1
20	6665570	RING	glide		1
21	6665846	SEAL			4
22	6534630	RESTRICTOR	.134/.141		1
23	79K000010B	O-RING			2
24	80K000014B	RING	back-up		5
25	58K000014B	O-RING	back-up washer required		5
25	6677106	O-RING	back-up washer not required		5
26	29G000412B	SCREW			4
27	6587633	BONNET			1
28	30G000416B	BOLT			2
29	6592109	ADAPTER			1
30	6592100	COLLAR			2
31	6587580	SPRING			2
32	6587523	WASHER			2
33	95K000012B	O-RING	tapered boss face - socket head		x
34	55K000212B	O-RING			4
35	90KV00008B	PLUG	W/Ref 33 tapered boss face - socket head		1
36	55K000204B	O-RING			1
37	6596569	SEAT			1
38	6589045	SPRING	white		2
39	6662848	CAP			1
40	6803092	BONNET	.625" flange		1
41	6801167	PLUG	plastic		1
42	6595663	BUSHING			2
43	6588781	END CAP			2
44	6592720	PLUG	W/Ref 23 W/Ref 24 W/Ref 25		1
45	6596332	SPRING			2
46	58K000124B	O-RING			2
47	7108780	SLEEVE	Was 6595951 [A]		2
48	6803605	SEAL KIT	one spool - Ref. 4, 21 & 26		x
48	6632279	SEAL KIT	main relief - Ref. 17-20		x
48	6809425	SEAL KIT	Ref. 13 & 23-25		x

Page 85 - OSS# 2060759 - All rights reserved by Bobcat Company, a business unit of Ingersoll-Rand - 05/22/2008 - 07:23:42 - Produced by Ken Cook Co. with media1off

HYDRAULIC CONTROL VALVE (Cont'd)
(Service Valve) (Advanced Control System)

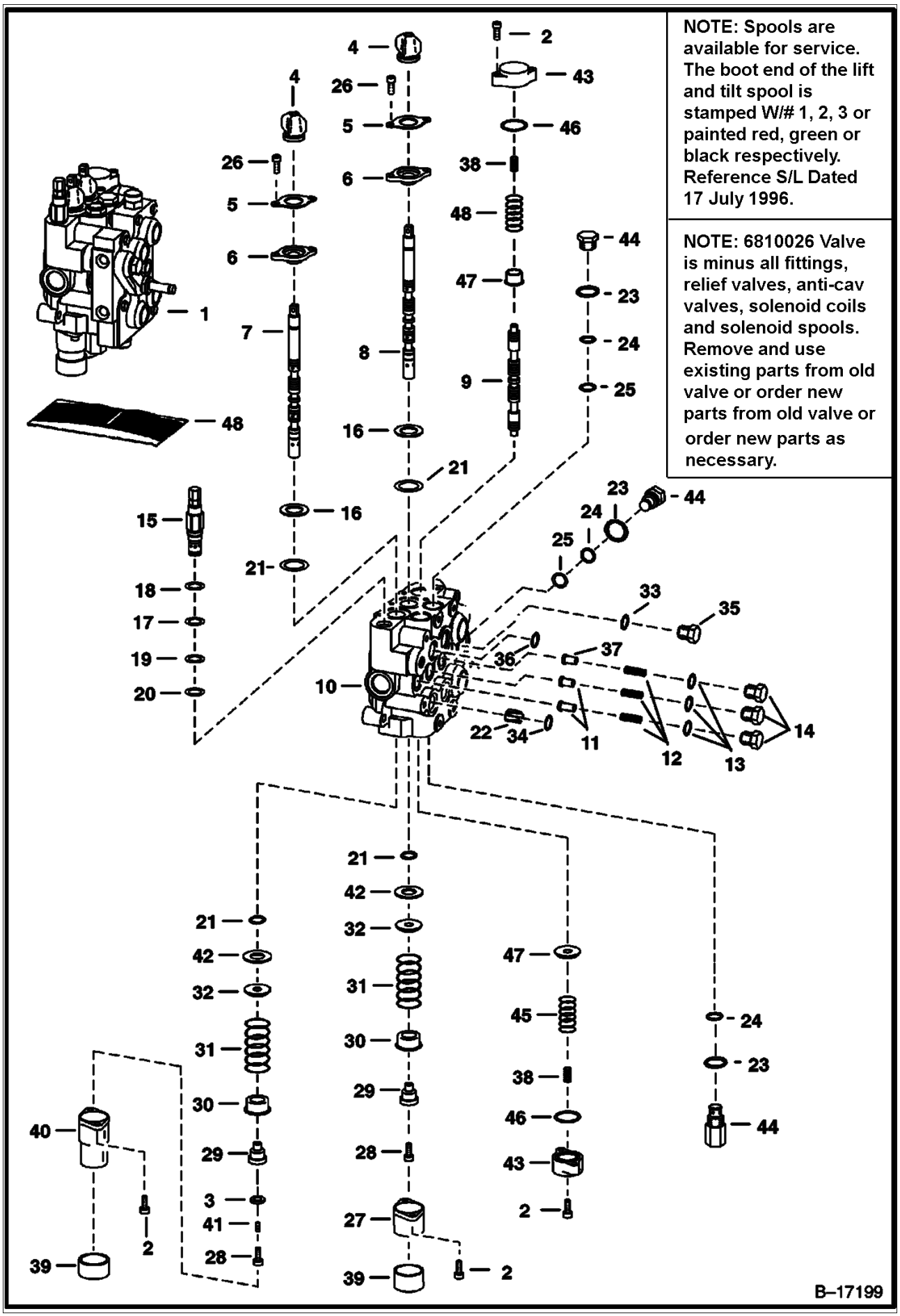

Page 86 - OSS# 2060759 - All rights reserved by Bobcat Company, a business unit of Ingersoll-Rand - 05/22/2008 - 07:23:42 - Produced by Ken Cook Co. with mediaoff

Ref No	Part Number	Description	Remarks	Serial Number	Qty
48	6809448	SEAL KIT	complete - Ref. 4, 13, 17-20, 21, 23-25, 26, 34, 36 & 46		x

Page 87 - OSS# 2060759 - All rights reserved by Bobcat Company, a business unit of Ingersoll-Rand - 05/22/2008 - 07:23:42 - Produced by Ken Cook Co. with mediaioff

BICS CONTROL VALVE

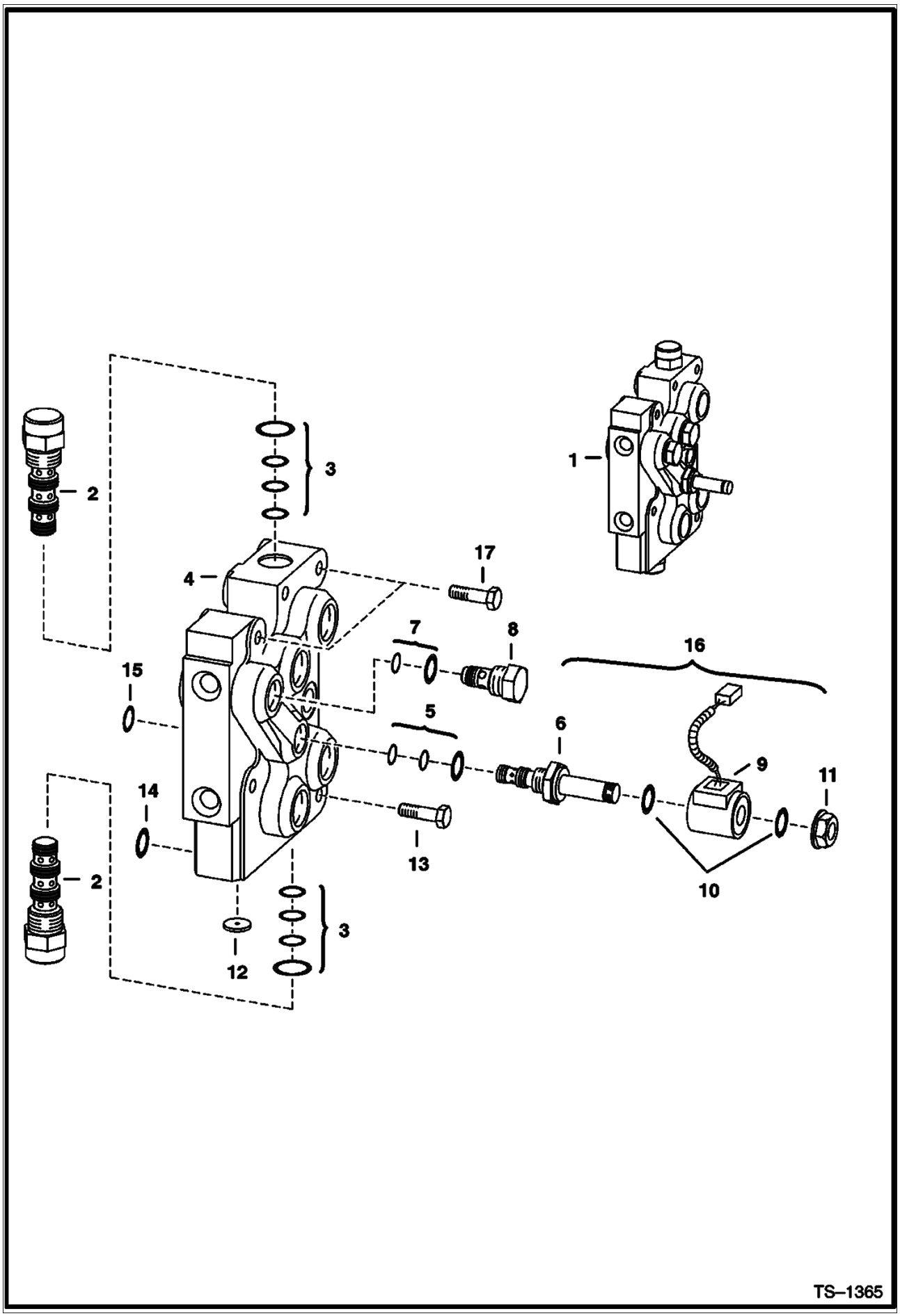

Page 88 - OSS# 2060759 - All rights reserved by Bobcat Company, a business unit of Ingersoll-Rand - 05/22/2008 - 07:23:42 - Produced by Ken Cook Co. with media1off

Ref No	Part Number	Description	Remarks	Serial Number	Qty
1	6628571	VALVE ASSY	Ref. 2 - 8		1
2	6668765	VALVE	pilot operated		2
3	6669734	SEAL KIT			x
4		BODY	NSS		1
5	6669732	SEAL KIT			x
6	6667687	STEM	solenoid valve- Was 6665004 [D]		1
7	6669733	SEAL KIT			x
8	6669057	CHECK VALVE	filter		1
9	6671025	COIL	W/diode - SEE NOTE - Was NSS [D]		1
10	54K020028B	O-RING			2
11	6668820	NUT			1
12	6668791	ORIFICE			1
13	43C000532B	BOLT		& Bel	6
13	43C000532B	BOLT		& Abv	4
14	55K000212B	O-RING			4
15	55K000204B	O-RING			1
16		VALVE	Ref 9 Ref 10 Ref 11 NAP - solenoid - W/O diode - Was 6667688 [A]		1
16	6672471	VALVE	Ref 5 Ref 6 Ref 9 Ref 10 Ref 11 solenoid - W/diode - SEE NOTE		1
17	43C000524B	BOLT		& Abv	2

Page 89 - OSS# 2060759 - All rights reserved by Bobcat Company, a business unit of Ingersoll-Rand - 05/22/2008 - 07:23:42 - Produced by Ken Cook Co. with media1off

MANUAL LIFT RELEASE VALVE

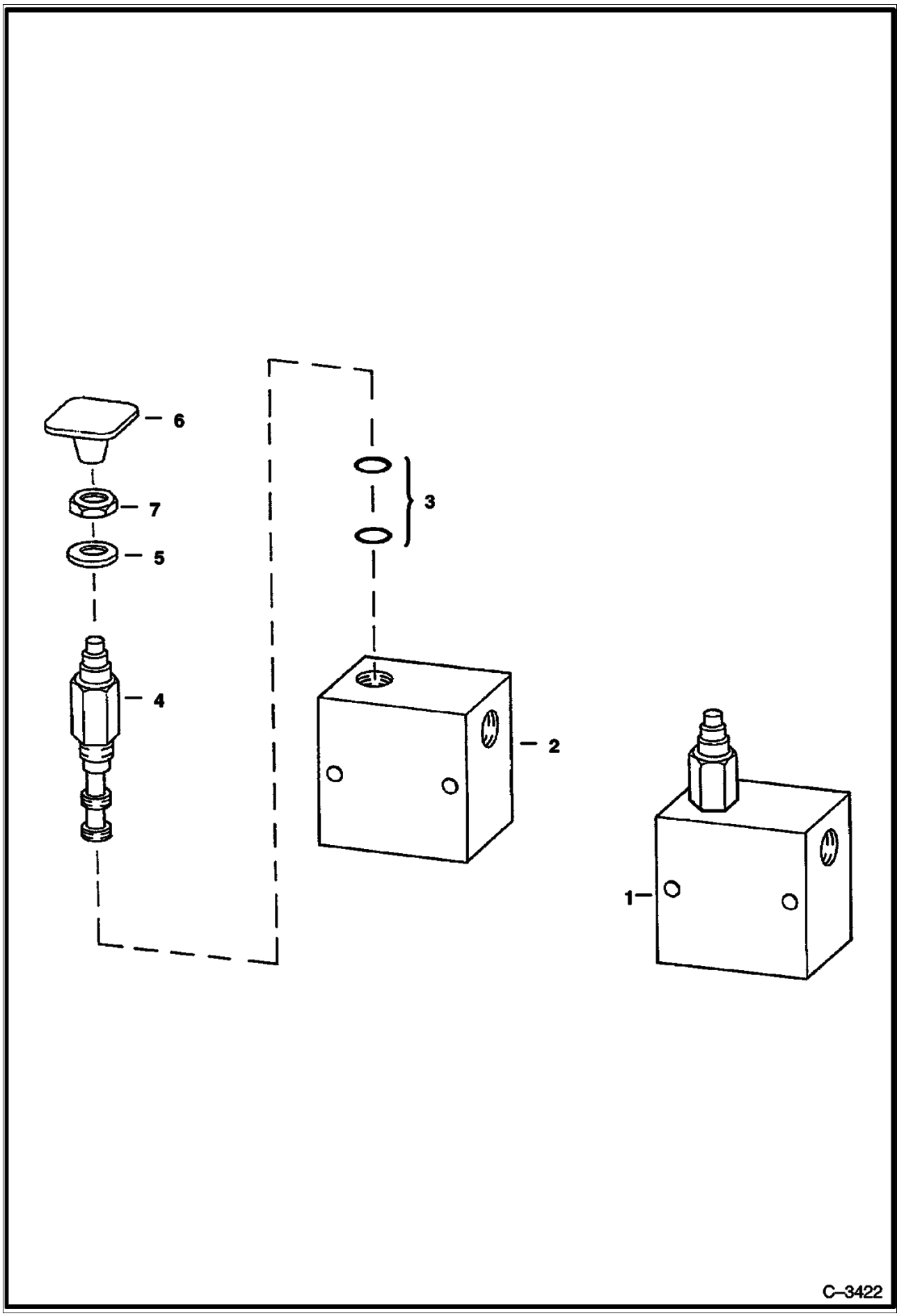

Page 90 - OSS# 2060759 - All rights reserved by Bobcat Company, a business unit of Ingersoll-Rand - 05/22/2008 - 07:23:42 - Produced by Ken Cook Co. with mediaioff

MANUAL LIFT RELEASE VALVE (Cont'd)

Ref No	Part Number	Description	Remarks	Serial Number	Qty
1	6667844	VALVE ASSY	Ref 2 Ref 3 Ref 4		1
2		BLOCK	NSS		1
3	6669087	SEAL KIT			1
4	6669085	VALVE			1
5	6707101	SEAL	neoprene		1
6	6737524	KNOB	red square - Was 6668913 [A]		1
7	7D000004B	NUT			1

Page 91 - OSS# 2060759 - All rights reserved by Bobcat Company, a business unit of Ingersoll-Rand - 05/22/2008 - 07:23:42 - Produced by Ken Cook Co. with media1off

BUCKET POSITIONING VALVE

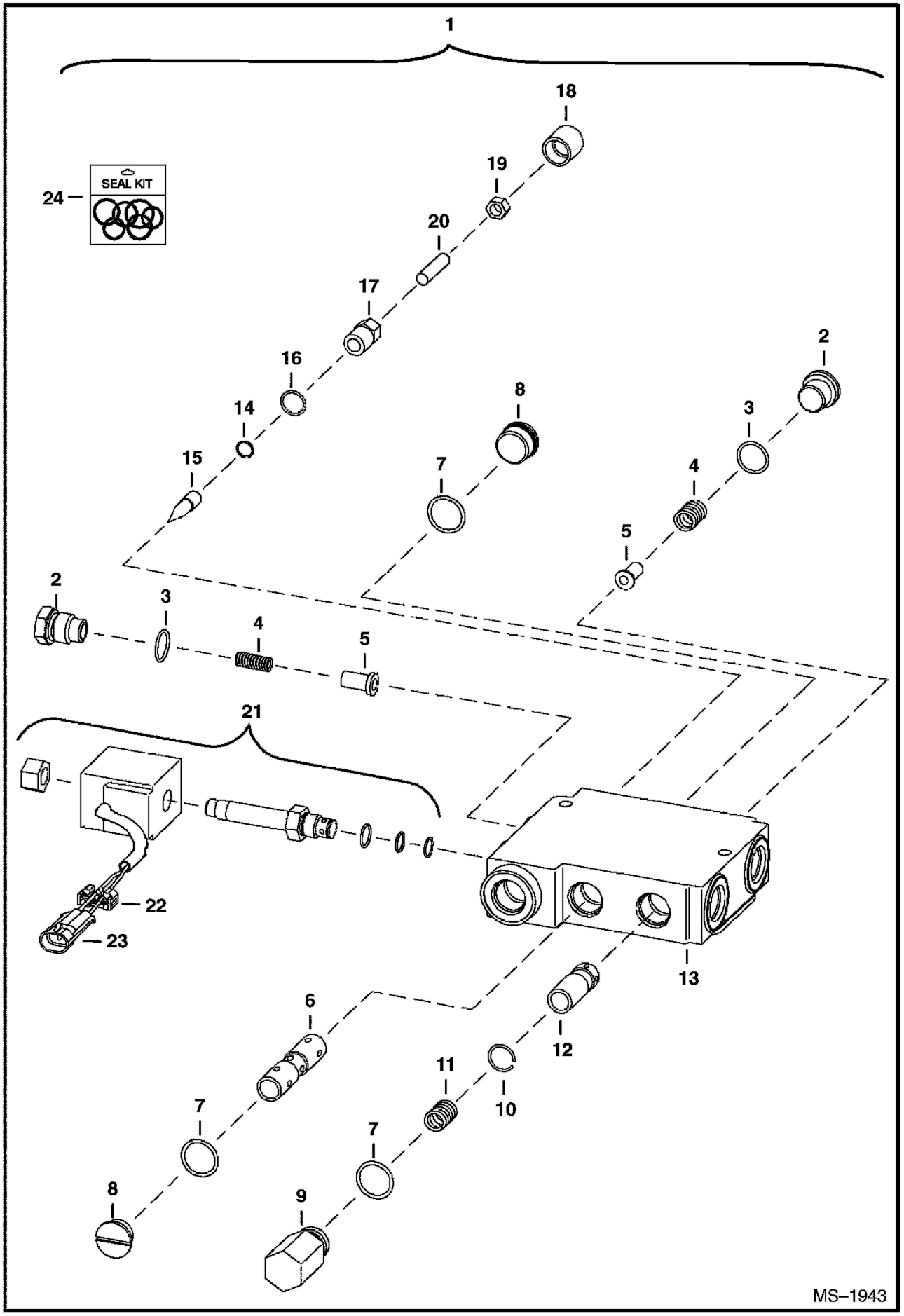

Page 92 - OSS# 2060759 - All rights reserved by Bobcat Company, a business unit of Ingersoll-Rand - 05/22/2008 - 07:23:42 - Produced by Ken Cook Co. with mediaioff

BUCKET POSITIONING VALVE (Cont'd)

Ref No	Part Number	Description	Remarks	Serial Number	Qty
1	6666341	VALVE	Ref. 2-20 - White		1
1	6673959	VALVE	Ref. 2-23 - white		1
2	6647784	PLUG	W/Ref 3		2
3	79K000008B	O-RING			2
4	6647785	SPRING			2
5	6647783	LOAD CHECK			2
6		SPOOL	NSS		1
7	58K000116B	O-RING	Was 80K000116B [B]		3
8	6647780	PLUG	W/Ref 7		2
9	6667176	PLUG	W/Ref 7		1
10	6667680	SNAP RING			1
11	6648294	SPRING			1
12		SPOOL	NSS		1
13		BODY	NSS		1
14	6667677	O-RING			1
15	6647777	PIN			1
16	79K000006B	O-RING	Was 6634874 [B,D]		1
17	6647778	CAP			1
18	6667676	COVER			1
19	6631561	NUT			1
20	6648293	SCREW			1
21	6672863	SOLENOID			1
21	6671527	NUT			1
21	6670634	SEAL KIT			1
21	6674331	COIL	W/Ref. 22 & 23		1
21	6676545	CARTRIDGE			1
22	6641180	LOCK	2-Pin		1
23	6641179	CONNECTOR	2-Pin		1
24	6647786	SEAL KIT	Ref. 3, 7, 14, 16 & 18		1

Page 93 - OSS# 2060759 - All rights reserved by Bobcat Company, a business unit of Ingersoll-Rand - 05/22/2008 - 07:23:42 - Produced by Ken Cook Co. with media1off

HYDROSTATIC CIRCUITRY

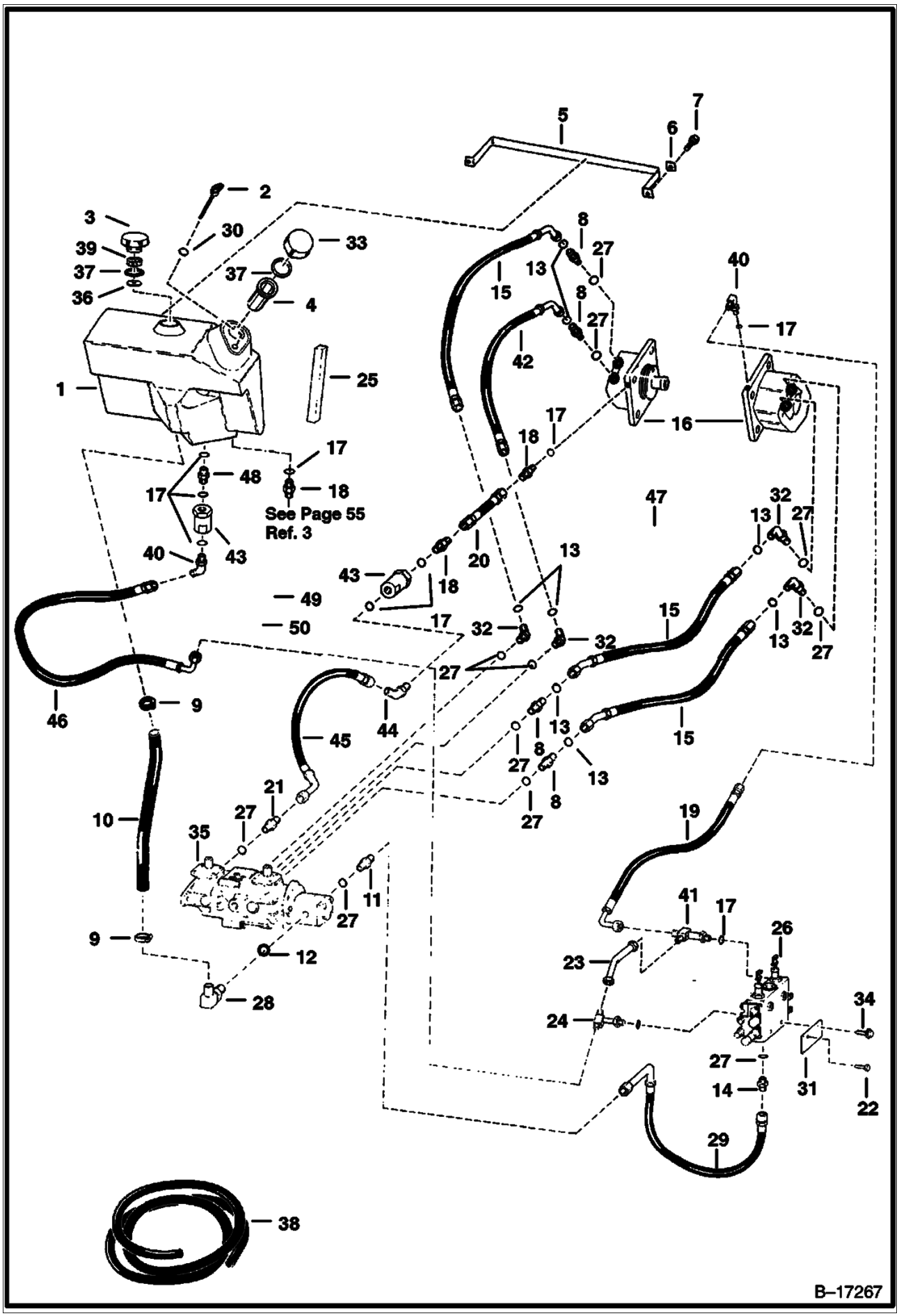

Page 94 - OSS# 2060759 - All rights reserved by Bobcat Company, a business unit of Ingersoll-Rand - 05/22/2008 - 07:23:42 - Produced by Ken Cook Co. with mediaoff

Ref No	Part Number	Description	Remarks	Serial Number	Qty
1	6706450	TANK	.93" I.D. Suction Outlet		1
2	6577459	DIPSTICK	W/Ref 30		1
3	6727475	CAP	& Ref 37 & Ref 39 breather - Was 6577785 [A]		1
4	6569219	SCREEN			1
5	6577585	BAND			1
6	6559447	WASHER			2
7	84G003712B	BOLT			2
8	52E001212B	ADAPTER	Was 52E000012B [A]		4
9	5HM00042B	CLAMP	constant tension		2
9	6666864	CLAMP	worm gear		2
9	6672281	CLAMP	constant torque		2
10	6716423	HOSE	1.25" (31,8 mm) I.D. - Was 6706452 [A]		1
11	6704693	TEE	W/Ref 27 flat boss face		1
11	15KN00008B	ADAPTER	W/Ref 27 tapered boss face		1
11	97K000012B	O-RING	flared end		1
12	79K000016B	O-RING			x
13	58K000018B	O-RING			8
14	15K000008B	ADAPTER	W/Ref 27 flat boss face		1
14	15KN00008B	ADAPTER	W/Ref 27 tapered boss face		1
14	97K000012B	O-RING	flared end		1
15	6671619	HOSE	Was 6658365 [D]		3
16		MOTOR KIT	See Illustration HYDROSTATIC MOTOR/ C3431		2
17	79K000006B	O-RING	flat boss face		x
17	99K000006B	O-RING	tapered boss face		x
18	15K000005B	ADAPTER	W/Ref 17 flat boss face		3
18	15KV00005B	ADAPTER	W/Ref 17 tapered boss face		3
18	97K000006B	O-RING	flared end		3
19	6707234	HOSE			1
20	6617736	HOSE	Was 6704630 [B,D] [B,D]		1
21	6578812	ADAPTER	W/Ref 27 flat boss face		1
21	6715186	ADAPTER	W/Ref 27 tapered boss face		1
21	97K000006B	O-RING	flared end		1
22	17C000532B	BOLT			1
22	17C000632B	BOLT	AHC		1
23	6577690	TUBE			1
24		TEE	W/Ref 17 NAP - W/O flared end O-ring - Was 6587888 [A]		1
24	6805696	TEE	W/Ref 17 W/ flared end O-ring		1
24	97K000006B	O-RING	flared end		2
25		FOAM	Order Ref 38 NAP - 16.12" (409,5 MM) LONG		1
26		VALVE	W/Ref 23 W/Ref 34 See Illustration HYDRAULIC CONTROL VALVE/ TS1454 HYD. CONTROL		1
27	79K000012B	O-RING	flat boss face		x
27	99K000012B	O-RING	tapered boss face		x
28	6714905	ELBOW	W/Ref 12 Was 6707409 [A]		1
29	6714594	HOSE	Was 6705074 [A]		2
30	25K020010B	SEAL			1
31	6704680	COVER	COVER		1
32	6714902	ELBOW	W/Ref 13 W/Ref 27 Was 69E000012B [A]		4
33	6728149	CAP	& Ref 37 fill - Was 6532508 [A]		1
34	84G003110B	BOLT			1
34	84G003710B	BOLT	AHC		1
35		PUMP	See Illustration HYDROSTATIC PUMP/ D2377		1
36	6701552	BAFFLE			1
37	6700631	GASKET			2
38	6511855	SEAL	bulk - Sold Per Foot -self stick		x

Page 95 - OSS# 2060759 - All rights reserved by Bobcat Company, a business unit of Ingersoll-Rand - 05/22/2008 - 07:23:42 - Produced by Ken Cook Co. with media1off

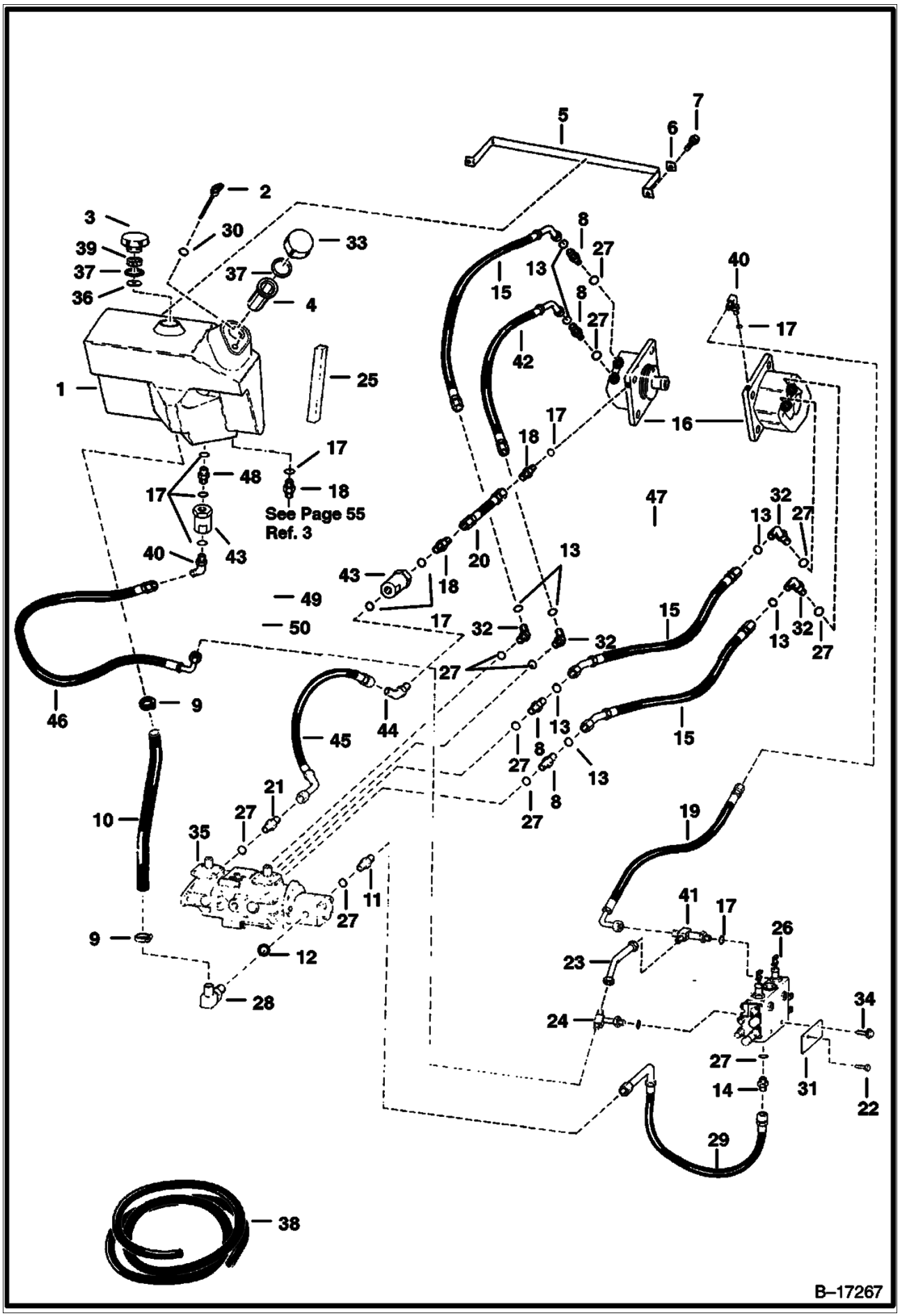

Page 96 - OSS# 2060759 - All rights reserved by Bobcat Company, a business unit of Ingersoll-Rand - 05/22/2008 - 07:23:42 - Produced by Ken Cook Co. with mediaoff

Ref No	Part Number	Description	Remarks	Serial Number	Qty
39	6703427	FOAM FILTER			1
40	17K000005B	ELBOW	W/Ref 17 flat boss face		2
40	17KV00005B	ELBOW	W/Ref 17 tapered boss face		2
40	97K000006B	O-RING	flared end		2
41		TEE	W/Ref 17 NAP - W/O flared end O-rings - Was 6587889 [A]		1
41	6805243	TEE	W/Ref 17 W/flared end O-rings		1
41	97K000006B	O-RING	flared end		2
42	6661076	HOSE			1
43	6661022	FILTER	See Illustration HYDROSTATIC OIL FILTER/ B13527 IN-LINE		2
44	18K000005B	ELBOW	W/Ref 17		1
45		HOSE	NAP - 13.5'(342,9 mm) long - Order 6730769 Hose - Was 6712414 [A]		1
45	6730769	HOSE	14.5"(368,3 mm) long		1
46	6578327	HOSE			1
47	6715251	HOSE	Was 6648636 [D]		1
48	6716473	ADAPTER	W/Ref 17 tapered boss face		1
48	97K000006B	O-RING	flared end		2
49	6719211	TUBE			1
50	87FN00005B	ADAPTER			1

Page 97 - OSS# 2060759 - All rights reserved by Bobcat Company, a business unit of Ingersoll-Rand - 05/22/2008 - 07:23:42 - Produced by Ken Cook Co. with media1off

HYDROSTATIC CIRCUITRY

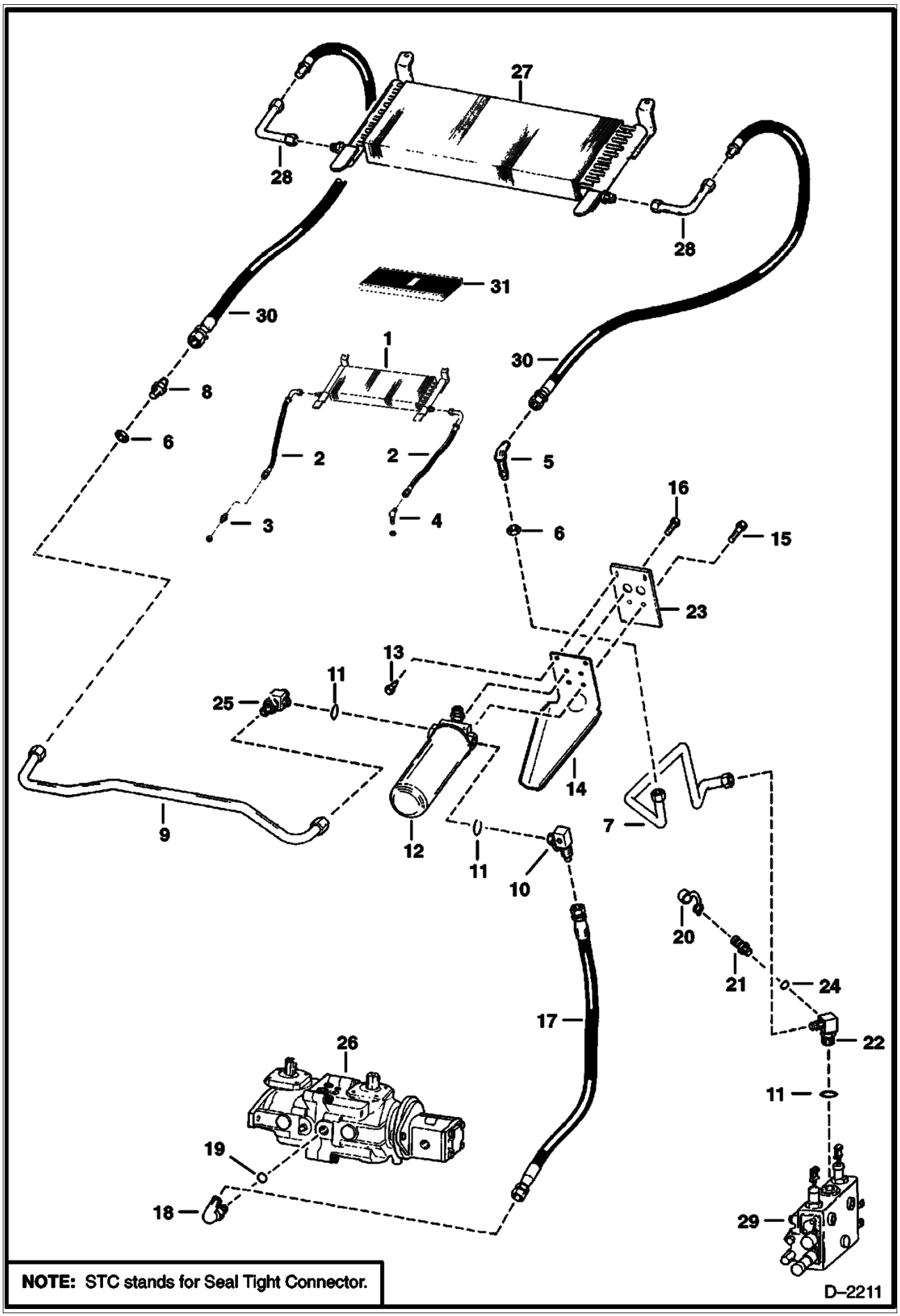

Page 98 - OSS# 2060759 - All rights reserved by Bobcat Company, a business unit of Ingersoll-Rand - 05/22/2008 - 07:23:42 - Produced by Ken Cook Co. with mediaioff

Ref No	Part Number	Description	Remarks	Serial Number	Qty
1	6674150	OIL COOLER	STC - SEE NOTE		1
2	6673828	HOSE	STC - SEE NOTE		2
3	6670830	ADAPTER	STC - SEE NOTE		1
4	6670831	ELBOW	STC - SEE NOTE		1
5	88F000008B	ELBOW	flat boss face		1
5	88FN00008B	ELBOW	tapered boss face		1
5	97K000012B	O-RING	flared end		1
6	86F000008B	NUT			2
7	6708748	TUBE	Was 6706671 [A]		1
8	45K000008B	ADAPTER	flat boss face		1
8	45KN00008B	ADAPTER	tapered boss face		1
8	97K000012B	O-RING	flared end		2
9	6704155	TUBE			1
10	6704164	ELBOW	W/Ref 11 flat boss face		1
10	6715655	ELBOW	W/Ref 11 tapered boss face		1
10	97K000012B	O-RING	flared end		1
11	79K000012B	O-RING	flat boss face		x
11	99K000012B	O-RING	tapered boss face		x
12		FILTER ASSY.	See Illustration HYDROSTATIC OIL FILTER/ C2818		1
12	6661248	ELEMENT			1
13	84G003712B	BOLT			2
14	6727345	MOUNT	filter drain - Was 6704342 [A]		1
15	17C000616B	BOLT			2
16	17C000610B	BOLT			2
17	6704159	HOSE			1
18	6714901	ELBOW	W/Ref 19 Was 1300294B [A]		1
19	79K000010B	O-RING			x
20	6630367	CAP			1
21	6630168	COUPLER	W/Ref 25 diagnostic		1
22		TEE	W/Ref 11 NAP - flat boss face - Order 6715653 Tee - Was 6704158 [A]		1
22	6715653	TEE	W/Ref 11 tapered boss face		1
22	97K000012B	O-RING	flared end		1
23	6704341	MOUNT			1
24	79K000006B	O-RING			1
25	6704696	ELBOW	W/Ref 11 W/O B.O.S.S. Option - flat boss face		1
25	6715714	ELBOW	W/Ref 11 W/O B.O.S.S. Option - tapered boss face		1
25	97K000012B	O-RING	flared end		1
25	6700599	ELBOW	W/Ref 11 W/ B.O.S.S. Option		1
26		PUMP	See Illustration HYDROSTATIC PUMP/ D2377		1
27	6661238	OIL COOLER			1
28	6703012	TUBE			2
29		VALVE	See Illustration HYDRAULIC CONTROL VALVE/ TS1454 HYD. CONTROL		1
30	6654205	HOSE			2
31	6674798	REPAIR KIT	For Ref. 1, 3 & 4		x

Page 99 - OSS# 2060759 - All rights reserved by Bobcat Company, a business unit of Ingersoll-Rand - 05/22/2008 - 07:23:42 - Produced by Ken Cook Co. with media1off

HAND CONTROLS

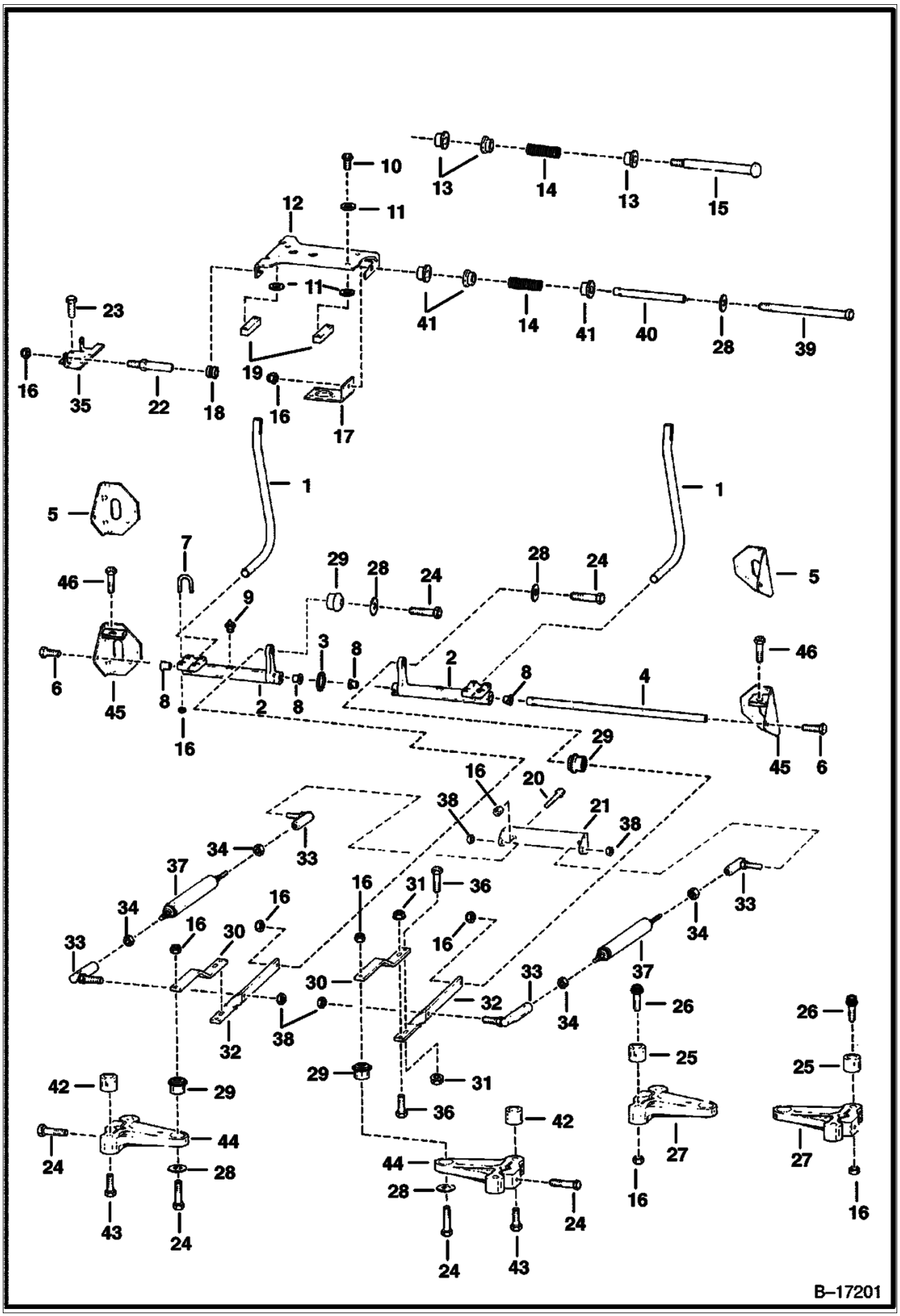

Page 100 - OSS# 2060759 - All rights reserved by Bobcat Company, a business unit of Ingersoll-Rand - 05/22/2008 - 07:23:42 - Produced by Ken Cook Co. with mediaioff

Ref No	Part Number	Description	Remarks	Serial Number	Qty
1	6702543	LEVER			2
2		BELLCRANK	Ref 28 & Ref 29 NAP - W/Notch for bushing tab - Order 6729957 Bellcrank, (619021B Washer) (6678067 Bushing) - Was 6703880 [A]		2
2	6729957	BELLCRANK	W/O Notch for bushing tab		2
3	6599741	WASHER	wave		1
4		ROD	Used W/Ref 6 NAP - (17C-616 Bolt) - Order 6716545 Rod & (2) of 45C000620B Bolt - Was 6576250 [A]		1
4	6716545	ROD	Used W/Ref 6 (45C-620 Bolt)		1
5	6577230	BRACKET			2
6	17C000616B	BOLT			2
6	45C000620B	BOLT	Was 45C-524 [B]		2
7	6700768	U-BOLT			4
8	6703879	BUSHING			4
9	6518200	GREASE ZERK			2
10	8C000616B	BOLT			4
11	6557831	WASHER			8
12	6706095	MOUNT			1
13		BUSHING	Ref 41 Order Ref 39 Order Ref 40 NAP - & (3) of - Was 6706097 [A]		3
14	6701535	SPRING			1
15		BOLT	Ref 41 Order Ref 39 Order Ref 40 NAP - shoulder - & (3) of -Was 6702715 [A]		1
16	95D000006B	NUT	Was 91D000006B [A]		19
17	6576196	MOUNT			1
18	6706098	GUIDE			2
19	6702716	BLOCK			2
20	17C000612B	BOLT			2
21	6706106	MOUNT			1
22	6577058	PIN			2
23	1CM00820B	BOLT			8
24	17C000626B	BOLT			8
25	6704435	WEAR CAM			4
26	93G000616B	BOLT			4
27	6701145	LEVER	.63" pump lever shaft		2
28	6563914	WASHER	1.00"(25,4 mm) O.D.		4
28	619021B	WASHER			4
29	6665701	BUSHING	neoprene - .885"(22,5 mm) O.D.		4
29	6678067	BUSHING	torsion - 1.055"(26,8 mm) O.D.		4
30	6576194	LINK			2
31	83D000006B	NUT			4
32	6576195	LINK			2
33	6599744	BALL JOINT			4
34	8D000006B	NUT			4
35	6706096	MOUNT			1
36	17C000620B	BOLT			4
37	6649551	SHOCK			2
38	62D000006B	NUT			4
39	17C000680B	BOLT			1
40	6715164	SLEEVE			1
41	6715163	BUSHING			3
42	6711643	CAM			4
43	35C000612B	BOLT			4
44		LEVER	W/Ref 29 Ref 28 & Ref 29 NAP - .8725"(22,2 MM) I.D. HOLE - ORDER 6729956 LEVER, (619021B WASHER) (6678067 BUSHING) - WAS 6711644 [A]		2

Page 101 - OSS# 2060759 - All rights reserved by Bobcat Company, a business unit of Ingersoll-Rand - 05/22/2008 - 07:23:42 - Produced by Ken Cook Co. with mediaioff

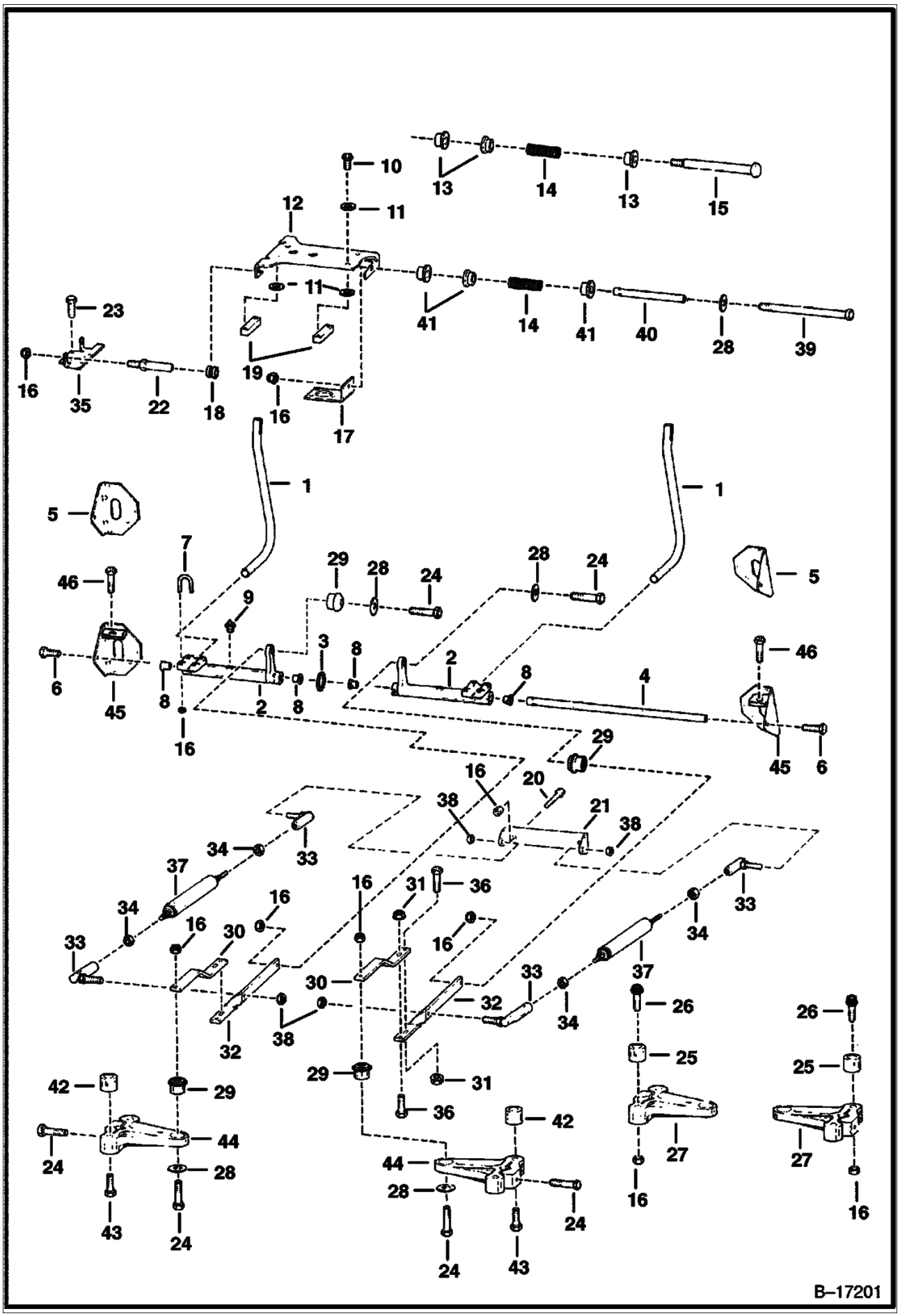

Page 102 - OSS# 2060759 - All rights reserved by Bobcat Company, a business unit of Ingersoll-Rand - 05/22/2008 - 07:23:42 - Produced by Ken Cook Co. with mediaioff

Ref No	Part Number	Description	Remarks	Serial Number	Qty
44	6729956	LEVER	W/Ref 29 1.0425"(26,5 mm) I.D. hole		2

Page 103 - OSS# 2060759 - All rights reserved by Bobcat Company, a business unit of Ingersoll-Rand - 05/22/2008 - 07:23:42 - Produced by Ken Cook Co. with media1off

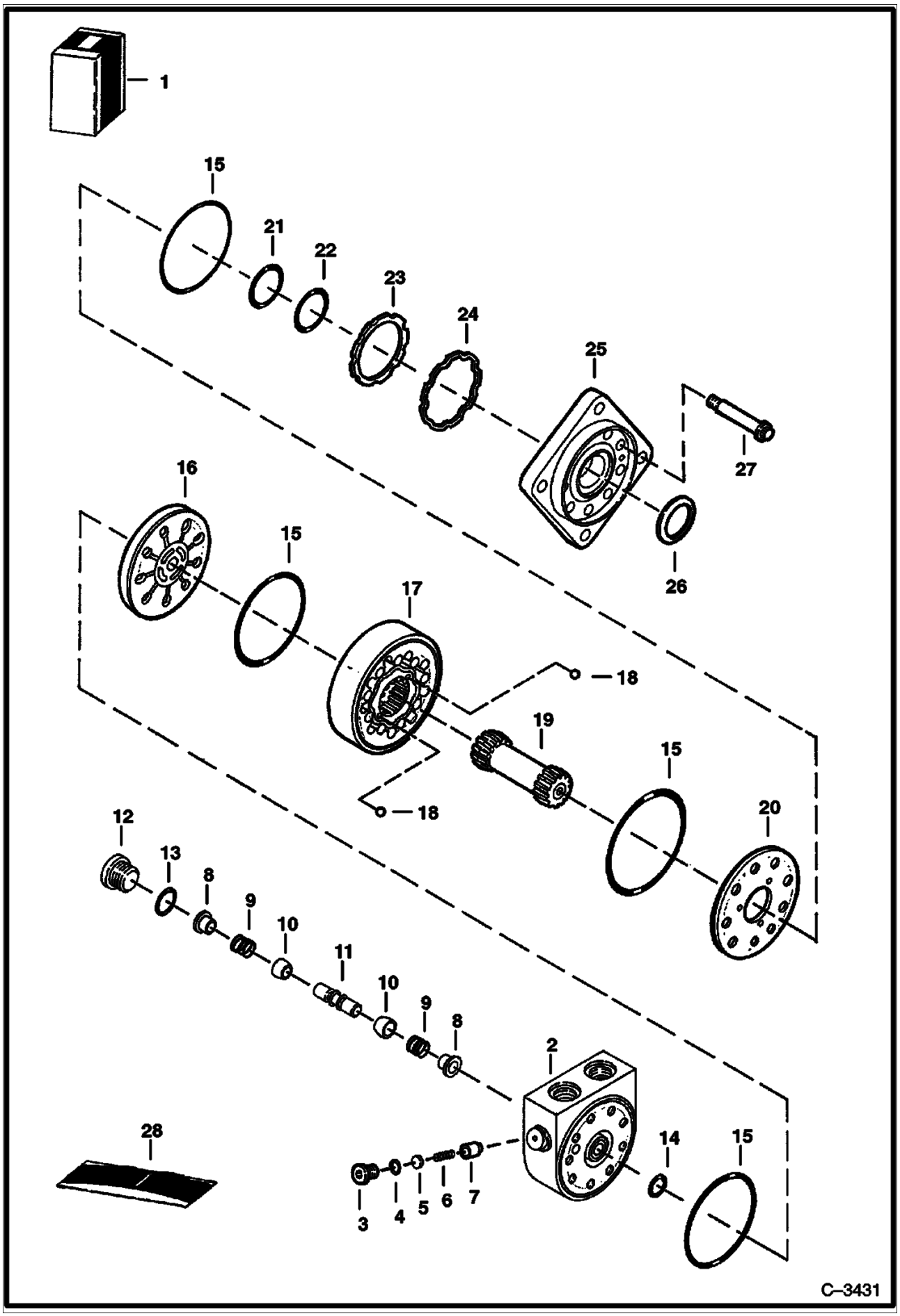

Page 104 - OSS# 2060759 - All rights reserved by Bobcat Company, a business unit of Ingersoll-Rand - 05/22/2008 - 07:23:42 - Produced by Ken Cook Co. with mediaIoff

Ref No	Part Number	Description	Remarks	Serial Number	Qty
1		MOTOR	See BTI367 NAP - Ref. 2-27 - Was 6671617 [A]		1
2	6669442	HOUSING	W/Ref. 3-7		1
3	6668079	PLUG	W/Ref. 4		1
4	79K000005B	O-RING			1
5	6668080	SHIM			x
6	6669444	SPRING			1
7	6668082	POPPET			1
8	6561218	SHUTTLE			2
9	6513533	SPRING			2
10	6513532	POPPET			2
11	6668088	PISTON	shuttle		1
12	6668089	PLUG	W/Ref. 13		1
13	79K000006B	O-RING			1
14	6669452	O-RING			1
15	6669446	O-RING			4
16	6669447	PLATE	valve		1
17	6672126	GEROLER			1
18	6651542	BALL			2
19	6669469	SHAFT			1
20	6669448	PLATE	balance		1
21	6669450	RING	backup		1
22	6669449	O-RING			1
23	6669453	SEAL			1
24	6669454	RING	backup		1
25	6669451	FLANGE	mounting		1
26	6664815	SEAL			1
27	6669470	BOLT			9
28	6669455	SEAL KIT	W/Ref. 4, 13, 14, 21-24 & 26		1

Page 105 - OSS# 2060759 - All rights reserved by Bobcat Company, a business unit of Ingersoll-Rand - 05/22/2008 - 07:23:42 - Produced by Ken Cook Co. with mediaioff

HYDROSTATIC PUMP
(Pulley Shaft Section) (Models 4355066, 4355065 & 4445050)

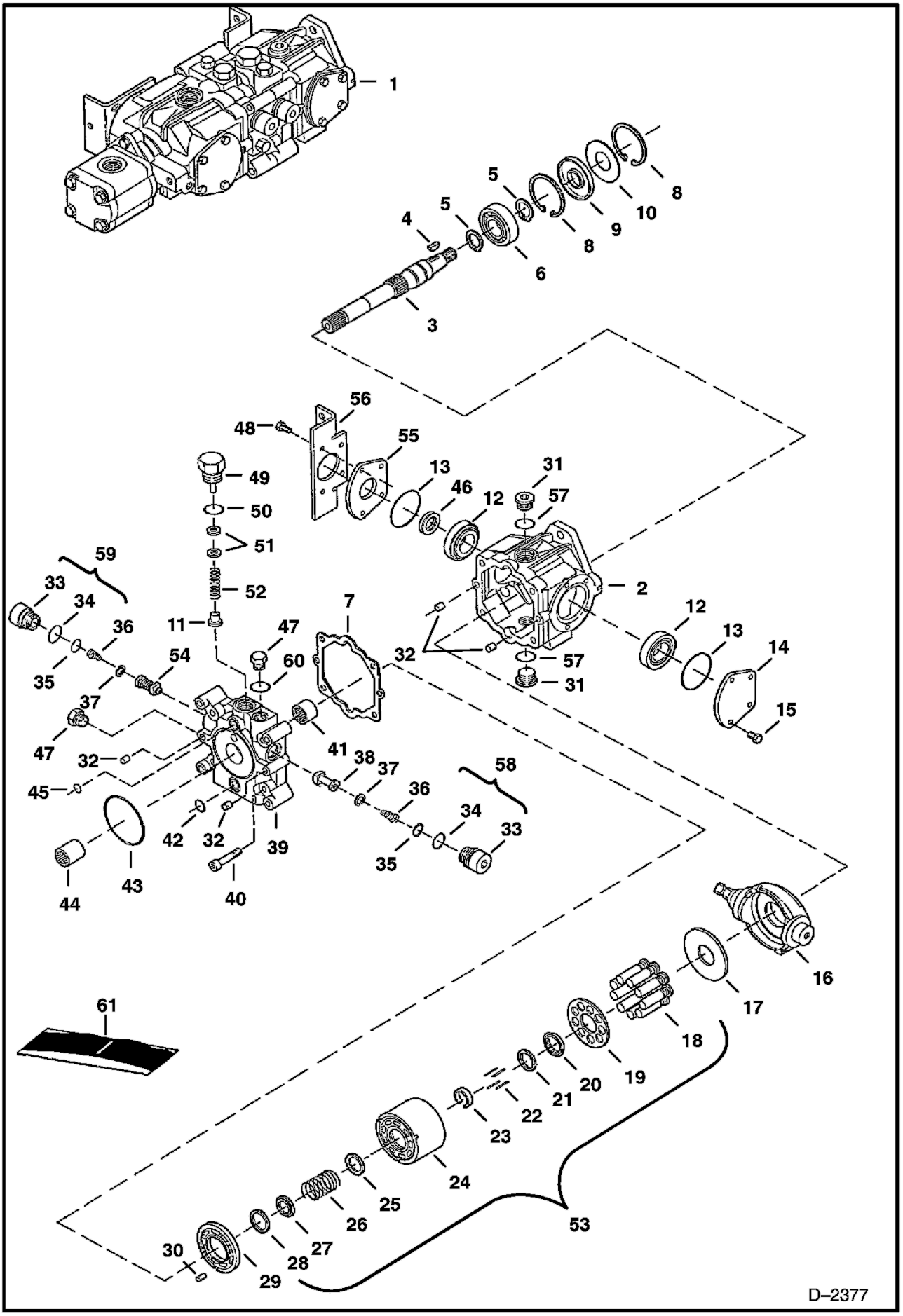

Page 106 - OSS# 2060759 - All rights reserved by Bobcat Company, a business unit of Ingersoll-Rand - 05/22/2008 - 07:23:42 - Produced by Ken Cook Co. with mediaIoff

HYDROSTATIC PUMP (Cont'd)
(Pulley Shaft Section) (Models 4355066, 4355065 & 4445050)

Ref No	Part Number	Description	Remarks	Serial Number	Qty
1	6669464	PUMP	Complete W/Gear Pump - gray - Domestic - Model 4355066	5157 13121 & Bel	1
1	6671019REM	PUMP REM	remanufactured - complete W/gear pump - Was 6671019 [A]		1
1		PUMP	NAP - Complete W/Gear Pump - black- Model 4355065 - Export - Order 6671019 Pump - Was 6669465 [A]	5156 11135 & Bel	1
1		PUMP	NAP - Order 6671019 Pump - Was 6669465 REM [A]		1
1	6672051	PUMP	Model 4445050 - Was 6772051 [D]	5157 13122 & Abv	1
1	6672051	PUMP		5156 11136 & Abv	1
2	6669402	HOUSING			1
3	6669408	SHAFT			1
4	6J000807B	KEY			1
5	658128B	SNAP RING			2
6	654299B	BEARING			1
7	6650634	GASKET			1
8	669863B	SNAP RING			2
9	6687191	SEAL	Was 6645090 [A]		1
10	6669409	WASHER			1
11	6650652	POPPET	charge relief		1
12	6669411	BEARING			2
13	6660814	O-RING			2
14	6657068	COVER			2
15	6650668	BOLT			4
16	6669404	SWASH PLATE	Model 4355066 & 4355065		1
16	6685344	SWASH PLATE	W/threaded shaft hole - Was 6671513 [A]		1
17	6650627	PLATE			1
18		PISTON ASSY.	Order Ref 53 NAP		1
19		RETAINER	Order Ref 53 NAP		1
20		RETAINER	Order Ref 53 NAP - guide		1
21	6666338	WASHER			1
22	6650629	PIN			4
23	6650630	RETAINER			1
24		BLOCK	Order Ref 53 NAP		1
25		WASHER	Order Ref 53 NAP		1
26		SPRING	Order Ref 53 NAP		1
27		WASHER	Order Ref 53 NAP		1
28		WASHER	Order Ref 53 NAP		1
29	6669401	VALVE PLATE	Model 4355066 & 4355065		1
29	6671515	VALVE PLATE	Model 4445050		1
30	6650636	PIN			1
31	47K000008B	PLUG	W/Ref 57		2
32	6518460	PIN			4
33		PLUG	NAP - Order Ref. 58 or 59		2
34	6657028	O-RING			2
35	79K000008B	O-RING			2
36		SPRING	NAP - Order Ref. 58 or 59		2
37		RETAINER	NAP - Order Ref. 58 or 59		2
38		CHECK VALVE	Order Ref 58 NAP - poppet		1
39	6669406	END PLATE			1
40	6650637	BOLT			4
41	6650635	BEARING			1
42	6650647	O-RING			1
43	6645081	O-RING			1
44	6650675	COUPLER			1
45	6650646	O-RING			1

Page 107 - OSS# 2060759 - All rights reserved by Bobcat Company, a business unit of Ingersoll-Rand - 05/22/2008 - 07:23:42 - Produced by Ken Cook Co. with mediaioff

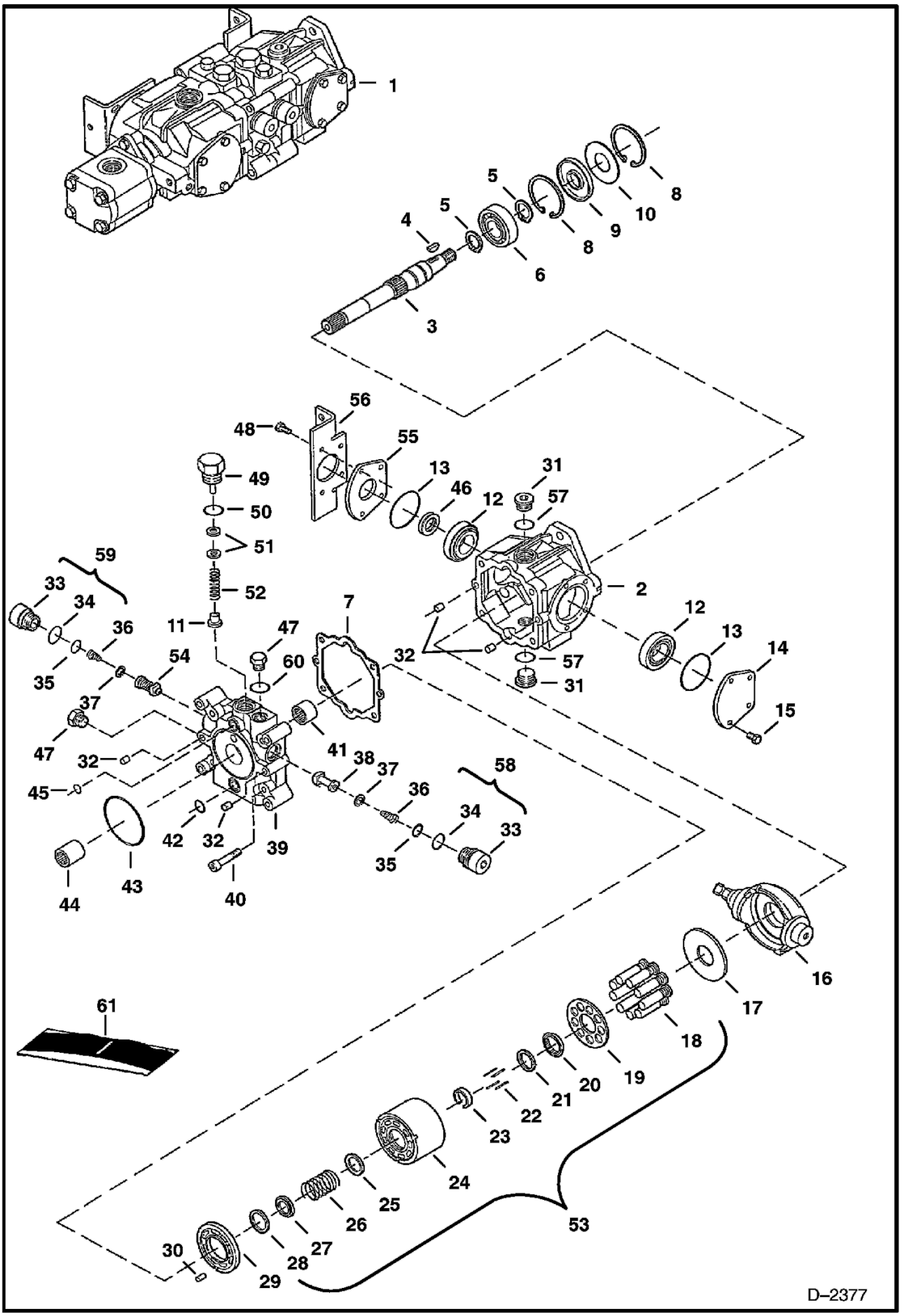

Page 108 - OSS# 2060759 - All rights reserved by Bobcat Company, a business unit of Ingersoll-Rand - 05/22/2008 - 07:23:42 - Produced by Ken Cook Co. with mediaoff

HYDROSTATIC PUMP (Cont'd)
(Pulley Shaft Section) (Models 4355066, 4355065 & 4445050)

Ref No	Part Number	Description	Remarks	Serial Number	Qty
46	6678226	SEAL	Was 6673881 [A]		1
47	6645086	PLUG	W/Ref 60		2
48	1CM00820B	BOLT	Model 4355066 & 4355065		4
48	6671518	BOLT	Model 4445050		4
49	6650648	PLUG	W/Ref 50 charge relief		1
50	79K000010B	O-RING			1
51	6669410	SHIM KIT	charge relief		1
52	6658301	SPRING			1
53	6661758	BLOCK ASSY	W/Ref. 18 - 28 - Model 4355066 & 4355065		1
53	6671512	BLOCK ASSY	Model 4445050		1
54		RELIEF VALVE	Order Ref 59 NAP - 5000 PSI (345 bar) for Pump		1
55	6657067	COVER			1
56	6706096	MOUNT			1
57	79K000012B	O-RING			2
58	6670684	CHECK VALVE			1
59	6670685	RELIEF VALVE	Model 4355066 & 4355065		1
59	6671510	RELIEF VALVE	Model 4445050		1
60	6661481	O-RING			2
61	6658092	SEAL KIT	See Illustration HYDROSTATIC PUMP/ D2376 REF. 7, 9, 13, 34, 35, 42, 43, 45 & 46 - ALSO INCLUDES REF. 2, 3, 12 & 41 FOR PUMP MODELS 4355066 & 4355065		1
61	6671516	SEAL KIT	See Illustration HYDROSTATIC PUMP/ D2376 REF. 7, 9, 13, 34, 35, 42, 43, 45, 46, 50, 57 & 60 - ALSO INCLUDES REF. 2, 3, 12, 31, 41 & 50 FOR PUMP MODEL 4445050		1

Page 109 - OSS# 2060759 - All rights reserved by Bobcat Company, a business unit of Ingersoll-Rand - 05/22/2008 - 07:23:42 - Produced by Ken Cook Co. with mediaioff

HYDROSTATIC PUMP
(Gear Pump Section) (Models 4355066, 4355065 & 4445050)

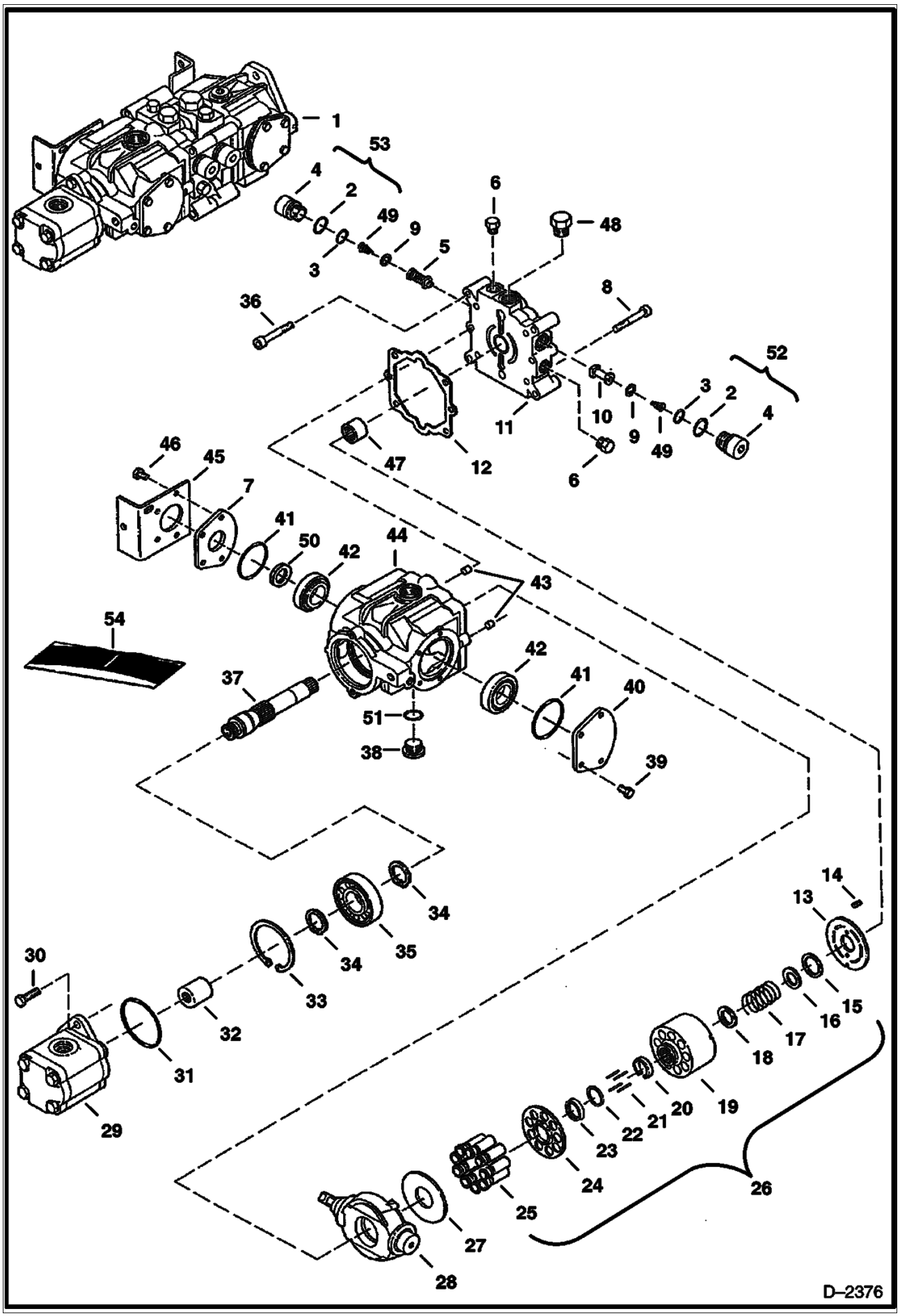

Page 110 - OS$# 2060759 - All rights reserved by Bobcat Company, a business unit of Ingersoll-Rand - 05/22/2008 - 07:23:42 - Produced by Ken Cook Co. with mediaioff

HYDROSTATIC PUMP (Cont'd)
(Gear Pump Section) (Models 4355066, 4355065 & 4445050)

Ref No	Part Number	Description	Remarks	Serial Number	Qty
1	6669464	PUMP	Complete W/Gear Pump - gray - Domestic - Model 4355066	5157 13121 & Bel	1
1	6671019REM	PUMP REM	remanufactured - complete W/gear pump - Was 6671019 [A]		1
1		PUMP	NAP - Complete W/Gear Pump - black- Model 4355065 - Export - Order 6671019 Pump - Was 6669465 [A]	5156 11135 & Bel	1
1		PUMP	NAP - Order 6671019 Pump - Was 6669465 REM [A]		1
1	6672051	PUMP	Model 4445050 - Was 6772051 [D]	5157 13122 & Abv	1
1	6672051	PUMP		5156 11136 & Abv	1
2	6657028	O-RING			2
3	79K000008B	O-RING			2
4		PLUG	NAP - Order Ref. 52 or 53		2
5		RELIEF VALVE	Order Ref 53 NAP - 5000 PSI (345 bar) for Pump		1
6	6645086	PLUG			2
7	6657067	COVER			1
8	6650637	BOLT			2
9		RETAINER	NAP - Order Ref. 52 or 53		4
10		CHECK VALVE	Order Ref 52 NAP - poppet		1
11	6669405	END CAP			1
12	6650634	GASKET			1
13	6669400	VALVE PLATE	Model 4355066 & 4355065		1
13			See BTI361 NAP - Model 4445050 - Was 6675339 [A]		1
14	6650636	PIN			2
15		RETAINER	Order Ref 26 NAP		1
16		WASHER	Order Ref 26 NAP		1
17		SPRING	Order Ref 26 NAP		1
18		WASHER	Order Ref 26 NAP		1
19		BLOCK	Order Ref 26 NAP		1
20	6650630	RETAINER			1
21	6650629	PIN			4
22	6666338	WASHER			1
23		RETAINER	Order Ref 26 NAP		1
24		RETAINER	Order Ref 26 NAP		1
25		PISTON ASSY.	Order Ref 26 NAP		1
26	6661758	BLOCK ASSY	Models 4355066 & 4355065		1
26	6671512	BLOCK ASSY	Model 4445050		1
27	6650627	PLATE			1
28	6669404	SWASH PLATE	Model 4355066 & 4355065		1
28	6685344	SWASH PLATE	W/threaded shaft hole - Was 6671513 [A]		1
29		GEAR PUMP	See Illustration GEAR PUMP (MODELS B5501-34727 & B5501-36006)/ TS1035 FOR PUMP MODEL 4355066 & 4355065		1
29		GEAR PUMP	See Illustration GEAR PUMP/ TS1022 FOR PUMP MODELS 4445050		1
30	6666339	BOLT			2
31	6645080	O-RING			1
32	6650677	COUPLER	Model 4355066 & 4355065		1
32	6671509	COUPLER	Model 4445050 - Was 6671519 [D]		1
33	669863B	SNAP RING			1
34	658128B	SNAP RING			2
35	654299B	BEARING			1
36	6652018	BOLT			4
37	6669407	SHAFT			1
38	47K000008B	PLUG	W/Ref 51		1
39	6650668	BOLT			4

Page 111 - OSS# 2060759 - All rights reserved by Bobcat Company, a business unit of Ingersoll-Rand - 05/22/2008 - 07:23:42 - Produced by Ken Cook Co. with mediaioff

HYDROSTATIC PUMP (Cont'd)
(Gear Pump Section) (Models 4355066, 4355065 & 4445050)

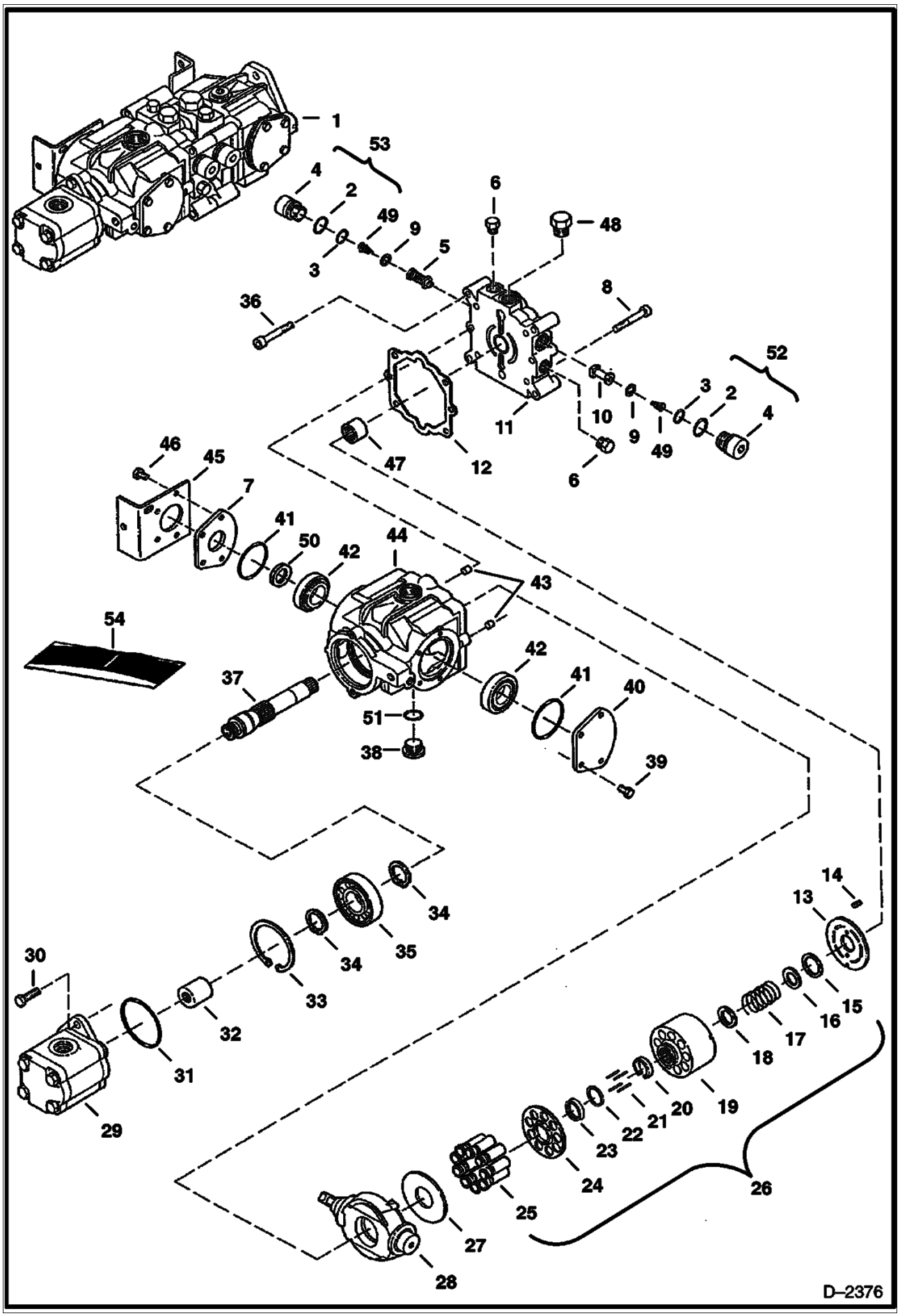

Page 112 - OSS# 2060759 - All rights reserved by Bobcat Company, a business unit of Ingersoll-Rand - 05/22/2008 - 07:23:42 - Produced by Ken Cook Co. with mediaIoff

HYDROSTATIC PUMP (Cont'd)
(Gear Pump Section) (Models 4355066, 4355065 & 4445050)

Ref No	Part Number	Description	Remarks	Serial Number	Qty
40	6657068	COVER			1
41	6660814	O-RING			2
42	6669411	BEARING			2
43	6518460	PIN			2
44	6669403	HOUSING			1
45	6576196	MOUNT			1
46	1CM00820B	BOLT			4
47	6650635	BEARING			1
48		PLUG			1
49		SPRING	NAP - Order Ref. 52 or 53		2
50	6650639	SEAL			1
51	79K000012B	O-RING			2
52	6670684	CHECK VALVE			1
53	6670685	RELIEF VALVE	Models 4355066 & 4355065		1
53	6671510	RELIEF VALVE	Model 4445050		1
54	6658092	SEAL KIT	See Illustration HYDROSTATIC PUMP/ D2377 REF. 2, 3, 12 & 41 - ALSO INCLUDES 7, 9, 13, 34, 35, 42, 43, 45 & 46 FOR PUMP MODELS 4355066 & 4355065		1
54	6671516	SEAL KIT	See Illustration HYDROSTATIC PUMP/ D2377 REF. 7, 9, 13, 34, 35, 42, 43, 45, 46, 50, 57 & 60 - ALSO INCLUDES REF. 2, 3, 12, 31, 41 & 50 FOR PUMP MODEL 4445050		1

Page 113 - OSS# 2060759 - All rights reserved by Bobcat Company, a business unit of Ingersoll-Rand - 05/22/2008 - 07:23:42 - Produced by Ken Cook Co. with mediaioff

GEAR PUMP (MODELS B5501-34727 & B5501-36006)
(For Hydro. Pump Models 4355065 & 4355066)

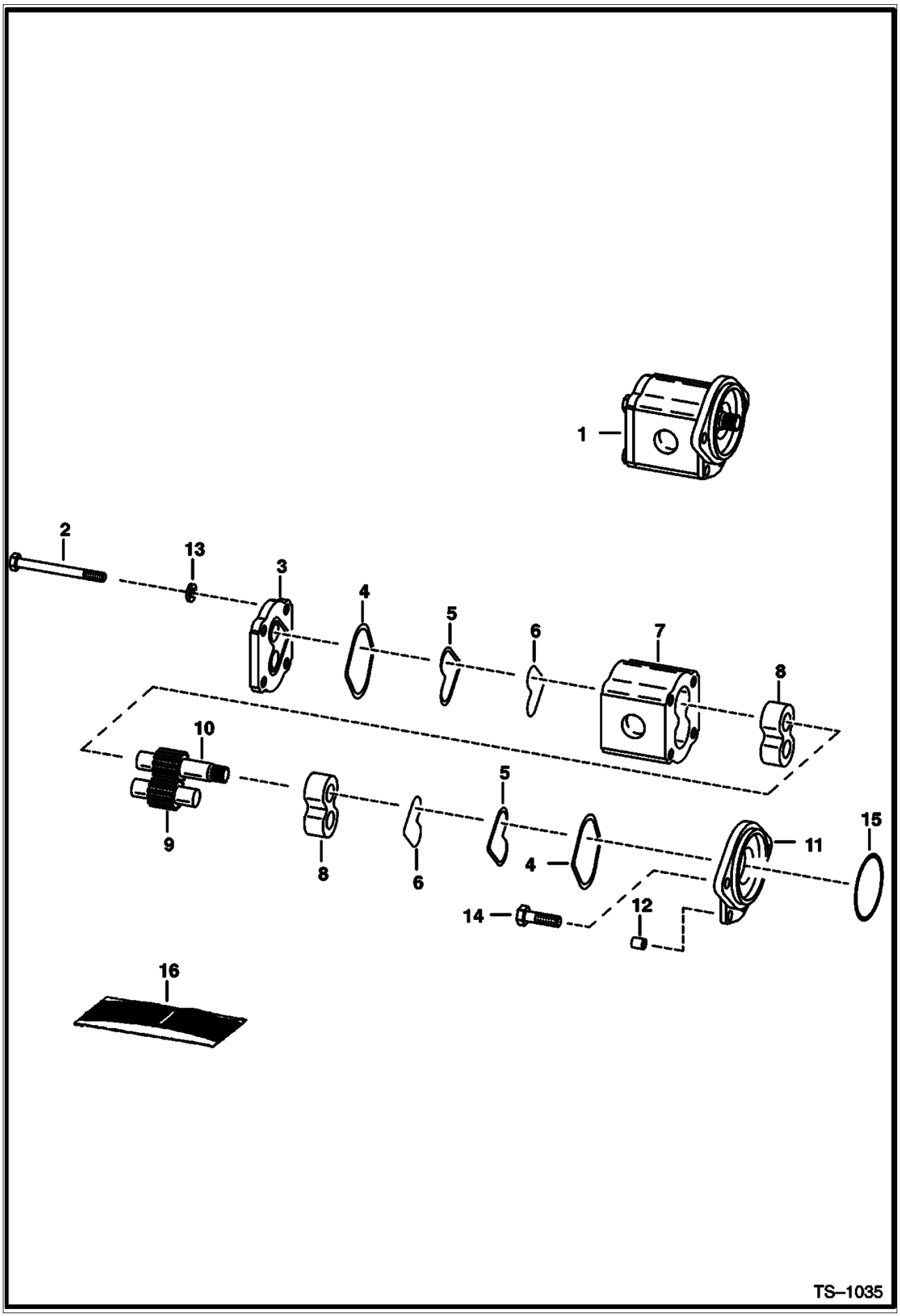

Page 114 - OSS# 2060759 - All rights reserved by Bobcat Company, a business unit of Ingersoll-Rand - 05/22/2008 - 07:23:42 - Produced by Ken Cook Co. with mediaioff

GEAR PUMP (MODELS B5501-34727 & B5501-36006) (Cont'd)
(For Hydro. Pump Models 4355065 & 4355066)

Ref No	Part Number	Description	Remarks	Serial Number	Qty
1		PUMP	NAP - B5501-34727 - For Pump Model 4355065 - Order 6669385 Pump - Was 6667723 [A]		1
1	6669385	PUMP	Model B5501-36006 - For Pump Model 4355066		1
2		BOLT	NSS		4
3	6655415	COVER			1
4		O-RING	NSS - seal		2
5		SEAL	NSS		2
6		RING	NSS		2
7		BODY	NSS		1
8		BEARING	NSS		2
9		GEAR	NSS - idler		1
10		GEAR	NSS - drive		1
11	6655418	COVER			1
12		DOWEL	NSS		2
13		WASHER	NSS		4
14	6650679	BOLT			2
15	6645080	O-RING	O.D. of pump		1
16	6671041	SEAL KIT	Ref. 4 - 6 - For Pump Model B5501-34727		1
16	6671042	SEAL KIT	Ref. 4 - 6 - For Pump Model B5501-36006		1

Page 115 - OSS# 2060759 - All rights reserved by Bobcat Company, a business unit of Ingersoll-Rand - 05/22/2008 - 07:23:42 - Produced by Ken Cook Co. with mediaioff

GEAR PUMP
(For Hydro. Pump Model 4445050)

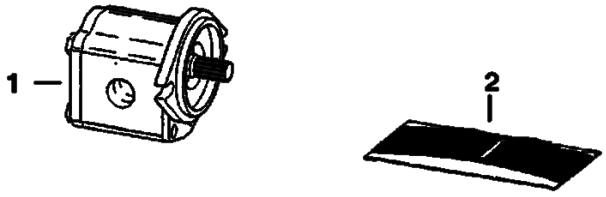

TS–1022

Page 116 - OSS# 2060759 - All rights reserved by Bobcat Company, a business unit of Ingersoll-Rand - 05/22/2008 - 07:23:42 - Produced by Ken Cook Co. with mediaIoff

GEAR PUMP (Cont'd)
(For Hydro. Pump Model 4445050)

Ref No	Part Number	Description	Remarks	Serial Number	Qty
1	6672513	PUMP	B5501-36836 - For Pump Model 4445050		1
2	6671042	SEAL KIT	Was 6666340 [A]		1

Page 117 - OSS# 2060759 - All rights reserved by Bobcat Company, a business unit of Ingersoll-Rand - 05/22/2008 - 07:23:42 - Produced by Ken Cook Co. with media1off

HYDROSTATIC OIL FILTER
(In-Line)

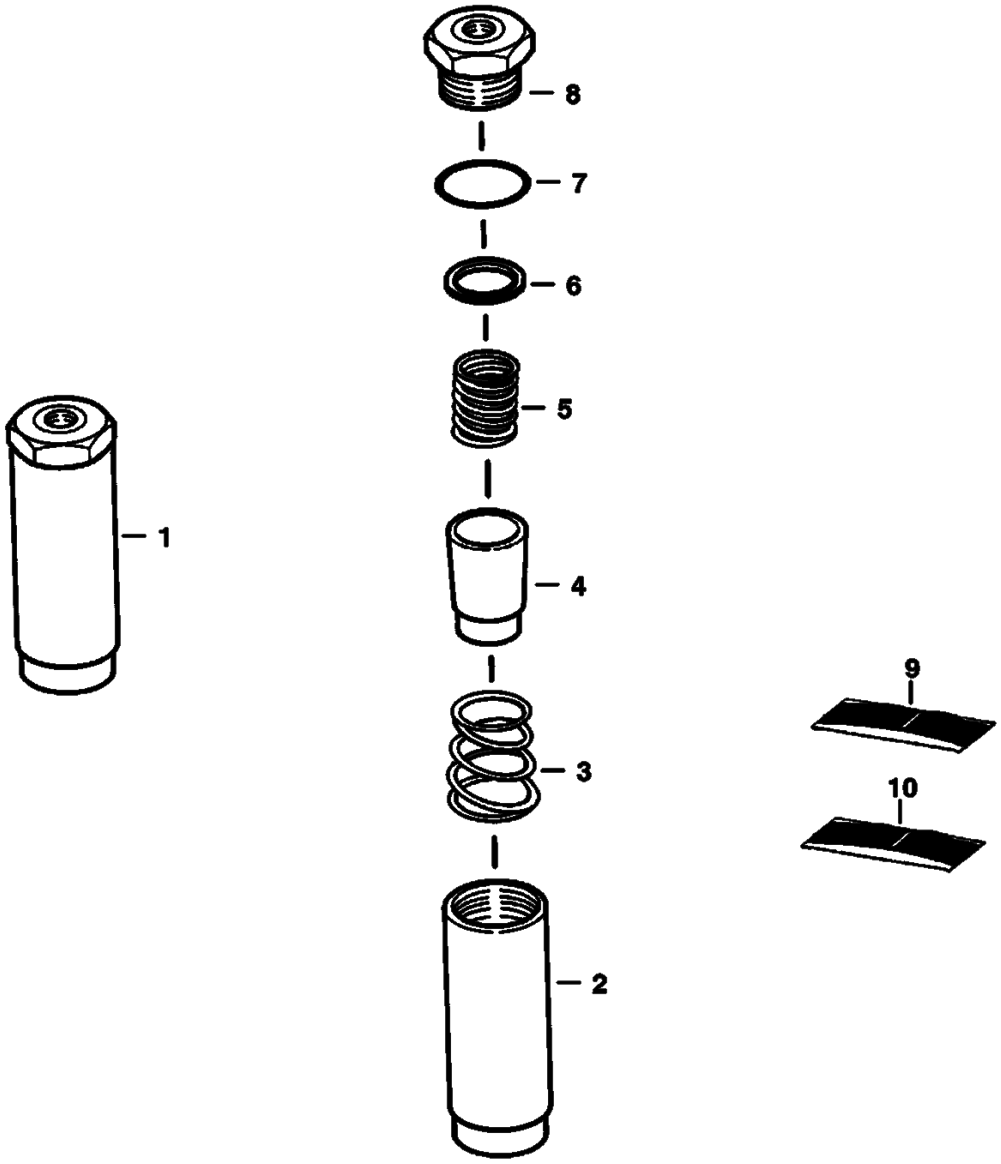

Page 118 - OSS# 2060759 - All rights reserved by Bobcat Company, a business unit of Ingersoll-Rand - 05/22/2008 - 07:23:42 - Produced by Ken Cook Co. with mediaoff

HYDROSTATIC OIL FILTER (Cont'd)
(In-Line)

Ref No	Part Number	Description	Remarks	Serial Number	Qty
1	6661022	FILTER	Ref. 2 - 8		1
2		HOUSING	NAP		1
3		SPRING	NAP		1
4		ELEMENT	NAP		1
5		SPRING	NAP		1
6		GASKET	NAP		1
7		O-RING	NAP		1
8		PLUG	NAP		1
9	6661807	KIT	element - Ref. 4, 6 & 7		1
10	6661808	KIT	spring - Ref. 3 & 5		1

Page 119 - OSS# 2060759 - All rights reserved by Bobcat Company, a business unit of Ingersoll-Rand - 05/22/2008 - 07:23:42 - Produced by Ken Cook Co. with media1off

HYDROSTATIC OIL FILTER

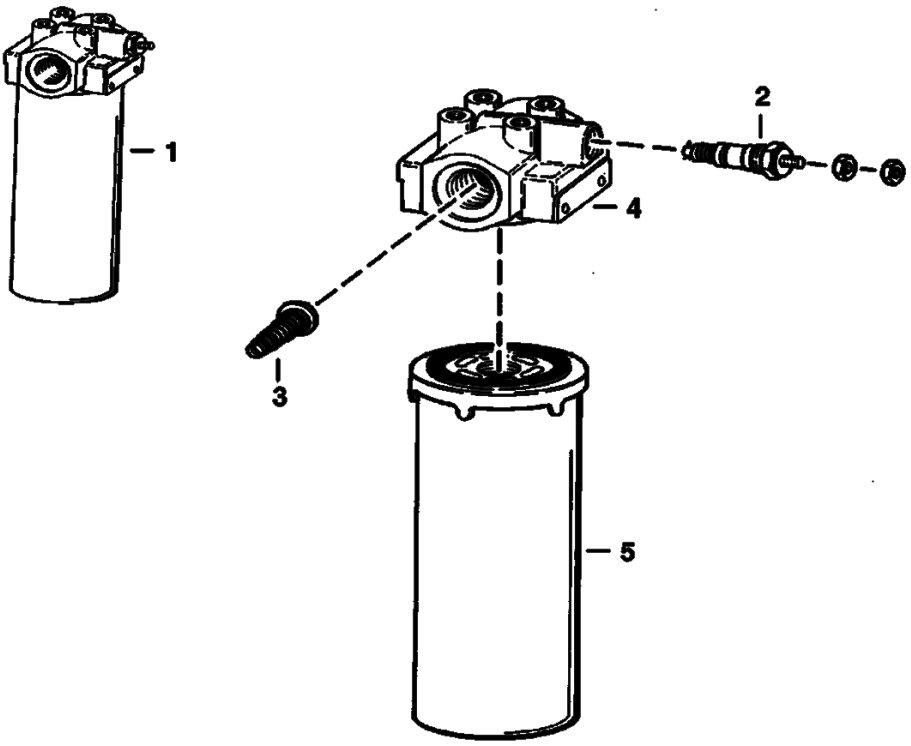

Page 120 - OSS# 2060759 - All rights reserved by Bobcat Company, a business unit of Ingersoll-Rand - 05/22/2008 - 07:23:42 - Produced by Ken Cook Co. with mediaoff

HYDROSTATIC OIL FILTER (Cont'd)

Ref No	Part Number	Description	Remarks	Serial Number	Qty
1	6661334	FILTER ASSY	W/Ref 3 W/Ref 4 W/Ref 5 (50 PSI by-pass & switch)		1
2	6632053	SWITCH	pressure - Normally open		1
2	6599365	KIT	Nut, washer & o-rings for switch		1
3		VALVE	Order Ref 1 NAP - by-pass (50 PSI -)		1
4		HEAD	Order Ref 1 NSS		1
5	6661248	ELEMENT			1

Page 121 - OSS# 2060759 - All rights reserved by Bobcat Company, a business unit of Ingersoll-Rand - 05/22/2008 - 07:23:42 - Produced by Ken Cook Co. with mediaioff

CAB ELECTRICAL CIRCUITRY

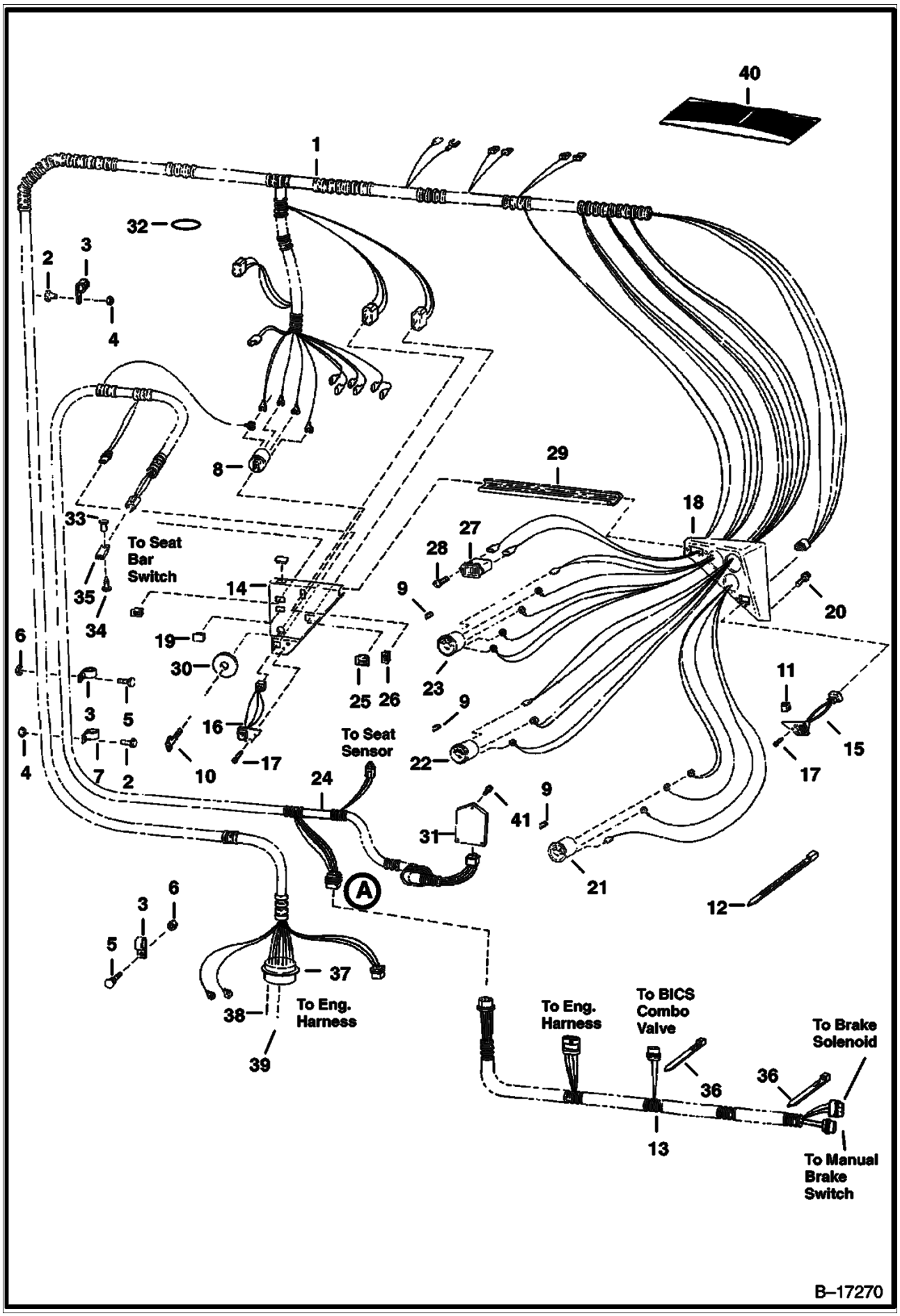

Page 122 - OSS# 2060759 - All rights reserved by Bobcat Company, a business unit of Ingersoll-Rand - 05/22/2008 - 07:23:42 - Produced by Ken Cook Co. with mediaIoff

CAB ELECTRICAL CIRCUITRY (Cont'd)

Ref No	Part Number	Description	Remarks	Serial Number	Qty
1	6711767	HARNESS			1
1	6710482	HARNESS	Export		1
2	35C000410B	BOLT			4
3	30H000056B	CLAMP			3
4	83D000004B	NUT			4
5	10C000412B	BOLT			2
6	61D000004B	NUT			2
7	30H000029B	CLAMP			2
8	6665606	SWITCH			1
8	6674202	NUT			1
9	6599696	SOCKET & BULB	assy.		3
9	895771B	BULB			3
10	6709527	KEY			2
11	6660594	BUTTON	on/off		1
12	6610510	TIE			3
13	6712523	HARNESS	for BICS combo control valve		1
14	6712152	PANEL	L.H.		1
15	6667904	SWITCH	W/Ref 11 aux. controls module - W/ 5-pin connector		1
16	6667905	SWITCH	traction override		1
16		SWITCH	NAP - traction/seat sensor override - Order 6674220 Switch - Was 6673005 [A]		1
16	6674220	SWITCH	push to operate		1
17	6669225	BOLT			4
18	6706896	PANEL	R.H.		1
19	6719038	PLUG	Was 6665314 [A]		1
20	6702642	SCREW			6
21	6669663	GAUGE	eng. temp.		1
22	6669664	VOLTMETER			1
23	6669665	FUEL GUAGE			1
24	6712134	HARNESS			1
25	6668927	PLUG	glow plug		1
26	6636018	LIGHT	indicator		1
27	6664886	HOURMETER			1
28	65G000608B	BOLT			2
29	6578780	CROSSMEMBER			1
30	6709027	PLATE			1
31		CONTROLLER	NAP - Order 6717700 Foot Pedal Push to Operate Kit or 6717702 Mechanical Hand Control Push Kit - Was 6668767 [A]		1
31		CONTROLLER	NAP - Order 6717700 Standard Hand Control Seat Sensor Kit or 6717702 Mechanical Hand Control Seat Sensor Kit - Was 6673002 [A]		1
31	6674222	CONTROLLER	foot pedals		1
31	6674224	CONTROLLER	AHC		1
32	6707674	PLUG	round -plugs 1.28"(32,5 mm) dia. hole in cab		1
33	6665321	RIVET	plastic male		1
34	6665322	RIVET	plastic female		1
35	6665000	CLIP			1
36	6665527	TIE	never modify		2
37	6664584	CONNECTOR	Ref 38 Also Order (20) of & (4) of Ref. 39 - Was 6665683 [A]		1
38	6664827	PIN			x
39	6664040	PIN			4
40	6724282	SWITCH KIT	Ref. 8, 10 & 30		1
41	91G000412B	BOLT	cross recess pan head		3
41	25G000412B	BOLT	hex socket button head		3

Page 123 - OS6# 2060759 - All rights reserved by Bobcat Company, a business unit of Ingersoll-Rand - 05/22/2008 - 07:23:42 - Produced by Ken Cook Co. with media1off

ENGINE ELECTRICAL CIRCUITRY

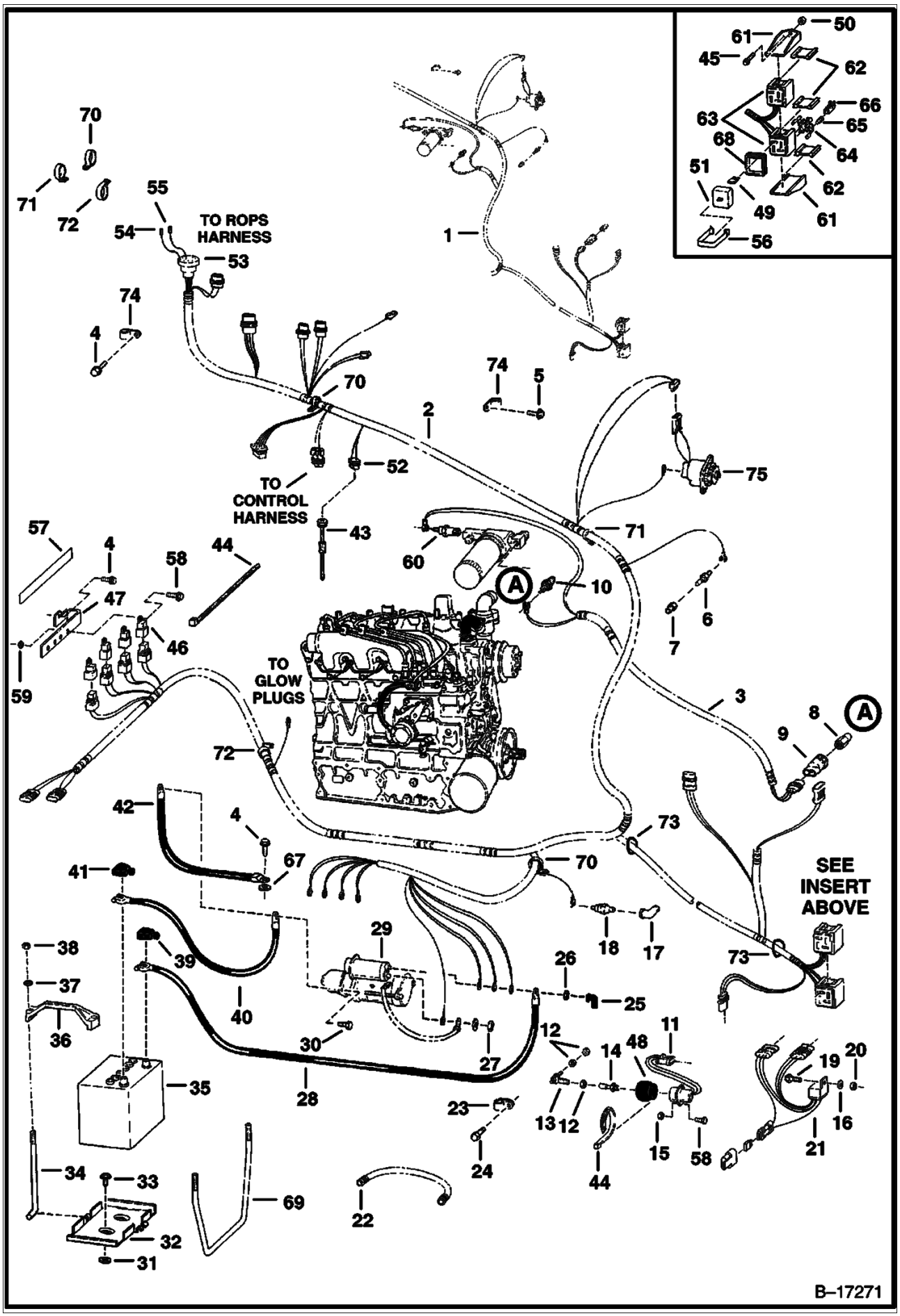

Page 124 - OSS# 2060759 - All rights reserved by Bobcat Company, a business unit of Ingersoll-Rand - 05/22/2008 - 07:23:42 - Produced by Ken Cook Co. with mediaioff

Ref No	Part Number	Description	Remarks	Serial Number	Qty
1		HARNESS	Order Ref 3 NAP - ENGINE - W/REF. 53-55, 61-66, & 70-72 - W/10 PIN CONNECTOR FOR REAR WIPER - - WAS 6710486 [A]	5157 11001 13356	1
1				5156 11001 11697	1
1	6610510	TIE	black		19
2	6715892	HARNESS	engine- W/Ref. 53-55, 61-66 & 70-73	5157 13357 & Abv	1
2	6715892	HARNESS		5156 11698 & Abv	1
3	6715880	HARNESS	filter	5157 13357 & Abv	1
3	6715880	HARNESS		5156 11698 & Abv	1
4	84G003712B	BOLT			3
5	35C000608B	BOLT			1
6	6658818	SENDER	eng. temp.		1
7	19F000004B	ADAPTER	sender		1
8	6563922	SNUBBER	W/Filter		1
8	6563920	FILTER			1
9	6670705	SWITCH	hyd. chg. press. - W/3 pin molded connector		1
10	6632633	SWITCH	hyd. temp.		1
11	6667993	SOLENOID	fuel shut off		1
12	62D000004B	NUT			3
13	6578363	ROD END	swivel		1
14	6578366	BALL JOINT			1
15	61D000004B	NUT			2
16	25E000013B	WASHER	Was 17C000408B [B,D] [B,D]		1
17	6707040	ELBOW			1
18	6631010	SWITCH	eng. oil press.		1
19	35C000416B	BOLT	Was 35C000516B [B,D] [B,D]		2
20	83D000004B	NUT	Was 83D000005B [B,D] [B,D]		2
21	6669415	TIMER	solenoid		1
21	6670808	FUSE	25 amp		1
22	6563505	CONDUIT	bulk - Sold Per Foot		x
23	30H000048B	CLAMP			1
24	6CM01220B	BOLT			1
25	6560172	COVER			1
26	4DM00010B	NUT			1
27	4DM00005B	NUT			1
28	6564991	CABLE	Ref 22 pos. - W/30" (762 mm) of		1
29		STARTER	See Illustration STARTER/ D2297		1
30	35C000620B	BOLT			3
31	6555455	WASHER			2
32	6712536	PAN	Was 6577809 [A]		1
33	84G003716B	BOLT			2
34	6576280	BOLT			2
35	6665031	BATTERY			1
35	6630153	BATTERY CAP			2
36	6569203	CLAMP			x
37	25E000015B	WASHER			x
38	59D000005B	NUT			x
39	2356058B	BOOT			1
40	6562905	CABLE	W/Ref 41 ground		1
41	6599652	BOOT			1
42	6565170	CABLE	ground		1
43		SENSOR	NAP - fuel - W/ O-ring - Order 6674209 Sensor - Was 6669642 [B]		1
43	79K000014B	O-RING			1
43	6674209	SENSOR	fuel - W/ Gasket		1
43	6717579	GASKET			1

Page 125 - OS$# 2060759 - All rights reserved by Bobcat Company, a business unit of Ingersoll-Rand - 05/22/2008 - 07:23:42 - Produced by Ken Cook Co. with mediaioff

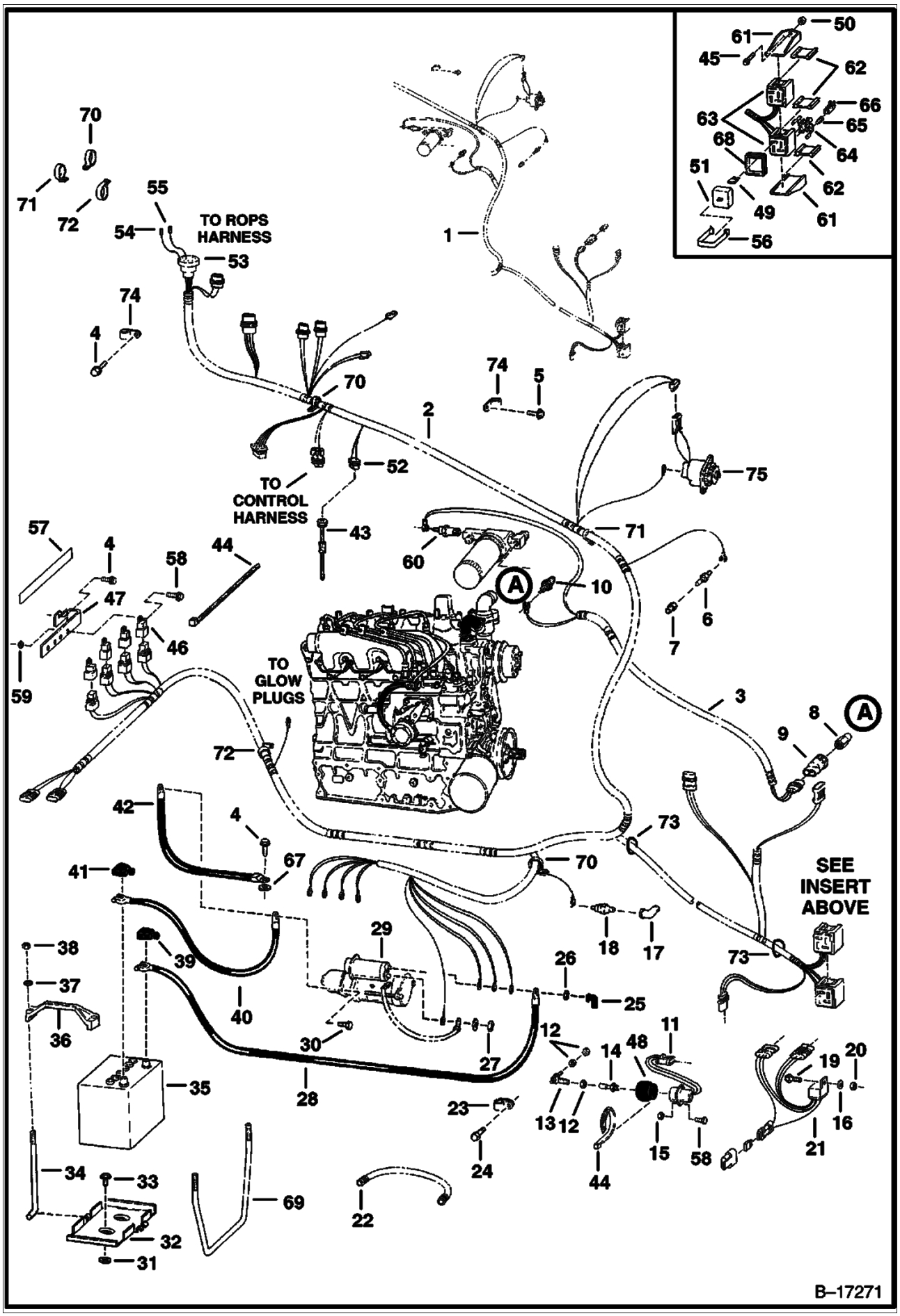

Page 126 - OSS# 2060759 - All rights reserved by Bobcat Company, a business unit of Ingersoll-Rand - 05/22/2008 - 07:23:42 - Produced by Ken Cook Co. with mediaioff

Ref No	Part Number	Description	Remarks	Serial Number	Qty
44	6610510	TIE			4
45	45G001212B	BOLT			2
46	6670312	SOLENOID	relay		4
47	6707649	MOUNT			1
48	6664286	BOOT	& Ref 44		1
49	6707620	FUSE	10 amp		x
49	6707621	FUSE	15 amp		x
49	6707622	FUSE	20 amp		x
49	6707623	FUSE	25 amp		x
49	6674099	BREAKER	25 amp		x
50	50D000012B	NUT			2
51	6665358	COVER			2
52	6646383	CONNECTOR	fuel sender		1
52	6632946	TERMINAL	female		2
53	6664585	CONNECTOR	Ref 54 Also Order (20) of & (4) of Ref. 55 - Was 6665682 [A]		1
54	6664828	SOCKET			x
55	6664041	SOCKET			4
56	6708437	CLIP	spring		2
57	6707787	DECAL	relax		1
58	17C000410B	BOLT			6
59	85D000004B	NUT			4
60	6632053	SWITCH	See Illustration HYDROSTATIC OIL FILTER/ C2818 FILTER		1
61	6665369	MOUNT	fuse		2
62	6665411	WEDGE	red		3
63	6665356	BLOCK	W/Ref 68 fuse		2
63		SEAL	NSS - green square		1
64	6665357	LOCK	yellow		2
65	6650107	SEAL			16
66	6668719	PIN	female - for 14 gauge wire		x
66	6668720	PIN	female - for 16 gauge wire		x
67	6E000006B	WASHER			1
68	6671528	SEAL	green square-Was 6671156 [B,D] [B,D]		2
69	6712640	BRACKET			2
70	6669722	CLAMP			1
71	6669723	CLAMP			1
72	6669724	CLAMP			1
73	6717814	TIE			2
74	30H000060B	CLAMP			2
75		ALTERNATOR	See Illustration ALTERNATOR/ C3312		1

Page 127 - OSS# 2060759 - All rights reserved by Bobcat Company, a business unit of Ingersoll-Rand - 05/22/2008 - 07:23:42 - Produced by Ken Cook Co. with mediaioff

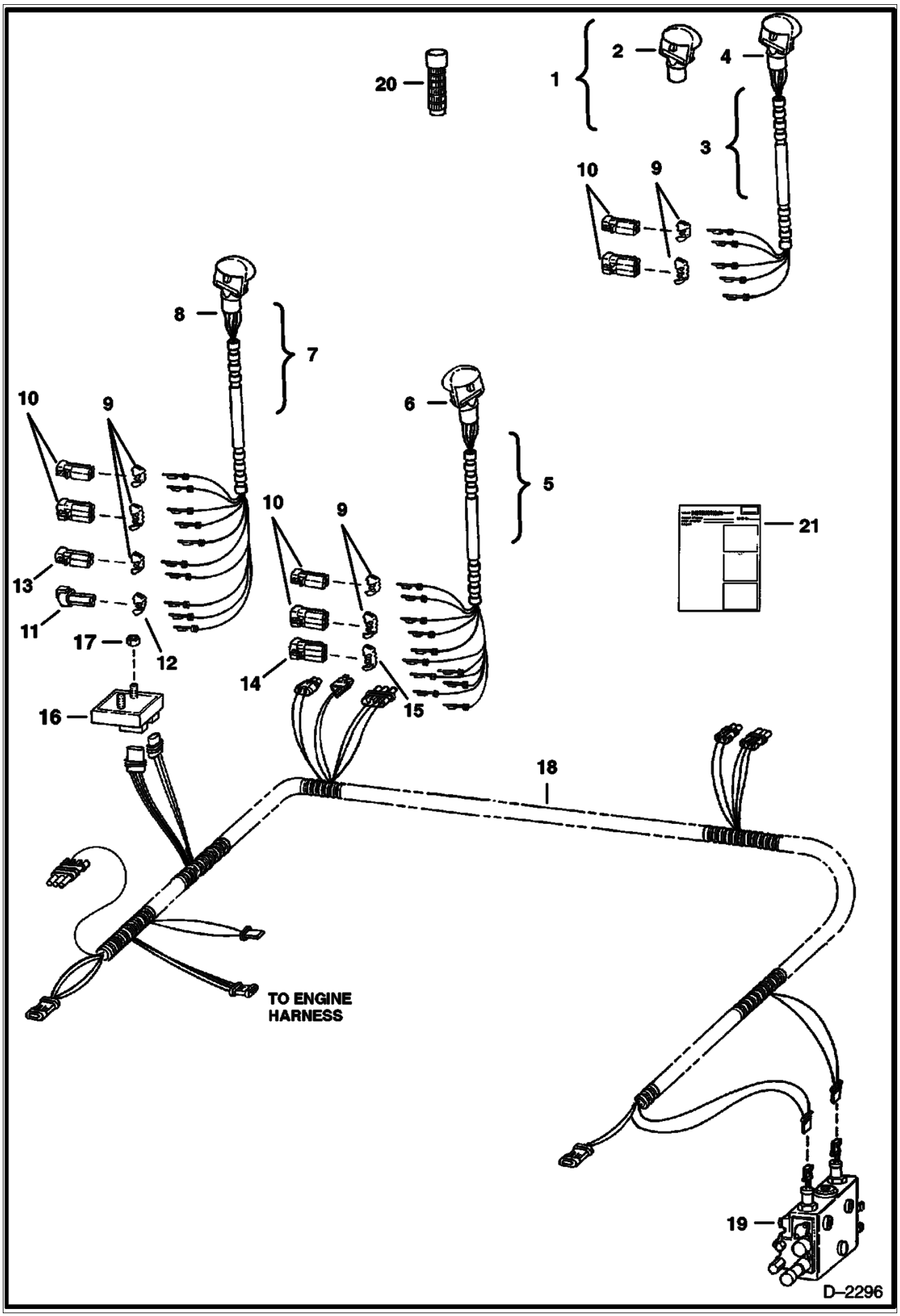

Page 128 - OSS# 2060759 - All rights reserved by Bobcat Company, a business unit of Ingersoll-Rand - 05/22/2008 - 07:23:42 - Produced by Ken Cook Co. with mediaoff

Ref No	Part Number	Description	Remarks	Serial Number	Qty
1	6706565	KIT	blank handle - Ref. 2 & 21		1
2	6680415	HANDLE	L.H. - blank - Was 6705920 [A]		1
3	6706566	KIT	two-switch handle - Ref. 4, 9, 10 & 21		1
4	6705921	HANDLE ASSY.	& Ref 10 two-switch		2
4	6640690	PIN			5
4	6641176	SEAL			5
5	6706567	KIT	R.H. multi switch handle -Ref. 6, 9, 10, 14, 15 & 21		1
6	6706340	HANDLE ASSY.	& Ref 14 & Ref 15 R.H. multi switch handle		1
6	6640690	PIN			9
6	6641176	SEAL			9
7	6706568	KIT	L.H. multi switch handle - Ref. 8 - 13 & 21		1
8	6707976	HANDLE ASSY.	& Ref 11 & Ref 12 & Ref 13 L.H. multi switch handle		1
8	6640690	PIN			5
8	6640691	PIN			2
8	6641176	SEAL			7
8	6662257	PIN			3
8	6680447	DECAL	Was 6677370 [A]		1
9	6641180	LOCK	2 - pin		3
9	6640700	LOCK	3 - pin		2
10	6641179	CONNECTOR	2 - pin		2
10	6640699	CONNECTOR	3 - pin		2
11	6664599	CONNECTOR	3 - pin triangle		1
12	6664800	LOCK	3 - pin triangle		1
13	6641178	CONNECTOR	2 - pin		1
14	6641173	CONNECTOR	6 - pin		1
15	6641181	LOCK	6 - pin		1
16	6671669	MODULE	aux. control - Was 6669529 [C]		1
17	85D000004B	NUT			2
18	6719149	HARNESS	Was 6712136 [A]		1
19		VALVE	See Illustration HYDRAULIC CONTROL VALVE/ TS1454		1
20	6702621	GRIP			2
21	6722759	INSTRUCTIONS	W/Ref 1 W/Ref 3 W/Ref 5 W/Ref 7		1

Page 129 - OSS# 2060759 - All rights reserved by Bobcat Company, a business unit of Ingersoll-Rand - 05/22/2008 - 07:23:42 - Produced by Ken Cook Co. with mediaioff

CONTROLS ELECTRICAL
(Advanced Hand Controls Option)

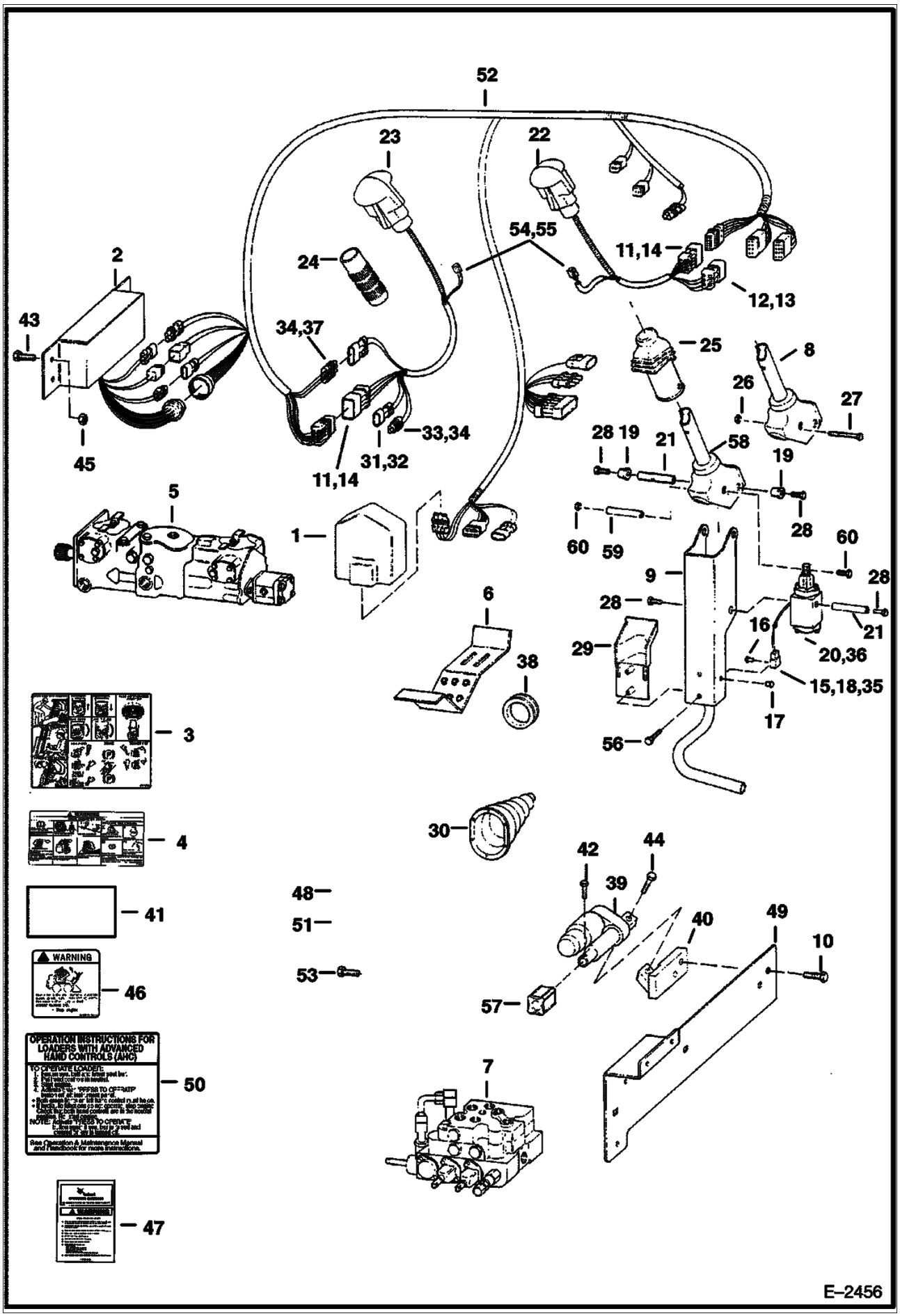

Page 130 - OSS# 2060759 - All rights reserved by Bobcat Company, a business unit of Ingersoll-Rand - 05/22/2008 - 07:23:42 - Produced by Ken Cook Co. with mediaoff

CONTROLS ELECTRICAL (Cont'd)
(Advanced Hand Controls Option)

Ref No	Part Number	Description	Remarks	Serial Number	Qty
1	6674224	CONTROLLER			1
2	6675129	CONTROLLER	Was 6674211 [A]		1
3	6715940	DECAL	operation		1
4	6715941	DECAL	warning		1
5		PUMP			1
6	6712365	STEP			2
7		VALVE	See Illustration HYDRAULIC CONTROL VALVE/ B17198 AHC		1
8		HANDLE	Ref 60 Order Ref 59 NAP - R.H. - & (2) of - Was 6597774 [A]	& Bel	1
8		HANDLE	Ref 60 Order Ref 59 NAP - L.H. - & (2) of - Was 6717163 [A]	& Bel	1
9	6717055	LEVER	R.H.		1
9	6717056	LEVER	L.H.		1
10	6717378	BOLT			2
11	6640696	CONNECTOR	8 pin		2
12	6641173	CONNECTOR			1
13	6641181	LOCK			1
14	6661183	LOCK			2
15	6665000	CLIP			2
16	6665321	RIVET	male		2
17	6665322	RIVET	female		2
18	6670706	CONNECTOR	3 pin		2
19	6702990	BUSHING			4
20		CONTROL	See Illustration HAND CONTROL KIT/ PE1373 NAP - TILT - ORDER 6727297 AHC KIT - WAS 6712398 [A]		4
21	6713043	SPACER			4
22	6675515	HANDLE ASSY.	R.H. - Was 6713261 [A]		1
22	6640690	PIN			12
22	6670715	PIN			3
22	6641176	SEAL			12
23	6713262	HANDLE ASSY	L.H.		1
23	6640690	PIN			11
23	6640691	PIN			2
23	6641176	SEAL			13
23	6680447	DECAL	Was 6677370 [A]		1
24		GRIP	NAP - Order 6702621 Grip & cut to 2.8" (71,1 mm) long -Was 6703349 [A]		2
24	6702621	GRIP	Was 6712621 [D]		2
25	6713898	COVER			2
26	12D000010B	NUT			2
27	6716826	BOLT			2
28	25GT00410B	BOLT			8
29	6715957	COVER			2
30	6532127	BOOT			2
31	6640699	CONNECTOR			1
32	6640700	LOCK			1
33	6641178	CONNECTOR			1
34	6641180	LOCK			1
35	6670710	LOCK			1
36		CONTROL	See Illustration HAND CONTROL KIT/ PE1373 NAP - LIFT - ORDER 6727297 AHC KIT - WAS 6712397 [A]		1
37	6641179	CONNECTOR			1
38	6714726	GROMMET			1
39		ACTUATOR	NAP - tail mount - Order 7104842, see BTI 364 before ordering - Was 6678776 [A]		2

Page 131 - OS&H 2060759 - All rights reserved by Bobcat Company, a business unit of Ingersoll-Rand - 05/22/2008 - 07:23:42 - Produced by Ken Cook Co. with mediaioff

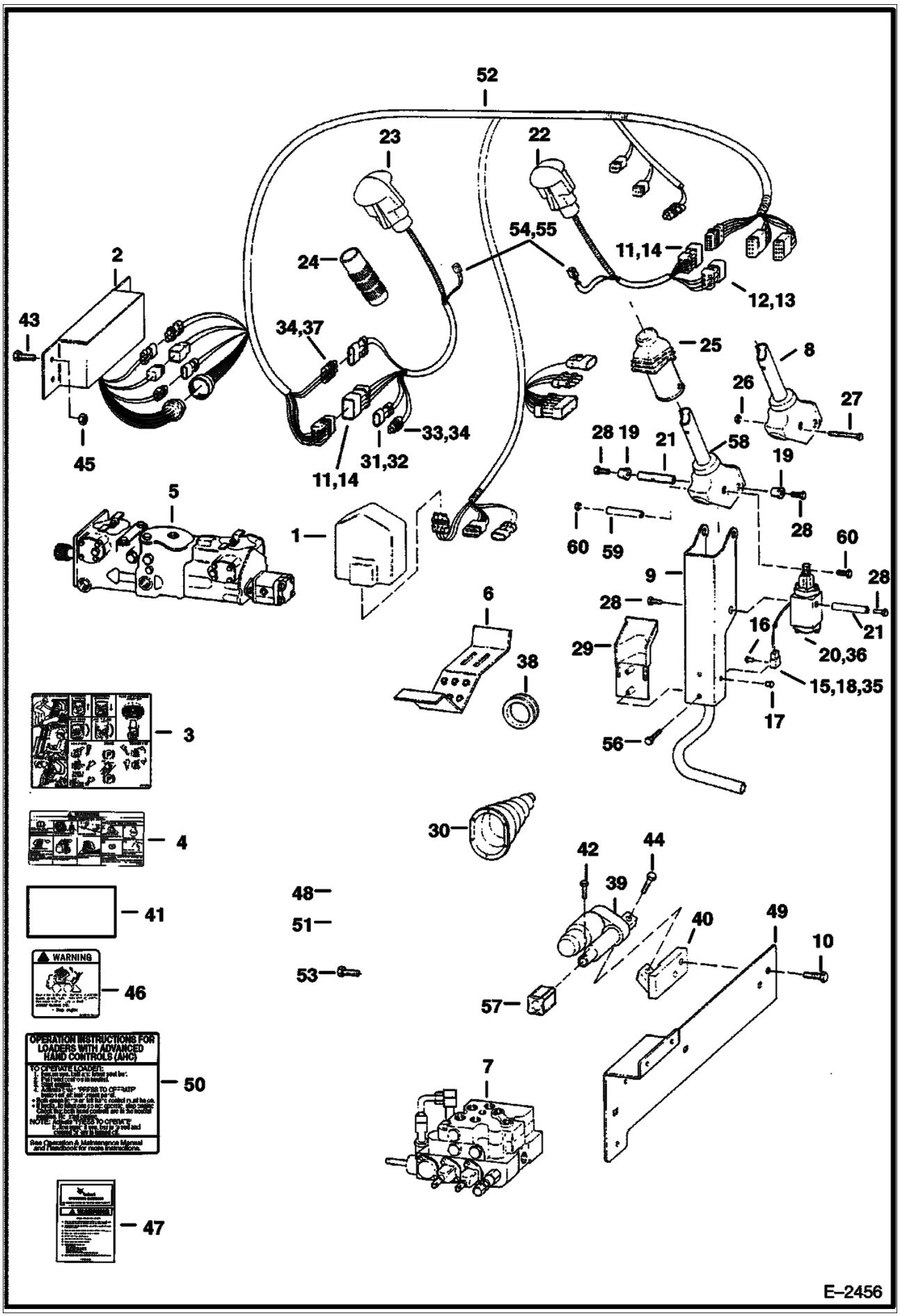

Page 132 - OSS# 2060759 - All rights reserved by Bobcat Company, a business unit of Ingersoll-Rand - 05/22/2008 - 07:23:42 - Produced by Ken Cook Co. with mediaoff

Ref No	Part Number	Description	Remarks	Serial Number	Qty
39	7104842	ACTUATOR	direct mount		2
40	6717567	MOUNT	actuator		1
41	6715991	DECAL	fuse-AHC		1
42	6716052	PIN			2
43	17C000412B	BOLT			3
44	38C000606B	SCREW			2
45	61D000004B	NUT			4
46	6715944	DECAL			1
47	6708158	HANDBOOK	AHC		1
48	6704436	PAD			2
49	6716902	MOUNT			1
50	6717043	DECAL	operation - W/seat sensor		1
50	6717639	DECAL	operation - W/O seat sensor		1
51	4E000004B	WASHER			1
52	6718889	HARNESS	AHC - Was 6717177 [A]		1
52	6717569	DIODE	6 amp		1
53	6717378	BOLT	Was 17C000408B [B,D] [B,D]		1
54	6670707	CONNECTOR			2
55	6670711	LOCK			2
56	6669224	BOLT			4
57	6664286	BOOT	Was 6675280 [A]		2
58	6729594	HANDLE	R.H.	& Abv	1
58	6729595	HANDLE	L.H.	& Abv	1
59	6729600	SPACER		& Abv	1
60	6727065	BOLT		& Abv	2

Page 133 - OSS# 2060759 - All rights reserved by Bobcat Company, a business unit of Ingersoll-Rand - 05/22/2008 - 07:23:42 - Produced by Ken Cook Co. with media1off

ALTERNATOR
(Bobcat)

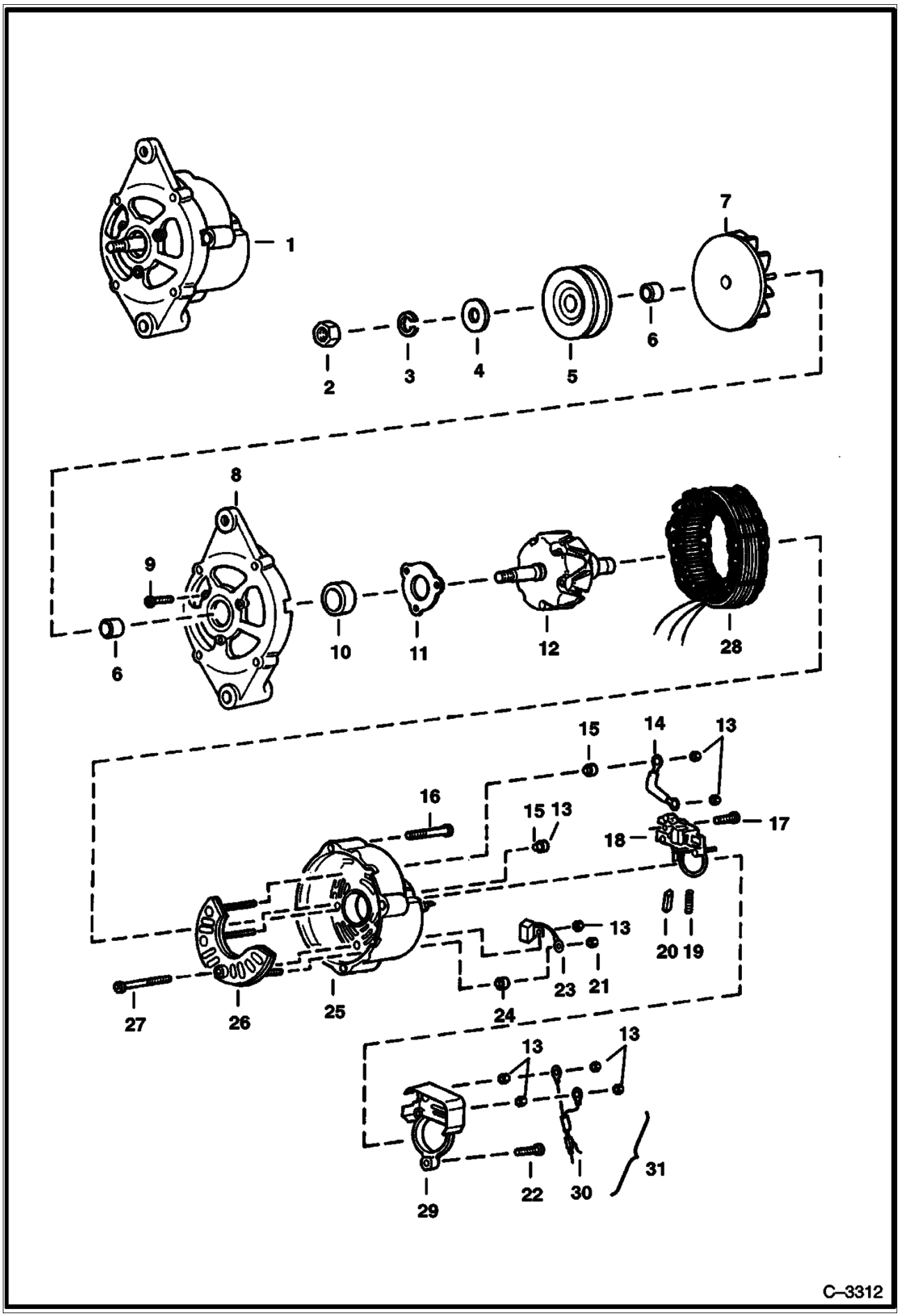

Page 134 - OSS# 2060759 - All rights reserved by Bobcat Company, a business unit of Ingersoll-Rand - 05/22/2008 - 07:23:42 - Produced by Ken Cook Co. with mediaioff

Ref No	Part Number	Description	Remarks	Serial Number	Qty
1	6661611	ALTERNATOR	Less Fan & Pulley		1
2	6659371	NUT			1
3	6659372	WASHER			1
4	6632323	WASHER			1
5	6571536	PULLEY			1
6	6659374	SPACER			2
7	6659375	FAN			1
8	6659376	BRACKET	W/Ref 9 W/Ref 10 W/Ref 11		1
9	6659378	BOLT			3
10	6659379	BEARING			1
11	6632228	RETAINER			1
12	6659380	ROTOR			1
13	6659387	NUT			7
14	6659397	TERMINAL			1
15	6659386	HOLDER			2
16	6659392	BOLT			3
17	6659396	SCREW			2
18	6659393	REGULATOR	Ref 19 Ref 20 W.		1
19	6659395	SPRING			2
20	6659394	BRUSH			2
21	6659391	NUT			1
22	6659399	SCREW			1
23	6659388	CONDENSER			1
24	6659390	HOLDER			1
25	6659382	BRACKET	rear -W/Ref. 13, 15, 21 & 23 - 27		1
26	6659384	RECTIFIER			1
27	6659385	SCREW			1
28	6659381	STATOR			1
29	6659398	COVER			1
30	6659400	CONNECTOR	assy.		1
31	6577456	KIT	Weather-Pak Connector - Includes both male & female parts		1

Page 135 - OSS# 2060759 - All rights reserved by Bobcat Company, a business unit of Ingersoll-Rand - 05/22/2008 - 07:23:42 - Produced by Ken Cook Co. with mediaioff

STARTER
(Nippondenso)

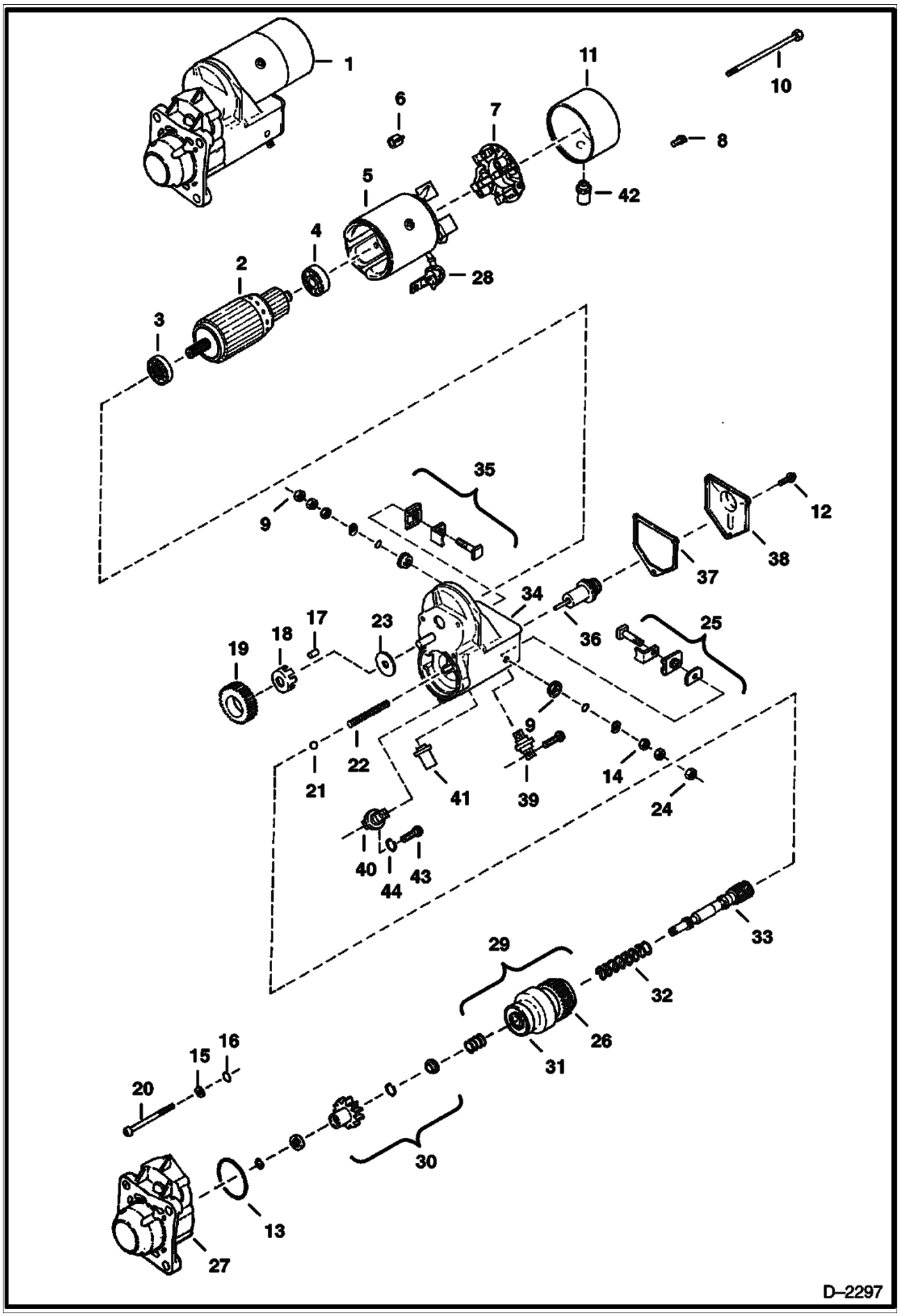

Page 136 - OSS# 2060759 - All rights reserved by Bobcat Company, a business unit of Ingersoll-Rand - 05/22/2008 - 07:23:42 - Produced by Ken Cook Co. with mediaIoff

STARTER (Cont'd)
(Nippondenso)

Ref No	Part Number	Description	Remarks	Serial Number	Qty
1	6667587	STARTER			1
2	6666621	ARMATURE	W/Ref 3 W/Ref 4		1
3	6632417	BEARING			1
4	6632418	BEARING			1
4	6671128	BEARING			1
4	6671129	BEARING			1
5	6632419	HOUSING ASSY.			1
6	6632421	SPRING			4
7	6632420	BRUSH HOLDER	W/Ref 6		1
8	6666634	BOLT	5mm x 9,4 mm		2
9	6666637	NUT			1
10	6666636	BOLT	6mm x 181mm		2
11	6671121	COVER			1
12	6666635	BOLT	5mm x 8mm		1
13	6666632	O-RING			1
14	6666630	WASHER	10mm		1
15	6666629	WASHER			3
16	6666631	WASHER			3
17	6632430	ROLLER			5
18	6632429	RETAINER			1
19	6632428	PINION			1
20	6666633	BOLT	6mm x 50mm		3
21	6671122	BALL			3
22	6632436	SPRING			1
23	6662437	WASHER			1
24	6666628	NUT	10mm		1
25	6671117	TERMINALS			1
26	6666622	DRIVE			1
27	6671124	HOUSING			1
28	6669365	BOOT			1
29	6671119	CLUTCH ASSY.	Ref 26 Ref 30 Ref 31 Ref 32 Ref 33		1
30	6671118	PINION			1
31	6671127	BEARING			1
32	6632441	SPRING			1
33	6669354	SHAFT			1
34	6671123	HOUSING			1
35	6671116	TERMINALS			1
36	6632432	PLUNGER			1
37	6632433	GASKET			1
38	6632434	COVER			1
39	6669359	TERMINAL			1
40	6671120	TERMINAL			1
41	6669360	BUSHING			1
42	6669372	COVER			1
43	6671126	SCREW			1
44	6671125	WASHER			1

Page 137 - OSS# 2060759 - All rights reserved by Bobcat Company, a business unit of Ingersoll-Rand - 05/22/2008 - 07:23:42 - Produced by Ken Cook Co. with mediaioff

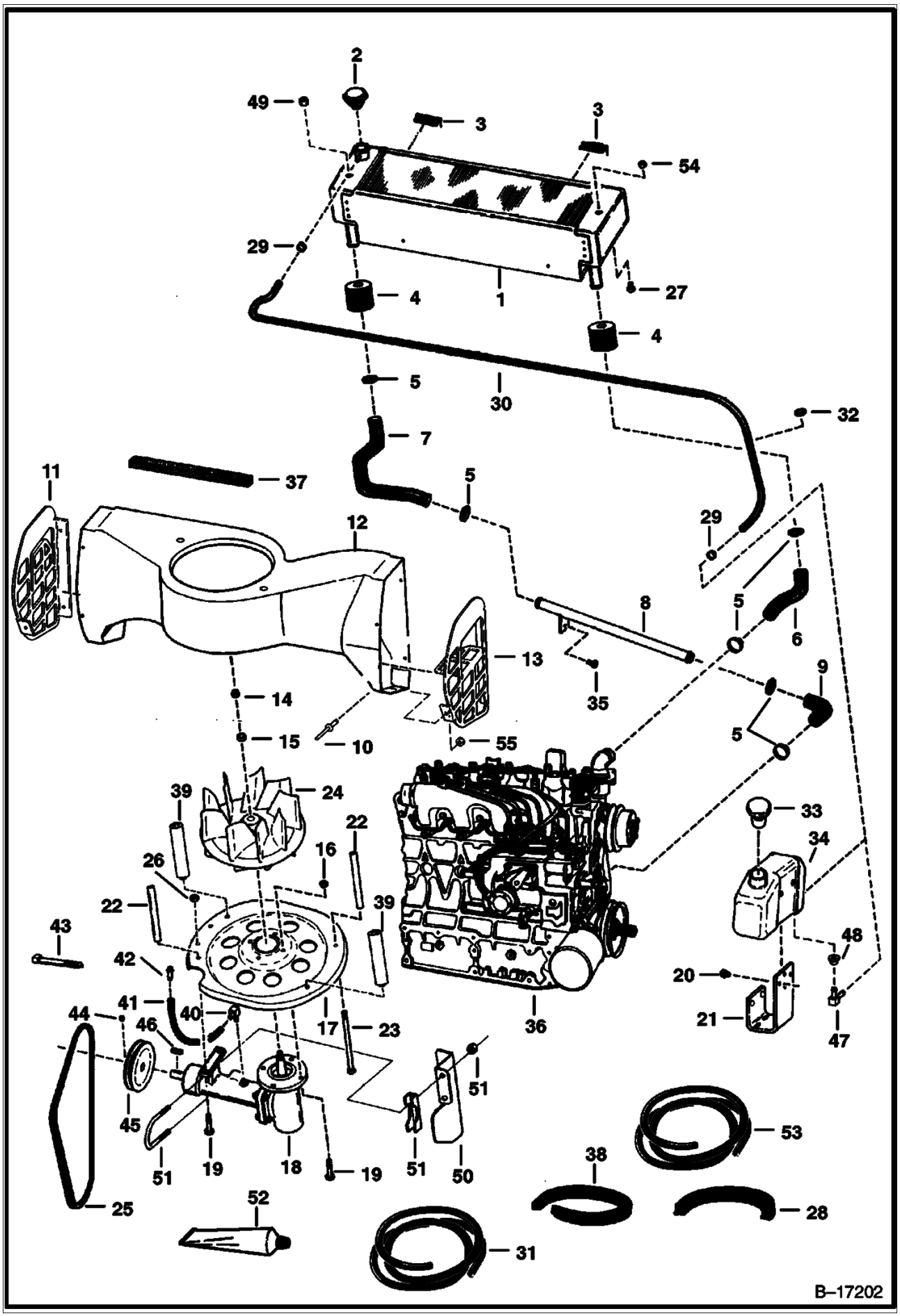

Page 138 - OSS# 2060759 - All rights reserved by Bobcat Company, a business unit of Ingersoll-Rand - 05/22/2008 - 07:23:42 - Produced by Ken Cook Co. with mediaioff

Ref No	Part Number	Description	Remarks	Serial Number	Qty
1	6666384	RADIATOR			1
2	6646678	CAP	14 PSI		1
3		MOULDING	Order Ref 28 NAP - 3" (76,2 mm) long		2
4	6726433	SPACER	Was 6704829 [A]		2
5	5HM00042B	CLAMP	constant tension		6
5	6518820	CLAMP	worm gear		6
6	6578280	HOSE			1
7	6578279	HOSE			1
8	6730999	TUBE ASSY	Was 6576029 [A]		1
9	6576028	HOSE			1
10	6706517	SCREW	Use W/plastic louvers		8
10	6661209	RIVET	Use W/steel louvers		6
11		LOUVER	Ref 12 NAP - L.H. - plastic - Order 6716571 Louver & (4) of 6706517 Screw & drill (4) new holes in - Was 6700419 [A]		1
11		LOUVER	Ref 12 NAP - L.H. - steel - Order 6716571 Louver & (4) of 6706517 Screw & drill (4) new holes in - Was 6713308 [A]		1
11	6716571	LOUVER	L.H. - plastic		1
12	6700329	HOUSING			1
13		LOUVER	Ref 12 NAP - R.H. - plastic - Order 6716572 Louver & (4) of 6706517 Screw & drill (4) new holes in - Was 6700418 [A]		1
13		LOUVER	Ref 12 NAP - R.H. - steel - Order 6716572 Louver & (4) of 6706517 Screw & drill (4) new holes in - Was 6713306 [A]		1
13	6716572	LOUVER	R.H. - plastic		1
14	86D000008B	NUT			1
15	6803867	WASHER	Was 6558956 [A]		1
16	7D000006B	NUT			4
17	6577227	INLET	8-hole		1
17	6717478	INLET	4-slot		1
18	6702138	HOUSING ASSY.	See Illustration COOLING FAN DRIVE ASSY./ TS1002		1
19	17C000616B	BOLT			6
20	84G003708B	BOLT			2
21	6709415	MOUNT			1
22	6577382	SPACER			2
23	17C006116B	BOLT			4
24	6715142	FAN	Was 6700334 [A]		1
25	6669034	BELT	fan - 41.3"(1049 mm) long		1
25	6715478	BELT	fan - 40"(1016 mm) long		1
26	61D000006B	NUT			4
27	35C000508B	BOLT			2
28	6649402	MOULDING	bulk - Sold Per Foot		x
29	6515575	CLAMP			2
30		HOSE	Order Ref 53 NAP - 62" (1574,8 mm) long		1
31	6577822	HOSE	bulk - Sold Per Foot		x
32	1303932B	GROMMET			1
33	6702797	CAP			1
34	6576660	TANK			1
35	17C000612B	BOLT			1
36		ENGINE	See Illustration ENGINE & GASKET KITS/ B16450		1
37		FOAM	Order Ref 38 NAP - 42"(1067MM)LONG		1
38	6511855	SEAL	bulk - Sold Per Foot - self adhesive		x
39	6704907	SPACER			2

Page 139 - OS$# 2060759 - All rights reserved by Bobcat Company, a business unit of Ingersoll-Rand - 05/22/2008 - 07:23:42 - Produced by Ken Cook Co. with mediaioff

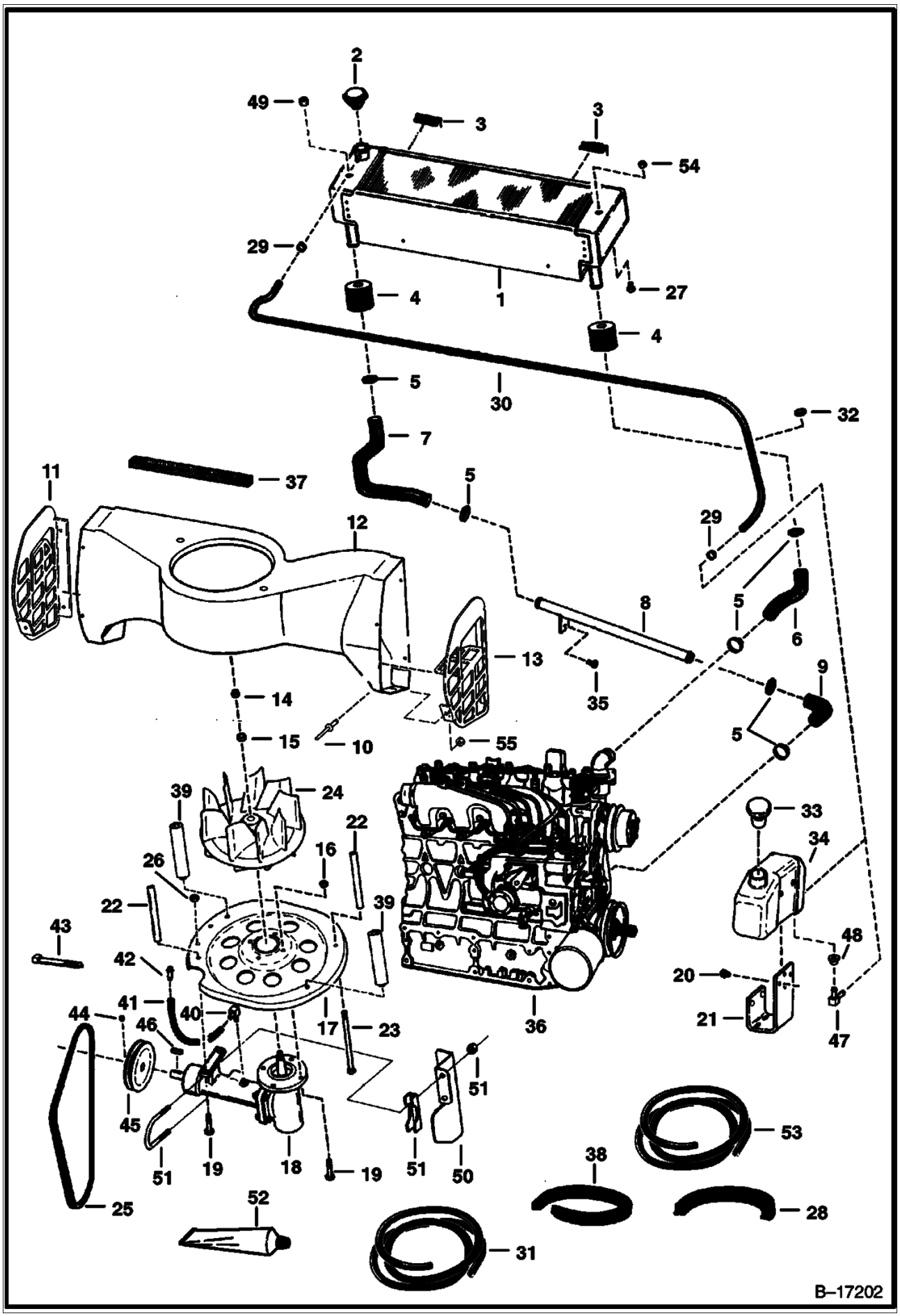

Page 140 - OS$# 2060759 - All rights reserved by Bobcat Company, a business unit of Ingersoll-Rand - 05/22/2008 - 07:23:42 - Produced by Ken Cook Co. with mediaIoff

Ref No	Part Number	Description	Remarks	Serial Number	Qty
40	6657376	ELBOW			1
41		HOSE	Order Ref 31 NAP - 19-1/2" (495,3 mm) long		1
42	6680970	BREATHER	Was 6670627 [A]		1
43	6610510	TIE			1
44	6715143	SET SCREW	Was 5216G-506 [B]		2
45	6710665	PULLEY	6"(152,4 mm) O.D.		1
45	6715924	PULLEY	4.5"(114,3 mm) O.D.		1
46	7J002108B	KEY			1
47	6553412	ELBOW	alternate design		1
48	6553411	BUSHING	alternate design		1
49	6704753	PLUG	brass - .25" -Used W/O B.O.S.S. Option		1
50	7102200	SHIELD	belt - Was 6719851 [A]		1
51	6626631	CLAMP			1
52	6650407	ADHESIVE	1oz. tube		x
53	6667189	HOSE	bulk - Sold Per Foot		x
54	6704753	PLUG	brass - .25"		1
55	25E000010B	WASHER	Use W/steel louvers		6

Page 141 - OSS# 2060759 - All rights reserved by Bobcat Company, a business unit of Ingersoll-Rand - 05/22/2008 - 07:23:42 - Produced by Ken Cook Co. with media1off

ENGINE & ATTACHING PARTS
(Air Cleaner, Muffler & Grill)

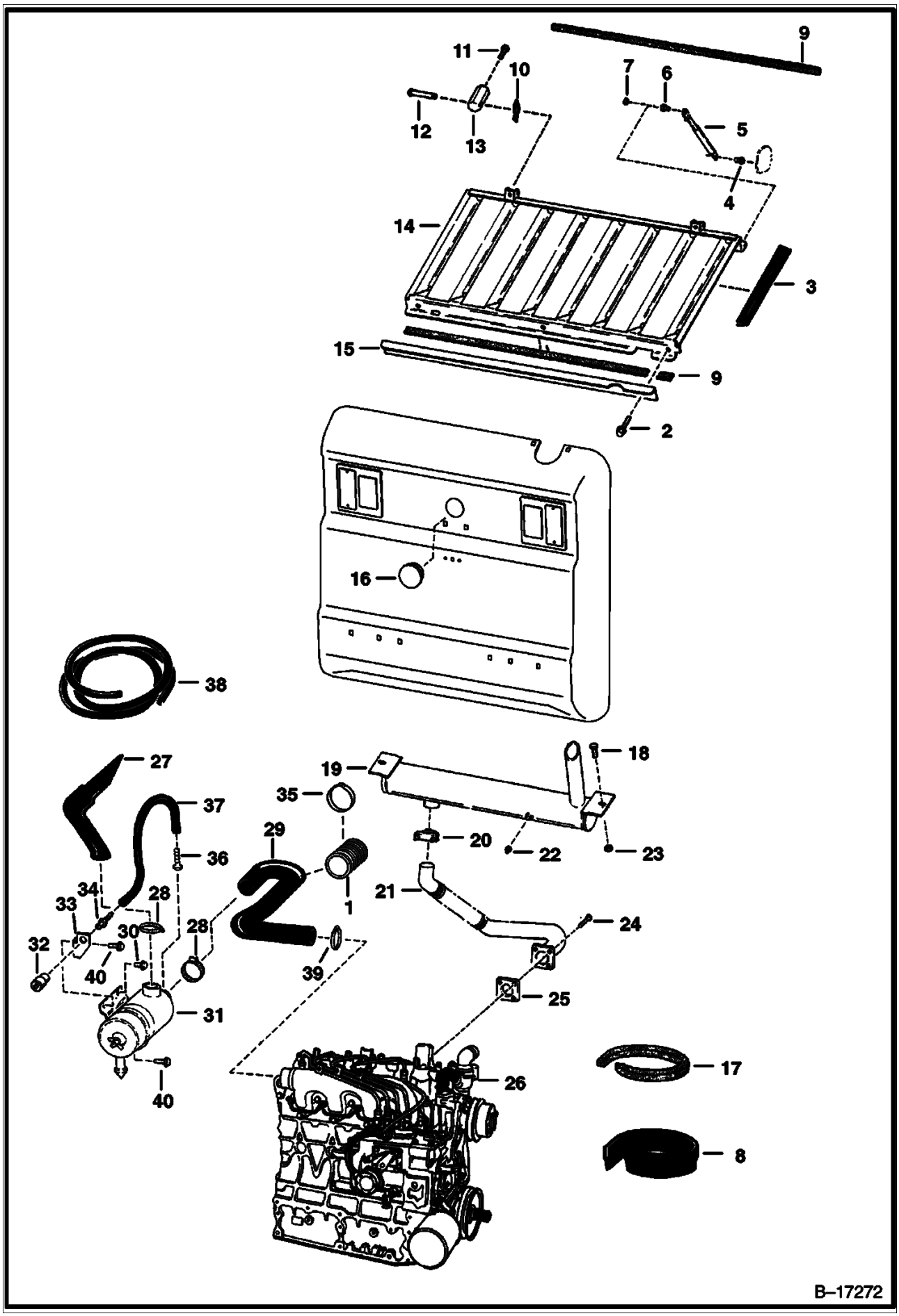

Page 142 - OS$# 2060759 - All rights reserved by Bobcat Company, a business unit of Ingersoll-Rand - 05/22/2008 - 07:23:42 - Produced by Ken Cook Co. with mediaioff

ENGINE & ATTACHING PARTS (Cont'd)
(Air Cleaner, Muffler & Grill)

Ref No	Part Number	Description	Remarks	Serial Number	Qty
1	6706393	SHIELD	5"(127 mm) long		1
2	84G003112B	BOLT			3
3		MOULDING	Order Ref 8 NAP - 14.65" (372,1 MM) LONG		2
4	6705052	BALL STUD	weld on		1
5	6674285	GAS SPRING	Was 6661805 [A]		1
6	6649244	STUD			1
7	61D000005B	NUT			1
8	6646705	SEAL	bulk - Sold Per Foot		x
9		FOAM STRIP	Order Ref 17 NAP - 34.5" (876,3 MM) LONG		2
10	6631418	PIN			2
11	17C000608B	BOLT			2
12	6567743	PIN			2
13	6579326	MOUNT			2
14	6718291	GRILL	Was 6705131 [A]		1
15	6708981	BRACKET			1
16	6718796	PLUG	Was 6660646 [A]		1
17	6511855	SEAL	bulk - Sold Per Foot - self adhesive		x
18	35C000612B	BOLT			2
19	6671667	MUFFLER	Was 6661768 [A]		1
20	6677363	CLAMP	Was 657904B [A]		1
21	6701151	PIPE			1
22	6661062	PLUG	brass 3/8" (9,5 mm)		1
23	83D000006B	NUT			2
24	6701123	SCREW			4
25	6575580	GASKET			1
26		ENGINE	See Illustration ENGINE & GASKET KITS/ B16450		1
27	6718237	HOSE	Was 6703332 [A]		1
28	6598799	CLAMP			2
28	42H000052B	CLAMP			2
29	6714889	HOSE	W/Ref 1 W/Ref 35		1
30	84G003708B	BOLT			2
31		AIR CLEANER	See Illustration AIR CLEANER/ B17228		1
32	6515007	GAUGE	dust		1
33	6704823	BRACKET			1
34	6505813	CONNECTOR	barbed		1
35	6664004	CLAMP			1
36	6563452	FITTING	barbed		1
37		HOSE	Order Ref 38 NAP - 12" (304,8 mm) long		1
38	6557720	HOSE	bulk - Sold Per Foot		x
39	42H000032B	CLAMP			1
40	84G003712B	BOLT			1

Page 143 - OSS# 2060759 - All rights reserved by Bobcat Company, a business unit of Ingersoll-Rand - 05/22/2008 - 07:23:42 - Produced by Ken Cook Co. with mediaioff

ENGINE & ATTACHING PARTS
(Belt Drive System)

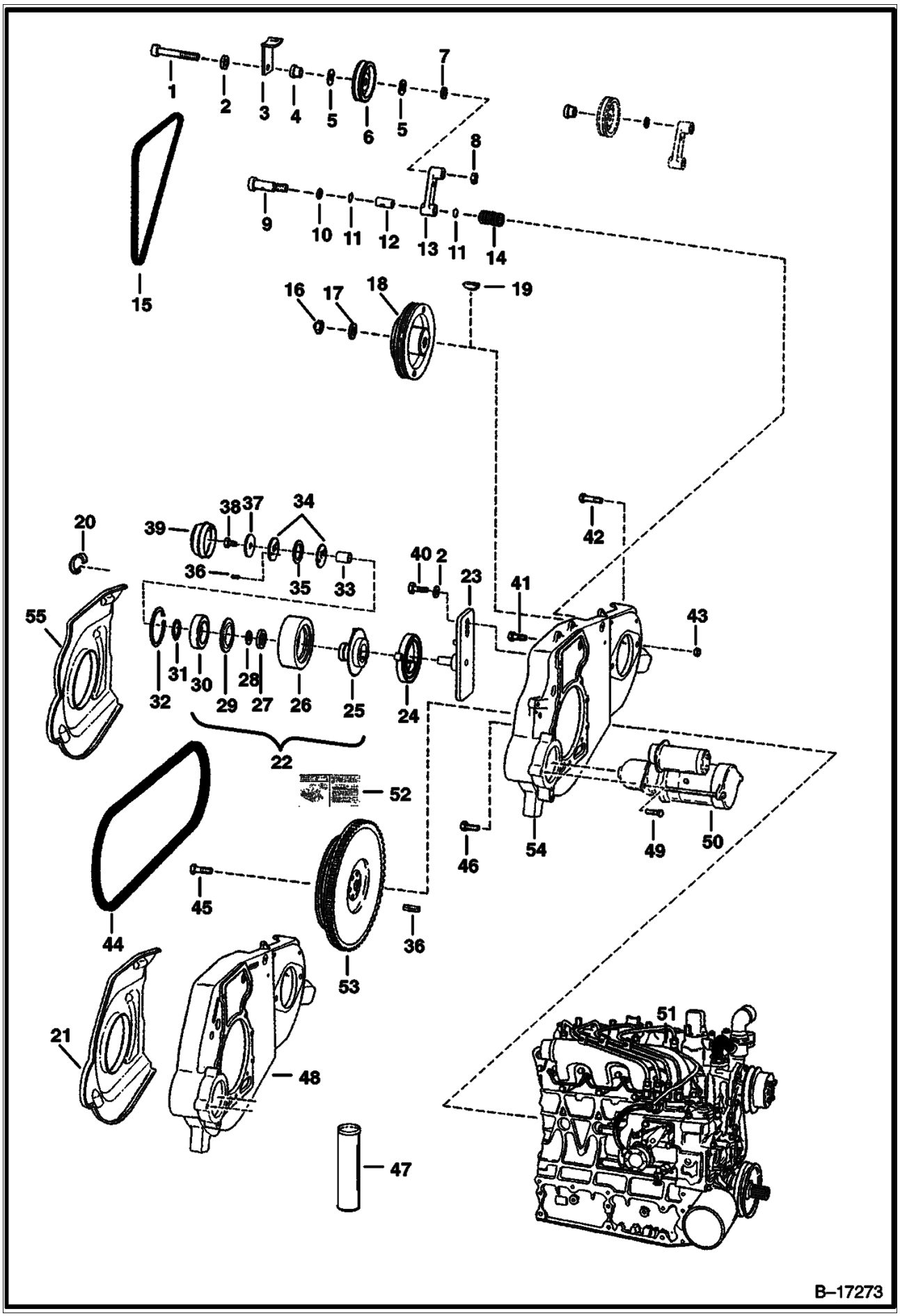

Page 144 - OSS# 2060759 - All rights reserved by Bobcat Company, a business unit of Ingersoll-Rand - 05/22/2008 - 07:23:42 - Produced by Ken Cook Co. with mediaioff

ENGINE & ATTACHING PARTS (Cont'd)
(Belt Drive System)

Ref No	Part Number	Description	Remarks	Serial Number	Qty
1	73G000656B	BOLT			1
2	6704484	WASHER	thrust		3
3	6702474	RETAINER	fan drive idler belt		1
4	6704443	BUSHING	spacer		1
5	6660995	GREASE RING	grease		2
6	6662997	PULLEY	fan drive idler		1
7	6704444	WASHER			1
8	61D000006B	NUT			1
9	38C000820B	BOLT	shoulder		1
10	6655781	BEARING			1
11	6704820	O-RING			2
12	6670682	BEARING	nylon		1
13	6725212	ARM	W/Ref 12 Was 6703507 [A]		1
14	6700115	SPRING			1
15	6669034	BELT	fan - 41.3"(1049 mm) long		1
16	92D000012B	NUT			1
17	6576033	WASHER			1
18	6704424	PULLEY	to hyd. pump		1
19	6J000807B	KEY			1
20	6703022	CLIP			3
21	6704450	SHIELD			1
22	6711698	IDLER ASSY.	& Ref 52 SPRING LOADED - REF. 23 - 39		1
23	6708767	BRACKET			1
24	6705491	SPRING	torsion		1
25	6711699	HUB ASSY.	Order Ref 22		1
26	6704391	PULLEY	idler		1
27	6661112	SEAL			1
28	6703168	BEARING	thrust		1
29	6664209	SEAL			1
30	6668114	BEARING	Order Ref 22 ball		1
31	6658536	RING			1
32	6658847	RING			1
33	6704393	BEARING	bronze sleeve		1
34	6705231	WASHER			2
35	6710585	WASHER	wave spring		1
36	6713370	PIN	Was 14J001808B [A]		2
37	6705232	WASHER			1
38	17C000610B	BOLT			1
39	6708770	CAP	dust		1
40	17C000620B	BOLT			1
41	6CM01230B	BOLT			2
42	17C000828B	BOLT	hyd. pump mount		2
43	85D000008B	NUT			2
44	6667322	BELT	pump drive - 3 groove	5157 13121 & Bel	1
44	6667322	BELT		5156 11135 & Bel	1
44	6672445	BELT	pump drive - 3 groove	5157 13122 & Abv	1
44	6672445	BELT		5156 11136 & Abv	1
45	6652487	BOLT			6
46	5CM01025B	SCREW			7
47	6599719	GREASE	Used W/Ref 22		x
48		MOUNT	Order Ref 54 Order Ref 55 NAP - it may be necessary to reposition the battery & battery pan.- Was 6700541 [A]		1
49	35C000620B	BOLT			3
50		STARTER	See Illustration STARTER/ D2297		1
51		ENGINE	See Illustration ENGINE & GASKET KITS/ B16450		1

Page 145 - OS6# 2060759 - All rights reserved by Bobcat Company, a business unit of Ingersoll-Rand - 05/22/2008 - 07:23:42 - Produced by Ken Cook Co. with mediaioff

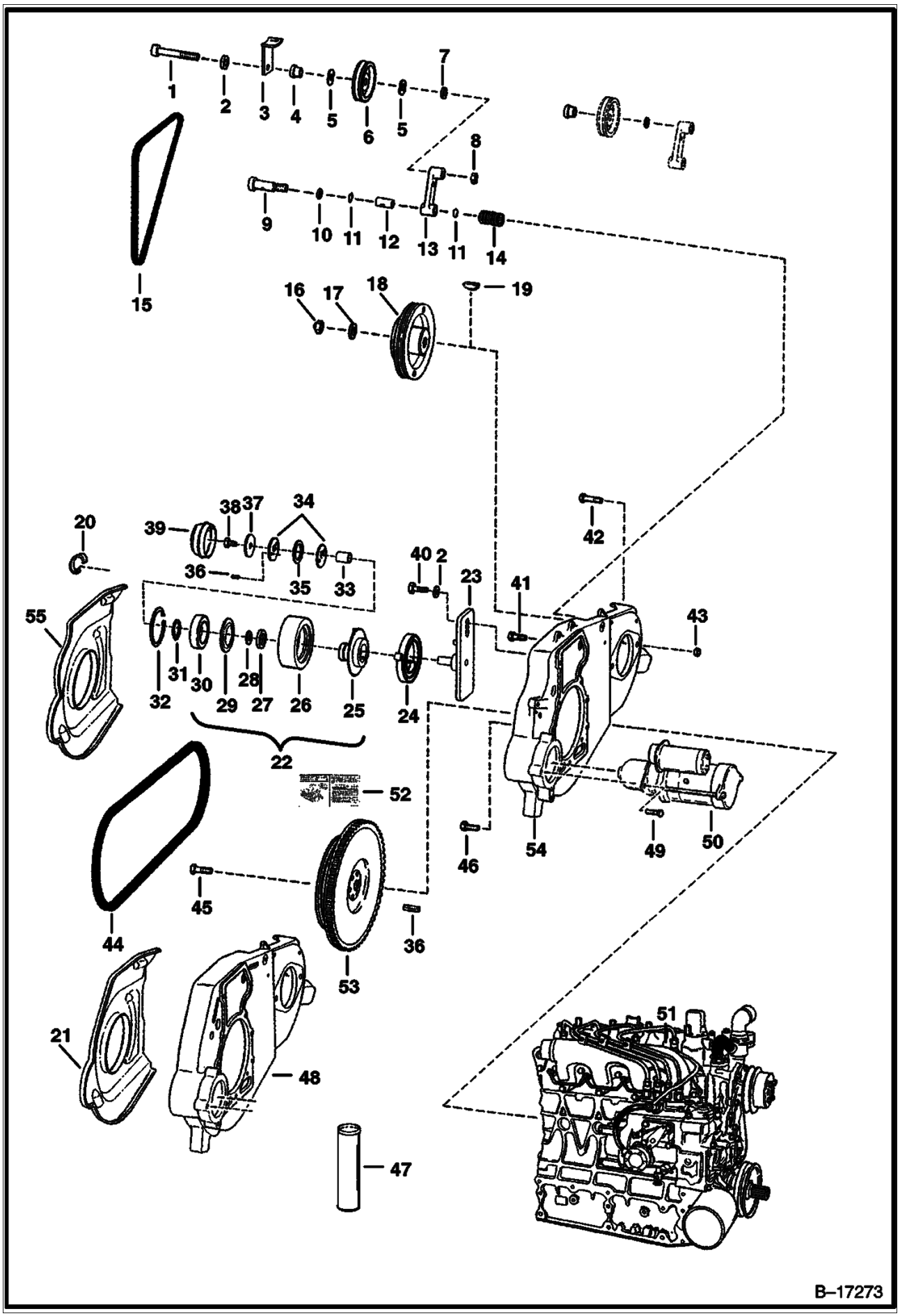

Page 146 - OSS# 2060759 - All rights reserved by Bobcat Company, a business unit of Ingersoll-Rand - 05/22/2008 - 07:23:42 - Produced by Ken Cook Co. with mediaioff

Ref No	Part Number	Description	Remarks	Serial Number	Qty
52	6709030	DECAL	belt tension		1
53	6714430	FLYWHEEL ASSY.	W/Ring gear	5157 13121 & Bel	1
53	6714430	FLYWHEEL ASSY.		5156 11135 & Bel	1
53	6715166	FLYWHEEL ASSY.	W/Ring gear	5157 13122 & Abv	1
53	6715166	FLYWHEEL ASSY.		5156 11136 & Abv	1
53	6510470	RING GEAR			1
54	6726613	MOUNT	Was 6728062 [A]		1
55	7109712	SHIELD	Was 6726938 [A]		1

Page 147 - OSS# 2060759 - All rights reserved by Bobcat Company, a business unit of Ingersoll-Rand - 05/22/2008 - 07:23:42 - Produced by Ken Cook Co. with mediaioff

ENGINE & ATTACHING PARTS
(Engine Mounts)

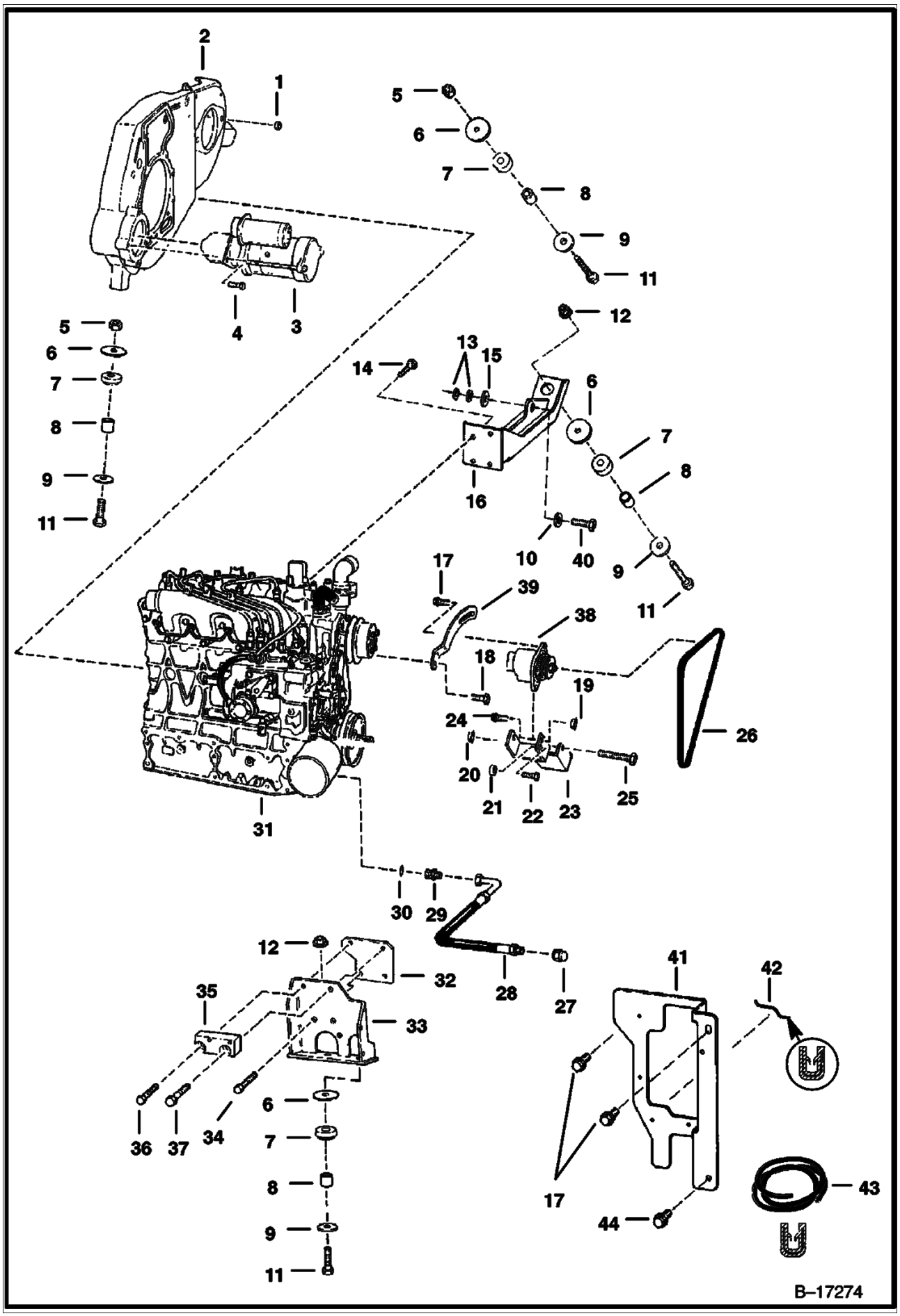

Page 148 - OSS# 2060759 - All rights reserved by Bobcat Company, a business unit of Ingersoll-Rand - 05/22/2008 - 07:23:42 - Produced by Ken Cook Co. with mediaioff

ENGINE & ATTACHING PARTS (Cont'd)
(Engine Mounts)

Ref No	Part Number	Description	Remarks	Serial Number	Qty
1	85D000008B	NUT			2
2	6700541	MOUNT			1
3		STARTER	See Illustration STARTER/ D2297		1
4	35C000620B	BOLT			3
5	6652918	NUT			2
6	6705106	WASHER			4
7	6661785	MOUNT			4
8	6706043	SPACER			4
9	6661787	WASHER			4
10	742640B	WASHER			1
11	17C000848B	SCREW	Was 17C000844B [B]		4
12	83D000008B	NUT			2
13	25E000021B	WASHER	use 2 max. for horizontal mount		x
14	6CM01225B	BOLT			4
15	6703140	WASHER			1
16	7104568	MOUNT	engine & hyd. pump - for horizontal hardware mounting of hydrostatic pump - Was 6712161 [A]		1
17	35C000516B	BOLT			3
18	1CM00870B	BOLT			1
19	57D000005B	NUT			1
20	85D000006B	NUT			1
21	6568877	WASHER			1
22	1CM00890B	BOLT			1
23	6562257	MOUNT			1
24	17C000556B	BOLT			1
25	17C000648B	BOLT			1
26	6704720	BELT	alternator		1
27	36K000006B	CAP			1
28	6704012	HOSE			1
29	15K000006B	ADAPTER	W/Ref. 30 - flat boss face		1
29	15KN00006B	ADAPTER	W/Ref. 30 - tapered boss face		1
29	97K000008B	O-RING	flared end		1
30	79K000008B	O-RING	flat boss face		1
30	99K000008B	O-RING	tapered boss face		x
31		ENGINE	See Illustration ENGINE & GASKET KITS/ B16450		1
32	6700535	SPACER			1
33	6703981	MOUNT		& Bel.	1
33	6703981	MOUNT	W/Ref. 32	& Above	1
34	6CM01230B	BOLT			2
35	6704322	MOUNT	fuel filter		1
36	5CM01035B	BOLT			1
37	6CM01235B	BOLT			1
38		ALTERNATOR	See Illustration ALTERNATOR/ C3312		1
39	6705711	BRACKET			1
40	17C000830B	BOLT			1
41		SHIELD	NAP - Order 6731060 Shield & relocate timer solenoid - Was 6714890 [A]	& Bel	1
41	6731060	SHIELD	Was 6717812 [A]	& Abv	1
42		MOULDING	NAP - 5.5"(139,7 mm) long - Order Ref. 43		1
43	6654139	MOULDING	bulk - Sold Per Foot		x
44	84G003716B	BOLT			2

Page 149 - OSS# 2060759 - All rights reserved by Bobcat Company, a business unit of Ingersoll-Rand - 05/22/2008 - 07:23:42 - Produced by Ken Cook Co. with mediaioff

THROTTLE

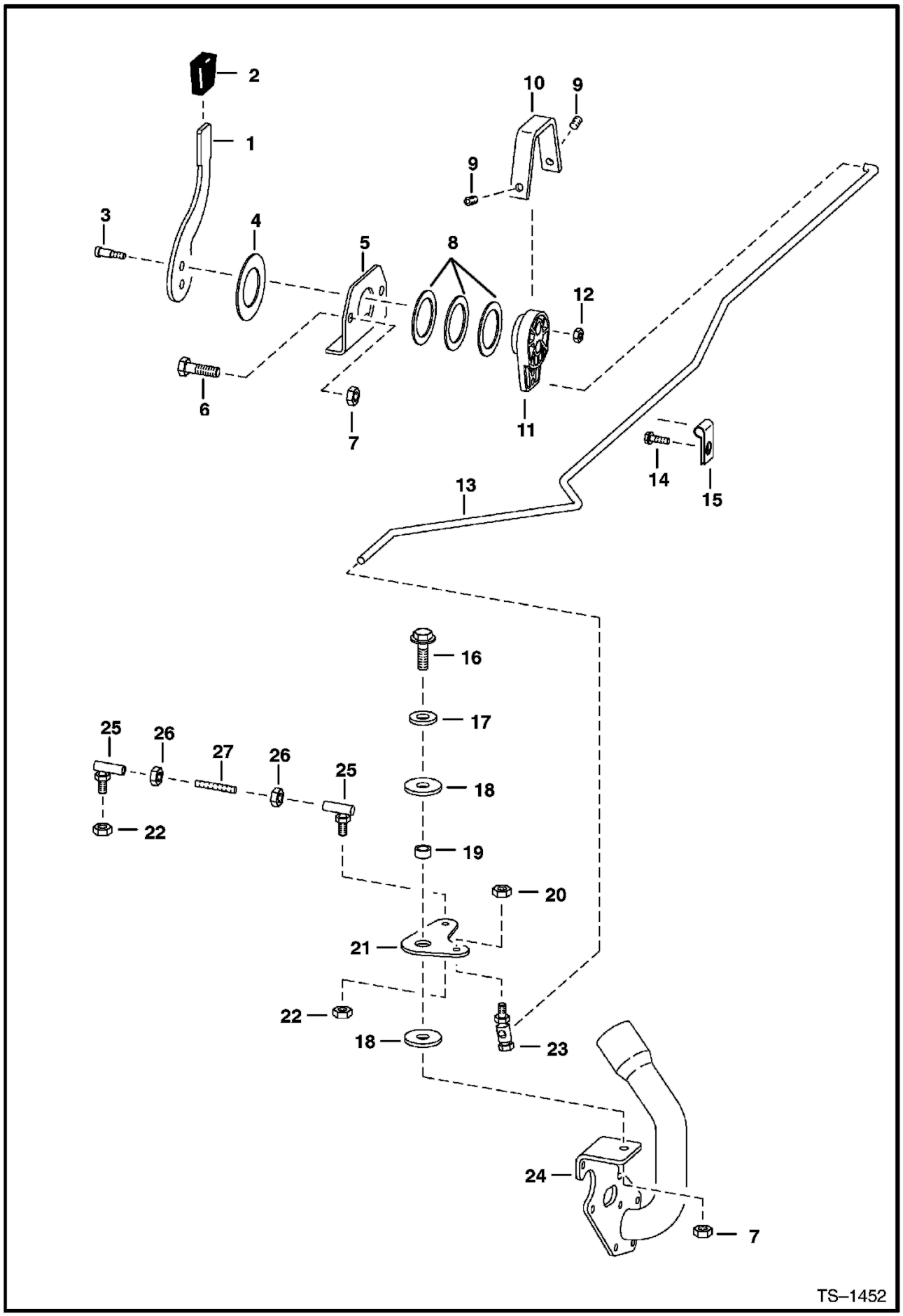

Page 150 - OSS# 2060759 - All rights reserved by Bobcat Company, a business unit of Ingersoll-Rand - 05/22/2008 - 07:23:42 - Produced by Ken Cook Co. with mediaioff

Ref No	Part Number	Description	Remarks	Serial Number	Qty
1	6705452	LEVER			1
2	6564452	GRIP			1
3	38C000610B	BOLT	shoulder		2
4	6567962	WASHER			1
5	6576262	MOUNT			1
6	17C000626B	BOLT			2
7	95D000006B	NUT	Was 91D000006B [A]		3
8	6630945	WASHER			3
9	6706572	SET SCREW			2
10	6576261	COVER			1
11	6709022	LEVER			1
12	85D000005B	NUT			2
13	6702397	ROD			1
14	84G003712B	BOLT			1
15	30H000023B	CLAMP			1
16	84G003716B	BOLT			1
17	25E000018B	WASHER			1
18	6700170	WASHER	plastic		2
19	6564343	SPACER			1
20	85D000004B	NUT			1
21	6578268	BELLCRANK			1
22	86D000004B	NUT			2
23	6557291	BALL JOINT			1
24	6719048	MOUNT	See Illustration GEARCASE/ B13160 FUEL SHUTOFF SOLENOID & OIL FILL - WAS 6703738 [A]		1
25	6554858	BALL JOINT			2
26	62D000004B	NUT			2
27	6576252	ROD			1

Page 151 - OSS# 2060759 - All rights reserved by Bobcat Company, a business unit of Ingersoll-Rand - 05/22/2008 - 07:23:42 - Produced by Ken Cook Co. with mediaioff

COOLING FAN DRIVE ASSY.

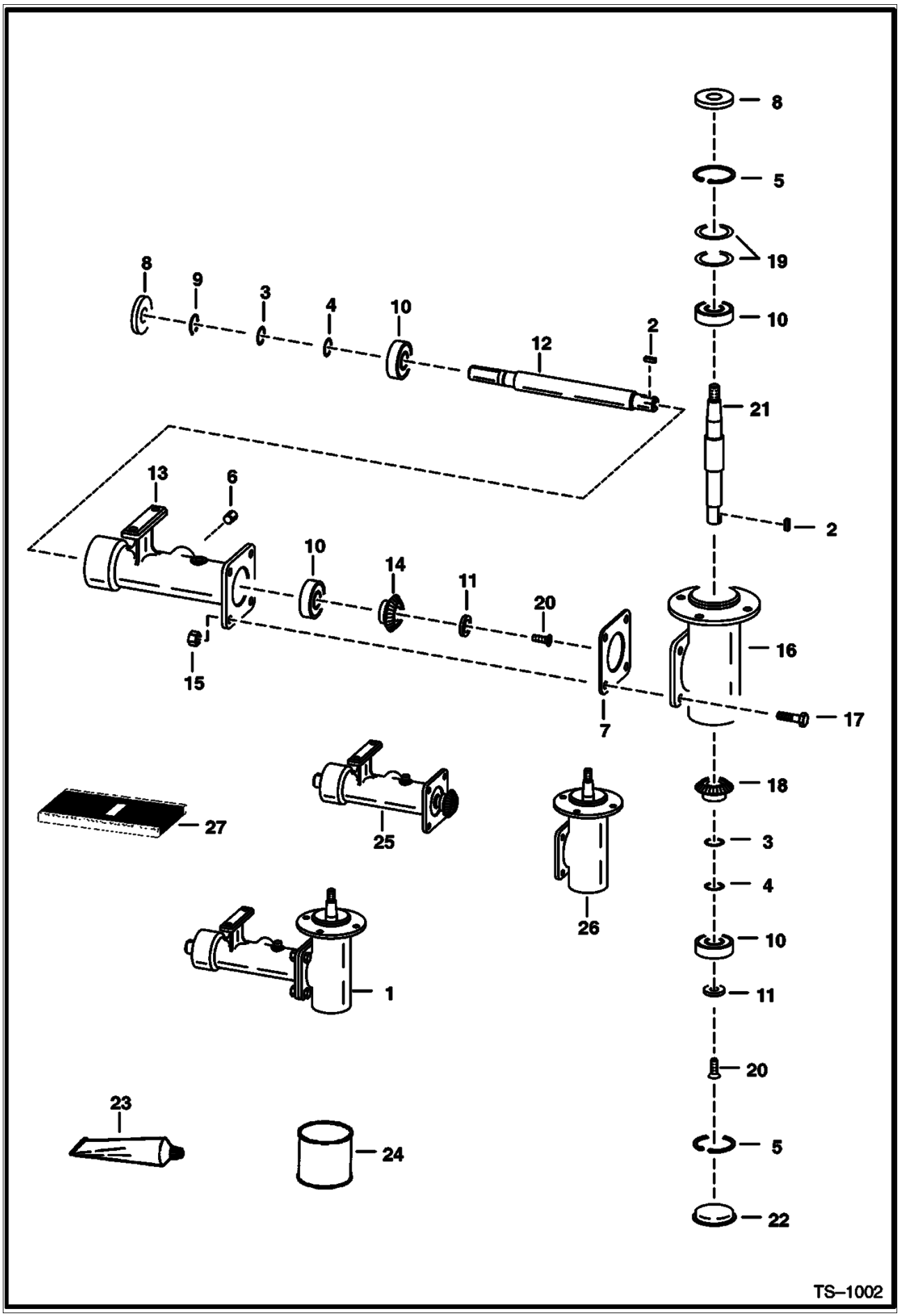

Page 152 - OSS# 2060759 - All rights reserved by Bobcat Company, a business unit of Ingersoll-Rand - 05/22/2008 - 07:23:42 - Produced by Ken Cook Co. with mediaioff

COOLING FAN DRIVE ASSY. (Cont'd)

Ref No	Part Number	Description	Remarks	Serial Number	Qty
1		HOUSING ASSY.	See Illustration COOLING FAN DRIVE ASSY./ PE2349 NAP - REF. 2-22 - ORDER 6734104 HOUSING ASSY. - A - WAS 6702138 [A]		1
2	7J002010B	KEY			2
3	6702165	SHIM	.002"(0,05 mm) thickness - 1"(25,4 mm) O.D.		x
4	6701159	SHIM	.005"(0,13 mm) thickness - 1"(25,4 mm) O.D.		x
5	6653758	SNAP RING			2
6	16F000008B	PLUG			1
7	6578284	SHIM	.003'' (0,08 mm) thickness		x
8	6653702	SEAL			2
9	6653757	SNAP RING			1
10	6646627	BEARING			4
11		WASHER	NAP - countersink - Was 6702140 [A]		2
12	6702137	SHAFT	keyed		1
13	6579641	HOUSING			1
14	6702103	GEAR	keyed		1
15	95D000006B	NUT	Was 61D000006B [B]		4
16		HOUSING	Ref 26 NSS - Order 6702138 Housing or		1
17	17C000620B	BOLT			4
18	6702102	GEAR	keyed		1
19	6702166	SHIM	.002'' (0,05 mm) thickness - 2"(50,8 mm) O.D.		x
19	6702144	SHIM	.005'' (0,13 mm) thickness - 2"(50,8 mm) O.D.		x
20	9G000512B	SCREW			2
21	6702135	SHAFT	keyed		1
22	6700782	CAP	grease		1
23	6672486	SEALANT	Used W/Ref 7 Used W/Ref 22 Was 6633583 [A]		x
24	6903121	GEAR LUBE 12	Was 6634393 [A]		x
25	6707078	HOUSING ASSY.	half		1
26	6707077	HOUSING ASSY.	half		1
27	6669384	SPEEDY SLEEVE	repair kit		1

Page 153 - OSS# 2060759 - All rights reserved by Bobcat Company, a business unit of Ingersoll-Rand - 05/22/2008 - 07:23:42 - Produced by Ken Cook Co. with mediaioff

COOLING FAN DRIVE ASSY.

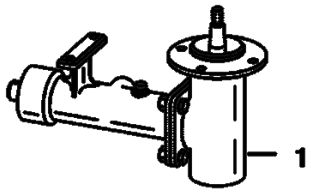

PE–2349

Page 154 - OSS# 2060759 - All rights reserved by Bobcat Company, a business unit of Ingersoll-Rand - 05/22/2008 - 07:23:42 - Produced by Ken Cook Co. with mediaioff

Ref No	Part Number	Description	Remarks	Serial Number	Qty
1	6734104	HOUSING ASSY.			1

Page 155 - OSS# 2060759 - All rights reserved by Bobcat Company, a business unit of Ingersoll-Rand - 05/22/2008 - 07:23:42 - Produced by Ken Cook Co. with media1off

ENGINE & GASKET KITS
(Kubota - V1903)

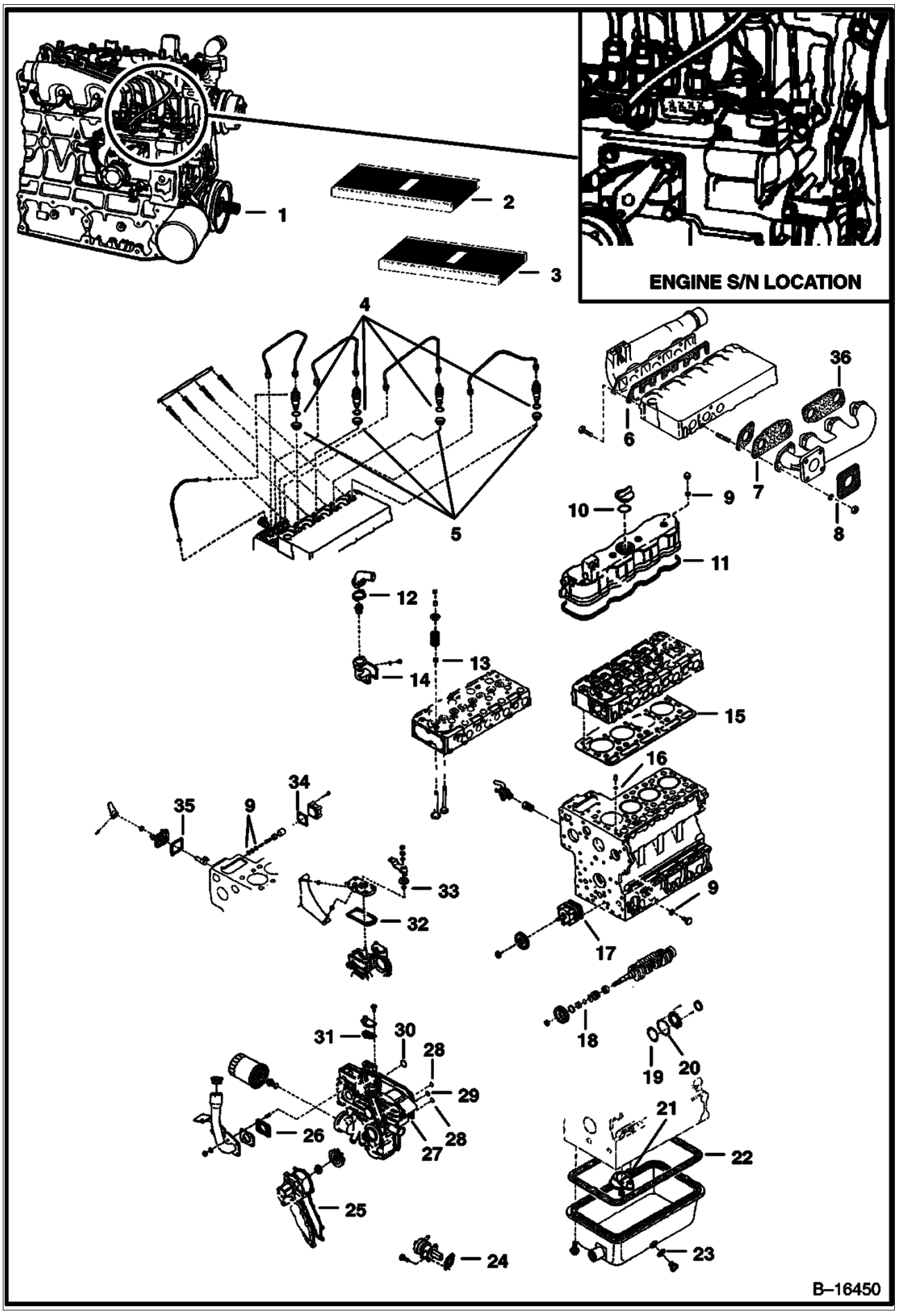

Page 156 - OSS# 2060759 - All rights reserved by Bobcat Company, a business unit of Ingersoll-Rand - 05/22/2008 - 07:23:42 - Produced by Ken Cook Co. with mediaIoff

ENGINE & GASKET KITS (Cont'd)
(Kubota - V1903)

Ref No	Part Number	Description	Remarks	Serial Number	Qty
1	6671060	ENGINE	Does not include starter, alternator, flywheel, & flywheel housing		1
1		SHORT BLOCK	NAP		1
2	6674698	GASKET KIT	Upper - Ref. 6-16 & 36 - Was 6657401 [B,D] [B,D]		1
3	6657402	GASKET KIT	Lower - Does not include rear oil seal - Ref. 17-35		1
4	6655218	GASKET	See Illustration INJECTOR NOZZLES/ B13155		4
5	6655872	HEAT SEAL	See Illustration INJECTOR NOZZLES/ B13155		4
6	6666811	GASKET	See Illustration MANIFOLDS/ B17099		1
7	6666781	GASKET	See Illustration MANIFOLDS/ B17099		4
8	6575580	GASKET	See Illustration MANIFOLDS/ B17099 MUFFLER		1
9	3974095B	GASKET	See Illustration CRANKCASE/ B13159 See Illustration ROCKER ARM COVER/ B13158 See Illustration ENGINE STOP LEVER/ B13139		7
10	3966602B	O-RING	See Illustration ROCKER ARM COVER/ B13158		1
11	6598136	GASKET	See Illustration ROCKER ARM COVER/ B13158		1
12	6666790	GASKET	See Illustration WATER FLANGE & THERMOSTAT/ B13141 THERMOSTAT COVER		1
13	6653830	SEAL	See Illustration VALVE ROCKER ARM/ C2547 VALVE STEM		8
14	6666802	GASKET	See Illustration WATER FLANGE & THERMOSTAT/ B13141 WATER FLANGE		1
15	6672144	GASKET	See Illustration CYLINDER HEAD/ B13153 CYLINDER HEAD		1
16	3974038B	O-RING	See Illustration CRANKCASE/ B13159		1
17	6666782	GASKET	See Illustration CRANKCASE/ B13159 WAS 3974456B [A]		1
18	3974577B	O-RING	See Illustration PISTON & CRANKSHAFT/ B17276		1
19	6655165	GASKET	See Illustration PISTON & CRANKSHAFT/ B17276		1
20	6666812	GASKET	See Illustration PISTON & CRANKSHAFT/ B17276 WAS 6655167 [A]		1
21	3966516B	O-RING	See Illustration OIL PAN/ B17275		1
22	6666817	GASKET	See Illustration OIL PAN/ B17275 OIL PAN - WAS 3975449B [A]		1
23	3974403	GASKET	See Illustration OIL PAN/ B17275		1
24	3974502B	GASKET	See Illustration FUEL & INJECTION PUMPS/ B13157 FUEL PUMP		1
25	6666804	GASKET	See Illustration WATER PUMP/ B13142 WAS 3974995B [A]		1
26	6714543	GASKET	See Illustration GEARCASE/ B13160 WAS 3974461B [A]		1
27	6666800	GASKET	See Illustration GEARCASE/ B13160 GEARCASE - WAS 6653806 [A]		1
28	3966515B	O-RING	See Illustration GEARCASE/ B13160		2
29	6655162	O-RING	See Illustration GEARCASE/ B13160		1
30	3966530B	O-RING	See Illustration GEARCASE/ B13160		1
31	6666803	GASKET	See Illustration SPEED CONTROL PLATE/ B13137 WATER RETURN FLANGE - WAS 3974895B [A]		1
32	6666792	GASKET	See Illustration SPEED CONTROL PLATE/ B13137 WAS 6635392 [A]		1
33	3966512B	O-RING	See Illustration SPEED CONTROL PLATE/ B13137		1
34	3974630B	GASKET	See Illustration FUEL CAMSHAFT/ B13144		1
35	6666783	GASKET	See Illustration ENGINE STOP LEVER/ B13139 PUMP COVER - WAS 3974601B [A]		1
36	6666791	GASKET	See Illustration MANIFOLDS/ B17099		1

Page 157 - OSS# 2060759 - All rights reserved by Bobcat Company, a business unit of Ingersoll-Rand - 05/22/2008 - 07:23:42 - Produced by Ken Cook Co. with mediaioff

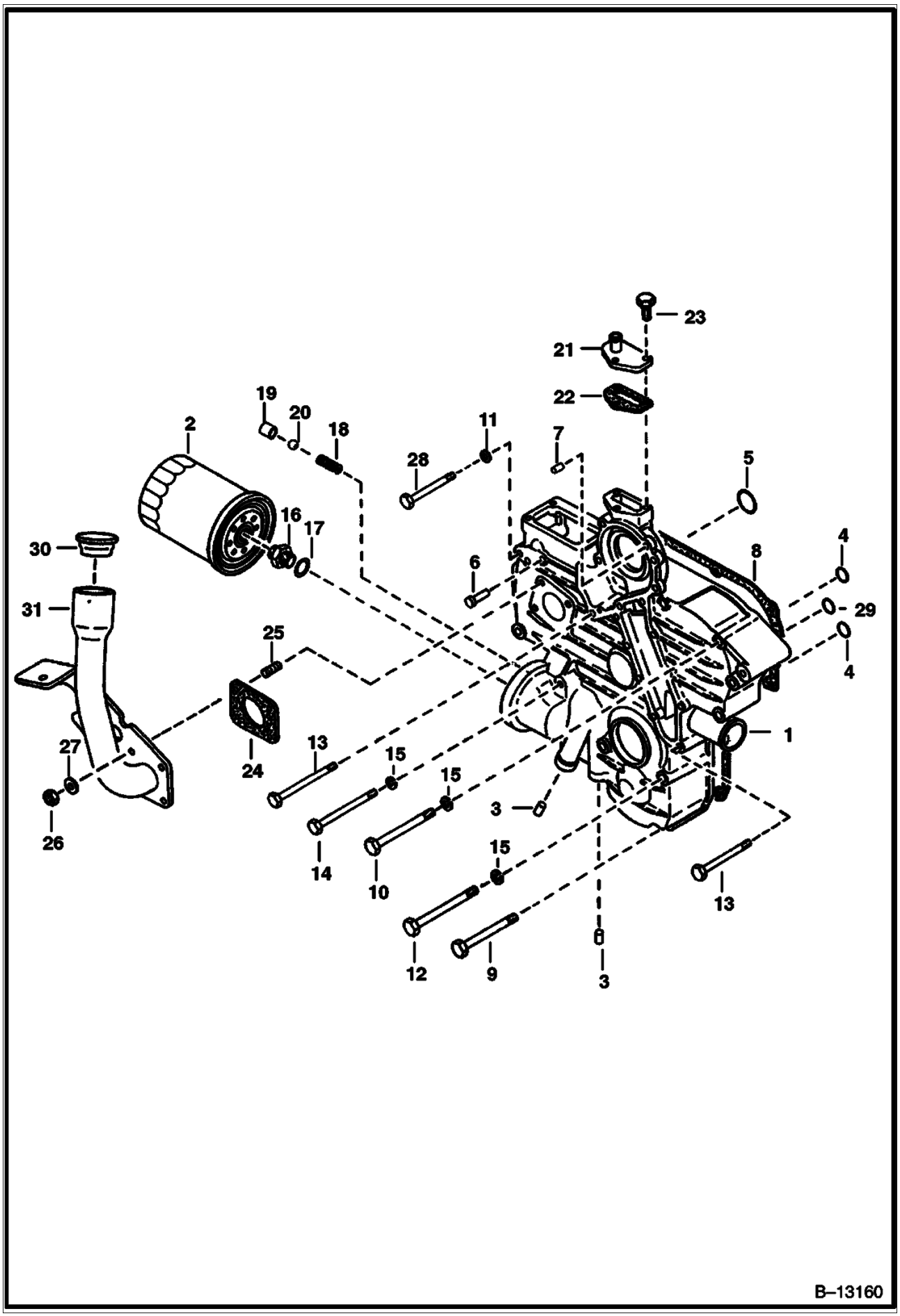

Page 158 - OSS# 2060759 - All rights reserved by Bobcat Company, a business unit of Ingersoll-Rand - 05/22/2008 - 07:23:42 - Produced by Ken Cook Co. with mediaioff

Ref No	Part Number	Description	Remarks	Serial Number	Qty
1	6674164	CASE ASSY.	Was 6655479 [B,D] [B,D]		1
2	6675517	FILTER	oil filter - 6 Pack - Was 3974896B [A]		1
3	6667425	PLUG	pin		2
4	3966515B	O-RING			2
5	3966530B	O-RING			1
6	6652592	PIN	start spring		1
7	3974395B	PIN	straight		2
8	6666800	GASKET	gearcase - Was 6653806 [A]		1
9	3974888B	BOLT			2
10	1CM00870B	BOLT			5
11	2EM00008B	WASHER			1
12	1CM00880B	SCREW			2
13	6653808	BOLT			3
14	1CM00895B	BOLT			2
15	6EM00080B	WASHER			9
16	6653809	ADAPTER			1
17	15EM00180B	WASHER			1
18	6652652	SPRING			1
19	3974893B	SEAT	valve		1
20	10J000013B	BALL			1
21	6674176	FLANGE	water return - Was 3974894B [B,D] [B,D]		1
22	6666803	GASKET	water return flange - Was 3974895B [A]		1
23	4CM00620B	BOLT			3
24	6714543	GASKET	Was 3974461B [A]		1
25	6652764	STUD			4
26	1DM00006B	NUT			4
27	6EM00060B	WASHER	spring		4
28	6653807	BOLT			1
29	6655162	O-RING			1
30	6703736	CAP			1
31	6719048	MOUNT	Was 6703738 [A]		1

Page 159 - OSS# 2060759 - All rights reserved by Bobcat Company, a business unit of Ingersoll-Rand - 05/22/2008 - 07:23:42 - Produced by Ken Cook Co. with mediaioff

CRANKCASE

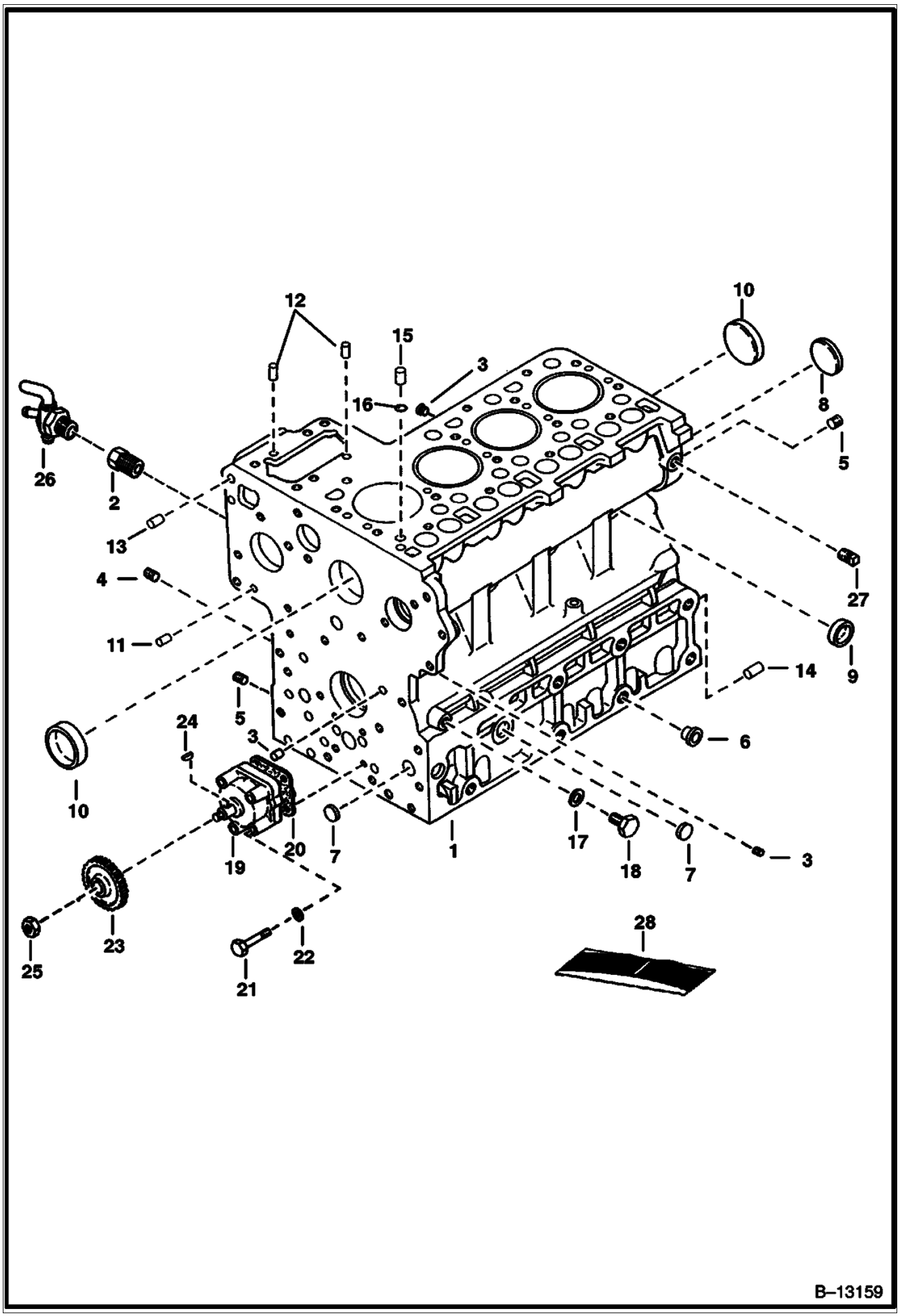

Page 160 - OSS# 2060759 - All rights reserved by Bobcat Company, a business unit of Ingersoll-Rand - 05/22/2008 - 07:23:42 - Produced by Ken Cook Co. with mediaoff

Ref No	Part Number	Description	Remarks	Serial Number	Qty
1	6672146	CRANKCASE	assy. - W/Ref. 2 - 15		1
2	3974871B	ADAPTER			1
3	6652574	PLUG			5
4	6655869	PLUG			1
5	6652575	PLUG			2
6	6598187	PLUG			2
7	4FM00018B	PLUG	expansion		3
8	4FM00045B	PLUG	expansion		1
9	3974389B	GASKET	sealing		6
10	3974390B	CAP	sealing		2
11	3974393B	PIN	straight		2
12	3974394B	PIN	straight		2
13	3974395B	PIN	straight		2
14	3974868B	PIN	straight		1
15	3974037B	PIN	pipe		1
16	3974038B	O-RING			1
17	3974095B	GASKET			1
18	6655884	PLUG	Was 3974051B [D]		1
19	3975426B	OIL PUMP			1
20	6666782	GASKET	Was 3974456B [A]		1
21	6655195	BOLT			4
22	6EM00060B	WASHER			4
23	6672190	DRAINCOCK	Was 3975441B [A]		1
24	15JM00410B	KEY			1
25	3DM00012B	NUT			1
26	3975447B	DRAINCOCK			1
27	16F000002B	PLUG			1
28	6657402	GASKET KIT	See Illustration ENGINE & GASKET KITS/ B16450 LOWER - DOES NOT INCLUDE REAR OIL SEAL		1

Page 161 - OSS# 2060759 - All rights reserved by Bobcat Company, a business unit of Ingersoll-Rand - 05/22/2008 - 07:23:42 - Produced by Ken Cook Co. with mediaioff

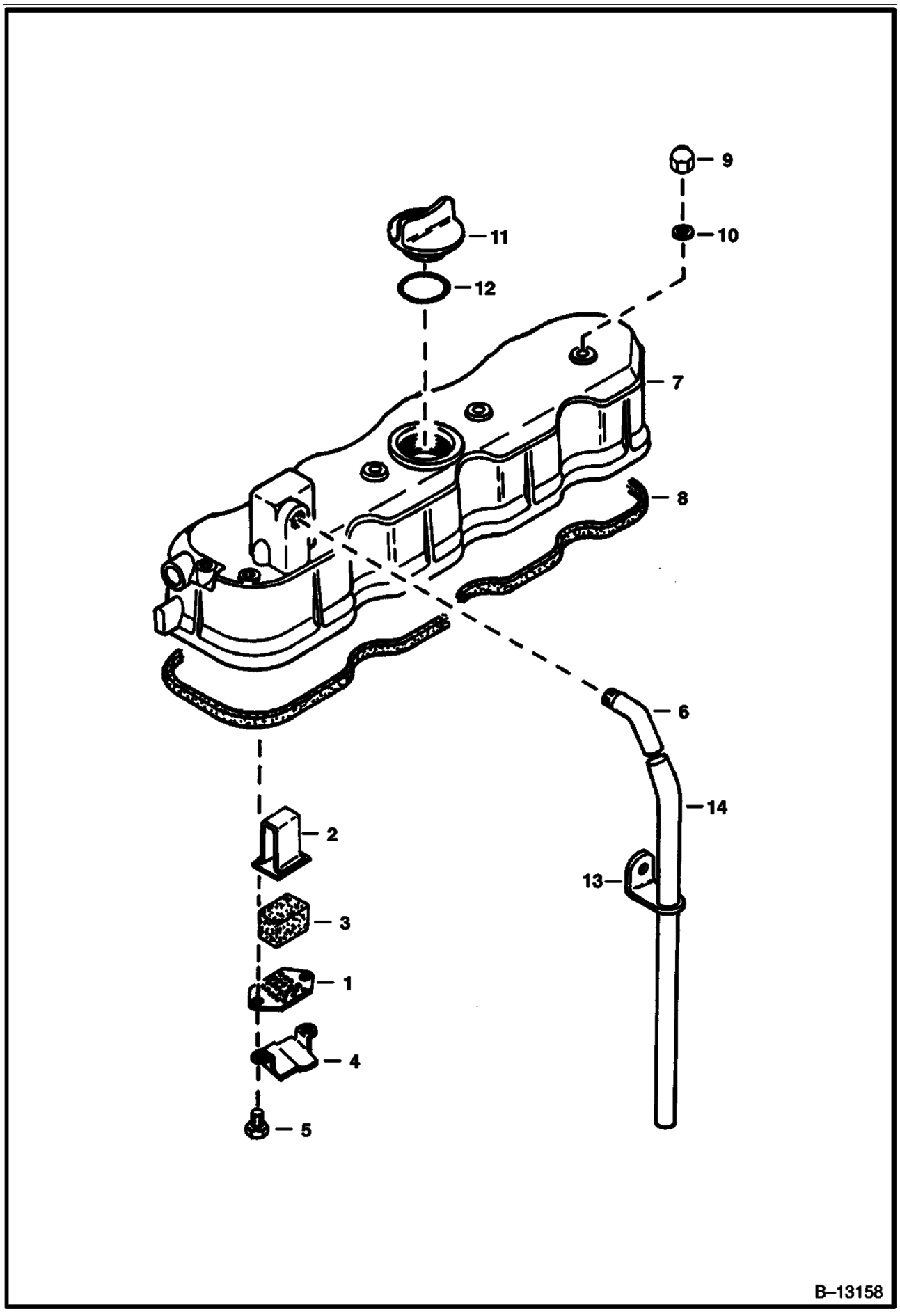

Page 162 - OSS# 2060759 - All rights reserved by Bobcat Company, a business unit of Ingersoll-Rand - 05/22/2008 - 07:23:42 - Produced by Ken Cook Co. with mediaioff

Ref No	Part Number	Description	Remarks	Serial Number	Qty
1	3974924B	PLATE	element		1
2	3974925B	PLATE	element		1
3	3974926B	ELEMENT	breather		1
4	3974927B	SHIELD	breather		1
5	3975436B	SCREW	W/Washer		2
6	6652624	JOINT	breather pipe		1
7	6655175	COVER	valve		1
8	6598136	GASKET	Was 3975419B [A]		1
9	3974923B	NUT	cap		4
10	3974095B	GASKET			4
11	6652653	PLUG	oil filler		1
12	3966602B	O-RING			1
13	3974931B	CLAMP	pipe		1
14	3974930B	PIPE	breather		1

Page 163 - OSS# 2060759 - All rights reserved by Bobcat Company, a business unit of Ingersoll-Rand - 05/22/2008 - 07:23:42 - Produced by Ken Cook Co. with media1off

VALVE ROCKER ARM

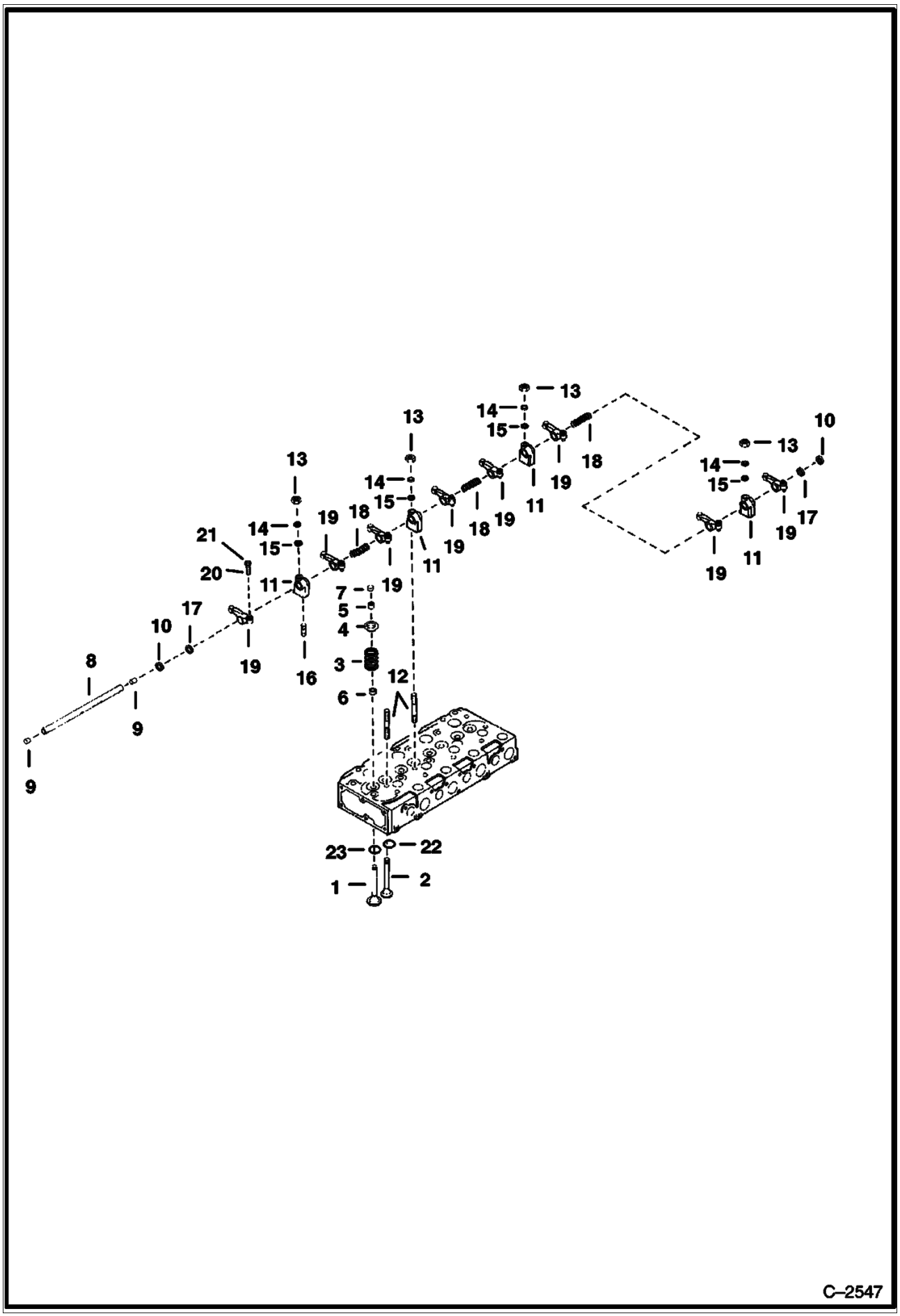

Page 164 - OSS# 2060759 - All rights reserved by Bobcat Company, a business unit of Ingersoll-Rand - 05/22/2008 - 07:23:42 - Produced by Ken Cook Co. with mediaioff

Ref No	Part Number	Description	Remarks	Serial Number	Qty
1	6655173	VALVE	inlet		4
2	6655174	VALVE	exhaust		4
3	3974514B	SPRING	valve		8
4	3974515B	RETAINER	valve spring		8
5	3974516B	COLLET	valve spring - complete set		1
6	6653830	SEAL	valve stem		8
7	3974518B	CAP	valve		8
8	3974519B	SHAFT	W/Ref 9 rocker arm		1
9	25GM08010B	SET SCREW			2
10	5JM00014B	CIR-CLIP	external		2
11	3974521B	BRACKET	rocker arm		4
12	6653832	STUD			4
13	6652792	NUT			4
14	6EM00080B	WASHER	spring		4
15	2EM00008B	WASHER	plain		4
16	3974523B	ORIFICE			1
17	3974524B	WASHER			2
18	3974525B	SPRING	rocker arm		3
19	6655870	ROCKER ARM	W/Ref 20 W/Ref 21 rocker		8
20	3974920B	SCREW	adjusting		8
21	2DM00008B	NUT			8
22	6655156	SEAT	valve exhaust		4
23	6655155	SEAT	valve inlet		4

Page 165 - OSS# 2060759 - All rights reserved by Bobcat Company, a business unit of Ingersoll-Rand - 05/22/2008 - 07:23:42 - Produced by Ken Cook Co. with mediaioff

CYLINDER HEAD

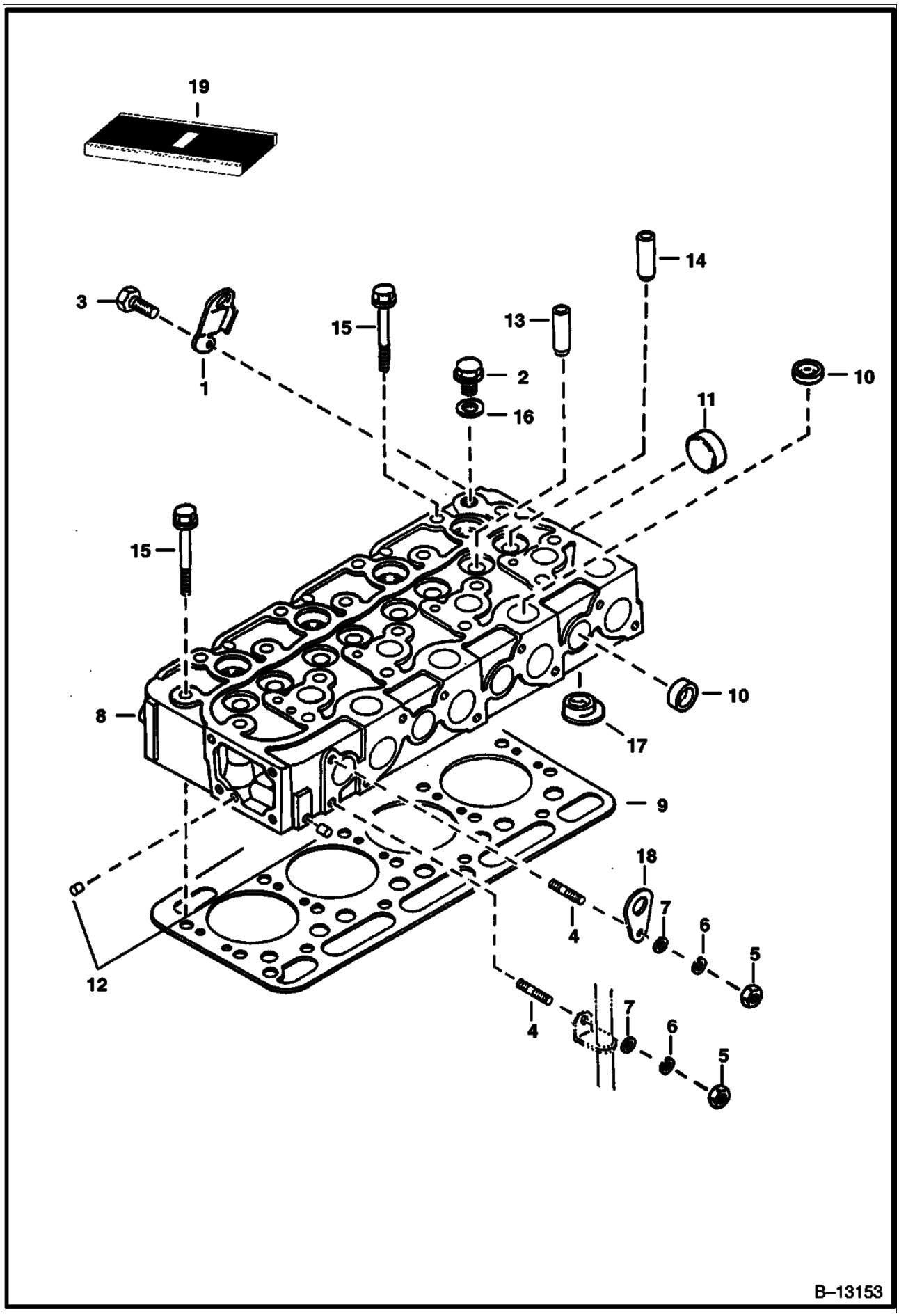

Page 166 - OSS# 2060759 - All rights reserved by Bobcat Company, a business unit of Ingersoll-Rand - 05/22/2008 - 07:23:42 - Produced by Ken Cook Co. with mediaIoff

Ref No	Part Number	Description	Remarks	Serial Number	Qty
1	6655152	HOOK			1
2	6655160	PLUG			1
3	4CM00816B	BOLT			1
4	6652670	STUD			2
5	6652792	NUT			2
6	6EM00080B	WASHER	spring		2
7	2EM00008B	WASHER	plain		2
8	6672143	HEAD	cylinder - W/Ref. 10-14		1
9	6672144	GASKET	cylinder head		1
10	3974432B	CAP	sealing		12
11	3974433B	CAP	sealing		1
12	6598116	PLUG	Was 6652797 [A]		2
13	6655154	GUIDE	intake valve		4
14	6653803	GUIDE	exhaust valve		4
15	6655158	BOLT			18
16	6655161	WASHER			1
17	6672140	CHAMBER	combustion		4
18	3974882B	BRACKET			1
19	6657401	GASKET KIT	See Illustration ENGINE & GASKET KITS/ B16450 upper		1

Page 167 - OSS# 2060759 - All rights reserved by Bobcat Company, a business unit of Ingersoll-Rand - 05/22/2008 - 07:23:42 - Produced by Ken Cook Co. with mediaioff

OIL PAN

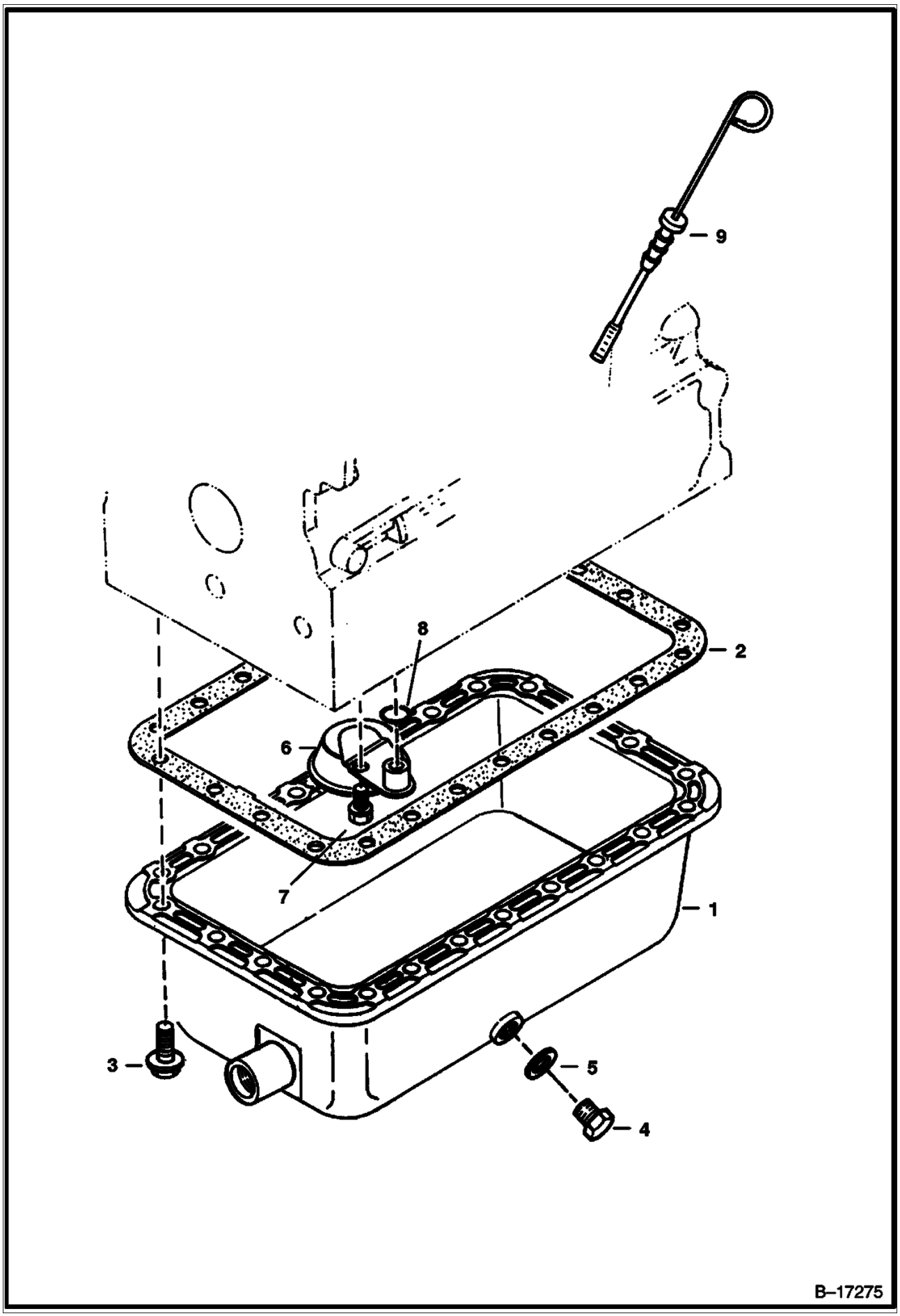

Page 168 - OSS# 2060759 - All rights reserved by Bobcat Company, a business unit of Ingersoll-Rand - 05/22/2008 - 07:23:42 - Produced by Ken Cook Co. with mediaoff

Ref No	Part Number	Description	Remarks	Serial Number	Qty
1	6655151	OIL PAN			1
2	6666817	GASKET	oil pan - Was 3975449B [A]		1
3	6653798	BOLT			24
4	3974402B	PLUG	drain - Was 6652583 [A]		1
5	3974403	GASKET			1
6	6655194	OIL FILTER			1
7	4CM00816B	BOLT			1
8	3966516B	O-RING			1
9	6674178	DIPSTICK	oil - Was 6658245 [B,D] [B,D]		1

Page 169 - OSS# 2060759 - All rights reserved by Bobcat Company, a business unit of Ingersoll-Rand - 05/22/2008 - 07:23:42 - Produced by Ken Cook Co. with media1off

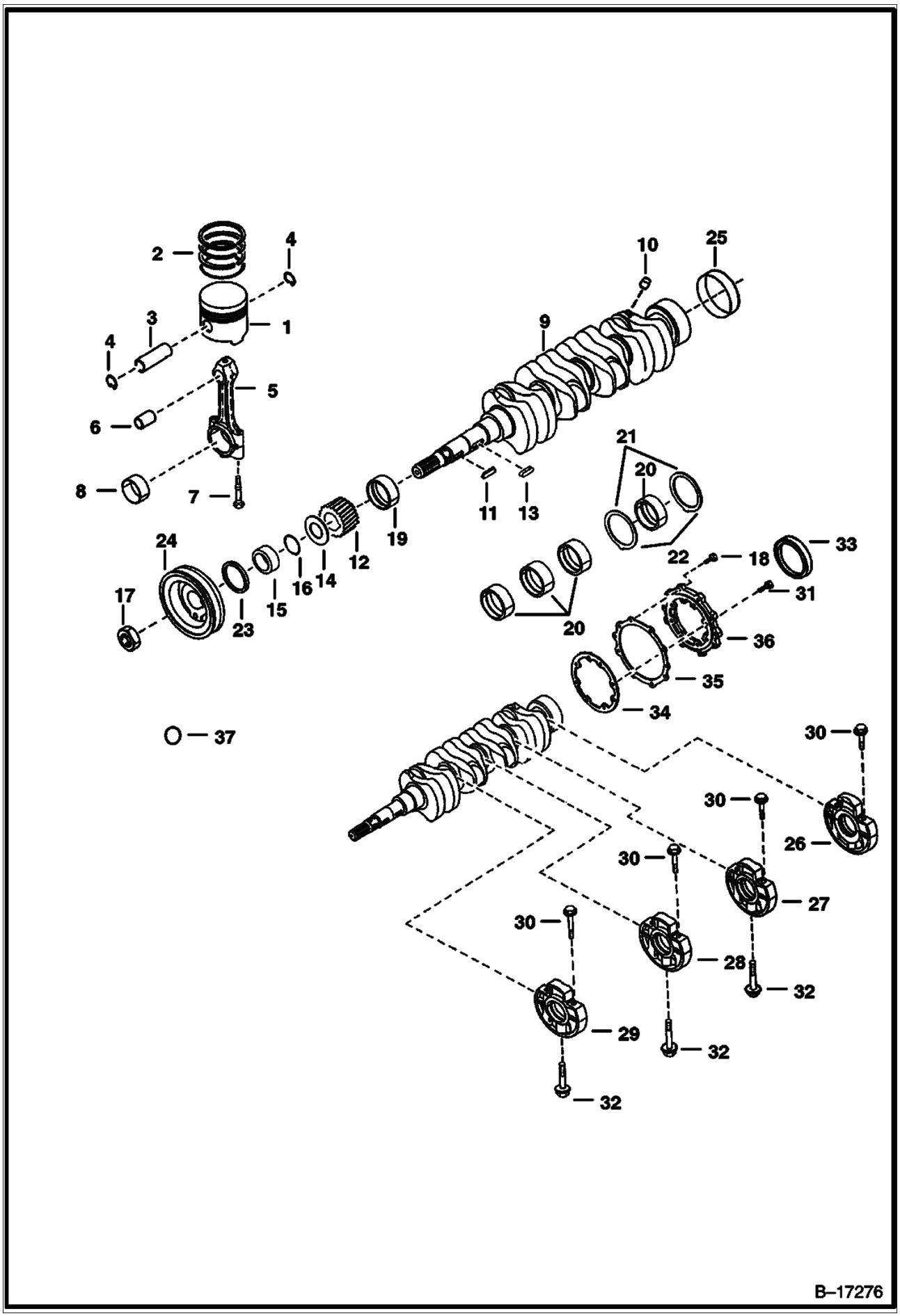

Page 170 - OSS# 2060759 - All rights reserved by Bobcat Company, a business unit of Ingersoll-Rand - 05/22/2008 - 07:23:42 - Produced by Ken Cook Co. with mediaioff

Ref No	Part Number	Description	Remarks	Serial Number	Qty
1	6672142	PISTON	Std.		4
1	6674255	PISTON	(0.5mm - .0197)-Was 6667436 [A]		4
2	6672141	RINGS	piston - Std.		4
2	6674256	RINGS	piston - (0.5mm - .0197) - Was 6657696 [A]		4
3	6655179	PIN			4
4	6655180	CIR-CLIP			8
5	6655181	ROD	W/Ref 6 W/Ref 7 W/Ref 8 connecting		4
6	6655243	BUSHING			4
7	6655498	BOLT			8
8	6655183	PIN	rod - Std.		4
8	6655236	PIN	rod (0,2 mm-.0079)		4
8	6655237	PIN	rod (0,4 mm-.0157)		4
9	6655184	CRANKSHAFT	Ref 10 Ref 25 SEE NOTE - Was 6674166 [A]		1
10	6652633	BALL			4
11	6598100	KEY			1
12	6598142	GEAR			1
13	3974546B	KEY			1
14	6653861	SLINGER	oil		1
15	3975337B	COLLAR			1
16	3974577B	O-RING			1
17	3974671B	NUT			1
18	4CM00825B	BOLT			8
19	6655185	BEARING	main - Std.		1
19	6655238	BEARING	main (0,2 mm-.0079)		1
19	6655239	BEARING	main (0,4 mm-.0157)		1
20	6655186	BEARING	main - Std.		4
20	6655240	BEARING	main (0,2 mm-.0079)		4
20	6655241	BEARING	main (0,4 mm-.0157)		4
21	3974945B	WASHER	thrust - Std.		2
21	3975021B	WASHER	thrust (0,2 mm-.0079)		2
21	3975022B	WASHER	thrust (0,4 mm-.0157)		2
22	6653865	WASHER	thrust - Std.		2
22	6654002	WASHER	thrust (0,2 mm-.0079)		2
22	6654003	WASHER	thrust (0,4 mm-.0157)		2
23	6631664	SEAL	oil		1
24	6674168	PULLEY	Was 6655235 [B,D] [B,D]		1
25	6653859	SLEEVE	Was 3975334B [A]		1
26	6655163	CASE	W/Ref 30 main bearing		1
27	6655170	CASE	W/Ref 30 main bearing		1
28	6655169	CASE	W/Ref 30 main bearing		1
29	6655168	CASE	W/Ref 30 main bearing		1
30	6655164	BOLT			8
31	4CM00828B	BOLT			8
32	6653821	BOLT			3
33	6649300	SEAL	oil		1
34	6655165	GASKET			1
35	6666814	GASKET	Was 6655167 [A]		1
36	6655166	COVER			1
37	6672145	PLUG			1

Page 171 - OSS# 2060759 - All rights reserved by Bobcat Company, a business unit of Ingersoll-Rand - 05/22/2008 - 07:23:42 - Produced by Ken Cook Co. with mediaioff

FUEL CAMSHAFT

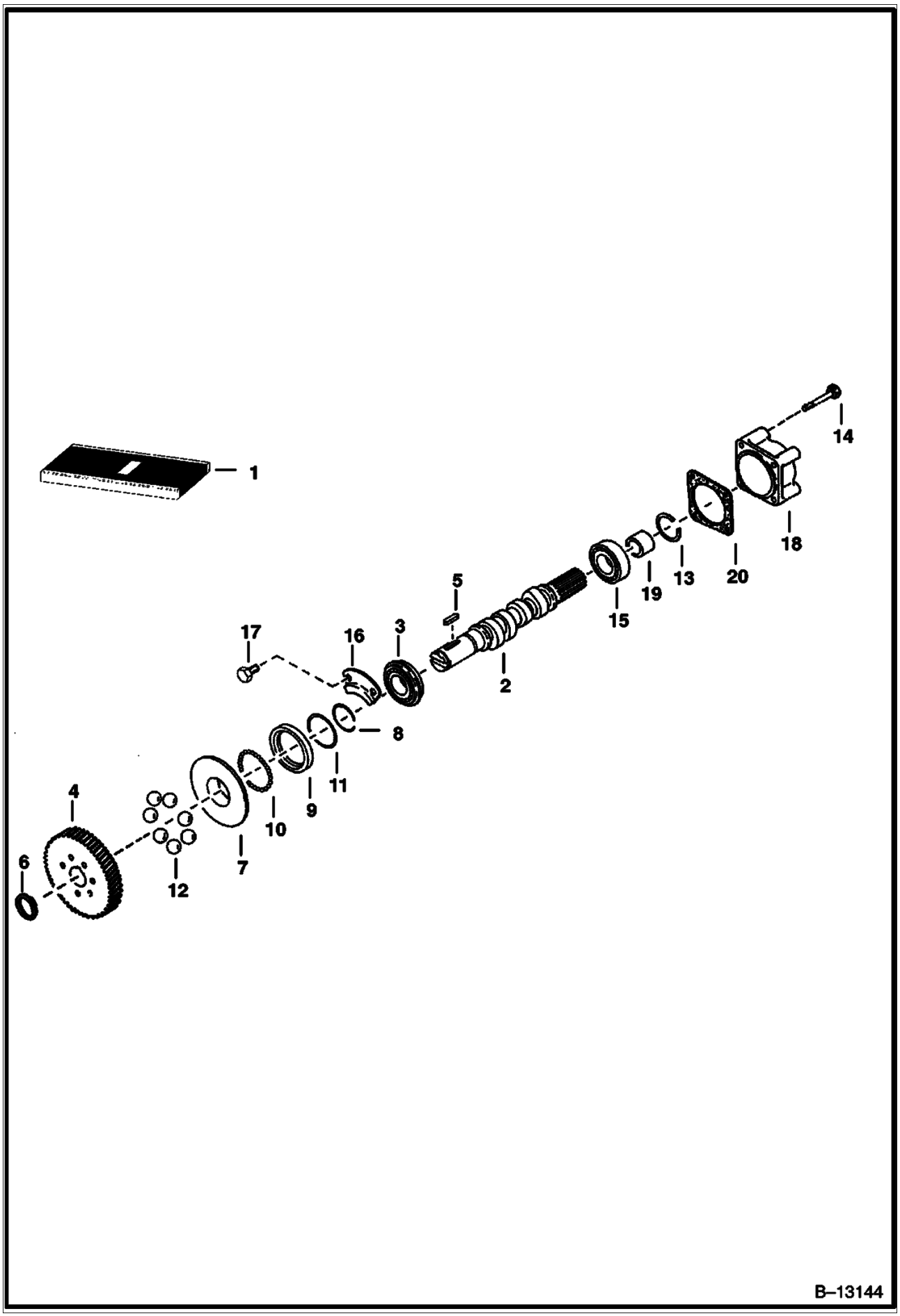

Page 172 - OSS# 2060759 - All rights reserved by Bobcat Company, a business unit of Ingersoll-Rand - 05/22/2008 - 07:23:42 - Produced by Ken Cook Co. with mediaioff

Ref No	Part Number	Description	Remarks	Serial Number	Qty
1	6655211	CAMSHAFT	assy. - Ref. 2-14		1
2	6655875	CAMSHAFT	fuel		1
3	851242B	BEARING			1
4	6655212	GEAR	injection pump		1
5	6598099	KEY			1
6	5JM00024B	CIRCLIP	external		1
7	6655213	SLEEVE	governor		1
8	3974618B	CIRCLIP	sleeve		1
9	6655214	CASE	governor ball		1
10	10J000005B	BALL			39
11	3974620B	CIRCLIP	ball case		1
12	6655215	BALL			7
13	6598158	CIRCLIP	governor ball - Was 3975432B [A]		1
14	6651934	BOLT			7
15	6598101	BALL BEARING			1
16	3974624B	STOPPER			1
17	4CM00814B	BOLT			2
18	3974996B	COVER	fuel camshaft		1
19	3975442B	COLLAR			1
20	6666827	GASKET	Was 3974630B [A]		1

Page 173 - OSS# 2060759 - All rights reserved by Bobcat Company, a business unit of Ingersoll-Rand - 05/22/2008 - 07:23:42 - Produced by Ken Cook Co. with mediaioff

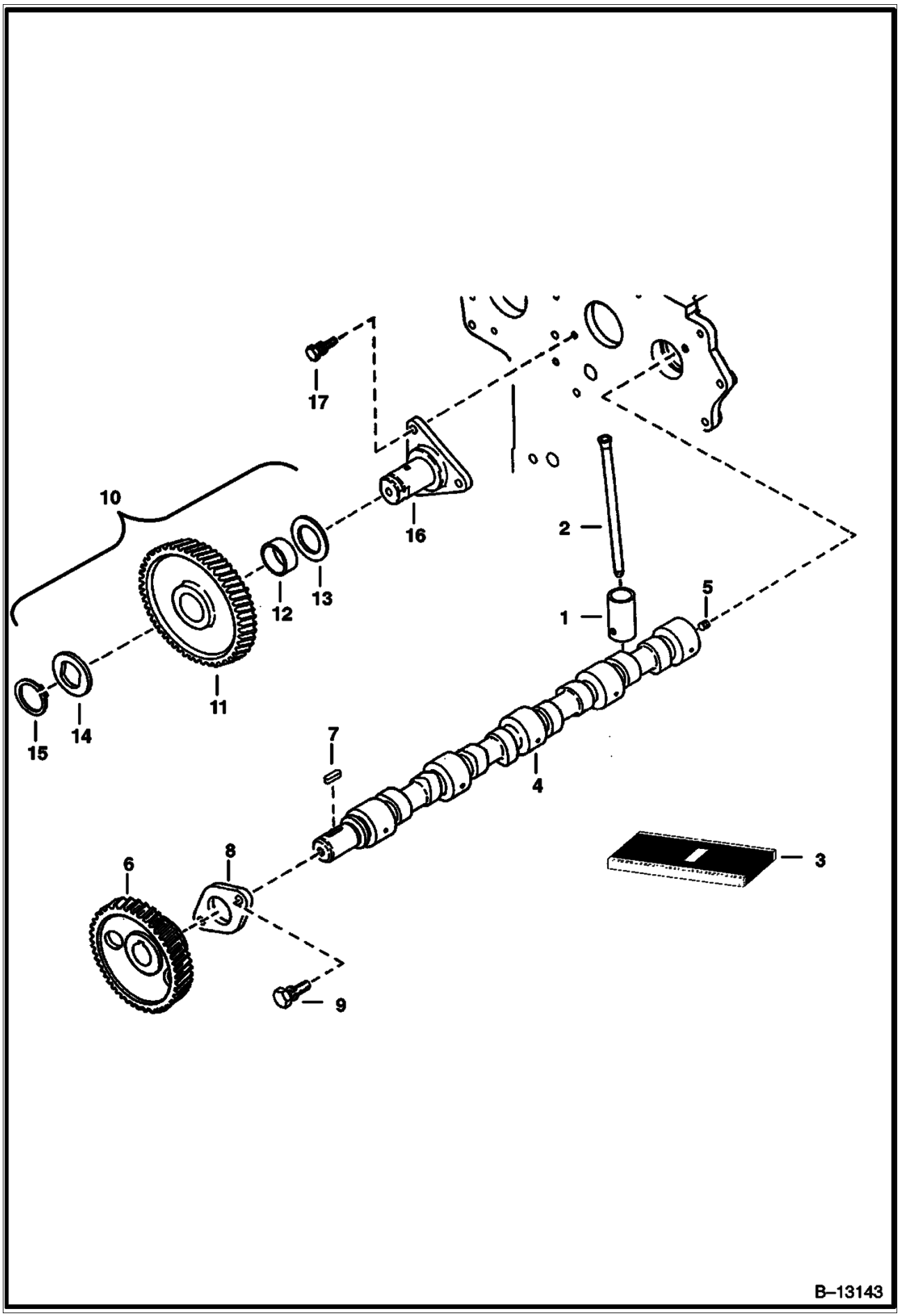

Page 174 - OSS# 2060759 - All rights reserved by Bobcat Company, a business unit of Ingersoll-Rand - 05/22/2008 - 07:23:42 - Produced by Ken Cook Co. with mediaoff

Ref No	Part Number	Description	Remarks	Serial Number	Qty
1	6667428	TAPPET			8
2	6655176	PUSHROD			8
3	6655427	CAMSHAFT	Ref 4 Ref 5 Ref 6 Ref 7 Ref 8 assy.		1
4	6655384	CAMSHAFT			1
5	6653839	SCREW	seat		1
6	6653840	GEAR	camshaft		1
7	3974546B	KEY			1
8	6653843	STOPPER	camshaft		1
9	4CM00818B	BOLT			2
10	6655187	GEAR ASSY.	W/Ref 11 W/Ref 12 idle		1
11		GEAR	Order Ref 10 NSS - idle		2
12	6655242	BUSHING	idle gear		1
13	6655190	COLLAR			1
14	6655191	COLLAR			1
15	6655192	CIR-CLIP	external		1
16	6655193	SHAFT	idle gear		1
17	4CM00816B	BOLT			3

Page 175 - OSS# 2060759 - All rights reserved by Bobcat Company, a business unit of Ingersoll-Rand - 05/22/2008 - 07:23:42 - Produced by Ken Cook Co. with media1off

WATER PUMP

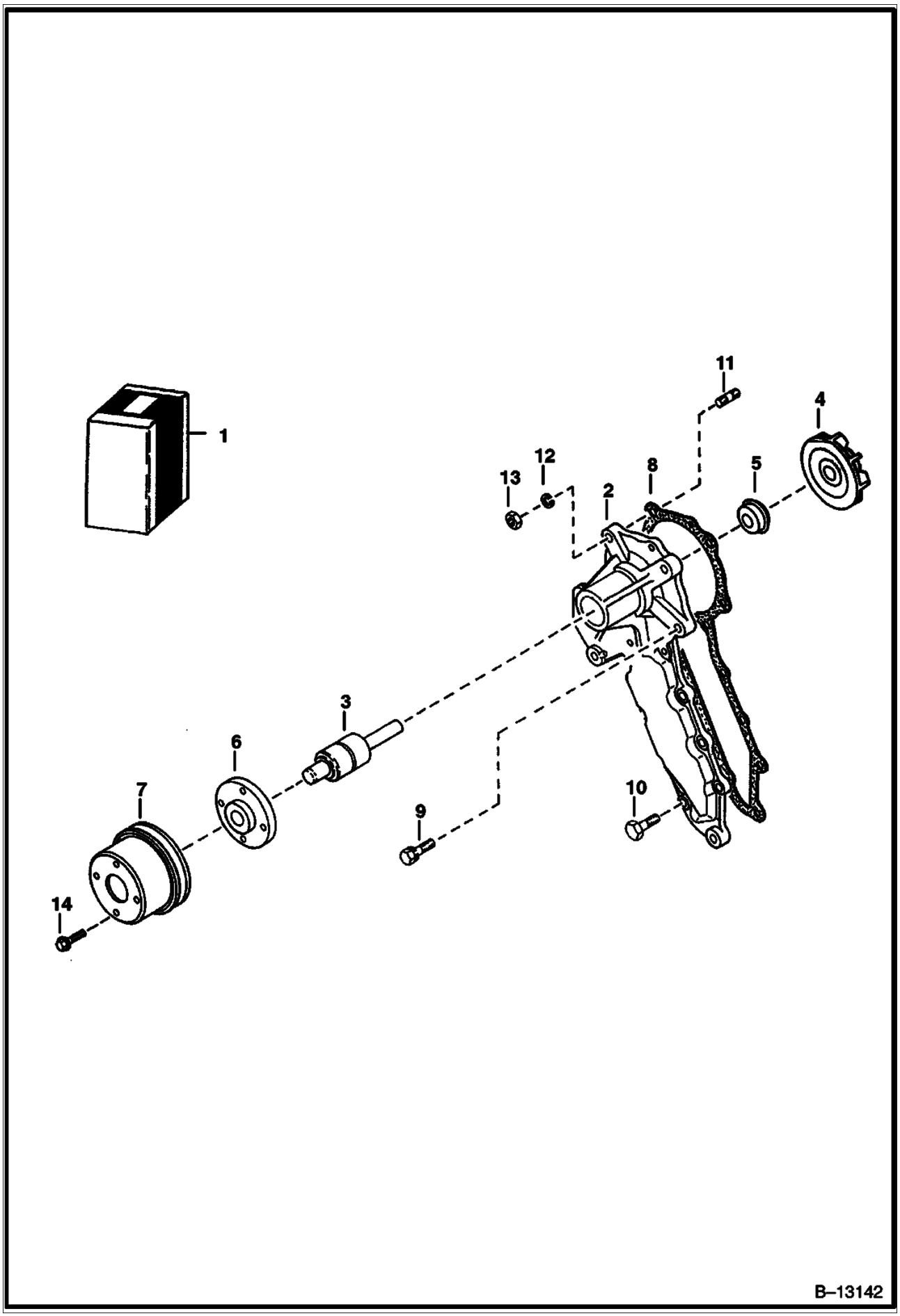

Page 176 - OSS# 2060759 - All rights reserved by Bobcat Company, a business unit of Ingersoll-Rand - 05/22/2008 - 07:23:42 - Produced by Ken Cook Co. with mediaoff

Ref No	Part Number	Description	Remarks	Serial Number	Qty
1	6653941	WATER PUMP	Ref 2 Ref 3 Ref 4 Ref 5 Ref 6		1
2		BODY	NAP		1
3	3974991B	BEARING			1
4	6667460	IMPELLER	Ref 5 for one piece seal		1
5	6667465	SEAL	one piece		1
6	3974992B	FLANGE			1
7	6674169	PULLEY	fan - Was 6651487 [B,D] [B,D]		1
8	6666804	GASKET	Was 3974995B [A]		1
9	4CM00828B	BOLT			2
10	6652580	BOLT			6
11	6653946	STUD			2
12	6EM00080B	WASHER	spring		2
13	6652792	NUT			2
14	6652762	BOLT			4

Page 177 - OSS# 2060759 - All rights reserved by Bobcat Company, a business unit of Ingersoll-Rand - 05/22/2008 - 07:23:42 - Produced by Ken Cook Co. with mediaioff

WATER FLANGE & THERMOSTAT

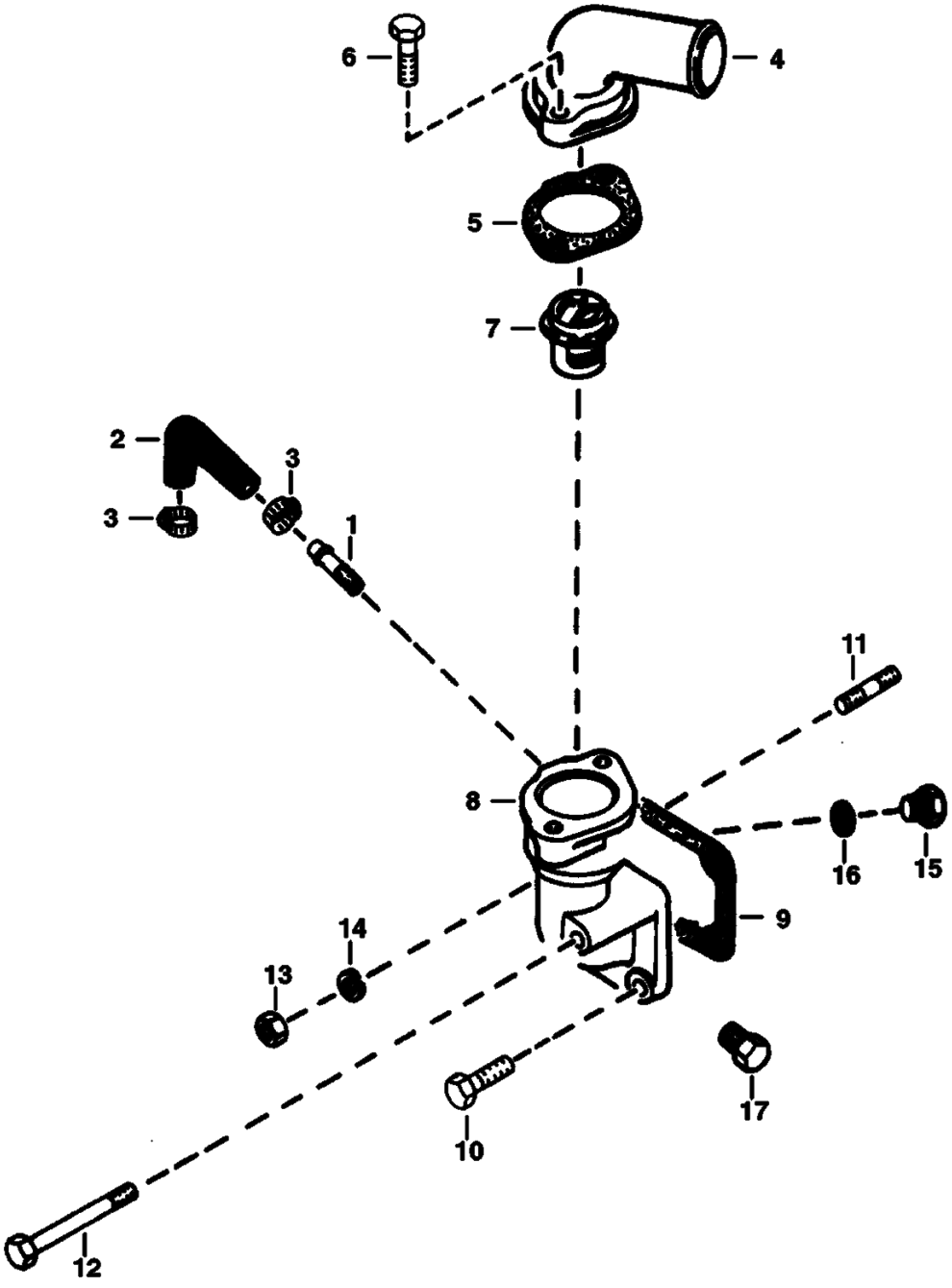

Page 178 - OSS# 2060759 - All rights reserved by Bobcat Company, a business unit of Ingersoll-Rand - 05/22/2008 - 07:23:42 - Produced by Ken Cook Co. with mediaioff

Ref No	Part Number	Description	Remarks	Serial Number	Qty
1	6655880	PIPE	water return		1
2	3974988B	PIPE	water return		1
3	3974679B	BAND	pipe		2
4	6674173	COVER	thermostat - Was 6651489 [B,D] [B,D]		1
5	6666790	GASKET	thermostat cover		1
6	1CM00835B	BOLT			2
7	6674172	THERMOSTAT	230_ F - Was 6653948 [B,D] [B,D]		1
7	6630184	THERMOSTAT	203_ F -Used W/cab heater		1
8	6674167	FLANGE	W/Ref 1 Was 6655966 [B,D] [B,D]		1
9	6666802	GASKET	water flange		1
10	4CM00822B	BOLT			2
11	3974627B	STUD			1
12	1CM00865B	BOLT			1
13	6652792	NUT			1
14	6EM00080B	WASHER			1
15	6649536	PLUG			1
16	6653562	GASKET			1
17	40K000002B	PLUG			1

Page 179 - OSS# 2060759 - All rights reserved by Bobcat Company, a business unit of Ingersoll-Rand - 05/22/2008 - 07:23:42 - Produced by Ken Cook Co. with media1off

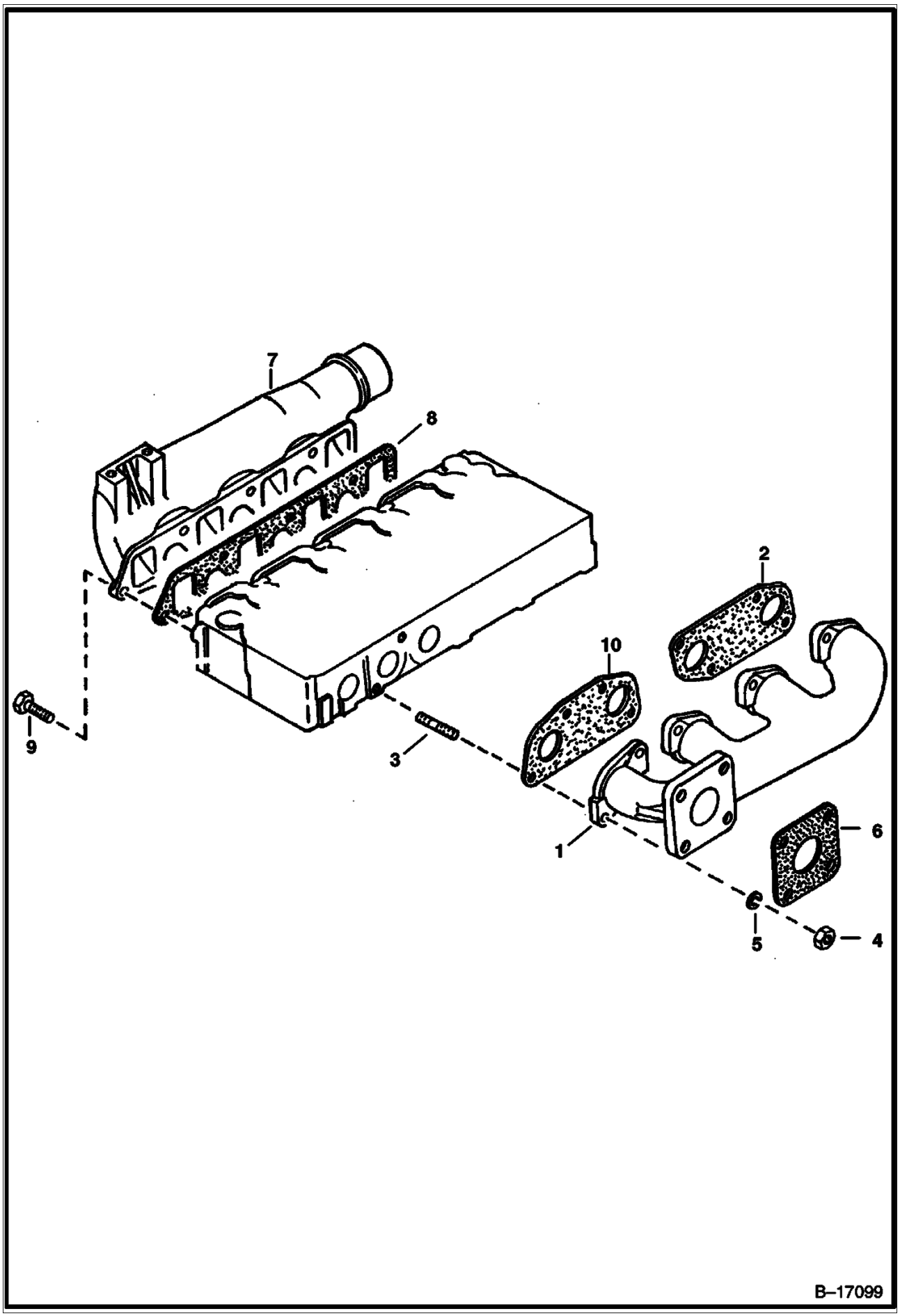

Page 180 - OSS# 2060759 - All rights reserved by Bobcat Company, a business unit of Ingersoll-Rand - 05/22/2008 - 07:23:42 - Produced by Ken Cook Co. with mediaoff

Ref No	Part Number	Description	Remarks	Serial Number	Qty
1	6651482	MANIFOLD	exhaust		1
2	6666791	GASKET			1
3	6652670	STUD			8
4	6652792	NUT			8
5	6EM00080B	WASHER	spring		12
6	6575580	GASKET	muffler		1
7	6655171	MANIFOLD	intake		1
8	6666811	GASKET			1
9	4CM00822B	BOLT			7
10	6666781	GASKET			1

Page 181 - OSS# 2060759 - All rights reserved by Bobcat Company, a business unit of Ingersoll-Rand - 05/22/2008 - 07:23:42 - Produced by Ken Cook Co. with media1off

ENGINE STOP LEVER

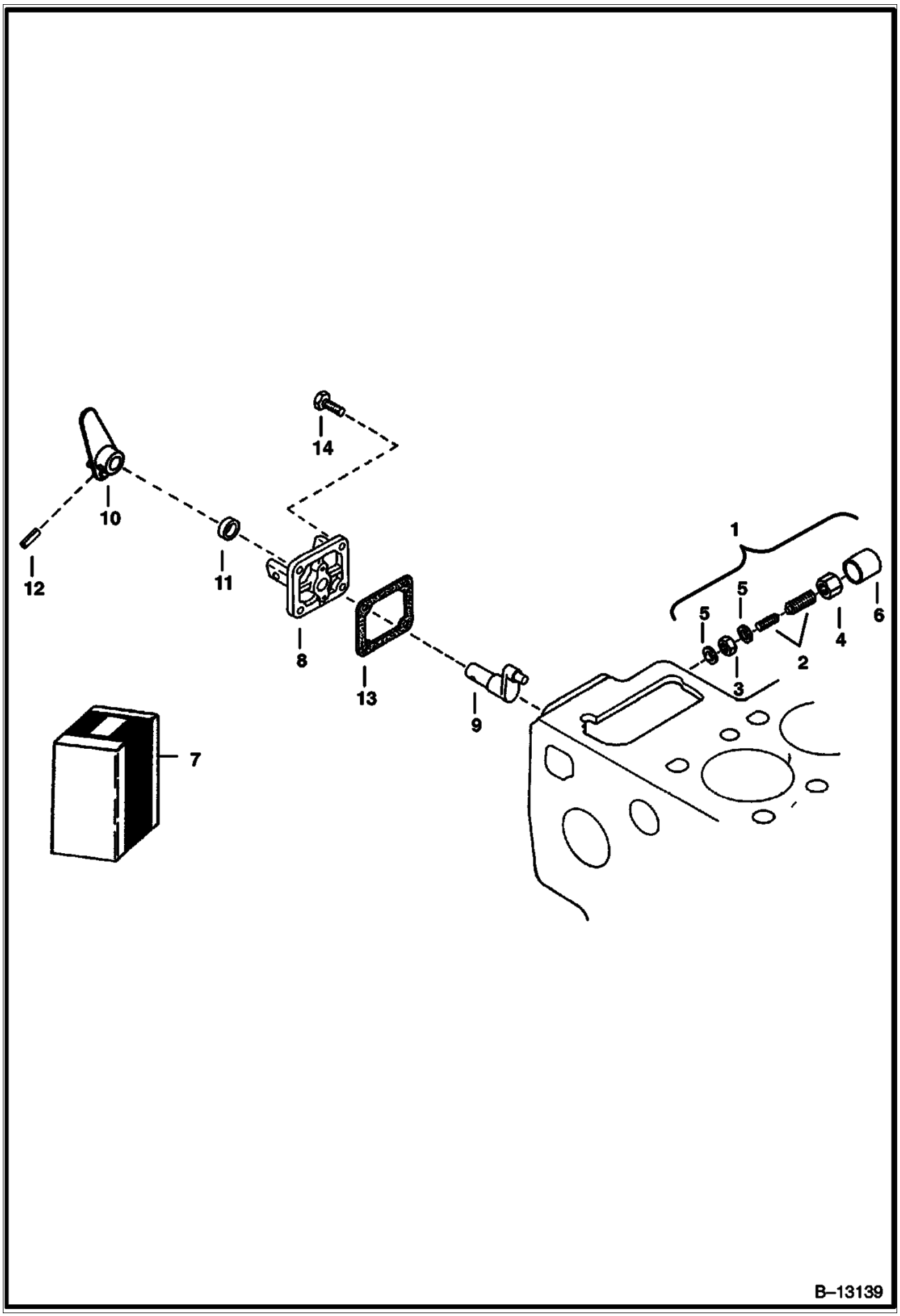

Page 182 - OSS# 2060759 - All rights reserved by Bobcat Company, a business unit of Ingersoll-Rand - 05/22/2008 - 07:23:42 - Produced by Ken Cook Co. with mediaioff

Ref No	Part Number	Description	Remarks	Serial Number	Qty
1	3974975B	APPARATUS	Ref 2 Ref 3 Ref 4 Ref 5 Ref 6 assy., idle		1
2	6653906	BOLT ASSY.	adjusting		1
3	2DM00008B	NUT	adjusting		1
4	3974978B	NUT			1
5	3974095B	GASKET			2
6	3974979B	CAP			1
7	6676060	LEVER ASSY.	Ref 8 Ref 9 Ref 10 Ref 11 Ref 12 eng. stop - Was 6655879 [A]		1
8	6655230	COVER	injection pump		1
9	6655231	SHAFT	lever		1
10	6674175	LEVER	engine stop - Was 6655232 [B,D] [B,D]		1
11	6598703	SEAL	oil		1
12	6598098	PIN	spring		1
13	6666783	GASKET	pump cover - Was 3974601B [A]		1
14	6652580	BOLT			3

Page 183 - OSS# 2060759 - All rights reserved by Bobcat Company, a business unit of Ingersoll-Rand - 05/22/2008 - 07:23:42 - Produced by Ken Cook Co. with mediaioff

GOVERNOR

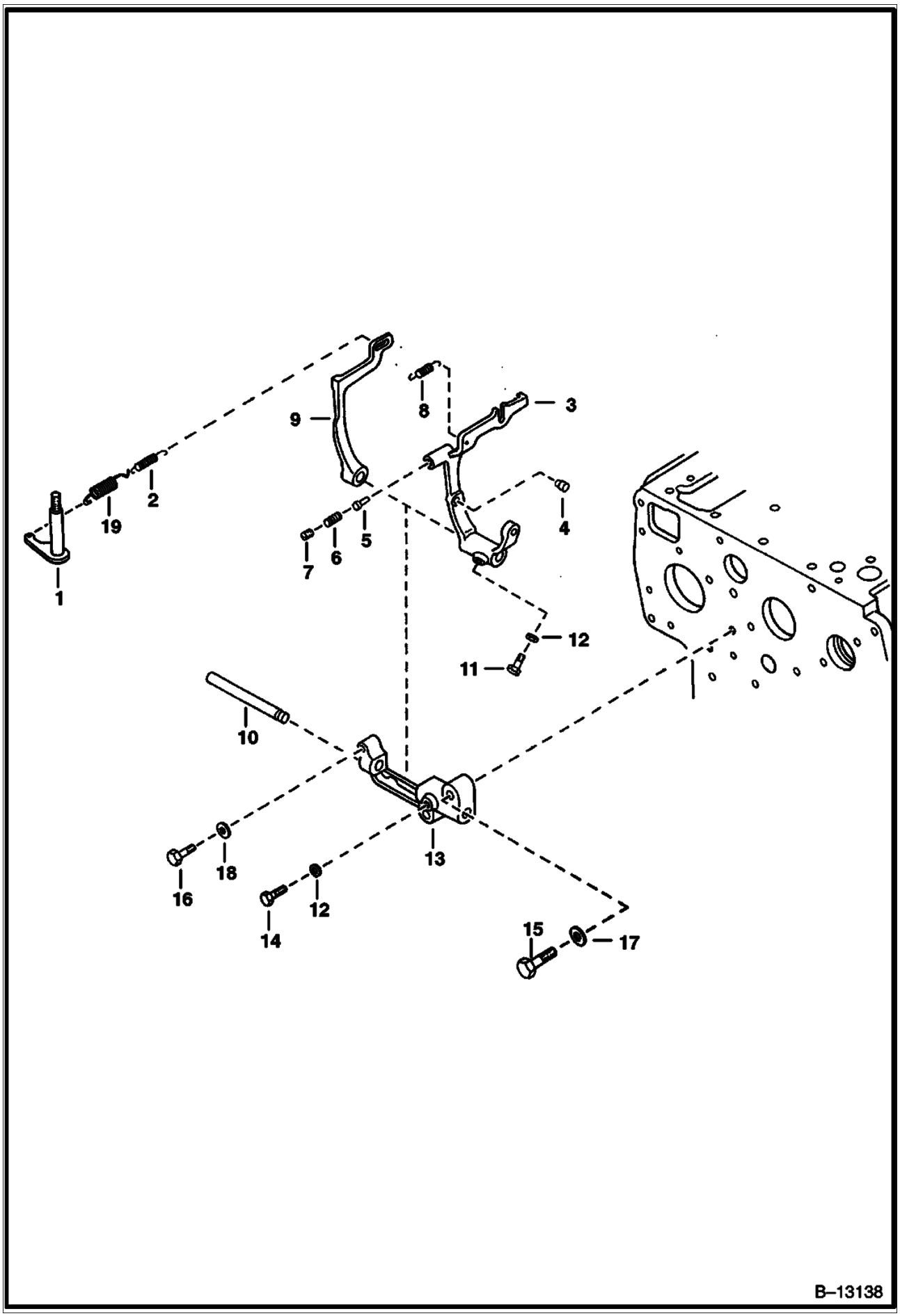

Page 184 - OSS# 2060759 - All rights reserved by Bobcat Company, a business unit of Ingersoll-Rand - 05/22/2008 - 07:23:42 - Produced by Ken Cook Co. with mediaioff

Ref No	Part Number	Description	Remarks	Serial Number	Qty
1	6598174	LEVER	governor		1
2	6655227	SPRING			1
3	6655224	LEVER	W/Ref 4 W/Ref 5 W/Ref 6 W/Ref 7 fork - Was 6655876 [A]		1
4		PIN	NSS		2
5		PIN	NSS		1
6		SPRING	NSS		1
7		SCREW	NSS		1
8	6655225	SPRING			1
9	6655877	LEVER			1
10	3974658B	SHAFT			1
11	3974659B	BOLT			1
12	6EM00060B	WASHER			2
13	3974661B	HOLDER			1
14	3974192B	BOLT			1
15	6598355	BOLT			2
16	4CM00628B	BOLT			1
17	2EM00008B	WASHER			2
18	1EM00060B	WASHER			1
19	6655878	SPRING	governor		1

Page 185 - OSS# 2060759 - All rights reserved by Bobcat Company, a business unit of Ingersoll-Rand - 05/22/2008 - 07:23:42 - Produced by Ken Cook Co. with media1off

SPEED CONTROL PLATE

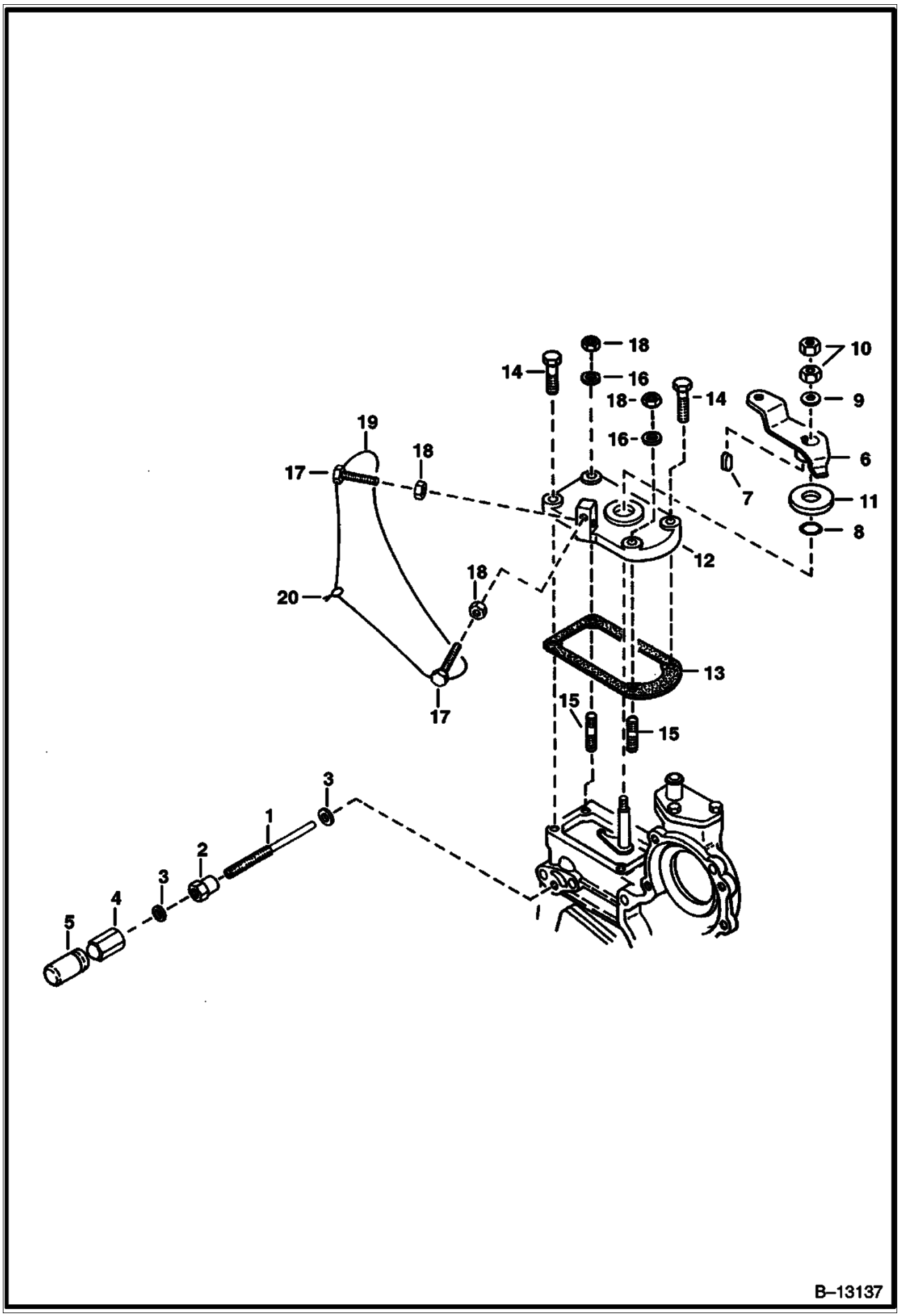

Page 186 - OSS# 2060759 - All rights reserved by Bobcat Company, a business unit of Ingersoll-Rand - 05/22/2008 - 07:23:42 - Produced by Ken Cook Co. with mediaoff

SPEED CONTROL PLATE (Cont'd)

Ref No	Part Number	Description	Remarks	Serial Number	Qty
1	3974970B	SCREW	adjusting		1
2	3974971B	NUT			1
3	3974972B	GASKET			2
4	6655223	NUT	cap		1
5	6653905	CAP			1
6	6598176	LEVER	speed control		1
7	15JM00048B	KEY	feather		1
8	3966512B	O-RING			1
9	1EM00080B	WASHER	plain		1
10	1DM00008B	NUT			2
11	3974644B	PLATE	friction		1
12	6641231	PLATE	speed control		1
13	6666792	GASKET	Was 6635392 [A]		1
14	4CM00620B	BOLT			2
15	6652764	STUD			2
16	6EM00060B	WASHER	spring		2
17	6655228	STOPPER			2
18	1DM00006B	NUT			4
19		WIRE	NAP		1
20		LEAD	NAP - sealing		1

Page 187 - OSS# 2060759 - All rights reserved by Bobcat Company, a business unit of Ingersoll-Rand - 05/22/2008 - 07:23:42 - Produced by Ken Cook Co. with mediaioff

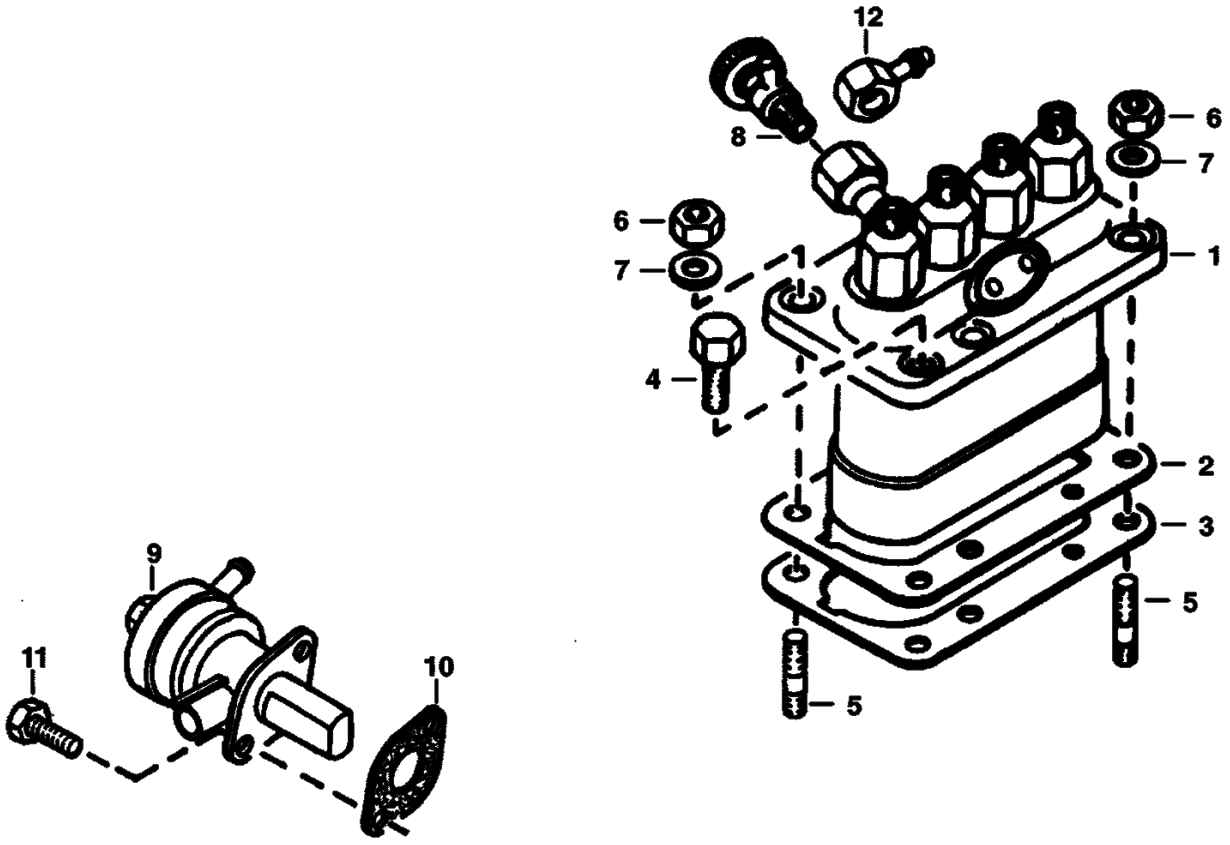

Page 188 - OSS# 2060759 - All rights reserved by Bobcat Company, a business unit of Ingersoll-Rand - 05/22/2008 - 07:23:42 - Produced by Ken Cook Co. with mediaoff

Ref No	Part Number	Description	Remarks	Serial Number	Qty
1		PUMP	See Illustration INJECTION PUMP/ B13156		1
2	3974626B	SHIM	0.15 mm		2
3	6655210	SHIM	0.45 mm		1
4	4CM00822B	BOLT			4
5	6652670	STUD			2
6	6652792	NUT			2
7	6EM00080B	WASHER	spring		2
8	6598102	VALVE	jet start		1
9	6655216	FUEL PUMP	Was 6674170 [A]		1
10	3974502B	GASKET	fuel pump		1
11	4CM00616B	BOLT			2
12	6655515	JOINT	EYE - CONNECTS TO REF. 25		1

Page 189 - OSS# 2060759 - All rights reserved by Bobcat Company, a business unit of Ingersoll-Rand - 05/22/2008 - 07:23:42 - Produced by Ken Cook Co. with media1off

INJECTION PUMP

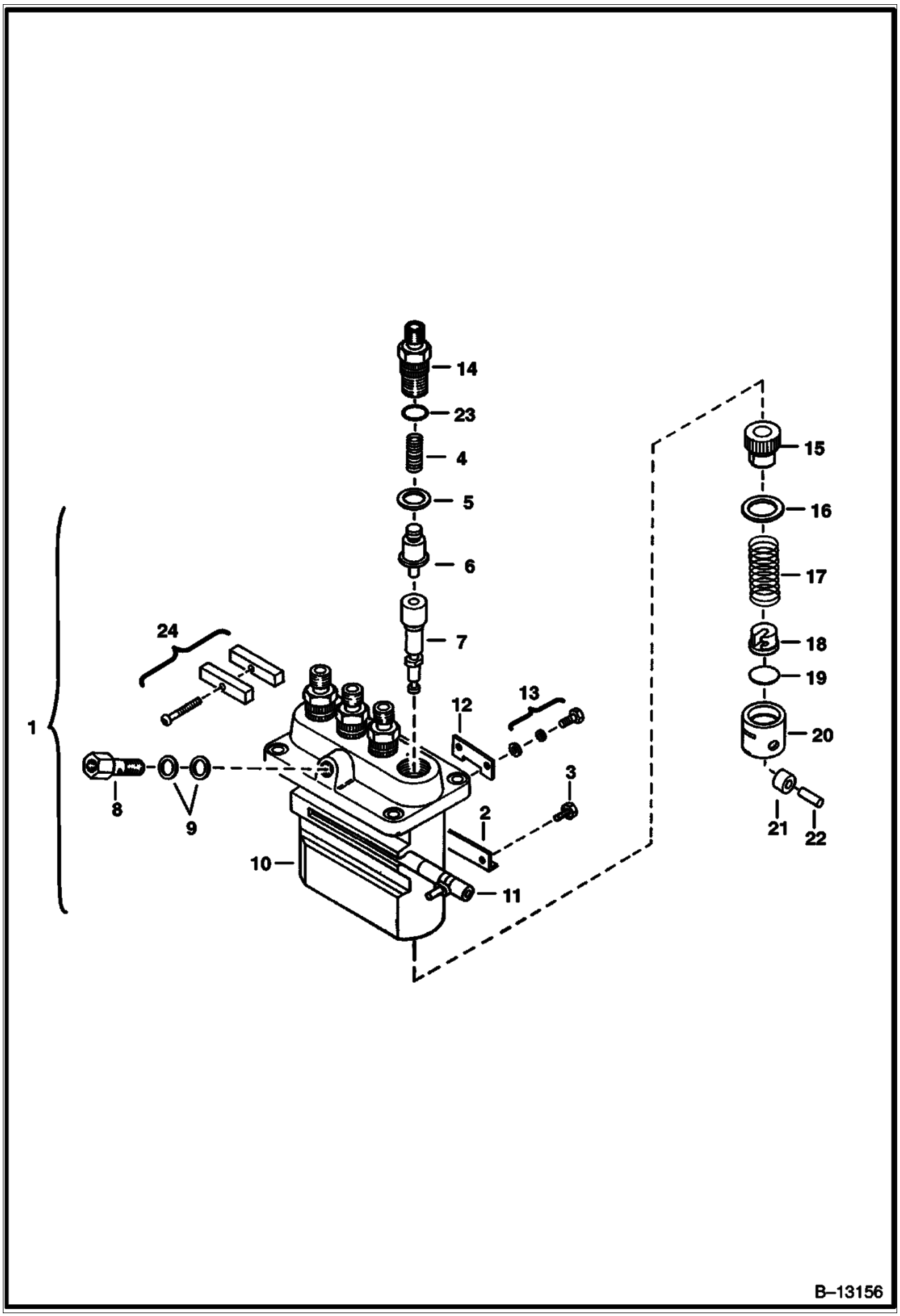

Page 190 - OSS# 2060759 - All rights reserved by Bobcat Company, a business unit of Ingersoll-Rand - 05/22/2008 - 07:23:42 - Produced by Ken Cook Co. with mediaioff

Ref No	Part Number	Description	Remarks	Serial Number	Qty
1	6667996	PUMP	injection - No serviceable parts available - Take to injection pump specialist	E/ & Bel	1
1	6674676	PUMP	injection	E/XA..... & Abv	1
2	6655207	PLATE	adjust		3
3	6655206	BOLT			3
4	6655203	SPRING	delivery valve		4
5	3974368B	GASKET	delivery valve		4
6	6655202	VALVE	delivery		4
7	6655201	ELEMENT	pump		4
8	3975428B	SCREW			1
9	3975389B	GASKET			2
10		HOUSING	NSS - pump		1
11	3974787B	RACK	control		1
12	6655209	PLATE	adjusting		3
13	3974366B	BOLT			3
14	6655204	HOLDER	delivery valve		4
15	6653894	SLEEVE	control		4
16	3974381B	SEAT	spring - Upper		4
17	3974382B	SPRING	plunger		4
18	3974383B	SEAT	spring - Under		4
19	3974384B	SHIM			4
20	3974385B	TAPPET	W/Ref 21 W/Ref 22		4
21		ROLLER	NSS		4
22		PIN	NSS		4
23	6646730	O-RING	Was 6655518 [A]		4
24	6655205	PLATE ASSY.			2

Page 191 - OSS# 2060759 - All rights reserved by Bobcat Company, a business unit of Ingersoll-Rand - 05/22/2008 - 07:23:42 - Produced by Ken Cook Co. with mediaioff

INJECTOR NOZZLES

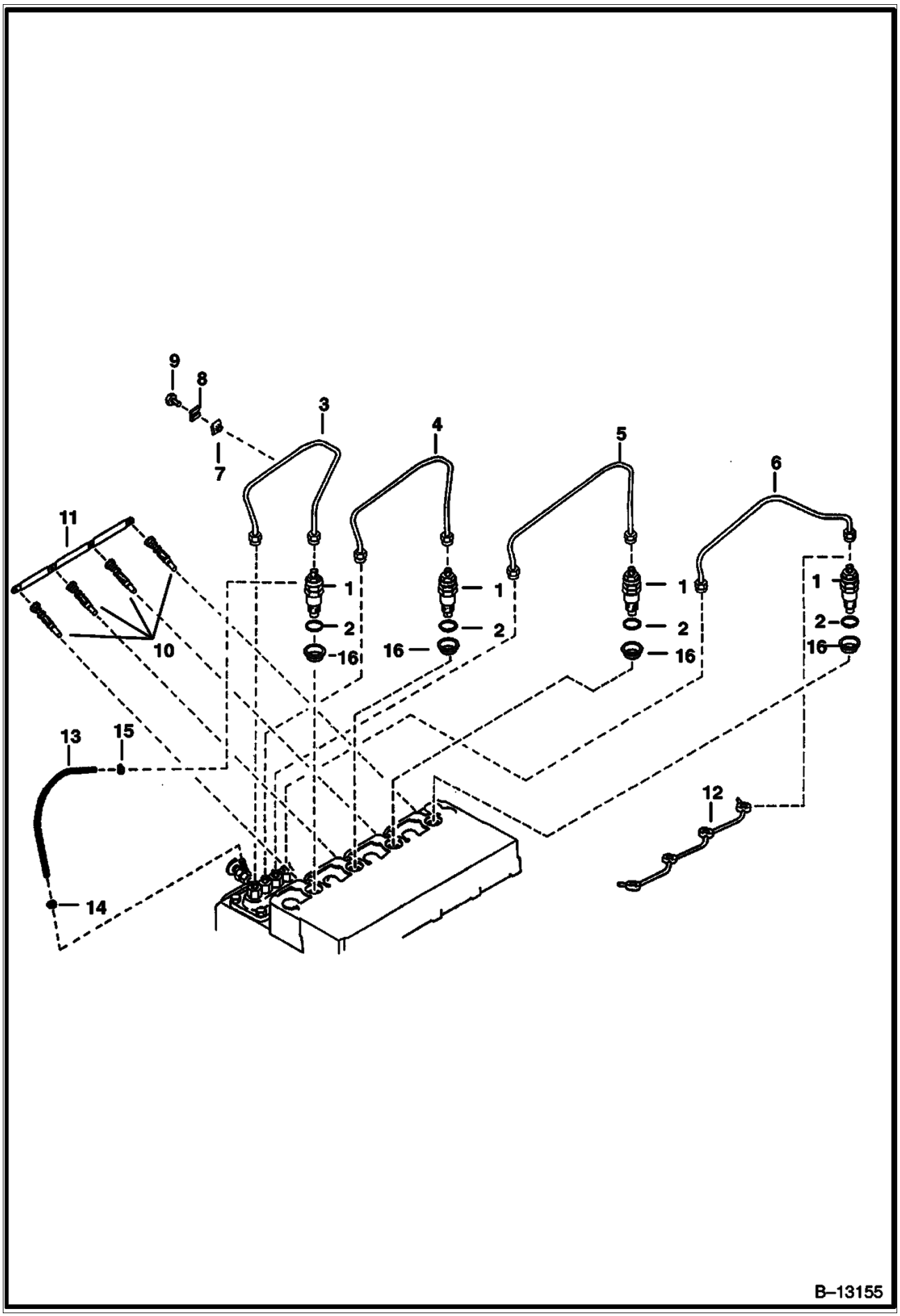

Page 192 - OSS# 2060759 - All rights reserved by Bobcat Company, a business unit of Ingersoll-Rand - 05/22/2008 - 07:23:42 - Produced by Ken Cook Co. with mediaioff

INJECTOR NOZZLES (Cont'd)

Ref No	Part Number	Description	Remarks	Serial Number	Qty
1	6722147	HOLDER KIT	See Illustration INJECTOR HOLDER/ B13154 NOZZLE-W/REF. 2 & 16 - WAS 6674174 [A]		4
2	6655218	GASKET			4
3	6655219	PIPE	injection (1)		1
4	6655220	PIPE	injection (2)		1
5	6655221	PIPE	injection (3)		1
6	6655222	PIPE	injection (4)		1
7	6652688	CLAMP	pipe (1)		3
8	6652689	CLAMP	pipe (2)		3
9	3974260B	BOLT	with washer		3
10	6655233	GLOW PLUG			4
11	6655234	CORD	glow plug - Was 6686987 [A]		1
12	6655198	PIPE	fuel over flow		1
13	6598146	PIPE	fuel over flow (2)		1
14	6599136	CLIP	pipe		1
15	6654718	CLAMP	pipe		1
16	6655872	HEAT SEAL			4

Page 193 - OSS# 2060759 - All rights reserved by Bobcat Company, a business unit of Ingersoll-Rand - 05/22/2008 - 07:23:42 - Produced by Ken Cook Co. with mediaioff

INJECTOR HOLDER

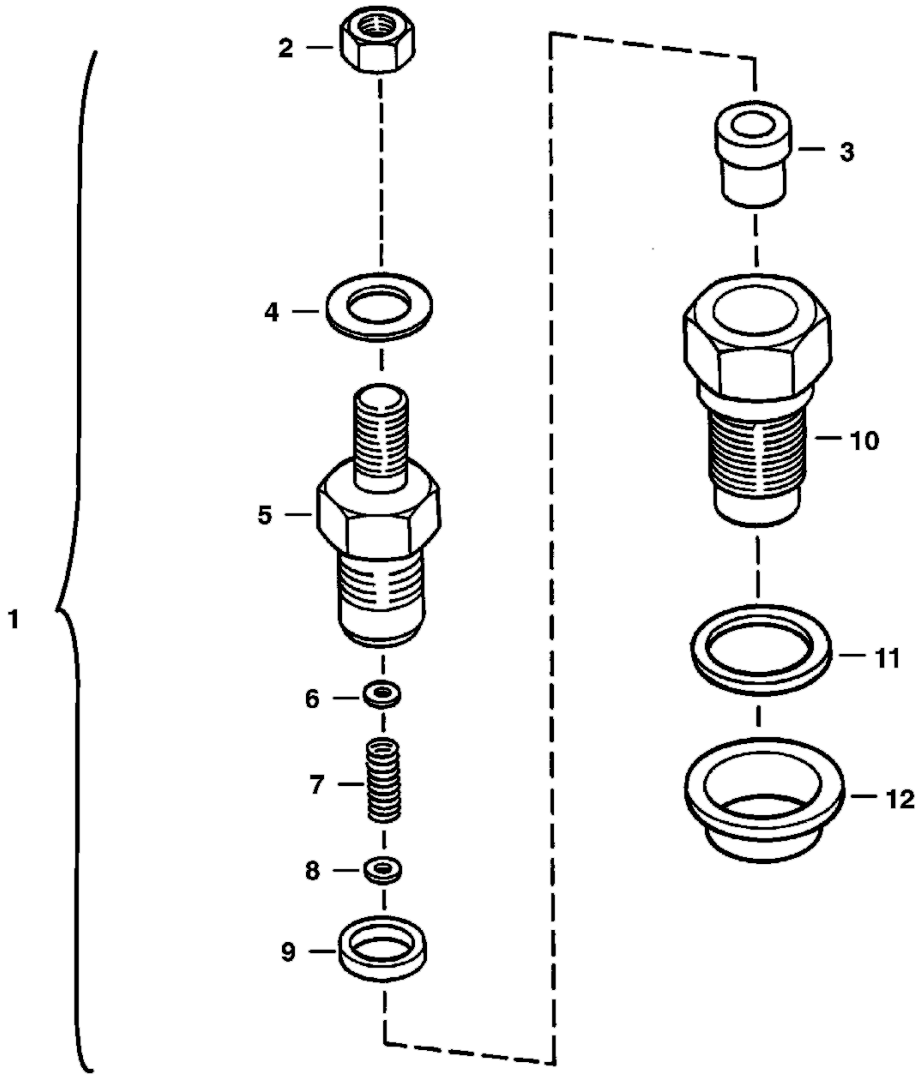

Page 194 - OSS# 2060759 - All rights reserved by Bobcat Company, a business unit of Ingersoll-Rand - 05/22/2008 - 07:23:42 - Produced by Ken Cook Co. with mediaioff

Ref No	Part Number	Description	Remarks	Serial Number	Qty
1	6722147	HOLDER KIT	nozzle - Ref. 2 & 10 - Was 6674174 [A]		4
2	6657460	NUT			1
3	6655873	PIECE	nozzle		1
4	6657463	WASHER	plain		1
5		BODY	NSS - nozzle holder		1
6	6657742	KIT	washer - (.900mm thru 1.950mm)		x
6	6656126	WASHER	adj. (1.00 mm)		x
6	6656127	WASHER	adj. (1.05 mm)		x
6	6656128	WASHER	adj. (1.10 mm)		x
6	6656129	WASHER	adj. (1.15 mm)		x
6	6656130	WASHER	adj. (1.20 mm)		x
6	6656131	WASHER	adj. (1.25 mm)		x
6	6656132	WASHER	adj. (1.30 mm)		x
7		SPRING	NSS - nozzle		1
8		PIECE	NSS - distance		1
9		PUSH ROD	NSS		1
10		NUT	NSS - nozzle		1
11	6655218	GASKET			1
12	6655872	HEAT SEAL			1

Page 195 - OSS# 2060759 - All rights reserved by Bobcat Company, a business unit of Ingersoll-Rand - 05/22/2008 - 07:23:42 - Produced by Ken Cook Co. with media1off

AIR CLEANER

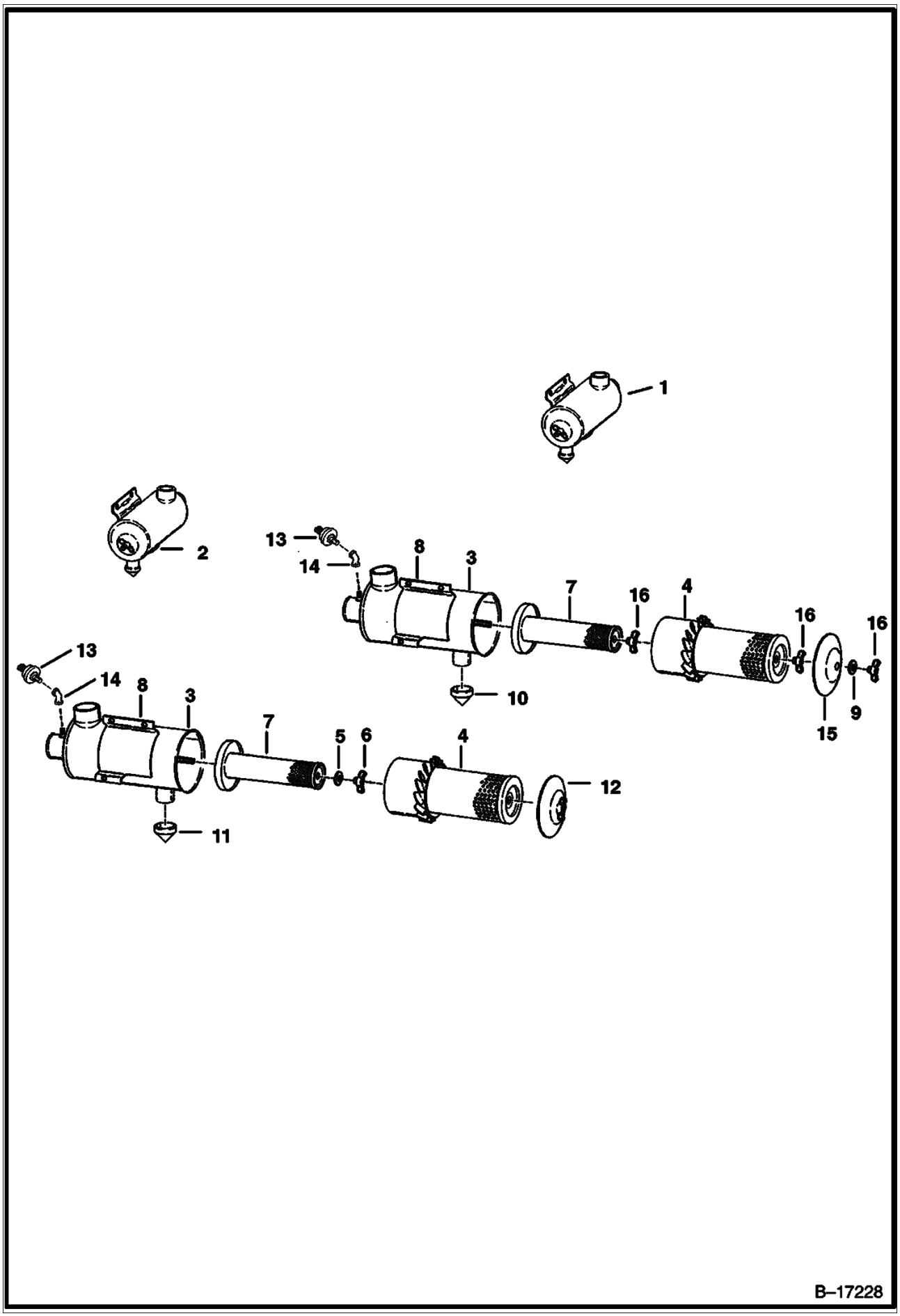

Page 196 - OSS# 2060759 - All rights reserved by Bobcat Company, a business unit of Ingersoll-Rand - 05/22/2008 - 07:23:42 - Produced by Ken Cook Co. with mediaioff

Ref No	Part Number	Description	Remarks	Serial Number	Qty
1	6700711	AIR CLEANER	W/ 1.5" Evacuator Valve - Ref. 3, 4, 7-10 & 13-16 - Was 6661400 [A]		1
2		AIR CLEANER	Order Ref 1 NAP - W/ 2" EVACUATOR VALVE - REF. 3-8 & 11-14 - - WAS 6653506 [A]		1
3		TANK	NAP		1
4	6598492	ELEMENT			1
5	886527B	WASHER			2
6	3291290B	WING NUT			2
7	6598362	ELEMENT			1
8	866028B	CLAMP			1
9	6661244	WASHER			1
10	6655938	VALVE	evacuator - 1.5" (38,1 mm) I.D.		1
11	6655937	VALVE	evacuator - 2" I.D.		1
12	6630941	COVER	W/Wing Nut		1
13	6665371	SWITCH			1
14	6725502	ELBOW	Was 23F000001B [A]		1
15	6661242	COVER			1
16	6661243	WING NUT			3

Page 197 - OSS# 2060759 - All rights reserved by Bobcat Company, a business unit of Ingersoll-Rand - 05/22/2008 - 07:23:42 - Produced by Ken Cook Co. with mediaioff

ENGINE & GASKET KITS
(Kubota - V1903 2EB - Tier II Replacement)

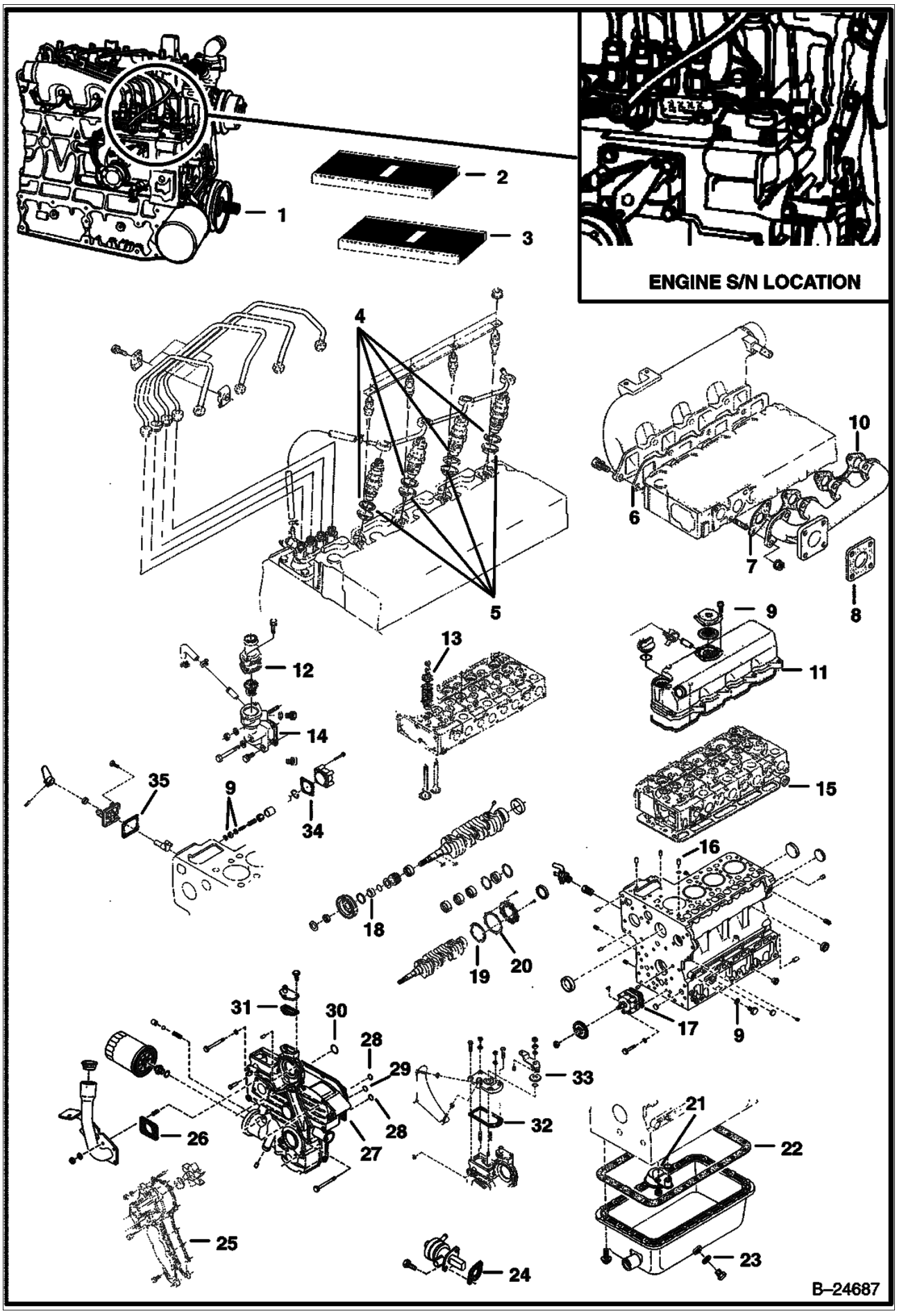

Page 198 - OSS# 2060759 - All rights reserved by Bobcat Company, a business unit of Ingersoll-Rand - 05/22/2008 - 07:23:42 - Produced by Ken Cook Co. with mediaIoff

ENGINE & GASKET KITS (Cont'd)
(Kubota - V1903 2EB - Tier II Replacement)

Ref No	Part Number	Description	Remarks	Serial Number	Qty
1	6685980	ENGINE V1903 T	Does not include starter, alternator, flywheel, & flywheel housing		1
1		SHORT BLOCK	NAP		1
2	6674698	GASKET KIT	Upper - Ref. 6-16 & 10		1
3	6657402	GASKET KIT	Lower - Does not include rear oil seal - Ref. 17-35		1
4	6655218	GASKET	See Page		4
5	6655872	HEAT SEAL	See Page		4
6	6686991	GASKET	See Page 25		1
7	6684879	GASKET	See Page 25		4
8	6575580	GASKET	muffler - See Page 25		1
9	3974095B	GASKET	See Page 5 , 7 & 27		7
10	6666781	GASKET	See Page 25		1
11	6684780	GASKET	See Page 7		1
12	6684863	GASKET	thermostat cover -See Page 23		1
13	6653830	SEAL	valve stem - See Page		8
14	6684860	GASKET	water flange - See Page 23		1
15	6672144	GASKET	cylinder head - See Page 11		1
16	3974038B	O-RING	See Page 5		1
17	6684786	GASKET	See Page 5		1
18	3974577B	O-RING	See Page 15		1
19	6684788	GASKET	See Page 15		1
20	6666814	GASKET	See Page 15		1
21	3966516B	O-RING	See Page 13		1
22	6684753	GASKET	oil pan - See Page 13		1
23	6680484	GASKET	See Page 13		1
24	6686037	GASKET	fuel pump - See Page 33		1
25	6666804	GASKET	See Page 21		1
26	6714543	GASKET	See Page		1
27	6666800	GASKET	gearcase - See Page		1
28	6685466	O-RING	See Page		2
29	6686981	O-RING	See Page		1
30	6685468	O-RING	See Page		1
31	6684774	GASKET	water return flange - See Page		1
32	6666792	GASKET	See Page 31		1
33	6686986	O-RING	See Page 31		1
34	6684813	GASKET	See Page 17		1
35	6666783	GASKET	pump cover - See Page 27		1

Page 199 - OSS# 2060759 - All rights reserved by Bobcat Company, a business unit of Ingersoll-Rand - 05/22/2008 - 07:23:42 - Produced by Ken Cook Co. with mediaioff

GEARCASE
(Kubota - V1903 2EB - Tier II Replacement)

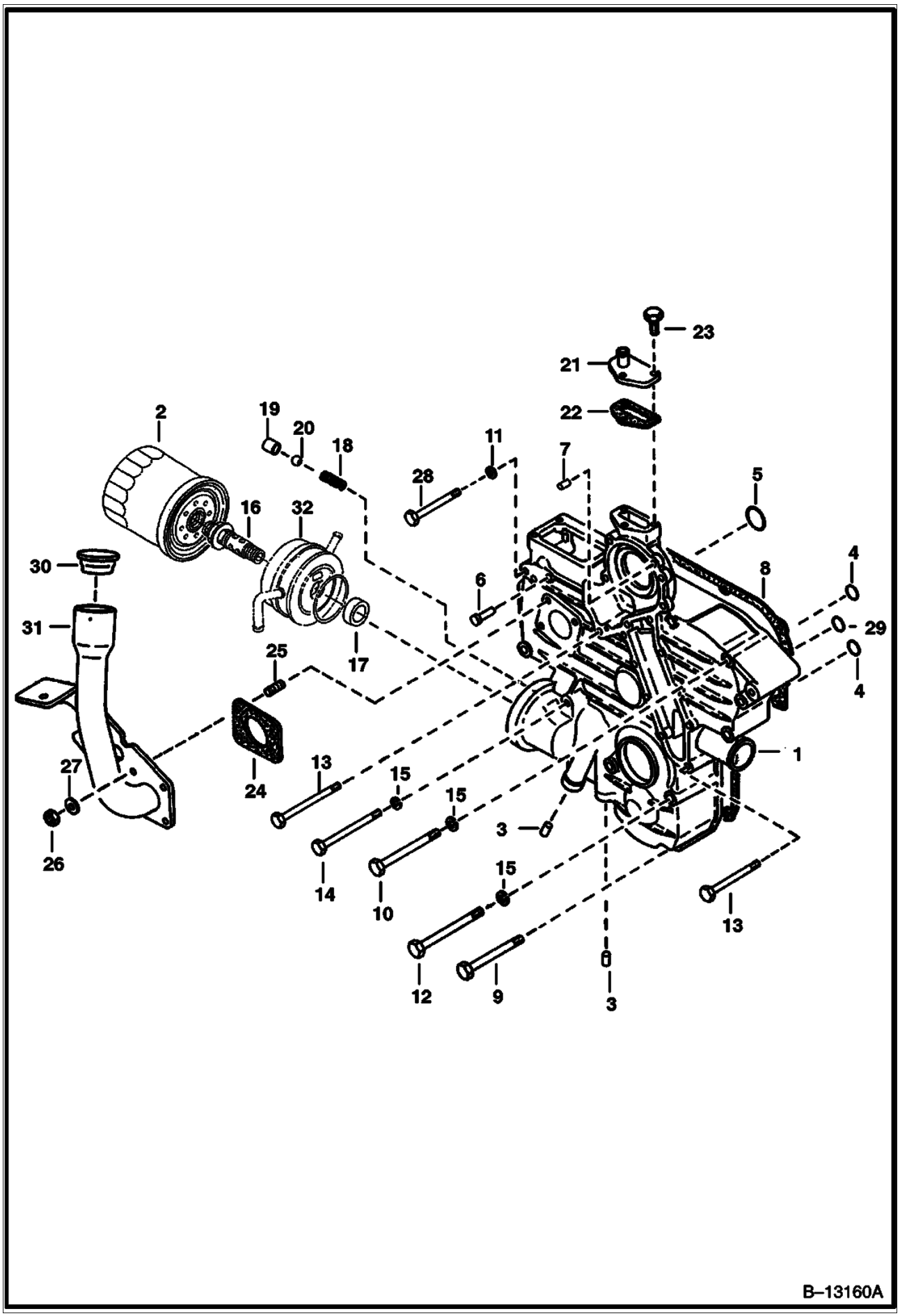

Page 200 - OSS# 2060759 - All rights reserved by Bobcat Company, a business unit of Ingersoll-Rand - 05/22/2008 - 07:23:42 - Produced by Ken Cook Co. with mediaioff

GEARCASE (Cont'd)
(Kubota - V1903 2EB - Tier II Replacement)

Ref No	Part Number	Description	Remarks	Serial Number	Qty
1	6674164	CASE ASSY.			1
2	6675517	FILTER	oil filter - 6 Pack		1
3	6667425	PLUG	pin		2
4	6685466	O-RING			2
5	6685468	O-RING			1
6	6652592	PIN	start spring		1
7	3974395B	PIN	straight		2
8	6666800	GASKET	gearcase		1
9	3974888B	BOLT			2
10	1CM00870B	BOLT			5
11	2EM00008B	WASHER			1
12	1CM00880B	SCREW			2
13	6653808	BOLT			3
14	1CM00895B	BOLT			2
15	6667422	WASHER			9
16	6653809	ADAPTER			1
17	6685501	WASHER			1
18	6652652	SPRING			1
19	3974893B	SEAT	valve		1
20	10J000013B	BALL			1
21	3974894B	FLANGE	water return		1
22	6684774	GASKET	water return flange		1
23	4CM00620B	BOLT			3
24	6714543	GASKET			1
25	6652764	STUD			4
26	1DM00006B	NUT			4
27	6EM00060B	WASHER	spring		4
28	6653807	BOLT			1
29	6686981	O-RING			1
30	6703736	CAP			1
31	6719048	MOUNT			1

Page 201 - OSS# 2060759 - All rights reserved by Bobcat Company, a business unit of Ingersoll-Rand - 05/22/2008 - 07:23:42 - Produced by Ken Cook Co. with mediaioff

CRANKCASE
(Kubota - V1903 2EB - Tier II Replacement)

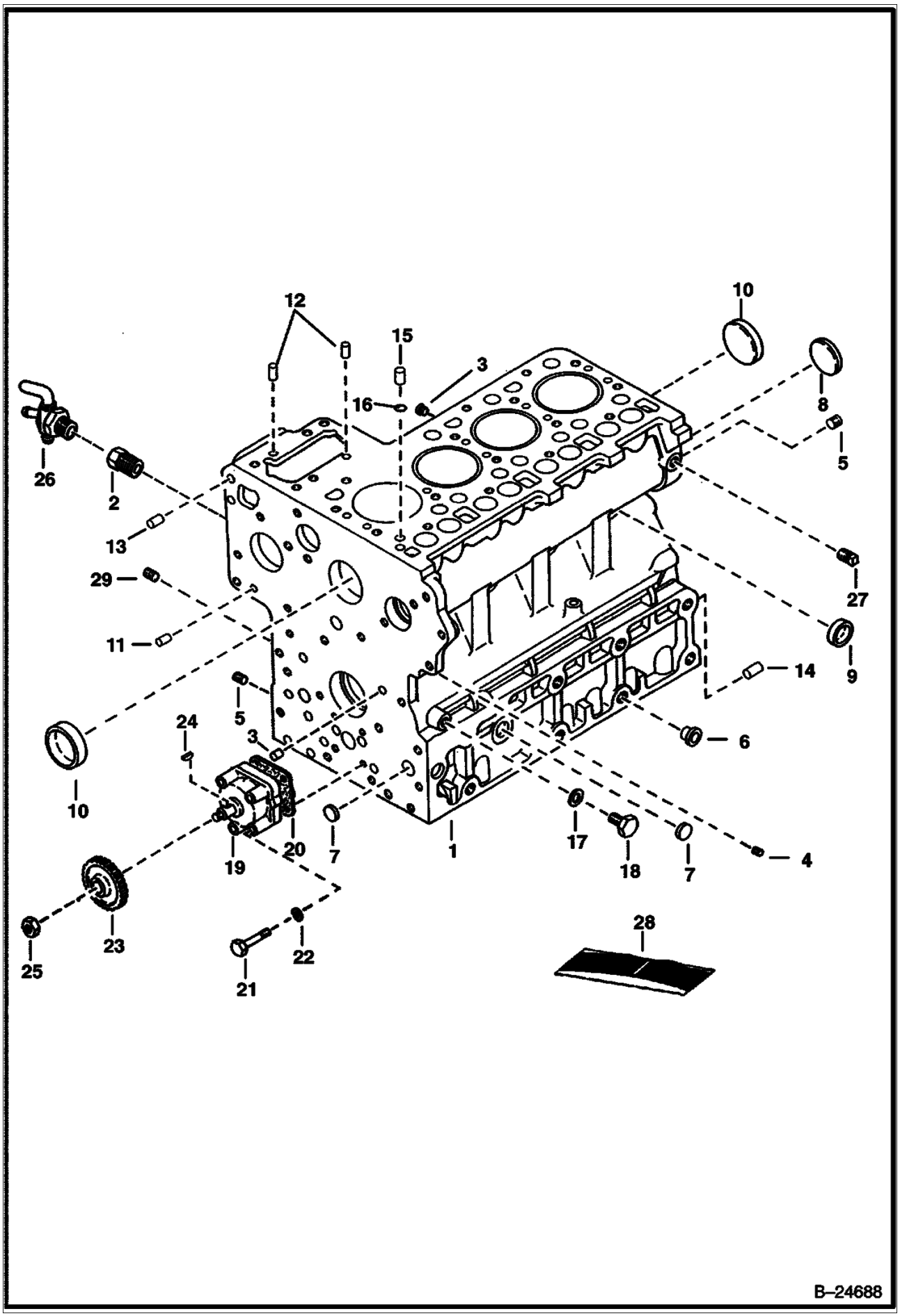

Page 202 - OSS# 2060759 - All rights reserved by Bobcat Company, a business unit of Ingersoll-Rand - 05/22/2008 - 07:23:42 - Produced by Ken Cook Co. with mediaioff

CRANKCASE (Cont'd)
(Kubota - V1903 2EB - Tier II Replacement)

Ref No	Part Number	Description	Remarks	Serial Number	Qty
1	6672146	CRANKCASE	assy. - W/Ref. 2 - 15		1
2	3974871B	ADAPTER			1
3	6652574	PLUG			5
4	6685477	PLUG			1
5	6652575	PLUG			2
6	6598187	PLUG			2
7	6667418	PLUG	expansion		3
8	6657663	PLUG	expansion		1
9	3974389B	GASKET	sealing		6
10	6680639	PLUG	sealing		2
11	3974393B	PIN	straight		2
12	3974394B	PIN	straight		2
13	3974395B	PIN	straight		2
14	3974868B	PIN	straight		1
15	3974037B	PIN	pipe		1
16	3974038B	O-RING			1
17	3974095B	GASKET			1
18	6683104	PLUG			1
19	3975426B	OIL PUMP			1
20	6684786	GASKET			1
21	6655195	BOLT			4
22	6667419	WASHER			4
23	3975441B	GEAR			1
24	15JM00410B	KEY			1
25	3DM00012B	NUT			1
26	6630177	DRAINCOCK			1
27	16F000002B	PLUG			1
28	6657402	GASKET KIT	Lower - Does not include rear oil seal - See Page		1
29	3974399B	PLUG			1

Page 203 - OSS# 2060759 - All rights reserved by Bobcat Company, a business unit of Ingersoll-Rand - 05/22/2008 - 07:23:42 - Produced by Ken Cook Co. with mediaioff

ROCKER ARM COVER
(Kubota - V1903 2EB - Tier II Replacement)

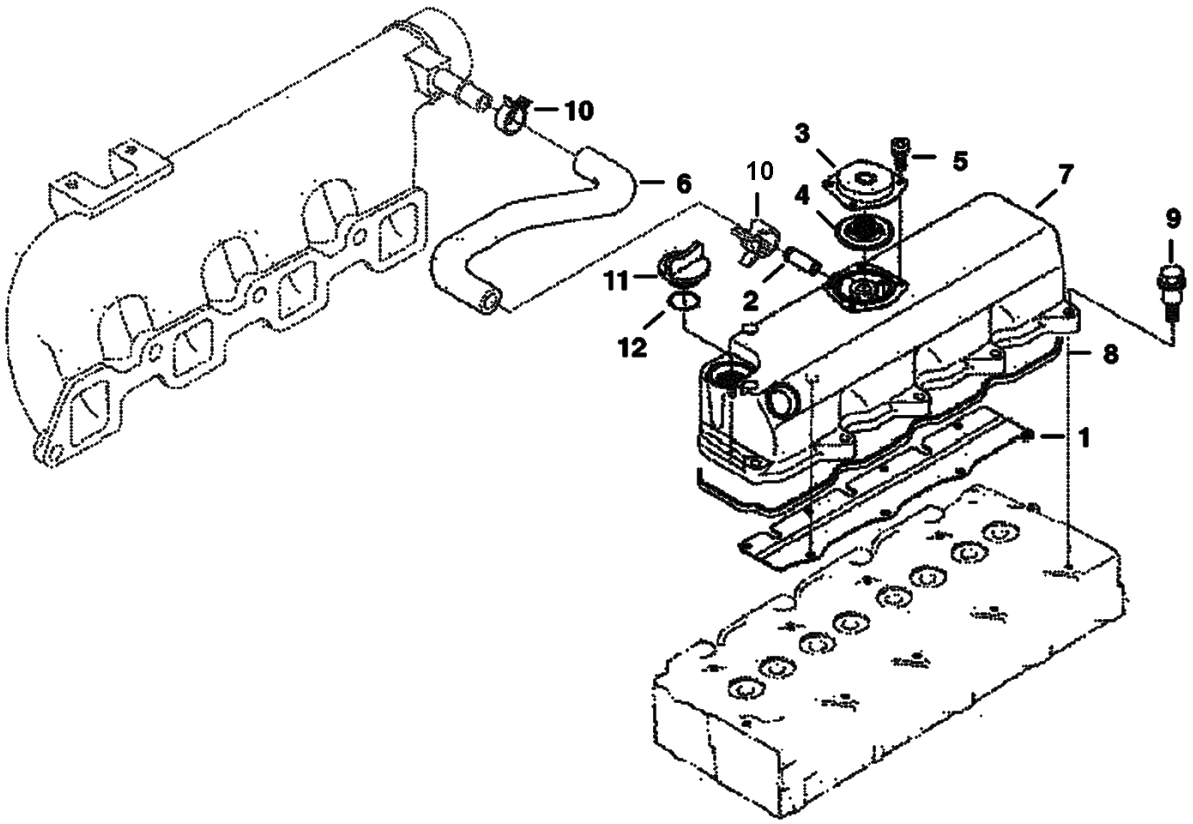

Page 204 - OSS# 2060759 - All rights reserved by Bobcat Company, a business unit of Ingersoll-Rand - 05/22/2008 - 07:23:42 - Produced by Ken Cook Co. with mediaioff

ROCKER ARM COVER (Cont'd)
(Kubota - V1903 2EB - Tier II Replacement)

Ref No	Part Number	Description	Remarks	Serial Number	Qty
1	6684779	SHIELD	breather		1
2	6655880	PIPE			1
3	6685086	COVER			1
4	6685087	VALVE			1
5	3974928B	SCREW	W/Washer		4
6	6686983	PIPE	breather		1
7	6685085	COVER	valve		1
8	6684780	GASKET			1
9	6684781	BOLT			10
10	6684776	CLAMP	pipe		2
11	6680908	CAP	oil filler		1
12	6684782	O-RING			1

Page 205 - OSS# 2060759 - All rights reserved by Bobcat Company, a business unit of Ingersoll-Rand - 05/22/2008 - 07:23:42 - Produced by Ken Cook Co. with media1off

VALVE ROCKER ARM
(Kubota - V1903 2EB - Tier II Replacement)

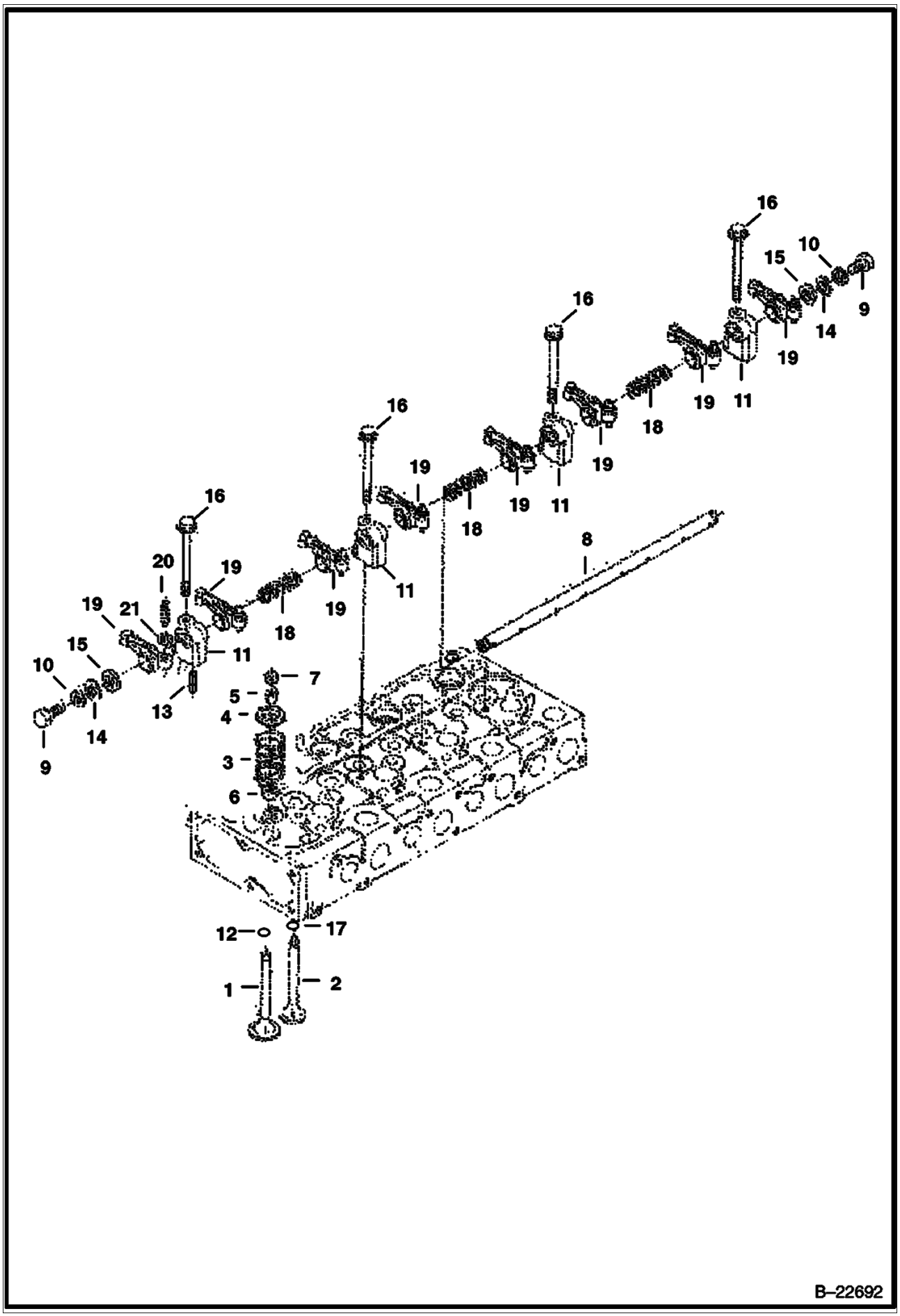

Page 206 - OSS# 2060759 - All rights reserved by Bobcat Company, a business unit of Ingersoll-Rand - 05/22/2008 - 07:23:42 - Produced by Ken Cook Co. with mediaioff

VALVE ROCKER ARM (Cont'd)
(Kubota - V1903 2EB - Tier II Replacement)

Ref No	Part Number	Description	Remarks	Serial Number	Qty
1	6655173	VALVE	inlet		4
2	6655174	VALVE	exhaust		4
3	3974514B	SPRING	valve		8
4	3974515B	RETAINER	valve spring		8
5	6684874	COLLAR	valve spring - complete set		1
6	6653830	SEAL	valve stem		8
7	3974518B	CAP	valve		8
8	6684875	SHAFT	rocker arm		1
9	5CM00812B	BOLT			2
10	6667422	WASHER	external		2
11	3974521B	BRACKET	rocker arm		4
12	6655155	SEAT	valve inlet		4
13	6667461	PIN	spring		4
14	6667451	WASHER	spring		4
15	3974524B	WASHER			2
16	6680685	BOLT			1
17	6655156	SEAT	valve exhaust		4
18	6653833	SPRING	rocker arm		3
19	6655870	ROCKER ARM	rocker - W/Ref. &		8
20	3974920B	SCREW	adjusting		8
21	2DM00008B	NUT			8

Page 207 - OSS# 2060759 - All rights reserved by Bobcat Company, a business unit of Ingersoll-Rand - 05/22/2008 - 07:23:42 - Produced by Ken Cook Co. with mediaioff

CYLINDER HEAD
(Kubota - V1903 2EB - Tier II Replacement)

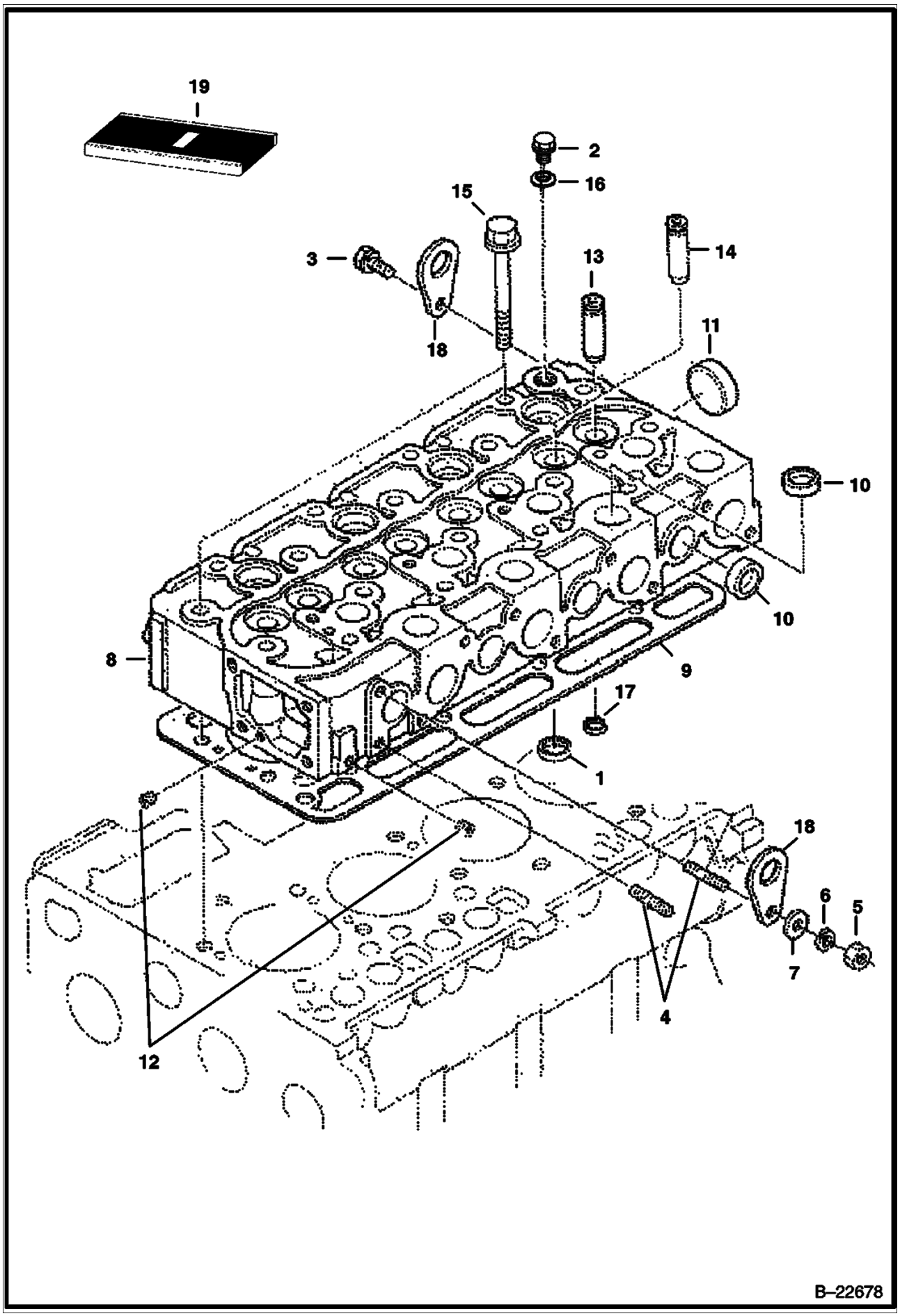

Page 208 - OSS# 2060759 - All rights reserved by Bobcat Company, a business unit of Ingersoll-Rand - 05/22/2008 - 07:23:42 - Produced by Ken Cook Co. with mediaoff

CYLINDER HEAD (Cont'd)
(Kubota - V1903 2EB - Tier II Replacement)

Ref No	Part Number	Description	Remarks	Serial Number	Qty
1	6655155	SEAT	inlet valve		1
2	6655160	PLUG			1
3	6667421	BOLT			1
4	6652670	STUD			2
5	6652792	NUT			2
6	6EM00080B	WASHER	spring		2
7	2EM00008B	WASHER	plain		2
8	6686980	HEAD	cylinder - W/Ref. 10 - 14		1
9	6672144	GASKET	cylinder head		1
10	3974432B	CAP	sealing		12
11	3974433B	CAP	sealing		1
12	6598116	PLUG			2
13	6655154	GUIDE	intake valve		4
14	6653803	GUIDE	exhaust valve		4
15	6655158	BOLT			18
16	6655161	WASHER			1
17	6655156	SEAT	exhaust valve		4
18	3974882B	BRACKET			2
19	6657401	GASKET KIT	upper - See Page		1

Page 209 - OSS# 2060759 - All rights reserved by Bobcat Company, a business unit of Ingersoll-Rand - 05/22/2008 - 07:23:42 - Produced by Ken Cook Co. with mediaioff

OIL PAN
(Kubota - V1903 2EB - Tier II Replacement)

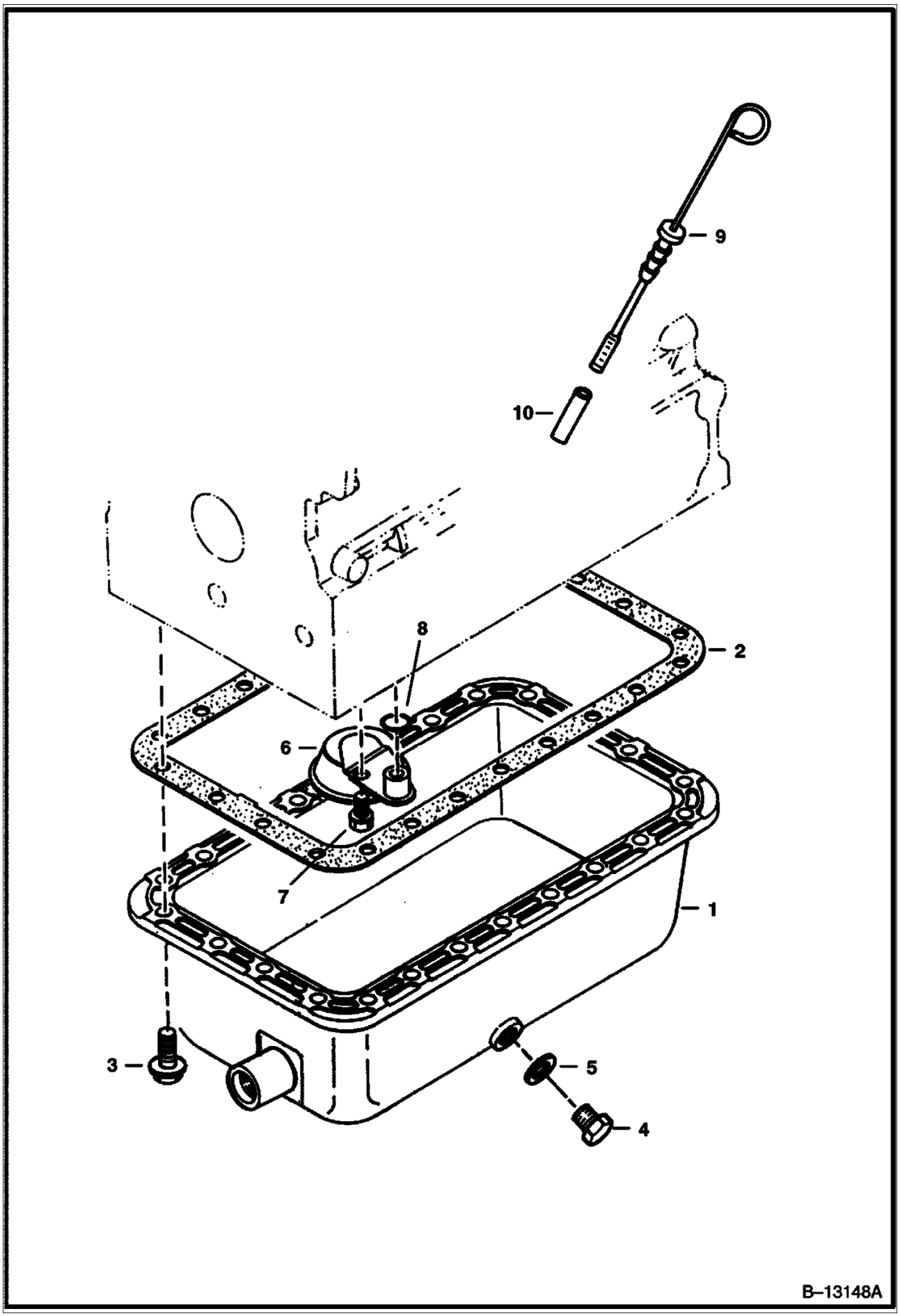

Page 210 - OSS# 2060759 - All rights reserved by Bobcat Company, a business unit of Ingersoll-Rand - 05/22/2008 - 07:23:42 - Produced by Ken Cook Co. with mediaoff

OIL PAN (Cont'd)
(Kubota - V1903 2EB - Tier II Replacement)

Ref No	Part Number	Description	Remarks	Serial Number	Qty
1	6655151	OIL PAN			1
2	6684753	GASKET	oil pan		1
3	6653798	BOLT			24
4	6686979	PLUG	drain		1
5	6680484	GASKET			1
6	6655194	OIL FILTER			1
7	4CM00816B	BOLT			1
8	3966516B	O-RING			1
9	6684784	GAUGE	oil		1
10	6677203	GUIDE	dipstick		1

Page 211 - OSS# 2060759 - All rights reserved by Bobcat Company, a business unit of Ingersoll-Rand - 05/22/2008 - 07:23:42 - Produced by Ken Cook Co. with media1off

PISTON & CRANKSHAFT
(Kubota - V1903 2EB - Tier II Replacement)

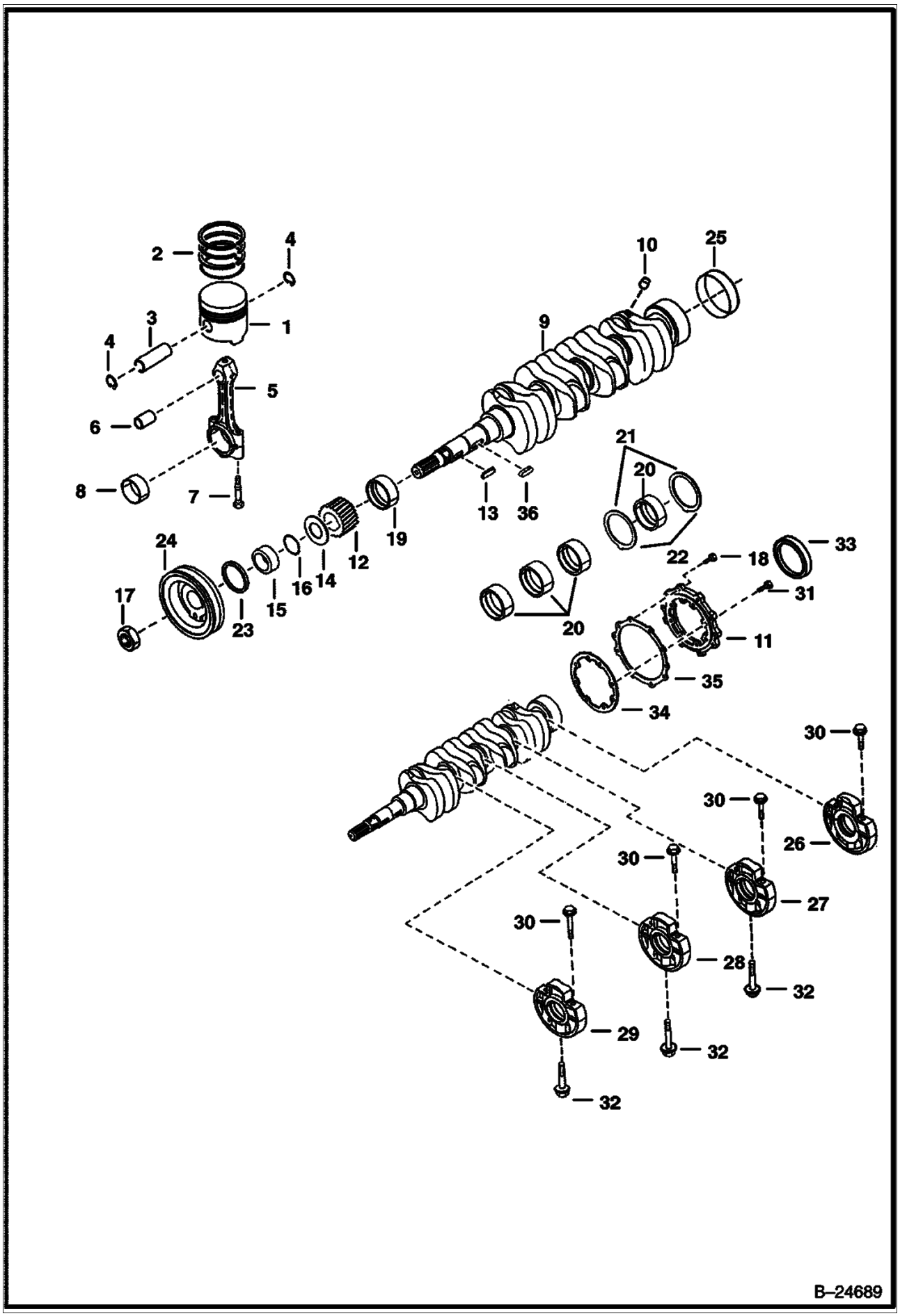

Page 212 - OSS# 2060759 - All rights reserved by Bobcat Company, a business unit of Ingersoll-Rand - 05/22/2008 - 07:23:42 - Produced by Ken Cook Co. with mediaioff

PISTON & CRANKSHAFT (Cont'd)
(Kubota - V1903 2EB - Tier II Replacement)

Ref No	Part Number	Description	Remarks	Serial Number	Qty
1	6672142	PISTON	Std.		4
1	6674255	PISTON	(0.5mm - .0197)		4
2	6672141	RINGS	piston - Std.		4
2	6674256	RINGS	piston - (0.5mm - .0197)		4
3	6655179	PIN			4
4	6655180	CIR-CLIP			8
5	6655181	ROD	connecting - W/Ref. 6, 7 & 8		4
6	6655243	BUSHING			4
7	6655498	BOLT			8
8	6655183	PIN	rod - Std.		4
8	6655236	PIN	rod (0,2 mm-.0079)		4
8	6655237	PIN	rod (0,4 mm-.0157)		4
9	6655184	CRANKSHAFT	Ref. 10 & 25 - Ref. 10 must be installted before using		1
10	6652633	BALL	Must be installed before using Ref. 9 crankshaft - See S/L dated 3 Jan 85		4
11	6685515	COVER			1
12	6598142	GEAR			1
13	3974546B	KEY			1
14	6653861	SLINGER	oil		1
15	3975337B	COLLAR			1
16	3974577B	O-RING			1
17	3974671B	NUT			1
18	4CM00825B	BOLT			8
19	6655185	BEARING	main - Std.		1
19	6655238	BEARING	main (0,2 mm-.0079)		1
19	6655239	BEARING	main (0,4 mm-.0157)		1
20	6655186	BEARING	main - Std.		4
20	6655240	BEARING	main (0,2 mm-.0079)		4
20	6655241	BEARING	main (0,4 mm-.0157)		4
21	3974945B	WASHER	thrust - Std.		2
21	3975021B	WASHER	thrust (0,2 mm-.0079)		2
21	3975022B	WASHER	thrust (0,4 mm-.0157)		2
22	6653865	WASHER	thrust - Std.		2
22	6654002	WASHER	thrust (0,2 mm-.0079)		2
22	6654003	WASHER	thrust (0,4 mm-.0157)		2
23	6631664	SEAL	oil		1
24	6674168	PULLEY			1
25	6653859	SLEEVE			1
26	6655163	CASE	main bearing - W/Ref. 30		1
27	6655170	CASE	main bearing - W/Ref. 30		1
28	6655169	CASE	main bearing - W/Ref. 30		1
29	6655168	CASE	main bearing - W/Ref. 30		1
30	6655164	BOLT			8
31	4CM00828B	BOLT			8
32	6653821	BOLT			3
33	6649300	SEAL	oil		1
34	6655165	GASKET			1
35	6666814	GASKET			1

Page 213 - OSS# 2060759 - All rights reserved by Bobcat Company, a business unit of Ingersoll-Rand - 05/22/2008 - 07:23:42 - Produced by Ken Cook Co. with mediaioff

FUEL CAMSHAFT
(Kubota - V1903 2EB - Tier II Replacement)

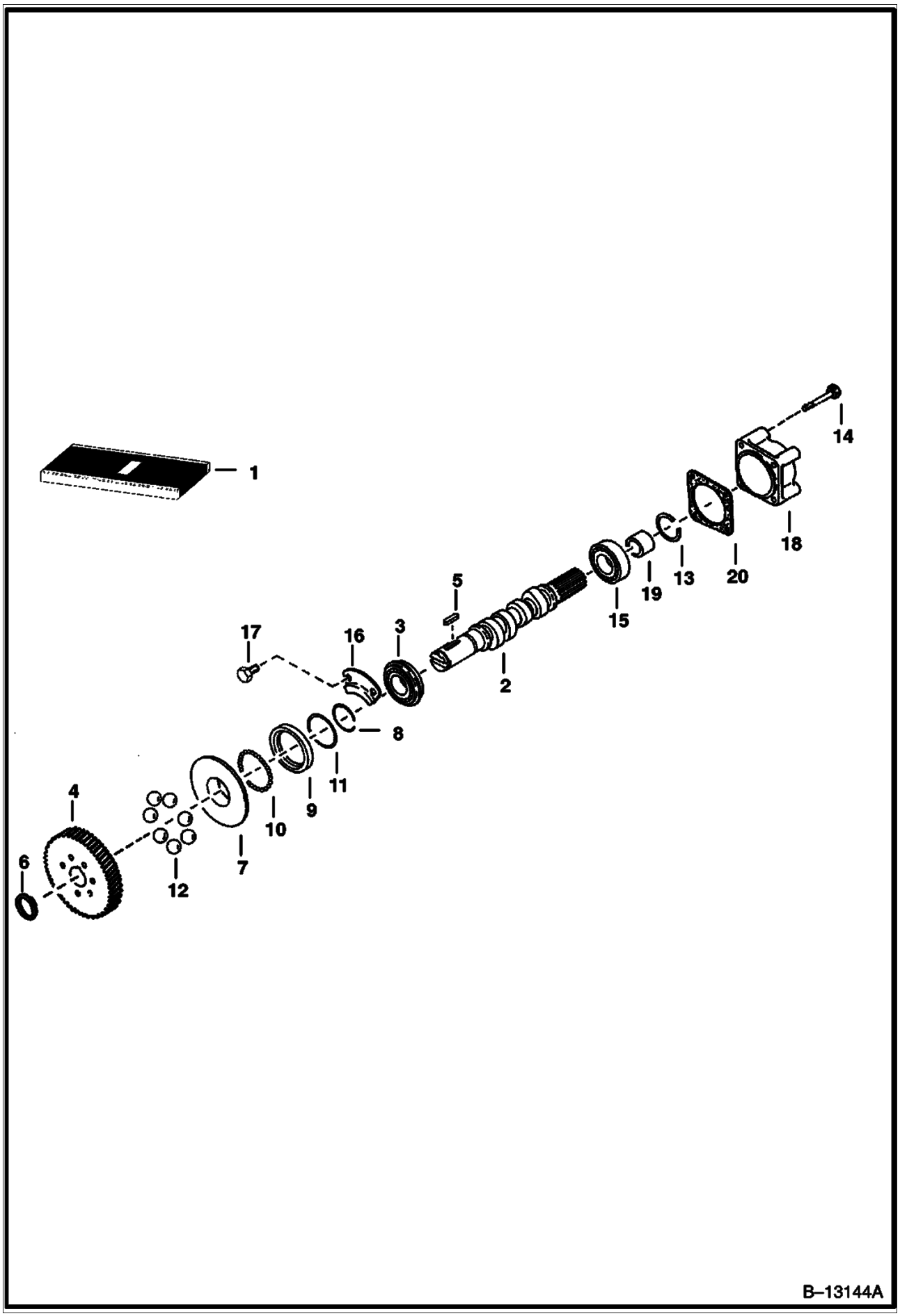

Page 214 - OSS# 2060759 - All rights reserved by Bobcat Company, a business unit of Ingersoll-Rand - 05/22/2008 - 07:23:42 - Produced by Ken Cook Co. with mediaioff

FUEL CAMSHAFT (Cont'd)
(Kubota - V1903 2EB - Tier II Replacement)

Ref No	Part Number	Description	Remarks	Serial Number	Qty
1	6655211	CAMSHAFT	assy. - Ref. 2-14		1
2	6655875	CAMSHAFT	fuel		1
3	851242B	BEARING			1
4	6655212	GEAR	injection pump		1
5	6598099	KEY			1
6	5JM00024B	CIRCLIP	external		1
7	6655213	SLEEVE	governor		1
8	3974618B	CIRCLIP	sleeve		1
9	6655214	CASE	governor ball		1
10	10J000005B	BALL			39
11	3974620B	CIRCLIP	ball case		1
12	6655215	BALL			7
13	6598158	CIRCLIP	governor ball		1
14	6651934	BOLT			7
15	6684812	BALL BEARING			1
16	3974624B	STOPPER			1
17	6667420	BOLT			2
18	3974996B	COVER	fuel camshaft		1
19	6598179	COLLAR			1
20	6684813	GASKET			1

Page 215 - OSS# 2060759 - All rights reserved by Bobcat Company, a business unit of Ingersoll-Rand - 05/22/2008 - 07:23:42 - Produced by Ken Cook Co. with mediaioff

CAMSHAFT
(Kubota - V1903 2EB - Tier II Replacement)

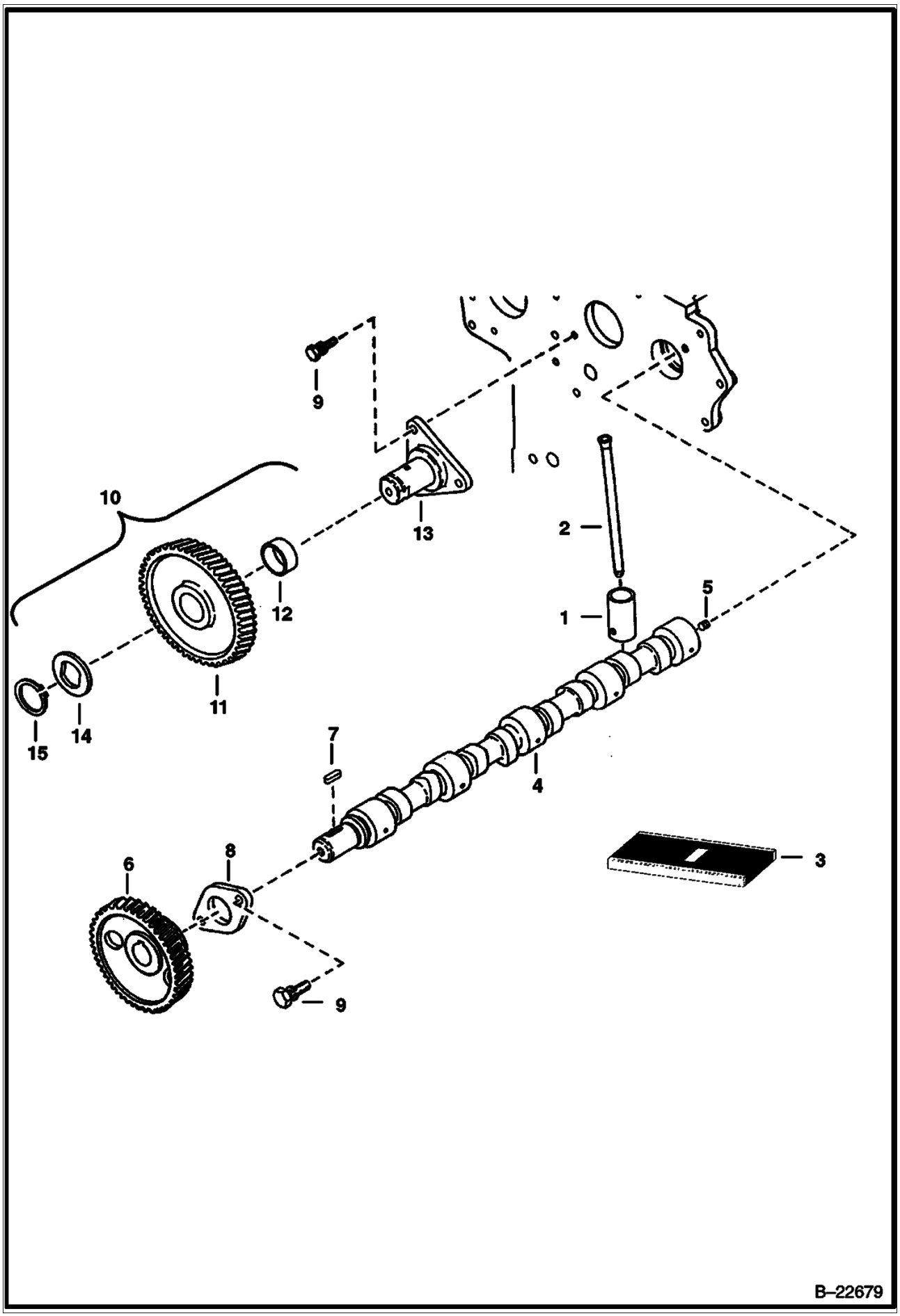

Page 216 - OSS# 2060759 - All rights reserved by Bobcat Company, a business unit of Ingersoll-Rand - 05/22/2008 - 07:23:42 - Produced by Ken Cook Co. with mediaioff

Ref No	Part Number	Description	Remarks	Serial Number	Qty
1	6667428	TAPPET			8
2	6655176	PUSHROD			8
3	6655427	CAMSHAFT	assy. - Ref. 4-8		1
4	6655384	CAMSHAFT			1
5	6652633	BALL	seat		1
6	6653840	GEAR	camshaft		1
7	3974546B	KEY			1
8	3974547B	STOPPER	camshaft		1
9	4CM00818B	BOLT			5
10	6684793	GEAR	idle - W/Ref. 11 & 12		1
11		GEAR	NSS - idle - Order Ref. 10		2
12	6655242	BUSHING	idle gear		1
13	6684796	SHAFT	idle gear		1
14	6684795	COLLAR			1
15	6667433	CIRCLIP	external		1

Page 217 - OSS# 2060759 - All rights reserved by Bobcat Company, a business unit of Ingersoll-Rand - 05/22/2008 - 07:23:42 - Produced by Ken Cook Co. with mediaioff

WATER PUMP
(Kubota - V1903 2EB - Tier II Replacement)

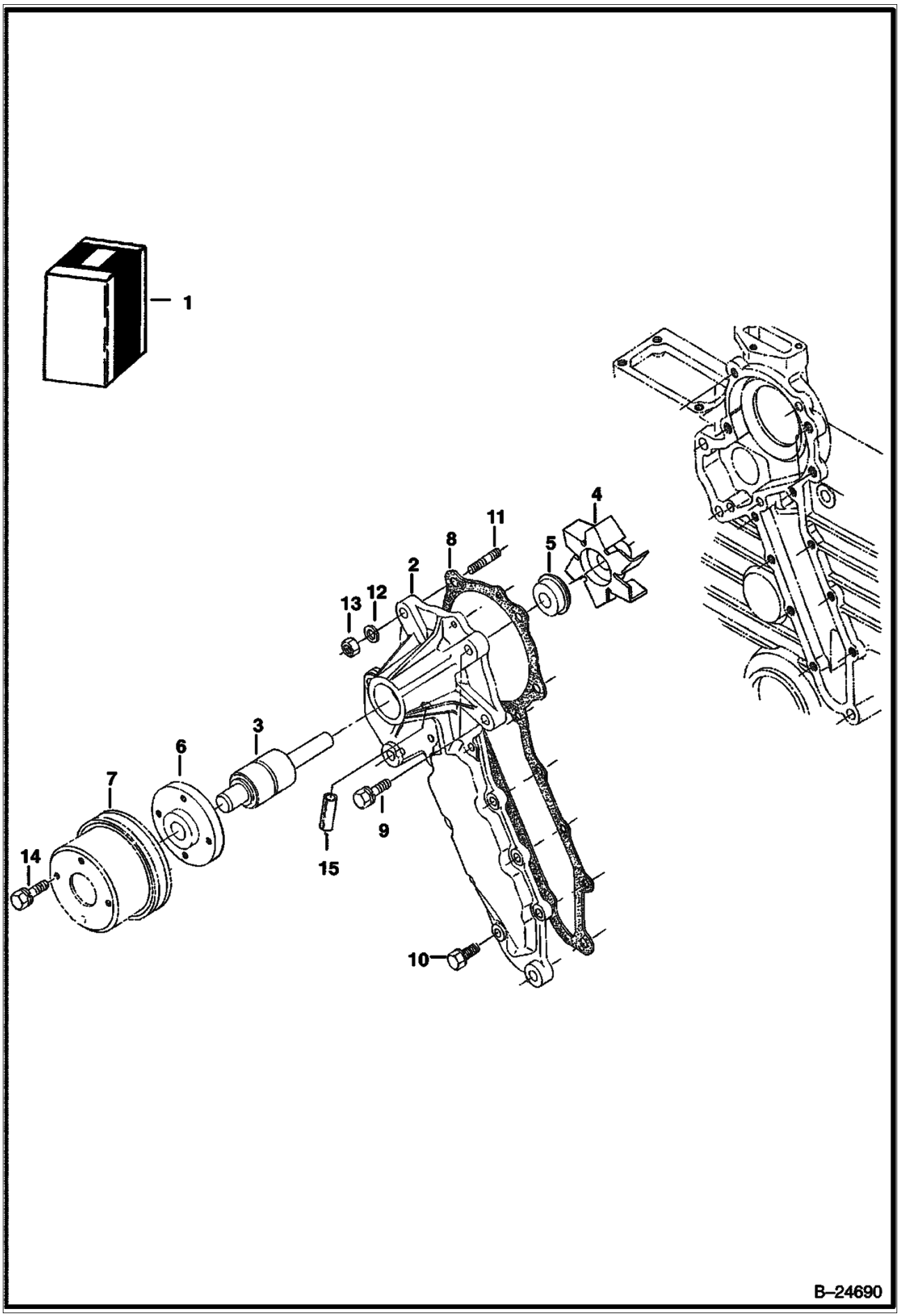

Page 218 - OSS# 2060759 - All rights reserved by Bobcat Company, a business unit of Ingersoll-Rand - 05/22/2008 - 07:23:42 - Produced by Ken Cook Co. with mediaoff

WATER PUMP (Cont'd)
(Kubota - V1903 2EB - Tier II Replacement)

Ref No	Part Number	Description	Remarks	Serial Number	Qty
1	6686989	WATER PUMP	Ref. 2-6		1
2		BODY	NAP		1
3	6685474	BEARING			1
4	6684867	SEAL			1
5	6684868	SEAL			1
6	6684869	FLANGE			1
7	6674169	PULLEY	fan		1
8	6666804	GASKET			1
9	4CM00828B	BOLT			2
10	6652580	BOLT			6
11	3974267B	STUD			2
12	6667422	WASHER	spring		2
13	6652792	NUT			2
14	29CM00612B	SCREW			4
15	6683174	ROLL PIN			1

Page 219 - OSS# 2060759 - All rights reserved by Bobcat Company, a business unit of Ingersoll-Rand - 05/22/2008 - 07:23:42 - Produced by Ken Cook Co. with mediaioff

WATER FLANGE & THERMOSTAT
(Kubota - V1903 2EB - Tier II Replacement)

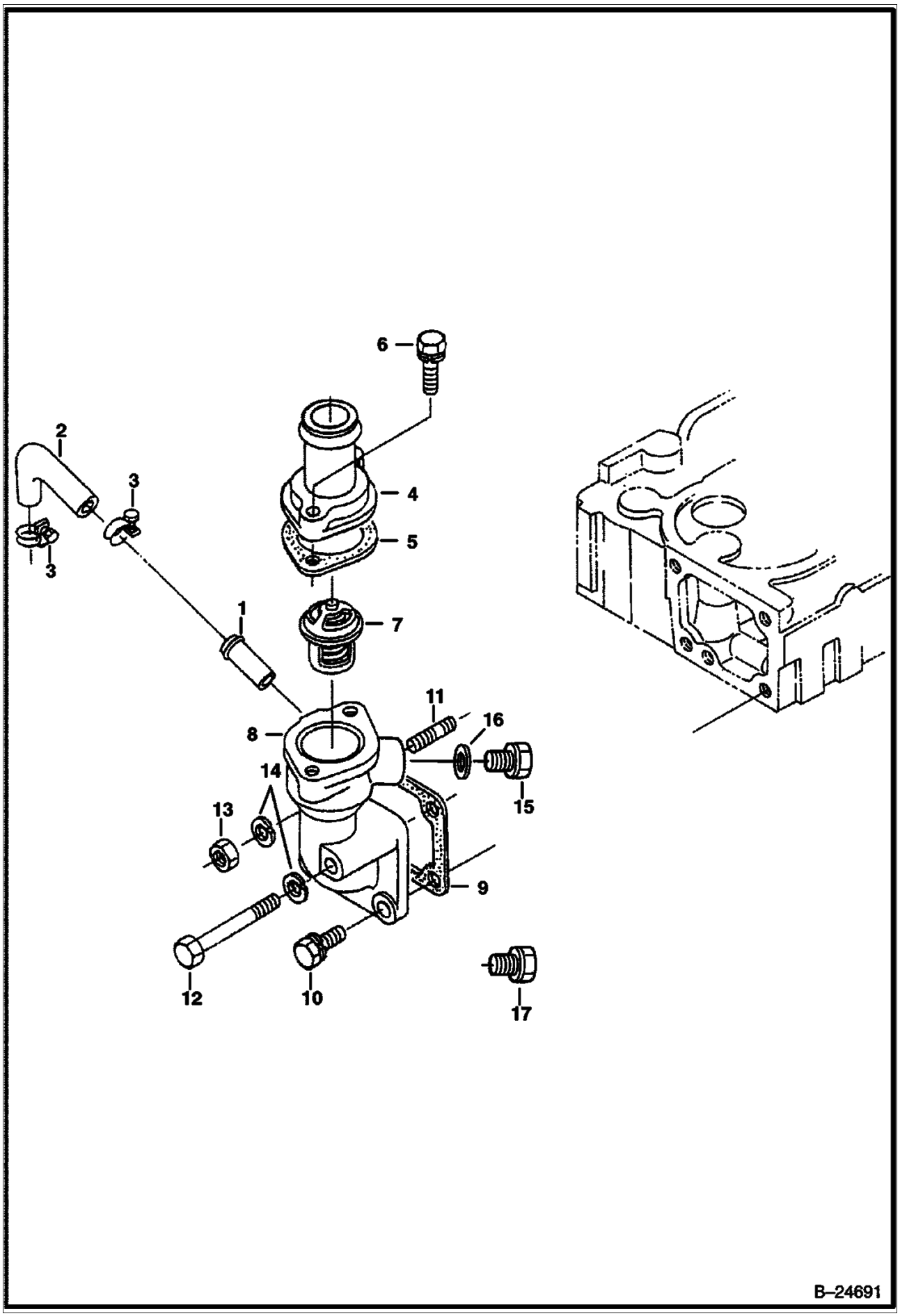

Page 220 - OSS# 2060759 - All rights reserved by Bobcat Company, a business unit of Ingersoll-Rand - 05/22/2008 - 07:23:42 - Produced by Ken Cook Co. with mediaoff

WATER FLANGE & THERMOSTAT (Cont'd)
(Kubota - V1903 2EB - Tier II Replacement)

Ref No	Part Number	Description	Remarks	Serial Number	Qty
1	6655880	PIPE	water return		1
2	6686988	PIPE	water return		1
3	3974679B	BAND	pipe		2
4	6674173	COVER	thermostat		1
5	6684863	GASKET	thermostat cover		1
6	1CM00835B	BOLT			2
7	6674172	THERMOSTAT	230_ F		1
7	6630184	THERMOSTAT	203_ F -Used W/cab heater		1
8	6674167	FLANGE	W/Ref. 1		1
9	6684860	GASKET	water flange		1
10	6657415	BOLT			2
11	3974916B	STUD			1
12	1CM00865B	BOLT			1
13	6652792	NUT			1
14	6667422	WASHER			1
15	6649536	PLUG			1
16	6653562	GASKET			1
17	40K000002B	PLUG			1

Page 221 - OSS# 2060759 - All rights reserved by Bobcat Company, a business unit of Ingersoll-Rand - 05/22/2008 - 07:23:42 - Produced by Ken Cook Co. with mediaioff

MANIFOLDS
(Kubota - V1903 2EB - Tier II Replacement)

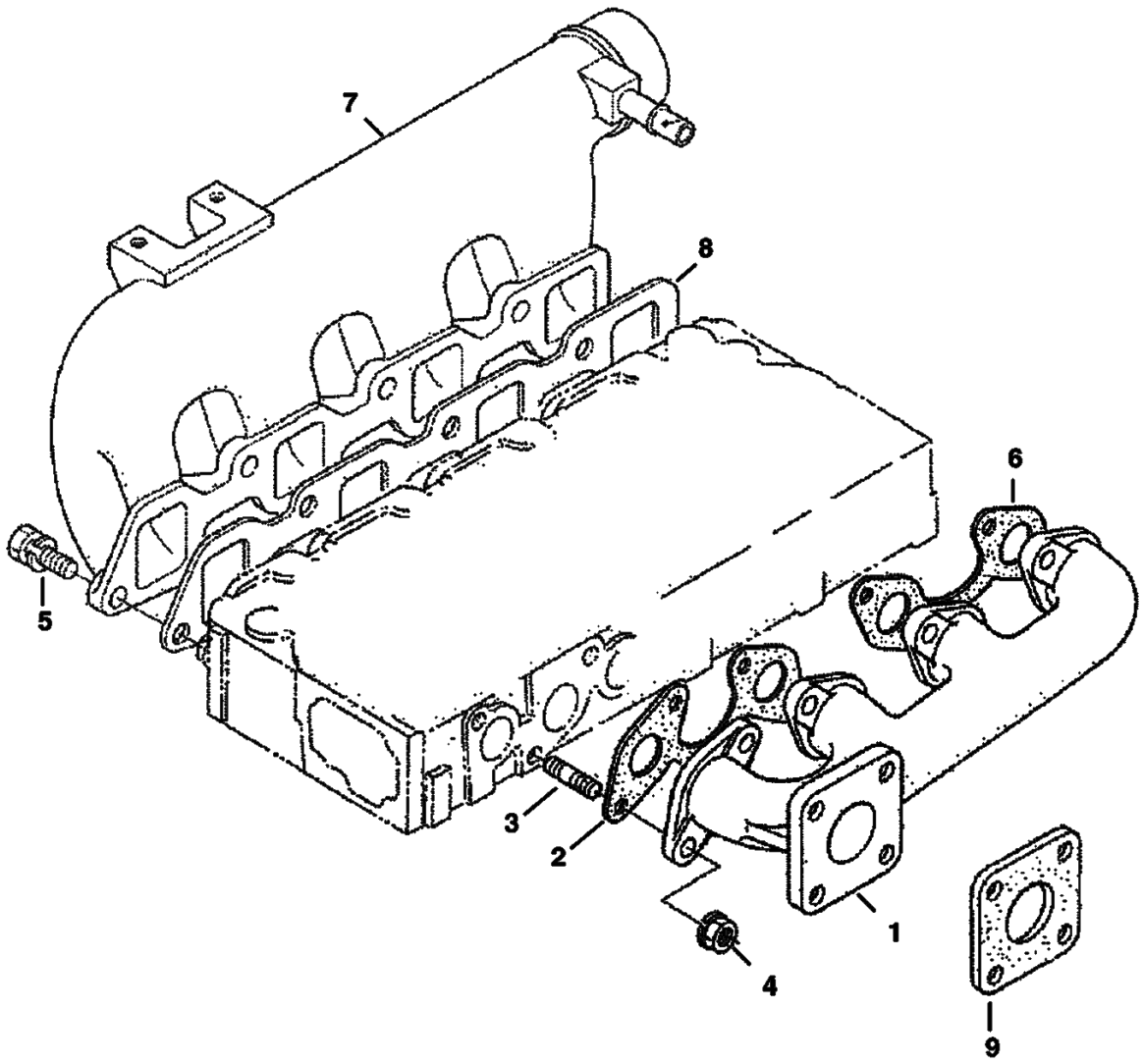

Page 222 - OS$# 2060759 - All rights reserved by Bobcat Company, a business unit of Ingersoll-Rand - 05/22/2008 - 07:23:42 - Produced by Ken Cook Co. with mediaioff

MANIFOLDS (Cont'd)
(Kubota - V1903 2EB - Tier II Replacement)

Ref No	Part Number	Description	Remarks	Serial Number	Qty
1	6685475	MANIFOLD	exhaust		1
2	6684879	GASKET			1
3	6652670	STUD			8
4	6682532	NUT			8
5	4CM00822B	BOLT			7
6	6666781	GASKET			1
7	6686990	MANIFOLD	intake - W/Ref.		1
8	6686991	GASKET			16
9	6575580	GASKET	muffler		1

Page 223 - OSS# 2060759 - All rights reserved by Bobcat Company, a business unit of Ingersoll-Rand - 05/22/2008 - 07:23:42 - Produced by Ken Cook Co. with mediaioff

GOVERNOR
(Kubota - V1903 2EB - Tier II Replacement)

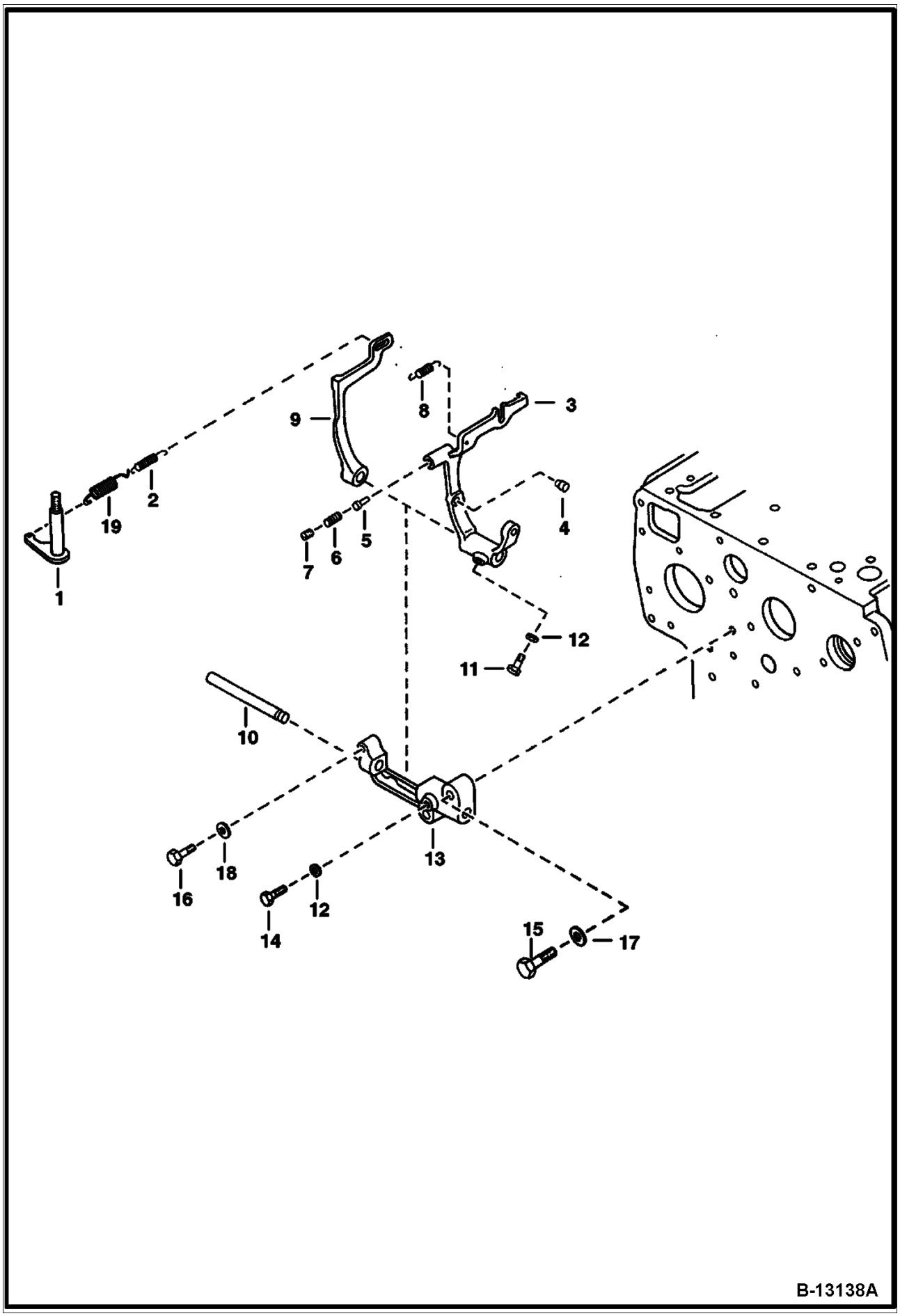

Page 224 - OSS# 2060759 - All rights reserved by Bobcat Company, a business unit of Ingersoll-Rand - 05/22/2008 - 07:23:42 - Produced by Ken Cook Co. with mediaioff

GOVERNOR (Cont'd)
(Kubota - V1903 2EB - Tier II Replacement)

Ref No	Part Number	Description	Remarks	Serial Number	Qty
1	6598174	LEVER	governor		1
2	6655227	SPRING			1
3	6655224	LEVER	fork - W/Ref. 4-7		1
4		PIN	NSS		2
5		PIN	NSS		1
6		SPRING	NSS		1
7		SCREW	NSS		1
8	6655225	SPRING	Was 6686986 [D]		1
9	6667451	WASHER			1
10	6684833	SHAFT			1
11	6680830	BOLT			1
12	6667491	WASHER			2
13	3974661B	HOLDER			1
14	3974192B	BOLT			1
15	6680706	BOLT			2
16	6685464	BOLT			1
17	2EM00008B	WASHER			2
18	1EM00060B	WASHER			1
19	6655878	SPRING	governor		1

Page 225 - OSS# 2060759 - All rights reserved by Bobcat Company, a business unit of Ingersoll-Rand - 05/22/2008 - 07:23:42 - Produced by Ken Cook Co. with mediaioff

ENGINE STOP LEVER
(Kubota - V1903 2EB - Tier II Replacement)

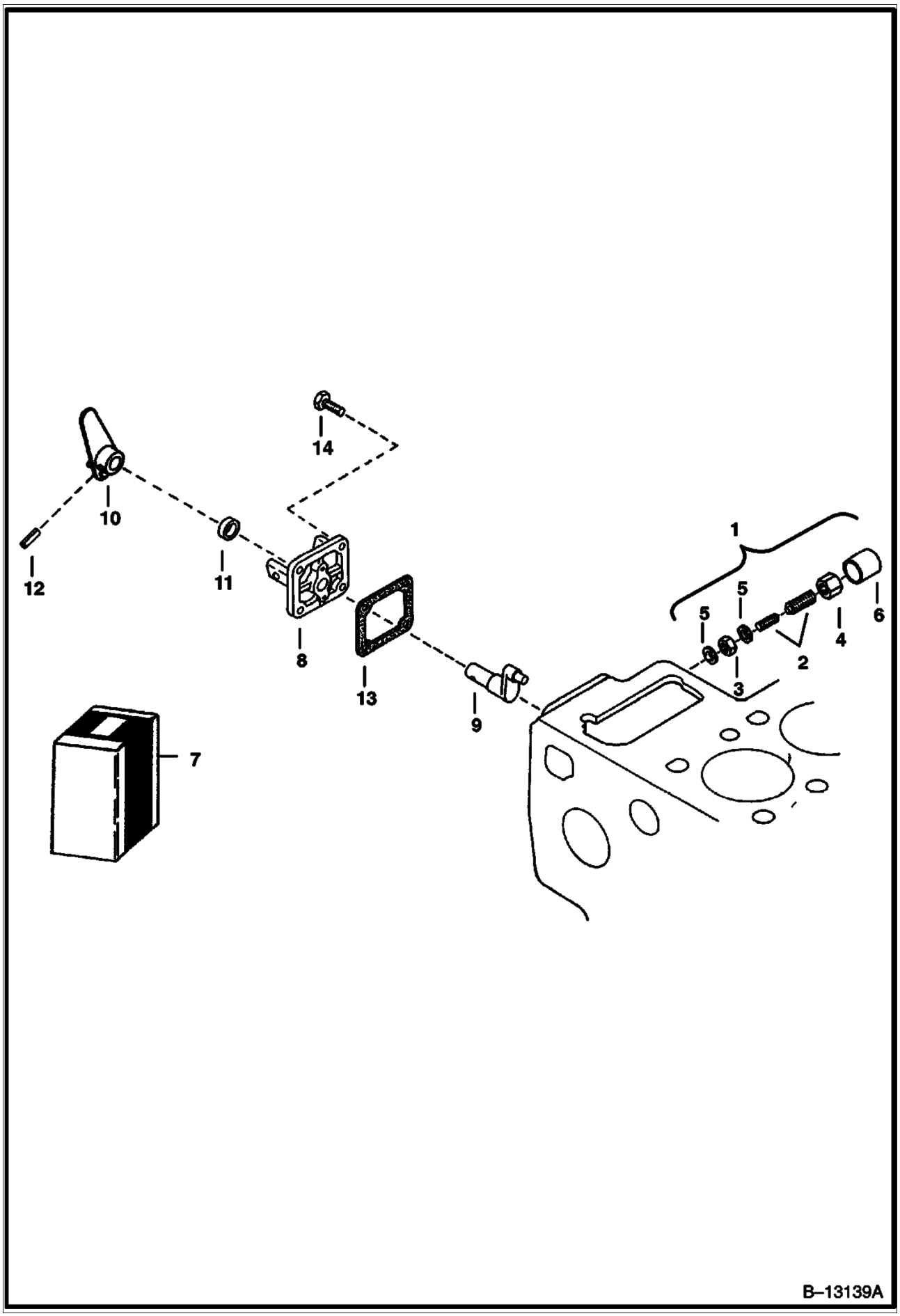

Page 226 - OSS# 2060759 - All rights reserved by Bobcat Company, a business unit of Ingersoll-Rand - 05/22/2008 - 07:23:42 - Produced by Ken Cook Co. with mediaioff

ENGINE STOP LEVER (Cont'd)
(Kubota - V1903 2EB - Tier II Replacement)

Ref No	Part Number	Description	Remarks	Serial Number	Qty
1	3974975B	APPARATUS	assy., idle - Ref. 2-6		1
2	6653906	BOLT ASSY.	adjusting		1
3	2DM00008B	NUT	adjusting		1
4	3974978B	NUT			1
5	3974095B	GASKET			2
6	3974979B	CAP			1
7	6676060	LEVER ASSY.	eng. stop - Ref. 8-12		1
8	6655540	COVER	injection pump		1
9	6655231	SHAFT	lever		1
10	6655232	LEVER	engine stop		1
11	6685476	SEAL	oil		1
12	6598098	PIN	spring		1
13	6666783	GASKET	pump cover		1
14	6652580	BOLT			3

Page 227 - OSS# 2060759 - All rights reserved by Bobcat Company, a business unit of Ingersoll-Rand - 05/22/2008 - 07:23:42 - Produced by Ken Cook Co. with mediaioff

SPEED CONTROL PLATE
(Kubota - V1903 2EB - Tier II Replacement)

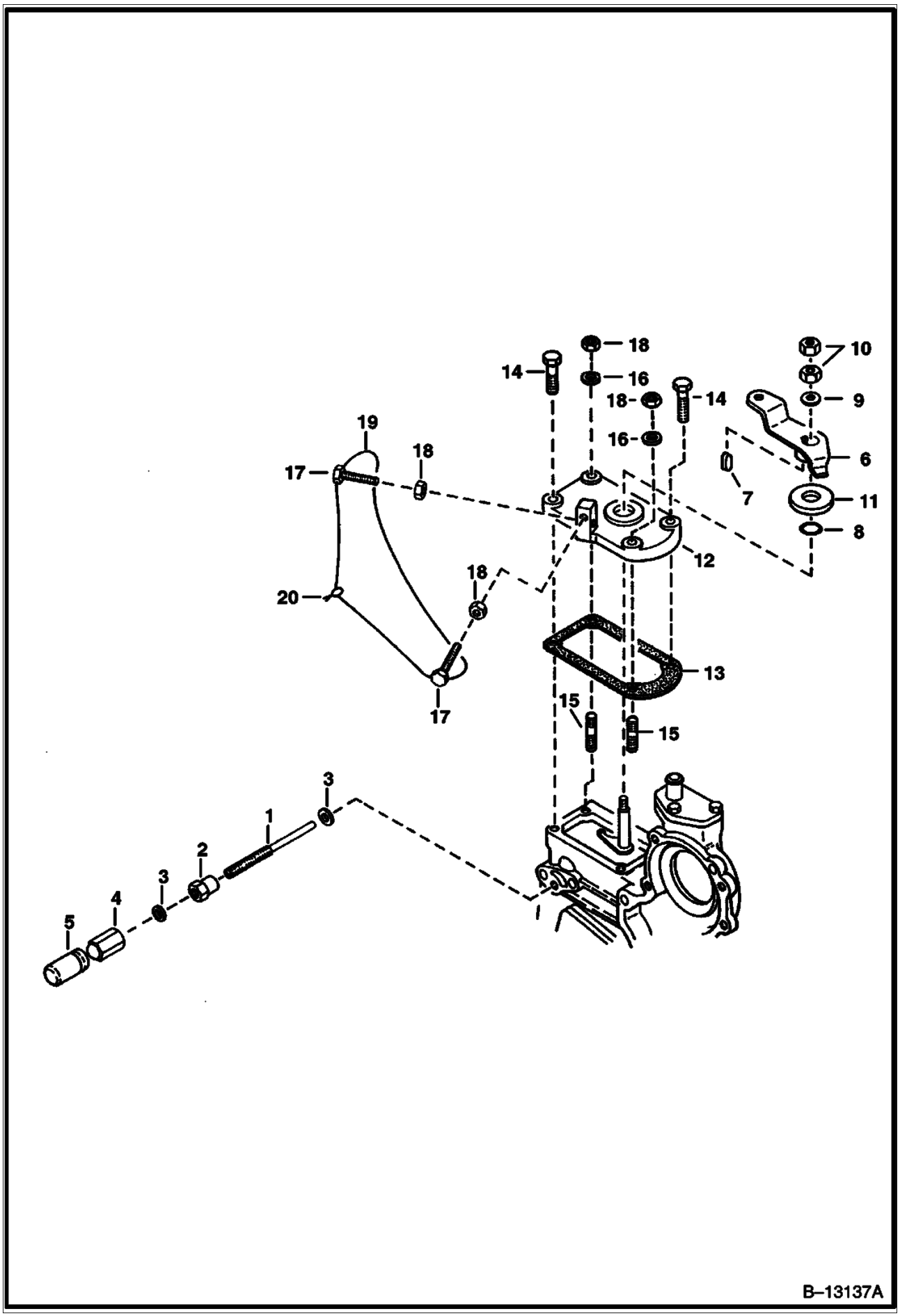

Page 228 - OSS# 2060759 - All rights reserved by Bobcat Company, a business unit of Ingersoll-Rand - 05/22/2008 - 07:23:42 - Produced by Ken Cook Co. with mediaIoff

SPEED CONTROL PLATE (Cont'd)
(Kubota - V1903 2EB - Tier II Replacement)

Ref No	Part Number	Description	Remarks	Serial Number	Qty
1	6686985	BOLT	adjusting		1
2	3974971B	NUT			1
3	3974972B	GASKET			2
4	6655223	NUT	cap		1
5	6653905	CAP			1
6	6598176	LEVER	speed control		1
7	15JM00048B	KEY	feather		1
8	6686986	O-RING			1
9	6667451	WASHER	plain		1
10	1DM00008B	NUT			2
11	3974644B	PLATE	friction		1
12	6641231	PLATE	speed control		1
13	6666792	GASKET			1
14	4CM00620B	BOLT			2
15	6652764	STUD			2
16	6667419	WASHER	spring		2
17	6655228	STOPPER			2
18	1DM00006B	NUT			4
19		WIRE	NAP		1
20		LEAD	NAP - sealing		1

Page 229 - OSS# 2060759 - All rights reserved by Bobcat Company, a business unit of Ingersoll-Rand - 05/22/2008 - 07:23:42 - Produced by Ken Cook Co. with mediaioff

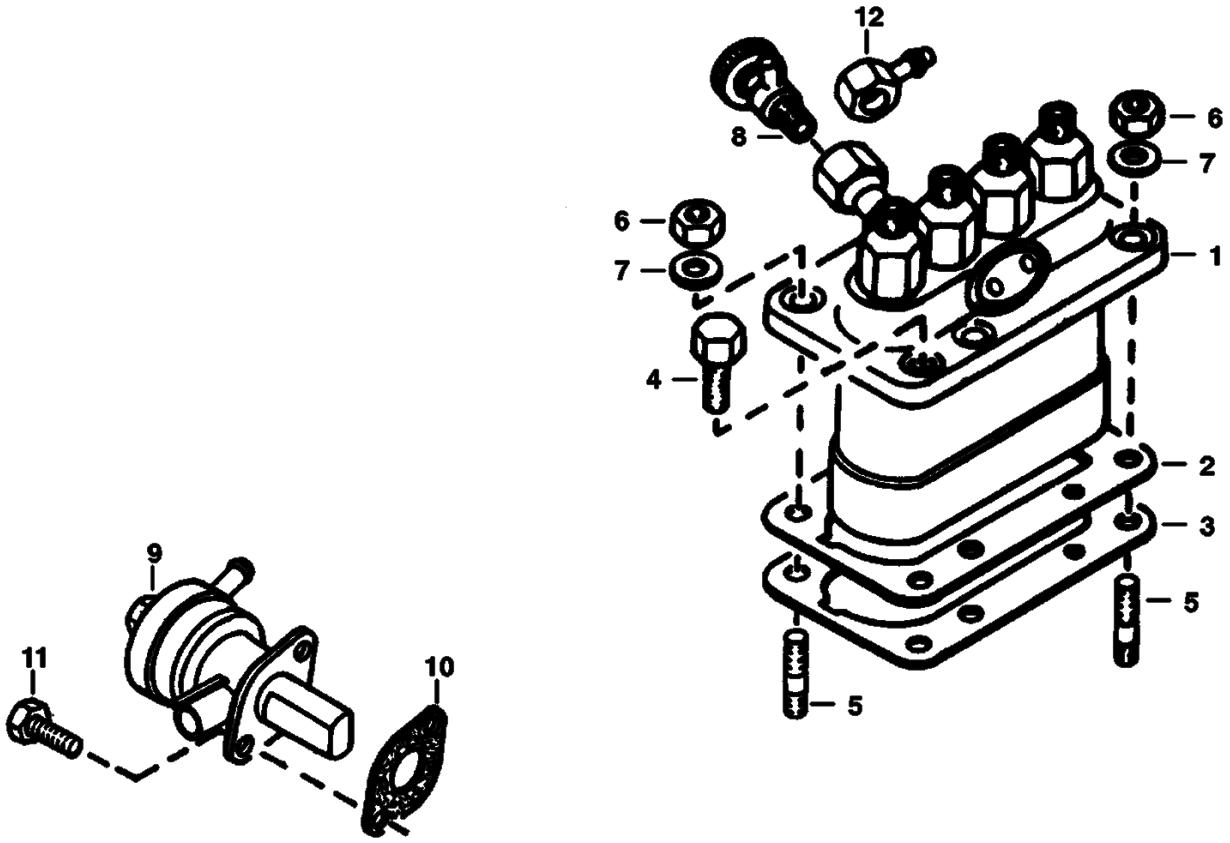

Page 230 - OSS# 2060759 - All rights reserved by Bobcat Company, a business unit of Ingersoll-Rand - 05/22/2008 - 07:23:42 - Produced by Ken Cook Co. with mediaoff

FUEL & INJECTION PUMPS (Cont'd)
(Kubota - V1903 2EB - Tier II Replacement)

Ref No	Part Number	Description	Remarks	Serial Number	Qty
1		PUMP	See Page		1
2	6682514	SHIM	0.20 mm		x
2	6682515	SHIM	0.25 mm		x
2	6655210	SHIM	0.30 mm		x
3	6655210	SHIM	0.45 mm		1
4	4CM00822B	BOLT			4
5	6652670	STUD			2
6	6652792	NUT			2
7	6667422	WASHER	spring		2
8	6598102	VALVE	jet start		1
9	6655216	FUEL PUMP			1
10	6686037	GASKET	fuel pump		1
11	4CM00616B	BOLT			2
12	6655515	JOINT	eye - connects to Ref. See Page		1

Page 231 - OSS# 2060759 - All rights reserved by Bobcat Company, a business unit of Ingersoll-Rand - 05/22/2008 - 07:23:42 - Produced by Ken Cook Co. with mediaioff

INJECTOR NOZZLES
(Kubota - V1903 2EB - Tier II Replacement)

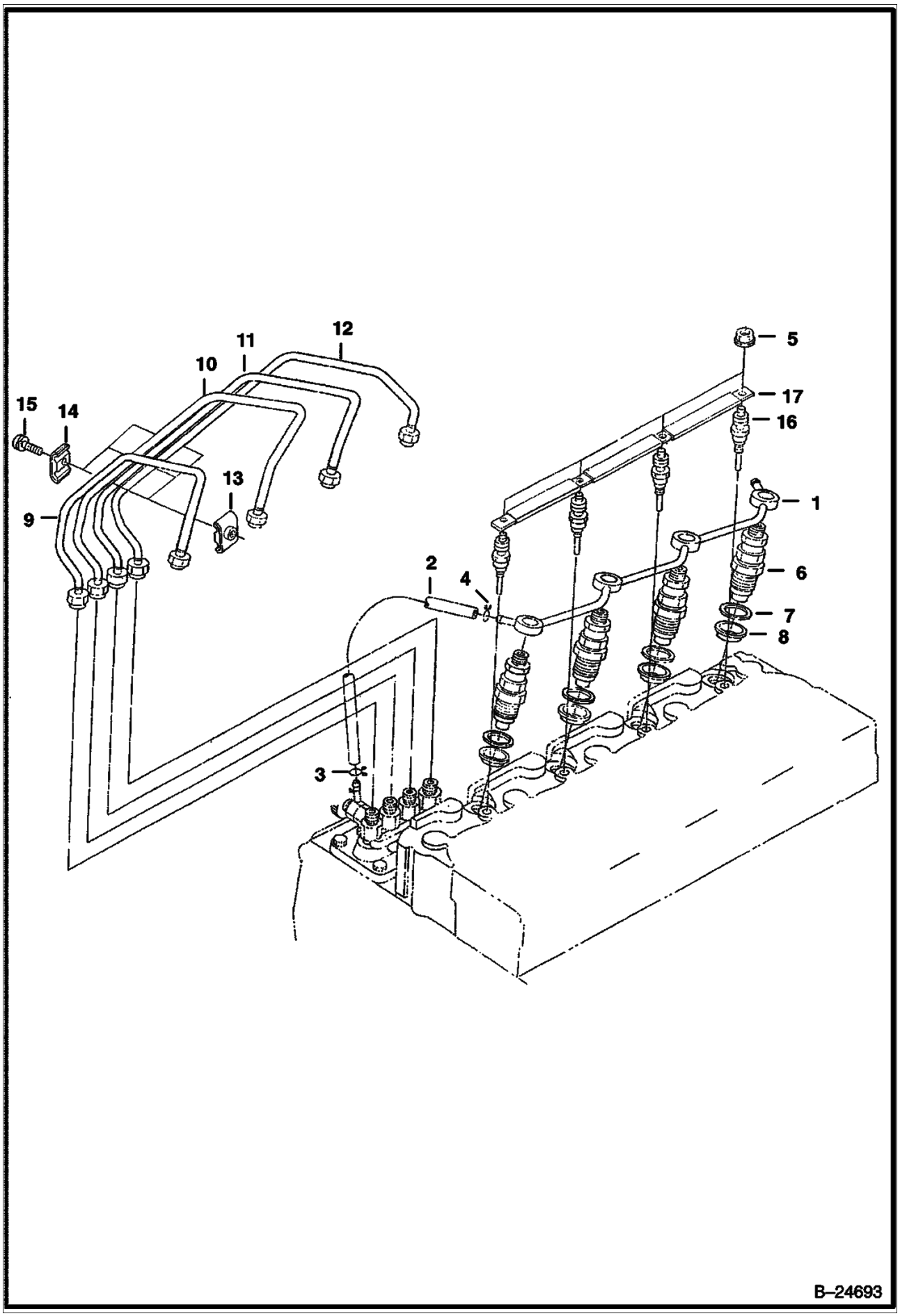

Page 232 - OSS# 2060759 - All rights reserved by Bobcat Company, a business unit of Ingersoll-Rand - 05/22/2008 - 07:23:42 - Produced by Ken Cook Co. with mediaioff

INJECTOR NOZZLES (Cont'd)
(Kubota - V1903 2EB - Tier II Replacement)

Ref No	Part Number	Description	Remarks	Serial Number	Qty
1	6682521	PIPE			1
2	6598146	PIPE	fuel over flow		1
3	6680795	CLAMP	pipe		1
4	6654718	CLAMP	pipe		1
5	6670472	NUT			4
6	6722147	HOLDER KIT	nozzle		4
7	6655218	GASKET			4
8	6655872	HEAT SEAL			4
9	6655219	PIPE	injection		1
10	6655220	PIPE	injection		1
11	6655221	PIPE			1
12	6655222	PIPE	injection		1
13	6652688	CLAMP	pipe		3
14	6652689	CLAMP	pipe		3
15	3974260B	BOLT			3
16	6655233	GLOW PLUG			4
17	6655234	CORD	glow plug - Was 6686987 [A]		3
18	6670473	WASHER			1

Page 233 - OSS# 2060759 - All rights reserved by Bobcat Company, a business unit of Ingersoll-Rand - 05/22/2008 - 07:23:42 - Produced by Ken Cook Co. with mediaioff

ACCESS COVER
(Cleanout - Lower Front of Chaincase)

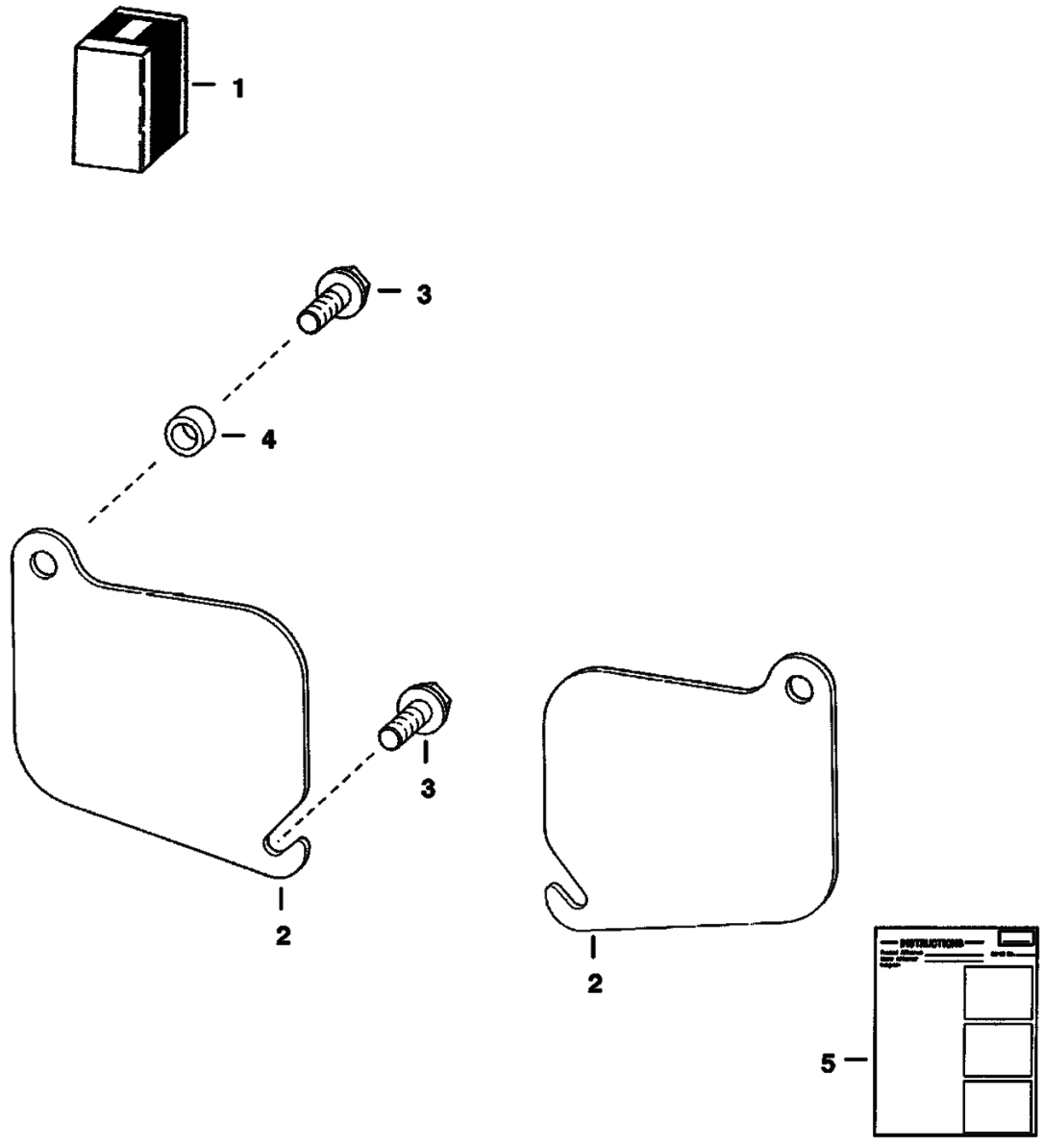

Page 234 - OSS# 2060759 - All rights reserved by Bobcat Company, a business unit of Ingersoll-Rand - 05/22/2008 - 07:23:42 - Produced by Ken Cook Co. with mediaoff

ACCESS COVER (Cont'd)
(Cleanout - Lower Front of Chaincase)

Ref No	Part Number	Description	Remarks	Serial Number	Qty
1	6577880	KIT	Ref. 2-5		1
2	6577812	COVER			2
3	84G003720B	BOLT			4
4	6562619	BUSHING			2
5	6570931	INSTRUCTIONS			1

Page 235 - OSS# 2060759 - All rights reserved by Bobcat Company, a business unit of Ingersoll-Rand - 05/22/2008 - 07:23:42 - Produced by Ken Cook Co. with media1off

ACCESS COVER
(Hyd. Tank Fill Cap)

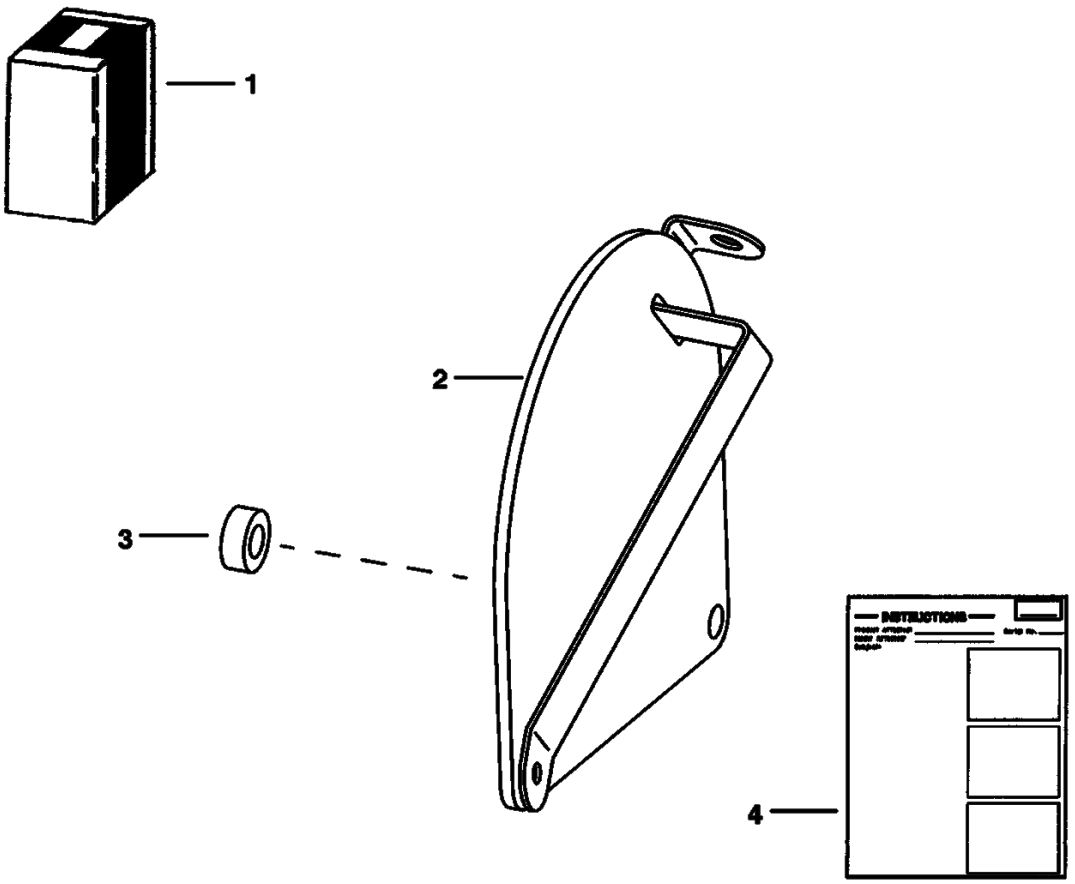

TS–1133

Page 236 - OSS# 2060759 - All rights reserved by Bobcat Company, a business unit of Ingersoll-Rand - 05/22/2008 - 07:23:42 - Produced by Ken Cook Co. with mediaioff

ACCESS COVER (Cont'd)
(Hyd. Tank Fill Cap)

Ref No	Part Number	Description	Remarks	Serial Number	Qty
1	6700710	KIT	Ref. 2-4		1
2	6700347	COVER			1
3	6700704	BUSHING			1
4	6720185	INSTRUCTIONS			1

Page 237 - OSS# 2060759 - All rights reserved by Bobcat Company, a business unit of Ingersoll-Rand - 05/22/2008 - 07:23:42 - Produced by Ken Cook Co. with media1off

AIR DEFLECTOR KIT

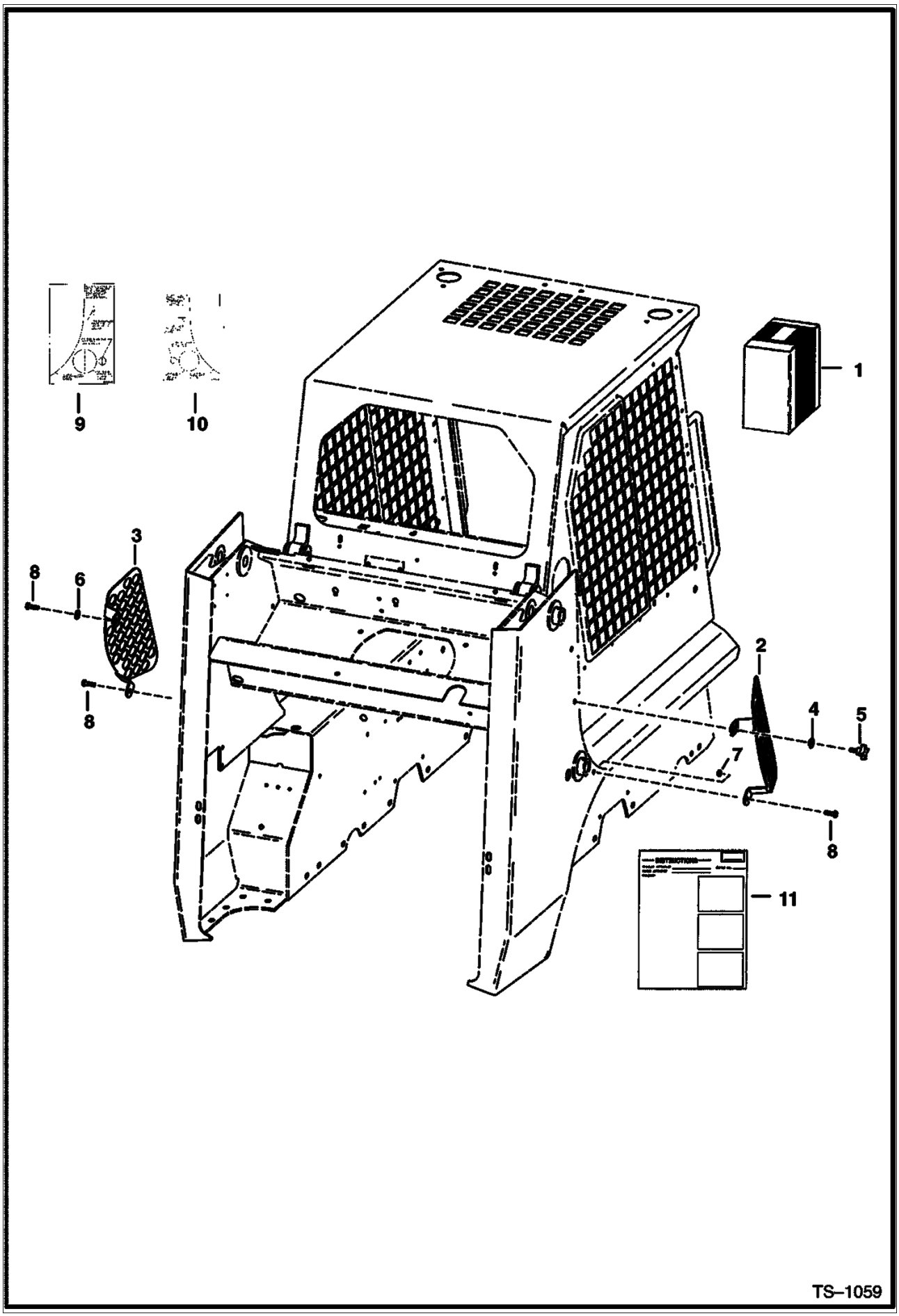

Page 238 - OSS# 2060759 - All rights reserved by Bobcat Company, a business unit of Ingersoll-Rand - 05/22/2008 - 07:23:42 - Produced by Ken Cook Co. with mediaioff

Ref No	Part Number	Description	Remarks	Serial Number	Qty
1	6702351	KIT	air deflector		1
2	6702346	SCREEN	R.H.		1
3	6702347	SCREEN	L.H.		1
4	6702986	NUT	spacer		1
5	6703090	HANDLE			1
6	27E000006B	WASHER			1
7	61D000006B	NUT			1
8	84G003716B	BOLT			3
9		TEMPLATE	Order Ref 11 NAP - R.H.		1
10		TEMPLATE	Order Ref 11 NAP - L.H.		1
11	6720621	INSTRUCTIONS			1

Page 239 - OSS# 2060759 - All rights reserved by Bobcat Company, a business unit of Ingersoll-Rand - 05/22/2008 - 07:23:42 - Produced by Ken Cook Co. with media1off

AXLE SEAL KIT

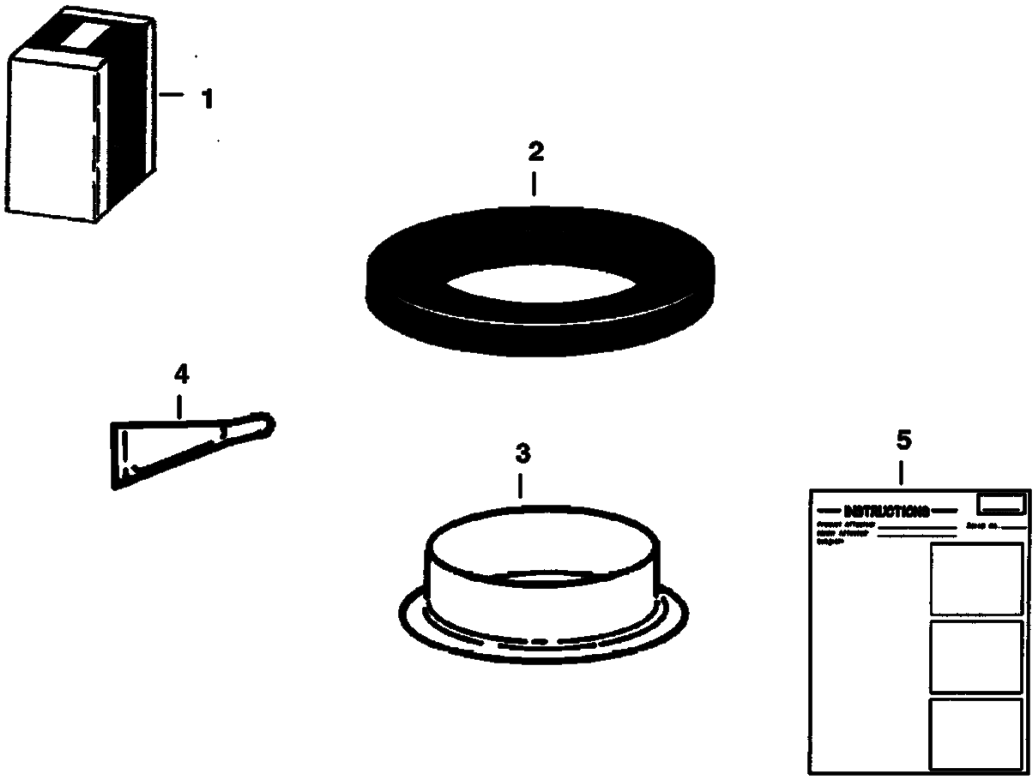

Page 240 - OSS# 2060759 - All rights reserved by Bobcat Company, a business unit of Ingersoll-Rand - 05/22/2008 - 07:23:42 - Produced by Ken Cook Co. with mediaioff

Ref No	Part Number	Description	Remarks	Serial Number	Qty
1	6722907	KIT	Ref. 2 - 5		1
2	6658228	SEAL			1
3	6662306	RING			1
4	6598485	SEALANT			1
5	6722908	INSTRUCTIONS			1

Page 241 - OSS# 2060759 - All rights reserved by Bobcat Company, a business unit of Ingersoll-Rand - 05/22/2008 - 07:23:42 - Produced by Ken Cook Co. with media1off

BACK-UP ALARM

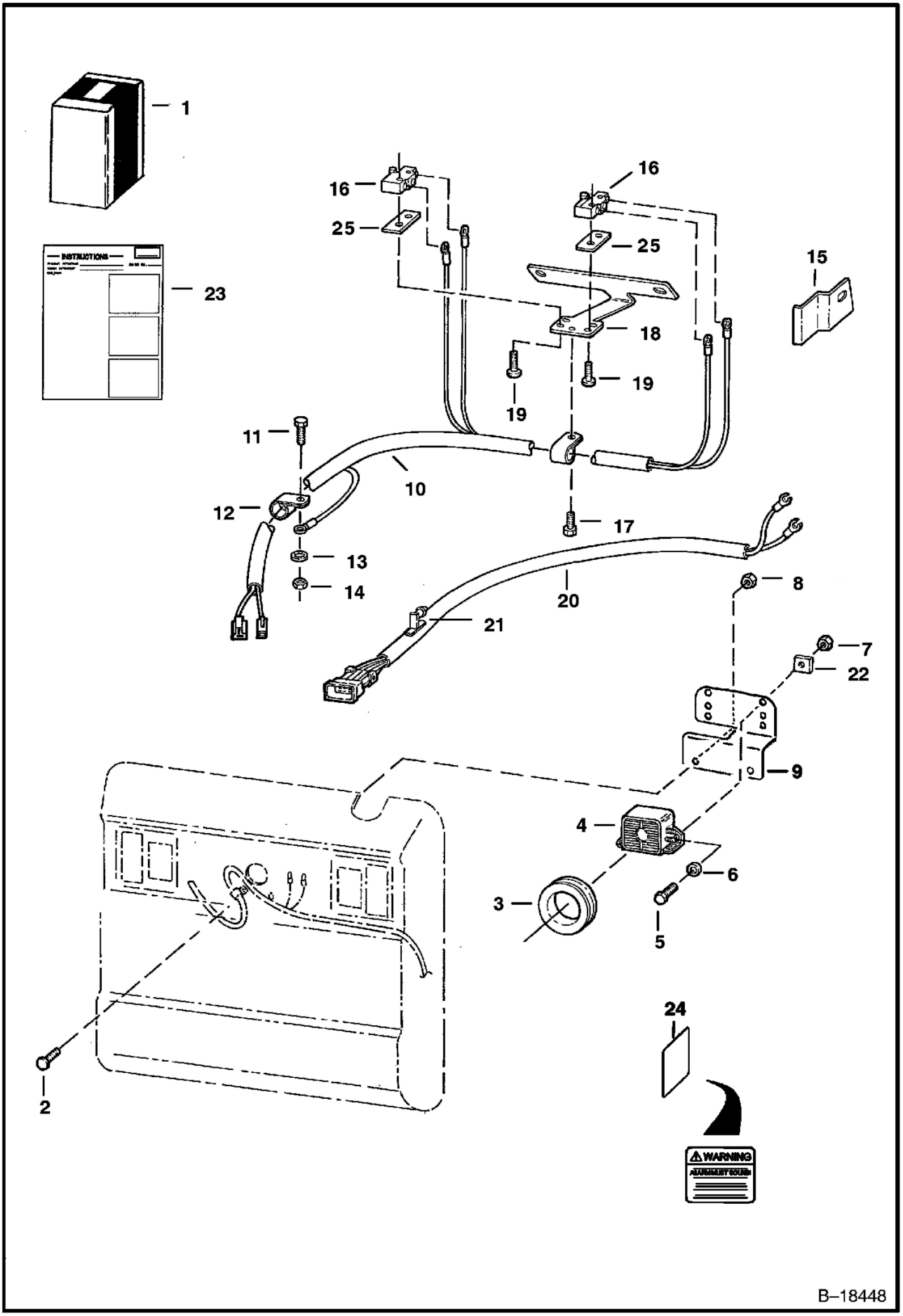

Page 242 - OSS# 2060759 - All rights reserved by Bobcat Company, a business unit of Ingersoll-Rand - 05/22/2008 - 07:23:42 - Produced by Ken Cook Co. with mediaioff

Ref No	Part Number	Description	Remarks	Serial Number	Qty
1	6714980	KIT	backup alarm - Ref. 2 - 24		1
2	37C000512B	BOLT			2
3	6577545	GROMMET			1
4	6599931	ALARM	backup		1
5	35C000410B	BOLT	Was 17C000410B [B]		2
6	25E000013B	WASHER	Not in Kit		2
7	61D000005B	NUT			2
8	97D000004B	NUT	Was 83D000004B [B]		2
9	6733970	MOUNT	Was 6707726 [A]		1
10	6704358	HARNESS			1
11	17C000412B	BOLT			1
12	30H000019B	CLAMP	insulated - Was 30H000021B [B,D] [B,D]		2
13	6E000004B	WASHER			1
14	61D000004B	NUT			1
15	6713793	BRACKET	switch		2
16	6646781	SWITCH	alarm		2
17	84G003112B	BOLT			1
18	7100153	MOUNT	switch - Was 6713792 [A]		1
19	59G000616B	BOLT			4
20	6715659	HARNESS	W/Ref 21 Used on loaders W/O rear lights - comes		1
21	6672492	RETAINER			1
22	774220	NUT			2
23	6722083	INSTRUCTIONS			1
24	6737189	DECAL	Warning		1
25	6702593	SPACER			2

Page 243 - OSS# 2060759 - All rights reserved by Bobcat Company, a business unit of Ingersoll-Rand - 05/22/2008 - 07:23:42 - Produced by Ken Cook Co. with mediaioff

BEACON LIGHT

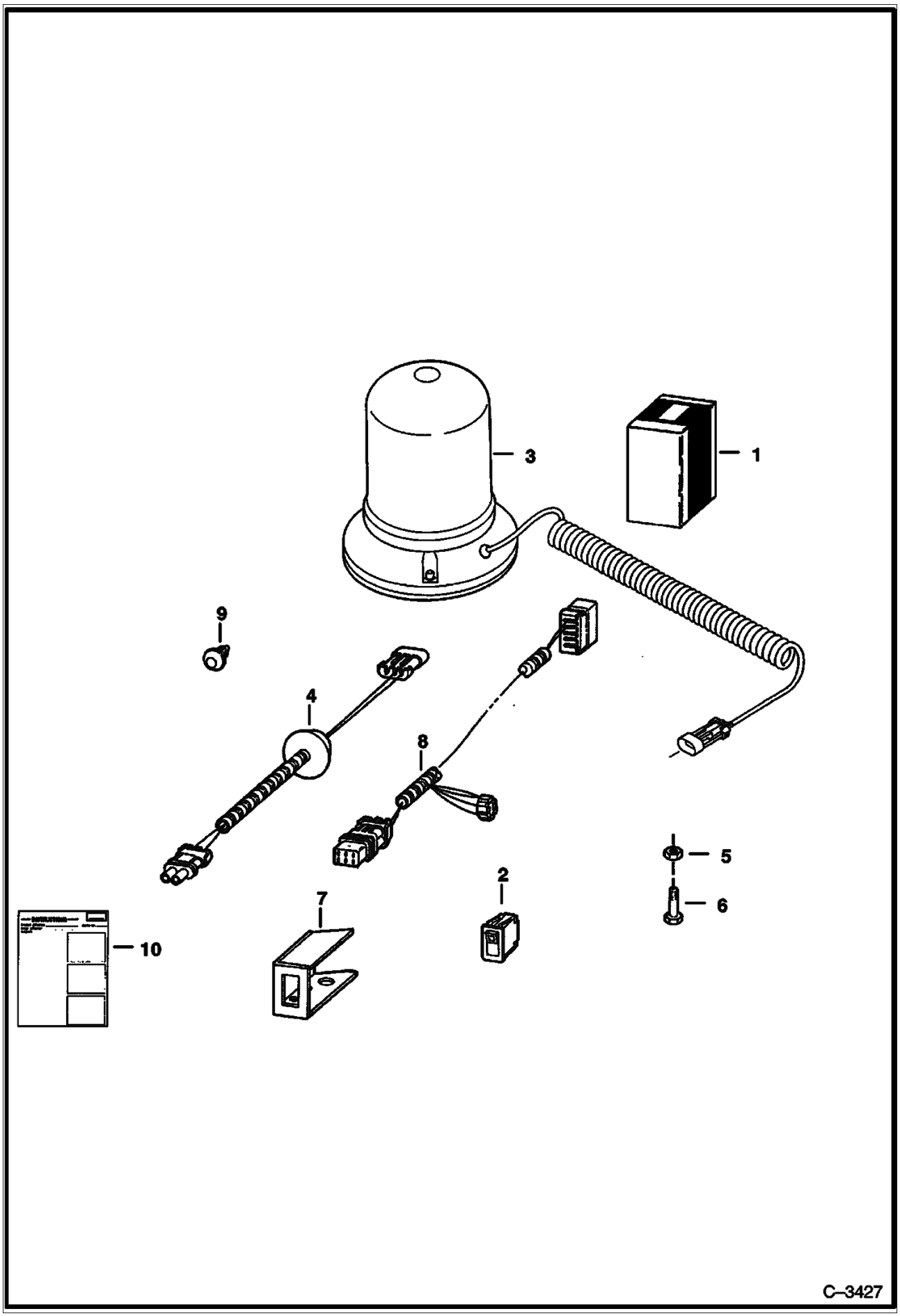

Page 244 - OSS# 2060759 - All rights reserved by Bobcat Company, a business unit of Ingersoll-Rand - 05/22/2008 - 07:23:42 - Produced by Ken Cook Co. with mediaioff

Ref No	Part Number	Description	Remarks	Serial Number	Qty
1	6712692	BEACON KIT	Ref. 2 - 10		1
2	6668816	SWITCH			1
3	6665730	LIGHT			1
3	6666571	BULB			1
3	6666572	LENS	amber		1
4	6708318	HARNESS	beacon		1
5	6660988	RETAINER			2
6	35C000412B	BOLT			2
7	6711708	MOUNT			1
8	6712258	HARNESS	strobe		1
9	6669308	RETAINER	snap in		1
10	6724071	INSTRUCTIONS			1

Page 245 - OSS# 2060759 - All rights reserved by Bobcat Company, a business unit of Ingersoll-Rand - 05/22/2008 - 07:23:42 - Produced by Ken Cook Co. with mediaioff

BLOCK HEATER
(Engine)

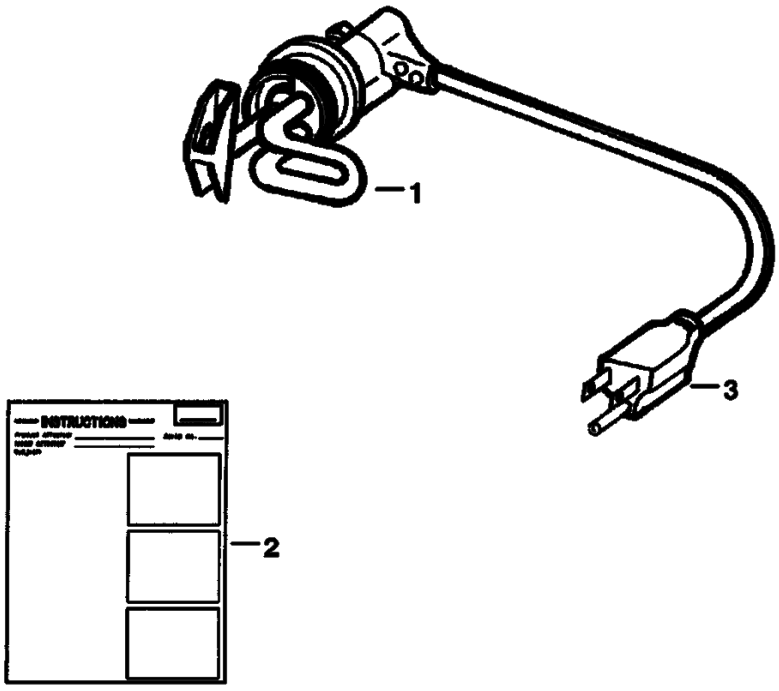

B–12299

Page 246 - OSS# 2060759 - All rights reserved by Bobcat Company, a business unit of Ingersoll-Rand - 05/22/2008 - 07:23:42 - Produced by Ken Cook Co. with mediaIoff

BLOCK HEATER (Cont'd)
(Engine)

Ref No	Part Number	Description	Remarks	Serial Number	Qty
1	6720736	PLUG	W/Ref 2 W/Ref 3		1
2	6720038	INSTRUCTIONS			1
3	6668881	CORD			1

Page 247 - OSS# 2060759 - All rights reserved by Bobcat Company, a business unit of Ingersoll-Rand - 05/22/2008 - 07:23:42 - Produced by Ken Cook Co. with media1off

BOB-TACH LEVERS
(For Use W/Industrial Grapple Fork)

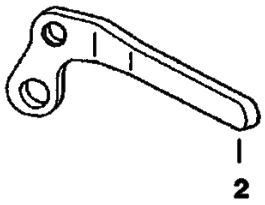

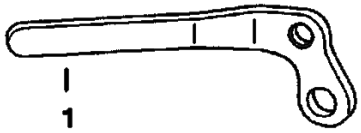

TS–1019

Page 248 - OSS# 2060759 - All rights reserved by Bobcat Company, a business unit of Ingersoll-Rand - 05/22/2008 - 07:23:42 - Produced by Ken Cook Co. with mediaioff

BOB-TACH LEVERS (Cont'd)
(For Use W/Industrial Grapple Fork)

Ref No	Part Number	Description	Remarks	Serial Number	Qty
1	6578139	LEVER	R.H.		1
2	6578140	LEVER	L.H.		1

Page 249 - OSS# 2060759 - All rights reserved by Bobcat Company, a business unit of Ingersoll-Rand - 05/22/2008 - 07:23:42 - Produced by Ken Cook Co. with mediaioff

BUCKET POSITION ON-OFF KIT

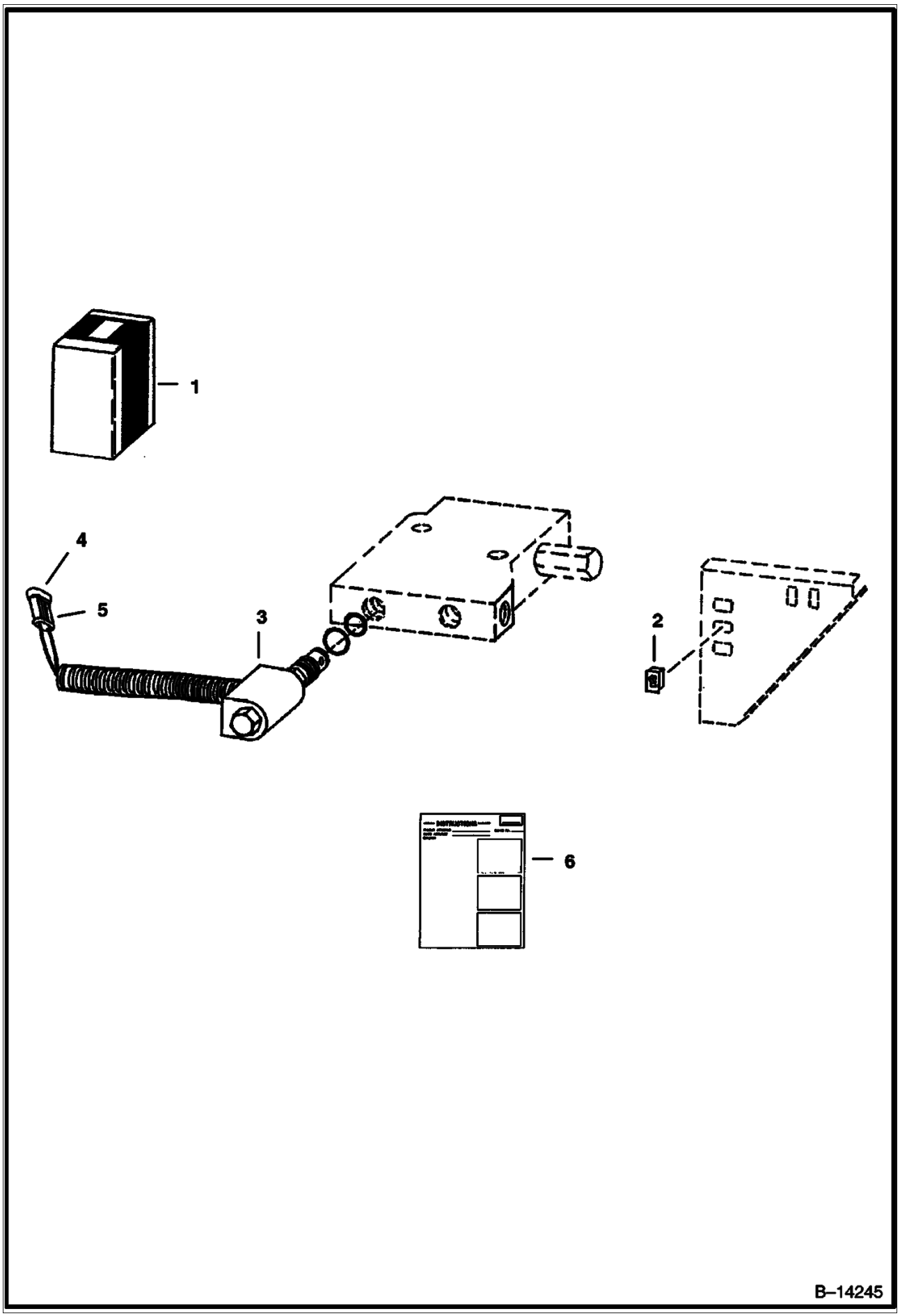

Page 250 - OSS# 2060759 - All rights reserved by Bobcat Company, a business unit of Ingersoll-Rand - 05/22/2008 - 07:23:42 - Produced by Ken Cook Co. with mediaioff

Ref No	Part Number	Description	Remarks	Serial Number	Qty
1	6712678	KIT	Ref. 2 - 5		1
2	6668814	SWITCH			1
3	6672863	SOLENOID	W/Ref 4 W/Ref 5 Was 6708271 [A]		1
3	6670634	SEAL KIT			1
3	6671527	NUT			1
4	6641179	CONNECTOR	2-pin		1
5	6641180	LOCK	2-pin		1
6	6720321	INSTRUCTIONS			1

Page 251 - OSS# 2060759 - All rights reserved by Bobcat Company, a business unit of Ingersoll-Rand - 05/22/2008 - 07:23:42 - Produced by Ken Cook Co. with media1off

BUCKET POSITIONING VALVE KIT

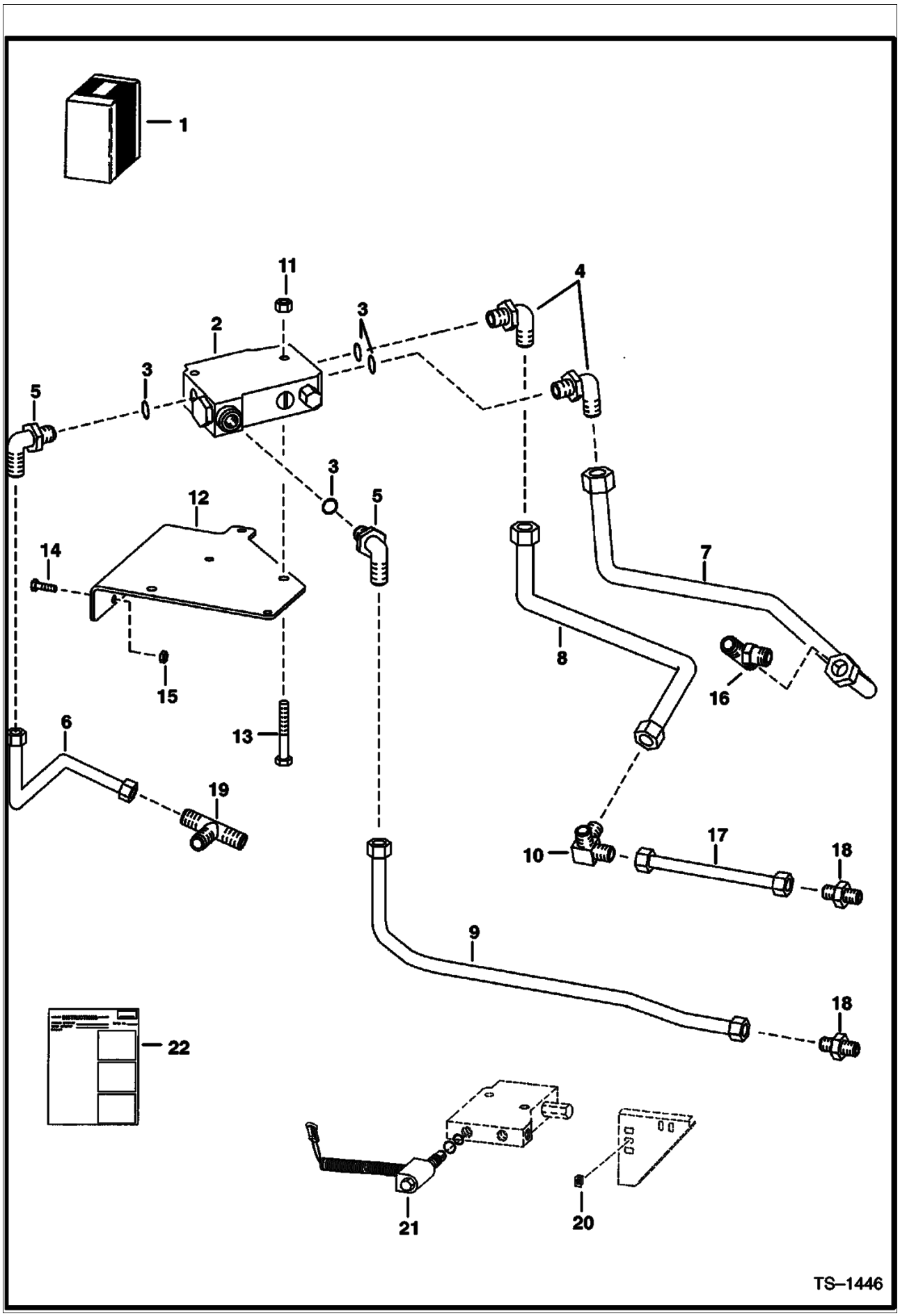

Page 252 - OSS# 2060759 - All rights reserved by Bobcat Company, a business unit of Ingersoll-Rand - 05/22/2008 - 07:23:42 - Produced by Ken Cook Co. with mediaIoff

BUCKET POSITIONING VALVE KIT (Cont'd)

Ref No	Part Number	Description	Remarks	Serial Number	Qty
1	6712050	KIT	Ref. 2 - 15 & 20 - 22		1
2	6666341	VALVE	See Illustration BUCKET POSITIONING VALVE/ MS1943 BUCKET POS.		1
3	79K000010B	O-RING	flat boss face		x
3	99K000010B	O-RING	tapered boss face		x
4	17K000007B	ELBOW	W/Ref 3 flat boss face		2
4	17KV00007B	ELBOW	W/Ref 3 tapered boss face		2
4	97K000010B	O-RING	flared end		2
5	784568B	ELBOW	W/Ref 3 flat boss face		2
5	6715716	ELBOW	W/Ref 3 tapered boss face		2
5	97K000008B	O-RING	flared end		2
6	6705068	TUBE			1
7	6710583	TUBE			1
8	6704839	TUBE			1
9	6710584	TUBE			1
10	6705070	TEE			1
11	57D000005B	NUT			2
12	6704833	BRACKET			1
13	35C000536B	BOLT			2
14	35C000412B	BOLT			2
15	55D000004B	NUT			2
16		TEE	See Illustration HYDRAULIC CIRCUITRY/ E2331 NOT IN KIT		1
17	6710573	TUBE	See Illustration HYDRAULIC CIRCUITRY/ E2331 NOT IN KIT		1
18		ADAPTER	See Illustration HYDRAULIC CIRCUITRY/ E2331 NOT IN KIT		2
19	10K000007B	TEE	See Illustration HYDRAULIC CIRCUITRY/ E2331 NOT IN KIT		1
20	6672863	SOLENOID	See Illustration BUCKET POSITION ON-OFF KIT/ B14245 WAS 6708271 [A]		1
20	6670634	SEAL KIT			1
20	6671527	NUT			1
21	6668814	SWITCH	See Illustration BUCKET POSITION ON-OFF KIT/ B14245		1
22	6724522	INSTRUCTIONS			1

Page 253 - OSS# 2060759 - All rights reserved by Bobcat Company, a business unit of Ingersoll-Rand - 05/22/2008 - 07:23:42 - Produced by Ken Cook Co. with mediaioff

CAB DOOR
(L.H. Hinged)

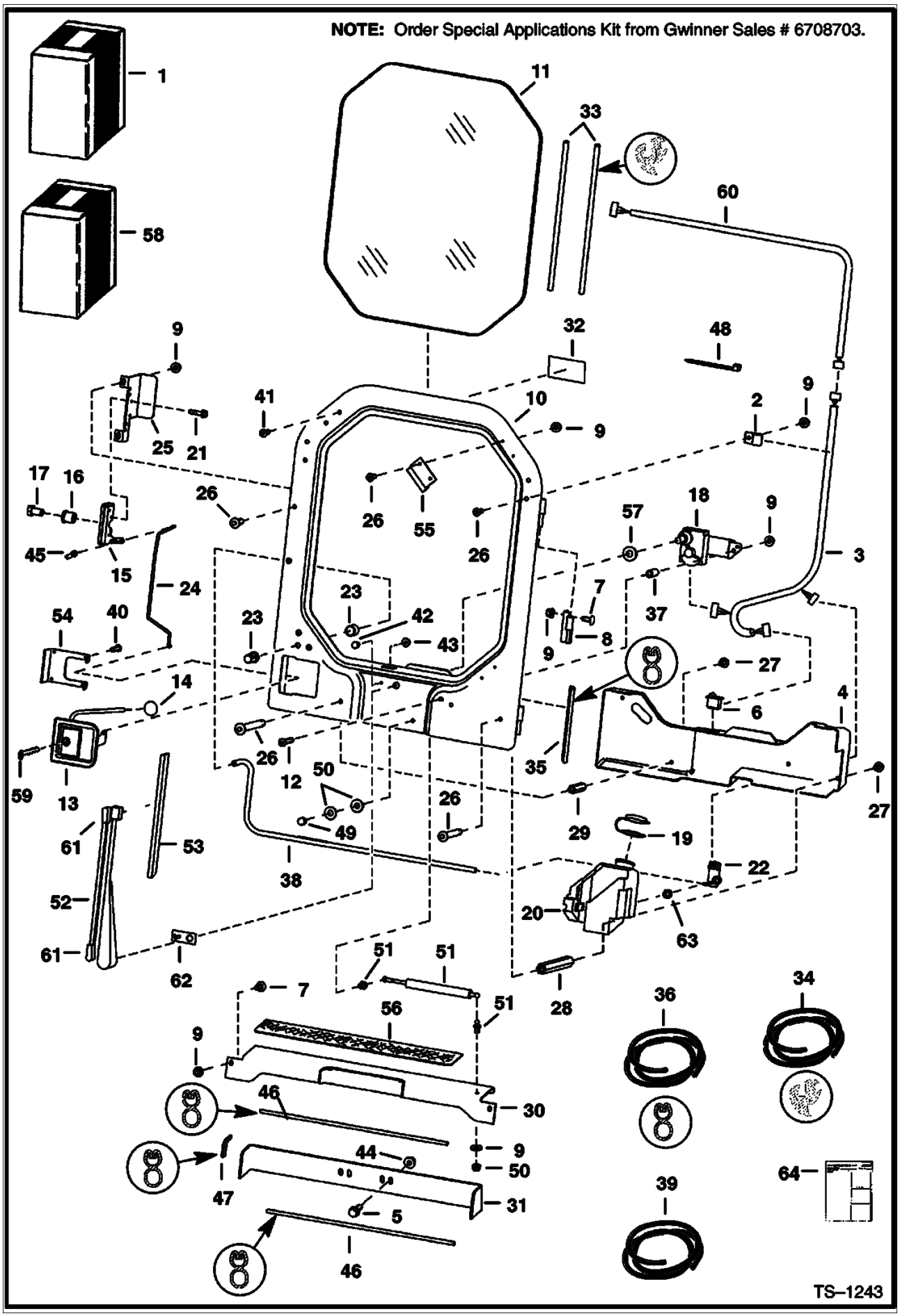

Page 254 - OSS# 2060759 - All rights reserved by Bobcat Company, a business unit of Ingersoll-Rand - 05/22/2008 - 07:23:42 - Produced by Ken Cook Co. with mediaioff

CAB DOOR (Cont'd)
(L.H. Hinged)

Ref No	Part Number	Description	Remarks	Serial Number	Qty
1	6708973	KIT	door - Ref. 2-4, 6-29, 32-35, 37-43, 45, 48-55, 57, 59 & 64 - Also Order Ref. 58		1
1		KIT	SALES - door - special applications - Ref. 4, 5, 7-17, 21, 24-37, 40-51, 54-56 & 64 - Also Order Ref. 58		1
2	30H000037B	CLAMP			1
3	6712259	HARNESS	W/2 diodes		1
4	6707179	SHIELD			1
5	35C000616B	BOLT			2
6	6665707	SWITCH			1
7	10C000512B	BOLT			6
8	6707216	HINGE			2
9	83D000005B	NUT	for standard door		10
9	83D000005B	NUT	for special applications door		15
10	6707220	DOOR			1
11	6707225	WINDOW	.25" thick - safety glass - for standard door		1
11	6708499	WINDOW	.5" thick - plexiglass - for special applications door		1
12	25G000528B	BOLT			1
13	6665530	LATCH	W/Ref 14 & Ref 59		1
14	6647635	KNOB			1
15	6665531	LATCH			1
16	6568047	NUT	bushing		1
17	17C000712B	BOLT			1
18	6665532	MOTOR	wiper		1
18	6631927	GEAR			1
18	6670163	SHAFT			1
18	6670164	LINK			1
18	6670165	CLIP			1
19	6665605	CAP			1
20	6707178	TANK			1
21	35C000416B	BOLT			4
22	6664554	PUMP	wiper washer		1
23	6664555	NOZZLE	washer		1
24	6707221	ROD	latch release		1
25	6707222	MOUNT	latch		1
26	25G000512B	BOLT	for standard door		7
26	25G000512B	BOLT	for special applications door		14
27	35C000510B	BOLT			4
28	6707223	COUPLING			2
29	6707224	COUPLING			2
30	6707239	SHIELD	bolts to cab		1
31	6707236	SHIELD	bolts to main frame		1
32	6707852	DECAL			1
33		SEAL	Order Ref 34 NAP - 91"(2311 mm)long		1
33		CORD	Order Ref 34 NAP - 91"(2311 mm)long		1
34	6665568	EXTRUSION	bulk - Sold Per Foot		x
34	6554149	CORD	bulk - Sold Per Foot		x
35		SEAL	Order Ref 36 NAP - 137"(3480mm)long		1
36	6513152	SEAL	bulk - Sold Per Foot		x
37	6708096	BUSHING			1
38		HOSE	Order Ref 39 NAP - 26"(660,4 mm)long		1
39	6708310	HOSE	bulk - Sold Per Foot		x
40	45G001008B	BOLT			4
41	5289686B	PLUG	black		11
42	17C000408B	BOLT			1
43	55D000004B	NUT			1
44	83D000006B	NUT			2

Page 255 - OSS# 2060759 - All rights reserved by Bobcat Company, a business unit of Ingersoll-Rand - 05/22/2008 - 07:23:42 - Produced by Ken Cook Co. with mediaioff

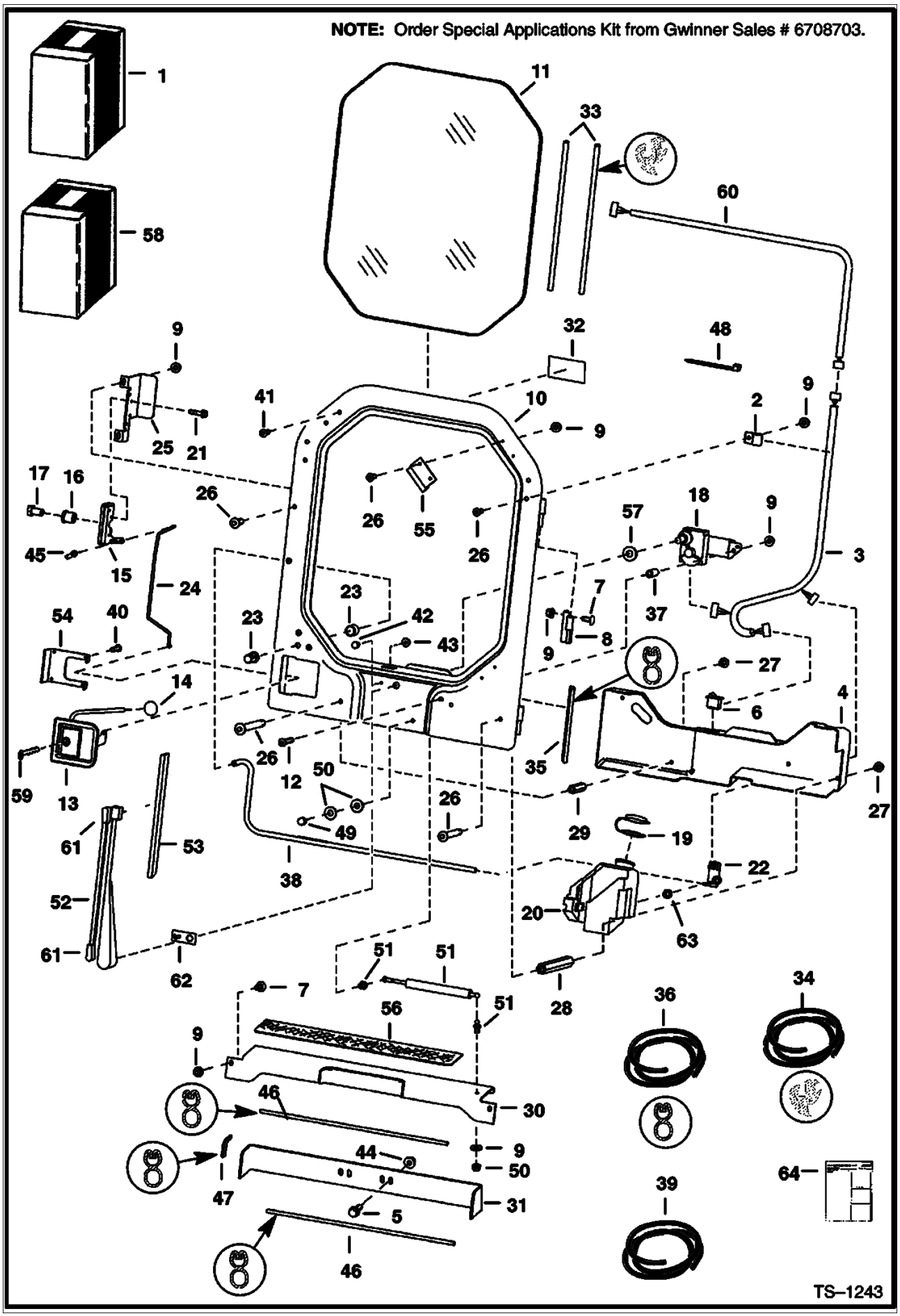

Page 256 - OSS# 2060759 - All rights reserved by Bobcat Company, a business unit of Ingersoll-Rand - 05/22/2008 - 07:23:42 - Produced by Ken Cook Co. with mediaioff

Ref No	Part Number	Description	Remarks	Serial Number	Qty
45	6512274	CLIP			1
46		SEAL	Order Ref 36 NAP - 28"(711 mm)long		2
47		SEAL	Order Ref 36 NAP - 5"(127 mm)long		2
48	6610510	TIE			1
49	46D000005B	NUT			1
50	25E000016B	WASHER			3
51	6630797	GAS SPRING			1
51	6632221	STUD	ball		2
51	2756257B	RETAINER	spring		2
52	6664095	ARM	W/Ref 61 W/Ref 62 wiper		1
53	6664096	BLADE	wiper		1
54	6703751	RETAINER			1
55	6708500	CLAMP	for special applications door		4
56	6564833	SAFETY TREAD			1
57	27E000010B	WASHER			1
58	6708975	KIT	shields - Ref. 5, 7, 9, 30, 31, 44, 46, 47, 56 & 64		1
59	6709527	KEY			1
60	6708225	HARNESS	not in kit - for non BICS loaders only		1
61	6670288	END	plastic		2
62	6670289	BRACKET			1
63	6666766	GROMMET			1
64	6724029	INSTRUCTIONS			1

Page 257 - OSS# 2060759 - All rights reserved by Bobcat Company, a business unit of Ingersoll-Rand - 05/22/2008 - 07:23:42 - Produced by Ken Cook Co. with mediaioff

CAB ENCLOSURE

NOTE: Order Special Application Kit from Gwinner Sales # 6708703. Order Cab Enclosure Kit from Gwinner Sales # 6708702.

NOTE: Wiper is not included in Special Application Door. Wiper may scratch Special Application Window.

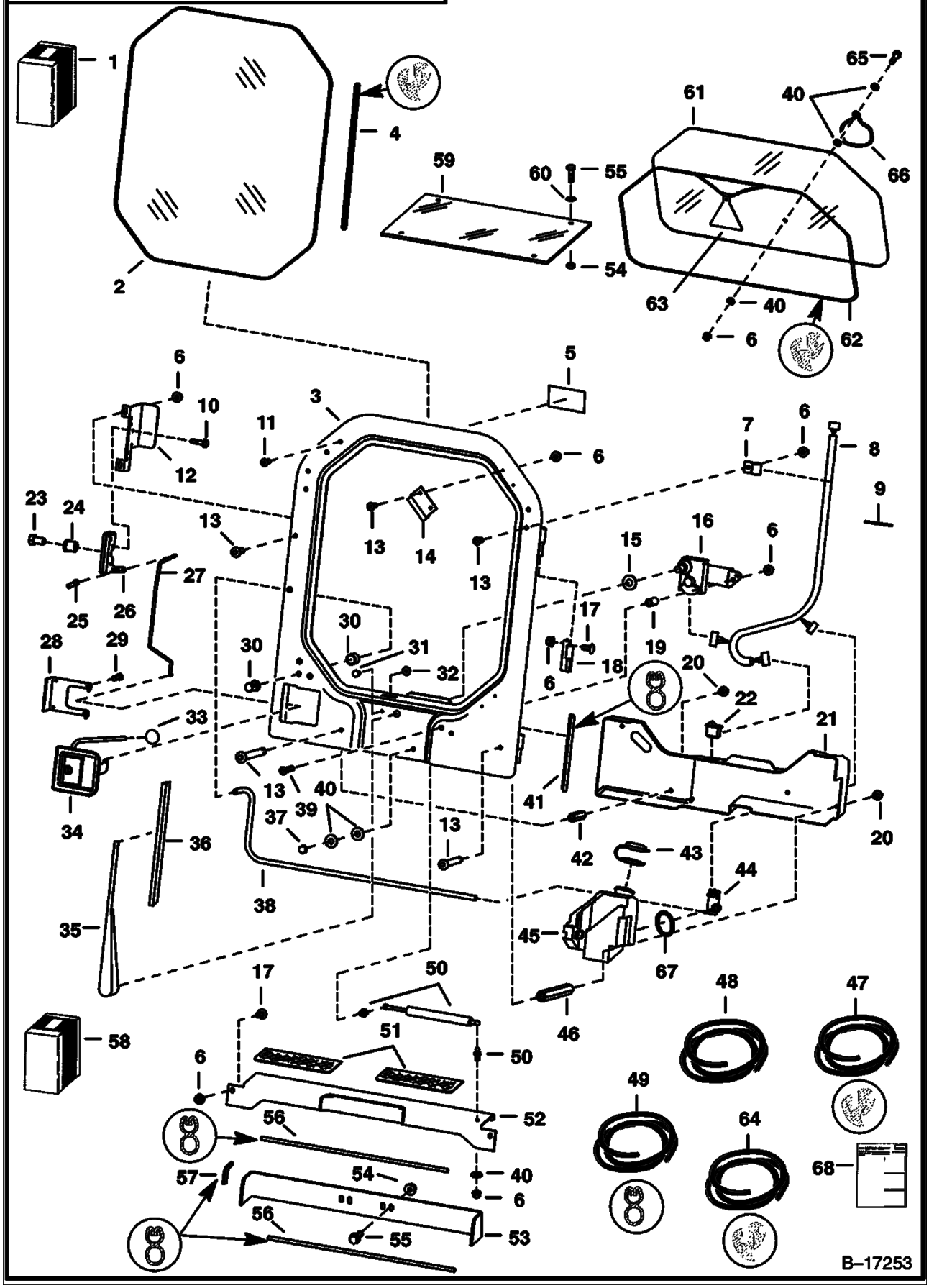

Page 258 - OSS# 2060759 - All rights reserved by Bobcat Company, a business unit of Ingersoll-Rand - 05/22/2008 - 07:23:42 - Produced by Ken Cook Co. with mediaioff

Ref No	Part Number	Description	Remarks	Serial Number	Qty
1		KIT	SALES - cab enclosure - Ref. 2 - 68 - SEE NOTE		1
1		KIT	SALES - cab enclosure - Special Applications - Does not include wiper - SEE NOTE		1
2	6707225	WINDOW	.25" thick - safety glass - for standard door		1
2	6708499	WINDOW	.5" thick - plexiglass - for special applications door		1
3	6707220	DOOR			1
4		SEAL	Order Ref 47 NAP - 91"(2311 mm)long		1
4		CORD	Order Ref 47 NAP - 91"(2311 mm)long		1
5	6707852	DECAL			1
6	83D000005B	NUT	for standard door		10
6	83D000005B	NUT	for special applications door		15
7	30H000037B	CLAMP			1
8	6708269	HARNESS			1
9	6610510	TIE			1
10	35C000416B	BOLT			4
11	5289686B	PLUG	black		11
12	6707222	MOUNT	latch		1
13	25G000512B	BOLT	for standard door		7
13	25G000512B	BOLT	for special applications door		14
14	6708500	CLAMP	for special applications door		4
15	27E000010B	WASHER			1
16	6665532	MOTOR	wiper		1
16	6631927	GEAR			1
16	6670163	SHAFT			1
16	6670164	LINK			1
16	6670165	CLIP			1
17	10C000512B	BOLT			6
18	6707216	HINGE			2
19	6708096	BUSHING			1
20	35C000510B	BOLT			4
21	6707179	SHIELD			1
22	6665707	SWITCH			1
23	17C000712B	BOLT			1
24	6568047	NUT	bushing		1
25	6512274	CLIP			1
26	6665531	LATCH			1
27	6707221	ROD	latch release		1
28	6703751	RETAINER			1
29	45G001008B	BOLT			4
30	6664555	NOZZLE	washer		1
31	17C000408B	BOLT			1
32	55D000004B	NUT			1
33	6647635	KNOB			1
34	6665530	LATCH	& Ref 33 W/ Key		1
34	6632560	KEY			1
35	6664095	ARM	wiper		1
36	6664096	BLADE	wiper		1
37	46D000005B	NUT			1
38		HOSE	Order Ref 48 NAP - 26"(660,4 mm)long		1
39	25G000528B	BOLT			1
40	25E000016B	WASHER			3
41		SEAL	Order Ref 49 NAP - 137"(3480mm)long		1
42	6707224	COUPLING			2
43	6665605	CAP			1
44	6664554	PUMP	wiper washer		1

Page 259 - OS$# 2060759 - All rights reserved by Bobcat Company, a business unit of Ingersoll-Rand - 05/22/2008 - 07:23:42 - Produced by Ken Cook Co. with mediaioff

NOTE: Order Special Application Kit from Gwinner Sales # 6708703. Order Cab Enclosure Kit from Gwinner Sales # 6708702.

NOTE: Wiper is not included in Special Application Door. Wiper may scratch Special Application Window.

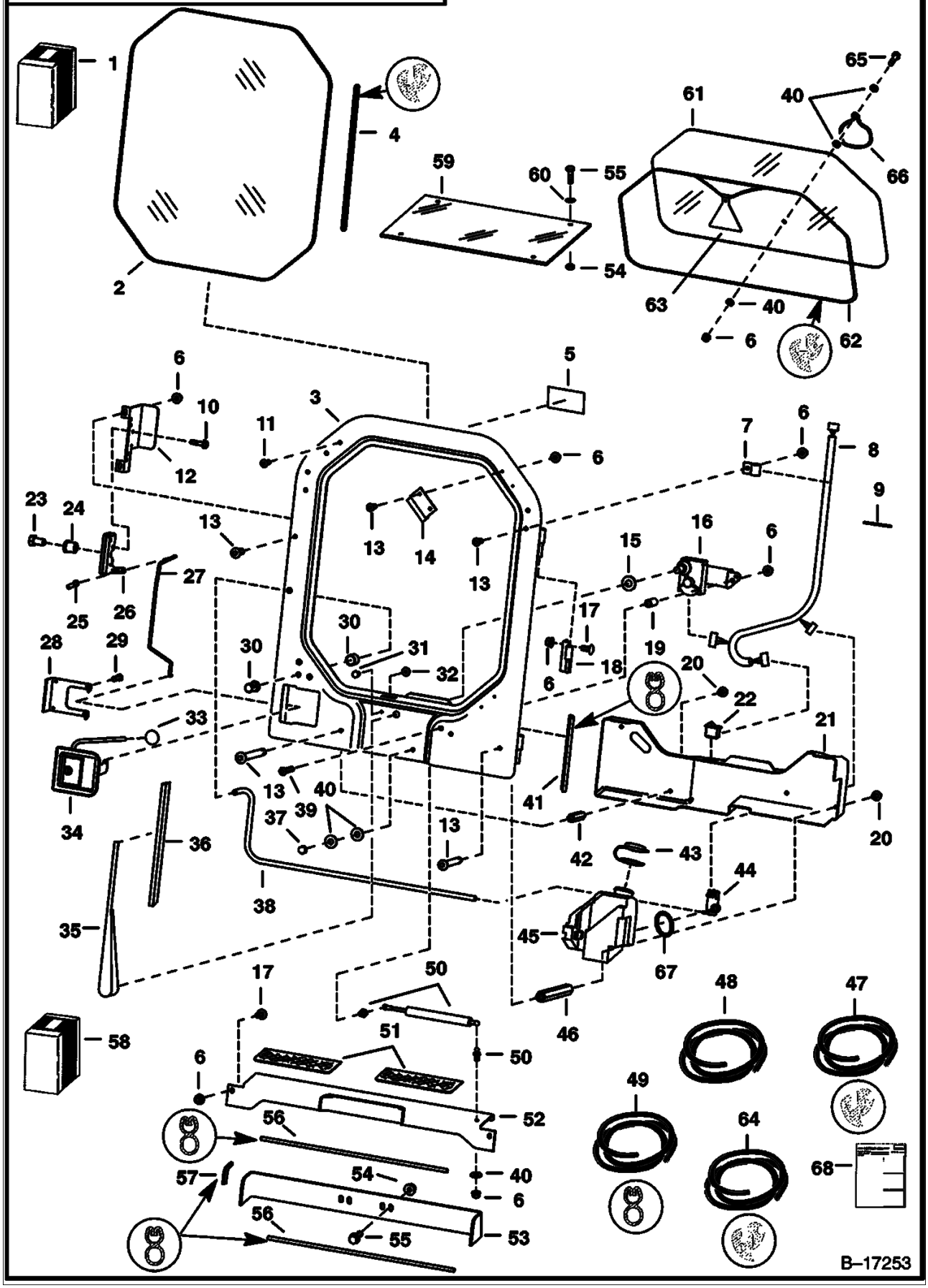

Page 260 - OSS# 2060759 - All rights reserved by Bobcat Company, a business unit of Ingersoll-Rand - 05/22/2008 - 07:23:42 - Produced by Ken Cook Co. with mediaioff

Ref No	Part Number	Description	Remarks	Serial Number	Qty
45	6707178	TANK			1
46	6707223	COUPLING			2
47	6665568	EXTRUSION	bulk - Sold Per Foot		x
47	6554149	CORD	bulk - Sold Per Foot		x
48	6708310	HOSE	bulk - Sold Per Foot - 5/32" I.D.		x
49	6513152	SEAL	bulk - Sold Per Foot		x
50	6630797	GAS SPRING			1
50	6632221	STUD	ball		2
50	2756257B	RETAINER	spring		2
51	6703757	SAFETY TREAD			2
52	6707239	SHIELD			1
53	6707236	SHIELD			1
54	83D000006B	NUT			2
55	35C000616B	BOLT			2
56		SEAL	Order Ref 49 NAP - 28"(711 mm)long		2
57		SEAL	Order Ref 49 NAP - 5"(127 mm)long		1
58	6708975	KIT	shield - Ref. 6, 17, 51 - 57 & 59		1
59	6705216	WINDOW	top		1
60	25E000018B	WASHER			4
61	6579325	WINDOW	rear - .25" thick poly carbonate		1
62		EXTRUSION	Order Ref 64 NAP - 100"(2540 mm) long		1
62		CORD	Order Ref 64 NAP - 100"(2540 mm) long		1
63	6731478	EXIT TAG	Was 6559515 [A]		1
64	6658352	MOULDING	bulk - Sold Per Foot		x
64	6554149	CORD	bulk - Sold Per Foot		x
65	35C000516B	BOLT			1
66	6555331	WIRE ROPE			1
67	6666766	GROMMET			1
68	6724029	INSTRUCTIONS			1

Page 261 - OSS# 2060759 - All rights reserved by Bobcat Company, a business unit of Ingersoll-Rand - 05/22/2008 - 07:23:42 - Produced by Ken Cook Co. with mediaioff

CAB ENCLOSURE
(Envelope)

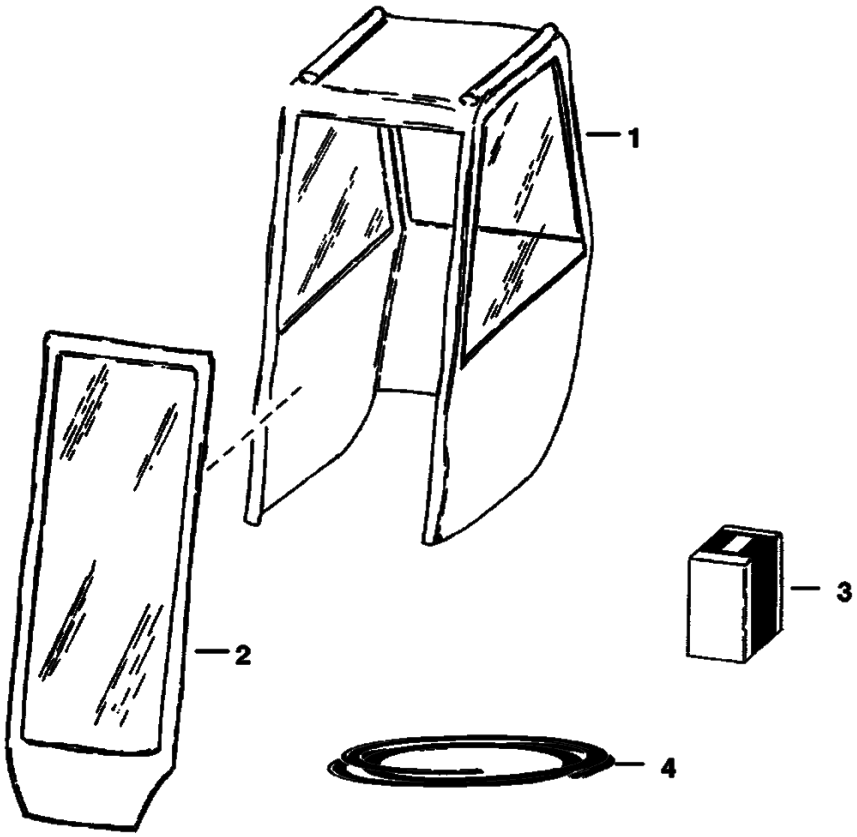

Page 262 - OSS# 2060759 - All rights reserved by Bobcat Company, a business unit of Ingersoll-Rand - 05/22/2008 - 07:23:42 - Produced by Ken Cook Co. with mediaioff

CAB ENCLOSURE (Cont'd)
(Envelope)

Ref No	Part Number	Description	Remarks	Serial Number	Qty
1	6565270	VINYL CAB	W/Ref 2 fastens inside of cab W/velcro		1
1	6660340	VINYL CAB	W/Ref 2 fits over cab		1
2	6599721	DOOR	vinyl		1
3	6662839	HINGE KIT			1

Page 263 - OSS# 2060759 - All rights reserved by Bobcat Company, a business unit of Ingersoll-Rand - 05/22/2008 - 07:23:42 - Produced by Ken Cook Co. with media1off

NOTE: Order Top WIndow Kit from Gwinner Sales # 6702953.
Order Rear Window Kit from Gwinner Sales # 6701514.
Order Side Window Kit from Gwinner Sales # 6706993.

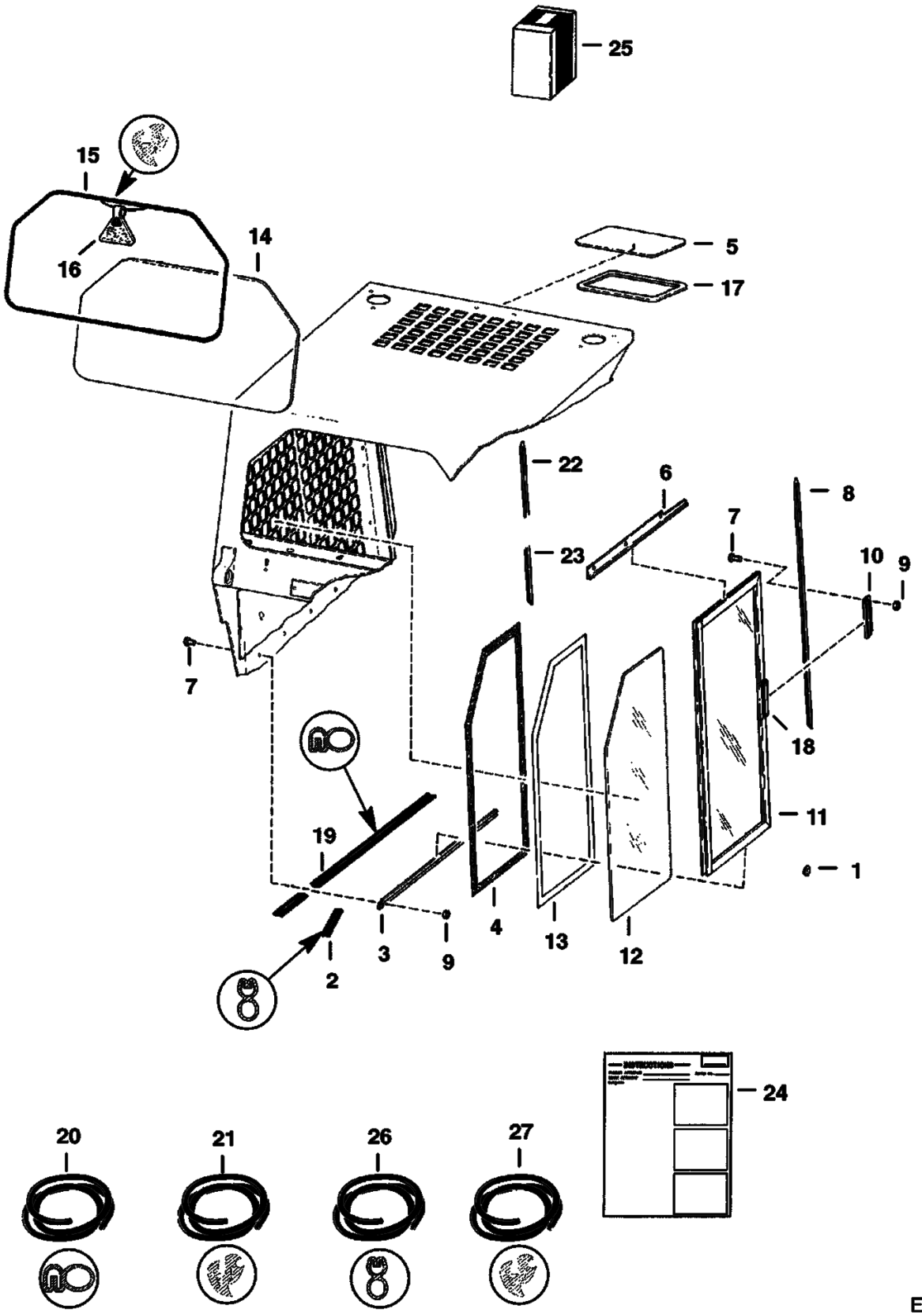

Page 264 - OS8# 2060759 - All rights reserved by Bobcat Company, a business unit of Ingersoll-Rand - 05/22/2008 - 07:23:42 - Produced by Ken Cook Co. with mediaioff

Ref No	Part Number	Description	Remarks	Serial Number	Qty
1	6632265	PLUG	button		2
2		SEAL	Order Ref 26 NAP - 8"(203,2 mm) long		2
3	6661689	TRACK	L.H.		1
3	6661690	TRACK	R.H.		1
4	6631549	HOOK	scotchmate		2
5	6705735	WINDOW	use W/Ref. 17 - 8.6" x 15.5" (218,4 mm x 393,7 mm) opening in cab		1
6	6703160	TRACK	L.H.		1
6	6703159	TRACK	R.H.		1
7	35C000410B	BOLT			26
8	6630919	TRACK	R.H.		1
9	83D000004B	NUT			26
10	6630924	BRACKET			2
11	6658143	WINDOW	L.H.		1
11	6658142	WINDOW	R.H.		1
12	6702731	WINDOW			2
13	6631548	LOOP	scotchmate		2
14		WINDOW	& Ref 27 NAP - rear - .25" thick safety glass - 15" x 27.5"(381 mm x 698,5 mm) - Order 6729730 Window - Was 6701651 [A]		1
14	6729730	WINDOW	rear - .25" thick safety glass - 14.4"x26.84"(365,8mm x 681,7mm)		1
15		SEAL	NAP - 81.5"(2070 mm)long-Order Ref. 21 or 27		x
15		CORD	NAP - 81.5"(2070 mm)long-Order Ref. 21 or 27		x
16	6731478	EXIT TAG	Was 6559515 [A]		1
17	6664351	SEAL	Used W/Cab Headliner		1
17	6665012	SEAL	Used W/O Cab Headliner		1
18	6659949	LATCH			2
19		SEAL	Order Ref 20 NAP - 24.5"(622mm)long		1
20	6555351	SEAL	bulk - Sold Per Foot		x
21	6665568	EXTRUSION	Used W/Ref 14 bulk - Sold Per Foot - (NAP/6701651 Window)		x
21	6554149	CORD	bulk - Sold Per Foot		x
22	6706744	TRACK	L.H. - top half		1
23	6706745	TRACK	L.H. - bottom half		1
24	6566957	INSTRUCTIONS	INSTRUCTIONS Side Windows		1
24	6720320	INSTRUCTIONS	INSTRUCTIONS Rear Window		1
24	6720598	INSTRUCTIONS	INSTRUCTIONS Top Window		1
25		KIT	SALES - Side Window - SEE NOTE		1
25		KIT	SALES - Top Window - SEE NOTE		1
25		KIT	SALES - Rear Window - SEE NOTE		1
26	6513152	SEAL	bulk - Sold Per Foot		x
27	6675387	EXTRUSION	Used W/Ref 14 bulk - Sold Per Foot - (6729730 Window)		x
27	6554149	CORD	Used W/Ref 14 bulk - Sold Per Foot - (6729730 Window)		x

Page 265 - OSS# 2060759 - All rights reserved by Bobcat Company, a business unit of Ingersoll-Rand - 05/22/2008 - 07:23:42 - Produced by Ken Cook Co. with mediaioff

CLOSED ALTERNATOR
(30 Amp. Motorola or Prestolite)

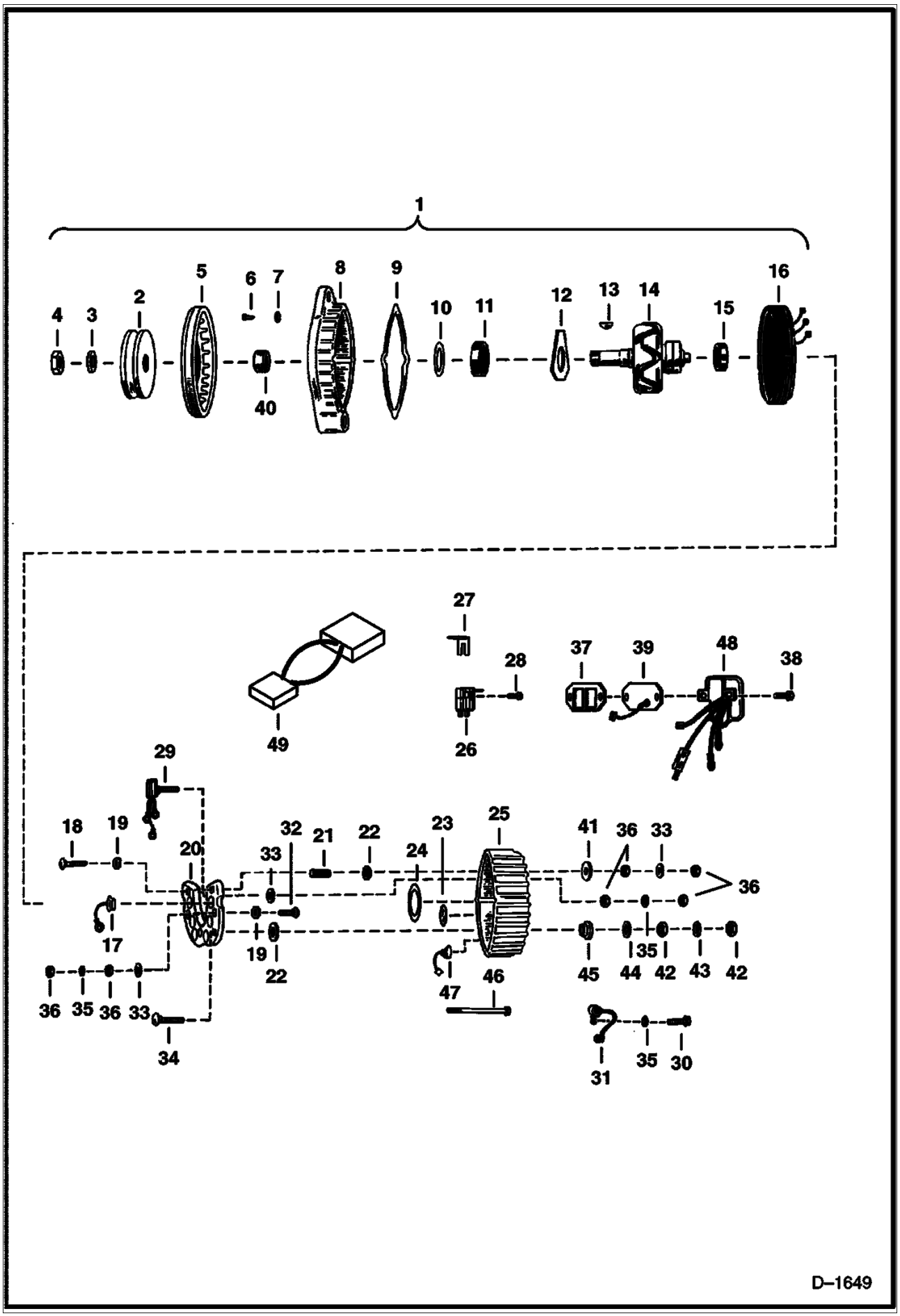

Page 266 - OSS# 2060759 - All rights reserved by Bobcat Company, a business unit of Ingersoll-Rand - 05/22/2008 - 07:23:42 - Produced by Ken Cook Co. with mediaioff

CLOSED ALTERNATOR (Cont'd)
(30 Amp. Motorola or Prestolite)

Ref No	Part Number	Description	Remarks	Serial Number	Qty
1		ALTERNATOR	See BTI212 NAP - REF. 3-47		1
2	6630163	PULLEY			1
3	6635557	WASHER			1
4	896979B	NUT			1
5	899157B	FAN			1
6	41G000806B	SCREW			3
7	17E000008B	WASHER			3
8	6630340	HOUSING			1
9	6630345	GASKET			1
10	899374B	SEAL			1
11	889163B	BEARING			1
12	6630343	RETAINER			1
13	6J000405B	KEY			1
14	899163B	ROTOR			1
15	1991038B	BEARING			1
16	6630341	STATOR			1
17	899375B	DIODE			3
18	7C000322B	BOLT			1
19	897245B	INSULATOR			4
20	899167B	SINK	heat		1
21	897239B	SLEEVE			1
22	899376B	WASHER			2
23	899165B	INSULATOR			3
24	896992B	RETAINER			1
25	6630342	HOUSING			1
26	6630344	BRUSH ASSY.			1
27	899169B	INSULATOR			1
28	84G001608B	SCREW			2
29	6630350	DIODE	field		1
30	84G001906B	SCREW			1
31	6630348	CAPACITOR			1
32	7C000312B	BOLT			3
33	896996B	WASHER			5
34	899377B	BOLT			1
35	17E000010B	WASHER			5
36	12D000010B	NUT			10
37	899170B	GASKET			1
38	84G001910B	SCREW			2
39	6630346	COVER			1
40	6649459	CONNECTOR			1
41	896990B	WASHER			1
42	62D000004B	NUT			2
43	4E000004B	WASHER			1
44	897732B	WASHER			1
45	897719B	INSULATOR			1
46	896984B	BOLT	thru		4
47	899378B	DIODE			3
48	6630349	REGULATOR	voltage		1
49	6713803	HARNESS			1

Page 267 - OSS# 2060759 - All rights reserved by Bobcat Company, a business unit of Ingersoll-Rand - 05/22/2008 - 07:23:42 - Produced by Ken Cook Co. with mediaioff

COUNTERWEIGHT KIT
(1850 lb.)

NOTE: Order Counterweight Kit from Gwinner Sales # 6714932.

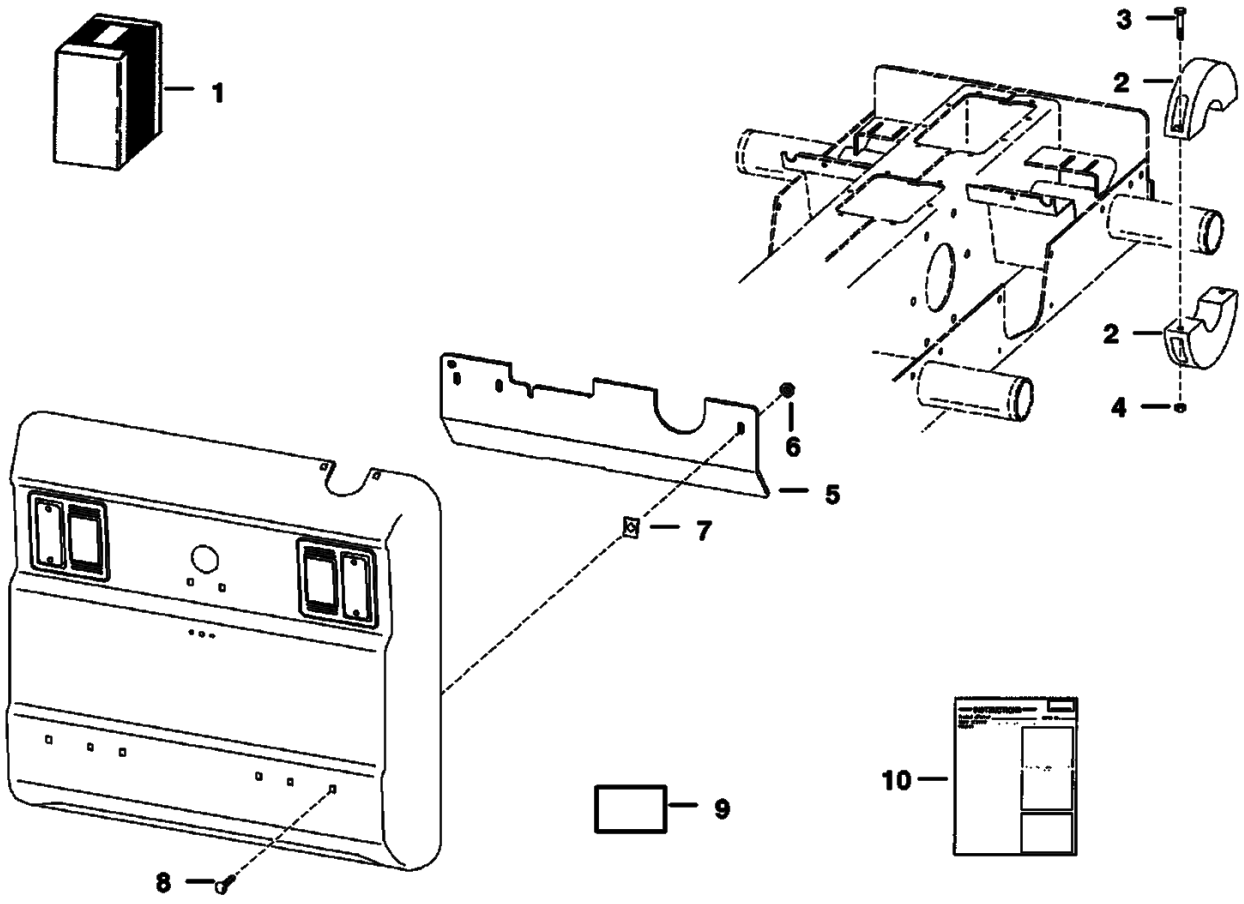

Page 268 - OSS# 2060759 - All rights reserved by Bobcat Company, a business unit of Ingersoll-Rand - 05/22/2008 - 07:23:42 - Produced by Ken Cook Co. with mediaioff

COUNTERWEIGHT KIT (Cont'd)
(1850 lb.)

Ref No	Part Number	Description	Remarks	Serial Number	Qty
1		KIT	SALES - counterweight		1
2	6714361	WEIGHT	front axle - 38.7 lbs (17,6 kg) - 4.5"(114,3 mm) wide		4
3	17C000640B	BOLT			4
4	61D000006B	NUT			4
5	6725256	COUNTERWEIGHT	Was 6714053 [A]		3
6	57D000006B	NUT			3
7	1612281B	NUT	spring		3
8	37C000628B	BOLT			3
9	6703586	DECAL	1400 lb. - Not in Kit		1
9	6707481	DECAL	1600 lb. - Not in Kit		1
9	6705102	DECAL	1800 lb. - Not in Kit		1
10	6900410	INSTRUCTIONS			1

Page 269 - OSS# 2060759 - All rights reserved by Bobcat Company, a business unit of Ingersoll-Rand - 05/22/2008 - 07:23:42 - Produced by Ken Cook Co. with mediaioff

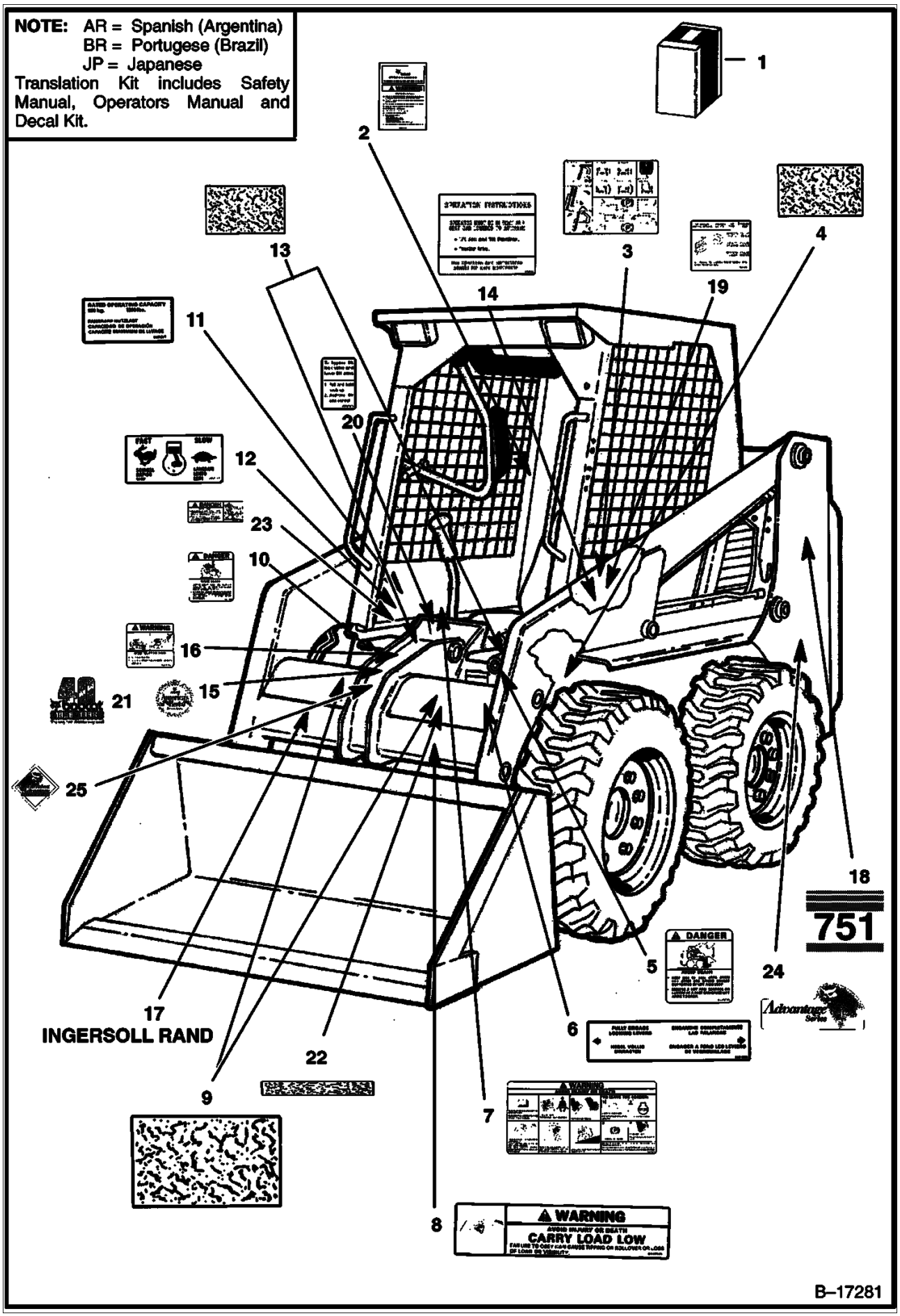

Page 270 - OSS# 2060759 - All rights reserved by Bobcat Company, a business unit of Ingersoll-Rand - 05/22/2008 - 07:23:42 - Produced by Ken Cook Co. with mediaIoff

Ref No	Part Number	Description	Remarks	Serial Number	Qty
1	6900503	KIT	decal - Was 6701897 [B,D] [B,D]		1
1	6716206AR	KIT	decal - SEE NOTE		1
1	6716206BR	KIT	decal - SEE NOTE		1
1	6716206JP	KIT	decal - SEE NOTE		1
1	6716207AR	KIT	translation - SEE NOTE		1
1	6716207BR	KIT	translation - SEE NOTE		1
2	6708154	KIT	handbook - W/Wire Rope		1
2	6708154ES	KIT	handbook-W/Wire Rope-Spanish		1
2	6558309	WIRE ROPE	33" (838,2 mm) long - Bulk - Sold Per Foot - Also Order (2) of 6558310		x
2	6558310	SLEEVE	wire rope		2
2	17C000512B	BOLT			1
2	61D000005B	NUT			1
3	6703723	DECAL	operating		1
4	6554100	TREAD	6" x 6" (152,4 mm x 152,4 mm)		4
5	6579639	DECAL	danger		1
6	6561383	DECAL	Bob-tach		1
7	6579510	DECAL	warning		1
8	6579528	DECAL	carry load low		1
9	6577947	SAFETY TREAD	7.5" x 15" (190,5 mm x 381,0 mm)		2
10	6579509	DECAL	danger		1
11	6725527	DECAL	capacity - 751 - Was 6714918 [A]		1
12	6557565	DECAL	throttle		1
13	6577949	SAFETY TREAD	6.8" x 8.75" - (172,7 mm x 222,3 mm)		2
14	6718703	DECAL	seat & seat bar operating - Was 6717640 [A]		1
14	6717043	DECAL	operating - AHC		1
15	6705088	DECAL	America's Best		1
16	6710358	DECAL	warning		1
17	6727310	DECAL	Ingersoll Rand -Was 6711329 [A]		1
18	6714531	DECAL	model no. - 751		2
19	6708105	DECAL	pre heat		1
20	6711840	DECAL	lift lock		1
21	6715912	DECAL	40th anniversary		1
22	6710746	SAFETY TREAD	1.25"x15"(31,8 mm x 381 mm)		2
22	6727917	SAFETY TREAD	1.25"x10.5"(31,8 mm x 266,7 mm)		2
23	6717343	DECAL	danger		2
24	6718271	DECAL	advantage series - L.H. - Not in Kit		1
25	6718275	DECAL	Bobcat advantage		1

Page 271 - OSS# 2060759 - All rights reserved by Bobcat Company, a business unit of Ingersoll-Rand - 05/22/2008 - 07:23:42 - Produced by Ken Cook Co. with mediaioff

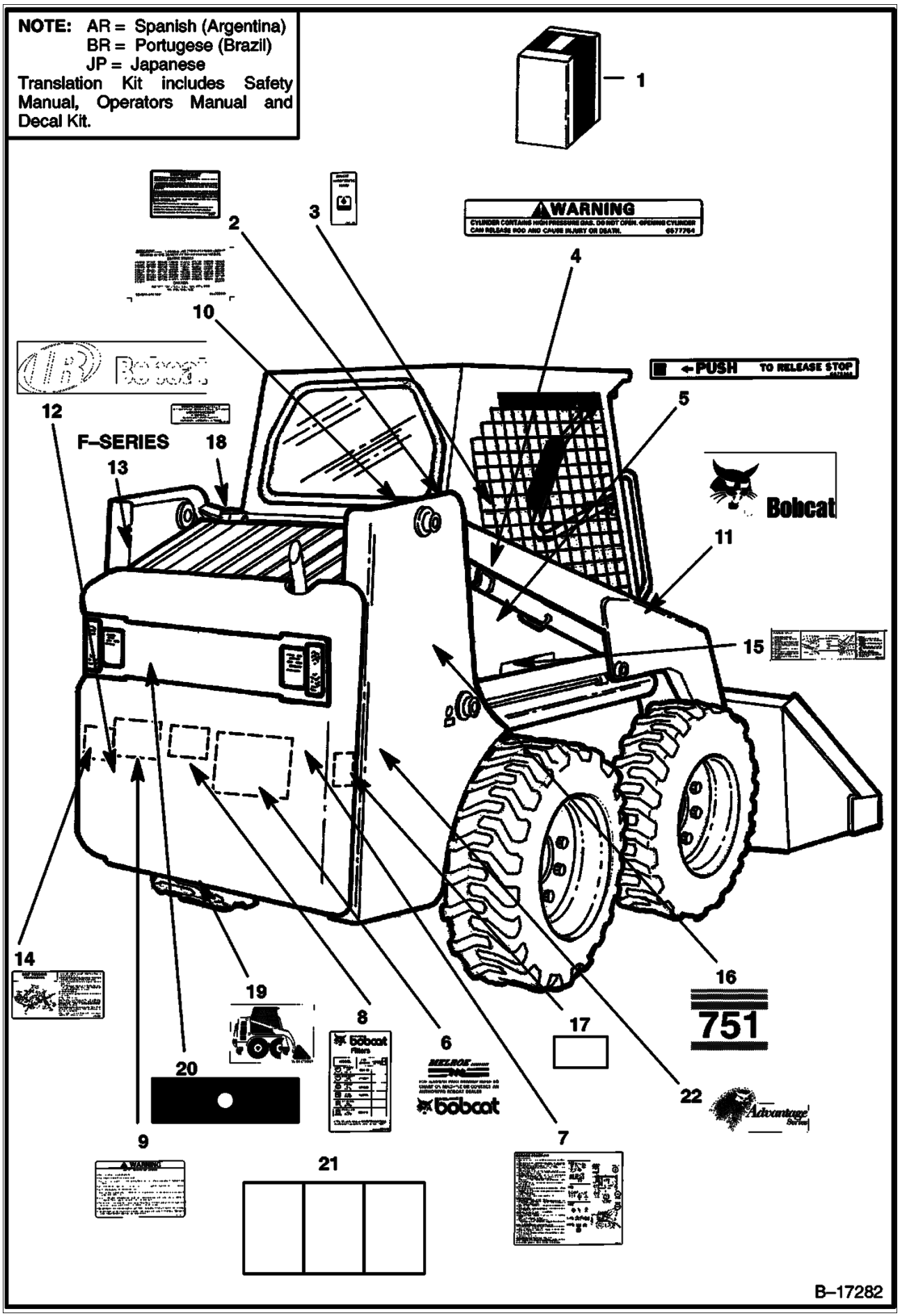

Page 272 - OSS# 2060759 - All rights reserved by Bobcat Company, a business unit of Ingersoll-Rand - 05/22/2008 - 07:23:42 - Produced by Ken Cook Co. with mediaIoff

Ref No	Part Number	Description	Remarks	Serial Number	Qty
1	6900503	KIT	decal - Was 6701897 [B,D] [B,D]		1
1	6716206AR	KIT	decal - SEE NOTE		1
1	6716206BR	KIT	decal - SEE NOTE		1
1	6716206JP	KIT	decal - SEE NOTE		1
1	6716207AR	KIT	translation - SEE NOTE		1
1	6716207BR	KIT	translation - SEE NOTE		1
2	6560573	DECAL	spark arrestor		1
3	6565990	DECAL	hydraulic fluid		1
4	6577754	DECAL	warning		3
5	6578368	DECAL	push		1
6	6565200	DECAL	engine oil filter		1
7		DECAL	NAP - service - Was 6708212 [A]		1
8		DECAL	NAP - filters - Was 6709781 [A]		1
9		DECAL	NAP - warning - Was 6579511 [A]		1
10	6557224	DECAL	patent		1
11	6727309	DECAL	R.H. - Was 6702826 [A]		1
11	6727308	DECAL	L.H. - Was 6702827 [A]		1
12	6727311	DECAL	Bobcat Logo - Was 6714139 [A]		1
13	6714858	DECAL	"F"-Series		1
14	6709030	DECAL	belt tension		1
15	6706558	DECAL	boom stop		1
16	6714531	DECAL	model no. - 751		1
17	6715991	DECAL	fuses - Was 6707786 [A]		1
18	6708929	DECAL	propylene glycol anti-freeze		1
19	6707867	DECAL	tow hook		1
20	6714242	DECAL	rear door		1
21	6718398	DECAL	warning/service/service parts - Was 6715563 [A]		1
22	6718272	DECAL	advantage series - R.H. - Not in Kit		1

Page 273 - OSS# 2060759 - All rights reserved by Bobcat Company, a business unit of Ingersoll-Rand - 05/22/2008 - 07:23:42 - Produced by Ken Cook Co. with mediaioff

ELECTRICAL CONTROLS KIT
(Attachments)

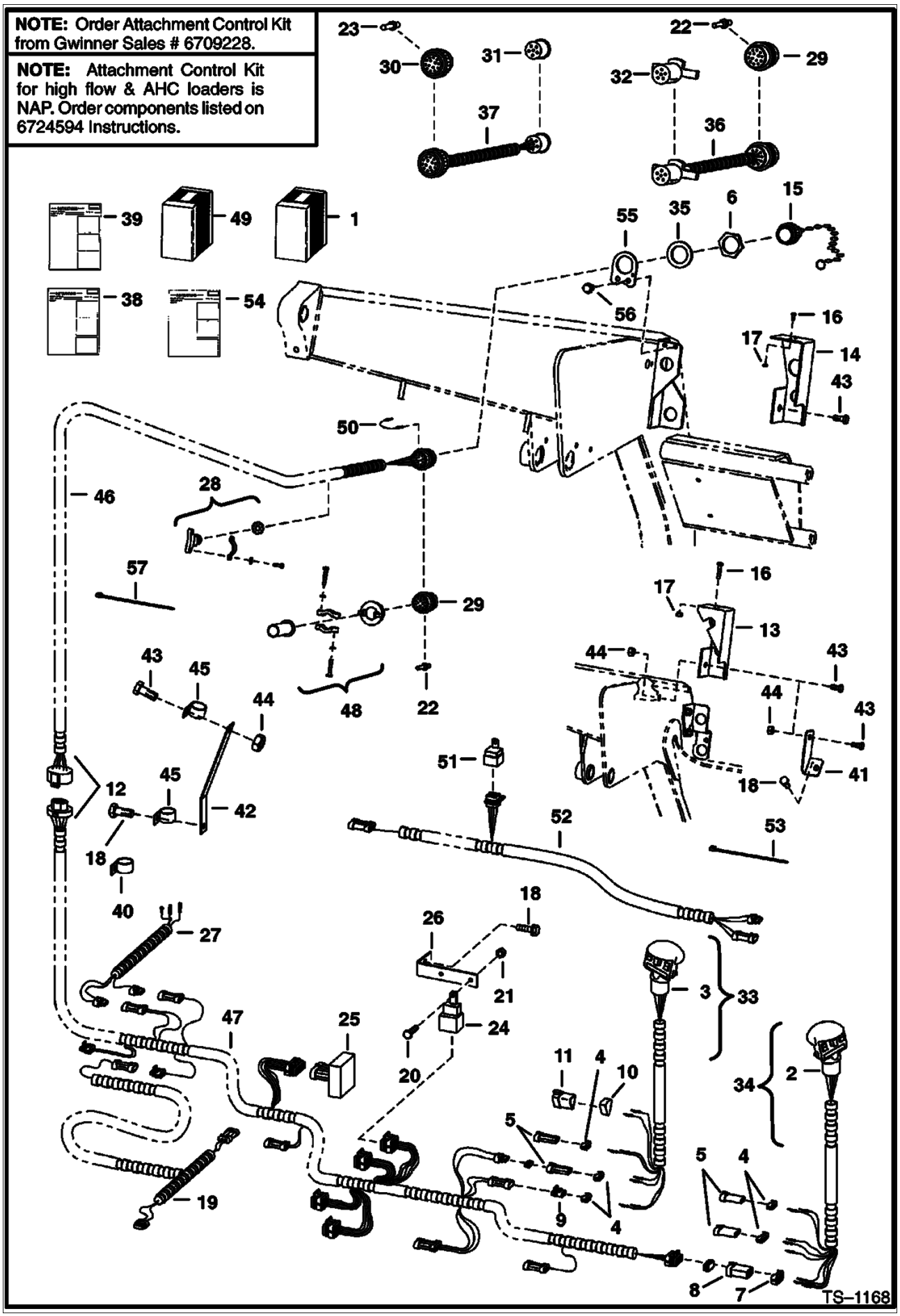

Page 274 - OSS# 2060759 - All rights reserved by Bobcat Company, a business unit of Ingersoll-Rand - 05/22/2008 - 07:23:42 - Produced by Ken Cook Co. with mediaIoff

ELECTRICAL CONTROLS KIT (Cont'd)
(Attachments)

Ref No	Part Number	Description	Remarks	Serial Number	Qty
1		KIT	SALES - controls - W/handles - Ref. 2-29		1
1		KIT	NAP - controls-W/O handles-SEE NOTE Ref. 12 - 29 - Was SALES [D]		1
2	6706340	HANDLE ASSY.	R.H. - Also Order Ref. 4, 5, 7 & 8		1
2	6640690	PIN			9
2	6641176	SEAL			9
3	6707976	HANDLE ASSY.	L.H. - Also Order Ref. 4, 5 & 9 - 11 - Was 6705923 [A]		1
3	6640690	PIN			5
3	6640691	PIN			2
3	6641176	SEAL			7
3	6662257	PIN			3
3	6680447	DECAL	Was 6677370 [A]		1
4	6641180	LOCK	2 - pin		2
4	6640700	LOCK	3 - pin		2
5	6641179	CONNECTOR	2 - pin		2
5	6640699	CONNECTOR	3 - pin		2
6	6664036	NUT			1
7	6641181	LOCK	6 - pin		1
8	6641173	CONNECTOR	6 - pin		1
9	6641178	CONNECTOR	2 - pin		1
10	6664800	LOCK	3 - pin triangle -Was 6664186 [B]		1
11	6664599	CONNECTOR	3 - pin triangle -Was 6664184 [B]		1
12		HARNESS	NAP - One piece - Order Ref. 46, 47, 6711621 Mount & (4) of 6670312 Solenoid - Was 6705901 [A]		1
13	6706753	MOUNT	Used W/Ref. 12		1
14	6711621	MOUNT	Used W/Ref. 46		1
15	6664035	CAP			1
16	45G000508B	BOLT			1
17	50D000005B	NUT			1
18	84G003712B	BOLT	Was 84G003716B [B]		1
19	6706552	HARNESS	for grader - Not in Kit		1
20	45G001212B	BOLT			2
21	50D000012B	NUT			2
22	6664040	PIN	male		x
23	6664041	SOCKET	female		x
24	6651975	SWITCH	relay - Used W/Ref. 12		4
24	6670312	SOLENOID	relay - Used W/Ref. 46		1
25	6664388	DIODE	memory		1
26	6702650	MOUNT			1
27	6706446	HARNESS	Not in Kit		1
28	6649028	CLAMP			1
29	6667569	CONNECTOR	Order (14) of Ref. 22 - W/Ref. 48		1
30	6665001	CONNECTOR	Also Order (6) of Ref. 23 - Not in Kits - W/Ref. 48		1
31	6664181	CONNECTOR	trailer style - Not in Kits		1
32	6664182	CONNECTOR	trailer style - Not in Kits		1
33	6706392	HARNESS	connects old loader harness to new attachment harness - W/Ref. 29 & 32 - Not in Kits		1
34	6706391	HARNESS	connects new loader harness to old attachment harness - W/Ref. 30 & 31 - Not in Kits		1
35	6664037	WASHER			1
36	6706568	KIT	handle - Ref. 3 - 5, 9 - 11 & 38		1
37	6706567	KIT	handle - W/Ref. 2, 4, 5, 7, 8 & 38		1
38	6722759	INSTRUCTIONS	for Ref. 3 - 5 & 9 - 11		1
39	6722758	INSTRUCTIONS	for control elec. kit		1
40	30H000049B	CLAMP			1
41	6709176	BRACKET			1

Page 275 - OSS# 2060759 - All rights reserved by Bobcat Company, a business unit of Ingersoll-Rand - 05/22/2008 - 07:23:42 - Produced by Ken Cook Co. with mediaioff

ELECTRICAL CONTROLS KIT (Cont'd)
(Attachments)

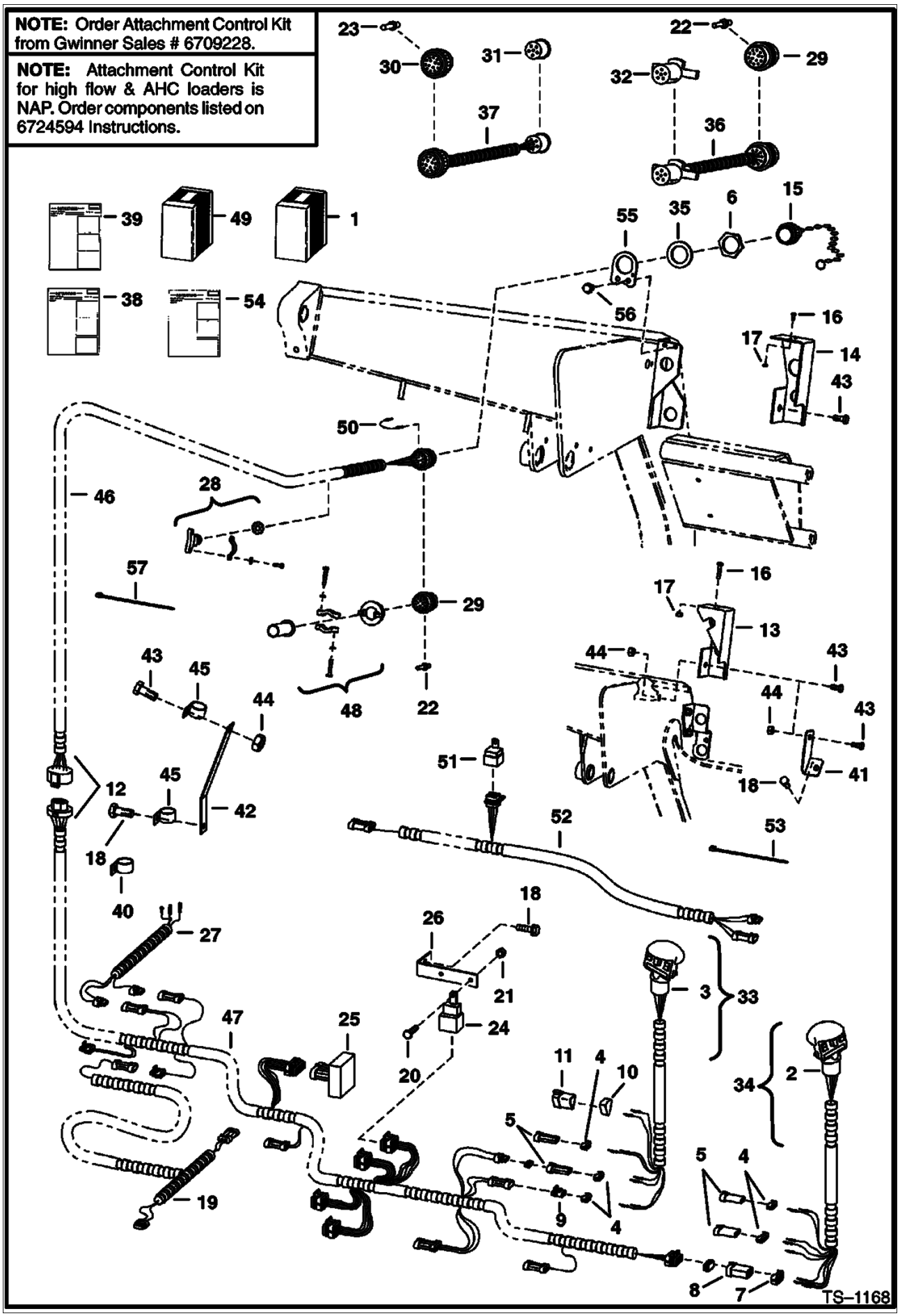

Page 276 - OSS# 2060759 - All rights reserved by Bobcat Company, a business unit of Ingersoll-Rand - 05/22/2008 - 07:23:42 - Produced by Ken Cook Co. with mediaioff

ELECTRICAL CONTROLS KIT (Cont'd)
(Attachments)

Ref No	Part Number	Description	Remarks	Serial Number	Qty
42	6709177	BRACKET			1
43	17C000612B	BOLT			2
44	85D000006B	NUT			2
45	30H000046B	CLAMP			2
46	6710299	HARNESS			1
47	6710300	HARNESS			1
48	6669286	CLAMP	W/saddles		1
49	6716799	KIT	dual functions - Ref. 50 - 54		1
50	6716844	HARNESS	jumper		1
51	6670312	SOLENOID	relay		1
52	6716798	HARNESS	KP diverter		1
53	6624289	STA STRAP			6
54	6900601	INSTRUCTIONS			1
55	6714999	MOUNT			1
56	84G003112B	BOLT			2
57	6610510	TIE			6

Page 277 - OSS# 2060759 - All rights reserved by Bobcat Company, a business unit of Ingersoll-Rand - 05/22/2008 - 07:23:42 - Produced by Ken Cook Co. with media1off

ENGINE MOUNT KIT
(For Rough Applications)

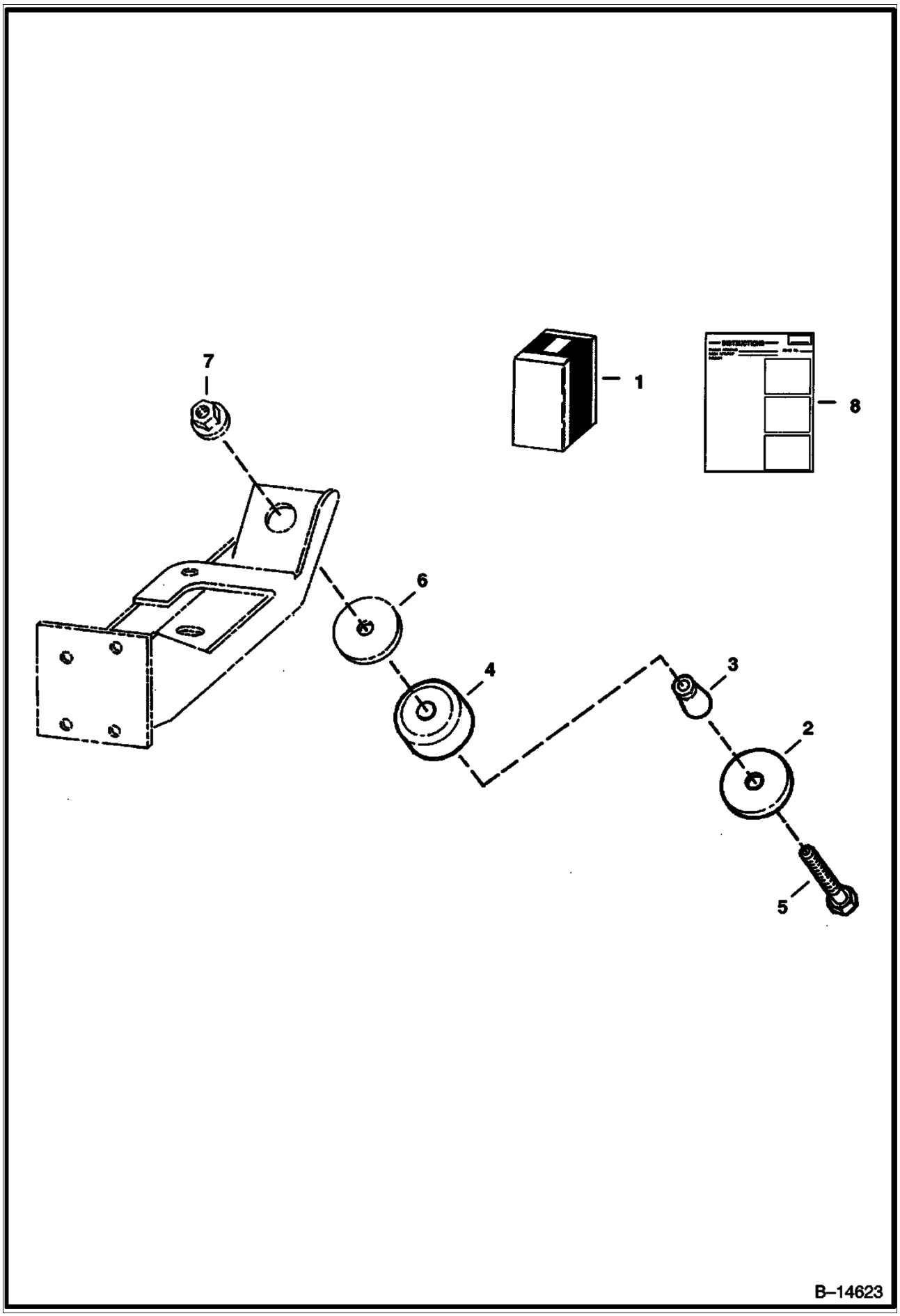

Page 278 - OSS# 2060759 - All rights reserved by Bobcat Company, a business unit of Ingersoll-Rand - 05/22/2008 - 07:23:42 - Produced by Ken Cook Co. with mediaioff

ENGINE MOUNT KIT (Cont'd)
(For Rough Applications)

Ref No	Part Number	Description	Remarks	Serial Number	Qty
1	6711632	MOUNTING KIT	engine mounting - Ref. 2 - 8		1
2	6661787	WASHER			4
3	6715287	SPACER	Was 6712650 [A]		4
4	6668104	MOUNT			4
5	43C000852B	BOLT	Not in Kit - Was 17C000844B [B]		4
6	6705106	WASHER	Not in Kit		4
7	6652918	NUT	Not in Kit - Was 83D000008B [B]		4
8	6724482	INSTRUCTION	INSTRUCTION		1

Page 279 - OSS# 2060759 - All rights reserved by Bobcat Company, a business unit of Ingersoll-Rand - 05/22/2008 - 07:23:42 - Produced by Ken Cook Co. with mediaioff

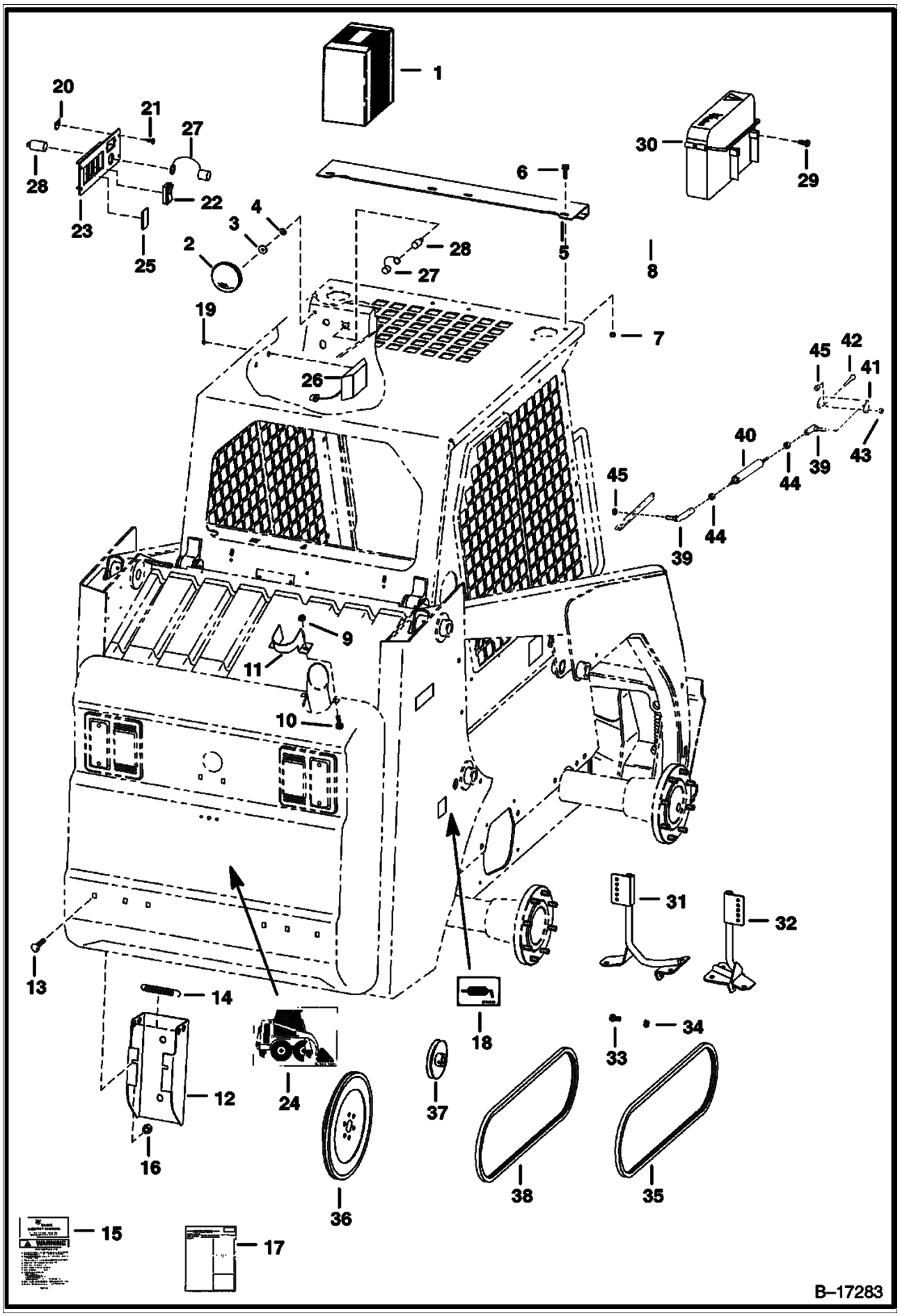

Page 280 - OSS# 2060759 - All rights reserved by Bobcat Company, a business unit of Ingersoll-Rand - 05/22/2008 - 07:23:42 - Produced by Ken Cook Co. with mediaIoff

Ref No	Part Number	Description	Remarks	Serial Number	Qty
1		KIT	NAP - European Accessories - Ref. 2-18 -Order individual parts		1
2	6653388	MIRROR	convex		1
3	6518952	WASHER	.26" I.D. - 1" O.D.		1
4	25E000013B	WASHER	.25" I.D. - .75" O.D.		1
5	6701852	SHIELD			1
6	35C000616B	BOLT			4
7	61D000006B	NUT			4
8		COVER	NAP - grease		14
9	61D000005B	NUT			2
10	37C000512B	BOLT			2
11	6714624	SHIELD	exhaust		1
12	6715318	TOOL HOLDER	Was 6714064 [A]		1
13	37C000612B	BOLT			2
14	6700743	SPRING			1
15	6708155	KIT	handbook		1
16	55D000006B	NUT			2
17	6722300	INSTRUCTIONS	W/Ref 12 W/Ref 13 W/Ref 14		1
18	6705340	DECAL	lube		1
19	6664221	RETAINER	snap in		2
20	6669091	CLIP			4
21	6669224	BOLT			4
22	6668742	SWITCH	travel control		1
22	6665315	SWITCH	head light		1
23	6710527	PANEL			1
24	6707867	DECAL	tow hook		1
25	6719038	PLUG	Was 6665314 [A]		3
26	6664368	LIGHT	dome		1
26	6665367	BULB			1
26	6665353	SWITCH			1
27	6664224	CAP			2
28	6664223	OUTLET			2
29	6702642	SCREW			2
30	6708827	CONTAINER	manuals		1
31	6712985	MOUNT	mirror - Japan		1
32	6712987	MOUNT	mirror - Japan		1
33	35C000512B	BOLT	Japan		6
34	83D000005B	NUT			6
35	6672445	BELT	pump drive		1
36	6715166	FLYWHEEL ASSY.	W/Ring gear		1
36	6510470	RING GEAR			1
37	6712970	PULLEY	fan drive		1
38	6715478	BELT	fan drive		1
39	6599744	BALL JOINT			4
40	6649551	SHOCK			2
41	6706106	MOUNT			1
42	17C000612B	BOLT			2
43	62D000006B	NUT			4
44	86D000006B	NUT			4
45	95D000006B	NUT	91D000006B [A]		2

Page 281 - OSS# 2060759 - All rights reserved by Bobcat Company, a business unit of Ingersoll-Rand - 05/22/2008 - 07:23:42 - Produced by Ken Cook Co. with mediaioff

EUROPEAN ACCESSORIES
(Caliper Brake Kit)

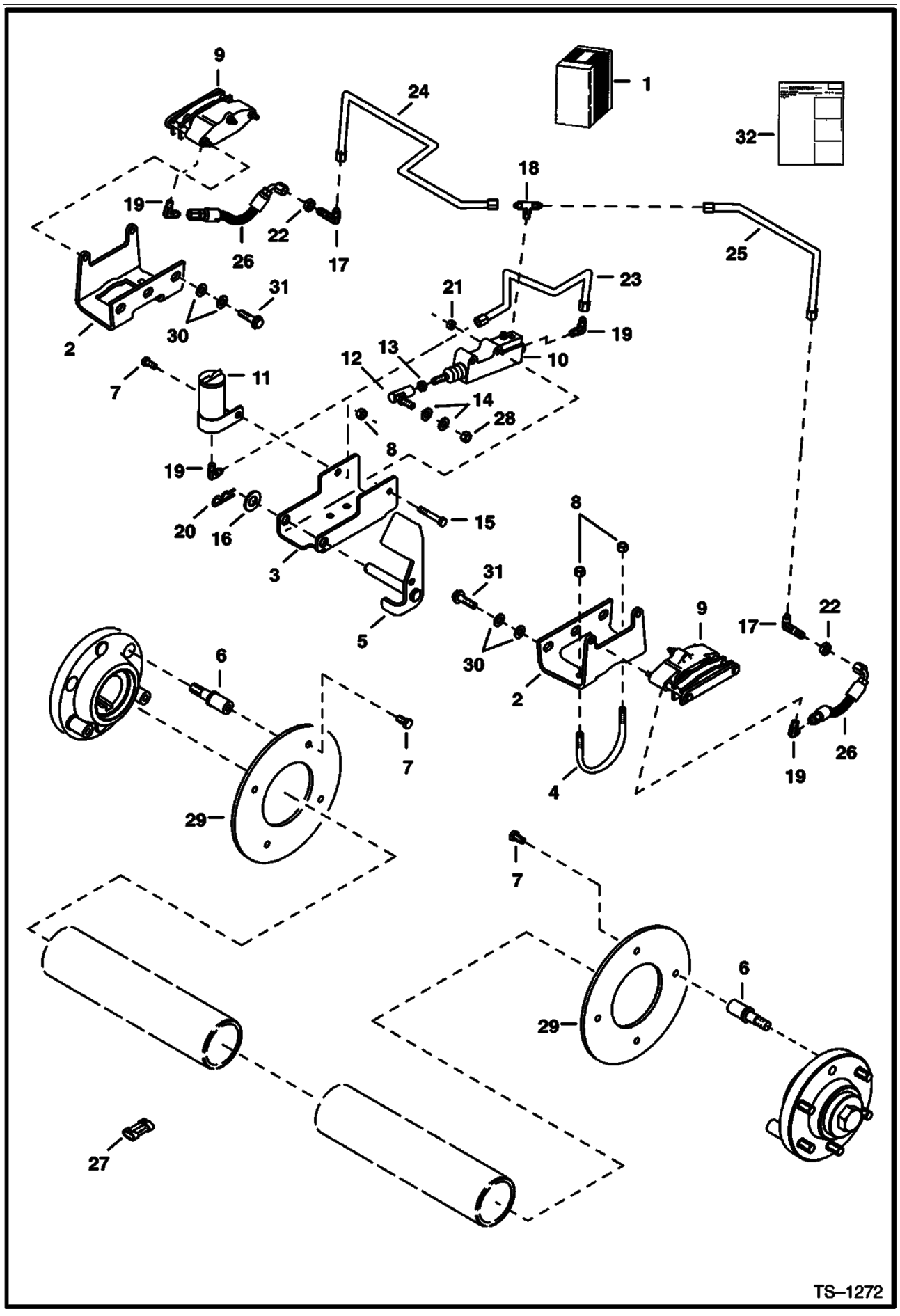

Page 282 - OSS# 2060759 - All rights reserved by Bobcat Company, a business unit of Ingersoll-Rand - 05/22/2008 - 07:23:42 - Produced by Ken Cook Co. with mediaioff

EUROPEAN ACCESSORIES (Cont'd)
(Caliper Brake Kit)

Ref No	Part Number	Description	Remarks	Serial Number	Qty
1	6709242	KIT	Ref. 2 - 32 - Was NAP [D]		1
2	6710467	MOUNT ASSY.	caliper		2
3	6709236	MOUNT	pedal		1
4	6709237	CLAMP			2
5	6709239	PEDAL ASSY.	brake		1
6	6709229	BOLT	wheel		8
7	17C000612B	BOLT			9
8	95D000006B	NUT	Was 91D000006B [A]		5
9	6666932	BRAKE	See Illustration EUROPEAN ACCESSORIES/ B14851		2
10	6666933	CYLINDER	See Illustration EUROPEAN ACCESSORIES/ C3403 MASTER		1
11	6661117	TANK			1
12	6599744	BALL JOINT			1
13	8D000006B	NUT			1
14	25E000017B	WASHER			2
15	17C000532B	BOLT			2
16	25E000025B	WASHER			1
17	88F000003B	NUT	W/O O-rings		2
17	88FN00003B	ELBOW	W/ O-rings		2
17	97K000004B	O-RING	flared end		4
18	98F000003B	TEE			1
19	83F000003B	ELBOW			4
20	1318565B	PIN			1
21	91D000005B	NUT			2
22	86F000003B	NUT			2
23	6709400	TUBE			1
24	6709409	TUBE			1
25	6709410	TUBE			1
26	6709544	HOSE			2
27	6667139	CAP			1
28	62D000006B	NUT			1
29	6709234	DISC	brake		2
30	27E000008B	WASHER			8
31	31C000824B	BOLT			4
32	6901702	INSTRUCTIONS	INSTRUCTIONS Was 6724380 [A]		1

Page 283 - OSS# 2060759 - All rights reserved by Bobcat Company, a business unit of Ingersoll-Rand - 05/22/2008 - 07:23:42 - Produced by Ken Cook Co. with mediaioff

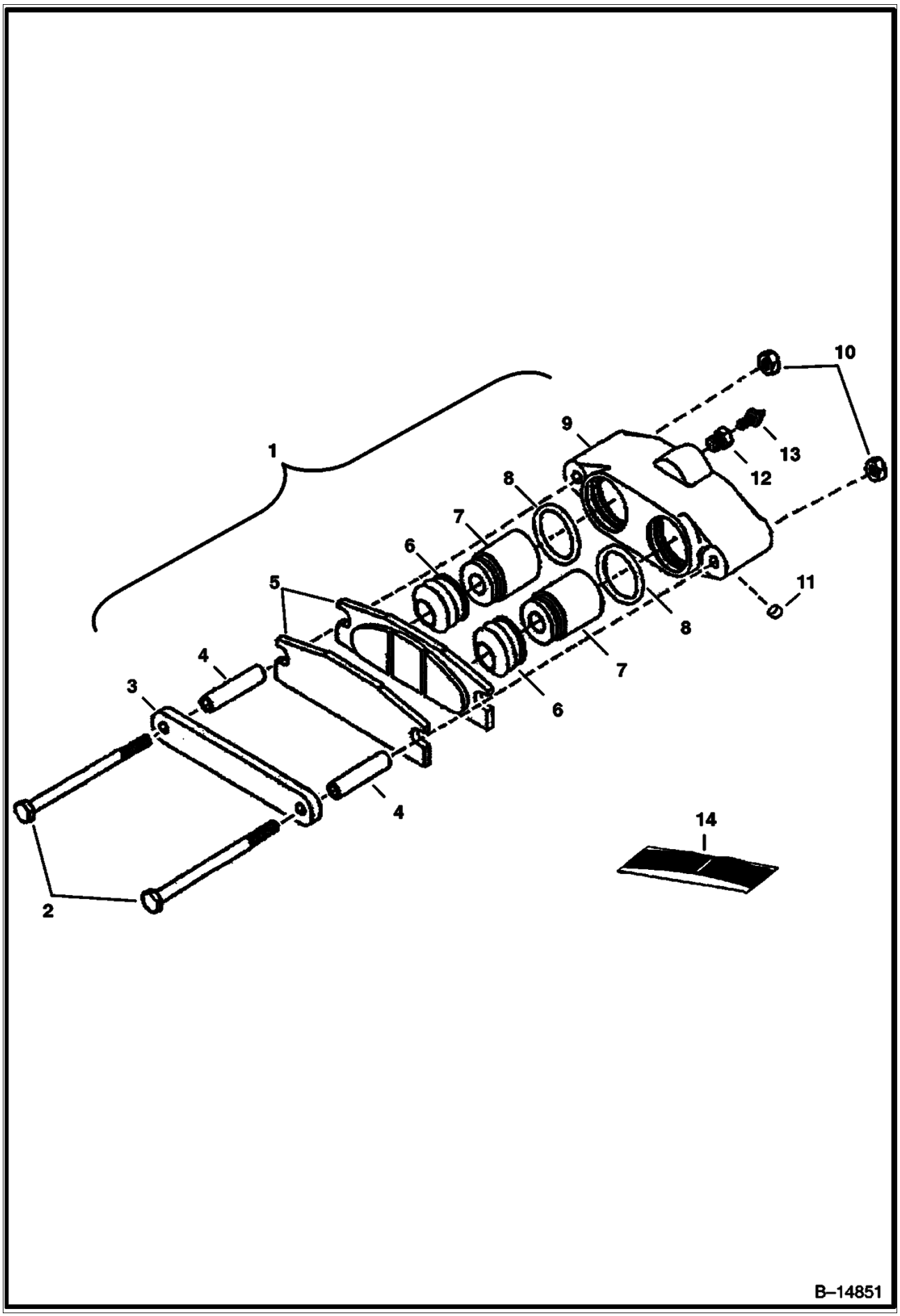

Page 284 - OSS# 2060759 - All rights reserved by Bobcat Company, a business unit of Ingersoll-Rand - 05/22/2008 - 07:23:42 - Produced by Ken Cook Co. with mediaioff

EUROPEAN ACCESSORIES (Cont'd)
(Brake)

Ref No	Part Number	Description	Remarks	Serial Number	Qty
1	6666932	BRAKE	W/Ref. 2 - 13		1
2	6669154	BOLT			2
3	6669155	PLATE			1
4	6669156	SPACER			2
5	6669184	STATOR ASSY.			1
6		BOOT	Order Ref 14 NSS		2
7	6669159	PISTON			2
8		O-RING	Order Ref 14 NSS		2
9		HOUSING	Order Ref 1 NSS		1
10	6669162	NUT			2
11	6669163	PLUG			1
12	6669164	ADAPTER			1
13	6669165	SCREW	bleeder		1
14	6669185	SEAL KIT	W/Ref. 6 & 8		1

Page 285 - OSS# 2060759 - All rights reserved by Bobcat Company, a business unit of Ingersoll-Rand - 05/22/2008 - 07:23:42 - Produced by Ken Cook Co. with mediaioff

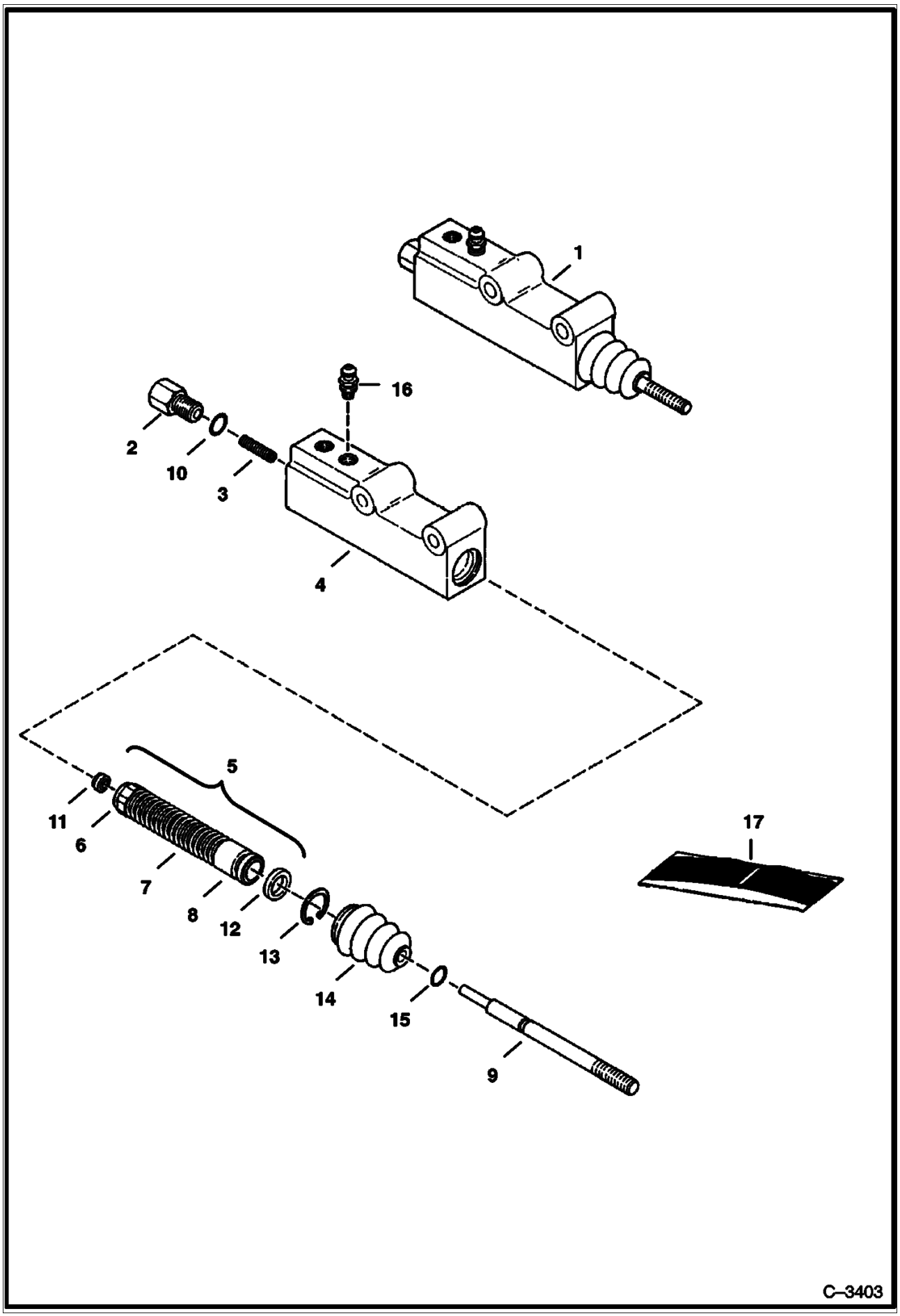

Page 286 - OSS# 2060759 - All rights reserved by Bobcat Company, a business unit of Ingersoll-Rand - 05/22/2008 - 07:23:42 - Produced by Ken Cook Co. with mediaioff

EUROPEAN ACCESSORIES (Cont'd)
(Master Cylinder - Caliper Brakes)

Ref No	Part Number	Description	Remarks	Serial Number	Qty
1	6666933	CYLINDER	master brake - Ref. 2 - 16		1
2		ADAPTER	NSS		1
3		SPRING	NSS		1
4		BODY	NSS		1
5		SPRING ASSY.	Ref 6 Ref 7 Ref 8 Ref 11 NSS		1
6		RETAINER	NSS		1
7		SPRING	NSS		1
8		PISTON	NSS		1
9		PUSH ROD	NSS		1
10		O-RING	NSS		1
11		SEAT	NSS		1
12		CUP	NSS		1
13		SNAP RING	NSS		1
14		BOOT	NSS		1
15		O-RING	NSS		1
16	6668097	SCREW	bleeder		1
17	6661608	SEAL KIT	Ref. 10 - 15		1

Page 287 - OSS# 2060759 - All rights reserved by Bobcat Company, a business unit of Ingersoll-Rand - 05/22/2008 - 07:23:42 - Produced by Ken Cook Co. with mediaioff

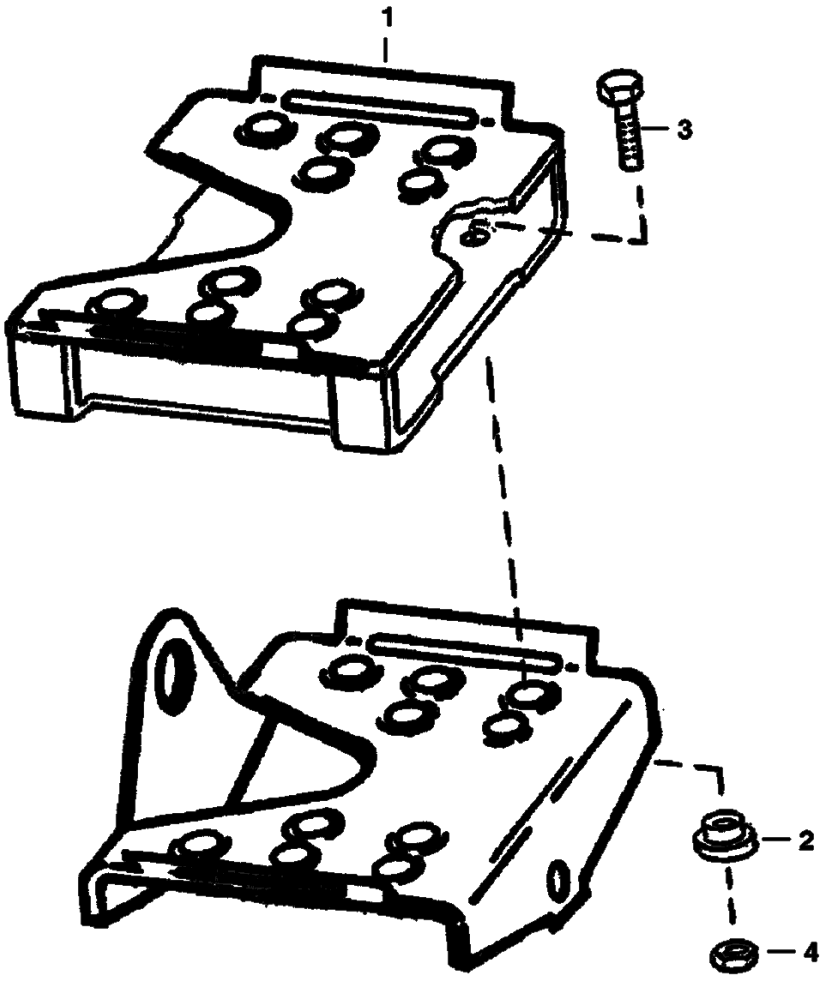

Page 288 - OSS# 2060759 - All rights reserved by Bobcat Company, a business unit of Ingersoll-Rand - 05/22/2008 - 07:23:42 - Produced by Ken Cook Co. with mediaioff

EUROPEAN ACCESSORIES (Cont'd)
(Pedal Extenders)

Ref No	Part Number	Description	Remarks	Serial Number	Qty
1	6713115	PEDAL	extender		2
2	6713116	BUSHING			8
3	17C000516B	BOLT			8
4	85D000005B	NUT			8

Page 289 - OSS# 2060759 - All rights reserved by Bobcat Company, a business unit of Ingersoll-Rand - 05/22/2008 - 07:23:42 - Produced by Ken Cook Co. with media1off

EUROPEAN ACCESSORIES
(Seat Rail Cover - Grammer Suspension Seat)

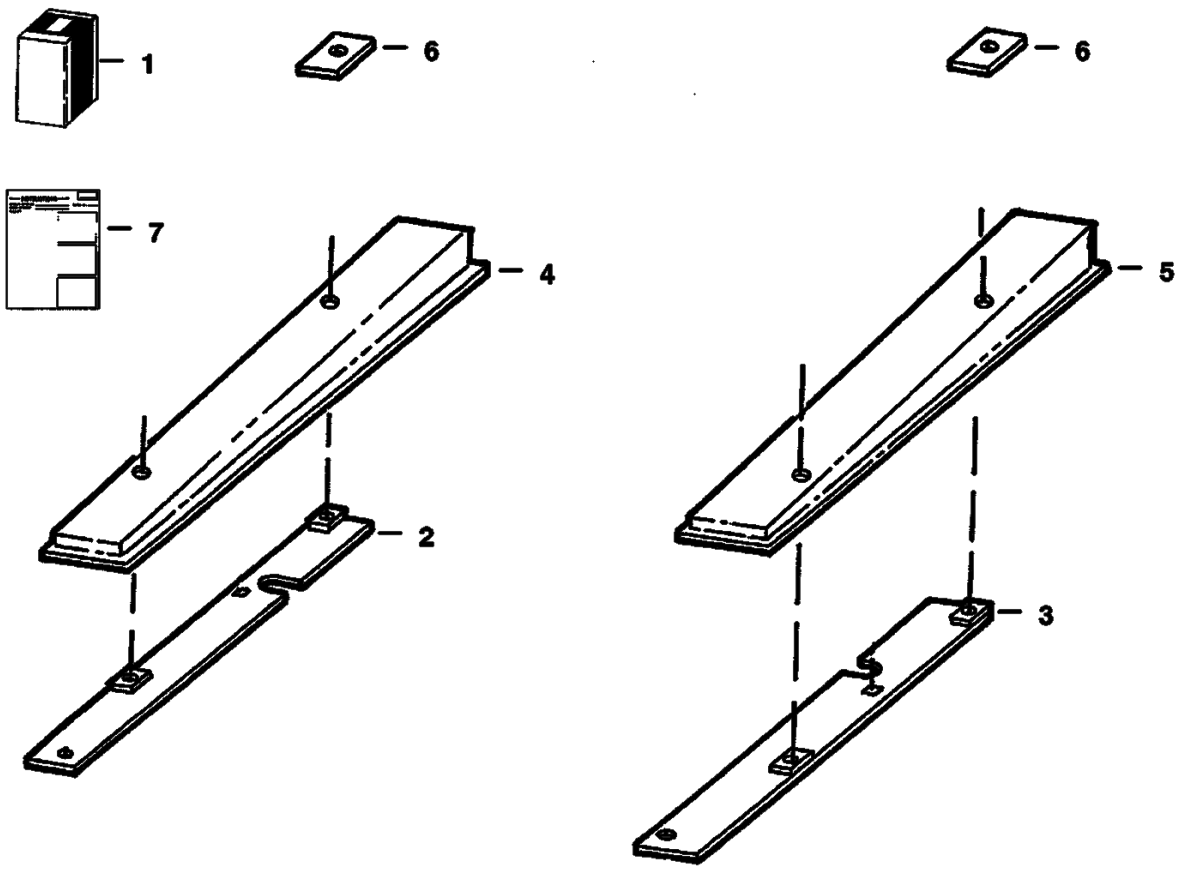

Page 290 - OSS# 2060759 - All rights reserved by Bobcat Company, a business unit of Ingersoll-Rand - 05/22/2008 - 07:23:42 - Produced by Ken Cook Co. with mediaIoff

Ref No	Part Number	Description	Remarks	Serial Number	Qty
1	6712875	KIT	rail cover - Ref. 2-7		1
2	6712183	MOUNT	R.H.		1
3	6712186	MOUNT	L.H.		1
4	6712070	COVER	R.H.		1
5	6712068	COVER	L.H.		1
6	6712146	WASHER	square		2
7	6724880	INSTRUCTIONS			1

Page 291 - OSS# 2060759 - All rights reserved by Bobcat Company, a business unit of Ingersoll-Rand - 05/22/2008 - 07:23:42 - Produced by Ken Cook Co. with media1off

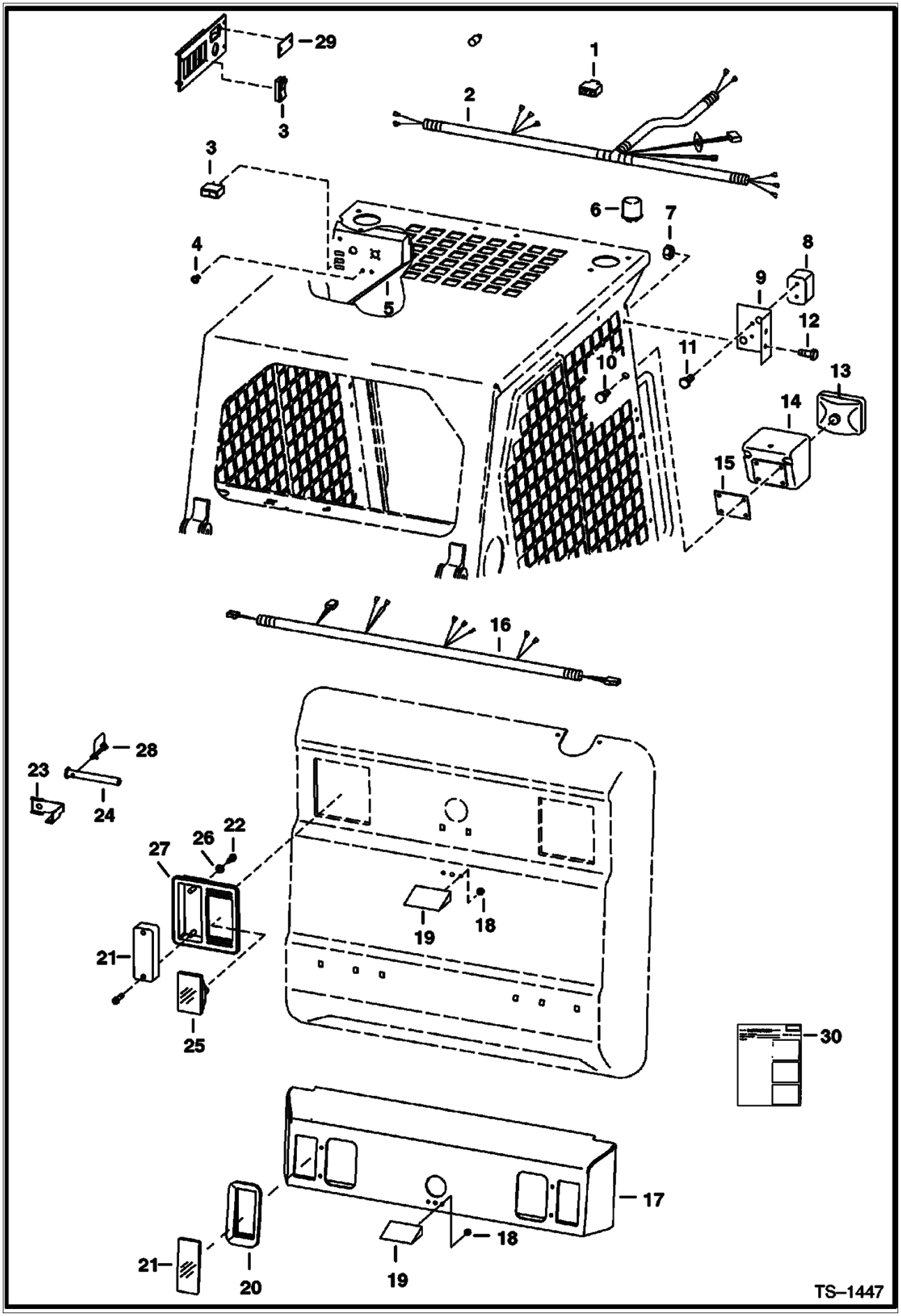

Page 292 - OSS# 2060759 - All rights reserved by Bobcat Company, a business unit of Ingersoll-Rand - 05/22/2008 - 07:23:42 - Produced by Ken Cook Co. with mediaioff

EUROPEAN ACCESSORIES (Cont'd)
(Road Lights)

Ref No	Part Number	Description	Remarks	Serial Number	Qty
1	6519548	CONNECTOR			1
2	6707672	HARNESS			1
3	6665316	SWITCH	hazard		1
3	6665315	SWITCH	head light		1
4	6665757	LIGHT	indicator		2
5	6712152	PANEL	See Illustration CAB ELECTRICAL CIRCUITRY/ B17270 L.H.		1
6	6557904	FLASHER			1
7	83D000004B	NUT			2
8	6665727	LIGHT	front turn		2
8	6666567	BULB	5W		2
8	6666568	BULB	21W		2
8	6666563	LENS			2
9	6707706	MOUNT	light		2
10	17C000508B	BOLT			4
11	58G000808B	SCREW			4
12	35C000410B	BOLT			2
13	6665728	LIGHT	front		2
13	6666570	BULB	40/45W		2
13	6666564	HOUSING			2
13	6666565	LENS			2
13	6666566	GASKET			2
14	6707804	HOUSING	light		2
15	6708824	MOUNT			2
16	6718198	HARNESS	Was 6714546 [A]		1
17	6705776	HOOD			1
18	1DM00006B	NUT			2
19	6665729	LIGHT	license plate		1
19	6666569	BULB	5W		2
20	6705774	MOUNT			2
21	6707789	LIGHT			2
21	6666568	BULB	21W		2
21	6667887	BULB	21/5W		2
21	6668007	SCREW			2
21	6668010	LENS			1
22	4DM00005B	NUT			4
23	6713736	BRACKETS	light switch		1
24	6714008	PIN	Bob-Tach lock		1
25	6671027	LIGHT			2
26	25E000011B	WASHER			4
27	6672279	MOUNT	rubber		2
28	6670668	PIN	snapper		1
29			NAP - fuse out - Was 6669143 [D]		1
29	6669144	INDICATOR	fuse/flasher		1
30	6724072	INSTRUCTIONS			1

Page 293 - OSS# 2060759 - All rights reserved by Bobcat Company, a business unit of Ingersoll-Rand - 05/22/2008 - 07:23:42 - Produced by Ken Cook Co. with mediaioff

EUROPEAN ACCESSORIES
(Sound Option)

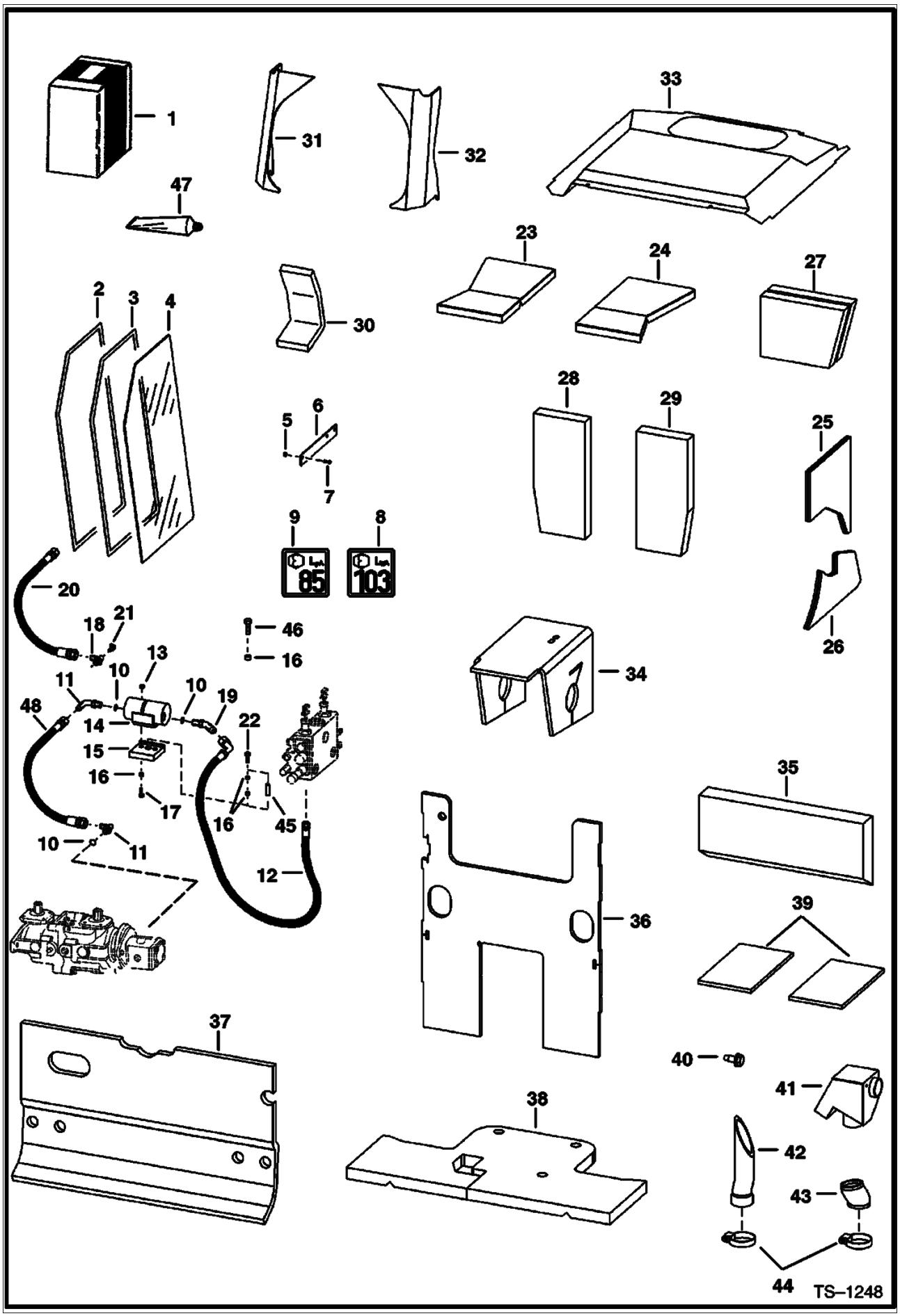

Page 294 - OSS# 2060759 - All rights reserved by Bobcat Company, a business unit of Ingersoll-Rand - 05/22/2008 - 07:23:42 - Produced by Ken Cook Co. with mediaIoff

EUROPEAN ACCESSORIES (Cont'd)
(Sound Option)

Ref No	Part Number	Description	Remarks	Serial Number	Qty
1		KIT	NAP - Ref. 2-11 & 13-38 - Order individual parts		1
2	6631549	HOOK	scotchmate		2
3	6631548	LOOP	scotchmate		2
4	6702731	WINDOW	cab		2
5	83D000004B	NUT			4
6	6700875	RETAINER	window		2
7	35C000410B	BOLT			4
8	6579403	DECAL	sound level warning -103 decibel	& Bel	1
8	6579402	DECAL	sound level warning -102 decibel	& Abv	1
9	6579385	DECAL	sound level warning - 85 decibel	& Bel	1
9	6579399	DECAL	sound level warning - 83 decibel	& Abv	1
10	79K000012B	O-RING	flat boss face		x
10	99K000012B	O-RING	tapered boss face		x
11	17K000008B	ELBOW	W/Ref 10 flat boss face		1
11	17KN00008B	ELBOW	W/Ref 10 tapered boss face		1
11	97K000012B	O-RING	flared end		1
12	6729147	HOSE	Was 6707233 [A]		1
13	85D000006B	NUT			2
14	6659982	MUFFLER	Was 6703648 [A]		1
15	6705333	MOUNT	rubber		1
16	6562619	BUSHING			2
17	35C000616B	BOLT			2
18	6700599	ELBOW	W/Ref 10 Used W/Ref 20		1
19	18K000008B	ELBOW	W/Ref 10 flat boss face		1
19	18KV00008B	ELBOW	W/Ref 10 tapered boss face		1
19	97K000012B	O-RING	flared end		1
20		HOSE	Order Ref 48 NAP - Was 6707231 [A]		1
21	6707895	ELBOW			1
22	84G003724B	BOLT			1
23	6704722	INSULATION	crossmember - R.H.		1
24	6704721	INSULATION	crossmember - L.H.		1
25	6719332	INSULATION	blower housing - Was 6704725 [A]		1
26	6704769	INSULATION	blower housing		1
27	6705848	INSULATION	transmission		2
28	6705849	INSULATION	brace - L.H.		1
29	6705850	INSULATION	brace - R.H.		1
30	6703331	INSULATION	air inlet		1
31	6715097	INSULATION	cab corner		1
32	6715098	INSULATION	cab corner		1
33	6715094	INSULATION	cab top		1
34	6715372	INSULATION	transmission		1
35	6715096	INSULATION	cab back - Was 6706903 [A]		1
36	6715099	INSULATION	steering panel		1
37	6715106	INSULATION	rear door		1
38	6715095	INSULATION	seat pan - Was 6706983 [A]		1
39	6715371	INSULATION	pedal		2
40	84G003112B	BOLT	Was 84G003712B [B]		2
41	6715250	MUFFLER	intake		1
42	6715239	HOSE	intake		1
43	6715240	HOSE	air cleaner		1
44	6598799	CLAMP			4
45	6715744	BUSHING			1
46	84G003716B	BOLT			2
47	6633583	SEALANT			x

Page 295 - OSS# 2060759 - All rights reserved by Bobcat Company, a business unit of Ingersoll-Rand - 05/22/2008 - 07:23:42 - Produced by Ken Cook Co. with mediaioff

EUROPEAN ACCESSORIES (Cont'd)
(Sound Option)

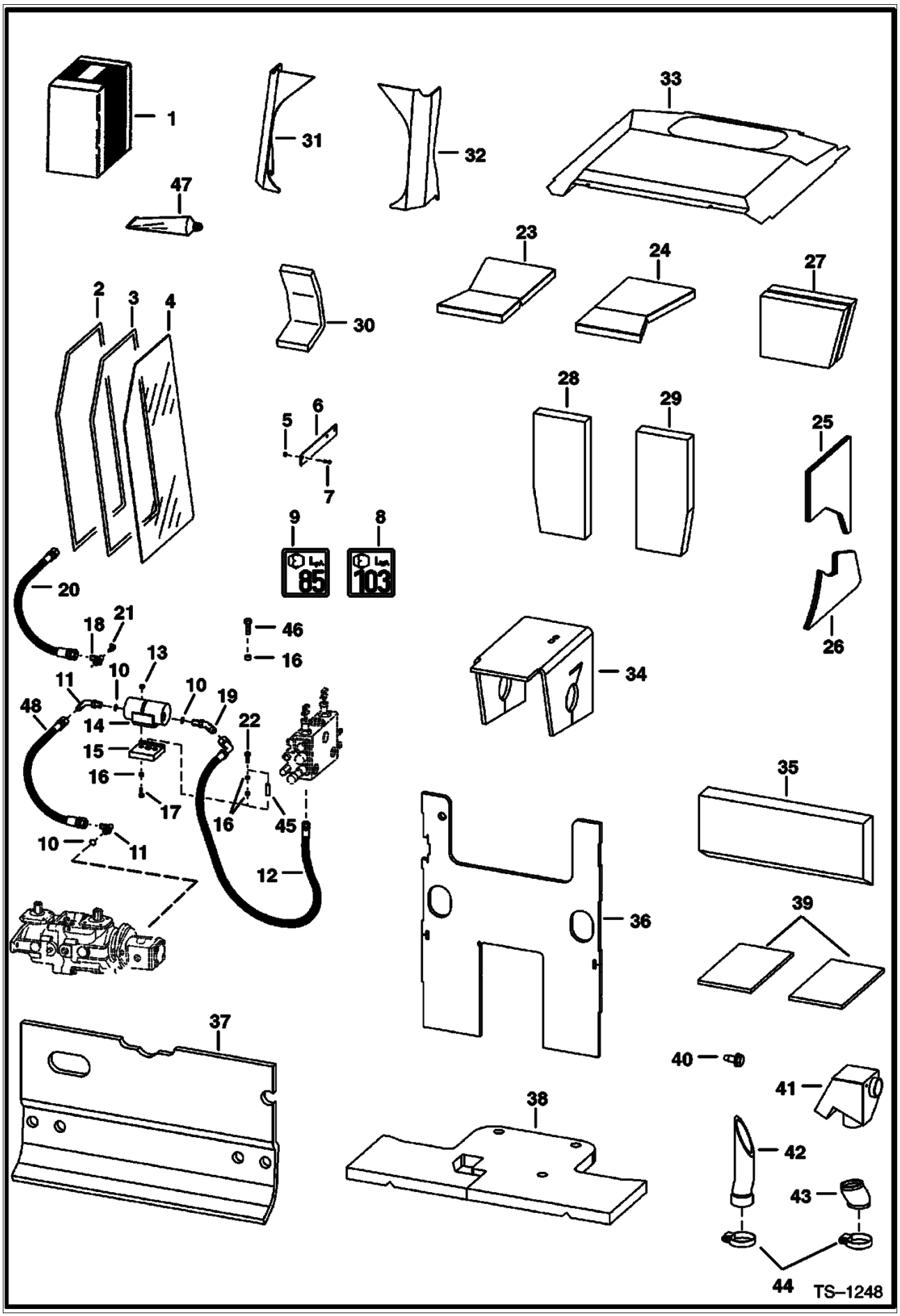

Page 296 - OSS# 2060759 - All rights reserved by Bobcat Company, a business unit of Ingersoll-Rand - 05/22/2008 - 07:23:42 - Produced by Ken Cook Co. with mediaioff

Ref No	Part Number	Description	Remarks	Serial Number	Qty
48	6729144	HOSE			1

Page 297 - OSS# 2060759 - All rights reserved by Bobcat Company, a business unit of Ingersoll-Rand - 05/22/2008 - 07:23:42 - Produced by Ken Cook Co. with media1off

FIRE EXTINGUISHER

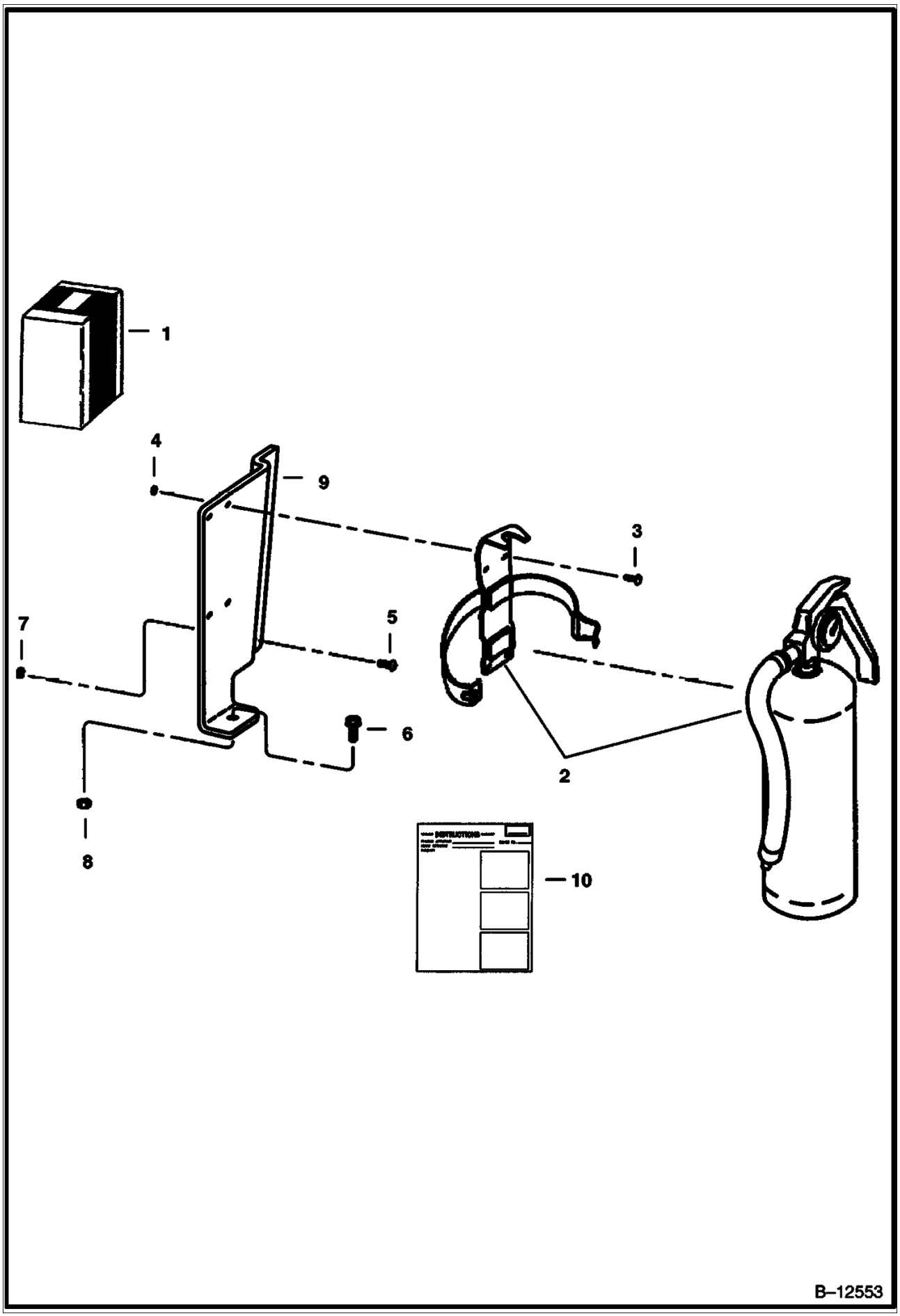

Page 298 - OSS# 2060759 - All rights reserved by Bobcat Company, a business unit of Ingersoll-Rand - 05/22/2008 - 07:23:42 - Produced by Ken Cook Co. with mediaioff

Ref No	Part Number	Description	Remarks	Serial Number	Qty
1	6569112	KIT	fire extinguisher - Ref. 2 - 10		1
2	1908806B	EXTINGUISHER	fire		1
3	85G001008B	BOLT			4
4	12D000010B	NUT			4
5	25G000410B	BOLT			2
6	35C000516B	BOLT			1
7	83D000004B	NUT			2
8	83D000005B	NUT			1
9	6569095	MOUNT			1
10	6570040	INSTRUCTIONS			1

Page 299 - OSS# 2060759 - All rights reserved by Bobcat Company, a business unit of Ingersoll-Rand - 05/22/2008 - 07:23:42 - Produced by Ken Cook Co. with media1off

FLASHER LIGHTS
(4-Way)

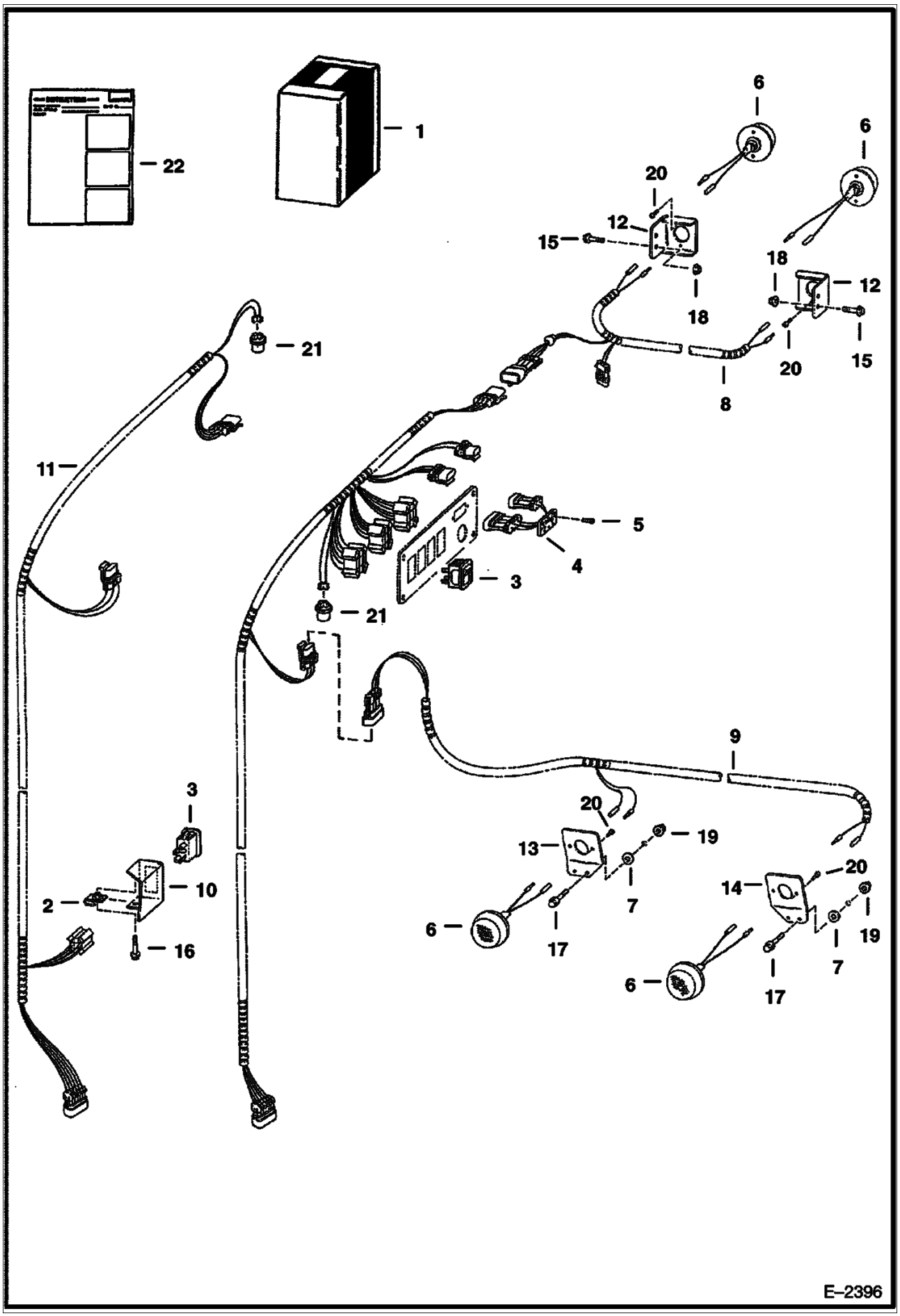

Page 300 - OSS# 2060759 - All rights reserved by Bobcat Company, a business unit of Ingersoll-Rand - 05/22/2008 - 07:23:42 - Produced by Ken Cook Co. with mediaioff

FLASHER LIGHTS (Cont'd)
(4-Way)

Ref No	Part Number	Description	Remarks	Serial Number	Qty
1	6712698	KIT	Ref. 2-22		1
2	6660988	RETAINER			2
3	6668815	SWITCH	hazard		1
4	6669144	INDICATOR	flasher		1
5	6669225	BOLT			2
6	6670732	LAMP			4
6	6675097	BULB			1
7	6704484	WASHER			4
8	6710905	HARNESS			1
9	6711160	HARNESS			1
10	6711708	MOUNT	switch		1
11	6712288	HARNESS			1
12	6714300	MOUNT			2
13	6714463	MOUNT	left rear		1
14	6714467	MOUNT	right rear		1
15	35C000410B	BOLT			2
16	31C000420B	BOLT			2
17	35C000520B	BOLT			4
18	83D000004B	NUT			2
19	83D000005B	NUT			4
20	58G000808B	SCREW			8
21	6557904	FLASHER			1
22	6900398	INSTRUCTION	INSTRUCTION		1

Page 301 - OSS# 2060759 - All rights reserved by Bobcat Company, a business unit of Ingersoll-Rand - 05/22/2008 - 07:23:42 - Produced by Ken Cook Co. with mediaioff

FRONT AUXILIARY KIT

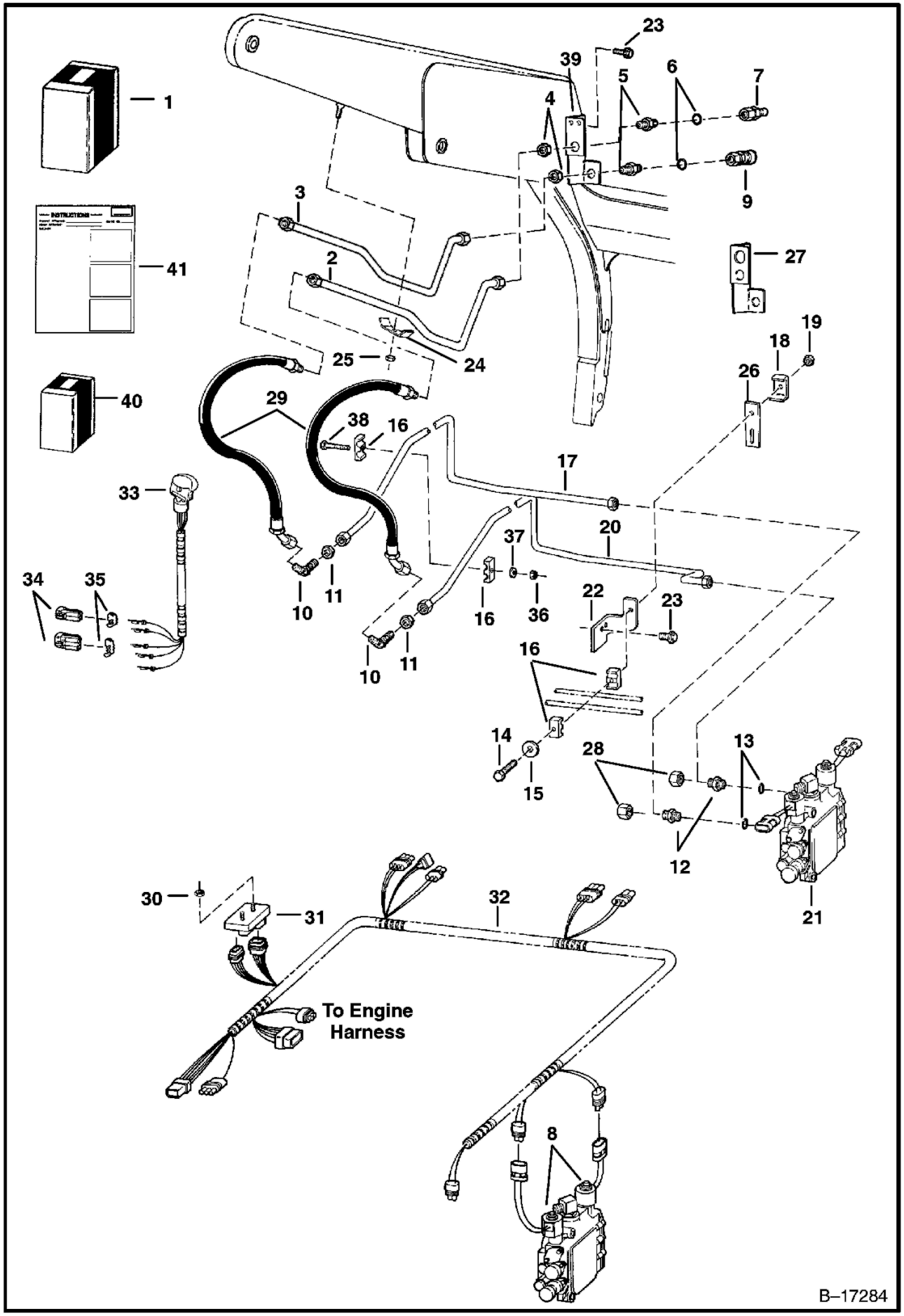

Page 302 - OSS# 2060759 - All rights reserved by Bobcat Company, a business unit of Ingersoll-Rand - 05/22/2008 - 07:23:42 - Produced by Ken Cook Co. with mediaIoff

FRONT AUXILIARY KIT (Cont'd)

Ref No	Part Number	Description	Remarks	Serial Number	Qty
1	6712387	KIT	front aux Ref. 2-7, 9-11, 13, 14, 16-20 & 23-41		1
2	6711735	TUBE			1
3	6711736	TUBE			1
4	86F000007B	NUT			2
5	6711625	FITTING	W/Ref 6 flat boss face		2
5	6715185	CONNECTOR	W/Ref 6 tapered boss face		2
5	97K000010B	O-RING	flared end		2
6	79K000012B	O-RING	flat boss face		x
6	99K000012B	O-RING	tapered boss face		x
7	6667808	COUPLER	Male		1
7	6672026	O-RING			1
8	6717708	COIL	Not in Kit - Was 6665759 [A]		2
9	6672960	COUPLER	Female - Was 6667807 [A]		1
10	46K000008B	ELBOW	flat boss face - Was 16K000008B [B]		2
10	46KN00008B	ELBOW	tapered boss face		1
10	97K000012B	O-RING	flared end		1
11	86F000008B	NUT			2
12		ADAPTER	W/Ref 6 Not in Kit		2
13	79K000010B	O-RING	flat boss face		x
13	99K000010B	O-RING	tapered boss face		x
14	17C000552B	BOLT			1
15	872229	WASHER	Not in Kit		1
16	6592506	CLAMP			2
17	6713754	TUBE			1
18	6568476	CLAMP			1
19	85D000005B	NUT			2
20	6713755	TUBE			1
21		VALVE	See Illustration HYDRAULIC CONTROL VALVE/ TS1454 NOT IN KIT		1
22	6704619	MOUNT	Not in Kit		1
23	84G003112B	BOLT			2
24	6502203	CLAMP			2
25	59D000006B	NUT			3
26	6702548	PAD			2
27		MOUNT	Order Ref 39 NAP - Was 6711672 [A]		1
28	36K000008B	CAP			2
29	6729153	HOSE	Was 6714577 [D]		2
30	85D000004B	NUT			2
31	6671669	MODULE	Was 6669529 [C]		1
32	6719149	HARNESS	Was 6712136 [A]		1
33	6705921	HANDLE ASSY.			1
33	6640690	PIN			5
33	6641176	SEAL			5
34	6641179	CONNECTOR	2-pin		1
34	6640699	CONNECTOR	3-pin		1
35	6641180	LOCK	2-pin		1
35	6640700	LOCK	3-pin		1
36	83D000005B	NUT			1
37	872229	WASHER			1
38	37C000540B	BOLT			1
39	6713850	MOUNT			1
40	6718240	KIT	See Illustration PRESSURE RELEASE KIT/ B17286 FRONT AUX. PRESSURE RELEASE		1
41	6724529	INSTRUCTIONS			1

Page 303 - OSS# 2060759 - All rights reserved by Bobcat Company, a business unit of Ingersoll-Rand - 05/22/2008 - 07:23:42 - Produced by Ken Cook Co. with mediaioff

HAND CONTROL KIT

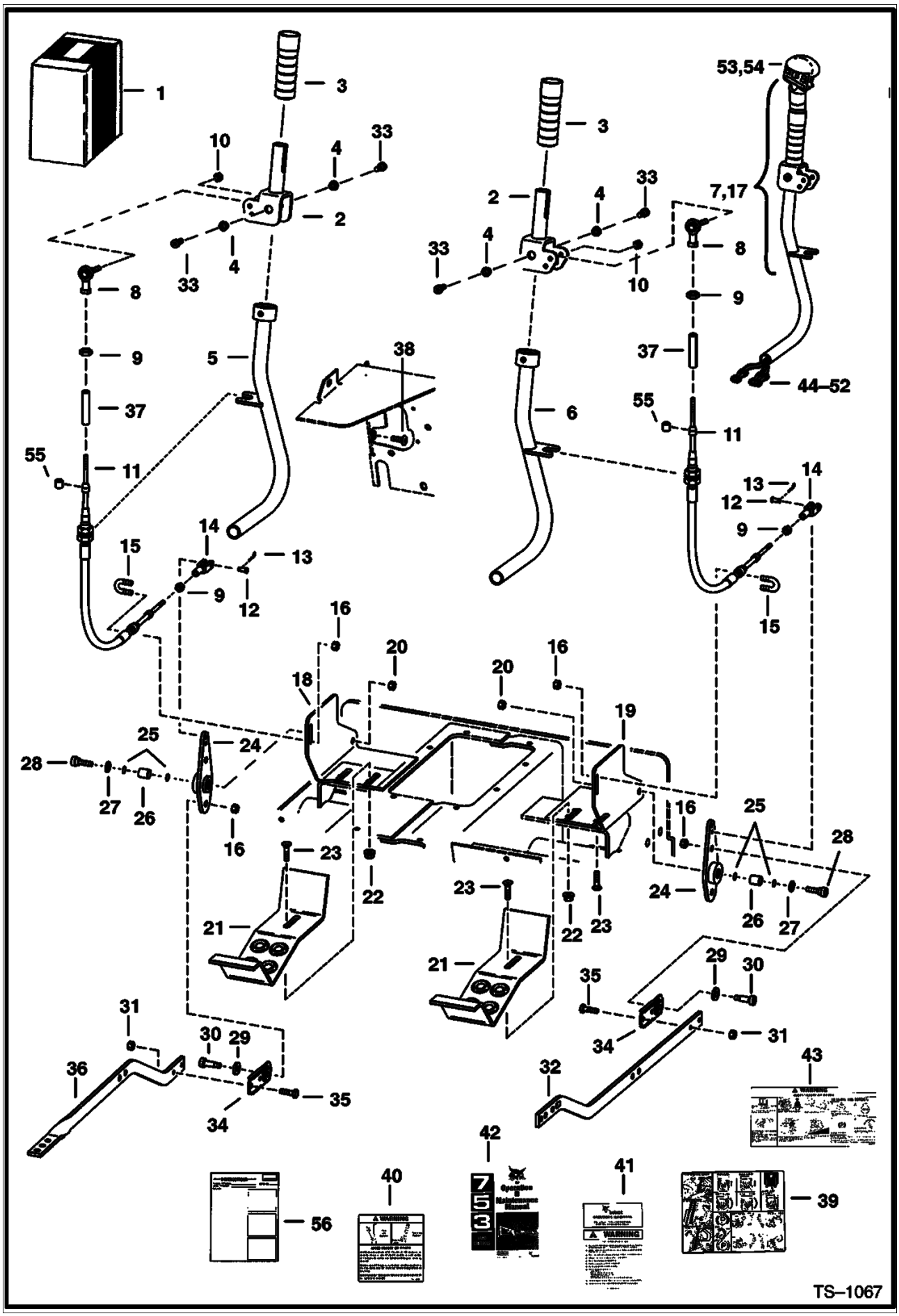

Page 304 - OSS# 2060759 - All rights reserved by Bobcat Company, a business unit of Ingersoll-Rand - 05/22/2008 - 07:23:42 - Produced by Ken Cook Co. with mediaioff

HAND CONTROL KIT (Cont'd)

Ref No	Part Number	Description	Remarks	Serial Number	Qty
1		KIT	NAP - Ref. 2-55 - Multi-switch handles - Order components - Was SALES [D]		1
2	6707349	LEVER			2
3	6707367	GRIP			2
4	6702990	BUSHING	bronze sleeve		4
5	6707351	LEVER			1
6	6707352	LEVER			1
7		LEVER ASSY.	NAP - L.H. Multi-switch - W/Ref. 2-5, 33 & 44-50 - Order individual parts		1
8	6631036	JOINT			2
9	8D000004B	NUT			4
10	86D000004B	NUT			2
11	6666379	CABLE			2
12	4F004051B	PIN			2
13	6513495	COTTER PIN			2
14	2J004200B	ROD END			2
15	6592766	U-BOLT			2
16	83D000005B	NUT			6
17		LEVER ASSY.	NAP - R.H. Multi-switch - W/Ref. 2-4, 6, 33, & 44-56- Order individual parts		1
18	6706420	MOUNT	cable		1
19	6706421	MOUNT	cable		1
20	85D000006B	NUT			2
21	6702776	BRACKET			2
22	57D000006B	NUT			6
23	37C000620B	BOLT	carriage		6
24	6706281	BELLCRANK	W/Ref 26		2
25	58K000014B	O-RING			4
26	6702782	BUSHING	bronze - Not in Kit		2
27	6655781	BEARING	thrust		2
28	38C000816B	BOLT	shoulder		2
29	6563914	WASHER			2
30	38C000610B	BOLT	Was 6704285 [A]		2
31	85D000004B	NUT			4
32	6702774	LINK	tilt		1
33	38C000606B	SCREW	shoulder		4
34	6658682	BEARING	swivel		2
35	17C000410B	BOLT			4
36	6702773	LINK	lift		1
37	6658930	BOOT			2
38	25G000612B	BOLT	socket hex head		2
39	6703724	DECAL	operating		1
40	6703726	DECAL	warning		1
41	6708159	HANDBOOK KIT	W/wire rope		1
41	6558309	WIRE ROPE	33" (838,2 mm) long - Bulk - Sold Per Foot - Also Order (2) of 6558310 Sleeve		x
41	6558310	SLEEVE	wire rope		2
42	6724033	MANUAL	operator - Was 6900369 [B,D] [B,D]		1
43	6703725	DECAL	warning		1
44	6641180	LOCK	2 - pin		3
45	6640700	LOCK	3 - pin		2
46	6641179	CONNECTOR	2 - pin		2
47	6640699	CONNECTOR	3 - pin		2
48	6641178	CONNECTOR	2 - pin		1
49	6664599	CONNECTOR	3 - pin triangle		1
50	6664800	LOCK	3 - pin triangle		1

Page 305 - OSS# 2060759 - All rights reserved by Bobcat Company, a business unit of Ingersoll-Rand - 05/22/2008 - 07:23:42 - Produced by Ken Cook Co. with mediaioff

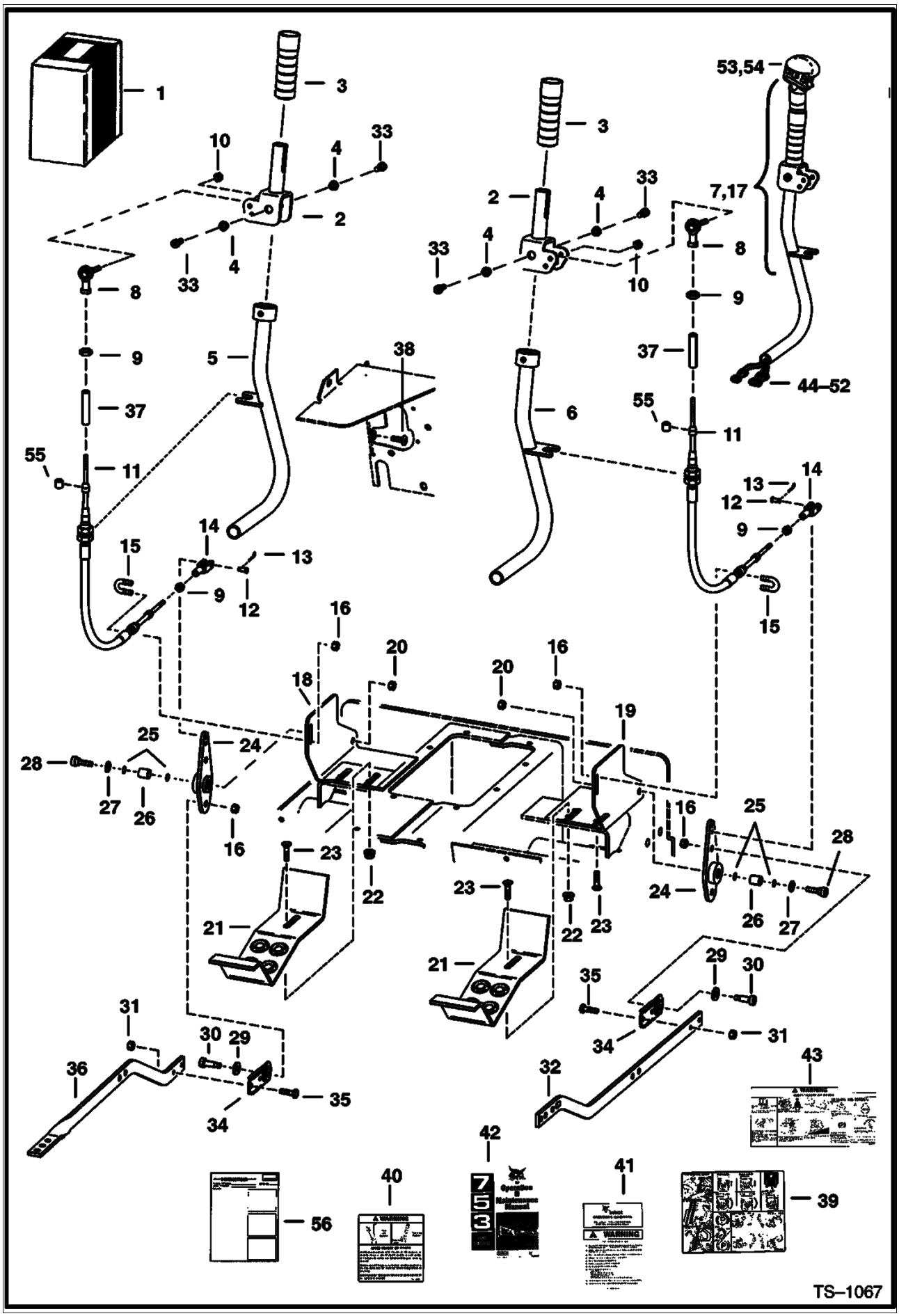

Page 306 - OSS# 2060759 - All rights reserved by Bobcat Company, a business unit of Ingersoll-Rand - 05/22/2008 - 07:23:42 - Produced by Ken Cook Co. with mediaioff

Ref No	Part Number	Description	Remarks	Serial Number	Qty
51	6641173	CONNECTOR	3 - pin		1
52	6641181	LOCK	3 - pin		1
53	6707976	HANDLE ASSY.	Multi-switch - L.H.		1
53	6640690	PIN			5
53	6640691	PIN			2
53	6641176	SEAL			7
53	6662257	PIN			3
53	6706568	KIT	See Illustration HANDLE KITS/ TS1190 MULTI-SWITCH - INCLUDES REF. 48-50		1
53	6680447	DECAL	Was 6677370 [A]		1
54	6706340	HANDLE ASSY.	Multi-switch - R.H.		1
54	6640690	PIN			9
54	6641176	SEAL			9
54	6706567	KIT	See Illustration HANDLE KITS/ TS1190 MULTI-SWITCH - INCLUDES REF. 44, 45, 46, 47 & 54		1
55	6666534	SEAL			4
56	6724043	INSTRUCTIONS			1

Page 307 - OSS# 2060759 - All rights reserved by Bobcat Company, a business unit of Ingersoll-Rand - 05/22/2008 - 07:23:42 - Produced by Ken Cook Co. with mediaioff

HAND CONTROL KIT
(For Loaders Equipped W/Advanced Hand Controls) (Push Button Float)

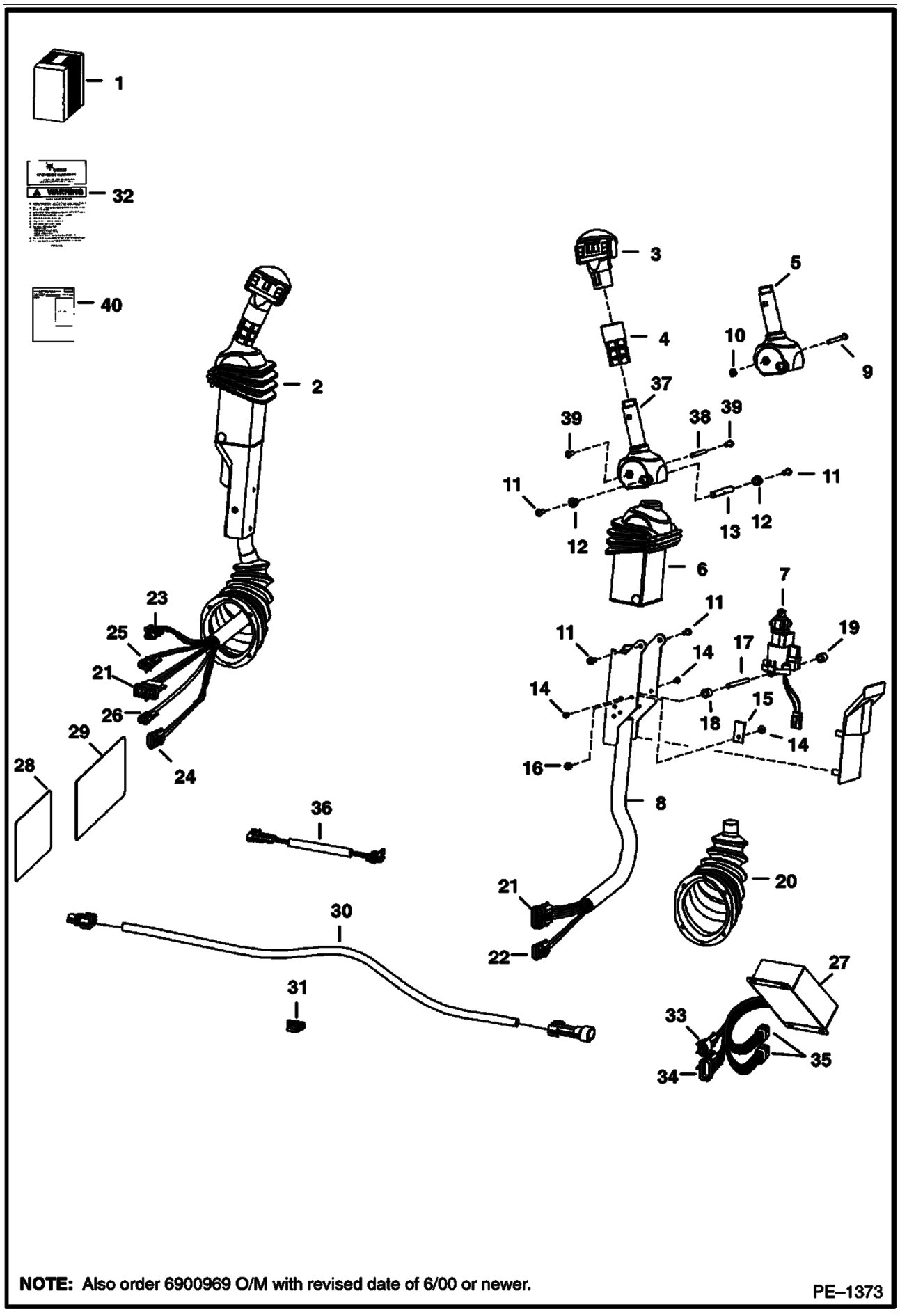

Page 308 - OS$# 2060759 - All rights reserved by Bobcat Company, a business unit of Ingersoll-Rand - 05/22/2008 - 07:23:42 - Produced by Ken Cook Co. with mediaioff

HAND CONTROL KIT (Cont'd)
(For Loaders Equipped W/Advanced Hand Controls) (Push Button Float)

Ref No	Part Number	Description	Remarks	Serial Number	Qty
1	6727297	KIT			1
2	6675748	LEVER	tilt - R.H.		1
2	6675747	LEVER	lift - L.H.		1
3	6675515	HANDLE ASSY.	lift - R.H.		1
3	6675746	HANDLE ASSY.	lift - L.H.		1
4	6713349	GRIP			2
5		HANDLE	Order Ref 38 Order Ref 39 NAP - R.H. - Was 6597774 [A]	& Bel	1
5		HANDLE	Order Ref 38 Order Ref 39 NAP - L.H. - Was 6717163 [A]	& Bel	1
6	6713898	COVER			2
7	6675741	SENSOR			2
7	6670706	CONNECTOR			1
7	6670715	PIN			3
7	6670710	LOCK			1
8	6719712	CHANNEL	R.H.		1
8	6719711	CHANNEL	L.H.		1
9	6716826	BOLT		& Bel	2
10	12D000010B	NUT		& Bel	2
11	25GT00410B	BOLT			8
12	6702990	BUSHING			4
13	6713043	SPACER			4
14	6665321	RIVET	male		2
15	6665000	CLIP			2
16	6665322	RIVET	female		2
17	6719834	SPACER	threaded		2
18	6727065	BOLT			6
19	6719835	SLEEVE			4
20	6532127	BOOT			2
21	6640696	CONNECTOR	8-pin		2
21	6661183	LOCK			1
22	6641173	CONNECTOR	6-pin		1
22	6641181	LOCK			1
23	6641179	CONNECTOR	2-pin		1
23	6661180	LOCK			3
24	6640699	CONNECTOR	3-pin		1
24	6640700	LOCK			1
25	6641178	CONNECTOR	2-pin		1
25	6641180	LOCK			1
26	6630838	CONNECTOR	1-pin		1
27	6676442	CONTROLLER			1
28	6727155	DECAL			1
29	6727243	DECAL			1
30	6727327	HARNESS			1
31	6670707	CONNECTOR	3-pin		1
31	6670715	PIN			3
31	6670711	LOCK			1
32	6708159	HANDBOOK KIT	operator handbook		1
33	6640692	CONNECTOR	10-pin		1
33	6640690	PIN			9
33	6640694	LOCK			1
33	6641176	SEAL			9
33	6646582	PLUG	cavity		1
34	6648307	CONNECTOR	2-pin		1
35	6670709	CONNECTOR	8-pin		2
36	6730272	HARNESS	W/Capacitor		1

Page 309 - OSS# 2060759 - All rights reserved by Bobcat Company, a business unit of Ingersoll-Rand - 05/22/2008 - 07:23:42 - Produced by Ken Cook Co. with mediaioff

HAND CONTROL KIT (Cont'd)
(For Loaders Equipped W/Advanced Hand Controls) (Push Button Float)

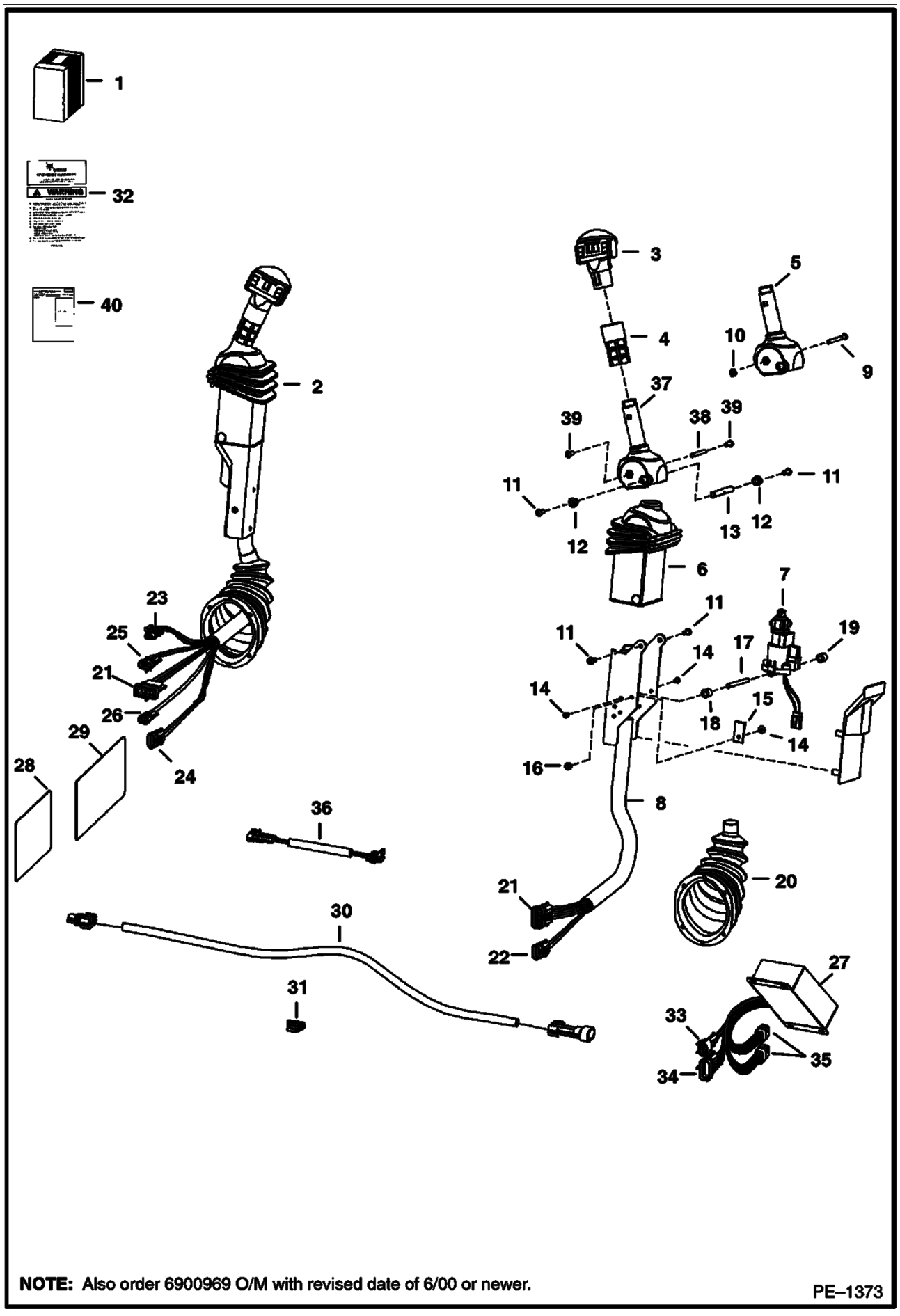

Page 310 - OS$# 2060759 - All rights reserved by Bobcat Company, a business unit of Ingersoll-Rand - 05/22/2008 - 07:23:42 - Produced by Ken Cook Co. with mediaoff

HAND CONTROL KIT (Cont'd)
(For Loaders Equipped W/Advanced Hand Controls) (Push Button Float)

Ref No	Part Number	Description	Remarks	Serial Number	Qty
37	6729594	HANDLE	R.H.	& Abv	1
37	6729595	HANDLE	L.H.	& Abv	1
38	6729600	SPACER		& Abv	1
39	6727065	BOLT		& Abv	2
40	6901099	INSTRUCTIONS			1

Page 311 - OSS# 2060759 - All rights reserved by Bobcat Company, a business unit of Ingersoll-Rand - 05/22/2008 - 07:23:42 - Produced by Ken Cook Co. with media1off

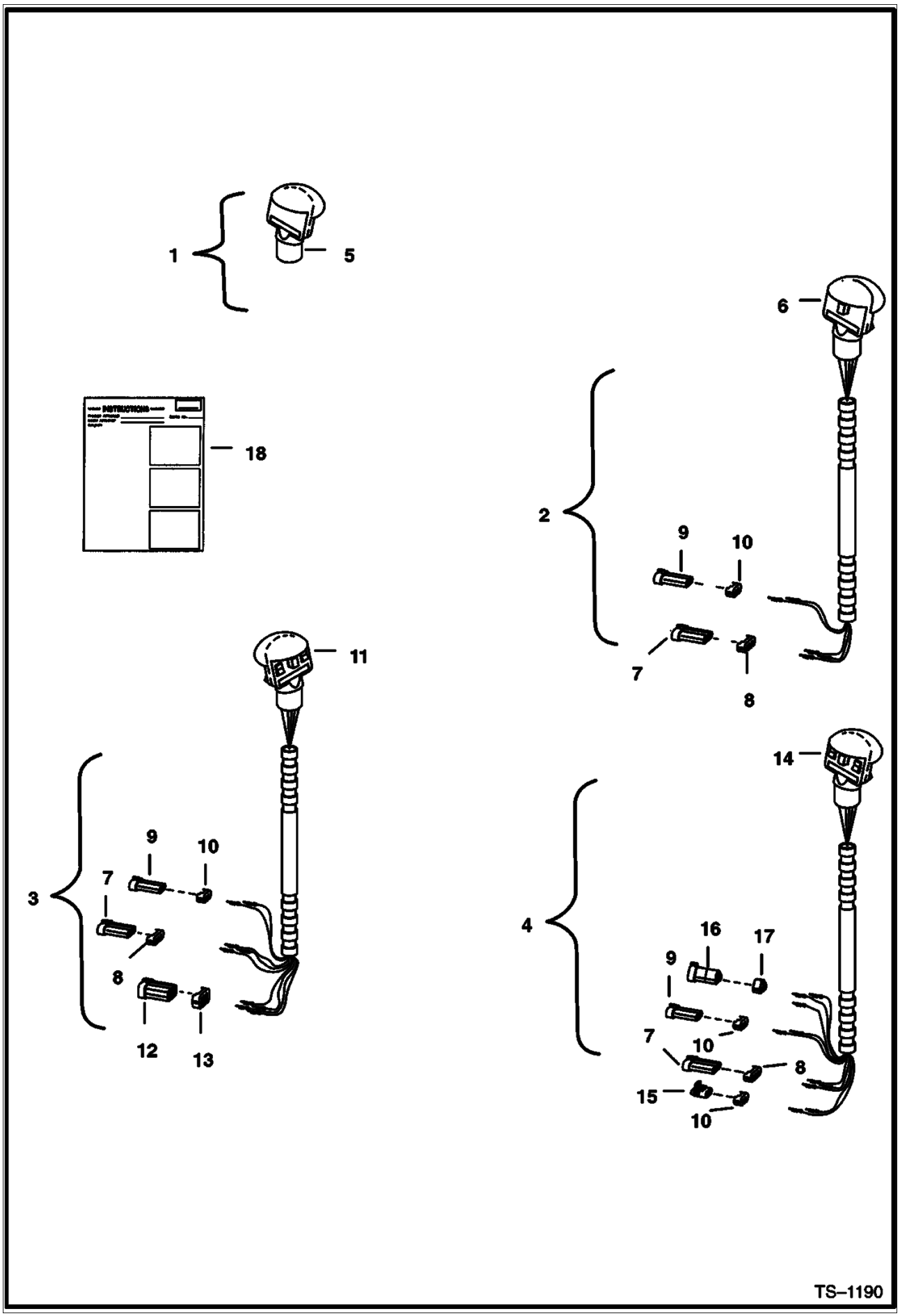

Page 312 - OSS# 2060759 - All rights reserved by Bobcat Company, a business unit of Ingersoll-Rand - 05/22/2008 - 07:23:42 - Produced by Ken Cook Co. with mediaioff

Ref No	Part Number	Description	Remarks	Serial Number	Qty
1	6706565	KIT	Ref. 5 & 18		1
2	6706566	KIT	Ref. 6 - 10 & 18		1
3	6706567	KIT	R.H. - Ref. 7 - 13 & 18		1
4	6706568	KIT	L.H. - Ref. 7 - 10 & 14 - 18		1
5	6680415	HANDLE	blank - Was 6705920 [A]		1
6	6705921	HANDLE ASSY.	2 - switch		1
6	6640690	PIN			5
6	6641176	SEAL			5
7	6640699	CONNECTOR	3 - pin		1
8	6640700	LOCK	3 - pin		1
9	6641179	CONNECTOR	2 - pin		1
10	6641180	LOCK	2 - pin		1
11	6706340	HANDLE ASSY.	R.H. deluxe - multi switch		1
11	6640690	PIN			9
11	6641176	SEAL			9
12	6641173	CONNECTOR	6 - pin		1
13	6641181	LOCK	6 - pin		1
14	6707976	HANDLE ASSY.	L.H. deluxe - multi switch		1
14	6640690	PIN			5
14	6640691	PIN			2
14	6641176	SEAL			7
14	6662257	PIN			3
14	6680447	DECAL	Was 6677370 [A]		1
15	6641178	CONNECTOR	2 - pin		1
16	6664599	CONNECTOR	3 - pin triangle		1
17	6664800	LOCK	3 - pin triangle		1
18	6722759	INSTRUCTIONS			1

Page 313 - OSS# 2060759 - All rights reserved by Bobcat Company, a business unit of Ingersoll-Rand - 05/22/2008 - 07:23:42 - Produced by Ken Cook Co. with mediaioff

HEATER KIT
(Fresh Air)

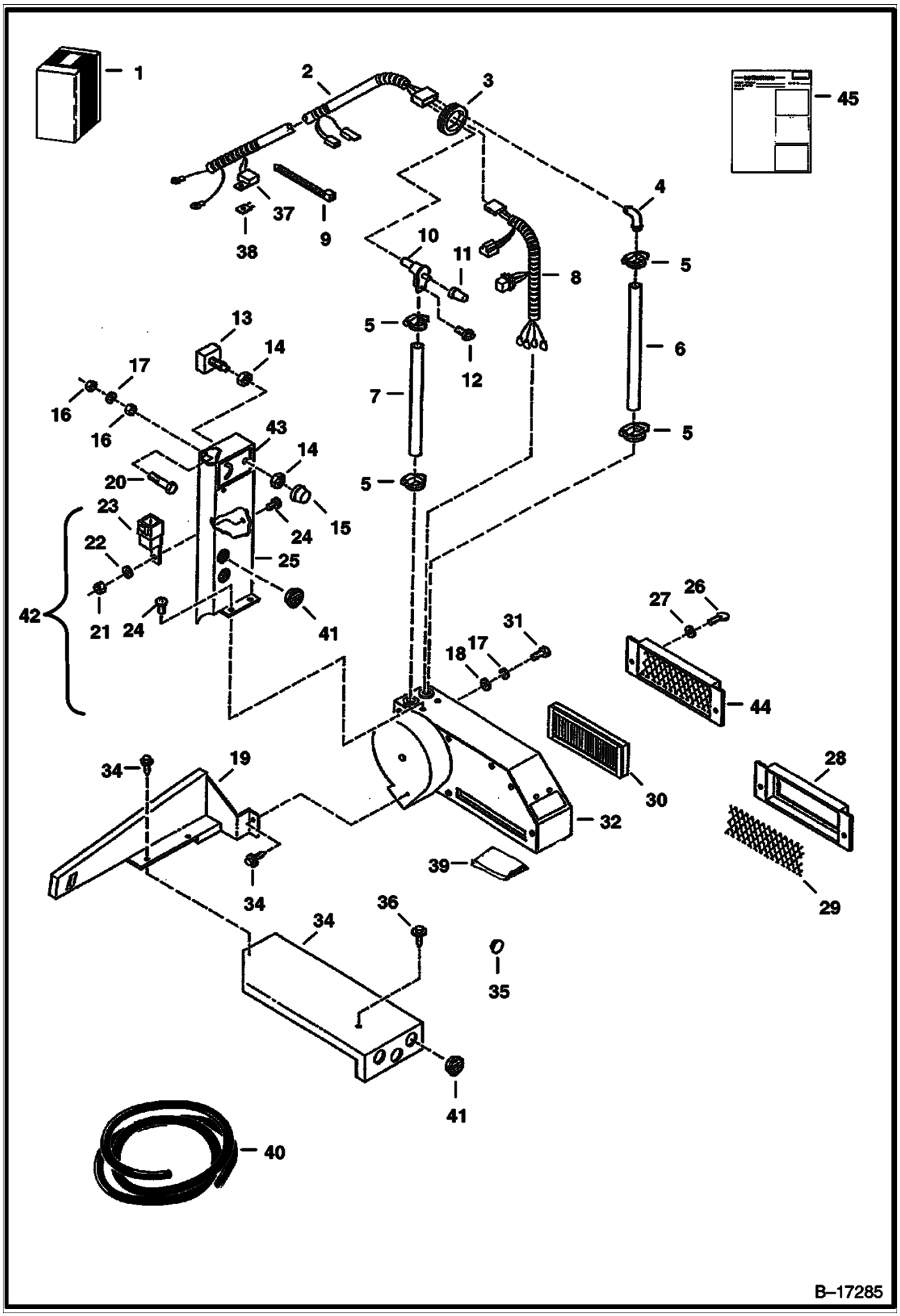

Page 314 - OSS# 2060759 - All rights reserved by Bobcat Company, a business unit of Ingersoll-Rand - 05/22/2008 - 07:23:42 - Produced by Ken Cook Co. with mediaoff

HEATER KIT (Cont'd)
(Fresh Air)

Ref No	Part Number	Description	Remarks	Serial Number	Qty
1	6713379	KIT	See Illustration HEATER PLUMBING KIT/ C3304 REF. 2 - 27 & 30 - 45 - FOR HEATER PLUMBING KIT		1
2	6660894	HARNESS	W/Ref 37 W/Ref 38		1
3	6512067	GROMMET			1
4	6660879	ELBOW			1
5	42H000010B	CLAMP	worm gear		4
5	5HM00024B	CLAMP	constant tension		4
6		HOSE	Order Ref 40 NAP - 17"(431,8 mm) long		1
7		HOSE	Order Ref 40 NAP - 19"(482,6 mm) long		1
8	6660892	HARNESS			1
9	6660883	TIE			6
10	6654191	VALVE			1
11	6660881	KNOB	water valve		1
12	6660884	SCREW			1
13	6660659	SWITCH	fan		1
14	6624435	NUT			2
15	6660822	KNOB			1
16	6670142	NUT			2
17	4E000004B	WASHER			5
18	25E000014B	WASHER			5
19	6669650	VENT	side		1
20	6670144	BOLT			2
21	6641065	NUT			1
22	6641072	WASHER			1
23	6651975	SWITCH	relay - Was 6670141 [A]		1
24	6641066	SCREW			2
25	6850026	COVER	Ref 41 Also Order (2)		1
26	6660930	THUMBSCREW			2
27	25E000010B	WASHER			2
28		COVER	Order Ref 44 NAP - Was 6660886 [A]		1
29		SCREEN	Order Ref 44 NAP - Was 6660891 [A]		1
30	6660880	FILTER			1
31	17C000412B	BOLT			3
32		HEATER	See Illustration HEATER/ D2181		1
33	6705792	SCREW			3
34	6669652	DUCT	Ref 41 under seat-Also Order (3)		1
35	6657719	PLUG			1
36	84G003120B	BOLT			1
37	6657306	CAP	fuse		1
38	6702444	FUSE	25 amp		1
39		MOULDING	NAP		1
40	889269B	HOSE	bulk - Sold Per Foot		x
41	6660885	LOUVER			5
42	6660890	COVER ASSY.	Ref 21 Ref 22 Ref 23 Ref 25 Ref 43		1
43	6660865	DECAL	fan & valve		1
44	6674151	COVER			1
45	6724384	INSTRUCTIONS			1

Page 315 - OSS# 2060759 - All rights reserved by Bobcat Company, a business unit of Ingersoll-Rand - 05/22/2008 - 07:23:42 - Produced by Ken Cook Co. with mediaioff

HEATER
(Fresh Air)

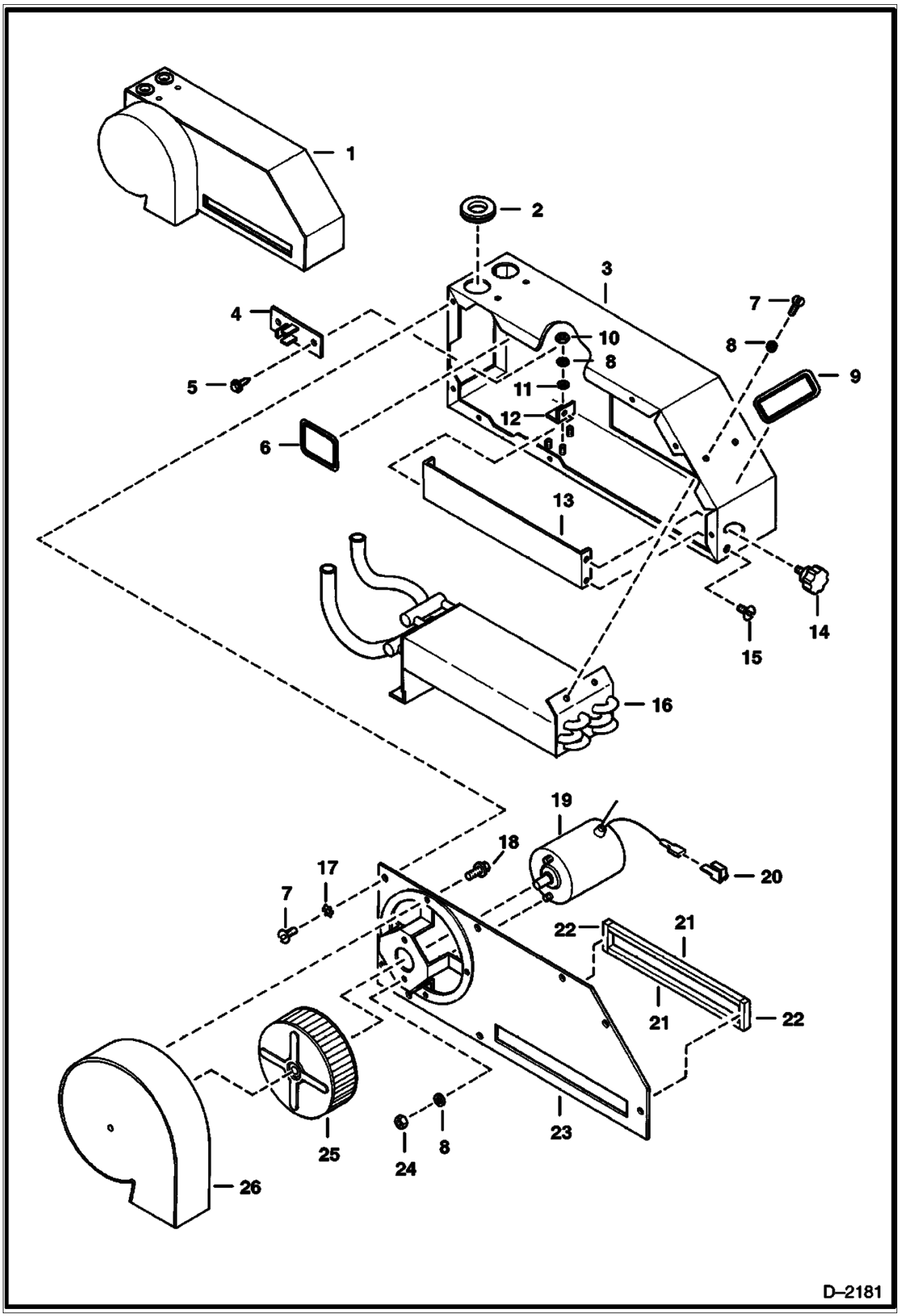

Page 316 - OSS# 2060759 - All rights reserved by Bobcat Company, a business unit of Ingersoll-Rand - 05/22/2008 - 07:23:42 - Produced by Ken Cook Co. with mediaioff

HEATER (Cont'd)
(Fresh Air)

Ref No	Part Number	Description	Remarks	Serial Number	Qty
1	6669689	HEATER	Ref. 2 - 26 - W/rear hole in blower wheel housing & 2.5" (63,5 mm) thick heater core		1
2	6641056	GROMMET			2
3	6660874	HOUSING	heater		1
3	6664806	HOUSING	heater - 18.3"(464,8 mm)long		1
4	6632584	RESISTOR			1
5	6705792	SCREW			3
6	6660656	DECAL	wiring schematic		1
7	6641066	SCREW			10
8	6641072	WASHER			7
9	6660868	DECAL	recirculation		1
10	6641065	NUT			3
11	25E000010B	WASHER			3
12	6660873	BRACKET	door		1
13	6660872	DOOR			1
13	6664808	DOOR	10.5"(266,7 mm) long		1
14	6660869	KNOB			1
15	6648470	SCREW			1
16	6670140	CORE	2.5"(63,5 mm) thick		1
17	12E000010B	WASHER			8
18	6641062	SCREW			4
19	6660876	MOTOR			1
20	6660654	CONNECTOR			1
21	6660877	MOULDING			1
22	6660878	MOULDING			1
23	6667567	COVER	18.4"(467,4 mm) long - 1.125" (28,6 mm) wide		1
24	6641073	NUT			2
25	6667565	BLOWER	1.50"(38,1 mm)wide-		1
26	6850027	HOUSING	blower - W/rear hole		1

Page 317 - OSS# 2060759 - All rights reserved by Bobcat Company, a business unit of Ingersoll-Rand - 05/22/2008 - 07:23:42 - Produced by Ken Cook Co. with mediaioff

HEATER PLUMBING KIT
(Fresh Air)

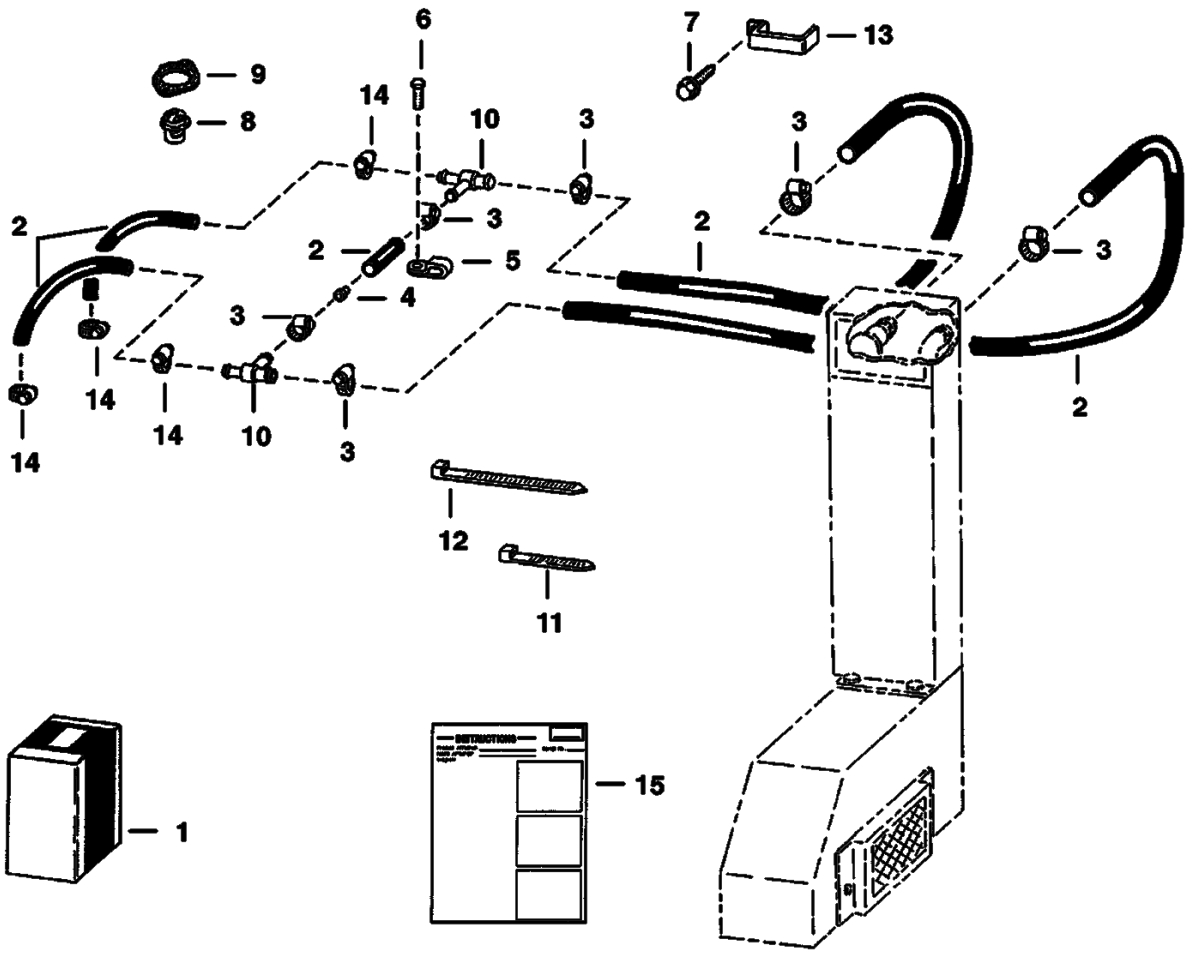

Page 318 - OSS# 2060759 - All rights reserved by Bobcat Company, a business unit of Ingersoll-Rand - 05/22/2008 - 07:23:42 - Produced by Ken Cook Co. with mediaIoff

HEATER PLUMBING KIT (Cont'd)
(Fresh Air)

Ref No	Part Number	Description	Remarks	Serial Number	Qty
1	6660777	KIT	See Illustration HEATER PLUMBING KIT/ C3304 REF. 2-15 - FOR HEATER KIT		1
2	889269B	HOSE	bulk - Sold Per Foot		x
3	42H000010B	CLAMP	worm gear		10
3	5HM00024B	CLAMP	constant tension		6
4	6585223	ORIFICE			1
5	30H000050B	CLAMP			1
6	1CM00820B	BOLT			1
7	84G003712B	BOLT			1
8	6630184	THERMOSTAT	180_-203_F		1
9	6666790	GASKET			1
10	6648485	TEE			2
11	6660883	TIE			10
12	6624289	STA STRAP			1
13	6660795	GUIDE			1
14	5HM00020B	CLAMP	constant tension		4
15	6722058	INSTRUCTIONS			1

Page 319 - OSS# 2060759 - All rights reserved by Bobcat Company, a business unit of Ingersoll-Rand - 05/22/2008 - 07:23:42 - Produced by Ken Cook Co. with media1off

HEATER KIT

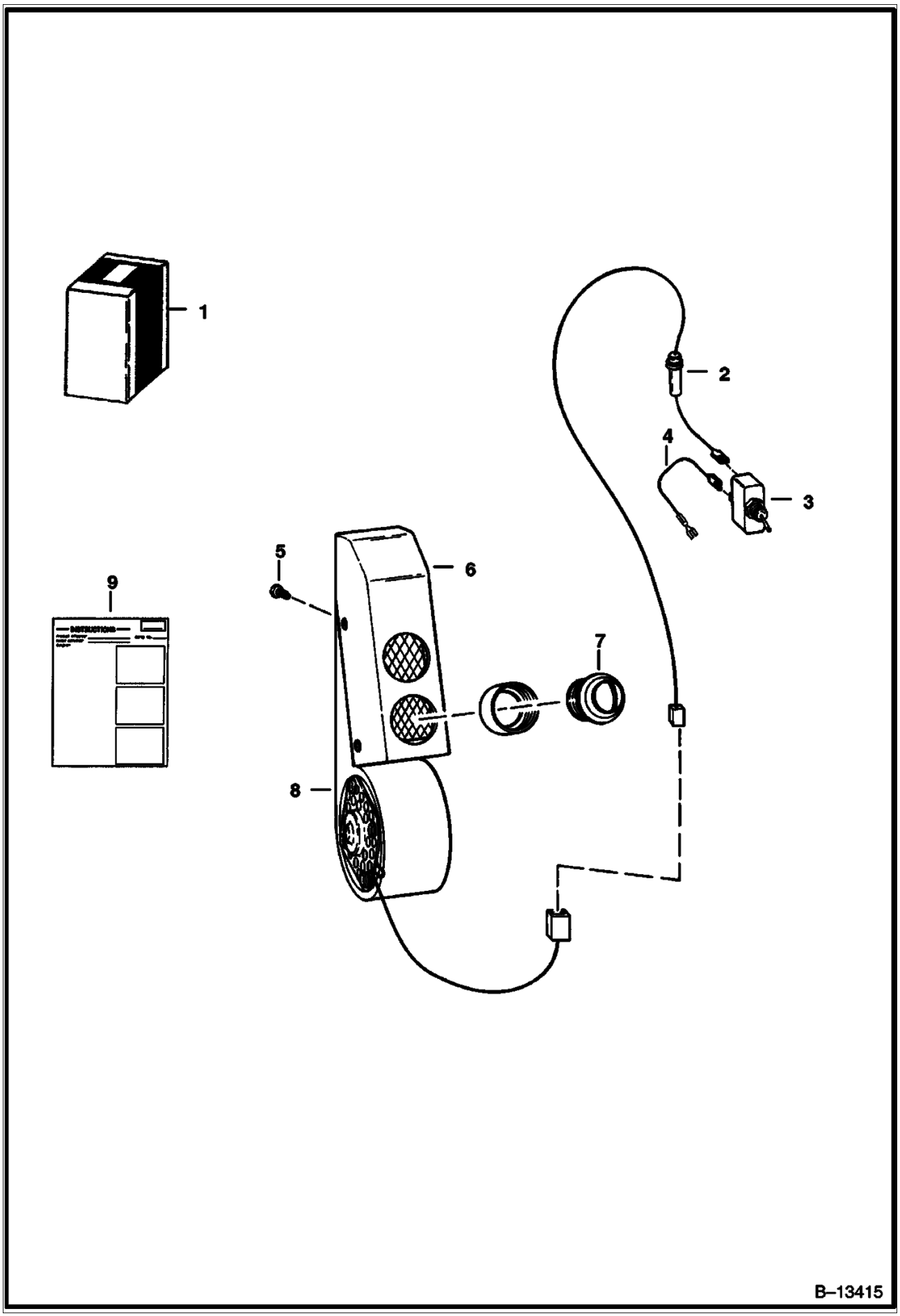

Page 320 - OSS# 2060759 - All rights reserved by Bobcat Company, a business unit of Ingersoll-Rand - 05/22/2008 - 07:23:42 - Produced by Ken Cook Co. with mediaioff

Ref No	Part Number	Description	Remarks	Serial Number	Qty
1	6703046	KIT	See Illustration HEATER PLUMBING KIT/ C3250 REF. 2-9 - FOR HEATER PLUMBING KIT		1
2	6703041	WIRE	fused		1
3	6515521	SWITCH			1
4	6564517	WIRE			1
5	17C000412B	BOLT			3
6	6702975	VENT			1
7	6632587	BALL	louvered		2
8	6658693	HEATER	See Illustration HEATER/ B13521		1
9	6720656	INSTRUCTIONS			1

Page 321 - OSS# 2060759 - All rights reserved by Bobcat Company, a business unit of Ingersoll-Rand - 05/22/2008 - 07:23:42 - Produced by Ken Cook Co. with media1off

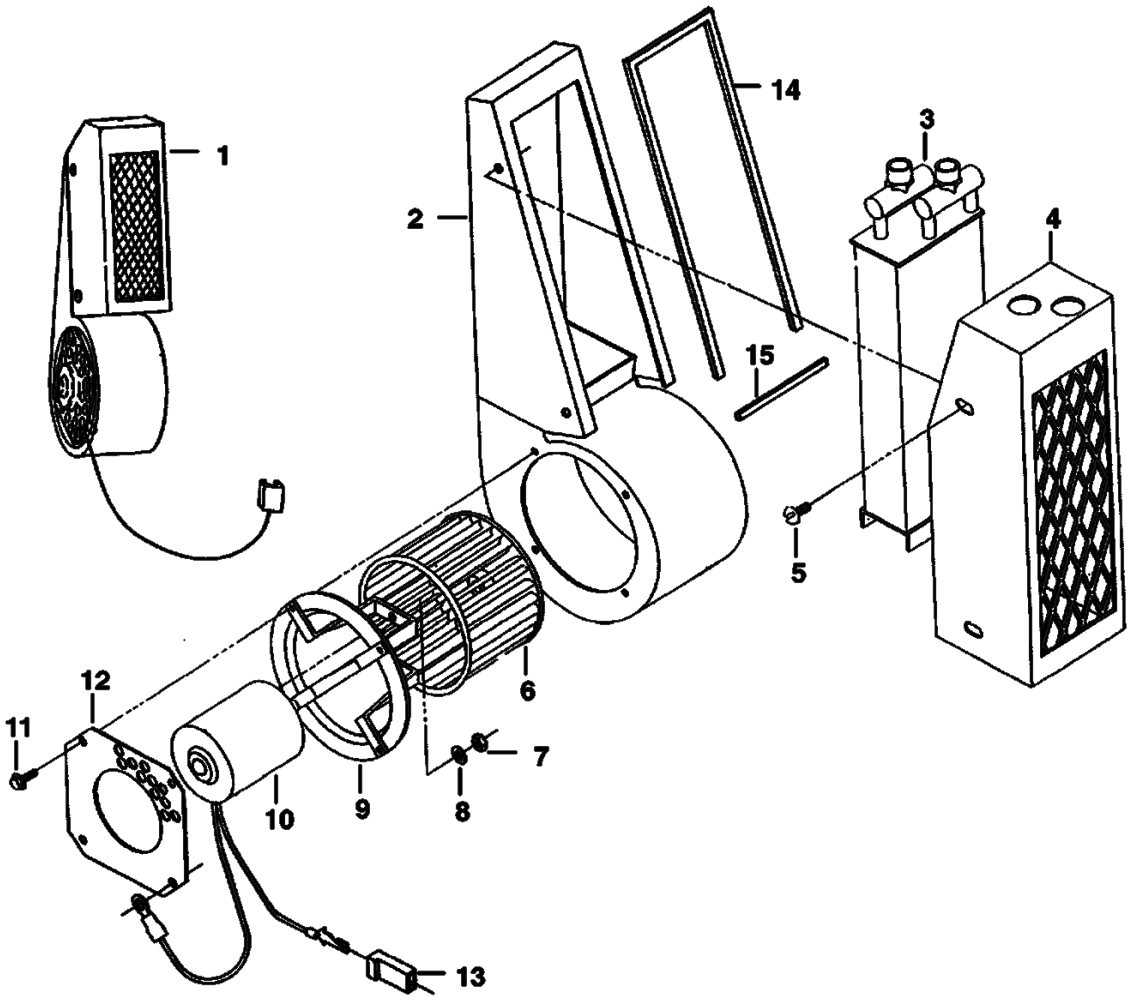

Page 322 - OSS# 2060759 - All rights reserved by Bobcat Company, a business unit of Ingersoll-Rand - 05/22/2008 - 07:23:42 - Produced by Ken Cook Co. with mediaioff

Ref No	Part Number	Description	Remarks	Serial Number	Qty
1	6658693	HEATER			1
2	6648469	HOUSING			1
3	6648471	CORE			1
4	6648472	COVER			1
5	6648470	SCREW			4
6	6648468	FAN			1
7	6641073	NUT			2
8	6641072	WASHER			2
9	6648467	MOUNT			1
10	6648466	MOTOR			1
11	6641062	SCREW			4
12	6659890	SHIELD			1
13	6648460	CONNECTOR			1
14	6659891	MOULDING			1
15	6659892	MOULDING			1

Page 323 - OSS# 2060759 - All rights reserved by Bobcat Company, a business unit of Ingersoll-Rand - 05/22/2008 - 07:23:42 - Produced by Ken Cook Co. with media1off

HEATER PLUMBING KIT

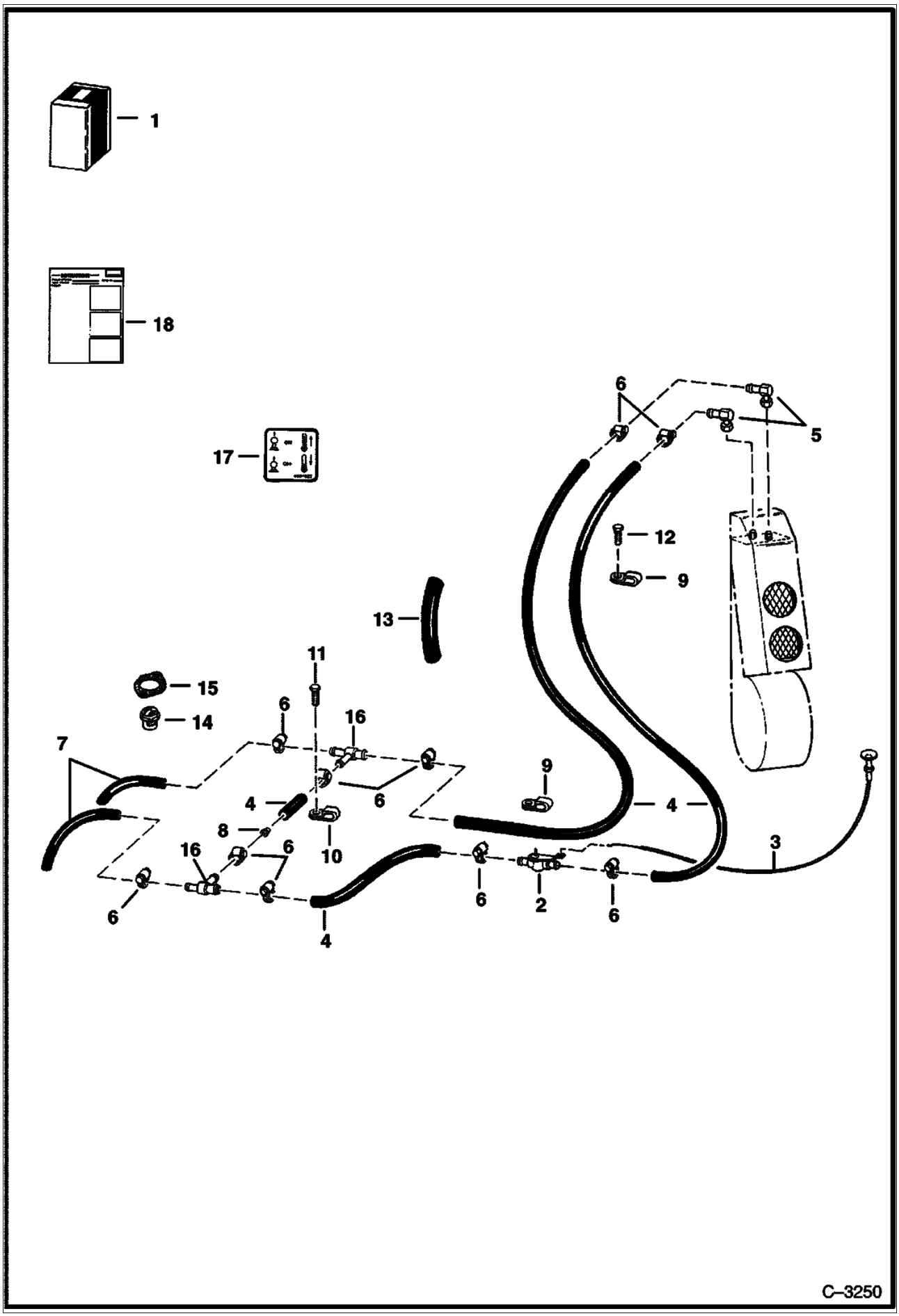

Page 324 - OSS# 2060759 - All rights reserved by Bobcat Company, a business unit of Ingersoll-Rand - 05/22/2008 - 07:23:42 - Produced by Ken Cook Co. with mediaioff

Ref No	Part Number	Description	Remarks	Serial Number	Qty
1	6703045	KIT	See Illustration HEATER KIT/ B13415 REF. 2 - 18 - FOR HEATER KIT		1
2	6648483	VALVE			1
3	6648482	CABLE			1
4	889269B	HOSE	bulk - Sold Per Foot		x
5	6648474	ELBOW			2
5	6648475	O-RING			2
6	42H000010B	CLAMP			10
7	6565977	HOSE	bulk - Sold Per Foot		x
8	6585223	ORIFICE			1
9	31H000052B	CLIP			2
10	30H000050B	CLAMP			1
11	1CM00820B	BOLT			1
12	84G003712B	BOLT			1
13	6652367	HOSE COVER	bulk - Sold Per Foot		x
14	6630184	THERMOSTAT			1
15	6666790	GASKET	Was 3974693B [A]		1
16	6564697	TEE			2
17	6564527	DECAL			1
18	6720656	INSTRUCTIONS			1

Page 325 - OSS# 2060759 - All rights reserved by Bobcat Company, a business unit of Ingersoll-Rand - 05/22/2008 - 07:23:42 - Produced by Ken Cook Co. with mediaioff

HORN KIT

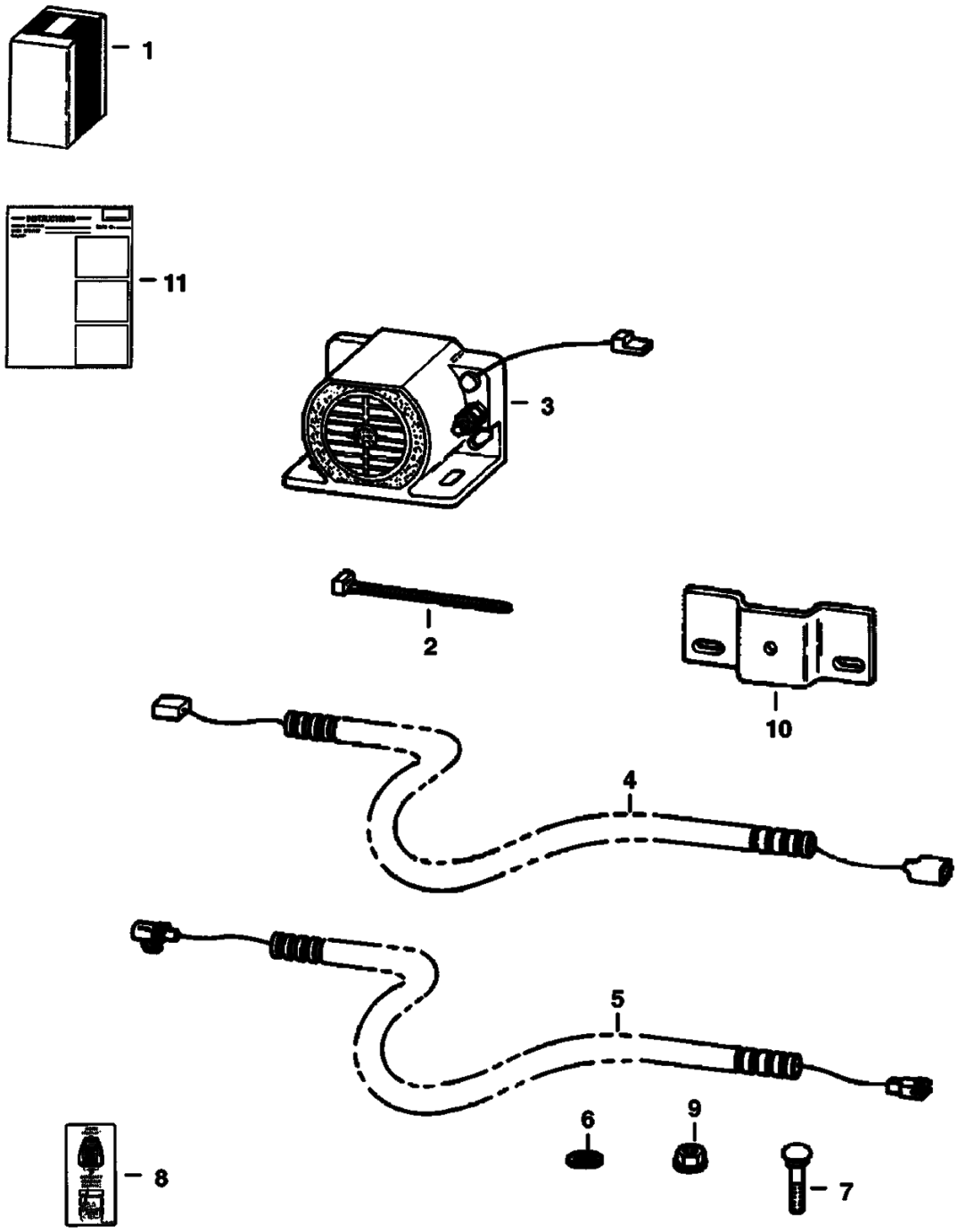

NOTE: This Kit required if loader is equipped W/2–switch or Multi–switch left control lever handle and/or High Horsepower Hydraulics.

C–3267

Page 326 - OSS# 2060759 - All rights reserved by Bobcat Company, a business unit of Ingersoll-Rand - 05/22/2008 - 07:23:42 - Produced by Ken Cook Co. with mediaIoff

Ref No	Part Number	Description	Remarks	Serial Number	Qty
1	6703162	HORN KIT	Ref. 2-11 - SEE NOTE		1
2	6610510	TIE			2
3	6660294	HORN			1
4	6701961	HARNESS	113"(2870,2 mm) long		1
5	6704408	HARNESS	54"(1371,6 mm) long		1
6	25E000013B	WASHER			1
7	84G002516B	BOLT			2
8	6703727	DECAL	horn/aux.		1
9	59D000004B	NUT			2
10	6704641	MOUNT			1
11	6720761	INSTRUCTIONS			1

Page 327 - OSS# 2060759 - All rights reserved by Bobcat Company, a business unit of Ingersoll-Rand - 05/22/2008 - 07:23:42 - Produced by Ken Cook Co. with media1off

HORN KIT

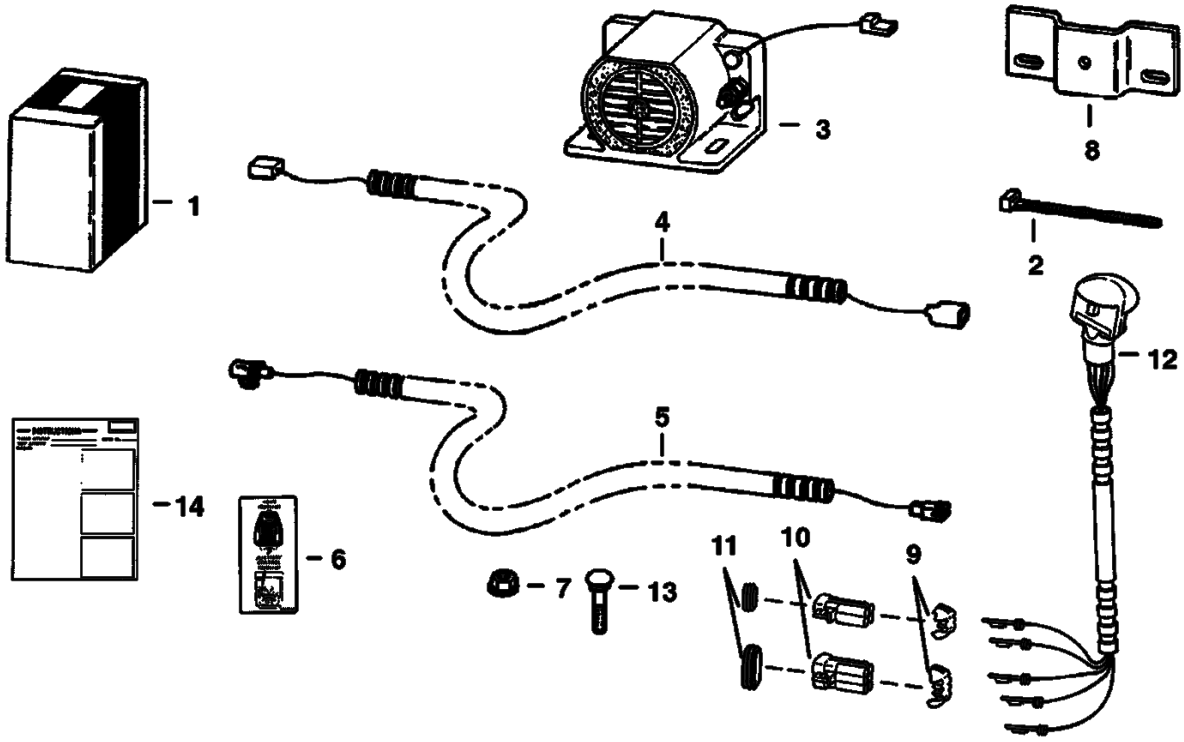

NOTE: This kit required for all loaders equipped W/blank left hand control lever handle.

B–17256

Page 328 - OS$# 2060759 - All rights reserved by Bobcat Company, a business unit of Ingersoll-Rand - 05/22/2008 - 07:23:42 - Produced by Ken Cook Co. with mediaioff

Ref No	Part Number	Description	Remarks	Serial Number	Qty
1	6706679	HORN KIT	Ref. 2 - 14 - SEE NOTE		1
2	6610510	TIE			2
3	6660294	HORN			1
4	6701961	HARNESS	113"(2870,2 mm) long		1
5	6704408	HARNESS	54"(1371,6 mm) long		1
6	6703727	DECAL	horn/aux.		1
7	59D000004B	NUT			2
8	6704641	MOUNT			1
9	6641180	LOCK	2 - pin		1
9	6640700	LOCK	3 - pin		1
10	6641179	CONNECTOR	2 - pin		1
10	6640699	CONNECTOR	3 - pin		1
11	6649683	SEAL	For use W/2 - pin connector - Not in Kit		1
11	6659553	SEAL	For use W/3 - pin connector - Not in Kit		1
12	6705921	HANDLE ASSY.			1
12	6640690	PIN			5
12	6641176	SEAL			5
13	84G002516B	BOLT			2
14	6720761	INSTRUCTIONS			1

Page 329 - OSS# 2060759 - All rights reserved by Bobcat Company, a business unit of Ingersoll-Rand - 05/22/2008 - 07:23:42 - Produced by Ken Cook Co. with mediaioff

HOURMETER KIT

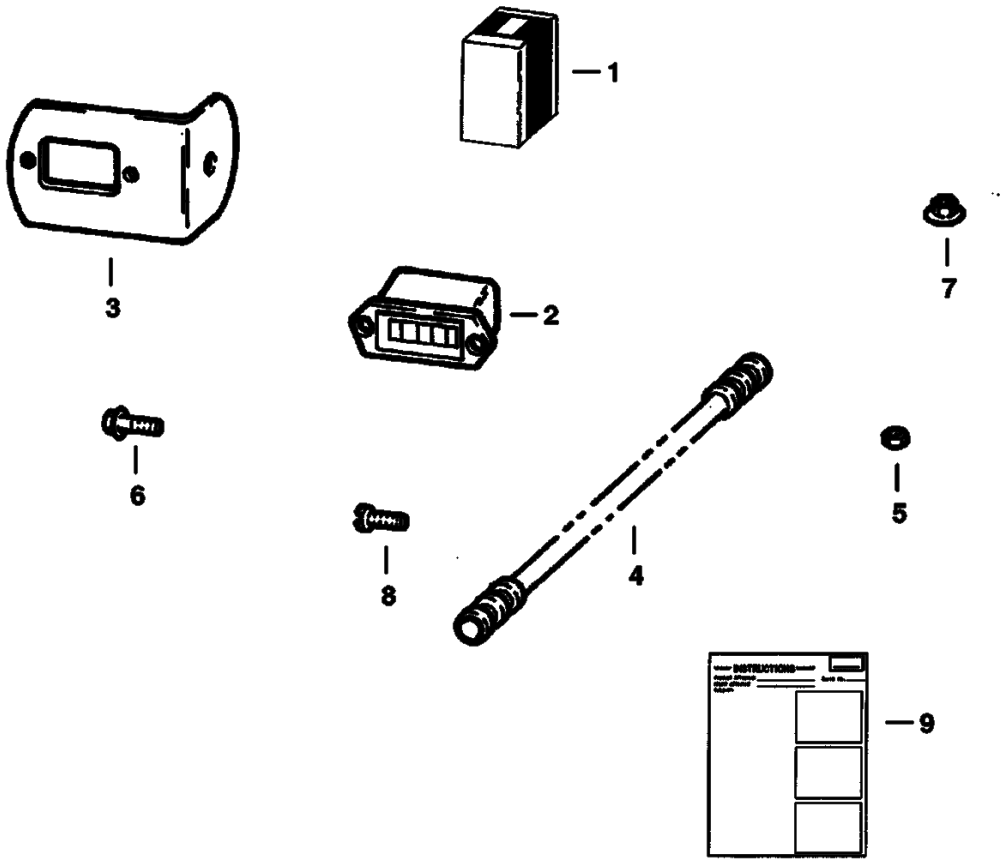

Page 330 - OSS# 2060759 - All rights reserved by Bobcat Company, a business unit of Ingersoll-Rand - 05/22/2008 - 07:23:42 - Produced by Ken Cook Co. with mediaioff

Ref No	Part Number	Description	Remarks	Serial Number	Qty
1	6700229	KIT	Ref. 2-9		1
2	6664886	HOURMETER			1
3	6552906	BRACKET			1
4	6700228	HARNESS			1
5	12D000006B	NUT			2
6	35C000716B	BOLT			1
7	55D000007B	NUT			1
8	85G000608B	SCREW			2
9	6720451	INSTRUCTIONS			1

Page 331 - OSS# 2060759 - All rights reserved by Bobcat Company, a business unit of Ingersoll-Rand - 05/22/2008 - 07:23:42 - Produced by Ken Cook Co. with media1off

KEYLESS IGNITION

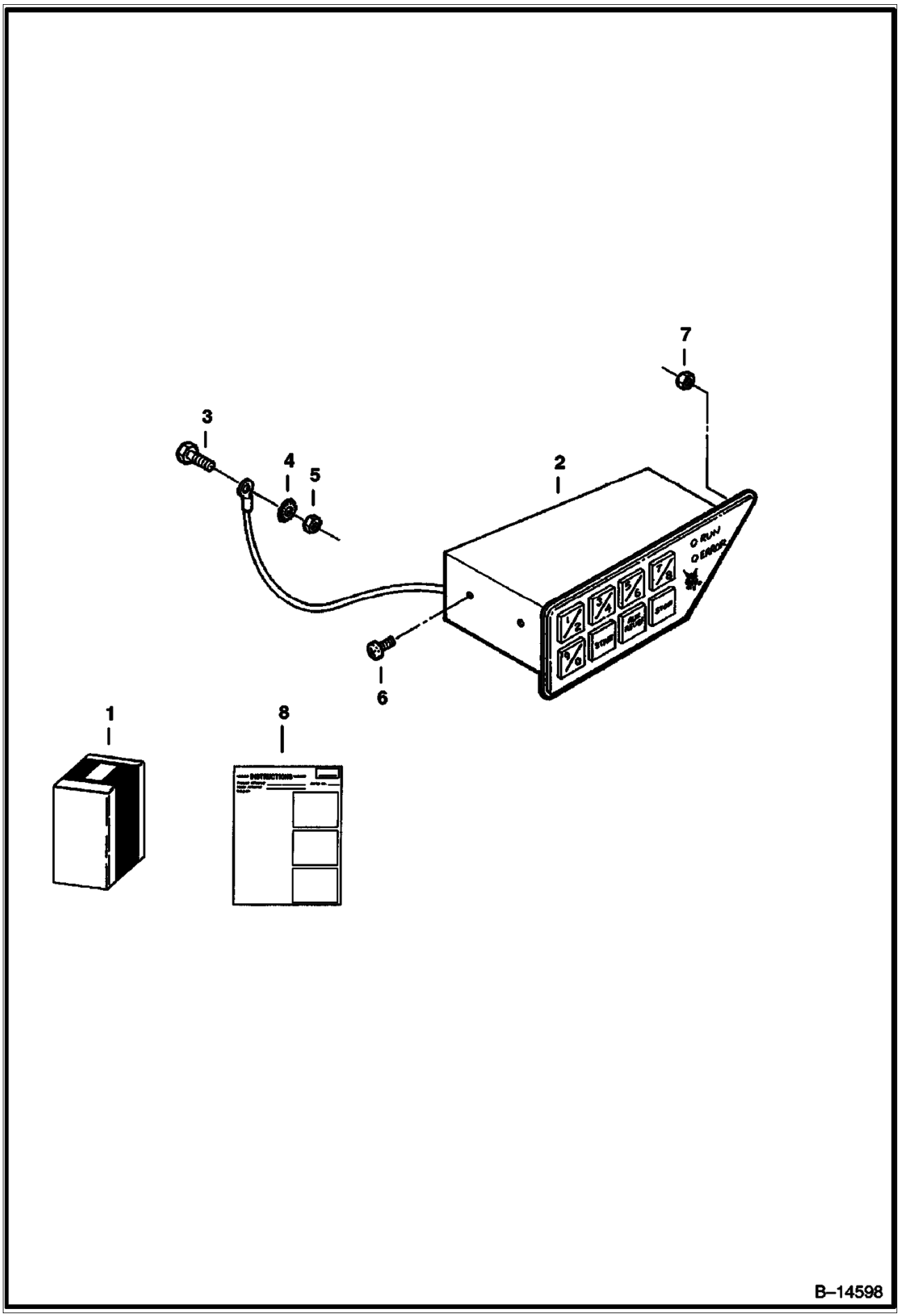

Page 332 - OSS# 2060759 - All rights reserved by Bobcat Company, a business unit of Ingersoll-Rand - 05/22/2008 - 07:23:42 - Produced by Ken Cook Co. with mediaioff

Ref No	Part Number	Description	Remarks	Serial Number	Qty
1	6712972	KIT	Keyless Ignition - W/Ref. 2-8		1
2		MODULE	Order Ref 1 NSS		1
3	35C000410B	BOLT			1
4	6E000004B	WASHER	Star		1
5	83D000004B	NUT			1
6	87G000806B	BOLT			2
7	12D000006B	NUT			1
8	6724586	INSTRUCTIONS			1

Page 333 - OSS# 2060759 - All rights reserved by Bobcat Company, a business unit of Ingersoll-Rand - 05/22/2008 - 07:23:42 - Produced by Ken Cook Co. with media1off

LIFT KIT
(Four Point - .75" Thick Lift Eyes)

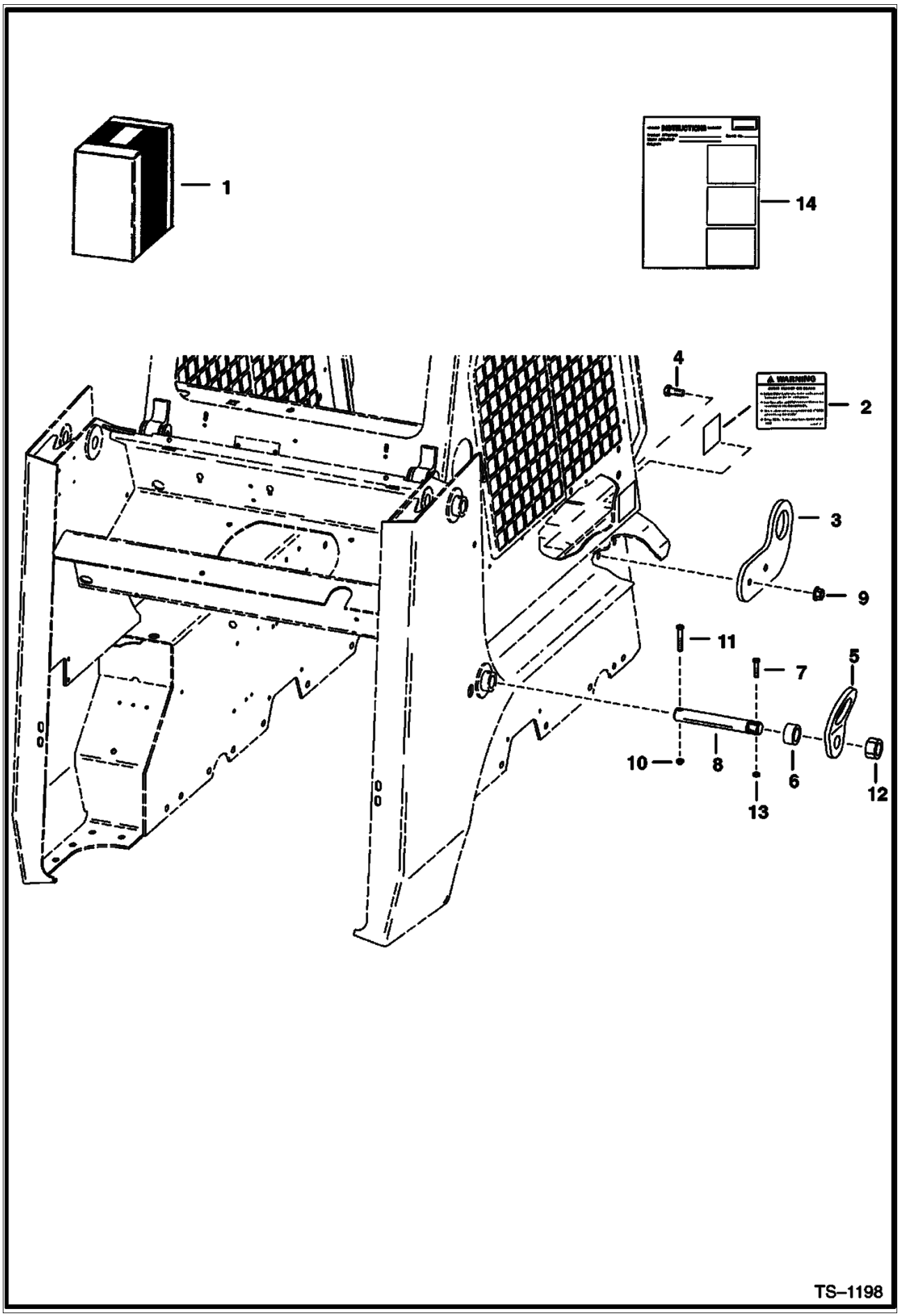

Page 334 - OSS# 2060759 - All rights reserved by Bobcat Company, a business unit of Ingersoll-Rand - 05/22/2008 - 07:23:42 - Produced by Ken Cook Co. with mediaIoff

LIFT KIT (Cont'd)
(Four Point - .75" Thick Lift Eyes)

Ref No	Part Number	Description	Remarks	Serial Number	Qty
1		KIT	See Illustration LIFT KIT/ TS1198A NAP - REF. 2 - 14 - ORDER 6725224 KIT - WAS 6707000 [A]		1
2	6702916	DECAL			2
3	6706826	LIFT EYE	front		2
4	17C001028B	BOLT			4
5	6706825	LIFT EYE	rear		2
6	6702921	SPACER			2
7	17C000540B	BOLT			2
8	6706807	PIN			2
9	83D000010B	NUT			4
10	85D000006B	NUT			2
11	17C000640B	BOLT			2
12	4D000020B	NUT			2
13	87D000005B	NUT			2
14	6722872	INSTRUCTIONS			1

Page 335 - OSS# 2060759 - All rights reserved by Bobcat Company, a business unit of Ingersoll-Rand - 05/22/2008 - 07:23:42 - Produced by Ken Cook Co. with media1off

LIFT KIT
(Four Point - .75" Thick Lift Eyes)

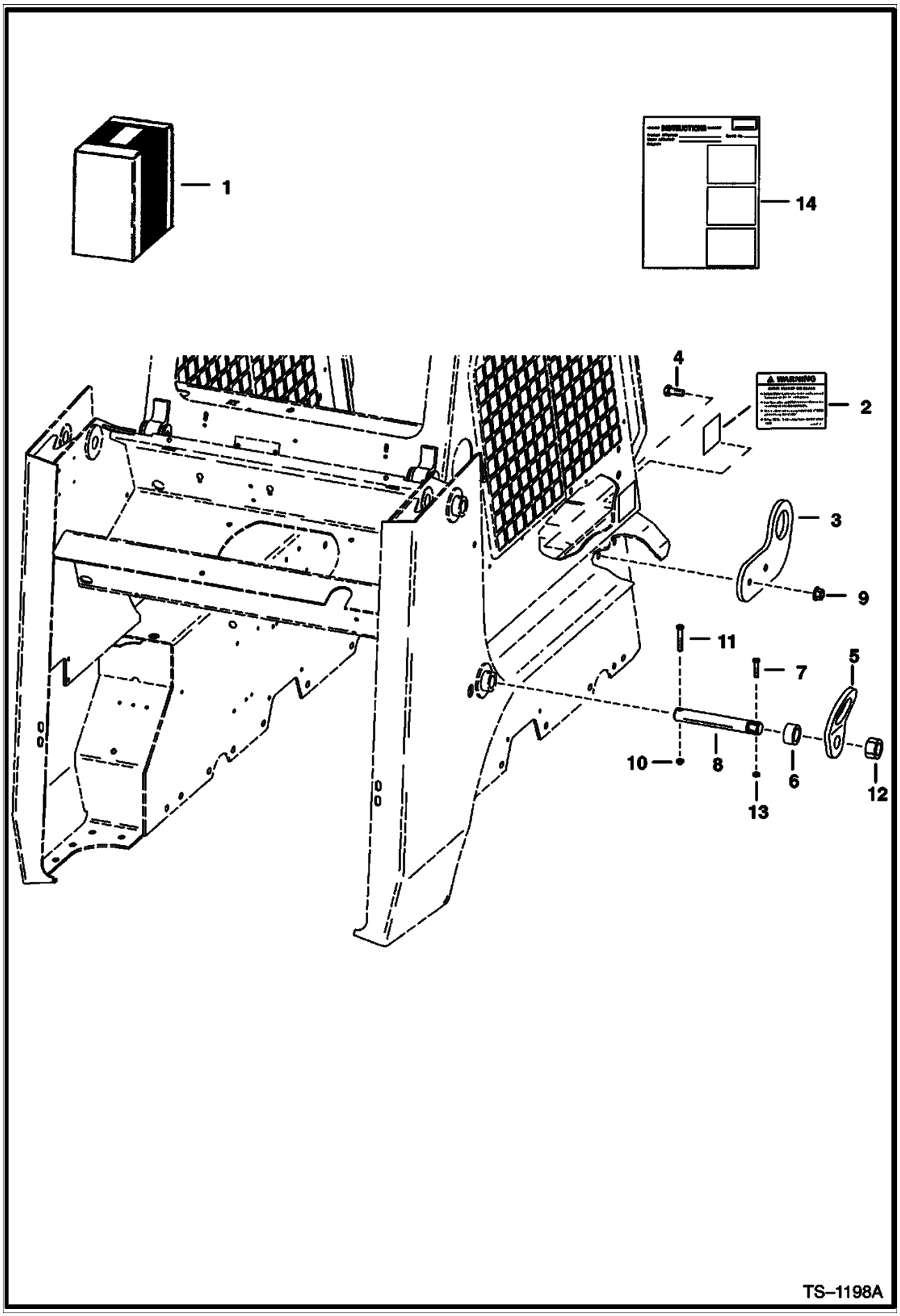

Page 336 - OSS# 2060759 - All rights reserved by Bobcat Company, a business unit of Ingersoll-Rand - 05/22/2008 - 07:23:42 - Produced by Ken Cook Co. with mediaIoff

LIFT KIT (Cont'd)
(Four Point - .75" Thick Lift Eyes)

Ref No	Part Number	Description	Remarks	Serial Number	Qty
1	6725224	KIT	Ref. 2 - 14		1
2	6726423	DECAL	Was 6702916 [A]		2
3	6719490	LIFT EYE	front		2
4	17C001028B	BOLT			4
5	6706825	LIFT EYE	rear		2
6	6702921	SPACER	1.00" thick - 751 & 753 loaders		2
6	6719906	SPACER	.70" thick - 763 loaders		2
7	17C000540B	BOLT			2
8	6706807	PIN			2
9	83D000010B	NUT			4
10	85D000006B	NUT			2
11	17C000640B	BOLT			2
12	4D000020B	NUT			2
13	87D000005B	NUT			2
14	6722872	INSTRUCTIONS			1

Page 337 - OSS# 2060759 - All rights reserved by Bobcat Company, a business unit of Ingersoll-Rand - 05/22/2008 - 07:23:42 - Produced by Ken Cook Co. with media1off

LIFT KIT
(Single Point)

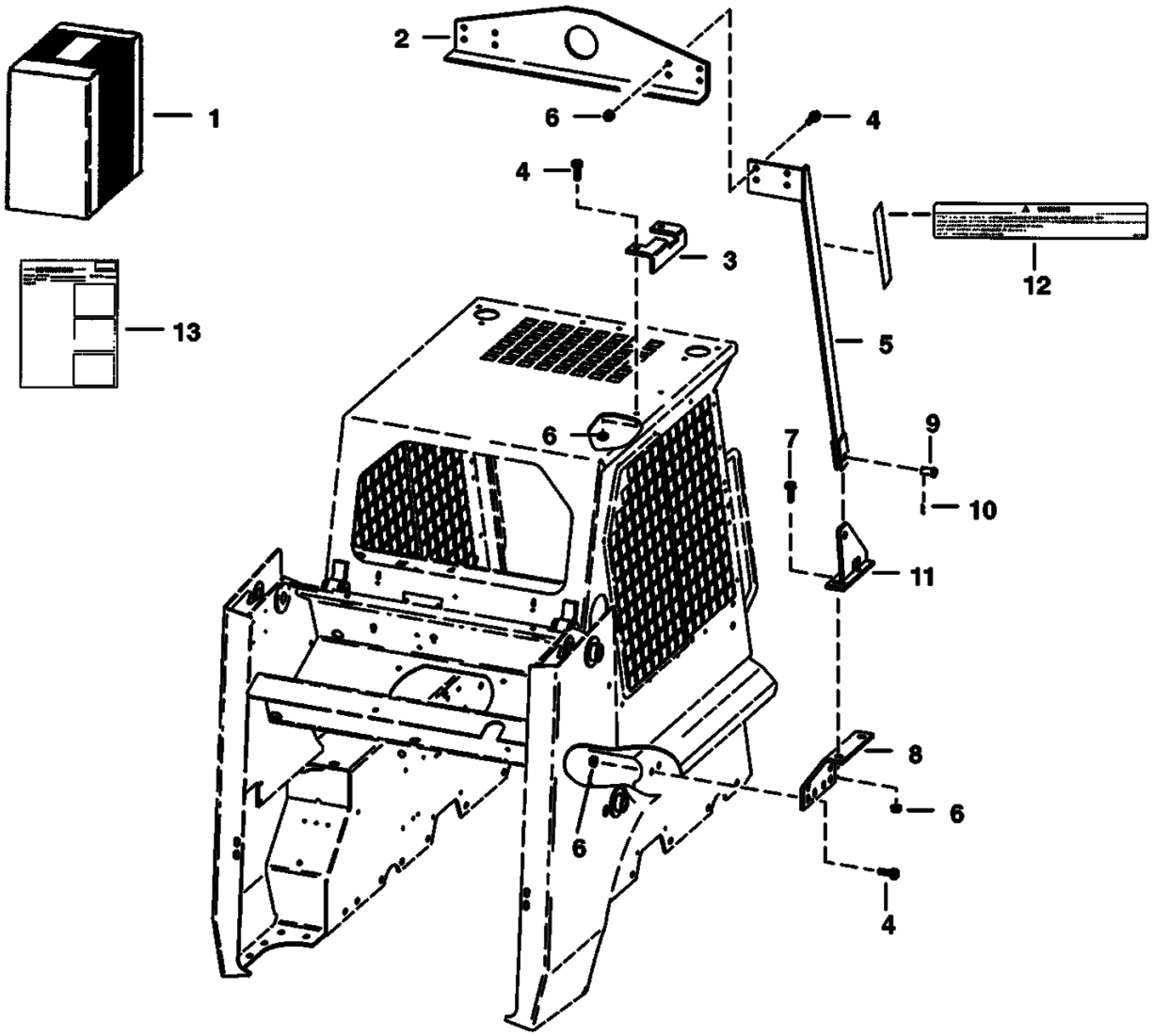

Page 338 - OSS# 2060759 - All rights reserved by Bobcat Company, a business unit of Ingersoll-Rand - 05/22/2008 - 07:23:42 - Produced by Ken Cook Co. with mediaioff

LIFT KIT (Cont'd)
(Single Point)

Ref No	Part Number	Description	Remarks	Serial Number	Qty
1	6704153	KIT	Ref. 2-13		1
2	6567827	ANGLE			1
3	6704154	BRACKET	L.H.		1
3	6704148	BRACKET	R.H.		1
4	31C000824B	BOLT			16
5	6704146	BRACKET	R.H.		1
5	6704147	BRACKET	L.H.		1
6	57D000008B	NUT			20
7	31C000828B	BOLT			4
8	6704149	BRACKET			2
9	6567838	PIN			2
10	1320075	COTTER PIN			2
11	6704151	BRACKET			2
12	6704786	DECAL	warning		2
13	6722105	INSTRUCTIONS			1

Page 339 - OSS# 2060759 - All rights reserved by Bobcat Company, a business unit of Ingersoll-Rand - 05/22/2008 - 07:23:42 - Produced by Ken Cook Co. with mediaioff

LIGHT KIT

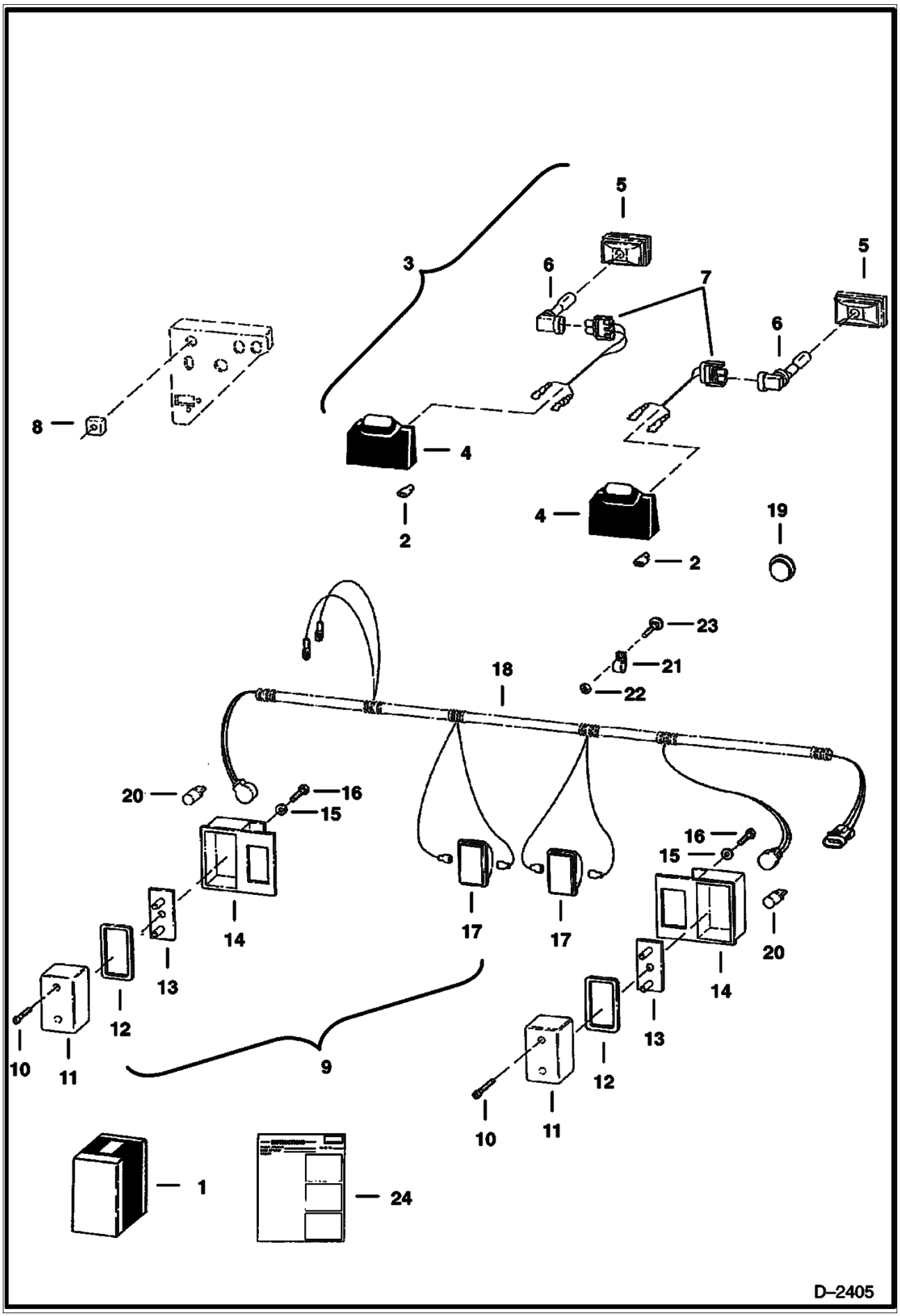

Page 340 - OSS# 2060759 - All rights reserved by Bobcat Company, a business unit of Ingersoll-Rand - 05/22/2008 - 07:23:42 - Produced by Ken Cook Co. with mediaioff

LIGHT KIT (Cont'd)

Ref No	Part Number	Description	Remarks	Serial Number	Qty
1	6714985	LIGHT KIT	W/Ref. 2 - 23		1
2	6519548	CONNECTOR			4
3	6577801	LIGHT	W/Ref 4 W/Ref 5 W/Ref 6 W/Ref 7		2
4	6578824	HOUSING	lights		2
5	6649478	BULB HOUSING			2
6	6667934	BULB			2
7	6578528	HARNESS	light		2
8	6665410	SWITCH			1
9	6670284	LIGHT ASSY	Ref. 10 - 16		2
10	6672273	SCREW			2
11	6672276	LENS	red		2
12	6672275	GASKET			2
13	6672277	BRACKET			2
14	6672279	MOUNT	rubber		2
15	6672272	WASHER			4
16	6672274	SCREW			4
17	6661353	LIGHT ASSY	W/bulb - white		2
17	898731B	BULB			2
18	6716419	HARNESS	Was 6714350 [A]		1
19	6718796	PLUG	Was 6660646 [A]		1
20	6649481	BULB			2
21	30H000042B	CLAMP	Was 30H000035B [B]		1
22	37C000512B	BOLT			1
23	61D000005B	NUT			1
24	6900651	INSTRUCTIONS	INSTRUCTIONS Was 6722198 [A]		1

Page 341 - OSS# 2060759 - All rights reserved by Bobcat Company, a business unit of Ingersoll-Rand - 05/22/2008 - 07:23:42 - Produced by Ken Cook Co. with mediaioff

MUFFLER/PURIFIER KIT

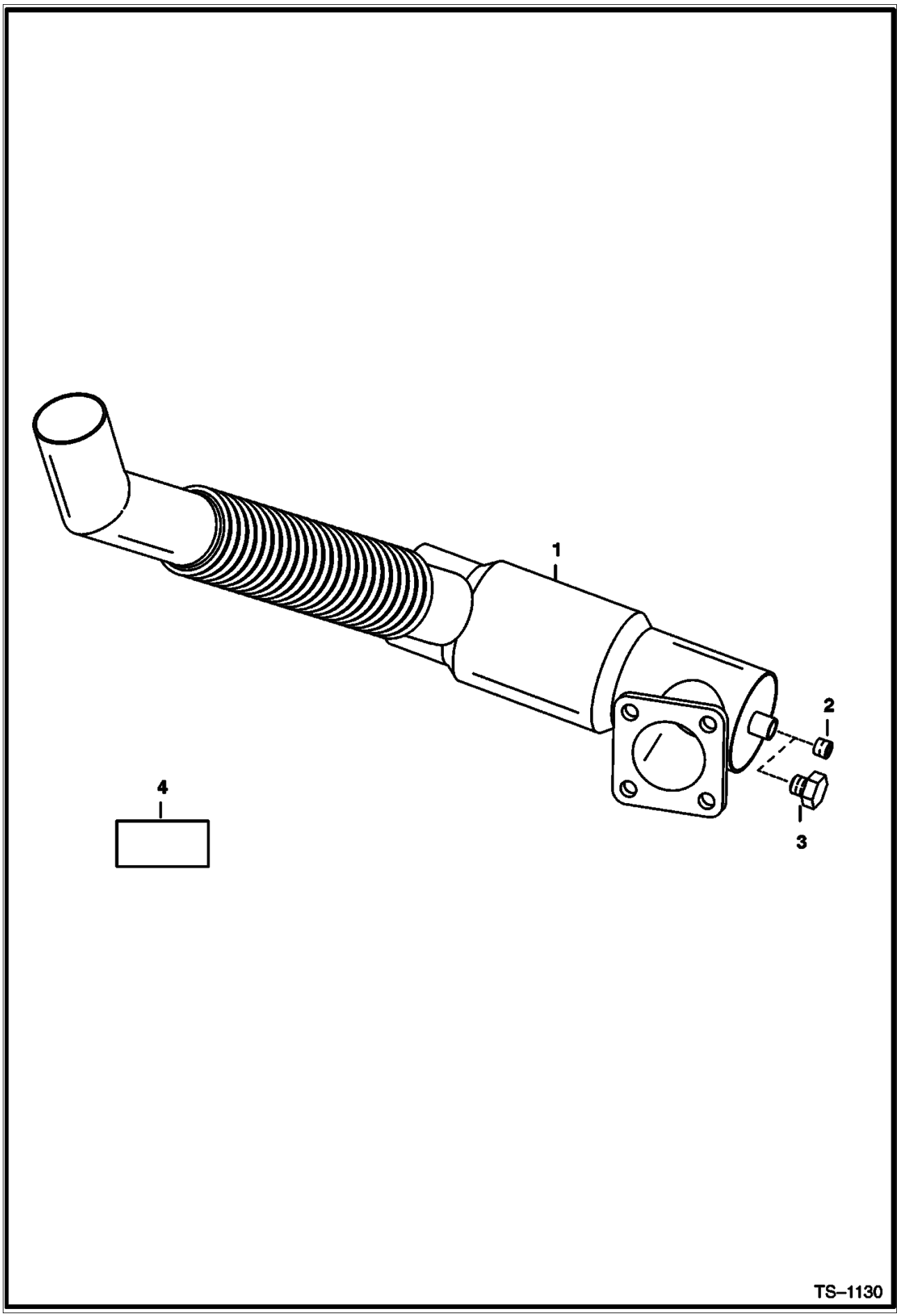

Page 342 - OSS# 2060759 - All rights reserved by Bobcat Company, a business unit of Ingersoll-Rand - 05/22/2008 - 07:23:42 - Produced by Ken Cook Co. with mediaioff

Ref No	Part Number	Description	Remarks	Serial Number	Qty
1	6661616	MUFFLER	W/Ref 2		1
2		PLUG	Order Ref 3 NAP - 1/8" brass - allen head		1
3	6659543	PLUG	1/8" brass - hex head		1
4	6667573	DECAL			1

Page 343 - OSS# 2060759 - All rights reserved by Bobcat Company, a business unit of Ingersoll-Rand - 05/22/2008 - 07:23:42 - Produced by Ken Cook Co. with media1off

PRESSURE RELEASE KIT
(Front Auxiliary)

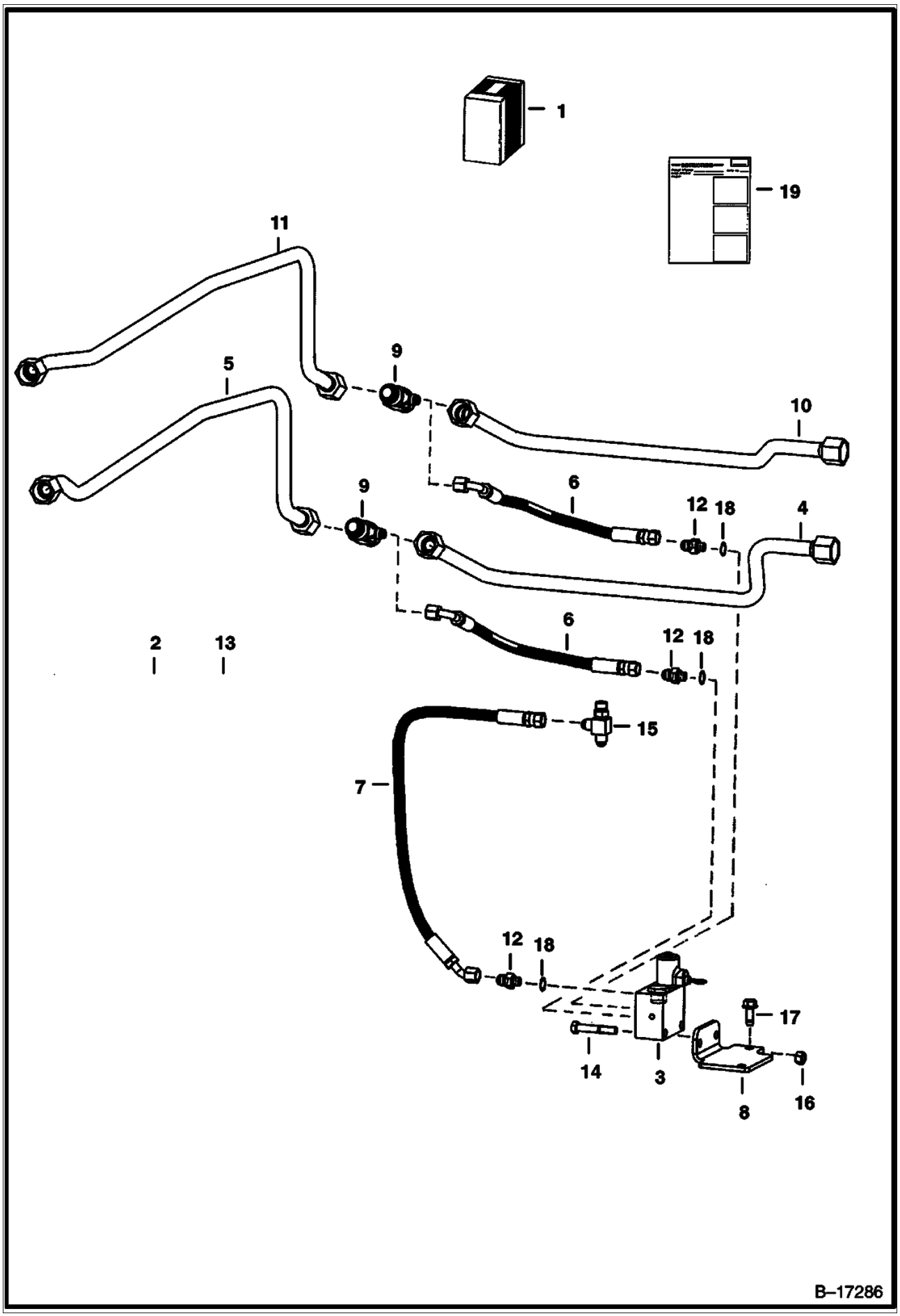

Page 344 - OSS# 2060759 - All rights reserved by Bobcat Company, a business unit of Ingersoll-Rand - 05/22/2008 - 07:23:42 - Produced by Ken Cook Co. with mediaioff

PRESSURE RELEASE KIT (Cont'd)
(Front Auxiliary)

Ref No	Part Number	Description	Remarks	Serial Number	Qty
1	6718240	KIT	front aux. press. release - Ref. 2 - 19		1
2	6610510	TIE			3
3		VALVE	Ref 12 See Illustration PRESSURE RELEASE VALVE/ PE1017 NAP - .4375" THREADED PORTS - ORDER 6678150 VALVE & (3) OF (15KV-5 ADAPTER)		1
3	6678150	VALVE	See Illustration PRESSURE RELEASE VALVE/ PE1017 .5625" THREADED PORTS		1
4	6717915	TUBE			1
5	6717916	TUBE			1
6	6717919	HOSE			2
7	6717921	HOSE			1
8	6717922	BRACKET			1
9	6717923	TEE			2
10	6717917	TUBE			1
11	6717918	TUBE			1
12	6718109	CONNECTOR	W/Ref 18 Used W/Ref 3 (79K-4 O-ring) - (NAP/6674372 Valve)		3
12	97K000006B	O-RING	flared end		2
12	15KV00005B	ADAPTER	W/Ref 18 Used W/Ref 3 (99K-6 O-ring) - (6678150 Valve)		3
12	97K000006B	O-RING	flared end		2
13	6718111	HARNESS			1
14	17C000636B	BOLT			2
15	21KN00005B	TEE			1
15	97K000006B	O-RING	flared end		2
16	61D000006B	NUT			2
17	84G003716B	BOLT			1
18	79K000004B	O-RING			3
18	99K000006B	O-RING			3
19	6900841	INSTRUCTIONS			1

Page 345 - OSS# 2060759 - All rights reserved by Bobcat Company, a business unit of Ingersoll-Rand - 05/22/2008 - 07:23:42 - Produced by Ken Cook Co. with mediaioff

PRESSURE RELEASE VALVE
(Front Auxiliary)

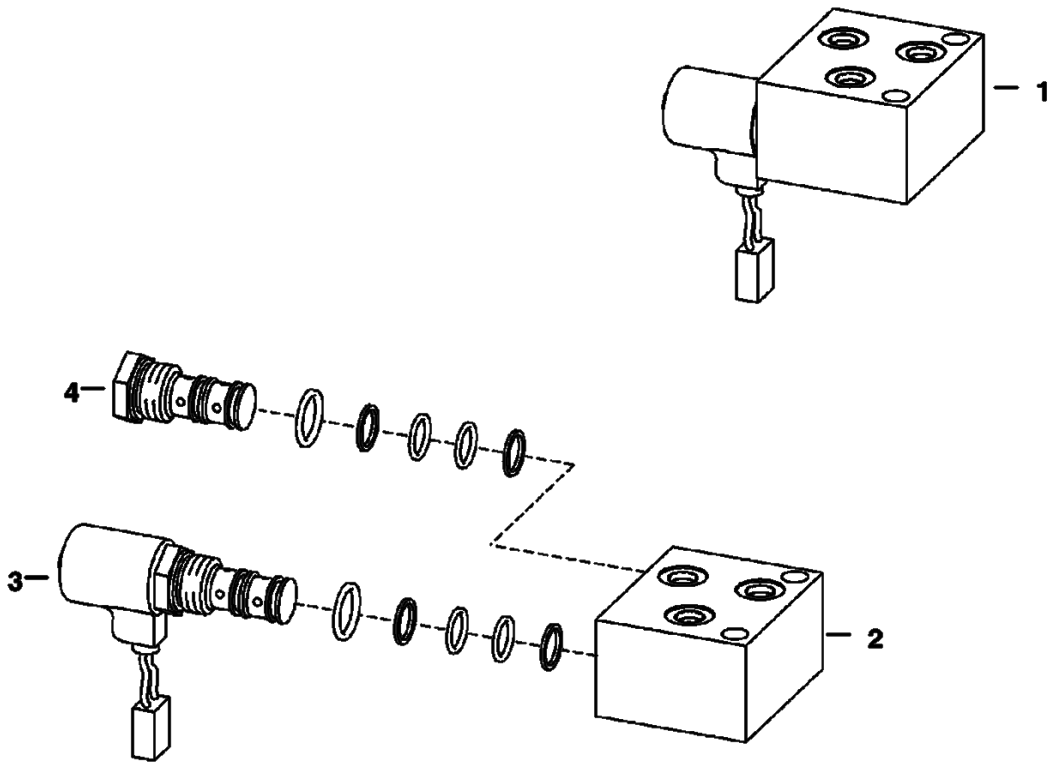

PE–1017

Page 346 - OSS# 2060759 - All rights reserved by Bobcat Company, a business unit of Ingersoll-Rand - 05/22/2008 - 07:23:42 - Produced by Ken Cook Co. with mediaioff

PRESSURE RELEASE VALVE (Cont'd)
(Front Auxiliary)

Ref No	Part Number	Description	Remarks	Serial Number	Qty
1		VALVE	NAP - .4375" threaded ports - Order 6678150 Valve & (3) of 15KV00005B Adapter - Was 6674372 [A]		1
1	6678150	VALVE	.5625" threaded ports		1
2		BLOCK	NSS		1
3		VALVE	NSS - solenoid		1
3	6675285	STEM			1
3	6676564	SEAL KIT			1
3	6672962	COIL			1
3	6676566	NUT			1
4	6675284	SHUTTLE VALVE			1
4	6657409	SEAL KIT			1

Page 347 - OSS# 2060759 - All rights reserved by Bobcat Company, a business unit of Ingersoll-Rand - 05/22/2008 - 07:23:42 - Produced by Ken Cook Co. with mediaioff

PUSH TO OPERATE KIT
(Mechanical Hand Controls)

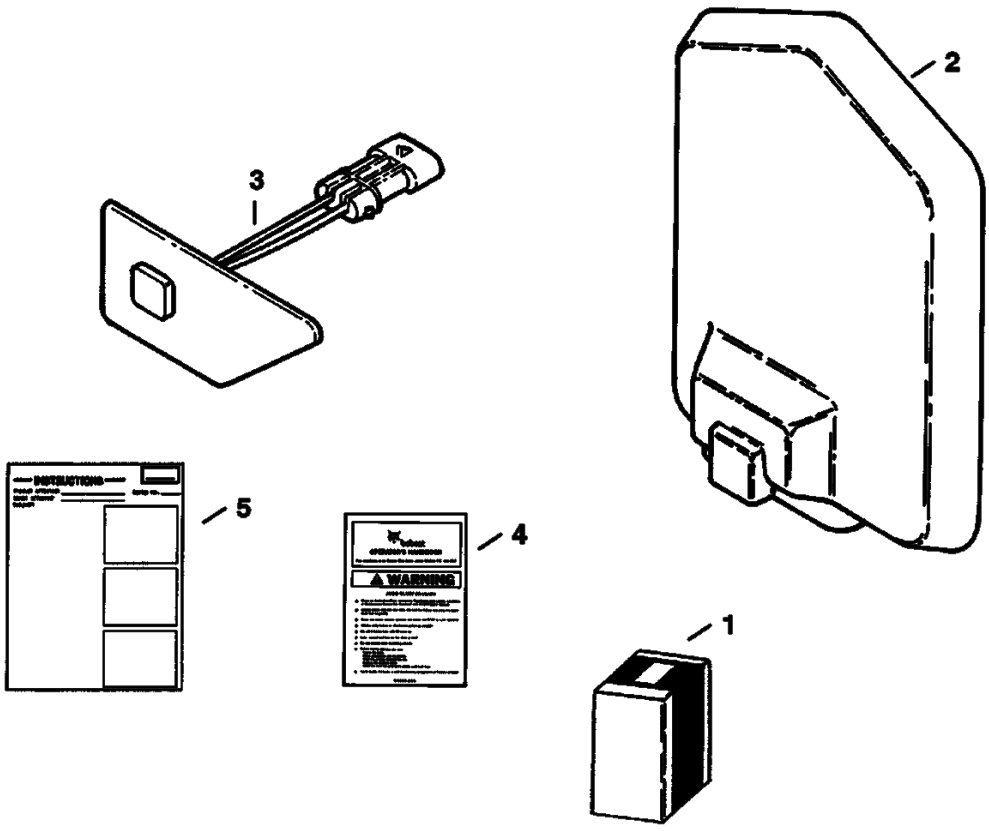

Page 348 - OSS# 2060759 - All rights reserved by Bobcat Company, a business unit of Ingersoll-Rand - 05/22/2008 - 07:23:42 - Produced by Ken Cook Co. with mediaioff

PUSH TO OPERATE KIT (Cont'd)
(Mechanical Hand Controls)

Ref No	Part Number	Description	Remarks	Serial Number	Qty
1	6717702	KIT	Ref. 2 - 5		1
2	6674222	CONTROLLER			1
3	6674220	SWITCH			1
4	6708159	HANDBOOK KIT	Operator		1
5	6900804	INSTRUCTIONS			1

Page 349 - OSS# 2060759 - All rights reserved by Bobcat Company, a business unit of Ingersoll-Rand - 05/22/2008 - 07:23:42 - Produced by Ken Cook Co. with media1off

PUSH TO OPERATE KIT
(Foot Pedals)

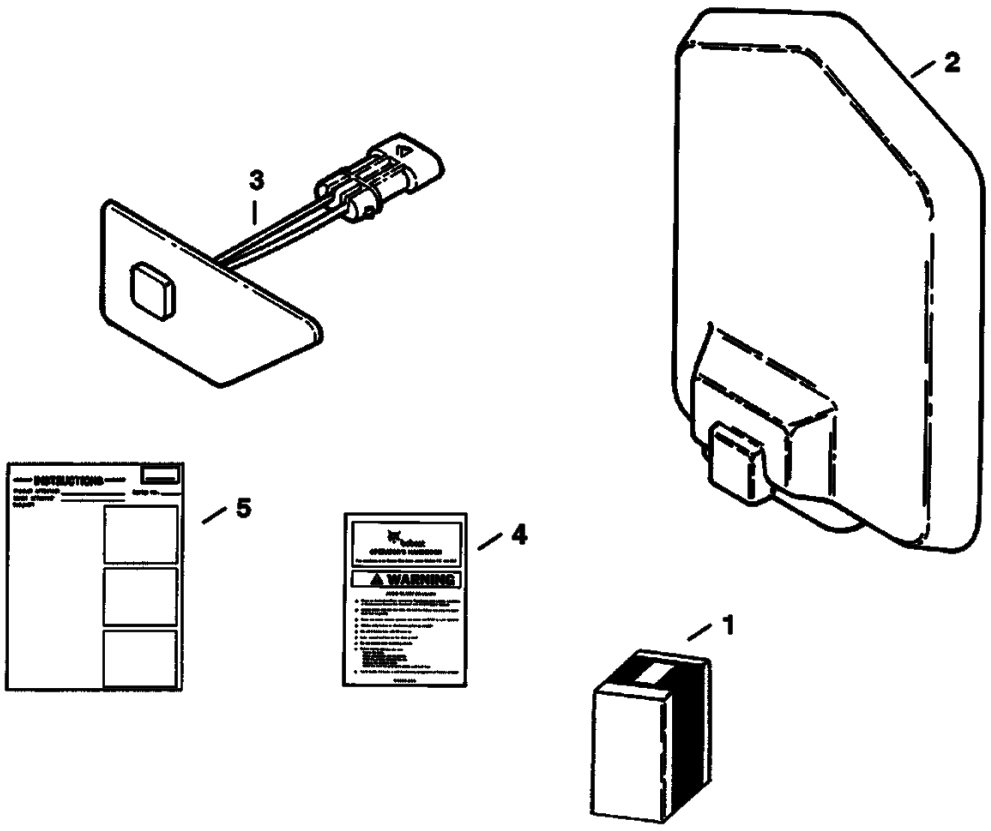

Page 350 - OS$# 2060759 - All rights reserved by Bobcat Company, a business unit of Ingersoll-Rand - 05/22/2008 - 07:23:42 - Produced by Ken Cook Co. with mediaioff

PUSH TO OPERATE KIT (Cont'd)
(Foot Pedals)

Ref No	Part Number	Description	Remarks	Serial Number	Qty
1	6717700	KIT	Ref. 2 - 5		1
2	6674222	CONTROLLER			1
3	6674220	SWITCH			1
4	6708154	KIT	Operator		1
5	6900804	INSTRUCTIONS			1

Page 351 - OSS# 2060759 - All rights reserved by Bobcat Company, a business unit of Ingersoll-Rand - 05/22/2008 - 07:23:42 - Produced by Ken Cook Co. with mediaioff

RADIATOR SCREEN KIT

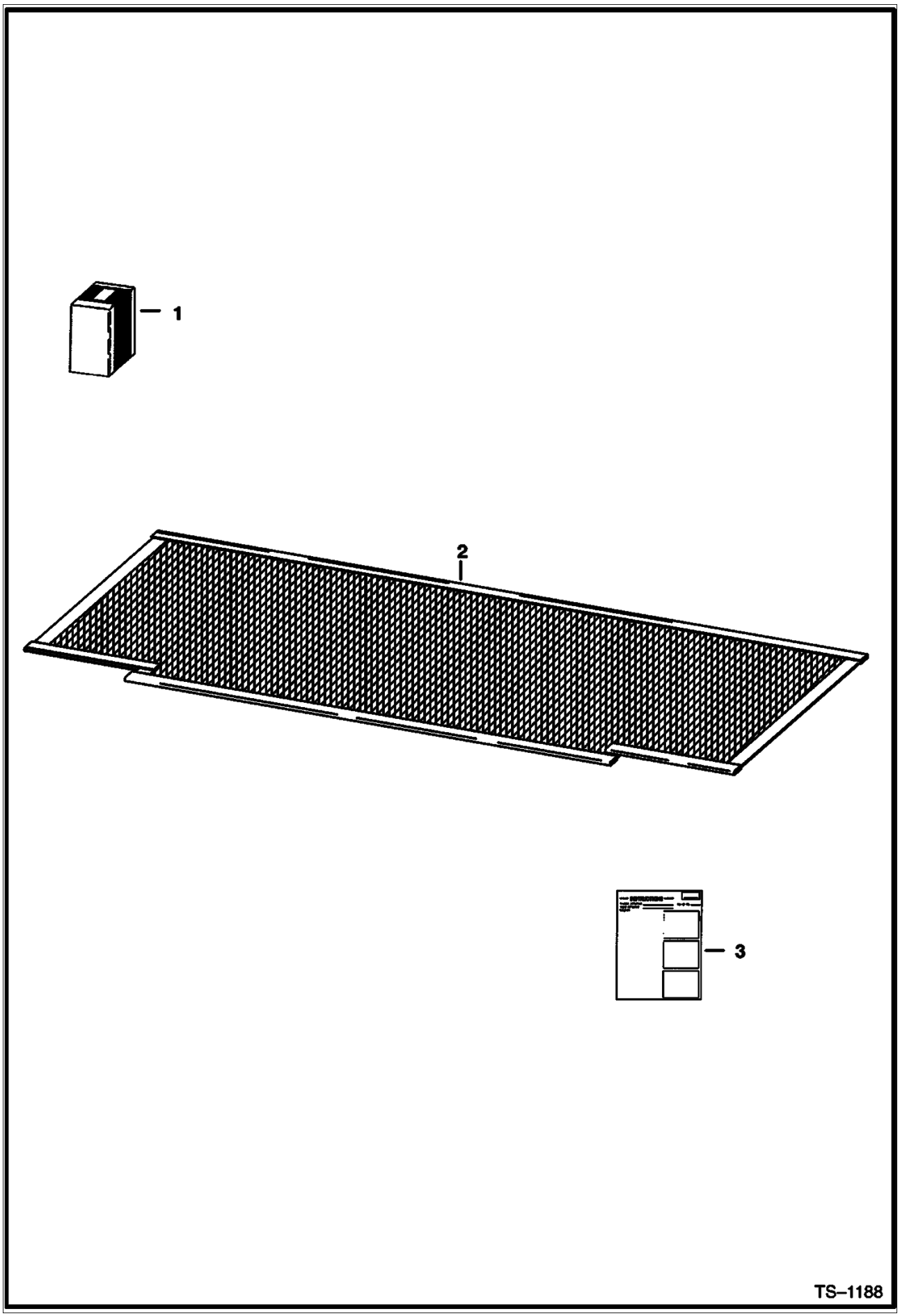

Page 352 - OSS# 2060759 - All rights reserved by Bobcat Company, a business unit of Ingersoll-Rand - 05/22/2008 - 07:23:42 - Produced by Ken Cook Co. with mediaioff

Ref No	Part Number	Description	Remarks	Serial Number	Qty
1	6706939	KIT	Ref. 2 & 3		1
2	6706285	SCREEN			1
3	6722861	INSTRUCTIONS			1

Page 353 - OSS# 2060759 - All rights reserved by Bobcat Company, a business unit of Ingersoll-Rand - 05/22/2008 - 07:23:42 - Produced by Ken Cook Co. with mediaioff

REAR AUXILIARY
(W/Pressure Relief Features & FF Couplers)

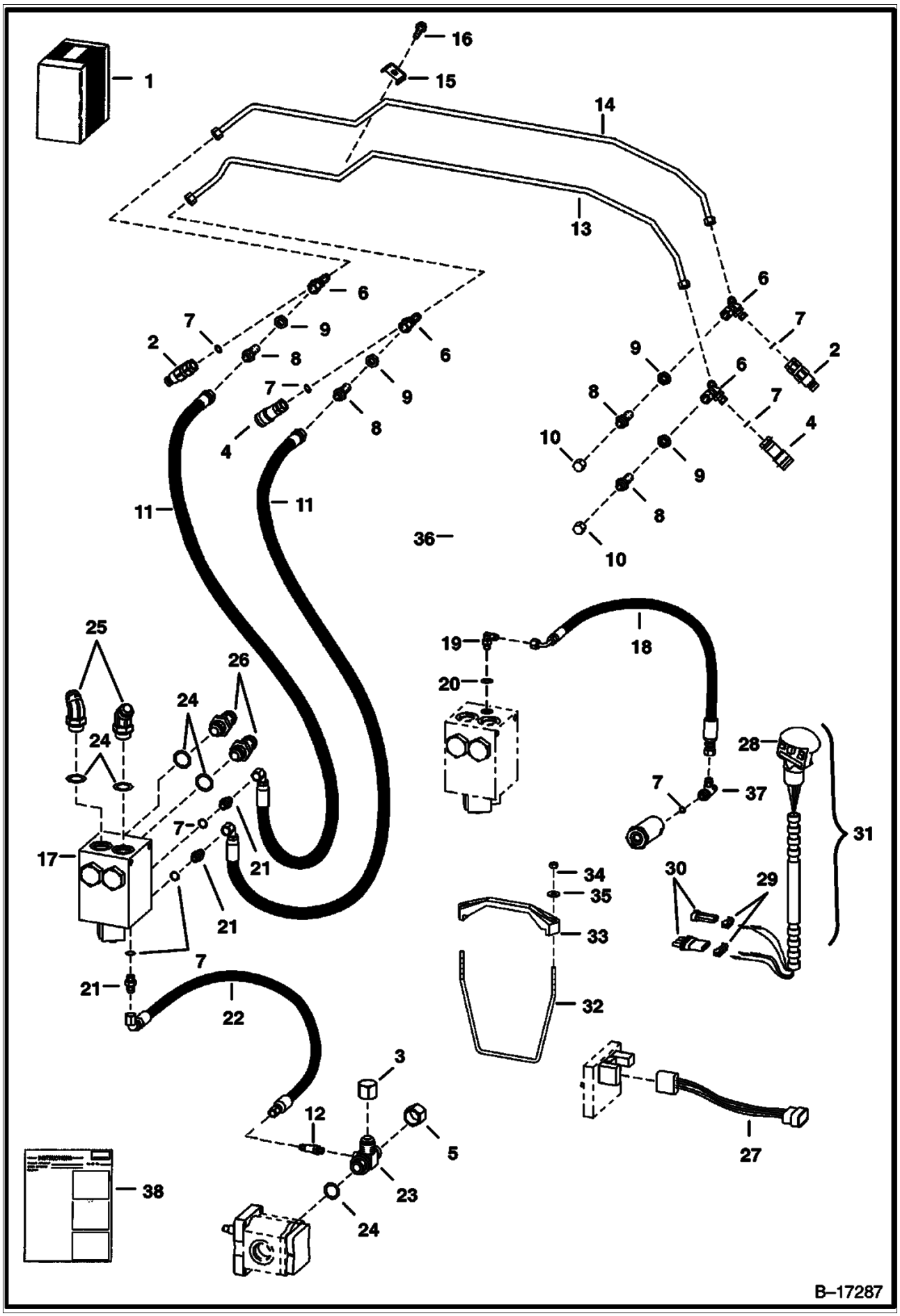

Page 354 - OSS# 2060759 - All rights reserved by Bobcat Company, a business unit of Ingersoll-Rand - 05/22/2008 - 07:23:42 - Produced by Ken Cook Co. with mediaioff

REAR AUXILIARY (Cont'd)
(W/Pressure Relief Features & FF Couplers)

Ref No	Part Number	Description	Remarks	Serial Number	Qty
1	6711676	KIT	Ref. 2 - 38 - Was SALES [D]		1
2	6667804	COUPLER	male		2
3	36K000008B	CAP	Used W/O hyd. muffler		1
4	6667803	COUPLER	female		2
5	36K000008B	CAP	Used W/hyd. muffler		1
6	6706220	TEE	W/Ref 7		4
7	79K000006B	O-RING	flat boss face		x
7	99K000006B	O-RING	tapered boss face		x
8	51E000404B	ADAPTER			4
9	61E000004B	NUT			4
10	63E000004B	PLUG			2
11	6706089	HOSE			2
12	15K000003B	CONNECTOR	W/Ref 7 flat boss face - Was 21K000005B [B]		1
12	15KN00003B	ADAPTER	W/Ref 7 tapered boss face		1
12	97K000004B	O-RING	flared end		6
13	6705358	TUBE			1
14	6705357	TUBE			1
15	6500989	CLAMP			1
16	84G003716B	BOLT			1
17		VALVE	See Illustration REAR AUXILIARY VALVE/ TS1362		1
18	6711681	HOSE			1
19	17K000003B	ELBOW	W/Ref 20 flat boss face		1
19	17KV00003B	ELBOW	W/Ref 20 tapered boss face		1
19	97K000004B	O-RING	flared end		1
20	79K000004B	O-RING	flat boss face		x
20	99K000004B	O-RING	tapered boss face		x
21	15K000005B	ADAPTER	W/Ref 7 flat boss face		3
21	15KV00005B	ADAPTER	W/Ref 7 tapered boss face		3
21	97K000006B	O-RING	flared end		3
22	6702962	HOSE			1
23	6707103	CONNECTOR	W/Ref 24		1
24	79K000012B	O-RING	flat boss face		x
24	99K000012B	O-RING	tapered boss face		x
25	18K000008B	ELBOW	W/Ref 24 flat boss face		2
25	18KV00008B	ELBOW	W/Ref 24 tapered boss face		2
25	97K000012B	O-RING	flared end		2
26	45K000008B	ADAPTER	flat boss face		2
26	45KN00008B	ADAPTER	tapered boss face		2
26	97K000012B	O-RING	flared end		2
27	6704114	HARNESS			1
28	6705921	HANDLE ASSY.	two-switch - for L.H. steering lever		1
29	6641180	LOCK	2-pin		1
29	6640700	LOCK	3-pin		1
30	6641179	CONNECTOR	2-pin		1
30	6640699	CONNECTOR	3-pin		1
31	6706566	KIT	two-switch - Ref. 28 - 30		1
32	6712640	BRACKET			2
33	6569203	CLAMP			1
34	59D000005B	NUT			2
35	25E000015B	WASHER			2
36	6710435	HARNESS			1
37	21KV00005B	TEE	W/Ref 7		1
37	97K000006B	O-RING	flared end		2
38	6724487	INSTRUCTIONS			1

Page 355 - OSS# 2060759 - All rights reserved by Bobcat Company, a business unit of Ingersoll-Rand - 05/22/2008 - 07:23:42 - Produced by Ken Cook Co. with mediaioff

REAR AUXILIARY VALVE
(For Use W/FF Couplers)

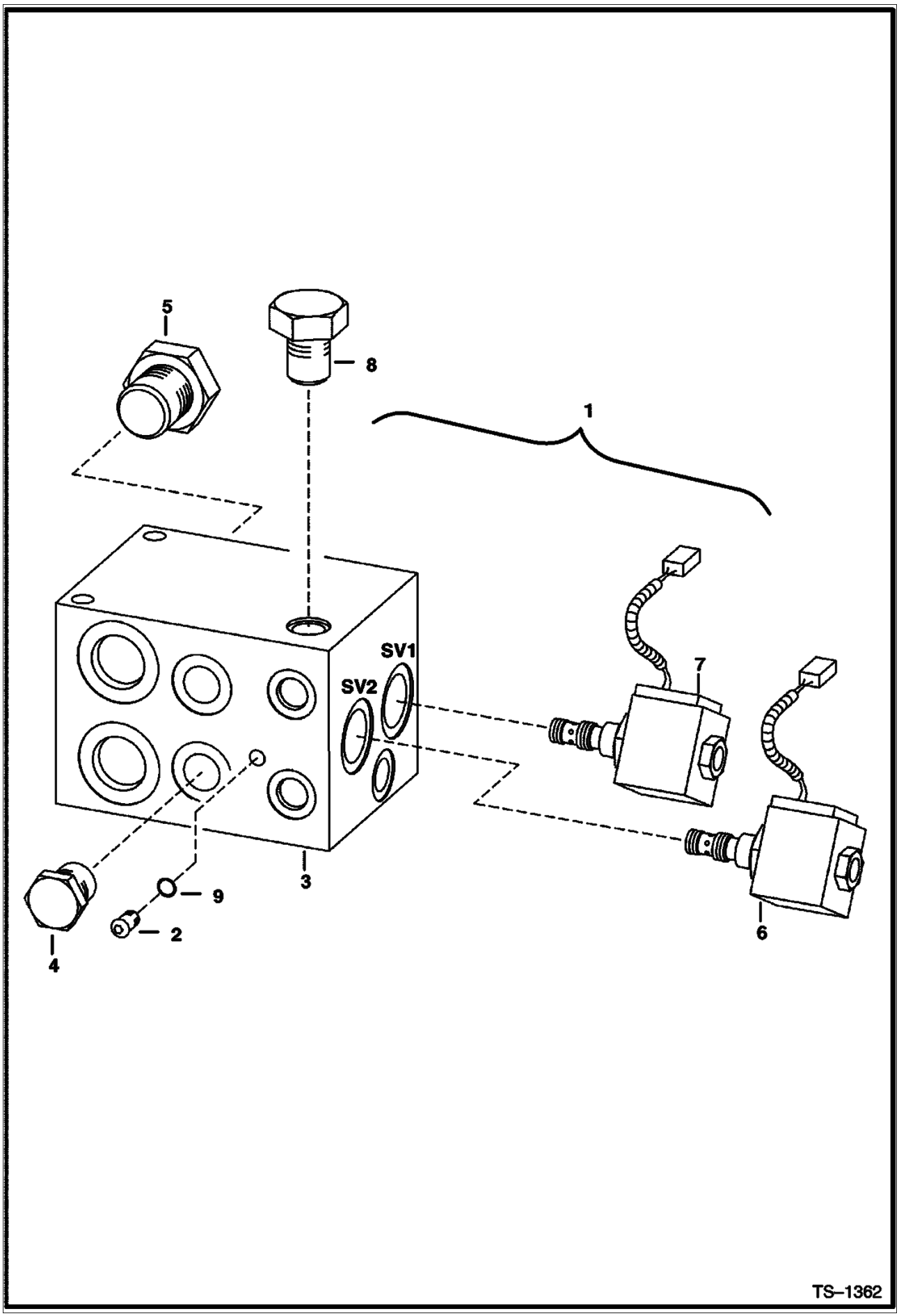

Page 356 - OSS# 2060759 - All rights reserved by Bobcat Company, a business unit of Ingersoll-Rand - 05/22/2008 - 07:23:42 - Produced by Ken Cook Co. with mediaioff

REAR AUXILIARY VALVE (Cont'd)
(For Use W/FF Couplers)

Ref No	Part Number	Description	Remarks	Serial Number	Qty
1		VALVE	NAP - diverter - silver - rear pressure release -Was 6665572 [A]		1
1	6675073	VALVE	diverter - gold - front & rear pressure release		1
2	6653490	PLUG	W/Ref 1 W/Ref 9 (NAP/6665572 Valve)		18
2	6676152	PLUG	W/Ref 1 W/Ref 9 (6675073 Valve)		27
3		BODY	NSS		1
4	6664212	CHECK VALVE			2
4	6653487	SEAL KIT			2
5	6653484	VALVE			2
5	6653485	SEAL KIT			2
6	6669218	VALVE	solenoid - W/Connector		1
6	6669190	COIL	W/Ref 1 (NAP/6665572 Valve)		1
6	6676151	COIL	W/Ref 1 (6675073 Valve)		1
6	6669188	STEM			1
6	6669217	SEAL KIT			1
7	6669219	VALVE	solenoid - W/Connector		1
7	6669190	COIL			1
7	6669189	STEM			1
7	6669216	SEAL KIT			1
8	6669187	VALVE			1
8	6653487	SEAL KIT			1
9	79K000002B	O-RING			x

Page 357 - OSS# 2060759 - All rights reserved by Bobcat Company, a business unit of Ingersoll-Rand - 05/22/2008 - 07:23:42 - Produced by Ken Cook Co. with mediaioff

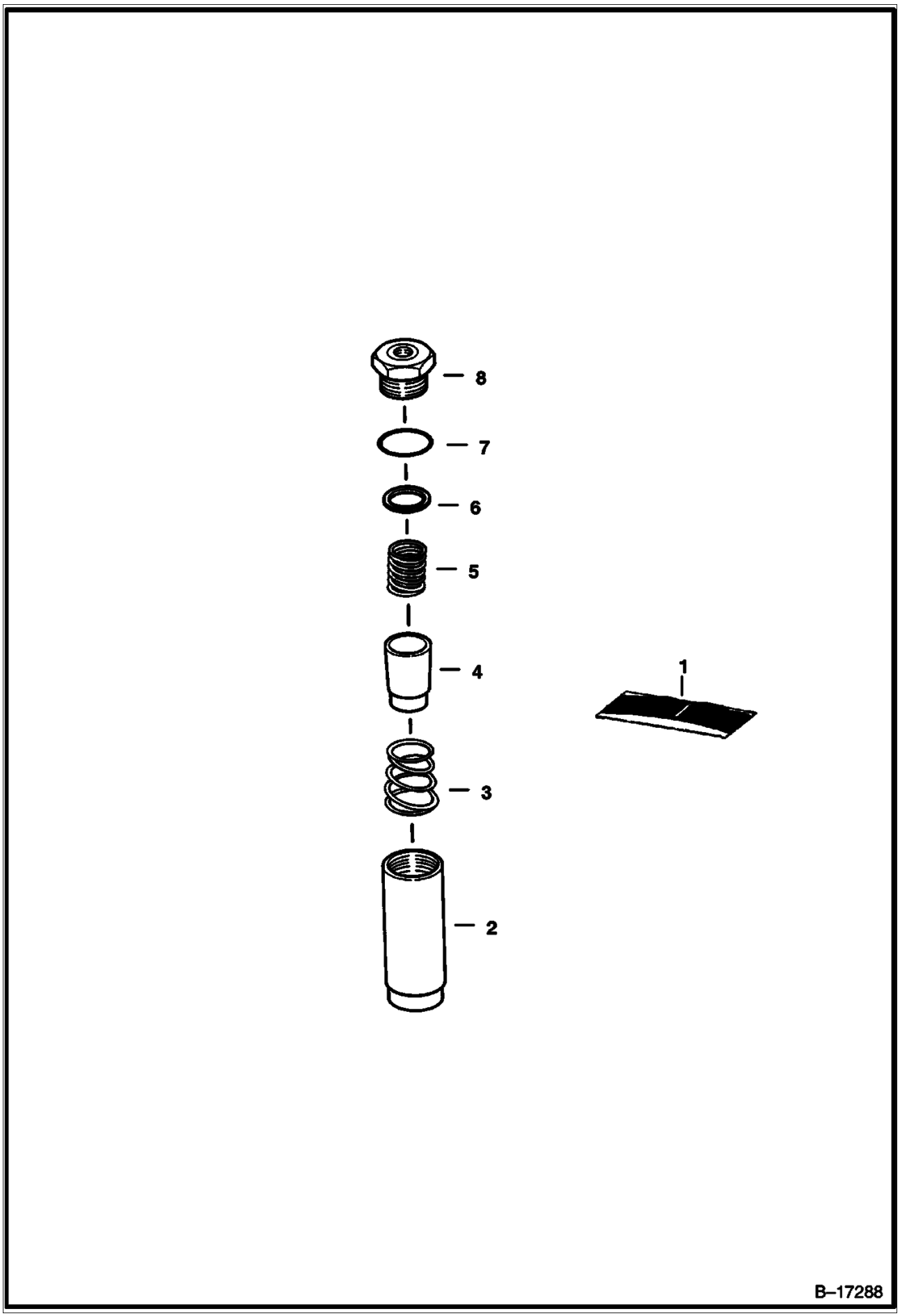

Page 358 - OSS# 2060759 - All rights reserved by Bobcat Company, a business unit of Ingersoll-Rand - 05/22/2008 - 07:23:42 - Produced by Ken Cook Co. with mediaioff

Ref No	Part Number	Description	Remarks	Serial Number	Qty
1	6568167	KIT	element - Ref. 4, 6 & 7		1
2	6630521	FILTER	Ref 3 Ref 4 Ref 5 in-line		1
3	6630616	SPRING			1
4		ELEMENT	Order Ref 1 NSS		1
5	6630620	SPRING			1
6	6630619	GASKET			1
7	58K000122B	O-RING			1
8	6630618	PLUG			1

Page 359 - OSS# 2060759 - All rights reserved by Bobcat Company, a business unit of Ingersoll-Rand - 05/22/2008 - 07:23:42 - Produced by Ken Cook Co. with media1off

REAR DOOR LOCK
(One Piece Rear Door)

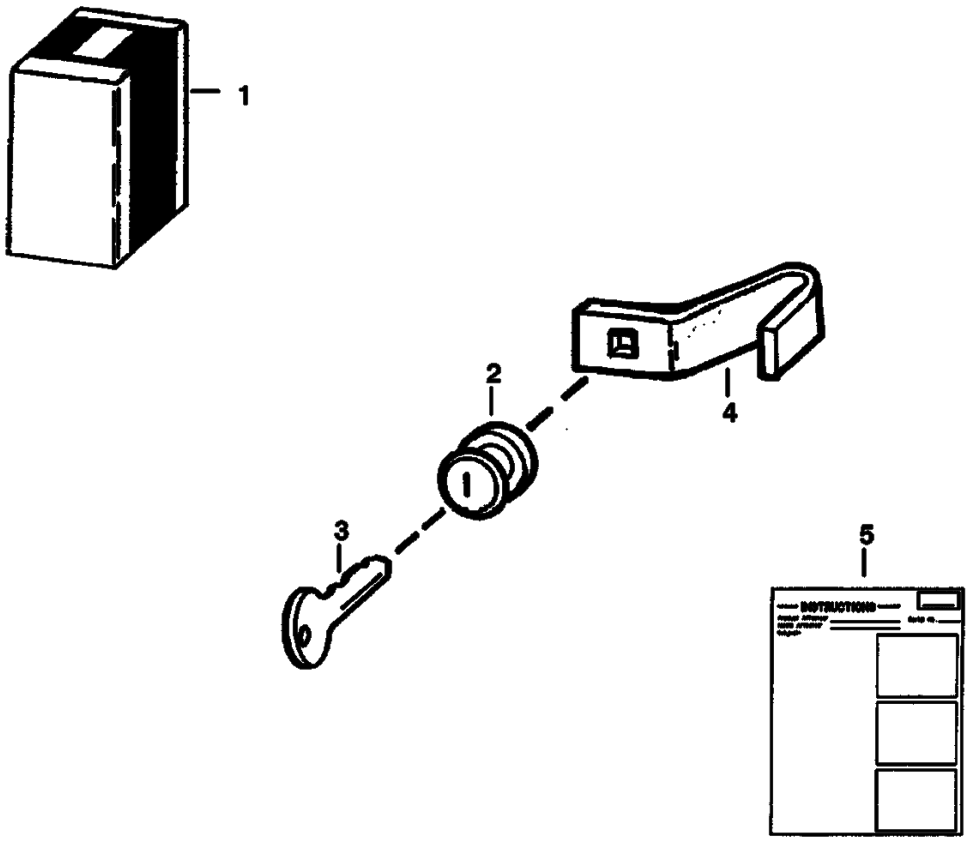

B–12953

Page 360 - OSS# 2060759 - All rights reserved by Bobcat Company, a business unit of Ingersoll-Rand - 05/22/2008 - 07:23:42 - Produced by Ken Cook Co. with mediaioff

REAR DOOR LOCK (Cont'd)
(One Piece Rear Door)

Ref No	Part Number	Description	Remarks	Serial Number	Qty
1	6732001	KIT	lock - Ref. 2-5 -Was 6714973 [A]		1
2	6670726	LOCK			1
3	6672345	KEY	Not in Kit - for earlier loaders		1
3	6709527	KEY	ignition		1
4	6714037	LATCH	Use W/6711524 Rear Door		1
4	6729688	LATCH	Use W/6729991 Rear Door		1
5	6901656	INSTRUCTIONS	INSTRUCTIONS Was 6570762 [A]		1

Page 361 - OSS# 2060759 - All rights reserved by Bobcat Company, a business unit of Ingersoll-Rand - 05/22/2008 - 07:23:42 - Produced by Ken Cook Co. with media1off

REAR WIPER KIT

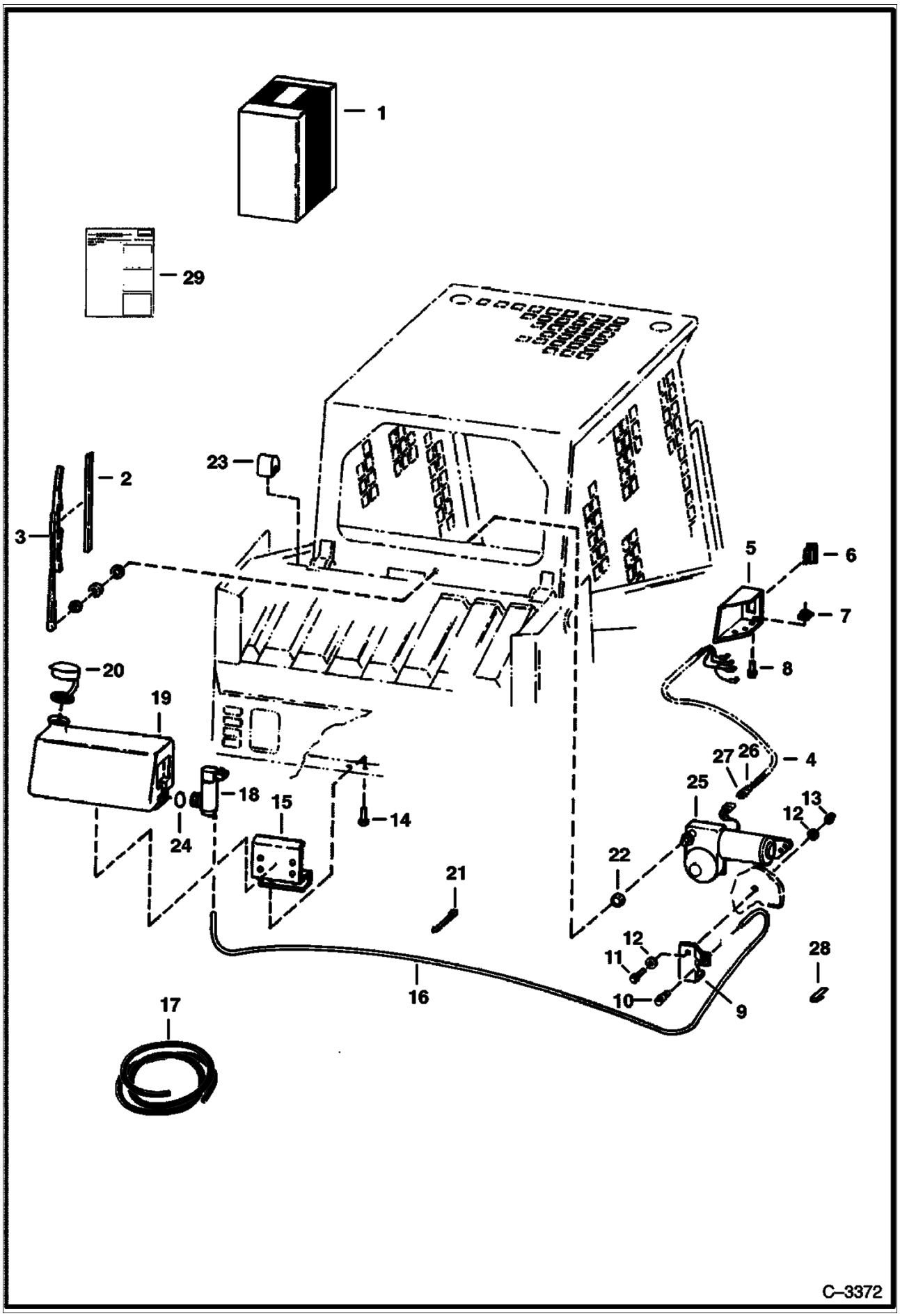

Page 362 - OSS# 2060759 - All rights reserved by Bobcat Company, a business unit of Ingersoll-Rand - 05/22/2008 - 07:23:42 - Produced by Ken Cook Co. with mediaIoff

REAR WIPER KIT (Cont'd)

Ref No	Part Number	Description	Remarks	Serial Number	Qty
1		KIT	rear wiper - Ref. 2 - 23 & 25 - 29		1
2	6665688	BLADE			1
3	6665687	ARM			1
4	6712260	HARNESS	W/10 pin connector-W/(2) diodes		1
5	6708280	MOUNT	switch		1
6	6668817	SWITCH	rocker		1
7	6660988	RETAINER			2
8	35C000412B	BOLT			2
9	6708286	MOUNT	nozzle		1
10	6664555	NOZZLE			1
11	17C000514B	BOLT			1
12	25E000015B	WASHER			2
13	83D000005B	NUT			1
14	84G003710B	BOLT			2
15	6708044	MOUNT	tank		1
16		HOSE	Order Ref 17 NAP - 84"(2133.6mm) long		1
17	6708310	HOSE	bulk - Sold Per Foot - clear - 0.15"(3.81mm) I.D.		x
18	6664554	PUMP			1
19	6708035	TANK			1
20	6665605	CAP			1
21	6610510	TIE			5
22	6708069	BUSHING			1
23	6708272	STOP	cab		2
24	6666766	GROMMET	Not in Kit		1
25	6665602	MOTOR			1
26	6641179	CONNECTOR	2-pin		1
27	6641180	LOCK	2-pin		1
28	6669308	RETAINER			2
29		INSTRUCTIONS			1

Page 363 - OSS# 2060759 - All rights reserved by Bobcat Company, a business unit of Ingersoll-Rand - 05/22/2008 - 07:23:42 - Produced by Ken Cook Co. with mediaioff

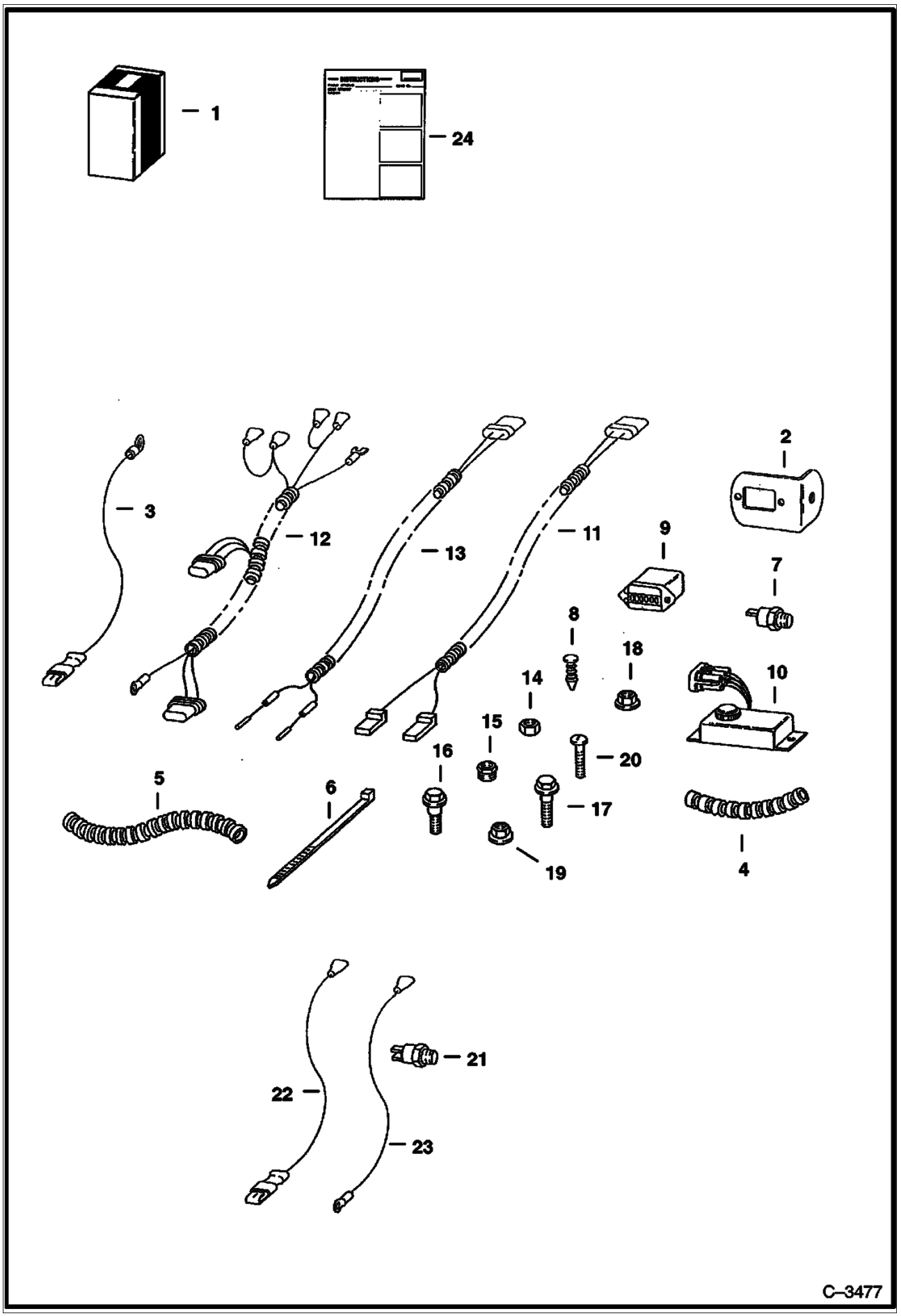

Page 364 - OSS# 2060759 - All rights reserved by Bobcat Company, a business unit of Ingersoll-Rand - 05/22/2008 - 07:23:42 - Produced by Ken Cook Co. with mediaIoff

Ref No	Part Number	Description	Remarks	Serial Number	Qty
1	6712750	KIT	W/Ref. 2-24		1
2	6552906	BRACKET			1
3	6567968	WIRE	assy.		1
3	614142B	SLEEVE			1
3	733611B	TERMINAL	female		1
3	6517924	CONNECTOR			1
3	30R000107B	TERMINAL			1
4		CONDUIT	Order Ref 5 NAP - 76.50" (1943,1 mm) long		1
5	6584978	CONDUIT	bulk - Sold Per Foot		1
6	6610510	TIE			12
7	6630821	SWITCH	temp.		1
8	6664221	RETAINER			1
9	6664886	HOURMETER			1
10	6669420	CONTROLLER			1
11	6700228	HARNESS	Hourmeter		1
11	733611B	TERMINAL	female		1
11	6517924	CONNECTOR			1
11	6640690	PIN	male		x
11	6641176	SEAL	cable		x
11	6641179	CONNECTOR			x
11	6641180	LOCK			x
12	6714038	HARNESS			1
12	733616	TERMINAL	male		x
12	6640691	PIN	female		x
12	6641176	SEAL	cable		x
12	6641178	CONNECTOR			x
12	6641180	LOCK			x
12	6641181	LOCK			x
13	6714039	HARNESS			1
13	6640690	PIN	male		x
13	6641176	SEAL	cable		x
13	6641179	CONNECTOR			x
13	6641180	LOCK			x
14	12D000006B	NUT			2
15	19F000005B	REDUCER			1
16	35C000408B	BOLT			2
17	35C000716B	BOLT			1
18	55D000004B	NUT			2
19	55D000007B	NUT			1
20	85G000608B	SCREW			2
21	6671964	SENDER	800 Models only		1
22	6714990	WIRE	800 Models only		1
23	6714991	WIRE	800 Models only		1
24	6900133	INSTRUCTIONS			1

Page 365 - OSS# 2060759 - All rights reserved by Bobcat Company, a business unit of Ingersoll-Rand - 05/22/2008 - 07:23:42 - Produced by Ken Cook Co. with mediaioff

SEAT
(Suspension - Grammer)

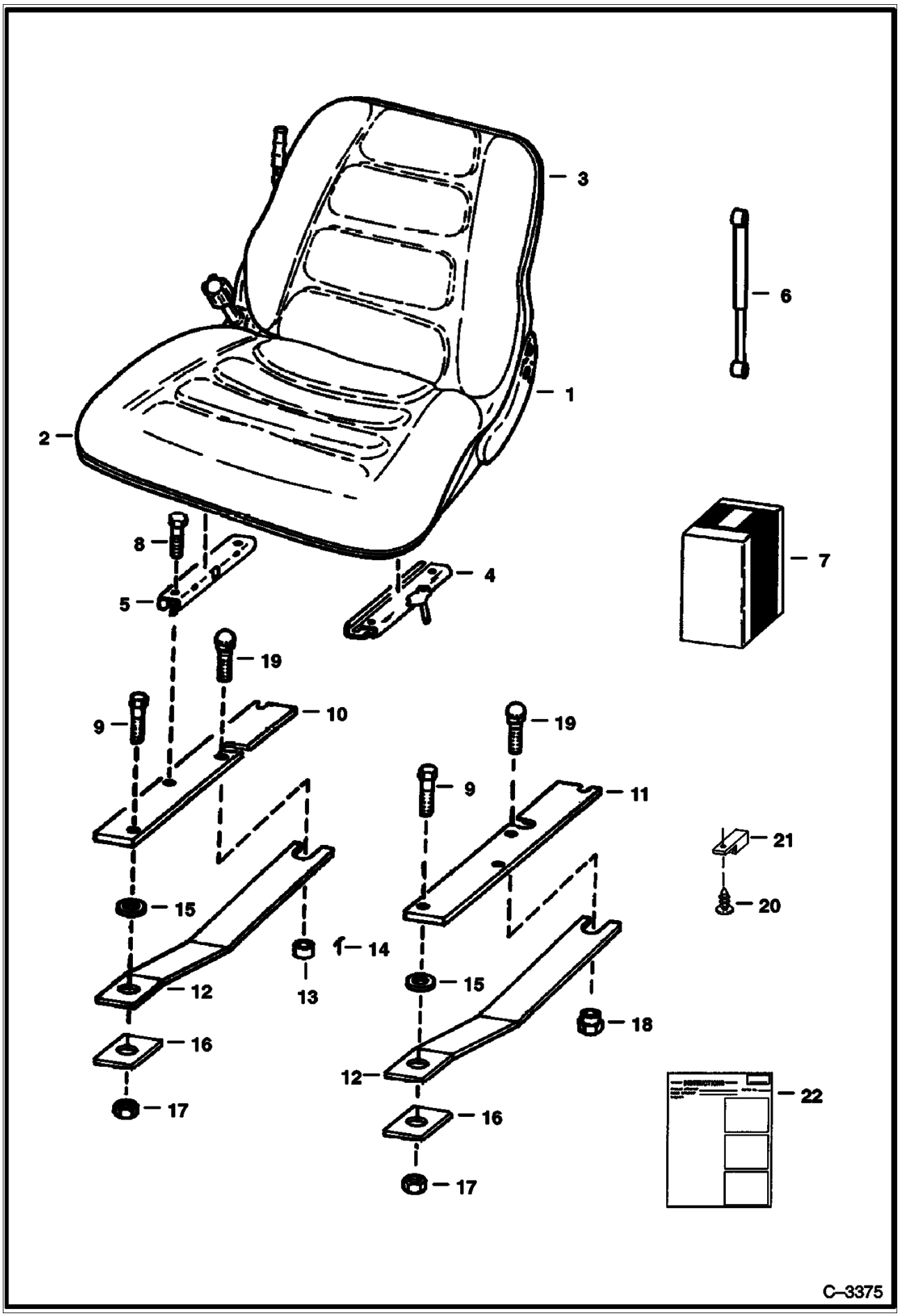

Page 366 - OSS# 2060759 - All rights reserved by Bobcat Company, a business unit of Ingersoll-Rand - 05/22/2008 - 07:23:42 - Produced by Ken Cook Co. with mediaIoff

SEAT (Cont'd)
(Suspension - Grammer)

Ref No	Part Number	Description	Remarks	Serial Number	Qty
1	6632388	SEAT			1
2	3737010B	CUSHION	seat		1
3	3737081B	CUSHION	backrest		1
4	3737000B	TRACK	W/Adjusting Handle		1
5	3737001B	TRACK	W/O Adjusting Handle		1
6	6660348	GAS SPRING			1
7	6708523	KIT	seat mount - Ref. 9 - 11, 16 & 19 - 22 - used to relocate seat sensor forward a distance of 4.6"(116,8 mm)		1
8	17C000512B	BOLT			4
9	17C000508B	BOLT			4
10	6712183	MOUNT	R.H.		1
11	6712186	MOUNT	L.H.		1
12	6706966	SPRING	plate		2
13	6710751	BUSHING	spacer		1
14	6664881	KEY	magnet bushing		1
15	6706890	WASHER			2
16	6710622	WASHER	square		2
17	61D000005B	NUT			2
18	6707319	NUT	spacer		1
19	37C000516B	BOLT	carriage		2
20	6664221	RETAINER			1
21	6665000	CLIP			1
22	6724161	INSTRUCTIONS			1

Page 367 - OSS# 2060759 - All rights reserved by Bobcat Company, a business unit of Ingersoll-Rand - 05/22/2008 - 07:23:42 - Produced by Ken Cook Co. with media1off

SEAT
(Suspension - Michigan)

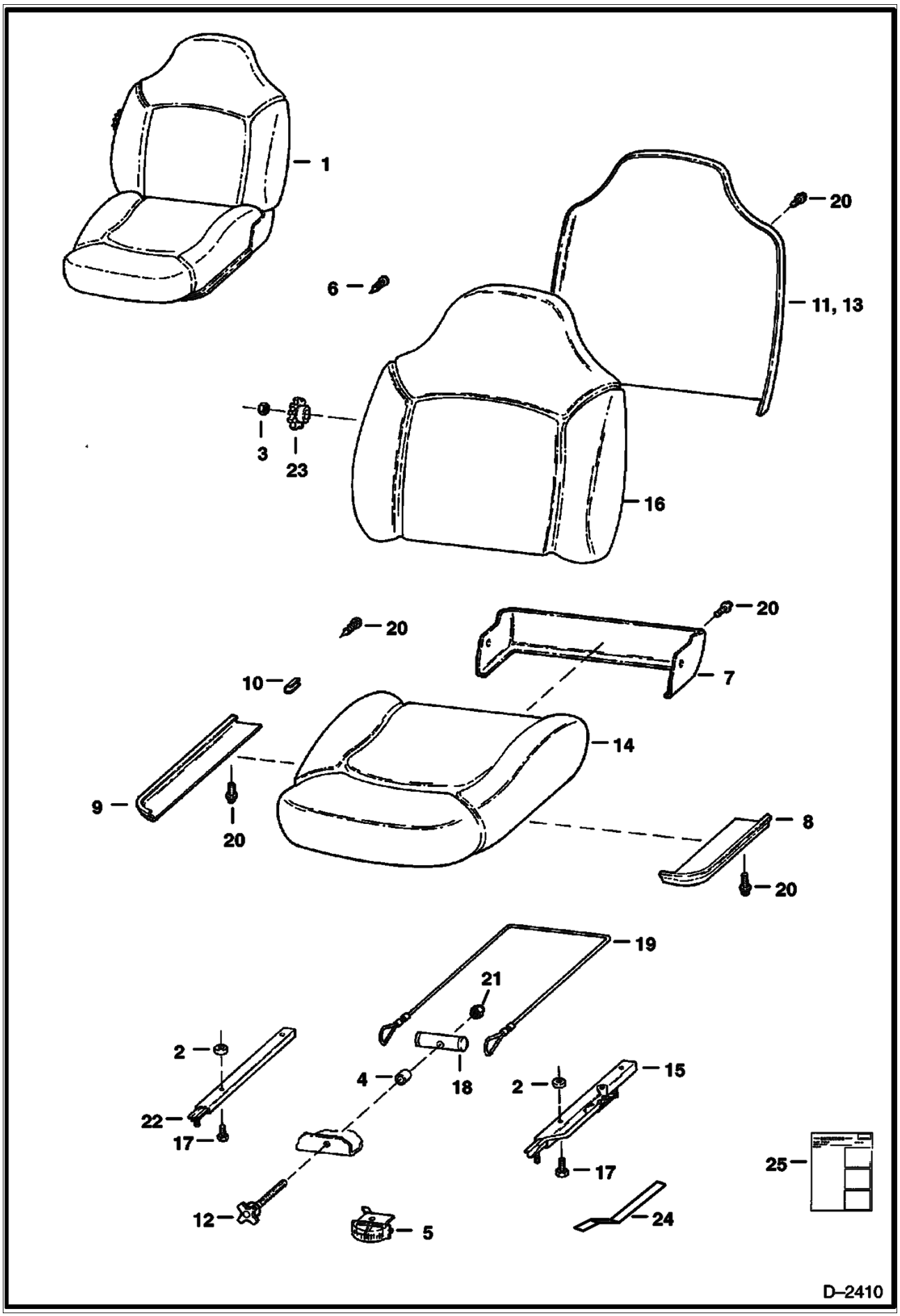

Page 368 - OSS# 2060759 - All rights reserved by Bobcat Company, a business unit of Ingersoll-Rand - 05/22/2008 - 07:23:42 - Produced by Ken Cook Co. with mediaioff

SEAT (Cont'd)
(Suspension - Michigan)

Ref No	Part Number	Description	Remarks	Serial Number	Qty
1	6674019	SEAT	& Ref 24 & Ref 25 REF. 2 - 23 - IF LOADER IS EQUIPPED W/SEAT SENSOR - WAS 6670113 [A]		1
2	6672715	SPACER			4
3	6672738	NUT			1
4	6672717	SPACER			1
5	6672718	INDICATOR			1
6	6672719	CLIP			7
7	6672720	COVER			1
8	6672721	FENDER	L.H.		1
9	6672722	FENDER	R.H.		1
10	6672723	CLIP			2
11	6672724	PANEL			1
12	6672725	KNOB			1
13	6672726	FRAME			1
14	6672727	CUSHION	seat		1
15		ADJUSTER	NAP - L.H. - W/10"(254 mm) Latch - Was 6672728 [A]		1
15	6674013	TRACK	L.H. - W/8"(203,2 mm) Latch		1
16	6672729	CUSHION	back		1
17	6672730	BOLT			4
18	6672731	BAR			1
19	6672732	CABLE			2
20	6672733	BOLT			14
21	6672734	NUT			1
22	6669089	TRACK	Was 6672735 [A]		1
23	6674263	KNOB	Was 6672737 [A]		1
23	6672736	DECAL			1
24	6706966	SPRING	PLATE		1
25	6724017	INSTRUCTIONS			1

Page 369 - OSS# 2060759 - All rights reserved by Bobcat Company, a business unit of Ingersoll-Rand - 05/22/2008 - 07:23:42 - Produced by Ken Cook Co. with mediaioff

SEAT
(Suspension - Milsco)

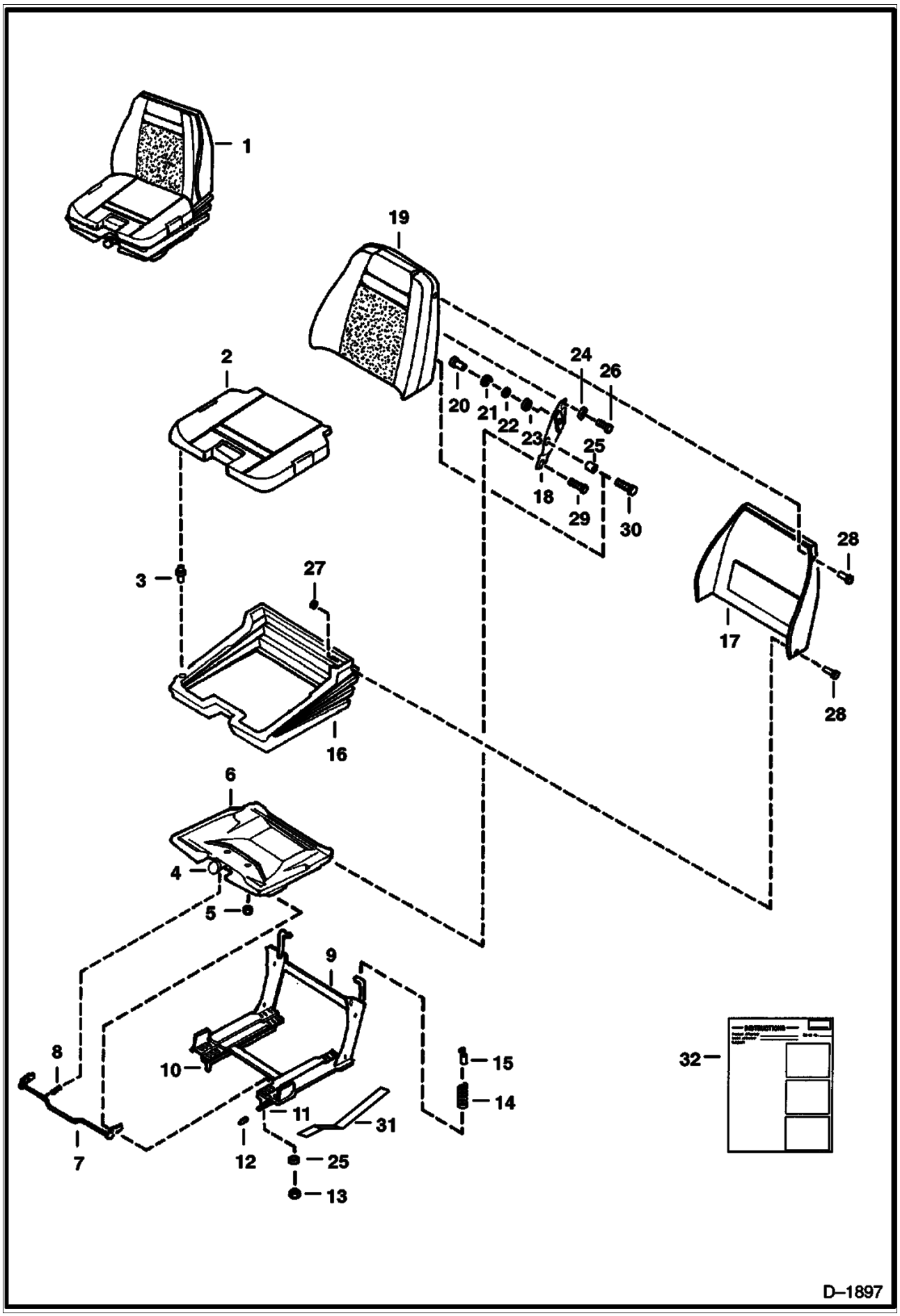

Page 370 - OSS# 2060759 - All rights reserved by Bobcat Company, a business unit of Ingersoll-Rand - 05/22/2008 - 07:23:42 - Produced by Ken Cook Co. with mediaioff

SEAT (Cont'd)
(Suspension - Milsco)

Ref No	Part Number	Description	Remarks	Serial Number	Qty
1		SEAT	& Ref 31 & Ref 32 See Illustration SEAT/ D2410 NAP - REF. 2 - 32 - ORDER 6674019 SEAT - IF LOADER IS EQUIPPED W/SEAT SENSOR -WAS 6647432 [A]		1
2	6650226	SEAT CUSHION	W/Ref 3		1
3	6650231	CLIP			x
4	6650219	KNOB KIT	W/Nut, Bushing		1
5	6650241	PUSH NUT			2
6	6650230	SEAT PAN	W/Mounting Hardware		1
7	6650221	LATCH TILT	W/Ref 8 W/Mounting Hardware		1
8	6650229	SPRING			1
9		FRAME	NSS		1
10	6650228	TRACK			1
11	6599779	ADJUSTER			1
12	6650242	TIP			1
13	61D000005B	NUT			4
14	6650222	SPRING			1
15	6650223	CABLE			1
16	6650243	BOOT			1
17	6650220	SHROUD	W/Mounting Hardware		1
18	6650224	SUPPORT	R.H. & L.H. Backrest		1
19	6650225	BACK CUSHION	W/Mounting Hardware		1
20	6650244	NUT			2
21	6650245	WASHER			2
22	6650246	WASHER			2
23	6650247	WASHER			2
24	6650248	SPACER			2
25	6650249	SPACER			2
26	17C000510B	BOLT			4
27	6650250	WASHER			5
28	6650251	CLIP			7
29	6668717	SCREW	shoulder		4
30	31C000510B	BOLT			2
31	6706966	SPRING	PLATE		1
32	6724017	INSTRUCTIONS			1

Page 371 - OSS# 2060759 - All rights reserved by Bobcat Company, a business unit of Ingersoll-Rand - 05/22/2008 - 07:23:42 - Produced by Ken Cook Co. with mediaioff

SEAT BELT
(3" Wide)

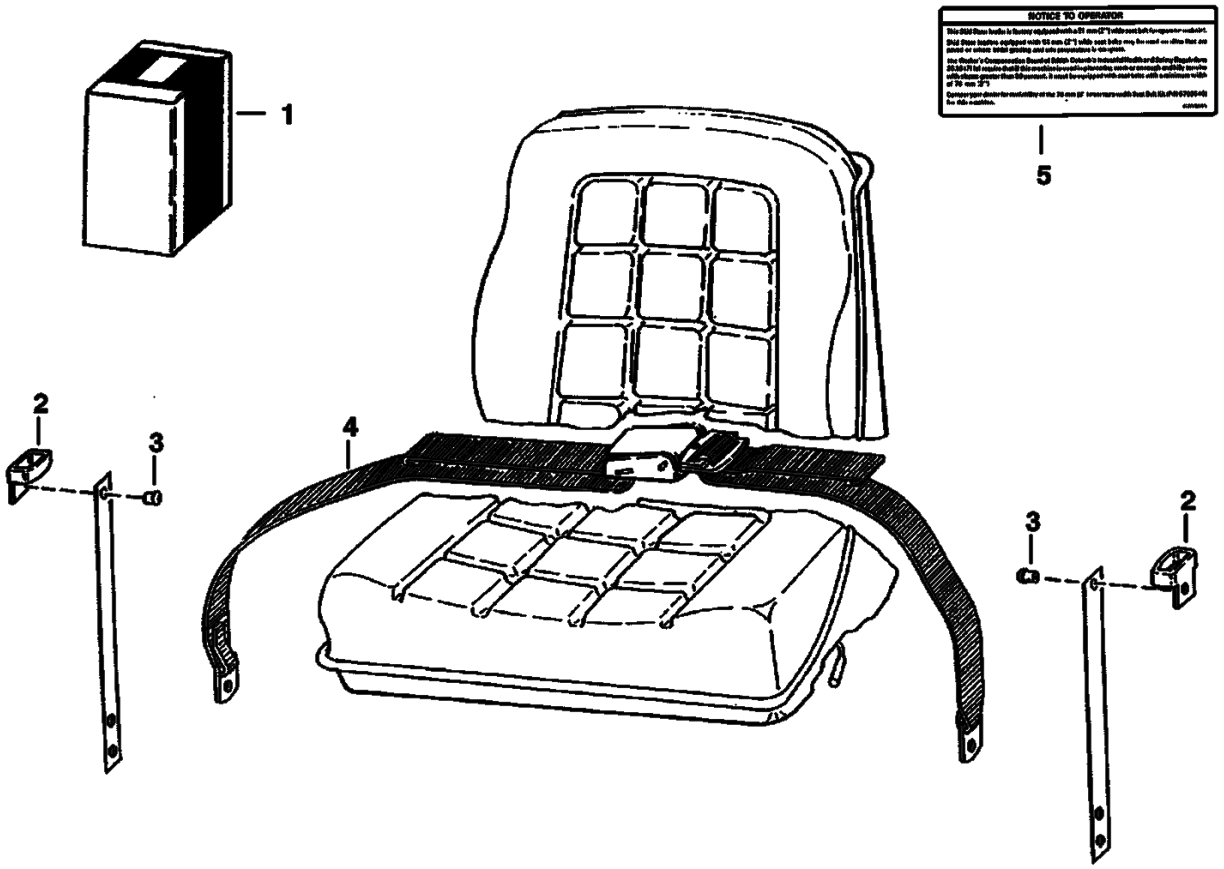

NOTE: Complies with British Columbia Industrial Health and Safety Regulations 26.16 (7) (a).

B–13601

Page 372 - OSS# 2060759 - All rights reserved by Bobcat Company, a business unit of Ingersoll-Rand - 05/22/2008 - 07:23:42 - Produced by Ken Cook Co. with mediaioff

SEAT BELT (Cont'd)
(3" Wide)

Ref No	Part Number	Description	Remarks	Serial Number	Qty
1	6703640	KIT	W/Ref. 2-5		1
2	6703703	GUIDE			2
3	6512797	RIVET			4
4	6659999	BELT			1
5	6703641	DECAL			1

Page 373 - OSS# 2060759 - All rights reserved by Bobcat Company, a business unit of Ingersoll-Rand - 05/22/2008 - 07:23:42 - Produced by Ken Cook Co. with media1off

SEAT BAR KIT
(Forward Position Compression Spring)

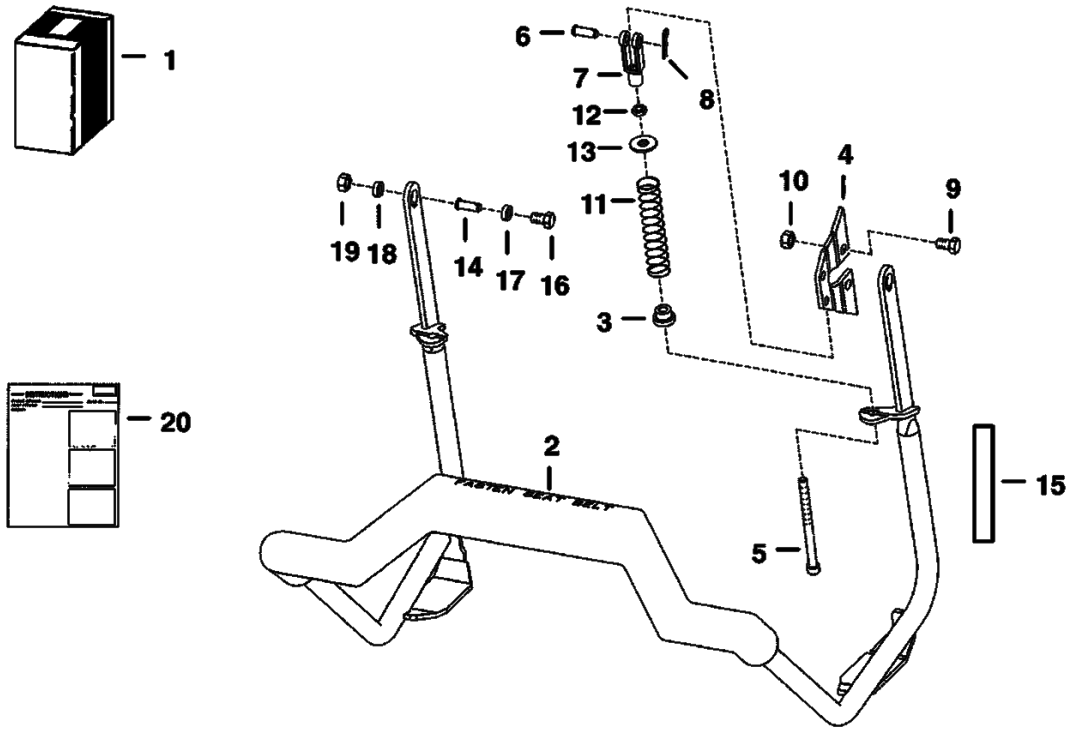

Page 374 - OSS# 2060759 - All rights reserved by Bobcat Company, a business unit of Ingersoll-Rand - 05/22/2008 - 07:23:42 - Produced by Ken Cook Co. with mediaioff

SEAT BAR KIT (Cont'd)
(Forward Position Compression Spring)

Ref No	Part Number	Description	Remarks	Serial Number	Qty
1	6714285	KIT			1
2	6716779	SEAT BAR	Was 6714282 [A]		1
3	6710659	BUSHING			4
4	6710660	MOUNT			2
5	6711897	BOLT			2
6	4F006106B	PIN	clevis		2
7	6713589	CLEVIS			2
8	6631418	PIN			2
9	17C000712B	BOLT			2
10	91D000007B	NUT			2
11	6701535	SPRING			2
12	8D000006B	NUT	jam		2
13	6571991	GUIDE			2
14	6664882	BUSHING			2
15	6714629	DECAL			1
16	17C000612B	BOLT			2
17	25E000017B	WASHER			2
18	6706962	BUSHING			1
19	35C000608B	BOLT			2
20	6900328	INSTRUCTIONS			1

Page 375 - OSS# 2060759 - All rights reserved by Bobcat Company, a business unit of Ingersoll-Rand - 05/22/2008 - 07:23:42 - Produced by Ken Cook Co. with mediaioff

SEAT KIT
(Side Pivot) (For Standard & Suspension Seats)

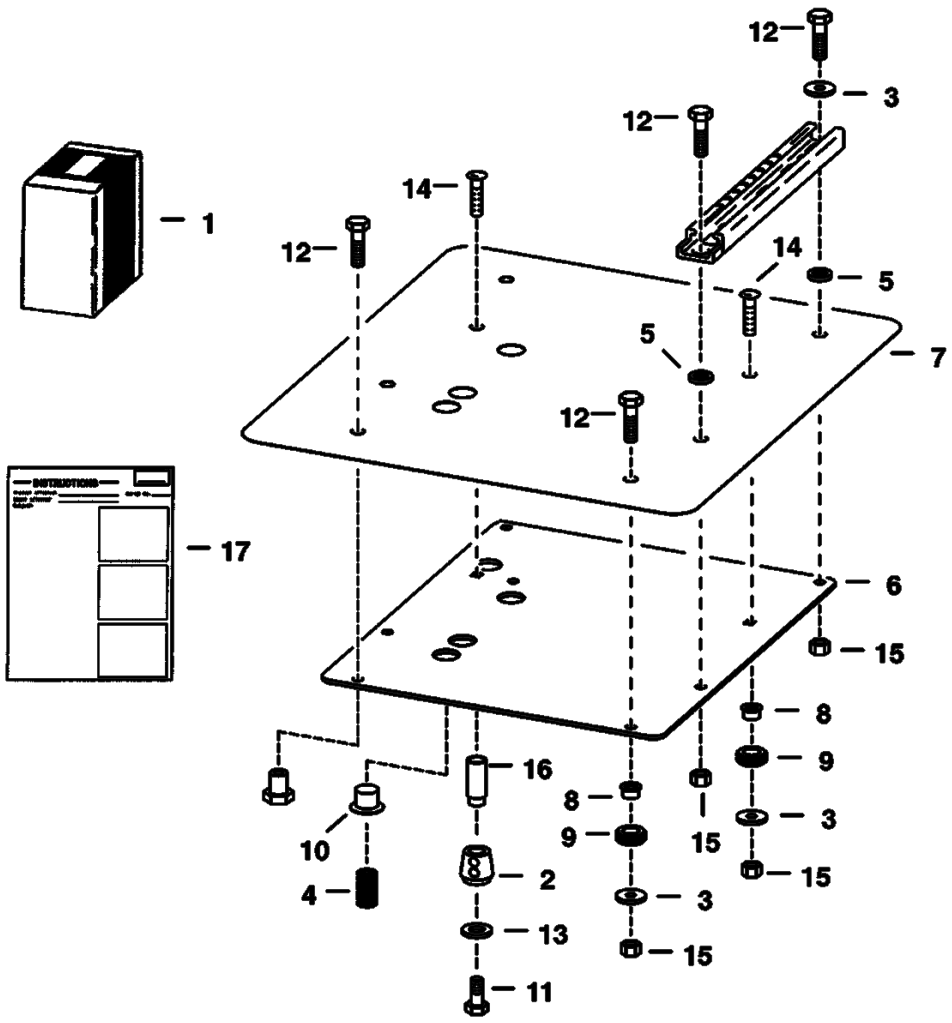

MC–2108

Page 376 - OSS# 2060759 - All rights reserved by Bobcat Company, a business unit of Ingersoll-Rand - 05/22/2008 - 07:23:42 - Produced by Ken Cook Co. with mediaioff

SEAT KIT (Cont'd)
(Side Pivot) (For Standard & Suspension Seats)

Ref No	Part Number	Description	Remarks	Serial Number	Qty
1		KIT	See Illustration PUSH TO OPERATE KIT/ B15147 See Illustration PUSH TO OPERATE KIT/ B15147A NAP - SIDE PIVOT SEAT - REF. 2-17 - ORDER APPROPRIATE PUSH TO OPERATE KIT - WAS 6708913 A]		1
2	6666608	BUSHING	magnet		1
3	6701174	WASHER			4
4	6702430	SPRING			3
5	6706890	WASHER			4
6		MOUNT	NAP - seat - Was 6708447 [A]		1
7	6708460	COVER	mount		1
8	6708465	BUSHING	seat		2
9	6708622	GROMMET			2
10	6708680	GUIDE	spring		3
11	17C000508B	BOLT			1
12	17C000516B	BOLT			6
13	25E000016B	WASHER			1
14	37C000516B	BOLT			2
15	61D000005B	NUT			6
16	6710751	BUSHING	spacer		1
17	6724258	INSTRUCTIONS			1

Page 377 - OSS# 2060759 - All rights reserved by Bobcat Company, a business unit of Ingersoll-Rand - 05/22/2008 - 07:23:42 - Produced by Ken Cook Co. with media1off

SEAT RAIL COVER KIT

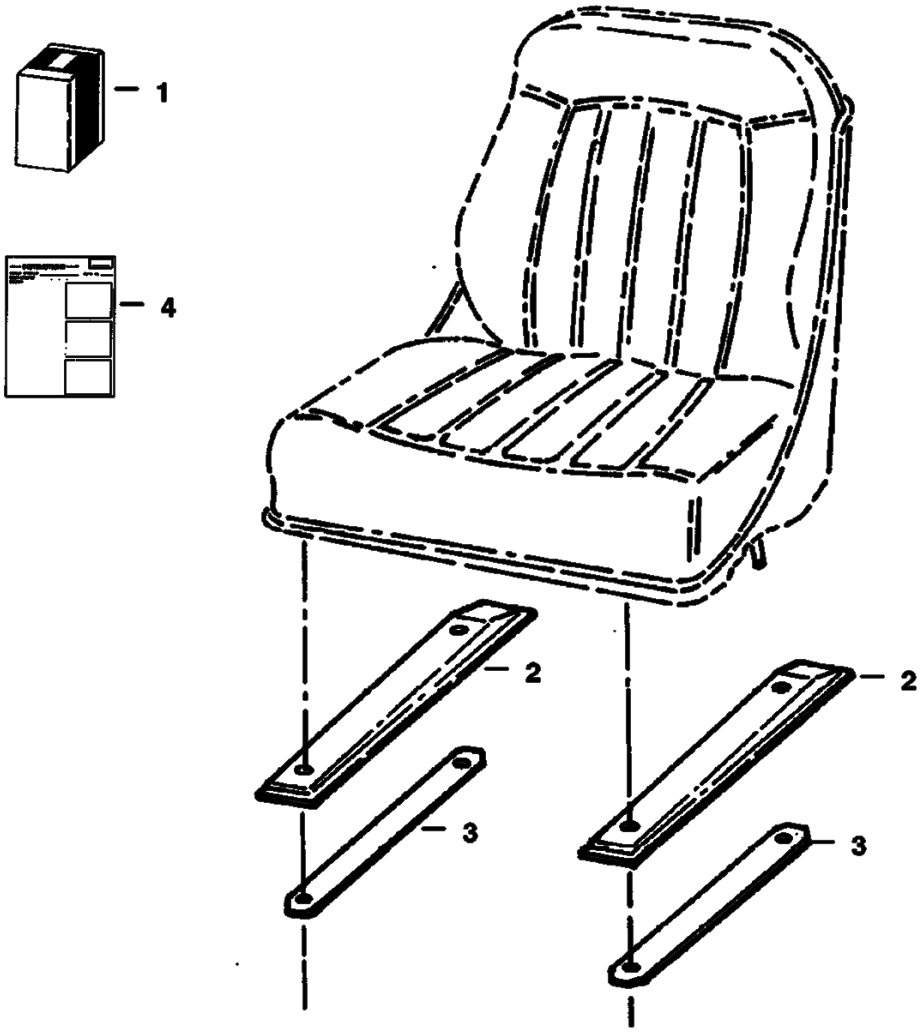

Page 378 - OSS# 2060759 - All rights reserved by Bobcat Company, a business unit of Ingersoll-Rand - 05/22/2008 - 07:23:42 - Produced by Ken Cook Co. with mediaoff

SEAT RAIL COVER KIT (Cont'd)

Ref No	Part Number	Description	Remarks	Serial Number	Qty
1	6712184	KIT	W/Ref. 2 - 4		1
2	6711729	COVER			2
3	6711730	STRIP			2
4	6724800	INSTRUCTIONS			1

Page 379 - OSS# 2060759 - All rights reserved by Bobcat Company, a business unit of Ingersoll-Rand - 05/22/2008 - 07:23:42 - Produced by Ken Cook Co. with media1off

SEAT SENSOR OVERRIDE
(Mechanical Hand Controls)

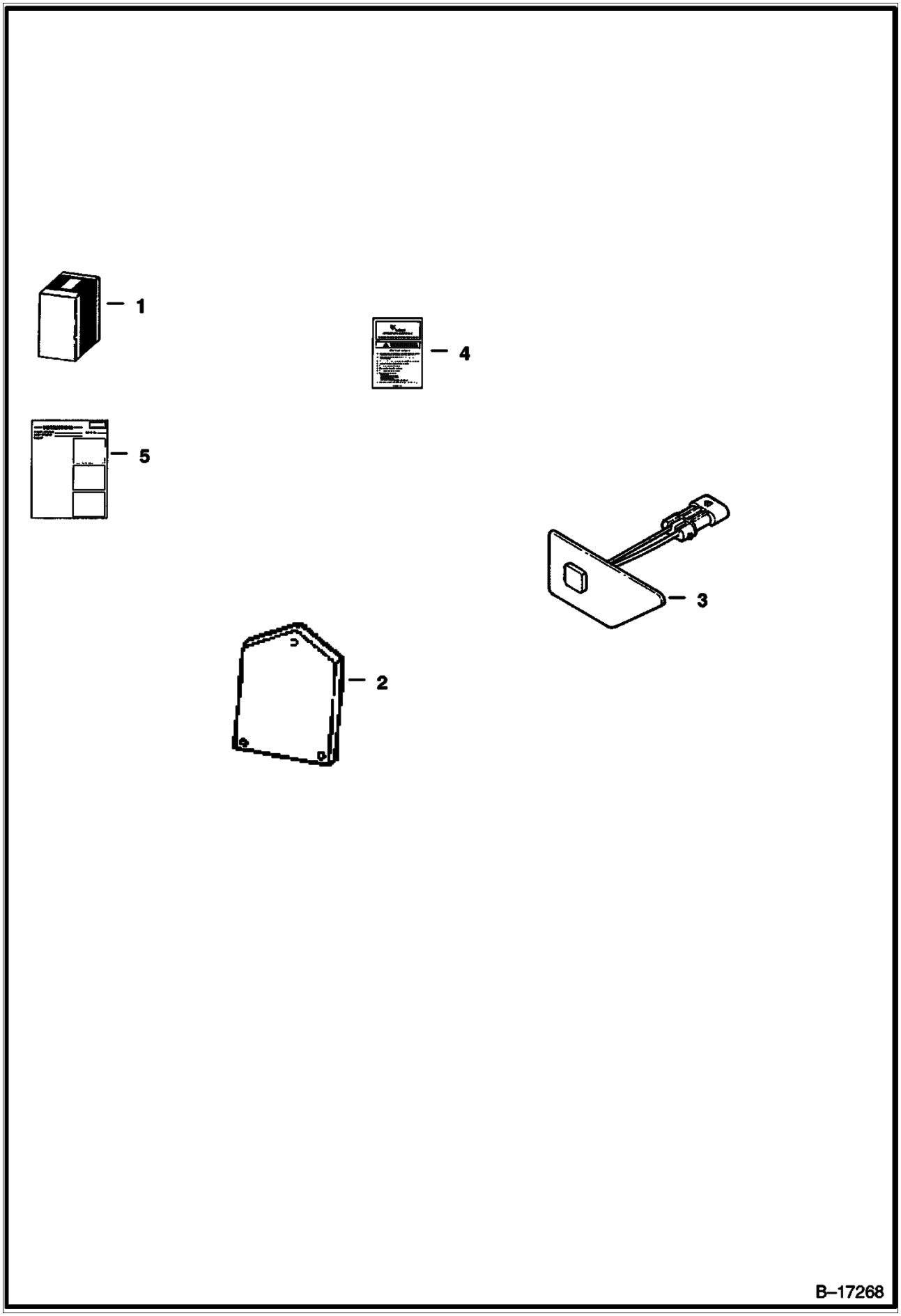

Page 380 - OSS# 2060759 - All rights reserved by Bobcat Company, a business unit of Ingersoll-Rand - 05/22/2008 - 07:23:42 - Produced by Ken Cook Co. with mediaoff

Ref No	Part Number	Description	Remarks	Serial Number	Qty
1		KIT	See Illustration PUSH TO OPERATE KIT/ B15147 NAP - REF. 2 - 5 - ORDER 6717702 KIT - WAS 6716460 [A]		1
2		CONTROLLER	See Illustration PUSH TO OPERATE KIT/ B15147 NAP - ORDER 6717702 KIT - WAS 6673002 [A]		1
3		SWITCH	See Illustration PUSH TO OPERATE KIT/ B15147 NAP - ORDER 6717702 KIT - WAS 6673005 [A]		1
4	6708021	HANDBOOK	Operator		1
5		INSTRUCTIONS	NAP - Was 6900589 [A]		1

Page 381 - OSS# 2060759 - All rights reserved by Bobcat Company, a business unit of Ingersoll-Rand - 05/22/2008 - 07:23:42 - Produced by Ken Cook Co. with mediaioff

SEAT SENSOR OVERRIDE
(Foot Pedals)

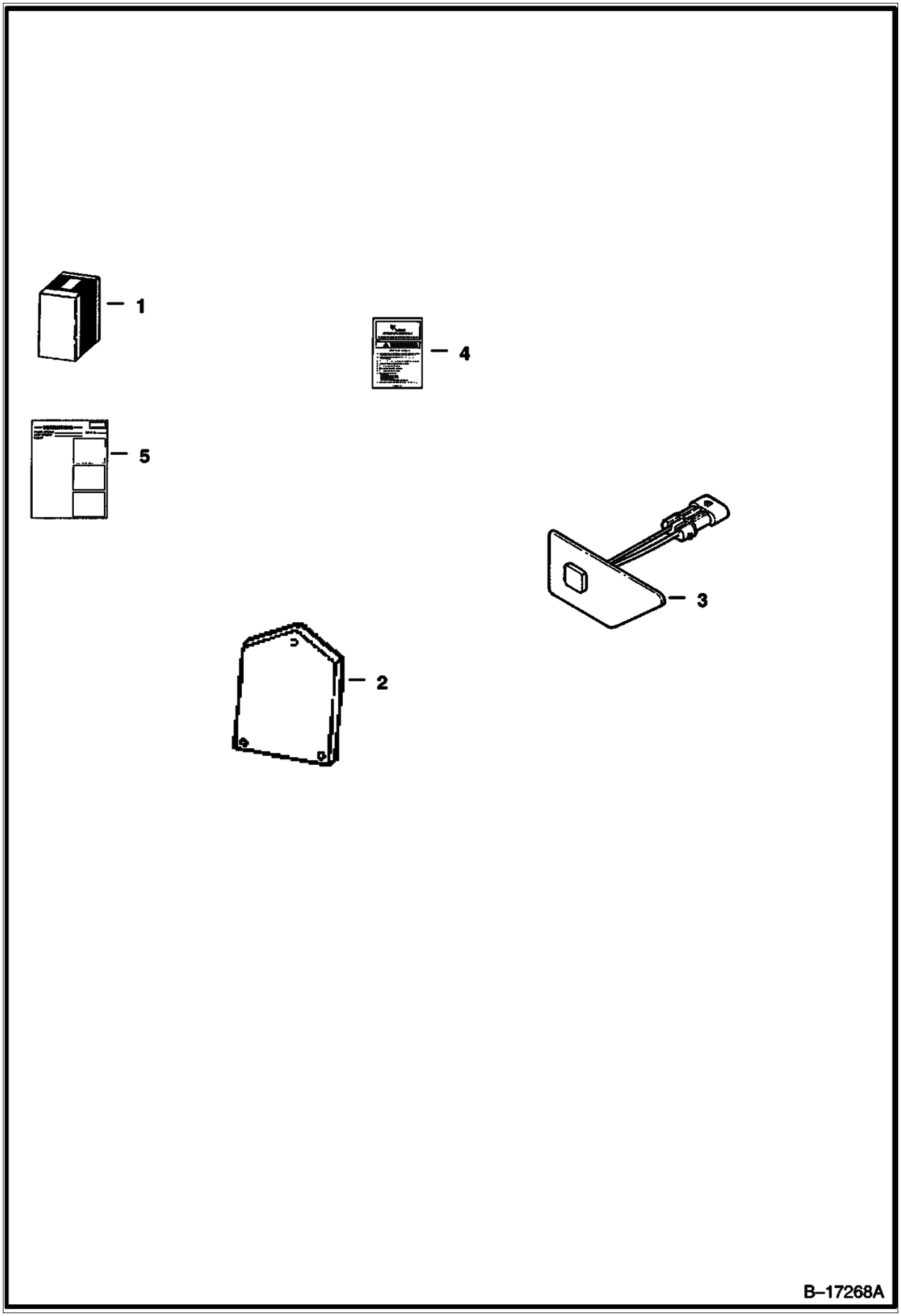

Page 382 - OSS# 2060759 - All rights reserved by Bobcat Company, a business unit of Ingersoll-Rand - 05/22/2008 - 07:23:42 - Produced by Ken Cook Co. with mediaIoff

SEAT SENSOR OVERRIDE (Cont'd)
(Foot Pedals)

Ref No	Part Number	Description	Remarks	Serial Number	Qty
1		KIT	See Illustration PUSH TO OPERATE KIT/ B15147A NAP - REF. 2 - 5 - ORDER 6717700 KIT - WAS 6716458 [A]		1
2		CONTROLLER	See Illustration PUSH TO OPERATE KIT/ B15147A NAP - ORDER 6717700 KIT - WAS 6673002 [A]		1
3		SWITCH	See Illustration PUSH TO OPERATE KIT/ B15147A NAP - ORDER 6717700 KIT - WAS 6673005 [A]		1
4	6708158	HANDBOOK	Operator		1
5		INSTRUCTIONS	NAP - Was 6900589 [A]		1

Page 383 - OSS# 2060759 - All rights reserved by Bobcat Company, a business unit of Ingersoll-Rand - 05/22/2008 - 07:23:42 - Produced by Ken Cook Co. with media1off

SIDE CONSOLE KIT

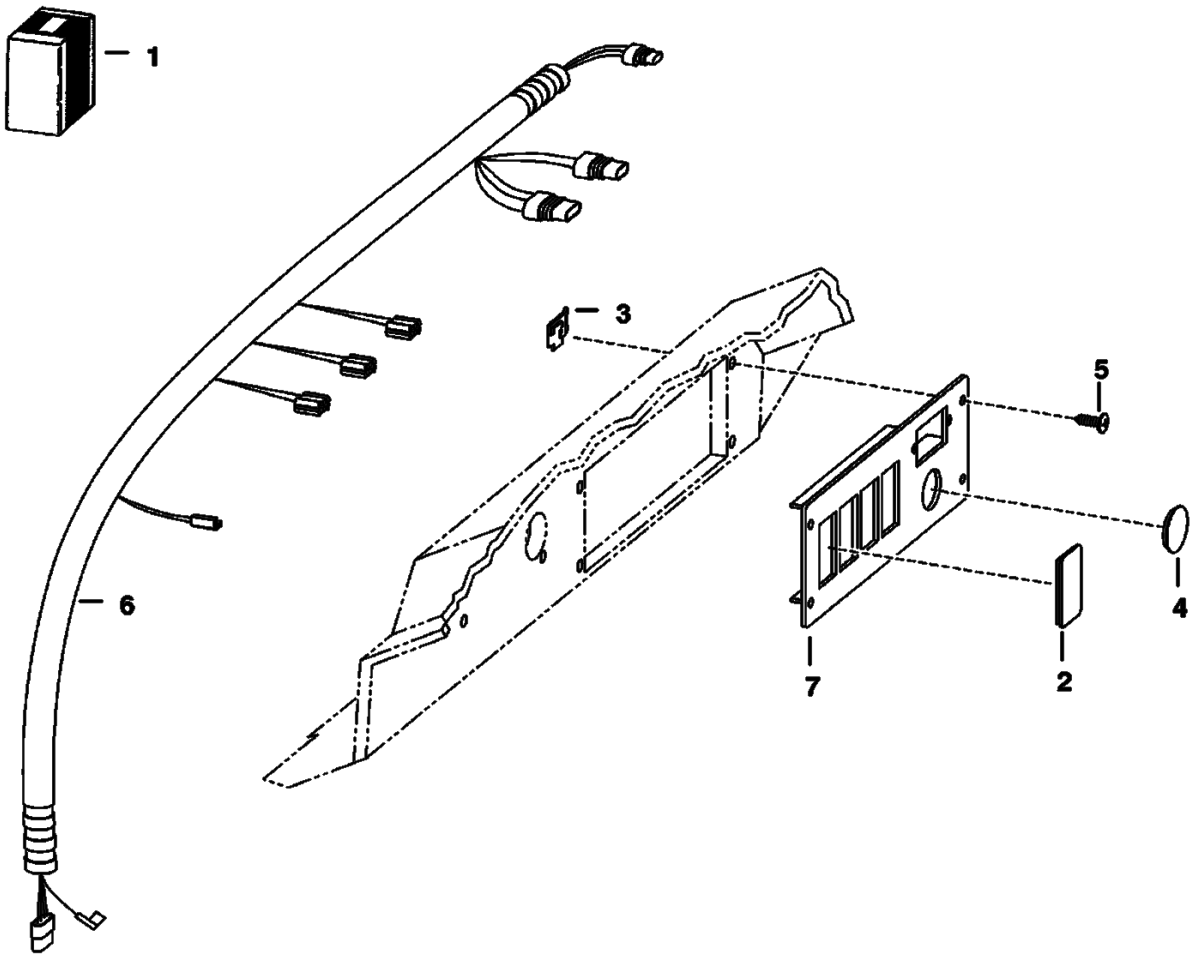

TS–1443

Page 384 - OSS# 2060759 - All rights reserved by Bobcat Company, a business unit of Ingersoll-Rand - 05/22/2008 - 07:23:42 - Produced by Ken Cook Co. with mediaioff

SIDE CONSOLE KIT (Cont'd)

Ref No	Part Number	Description	Remarks	Serial Number	Qty
1	6712700	KIT	side console		1
2	6719038	PLUG	rocker switch - Was 6665314 [A]		5
3	6669091	CLIP			4
4	6669146	PLUG			1
5	6669224	BOLT			4
6	6710481	HARNESS			1
7	6710527	PANEL			1

Page 385 - OSS# 2060759 - All rights reserved by Bobcat Company, a business unit of Ingersoll-Rand - 05/22/2008 - 07:23:42 - Produced by Ken Cook Co. with mediaioff

SOUND KIT

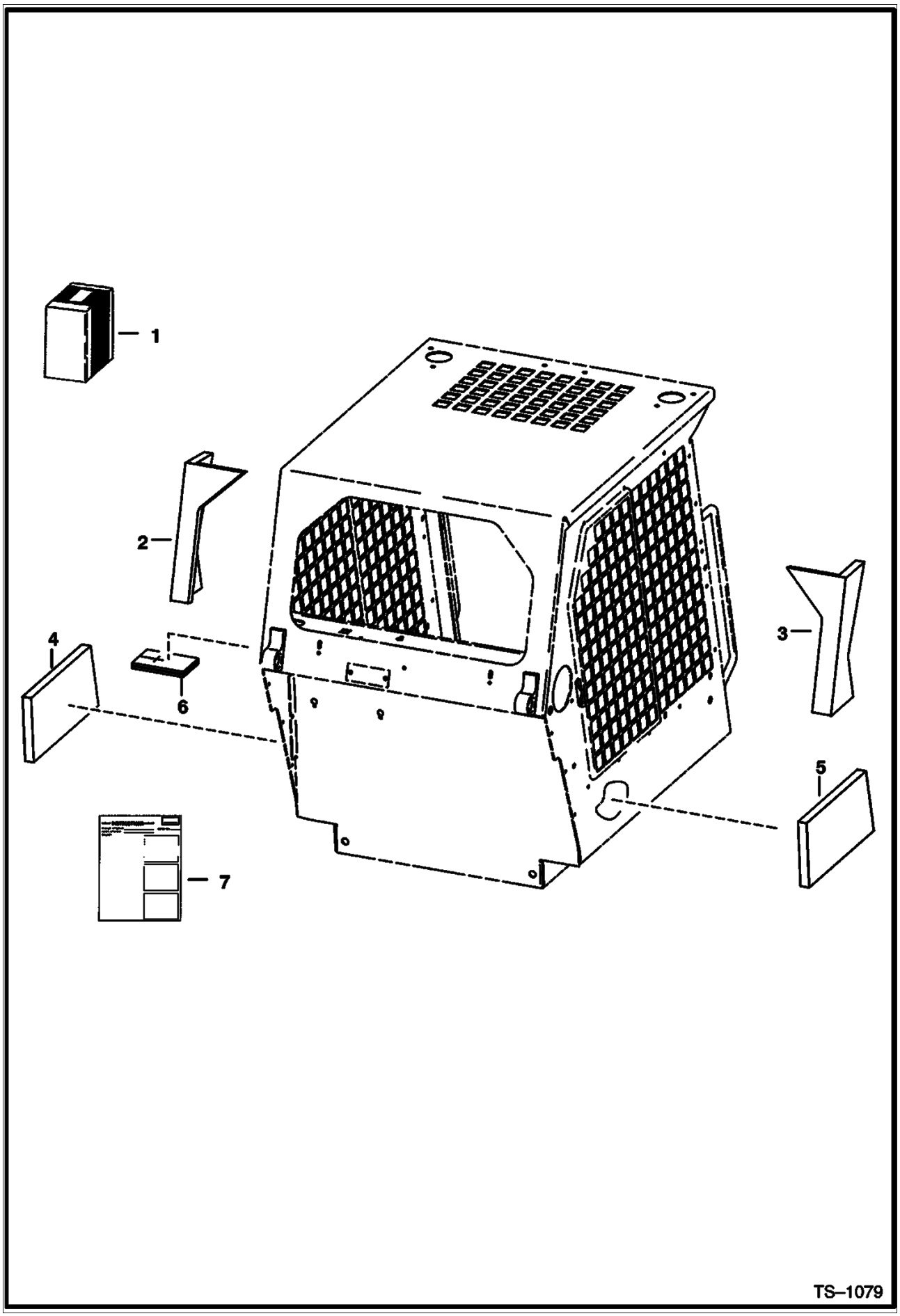

Page 386 - OSS# 2060759 - All rights reserved by Bobcat Company, a business unit of Ingersoll-Rand - 05/22/2008 - 07:23:42 - Produced by Ken Cook Co. with mediaioff

Ref No	Part Number	Description	Remarks	Serial Number	Qty
1	6704125	SOUND KIT	Ref. 2 - 7		1
2	6703449	INSULATION	cab back		1
3	6703450	INSULATION	cab back		1
4	6703451	INSULATION	cab back		1
5	6703452	INSULATION	cab back		1
6	6703455	INSULATION	cab back		1
7	6720961	INSTRUCTIONS			1

Page 387 - OSS# 2060759 - All rights reserved by Bobcat Company, a business unit of Ingersoll-Rand - 05/22/2008 - 07:23:42 - Produced by Ken Cook Co. with media1off

SOUND REDUCTION HARDHAT

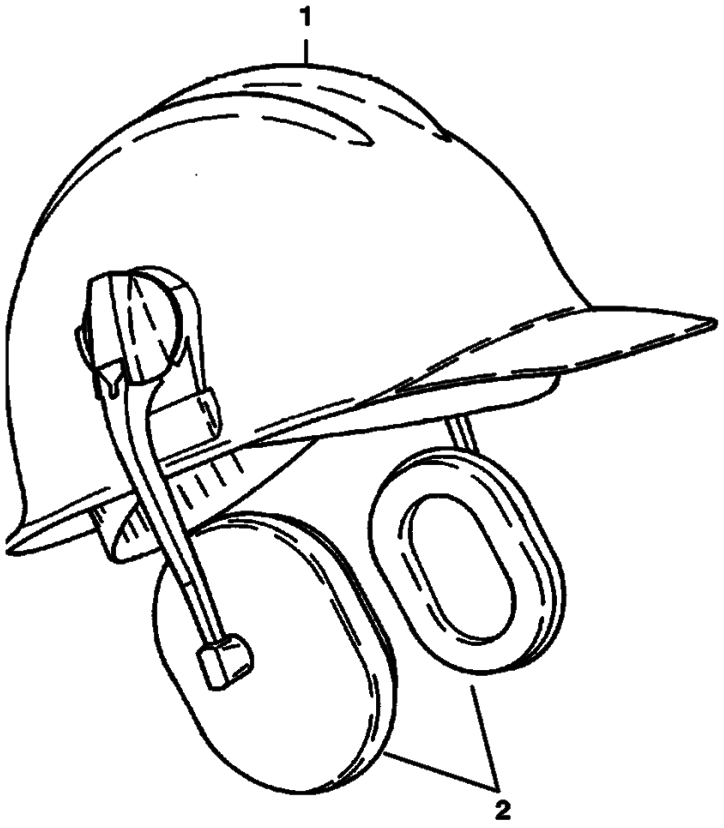

B–3111

Page 388 - OSS# 2060759 - All rights reserved by Bobcat Company, a business unit of Ingersoll-Rand - 05/22/2008 - 07:23:42 - Produced by Ken Cook Co. with mediaioff

Ref No	Part Number	Description	Remarks	Serial Number	Qty
1	6559552	HARDHAT			1
2	6559775	EARMUFFS			1

Page 389 - OSS# 2060759 - All rights reserved by Bobcat Company, a business unit of Ingersoll-Rand - 05/22/2008 - 07:23:42 - Produced by Ken Cook Co. with mediaioff

STROBE LIGHT
(Amber - 3414 ALW)

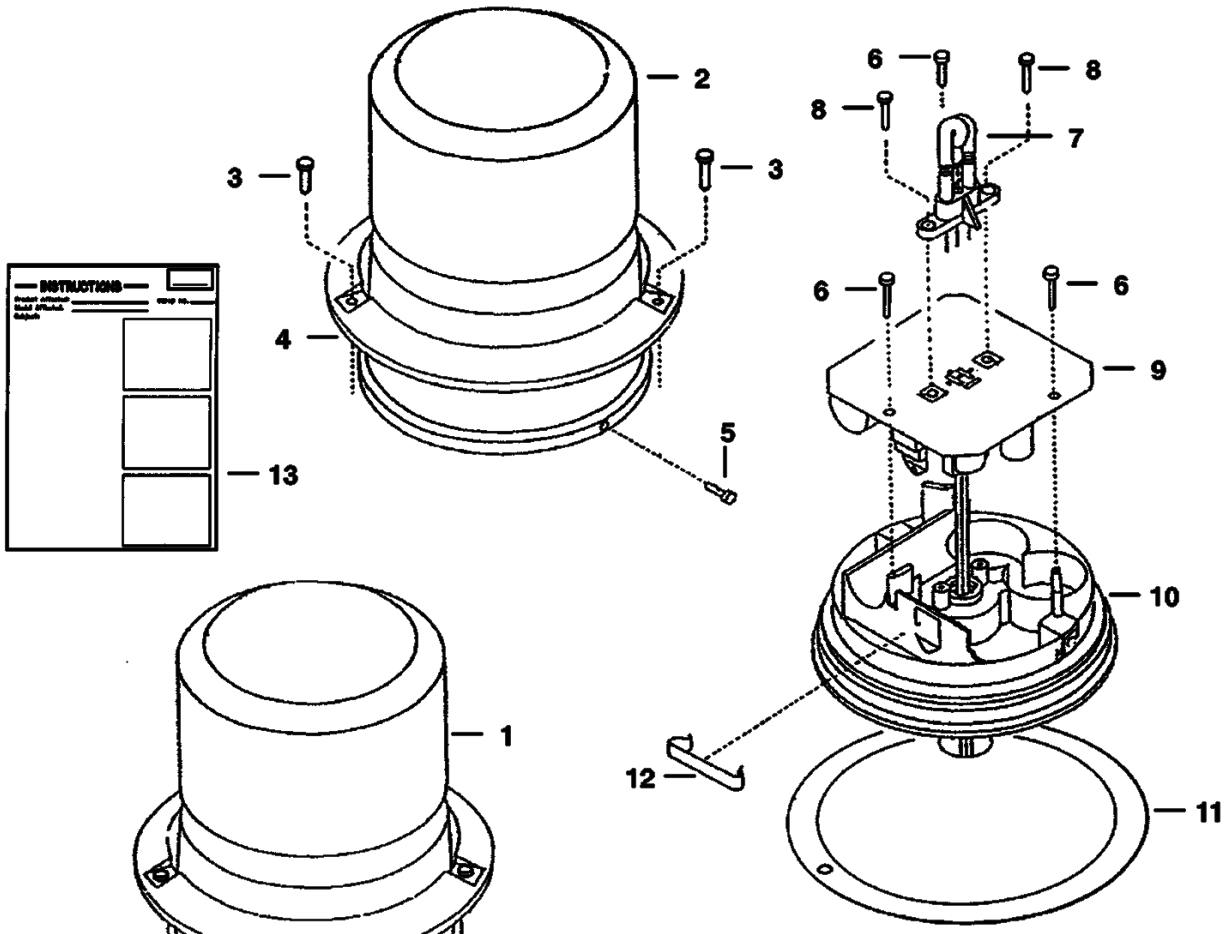

Page 390 - OSS# 2060759 - All rights reserved by Bobcat Company, a business unit of Ingersoll-Rand - 05/22/2008 - 07:23:42 - Produced by Ken Cook Co. with mediaoff

STROBE LIGHT (Cont'd)
(Amber - 3414 ALW)

Ref No	Part Number	Description	Remarks	Serial Number	Qty
1	6587526	KIT	Strobe light - Ref. 2-9 & 11		1
2	6665021	LENS	Amber		1
2	6665025	LENS	Blue - Not in kit		1
3		SCREW	NSS		3
4		SCREW	NSS		1
5	6665022	FLASH TUBE			1
6		POWER SUPPLY	NSS		1
7		BASE	NSS		1
8	6665023	GASKET			1
9		RETAINER	NSS		1
10	6665024	BRANCH GUARD	Not in Kit		1
11	6720856	INSTRUCTIONS			1

Page 391 - OSS# 2060759 - All rights reserved by Bobcat Company, a business unit of Ingersoll-Rand - 05/22/2008 - 07:23:42 - Produced by Ken Cook Co. with mediaioff

STROBE LIGHT

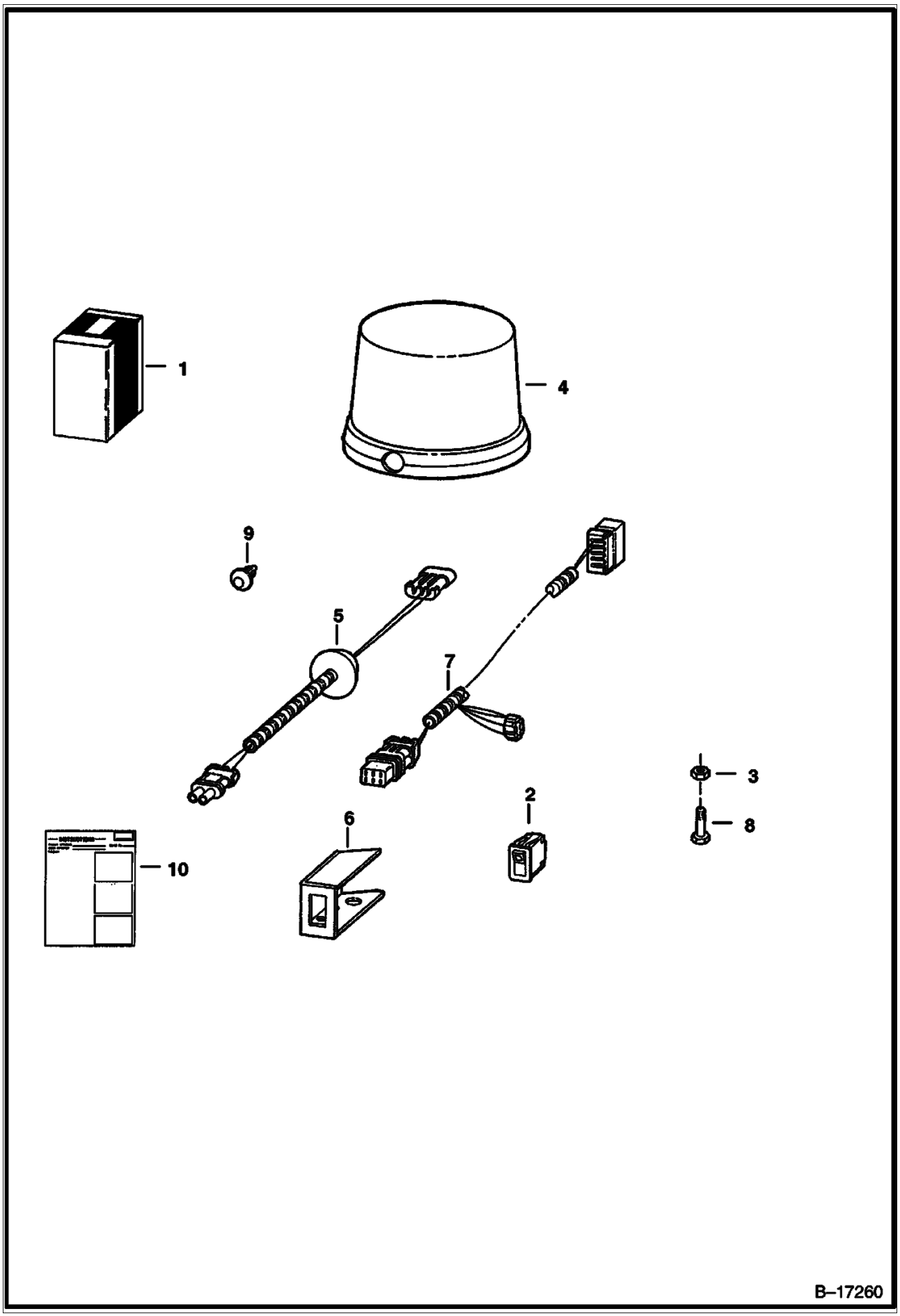

Page 392 - OSS# 2060759 - All rights reserved by Bobcat Company, a business unit of Ingersoll-Rand - 05/22/2008 - 07:23:42 - Produced by Ken Cook Co. with mediaioff

Ref No	Part Number	Description	Remarks	Serial Number	Qty
1	6712696	STROBE KIT	Strobe light - Ref. 2-10		1
2	6668816	SWITCH			1
3	6660988	RETAINER			2
4	6669191	LIGHT	Strobe - magnetic base		1
4	6665022	FLASH TUBE	bulb		1
5	6708318	HARNESS	beacon		1
6	6711708	MOUNT	switch		1
7	6712258	HARNESS	strobe		1
8	35C000412B	BOLT			2
9	6669308	RETAINER			2
10	6724071	INSTRUCTIONS			1

Page 393 - OSS# 2060759 - All rights reserved by Bobcat Company, a business unit of Ingersoll-Rand - 05/22/2008 - 07:23:42 - Produced by Ken Cook Co. with media1off

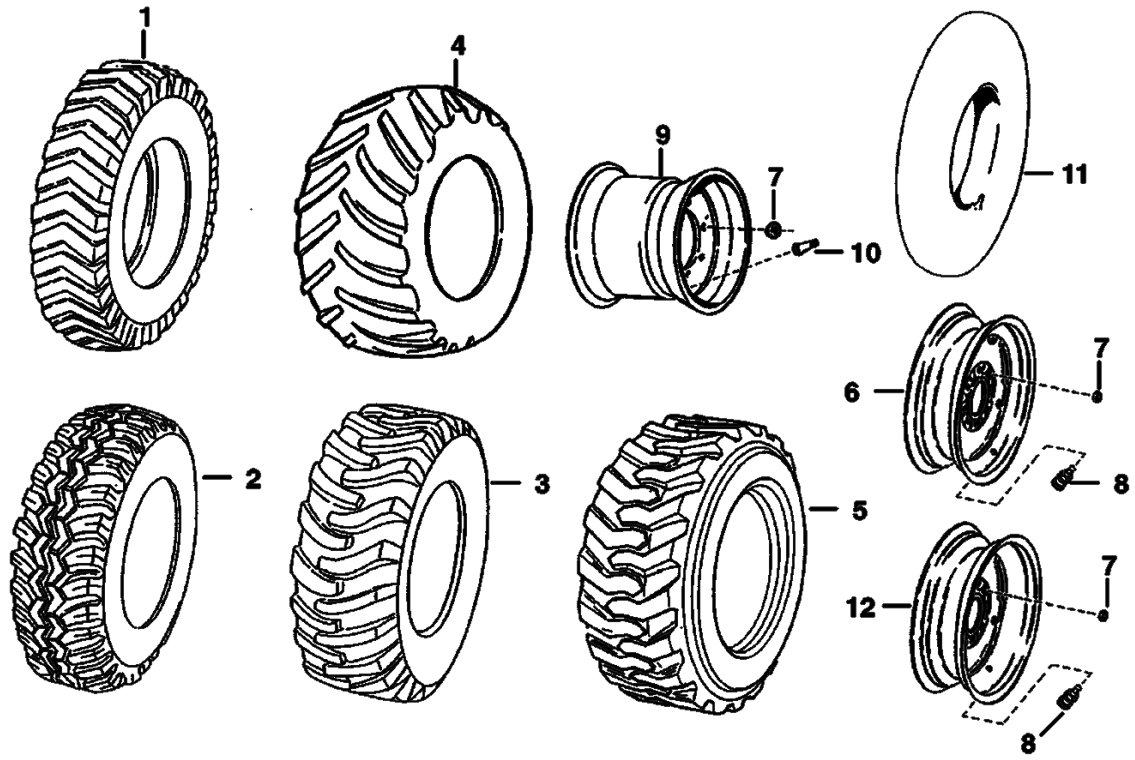

Page 394 - OSS# 2060759 - All rights reserved by Bobcat Company, a business unit of Ingersoll-Rand - 05/22/2008 - 07:23:42 - Produced by Ken Cook Co. with mediaioff

Ref No	Part Number	Description	Remarks	Serial Number	Qty
1		TIRE	NAP - 7.00-15, 6 Ply Rating - Steel Cap Bar Lug Tread - Firestone Brand		4
1	6659473	TIRE	7.00-15, 6 Ply Rating - Steel Cap Bar Lug Tread - Dico Brand		4
1	6665724	TIRE	7.00-15, 6 Ply Rating - Dico - IDT (Industrial Brand Tread)		4
2		TIRE	Order Ref 3 NAP - 10.00-16.5, 4 Ply Rating - flotation - Super All Traction		4
3		TIRE	NAP - 10.00-16.5, 6 Ply Rating - Gerneral Brand - Was 6550826 [A]		4
3		TIRE	NAP - 10.00-16.5, 6 Ply Rating - Steel Cap - Dico Brand - Was 6550828 [A]		4
3	6646601	TIRE	10.00-16.5, 6 Ply Rating - Firestone Brand		4
3	6667889	TIRE	10.00-16.5, 8 Ply Rating - heavy duty - Dico Brand		4
4		TIRE	NAP - 31-15, 8 Ply Rating - Terra Grip - Goodyear Brand - Was 6513971 [A]		4
4		TIRE	NAP - 31-15.5, 8 Ply Rating - Ultra tread Grip-Goodyear Brand - Was 6666668 [A]		4
5		TIRE	NAP - 10.00-16.5, 8 Ply Rating - Bobcat Brand - heavy duty - Order 6729896 Tire or 6729900 Tire - Was 6661287 [A]		4
5	6729896	TIRE			4
5	6729900	TIRE			4
6	6730771	RIM	Used W/Ref 2 Used W/Ref 3 See BTI197 Was 6565239 [A]		4
6	6562777	RIM	Used W/Ref 1		4
7	6564669	NUT	wheel		32
8	1614765B	STEM	tubeless tire		4
9	6561095	RIM	Used W/Ref 4		4
10	6591447	STEM	Used W/Ref 9 valve		4
11	6515045	TUBE	Used W/Ref 1		4
11	6516033	TUBE	Used W/Ref 2 Used W/Ref 3		4
12	6730775	RIM	Used W/Ref 5 inverted - For 54" width - Was 6705109 [A]		4

Page 395 - OSS# 2060759 - All rights reserved by Bobcat Company, a business unit of Ingersoll-Rand - 05/22/2008 - 07:23:42 - Produced by Ken Cook Co. with mediaioff

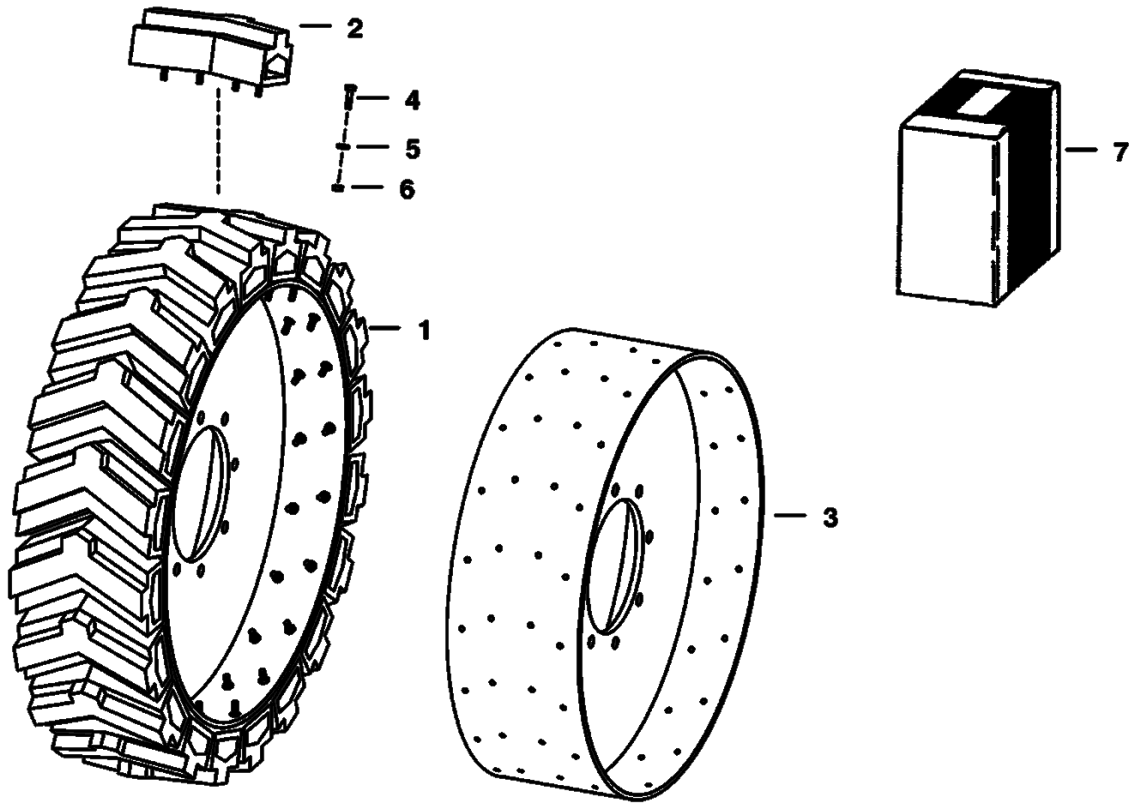

TS–1082

Page 396 - OSS# 2060759 - All rights reserved by Bobcat Company, a business unit of Ingersoll-Rand - 05/22/2008 - 07:23:42 - Produced by Ken Cook Co. with mediaioff

TIRES & RIMS (Cont'd)
(Solid Tire)

Ref No	Part Number	Description	Remarks	Serial Number	Qty
1	6664993	TIRE & RIM	Assy. - R.H. - 7.5 x 15		2
1	6664994	TIRE & RIM	Assy. - L.H. - 7.5 x 15		2
1	6674003	TIRE & RIM	Assy. - R.H. - 10 x 16.5 - Was 6670616 [A]		2
1	6674004	TIRE & RIM	Assy. - L.H. - 10 x 16.5 - Was 6670617 [A]		2
2	6664995	KIT	Box of (9) segments - 7.5 x 15 W/Ref. 4 - 6 - (18) segments/tire		x
2	6674007	KIT	Box of (10) segments - 10 x 16.5 W/Ref. 4 - 6 - (20) segments/tire - Was 6670618 [A]		x
3		RIM	NAP - R.H. - 7.5 x 15 - Order Ref. 1		2
3		RIM	NAP - L.H. - 7.5 x 15 - Order Ref. 1		2
3		RIM	NAP - R.H. - 10 x 16.5 - Order Ref. 1		2
3		RIM	NAP - L.H. - 10 x 16.5 - Order Ref. 1		2
4	1CM00830B	BOLT			x
5	25E000015B	WASHER			x
6	40DM00008B	NUT			x
7	6707172	KIT	wheel - Set of (4) 7.5 x 15 Tire & Rim Assys. - Ref. 1 - (2) R.H. & (2) L.H.		1
7	6718298	KIT	wheel - Set of (4) 10 x 16.5 Tire & Rim Assys. - Ref. 1 - (2) R.H. & (2) L.H. - Was 6713885 [A]		1

Page 397 - OSS# 2060759 - All rights reserved by Bobcat Company, a business unit of Ingersoll-Rand - 05/22/2008 - 07:23:42 - Produced by Ken Cook Co. with mediaioff

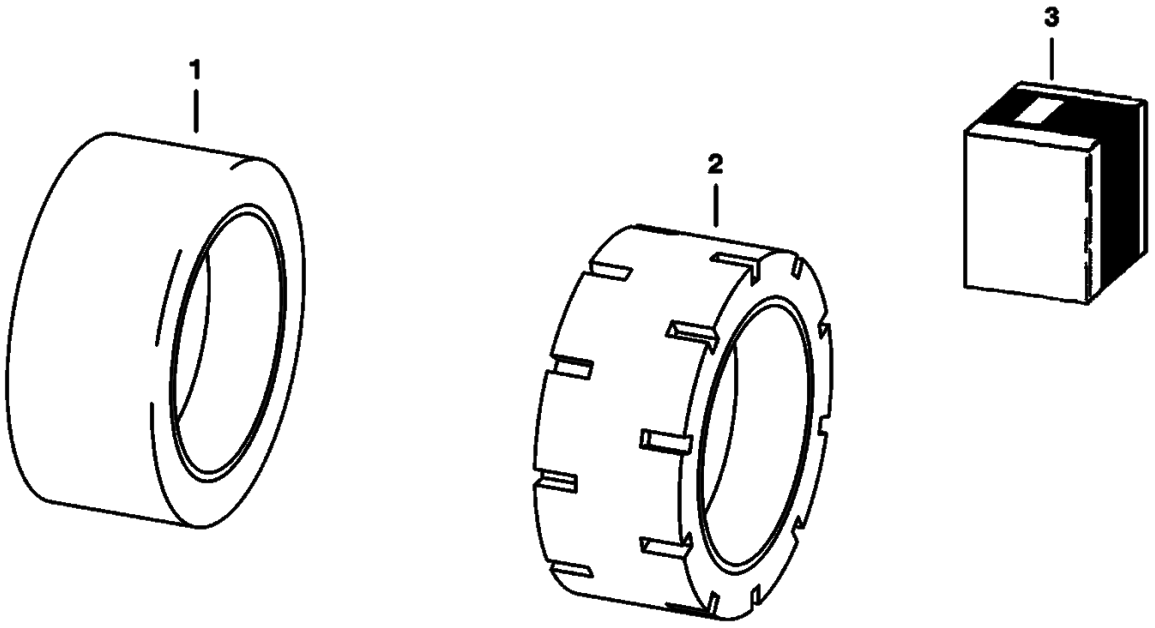

TS–1086

Page 398 - OSS# 2060759 - All rights reserved by Bobcat Company, a business unit of Ingersoll-Rand - 05/22/2008 - 07:23:42 - Produced by Ken Cook Co. with mediaioff

Ref No	Part Number	Description	Remarks	Serial Number	Qty
1	6704167	TIRE & RIM	10 X 31 Slick W/Wire		4
2	6704168	TIRE & RIM	10 X 31 Staggered Gear Lug		4
3		TIRE & RIM	Order Ref 1 NAP - 10 X 31 Slick W/Wire - Set of (4) - - Was 6722149 [A]		4
3		TIRE & RIM	Order Ref 2 NAP - 10 X 31 Staggered Gear Lug - Set of (4) - - Was 6722150 [A]		1

Page 399 - OSS# 2060759 - All rights reserved by Bobcat Company, a business unit of Ingersoll-Rand - 05/22/2008 - 07:23:42 - Produced by Ken Cook Co. with media1off

BULK ITEMS
(See Note)

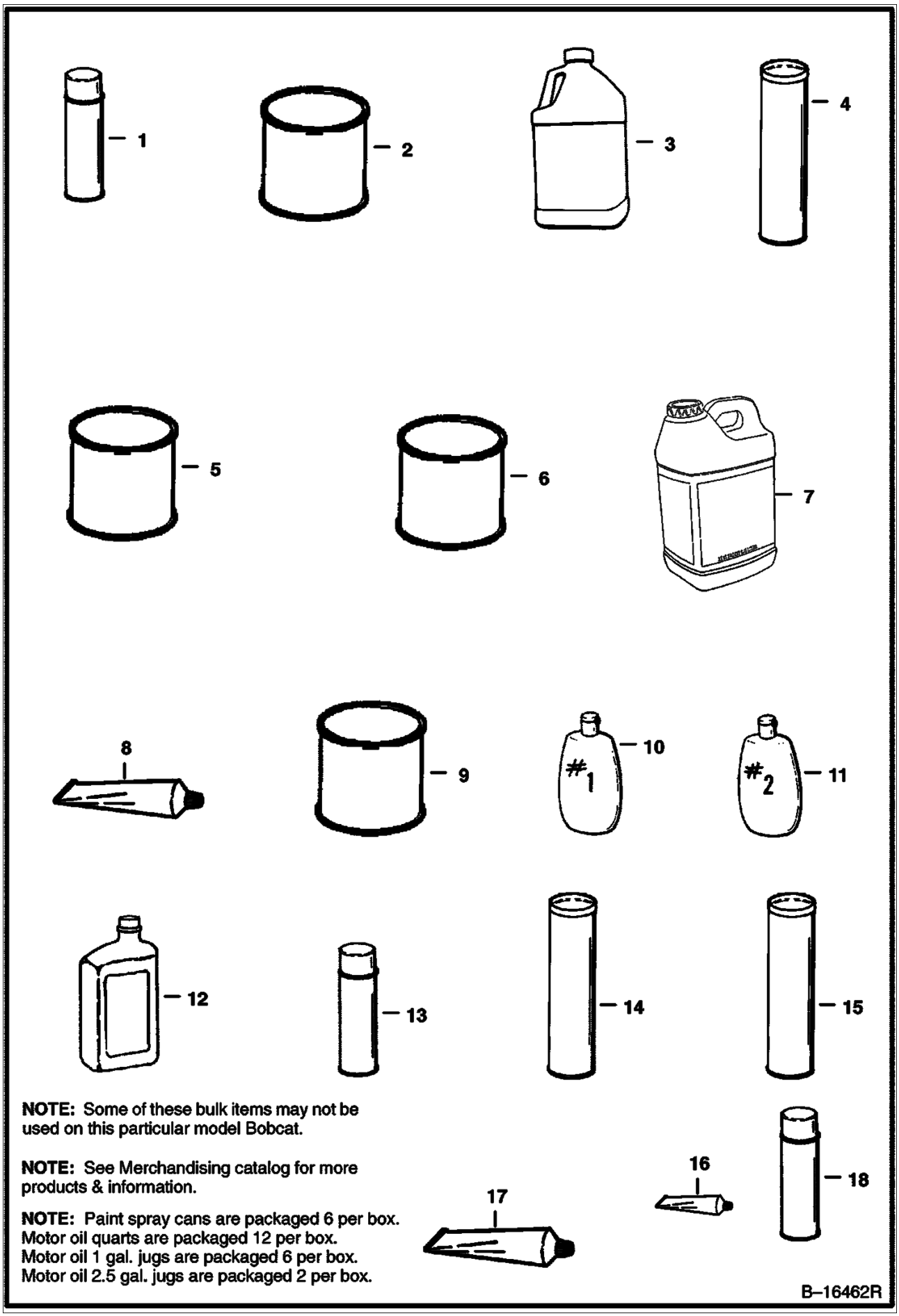

NOTE: Some of these bulk items may not be used on this particular model Bobcat.

NOTE: See Merchandising catalog for more products & information.

NOTE: Paint spray cans are packaged 6 per box.
Motor oil quarts are packaged 12 per box.
Motor oil 1 gal. jugs are packaged 6 per box.
Motor oil 2.5 gal. jugs are packaged 2 per box.

Page 400 - OSS# 2060759 - All rights reserved by Bobcat Company, a business unit of Ingersoll-Rand - 05/22/2008 - 07:23:42 - Produced by Ken Cook Co. with mediaioff

BULK ITEMS (Cont'd)
(See Note)

Ref No	Part Number	Description	Remarks	Serial Number	Qty
1	6722783	PAINT	orange - Spray Can - See Note		x
1	6722786	PAINT	charcoal - Spray Can - See Note		x
1	6722789	PAINT	white - Spray Can - See Note		x
2	6722781	PAINT	orange - Gal. - Also Order Ref. 5		x
2	6722782	PAINT	orange - Qt. - Also Order Ref. 5		x
2	6722784	PAINT	charcoal - Gal. - Also Order Ref. 5		x
2	6722785	PAINT	charcoal - Qt. - Also Order Ref. 5		x
2	6722787	PAINT	white - Gal. - Also Order Ref. 5		x
2	6722788	PAINT	white - Qt. Also Order Ref. 5		x
3	6724094	ANTI-FREEEZE	1 gal. premixed PG		x
3	6724354	ANTI-FREEZE	1 gal. PG concentrate		x
4	6633583	SEALANT	chaincase covers		x
5	6653517	REDUCER	Gal.		x
6	6653518	PRIMER	Gal.		x
7	6903117	HYD FLUID 2.5 GAL.	Was 6563328 [A]		x
7	6903118	HYD. FLUID 5GAL	Was 6722344 [A]		x
7		FLUID	NAP - 30 Gal. Drum		x
7	6903119	HYD. FLUID 55GAL	Was 6563330 [A]		x
8	6599360	SEALANT	electrical - 3 oz. tube		x
9	6903121	GEAR LUBE 12	Was 6634393 [A]		x
10	6630188	POLISH	window-1 (8 oz.)		x
10		POLISH	NAP - window-1 (64 oz.) - Order 6630188 Polish- Was 6630190 [A]		x
11	6630189	POLISH	window-2 (8 oz.) - scratch remover		x
11		POLISH	NAP - window-2 (64 oz.) - scratch remover - Order 6630189 Polish - Was 6630191 [A]		x
12	6903109	OIL 30W QT. 12	Was 6657303 [A]		x
12	6903110	OIL 30W GAL. 6	Was 6724559 [A]		x
12	6903111	OIL 30W 2.5 GAL 2	Was 6674206 [A]		x
12	6903107	OIL 10W30 QT. 12	Was 6657301 [A]		x
12	6903108	OIL 10W30 GAL. 6	Was 6724557 [A]		x
12	6903112	OIL 10W30 2.5 GAL 2	Was 6674205 [A]		x
12	6903105	OIL 15W40 QT. 12	Was 6657299 [A]		x
12	6903106	OIL 15W40 GAL. 6	Was 6724558 [A]		x
12	6903113	OIL 15W40 2.5 GAL. 2	Was 6674204 [A]		x
13	6675380	ADHESIVE	insul. - Spray - Was 6652818 [A]		x
14	6903122	GREASE 10	Was 6658266 [A]		x
15	6599719	GREASE	14.5 oz. cartridge - For fan idler bearing & spring loaded drive idler		x
16	6650407	ADHESIVE	1 oz. tube		x
17	6650388	SEALANT	flange		x

Page 401 - OSS# 2060759 - All rights reserved by Bobcat Company, a business unit of Ingersoll-Rand - 05/22/2008 - 07:23:42 - Produced by Ken Cook Co. with mediaioff

Page 402 - OSS# 20060759 - All rights reserved by Bobcat Company, a business unit of Ingersoll-Rand - 05/22/2008 - 07:23:42 - Produced by Ken Cook Co. with mediaIoff

Part No.	Description	Was	Code	Page
10C000412B	BOLT			112
10C000512B	BOLT			244, 248
10H000025B	GREASE ZERK			20, 42, 46
10H000035B	GREASE ZERK			20, 24
10J000005B	BALL			162, 204
10J000013B	BALL			148, 190
10K000006B	TEE			42, 46
10K000007B	TEE			242
10KN00006B	TEE			42, 46
11H000015B	GREASE ZERK			20, 42, 46
12D000006B	NUT			320, 322, 354
12D000008B	NUT			36
12D000010B	NUT			120, 256, 288, 298
12E000010B	WASHER			306
12H000015B	GREASE ZERK			20, 42, 46
1303932B	GROMMET			128
1306637B	PIN			60
1318565B	PIN			272
1320075	COTTER PIN			328
14J002512B	ROLL PIN			10
14J005032B	PIN			24
15EM00180B	WASHER			148
15JM00048B	KEY			176, 218
15JM00410B	KEY			150, 192
15K000003B	CONNECTOR	21K000005B	B	344
15K000005B	ADAPTER			49, 50, 84, 344
15K000006B	ADAPTER			138
15K000007B	CONNECTOR			42, 46
15K000008B	ADAPTER			50, 52, 84
15KN00003B	ADAPTER			344
15KN00006B	ADAPTER			138
15KN00008B	ADAPTER			50, 52, 84
15KV00005B	ADAPTER			50, 84, 334, 344
1612281B	NUT			258
1614765B	STEM			384
16F000002B	PLUG			150, 192
16F000008B	PLUG			142
17C000408B	BOLT			244, 248
17C000410B	BOLT			116, 294
17C000412B	BOLT			35, 36, 37, 38, 122, 232, 304, 310
17C000428B	BOLT	6710539	A	10, 44, 48, 50
17C000428B	BOLT			10, 44, 48, 50
17C000508B	BOLT			12, 282, 356, 366
17C000510B	BOLT			360
17C000512B	BOLT			6, 28, 260, 356
17C000514B	BOLT			352
17C000516B	BOLT			278, 366
17C000532B	BOLT			42, 46, 84, 272
17C000540B	BOLT			44, 46, 324, 326
17C000552B	BOLT			52, 292
17C000556B	BOLT			138
17C000608B	BOLT			10, 132
17C000610B	BOLT			36, 88, 134
17C000612B	BOLT			10, 28, 60, 90, 128, 266, 270, 272, 364

Code for disposition of old part number

A -- Use up
B -- Use on other application (See PNI)
C -- File PDR Report with Bobcat Parts Sales
D -- Part Number Error

Page 403 - OS&H 2060759 - All rights reserved by Bobcat Company, a business unit of Ingersoll-Rand - 05/22/2008 - 07:23:42 - Produced by Ken Cook Co. with mediaioff

Part No.	Description	Was	Code	Page
17C000616B	BOLT			10, 88, 90, 128
17C000620B	BOLT			20, 36, 60, 90, 134, 142
17C000624B	BOLT			60
17C000626B	BOLT			90, 140
17C000632B	BOLT			84
17C000636B	BOLT			334
17C000640B	BOLT			19, 20, 258, 324, 326
17C000644B	BOLT			24
17C000648B	BOLT			20, 138
17C000660B	BOLT			24
17C000680B	BOLT			90
17C000712B	BOLT			10, 244, 248, 364
17C000716B	BOLT			10
17C000820B	BOLT			36
17C000828B	BOLT			134
17C000830B	BOLT			138
17C000848B	SCREW	17C000844B	B	138
17C001028B	BOLT			324, 326
17C001056B	BOLT			6
17C006116B	BOLT			128
17E000008B	WASHER			256
17E000010B	WASHER			256
17K000003B	ELBOW			344
17K000005B	ELBOW			44, 48, 50, 86
17K000007B	ELBOW			48, 242
17K000008B	ELBOW			284
17KN00008B	ELBOW			284
17KV00003B	ELBOW			344
17KV00005B	ELBOW			44, 48, 50, 86
17KV00007B	ELBOW			48, 242
18C001224B	BOLT			39, 40
18C001632B	BOLT			40
18C001636B	BOLT			40
18K000005B	ELBOW			86
18K000008B	ELBOW			50, 284, 344
18KV00008B	ELBOW			50, 284, 344
1908806B	EXTINGUISHER			288
1991038B	BEARING			256
19F000004B	ADAPTER			114
19F000005B	REDUCER			354
19K000007B	TEE			44, 48
19KN00007B	TEE			44, 48
1CM00820B	BOLT			90, 98, 102, 308, 314
1CM00830B	BOLT			386
1CM00835B	BOLT			168, 210
1CM00865B	BOLT			168, 210
1CM00870B	BOLT			138, 148, 190
1CM00880B	SCREW			148, 190
1CM00890B	BOLT			138
1CM00895B	BOLT			148, 190
1DM00006B	NUT			148, 176, 190, 218, 282
1DM00008B	NUT			176, 218
1EM00060B	WASHER			174, 214
1EM00080B	WASHER			176

Code for disposition of old part number

A -- Use up
B -- Use on other application (See PNI)
C -- File PDR Report with Bobcat Parts Sales
D -- Part Number Error

Page 404 - OSS# 2060759 - All rights reserved by Bobcat Company, a business unit of Ingersoll-Rand - 05/22/2008 - 07:23:42 - Produced by Ken Cook Co. with mediaioff

Part No.	Description	Was	Code	Page
21KN00005B	TEE			334
21KV00005B	TEE			344
225855B	SEAL			20
2356058B	BOOT			114
23G000812B	SCREW			36
24K000008B	PLUG			64
24KN00008B	PLUG			64
25E000008B	WASHER			36
25E000010B	WASHER			12, 130, 304, 306
25E000011B	WASHER			282
25E000013B	WASHER	17C000408B	B,D	8, 36, 38, 114, 232, 270, 316
25E000013B	WASHER			8, 36, 38, 114, 232, 270, 316
25E000014B	WASHER			304
25E000015B	WASHER			114, 344, 352, 386
25E000016B	WASHER			12, 246, 248, 366
25E000017B	WASHER			10, 272, 364
25E000018B	WASHER			140, 250
25E000021B	WASHER			60, 138
25E000025B	WASHER			272
25G000410B	BOLT			288
25G000412B	BOLT			112
25G000512B	BOLT			16, 244, 248
25G000520B	BOLT			16
25G000528B	BOLT			244, 248
25G000612B	BOLT			294
25G000820B	BOLT			18
25GM08010B	SET SCREW			154
25GT00410B	BOLT			120, 298
25K020010B	SEAL			84
25K020016B	O-RING			62, 70, 74
25K030202B	O-RING			32
25K030508B	O-RING			32
2756257B	RETAINER			246, 250
27E000006B	WASHER			228
27E000008B	WASHER			272
27E000010B	WASHER			246, 248
29CM00612B	SCREW			208
29G000412B	SCREW			62, 68, 70, 74
29G000416B	SCREW			62, 68, 70, 74
2DM00008B	NUT			154, 172, 196, 216
2EM00008B	WASHER			148, 154, 156, 174, 190, 198, 214
2J004200B	ROD END			294
30G000416B	BOLT			62, 66, 70, 74
30H000019B	CLAMP	30H000021B	B,D	232
30H000023B	CLAMP			36, 140
30H000029B	CLAMP			112
30H000036B	CLAMP			28
30H000037B	CLAMP			244, 248
30H000042B	CLAMP	30H000035B	B	330
30H000046B	CLAMP			266
30H000048B	CLAMP			114
30H000049B	CLAMP			264
30H000050B	CLAMP			308, 314
30H000056B	CLAMP			112

Code for disposition of old part number

A -- Use up
B -- Use on other application (See PNI)
C -- File PDR Report with Bobcat Parts Sales
D -- Part Number Error

Page 405 - OS&H 2060759 - All rights reserved by Bobcat Company, a business unit of Ingersoll-Rand - 05/22/2008 - 07:23:42 - Produced by Ken Cook Co. with mediaioff

Part No.	Description	Was	Code	Page
30H000060B	CLAMP			116
30R000107B	TERMINAL			354
31C000420B	BOLT			18, 290
31C000510B	BOLT			360
31C000820B	BOLT			4
31C000824B	BOLT			4, 272, 328
31C000828B	BOLT			328
31C001064B	BOLT	17C001064B	B	20
31C001264B	BOLT			20
31H000052B	CLIP			314
3291290B	WING NUT			186
35C000408B	BOLT			354
35C000410B	BOLT	17C000410B	B	6, 12, 112, 232, 254, 282, 284, 290, 322
35C000410B	BOLT			6, 12, 112, 232, 254, 282, 284, 290, 322
35C000412B	BOLT			48, 234, 242, 352, 382
35C000416B	BOLT	35C000516B	B,D	114, 244, 248
35C000416B	BOLT			114, 244, 248
35C000508B	BOLT			128
35C000510B	BOLT			244, 248
35C000512B	BOLT			270
35C000516B	BOLT			138, 250, 288
35C000520B	BOLT			290
35C000536B	BOLT			48, 242
35C000608B	BOLT			114, 364
35C000612B	BOLT			10, 60, 90, 132
35C000616B	BOLT			244, 250, 270, 284
35C000620B	BOLT			114, 134, 138
35C000716B	BOLT			320, 354
35C001032B	BOLT			32
36K000006B	CAP			138
36K000007B	CAP			44
36K000008B	CAP			52, 292, 344
3737000B	TRACK			356
3737001B	TRACK			356
3737010B	CUSHION			356
3737081B	CUSHION			356
37C000512B	BOLT			232, 270, 330
37C000516B	BOLT			356, 366
37C000540B	BOLT			292
37C000612B	BOLT			18, 270
37C000620B	BOLT			294
37C000628B	BOLT			258
37C000820B	BOLT			18
38C000606B	SCREW			122, 294
38C000610B	BOLT	6704285	A	140, 294
38C000610B	BOLT			140, 294
38C000816B	BOLT			294
38C000820B	BOLT			134
38C000856B	SCREW			18
3966512B	O-RING			146, 176
3966515B	O-RING			146, 148
3966516B	O-RING			146, 158, 188, 200
3966530B	O-RING			146, 148
3966602B	O-RING			146, 152

Code for disposition of old part number

A -- Use up
B -- Use on other application (See PNI)
C -- File PDR Report with Bobcat Parts Sales
D -- Part Number Error

Page 406 - OSS# 2060759 - All rights reserved by Bobcat Company, a business unit of Ingersoll-Rand - 05/22/2008 - 07:23:42 - Produced by Ken Cook Co. with mediaIoff

Part No.	Description	Was	Code	Page
3974037B	PIN			150, 192
3974038B	O-RING			146, 150, 188, 192
3974095B	GASKET			146, 150, 152, 172, 188, 192, 216
3974192B	BOLT			174, 214
3974260B	BOLT			182, 222
3974267B	STUD			208
3974366B	BOLT			180
3974368B	GASKET			180
3974381B	SEAT			180
3974382B	SPRING			180
3974383B	SEAT			180
3974384B	SHIM			180
3974385B	TAPPET			180
3974389B	GASKET			150, 192
3974390B	CAP			150
3974393B	PIN			150, 192
3974394B	PIN			150, 192
3974395B	PIN			148, 150, 190, 192
3974399B	PLUG			192
3974402B	PLUG	6652583	A	158
3974403	GASKET			146, 158
3974432B	CAP			156, 198
3974433B	CAP			156, 198
3974502B	GASKET			146, 178
3974514B	SPRING			154, 196
3974515B	RETAINER			154, 196
3974516B	COLLET			154
3974518B	CAP			154, 196
3974519B	SHAFT			154
3974521B	BRACKET			154, 196
3974523B	ORIFICE			154
3974524B	WASHER			154, 196
3974525B	SPRING			154
3974546B	KEY			160, 164, 202, 206
3974547B	STOPPER			206
3974577B	O-RING			146, 160, 188, 202
3974618B	CIRCLIP			162, 204
3974620B	CIRCLIP			162, 204
3974624B	STOPPER			162, 204
3974626B	SHIM			178
3974627B	STUD			168
3974630B	GASKET			146
3974644B	PLATE			176, 218
3974658B	SHAFT			174
3974659B	BOLT			174
3974661B	HOLDER			174, 214
3974671B	NUT			160, 202
3974679B	BAND			168, 210
3974787B	RACK			180
3974868B	PIN			150, 192
3974871B	ADAPTER			150, 192
3974882B	BRACKET			156, 198
3974888B	BOLT			148, 190
3974893B	SEAT			148, 190

Code for disposition of old part number

A -- Use up
B -- Use on other application (See PNI)
C -- File PDR Report with Bobcat Parts Sales
D -- Part Number Error

Page 407 - OS$# 2060759 - All rights reserved by Bobcat Company, a business unit of Ingersoll-Rand - 05/22/2008 - 07:23:42 - Produced by Ken Cook Co. with media1off

Part No.	Description	Was	Code	Page
3974894B	FLANGE			190
3974916B	STUD			210
3974920B	SCREW			154, 196
3974923B	NUT			152
3974924B	PLATE			151, 152
3974925B	PLATE			152
3974926B	ELEMENT			152
3974927B	SHIELD			152
3974928B	SCREW			194
3974930B	PIPE			152
3974931B	CLAMP			152
3974945B	WASHER			160, 202
3974970B	SCREW			175, 176
3974971B	NUT			176, 218
3974972B	GASKET			176, 218
3974975B	APPARATUS			171, 172, 215, 216
3974978B	NUT			172, 216
3974979B	CAP			172, 216
3974988B	PIPE			168
3974991B	BEARING			166
3974992B	FLANGE			166
3974996B	COVER			162, 204
3975021B	WASHER			160, 202
3975022B	WASHER			160, 202
3975337B	COLLAR			160, 202
3975389B	GASKET			180
3975426B	OIL PUMP			150, 192
3975428B	SCREW			180
3975436B	SCREW			152
3975441B	GEAR			192
3975442B	COLLAR			162
3975447B	DRAINCOCK			150
3DM00012B	NUT			150, 192
40DM00008B	NUT			386
40K000002B	PLUG			168, 210
41G000806B	SCREW			256
42H000010B	CLAMP			28, 304, 308, 314
42H000032B	CLAMP			28, 132
42H000052B	CLAMP			132
43C000524B	BOLT			78
43C000532B	BOLT			50, 78
43C000852B	BOLT	17C000844B	B	268
45C000620B	BOLT	45C-524	B	90
45G000508B	BOLT			264
45G001008B	BOLT			244, 248
45G001212B	BOLT			116, 264
45K000008B	ADAPTER			88, 344
45KN00008B	ADAPTER			88, 344
46D000005B	NUT			246, 248
46K000008B	ELBOW	16K000008B	B	52, 292
46K000008B	ELBOW			52, 292
46KN00008B	ELBOW			52, 292
47C000820B	BOLT			38
47K000008B	PLUG			96, 100

Code for disposition of old part number

A -- Use up
B -- Use on other application (See PNI)
C -- File PDR Report with Bobcat Parts Sales
D -- Part Number Error

Page 408 - OSS# 2060759 - All rights reserved by Bobcat Company, a business unit of Ingersoll-Rand - 05/22/2008 - 07:23:42 - Produced by Ken Cook Co. with mediaioff

Part No.	Description	Was	Code	Page
4CM00616B	BOLT			178, 220
4CM00620B	BOLT			148, 176, 190, 218
4CM00628B	BOLT			174
4CM00814B	BOLT			162
4CM00816B	BOLT			156, 158, 164, 200
4CM00818B	BOLT			164, 206
4CM00822B	BOLT			168, 170, 178, 212, 220
4CM00825B	BOLT			160, 202
4CM00828B	BOLT			160, 166, 202, 208
4D000020B	NUT			324, 326
4DM00005B	NUT			114, 282
4DM00010B	NUT			114
4E000004B	WASHER			122, 256, 304
4F004051B	PIN			294
4F006106B	PIN			12, 364
4FM00018B	PLUG			150
4FM00045B	PLUG			150
50D000005B	NUT			264
50D000012B	NUT			10, 116, 264
51E000404B	ADAPTER			344
5289686B	PLUG			26, 244, 248
52E001212B	ADAPTER	52E000012B	A	84
53D000010B	NUT	83D000010B	B	6
54K020002B	O-RING			68, 70, 74
54K020028B	O-RING			78
54K030118B	O-RING			58
54K030226B	O-RING	25K030226B	A	54, 56
54K030226B	O-RING			54, 56
54K040124B	O-RING	25K040124B	A	58
54K040300B	O-RING	58K000234B	A	54, 56
54K040300B	O-RING			54, 56
55D000004B	NUT			242, 244, 248, 354
55D000006B	NUT			18, 270
55D000007B	NUT			320, 354
55K000204B	O-RING			64, 68, 70, 74, 78
55K000212B	O-RING			64, 68, 70, 74, 78
57D000004B	NUT			48
57D000005B	NUT			48, 138, 242
57D000006B	NUT			60, 258, 294
57D000008B	NUT	83D-8	B	18, 328
57D000008B	NUT			18, 328
58G000808B	SCREW			282, 290
58K000014B	O-RING			62, 66, 70, 74, 294
58K000017B	O-RING			62, 70, 74
58K000018B	O-RING			84
58K000116B	O-RING	80K000116B	B	82
58K000122B	O-RING			348
58K000124B	O-RING			62, 66, 72, 74
58K000127B	O-RING			64, 66, 72, 74
58K000136B	O-RING			58
58K000236B	O-RING			54, 56
59D000004B	NUT			316, 318
59D000005B	NUT	61D-5	B	10, 114, 344
59D000005B	NUT			10, 114, 344

Code for disposition of old part number

A -- Use up
B -- Use on other application (See PNI)
C -- File PDR Report with Bobcat Parts Sales
D -- Part Number Error

Page 409 - OS6# 2060759 - All rights reserved by Bobcat Company, a business unit of Ingersoll-Rand - 05/22/2008 - 07:23:42 - Produced by Ken Cook Co. with mediaioff

Part No.	Description	Was	Code	Page
59D000006B	NUT			18, 42, 46, 52, 292
59D000008B	NUT			6
59G000616B	BOLT			232
5CM00812B	BOLT			196
5CM01025B	SCREW			134
5CM01035B	BOLT			138
5HM00020B	CLAMP			308
5HM00024B	CLAMP			304, 308
5HM00042B	CLAMP			84, 128
5JM00014B	CIR-CLIP			154
5JM00024B	CIRCLIP			162, 204
614142B	SLEEVE			354
619021B	WASHER			24, 60, 90
61D000004B	NUT			112, 114, 122, 232
61D000005B	NUT			10, 18, 132, 232, 260, 270, 330, 356, 360, 366
61D000006B	NUT			20, 28, 128, 134, 228, 258, 270, 334
61E000004B	NUT			344
62D000004B	NUT			114, 140, 256
62D000006B	NUT			90, 270, 272
63E000004B	PLUG			344
6500989	CLAMP			344
6502203	CLAMP			42, 46, 52, 292
6505813	CONNECTOR			132
6510171	LINK			32
6510470	RING GEAR			136, 270
6511855	SEAL			84, 128, 132
6512026	BUSHING			60
6512067	GROMMET			304
6512274	CLIP			245, 246, 248
6512797	RIVET			362
6513152	SEAL			244, 250, 254
6513466	SEAL			54, 56
6513495	COTTER PIN			60, 294
6513532	POPPET			94
6513533	SPRING			94
6515007	GAUGE			132
6515045	TUBE			384
6515521	SWITCH			310
6515575	CLAMP			28, 128
6515817	WASHER			6
6516033	TUBE			384
6516231	RING			58
6517924	CONNECTOR			354
6518200	GREASE ZERK			90
6518460	PIN			96, 102
6518820	CLAMP			128
6518952	WASHER			270
6519178	BUMPER			20
6519548	CONNECTOR			281, 282, 330
6519925	BEARING	6669050	A	40
6531270	SLEEVE			62, 66
6532127	BOOT			26, 120, 298
6534559	SEAL KIT			64
6534630	RESTRICTOR			64, 67, 68, 72, 74

Code for disposition of old part number

A -- Use up
B -- Use on other application (See PNI)
C -- File PDR Report with Bobcat Parts Sales
D -- Part Number Error

Page 410 - OSS# 2060759 - All rights reserved by Bobcat Company, a business unit of Ingersoll-Rand - 05/22/2008 - 07:23:42 - Produced by Ken Cook Co. with mediaIoff

Part No.	Description	Was	Code	Page
6535451	HOSE			44, 48, 50
6537096	WASHER			62, 63, 64
6539144	TUBE			54, 56
6539185	HEAD			54, 56
6539299	SPACER			58
6539304	ROD			58
6539323	HEAD			58
654299B	BEARING			96, 100
6544654	BUSHING			36, 60
6547593	PIN			20
6552871	WASHER			40
6552906	BRACKET			320, 354
6553411	BUSHING			4, 28, 36, 38, 130
6553412	ELBOW			130
6553709	WASHER			6
6554100	TREAD			260
6554149	CORD			6, 244, 250, 254
6554858	BALL JOINT			140
6555331	WIRE ROPE			250
6555351	SEAL			254
6555455	WASHER			20, 114
6555987	BUSHING			4, 20
6555989	BUSHING			20
6557224	DECAL			262
6557291	BALL JOINT			140
6557565	DECAL			260
6557720	HOSE			132
6557831	WASHER			24, 90
6557904	FLASHER			282, 290
6558309	WIRE ROPE			260, 294
6558310	SLEEVE			260, 294
6559447	WASHER			84
6559479	NUT			10, 36
6559552	HARDHAT			377, 378
6559775	EARMUFFS			378
6560172	COVER			114
6560416	WASHER			20
6560573	DECAL			262
6560633	DAMPENER			6
6561095	RIM			384
6561218	SHUTTLE			94
6561383	DECAL			260
6562018	SPRING	6578253	A	24
6562257	MOUNT			138
6562266	CLAMP			54, 56
6562602	BUSHING			6
6562619	BUSHING			224, 284
6562777	RIM			384
6562905	CABLE			114
6563140	SEAT	6665401	A	13, 14
6563148	BLOCK			10
6563151	LINK			10
6563452	FITTING			132
6563505	CONDUIT			114

Code for disposition of old part number

A -- Use up
B -- Use on other application (See PNI)
C -- File PDR Report with Bobcat Parts Sales
D -- Part Number Error

Page 411 - OS&H 2060759 - All rights reserved by Bobcat Company, a business unit of Ingersoll-Rand - 05/22/2008 - 07:23:42 - Produced by Ken Cook Co. with mediaioff

Part No.	Description	Was	Code	Page
6563606	WASHER			40
6563914	WASHER			60, 90, 294
6563920	FILTER			114
6563922	SNUBBER			114
6564343	SPACER			140
6564452	GRIP			140
6564517	WIRE			310
6564527	DECAL			314
6564657	PIN			60
6564669	NUT			40, 384
6564697	TEE			314
6564833	SAFETY TREAD			246
6564991	CABLE			114
6565170	CABLE			114
6565200	DECAL			262
6565270	VINYL CAB			251, 252
6565355	GUIDE			10
6565977	HOSE			314
6565990	DECAL			262
6566957	INSTRUCTIONS			254
6567604	SPACER			6
6567743	PIN			6, 132
6567827	ANGLE			328
6567838	PIN			328
6567962	WASHER			140
6567968	WIRE			354
6568047	NUT			244, 248
6568167	KIT			347, 348
6568476	CLAMP			52, 292
6568877	WASHER			138
6569095	MOUNT			288
6569112	KIT			287, 288
6569203	CLAMP			114, 344
6569219	SCREEN			28, 84
6569465	AXLE			40
6570040	INSTRUCTIONS			288
6570931	INSTRUCTIONS			224
6571536	PULLEY			124
6571744	BOB-TACH			24
6571851	SNAP RING			34
6571852	SNAP RING			34
6571991	GUIDE			364
6575580	GASKET			132, 146, 170, 188, 212
6576028	HOSE			128
6576033	WASHER			134
6576194	LINK			90
6576195	LINK			90
6576196	MOUNT			90, 102
6576252	ROD			140
6576261	COVER			140
6576262	MOUNT			140
6576280	BOLT			114
6576302	BAR			60
6576386	HOSE			28

Code for disposition of old part number

A -- Use up
B -- Use on other application (See PNI)
C -- File PDR Report with Bobcat Parts Sales
D -- Part Number Error

Page 412 - OSS# 2060759 - All rights reserved by Bobcat Company, a business unit of Ingersoll-Rand - 05/22/2008 - 07:23:42 - Produced by Ken Cook Co. with mediaioff

Part No.	Description	Was	Code	Page
6576660	TANK			128
6577058	PIN			90
6577204	SPROCKET			31, 32, 40
6577227	INLET			128
6577230	BRACKET			90
6577382	SPACER			128
6577446	BUSHING			24
6577456	KIT			124
6577459	DIPSTICK			84
6577545	GROMMET			232
6577585	BAND			84
6577669	HOSE			42, 46
6577671	HOSE			42, 46
6577690	TUBE			64, 72, 84
6577754	DECAL			262
6577801	LIGHT			330
6577812	COVER			224
6577813	BAR			60
6577821	HOSE			28
6577822	HOSE			28, 128
6577880	KIT			223, 224
6577947	SAFETY TREAD			260
6577949	SAFETY TREAD			260
6577954	PIN			20
6577961	GROMMET			26
6578139	LEVER			237, 238
6578140	LEVER			238
6578150	LOCK			10
6578169	HOSE			28
6578172	HOSE			28
6578268	BELLCRANK			140
6578278	PAD			28
6578279	HOSE			128
6578280	HOSE			128
6578284	SHIM			142
6578327	HOSE			86
6578356	BUSHING			20
6578363	ROD END			114
6578366	BALL JOINT			114
6578368	DECAL			262
6578505	COVER			4, 36
6578528	HARNESS			330
6578689	HUB			40
6578780	CROSSMEMBER			112
6578804	HOSE			44, 48, 50
6578812	ADAPTER			84
6578824	HOUSING			330
6579104	SHIM			24
6579106	SHIM			24
6579126	CHAIN			32
6579127	CHAIN			32
6579325	WINDOW			250
6579326	MOUNT			132
6579385	DECAL			284

Code for disposition of old part number

A -- Use up
B -- Use on other application (See PNI)
C -- File PDR Report with Bobcat Parts Sales
D -- Part Number Error

Page 413 - OS&H 2060759 - All rights reserved by Bobcat Company, a business unit of Ingersoll-Rand - 05/22/2008 - 07:23:42 - Produced by Ken Cook Co. with mediaioff

Part No.	Description	Was	Code	Page
6579399	DECAL			284
6579402	DECAL			284
6579403	DECAL			284
6579509	DECAL			260
6579510	DECAL			260
6579528	DECAL			260
6579613	STOP			6
6579639	DECAL			260
6579641	HOUSING			142
658128B	SNAP RING			96, 100
6584978	CONDUIT			36, 354
6585223	ORIFICE			308, 314
6585860	SPRING			36
6586459	SEAL KIT			70
6586575	CYLINDER			57, 58
6586576	TUBE			58
6586577	CASE			58
6586906	PISTON			54
6586910	ROD			54
6586918	SCREW			62, 66
6587458	KEY			28
6587523	WASHER			62, 66, 70, 74
6587526	KIT			379, 380
6587575	ADAPTER			62, 66
6587580	SPRING			62, 66, 70, 74
6587633	BONNET			62, 66, 70, 74
6587763	BOOT			62, 66, 70, 74
6588074	SPOOL			62, 66, 70, 74
6588197	SPRING			62
6588781	END CAP			66, 72, 74
6588981	END CAP			62
6589045	SPRING			70, 74
6589226	BONNET			62, 66
6589564	RETAINER			62, 66, 70, 74
6589565	BUSHING			62, 66, 70, 74
6589665	BUSHING	6534387	A	24, 54
6589665	BUSHING			24, 54
6591447	STEM			384
6592098	WASHER			62, 66
6592100	COLLAR			62, 66, 70, 74
6592105	BALL			62, 66
6592107	SPRING			62, 66
6592109	ADAPTER			62, 66, 70, 74
6592115	SEAT			62, 66, 70, 74
6592116	NUT			62, 66, 70, 74
6592117	SPRING			62, 66, 70, 74
6592506	CLAMP			292
6592720	PLUG			64, 66, 72, 74
6592766	U-BOLT			294
6595663	BUSHING			62, 66, 72, 74
6596311	SEAL KIT			72
6596332	SPRING			66, 72, 74
6596569	SEAT			66, 70, 74
6596807	PLUG			62, 66

Code for disposition of old part number

A -- Use up
B -- Use on other application (See PNI)
C -- File PDR Report with Bobcat Parts Sales
D -- Part Number Error

Page 414 - OSS# 2060759 - All rights reserved by Bobcat Company, a business unit of Ingersoll-Rand - 05/22/2008 - 07:23:42 - Produced by Ken Cook Co. with mediaioff

Part No.	Description	Was	Code	Page
6598098	PIN			172, 216
6598099	KEY			162, 204
6598100	KEY			160
6598101	BALL BEARING			162
6598102	VALVE			178, 220
6598116	PLUG	6652797	A	156, 198
6598116	PLUG			156, 198
6598136	GASKET	3975419B	A	146, 152
6598136	GASKET			146, 152
6598142	GEAR			160, 202
6598146	PIPE			182, 222
6598158	CIRCLIP	3975432B	A	162, 204
6598158	CIRCLIP			162, 204
6598174	LEVER			173, 174, 213, 214
6598176	LEVER			176, 218
6598179	COLLAR			204
6598187	PLUG			150, 192
6598355	BOLT			174
6598362	ELEMENT			2, 186
6598485	SEALANT			230
6598492	ELEMENT			2, 186
6598703	SEAL			172
6598799	CLAMP			132, 284
6598908	ELBOW			28
6599136	CLIP			182
6599161	RELIEF VALVE			62, 70
6599360	SEALANT			390
6599365	KIT			110
6599645	PLUG			4, 28
6599652	BOOT			114
6599696	SOCKET & BULB			112
6599719	GREASE			134, 390
6599721	DOOR			252
6599741	WASHER			90
6599744	BALL JOINT			90, 270, 272
6599779	ADJUSTER			360
6599780	TRACK			14
6599931	ALARM			232
65G000608B	BOLT			112
6610510	TIE			42, 46, 112, 114, 115, 116, 130, 246, 248, 266, 316, 318, 334, 352, 354
6617736	HOSE	6704630	B,D	84
6624289	STA STRAP			266, 308
6624435	NUT			304
6626631	CLAMP			130
6628571	VALVE ASSY			50, 62, 66, 70, 74, 77, 78
6630153	BATTERY CAP			114
6630163	PULLEY			256
6630168	COUPLER			88
6630177	DRAINCOCK			192
6630184	THERMOSTAT			168, 210, 308, 314
6630188	POLISH			390
6630189	POLISH			390
6630207	RIVET			10, 26

Code for disposition of old part number

A -- Use up
B -- Use on other application (See PNI)
C -- File PDR Report with Bobcat Parts Sales
D -- Part Number Error

Page 415 - OS&H 2060759 - All rights reserved by Bobcat Company, a business unit of Ingersoll-Rand - 05/22/2008 - 07:23:42 - Produced by Ken Cook Co. with mediaioff

Part No.	Description	Was	Code	Page
6630340	HOUSING			256
6630341	STATOR			256
6630342	HOUSING			256
6630343	RETAINER			256
6630344	BRUSH ASSY.			256
6630345	GASKET			256
6630346	COVER			256
6630348	CAPACITOR			256
6630349	REGULATOR			256
6630350	DIODE			256
6630367	CAP			88
6630465	CUSHION			14
6630468	CUSHION			14
6630469	TRACK			14
6630521	FILTER			348
6630616	SPRING			348
6630618	PLUG			348
6630619	GASKET			348
6630620	SPRING			348
6630797	GAS SPRING			246, 250
6630821	SWITCH			354
6630838	CONNECTOR			298
6630919	TRACK			254
6630924	BRACKET			254
6630941	COVER			186
6630945	WASHER			140
6631010	SWITCH			114
6631036	JOINT			294
6631418	PIN			6, 10, 132, 364
6631548	LOOP			254, 284
6631549	HOOK			254, 284
6631561	NUT			82
6631664	SEAL			160, 202
6631927	GEAR			244, 248
6632053	SWITCH			110, 116
6632218	BEARING			34
6632221	STUD			246, 250
6632228	RETAINER			124
6632265	PLUG			253, 254
6632279	SEAL KIT			64, 68, 74
6632323	WASHER			124
6632388	SEAT			355, 356
6632417	BEARING			126
6632418	BEARING			126
6632419	HOUSING ASSY.			126
6632420	BRUSH HOLDER			126
6632421	SPRING			126
6632428	PINION			126
6632429	RETAINER			126
6632430	ROLLER			126
6632432	PLUNGER			126
6632433	GASKET			126
6632434	COVER			126
6632436	SPRING			126

Code for disposition of old part number

A -- Use up
B -- Use on other application (See PNI)
C -- File PDR Report with Bobcat Parts Sales
D -- Part Number Error

Page 416 - OSS# 2060759 - All rights reserved by Bobcat Company, a business unit of Ingersoll-Rand - 05/22/2008 - 07:23:42 - Produced by Ken Cook Co. with mediaioff

Part No.	Description	Was	Code	Page
6632441	SPRING			126
6632541	RACE			34
6632560	KEY			248
6632584	RESISTOR			306
6632587	BALL			310
6632633	SWITCH			114
6632946	TERMINAL			116
6633583	SEALANT			4, 284, 390
6634609	RACE			40
6635557	WASHER			256
6636018	LIGHT			112
6640690	PIN			118, 120, 264, 292, 296, 298, 302, 318, 354
6640691	PIN			118, 120, 264, 296, 302, 354
6640692	CONNECTOR			298
6640694	LOCK			298
6640696	CONNECTOR			120, 298
6640699	CONNECTOR			118, 120, 264, 292, 294, 298, 302, 318, 344
6640700	LOCK			118, 120, 264, 292, 294, 298, 302, 318, 344
6641056	GROMMET			306
6641062	SCREW			306, 312
6641065	NUT			304, 306
6641066	SCREW			304, 306
6641072	WASHER			304, 306, 312
6641073	NUT			306, 312
6641173	CONNECTOR			118, 120, 264, 294, 295, 296, 298, 302
6641176	SEAL			118, 120, 264, 292, 296, 298, 302, 318, 354
6641178	CONNECTOR			118, 120, 264, 294, 298, 302, 354
6641179	CONNECTOR			82, 118, 120, 240, 264, 292, 294, 298, 302, 318, 344, 352, 354
6641180	LOCK			82, 118, 120, 240, 264, 292, 294, 298, 302, 318, 344, 352, 354
6641181	LOCK			118, 120, 264, 296, 298, 302, 354
6641231	PLATE			176, 218
6645080	O-RING			100, 104
6645081	O-RING			96
6645086	PLUG			98, 100
6646383	CONNECTOR			116
6646582	PLUG			298
6646601	TIRE			384
6646627	BEARING			142
6646678	CAP			128
6646705	SEAL			132
6646730	O-RING	6655518	A	180
6646781	SWITCH			232
6647635	KNOB			244, 248
6647777	PIN			82
6647778	CAP			82
6647780	PLUG			82
6647783	LOAD CHECK			82
6647784	PLUG			82
6647785	SPRING			82
6647786	SEAL KIT			82
6648293	SCREW			82
6648294	SPRING			82

Code for disposition of old part number

A -- Use up
B -- Use on other application (See PNI)
C -- File PDR Report with Bobcat Parts Sales
D -- Part Number Error

Page 417 - OS&H 2060759 - All rights reserved by Bobcat Company, a business unit of Ingersoll-Rand - 05/22/2008 - 07:23:42 - Produced by Ken Cook Co. with mediaioff

Part No.	Description	Was	Code	Page
6648307	CONNECTOR			298
6648348	PLUG			26
6648460	CONNECTOR			312
6648466	MOTOR			312
6648467	MOUNT			312
6648468	FAN			312
6648469	HOUSING			312
6648470	SCREW			306, 312
6648471	CORE			312
6648472	COVER			312
6648474	ELBOW			314
6648475	O-RING			314
6648482	CABLE			314
6648483	VALVE			314
6648485	TEE			308
6649028	CLAMP			264
6649244	STUD			132
6649300	SEAL			160, 202
6649402	MOULDING			128
6649459	CONNECTOR			256
6649478	BULB HOUSING			330
6649481	BULB			330
6649536	PLUG			168, 210
6649551	SHOCK			90, 270
6649683	SEAL			318
6650107	SEAL			116
6650219	KNOB KIT			360
6650220	SHROUD			360
6650221	LATCH TILT			360
6650222	SPRING			360
6650223	CABLE			360
6650224	SUPPORT			360
6650225	BACK CUSHION			360
6650226	SEAT CUSHION			360
6650228	TRACK			360
6650229	SPRING			360
6650230	SEAT PAN			360
6650231	CLIP			360
6650239	SCREEN			28
6650241	PUSH NUT			360
6650242	TIP			360
6650243	BOOT			360
6650244	NUT			360
6650245	WASHER			360
6650246	WASHER			360
6650247	WASHER			360
6650248	SPACER			360
6650249	SPACER			360
6650250	WASHER			360
6650251	CLIP			360
6650388	SEALANT			390
6650407	ADHESIVE			130, 390
6650627	PLATE			96, 100
6650629	PIN			96, 100

Code for disposition of old part number

A -- Use up
B -- Use on other application (See PNI)
C -- File PDR Report with Bobcat Parts Sales
D -- Part Number Error

Page 418 - OSS# 2060759 - All rights reserved by Bobcat Company, a business unit of Ingersoll-Rand - 05/22/2008 - 07:23:42 - Produced by Ken Cook Co. with mediaioff

Part No.	Description	Was	Code	Page
6650630	RETAINER			96, 100
6650634	GASKET			96, 100
6650635	BEARING			96, 102
6650636	PIN			96, 100
6650637	BOLT			96, 100
6650639	SEAL			102
6650646	O-RING			96
6650647	O-RING			96
6650648	PLUG			98
6650652	POPPET			96
6650668	BOLT			96, 100
6650675	COUPLER			96
6650677	COUPLER			100
6650679	BOLT			104
6651482	MANIFOLD			169, 170
6651542	BALL			94
6651709	SEAL			20
6651934	BOLT			162, 204
6651975	SWITCH	6670141	A	264, 304
6651975	SWITCH			264, 304
6652018	BOLT			100
6652367	HOSE COVER			314
6652487	BOLT			134
6652574	PLUG			150, 192
6652575	PLUG			150, 192
6652580	BOLT			166, 172, 208, 216
6652592	PIN			148, 190
6652624	JOINT			152
6652633	BALL			160, 202, 206
6652652	SPRING			148, 190
6652653	PLUG			152
6652670	STUD			156, 170, 178, 198, 212, 220
6652688	CLAMP			182, 222
6652689	CLAMP			182, 222
6652762	BOLT			166
6652764	STUD			148, 176, 190, 218
6652792	NUT			154, 156, 166, 168, 170, 178, 198, 208, 210, 220
6652818	ADHESIVE			6
6652918	NUT	83D000008B	B	138, 268
6652918	NUT			138, 268
6652935	EDGING			14
6653388	MIRROR			270
6653395	VALVE			64, 70
6653484	VALVE			346
6653485	SEAL KIT			346
6653487	SEAL KIT			346
6653490	PLUG			346
6653517	REDUCER			390
6653518	PRIMER			390
6653562	GASKET			168, 210
6653702	SEAL			142
6653757	SNAP RING			142
6653758	SNAP RING			142

Code for disposition of old part number

A -- Use up
B -- Use on other application (See PNI)
C -- File PDR Report with Bobcat Parts Sales
D -- Part Number Error

Page 419 - OS&H 2060759 - All rights reserved by Bobcat Company, a business unit of Ingersoll-Rand - 05/22/2008 - 07:23:42 - Produced by Ken Cook Co. with mediaioff

Part No.	Description	Was	Code	Page
6653798	BOLT			158, 200
6653803	GUIDE			156, 198
6653807	BOLT			148, 190
6653808	BOLT			148, 190
6653809	ADAPTER			148, 190
6653821	BOLT			160, 202
6653830	SEAL			146, 154, 188, 196
6653832	STUD			154
6653833	SPRING			196
6653839	SCREW			164
6653840	GEAR			164, 206
6653843	STOPPER			164
6653859	SLEEVE	3975334B	A	160, 202
6653859	SLEEVE			160, 202
6653861	SLINGER			160, 202
6653865	WASHER			160, 202
6653894	SLEEVE			180
6653905	CAP			176, 218
6653906	BOLT ASSY.			172, 216
6653941	WATER PUMP			165, 166
6653946	STUD			166
6654002	WASHER			160, 202
6654003	WASHER			160, 202
6654139	MOULDING			8, 138
6654191	VALVE			304
6654205	HOSE			88
6654374	KEY			28
6654718	CLAMP			182, 222
6655151	OIL PAN			157, 158, 199, 200
6655152	HOOK			155, 156
6655154	GUIDE			156, 198
6655155	SEAT			154, 196, 197, 198
6655156	SEAT			154, 196, 198
6655158	BOLT			156, 198
6655160	PLUG			156, 198
6655161	WASHER			156, 198
6655162	O-RING			146, 148
6655163	CASE			160, 202
6655164	BOLT			160, 202
6655165	GASKET			146, 160, 202
6655166	COVER			160
6655168	CASE			160, 202
6655169	CASE			160, 202
6655170	CASE			160, 202
6655171	MANIFOLD			170
6655173	VALVE			153, 154, 195, 196
6655174	VALVE			154, 196
6655175	COVER			152
6655176	PUSHROD			164, 206
6655179	PIN			160, 202
6655180	CIR-CLIP			160, 202
6655181	ROD			160, 202
6655183	PIN			160, 202
6655184	CRANKSHAFT	6674166	A	160, 202

Code for disposition of old part number

A -- Use up
B -- Use on other application (See PNI)
C -- File PDR Report with Bobcat Parts Sales
D -- Part Number Error

Page 420 - OSS# 2060759 - All rights reserved by Bobcat Company, a business unit of Ingersoll-Rand - 05/22/2008 - 07:23:42 - Produced by Ken Cook Co. with mediaioff

Part No.	Description	Was	Code	Page
6655184	CRANKSHAFT			160, 202
6655185	BEARING			160, 202
6655186	BEARING			160, 202
6655187	GEAR ASSY.			164
6655190	COLLAR			164
6655191	COLLAR			164
6655192	CIR-CLIP			164
6655193	SHAFT			164
6655194	OIL FILTER			158, 200
6655195	BOLT			150, 192
6655198	PIPE			182
6655201	ELEMENT			180
6655202	VALVE			180
6655203	SPRING			180
6655204	HOLDER			180
6655205	PLATE ASSY.			180
6655206	BOLT			180
6655207	PLATE			180
6655209	PLATE			180
6655210	SHIM			178, 220
6655211	CAMSHAFT			161, 162, 203, 204
6655212	GEAR			162, 204
6655213	SLEEVE			162, 204
6655214	CASE			162, 204
6655215	BALL			162, 204
6655216	FUEL PUMP	6674170	A	178, 220
6655216	FUEL PUMP			178, 220
6655218	GASKET			146, 182, 184, 188, 222
6655219	PIPE			182, 222
6655220	PIPE			182, 222
6655221	PIPE			182, 222
6655222	PIPE			182, 222
6655223	NUT			176, 218
6655224	LEVER	6655876	A	174, 214
6655224	LEVER			174, 214
6655225	SPRING	6686986	D	174, 214
6655225	SPRING			174, 214
6655227	SPRING			174, 214
6655228	STOPPER			176, 218
6655230	COVER			172
6655231	SHAFT			172, 216
6655232	LEVER			216
6655233	GLOW PLUG			182, 222
6655234	CORD	6686987	A	182, 222
6655236	PIN			160, 202
6655237	PIN			160, 202
6655238	BEARING			160, 202
6655239	BEARING			160, 202
6655240	BEARING			160, 202
6655241	BEARING			160, 202
6655242	BUSHING			164, 206
6655243	BUSHING			160, 202
6655384	CAMSHAFT			164, 206
6655399	BUMPER			18

Code for disposition of old part number

A -- Use up
B -- Use on other application (See PNI)
C -- File PDR Report with Bobcat Parts Sales
D -- Part Number Error

Page 421 - OS6# 2060759 - All rights reserved by Bobcat Company, a business unit of Ingersoll-Rand - 05/22/2008 - 07:23:42 - Produced by Ken Cook Co. with mediaioff

Part No.	Description	Was	Code	Page
6655415	COVER			104
6655418	COVER			104
6655427	CAMSHAFT			164, 206
6655498	BOLT			160, 202
6655515	JOINT			178, 220
6655540	COVER			216
6655781	BEARING			134, 294
6655869	PLUG			150
6655870	ROCKER ARM			154, 196
6655872	HEAT SEAL			146, 182, 184, 188, 222
6655873	PIECE			184
6655875	CAMSHAFT			162, 204
6655877	LEVER			174
6655878	SPRING			174, 214
6655880	PIPE			167, 168, 194, 209, 210
6655884	PLUG	3974051B	D	150
6655937	VALVE			186
6655938	VALVE			186
6656126	WASHER			184
6656127	WASHER			184
6656128	WASHER			184
6656129	WASHER			184
6656130	WASHER			184
6656131	WASHER			184
6656132	WASHER			184
6656155	HOSE COVER			42, 46
6657028	O-RING			96, 100
6657067	COVER			98, 100
6657068	COVER			96, 100, 101, 102
6657083	ELBOW			28
6657306	CAP			304
6657376	ELBOW			128, 129, 130
6657401	GASKET KIT			156, 198
6657402	GASKET KIT			146, 150, 188, 192
6657409	SEAL KIT			336
6657415	BOLT			210
6657460	NUT			184
6657463	WASHER			184
6657663	PLUG			192
6657719	PLUG			26, 304
6657734	PUMP			28
6657742	KIT			184
6658092	SEAL KIT			98, 102
6658142	WINDOW			254
6658143	WINDOW			254
6658180	BREATHER			28
6658228	SEAL			40, 230
6658301	SPRING			98
6658352	MOULDING			250
6658536	RING			134
6658672	SNAP RING			36, 38
6658682	BEARING			294
6658693	HEATER			310, 311, 312
6658818	SENDER			114

Code for disposition of old part number

A -- Use up
B -- Use on other application (See PNI)
C -- File PDR Report with Bobcat Parts Sales
D -- Part Number Error

Page 422 - OSS# 2060759 - All rights reserved by Bobcat Company, a business unit of Ingersoll-Rand - 05/22/2008 - 07:23:42 - Produced by Ken Cook Co. with mediaIoff

Part No.	Description	Was	Code	Page
6658847	RING			134
6658930	BOOT			294
6659371	NUT			124
6659372	WASHER			124
6659374	SPACER			124
6659375	FAN			124
6659376	BRACKET			124
6659378	BOLT			124
6659379	BEARING			124
6659380	ROTOR			124
6659381	STATOR			124
6659382	BRACKET			124
6659384	RECTIFIER			124
6659385	SCREW			124
6659386	HOLDER			124
6659387	NUT			124
6659388	CONDENSER			124
6659390	HOLDER			124
6659391	NUT			124
6659392	BOLT			124
6659393	REGULATOR			124
6659394	BRUSH			124
6659395	SPRING			124
6659396	SCREW			124
6659397	TERMINAL			124
6659398	COVER			124
6659399	SCREW			124
6659400	CONNECTOR			124
6659473	TIRE			384
6659543	PLUG			332
6659553	SEAL			318
6659890	SHIELD			312
6659891	MOULDING			312
6659892	MOULDING			312
6659949	LATCH			254
6659982	MUFFLER	6703648	A	284
6659999	BELT			362
6660294	HORN			316, 318
6660340	VINYL CAB			252
6660348	GAS SPRING			356
6660594	BUTTON			112
6660644	CAP			62, 66
6660654	CONNECTOR			306
6660656	DECAL			306
6660659	SWITCH			304
6660777	KIT			307, 308
6660795	GUIDE			308
6660814	O-RING			96, 102
6660822	KNOB			304
6660865	DECAL			304
6660868	DECAL			306
6660869	KNOB			306
6660872	DOOR			306
6660873	BRACKET			306

Code for disposition of old part number

A -- Use up
B -- Use on other application (See PNI)
C -- File PDR Report with Bobcat Parts Sales
D -- Part Number Error

Page 423 - OS&H 2060759 - All rights reserved by Bobcat Company, a business unit of Ingersoll-Rand - 05/22/2008 - 07:23:42 - Produced by Ken Cook Co. with media1off

Part No.	Description	Was	Code	Page
6660874	HOUSING			306
6660876	MOTOR			306
6660877	MOULDING			306
6660878	MOULDING			306
6660879	ELBOW			304
6660880	FILTER			304
6660881	KNOB			304
6660883	TIE			304, 308
6660884	SCREW			304
6660885	LOUVER			304
6660890	COVER ASSY.			304
6660892	HARNESS			304
6660894	HARNESS			304
6660930	THUMBSCREW			304
6660988	RETAINER			234, 290, 352, 382
6660995	GREASE RING			134
6661022	FILTER			86, 107, 108
6661062	PLUG			132
6661076	HOSE			86
6661112	SEAL			134
6661114	CAP			28
6661117	TANK			272
6661180	LOCK			298
6661183	LOCK			120, 298
6661209	RIVET			128
6661213	RING			28
6661238	OIL COOLER			88
6661242	COVER			186
6661243	WING NUT			186
6661244	WASHER			186
6661248	ELEMENT			2, 88, 110
6661328	SEAL KIT			72
6661334	FILTER ASSY			109, 110
6661353	LIGHT ASSY			330
6661382	ELBOW			28
6661481	O-RING			98
6661608	SEAL KIT			276
6661611	ALTERNATOR			123, 124
6661616	MUFFLER			331, 332
6661689	TRACK			254
6661690	TRACK			254
6661694	PISTON			58
6661696	CAP			28
6661758	BLOCK ASSY			98, 100
6661785	MOUNT			138
6661787	WASHER			138, 268
6661807	KIT			108
6661808	KIT			108
6662257	PIN			118, 264, 296, 302
6662306	RING			40, 230
6662437	WASHER			126
6662839	HINGE KIT			252
6662848	CAP			64, 68, 72, 74
6662997	PULLEY			134

Code for disposition of old part number

A -- Use up
B -- Use on other application (See PNI)
C -- File PDR Report with Bobcat Parts Sales
D -- Part Number Error

Page 424 - OSS# 2060759 - All rights reserved by Bobcat Company, a business unit of Ingersoll-Rand - 05/22/2008 - 07:23:42 - Produced by Ken Cook Co. with mediaioff

Part No.	Description	Was	Code	Page
6664004	CLAMP			132
6664035	CAP			264
6664036	NUT			264
6664037	WASHER			264
6664040	PIN			112, 264
6664041	SOCKET			116, 264
6664095	ARM			246, 248
6664096	BLADE			246, 248
6664181	CONNECTOR			264
6664182	CONNECTOR			264
6664205	GAS SPRING			6
6664209	SEAL			134
6664212	CHECK VALVE			346
6664221	RETAINER			12, 270, 354, 356
6664223	OUTLET			270
6664224	CAP			270
6664286	BOOT	6675280	A	116, 122
6664286	BOOT			116, 122
6664310	CLIP			6
6664351	SEAL			6, 254
6664368	LIGHT			270
6664373	VALVE			64
6664374	PLUG			6
6664388	DIODE			264
6664554	PUMP			244, 248, 352
6664555	NOZZLE			244, 248, 352
6664584	CONNECTOR	6665683	A	112
6664585	CONNECTOR	6665682	A	116
6664599	CONNECTOR	6664184	B	118, 264, 294, 302
6664599	CONNECTOR			118, 264, 294, 302
6664800	LOCK	6664186	B	118, 264, 294, 302
6664800	LOCK			118, 264, 294, 302
6664806	HOUSING			306
6664808	DOOR			306
6664815	SEAL			94
6664827	PIN			112
6664828	SOCKET			116
6664881	KEY			356
6664882	BUSHING			364
6664886	HOURMETER			112, 320, 354
6664993	TIRE & RIM			385, 386
6664994	TIRE & RIM			386
6664995	KIT			386
6665000	CLIP			10, 112, 120, 298, 356
6665001	CONNECTOR			264
6665012	SEAL			6, 254
6665021	LENS			380
6665022	FLASH TUBE			380, 382
6665023	GASKET			380
6665024	BRANCH GUARD			380
6665025	LENS			380
6665031	BATTERY			114
6665086	SEAL			54, 56
6665208	SEAL			58

Code for disposition of old part number

A -- Use up

B -- Use on other application (See PNI)

C -- File PDR Report with Bobcat Parts Sales

D -- Part Number Error

Page 425 - OS&H 2060759 - All rights reserved by Bobcat Company, a business unit of Ingersoll-Rand - 05/22/2008 - 07:23:42 - Produced by Ken Cook Co. with mediaioff

Part No.	Description	Was	Code	Page
6665315	SWITCH			270, 282
6665316	SWITCH			282
6665321	RIVET			112, 120, 298
6665322	RIVET			112, 120, 298
6665353	SWITCH			270
6665356	BLOCK			116
6665357	LOCK			116
6665358	COVER			116
6665367	BULB			270
6665369	MOUNT			116
6665371	SWITCH			186
6665410	SWITCH			330
6665411	WEDGE			116
6665527	TIE			112
6665530	LATCH			244, 248
6665531	LATCH			244, 248
6665532	MOTOR			244, 248
6665568	EXTRUSION			6, 244, 250, 254
6665569	WASHER			62, 70, 74
6665570	RING			62, 70, 74
6665602	MOTOR			352
6665605	CAP			244, 248, 352
6665606	SWITCH			112
6665656	CLIP			14
6665687	ARM			352
6665688	BLADE			352
6665701	BUSHING			60, 90
6665707	SWITCH			244, 248
6665724	TIRE			384
6665727	LIGHT			282
6665728	LIGHT			282
6665729	LIGHT			282
6665730	LIGHT			234
6665757	LIGHT			282
6665758	VALVE			64
6665846	SEAL			62, 66, 72, 74
6666338	WASHER			96, 100
6666339	BOLT			100
6666341	VALVE			48, 81, 82, 242
6666379	CABLE			294
6666384	RADIATOR			127, 128
6666534	SEAL			296
6666563	LENS			282
6666564	HOUSING			282
6666565	LENS			282
6666566	GASKET			282
6666567	BULB			282
6666568	BULB			282
6666569	BULB			282
6666570	BULB			282
6666571	BULB			234
6666572	LENS			234
6666588	SPOOL			62, 66
6666589	SPOOL			62, 66

Code for disposition of old part number

A -- Use up
B -- Use on other application (See PNI)
C -- File PDR Report with Bobcat Parts Sales
D -- Part Number Error

Page 426 - OSS# 2060759 - All rights reserved by Bobcat Company, a business unit of Ingersoll-Rand - 05/22/2008 - 07:23:42 - Produced by Ken Cook Co. with mediaIoff

Part No.	Description	Was	Code	Page
6666590	SPOOL			62, 66
6666591	SPOOL			62, 66
6666592	SPOOL			62, 66
6666593	SPOOL			62, 66
6666608	BUSHING			366
6666616	STEM			70
6666621	ARMATURE			126
6666622	DRIVE			126
6666628	NUT			126
6666629	WASHER			126
6666630	WASHER			126
6666631	WASHER			126
6666632	O-RING			126
6666633	BOLT			126
6666634	BOLT			126
6666635	BOLT			126
6666636	BOLT			126
6666637	NUT			126
6666766	GROMMET			246, 250, 352
6666781	GASKET			146, 170, 188, 212
6666782	GASKET	3974456B	A	146, 150
6666783	GASKET	3974601B	A	146, 172, 188, 216
6666783	GASKET			146, 172, 188, 216
6666790	GASKET	3974693B	A	146, 168, 308, 314
6666790	GASKET			146, 168, 308, 314
6666791	GASKET			146, 170
6666792	GASKET	6635392	A	146, 176, 188, 218
6666792	GASKET			146, 176, 188, 218
6666800	GASKET	6653806	A	146, 148, 188, 190
6666800	GASKET			146, 148, 188, 190
6666802	GASKET			146, 168
6666803	GASKET	3974895B	A	146, 148
6666804	GASKET	3974995B	A	146, 166, 188, 208
6666804	GASKET			146, 166, 188, 208
6666811	GASKET			146, 170
6666812	GASKET	6655167	A	146
6666814	GASKET	6655167	A	160, 188, 202
6666814	GASKET			160, 188, 202
6666817	GASKET	3975449B	A	146, 158
6666827	GASKET	3974630B	A	162
6666864	CLAMP			84
6666932	BRAKE			272, 273, 274
6666933	CYLINDER			272, 275, 276
6667139	CAP			272
6667176	PLUG			82
6667189	HOSE			130
6667322	BELT			134
6667324	SEAL	6665184	A	58
6667326	SEAL	6538141	A	54, 56
6667326	SEAL			54, 56
6667352	FILTER FUEL			2, 28
6667353	FILTER ASSY			28
6667418	PLUG			192
6667419	WASHER			192, 218

Code for disposition of old part number

A -- Use up
B -- Use on other application (See PNI)
C -- File PDR Report with Bobcat Parts Sales
D -- Part Number Error

Page 427 - OS6# 2060759 - All rights reserved by Bobcat Company, a business unit of Ingersoll-Rand - 05/22/2008 - 07:23:42 - Produced by Ken Cook Co. with mediaioff

Part No.	Description	Was	Code	Page
6667420	BOLT			204
6667421	BOLT			198
6667422	WASHER			190, 196, 208, 210, 220
6667425	PLUG			148, 190
6667428	TAPPET			163, 164, 205, 206
6667433	CIRCLIP			206
6667451	WASHER			196, 214, 218
6667460	IMPELLER			166
6667461	PIN			196
6667465	SEAL			166
6667491	WASHER			214
6667549	VALVE			62, 70
6667565	BLOWER			306
6667567	COVER			306
6667569	CONNECTOR			264
6667573	DECAL			332
6667587	STARTER			125, 126
6667676	COVER			82
6667677	O-RING			82
6667680	SNAP RING			82
6667687	STEM	6665004	D	78
6667803	COUPLER			344
6667804	COUPLER			344
6667808	COUPLER			292
6667844	VALVE ASSY			50, 79, 80
6667887	BULB			282
6667889	TIRE			384
6667904	SWITCH			112
6667905	SWITCH			112
6667934	BULB			330
6667992	SOLENOID			36
6667993	SOLENOID			114
6667996	PUMP			179, 180
6668007	SCREW			282
6668010	LENS			282
6668079	PLUG			94
6668080	SHIM			94
6668082	POPPET			94
6668088	PISTON			94
6668089	PLUG			94
6668097	SCREW			276
6668104	MOUNT			268
6668114	BEARING			134
6668717	SCREW			360
6668719	PIN			116
6668720	PIN			116
6668742	SWITCH			270
6668765	VALVE			78
6668791	ORIFICE			78
6668814	SWITCH			240, 242
6668815	SWITCH			290
6668816	SWITCH			234, 382
6668817	SWITCH			352
6668820	NUT			78

Code for disposition of old part number

A -- Use up
B -- Use on other application (See PNI)
C -- File PDR Report with Bobcat Parts Sales
D -- Part Number Error

Page 428 - OSS# 2060759 - All rights reserved by Bobcat Company, a business unit of Ingersoll-Rand - 05/22/2008 - 07:23:42 - Produced by Ken Cook Co. with mediaioff

Part No.	Description	Was	Code	Page
6668881	CORD			236
6668927	PLUG			112
6668953	BRACKET			16
6669034	BELT			128, 134
6669057	CHECK VALVE			78
6669085	VALVE			80
6669087	SEAL KIT			80
6669089	TRACK	6672735	A	16, 358
6669089	TRACK			16, 358
6669091	CLIP			270, 374
6669135	SEAT			15, 16
6669144	INDICATOR			282, 290
6669146	PLUG			374
6669154	BOLT			274
6669155	PLATE			274
6669156	SPACER			274
6669159	PISTON			274
6669162	NUT			274
6669163	PLUG			274
6669164	ADAPTER			274
6669165	SCREW			274
6669184	STATOR ASSY.			274
6669185	SEAL KIT			274
6669187	VALVE			346
6669188	STEM			346
6669189	STEM			346
6669190	COIL			346
6669191	LIGHT			382
6669216	SEAL KIT			346
6669217	SEAL KIT			346
6669218	VALVE			346
6669219	VALVE			346
6669224	BOLT			122, 270, 374
6669225	BOLT			112, 290
6669286	CLAMP			266
6669308	RETAINER			6, 234, 352, 382
6669354	SHAFT			126
6669359	TERMINAL			126
6669360	BUSHING			126
6669365	BOOT			126
6669372	COVER			126
6669384	SPEEDY SLEEVE			142
6669385	PUMP			104
6669400	VALVE PLATE			100
6669401	VALVE PLATE			96
6669402	HOUSING			96
6669403	HOUSING			102
6669404	SWASH PLATE			96, 100
6669405	END CAP			100
6669406	END PLATE			96
6669407	SHAFT			100
6669408	SHAFT			96
6669409	WASHER			96
6669410	SHIM KIT			98

Code for disposition of old part number

A -- Use up

B -- Use on other application (See PNI)

C -- File PDR Report with Bobcat Parts Sales

D -- Part Number Error

Page 429 - OS&H 2060759 - All rights reserved by Bobcat Company, a business unit of Ingersoll-Rand - 05/22/2008 - 07:23:42 - Produced by Ken Cook Co. with media1off

Part No.	Description	Was	Code	Page
6669411	BEARING			96, 102
6669415	TIMER			114
6669420	CONTROLLER			354
6669442	HOUSING			94
6669444	SPRING			94
6669446	O-RING			94
6669447	PLATE			94
6669448	PLATE			94
6669449	O-RING			94
6669450	RING			94
6669451	FLANGE			94
6669452	O-RING			94
6669453	SEAL			94
6669454	RING			94
6669455	SEAL KIT			94
6669464	PUMP			95, 96, 99, 100
6669469	SHAFT			94
6669470	BOLT			94
6669650	VENT			304
6669652	DUCT			304
6669663	GAUGE			112
6669664	VOLTMETER			112
6669665	FUEL GUAGE			112
6669689	HEATER			305, 306
6669722	CLAMP			116
6669723	CLAMP			116
6669724	CLAMP			116
6669732	SEAL KIT			78
6669733	SEAL KIT			78
6669734	SEAL KIT			78
6670140	CORE			306
6670142	NUT			304
6670144	BOLT			304
6670160	CUSHION			16
6670163	SHAFT			244, 248
6670164	LINK			244, 248
6670165	CLIP			244, 248
6670284	LIGHT ASSY			330
6670287	COVER			17, 18
6670288	END			246
6670289	BRACKET			246
6670312	SOLENOID			116, 264, 266
6670472	NUT			222
6670473	WASHER			222
6670634	SEAL KIT			82, 240, 242
6670668	PIN			282
6670682	BEARING			134
6670684	CHECK VALVE			98, 102
6670685	RELIEF VALVE			98, 102
6670705	SWITCH			114
6670706	CONNECTOR			120, 298
6670707	CONNECTOR			122, 298
6670709	CONNECTOR			298
6670710	LOCK			120, 298

Code for disposition of old part number

A -- Use up
B -- Use on other application (See PNI)
C -- File PDR Report with Bobcat Parts Sales
D -- Part Number Error

Page 430 - OSS# 2060759 - All rights reserved by Bobcat Company, a business unit of Ingersoll-Rand - 05/22/2008 - 07:23:42 - Produced by Ken Cook Co. with mediaIoff

Part No.	Description	Was	Code	Page
6670711	LOCK			122, 298
6670715	PIN			120, 298
6670726	LOCK			350
6670732	LAMP			290
6670808	FUSE			114
6670830	ADAPTER			88
6670831	ELBOW			88
6670867	LATCH			18
6671019REM	PUMP REM	6671019	A	96, 100
6671025	COIL	NSS	D	78
6671027	LIGHT			282
6671041	SEAL KIT			104
6671042	SEAL KIT	6666340	A	104, 106
6671042	SEAL KIT			104, 106
6671060	ENGINE			145, 146
6671116	TERMINALS			126
6671117	TERMINALS			126
6671118	PINION			126
6671119	CLUTCH ASSY.			126
6671120	TERMINAL			126
6671121	COVER			126
6671122	BALL			126
6671123	HOUSING			126
6671124	HOUSING			126
6671125	WASHER			126
6671126	SCREW			126
6671127	BEARING			126
6671128	BEARING			126
6671129	BEARING			126
6671509	COUPLER	6671519	D	100
6671510	RELIEF VALVE			98, 102
6671512	BLOCK ASSY			98, 100
6671515	VALVE PLATE			96
6671516	SEAL KIT			98, 102
6671518	BOLT			98
6671527	NUT			82, 240, 242
6671528	SEAL	6671156	B,D	116
6671619	HOSE	6658365	D	84
6671667	MUFFLER	6661768	A	132
6671669	MODULE	6669529	C	118, 292
6671964	SENDER			354
6672026	O-RING			52, 292
6672051	PUMP	6772051	D	96, 100
6672051	PUMP			96, 100
6672126	GEROLER			94
6672140	CHAMBER			156
6672141	RINGS			160, 202
6672142	PISTON			159, 160, 201, 202
6672143	HEAD			156
6672144	GASKET			146, 156, 188, 198
6672145	PLUG			160
6672146	CRANKCASE			149, 150, 191, 192
6672190	DRAINCOCK	3975441B	A	150
6672272	WASHER			330

Code for disposition of old part number

A -- Use up
B -- Use on other application (See PNI)
C -- File PDR Report with Bobcat Parts Sales
D -- Part Number Error

Page 431 - OS6# 2060759 - All rights reserved by Bobcat Company, a business unit of Ingersoll-Rand - 05/22/2008 - 07:23:42 - Produced by Ken Cook Co. with mediaioff

Part No.	Description	Was	Code	Page
6672273	SCREW			330
6672274	SCREW			330
6672275	GASKET			330
6672276	LENS			330
6672277	BRACKET			330
6672279	MOUNT			282, 330
6672281	CLAMP			84
6672345	KEY			350
6672445	BELT			134, 270
6672471	VALVE			78
6672486	SEALANT	6633583	A	142
6672492	RETAINER			232
6672513	PUMP			105, 106
6672715	SPACER	7000010	A	16, 358
6672715	SPACER			16, 358
6672717	SPACER			358
6672718	INDICATOR			358
6672719	CLIP			358
6672720	COVER			358
6672721	FENDER			358
6672722	FENDER			358
6672723	CLIP			358
6672724	PANEL			358
6672725	KNOB			358
6672726	FRAME			358
6672727	CUSHION			358
6672729	CUSHION			358
6672730	BOLT			358
6672731	BAR			358
6672732	CABLE			358
6672733	BOLT			358
6672734	NUT			358
6672736	DECAL			358
6672738	NUT			358
6672863	SOLENOID	6708271	A	82, 240, 242
6672863	SOLENOID			82, 240, 242
6672960	COUPLER	6667807	A	52, 292
6672962	COIL			336
6673828	HOSE			88
6673959	VALVE			82
6674003	TIRE & RIM	6670616	A	386
6674004	TIRE & RIM	6670617	A	386
6674007	KIT	6670618	A	386
6674013	TRACK			16, 358
6674019	SEAT	6670113	A	357, 358
6674099	BREAKER			116
6674150	OIL COOLER			87, 88
6674151	COVER			304
6674164	CASE ASSY.	6655479	B,D	147, 148, 189, 190
6674164	CASE ASSY.			147, 148, 189, 190
6674167	FLANGE	6655966	B,D	168, 210
6674167	FLANGE			168, 210
6674168	PULLEY	6655235	B,D	160, 202
6674168	PULLEY			160, 202

Code for disposition of old part number

A -- Use up

B -- Use on other application (See PNI)

C -- File PDR Report with Bobcat Parts Sales

D -- Part Number Error

Page 432 - OSS# 2060759 - All rights reserved by Bobcat Company, a business unit of Ingersoll-Rand - 05/22/2008 - 07:23:42 - Produced by Ken Cook Co. with mediaioff

Part No.	Description	Was	Code	Page
6674169	PULLEY	6651487	B,D	166, 208
6674169	PULLEY			166, 208
6674170	FUEL PUMP	6655216	A	28
6674172	THERMOSTAT	6653948	B,D	168, 210
6674172	THERMOSTAT			168, 210
6674173	COVER	6651489	B,D	168, 210
6674173	COVER			168, 210
6674175	LEVER	6655232	B,D	172
6674176	FLANGE	3974894B	B,D	148
6674178	DIPSTICK	6658245	B,D	158
6674202	NUT			112
6674209	SENSOR			114
6674220	SWITCH			112, 338, 340
6674222	CONTROLLER			112, 338, 340
6674224	CONTROLLER			112, 119, 120
6674255	PISTON	6667436	A	160, 202
6674255	PISTON			160, 202
6674256	RINGS	6657696	A	160, 202
6674256	RINGS			160, 202
6674263	KNOB	6672737	A	358
6674285	GAS SPRING	6661805	A	132
6674297	SPOOL			70
6674298	SPOOL			70
6674299	SPOOL			70
6674300	SPOOL			70
6674301	SPOOL			70
6674302	SPOOL			70
6674331	COIL			82
6674676	PUMP			180
6674687	BATTERY			2
6674698	GASKET KIT	6657401	B,D	146, 188
6674698	GASKET KIT			146, 188
6674798	REPAIR KIT			88
6675073	VALVE			346
6675074	SEAT BELT			10
6675097	BULB			290
6675129	CONTROLLER	6674211	A	120
6675284	SHUTTLE VALVE			336
6675285	STEM			336
6675332	LINK			32
6675380	ADHESIVE	6652818	A	390
6675387	EXTRUSION			254
6675515	HANDLE ASSY.	6713261	A	120, 298
6675515	HANDLE ASSY.			120, 298
6675517	FILTER	3974896B	A	1, 2, 148, 190
6675517	FILTER			1, 2, 148, 190
6675741	SENSOR			298
6675746	HANDLE ASSY.			298
6675747	LEVER			298
6675748	LEVER			298
6676060	LEVER ASSY.	6655879	A	172, 216
6676060	LEVER ASSY.			172, 216
6676151	COIL			346
6676152	PLUG			346

Code for disposition of old part number

A -- Use up
B -- Use on other application (See PNI)
C -- File PDR Report with Bobcat Parts Sales
D -- Part Number Error

Page 433 - OS&H 2060759 - All rights reserved by Bobcat Company, a business unit of Ingersoll-Rand - 05/22/2008 - 07:23:42 - Produced by Ken Cook Co. with mediaioff

Part No.	Description	Was	Code	Page
6676196	VALVE	6659328	A	62, 66, 70, 74
6676196	VALVE			62, 66, 70, 74
6676442	CONTROLLER			298
6676488	VALVE	6667808	A	52
6676545	CARTRIDGE			82
6676564	SEAL KIT			336
6676566	NUT			336
6676871	SEAL KIT			66
6677106	O-RING			62, 66, 70, 74
6677203	GUIDE			200
6677363	CLAMP	657904B	A	132
6677660	SPOOL			74
6678067	BUSHING			90
6678150	VALVE			334, 336
6678226	SEAL	6673881	A	96, 97, 98
6680415	HANDLE	6705920	A	118, 302
6680441	BUSHING	6664882	A	10, 11, 12
6680447	DECAL	6677370	A	118, 120, 264, 296, 302
6680472	SENSOR	6666608	A	12
6680473	BUSHING	6680442	A	10
6680484	GASKET			188, 200
6680523	KEY,MAGNETIC	6664881	A	12
6680639	PLUG			192
6680685	BOLT			196
6680706	BOLT			214
6680795	CLAMP			222
6680830	BOLT			214
6680908	CAP			194
6680970	BREATHER	6670627	A	4, 36, 38, 130
6680970	BREATHER			4, 36, 38, 130
6681512	SOLENOID			38
6682514	SHIM			220
6682515	SHIM			220
6682521	PIPE			221, 222
6682532	NUT			212
6683104	PLUG			192
6683174	ROLL PIN			208
6684753	GASKET			188, 200
6684774	GASKET			188, 190
6684776	CLAMP			194
6684779	SHIELD			193, 194
6684780	GASKET			188, 194
6684781	BOLT			194
6684782	O-RING			194
6684784	GAUGE			200
6684786	GASKET			188, 192
6684788	GASKET			188
6684793	GEAR			206
6684795	COLLAR			206
6684796	SHAFT			206
6684812	BALL BEARING			204
6684813	GASKET			188, 204
6684833	SHAFT			214
6684860	GASKET			188, 210

Code for disposition of old part number

A -- Use up
B -- Use on other application (See PNI)
C -- File PDR Report with Bobcat Parts Sales
D -- Part Number Error

Page 434 - OSS# 2060759 - All rights reserved by Bobcat Company, a business unit of Ingersoll-Rand - 05/22/2008 - 07:23:42 - Produced by Ken Cook Co. with mediaioff

Part No.	Description	Was	Code	Page
6684863	GASKET			188, 210
6684867	SEAL			208
6684868	SEAL			208
6684869	FLANGE			208
6684874	COLLAR			196
6684875	SHAFT			196
6684879	GASKET			188, 212
6685085	COVER			194
6685086	COVER			194
6685087	VALVE			194
6685344	SWASH PLATE	6671513	A	96, 100
6685372	SEAL			38
6685464	BOLT			214
6685466	O-RING			188, 190
6685468	O-RING			188, 190
6685474	BEARING			208
6685475	MANIFOLD			211, 212
6685476	SEAL			216
6685477	PLUG			192
6685501	WASHER			190
6685515	COVER			202
6685980	ENGINE V1903 T			187, 188
6686037	GASKET			188, 220
6686979	PLUG			200
6686980	HEAD			198
6686981	O-RING			188, 190
6686983	PIPE			194
6686985	BOLT			217, 218
6686986	O-RING			188, 218
6686988	PIPE			210
6686989	WATER PUMP			207, 208
6686990	MANIFOLD			212
6686991	GASKET			188, 212
6687191	SEAL	6645090	A	96
669863B	SNAP RING			96, 100
6700039	CUP			20
6700115	SPRING			134
6700170	WASHER			10, 36, 140
6700171	GAS SPRING			6
6700182	COVER			4
6700228	HARNESS			320, 354
6700229	KIT			319, 320
6700329	HOUSING			128
6700330	COVER			4, 36
6700347	COVER			226
6700463	CUP			20
6700469	SPACER			20
6700535	SPACER			138
6700541	MOUNT			138
6700599	ELBOW			88, 284
6700631	GASKET			84
6700704	BUSHING			226
6700710	KIT			225, 226
6700711	AIR CLEANER	6661400	A	185, 186

Code for disposition of old part number

A -- Use up
B -- Use on other application (See PNI)
C -- File PDR Report with Bobcat Parts Sales
D -- Part Number Error

Page 435 - OS&H 2060759 - All rights reserved by Bobcat Company, a business unit of Ingersoll-Rand - 05/22/2008 - 07:23:42 - Produced by Ken Cook Co. with mediaioff

Part No.	Description	Was	Code	Page
6700743	SPRING			20, 270
6700768	U-BOLT			90
6700782	CAP			142
6700875	RETAINER			284
6701097	WASHER			4
6701123	SCREW			132
6701145	LEVER			90
6701151	PIPE			132
6701159	SHIM			142
6701174	WASHER			6, 10, 366
6701449	FILLER TUBE			28
6701535	SPRING			10, 90, 364
6701552	BAFFLE			84
6701651	WINDOW			6
6701852	SHIELD			270
6701892	CLAMP			42, 46, 52
6701893	CLAMP			42, 46
6701957	OPERATOR CAB			5, 6
6701961	HARNESS			316, 318
6702102	GEAR			142
6702103	GEAR			142
6702135	SHAFT			142
6702137	SHAFT			142
6702138	HOUSING ASSY.			128
6702144	SHIM			142
6702165	SHIM			142
6702166	SHIM			142
6702346	SCREEN			228
6702347	SCREEN			228
6702351	KIT			227, 228
6702397	ROD			140
6702430	SPRING			10, 366
6702444	FUSE			304
6702474	RETAINER			134
6702543	LEVER			89, 90
6702548	PAD			52, 292
6702583	BUSHING			4
6702584	BUSHING			4
6702593	SPACER			232
6702621	GRIP	6712621	D	118, 120
6702621	GRIP			118, 120
6702642	SCREW			6, 112, 270
6702650	MOUNT			264
6702716	BLOCK			90
6702731	WINDOW			254, 284
6702773	LINK			294
6702774	LINK			294
6702776	BRACKET			294
6702782	BUSHING			294
6702797	CAP			128
6702903	LEVER	6578855	A	24
6702904	LEVER	6578855	A	24
6702916	DECAL			324
6702921	SPACER			324, 326

Code for disposition of old part number

A -- Use up
B -- Use on other application (See PNI)
C -- File PDR Report with Bobcat Parts Sales
D -- Part Number Error

Page 436 - OSS# 2060759 - All rights reserved by Bobcat Company, a business unit of Ingersoll-Rand - 05/22/2008 - 07:23:42 - Produced by Ken Cook Co. with mediaioff

Part No.	Description	Was	Code	Page
6702958	BUSHING			24
6702962	HOSE			344
6702971	BOLT			6
6702975	VENT			310
6702986	NUT			228
6702990	BUSHING			120, 294, 298
6703012	TUBE			88
6703022	CLIP			134
6703041	WIRE			310
6703045	KIT			313, 314
6703046	KIT			309, 310
6703090	HANDLE			228
6703097	GASKET			4, 36
6703140	WASHER			138
6703159	TRACK			6, 254
6703160	TRACK			6, 254
6703162	HORN KIT			315, 316
6703168	BEARING			134
6703331	INSULATION			284
6703363	BUSHING			20
6703427	FOAM FILTER			85, 86
6703449	INSULATION			376
6703450	INSULATION			376
6703451	INSULATION			6, 376
6703452	INSULATION			6, 376
6703455	INSULATION			6, 376
6703586	DECAL			258
6703640	KIT			361, 362
6703641	DECAL			362
6703703	GUIDE			362
6703723	DECAL			260
6703724	DECAL			294
6703725	DECAL			294
6703726	DECAL			294
6703727	DECAL			316, 318
6703736	CAP			148, 190
6703751	RETAINER			246, 248
6703757	SAFETY TREAD			250
6703879	BUSHING			90
6703981	MOUNT			138
6704012	HOSE			138
6704114	HARNESS			344
6704125	SOUND KIT			375, 376
6704146	BRACKET			328
6704147	BRACKET			328
6704148	BRACKET			328
6704149	BRACKET			328
6704151	BRACKET			328
6704153	KIT			327, 328
6704154	BRACKET			328
6704155	TUBE			88
6704159	HOSE			88
6704164	ELBOW			88
6704167	TIRE & RIM			387, 388

Code for disposition of old part number

A -- Use up
B -- Use on other application (See PNI)
C -- File PDR Report with Bobcat Parts Sales
D -- Part Number Error

Page 437 - OS&H 2060759 - All rights reserved by Bobcat Company, a business unit of Ingersoll-Rand - 05/22/2008 - 07:23:42 - Produced by Ken Cook Co. with mediaioff

Part No.	Description	Was	Code	Page
6704168	TIRE & RIM			388
6704240	PIVOT ASSY.	6576456	C	24
6704248	PIVOT	6576454	A	24
6704287	BUSHING			20
6704288	PIN			20
6704322	MOUNT			138
6704335	HOSE			42, 46
6704336	HOSE			42, 46
6704341	MOUNT			88
6704358	HARNESS			232
6704391	PULLEY			134
6704393	BEARING			134
6704403	STOP			20, 21, 22
6704408	HARNESS			316, 318
6704424	PULLEY			134
6704435	WEAR CAM			90
6704436	PAD			20, 122
6704443	BUSHING			134
6704444	WASHER			134
6704450	SHIELD			134
6704453	SPRING	6578252	C	24
6704484	WASHER			134, 290
6704492	HOUSING			34
6704600	STOP	6701451	A	24
6704601	STOP	6701468	A	24
6704619	MOUNT			52, 292
6704641	MOUNT			316, 318
6704680	COVER			4, 84
6704693	TEE			84
6704696	ELBOW			88
6704720	BELT			138
6704721	INSULATION			284
6704722	INSULATION			284
6704753	PLUG			130
6704769	INSULATION			284
6704786	DECAL			328
6704820	O-RING			134
6704823	BRACKET			132
6704833	BRACKET			48, 242
6704839	TUBE			48, 242
6704878	GASKET			32
6704907	SPACER			128
6705052	BALL STUD			132
6705068	TUBE			46, 242
6705070	TEE			46, 242
6705088	DECAL			260
6705089	LIFT ARM STOP			20
6705091	TAB			20
6705102	DECAL			258
6705106	WASHER			138, 268
6705216	WINDOW			250
6705223	PIN			20
6705231	WASHER			134
6705232	WASHER			134

Code for disposition of old part number

A -- Use up
B -- Use on other application (See PNI)
C -- File PDR Report with Bobcat Parts Sales
D -- Part Number Error

Page 438 - OSS# 2060759 - All rights reserved by Bobcat Company, a business unit of Ingersoll-Rand - 05/22/2008 - 07:23:42 - Produced by Ken Cook Co. with mediaioff

Part No.	Description	Was	Code	Page
6705287	MOUNT ASSY.			32
6705333	MOUNT			284
6705340	DECAL			270
6705357	TUBE			344
6705358	TUBE			344
6705452	LEVER			139, 140
6705474	LOCK SHIELD			10
6705489	BOLT			10
6705491	SPRING			134
6705711	BRACKET			138
6705720	DECAL			12
6705735	WINDOW			6, 254
6705749	SHIELD			42, 43, 44, 46
6705774	MOUNT			282
6705776	HOOD			282
6705792	SCREW			304, 306
6705847	SEAL			34
6705848	INSULATION			284
6705849	INSULATION			284
6705850	INSULATION			284
6705896	GUIDE			36
6705921	HANDLE ASSY.			118, 292, 302, 318, 344
6706042	COVER			4, 36
6706043	SPACER			138
6706089	HOSE			344
6706095	MOUNT			90
6706096	MOUNT			90, 98
6706098	GUIDE			90
6706103	LEVER			60
6706104	RETAINING NUT			60
6706105	YOKE			60
6706106	MOUNT			90, 270
6706220	TEE			344
6706281	BELLCRANK			294
6706285	SCREEN			342
6706340	HANDLE ASSY.			118, 264, 296, 302
6706349	MOUNT			6
6706391	HARNESS			264
6706392	HARNESS			264
6706393	SHIELD			131, 132
6706420	MOUNT			294
6706421	MOUNT			294
6706446	HARNESS			264
6706450	TANK			83, 84
6706485	HOOK			4
6706517	SCREW			28, 128
6706552	HARNESS			264
6706558	DECAL			262
6706565	KIT			117, 118, 301, 302
6706566	KIT			118, 302, 344
6706567	KIT			118, 264, 296, 302
6706568	KIT			118, 264, 296, 302
6706572	SET SCREW			140
6706674	HOSE			28

Code for disposition of old part number

A -- Use up

B -- Use on other application (See PNI)

C -- File PDR Report with Bobcat Parts Sales

D -- Part Number Error

Page 439 - OS&H 2060759 - All rights reserved by Bobcat Company, a business unit of Ingersoll-Rand - 05/22/2008 - 07:23:42 - Produced by Ken Cook Co. with mediaioff

Part No.	Description	Was	Code	Page
6706679	HORN KIT			317, 318
6706685	BUSHING			10
6706718	MOUNT			36, 38
6706737	GASKET			36, 38
6706744	TRACK			254
6706745	TRACK			254
6706753	MOUNT			264
6706807	PIN			324, 326
6706825	LIFT EYE			324, 326
6706826	LIFT EYE			324
6706890	WASHER			12, 356, 366
6706896	PANEL			112
6706939	KIT			341, 342
6706962	BUSHING			10, 364
6706966	SPRING			12, 356, 358, 360
6706968	GASKET			4, 36
6707040	ELBOW			114
6707077	HOUSING ASSY.			142
6707078	HOUSING ASSY.			142
6707101	SEAL			50, 80
6707103	CONNECTOR			344
6707134	DECAL			12
6707172	KIT			386
6707178	TANK			244, 249, 250
6707179	SHIELD			244, 248
6707216	HINGE			244, 248
6707220	DOOR			244, 248
6707221	ROD			244, 248
6707222	MOUNT			244, 248
6707223	COUPLING			244, 250
6707224	COUPLING			244, 248
6707225	WINDOW			244, 248
6707234	HOSE			84
6707236	SHIELD			244, 250
6707239	SHIELD			244, 250
6707313	PEDAL MOUNT			36
6707314	PEDAL			36
6707315	ANGLE			36
6707316	PLATE			25, 26
6707318	GUIDE	6571991	A	12
6707318	GUIDE			12
6707319	NUT			10, 356
6707337	SWITCH			36
6707349	LEVER			294
6707351	LEVER			294
6707352	LEVER			294
6707367	GRIP			294
6707481	DECAL			258
6707514	SHIM			24
6707620	FUSE			116
6707621	FUSE			116
6707622	FUSE			116
6707623	FUSE			116
6707649	MOUNT			116

Code for disposition of old part number

A -- Use up
B -- Use on other application (See PNI)
C -- File PDR Report with Bobcat Parts Sales
D -- Part Number Error

Page 440 - OSS# 2060759 - All rights reserved by Bobcat Company, a business unit of Ingersoll-Rand - 05/22/2008 - 07:23:42 - Produced by Ken Cook Co. with mediaIoff

Part No.	Description	Was	Code	Page
6707672	HARNESS			282
6707674	PLUG			8, 112
6707706	MOUNT			282
6707787	DECAL			116
6707789	LIGHT			282
6707804	HOUSING			282
6707852	DECAL			244, 248
6707867	DECAL			262, 270
6707879	COVER			6
6707895	ELBOW			284
6707976	HANDLE ASSY.	6705923	A	118, 264, 296, 302
6707976	HANDLE ASSY.			118, 264, 296, 302
6708009	LINK			60
6708016	GASKET			36, 38
6708018	SPRING			36, 38
6708021	HANDBOOK			370
6708035	TANK			352
6708044	MOUNT			352
6708069	BUSHING			352
6708096	BUSHING			244, 248
6708105	DECAL			260
6708154	KIT			2, 260, 340
6708154ES	KIT			260
6708155	KIT			270
6708158	HANDBOOK			122, 372
6708159	HANDBOOK KIT			294, 298, 338
6708189	TUBE			6
6708225	HARNESS			246
6708267	BOLT			36, 38
6708269	HARNESS			248
6708272	STOP			352
6708280	MOUNT			352
6708286	MOUNT			352
6708310	HOSE			244, 250, 352
6708318	HARNESS			234, 382
6708437	CLIP			116
6708460	COVER			366
6708465	BUSHING			366
6708499	WINDOW			244, 248
6708500	CLAMP			246, 248
6708523	KIT			356
6708622	GROMMET			366
6708680	GUIDE			366
6708682	INSULATION			6
6708748	TUBE	6706671	A	88
6708767	BRACKET			134
6708770	CAP			134
6708824	MOUNT			282
6708827	CONTAINER			6, 270
6708929	DECAL			262
6708973	KIT			243, 244
6708975	KIT			246, 250
6708981	BRACKET			132
6708987	HINGE			4

Code for disposition of old part number

A -- Use up
B -- Use on other application (See PNI)
C -- File PDR Report with Bobcat Parts Sales
D -- Part Number Error

Page 441 - OS6# 2060759 - All rights reserved by Bobcat Company, a business unit of Ingersoll-Rand - 05/22/2008 - 07:23:42 - Produced by Ken Cook Co. with mediaioff

Part No.	Description	Was	Code	Page
6709022	LEVER			140
6709027	PLATE			112
6709030	DECAL			135, 136, 262
6709170	STUD			40
6709176	BRACKET			264
6709177	BRACKET			264, 265, 266
6709215	BOB-TACH			24
6709229	BOLT			272
6709234	DISC			272
6709236	MOUNT			272
6709237	CLAMP			272
6709239	PEDAL ASSY.			272
6709242	KIT	NAP	D	271, 272
6709400	TUBE			272
6709409	TUBE			272
6709410	TUBE			272
6709415	MOUNT			128
6709527	KEY			112, 246, 350
6709544	HOSE			272
6710299	HARNESS			266
6710300	HARNESS			266
6710358	DECAL			260
6710435	HARNESS			344
6710467	MOUNT ASSY.			272
6710481	HARNESS			374
6710482	HARNESS			112
6710527	PANEL			270, 374
6710573	TUBE			42, 46, 242
6710576	TUBE			42, 46
6710577	TUBE			42, 46
6710578	TUBE			42, 46
6710580	TUBE			42, 46
6710581	TUBE			42, 46
6710582	TUBE			42, 46
6710583	TUBE			48, 242
6710584	TUBE			48, 242
6710585	WASHER			134
6710616	TUBE			42
6710622	WASHER			356
6710653	HOSE			28
6710659	BUSHING			12, 364
6710660	MOUNT			12, 364
6710665	PULLEY			130
6710746	SAFETY TREAD			260
6710751	BUSHING			12, 356, 366
6710905	HARNESS			290
6711160	HARNESS			290
6711280	MOUNT			44, 48, 50
6711527	LATCH PLATE			18
6711621	MOUNT			264
6711625	FITTING			52, 292
6711632	MOUNTING KIT			267, 268
6711643	CAM			90
6711651	TEE			42, 46

Code for disposition of old part number

A -- Use up
B -- Use on other application (See PNI)
C -- File PDR Report with Bobcat Parts Sales
D -- Part Number Error

Page 442 - OSS# 2060759 - All rights reserved by Bobcat Company, a business unit of Ingersoll-Rand - 05/22/2008 - 07:23:42 - Produced by Ken Cook Co. with mediaIoff

Part No.	Description	Was	Code	Page
6711656	HOSE			50
6711664	GUIDE			18
6711676	KIT	SALES	D	343, 344
6711681	HOSE			344
6711698	IDLER ASSY.			134
6711699	HUB ASSY.			134
6711708	MOUNT			234, 290, 382
6711729	COVER			12, 368
6711730	STRIP			12, 368
6711735	TUBE			52, 292
6711736	TUBE			52, 292
6711767	HARNESS			111, 112
6711840	DECAL			260
6711897	BOLT			364
6711908	SPRING PLATE			10
6712050	KIT			241, 242
6712068	COVER			280
6712070	COVER			280
6712134	HARNESS			112
6712146	WASHER			280
6712152	PANEL			112, 282
6712183	MOUNT			280, 356
6712184	KIT			367, 368
6712186	MOUNT			280, 356
6712258	HARNESS			234, 382
6712259	HARNESS			244
6712260	HARNESS			352
6712288	HARNESS			290
6712365	STEP			120
6712387	KIT			291, 292
6712402	MOUNT ASSY.			33, 34
6712523	HARNESS			112
6712536	PAN	6577809	A	114
6712640	BRACKET			116, 344
6712678	KIT			239, 240
6712692	BEACON KIT			233, 234
6712696	STROBE KIT			381, 382
6712698	KIT			289, 290
6712700	KIT			373, 374
6712750	KIT			353, 354
6712875	KIT			279, 280
6712970	PULLEY			270
6712972	KIT			321, 322
6712985	MOUNT			270
6712987	MOUNT			270
6713040	SPRING			24
6713043	SPACER			120, 298
6713115	PEDAL			277, 278
6713116	BUSHING			278
6713262	HANDLE ASSY			120
6713349	GRIP			298
6713370	PIN	14J001808B	A	134
6713379	KIT			303, 304
6713456	SHAFT			34, 36

Code for disposition of old part number

A -- Use up
B -- Use on other application (See PNI)
C -- File PDR Report with Bobcat Parts Sales
D -- Part Number Error

Page 443 - OS6# 2060759 - All rights reserved by Bobcat Company, a business unit of Ingersoll-Rand - 05/22/2008 - 07:23:42 - Produced by Ken Cook Co. with mediaioff

Part No.	Description	Was	Code	Page
6713589	CLEVIS			10, 364
6713736	BRACKETS			282
6713754	TUBE			52, 292
6713755	TUBE			52, 292
6713793	BRACKET			232
6713803	HARNESS			256
6713850	MOUNT			52, 292
6713887	BOLT			12
6713898	COVER			120, 298
6714008	PIN			282
6714037	LATCH			350
6714038	HARNESS			354
6714039	HARNESS			354
6714062	KIT			6
6714126	DOOR STOP			18
6714210	SPRING			18
6714242	DECAL			262
6714278	GUIDE			36, 38
6714285	KIT			363, 364
6714300	MOUNT			290
6714361	WEIGHT			258
6714430	FLYWHEEL ASSY.			136
6714463	MOUNT			290
6714467	MOUNT			290
6714531	DECAL			260, 262
6714543	GASKET	3974461B	A	146, 148, 188, 190
6714543	GASKET			146, 148, 188, 190
6714594	HOSE	6705074	A	50, 84
6714594	HOSE	6712848	B,D	50, 84
6714624	SHIELD			270
6714629	DECAL			364
6714726	GROMMET			120
6714810	PIN			20
6714858	DECAL			262
6714874	BUSHING			20
6714889	HOSE			132
6714901	ELBOW	1300294B	A	88
6714902	ELBOW	69E000012B	A	84
6714905	ELBOW	6707409	A	84
6714980	KIT			231, 232
6714985	LIGHT KIT			329, 330
6714990	WIRE			354
6714991	WIRE			354
6714999	MOUNT			266
6715094	INSULATION	6712537	A	6, 284
6715094	INSULATION			6, 284
6715095	INSULATION	6706982	A	6, 284
6715095	INSULATION	6706983	A	6, 284
6715096	INSULATION	6706903	A	284
6715097	INSULATION	6706157	A	6, 284
6715097	INSULATION			6, 284
6715098	INSULATION	6706156	A	6, 284
6715098	INSULATION			6, 284
6715099	INSULATION			284

Code for disposition of old part number

A -- Use up
B -- Use on other application (See PNI)
C -- File PDR Report with Bobcat Parts Sales
D -- Part Number Error

Page 444 - OSS# 2060759 - All rights reserved by Bobcat Company, a business unit of Ingersoll-Rand - 05/22/2008 - 07:23:42 - Produced by Ken Cook Co. with mediaioff

Part No.	Description	Was	Code	Page
6715106	INSULATION			284
6715142	FAN	6700334	A	128
6715143	SET SCREW	5216G-506	B	130
6715157	STRIKER ASSY.	6579969	A	18
6715163	BUSHING			90
6715164	SLEEVE			90
6715166	FLYWHEEL ASSY.			136, 270
6715183	ELBOW			28
6715184	ADAPTER			42, 46
6715185	CONNECTOR			52, 292
6715186	ADAPTER			84
6715239	HOSE			284
6715240	HOSE			284
6715250	MUFFLER			284
6715251	HOSE	6648636	D	86
6715287	SPACER	6712650	A	268
6715318	TOOL HOLDER	6714064	A	18, 270
6715371	INSULATION			284
6715372	INSULATION			284
6715478	BELT			128, 270
6715653	TEE			88
6715655	ELBOW			88
6715656	TEE			42, 46
6715659	HARNESS			232
6715714	ELBOW			88
6715716	ELBOW			242
6715744	BUSHING			284
6715880	HARNESS			114
6715892	HARNESS			114
6715912	DECAL			260
6715924	PULLEY			130
6715940	DECAL			120
6715941	DECAL			120
6715944	DECAL			122
6715957	COVER			120
6715991	DECAL	6707786	A	122, 262
6715991	DECAL			122, 262
6716052	PIN			122
6716206AR	KIT			260, 262
6716206BR	KIT			260, 262
6716206JP	KIT			260, 262
6716207AR	KIT			260, 262
6716207BR	KIT			260, 262
6716228	BRAKE			36, 38
6716419	HARNESS	6714350	A	330
6716423	HOSE	6706452	A	84
6716473	ADAPTER			86
6716545	ROD			90
6716571	LOUVER			128
6716572	LOUVER			128
6716601	PIN			20
6716777	SEAT BAR	6713609	A	12
6716779	SEAT BAR	6714282	A	364
6716798	HARNESS			266

Code for disposition of old part number

A -- Use up
B -- Use on other application (See PNI)
C -- File PDR Report with Bobcat Parts Sales
D -- Part Number Error

Page 445 - OS$# 2060759 - All rights reserved by Bobcat Company, a business unit of Ingersoll-Rand - 05/22/2008 - 07:23:42 - Produced by Ken Cook Co. with mediaioff

Part No.	Description	Was	Code	Page
6716799	KIT			266
6716826	BOLT			120, 298
6716843	WASHER	6569461	A	40
6716844	HARNESS			266
6716902	MOUNT			122
6717043	DECAL			122, 260
6717055	LEVER			120
6717056	LEVER			120
6717208	SHIELD			26
6717343	DECAL			260
6717378	BOLT	17C000408B	B,D	120, 122
6717378	BOLT			120, 122
6717401	PLUG			28
6717402	BUSHING			28
6717478	INLET			128
6717567	MOUNT			122
6717569	DIODE			122
6717572	TANK			28
6717579	GASKET			28, 114
6717639	DECAL			122
6717700	KIT			339, 340
6717702	KIT			337, 338
6717706	COIL	6666547	A	72
6717708	COIL	6665759	A	64, 292
6717734	KIT			36
6717814	TIE			116
6717915	TUBE			334
6717916	TUBE			334
6717917	TUBE			334
6717918	TUBE			334
6717919	HOSE			334
6717921	HOSE			334
6717922	BRACKET			334
6717923	TEE			334
6718109	CONNECTOR			334
6718111	HARNESS			334
6718198	HARNESS	6714546	A	282
6718237	HOSE	6703332	A	132
6718240	KIT			292, 333, 334
6718271	DECAL			260
6718272	DECAL			262
6718275	DECAL			260
6718291	GRILL	6705131	A	132
6718298	KIT	6713885	A	386
6718398	DECAL	6715563	A	262
6718446	COVER			26
6718489	INSULATION	6709020	A	6
6718703	DECAL	6717640	A	260
6718723	WASHER			20
6718796	PLUG	6660646	A	132, 330
6718889	HARNESS	6717177	A	122
6718954	HOSE	6578808	A	42, 46
6719038	PLUG	6665314	A	112, 270, 374
6719048	MOUNT	6703738	A	140, 148, 190

Code for disposition of old part number
A -- Use up
B -- Use on other application (See PNI)
C -- File PDR Report with Bobcat Parts Sales
D -- Part Number Error

Page 446 - OSS# 2060759 - All rights reserved by Bobcat Company, a business unit of Ingersoll-Rand - 05/22/2008 - 07:23:42 - Produced by Ken Cook Co. with mediaioff

Part No.	Description	Was	Code	Page
6719048	MOUNT			140, 148, 190
6719056	BLOCK	6705898	A	36, 38
6719056	BLOCK			36, 38
6719057	BLOCK	6705897	A	36, 38
6719057	BLOCK			36, 38
6719149	HARNESS	6712136	A	118, 292
6719211	TUBE			86
6719332	INSULATION	6704725	A	284
6719490	LIFT EYE			326
6719711	CHANNEL			298
6719712	CHANNEL			298
6719834	SPACER			298
6719835	SLEEVE			298
6719906	SPACER			326
6720038	INSTRUCTIONS			236
6720185	INSTRUCTIONS			226
6720320	INSTRUCTIONS			254
6720321	INSTRUCTIONS			240
6720451	INSTRUCTIONS			320
6720598	INSTRUCTIONS			254
6720621	INSTRUCTIONS			228
6720656	INSTRUCTIONS			310, 314
6720736	PLUG			235, 236
6720761	INSTRUCTIONS			316, 318
6720856	INSTRUCTIONS			380
6720961	INSTRUCTIONS			376
6722058	INSTRUCTIONS			308
6722083	INSTRUCTIONS			232
6722105	INSTRUCTIONS			328
6722147	HOLDER KIT	6674174	A	181, 182, 183, 184, 222
6722147	HOLDER KIT			181, 182, 183, 184, 222
6722300	INSTRUCTIONS			270
6722392	INSTRUCTIONS			10
6722758	INSTRUCTIONS			264
6722759	INSTRUCTIONS			118, 264, 302
6722781	PAINT			390
6722782	PAINT			390
6722783	PAINT			389, 390
6722784	PAINT			390
6722785	PAINT			390
6722786	PAINT			390
6722787	PAINT			390
6722788	PAINT			390
6722789	PAINT			390
6722861	INSTRUCTIONS			342
6722872	INSTRUCTIONS			324, 326
6722907	KIT			40, 229, 230
6722908	INSTRUCTIONS			230
6724017	INSTRUCTIONS			358, 360
6724029	INSTRUCTIONS			246, 250
6724033	MANUAL	6900369	B,D	294
6724043	INSTRUCTIONS			296
6724071	INSTRUCTIONS			234, 382
6724072	INSTRUCTIONS			282

Code for disposition of old part number

A -- Use up
B -- Use on other application (See PNI)
C -- File PDR Report with Bobcat Parts Sales
D -- Part Number Error

Page 447 - OS&H 2060759 - All rights reserved by Bobcat Company, a business unit of Ingersoll-Rand - 05/22/2008 - 07:23:42 - Produced by Ken Cook Co. with mediaioff

Part No.	Description	Was	Code	Page
6724094	ANTI-FREEEZE			390
6724161	INSTRUCTIONS			356
6724258	INSTRUCTIONS			366
6724282	SWITCH KIT			112
6724354	ANTI-FREEZE			390
6724384	INSTRUCTIONS			304
6724482	INSTRUCTION			268
6724487	INSTRUCTIONS			344
6724522	INSTRUCTIONS			242
6724529	INSTRUCTIONS			292
6724586	INSTRUCTIONS			322
6724775	LEVER KIT			24
6724776	LEVER KIT			24
6724800	INSTRUCTIONS			368
6724880	INSTRUCTIONS			280
6725212	ARM	6703507	A	134
6725224	KIT			325, 326
6725256	COUNTERWEIGHT	6714053	A	258
6725373	SPRING PLATE			10
6725502	ELBOW	23F000001B	A	186
6725527	DECAL	6714918	A	260
6726423	DECAL	6702916	A	326
6726433	SPACER	6704829	A	128
6726613	MOUNT	6728062	A	136
6726679	MOUNT	6564658	A	60
6726680	PEDAL	6564656	A	60
6727065	BOLT			122, 298, 300
6727155	DECAL			298
6727243	DECAL			298
6727297	KIT			297, 298
6727308	DECAL	6702827	A	262
6727309	DECAL	6702826	A	262
6727310	DECAL	6711329	A	260
6727311	DECAL	6714139	A	262
6727327	HARNESS			298
6727345	MOUNT	6704342	A	88
6727475	CAP	6577785	A	84
6727544	PLATE			22
6727545	PLATE			22
6727840	TUBE	6703608	A	42, 46
6727841	TUBE	6703609	A	42, 46
6727917	SAFETY TREAD			260
6728149	CAP	6532508	A	84
6728473	BOLT	6578166	A	24
6729144	HOSE			285, 286
6729147	HOSE	6707233	A	284
6729153	HOSE	6714577	A	51, 52, 292
6729153	HOSE	6714577	D	51, 52, 292
6729594	HANDLE			122, 299, 300
6729595	HANDLE			122, 300
6729600	SPACER			122, 300
6729688	LATCH			350
6729730	WINDOW			254
6729896	TIRE			384

Code for disposition of old part number
A -- Use up
B -- Use on other application (See PNI)
C -- File PDR Report with Bobcat Parts Sales
D -- Part Number Error

Page 448 - OSS# 2060759 - All rights reserved by Bobcat Company, a business unit of Ingersoll-Rand - 05/22/2008 - 07:23:42 - Produced by Ken Cook Co. with mediaioff

Part No.	Description	Was	Code	Page
6729900	TIRE			384
6729956	LEVER			90, 91, 92
6729957	BELLCRANK			90
6730263	PIN			20
6730272	HARNESS			298
6730769	HOSE			86
6730771	RIM	6565239	A	384
6730775	RIM	6705109	A	384
6730797	LIFT ARM			20
6730997	BUSHING			24
6730999	TUBE ASSY	6576029	A	128
6731060	SHIELD	6717812	A	138
6731121	PLUG	11F-12	A	4
6731218	CHAIN			32
6731219	CHAIN			32
6731254	BUSHING			22
6731478	EXIT TAG	6559515	A	6, 250, 254
6731979	BUSHING			24
6732001	KIT	6714973	A	349, 350
6732012	PIN			20
6732446	BUSHING			24
6733575	HINGE	6711526	A	18
6733621	SHAFT			38
6733701	COVER	6704695	A	4
6733956	COVER			38
6733970	MOUNT	6707726	A	232
6734104	HOUSING ASSY.			143, 144
6735316	COVER			38
6736126	COVER			7, 8
6737189	DECAL			232
6737191	WEDGE	6704242	A	24
6737360	MAINFRAME			4
6737524	KNOB	6668913	A	50, 80
6801167	PLUG			70, 74
6803092	BONNET			70, 74
6803329	SEAL KIT	6589831	A	58
6803605	SEAL KIT	6596310	A	64, 68, 72, 74
6803605	SEAL KIT			64, 68, 72, 74
6803867	WASHER	6558956	A	128
6804592	NUT	92D000018B	A	54, 56
6804592	NUT			54, 56
6804605	SEAL KIT	6589792	A	54, 56
6804605	SEAL KIT			54, 56
6804692	CYLINDER			55, 56
6804699	PISTON			56
6804703	CASE			56
6804704	ROD			56
6805150	BUSHING			56
6805241	CROSS			64, 72
6805243	TEE			86
6805696	TEE			64, 72, 84
6808046	VALVE			65, 66
6809425	SEAL KIT	6586461	A	64, 68, 72, 74
6809425	SEAL KIT			64, 68, 72, 74

Code for disposition of old part number

A -- Use up
B -- Use on other application (See PNI)
C -- File PDR Report with Bobcat Parts Sales
D -- Part Number Error

Page 449 - OS&H 2060759 - All rights reserved by Bobcat Company, a business unit of Ingersoll-Rand - 05/22/2008 - 07:23:42 - Produced by Ken Cook Co. with mediaioff

Part No.	Description	Was	Code	Page
6809448	SEAL KIT	6628835	A	64, 68, 75, 76
6809448	SEAL KIT			64, 68, 75, 76
6810026	VALVE			73, 74
6850026	COVER			304
6850027	HOUSING			306
6900133	INSTRUCTIONS			354
6900328	INSTRUCTIONS			364
6900398	INSTRUCTION			290
6900410	INSTRUCTIONS			258
6900417	751 O/M			2
6900439	751F P/M			2
6900443	751 S/M			2
6900503	KIT	6701897	B,D	259, 260, 261, 262
6900601	INSTRUCTIONS			266
6900651	INSTRUCTIONS	6722198	A	330
6900786	751 O/M			2
6900804	INSTRUCTIONS			338, 340
6900805	INSTRUCTIONS			36
6900841	INSTRUCTIONS			334
6901099	INSTRUCTIONS			300
6901656	INSTRUCTIONS	6570762	A	350
6901702	INSTRUCTIONS	6724380	A	272
6903105	OIL 15W40 QT. 12	6657299	A	2, 390
6903106	OIL 15W40 GAL. 6	6724558	A	2, 390
6903107	OIL 10W30 QT. 12	6657301	A	2, 390
6903108	OIL 10W30 GAL. 6	6724557	A	2, 390
6903109	OIL 30W QT. 12	6657303	A	2, 390
6903110	OIL 30W GAL. 6	6724559	A	2, 390
6903111	OIL 30W 2.5 GAL 2	6674206	A	2, 390
6903112	OIL 10W30 2.5 GAL 2	6674205	A	2, 390
6903113	OIL 15W40 2.5 GAL. 2	6674204	A	2, 390
6903117	HYD FLUID 2.5 GAL.	6563328	A	2, 390
6903118	HYD. FLUID 5GAL	6722344	A	2, 390
6903119	HYD. FLUID 55GAL	6563330	A	2, 390
6903121	GEAR LUBE 12	6634393	A	142, 390
6903122	GREASE 10	6658266	A	390
6CM01220B	BOLT			114
6CM01225B	BOLT			138
6CM01230B	BOLT			134, 138
6CM01235B	BOLT			138
6E000004B	WASHER			232, 322
6E000006B	WASHER			116
6EM00060B	WASHER			148, 150, 174, 176, 190
6EM00080B	WASHER			148, 154, 156, 166, 168, 170, 178, 198
6J000405B	KEY			256
6J000807B	KEY			96, 134
6J001664B	WOODRUFF KEY			40
7100153	MOUNT	6713792	A	232
7102200	SHIELD	6719851	A	130
7104568	MOUNT	6712161	A	138
7104842	ACTUATOR			120, 121, 122

Code for disposition of old part number

A -- Use up
B -- Use on other application (See PNI)
C -- File PDR Report with Bobcat Parts Sales
D -- Part Number Error

Page 450 - OSS# 2060759 - All rights reserved by Bobcat Company, a business unit of Ingersoll-Rand - 05/22/2008 - 07:23:42 - Produced by Ken Cook Co. with mediaioff

Part No.	Description	Was	Code	Page
7105252	SENSOR	6680430	A	10
7108780	SLEEVE	6595951	A	66, 72, 74
7109712	SHIELD	6726938	A	136
72F000001B	DRAIN COCK			28
731794B	FITTING			42, 46
733611B	TERMINAL			354
733616	TERMINAL			354
73G000656B	BOLT			133, 134
73G000824B	BOLT	93G000824B	A	32
73K000224B	WASHER			58
742640B	WASHER			138
743332B	GREASE ZERK			20, 24
774220	NUT			232
77F000007B	ELBOW			42
77FN00007B	ELBOW			42
784568B	ELBOW			48, 242
799119B	SNAP RING			62, 66
79K000002B	O-RING			346
79K000004B	O-RING			334, 344
79K000005B	O-RING			28, 94
79K000006B	O-RING	6634874	B,D	42, 46, 50, 54, 58, 64, 72, 82, 84, 88, 94, 344
79K000006B	O-RING			42, 46, 50, 54, 58, 64, 72, 82, 84, 88, 94, 344
79K000007B	O-RING			64
79K000008B	O-RING			62, 66, 70, 74, 82, 96, 100, 138
79K000010B	O-RING			42, 46, 62, 66, 70, 74, 88, 98, 242, 292
79K000012B	O-RING			50, 52, 64, 70, 84, 88, 98, 102, 284, 292, 344
79K000014B	O-RING			28, 114
79K000016B	O-RING			84
7C000312B	BOLT			256
7C000322B	BOLT			256
7C000620B	BOLT	6704349	B	60
7D000004B	NUT			80
7D000006B	NUT			128
7J002010B	KEY			142
7J002108B	KEY			130
80K000014B	RING			62, 66, 70, 74
80K000234B	RING	73K000234B	B	54, 56
80K000234B	RING			54, 56
83D000004B	NUT	83D000005B	B,D	6, 12, 44, 48, 50, 112, 114, 254, 282, 284, 288, 290, 322
83D000004B	NUT			6, 12, 44, 48, 50, 112, 114, 254, 282, 284, 288, 290, 322
83D000005B	NUT			6, 244, 248, 270, 288, 290, 292, 294, 352
83D000006B	NUT			10, 90, 132, 244, 250
83D000008B	NUT			4, 138
83D000010B	NUT			324, 326
83F000003B	ELBOW			272
84G001608B	SCREW			256
84G001906B	SCREW			256
84G001910B	SCREW			256
84G002516B	BOLT			316, 318
84G003110B	BOLT			84
84G003112B	BOLT	84G003712B	B	6, 50, 52, 132, 232, 266, 284, 292
84G003112B	BOLT			6, 50, 52, 132, 232, 266, 284, 292

Code for disposition of old part number

A -- Use up

B -- Use on other application (See PNI)

C -- File PDR Report with Bobcat Parts Sales

D -- Part Number Error

Page 451 - OS&H 2060759 - All rights reserved by Bobcat Company, a business unit of Ingersoll-Rand - 05/22/2008 - 07:23:42 - Produced by Ken Cook Co. with mediaioff

Part No.	Description	Was	Code	Page
84G003120B	BOLT			304
84G003708B	BOLT			128, 132
84G003710B	BOLT			84, 352
84G003712B	BOLT	84G003716B	B	4, 26, 36, 44, 48, 84, 88, 114, 132, 140, 264, 308, 314
84G003712B	BOLT			4, 26, 36, 44, 48, 84, 88, 114, 132, 140, 264, 308, 314
84G003716B	BOLT			36, 38, 44, 46, 47, 48, 50, 114, 138, 140, 228, 284, 334, 344
84G003720B	BOLT			36, 38, 224
84G003724B	BOLT			42, 46, 284
84G003732B	BOLT			42, 46
851242B	BEARING			162, 204
85D000004B	NUT			116, 118, 140, 292, 294
85D000005B	NUT			42, 46, 52, 140, 278, 292
85D000006B	NUT			10, 20, 24, 138, 266, 284, 294, 324, 326
85D000007B	NUT			10
85D000008B	NUT			6, 134, 137, 138
85G000608B	SCREW			320, 354
85G001008B	BOLT			288
866028B	CLAMP			186
86D000004B	NUT			140, 294
86D000006B	NUT			270
86D000008B	NUT			128
86F000003B	NUT			272
86F000007B	NUT			52, 292
86F000008B	NUT			52, 88, 292
872229	WASHER			42, 46, 52, 292
87D000005B	NUT			324, 326
87FN00005B	ADAPTER			86
87G000806B	BOLT			322
886527B	WASHER			186
889163B	BEARING			256
889269B	HOSE			304, 308, 314
88F000003B	NUT			272
88F000008B	ELBOW			88
88FN00003B	ELBOW			272
88FN00008B	ELBOW			88
895771B	BULB			112
896979B	NUT			256
896984B	BOLT			256
896990B	WASHER			256
896992B	RETAINER			256
896996B	WASHER			256
897239B	SLEEVE			256
897245B	INSULATOR			256
897719B	INSULATOR			256
897732B	WASHER			256
898731B	BULB			330
899157B	FAN			256
899163B	ROTOR			256
899165B	INSULATOR			256
899167B	SINK			256
899169B	INSULATOR			256

Code for disposition of old part number

A -- Use up
B -- Use on other application (See PNI)
C -- File PDR Report with Bobcat Parts Sales
D -- Part Number Error

Page 452 - OSS# 2060759 - All rights reserved by Bobcat Company, a business unit of Ingersoll-Rand - 05/22/2008 - 07:23:42 - Produced by Ken Cook Co. with mediaioff

Part No.	Description	Was	Code	Page
899170B	GASKET			256
899374B	SEAL			256
899375B	DIODE			256
899376B	WASHER			256
899377B	BOLT			256
899378B	DIODE			256
8C000616B	BOLT			90
8D000004B	NUT			294
8D000006B	NUT			90, 272, 364
90K000005B	PLUG			54, 58
90KV00005B	PLUG			54, 56, 58
90KV00008B	PLUG			64, 66, 70, 74
91D000005B	NUT			272
91D000007B	NUT			10, 364
91G000410B	SCREW			6
91G000412B	BOLT			112
92D000012B	NUT			58, 134
93G000616B	BOLT			90
95D000006B	NUT	61D000006B	B	36, 54, 56, 59, 60, 90, 140, 142, 270, 272
95D000006B	NUT	91D000006B	A	36, 54, 56, 59, 60, 90, 140, 142, 270, 272
95D000006B	NUT		A	36, 54, 56, 59, 60, 90, 140, 142, 270, 272
95K000006B	O-RING			54, 56, 58
95K000012B	O-RING			64, 66, 70, 74
97D000004B	NUT	83D000004B	B	232
97K000004B	O-RING			272, 344
97K000006B	O-RING			44, 48, 50, 64, 72, 84, 86, 334, 344
97K000008B	O-RING			42, 46, 138, 242
97K000010B	O-RING			42, 44, 46, 48, 52, 242, 292
97K000012B	O-RING			50, 52, 84, 88, 284, 292, 344
98F000003B	TEE			272
99K000004B	O-RING			344
99K000005B	O-RING			28
99K000006B	O-RING			42, 46, 50, 64, 72, 84, 334, 344
99K000008B	O-RING			138
99K000010B	O-RING			42, 46, 242, 292
99K000012B	O-RING			50, 52, 64, 70, 84, 88, 284, 292, 344
9G000512B	SCREW			142
9G000620B	BOLT			24

Code for disposition of old part number

A -- Use up
B -- Use on other application (See PNI)
C -- File PDR Report with Bobcat Parts Sales
D -- Part Number Error

Page 453 - OS6# 2060759 - All rights reserved by Bobcat Company, a business unit of Ingersoll-Rand - 05/22/2008 - 07:23:42 - Produced by Ken Cook Co. with mediaioff