RUTHZIL TRATOR COMERCIAL DE PEÇAS LTDA 11 97083-6812 ROLANDO

SETEMBRO 2001

751

Bobcat®

-- G-SERIES

Parts Manual

S/N 5157 30001 & Above
S/N 5156 20001 & Above

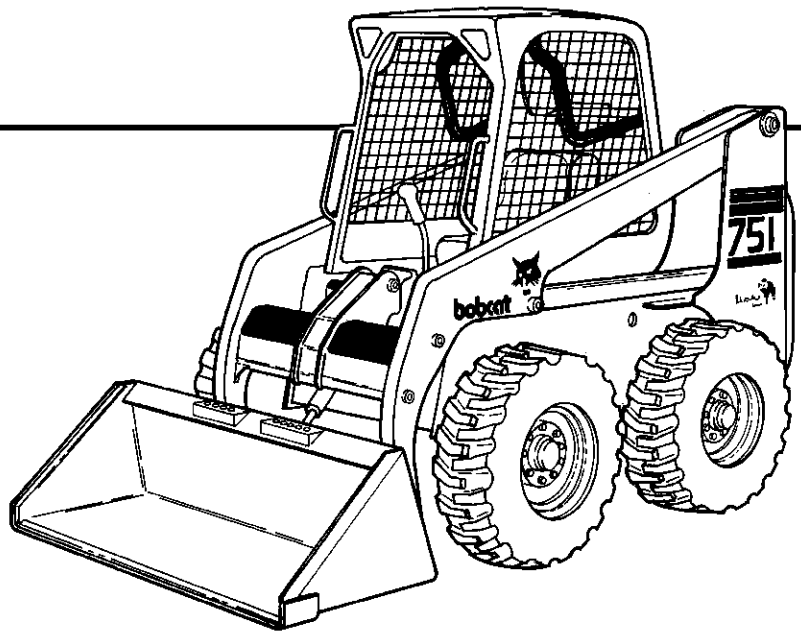

EQUIPPED WITH BOBCAT INTERLOCK CONTROL SYSTEM (BICS™)

IR Bobcat

6900982 (10-00) Revised (9-01)

Printed in U.S.A.

© Bobcat Company 2001

751 G-SERIES ALPHABETICAL INDEX

ADHESIVE 272
AIR CLEANER 126
ALTERNATOR 116, 118, 128
ANTI–FREEZE 272
AXLE 35

BATTERY 100
BELT, ALTERNATOR 128
BELT, PUMP DRIVE 132
BLOCK HEATER 174
BOB–TACH 24, 28

CAB 14, 16
CAB DOOR 180, 188
CAB ENCLOSURE 193
CABLE, BATTERY 100
CAMSHAFT 151, 152
CAP, FUEL 30
CAP, HYD. OIL 76
CAP, RADIATOR 122
CHAIN, DRIVE 31
CHAINCASE 12, 31
COOLING FAN DRIVE ASSY. 138
COUNTER WEIGHTS 201, 202
CYLINDER BLOCK 143
CYLINDER, LIFT 53
CYLINDER, TILT 52

DIPSTICK, ENG. OIL 148
DOOR, CAB 180, 188
DOOR, REAR 22
DRIVE MOUNT ASSY. 32

ENGINE 132, 140
EXTINGUISHER 220

FAN 122
FILTER, AIR 164
FILTER, ENG. OIL 141
FILTER, FUEL 30
FILTER, HYD. OIL 80
FIRE EXTINGUISHER 220
FLASHER LIGHTS 222
FUEL SYSTEM 30

GAS SPRING 14, 180, 188
GASKET KIT, ENG. 140
GLOW PLUG 161
GUAGE, ENG. TEMP. 98
GUAGE, FUEL 98

HARNESS, CAB 98
HARNESS, CONTROLS 108
HARNESS, ENGINE 100
HARNESS, LIGHTS 245
HEAD, CYLINDER 147
HEATER 228, 232
HORN 240
HUB, AXLE 35

INJECTION NOZZLES 161, 162

LATCH, REAR DOOR 22
LEVER, PINTLE 82
LIFT KITS 242, 243
LIGHT KIT 245
LIGHTS, FLASHER 222
LOCK, REAR DOOR 253
LUBRICANT 272

MANIFOLD 155
MOUNT, ENGINE 128
MOUNT, HYDRO. PUMP 128, 132
MUFFLER 126

OIL 272
OIL COOLER 80

PAINT 272
PAN, OIL 148
PANEL, INSTRUMENT 98
PEDALS, CONTROL 55
PISTON, ENGINE 150
POLISH 272
PUMP, FUEL 30, 159
PUMP, GEAR 93
PUMP, HYDRO. 86
PUMP, OIL 144
PUMP, WATER 153

RIM, WHEEL 269
RING GEAR 132

SEALANT 272
SEAT 19, 255
SEAT BELT 16, 256, 261
SENDER, ENG. TEMP. 100
SENDER, FUEL 30
SENSOR, RPM 100
SHOCK CONTROLS 82
SOLENOID 100
SPROCKET, AXLE 31, 35
STARTER 100, 120, 132
STOP, LIFT ARM 24
SWITCH, ENG. OIL PRESS. 100
SWITCH, HYD. PRESS. 100
SWITCH, HYD. TEMP. 100
SWITCH, IGNITION 98

TANK, COOLANT 122
THERMOSTAT 154
THROTTLE 136

VALVE COVER 145
VALVE, ENGINE 146
VALVE, HYD. CONTROL 58, 62, 66

WINDOW, REAR REMOVAL KIT 199
WINDOW, REAR 196, 208
WINDOW, SIDE 196
WIPER, WINDSHIELD 184

751 G-SERIES CONTENTS

MAIN FRAME 12-35
MAIN FRAME 12-13
OPERATOR CAB 14-17
SEAT & SEAT BAR 18-19
SEAT 20-21
PANELS 22-23
REAR DOOR 24-25
LIFT ARM & BOB-TACH 26-29
BOB-TACH 30-31
FUEL SYSTEM 32-35
DRIVE TRAIN 36-43
DRIVE TRAIN 36-37
MOTOR CARRIER 38-39
DISC BRAKE 40-41
AXLE 42-43
HYDRAULIC SYSTEM 44-83
HYDRAULIC CIRCUITRY 44-51
MANUAL LIFT RELEASE SYSTEM 52-53
AUXILIARY HYDRAULICS 54-57
TILT CYLINDER 58-59
LIFT CYLINDER 60-61
CONTROL PEDALS 62-63
HYDRAULIC CONTROL VALVE 64-71
* HYDRAULIC CONTROL VALVE 72-75
BICS CONTROL VALVE 76-77
MANUAL LIFT RELEASE VALVE 78-79
PRESSURE RELEASE VALVE 80-81
BUCKET POSITIONING VALVE 82-83
HYDROSTATIC SYSTEM 84-111
HYDROSTATIC CIRCUITRY 84-89
HAND CONTROLS 90-93
HYDROSTATIC MOTOR 94-95
HYDROSTATIC PUMP 96-103
GEAR PUMP 104-105
HYDROSTATIC OIL FILTER 106-111
ELECTRICAL SYSTEM 112-139
CAB ELECTRICAL CIRCUITRY 112-115
ENGINE ELECTRICAL CIRCUITRY 116-119
CONTROLS ELECTRICAL 120-131
ALTERNATOR 132-135
STARTER (NIPPONDENSO) 136-137
* STARTER (VALEO) 138-139
POWER UNIT 140-199
COOLING SYSTEM 140-143
ENGINE & ATTACHING PARTS 144-153
THROTTLE 154-155
COOLING FAN DRIVE ASSY. 156-157
ENGINE & GASKET KITS 158-159
GEARCASE 160-161
CRANKCASE 162-163
ROCKER ARM COVER 164-165
VALVE ROCKER ARM 166-167
CYLINDER HEAD 168-169
OIL PAN 170-171

751 G-SERIES CONTENTS (Cont'd)

POWER UNIT (CONT'D) 140-199

PISTON & CRANKSHAFT 172-173
FUEL CAMSHAFT 174-175
CAMSHAFT 176-177
WATER PUMP 178-179
WATER FLANGE & THERMOSTAT 180-181
MANIFOLDS 182-183
ENGINE STOP LEVER 184-185
GOVERNOR 186-187
SPEED CONTROL PLATE 188-189
INJECTION PUMP 190-193
INJECTOR NOZZLES 194-195
INJECTOR HOLDER 196-197
AIR CLEANER 198-199

ACCESSORIES & OPTIONS 203-336

ACCESS COVER 203-204
ACCESSORIES HARNESS 205-206
AIR DEFLECTOR KIT 207-208
AXLE SEAL KIT 209-210
BACK-UP ALARM 211-212
BEACON 213-214
BLOCK HEATER 215-216
BOB-TACH LEVERS 217-218
BUCKET POSITIONING VALVE KIT 219-220
CAB DOOR 221-234
CAB ENCLOSURE 235-238
CAB WINDOWS 239-244
COUNTERWEIGHT KIT 245-248
DECALS 249-252
DELUXE CAB 253-254
ELECTRICAL CONNECTOR KIT 255-256
ELECTRICAL CONTROLS KIT 257-262
ENGINE MOUNT KIT 263-264
EUROPEAN ACCESSORIES 265-266
FIRE EXTINGUISHER 267-268
F.O.P.S. KIT 269-270
FLASHER LIGHTS 271-272
HAND CONTROL KIT 273-276
HEATER KIT 277-280
HEATER 281-288
HEATER PLUMBING KIT 289-290
* HEATER PLUMBING KIT 291-292
HORN KIT 293-294
LIFT KIT 295-298
LIGHT KIT 299-300
MUFFLER/PURIFIER KIT 301-302
RADIATOR SCREEN KIT 303-304
REAR AUXILIARY KIT 305-306
REAR AUXILIARY VALVE 307-308
REAR DOOR LOCK 309-310
REAR WIPER 311-312
SEAT 313-316
SEAT BELT 317-322
SOUND KIT 323-324
SOUND OPTION 325-326

751 G-SERIES CONTENTS (Cont'd)

ACCESSORIES & OPTIONS (CONT'D) 203-336
SOUND REDUCTION HARDHAT 327-328
STROBE LIGHT 329-330
TIRES & RIMS 331-334
BULK ITEMS 335-336
NUMERICAL INDEX 337
NUMERICAL INDEX 337

751 G-SERIES CONTENTS

MAIN FRAME 12-35
MAIN FRAME 12-13
OPERATOR CAB 14-17
SEAT & SEAT BAR 18-19
SEAT 20-21
PANELS 22-23
REAR DOOR 24-25
LIFT ARM & BOB-TACH 26-29
BOB-TACH 30-31
FUEL SYSTEM 32-35
DRIVE TRAIN 36-43
DRIVE TRAIN 36-37
MOTOR CARRIER 38-39
DISC BRAKE 40-41
AXLE 42-43
HYDRAULIC SYSTEM 44-83
HYDRAULIC CIRCUITRY 44-51
MANUAL LIFT RELEASE SYSTEM 52-53
AUXILIARY HYDRAULICS 54-57
TILT CYLINDER 58-59
LIFT CYLINDER 60-61
CONTROL PEDALS 62-63
HYDRAULIC CONTROL VALVE 64-71
* HYDRAULIC CONTROL VALVE 72-75
BICS CONTROL VALVE 76-77
MANUAL LIFT RELEASE VALVE 78-79
PRESSURE RELEASE VALVE 80-81
BUCKET POSITIONING VALVE 82-83
HYDROSTATIC SYSTEM 84-111
HYDROSTATIC CIRCUITRY 84-89
HAND CONTROLS 90-93
HYDROSTATIC MOTOR 94-95
HYDROSTATIC PUMP 96-103
GEAR PUMP 104-105
HYDROSTATIC OIL FILTER 106-111
ELECTRICAL SYSTEM 112-139
CAB ELECTRICAL CIRCUITRY 112-115
ENGINE ELECTRICAL CIRCUITRY 116-119
CONTROLS ELECTRICAL 120-131
ALTERNATOR 132-135
STARTER (NIPPONDENSO) 136-137
* STARTER (VALEO) 138-139
POWER UNIT 140-199
COOLING SYSTEM 140-143
ENGINE & ATTACHING PARTS 144-153
THROTTLE 154-155
COOLING FAN DRIVE ASSY. 156-157
ENGINE & GASKET KITS 158-159
GEARCASE 160-161
CRANKCASE 162-163
ROCKER ARM COVER 164-165
VALVE ROCKER ARM 166-167
CYLINDER HEAD 168-169
OIL PAN 170-171

751 G-SERIES CONTENTS (Cont'd)

POWER UNIT (CONT'D) 140-199

PISTON & CRANKSHAFT 172-173
FUEL CAMSHAFT 174-175
CAMSHAFT 176-177
WATER PUMP 178-179
WATER FLANGE & THERMOSTAT 180-181
MANIFOLDS 182-183
ENGINE STOP LEVER 184-185
GOVERNOR 186-187
SPEED CONTROL PLATE 188-189
INJECTION PUMP 190-193
INJECTOR NOZZLES 194-195
INJECTOR HOLDER 196-197
AIR CLEANER 198-199

ACCESSORIES & OPTIONS 203-336

ACCESS COVER 203-204
ACCESSORIES HARNESS 205-206
AIR DEFLECTOR KIT 207-208
AXLE SEAL KIT 209-210
BACK-UP ALARM 211-212
BEACON 213-214
BLOCK HEATER 215-216
BOB-TACH LEVERS 217-218
BUCKET POSITIONING VALVE KIT 219-220
CAB DOOR 221-234
CAB ENCLOSURE 235-238
CAB WINDOWS 239-244
COUNTERWEIGHT KIT 245-248
DECALS 249-252
DELUXE CAB 253-254
ELECTRICAL CONNECTOR KIT 255-256
ELECTRICAL CONTROLS KIT 257-262
ENGINE MOUNT KIT 263-264
EUROPEAN ACCESSORIES 265-266
FIRE EXTINGUISHER 267-268
F.O.P.S. KIT 269-270
FLASHER LIGHTS 271-272
HAND CONTROL KIT 273-276
HEATER KIT 277-280
HEATER 281-288
HEATER PLUMBING KIT 289-290
* HEATER PLUMBING KIT 291-292
HORN KIT 293-294
LIFT KIT 295-298
LIGHT KIT 299-300
MUFFLER/PURIFIER KIT 301-302
RADIATOR SCREEN KIT 303-304
REAR AUXILIARY KIT 305-306
REAR AUXILIARY VALVE 307-308
REAR DOOR LOCK 309-310
REAR WIPER 311-312
SEAT 313-316
SEAT BELT 317-322
SOUND KIT 323-324
SOUND OPTION 325-326

751 G-SERIES CONTENTS (Cont'd)

ACCESSORIES & OPTIONS (CONT'D) 203-336
SOUND REDUCTION HARDHAT 327-328
STROBE LIGHT 329-330
TIRES & RIMS 331-334
BULK ITEMS 335-336
NUMERICAL INDEX 337
NUMERICAL INDEX 337

MAINTENANCE ITEMS
MODEL 751 G-Series

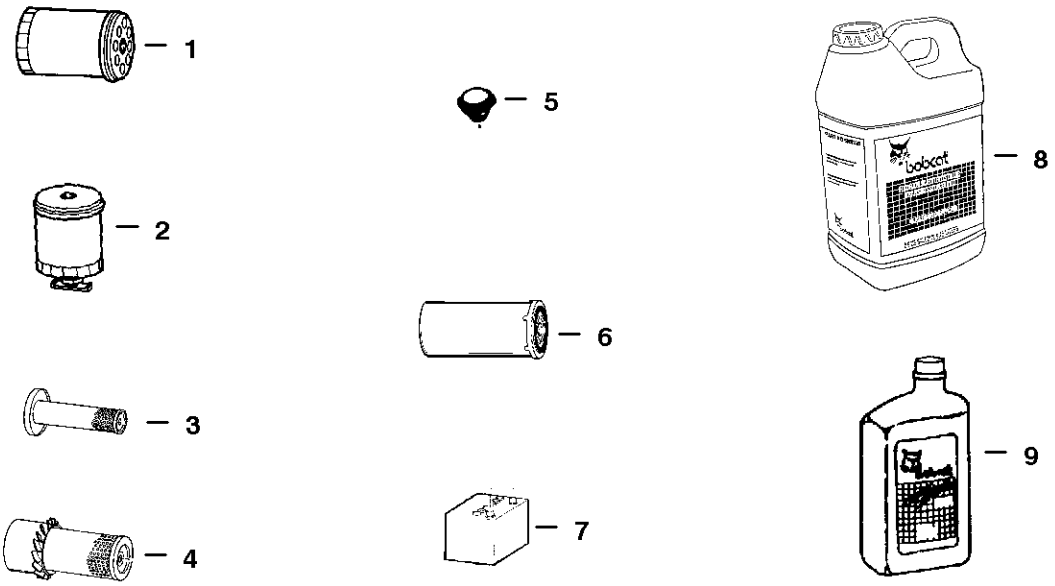

Ref.	Part Number	Description	Remarks	Page
1	6675517	FILTER	Engine Oil (6 Pack)	160
2	6667352	ELEMENT	Fuel	32
3	6598362	CARTRIDGE	Inner Air Cleaner	198
4	6598492	CARTRIDGE	Outer Air Cleaner	198
5	6646678	CAP	Radiator	140
6	6661248	ELEMENT	Hydrostatic # 3 Media	108
7	6674687	BATTERY		116
	(HYDRAULIC —RESERVOIR CAPACITY)			14.0 QTS. (13,2 L.)
	(HYDRAULIC/HYDROSTATIC SYSTEM)			6.0 GALS. (23 L.)
8	6563328	FLUID	Hyd./Hydro. Fluid - (2) 2.5 Gal. - (5 Gal.)	335
	6722344	FLUID	Hyd./Hydro. Fluid - (5 Gal.)	335
	6563330	FLUID	55 Gallon Drum	335
	(ENGINE OIL W/FILTER CAPACITY)			7.5 QTS. (7,1 L.)
9	6657301	MOTOR OIL	10W30 CE/SG - 1 Qt.	335
	6724557	MOTOR OIL	10W30 CE/SG - 1 Gallon	335
	6674205	MOTOR OIL	10W30 CE/SG - 2.5 Gal.	335
	6657299	MOTOR OIL	15W40 CE/SG - 1 Qt.	335
	6724558	MOTOR OIL	15W40 CE/SG - 1 Gallon	335
	6674204	MOTOR OIL	15W40 CE/SG - 2.5 Gal.	335
	6657303	MOTOR OIL	30 CE/SG - 1 Qt.	335
	6724559	MOTOR OIL	30 CE/SG - 1 Gallon	335
	6674206	MOTOR OIL	30 CE/SG - 2.5 Gal.	335

GENERAL INFORMATION

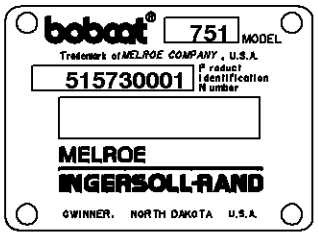

DOMESTIC

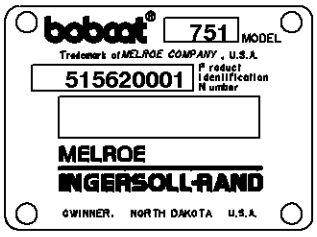

EXPORT

When using the machine serial number, use the complete number. When Serial Numbers do not appear below the page heading, parts information applies to all loaders.

Some Serial Number breaks are not available at time of printing. These are listed as & Below or & Above.

The number shown in the quantity column in this manual is the number of parts needed for the illustration on the page. For some parts an "x" will be shown in the quantity column. This "x" indicates that the quantity to be used is "As Needed".

When references L.H. and R.H. are used in this manual, it is done from the operator's seat in the forward operating position.

Some of the illustrations and information found in this parts manual were supplied to Bobcat by machine component companies.

ABBREVIATIONS & SYMBOLS

SALES = Order from Gwinner Sales Department

NSS = Not Serviced Seperately

NAP = Not Available as Parts

***** = Changed or Added Sections, Pages or Part Number

Disposition Code Definition
(Found in the Remarks Column)

[A] = Use Up

[B] = Use Up on Other Appplication (See PNI)

[C] = File PDR Report With Bobcat Parts Sales

[D] = Part Number Error

Explications en francais	Grid Nb	3
Erklärungen auf deutsch	Grid Nb	4
Spiegazioni in italiano	Grid Nb	5
Explicaciones en espanol	Grid Nb	6
Verklaring in het Nederlands	Grid Nb	7

NOTE D'INFORMATION

Pour toute référence au numéro de série de l'engin, toujours donner le numéro complet.

Le chiffré apparaissant dans la colonne des quantités de ce manuel représentent le nombre de pièces nécessaires pour l'illustration reprise sur la page. Dans certains cas, on lira un "x" dans la colonne des quantités. Cet "x" indique que la quantité nécessaire est "selon besoin".

Pour toute référence vers la GAUCHE ou la DROITE dans ce manuel, considérer que la personne se trouve assise dans le siège de l'opérateur, en position de fonctionnement en marche avant.

Certaines illustrations et informations reprises dans ce manuel de pièces de rechange ont été fournies à Bobcat par des fabricants de composants.

ABREVIATIONS & SYMBOLES

SALES	= Commander au Service Ventes à Bruxelles
NSS	= Pas vendu séparément
NAP	= Non disponible comme pièce de rechange
*	= Chapitre, page ou numéro de pièce modifié ou supplémentaire
BTI	= Bobcat Technical Information Bulletin : voir à la fin de la microfiché du modèle concerné ou la microfiche générale reprenant l' ensemble des "BTI".
was 6535403	= était avant 6535403
adj. (adjustment)	= réglage
Assembly	= ensemble
available W/Ref.	= disponible avec réf.
bulk/sold per foot	= en vrac/vendu par pied
does not include	= ne comprend pas
included with	= compris dans
I.D.	= D.I. (diamètre intérieur)
O.D.	= D.E. (diamètre extérieur)
not in kit	= pas en kit
W/ - WO/	= inclus/ - non inclus/
Qty	= quantité requise
see page/ref.	= voir page/réf.
used with ref/	= utilisé avec réf.
0,05 inch thickness	= 0,05 pouce d'épaisseur (un pouce = 25.4 mm)
weld on	= à souder

ALLGEMEINE INFORMATIONEN

Bei Angabe der Maschinen-Seriennummer stets die komplette Nummer angeben.

Bei der in der Mengenspalte (Anzahl) in diesem Handbuch angegebenen Zahl handelt es sich um die Anzahl von Teilen, die für die Abbildung auf der betreffenden Seite benötigt werden. Bei manchen Teilen in der Mengenspalte ist ein “x” angegeben. Dieses “x” weist darauf hin, dass sich die Anzahl der verwendeten Teile auf den “Bedarf” bezieht.

Bei Verwendung der Seitenangaben links und rechts in diesem Handbuch gelten diese für die Blickrichtung vom Fahrersitz aus, und zwar in Vorwärts-Betriebsrichtung.

Einige der in diesem Ersatzteilhandbuch aufgeführten Abbildungen und Informationen wurden der Bobcat von den Herstellern von Maschinenbauteilen zur Verfügung gestellt.

ABKÜRZUNGEN UND SYMBOLE

SALES	= Bestellung bei der Verkaufsabteilung in Brüssel
NSS	= Nicht einzeln erhältlich
NAP	= Nicht als Ersatzteil erhältlich
*****	= Geänderte oder hinzugefügte Abschnitte, Seiten oder Teilenummern
BTI	= Bobcat Technical Information Bulletin : Siehe am Ende der Mikrokarte des jeweiligen Modells oder der allgemeinen Mikrokarte der BTI.
was 6535403	= War 6535403
adj.	= Einstellung
Assembly	= Baugruppe
available W/Ref.	= erhältlich mit der Referenz
bulk/sold per foot	= Mengenabnahme / Verkauf pro Fuss
does not include	= beinhaltet nicht
included with	= enthalten in
I.D.	= Innendurchmesser
O.D.	= Aussendurchmesser
not in kit	= nicht in Bausatz
W/ - WO/	= mit/ - ohne/
Qty	= Anzahl
see page/ref.	= Siehe Seite / Referenz
used with ref.	= verwendet mit Referenz
0.05 inch thickness	= Dicke : 0.05 Zoll (ein Zoll = 25.4 mm)
weld on	= anschweissen

INFORMAZIONI GENERALI

Quando si usa il numero di serie della macchina usare il numero completo.

Il numero mostrato nella colonna della quantità di questo manuale corrisponde al numero di componenti necessari per l'illustrazione della pagina. Per alcuni componenti appare "X" nella colonna delle quantità. Questa "X" indica che la quantità da usare è "come necessario".

See in questo manuale si fa riferimento alla parte destra o sinistra, si intende dal sedile dell'operatore nella posizione in avanti di funzionamento.

Alcune delle illustrazioni e informazioni trovate in questo manuale di componenti sono state fornite alla Bobcat da società di componenti di macchine.

SIMBOLI E ABBREVIAZIONI

SALES	= Ordinare al servizio vendite di Bruxelles
NSS	= Non vendute separatamente
NAP	= Non disponibile come componente
*	= Sezioni, pagine o numeri di componente cambiati o aggiunti
BTI	= (Bobcat Technical information) Ved. al termine del microfiche del modello relativo oppure microfiche generale
was 6535403	= era 6535403
adj. (adjustment)	= regol. (regolazione)
Assembly	= Complessivo
available W/Ref.	= disponibile con rif.
bulk/sold per foot	= alla rinfusa/venduto al piede
does not include	= non comprende
Included with	= compreso con
I.D.	= d. i.
O.D.	= d. e.
not in kit	= non fa parte del kit
W/ - WO/	= con - senza
Qty	= Qtà
see page/ref	= ved. pagina/rif.
used with ref.	= usato con il rif.
0,05 inch thickness	= spessore 0,05 pollici (un pollice = 25,4 mm)
weld on	= a saldare

INFORMACION GENERAL

Al utilizar el número de serie de la máquina, debe emplearse el número completo.

El número que figura en la columna de “Unidades” en este manual es el número de piezas que se necesitan para la ilustración que consta en la página. En algunas piezas aparece una “x” en la columna de “Unidades”. Esta “x” indica que las unidades a utilizar son “según sea necesario”.

Cuando se empleen las referencias izq. y dcha., éstas se entienden mirando desde el asiento del conductor, en posición de marcha adelante.

Algunas de las ilustraciones y la información que figuran en este manual de piezas han sido facilitadas a Bobcat por empresas de componentes de máquinas.

ABREVIATURAS Y SIMBOLOS

VENTAS	= Pedido al Departamento de Ventas de Bruselas
NSS	= No se vende por separado
NAP	= No disponible como pieza de repuesto
*	= Secciones, páginas o referencias modificadas o añadidas
BTI	= (Bobcat Tecnical Information) Ver al final de la microficha del modelo afectado o en la microficha general “Boletín de Información Técnica Bobcat”.
was 6535403	= era anteriormente el 6535403
adj. (adjustment)	= ajuste
assembly	= conjunto
available W/Ref.	= disponible con la ref.
bulk/sold per foot	= a granel/vendido por pies
does not include	= no incluye
included with	= incluido en
I.D.	= diámetro interior
O.D.	= diámetro exterior
not in kit	= no en el kit
W/ - WO/	= con/ - sin
Qty	= Unidades
see page /ref.	= ver página/ref.
used with ref.	= empleado con la ref.
0,05 inch thickness	= 0,05 pulgadas de espesor (1 pulgada = 25,4 mm)
weld on	= debe ser soldado

ALGEMENE INFORMATIE

Als u het serienummer van de machine gebruikt, geef dan het gehele serienummer.

Het cijfer dat voorkomt in de kolom “Aantal”, in deze handleiding, is het aantal onderdelen dat nodig is van de illustratie op de pagina. Voor sommige onderdelen staat er een “x” in de kolom “Aantal”. Deze “x” betekent dat er een aantal “zoals nodig” vereist is.

Wanneer er in deze handleiding naar “links” en naar “rechts” gerefereerd wordt, moet dit verstaan worden voor een bestuurder die in de bestuurdersstoel zit in de voorwaartse bedrijfsstand.

Sommige van de illustraties en informatie in deze onderdelen-handleiding werden door firma’s van machine-componenten geleverd aan Bobcat.

AFKORTINGEN EN SYMBOLEN

SALES	= Bestellen bij de Verkoopafdeling te Brussel
NSS	= Niet afzonderlijk te verkrijgen
NAP	= Niet beschikbaar als onderdeel
*	= Gewijzigde of toegevoegde paragrafen, pagina’s of onderdeelnummers
BTI	= Bobcat Technical Information Bulletin : Zie einde van de microfiche van het desbetreffende model of einde van de algemene microfiche die het geheel van alle “BTI” herneemt.
was 6535403	= was vroeger 6535403
adj. (adjustment)	= afstelling
Assembly	= geheel
available W/Ref.	= beschikbaar met ref.
bulk/sold per foot	= bulk/aan de meter verkocht
does not include	= bevat niet
includes with	= is bevat in
I.D.	= ϕ inw. (inwendige diameter)
O.D.	= ϕ uitw. (uitwendige diameter)
not in kit	= niet in de kit
W/ - WO/	= met/ - zonder/
Qty	= vereiste aantal
see page/ref.	= zie pagina/ref.
used with ref/	= gebruikt met ref.
0,05 inch thickness	= 0.05 inch dik (een inch = 25.4 mm)
weld on	= te lassen

MAIN FRAME

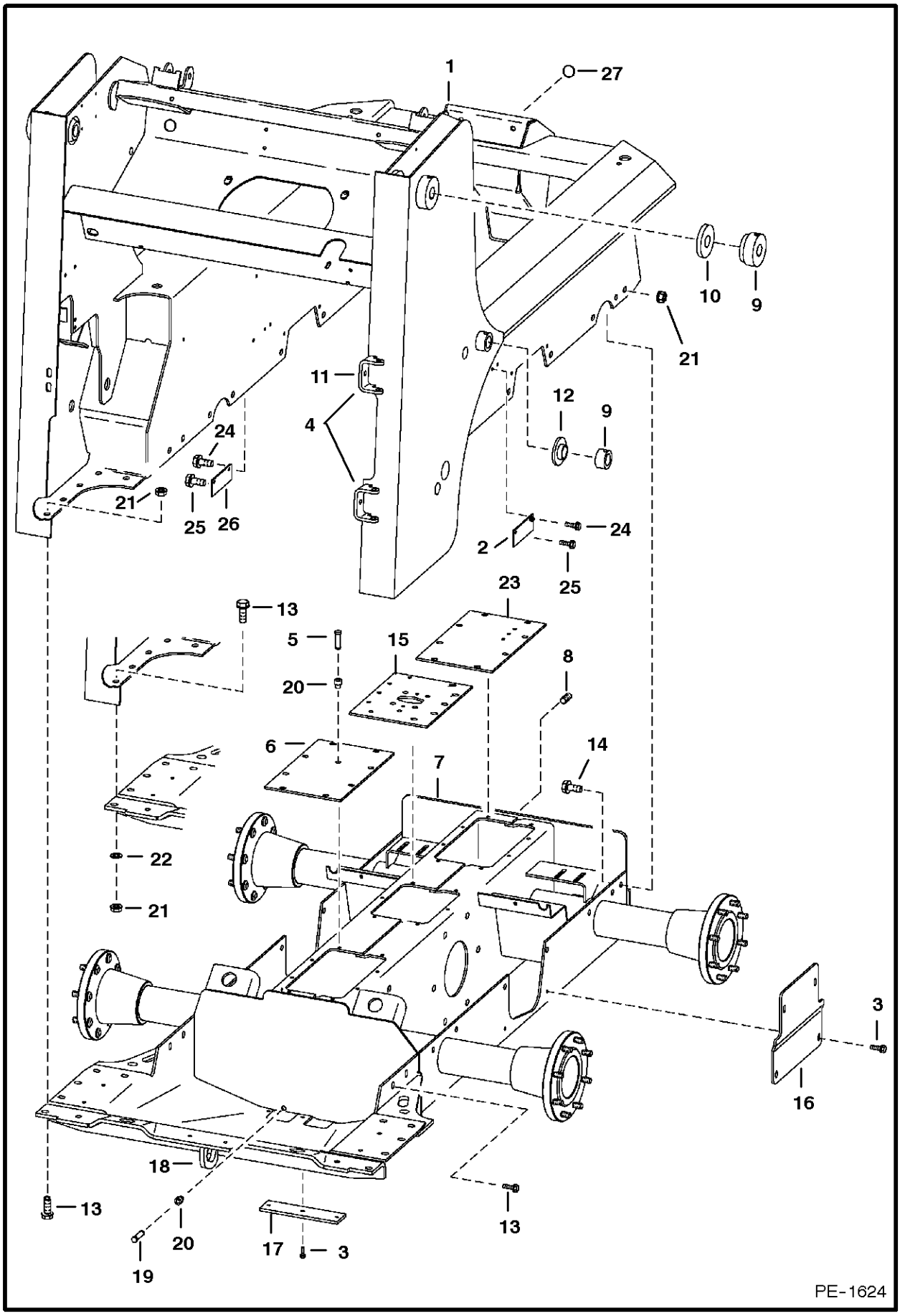
1
27
10
9
21
11
4
12
9
24
21
25
26
24
2
25
23
13
5
15
20
8
6
7
14
22
21
3
16
18
13
20
17
3
19
13
PE-1624

MAIN FRAME

Ref.N°	Part N°	Description	Remarks	Serial N°	Qty.
1	6714590	MAIN FRAME			1
2	6704680	COVER		& Bel	2
3	84G-3712	BOLT			11
4	6708987	BRACKET	hinge - weld on		2
5	6670627	BREATHER	See Page DISC BRAKE(1)		1
6	6700330	COVER			1
7	6712827	CHAINCASE	See Page DRIVE TRAIN(1)		1
8	11F-12	PLUG	chaincase fill		1
9	6702584	BUSHING	weld on		4
10	6702583	BUSHING	weld on		2
11	6577394	BRACKET	hinge - weld on		1
12	6555987	BUSHING	weld on		2
13	31C-824	BOLT			12
14	31C-820	BOLT			28
15	6706042	COVER	See Page DISC BRAKE(1)		1
16	6704695	COVER			2
17	6700182	COVER			1
18	6706485	HOOK	tie down - weld on		2
19	6599645	PLUG	chaincase drain		1
20	6553411	BUSHING			2
21	83D-8	NUT			26
22	6701097	WASHER		& Bel	10
23	6578505	COVER	See Page DISC BRAKE(1)		1
24	84G-3110	BOLT	R.H. side	& Bel	2
24	84G-3112	BOLT	L.H. side	& Bel	2
24	84G-3710	BOLT		& Abv	2
25	17C-620	BOLT	Was 6717378 [A]		2
26	6727837	COVER		& Abv	2
27	6718796	PLUG			1

OPERATOR CAB

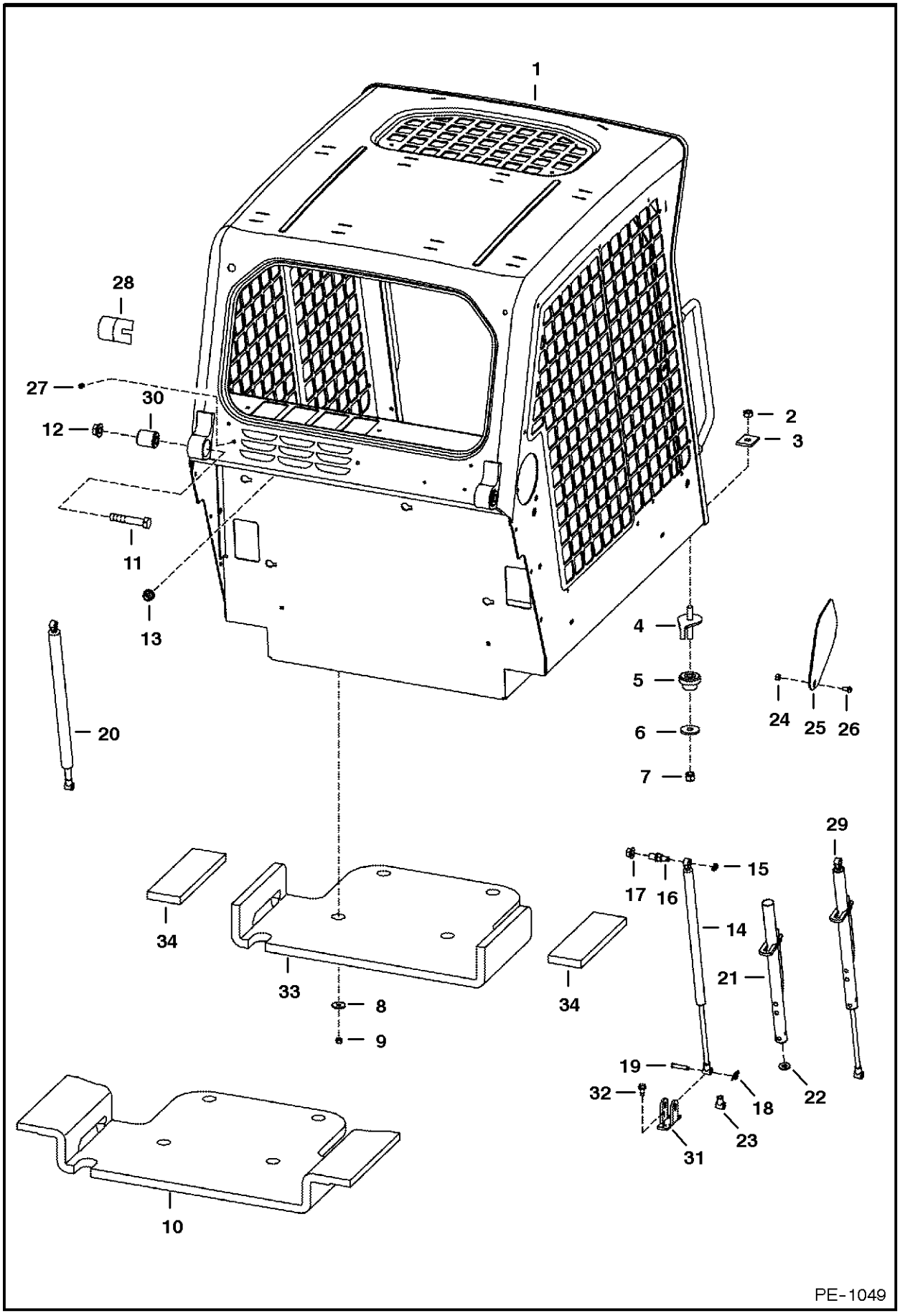

OPERATOR CAB

Ref.N°	Part N°	Description	Remarks	Serial N°	Qty.
1	6719672	OPERATOR CAB	includes cab decals		1
2	59D-8	NUT			2
3	6553709	WASHER	rectangular		2
4	6702971	BOLT			2
5	6560633	MOUNT			2
6	6515817	WASHER			2
7	85D-8	NUT			2
8	619021	WASHER			4
9	59D-5	NUT			4
10	NAP	INSULATION	seat pan - Order Ref. OPERATOR CAB(33) & (2) of Ref. OPERATOR CAB(34) - Was 6719360 [A]		1
11	17C-1056	BOLT			2
12	53D-10	NUT			2
13	53D-6	NUT			4
14	6675135	GAS SPRING	R.H.		1
15	6675140	SNAP RING			2
16	6719064	MOUNT	Was 6719005 [A]		2
17	83D-8	NUT			2
18	6631418	PIN	ring		2
19	6567743	PIN			2
20	6675134	GAS SPRING	L.H.		1
20	6675136	GAS SPRING	L.H. - heavy duty		1
21	6708189	TUBE	stop - R.H.		1
22	6701174	WASHER			1
23	6675257	ROD END			1
24	95D-5	NUT			2
25	6718784	COVER			2
26	25G-512	BOLT	Was 25G-510 [B]		2
27	6675033	INSERT			2
28	6579613	STOP			2
29	NAP	GAS SPRING	R.H. - W/latch - Order Ref. OPERATOR CAB(14) & OPERATOR CAB(21)-OPERATOR CAB(23) - Was 6719072 [A]		1
30	6562602	BUSHING			2
31	6706349	MOUNT	gas spring		2
32	84G-3112	BOLT			4
33	6729013	INSULATION	seat pan		1
34	6729012	INSULATION	seat pan		2

OPERATOR CAB

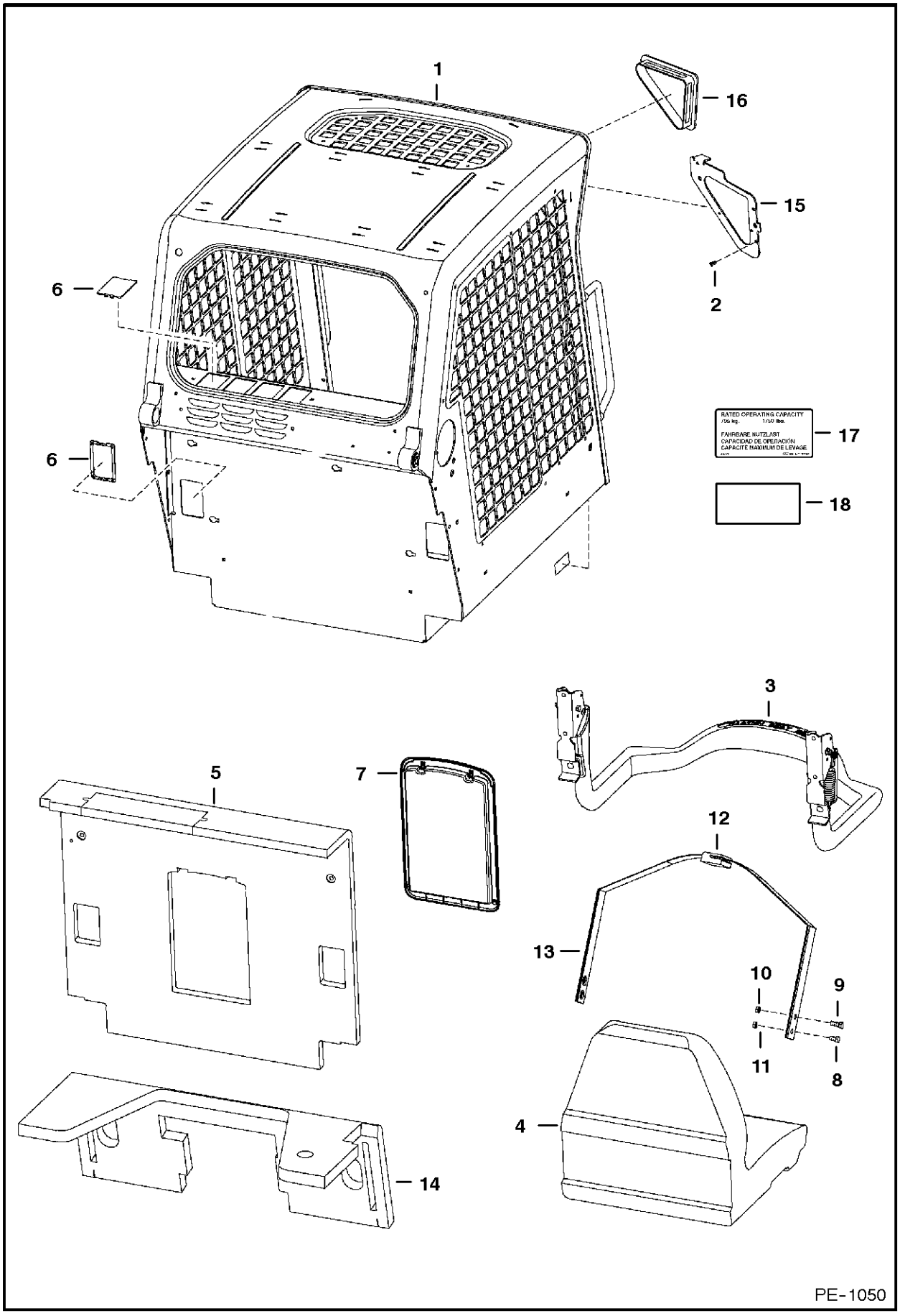

OPERATOR CAB

Ref.N°	Part N°	Description	Remarks	Serial N°	Qty.
1	6719672	OPERATOR CAB	includes cab decals		1
2	6675033	INSERT	See Page CAB ELECTRICAL CIRCUITRY(1)		6
3		SEAT BAR	See Page SEAT & SEAT BAR(1)		1
4	6669135	SEAT	See Page SEAT(1)		1
5	6719504	INSULATION	W/Ref. OPERATOR CAB(7)		1
6	6718101	COVER			6
7	6719503	CONTAINER	manuals		1
7	6675524	CLIP			2
7	6725301	COVER			1
7	6725303	FRAME			1
8	17C-612	BOLT			2
9	17C-716	BOLT			2
10	85D-7	NUT			2
11	85D-6	NUT			2
12	NAP	SEAT BELT	Order 6725403inD1}' Seat Belt - Was 6667875 [A]		1
12	NAP	SEAT BELT	W/spring plates - Order 6675074inD1+ (Seat Belt & (2) of Ref. OPERATOR CAB(13) (6725373inD1) Spring Plate) - Was 6725403 [A]		1
12	6675074	SEAT BELT	W/O spring plates		1
13	NAP	GUIDE	Order 6711908inD1}) Spring Plate, 6565355inD1}+ Guide & (2) of 6630207inD1} Rivet - Was 6711907 [A]		2
13	6711908	SPRING PLATE	Use W/Ref. OPERATOR CAB(12) (NAP/6667875 & NAP/6725403 Seat Belt)		2
13	6565355	GUIDE			1
13	6630207	RIVET			2
13	6725373	SPRING PLATE	(Use W/Ref. OPERATOR CAB(12) (6675074inD1+ Seat Belt)		2
14	6718489	INSULATION	steering panel		1
15	NSS	PLATE	R.H. - weld on		1
15	NSS	PLATE	L.H. - weld on		1
16	6674403	COVER	no lights		2
17	6725374	DECAL	load - Was 6718200 [B,D]		1
18	6804790	DECAL	capacity		1

SEAT & SEAT BAR

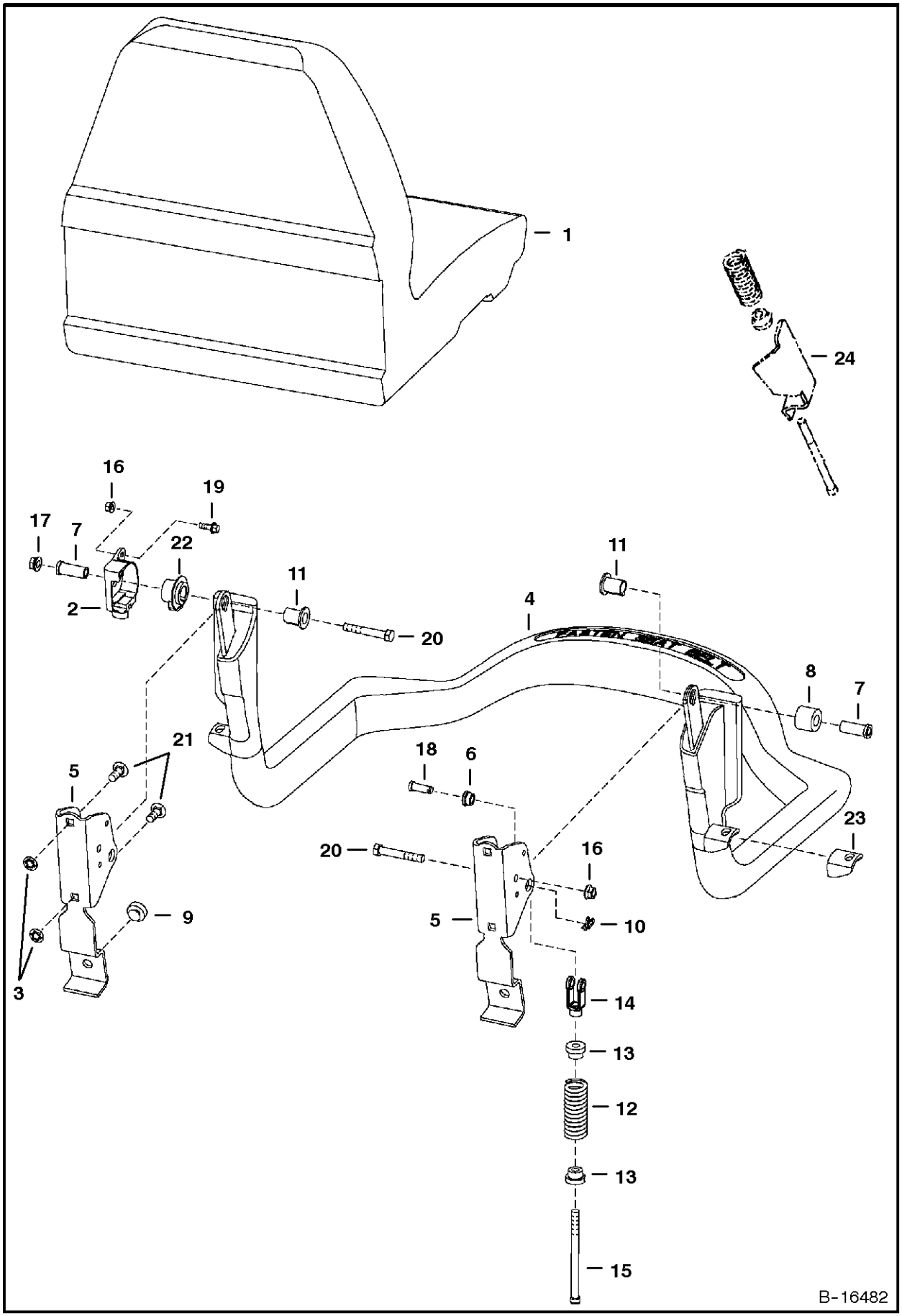

SEAT & SEAT BAR

Ref.N°	Part N°	Description	Remarks	Serial N°	Qty.
1	6669135	SEAT	See Page SEAT(1)		1
2	6674406	SENSOR			1
3	6674894	NUT			4
4	6715860	SEAT BAR			1
5	6715863	BRACKET			1
6	6715864	BUSHING			2
7	6715865	BUSHING			2
8	6715866	BUSHING			1
9	6519178	BUMPER			2
10	6631418	PIN	ring		2
11	6664882	BUSHING	keyed		2
12	6701535	SPRING			2
13	6710659	BUSHING			2
14	6713589	CLEVIS			2
15	6713887	BOLT			2
16	83D-4	NUT			1
17	53D-6	NUT			2
18	4F-6106	PIN			2
19	35C-412	BOLT			1
20	17C-640	BOLT			2
21	10C-616	BOLT			4
22	6674405	BUSHING			1
23	NAP	MOUNT	Order Ref. SEAT & SEAT BAR(4)	& Abv	1
24	NAP	MOUNT	Order Ref. SEAT & SEAT BAR(4)	& Bel	1

SEAT
(Michigan)

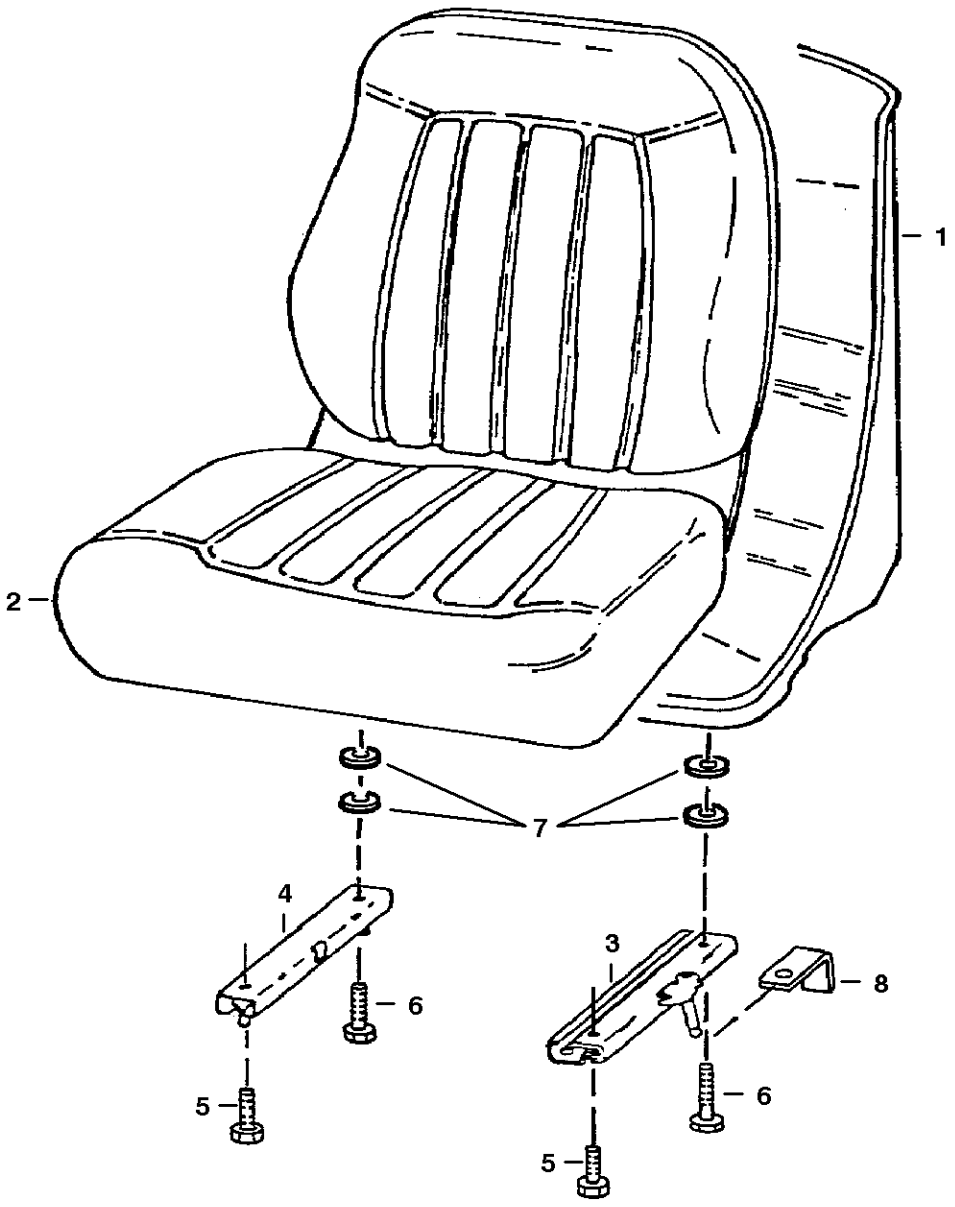

SEAT

Ref.N°	Part N°	Description	Remarks	Serial N°	Qty.
1	6669135	SEAT	W/Ref. SEAT(2)-SEAT(7)		1
2	6670160	CUSHION	W/edging, clip & (2) grommets		1
2	NSS	EDGING			1
2	NSS	CLIP			1
3	6674013	TRACK	L.H. - W/8' (203,2 mm) Latch		1
4	6669089	TRACK	R.H. - W/O Latch		1
5	25G-512	BOLT			2
6	25G-520	BOLT			2
7	6672715	SPACER	Was 7000010 [A]		4
8	6668953	BRACKET			2

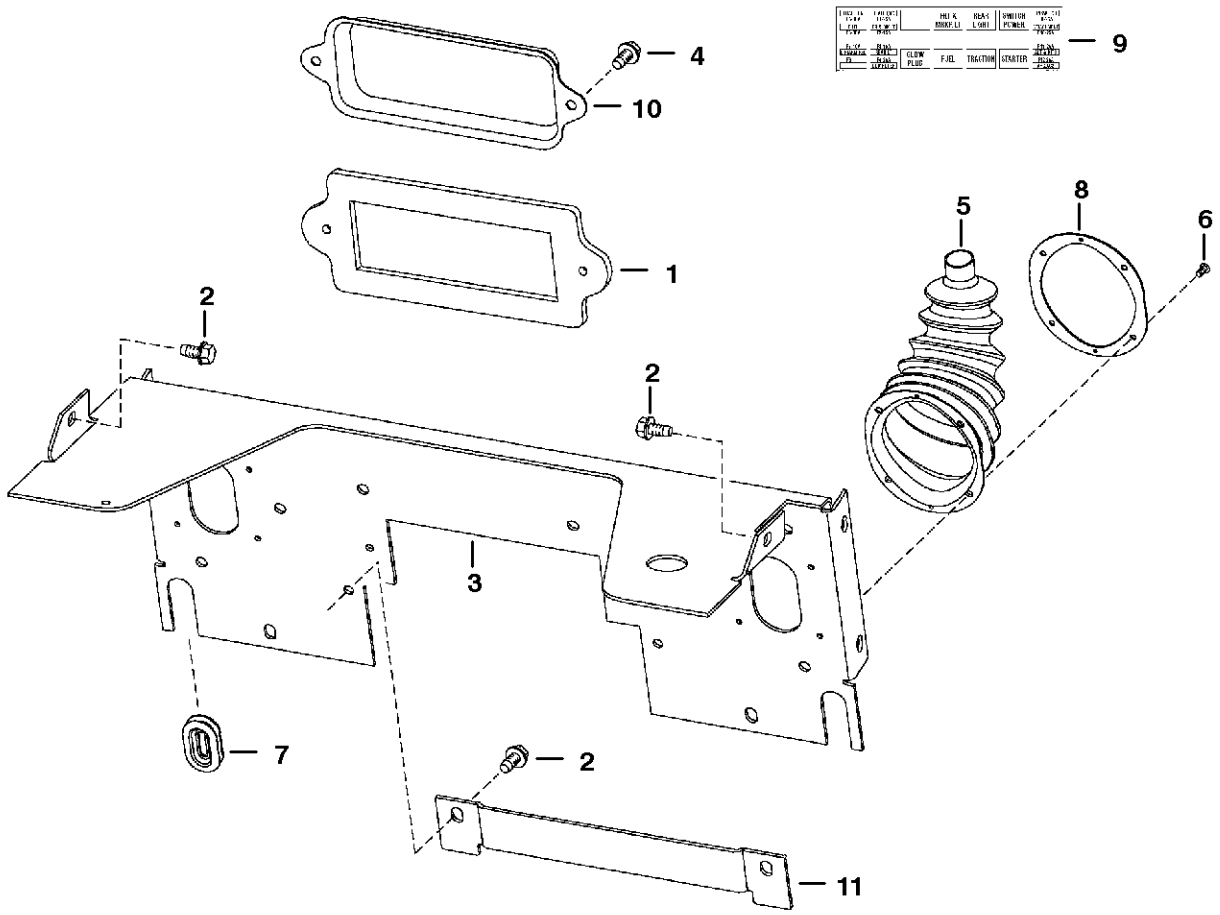
4
10
9
1
5
8
6
2
2
3
7
2
11
B-16483

PANELS

Ref.N°	Part N°	Description	Remarks	Serial N°	Qty.
1	6725302	GASKET			1
2	84G-3712	BOLT			16
3	6717208	SHIELD			1
4	84G-3112	BOLT			2
5	6532127	BOOT	W/Ref. PANELS(8)		2
6	6630207	RIVET			12
7	6577961	GROMMET			2
8	NAP	PLATE	Order Ref. PANELS(5)		2
9	NAP	DECAL	fuse/relay - 2.10' x 9.40' (53,3 mm x 238,8 mm) - Order 6718774inD17 Decal		1
9	6718774	DECAL	fuse/relay - 2' x 7' (50,8 mm x 177,8 mm)		1
10	6716621	COVER	fuse/relay		1
11	6718760	COVER			1

REAR DOOR

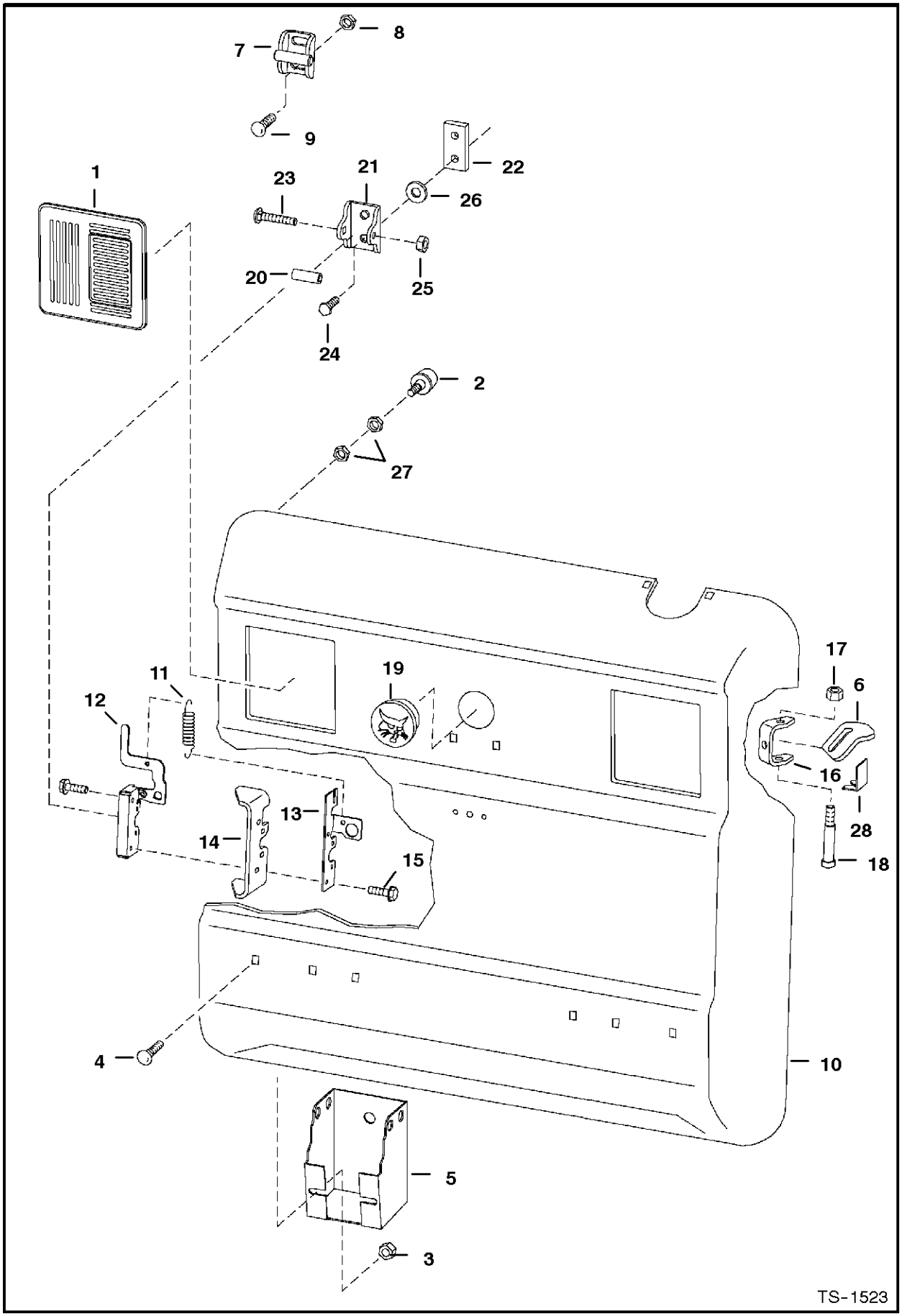
1
2
3
4
5
6
7
8
9
10
11
12
13
14
15
16
17
18
19
20
21
22
23
24
25
26
27
28
TS-1523

REAR DOOR

Ref.N°	Part N°	Description	Remarks	Serial N°	Qty.
1	6670287	COVER	For Light Mount See Page LIGHT KIT(1)		2
2	6655399	BUMPER	Was 6714454 [B,D]		2
3	55D-6	NUT			2
4	37C-612	BOLT			2
5	6715318	TOOL HOLDER			1
6	6714126	DOOR STOP			1
7	NAP	STRIKER ASSY.	Order Ref. REAR DOOR(20) - REAR DOOR(26) - Was 6715157 [A]		1
8	57D-8	NUT			2
9	37C-820	BOLT	carriage		2
9	25G-820	BOLT	hex socket		2
10	6711524	REAR DOOR			1
11	6714210	SPRING			1
12	6670867	LATCH			1
13	6711664	GUIDE	latch		1
14	6711527	LATCH PLATE	weld-on		1
15	31C-420	BOLT			4
16	6711526	HINGE	weld on		2
17	59D-6	NUT			2
18	38C-856	BOLT			2
19	6718796	PLUG			1
20	6719550	TUBE	striker		1
21	6719524	STRIKER			1
22	6719525	BAR	threaded striker		1
23	37C-644	BOLT	carriage		1
24	17C-820	BOLT			2
25	61D-6	NUT			2
26	6675273	WASHER	lock		2
27	61D-5	NUT			2
28	6719766	STOP			1

LIFT ARM & BOB-TACH

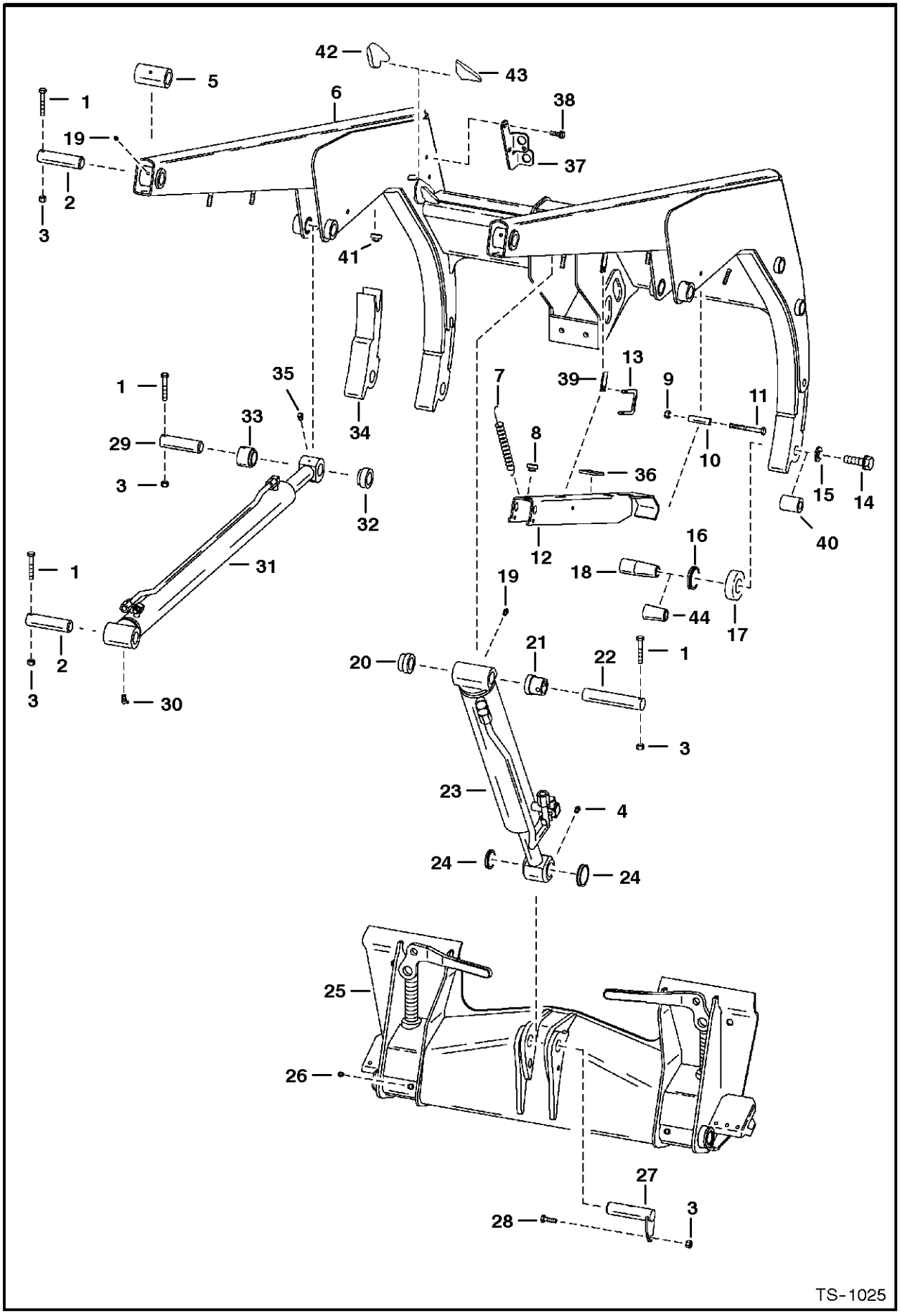

LIFT ARM & BOB-TACH

Ref.N°	Part N°	Description	Remarks	Serial N°	Qty.
1	17C-640	BOLT			8
2	6577954	PIN			4
3	85D-6	NUT			9
4	10H-35	GREASE ZERK			1
5	6578356	BUSHING	Weld On		2
6	NAP	LIFT ARM	1.25' (31,8 mm) dia. Bob-Tach pins - Order 6730797inD1 Lift Arm & (2) of Ref. LIFT ARM & BOB-TACH(44) - Was 6703136 [A]	& Bel	1
6	6730797	LIFT ARM	1.50' (38,1 mm) dia. Bob-Tach pins	& Abv	1
7	6700743	SPRING			1
8	6519178	BUMPER	rubber		1
9	61D-6	NUT			1
10	6700469	SPACER			1
11	17C-648	BOLT			1
12	6705089	LIFT ARM STOP			1
13	6714810	PIN	retainer		1
14	17C-1064	BOLT		& Bel	2
14	31C-1264	BOLT		& Abv	2
15	6555455	WASHER		& Bel	2
15	6718723	WASHER		& Abv	2
16	6651709	SEAL			2
17	6700039	CUP	seal	& Bel	2
17	6700463	CUP	seal	& Abv	2
18	6707042	PIN		& Bel	2
18	6730263	PIN	1.50' (38,1 mm) dia.	& Abv	2
19	10H-25	GREASE ZERK			3
20	6703363	BUSHING	Weld On - Also Order Ref. LIFT ARM & BOB-TACH(22)		1
21	6704287	BUSHING	Weld On - Also Order Ref. LIFT ARM & BOB-TACH(22)		1
22	6704288	PIN	1.25'(31,8 mm) dia. - 7'(177,8 mm) long		1
23		CYLINDER	tilt - See Page TILT CYLINDER(1)		1
24	225855	SEAL			2
25		BOB-TACH	See Page BOB-TACH(1)		1
26	743332	GREASE ZERK			2
27	6716601	PIN			1
28	17C-620	BOLT			1
29	6547593	PIN			2
30	11H-15	GREASE ZERK			2
31		CYLINDER	lift - See Page LIFT CYLINDER(1)		2
32	6555989	BUSHING	Weld On		2
33	6555987	BUSHING	Weld On		2
34	NAP	ARM	R.H. - Weld On		1
34	NAP	ARM	L.H. - Weld On		1
35	12H-15	GREASE ZERK			2
36	6704436	PAD	foam - self adhesive		1
37	6713850	MOUNT	See Page AUXILIARY HYDRAULICS(1)		1
38	84G-3112	BOLT	See Page AUXILIARY HYDRAULICS(1)		2
39	6705091	TAB	weld on		1
40	6714874	BUSHING	weld on - W/tapered hole - for 1.25'(31,8 mm) dia. pin		2
41	6704403	STOP	weld on		2
42	6727544	PLATE	weld on		2
43	6727545	PLATE	weld on		2

LIFT ARM & BOB-TACH

Ref.N°	Part N°	Description	Remarks	Serial N°	Qty.
44	6731254	BUSHING	tapered - allows 1.25' (31,8 mm) dia. Bob-Tach pins to be used in 1.50' (38,1 mm) dia. Lift Arm holes		2

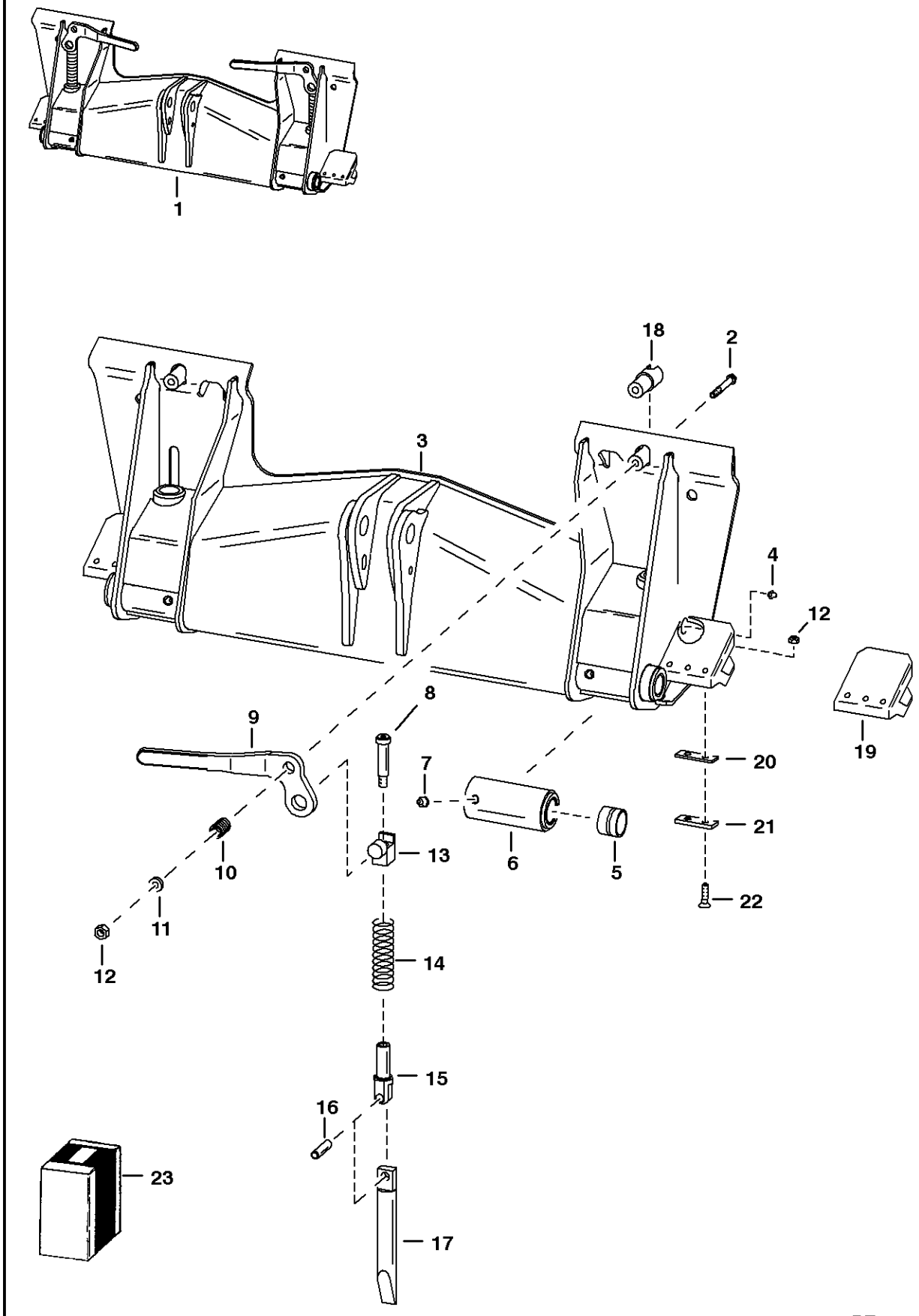
1
18
2
3
4
12
19
8
9
20
7
21
10
13
6
5
22
11
12
14
15
16
23
17
PE-1523

BOB-TACH

Ref.N°	Part N°	Description	Remarks	Serial N°	Qty.
1	6571744	BOB-TACH	Ref. BOB-TACH(2)-BOB-TACH(22) (- W/1.25' (31,8 mm) dia. Lift Arm holes - Was SALES [D]	& Bel	1
1	6709215	BOB-TACH	Ref. BOB-TACH(2)-BOB-TACH(22) - W/1.50' (38,1 mm) dia. Lift Arm holes	& Abv	1
2	17C-660	BOLT			2
3	NAP	FRAME			1
4	10H-35	GREASE ZERK			2
5	6589665	BUSHING	Press Fit		2
6	6731243	BUSHING	Weld-on -W/Ref. BOB-TACH(5) - Was 6577445 [A]		2
7	743332	GREASE ZERK			2
8	38C-1036	BOLT	shoulder		2
9	6702904	LEVER	R.H.		1
9	6702903	LEVER	L.H.		1
10	6713040	SPRING			2
11	619021	WASHER			2
12	85D-6	NUT			6
13	6704240	PIVOT ASSY			2
14	6562018	SPRING			2
15	6704248	PIVOT	wedge		2
16	14J-5032	PIN			2
17	6704242	WEDGE ASSY.			2
18	6702958	BUSHING	weld on		2
19	6704600	STOP	R.H. - Weld on - Shown		1
19	6704601	STOP	L.H. - Weld on - Not shown		1
20	6707514	SHIM	.060		x
20	6579106	SHIM	.125		2
21	6579104	SHIM	.250		2
22	9G-620	BOLT			4
23	6724775	LEVER KIT	R.H. - Bob-Tach - Ref. BOB-TACH(2) & BOB-TACH(8) - BOB-TACH(17)		1
23	6724776	LEVER KIT	L.H. - Bob-Tach - Ref. BOB-TACH(2) & BOB-TACH(8) - BOB-TACH(17)		1

FUEL SYSTEM

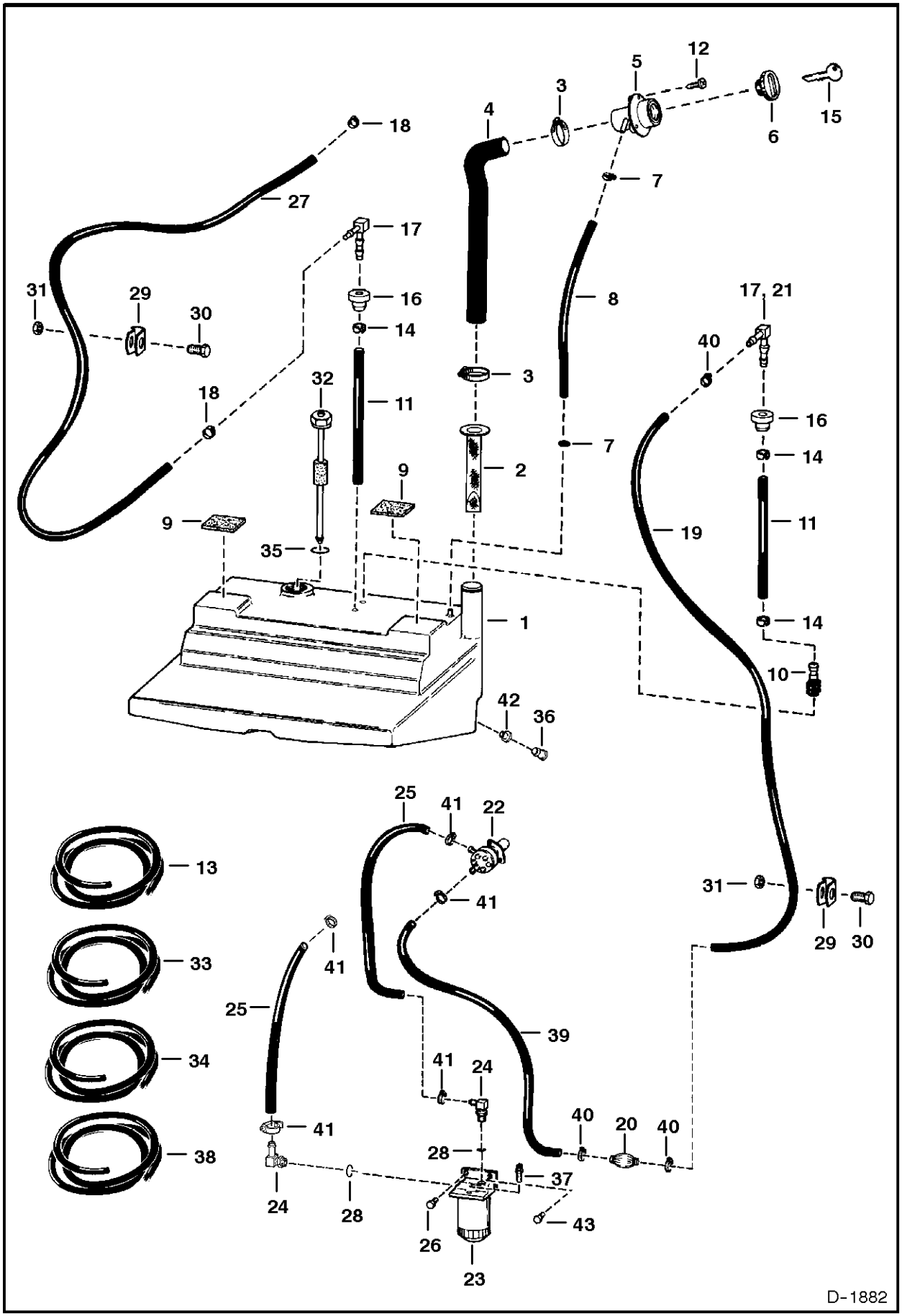
1
2
3
4
5
6
7
8
9
10
11
12
13
14
15
16
17
18
19
20
21
22
23
24
25
26
27
28
29
30
31
32
33
34
35
36
37
38
39
40
41
42
43
D-1882

FUEL SYSTEM

Ref.N°	Part N°	Description	Remarks	Serial N°	Qty.
1	6717572	TANK			1
2	6569219	SCREEN			1
3	42H-32	CLAMP			2
4	6710653	HOSE			1
5	6701449	FILLER TUBE			1
6	6661114	CAP	green		1
6	NAP	CAP	locking -W/Ref. FUEL SYSTEM(15) Code GC020		1
6	6661696	FUEL CAP	locking - W/Ref. FUEL SYSTEM(15) Code PK510		1
7	42H-10	CLAMP			2
8	NAP	HOSE	21.5" (546,1 mm) long - Order Ref. FUEL SYSTEM(13)		1
9	6578278	PAD	self adhesive one side		2
10	6650239	SCREEN			1
11	NAP	HOSE	8.5'-9.5'(215,9 mm - 241,3 mm) long - Order 6729853inD 1 Hose - Was 6576386 [B]	& Bel	2
11	6729853	HOSE	9.75'(247,7 mm) long	& Abv	2
12	6706517	SCREW			3
13	6578172	HOSE	bulk - Sold Per Foot		x
14	6661213	CLAMP			3
15	6654374	KEY	Code GC020		1
15	6587458	KEY SET	Code PK510		1
16	6553411	BUSHING	.5' I.D.		3
17	6598908	ELBOW			1
18	42HS-4	CLAMP	Was 6515575 [B]		2
19	NAP	HOSE	35" (889,0 mm) long - Order Ref. FUEL SYSTEM(33)		1
20	6657734	PUMP	hand primer		1
21	6661382	ELBOW			1
22	6655216	FUEL PUMP	See Page INJECTION PUMP(1) - Was 6674170 [D]		1
23	6667353	FILTER ASSY			1
23	6667352	FILTER			1
23	72F-1	DRAIN COCK			1
24	6715183	ELBOW	W/Ref. FUEL SYSTEM(28)		2
25	NAP	HOSE	13"(330,2 mm)long-Order Ref. FUEL SYSTEM(34) - connects to Ref. INJECTION PUMP(12) on Page INJECT ION PUMP(1)		2
26	17C-512	BOLT			2
27	NAP	HOSE	(53"(1346,2 mm)long-Order Ref. FUEL SYSTEM(38)		1
28	99K-5	O-RING			x
29	30H-36	CLAMP			2
30	17C-612	BOLT			2
31	61D-6	NUT			1
32	6674209	SENSOR	fuel - W/Ref. FUEL SYSTEM(35) - See Page ENGINE ELECTRICAL CIRCUITRY(1)		1
33	6577821	HOSE	bulk - Sold Per Foot		x
34	6577822	HOSE	bulk - Sold Per Foot		x
35	6717579	GASKET			1
36	6599645	PLUG	fuel drain - .5' O.D.		1
36	6717401	PLUG	fuel drain - .75' O.D.		1
37	6658180	PLUG	breather		1
38	6578169	HOSE	bulk - Sold Per Foot		x
39	NAP	HOSE	18" (457,2 mm) - Order Ref. FUEL SYSTEM(33)		1
40	5HM-13	CLAMP	constant tension		3
41	5HM-14	CLAMP	constant tension		5

FUEL SYSTEM

Ref.N°	Part N°	Description	Remarks	Serial N°	Qty.
42	6717402	BUSHING	.75' I.D.		1
43	84G-3116	BOLT		& Abv	1

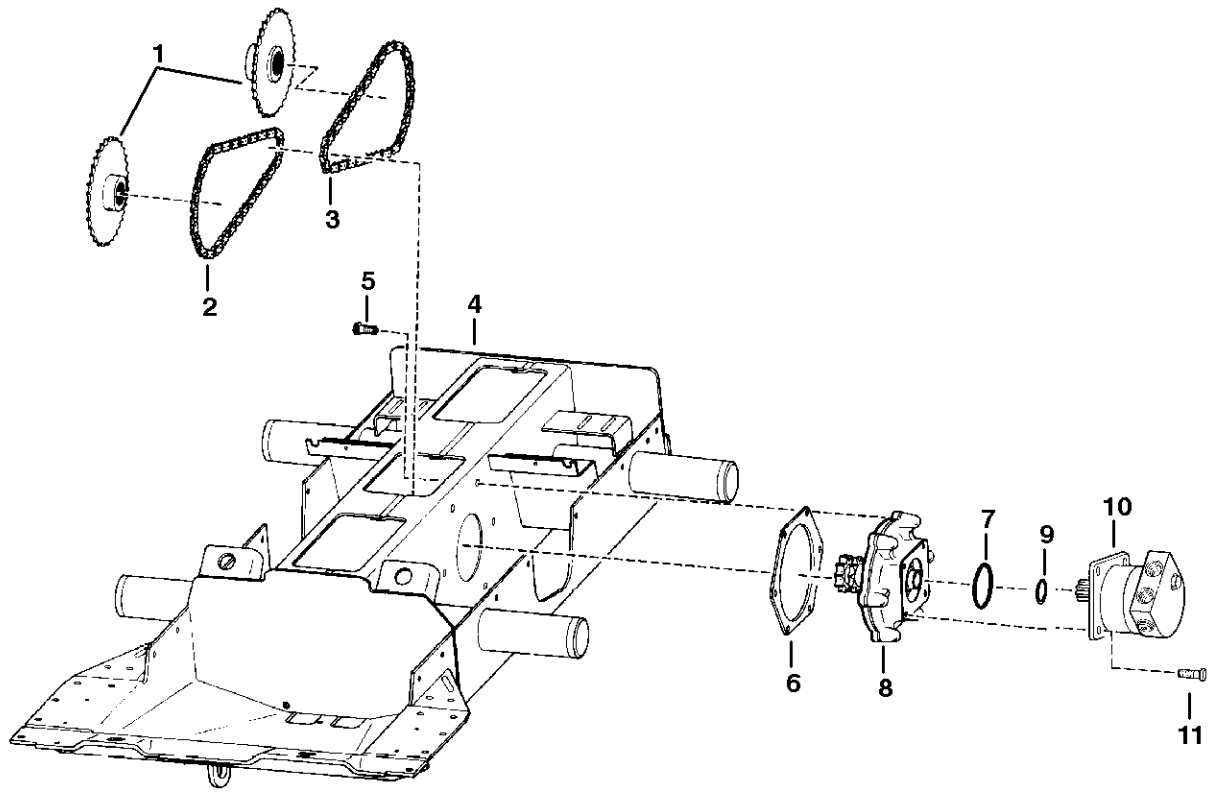

D-1886

DRIVE TRAIN

Ref.N°	Part N°	Description	Remarks	Serial N°	Qty.
1	6577204	SPROCKET			4
2	6579126	CHAIN	58 pitches - hour glass shape		2
2	6731219	CHAIN	58 pitch - oval shape link		2
3	6579127	CHAIN	62 pitches - hour glass shape		2
3	6731218	CHAIN	62 pitch - oval shape link		2
3	6510171	LINK	conn. - hour glass shape		x
3	6675332	LINK	conn. - oval shape		x
4	6712827	CHAINCASE			1
5	35C-1032	BOLT			12
6	6704878	GASKET	install W/rib toward chaincase		2
7	25K-30508	O-RING			2
8	6705287	MOUNT ASSY.	drive motor - See Page MOTOR CARRIER(1)		2
9	25K-30202	O-RING	Supplied W/Motor		2
10		MOTOR	See Page HYDROSTATIC MOTOR(1) - W/Ref. DRIVE TRAIN(9)		2
11	93G-824	BOLT	Was 73G-824 [B]		8

MOTOR CARRIER
(Drive Motor Mount Assy.)

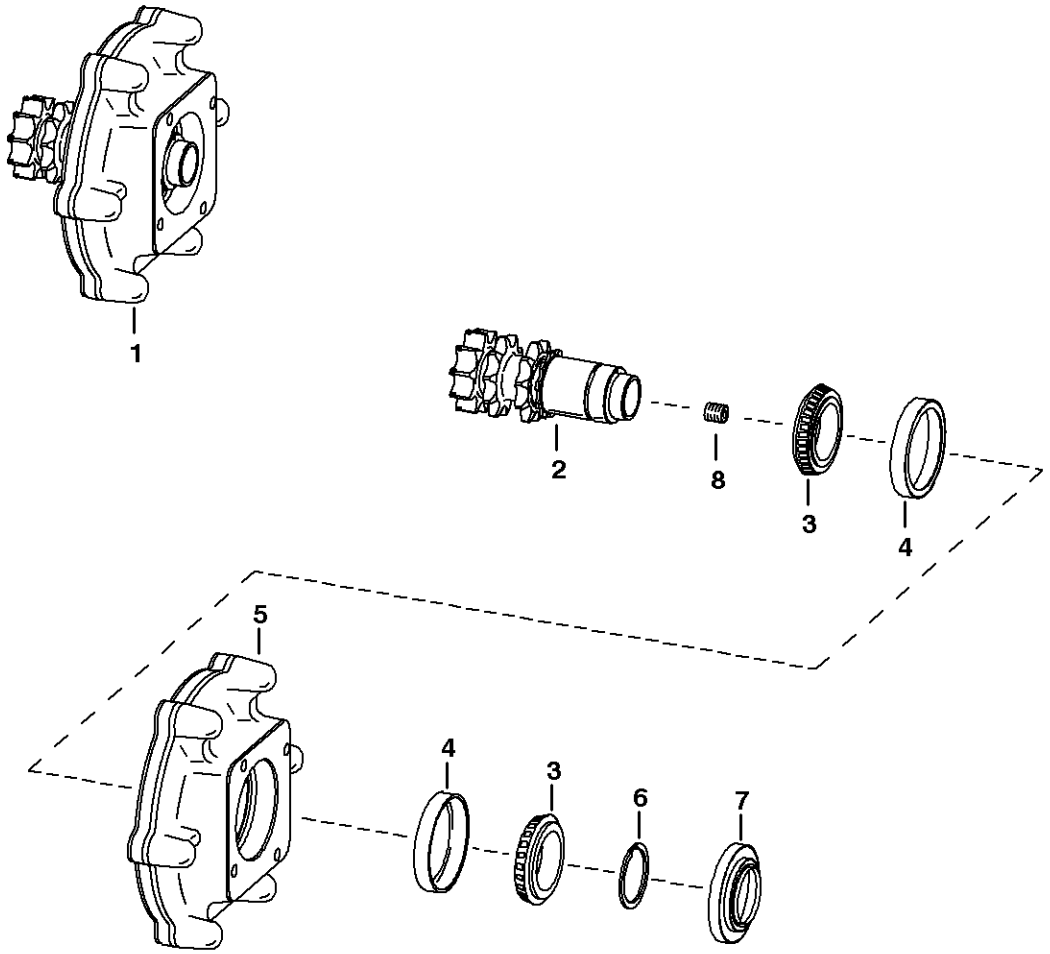

MC-1937

MOTOR CARRIER

Ref.N°	Part N°	Description	Remarks	Serial N°	Qty.
1	6712402	MOUNT ASSY.	drive motor - Ref. MOTOR CARRIER(2) - MOTOR CARRIER(7)		1
2	6713456	SHAFT	W/double snap ring groove		1
3	6632218	BEARING			2
4	6632541	RACE			2
5	6704492	HOUSING			1
6	6571851	SNAP RING	.118' (3,0 mm) thickness		1
6	6571852	SNAP RING	.125' (3,2 mm) thickness		1
7	6705847	SEAL			1
8	NSS	PLUG	Was 16F-6 [B]		1

DISC BRAKE

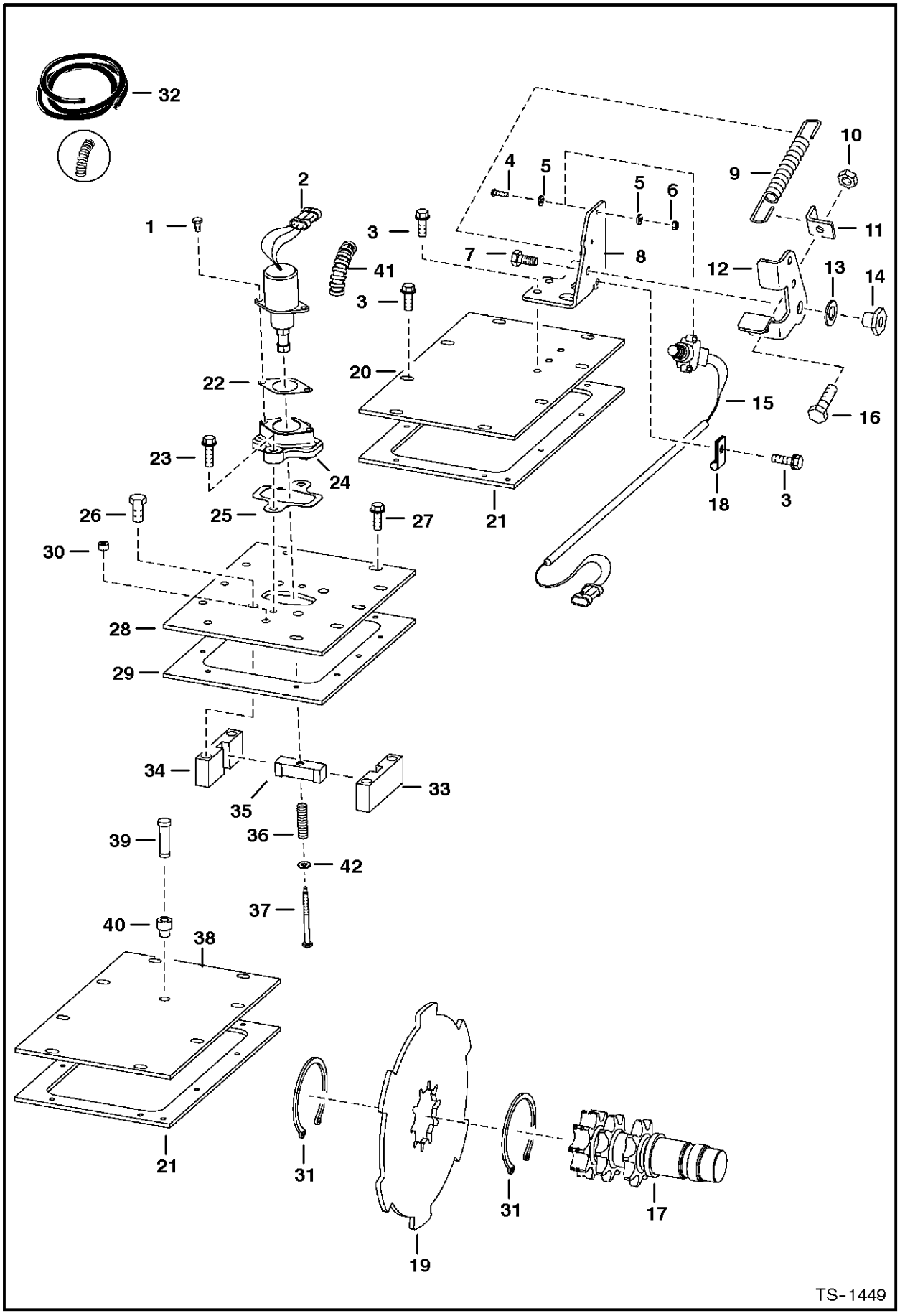
32
2
1
3
41
3
4
5
5
6
7
8
9
10
11
12
13
14
15
16
18
3
20
21
22
23
24
25
26
27
30
28
29
34
33
35
36
42
37
39
40
38
21
31
31
17
19
TS-1449

DISC BRAKE

Ref.N°	Part N°	Description	Remarks	Serial N°	Qty.
1	17C-412	BOLT			2
2	6667992	SOLENOID	W/Ref. DISC BRAKE(41) - See S/L dated 18 April 1996		1
3	84G-3712	BOLT			18
4	23G-812	SCREW			2
5	25E-8	WASHER			4
6	12D-8	NUT			2
7	17C-610	BOLT			1
8	6707313	PEDAL MOUNT			1
9	6585860	SPRING			1
10	95D-6	NUT			2
11	6707315	ANGLE			1
12	6707314	PEDAL	brake		1
13	6700170	WASHER	plastic		2
14	6559479	NUT			1
15	6707337	SWITCH			1
16	17C-620	BOLT			2
17	6713456	SHAFT	See Page MOTOR CARRIER(1)		2
18	30H-23	CLAMP			1
19	6716228	BRAKE	disc - 6 lobe		2
20	6578505	COVER			1
21	6703097	GASKET			2
22	6706737	GASKET			1
23	84G-3720	BOLT			2
24	6706718	MOUNT			1
25	6708016	GASKET			1
26	17C-820	BOLT			4
26	47C-820	BOLT			4
27	84G-3716	BOLT			10
28	6706042	COVER			1
29	6706968	GASKET			1
30	6544654	BUSHING	spacer		1
31	6658672	SNAP RING			4
32	6584978	CONDUIT	bulk - Sold Per Foot		x
33	6719056	BLOCK	guide - R.H.		1
34	6719057	BLOCK	guide - L.H.		1
35	6714278	WEDGE			1
36	6708018	SPRING			1
37	6708267	BOLT			1
38	6700330	COVER			1
39	6670627	BREATHER	See Page MAIN FRAME(1)		1
40	6553411	BUSHING			1
41	NAP	CONDUIT	5'(127 mm) long - Order Ref. DISC BRAKE(32)		1
42	25E-13	WASHER			1

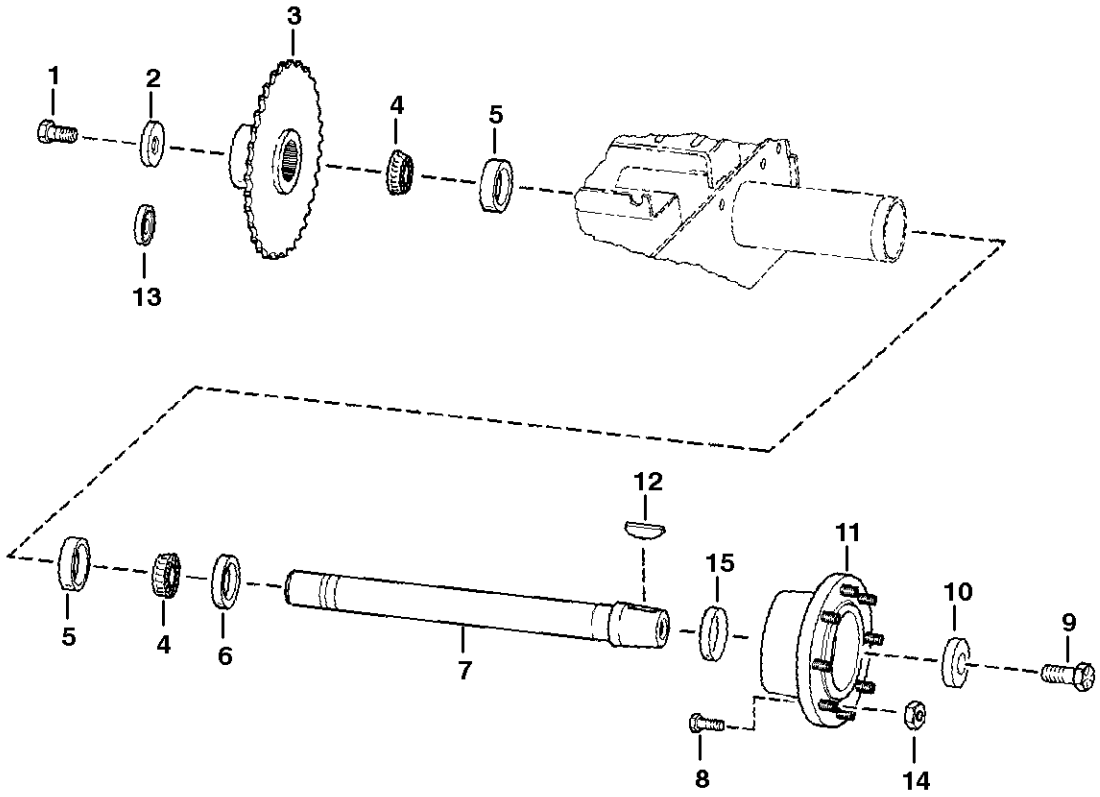

C-3270

AXLE

Ref.N°	Part N°	Description	Remarks	Serial N°	Qty.
1	18C-1224	BOLT			1
2	6552871	WASHER			1
3	6577204	SPROCKET			1
4	6519925	BEARING	Was 6669050 [A]		2
5	6634609	RACE			2
6	6658228	SEAL			1
7	6569465	AXLE			1
8	6709170	STUD	wheel		8
9	18C-1636	BOLT			1
10	6716843	WASHER	recessed		1
11	6578689	HUB			1
12	6J-1664	KEY			1
13	6662306	RING	wear - service part only		1
13	6722907	KIT	axle seal & wear sleeve - See Page AXLE SEAL KIT(1)		4
14	6564669	NUT	wheel		8
15	6563606	WASHER	recessed - Used to take up .005 or .010 end play on axle		1

HYDRAULIC CIRCUITRY
(W/O Bucket Positioning Valve)

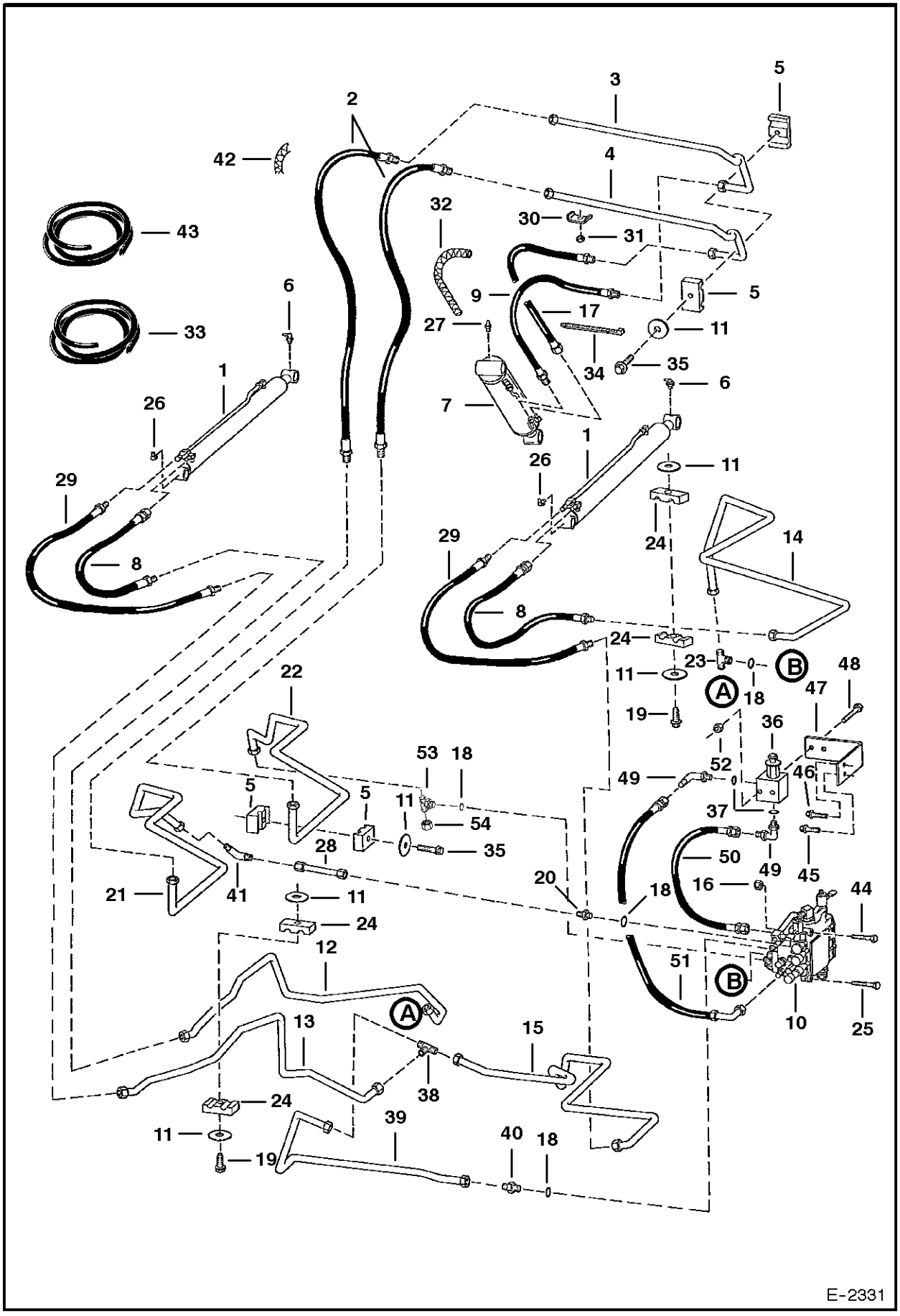

HYDRAULIC CIRCUITRY

Ref.N°	Part N°	Description	Remarks	Serial N°	Qty.
1		CYLINDER	lift - See Page LIFT CYLINDER(1)		2
2	6577669	HOSE			2
3	6727840	TUBE	Was 6703608 [A]		1
4	6727841	TUBE	Was 6703609 [A]		1
5	6701893	CLAMP			4
6	12H-15	GREASE ZERK			2
7		CYLINDER	tilt - See Page TILT CYLINDER(1)		1
8	6577671	HOSE			2
9	6704335	HOSE			1
10		VALVE	See Page HYDRAULIC CONTROL VALVE(1) - HYDRAULIC CONTROL VALVE(1)		1
11	872229	WASHER			8
12	6718492	TUBE			1
13	6718491	TUBE			1
14	6710581	TUBE			1
15	6710578	TUBE			1
16	85D-5	NUT			3
17	6704336	HOSE			1
18	99K-10	O-RING			4
19	84G-3732	BOLT			2
20	15KV-7	ADAPTER	W/Ref. HYDRAULIC CIRCUITRY(18)		1
20	97K-10	O-RING	flared end		1
21	6710577	TUBE			1
22	6710576	TUBE			1
23	6711651	TEE	W/Ref. HYDRAULIC CIRCUITRY(18)		1
24	6701892	CLAMP			4
25	17C-532	BOLT			2
26	11H-15	GREASE ZERK			2
27	10H-25	GREASE ZERK			1
28	6710573	TUBE			1
29	6718954	HOSE	Was 6578808 [A]		2
30	6502203	CLAMP			2
31	59D-6	NUT			2
32	NAP	COVER	18' (457,2 mm) - Order Ref. HYDRAULIC CIRCUITRY(33)		2
33	6656155	COVER	bulk - Sold Per Foot		x
34	6610510	NYLON TIE			4
35	84G-3724	BOLT			1
36		VALVE	lift lock - See Page MANUAL LIFT RELEASE VALVE(1)		1
37	99K-6	O-RING			x
38	10KN-6	TEE			1
38	97K-8	O-RING	flared end		3
39	6718099	TUBE			1
40	6715184	ADAPTER	W/Ref. HYDRAULIC CIRCUITRY(18)		1
40	97K-8	O-RING	flared end		1
41	77FN-7	ELBOW			1
41	97K-10	O-RING	flared end		1
42	NAP	COVER	36'(914,4 mm) - Order Ref. HYDRAULIC CIRCUITRY(43)		1
43	6705749	COVER	bulk - Sold Per Foot		x
44	17C-540	BOLT			2
45	84G-3716	BOLT			1

HYDRAULIC CIRCUITRY

Ref.N°	Part N°	Description	Remarks	Serial N°	Qty.
46	84G-3712	BOLT			1
47	6711280	MOUNT			1
48	17C-428	BOLT			2
49	17KV-5	ELBOW	W/Ref. HYDRAULIC CIRCUITRY(37)		1
49	97K-6	O-RING	flared end		1
50	6535451	HOSE			1
51	6578804	HOSE			1
52	83D-4	NUT			2
53	19KN-7	TEE	W/Ref. HYDRAULIC CIRCUITRY(18)		1
53	97K-10	O-RING	flared end		1
54	36K-7	CAP			1

HYDRAULIC CIRCUITRY
(W/Bucket Positioning Valve)

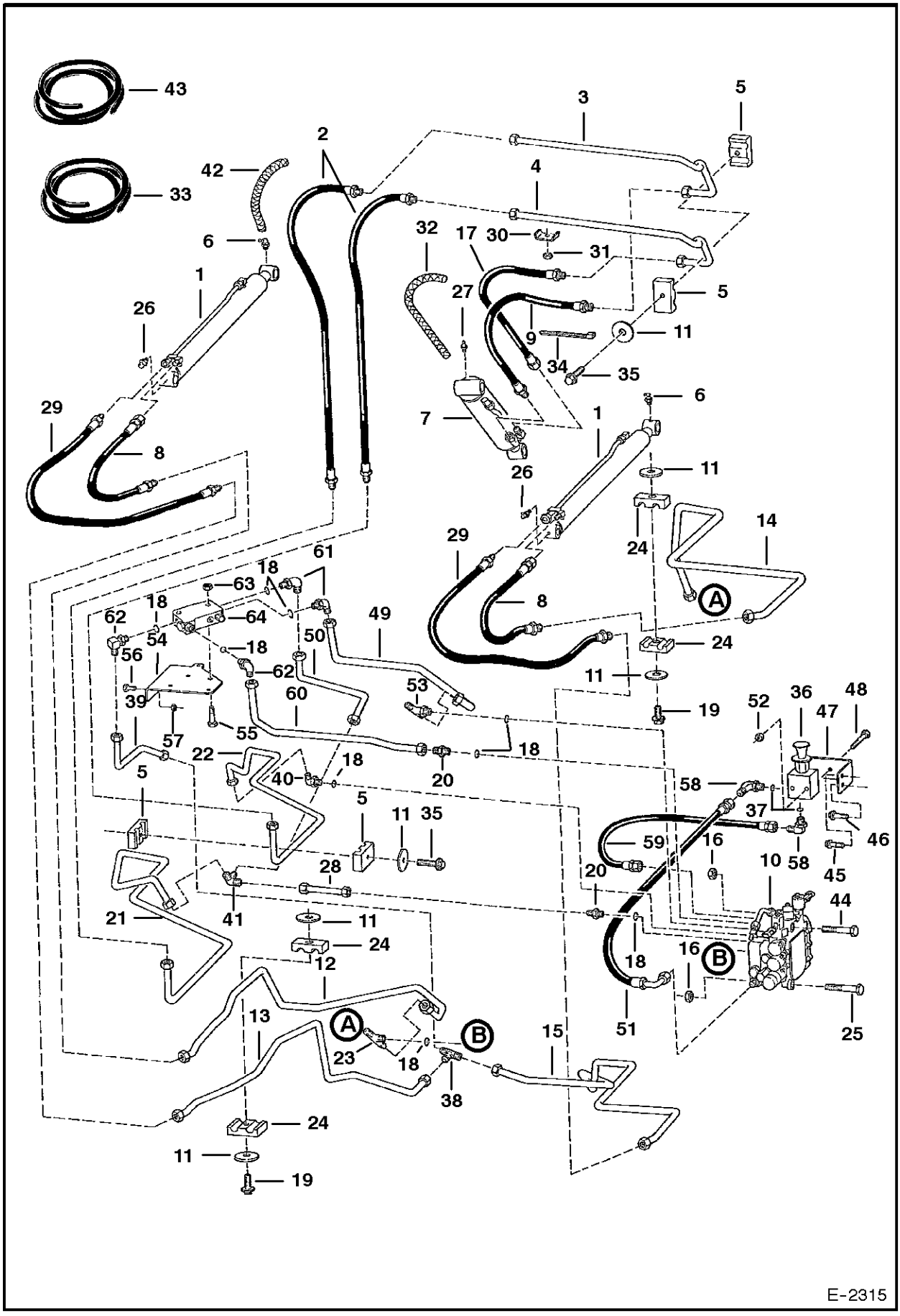

E-2315

HYDRAULIC CIRCUITRY

Ref.N°	Part N°	Description	Remarks	Serial N°	Qty.
1		CYLINDER	lift - See Page LIFT CYLINDER(1)		2
2	6577669	HOSE			2
3	6727840	TUBE	Was 6703608 [A]		1
4	6727841	TUBE	Was 6703609 [A]		1
5	6701893	CLAMP			4
6	12H-15	GREASE ZERK			2
7		CYLINDER	tilt - See Page TILT CYLINDER(1)		1
8	6577671	HOSE			2
9	6704335	HOSE			1
10		VALVE	See Page HYDRAULIC CONTROL VALVE(1) - HYDRAULIC CONTROL VALVE(1)		1
11	872229	WASHER			8
12	6718492	TUBE			1
13	6718491	TUBE			1
14	6710581	TUBE			1
15	6710578	TUBE			1
16	85D-5	NUT			3
17	6704336	HOSE			1
18	99K-10	O-RING			4
19	84G-3732	BOLT			2
20	15KV-7	ADAPTER	W/Ref. HYDRAULIC CIRCUITRY(18)		2
20	97K-10	O-RING	flared end		2
21	6710577	TUBE			1
22	6710576	TUBE			1
23	6715656	TEE	W/Ref. HYDRAULIC CIRCUITRY(18)		1
23	97K-10	O-RING	flared end		1
24	6701892	CLAMP			4
25	17C-532	BOLT			2
26	11H-15	GREASE ZERK			2
27	10H-25	GREASE ZERK			1
28	6710573	TUBE			1
29	6718954	HOSE	Was 6578808 [A]		2
30	6502203	CLAMP			2
31	59D-6	NUT			2
32	NAP	COVER	18' (457,2 mm) - Order Ref. HYDRAULIC CIRCUITRY(33)		2
33	6656155	COVER	bulk - Sold Per Foot		x
34	6610510	NYLON TIE			4
35	84G-3728	BOLT	Was 84G-3724 [B]		1
36		VALVE	Manual lift release - See Page MANUAL LIFT RELEASE VALVE(1)		1
37	99K-6	O-RING			x
38	10KN-6	TEE			1
38	97K-8	O-RING	flared end		3
39	6705068	TUBE			1
40	6715184	ADAPTER	W/Ref. HYDRAULIC CIRCUITRY(18)		1
40	97K-8	O-RING	flared end		1
41	6705070	TEE			1
42	NAP	COVER	36'(914,4 mm) - Order Ref. HYDRAULIC CIRCUITRY(43)		1
43	6705749	COVER	bulk - Sold Per Foot		x
44	17C-540	BOLT		& Bel	2

HYDRAULIC CIRCUITRY

Ref.N°	Part N°	Description	Remarks	Serial N°	Qty.
44	17C-620	BOLT		& Abv	2
45	84G-3716	BOLT			1
46	84G-3712	BOLT			1
47	6711280	MOUNT			1
48	17C-428	BOLT			2
49	6710583	TUBE			1
50	6704839	TUBE			1
51	6578804	HOSE			1
52	83D-4	NUT			1
53	19KN-7	TEE	W/Ref. HYDRAULIC CIRCUITRY(18)		1
53	97K-10	O-RING	flared end		1
54	6704833	BRACKET			1
55	35C-536	BOLT			2
56	35C-412	BOLT			2
57	57D-4	NUT			2
58	17KV-5	ELBOW	W/Ref. HYDRAULIC CIRCUITRY(37)		1
58	97K-6	O-RING	flared end		1
59	6535451	HOSE			1
60	6710584	TUBE			1
61	17KV-7	ELBOW	W/Ref. HYDRAULIC CIRCUITRY(18)		2
61	97K-10	O-RING	flared end		2
62	6715716	ELBOW	W/Ref. HYDRAULIC CIRCUITRY(18)		1
62	97K-8	O-RING	flared end		1
63	57D-5	NUT			2
64	6666341	VALVE	bucket pos. - See Page BUCKET POSITIONING VALVE(1)		1

MANUAL LIFT RELEASE SYSTEM

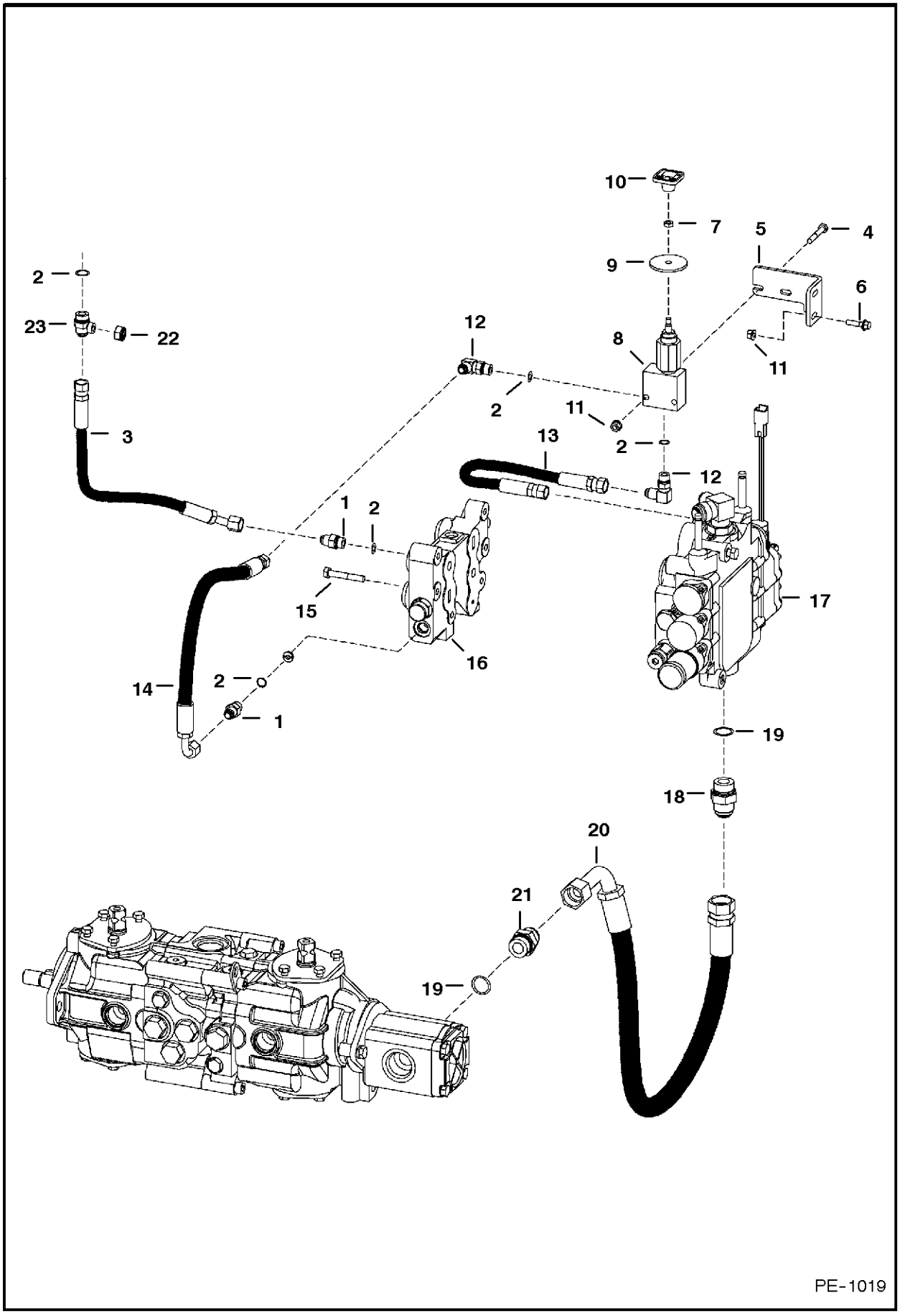

MANUAL LIFT RELEASE SYSTEM

Ref.N°	Part N°	Description	Remarks	Serial N°	Qty.
1	15KV-5	ADAPTER	W/Ref. MANUAL LIFT RELEASE SYSTEM(2)		3
1	97K-6	O-RING	flared end		3
2	99K-6	O-RING			x
3	6719653	HOSE			1
4	17C-428	BOLT			2
5	6711280	MOUNT			1
6	35C-416	BOLT	Was 84G-3716 [B]		2
7	7D-4	NUT			1
8	6667844	VALVE	&manual lift release - See Page MANUAL LIFT RELEASE VALVE(1)		1
9	6707101	WASHER	neoprene		1
10	6668913	KNOB	red square		1
11	83D-4	NUT			4
12	17KV-5	ELBOW	W/Ref. MANUAL LIFT RELEASE SYSTEM(2)		2
12	97K-6	O-RING	flared end		2
13	6535451	HOSE			1
14	6578804	HOSE			1
15	43C-532	BOLT			6
16	6628571	VALVE	BICS control - See Page BICS CONTROL VALVE(1)		1
17	NSS	VALVE	control - Order 6628394inD1}) Valve - See Page HYDRAULIC CONTROL VALVE(1) - HYDRAULIC CONTROL VALVE(1)		1
18	15KN-8	ADAPTER	W/Ref. MANUAL LIFT RELEASE SYSTEM(19)		2
18	97K-12	O-RING	flared end		2
19	99K-12	O-RING			2
20	6729154	HOSE	Was 6714594 [A]		1
21	18KV-8	ELBOW	W/Ref. MANUAL LIFT RELEASE SYSTEM(19)		1
21	97K-12	O-RING	flared end		1
22	21KV-5	TEE	W/Ref. MANUAL LIFT RELEASE SYSTEM(2)		1
22	97K-6	O-RING	flared end		2
23	36K-5	CAP			1
24	6719655	HOSE			1

AUXILIARY HYDRAULICS

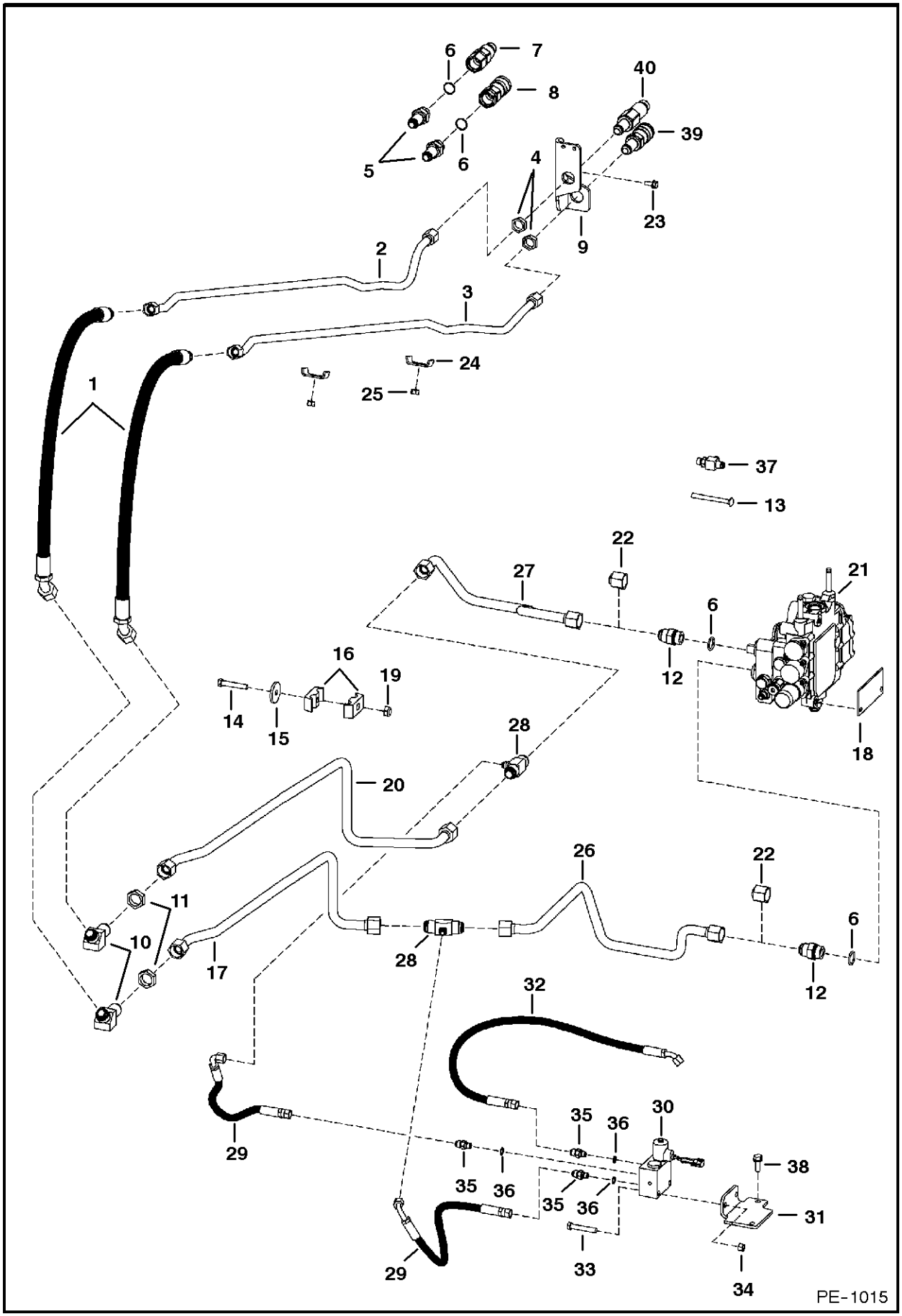

AUXILIARY HYDRAULICS

Ref.N°	Part N°	Description	Remarks	Serial N°	Qty.
1	6729153	HOSE	Was 6714577 [A]		2
2	6711735	TUBE			1
3	6711736	TUBE			1
4	86F-7	NUT			2
5	6715185	ADAPTER	W/Ref. AUXILIARY HYDRAULICS(6)		2
5	97K-10	O-RING	flared end		2
6	com3\}H~10{M				x
7	NAP	QUICK COUPLER	FF Male - Order Ref. AUXILIARY HYDRAULICS(40) - Was 6667808 [B]		1
7	6672026	O-RING			1
8	NAP	QUICK COUPLER	FF Female - Order Ref. AUXILIARY HYDRAULICS(39) Was 6672960 [B]		1
9	6713850	MOUNT			1
10	46KN-8	ELBOW			2
10	97K-12	O-RING	flared end		4
11	86F-8	NUT			2
12	15KN-8	ADAPTER	W/Ref. AUXILIARY HYDRAULICS(6)		2
12	97K-12	O-RING	flared end		2
13	37C-556	BOLT			1
14	17C-552	BOLT			1
15	872229	WASHER			1
16	6701893	CLAMP			2
17	6718087	TUBE			1
18	6704680	COVER			1
19	85D-5	NUT			2
20	6718089	TUBE			1
21		VALVE	See Page HYDRAULIC CONTROL VALVE(1) - HYDRAULIC CONTROL VALVE(1)		1
22	36K-8	CAP			2
23	84G-3112	BOLT			4
24	6502203	CLAMP			2
25	59D-6	NUT			2
26	6718086	TUBE			1
27	6718088	TUBE			1
28	6717923	TEE			2
29	6717919	HOSE			2
30	NAP	VALVE	W/.4375' threaded ports - Order 6678150 Valve & (3) of Ref. AUXILIARY HYDRAULICS(35) (15KV-5 Adapter) - See Page PRESSURE RELEA		1
30	6678150	VALVE	W/.5625' threaded ports		1
31	6717922	BRACKET			1
32	6719251	HOSE			1
33	17C-636	BOLT			2
34	61D-6	NUT			1
35	6718109	CONNECTOR	W/Ref. AUXILIARY HYDRAULICS(36) (79K-4 O-ring) - Use W/Ref. AUXILIARY HYDRAULICS(30) (NAP/6674372 Valve)		3
35	97K-6	O-RING	flared end		3
35	15KV-5	ADAPTER	W/Ref. AUXILIARY HYDRAULICS(36) (99K-6 O-ring) - Use W/Ref. AUXILIARY HYDRAULICS(30) (6678150inD 1}b Valve)		3
35	97K-6	O-RING	flared end		3
36	79K-4	O-RING			3
36	99K-6	O-RING			3

AUXILIARY HYDRAULICS

Ref.N°	Part N°	Description	Remarks	Serial N°	Qty.
37	21KV-5	TEE			1
38	84G-3716	BOLT			3
39	6676446	QUICK COUPLER	FF Female		1
40	6676444	QUICK COUPLER	FF Male		1

TILT CYLINDER
(W/ Rod Eye Grease Zerk Hole)

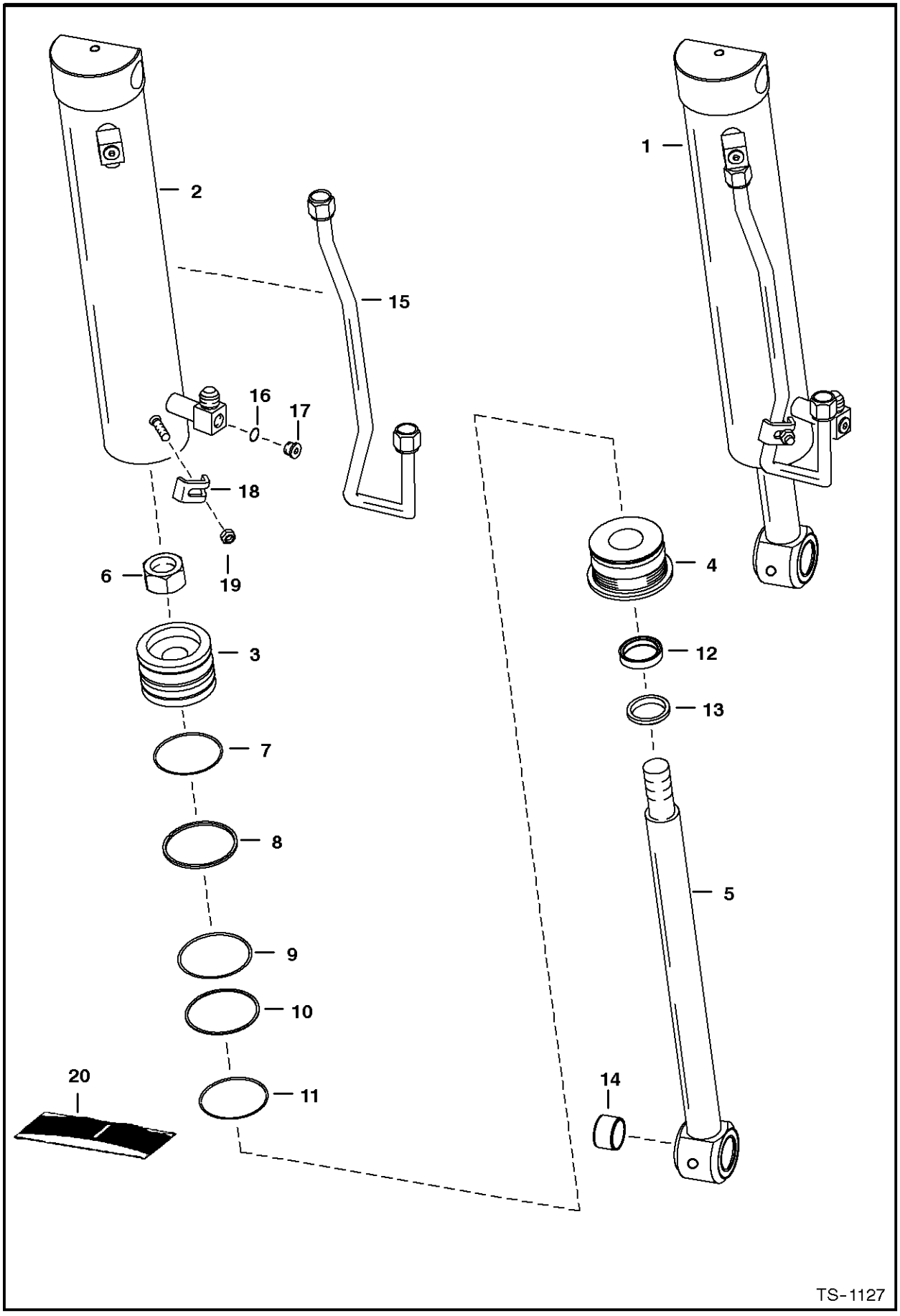

TILT CYLINDER

Ref.N°	Part N°	Description	Remarks	Serial N°	Qty.
1	6804692	CYLINDER	tilt - Ref. TILT CYLINDER(2) - TILT CYLINDER(19)		1
2	6804703	CASE	3.25'(82,6 mm) I.D.		1
3	6804699	PISTON	1.125' (28,6 mm) I.D.		1
4	6539185	HEAD			1
5	6804704	ROD	W/Ref. TILT CYLINDER(14) - 1.5'(38,1 mm) O.D. - W/ grease zerk hole		1
6	6804592	NUT			1
7	54K-30226	O-RING			1
8	6513466	SEAL			1
9	54K-40300	O-RING			1
10	80K-234	WASHER	back-up		1
11	58K-236	O-RING			1
12	6667326	SEAL			1
13	6665086	SEAL	wiper		1
14	6805150	BUSHING	wear - W/ grease zerk hole		1
15	6539144	TUBE			1
16	95K-6	O-RING	tapered boss face		1
17	90KV-5	PLUG	W/Ref. TILT CYLINDER(16) - tapered boss face		2
18	6562266	CLAMP			1
19	95D-6	NUT	Was 91D-6 [A]		1
20	6804605	SEAL KIT	Ref. TILT CYLINDER(6) - TILT CYLINDER(13)		1

LIFT CYLINDER

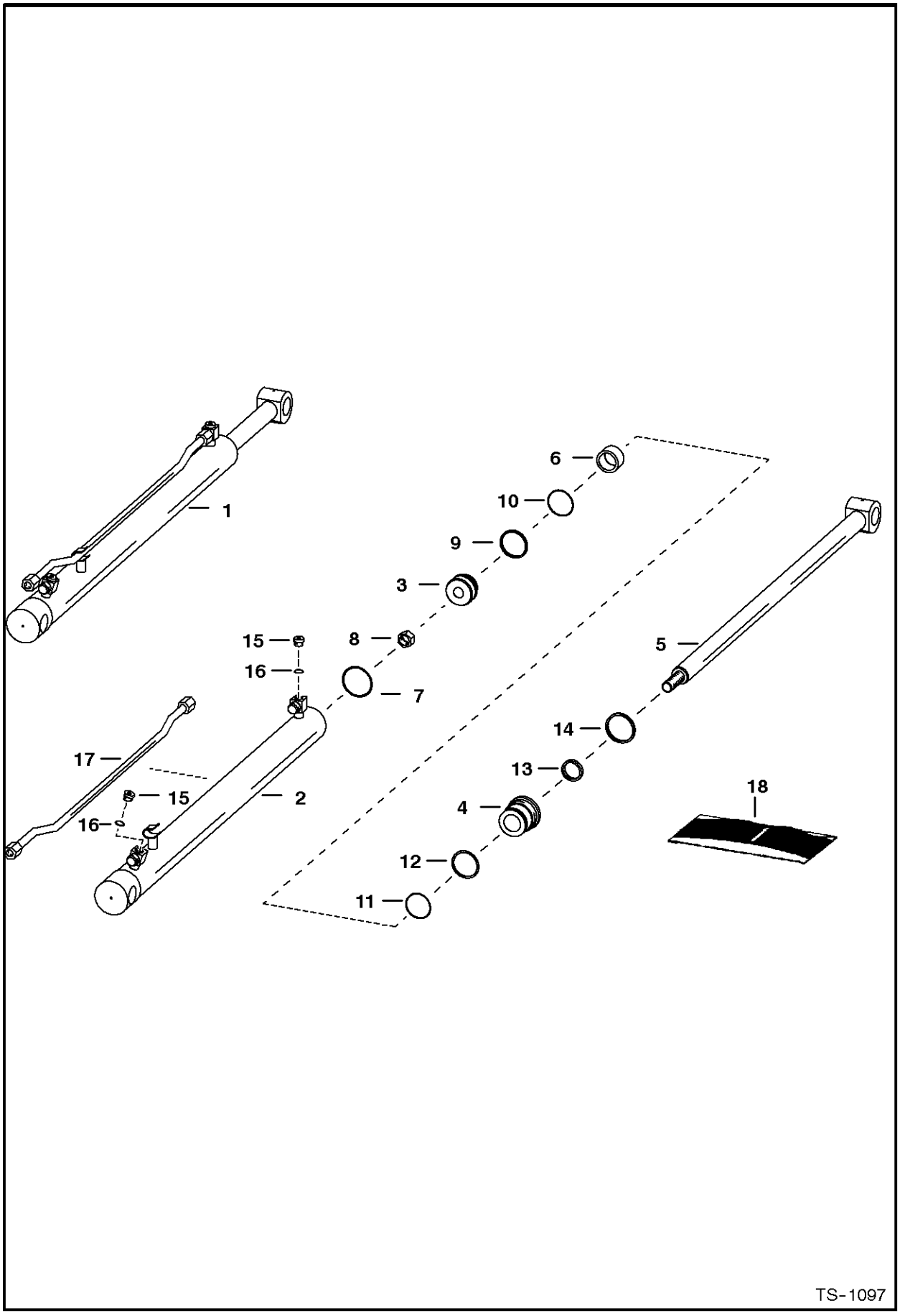

LIFT CYLINDER

Ref.N°	Part N°	Description	Remarks	Serial N°	Qty.
1	6586575	CYLINDER	Ref. LIFT CYLINDER(2) - LIFT CYLINDER(7)		2
2	6586577	CASE			1
3	6661694	PISTON	&W/Ref. LIFT CYLINDER(9) & LIFT CYLINDER(10) - W/Non- Replaceable wear sleeves		1
4	6539323	HEAD			1
5	6539304	ROD			1
6	6539299	SPACER			1
7	58K-136	O-RING			1
8	92D-12	NUT			1
9	6516231	O-RING			1
10	54K-30118	RING			1
11	54K-40124	O-RING			1
12	73K-224	WASHER	back-up		1
13	6667324	SEAL	rod		1
14	6665208	SEAL	wiper		1
15	90KV-5	PLUG	W/Ref. LIFT CYLINDER(16)		2
16	95K-6	O-RING			2
17	6586576	TUBE			1
18	6803329	SEAL KIT	Ref. LIFT CYLINDER(7) - LIFT CYLINDER(14)		1

CONTROL PEDALS

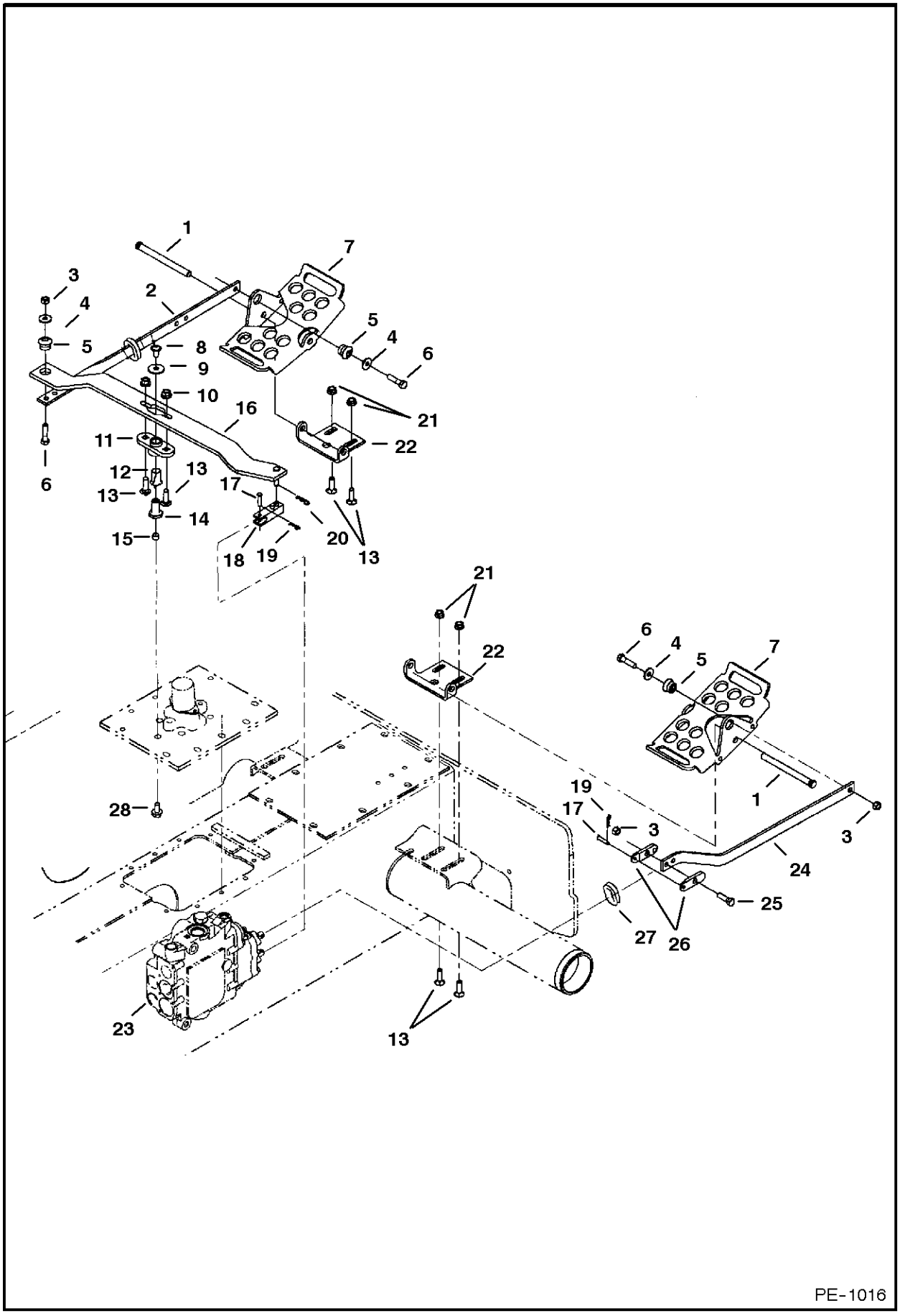

CONTROL PEDALS

Ref.N°	Part N°	Description	Remarks	Serial N°	Qty.
1	6564657	PIN			2
2	6576302	BAR			1
3	95D-6	NUT			5
4	6563914	WASHER			3
5	6665701	BUSHING			3
6	17C-624	BOLT			3
7	6726680	PEDAL	Was 6564656 [A]		2
8	6665839	BOLT	Was 17C-612 [B]		1
9	619021	WASHER			1
10	83D-6	NUT			2
11	6708043	BUSHING	flange		1
12	6512026	BUSHING			1
13	37C-620	BOLT			6
14	6706104	RETAINING NUT			1
15	6544654	BUSHING	spacer		1
16	6717822	LEVER	Was 6706103 [A]		1
17	6564654	PIN			2
18	6706105	YOKE			1
19	6513495	COTTER PIN			2
20	1306637	PIN			1
21	57D-6	NUT			4
22	6726679	BRACKET	Was 6564658 [A]		2
23		VALVE	See Page HYDRAULIC CONTROL VALVE(1) - HYDRAULIC CONTROL VALVE(1)		1
24	6577813	BAR			1
25	17C-620	BOLT			1
26	6708009	LINK	2.69' (68,3 mm) long		2
27	6577961	GROMMET			2
28	35C-612	BOLT			1

HYDRAULIC CONTROL VALVE
(BICS Combo Valve)

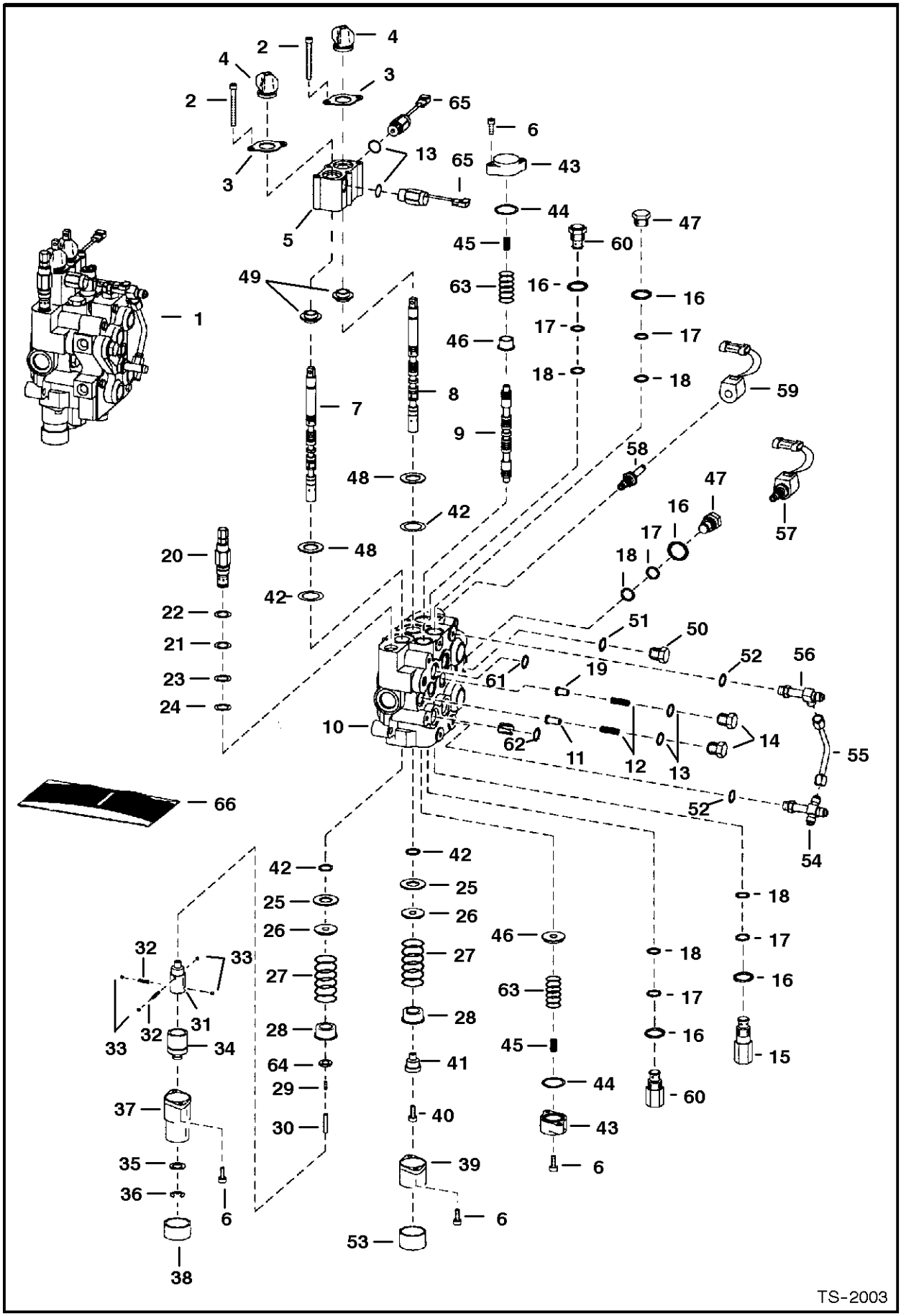

HYDRAULIC CONTROL VALVE

Ref.N°	Part N°	Description	Remarks	Serial N°	Qty.
1	6806836	VALVE	W/Fittings - Ref. HYDRAULIC CONTROL VALVE(2) - HYDRAULIC CONTROL VALVE(56), HYDRAULIC CONTROL VALVE(58) & HYDRAULIC CONTROL VALV		1
1	6628571	VALVE	BICS control - See Page BICS CONTROL VALVE(1)		1
2	29G-444	BOLT			4
3	6589564	RETAINER			2
4	6587763	BOOT			2
5	6805657	BLOCK	lock		1
6	29G-416	SCREW			8
7	6674808	SPOOL	lift - # 1 or Red		1
7	6674809	SPOOL	lift - # 2 or Green		1
7	6674810	SPOOL	lift - # 3 or Black		1
8	6674814	SPOOL	tilt - # 1 or Red		1
8	6674815	SPOOL	tilt - # 2 or Green		1
8	6674816	SPOOL	tilt - # 3 or Black		1
9	6588074	SPOOL	auxiliary		3
10	NSS	BODY			1
11	6592115	SEAT	load check		2
12	6592117	SPRING			3
13	79K-8	O-RING			3
14	6592116	NUT	load check		3
15	6667549	VALVE	anti-cavity check -W/Ref. HYDRAULIC CONTROL VALVE(16)-HYDRAULIC CONTROL VALVE(18)		1
16	79K-10	O-RING			2
17	80K-14	WASHER	back-up		5
18	58K-14	O-RING	back-up washer required		5
18	6677106	O-RING	back-up washer not required		5
19	6596569	SEAT	aux. load check		1
20	6676196	VALVE	main relief - W/Ref. HYDRAULIC CONTROL VALVE(21)-HYDRAULIC CONTROL VALVE(24) - Was 6659328 [A]		1
21	58K-17	O-RING			1
22	6665569	WASHER	back-up		1
23	25K-20016	O-RING			1
24	6665570	RING	glide		1
25	6595663	BUSHING			2
26	6587523	WASHER			2
27	6587580	SPRING			2
28	6592100	COLLAR			2
29	6596807	PLUG			1
30	6586918	SCREW			1
31	6587575	ADAPTER			1
32	6592107	SPRING			2
33	6592105	BALL			4
34	6531270	SLEEVE			1
35	6592098	WASHER			1
36	799119	RETAINER			1
37	6589226	BONNET	.625' flange		1
38	6660644	CAP			1
39	6587633	BONNET			1
40	30G-416	SCREW			1
41	6592109	ADAPTER			1
42	6665846	SEAL			4

HYDRAULIC CONTROL VALVE

Ref.N°	Part N°	Description	Remarks	Serial N°	Qty.
43	6588781	END CAP			2
44	58K-124	O-RING			2
45	6806007	SPRING			2
46	6595951	SLEEVE			2
47	6592720	PLUG	W/Ref. HYDRAULIC CONTROL VALVE(16)-HYDRAULIC CONTROL VALVE(18)		1
48	58K-127	O-RING			2
49	6805102	BUSHING			1
50	90KV-8	PLUG	W/Ref. HYDRAULIC CONTROL VALVE(51) - tapered boss face - socket head		1
51	95K-12	O-RING	tapered boss face - socket head - Was 99K-12 [B]		1
52	99K-6	O-RING			x
53	6662848	CAP			1
54	6805241	CROSS	W/Ref. HYDRAULIC CONTROL VALVE(52)		2
54	97K-6	O-RING	flared end		6
55	6577690	TUBE			1
56	6805696	TEE	W/Ref. HYDRAULIC CONTROL VALVE(52)		1
56	97K-6	O-RING	flared end		2
57	6665084	VALVE	solenoid - W/Ref. HYDRAULIC CONTROL VALVE(58) & HYDRAULIC CONTROL VALVE(59) - Was 6653395 [B,D]		2
57	6586459	SEAL KIT			x
58	6666616	STEM			2
58	79K-7	O-RING			2
59	6717706	COIL	10 volt -W/Nut -Was 6665759 [A]		2
60	6673184	VALVE	optional - port relief & anti-cav. W/Ref. HYDRAULIC CONTROL VALVE(16)-HYDRAULIC CONTROL VALVE(18) - 3500 PSI - use in tilt cylin		1
61	55K-204	O-RING	See Page BICS CONTROL VALVE(1)		1
62	55K-212	O-RING	See Page BICS CONTROL VALVE(1)		4
63	6596332	SPRING			2
64	54K-20002	O-RING			1
65	NAP	SOLENOID	W/Ref. HYDRAULIC CONTROL VALVE(13) - 3'(76,2 mm) wire - Order 6677383inD1}| Solenoid - Was 6674786 [A]		2
65	6677383	SOLENOID	W/Ref. HYDRAULIC CONTROL VALVE(13) - 5'(127 mm) wire		2
66	6806941	SEAL KIT	two spool - Ref. HYDRAULIC CONTROL VALVE(2), HYDRAULIC CONTROL VALVE(4) & HYDRAULIC CONTROL VALVE(42)		x
66	6632279	SEAL KIT	main relief - Ref. HYDRAULIC CONTROL VALVE(21)-HYDRAULIC CONTROL VALVE(24)		x
66	6809425	SEAL KIT	Ref. HYDRAULIC CONTROL VALVE(13) & HYDRAULIC CONTROL VALVE(16)-HYDRAULIC CONTROL VALVE(18) - Was 6586461 [A]		x
66	6809448	SEAL KIT	complete - Ref. HYDRAULIC CONTROL VALVE(2), HYDRAULIC CONTROL VALVE(4), HYDRAULIC CONTROL VALVE(13), HYDRAULIC CONTROL VALVE(16)		x

HYDRAULIC CONTROL VALVE
(Advanced Hand Controls) (W/BICS Valve)

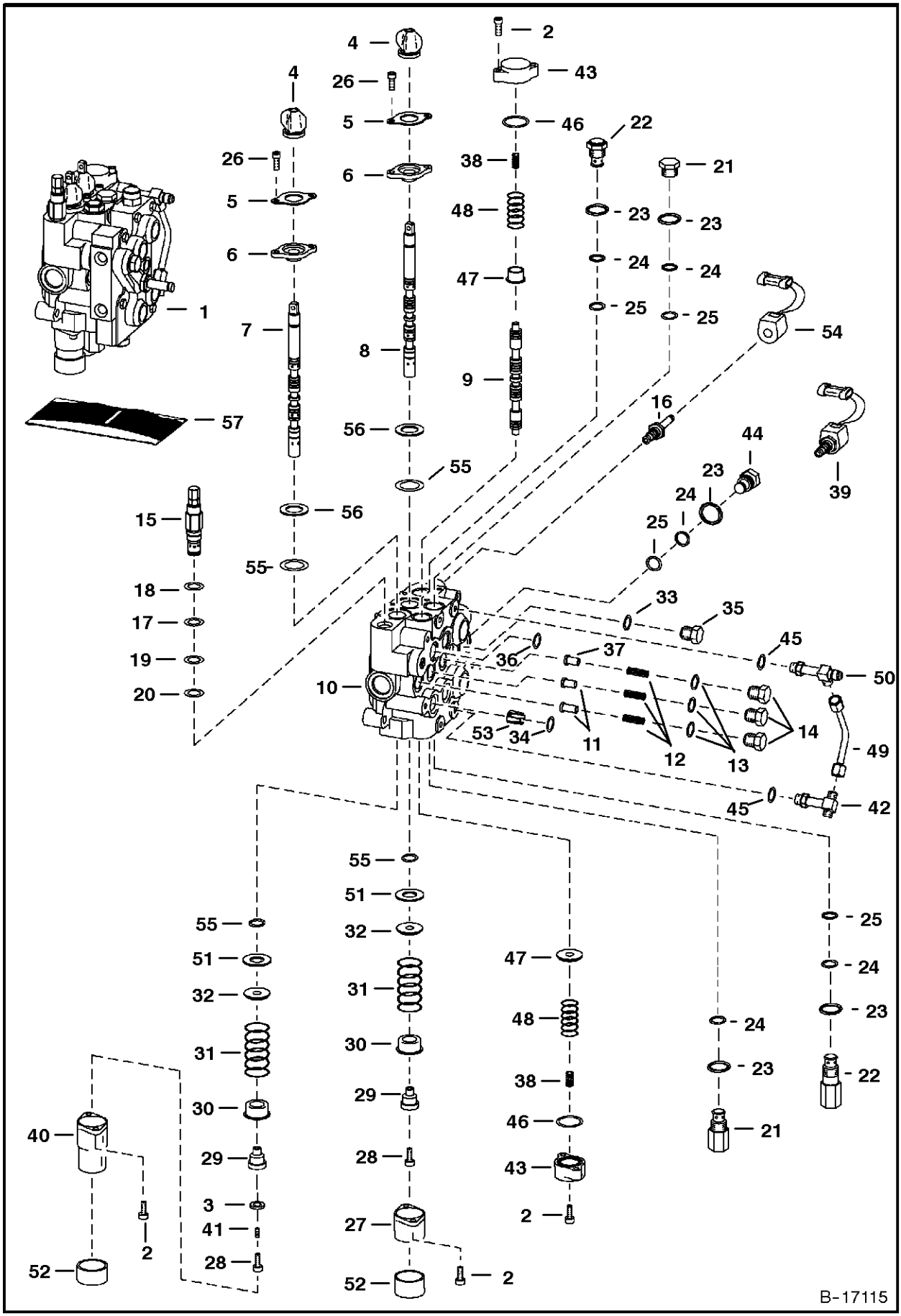

HYDRAULIC CONTROL VALVE

Ref.N°	Part N°	Description	Remarks	Serial N°	Qty.
1	NAP	VALVE	W/Fittings - Ref. HYDRAULIC CONTROL VALVE(2)-HYDRAULIC CONTROL VALVE(38), HYDRAULIC CONTROL VALVE(40)-HYDRAULIC CONTROL VALVE(53		1
1	6628571	VALVE	BICS control - See Page BICS CONTROL VALVE(1)		1
2	29G-416	SCREW			8
3	54K-20002	O-RING			1
4	6587763	BOOT			2
5	6589564	RETAINER			2
6	6589565	RETAINER	seal		2
7	6674297	SPOOL	lift - # 1 or Red		1
7	6674298	SPOOL	lift - # 2 or Green		1
7	6674299	SPOOL	lift - # 3 or Black		1
8	6674300	SPOOL	tilt - # 1 or Red		1
8	6674301	SPOOL	tilt - # 2 or Green		1
8	6674302	SPOOL	tilt - # 3 or Black		1
9	6588074	SPOOL	auxiliary		3
10	NSS	BODY			1
11	6592115	SEAT	load check		2
12	6592117	SPRING			3
13	79K-8	O-RING			3
14	6592116	NUT	load check		3
15	6676196	VALVE	main relief - W/Ref. HYDRAULIC CONTROL VALVE(21)-HYDRAULIC CONTROL VALVE(24) - Was 6659328 [A]		1
16	6666616	STEM			2
17	58K-17	O-RING			1
18	6665569	WASHER	back-up		1
19	25K-20016	O-RING			1
20	6665570	RING	glide		1
21	6673184	VALVE	port relief - 3400-3600 PSI - W/Ref. HYDRAULIC CONTROL VALVE(16)-HYDRAULIC CONTROL VALVE(18)		1
22	6667549	VALVE	anti-cavity check -W/Ref. HYDRAULIC CONTROL VALVE(16)-HYDRAULIC CONTROL VALVE(18)		2
23	79K-10	O-RING			2
24	80K-14	WASHER	back-up		5
25	58K-14	O-RING	back-up washer required		5
25	6677106	O-RING	back-up washer not required		5
26	29G-412	SCREW			4
27	6587633	BONNET			1
28	30G-416	SCREW			2
29	6592109	ADAPTER			2
30	6592100	COLLAR			2
31	6587580	SPRING			2
32	6587523	WASHER			2
33	95K-12	O-RING	tapered boss face - socket head - Was 99K-12 [B]		1
34	55K-212	O-RING	See Page BICS CONTROL VALVE(1)		4
35	90KV-8	PLUG	W/Ref. HYDRAULIC CONTROL VALVE(33) - tapered boss face - socket head		1
36	55K-204	O-RING	See Page BICS CONTROL VALVE(1)		1
37	6596569	SEAT			1
38	6806007	SPRING	white		2
39	6653395	VALVE	solenoid - W/Ref. HYDRAULIC CONTROL VALVE(58) & HYDRAULIC CONTROL VALVE(59)		2

HYDRAULIC CONTROL VALVE

Ref.N°	Part N°	Description	Remarks	Serial N°	Qty.
39	6586459	SEAL KIT			x
40	6803092	BONNET	.625' flange		1
41	6801167	PLUG	plastic		1
42	6805696	TEE	W/Ref. HYDRAULIC CONTROL VALVE(6)		1
43	6588781	END CAP			2
44	6592720	PLUG	W/Ref. HYDRAULIC CONTROL VALVE(16)-HYDRAULIC CONTROL VALVE(18)		2
45	99K-6	O-RING			x
46	58K-124	O-RING			2
47	6595951	SLEEVE			2
48	6596332	SPRING			2
49	6577690	TUBE			1
50	6805241	CROSS	W/Ref. HYDRAULIC CONTROL VALVE(45)		1
50	97K-6	O-RING	flared end		1
51	6595663	BUSHING			2
52	6662848	CAP			2
53	6534630	RESTRICTOR	.183/.187		1
54	6666547	COIL			2
55	6665846	SEAL			4
56	58K-127	O-RING			2
57	6803605	SEAL KIT	one spool - Ref. HYDRAULIC CONTROL VALVE(4), HYDRAULIC CONTROL VALVE(26) & HYDRAULIC CONTROL VALVE(42)		x
57	6661328	SEAL KIT	main relief - Ref. HYDRAULIC CONTROL VALVE(21)-HYDRAULIC CONTROL VALVE(24) - main relief		x
57	6809425	SEAL KIT	Ref. HYDRAULIC CONTROL VALVE(13) & HYDRAULIC CONTROL VALVE(16)-HYDRAULIC CONTROL VALVE(18) - Was 6586461 [A]		x
57	6596311	SEAL KIT	complete - Ref. HYDRAULIC CONTROL VALVE(4), 'HYDRAULIC CONTROL VALVE(6), HYDRAULIC CONTROL VALVE(13), HYDRAULIC CONTROL VALVE(1		x

* HYDRAULIC CONTROL VALVE
(Service Valve) (ACS)

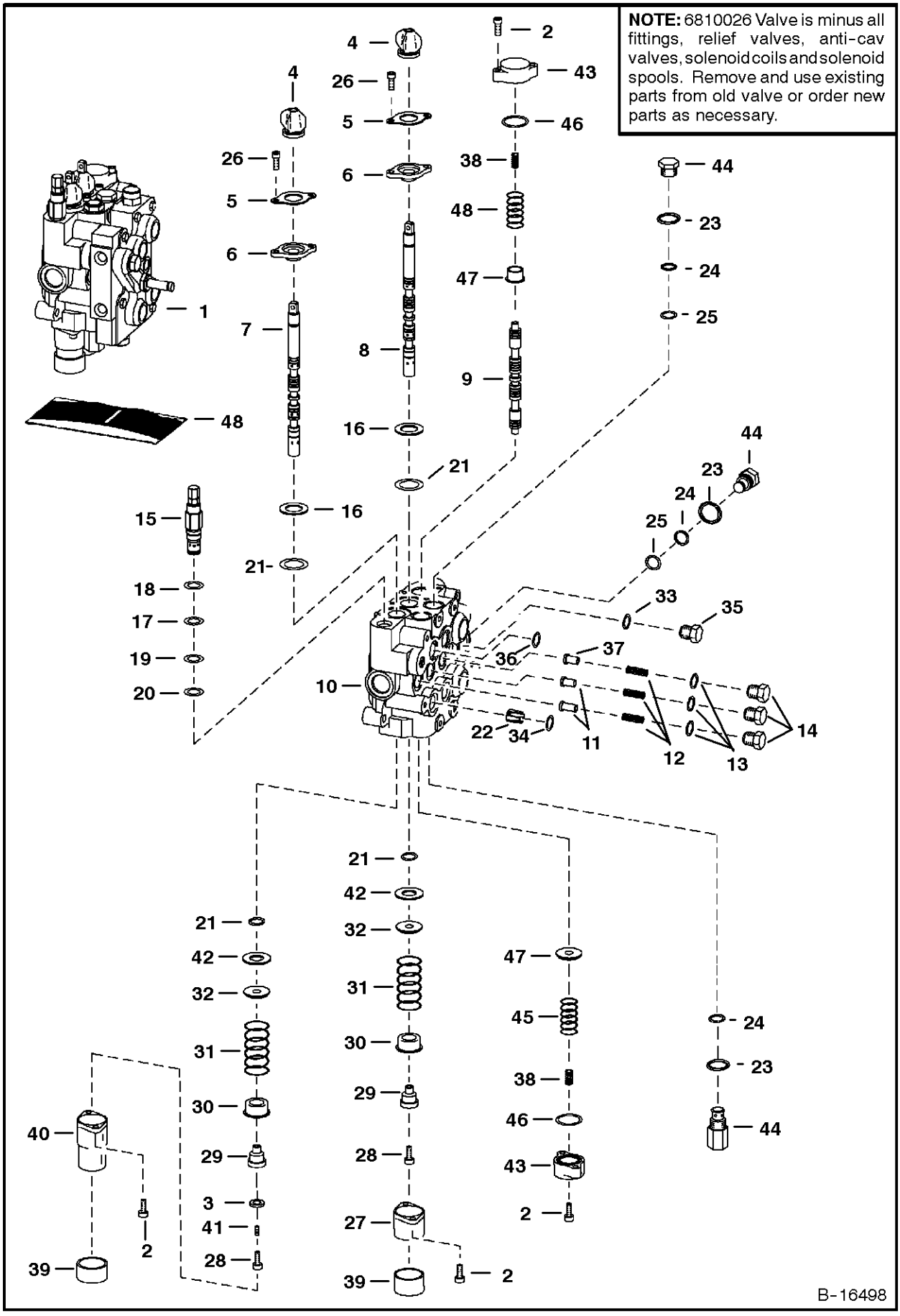

*

Ref.N°	Part N°	Description	Remarks	Serial N°	Qty.
1	6810026	VALVE	W/O fittings - SEE NOTE		1
1	6628571	VALVE	BICS control - See Page BICS CONTROL VALVE(1)		1
2	29G-416	SCREW			8
3	54K-20002	O-RING			1
4	6587763	BOOT			2
5	6589564	RETAINER			2
6	6589565	RETAINER	seal		2
7	6677660	SPOOL	lift - # 1 or Red		1
7	6677661	SPOOL	lift - # 2 or Green		1
8	6677662	SPOOL	tilt - # 1 or Red		1
8	6677663	SPOOL	tilt - # 2 or Green		1
9	6588074	SPOOL	auxiliary		3
10	NSS	BODY			1
11	6592115	SEAT	load check		2
12	6592117	SPRING			3
13	79K-8	O-RING			3
14	6592116	NUT	load check		3
15	6676196	VALVE	main relief - W/Ref. * (17)-* (20)		1
16	58K-127	O-RING			2
17	58K-17	O-RING			1
18	6665569	WASHER	back-up		1
19	25K-20016	O-RING			1
20	6665570	RING	glide		1
21	6665846	SEAL			4
22	6534630	RESTRICTOR	.134/.141		1
23	79K-10	O-RING			2
24	80K-14	WASHER	back-up		5
25	58K-14	O-RING	back-up washer required		5
25	6677106	O-RING	back-up washer not required		5
26	29G-412	SCREW			4
27	6587633	BONNET			1
28	30G-416	SCREW			2
29	6592109	ADAPTER			1
30	6592100	COLLAR			2
31	6587580	SPRING			2
32	6587523	WASHER			2
33	95K-12	O-RING	tapered boss face - socket head		x
34	55K-212	O-RING			4
35	90KV-8	PLUG	W/Ref. HYDRAULIC CONTROL VALVE(33) - tapered boss face - socket head		1
36	55K-204	O-RING			1
37	6596569	SEAT			1
38	6589045	SPRING	white		2
39	6662848	CAP			1
40	6803092	BONNET	.625' flange		1
41	6801167	PLUG	plastic		1
42	6595663	BUSHING			2
43	6588781	END CAP			2
44	6592720	PLUG	W/Ref. * (23)-* (25)		5
45	6596332	SPRING			2
46	58K-124	O-RING			2

*

Ref.N°	Part N°	Description	Remarks	Serial N°	Qty.
47	6595951	SLEEVE			2
48	6803605	SEAL KIT	one spool - Ref. * (4), * (21) & * (26)		x
48	6632279	SEAL KIT	main relief - Ref. * (17)-* (20) - main relief		x
48	6809425	SEAL KIT	Ref. HYDRAULIC CONTROL VALVE(13) & * (23)-* (25)		x
48	6809448	SEAL KIT	complete - Ref. * (4), HYDRAULIC CONTROL VALVE(13), * (17)-* (20)', * (21), * (23)-* (25), * (26),' * (34), * (36) & * (46)		x

BICS CONTROL VALVE

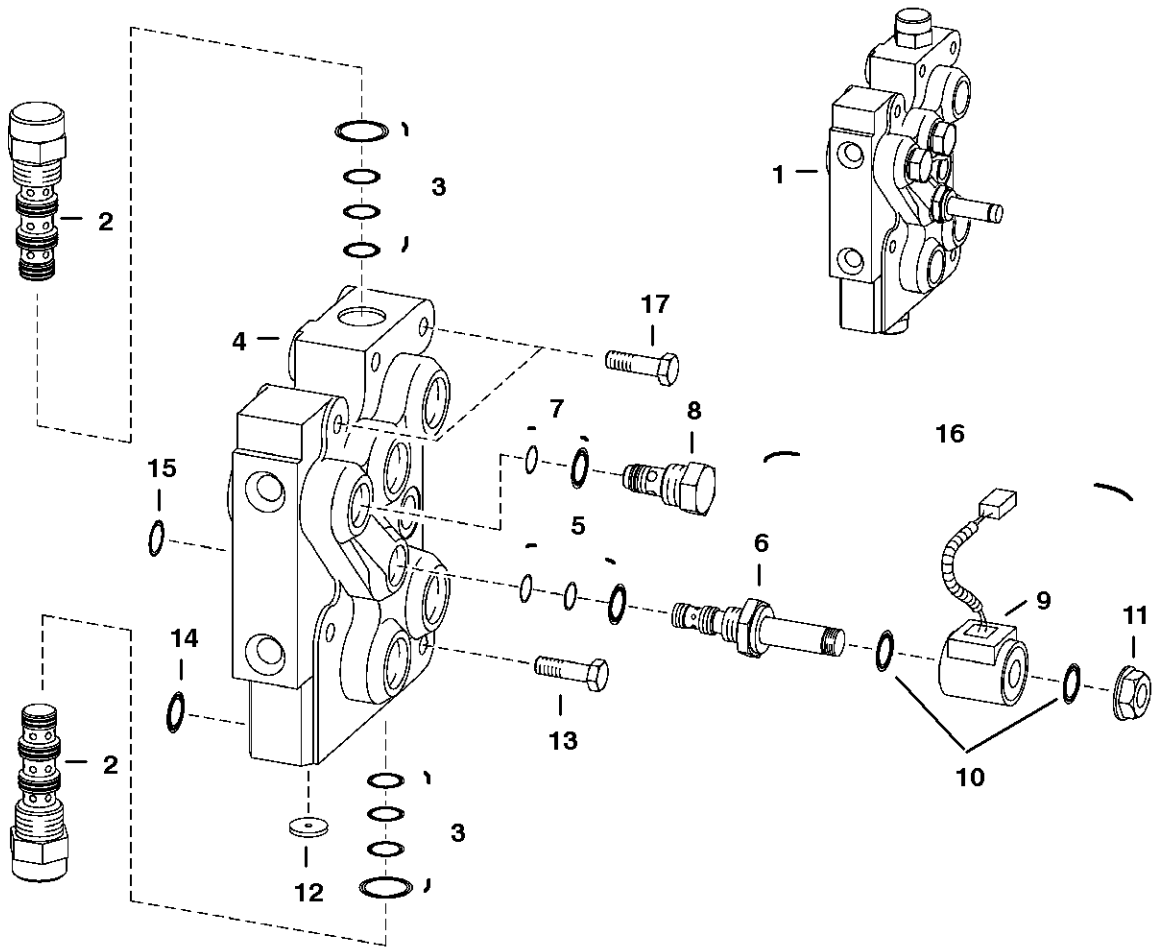

TS-1365

BICS CONTROL VALVE

Ref.N°	Part N°	Description	Remarks	Serial N°	Qty.
1	6628571	VALVE	Ref. BICS CONTROL VALVE(2) - BICS CONTROL VALVE(8)		1
2	6668765	VALVE	pilot operated		2
3	6669734	SEAL KIT			x
4	NSS	BODY			1
5	6669732	SEAL KIT			x
6	6667687	STEM	solenoid valve		1
7	6669733	SEAL KIT			x
8	6669057	CHECK VALVE	filter		1
9	6671025	COIL	W/ diode		x
10	54K-20028	O-RING			2
11	6668820	NUT			1
12	6668791	ORIFICE			1
13	43C-532	BOLT			4
14	55K-212	O-RING			4
15	55K-204	O-RING			1
16	6672471	SOLENOID	solenoid - Ref. BICS CONTROL VALVE(5), BICS CONTROL VALVE(6) & BICS CONTROL VALVE(9) - BICS CONTROL VALVE(11)		x
17	43C-524	BOLT			2

MANUAL LIFT RELEASE VALVE

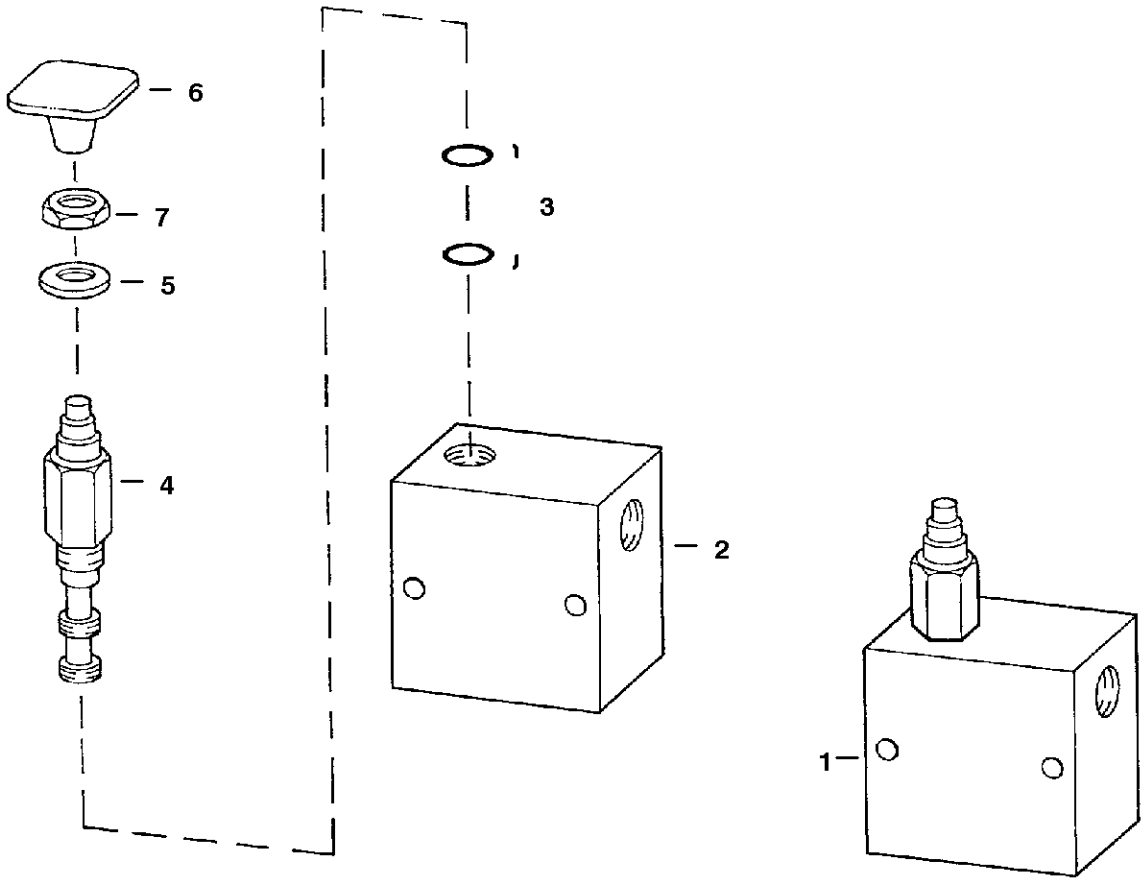

MANUAL LIFT RELEASE VALVE

Ref.N°	Part N°	Description	Remarks	Serial N°	Qty.
1	6667844	VALVE	Ref. MANUAL LIFT RELEASE VALVE(2)-MANUAL LIFT RELEASE VALVE(4)		1
2	NSS	BLOCK			1
3	6669087	SEAL KIT			1
4	6669085	VALVE			1
5	6707101	WASHER	neoprene		1
6	6668913	KNOB	red square		1

PRESSURE RELEASE VALVE
(Front Auxiliary)

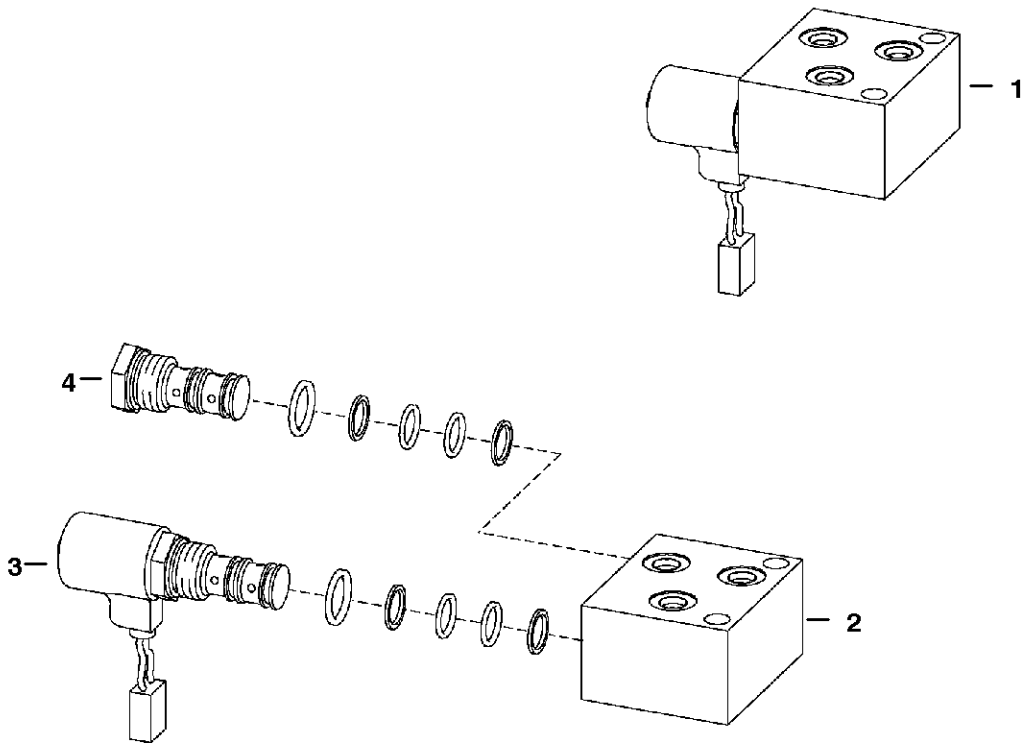

PE-1017

PRESSURE RELEASE VALVE

Ref.N°	Part N°	Description	Remarks	Serial N°	Qty.
1	NAP	VALVE	W/.4375' threaded ports - Order 6678150 Valve & (3) of 15KV-5inD1}v Adapter - Was 6674372 [A]		1
1	6678150	VALVE	W/.5625' threaded ports		1
2	NSS	BLOCK			1
3	NSS	VALVE	solenoid		1
3	6675285	STEM			1
3	6676564	SEAL KIT			1
3	6672962	COIL			1
3	6676566	NUT			1
4	6675284	SHUTTLE VALVE			1
4	6657409	SEAL KIT			1

BUCKET POSITIONING VALVE

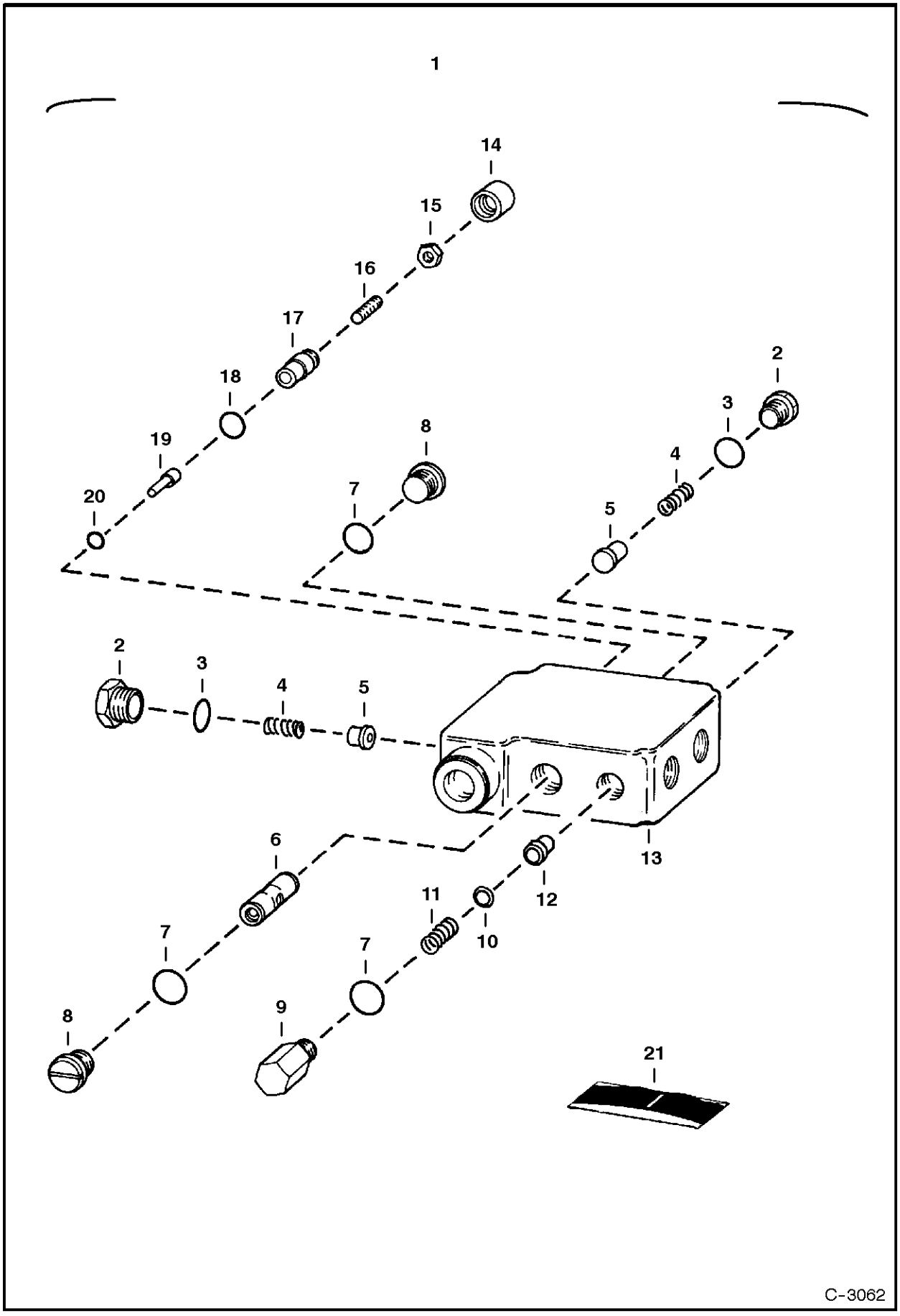

BUCKET POSITIONING VALVE

Ref.N°	Part N°	Description	Remarks	Serial N°	Qty.
1	6666341	VALVE	Ref. BUCKET POSITIONING VALVE(2)-BUCKET POSIT IONING VALVE(20)		1
2	6647784	PLUG	W/Ref. BUCKET POSITIONING VALVE(3)		2
3	79K-8	O-RING			2
4	6647785	SPRING			2
5	6647783	LOAD CHECK			2
6	NSS	SPOOL			1
7	58K-116	O-RING	backup - Was 80K-116 [B]		3
8	6647780	PLUG	W/Ref. BUCKET POSITIONING VALVE(7)		2
9	6667176	PLUG	W/Ref. BUCKET POSITIONING VALVE(7)		1
10	6667680	SNAP RING			1
11	6648294	SPRING			1
12	NSS	SPOOL			1
13	NSS	BODY			1
14	6667676	COVER			1
15	6631561	NUT			1
16	6648293	SCREW			1
17	6647778	CAP			1
18	6634874	O-RING			1
19	6647777	PIN			1
20	6667677	O-RING			1
21	6647786	SEAL KIT	Ref. BUCKET POSITIONING VALVE(3), BUCKET POSIT IONING VALVE(7), BUCKET POSITIONING VALVE(14), BUCKET POSITIONING VALVE(18) & BUCK		1

HYDROSTATIC CIRCUITRY

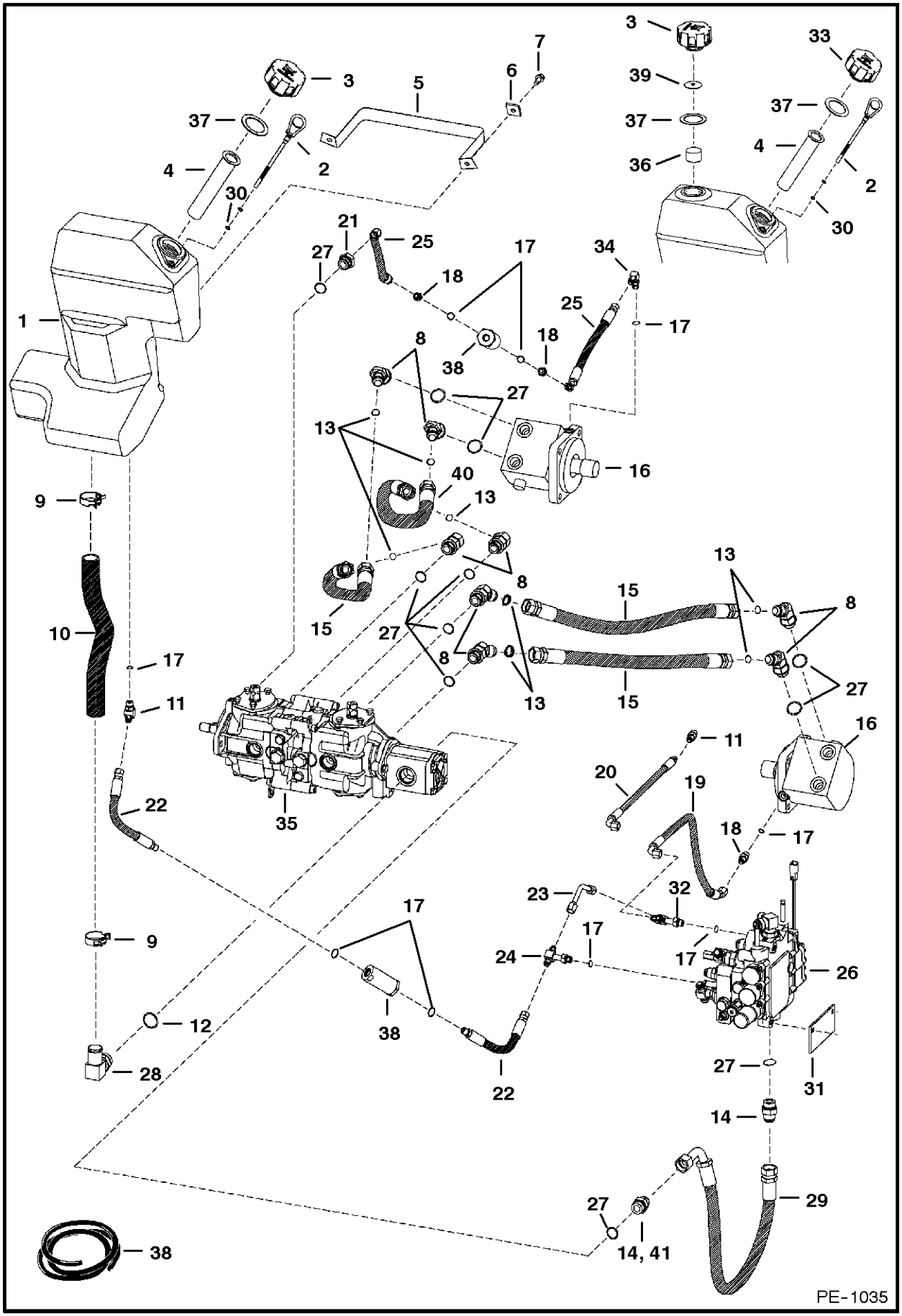

HYDROSTATIC CIRCUITRY

Ref.N°	Part N°	Description	Remarks	Serial N°	Qty.
1	NAP	TANK	.93' I.D. Suction Outlet - W/vented fill cap & breather cap - Order 6718318inD1 Tank - Was 6718318 [D]	& Bel	1
1	6718318	TANK	W/vented fill cap	& Abv	1
2	6577459	DIPSTICK	W/Ref. HYDROSTATIC CIRCUITRY(30)		1
3	6727475	CAP	breather - Also Order Ref. HYDROSTATIC CIRCUITRY(37)&HYDROSTATIC CIRCUITRY(39) - Was 6577785 [B]		1
4	6569219	SCREEN			1
5	6718518	BAND			1
6	6559447	WASHER			2
7	84G-3712	BOLT			2
8	52E-1212	ELBOW	W/Ref. HYDROSTATIC CIRCUITRY(27) (99K-12 O-ring) - face seal		8
8	6718181	ELBOW	W/Ref. HYDROSTATIC CIRCUITRY(27) (79K-12 O-ring) - mega seal		8
9	5HM-42	CLAMP	constant tension		2
9	6672281	CLAMP	constant torque		2
10	6718354	HOSE	1.25' (31,8 mm) I.D.		1
11	18KV-5	ELBOW	W/Ref. HYDROSTATIC CIRCUITRY(17)		1
11	97K-6	O-RING	flared end		1
12	99K-16	O-RING			x
13	58K-18	O-RING	Use W/Ref. HYDROSTATIC CIRCUITRY(8) (52E-1212inD1} Elbow)		8
14	15KN-8	ADAPTER	W/Ref. HYDROSTATIC CIRCUITRY(27) (99K-12 O-ring)	& Bel	2
14	97K-12	O-RING	flared end		2
14	6812646	ADAPTER	W/Ref. HYDROSTATIC CIRCUITRY(27) (79K-12 O-ring)	& Abv	1
14	97K-12	O-RING	flared end		1
15	6671619	HOSE	face seal - Use W/Ref. HYDROSTATIC CIRCUITRY(8) (52E-1212inD1} Elbow)		3
15	6726378	HOSE	mega seal - Use W/Ref. HYDROSTATIC CIRCUITRY(8) (6718181inD1}5 Elbow)		3
16		MOTOR	See Page HYDROSTATIC MOTOR(1)		2
17	99K-6	O-RING			x
18	15KV-5	ADAPTER	W/Ref. HYDROSTATIC CIRCUITRY(17)		3
18	97K-6	O-RING	flared end		3
19	6715251	HOSE			1
20	NAP	HOSE	Order Ref. HYDROSTATIC CIRCUITRY(18) & HYDROSTATIC CIRCUITRY(19) - Was 6707234 [A]		1
21	6715186	ADAPTER	W/Ref. HYDROSTATIC CIRCUITRY(27) (99K-12 O-ring)		1
21	97K-6	O-RING	flared end		1
22	6725192	HOSE	Was 6719654 [A]		2
23	6577690	TUBE			1
24	6805696	TEE	W/Ref. HYDROSTATIC CIRCUITRY(17)		1
24	97K-6	O-RING	flared end		2
25	NAP	HOSE	13.5'(342,9 mm) long - Order 6730769inD1}l Hose - Was 6712414 [A]		2
25	6730769	HOSE	14.5'(368,3 mm) long		2
26		VALVE	hyd. control - W/Ref. HYDROSTATIC CIRCUITRY(23), HYDROSTATIC CIRCUITRY(24) & HYDROSTATIC CIRCUITRY(32) - See Page HYDRAULIC CONT		1
27	99K-12	O-RING			x
27	79K-12	O-RING			x
28	6715191	ELBOW	W/Ref. HYDROSTATIC CIRCUITRY(12)		1
29	NAP	HOSE	29'(736,6 mm) long - Order 6729154inD1}p Hose - Was 6714594 [D]		2
29	6729154	HOSE	31'(787,4 mm) long - Was 6714594 [A]		2

HYDROSTATIC CIRCUITRY

Ref.N°	Part N°	Description	Remarks	Serial N°	Qty.
30	25K-20010	O-RING			1
31		COVER	outside main frame - See Page MAIN FRAME(1)		1
32	6805243	TEE	W/Ref. HYDROSTATIC CIRCUITRY(17)		1
32	97K-6	O-RING	flared end		2
33	6728149	CAP	fill - Also Order Ref. HYDROSTATIC CIRCUITRY(37) - Was 6532508 [A]		1
34	17KV-5	ELBOW	W/Ref. HYDROSTATIC CIRCUITRY(17)		2
34	97K-6	O-RING	flared end		2
35		PUMP	See Page HYDROSTATIC PUMP(1)		1
36	6701552	BAFFLE			1
37	6700631	GASKET		& Bel	2
37	6700631	GASKET		& Abv	1
38	6661022	FILTER	in-line - See Page HYDROSTATIC OIL FILTER(1)		2
39	6703427	FOAM FILTER			1
40	6661076	HOSE	face seal - Use W/Ref. HYDROSTATIC CIRCUITRY(8) (52E-1212inD1} Elbow)		1
40	6726379	HOSE	mega seal - Use W/Ref. HYDROSTATIC CIRCUITRY(8) (6718181inD1}5 Elbow)		1
41	18KV-8	ELBOW	W/Ref. HYDROSTATIC CIRCUITRY(27) (99K-12 O-ring)	& Abv	1
41	97K-12	O-RING	flared end		1

HYDROSTATIC CIRCUITRY

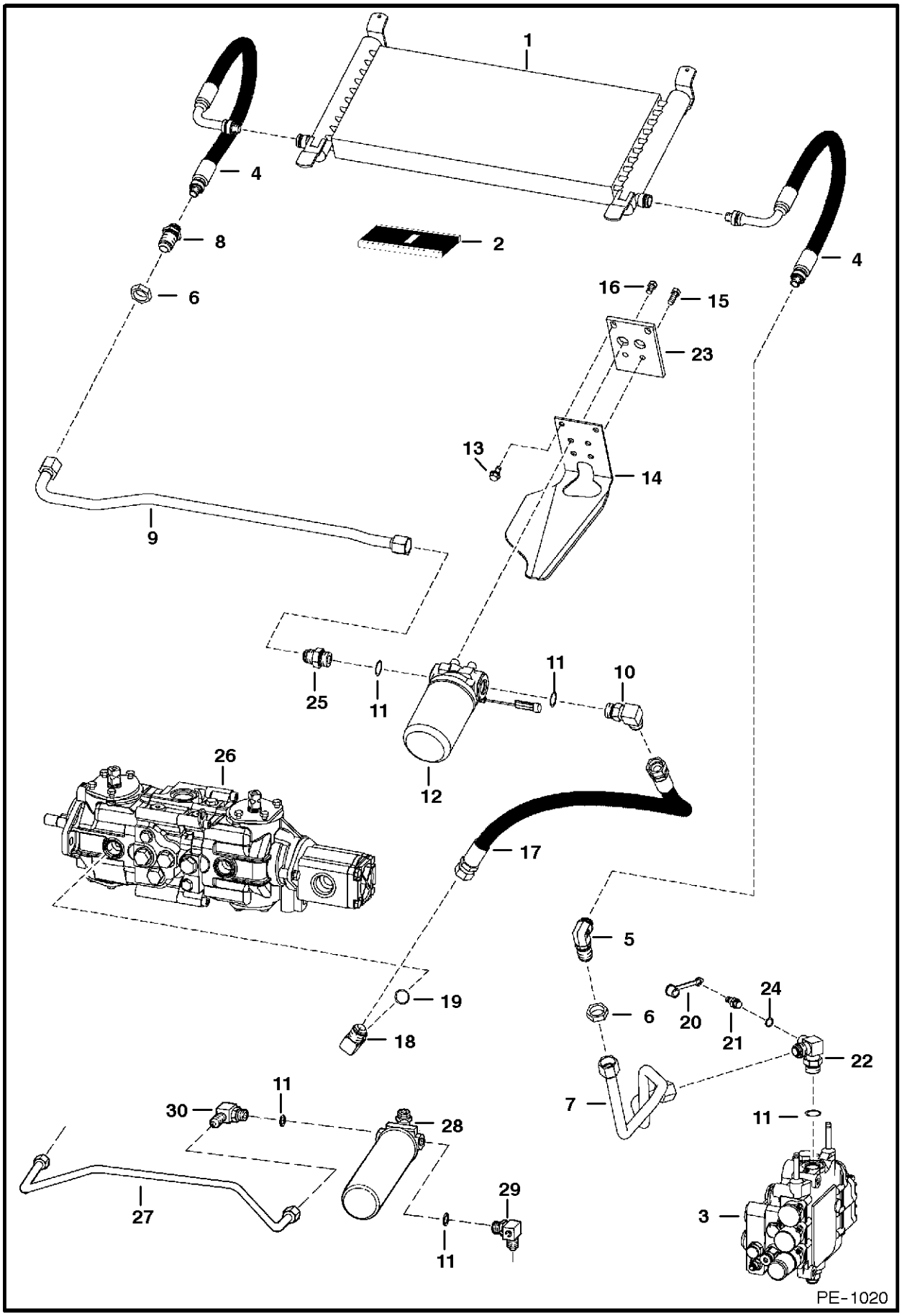

HYDROSTATIC CIRCUITRY

Ref.N°	Part N°	Description	Remarks	Serial N°	Qty.
1	6674150	OIL COOLER			1
2	6674798	REPAIR KIT	For Ref. HYDROSTATIC CIRCUITRY(1), HYDROSTATIC CIRCUITRY(5) & HYDROSTATIC CIRCUITRY(8)		2
3		VALVE	hyd. control - See Page HYDRAULIC CONTROL VALVE(1) - HYDRAULIC CONTROL VALVE(1)		1
4	6673828	HOSE			2
5	6670831	ELBOW			1
5	97K-12	O-RING	flared end		2
6	86F-8	NUT			2
7	6708748	TUBE	Was 6706671 [A]		1
8	6670830	ADAPTER			1
8	97K-12	O-RING	flared end		2
9	6727347	TUBE		& Abv	1
10	17KV-8	ELBOW	W/Ref. HYDROSTATIC CIRCUITRY(11)	& Abv	1
10	97K-12	O-RING	flared end		2
11	99K-12	O-RING			x
12	6676969	FILTER ASSY	See Page HYDROSTATIC OIL FILTER(1)	& Abv	1
12	6661248	ELEMENT			1
13	84G-3712	BOLT			2
14	6727345	MOUNT	filter drain - Was 6704342 [A]		1
15	17C-616	BOLT			2
16	17C-610	BOLT			2
17	6704159	HOSE			1
18	6714901	ELBOW			1
19	79K-10	O-RING			x
20	6630367	DUST CAP			1
21	6630168	COUPLER	diagnostic - W/Ref. HYDROSTATIC CIRCUITRY(30)		1
22	6715653	TEE	W/Ref. HYDROSTATIC CIRCUITRY(11)		1
22	97K-12	O-RING	flared end		1
23	6704341	MOUNT			1
24	79K-6	O-RING			1
25	15KV-8	ADAPTER	W/Ref. HYDROSTATIC CIRCUITRY(11)	& Abv	1
25	97K-12	O-RING	flared end		2
26		PUMP	See Page HYDROSTATIC PUMP(1)		1
27	6704155	TUBE		& Bel	1
28	6718661	ELBOW	W/Ref. HYDROSTATIC CIRCUITRY(11) - Was 6715655 [B,D]	& Bel	1
28	97K-12	O-RING	flared end		1
29		FILTER ASSY.	See Page HYDROSTATIC OIL FILTER(1)	& Bel	1
29	6661248	ELEMENT			1
30	6700599	ELBOW	W/Ref. HYDROSTATIC CIRCUITRY(11) - Was 6715714 [A]	& Bel	1
30	97K-12	O-RING	flared end		1

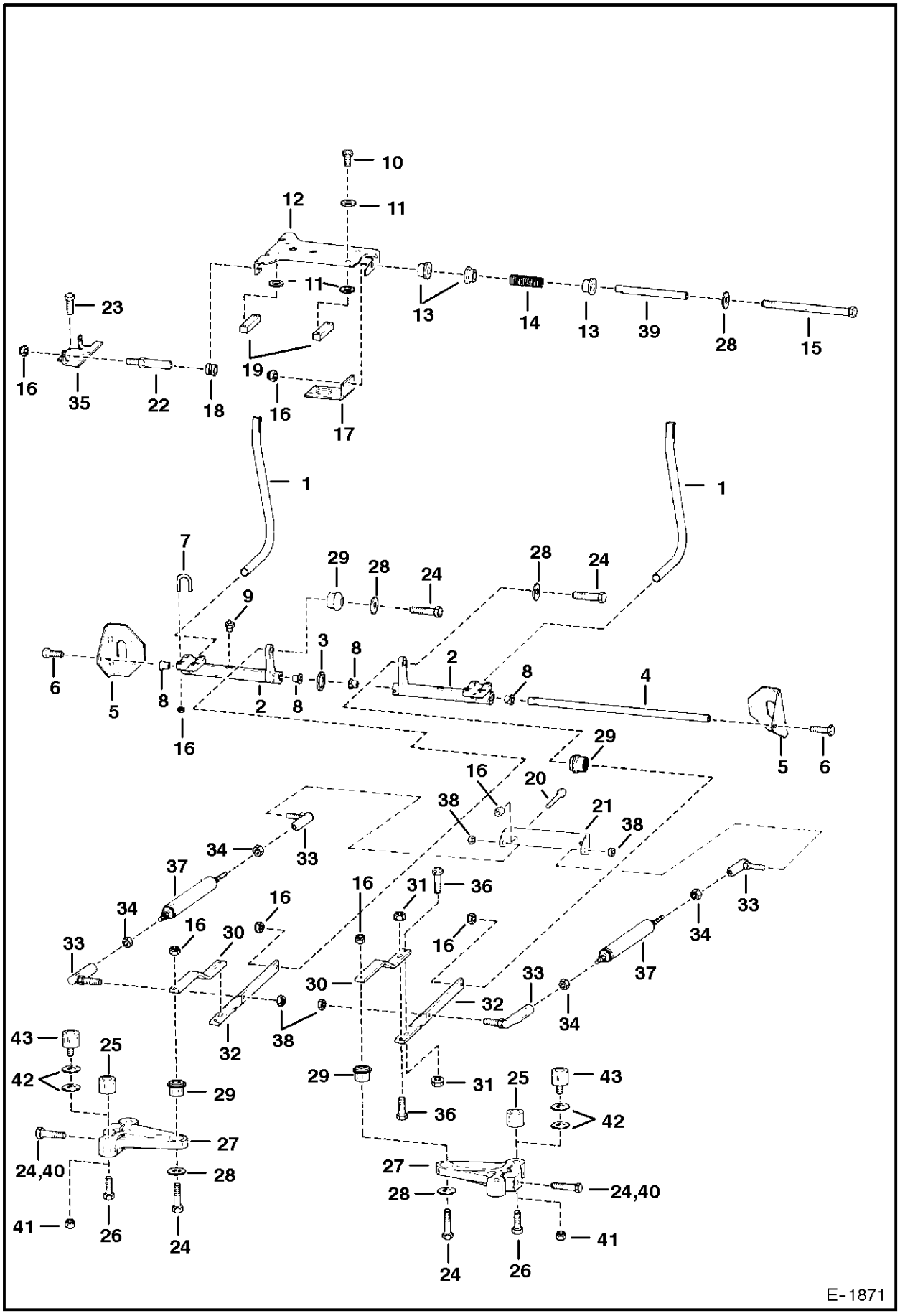
10
11
12
11
23
13
14
13
39
28
15
16
35
22
18
19
16
17
1
1
7
29
28
24
28
24
9
3
8
2
8
6
5
8
2
8
4
16
5
6
29
16
20
38
21
38
34
33
37
16
31
36
34
16
16
33
30
16
33
34
37
30
32
33
34
38
32
43
25
42
29
31
25
43
29
36
42
27
24,40
28
27
28
24,40
41
26
24
41
24
26
E-1871

HAND CONTROLS

Ref.N°	Part N°	Description	Remarks	Serial N°	Qty.
1	6702543	LEVER			2
2	NAP	BELLCRANK	W/notch for bushing tab - Order 6729957inD1 Bellcrank, Ref. HAND CONTROLS(28) (619021inD1 Washer) & Ref. HAND CONTROLS(29) (6678		2
2	6729957	BELLCRANK	W/O notch for bushing tab		2
3	6599741	WASHER	wave		1
4	6716545	ROD			1
5	6577230	MOUNT			2
6	45C-624	BOLT	Was 45C-620 [B]		2
7	6700768	U-BOLT			4
8	6703879	BUSHING			4
9	6518200	GREASE ZERK			2
10	8C-616	BOLT			4
11	6557831	WASHER			8
12	6706095	MOUNT			1
13	6715163	BUSHING			3
14	6701535	SPRING			1
15	17C-680	BOLT			1
16	95D-6	NUT			15
17	6576196	BRACKET			1
18	6706098	GUIDE			2
19	6702716	BLOCK			2
20	17C-612	BOLT			2
21	6706106	MOUNT			1
22	6577058	PIN			2
23	1CM-820	BOLT			8
24	17C-626	BOLT			6
25	6711643	CAM			4
26	35C-612	BOLT			4
27	NAP	LEVER	.8725'(22,2mm) I.D. hole for Ref. HAND CONTROLS(29) - Order 6729956inD1 Lever, Ref. HAND CONTROLS(28) (619021inD1 Washer) & Ref		2
27	6729956	LEVER	1.0425'(26,5 mm) I.D. for Ref. HAND CONTROLS(29)		2
28	6563914	WASHER	1.00' (24,4 mm) O.D.		4
28	619021	WASHER	1.25' (31,8 mm) O.D.		4
29	6665701	BUSHING	neoprene - .855'(22,5 mm) O.D.		4
29	6678067	BUSHING	torsion - 1.055'(26,8 mm) O.D.		4
30	6576194	LINK	Was 6702372 [B,D]		2
31	83D-6	NUT			4
32	6576195	LINK			2
33	6599744	BALL JOINT	export only		4
34	8D-6	NUT	export only		4
35	6706096	MOUNT			1
36	17C-620	BOLT			4
37	6649551	DAMPENER	export only		2
38	62D-6	NUT	export only		4
39	6715164	SLEEVE			1
40	35C-624	BOLT			2
41	98D-6	NUT	AHC - See Page CONTROLS ELECTRICAL(1)		4
42	25E-17	WASHER	AHC - See Page CONTROLS ELECTRICAL(1)		8
43	6673789	BEARING	roller - AHC - See Page CONTROLS ELECTRICAL(1)		4

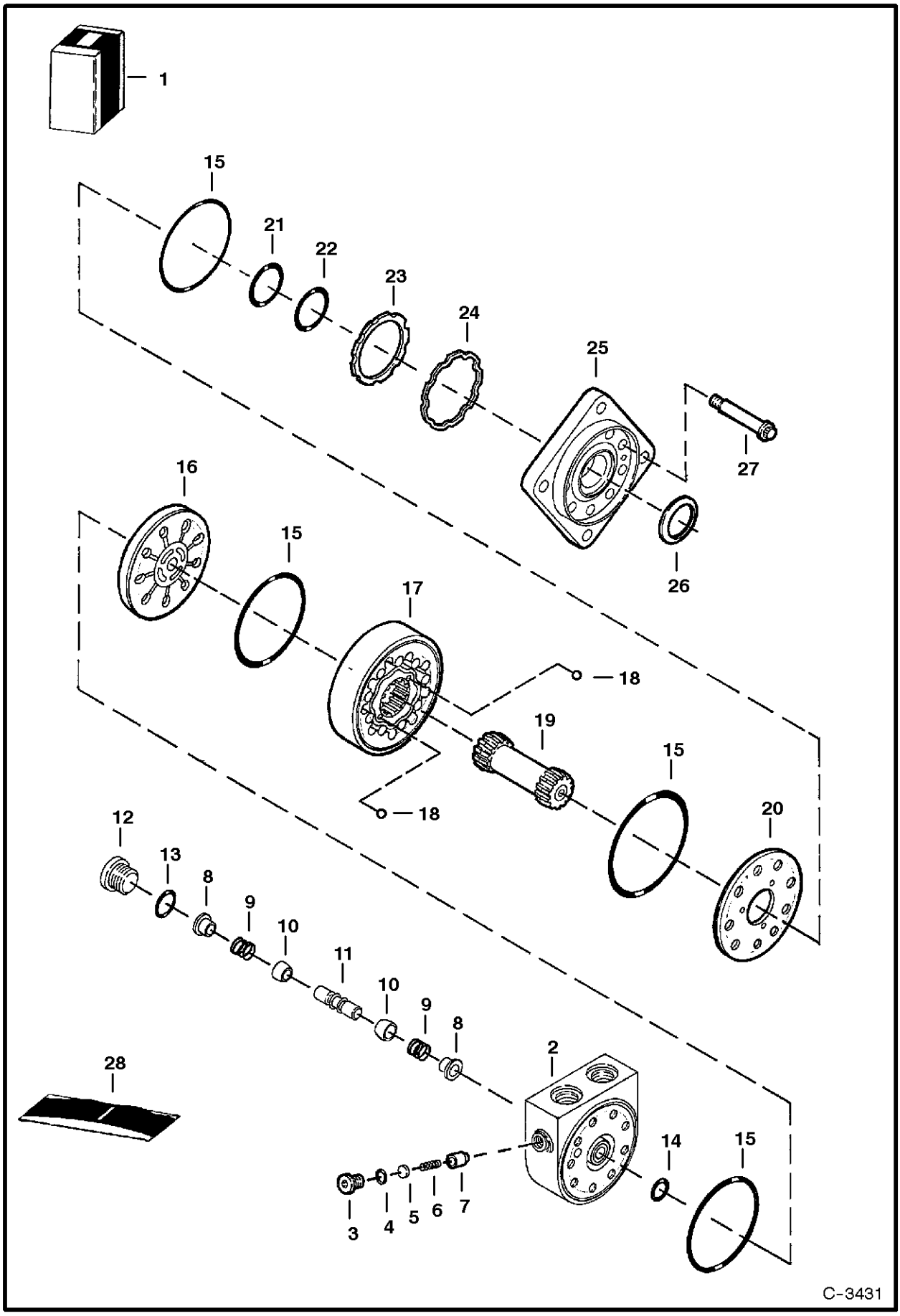
1
15
21
22
23
24
25
27
16
15
26
17
18
19
15
18
20
12
13
8
9
10
11
10
9
8
2
28
14
15
3
4
5
6
7
C-3431

HYDROSTATIC MOTOR

Ref.N°	Part N°	Description	Remarks	Serial N°	Qty.
1	6671617	MOTOR	Ref. HYDROSTATIC MOTOR(2) - HYDROSTATIC MOTOR(27)		1
2	6669442	HOUSING	W/Ref. HYDROSTATIC MOTOR(3)-HYDROSTATIC MOTOR(7)		1
3	6668079	PLUG	W/Ref. HYDROSTATIC MOTOR(4)		1
4	79K-5	O-RING			1
5	6668080	SHIM			x
6	6669444	SPRING			1
7	6668082	POPPET			1
8	6561218	SHUTTLE			2
9	6513533	SPRING			2
10	6513532	POPPET			2
11	6668088	PISTON	shuttle		1
12	6668089	PLUG	W/Ref. HYDROSTATIC MOTOR(13)		1
13	79K-6	O-RING			1
14	6669452	O-RING			1
15	6669446	O-RING			4
16	6669447	PLATE	valve		1
17	6672126	GEROLER			1
18	6651542	BALL			2
19	6669469	SHAFT			1
20	6669448	PLATE	balance		1
21	6669450	RING	backup		1
22	6669449	O-RING			1
23	6669453	SEAL			1
24	6669454	RING	backup		1
25	6669451	FLANGE	mounting		1
26	6664815	SEAL			1
27	6669470	BOLT			9
28	6669455	SEAL KIT	W/Ref. HYDROSTATIC MOTOR(4), HYDROSTATIC MOTOR(13), HYDROSTATIC MOTOR(14), HYDROSTATIC MOTOR(21)-HYDROSTATIC MOTOR(24) & HYDROST		1

HYDROSTATIC PUMP

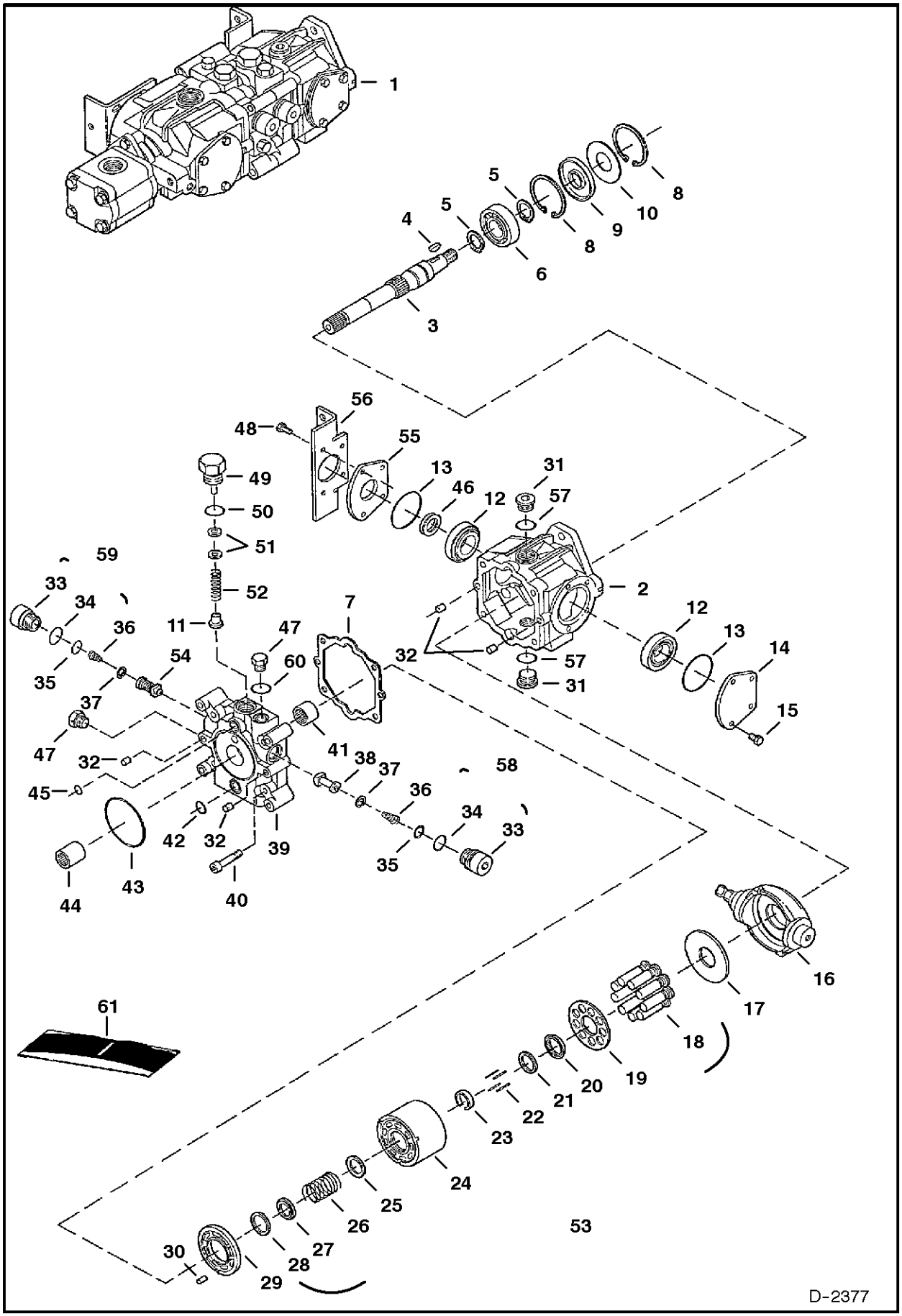

HYDROSTATIC PUMP

Ref.N°	Part N°	Description	Remarks	Serial N°	Qty.
1	6672051	PUMP			1
2	6669402	HOUSING			1
3	6669408	SHAFT			1
4	6J-807	KEY			1
5	658128	SNAP RING			2
6	654299	BEARING			1
7	6650634	GASKET			1
8	669863	SNAP RING			2
9	6645090	SEAL			1
10	6669409	WASHER			1
11	6650652	RELIEF	charge		1
12	6669411	BEARING	W/cup		2
13	6660814	O-RING			2
14	6657068	COVER			2
15	6650668	BOLT			4
16	6671513	SWASH PLATE			1
17	6650627	PLATE			1
18	NAP	PISTON ASSY.	Order Ref. HYDROSTATIC PUMP(53)		1
19	NAP	RETAINER	Order Ref. HYDROSTATIC PUMP(53)		1
20	NAP	RETAINER	guide - Order Ref. HYDROSTATIC PUMP(53)		1
21	6666338	WASHER			1
22	6650629	PIN			4
23	6650630	RETAINER			1
24	NAP	BLOCK	Order Ref. HYDROSTATIC PUMP(53)		1
25	NAP	WASHER	Order Ref. HYDROSTATIC PUMP(53)		1
26	NAP	SPRING	Order Ref. HYDROSTATIC PUMP(53)		1
27	NAP	WASHER	Order Ref. HYDROSTATIC PUMP(53)		1
28	NAP	WASHER	Order Ref. HYDROSTATIC PUMP(53)		1
29	6671515	VALVE PLATE			1
30	6650636	PIN			1
31	47K-8	PLUG	W/Ref. HYDROSTATIC PUMP(57)		2
32	6518460	PIN			4
33	NAP	PLUG	Order Ref. HYDROSTATIC PUMP(58) or HYDROSTATIC PUMP(59)		2
34	6657028	O-RING			2
35	79K-8	O-RING			2
36	NAP	SPRING	Order Ref. HYDROSTATIC PUMP(58) or HYDROSTATIC PUMP(59)		2
37	NAP	RETAINER	Order Ref. HYDROSTATIC PUMP(58) or HYDROSTATIC PUMP(59)		2
38	NAP	CHECK VALVE	poppet - Order Ref. HYDROSTATIC PUMP(58)		1
39	6669406	END PLATE			1
40	6650637	BOLT			4
41	6650635	BEARING			1
42	6650647	O-RING			1
43	6645081	O-RING			1
44	6650675	COUPLER			1
45	6650646	O-RING			1
46	6673881	SEAL			1
47	6645086	PLUG	W/Ref. HYDROSTATIC PUMP(60)		2
48	6671518	BOLT			1
49	6650648	PLUG	charge relief		1

HYDROSTATIC PUMP

Ref.N°	Part N°	Description	Remarks	Serial N°	Qty.
50	79K-10	O-RING			1
51	6669410	SHIM KIT	charge relief		1
52	6658301	SPRING			1
53	6671512	BLOCK ASSY			1
54	NAP	RELIEF VALVE	5000 PSI (345 bar) for Pump - Order Ref. HYDROSTATIC PUMP(59)		1
55	6657067	COVER			1
56	6706096	MOUNT			1
57	79K-12	O-RING			2
58	6670684	CHECK VALVE			1
59	6671510	RELIEF VALVE			1
60	6661481	O-RING			2
61	6671516	SEAL KIT	Ref. HYDROSTATIC PUMP(7), HYDROSTATIC PUMP(9), HYDROSTATIC PUMP(13), HYDROSTATIC PUMP(34), HYDROSTATIC PUMP(35), HYDROSTATIC PUM		1

HYDROSTATIC PUMP

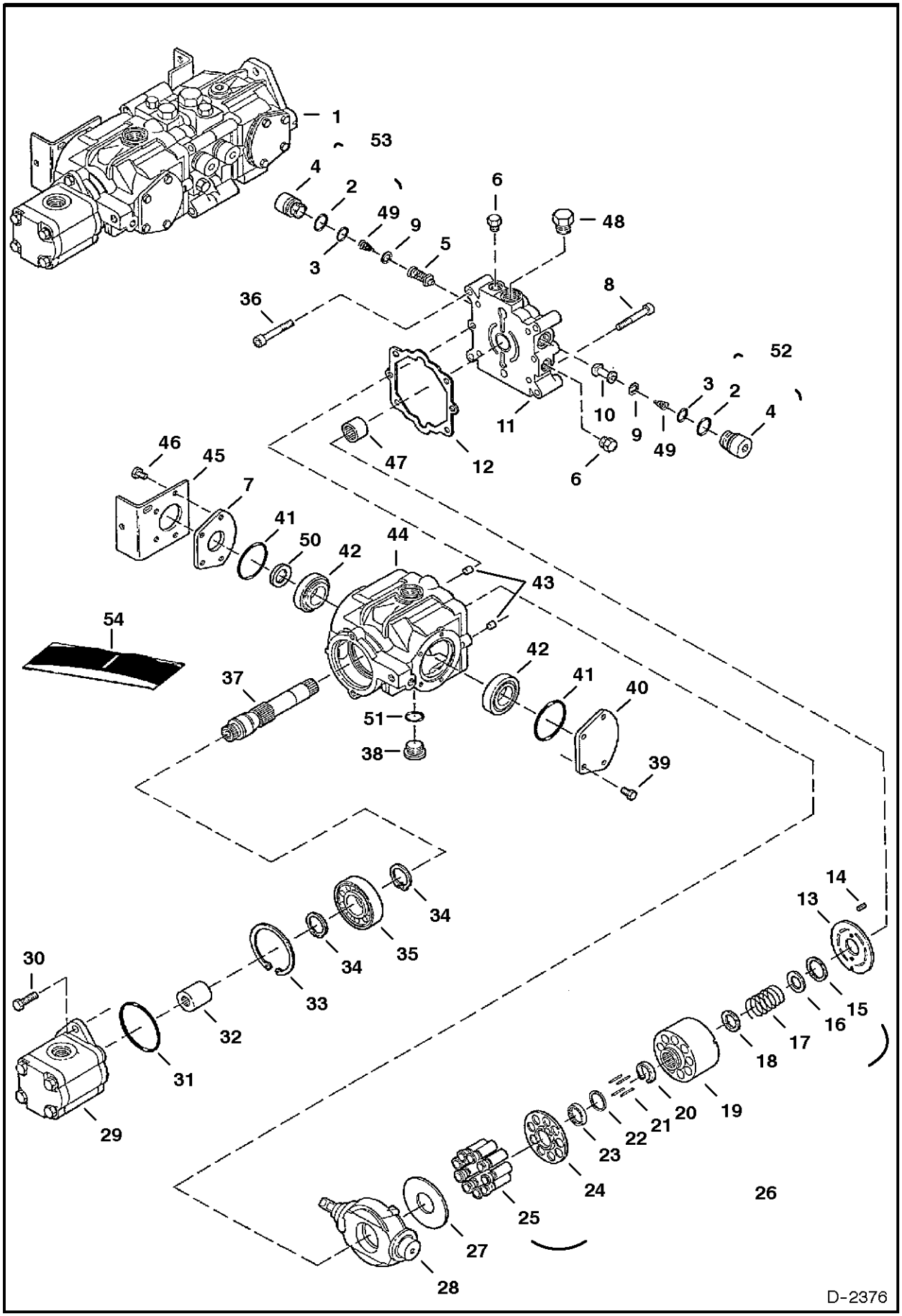

HYDROSTATIC PUMP

Ref.N°	Part N°	Description	Remarks	Serial N°	Qty.
1	6672051	PUMP			1
2	6657028	O-RING			2
3	79K-8	O-RING			2
4	NAP	PLUG	Order Ref. HYDROSTATIC PUMP(52) or HYDROSTATIC PUMP(53)		2
5	NAP	RELIEF VALVE	5000 PSI (345 bar) for Pump - Order Ref. HYDROSTATIC PUMP(53)		1
6	6645086	PLUG			4
7	6657067	COVER			1
8	6650637	BOLT			2
9	NAP	RETAINER	Order Ref. HYDROSTATIC PUMP(52) or HYDROSTATIC PUMP(53)		4
10	NAP	CHECK VALVE	poppet - Order Ref. HYDROSTATIC PUMP(52)		1
11	6669405	END CAP			1
12	6650634	GASKET			1
13	6671514	VALVE PLATE			1
14	6650636	PIN			2
15	NAP	RETAINER	Order Ref. HYDROSTATIC PUMP(26)		1
16	NAP	WASHER	Order Ref. HYDROSTATIC PUMP(26)		1
17	NAP	SPRING	Order Ref. HYDROSTATIC PUMP(26)		1
18	NAP	WASHER	Order Ref. HYDROSTATIC PUMP(26)		1
19	NAP	BLOCK	Order Ref. HYDROSTATIC PUMP(26)		1
20	6650630	RETAINER			1
21	6650629	PIN			4
22	6666338	WASHER			1
23	NAP	RETAINER	Order Ref. HYDROSTATIC PUMP(26)		1
24	NAP	RETAINER	Order Ref. HYDROSTATIC PUMP(26)		1
25	NAP	PISTON ASSY.	Order Ref. HYDROSTATIC PUMP(26)		1
26	6671512	BLOCK ASSY			1
27	6650627	PLATE			1
28	6671513	SWASH PLATE			1
29		GEAR PUMP			1
30	6666339	BOLT			2
31	6645080	O-RING			1
32	6671509	COUPLER			1
33	669863	SNAP RING			1
34	658128	SNAP RING			2
35	654299	BEARING			1
36	6652018	BOLT			4
37	6669407	SHAFT			1
38	47K-8	PLUG	W/Ref. HYDROSTATIC PUMP(51)		1
39	6650668	BOLT			4
40	6657068	COVER			1
41	6660814	O-RING			2
42	6669411	BEARING	W/cup		2
43	6518460	PIN			2
44	6669403	HOUSING			1
45	6576196	BRACKET			1
46	6650668	BOLT			1
47	6650635	BEARING			1
48	6645086	PLUG			1

HYDROSTATIC PUMP

Ref.N°	Part N°	Description	Remarks	Serial N°	Qty.
49	NAP	SPRING	Order Ref. HYDROSTATIC PUMP(52) or HYDROSTATIC PUMP(53)		2
50	6673881	SEAL			1
51	79K-12	O-RING			1
52	6670684	CHECK VALVE			1
53	6671510	RELIEF VALVE			1
54	6671516	SEAL KIT	Ref. HYDROSTATIC PUMP(2), HYDROSTATIC PUMP(3), HYDROSTATIC PUMP(12), HYDROSTATIC PUMP(31), HYDROSTATIC PUMP(41) & HYDROSTATIC PU		1

GEAR PUMP

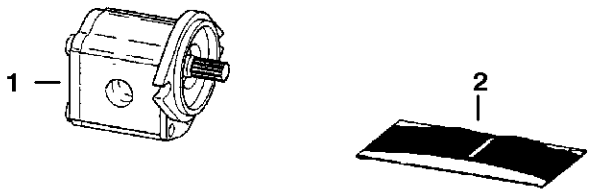

TS-1022

GEAR PUMP

Ref.N°	Part N°	Description	Remarks	Serial N°	Qty.
1	6672513	PUMP	Model B5501-36836		1
2	6671042	SEAL KIT			1

HYDROSTATIC OIL FILTER
(In-Line)

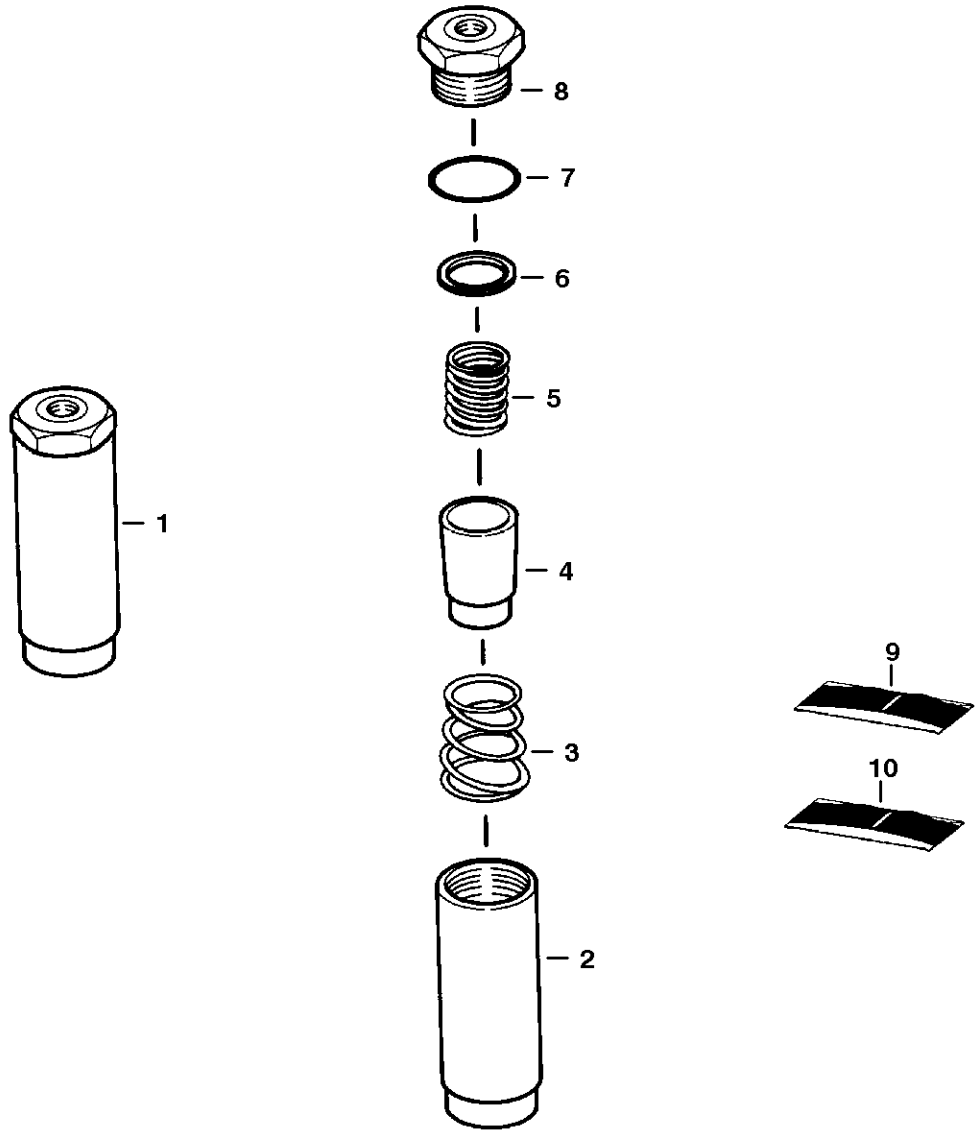

B-13527

HYDROSTATIC OIL FILTER

Ref.N°	Part N°	Description	Remarks	Serial N°	Qty.
1	6661022	FILTER	Ref. HYDROSTATIC OIL FILTER(2) - HYDROSTATIC OIL FILTER(8)		1
2	NAP	HOUSING			1
3	NAP	SPRING			1
4	NAP	ELEMENT			1
5	NAP	SPRING			1
6	NAP	GASKET			1
7	NAP	O-RING			1
8	NAP	PLUG			1
9	6661807	KIT	element - Ref. HYDROSTATIC OIL FILTER(4), HYDROSTATIC OIL FILTER(6) & HYDROSTATIC OIL FILTER(7)		1
10	6661808	KIT	spring - Ref. HYDROSTATIC OIL FILTER(3) & HYDROSTATIC OIL FILTER(5)		1

HYDROSTATIC OIL FILTER

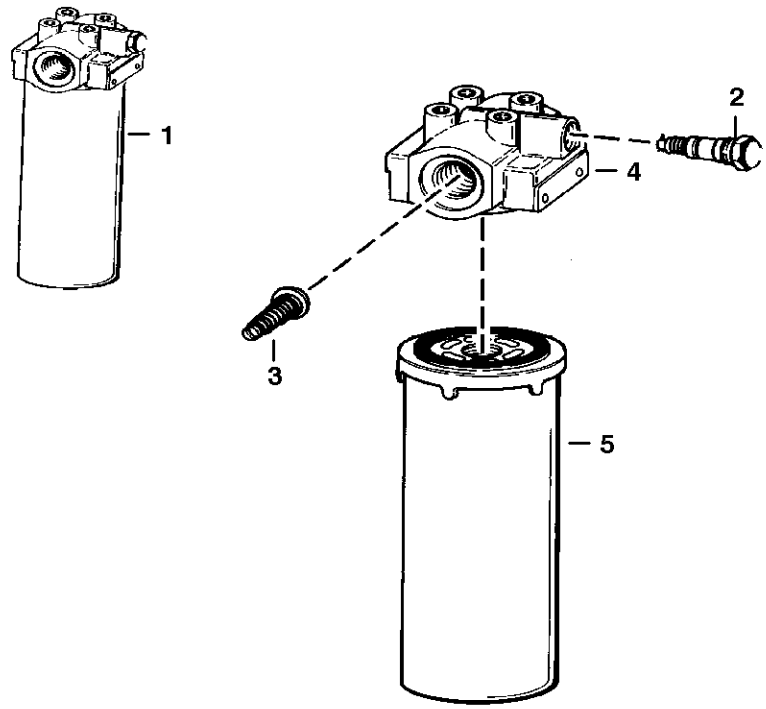

B-16487

HYDROSTATIC OIL FILTER

Ref.N°	Part N°	Description	Remarks	Serial N°	Qty.
1	6661247	FILTER ASSY.	W/Ref. HYDROSTATIC OIL FILTER(2) - HYDROSTATIC OIL FILTER(5) (50 PSI by-pass & switch)		1
2	6660260	SWITCH	pressure - Normally closed		1
2	6599365	KIT	Nut, washer & o-rings for 6660260 switch		1
3	NAP	VALVE	by-pass (50 PSI - Order Ref. HYDROSTATIC OIL FILTER(1))		1
4	NSS	HEAD	Order Ref. HYDROSTATIC OIL FILTER(1)		1
5	6661248	ELEMENT			1

HYDROSTATIC OIL FILTER

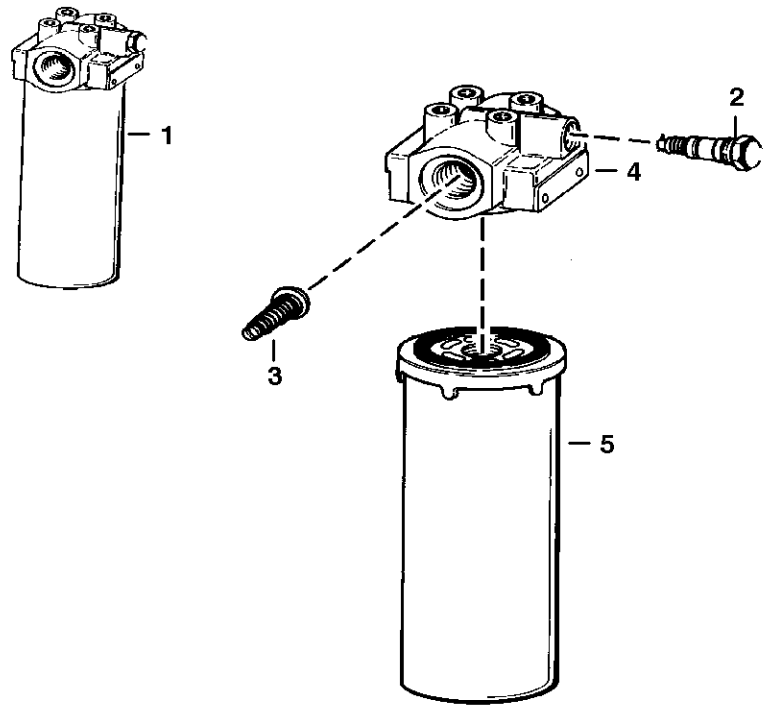

B-16487A

HYDROSTATIC OIL FILTER

Ref.N°	Part N°	Description	Remarks	Serial N°	Qty.
1	6676969	FILTER ASSY	W/Ref. HYDROSTATIC OIL FILTER(2) - HYDROSTATIC OIL FILTER(5) (50 PSI by-pass & switch)		1
2	6660260	SWITCH	pressure - normally open		1
3	NAP	VALVE	by-pass (50 PSI - Order Ref. HYDROSTATIC OIL FILTER(1))		1
4	NSS	HEAD	Order Ref. HYDROSTATIC OIL FILTER(1)		1
5	6661248	ELEMENT			1

CAB ELECTRICAL CIRCUITRY

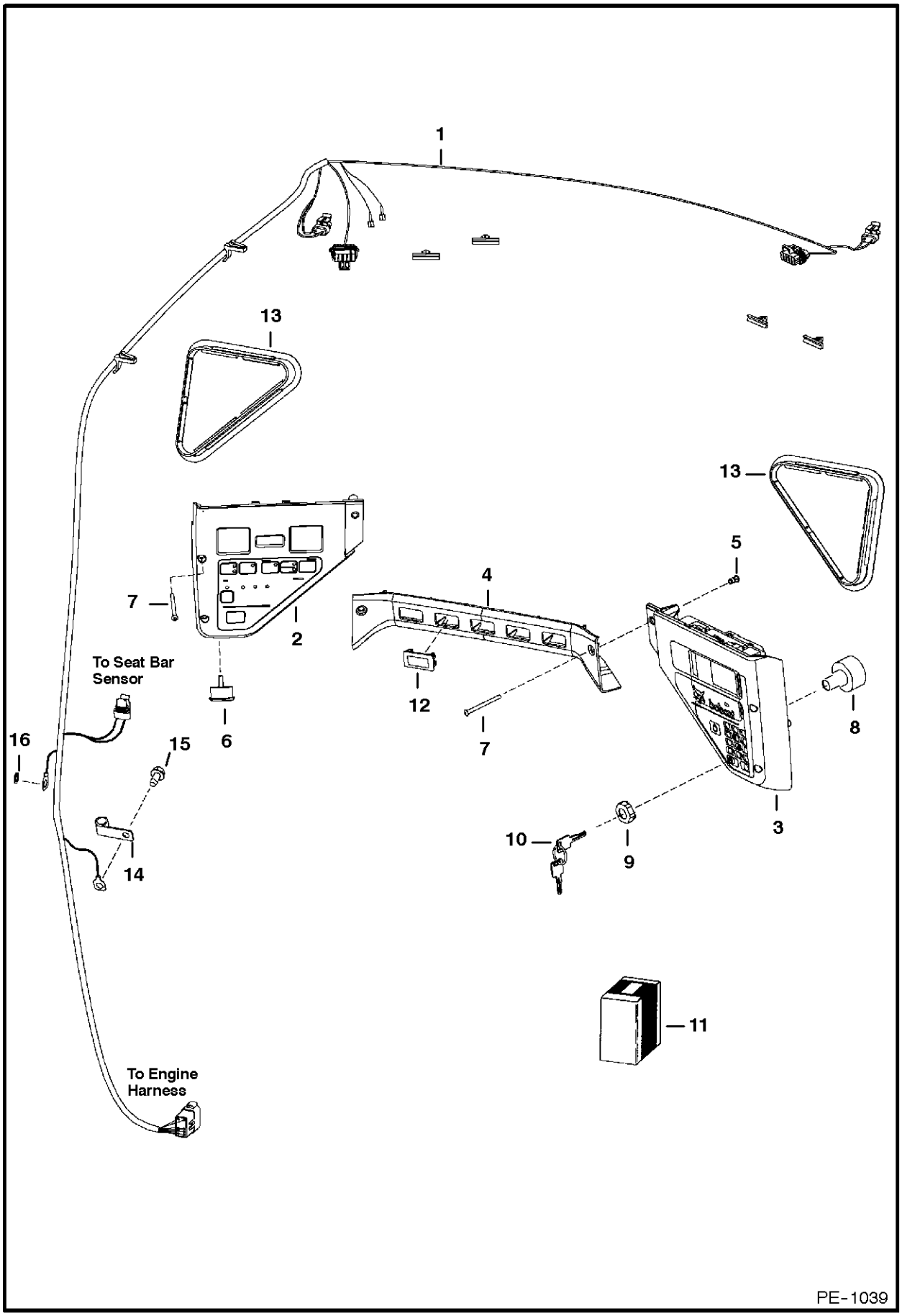

CAB ELECTRICAL CIRCUITRY

Ref.N°	Part N°	Description	Remarks	Serial N°	Qty.
1	6718870	HARNESS			1
2	6672346	PANEL	L.H.		1
2	6675982	PLUG	backlighting service hole		1
2	6675337	BULB			2
3	6677175	PANEL	R.H. - keyed - Was 6672347 [A]		1
3	6678682	PANEL	R.H. - deluxe - keyless - Was 6672348 [A]		1
3	NAP	INSTRUCTIONS	for deluxe panel - See Service Manual - Was 6900860 [A]		1
4	NAP	CROSSMEMBER	Order 6676723 Crossmember - See Page CAB ELECTRICAL CIRCUITRY(1) - Was 6674317 [A]		1
5	6675033	INSERT	threaded		6
6	6675390	ALARM	W/nut		1
7	6719084	BOLT			6
8	6675470	SWITCH	ignition - W/Ref. CAB ELECTRICAL CIRCUITRY(9)		1
9	6674202	NUT			2
10	6709527	KEY	ignition		1
11	NAP	KIT	keyless ign. - Order 6672348inD1}D Panel - See Service Manual for proper installation		1
12	6719038	PLUG	cover		5
13	6674403	COVER			2
14	6675171	CLAMP			1
15	84G-3712	BOLT			1
16	6E-5	WASHER			1

CAB ELECTRICAL CIRCUITRY

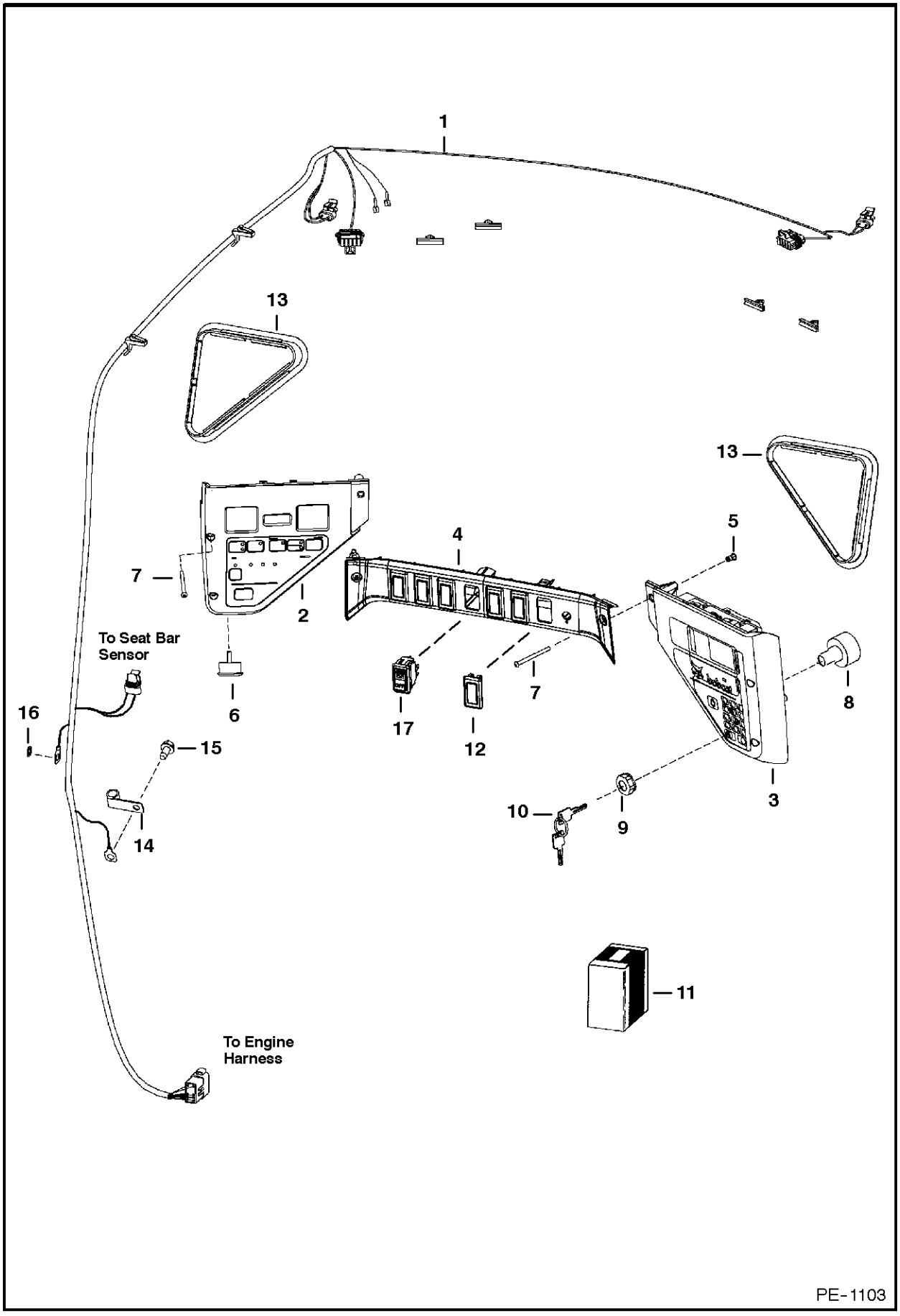

CAB ELECTRICAL CIRCUITRY

Ref.N°	Part N°	Description	Remarks	Serial N°	Qty.
1	6727178	HARNESS			1
2	6672346	PANEL	L.H.		1
2	6675982	PLUG	backlighting service hole		1
2	6675337	BULB			2
3	6677175	PANEL	R.H. - keyed - Was 6672347 [A]		1
3	6672348	PANEL	R.H. - deluxe - keyless		1
3	NAP	INSTRUCTIONS	for deluxe panel - See Service Manual - Was 6900860 [A]		1
4	6676723	CROSSMEMBER			1
5	6675033	INSERT	threaded		6
6	6675390	ALARM	W/nut		1
7	6719084	BOLT			6
8	6675470	SWITCH	ignition - W/Ref. CAB ELECTRICAL CIRCUITRY(9) & CAB ELECTRICAL CIRCUITRY(10)		1
9	6674202	NUT			2
10	6709527	KEY	ignition		1
11	NAP	KIT	keyless ign. - Order 6672348inD1}D Panel - See Service Manual for proper installation		1
12	6719038	PLUG			x
13	6674403	COVER			2
14	6675171	CLAMP			1
15	84G-3712	BOLT			1
16	6E-5	WASHER			1
17	6676536	SWITCH	park brake		1

ENGINE ELECTRICAL CIRCUITRY

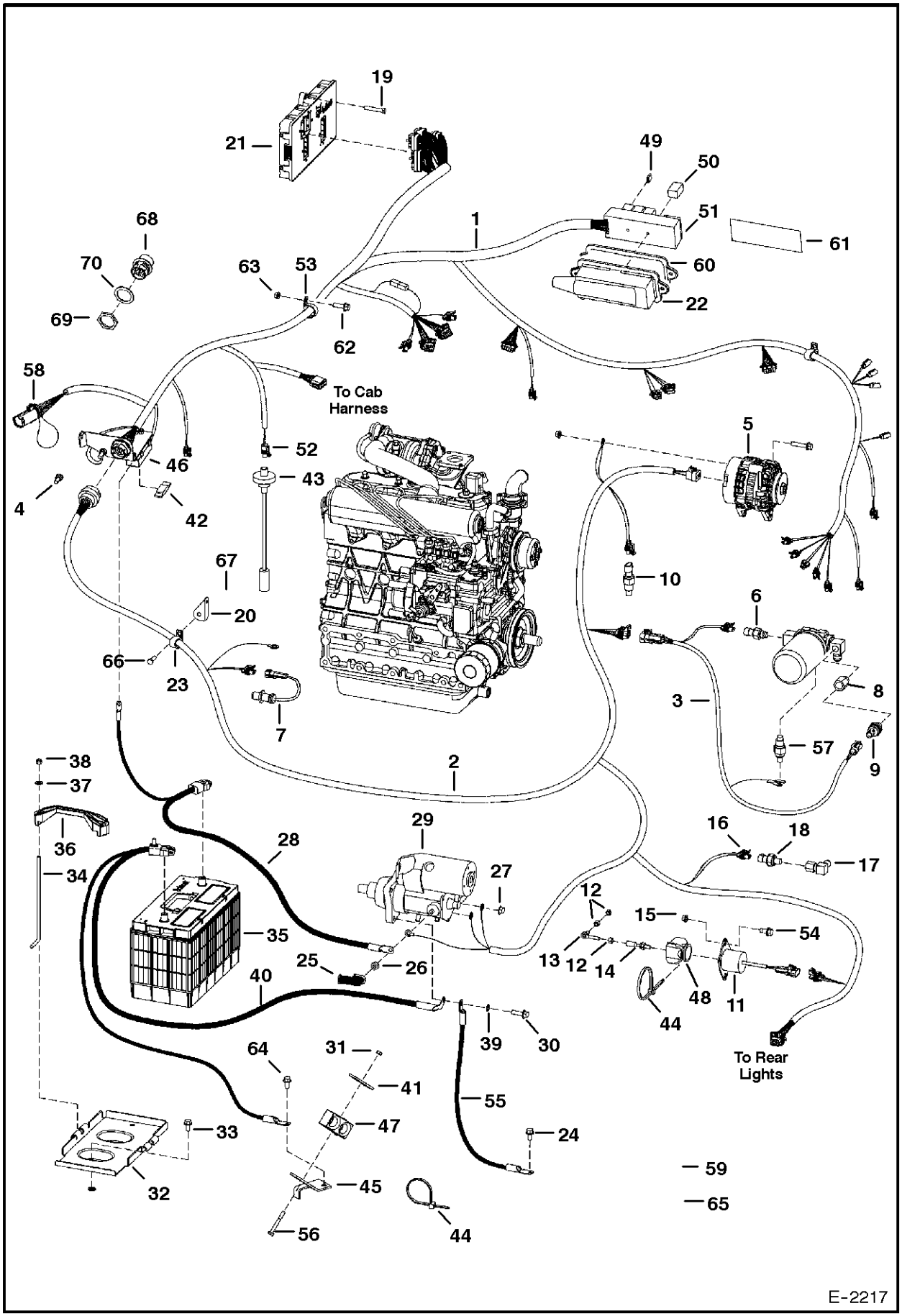

ENGINE ELECTRICAL CIRCUITRY

Ref.N°	Part N°	Description	Remarks	Serial N°	Qty.
1	6719802	HARNESS	&W/Ref. ENGINE ELECTRICAL CIRCUITRY(49) - ENGINE ELECTRICAL CIRCUITRY(51) & ENGINE ELECTRICAL CIRCUITRY(53) -See Page CONTROLS E		1
1	6719803	HARNESS	W/Ref. ENGINE ELECTRICAL CIRCUITRY(49) - ENGIN E ELECTRICAL CIRCUITRY(51) & ENGINE ELECTRICA L CIRCUITRY(53) - AHC See Page CONTRO		1
2	6718871	HARNESS	engine - W/Ref. ENGINE ELECTRICAL CIRCUITRY(20), ENGINE ELECTRICAL CIRCUITRY(66) & ENGINE ELECTRICAL CIRCUITRY(67)		1
3	6715975	HARNESS	filter		1
4	84G-3712	BOLT			2
5		ALTERNATOR	See Page ALTERNATOR(1) - ALTERNATOR(1)		1
6	6727869	SENDER	hyd. temp. - Was 6718417 [B]		1
7	6658260	SENSOR	rpm		1
8	6718948	ADAPTER	W/filter		1
8	6675278	FILTER			1
9	6674316	SWITCH	&hyd. chg. press. - 3-pin molded connector		1
10	6718415	SWITCH	eng. temp.		1
11	6667993	SOLENOID	fuel shut off		1
12	62D-4	NUT			3
13	6578363	ROD END	swivel		1
14	6578366	BALL JOINT			1
15	61D-4	NUT			2
16	6672750	CONNECTOR			1
17	6707040	ELBOW			1
18	6674315	SWITCH	eng. oil press.		1
19	43C-616	BOLT	Was 35C-616 [B]		3
20	6714979	BRACKET			1
21	6678068	CONTROLLER	Bobcat - Was 6676553 [A]		1
22	6718659	HOUSING	fuse - boot		1
23	6675171	CLAMP			1
24	1CM-1220	BOLT			1
25	6560172	COVER			1
26	4DM-10	NUT			1
27	4DM-5	NUT			1
28	6719060	CABLE	pos.		1
29		STARTER	See Page STARTER(1)		1
30	35C-620	BOLT			3
31	91D-5	NUT			1
32	6718260	BATTERY PAN			1
33	84G-3716	BOLT			2
34	6576280	BOLT			2
35	6674687	BATTERY			1
35		BATTERY CAP			2
36	6569203	CLAMP			1
37	25E-15	WASHER			2
38	59D-5	NUT			2
39	6E-6	WASHER			1
40	6719059	CABLE	ground		1
41	6715132	RETAINER			1
42	6675155	FUSE	100 amp		1
42	6675154	HOLDER	high amp fuse		1
43	6674209	SENSOR	fuel - W/gasket		1

ENGINE ELECTRICAL CIRCUITRY

Ref.N°	Part N°	Description	Remarks	Serial N°	Qty.
43	6717579	GASKET			1
44	6610510	NYLON TIE			3
45	6719230	BRACKET			1
46	6726503	BRACKET	Was 6718970 [A]		1
47	6715197	CLAMP			1
48	6664286	BOOT	Also Order Ref. ENGINE ELECTRICAL CIRCUITRY(44)		1
49	6654806	FUSE	15 amp		2
49	6702444	FUSE	25 amp		6
49	6718034	FUSE	30 amp		2
50	6674376	SWITCH	relay		7
51	6673200	FUSE BLOCK			1
52	6646383	CONNECTOR	fuel sender		1
52	6648330	TERMINAL	female - Was 6632946 [B]		2
53	6674673	CLAMP			1
54	17C-410	BOLT			2
55	6713821	CABLE			1
56	6716744	BOLT			1
57	6674376	SWITCH			1
58	6667533	COVER			1
59	6675096	GROMMET			1
60	6725302	GASKET	See Page PANELS(1)		1
61	NAP	DECAL	fuse/relay - 2.10' x 9.40' (53,3 mm x 238,8 mm) - Order 6718774inD1}R Decal		1
61	6718774	DECAL	fuse/relay - 2' x 7' (50,8 mm x 177,8 mm) - See Page PANELS(1)		1
62	35C-616	BOLT			1
63	91D-6	NUT			1
64	57D-6	NUT			1
65	30H-48	CLAMP			1
66	17C-512	BOLT			2
67	85D-5	NUT			2
68	6664584	CONNECTOR	21-pin		1
69	6664972	NUT			1
70	6664971	WASHER			1

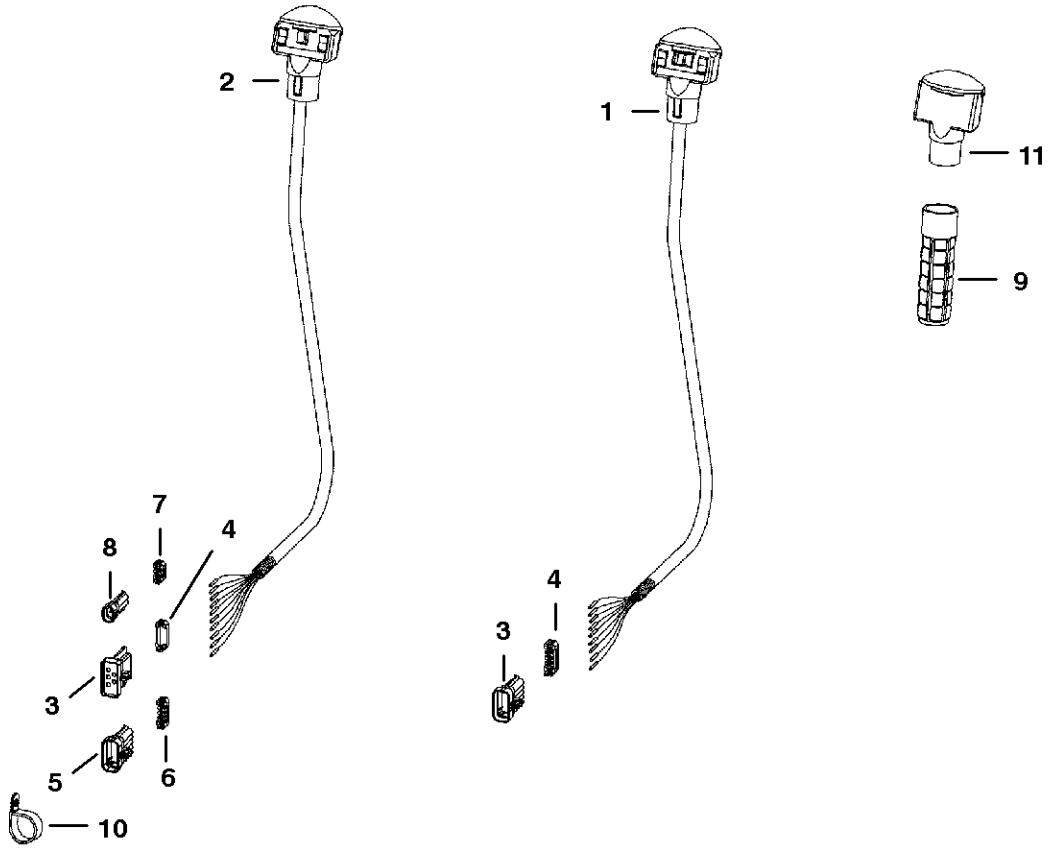

PE-1041

CONTROLS ELECTRICAL

Ref.N°	Part N°	Description	Remarks	Serial N°	Qty.
1	6675468	HANDLE ASSY	R.H. - &Also Order Ref. CONTROLS ELECTRICAL(3) & CONTROLS ELECTRICAL(4) - Was 6674449 [A]&		1
1	6640690	PIN			9
1	6641176	SEAL			9
2	6674450	HANDLE ASSY.	L.H. - Also Order Ref. &CONTROLS ELECTRICAL(3), CONTROLS ELECTRICAL(4) & CONTROLS ELECTRIC AL(7) - CONTROLS ELECTRICAL(6)		1
2	6640690	PIN			10
2	6641176	SEAL			10
2	6677370	DECAL			1
3	6640692	CONNECTOR	10-pin		1
4	6640694	LOCK	10-pin		1
5	6667144	CONNECTOR	5 - way		1
6	6667145	LOCK	5 - way		1
7	6641180	LOCK	2 - pin		1
8	6641179	CONNECTOR	2 - pin		2
9	6702621	GRIP			2
10	6674000	CLAMP			2
11	6705920	HANDLE	L.H. - blank		2

CONTROLS ELECTRICAL
(AHC) (W/O Push Button Float)

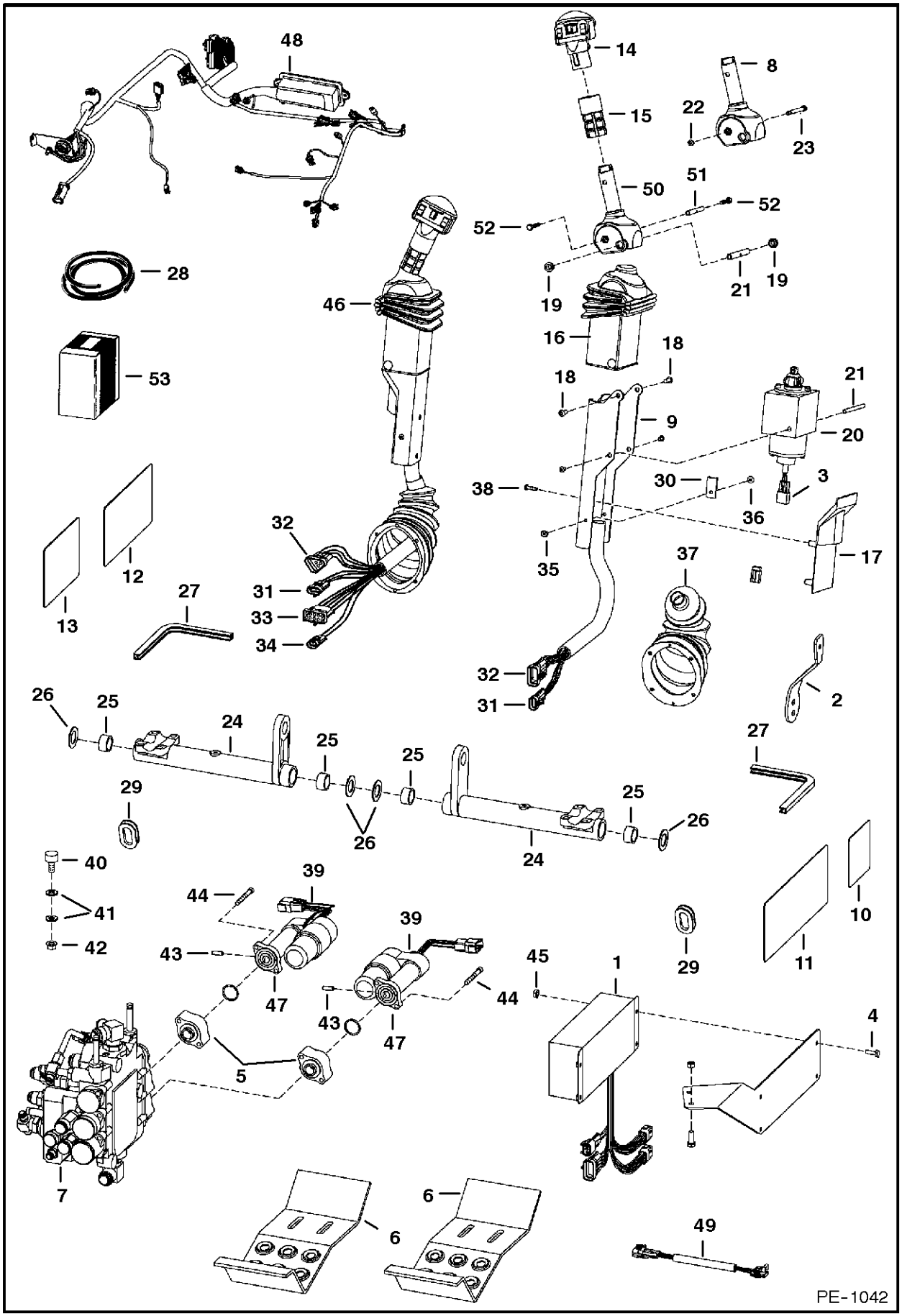

CONTROLS ELECTRICAL

Ref.N°	Part N°	Description	Remarks	Serial N°	Qty.
1	6674804	CONTROLLER			1
2	6717393	LEVER	throttle		1
3	6670707	CONNECTOR	3-way		2
3	6670710	LOCK	3-way		2
4	17C-412	BOLT			4
5	6725128	ADAPTER	actuator - Was 6718801 [A]		2
6	6712365	STEP			2
7		VALVE	AHC - See Page HYDRAULIC CONTROL VALVE(1)		1
8	NAP	HANDLE	R.H. - tilt - Order Ref. CONTROLS ELECTRICAL(50) - CONTROLS ELECTRICAL(52) - Was 6597774 [A]	& Bel	1
8	NAP	HANDLE	L.H. - lift - Order Ref. CONTROLS ELECTRICAL(50) - CONTROLS ELECTRICAL(52) - Was 6717163 [A]	& Bel	1
9	NAP	LEVER	R.H. - tilt - L shaped - Order 6597777inD1 Lever - Was 6717055 [A]		1
9	6597777	LEVER	R.H. tilt - S shaped		1
9	NAP	LEVER	L.H. - lift - L shaped - Order 6587776inD1 Lever - Was 6717056 [A]		1
9	6597776	LEVER	L.H. lift - S shaped		1
10	6718706	DECAL	warning		1
11	6718699	DECAL			1
12	6718702	DECAL	operation		1
13	6718704	DECAL	opeation		1
14	NAP	HANDLE ASSY	R.H. - tilt - SEE BTI 335inD1}, - Was 6675469 [A]		1
14	6640690	PIN			11
14	6670715	SOCKET			3
14	6641176	SEAL			11
14	6675250	HANDLE ASSY	L.H. - lift		1
14	6640690	PIN			13
14	6670715	SOCKET			3
14	6641176	SEAL			13
14	6677370	DECAL			1
15	6713349	GRIP			2
16	6713898	COVER			2
17	6715957	COVER			2
18	25GT-410	BOLT			8
19	6702990	BUSHING			4
20	6712398	CONTROL	R.H. - tilt		4
20	6712397	CONTROL	L.H. - lift		1
21	6713043	SPACER			4
22	12D-10	NUT			2
23	6716826	BOLT			2
24	6716977	BELLCRANK			2
25	6673710	BEARING	needle		4
26	6716916	WASHER	plastic		4
27	NAP	MOULDING	10.5'(266 mm) long - Order Ref. CONTROLS ELECTRIC AL(28)		2
28	6654139	MOULDING	bulk - Sold Per Foot		x
29	6714726	PLUG			2
30	6665000	CLIP			2
31	6640699	CONNECTOR			1
31	6640700	LOCK			1
32	6640692	CONNECTOR			2
32	6640694	LOCK			2

CONTROLS ELECTRICAL

Ref.N°	Part N°	Description	Remarks	Serial N°	Qty.
33	6667144	CONNECTOR			1
33	6667145	LOCK			1
34	6641179	CONNECTOR			1
34	6641180	LOCK			1
35	6665322	RIVET	female		2
36	6665321	RIVET	male		2
37	6532127	BOOT			2
38	6669224	BOLT			4
39	6678775	ACTUATOR	Was 6674838 [A]		2
40	6673789	BEARING			4
41	25E-17	WASHER			8
42	98D-6	NUT			4
43	6718506	PIN			2
44	69G-436	BOLT			4
45	61D-4	NUT			5
46	NAP	LEVER ASSY	R.H. - tilt - L shaped - Order 6718201inD1}f Lever Assy. - Was 6718195 [A]		1
46	NAP	LEVER ASSY	R.H. - lift - S shaped - Order 6727298inD1}2 AHC Kit - Was 6718201 [A]		1
46	NAP	LEVER ASSY	L.H. - lift - L shaped - Order 6718202inD1}h Lever Assy. - Was 6718194 [A]		1
46	NAP	LEVER ASSY	L.H. - lift - S shaped - Order 6727298inD1}2 AHC Kit - Was 6718202 [A]		1
47	NAP	FLANGE			4
48	6719803	HARNESS	AHC - Was 6718889 [B,D]		1
48	6717569	DIODE	6 amp		1
48	6670707	CONNECTOR			2
48	6670710	LOCK			2
49	6728742	HARNESS	jumper - enhance boom lift		1
50	6729594	HANDLE	R.H.	& Abv	1
50	6729595	HANDLE	L.H.	& Abv	1
51	6729600	SPACER		& Abv	1
52	6727065	BOLT		& Abv	2
53	6727298	KIT	AHC - See Page HAND CONTROL KIT(1)		1

CONTROLS ELECTRICAL
(AHC) (W/ Push Button Float)

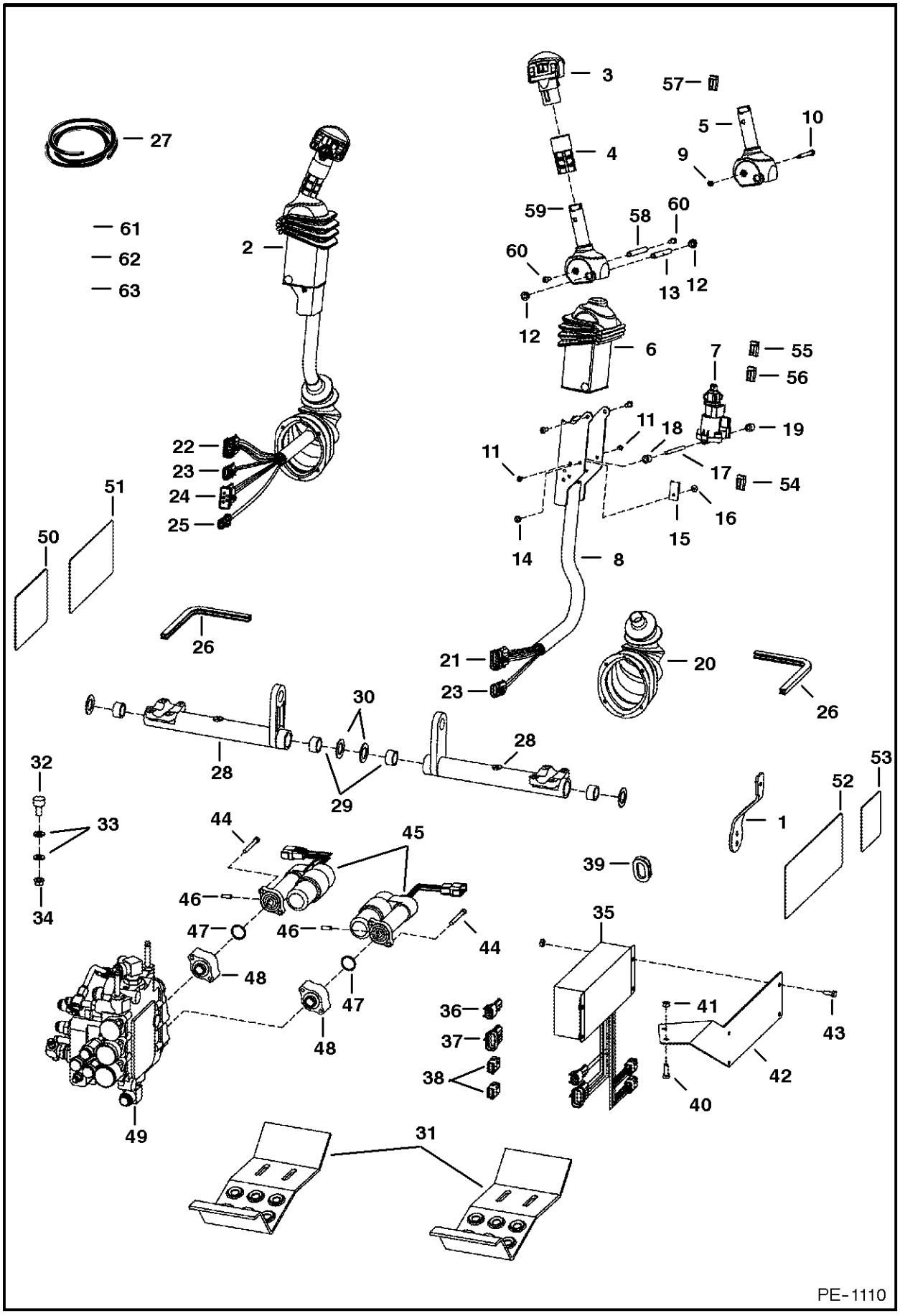

CONTROLS ELECTRICAL

Ref.N°	Part N°	Description	Remarks	Serial N°	Qty.
1	6717393	LEVER	throttle		1
2	6675742	LEVER	tilt - R.H.		1
2	6675750	LEVER	lift - L.H.		1
3	6675469	HANDLE ASSY	lift - R.H.		1
3	6675749	HANDLE	lift - L.H.		1
4	6713349	GRIP			2
5	NAP	HANDLE	R.H. - Order Ref. CONTROLS ELECTRICAL(58)-CONTROLS ELECTRICAL(60) - Was 6597774 [A]	& Bel	1
5	NAP	HANDLE	L.H. - Order Ref. CONTROLS ELECTRICAL(58)-CONTROLS ELECTRICAL(60) - Was 6717163 [A]	& Bel	1
6	6713898	COVER			2
7	6675741	SENSOR			2
7	6670706	CONNECTOR			1
7	6670715	SOCKET			3
7	6670710	LOCK			1
8	6719712	CHANNEL	R.H.		1
8	6719711	CHANNEL	L.H.		1
9	12D-10	NUT		& Bel	2
10	6716826	BOLT		& Bel	2
11	25GT-410	BOLT			8
12	6702990	BUSHING			4
13	6713043	SPACER			4
14	6665321	RIVET	male		2
15	6665000	CLIP			2
16	6665322	RIVET	female		2
17	6719834	SPACER	threaded		2
18	6727065	BOLT			4
19	6719835	SLEEVE			4
20	6532127	BOOT			2
21	6640692	CONNECTOR	10-pin		1
21	6640690	PIN			8
21	6640694	LOCK			1
21	6641176	SEAL			8
21	6646582	PLUG	cavity		1
22	6640692	CONNECTOR	10-pin		1
22	6640690	PIN			6
22	6640694	LOCK			1
22	6641176	SEAL			6
22	6646582	PLUG	cavity		4
23	6640699	CONNECTOR	3-pin		2
23	6640690	PIN			3
23	6641176	SEAL			3
23	6640700	LOCK			3
24	6667144	CONNECTOR	5-pin		2
24	6640690	PIN			3
24	6641176	SEAL			3
24	6646582	PLUG	cavity		1
24	6667145	LOCK			1
25	6641179	CONNECTOR	2-pin		1
25	6640690	PIN			2
25	6641176	SEAL			2
25	6641180	LOCK			1

CONTROLS ELECTRICAL

Ref.N°	Part N°	Description	Remarks	Serial N°	Qty.
26	NAP	MOULDING	&10.5'(266,7 mm)long-Order Ref. CONTROLS ELECTRICAL(27)		1
27	6654139	MOULDING	bulk - Sold Per Foot		x
28	6716977	BELLCRANK			2
29	6673710	BEARING			4
30	6716916	WASHER	plastic		4
31	6712365	STEP			2
32	6673789	BEARING			4
33	25E-17	WASHER			8
34	98D-6	NUT			4
35	6676153	CONTROLLER		5158 35000-36424	1
35				5162 22000-22355	1
35	6676337	CONTROLLER		5158 36425-37343	1
35				5162 22356-22766	1
36	6640692	CONNECTOR	10-pin		1
36	6640690	PIN			9
36	6640694	LOCK			1
36	6641176	SEAL			9
36	6646582	PLUG	cavity		1
37	6648307	CONNECTOR	2-pin		1
38	6670709	CONNECTOR	8-pin		2
39	6714726	PLUG			1
40	17C-612	BOLT			2
41	61D-6	NUT			2
42	6725165	MOUNT			1
43	17C-412	BOLT			4
44	69G-436	BOLT			4
45	6678775	ACTUATOR	Was 6674838 [A]		2
46	6718506	PIN			2
47	58K-120	O-RING			2
48	6725128	ADAPTER			2
49		VALVE	See Page HYDRAULIC CONTROL VALVE(1)		1
50	6718704	DECAL		5158 34999 & Bel	1
50				5162 21999 & Bel	1
50	6728328	DECAL		5158 35000 & Abv	1
50				5162 22000 & Abv	1
51	6727155	DECAL		5158 34999 & Bel	1
51				5162 21999 & Bel	1
51	6728328	DECAL		5158 35000 & Abv	1
51				5162 22000 & Abv	1
52	6718699	DECAL			1
53	6718706	DECAL			1
54	6670707	CONNECTOR	3-pin		1
54	6670715	SOCKET			3
54	6670711	LOCK			1
55	6677364	CONNECTOR	3-pin		1
55	6676640	SEAL			3
56	6676870	CONNECTOR	3-pin		1
56	6676640	SEAL			1
56	6670715	SOCKET			1
56	6670711	LOCK			1

CONTROLS ELECTRICAL

Ref.N°	Part N°	Description	Remarks	Serial N°	Qty.
57	6676537	SWITCH	ACS		1
58	6729600	SPACER		& Abv	1
59	6729594	HANDLE	R.H.	& Abv	1
59	6729595	HANDLE	L.H.	& Abv	1
60	6727065	BOLT		& Abv	2
61	6728742	HARNESS	jumper - to enhance boom lift		1
62	6727129	HARNESS	Was 6727130 [B]	5158 34999 & Bel	1
62				5162 21999 & Bel	1
62	6726925	HARNESS		5158 35000 & Abv	1
62				5162 22000 & Abv	1
63	6729054	HARNESS	W/capacitor - Use W/Ref. CONTROLS ELECTRICAL(35) (6676153 Controller)	5158 35000-36424	1
63				5162 22000-22355	1

ALTERNATOR
(Bobcat)

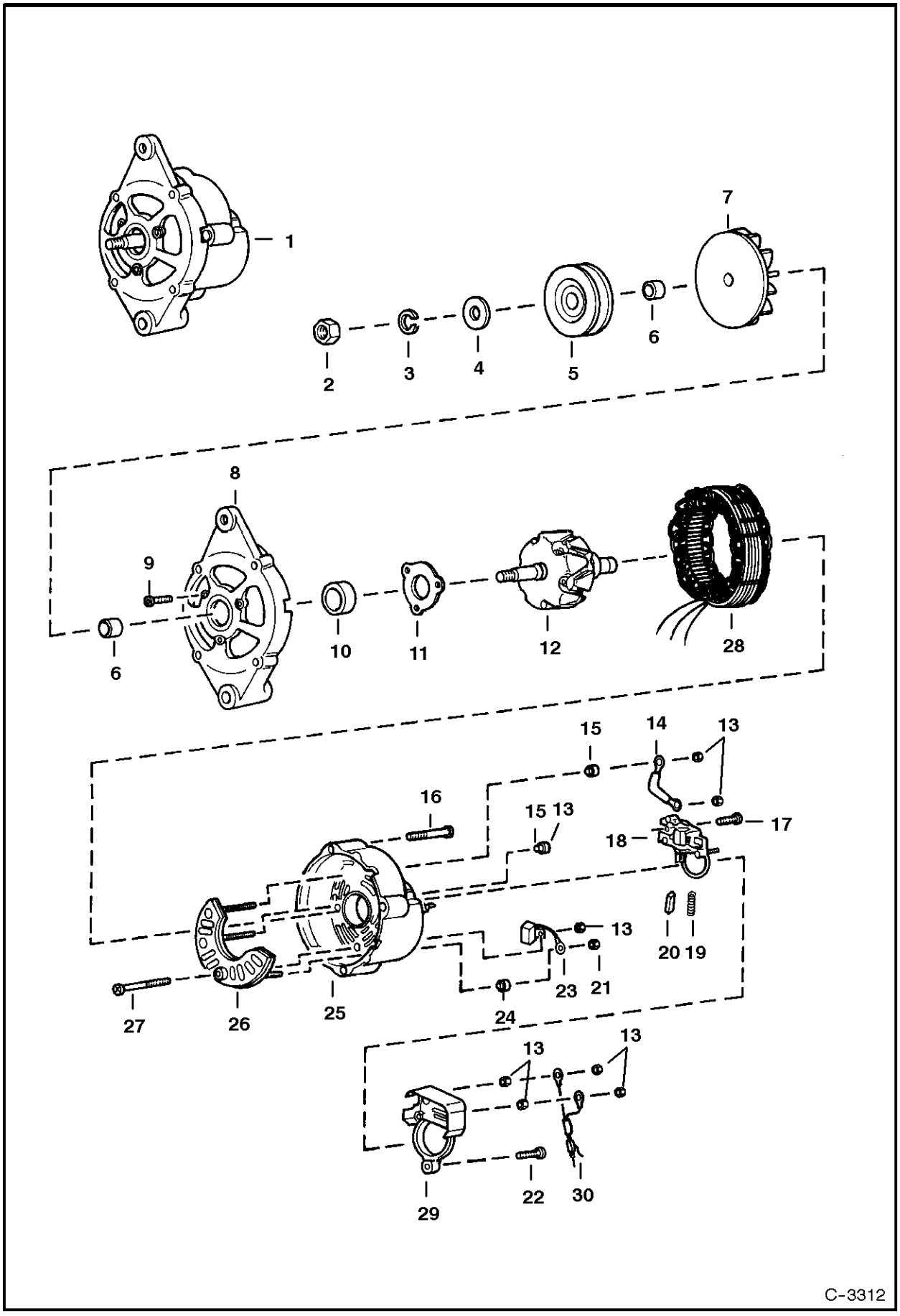

ALTERNATOR

Ref.N°	Part N°	Description	Remarks	Serial N°	Qty.
1	6661611	ALTERNATOR	Less Fan & Pulley		1
2	6659371	NUT			1
3	6659372	WASHER			1
4	6632323	WASHER			1
5	6571536	PULLEY			1
6	6659374	SPACER			2
7	6659375	FAN			1
8	6659376	BRACKET	W/Ref. ALTERNATOR(9) - ALTERNATOR(11)		1
9	6659378	BOLT			3
10	6659379	BEARING			1
11	6632228	RETAINER			1
12	6659380	ROTOR			1
13	6659387	NUT			7
14	6659397	TERMINAL			1
15	6659386	HOLDER			2
16	6659392	BOLT			3
17	6659396	SCREW			2
18	6659393	REGULATOR	W.Ref. ALTERNATOR(19) & ALTERNATOR(20)		1
19	6659395	SPRING			2
20	6659394	BRUSH			2
21	6659391	NUT			1
22	6659399	SCREW			1
23	6659388	CONDENSER			1
24	6659390	HOLDER			1
25	6659382	BRACKET	rear -W/Ref. ALTERNATOR(13), ALTERNATOR(15), ALTERNATOR(21) & ALTERNATOR(23) - ALTERNATOR(27)		1
26	6659384	RECTIFIER			1
27	6659385	SCREW			1
28	6659381	STATOR			1
29	6659398	COVER			1
30	6659400	CONNECTOR	assy.		1

ALTERNATOR
(Mando)

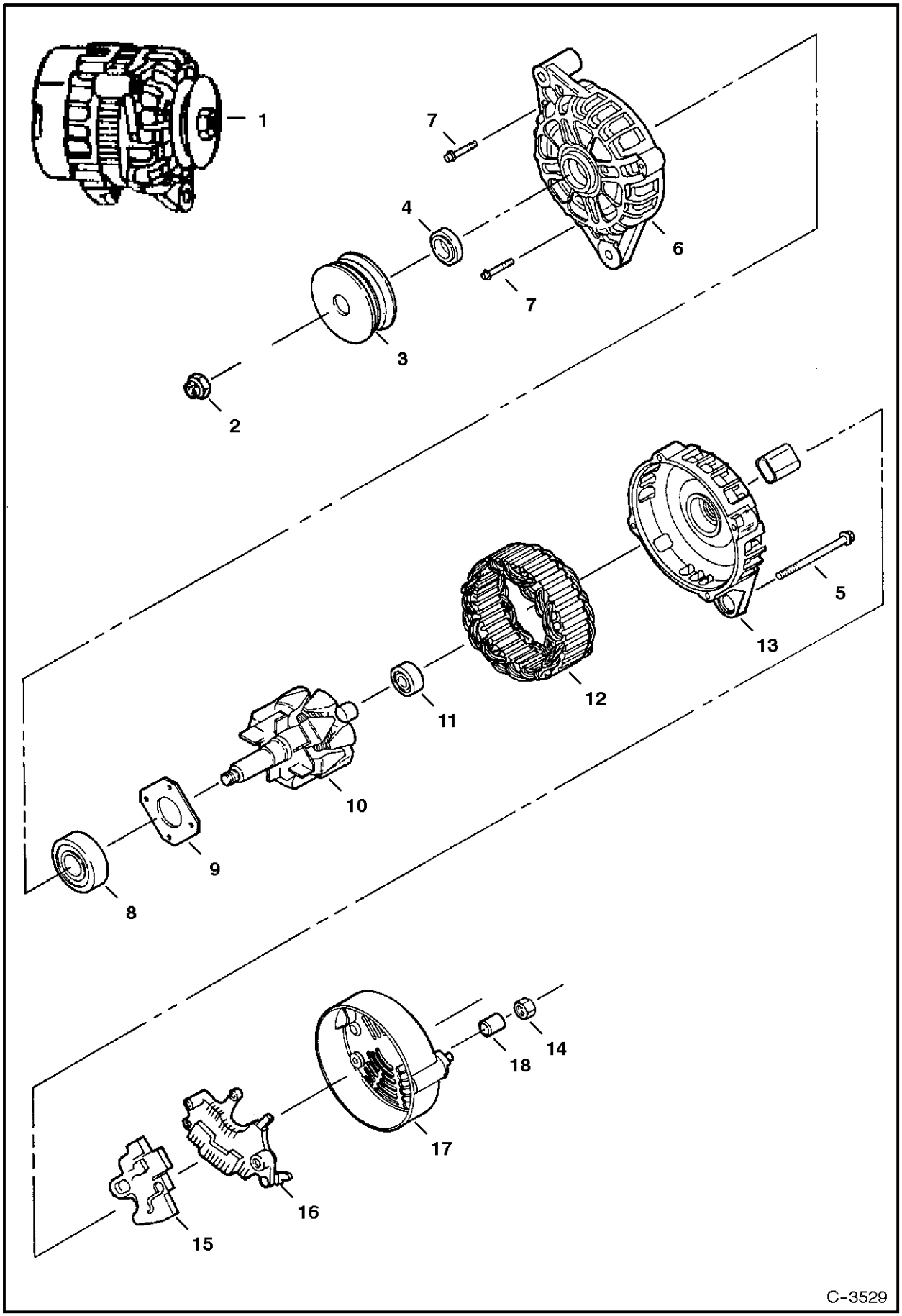

ALTERNATOR

Ref.N°	Part N°	Description	Remarks	Serial N°	Qty.
1	6675292	ALTERNATOR	90 amp		1
2	6677497	NUT			1
3	6677496	PULLEY			1
4	6677495	SPACER	front		1
5	6677494	BOLT			4
6	6677491	BRACKET	rear		1
7	6677817	BOLT			4
8	6677818	BEARING			1
9	6677819	RETAINER			1
10	6677492	ROTOR ASSY			1
11	6677820	BEARING			1
12	6677493	STATOR ASSY			1
13	6677490	BRACKET			1
14					x
15	NAP	'REGULATOR ASSY	Order Ref. ALTERNATOR(1) - Was 6677489 [A]		1
16	6677488	RECTIFIER ASSY			1
17	6677487	COVER			1
18	6677485	SPACER	rear		1
19	6677486	NUT			1

STARTER
(Nippondenso)

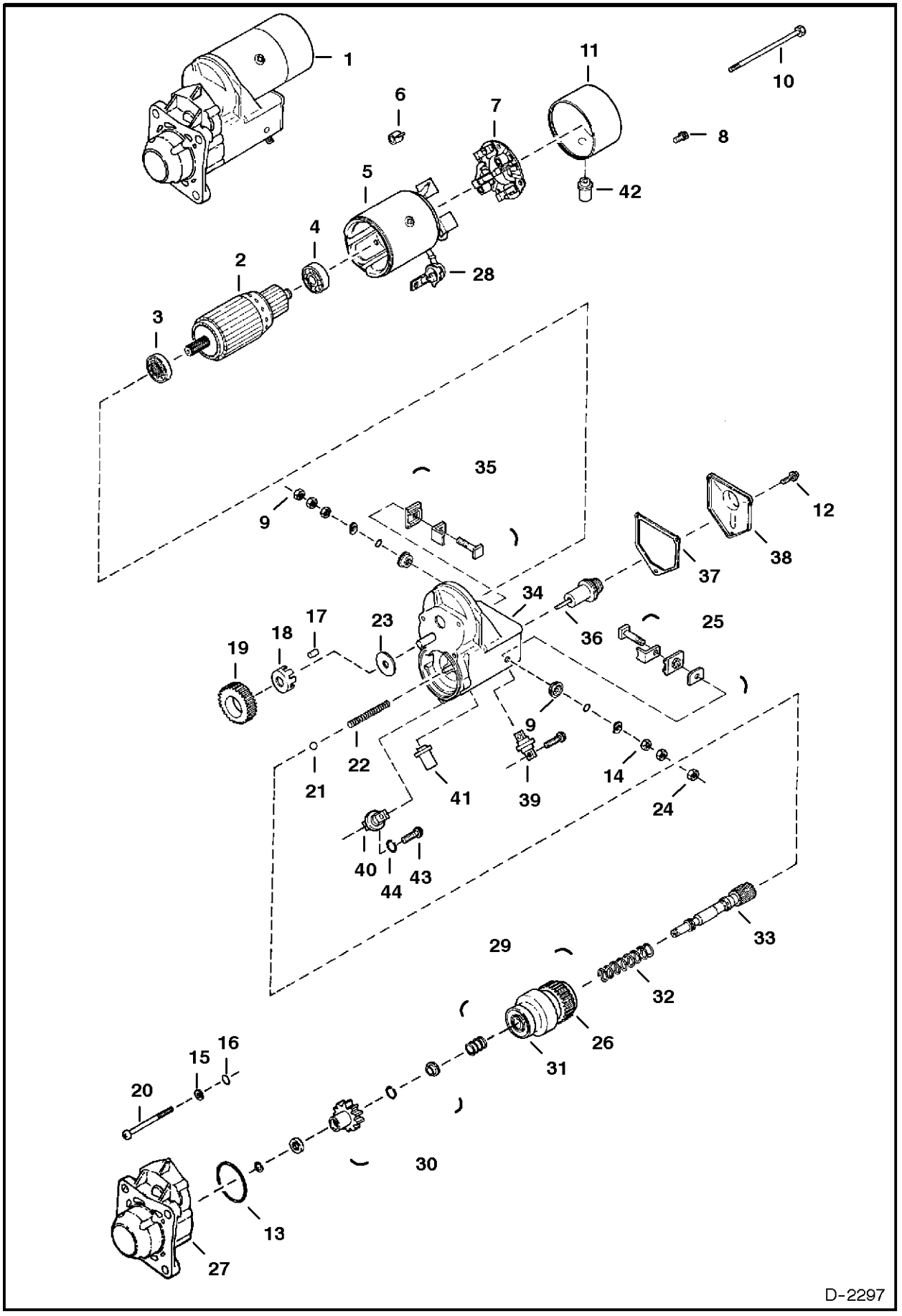

STARTER

Ref.N°	Part N°	Description	Remarks	Serial N°	Qty.
1	6667587	STARTER			1
2	6666621	ARMATURE	W/Ref. STARTER(3) & STARTER(4)		1
3	6632417	BEARING			1
4	6632418	BEARING			1
4	6671128	BEARING			1
4	6671129	BEARING			1
5	6632419	HOUSING ASSY.			1
6	6632421	SPRING			4
7	6632420	BRUSH HOLDER	W/Ref. STARTER(6)		1
8	6666634	BOLT	5mm x 9,4 mm		2
9	6666637	NUT			1
10	6666636	BOLT	6mm x 181mm		2
11	6671121	COVER			1
12	6666635	BOLT	5mm x 8mm		1
13	6666632	O-RING			1
14	6666630	WASHER	10mm		1
15	6666629	WASHER			3
16	6666631	O-RING			3
17	6632430	ROLLER			5
18	6632429	RETAINER			1
19	6632428	PINION			1
20	6666633	BOLT	6mm x 50mm		3
21	6671122	BALL			3
22	6632436	SPRING			1
23	6662437	WASHER			1
24	6666628	NUT	10mm		1
25	6671117	TERMINALS			1
26	6666622	DRIVE			1
27	6671124	HOUSING			1
28	6669365	BOOT			1
29	6671119	CLUTCH ASSY.	Ref. STARTER(26) & STARTER(30) - STARTER(33)		1
30	6671118	PINION			1
31	6671127	BEARING			1
32	6632441	SPRING			1
33	6669354	SHAFT			1
34	6671123	HOUSING			1
35	6671116	TERMINALS			1
36	6632432	PLUNGER			1
37	6632433	GASKET			1
38	6632434	COVER			1
39	6669359	TERMINAL			1
40	6671120	TERMINAL			1
41	6669360	BUSHING			1
42	6669372	COVER			1
43	6671126	SCREW			1
44	6671125	WASHER			1

*STARTER
(Valeo)

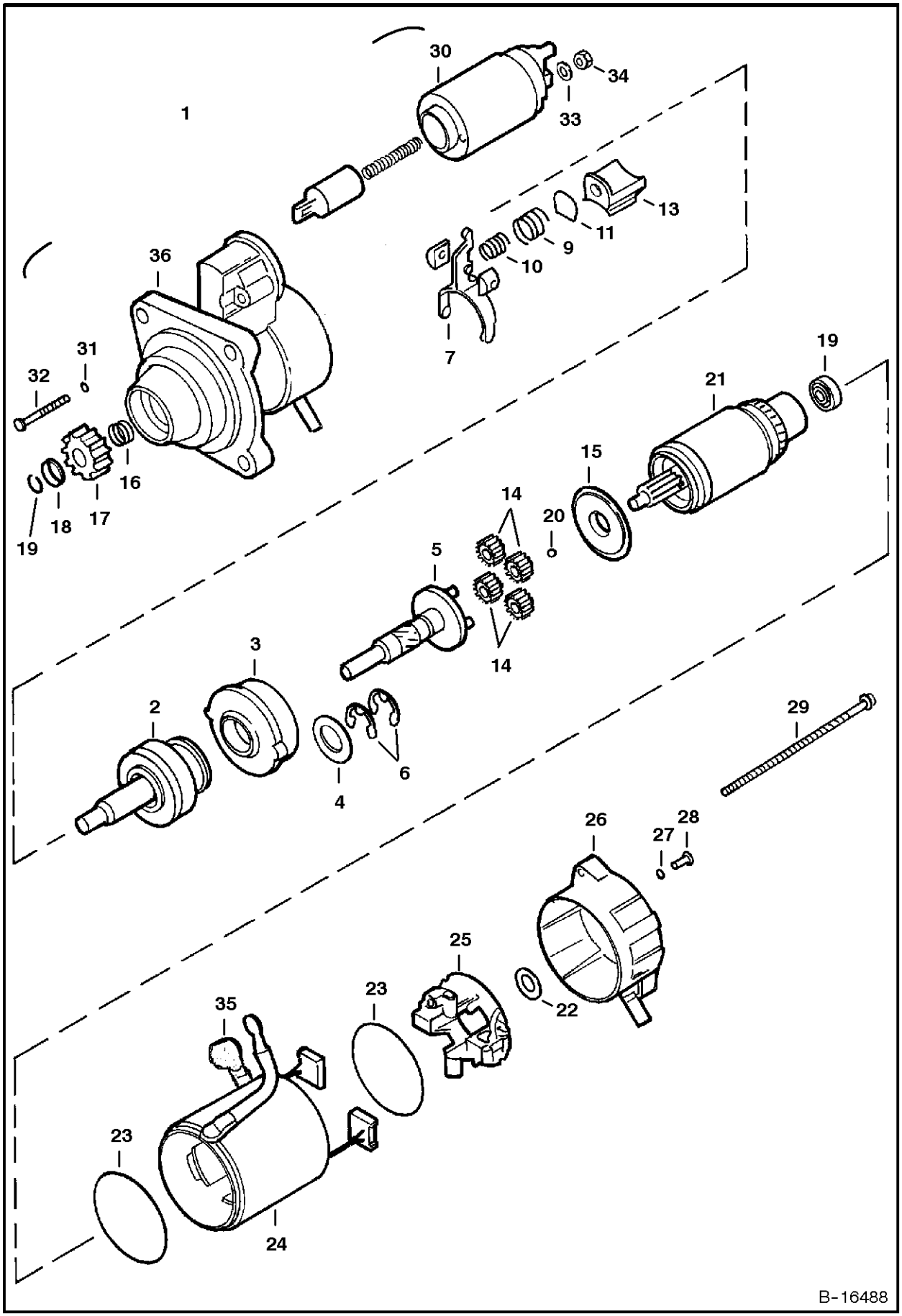

*

Ref.N°	Part N°	Description	Remarks	Serial N°	Qty.
1	6676958	STARTER			1
2	6680375	SHAFT	O.R.C. assy.		1
3	6680367	GEAR			1
4	6680378	WASHER			1
5	6680365	SHAFT			1
6	6680368	STOP RING			2
7	6680364	LEVER			1
8	6680357	HOLDER			2
9	6680381	SPRING			1
10	6680382	SPRING			1
11	6680370	PLATE			1
12	6680369	SEAL			1
13	6680371	LEVER			1
14	6680366	GEAR			4
15	6680372	BRACKET			1
16	6680361	SPRING			1
17	6680387	GEAR			1
18	6680360	STOP			1
19	6680359	STOP RING			1
20	6680362	BALL			1
21	6680374	ARMATURE			1
22	6680363	WASHER			1
23	6680380	SEAL			2
24	6680373	YOKE			1
25	6680377	HOLDER			1
26	6680386	BRACKET			1
27	6680358	RING	rubber		2
28	6680384	BOLT			2
29	6680356	BOLT			2
30	6680376	SWITCH			1
31	6680379	SEAL			2
32	6680383	BOLT			2
33	6EM-80	WASHER			1
34	4DM-8	NUT			1
35	6680355	BOOT			1
36	6680385	BRACKET			1

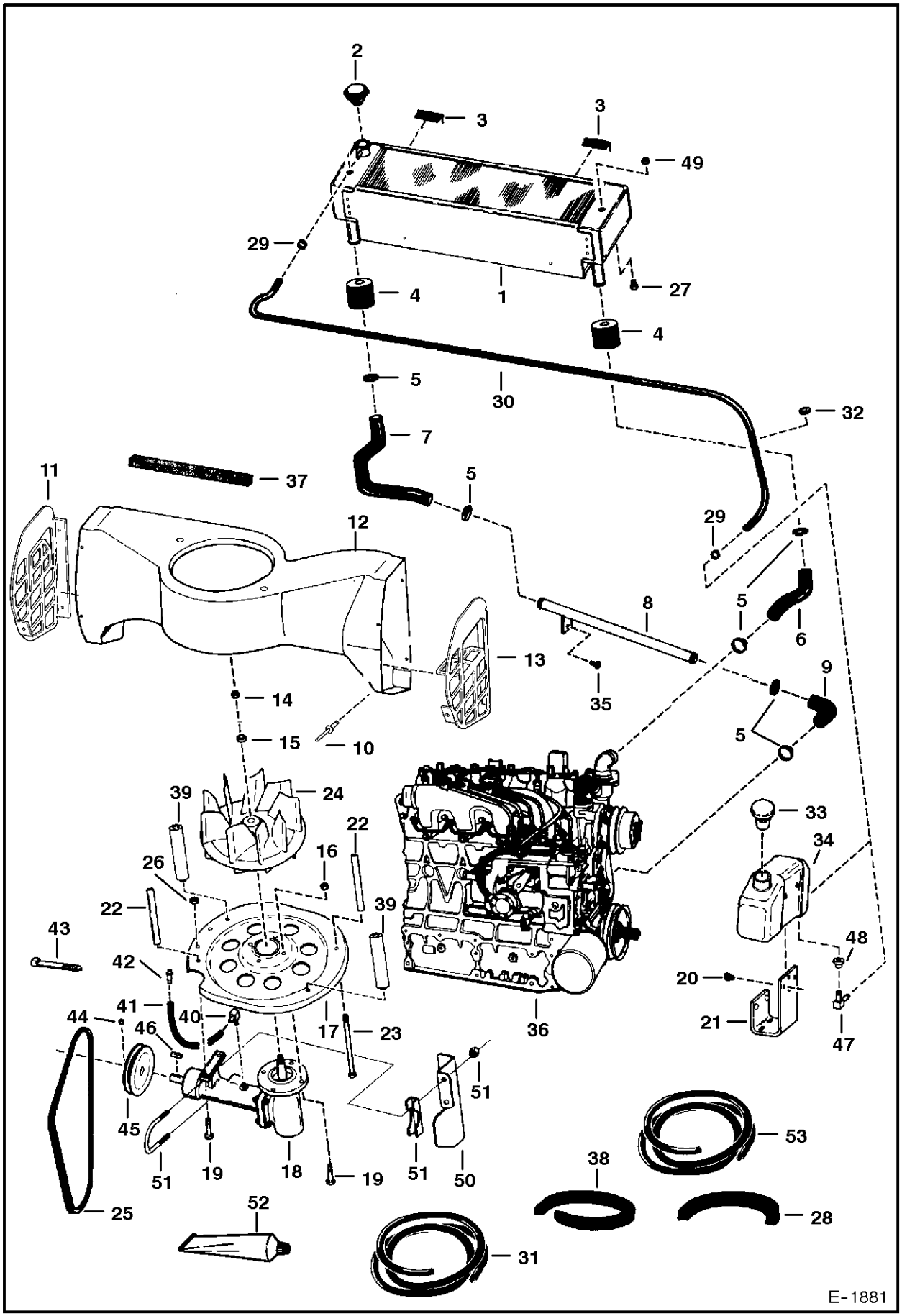
2
3
3
49
29
4
1
27
4
5
30
32
7
37
11
5
12
29
8
5
6
13
35
9
14
5
15
10
39
24
22
33
34
26
16
22
39
43
42
48
20
41
40
17
23
36
44
46
21
47
45
51
19
18
19
51
50
51
53
38
52
25
28
31
E-1881

COOLING SYSTEM

Ref.N°	Part N°	Description	Remarks	Serial N°	Qty.
1	6666384	RADIATOR			1
2	6646678	CAP	14 PSI		1
3	NAP	MOULDING	3" (76,2 mm) long -Order Ref. COOLING SYSTEM(28)		2
4	6726433	SPACER	Was 6704829 [A]		2
5	6518820	CLAMP	worm gear		6
5	5HM-42	CLAMP	constant tension		6
6	6578280	HOSE			1
7	6578279	HOSE			1
8	6730999	TUBE ASSY	Was 6576029 [A]		1
9	6576028	HOSE			1
10	6706517	SCREW			8
11	6716571	LOUVER	L.H. - plastic		1
12	6700329	HOUSING			1
13	6716572	LOUVER	R.H. - plastic		1
14	86D-8	NUT			1
15	6701097	WASHER	Was 6803867 [A]		1
16	7D-6	NUT			4
17	6717478	INLET	4 slot		1
18	6702138	HOUSING ASSY.	See Page COOLING FAN DRIVE ASSY.(1)		1
19	17C-616	BOLT			6
20	84G-3708	BOLT			2
21	6709415	MOUNT			1
22	6577382	SPACER			2
23	17C-6116	BOLT			4
24	6715142	FAN			1
25	6715478	BELT	fan - 40'(1016 mm) long		1
26	61D-6	NUT			4
27	35C-508	BOLT			2
28	6649402	MOULDING	bulk - Sold Per Foot		x
29	6515575	CLAMP			2
30	NAP	HOSE	62" (1574,8 mm) long - Order Ref. COOLING SYSTEM(53)		1
31	6577822	HOSE	bulk - Sold Per Foot		x
32	1303932	GROMMET			1
33	6702797	CAP			1
34	6576660	TANK			1
35	17C-612	BOLT			1
36		ENGINE	See Page ENGINE & GASKET KITS(1)		1
37	NAP	FOAM	42"(1067mm)long-Order Ref. COOLING SYSTEM(38)		1
38	6511855	FOAM STRIP	bulk - Sold Per Foot - self adhesive		x
39	6704907	SPACER			2
40	6657376	ELBOW			1
41	NAP	HOSE	19-1/2" (495,3 mm) long - Order Ref. COOLING SYSTEM(31)		1
42	6670627	BREATHER			1
43	6610510	NYLON TIE			1
44	6715143	SET SCREW			1
45	6715924	PULLEY	4.5'(114,3 mm) O.D.		1
46	7J-2108	KEY			1
47	6553412	ELBOW	alternate design		1
48	6553411	BUSHING	alternate design		1
49	6704753	PLUG	brass - .25'		1

COOLING SYSTEM

Ref.N°	Part N°	Description	Remarks	Serial N°	Qty.
50	6719851	SHIELD	belt		1
51	6626631	CLAMP			1
52	6650407	ADHESIVE	1oz. tube		x
53	6667189	HOSE	bulk - Sold Per Foot		x

ENGINE & ATTACHING PARTS
(Air Cleaner, Muffler & Grill)

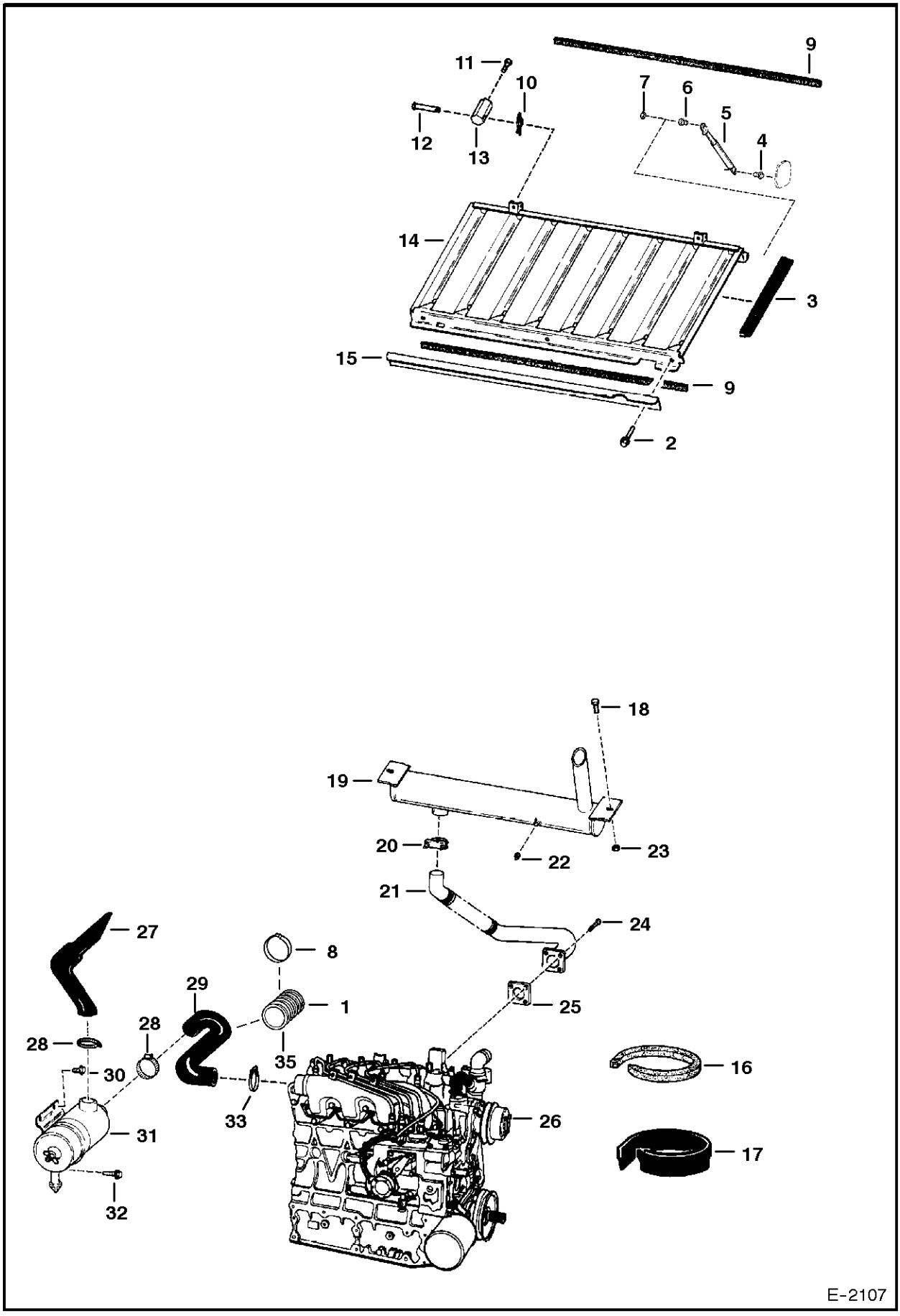

ENGINE & ATTACHING PARTS

Ref.N°	Part N°	Description	Remarks	Serial N°	Qty.
1	6706393	SHIELD	5'(127 mm) long		1
2	84G-3112	BOLT			3
3	NAP	MOULDING	14.65" (372,1 mm) long - Order Ref. ENGINE & ATTACHING PARTS(17)		2
4	6705052	BALL STUD	weld on		1
5	6674285	GAS SPRING			1
6	6649244	BALL STUD			1
7	61D-5	NUT			1
8	6664004	CLAMP			1
9	NAP	FOAM STRIP	34.5" (876,3 mm) long - Order Ref. ENGINE & ATTACHING PARTS(16)		2
10	6631418	PIN			2
11	17C-608	BOLT			2
12	6567743	PIN			2
13	6579326	MOUNT			2
14	6718291	GRILL			1
15	6708981	BRACKET			1
16	6511855	FOAM STRIP	bulk - Sold Per Foot - self adhesive		x
17	6646705	MOULDING	bulk - Sold Per Foot		x
18	35C-612	BOLT			2
19	6671667	MUFFLER			1
20	6677363	CLAMP	Was 657904 [A]		1
21	6701151	PIPE			1
22	6661062	PLUG	brass 3/8" (9,5 mm)		1
23	83D-6	NUT			2
24	6701123	BOLT			4
25	6575580	GASKET			1
26		ENGINE	See Page ENGINE & GASKET KITS(1)		1
27	6718237	HOSE			1
28	6598799	CLAMP			2
28	42H-52	CLAMP			2
29	6714889	HOSE	W/Ref. ENGINE & ATTACHING PARTS(1) & ENGINE & ATTACHING PARTS(8)		1
30	84G-3708	BOLT			1
31		AIR CLEANER	See Page AIR CLEANER(1)		1
32	84G-3712	BOLT			2
33	42H-32	CLAMP			1

ENGINE & ATTACHING PARTS
(Engine Mounts)

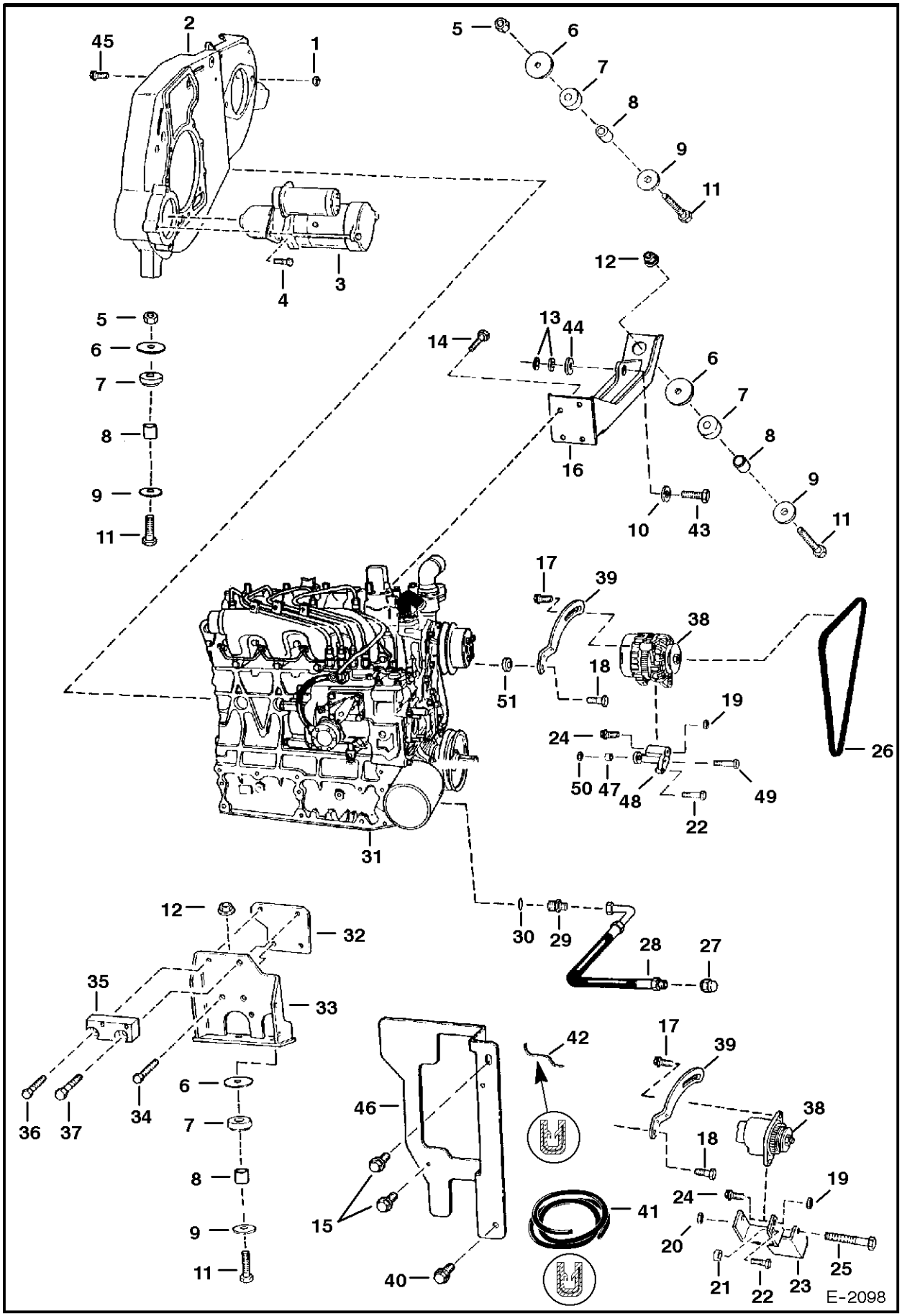

ENGINE & ATTACHING PARTS

Ref.N°	Part N°	Description	Remarks	Serial N°	Qty.
1	85D-8	NUT			2
2	6700541	MOUNT			1
3		STARTER	See Page STARTER(1)		1
4	35C-620	BOLT			3
5	6652918	NUT			2
6	6705106	WASHER			4
7	6661785	MOUNT			4
8	6706043	BUSHING			4
9	6661787	WASHER			4
10	742640	WASHER	.25' thick - Use W/Ref. ENGINE & ATTACHING PARTS(43) (17C-830 Bolt)		1
10	6716408	WASHER	.40' thick - Use W/Ref. ENGINE & ATTACHING PARTS(43) (47C-832 Bolt)		1
11	43C-848	BOLT	Was 17C-848 [B]		4
12	83D-8	NUT			2
13	25E-21	WASHER	use 2 max.		x
14	6719827	BOLT	Was 6CM-1225 [B]		4
15	84G-3712	BOLT			2
16	6712161	MOUNT			1
17	35C-516	BOLT			3
18	1CM-870	BOLT			1
18	29CM-820	BOLT	90 amp. alt.		1
19	57D-5	NUT			1
20	85D-6	NUT			1
21	6568877	WASHER			1
22	1CM-890	BOLT			1
23	6562257	MOUNT			1
24	17C-556	BOLT			1
25	17C-648	BOLT			1
26	6704720	BELT	alternator		1
26	6675837	BELT	alternator - 90 amp.		1
27	36K-6	CAP			1
28	6704012	HOSE			1
29	15KN-6	ADAPTER	W/Ref. ENGINE & ATTACHING PARTS(30)		1
29	97K-8	O-RING	flared end		1
30	99K-8	O-RING			x
31		ENGINE	See Page ENGINE & GASKET KITS(1)		1
32	6700535	SPACER			1
33	6703981	MOUNT			1
34	6719828	BOLT	Was 6CM-1230 [B]		2
35	6704322	MOUNT	fuel filter		1
36	6719826	BOLT	Was 5CM-1035 [B]		1
37	6719829	BOLT	Was 6CM-1235 [B]		1
38		ALTERNATOR	See Page ALTERNATOR(1) - ALTERNATOR(1)		1
39	6705711	BRACKET			1
39	6727084	BRACKET	alt. - 90 amp.		1
40	84G-3716	BOLT			2
41	6654139	MOULDING	bulk - Sold Per Foot		x
42	NAP	MOULDING	7.7'(196 mm) long- Order Ref. ENGINE & ATTACHING PARTS(41)		1
43	17C-830	BOLT	hyd. pump mount		1
44	6703140	WASHER			1

ENGINE & ATTACHING PARTS

Ref.N°	Part N°	Description	Remarks	Serial N°	Qty.
45	17C-828	BOLT	hyd. pump mount		1
46	6717812	SHIELD	bolts to frame		1
47	6675838	BUSHING	90 amp. alt.		1
48	6725427	BRACKET	90 amp. alt.		1
49	1CM-8100	BOLT			2
50	53DM-8	NUT			2
51	6E-5	WASHER	90 amp. alt.		1

ENGINE & ATTACHING PARTS
(Belt Drive System)

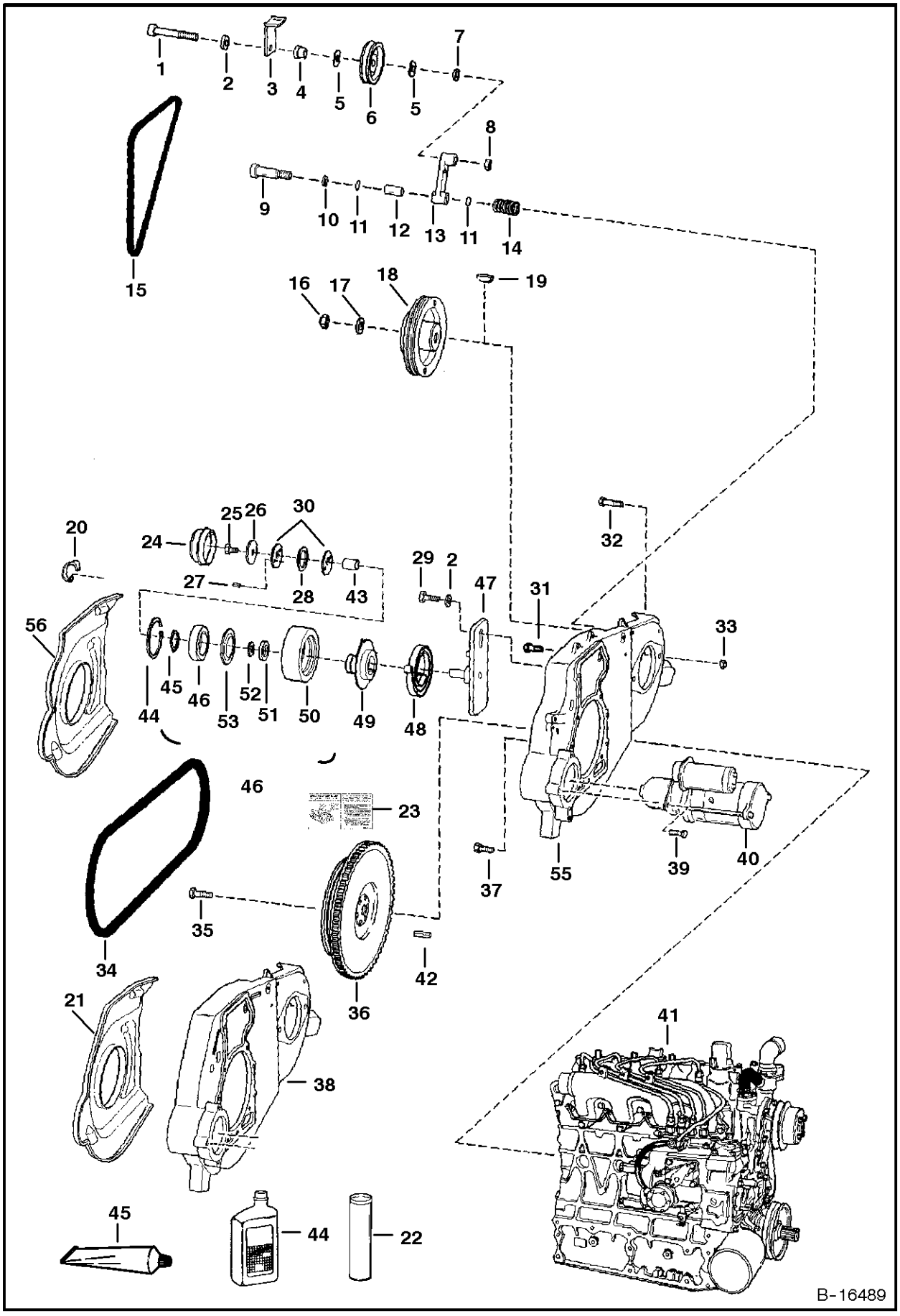

ENGINE & ATTACHING PARTS

Ref.N°	Part N°	Description	Remarks	Serial N°	Qty.
1	73G-656	BOLT			1
2	6704484	WASHER	thrust		3
3	6702474	RETAINER	fan drive idler belt		1
4	6704443	BUSHING	spacer		1
5	6660995	RING	grease		2
6	6662997	PULLEY	fan drive idler		1
7	6704444	WASHER			1
8	61D-6	NUT			1
9	38C-820	BOLT	shoulder		1
10	6655781	BEARING			1
11	6704820	O-RING			2
12	6670682	BEARING	nylon		1
13	6725212	IDLER ARM	W/Ref. ENGINE & ATTACHING PARTS(12) - Was 6703507 [A]		1
14	6700115	SPRING			1
15		BELT	fan drive - See Page COOLING SYSTEM(1) Ref. COOLI NG SYSTEM(25)		1
16	92D-12	NUT			1
17	6576033	WASHER			1
18	6704424	PULLEY	to hyd. pump - 3 groove		1
19	6J-807	KEY			1
20	6703022	CLIP			3
21	6704450	SHIELD			1
22	6599719	GREASE	Use W/Ref. ENGINE & ATTACHING PARTS(46)		x
23	6709030	DECAL	belt tension		1
24	6708770	CAP	dust		1
25	17C-610	BOLT			1
26	6705232%	WASHER			1
27	6713370	PIN			2
28	6710585	WASHER	wave spring		1
29	17C-620	BOLT			1
30	6705231	WASHER			2
31	6719828	BOLT	Was 6CM-1230 [B]		2
32	17C-828	BOLT	hyd. pump mount		2
33	85D-8	NUT			2
34	6672445	BELT	pump drive - 3 groove - Was 6672021 [B,D]		1
35	6652487	BOLT			6
36	6715166	FLYWHEEL	W/Ring Gear & Ref. ENGINE & ATTACHING PARTS(42) - 3 groove - Was 6715165 [B,D]		1
36	6510470	RING GEAR			1
37	6719825	BOLT	Was 5CM-1025 [B]		7
38	NAP	MOUNT	Order Ref. ENGINE & ATTACHING PARTS(55) & ENGIN E & ATTACHING PARTS(56) - It may be necessary to reposition the battery & batter		1
39	35C-620	BOLT			3
40		STARTER	See Page STARTER(1)		1
41		ENGINE	See Page ENGINE & GASKET KITS(1)		1
42	6713370	PIN			1
43	6704393	BEARING	bronze sleeve		1
44	6658847	SNAP RING			1
45	6658536	SNAP RING			1

ENGINE & ATTACHING PARTS

Ref.N°	Part N°	Description	Remarks	Serial N°	Qty.
46	6711698	IDLER ASSY.	spring loaded - Ref. ENGINE & ATTACHING PARTS(24) - ENGINE & ATTACHING PARTS(28), ENGINE & ATTACHING PARTS(30), ENGINE & ATTACHI		1
46	6714212	PULLEY ASSY.	Ref. ENGINE & ATTACHING PARTS(43) - ENGINE & ATTACHING PARTS(45) & ENGINE & ATTACHING PARTS(49) - ENGINE & ATTACHING PARTS(54)		1
47	6708767	BRACKET			1
48	6705491	SPRING	torsion		1
49	6711699	HUB ASSY.	Order Ref. ENGINE & ATTACHING PARTS(46)		1
50	6704391	PULLEY	idler		1
51	6661112	SEAL			1
52	6703168	BEARING	thrust		1
53	6664209	SEAL			1
54	6668114	BEARING	ball		1
55	6728062	MOUNT			1
56	6726938	SHIELD			1

THROTTLE

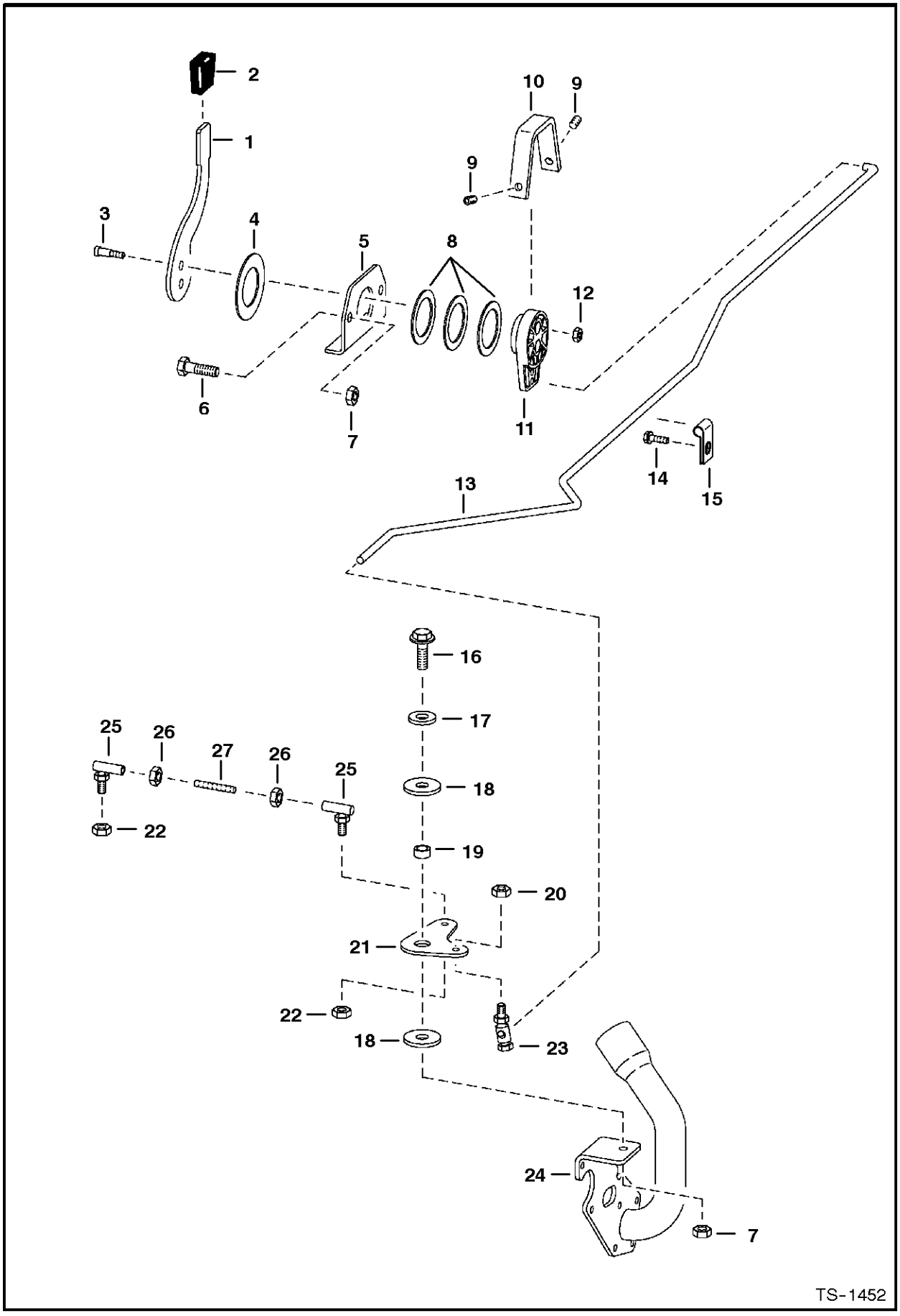
2
1
10
9
9
3
4
5
8
12
6
7
11
14
15
13
16
17
25
26
27
26
25
18
22
19
20
21
22
18
23
24
7
TS-1452

THROTTLE

Ref.N°	Part N°	Description	Remarks	Serial N°	Qty.
1	6705452	LEVER			1
2	6564452	GRIP			1
3	38C-610	BOLT	shoulder		2
4	6567962	WASHER			1
5	6576262	MOUNT			1
6	17C-626	BOLT			2
7	95D-6	NUT			3
8	6630945	WASHER			3
9	6706572	SET SCREW			2
10	6576261	COVER			1
11	6709022	LEVER			1
12	85D-5	NUT			2
13	6702397	ROD			1
14	84G-3712	BOLT			1
15	30H-23	CLAMP			1
16	84G-3716	BOLT			1
17	25E-18	WASHER			1
18	6700170	WASHER	plastic		2
19	6564343	BUSHING			1
20	59D-4	NUT	Was 85D-4 [A]		1
21	6578268	BELLCRANK			1
22	66D-4	NUT	Was 86D-4 [B]		2
23	6557291	BALL JOINT			1
24	6719048	MOUNT	fuel shutoff solenoid & oil fill - See Page GEARCASE(1)		1
25	6554858	BALL JOINT			2
26	62D-4	NUT			2
27	6576252	ROD			1

COOLING FAN DRIVE ASSY.

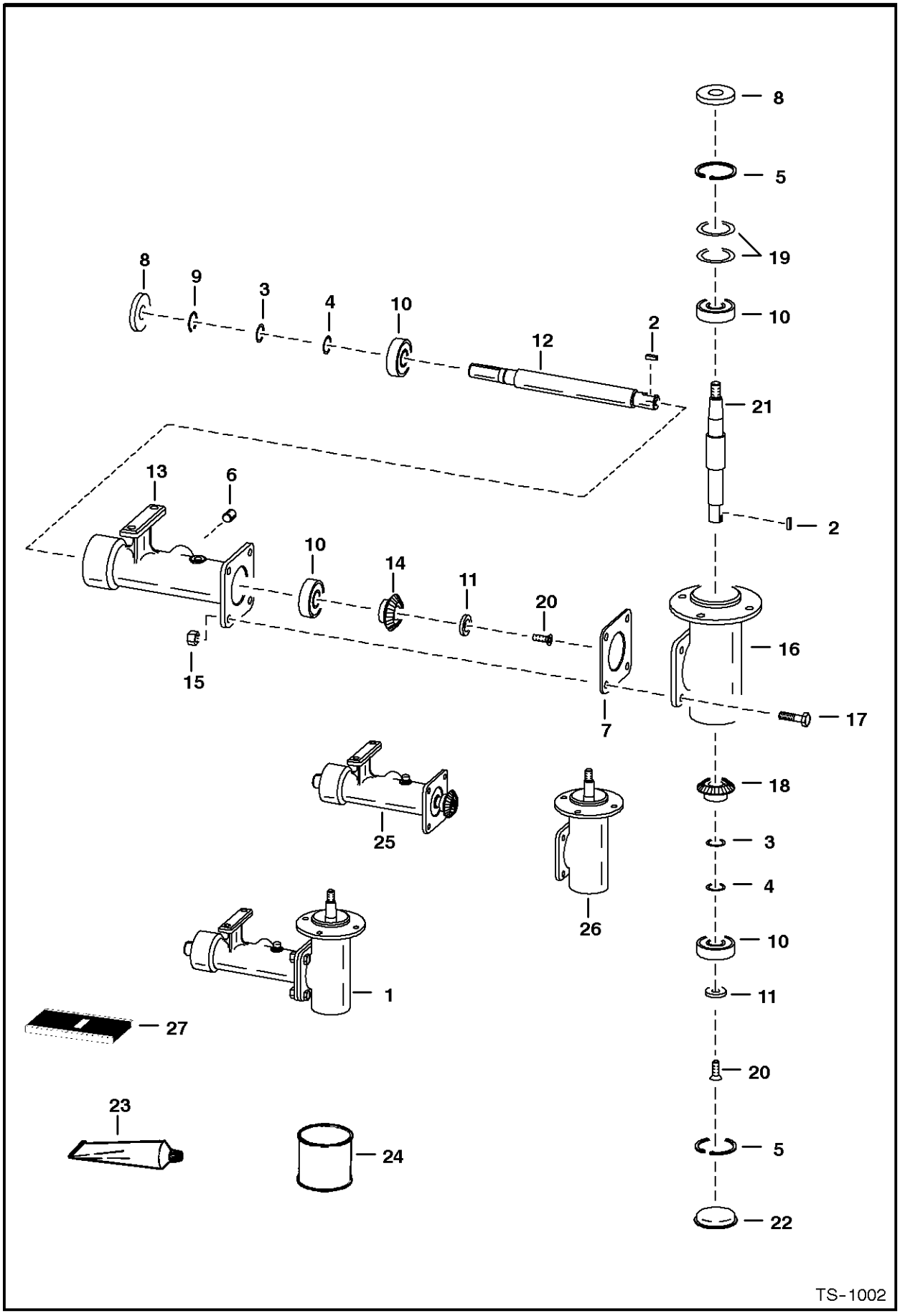

COOLING FAN DRIVE ASSY.

Ref.N°	Part N°	Description	Remarks	Serial N°	Qty.
1	6702138	HOUSING ASSY.	Ref. COOLING FAN DRIVE ASSY.(2) - COOLING FAN DRIVE ASSY.(22)		1
2	7J-2010	KEY			2
3	6702165	SHIM	.002' (0,05 mm) thickness - 1' (25,4 mm) O.D.		x
4	6701159	SHIM	.005' (0,13 mm) thickness - 1' (25,4 mm) O.D.		x
5	6653758	SNAP RING			2
6	16F-8	PLUG			1
7	6578284	SHIM	.003'' (0,08 mm) thickness		x
8	6653702	SEAL			2
9	6653757	SNAP RING			1
10	6646627%	BEARING			4
11	6702140	WASHER	countersink		2
12	6702137	SHAFT	keyed		1
13	6579641	HOUSING			1
14	6702103	GEAR	keyed		1
15	95D-6	NUT			4
16	NSS	HOUSING	&Order 6702138 Housing or Ref. COOLING FAN DRIVE ASSY.(26)		1
17	17C-620	BOLT			4
18	6702102	GEAR	keyed		1
19	6702166	SHIM	.002'' (0,05 mm) thickness - 2' (50,8 mm) O.D.		x
19	6702144	SHIM	.005'' (0,13 mm) thickness - 2' (50,8 mm) O.D.		x
20	9G-512	SCREW			2
21	6702135	SHAFT	keyed		1
22	6700782	CAP	grease		1
23	6672486	SEALANT	Use W/Ref. COOLING FAN DRIVE ASSY.(7) & COOLIN G FAN DRIVE ASSY.(22)		x
24	6634393	LUBRICANT	gear - 1 pint		x
25	6707078	HOUSING ASSY.	half		1
26	6707077	HOUSING ASSY.	half		1
27	6669384	SPEEDY SLEEVE	repair kit		1

ENGINE & GASKET KITS
(Kubota - V1903)

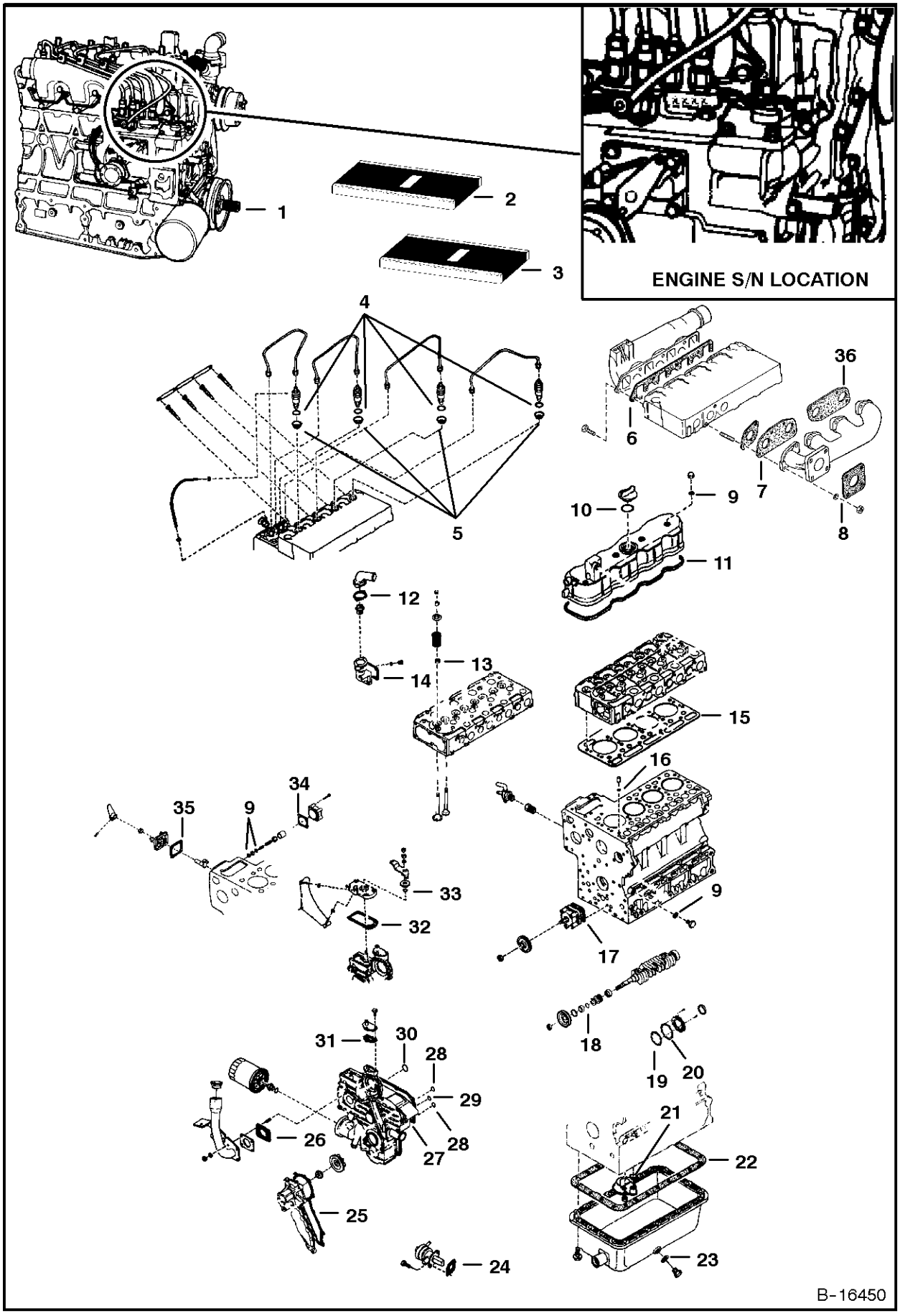

ENGINE & GASKET KITS

Ref.N°	Part N°	Description	Remarks	Serial N°	Qty.
1	6671060	ENGINE	Does not include starter, alternator, flywheel, & flywheel housing		1
1	NAP	SHORT BLOCK			1
2	6674698	GASKET KIT	Upper - Ref. ENGINE & GASKET KITS(6)-ENGINE & GASKET KITS(16) & ENGINE & GASKET KITS(36)		1
3	6657402	GASKET KIT	Lower - Does not include rear oil seal - Ref. ENGINE & GASKET KITS(17)-ENGINE & GASKET KITS(35)		1
4	6655218	GASKET	See Page INJECTOR NOZZLES(1)		4
5	6655872	SHIELD	See Page INJECTOR NOZZLES(1)		4
6	6666811	GASKET	See Page MANIFOLDS(1)		1
7	6666781	GASKET	See Page MANIFOLDS(1)		4
8	6575580	GASKET	muffler - See Page MANIFOLDS(1)		1
9	3974095	GASKET	See Page CRANKCASE(1) , ROCKER ARM COVER(1) & ENGINE STOP LEVER(1)		7
10	3966602	O-RING	See Page ROCKER ARM COVER(1)		1
11	6598136	GASKET	See Page ROCKER ARM COVER(1)		1
12	6666790	GASKET	thermostat cover -See Page WATER FLANGE & THERM OSTAT(1)		1
13	6653830	SEAL	valve stem - See Page VALVE ROCKER ARM(1)		8
14	6666802	GASKET	water flange - See Page WATER FLANGE & THERMOST AT(1)		1
15	6672144	GASKET	cylinder head - See Page CYLINDER HEAD(1)		1
16	3974038	O-RING	See Page CRANKCASE(1)		1
17	6666782	GASKET	See Page CRANKCASE(1)		1
18	3974577	O-RING	See Page PISTON & CRANKSHAFT(1)		1
19	6655165	GASKET	See Page PISTON & CRANKSHAFT(1)		1
20	6666812	GASKET	See Page PISTON & CRANKSHAFT(1)		1
21	3966516	O-RING	See Page OIL PAN(1)		1
22	6666817	GASKET	oil pan - See Page OIL PAN(1)		1
23	3974403	GASKET	See Page OIL PAN(1)		1
24	3974502	GASKET	fuel pump - See Page INJECTION PUMP(1)		1
25	6666804	GASKET	See Page WATER PUMP(1)		1
26	6714543	GASKET	See Page GEARCASE(1)		1
27	6666800	GASKET	gearcase - See Page GEARCASE(1)		1
28	3966515	O-RING	See Page GEARCASE(1)		2
29	6655162	O-RING	See Page GEARCASE(1)		1
30	3966530	O-RING	See Page GEARCASE(1)		1
31	6666803	GASKET	water return flange - See Page GEARCASE(1)		1
32	6666792	GASKET	See Page SPEED CONTROL PLATE(1)		1
33	3966512	O-RING	See Page SPEED CONTROL PLATE(1)		1
34	3974630	GASKET	See Page FUEL CAMSHAFT(1)		1
35	6666783	GASKET	pump cover - See Page ENGINE STOP LEVER(1)		1
36	6666791	GASKET	See Page MANIFOLDS(1)		1

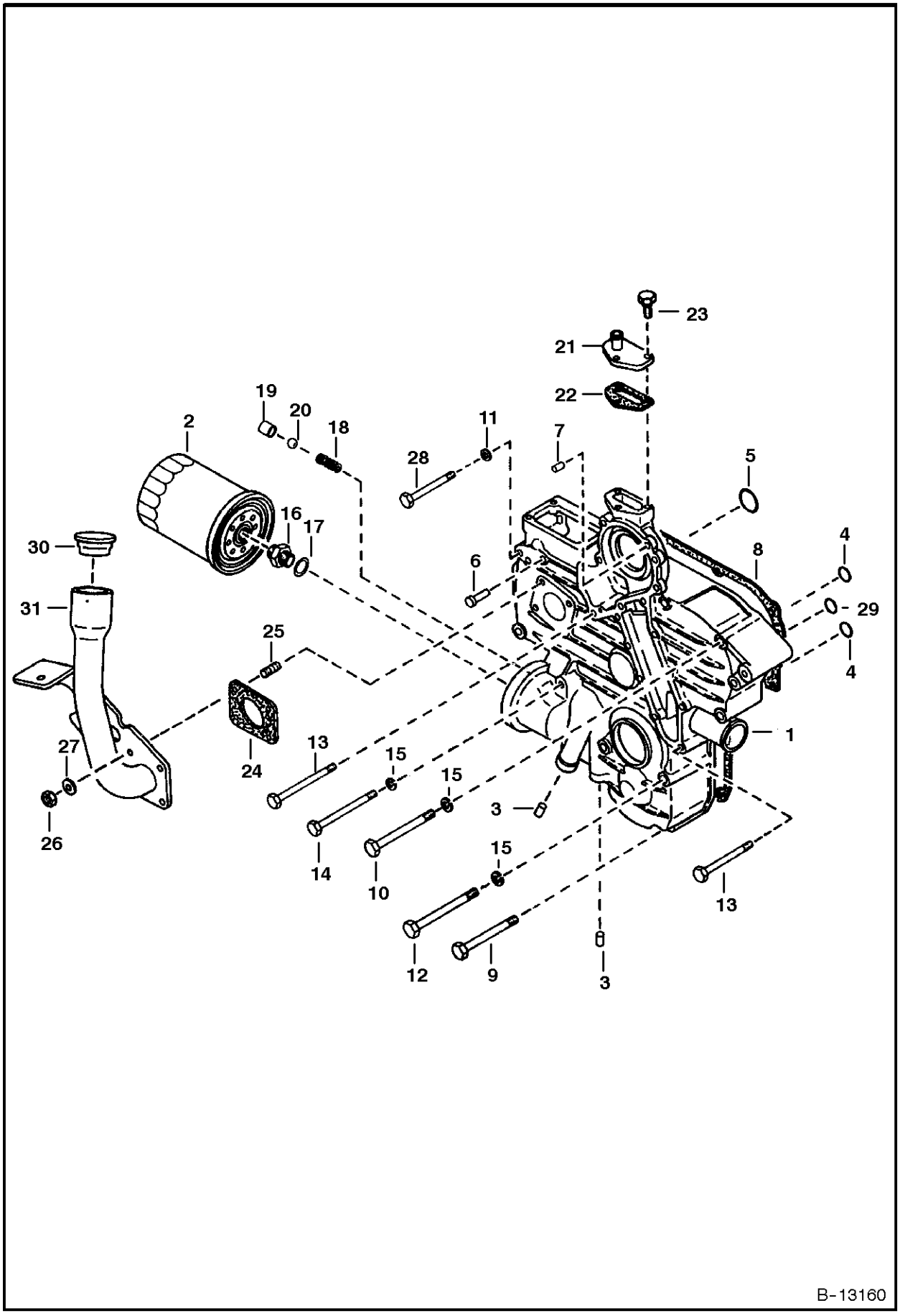
23
21
22
19
20
18
11
7
2
28
5
16
17
30
6
8
4
31
29
25
4
1
27
24
13
15
15
3
26
14
10
15
13
12
9
3
B-13160

GEARCASE

Ref.N°	Part N°	Description	Remarks	Serial N°	Qty.
1	6674164	CASE ASSY.			1
2	6675517	FILTER	oil filter - 6 Pack - Was 3974896 [A]		1
3	6667425	PLUG	pin		2
4	3966515	O-RING			2
5	3966530	O-RING			1
6	6652592	PIN	start spring		1
7	3974395	PIN	straight		2
8	6666800	GASKET	gearcase		1
9	3974888	BOLT			2
10	1CM-870	BOLT			5
11	2EM-8	WASHER			1
12	1CM-880	BOLT			2
13	6653808	BOLT			3
14	1CM-895	BOLT			2
15	6EM-80	WASHER			9
16	6653809	ADAPTER			1
17	15EM-180	WASHER			1
18	6652652	SPRING			1
19	3974893	SEAT	valve		1
20	10J-13	BALL			1
21	6674176	FLANGE	water return		1
22	6666803	GASKET	water return flange		1
23	4CM-620	BOLT			3
24	6714543	GASKET			1
25	6652764	STUD			4
26	1DM-6	NUT			4
27	6EM-60	WASHER	spring		4
28	6653807	BOLT			1
29	6655162	O-RING			1
30	6703736	CAP			1
31	6719048	MOUNT			1

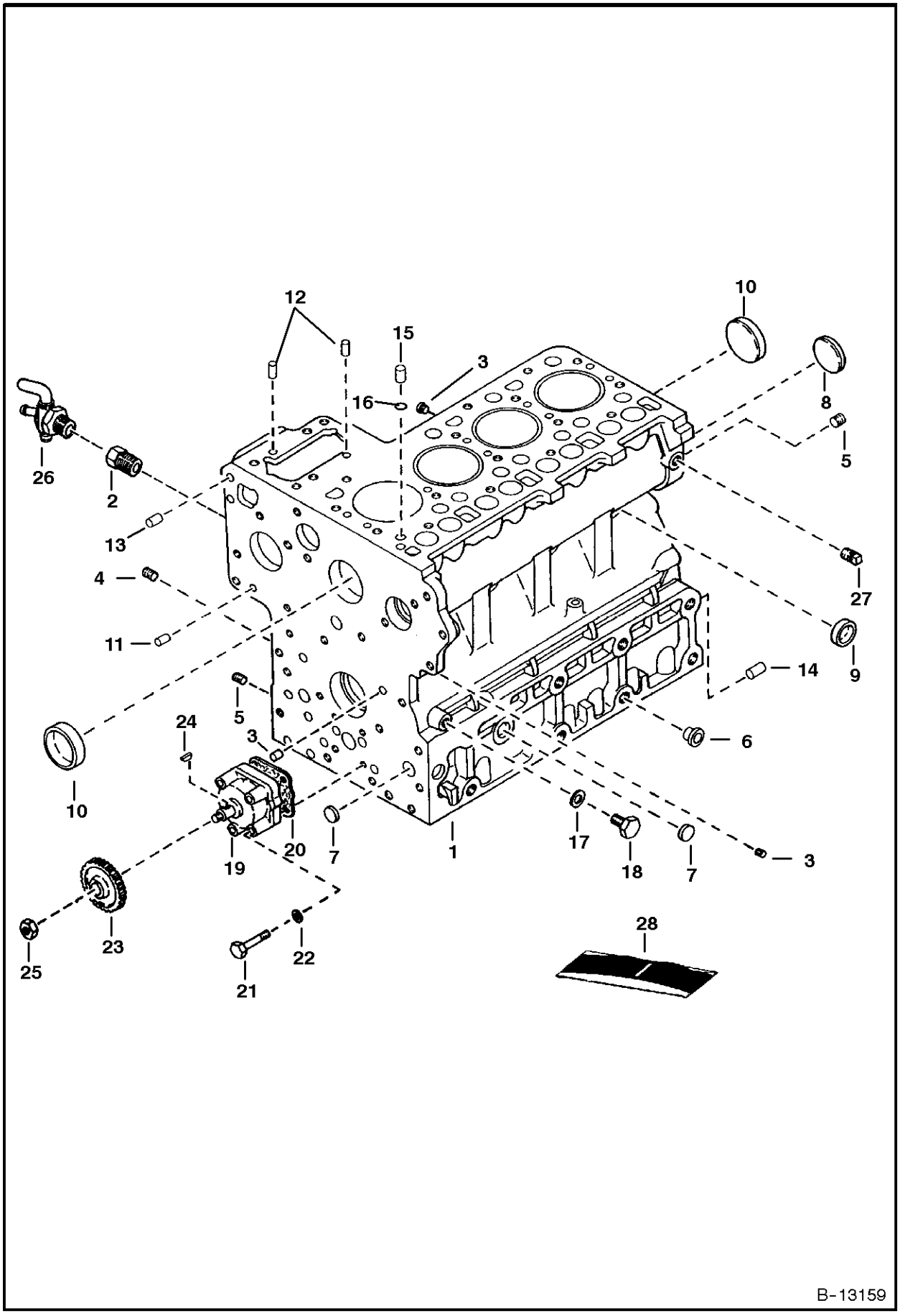
12
15
3
16
10
8
5
26
2
13
4
11
27
9
14
6
24
5
3
10
20
7
1
17
18
7
3
19
23
25
22
21
28
B-13159

CRANKCASE

Ref.N°	Part N°	Description	Remarks	Serial N°	Qty.
1	6672146	CRANKCASE	assy. - W/Ref. CRANKCASE(2) - CRANKCASE(15)		1
2	3974871	ADAPTER			1
3	6652574	PLUG			5
4	6655869	PLUG			1
5	6652575	PLUG			2
6	6598187	PLUG			2
7	4FM-18	PLUG	expansion		3
8	4FM-45	PLUG	expansion		1
9	3974389	CAP	sealing		6
10	3974390	CAP	sealing		2
11	3974393	PIN	straight		2
12	3974394	PIN	straight		2
13	3974395	PIN	straight		2
14	3974868	PIN	straight		1
15	3974037	PIN	pipe		1
16	3974038	O-RING			1
17	3974095	GASKET			1
18	6655884	PLUG			1
19	3975426	OIL PUMP			1
20	6666782	GASKET			1
21	6655195	BOLT			4
22	6EM-60	WASHER			4
23	6672190	GEAR			1
24	15JM-410	KEY			1
25	3DM-12	NUT			1
26	3975447	DRAINCOCK			1
27	16F-2	PLUG			1
28	6657402	GASKET KIT	Lower - Does not include rear oil seal - See Page ENGIN E & GASKET KITS(1)		1

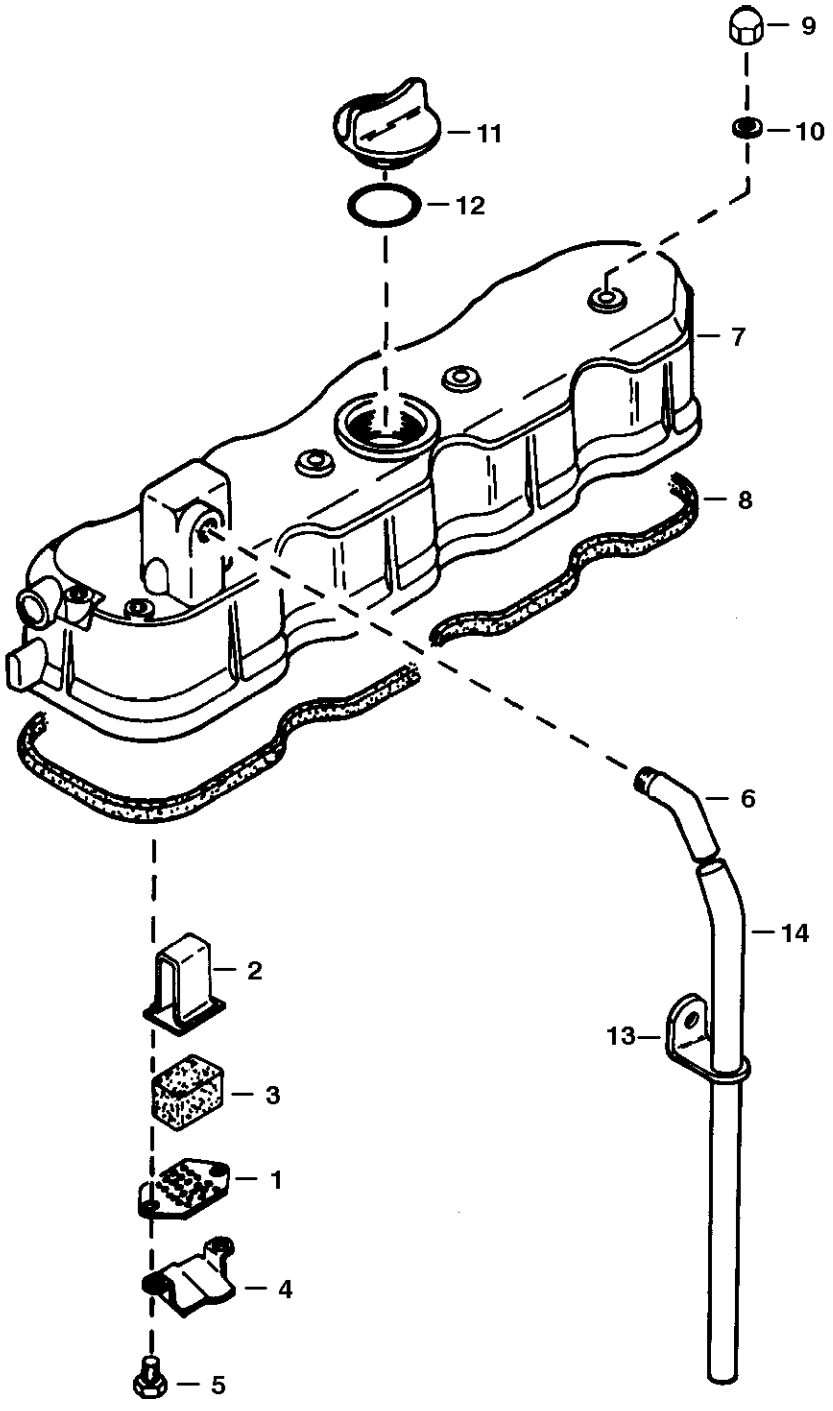
9
10
11
12
7
8
6
14
13
2
3
1
4
5
B-13158

ROCKER ARM COVER

Ref.N°	Part N°	Description	Remarks	Serial N°	Qty.
1	3974924	PLATE	element		1
2	3974925	PLATE	element		1
3	3974926	ELEMENT	breather		1
4	3974927	SHIELD	breather		1
5	3975436	SCREW	W/Washer		2
6	6652624	JOINT	breather pipe		1
7	6655175	COVER	valve		1
8	6598136	GASKET			1
9	3974923	NUT	cap		4
10	3974095	GASKET			4
11	6652653	PLUG	oil filler		1
12	3966602	O-RING			1
13	3974931	CLAMP	pipe		1
14	3974930	PIPE	breather		1

VALVE ROCKER ARM

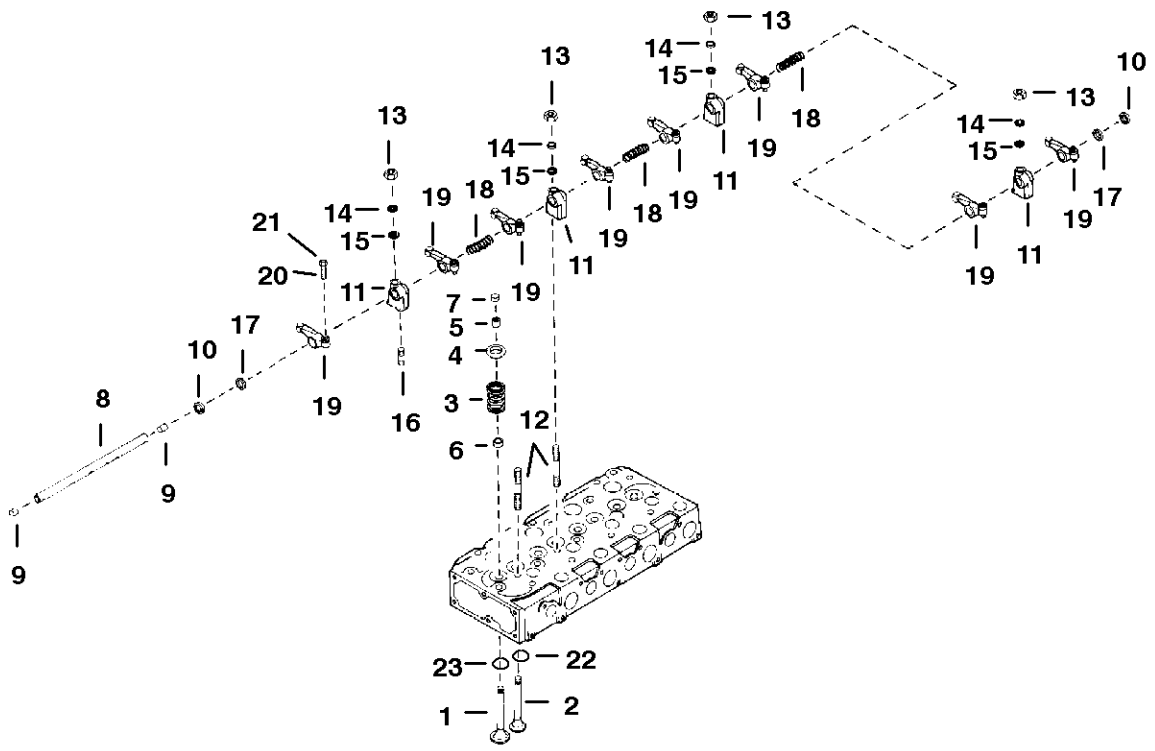

C-2547

VALVE ROCKER ARM

Ref.N°	Part N°	Description	Remarks	Serial N°	Qty.
1	6655173	VALVE	inlet		4
2	6655174	VALVE	exhaust		4
3	3974514	SPRING	valve		8
4	3974515	RETAINER	valve spring		8
5	3974516	COLLET	valve spring - complete set		1
6	6653830	SEAL	valve stem		8
7	3974518	CAP	valve		8
8	3974519	SHAFT	rocker arm - W/Ref. VALVE ROCKER ARM(9)		1
9	25GM-8010	SET SCREW			2
10	5JM-14	CIR-CLIP	external		2
11	3974521	BRACKET	rocker arm		4
12	6653832	STUD			4
13	6652792	NUT			4
14	6EM-80	WASHER	spring		4
15	2EM-8	WASHER	plain		4
16	3974523	ORIFICE			1
17	3974524	WASHER			2
18	6653833	SPRING	rocker arm - Was 3974525 [A]		3
19	6655870	ARM	rocker - W/Ref. VALVE ROCKER ARM(20) & VALVE ROCKER ARM(21)		8
20	3974920	SCREW	adjusting		8
21	2DM-8	NUT			8
22	6655156	SEAT	valve exhaust		4
23	6655155	SEAT	valve inlet		4

CYLINDER HEAD

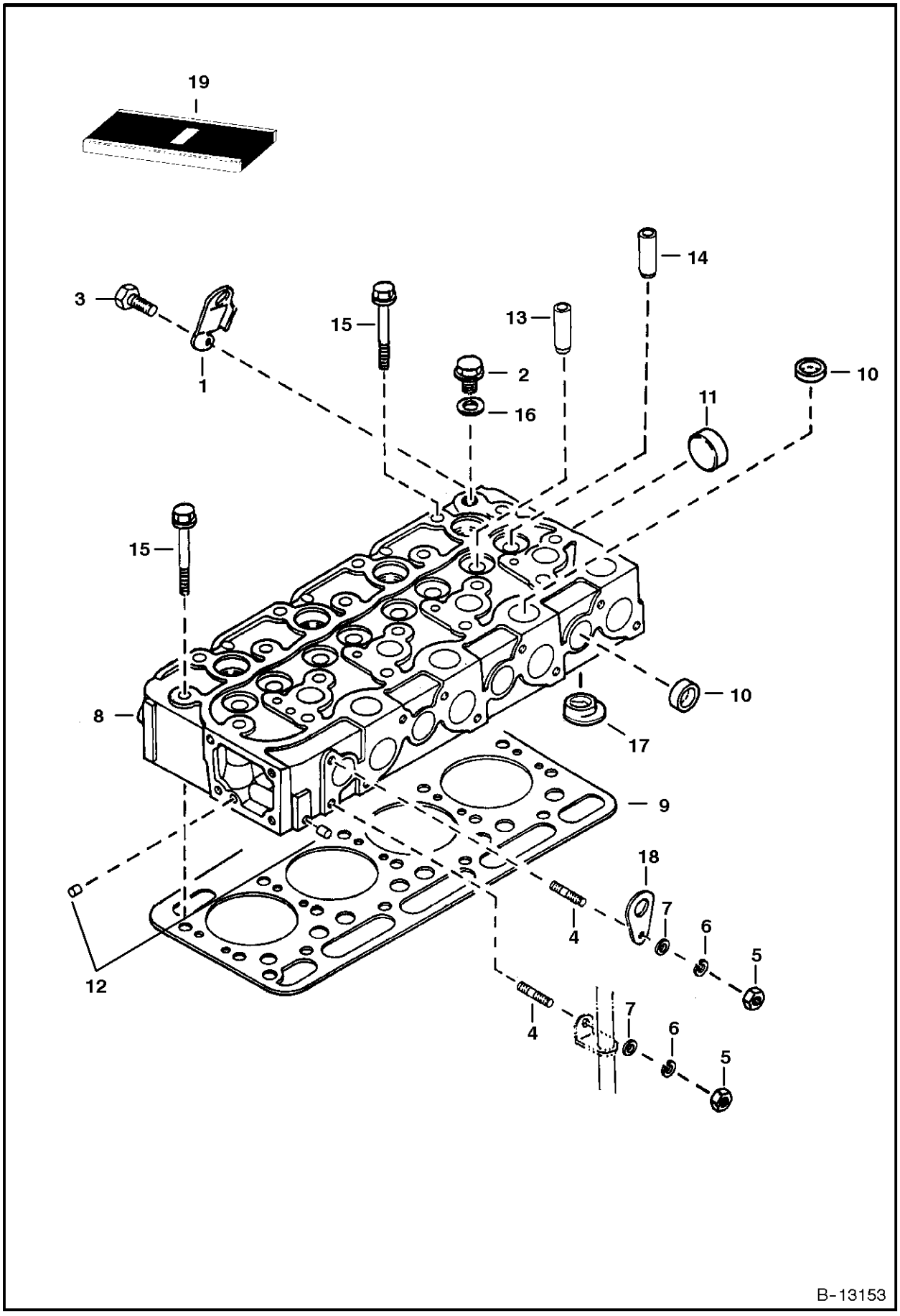

CYLINDER HEAD

Ref.N°	Part N°	Description	Remarks	Serial N°	Qty.
1	6655152	HOOK	engine		1
2	6655160	PLUG			1
3	4CM-816	BOLT			1
4	6652670	STUD			2
5	6652792	NUT			2
6	6EM-80	WASHER	spring		2
7	2EM-8	WASHER	plain		2
8	6672143	HEAD	cylinder - W/Ref. CYLINDER HEAD(10) - CYLINDER HEAD(14)		1
9	6672144	GASKET	cylinder head		1
10	3974432	CAP	sealing		12
11	3974433	CAP	sealing		1
12	6598116	PLUG	Was 6652797 [A]		2
13	6655154	GUIDE	intake valve		4
14	6653803	GUIDE	exhaust valve		4
15	6655158	BOLT			18
16	6655161	WASHER			1
17	6672140	CHAMBER	combustion		4
18	3974882	HOOK			2
19	6657401	GASKET KIT	upper - See Page ENGINE & GASKET KITS(1)		1

OIL PAN

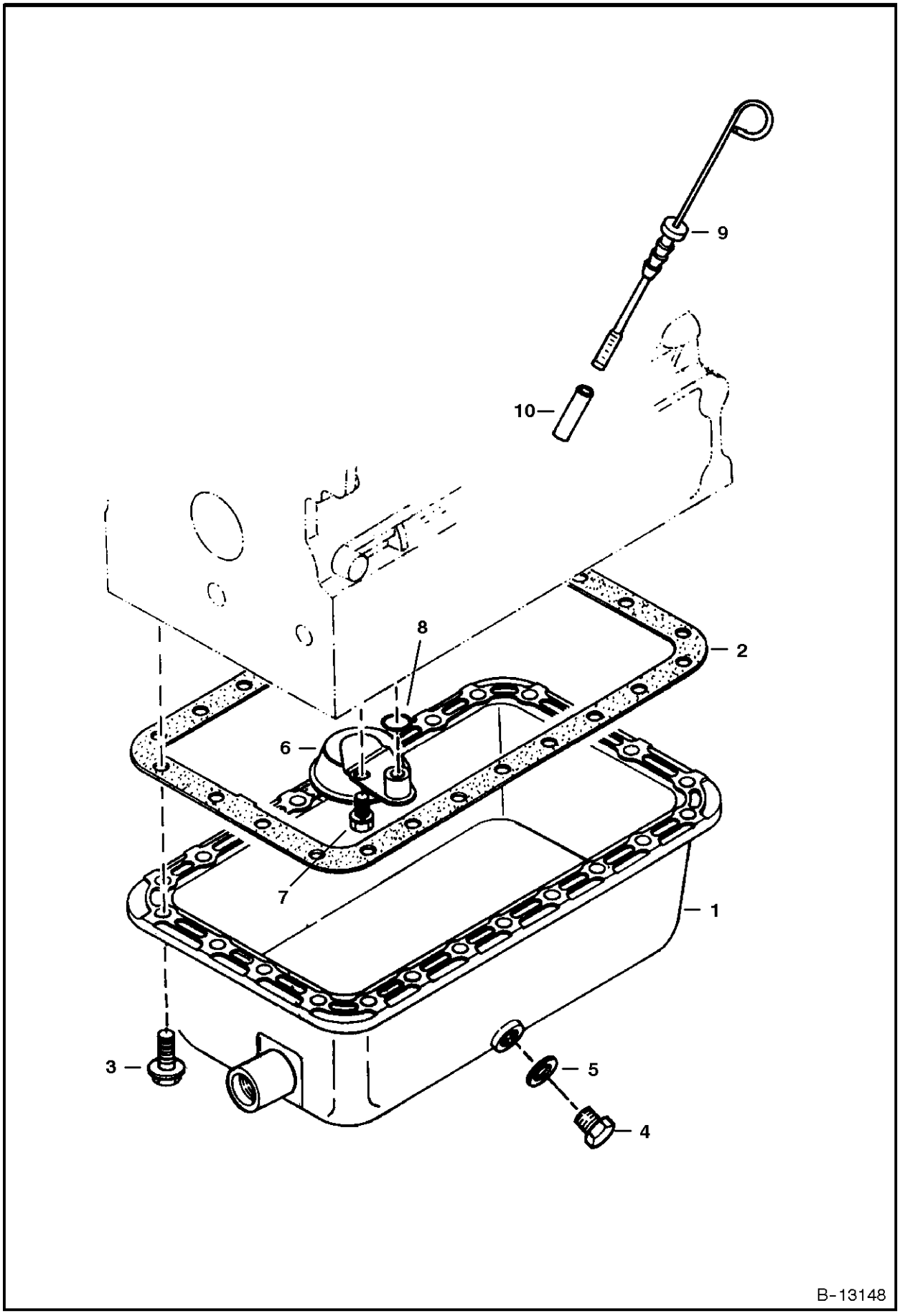

OIL PAN

Ref.N°	Part N°	Description	Remarks	Serial N°	Qty.
1	6655151	OIL PAN			1
2	6666817	GASKET	oil pan		1
3	6653798	BOLT			24
4	3974402	PLUG	drain		1
5	3974403	GASKET			1
6	6655194	OIL FILTER			1
7	4CM-816	BOLT			1
8	3966516	O-RING			1
9	6674178	DIPSTICK	oil		1

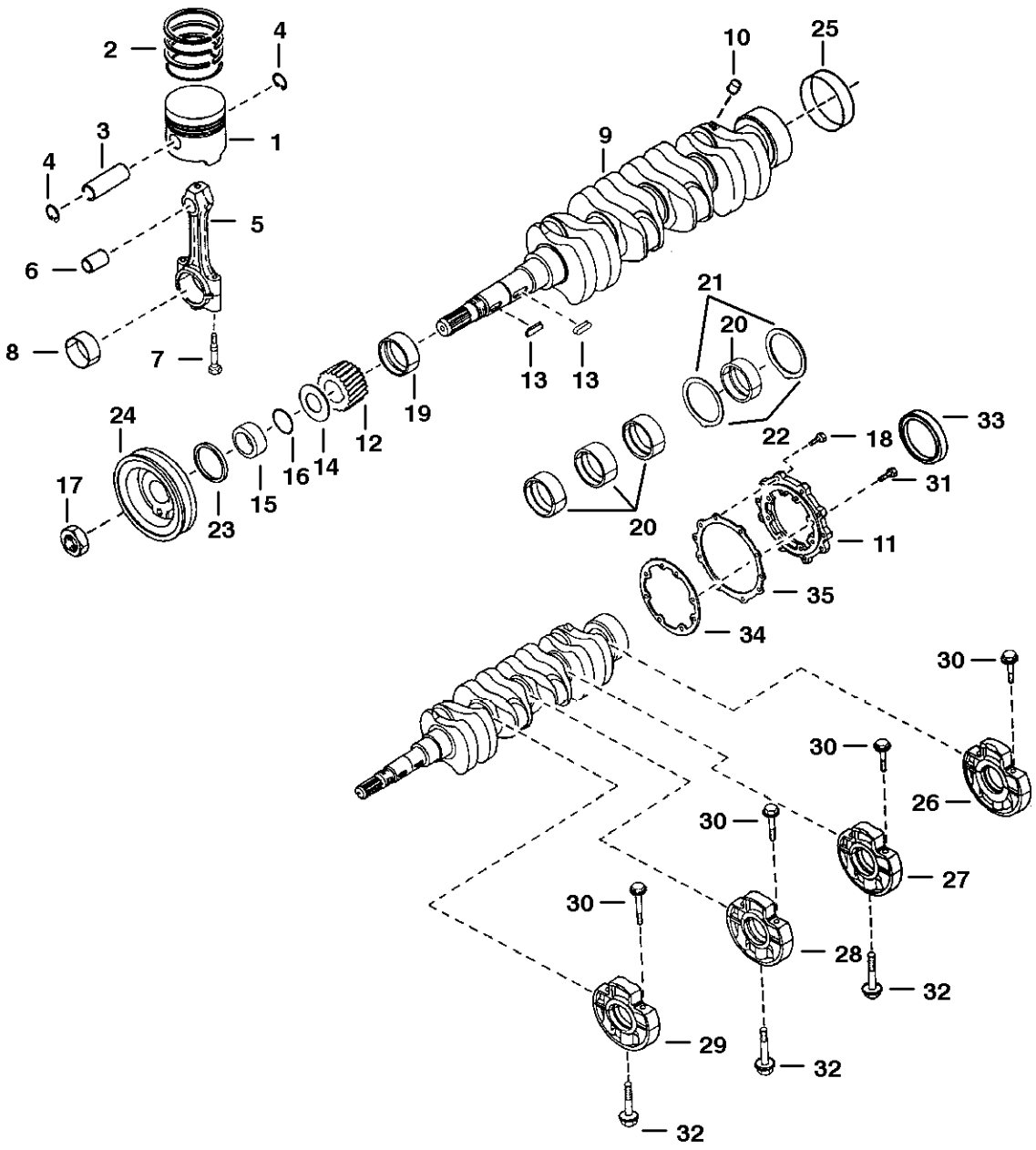
2
4
3
1
4
5
6
8
7
9
10
25
21
20
13
13
19
12
14
16
15
24
17
23
22
18
33
31
11
35
34
20
30
26
27
28
29
32

B-13145

PISTON & CRANKSHAFT

Ref.N°	Part N°	Description	Remarks	Serial N°	Qty.
1	6672142	PISTON	Std.		4
1	6674255	PISTON	(0.5mm - .0197)		4
2	6672141	RINGS	piston - Std.		4
2	6674256	RINGS	piston - (0.5mm - .0197)		4
3	6655179	PIN			4
4	6655180	CIR-CLIP			8
5	6655181	ROD	connecting - W/Ref. PISTON & CRANKSHAFT(6), PISTON & CRANKSHAFT(7) & PISTON & CRANKSHAFT(8)		4
6	6655243	BUSHING			4
7	6655498	BOLT			8
8	6655183	BEARING	rod - Std.		4
8	6655236	BEARING	rod (0,2 mm-.0079)		4
8	6655237	BEARING	rod (0,4 mm-.0157)		4
9	6655184	CRANKSHAFT	Ref. PISTON & CRANKSHAFT(10) & PISTON & CRANKSHAFT(25) - Ref. PISTON & CRANKSHAFT(10) must be installted before using - Was 6674		1
10	6652633	PLUG	Must be installed before using Ref. PISTON & CRANKSHAFT(9) crankshaft - See S/L dated 3 Jan 85		4
11	6598100	KEY			1
12	6598142	GEAR			1
13	3974546	KEY			1
14	6653861	SLINGER	oil		1
15	3975337	COLLAR			1
16	3974577	O-RING			1
17	3974671	NUT			1
18	4CM-825	BOLT			8
19	6655185	BEARING	main - Std.		1
19	6655238	BEARING	main (0,2 mm-.0079)		1
19	6655239	BEARING	main (0,4 mm-.0157)		1
20	6655186	BEARING	main - Std.		4
20	6655240	BEARING	main (0,2 mm-.0079)		4
20	6655241	BEARING	main (0,4 mm-.0157)		4
21	3974945	WASHER	thrust - Std.		2
21	3975021	WASHER	thrust (0,2 mm-.0079)		2
21	3975022	WASHER	thrust (0,4 mm-.0157)		2
22	6653865	WASHER	thrust - Std.		2
22	6654002	WASHER	thrust (0,2 mm-.0079)		2
22	6654003	WASHER	thrust (0,4 mm-.0157)		2
23	6631664	SEAL	oil		1
24	6674168	PULLEY			1
25	6653859	SLEEVE			1
26	6655163	CASE	main bearing - W/Ref. PISTON & CRANKSHAFT(30)		1
27	6655170	CASE	main bearing - W/Ref. PISTON & CRANKSHAFT(30)		1
28	6655169	CASE	main bearing - W/Ref. PISTON & CRANKSHAFT(30)		1
29	6655168	CASE	main bearing - W/Ref. PISTON & CRANKSHAFT(30)		1
30	6655164	BOLT			8
31	4CM-828	BOLT			8
32	6653821	BOLT			3
33	6649300	SEAL	oil		1
34	6655165	GASKET			1
35	6666814	GASKET			1

FUEL CAMSHAFT

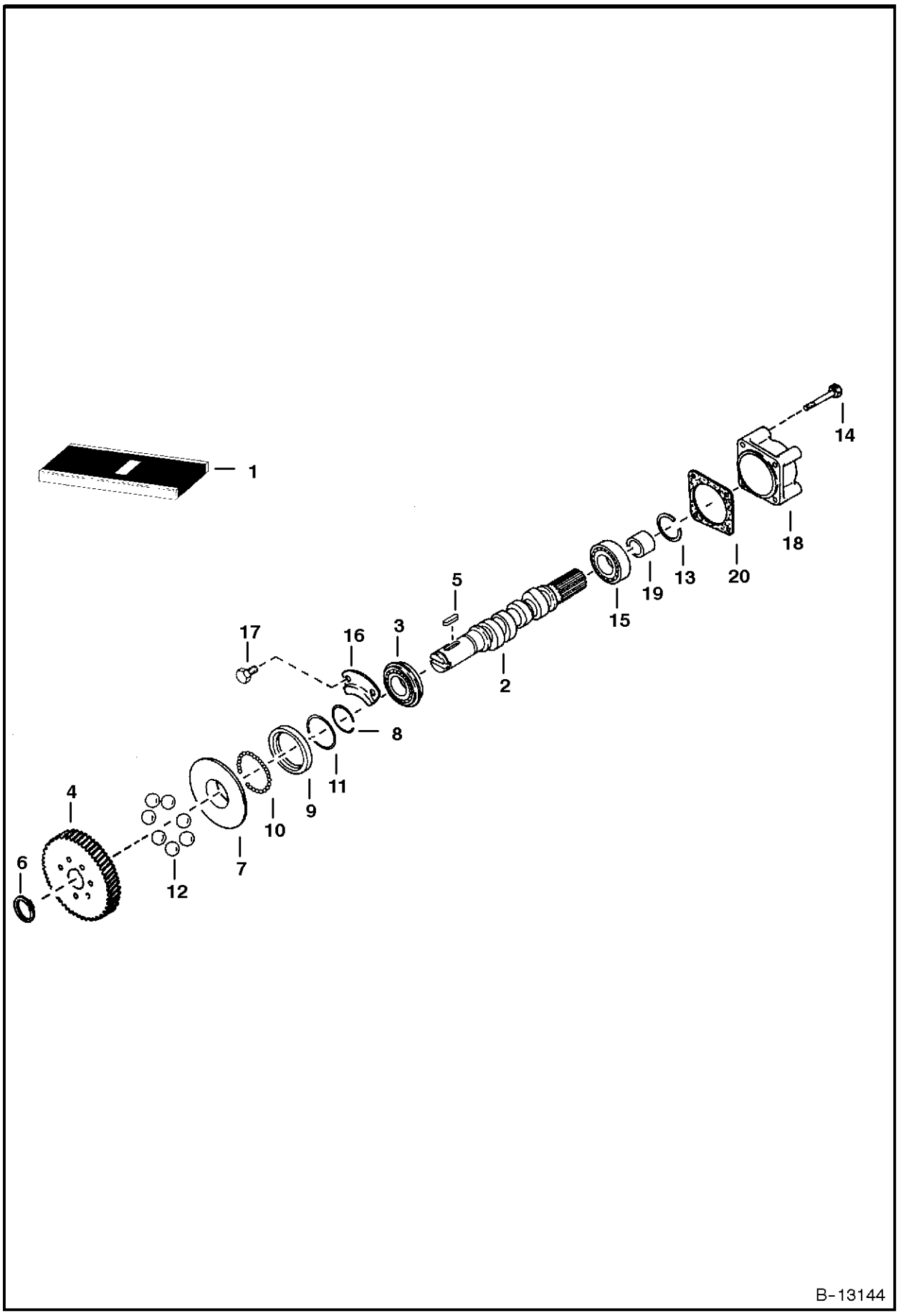

FUEL CAMSHAFT

Ref.N°	Part N°	Description	Remarks	Serial N°	Qty.
1	6655211	CAMSHAFT	assy. - Ref. FUEL CAMSHAFT(2)-FUEL CAMSHAFT(14)		1
2	6655875	CAMSHAFT	fuel		1
3	851242	BEARING			1
4	6655212	GEAR	injection pump		1
5	6598099	KEY			1
6	5JM-24	CIR-CLIP	external		1
7	6655213	SLEEVE	governor		1
8	3974618	CIR-CLIP	sleeve		1
9	6655214	CASE	governor ball		1
10	10J-5	BALL			39
11	3974620	CIR-CLIP	ball case		1
12	6655215	BALL			7
13	6598158	CIR-CLIP	governor ball - Was 3975432 [A]		1
14	6651934	RIVET			7
15	6598101	BALL BEARING			1
16	3974624	STOPPER			1
17	4CM-814	BOLT			2
18	3974996	COVER	fuel camshaft		1
19	3975442	COLLAR			1
20	6666827	GASKET			1

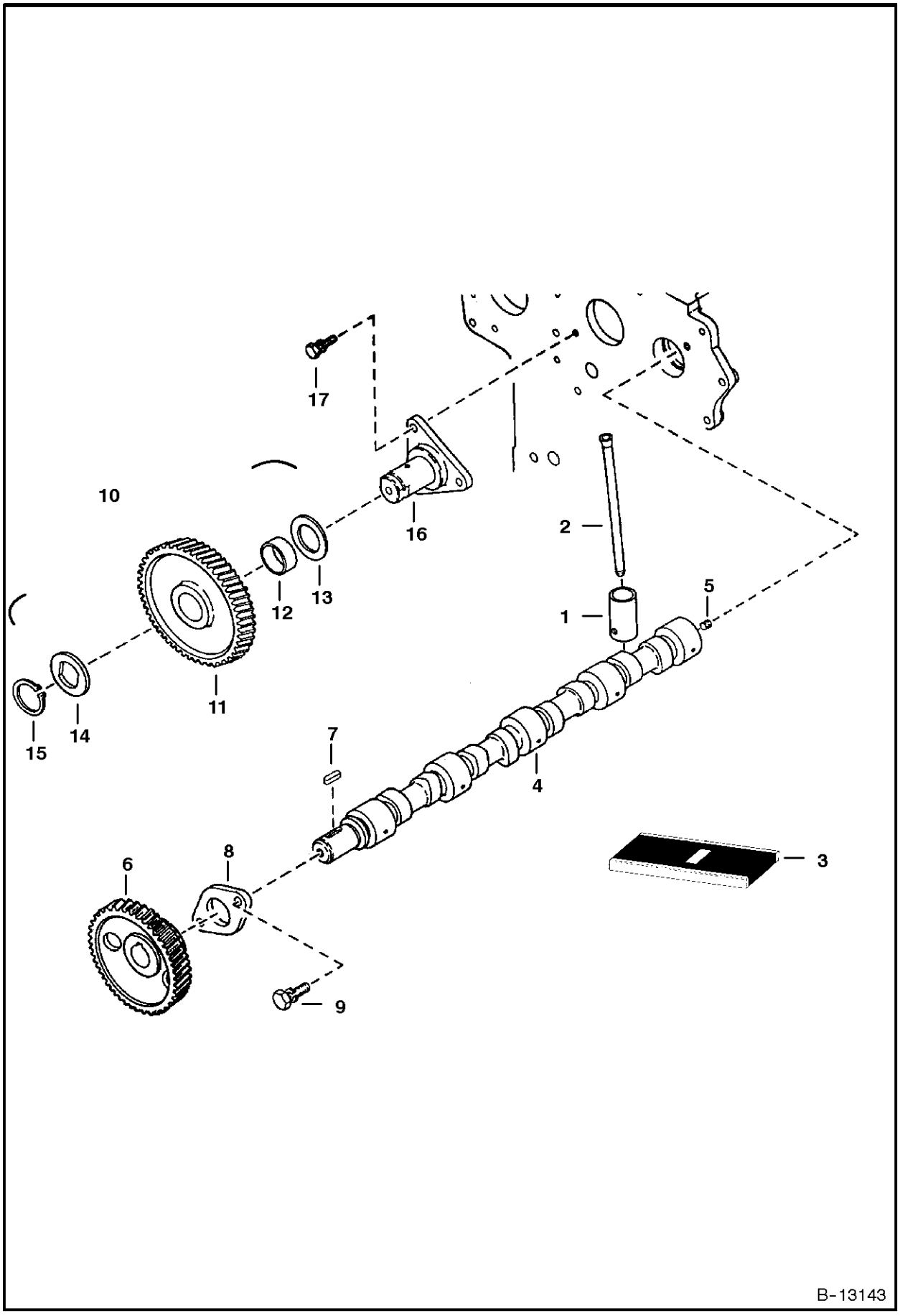
17
10
16
2
12
13
1
5
11
14
15
7
4
6
8
3
9
B-13143

CAMSHAFT

Ref.N°	Part N°	Description	Remarks	Serial N°	Qty.
1	6667428	TAPPET			8
2	6655176	PUSH ROD			8
3	6655427	CAMSHAFT	assy. - Ref. CAMSHAFT(4)-CAMSHAFT(8)		1
4	6655384	CAMSHAFT			1
5	6653839	PLUG	seat		1
6	6653840	GEAR	camshaft		1
7	3974546	KEY			1
8	6653843	STOPPER	camshaft		1
9	4CM-818	BOLT			2
10	6655187	GEAR ASSY.	idle - W/Ref. CAMSHAFT(11) & CAMSHAFT(12)		1
11	NSS	GEAR	idle - Order Ref. CAMSHAFT(10)		2
12	6655242	BUSHING	idle gear		1
13	6655190	COLLAR			1
14	6655191	COLLAR			1
15	6655192	CIR-CLIP	external		1
16	6655193	SHAFT	idle gear		1
17	4CM-816	BOLT			3

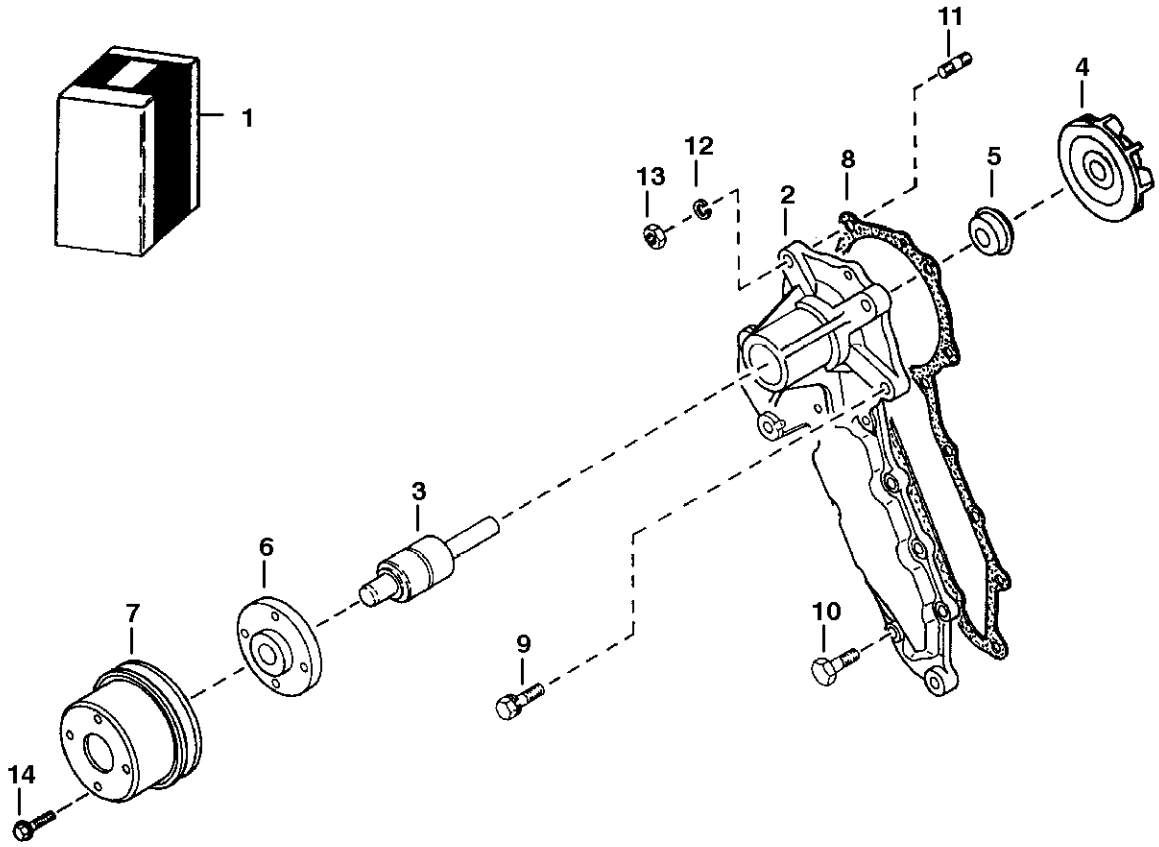

B-13142

WATER PUMP

Ref.N°	Part N°	Description	Remarks	Serial N°	Qty.
1	6653941	WATER PUMP	Ref. WATER PUMP(2)-WATER PUMP(6)		1
2	NAP	BODY			1
3	3974991	BEARING			1
4	6667460	IMPELLER	for one piece seal Ref. WATER PUMP(5)		1
5	6667465	SEAL	one piece		1
6	3974992	FLANGE			1
7	6674169	PULLEY	fan		1
8	6666804	GASKET			1
9	4CM-828	BOLT			2
10	6652580	BOLT			6
11	6653946	STUD			2
12	6EM-80	WASHER	spring		2
13	6652792	NUT			2
14	6652762	BOLT			4

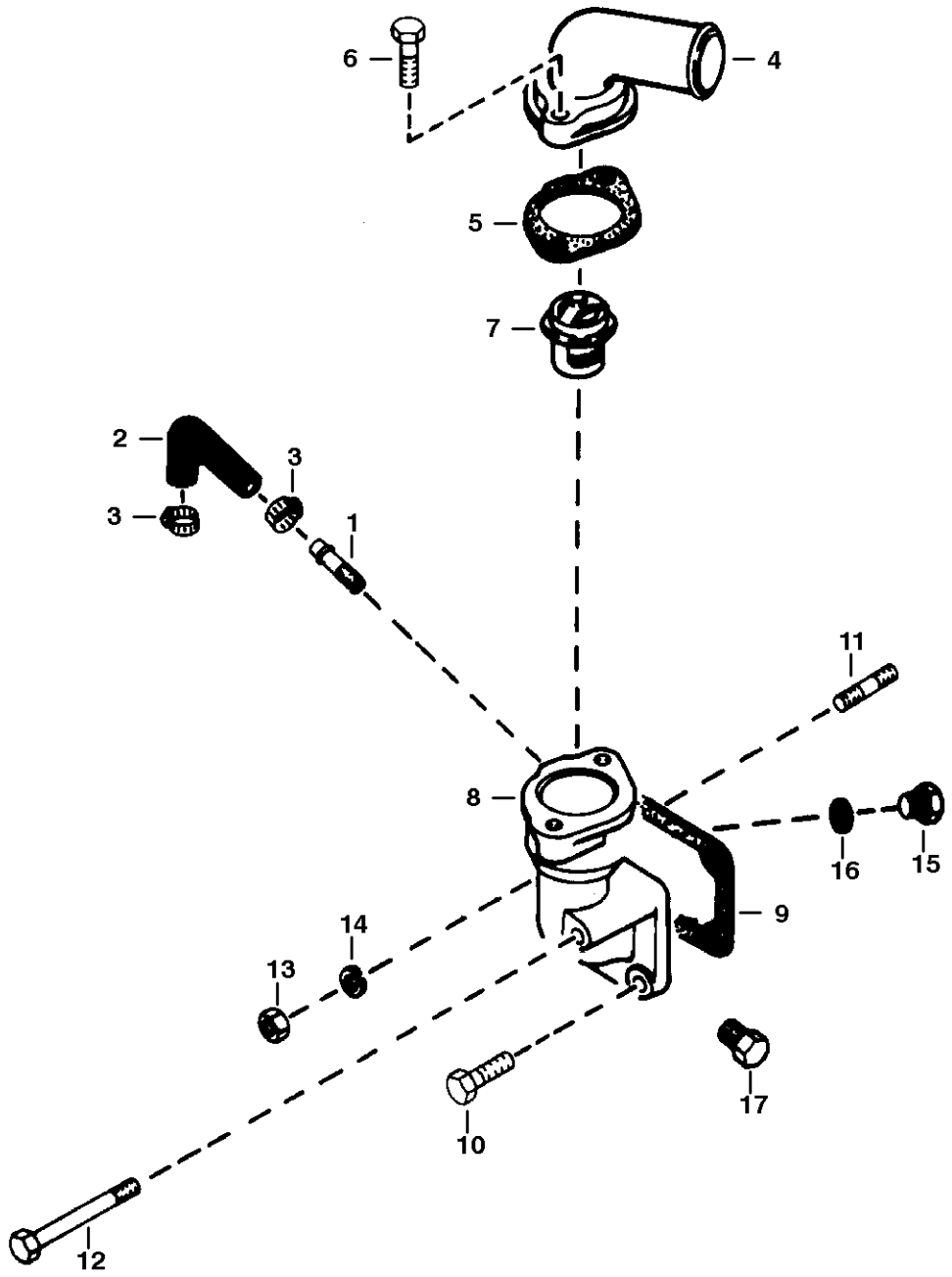
6
4
5
7
2
3
3
1
11
8
16
15
9
14
13
10
17
12
B-13141

WATER FLANGE & THERMOSTAT

Ref.N°	Part N°	Description	Remarks	Serial N°	Qty.
1	6655880	PIPE	water return		1
2	3974988	PIPE	water return		1
3	3974679	BAND	pipe		2
4	6674173	COVER	thermostat		1
5	6666790	GASKET	&thermostat cover		1
6	1CM-835	BOLT			2
7	6674172	THERMOSTAT	230'_ F		1
7	6630184	THERMOSTAT	&203(_& F -Used W/cab heater		1
8	6674167	FLANGE	W/Ref. WATER FLANGE & THERMOSTAT(1)		1
9	6666802	GASKET	water flange		1
10	4CM-822	BOLT			2
11	3974627	STUD			1
12	1CM-865	BOLT			1
13	6652792	NUT			1
14	6EM-80	WASHER			1
15	6649536	PLUG			1
16	6653562	GASKET			1
17	40K-2	PLUG			1

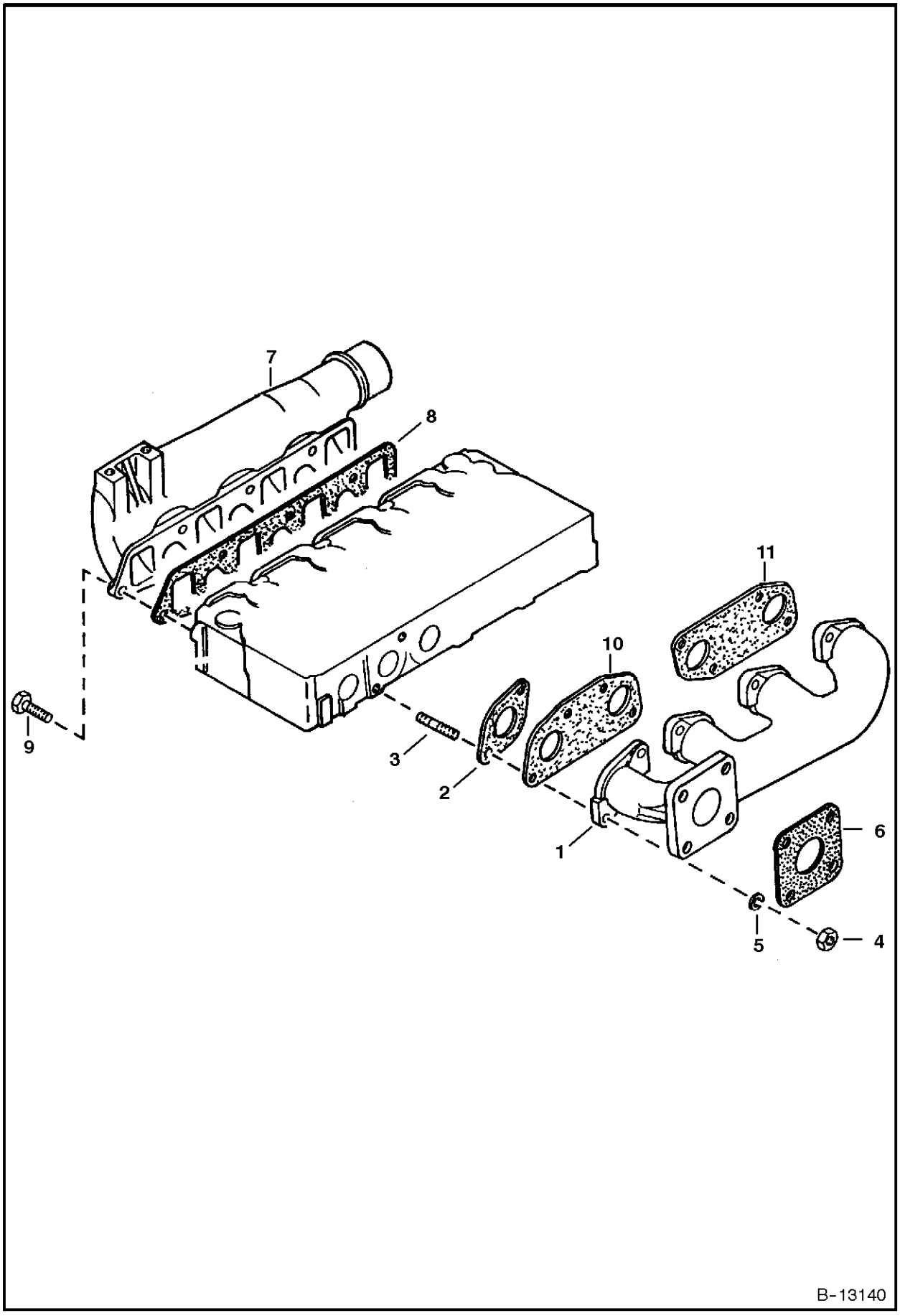
7
8
11
10
9
3
2
1
6
5
4
B-13140

MANIFOLDS

Ref.N°	Part N°	Description	Remarks	Serial N°	Qty.
1	6651482	MANIFOLD	exhaust		1
2	NAP	GASKET	Order Ref. MANIFOLDS(10) & MANIFOLDS(11)		4
3	6652670	STUD			8
4	6652792	NUT			8
5	6EM-80	WASHER	spring		12
6	6575580	GASKET	muffler		1
7	6655171	MANIFOLD	intake		1
8	6666811	GASKET			1
9	4CM-822	BOLT			7
10	6666781	GASKET			1
11	6666791	GASKET			1

ENGINE STOP LEVER

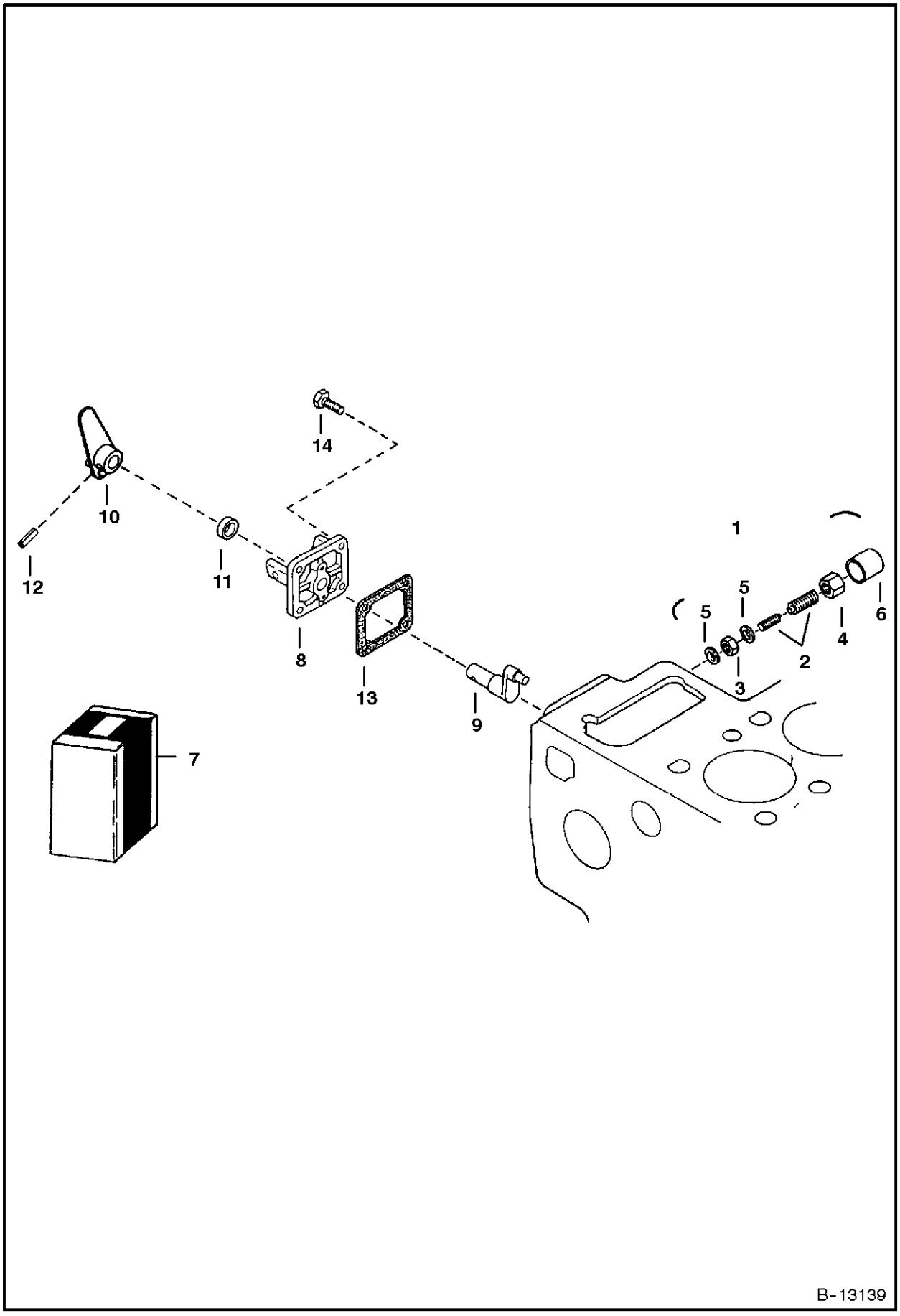

ENGINE STOP LEVER

Ref.N°	Part N°	Description	Remarks	Serial N°	Qty.
1	3974975	APPARATUS	assy., idle - Ref. ENGINE STOP LEVER(2)-ENGINE STOP LEVER(6)		1
2	6653906	BOLT ASSY.	adjusting		1
3	2DM-8	NUT	adjusting		1
4	3974978	NUT			1
5	3974095	GASKET			2
6	3974979	CAP			1
7	6676060	LEVER ASSY.	eng. stop - Ref. ENGINE STOP LEVER(8)-ENGINE STOP LEVER(12) - Was 6655879 [A]		1
8	6655230	COVER	injection pump		1
9	6655231	SHAFT	lever		1
10	6674175	LEVER	engine stop		1
11	6598703	SEAL	oil		1
12	6598098	PIN	spring		1
13	6666783	GASKET	pump cover		1
14	6652580	BOLT			3

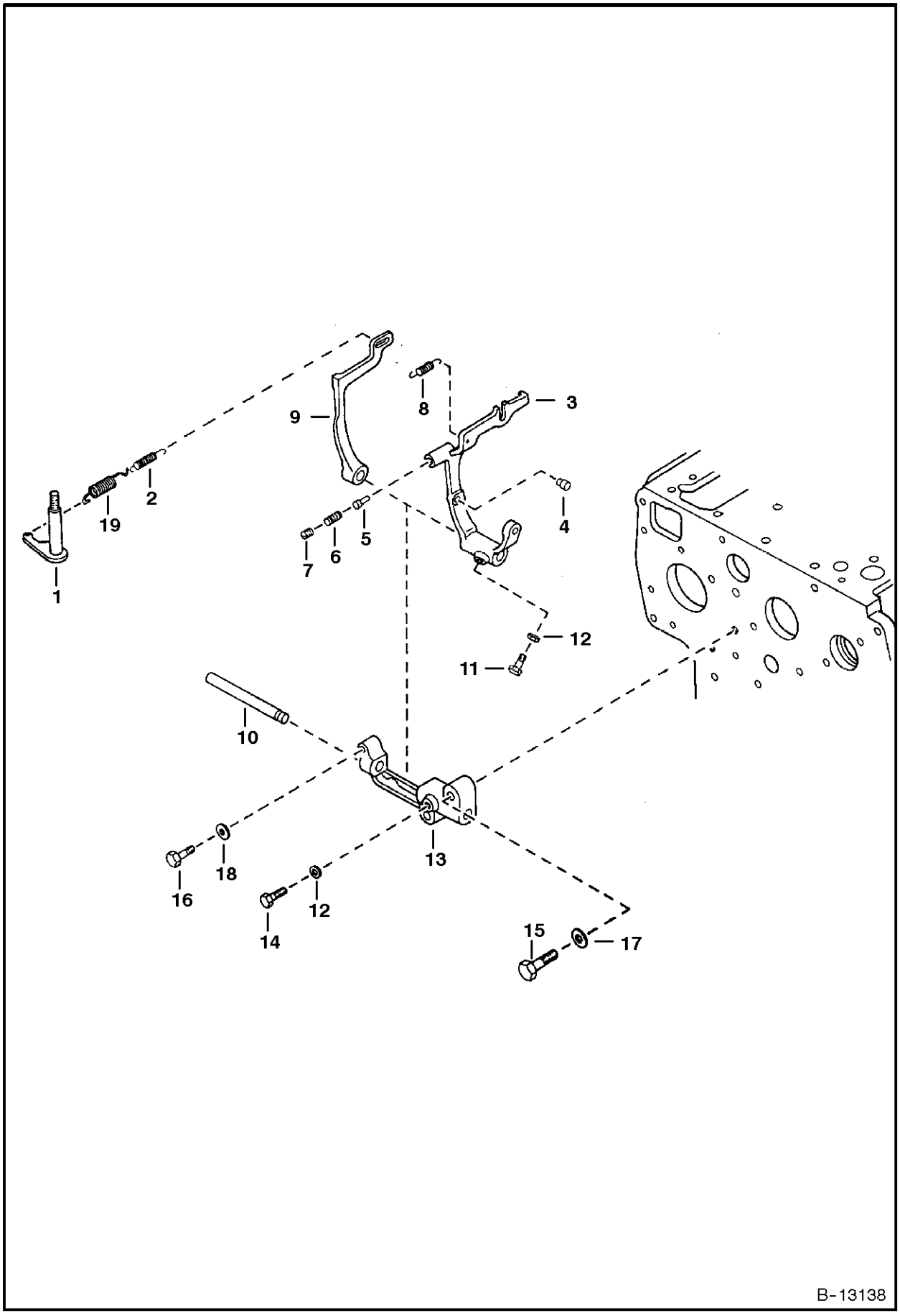
1
19
2
9
8
3
7
6
5
4
12
11
10
13
16
18
14
12
15
17
B-13138

GOVERNOR

Ref.N°	Part N°	Description	Remarks	Serial N°	Qty.
1	6598174	LEVER	governor		1
2	6655227	SPRING			1
3	6655224	LEVER	fork - W/Ref. GOVERNOR(4)-GOVERNOR(7)		1
4	NSS	PIN			2
5	NSS	PIN			1
6	NSS	SPRING			1
7	NSS	SCREW			1
8	6655225	SPRING			1
9	6655877	LEVER			1
10	3974658	SHAFT			1
11	3974659	BOLT			1
12	6EM-60	WASHER			2
13	3974661	HOLDER			1
14	3974192	BOLT			1
15	6598355	BOLT			2
16	4CM-628	BOLT			1
17	2EM-8	WASHER			2
18	1EM-60	WASHER			1
19	6655878	SPRING	governor		1

SPEED CONTROL PLATE

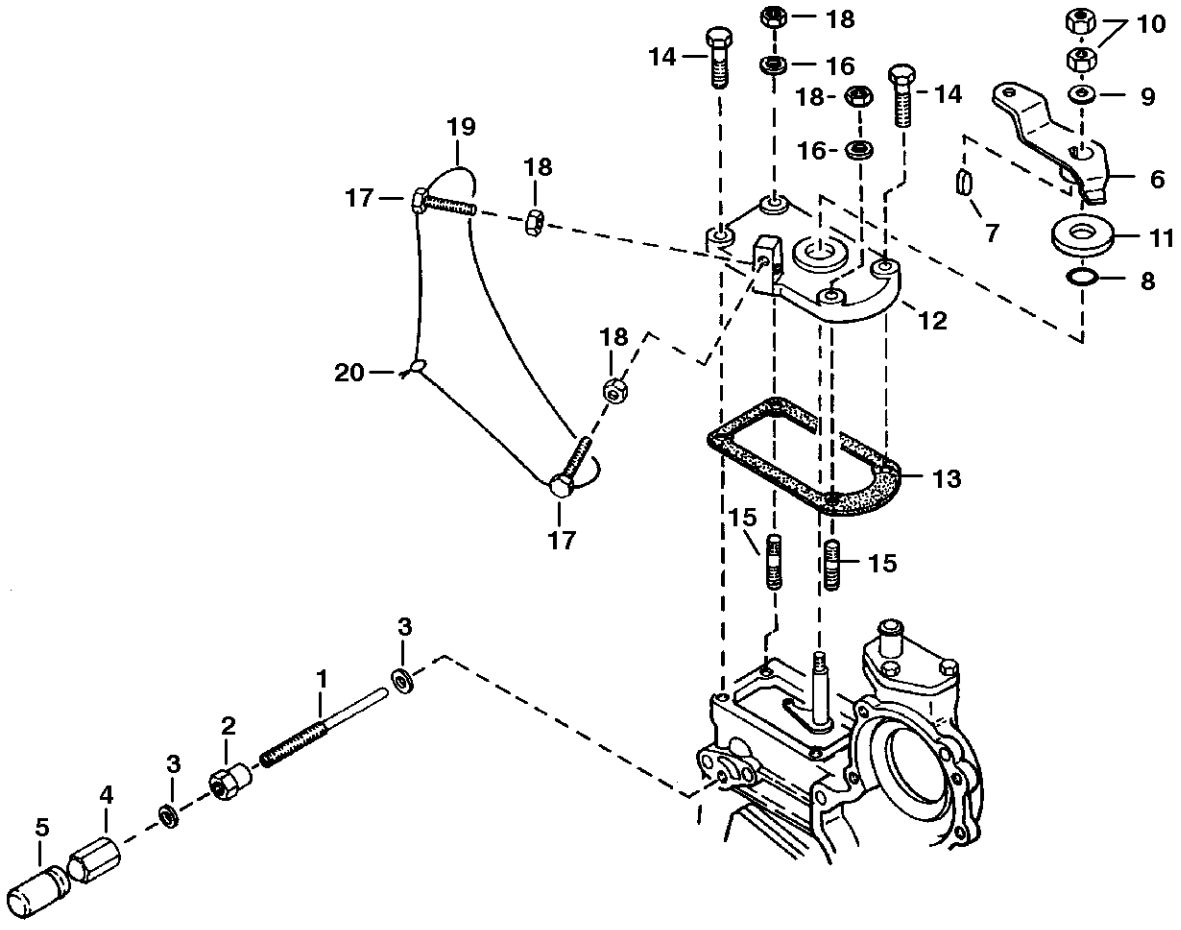

SPEED CONTROL PLATE

Ref.N°	Part N°	Description	Remarks	Serial N°	Qty.
1	3974970	BOLT	adjusting		1
2	3974971	NUT			1
3	3974972	GASKET			2
4	6655223	NUT	cap		1
5	6653905	CAP			1
6	6598176	LEVER	speed control		1
7	15JM-48	KEY	feather		1
8	3966512	O-RING			1
9	1EM-80	WASHER	plain		1
10	1DM-8	NUT			2
11	3974644	PLATE	friction		1
12	6641231	PLATE	speed control		1
13	6666792	GASKET			1
14	4CM-620	BOLT			2
15	6652764	STUD			2
16	6EM-60	WASHER	spring		2
17	6655228	BOLT			2
18	1DM-6	NUT			4
19	NAP	WIRE			1
20	NAP	LEAD	sealing		1

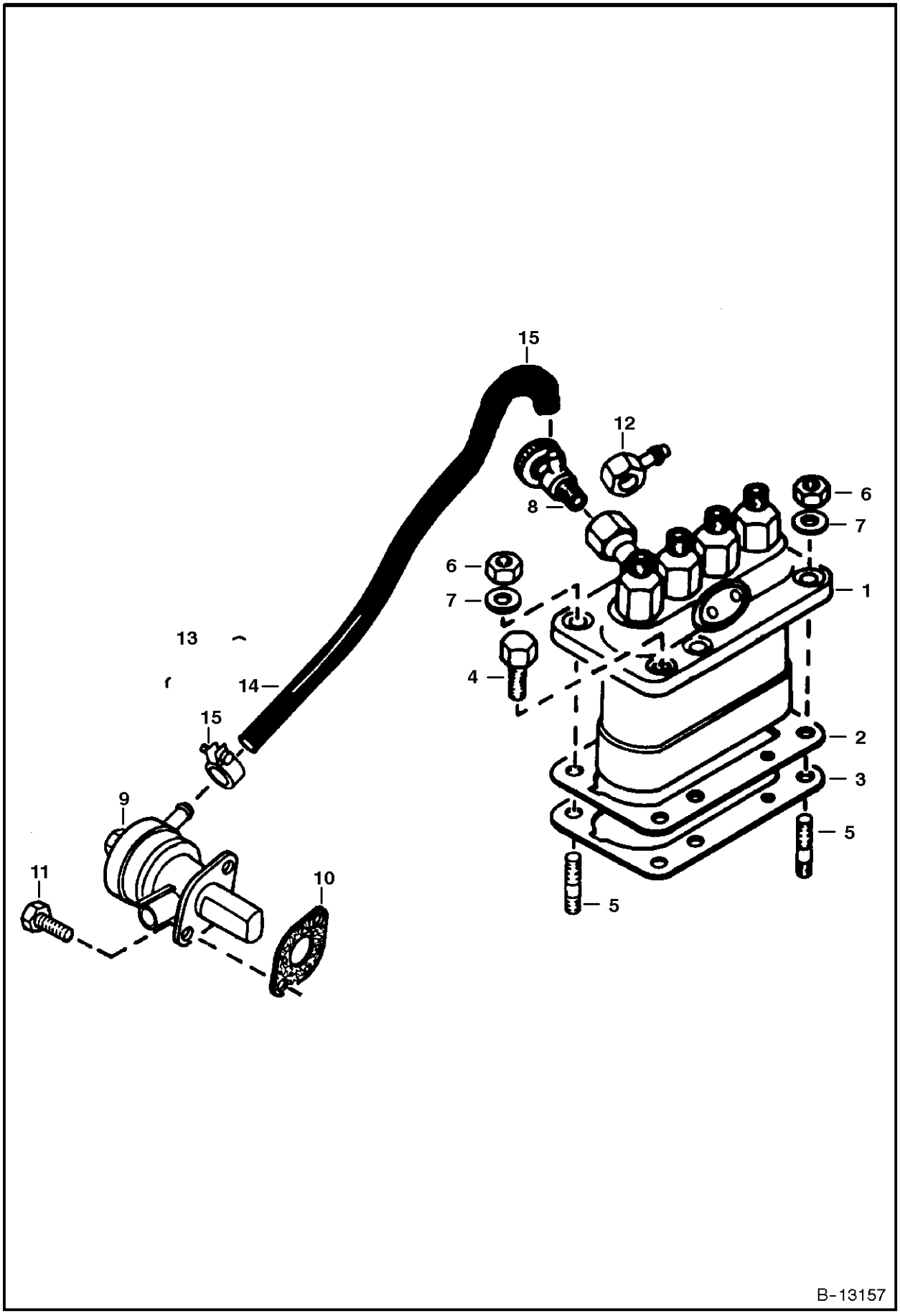
15
12
8
6
7
1
6
7
1
13
14
4
15
2
3
9
5
11
10
5
B-13157

INJECTION PUMP

Ref.N°	Part N°	Description	Remarks	Serial N°	Qty.
1		PUMP	See Page INJECTION PUMP(1)		1
2	3974626	SHIM	0.15 mm		2
3	6655210	SHIM	0.45 mm		1
4	4CM-822	BOLT			4
5	6652670	STUD			2
6	6652792	NUT			2
7	6EM-80	WASHER	spring		2
8	6598102	COCK	jet start		1
9	6655216	FUEL PUMP	Was 6674170 [A]		1
10	3974502	GASKET	fuel pump		1
11	4CM-616	BOLT			2
12	6655515	JOINT	eye - connects to Ref. FUEL SYSTEM(25) on Page FUEL SYSTEM(1)		1
13	6655197	PIPE ASSY.	fuel - W/Ref INJECTION PUMP(13) & INJECTION PUMP(14)		1
14	NSS	PIPE	fuel		1
15	6655874	CLIP	pipe		2
16	NAP	REPAIR KIT	for Ref. INJECTION PUMP(9)		1

INJECTION PUMP

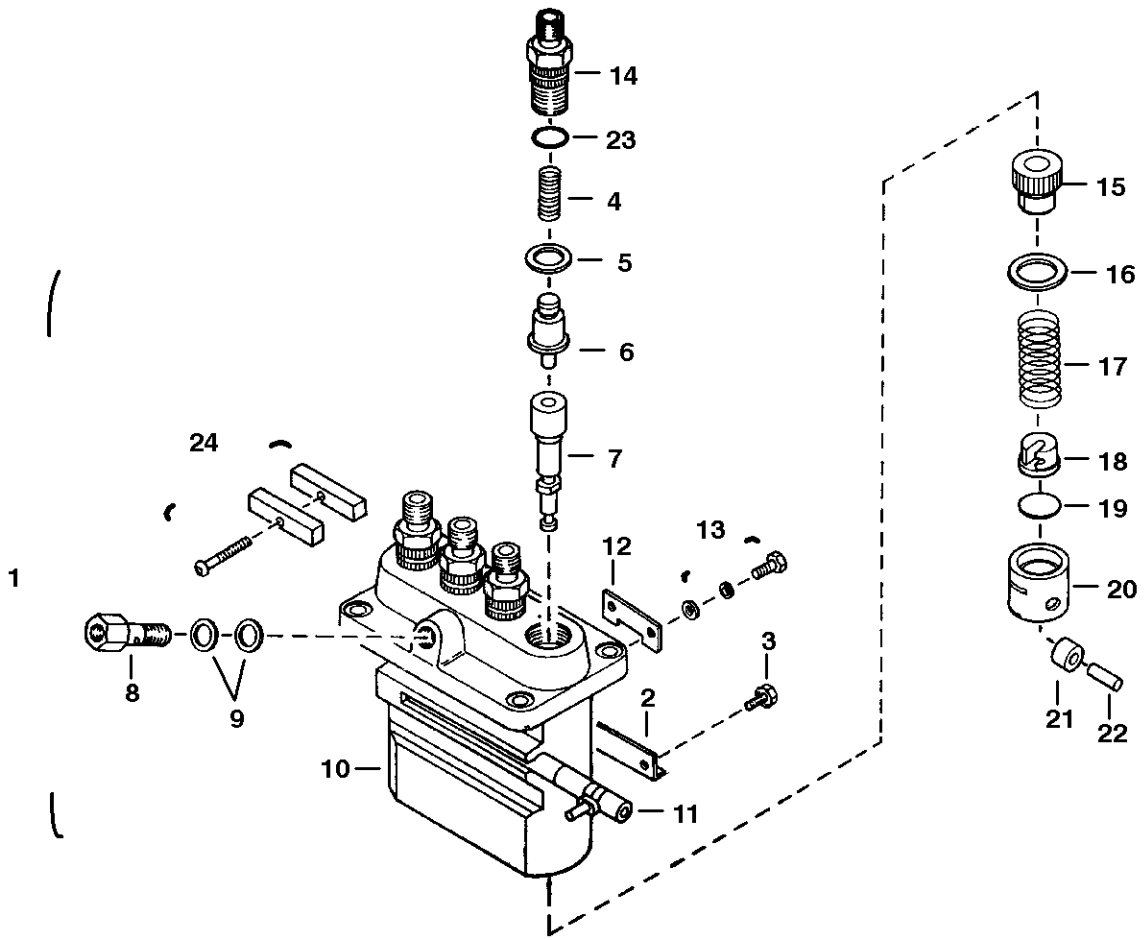

INJECTION PUMP

Ref.N°	Part N°	Description	Remarks	Serial N°	Qty.
1	6674676	PUMP	injection - No serviceable parts available - Take to injectio n pump specialist		1
2	6655207	PLATE	adjust		3
3	6655206	BOLT			3
4	6655203	SPRING	delivery valve		4
5	3974368	GASKET	delivery valve		4
6	6655202	VALVE	delivery		4
7	6655201	ELEMENT	pump		4
8	3975428	SCREW			1
9	3975389	GASKET			2
10	NSS	HOUSING	pump		1
11	3974787	RACK	control		1
12	6655209	PLATE	adjusting		3
13	3974366	BOLT			3
14	6655204	HOLDER	delivery valve		4
15	6653894	SLEEVE	control		4
16	3974381	SEAT	spring - Upper		4
17	3974382	SPRING	plunger		4
18	3974383	SEAT	spring - Under		4
19	3974384	SHIM			4
20	3974385	TAPPET	W/Ref. INJECTION PUMP(21), INJECTION PUMP(22)		4
21	NSS	ROLLER			4
22	NSS	PIN			4
23	6646730	O-RING			4
24	6655205	PLATE ASSY.			2

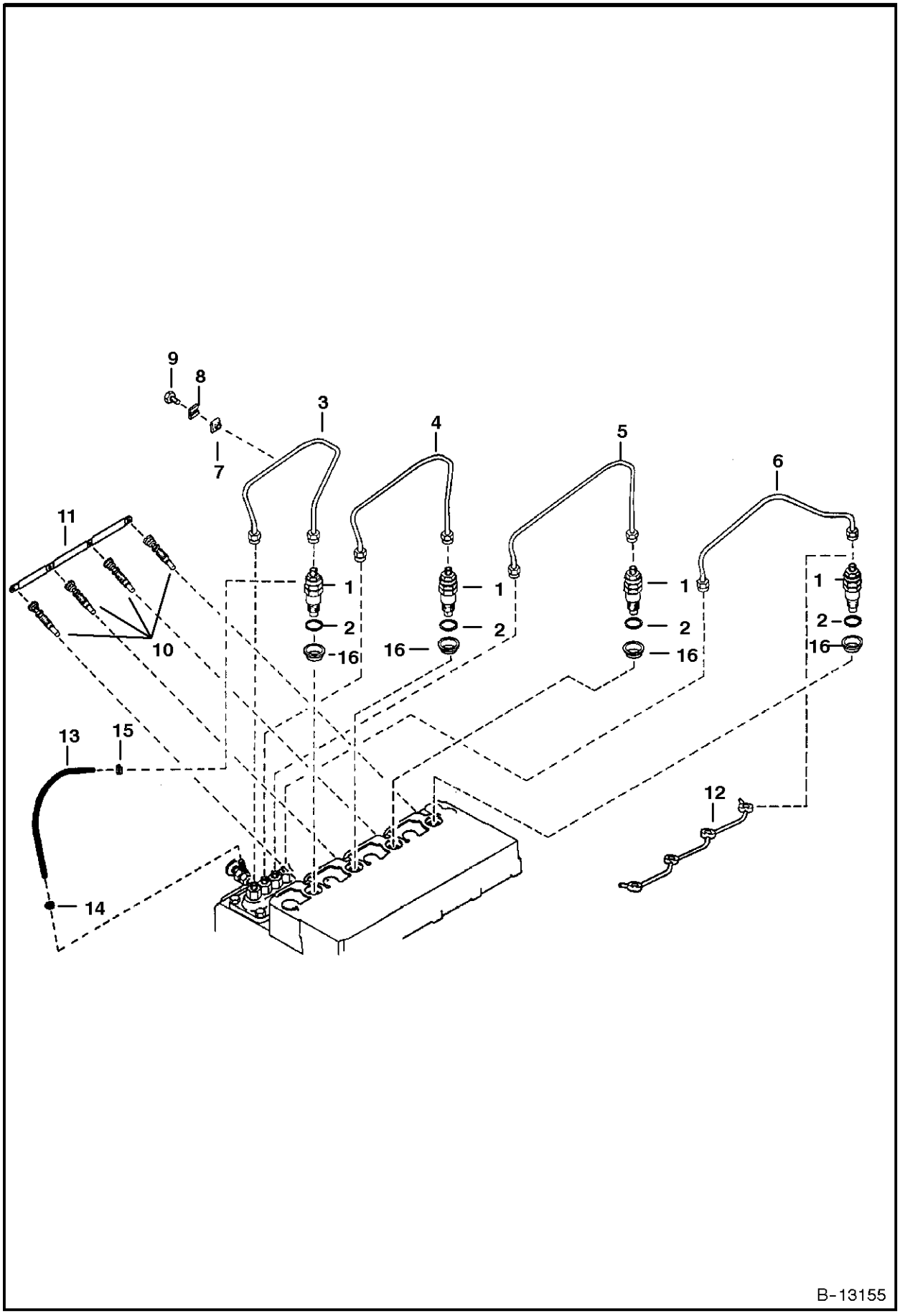
9
8
7
3
4
5
6
11
1
2
16
10
13
15
14
12
B-13155

INJECTOR NOZZLES

Ref.N°	Part N°	Description	Remarks	Serial N°	Qty.
1	6722147	HOLDER KIT	nozzle - W/Ref. INJECTOR NOZZLES(2) & INJECTOR NOZZLES(16) - See Page INJECTOR HOLDER(1) - Was 6674174 [A]		4
2	6655218	GASKET			4
3	6655219	PIPE	injection (1)		1
4	6655220	PIPE	injection (2)		1
5	6655221	PIPE	injection (3)		1
6	6655222	PIPE	injection (4)		1
7	6652688	CLAMP	pipe (1)		3
8	6652689	CLAMP	pipe (2)		3
9	3974260	SCREW	with washer		3
10	6655233	GLOW PLUG			4
11	6655234	CORD	glow plug		1
12	6655198	PIPE	fuel over flow		1
13	6598146	PIPE	fuel over flow (2)		1
14	6599136	CLAMP	pipe		1
15	6654718	CLIP	pipe		1
16	6655872	SHIELD			4

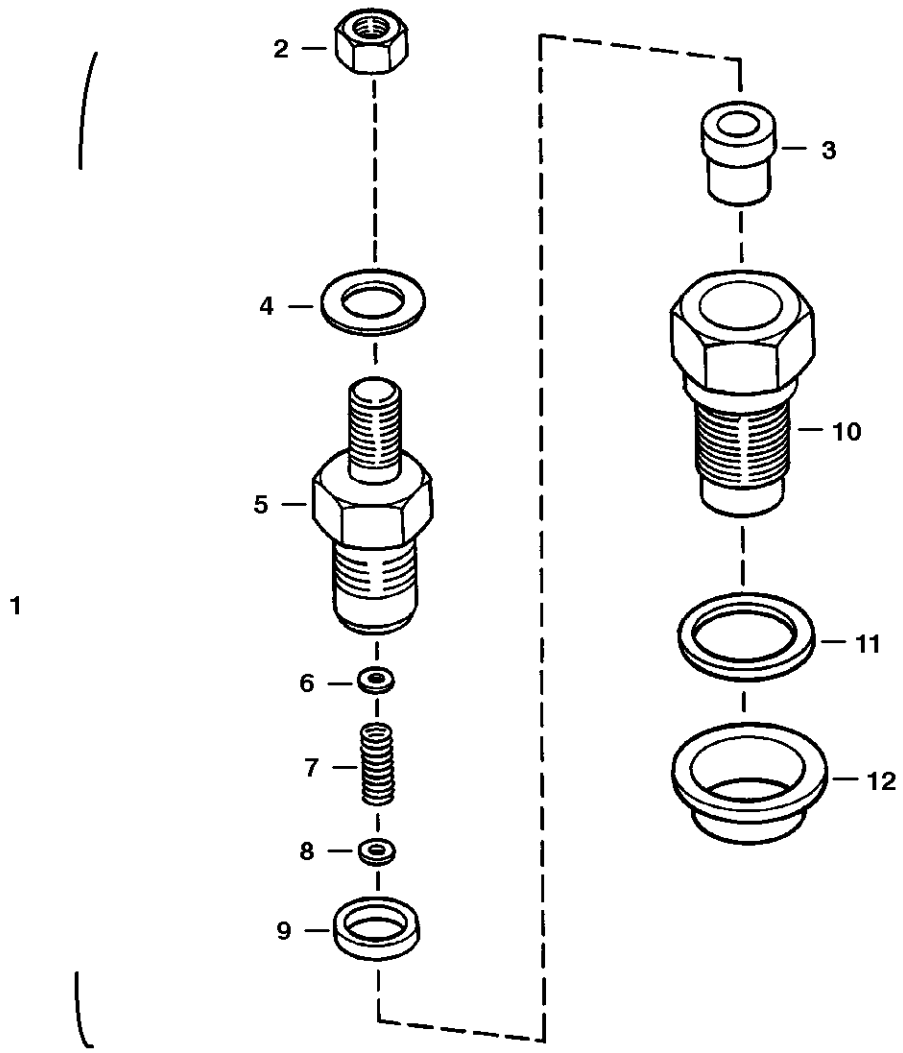
1
2
3
4
5
6
7
8
9
10
11
12
B-13154

INJECTOR HOLDER

Ref.N°	Part N°	Description	Remarks	Serial N°	Qty.
1	6722147	HOLDER KIT	nozzle - Ref. INJECTOR NOZZLES(2) - INJECTOR HOLDER(12) - Was 6674174 [A]		4
2	6657460	NUT			1
3	6655873	PIECE	nozzle		1
4	6657463	WASHER	plain		1
5	NSS	BODY	nozzle holder		1
6	6657742	WASHER ASSY	washer - (.900mm thru 1.950mm)		x
6	6656126	WASHER	adj. (1.00 mm)		x
6	6656127	WASHER	adj. (1.05 mm)		x
6	6656128	WASHER	adj. (1.10 mm)		x
6	6656129	WASHER	adj. (1.15 mm)		x
6	6656130	WASHER	adj. (1.20 mm)		x
6	6656131	WASHER	adj. (1.25 mm)		x
6	6656132	WASHER	adj. (1.30 mm)		x
7	NSS	SPRING	nozzle		1
8	NSS	PIECE	distance		1
9	NSS	PUSH ROD			1
10	NSS	NUT	nozzle		1
11	6655218	GASKET			1
12	6655872	SHIELD			1

AIR CLEANER

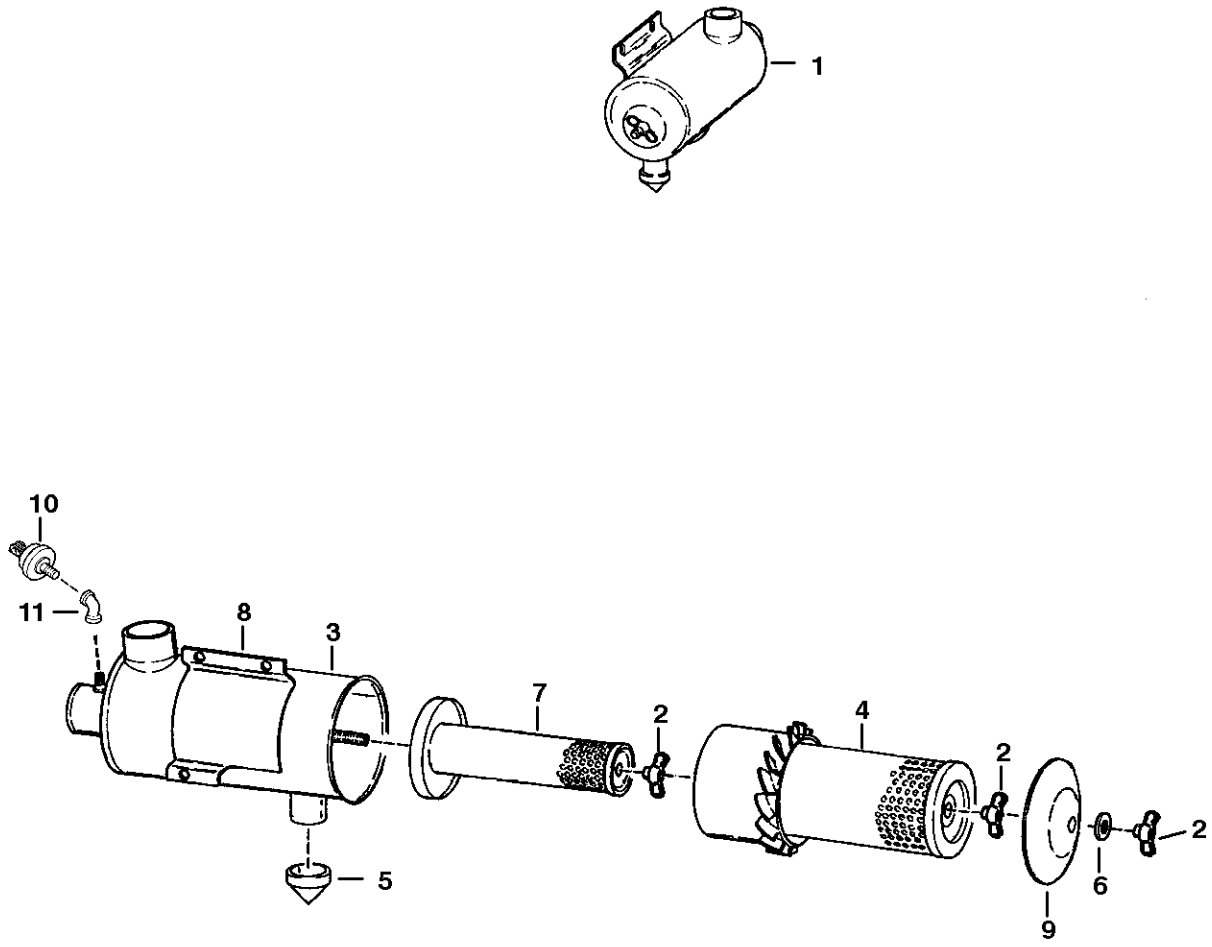

AIR CLEANER

Ref.N°	Part N°	Description	Remarks	Serial N°	Qty.
1	6700711	AIR CLEANER			1
2	6661243	WING NUT			3
3	NAP	TANK			1
4	6598492	CARTRIDGE	outer		1
5	6661242	COVER			1
6	6725502	ELBOW	Was 23F-1 [A]		1
7	6598362	CARTRIDGE	inner		1
8	866028	CLAMP			1
9	6661244	WASHER			1
10	6655938	VALVE			1
11	6665371	SWITCH			1

ACCESS COVER
(Cleanout - Lower Front of Chaincase)

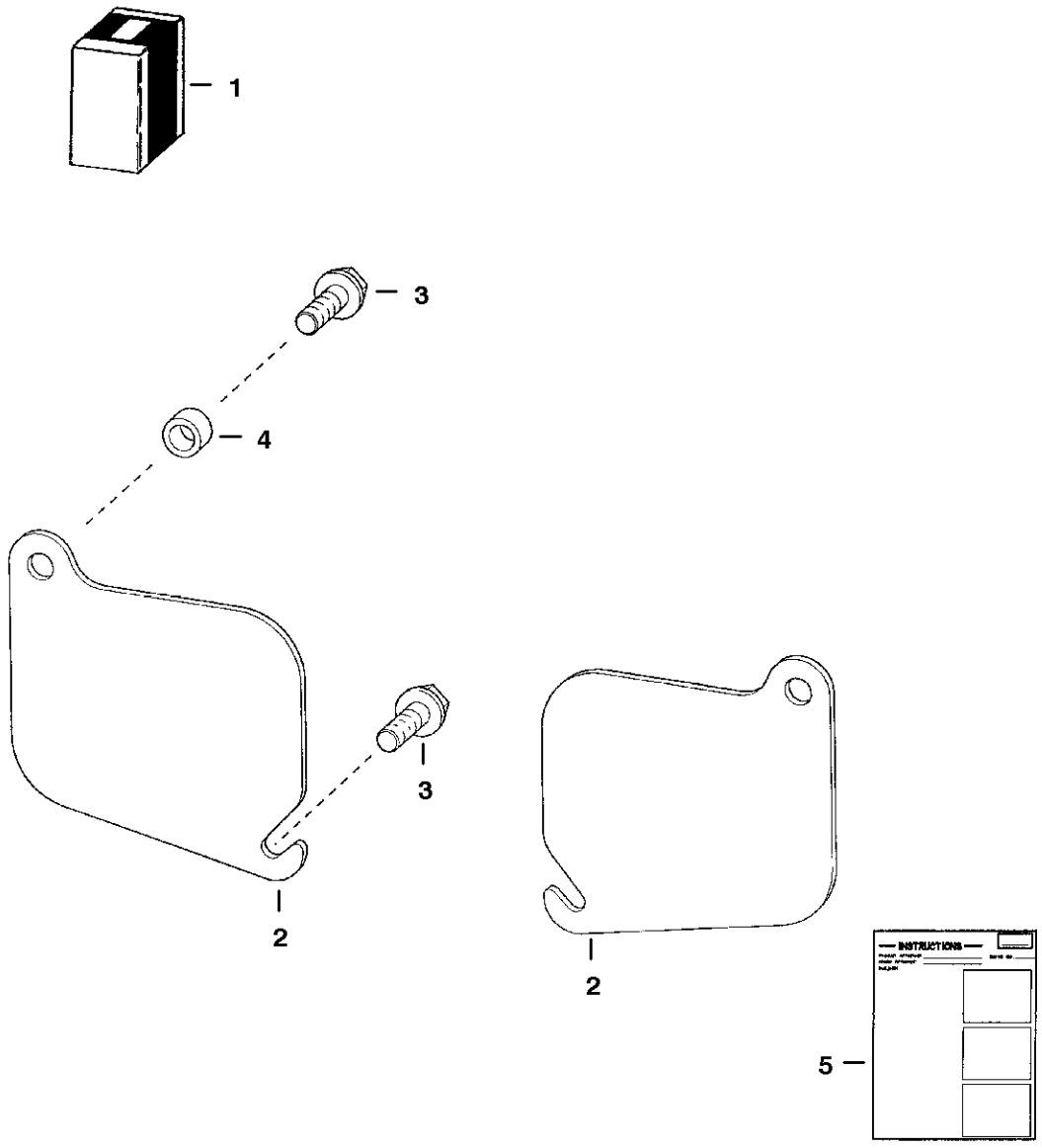

TS-1049

ACCESS COVER

Ref.N°	Part N°	Description	Remarks	Serial N°	Qty.
1	6577880	KIT	Ref. ACCESS COVER(2)-ACCESS COVER(5)		1
2	6577812	COVER			2
3	84G-3720	BOLT			4
4	6562619	BUSHING			2
5	6570931	INSTRUCTIONS			1

ACCESSORIES HARNESS
(Standard - Non Deluxe Cab)

NOTE: If loader is not equipped with Deluxe Cab Option, this harness must be used to run Flasher Lights, Turn Indicators, Hazard LIghts, Rotating Beacon and/or Strobe Lights.

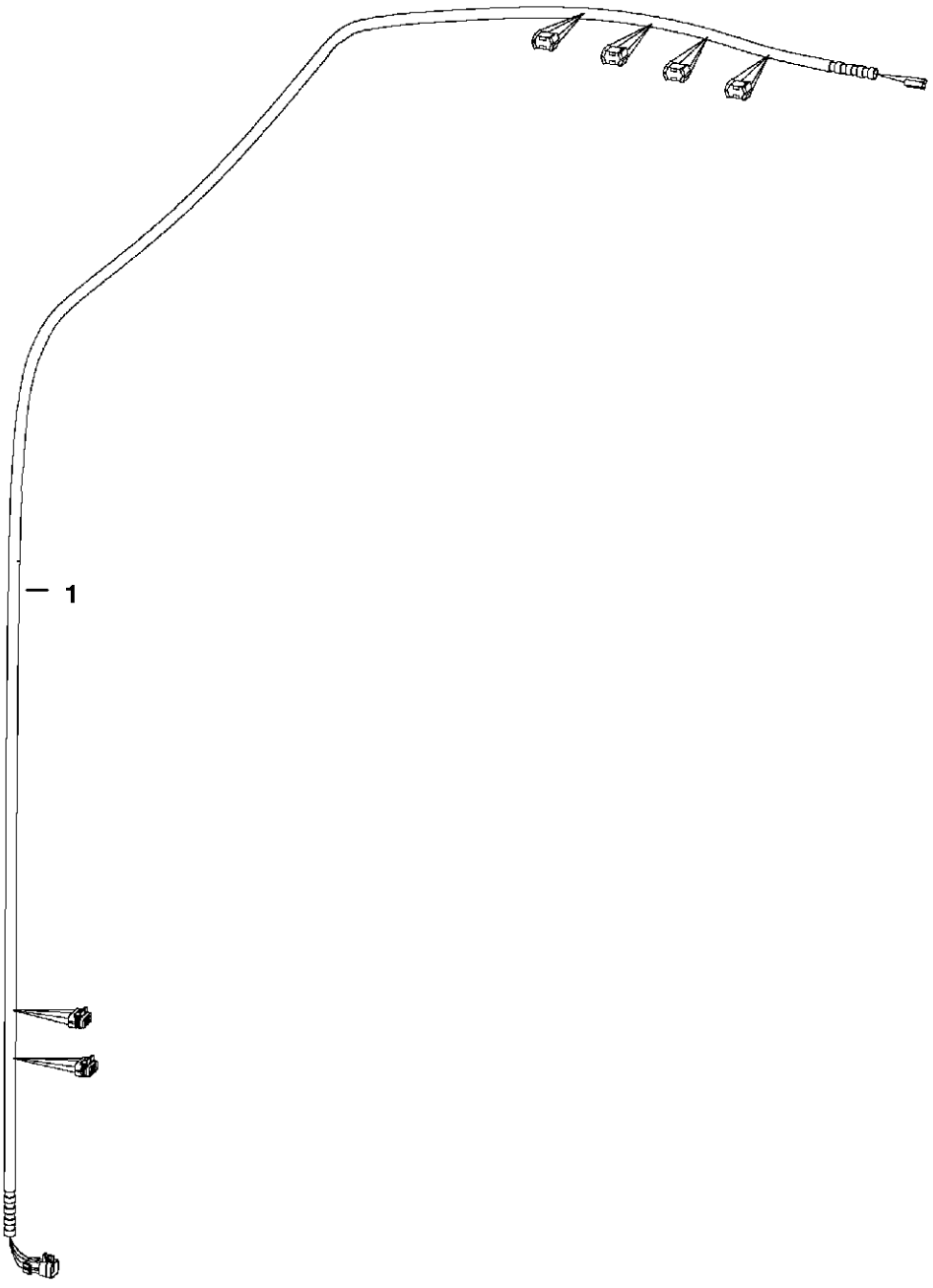

PE-1557

ACCESSORIES HARNESS

Ref.N°	Part N°	Description	Remarks	Serial N°	Qty.
1	6727468	HARNESS	SEE NOTE		1

AIR DEFLECTOR KIT

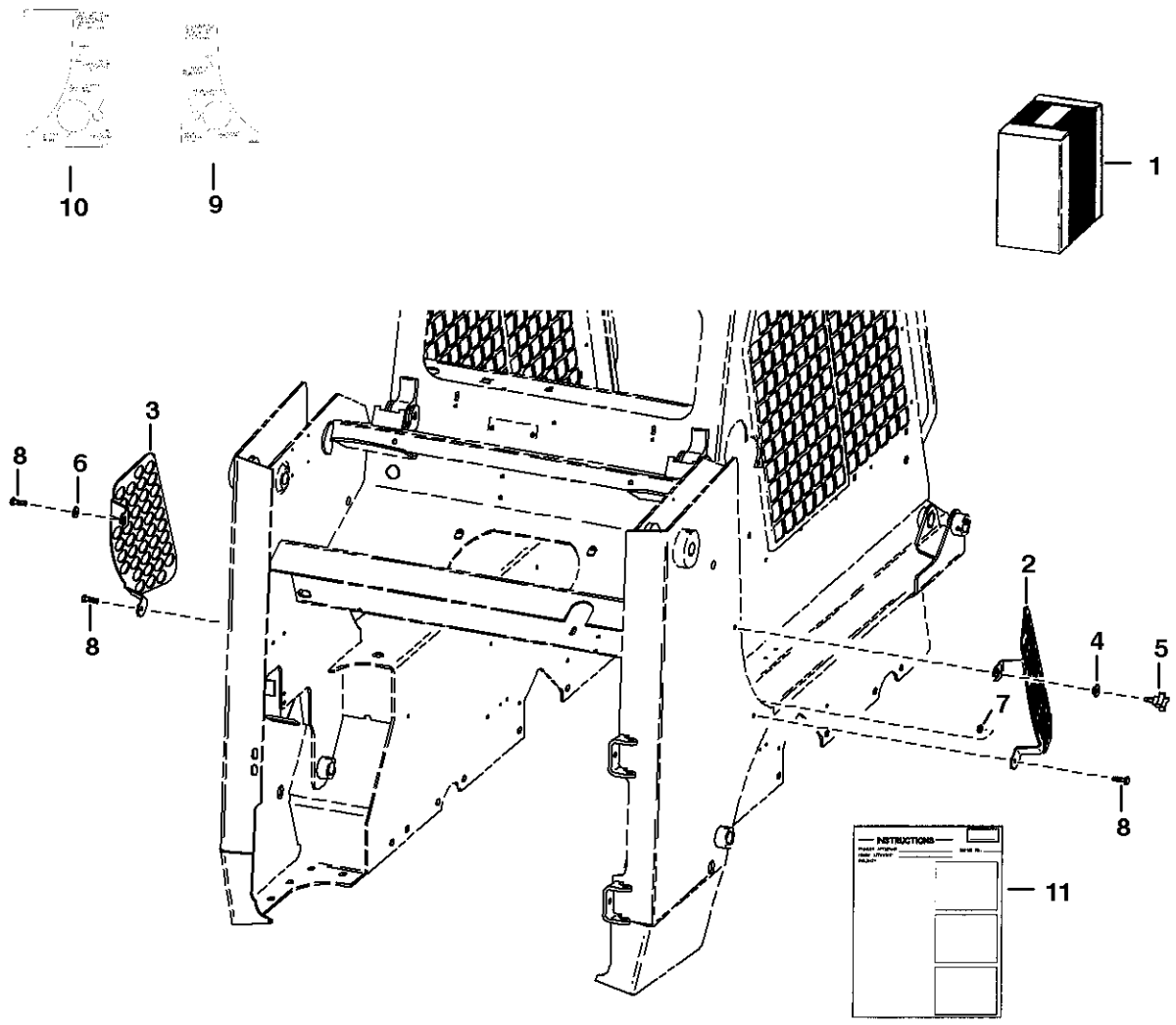

TS-1116

AIR DEFLECTOR KIT

Ref.N°	Part N°	Description	Remarks	Serial N°	Qty.
1	6702351	KIT	air deflector		1
2	6702346	SCREEN	R.H.		1
3	6702347	SCREEN	L.H.		1
4	6702986	NUT	spacer		1
5	6703090	HANDLE			1
6	27E-6	WASHER			1
7	61D-6	NUT			1
8	84G-3716	BOLT			3
9	NAP	TEMPLATE	R.H.-Order Ref. AIR DEFLECTOR KIT(11)		1
10	NAP	TEMPLATE	L.H.-Order Ref. AIR DEFLECTOR KIT(11)		1
11	6720621	INSTRUCTIONS			1

AXLE SEAL KIT

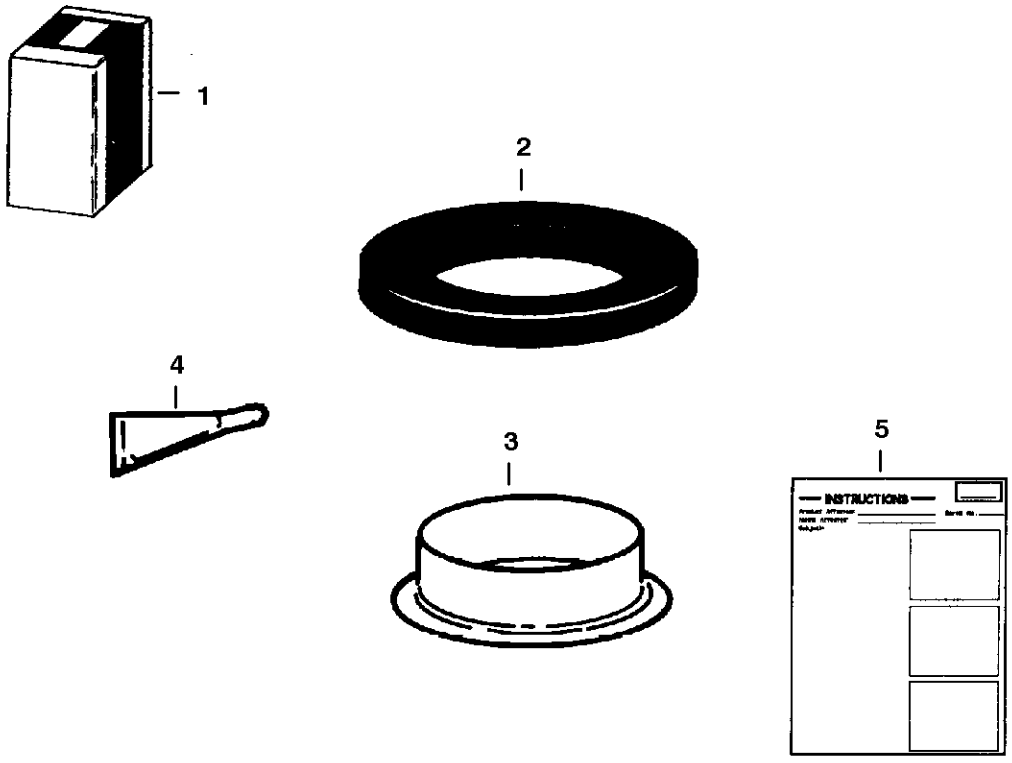

B-4041

AXLE SEAL KIT

Ref.N°	Part N°	Description	Remarks	Serial N°	Qty.
1	6722907	KIT	Ref. AXLE SEAL KIT(2) - AXLE SEAL KIT(5)		1
2	6658228	SEAL			1
3	6662306	RING			1
4	6598485	SEALANT			1
5	6722908	INSTRUCTIONS			1

BACK-UP ALARM

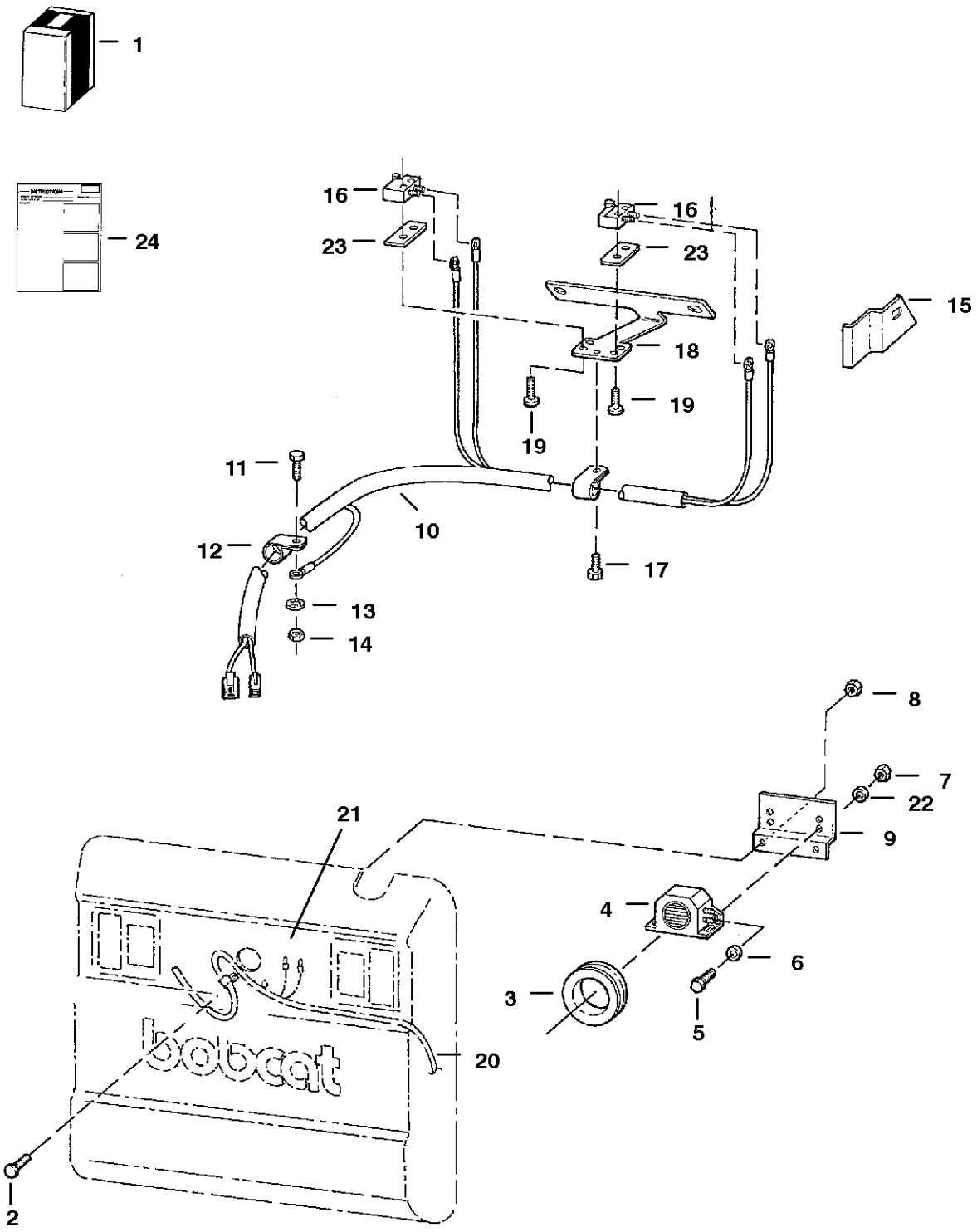

BACK-UP ALARM

Ref.N°	Part N°	Description	Remarks	Serial N°	Qty.
1	6718822	KIT	backup alarm - Ref. BACK-UP ALARM(2) - BACK-UP ALARM(24)		1
2	37C-512	BOLT			2
3	6577545	GROMMET			1
4	6599931	ALARM	backup		1
4	6668879	DECAL			1
5	17C-410	BOLT			2
6	25E-13	WASHER			2
7	61D-5	NUT			2
8	83D-4	NUT			2
9	6707726	MOUNT			1
10	6718820	HARNESS			1
11	17C-412	BOLT			1
12	30H-19	CLAMP	insulated		2
13	6E-4	WASHER			1
14	61D-4	NUT			1
15	6713793	BRACKET	switch		2
16	6646781	SWITCH	alarm		2
17	84G-3112	BOLT			1
18	6713792	MOUNT	switch		1
19	59G-616	BOLT			4
20	6715659	HARNESS	Used on loaders W/O rear lights - comes W/Ref. BACK-UP ALARM(21)		1
21	6672492	RETAINER			1
22	774220	NUT			2
23	6702593	SPACER			2
24	6900857	INSTRUCTIONS			1

BEACON

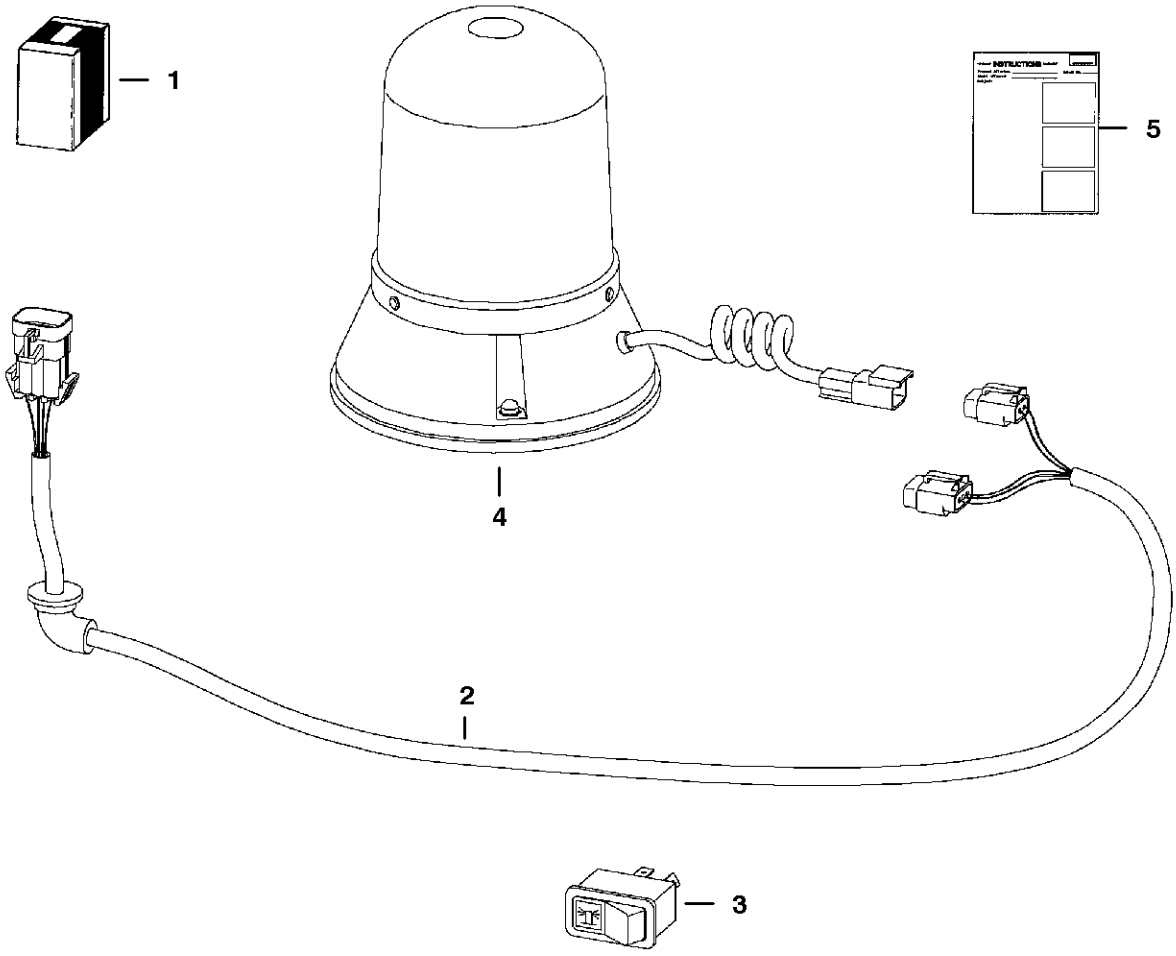

TS-1978

BEACON

Ref.N°	Part N°	Description	Remarks	Serial N°	Qty.
1	6719854	KIT	rotating beacon- If loader is not equipped W/Deluxe Cab Option also order 6727468 Harness - See Page ACCESS ORIES HARNESS(1)		1
2	6718872	HARNESS			1
3	6665317	SWITCH	horizontal		1
3	6668816	SWITCH	vertical		1
4	6675523	BEACON			1
4	6666571	BULB			1
5	6900991	INSTRUCTIONS			1

BLOCK HEATER
(Engine)

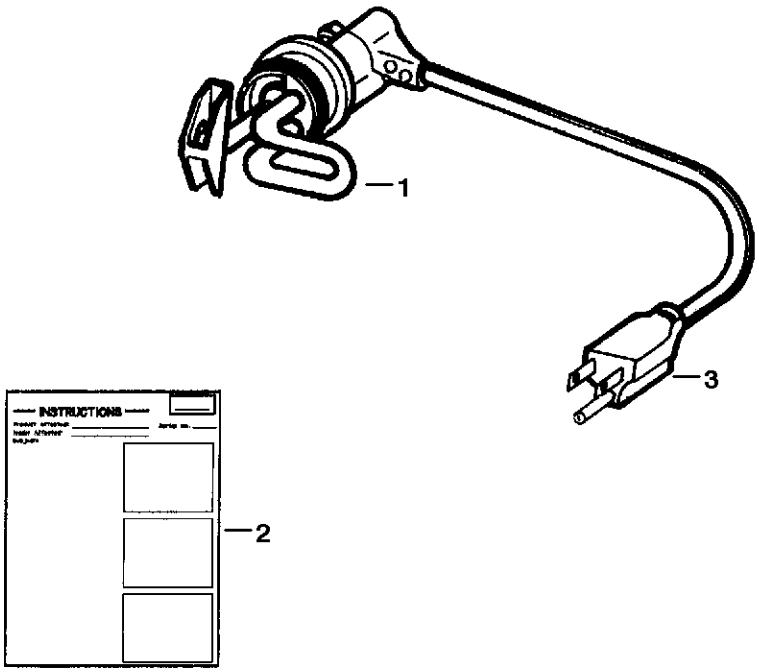

B-12299

BLOCK HEATER

Ref.N°	Part N°	Description	Remarks	Serial N°	Qty.
1	6720736	HEATER	W/Ref. BLOCK HEATER(2) & BLOCK HEATER(3)		1
2	6720038	INSTRUCTIONS			1
3	6668881	CORD			1

BOB-TACH LEVERS
(For Use W/Industrial Grapple Fork)

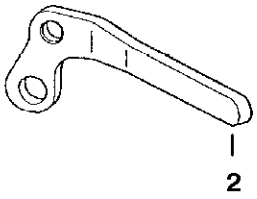

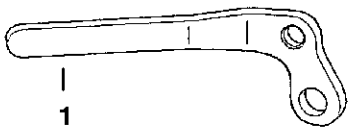

TS-1019

BOB-TACH LEVERS

Ref.N°	Part N°	Description	Remarks	Serial N°	Qty.
1	6578139	LEVER	R.H.		1
2	6578140	LEVER	L.H.		1

BUCKET POSITIONING VALVE KIT

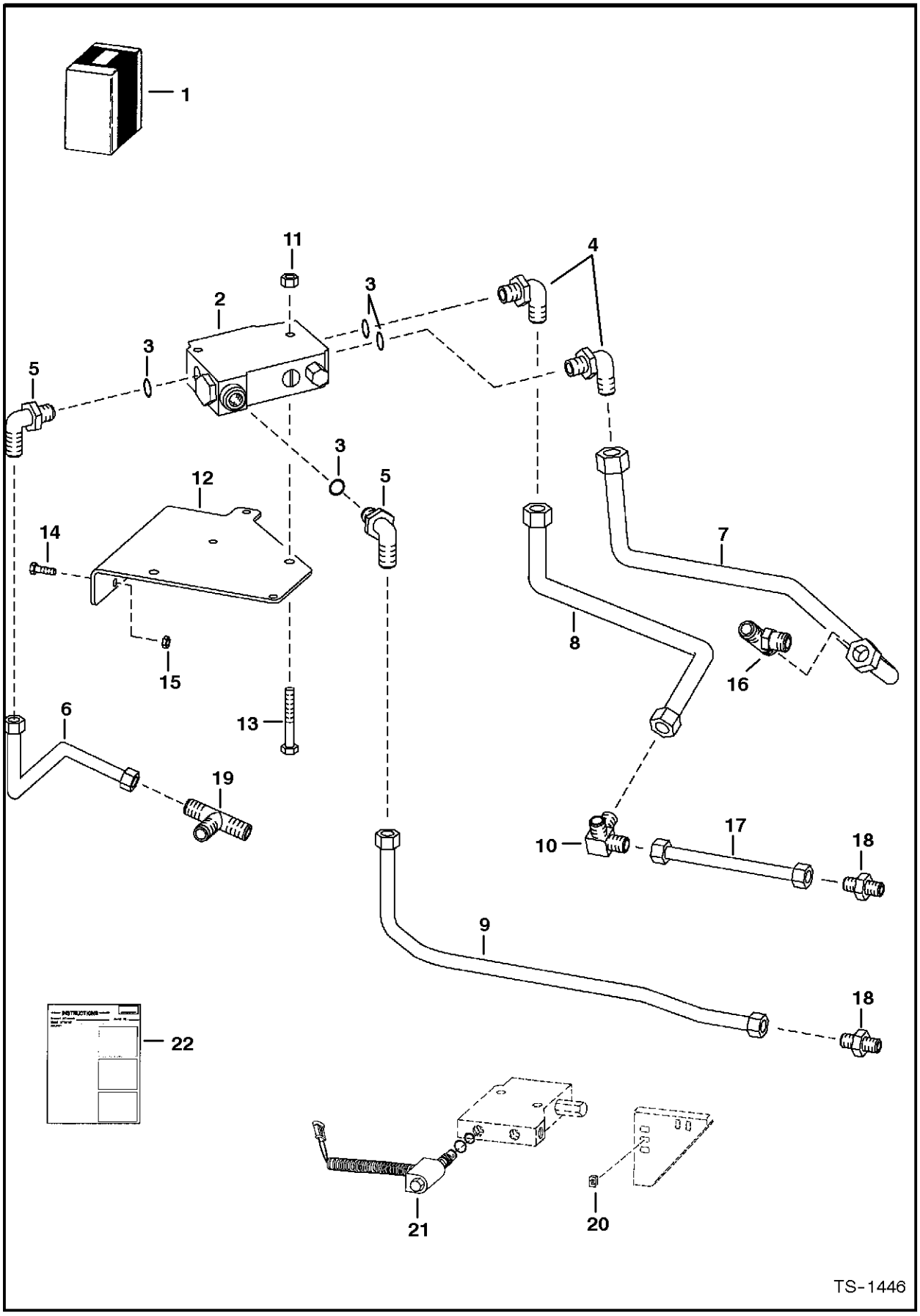

BUCKET POSITIONING VALVE KIT

Ref.N°	Part N°	Description	Remarks	Serial N°	Qty.
1	6712050	KIT	Ref. BUCKET POSITIONING VALVE KIT(2) - BUCKET POSITIONING VALVE KIT(15) & BUCKET POSITIONIN G VALVE KIT(20) - BUCKET POSITIONING		1
2	6666341	VALVE	bucket pos. - See Page BUCKET POSITIONING VALVE(1)		1
3	99K-10	O-RING			x
4	17KV-7	ELBOW	W/Ref. BUCKET POSITIONING VALVE KIT(3)		2
4	97K-10	O-RING	flared end		2
5	6715716	ELBOW	W/Ref. BUCKET POSITIONING VALVE KIT(3)		2
5	97K-8	O-RING	flared end		2
6	6705068	TUBE			1
7	6710583	TUBE			1
8	6704839	TUBE			1
9	6710584	TUBE			1
10	6705070	TEE			1
11	57D-5	NUT			2
12	6704833	BRACKET			1
13	35C-536	BOLT			2
14	35C-412	BOLT			2
15	55D-4	NUT			2
16		TEE	Not in Kit - See Page HYDRAULIC CIRCUITRY(1)		1
17		TUBE	Not in Kit - See Page HYDRAULIC CIRCUITRY(1)		1
18		ADAPTER	Not in Kit - See Page HYDRAULIC CIRCUITRY(1)		2
19		TEE	Not in Kit - See Page HYDRAULIC CIRCUITRY(1)		1
20	6668814	SWITCH			1
21	6672863	SOLENOID			1
21	6670634	SEAL KIT			1
21	6671527	NUT			1
22	6724522	INSTRUCTIONS			1

CAB DOOR

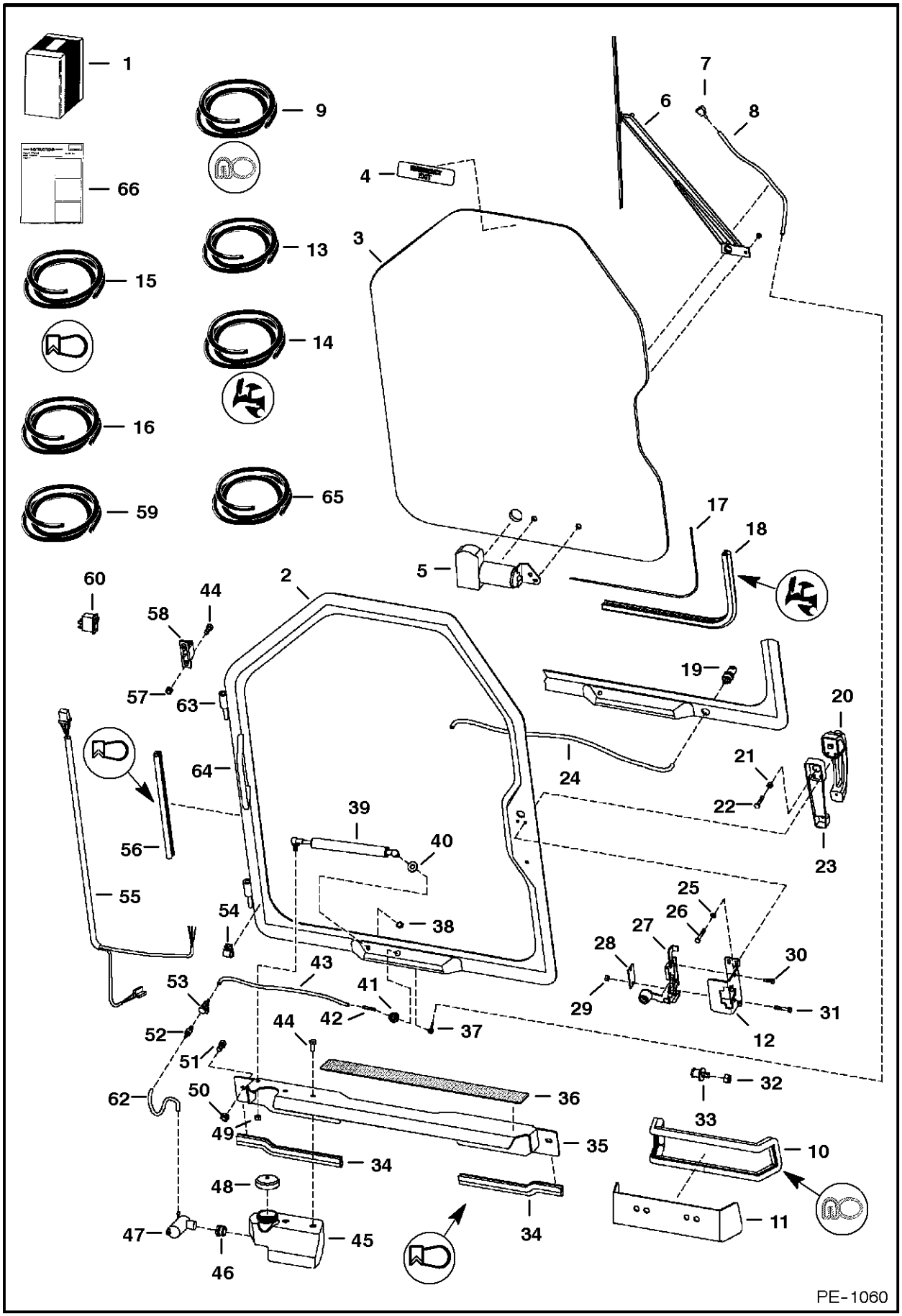
1
9
66
13
15
14
16
65
59
7
6
8
4
3
17
18
5
60
44
2
58
57
63
19
20
64
24
21
22
23
39
40
56
55
54
38
25
26
27
28
30
29
31
43
53
41
42
37
12
52
44
51
32
62
50
36
33
49
35
10
34
48
34
47
45
11
46
PE-1060

CAB DOOR

Ref.N°	Part N°	Description	Remarks	Serial N°	Qty.
1	6718808	KIT	door - Was 6718807 [B,D]		1
2	NAP	DOOR	.5' longer than 6726435inD1} Door - Was 6717590 [A]		1
2	6726435	DOOR	'.5' shorter than NAP/6717590 Door		1
3	6717360	WINDOW	.25' thick - glass - See Page CAB DOOR(1)		1
4	6707852	DECAL	exit		1
5		MOTOR	See Page CAB DOOR(1)		1
6		ARM	wiper - See Page CAB DOOR(1)		1
7		NOZZLE	'wiper arm mounted -See Page CAB DOOR(1)		1
8		HOSE	See Page CAB DOOR(1)		1
9	6555351	SEAL	bulk - Sold Per Foot		x
10	NAP	SEAL	'40'(1016 mm) long - Order Ref. CAB DOOR(9)		1
11	6725200	PLATE			1
12	6717369	BRACKET	latch		1
13	6676918	HOSE	'50' (15,240 mm) long roll - .125' I.D. - black		x
14	6665568	SEAL	bulk - Sold Per Foot		x
15	6675558	SEAL	bulk - Sold Per Foot - Was 6669390 [A]		x
16	6554149	CORD	bulk - Sold Per Foot		x
17	NAP	CORD	window - 113.3' (2877,8mm) - Order Ref. CAB DOOR(16)		1
18	NAP	SEAL	window - 113.3' (2877,8mm) - Order Ref. CAB DOOR(14)		1
19	6664555	NOZZLE	washer		1
20	6674667	HANDLE			1
20	6709527	KEY	ign. & rear door		1
21	61D-4	NUT			1
22	17C-420	BOLT			1
23	6717146	SPACER	handle		1
24	NAP	HOSE	25.25' (641,4 mm) long - Order Ref. CAB DOOR(59)		1
25	6EM-60	WASHER			3
26	1CM-640	BOLT			3
27	6674666	LATCH			1
28	6718520	COVER	latch		1
29	4DM-6	NUT			2
30	1CM-620	BOLT			2
31	1CM-635	BOLT			2
32	91D-7	NUT			1
33	6654170	STRIKER BOLT			1
34	NAP	SEAL	threshold - 11' (279,4mm) - Order Ref. CAB DOOR(15)		2
35	6725042	SHIELD			1
36	6542731	SAFETY TREAD			1
37	6676500	ELBOW			1
38	46D-5	NUT	acorn		1
39	6674938	GAS SPRING			1
39	6678548	SOCKET	ball		2
39	6649244	BALL STUD			2
39	6649245	CLIP	spring		2
40	25E-16	WASHER			1
41	6676499	GROMMET	wiper		1
42	6676917	ELBOW			1
43	NAP	HOSE	18.25' (463,6 mm) long - Order Ref. CAB DOOR(59)		1
44	17C-512	BOLT			6
45	6730830	TANK	washer - Was 6718627 [A]		1

CAB DOOR

Ref.N°	Part N°	Description	Remarks	Serial N°	Qty.
46	6666766	GROMMET			1
47	6664554	PUMP	washer bottle		1
48	6674993	CAP	vented		1
49	61D-5	NUT			5
50	61D-6	NUT	Was 61D-8 [B]		2
51	17C-612	BOLT	Was 17C-812 [B]		2
52	6675299	COUPLER	insert		1
53	6675298	COUPLER	body		1
54	6675378	CLIP	Use W/door mounted nozzle		2
54	6675378	CLIP	Use W/wiper arm mounted nozzle		1
55	6718295	HARNESS	wiper		1
56	NAP	SEAL	127.3'(3233,4mm) -Order Ref. CAB DOOR(15)		1
57	59D-5	NUT			4
58	6717593	HINGE	base		2
59	6676003	HOSE	bulk - Sold Per Foot - .109' I.D. - black - Was 6708310 [A]		x
60	6665707	SWITCH	front wiper		1
61	6664097	COVER	wiper		1
62	NAP	HOSE	washer - 4.25' (108 mm) long - Order Ref. CAB DOOR(65)		1
63	6718376	HINGE	door		2
64	6718521	HANDLE	grab		1
65	6708310	HOSE	bulk - Sold Per Foot - .149' I.D. - clear		1
66	6901013	INSTRUCTIONS	Was 6900854 [A]		1

CAB DOOR
(Window & Wiper)

NOTE: It is necessary to identify the correct style of wiper motor before ordering wiper replacement parts.
Components for wipers W/threaded shaft ends & built in fuse are shown on the upper half ot this page.
Components for wipers W/knurled shaft ends are shown on the lower half of this page.

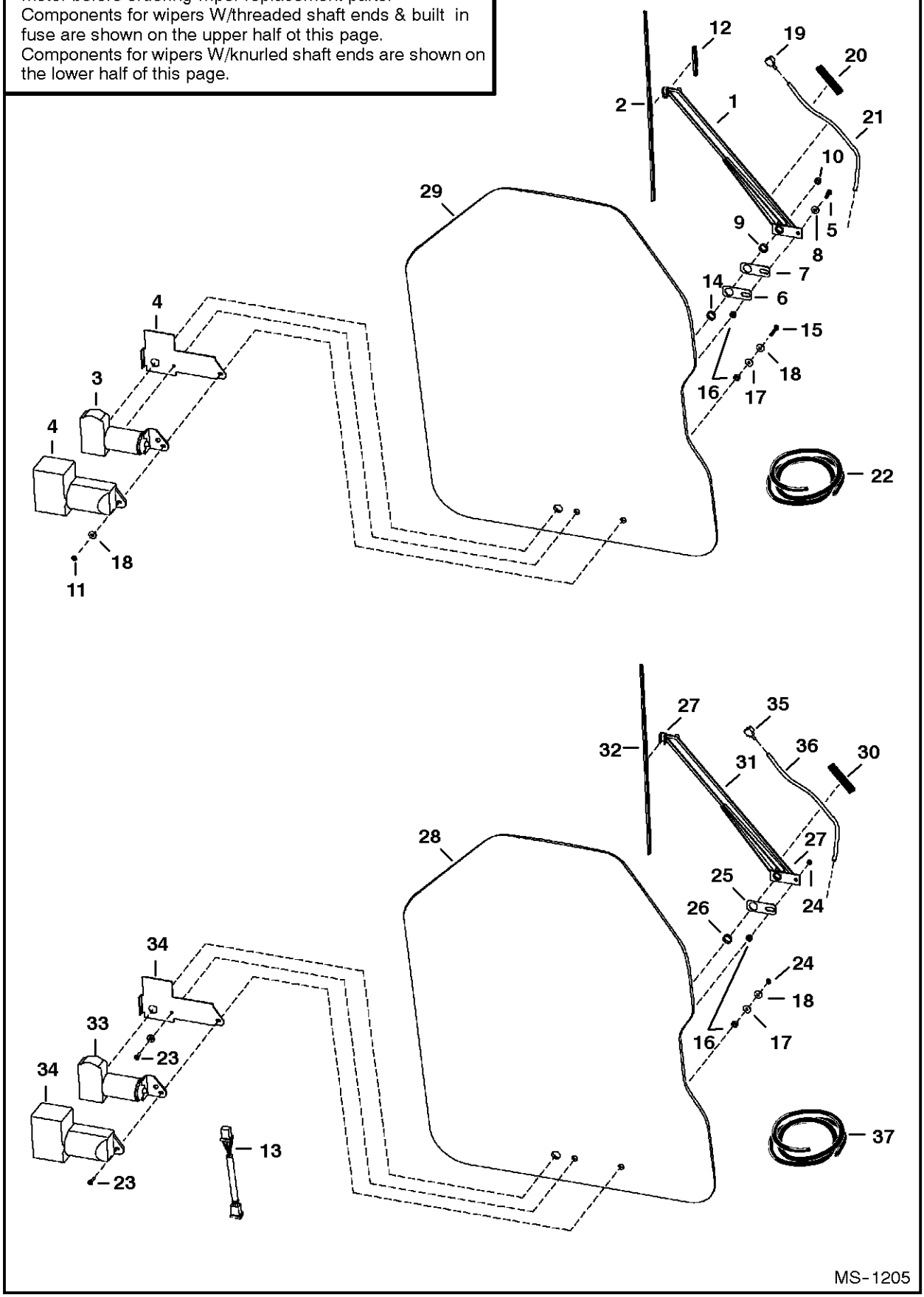

CAB DOOR

Ref.N°	Part N°	Description	Remarks	Serial N°	Qty.
1	6677833	ARM ASSY	W/Ref. CAB DOOR(19) - CAB DOOR(21)		1
2	6677834	BLADE			1
3	6677835	COVER	W/threaded shaft end & built in fuse - SEE NOTE		1
4	6677836	MOTOR			1
5	6677837	BOLT			1
6	6677839	GASKET			1
7	6677840	SWIVEL ASSY			1
8	6677841	WASHER	tooth lock		1
9	6677842	NUT			1
10	6677843	NUT			1
11	6677844	NUT			2
12	6677845	ADAPTER	arm		1
13	6730123	HARNESS	7'(177,8 mm) long wiper jumper - W/fuse - Use W/Ref. CAB DOOR(33)		1
14	6677848	SLEEVE	rubber - Use W/Ref. CAB DOOR(3) & Ref. CAB DOOR(28)		1
14	6677847	GROMMET	rubber - Use W/Ref. CAB DOOR(3) & Ref. CAB DOOR(29)		1
15	6678198	BOLT			1
16	6664085	BUSHING	nylon		2
17	6801059	WASHER	neoprene		1
18	6678739	WASHER	steel - Was 6664065 [A]		2
19	6678920	NOZZLE	For Ref. CAB DOOR(1)		1
20	6678921	GUIDE	hose		1
21	NAP	HOSE	18'(457,2mm)long -Order Ref. CAB DOOR(22)		x
22	6676003	HOSE	bulk - Sold Per Foot - .109' I.D. - black		x
23	6664566	SCREW			2
24	6664103	NUT	acorn		2
25	6664178	GASKET			1
26	6667201	SPACER	nylon - Use W/Ref. CAB DOOR(28) & Ref. CAB DOOR(33)		1
27	6670288	END	plastic		2
28	NAP	WINDOW	.25' thick glass W/.77' dia. wiper motor shaft hole - Order Ref. CAB DOOR(14) (6677847 Grommet) & Ref. CAB DOOR(29) - Was 6717		1
29	6729776	WINDOW	.25' thick glass W/1.00' dia. wiper motor shaft hole		1
30	6676501	CLIP			1
31	6664095	ARM	W/Ref. CAB DOOR(27) & CAB DOOR(30)		1
32	6664096	BLADE			1
33	NAP	MOTOR	wiper - W/knurled shaft end - Use W/Ref. CAB DOOR(13) - SEE NOTE - SEE BTIinD1}~ 337		1
33	6631928	SHAFT			1
33	6631927	GEAR			1
33	6670164	LINK			1
33	961528	HARDWARE			1
34	6664097	COVER			1
35	6676498	NOZZLE	For Ref. CAB DOOR(31)		1
36	NAP	HOSE	10.25'(260,4 mm) long - Order Ref. CAB DOOR(37)		1
37	6676918	HOSE	50' (15,240 mm) long roll - .125' I.D. - black		x

CAB DOOR
(Special Applications)

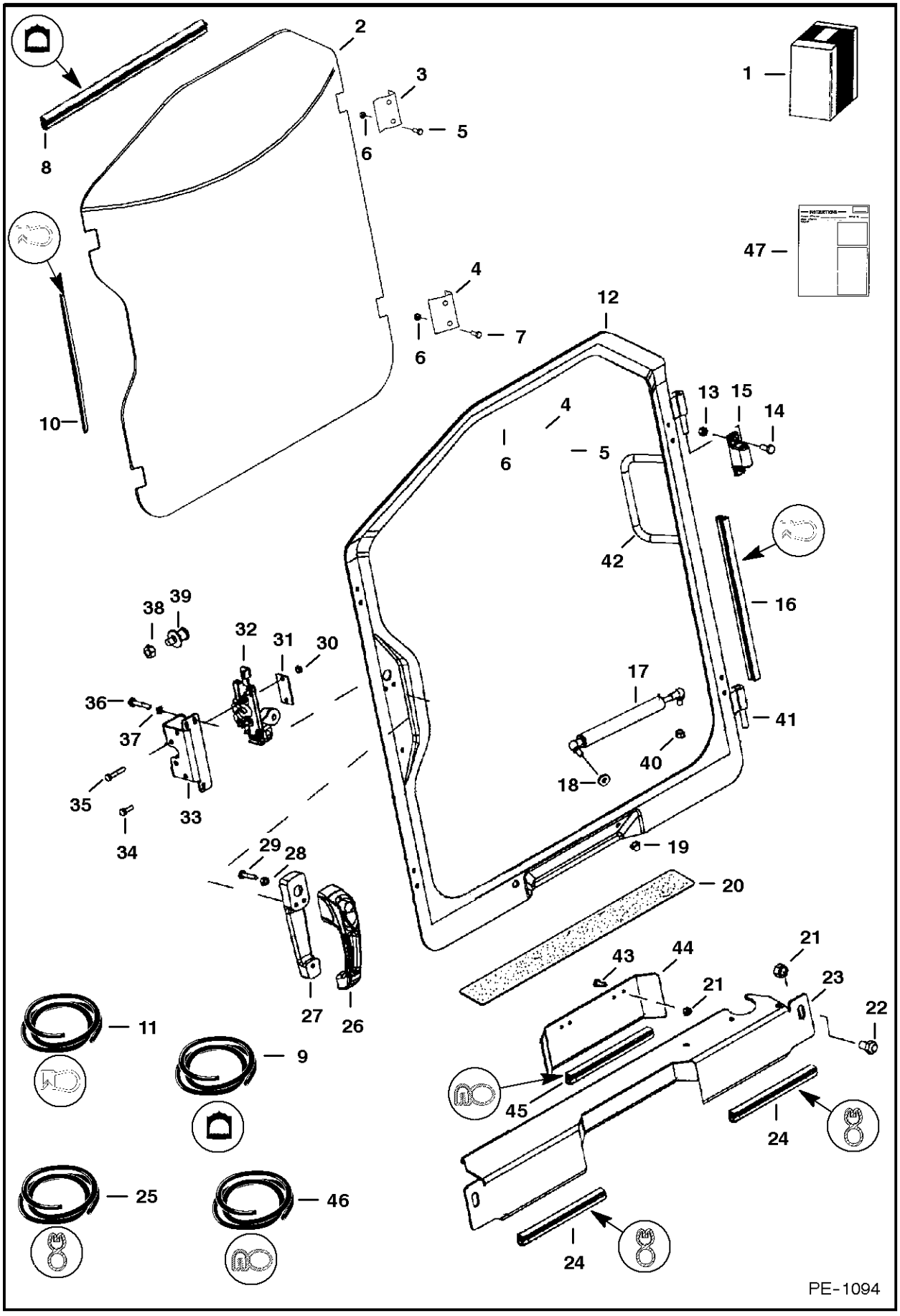

CAB DOOR

Ref.N°	Part N°	Description	Remarks	Serial N°	Qty.
1	6725941	KIT	door		1
2	NAP	WINDOW	.5' thick polycarbonate -W/O top notch - Order 6725935in D1}A Window, Ref. CAB DOOR(4) & (2) each of Ref. CAB DOOR(5) & CAB DOOR		1
2	6725935	WINDOW	.5' thick polycarbonate - W/top notch		1
3	6725938	CLAMP			2
4	6725937	CLAMP			2
5	17C-628	BOLT			4
6	95D-6	NUT			8
7	17C-624	BOLT			4
8	NAP	SEAL	'12'(304,8 mm) long - Order Ref. CAB DOOR(9) - Used W/Ref. CAB DOOR(2) W/O top notch		1
9	6670759	SEAL	bulk - Sold Per Foot		x
10	NAP	SEAL	'115'(2921 mm) long -Order Ref. CAB DOOR(11)		1
11	6675558	SEAL	bulk - Sold Per Foot		x
12	6726932	DOOR	W/Ref. CAB DOOR(41) & CAB DOOR(42)		1
13	59D-5	NUT			4
14	17C-512	BOLT			6
15	6717593	HINGE	base		2
16	NAP	SEAL	127.3'(3233,4 mm) long - Order Ref. CAB DOOR(11)		1
17	6674938	GAS SPRING			1
17	6678548	SOCKET	ball		2
17	6649245	CLIP	spring		2
18	25E-16	WASHER			1
19	46D-5	NUT	acorn		1
20	6542731	SAFETY TREAD			1
21	55D-6	NUT			4
22	17C-612	BOLT			2
23	6725042	SHIELD			1
24	NAP	SEAL	'11'(279,4 mm) long -Order Ref. CAB DOOR(25)		2
25	6513152	SEAL	bulk - Sold Per Foot		x
26	6674667	HANDLE			1
26	6709527	KEY	ign. & rear door		1
27	6717146	SPACER	handle		1
28	61D-4	NUT			1
29	17C-420	BOLT			1
30	4DM-6	NUT			2
31	6718520	COVER	latch		1
32	6674666	LATCH			1
33	6717369	BRACKET	latch		1
34	1CM-620	BOLT			2
35	1CM-635	BOLT			2
36	1CM-640	BOLT			3
37	6EM-60	WASHER			3
38	91D-7	NUT			1
39	6654170	STRIKER BOLT			1
40	61D-5	NUT			5
41	6718376	HINGE	door		2
42	6718521	HANDLE	grab		1
43	35C-620	BOLT			2
44	6725200	PLATE			1
45	NAP	SEAL	'40'(1016 mm) long - Order Ref. CAB DOOR(46)		1

CAB DOOR

Ref.N°	Part N°	Description	Remarks	Serial N°	Qty.
46	6555351	SEAL	bulk - Sold Per Foot		x
47	6901013	INSTRUCTIONS			1

CAB DOOR
(Lexan Window)

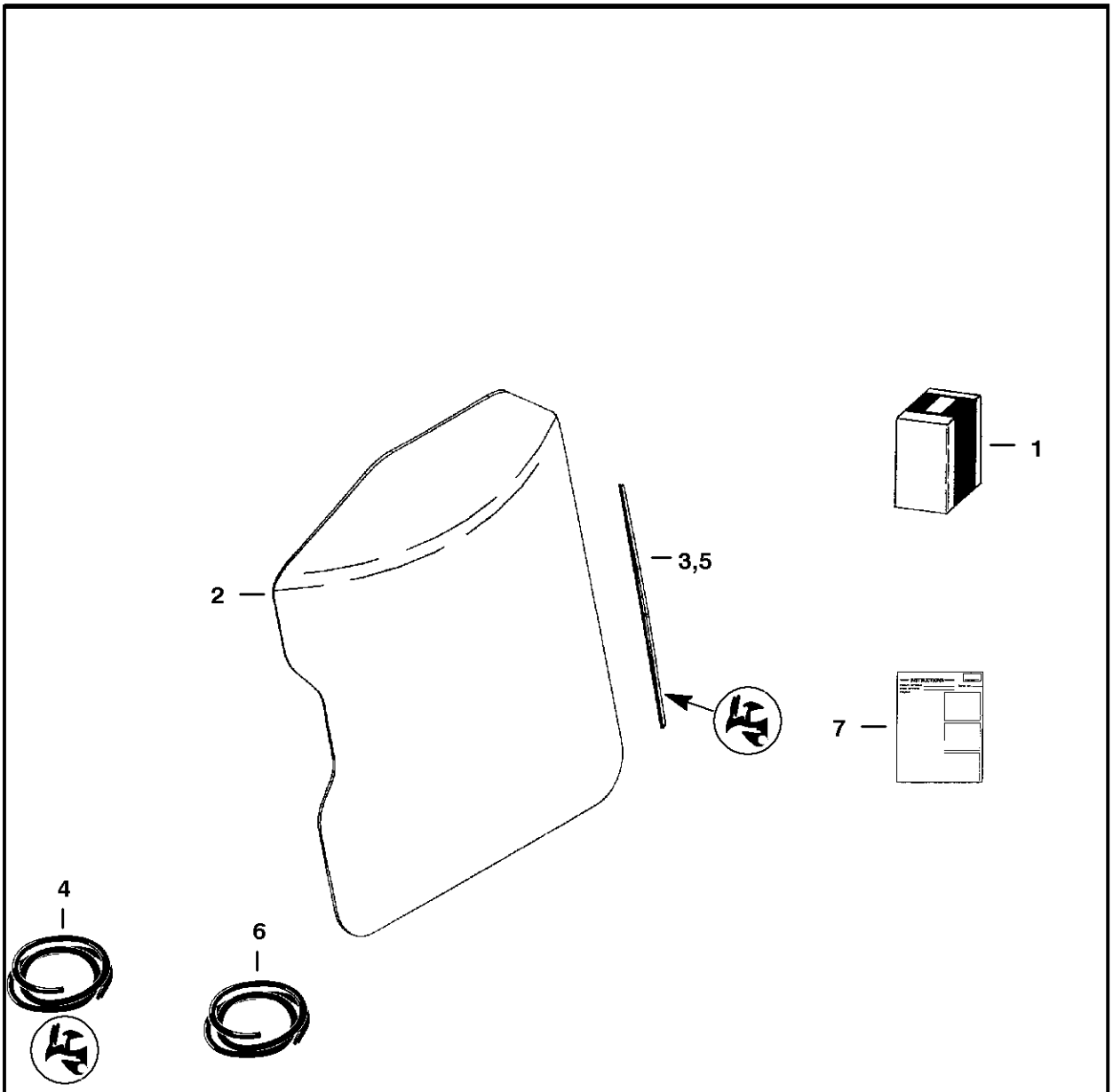

NOTE: This Lexan window in NOT approved as a Special Applications Kit. This window does not provide additional protection from materials entering cab openings.

PE-1558

CAB DOOR

Ref.N°	Part N°	Description	Remarks	Serial N°	Qty.
1	6726427	KIT	Ref.		1
2	6675215	WINDOW	lexan		1
3	NAP	SEAL	113.3'(2877,8 mm) long - Order Ref. CAB DOOR(4)		1
4	6665568	SEAL	bulk - Sold Per Foot		x
5	NAP	CORD	113.3'(2877,8 mm) long - Order Ref. CAB DOOR(6)		1
6	6554149	CORD	bulk - Sold Per Foot		x
7	6901036	INSTRUCTIONS			1

CAB ENCLOSURE

NOTE: Order Cab Enclosure Kit from Gwinner SALES #6719667.
Order Special Applications Kit from Gwinner SALES # 6719390.

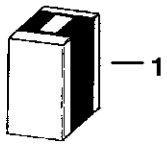

B-16410

CAB ENCLOSURE

Ref.N°	Part N°	Description	Remarks	Serial N°	Qty.
1	SALES	KIT	cab enclosure - SEE NOTE - includes items on Page CAB DOOR(1) & CAB WINDOWS(1)		1
1	SALES	KIT	special cab enclosure - SEE NOTE - includes items on Page CAB DOOR(1) & CAB WINDOWS(1)		1

CAB ENCLOSURE
(Envelope)

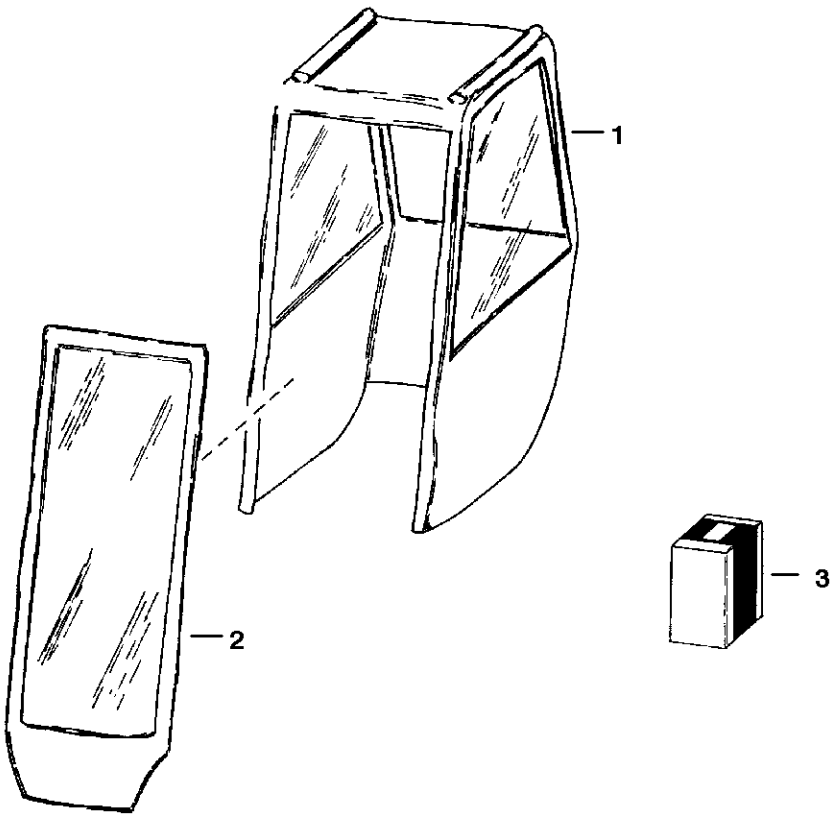

B-1413

CAB ENCLOSURE

Ref.N°	Part N°	Description	Remarks	Serial N°	Qty.
1	6675544	VINYLCAB	fastens inside of cab W/velcro - W/Ref. CAB ENCLOSURE(2) - Was 6565270 [B,D]		1
2	6675590	DOOR	vinyl - Was 6599721 [B,D]		1
3	6675591	HINGE KIT	Was 6662839 [B,D]		1
4	6722597	VELCRO	27'(8229,6 mm) roll		1

CAB WINDOWS

NOTE: Order Top & Rear Window Kit from Gwinner Sales # 6718805.
Order Side Window Kit from Gwinner Sales # 6718806.

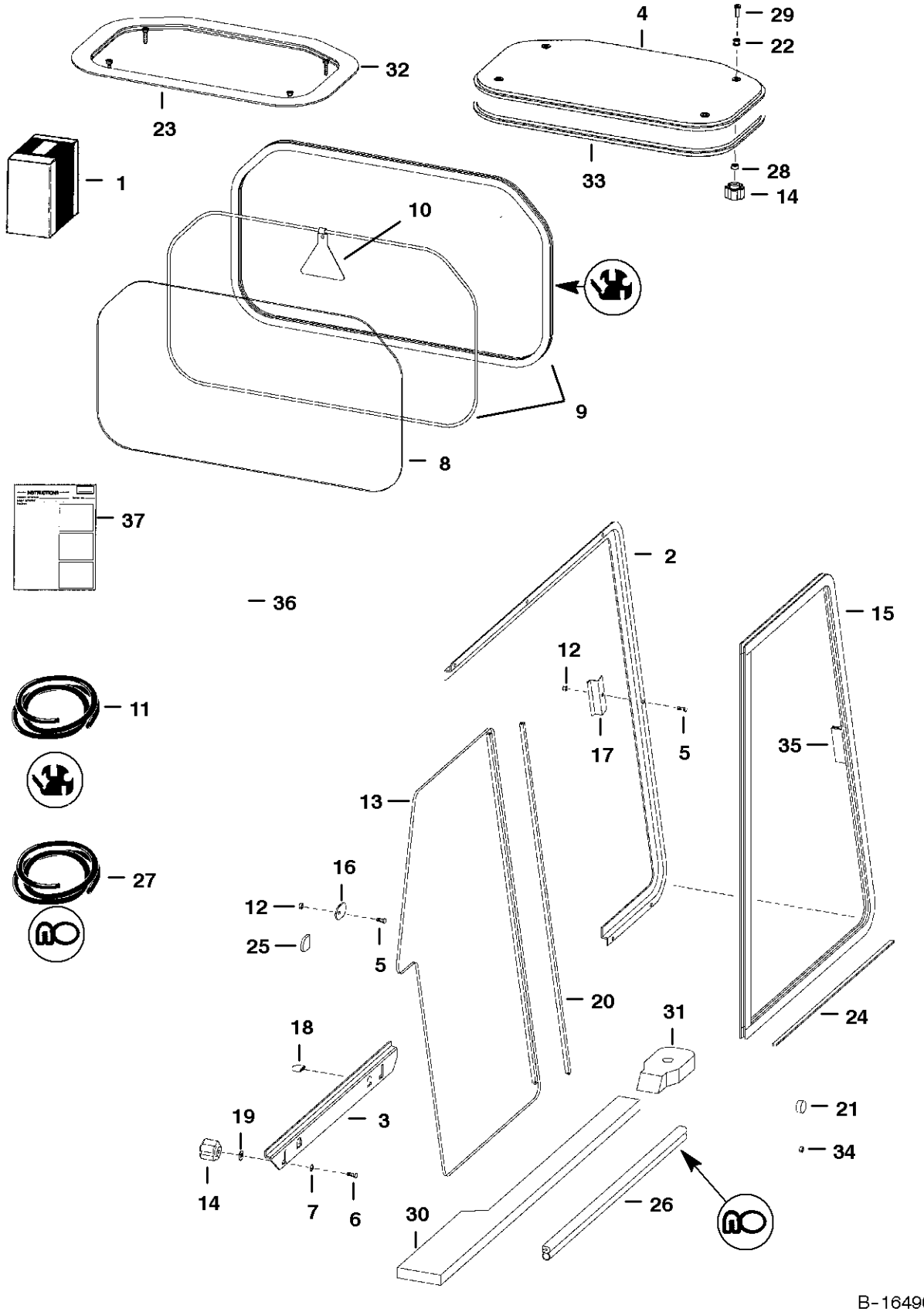

CAB WINDOWS

Ref.N°	Part N°	Description	Remarks	Serial N°	Qty.
1	SALES	KIT	Top & Rear Window - SEE NOTE		1
1	SALES	KIT	Side Window - SEE NOTE		1
2	6717870	TRACK	L.H. side		1
2	6717872	TRACK	R.H. side		1
3	6717871	TRACK	L.H. bottom		1
3	6717873	TRACK	R.H. bottom		1
4	6728629	WINDOW	assy. - lexan - W/Ref. CAB WINDOWS(22) & CAB WINDOWS(33)		1
5	10C-410	BOLT	carriage		18
6	10C-416	BOLT	carriage		4
7	25E-14	WASHER			4
8	6717874	WINDOW	rear		1
8	6719413	WINDOW	rear - lexan		1
9	NAP	EXTRUSION	75.75'(1924 mm) long - Order Ref. CAB WINDOWS(11)		x
9	NAP	CORD	75.75'(1924 mm) long - Order Ref. CAB WINDOWS(11)		x
10	6559515	EXIT TAG			1
11	6675387	SEA;	bulk - Sold Per Foot - Was 6674524 [A]		x
11	6554149	CORD	bulk - Sold Per Foot		x
12	59D-4	NUT			18
13	6674520	WINDOW	L.H. rear - W/Ref. CAB WINDOWS(24)		1
13	6674522	WINDOW	R.H. rear - W/Ref. CAB WINDOWS(24)		1
14	6674741	KNOB			8
15	6674519	WINDOW	L.H. front		1
15	6674521	WINDOW	R.H. front		1
16	6719063	STOP			2
17	6719037	STRIKER			2
18	6719065	COVER	tab		4
19	6675212	RETAINER	bolt		4
20	6675833	SEAL	rear window dual wiper W/tape		2
21	6657719	PLUG	for .75' dia. hole		2
22	6675545	GROMMET			4
23	NAP	SEAL	bulk - Sold Per Foot - Order Ref. CAB WINDOWS(4) - Was 6675546 [A]		x
24	6676927	FELT STRIP	20.38' (517,7 mm) long		2
25	6677198	CAP	tab		2
26	NAP	SEAL	24'(609,6 mm) long - Order Ref. CAB WINDOWS(27)		1
27	6555351	SEAL	bulk - Sold Per Foot		x
28	6664085	BUSHING	nylon		4
29	91G-416	BOLT			4
30	6729010	SEAL	L.H. - cab to main frame - foam		1
30	6729009	SEAL	R.H. - cab to main frame - foam		1
31	6729011	SEAL	cab mount		2
32	NAP	WINDOW	top - Order Ref. CAB WINDOWS(4) - Was 6725360 [A]		1
33	NAP	SEAL	Order Ref. CAB WINDOWS(4)		1
34	6677973	PLUG	for .22' dia. hole		2
35	6678283	HANDLE	'side window - W/tape & insulation		2
36	NAP	ADHESIVE	top window - Was 6675694 [B]		1
37	6901013	INSTRUCTIONS	Was 6900854 [A]		1
37	6900853	INSTRUCTIONS	Side Windows		1

CAB WINDOWS
(Rear Window Removal Kit)

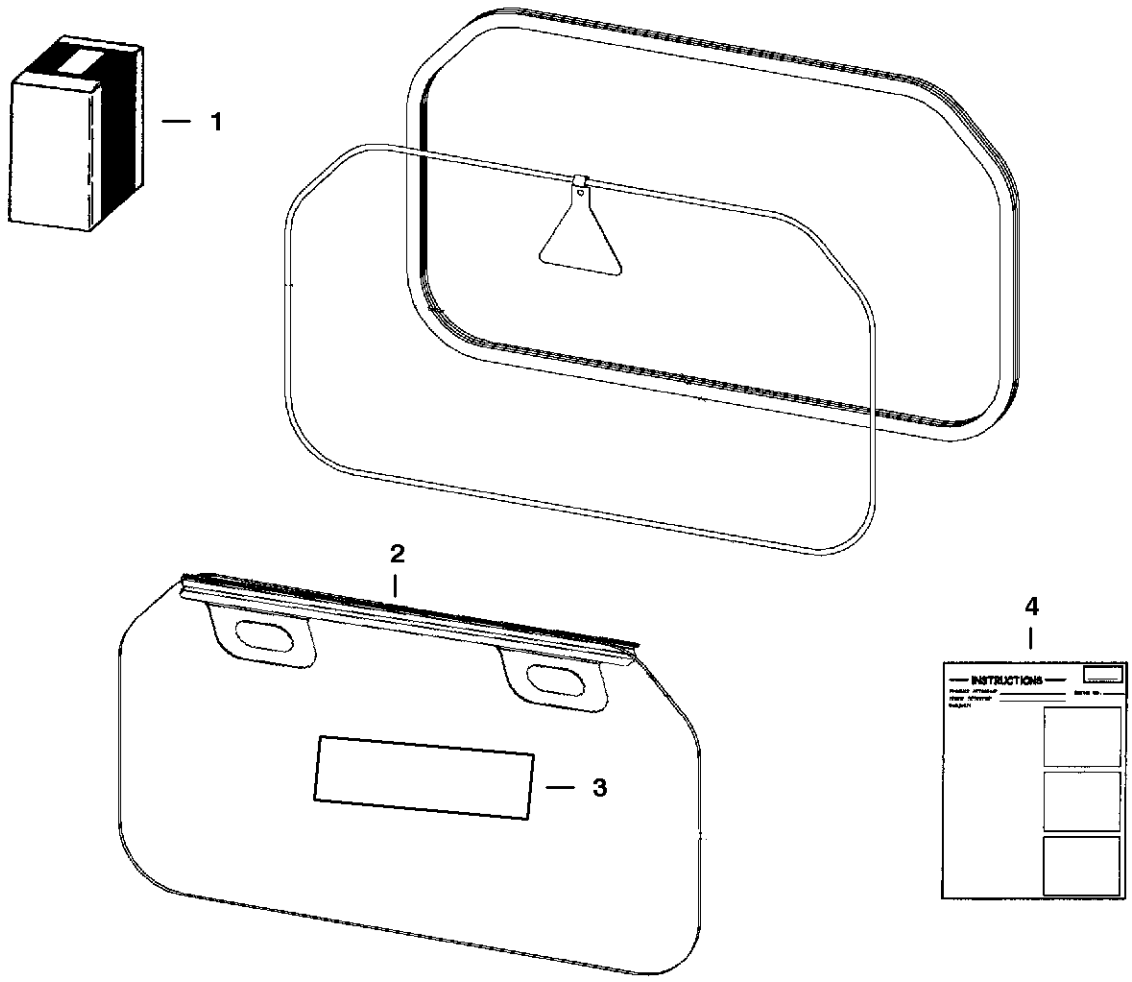

TS-2006

CAB WINDOWS

Ref.N°	Part N°	Description	Remarks	Serial N°	Qty.
1	6725946	KIT	Ref. CAB WINDOWS(2) - CAB WINDOWS(4)		1
2	6725421	HANDLE			1
3	6726303	DECAL			1
4	6901029	INSTRUCTIONS			1

COUNTERWEIGHT KIT
(Front Axle)

NOTE: Order Counterweight Kit from Gwinner Sales # 6704284.

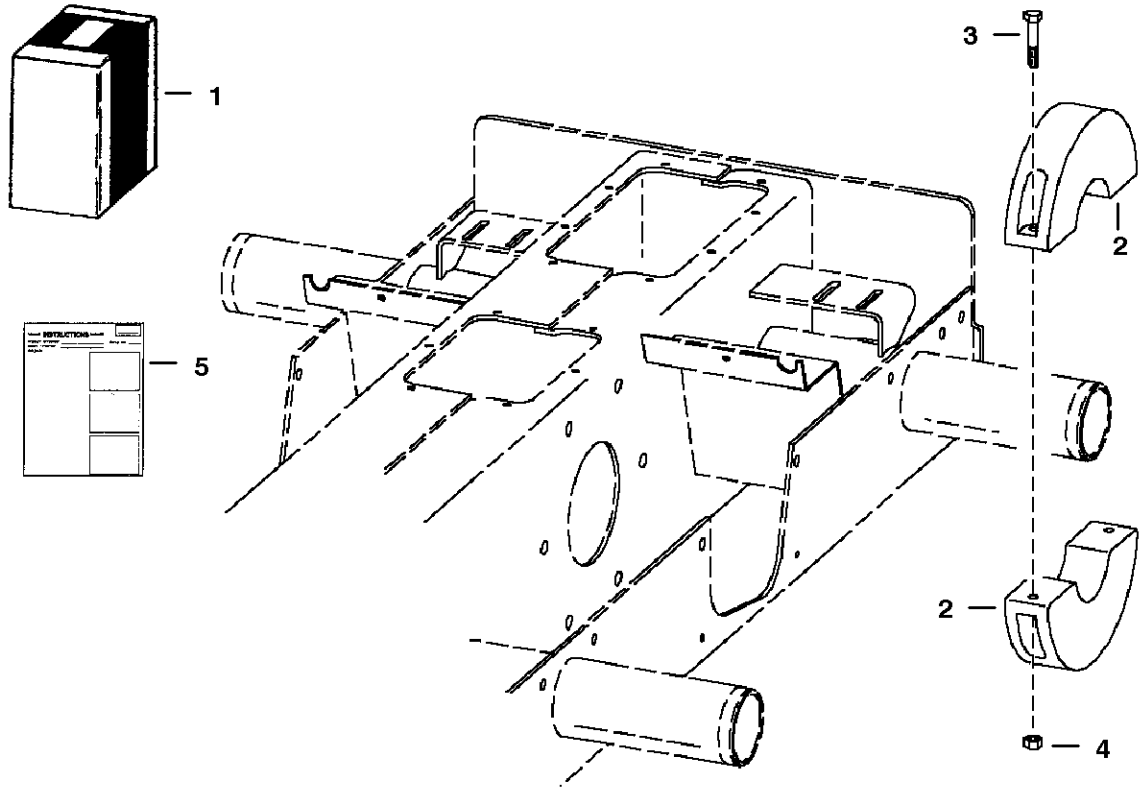

TS-1020

COUNTERWEIGHT KIT

Ref.N°	Part N°	Description	Remarks	Serial N°	Qty.
1	SALES	KIT	counterweight		1
2	6714361	WEIGHT	38.7 lbs. (17,6 kg) - 4.5'(114,3 mm) wide		4
3	17C-640	BOLT			8
4	61D-6	NUT			8
5	6900366	INSTRUCTIONS			1

COUNTERWEIGHT KIT
(1350 lb.)

NOTE: Order Counterweight Kit from Gwinner Sales # 6726407.

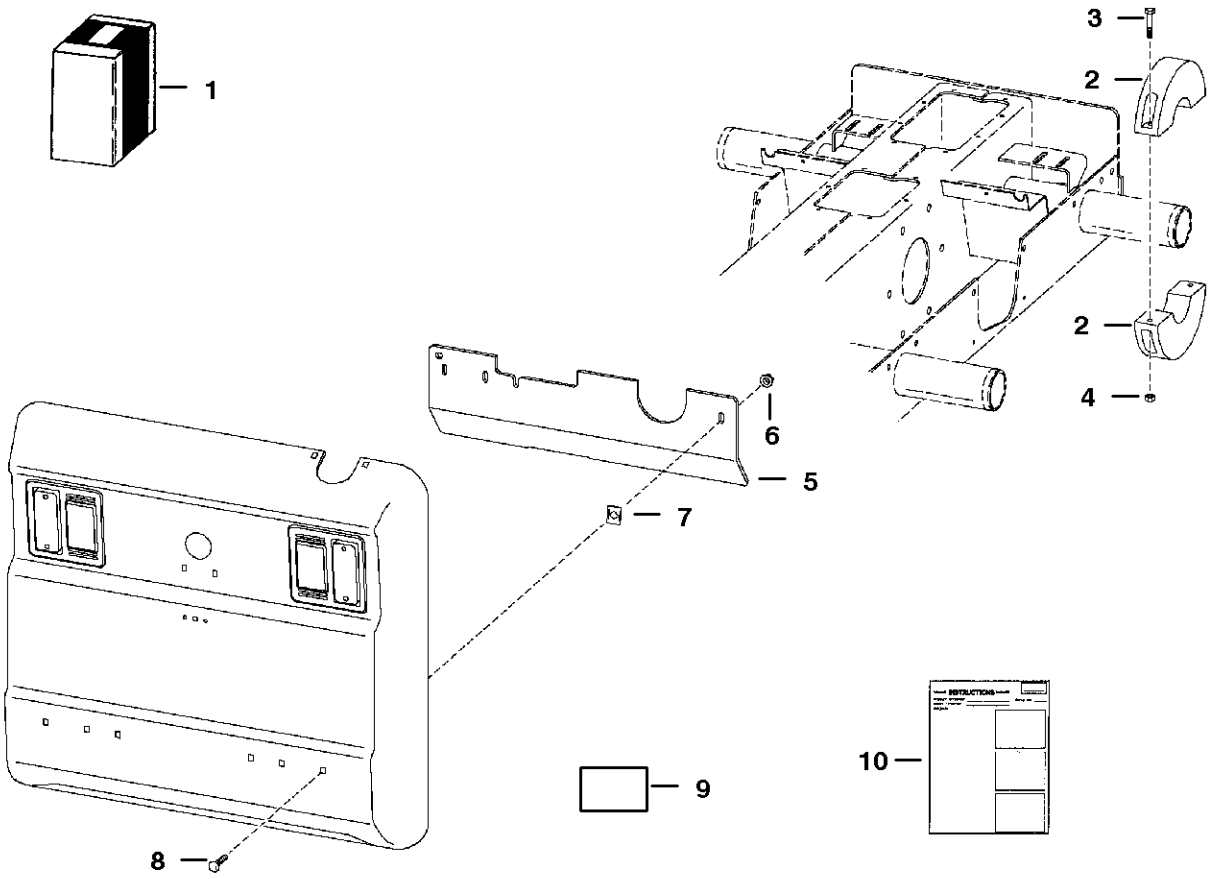

B-17013

COUNTERWEIGHT KIT

Ref.N°	Part N°	Description	Remarks	Serial N°	Qty.
1	SALES	KIT	counterweight		1
2	6714361	WEIGHT	front axle - 38.7 lbs (17,6 kg) - 4.5'(114,3 mm) wide		4
3	17C-640	BOLT			4
4	61D-6	NUT			4
5	6725256	WEIGHT			2
6	57D-6	NUT			2
7	1612281	NUT	spring		2
8	37C-632	BOLT			2
9	6900410	INSTRUCTIONS			1

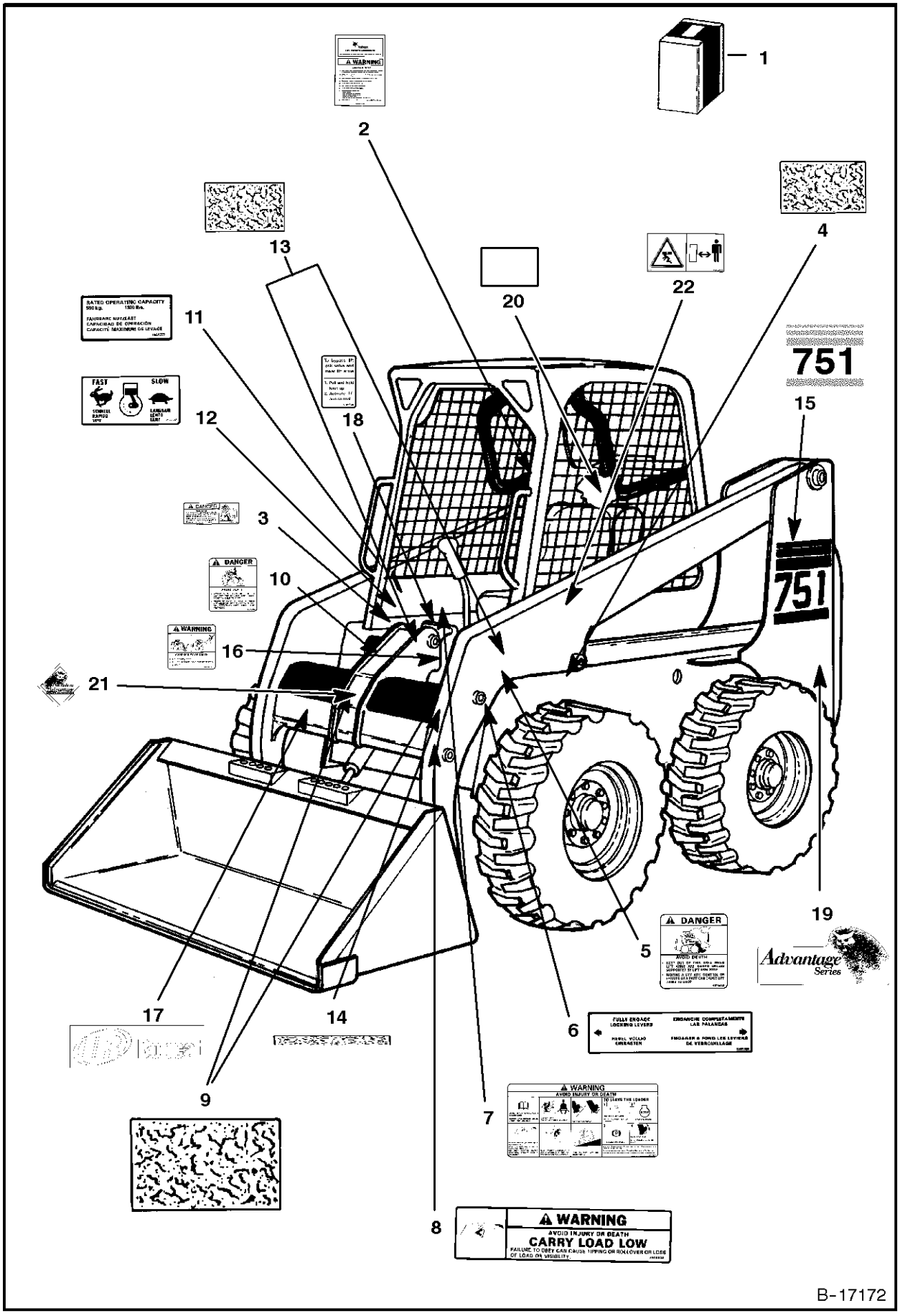
1
2
3
4
5
6
7
8
9
10
11
12
13
14
15
16
17
18
19
20
21
22
751
751
RATED OPERATING CAPACITY
FAST
SLOW
DANGER
WARNING
DANGER
WARNING
AVOID INJURY OR DEATH
CARRY LOAD LOW
FAILURE TO OBEY CAN CAUSE TIPPING OR ROLLOVER OR LOSS OF LOAD OR VISIBILITY
Advantage Series
B-17172

DECALS

Ref.N°	Part N°	Description	Remarks	Serial N°	Qty.
1	6901065	KIT	decal		1
1	6725366AR	KIT	decal		1
1	6725366BR	KIT	decal		1
1	6725366JP	KIT	decal		1
1	6725499AR	KIT	translation		1
1	6725499BR	KIT	translation		1
2	6719563	KIT	handbook - W/Wire Rope - Was 6704831 [B]		1
2	6558309	WIRE ROPE	33' (838,2 mm) long - Bulk - Sold Per Foot - Also Order (2) of 6558310inD1}\ Sleeve		x
2	6558310	SLEEVE	wire rope		2
2	17C-512	BOLT			1
2	61D-5	NUT			1
3	6717343	DECAL	danger		2
4	6554100	SAFETY TREAD	6' x 6' (152,4 mm x 152,4 mm)		4
5	6579639	DECAL	danger		1
6	6561383	DECAL	Bob-tach		1
7	6718698	DECAL	warning - Was 6579510 [B]		1
8	6579528	DECAL	carry load low		1
9	6577947	SAFETY TREAD	7.5' x 15' (190,5 mm x 381,0 mm)		2
10	6579509	DECAL	danger		1
11	6725527	DECAL	capacity - 763 - Was 6714918 [A]		1
12	6557565	DECAL	throttle		1
13	6577949	SAFETY TREAD	6.8' x 8.75' - (172,7 mm x 222,3 mm)		2
14	6710746	SAFETY TREAD	1.25' x 15'(31,8 mm x 381,0 mm)		2
14	6727917	SAFETY TREAD	1.25'x10.5'(31,8 mm x 266,7 mm)		2
15	6714531	DECAL	model no. - 751		2
16	6710358	DECAL	warning		1
17	6727310	DECAL	Ingersoll Rand -Was 6711329 [A]		1
18	6711840	DECAL	lift lock		1
19	6718271	DECAL	advantage series - L.H. - 14'(355,6 mm) wide - Not in Kit		1
20	6804790	DECAL	capacity		1
21	6718275	DECAL	advantage logo		1
22	6713507	DECAL	stay clear -European - Not in Kit		2

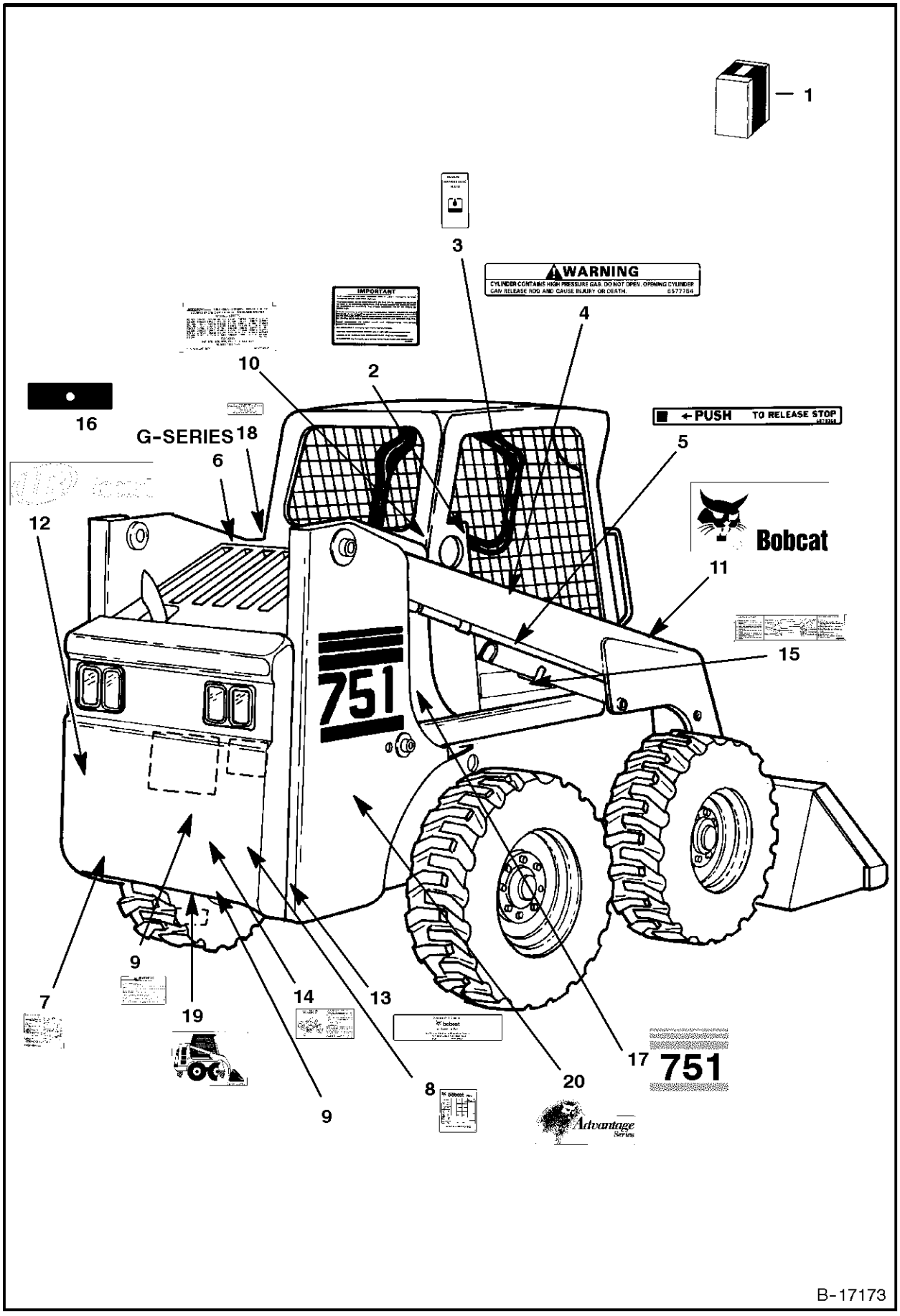
1
3
WARNING
CYLINDER CONTAINS HIGH PRESSURE GAS. DO NOT OPEN. OPENING CYLINDER CAN RELEASE ROD AND CAUSE INJURY OR DEATH.
IMPORTANT
4
10
2
16
G-SERIES
18
6
PUSH TO RELEASE STOP
5
12
Bobcat
11
751
15
9
7
14
13
19
17
751
20
8
9
Advantage
B-17173

DECALS

Ref.N°	Part N°	Description	Remarks	Serial N°	Qty.
1	6901065	KIT	decal		1
1	6725366AR	KIT	decal		1
1	6725366BR	KIT	decal		1
1	6725366JP	KIT	decal		1
1	6725499AR	KIT	translation		1
1	6725499BR	KIT	translation		1
2	6560573	DECAL	spark arrestor		1
3	6565990	DECAL	hydraulic fluid		1
4	6577754	DECAL	gas spring warning		2
5	6578368	DECAL	push		1
6	6717907	DECAL	'G'-Series		1
7	6728327	DECAL	operations - Was 6718701 [B]		1
8	6718703	DECAL	operations		1
9	6718398	DECAL	warning/service schedule/ service parts - Was 6715563 [A]		1
10	6557224	DECAL	patent		1
11	6727309	DECAL	R.H. - Was 6702826 [A]		1
11	6727308	DECAL	L.H. - Was 6702827 [A]		1
12	6727311	DECAL	Melroe Logo - Was 6714139 [A]		1
13	6565200	DECAL	engine oil filter		1
14	6709030	DECAL	belt tension		1
15	6706558	DECAL	boom stop		1
16	6714242	DECAL			1
17	6714531	DECAL	model no. - 751		2
18	6708929	DECAL	propylene gylcol antifreeze		1
19	6707867	DECAL	tow hook		1
20	6718272	DECAL	advantage series - R.H. - 14'(355,6 mm) wide - Not in Kit		1

DELUXE CAB

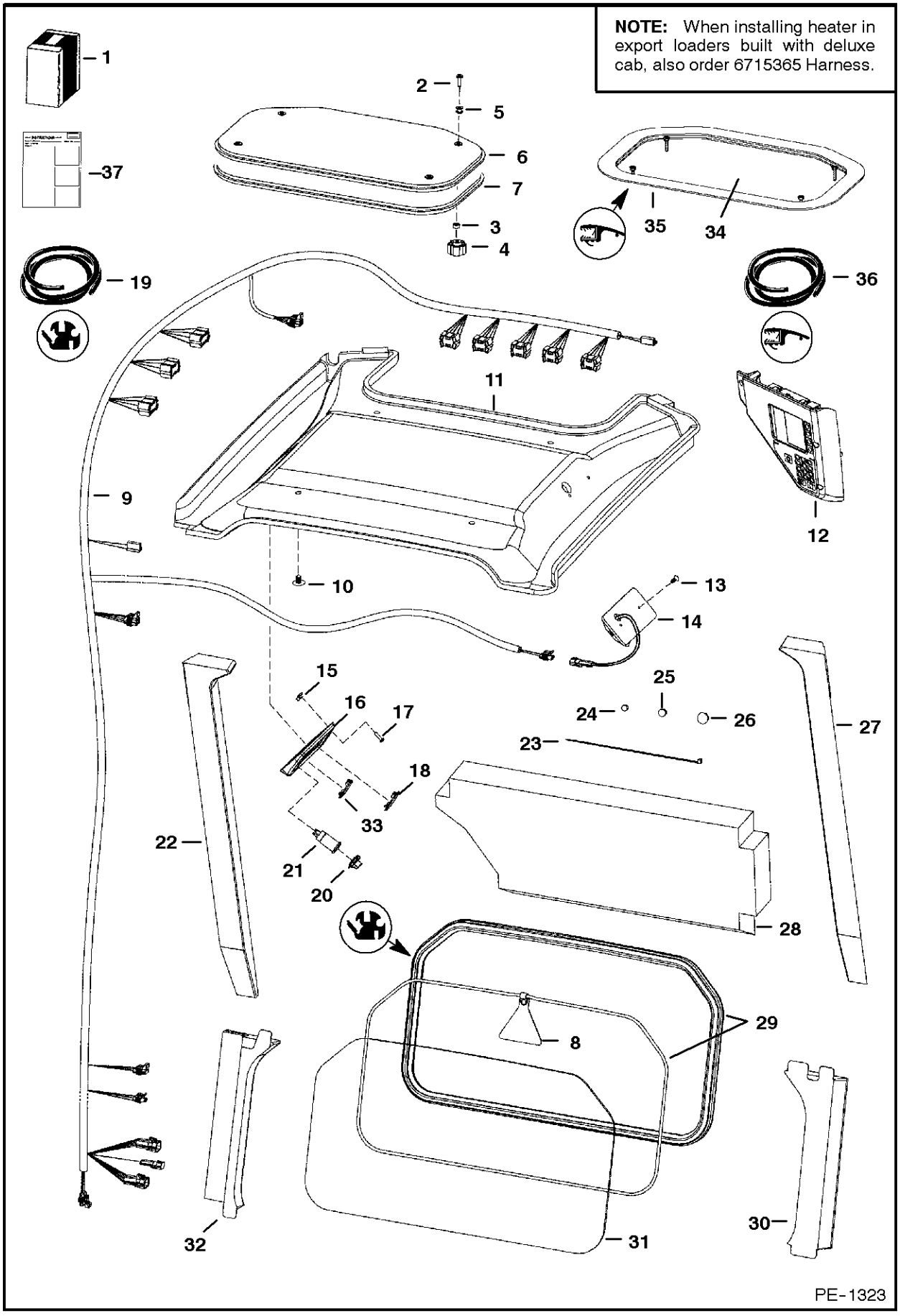
NOTE: When installing heater in export loaders built with deluxe cab, also order 6715365 Harness.
1
2
5
6
7
3
4
37
35
34
19
36
11
9
12
10
13
14
15
16
17
18
33
22
21
20
25
24
26
23
27
28
29
8
32
31
30
PE-1323

DELUXE CAB

Ref.N°	Part N°	Description	Remarks	Serial N°	Qty.
1	6718804	KIT	deluxe cab		1
2	91G-416	BOLT	Was 88G-1216 [B]		4
3	6664085	BUSHING	nylon		4
4	6674741	KNOB			4
5	6675545	GROMMET			4
6	6728629	WINDOW	assy. - W/Ref. DELUXE CAB(5) & DELUXE CAB(7)		1
7	NAP	SEAL	Order Ref. DELUXE CAB(6)		x
8	6559515	EXIT TAG			1
9	NAP	HARNESS	Order 6725273inD1}_ Harness & 6725275inD1}a Harness - Was 6715366 [A]	& Bel	1
9	6725273	HARNESS		& Abv	1
10	6674895	RETAINER	snap in		4
11	6717515	INSULATION	headliner		1
12	6672348	PANEL	R.H. - deluxe - keyless		1
12	NAP	INSTRUCTIONS	See Loader Service Manual - Was 6900860 [A]		1
13	6664221	RETAINER	snap in		2
14	6664368	DOME LIGHT	dome		1
14	6665367	BULB			1
15	6669091	CLIP			4
16	6718580	PANEL			1
17	6669224	BOLT			4
18	6719038	PLUG			5
19	6675387	SEA;	bulk - Sold Per Foot - Was 6674524 [A]		x
19	6554149	CORD	bulk - Sold Per Foot		x
20	6664224	CAP			1
21	6664223	OUTLET			1
22	6717519	INSULATION			1
23	6610510	NYLON TIE			6
24	5289686	PLUG	black		1
25	6649949	PLUG			2
26	6657719	PLUG			1
27	6717520	INSULATION			1
28	6727299	INSULATION	cab back - Was 6719425 [A]		1
29	NAP	EXTRUSION	75.75'(1924 mm) long - Order Ref. DELUXE CAB(19)		x
29	NAP	CORD	75.75'(1924 mm) long - Order Ref. DELUXE CAB(19)		x
30	6717518	INSULATION			1
31	6717874	WINDOW	rear		1
32	6717517	INSULATION			1
33	6668742	SWITCH	travel control - export		1
34	NAP	WINDOW	Order Ref. DELUXE CAB(6) - Was 6725360 [A]		1
35	NAP	SEAL	Order Ref. DELUXE CAB(6)		x
36	NAP	SEAL	bulk - Sold Per Foot - Order Ref. DELUXE CAB(6) - Was 6675546 [A]		x
37	6900851	INSTRUCTIONS			1

ELECTRICAL CONNECTOR KIT
(7-Pin)

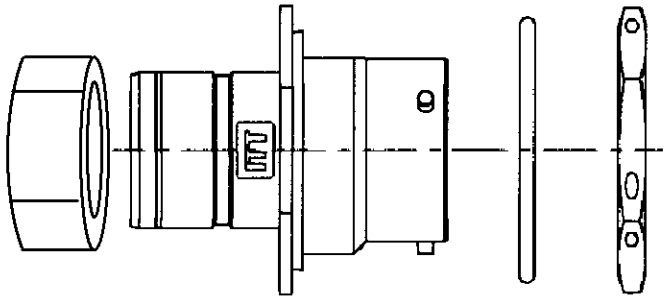

2

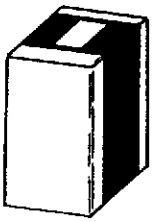

1

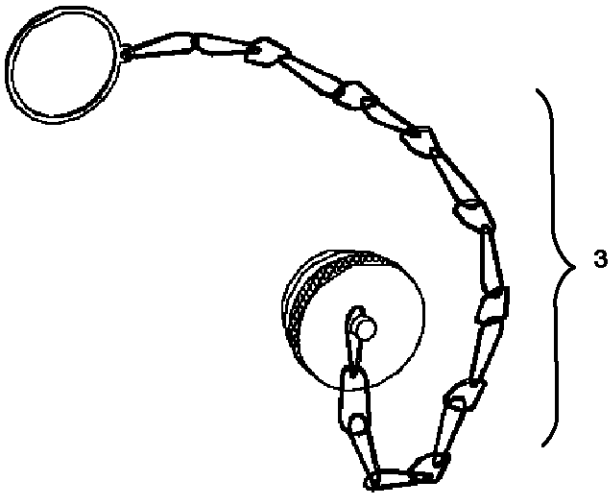

3

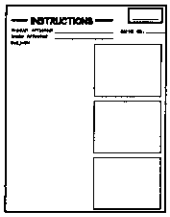

4

P-16385

ELECTRICAL CONNECTOR KIT

Ref.N°	Part N°	Description	Remarks	Serial N°	Qty.
1	6727176	KIT			1
2	6674802	CONNECTOR	7-pin		1
2	6669549	SOCKET	small		4
2	6677136	SOCKET	12 ga		3
3	6675026	CAP			1
4	6901076	INSTRUCTIONS			1

ELECTRICAL CONTROLS KIT
(To Run "G" Series Attachments & Old Attachments) (W/Toggle Switch)

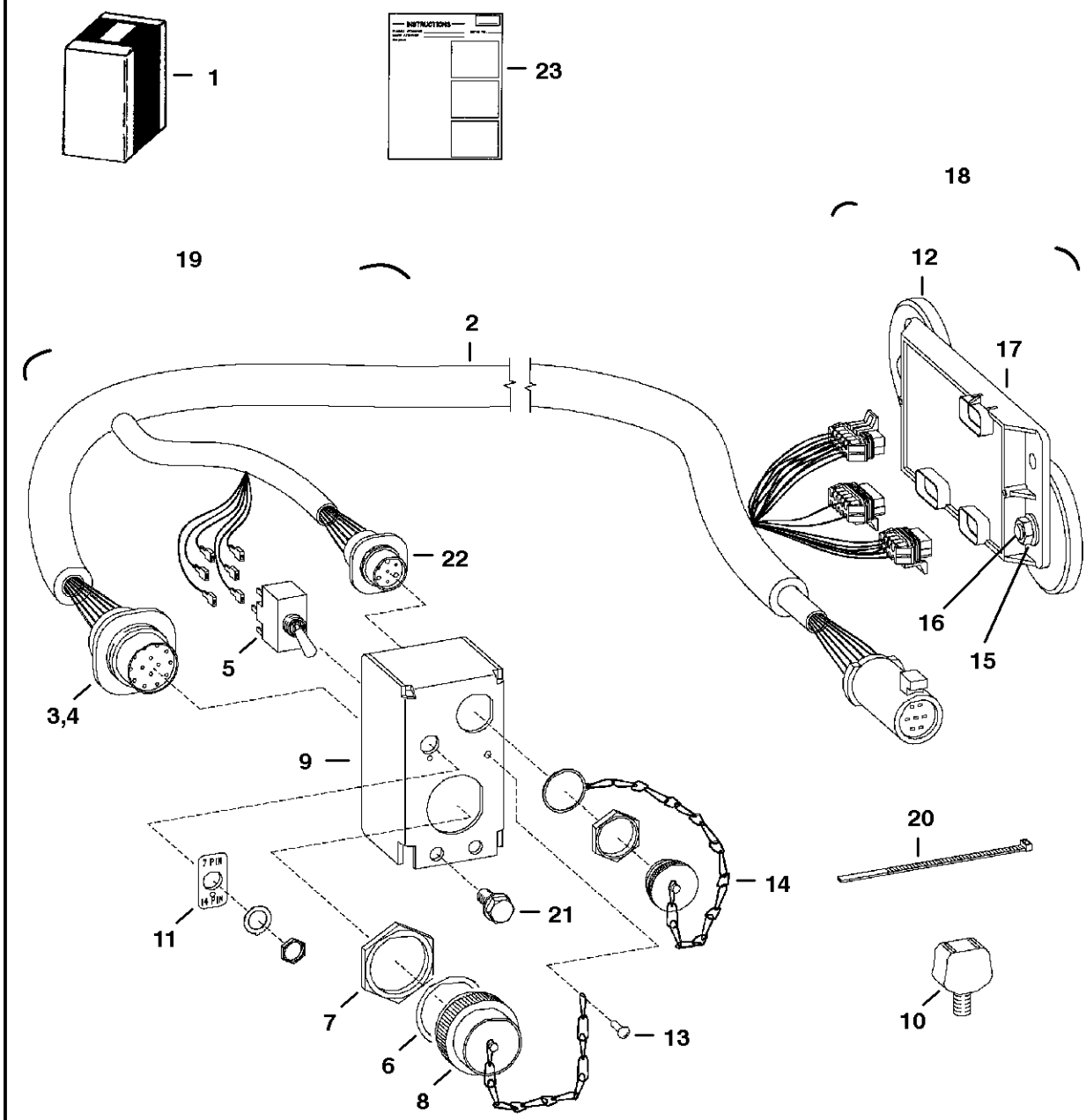

ELECTRICAL CONTROLS KIT

Ref.N°	Part N°	Description	Remarks	Serial N°	Qty.
1	NAP	KIT	Order 6727739inD1} Kit -See Page ELECTRICAL CONTROLS KIT(1) Was 6719431 [A]		1
2	6719434	HARNESS	W/Ref. ELECTRICAL CONTROLS KIT(3) - ELECTRICAL CONTROLS KIT(8) & ELECTRICAL CONTROLS KIT(14)		1
3	6667569	CONNECTOR	Also Order (14) of Ref. ELECTRICAL CONTROLS KIT(4)		1
4	6664040	PIN	male		x
5	6675389	SWITCH			1
6	6664037	WASHER			2
7	6664036	NUT			2
8	6664035	CAP			1
9	6719442	MOUNT			1
10	6675281	MOUNT	773G only		1
11	6719441	DECAL			1
12	6719448	MAGNET	100 lb. force		4
13	6704892	RIVET	Was 84G-1908 [B]		1
14	6675026	CAP			2
15	83D-6	NUT			2
16	25G-612	BOLT			2
17	6676514	CONTROLLER	Was 6674943 [A]		1
18	NAP	CONTROLLER	assy - Ref. ELECTRICAL CONTROLS KIT(12) & ELECTRICAL CONTROLS KIT(15) - ELECTRICAL CONTROLS KIT(17) - Order Ref. ELECTRICAL CONT		1
19	NAP	CONTROL	assy - Order Ref. ELECTRICAL CONTROLS KIT(2), ELECTRICAL CONTROLS KIT(5) - ELECTRICAL CONTROLS KIT(8) & ELECTRICAL CONTROLS KIT(		1
20	6624289	STA-STRAP	Was 6610510 [B]		8
21	84G-3112	BOLT			2
22	6674802	CONNECTOR	7-pin - See Page ELECTRICAL CONNECTOR KIT(1)		1
22	6669549	SOCKET	small		4
22	6677136	SOCKET	12 ga		3
23	6900921	INSTRUCTIONS			1

ELECTRICAL CONTROLS KIT
(To Run "G" Series Attachments & Old Attachments) (W/O Toggle Switch)

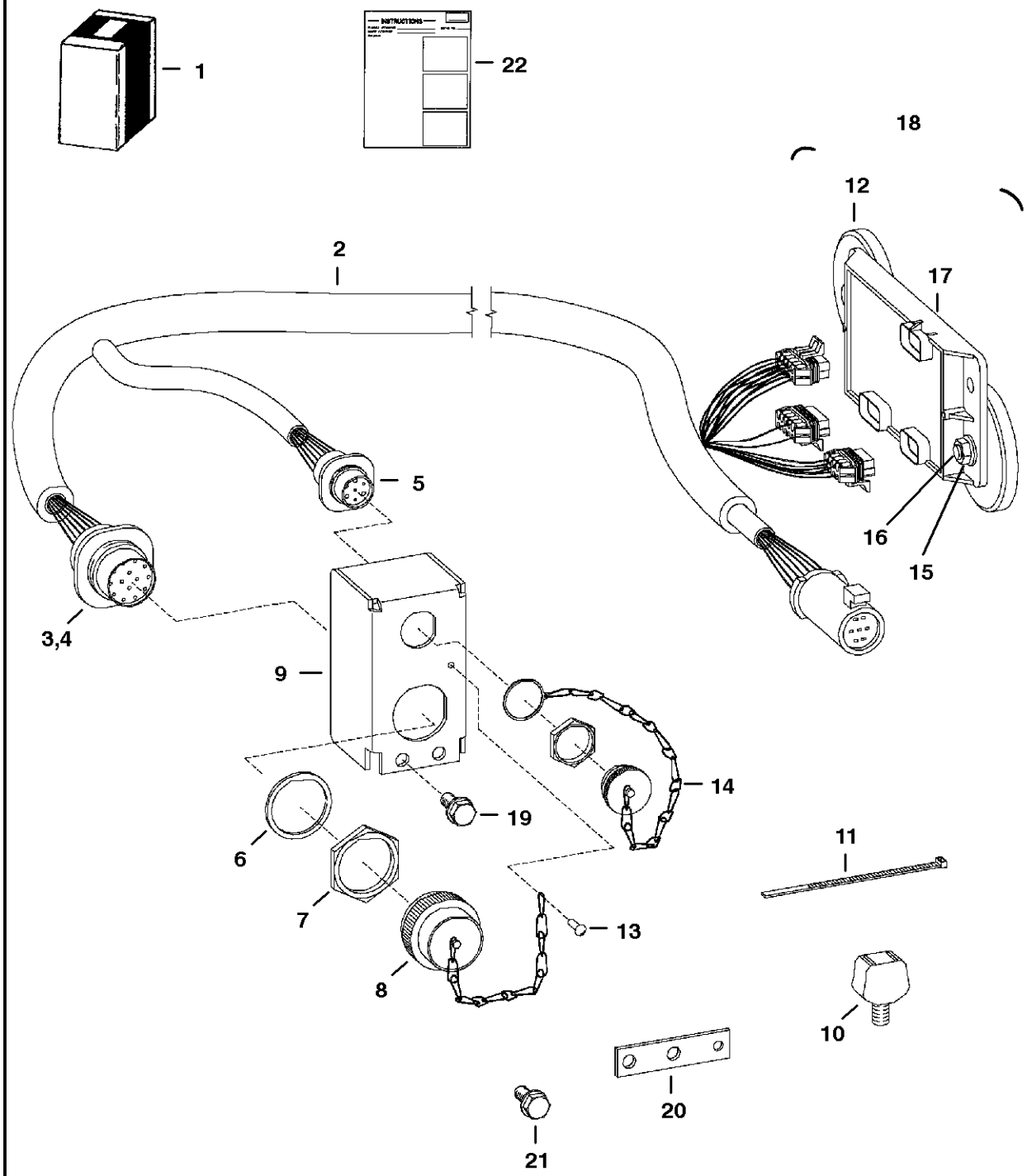

ELECTRICAL CONTROLS KIT

Ref.N°	Part N°	Description	Remarks	Serial N°	Qty.
1	6727739	KIT			1
2	6729380	HARNESS	W/Ref. ELECTRICAL CONTROLS KIT(3) - ELECTRICAL CONTROLS KIT(8) & ELECTRICAL CONTROLS KIT(14) - Was 6727177 [A]		1
3	6667569	CONNECTOR	Also Order (14) of Ref. ELECTRICAL CONTROLS KIT(4)		1
4	6664040	PIN	male		x
5	6674802	CONNECTOR	7-pin - See Page ELECTRICAL CONNECTOR KIT(1)		1
5	6669549	SOCKET	small		4
5	6677136	SOCKET	large - 12 ga.		3
6	6664037	WASHER			2
7	6664036	NUT			2
8	6664035	CAP			1
9	6726945	MOUNT			1
10	6675281	MOUNT	773G only		1
11	6624289	STA-STRAP			8
12	6719448	MAGNET	100 lb. force		4
13	6704892	RIVET			1
14	6675026	CAP			2
15	83D-6	NUT			2
16	25G-612	BOLT			2
17	6676514	CONTROLLER			1
18	NAP	CONTROLLER	assy - Ref. ELECTRICAL CONTROLS KIT(12) & ELECTRICAL CONTROLS KIT(15) - ELECTRICAL CONTROLS KIT(17) - Order Ref. ELECTRICAL CONT		1
19	84G-3112	BOLT			2
20	6730291	BRACKET	873G & 883 only		1
21	35C-512	BOLT			2
22	6901116	INSTRUCTIONS			1

ELECTRICAL CONTROLS KIT
(Electronic Attachments)

NOTE: This kit will be used for chipper and mixer attachments.

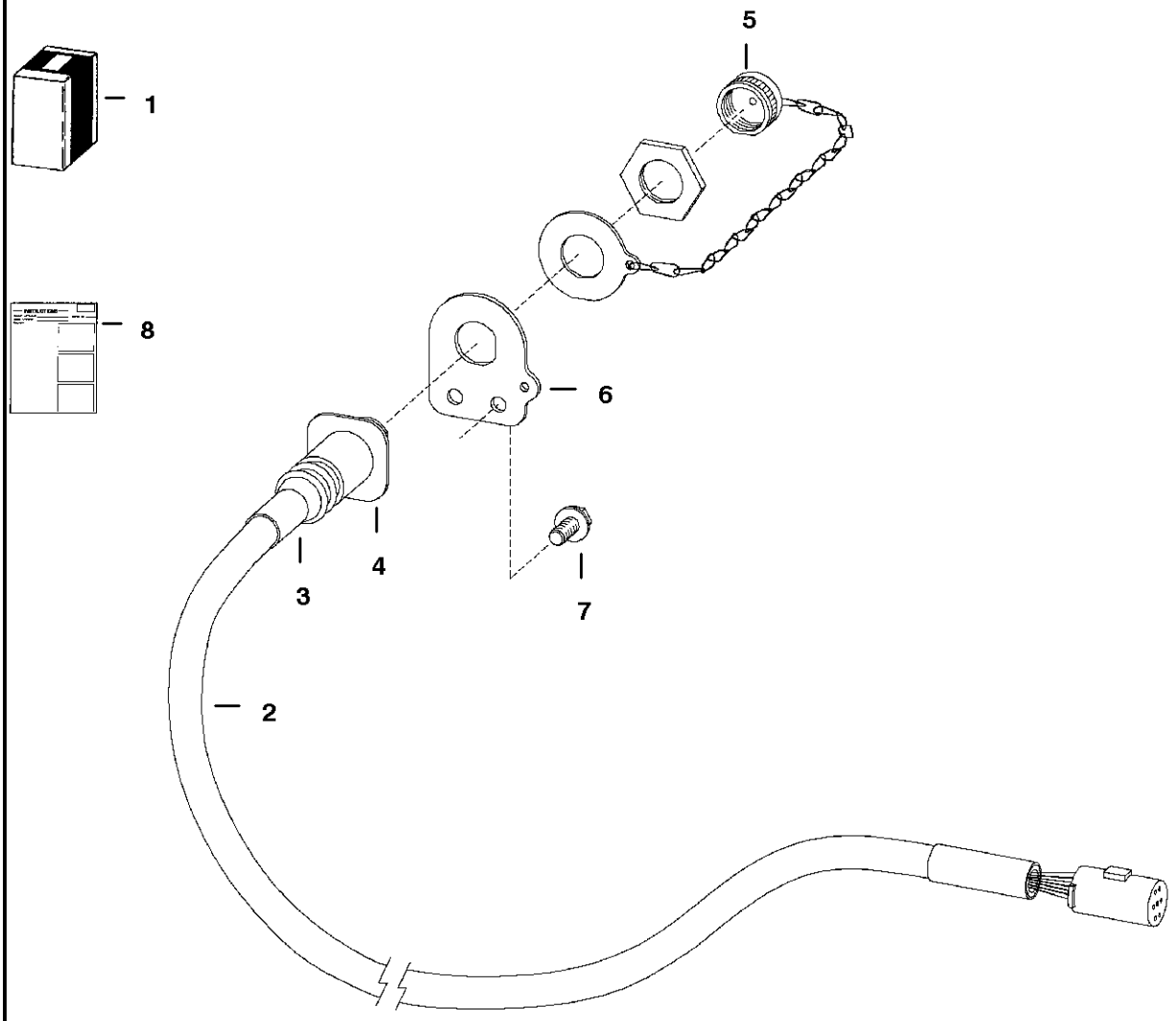

TS-1935

ELECTRICAL CONTROLS KIT

Ref.N°	Part N°	Description	Remarks	Serial N°	Qty.
1	6718812	KIT	Ref. ELECTRICAL CONTROLS KIT(2) - ELECTRICAL CONTROLS KIT(8)		1
2	6718426	HARNESS			1
3	6674799	ADAPTER	heat shrink		1
4	6674802	CONNECTOR	7-pin		1
4	6669549	SOCKET	small		4
4	6677136	SOCKET	12 ga		3
5	6675026	CAP			1
6	6718750	MOUNT			1
7	84G-3112	BOLT			2
8	6900855	INSTRUCTIONS			1

ENGINE MOUNT KIT
(For Rough Application)

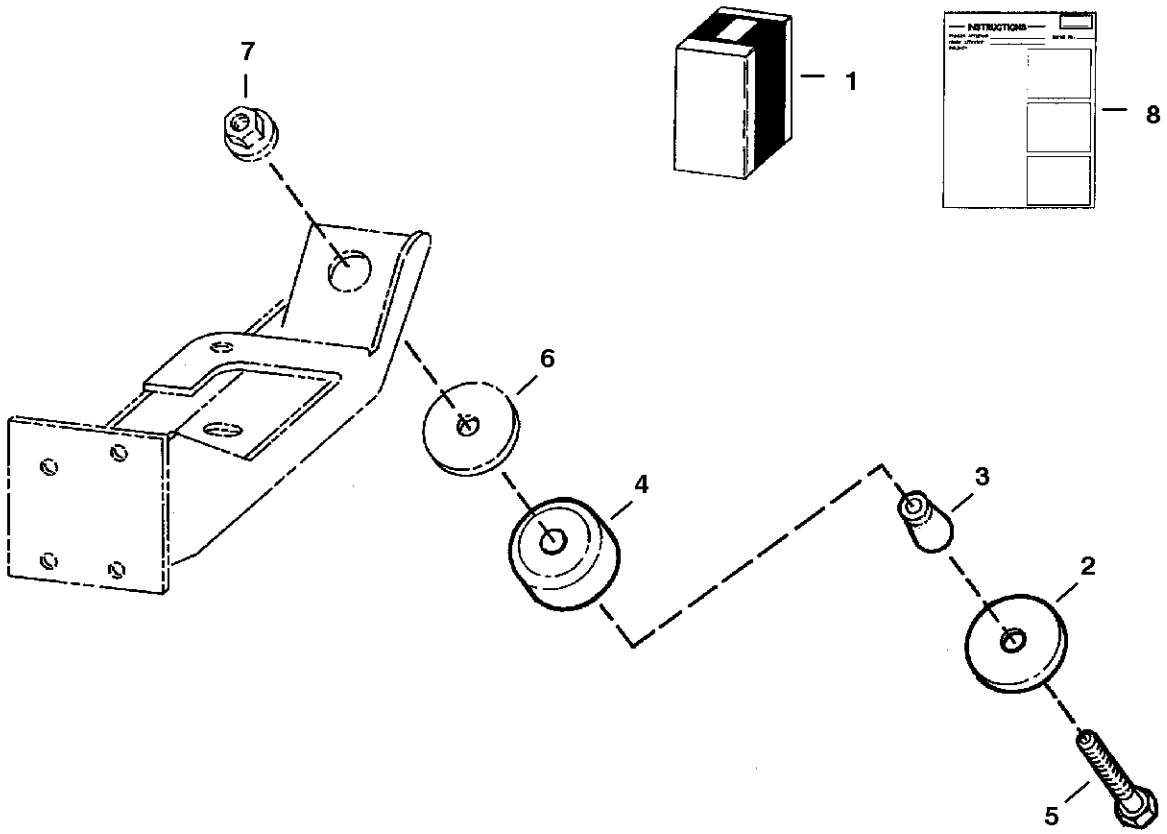

B-14623

ENGINE MOUNT KIT

Ref.N°	Part N°	Description	Remarks	Serial N°	Qty.
1	6711632	MOUNTING KIT	Ref. ENGINE MOUNT KIT(2) - ENGINE MOUNT KIT(8)		1
2	6661787	WASHER			4
3	6715287	SPACER			4
4	6668104	MOUNT			4
5	43C-852	BOLT			4
6	6705106	WASHER			4
7	6652918	NUT			4
8	6724482	INSTRUCTION			1

EUROPEAN ACCESSORIES
(Sound Option)

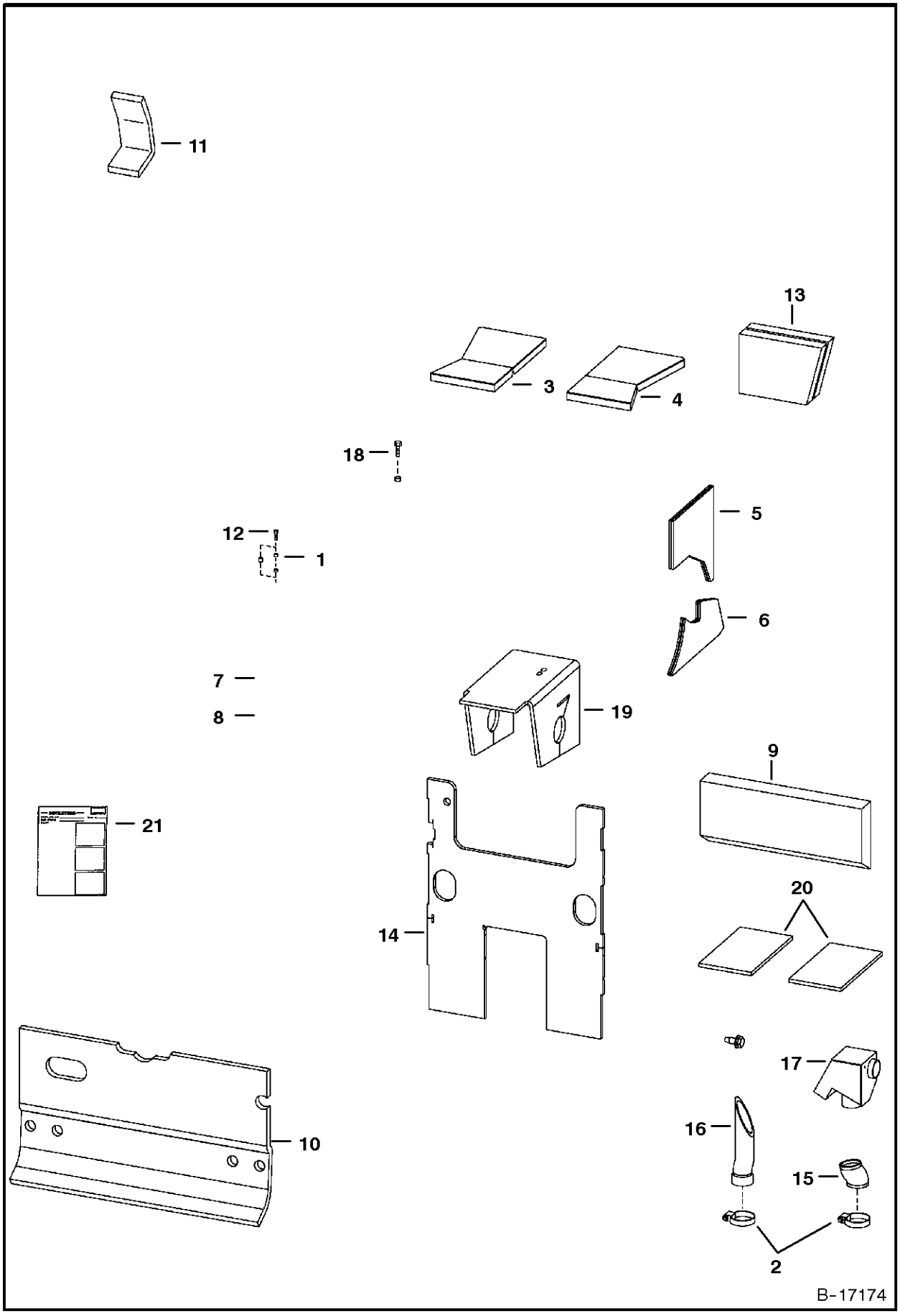

EUROPEAN ACCESSORIES

Ref.N°	Part N°	Description	Remarks	Serial N°	Qty.
1	6562619	BUSHING			2
2	42H-52	CLAMP			2
3	6704721	INSULATION	cross member - L.H.		1
4	6704722	INSULATION	cross member - R.H.		1
5	6719332	INSULATION	blower housing		1
6	6704769	INSULATION	blower housing		1
7	6705849	INSULATION	brace		1
8	6705850	INSULATION	brace		1
9	6725316	INSULATION	transmission		1
10	6715106	INSULATION	rear door		1
11	6703331	INSULATION	air inlet		1
12	84G-3112	BOLT			1
13	6705848	INSULATION	transmission		2
14	6719372	INSULATION	steering panel		1
15	6715240	HOSE	air cleaner		1
16	6715239	HOSE	intake		1
17	6715250	MUFFLER	intake		1
18	84G-3716	BOLT			2
19	6715371	INSULATION	transmission		1
20	6715372	INSULATION	pedal		1
21	6715428	DECAL	dynamic level		1
22	6579384	DECAL	noise level		1
23	6579402	DECAL	noise level		1
24	6712970	PULLEY			1

FIRE EXTINGUISHER

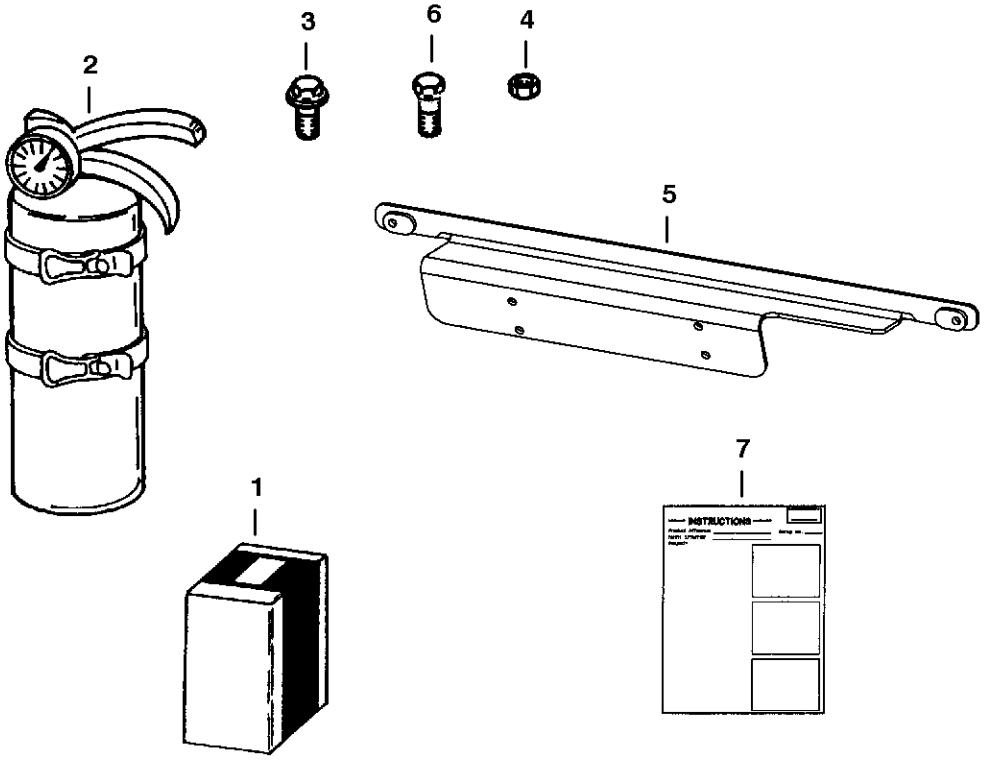

A-2386

FIRE EXTINGUISHER

Ref.N°	Part N°	Description	Remarks	Serial N°	Qty.
1	6725898	KIT	fire extinguisher - Ref. FIRE EXTINGUISHER(2) - FIRE EXTINGUISHER(7)		1
2	6675581	EXTINGUISHER			1
3	45G-1006	BOLT			4
4	12D-10	NUT			4
5	6725906	BRACKET			1
6	31C-410	BOLT			2
7	6901025	INSTRUCTIONS			1

F.O.P.S. KIT

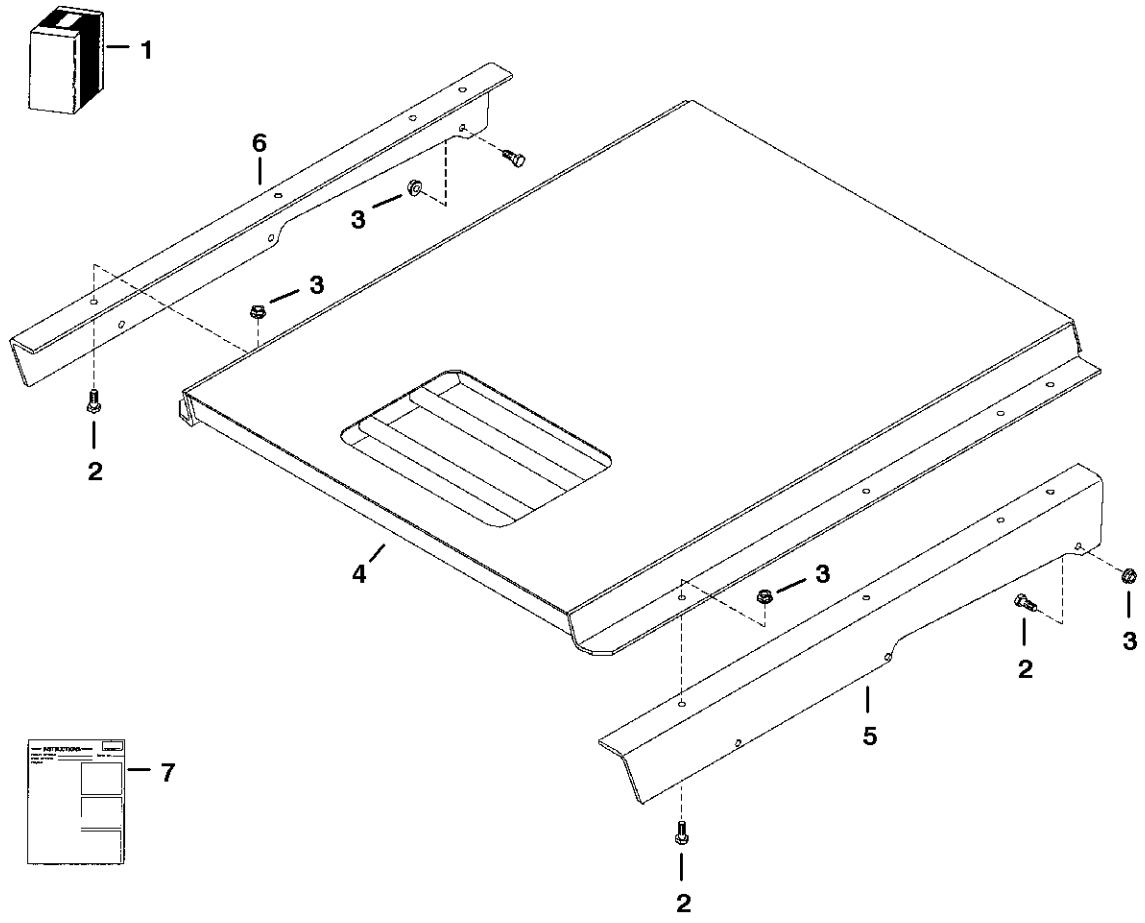

TS-2052

F.O.P.S. KIT

Ref.N°	Part N°	Description	Remarks	Serial N°	Qty.
1	6718924	KIT	Ref. F.O.P.S. KIT(2) - F.O.P.S. KIT(7)		1
2	17C-616	BOLT	Was 17C-612 [B]		14
3	83D-6	NUT			14
4	6702402	SHIELD			1
5	6718833	BRACKET	L.H.		1
6	6718834	BRACKET	R.H.		1
7	6720592	INSTRUCTIONS			1

FLASHER LIGHTS
(4-Way/Turn Indicators)

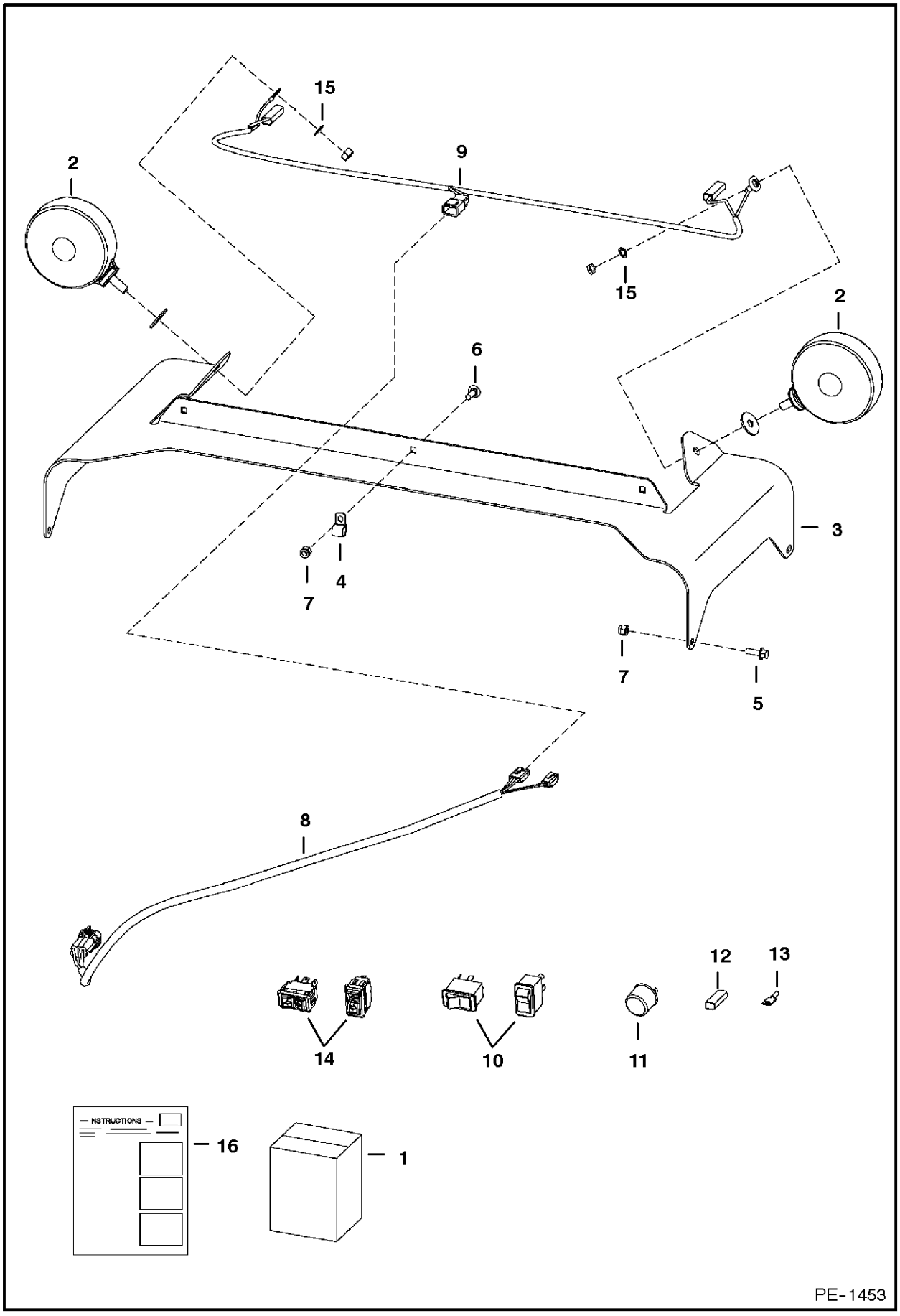

FLASHER LIGHTS

Ref.N°	Part N°	Description	Remarks	Serial N°	Qty.
1	6718411	KIT	Ref. FLASHER LIGHTS (2), FLASHER LIGHTS (3) & FLASHER LIGHTS (5) - FLASHER LIGHTS (16) - If loader is equipped W/Deluxe Cab Opti		1
2	6517516	LIGHT			2
3	6718326	MOUNT			1
4	30H-21	CLAMP	Not in Kit		3
5	35C-412	BOLT			4
6	37C-412	BOLT			3
7	59D-4	NUT			7
8	6718872	HARNESS	ext. cab		1
9	6718873	HARNESS	4-way flasher		1
10	6665316	SWITCH	horizontal		1
10	6668815	SWITCH	vertical		1
11	6557904	FLASHER			1
12	614142	SLEEVE			1
13	6515131	TERMINAL			1
14	6675835	TURN SIGNAL	horizontal		1
14	6676872	TURN SIGNAL	vertical		1
15	6E-5	WASHER			1
16	6900848	INSTRUCTIONS			1

HAND CONTROL KIT
(W/Push Button Float)

NOTE: Also order 6900969 O/M with revised date of 6/00 or newer.

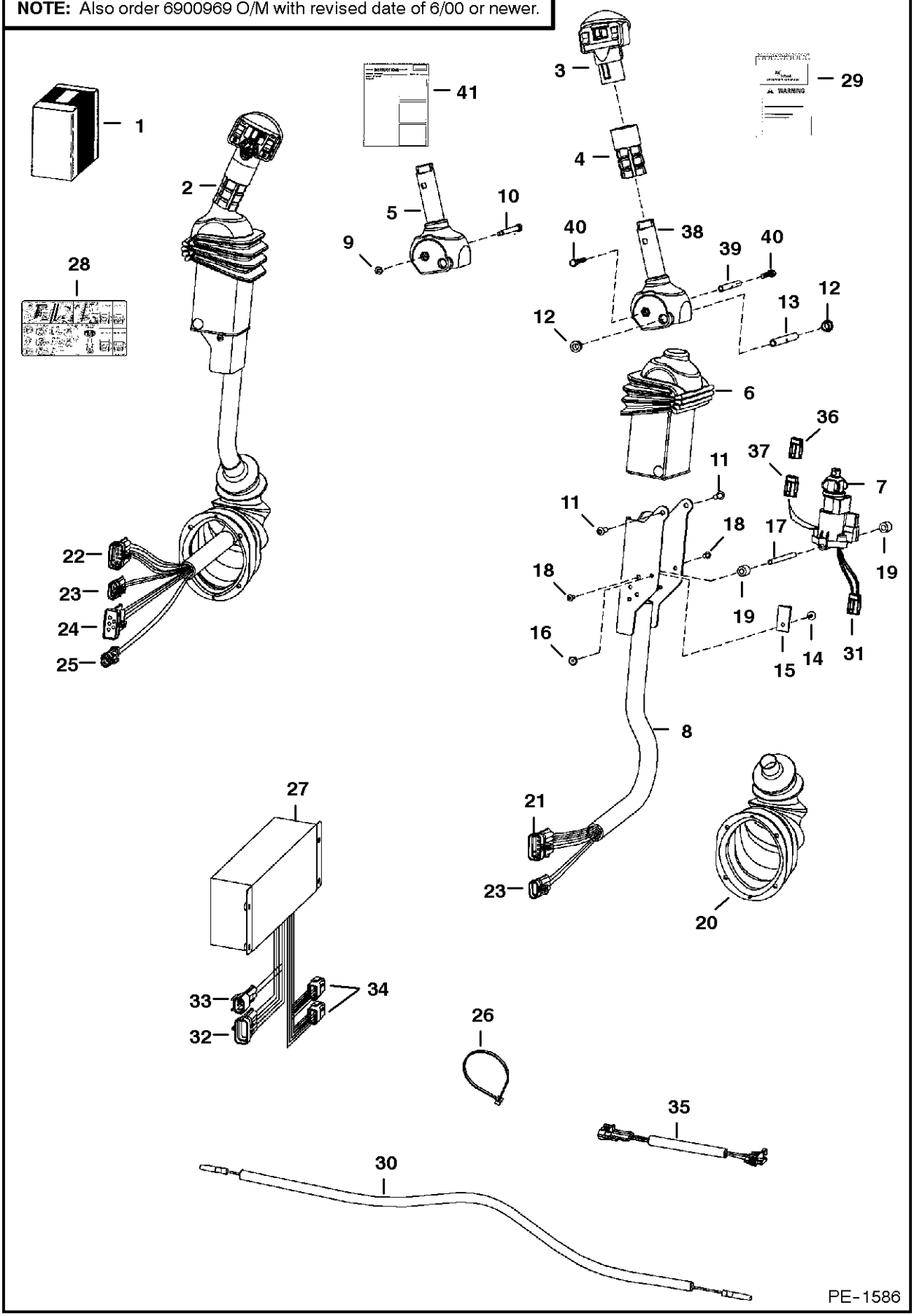

HAND CONTROL KIT

Ref.N°	Part N°	Description	Remarks	Serial N°	Qty.
1	6727298	KIT	SEE NOTE		1
2	6675742	LEVER	tilt - R.H.		1
2	6675750	LEVER	lift - L.H.		1
3	6675469	HANDLE ASSY	lift - R.H.		1
3	6675749	HANDLE	lift - L.H.		1
4	6713349	GRIP			2
5	NAP	HANDLE	R.H. - Order Ref. HAND CONTROL KIT(38) - HAND CONTROL KIT(40) - Was 6597774 [A]	& Bel	1
5	NAP	HANDLE	L.H. - Order Ref. HAND CONTROL KIT(38) - HAND CONTROL KIT(40) - Was 6717163 [A]	& Bel	1
6	6713898	COVER			2
7	6675741	SENSOR			2
7	6670706	CONNECTOR	3pin		1
7	6670714	PIN			3
7	6670710	LOCK			1
8	6719712	CHANNEL	R.H.		1
8	6719711	CHANNEL	L.H.		1
9	12D-10	NUT		& Bel	2
10	6716826	BOLT		& Bel	2
11	25GT-410	BOLT			8
12	6702990	BUSHING			4
13	6713043	SPACER			4
14	6665321	RIVET	male		2
15	6665000	CLIP			2
16	6665322	RIVET	female		2
17	6719834	SPACER	threaded		2
18	6727065	BOLT			4
19	6719835	SLEEVE			4
20	6532127	BOOT			2
21	6640692	CONNECTOR	10pin		1
21	6640690	PIN			8
21	6640694	LOCK			1
21	6641176	SEAL			8
21	6646582	PLUG	cavity		2
22	6640692	CONNECTOR	10pin		1
22	6640690	PIN			6
22	6640694	LOCK			1
22	6641176	SEAL			6
22	6646582	PLUG	cavity		4
23	6640699	CONNECTOR	3pin		2
23	6640690	PIN			3
23	6641176	SEAL			3
23	6640700	LOCK			3
24	6667144	CONNECTOR	5pin		1
24	6640690	PIN			3
24	6641176	SEAL			3
24	6646582	PLUG	cavity		1
24	6667145	LOCK			1
25	6641179	CONNECTOR	2pin		1
25	6640690	PIN			2
25	6641176	SEAL			2
25	6641180	LOCK			1

HAND CONTROL KIT

Ref.N°	Part N°	Description	Remarks	Serial N°	Qty.
26	6610510	NYLON TIE			11
27	6676153	CONTROLLER			1
28	6727155	DECAL			1
29	6719563	KIT	handbook		1
30	6727328	HARNESS			1
31	6670707	CONNECTOR	3pin		1
31	6670715	SOCKET			3
31	6670711	LOCK			1
32	6640692	CONNECTOR	10pin		1
32	6640690	PIN			9
32	6640694	LOCK			1
32	6641176	SEAL			9
32	6646582	PLUG	cavity		1
33	6648307	CONNECTOR	2pin		1
34	6670709	CONNECTOR	8pin		2
35	6728742	HARNESS	W/capacitor		1
36	6677364	CONNECTOR	3-pin		1
36	6676640	SEAL			3
37	6676870	CONNECTOR	3-pin		1
37	6676640	SEAL			3
37	6670715	SOCKET			1
37	6670711	LOCK			1
38	6729594	HANDLE	R.H.	& Abv	1
38	6729595	HANDLE	L.H.	& Abv	1
39	6729600	SPACER			1
40	6727065	BOLT			2
41	6901100	INSTRUCTIONS			1

HEATER KIT

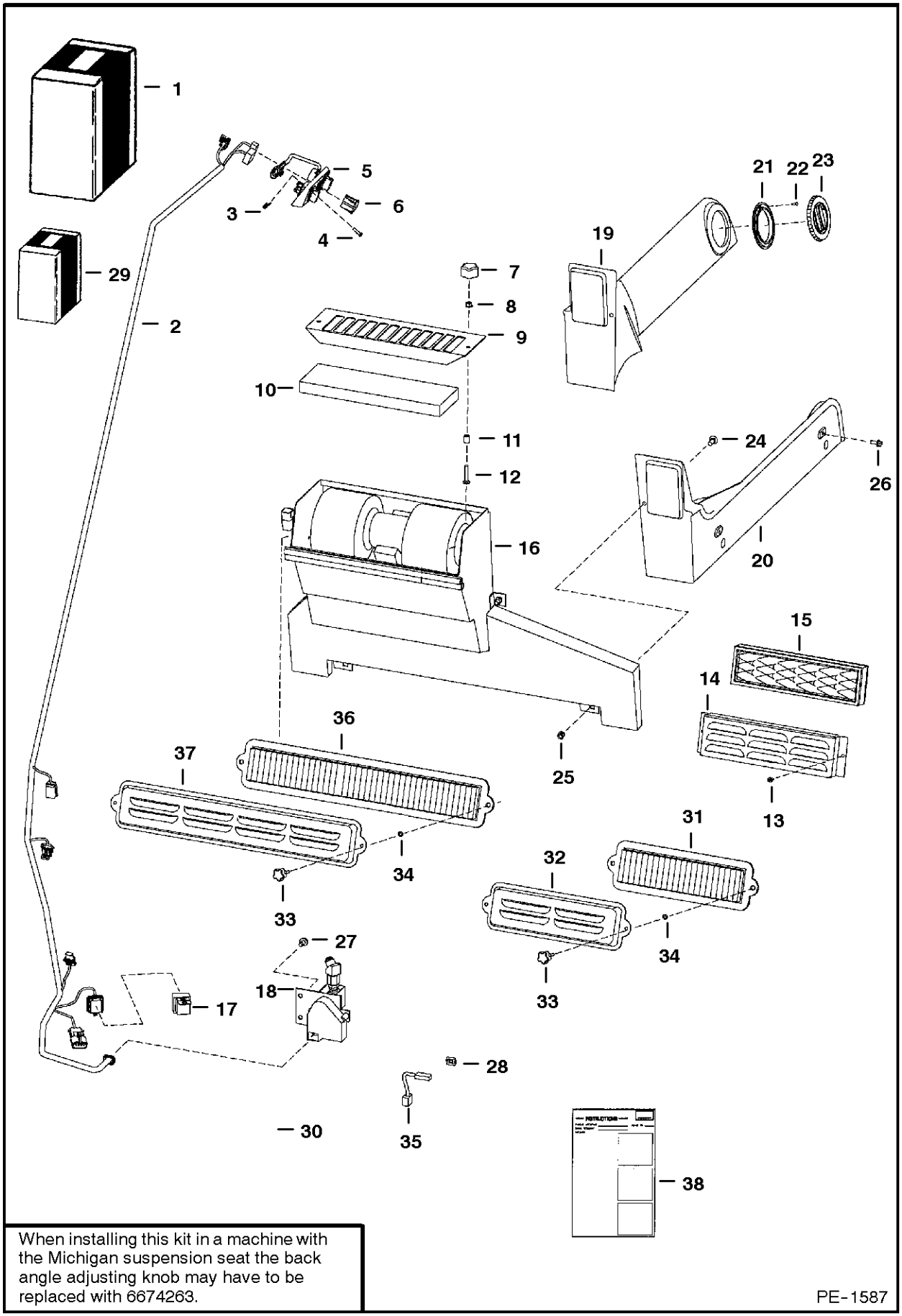

When installing this kit in a machine with the Michigan suspension seat the back angle adjusting knob may have to be replaced with 6674263.

PE-1587

HEATER KIT

Ref.N°	Part N°	Description	Remarks	Serial N°	Qty.
1	6718803	HEATER KIT	Ref. HEATER KIT(2) - HEATER KIT(38) - SEE NOTE		1
2	6725933	HARNESS	hvac - W/Ref. HEATER KIT(17) - Was 6717877 [A]		1
2	6725273	HARNESS	AHC		1
3	6669091	CLIP	retainer		3
4	6669224	BOLT			3
5	6674228	PANEL	control		1
5	6640699	CONNECTOR			1
5	6718579	DECAL			1
5	6718887	PANEL	A/C		1
5	6675176	SWITCH	blower		1
5	6675177	KNOB			1
5	6675846	POTENTIOMETER	Was 6675178 [A]		1
6	6675181	PLUG	switch hole		1
7	6674741	KNOB			2
8	83D-4	NUT			2
9	6718175	SCREEN	filter		1
10	6674229	FILTER	recirculation		1
11	6718837	SPACER			2
12	37C-424	BOLT			2
13	87G-1008	SCREW			2
14	NAP	COVER	filter - Order Ref. HEATER KIT(31), HEATER KIT(32) & (2) ea. of Ref. HEATER KIT(33) & HEATER KIT(34) - Was 6674236 [A]		1
15	NAP	FILTER	Order Ref. HEATER KIT(31), HEATER KIT(32) & (2) each of Ref. HEATER KIT(33) & HEATER KIT(34) -Was 6674230 [A]		1
16	6674933	HEATER	See Page HEATER(1) - HEATER(1)		1
17	6670312	SOLENOID	relay		1
18	6675684	VALVE	Was 6674227 [A]		1
18	6640699	CONNECTOR			1
18	6675175	BRACKET			1
18	6675172	BRACKET			1
18	6675173	ACTUATOR			1
18	6675174	BODY			1
19	6717644	DUCT	L.H. - W/Ref. HEATER KIT(21) - HEATER KIT(23)		1
20	6717643	DUCT	R.H. - W/Ref. HEATER KIT(21) - HEATER KIT(23)		1
21	6675179	FLANGE			4
22	57G-608	SCREW			16
23	6674231	VENT	round		4
23	6675180	VENT			4
24	37C-512	BOLT			4
25	59D-5	NUT			4
26	35C-410	BOLT			4
27	84G-3110	BOLT			2
28	774220	NUT	spring		2
29	6725513	DECAL PACKAGE			1
30	6725390	HARNESS	jumper - SEE NOTE		1
31	6727140	FILTER			1
32	6726608	COVER			1
33	6726386	KNOB			2
34	6676516	NUT	push		2

HEATER KIT

Ref.N°	Part N°	Description	Remarks	Serial N°	Qty.
35	6725934	HARNESS	jumper - 4' (101,6 mm) long - 'connects Ref. HEATER KIT(2) (6725933inD1} Harness) & Ref. HEATER KIT(18) (NAP/6674227inD1}V Val		1
35	6725936	HARNESS	jumper - 8' (203,2 mm) long - 'connects Ref. HEATER KIT(2) (6725933inD1} Harness) & Ref. HEATER KIT(18) (6675684inD1}t Valve)		1
36	6677983	FILTER			1
37	6727847	COVER			1
38	6900850	INSTRUCTIONS			1

HEATER

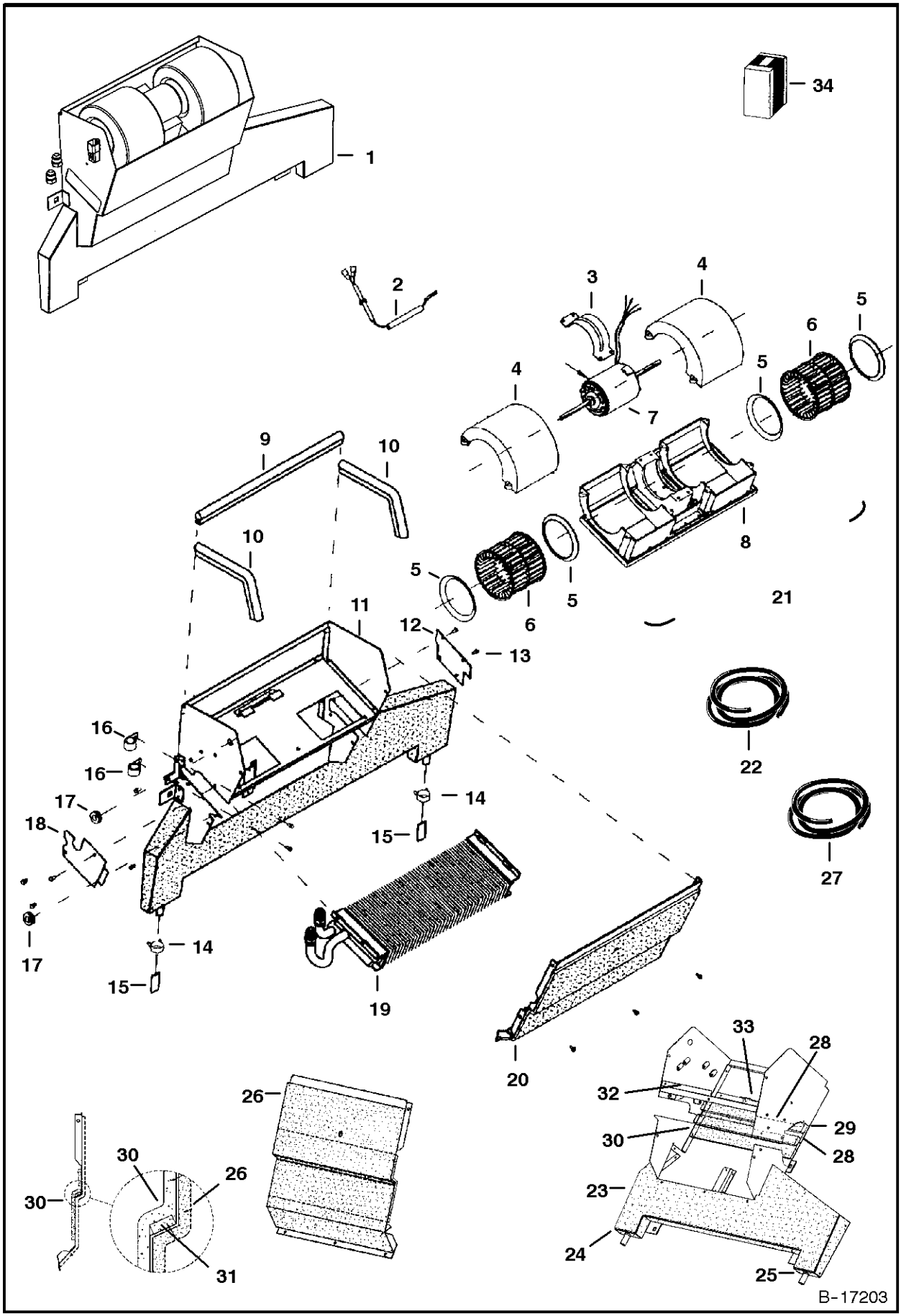
1
2
3
4
5
6
7
8
9
10
11
12
13
14
15
16
17
18
19
20
21
22
27
33
28
32
29
30
23
24
25
26
31
34
B-17203

HEATER

Ref.N°	Part N°	Description	Remarks	Serial N°	Qty.
1	6674933	HEATER	Ref. HEATER(2) - HEATER(22)		1
2	6675508	HARNESS			1
3	6675506	MOUNT			1
4	6675507	COVER			2
5	6675504	RING			4
6	6675505	BLOWER WHEEL			2
6	6676618	CLIP			2
7	6675509	MOTOR			1
8	6675503	HOUSING			1
9	NAP	SEAL	'14.75'(375 mm)long- Order Ref. HEATER(22)		1
10	NAP	SEAL	8.5'(215 mm)long - Order Ref. HEATER(22)		2
11	6675499	HOUSING	W/Ref. HEATER(23) - HEATER(25) & HEATER(27) - HEATER(30)		1
12	6675502	PLATE	cover		1
13		BOLT			x
14	6675510	CLAMP			2
15	6675511	DRAIN VALVE			2
16	6675512	CLAMP			2
17	6675513	GROMMET			2
18	6675501	PLATE	cover		1
19	NAP	COIL	See Page HEATER(1) - Was 6675498 [A]		1
20	6675500	COVER	W/Ref. HEATER(26), HEATER(27) & HEATER(30)		1
21	6675497	BLOWER	Ref. HEATER(2) - HEATER(8)		1
22	6675514	SEAL	bulk - Sold Per Foot		x
23	6675607	INSULATION			1
24	6675608	INSULATION			1
25	6675609	INSULATION			1
26	6675610	INSULATION			1
27	6675611	SEAL	bulk - Sold Per Foot		3
28	6675612	INSULATION			2
29	6675613	INSULATION			1
30	6675614	INSULATION			2
31	NAP	SEAL	15' (381 mm) long- Order Ref. HEATER(27)		1
32	NAP	SEAL	5.5'(140 mm) long- Order Ref. HEATER(27)		1
33	NAP	SEAL	4'(101,6 mm) long- Order Ref. HEATER(27)		1
34	6728567	KIT	See Page HEATER(1)		1

HEATER

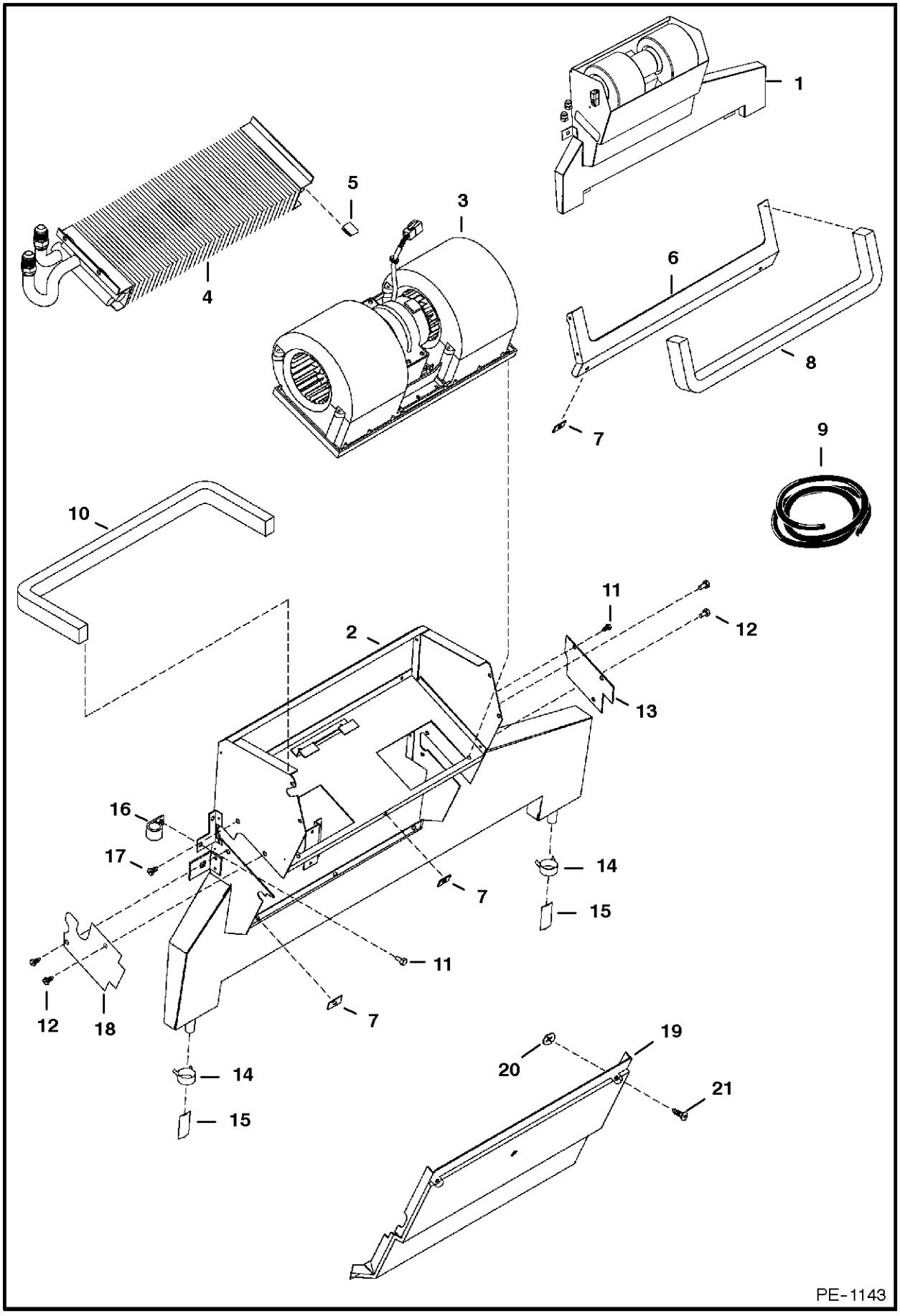

HEATER

Ref.N°	Part N°	Description	Remarks	Serial N°	Qty.
1	6676562	HEATER	assy - Ref. HEATER(2)-HEATER(11)		1
2	6677108	HOUSING			1
3	6675497	BLOWER	assy - See Page HEATER(1)		1
4	NAP	COIL	heater - See Page HEATER(1) - Was 6676603 [A]		1
5	6676539	CLIP			3
6	NAP	SEAL	Order 6678152inD1}I Seal & Ref. HEATER(19) '(667815 1inD1}K Cover) - Was 6677114 [A]		1
6	6678152	SEAL			1
7	6677115	RECEPTACLE			6
8	NAP	SEAL	'22.6'(575mm) long - Order Ref. HEATER(9)		1
9	6677111	SEAL	bulk - Sold Per Foot		x
10	NAP	SEAL	25'(635mm) long - Order Ref. HEATER(9)		1
11	6677119	SCREW	sheetmetal		7
12	6677118	SCREW	w/washer		4
13	6677120	COVER			1
14	6675510	CLAMP	drain hose		2
15	6675511	DRAIN VALVE			2
16	6675512	CLAMP	hose		2
17	6675513	GROMMET			1
18	6676604	COVER			1
19	NAP	COVER	Order 6678151inD1}K Cover & Ref. HEATER(6) (667815 2inD1}I Seal)- Was 6677109 [A]		1
19	6678151	COVER			1
20	6677116	RETAINER			6
21	6677117	SCREW	captive		6

HEATER
(Blower Seal Kit)

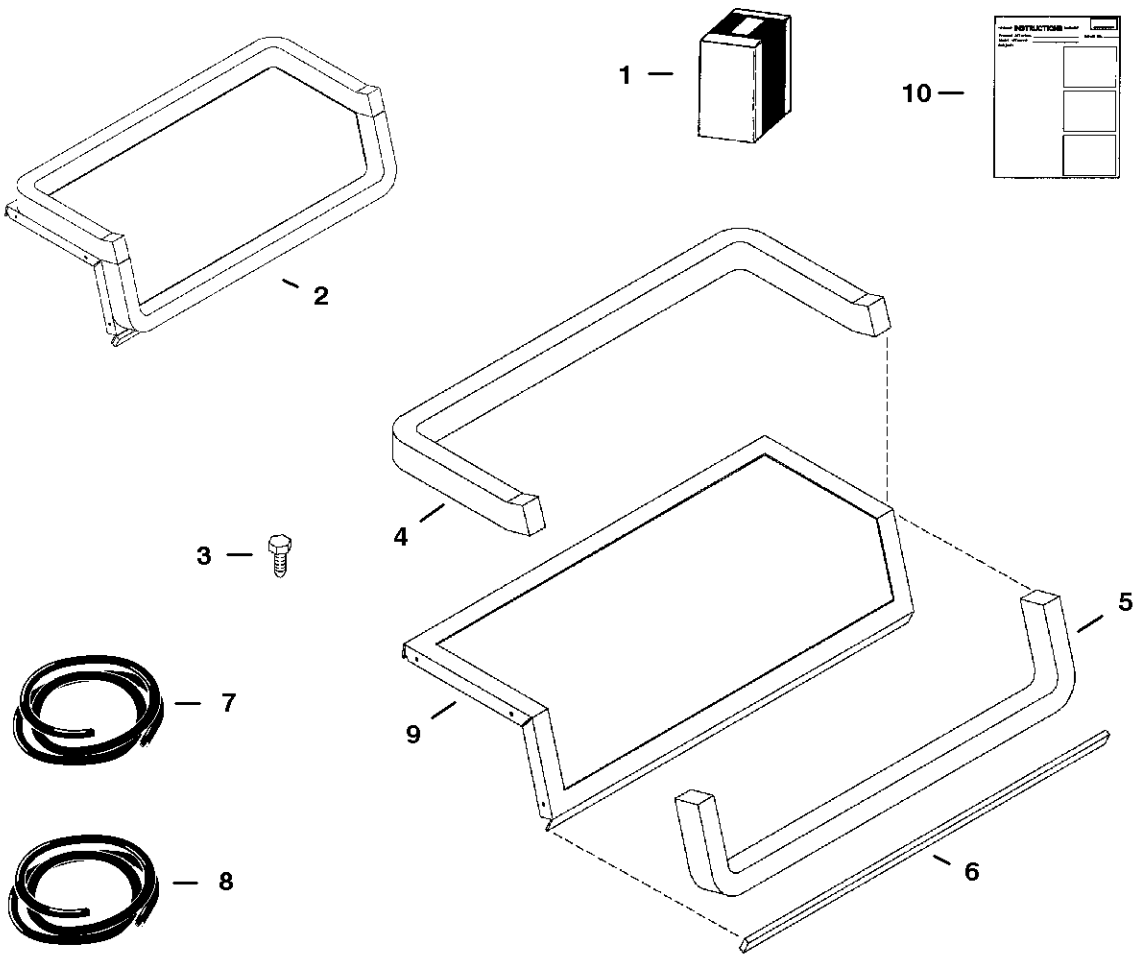

PE-1151

HEATER

Ref.N°	Part N°	Description	Remarks	Serial N°	Qty.
1	6728567	KIT	blower seal - W/Ref. HEATER(2), HEATER(3) & HEATER(10)		1
2	NSS	FLANGE SEAL	assy - Ref. HEATER(4), HEATER(5), HEATER(6) & HEATER(9) - Order Ref. HEATER(1)		1
3	6726621	SCREW			7
4	NAP	SEAL	27'(686mm) long - Order Ref. HEATER(8)		1
5	NAP	SEAL	21'(534mm) long - Order Ref. HEATER(8)		1
6	NAP	SEAL	15'(384mm) long - Order Ref. HEATER(7)		1
7	6675611	SEAL	bulk - Sold Per Foot		x
8	6677111	SEAL	bulk - Sold Per Foot		x
9	NSS	FLANGE	Order Ref. HEATER(1)		1
10	6901213	INSTRUCTIONS			1

HEATER
(Heater Coil Kit)

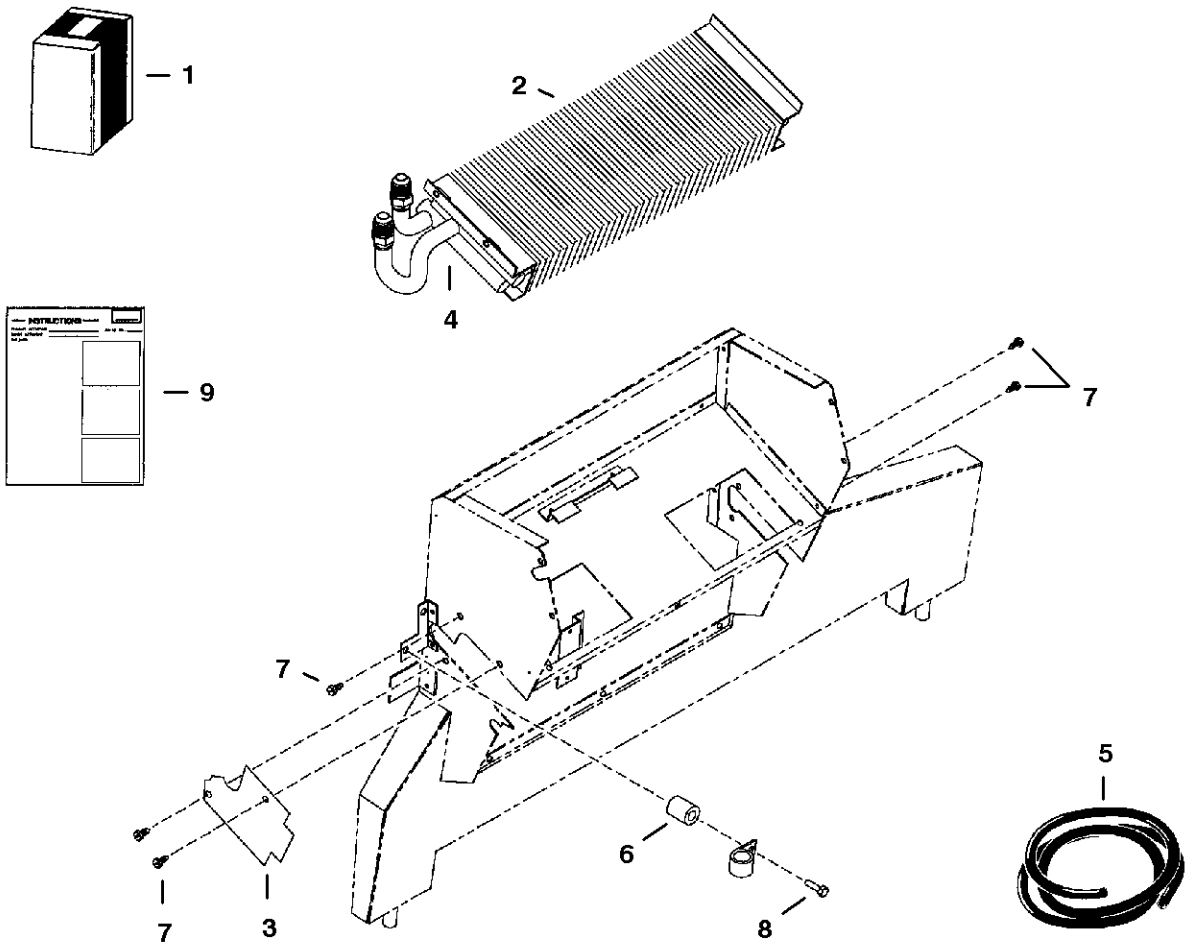

PE-1228

HEATER

Ref.N°	Part N°	Description	Remarks	Serial N°	Qty.
1	6728990	KIT	heater coil - W/Ref. HEATER(2)-HEATER(9)		1
2	NSS	HEATER COIL	Order Ref. HEATER(1)		1
3	6677504	COVER	.279'(7,1mm) thickness		1
4	NAP	INSULATION	6'(152.4mm) long - Order Ref. HEATER(5)		1
5	6676538	INSULATION	bulk - Sold Per Foot		x
6	6676606	SPACER			1
7	6726621	SCREW			2
8	6676653	SCREW			1
9	6901120	INSTRUCTIONS			1

HEATER PLUMBING KIT

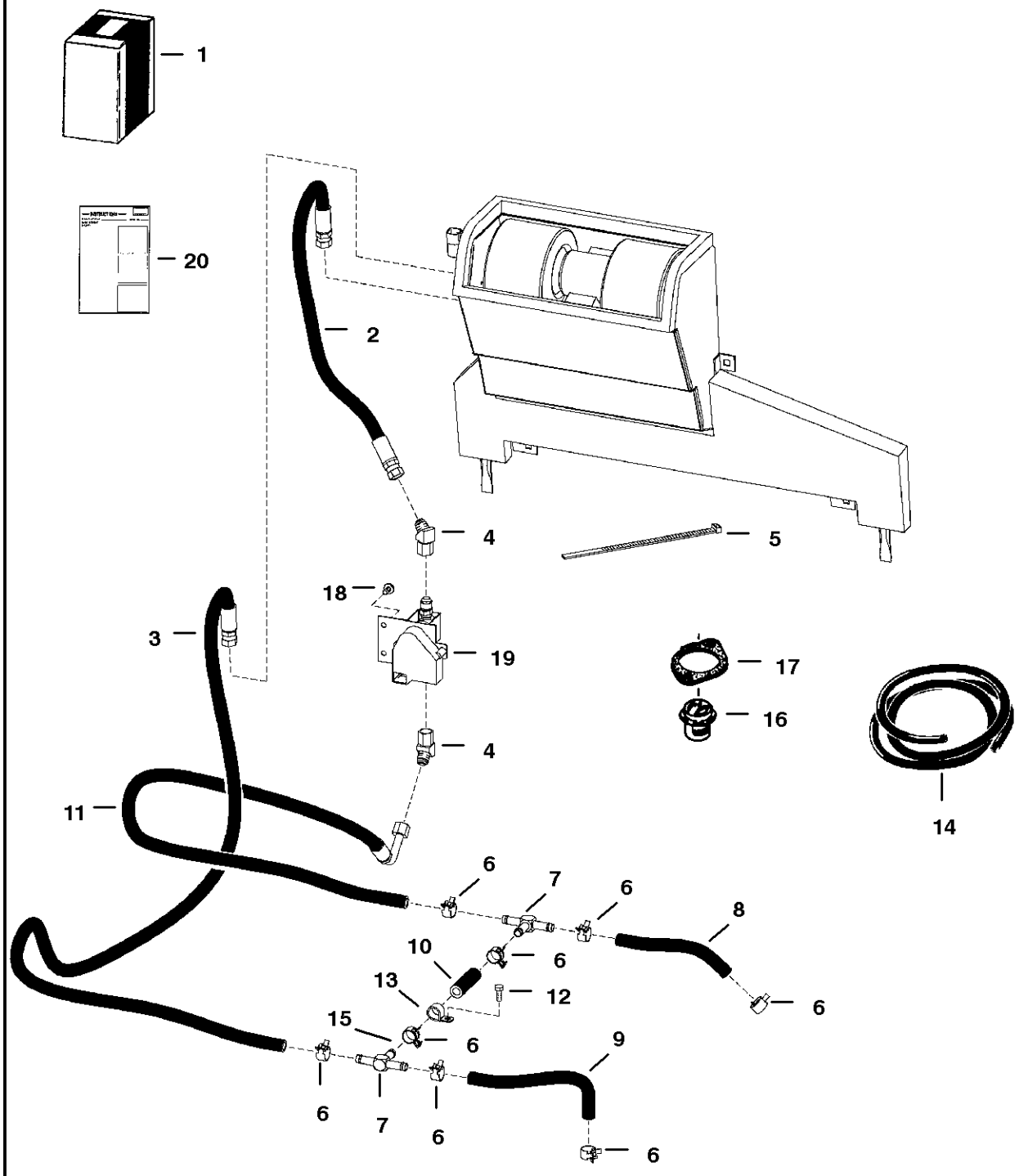

HEATER PLUMBING KIT

Ref.N°	Part N°	Description	Remarks	Serial N°	Qty.
1	6718809	KIT	Ref. HEATER PLUMBING KIT(2) - HEATER PLUMBING KIT(17) - For Heater Kit See Page HEATER KIT(1)		1
2	6719144				1
3	6719080	HOSE			1
4	12KN-6	ELBOW			2
5	6624289	STA-STRAP			4
6	5HM-20	CLAMP	hose		8
7	6718578	TEE			2
8	NAP	HOSE	8.3'(210,8 mm) long - Order Ref. HEATER PLUMBING KIT(14)		x
9	NAP	HOSE	10.5'(266,7 mm) long -Order Ref. HEATER PLUMBING KIT(14)		1
10	NAP	HOSE	3'(76,2 mm) long - Order Ref. HEATER PLUMBING KIT(14)		1
11	6717987	HOSE			1
12	1CM-820	BOLT			1
13	30H-64	CLAMP	insulated		1
14	6674905	HOSE	bulk - Sold Per Foot		x
15	6592852	ORIFICE			1
16	6630184	THERMOSTAT			1
17	6666790	GASKET	thermostat		1
18	17C-512	BOLT	Not in Kit		2
18	95D-5	NUT	Not in Kit		2
19		VALVE	Not in Kit - See Page HEATER KIT(1)		1

*HEATER PLUMBING KIT
(Heater Plumbing Kit)

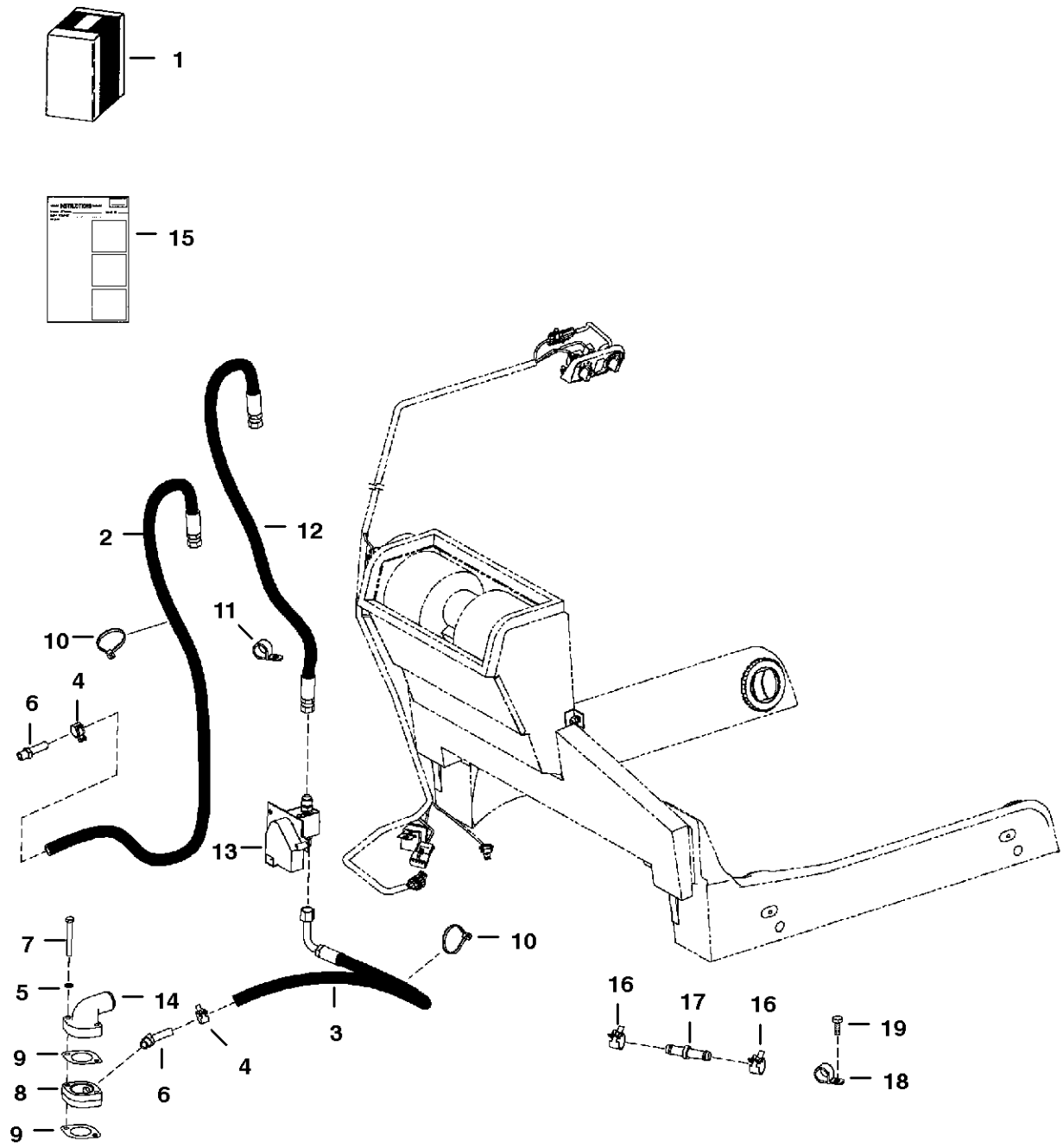

*

Ref.N°	Part N°	Description	Remarks	Serial N°	Qty.
1	6731158	KIT	Ref. HEATER PLUMBING KIT(2) - * (14) - For Heater Kit See Page HEATER KIT(1)		1
2	6730996	HOSE	W/10' spring guard		1
3	6730998	HOSE			1
4	5HM-20	CLAMP	hose		2
5	6731084	CONNECTOR			1
6	6731085	ELBOW			1
7	1CM-870	BOLT			2
8	6731049	ADAPTER			1
9	6666790	GASKET	thermostat		2
10	6624289	STA-STRAP			3
11	30H-45	CLAMP	insulated		1
12	6EM-80	WASHER			2
13		VALVE	Not in Kit - See Page HEATER KIT(1)		1
14	6901497	INSTRUCTIONS			1

HORN KIT

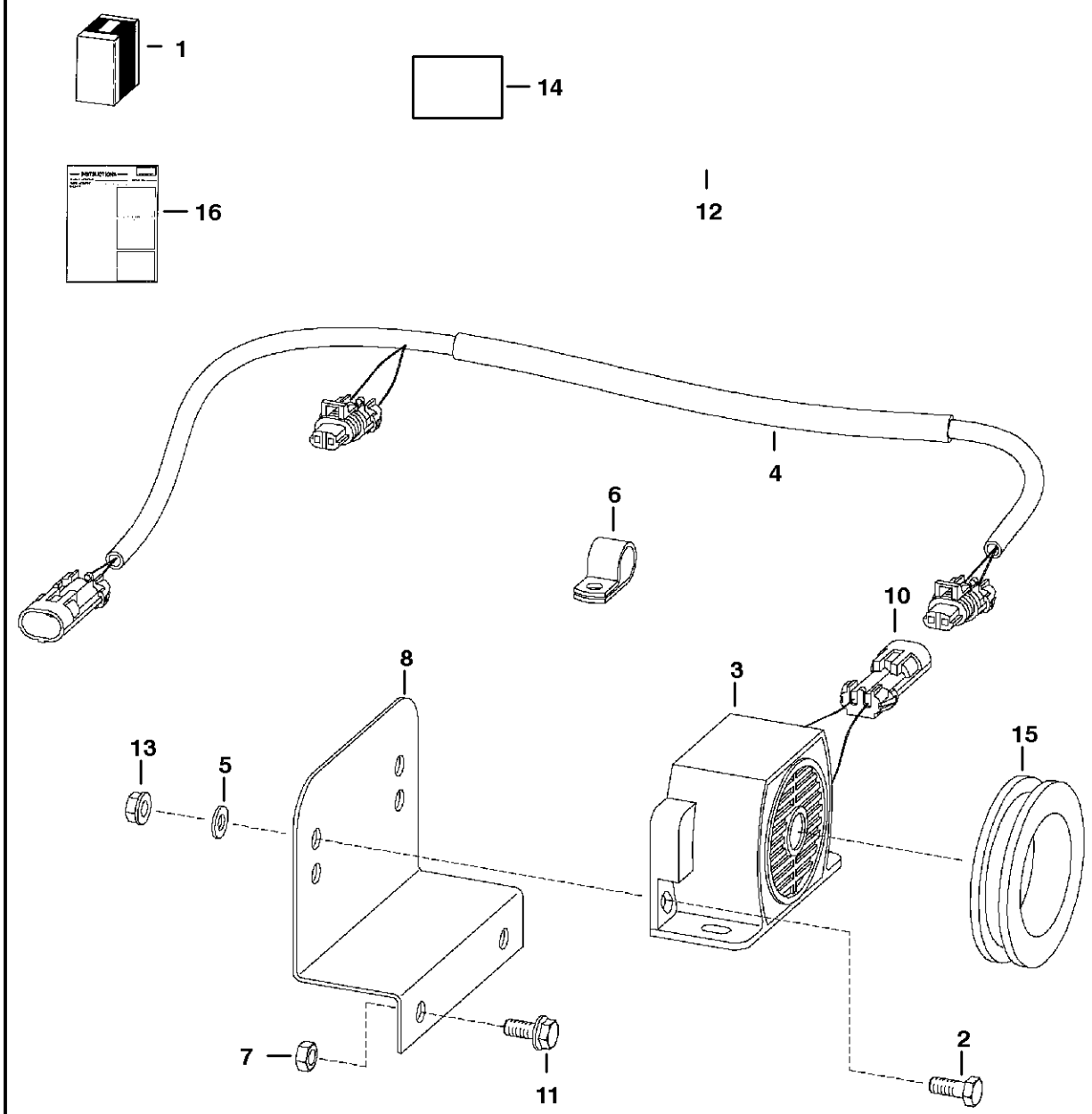

HORN KIT

Ref.N°	Part N°	Description	Remarks	Serial N°	Qty.
1	6719043	HORN KIT	Ref. HORN KIT(2) - HORN KIT(16)		1
2	17C-410	BOLT			2
3	6675099	HORN			1
4	6719151	HARNESS	113'(2870,2 mm) long		1
5	25E-13	WASHER			1
6	30H-23	CLAMP			1
7	83D-5	NUT	Was 61D-5 [B]		2
8	6707726	MOUNT			1
9	6641180	LOCK	2 - pin		2
9	6640700	LOCK	3 - pin		2
10	6641179	CONNECTOR	2 - pin		2
10	6640699	CONNECTOR	3 - pin		2
11	35C-512	BOLT			2
12	6705921	HANDLE ASSY.			1
12	6640690	PIN			5
12	6641176	SEAL			5
13	83D-4	NUT			2
14	6703727	DECAL			1
15	6577545	GROMMET			1
16	6900913	INSTRUCTIONS			1

LIFT KIT
(Four Point - .75" Thick Lift Eye)

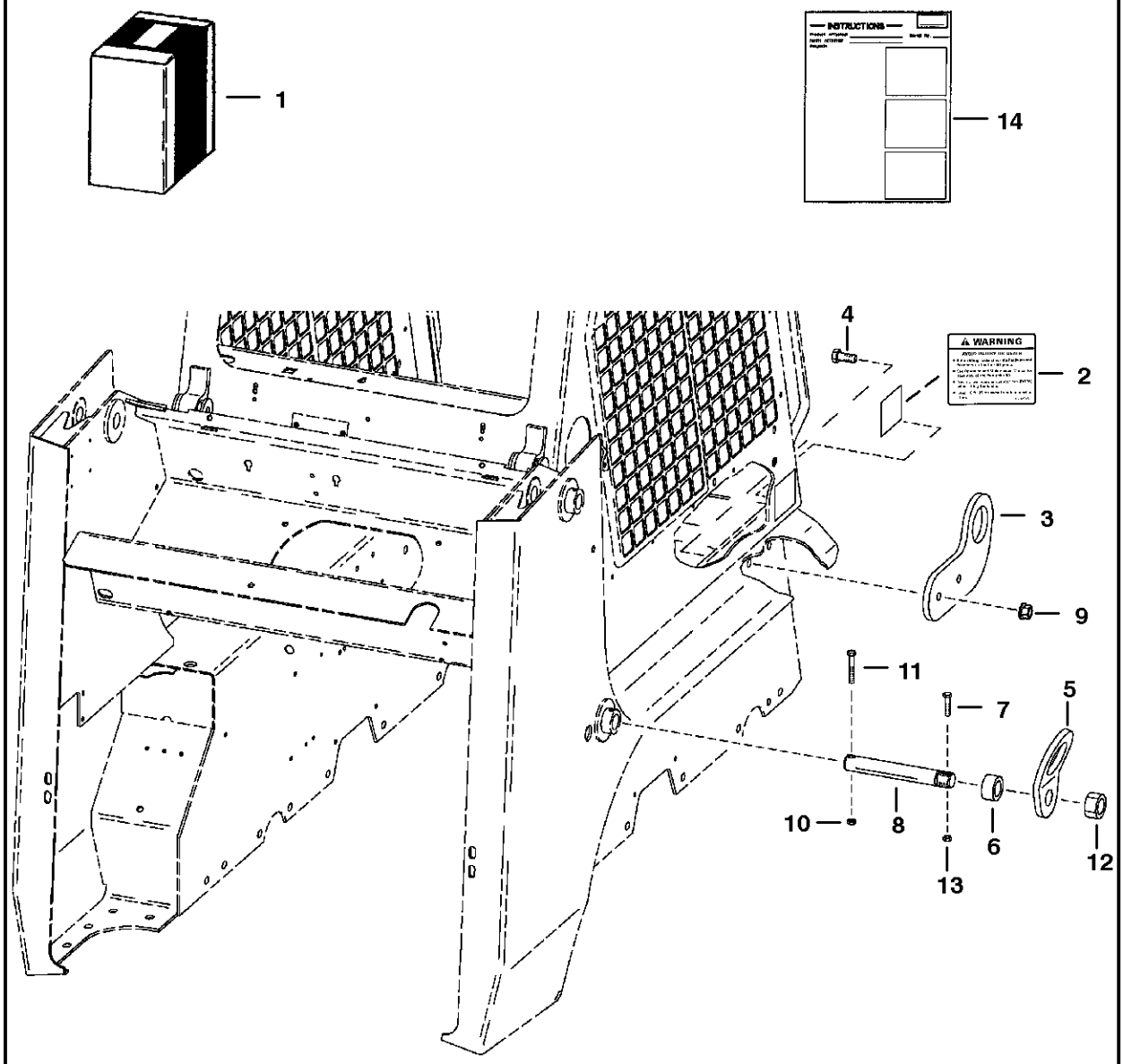

LIFT KIT

Ref.N°	Part N°	Description	Remarks	Serial N°	Qty.
1	6725224	KIT	Ref. LIFT KIT(2) - LIFT KIT(14)		1
2	6726423	DECAL	Was 6702916 [A]		2
3	6719490	LIFT EYE	front		2
4	17C-1028	BOLT			4
5	6706825	LIFT EYE	rear		2
6	6702921	SPACER	1.00' thick - 751 & 753		2
6	6719906	SPACER	.70' thick - 763		2
7	17C-540	BOLT			2
8	6706807	PIN			2
9	83D-10	NUT			4
10	85D-6	NUT	Not in Kit		2
11	17C-640	BOLT	Not in Kit		2
12	4D-20	NUT			2
13	87D-5	NUT			2
14	6722872	INSTRUCTIONS			1

LIFT KIT
(Single Point)

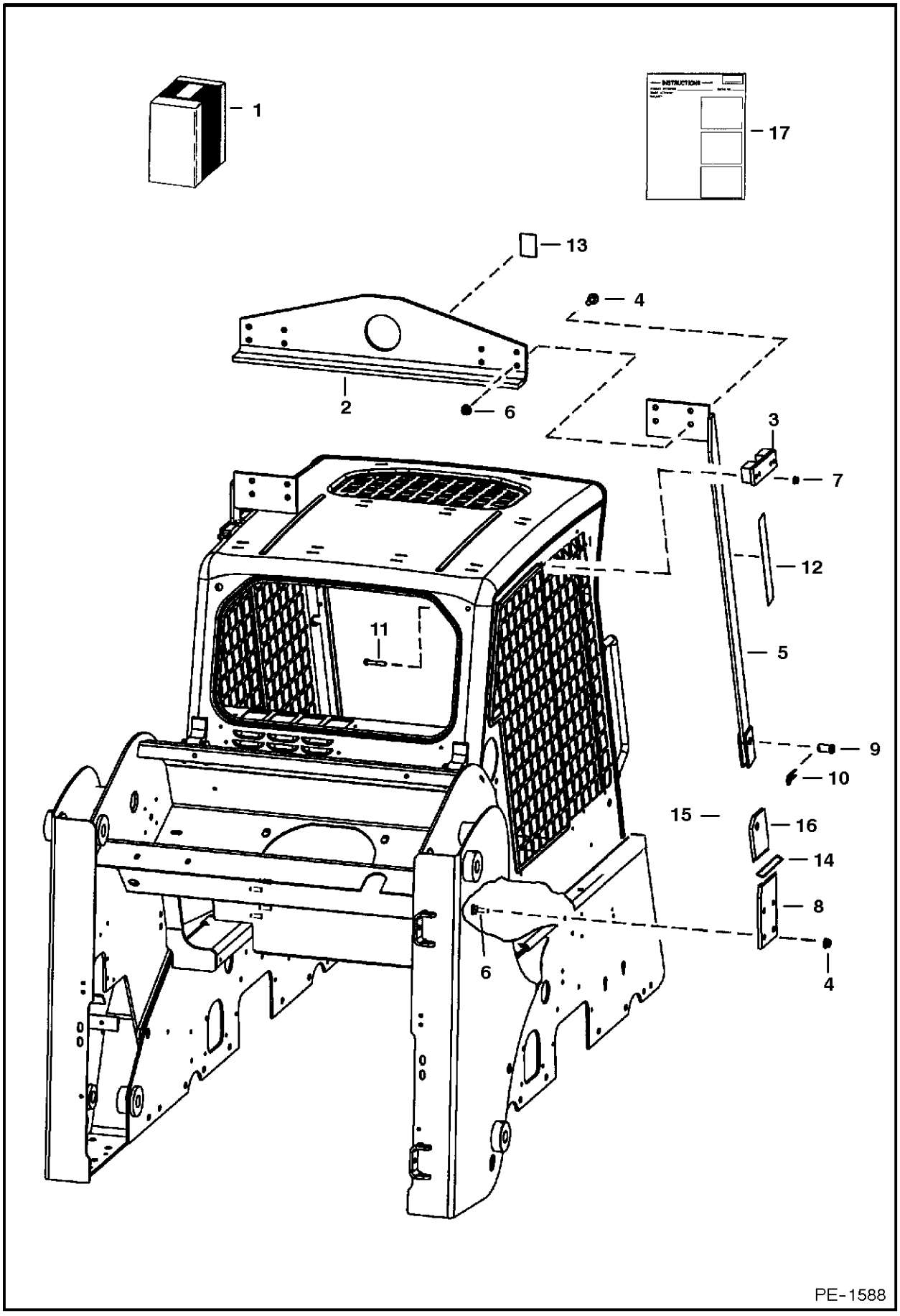

L

Ref.N°	Part N°	Description	Remarks	Serial N°	Qty.
1	6719323	KIT	Ref. LIFT KIT(2) - LIFT KIT(17)		1
2	6567827	ANGLE			1
3	6719184	BRACKET	L.H.		1
3	6719185	BRACKET	R.H.		1
4	31C-824	BOLT		& Bel	12
4	31C-824	BOLT		& Abv	16
5	NAP	BRACKET	R.H. - Was 6704146 [A]	& Bel	1
5	6725299	BRACKET	R.H.	& Abv	1
5	NAP	BRACKET	L.H. - Was 6704147 [A]	& Bel	1
5	6725300	BRACKET	L.H.	& Abv	1
6	57D-8	NUT			12
7	57D-6	NUT			8
8	6704149	BRACKET			2
9	6567838	PIN			2
10	1320075	COTTER PIN			2
11	17C-632	BOLT			8
12	6704786	DECAL	warning		2
13	6533898	DECAL	hook		1
14	NAP	SPACER	Was 6719324 [A]	& Bel	2
15	31C-844	BOLT	Was 31C-841 [B]	& Bel	4
16	NAP	BRACKET	Was 6704151 [A]	& Bel	2
16	6725297	BRACKET		& Abv	2
17	6900888	INSTRUCTIONS			1

LIGHT KIT

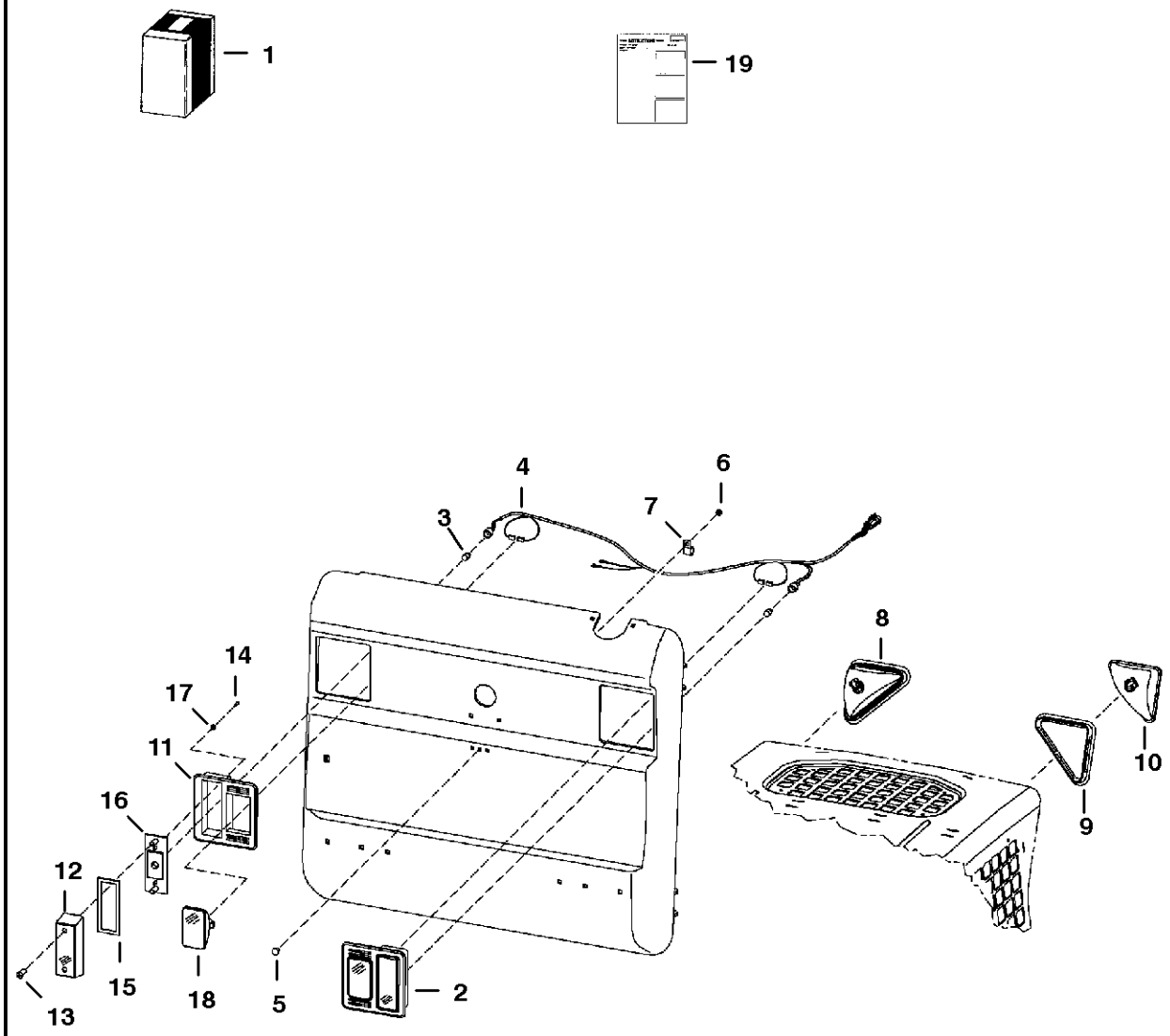

PE-1062

LIGHT KIT

Ref.N°	Part N°	Description	Remarks	Serial N°	Qty.
1	NAP	KIT	Ref.		1
2	6670284	LIGHT	rear		2
3	6649481	BULB			2
4	6716419	HARNESS			1
5	37C-512	BOLT			1
6	85D-5	NUT			1
7	30H-42	CLAMP			1
8	NAP	LIGHT ASSY	R.H. - Ref. LIGHT KIT(9) & LIGHT KIT(10)		1
8	NAP	LIGHT ASSY	L.H. - Ref. LIGHT KIT(9) & LIGHT KIT(10)		1
9	6674401	HOUSING	R.H.		1
9	6675336	BULB	55 watt		1
9	6674400	HOUSING	L.H.		1
9	6675336	BULB	55 watt		1
10	6674402	MOUNT			1
11	6672279	MOUNT	rubber		2
12	6672276	LENS	red		2
13	6672274	SCREW			4
14	6672273	SCREW			2
15	6672275	GASKET			2
16	6672277	BRACKET			2
17	6672272	WASHER			4
18	6661353	LIGHT ASSY	W/bulb - white		2
18	898731	LIGHT BULB			2
19	NAP	INSTRUCTIONS			1

MUFFLER/PURIFIER KIT

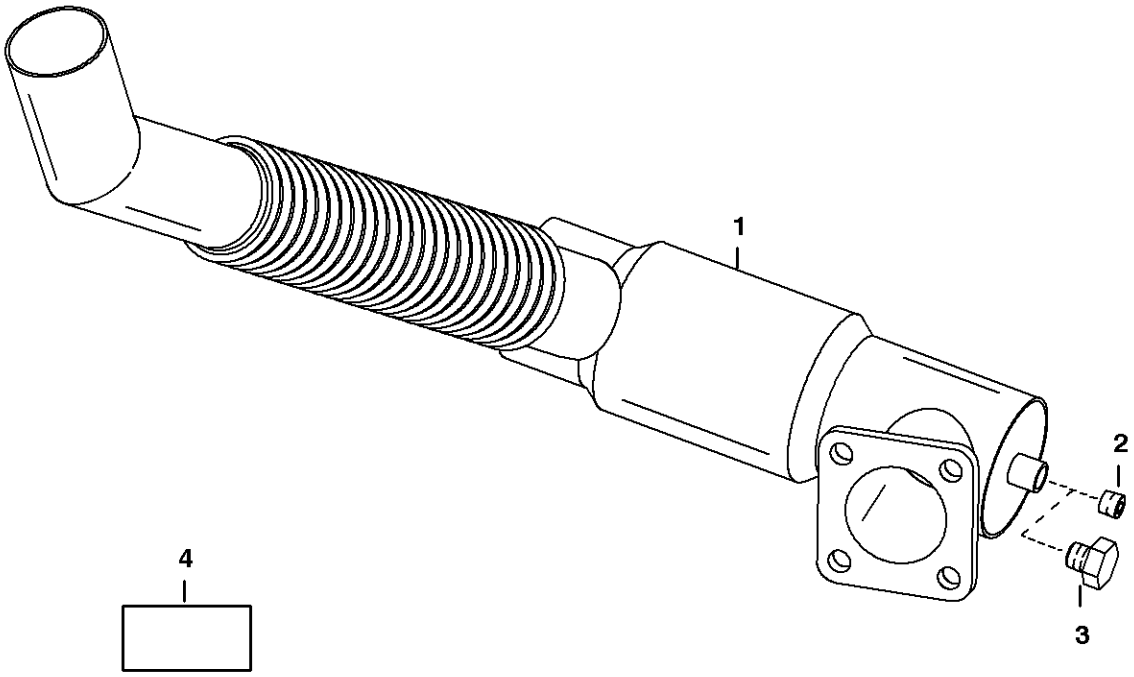

TS-1130

MUFFLER/PURIFIER KIT

Ref.N°	Part N°	Description	Remarks	Serial N°	Qty.
1	6661616	MUFFLER	W/Ref. MUFFLER/PURIFIER KIT(2)		1
2	NAP	PLUG	1/8' brass Allen Head - Order Ref. MUFFLER/PURIFIER KIT(3)		1
3	6659543	PLUG	1/8' brass - hex head		1
4	6667573	DECAL			1

RADIATOR SCREEN KIT

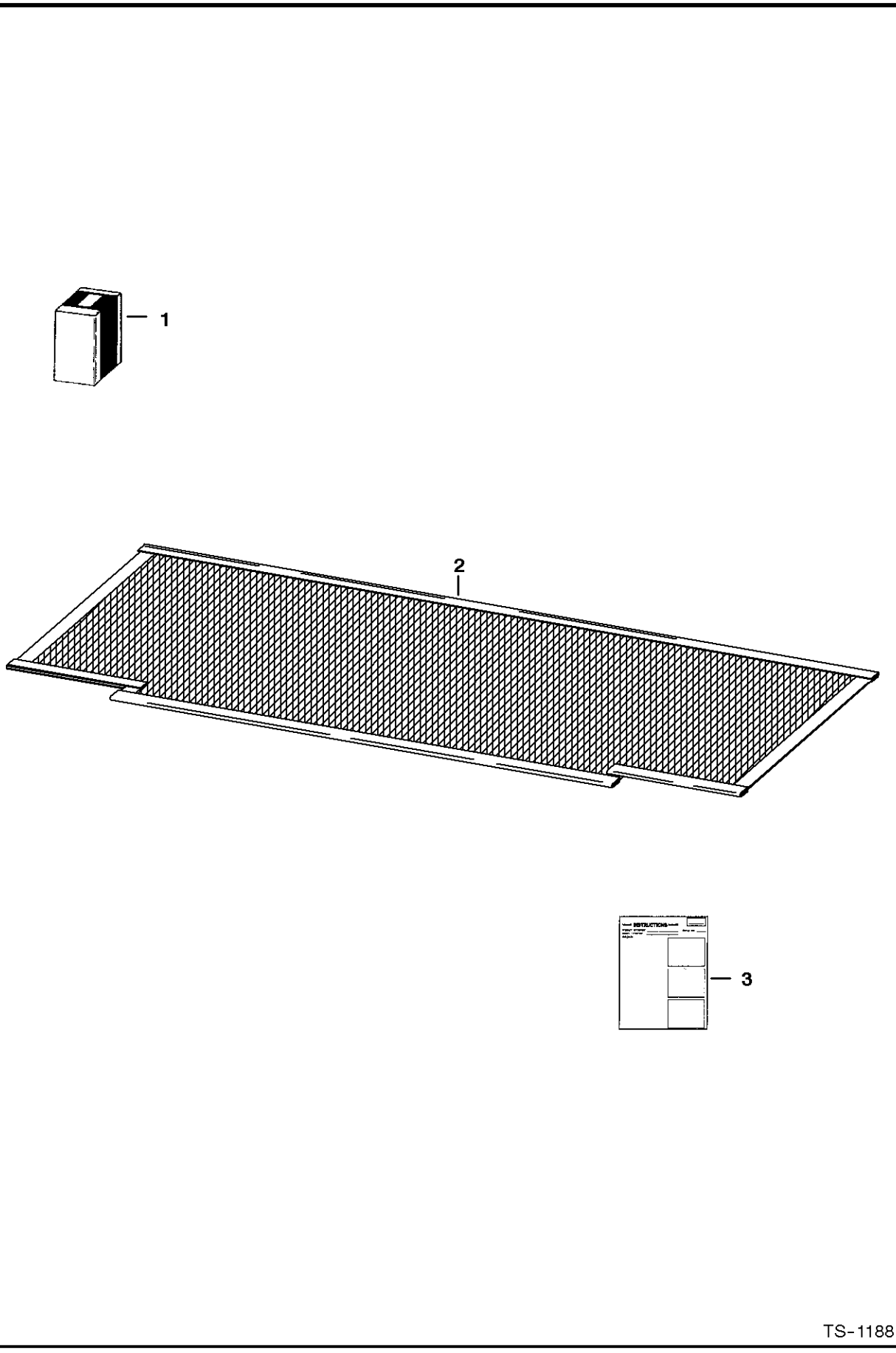

RADIATOR SCREEN KIT

Ref.N°	Part N°	Description	Remarks	Serial N°	Qty.
1	6706939	KIT	Ref. RADIATOR SCREEN KIT(2) & RADIATOR SCREEN KIT(3)		1
2	6706285	SCREEN			1
3	6722861	INSTRUCTIONS			1

REAR AUXILIARY KIT

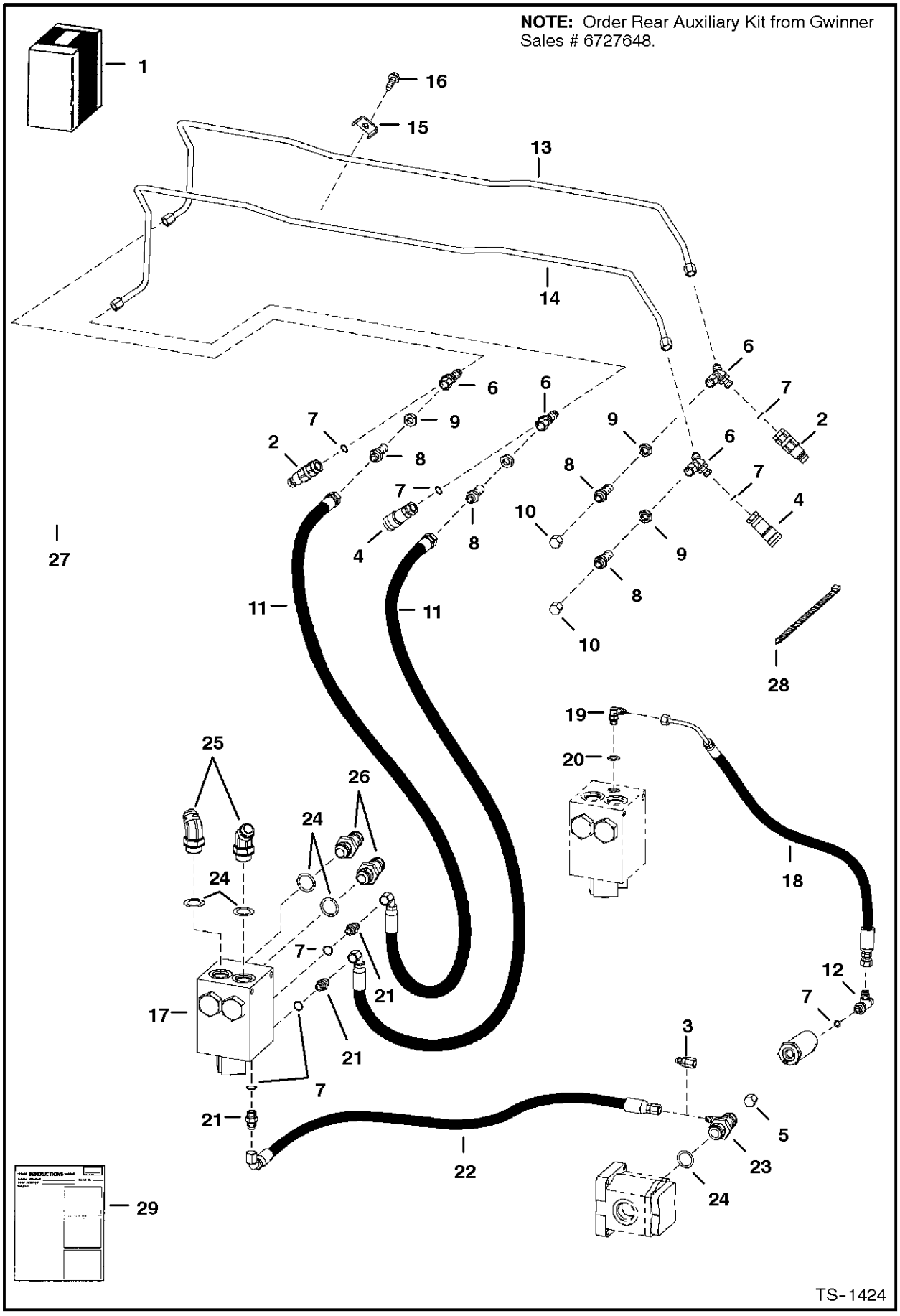

REAR AUXILIARY KIT

Ref.N°	Part N°	Description	Remarks	Serial N°	Qty.
1	SALES	KIT	SEE NOTE		1
2	6667804	QUICK COUPLER			2
2	6669657	O-RING			x
3	6804359	ADAPTER	europe		1
4	6667803	QUICK COUPLER			2
5	36K-5	CAP			3
6	6706220	TEE	W/Ref. REAR AUXILIARY KIT(7)		4
7	99K-6	O-RING			x
8	51E-404	ADAPTER			4
9	61E-4	NUT			4
10	63E-4	PLUG			2
11	6706089	HOSE			2
12	13 KN-5	ELBOW	W/Ref. REAR AUXILIARY KIT(7) - Was 17KV-5 [B]		1
12	97K-6	O-RING	flared end		2
13	6718570	TUBE			1
14	6718571	TUBE			1
15	6500989	CLAMP			1
16	84G-3716	BOLT	Was 84G-3712 [B]		2
17		VALVE	See Page REAR AUXILIARY VALVE(1)		1
18	6727108	HOSE	Was 6711681 [B]		1
19	17KV-3	ELBOW	W/Ref. REAR AUXILIARY KIT(20)		1
19	97K-4	O-RING	flared end		4
20	99K-4	O-RING			x
21	15KV-5	ADAPTER	W/Ref. REAR AUXILIARY KIT(7)		4
21	97K-6	O-RING	flared end		4
22	6702962	HOSE			1
23	6704693	TEE	W/Ref. REAR AUXILIARY KIT(24)		1
23	6715653	TEE	W/Ref. REAR AUXILIARY KIT(24) - Europe		1
24	79K-12	O-RING	flat boss face		x
24	99K-12	O-RING	tapered boss face		x
25	18KV-8	ELBOW	W/Ref. REAR AUXILIARY KIT(24)		2
25	97K-12	O-RING	flared end		4
26	45KN-8	ADAPTER			2
26	97K-12	O-RING	flared end		4
27	6718645	HARNESS			1
28	6624289	STA-STRAP			4
29	6901221	INSTRUCTIONS	Was 6901009 [A]		1

REAR AUXILIARY VALVE
(For Use W/FF Couplers)

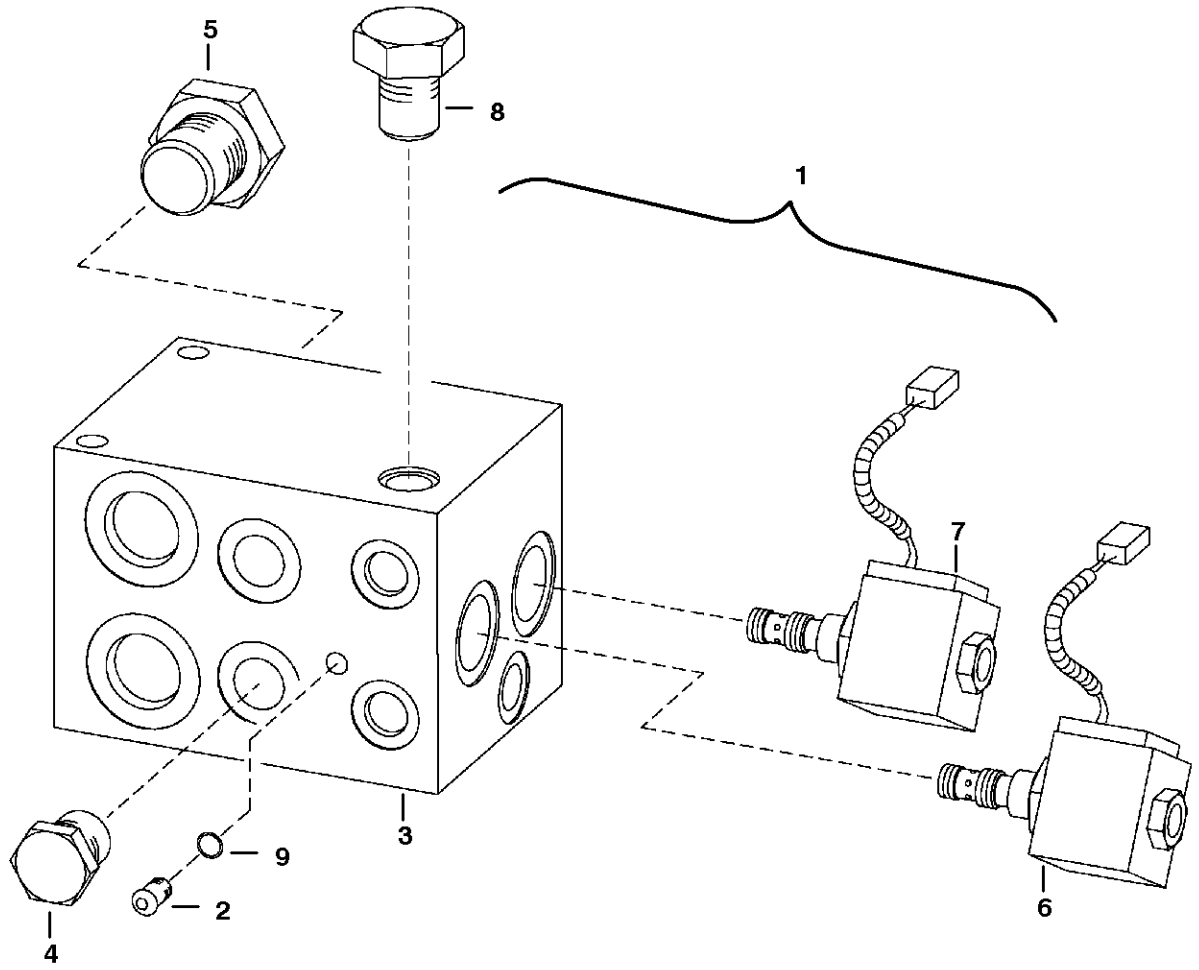

TS-1362

REAR AUXILIARY VALVE

Ref.N°	Part N°	Description	Remarks	Serial N°	Qty.
1	NAP	VALVE	diverter - silver - rear pressure 'release function -Was 6665572 [A]		1
1	6675073	VALVE	diverter - gold - front & rear pressure release function		1
2	6653490	PLUG	W/Ref. REAR AUXILIARY VALVE(9) - For Ref. REAR AUXILIARY VALVE(1) (NAP/ 6665572inD1 Valve)		18
2	6676152	PLUG	W/Ref. REAR AUXILIARY VALVE(9) - For Ref. REAR AUXILIARY VALVE(1) (6675073inD1 Valve)		27
3	NSS	BODY			1
4	6664212	CHECK VALVE			2
4	6653487	SEAL KIT			2
5	6653484	VALVE			2
5	6653485	SEAL KIT			2
6	6669218	VALVE	solenoid - W/Connector		1
6	6669190	COIL	For Ref. REAR AUXILIARY VALVE(1) (NAP/6665572inD 1 Valve)		1
6	6676151	COIL	For Ref. REAR AUXILIARY VALVE(1) (6675073inD1 Valve)		1
6	6669188	STEM			1
6	6669217	SEAL KIT			1
7	6669219	VALVE	solenoid - W/Connector		1
7	6669190	COIL			1
7	6669189	STEM			1
7	6669216	SEAL KIT			1
8	6669187	VALVE			1
8	6653487	SEAL KIT			1
9	79K-2	O-RING			x

REAR DOOR LOCK

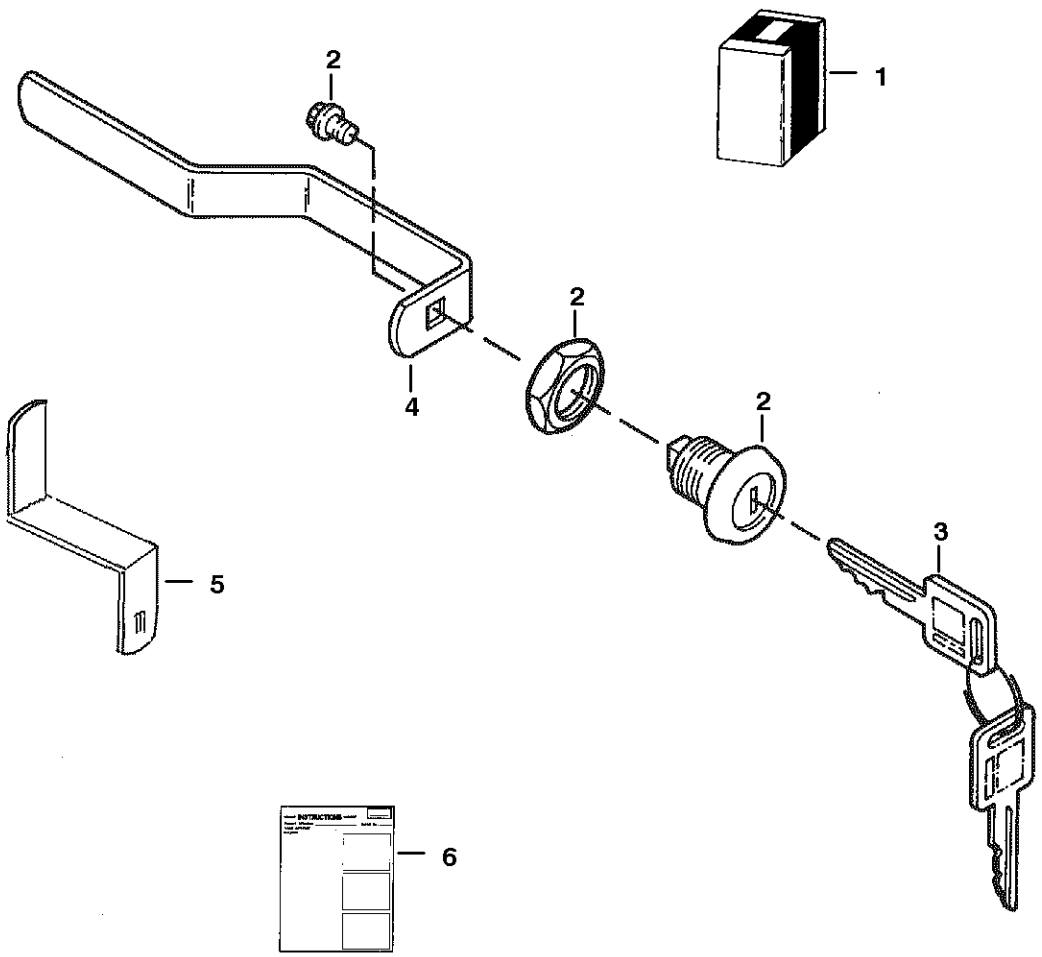

REAR DOOR LOCK

Ref.N°	Part N°	Description	Remarks	Serial N°	Qty.
1	6714973	KIT	lock - Ref. REAR DOOR LOCK(2)-REAR DOOR LOCK(6)		1
2	6670726	LOCK			1
3	6709527	KEY	ignition		1
4	6714037*	LATCH			1
5	6729688	LATCH	Use W/6729991 Rear Door		1
6	6570762	INSTRUCTIONS			1

REAR WIPER

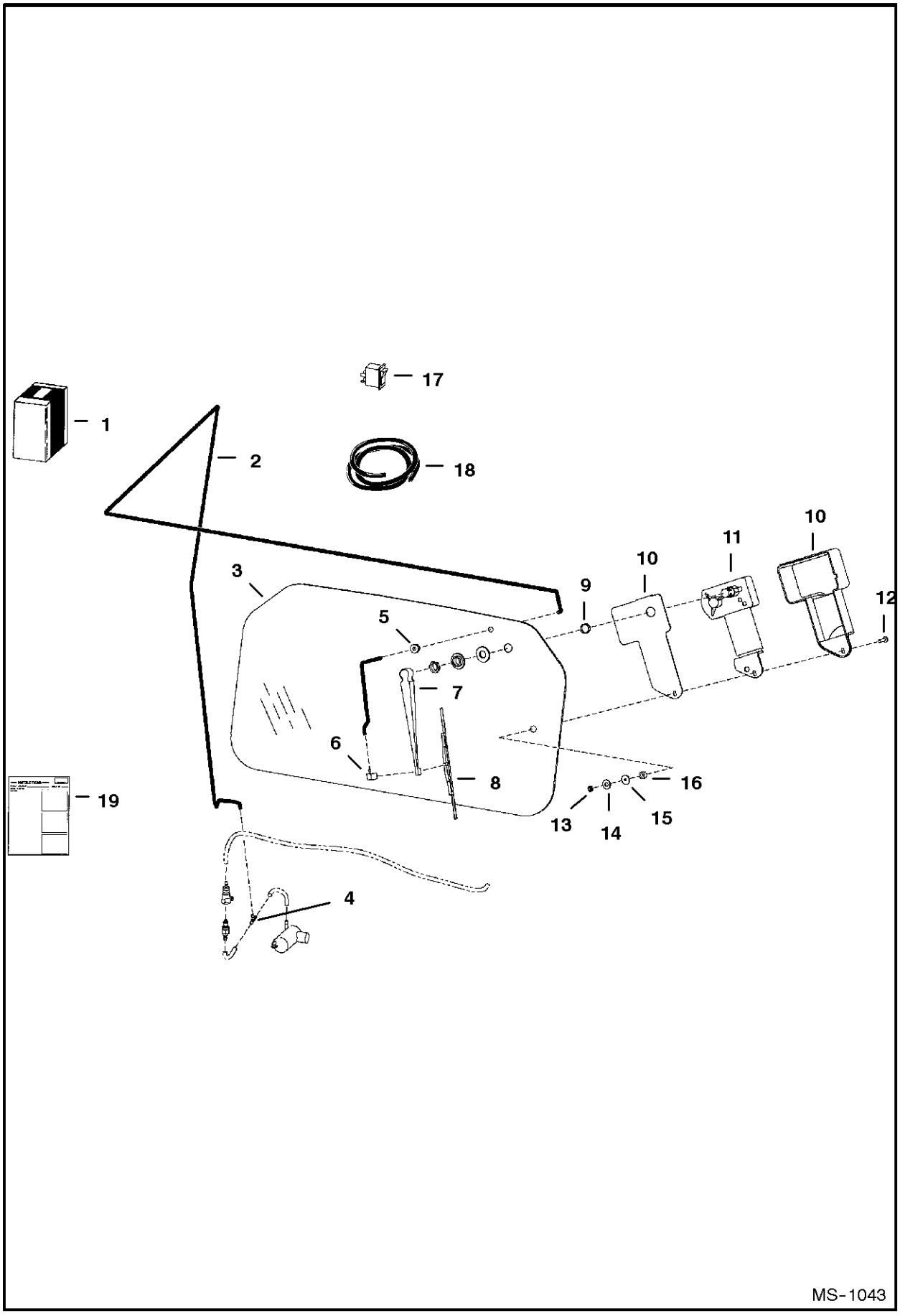

REAR WIPER

Ref.N°	Part N°	Description	Remarks	Serial N°	Qty.
1	6726655	KIT	rear wiper		1
2	NAP	HOSE	96' (2438,4 mm) long - Order Ref. REAR WIPER(18)		1
3	6719317	WINDOW			1
4	6676000	TEE			1
5	6557493	GROMMET			1
6	6676028	NOZZLE			1
7	6676001	ARM			1
8	6676002	BLADE			1
9	6667201	SPACER	nylon		1
10	6664097	COVER	wiper		1
11	6665602	MOTOR			1
12	6664566	SCREW			1
13	6664103	NUT			1
14	6664065	WASHER	nylon		1
15	6801059	WASHER	neoprene		1
16	6664085	BUSHING	nylon		1
17	6675999	SWITCH			1
18	6676003	HOSE	bulk - Sold Per Foot		x
19	6901061	INSTRUCTIONS			1

SEAT
(Suspension - Sears)

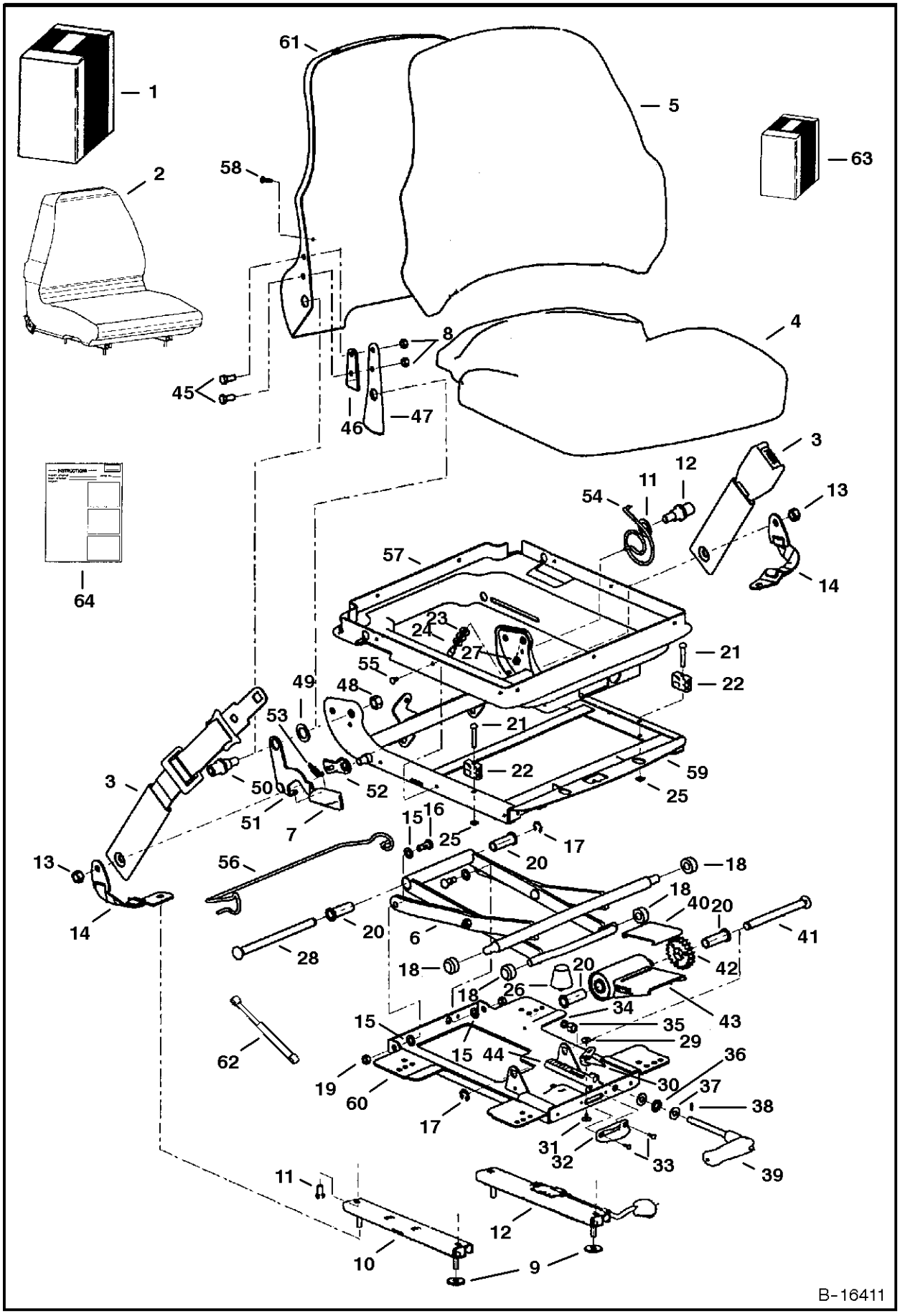

SEAT

Ref.N°	Part N°	Description	Remarks	Serial N°	Qty.
1	NAP	KIT	vinyl seat - Order Ref. SEAT(2), SEAT(3) & SEAT(64) - Was 6718868 [A]		1
1	NAP	KIT	fabric seat - Order Ref. SEAT(2), SEAT(3) & SEAT(64) - Was 6718869 [A]		1
2	NAP	SEAT	vinyl - W/Ref. SEAT(4) - SEAT(61) - W/R.H. recliner lever - Order 6675595inD1}7 Seat - Was 6674896 [A]		1
2	6675595	SEAT	vinyl - W/Ref. SEAT(4) - SEAT(61) - W/L.H. recliner lever		1
2	NAP	SEAT	fabric - W/Ref. SEAT(4) - SEAT(61) - W/R.H. recliner lever - Order 6675596inD1}9 Seat - Was 6674404 [A]		1
2	6675596	SEAT	fabric - W/Ref. SEAT(4) - SEAT(61) - W/L.H. recliner lever		1
3	6675170	SEAT BELT	lap		1
4	6675320	SEAT	seat - fabric		1
4	6675322	SEAT	seat - vinyl		1
5	6675319	SEAT	backrest - fabric - W/Ref. SEAT(58)		1
5	6675321	SEAT	backrest - vinyl - W/Ref. SEAT(58)		1
6	6675317	SCISSORS			1
7	6675323	KNOB	recliner		1
8	NSS	NUT			6
9	619021	WASHER			2
10	NSS	SLIDE	slave		1
11	NSS	BOLT			4
12	NSS	SLIDE	locking		1
13	NSS	NUT			2
14	NSS	BELT	tether		2
15	NSS	WASHER	cross pivot		4
16	NSS	BOLT	pivot		2
17	NSS	RING	retaining		2
18	NSS	ROLLER			4
19	NSS	NUT			2
20	NSS	BUSHING	wt adjustment		4
21	NSS	RIVET			2
22	NSS	BLOCK	up stop		2
23	NSS	WASHER			3
24	NSS	STOP	armrest		1
25	NSS	PUSHNUT			2
26	NSS	BUMPER			1
27	NSS	NUT			1
28	NSS	SHAFT	bearing		1
29	NSS	RIVET	female snap		1
30	NSS	INDICATOR	weight		1
31	NSS	RIVET	male snap		1
32	NSS	DIAL	weight indicator		1
33	NSS	POP RIVET			2
34	NSS	SPACER			1
35	NSS	NUT			1
36	NSS	BEARING	thrust		1
37	NSS	RACE	thrust		2
38	NSS	SHEAR PIN			1
39	NSS	HANDLE	weight adjustment		1
40	NSS	PLATE	wear		1
41	NSS	SHAFT	torsion		1
42	NSS	DRIVE GEAR			1

SEAT

Ref.N°	Part N°	Description	Remarks	Serial N°	Qty.
43	NSS	BUSHING	torsion		1
44	NSS	RACK	wt adjustment		1
45	NSS	BOLT			2
46	NSS	SPACER	recliner		1
47	NSS	BRACKET	back tilt		1
48	NSS	NUT			2
49	NSS	WASHER	plastic		2
50	NSS	BOSS	back pan pivot		2
51	NSS	HANDLE	recliner (RH)		1
52	NSS	LATCH	recliner		1
53	NSS	SPRING	extension		1
54	NSS	SPRING	tilt latch		1
55	NSS	CLIP			6
56	NSS	WIRE	boot support		1
57	NSS	SUSPENSION	boot		1
58	NSS	SCREW			2
59	NSS	HOUSING	upper		1
60	NSS	HOUSING	lower		1
61	NSS	BACK PAN			1
62	6676338	GAS SPRING			1
63	6675309	KIT	slides - W/Ref. SEAT(8) - SEAT(12)		1
63	6675310	KIT	tether belt - W/Ref. SEAT(9), SEAT(13) & SEAT(14)		1
63	6675311	KIT	suspension rollers & bearings - W/Ref. SEAT(15) - SEAT(20)		1
63	6675312	KIT	suspension bumpers & stops - W/Ref. SEAT(21) - SEAT(27)		1
63	6675313	KIT	rear tube - W/Ref. SEAT(17), SEAT(20) & SEAT(28)		1
63	6675314	KIT	weight adj. indicator - W/Ref. SEAT(29) - SEAT(33)		1
63	6675315	KIT	weight adj. handle - W/Ref. SEAT(34) - SEAT(39)		1
63	6675316	KIT	weight adj. - W/Ref. SEAT(17), SEAT(20) & SEAT(40) - SEAT(44)		1
63	NAP	KIT	R.H. recliner - Ref. SEAT(7), SEAT(8) & SEAT(45) - SEAT(54) - Order 6676034inD1}; Kit - Was 6675318 [A]		1
63	6676034	KIT	L.H. recliner - Ref. SEAT(7), SEAT(8) & SEAT(45) - SEAT(54)		1
63	6675308	KIT	susp. boot - W/Ref. SEAT(55) - SEAT(57)		1
64	6900861	INSTRUCTIONS			1

SEAT BELT
(Three Point Retractable)

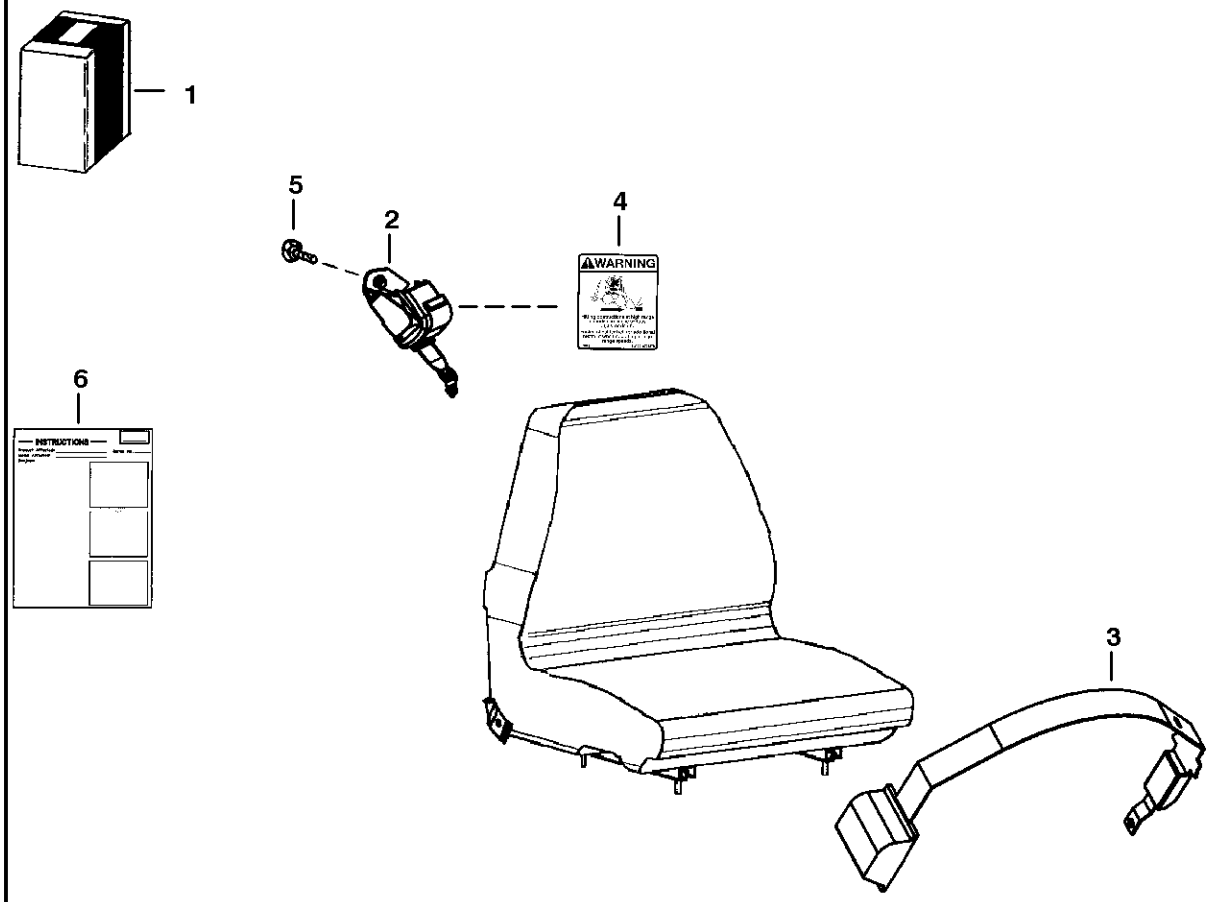

PE-1507

SEAT BELT

Ref.N°	Part N°	Description	Remarks	Serial N°	Qty.
1	6725168	KIT	three point retractable seat belt - Use W/Sears brand suspension seat W/L.H. reliner lever - See Page SEAT(1)		1
2	6674407	SHOULDER BELT			1
3	6674408	SEAT BELT			1
4	6725370	DECAL			1
5	35C-612	BOLT			1
6	6901010	INSTRUCTIONS			1

SEAT BELT
(3" Wide Retractable)

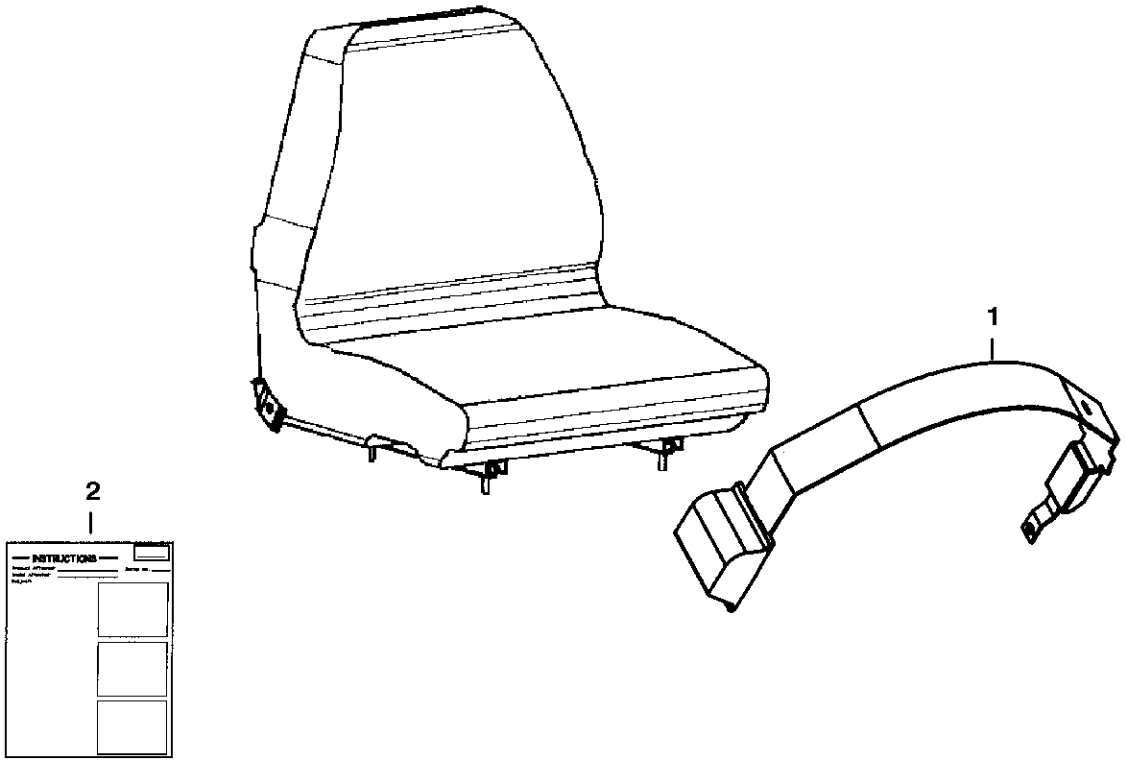

PE-1508

SEAT BELT

Ref.N°	Part N°	Description	Remarks	Serial N°	Qty.
1	6675562	SEAT BELT	3' wide retractable - Use W/Sears brand suspension seat W/L.H. reliner lever - See Page SEAT(1)		1
2	6901011	INSTRUCTIONS			1

SEAT BELT
(3" Wide)

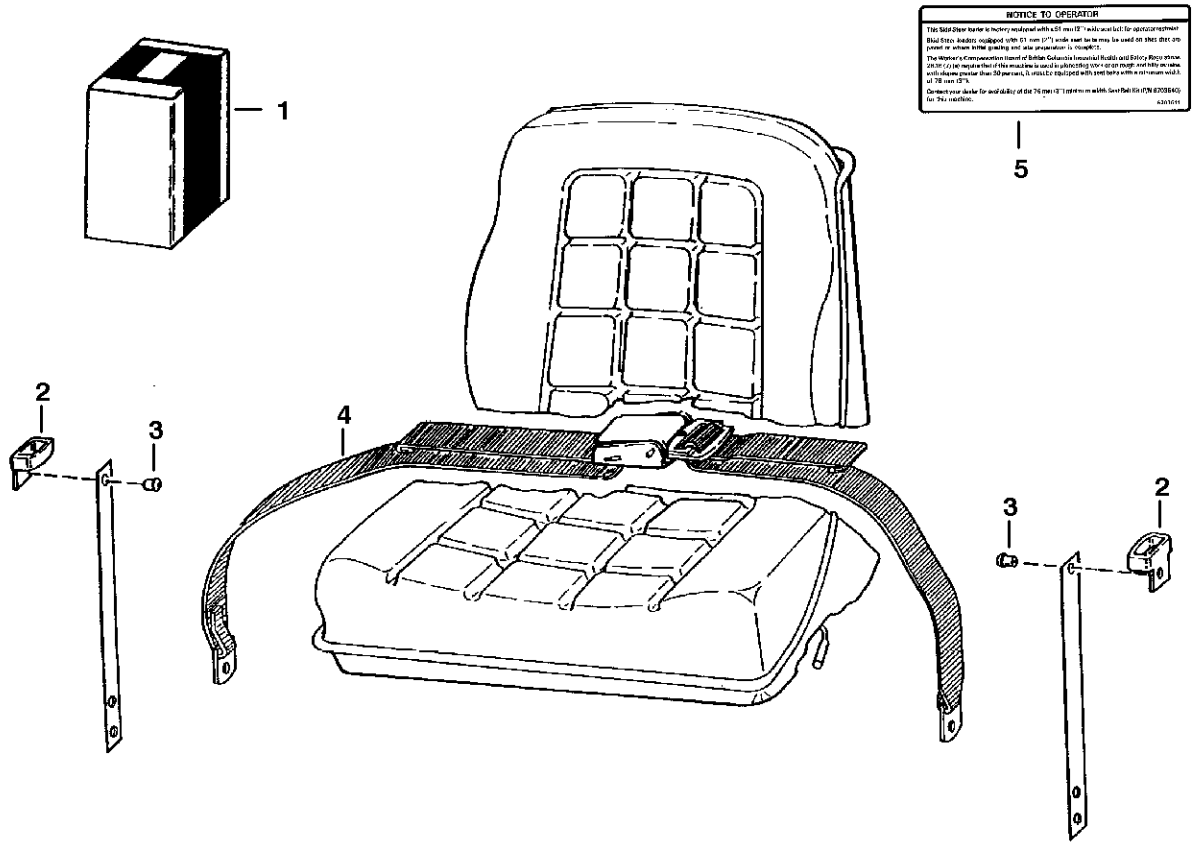

NOTE: Complies with British Columbia Industrial Health and Safety Regulations 26.16 (7) (a).

B-13601

SEAT BELT

Ref.N°	Part N°	Description	Remarks	Serial N°	Qty.
1	6703640	KIT	W/Ref. 2-5		1
2	6703703	GUIDE			2
3	6512797	RIVET			4
4	6659999	BELT			1
5	6703641	DECAL			1

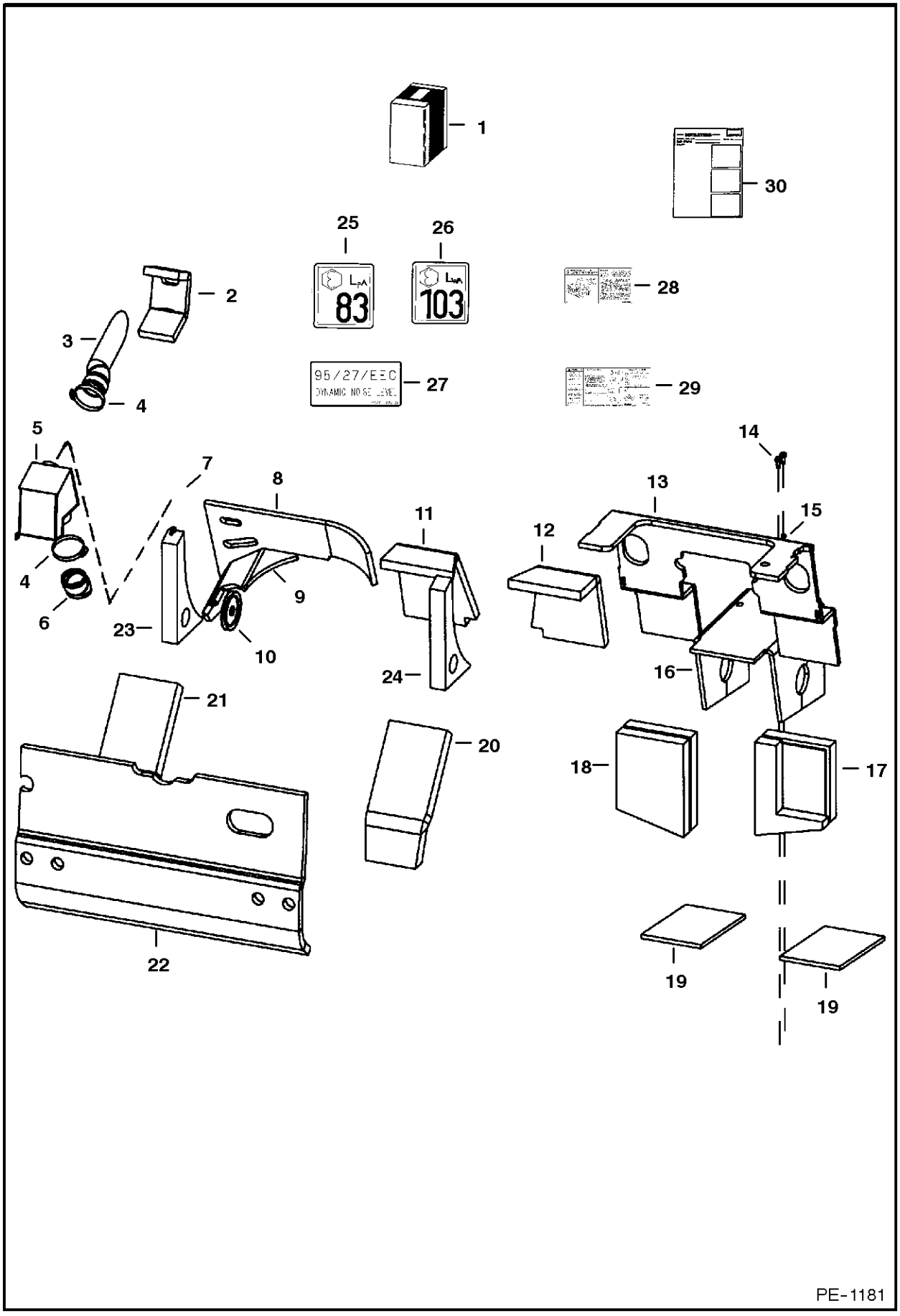
1
30
25
26
2
83
103
28
3
95/27/EEC
DYNAMIC NOISE LEVEL
27
29
4
5
14
7
8
13
11
15
12
4
9
6
23
10
24
16
21
20
18
17
22
19
19
PE-1181

SOUND KIT

Ref.N°	Part N°	Description	Remarks	Serial N°	Qty.
1	6725485	KIT			1
2	6703331	INSULATION	air inlet		1
3	6715239	HOSE	intake		1
4	42H-52	CLAMP			2
5	6715250	MUFFLER	intake		1
6	6715240	HOSE	air cleaner		1
7	84G-3112	BOLT			1
8	6719332	INSULATION	blower housing		1
9	6704769	INSULATION	blower housing		1
10	6712970	PULLEY			1
11	6704721	INSULATION	cross member - L.H.		1
12	6704722	INSULATION	cross member - R.H.		1
13	6719372	INSULATION	steering panel		1
14	84G-3716	BOLT			2
15	6562619	BUSHING			2
16	6715372	INSULATION	pedal		1
17	6725316	INSULATION	transmission		1
18	6705848	INSULATION	transmission		1
19	6715371	INSULATION	transmission		2
20	6705850	INSULATION	brace		1
21	6705849	INSULATION	brace		1
22	6715106	INSULATION	rear door		1
23	6579384	DECAL	noise level		1
24	6579399	DECAL	noise level		1
25	6579402	DECAL	noise level		1
26	6579403	DECAL	noise level		1
27	6715428	DECAL	dynamic level		1
28	6709030	DECAL	belt tension idler		1
29	6718398	DECAL	warning/service schedule/service parts		1
30	6901003	INSTRUCTIONS			1

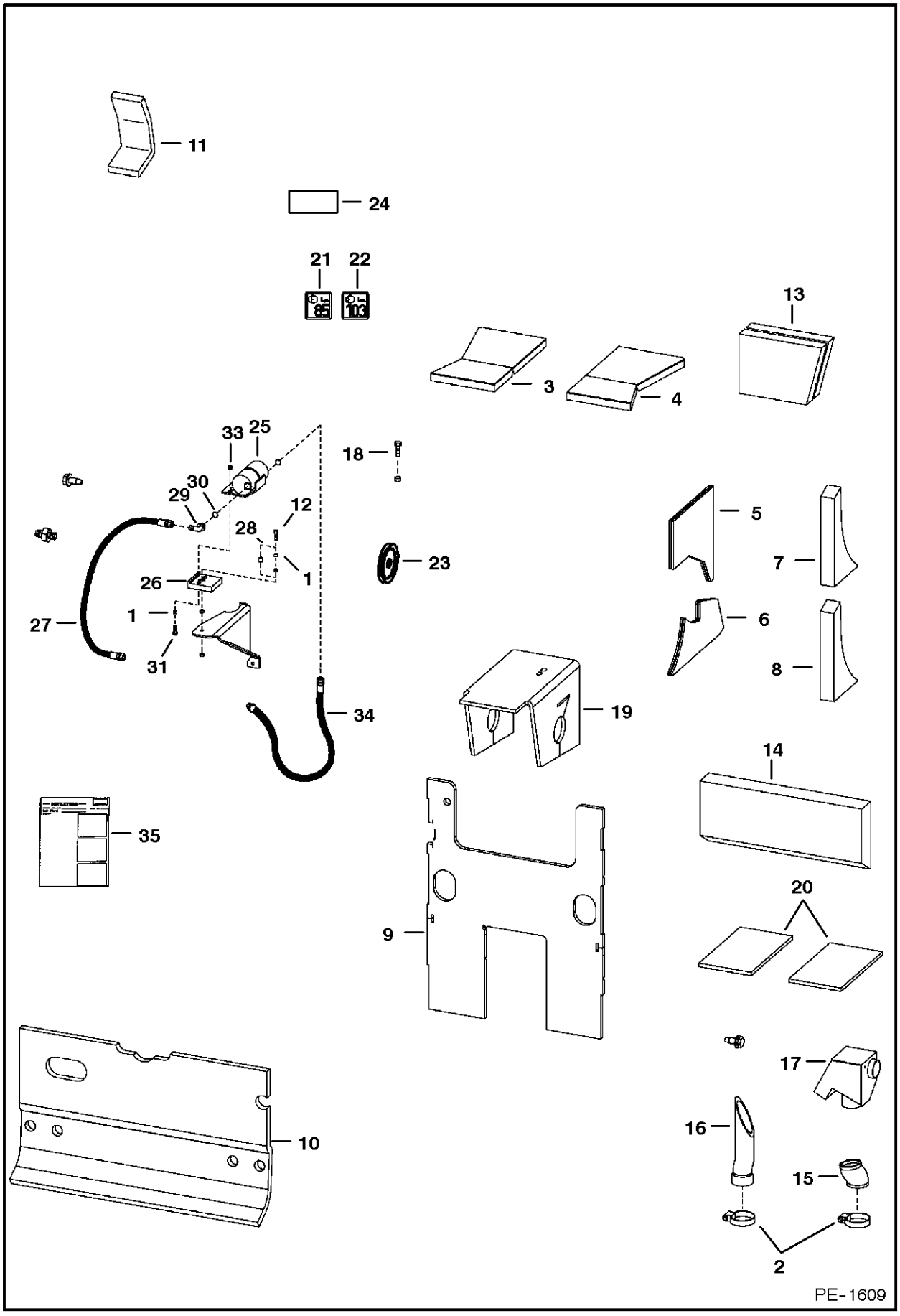
11
24
21
22
85
103
13
3
4
33
25
18
30
29
12
28
23
5
7
26
1
27
1
31
6
8
34
19
14
35
9
20
10
17
16
15
2
PE-1609

SOUND OPTION

Ref.N°	Part N°	Description	Remarks	Serial N°	Qty.
1	6562619	BUSHING			2
2	42H-52	CLAMP			2
3	6704721	INSULATION	cross member - L.H.		1
4	6704722	INSULATION	cross member - R.H.		1
5	6719332	INSULATION	blower housing		1
6	6704769	INSULATION	blower housing		1
7	6705849	INSULATION	brace		1
8	6705850	INSULATION	brace		1
9	6725316	INSULATION	transmission		1
10	6715106	INSULATION	rear door		1
11	6703331	INSULATION	air inlet		1
12	84G-3112	BOLT			1
13	6705848	INSULATION	transmission		2
14	6719372	INSULATION	steering panel		1
15	6715240	HOSE	air cleaner		1
16	6715239	HOSE	intake		1
17	6715250	MUFFLER	intake		1
18	84G-3716	BOLT			2
19	6715371	INSULATION	transmission		1
20	6715372	INSULATION	pedal		1
21	6579399	DECAL	sound level warning - 83 decibal		1
22	6579403	DECAL	sound level warning -103 decibal		1
23	6712970	PULLEY			1
24	6715428	DECAL			1
25	6659982	MUFFLER	hyd.		1
26	6705333	MOUNT	rubber		1
27	6707231	HOSE			1
28	6715744	BUSHING			1
29	17KV-8	ELBOW	W/Ref. SOUND OPTION(30)		2
29	97K-12	O-RING	flared end		2
30	99K-12	O-RING			2
31	35C-616	BOLT			2
32	84G-3724	BOLT			1
33	85D-6	NUT			2
34	6729154	HOSE	Was 6729147 [B]		1
35	6901003	INSTRUCTIONS			1

SOUND REDUCTION HARDHAT

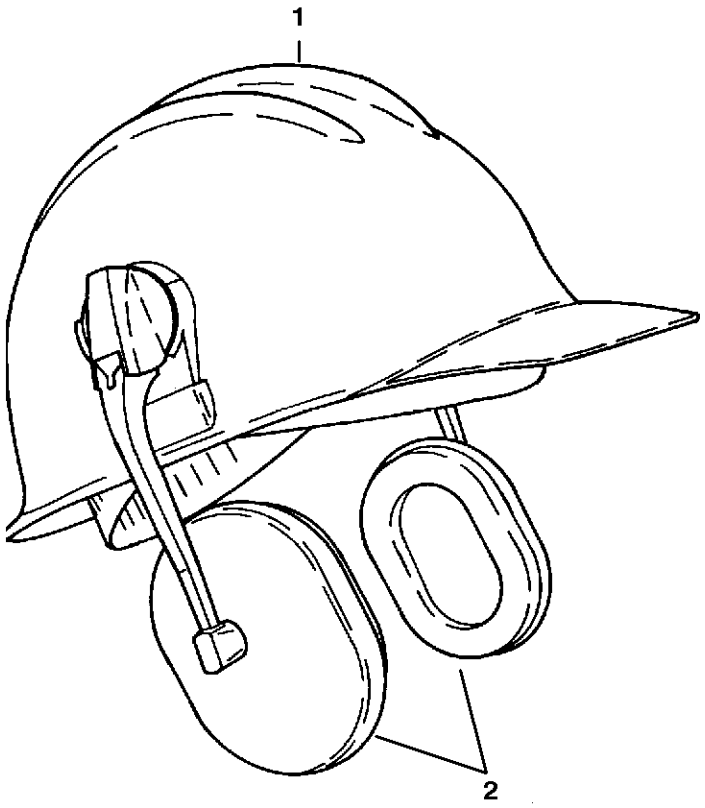

B-3111

SOUND REDUCTION HARDHAT

Ref.N°	Part N°	Description	Remarks	Serial N°	Qty.
1	6559552	HARDHAT			1
2	6559775	EARMUFFS			1

STROBE LIGHT

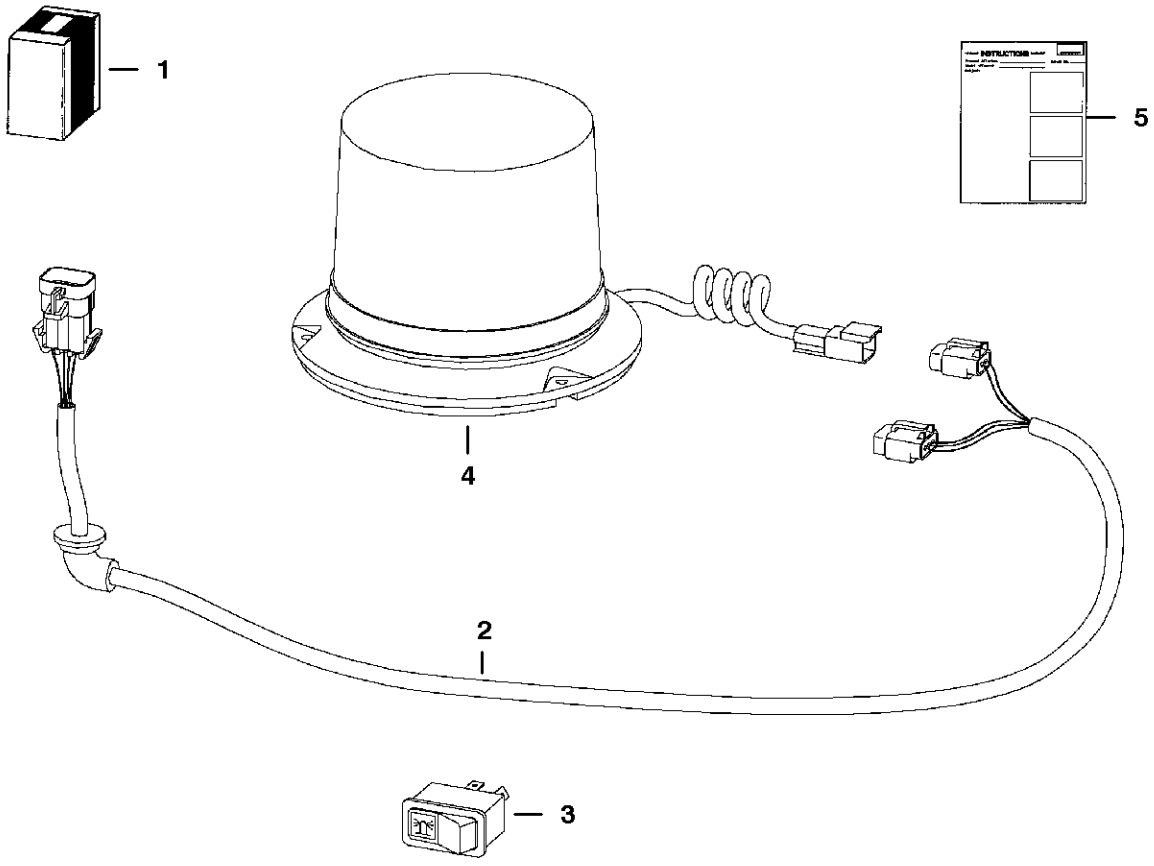

TS-1977

STROBE LIGHT

Ref.N°	Part N°	Description	Remarks	Serial N°	Qty.
1	6719857	KIT	strobe light - If loader is equipped W/Deluxe Cab Option also order 6727468 Harness - See Page ACCESSORIES HARNESS(1) - - Was 67		1
2	6718872	HARNESS			1
3	6665317	SWITCH	horizontal		1
3	6668816	SWITCH	vertical		1
4	6675522	STROBE			1
4	6675858	FLASH TUBE			1
5	6900992	INSTRUCTIONS			1

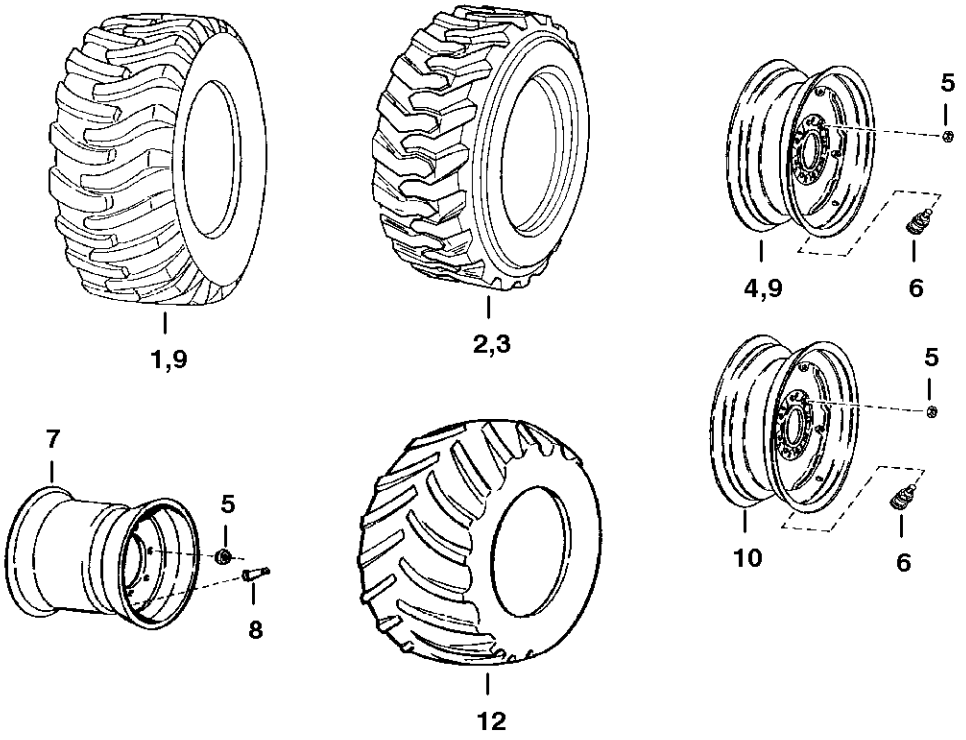

B-16463

TIRES & RIMS

Ref.N°	Part N°	Description	Remarks	Serial N°	Qty.
1	6646601	TIRE	10.00-16.5, 6 Ply Rating - Firestone Brand		4
1	6667889	TIRE	10.00-16.5, 8 ply Rating - Dico Heavy Duty		4
2	NAP	TIRE	31-15, 8 Ply Rating - Terra Grip- Goodyear Brand - Order Ref. TIRES & RIMS(11) (6730107inD1} Tire) - Was 6513971 [A]		4
2	NAP	TIRE	-31-15.5, 8 Ply Rating -Ultra Tread Grip - Goodyear - Order Ref. TIRES & RIMS(11) (6730107inD1} Tire) - Was 6666668 [A]		4
3	NAP	TIRE	10.00-16.5, 8 ply - Bobcat Brand - Heavy Duty - Order 6729896inD1} Tire or 6729900inD1} Tire - Was 6661287 [A]		4
3	6729896	TIRE			4
3	6729900	TIRE			4
4	6730771	RIM	Used W/Ref. TIRES & RIMS(1) & TIRES & RIMS(3) - Was 6565239 [A]		4
4	6730772	RIM	Used W/Ref. TIRES & RIMS(11)		4
5	6564669	NUT	wheel		32
6	1614765	VALVE	tubeless tire		4
7	6658846	RIM	Use W/Ref. TIRES & RIMS(2)		4
8	6591447	STEM	valve - Use W/Ref. TIRES & RIMS(7)		4
9	NAP	TIRE	10 x 16.5 Bar Lug Flotation (Dico)		4
10	6730775	RIM	inverted - Use W/Ref. TIRES & RIMS(3) - For 60' width - Was 6705109 [A]		4
11	NAP	TIRE	31.5 - 13 x 16.5 - Galaxy Brand - Order 6730107inD1} Tire - Was 6729035 [A]		4
11	6730107	TIRE	31.5 - 13 x 16.5 - Bobcat Brand		4
12	NAP	TIRE	31-15, 8 Ply - Terra Grip- Goodyear Brand - Order Ref. TIRES & RIMS(11) (6730107inD1} Tire) - Was 6513971 [A]		4
12	NAP	TIRE	-31-15.5, 8 Ply - Ultra Tread Grip - Goodyear - Order Ref. TIRES & RIMS(11) (6730107inD1} Tire) - Was 6666668 [A]		4

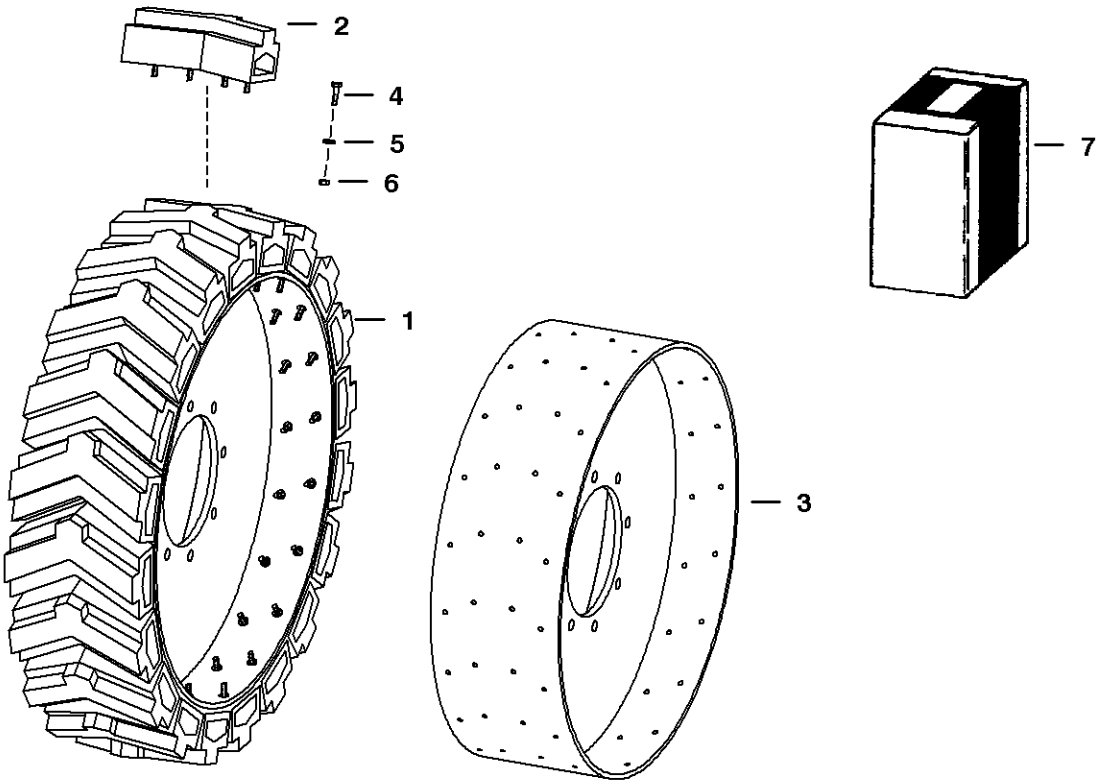

TS-1082

TIRES & RIMS

Ref.N°	Part N°	Description	Remarks	Serial N°	Qty.
1	6664993	TIRE & RIM	Assy. - R.H. - 7.5 x 15		2
1	6664994	TIRE & RIM	Assy. - L.H. - 7.5 x 15		2
1	6674003	TIRE & RIM	Assy. - R.H. - 10 x 16.5		2
1	6674004	TIRE & RIM	Assy. - L.H. - 10 x 16.5		2
2	6664995	KIT	Box of (9) segments - 7.5 x 15 W/Ref. TIRES & RIMS(4) - TIRES & RIMS(6) (12) segments/tire		x
2	6674007	KIT	Box of (10) segments - 10 x 16.5 W/Ref. TIRES & RIMS(4) - TIRES & RIMS(6) (20) segments/tire		x
3	NAP	RIM	R.H. - 7.5 x 15 - Order Ref. TIRES & RIMS(1)		2
3	NAP	RIM	L.H. - 7.5 x 15 - Order Ref. TIRES & RIMS(1)		2
3	NAP	RIM	R.H. - 10 x 16.5 - Order Ref. TIRES & RIMS(1)		2
3	NAP	RIM	L.H. - 10 x 16.5 - Order Ref. TIRES & RIMS(1)		2
4	1CM-830	BOLT			x
5	25E-15	WASHER			x
6	40DM-8	NUT			x
7	6707172	KIT	wheel - Set of (4) 7.5 x 15 Tire & Rim Assys. - Ref. TIRES & RIMS(1) - (2) R.H. & (2) L.H.		1
7	6718298	KIT	wheel - Set of (4) 10 x 16.5 Tire & Rim Assys. - Ref. TIRES & RIMS(1) - (2) R.H. & (2) L.H.		1

BULK ITEMS
(SEE NOTE)

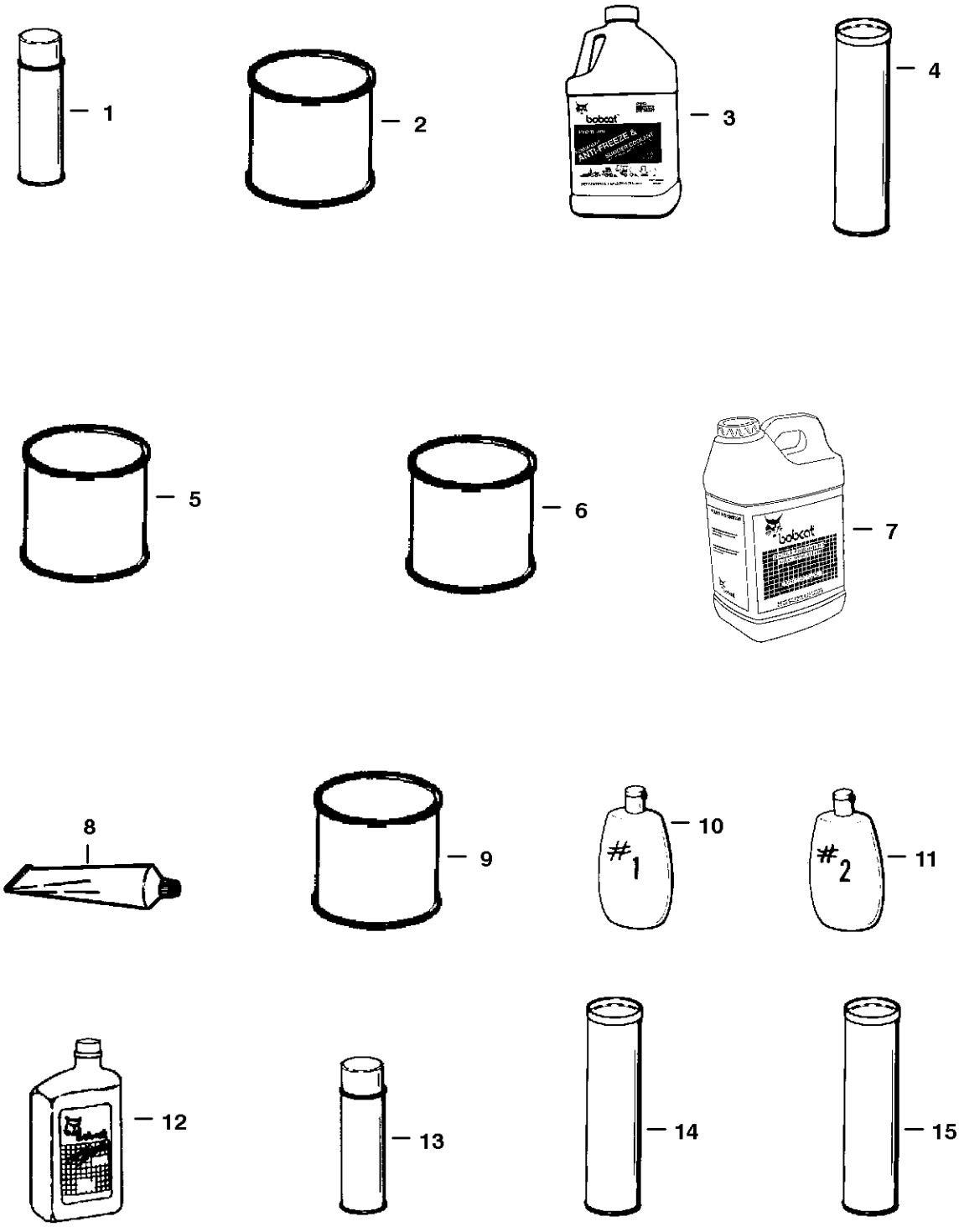

NOTE: Some of these bulk items may not be used on this particular model Bobcat.

NOTE: See Merchandising catalog for more products & information.

NOTE: Paint spray cans are packaged 6 per box.
Motor oil quarts are packaged 12 per box.
Motor oil 5 qt. jugs are packaged 4 per box.
Motor oil 2.5 gal. jugs are packaged 2 per box.

B-16462

BULK ITEMS

Ref.N°	Part N°	Description	Remarks	Serial N°	Qty.
1	6722783	PAINT	orange - Spray Can - SEE NOTE		x
1	6722786	PAINT	charcoal -Spray Can -SEE NOTE		x
1	6722789	PAINT	white - Spray Can - SEE NOTE		x
2	6722781	PAINT	orange - Gal. - Also Order Ref. BULK ITEMS(5)		x
2	6722782	PAINT	orange - Qt. - Also Order Ref. BULK ITEMS(5)		x
2	6722784	PAINT	charcoal - Gal-Also Order Ref. BULK ITEMS(5)		x
2	6722785	PAINT	'charcoal - Qt. - Also Order Ref. BULK ITEMS(5)		x
2	6722787	PAINT	'white - Gallon - Also Order Ref. BULK ITEMS(5)		x
2	6722788	PAINT	white - Qt. Also Order Ref. BULK ITEMS(5)		x
3	6724094	ANTI-FREEEZE	gallon - PG - premixed		x
3	6724354	ANTI-FREEZE	gallon - PG - concentrate		x
4	6633583	SEALANT	chaincase covers		x
5	6653517	REDUCER	gallon		x
6	6653518	PRIMER	gallon		x
6	6653519	PRIMER	Qt.		x
7	6563328	BLACK GOLD	Hydraulic/Hydrostatic Transmission Fluid - 5 Gallons - 2-2 1/2 Gallon Containers		x
7	6722344	BLACK GOLD	Hydraulic/Hydrostatic Transmission Fluid - 5 Gallons Container		x
7	NAP	FLUID	30 Gallon Drum		x
7	6563330	BLACK GOLD	55 Gallon Drum		x
8	6599360	SEALANT	electrical - 3 oz. tube		x
9	6634393	LUBRICANT	90 wt. gear - pint - For use in cooling fan drive assy.		x
10	6630188	POLISH	window-1 (8 oz.)		x
10	NAP	POLISH	'window-1 (64 oz.) -Order 6630188inD1} Polish - Was 6630190 [A]		x
11	6630189	POLISH	window-2 (8 oz.) - scratch remover		x
11	NAP	POLISH	window-2 (64 oz.) - scratch remover - Order 6630189inD 1} Polish - - Was 6630191 [A]		x
12	6657303	MOTOR OIL	30 CE/SG - 1 Qt. - SEE NOTE		x
12	6724559	MOTOR OIL	SAE 30 - 1 Gal.		x
12	6674206	MOTOR OIL	30 CE/SG - 2.5 Gal. - SEE NOTE		x
12	6657301	MOTOR OIL	10W30 CE/SG - 1 Qt. -SEE NOTE		x
12	6724557	MOTOR OIL	SAE 10W30 - 1 Gal. - SEE NOTE		x
12	6674205	MOTOR OIL	10W30 CE/SG-'2.5 Gal.-SEE NOTE		x
12	6657299	MOTOR OIL	15W40 CE/SG - 1 Qt. -SEE NOTE		x
12	6724558	MOTOR OIL	SAE 15W40 - 1 Gal. - SEE NOTE		x
12	6674204	MOTOR OIL	15W40 CE/SG-'2.5 Gal.-SEE NOTE		x
13	6652818	ADHESIVE	insulation - spray can		x
14	6658266	GREASE	general purpose		x
15	6599719	GREASE	14.5 oz. cartridge - For fan idler bearing & spring loaded drive idler		x
16	6650407	ADHESIVE	1 oz. tube		x
17	6650388	SEALANT	flange		x

Part No.	Description	Was	Code	Page
225855	SEAL			24

Code for disposition of old part number
A — Use up
B — Use on other application (See PNI)
C — File PDR Report with Bobcat Parts Sales
D — Part Number Error