https://www.pdfmanual4trucks.com/

RUTHZIL TRATOR COMERCIAL DE PEÇAS LTDA 11 97083-6812 ROLANDO

753

Bobcat®

Parts Manual

OUTUBRO 2006

S/N 5158 11001-29999
S/N 5162 11001-19999
S/N 5127 16001 & Above
S/N 5086 30001 & Above
S/N 5114 76001 & Above
S/N 5139 11001-11148

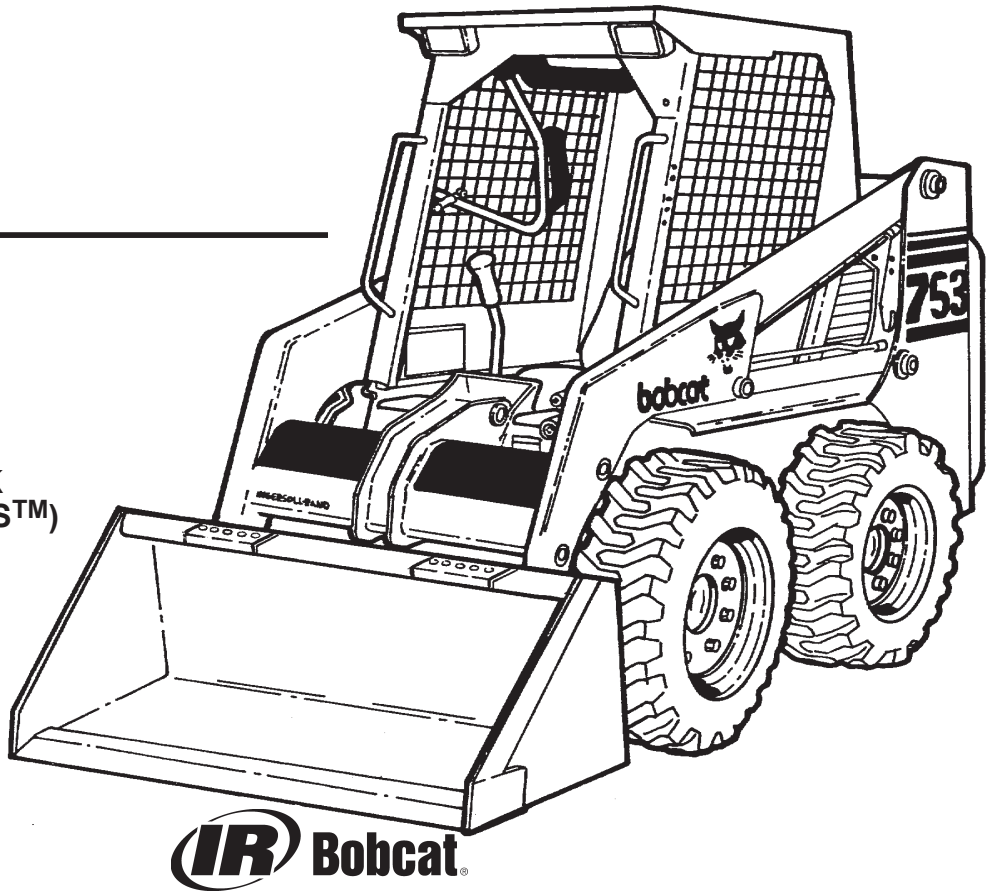

EQUIPPED WITH BOBCAT INTERLOCK CONTROL SYSTEM (BICS™)

IR Bobcat

6724067 (05-05) Revised (10-06)

Printed in U.S.A.

© Bobcat Company 2006

https://www.pdfmanual4trucks.com/

GENERAL INFORMATION

Before ordering parts, ALWAYS provide dealer with your product model number and complete serial number information. Before ordering parts, verify correct part numbers and/or serial numbers with your dealer. When using the machine serial number, use the complete number.

Some Serial Number breaks are not available at time of printing.
These are listed as & Bel or & Abv or - (thru)

The number shown in the quantity column in this manual is the number of parts needed for the illustration on the page. For some parts an "x" will be shown in the quantity column. This "x" indicates that the quantity to be used is "As Needed".

When references L.H. (Left Hand) and R.H. (Right Hand) are used in this manual, it is done from the operator's seat in the forward operating position.

When "See Illustration...." appears in the remarks column, refer to the contents page for the illustration title to find page number location.

Some of the illustrations and information found in this parts manual were supplied to Bobcat by machine component companies.

For additional information on the Bobcat website visit www.bobcat.com

ABBREVIATIONS

SALES	=	Order from Gwinner Sales Department
NSS	=	Not Serviced Separately
NAP	=	Not Available as Parts
BTI	=	Bobcat Technical Information Bulletin
P/M	=	Parts Manual
O/M	=	Operation & Maintenance Manual
S/M	=	Service Manual
S/L	=	Service Letter
AHC	=	Advanced Hand Controls
ACS	=	Advanced Control System
SJC	=	Selectable Joystick Controls
W/	=	With
W/O	=	Without
I.D.	=	Inside Diameter
O.D.	=	Outside Diameter
"	=	Inches
'	=	Feet
mm	=	Millimeters

DISPOSITION CODE DEFINITIONS

(Found in Remarks Column)

[A]	=	Use Up
[B]	=	Use Up on Other Application
[C]	=	File PDR Report with Bobcat Parts Sales
[D]	=	Part Number Error

https://www.pdfmanual4trucks.com/

NOTE D'INFORMATION

Pour toute référence au numéro de série de l'engin, toujours donner le numéro complet.

Le chiffré apparaissant dans la colonne des quantités de ce manuel représentent le nombre de pièces nécessaires pour l'illustration reprise sur la page. Dans certains cas, on lira un "x" dans la colonne des quantités. Cet "x" indique que la quantité nécessaire est "selon besoin".

Pour toute référence vers la GAUCHE ou la DROITE dans ce manuel, considérer que la personne se trouve assise dans le siège de l'opérateur, en position de fonctionnement en marche avant.

Certaines illustrations et informations reprises dans ce manuel de pièces de rechange ont été fournies à Bobcat/Ingersoll-Rand par des fabricants de composants.

ABREVIATIONS & SYMBOLES

SALES	= Commander au Service Ventes à Bruxelles
NSS	= Pas vendu séparément
NAP	= Non disponible comme pièce de rechange
*	= Chapitre, page ou numéro de pièce modifié ou supplémentaire
BTI	= Bobcat Technical Information Bulletin : voir à la fin de la microfiché du modèle concerné ou la microfiche générale reprenant l' ensemble des "BTI".
was 6535403	= était avant 6535403
adj. (adjustment)	= réglage
Assembly	= ensemble
available W/Ref.	= disponible avec réf.
bulk/sold per foot	= en vrac/vendu par pied
does not include	= ne comprend pas
included with	= compris dans
I.D.	= D.I. (diamètre intérieur)
O.D.	= D.E. (diamètre extérieur)
not in kit	= pas en kit
W/ - WO/	= inclus/ - non inclus/
Qty	= quantité requise
see page/ref.	= voir page/réf.
used with ref/	= utilisé avec réf.
0,05 inch thickness	= 0,05 pouce d'épaisseur (un pouce = 25.4 mm)
weld on	= à souder

https://www.pdfmanual4trucks.com/

ALLGEMEINE INFORMATIONEN

Bei Angabe der Maschinen-Seriennummer stets die komplette Nummer angeben.

Bei der in der Mengenspalte (Anzahl) in diesem Handbuch angegebenen Zahl handelt es sich um die Anzahl von Teilen, die für die Abbildung auf der betreffenden Seite benötigt werden. Bei manchen Teilen in der Mengenspalte ist ein "x" angegeben. Dieses "x" weist darauf hin, dass sich die Anzahl der verwendeten Teile auf den "Bedarf" bezieht.

Bei Verwendung der Seitenangaben links und rechts in diesem Handbuch gelten diese für die Blickrichtung vom Fahrersitz aus, und zwar in Vorwärts-Betriebsrichtung.

Einige der in diesem Ersatzteilhandbuch aufgeführten Abbildungen und Informationen wurden der Bobcat/Ingersoll-Rand von den Herstellern von Maschinenbauteilen zur Verfügung gestellt.

ABKÜRZUNGEN UND SYMBOLE

SALES	= Bestellung bei der Verkaufsabteilung in Brüssel
NSS	= Nicht einzeln erhältlich
NAP	= Nicht als Ersatzteil erhältlich
*	= Geänderte oder hinzugefügte Abschnitte, Seiten oder Teilenummern
BTI	= Bobcat Technical Information Bulletin : Siehe am Ende der Mikrokarte des jeweiligen Modells oder der allgemeinen Mikrokarte der BTI.
was 6535403	= War 6535403
adj.	= Einstellung
Assembly	= Baugruppe
available W/Ref.	= erhältlich mit der Referenz
bulk/sold per foot	= Mengenabnahme / Verkauf pro Fuss
does not include	= beinhaltet nicht
included with	= enthalten in
I.D.	= Innendurchmesser
O.D.	= Aussendurchmesser
not in kit	= nicht in Bausatz
W/ - WO/	= mit/ - ohne/
Qty	= Anzahl
see page/ref.	= Siehe Seite / Referenz
used with ref.	= verwendet mit Referenz
0.05 inch thickness	= Dicke : 0.05 Zoll (ein Zoll = 25.4 mm)
weld on	= anschweissen

https://www.pdfmanual4trucks.com/

INFORMAZIONI GENERALI

Quando si usa il numero di serie della macchina usare il numero completo.

Il numero mostrato nella colonna della quantità di questo manuale corrisponde al numero di componenti necessari per l'illustrazione della pagina. Per alcuni componenti appare "X" nella colonna delle quantità. Questa "X" indica che la quantità da usare è "come necessario".

See in questo manuale si fa riferimento alla parte destra o sinistra, si intende dal sedile dell'operatore nella posizione in avanti di funzionamento.

Alcune delle illustrazioni e informazioni trovate in questo manuale di componenti sono state fornite alla Bobcat/Ingersoll-Rand da società di componenti di macchine.

SIMBOLI E ABBREVIAZIONI

SALES	= Ordinare al servizio vendite di Bruxelles
NSS	= Non vendute separatamente
NAP	= Non disponibile come componente
*	= Sezioni, pagine o numeri di componente cambiati o aggiunti
BTI	= (Bobcat Technical information) Ved. al termine del microfiche del modello relativo oppure microfiche generale
was 6535403	= era 6535403
adj. (adjustment)	= regol. (regolazione)
Assembly	= Complessivo
available W/Ref.	= disponibile con rif.
bulk/sold per foot	= alla rinfusa/venduto al piede
does not include	= non comprende
Included with	= compreso con
I.D.	= d. i.
O.D.	= d. e.
not in kit	= non fa parte del kit
W/ - WO/	= con - senza
Qty	= Qtà
see page/ref	= ved. pagina/rif.
used with ref.	= usato con il rif.
0,05 inch thickness	= spessore 0,05 pollici (un pollice = 25,4 mm)
weld on	= a saldare

https://www.pdfmanual4trucks.com/

INFORMACION GENERAL

Al utilizar el número de serie de la máquina, debe emplearse el número completo.

El número que figura en la columna de "Unidades" en este manual es el número de piezas que se necesitan para la ilustración que consta en la página. En algunas piezas aparece una "x" en la columna de "Unidades". Esta "x" indica que las unidades a utilizar son "según sea necesario".

Cuando se empleen las referencias izq. y dcha., éstas se entienden mirando desde el asiento del conductor, en posición de marcha adelante.

Algunas de las ilustraciones y la información que figuran en este manual de piezas han sido facilitadas a Bobcat/Ingersoll-Rand por empresas de componentes de máquinas.

ABREVIATURAS Y SIMBOLOS

VENTAS	= Pedido al Departamento de Ventas de Bruselas
NSS	= No se vende por separado
NAP	= No disponible como pieza de repuesto
*	= Secciones, páginas o referencias modificadas o añadidas
BTI	= (Bobcat Tecnical Information) Ver al final de la microficha del modelo afectado o en la microficha general "Boletín de Información Técnica Bobcat".
was 6535403	= era anteriormente el 6535403
adj. (adjustment)	= ajuste
assembly	= conjunto
available W/Ref.	= disponible con la ref.
bulk/sold per foot	= a granel/vendido por pies
does not include	= no incluye
included with	= incluido en
I.D.	= diámetro interior
O.D.	= diámetro exterior
not in kit	= no en el kit
W/ - WO/	= con/ - sin
Qty	= Unidades
see page /ref.	= ver página/ref.
used with ref.	= empleado con la ref.
0,05 inch thickness	= 0,05 pulgadas de espesor (1 pulgada = 25,4 mm)
weld on	= debe ser soldado

https://www.pdfmanual4trucks.com/

ALGEMENE INFORMATIE

Als u het serienummer van de machine gebruikt, geef dan het gehele serienummer.

Het cijfer dat voorkomt in de kolom "Aantal", in deze handleiding, is het aantal onderdelen dat nodig is van de illustratie op de pagina. Voor sommige onderdelen staat er een "x" in de kolom "Aantal". Deze "x" betekent dat er een aantal "zoals nodig" vereist is.

Wanneer er in deze handleiding naar "links" en naar "rechts" gerefereerd wordt, moet dit verstaan worden voor een bestuurder die in de bestuurdersstoel zit in de voorwaartse bedrijfsstand.

Sommige van de illustraties en informatie in deze onderdelen-handleiding werden door firma's van machine-componenten geleverd aan Bobcat/Ingersoll-Rand.

AFKORTINGEN EN SYMBOLEN

SALES	= Bestellen bij de Verkoopafdeling te Brussel
NSS	= Niet afzonderlijk te verkrijgen
NAP	= Niet beschikbaar als onderdeel
*	= Gewijzigde of toegevoegde paragrafen, pagina's of onderdeelnummers
BTI	= Bobcat Technical Information Bulletin : Zie einde van de microfiche van het desbetreffende model of einde van de algemene microfiche die het geheel van alle "BTI" herneemt.
was 6535403	= was vroeger 6535403
adj. (adjustment)	= afstelling
Assembly	= geheel
available W/Ref.	= beschikbaar met ref.
bulk/sold per foot	= bulk/aan de meter verkocht
does not include	= bevat niet
includes with	= is bevat in
I.D.	= ϕ inw. (inwendige diameter)
O.D.	= ϕ uitw. (uitwendige diameter)
not in kit	= niet in de kit
W/ - WO/	= met/ - zonder/
Qty	= vereiste aantal
see page/ref.	= zie pagina/ref.
used with ref/	= gebruikt met ref.
0,05 inch thickness	= 0.05 inch dik (een inch = 25.4 mm)
weld on	= te lassen

https://www.pdfmanual4trucks.com/

Use only Bobcat belts and hoses to maintain maximum service life.

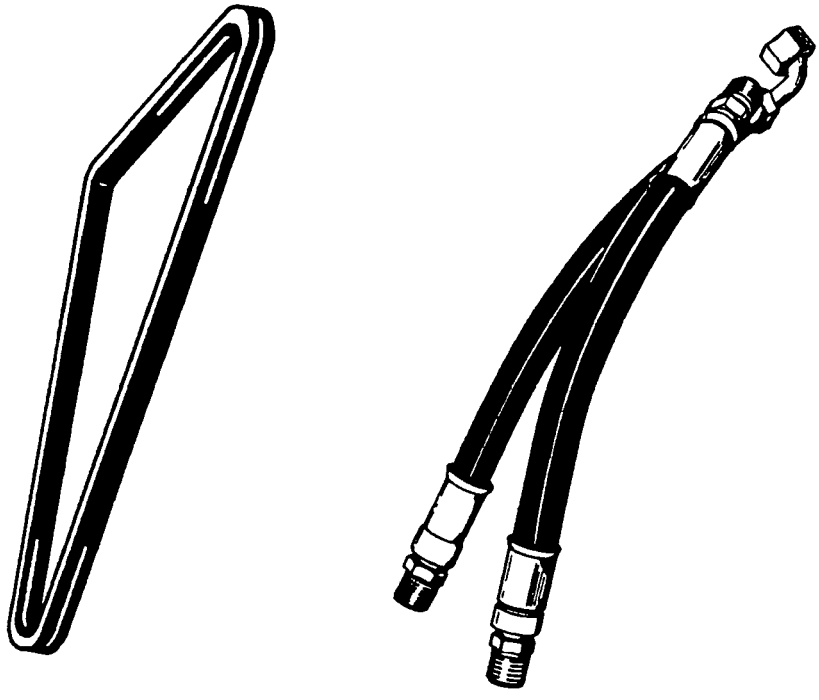

Available from Bobcat Parts.

Bobcat®

https://www.pdfmanual4trucks.com/

CONTENTS

MAINTENANCE ITEMS **1-2**
MAINTENANCE ITEMS 1
MAIN FRAME **3-34**
SEAT 15-18
PANELS 19
REAR DOOR 21-24
LIFT ARM & BOB-TACH 25-28
BOB-TACH 29
MAIN FRAME 3
FUEL SYSTEM 31-34
OPERATOR CAB 5-8
SEAT & SEAT BAR 9-14
DRIVE TRAIN **35-50**
DRIVE TRAIN 35-38
MOTOR CARRIER 39-42
DISC BRAKE 43-48
AXLE 49
HYDRAULIC SYSTEM **51-126**
BICS CONTROL VALVE 117
TILT LOCK VALVE 119
LIFT LOCK VALVE 121
MANUAL LIFT RELEASE VALVE 123
BUCKET POSITIONING VALVE 125
HYDRAULIC CIRCUITRY 51-64
LIFT & TILT CONTROL SYSTEM 65
MANUAL LIFT RELEASE SYSTEM 67
AUXILIARY HYDRAULICS 69-72
TILT CYLINDER 73-80
LIFT CYLINDER 81
CONTROL PEDALS 83
HYDRAULIC CONTROL VALVE 85-116
HIGH FLOW HYDRAULICS **127-152**
HIGH FLOW HYDRAULICS 127-152
HYDROSTATIC SYSTEM **153-196**
HYDROSTATIC CIRCUITRY 153-158
HAND CONTROLS 159-162
HYDROSTATIC MOTOR 163-170
HYDROSTATIC PUMP 171-186
GEAR PUMP 187-190
HYDROSTATIC OIL FILTER 191-196
ELECTRICAL SYSTEM **197-234**
CAB ELECTRICAL CIRCUITRY 197-206
ENGINE ELECTRICAL CIRCUITRY 207-220
CONTROLS ELECTRICAL 221-226
ALTERNATOR 227
STARTER 229-234
STARTER KIT 231
POWER UNIT **235-302**
COOLING SYSTEM 235-238
ENGINE & ATTACHING PARTS 239-254
THROTTLE 255
COOLING FAN DRIVE ASSY. 257-260

https://www.pdfmanual4trucks.com/

CONTENTS (Cont'd)

POWER UNIT
ENGINE & GASKET KITS 261-264
GEARCASE 265
CRANKCASE 267
ROCKER ARM COVER 269
VALVE ROCKER ARM 271
CYLINDER HEAD 273
OIL PAN 275
PISTON & CRANKSHAFT 277
FUEL CAMSHAFT 279
CAMSHAFT 281
WATER PUMP 283
WATER FLANGE & THERMOSTAT 285
MANIFOLDS 287
ENGINE STOP LEVER 289
GOVERNOR 291
SPEED CONTROL PLATE 293
FUEL & INJECTION PUMPS 295
INJECTION PUMP 297
INJECTOR NOZZLES 299
INJECTOR HOLDER 301

REPLACEMENT ENGINE 303-340
ENGINE & GASKET KITS 303
GEARCASE 305
CRANKCASE 307
ROCKER ARM COVER 309
VALVE ROCKER ARM 311
CYLINDER HEAD 313
OIL PAN 315
PISTON & CRANKSHAFT 317
FUEL CAMSHAFT 319
CAMSHAFT 321
WATER PUMP 323
WATER FLANGE & THERMOSTAT 325
MANIFOLDS 327
ENGINE STOP LEVER 329
GOVERNOR 331
SPEED CONTROL PLATE 333
FUEL & INJECTION PUMPS 335
INJECTOR NOZZLES 337
AIR CLEANER 339

ACCESSORIES & OPTIONS 341-554
ACCESS COVER 341-344
AIR DEFLECTOR KIT 345
AXLE SEAL KIT 347
BACK-UP ALARM 349-352
BEACON LIGHT 353
BLOCK HEATER 355
BOB-TACH LEVERS 357
BUCKET POSITION ON-OFF KIT 359
BUCKET POSITIONING VALVE KIT 361-364
BUMPERS 365

https://www.pdfmanual4trucks.com/

CONTENTS (Cont'd)

ACCESSORIES & OPTIONS

CAB ENCLOSURE 367-382
CAB DOOR 369-376
CAB WINDOWS 383
CLOSED ALTERNATOR 385
COUNTERWEIGHT KIT 387-392
DECALS 393-396
ELECTRICAL CONTROLS KIT 397-400
ENGINE MOUNT KIT 401
EUROPEAN ACCESSORIES 403-420
EUROPEAN ACCESSORIES 405-410
FIRE EXTINGUISHER 421
FLASHER LIGHTS 423-426
FRONT AUXILIARY KIT 427-434
HAND CONTROL KIT 435-442
HANDLE KITS 443
HEATER KIT 445-454
HEATER 449-456
HEATER PLUMBING KIT 451-458
HORN KIT 459-462
HOURMETER KIT 463
INSECT SCREEN KIT 465
KEYLESS IGNITION 467
LIFT KIT 469-474
LIGHT KIT 475-478
MUFFLER/PURIFIER KIT 479
PEDAL EXTENDERS 481
PRESSURE RELEASE KIT 483-488
PRESSURE RELEASE VALVE 485
PUSH TO OPERATE KIT 489-492
RADIATOR SCREEN KIT 493
REAR AUXILIARY 495-502
REAR AUXILIARY VALVE 503-506
REAR DOOR LOCK 507-510
REAR WIPER KIT 511
RENTAL KIT 513
SEAT 515-520
SEAT BAR KIT 521-524
SEAT BELT 525
SEAT KIT 527
SEAT RAIL COVER KIT 529
SEAT SENSOR OVERRIDE 531-534
SIDE CONSOLE KIT 535
SOUND KIT 537
SOUND REDUCTION HARDHAT 539
STROBE LIGHT 541-544
TIRES & RIMS 545-550
TOOL BOX 551
BULK ITEMS 553

NUMERICAL INDEX 556-619

https://www.pdfmanual4trucks.com/

MAINTENANCE ITEMS

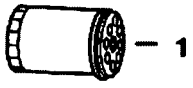

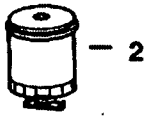



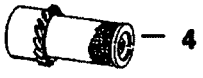



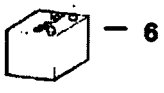

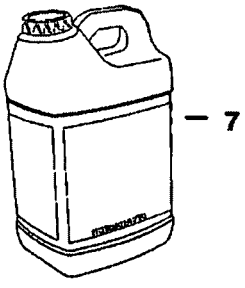

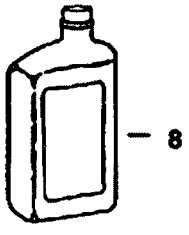

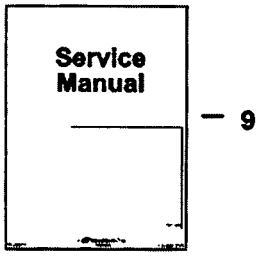

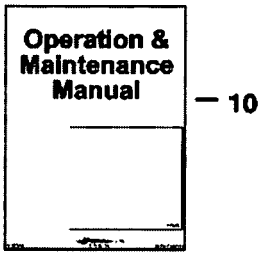

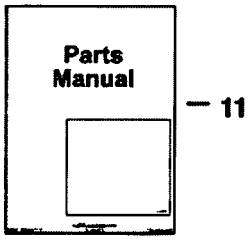

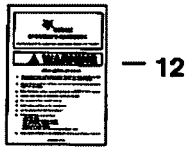

B–22668

https://www.pdfmanual4trucks.com/

MAINTENANCE ITEMS (Cont'd)

f No	Part Number	Description	Remarks	Serial Number	Qty
1	6675517	FILTER	See Illustration GEARCASE/ B13160 See Illustration GEARCASE/ B13160A		x
2	6667352	FILTER FUEL	See Illustration FUEL SYSTEM/ B17193 FUEL		x
3	6598362	ELEMENT	INNER AIR CLEANER		x
4	6598492	ELEMENT	OUTER AIR CLEANER		x
5	6661248	ELEMENT	See Illustration HYDROSTATIC OIL FILTER/ B16487 See Illustration HYDROSTATIC OIL FILTER/ C2818 HYDROSTATIC # 3 MEDIA		x
6	6665032	BATTERY	See Illustration ENGINE ELECTRICAL CIRCUITRY/ E2249 See Illustration ENGINE ELECTRICAL CIRCUITRY/ E2258		x
7	6903117	HYD FLUID 2.5 GAL. 2	Was 6563328 [A]		x
7	6903118	HYD. FLUID 5GAL	Was 6722344 [A]		x
7	6903119	HYD. FLUID 55GAL	Was 6563330 [A]		x
3	6903107	OIL 10W30 QT. 12	Was 6657301 [A]		x
8	6903108	OIL 10W30 GAL. 6	Was 6724557 [A]		x
8	6903112	OIL 10W30 2.5 GAL 2	Was 6674205 [A]		x
8	6903105	OIL 15W40 QT. 12	Was 6657299 [A]		x
8	6903106	OIL 15W40 GAL. 6	Was 6724558 [A]		x
8	6903113	OIL 15W40 2.5 GAL. 2	Was 6674204 [A]		x
8	6903109	OIL 30W QT. 12	30W - 1 Qt. - Was 6657303 [A]		x
8	6903110	OIL 30W GAL. 6	Was 6724559 [A]		x
8	6903111	OIL 30W 2.5 GAL 2	Was 6674206 [A]		x
9	6900090	753 S/M	Service Manual		1
10	6900374	753/753H	Operation & Maintenance Manual	5127 16001 & Abv	1
0	6900438	753 O/M	Operation & Maintenance Manual	5158 11001-17499	1
)	6900787	753 O/M	Operation & Maintenance Manual	5158 17500-29999	1
11	6724067	753 P/M	Parts Manual		1
12	6708154	KIT	See Illustration DECALS/ B17334 Operator Handbook		1

https://www.pdfmanual4trucks.com/

MAIN FRAME

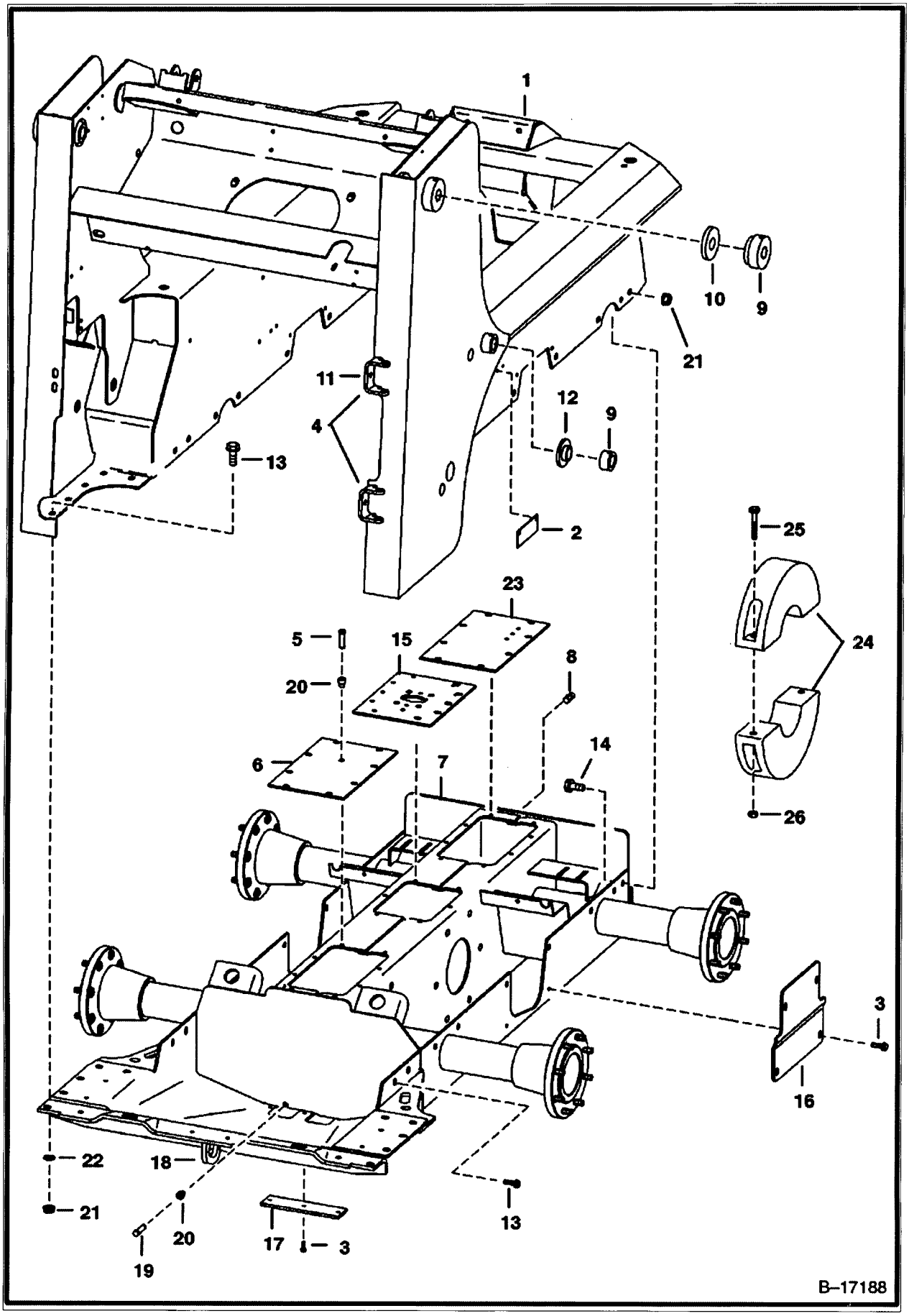

https://www.pdfmanual4trucks.com/

MAIN FRAME (Cont'd)

f No	Part Number	Description	Remarks	Serial Number	Qty
1		MAIN FRAME	See BTI316 NAP - two piece rear door - Was 6708984 [A]		1
1		MAIN FRAME	NAP - one piece rear door - Order 6737360 Main Frame, 6736359 Grill, 6736362 Radiator, 6736378 Seal, 6736379 Tank, 7101090 Hose, 6681945 Elbow, 6685625 Hose, 6732670 Mount, 6733429 Cap, 6736377 Oil Cooler, 6657376 Elbow, 6737365 Hose, 6577822 Hose (3ft.), 5HM-14 Clamp (2), 6734420 Covers (2) & 6676969 Filter Assy. - Was 6714590 [A]	5158 11001-29999	1
1		MAIN FRAME	NAP - one piece rear door - Order 6737360 Main Frame, 6736359 Grill, 6736362 Radiator, 6736378 Seal, 6736379 Tank, 7101090 Hose, 6681945 Elbow, 6685625 Hose, 6732670 Mount, 6733429 Cap, 6736377 Oil Cooler, 6657376 Elbow, 6737365 Hose, 6577822 Hose (3ft.), 5HM-14 Clamp (2), 6734420 Covers (2) & 6676969 Filter Assy. - Was 6714590 [A]	5162 11001-19999	1
1	6737360	MAINFRAME			1
2	6704680	COVER	See Illustration HYDROSTATIC CIRCUITRY/ E2227		1
3	84G3712	BOLT			11
4	6708987	HINGE	hinge - weld on - for two piece rear door		1
4	6708987	HINGE	hinge - weld on - for one piece rear door		2
5	6680970	BREATHER	See Illustration DISC BRAKE/ TS1455 Was 6670627 [A]		1
6	6700330	COVER			1
7		CHAINCASE	See Illustration DRIVE TRAIN/ B17194 See BTI373 NAP - Was 6712827 [A]		1
8	6731121	PLUG	chaincase fill - Was 11F12 [A]		1
9	6702584	BUSHING	weld on		4
10	6702583	BUSHING	weld on		2
11	6577394	BRACKET	hinge - weld on - for two piece rear door		1
12	6555987	BUSHING	weld on		2
13	31C824	BOLT 10			12
14	31C820	BOLT			16
14	31C820	BOLT		5158 11001-29999	28
14	31C820	BOLT		5162 11001-19999	28
15	6706042	COVER	See Illustration DISC BRAKE/ TS1455		1
16	6733701	COVER	Was 6704695 [A]		2
17	6700182	COVER			1
18	6706485	HOOK	tie down - weld on		2
19	6599645	PLUG	chaincase drain		1
20	6553411	BUSHING			2
21	83D8	NUT 5			28
21	83D8	NUT 5		5158 11001-29999	26
21	83D8	NUT 5		5162 11001-19999	26
22	6701097	WASHER			10
23	6578505	COVER	See Illustration DISC BRAKE/ TS1455		1
24	6714361	WEIGHT	38.7 lbs (17,6 kg) - 4.5"(114,3 mm) wide	5158 11001-29999	4
24	6714361	WEIGHT	38.7 lbs (17,6 kg) - 4.5"(114,3 mm) wide	5162 11001-19999	4
25	17C640	BOLT 5		5158 11001-29999	8
25	17C640	BOLT 5		5162 11001-19999	8
26	61D000006B	NUT		5158 11001-29999	8
26	61D000006B	NUT		5162 11001-19999	8

https://www.pdfmanual4trucks.com/

OPERATOR CAB

NOTE: 6714062 Gas Spring Kit to be used when loader is equipped W/Cab Enclosure. Because 6714062 Gas Spring is heavy duty W/larger diameter, (2) of 91G-416 Screws, with low profile heads, must be used in place of 35C-410 Bolt located behind gas spring on left side of ROPS.

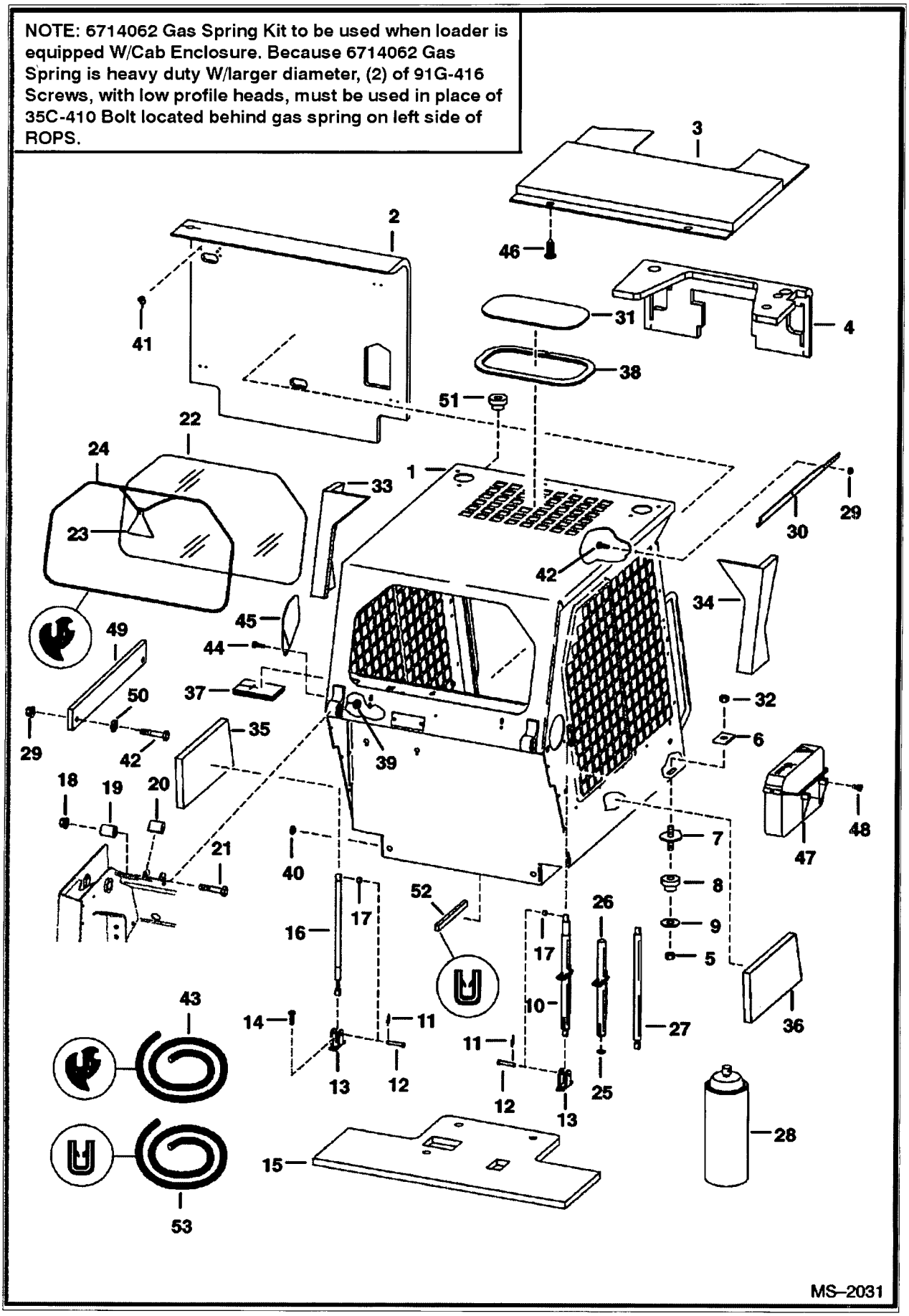

https://www.pdfmanual4trucks.com/

OPERATOR CAB (Cont'd)

,f No	Part Number	Description	Remarks	Serial Number	Qty
1	6701957	OPERATOR CAB	Does NOT include cab decals		1
2	6708682	INSULATION	Use W/Ref. 41 - Was 6707326 [A]		1
3	6706155	INSULATION	cab top - Use W/Ref. 48	5127 27672 & Bel	1
3	6706155	INSULATION	cab top - Use W/Ref. 48	5086 94556 & Bel	1
3	6715094	INSULATION	cab top - Use W/Ref. 48 - Was 6712537 [A]	5086 94557 & Abv	1
3	6715094	INSULATION	cab top - Use W/Ref. 48 - Was 6712537 [A]	5162 11001-19999	1
3	6715094	INSULATION	cab top - Use W/Ref. 48 - Was 6712537 [A]	5127 27673 & Abv	1
3	6715094	INSULATION	cab top - Use W/Ref. 48 - Was 6712537 [A]	5158 11001-29999	1
4	6718489	INSULATION	control panel - Use W/Ref. 41 - Was 6709020 [A]		1
5	85D8	NUT 5			2
6	6553709	WASHER			2
7	6702971	BOLT			2
8	6560633	DAMPENER			2
9	6515817	WASHER			2
10		GAS SPRING	NAP - Order Ref. 25-27		1
11	6631418	PIN	ring		4
12	6567743	PIN			4
3	6706349	MOUNT			2
14	84G3112	BOLT 5			4
15	6715095	INSULATION	seat pan - Used W/Ref. 28 - Was 6706982 [B]		1
16	6700171	GAS SPRING	W/O lock		1
16	6714062	KIT	W/O lock - heavy duty gas spring - SEE NOTE		1
16	91G000416B	BOLT	SEE NOTE		2
17	6567604	SPACER			2
18	53D10	NUT	Was 83D000010B [B]		2
19	6562602	BUSHING	rubber		2
0	6579613	STOP	cab tilt		2
21	17C1056	BOLT			2
22	6701651	WINDOW	rear		1
23	6731478	EXIT TAG	Was 6559515 [A]		1
24		EXTRUSION	NAP - 100"(2540 mm)long - Order Ref. 43		1
24		CORD	NAP - 100"(2540 mm)long - Order Ref. 43		1
25	6701174	WASHER			1
26	6708189	TUBE	stop - Was 6701175 [A]		1
27	6664205	GAS SPRING			1
27	6675257	CLEVIS			1
28	6652818	ADHESIVE	insulation - 24 oz. spray can		x
29	83D4	NUT 10			6
30	6703159	TRACK	R.H.		1
30	6703160	TRACK	L.H.		1
31	6705735	WINDOW			1
32	59D8	NUT 5			2
33	6715098	INSULATION	cab back - Use WRef. 41 - Was 6706156 [A]		1
34	6715097	INSULATION	cab back - Used W/Ref. 41 - Was 6706157 [A]		1
35	6703451	INSULATION	cab back - Use W/Ref. 28		1
36	6703452	INSULATION	cab back - Use W/Ref. 28		1
37	6703455	INSULATION	cab back - Use W/Ref. 28		1
38	6664351	SEAL	Used W/ Cab Headliner		1
38	6665012	SEAL	Used W/O Cab Headliner		1
39	83D5	NUT 5			4
40	6664374	PLUG	heater hole		5
41	6664310	CLIP	insulation		7
42	35C410	BOLT 5			6
3	6665568	EXTRUSION	bulk - Sold Per Foot - Was 6658352 [B]		x

https://www.pdfmanual4trucks.com/

OPERATOR CAB (Cont'd)

NOTE: 6714062 Gas Spring Kit to be used when loader is equipped W/Cab Enclosure. Because 6714062 Gas Spring is heavy duty W/larger diameter, (2) of 91G-416 Screws, with low profile heads, must be used in place of 35C-410 Bolt located behind gas spring on left side of ROPS.

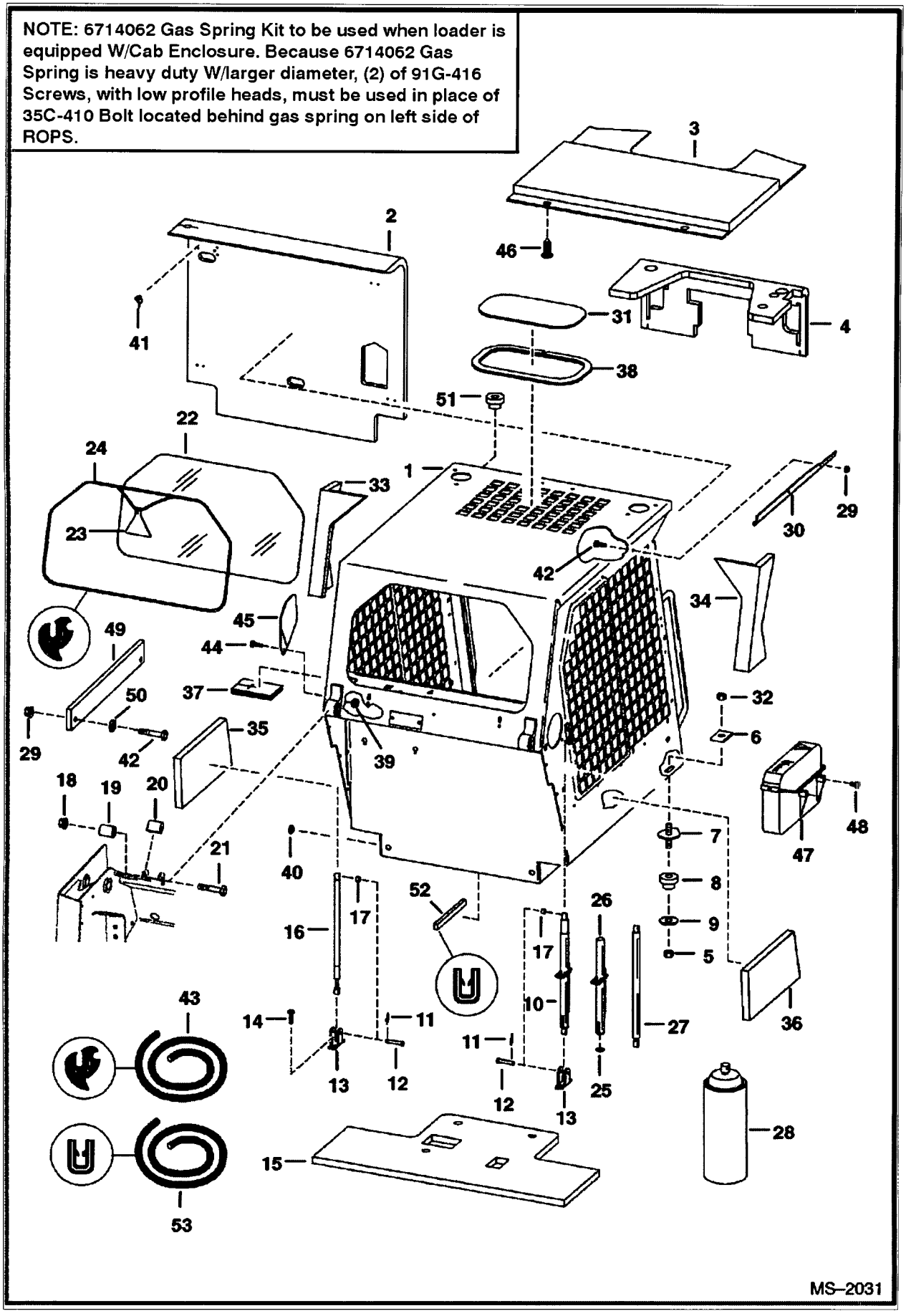

https://www.pdfmanual4trucks.com/

OPERATOR CAB (Cont'd)

f No	Part Number	Description	Remarks	Serial Number	Qty
3	6554149	CORD	bulk - Sold Per Foot		x
44	17C000512B	BOLT			1
45	6707879	COVER			1
46	6669308	RETAINER	snap in		2
47	6708827	CONTAINER	manuals		1
48	6702642	SCREW			2
49	6736126	COVER			1
50	25E13	WASHER 5			2
51	6707674	PLUG	round - plugs 1.28" (32,5 mm) dia. hole in cab - Was 6707644 [D]		2
52		MOULDING	NAP - 10.5" (266 mm) long - Order Ref. 53		2
53	6654139	MOULDING	bulk - sold per foot		x

https://www.pdfmanual4trucks.com/

SEAT & SEAT BAR

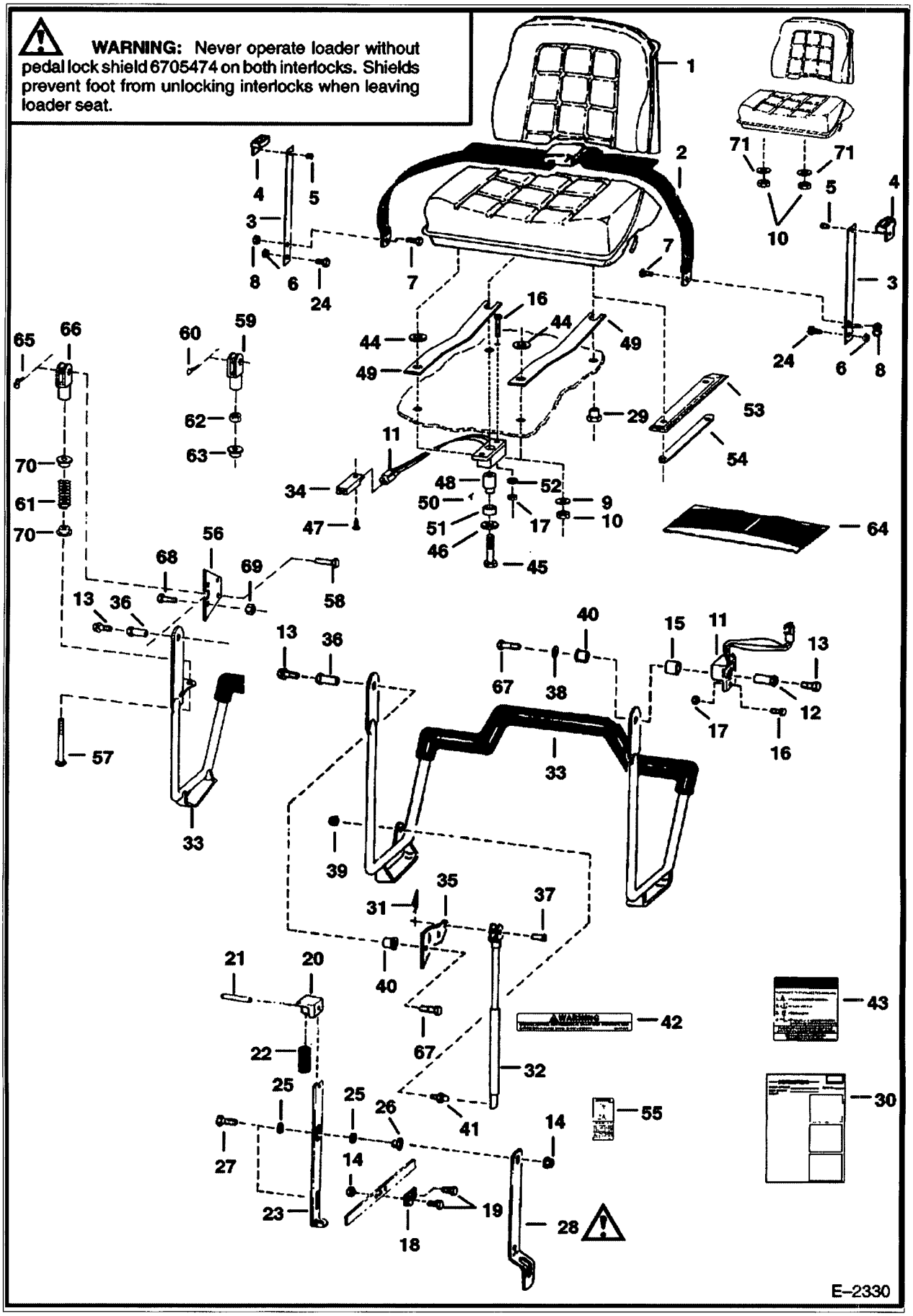

https://www.pdfmanual4trucks.com/

SEAT & SEAT BAR (Cont'd)

f No	Part Number	Description	Remarks	Serial Number	Qty
1		SEAT	See Illustration SEAT/ B7185 STANDARD SEAT REQUIRES (1) OF Ref. 49 LOCATED ON R.H. SIDE - MILSCO SUSPENSION SEAT REQUIRES (2) OF Ref. 49 LOCATED ONE EACH SIDE - FOR GRAMMER SUSPENSION SEAT		1
2		SEAT BELT	NAP - Order Ref. 64 - Was 6564774 [A]		1
2		SEAT BELT	NAP - Order 6675074 Seat Belt & (2) of Ref. 3 (6725373 Spring Plate) - Was 6667875 [A]		1
2		SEAT BELT	NAP - W/spring plates - Order 6675074 Seat Belt & (2) of Ref. 3 (6725373 Spring Plate) - Was 6725403 [A]		1
2	6675074	SEAT BELT	W/O spring plates		1
3		GUIDE ASSY.	NAP - W/Ref. 4 & 5 - 13.75"(349,3 mm) long - Use W/(NAP/6564774 Seat Belt) - Was 6565354 [A]		2
3		GUIDE ASSY.	NAP - W/Ref. 4 & 5 - 12.25"(311,2 mm) long - Use W/(NAP/6667875 Seat Belt) - Order 6711908 Spring Plate, Ref. 4 & (2) of Ref. 5 - Was 6711907 [A]		2
3	6711908	SPRING PLATE	Use W/Ref. 2 (NAP/6667875 Seat Belt)		2
3	6725373	SPRING PLATE	Use W/Ref. 2 (6675074 Seat Belt)		2
4	6565355	GUIDE			2
5	6630207	RIVET			4
6	85D6	LOCK NUT			2
7	17C716	BOLT	Was 17C000715B [D]		2
8	85D7	NUT			2
9	6701174	WASHER			2
10	61D5	NUT			2
0	61D5	NUT		5162 12000-19999	4
.0	61D5	NUT		5158 17500-29999	4
11	7105252	SENSOR	Also Order Ref. 50 - Was 6670652 [A]		2
12	6706685	BUSHING			1
13	35C000608B	BOLT		5127 & Bel	2
13	35C000612B	BOLT		5127 & Abv	2
13	35C000612B	BOLT		5158 11001-29999	2
13	35C000612B	BOLT		5162 11001-19999	2
14	83D6	NUT 5			8
15	6680473	BUSHING	magnetic - Was 6671135 [A]		1
6	35C410	BOLT 5	fastens thru tab of Ref. 11- 5/8"(15,9 mm) long		2
3	17C428	BOLT	fastens thru body of Ref. 11 - 1.75"(44,4 mm) long - Was 6710539 [A]		1
17	83D4	NUT 10	fastens thru tab of Ref. 11		2
17	50D000012B	NUT	fastens thru body of Ref. 11		1
18	6563151	LINK			2
19	17C000616B	BOLT			4
20	6563148	BLOCK			2
21	14J002512B	ROLL PIN			2
22	6702430	SPRING			2
23	6578150	LOCK			2
24	17C612	BOLT 5		5127 & Bel	4
24	17C612	BOLT 5		5158 11001-29999	2
24	17C612	BOLT 5		5162 11001-19999	2
24	17C612	BOLT 5		5127 & Abv	2
25	6700170	WASHER	plastic		8
26	6559479	NUT			4
7	6705489	BOLT			4
28	6705474	LOCK SHIELD	Never operate loader without pedal lock shield on both interlocks ... SEE WARNING ON PREVIOUS PAGE		2

https://www.pdfmanual4trucks.com/

SEAT & SEAT BAR (Cont'd)

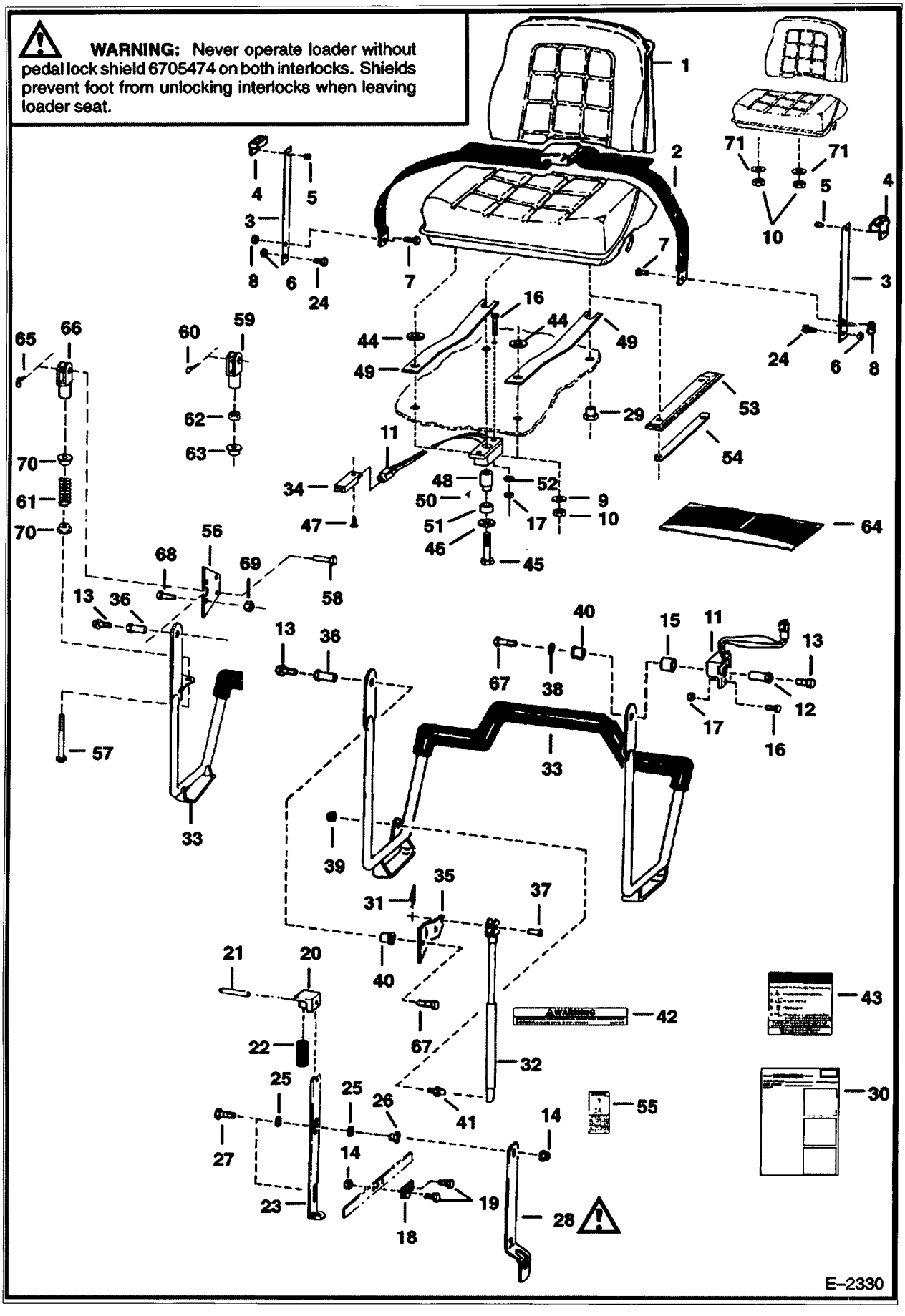

https://www.pdfmanual4trucks.com/

SEAT & SEAT BAR (Cont'd)

f No	Part Number	Description	Remarks	Serial Number	Qty
9	6707319	NUT	spacer		1
30	6722392	INSTRUCTIONS	For Ref. 28		1
31	6631418	PIN	ring	5127 27480 & Bel	1
31	6631418	PIN	ring	5086 94528 & Bel	1
32	6664207	GAS SPRING		5127 27480 & Bel	1
32	6664207	GAS SPRING		5086 94528 & Bel	1
33	6716778	SEAT BAR	for use W/Gas Spring - Was 6706358 [A]	5127 27480 & Bel	1
33	6716778	SEAT BAR	for use W/Gas Spring - Was 6706358 [A]	5086 94528 & Bel	1
33		SEAT BAR	NAP - for use W/Compression Springs - 6.88"(174,8 mm) from top hole to weld on tab - Order 6713609 Seat Bar & (2) ea. of Ref. 56, 65, 66 & 70 - Was 6710661 [A]	5127 27481 33853	1
33		SEAT BAR	NAP - for use W/Compression Springs - 6.88"(174,8 mm) from top hole to weld on tab - Order 6713609 Seat Bar & (2) ea. of Ref. 56, 65, 66 & 70 - Was 6710661 [A]	5086 94529-	1
33	6716777	SEAT BAR	for use W/Compression Springs - 6.13"(155,7 mm) from top hole to weld on tab - Order 6713609 Seat Bar & (2) ea. of Ref. 56, 65, 66 & 70 - Was 6713609 [A]	5127 33854 & Abv	1
33	6716777	SEAT BAR	for use W/Compression Springs - 6.13"(155,7 mm) from top hole to weld on tab - Order 6713609 Seat Bar & (2) ea. of Ref. 56, 65, 66 & 70 - Was 6713609 [A]	5158 11001-29999	1
33	6716777	SEAT BAR	for use W/Compression Springs - 6.13"(155,7 mm) from top hole to weld on tab - Order 6713609 Seat Bar & (2) ea. of Ref. 56, 65, 66 & 70 - Was 6713609 [A]	5162 11001-19999	1
34	6665000	CLIP		5127 27480 & Bel	1
34	6665000	CLIP		5086 94528 & Bel	1
35	6706388	BRACKET		5127 27480 & Bel	1
35	6706388	BRACKET		5086 94528 & Bel	1
36	6706962	BUSHING			1
37	4F005062B	PIN			1
38	25E000017B	WASHER	Was 25E000018B [B]		1
39	85D5	NUT 5			1
40	6680441	BUSHING	keyed - Was 6664882 [A]		1
41	6649244	STUD		5127 27480 & Bel	1
41	6649244	STUD		5086 94528 & Bel	1
42	6577754	DECAL	warning	5127 27480 & Bel	1
42	6577754	DECAL	warning	5086 94528 & Bel	1
43	6707134	DECAL	instruction for LCS		1
44	6706890	WASHER			2
45	17C000508B	BOLT			2
46	25E000016B	WASHER			1
47	6664221	RETAINER			1
48		BUSHING	NAP - spacer - 1.77"(45 mm) long		1
48	6710751	BUSHING	spacer - 1.67"(42,4 mm) long		1
49	6706966	SPRING	plate		1
50	6680523	KEY,MAGNETIC	magnet bushing - Was 6664881 [A]		1
51	6680472	SENSOR	tapered magnetic - Was 6666608 [A]		1
52	25E000010B	WASHER			1
53	6711729	COVER			2
54	6711730	STRIP			2
55	6705720	DECAL	lock shield		1
56	6710660	MOUNT		5127 27481 & Abv	2
57	6710660	MOUNT		5086 94529 & Abv	2

https://www.pdfmanual4trucks.com/

SEAT & SEAT BAR (Cont'd)

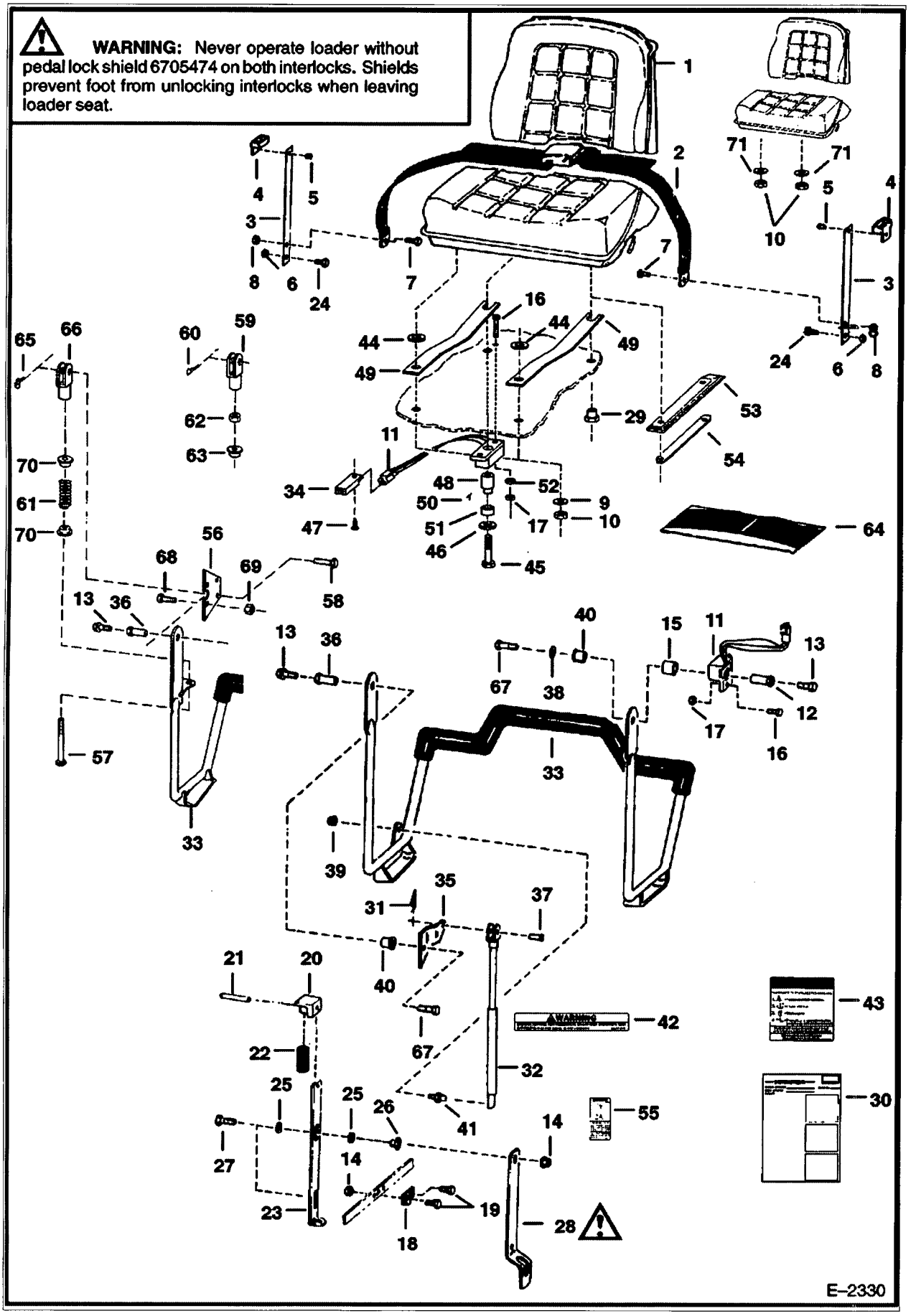

https://www.pdfmanual4trucks.com/

SEAT & SEAT BAR (Cont'd)

;f No	Part Number	Description	Remarks	Serial Number	Qty
56	6710660	MOUNT		5158 11001-29999	2
56	6710660	MOUNT		5162 11001-19999	2
57	6713887	BOLT	Was 6711897 [A]	5127 27481 & Abv	2
57	6713887	BOLT	Was 6711897 [A]	5086 94529 & Abv	2
57	6713887	BOLT	Was 6711897 [A]	5158 11001-29999	2
57	6713887	BOLT	Was 6711897 [A]	5162 11001-19999	2
58	4F6106	PIN		5127 27481 & Abv	2
58	4F6106	PIN		5086 94529 & Abv	2
58	4F6106	PIN		5158 11001-29999	2
58	4F6106	PIN		5162 11001-19999	2
59	2J006208B	CLEVIS	2.85"(72,4 mm) long	5127 27481 & Abv	2
59	2J006208B	CLEVIS	2.85"(72,4 mm) long	5086 94529 & Abv	2
59	2J006208B	CLEVIS	2.85"(72,4 mm) long	5158 11001-29999	2
59	2J006208B	CLEVIS	2.85"(72,4 mm) long	5162 11001-19999	2
60	1306637B	PIN		5127 27481 & Abv	2
60	1306637B	PIN		5086 94529 & Abv	2
60	1306637B	PIN		5158 11001-29999	2
0	1306637B	PIN		5162 11001-19999	2
61	6701535	SPRING		5127 27481 & Abv	2
61	6701535	SPRING		5086 94529 & Abv	2
61	6701535	SPRING		5158 11001-29999	2
61	6701535	SPRING		5162 11001-19999	2
62	8D000006B	NUT	jam	5127 27481 & Abv	2
62	8D000006B	NUT	jam	5086 94529 & Abv	2
62	8D000006B	NUT	jam	5158 11001-29999	2
62	8D000006B	NUT	jam	5162 11001-19999	2
63	6571991	GUIDE		5127 27481 & Abv	2
63	6571991	GUIDE		5086 94529 & Abv	2
63	6571991	GUIDE		5158 11001-29999	2
63	6571991	GUIDE		5162 11001-19999	2
64		KIT	NAP - seat belt - W/Ref. 2 & 3 - Order Ref. 2 (6675074 Seat Belt) & (2) of Ref. 3 (6725373 Spring Plate) - Was 6713061 [A]		1
65	6631418	PIN		5127 & Abv	2
65	6631418	PIN		5158 11001-29999	2
65	6631418	PIN		5162 11001-19999	2
66	6713589	CLEVIS	2.09"(53,1 mm) long	5127 & Abv	2
66	6713589	CLEVIS	2.09"(53,1 mm) long	5158 11001-29999	2
66	6713589	CLEVIS	2.09"(53,1 mm) long	5162 11001-19999	2
67	17C612	BOLT 5		5127 & Bel	2
67	17C000608B	BOLT		5127 & Abv	2
67	17C000608B	BOLT		5158 11001-29999	2
67	17C000608B	BOLT		5162 11001-19999	2
68	17C000712B	BOLT			2
69	91D000007B	NUT			2
70	6710659	BUSHING		5086 94529 & Abv	2
70	6710659	BUSHING		5127 27481 & Abv	2
70	6710659	BUSHING		5158 11001-29999	2
70	6710659	BUSHING		5162 11001-19999	2
71	6707318	GUIDE	Was 6571991 [B,D]	5162 12000-19999	2
71	6707318	GUIDE	Was 6571991 [B,D]	5158 17500-29999	2

https://www.pdfmanual4trucks.com/

SEAT
(Milsco)

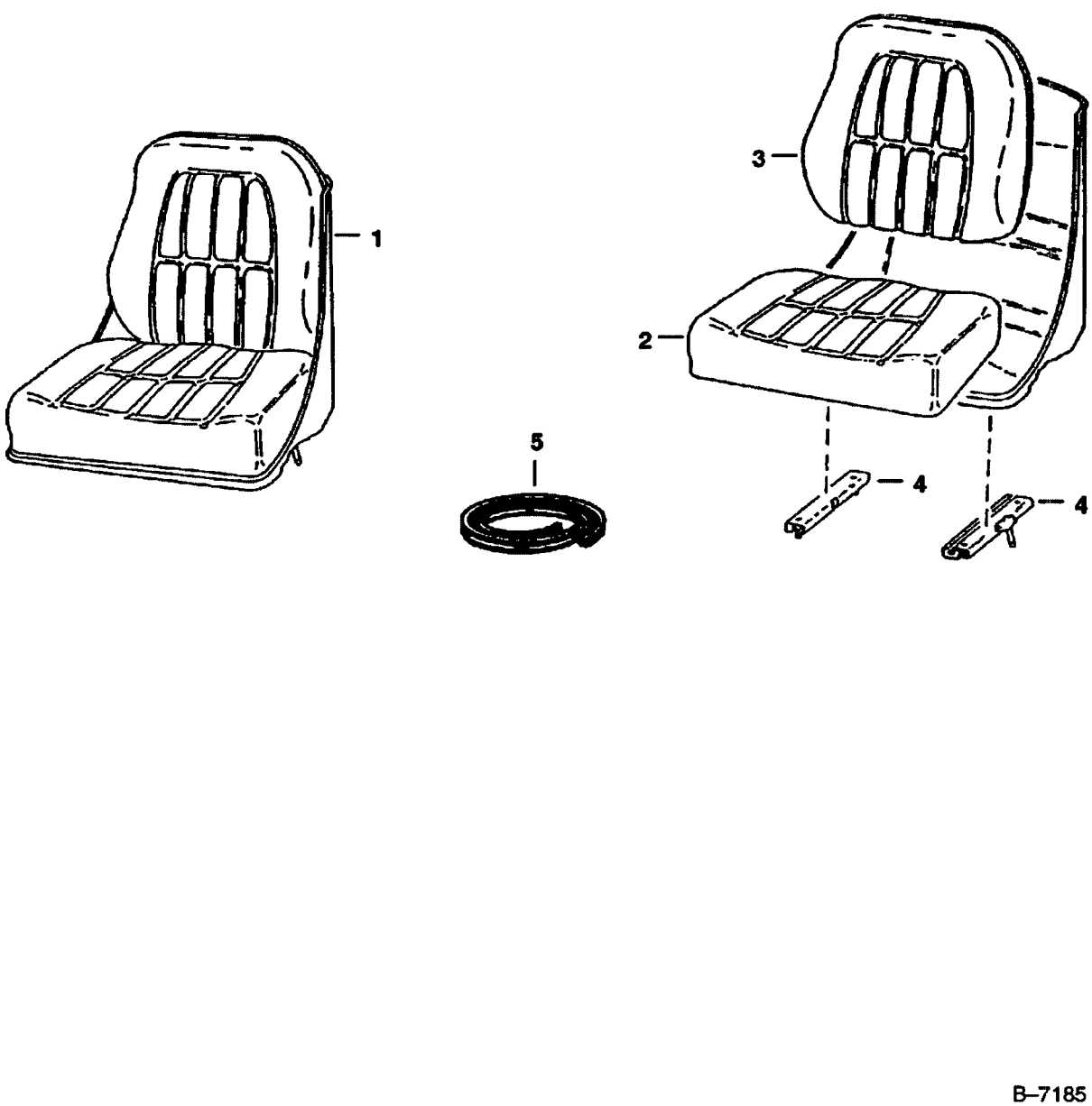

https://www.pdfmanual4trucks.com/

SEAT (Cont'd)
(Milsco)

Ref No	Part Number	Description	Remarks	Serial Number	Qty
1		SEAT	See Illustration SEAT/ B14720 NAP - ORDER 6669135 SEAT - WAS 6665401 [A]		1
2	6630468	CUSHION	seat		1
3	6630465	CUSHION	back		1
4	6630469	TRACK	W/ Latch		1
4	6599780	TRACK	W/O Latch		1
5	6652935	EDGING	96" (2,4 m) - For Ref. 2 & 3		x
5	6665656	CLIP	splice		1

https://www.pdfmanual4trucks.com/

SEAT
(Michigan)

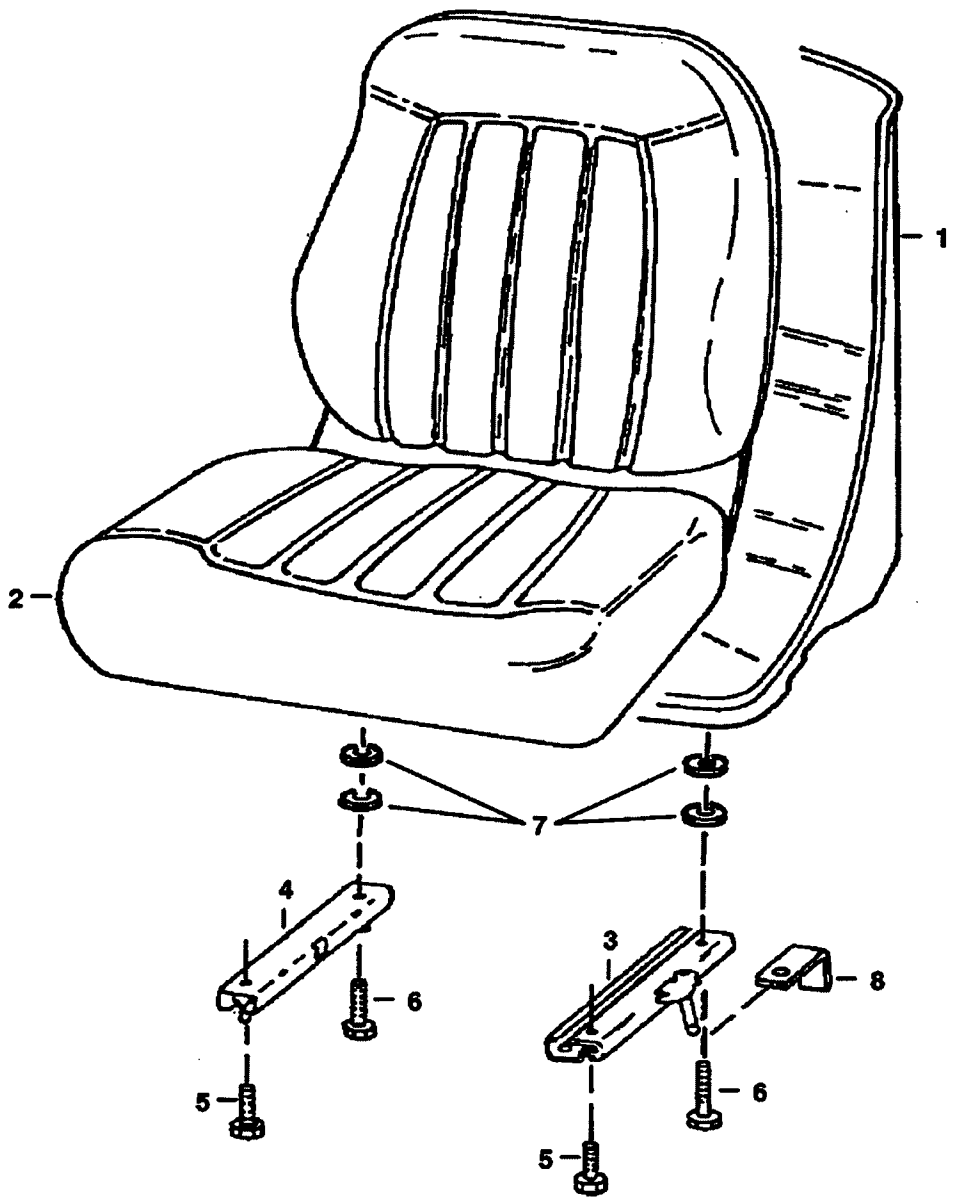

https://www.pdfmanual4trucks.com/

SEAT (Cont'd)
(Michigan)

,f No	Part Number	Description	Remarks	Serial Number	Qty
1		SEAT	NAP - W/Ref. 2-5 & 8 - Order 6669135 Seat - Was 6667684 [A]		1
1	6669135	SEAT	W/Ref. 2-7		1
2	6670160	CUSHION	W/edging, clip & (2) grommets		1
2		EDGING	NSS		1
2		CLIP	NSS		1
3		TRACK	NAP - L.H. - W/10"(254 mm) latch - Was 6669088 [A]		1
3	6674013	TRACK	L.H. - W/8"(203,2 mm) latch		1
4	6669089	TRACK	R.H. - W/O Latch		1
5	25G512	SCREW	6669135 Seat uses (2) bolts		4
6	25G520	SCREW			2
7	6672715	SPACER	Was 7000010 [A]		4
8	6668953	BRACKET	See S/L Dated 16 April 1996		2

https://www.pdfmanual4trucks.com/

PANELS

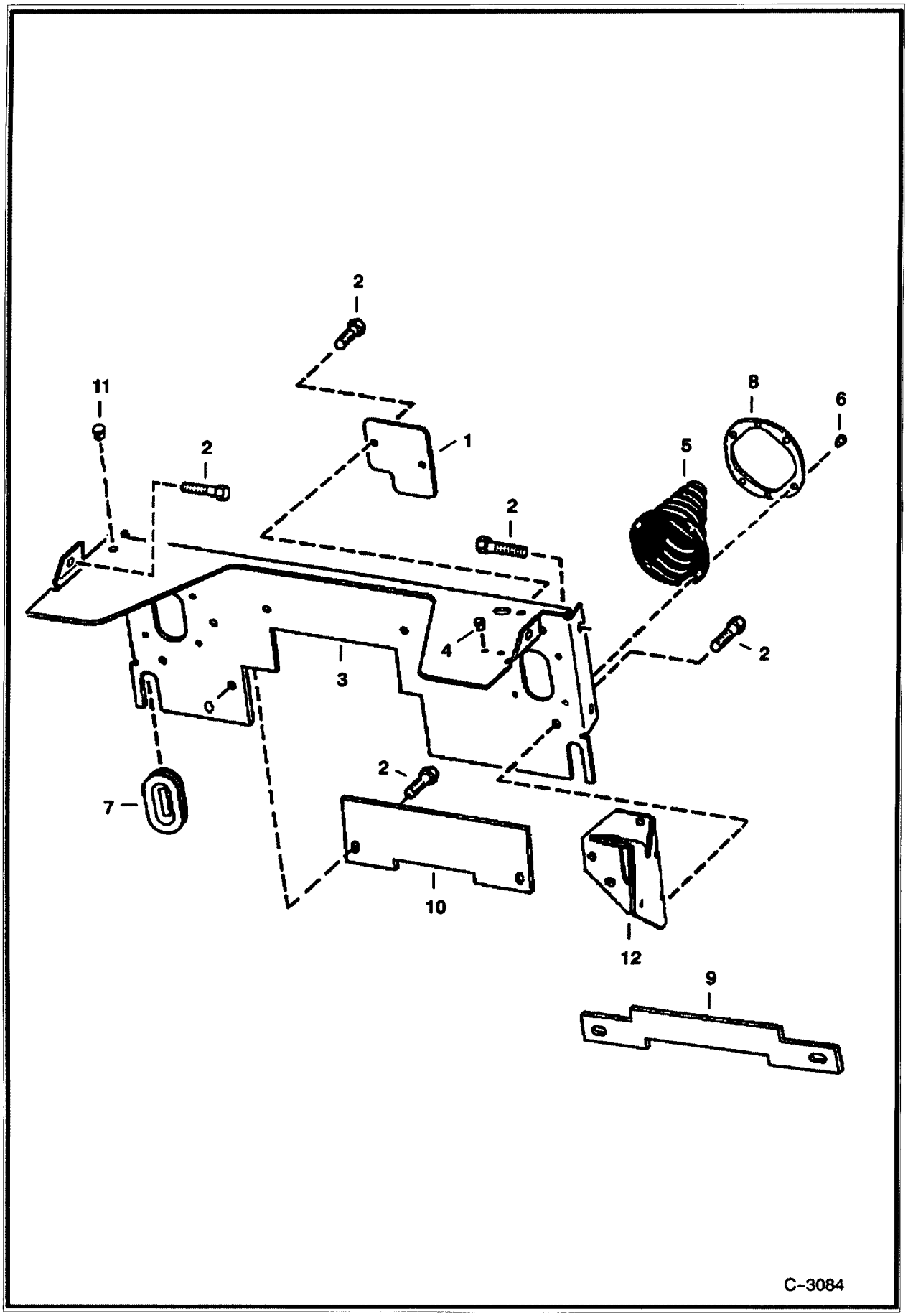

https://www.pdfmanual4trucks.com/

PANELS (Cont'd)

f No	Part Number	Description	Remarks	Serial Number	Qty
1	6707316	PLATE			1
2	84G3712	BOLT			16
3		SHIELD	NAP - Order (2) of Ref. 2 & (1) ea. of 6717208 Shield & Ref. 10 - Was 6706917 [A]		1
3	7106687	SHIELD	also order 6734520 cover - Was 6717208 [A]		1
4	5289686B	PLUG			2
5	6532127	BOOT	W/Ref. 8		2
6	6630207	RIVET			12
7	6577961	GROMMET			2
8		PLATE	NAP - Order Ref. 5		2
9		COVER	NAP - Order Ref. 10 - Was 6717890 [B]		1
10	6718446	COVER	5.25" x 13" (133,4mm x 330,2mm)		1
11	6657719	PLUG	.75" dia. hole		2
11	6648348	PLUG	.812" dia. hole		2
12		BRACKET	See Illustration HAND CONTROLS/ B17201 R.H. - Was 6733022 [A]		1
12		BRACKET	See Illustration HAND CONTROLS/ B17201 L.H. - Was 6733024 [A]		1

https://www.pdfmanual4trucks.com/

REAR DOOR
(S/N 5127 16001 & Abv, 5086 93001-95347, 5139 11001 & Abv, 5114 76001 & Abv

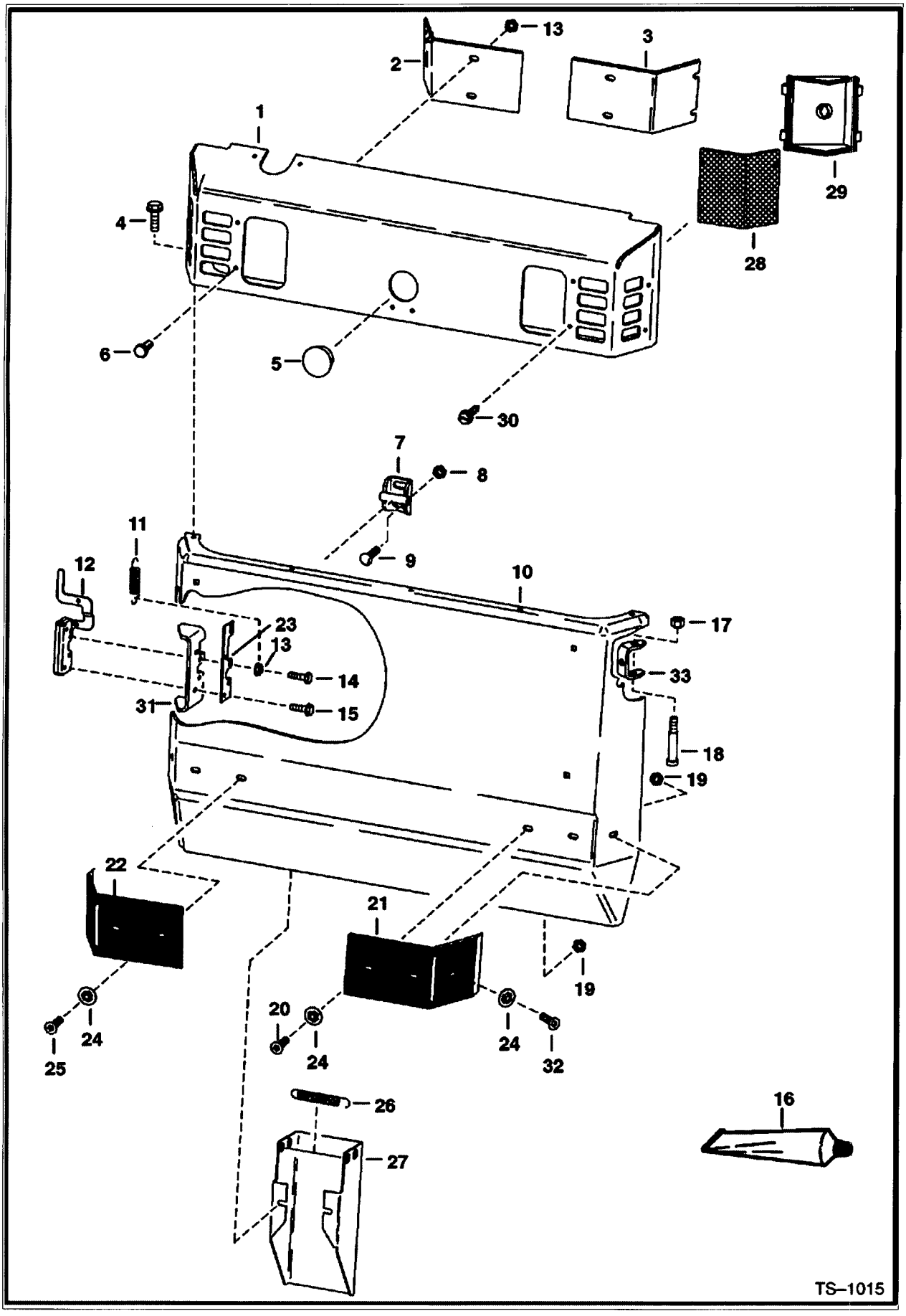

https://www.pdfmanual4trucks.com/

REAR DOOR (Cont'd)
(S/N 5127 16001 & Abv, 5086 93001-95347, 5139 11001 & Abv, 5114 76001 & Abv

f No	Part Number	Description	Remarks	Serial Number	Qty
1	6703868	HOOD	See Illustration ENGINE & ATTACHING PARTS/ E2168 See Illustration ENGINE & ATTACHING PARTS/ B17204 WAS 6709093 [D]		1
2	6704682	COVER			1
3	6704683	COVER			1
4	84G3716	SCREW 5			5
5	6718796	PLUG	Was 6660646 [A]		1
6	17C412	BOLT 5			8
7	6715157	STRIKER ASSY.	Was 6579969 [A]		1
8	83D8	NUT 5			2
9	37C000820B	BOLT			2
10	6708624	REAR DOOR	Was 6704639 [A]		1
11	6563128	SPRING			1
12	6649420	LATCH			1
13	57D000004B	NUT			9
14	17C000424B	BOLT			1
15	31C000420B	BOLT			3
;	6649835	ADHESIVE	Use W/Ref. 21 & 22		x
17	59D6	NUT			2
18	38C000856B	SCREW			2
19	57D6	NUT 5			6
20	9G000628B	BOLT			2
21	6577400	BUMPER	bond - W/Ref. 16		1
22	6577401	BUMPER	bond - W/Ref. 16		1
23	6704464	GUIDE	latch		1
24	6704332	WASHER			6
5	9G000636B	BOLT			2
6	6700743	SPRING			1
27	6709379	TOOL HOLDER	Was 6705100 [A]		1
28	6703797	LENS	See Illustration LIGHT KIT/ D2190 LIGHT OPTION ONLY		2
29	6704362	HOUSING	See Illustration LIGHT KIT/ D2190 LIGHT - LIGHT OPTION ONLY		2
30	6706517	SCREW	See Illustration LIGHT KIT/ D2190 SELF TAPPING - LIGHT OPTION ONLY - WAS 6704400 [B]		8
31	6700279	BRACKET	weld on		2
2	9G000620B	BOLT			2
3	6577395	HINGE	weld on		1

https://www.pdfmanual4trucks.com/

REAR DOOR
(S/N 5158 11001-29999, 5162 11001-19999, 5086 95348 & Abv)

NOTE: Counterweights are standard on rear door.

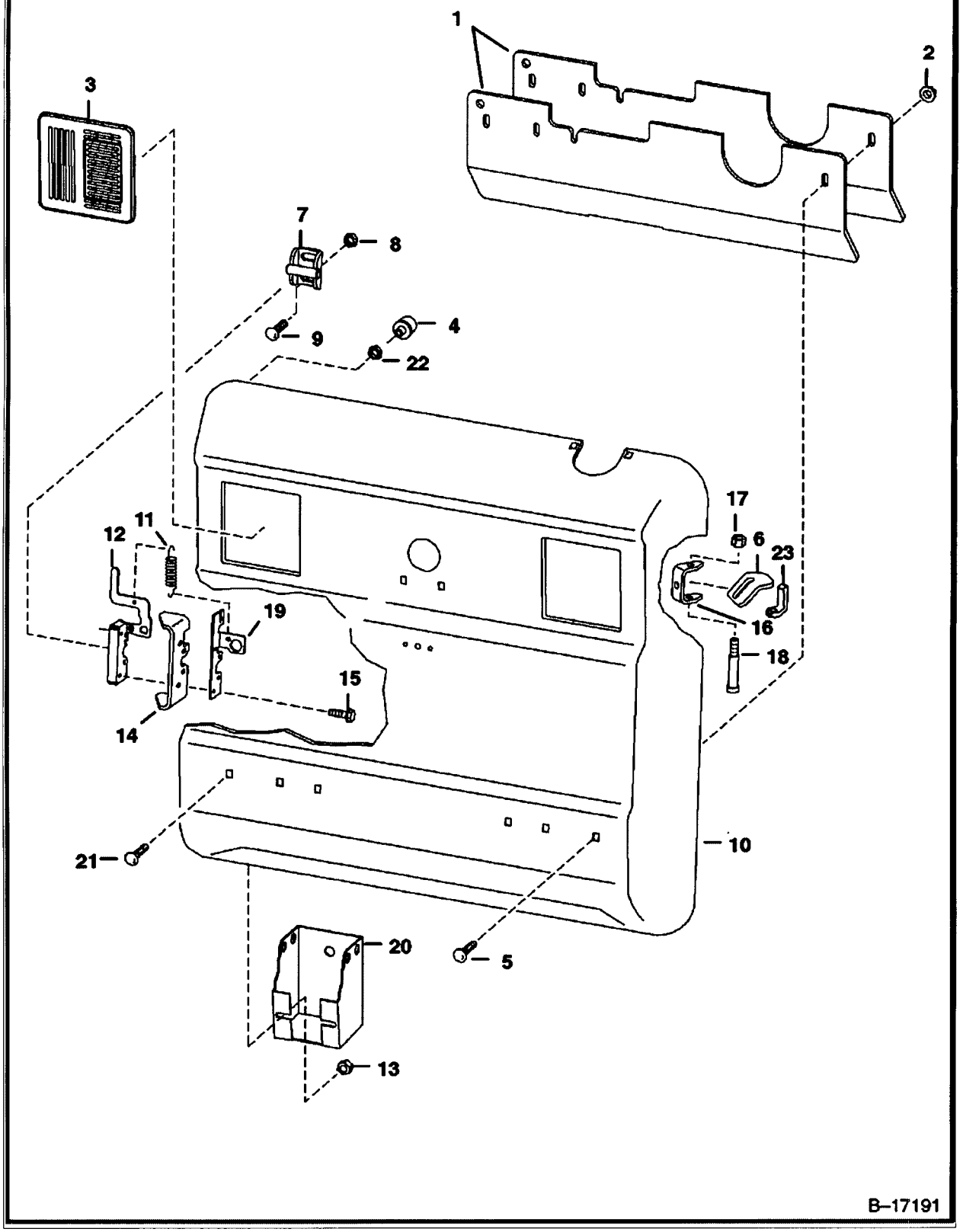

https://www.pdfmanual4trucks.com/

REAR DOOR (Cont'd)
(S/N 5158 11001-29999, 5162 11001-19999, 5086 95348 & Abv)

f No	Part Number	Description	Remarks	Serial Number	Qty
1	6725256	COUNTERWEIGHT	SEE NOTE - Was 6714053 [A]		2
2	57D6	NUT 5			3
3	6670287	COVER			2
4	6714454	BUMPER			2
5	37C000632B	BOLT	Was 37C000628B [A]		3
6	6714126	DOOR STOP			1
7	6715157	STRIKER ASSY.	Was 6579969 [A]		1
8	83D8	NUT 5			2
9	37C000820B	BOLT			2
10		REAR DOOR	See BTI357 NAP - Was 6711524 [A]		1
11	6714210	SPRING			1
12	6670867	LATCH			1
13	55D6	NUT			2
14	6711527	LATCH PLATE	weld-on		1
15	31C000420B	BOLT			4
16	6733575	HINGE	weld on - Was 6711526 [A]		2
17	59D6	NUT			2
18	38C000856B	SCREW			2
19	6711664	GUIDE	latch		1
20	6715318	TOOL HOLDER			1
21	37C000612B	BOLT			2
22	61D5	NUT			4
23	6719766	STOP			1

https://www.pdfmanual4trucks.com/

LIFT ARM & BOB-TACH

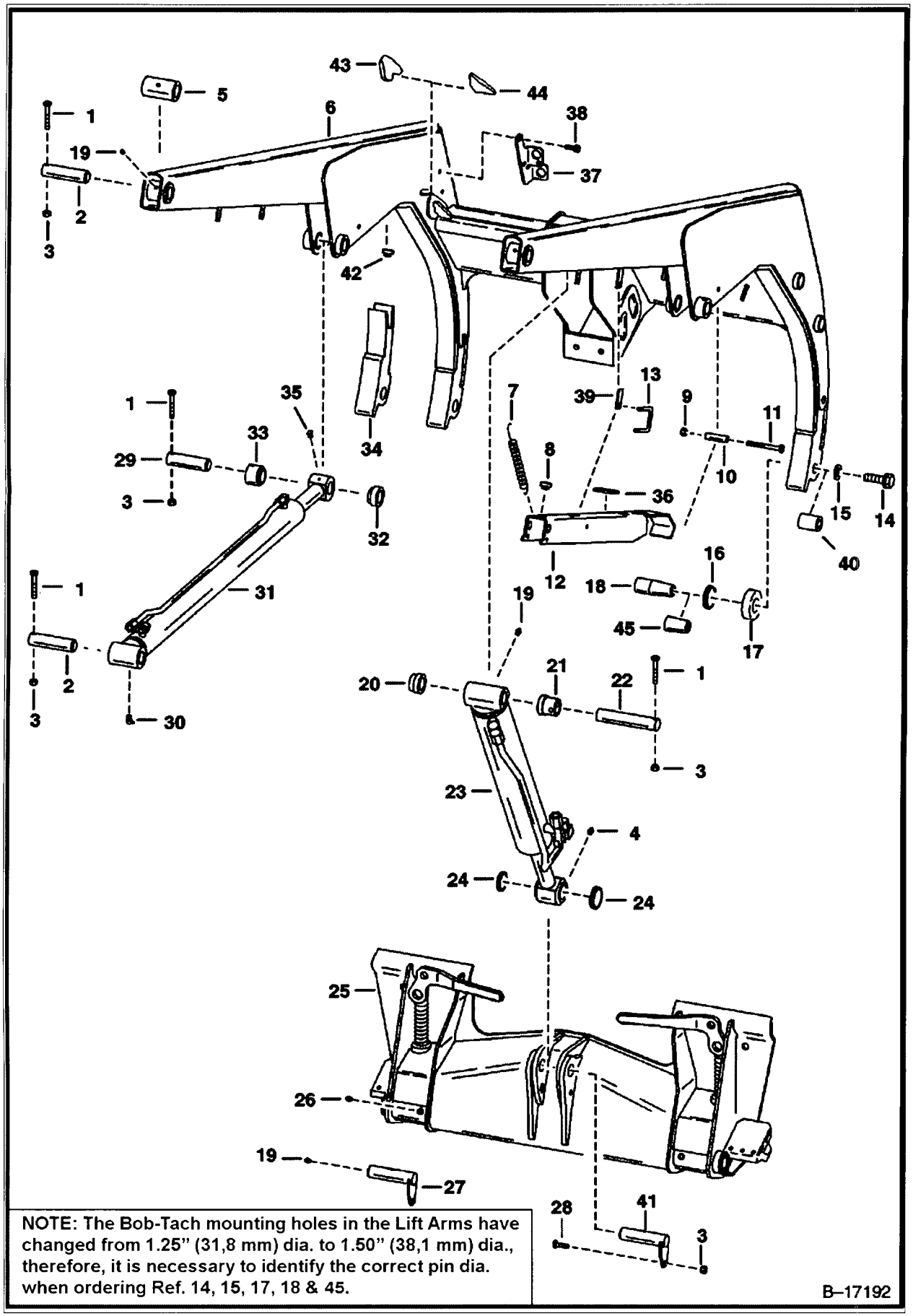

NOTE: The Bob-Tach mounting holes in the Lift Arms have changed from 1.25" (31,8 mm) dia. to 1.50" (38,1 mm) dia., therefore, it is necessary to identify the correct pin dia. when ordering Ref. 14, 15, 17, 18 & 45.

https://www.pdfmanual4trucks.com/

LIFT ARM & BOB-TACH (Cont'd)

,f No	Part Number	Description	Remarks	Serial Number	Qty
1	17C640	BOLT 5			8
2	6577954	PIN			4
3	85D6	LOCK NUT			9
4	10H000035B	GREASE ZERK			1
5	6578356	BUSHING	weld on		2
6		LIFT ARM	NAP - 1.25"(31.8mm) dia. bobtach pin - Order 6730797 lift arm and (2) ea. of Ref. 15 (6560416 washer & Ref. 45 - Was 6703136 [A]		1
6	6730797	LIFT ARM	1.50" (30,1 mm) dia. bobtach pin		1
7	6700743	SPRING	Was 6579072 [D]		1
8	6519178	BUMPER	rubber		1
9	61D000006B	NUT			1
10	6700469	SPACER			1
11	17C000648B	BOLT			1
12	6705089	LIFT ARM STOP			1
13	6714810	PIN	retainer - Was 6578457 [A]		1
14	31C001064B	BOLT	for 1.25" (31,8mm) dia. bobtach pin - Was 17C001064B [B]		2
,4	31C001264B	BOLT	for 1.50" (38,1mm) dia. bobtach pin		2
15	6555455	WASHER	for 1.25" (31,8mm) dia. bobtach pin		2
15	6560416	WASHER	for 1.25" (31,8mm) dia. bobtach pin - Used W/Ref. 45		2
15	6718723	WASHER	for 1.50" (38,1mm) dia. bobtach pin		2
16	6651709	SEAL			2
17	6700039	CUP	seal - for 1.25" (31,8mm) dia. bobtach pin		2
17	6700463	CUP	seal - for 1.50" (38,1mm) dia. bobtach pin		2
18		PIN	NAP - 1.25"(31.8mm) dia. - 4.00" (101,6mm) long - Order 6732012 pin - Was 6707042 [A]		2
.8	6732012	PIN	1.25" (31,8mm) dia. - 3.5"(98,6mm) long		2
18	6730263	PIN	1.50" (30,1 mm) dia.		2
19	10H25	GREASE ZERK			3
20	6703363	BUSHING	weld on - Also Order Ref. 22		1
21	6737623	BUSHING	weld on - Also Order Ref. 22 - Was 6704287 [A]		1
22	6704288	PIN	1.25"(31,8 mm) dia. - 7"(177,8 mm) long		1
23		CYLINDER	See Illustration TILT CYLINDER/ TS1127 See Illustration TILT CYLINDER/ TS1127A See Illustration TILT CYLINDER/ TS1098 See Illustration TILT CYLINDER/ TS1098A tilt		1
ł	225855B	SEAL	Used W/Ref. 41		2
24	6654117	SEAL	Used W/Ref. 27		2
25		BOB-TACH	See Illustration BOB-TACH/ PE1523		1
26	743332B	GREASE ZERK			2
27	6705223	PIN	W/grease zerk hole		1
28	17C620	BOLT			1
29	6718789	PIN	Was 6547593 [B]		2
30	11H15	GREASE FITTING			2
31		CYLINDER	See Illustration LIFT CYLINDER/ TS1097 LIFT		2
32	6555989	BUSHING	weld on		2
33	6555987	BUSHING	weld on		2
34		ARM	NAP - R.H. - weld on		1
34		ARM	NAP - L.H. - weld on		1
35	12H15	GREASE FITTING			2
36	6704436	PAD	foam - self adhesive		1
37		MOUNT	See Illustration AUXILIARY HYDRAULICS/ D2288		1
8	84G3112	BOLT 5	See Illustration AUXILIARY HYDRAULICS/ D2288		2
39	6705091	TAB	weld on		1
40	6714874	BUSHING	weld on - W/tapered hole - for 1.25" (31,8 mm) dia. pin		2

https://www.pdfmanual4trucks.com/

LIFT ARM & BOB-TACH (Cont'd)

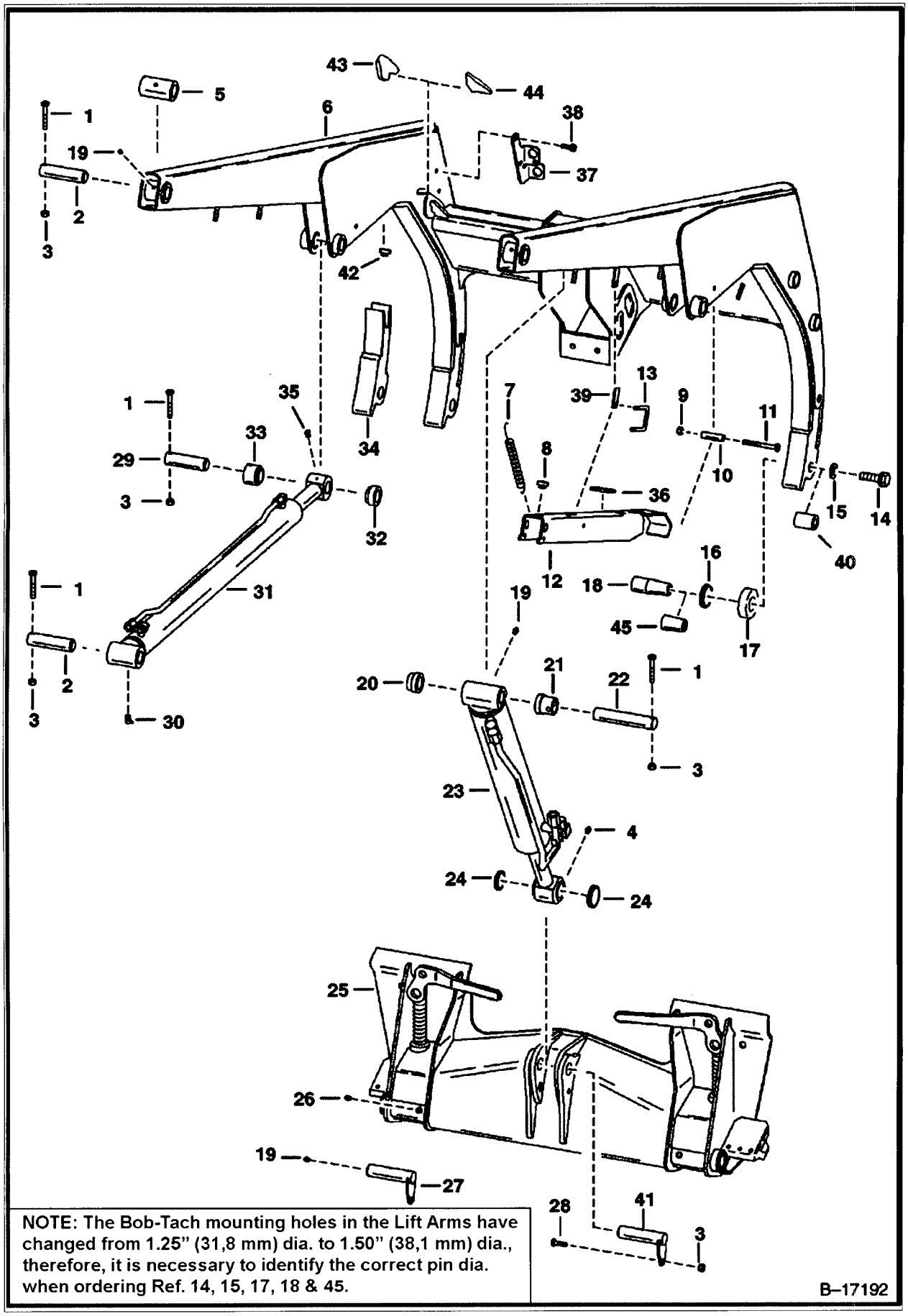

https://www.pdfmanual4trucks.com/

LIFT ARM & BOB-TACH (Cont'd)

f No	Part Number	Description	Remarks	Serial Number	Qty
'0	6717666	BUSHING	weld on - for 1.5" dia. pin		2
41	6716601	PIN	W/O grease zerk hole		1
42	6704403	STOP	weld on		2
43	6727544	PLATE	weld on		2
44	6727545	PLATE	weld on		2
45	6731254	BUSHING	tapered - allows 1.25 in. (31,8 mm) dia. Bob-Tach pin to be used in 1.50 in. (38,1 mm) dia. lift arm hole		2

https://www.pdfmanual4trucks.com/

BOB-TACH

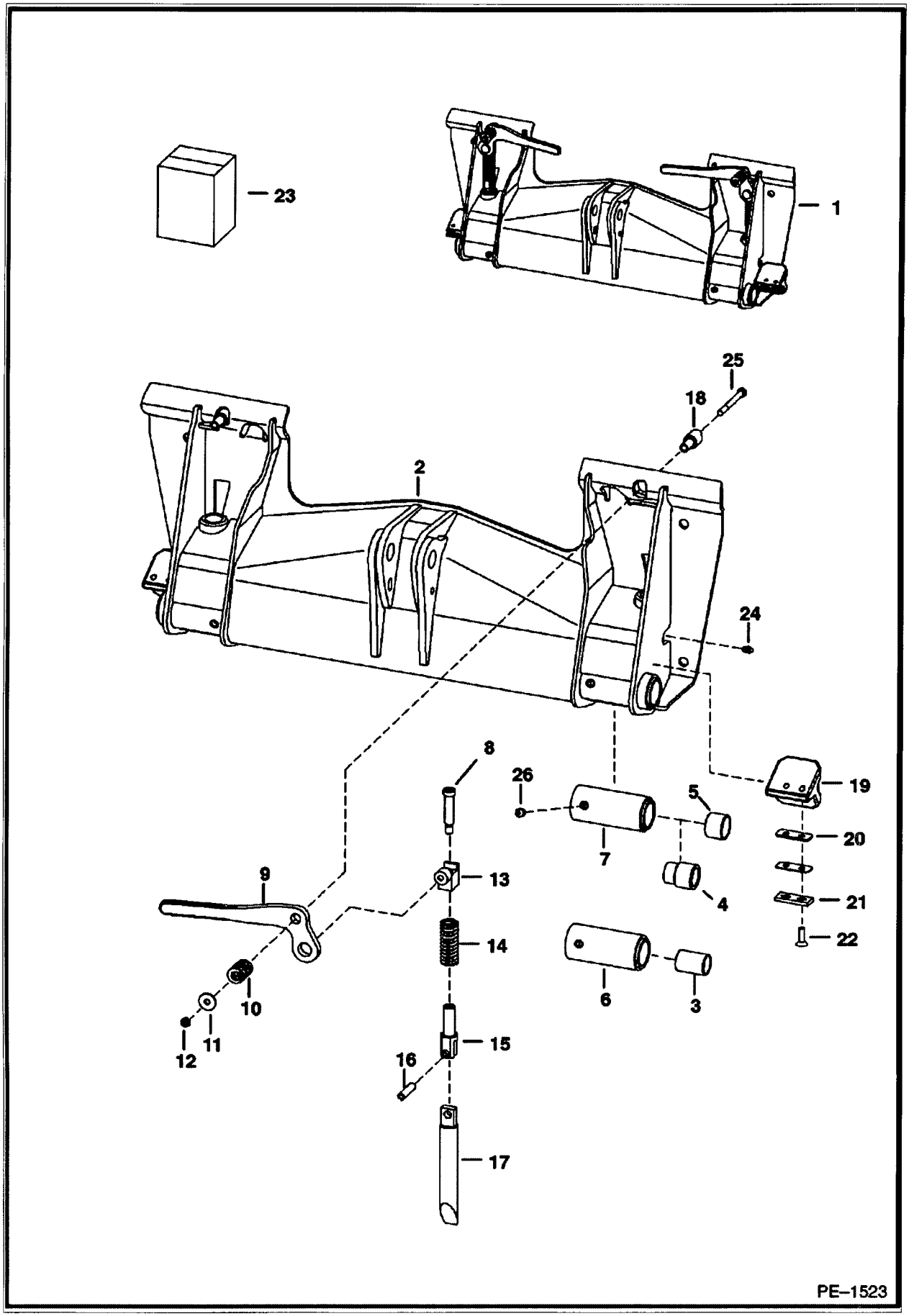

https://www.pdfmanual4trucks.com/

BOB-TACH (Cont'd)

,f No	Part Number	Description	Remarks	Serial Number	Qty
1		BOB-TACH	NAP - For 1.25" (31,8 mm) dia. lift arm pin - W/Ref. 6 (NAP/6577445 Bushing) - 2.25" (57,15 mm) O.D. weld on bushings - Order 6571744 Bob-Tach & (2) of Ref. 4 - Also Order 6561383 Decal		1
1	6571744	BOB-TACH	For 1.25" (31,8 mm) or 1.50" (38,1 mm) dia. lift arm pin - W/Ref. 7 - 2.50" (63.5 mm) O.D. weld on bushings - Also Order (2) of Ref. 4 or 5 - Also Order 6561383 Decal		1
1	6709215	BOB-TACH	For 1.50" (38,1 mm) dia. lift arm pin - W/Ref. 5 & 7 - 2.50" (63,5 mm) O.D. weld on bushings - Also Order 6561383 Decal		1
2		FRAME	NAP		1
3	6589665	BUSHING	press fit - 1.25" (31,8 mm) I.D. - straight O.D. - 2" (50,8 mm) long - Was 6534387 [A]		2
4	6732446	BUSHING	press fit - 1.25" (31,8 mm) I.D. - stepped O.D.		2
5	6730997	BUSHING	press fit - 1.50" (38,1 mm) I.D. - straight O.D. - 1.26" (32 mm) long		2
5		BUSHING	NAP - weld-on - W/Ref. 3 - for 1.25" (31,8 mm) dia. lift arm pin - 2.25" (57,15 mm) O.D. - Order 6577446 bushing & Ref. 3 - Was 6577445 [A]		2
6	6577446	BUSHING	weld on - W/O Ref. 3 - For 1.25" (31,8 mm) dia. lift arm pin - 2.25" (57,15 mm) O.D. - Also Order Ref. 3		2
7	6731979	BUSHING	weld on - W/O Ref. 4 or 5 - For 1.25" (31,8 mm) or 1.50" (38,1 mm) dia. lift arm pin - 2.50" (63,5 mm) O.D. - Also Order Ref. 4 or 5		2
8	6728473	BOLT	shoulder - Was 6578166 [A]		2
9	6702904	LEVER	R.H. - Was 6578855 [A]		1
9	6702903	LEVER	L.H. - Was 6578855 [A]		1
10	6704453	SPRING	Use W/Ref. 25 - (17C-644 Bolt) - Was 6578252 [C]		2
10	6713040	SPRING	Use W/Ref. 25 - (17C-660 Bolt)		2
11	6557831	WASHER	Use W/Ref. 25 - (17C-644 Bolt)		2
11	619021B	WASHER	Use W/Ref. 25 - (17C-660 Bolt)		2
12	85D6	LOCK NUT			2
13	6704240	PIVOT ASSY.	Was 6576456 [C]		2
14	6578253	SPRING	Was 6562018 [A]		2
15	6704248	PIVOT	wedge - Was 6576454 [A]		2
*6	14J005032B	PIN			2
7	6737191	WEDGE	Was 6704242 [A]		2
18	6702958	BUSHING	weld on		2
19	6704600	STOP	R.H. - Was 6701451 [A]		1
19	6704601	STOP	L.H. - Was 6701468 [A]		1
20	6707514	SHIM	.060		2
20	6579106	SHIM	.125		2
21	6579104	SHIM	.250		2
22	9G000620B	BOLT			4
23	6724775	LEVER KIT	lever - R.H. - Ref. 8-17 & 25		1
23	6724776	LEVER KIT	lever - L.H. - Ref. 8-17 & 25		1
24	10H000035B	GREASE ZERK			2
25	17C000644B	BOLT	See Ref. 10 & 11 - 2.75" (69,9 mm) long		2
25	17C000660B	BOLT	See Ref. 10 & 11 - 3.75" (95,3 mm) long		2
26	743332B	GREASE ZERK			2

https://www.pdfmanual4trucks.com/

FUEL SYSTEM

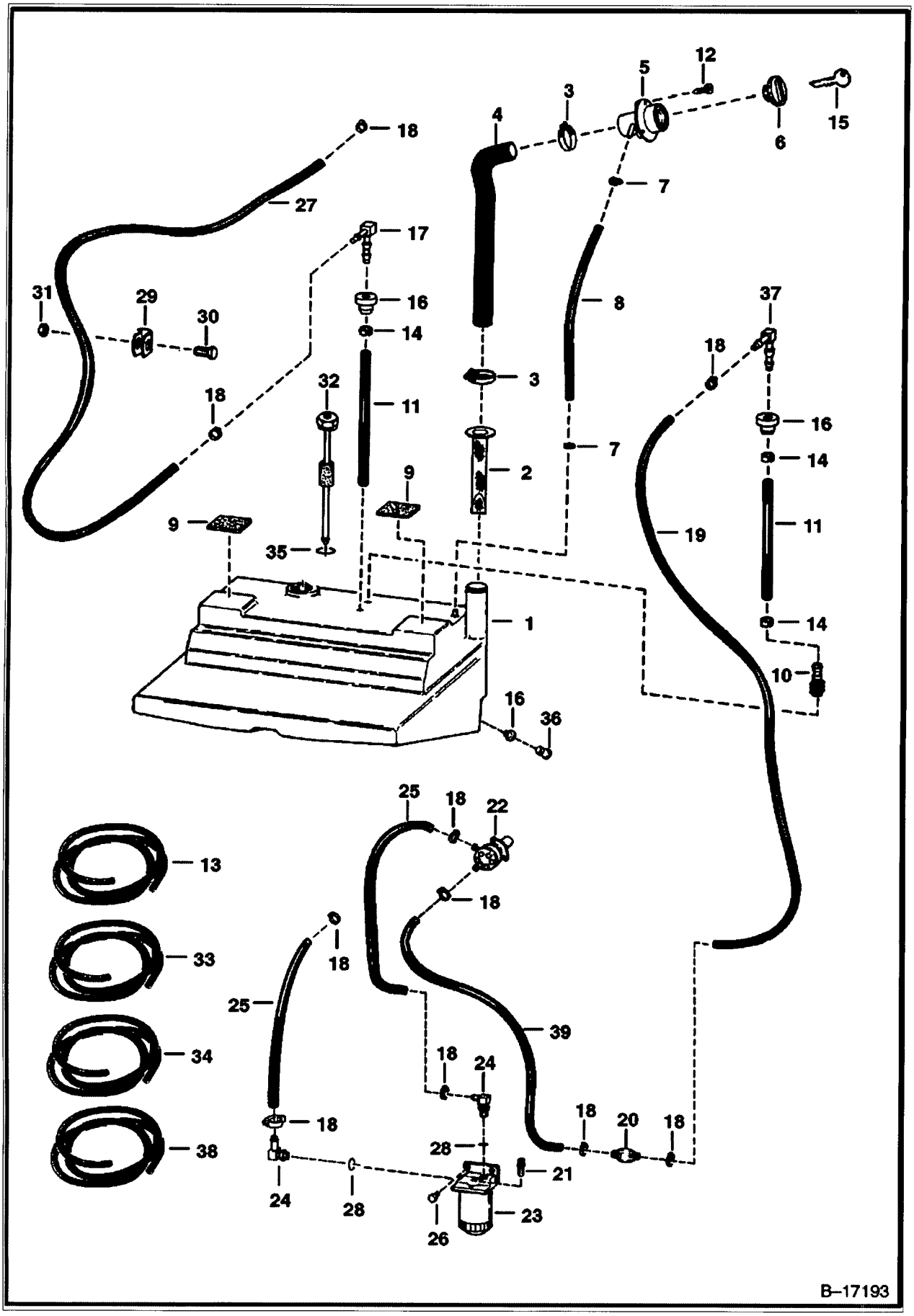

B–17193

https://www.pdfmanual4trucks.com/

FUEL SYSTEM (Cont'd)

.f No	Part Number	Description	Remarks	Serial Number	Qty
1		TANK	NAP - Order 6717572 Tank, Ref. 36 (6717401 Plug) & Ref. 16 (6717402 Bushing) - Was 6575897 [A]		1
1	6736659	TANK	Was 6717572 [A]		1
2	6569219	SCREEN			1
3	42H000032B	CLAMP	Was 6513595 [A]		2
4	6706674	HOSE	Was 6576374 [B,D]	5086 94508 & Bel	1
4	6706674	HOSE	Was 6576374 [B,D]	5127 27421 & Bel	1
4	6710653	HOSE		5086 94509 & Abv	1
4	6710653	HOSE		5127 27422 & Abv	1
5	6701449	FILLER TUBE			1
6	6661114	CAP	green		1
6		CAP	NAP - W/Ref. 15 - locking - Code GC020		1
6	6661696	CAP	locking - W/Ref. 15 - Code PK510		1
7	42H000010B	CLAMP			2
8		HOSE	NAP - 25" (635,0) long - Order Ref. 13		1
9	6578278	PAD	self adhesive one side		2
10	6650239	SCREEN			1
I	6576386	HOSE	8.5"-9.5" (215,9 mm - 241,3 mm) long		2
12	6706517	SCREW	Was 6579119 [A]		3
13	6578172	HOSE	bulk - Sold Per Foot		x
14	6661213	RING			3
15	6654374	KEY	Code GC020		1
15	6587458	KEY	Code PK510		1
16	6553411	BUSHING	.5" I.D.		3
16	6717402	BUSHING	.75" I.D.		1
17	7101291	ELBOW	Was 6598908 [A]		1
8	6515575	CLAMP			10
.9		HOSE	NAP - 35" (889,0 mm) long - Order Ref. 33		1
20	6657734	PUMP	hand primer		1
21	6658180	BREATHER	breather		1
22	6655216	FUEL PUMP	See Illustration FUEL & INJECTION PUMPS/ B13157		1
23	6667353	FILTER ASSY	Was 6657020 [A]		1
23	6667352	FILTER FUEL	Was 6647773 [A]		1
23	72F000001B	DRAIN COCK			1
24		ELBOW	NAP - W/Ref. 28 - flat boss face - Was 6657083 [A]		2
24	6715183	ELBOW	W/Ref. 28 - check boss face to determine correct replacement o-ring		2
5		HOSE	NAP - 13" (330,2 mm) long - Order Ref. 34		2
26	17C000512B	BOLT			2
27		HOSE	NAP - 44" (1118 mm)) long - Order Ref. 38 flat boss face		1
28	79K000005B	O-RING	flat boss face		x
28	99K000005B	O-RING	tapered boss face		x
29	30H000036B	CLAMP			2
30	17C612	BOLT 5			2
31	61D000006B	NUT			1
32		SENSOR	See Illustration ENGINE ELECTRICAL CIRCUITRY/ E2249 See Illustration ENGINE ELECTRICAL CIRCUITRY/ E2258 FUEL - W/Ref. 35		1
33	6577821	HOSE	bulk - Sold Per Foot		x
34	6577822	HOSE	bulk - Sold Per Foot		x
35	79K000014B	O-RING	Was 25K040102B [B]		1
35	6717579	GASKET	rubber		1
6	6599645	PLUG	fuel drain - .5" O.D.		1
36	6717401	PLUG	fuel drain - .75" O.D.		1
37	6661382	ELBOW			1
3	6578169	HOSE	.187" ID - bulk - Sold Per Foot		x

https://www.pdfmanual4trucks.com/

FUEL SYSTEM (Cont'd)

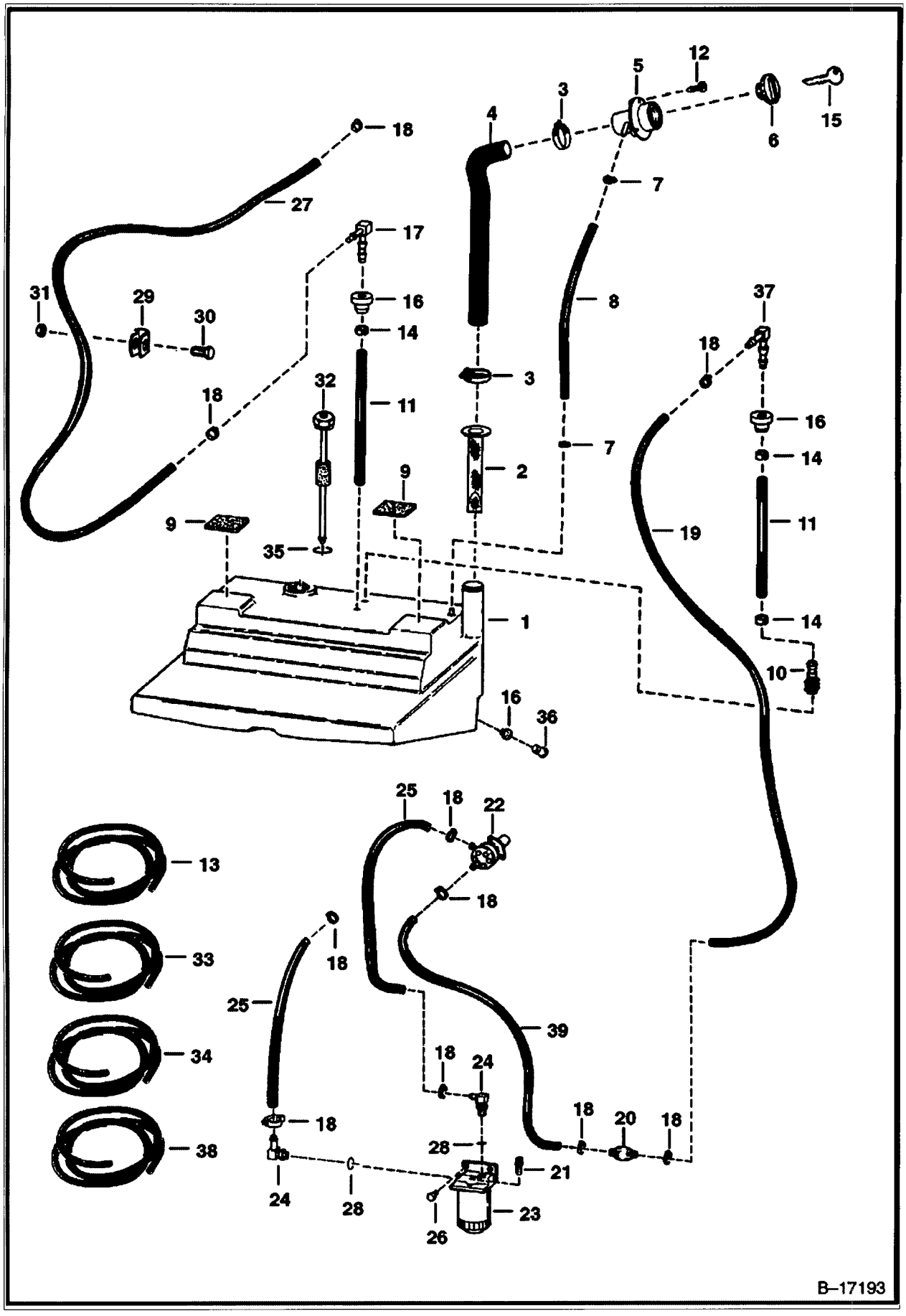

https://www.pdfmanual4trucks.com/

Item No	Part Number	Description	Remarks	Serial Number	Qty
9		HOSE	NAP - 18" (457,2 mm) - Order Ref. 33		1

https://www.pdfmanual4trucks.com/

DRIVE TRAIN
(S/N 5127 16001 & Abv, 5086 93001 & Abv, 5114 76001 & Abv)

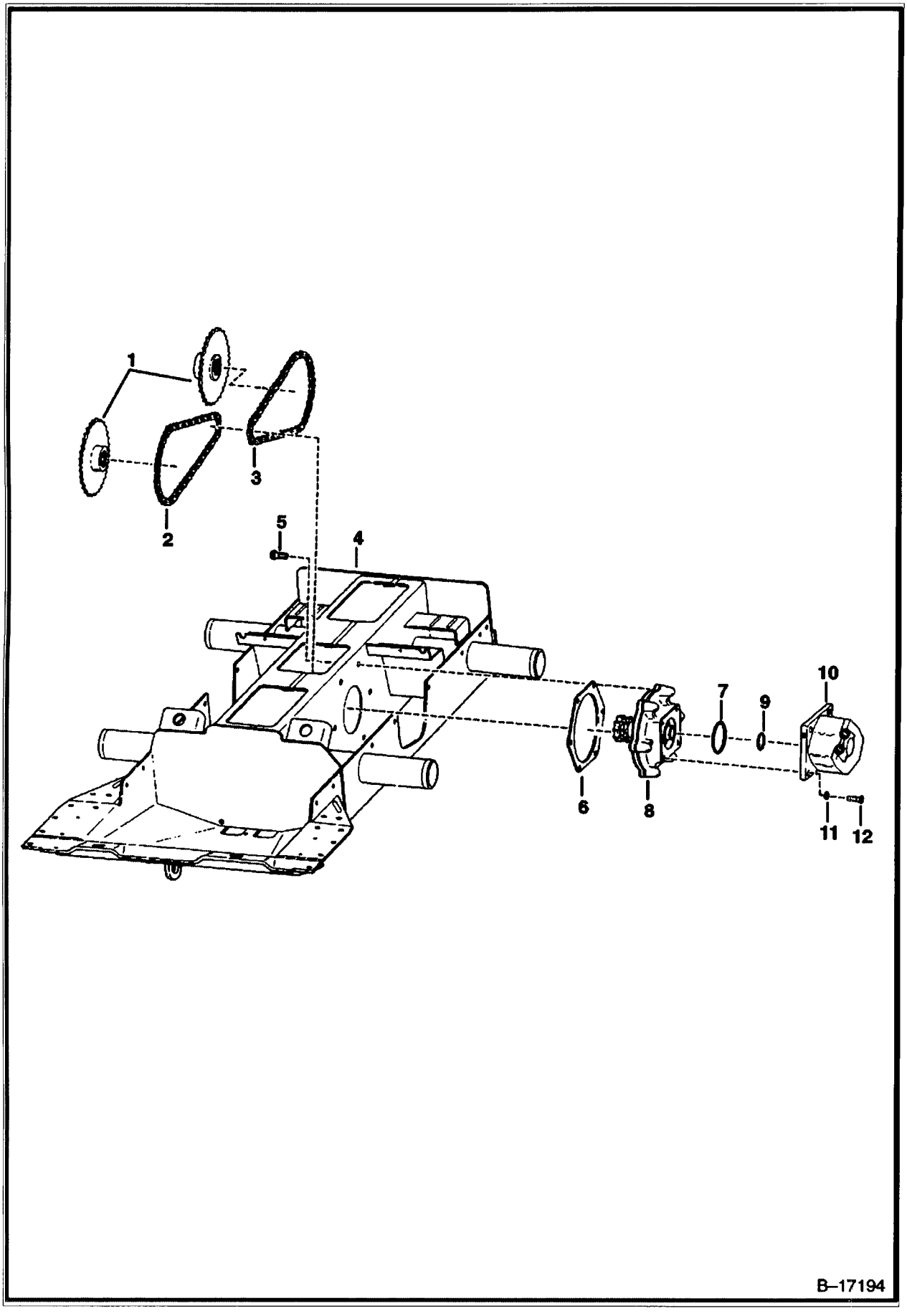

https://www.pdfmanual4trucks.com/

DRIVE TRAIN (Cont'd)
(S/N 5127 16001 & Abv, 5086 93001 & Abv, 5114 76001 & Abv)

,f No	Part Number	Description	Remarks	Serial Number	Qty
1	6577204	SPROCKET			4
2		CHAIN	NAP - 58 pitch - hour glass shape link - Order 6689649 chain - Was 6579126 [A]		2
2		CHAIN	NAP - 58 pitch - oval shape link - Order 6689649 chain - Was 6731219 [A]		2
2	6689649	CHAIN	58 pitch - hour glass shape link - Tsubaki		2
2	6510171	LINK	conn. - hour glass shape - Diamond		x
2	6675332	LINK	conn. - oval shape - Diamond		x
2	6690709	LINK	conn. - hour glass shape - Tsubaki		x
3		CHAIN	NAP - 62 pitch - hour glass shape link - Diamond - Order 6689651 chain - Was 6579127 [A]		2
3		CHAIN	NAP - 62 pitch - oval shape link - Diamond - Order 6689651 chain - Was 6731218 [A]		2
3	6689651	CHAIN	62 pitch - hour glass shape link - Tsubaki		2
3	6510171	LINK	conn. - hour glass shape - Diamond		x
3	6675332	LINK	conn. - oval shape - Diamond		x
3	6690709	LINK	conn. - hour glass shape - Tsubaki		x
4		CHAINCASE	See Illustration DISC BRAKE/ PE2278 See BTI373 NAP - Was 6712827 [A]		1
5	35C001032B	BOLT			12
6	6704878	GASKET	install W/Rib toward chaincase		2
7	58K000243B	O-RING			2
8		MOUNT ASSY.	See Illustration MOTOR CARRIER/ MC1936 DRIVE MOTOR		2
9	25K030202B	O-RING	Supplied W/Motor		2
10		MOTOR	W/Ref. 9		2
11	6701097	WASHER	.25" (6,4 mm) thickness - Was 6803867 [A]		8
11	6703140	WASHER	.37" (9,4 mm) thickness		8
12	17C000828B	BOLT			8

https://www.pdfmanual4trucks.com/

DRIVE TRAIN
(S/N 5158 11001-29999, 5162 11001-19999)

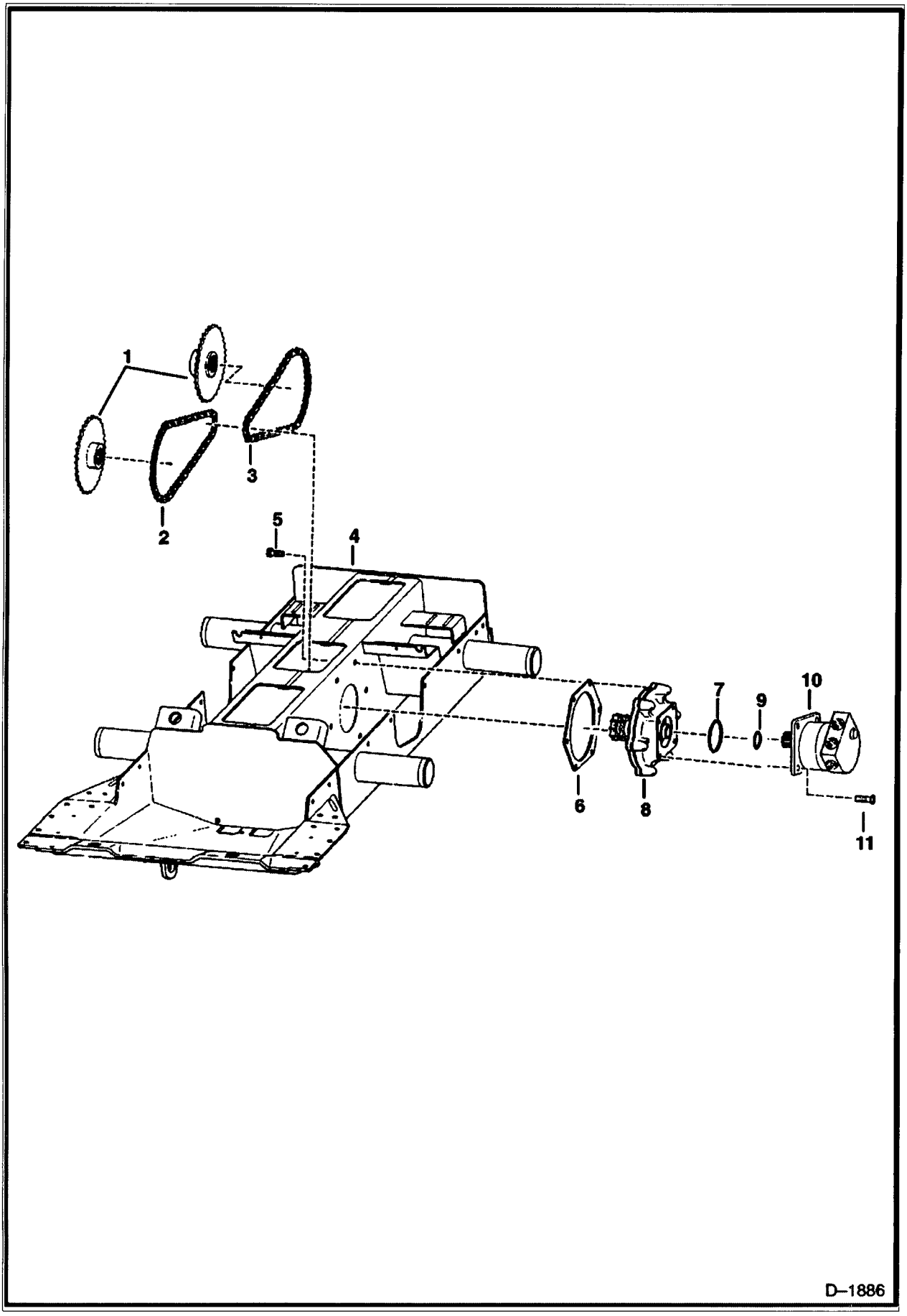

https://www.pdfmanual4trucks.com/

DRIVE TRAIN (Cont'd)
(S/N 5158 11001-29999, 5162 11001-19999)

f No	Part Number	Description	Remarks	Serial Number	Qty
1	6577204	SPROCKET			4
2		CHAIN	NAP - 58 pitch - hour glass shape link - Order 6689649 chain - Was 6579126 [A]		2
2		CHAIN	NAP - 58 pitch - oval shape link - Order 6689649 chain - Was 6731219 [A]		2
2	6689649	CHAIN	58 pitch - hour glass shape link - Tsubaki		2
2	6510171	LINK	conn. - hour glass shape - Diamond		x
2	6675332	LINK	conn. - oval shape - Diamond		x
2	6690709	LINK	conn. - hour glass shape - Tsubaki		x
3		CHAIN	NAP - 62 pitch - hour glass shape link - Diamond - Order 6689651 chain - Was 6579127 [A]		2
3		CHAIN	NAP - 62 pitch - oval shape link - Diamond - Order 6689651 chain - Was 6731218 [A]		2
3	6689651	CHAIN	62 pitch - hour glass shape link - Tsubaki		x
3	6510171	LINK	conn. - hour glass shape - Diamond		x
3	6675332	LINK	conn. - oval shape - Diamond		x
3	6690709	LINK	conn. - hour glass shape - Tsubaki		x
4		CHAINCASE	See Illustration DISC BRAKE/ PE2278 See BTI373 NAP - Was 6712827 [A]		1
5	35C001032B	BOLT			12
6	6704878	GASKET	install W/Rib toward chaincase		2
7	25K030508B	O-RING			2
8		MOUNT ASSY.	See Illustration MOTOR CARRIER/ MC1937 DRIVE MOTOR		2
9	25K030202B	O-RING	Supplied W/Motor		2
10		MOTOR	See Illustration HYDROSTATIC MOTOR/ C3431 W/Ref. 9		2
11	93G824	BOLT	Was 73G824 [A]		8

https://www.pdfmanual4trucks.com/

MOTOR CARRIER
(Drive Motor Mount Assy.)
(S/N 5127 16001 & Above, 5086 93001 & Above, 5114 76001 & Above)

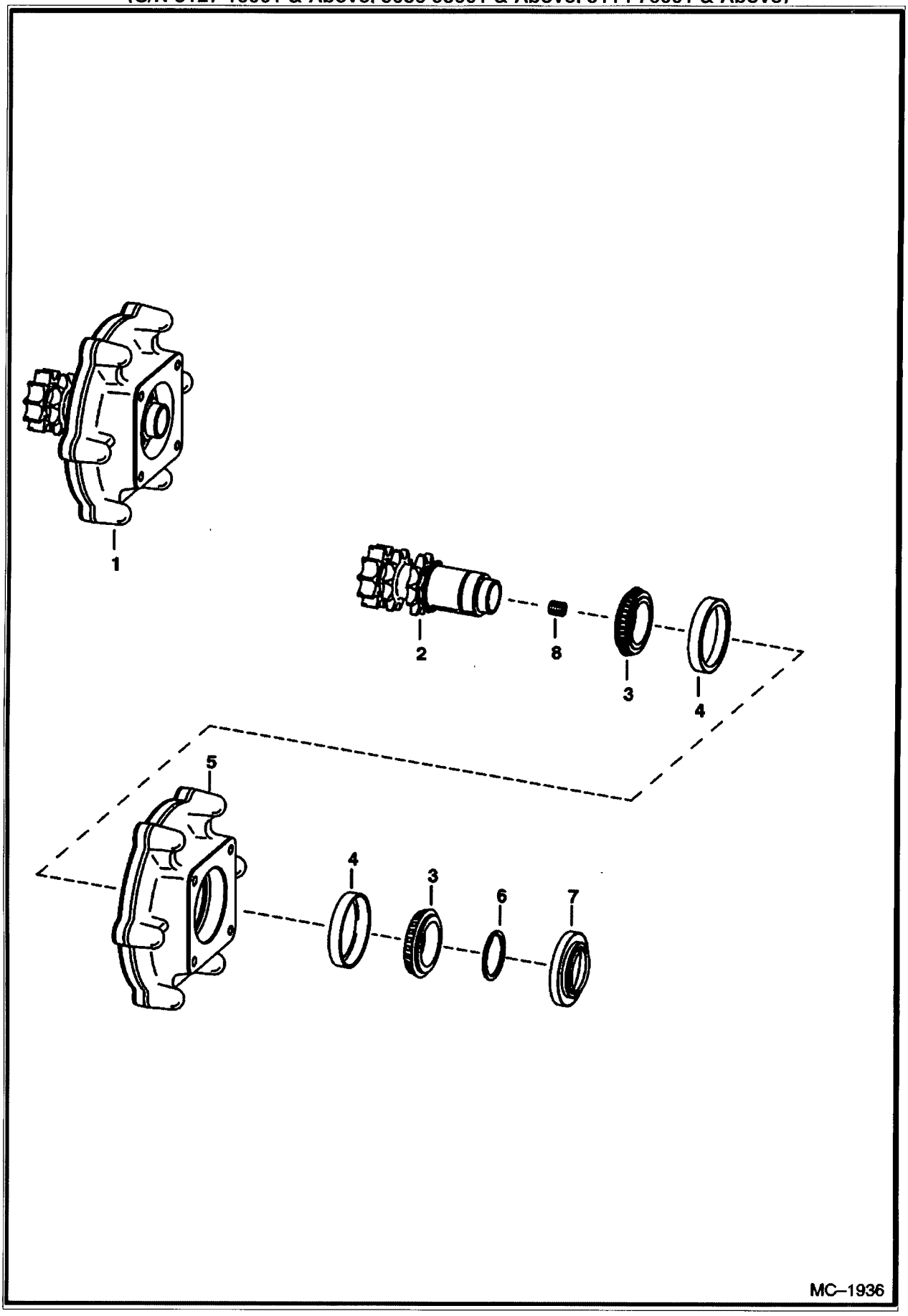

https://www.pdfmanual4trucks.com/

MOTOR CARRIER (Cont'd)
(Drive Motor Mount Assy.)
(S/N 5127 16001 & Above. 5086 93001 & Above. 5114 76001 & Above)

f NO	Part Number	Description	Remarks	Serial Number	Qty
1		MOUNT ASSY.	NAP - drive motor - Ref. 2 - 8 - Order Components - Was 6705287 [A]		1
2	6705065	SHAFT	W/single snap ring groove & Ref. 8		1
3	6632218	BEARING			2
4	6632541	RACE			2
5	6704491	HOUSING	Was 6704492 [B,D]		1
6	6571851	SNAP RING	.118" (3,0 mm) thickness		1
6	6571852	SNAP RING	.125" (3,18 mm) thickness		1
7	6705847	SEAL			1
8		PLUG	NSS - Was 16F000006B [B,D]		1

https://www.pdfmanual4trucks.com/

MOTOR CARRIER
(Drive Motor Mount Assy.)
(S/N 5158 11001 & Above, 5162 11001 & Above)

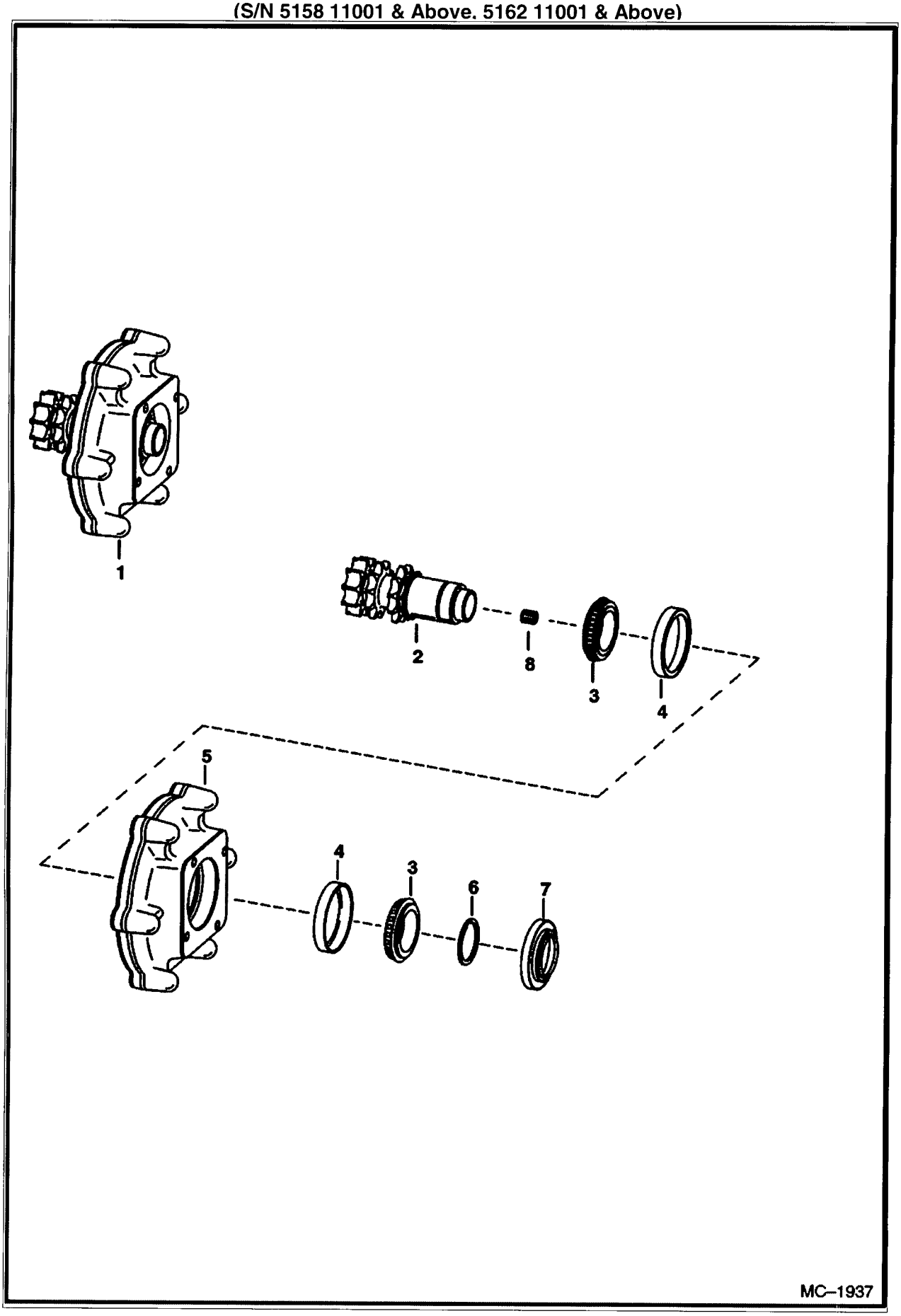

https://www.pdfmanual4trucks.com/

MOTOR CARRIER (Cont'd)
(Drive Motor Mount Assy.)
(S/N 5158 11001 & Above. 5162 11001 & Above)

,f No	Part Number	Description	Remarks	Serial Number	Qty
1		MOUNT ASSY.	NAP - drive motor - Ref. 2 - 8 - Order 6733695 Mount Assy & 6733701 Cover - Was 6712402 [A]		1
2	6713456	SHAFT	W/double snap ring groove & Ref. 8		1
3	6632218	BEARING			2
4	6632541	RACE			2
5	6704492	HOUSING			1
6	6571851	SNAP RING	.118" (3,0 mm) thickness		1
6	6571852	SNAP RING	.125" (3,18 mm) thickness		1
7	6705847	SEAL			1
8		PLUG	NSS - Was 16F000006B [B]		1

https://www.pdfmanual4trucks.com/

DISC BRAKE
Non - Flat Top Chaincase

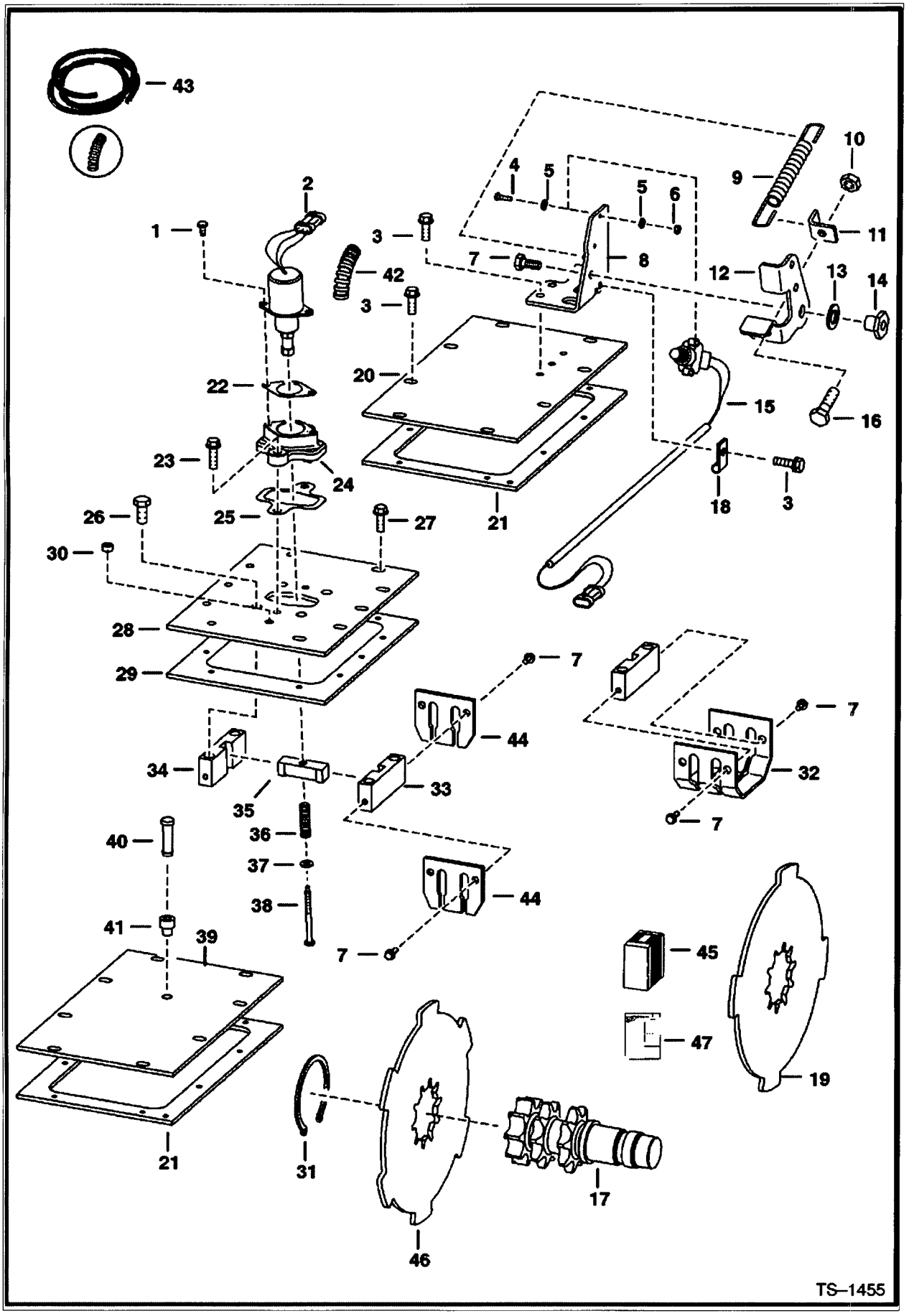

https://www.pdfmanual4trucks.com/

DISC BRAKE (Cont'd)
Non - Flat Top Chaincase

No	Part Number	Description	Remarks	Serial Number	Qty
1	17C412	BOLT 5	Was 17C000410B [B]		2
2	6681512	SOLENOID	W/Ref. 42 - See S/L dated 4/18/96 - Was 6667992 [A]		1
3	84G3712	BOLT			18
4	23G000812B	SCREW			2
5	25E000008B	WASHER			4
6	12D000008B	NUT			2
7	17C000610B	BOLT			5
8	6707313	PEDAL MOUNT			1
9	6585860	SPRING			1
10	95D000006B	NUT	Was 91D000006B [A]		2
11	6707315	ANGLE			1
12	6707314	PEDAL	brake		1
13	6700170	WASHER	plastic		2
14	6559479	NUT			1
15	6707337	SWITCH			1
16	17C620	BOLT			2
17		SHAFT	See Illustration MOTOR CARRIER/ MC1936 See Illustration MOTOR CARRIER/ MC1937		2
18	30H000023B	CLAMP			1
19		BRAKE	NAP - 4 lobe disc - Order Ref. 45 - Was 6707254 [A]		2
20	6578505	COVER			1
21	6703097	GASKET			2
22	6706737	GASKET			1
23	84G3720	BOLT			2
24	6706718	MOUNT			1
25	6708016	GASKET			1
26	17C820	BOLT			4
27	84G3716	SCREW 5			10
28	6706042	COVER			1
29	6706968	GASKET			1
30	6544654	BUSHING	spacer	& Above	1
31	6658672	SNAP RING			2
32		GUIDE	NAP - disc brake - Order (2) of Ref. 44 - Was 6708977 [A]		1
33	6705898	BLOCK	guide - R.H.	5086 93001 & Abv	1
33	6705898	BLOCK	guide - R.H.	5127 16001 & Abv	1
33	6705898	BLOCK	guide - R.H.	5114 76001 & Abv	1
33	6719057	BLOCK	guide - R.H.	5162 11001-19999	1
33	6719057	BLOCK	guide - R.H.	5158 11001 29999	1
34	6705897	BLOCK	guide - L.H.	5127 16001 & Abv	1
34	6705897	BLOCK	guide - L.H.	5086 93001 & Abv	1
34	6705897	BLOCK	guide - L.H.	5114 76001 & Abv	1
34	6719056	BLOCK	guide - L.H.	5158 11001 29999	1
34	6719056	BLOCK	guide - L.H.	5162 11001-19999	1
35	6705896	GUIDE	4 lobe disc brake		1
35	6714278	GUIDE	6 lobe disc brake		1
36	6708018	SPRING			1
37	25E13	WASHER 5		& Below	2
38	6708267	BOLT			1
39	6700330	COVER			1
40	6680970	BREATHER	See Illustration MAIN FRAME/ B17188 Was 6670627 [A]		1
41	6553411	BUSHING			1
42		CONDUIT	NAP - 5"(127 mm) long - Order Ref. 443		1
43	6584978	CONDUIT	bulk - Sold Per Foot		x
44	6708015	GUIDE		5127 16001 & Abv	2
44	6708015	GUIDE		5114 76001 & Abv	2

https://www.pdfmanual4trucks.com/

DISC BRAKE (Cont'd)
Non - Flat Top Chaincase

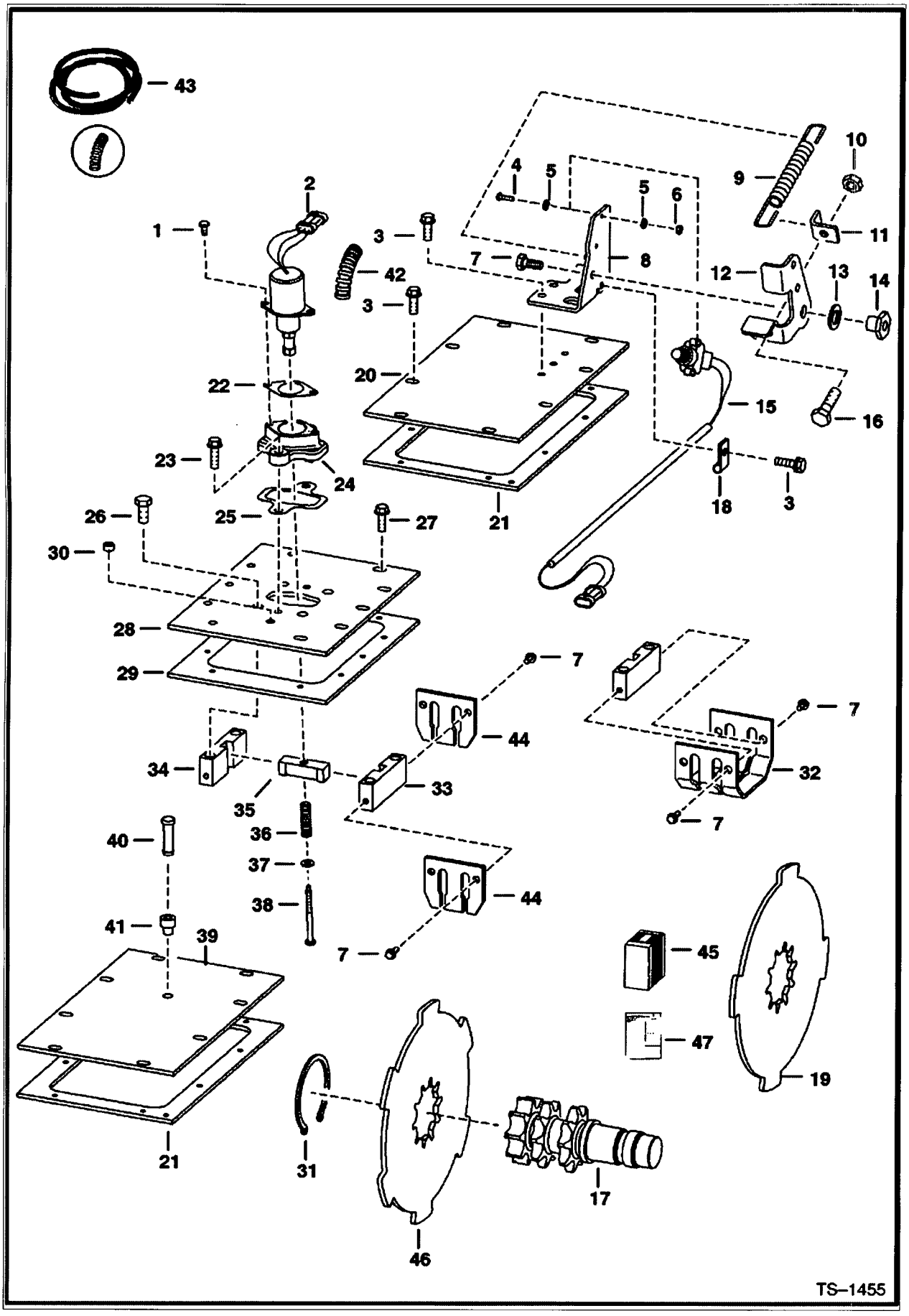

https://www.pdfmanual4trucks.com/

DISC BRAKE (Cont'd)
Non - Flat Top Chaincase

Ref No	Part Number	Description	Remarks	Serial Number	Qty
4	6708015	GUIDE		5086 93001 & Abv	2
45	6717734	KIT	6 lobe disc brake - consists of (2) of Ref. 46 & (1) ea. of Ref. 35 (6714278 Guide) & Ref. 47		1
46	7120111	BRAKE	disc - 6 lobe - Was 6716228 [A]		2
47	6900805	INSTRUCTIONS			1

https://www.pdfmanual4trucks.com/

DISC BRAKE
(Flat Top Chaincase)

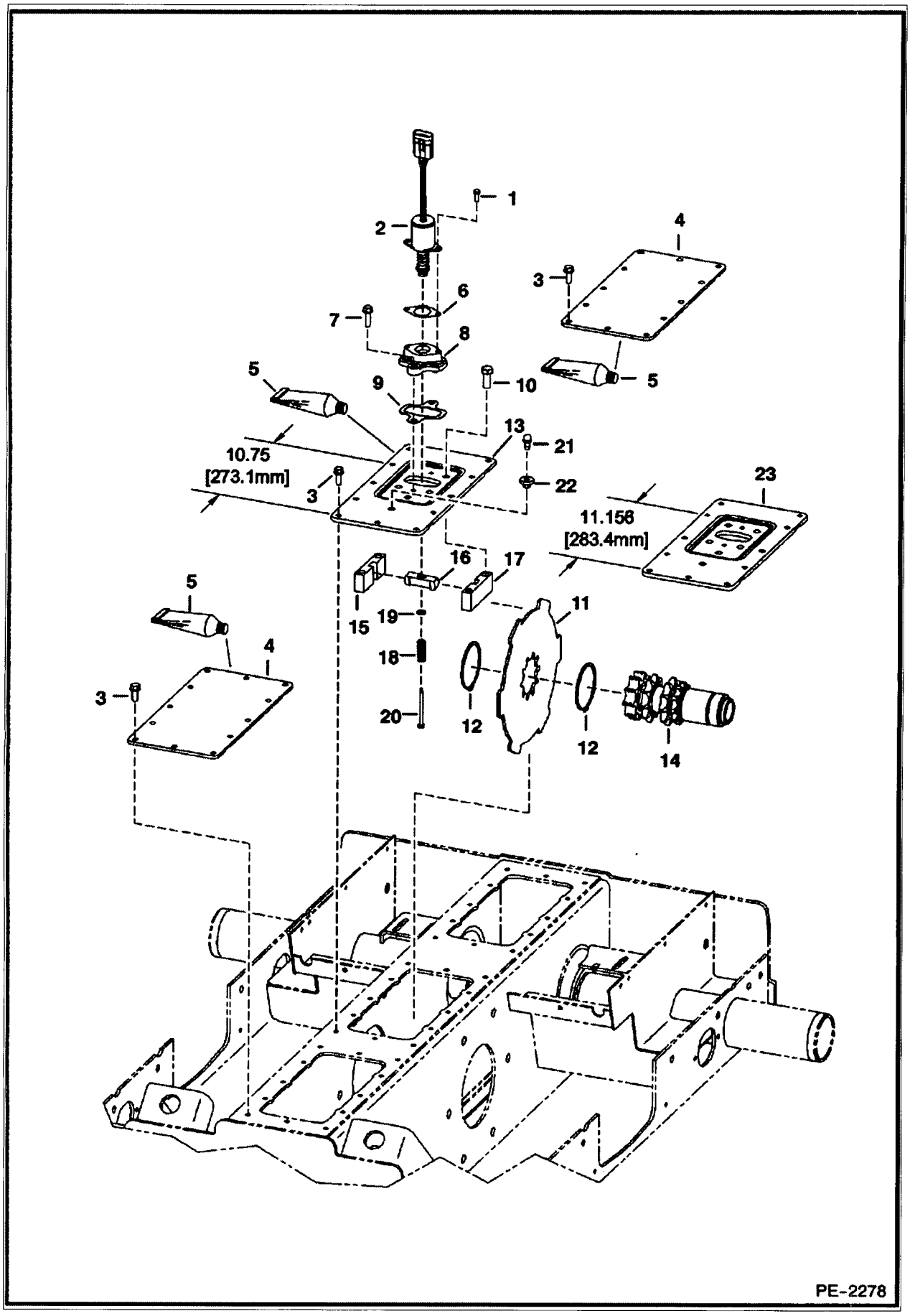

https://www.pdfmanual4trucks.com/

DISC BRAKE (Cont'd)
(Flat Top Chaincase)

f No	Part Number	Description	Remarks	Serial Number	Qty
1	17C412	BOLT 5			2
2	6681512	SOLENOID			1
3	84G3716	SCREW 5			36
4	7129987	COVER	Was 6733956 [A]		2
5	6685372	SEAL	liquid gasket - 20 oz. tube		x
6	6706737	GASKET			1
7	84G3720	BOLT			2
8	6706718	MOUNT			1
9	6708016	GASKET			1
10	47C000820B	BOLT			4
11	7120111	BRAKE	disc - Was 6716228 [A]		2
12	6658672	SNAP RING			4
13	6735612	CHAINCASE COVER			1
14	6733621	SHAFT	double snap ring groove		2
15	6719056	BLOCK	guide - L.H.		1
16	6714278	GUIDE			1
17	6719057	BLOCK	guide - R.H.		1
18	6708018	SPRING			1
19	25E13	WASHER 5			1
20	6708267	BOLT			1
21	6680970	BREATHER			1
22	6553411	BUSHING			1
23	7130298	COVER	Was 7121926 [A]		1

https://www.pdfmanual4trucks.com/

AXLE

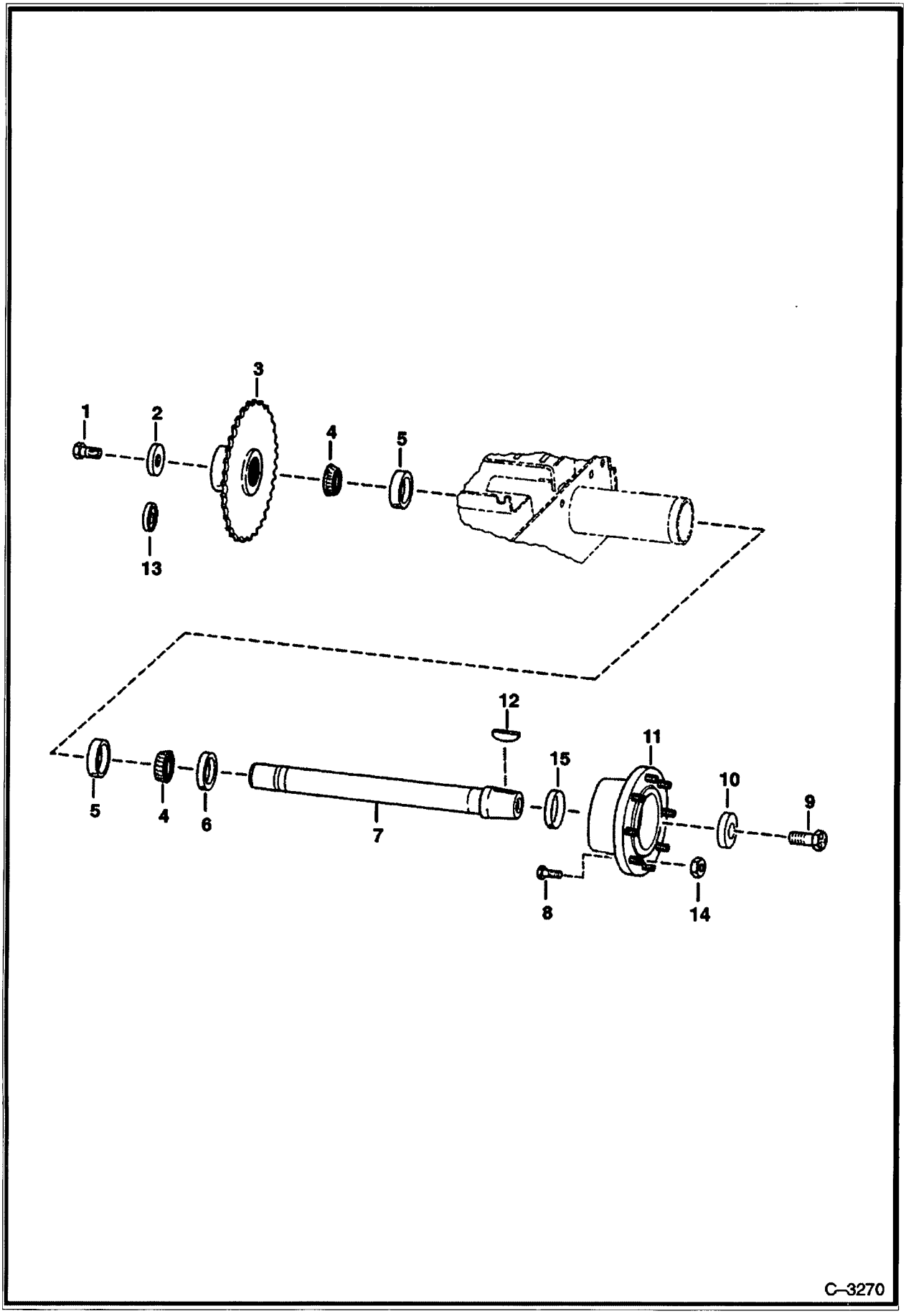

https://www.pdfmanual4trucks.com/

AXLE (Cont'd)

f No	Part Number	Description	Remarks	Serial Number	Qty
1	18C001224B	BOLT			1
2	6552871	WASHER			1
3	6577204	SPROCKET			1
4	6689775	BEARING	Was 6519925 [A]		2
5	6689638	RACE	Was 6634609 [A]		2
6	6658228	SEAL			1
7	6569465	AXLE			1
8	6709170	STUD	wheel - Was 6559502 [A]		8
9	18C001632B	BOLT	2" (50,8 mm) long - For Ref. 7 - W/1.5" (38,1 mm) deep threads		1
9	18C1636	BOLT	2.25" (57,2 mm) long - For Ref. 7 W/1.65" (41,9 mm) deep threads		1
10	6716843	WASHER	recessed - Was 6569461 [A]		1
11	6578689	HUB			1
12	6J1664	KEY			1
13	6563606	WASHER	recessed - Used to take up .005 or .010 end play on axle		1
14	6564669	NUT	wheel		8
15	6662306	RING	wear - service part only		1
15	6722907	KIT	See Illustration AXLE SEAL KIT/ B4041 AXLE SEAL & WEAR SLEEVE		4

https://www.pdfmanual4trucks.com/

HYDRAULIC CIRCUITRY
(W/BPV) (S/N 5127 27420 & Below, 5086 94508 & Below, 5114 76001 & Above)

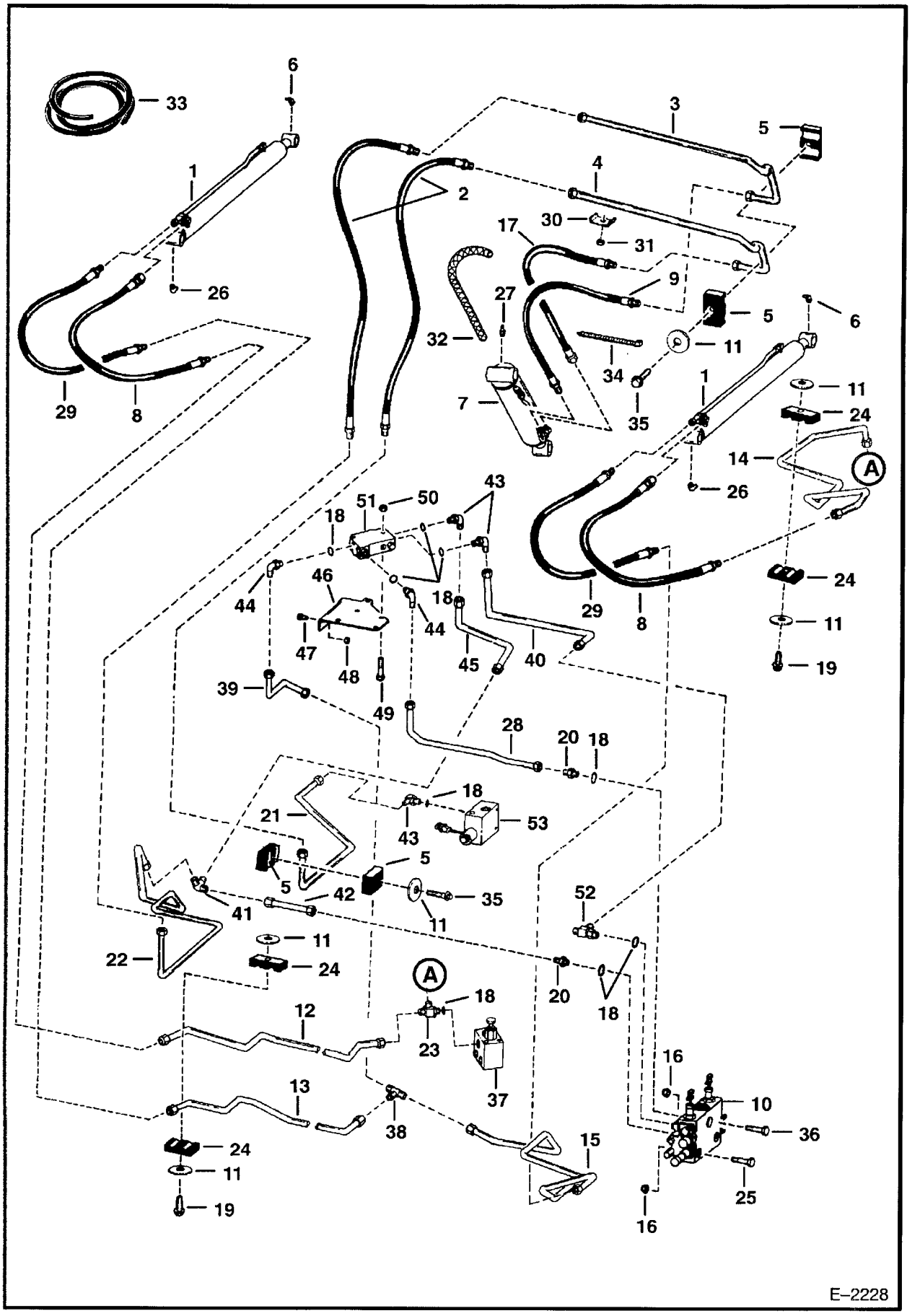

https://www.pdfmanual4trucks.com/

HYDRAULIC CIRCUITRY (Cont'd)
(W/BPV) (S/N 5127 27420 & Below, 5086 94508 & Below, 5114 76001 & Above)

f No	Part Number	Description	Remarks	Serial Number	Qty
1		CYLINDER	See Illustration LIFT CYLINDER/ TS1097 LIFT		2
2	6577669	HOSE			2
3	6727840	TUBE	Was 6703608 [A]		1
4	6727841	TUBE	Was 6703609 [A]		1
5	6701893	CLAMP			4
6	12H15	GREASE FITTING			2
7			See Illustration TILT CYLINDER/ TS1127 TILT		1
8	6577671	HOSE			2
9	6704335	HOSE			1
10		VALVE	See Illustration HYDRAULIC CONTROL VALVE/ E2229		1
11	872229	WASHER			8
12	6706523	TUBE			1
13	6704836	TUBE			1
14	6706522	TUBE			1
15	6706526	TUBE			1
16	85D5	NUT 5			3
7	6704336	HOSE			1
,8	79K10	O RING 10			8
19	84G003732B	BOLT			2
20	15K7	FITTING	W/Ref. 18		2
21	6706528	TUBE			1
22	6706527	TUBE			1
23	6578183	TEE	W/Ref. 18		1
24	6701892	CLAMP			4
25	17C532	BOLT 5			2
`6	11H15	GREASE FITTING			2
.7	10H25	GREASE ZERK			1
28	6704837	TUBE			1
29	6718954	HOSE	Was 6578808 [A]		2
30	6502203	CLAMP			2
31	59D6	NUT			2
32		COVER	NAP - 18" (457,2 mm) long - Order Ref. 33		2
33	6656155	HOSE COVER	bulk - Sold Per Foot		x
34	6610510	TIE			4
35	84G3724	BOLT			1
36	17C000540B	BOLT			1
7	6664850	VALVE	See Illustration LIFT & TILT CONTROL SYSTEM/ E2225 See Illustration TILT LOCK VALVE/ C3387 LIFT LOCK		1
38	10K000006B	TEE			1
39	6705068	TUBE			1
40	6704840	TUBE			1
41	6705070	TEE			1
42	6705069	TUBE			1
43	17K7	ELBOW	W/Ref. 18		3
44	784568B	ELBOW	W/Ref. 18 - Was 6634982 [A]		2
45	6704839	TUBE			1
46	6704833	BRACKET			1
47	35C412	BOLT			2
48	55D4	NUT			2
49	35C000540B	BOLT	Was 35C000536B [B]		2
50	57D000005B	NUT			2
1	6666341	VALVE	See Illustration BUCKET POSITIONING VALVE/ MS1943 BUCKET POS. - WAS 6645249 [A]		1
52	21K000007B	FITTING	W/Ref. 18		1
3	6664849	VALVE	See Illustration LIFT & TILT CONTROL SYSTEM/		1

https://www.pdfmanual4trucks.com/

HYDRAULIC CIRCUITRY (Cont'd)
(W/BPV) (S/N 5127 27420 & Below, 5086 94508 & Below, 5114 76001 & Above)

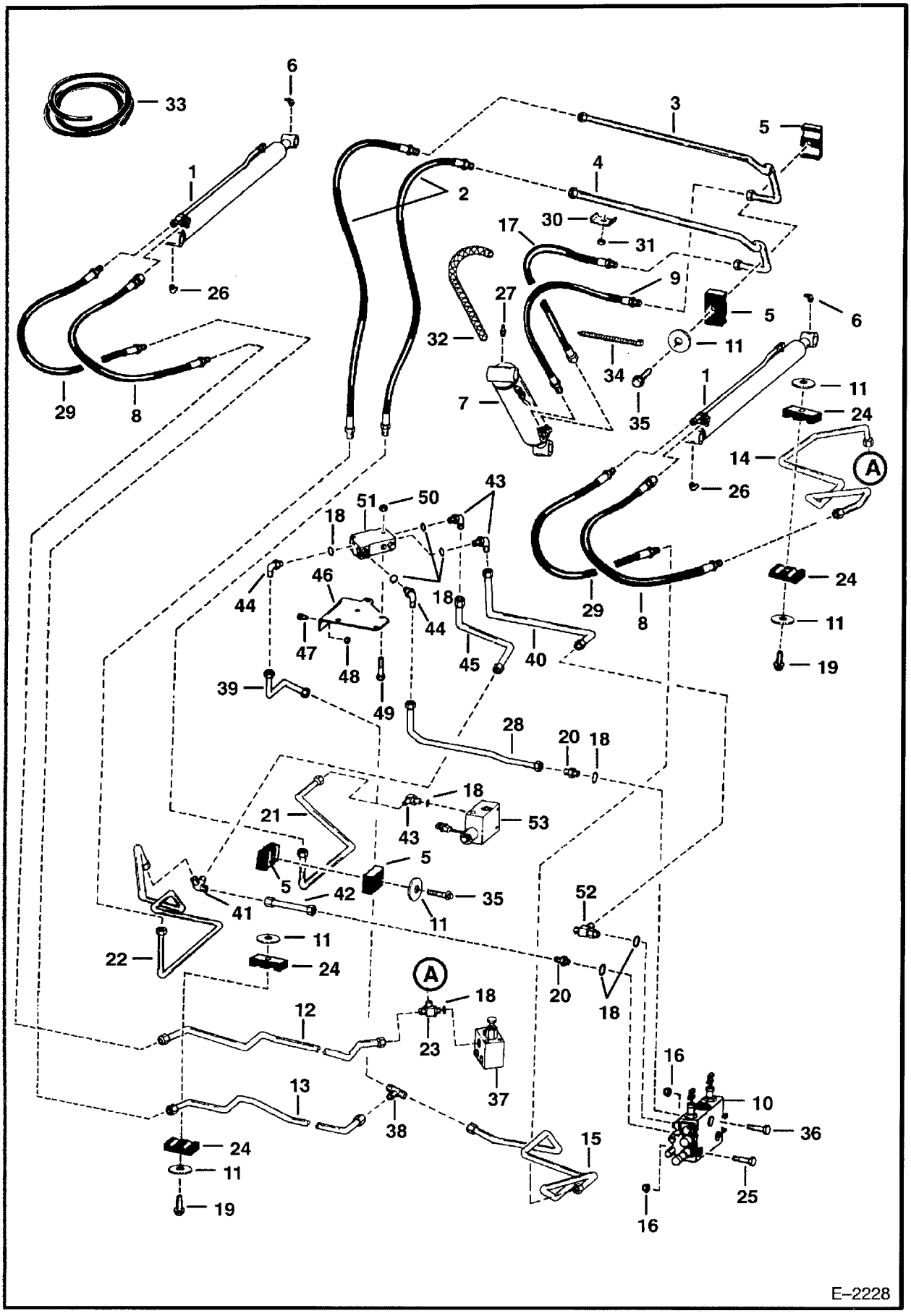

https://www.pdfmanual4trucks.com/

f No	Part Number	Description	Remarks	Serial Number	Qty
			E2225 See Illustration LIFT LOCK VALVE/ C3386 TILT LOCK		

https://www.pdfmanual4trucks.com/

HYDRAULIC CIRCUITRY
(W/O Bucket Positioning Valve) (S/N 5127 27420 & Below, 5086 94508 & Below)

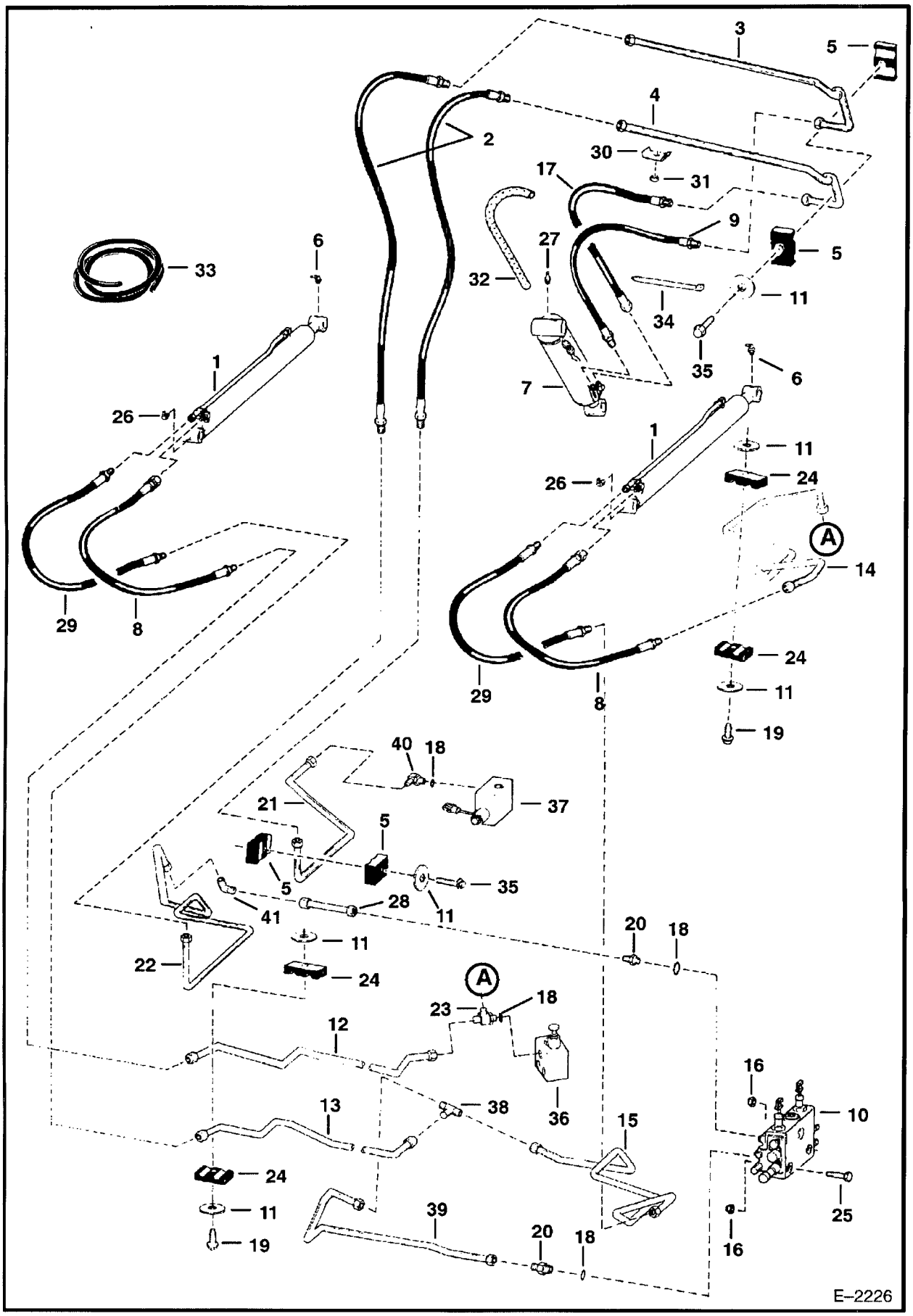

https://www.pdfmanual4trucks.com/

HYDRAULIC CIRCUITRY (Cont'd)
(W/O Bucket Positioning Valve) (S/N 5127 27420 & Below, 5086 94508 & Below)

f No	Part Number	Description	Remarks	Serial Number	Qty
1		CYLINDER	See Illustration LIFT CYLINDER/ TS1097 LIFT		2
2	6577669	HOSE			2
3	6727840	TUBE	Was 6703608 [A]		1
4	6727841	TUBE	Was 6703609 [A]		1
5	6701893	CLAMP			4
6	12H15	GREASE FITTING			2
7		CYLINDER	See Illustration TILT CYLINDER/ TS1127 TILT		1
8	6577671	HOSE			2
9	6704335	HOSE			1
10		VALVE	See Illustration HYDRAULIC CONTROL VALVE/ E2229		1
11	872229	WASHER			8
12	6706523	TUBE			1
13	6704836	TUBE			1
14	6706522	TUBE			1
15	6706526	TUBE			1
16	85D5	NUT 5			3
7	6704336	HOSE			1
18	79K10	O RING 10			4
19	84G003732B	BOLT			2
20	15K7	FITTING	W/Ref. 18		2
21	6706528	TUBE			1
22	6706527	TUBE			1
23	6578183	TEE	W/Ref. 18		1
24	6701892	CLAMP			4
25	17C532	BOLT 5			2
26	11H15	GREASE FITTING			2
27	10H25	GREASE ZERK			1
28	6705069	TUBE			1
29	6718954	HOSE	Was 6578808 [A]		2
30	6502203	CLAMP			2
31	59D6	NUT			2
32		COVER	NAP - 18" (457,2 mm) long - Order Ref. 33		2
33	6656155	HOSE COVER	bulk - Sold Per Foot		x
34	6610510	TIE			4
35	84G3724	BOLT			1
36	6664850	VALVE	See Illustration LIFT & TILT CONTROL SYSTEM/ E2225 See Illustration LIFT LOCK VALVE/ C3386 LIFT LOCK		1
37	6664849	VALVE	See Illustration LIFT & TILT CONTROL SYSTEM/ E2225 See Illustration TILT LOCK VALVE/ C3387 TILT LOCK		1
38	10K000006B	TEE			1
39	6705141	TUBE			1
40	17K7	ELBOW	W/Ref. 18		1
41	77F000007B	ELBOW			1

https://www.pdfmanual4trucks.com/

HYDRAULIC CIRCUITRY
(W/Bucket Positioning Valve)
(S/N 5127 27421 & Abv. 5086 94509 & Abv. 5158 11001-29999. 5162 11001-19999

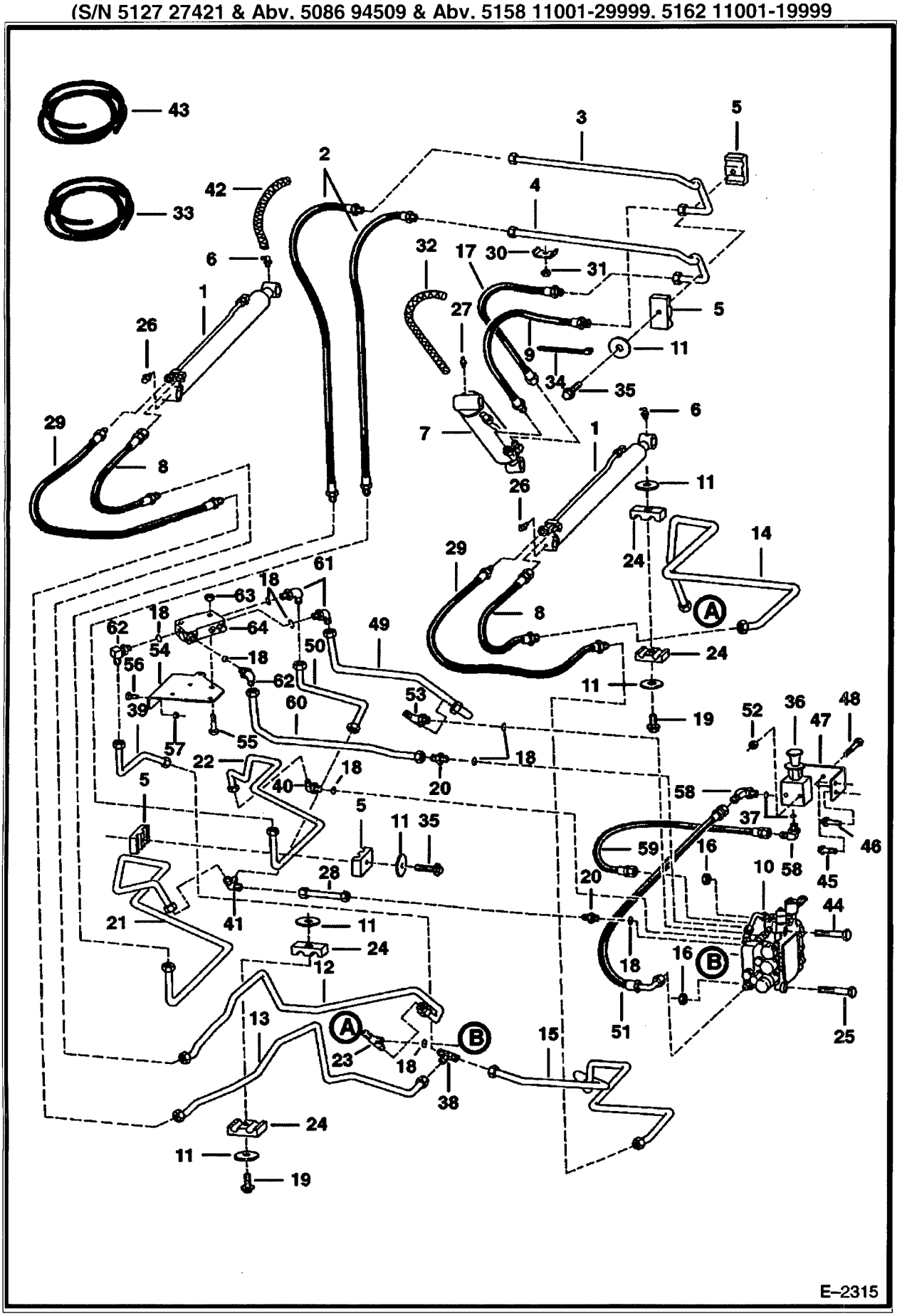

https://www.pdfmanual4trucks.com/

HYDRAULIC CIRCUITRY (Cont'd)
(W/Bucket Positioning Valve)
(S/N 5127 27421 & Abv. 5086 94509 & Abv. 5158 11001-29999. 5162 11001-19999

f No	Part Number	Description	Remarks	Serial Number	Qty
1		CYLINDER	See Illustration LIFT CYLINDER/ TS1097 LIFT		2
2	6577669	HOSE			2
3	6727840	TUBE	Was 6703608 [A]		1
4	6727841	TUBE	Was 6703609 [A]		1
5	6701893	CLAMP			4
6	12H15	GREASE FITTING			2
7		CYLINDER	See Illustration TILT CYLINDER/ TS1127 TILT		1
8	6577671	HOSE			2
9	6704335	HOSE			1
10		VALVE	See Illustration HYDRAULIC CONTROL VALVE/ TS1454		1
11	872229	WASHER			8
12	6710582	TUBE			1
13	6710580	TUBE			1
14	6710581	TUBE			1
15	6710578	TUBE			1
16	85D5	NUT 5			3
7	6704336	HOSE			1
18	79K10	O RING 10	flat boss face		4
18	99K10	O'RING	tapered boss face		4
19	84G003732B	BOLT			2
20	15K7	FITTING	W/Ref. 18 - flat boss face		2
20	15KV00007B	CONNECTOR	W/Ref. 18 - tapered boss face		2
20	97K10	O-RING 10	flared end		2
21	6710577	TUBE			1
22	6710576	TUBE			1
3	6711651	TEE	W/Ref. 18 - flat boss face		1
3	6715656	TEE	W/Ref. 18 - tapered boss face		1
23	97K10	O-RING 10	flared end		1
24	6701892	CLAMP			4
25	17C532	BOLT 5			2
26	11H15	GREASE FITTING			2
27	10H25	GREASE ZERK			1
28	6710573	TUBE			1
29	6718954	HOSE	Was 6578808 [A]		2
30	6502203	CLAMP			2
1	59D6	NUT			2
2		COVER	NAP - 18" (457,2 mm) - Order Ref. 33		2
33	6656155	HOSE COVER	bulk-Sold Per Foot		x
34	6610510	TIE			4
35	84G3724	BOLT			1
36		VALVE	See Illustration MANUAL LIFT RELEASE SYSTEM/ B17195 See Illustration MANUAL LIFT RELEASE VALVE/ C3422 MANUAL LIFT RELEASE		1
37	79K6	O RING 10	flat boss face		x
37	99K6	O'RING	tapered boss face		x
38	10K000006B	TEE	W/O O-rings		1
38	10KN00006B	TEE	W/ O-rings		1
38	97K8	O-RING	flared end		3
39	6705068	TUBE			1
40	731794B	FITTING	W/Ref. 18 - flat boss face		1
40	6715184	ADAPTER	W/Ref. 18 - tapered boss face		1
40	97K8	O-RING	flared end		1
1	6705070	TEE			1
42		COVER	NAP - 36"(914,4 mm) - Order Ref. 43		1
43	6705749	SHIELD	bulk-Sold Per Foot		x
1	17C000540B	BOLT			2

https://www.pdfmanual4trucks.com/

HYDRAULIC CIRCUITRY (Cont'd)
(W/Bucket Positioning Valve)
(S/N 5127 27421 & Abv. 5086 94509 & Abv. 5158 11001-29999, 5162 11001-19999

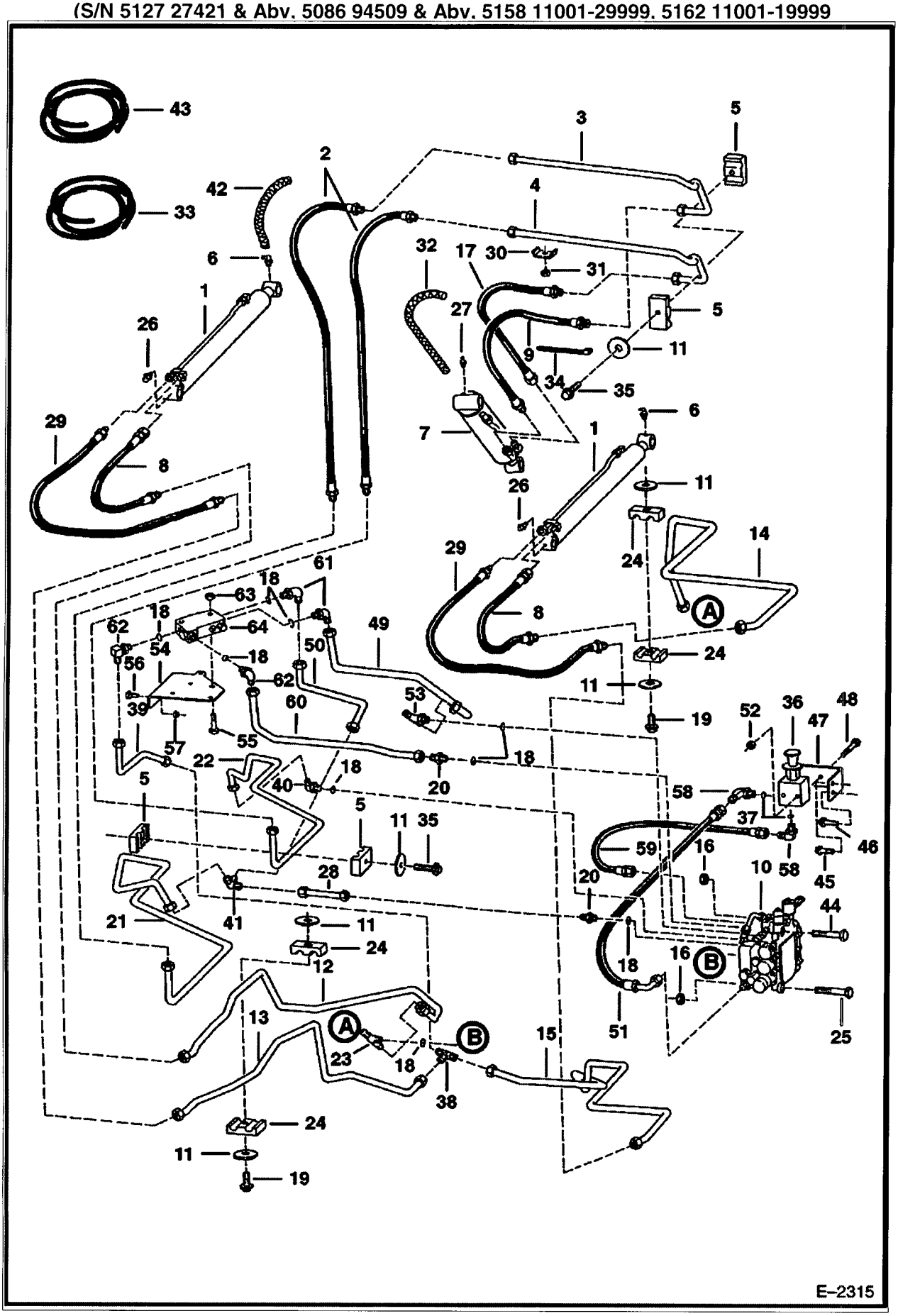

https://www.pdfmanual4trucks.com/

HYDRAULIC CIRCUITRY (Cont'd)
(W/Bucket Positioning Valve)
(S/N 5127 27421 & Abv. 5086 94509 & Abv. 5158 11001-29999. 5162 11001-19999

f NO	Part Number	Description	Remarks	Serial Number	Qty
5	84G3716	SCREW 5			1
6	84G3712	BOLT			1
47	6711280	MOUNT			1
48	17C428	BOLT			2
49	6710583	TUBE			1
50	6704839	TUBE			1
51	6578804	HOSE			1
52	83D4	NUT 10			1
53	19K000007B	TEE	W/Ref. 18 - flat boss face		1
53	19KN00007B	TEE	W/Ref. 18 - tapered boss face		1
53	97K10	O-RING 10	flared end		1
54	6704833	BRACKET			1
55	35C000536B	BOLT			2
56	35C412	BOLT			2
57	57D000004B	NUT			2
58	17K5	ELBOW	W/Ref. 37 - flat boss face		2
58	17KV00005B	ELBOW	W/Ref. 37 - tapered boss face		1
3	97K6	O'RING	flared end		1
9	6535451	HOSE			1
60	6710584	TUBE			1
61	17K7	ELBOW	W/Ref. 18 - flat boss face		2
61		ELBOW	NAP - W/Ref. 18 - tapered boss face - Was 17KV00007B [A]		2
61	97K10	O-RING 10	flared end		2
61	17KB1010	ELBOW	W/Ref. 18 - flat boss face		2
62	784568B	ELBOW	W/Ref. 18 - flat boss face		2
2		ELBOW	NAP - W/Ref. 18 - flat boss face - Was 6715716 [A]		1
2	97K8	O-RING	flared end		1
62	17KB000810B	ELBOW	W/Ref. 18 - flat boss face		1
63	57D000005B	NUT			2
64	6666341	VALVE	See Illustration BUCKET POSITIONING VALVE/ MS1943 BUCKET POS.		1

https://www.pdfmanual4trucks.com/

HYDRAULIC CIRCUITRY
(W/O Bucket Positioning Valve)
(S/N 5127 27421 & Abv. 5086 94509 & Abv. 5158 11001-29999, 5162 11001-19999

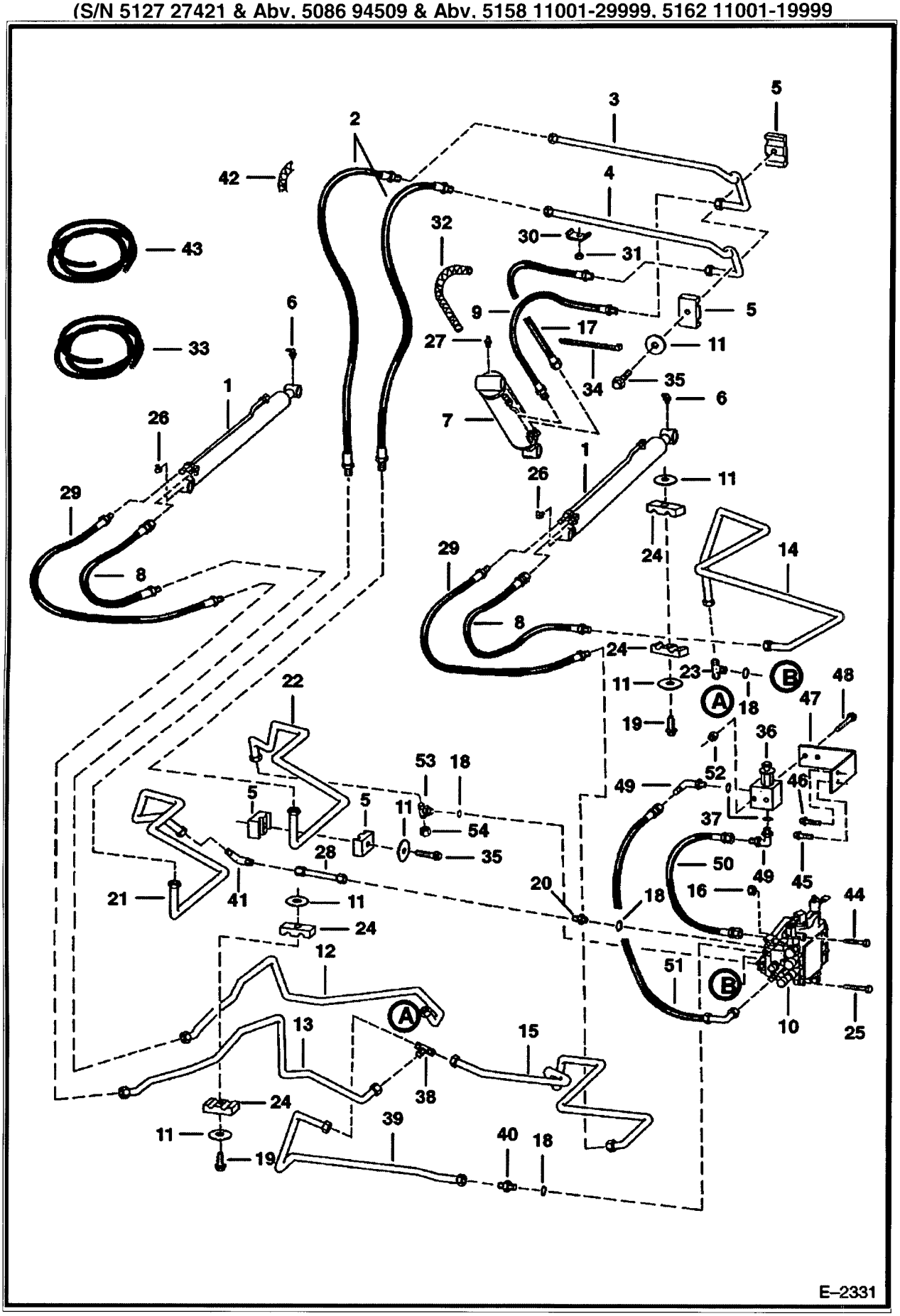

https://www.pdfmanual4trucks.com/

HYDRAULIC CIRCUITRY (Cont'd)
(W/O Bucket Positioning Valve)
(S/N 5127 27421 & Abv. 5086 94509 & Abv. 5158 11001-29999. 5162 11001-19999

f No	Part Number	Description	Remarks	Serial Number	Qty
1		CYLINDER	See Illustration LIFT CYLINDER/ TS1097 LIFT		2
2	6577669	HOSE			2
3	6727840	TUBE	Was 6703608 [A]		1
4	6727841	TUBE	Was 6703609 [A]		1
5	6701893	CLAMP			4
6	12H15	GREASE FITTING			2
7		CYLINDER	See Illustration TILT CYLINDER/ TS1127 TILT		1
8	6577671	HOSE			2
9	6704335	HOSE			1
10		VALVE	See Illustration HYDRAULIC CONTROL VALVE/ TS1454		1
11	872229	WASHER			8
12	6710582	TUBE			1
13	6710580	TUBE			1
14	6710581	TUBE			1
15	6710578	TUBE			1
16	85D5	NUT 5			3
7	6704336	HOSE			1
8	79K10	O RING 10	flat boss face		4
18	99K10	O'RING	tapered boss face		4
19	84G003732B	BOLT			2
20	15K7	FITTING	W/Ref. 18 - flat boss face		1
20	15KV00007B	CONNECTOR	W/Ref. 18 - tapered boss face		1
20	97K10	O-RING 10	flared end		1
21	6710577	TUBE			1
22	6710576	TUBE			1
3	6711651	TEE	W/Ref. 18		1
4	6701892	CLAMP			4
25	17C532	BOLT 5			2
26	11H15	GREASE FITTING			2
27	10H25	GREASE ZERK			1
28	6710573	TUBE			1
29	6718954	HOSE	Was 6578808 [A]		2
30	6502203	CLAMP			2
31	59D6	NUT			2
32		COVER	NAP - 18" (457,2 mm) - Order Ref. 33		2
3	6656155	HOSE COVER	bulk - Sold Per Foot		x
	6610510	TIE			4
35	84G3724	BOLT			1
36		VALVE	See Illustration MANUAL LIFT RELEASE SYSTEM/ B17195 See Illustration MANUAL LIFT RELEASE VALVE/ C3422 LIFT LOCK		1
37	79K6	O RING 10	flat boss face		x
37	99K6	O'RING	tapered boss face		x
38	10K000006B	TEE	W/O O-rings		1
38	10KN00006B	TEE	W/ O-rings		1
38	97K8	O-RING	flared end		3
39	6710616	TUBE			1
40	731794B	FITTING	flat boss face - W/Ref. 18		1
40	6715184	ADAPTER	tapered boss face - W/Ref. 18		1
40	97K8	O-RING	flared end		1
41	77F000007B	ELBOW	W/O O-rings		1
41	77FN00007B	ELBOW	W/ O-rings		1
1	97K10	O-RING 10	flared end		1
42		COVER	NAP - 36" (914,4 mm) - Order Ref. 43		1
43	6705749	SHIELD	bulk-Sold Per Foot		x
1	17C000540B	BOLT			2

https://www.pdfmanual4trucks.com/

HYDRAULIC CIRCUITRY (Cont'd)
(W/O Bucket Positioning Valve)
(S/N 5127 27421 & Abv. 5086 94509 & Abv. 5158 11001-29999, 5162 11001-19999

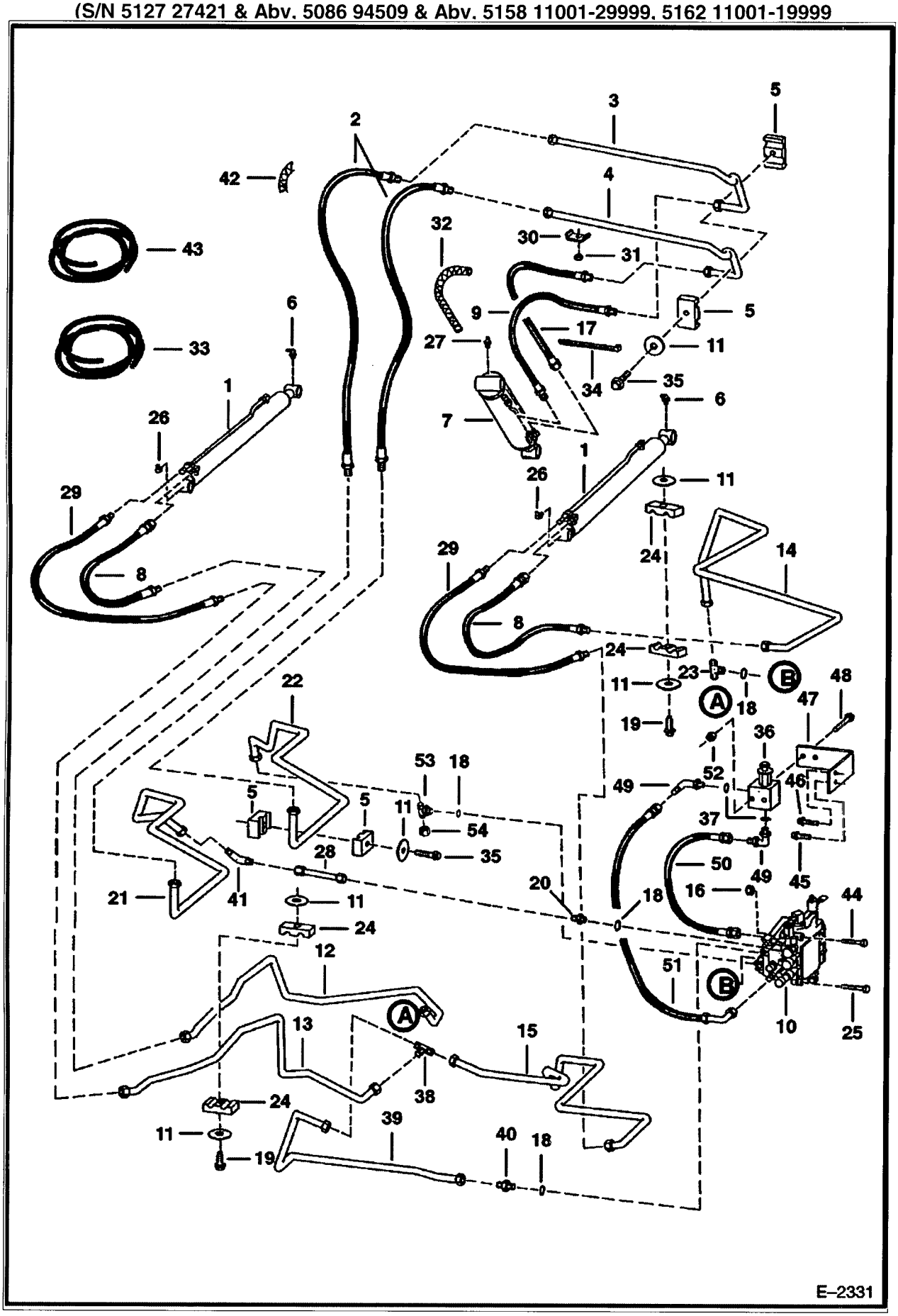

https://www.pdfmanual4trucks.com/

HYDRAULIC CIRCUITRY (Cont'd)
(W/O Bucket Positioning Valve)
(S/N 5127 27421 & Abv. 5086 94509 & Abv. 5158 11001-29999. 5162 11001-19999

f No	Part Number	Description	Remarks	Serial Number	Qty
'5	84G3716	SCREW 5			1
46	84G3712	BOLT			1
47	6711280	MOUNT			1
48	17C428	BOLT			2
49	17K5	ELBOW	W/Ref. 37 - flat boss face		2
49	17KV00005B	ELBOW	W/Ref. 37 - tapered boss face		1
49	97K6	O'RING	flared end		1
50	6535451	HOSE			1
51	6578804	HOSE			1
52	83D4	NUT 10			2
53	19K000007B	TEE	W/Ref. 18 - flat boss face		1
53	19KN00007B	TEE	W/Ref. 18 - tapered boss face		1
53	97K10	O-RING 10	flared end		1
54	36K7	FITTING			1

https://www.pdfmanual4trucks.com/

LIFT & TILT CONTROL SYSTEM
(S/N 5127 27420 & Below, 5086 94508 & Below)

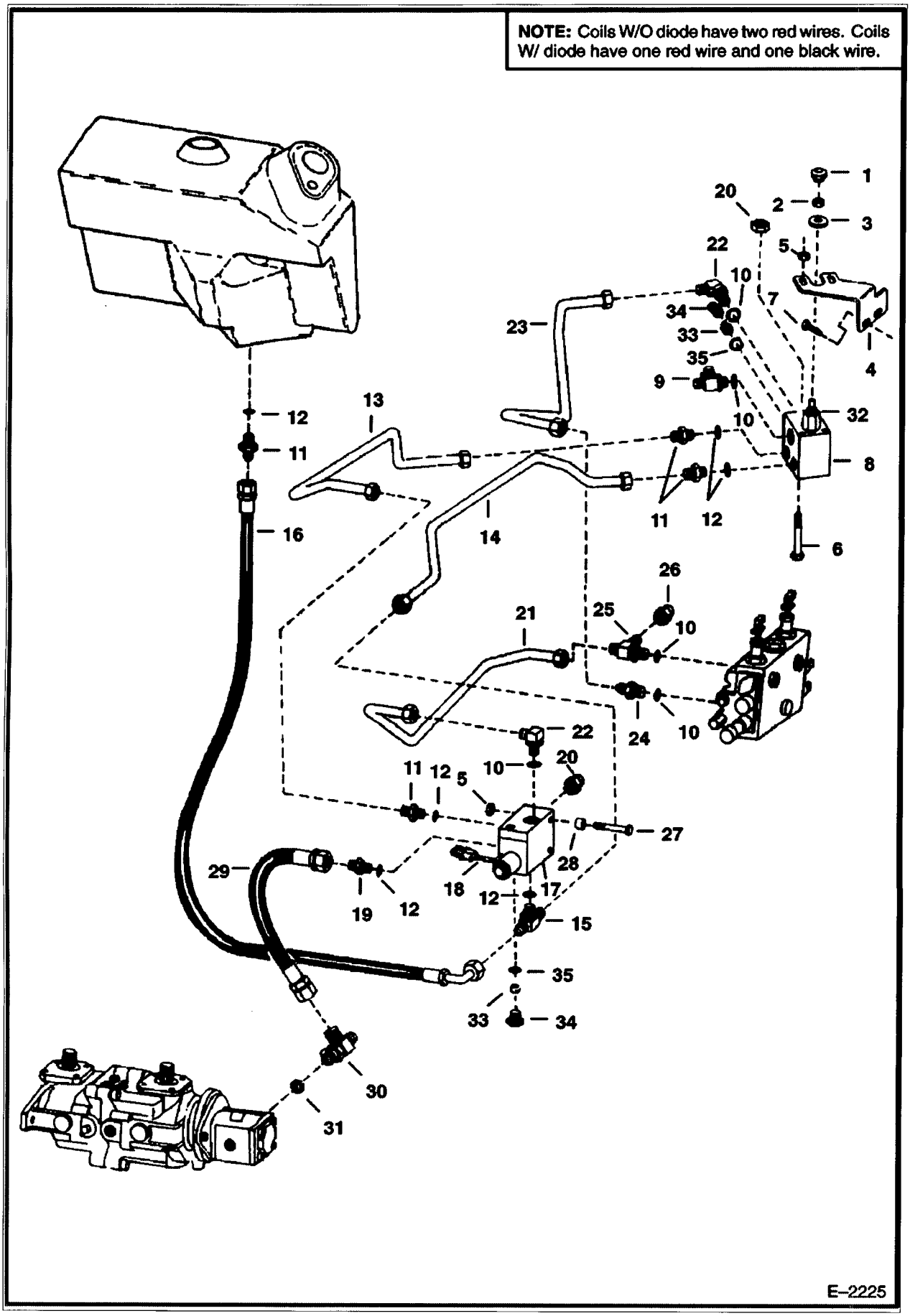

https://www.pdfmanual4trucks.com/

LIFT & TILT CONTROL SYSTEM (Cont'd)
(S/N 5127 27420 & Below, 5086 94508 & Below)

f No	Part Number	Description	Remarks	Serial Number	Qty
1		KNOB	NAP - red round lift lock valve - Order 6737524 knob - Was 6664858 [A]		1
1	6737524	KNOB	red square lift lock valve		1
2	7D000004B	NUT			1
3	6707101	SEAL	neoprene		1
4	6706582	MOUNT			1
5	83D5	NUT 5			3
6	17C000568B	BOLT	Was 17C000572B [B]		2
7	84G3716	SCREW 5			2
8	6664850	VALVE	See Illustration LIFT LOCK VALVE/ C3386 LIFT LOCK - W/Ref. 20, 32 & 33		1
9	6578183	TEE	W/Ref. 22		1
10	79K10	O RING 10			x
11	15K5	FITTING	W/Ref. 12		3
12	79K6	O RING 10			x
13	6706788	TUBE			1
14	6707241	TUBE			1
5	19K000005B	TEE	W/Ref. 12		2
16	6702079	HOSE			1
17	6664849	VALVE	See Illustration TILT LOCK VALVE/ C3387 TILT LOCK SOLENOID - W/Ref. 18-20		1
18		SOLENOID	NAP - W/O diode - SEE NOTE - Was 6667157 [A]		1
18	6672471	VALVE	W/ diode - SEE NOTE - Was 6672456 [A]		1
18	6667687	STEM	Was 6665004 [A]		1
18		COIL	NAP - W/O diode - SEE NOTE - Was 6667138 [A]		1
18	6671025	COIL	W/ diode - SEE NOTE		1
8	6665487	SEAL KIT			1
9	6665489	ADAPTER	filter		1
20	6665610	VALVE			2
20	6665612	SEAL KIT			2
21	6707235	TUBE			1
22	17K7	ELBOW	W/Ref. 12		2
23	6707369	TUBE	Was 6706641 [A]		1
24	15K7	FITTING	W/Ref. 10		1
25	21K000007B	FITTING	See Illustration HYDRAULIC CIRCUITRY/ E2228 W/Ref. 10		1
6	36K7	FITTING			1
7	17C000560B	BOLT			2
28	6593013	SPACER	tube - Was 6706650 [A]		1
29	6707700	HOSE			1
30	6704693	TEE	W/Ref. 31 - check boss face to determine correct replacement O-ring		1
31	79K12	O RING 10	flat boss face - Was 17K-16 [B]		x
31	99K000012B	O-RING	tapered boss face		x
32	6665490	VALVE	manual pull		1
32	6666828	SEAL KIT			1
33	6665609	CHECK VALVE			2
33	6665611	SEAL KIT			2
34	6667127	PLUG	W/Ref. 35		2
35	79K4	O RING 10			2

https://www.pdfmanual4trucks.com/

MANUAL LIFT RELEASE SYSTEM
(S/N 5127 27421 & Abv, 5086 94509 & Abv, 5158 11001-29999, 5162 11001-19999

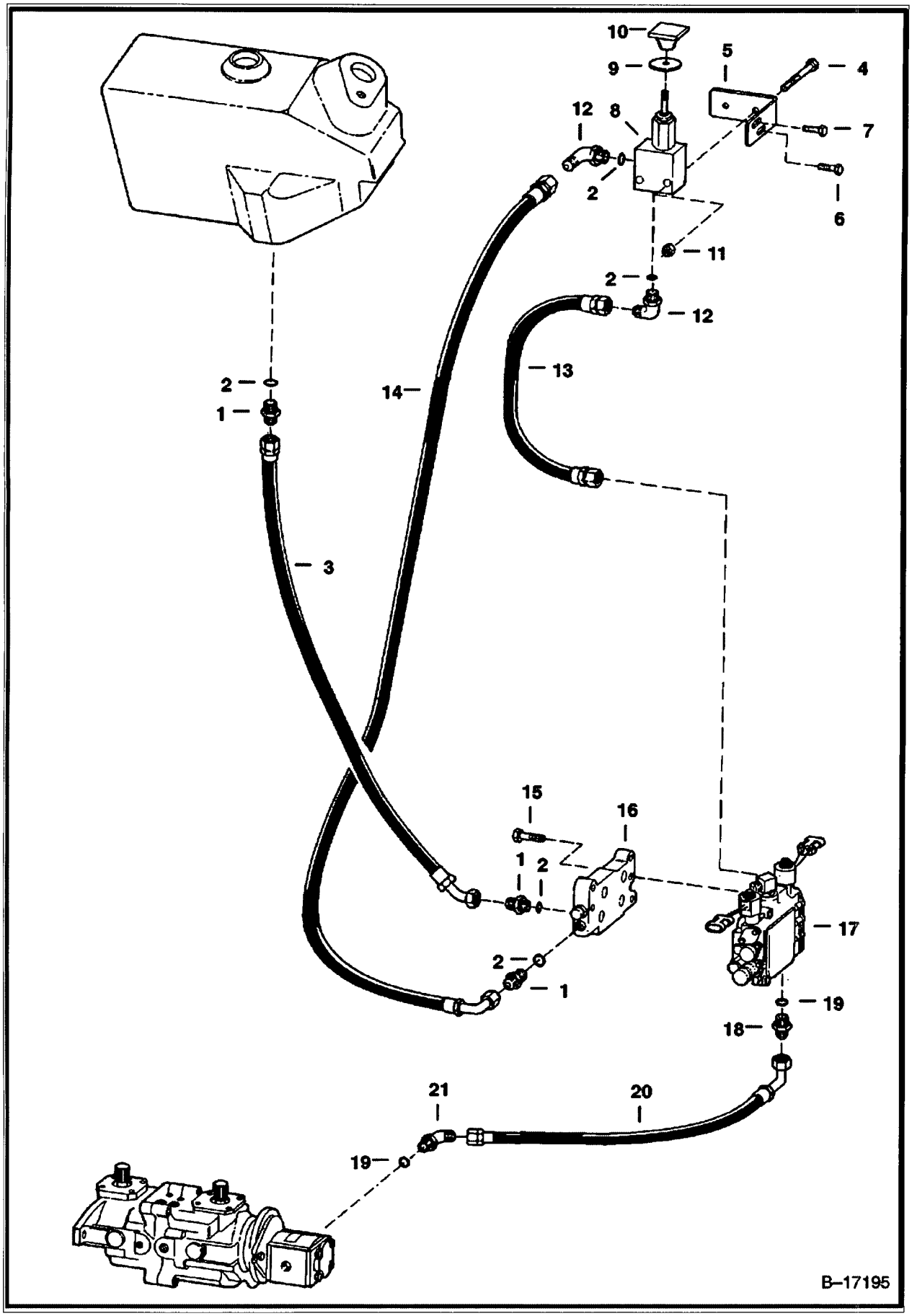

https://www.pdfmanual4trucks.com/

MANUAL LIFT RELEASE SYSTEM (Cont'd)
(S/N 5127 27421 & Abv, 5086 94509 & Abv, 5158 11001-29999, 5162 11001-19999

f No	Part Number	Description	Remarks	Serial Number	Qty
1	15K5	FITTING	W/Ref. 2 - flat boss face		3
1		ADAPTER	NAP - W/Ref. 2 - tapered boss face - Was 15KV00005B [A]		3
1	97K6	O'RING	flared end		3
1	15KB606	ADAPTER	W/Ref. 2 - flat boss face		3
2	79K6	O RING 10	flat boss face		x
2	99K6	O'RING	tapered boss face		x
3	6711656	HOSE			1
4	17C428	BOLT			2
5	6711280	MOUNT			1
6	84G3716	SCREW 5			1
7	84G3112	BOLT 5			1
8	6667844	VALVE ASSY	See Illustration MANUAL LIFT RELEASE VALVE/ C3422 MANUAL LIFT RELEASE		1
9	6707101	SEAL	neoprene		1
10	6737524	KNOB	red square - Was 6668913 [A]		1
11	83D4	NUT 10			2
?	17K5	ELBOW	W/Ref. 2 - flat boss face		2
12	17KV00005B	ELBOW	W/Ref. 2 - tapered boss face		2
12	97K6	O'RING	flared end		2
13	6535451	HOSE			1
14	6578804	HOSE			1
15	43C000532B	BOLT			6
16	6628571	VALVE ASSY	See Illustration BICS CONTROL VALVE/ TS1365 BICS CONTROL		1
17		VALVE	See Illustration HYDRAULIC CONTROL VALVE/ TS1454 NSS - CONTROL - ORDER 6628394 VALVE		1
18	15K8	FITTING	W/Ref. 19 - flat boss face		2
18	15KN00008B	ADAPTER	W/Ref. 19 - tapered boss face		2
18	97K000012B	O-RING	flared end		2
19	79K12	O RING 10	flat boss face		2
19	99K000012B	O-RING	tapered boss face		2
20	6729154	HOSE	Was 6714594 [A]		1
21	18K000008B	ELBOW	W/Ref. 19 - flat boss face		1
21	18KV00008B	ELBOW	W/Ref. 19 - tapered boss face		1
21	97K000012B	O-RING	flared end		1
1	6700599	ELBOW	See Illustration EUROPEAN ACCESSORIES/ TS1248 EXPORT - W/Ref. 19		1

https://www.pdfmanual4trucks.com/

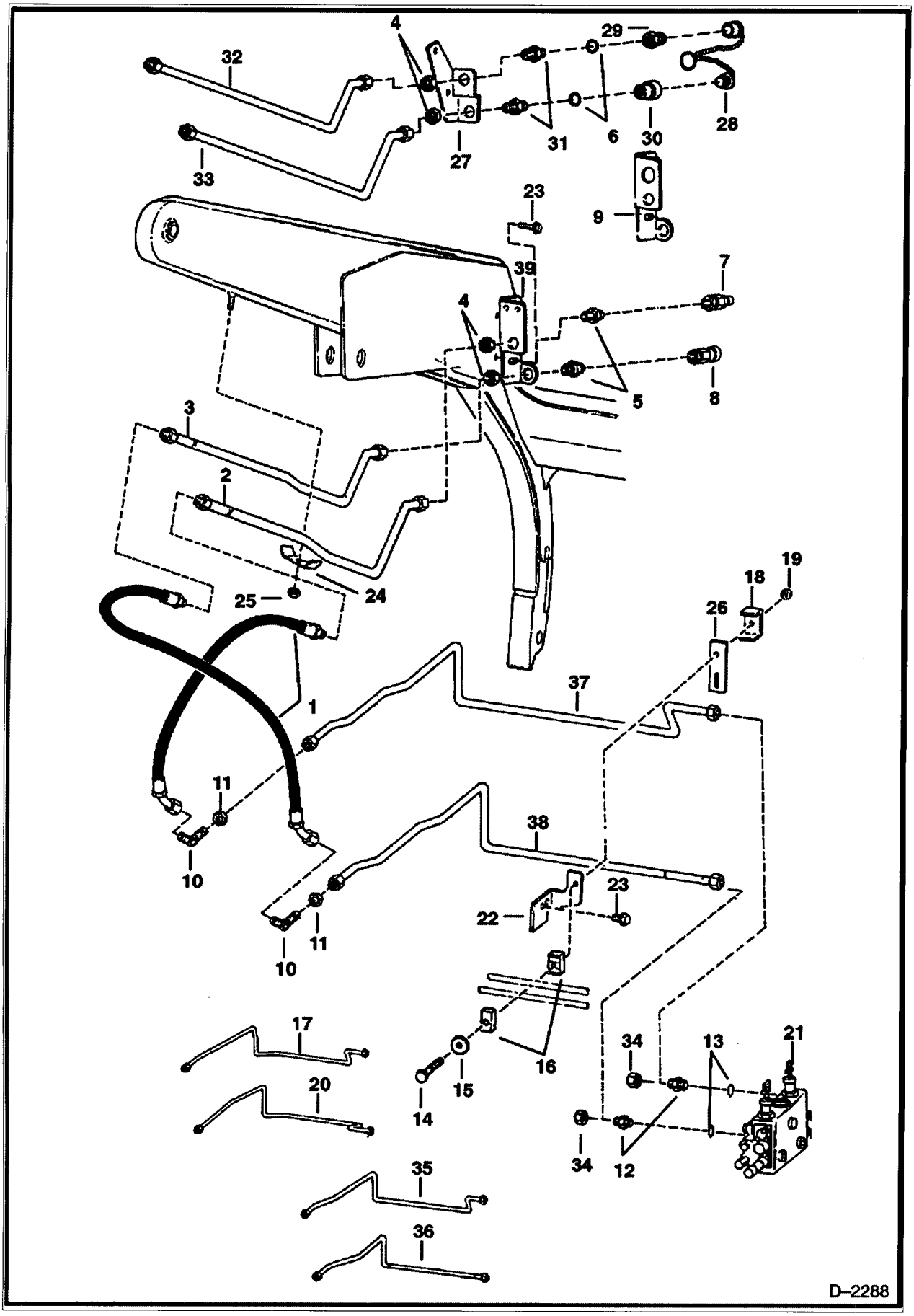

https://www.pdfmanual4trucks.com/

AUXILIARY HYDRAULICS (Cont'd)

f No	Part Number	Description	Remarks	Serial Number	Qty
1	6729153	HOSE	Was 6714577 [A]		2
2	6711735	TUBE		5127 25787 & Abv	1
2	6711735	TUBE		5162 11001-19999	1
2	6711735	TUBE		5086 93001 & Abv	1
2	6711735	TUBE		5158 11001-29999	1
3	6711736	TUBE		5127 25787 & Abv	1
3	6711736	TUBE		5086 93001 & Abv	1
3	6711736	TUBE		5158 11001-29999	1
3	6711736	TUBE		5162 11001-19999	1
4	86F000007B	NUT			2
5		FITTING	NAP - W/Ref. 13 - flat boss face - Was 6711625 [A]		2
5		CONNECTOR	NAP - W/Ref. 13 - flat boss face - Was 6715185 [A]		2
5	97K10	O-RING 10	flared end		2
5	6812816	ADAPTER	W/Ref. 13 - flat boss face		2
6	79K10	O RING 10			4
7	6674688	COUPLER	male - FF - Was 6667808 [A]		1
7	6672026	O-RING	Was 6669655 [A]		1
3	6672960	COUPLER	female - FF - Was 6667807 [A]		1
9		MOUNT	NAP - for FF couplers - Order Ref. 39 - Was 6711672 [A]		1
10	46K000008B	ELBOW	flat boss face		2
10		ELBOW	NAP - tapered boss face - Was 46KN00008B [A]		2
10	97K000012B	O-RING	flared end		4
11	86F000008B	NUT			2
12	15K8	FITTING	W/Ref. 13 - flat boss face		2
12	15KN00008B	ADAPTER	W/Ref. 13 - tapered boss face		2
2	97K000012B	O-RING	flared end		2
3	79K12	O RING 10	flat boss face		2
13	99K000012B	O-RING	tapered boss face		2
14	17C000552B	BOLT			1
15	872229	WASHER			1
16	6701892	CLAMP			2
17	6706154	TUBE		5127 16001 27420	1
17	6706154	TUBE		5086 93001-94508	1
18	6568476	CLAMP			1
19	85D5	NUT 5			2
0	6706153	TUBE		5127 16001 27420	1
)	6706153	TUBE		5086 93001-94508	1
21		VALVE	See Illustration HYDRAULIC CONTROL VALVE/ E2229		1
22	6704619	MOUNT			1
23	84G3112	BOLT 5			4
24	6502203	CLAMP			2
25	59D6	NUT			2
26	6702548	PAD			1
27	6705700	MOUNT	for poppet couplers		1
28	6513709	CAP PLUG	Assy. (Rubber)		1
28	6515167	PLUG	Steel		1
28	6515168	CAP	Steel		1
29	6598757	QUICK COUPLER	Male - poppet		1
30	6598758	QUICK COUPLER	Female - poppet		1
30	48K16	O RING 10			1
30	6665430	BACKUP RING			1
1	45K000007B	FITTING	W/Ref. 6		2
32	6704409	TUBE		5127 16001 25786	1
32	6704409	TUBE		5114 76001-76618	1

https://www.pdfmanual4trucks.com/

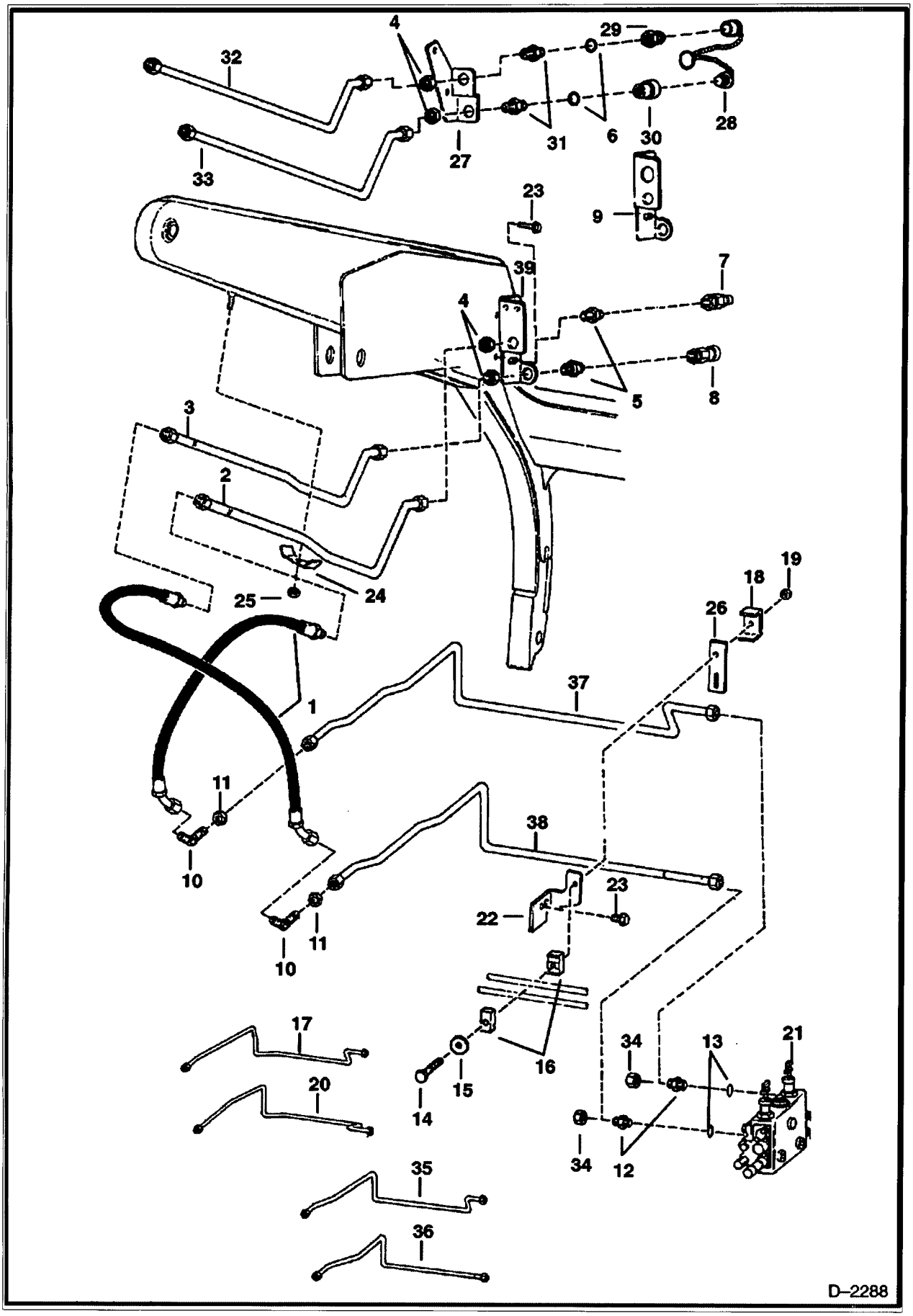

https://www.pdfmanual4trucks.com/

AUXILIARY HYDRAULICS (Cont'd)

f No	Part Number	Description	Remarks	Serial Number	Qty
2	6704409	TUBE		5086 30001-31363	1
33	6704410	TUBE		5127 16001 25786	1
33	6704410	TUBE		5114 76001-76618	1
33	6704410	TUBE		5086 30001-31363	1
34	36K000008B	CAP			2
35		TUBE	NAP - Order Ref. 37 & 38 - Was 6710575 [A]	5086 94509 & Abv	1
35		TUBE	NAP - Order Ref. 37 & 38 - Was 6710575 [A]	5127 27421 & Abv	1
36		TUBE	NAP - Order Ref. 37 & 38 - Was 6710579 [A]	5086 94509 & Abv	1
36		TUBE	NAP - Order Ref. 37 & 38 - Was 6710579 [A]	5127 27421 & Abv	1
37	6713754	TUBE		5158 11001-29999	1
37	6713754	TUBE		5162 11001-19999	1
38	6713755	TUBE		5158 11001-29999	1
38	6713755	TUBE		5162 11001-19999	1
39	6713850	MOUNT			1

https://www.pdfmanual4trucks.com/

TILT CYLINDER
(S/N 5127 16001 & Above, 5086 93001 & Above, 5114 76001 & Above)

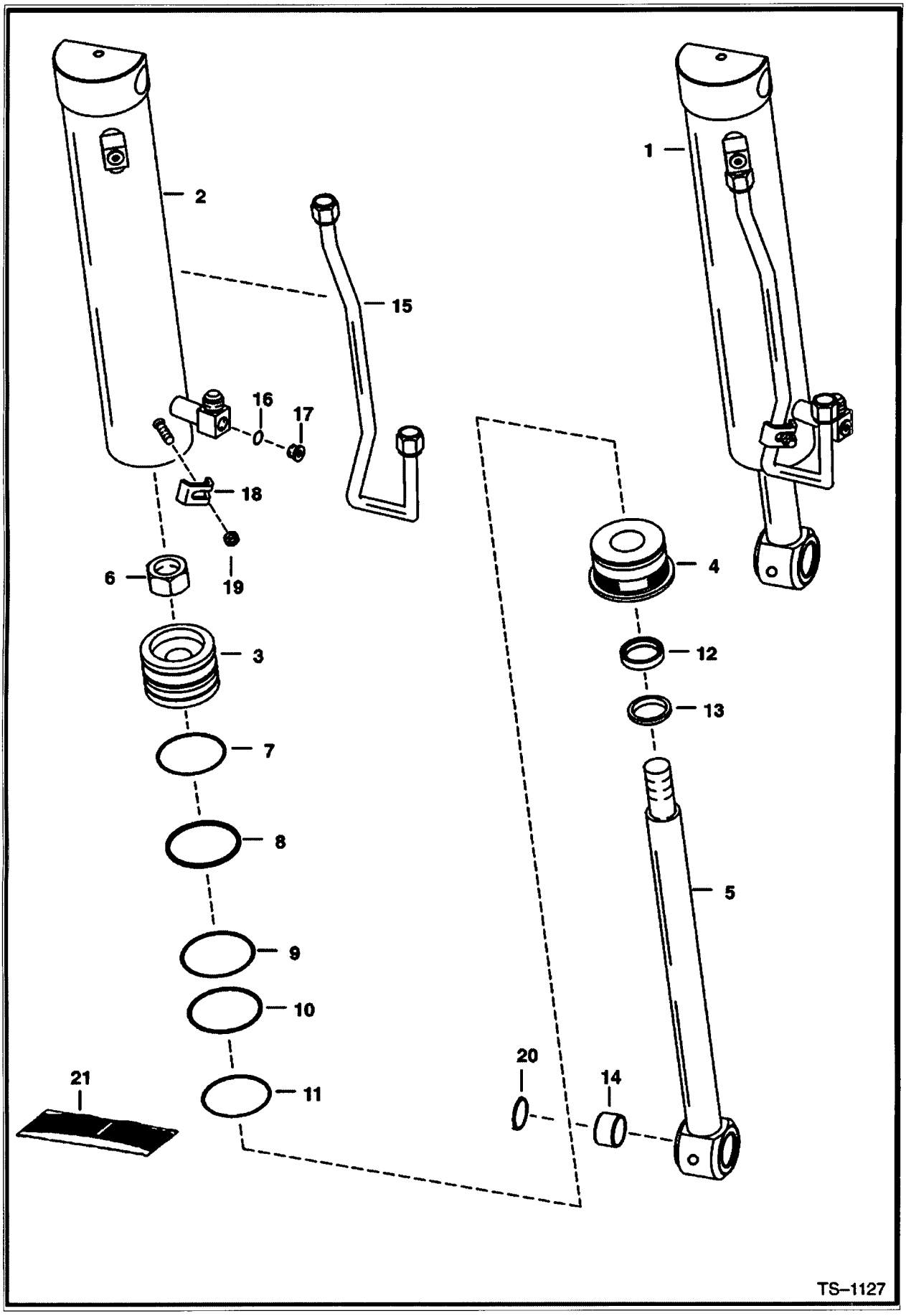

https://www.pdfmanual4trucks.com/

TILT CYLINDER (Cont'd)
(S/N 5127 16001 & Above, 5086 93001 & Above, 5114 76001 & Above)

f NO	Part Number	Description	Remarks	Serial Number	Qty
1		CYLINDER	See Illustration TILT CYLINDER/ TS1127A See Illustration TILT CYLINDER/ TS1098 See Illustration TILT CYLINDER/ TS1098A NAP - tilt - Ref. 2-19 - Order 6804692 Cylinder - Before ordering repair parts, make sure that this is the correct style cylinder - Note the difference in the base end of the cylinder and the inside diameter of the case - Was 6586905 [A]		1
2		CASE	See Illustration TILT CYLINDER/ TS1127A NAP - 3.25" (82,6 MM) I.D. - Order 6804692 cylinder - Was 6586907 [A]		1
3	6586906	PISTON	1.125" (28,6 mm) I.D.		1
4	6539185	HEAD			1
5	6586910	ROD	W/Ref. 14 - 1.5" (38,1 mm) O.D. - W/O grease zerk hole		1
6	6810539	NUT	Was 6804592 [A]		1
7	54K30226	O-RING	Was 25K030226B [A]		1
8	6513466	SEAL			1
9	54K40300	O-RING	Was 58K000234B [A]		1
10	80K000234B	RING	back-up - Was 73K000234B [B]		1
11	82K236	O-RING	Was 58K000236B [A]		1
12	6667326	SEAL	Was 6538141 [A]		1
13	6665086	SEAL	wiper		1
14	6589665	BUSHING	wear		1
15	6539144	TUBE			1
16	79K6	O RING 10	flat boss face		1
16	95K6	O'RING	tapered boss face		1
17	90K000005B	PLUG	W/Ref. 16 - flat boss face		2
17	90KV5	PLUG	W/Ref. 16 - tapered boss face		2
18	6562266	CLAMP			1
19	95D000006B	NUT	Was 91D000006B [A]		1
20	225855B	SEAL			2
21	6804605	SEAL KIT	Ref. 6 - 13 - Was 6589792 [A]		1

https://www.pdfmanual4trucks.com/

TILT CYLINDER
(S/N 5127 16001 & Above, 5086 93001 & Above, 5114 76001 & Above)

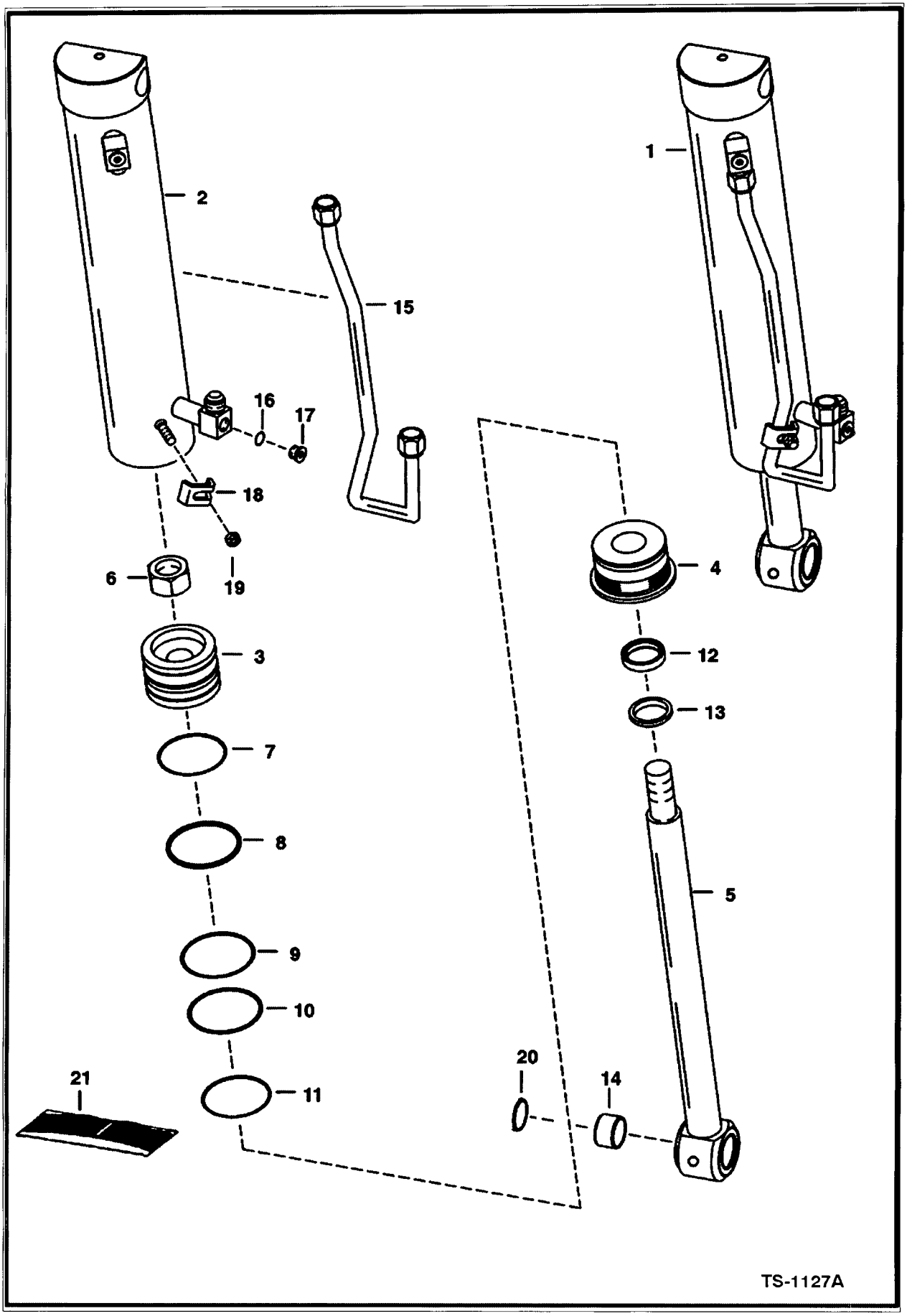

https://www.pdfmanual4trucks.com/

TILT CYLINDER (Cont'd)
(S/N 5127 16001 & Above, 5086 93001 & Above, 5114 76001 & Above)

f NO	Part Number	Description	Remarks	Serial Number	Qty
1	6804692	CYLINDER	See Illustration TILT CYLINDER/ TS1127 See Illustration TILT CYLINDER/ TS1098 See Illustration TILT CYLINDER/ TS1098A tilt - Ref. 2 - 19 - Before ordering repair parts, make sure that this is the correct style cylinder - Note the difference in the base end of the cylinder and the inside diameter of the case		1
2	6804703	CASE	3.25" (82,6 mm) I.D.		1
3	6804699	PISTON	1.125" (28,6 mm) I.D.		1
4	6539185	HEAD			1
5	6804704	ROD	1.5" (38,1 mm) O.D. - W/ grease zerk hole - Also Order Ref. 14		1
6	6810539	NUT	Was 6804592 [A]		1
7	54K30226	O-RING			1
8	6513466	SEAL			1
9	54K40300	O-RING			1
10	80K000234B	RING	back-up		1
1	82K236	O-RING	Was 58K000236B [A]		1
.2	6667326	SEAL			1
13	6665086	SEAL	wiper		1
14	6805150	BUSHING	wear - W/ grease zerk hole		1
15	6539144	TUBE			1
16	95K6	O'RING	tapered boss face		1
17	90KV5	PLUG	W/Ref. 16 - tapered boss face		2
18	6562266	CLAMP			1
19	95D000006B	NUT	Was 91D000006B [A]		1
?0	225855B	SEAL			2
1	6804605	SEAL KIT	Ref. 6 - 13		1

https://www.pdfmanual4trucks.com/

TILT CYLINDER
(S/N 5158 11001-29999, 5162 11001-19999)

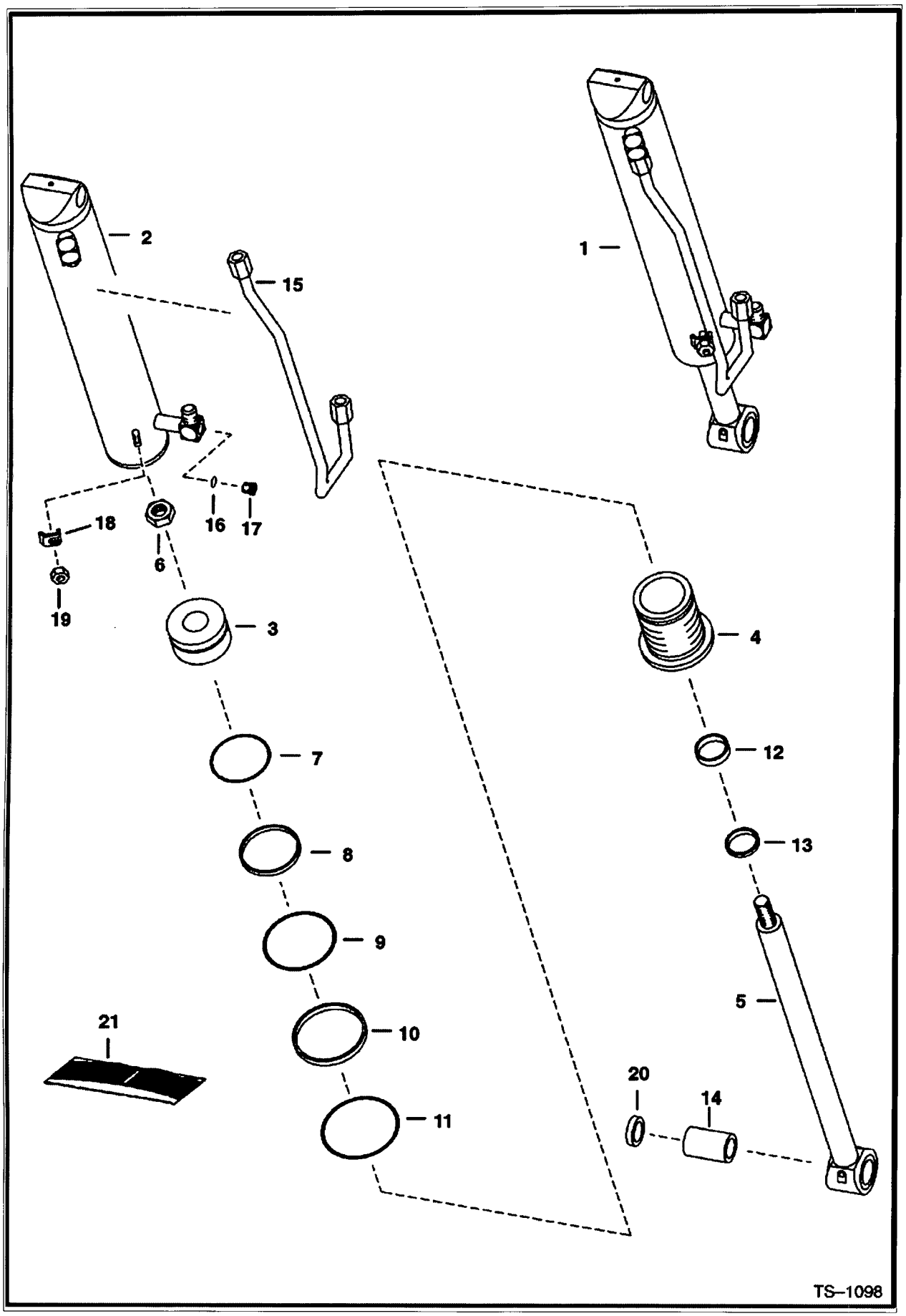

https://www.pdfmanual4trucks.com/

TILT CYLINDER (Cont'd)
(S/N 5158 11001-29999, 5162 11001-19999)

f No	Part Number	Description	Remarks	Serial Number	Qty
1		CYLINDER	See Illustration TILT CYLINDER/ TS1098A NAP - tilt - Ref. 2-19 - Order 6804630 Cylinder - Lift cylinder design changed to accomodate larger diameter cylinder. New cylinder will not work on older lift arms. - Was 6539931 [A]		1
2		CASE	See Illustration TILT CYLINDER/ TS1098A NAP - 3.5" (88,9 MM) I.D. - ORDER 6804630 CYLINDER - WAS 6586587 [A]		1
3	6539932	PISTON	1.125" (28,6 mm) I.D.		1
4	6539934	HEAD			1
5	6586588	ROD	1.5" (38,1 mm) O.D. - W/Ref. 14 - W/O grease zerk hole		1
6	6810539	NUT	Was 6804592 [A]		1
7	25K030300B	O-RING			1
8	1530265B	PISTON SEAL	piston		1
9	58K000338B	O-RING			1
10	73K000338B	RING	back-up - Was 80K000338B [A]		1
1	82K000238B	O-RING 10	Was 58K000238B [A]		1
,2	6538141	SEAL			1
13	6665086	SEAL	wiper		1
14	6589665	BUSHING	wear		1
15	6586586	TUBE			1
16	79K6	O RING 10	flat boss face		2
16	95K6	O'RING	tapered boss face		2
17	90K000005B	PLUG	W/Ref. 16 - flat boss face		2
17	90KV5	PLUG	W/Ref. 16 - tapered boss face		2
'8	6562266	CLAMP			1
9	95D000006B	NUT	Was 91D000006B [A]		1
20	225855B	SEAL	Use when Bob-tach pin W/O grease zerk is installed		2
20	6654117	SEAL	Use when Bob-tach pin W/grease zerk is installed		2
21	6816323	SEAL KIT	Ref. 6 - 13 - Was 6804606 [A]		1

https://www.pdfmanual4trucks.com/

TILT CYLINDER
(S/N 5158 11001-29999, 5162 11001-19999)

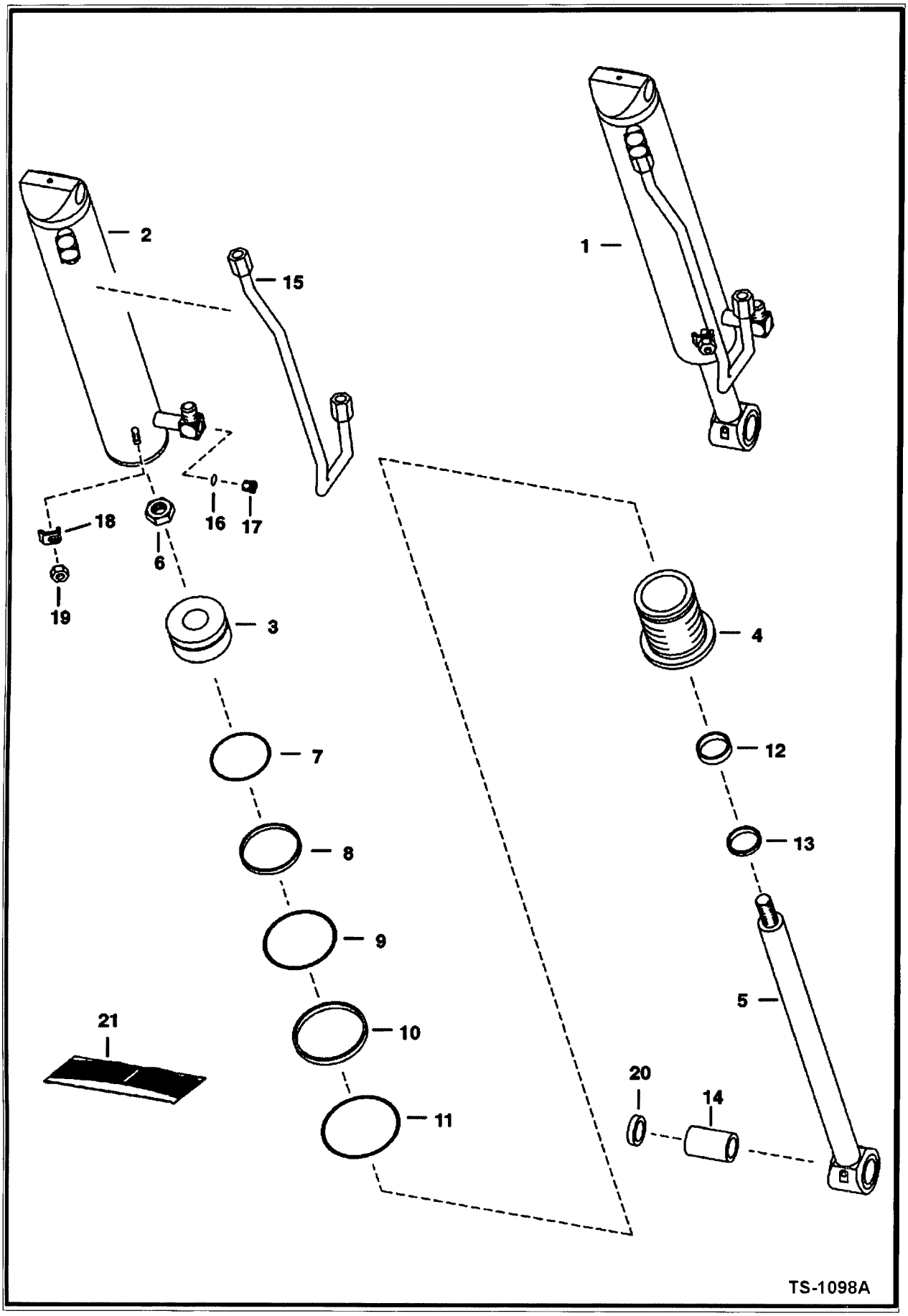

https://www.pdfmanual4trucks.com/

TILT CYLINDER (Cont'd)
(S/N 5158 11001-29999, 5162 11001-19999)

f No	Part Number	Description	Remarks	Serial Number	Qty
1	6804630	CYLINDER	tilt - Ref. 2-19		1
2	6804633	CASE	3.5" (88,9 mm) I.D.		1
3	6804632	PISTON	1.125" (28,6 mm) I.D.		1
4	6539934	HEAD			1
5	6804631	ROD	1.5" (38,1 mm) O.D - W/Ref. 14 - W/ grease zerk hole		1
6	6810539	NUT	Was 6804592 [A]		1
7	54K030300B	O-RING			1
8	1530265B	PISTON SEAL	piston		1
9	54K060304B	O-RING			1
10	73K000338B	RING	back-up - Was 80K000338B [A]		1
11	82K000238B	O-RING 10	Was 58K000238B [A]		1
12	6667326	SEAL			1
13	6665086	SEAL	wiper		1
14	6805150	BUSHING	wear - W/ grease zerk hole		1
15	6586586	TUBE			1
16	95K6	O'RING	tapered boss face		2
16	75K6	O-RING	flat boss face		2
3	75K000007B	O-RING	flat boss face		2
17		PLUG	NAP - W/Ref. 16 - tapered boss face - allen socket head - Was 90KV00005B [A]		2
17	90K000005B	PLUG	W/Ref. 16 (75K-6 O-Ring) - flat boss face - allen socket head		2
17	6812171	PLUG	W/Ref. 16 (75K-6 O-Ring) - flat boss face - hex head - .5625" threads		2
17	6816855	PLUG	W/Ref. 16 (75K-7 O-Ring) - flat boss face - hex head - .625" threads		2
18	6562266	CLAMP			1
19	95D000006B	NUT	Was 91D000006B [A]		1
20	225855B	SEAL			2
21	6816323	SEAL KIT	Ref. 6 - 13 - Was 6804606 [A]		1

https://www.pdfmanual4trucks.com/

LIFT CYLINDER
(S/N 5158 30001-40211, 5162 20001-23851)

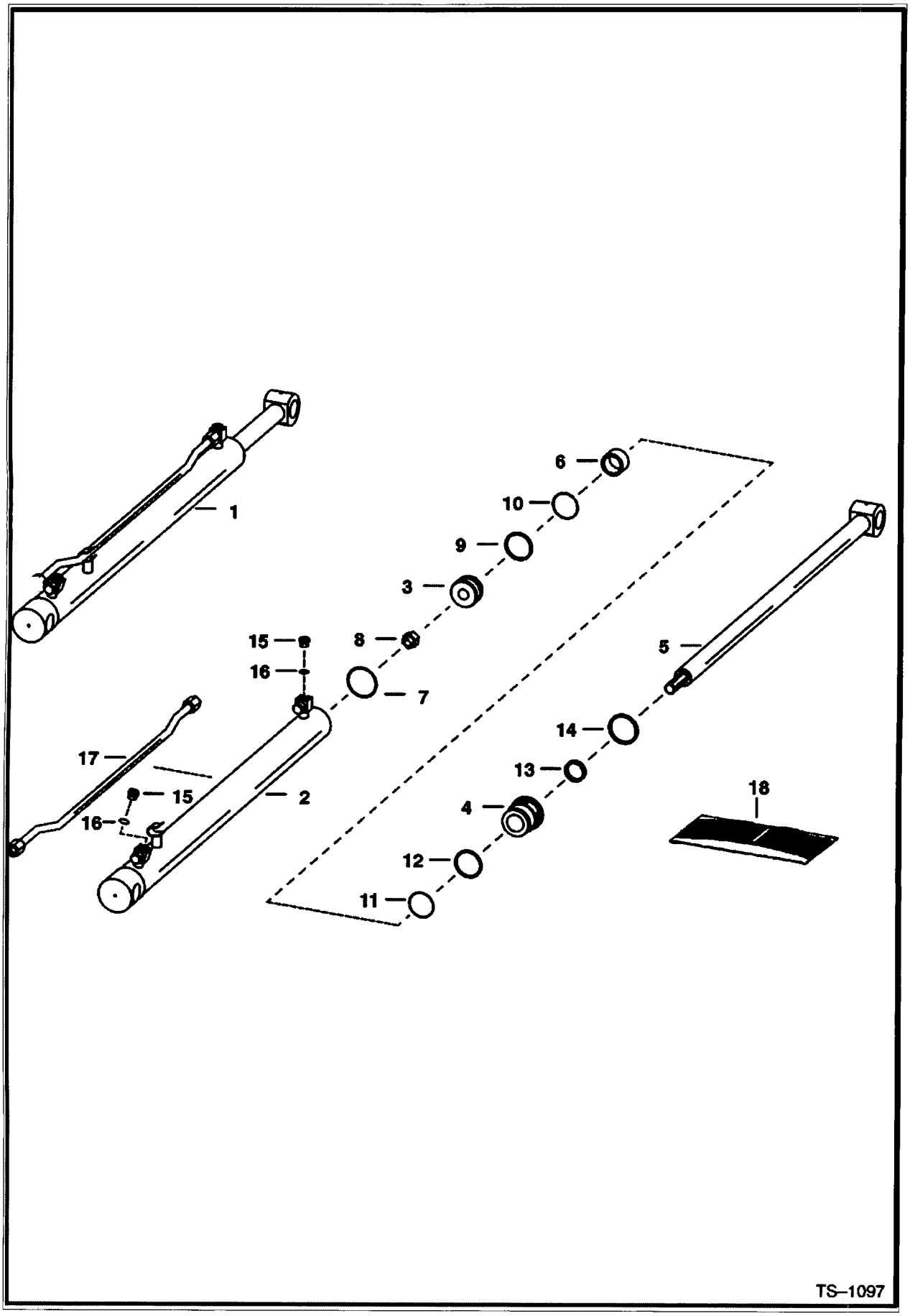

https://www.pdfmanual4trucks.com/

LIFT CYLINDER (Cont'd)
(S/N 5158 30001-40211, 5162 20001-23851)

,f No	Part Number	Description	Remarks	Serial Number	Qty
1	6586575	CYLINDER	Ref. 2 - 7		2
2	6586577	CASE			1
3	6661694	PISTON	W/Ref. 9 & 10 - W/Non- Replaceable wear sleeves		1
4	6539323	HEAD			1
5	6539304	ROD			1
6	6539299	SPACER			1
7	82K136	O-RING	Was 58K136 [B]		1
8	92D000012B	NUT			1
9	6516231	RING			1
10	54K30118	O-RING	Was NSS [D]		1
11	54K40124	O-RING	Was 25K040124B [A]		1
12	73K224	RING	back-up		1
13	6667324	SEAL	rod - Was 6665184 [A]		1
14	6665208	SEAL	wiper		1
15	90K000005B	PLUG	W/Ref. 16 - flat boss face - Was 47K000005B [B]		2
15	90KV5	PLUG	W/Ref. 16 - tapered boss face		2
16	79K6	O RING 10	flat boss face		2
;	95K6	O'RING	tapered boss face		2
17	6586576	TUBE			1
18	6803329	SEAL KIT	Ref. 7 - 14 - Was 6589831 [A]		1

https://www.pdfmanual4trucks.com/

CONTROL PEDALS

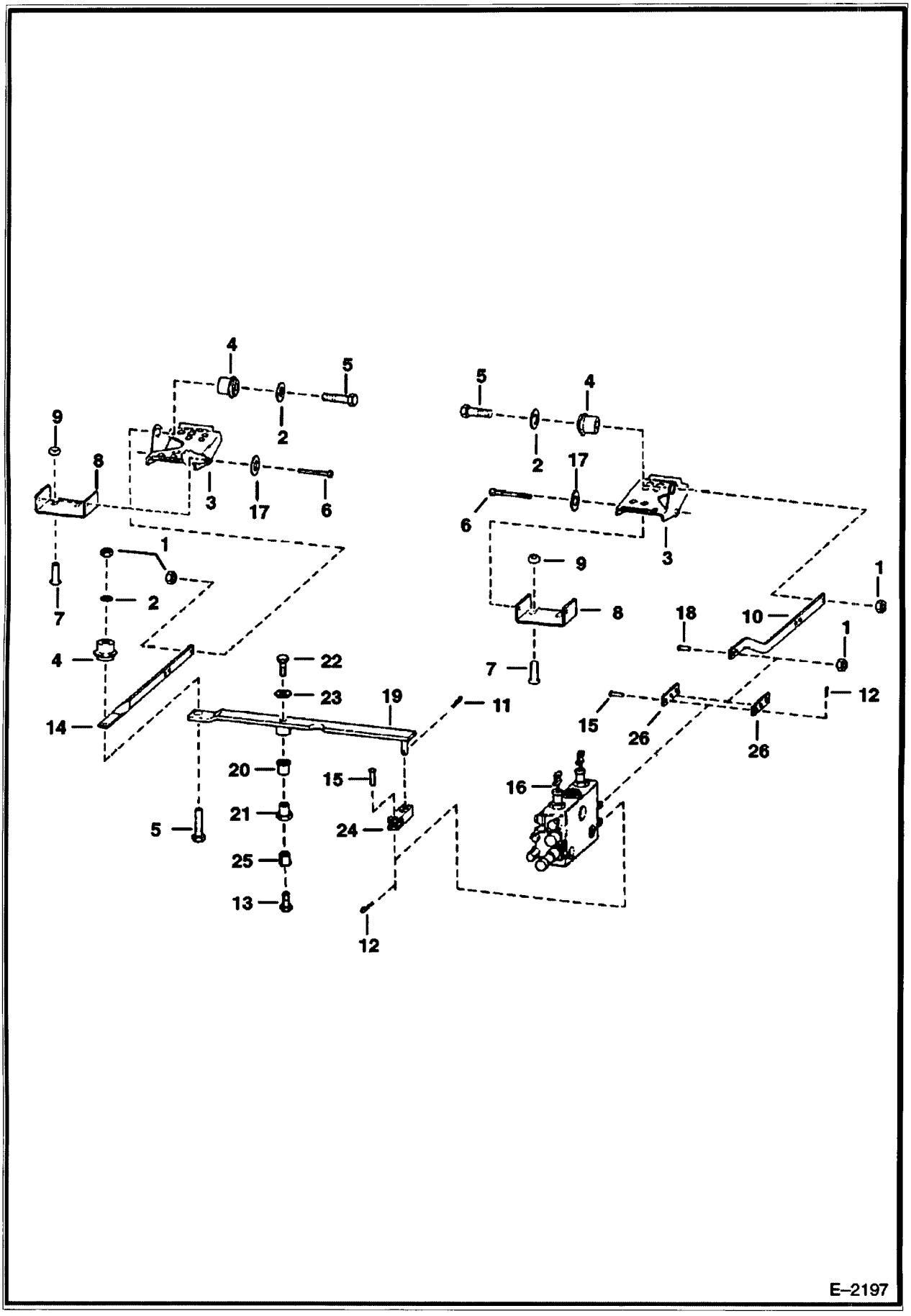

https://www.pdfmanual4trucks.com/

CONTROL PEDALS (Cont'd)

,f No	Part Number	Description	Remarks	Serial Number	Qty
1	95D000006B	NUT	Was 91D000006B [A]		5
2	6563914	WASHER			3
3	7115219	PEDAL	Was 6726680 [A]		2
4	6665701	BUSHING	Was 6630081 [A]		3
5	17C000624B	BOLT			3
6	6564657	PIN			2
7	7C000620B	BOLT	Was 6704349 [B]		4
8	6726679	MOUNT	Was 6564658 [A]		2
9	57D6	NUT 5			4
10	6577813	BAR			1
11	1306637B	PIN			1
12	6513495	COTTER PIN			2
13	35C000612B	BOLT	Was 31C000612B [B]		1
14	6576302	BAR			1
15		PIN	NAP - Was 6564654 [A]		2
16		VALVE	See Illustration HYDRAULIC CONTROL VALVE/ E2229		1
7	25E21	WASHER 5	Used if serrations on pins are too long		2
18	17C620	BOLT	Was 4F006106B [B,D]		1
19	6706103	LEVER			1
20	6512026	BUSHING			1
21	6706104	RETAINING NUT			1
22	17C612	BOLT 5			1
23	619021B	WASHER			1
24	6706105	YOKE			1
25	6544654	BUSHING	spacer	& Above	1
26	6706680	LINK	2.20" (55,9 mm) long - Use W/long spool control valve - Was 6564544 [A]		2
26	6708009	LINK	2.69" (68,3 mm) long - Use W/short spool control valve		2

https://www.pdfmanual4trucks.com/

HYDRAULIC CONTROL VALVE

NOTE: Spools are available for service. The boot end of the lift and tilt spool is stamped W/# 1, 2 , 3 or painted red, green or black respectively. Reference S/L Dated 17 July. 1996.

NOTE: 6596436 Valve is the service control valve for the valve shown on this page. 6596436 Valve is minus all fittings, relief valves, anti–cav valves, solenoid coils and solenoid spools. Remove and use existing parts from old valve or order new parts as necessary. Also, because 6596436 Valve has short spools and the valve on this page had long spools, it is necessary to order 6706105 Yoke and (2) of 6708009 Links. SEE BTI 307.

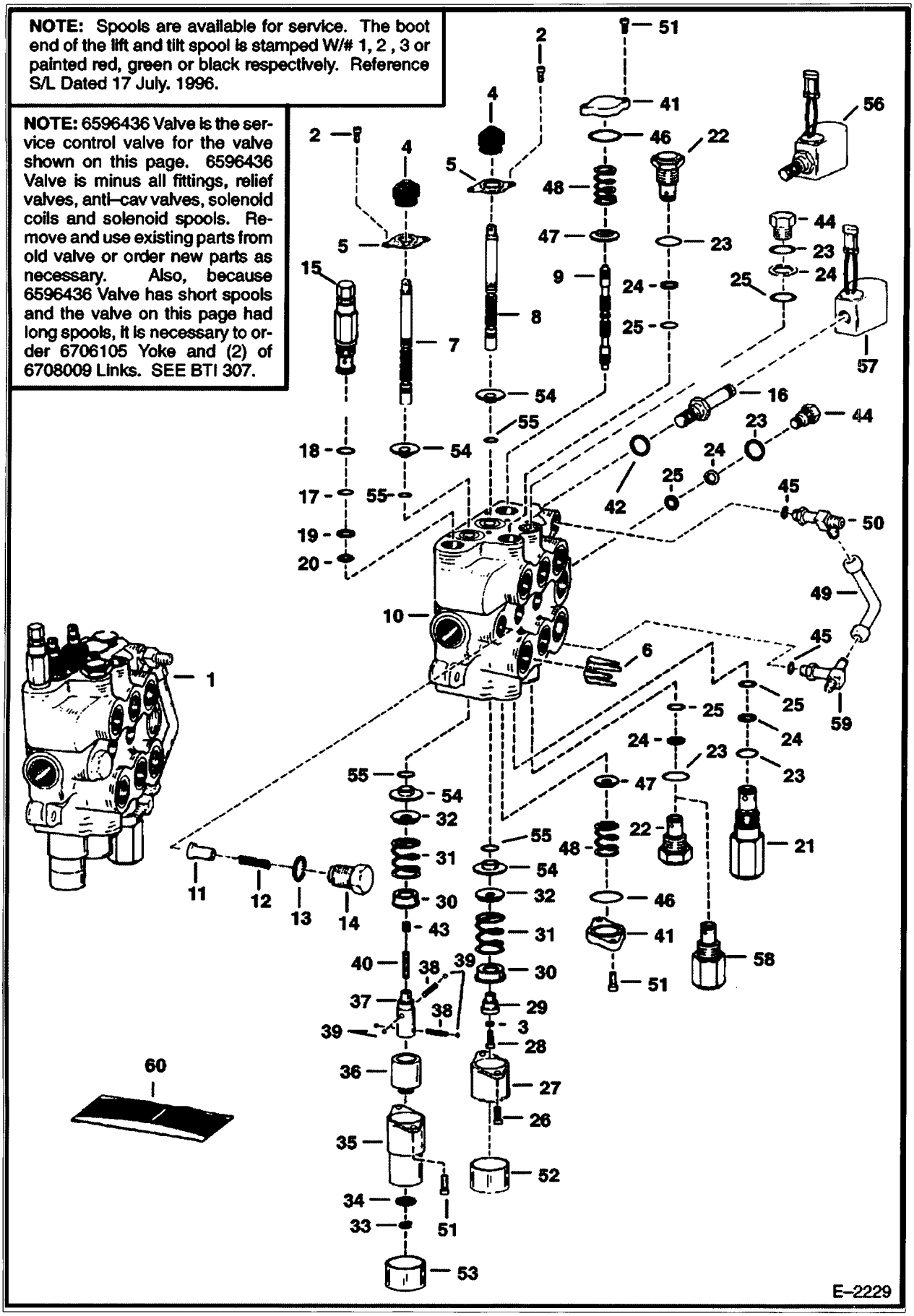

https://www.pdfmanual4trucks.com/

HYDRAULIC CONTROL VALVE (Cont'd)

;f No	Part Number	Description	Remarks	Serial Number	Qty
1		VALVE	See Illustration HYDRAULIC CONTROL VALVE/ E2252 See BTI307 NAP - REF. 2 - 56 -W/LONG SPOOLS AND FITTINGS - BEFORE ORDERING REPAIR PARTS, MAKE SURE THAT THIS IS THE CORRECT STYLE VALVE - ALSO REF. VALVE VALVE SHOWN HERE USES STAMPED BOOT RETAINERS, REF. 5, WHICH FIT FLUSH TO VALVE BODY - WAS 6589215 [A]		1
2	6588165	SCREW			4
3	22E000004B	WASHER			1
4	6587763	BOOT			2
5	6592123	RETAINER	stamped		2
6	6534630	RESTRICTOR	.134/.141		1
7	6666588	SPOOL	lift - #1 or red - SEE NOTE Was 6666576 [A]		1
7	6666589	SPOOL	lift - #2 or green - SEE NOTE Was 6666577 Was 6666577 Was 6666577 [A]		1
7	6666590	SPOOL	lift - #3 or black - SEE NOTE Was 6666578 [A]		1
8	6666579	SPOOL	tilt - #1 or red - SEE NOTE		1
8	6666580	SPOOL	tilt - #2 or green - SEE NOTE		1
8	6666581	SPOOL	tilt - #3 or black - SEE NOTE		1
9	6588074	SPOOL	auxiliary - SEE NOTE		1
10		BODY	NSS		1
11	6592115	SEAT			2
12	6592117	SPRING			2
13	79K8	O RING 10			3
14	6592116	NUT	load check		3
15		VALVE	NAP - main relief - W/Ref. 17 - 20 - 2550-2600 PSI - pressure preset at factory - Order 6686360 valve - Was 6676196 [A]		1
15	6686360	VALVE	main relief - W/Ref. 17-20 - pressure to be set in field		1
16	6665758	VALVE	W/Ref. 42		2
17	58K000017B	O-RING			1
18	6665569	WASHER	back-up		1
19	25K020016B	O-RING			1
20	6665570	RING	glide		1
21	6599161	RELIEF VALVE	port relief - 3400-3600 PSI - W/Ref. 23-25		1
22	6667549	VALVE	anti-cavity check - W/Ref. 23-25 - Was 6661345 [B]		2
3	79K10	O RING 10			5
24	80K000014B	RING	back-up		4
25	58K14	O RING 10	back-up washer required		4
25	6677106	O-RING	back-up washer not required		4
26	69G000414B	SCREW	Was 6588164 [A]		2
27	7101345	BONNET	Was 6587633 [A]		1
28	6588166	SCREW			1
29	6592109	ADAPTER			1
30	6592100	COLLAR			2
31	6587580	SPRING			2
32	6587523	WASHER			2
33	799119B	SNAP RING			1
34	6592098	WASHER			1
35	6589226	BONNET			1
36	6531270	SLEEVE	lift		1
37	6587575	ADAPTER			1
8	6592107	SPRING			2
39	6592105	BALL			4
40	6586918	SCREW			1
1	6588981	END CAP			2

https://www.pdfmanual4trucks.com/

NOTE: Spools are available for service. The boot end of the lift and tilt spool is stamped W/# 1, 2 , 3 or painted red, green or black respectively. Reference S/L Dated 17 July. 1996.

NOTE: 6596436 Valve is the service control valve for the valve shown on this page. 6596436 Valve is minus all fittings, relief valves, anti–cav valves, solenoid coils and solenoid spools. Remove and use existing parts from old valve or order new parts as necessary. Also, because 6596436 Valve has short spools and the valve on this page had long spools, it is necessary to order 6706105 Yoke and (2) of 6708009 Links. SEE BTI 307.

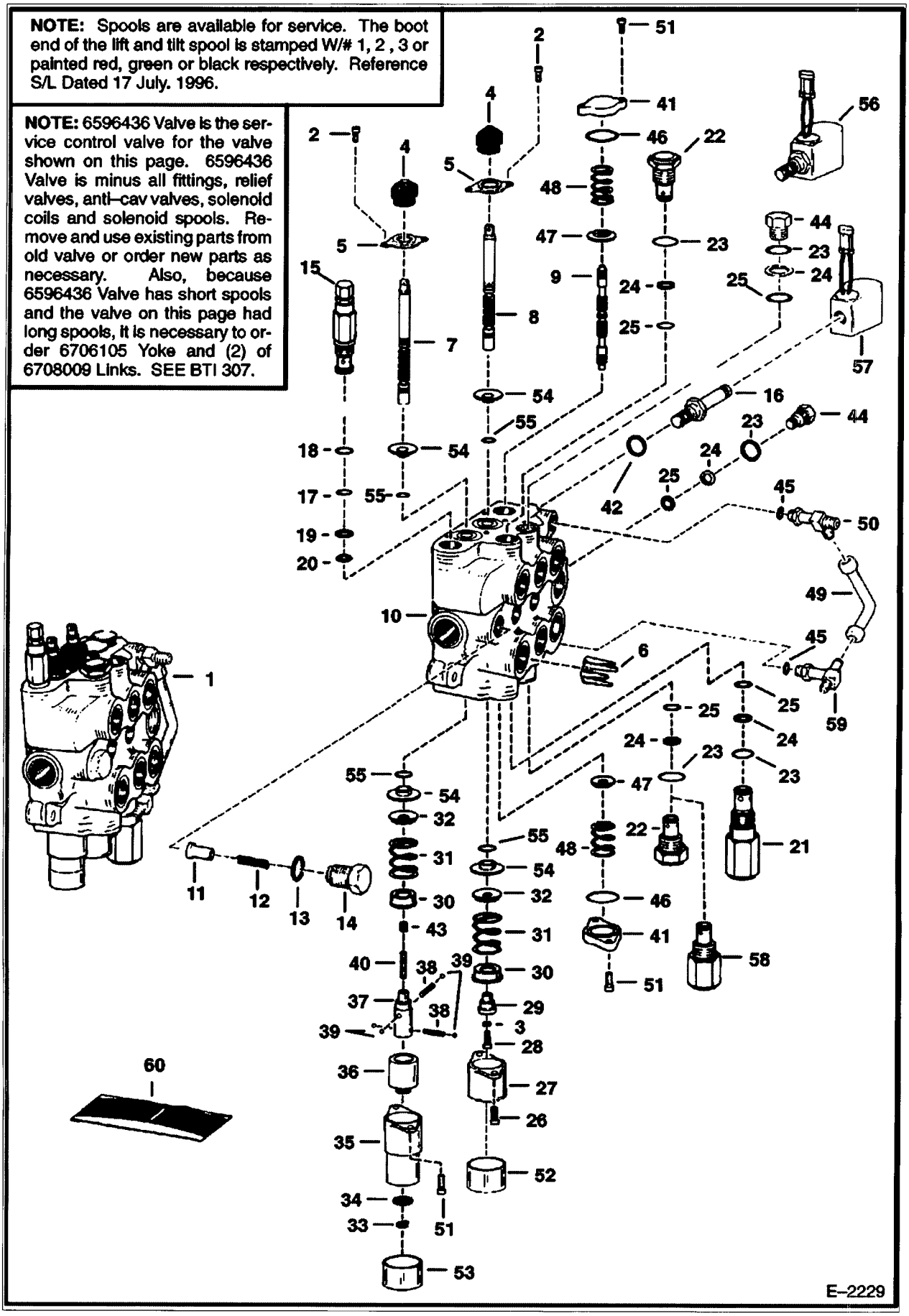

https://www.pdfmanual4trucks.com/

HYDRAULIC CONTROL VALVE (Cont'd)

f NO	Part Number	Description	Remarks	Serial Number	Qty
12	79K000007B	O-RING			2
13		PLUG	NAP - plastic - Order 6596807 Plug & 54K020002B O-ring - Was 6592752 [A]		1
43	6596807	PLUG	plastic - .460" long		1
43	54K020002B	O-RING			1
44	6592720	PLUG	W/Ref. 23-25		2
45	79K6	O RING 10			x
46	58K000124B	O-RING			2
47	6537096	WASHER			2
48	6588197	SPRING			2
49	6577690	TUBE			1
50		TEE	NAP - W/Ref. 45 - W/O flared end O-rings - Was 6587889 [A]		1
50	6805243	TEE	W/Ref. 45 - W/ flared end O-rings		1
50	97K6	O'RING	flared end		2
51	6588982	SCREW			6
52	6662848	CAP			1
3	6660644	CAP			1
4	6538466	BUSHING			4
55	6665089	SEAL	See BTI374 lip seal		4
56	6653395	VALVE	solenoid - Ref. 16 & 57		2
56	6586459	SEAL KIT			x
57	6717708	COIL	14 volt - w/nut - Was 6665759 [A]		2
57	6679961	NUT			2
58	6664373	VALVE	optional - port relief & anti-cav. -W/Ref. 23 - 2500 PSI - use in tilt cylinder base end port		1
59		TEE	NAP - W/Ref. 45 - W/O flared end O-ring - Was 6587888 [A]		1
59	6805696	TEE	W/Ref. 45 - W/flared end O-ring		1
59	97K6	O'RING	flared end		2
60	6816250	SEAL KIT	Ref. 4, 51 & 55 - For One Spool - See S/L 31 Aug 92 - Was 6803605 [A]		3
60	6632279	SEAL KIT	Ref. 17 - 20		1
60	6809425	SEAL KIT	Ref. 13 & 23 - 25 - Was 6586461 [A]		1
60	6816715	SEAL KIT	complete - Ref. 4, 13, 17 - 20, 23 - 25 & 55- See S/L 31 Aug 92 - Was 6596311 [A]		1

https://www.pdfmanual4trucks.com/

HYDRAULIC CONTROL VALVE
(S/N 5127 24458 & Below, 5086 93001-94062, 5086 31089 & Below)

NOTE: Spools are available for service. The boot end of the lift and tilt spool is stamped W/# 1, 2, 3 or painted red, green or black respectively. Reference S/L Dated 17 July 1996.

NOTE: 6596436 Valve is the service control valve for the valve shown on this page. 6596436 Valve is minus all fittings, relief valves, anti–cav valves, solenoid coils and solenoid spools. Remove and use existing parts from old valve or order new parts as necessary. Also, because 6596436 Valve has short spools and the valve on this page had long spools, it is necessary to order 6706105 Yoke and (2) of 6708009 Links. SEE BTI 307.

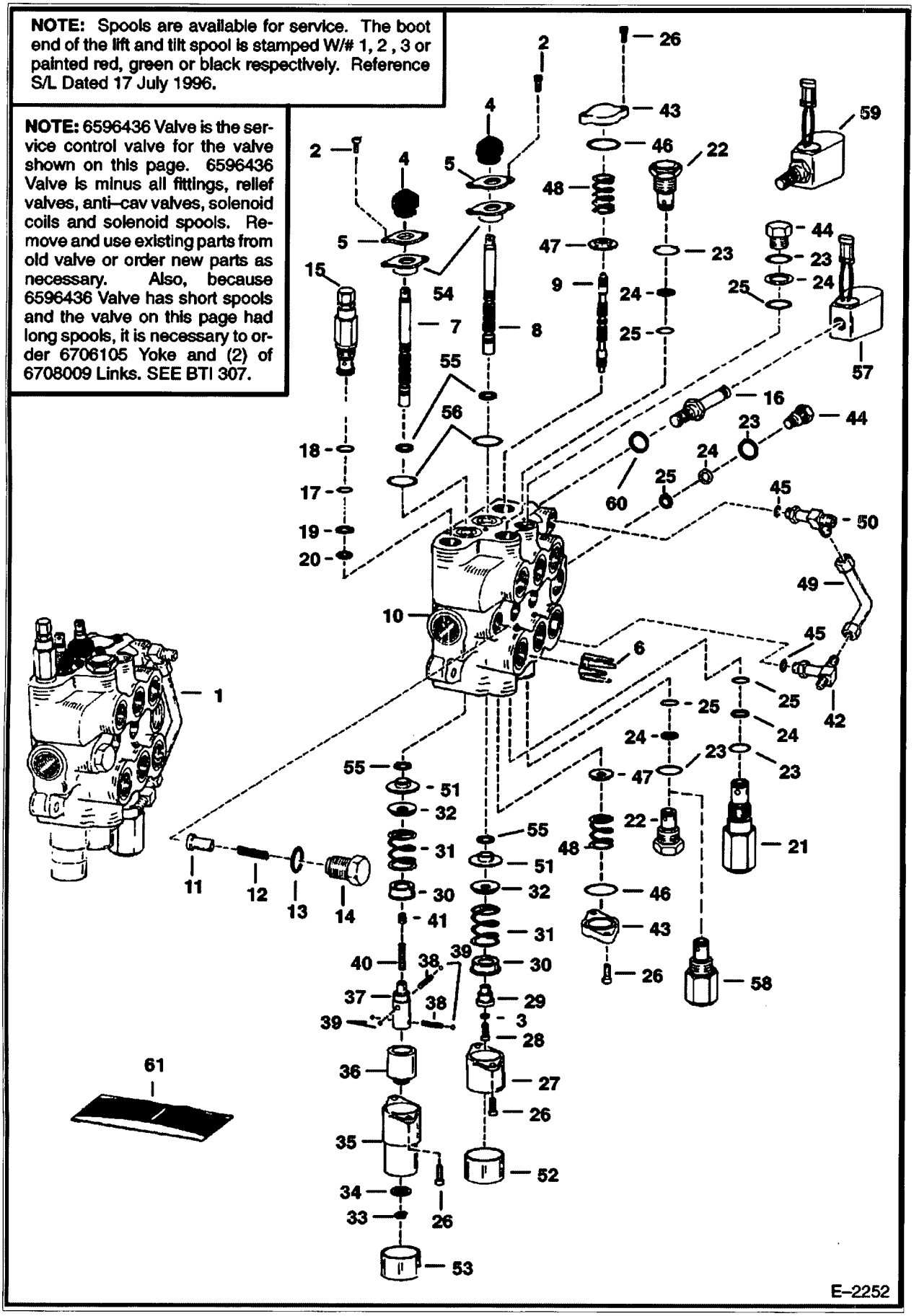

https://www.pdfmanual4trucks.com/

HYDRAULIC CONTROL VALVE (Cont'd)
(S/N 5127 24458 & Below, 5086 93001-94062, 5086 31089 & Below)

f No	Part Number	Description	Remarks	Serial Number	Qty
1		VALVE	See Illustration HYDRAULIC CONTROL VALVE/ E2229 See Illustration HYDRAULIC CONTROL VALVE/ E2318 See Illustration HYDRAULIC CONTROL VALVE/ B17196 See BTI307 NAP - REF. 2 - 56 - W/LONG SPOOLS & FITTINGS - - BEFORE ORDERING REPAIR PARTS, MAKE SURE THAT THIS IS THE CORRECT STYLE VALVE - ALSO REF. VALVE VALVE SHOWN HERE USES FLAT BOOT RETAINERS, REF. 5, WHICH FIT ABOVE PROTRUDING SPOOL SEAL REF. 54 - WAS 6596075 A]		1
2	6588163	SCREW			4
3	22E000004B	WASHER			1
4	6587763	BOOT			2
5	6589564	RETAINER	flat		2
6	6534630	RESTRICTOR	.134/.141		1
7	6666576	SPOOL	lift - #1 or red - SEE NOTE - Was 6666588 [B,D]		1
7	6666589	SPOOL	lift - #2 or green - SEE NOTE - Was 6666577 [A]		1
7	6666590	SPOOL	lift - #3 or black - SEE NOTE - Was 6666578 [A]		1
8	6666579	SPOOL	tilt - #1 or red - SEE NOTE - Was 6666591 [B,D]		1
8	6666580	SPOOL	tilt - #2 or green - SEE NOTE - Was 6666592 [B,D]		1
8	6666581	SPOOL	tilt - #3 or black - SEE NOTE - Was 6666593 [B,D]		1
9	6588074	SPOOL	auxiliary - SEE NOTE - Was 6589663 [B,D]		1
10		BODY	NSS		1
11	6592115	SEAT			2
12	6592117	SPRING			2
3	79K8	O RING 10			3
4	6592116	NUT	load check		3
15		VALVE	NAP - main relief - W/Ref. 17 - 20 - 2550-2600 PSI - pressure preset at factory - Order 6686360 valve - Was 6676196 [A]		1
15	6686360	VALVE	main relief - W/Ref. 17-20 - pressure to be set in field		1
16	6665758	VALVE	W/Ref. 60		2
17	58K000017B	O-RING			1
18	6665569	WASHER	back-up		1
19	25K020016B	O-RING			1
0	6665570	RING	glide		1
	6599161	RELIEF VALVE	port relief - 3400-3600 PSI - W/Ref. 23-25		1
22	6667549	VALVE	anti-cavity check- W/Ref. 23-25 - Was 6661345 [B]		2
23	79K10	O RING 10			5
24	80K000014B	RING	back-up		4
25	58K14	O RING 10	back-up washer required		4
25	6677106	O-RING	back-up washer not required		4
26	6588982	SCREW			8
27	7101345	BONNET	Was 6587633 [A]		1
28	6588166	SCREW			1
29	6592109	ADAPTER			1
30	6592100	COLLAR			2
31	6587580	SPRING			2
32	6587523	WASHER			2
33	799119B	SNAP RING			1
34	6592098	WASHER			1
35	6589226	BONNET			1
6	6531270	SLEEVE	lift		1
37	6587575	ADAPTER			1
38	6592107	SPRING			2
)	6592105	BALL			4

https://www.pdfmanual4trucks.com/

HYDRAULIC CONTROL VALVE (Cont'd)
(S/N 5127 24458 & Below, 5086 93001-94062, 5086 31089 & Below)

NOTE: Spools are available for service. The boot end of the lift and tilt spool is stamped W/# 1, 2 , 3 or painted red, green or black respectively. Reference S/L Dated 17 July 1996.

NOTE: 6596436 Valve is the service control valve for the valve shown on this page. 6596436 Valve is minus all fittings, relief valves, anti–cav valves, solenoid coils and solenoid spools. Remove and use existing parts from old valve or order new parts as necessary. Also, because 6596436 Valve has short spools and the valve on this page had long spools, it is necessary to order 6706105 Yoke and (2) of 6708009 Links. SEE BTI 307.

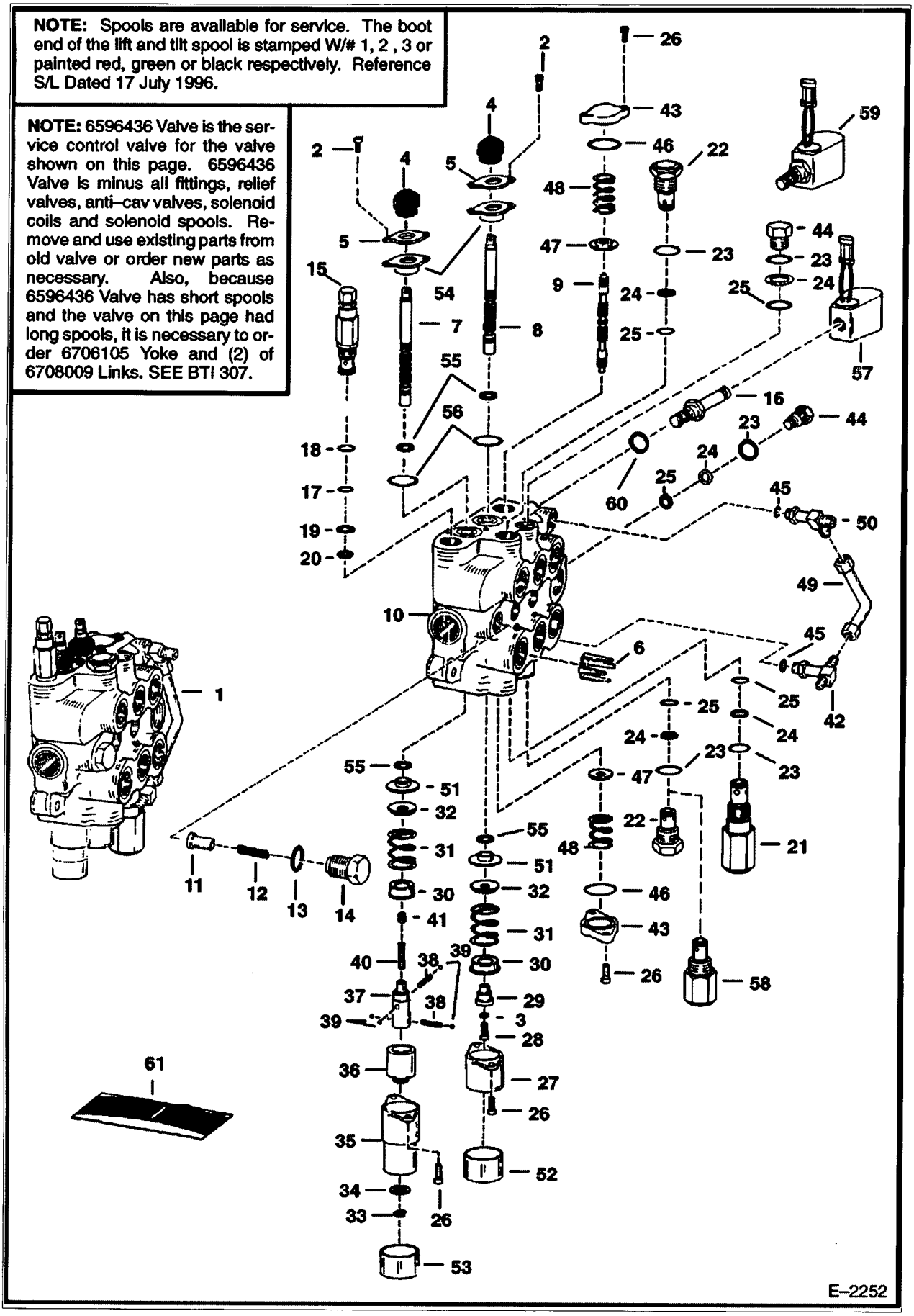

https://www.pdfmanual4trucks.com/

HYDRAULIC CONTROL VALVE (Cont'd)
(S/N 5127 24458 & Below, 5086 93001-94062, 5086 31089 & Below)

f No	Part Number	Description	Remarks	Serial Number	Qty
0	6586918	SCREW			1
41		PLUG	NAP - plastic - Order 6596807 Plug & 54K020002B O-ring - Was 6592752 [A]		1
41	6596807	PLUG	plastic - .460" long		1
41	54K020002B	O-RING			1
42		TEE	NAP - W/Ref. 45 - W/O flared end O-ring - Was 6587888 [A]		1
42	6805696	TEE	W/Ref. 45 - W/flared end O-ring		1
42	97K6	O'RING	flared end		2
43	6588981	END CAP			2
44	6592720	PLUG	W/Ref. 23-25		2
45	79K6	O RING 10			x
46	58K000124B	O-RING			2
47	6537096	WASHER			2
48	6588197	SPRING			2
49	6577690	TUBE			1
50		TEE	NAP - W/Ref. 45 - W/O flared end O-rings - Was 6587889 [A]		1
50	6805243	TEE	W/Ref. 45 - W/flared end O-rings		1
50	97K6	O'RING			2
51	6595663	BUSHING			2
52	6662848	CAP			1
53	6660644	CAP			1
54	6589565	BUSHING	seal		2
55	6683274	SEAL	See BTI374 - spool - Was 6665846 [A]		4
56	58K000127B	O-RING			2
57	6717708	COIL	14 volt - w/nut - Was 6665759 [A]		2
57	6679961	NUT			2
58	6664373	VALVE	optional - port relief & anti-cav. - W/Ref. 23 - 2500 PSI - use in tilt cylinder base end port		1
59	6653395	VALVE	solenoid - Ref. 16 & 57		2
59	6586459	SEAL KIT			x
60	79K000007B	O-RING			x
61	6816250	SEAL KIT	Ref. 4, 51 & 55 - For One Spool - See S/L 31 Aug 92 - Was 6803605 [A]		3
61	6632279	SEAL KIT	main relief - Ref. 17 - 20		1
61	6809425	SEAL KIT	Ref. 13 & 23 - 25 - Was 6586461 [A]		1
1	6816715	SEAL KIT	complete - Ref. 4, 13, 17 - 20, 23 - 25, 51 & 55 - Was 6596311 [A]		1

https://www.pdfmanual4trucks.com/

HYDRAULIC CONTROL VALVE
(S/N 5127 24459-27420, 5086 94063-94508, 5086 31090-92999)

NOTE: Spools are available for service. The boot end of the lift and tilt spool is stamped W/# 1, 2 , 3 or painted red, green or black respectively. Reference S/L Dated 17 July 1996.

NOTE: 6596436 Valve is the service control valve for the valve shown on this page. 6596436 Valve is minus all fittings, relief valves, anti–cav valves, solenoid coils and solenoid spools. Remove and use existing parts from old valve or order new parts as necessary. SEE BTI 307.

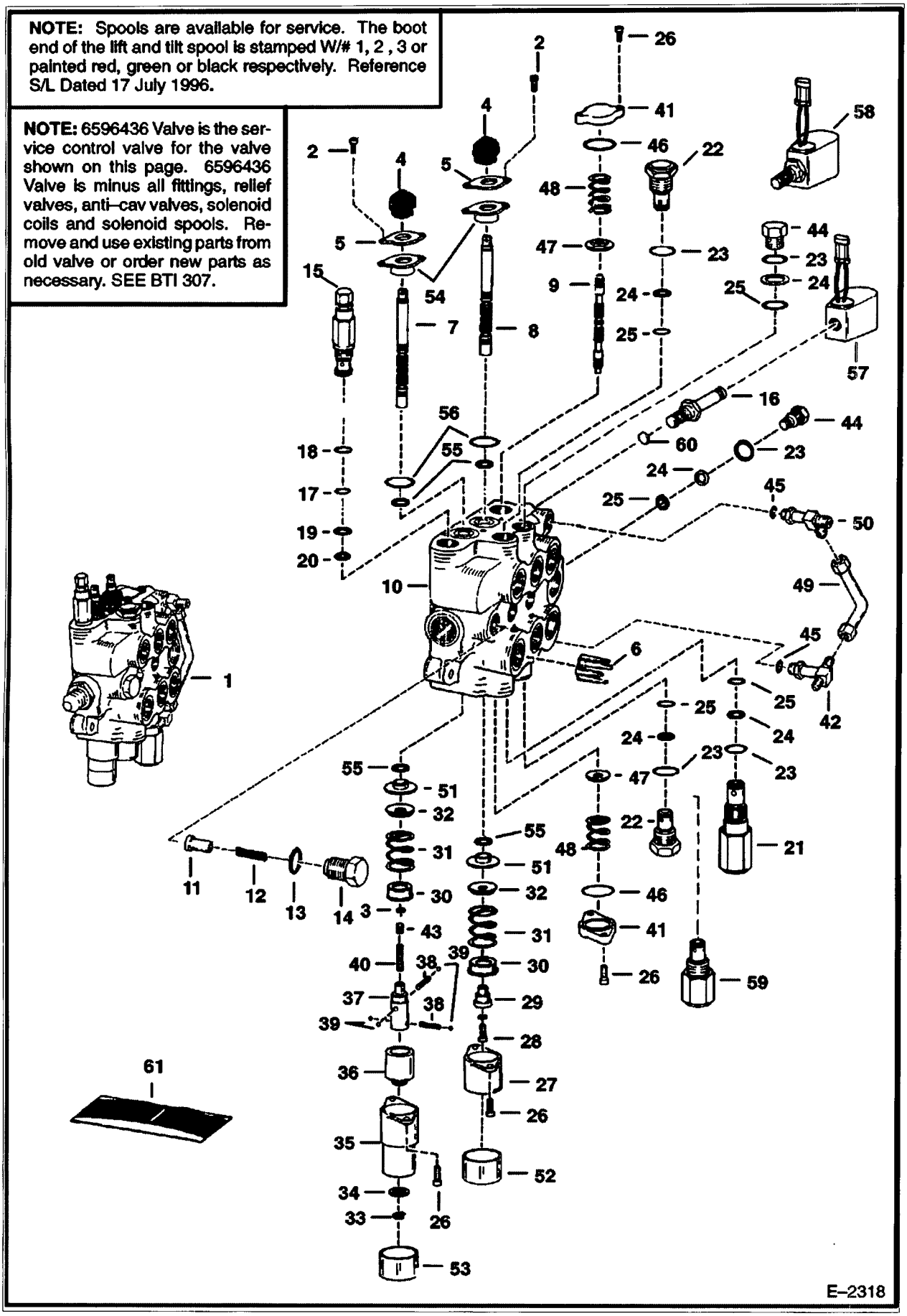

https://www.pdfmanual4trucks.com/

HYDRAULIC CONTROL VALVE (Cont'd)
(S/N 5127 24459-27420, 5086 94063-94508, 5086 31090-92999)

Ref No	Part Number	Description	Remarks	Serial Number	Qty
1		VALVE	See Illustration HYDRAULIC CONTROL VALVE/ B17196 NAP - REF. 2 - 56 - W/SHORT SPOOLS & FITTINGS - ORDER 6596436 VALVE - BEFORE ORDERING REPAIR PARTS, MAKE SURE THAT THIS IS THE CORRECT STYLE VALVE - ALSO REF. VALVE ON PAGE 183, 187 & 197 - VALVE SHOWN HERE USES FLAT BOOT RETAINERS, REF. 5, WHICH FIT ABOVE PROTRUDING SPOOL SEAL, REF. 54 - WAS 6597195 [A]		1
2	29G000412B	SCREW			4
3	54K020002B	O-RING			1
4	6587763	BOOT			2
5	6589564	RETAINER	flat		2
6	6534630	RESTRICTOR	.134/.141		1
7	6666588	SPOOL	lift - #1 or red - SEE NOTE		1
7	6666589	SPOOL	lift - #2 or green - SEE NOTE		1
7	6666590	SPOOL	lift - #3 or black - SEE NOTE		1
3	6666591	SPOOL	tilt - #1 or red - SEE NOTE		1
8	6666592	SPOOL	tilt - #2 or green - SEE NOTE		1
8	6666593	SPOOL	tilt - #3 or black - SEE NOTE		1
9	6588074	SPOOL	auxiliary - SEE NOTE		1
10		BODY	NSS		1
11	6592115	SEAT			2
12	6592117	SPRING			2
13	79K8	O RING 10			3
14	6592116	NUT	load check		3
5	6676196	VALVE	main relief - W/Ref. 17 - 20 - 2550-2600 PSI -Was 6659328 [A]		1
16	6665758	VALVE	W/Ref. 60		2
17	58K000017B	O-RING			1
18	6665569	WASHER	back-up		1
19	25K020016B	O-RING			1
20	6665570	RING	glide		1
21	6599161	RELIEF VALVE	port relief - 3400-3600 PSI - W/Ref. 23-25		1
22	6667549	VALVE	anti-cavity check - W/Ref. 23-25		2
23	79K10	O RING 10			5
4	80K000014B	RING	back-up		4
5	58K14	O RING 10	back-up washer required		4
25	6677106	O-RING	back-up washer not required		4
26	29G000416B	SCREW			8
27	6587633	BONNET			1
28	30G000416B	BOLT			1
29	6592109	ADAPTER			1
30	6592100	COLLAR			2
31	6587580	SPRING			2
32	6587523	WASHER			2
33	799119B	SNAP RING			1
34	6592098	WASHER			1
35	6589226	BONNET			1
36	6531270	SLEEVE	lift		1
37	6587575	ADAPTER			1
38	6592107	SPRING			2
39	6592105	BALL			4
0	6586918	SCREW			1
41	6588981	END CAP			2
42		TEE	NAP - W/Ref. 45 - W/O flared end O-ring - Was 6587888 [A]		1

https://www.pdfmanual4trucks.com/

HYDRAULIC CONTROL VALVE (Cont'd)
(S/N 5127 24459-27420, 5086 94063-94508, 5086 31090-92999)

NOTE: Spools are available for service. The boot end of the lift and tilt spool is stamped W/# 1, 2 , 3 or painted red, green or black respectively. Reference S/L Dated 17 July 1996.

NOTE: 6596436 Valve is the service control valve for the valve shown on this page. 6596436 Valve is minus all fittings, relief valves, anti–cav valves, solenoid coils and solenoid spools. Remove and use existing parts from old valve or order new parts as necessary. SEE BTI 307.

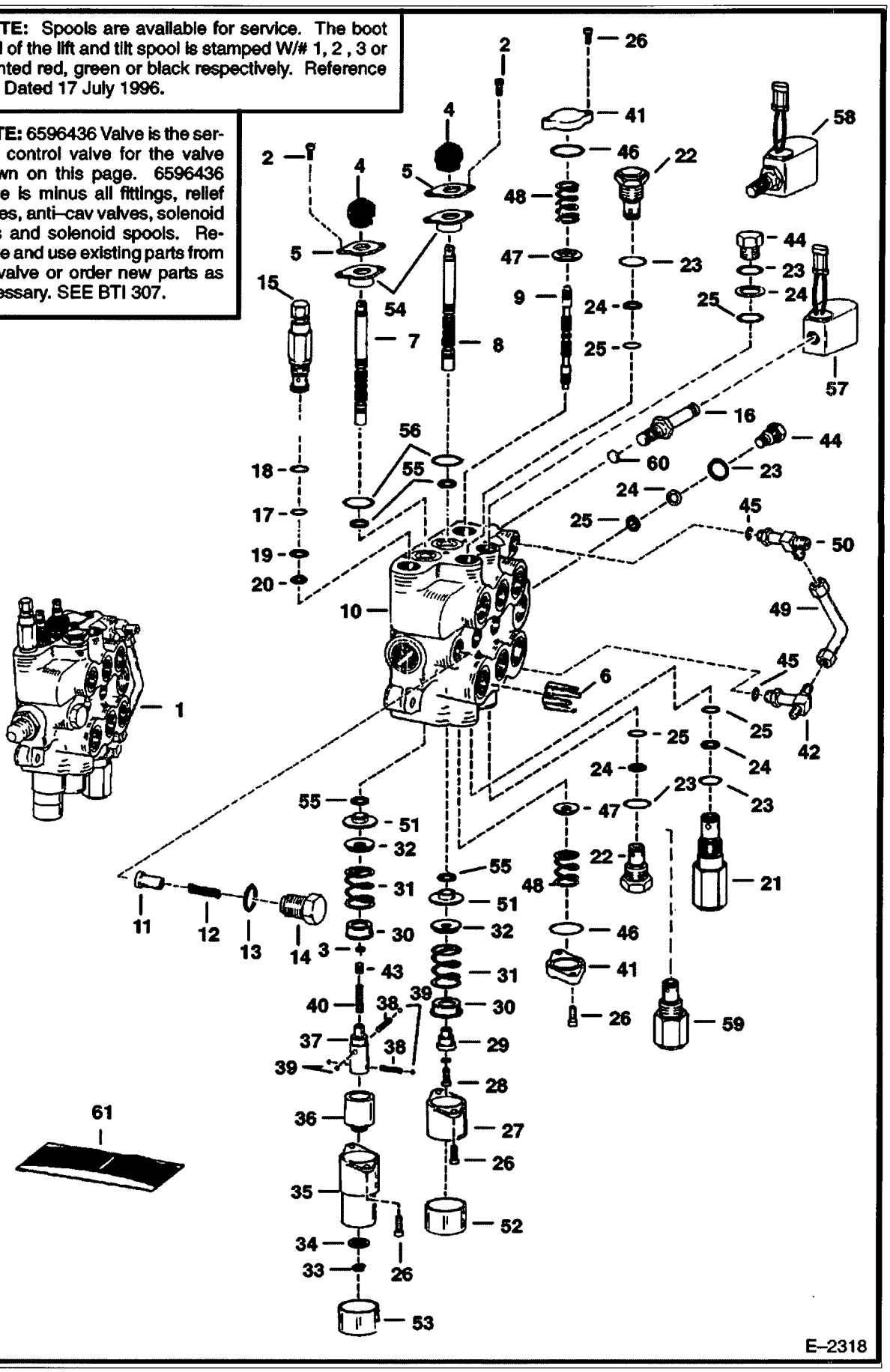

https://www.pdfmanual4trucks.com/

HYDRAULIC CONTROL VALVE (Cont'd)
(S/N 5127 24459-27420, 5086 94063-94508, 5086 31090-92999)

f No	Part Number	Description	Remarks	Serial Number	Qty
2	6805696	TEE	W/Ref. 45 - W/flared end O-ring		1
+2	97K6	O'RING	flared end		2
43		PLUG	NAP - plastic - Order 6596807 Plug & 54K020002B O-ring - Was 6592752 [A]		1
43	6596807	PLUG	plastic - .460" long		1
43	54K020002B	O-RING			1
44	6592720	PLUG	W/Ref. 23-25		2
45	79K6	O RING 10			x
46	58K000124B	O-RING			2
47	6537096	WASHER			2
48	6588197	SPRING			2
49	6577690	TUBE			1
50		TEE	NAP - W/Ref. 45 - W/O flared end O-rings - Was 6587889 [A]		1
50	6805243	TEE	W/Ref. 45 - W/flared end O-rings		1
50	97K6	O'RING			2
51	6595663	BUSHING			2
?	6662848	CAP			1
53	6660644	CAP			1
54	6589565	BUSHING	seal		2
55	6665846	SEAL			4
56	58K000127B	O-RING			2
57	6717708	COIL	14 volt - Was 6665759 [A]		2
58	6653395	VALVE	solenoid - Ref. 16 & 57		2
58	6586459	SEAL KIT			x
59	6664373	VALVE	optional - port relief & anti-cav - W/Ref. 23 - 2500 psi - use in tilt cylinder base end port		1
60	79K000007B	O-RING			2
61	6803605	SEAL KIT	Ref. 4, 51 & 55 - For One Spool - See S/L 31 Aug 92 - Was 6596310 [A]		3
61	6632279	SEAL KIT	Ref. 17 - 20		1
61	6809425	SEAL KIT	Ref. 13 & 23 - 25 - Was 6586461 [A]		1
61	6596311	SEAL KIT	complete - Ref. 2, 4, 13, 17 - 20,23 - 25, 51, 55 & 56 - See S/L 31 Aug 92		1

https://www.pdfmanual4trucks.com/

HYDRAULIC CONTROL VALVE
(Service Valve - Minus Fittings)

NOTE: Spools are available for service. The boot end of the lift and tilt spool is stamped W/# 1, 2 , 3 or painted red, green or black respectively. Reference S/L Dated 17 July 1996.

NOTE: 6596436 Valve is minus all fittings, relief valves, anti-cav valves, solenoid coils and solenoid spools. Remove and use existing parts from old valve or order new parts as necessary. SEE BTI 307.

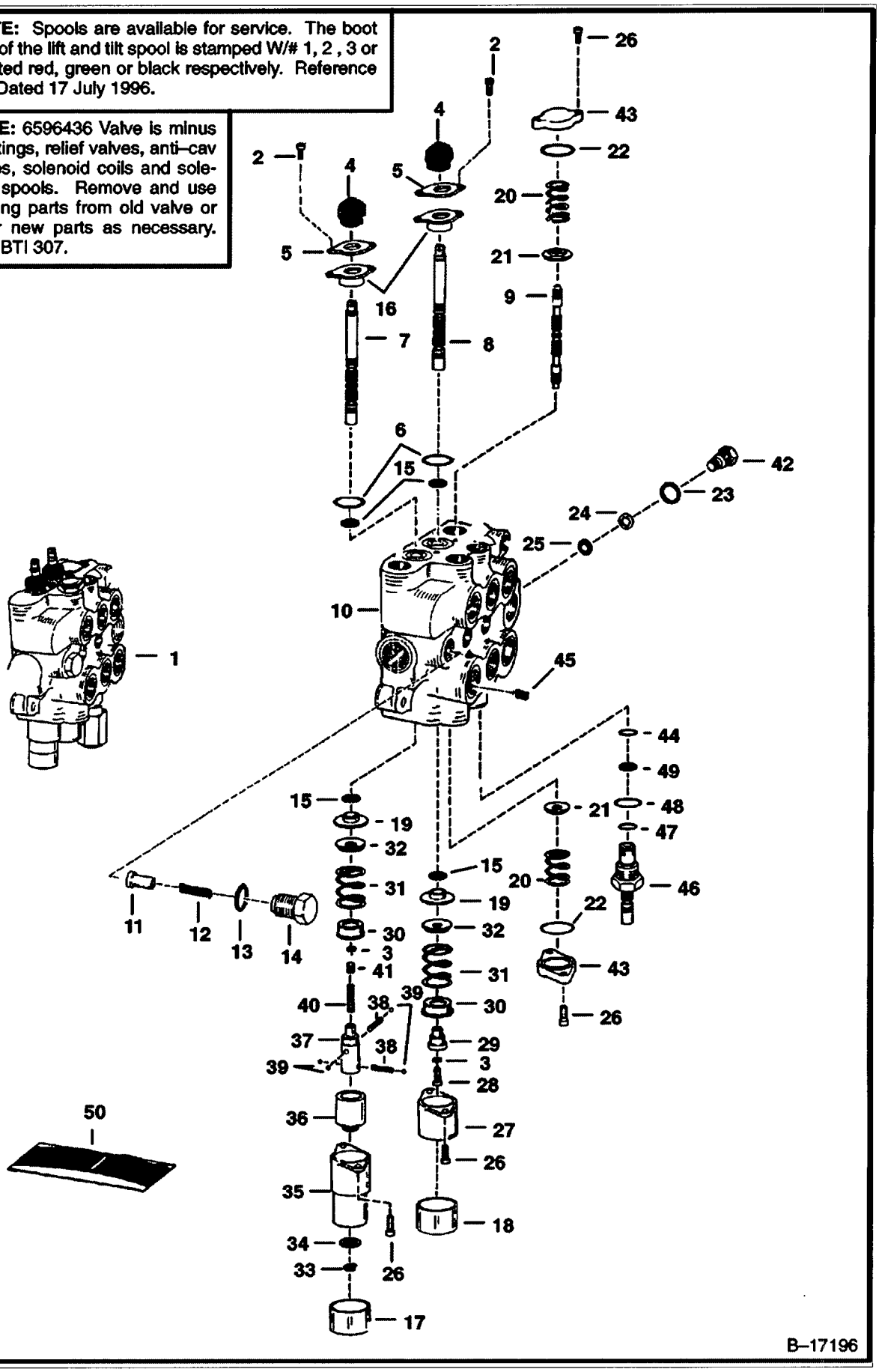

https://www.pdfmanual4trucks.com/

HYDRAULIC CONTROL VALVE (Cont'd)
(Service Valve - Minus Fittings)

f No	Part Number	Description	Remarks	Serial Number	Qty
1	6596436	VALVE	Ref. 2 - 56 - W/short spools - Before ordering repair parts, make sure that this is the correct style Valve - Also Ref. Valve on Page 183, 187 & 193 - Valve shown here uses flat boot retainers, Ref. 5, which fit above protruding spool seal, Ref. 54		1
2	29G000412B	SCREW			4
3	54K020002B	O-RING			1
4	6587763	BOOT			2
5	6589564	RETAINER	flat		2
6	58K000127B	O-RING	Was 6595663 [A]		2
7	6666588	SPOOL	lift - #1 or red - SEE NOTE		1
7	6666589	SPOOL	lift - #2 or green - SEE NOTE		1
7	6666590	SPOOL	lift - #3 or black - SEE NOTE		1
8	6666591	SPOOL	tilt - #1 or red - SEE NOTE		1
8	6666592	SPOOL	tilt - #2 or green - SEE NOTE		1
8	6666593	SPOOL	tilt - #3 or black - SEE NOTE		1
9	6588074	SPOOL	auxiliary - SEE NOTE		1
)		BODY	NSS		1
.1	6592115	SEAT			2
12	6592117	SPRING			2
13	79K8	O RING 10			3
14	6592116	NUT	load check		3
15	6683274	SEAL	See BTI374 - spool - Was 6665846 [A]		4
16	6589565	BUSHING	seal		2
17	6660644	CAP			1
18	6662848	CAP			1
'9	6595663	BUSHING			2
.0	6588197	SPRING			2
21	6537096	WASHER			2
22	58K000124B	O-RING			2
23	79K10	O RING 10			5
24	80K000014B	RING	back-up		4
25	58K14	O RING 10	back-up washer required		4
25	6677106	O-RING	back-up washer not required		4
26	29G000416B	SCREW			8
27	7101345	BONNET	Was 6587633 [A]		1
?8	30G000416B	BOLT			1
)	6592109	ADAPTER			1
30	6592100	COLLAR			2
31	6587580	SPRING			2
32	6587523	WASHER			2
33	799119B	SNAP RING			1
34	6592098	WASHER			1
35	6589226	BONNET			1
36	6531270	SLEEVE	lift		1
37	6587575	ADAPTER			1
38	6592107	SPRING			2
39	6592105	BALL			4
40	6586918	SCREW			1
41	6596807	PLUG	plastic - .460" long		1
42	6592720	PLUG	W/Ref. 23-25		1
43	6588981	END CAP			2
44		O-RING	NSS		1
5	6534630	RESTRICTOR	.134/.141		1
46		VALVE	NAP - W/Ref. 44 & 47-49 - pressure - Was 6598959 [A]		1
5	6686360	VALVE	W/Ref. 44 & 47-49 - pressure - Was 6685017 [A]		1

https://www.pdfmanual4trucks.com/

HYDRAULIC CONTROL VALVE (Cont'd)
(Service Valve - Minus Fittings)

NOTE: Spools are available for service. The boot end of the lift and tilt spool is stamped W/# 1, 2 , 3 or painted red, green or black respectively. Reference S/L Dated 17 July 1996.

NOTE: 6596436 Valve is minus all fittings, relief valves, anti–cav valves, solenoid coils and solenoid spools. Remove and use existing parts from old valve or order new parts as necessary. SEE BTI 307.

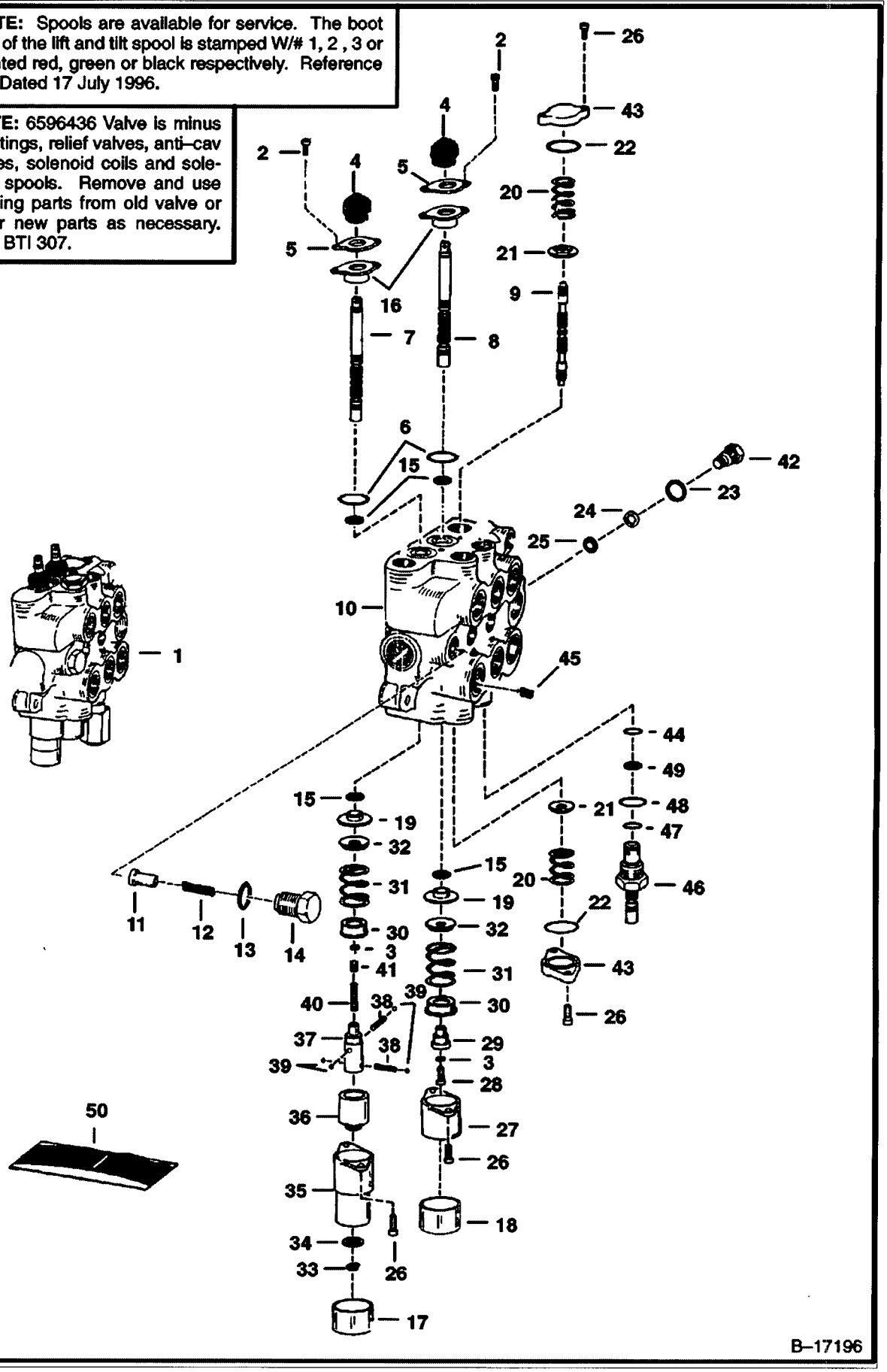

https://www.pdfmanual4trucks.com/

HYDRAULIC CONTROL VALVE (Cont'd)
(Service Valve - Minus Fittings)

f No	Part Number	Description	Remarks	Serial Number	Qty
7		O-RING	NSS		1
8		WASHER	NSS		1
49		WASHER	NSS		1
50	6816250	SEAL KIT	Ref. 2, 4 & 15 - For One Spool - See S/L 31 Aug 92 - Was 6803605 [A]		3
50	6809425	SEAL KIT	Ref. 13 & 23 - 25 - Was 6586461 [A]		1
50	6816715	SEAL KIT	complete - Ref. 2, 4, 13, 15, 16, 19 & 23 - 25 - Was 6596311 [A]		1

https://www.pdfmanual4trucks.com/

HYDRAULIC CONTROL VALVE
(S/N 5127 27421 & Abv, 5086 94509 & Abv, 5158 11001-29999, 5162 11001-19999

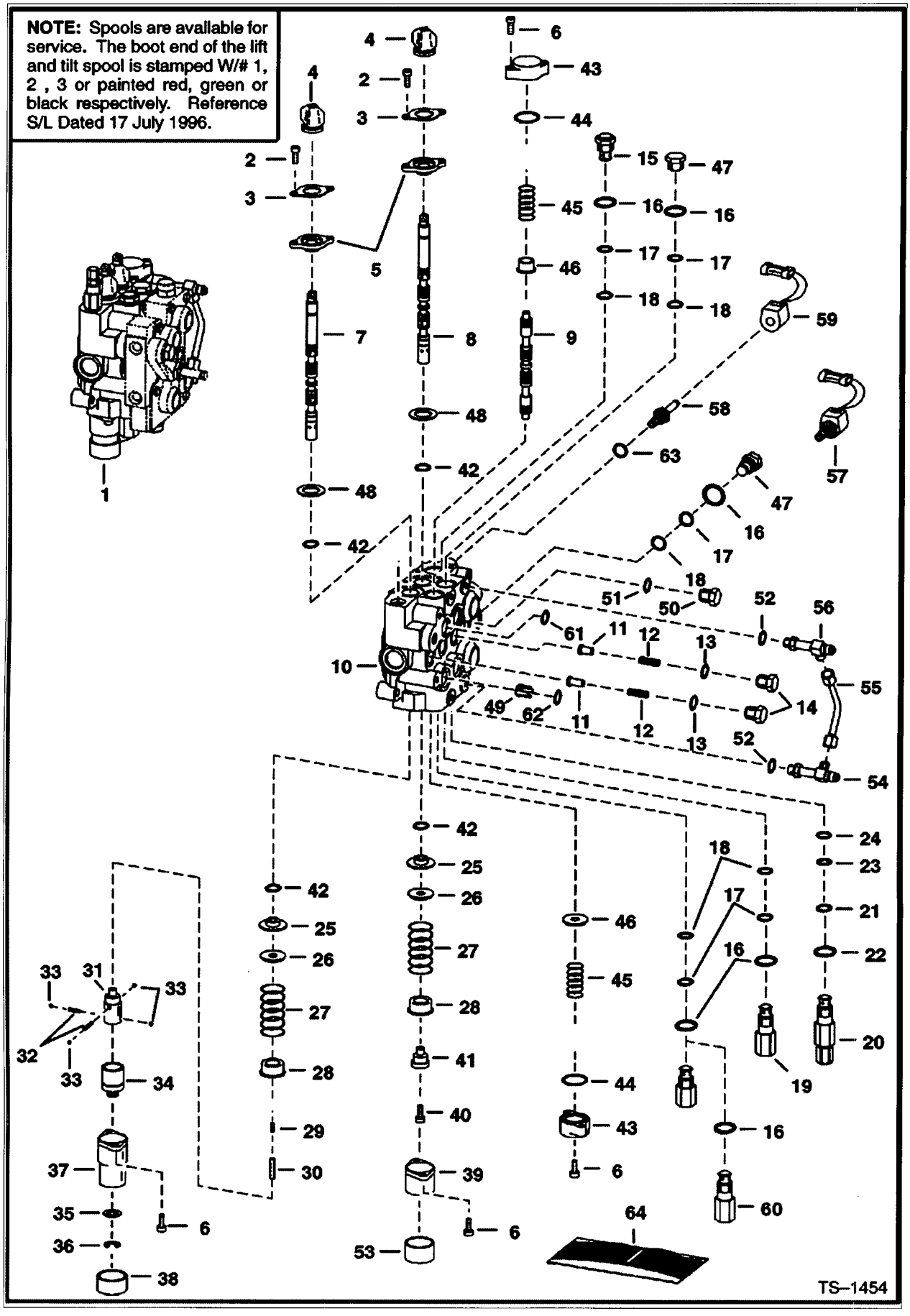

https://www.pdfmanual4trucks.com/

HYDRAULIC CONTROL VALVE (Cont'd)
(S/N 5127 27421 & Abv, 5086 94509 & Abv, 5158 11001-29999, 5162 11001-19999

,f No	Part Number	Description	Remarks	Serial Number	Qty
1		VALVE ASSY.	See Illustration HYDRAULIC CONTROL VALVE/ B17197 NAP - BICS COMBO - REF. 2 - 58 - W/Fittings - ORDER 6808046 VALVE -WAS 6628394 [A]		1
1	6628571	VALVE ASSY	See Illustration BICS CONTROL VALVE/ TS1365 BICS CONTROL		1
2	29G000412B	SCREW			4
3	6589564	RETAINER			2
4	6587763	BOOT			2
5	6589565	BUSHING	seal		2
6	29G000416B	SCREW	1" long		8
7	6666588	SPOOL	lift - # 1 or Red - SEE NOTE		1
7	6666589	SPOOL	lift - # 2 or Green-SEE NOTE		1
7	6666590	SPOOL	lift - # 3 or Black - SEE NOTE		1
8	6666591	SPOOL	tilt - # 1 or Red - SEE NOTE		1
8	6666592	SPOOL	tilt - # 2 or Green - SEE NOTE		1
8	6666593	SPOOL	tilt - # 3 or Black - SEE NOTE		1
)	6588074	SPOOL	auxiliary - SEE NOTE		3
,0		BODY	NSS		1
11	6592115	SEAT	load check		2
12	6592117	SPRING			2
13	79K8	O RING 10			3
14	6592116	NUT	load check		3
15	6667549	VALVE	anti-cavity check - W/Ref. 16-18		2
16	79K10	O RING 10			x
17	80K000014B	RING	back-up		5
8	58K14	O RING 10	back-up washer required		5
.8	6677106	O-RING	back-up washer not required		5
19	6599161	RELIEF VALVE	port relief - W/Ref. 16-18		1
20		VALVE	NAP - main relief - W/Ref. 21-24 - pressure preset at factory - Was 6676196 [A]		1
20	6686360	VALVE	main relief - W/Ref. 16-18 - pressure to be set in field		1
21	58K000017B	O-RING			1
22	6665569	WASHER	back-up		1
23	25K020016B	O-RING			1
24	6665570	RING	glide		1
`5	6595663	BUSHING			2
)	6587523	WASHER			2
27	6587580	SPRING			2
28	6592100	COLLAR			2
29	6596807	PLUG	plastic - .460" long		1
30	6586918	SCREW			1
31	6587575	ADAPTER			1
32	6592107	SPRING			2
33	6592105	BALL			4
34	6531270	SLEEVE			1
35	6592098	WASHER			1
36	799119B	SNAP RING			1
37	6589226	BONNET	.625" flange		1
38	6660644	CAP			1
39	7101345	BONNET	Was 6587633 [A]		1
40	30G000416B	BOLT			1
41	6592109	ADAPTER			1
2	6683274	SEAL	See BTI374 - spool - Was 6665846 [A]		4
43	6588981	END CAP	.625" thick		2
44	58K000124B	O-RING			2
)	6588197	SPRING			2

https://www.pdfmanual4trucks.com/

HYDRAULIC CONTROL VALVE (Cont'd)
(S/N 5127 27421 & Abv, 5086 94509 & Abv, 5158 11001-29999, 5162 11001-19999

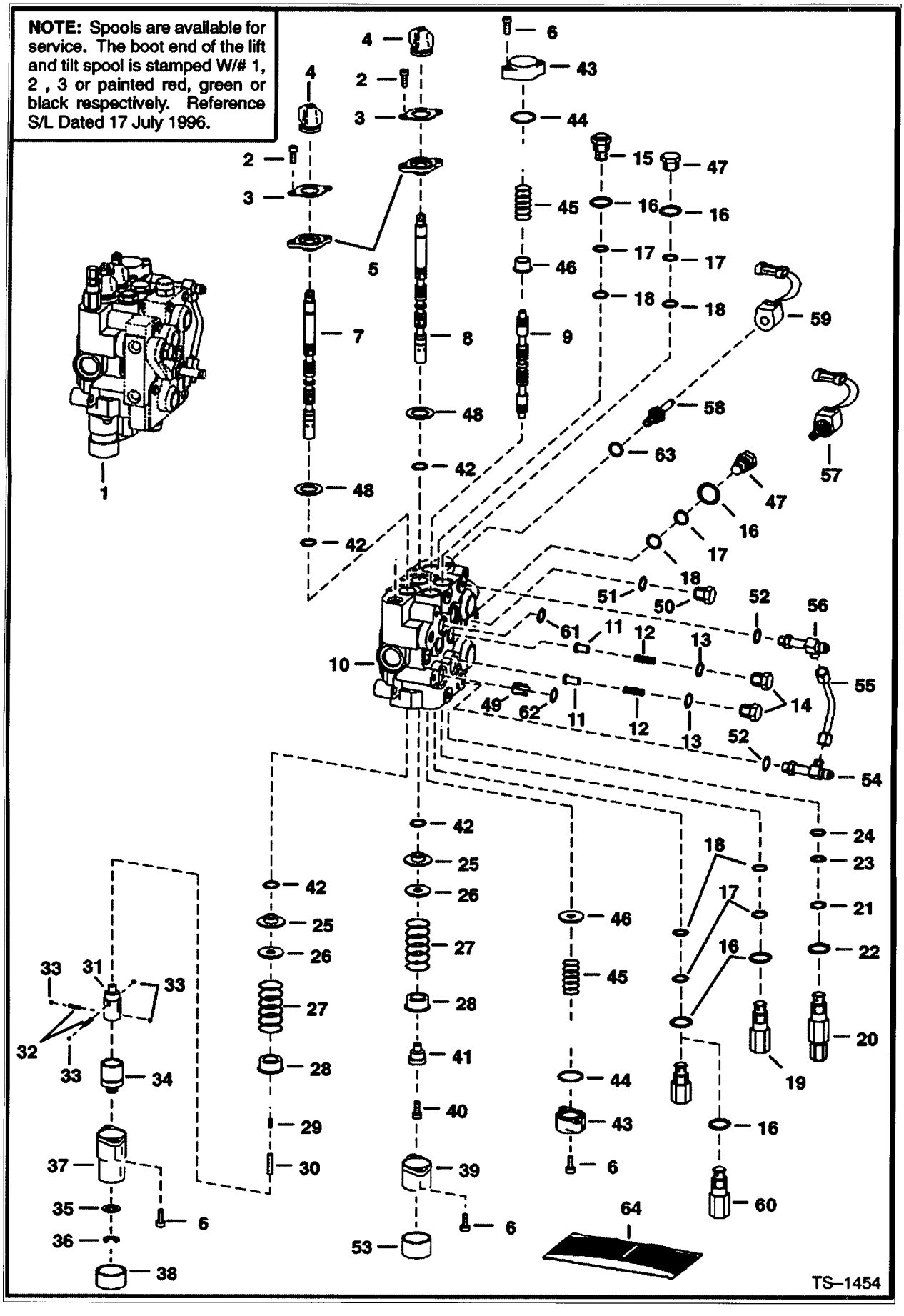

https://www.pdfmanual4trucks.com/

HYDRAULIC CONTROL VALVE (Cont'd)
(S/N 5127 27421 & Abv, 5086 94509 & Abv, 5158 11001-29999, 5162 11001-19999

f NO	Part Number	Description	Remarks	Serial Number	Qty
`6	6537096	WASHER			2
,7	6592720	PLUG	W/Ref. 16-18		2
48	58K000127B	O-RING			2
49	6534630	RESTRICTOR	.134/.141		1
50	24K000008B	PLUG	W/Ref. 51 - flat boss face		1
50	24KN00008B	PLUG	W/Ref. 51 - tapered boss face		1
51	79K12	O RING 10			1
51	99K000012B	O-RING	tapered boss face		x
52	79K6	O RING 10	flat boss face		x
52	99K6	O'RING	tapered boss face		x
53	6662848	CAP			1
54		TEE	NAP - W/Ref. 52 - W/O flared end O-ring - Was 6587888 [A]		1
54	6805696	TEE	W/Ref. 45 - W/flared end O-ring		1
54	97K6	O'RING	flared end		2
55	6577690	TUBE			1
56		CONNECTOR	NAP - W/Ref. 52 - flat boss face - W/O flared end O-rings - Was 6588188 [A]		1
,6		CONNECTOR	NAP - W/Ref. 52 - tapered boss face - W/flared end O-rings - Was 6715654 [B]		1
56	6817553	CROSS	W/Ref. 52 - flat boss face - W/flared end O-rings - Was 6805241 [A]		1
56	97K6	O'RING	flared end		1
57	6653395	VALVE	solenoid - W/Ref. 58 & 59		2
57	6534559	SEAL KIT			x
58	6665758	VALVE	W/Ref. 63		1
`9	6717708	COIL	14 volt - Was 6665759 [A]		2
.9	6679961	NUT			2
60	6664373	VALVE	optional - port relief & anti-cav. - W/Ref. 16 - 2500 PSI - use in tilt cylinder base end port		1
61	55K000204B	O-RING	See Illustration BICS CONTROL VALVE/ TS1365		1
62	55K000212B	O-RING	See Illustration BICS CONTROL VALVE/ TS1365		4
63	79K000007B	O-RING			2
64	6816250	SEAL KIT	Ref. 4, 51 & 55 - For One Spool - See S/L 31 Aug 92 - Was 6803605 [A]		x
64	6816253	SEAL KIT	complete - Ref. 4, 13, 16-18, 21-24, 42, 44, 61 & 62 - Was 6809448 [A]		x
ł	6632279	SEAL KIT	Ref. 21-24		x
o4	6809425	SEAL KIT	Ref. 13 & 16-18 - Was 6586461 [A]		x

https://www.pdfmanual4trucks.com/

HYDRAULIC CONTROL VALVE
(W/ BICS Control Valve) (Service Valve - Minus Fittings)

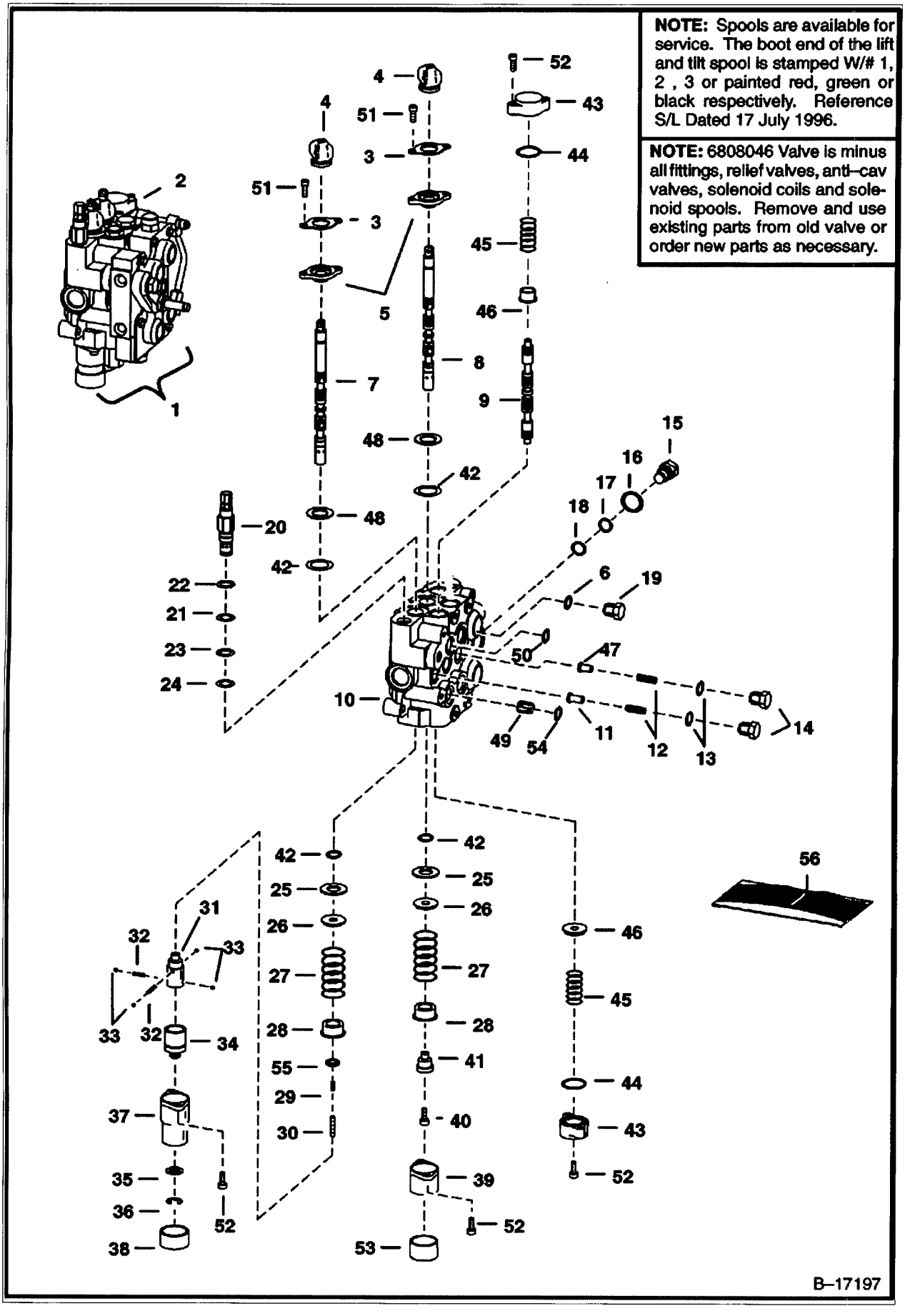

https://www.pdfmanual4trucks.com/

HYDRAULIC CONTROL VALVE (Cont'd)
(W/ BICS Control Valve) (Service Valve - Minus Fittings)

Item No	Part Number	Description	Remarks	Serial Number	Qty
1	6808046	VALVE	Ref. 2 - 55		1
2	6628571	VALVE ASSY	See Illustration BICS CONTROL VALVE/ TS1365 BICS CONTROL		1
3	6589564	RETAINER			2
4	6587763	BOOT			2
5	6589565	BUSHING			2
6	95K000012B	O-RING			x
7	6666588	SPOOL	lift - # 1 or Red - SEE NOTE		1
7	6666589	SPOOL	lift - # 2 or Green-SEE NOTE		1
7	6666590	SPOOL	lift - # 3 or Black - SEE NOTE		1
8	6666591	SPOOL	tilt - # 1 or Red - SEE NOTE		1
8	6666592	SPOOL	tilt - # 2 or Green - SEE NOTE		1
8	6666593	SPOOL	tilt - # 3 or Black - SEE NOTE		1
9	6588074	SPOOL	auxiliary - SEE NOTE		3
10		BODY	NSS		1
11	6592115	SEAT	load check		2
12	6592117	SPRING			3
13	79K8	O RING 10			3
14	6592116	NUT	load check		3
15	6592720	PLUG	W/Ref. 16-18		2
16	79K10	O RING 10			2
17	80K000014B	RING	back-up		5
18	58K14	O RING 10	back-up washer required		5
18	6677106	O-RING	back-up washer not required		5
19	90KV00008B	PLUG	W/Ref. 6		1
20		VALVE	NAP - main relief - pressure preset at factory - Was 6676196 [A]		1
20	6686360	VALVE	main relief - pressure to be set in field		1
20	6676871	SEAL KIT			1
21		O-RING	NSS		1
22		WASHER	NSS - back-up		1
23		O-RING	NSS		1
24		RING	NSS - glide		1
25	6595663	BUSHING			2
26	6587523	WASHER			2
27	6587580	SPRING			2
28	6592100	COLLAR			2
29	6596807	PLUG	plastic - .460" long		1
30	6586918	SCREW			1
31	6587575	ADAPTER			1
32	6592107	SPRING			2
33	6592105	BALL			4
34	6531270	SLEEVE			1
35	6592098	WASHER			1
36	799119B	SNAP RING			1
37	6589226	BONNET	.625" flange		1
38	6660644	CAP			1
39	7101345	BONNET	Was 6587633 [A]		1
40	30G000416B	BOLT			1
41	6592109	ADAPTER			1
42	6683274	SEAL	See BTI374 - spool - Was 6665846 [A]		4
43	6588781	END CAP	.87" thick		2
44	58K000124B	O-RING			2
45	6596332	SPRING			2
46	7108780	SLEEVE	Was 6595951 [A]		2
47	6596569	SEAT			1

https://www.pdfmanual4trucks.com/

HYDRAULIC CONTROL VALVE (Cont'd)
(W/ BICS Control Valve) (Service Valve - Minus Fittings)

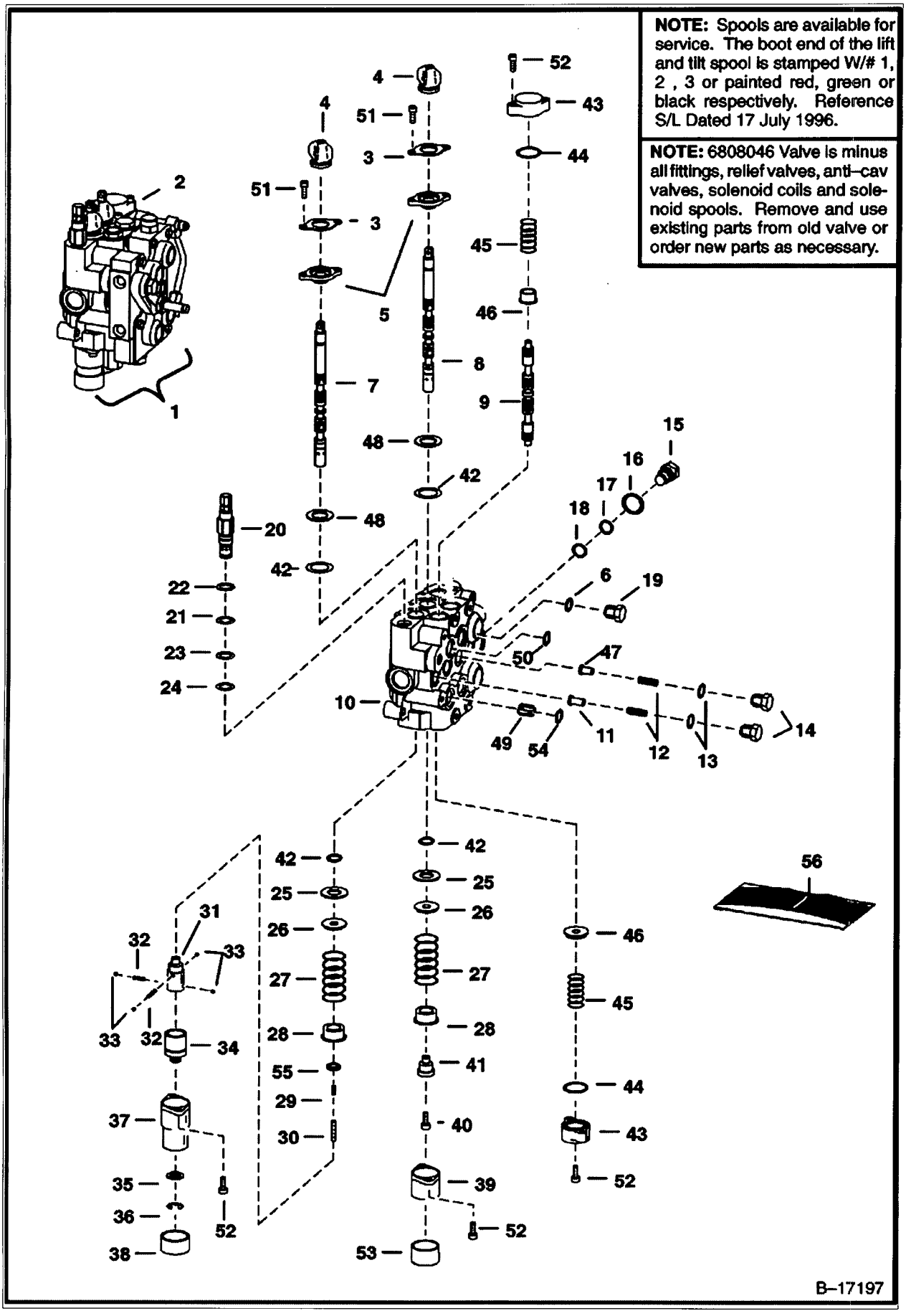

https://www.pdfmanual4trucks.com/

HYDRAULIC CONTROL VALVE (Cont'd)
(W/ BICS Control Valve) (Service Valve - Minus Fittings)

f No	Part Number	Description	Remarks	Serial Number	Qty
'8	58K000127B	O-RING			2
,9	6534630	RESTRICTOR			1
50	55K000204B	O-RING			1
51	29G000412B	SCREW			4
52	29G000416B	SCREW	1" long		8
53	6662848	CAP			1
54	55K000212B	O-RING			4
55	54K020002B	O-RING			1
56	6816250	SEAL KIT	one spool - Ref. 4, 42 & 51 - Was 6803605 [A]		x
56	6816253	SEAL KIT	complete - Ref. 4, 13, 16-18, 21-24, 42, 44, 50 & 54 - Was 6809448 [A]		x
56	6632279	SEAL KIT	main relief - Ref. 21-24		x
56	6809425	SEAL KIT	Ref. 13 & 16-18		x

https://www.pdfmanual4trucks.com/

HYDRAULIC CONTROL VALVE
(Advanced Hand Controls) (W/BICS Valve)

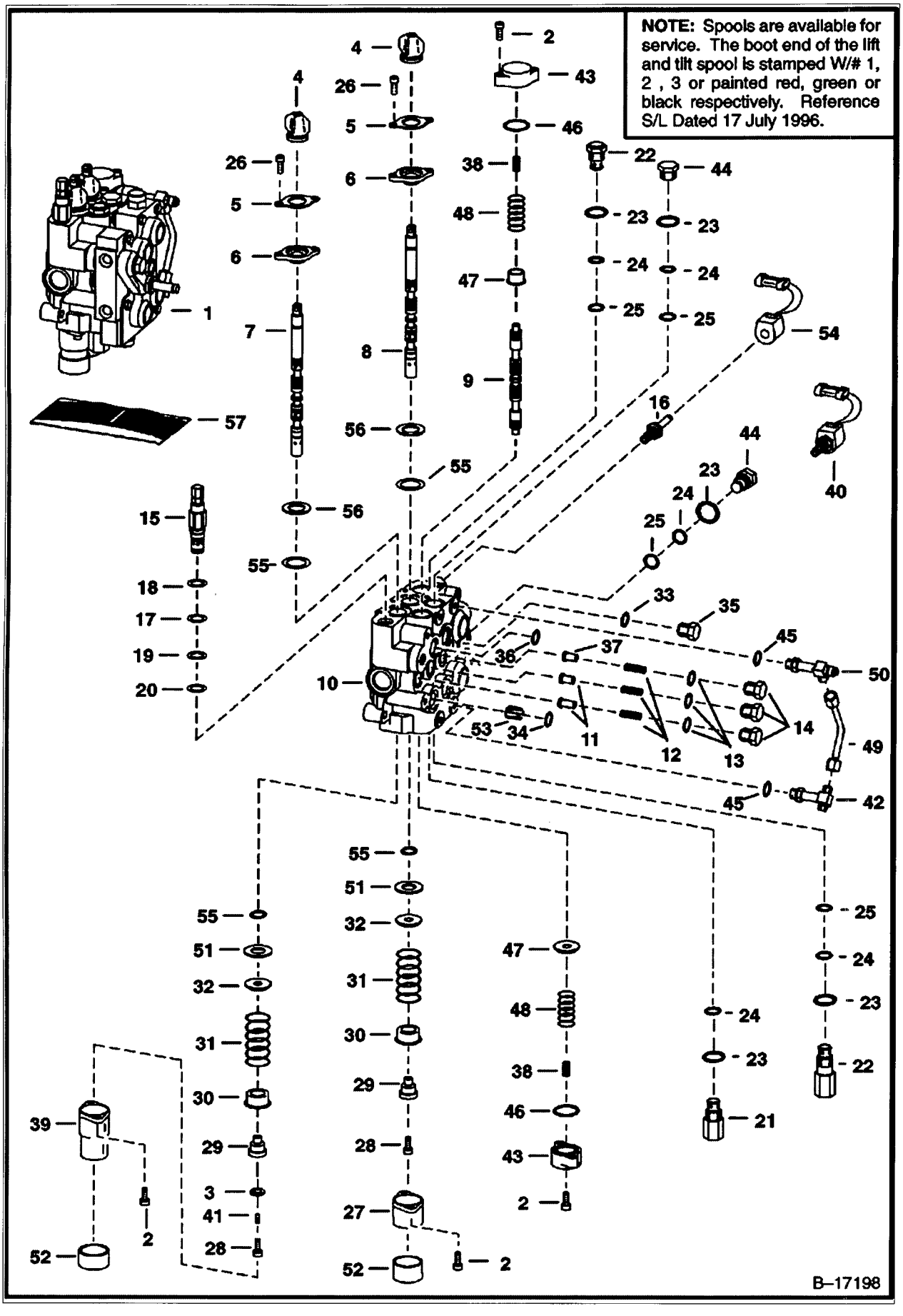

https://www.pdfmanual4trucks.com/

HYDRAULIC CONTROL VALVE (Cont'd)
(Advanced Hand Controls) (W/BICS Valve)

f No	Part Number	Description	Remarks	Serial Number	Qty
1		VALVE	See Illustration HYDRAULIC CONTROL VALVE/ B17199 NAP - W/FITTINGS - REF. 2-38, 39-53, 55 & 56 - ORDER 6810026 VALVE - WAS 6804599 [A]		1
1	6628571	VALVE ASSY	See Illustration BICS CONTROL VALVE/ TS1365 BICS CONTROL		1
2	29G000416B	SCREW			8
3	54K020002B	O-RING			1
4	6587763	BOOT			2
5	6589564	RETAINER			2
6	6589565	BUSHING	seal		2
7	6674297	SPOOL	lift - # 1 or Red - SEE NOTE		1
7	6674298	SPOOL	lift - # 2 or Green - SEE NOTE		1
7	6674299	SPOOL	lift - # 3 or Black - SEE NOTE		1
8	7108242	TILT SPOOL	tilt - # 1 or Red - SEE NOTE - Was 6677662 [A]		1
8	7108242	TILT SPOOL	tilt - # 2 or Green - SEE NOTE - Was 6677663 [A]		1
8	6674302	SPOOL	tilt - # 3 or Black - SEE NOTE		1
9	6588074	SPOOL	auxiliary - SEE NOTE		3
0		BODY	NSS		1
1	6592115	SEAT	load check		2
12	6592117	SPRING			3
13	79K8	O RING 10			3
14	6592116	NUT	load check		3
15		VALVE	NAP - main relief - W/Ref. 21-24 - pressure preset at factroy - 2550-2600 PSI - Was 6676196 [A]		1
15	6686360	VALVE	main relief - W/Ref. 21-24 - presssure to be set in field		1
16	6666616	STEM			2
17	58K000017B	O-RING			1
18	6665569	WASHER	back-up		1
19	25K020016B	O-RING			1
20	6665570	RING	glide		1
21	6599161	RELIEF VALVE	port relief - 3400-3600 PSI - W/Ref. 16-18		1
22	6667549	VALVE	anti-cavity check -W/Ref. 16-18		2
23	79K10	O RING 10			2
24	80K000014B	RING	back-up		5
25	58K14	O RING 10	back-up washer required		5
25	6677106	O-RING	back-up washer not required		5
26	29G000412B	SCREW			4
27	7101345	BONNET	Was 6587633 [A]		1
28	30G000416B	BOLT			1
29	6592109	ADAPTER			1
30	6592100	COLLAR			2
31	6587580	SPRING			2
32	6587523	WASHER			2
33	79K12	O RING 10	flat boss face		x
33	99K000012B	O-RING	tapered boss face		x
33	95K000012B	O-RING	tapered boss face - socket head		x
34	55K000212B	O-RING	See Illustration BICS CONTROL VALVE/ TS1365		4
35	90KV00008B	PLUG	W/Ref. 33 - flat boss face		1
36	55K000204B	O-RING	See Illustration BICS CONTROL VALVE/ TS1365		1
37	6596569	SEAT			1
38	6589045	SPRING	white		2
39	6803092	BONNET	.625" flange		1
0	6653395	VALVE	solenoid - W/Ref. 58 & 59		2
40	6586459	SEAL KIT			x
41	6801167	PLUG	plastic - .685" long		1
2		TEE	NAP - W/Ref. 6 - W/O flared end O-ring - Was		1

https://www.pdfmanual4trucks.com/

HYDRAULIC CONTROL VALVE (Cont'd)
(Advanced Hand Controls) (W/BICS Valve)

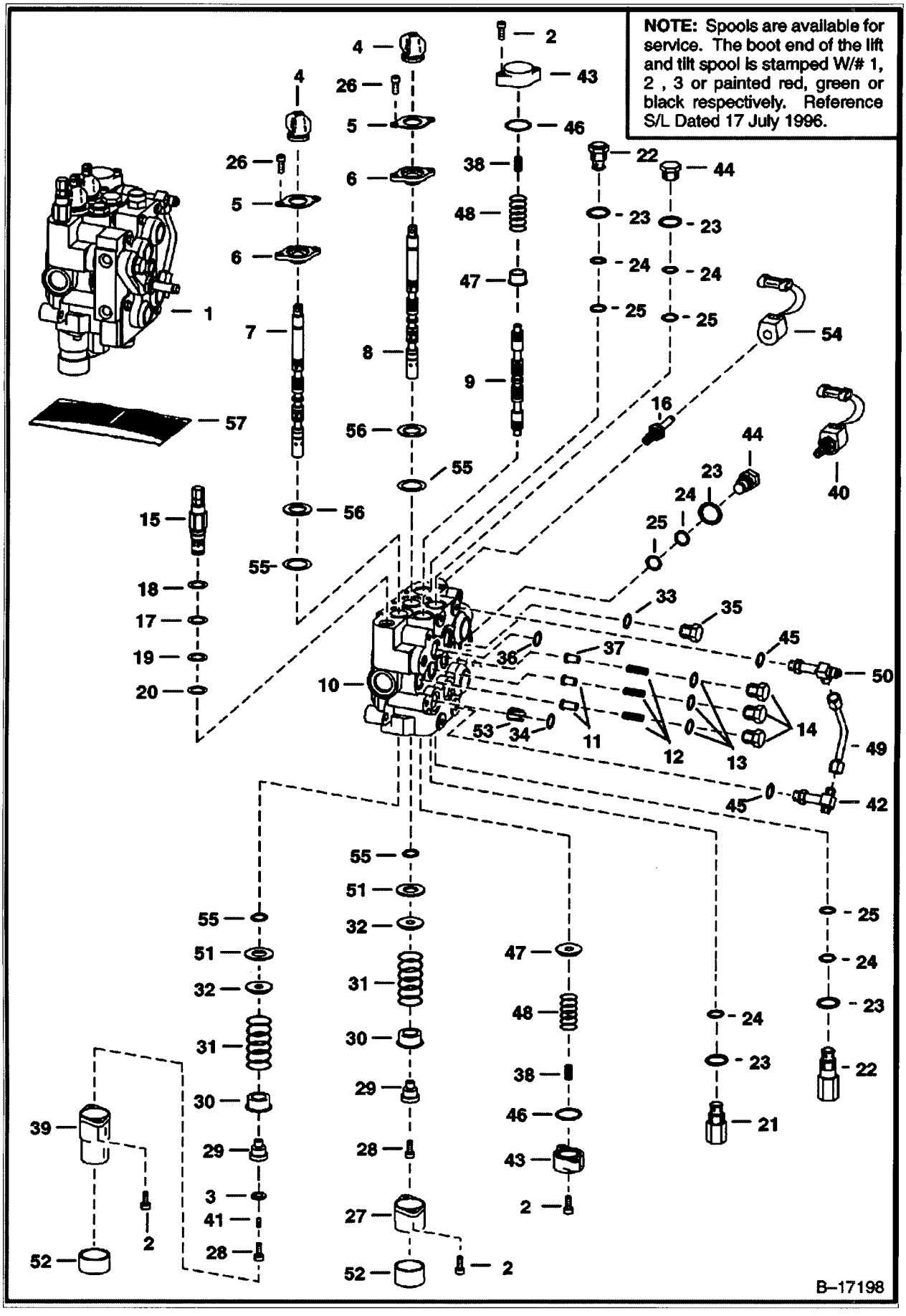

https://www.pdfmanual4trucks.com/

HYDRAULIC CONTROL VALVE (Cont'd)
(Advanced Hand Controls) (W/BICS Valve)

f No	Part Number	Description	Remarks	Serial Number	Qty
			6587888 [A]		
42	6805696	TEE	W/Ref. 45 - W/flared end O-ring		1
42	97K6	O'RING	flared end		2
43	6588781	END CAP			2
44	6592720	PLUG	W/Ref. 16-18		1
45	79K6	O RING 10	flat boss face		x
45	99K6	O'RING	tapered boss face		x
46	58K000124B	O-RING			2
47	7108780	SLEEVE	Was 6595951 [A]		2
48	6596332	SPRING			2
49	6577690	TUBE			1
50	6817553	CROSS	W/Ref. 45 - flat boss face - Was 6805241 [A]		1
50	97K6	O'RING	flared end		1
51	6595663	BUSHING			2
52	6662848	CAP			1
53	6534630	RESTRICTOR	.183/.187		1
54	6666547	COIL			2
5	6683274	SEAL	See BTI374 - spool - Was 6665846 [A]		4
56	58K000127B	O-RING			2
57	6816250	SEAL KIT	one spool - Ref. 4, 26 & 42 - Was 6803605 [A]		x
57	6661328	SEAL KIT	main relief - Ref. 21-24 - main relief		x
57	6809425	SEAL KIT	Ref. 13 & 16-18 - Was 6586461 [A]		x
57	6816715	SEAL KIT	complete - Ref. 4, 13, 21-24, 16-18, 36, 6, 44 & 42 - Was 6596311 [A]		x

https://www.pdfmanual4trucks.com/

HYDRAULIC CONTROL VALVE
(Service Valve) (Advanced Control System)

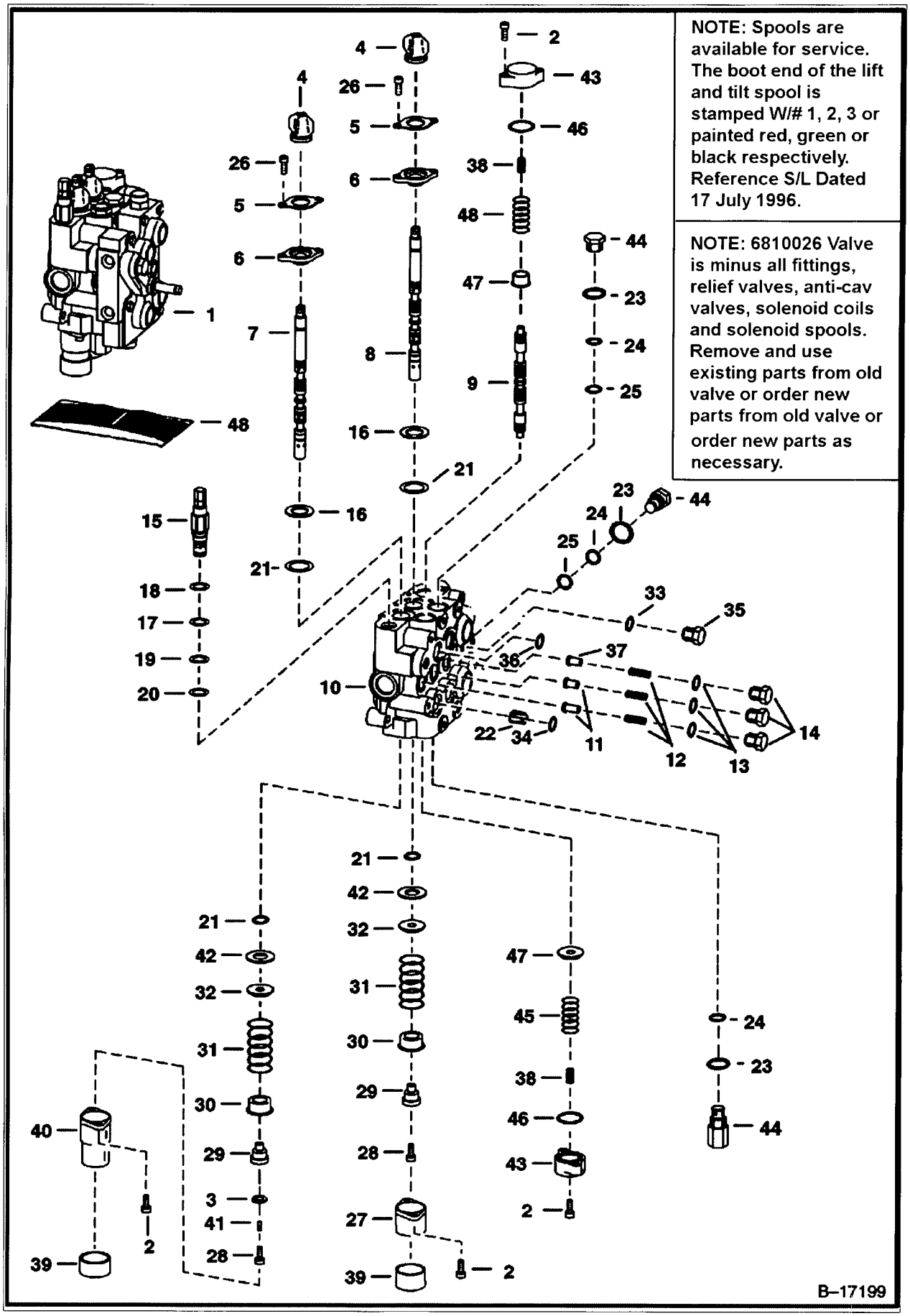

https://www.pdfmanual4trucks.com/

HYDRAULIC CONTROL VALVE (Cont'd)
(Service Valve) (Advanced Control System)

Ref No	Part Number	Description	Remarks	Serial Number	Qty
1	6810026	VALVE			1
1	6628571	VALVE ASSY	See Illustration BICS CONTROL VALVE/ TS1365 BICS CONTROL		1
2	29G000416B	SCREW			8
3	54K020002B	O-RING			1
4	6587763	BOOT			2
5	6589564	RETAINER			2
6	6589565	BUSHING	seal		2
7	7108251	SPOOL	lift - # 1 or Red - Was 6677660 [A]		1
7	7108251	SPOOL	lift - # 2 or Green - Was 6677661 [A]		1
8	7108242	TILT SPOOL	tilt - # 1 or Red - Was 6677662		1
8	7108242	TILT SPOOL	tilt - # 2 or Green - Was 6677663 [A]		1
9	6588074	SPOOL	auxiliary		3
10		BODY	NSS		1
11	6592115	SEAT	load check		2
12	6592117	SPRING			3
13	79K8	O RING 10			3
14	6592116	NUT	load check		3
15		VALVE	NAP - main relief - W/Ref. 17-20 - pressure preset at factory - Was 6676196 [A]		1
15	6686360	VALVE	main relief - W/Ref. 17-20 - pressure to be set in field		1
16	58K000127B	O-RING			2
17	58K000017B	O-RING			1
18	6665569	WASHER	back-up		1
19	25K020016B	O-RING			1
20	6665570	RING	glide		1
21	6683274	SEAL	See BTI374 - spool - Was 6665846 [A]		4
22	6534630	RESTRICTOR	.134/.141		1
23	79K10	O RING 10			2
24	80K000014B	RING	back-up		5
25	58K14	O RING 10	back-up washer required		5
25	6677106	O-RING	back-up washer not required		5
26	29G000412B	SCREW			4
27	7101345	BONNET	Was 6587633 [A]		1
28	30G000416B	BOLT			2
29	6592109	ADAPTER			1
30	6592100	COLLAR			2
31	6587580	SPRING			2
32	6587523	WASHER			2
33	95K000012B	O-RING	tapered boss face - socket head		x
34	55K000212B	O-RING			4
35	90KV00008B	PLUG	W/Ref. 33 - tapered boss face - socket head		1
36	55K000204B	O-RING			1
37	6596569	SEAT			1
38	6589045	SPRING	white		2
39	6662848	CAP			1
40	6803092	BONNET	.625" flange		1
41	6801167	PLUG	plastic - .685" long		1
42	6595663	BUSHING			2
43	6588781	END CAP			2
44	6592720	PLUG	W/Ref. 23-25		1
45	6596332	SPRING			2
46	58K000124B	O-RING			2
47	7108780	SLEEVE	Was 6595951 [A]		2
48	6816250	SEAL KIT	one spool - Ref. 4, 21 & 26 - Was 6803605 [A]		x
48	6632279	SEAL KIT	main relief - Ref. 17-20		x

https://www.pdfmanual4trucks.com/

HYDRAULIC CONTROL VALVE (Cont'd)
(Service Valve) (Advanced Control System)

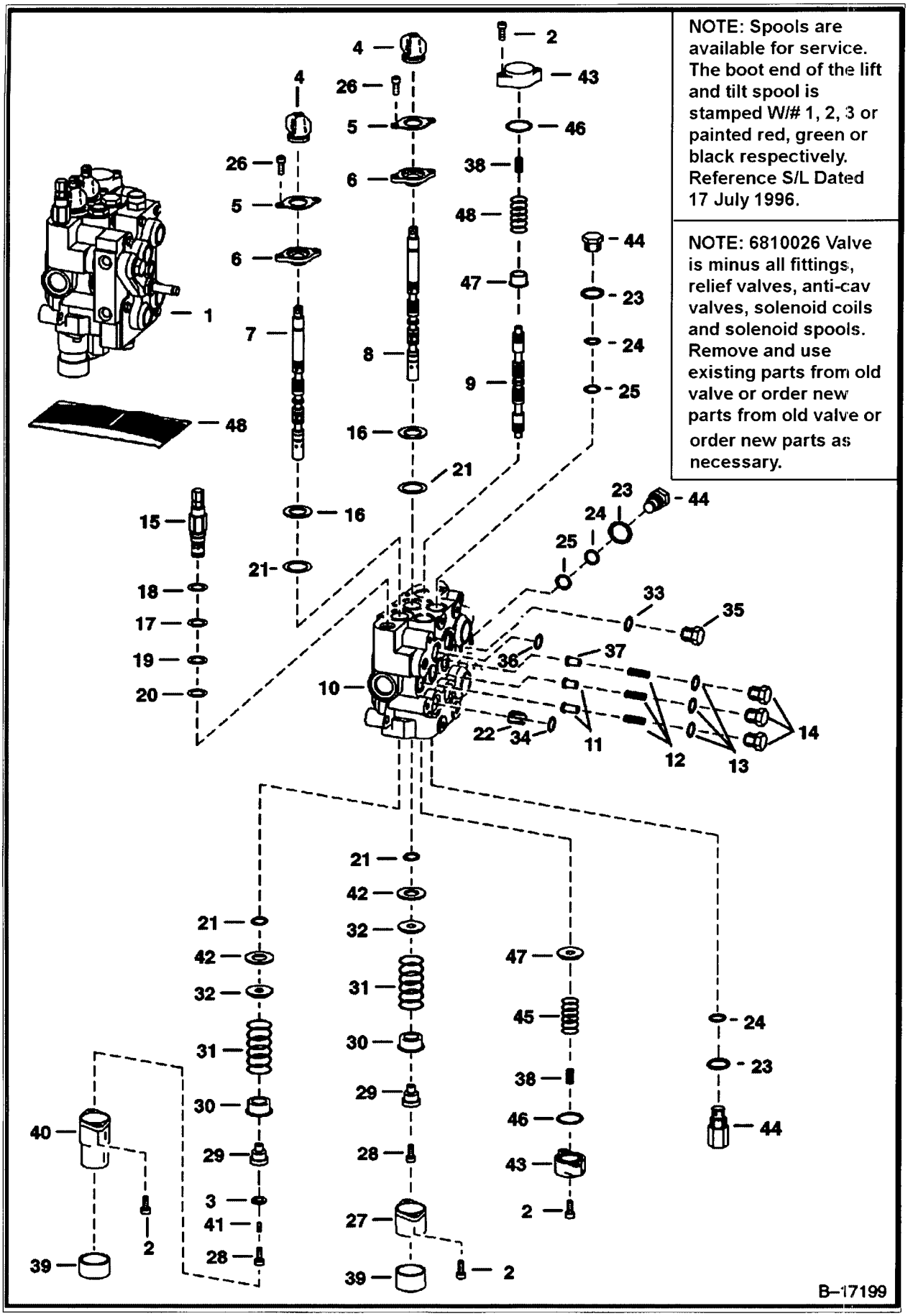

https://www.pdfmanual4trucks.com/

HYDRAULIC CONTROL VALVE (Cont'd)
(Service Valve) (Advanced Control System)

f No	Part Number	Description	Remarks	Serial Number	Qty
8	6809425	SEAL KIT	Ref. 13 & 23-25		x
48	6816253	SEAL KIT	complete - Ref. 4, 13, 17-20, 21, 23-25, 26, 34, 36 & 46 - Was 6809448 [A]		x

https://www.pdfmanual4trucks.com/

BICS CONTROL VALVE
(S/N 5127 27421 & Abv, 5086 94509 & Abv, 5158 11001-29999, 5162 11001-19999

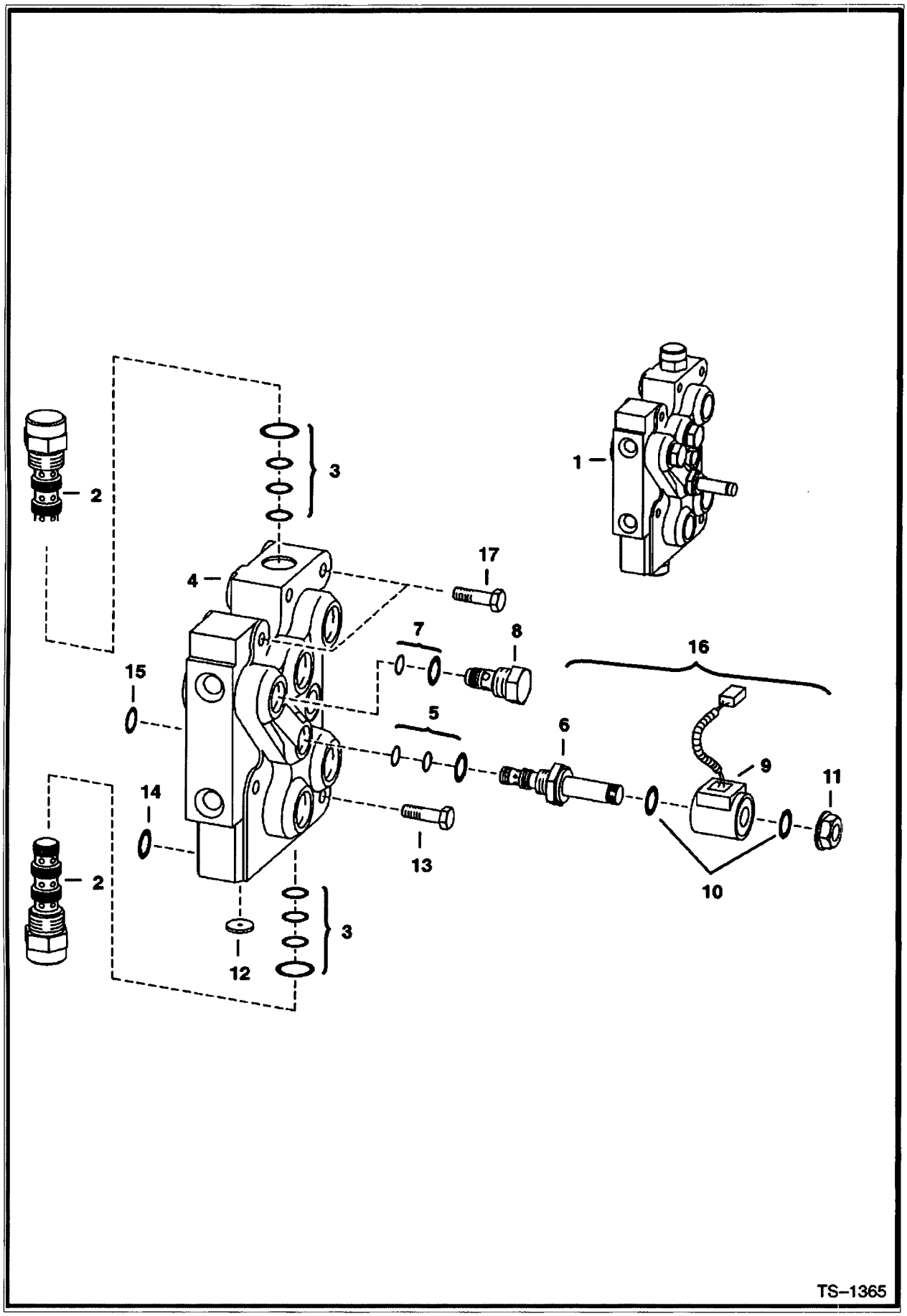

https://www.pdfmanual4trucks.com/

BICS CONTROL VALVE (Cont'd)
(S/N 5127 27421 & Abv, 5086 94509 & Abv, 5158 11001-29999, 5162 11001-19999

f No	Part Number	Description	Remarks	Serial Number	Qty
1	6628571	VALVE ASSY	Ref. 2 - 8		1
2	6689739	VALVE	pilot operated - Was 6668765 [A]		2
3	6669734	SEAL KIT			x
4		BODY	NSS		1
5	6669732	SEAL KIT			x
6	6667687	STEM	solenoid valve		1
7	6669733	SEAL KIT			x
8	6669057	CHECK VALVE	filter		1
9		COIL	NAP - W/O diode - Was 6667138 [A]		1
9	6671025	COIL	W/ diode - SEE NOTE		x
10	54K020028B	O-RING			2
11	6668820	NUT			1
12	6668791	ORIFICE			1
13	43C000532B	BOLT		& Bel	6
13	43C000532B	BOLT		& Abv	4
14	55K000212B	O-RING			4
15	55K000204B	O-RING			1
5		VALVE	NAP - Ref. 9-11 - Was 6667688 [A]		1
16	6672471	VALVE	Ref. 5, 6 & 9-11 - SEE NOTE		x
17	43C000524B	BOLT		& Abv	2

https://www.pdfmanual4trucks.com/

TILT LOCK VALVE
(S/N 5127 27420 & Below, 5086 94508 & Below)

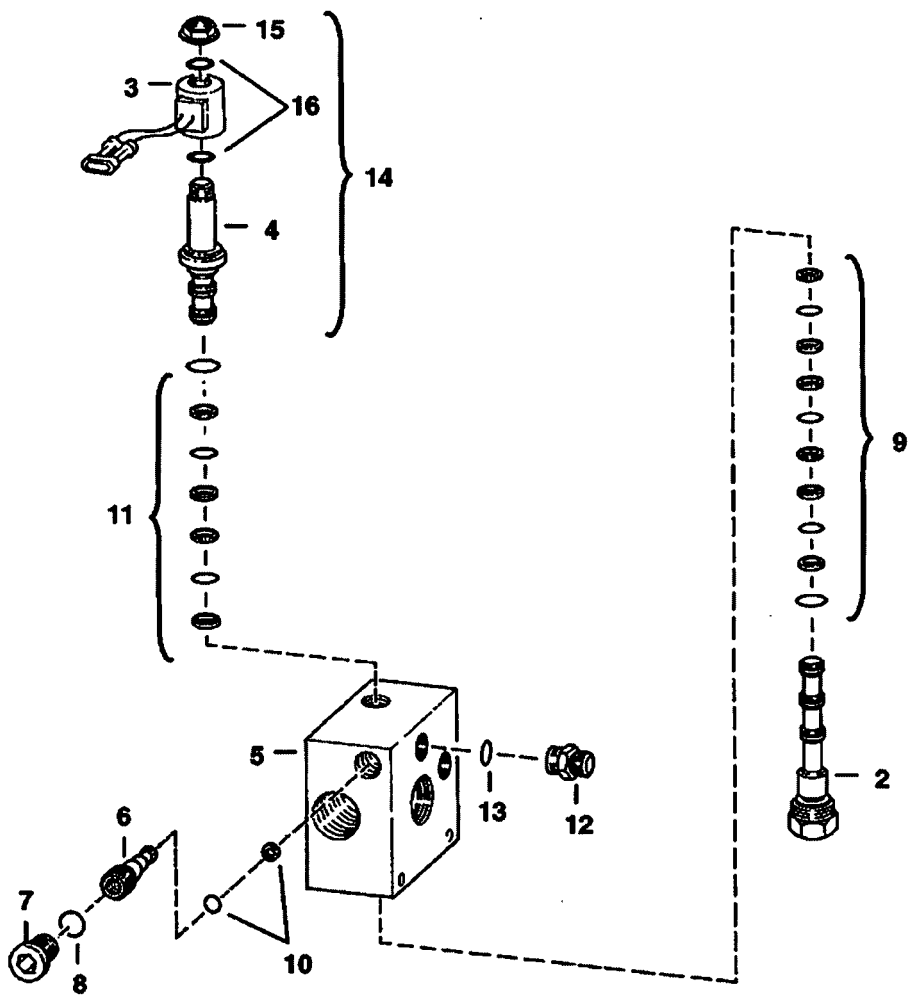

NOTE: Coils W/O diode have two red wires. Coils W/ diode have one red wire and one black wire.

C–3387

https://www.pdfmanual4trucks.com/

TILT LOCK VALVE (Cont'd)
(S/N 5127 27420 & Below, 5086 94508 & Below)

Ref No	Part Number	Description	Remarks	Serial Number	Qty
1	6664849	VALVE	Ref. 2-16		1
2	6665610	VALVE			1
3		COIL	NAP - W/O diode - Was 6667138 [A]		1
3	6671025	COIL	W/ diode - SEE NOTE		x
4	6667687	STEM	Was 6665004 [A]		1
5		BLOCK	NSS		1
6	6665609	CHECK VALVE			1
7	6667127	PLUG			1
8	95K4	O-RING	Was 79K000004B [B]		1
9	6665612	SEAL KIT			1
10	6665611	SEAL KIT			1
11	6665487	SEAL KIT			1
12	6665489	ADAPTER	filter		1
13	6667132	O-RING			1
14		SOLENOID	NAP - W/O diode - Was 6667157 [A]		1
14	6672471	VALVE	W/ diode - Was 6672456 [A]		x
15	6668820	NUT			1
3	6669076	O-RING			2

https://www.pdfmanual4trucks.com/

LIFT LOCK VALVE
(S/N 5127 27420 & Below, 5086 94508 & Below)

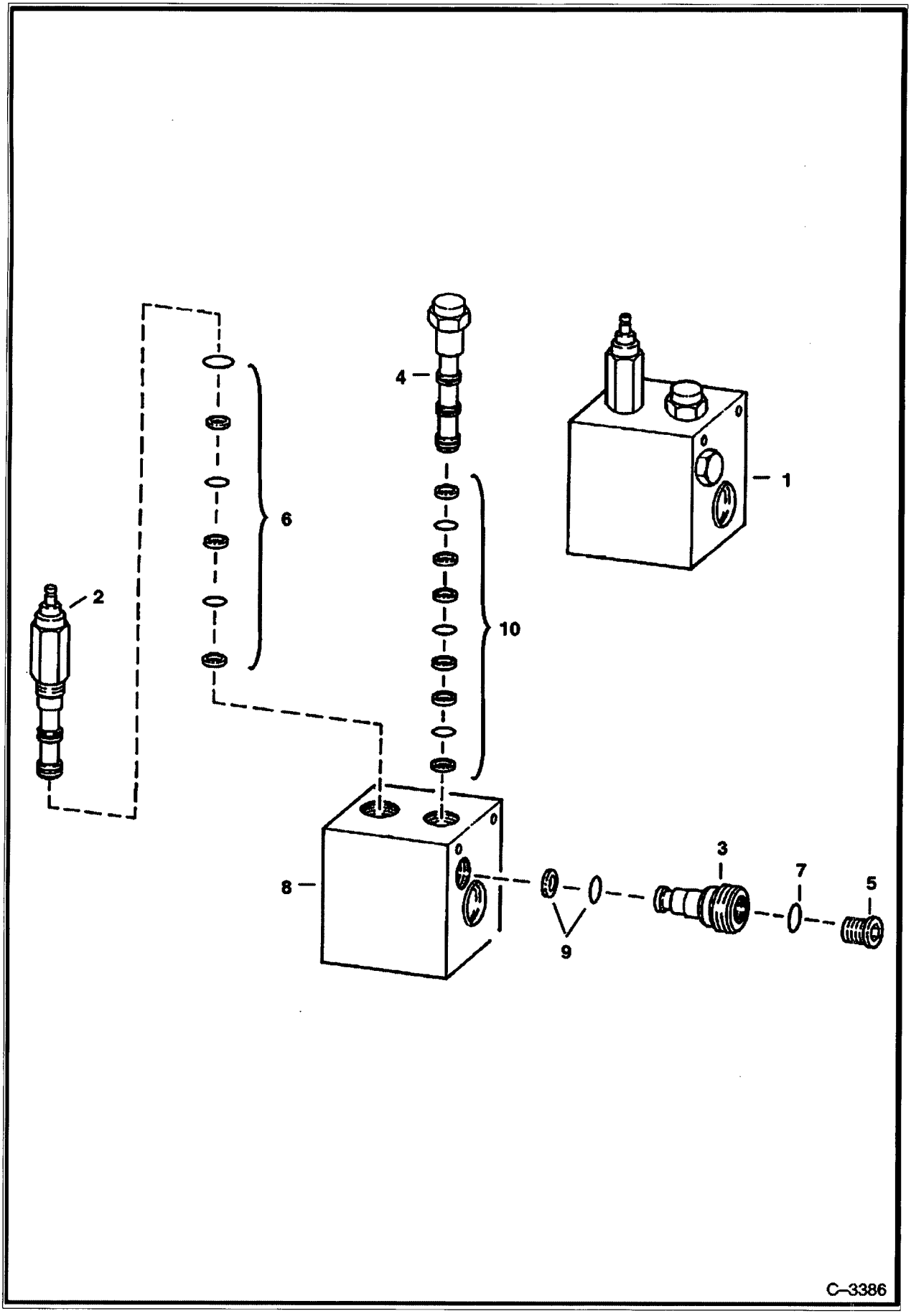

https://www.pdfmanual4trucks.com/

LIFT LOCK VALVE (Cont'd)
(S/N 5127 27420 & Below, 5086 94508 & Below)

f No	Part Number	Description	Remarks	Serial Number	Qty
1	6664850	VALVE	Ref. 2-8		1
2	6665490	VALVE			1
3	6665609	CHECK VALVE			1
4	6665610	VALVE	filter		1
5	6667127	PLUG			1
6	6666828	SEAL KIT			1
7	95K4	O-RING	Was 79K000004B [B]		1
8		BLOCK	NSS		1
9	6665611	SEAL KIT			1
10	6665612	SEAL KIT			1

https://www.pdfmanual4trucks.com/

MANUAL LIFT RELEASE VALVE

(S/N 5127 27421 & Abv, 5086 94509 & Abv, 5158 11001-29999, 5162 11001-19999

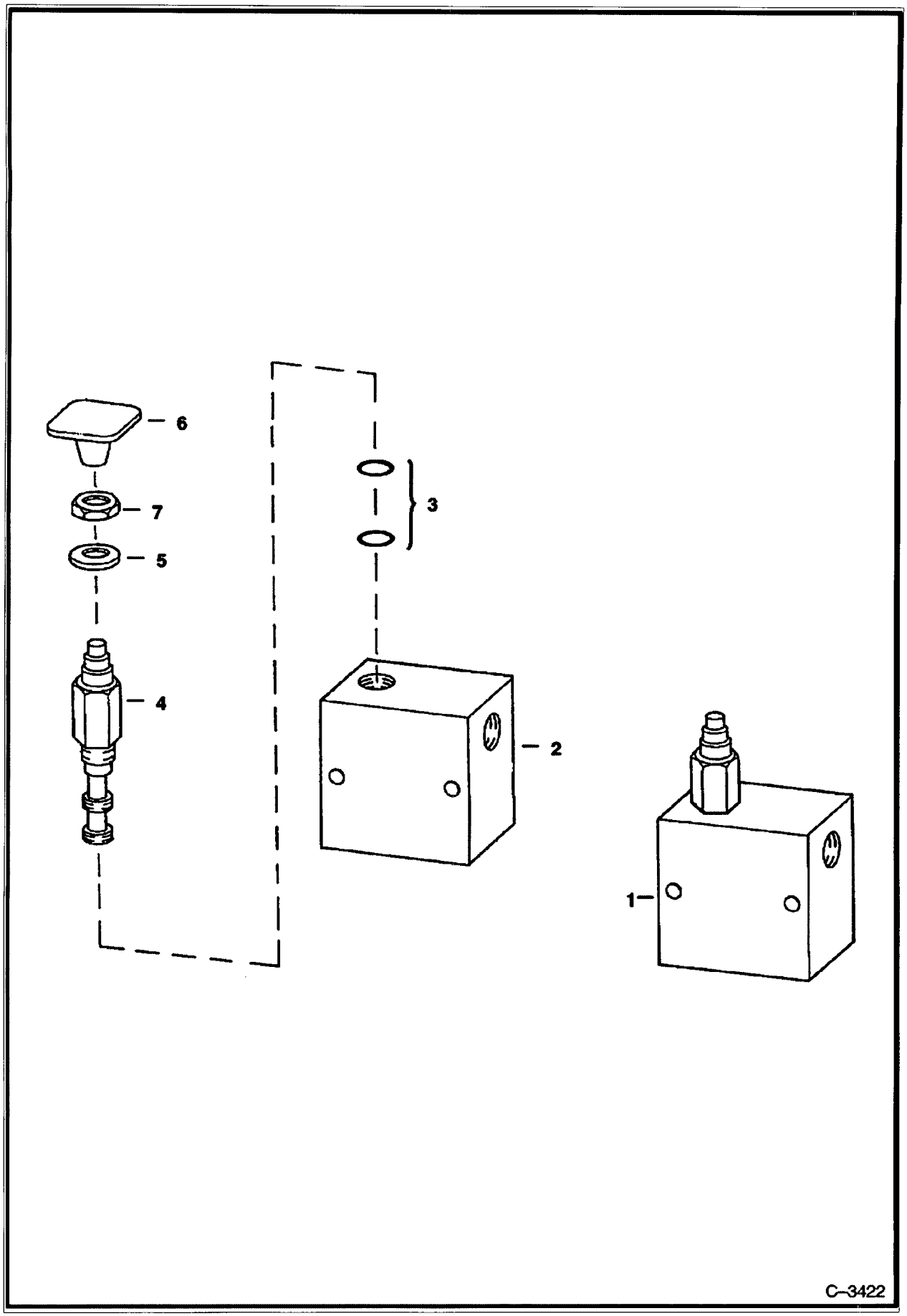

https://www.pdfmanual4trucks.com/

MANUAL LIFT RELEASE VALVE (Cont'd)
(S/N 5127 27421 & Abv, 5086 94509 & Abv, 5158 11001-29999, 5162 11001-19999

f No	Part Number	Description	Remarks	Serial Number	Qty
1	6667844	VALVE ASSY	Ref. 2-4		1
2		BLOCK	NSS		1
3	6669087	SEAL KIT			1
4	6669085	VALVE	NSS - Order Ref. 1		1
5	6707101	SEAL	neoprene		1
6	6737524	KNOB	red square - Was 6668913 [A]		1
7	7D000004B	NUT			1

https://www.pdfmanual4trucks.com/

BUCKET POSITIONING VALVE

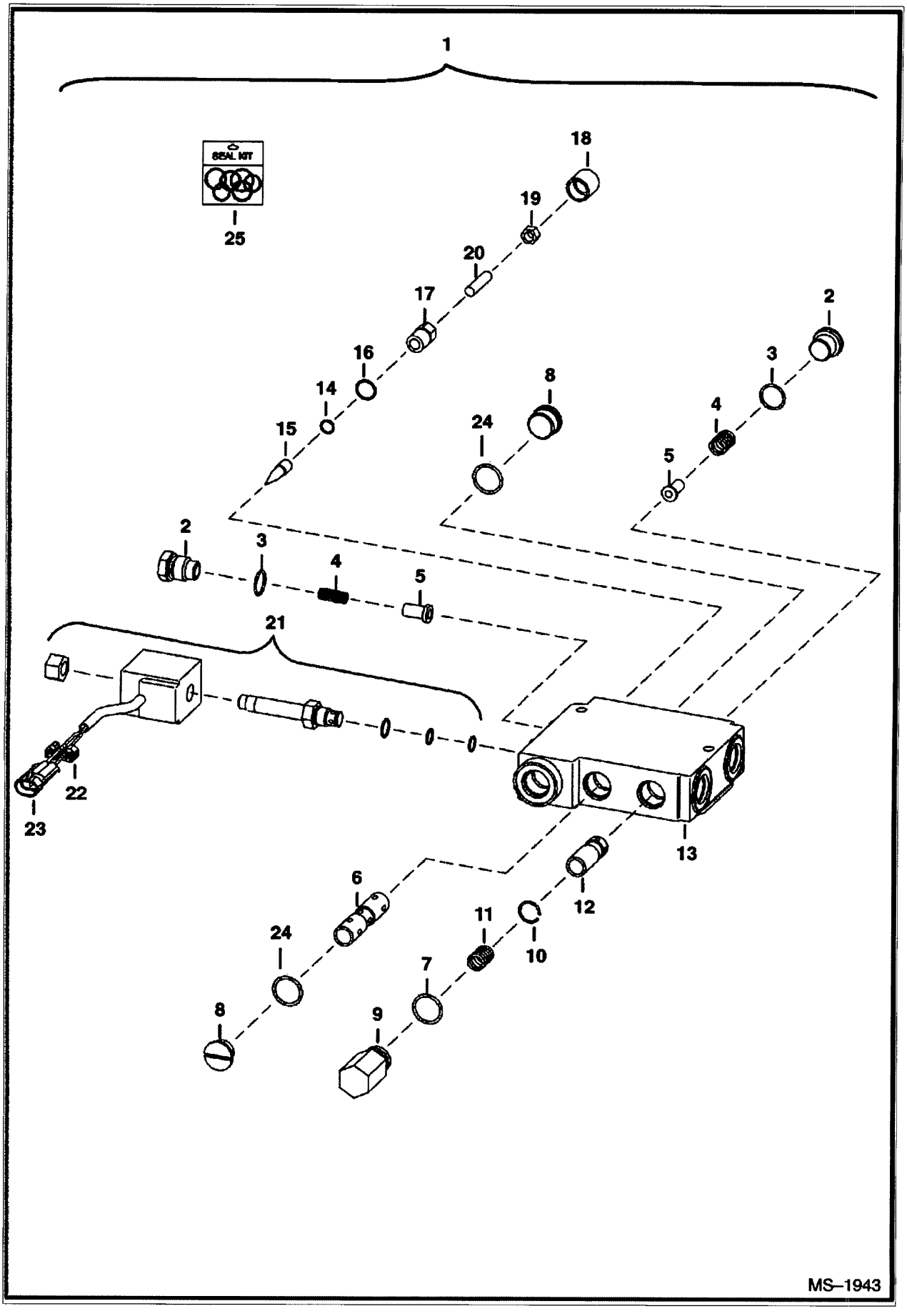

https://www.pdfmanual4trucks.com/

BUCKET POSITIONING VALVE (Cont'd)

;f No	Part Number	Description	Remarks	Serial Number	Qty
1	6666341	VALVE	Ref. 2-20 - white		1
1	6673959	VALVE	Ref. 2-23 - white		1
2	6647784	PLUG	W/Ref. 3		2
3	79K8	O RING 10			2
4	6647785	SPRING			2
5	6647783	LOAD CHECK			2
6		SPOOL	NSS		1
7	58K000116B	O-RING	Was 80K000116B [B]		3
8	6676543	PLUG	W/Ref. 24 - Was 6647780 [A]		2
9	6667176	PLUG	W/Ref. 7		1
10	6667680	SNAP RING			1
11	6648294	SPRING			1
12		SPOOL	NSS		1
13		BODY	NSS		1
14	6667677	O-RING			1
15	6647777	PIN			1
16	79K6	O RING 10	Was 6634874 [B,D]		1
17	6647778	CAP			1
18	6667676	COVER			1
19	6631561	NUT			1
20	6648293	SCREW			1
21	6672863	SOLENOID			1
21	6671527	NUT			1
21	6670634	SEAL KIT			1
21	6674331	COIL	W/Ref. 22 & 23		1
21	6675780	CARTRIDGE	Was 6676545 [A]		1
22	6641180	LOCK	2-Pin		1
23	6641179	CONNECTOR	2-Pin		1
24	79K10	O RING 10			2
25	6647786	SEAL KIT	Ref. 3, 7, 14, 16, 18 & 24		1

https://www.pdfmanual4trucks.com/

HIGH FLOW HYDRAULICS

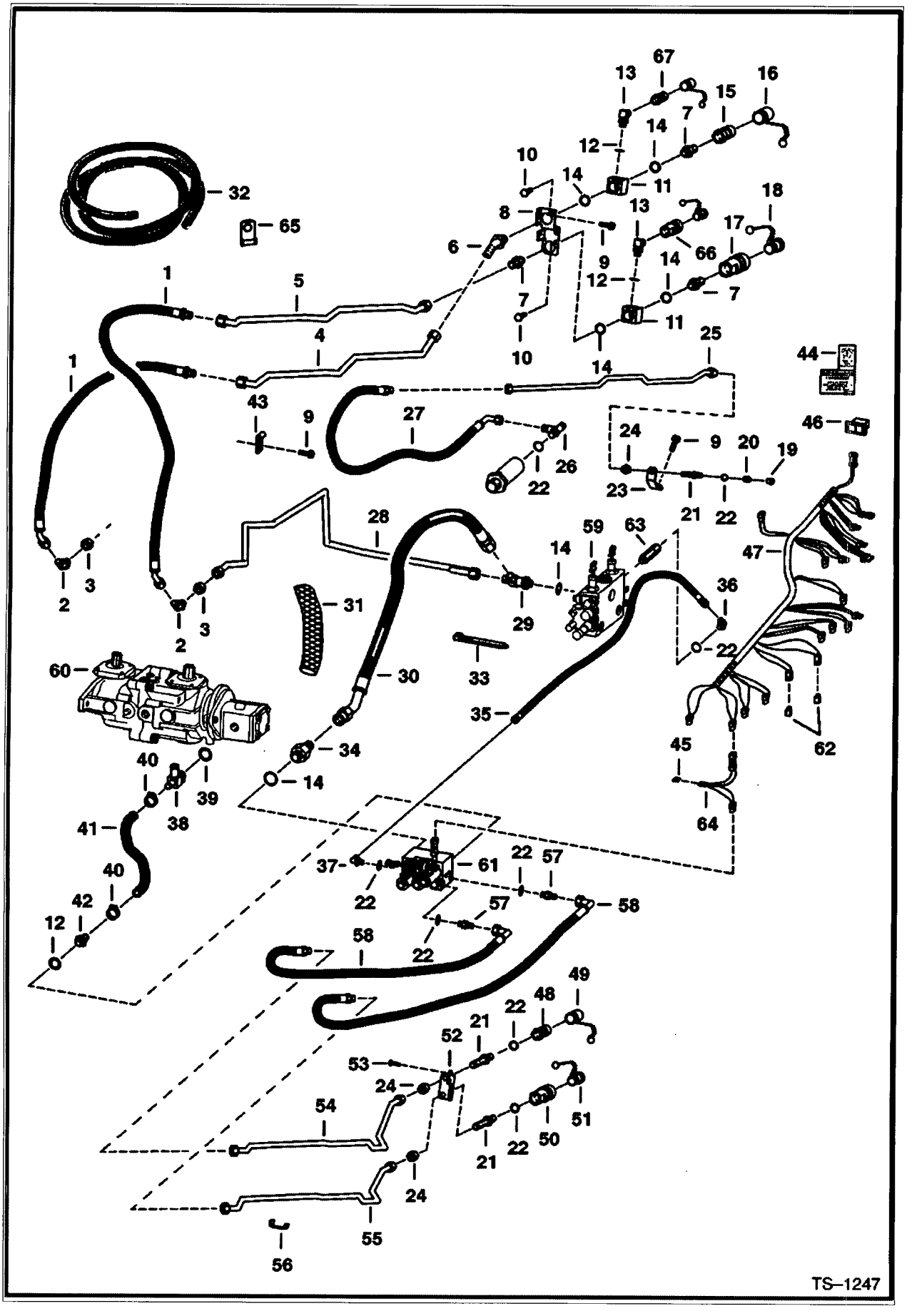

https://www.pdfmanual4trucks.com/

HIGH FLOW HYDRAULICS (Cont'd)

f No	Part Number	Description	Remarks	Serial Number	Qty
1	6706175	HOSE			2
2	46K000008B	ELBOW	See Illustration AUXILIARY HYDRAULICS/ D2288		2
3	86F000008B	NUT	See Illustration AUXILIARY HYDRAULICS/ D2288		2
4	6705062	TUBE			1
5	6705063	TUBE			1
6	18K000008B	ELBOW	W/Ref. 14		1
7	15K8	FITTING	W/Ref. 14		3
8	6705030	BRACKET			1
9	84G3712	BOLT			3
10	17C612	BOLT 5			2
11	6704010	BLOCK			2
12	79K10	O RING 10			x
13	6704013	ELBOW	W/Ref. 12		2
14	79K12	O RING 10			x
15	6648970	QUICK COUPLER	male		1
16	6515599	CAP			1
17	6648968	QUICK COUPLER	female		1
7	6655796	SEAL KIT			1
.8	6515598	PLUG	Was 6515590 [D]		1
19	3679001B	CAP			1
20	6658253	QUICK COUPLER	male - thread together		1
20	6658252	QUICK COUPLER	female - thread together - See attachments fiche		1
21	45K000005B	ADAPTER	ADAPTER		3
22	79K6	O RING 10	O-RING		x
23	6705029	BRACKET			1
24	86F000005B	NUT	NUT		3
25	6705064	TUBE			1
.6	21K000005B	TEE	W/Ref. 22		1
27	6719108	HOSE	Was 6706142 [A]		1
28	6705280	TUBE			1
29	6704921	TEE	W/Ref. 14		1
30	6707232	HOSE			1
31	6707232	HOSE	NAP - 28"(711,2 mm) long - Order Ref. 32		1
32	6652367	HOSE COVER	bulk - Sold Per Foot		x
33	6624289	CABLE TIE			2
34	6659459	CHECK VALVE	inline - W/Ref. 14		1
35	6705487	HOSE			1
3	18K000005B	ELBOW	W/Ref. 22		1
37	17K5	ELBOW	W/Ref. 22		1
38	6714904	TEE	W/Ref. 39 - check boss face to determine correct replacement o-ring - Was 6706466 [A]		1
39	79K16	O RING 10	flat boss face		x
39	99K6	O'RING	tapered boss face		x
40	42H000016B	CLAMP			2
41	6714423	HOSE	Was 6705466 [C]		1
42	1316263B	ADAPTER	W/Ref. 12		1
43	30H000042B	CLAMP			1
44	6706508	DECAL			1
45	6703899	DIODE			4
46	6668813	SWITCH	See Illustration CAB ELECTRICAL CIRCUITRY/ E2220 TO ACTIVATE HFH -WAS 6665320 [A]		1
47	6710366	HARNESS	W/Ref. 62 - Was 6707681 [A]		1
48	6648969	QUICK COUPLER	male		1
9	1513549B	CAP			1
50	6648967	QUICK COUPLER	female		1
50	6655795	SEAL KIT			1

https://www.pdfmanual4trucks.com/

HIGH FLOW HYDRAULICS (Cont'd)

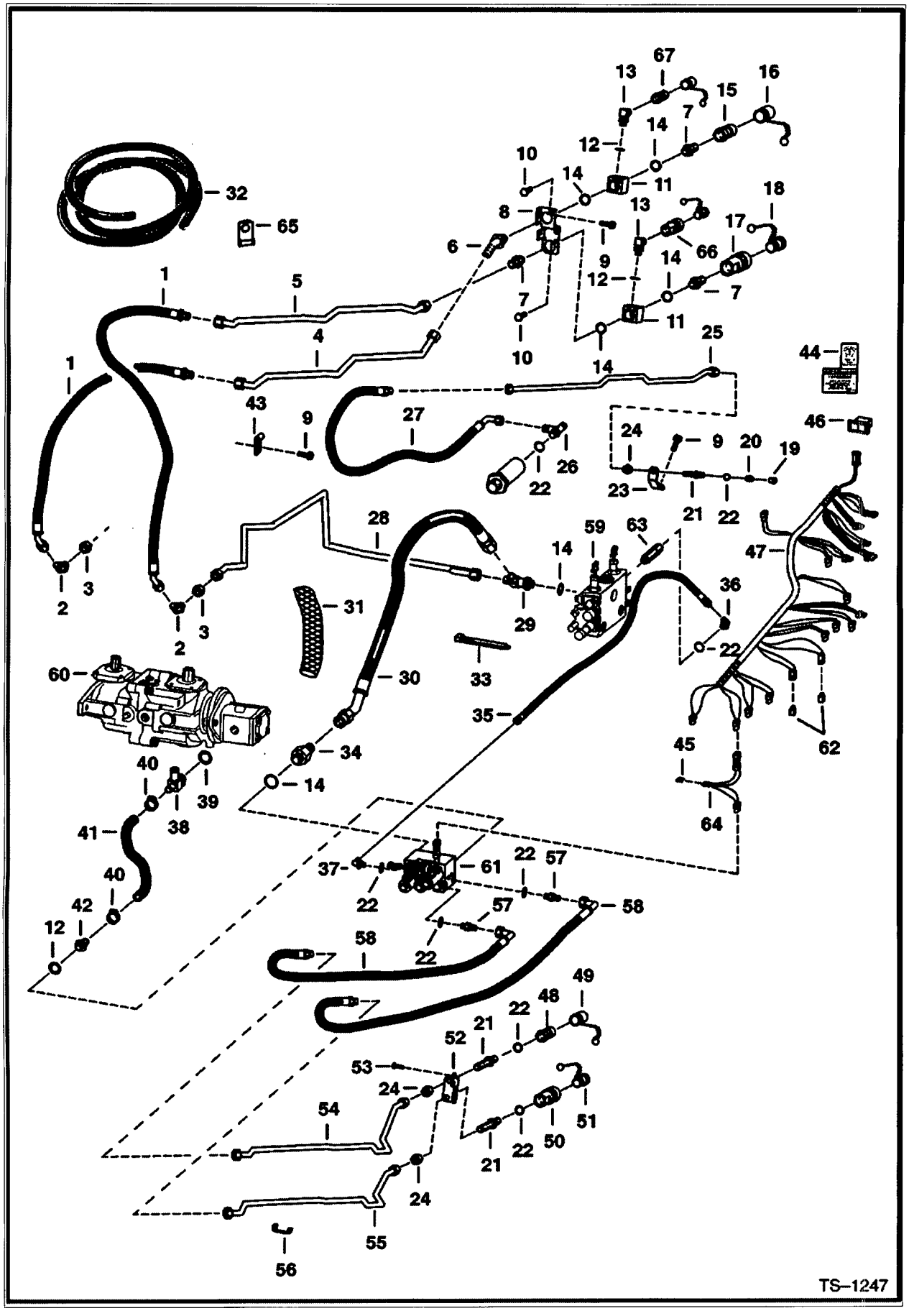

https://www.pdfmanual4trucks.com/

f No	Part Number	Description	Remarks	Serial Number	Qty
1	1519324	PLUG			1
52	6706750	BRACKET			1
53	84G3112	BOLT 5	Was 84G003712B [B]		2
54	6703611	TUBE			1
55	6703610	TUBE			1
56	6703615	CLAMP			2
57	15K5	FITTING	W/Ref. 22		2
58	6706093	HOSE			2
59		VALVE	See Illustration HIGH FLOW HYDRAULICS/ E2230 HYD. CONTROL		1
60		PUMP	See Illustration HYDROSTATIC PUMP/ D1979		1
61	6662695	VALVE	See Illustration HIGH FLOW HYDRAULICS/ TS1144 CONTROL		1
62	6704122	DIODE			2
63	6661225	VALVE	main relief - 3250-3350 PSI		1
64	6703898	HARNESS			4
65	30H000023B	CLAMP			2
5	6598758	QUICK COUPLER	See Illustration AUXILIARY HYDRAULICS/ D2288 FEMALE		1
66	48K16	O RING 10			1
66	6665430	BACKUP RING			1
67	6598757	QUICK COUPLER	See Illustration AUXILIARY HYDRAULICS/ D2288 MALE		1

https://www.pdfmanual4trucks.com/

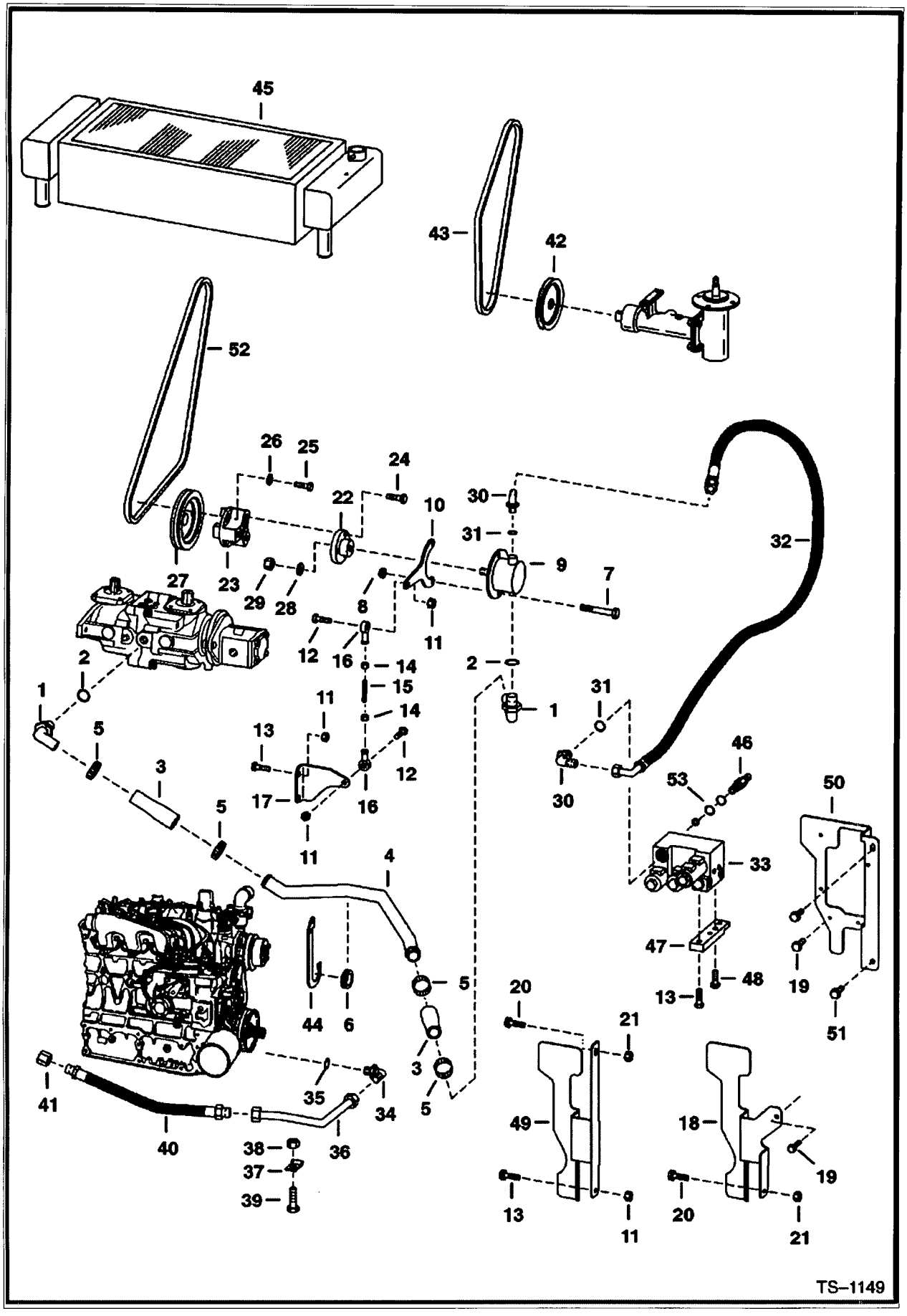

https://www.pdfmanual4trucks.com/

HIGH FLOW HYDRAULICS (Cont'd)

f No	Part Number	Description	Remarks	Serial Number	Qty
1	1321499B	ELBOW	W/Ref. 2 - Was 6567884 [A]		2
2	79K16	O RING 10			x
3	6703885	HOSE			2
4	6705161	TUBE			1
5	42H000016B	CLAMP			4
6	6705164	GROMMET			1
7	17C000724B	BOLT			2
8	83D000007B	NUT			2
9	6667382	PUMP	See Illustration HIGH FLOW HYDRAULICS/ B13927 GEAR - WAS 6662693 [A]		1
10	6703722	ARM	torgue		1
11	85D6	LOCK NUT			6
12	17C620	BOLT			2
13	17C000616B	BOLT			5
14	62D000006B	NUT			2
15	6703719	ROD			1
16	6512954	ROD END	R.H. threads		2
'	6704016	MOUNT			1
.8		SHIELD	NAP - Order Ref. 11, 13, 20, 21, & 49 - Was 6704928 [A]		1
19	84G3712	BOLT			2
20	35C516	BOLT 10			2
21	83D5	NUT 5			1
22	6705129	COUPLER			1
23	6705112	COUPLER			1
24	17C000720B	BOLT			3
`5	17C000524B	BOLT			3
.6	25E15	WASHER			3
27	6705780	PULLEY			1
28	25E21	WASHER 5			1
29	62D000008B	NUT			1
30	17K7	ELBOW	W/Ref. 31		2
31	79K10	O RING 10			2
32	6705497	HOSE			1
33	6662695	VALVE	See Illustration HIGH FLOW HYDRAULICS/ TS1144 CONTROL- W/Ref. 46		1
^4	763818B	ELBOW	W/Ref. 35		1
;	79K12	O RING 10			1
36	6705436	TUBE			1
37	30H000040B	CLAMP			1
38	85D8	NUT 5			1
39	17C000816B	BOLT			1
40	6705442	HOSE			1
41	36K7	FITTING			1
42	6703483	PULLEY	5.25" (133,3 mm) O.D.		1
43	6704607	BELT	40.25" (1022,5 mm) long		1
44	6705168	MOUNT			1
45		RADIATOR	See Illustration COOLING SYSTEM/ B17202		1
46		VALVE	NAP - relief - pressure preset at factory - Was 6658838 [A]		1
46	6686360	VALVE	relief - pressure to be set in field - Was 6685017 [A]		1
47	6705471	MOUNT			1
48	35C000610B	BOLT			1
3	6708307	SHIELD	use W/ two piece rear door		1
50	6714890	SHIELD	use W/ one piece rear door	5162 11001-12220	1
50	6714890	SHIELD	use W/ one piece rear door	5158 11001-18163	1
)	6731060	SHIELD	use W/ one piece rear door - Was 6717812 [A]	5158 18164 & Abv	1

https://www.pdfmanual4trucks.com/

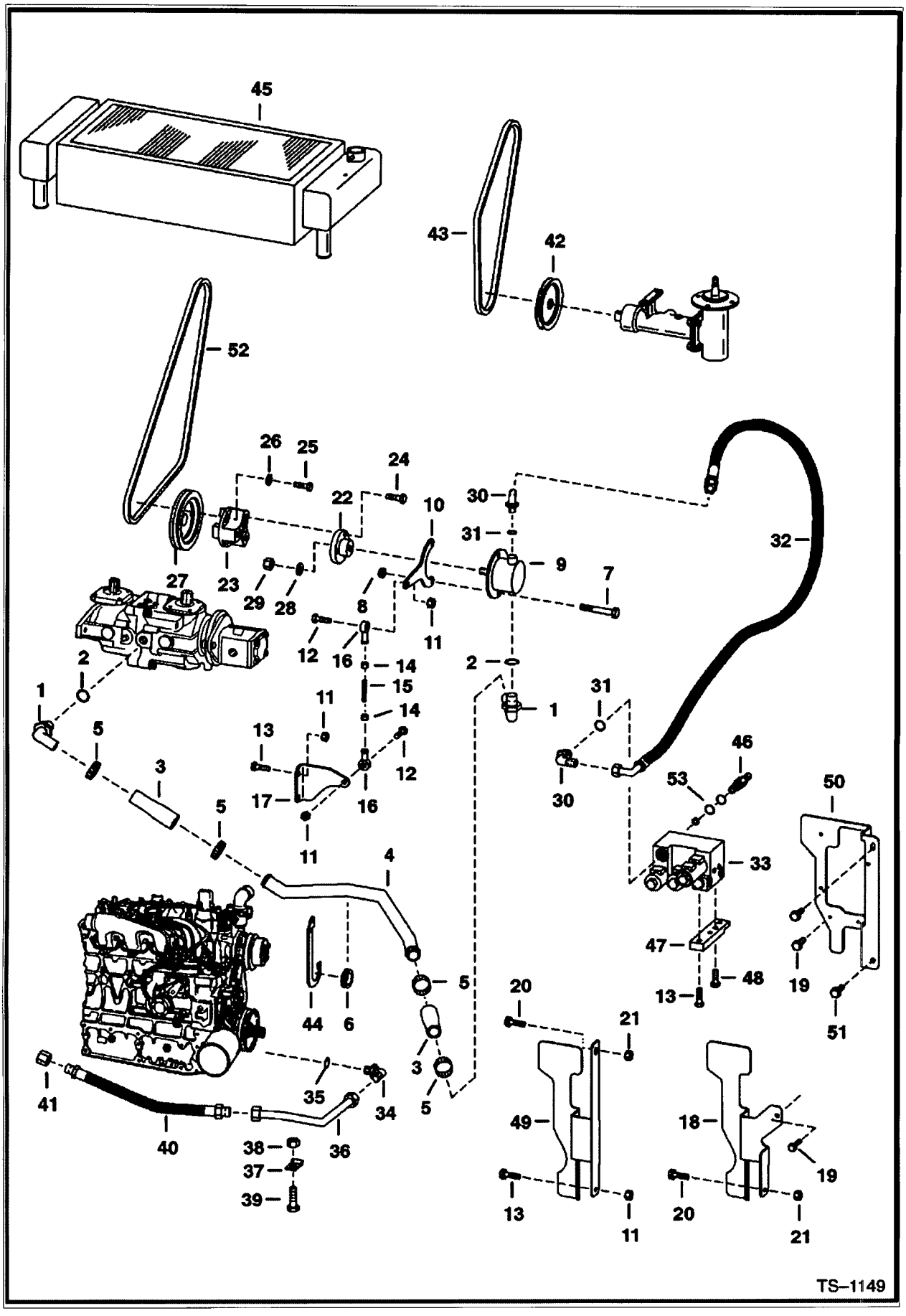

https://www.pdfmanual4trucks.com/

f No	Part Number	Description	Remarks	Serial Number	Qty
50	6731060	SHIELD	use W/ one piece rear door - Was 6717812 [A]	5162 12221 & Abv	1
51	84G3716	SCREW 5			2
52	6704720	BELT	See Illustration ENGINE & ATTACHING PARTS/ B17205		1
53	6659574	SEAL KIT			1

https://www.pdfmanual4trucks.com/

HIGH FLOW HYDRAULICS
(Control Valve)

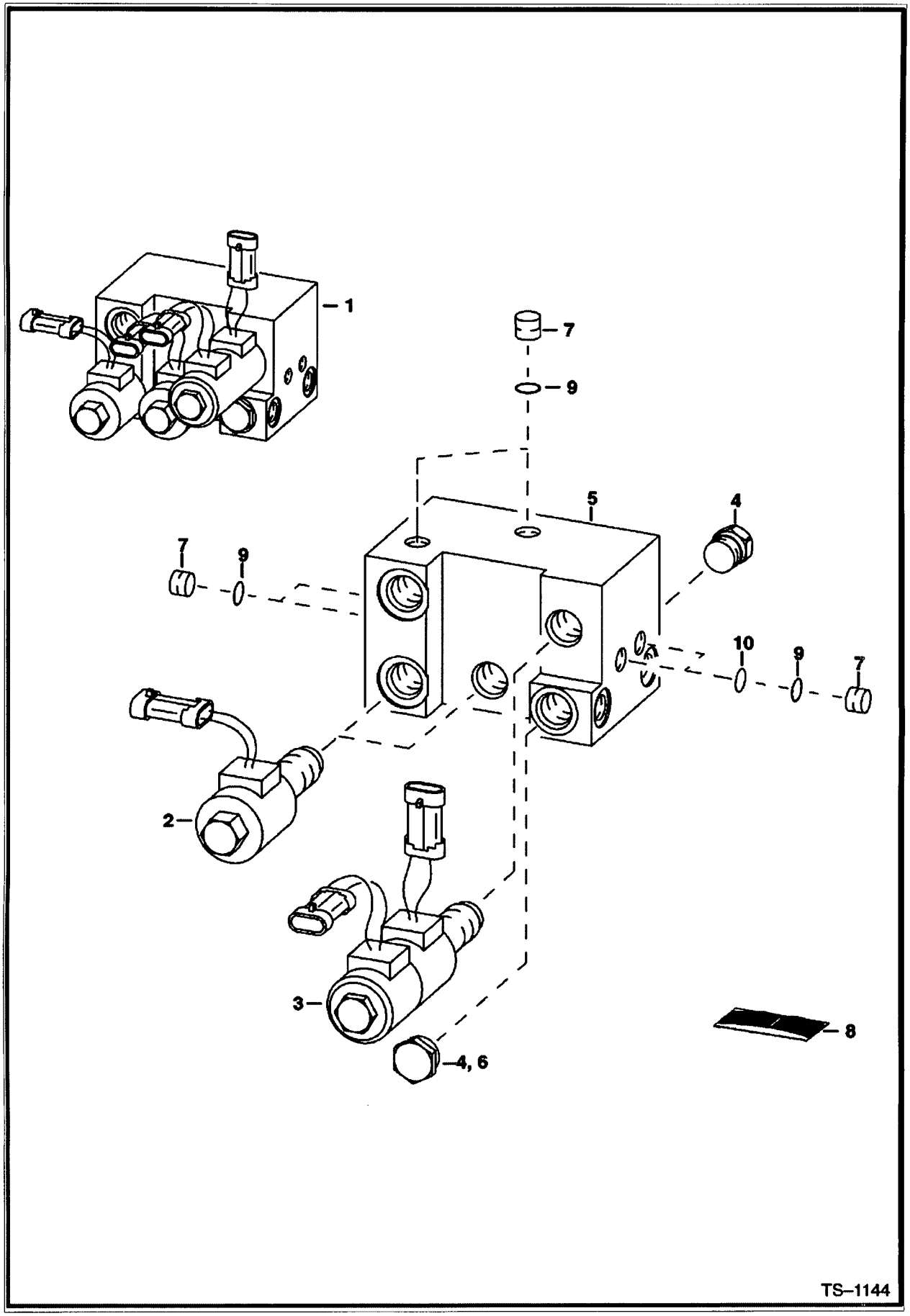

https://www.pdfmanual4trucks.com/

HIGH FLOW HYDRAULICS (Cont'd)
(Control Valve)

f No	Part Number	Description	Remarks	Serial Number	Qty
1	6662695	VALVE	Ref. 2 - 9		1
2	6668725	VALVE	Was 6661443 [B,D]		2
2	6664024	STEM			1
2		COIL	NAP - W/connector - Order 6671026 Coil - Was 6661447 [A]		1
2	6671026	COIL	w/connector - W/diode		1
2	7D000008B	NUT			1
3	6666599	VALVE			1
3	6664025	STEM			1
3		COIL	NAP - W/connector - Order 6671026 Coil - Was 6661447 [A]		1
3	6671026	COIL	W/connector - W/diode		1
3	7D000008B	NUT			1
4	6664026	CHECK VALVE			2
5		BLOCK	NSS - Order Ref. 1		1
6	6673990	PISTON	Was 6664028 [A]		1
7	6665719	PLUG	W/Ref. 9		6
3	6664032	SEAL KIT	For Ref. 2		1
8	6661448	SEAL KIT	For Ref. 3		1
8	6672515	SEAL KIT	For Ref. 4 - Was 6664033 [A]		1
9	95K4	O-RING	Was 79K000003B [B,D]		6
10	6669615	ORIFICE	.020 - Was 6665719 [A]		2

https://www.pdfmanual4trucks.com/

HIGH FLOW HYDRAULICS
(Gear Pump - Mounts to Frame)

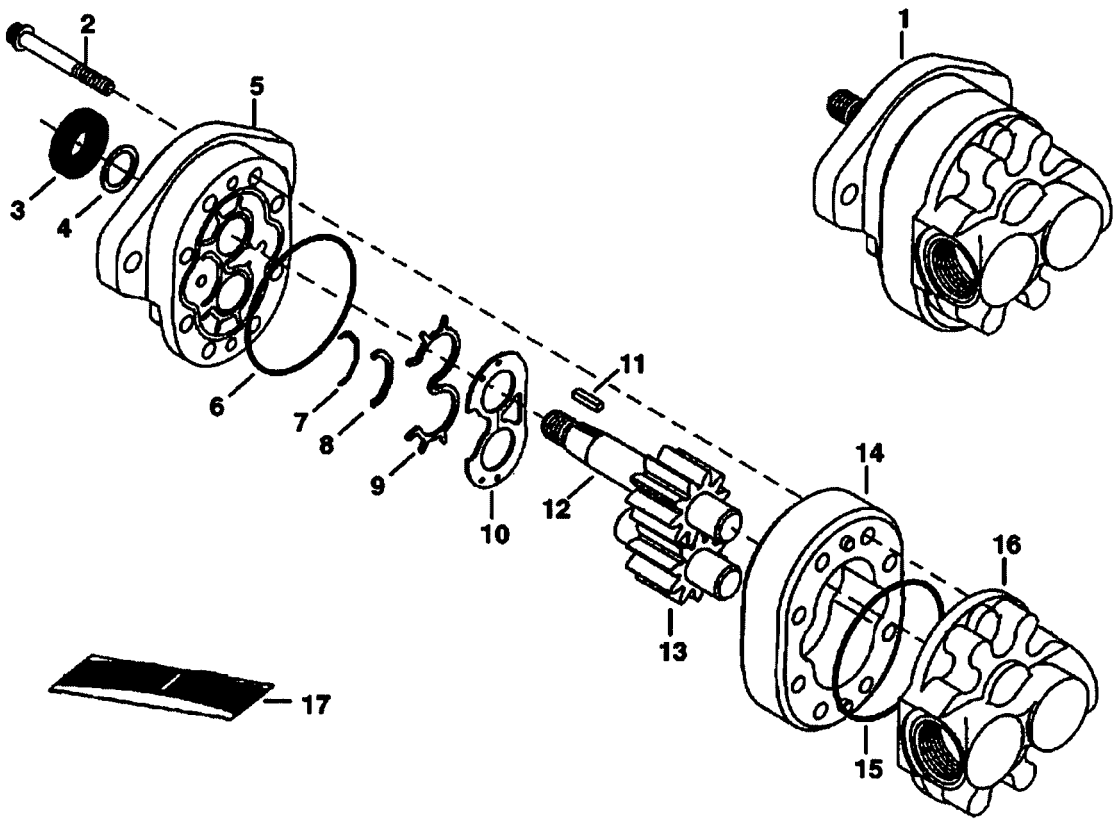

https://www.pdfmanual4trucks.com/

HIGH FLOW HYDRAULICS (Cont'd)
(Gear Pump - Mounts to Frame)

Ref No	Part Number	Description	Remarks	Serial Number	Qty
1	6667382	PUMP	Was 6662693 [A]		1
2		BOLT	NSS		8
3		SEAL	NSS - Was 1571759B [D]		1
4	945412B	WASHER			1
5		COVER	NSS		1
6		O-RING	NSS		2
7		O-RING	NSS - moulded		1
8		SEAL	NSS - bearing		1
9		SEAL	NSS		1
10		PLATE	NSS - wear		1
11	6661020	KEY			1
12		GEAR	NSS		1
13		GEAR	NSS		1
14		BODY	NSS		1
15		O-RING	NSS		1
16		COVER	NSS		1
17	6631598	SEAL KIT	Ref. 3, 4 & 6-10		1

https://www.pdfmanual4trucks.com/

HIGH FLOW HYDRAULICS
(Hydraulic Control Valve)

NOTE: Spools are available for service. The boot end of the lift and tilt spool is stamped W/# 1, 2 , 3 or painted red, green or black respectively. Reference S/L Dated 17 July, 1996.

NOTE: 6596436 Valve is the service control valve for the valve shown on this page. 6596436 Valve is minus all fittings, relief valves, anti–cav valves, solenoid coils and solenoid spools. Remove and use existing parts from old valve or order new parts as necessary. Also, because 6596436 Valve has short spools and the valve on this page had long spools, it is necessary to order 6706105 Yoke and (2) of 6708009 Links. SEE BTI 307.

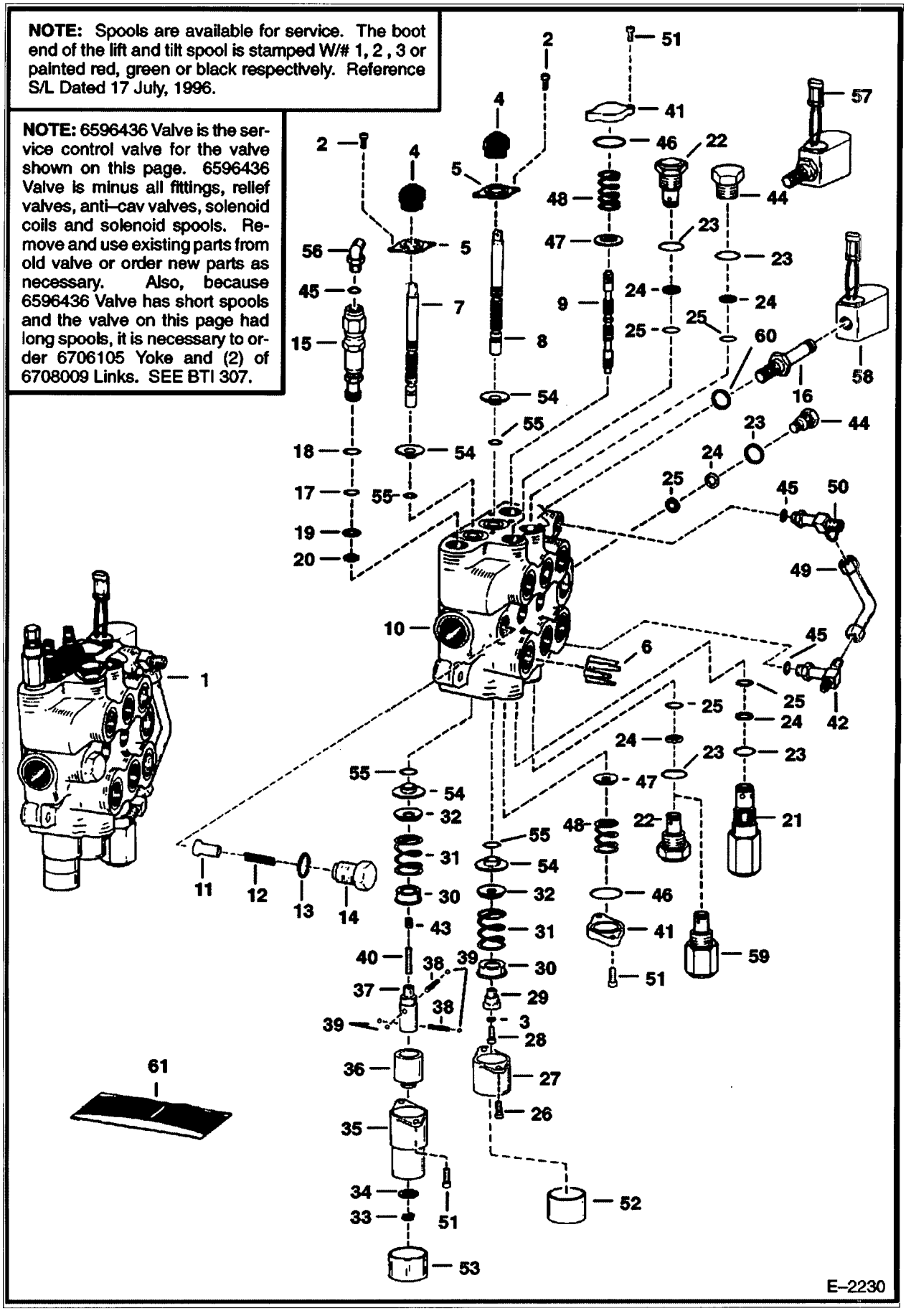

https://www.pdfmanual4trucks.com/

HIGH FLOW HYDRAULICS (Cont'd)
(Hydraulic Control Valve)

f No	Part Number	Description	Remarks	Serial Number	Qty
1		VALVE	NAP - Ref. 2 - 56 -W/long spools & fittings - Before ordering repair parts, make sure that this is the correct style Valve - Also Ref. Valve on Page 269 & 273 - Valve shown here uses stamped boot retainers, Ref. 5, which fit flush to valve body - Was 6589217 [A]		1
2	6588165	SCREW			4
3	22E000004B	WASHER			11
4	6587763	BOOT			2
5	6592123	RETAINER			2
6	6534630	RESTRICTOR	.134/.141		1
7	6666588	SPOOL	lift - #1 or red - SEE NOTE Was 6666576 [A]		1
7	6666589	SPOOL	lift - #2 or green - SEE NOTE Was 6666577 Was 6666577 Was 6666577 [A]		1
7	6666590	SPOOL	lift - #3 or black - SEE NOTE Was 6666578 [A]		1
8	6666579	SPOOL	tilt - #1 or red - SEE NOTE		1
8	6666580	SPOOL	tilt - #2 or green - SEE NOTE		1
3	6666581	SPOOL	tilt - #3 or black - SEE NOTE		1
9	6588074	SPOOL	auxiliary - SEE NOTE		1
10		BODY	NSS		1
11	6592115	SEAT			2
12	6592117	SPRING			2
13	79K8	O RING 10			3
14	6592116	NUT	load check		3
15	6661225	VALVE	main relief - W/Ref. 17 - 20 - 3250-3350 PSI		1
16	6665758	VALVE	W/Ref. 60		2
7	58K000017B	O-RING			1
8	6665569	WASHER	back-up		1
19	25K020016B	O-RING			1
20	6665570	RING	glide		1
21	6599161	RELIEF VALVE	port relief - 3400-3600 PSI - W/Ref. 23-25		1
22	6667549	VALVE	anti-cavity check - W/Ref. 23-25 - Was 6661345 [B]		2
23	79K10	O RING 10			5
24	80K000014B	RING	back-up		4
25	58K14	O RING 10			4
26	69G000414B	SCREW	Was 6588164 [A]		2
7	6587633	BONNET	W/.50" flange		1
3	6588166	SCREW			1
29	6592109	ADAPTER			1
30	6592100	COLLAR			2
31	6587580	SPRING			2
32	6587523	WASHER			4
33	799119B	SNAP RING			1
34	6592098	WASHER			1
35	6589226	BONNET			1
36	6531270	SLEEVE	lift		1
37	6587575	ADAPTER			1
38	6592107	SPRING			2
39	6592105	BALL			4
40	6586918	SCREW			1
41	6588981	END CAP	.62" thick		2
42	6587888	TEE	W/Ref. 45		1
43		PLUG	NAP - plastic - Order 6596807 Plug & 54K020002B O-ring - Was 6592752 [A]		1
43	6596807	PLUG	plastic - .460" long		1
43	54K020002B	O-RING			1
1	6592720	PLUG	W/Ref. 23-25		2

https://www.pdfmanual4trucks.com/

HIGH FLOW HYDRAULICS (Cont'd)
(Hydraulic Control Valve)

NOTE: Spools are available for service. The boot end of the lift and tilt spool is stamped W/# 1, 2 , 3 or painted red, green or black respectively. Reference S/L Dated 17 July, 1996.

NOTE: 6596436 Valve is the service control valve for the valve shown on this page. 6596436 Valve is minus all fittings, relief valves, anti–cav valves, solenoid coils and solenoid spools. Remove and use existing parts from old valve or order new parts as necessary. Also, because 6596436 Valve has short spools and the valve on this page had long spools, it is necessary to order 6706105 Yoke and (2) of 6708009 Links. SEE BTI 307.

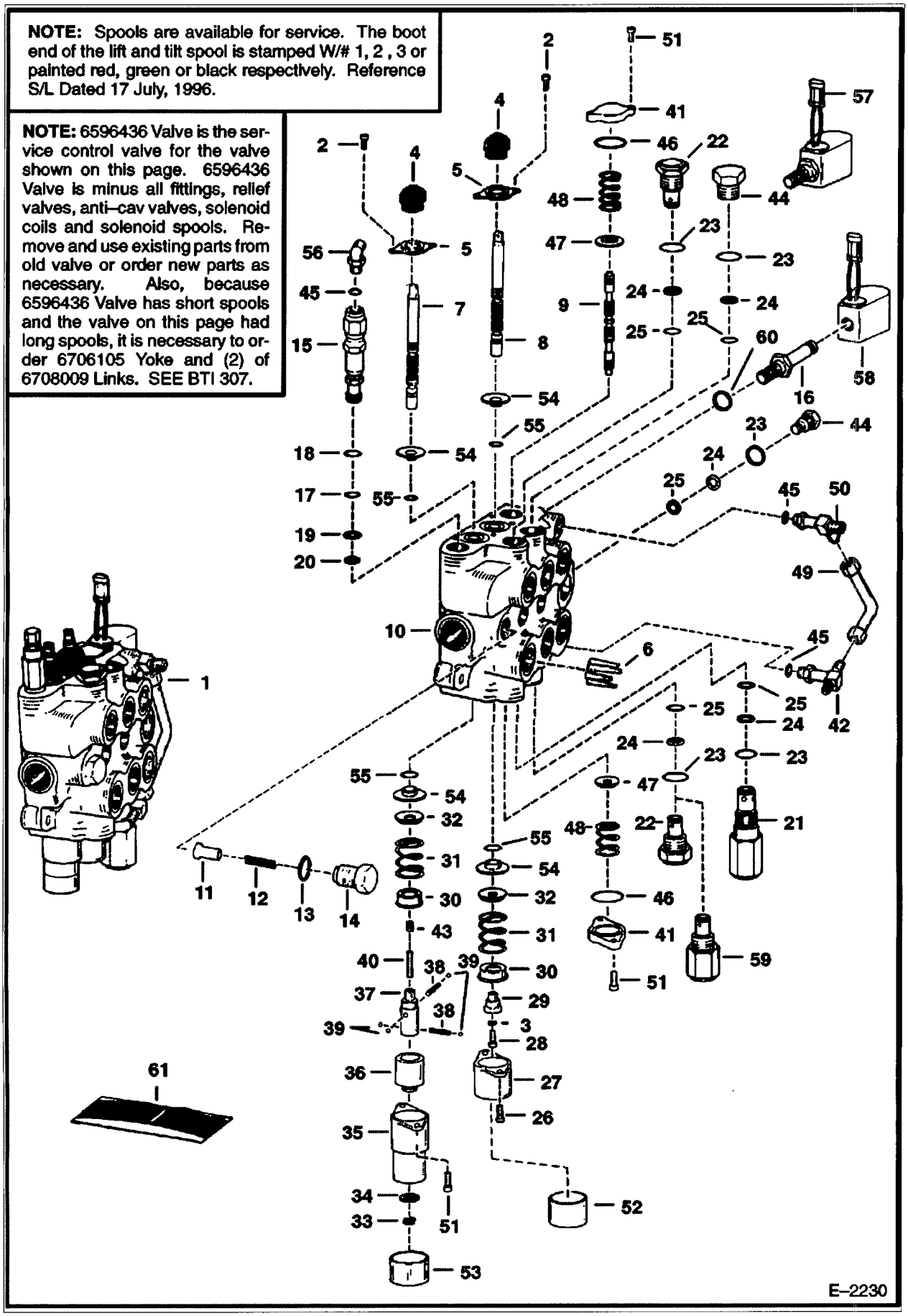

https://www.pdfmanual4trucks.com/

HIGH FLOW HYDRAULICS (Cont'd)
(Hydraulic Control Valve)

f No	Part Number	Description	Remarks	Serial Number	Qty
5	79K6	O RING 10			x
46	58K000124B	O-RING			2
47	6537096	WASHER			2
48	6588197	SPRING			2
49	6577690	TUBE			1
50		TEE	NAP - W/Ref. 45 - W/O flared end O-ring - Was 6587889 [A]		1
50	6805243	TEE	W/Ref. 45 - W/flared end O-ring - Was 6805696 [B,D]		1
50	97K6	O'RING	flared end		2
51	6588982	SCREW			6
52	6662848	CAP			1
53	6660644	CAP	Used W/6587633 Bonnet		1
54	6538466	BUSHING			4
55	6665089	SEAL	See BTI374 lip seal		4
56	18K000005B	ELBOW	W/Ref. 45		1
57	6653395	VALVE	solenoid - Ref. 16 & 58		2
57	6586459	SEAL KIT			x
3	6717708	COIL	w/nut - Was 6665759 [A]		2
58	6679961	NUT			2
59	6664373	VALVE	optional - port relief & anti-cav. -W/Ref. 23 - 2500 PSI - use in tilt cylinder base end port		1
60	79K000007B	O-RING			2
61	6816250	SEAL KIT	Ref. 4, 51 & 55 - For One Spool - See S/L 31 Aug 92 - Was 6803605 [A]		3
61	6632279	SEAL KIT	Ref. 17 - 20		1
61	6809425	SEAL KIT	Ref. 13 & 23 - 25 - Was 6586461 [A]		1
1	6816715	SEAL KIT	complete - Ref. 4, 13, 17 - 20, 23 - 51 & 55- See S/L 31 Aug 92 - Was 6596311 [A]		1

https://www.pdfmanual4trucks.com/

HIGH FLOW HYDRAULICS
(Hydraulic Control Valve)

NOTE: Spools are available for service. The boot end of the lift and tilt spool is stamped W/# 1, 2 , 3 or painted red, green or black respectively. Reference S/L Dated 17 July, 1996.

NOTE: 6596436 Valve is the service control valve for the valve shown on this page. 6596436 Valve is minus all fittings, relief valves, anti–cav valves, solenoid coils and solenoid spools. Remove and use existing parts from old valve or order new parts as necessary. Also, because 6596436 Valve has short spools and the valve on this page had long spools, it is necessary to order 6706105 Yoke and (2) of 6708009 Links. SEE BTI 307.

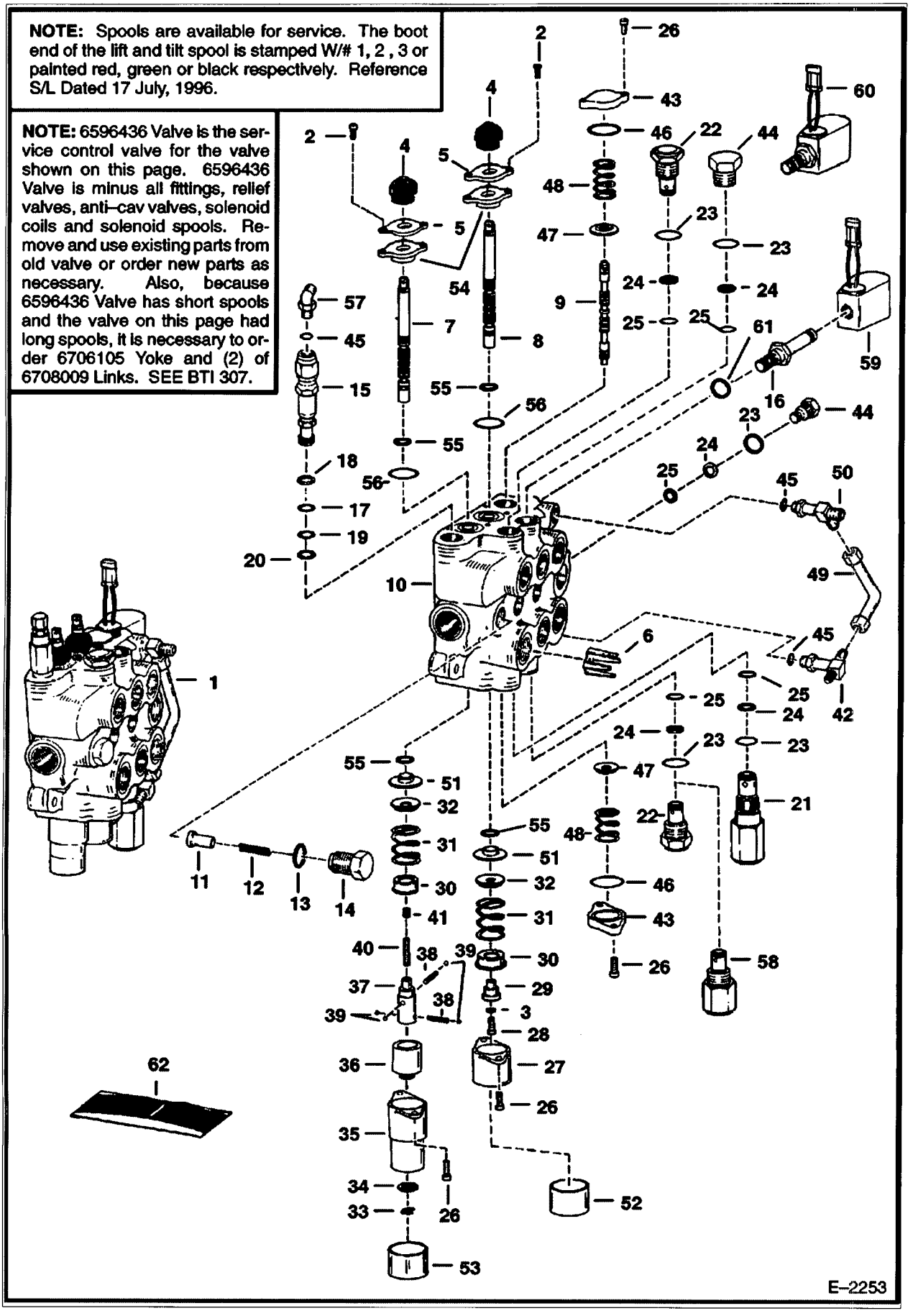

https://www.pdfmanual4trucks.com/

HIGH FLOW HYDRAULICS (Cont'd)
(Hydraulic Control Valve)

Ref No	Part Number	Description	Remarks	Serial Number	Qty
1		VALVE	NAP - Ref. 2 - 57 - W/long spools & fittings - Before ordering repair parts, make sure that this is the correct style Valve - Also Ref. Valve on Page 265 & 273 - Valve shown here uses flat boot retainers, Ref. 5, which fit above protruding spool seal, Ref. 54 - Was 6596114 [A]		1
2	6588163	SCREW			4
3	22E000004B	WASHER			1
4	6587763	BOOT			2
5	6589564	RETAINER	flat		2
6	6534630	RESTRICTOR	.134/.141		1
7	6666576	SPOOL	lift - #1 or red - SEE NOTE - Was 6666588 [B]		1
7	6666589	SPOOL	lift - #2 or green - SEE NOTE - Was 6666577 [A]		1
7	6666590	SPOOL	lift - #3 or black - SEE NOTE - Was 6666578 [A]		1
8	6666579	SPOOL	tilt - #1 or red - SEE NOTE - Was 6666591 [B,D]		1
8	6666580	SPOOL	tilt - #2 or green - SEE NOTE - Was 6666592 [B,D]		1
8	6666581	SPOOL	tilt - #3 or black - SEE NOTE - Was 6666593 [B,D]		1
9	6588074	SPOOL	auxiliary - SEE NOTE - Was 6589663 [B]		1
10		BODY	NSS		1
11	6592115	SEAT			2
12	6592117	SPRING			2
13	79K8	O RING 10			3
14	6592116	NUT	load check		3
15	6661225	VALVE	main relief - W/Ref. 17 - 20 - 3250-3350 PSI		1
16	6665758	VALVE	W/Ref. 61		2
17	58K000017B	O-RING			1
18	6665569	WASHER	back-up		1
19	25K020016B	O-RING			1
20	6665570	RING	glide		1
21	6599161	RELIEF VALVE	port relief - 3400-3600 PSI - W/Ref. 17-20		1
22	6667549	VALVE	anti-cavity check - W/Ref. 23-25 - Was 6661345 [B]		2
23	79K10	O RING 10			5
24	80K000014B	RING	back-up		4
25	58K14	O RING 10			4
26	6588982	SCREW			8
27	6587633	BONNET			1
28	6588166	SCREW			1
29	6592109	ADAPTER			1
30	6592100	COLLAR			2
31	6587580	SPRING			2
32	6587523	WASHER			2
33	799119B	SNAP RING			1
34	6592098	WASHER			1
35	6589226	BONNET			1
36	6531270	SLEEVE	lift		1
37	6587575	ADAPTER			1
38	6592107	SPRING			2
39	6592105	BALL			4
40	6586918	SCREW			1
41		PLUG	NAP - plastic - Order 6596807 Plug & 54K020002B O-ring - Was 6592752 [A]		1
41	6596807	PLUG	plastic - .460" long		1
41	54K020002B	O-RING			1
42		TEE	NAP - W/O flared end O-ring - W/Ref. 45 - Was 6587888 [A]		1
42	6805696	TEE	W/Ref. 45 - W/flared end O-ring		1
43	97K6	O'RING	flared end		2

https://www.pdfmanual4trucks.com/

HIGH FLOW HYDRAULICS (Cont'd)
(Hydraulic Control Valve)

NOTE: Spools are available for service. The boot end of the lift and tilt spool is stamped W/# 1, 2 , 3 or painted red, green or black respectively. Reference S/L Dated 17 July, 1996.

NOTE: 6596436 Valve is the service control valve for the valve shown on this page. 6596436 Valve is minus all fittings, relief valves, anti–cav valves, solenoid coils and solenoid spools. Remove and use existing parts from old valve or order new parts as necessary. Also, because 6596436 Valve has short spools and the valve on this page had long spools, it is necessary to order 6706105 Yoke and (2) of 6708009 Links. SEE BTI 307.

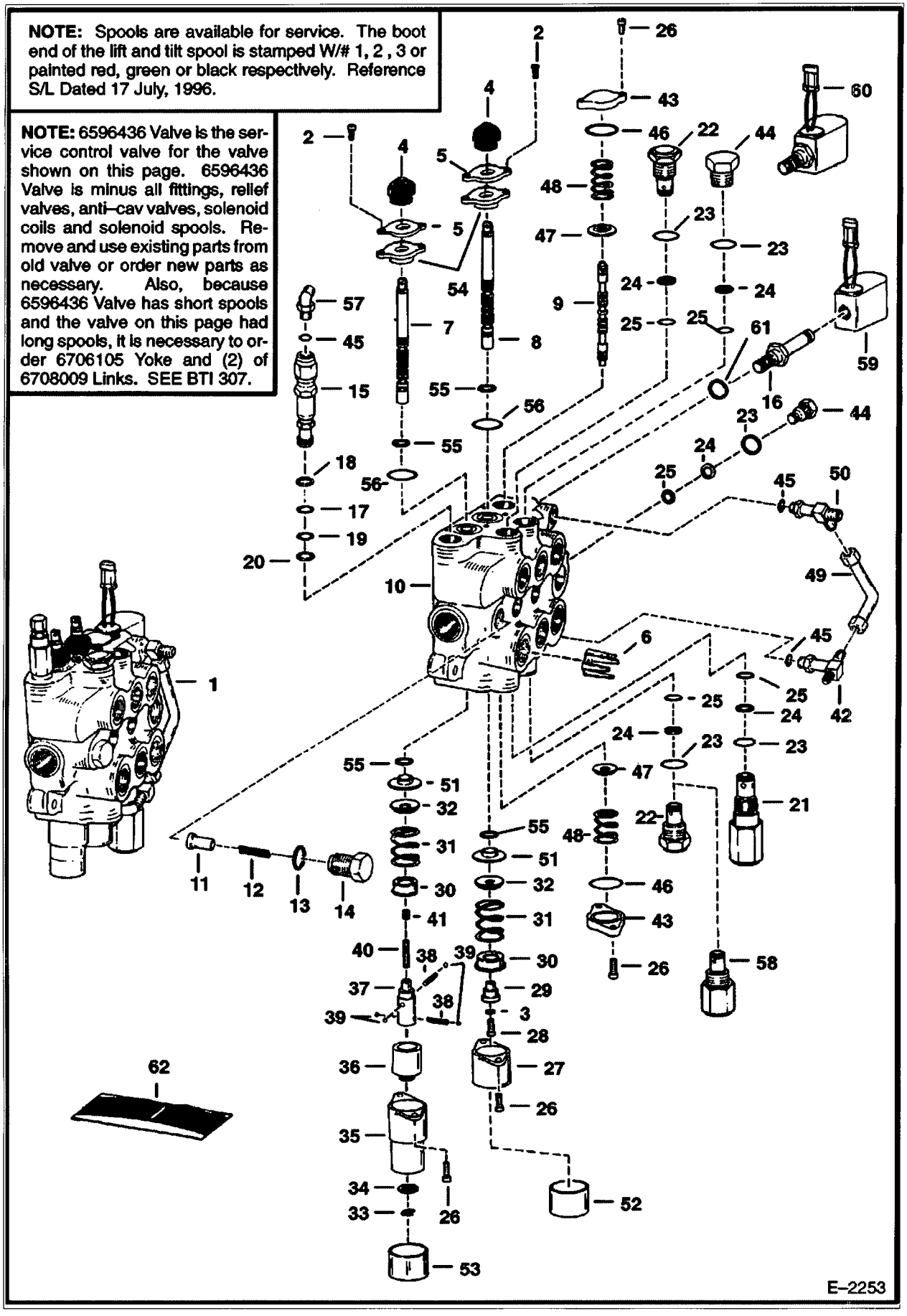

https://www.pdfmanual4trucks.com/

HIGH FLOW HYDRAULICS (Cont'd)
(Hydraulic Control Valve)

f NO	Part Number	Description	Remarks	Serial Number	Qty
'3	6588981	END CAP			2
,4	6592720	PLUG	W/Ref. 23-25		2
45	79K6	O RING 10			x
46	58K000124B	O-RING			2
47	6537096	WASHER			2
48	6588197	SPRING			2
49	6577690	TUBE			1
50		TEE	NAP - W/Ref. 45 - W/O flared end O-rings - Was 6587889 [A]		1
50	6805243	TEE	W/Ref. 45 - W/ flared end O-rings		1
50	97K6	O'RING	flared end		2
51	6595663	BUSHING			2
52	6662848	CAP			1
53	6660644	CAP			1
54	6589565	BUSHING	seal		2
55	6683724	COUPLER,6G-8FJX90S	lip - Was 6665846 [A]		4
5	58K000127B	O-RING			2
,7	18K000005B	ELBOW	W/Ref. 45		1
58	6664373	VALVE	optional - port relief & anti-cav. -W/Ref. 23 - 2500 PSI - use in tilt cylinder base end port		1
59	6717706	COIL	W/nut - 10 volt - Was 6665759 [A]		2
60	6653395	VALVE	solenoid - Ref. 16 & 57		2
60	6586459	SEAL KIT			x
61	79K000007B	O-RING			2
62	6816250	SEAL KIT	Ref. 4, 51 & 55 - For One Spool - Was 6803605 [A]		3
62	6632279	SEAL KIT	Ref. 17 - 20		1
,2	6809425	SEAL KIT	Ref. 13 & 23 - 25 - Was 6586461 [A]		1
62	6816715	SEAL KIT	complete - Ref. 4, 13, 17 - 20, 23 - 51 & 55 - Was 6596311 [A]		1

https://www.pdfmanual4trucks.com/

HIGH FLOW HYDRAULICS
(Hydraulic Control Valve) (S/N 5127 24459 & Above, 5114 76462 & Above)

NOTE: Spools are available for service. The boot end of the lift and tilt spool is stamped W/# 1, 2 , 3 or painted red, green or black respectively. Reference S/L Dated 17 July, 1996.

NOTE: 6596436 Valve is the service control valve for the valve shown on this page. 6596436 Valve is minus all fittings, relief valves, anti–cav valves, solenoid coils and solenoid spools. Remove and use existing parts from old valve or order new parts as necessary. SEE BTI 307.

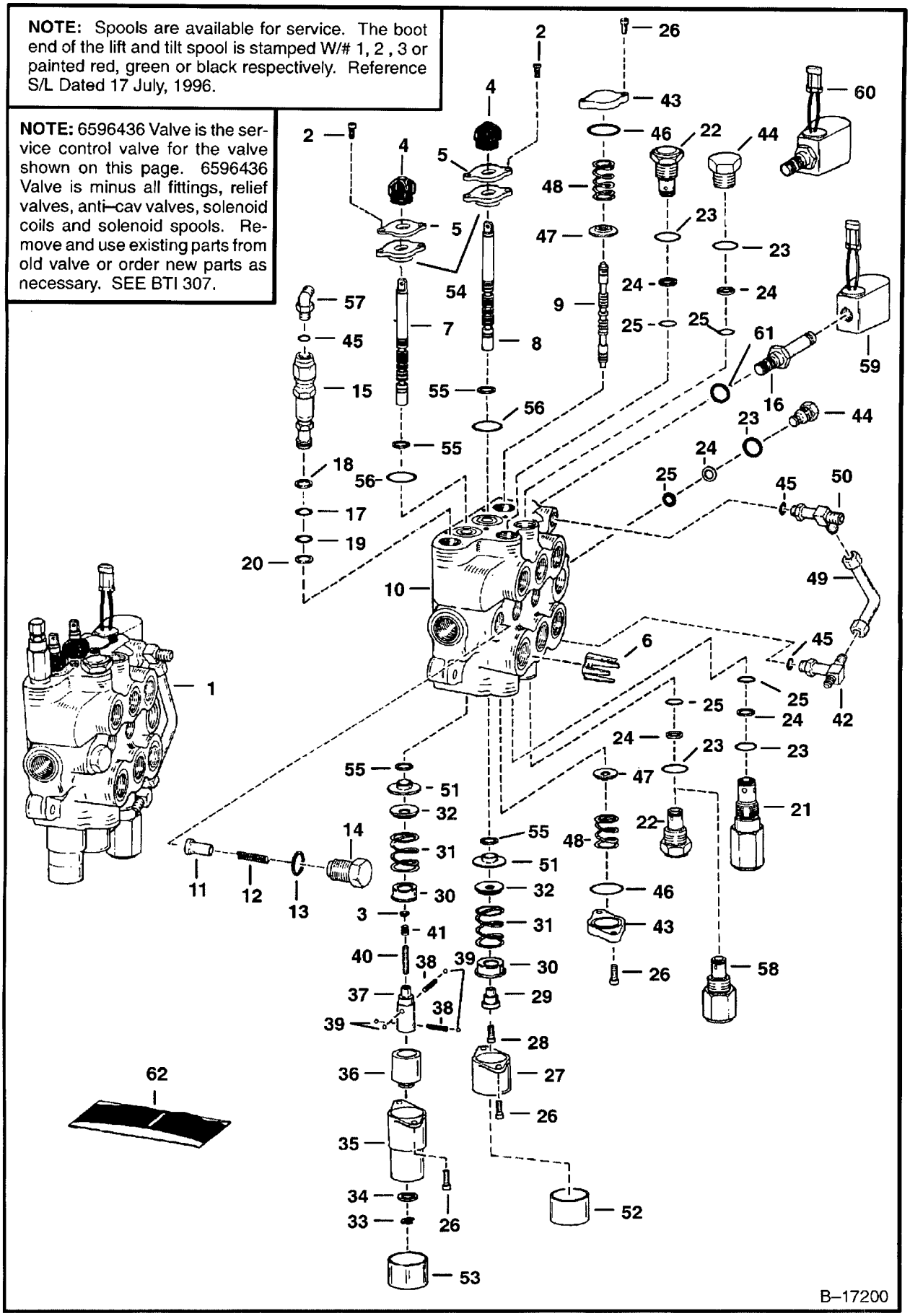

https://www.pdfmanual4trucks.com/

HIGH FLOW HYDRAULICS (Cont'd)
(Hydraulic Control Valve) (S/N 5127 24459 & Above, 5114 76462 & Above)

f no	Part Number	Description	Remarks	Serial Number	Qty
1		VALVE	NAP - Ref. 2 - 57 - W/Short spools & fittings - Before ordering repair parts, make sure that this is the correct style Valve - Also Ref. Valve on Page 265 & 269 - Valve shown here uses flat boot retainers, Ref. 5, which fit above protruding spool seal, Ref. 54 - Was 6597312 [A]		1
2	29G000412B	SCREW	Was 6588163 [B]		4
3	54K020002B	O-RING			1
4	6587763	BOOT			2
5	6589564	RETAINER	flat		2
6	6534630	RESTRICTOR	.134/.141		1
7	6666588	SPOOL	lift - #1 or red - SEE NOTE		1
7	6666589	SPOOL	lift - #2 or green - SEE NOTE		1
7	6666590	SPOOL	lift - #3 or black - SEE NOTE		1
8	6666591	SPOOL	tilt - #1 or red - SEE NOTE		1
8	6666592	SPOOL	tilt - #2 or green - SEE NOTE		1
8	6666593	SPOOL	tilt - #3 or black - SEE NOTE		1
9	6588074	SPOOL	auxiliary - SEE NOTE - Was 6589663 [B]		1
10		BODY	NSS		1
11	6592115	SEAT			2
12	6592117	SPRING			2
13	79K8	O RING 10			3
14	6592116	NUT	load check		3
15	6661225	VALVE	main relief - W/Ref. 17 - 20 - 3250-3350 PSI		1
16	6665758	VALVE	W/Ref. 61		2
17	58K000017B	O-RING			1
18	6665569	WASHER	back-up		1
19	25K020016B	O-RING			1
20	6665570	RING	glide		1
21	6599161	RELIEF VALVE	port relief - 3400-3600 PSI - W/Ref. 23-25		1
22	6667549	VALVE	anti-cavity check- W/Ref. 23-25 - Was 6661345 [B]		2
23	79K10	O RING 10			5
24	80K000014B	RING	back-up		4
25	58K14	O RING 10			4
26	29G000416B	SCREW	Was 6588982 [B]		8
27	6587633	BONNET			1
28	30G000416B	BOLT	Was 6588166 [B]		1
29	6592109	ADAPTER			1
30	6592100	COLLAR			2
31	6587580	SPRING			2
32	6587523	WASHER			2
33	799119B	SNAP RING			1
34	6592098	WASHER			1
35	6589226	BONNET			1
36	6531270	SLEEVE	lift		1
37	6587575	ADAPTER			1
38	6592107	SPRING			2
39	6592105	BALL			4
40	6586918	SCREW			1
41	6596807	PLUG	plastic - .460" long [B]		1
42		TEE	NAP - W/Ref. 45 - Was 6587888 [A]		1
42	6805696	TEE	W/Ref. 45 - W/flared end O-ring		1
42	97K6	O'RING	flared end		2
43	6588981	END CAP			2
44	6592720	PLUG	W/Ref. 23-25		2
45	79K6	O RING 10			x
46	58K000124B	O-RING			2

https://www.pdfmanual4trucks.com/

HIGH FLOW HYDRAULICS (Cont'd)
(Hydraulic Control Valve) (S/N 5127 24459 & Above, 5114 76462 & Above)

NOTE: Spools are available for service. The boot end of the lift and tilt spool is stamped W/# 1, 2 , 3 or painted red, green or black respectively. Reference S/L Dated 17 July, 1996.

NOTE: 6596436 Valve is the service control valve for the valve shown on this page. 6596436 Valve is minus all fittings, relief valves, anti–cav valves, solenoid coils and solenoid spools. Remove and use existing parts from old valve or order new parts as necessary. SEE BTI 307.

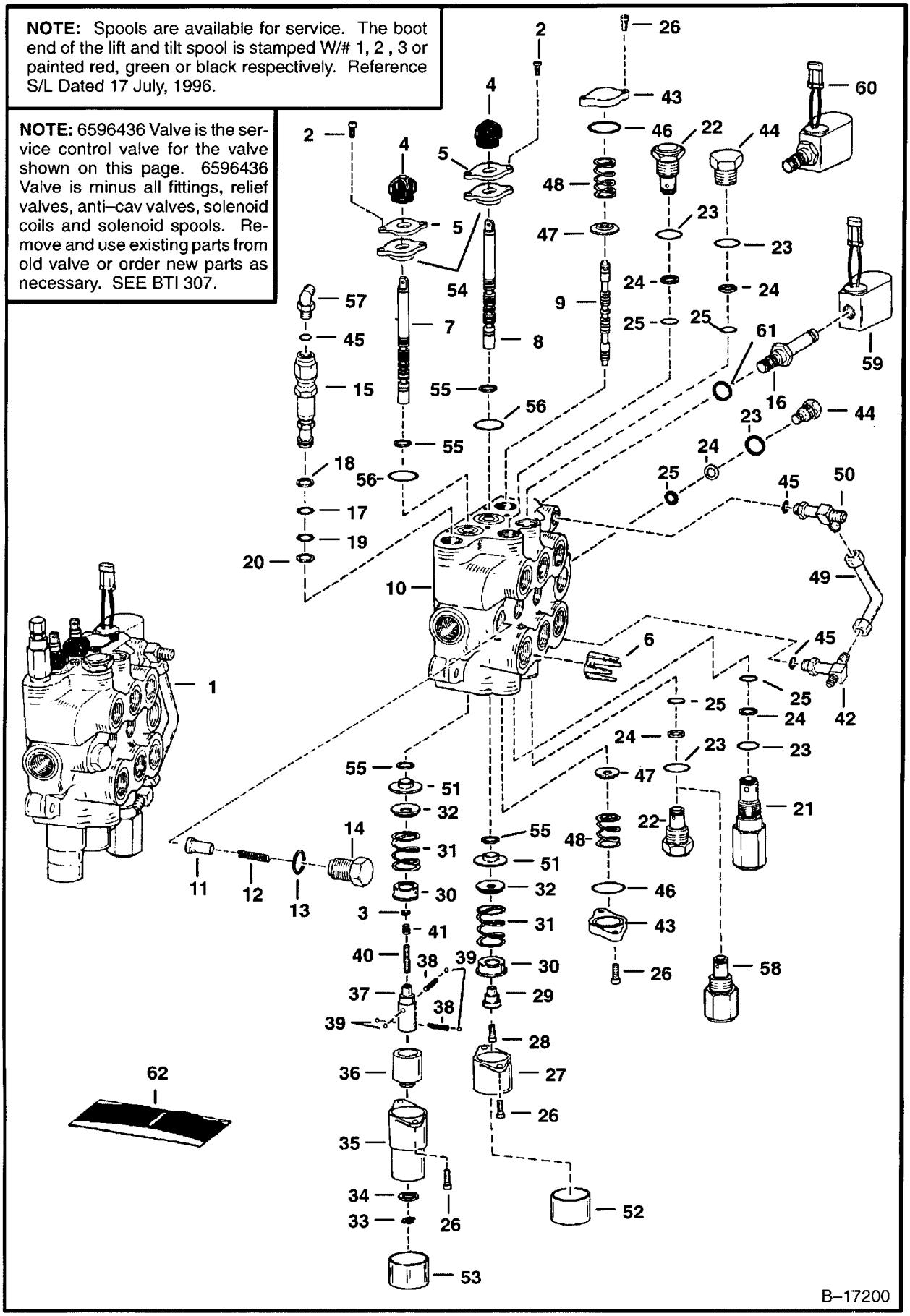

https://www.pdfmanual4trucks.com/

HIGH FLOW HYDRAULICS (Cont'd)
(Hydraulic Control Valve) (S/N 5127 24459 & Above, 5114 76462 & Above)

,f No	Part Number	Description	Remarks	Serial Number	Qty
7	6537096	WASHER			2
48	6588197	SPRING			2
49	6577690	TUBE			1
50	6587889	TEE	W/Ref. 45		1
51	6595663	BUSHING			2
52	6662848	CAP			1
53	6660644	CAP			1
54	6589565	BUSHING	seal		2
55	6683274	SEAL	See BTI374 - spool - Was 6665846 [A]		4
56	58K000127B	O-RING			2
57	18K000005B	ELBOW	W/Ref. 45		1
58	6664373	VALVE	optional - port relief & anti-cav. -W/Ref. 23 - 2500 PSI - use in tilt cylinder base end port		1
59	6717706	COIL	W/nut - 10 volt - Was 6665759 [A]		2
60	6653395	VALVE	solenoid - Ref. 16 & 57		2
60	6586459	SEAL KIT			x
61	79K000007B	O-RING			2
?	6816250	SEAL KIT	Ref. 4, 51 & 55 - For One Spool - Was 6803605 [A]		3
62	6632279	SEAL KIT	Ref. 17 - 20		1
62	6809425	SEAL KIT	Ref. 13 & 23 - 25 - Was 6586461 [A]		1
62	6816715	SEAL KIT	complete - Ref. 4, 13, 17 - 20, 23 - 51 & 55 - Was 6596311 [A]		1

https://www.pdfmanual4trucks.com/

HIGH FLOW HYDRAULICS
(1400 lb. Rear Door Counterweight Kit) (Two Piece Rear Door)

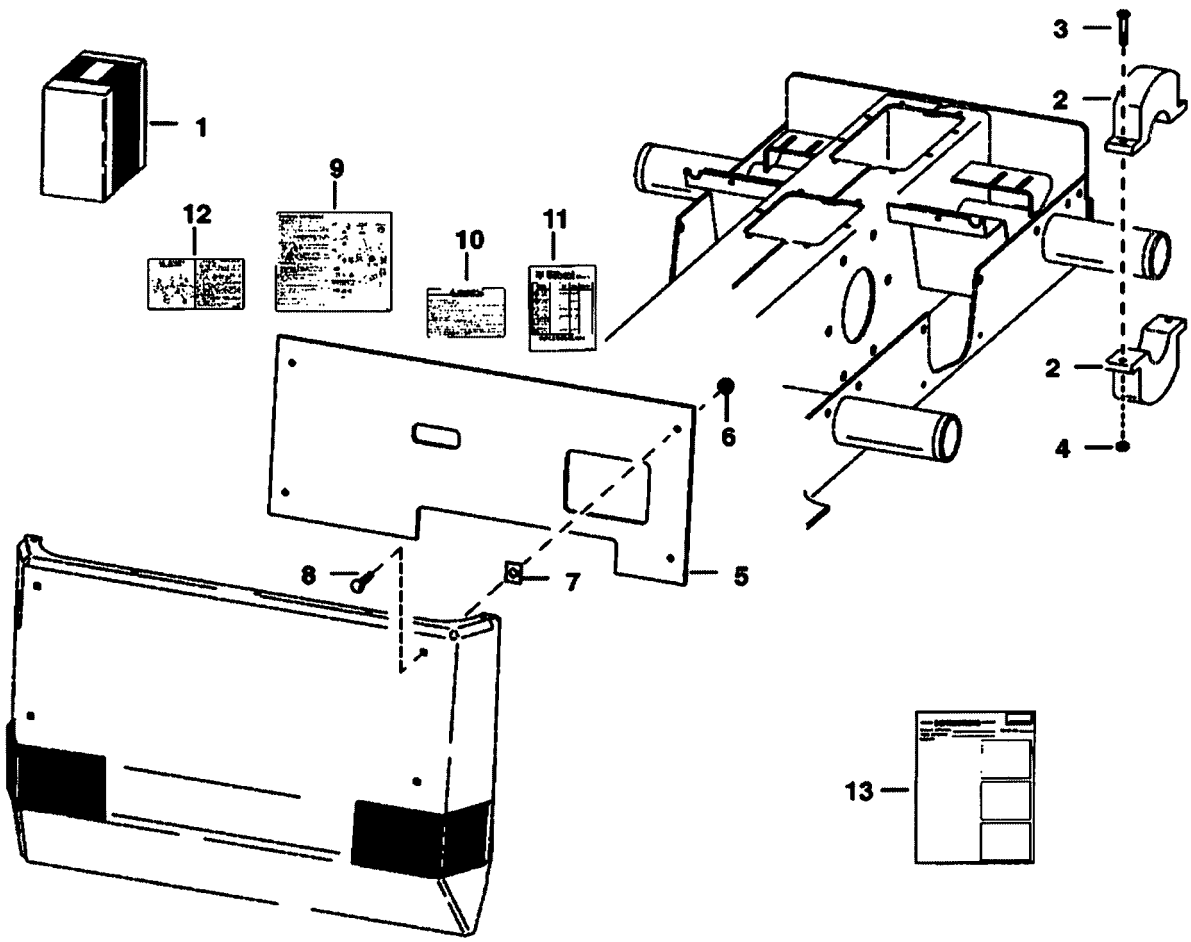

NOTE: Order Counterweight Kit from Gwinner Sales # 6704690.

TS–1108

https://www.pdfmanual4trucks.com/

HIGH FLOW HYDRAULICS (Cont'd)
(1400 lb. Rear Door Counterweight Kit) (Two Piece Rear Door)

,f No	Part Number	Description	Remarks	Serial Number	Qty
1		KIT	SALES - counterweight - SEE NOTE		1
2		WEIGHT	NAP - front axle - 19.1 lbs (8,7 kg) - Was 6702453 [A]		8
2	6714361	WEIGHT	front axle - 38.7 lbs (17,6 kg) - 4.5"(114,3 mm) wide		4
3	17C640	BOLT 5			8
4	61D000006B	NUT			8
5	6704638	WEIGHT			3
6	57D6	NUT 5			4
7	1612281B	NUT	spring		4
8	37C628	BOLT			4
9	6708212	DECAL	service - Was 6578218 [A]		1
10	6579511	DECAL	warning		1
11	6709781	DECAL	filters - Was 6700237 [A]		1
12	6705220	DECAL	belt tension		1
13	6722194	INSTRUCTIONS			1

https://www.pdfmanual4trucks.com/

HYDROSTATIC CIRCUITRY

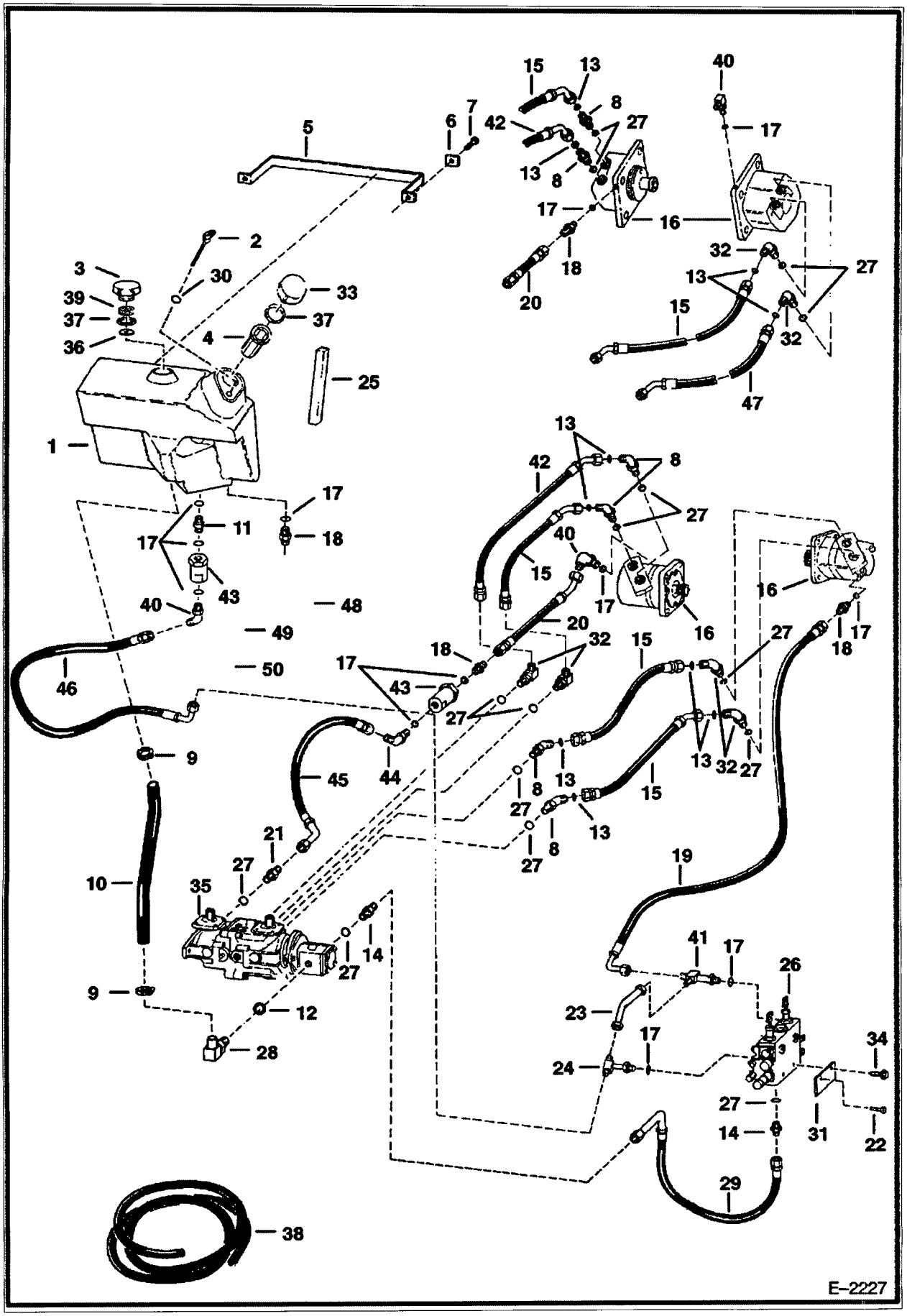

https://www.pdfmanual4trucks.com/

f No	Part Number	Description	Remarks	Serial Number	Qty
1	6706450	TANK	.93" I.D. Suction Outlet		1
2	6577459	DIPSTICK	W/Ref. 30		1
3	6727475	CAP	breather - Also Order Ref. 37 & 39 - Was 6577785 [A]		1
4	6569219	SCREEN			1
5	6577585	BAND			1
6	6559447	WASHER			2
7	84G3712	BOLT			2
8	52E001212B	ADAPTER	Was 52E000012B [D]		4
9	44H20	CLAMP	worm gear - Was 6666864 [A]		2
9	5HM00042B	CLAMP	constant tension		2
9	6672281	CLAMP	constant torque		2
10	6716423	HOSE	1.25" (31,8 mm) I.D. - Was 6706452 [A]		1
11	6716473	ADAPTER	W/Ref. 17 - tapered boss face		1
11	97K6	O'RING	flared end		2
12	79K16	O RING 10	flat boss face		x
12	99K16	O-RING	tapered boss face		x
13	58K000018B	O-RING			8
1	15K8	FITTING	W/Ref. 27 - flat boss face		1
14	15KN00008B	ADAPTER	W/Ref. 27 - tapered boss face		1
14	97K000012B	O-RING	flared end		1
15	6658365	HOSE	25" (635 mm) long		2
15	6671619	HOSE	26.5" (673,1 mm) long	5158 11001-29999	3
15	6671619	HOSE	26.5" (673,1 mm) long	5162 11001-19999	3
16		MOTOR KIT	See Illustration HYDROSTATIC MOTOR/ D1928		2
17	79K6	O RING 10	flat boss face		x
17	99K6	O'RING	tapered boss face		x
8	15K5	FITTING	W/Ref. 17 - flat boss face		4
.8		ADAPTER	NAP - W/Ref. 17 - tapered boss face - Was 15KV00005B [A]		4
18	97K6	O'RING	flared end		4
18	15KB606	ADAPTER	W/Ref. 17 - flat boss face		1
19	6707234	HOSE			1
20	6704630	HOSE			1
20	6617736	HOSE		5162 11001-19999	1
20	6617736	HOSE		5158 11001-29999	1
21	6578812	ADAPTER	W/Ref. 27 - flat boss face		1
1		ADAPTER	NAP - W/Ref. 27 - tapered boss face - Was 6715186 [A]		1
21	97K6	O'RING	flared end		1
21	15KB612	ADAPTER	W/Ref. 27 - flat boss face		1
22	17C532	BOLT 5		& Bel	1
22	17C000632B	BOLT	AHC	& Abv	1
23	6577690	TUBE			1
24		TEE	NAP - W/Ref. 17 - W/O flared end O-ring - Was 6587888 [A]		1
24	6805696	TEE	W/Ref. 45 - W/flared end O-ring		1
24	97K6	O'RING	flared end		2
25		FOAM	NAP - 16.12" (409,5 mm) long - Order Ref. 38		1
26		VALVE	See Illustration HYDRAULIC CONTROL VALVE/ E2229 HYD. CONTROL - W/Ref. 22-24 & 34		1
27	79K12	O RING 10	flat boss face		x
27	99K000012B	O-RING	tapered boss face		x
28	6714905	ELBOW	W/Ref. 12 - flat boss face - Was 6707409 [A]		1
8	6715191	ELBOW	W/ref. 12 - check boss face to determine correct replacement O-ring		1
29	6729154	HOSE	Was 6714594 [A]		2
)	25K020010B	SEAL			1

https://www.pdfmanual4trucks.com/

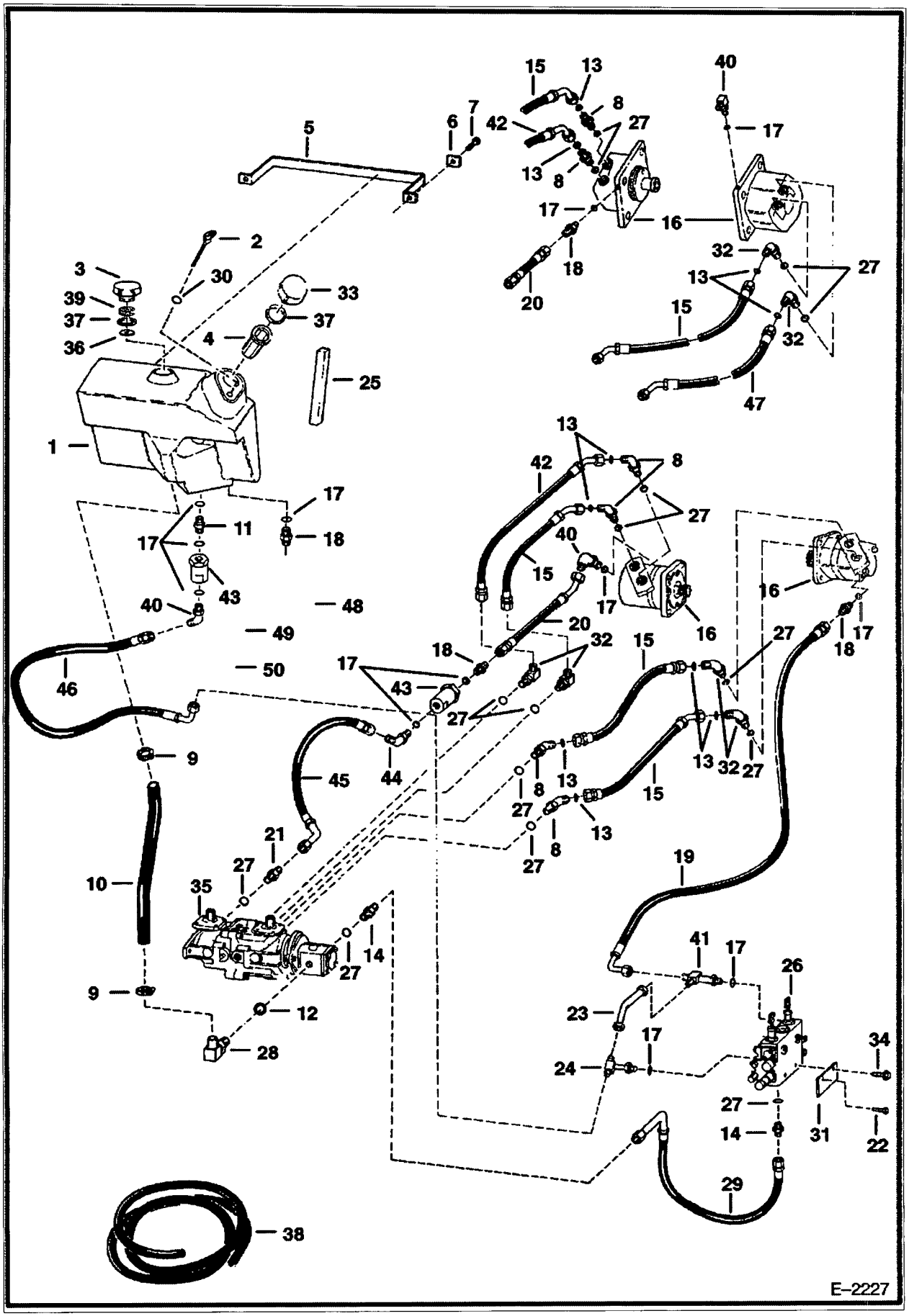

https://www.pdfmanual4trucks.com/

HYDROSTATIC CIRCUITRY (Cont'd)

Ref No	Part Number	Description	Remarks	Serial Number	Qty
31	6704680	COVER	on outside of main frame		1
32	6714902	ELBOW	W/Ref. 27 - Was 69E000012B [A]		4
33	6728149	CAP	fill - Also Order Ref. 27 - Was 6532508 [A]		1
34	84G3110	SCREW		& Bel	1
34	84G3710	SCREW	AHC	& Abv	1
35		PUMP	See Illustration HYDROSTATIC PUMP/ D1979		1
36	6701552	BAFFLE			1
37	6700631	GASKET			2
38	6511855	SEAL	bulk - Sold Per Foot - self adhesive		x
39	6703427	FOAM FILTER			1
40	17K5	ELBOW	W/Ref. 17 - flat boss face		2
40	17KV00005B	ELBOW	W/Ref. 17 - tapered boss face		2
40	97K6	O'RING	flared end		2
41		TEE	NAP - W/Ref. 17 - W/O flared end O-rings - Was 6587889 [A]		1
41	6805243	TEE	W/Ref. 17 - W/flared end O-rings		1
41	97K6	O'RING	flared end		2
42	6661076	HOSE			1
43	6661022	FILTER	See Illustration HYDROSTATIC OIL FILTER/ B13527 IN-LINE		2
44	18K000005B	ELBOW	W/Ref. 17 - flat boss face		1
44	18KV00005B	FITTING	W/Ref. 17 - tapered boss face		1
44	97K6	O'RING	flared end		1
45	6704631	HOSE			1
45		HOSE	NAP - 13.5"(342,9 mm) long - Order 6730769 Hose - Was 6712414 [A]	5158 11001-29999	2
45		HOSE	NAP - 13.5"(342,9 mm) long - Order 6730769 Hose - Was 6712414 [A]	5162 11001-19999	2
45	6730769	HOSE	14.5"(368,3 mm) long		2
46	6578327	HOSE			1
47	6648636	HOSE			1
48	6715251	HOSE		5158 11001-29999	1
48	6715251	HOSE		5162 11001-19999	1
49	6719211	TUBE	to hose from bleed manifold to hyd. tank		1
50	87FN00005B	ADAPTER			1

https://www.pdfmanual4trucks.com/

HYDROSTATIC CIRCUITRY

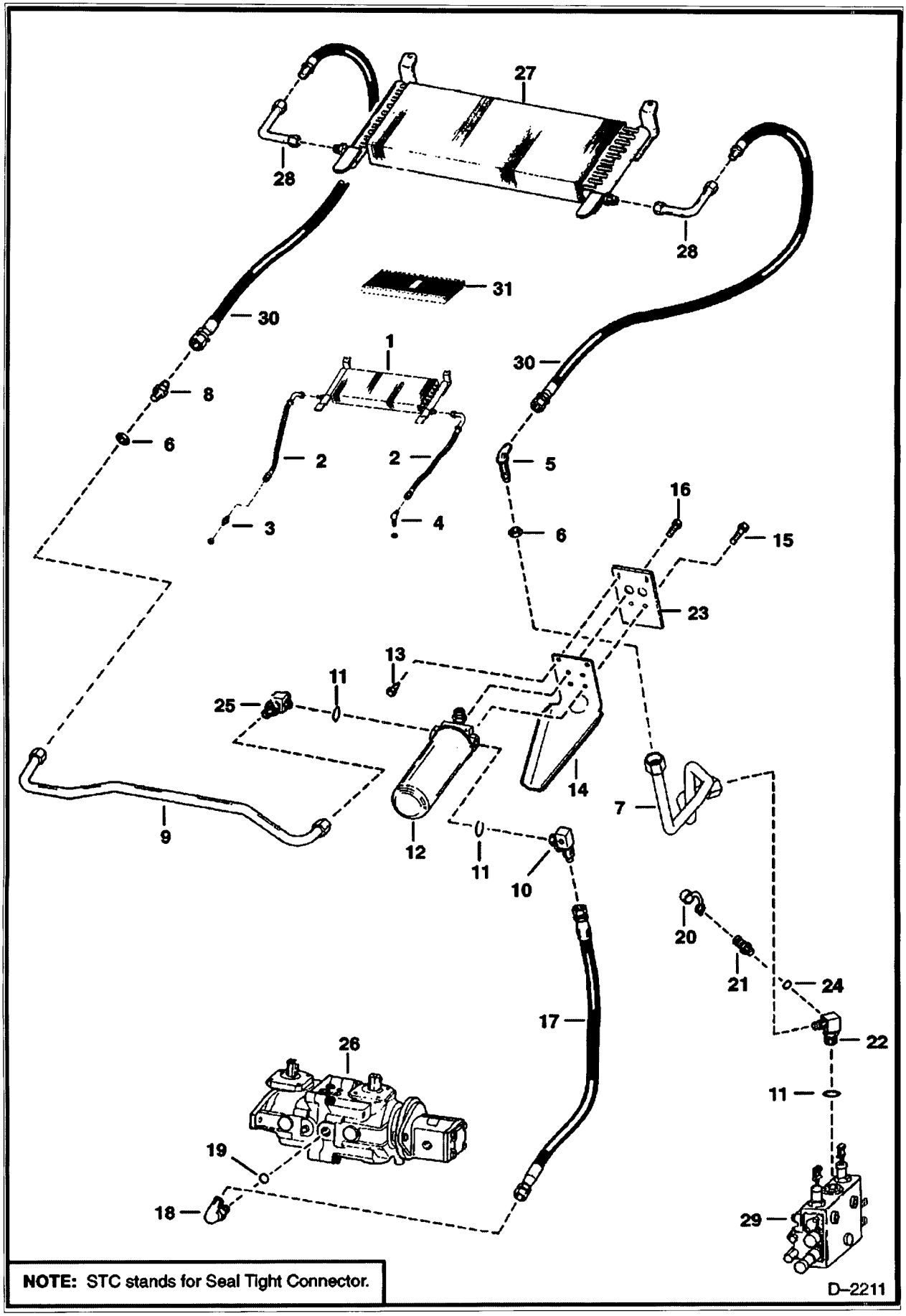

https://www.pdfmanual4trucks.com/

HYDROSTATIC CIRCUITRY (Cont'd)

f No	Part Number	Description	Remarks	Serial Number	Qty
1	6674150	OIL COOLER	STC - SEE NOTE		1
2	6673828	HOSE	STC - SEE NOTE		2
3	6670830	ADAPTER	STC - SEE NOTE		1
3	6690949	O-RING			1
4	6670831	ELBOW	STC - SEE NOTE		1
4	6690949	O-RING			1
5	88F000008B	ELBOW	W/O O-rings		1
5	88FN00008B	ELBOW	W/ O-rings		1
5	97K000012B	O-RING	flared end		2
6	86F000008B	NUT			2
7	6708748	TUBE	Was 6706671 [A]		1
8	45K000008B	ADAPTER	W/O O-rings		1
8	45KN00008B	ADAPTER	W/ O-rings		1
8	97K000012B	O-RING	flared end		2
9	6704155	TUBE			1
10	6704164	ELBOW	W/Ref. 11 - flat boss face		1
10	6715655	ELBOW	W/Ref. 11 - tapered boss face		1
)	97K000012B	O-RING	flared end		1
.1	79K12	O RING 10	flat boss face		x
11	99K000012B	O-RING	tapered boss face		x
12		FILTER ASSY.	See Illustration HYDROSTATIC OIL FILTER/ C2818 See Illustration HYDROSTATIC OIL FILTER/ B16487		1
12	6661248	ELEMENT			1
13	84G3712	BOLT			2
14	6727345	MOUNT	filter drain - Was 6704342 [A]		1
15	17C000616B	BOLT			2
'6	17C000610B	BOLT			2
7	6704159	HOSE			1
18	17KB01210B	ELBOW	Was 6714901 [A]		1
19	79K10	O RING 10			x
20	6630367	CAP			1
21	6630168	COUPLER	diagnostic - W/Ref. 25		1
22	6704158	TEE	W/Ref. 11 - flat boss face		1
22	6715653	TEE	W/Ref. 11 - check boss face to determine correct replacement O-ring		1
22	97K000012B	O-RING	flared end		1
?3	6704341	MOUNT			1
]	79K6	O RING 10			1
25	6704696	ELBOW	W/Ref. 11 - flat boss face - W/O B.O.S.S. Option		1
25	6715714	ELBOW	W/Ref. 11 - tapered boss face		1
25	97K000012B	O-RING	flared end		1
25	6700599	ELBOW	W/Ref. 11 - W/ B.O.S.S. Option		1
26		PUMP	See Illustration HYDROSTATIC PUMP/ D1979		1
27	6661238	OIL COOLER			1
28	6703012	TUBE			2
29		VALVE	See Illustration HYDRAULIC CONTROL VALVE/ E2229 HYD. CONTROL		1
30	6654205	HOSE			2
31	6674798	REPAIR KIT	For Ref. 1, 3 & 4		x

https://www.pdfmanual4trucks.com/

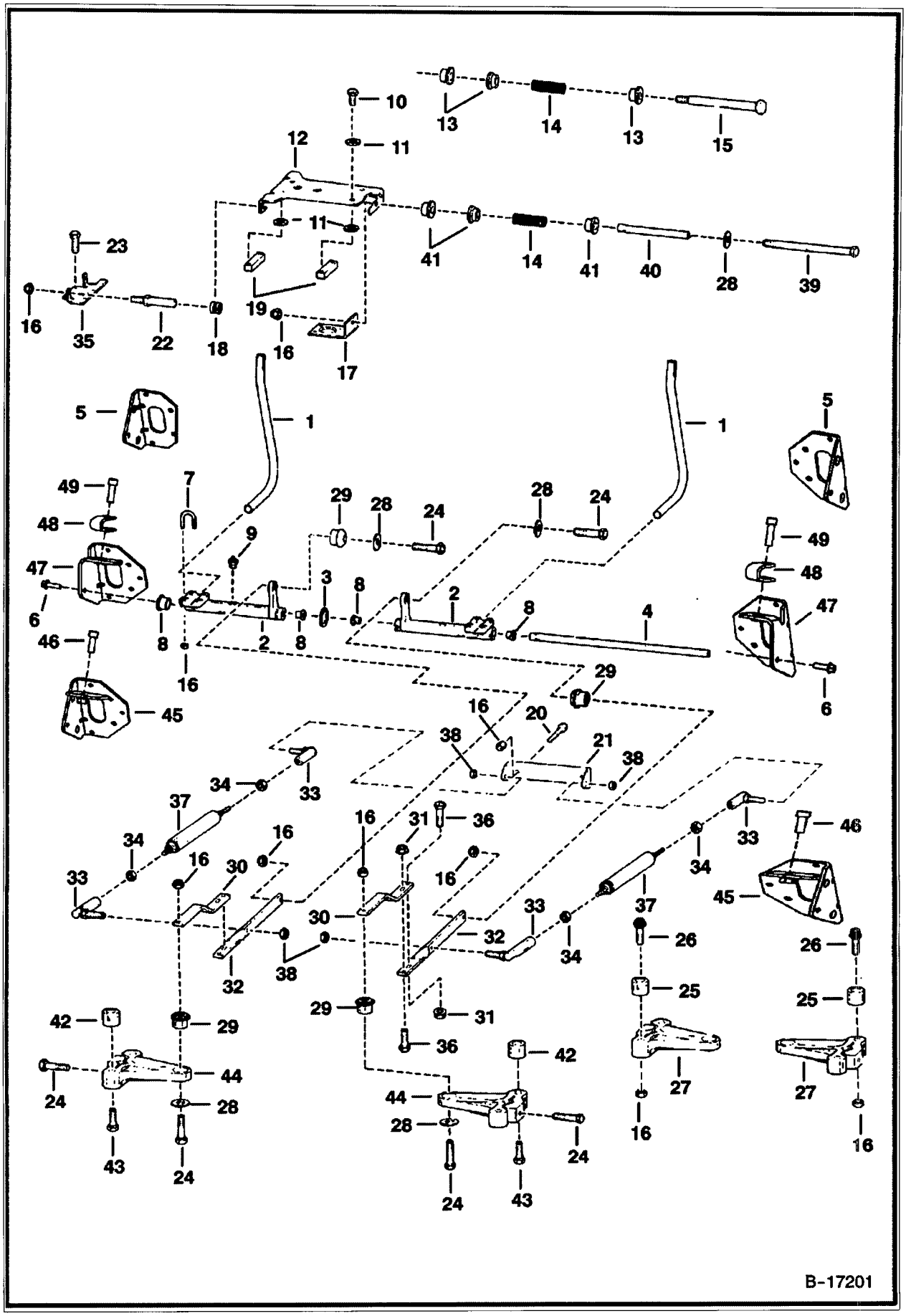

https://www.pdfmanual4trucks.com/

HAND CONTROLS (Cont'd)

f No	Part Number	Description	Remarks	Serial Number	Qty
1	6702543	LEVER			2
2		BELLCRANK	NAP - W/ Notch for bushing tab - Order 7110571 Bellcrank, Ref. 9 (10H000035B Grease Zerk), Ref. 28 (619021B Washer) & Ref. 29 (6678076 Bushing) - Was 6703880 [A]		2
2		BELLCRANK	W/ Notch for bushing tab - Use W/Ref. 9 (6518200 Grease Zerk) - Order 7110571 Bellcrank & Ref. 9 (10H000035B Grease Zerk) - Was 7101047 [A]		2
2	7110571	BELLCRANK	Use W/Ref. 9 (10H000035B Grease Zerk)		2
3	6599741	WASHER	wave		1
4		ROD	NAP - Use W/Ref. 6 (17C-616 Bolt) - Order 6716545 Rod & (2) of 45C000620B Bolts - Was 6576250 [A]		1
4	6716545	ROD	Use W/Ref. 6 - (45C-620 Bolt)		1
5	6577230	BRACKET			2
6	17C000616B	BOLT			2
6	45C000620B	BOLT	Was 45C000624B . [B,D]		2
7	6732997	U-BOLT	Was 6700768 [A]		4
3	6703879	BUSHING			4
9	6518200	GREASE ZERK	press fit		2
9	10H000035B	GREASE ZERK	threaded		2
10	8C000616B	BOLT			4
11	6557831	WASHER			8
12	6706095	MOUNT			1
13		BUSHING	NAP - Order Ref. 28, 39, 40 & (3) of Ref. 41 - Was 6706097 [A]		3
14	6701535	SPRING			1
15		BOLT	NAP - shoulder - Order Ref. 28, 39, 40 & (3) of Ref. 41 - Was 6702715 [A]		1
16	95D000006B	NUT	Was 91D000006B [A]		19
17	6576196	MOUNT			1
18	6706098	GUIDE			2
19	6702716	BLOCK			2
20	17C612	BOLT 5			2
21	6706106	MOUNT			1
22	6577058	PIN			2
23	1CM820	BOLT			8
24	17C000626B	BOLT			8
5	6704435	WEAR CAM		5127 16001 & Abv	4
25	6704435	WEAR CAM		5086 93001-95347	4
25	6704435	WEAR CAM		5114 76001 & Abv	4
25	6704435	WEAR CAM		5139 11001 & Abv	4
26	93G000616B	BOLT		5127 16001 & Abv	4
26	93G000616B	BOLT		5086 93001-95347	4
26	93G000616B	BOLT		5114 76001 & Abv	4
26	93G000616B	BOLT		5139 11001 & Abv	4
27	6701145	LEVER	.63" pump lever shaft	5114 76001 & Abv	2
27	6701145	LEVER	.63" pump lever shaft	5139 11001 & Abv	2
27	6701145	LEVER	.63" pump lever shaft	5127 16001 & Abv	2
27	6701145	LEVER	.63" pump lever shaft	5086 93001-95347	2
28	6563914	WASHER	1.00" (25,4 mm) O.D.		4
28	619021B	WASHER	1.25" (31,8 mm) O.D.		4
29	6665701	BUSHING	neoprene - .855" (22,5 mm) O.D. - Was 6630081 [A]		4
29	6678067	BUSHING	torsion - 1.055" (26,8 mm) O.D.		4
0	6576194	LINK	Was 6706194 [B,D]		2
31	83D6	NUT 5			4
32	6576195	LINK			2
3	6599744	BALL JOINT			4

https://www.pdfmanual4trucks.com/

HAND CONTROLS (Cont'd)

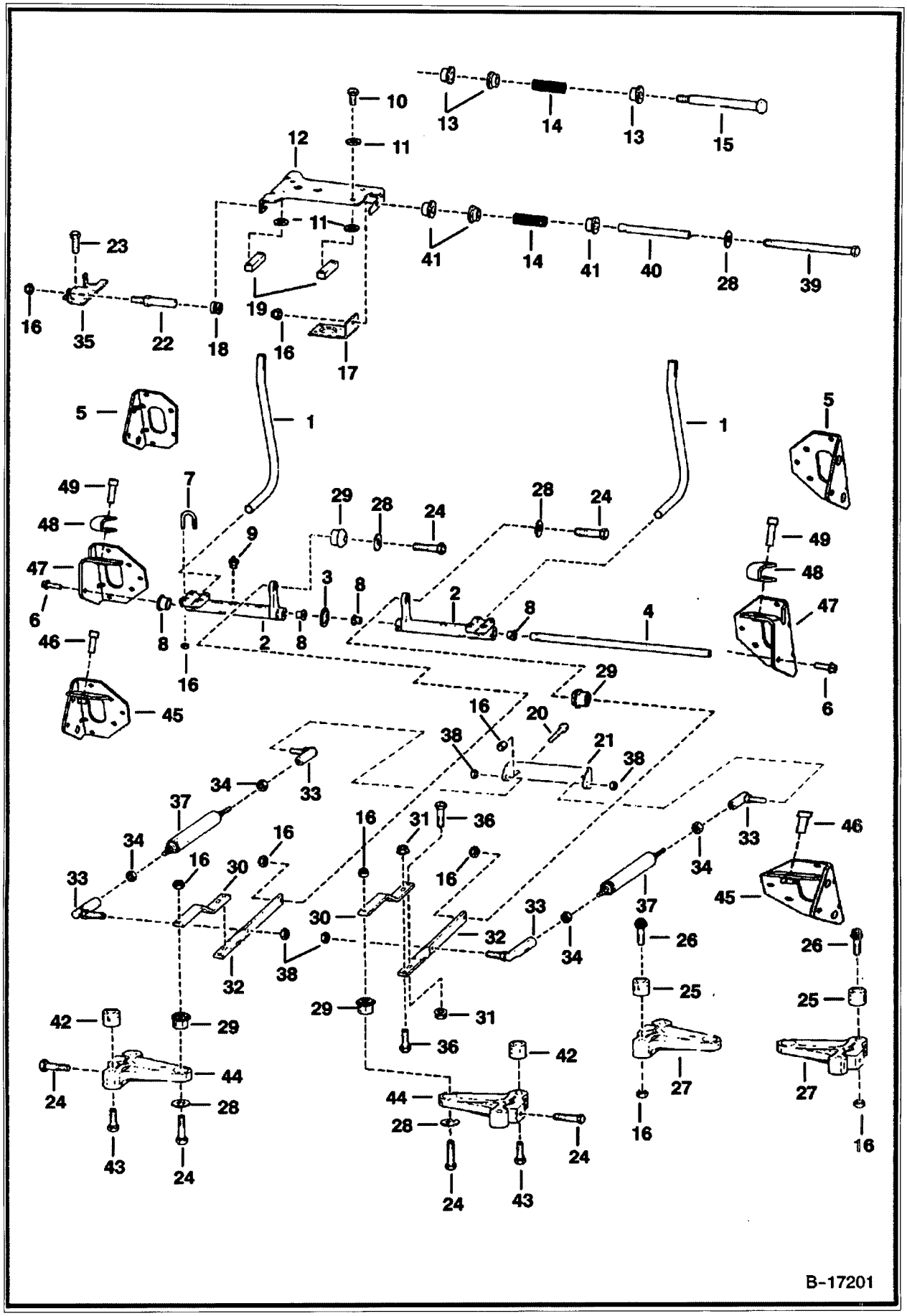

https://www.pdfmanual4trucks.com/

f No	Part Number	Description	Remarks	Serial Number	Qty
4	8D000006B	NUT			4
35	6706096	MOUNT			1
36	17C620	BOLT			4
37	6649551	SHOCK			2
38	62D000006B	NUT			2
39	17C000680B	BOLT			1
40	6715164	SLEEVE			1
41	6715163	BUSHING			3
42	6711643	CAM		5086 95348 & Abv	4
42	6711643	CAM		5158 11001-29999	4
42	6711643	CAM		5162 11001-19999	4
43	35C000612B	BOLT		5086 95348 & Abv	4
43	35C000612B	BOLT		5158 11001-29999	4
43	35C000612B	BOLT		5162 11001-19999	4
44		LEVER	NAP - .8725"(22,2 MM) I.D. HOLE for Ref. 29 (6665701 bushing) - ORDER 6729956 LEVER, Ref. 28 (619021B WASHER) & Ref. 29 (6678067 BUSHING) - WAS 6711644 [A]	5086 95348 & Abv	2
44		LEVER	NAP - .8725"(22,2 MM) I.D. HOLE for Ref. 29 (6665701 bushing) - ORDER 6729956 LEVER, Ref. 28 (619021B WASHER) & Ref. 29 (6678067 BUSHING) - WAS 6711644 [A]	5158 11001-29999	2
44		LEVER	NAP - .8725"(22,2 MM) I.D. HOLE for Ref. 29 (6665701 bushing) - ORDER 6729956 LEVER, Ref. 28 (619021B WASHER) & Ref. 29 (6678067 BUSHING) - WAS 6711644 [A]	5162 11001-19999	2
44	6729956	LEVER	1.0475" (26,5 mm) I.D. hole for Ref. 29 (6678067 Bushing)		2
45		BRACKET	NAP - R.H. - Order Ref. 47-49 - Was 6733022 [A]		1
45		BRACKET	NAP - L.H. - Order Ref. 47-49 - Was 6733024 [A]		1
46	93G824	BOLT	Was 73G824 [A]		2
47	7128600	BRACKET	R.H.		1
47	7128601	BRACKET	L.H.		1
48	7121779	PAD			2
49	73G828	BOLT			2

https://www.pdfmanual4trucks.com/

HYDROSTATIC MOTOR
(S/N 5127 16001 & Abv, 5086 30001 & Abv, 5139 11001 & Abv, 5114 76001 & Abv

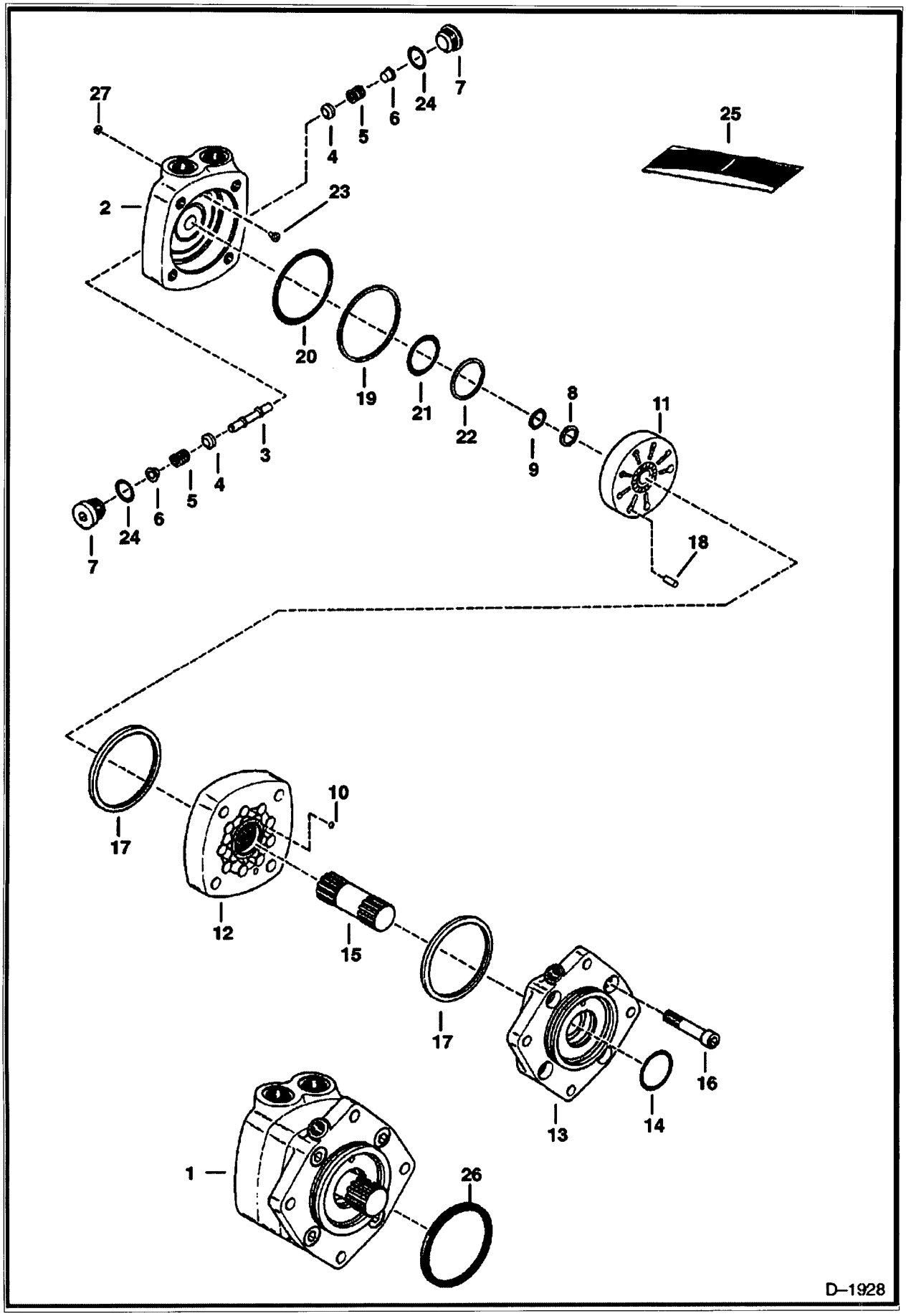

https://www.pdfmanual4trucks.com/

HYDROSTATIC MOTOR (Cont'd)
(S/N 5127 16001 & Abv, 5086 30001 & Abv, 5139 11001 & Abv, 5114 76001 & Abv

f No	Part Number	Description	Remarks	Serial Number	Qty
1		MOTOR	See BTI340 NAP - Ref. 2-24 - Model 137-1001-002 - Was 6657024 [A]		1
2		END CAP	See BTI340 NAP - W/Ref. 27 - Was 6659475 [A]		1
3	6513510	PISTON			1
4	6513532	POPPET			2
5	6513533	SPRING			2
6	6561218	SHUTTLE			2
7	6632271	PLUG	W/Ref. 24		2
8	6659476	BACK-UP RING			1
9	6659477	O-RING			1
10	6651542	BALL			2
11		PLATE	NAP - valve - Was 6659479 [A]		1
12	6651544	GEROLER			1
13		FLANGE	NAP - Was 6659480 [A]		1
14	25K030202B	O-RING			1
15		SHAFT	NAP - Was 6659481 [A]		1
16		BOLT	NAP - Was 6651548 [A]		4
7	6651549	SEAL			2
8	6659482	DOWEL PIN			3
19	6659483	BACK-UP RING			1
20	6651552	O-RING			1
21	6659484	O-RING			1
22	6659485	BACK-UP RING			1
23	6659478	DISC	pressure		1
24	79K6	O RING 10			2
25	6659601	SEAL KIT	Ref. 8, 9, 14, 17, 19-22 & 24		1
6	58K000243B	O-RING	See Illustration DRIVE TRAIN/ B17194		1
7		PLUG	NAP - requires special tool to install - Was 6667880 [D]		2

https://www.pdfmanual4trucks.com/

HYDROSTATIC MOTOR

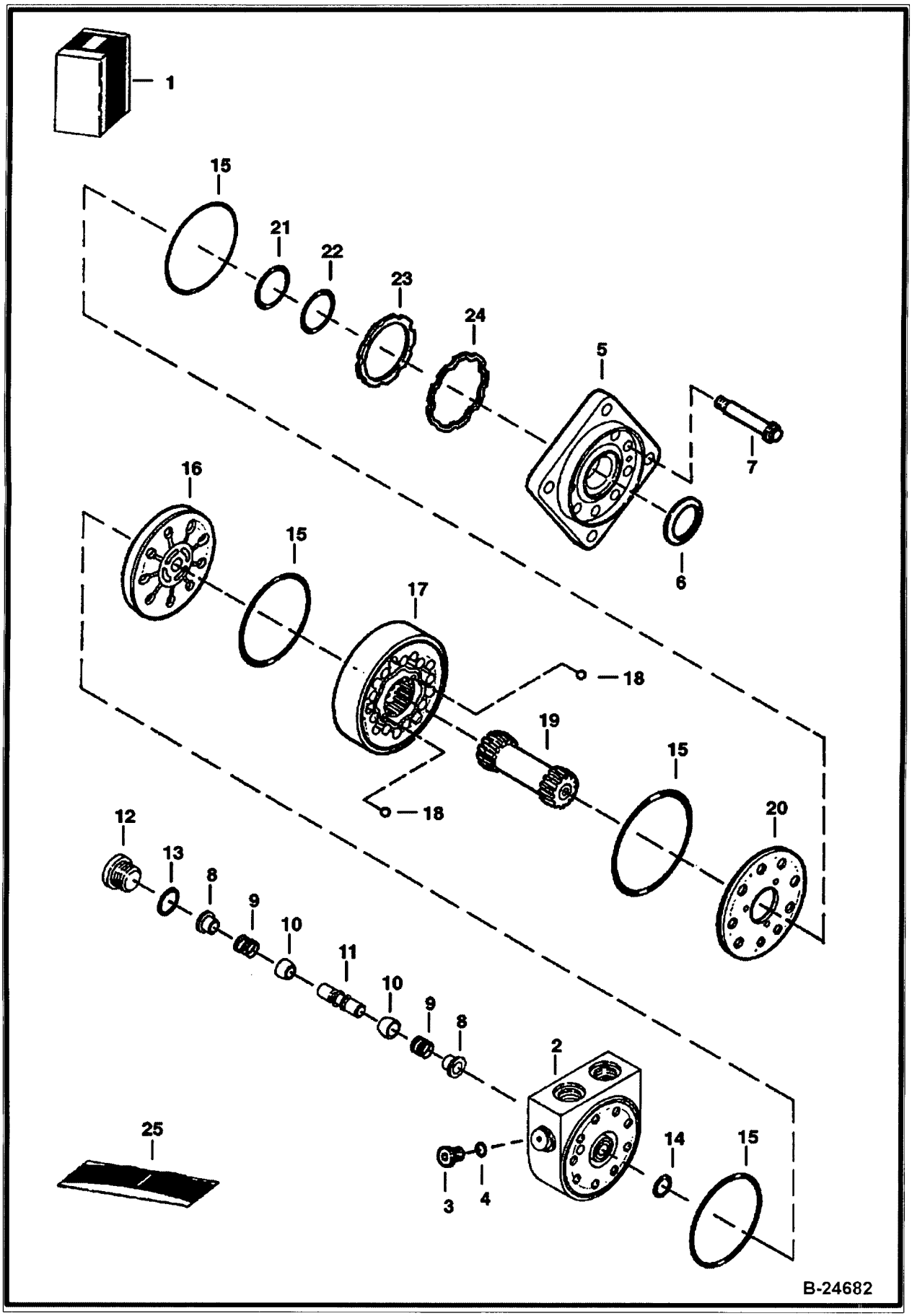

https://www.pdfmanual4trucks.com/

HYDROSTATIC MOTOR (Cont'd)

Ref No	Part Number	Description	Remarks	Serial Number	Qty
1	6681605	MOTOR	Ref. 2-24		1
2	6685063	HOUSING	W/Ref. 3 & 4		1
3	6668079	PLUG	W/Ref. 4		1
4	79K000005B	O-RING			1
5	6685553	FLANGE			1
6	6664815	SEAL			1
7	6686404	BOLT			9
8	6685065	SHUTTLE			2
9	6513533	SPRING			2
10	6513532	POPPET			2
11	6685066	PISTON	shuttle		1
12	6668089	PLUG	W/Ref. 13		1
13	79K6	O RING 10			1
14	6669452	O-RING			1
15	6678000	SEAL			4
16	6678001	PLATE	valve		1
17	6685067	GEROLER			2
18	6651542	BALL			2
19	6682862	SHAFT, DRIVE			1
20	6678003	PLATE	balance - outer		1
20	6678004	PLATE	balance - inner		1
21	6678006	BACK-UP RING	back-up		1
22	6682860	O-RING			1
23	6682897	SEAL			1
24	6685069	RING,BACK-UP	back-up		1
25	6686403	SEAL KIT	W/Ref. 4, 13-15 & 21-23		1

https://www.pdfmanual4trucks.com/

HYDROSTATIC MOTOR
(5158 11001-29999, 51628 11001-19999)

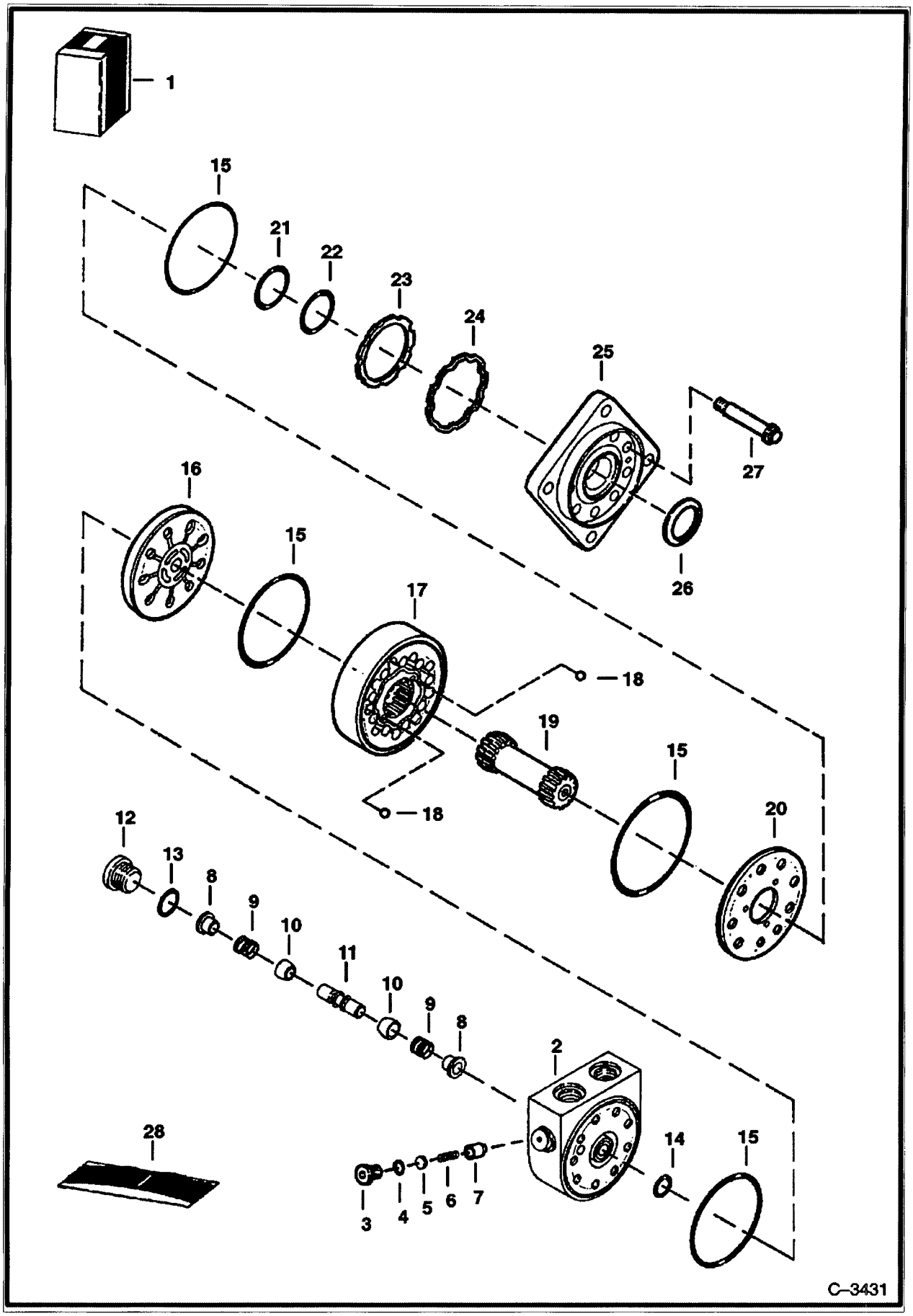

https://www.pdfmanual4trucks.com/

HYDROSTATIC MOTOR (Cont'd)
(5158 11001-29999, 51628 11001-19999)

.f No	Part Number	Description	Remarks	Serial Number	Qty
1		MOTOR	See BTI367 NAP - Ref. 2 - 27 - Model 161-0028-02 - Was 6671617		1
2	6669442	HOUSING	W/Ref. 3-7		1
3	6668079	PLUG	W/Ref. 4		1
4	79K000005B	O-RING			1
5	6668080	SHIM			x
6	6669444	SPRING			1
7	6668082	POPPET			1
8	6561218	SHUTTLE			2
9	6513533	SPRING			2
10	6513532	POPPET			2
11	6668088	PISTON	shuttle - round		1
11	6685066	PISTON	shuttle - W/ flat - fast acting		1
12	6668089	PLUG	W/Ref. 13		1
13	79K6	O RING 10			1
14	6669452	O-RING			1
15	6669446	O-RING			4
3	6669447	PLATE	valve		1
17	6672126	GEROLER	for Model 161-0028-02		1
18	6651542	BALL			2
19	6669469	SHAFT			1
20	6669448	PLATE	balance		1
21	6669450	RING	backup		1
22	6669449	O-RING			1
23	6669453	SEAL			1
24	6669454	RING	backup		1
5	6669451	FLANGE	mounting		1
.6	6664815	SEAL			1
27	6669470	BOLT			9
28	6669455	SEAL KIT	W/Ref. 4, 13, 14, 21-24 & 26		1

https://www.pdfmanual4trucks.com/

HYDROSTATIC MOTOR

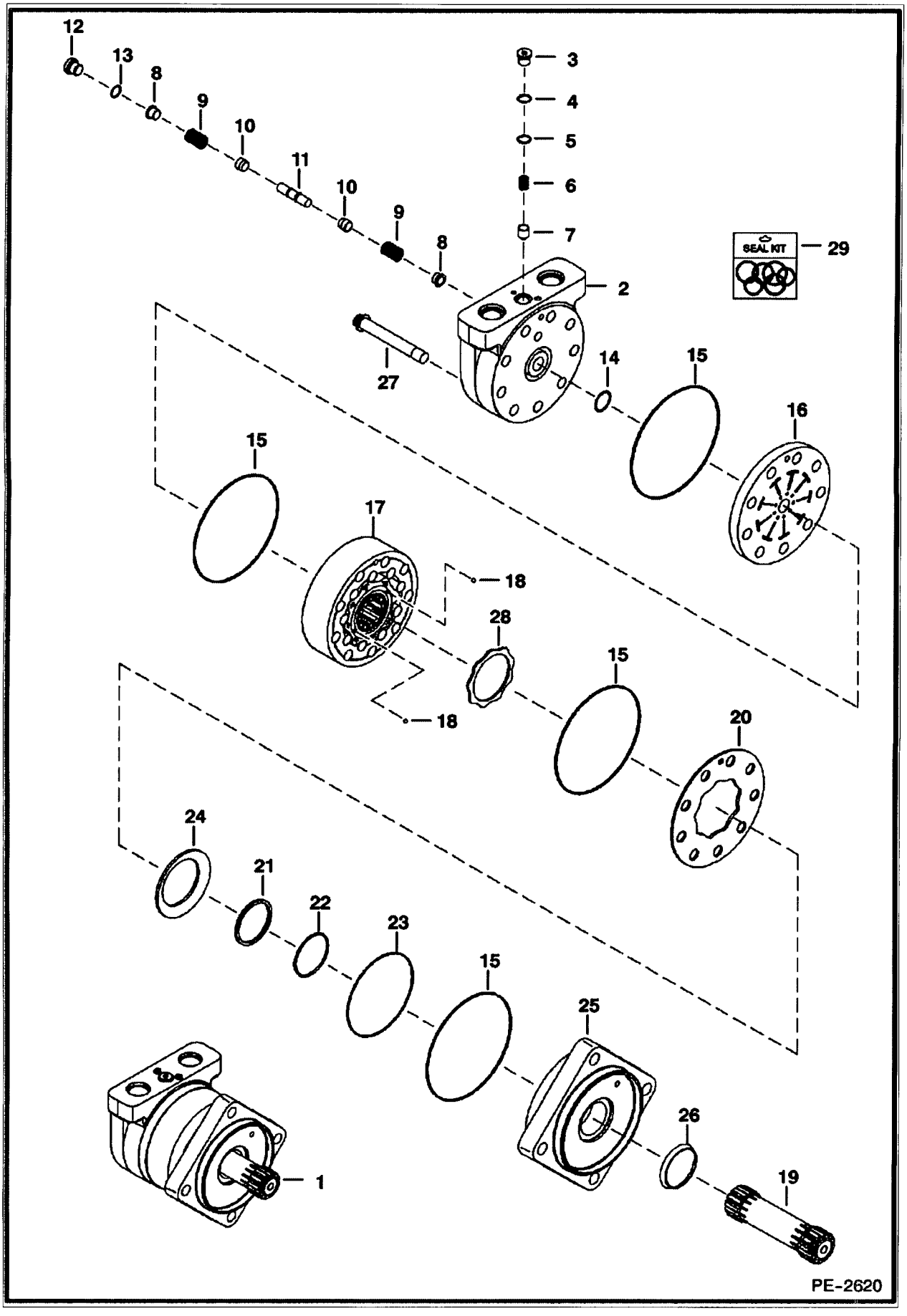

https://www.pdfmanual4trucks.com/

HYDROSTATIC MOTOR (Cont'd)

f No	Part Number	Description	Remarks	Serial Number	Qty
1	6682034	MOTOR	Ref. 2-27		1
2	6689697	HOUSING	W/Ref. 3-7 - Was 6685063 [B,D]		1
3	6668079	PLUG	W/Ref. 4		1
4	79K000005B	O-RING			1
5	6668080	SHIM			x
6	6688521	SPRING			1
7	6668082	POPPET	Was 6685064 [A]		1
8	6685065	SHUTTLE			2
9	6513533	SPRING			2
10	6513532	POPPET			2
11	6685066	PISTON	shuttle		1
12	6668089	PLUG	W/Ref. 13		1
13	79K6	O RING 10			1
14	6669452	O-RING			1
15	6678000	SEAL			4
16	6689698	PLATE	valve - Was 6678001 [B,D]		1
17	6691343	GEROLER	Was 6685067 [B,D]		1
3	6651542	BALL			2
.9	6682862	SHAFT, DRIVE			1
20	6689700	PLATE	balance - outer - Was 6678003 [B,D]		1
21	6678006	BACK-UP RING	backup		1
22	6682860	O-RING			1
23	6682897	SEAL			1
24	6685069	RING,BACK-UP	backup		1
25	6685068	FLANGE	mounting		1
26	6664815	SEAL			1
?7	6682863	BOLT			9
.8	6678004	PLATE	balance - inner		1
29	6685070	KIT, SEAL COMPLETE	W/Ref. 4, 13-15, 21-23 & 26		1

https://www.pdfmanual4trucks.com/

HYDROSTATIC PUMP

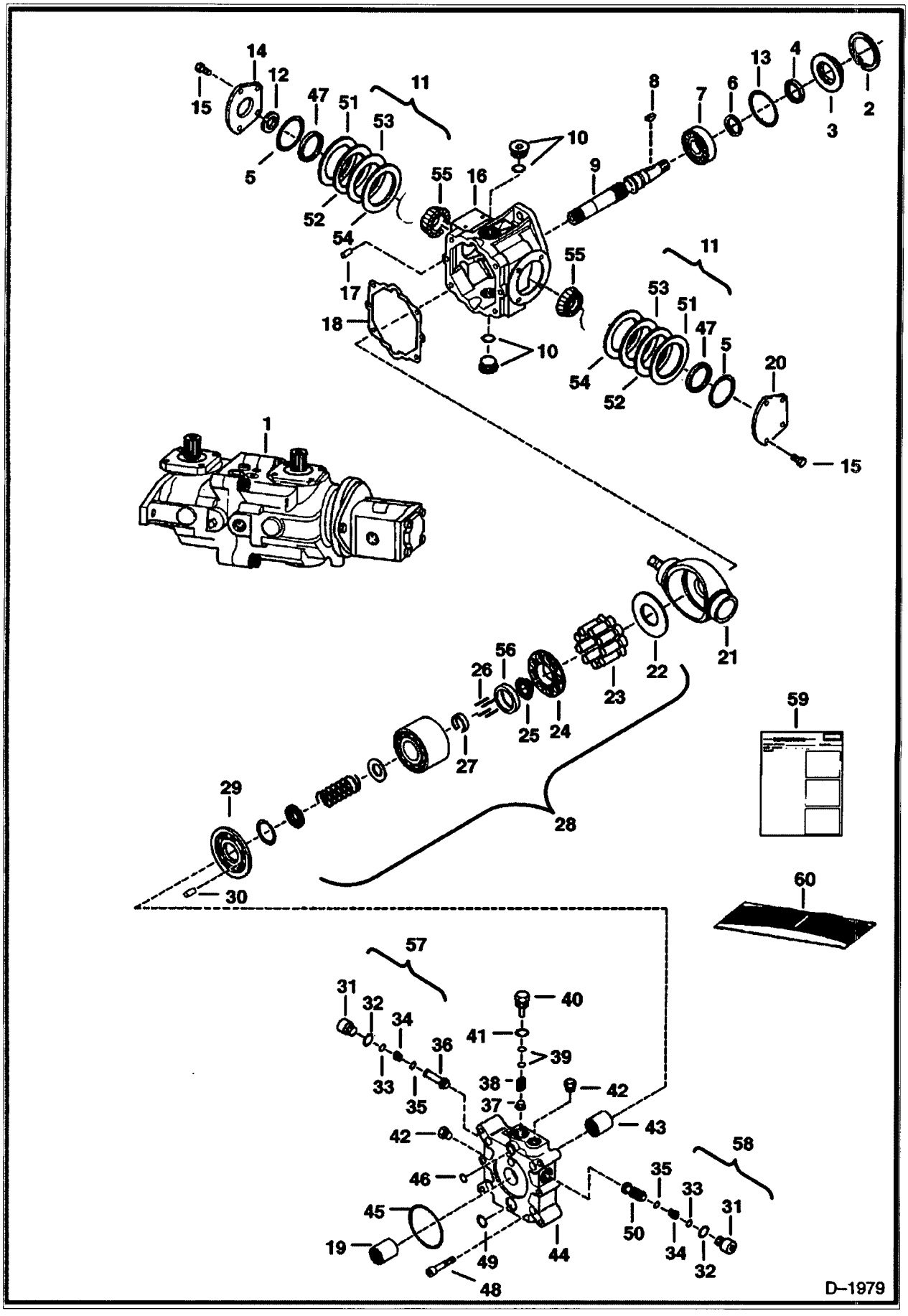

https://www.pdfmanual4trucks.com/

HYDROSTATIC PUMP (Cont'd)

f NO	Part Number	Description	Remarks	Serial Number	Qty
1		PUMP	See Illustration HYDROSTATIC PUMP/ D2377 NAP - W/GEAR PUMP - M91-35916 - ORDER 6662349 PUMP OR 6669464 PUMP PUMP IS SHOWN IN A RIGHT REAR VIEW - REF. 2-56 ARE SHOWN IN A LEFT FRONT VIEW, ROTATED 90 DEGREES CLOCKWISE WHEN FACING GEAR PUMP END - WAS 6661997 [A]	5127 16001 27374	1
1		PUMP	See Illustration HYDROSTATIC PUMP/ D2377 NAP - W/GEAR PUMP - M91-35916 - ORDER 6662349 PUMP OR 6669464 PUMP PUMP IS SHOWN IN A RIGHT REAR VIEW - REF. 2-56 ARE SHOWN IN A LEFT FRONT VIEW, ROTATED 90 DEGREES CLOCKWISE WHEN FACING GEAR PUMP END - WAS 6661997 [A]	5086 93001-94503	1
1	6662349REM	PUMP REM / CORE EXCHANGE REQUIRED	remanufactured - W/Gear Pump - Was 6662349 [A]		1
2	6652019	SNAP RING			1
3	6657074	ADAPTER			1
4	6650626	SEAL			1
5	6660814	O-RING			2
6	6650641	SNAP RING			1
7	6650640	BEARING			1
8	6J000807B	KEY			1
9	6650671	SHAFT	W/Ref. 8		1
10	47K000008B	PLUG			2
0	79K12	O RING 10			2
11	6660815	SHIM KIT	Ref. 51-54 - SEE NOTE		2
12	6678226	SEAL	Was 6673881 [A]		1
13	6657079	O-RING			1
14	6657067	COVER			1
15	6650668	BOLT			8
16		HOUSING	NAP - Was 6657076 [A]		1
17	6518460	PIN			2
18	6650634	GASKET			1
19	6650675	COUPLER			1
)	6657068	COVER			1
21		SWASH PLATE	NAP - Order 6671907 swash plate - utiliizes a .55" thick cup, a .71" thick bearing & Ref. 47 & 51-54. Order 6671907 kit which consists of a new swash plate, a .67" thick cup & a .83" thick bearing - Was 6659583 [A]		1
21	6671907	SWASH PLATE	W/Ref. 55		1
22	6650627	PLATE	thrust		1
23		PISTON	NAP - Order Ref. 28		9
24		GUIDE	NAP - Order Ref. 28		1
25		GUIDE	NAP - Order Ref. 28		1
26	6650629	PIN			4
27	6650630	RETAINER			1
28	6661758	BLOCK ASSY	W/Ref. 23-27		1
29	6666290	PLATE	valve - Was 6650672 [C]		1
30	6650636	PIN			1
1		PLUG	NAP - Order Ref. 57 or 58 - Was 6657070 [A]		2
2	6657028	O-RING			2
33	79K8	O RING 10			2
4		SPRING	NAP - Order Ref. 57 or 58 - Was 6650656 [A]		2

https://www.pdfmanual4trucks.com/

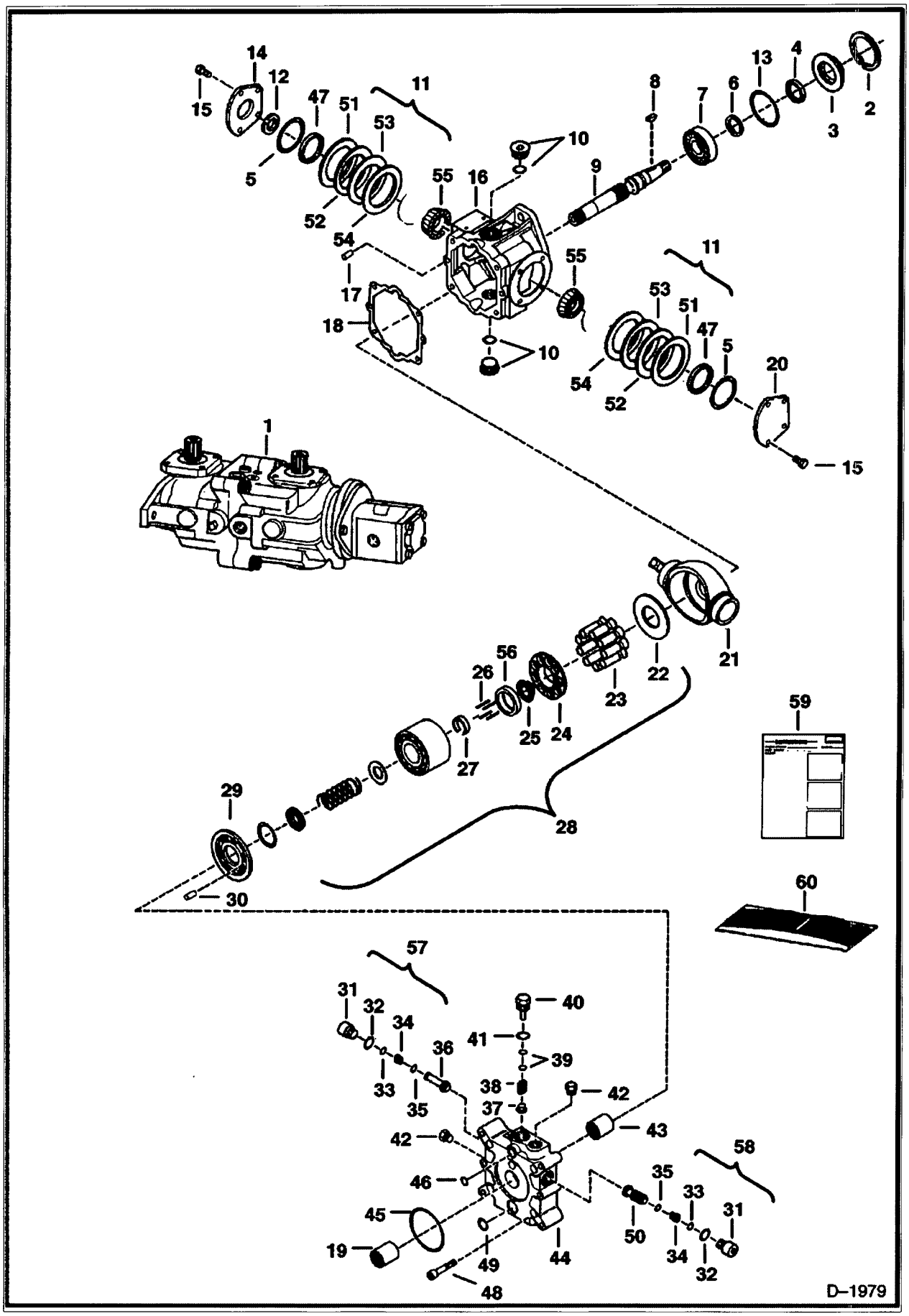

https://www.pdfmanual4trucks.com/

HYDROSTATIC PUMP (Cont'd)

f No	Part Number	Description	Remarks	Serial Number	Qty
5		SNAP RING	NAP - Order Ref. 57 or 58 - Was 6657071 [A]		2
36		CHECK VALVE	NAP - Order Ref. 57 - Was 6650669 [A]		1
37	6650652	POPPET	charge		1
38	6658301	SPRING			1
39	6658302	SHIM	.010 mm		1
39	6650649	SHIM	.020 mm		1
39	6650650	SHIM	.050 mm		1
40	6650648	PLUG			1
41	79K10	O RING 10			1
42	6645086	PLUG			2
43	6650635	BEARING			1
44	6650670	CAP			1
45	6645081	O-RING			1
46	6650646	O-RING			1
47	6659582	SPACER	SEE NOTE		x
48	6650637	BOLT			4
49	6650647	O-RING			1
)		RELIEF VALVE	NAP - 5000 PSI - Order Ref. 58 - Was 6658300 [A]		1
51	6659578	SHIM	.003 - SEE NOTE		x
52	6659579	SHIM	.005 - SEE NOTE		x
53	6659580	SHIM	.010 - SEE NOTE		x
54	6659581	SHIM	.020 - SEE NOTE		x
55	6660117	BEARING	W/cup - .55 Cup & .71 Bearing - SEE NOTE		2
55	6669411	BEARING	W/cup - .67 Cup & .83 Bearing - SEE NOTE		2
56	6666338	WASHER			1
57	6670684	CHECK VALVE			1
58	6689601	VALVE	Was 6670685 [A]		1
59	6722075	INSTRUCTIONS			1
60	6658092	SEAL KIT	See Illustration HYDROSTATIC PUMP/ D1929 REF. 4, 5, 12, 13, 18, 32, 33, 39, 41, 45 & 46 - ALSO INCLUDES REF. 3, 4, 28, 31 & 39		1

https://www.pdfmanual4trucks.com/

HYDROSTATIC PUMP

NOTE: 6659583 Swash Plate is NAP. This swash plate utilized a .55" thick cup, a .71" thick bearing & Ref. 47 & 51–54 . Order 6671907 Kit which consists of a new swash plate, a .67" thick cup & a .83" thick bearing.

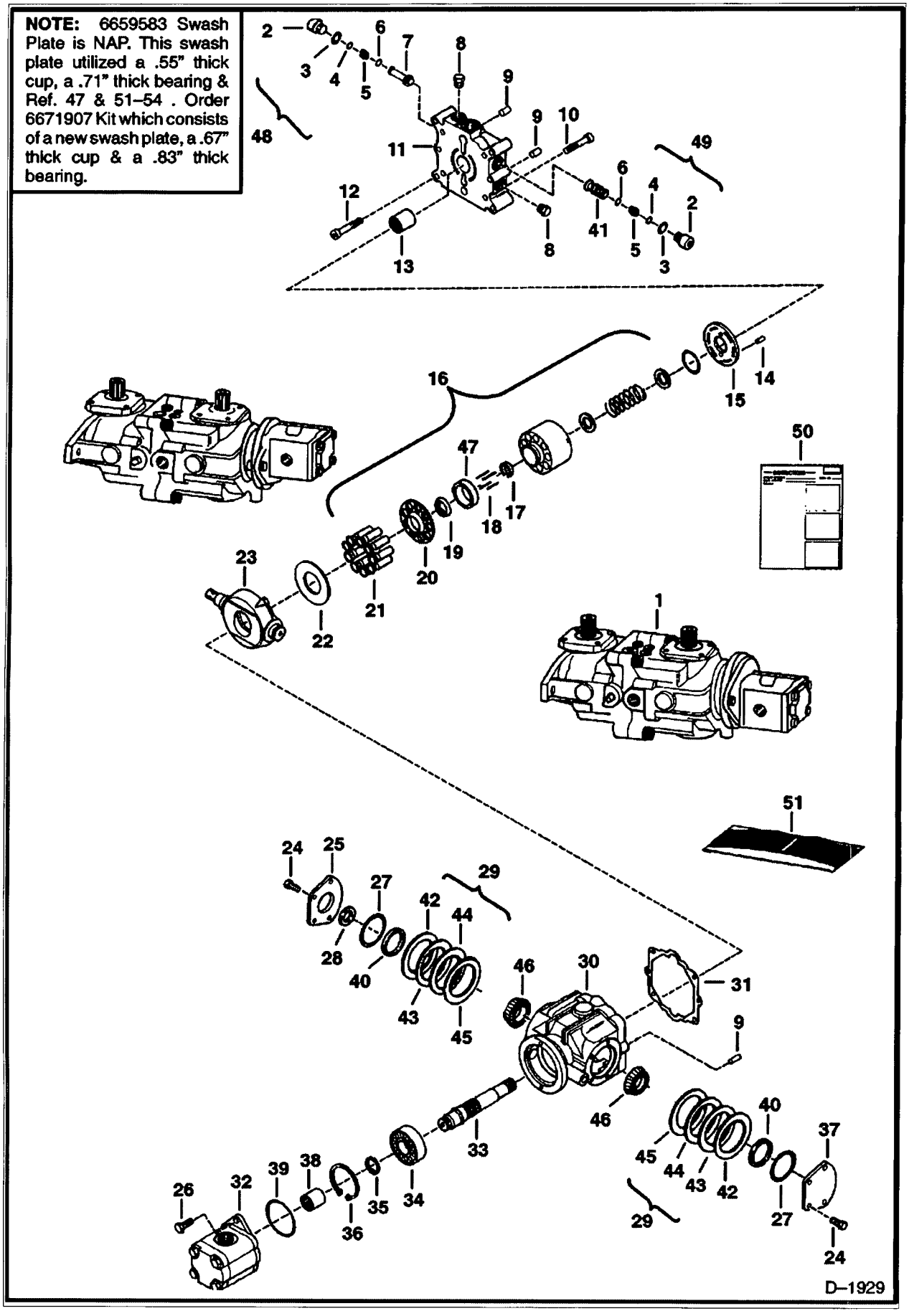

https://www.pdfmanual4trucks.com/

HYDROSTATIC PUMP (Cont'd)

f No	Part Number	Description	Remarks	Serial Number	Qty
1		PUMP	See Illustration HYDROSTATIC PUMP/ D2377 NAP - W/GEAR PUMP - M91-35916 - ORDER 6662349 PUMP OR 6669464 PUMP PUMP IS SHOWN IN A RIGHT REAR VIEW - REF. 2-46 & 47 ARE SHOWN IN A LEFT FRONT VIEW, ROTATED 90 DEGREES CLOCKWISE WHEN FACING GEAR PUMP END - WAS 6661997 [A]	5127 16001 27374	1
1		PUMP	See Illustration HYDROSTATIC PUMP/ D2377 NAP - W/GEAR PUMP - M91-35916 - ORDER 6662349 PUMP OR 6669464 PUMP PUMP IS SHOWN IN A RIGHT REAR VIEW - REF. 2-46 & 47 ARE SHOWN IN A LEFT FRONT VIEW, ROTATED 90 DEGREES CLOCKWISE WHEN FACING GEAR PUMP END - WAS 6661997 [A]	5086 93001-94503	1
1	6662349REM	PUMP REM / CORE EXCHANGE REQUIRED	remanufactured - W/Gear Pump - Was 6662349 [A]		1
2		PLUG	NAP - Order Ref. 58 or 59 - Was 6657070 [A]		2
3	6657028	O-RING			2
4	79K8	O RING 10			2
5		SPRING	NAP - Order Ref. 58 or 59 - Was 6650656 [A]		2
6		SNAP RING	NAP - Order Ref. 48 & 49 - Was 6657071 [A]		2
7		CHECK VALVE	NAP - Order Ref. 58 - Was 6650669 [A]		2
8	6645086	PLUG	Was 6657081 [B]		2
9	6518460	PIN			4
10	6650637	BOLT			4
11	6650653	END CAP			1
12	6652018	BOLT			4
13	6650635	BEARING			1
14	6650636	PIN			1
15	6666291	VALVE PLATE	Was 6650673 [C]		1
16	6661758	BLOCK ASSY	W/Ref. 17-21		1
17	6650630	RETAINER			1
18	6650629	PIN			4
19		GUIDE	NAP - Order Ref. 16		1
20		GUIDE	NAP - Order Ref. 16		1
21		PISTON	NAP - Order Ref. 16		9
22	6650627	PLATE	thrust		1
23		SWASH PLATE	NAP - Order 6671907 Swash Plate - Was 6659583 [A]		1
23	6671907	SWASH PLATE	W/Ref. 55		1
24	6650668	BOLT			8
25	6657067	COVER			1
26	6666339	BOLT	Was 6650679 [A]		2
27	6660814	O-RING			2
28	6678226	SEAL	Was 6673881 [A]		1
29	6660815	SHIM KIT	Ref. 42 - 45 - SEE NOTE		2
30	6657077	HOUSING			1
31	6650634	GASKET			1
32		PUMP	See Illustration GEAR PUMP/ TS1035		1
33	6650645	SHAFT			1
34	6650640	BEARING			1
35	6650641	SNAP RING			1
36	6652019	SNAP RING			1
37	6657068	COVER			1
38	6650677	COUPLER			1
39		QUAD RING	NAP - O.D. of Ref. 32		1

https://www.pdfmanual4trucks.com/

NOTE: 6659583 Swash Plate is NAP. This swash plate utilized a .55" thick cup, a .71" thick bearing & Ref. 47 & 51–54 . Order 6671907 Kit which consists of a new swash plate, a .67" thick cup & a .83" thick bearing.

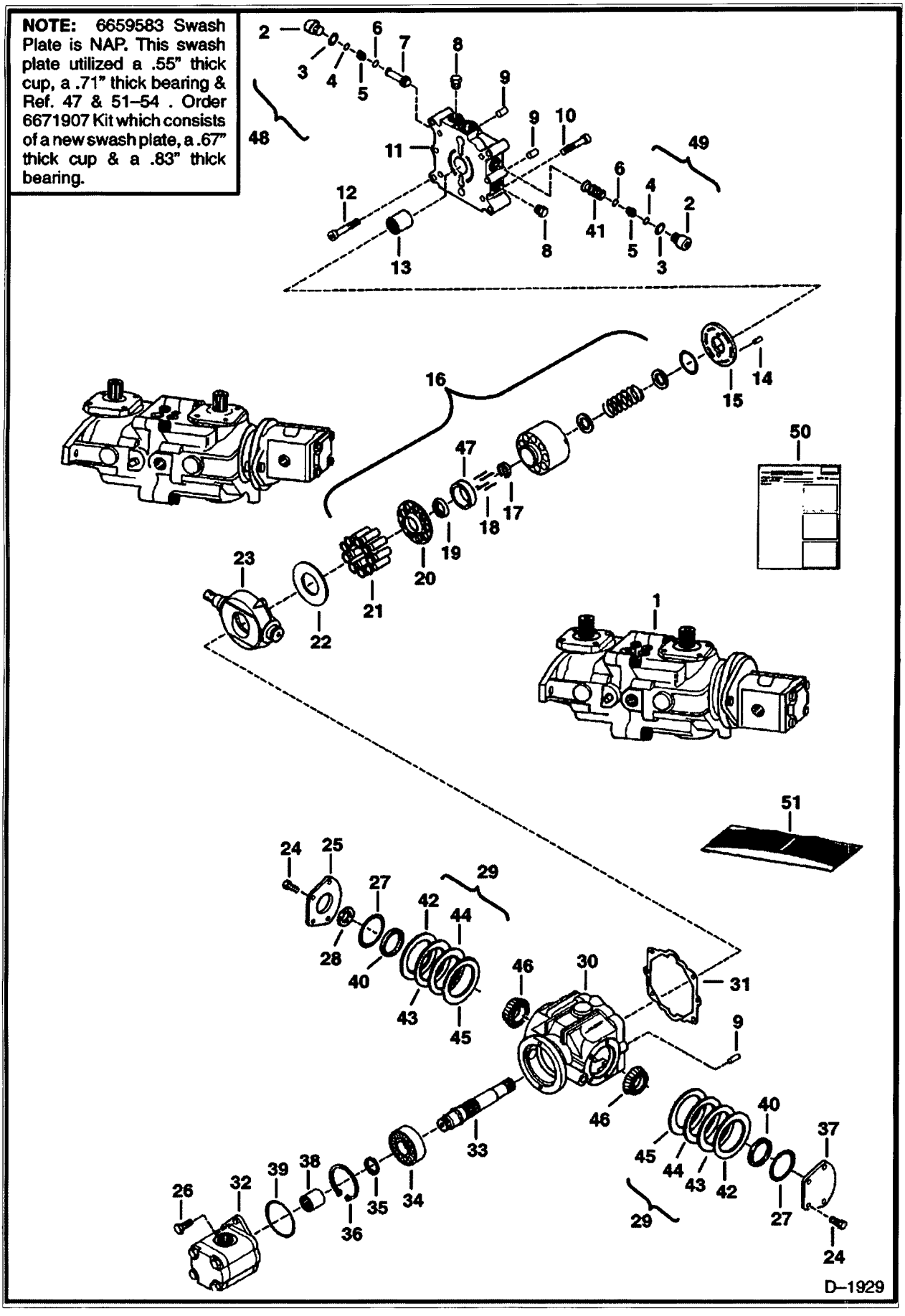

https://www.pdfmanual4trucks.com/

HYDROSTATIC PUMP (Cont'd)

Ref No	Part Number	Description	Remarks	Serial Number	Qty
9	6645080	O-RING	O.D. of Ref. 32		1
40	6659582	SPACER	SEE NOTE		2
41		RELIEF VALVE	NAP - 5000 PSI - Order Ref. 59 - Was 6658300 [A]		1
42	6659578	SHIM	.003 - SEE NOTE		x
43	6659579	SHIM	.005 - SEE NOTE		x
44	6659580	SHIM	.010 - SEE NOTE		x
45	6659581	SHIM	.020 - SEE NOTE		x
46	6660117	BEARING	W/cup - .55 Cup & .71 Bearing - SEE NOTE		x
46	6669411	BEARING	W/cup - .67 Cup & .83 Bearing - SEE NOTE		2
47	6666338	WASHER			1
48	6670684	CHECK VALVE			1
49	6689601	VALVE	Was 6670685 [A]		1
50	6722075	INSTRUCTIONS			1
51	6658092	SEAL KIT	See Illustration HYDROSTATIC PUMP/ D1979 REF. 3, 4, 28, 31 & 39 - ALSO INCLUDES REF. 4, 5, 12, 13, 18, 32, 33, 39, 41, 45 & 46		1

https://www.pdfmanual4trucks.com/

HYDROSTATIC PUMP

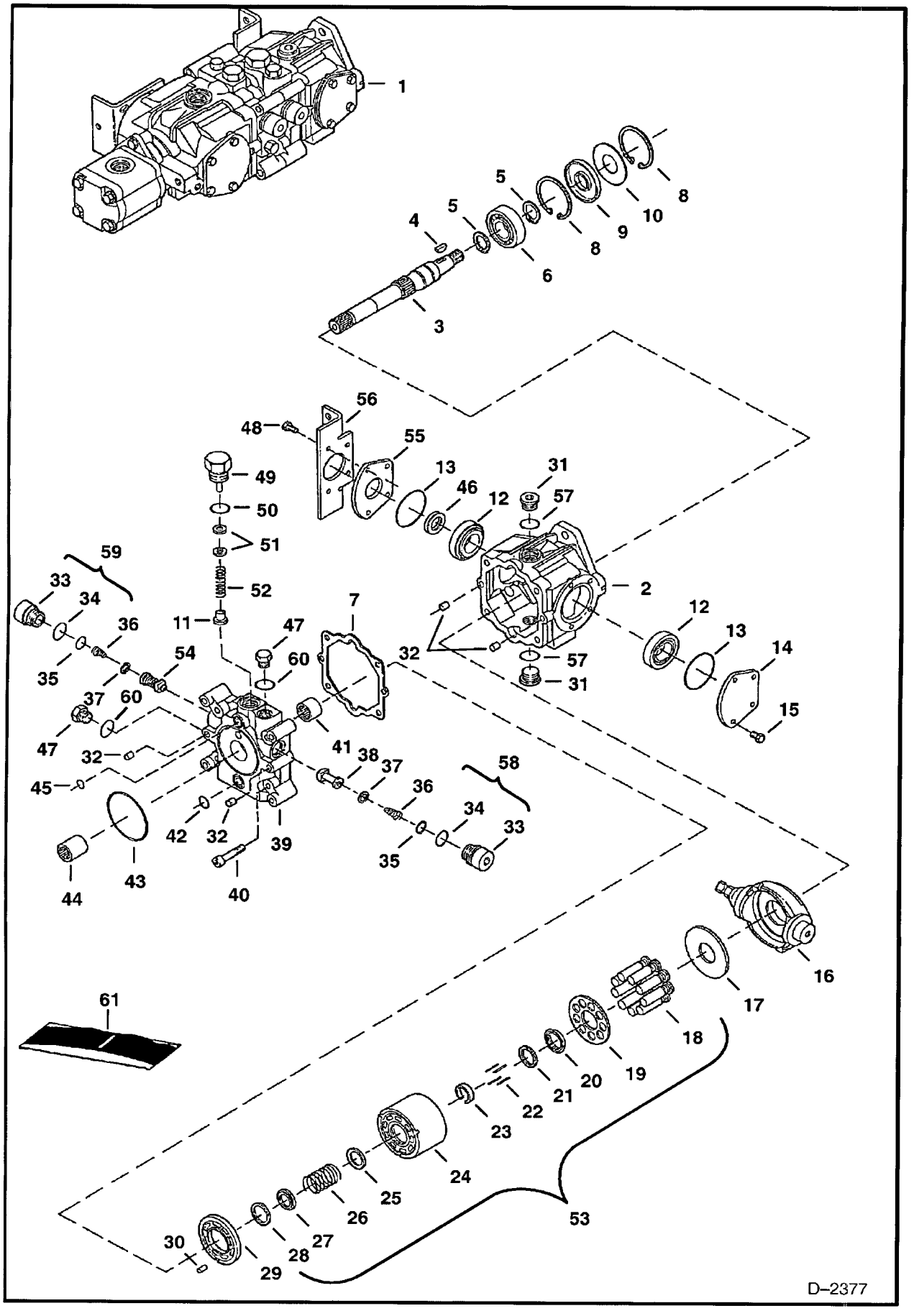

https://www.pdfmanual4trucks.com/

HYDROSTATIC PUMP (Cont'd)

f No	Part Number	Description	Remarks	Serial Number	Qty
1		PUMP	See Illustration ENGINE & ATTACHING PARTS/ B17205 NAP - COMPLETE W/GEAR PUMP - GRAY - DOMESTIC-MODEL 4355049 -ORDER 6669464 PUMP - PUMP CAN BE MOUNTED W/VERTICAL OR HORIZONTAL MOUNTING BOLTS - See Ref. 43 - WAS 6669011 [A]	5127 16001-27374	1
1	6669464	PUMP	Complete W/Gear Pump - gray - Domestic - Model 4355066	5127 27375 & Abv	1
1	6671019REM	PUMP REM / CORE EXCHANGE REQUIRED	Remanufactured - Was 6671019 [A]		1
1		PUMP	NAP - Complete W/Gear Pump - black- Model 4355047 - Export - Order 6671019 Pump - Was 6669014 [A]	5086 94504-95347	1
1		PUMP	NAP - Complete W/Gear Pump - black- Model 4355065 - Export - Order 6671019 Pump - Was 6669465 [A]	5114 76001 & Abv	1
1		PUMP	NAP - Complete W/Gear Pump - black- Model 4355065 - Export - Order 6671019 Pump - Was 6669465 [A]	5139 31364 & Abv	1
1		PUMP	NAP - remanufactured - Order 6671019 Pump - Was 6669465 REM [A]		1
1	6672051	PUMP	Model 4445050	5086 95348 & Abv	1
1	6672051	PUMP	Model 4445050	5162 11001-19999	1
1	6672051	PUMP	Model 4445050	5158 13845 & Abv	1
2	6669402	HOUSING			1
3		SHAFT	NAP - Order 6682260 shaft & Ref. 4 (6682261 key) - W/Woodruff key - Was 6669408 [A]		1
3	6682260	SHAFT	W/square key		1
4	6J000807B	KEY	woodruff		1
4	6682261	KEY	square		1
5	658128B	SNAP RING			2
6	654299B	BEARING			1
7	6650634	GASKET			1
8	669863B	SNAP RING			2
9	6687191	SEAL	Was 6645090 [A]		1
)	6669409	WASHER			1
11	6650652	POPPET	charge		1
12	6669411	BEARING			2
13	6660814	O-RING			2
14	6657068	COVER			2
15	6650668	BOLT			4
16	6669404	SWASH PLATE	Models 4355049 , 4355066 , 4355047 & 4355065		1
16	6685344	SWASH PLATE	W/threaded shaft hole - Was 6671513 [A]		1
17	6650627	PLATE			1
18		PISTON ASSY.	NAP - Order Ref. 53		1
19		RETAINER	NAP - Order Ref. 53		1
20		RETAINER	NAP - guide - Order Ref. 53		1
21	6666338	WASHER			1
22	6650629	PIN			4
23	6650630	RETAINER			1
24		BLOCK	NAP - Order Ref. 53		1
5		WASHER	NAP - Order Ref. 53		1
26		SPRING	NAP - Order Ref. 53		1
27		WASHER	NAP - Order Ref. 53		1
3		WASHER	NAP - Order Ref. 53		1

https://www.pdfmanual4trucks.com/

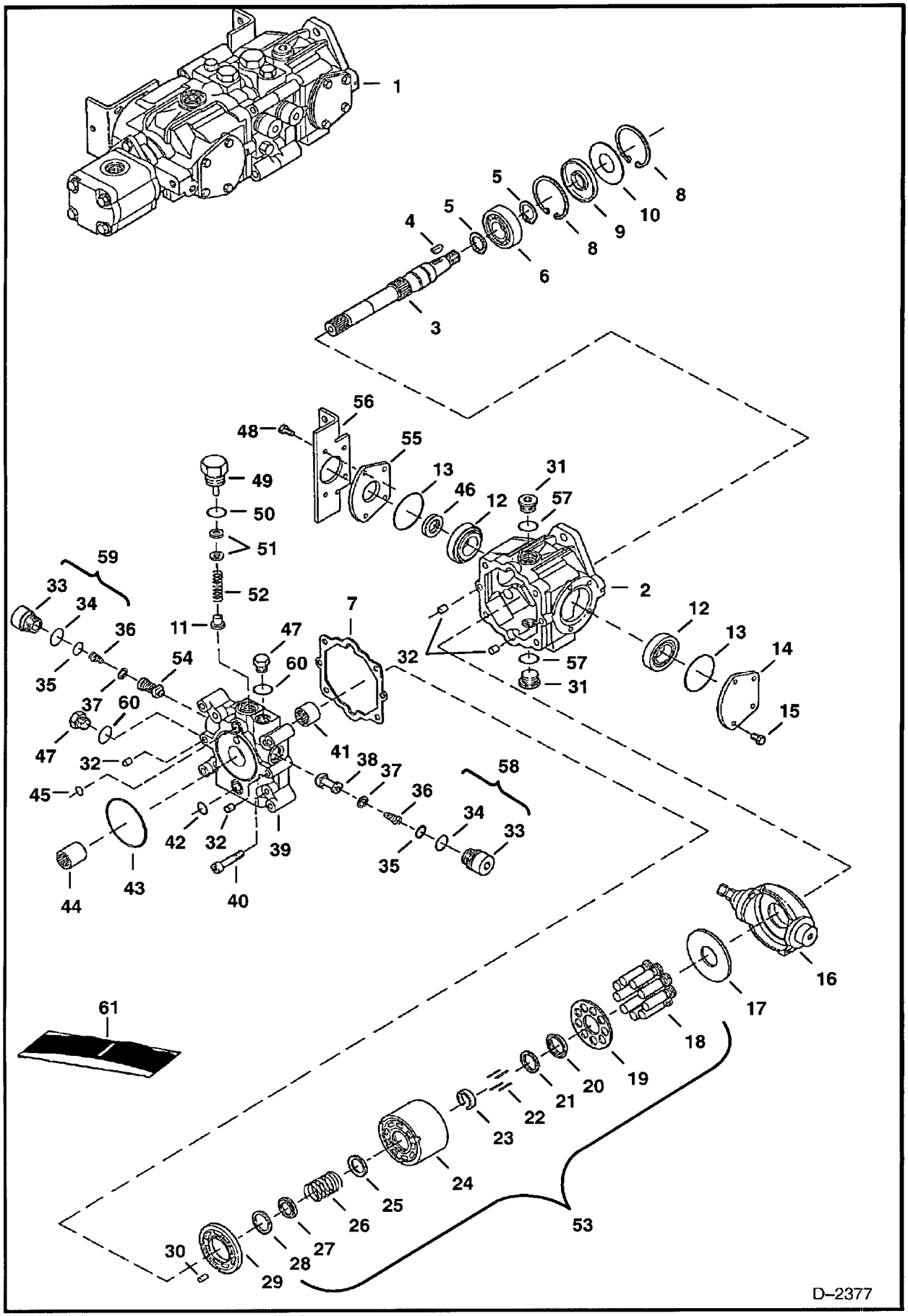

https://www.pdfmanual4trucks.com/

HYDROSTATIC PUMP (Cont'd)

f No	Part Number	Description	Remarks	Serial Number	Qty
29	6669401	VALVE PLATE	Models 4355049 , 4355066 , 4355047 & 4355065		1
29	6675340	VALVE PLATE	Model 4445050 - Was 6671515 [A]		1
30	6650636	PIN			1
31	47K000008B	PLUG	W/Ref. 57		2
32	6518460	PIN			4
33		PLUG	NAP - Order Ref. 58 or 59 - Was 6657070 [A]		2
34	6657028	O-RING			2
35	79K8	O RING 10			2
36		SPRING	NAP - Order Ref. 58 or 59 - Was 6650656 [A]		2
37		RETAINER	NAP - Order Ref. 58 or 59 - Was 6657071 [A]		2
38		CHECK VALVE	NAP - poppet - Order Ref. 58 - Was 6650669 [A]		1
39	6669406	END PLATE			1
40	6650637	BOLT			4
41	6650635	BEARING			1
42	6650647	O-RING			1
43	6645081	O-RING			1
44	6650675	COUPLER			1
5	6650646	O-RING			1
46	6678226	SEAL	Was 6673881 [A]		1
47	6645086	PLUG			2
48	1CM820	BOLT	Models 4355049 , 4355066 , 4355047 & 4355065		4
48	6671518	BOLT	Model 4445050		4
49	6650648	PLUG	charge relief - W/Ref. 50		1
50	79K10	O RING 10			1
51	6669410	SHIM KIT	charge relief		1
52	6658301	SPRING			1
53	6661758	BLOCK ASSY	W/Ref. 18-28 - Models 4355049 , 4355066 , 4355047 & 4355065		1
53	6671512	BLOCK ASSY	W/Ref. 18-28 - Model 4445050		4
54		RELIEF VALVE	NAP - 5000 PSI (345 bar) for Pump Model 4355049 & 4355047 - Order Ref. 59 - Was 6658300 [A]		1
54		RELIEF VALVE	NAP - 5000 PSI (345 bar) for Pump Model 4355066 & 4355065 - Order Ref. 59 - Was 6658300 [A]		2
55	6657067	COVER			1
56	6706096	MOUNT			1
57	79K12	O RING 10			2
58	6670684	CHECK VALVE			1
)	6689601	VALVE	Models 4355049 , 4355066 , 4355047 & 4355065 - Was 6670685 [A]		1
59	6671510	RELIEF VALVE	Model 4445050		1
60	6661481	O-RING			2
61	6658092	SEAL KIT	See Illustration HYDROSTATIC PUMP/ D2376 REF. 7, 9, 13, 34, 35, 42, 43, 45 & 46 - ALSO INCLUDES REF. 2, 3, 12 & 41 MODELS 4355049 , 4355066 , 4355047 & 4355065		1
61	6671516	SEAL KIT	See Illustration HYDROSTATIC PUMP/ D2376 REF. 7, 9, 13, 34, 35, 42, 43, 45, 46, 50, 57 & 60 -ALSO INCLUDES REF. 2, 3, 12, 41 & 50 MODEL 4445050		1

https://www.pdfmanual4trucks.com/

HYDROSTATIC PUMP

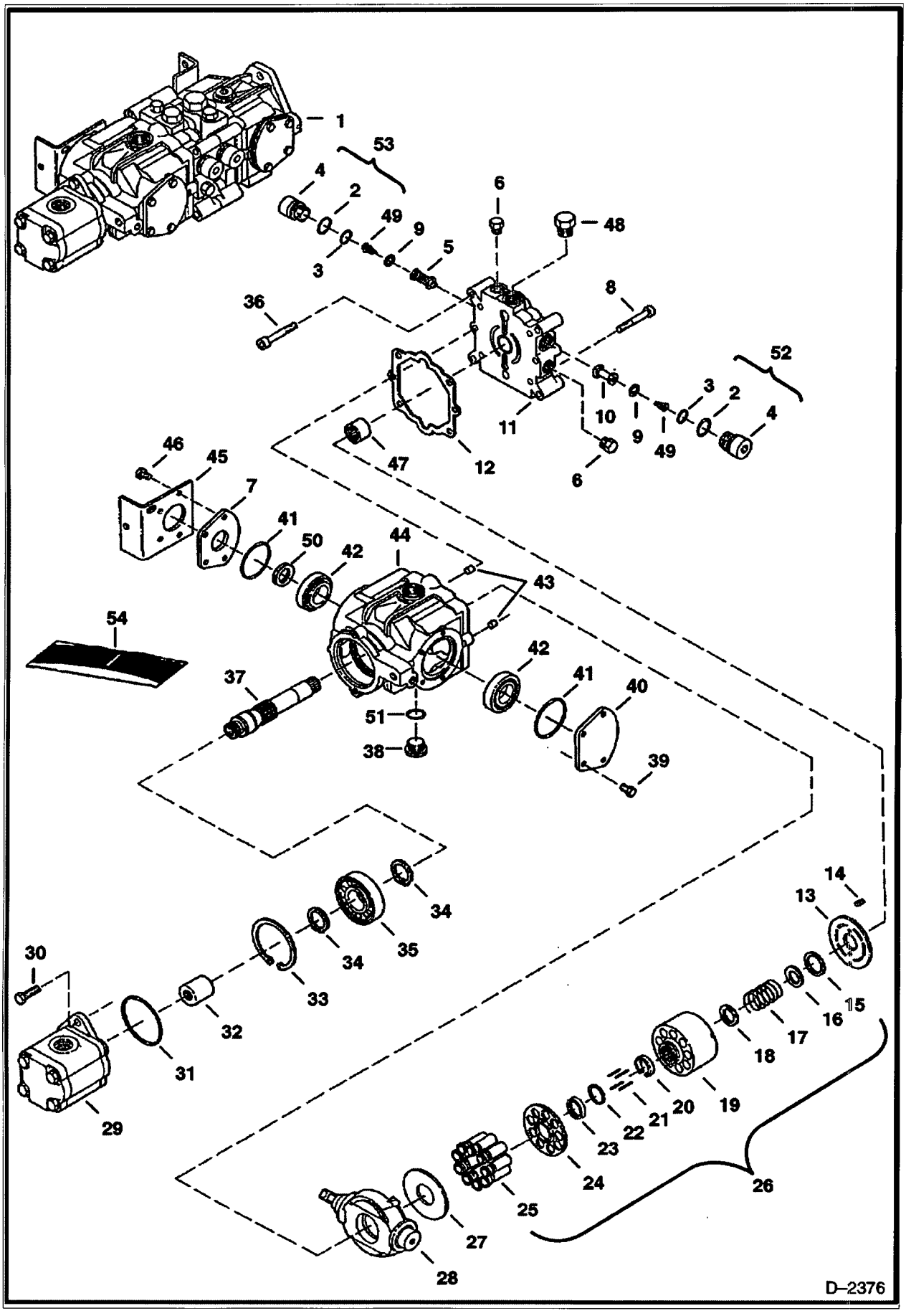

https://www.pdfmanual4trucks.com/

HYDROSTATIC PUMP (Cont'd)

f No	Part Number	Description	Remarks	Serial Number	Qty
1		PUMP	See Illustration ENGINE & ATTACHING PARTS/ B17205 NAP - COMPLETE W/GEAR PUMP - GRAY - DOMESTIC-MODEL 4355049 -ORDER 6669464 PUMP - PUMP CAN BE MOUNTED W/VERTICAL OR HORIZONTAL MOUNTING BOLTS - See Ref. 43 - WAS 6669011 [A]	5127 16001-27374	1
1	6669464	PUMP	Complete W/Gear Pump - gray - Domestic - Model 4355066	5127 27375 & Abv	1
1	6671019REM	PUMP REM / CORE EXCHANGE REQUIRED	Remanufactured - Was 6671019 [A]		1
1		PUMP	NAP - Complete W/Gear Pump - black- Model 4355047 - Export - Order 6671019 Pump - Was 6669014 [A]	5086 94504-95347	1
1		PUMP	NAP - Complete W/Gear Pump - black- Model 4355065 - Export - Order 6671019 Pump - Was 6669465 [A]	5114 76001 & Abv	1
1		PUMP	NAP - Complete W/Gear Pump - black- Model 4355065 - Export - Order 6671019 Pump - Was 6669465 [A]	5139 31364 & Abv	1
1		PUMP	NAP - remanufactured - Order 6671019 Pump - Was 6669465 REM [A]		1
1	6672051	PUMP	Model 4445050	5158 13845 & Abv	1
1	6672051	PUMP	Model 4445050	5086 95348 & Abv	1
1	6672051	PUMP	Model 4445050	5162 11001-19999	1
2	6657028	O-RING			2
3	79K8	O RING 10			2
4		PLUG	NAP - Order Ref. 52 or 53 - Was 6657070 [A]		2
5		RELIEF VALVE	NAP - 5000 PSI (345 bar) for Pump Model 4355049 & 4355047 - Order Ref. 53 - Was 6658300 [A]		1
5		RELIEF VALVE	NAP - 5000 PSI (345 bar) for Pump Model 4355066 & 4355065 - Order Ref. 53 - Was 6658300 [A]		2
6	6645086	PLUG			4
7	6657067	COVER			1
8	6650637	BOLT			2
9		RETAINER	NAP - Order Ref. 52 or 53 - Was 6657071 [A]		4
)		CHECK VALVE	NAP - poppet - Order Ref. 52 - Was 6650669 [A]		1
11	6669405	END CAP			1
12	6650634	GASKET			1
13	6669400	VALVE PLATE	Models 4355049 , 4355066 , 4355047 & 4355065		1
13			See BTI361 NAP - Model 4445050 - Was 6675339 [A]		1
14	6650636	PIN			2
15		RETAINER	NAP - Order Ref. 26		1
16		WASHER	NAP - Order Ref. 26		1
17		SPRING	NAP - Order Ref. 26		1
18		WASHER	NAP - Order Ref. 26		1
19		BLOCK	NAP - Order Ref. 26		1
20	6650630	RETAINER			1
21	6650629	PIN			4
22	6666338	WASHER			1
23		RETAINER	NAP - Order Ref. 26		1
24		RETAINER	NAP - Order Ref. 26		1
5		PISTON ASSY.	NAP - Order Ref. 26		1
26	6661758	BLOCK ASSY	Models 4355049 , 4355066 , 4355047 & 4355065		1
26	6671512	BLOCK ASSY	Model 4445050		1
7	6650627	PLATE			1

https://www.pdfmanual4trucks.com/

HYDROSTATIC PUMP (Cont'd)

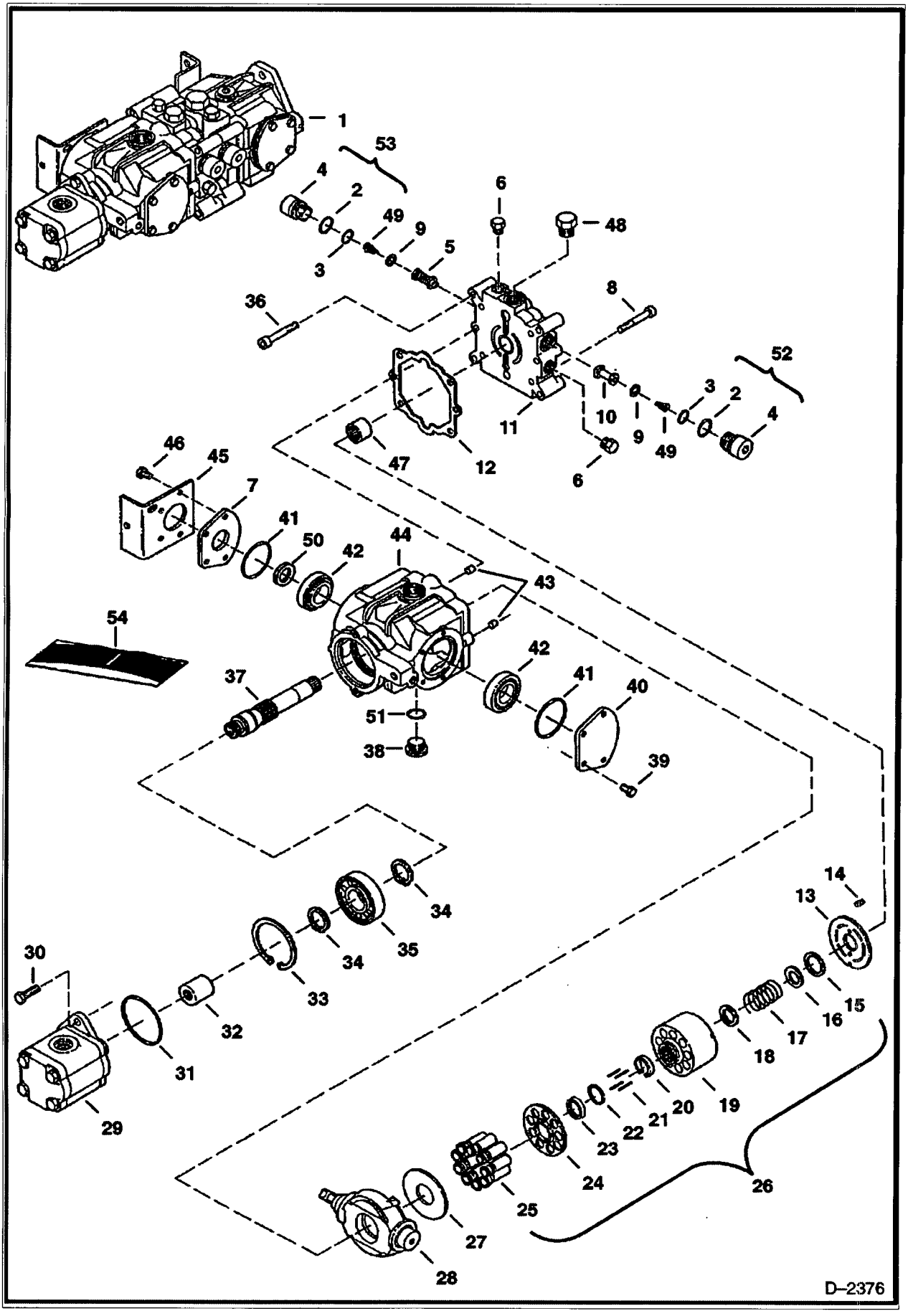

https://www.pdfmanual4trucks.com/

HYDROSTATIC PUMP (Cont'd)

;f No	Part Number	Description	Remarks	Serial Number	Qty
'8	6669404	SWASH PLATE	Models 4355049 , 4355066 , 4355047 & 4355065		1
28	6685344	SWASH PLATE	W/threaded shaft hole - Was 6671513 [A]		1
29		GEAR PUMP	See Illustration GEAR PUMP/ TS1035 FOR PUMP MODELS 4355049 & 4355066		1
29		GEAR PUMP	See Illustration GEAR PUMP/ TS1022 FOR PUMP MODELS 4355047 , 4355065 & 4445050		1
30	6666339	BOLT			2
31	6645080	O-RING	Was 6669412 [A]		1
32	6650677	COUPLER	Models 4355049 , 4355066 , 4355047 & 4355065		1
32	6671509	COUPLER	Model 4445050 - Was 6671519 [B,D]		1
33	669863B	SNAP RING			1
34	658128B	SNAP RING			2
35	654299B	BEARING			1
36	6652018	BOLT			4
37	6669407	SHAFT			1
38	47K000008B	PLUG	W/Ref. 51		1
39	6650668	BOLT			4
)	6657068	COVER			1
+1	6660814	O-RING			2
42	6669411	BEARING			2
43	6518460	PIN			2
44	6669403	HOUSING			1
45	6576196	MOUNT			1
46	1CM820	BOLT	Models 4355049 , 4355066 , 4355047 & 4355065		4
46	6650665	BOLT	Model 4445050		1
47	6650635	BEARING			1
'8		PLUG			1
+9		SPRING	NAP - Order Ref. 52 or 53 - Was 6650656 [A]		2
50	6678226	SEAL	Was 6673881 [A]		1
51	79K12	O RING 10			2
52	6670684	CHECK VALVE			1
53	6689601	VALVE	Models 4355049 , 4355066 , 4355047 & 4355065 - Was 6670685 [A]		1
53	6671510	RELIEF VALVE	Model 4445050		1
54	6658092	SEAL KIT	See Illustration HYDROSTATIC PUMP/ D2377 REF. 2, 3, 12 & 41 - ALSO INCLUDES 7, 9, 13, 34, 35, 42, 43, 45 & 46 MODELS 4355049 , 4355066 , 4355047 & 4355065		1
54	6671516	SEAL KIT	See Illustration HYDROSTATIC PUMP/ D2377 REF. 2, 3, 12, 41 & 50 - ALSO INCLUDES REF. 7, 9, 13, 34, 35, 42, 43, 45, 46, 50, 57 & 60 MODEL 4445050		1

https://www.pdfmanual4trucks.com/

GEAR PUMP
(Models B5501-30574, B5501-34727 & B5501-36006)
(For Hydro. Pump Models M91-35916, 4355047, 4355065, 4355049 or 4355066)

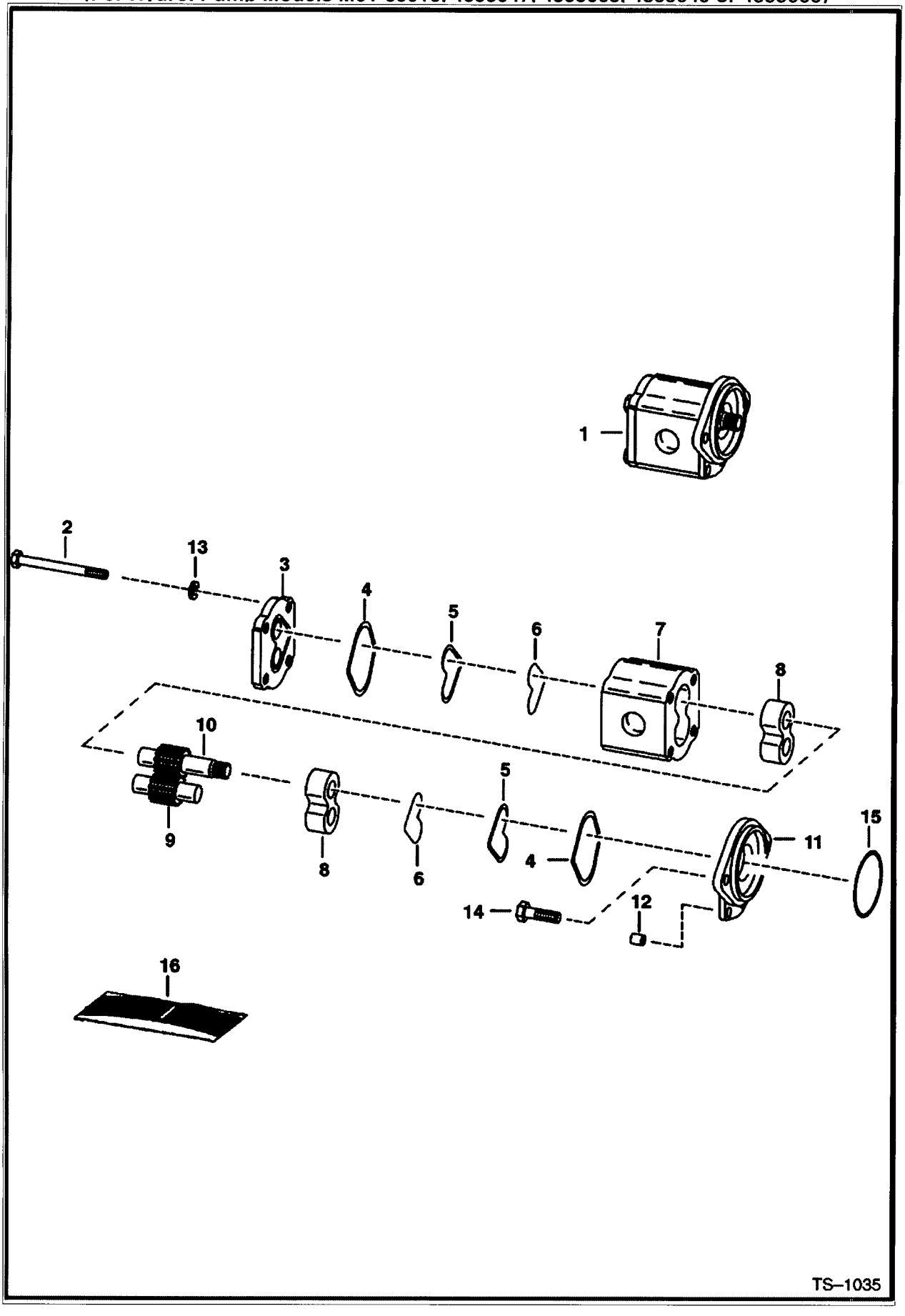

https://www.pdfmanual4trucks.com/

GEAR PUMP (Cont'd)
(Models B5501-30574, B5501-34727 & B5501-36006)
(For Hydro. Pump Models M91-35916, 4355047, 4355065, 4355049 or 4355066)

f No	Part Number	Description	Remarks	Serial Number	Qty
1		PUMP	NAP - Model B5501-30574 - For Pump Model M91-35916 - Order 6669385 Pump -Was 6650678 [A]		1
1		PUMP	NAP - Model B5501-34727 - Mounts to Pump Models 4355047 & 4355065 - Order 6669385 Pump - Was 6667723 [A]		1
1	6669385	PUMP	Model B5501-36006 - For Pump Models 4355049 & 4355066		1
2		BOLT	NSS		4
3		COVER	NAP - Was 6655415 [A]		1
4		O-RING	NSS - seal		2
5		SEAL	NSS		2
6		RING	NSS		2
7		BODY	NSS		1
8		BEARING	NSS		2
9		GEAR	NSS - idler		1
10		GEAR	NSS - drive		1
11		COVER	NAP - Was 6655418 [A]		1
2		DOWEL	NSS		2
3		WASHER	NSS		4
14	6650679	BOLT			2
15	6645080	O-RING	O.D. of pump		1
16	6666340	SEAL KIT	Ref. 4-6 - For Pump Model B5501-30574 - Was 6655421 [A]		1
16	6671041	SEAL KIT	Ref. 4-6 - For Pump Model B5501-34727		1
16	6671042	SEAL KIT	Ref. 4-6 - For Pump Model B5501-36006 - Was 6666340 [B]		1

https://www.pdfmanual4trucks.com/

GEAR PUMP
(For Hydro. Pump Model 4445050)

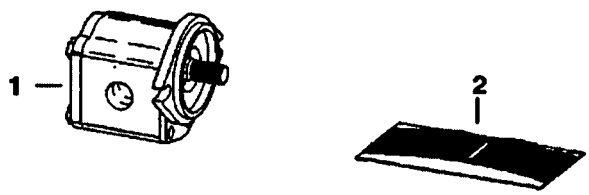

TS–1022

https://www.pdfmanual4trucks.com/

GEAR PUMP (Cont'd)
(For Hydro. Pump Model 4445050)

,f No	Part Number	Description	Remarks	Serial Number	Qty
1	6672513	PUMP	Model B5501-36836 - Mounts to Pump Model 4445050		1
2	6671042	SEAL KIT	For Model B5501-36836 - Was 6666340 [B,D]		1

https://www.pdfmanual4trucks.com/

HYDROSTATIC OIL FILTER
(In-Line)

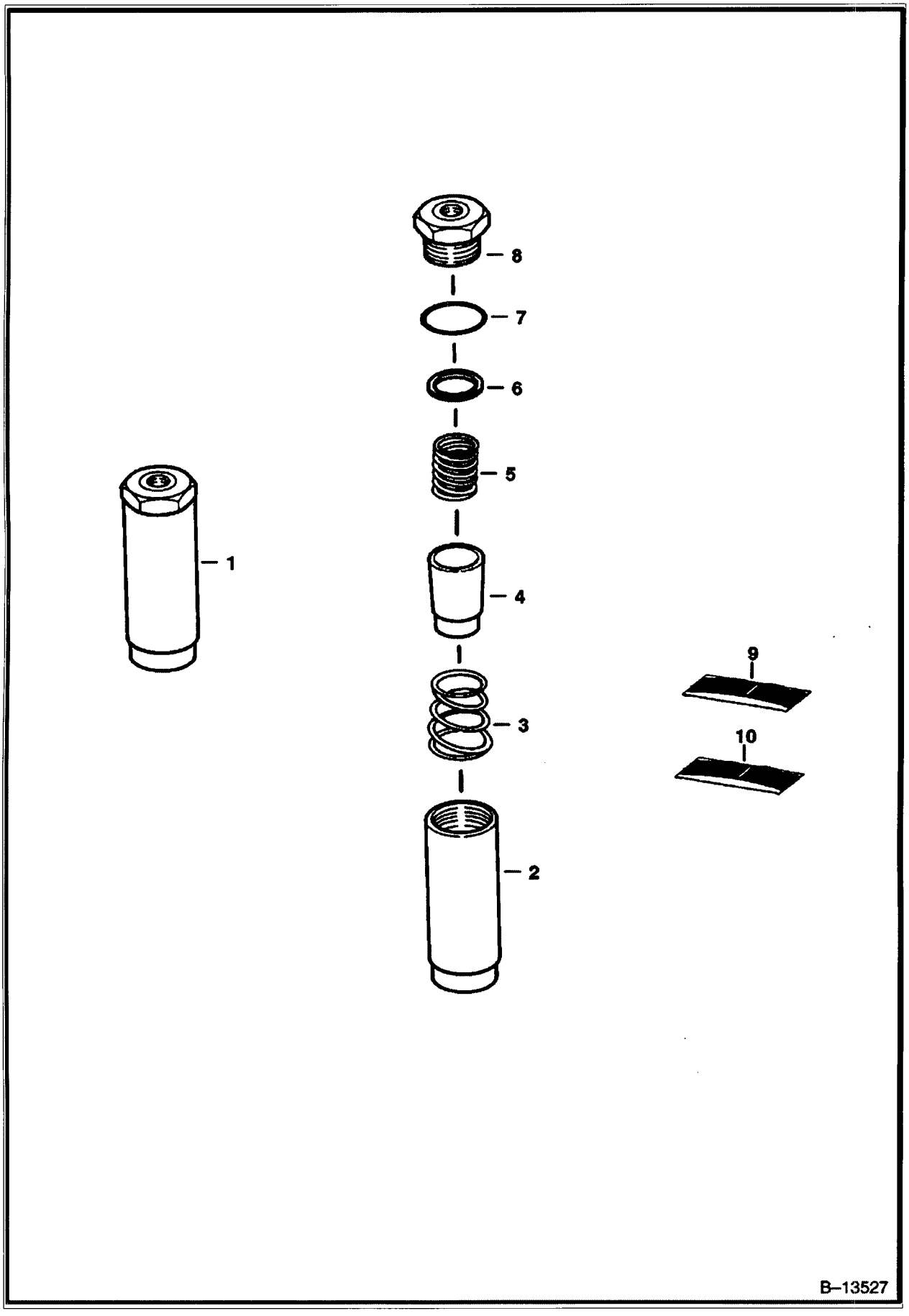

https://www.pdfmanual4trucks.com/

HYDROSTATIC OIL FILTER (Cont'd)
(In-Line)

.f No	Part Number	Description	Remarks	Serial Number	Qty
1	6661022	FILTER	Ref. 2 - 8		1
2		HOUSING	NAP		1
3		SPRING	NAP		1
4		ELEMENT	NAP		1
5		SPRING	NAP		1
6		GASKET	NAP		1
7		O-RING	NAP		1
8		PLUG	NAP		1
9	6661807	KIT	element - Ref. 4, 6 & 7		1
10	6661808	KIT	spring - Ref. 3 & 5		1

https://www.pdfmanual4trucks.com/

HYDROSTATIC OIL FILTER
(W/O B.O.S.S. Option)

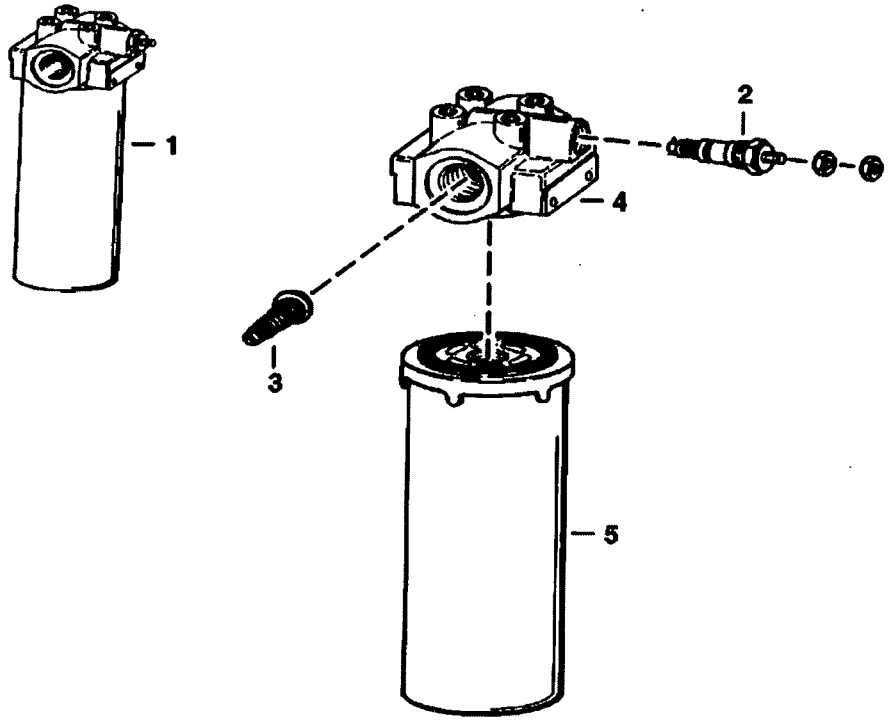

C–2818

https://www.pdfmanual4trucks.com/

HYDROSTATIC OIL FILTER (Cont'd)
(W/O B.O.S.S. Option)

Ref No	Part Number	Description	Remarks	Serial Number	Qty
1	6661334	FILTER ASSY	W/Ref. 2-5 - (50 PSI by-pass & switch)		1
2	6632053	SWITCH	pressure - Normally open		1
2	6599365	KIT	nut, washer & O-rings for 6632053 switch		1
3		VALVE	NAP - by-pass (50 PSI - Order Ref. 1)		1
4		HEAD	NSS - Order Ref. 1		1
5	6661248	ELEMENT			1

https://www.pdfmanual4trucks.com/

HYDROSTATIC OIL FILTER
(W/B.O.S.S. Option)

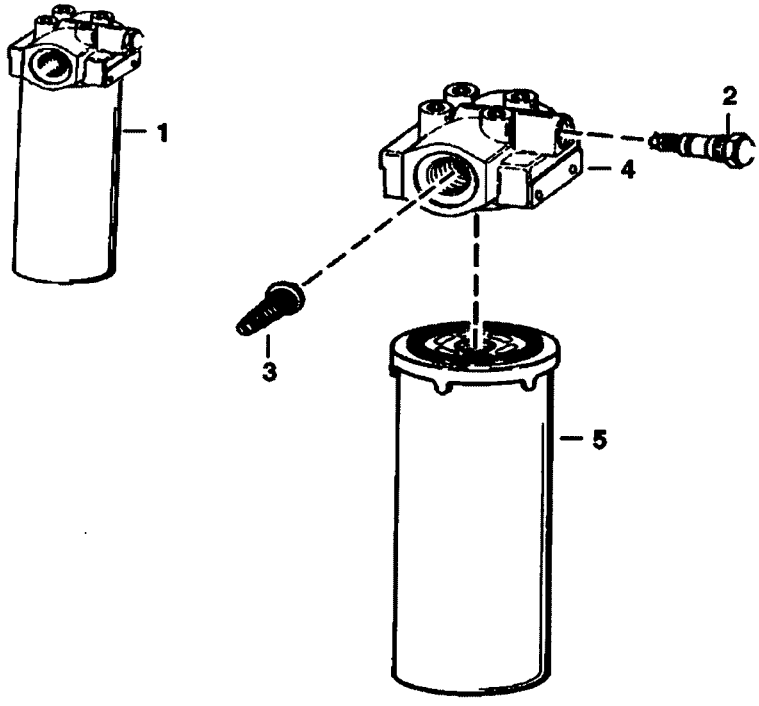

B–16487

https://www.pdfmanual4trucks.com/

HYDROSTATIC OIL FILTER (Cont'd)
(W/B.O.S.S. Option)

f NO	Part Number	Description	Remarks	Serial Number	Qty
1	6661247	FILTER	(50 PSI by-pass & switch) - W/Ref. 2-5		1
2	6660260	SWITCH	pressure - Normally closed		1
2	6599365	KIT	nut, washer & O-rings for 6660260 switch		1
3		VALVE	NAP - by-pass (50 PSI - Order Ref. 1)		1
4		HEAD	NSS - Order Ref. 1		1
5	6661248	ELEMENT			1

https://www.pdfmanual4trucks.com/

CAB ELECTRICAL CIRCUITRY
(W/O B.O.S.S. Option)

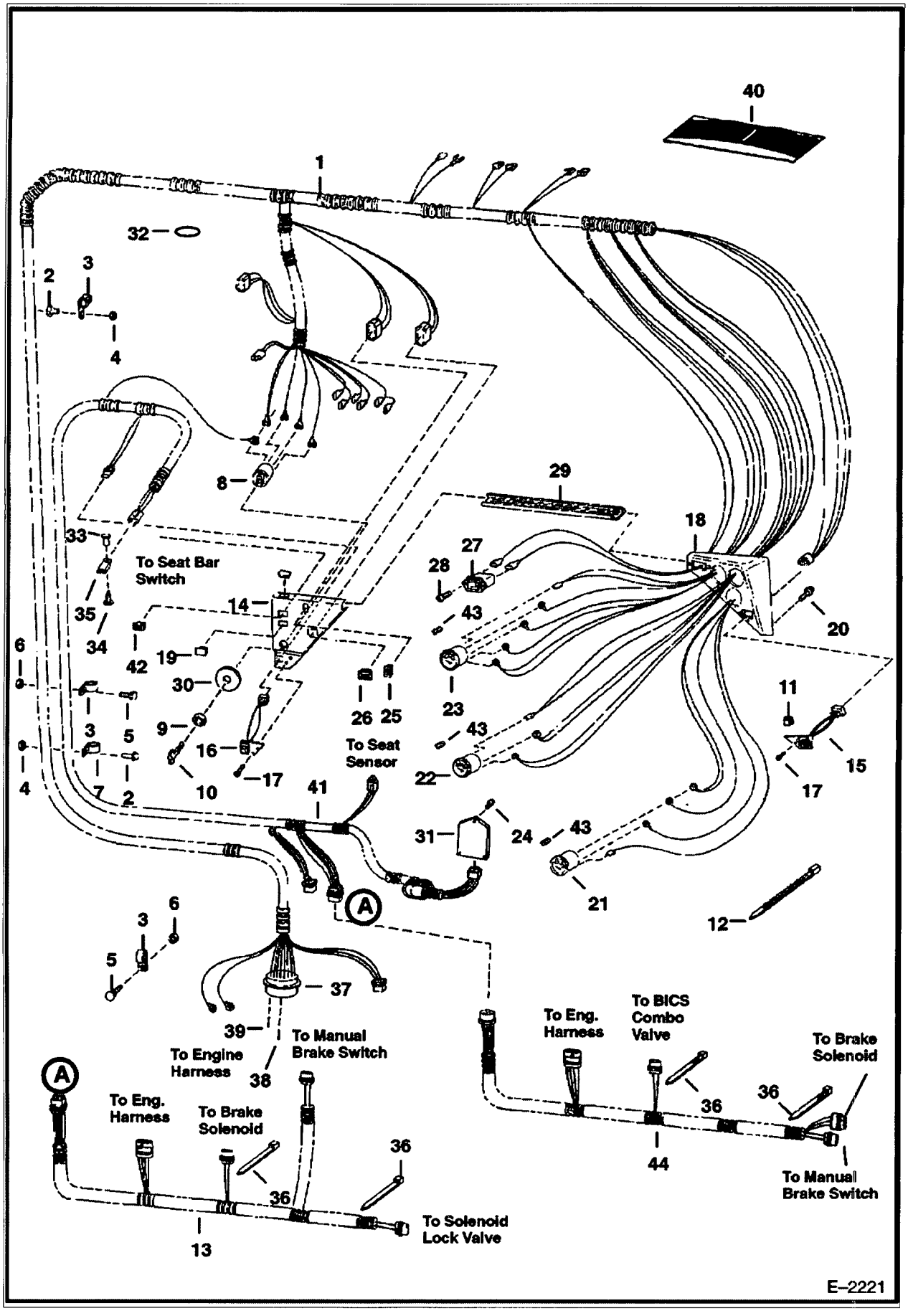

https://www.pdfmanual4trucks.com/

CAB ELECTRICAL CIRCUITRY (Cont'd)
(W/O B.O.S.S. Option)

f No	Part Number	Description	Remarks	Serial Number	Qty
1	6707665	HARNESS		5127 27672 & Bel	1
1	6707665	HARNESS		5086 93001-94556	1
1	6711767	HARNESS	accomodates side console opt.	5127 27673 & Abv	1
1	6711767	HARNESS	accomodates side console opt.	5086 94557 & Abv	1
1	6711767	HARNESS	accomodates side console opt.	5162 11001-19999	1
1	6711767	HARNESS	accomodates side console opt.	5158 11001-29999	1
2	35C410	BOLT 5			4
3	30H000056B	CLAMP			3
4	83D4	NUT 10			4
5	10C000412B	BOLT			2
6	61D4	NUT 5			2
7	30H000029B	CLAMP			2
8		SWITCH	See BTI289 NAP - IGN - W/Ref. 9 & 10 - Order Ref. 40 - WAS 6519592 [A]		1
8	6665606	SWITCH			1
9	6598721	NUT	For Ref. 8 (NAP/6519592 Switch)		2
9	6674202	NUT	For Ref. 8 (6665606 Switch)		2
)	6512809	KEY	For Ref. 8 (NAP/6519592 Switch)		2
10	6709527	KEY	For Ref. 8 (6665606 Switch) - Was 6666202 [A]		2
11	6660594	BUTTON	on/off		1
12	6610510	TIE			3
13	6706876	HARNESS		5127 23203 & Bel	1
13	6706876	HARNESS		5086 93001-93940	1
13	6706876	HARNESS		5086 30826 & Bel	1
13	6710313	HARNESS		5127 23204-27420	1
13	6710313	HARNESS		5086 30827-92999	1
13	6710313	HARNESS		5086 93941-94508	1
14	6708425	PANEL	L.H. - Was 6707658 [A]	5127 27672 & Bel	1
14	6708426	PANEL	See Illustration EUROPEAN ACCESSORIES/ TS1447 L.H. - EUROPE	5086 94556 & Bel	1
14	6712152	PANEL	L.H. - accomodates side console option	5127 27673 & Abv	1
14	6712152	PANEL	L.H. - accomodates side console option	5158 11001-29999	1
14	6712152	PANEL	L.H. - accomodates side console option	5162 11001-19999	1
14	6712152	PANEL	L.H. - accomodates side console option	5086 94557 & Abv	1
15	6667903	SWITCH	aux. controls module - W/4-spade connector - W/Ref. 11 - Was 6700603 [A]	5127 27672 & Bel	1
15	6667903	SWITCH	aux. controls module - W/4-spade connector - W/Ref. 11 - Was 6700603 [A]	5086 94556 & Bel	1
15	6667904	SWITCH	aux. controls module - W/ 5-pin connector - W/Ref. 11	5127 27673 & Abv	1
15	6667904	SWITCH	aux. controls module - W/ 5-pin connector - W/Ref. 11	5086 94557 & Abv	1
15	6667904	SWITCH	aux. controls module - W/ 5-pin connector - W/Ref. 11	5162 11001-19999	1
15	6667904	SWITCH	aux. controls module - W/ 5-pin connector - W/Ref. 11	5158 11001-29999	1
16	6667905	SWITCH	trac. override - Was 6706995 [A]		1
16		SWITCH	NAP - traction/seat sensor override - Order 6674220 Switch - Was 6673005 [A]		1
16	6674220	SWITCH	push to operate		1
17	6669225	BOLT	Was 58G000408B [A]		4
18	6706896	PANEL	R.H.		1
19	6665314	PLUG			1
0	6702642	SCREW			6
21	6669663	GAUGE	eng. temp. - Was 6658817 [A]		1
22	6669664	VOLTMETER	Was 6658819 [A]		1
3	6669665	FUEL GUAGE	Was 6658820 [A]		1

https://www.pdfmanual4trucks.com/

CAB ELECTRICAL CIRCUITRY (Cont'd)
(W/O B.O.S.S. Option)

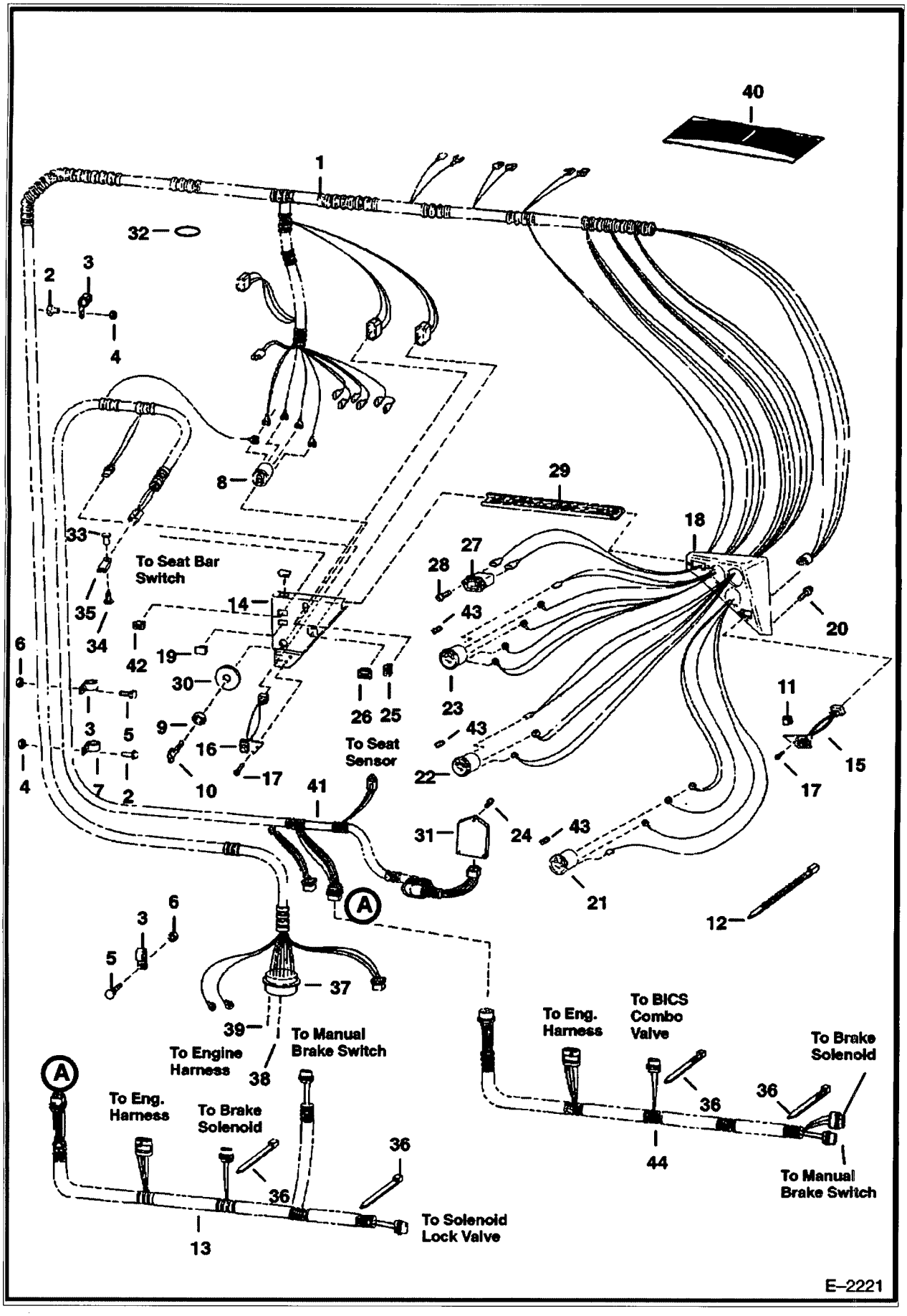

https://www.pdfmanual4trucks.com/

CAB ELECTRICAL CIRCUITRY (Cont'd)
(W/O B.O.S.S. Option)

f No	Part Number	Description	Remarks	Serial Number	Qty
4	91G000412B	BOLT	cross recess pan head		3
24	25G000412B	BOLT	hex socket button head		3
25	6665318	SWITCH	glow plug - Was 6719038 [D]	5127 27672 & Bel	1
25	6665318	SWITCH	glow plug - Was 6719038 [D]	5086 94556 & Bel	1
25	6668927	PLUG	glow plug	5127 27673 & Abv	1
25	6668927	PLUG	glow plug	5086 94557 & Abv	1
25	6668927	PLUG	glow plug	5162 11001-19999	1
25	6668927	PLUG	glow plug	5158 11001-29999	1
26	6636018	LIGHT	indicator		1
27	6664886	HOURMETER			1
28	65G000608B	BOLT			2
29	6578780	CROSSMEMBER			1
30	6707664	PLATE	brake start - For Ref. 8 (NAP/6519592 Switch)		1
30	6709027	PLATE	For Ref. 8 (6665606 Switch) - Was 6708693 [A]		1
31		CONTROLLER	NAP - Order 6717700 Foot Pedal Push to Operate Kit or 6717702 Mechanical Hand Control Push to Operate Kit - Was 6668767 [A]		1
1		CONTROLLER	NAP - Order 6717700 Foot Pedal Push to Operate Kit or 6717702 Mechanical Hand Control Push to Operate Kit - Was 6673002 [A]		1
31	6680411	CONTROLLER	foot pedals - Was 6674222 [A]		1
31	6680445	CONTROLER	AHC - Was 6674224 [A]		1
32	6707674	PLUG	round - plugs 1.28" (32,5 mm) dia. hole in cab		1
33	6665321	RIVET	plastic male		1
34	6665322	RIVET	plastic female		1
35	6665000	CLIP			1
36	6665527	TIE	never modify		2
37	6664584	CONNECTOR	Also Order (20) of & (4) of Ref. 39 - Was 6665683 [A]		1
38	6664827	PIN			x
39	6664040	PIN			4
40	6724282	SWITCH KIT	Ref. 8, 10 & 30		1
41	6706828	HARNESS		5086 30826 & Bel	1
41	6706828	HARNESS		5127 23203 & Bel	1
41	6706828	HARNESS		5086 93001-93940	1
41	6710312	HARNESS		5086 30826-92999	1
41	6710312	HARNESS		5127 23204-27420	1
41	6710312	HARNESS		5086 93941-94508	1
1	6712134	HARNESS		5127 27421 & Abv	1
41	6712134	HARNESS		5086 94509 & Abv	1
41	6712134	HARNESS		5162 11001-19999	1
41	6712134	HARNESS		5158 11001-29999	1
42	6668814	SWITCH	bucket position on-off		1
43	6599696	SOCKET & BULB	assy.		3
43	895771B	BULB			3
44	6712523	HARNESS	for BICS combo control valve	5127 27421 & Abv	1
44	6712523	HARNESS	for BICS combo control valve	5086 94509 & Abv	1
44	6712523	HARNESS	for BICS combo control valve	5158 11001-29999	1
44	6712523	HARNESS	for BICS combo control valve	5162 11001-19999	1

https://www.pdfmanual4trucks.com/

CAB ELECTRICAL CIRCUITRY
(W/B.O.S.S. Option)

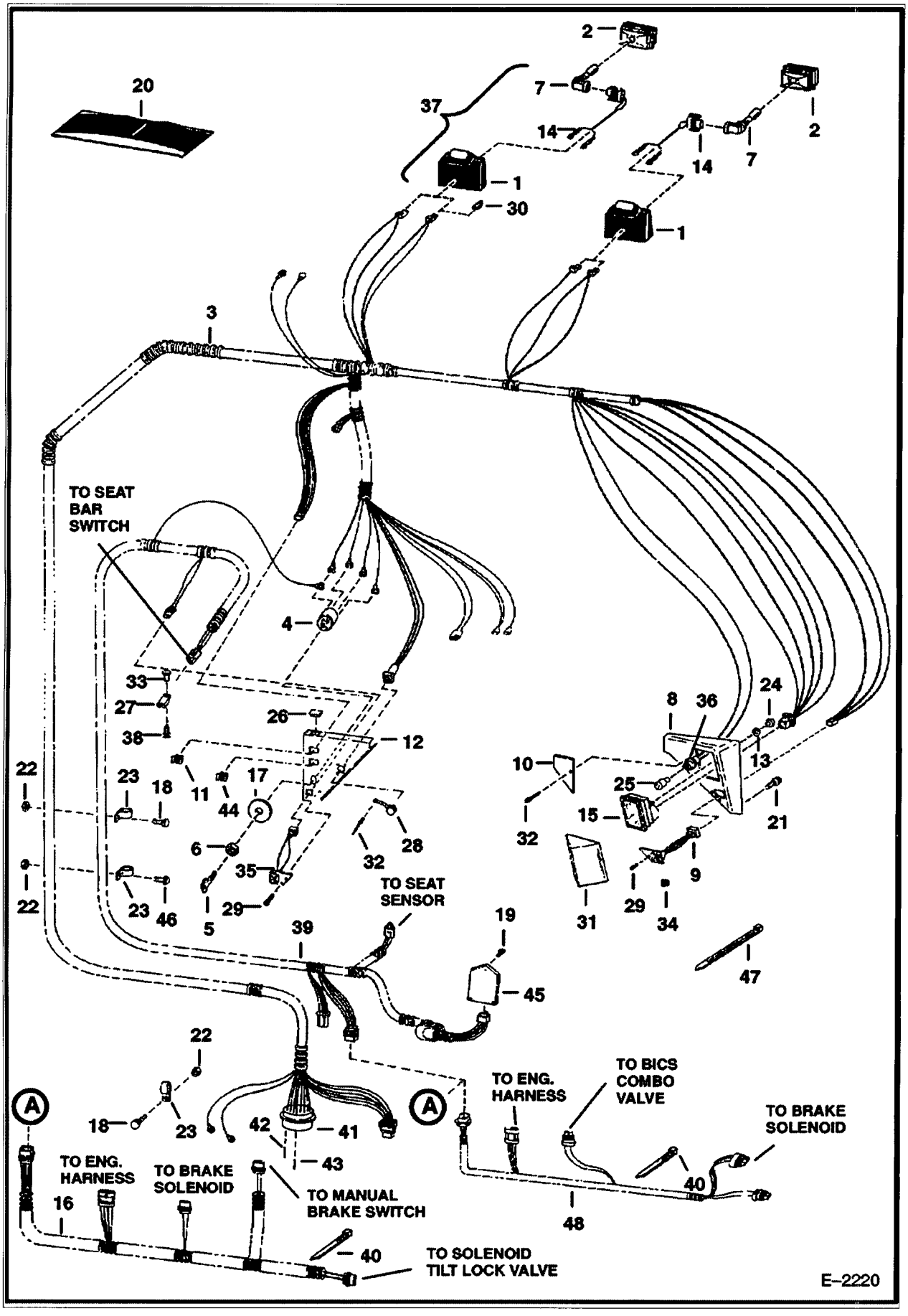

https://www.pdfmanual4trucks.com/

CAB ELECTRICAL CIRCUITRY (Cont'd)
(W/B.O.S.S. Option)

Ref No	Part Number	Description	Remarks	Serial Number	Qty
1	6578824	HOUSING	rubber		2
2	6649478	BULB HOUSING			2
3	6707671	HARNESS		5127 27672 & Bel	1
3	6707671	HARNESS		5086 30001-89999	1
3	6707671	HARNESS		5086 93001-94556	1
3	6707671	HARNESS		5114 76001 & Abv	1
3	6711774	HARNESS	accomodates side console option	5127 27673 & Abv	1
3	6711774	HARNESS	accomodates side console option	5158 11001-29999	1
3	6711774	HARNESS	accomodates side console option	5162 11001-19999	1
3	6710483	HARNESS	accomodates side console opt.	5086 94557 & Abv	1
4		SWITCH	See BTI289 NAP - IGNITION - W/Ref. 5 & 6 - Order Ref. 20 - WAS 6519592 [A]		1
4	6665606	SWITCH			1
5	6512809	KEY	ignition - For Ref. 4 (NAP/6519592 Switch)		x
5	6709527	KEY	ignition - For Ref. 4 (6665606 Switch) - Was 6666202 [A]		2
6	6598721	NUT	For Ref. 4 (NAP/6519592 Switch)		2
6	6674202	NUT	For Ref. 4 (6665606 Switch)		2
7	6667934	BULB	Was 6650111 [A]		2
8	6702660	PANEL	R.H.		1
9	6667903	SWITCH	aux. controls module - W/4-spade connector - W/Ref.34 - Was 6700603 [A]	5127 27672 & Bel	1
9	6667903	SWITCH	aux. controls module - W/4-spade connector - W/Ref.34 - Was 6700603 [A]	5086 94556 & Bel	1
9	6667904	SWITCH	aux. controls module - W/ 5-pin connector - W/Ref. 34	5127 27673 & Abv	1
9	6667904	SWITCH	aux. controls module - W/ 5-pin connector - W/Ref. 34	5086 94557 & Abv	1
9	6667904	SWITCH	aux. controls module - W/ 5-pin connector - W/Ref. 34	5158 11001-29999	1
9	6667904	SWITCH	aux. controls module - W/ 5-pin connector - W/Ref. 34	5162 11001-19999	1
10	6702678	PLATE	service codes		1
11	6665410	SWITCH	light		1
12	6708427	PANEL	L.H. - Was 6707660 [A]		1
12	6708428	PANEL	See Illustration EUROPEAN ACCESSORIES/ TS1447 L.H. - EUROPE		1
13	17E000008B	WASHER			2
14	6578528	HARNESS	light		2
15		DISPLAY	NAP - LCD monitor - mounted w/nuts - Order 7131641 kit - Was 6665923 [A]		1
15	7131641	LCD DISPLAY KIT	LCD monitor - screw mounted - includes screws, display & instructions		1
15		LCD monitor	NAP - LCD monitor mounted w/screws		1
15	6691063	SCREW			2
15	6904890	INSTRUCTIONS			1
16	6706876	HARNESS		5127 23203 & Bel	1
16	6706876	HARNESS		5086 30826 & Bel	1
16	6706876	HARNESS		5086 93001-93940	1
16	6706876	HARNESS		5114 76379 & Bel	1
16	6710313	HARNESS		5127 23204-27420	1
16	6710313	HARNESS		5086 30827-92999	1
16	6710313	HARNESS		5086 93941-94508	1
16	6710313	HARNESS		5114 76380 & Abv	1
17	6707664	PLATE	For Ref. 4 (NAP/6519592 Switch)		1
17	6708693	PLATE	For Ref. 4 (6665606 Switch)		1
18	10C000412B	BOLT			5

https://www.pdfmanual4trucks.com/

CAB ELECTRICAL CIRCUITRY (Cont'd)
(W/B.O.S.S. Option)

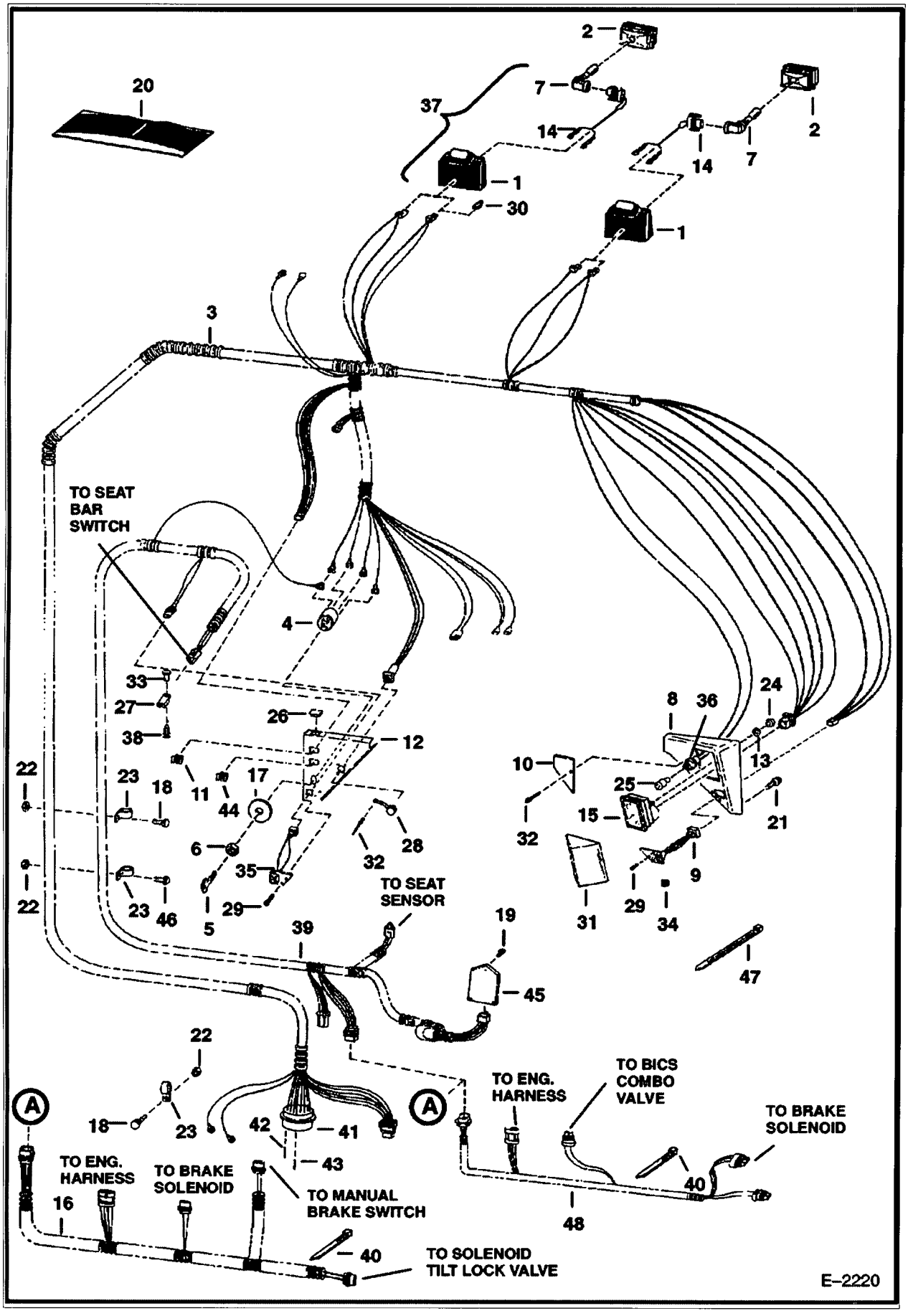

https://www.pdfmanual4trucks.com/

CAB ELECTRICAL CIRCUITRY (Cont'd)
(W/B.O.S.S. Option)

f No	Part Number	Description	Remarks	Serial Number	Qty
9	91G000412B	BOLT	cross recess pan head		3
19	25G000412B	BOLT	hex socket button head		3
20	6724282	SWITCH KIT	Ref. 4, 5 & 17		1
21	6702642	SCREW			6
22	61D4	NUT 5			5
23	30H000054B	CLAMP			3
24	12D000008B	NUT			2
25	6578357	BULB			1
26	6707674	PLUG			1
27	6665000	CLIP			1
28	6651703	CAP			1
29	6669225	BOLT	Was 58G000408B [A]		4
30	6519548	CONNECTOR			2
31	6700487	SHIELD	snap in place		1
32	6704892	RIVET			5
33	6665321	RIVET	plastic male		1
34	6660594	BUTTON	on/off		1
5	6667905	SWITCH	trac. override - Was 6706995 [A]		1
35		SWITCH	NAP - trac./seat sensor - Order 6674220 Switch - Was 6673005 [A]		1
35	6674220	SWITCH	push to operate		1
36	6649331	SOCKET	light - W/ 6" leads		1
37	6577801	LIGHT	Ref. 1, 2, 7 & 14		2
38	6665322	RIVET	plastic female		1
39	6706828	HARNESS		5127 23203 & Bel	1
39	6706828	HARNESS		5086 30826 & Bel	1
39	6706828	HARNESS		5086 93001-93940	1
39	6706828	HARNESS		5114 76379 & Bel	1
39	6710312	HARNESS		5127 23204-27420	1
39	6710312	HARNESS		5086 30827 & Abv	1
39	6710312	HARNESS		5086 93001-93940	1
39	6710312	HARNESS		5114 76380 & Abv	1
39	6712134	HARNESS		5127 27421 & Abv	1
39	6712134	HARNESS		5086 94509 & Abv	1
39	6712134	HARNESS		5158 11001-29999	1
39	6712134	HARNESS		5162 11001-19999	1
40	6665527	TIE	never modify		2
1	6664584	CONNECTOR	Also Order (20) of Ref. 42 & (4) of Ref. 43 - Was 6665683 [A]		1
42	6664827	PIN			x
43	6664040	PIN			4
44	6668813	SWITCH	See Illustration HIGH FLOW HYDRAULICS/ TS1247 HIGH HORSEPOWER HYDRAULIC - WAS 6665320 [A]		1
45		CONTROLLER	NAP - Order 6717700 Foot Pedal Push to Operate Kit or 6717702 Mechanical Hand Control Push to Operate Kit - Was 6668767 [A]		1
45		CONTROLLER	NAP - Order 6717700 Foot Pedal Push to Operate Kit or 6717702 Mechanical Hand Control Push to Operate Kit - Was 6673002 [A]		1
45	6680411	CONTROLLER	foot pedals - Was 6674222 [A]		1
45		CONTROLLER	AHC - Was 6674224 [A]		1
46	35C410	BOLT 5			2
7	6610510	TIE			3
48	6712523	HARNESS	for BICS combo control valve	5127 27421 & Abv	1
48	6712523	HARNESS	for BICS combo control valve	5086 93509 & Abv	1
3	6712523	HARNESS	for BICS combo control valve	5158 11001-29999	1

https://www.pdfmanual4trucks.com/

CAB ELECTRICAL CIRCUITRY (Cont'd)
(W/B.O.S.S. Option)

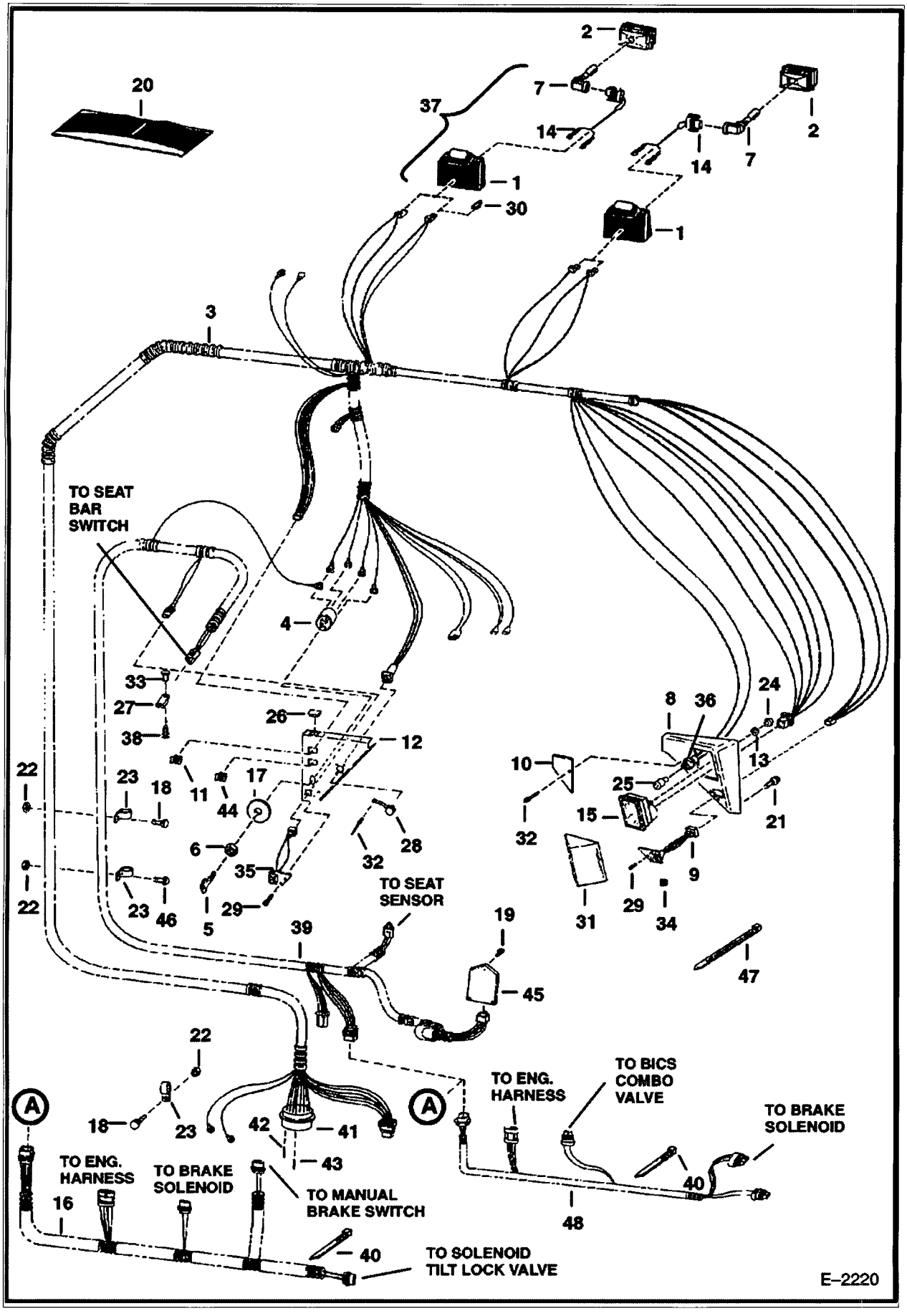

https://www.pdfmanual4trucks.com/

CAB ELECTRICAL CIRCUITRY (Cont'd)
(W/B.O.S.S. Option)

f NO	Part Number	Description	Remarks	Serial Number	Qty
8	6712523	HARNESS	for BICS combo control valve	5162 11001-19999	1

https://www.pdfmanual4trucks.com/

ENGINE ELECTRICAL CIRCUITRY
(W/O B.O.S.S. Option)

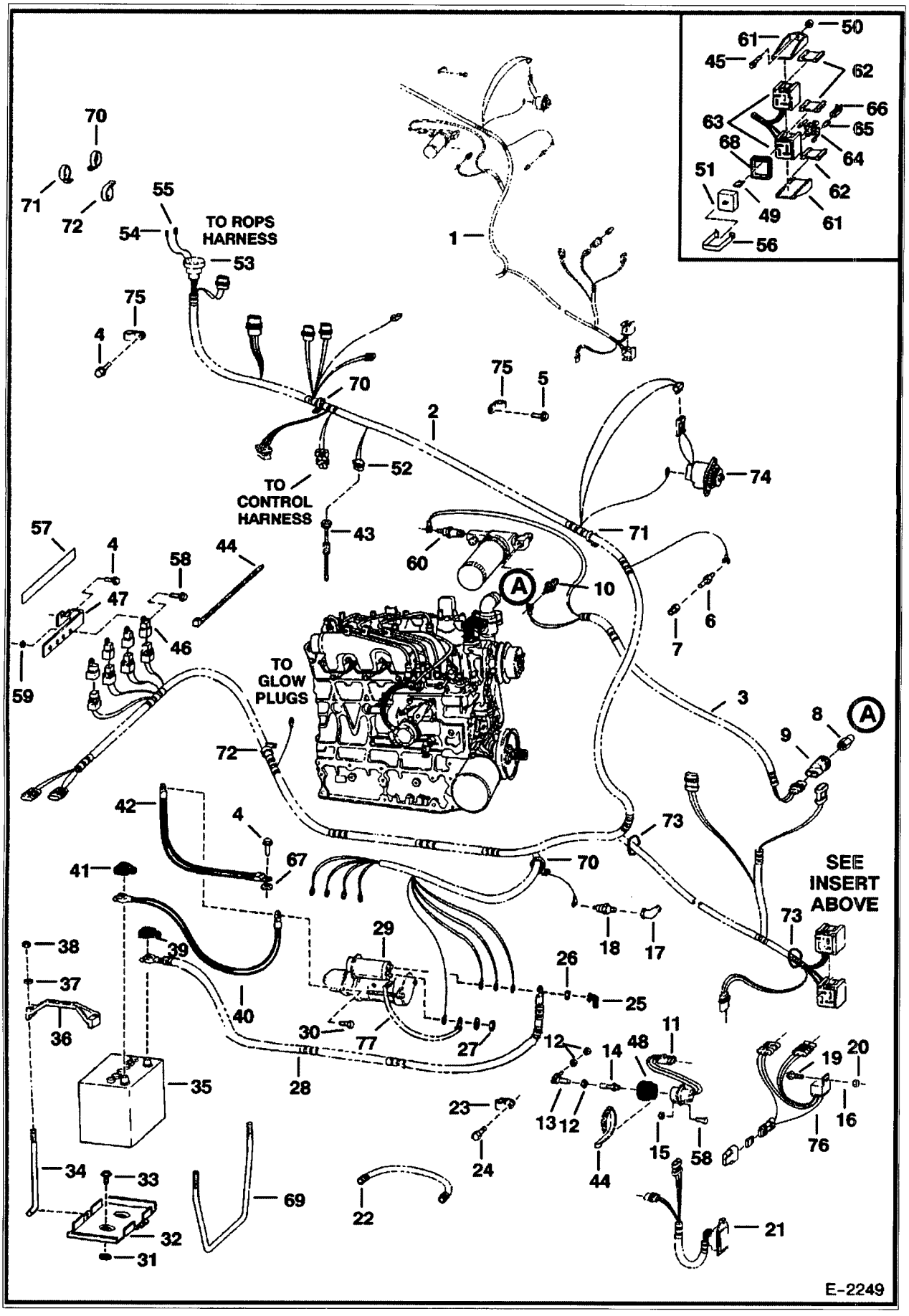

https://www.pdfmanual4trucks.com/

ENGINE ELECTRICAL CIRCUITRY (Cont'd)
(W/O B.O.S.S. Option)

f No	Part Number	Description	Remarks	Serial Number	Qty
1		HARNESS	NAP - ENGINE - W/REF. 53-55 & 61-66 - W/2 PIN CONNECTOR FOR REAR WIPER - Order Ref. 2 & 3 - IF LOADER IS EQUIPPED W/REAR WIPER ALSO ORDER 6712260 HARNESS - WAS 6707666 [A]	5127 16001-27672	1
1		HARNESS	NAP - ENGINE - W/REF. 53-55 & 61-66 - W/2 PIN CONNECTOR FOR REAR WIPER - Order Ref. 2 & 3 - IF LOADER IS EQUIPPED W/REAR WIPER ALSO ORDER 6712260 HARNESS - WAS 6707666 [A]	5086 93001-94556	1
1		HARNESS	NAP - ENGINE - W/REF. 53-55, 61-66 & 70-72 - W/10 PIN CONNECTOR FOR REAR WIPER - Order Ref. 2 & 3 - WAS 6710486 [A]	5127 27673 & Abv	1
1		HARNESS	NAP - ENGINE - W/REF. 53-55, 61-66 & 70-72 - W/10 PIN CONNECTOR FOR REAR WIPER - Order Ref. 2 & 3 - WAS 6710486 [A]	5162 11001-11352	1
1		HARNESS	NAP - ENGINE - W/REF. 53-55, 61-66 & 70-72 - W/10 PIN CONNECTOR FOR REAR WIPER - Order Ref. 2 & 3 - WAS 6710486 [A]	5158 11001-14193	1
1		HARNESS	NAP - ENGINE - W/REF. 53-55, 61-66 & 70-72 - W/10 PIN CONNECTOR FOR REAR WIPER - Order Ref. 2 & 3 - WAS 6710486 [A]	5086 94557 & Abv	1
1	6610510	TIE	black		19
2	6715892	HARNESS	engine - W/Ref. 53-55, 61-66 & 70-73	5158 14194-29999	1
2	6715892	HARNESS	engine - W/Ref. 53-55, 61-66 & 70-73	5162 11353-19999	1
3	6715880	HARNESS	filter	5162 11353-19999	1
3	6715880	HARNESS	filter	5158 14194-29999	1
4	84G3712	BOLT			4
5	35C000608B	BOLT			1
6	6658818	SENDER	eng. temp.		1
7	19F000004B	ADAPTER	sender		1
8	6563922	SNUBBER	W/Filter		1
8	6563920	FILTER			1
9	6670705	SWITCH	hyd. chg. press. - W/3 pin molded connector - Was 6665372 [A]		1
10	6632633	SWITCH	hyd. temp.		1
11	6681513	SOLENOID	fuel shut off - Was 6667993 [A]		1
12	62D000004B	NUT			3
13	6578363	ROD END	swivel		1
14	6578366	BALL JOINT			1
15	61D4	NUT 5			2
16	25E13	WASHER 5			1
17	6707040	ELBOW			1
18	6631010	SWITCH	eng. oil press.		1
19	35C000416B	BOLT	Was 35C000516B [B]		2
20	83D4	NUT 10	Was 83D000005B [B]		2
21		TIMER	NAP - Order Ref. 76 - solenoid - Was 6665522 [A]		1
22	6563505	CONDUIT	bulk - Sold Per Foot		x
23	30H000048B	CLAMP			1
24	6CM1220	BOLT	Was 1CM01220B [B]		1
25	6560172	COVER			1
26	4DM10	NUT			1
27	4DM00005B	NUT			1
28	6564991	CABLE	pos. - W/Ref. 22		1
29		STARTER	See Illustration STARTER/ D2119 See Illustration STARTER/ D2297		1
30	35C620	BOLT 5			3
31	6555455	WASHER			2
32	6712536	PAN	Was 6577809 [A]		1

https://www.pdfmanual4trucks.com/

ENGINE ELECTRICAL CIRCUITRY (Cont'd)
(W/O B.O.S.S. Option)

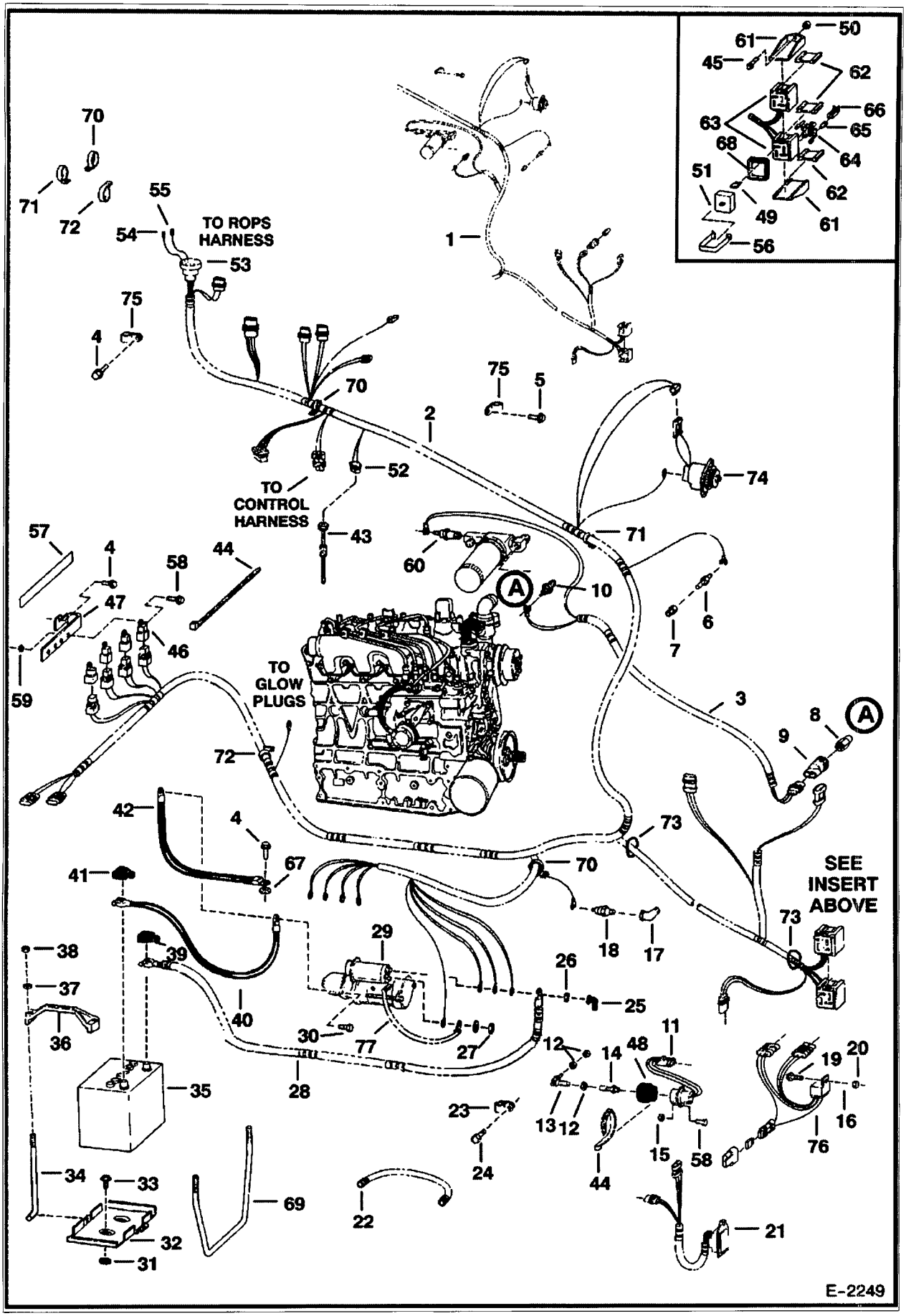

https://www.pdfmanual4trucks.com/

ENGINE ELECTRICAL CIRCUITRY (Cont'd)
(W/O B.O.S.S. Option)

f No	Part Number	Description	Remarks	Serial Number	Qty
3	84G3716	SCREW 5			2
34	6576280	BOLT			2
35	6665031	BATTERY			1
35	6630153	BATTERY CAP			2
36	6569203	CLAMP			x
37	25E15	WASHER			2
38	59D5	NUT 5			2
39	2356058B	BOOT			1
40	6562905	CABLE	ground - W/Ref. 41		1
41	6599652	BOOT			1
42	6565170	CABLE	ground		1
43		SENSOR	NAP - fuel - W/ O-ring - Order 6674209 Sensor & 6717579 Gasket - Was 6669642 [A]		1
43	79K000014B	O-RING	Was 25K040102B [B]		1
43	6680438	SENSOR	fuel - W/ Gasket - Was 6674209 [A]		1
43	6717579	GASKET			1
44	6610510	TIE			4
5	45G001212B	BOLT			2
46	6670312	RELAY	relay - Was 6665005 [A]		4
47	6707649	MOUNT			1
48	6664286	BOOT	Also Order Ref. 44		1
49	6707620	FUSE	10 amp		x
49	6707621	FUSE	15 amp		x
49	6707622	FUSE	20 amp		x
49	6707623	FUSE	25 amp		x
49	6674099	BREAKER	25 amp		x
0	50D000012B	NUT			2
1	6665358	COVER			2
52	6646383	CONNECTOR	fuel sender		1
52	6632946	TERMINAL	female		2
53	6664585	CONNECTOR	Also Order (20) of Ref. 54 & (4) of Ref. 55 - Was 6665682 [A]		1
54	6664828	SOCKET			x
55	6664041	SOCKET			4
56	6708437	CLIP	spring		2
57	6707787	DECAL	relax		1
8	17C000410B	BOLT			6
9	85D000004B	NUT			4
60	6632053	SWITCH	See Illustration HYDROSTATIC OIL FILTER/ C2818 FILTER		1
61	6665369	MOUNT	fuse		2
62	6665411	WEDGE	red		3
63	6665356	BLOCK	fuse - W/Ref. 68		2
63		SEAL	NSS - green square		1
64	6665357	LOCK	yellow		2
65	6650107	SEAL			16
66		PIN	NAP - female - Was 6648311 [A]		16
66	6668719	PIN	female - for 14 gauge wire		x
66	6668720	PIN	female - for 16 gauge wire		x
67	6E6	WASHER			1
68	6671528	SEAL	green square		2
69	6712640	BRACKET			2
70	6669722	CLAMP			2
1	6669723	CLAMP			1
72	6669724	CLAMP			1
73	6717814	TIE			2
1		ALTERNATOR	See Illustration ALTERNATOR/ C3312		1

https://www.pdfmanual4trucks.com/

ENGINE ELECTRICAL CIRCUITRY (Cont'd)
(W/O B.O.S.S. Option)

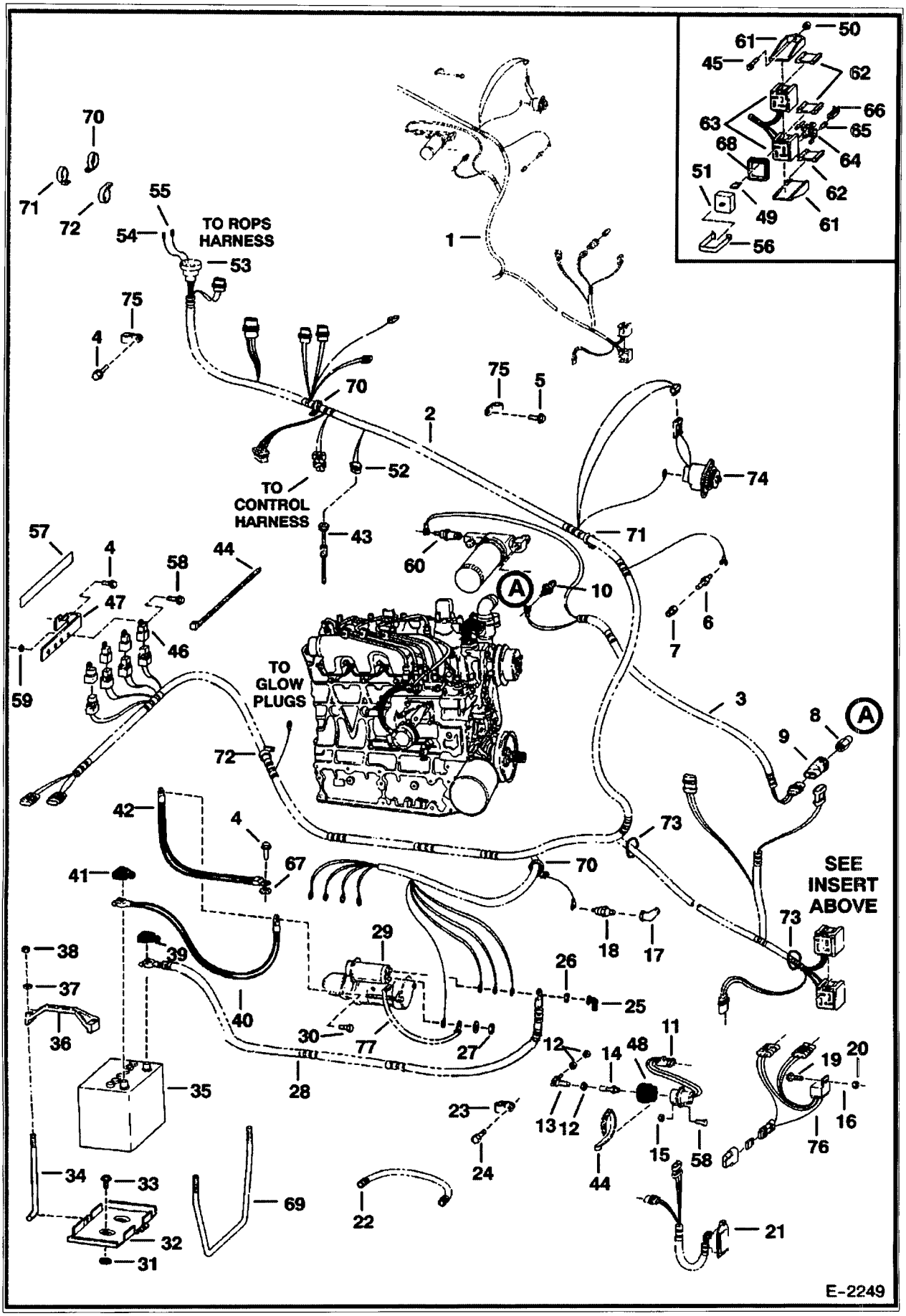

https://www.pdfmanual4trucks.com/

ENGINE ELECTRICAL CIRCUITRY (Cont'd)
(W/O B.O.S.S. Option)

f NO	Part Number	Description	Remarks	Serial Number	Qty
5	30H60	CLIP			2
6	6669415	TIMER	solenoid		1
76	6670808	FUSE	25 amp		1
77	6713794	WIRING KIT	See Illustration STARTER/ D2119 See Illustration STARTER/ D2297 SEE NOTE		1

https://www.pdfmanual4trucks.com/

ENGINE ELECTRICAL CIRCUITRY
(W/B.O.S.S. Option)

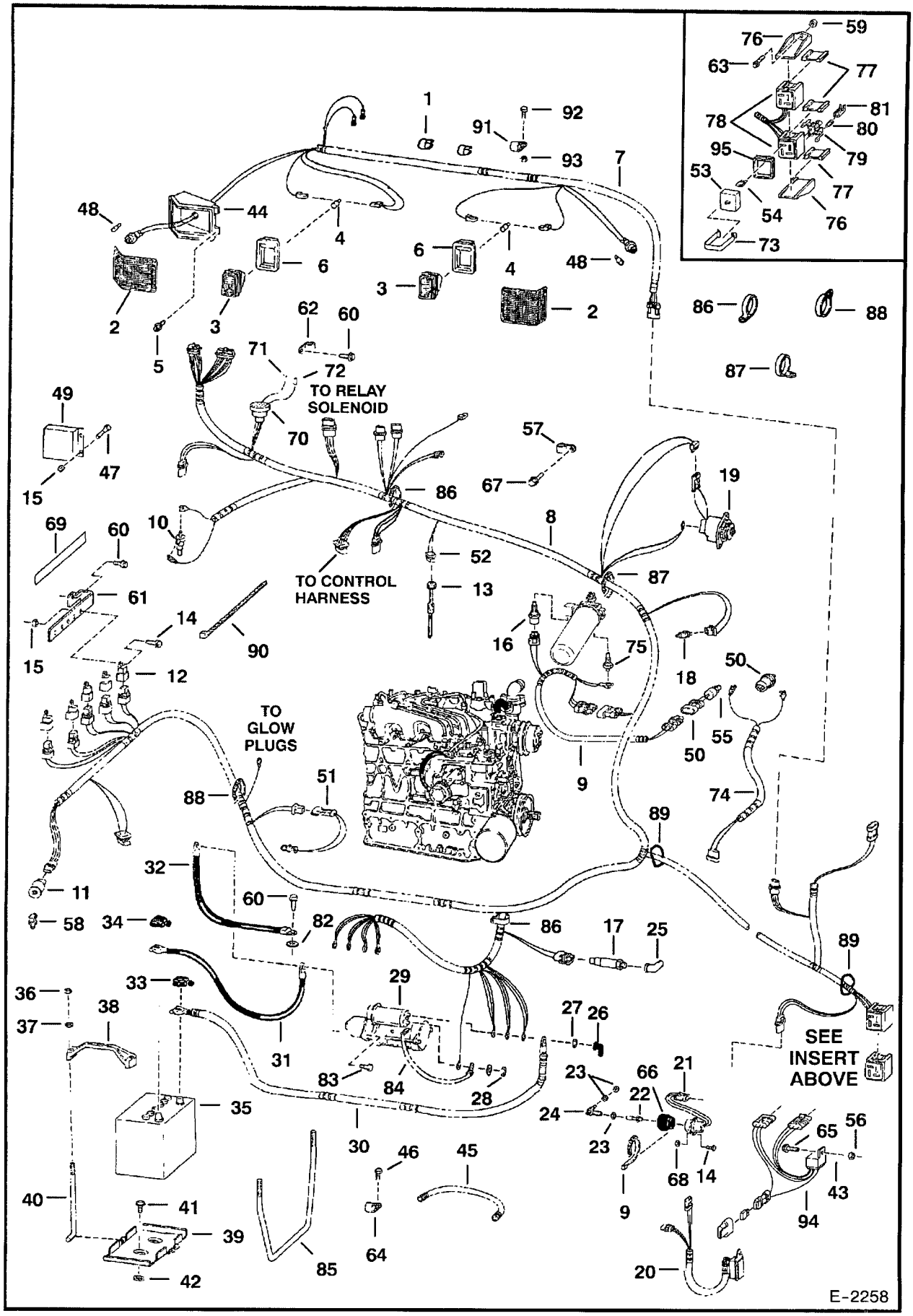

https://www.pdfmanual4trucks.com/

ENGINE ELECTRICAL CIRCUITRY (Cont'd)
(W/B.O.S.S. Option)

Ref No	Part Number	Description	Remarks	Serial Number	Qty
1	30H35	CLAMP 10			2
2	6703797	LENS			2
3	6665922	LAMP	W/Ref. 4 - Was 6661353 [A]		2
3	6665431	SOCKET	threaded bulb		2
4	898731B	BULB	light		2
5	6706517	SCREW	self tapping - Was 6704400 [A]		8
6	6703796	MOUNT	light		2
7	6707669	HARNESS	lights		1
7	6701952	SOCKET			x
8	6707668	HARNESS	engine - W/Ref. 70-72 & 76-81	5127 24122 & Bel	1
8	6707668	HARNESS	engine - W/Ref. 70-72 & 76-81	5086 94030 & Bel	1
8	6707668	HARNESS	engine - W/Ref. 70-72 & 76-81	5114 76437 & Bel	1
8		HARNESS	NAP - ENGINE - W/REF. 70-72 & 76-81 - W/2 PIN CONNECTOR FOR REAR WIPER - ORDER 6715893 HARNESS - IF LOADER IS EQUIPPED W/REAR WIPER - ALSO ORDER 6712260 HARNESS - ORDER 6715893 HARNESS & Ref. 9 - WAS 6707666 [A]	5086 94031-94556	1
8		HARNESS	NAP - ENGINE - W/REF. 70-72 & 76-81 - W/2 PIN CONNECTOR FOR REAR WIPER - ORDER 6715893 HARNESS - IF LOADER IS EQUIPPED W/REAR WIPER - ALSO ORDER 6712260 HARNESS - ORDER 6715893 HARNESS & Ref. 9 - WAS 6707666 [A]	5127 24123-27672	1
8		HARNESS	NAP - ENGINE - W/REF. 70-72 & 76-81 - W/2 PIN CONNECTOR FOR REAR WIPER - ORDER 6715893 HARNESS - IF LOADER IS EQUIPPED W/REAR WIPER - ALSO ORDER 6712260 HARNESS - ORDER 6715893 HARNESS & Ref. 9 - WAS 6707666 [A]	5114 76438 & Abv	1
8		HARNESS	NAP - ENGINE - W/REF. 70-72, 76-81 & 86-88 - W/10 PIN CONNECTOR FOR REAR WIPER- ORDER 6715893 HARNESS & Ref. 9 - WAS 6710487 [A]	5086 94557 & Abv	1
8		HARNESS	NAP - ENGINE - W/REF. 70-72, 76-81 & 86-88 - W/10 PIN CONNECTOR FOR REAR WIPER- ORDER 6715893 HARNESS & Ref. 9 - WAS 6710487 [A]	5162 11001-11352	1
8		HARNESS	NAP - ENGINE - W/REF. 70-72, 76-81 & 86-88 - W/10 PIN CONNECTOR FOR REAR WIPER- ORDER 6715893 HARNESS & Ref. 9 - WAS 6710487 [A]	5158 11001-14193	1
8		HARNESS	NAP - ENGINE - W/REF. 70-72, 76-81 & 86-88 - W/10 PIN CONNECTOR FOR REAR WIPER- ORDER 6715893 HARNESS & Ref. 9 - WAS 6710487 [A]	5127 27673 & Abv	1
8	6715893	HARNESS	engine - W/Ref. 70-72, 76-81 & 86-89	5158 14194-29999	1
8	6715893	HARNESS	engine - W/Ref. 70-72, 76-81 & 86-89	5162 11353-19999	1
8	6671037	TIE	yellow		2
8	6610510	TIE	black		19
9	6715881	HARNESS	filter	5158 14194-29999	1
9	6715881	HARNESS	filter	5162 11353-19999	1
10	6648326	SWITCH	coolant level		1
11	6665371	SWITCH	condition indicator		1
12	6670312	RELAY	relay - Was 6665005 [A]		5
13		SENSOR	NAP - fuel - W/ O-ring - Order 6658958 Sensor - Was 6658958 [D]		1
13	6680453	SENSOR FUEL	fuel - W/gasket - Was 6658958 [A]	5127 24122 & Bel	1
13	6680453	SENSOR FUEL	fuel - W/gasket - Was 6658958 [A]	5086 94030 & Bel	1
13	6680453	SENSOR FUEL	fuel - W/gasket - Was 6658958 [A]	5114 76437 & Bel	1
13	79K000014B	O-RING	Was 25K040102B [B]		1
13		SENSOR	NAP - fuel - W/ O-ring - Order 6674209 Sensor - Was 6669642 [A]	5127 24123 & Abv	1
13		SENSOR	NAP - fuel - W/ O-ring - Order 6674209 Sensor - Was	5086 94031 & Abv	1

https://www.pdfmanual4trucks.com/

ENGINE ELECTRICAL CIRCUITRY (Cont'd)
(W/B.O.S.S. Option)

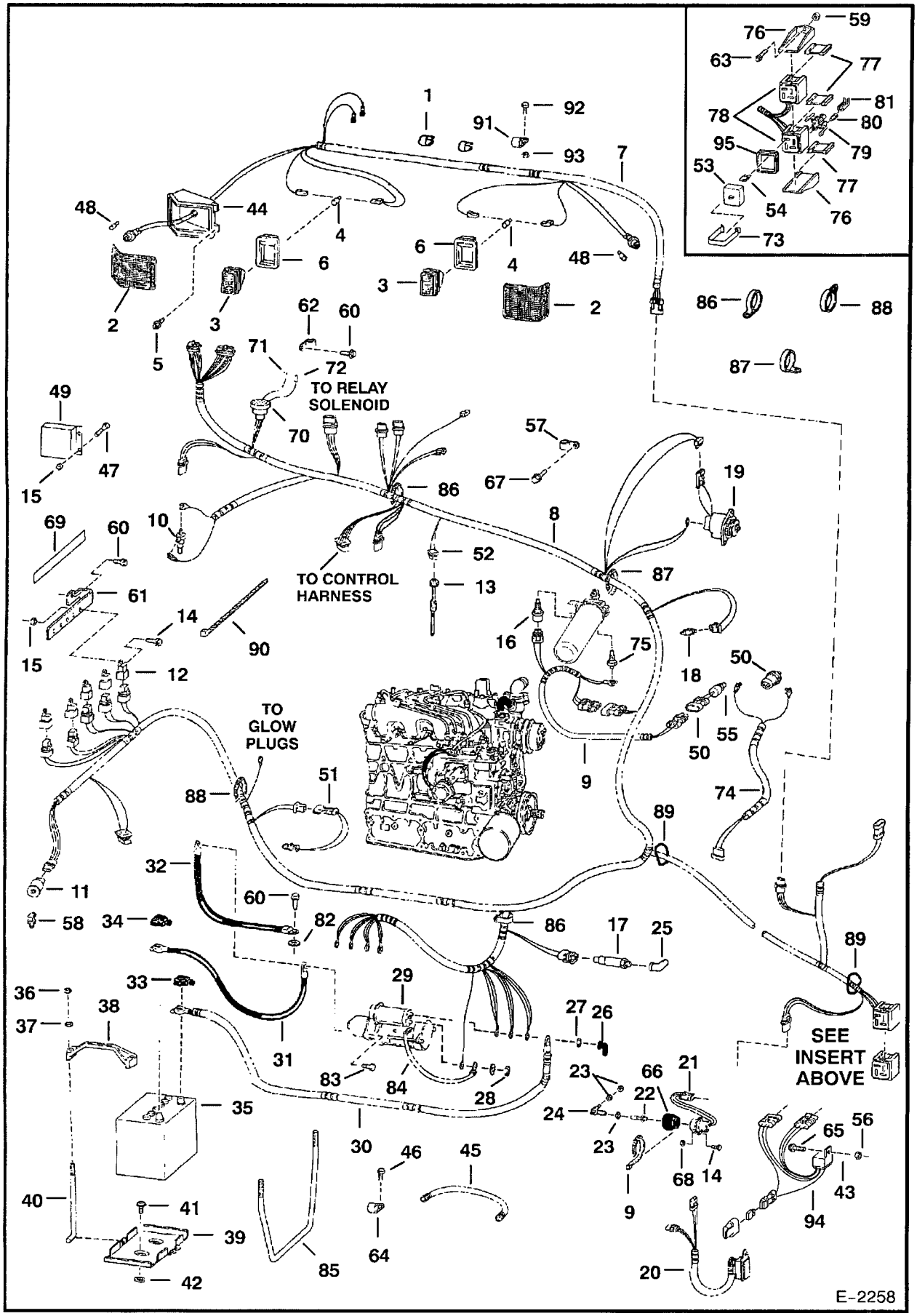

https://www.pdfmanual4trucks.com/

ENGINE ELECTRICAL CIRCUITRY (Cont'd)
(W/B.O.S.S. Option)

f No	Part Number	Description	Remarks	Serial Number	Qty
			6669642 [A]		
13		SENSOR	NAP - fuel - W/ O-ring - Order 6674209 Sensor - Was 6669642 [A]	5158 11001-29999	1
13		SENSOR	NAP - fuel - W/ O-ring - Order 6674209 Sensor - Was 6669642 [A]	5162 11001-19999	1
13		SENSOR	NAP - fuel - W/ O-ring - Order 6674209 Sensor - Was 6669642 [A]	5114 76438 & Abv	1
13	79K000014B	O-RING	Was 25K040102B [B]		1
13	6680438	SENSOR	fuel - W/ Gasket - Was 6674209 [A]		1
13	6717579	GASKET			1
14	17C000410B	BOLT			7
15	85D000004B	NUT			5
16	6654200	SENSOR	hydro. temp		1
17	6660204	SENSOR	eng. oil pressure		1
18	6654201	SENSOR	eng. temp.		1
19		ALTERNATOR	See Illustration ALTERNATOR/ C3312		1
20		TIMER	NAP - Order Ref. 94 - Was 6665522 [A]		1
1	6681513	SOLENOID	fuel shut off - Was 6667993 [A]		1
22	6578366	BALL JOINT			1
23	62D000004B	NUT			4
24	6578363	ROD END	swivel		1
25	6707040	ELBOW			1
26	6560172	COVER			1
27	4DM10	NUT			1
28	4DM00005B	NUT			1
29		STARTER	See Illustration STARTER/ D2119 See Illustration STARTER/ D2297		1
30	6564991	CABLE	pos. - W/Ref. 45		1
31	6562905	CABLE	ground		1
32	6565170	CABLE	ground		1
33	2356058B	BOOT			1
34	6599652	BOOT			1
35	6665031	BATTERY			1
35	6630153	BATTERY CAP			2
36	59D5	NUT 5			x
37	25E15	WASHER			x
38	6569203	CLAMP			x
39	6712536	PAN	Was 6577809 [A]		1
40	6576280	BOLT			2
41	84G3716	SCREW 5			2
42	6555455	WASHER			2
43	25E13	WASHER 5			1
44	6704362	HOUSING	light		2
45	6563505	CONDUIT	bulk - Sold Per Foot		x
46	6CM1220	BOLT	Was 1CM01220B [B]		1
47	10C000412B	BOLT			4
48	6649481	BULB			2
49	6667828	BOSS	See BTI304 initialized - Was 6661214 [A]	5127 24122 & Bel	1
49	6667828	BOSS	See BTI304 initialized - Was 6661214 [A]	5086 94030 & Bel	1
49	6667828	BOSS	See BTI304 initialized - Was 6661214 [A]	5114 76437 & Bel	1
49	6669686	BOSS	See BTI304 initialized - Was 6669167 [A]	5086 94031 & Abv	1
49	6669686	BOSS	See BTI304 initialized - Was 6669167 [A]	5127 24123 & Abv	1
49	6669686	BOSS	See BTI304 initialized - Was 6669167 [A]	5114 76438 & Abv	1
49	6669686	BOSS	See BTI304 initialized - Was 6669167 [A]	5158 11001-29999	1
49	6669686	BOSS	See BTI304 initialized - Was 6669167 [A]	5162 11001-19999	1
49	6666916	BOSS	See BTI304 not initialized - Was 6722444 [A]	5086 94030 & Bel	1
49	6666916	BOSS	See BTI304 not initialized - Was 6722444 [A]	5114 76437 & Bel	1

https://www.pdfmanual4trucks.com/

ENGINE ELECTRICAL CIRCUITRY (Cont'd)
(W/B.O.S.S. Option)

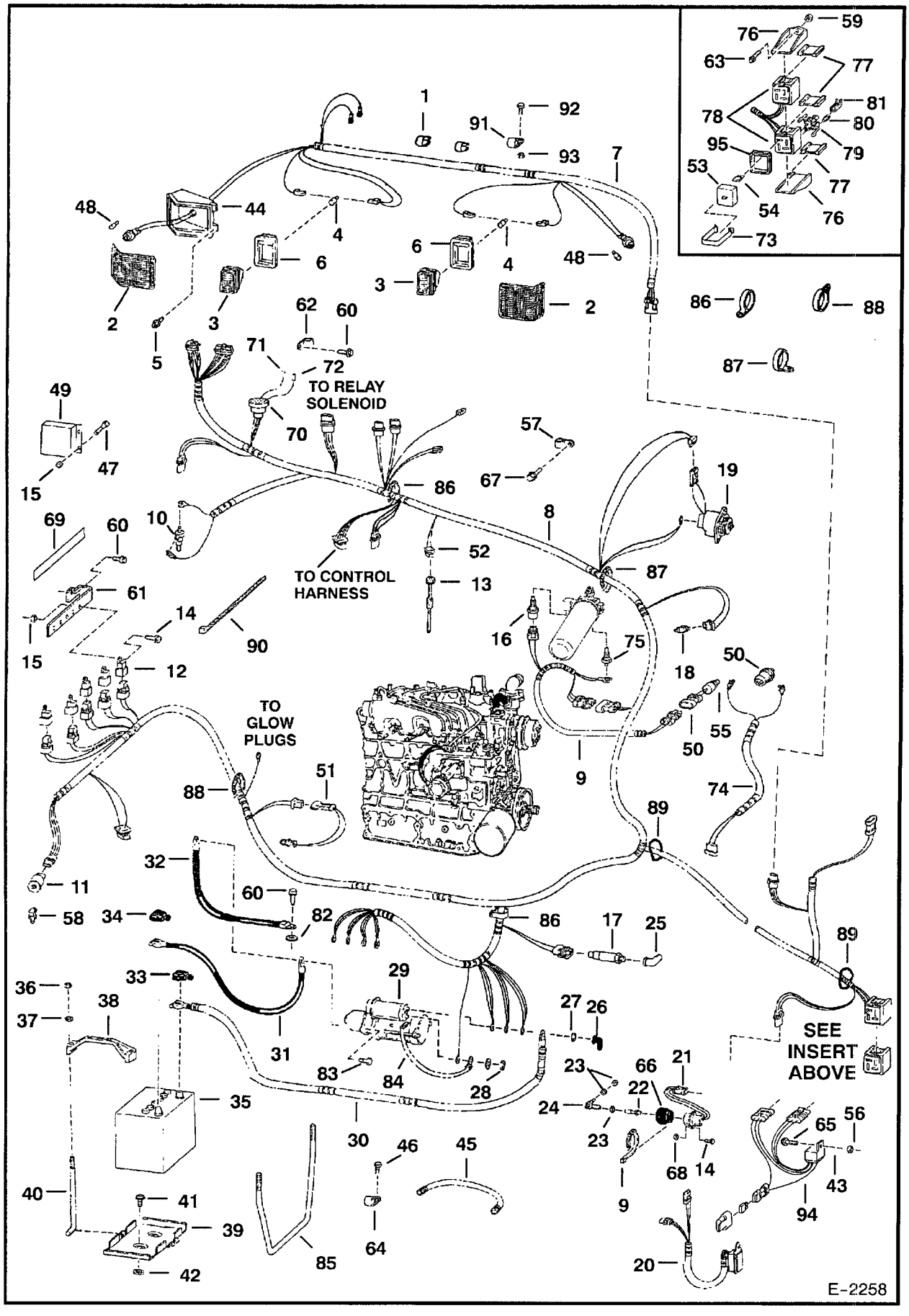

https://www.pdfmanual4trucks.com/

ENGINE ELECTRICAL CIRCUITRY (Cont'd)
(W/B.O.S.S. Option)

f No	Part Number	Description	Remarks	Serial Number	Qty
'9	6666916	BOSS	See BTI304 not initialized - Was 6722444 [A]	5127 24122 & Bel	1
49	6669685	BOSS	See BTI304 not initialized - Was 6669166 [A]	5127 24123 & Abv	1
49	6669685	BOSS	See BTI304 not initialized - Was 6669166 [A]	5114 76438 & Abv	1
49	6669685	BOSS	See BTI304 not initialized - Was 6669166 [A]	5086 94031 & Abv	1
49	6669685	BOSS	See BTI304 not initialized - Was 6669166 [A]	5158 11001-29999	1
49	6669685	BOSS	See BTI304 not initialized - Was 6669166 [A]	5162 11001-19999	1
49	6666918	BOSS	back-up	5127 24122 & Bel	1
49	6666918	BOSS	back-up	5086 94030 & Bel	1
49	6666918	BOSS	back-up	5114 76437 & Bel	1
49	6669687	BOSS	back-up - Was 6667363 [A]	5127 24123 & Abv	1
49	6669687	BOSS	back-up - Was 6667363 [A]	5114 76438 & Abv	1
49	6669687	BOSS	back-up - Was 6667363 [A]	5086 94031 & Abv	1
49	6669687	BOSS	back-up - Was 6667363 [A]	5158 11001-29999	1
49	6669687	BOSS	back-up - Was 6667363 [A]	5162 11001-19999	1
50	6661518	SENSOR	hyd. chg. press. - W/2 pin threaded terminals		1
50	6665033	SENDER	hyd. chg. press. - W/2 pin molded socket terminal		1
51	6684037	SENSOR	r.p.m. - Was 6658260 [B]		1
2	6646383	CONNECTOR	fuel sender		1
52	6632946	TERMINAL	female		2
53	6665358	COVER	fuses		2
54	6707620	FUSE	10 amp		x
54	6707621	FUSE	15 amp		x
54	6707622	FUSE	20 amp		x
54	6707623	FUSE	25 amp		x
54	6674099	BREAKER	25 amp		x
55	6563922	SNUBBER	W/filter		1
55	6563920	FILTER			1
56	83D4	NUT 10	Was 83D000005B [B]		2
57	30H60	CLIP			2
58	23F000001B	ELBOW			1
59	50D000012B	NUT			2
60	84G3712	BOLT			2
61	6707649	MOUNT			1
62	30H000057B	CLAMP	Was 30H000050B [B]		1
63	45G001212B	BOLT			2
64	30H000048B	CLAMP			1
65	35C000416B	BOLT	Was 35C000516B [B]		1
6	6664286	BOOT	Also Order Ref. 9		1
67	35C000608B	BOLT			1
68	61D4	NUT 5			2
69	6707787	DECAL	relay		1
70	6664585	CONNECTOR	Also Order (20) of Ref. 71 & (4) of Ref. 72 - Was 6665682 [A]		1
71	6664828	SOCKET			x
72	6664041	SOCKET			4
73	6708437	CLIP	spring		2
74	6704931	HARNESS	transducer - only used W/Ref. 50 (6661518 Sender)		1
75	6660260	SWITCH	See Illustration HYDROSTATIC OIL FILTER/ B16487 FILTER		1
76	6665369	MOUNT	fuse		2
77	6665411	WEDGE	red		3
78	6665356	BLOCK	fuse - W/Ref. 95		2
78		SEAL	NSS - green square		1
9	6665357	LOCK	yellow		2
80	6650107	SEAL			16
81		PIN	NAP - female - Was 6648311 [A]		16

https://www.pdfmanual4trucks.com/

ENGINE ELECTRICAL CIRCUITRY (Cont'd)
(W/B.O.S.S. Option)

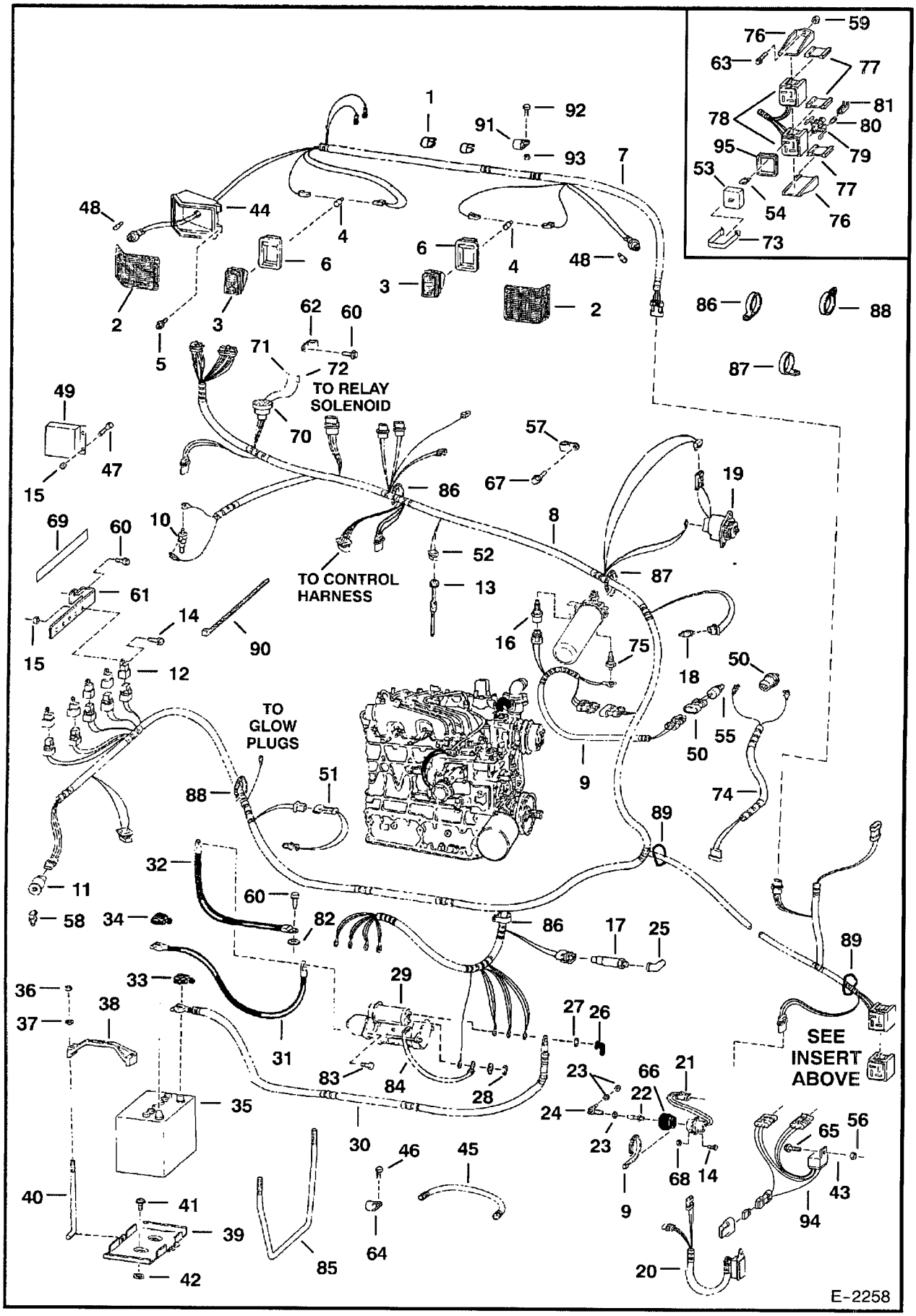

https://www.pdfmanual4trucks.com/

ENGINE ELECTRICAL CIRCUITRY (Cont'd)
(W/B.O.S.S. Option)

f No	Part Number	Description	Remarks	Serial Number	Qty
81	6668719	PIN	female - for 14 gauge wire		x
81	6668720	PIN	female - for 16 gauge wire		x
82	6E6	WASHER			1
83	35C620	BOLT 5			3
84	6713794	WIRING KIT	See Illustration STARTER/ D2119		1
85	6712640	BRACKET			2
86	6669722	CLAMP			2
87	6669723	CLAMP			1
88	6669724	CLAMP			1
89	6717814	TIE			2
90	6610510	TIE			3
91	30H000042B	CLAMP			1
92	37C512	BOLT			1
93	85D5	NUT 5			1
94	6669415	TIMER	solenoid		1
94	6670808	FUSE	25 amp		1
95	6671528	SEAL	green square		2

https://www.pdfmanual4trucks.com/

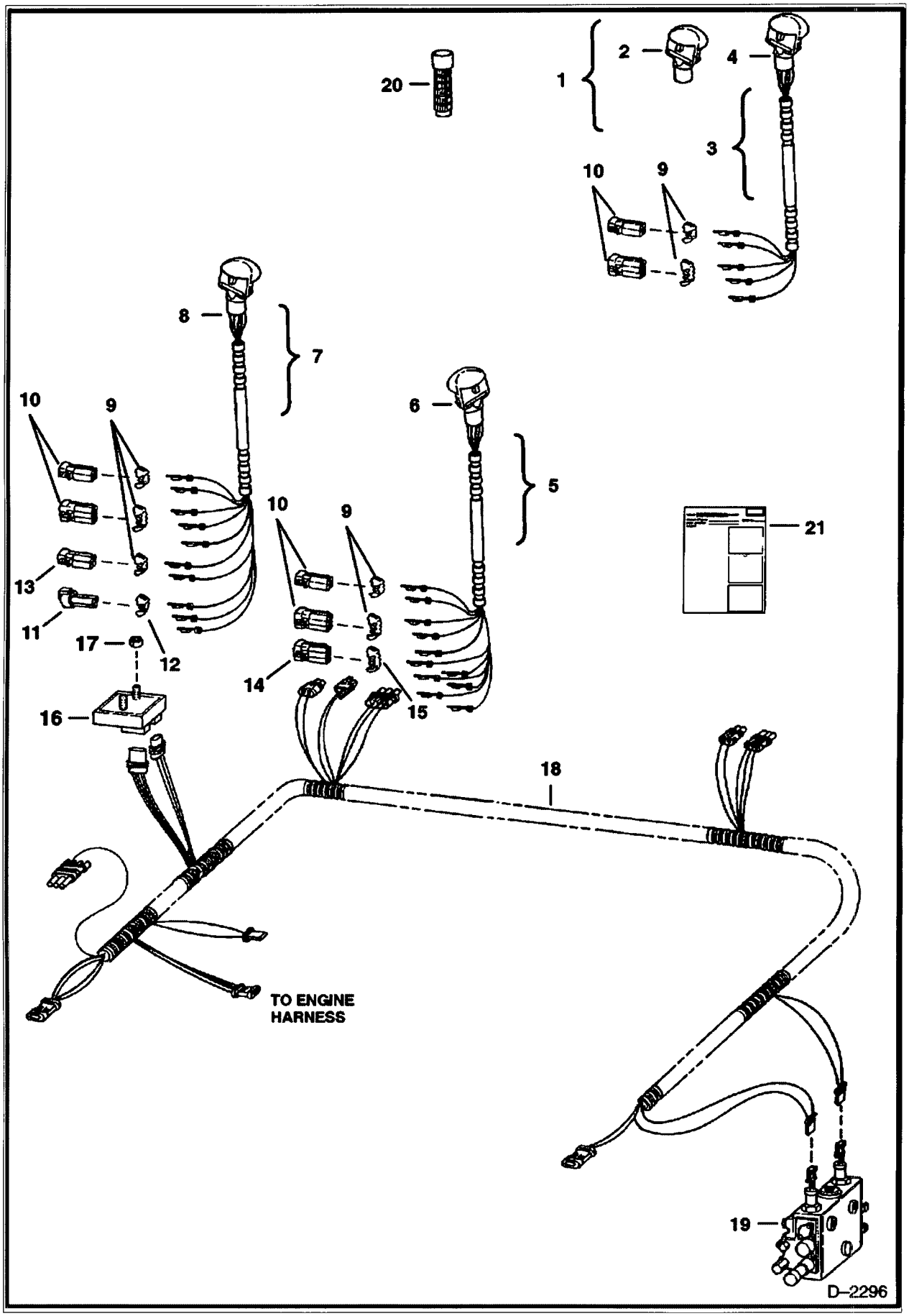

https://www.pdfmanual4trucks.com/

CONTROLS ELECTRICAL (Cont'd)

Ref No	Part Number	Description	Remarks	Serial Number	Qty
1	6706565	KIT	blank handle - Ref. 2 & 21		1
2	6680415	HANDLE	L.H. - blank - Was 6705920 [A]		1
3	6706566	KIT	two-switch handle - Ref. 4, 9, 10 & 21		1
4	6680414	HANDLE ASSY.	two-switch - Also Order Ref. 9 & 10 - Was 6705921 [A]		2
4	6640690	PIN			5
4	6641176	SEAL			5
5	6706567	KIT	R.H. multi switch handle - Ref. 6, 9, 10, 14, 15 & 21		1
6	6680413	HANDLE ASSY	R.H. multi switch handle - Also Order Ref. 9, 10, 14 & 15 - Was 6706340 [A]		1
6	6640690	PIN			9
6	6641176	SEAL			9
7	6706568	KIT	L.H. multi switch handle - Ref. 8-13 & 21		1
8	6680412	HANDLE ASSY	L.H. multi switch handle - Also Order Ref. 9-13 - Was 6707976 [A]		1
8	6640690	PIN			5
8	6640691	PIN			2
8	6641176	SEAL			7
8	6662257	PIN			3
8	6680447	DECAL	Was 6677370 [A]		1
9	6641180	LOCK	2 - pin		3
9	6640700	LOCK	3 - pin		2
10	6641179	CONNECTOR	2 - pin		2
10	6640699	CONNECTOR	3 - pin		2
11	6664599	CONNECTOR	3 - pin triangle - Was 6664184 [B,D]		1
12	6664800	LOCK	3 - pin triangle - Was 6664186 [B,D]		1
13	6641178	CONNECTOR	2 - pin		1
14	6641173	CONNECTOR	6 - pin		1
15	6641181	LOCK	6 - pin		1
16	6671669	MODULE	aux. control - Was 6669529 [C]		1
17	85D000004B	NUT			2
18	6710365	HARNESS	Was 6707676 [B,D]	5127 27672 & Bel	1
18	6710365	HARNESS	Was 6707676 [B,D]	5086 94556 & Bel	1
18	6719149	HARNESS	Was 6712136 [A]	5127 27673 & Abv	1
18	6719149	HARNESS	Was 6712136 [A]	5086 94557 & Abv	1
18	6719149	HARNESS	Was 6712136 [A]	5158 11001-29999	1
18	6719149	HARNESS	Was 6712136 [A]	5162 11001-19999	1
19		VALVE	See Illustration HYDRAULIC CONTROL VALVE/ E2229		1
20	6702621	GRIP			2
21	6722759	INSTRUCTIONS	for Ref. 1, 3, 5 & 7		1

https://www.pdfmanual4trucks.com/

CONTROLS ELECTRICAL
(Advanced Hand Controls Option)

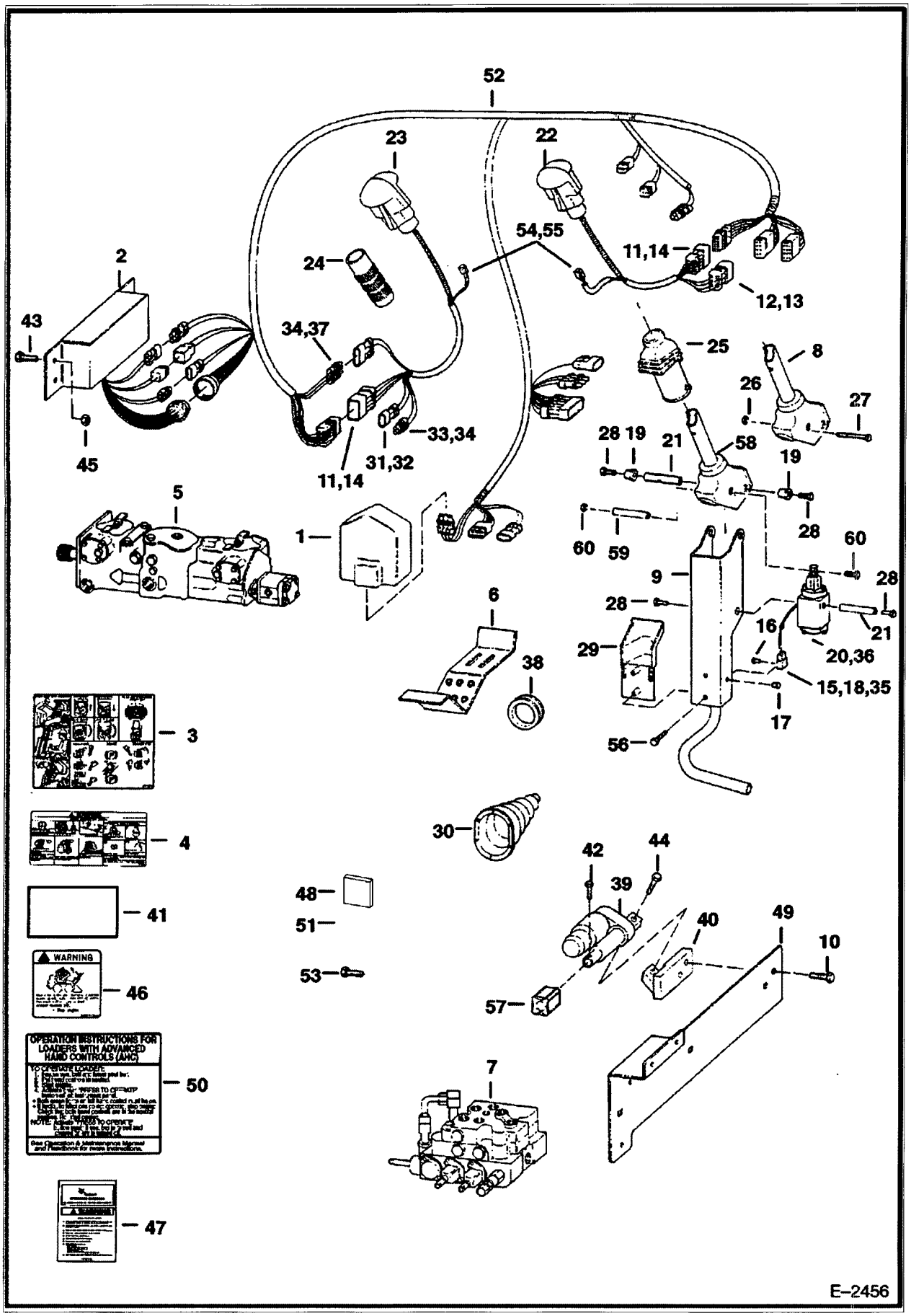

https://www.pdfmanual4trucks.com/

CONTROLS ELECTRICAL (Cont'd)
(Advanced Hand Controls Option)

f No	Part Number	Description	Remarks	Serial Number	Qty
1	6680445	CONTROLER	Was 6674224 [A]		1
2	6675129	CONTROLLER	Was 6674211 [A]		1
3	6715940	DECAL	operation		1
4	6715941	DECAL	warning		1
5		PUMP			1
6	6712365	STEP			2
7		VALVE	See Illustration HYDRAULIC CONTROL VALVE/ B17198 AHC		1
8		HANDLE	NAP - R.H. - Order Ref. 58, 59 & (2) of Ref. 60 - Was 6597774 [A]	& Bel	1
8		HANDLE	NAP - L.H. - 58, 59, & (2) of Ref. 60 - Was 6717163 [A]	& Bel	1
9	6717055	LEVER	R.H.		1
9	6717056	LEVER	L.H.		1
10	6717378	BOLT			2
11	6640696	CONNECTOR	8 pin		2
12	6641173	CONNECTOR	6 pin		1
13	6641181	LOCK			1
1	6661183	LOCK			2
.5	6665000	CLIP			2
16	6665321	RIVET	male		2
17	6665322	RIVET	female		2
18	6670706	CONNECTOR	3 pin		2
19	6702990	BUSHING			4
20		CONTROL	See Illustration HAND CONTROL KIT/ PE1373 NAP - tilt - Order 6727297 AHC Kit - Was 6712398 [A]		4
21	6713043	SPACER			4
22	6713261	HANDLE ASSY	R.H.		1
.2	6640690	PIN			12
22	6670715	PIN			3
22	6641176	SEAL			12
22	6680447	DECAL	Was 6677370 [A]		1
23	6680463	HANDLE	L.H. - Was 6713262 [A]		1
23	6640690	PIN			11
23	6640691	PIN			2
23	6641176	SEAL			13
23	6680447	DECAL	Was 6677370 [A]		1
24		GRIP	NAP - Order 6702621 Grip & cut to 2.8" (71,1mm) long - Was 6703349 [D]		2
24	6702621	GRIP			2
25	6680471	COVER	Was 6713898 [A]		2
26	12D000010B	NUT		& Bel	2
27	6716826	BOLT		& Bel	2
28	25GT00410B	BOLT			8
29	6715957	COVER			2
30	6532127	BOOT			2
31	6640699	CONNECTOR			1
32	6640700	LOCK			1
33	6641178	CONNECTOR			1
34	6641180	LOCK			1
35	6670710	LOCK			1
36		CONTROL	See Illustration HAND CONTROL KIT/ PE1373 lift - Order 6727297 AHC kit - Was 6712397		1
37	6641179	CONNECTOR			1
8	6714726	GROMMET			1
39		ACTUATOR	See BTI364 NAP - tail mount - Was 6678776 [A]		2
39	7104842	ACTUATOR	direct mount		2
)	6717567	MOUNT	actuator		1

https://www.pdfmanual4trucks.com/

CONTROLS ELECTRICAL (Cont'd)
(Advanced Hand Controls Option)

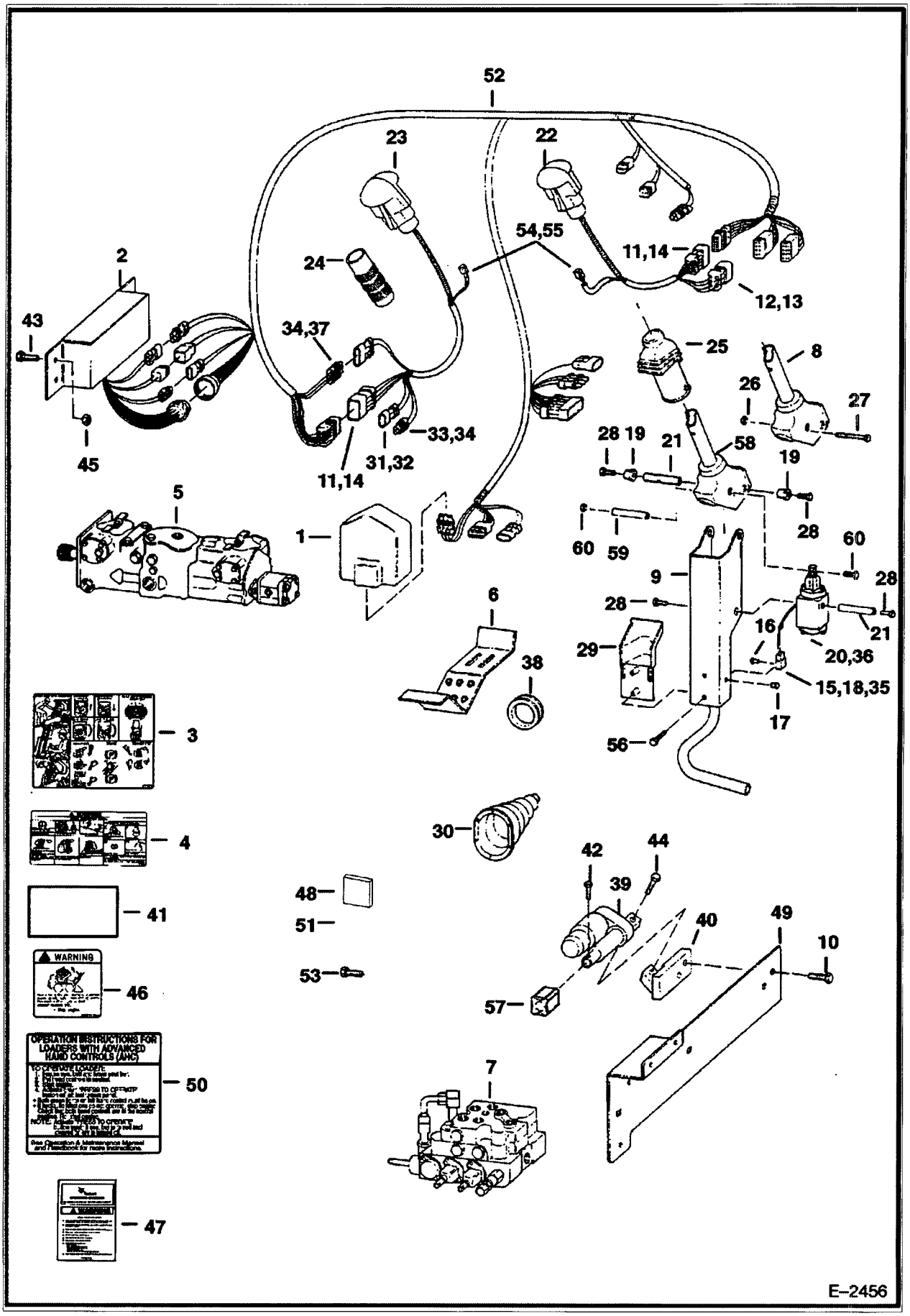

https://www.pdfmanual4trucks.com/

CONTROLS ELECTRICAL (Cont'd)
(Advanced Hand Controls Option)

,f No	Part Number	Description	Remarks	Serial Number	Qty
1	6715991	DECAL	fuse - AHC		1
42	6716052	PIN			2
43	17C412	BOLT 5			3
44	38C000606B	SCREW			2
45	61D4	NUT 5			4
46	6715944	DECAL			1
47	6708158	HANDBOOK	AHC		1
48	6704436	PAD			2
49	6716902	MOUNT			1
50	6717043	DECAL	operation - W/seat sensor		1
50	6717639	DECAL	operation - W/O seat sensor		1
51	4E000004B	WASHER			1
52	6718889	HARNESS	AHC - Was 6717177 [A]		1
52	6717569	DIODE	6 amp		1
53	17C408	BOLT			1
54	6670707	CONNECTOR			2
55	6670710	LOCK			2
5	6669224	BOLT			4
57	6664286	BOOT	Was 6675280 [A]		2
58	6729594	HANDLE	R.H.	& Abv	1
58	6729595	HANDLE	L.H.	& Abv	1
59	6680469	SPACER	Was 6729600 [A]	& Abv	1
60	6727065	BOLT		& Abv	2

https://www.pdfmanual4trucks.com/

ALTERNATOR
(Bobcat)

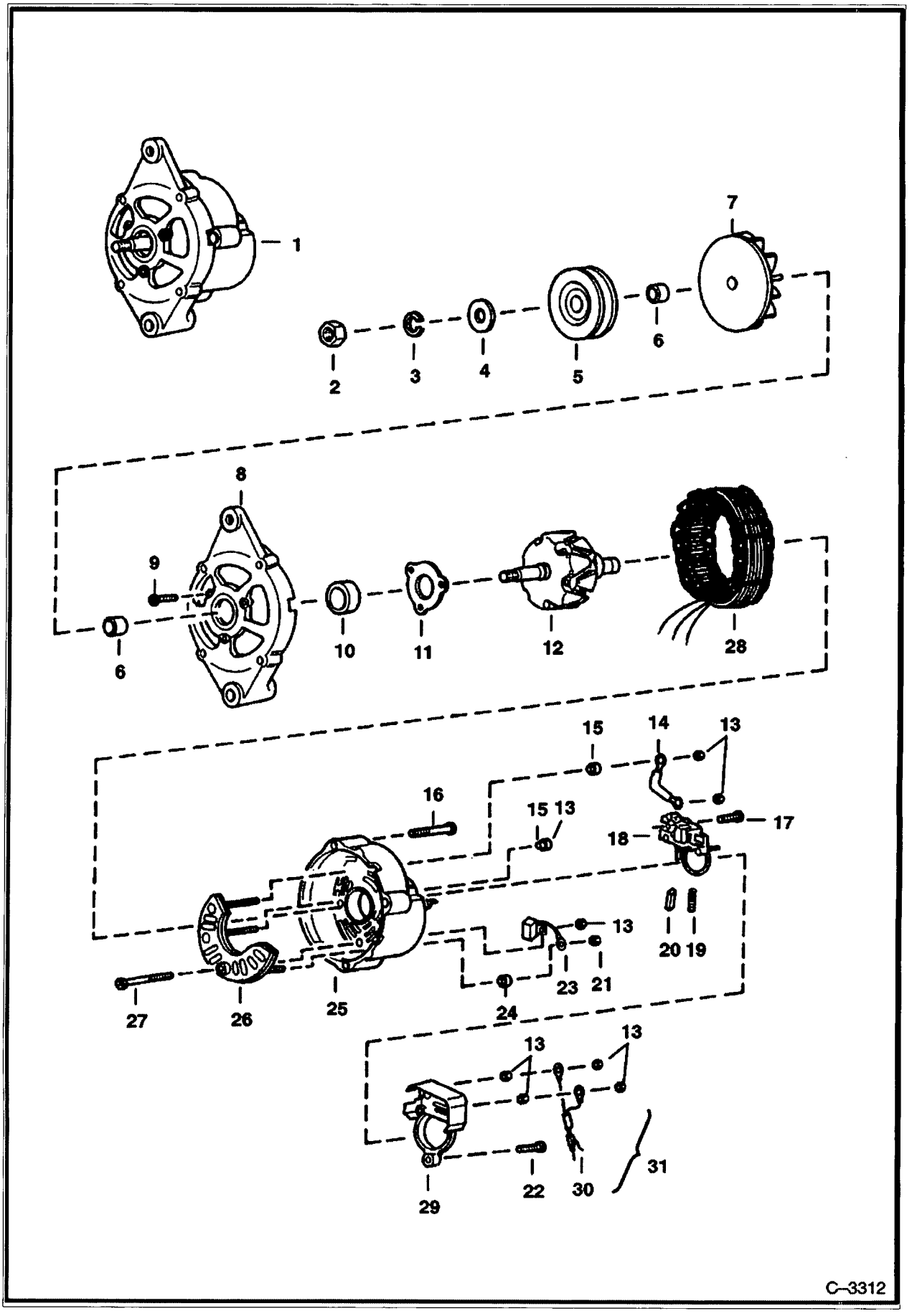

https://www.pdfmanual4trucks.com/

ALTERNATOR (Cont'd)
(Bobcat)

;f No	Part Number	Description	Remarks	Serial Number	Qty
1	6661611	ALTERNATOR	Less Fan & Pulley		1
2	6659371	NUT			1
3	6659372	WASHER			1
4	6632323	WASHER			1
5	6571536	PULLEY			1
6	6659374	SPACER			2
7	6659375	FAN			1
8	6659376	BRACKET	W/Ref. 9-11		1
9	6659378	BOLT			3
10	6659379	BEARING			1
11		RETAINER	NAP - Was 6632228 [A]		1
12	6659380	ROTOR			1
13	6659387	NUT			7
14	6659397	TERMINAL			1
15	6659386	HOLDER			2
16	6659392	BOLT			3
17	6659396	SCREW			2
3	6659393	REGULATOR	W/Ref. 19 & 20		1
;9	6659395	SPRING			2
20	6659394	BRUSH			2
21	6659391	NUT			1
22	6659399	SCREW			1
23	6659388	CONDENSER			1
24	6659390	HOLDER			1
25	6659382	BRACKET	rear - W/Ref. 13, 15, 21 & 23-27		1
26	6659384	RECTIFIER			1
7	6659385	SCREW			1
;8	6659381	STATOR			1
29	6659398	COVER			1
30	6659400	CONNECTOR	assy.		1
31	6577456	KIT	Weather-Pak Connector - Includes both male & female parts		1

https://www.pdfmanual4trucks.com/

STARTER
(1113273 or 10479613) (Delco)

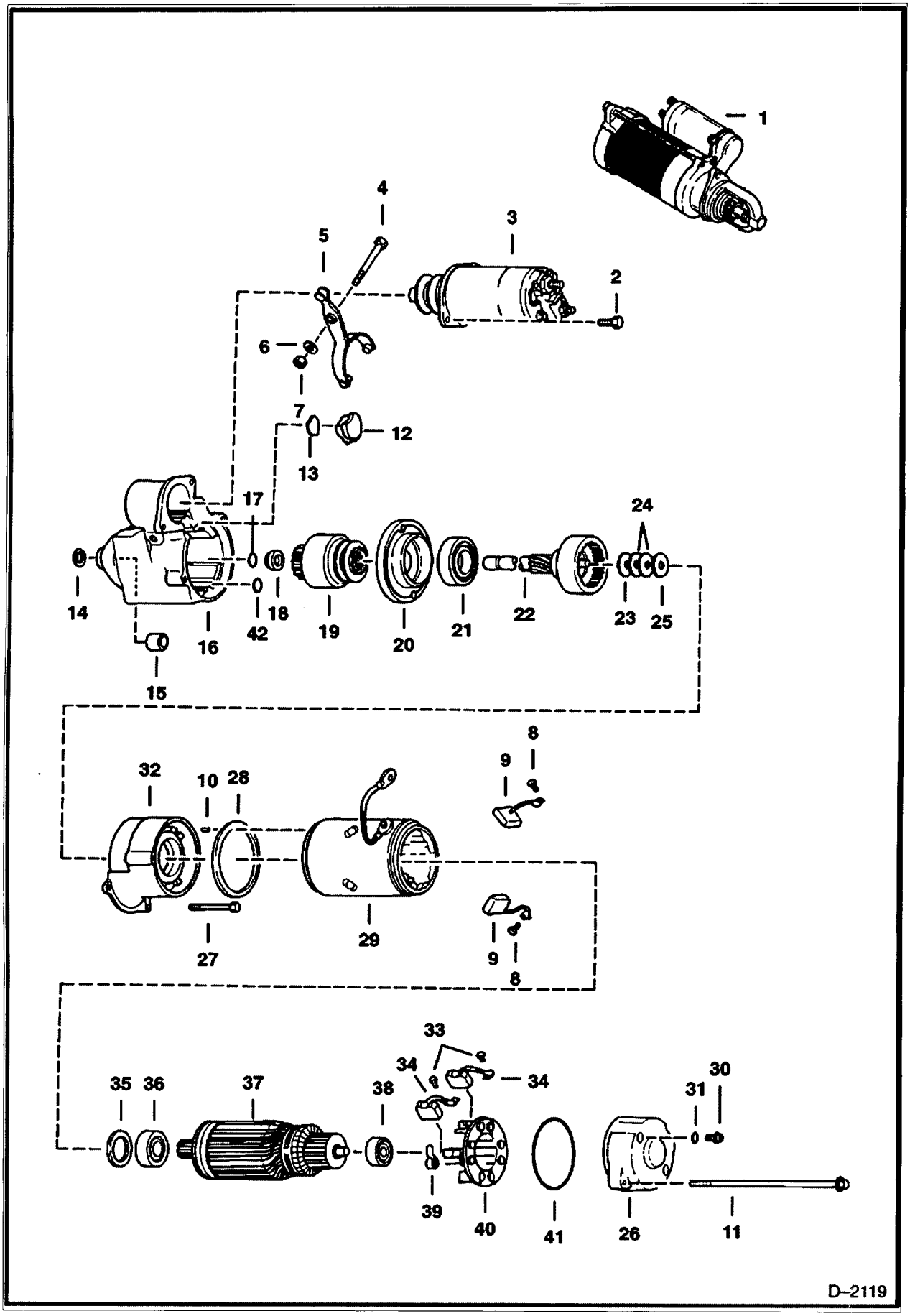

https://www.pdfmanual4trucks.com/

STARTER (Cont'd)
(1113273 or 10479613) (Delco)

Ref No	Part Number	Description	Remarks	Serial Number	Qty
1		STARTER	See Illustration STARTER KIT/ D2393 See BTI342 NAP - Order 6685190 starter - Was 6660797 [A]		1
1	6660797REM	STARTER	remanufactured		1
2		SCREW	NSS		2
3	6658582	SOLENOID			1
4	1CM00650B	BOLT			1
5	6658572	LEVER			1
6	1EM00060B	WASHER			1
7	7DM00006B	NUT			1
8	13GM00404B	SCREW			2
9	6658566	BRUSH			2
10		PIN	NSS		1
11		BOLT	NSS		2
12		PLUG	NSS		1
13		WASHER	NSS		1
14		WASHER	NSS		1
15	6658567	BUSHING			1
16	6658579	HOUSING	drive		1
17		RING	NSS		1
18	6658573	STOP			1
19	6661688	DRIVE			1
20	6661686	SUPPORT	drive - W/Seal		1
21	6658571	SUPPORT	center		1
22	6658576	SHAFT	drive		1
23		WASHER	NSS		1
24		WASHER	NSS		2
25		WASHER	NSS		1
26	6658577	SUPPORT	armature		1
27		BOLT	NSS		2
28		GASKET	NSS		1
29	6658580	FRAME	assy.		1
30		SCREW	NSS		2
31		WASHER	NSS		2
32	6658575	FRAME			1
33	13GM00408B	SCREW			2
34	6658565	BRUSH			2
35		SPACER	NSS		1
36	6658569	BEARING			1
37	6658574	ARMATURE			1
38	6658570	BEARING			1
39	6658568	SPRING			4
40	6658564	HOLDER	brush assy.		1
41	6658581	O-RING			1
42		O-RING	NSS - For 10479613		1

https://www.pdfmanual4trucks.com/

STARTER KIT
(Nippondenso to service Delco)

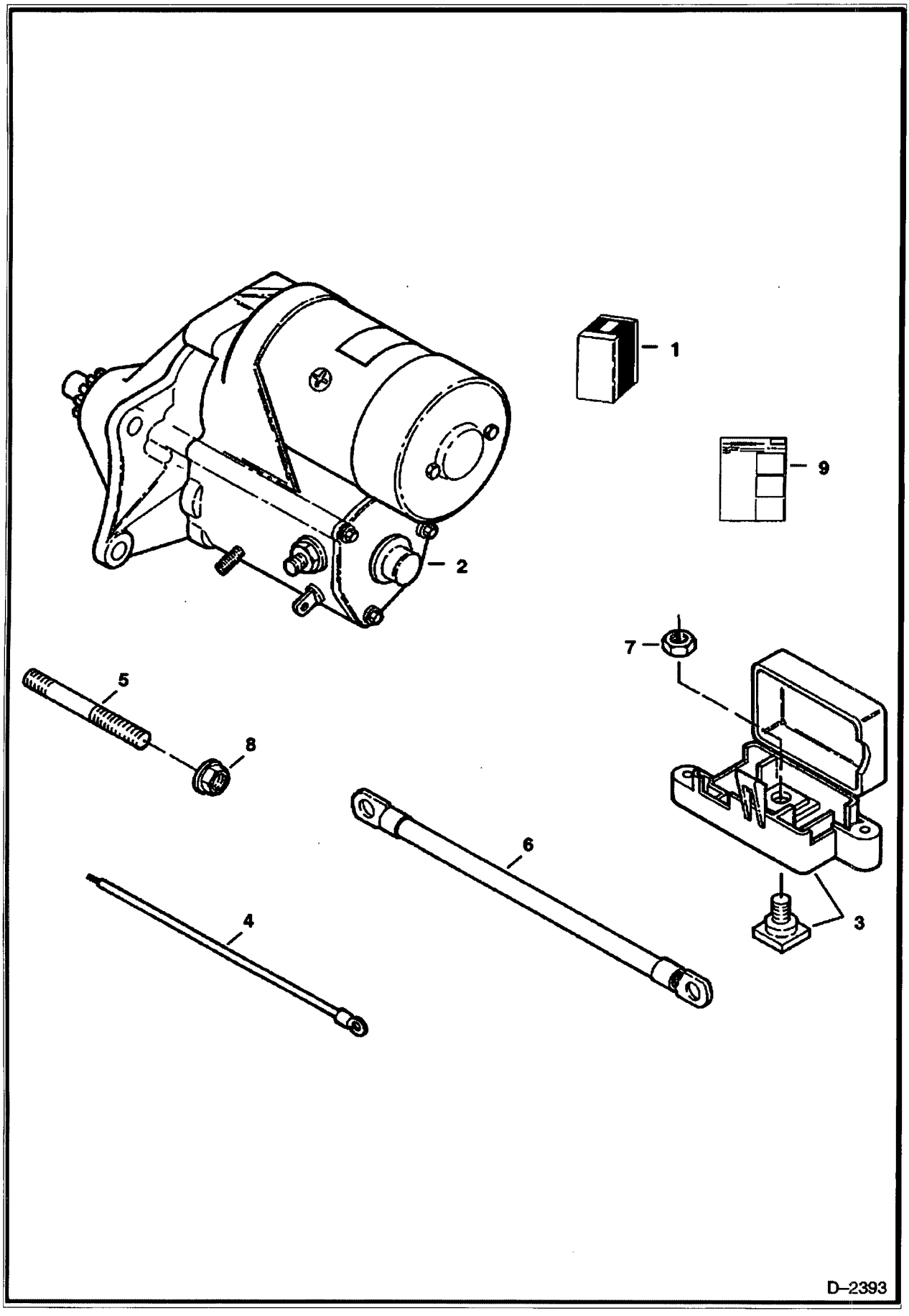

https://www.pdfmanual4trucks.com/

STARTER KIT (Cont'd)
(Nippondenso to service Delco)

f No	Part Number	Description	Remarks	Serial Number	Qty
1		STARTER KIT	See BTI342 NAP - Ref. 2 - 9 - Was 6714082 [A]		1
2		STARTER	See Illustration STARTER/ D2297 NAP - Was 6667587 [A]		1
3	6670558	TERMINAL			1
4	6713488	WIRE			1
5	6713780	ROD	threaded		1
6	6713821	CABLE			1
7	32DM00010B	NUT			1
8	57D6	NUT 5			1
9	6724979	INSTRUCTIONS			1

https://www.pdfmanual4trucks.com/

STARTER
(Nippondenso)

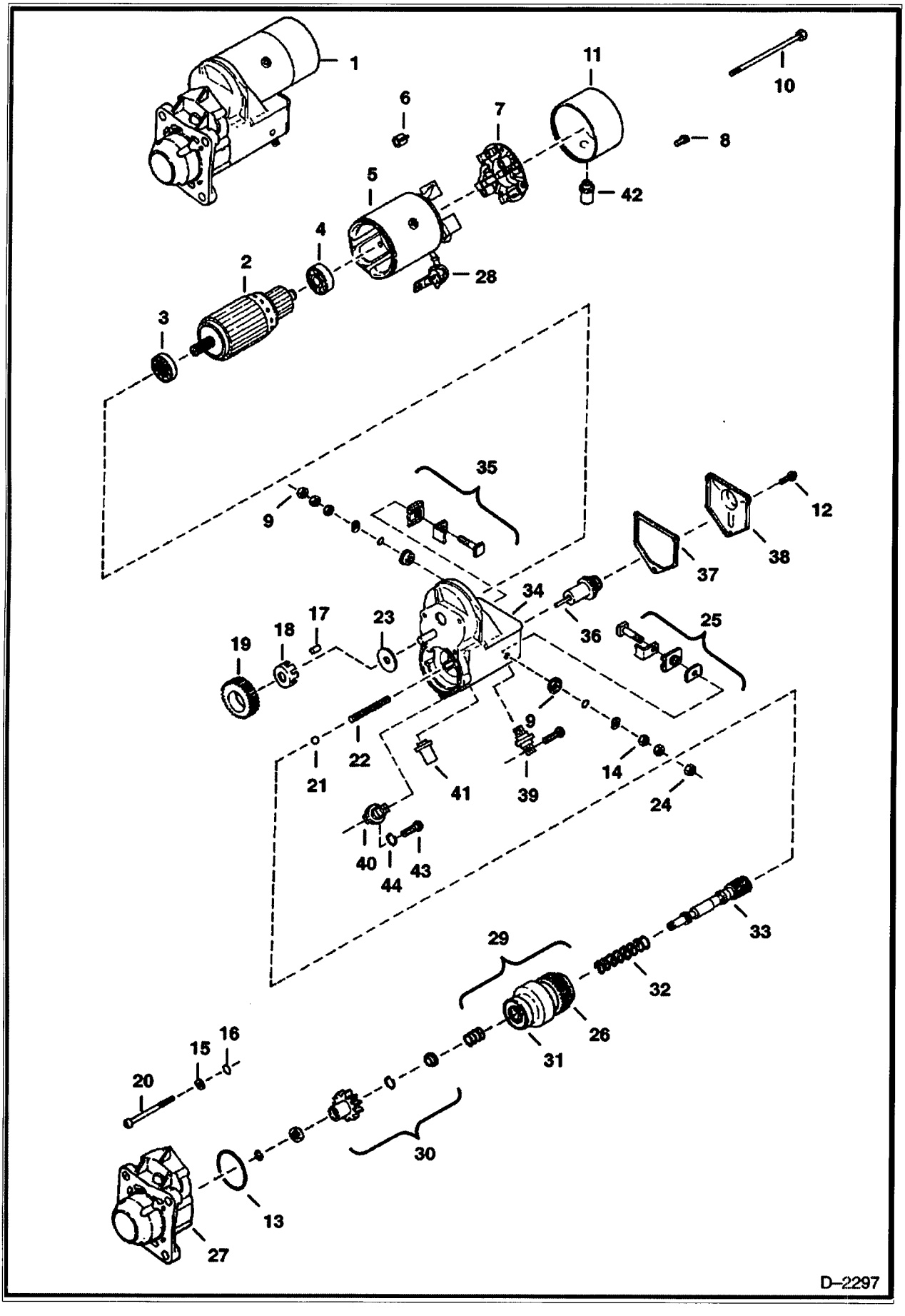

https://www.pdfmanual4trucks.com/

STARTER (Cont'd)
(Nippondenso)

,f No	Part Number	Description	Remarks	Serial Number	Qty
1		STARTER	See BTI342 NAP - Was 6667587 [A]		1
2	6666621	ARMATURE	W/Ref. 3 & 4		1
3	6632417	BEARING			1
4	6632418	BEARING			1
4	6671128	BEARING			1
4	6671129	BEARING			1
5	6632419	HOUSING ASSY.			1
6	6632421	SPRING			4
7	6632420	BRUSH HOLDER	W/Ref. 6		1
8	6666634	BOLT	5mm x 9,4 mm		2
9	6666637	NUT			1
10	6666636	BOLT	6mm x 181mm		2
11	6671121	COVER			1
12	6666635	BOLT	5mm x 8mm		1
13	6666632	O-RING			1
14	6666630	WASHER	10mm		1
15	6666629	WASHER			3
3	6666631	WASHER			3
17	6632430	ROLLER			5
18	6632429	RETAINER			1
19	6632428	PINION			1
20	6666633	BOLT	6mm x 50mm		3
21	6671122	BALL			3
22	6632436	SPRING			1
23	6662437	WASHER			1
24	6666628	NUT	10mm		1
25	6671117	TERMINALS			1
26	6666622	DRIVE			1
27	6671124	HOUSING			1
28	6669365	BOOT			1
29	6671119	CLUTCH ASSY.	Ref. 26 & 30-33		1
30	6671118	PINION			1
31	6671127	BEARING			1
32	6632441	SPRING			1
33	6669354	SHAFT			1
34	6671123	HOUSING			1
35	6671116	TERMINALS			1
3	6632432	PLUNGER			1
37	6632433	GASKET			1
38	6632434	COVER			1
39	6669359	TERMINAL			1
40	6671120	TERMINAL			1
41	6669360	BUSHING			1
42	6669372	COVER			1
43	6671126	SCREW			1
44	6671125	WASHER			1

https://www.pdfmanual4trucks.com/

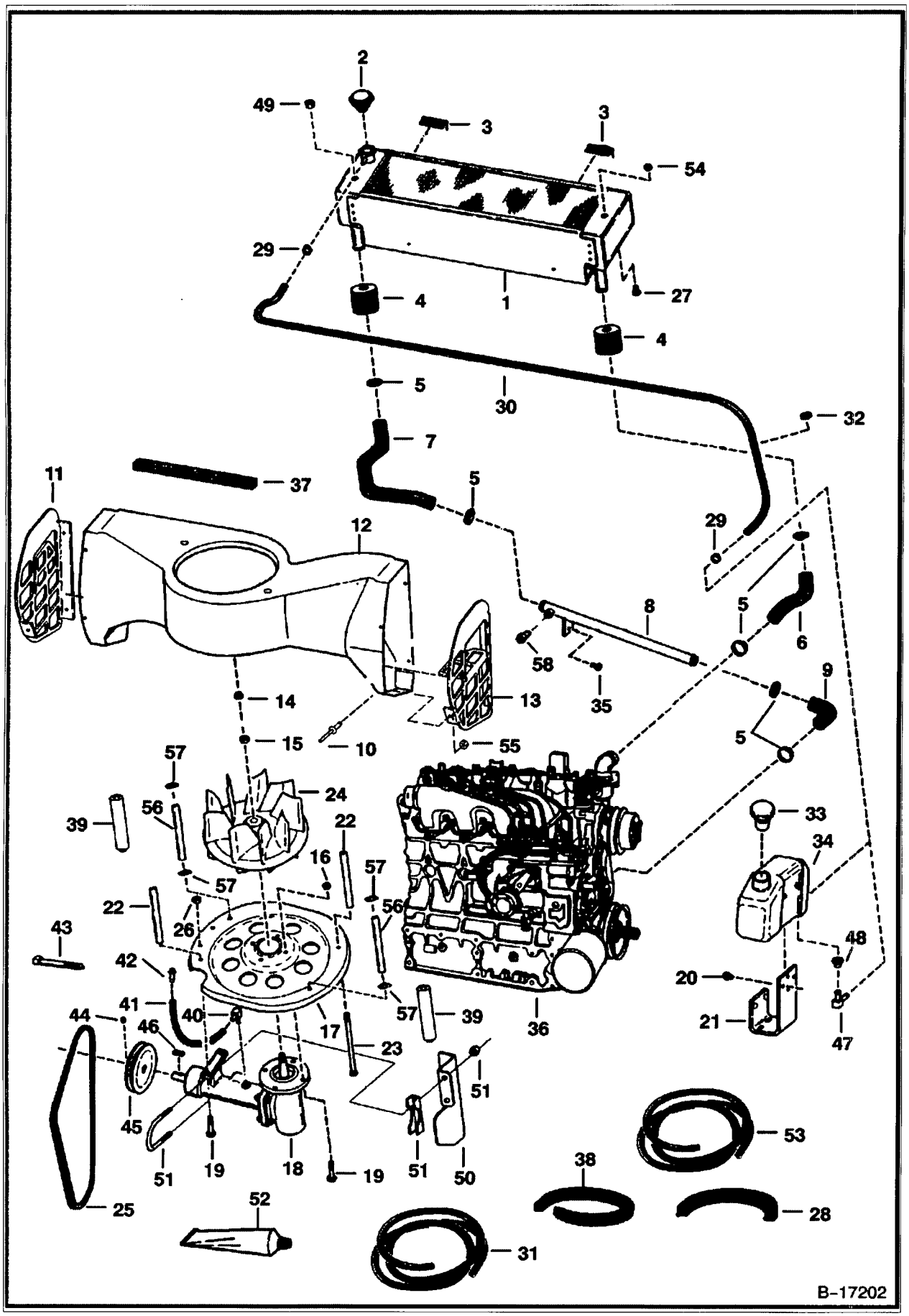

https://www.pdfmanual4trucks.com/

f No	Part Number	Description	Remarks	Serial Number	Qty
1		RADIATOR	NAP - Order 6666384 radiator & Ref. 54 - Was 6659460 [A]		1
1	6666384	RADIATOR			1
2	6646678	CAP	14 PSI		1
3		MOULDING	NAP - 3" (76,2 mm) long - Order Ref. 28		2
4	6726433	SPACER	Was 6704829 [A]		2
5	6518820	CLAMP	worm gear		6
5	5HM00042B	CLAMP	constant tension		6
6	6578280	HOSE			1
7	6578279	HOSE			1
8	6730999	TUBE ASSY	Was 6576029 [A]		1
9	6576028	HOSE			1
10	6706517	SCREW	Use W/plastic louvers - Was 6579119 [A]		8
10	6661209	RIVET	Use W/steel louvers		6
11		LOUVER	NAP - L.H. - plastic - Order 6716571 louver & (4) of Ref. 10 (6706517 screw) - Was 6700419 [A]		1
11		LOUVER	NAP - L.H. - steel - Order 6716571 louver & (4) of Ref. 10 (6706517 screw) - Was 6713308 [A]		1
11	6716571	LOUVER	L.H. - plastic		1
12	6700329	HOUSING			1
13		LOUVER	NAP - R.H. - plastic - Order 6716572 louver & (4) of Ref. 10 (6706517 screw) - Was 6700418 [A]		1
13		LOUVER	NAP - R.H. - steel - Order 6716572 louver & (4) of Ref. 10 (6706517 screw) - Was 6713306 [A]		1
13	6716572	LOUVER	R.H. - plastic		1
14	86D000008B	NUT			1
15	6701097	WASHER	Was 6803867 [A]		1
16	7D000006B	NUT			4
17	6577227	INLET	8 hole		1
17	7107175	INLET	4 slot - Was 6717478 [A]		1
18	6734104	HOUSING ASSY.	See Illustration COOLING FAN DRIVE ASSY./ TS1002 Was 6702138 [A]		1
19	17C000616B	BOLT			6
20	84G003708B	BOLT			2
21	6709415	MOUNT	Was 6571814 [A]		1
22	6577382	SPACER			2
23	17C006116B	BOLT			4
24	6715142	FAN	Was 6700334 [A]		1
25	6669034	BELT	fan - 41.3" (1049 mm) long - Use W/Ref. 45 (5.75" or 6" dia. pulley) - Was 6701158 [A]		1
25	6715478	BELT	fan - 40" (1016 mm) long - Use Ref. 45 (4.5" dia. pulley)		1
26	61D000006B	NUT			4
27	35C000508B	BOLT			2
28	6649402	MOULDING	bulk - Sold Per Foot		x
29	6515575	CLAMP			2
30		HOSE	NAP - 62" (1524,8 mm) long - Order Ref. 53		1
31	6577822	HOSE	bulk - Sold Per Foot		x
32	1303932B	GROMMET			1
33	6702797	CAP			1
34	6576660	TANK			1
35	17C612	BOLT 5			1
36		ENGINE	See Illustration ENGINE & GASKET KITS/ B16450		1
37		FOAM	NAP - 42" (1067 mm) long - Order Ref. 38		1
38	6511855	SEAL	bulk - Sold Per Foot - self adhesive		x
39		SPACER	NAP - Order Ref. 56 & (2) of Ref. 57 - Was 6704907 [A]		2

https://www.pdfmanual4trucks.com/

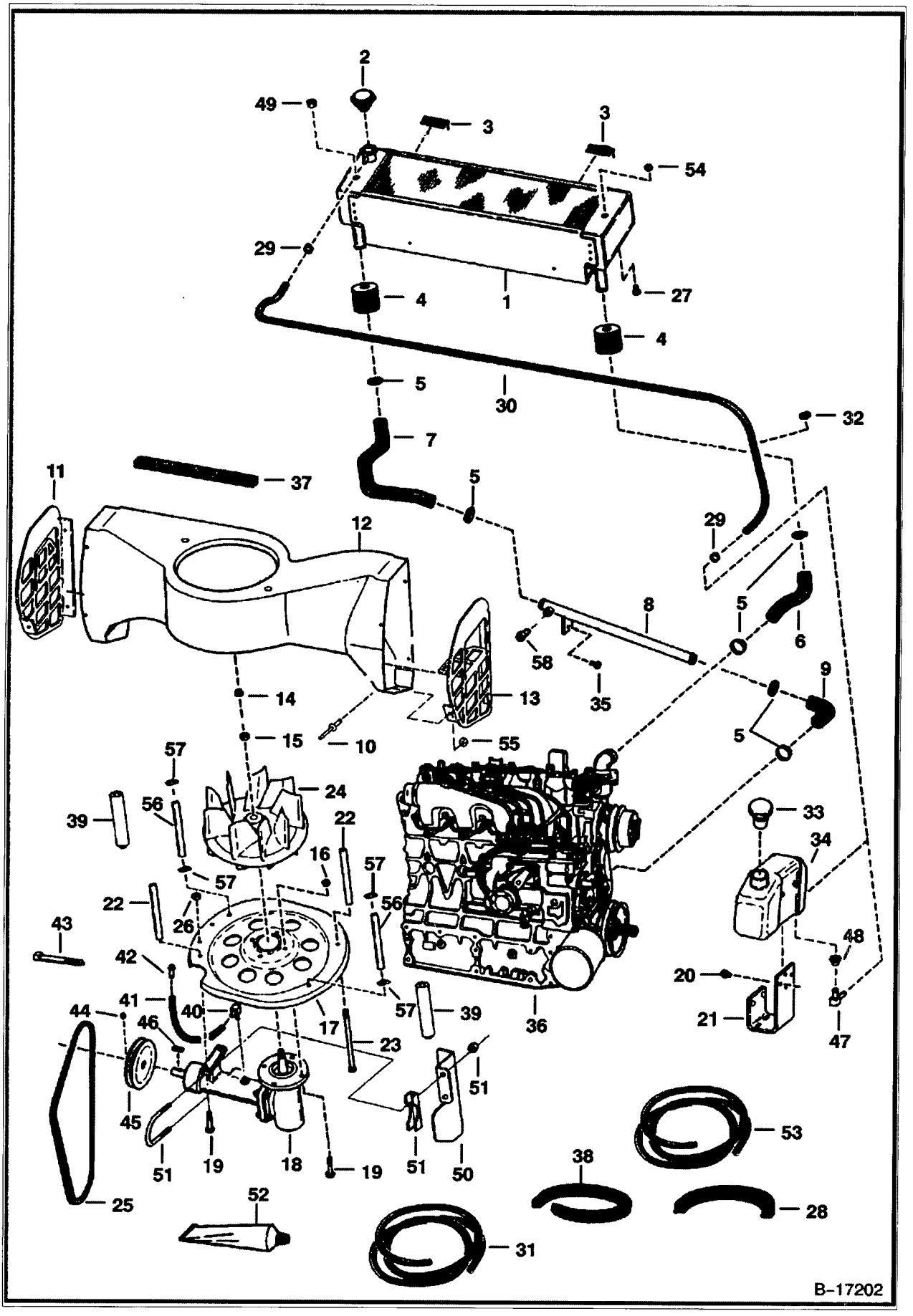

https://www.pdfmanual4trucks.com/

;f No	Part Number	Description	Remarks	Serial Number	Qty
0	6657376	ELBOW			1
41		HOSE	NAP - 16.5" (416,1mm) or 19.5" (495,3 mm) long - Order Ref. 31		1
42	6680970	BREATHER	Was 6670627 [A]		1
43	6610510	TIE			1
44	6715143	SET SCREW	Was 16G000506B [B]		1
45		PULLEY	NAP - 5.75" (146 mm) O.D. - Order 6710665 belt - Use W/Ref. 25 (41.3" long belt) - Was 6579541 [A]		1
45	6710665	PULLEY	6" (152,4 mm) O.D. - Use W/Ref. 25 (41.3" long belt)		1
45	6715924	PULLEY	4.5" (114,3 mm) O.D. - Use W/Ref. 25 (40" long belt)		1
46	7J002108B	KEY			1
47	6553412	ELBOW	alternate design		1
48	6553411	BUSHING	alternate design		1
49	6704753	PLUG	brass - .25" - Used W/O B.O.S.S. Option		1
50	7102200	SHIELD	belt - Was 6719851 [A]		1
51	6626631	CLAMP			1
52	6650407	ADHESIVE	1oz. tube		x
3	6667189	HOSE	bulk - sold per foot		x
54	6704753	PLUG	brass - .25"		1
55	25E000010B	WASHER	Use W/steel louvers		6
56	6732318	SPACER			2
57	6732457	WASHER	step		4
58	40K000006B	PLUG			1

https://www.pdfmanual4trucks.com/

ENGINE & ATTACHING PARTS
(Air Cleaner, Muffler & Grill)
(W/O B.O.S.S. Option)

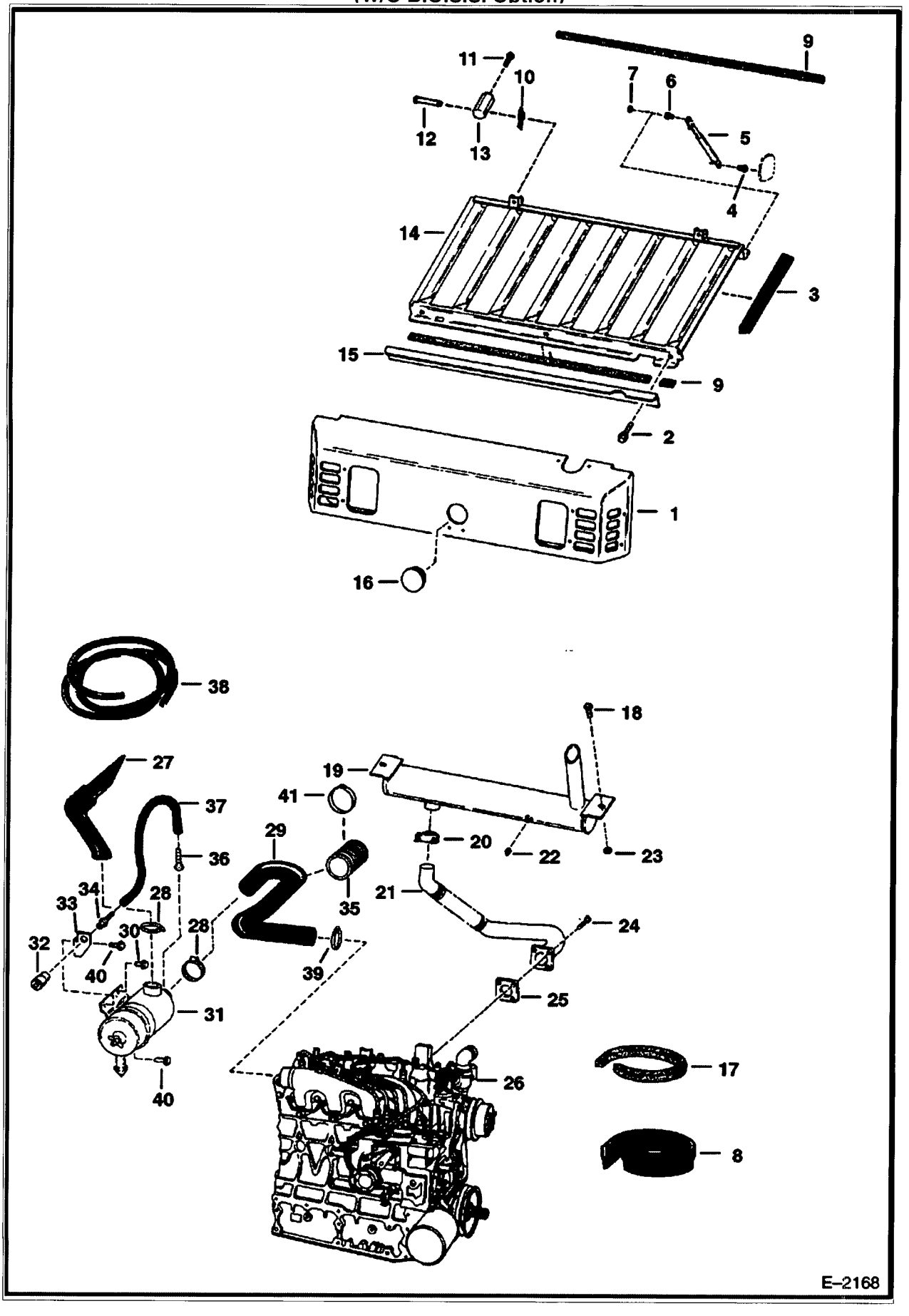

https://www.pdfmanual4trucks.com/

ENGINE & ATTACHING PARTS (Cont'd)
(Air Cleaner, Muffler & Grill)
(W/O B.O.S.S. Option)

f No	Part Number	Description	Remarks	Serial Number	Qty
1	6703868	HOOD	steel - for two piece rear door		1
2	84G3112	BOLT 5			3
3		MOULDING	NAP - 14.65" (372,1 MM) long - Order Ref. 8		2
4	6705052	BALL STUD	weld on		1
5	6674285	GAS SPRING	Was 6661805 [A]		1
6	6649244	STUD			1
7	61D5	NUT			1
8	6646705	SEAL	bulk - Sold Per Foot		x
9		FOAM STRIP	NAP - 34.5" (876,3 mm) long - Order Ref. 17		2
10	6631418	PIN			2
11	17C000608B	BOLT			2
12	6567743	PIN			2
13	6579326	MOUNT			2
14	6718291	GRILL	Was 6705131 [A]		1
15	6708981	BRACKET	Was 6703471 [A]		1
16	6718796	PLUG	Was 6660646 [A]		1
17	6511855	SEAL	bulk - Sold Per Foot - self adhesive		x
3	35C000612B	BOLT			2
.9	7100840	MUFFLER	Was 6671667 [A]		1
20	6677363	CLAMP	Was 657904B [A]		1
21	6701151	PIPE			1
22	6661062	PLUG	brass 3/8" (9,5 mm)		1
23	83D6	NUT 5			2
24	6701123	SCREW			4
25	6575580	GASKET			1
26		ENGINE	See Illustration ENGINE & GASKET KITS/ B16450		1
27	6718237	HOSE	Was 6703332 [A]		1
.8	42HL00300B	CLAMP	Was 6598799 [A]		2
28	42H000052B	CLAMP			2
29	6705281	HOSE	W/Ref. 35 (6706393 shield) & Ref. 41		1
29		HOSE	NAP - W/Ref. 35 (6706393 shield) & Ref. 41 - Was 6714889 [A]	5158 11001-29999	1
29		HOSE	NAP - W/Ref. 35 (6706393 shield) & Ref. 41 - Was 6714889 [A]	5162 11001-19999	1
29	7100573	HOSE	W/Ref. 35 (6706394 shield) & (2) of Ref. 41	5162 11001-19999	1
29	7100573	HOSE	W/Ref. 35 (6706394 shield) & (2) of Ref. 41	5158 11001-29999	1
30	84G003708B	BOLT			2
1		AIR CLEANER			1
32	6515007	GAUGE	dust		1
33	6704823	BRACKET			1
34	6505813	CONNECTOR	barbed		1
35	6706393	SHIELD	5" (127 mm) long		1
35	6706394	SHIELD	8" (203,2mm) long		1
36	6563452	FITTING	barbed		1
37		HOSE	NAP - 12" (304,8 mm)long - Order Ref. 38		1
38	6557720	HOSE	bulk - Sold Per Foot		x
39	42H000032B	CLAMP	Was 6513595 [A]		1
40	84G3712	BOLT			2
41	6664004	CLAMP	Use W/Ref. 35 (6706393 sheild)		1
41	6664004	CLAMP	Use W/Ref. 35 (6706394 sheild)		2

https://www.pdfmanual4trucks.com/

ENGINE & ATTACHING PARTS
(Air Cleaner, Muffler & Grill)
(W/B.O.S.S. Option)

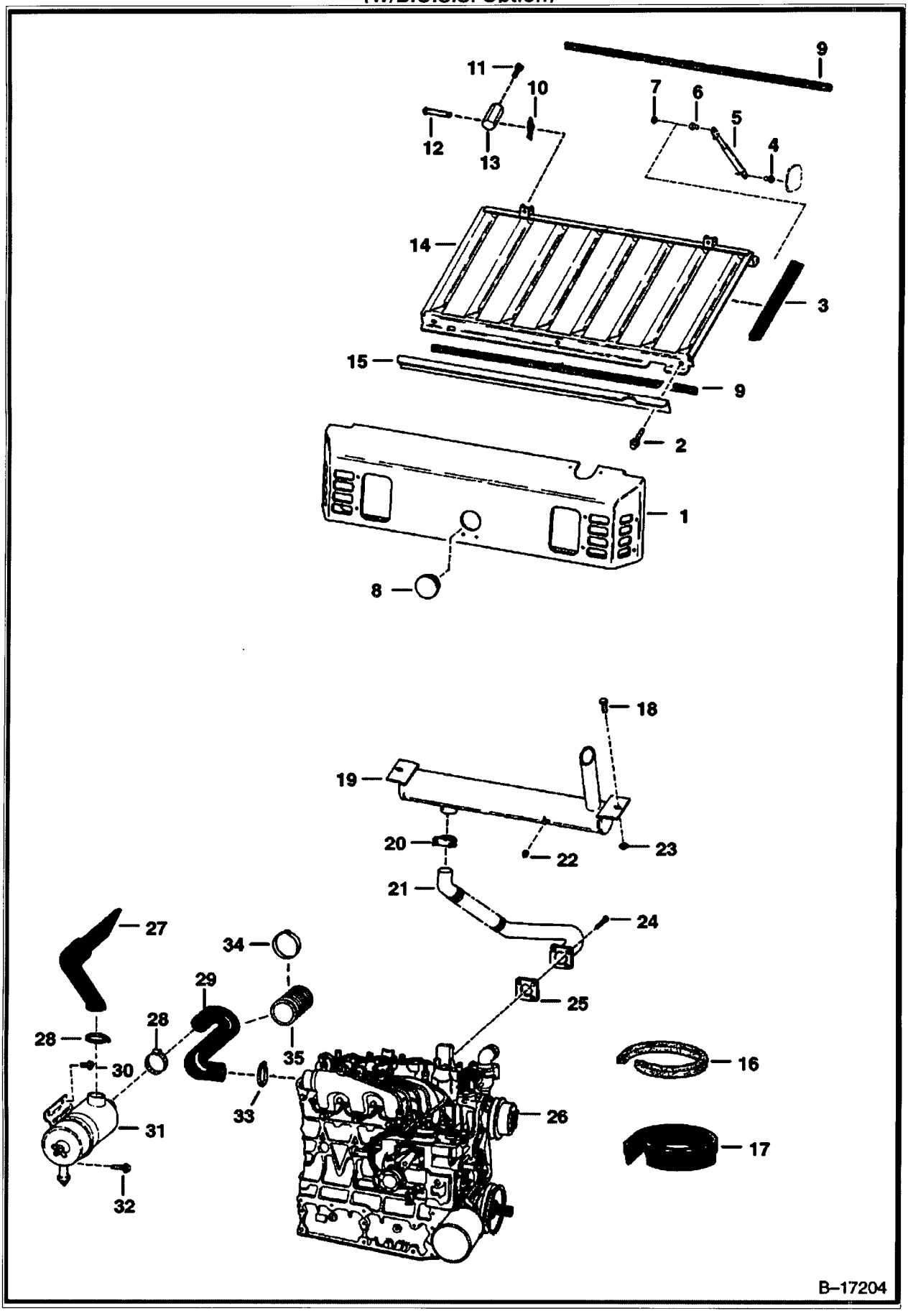

https://www.pdfmanual4trucks.com/

ENGINE & ATTACHING PARTS (Cont'd)
(Air Cleaner, Muffler & Grill)
(W/B.O.S.S. Option)

f No	Part Number	Description	Remarks	Serial Number	Qty
1	6703868	HOOD	steel - two piece rear door	5127 16001 & Abv	1
1	6703868	HOOD	steel - two piece rear door	5086 93001-95347	1
1	6703868	HOOD	steel - two piece rear door	5139 11001 & Abv	1
1	6703868	HOOD	steel - two piece rear door	5114 76001 & Abv	1
1	6711524	REAR DOOR	one piece	5158 11001-29999	1
1	6711524	REAR DOOR	one piece	5162 11001-19999	1
2	84G3112	BOLT 5			3
3		MOULDING	NAP - 14.65" (372,1 MM) long - Order Ref. 17		2
4	6705052	BALL STUD	weld on		1
5	6674285	GAS SPRING	Was 6661805 [A]		1
6	6649244	STUD			1
7	61D5	NUT			1
8	6718796	PLUG	Was 6660646 [A]		1
9		FOAM STRIP	NAP - 34.5" (876,3 mm) long - Order Ref. 16		2
10	6631418	PIN			2
11	17C000608B	BOLT			2
12	6567743	PIN			2
3	6579326	MOUNT			2
.4	6718291	GRILL	Was 6705131 [A]		1
15	6708981	BRACKET	Was 6703471 [A]		1
16	6511855	SEAL	bulk - Sold Per Foot - self adhesive		x
17	6646705	SEAL	bulk - Sold Per Foot		x
18	35C000612B	BOLT			2
19	7100840	MUFFLER	Was 6671667 [A]		1
20	6677363	CLAMP	Was 657904B [A]		1
21	6701151	PIPE			1
?2	6661062	PLUG	brass 3/8" (9,5 mm)		1
.3	83D6	NUT 5			2
24	6701123	SCREW			4
25	6575580	GASKET			1
26		ENGINE	See Illustration ENGINE & GASKET KITS/ B16450		1
27	6718237	HOSE	Was 6703332 [A]		1
28	7100840	MUFFLER	Was 6598799 [A]		2
28	42H000052B	CLAMP			2
29	6705281	HOSE	W/Ref. 34 & 35		1
29		HOSE	NAP - W/Ref. 34 & 35 (6706393 shield) - Was 6714889 [A]	5158 11001-29999	1
)		HOSE	NAP - W/Ref. 34 & 35 (6706393 shield) - Was 6714889 [A]	5162 11001-19999	1
29	7100573	HOSE	W/ (2) of Ref. 34 & (1) of Ref. 35 (6706394 shield)	5158 11001-29999	1
29	7100573	HOSE	W/ (2) of Ref. 34 & (1) of Ref. 35 (6706394 shield)	5162 11001-19999	1
30	84G003708B	BOLT			2
31		AIR CLEANER			1
32	42H000032B	CLAMP	Was 6513595 [A]		1
33	84G3712	BOLT			1
34	6664004	CLAMP	Use W/Ref. 35 (6706393 sheild)		1
34	6664004	CLAMP	Use W/Ref. 35 (6706394 sheild)		1
35	6706393	SHIELD	5" (127 mm) long		1
35	6706394	SHIELD	8" (203,2mm) long		1

https://www.pdfmanual4trucks.com/

ENGINE & ATTACHING PARTS
(Engine Mounts)

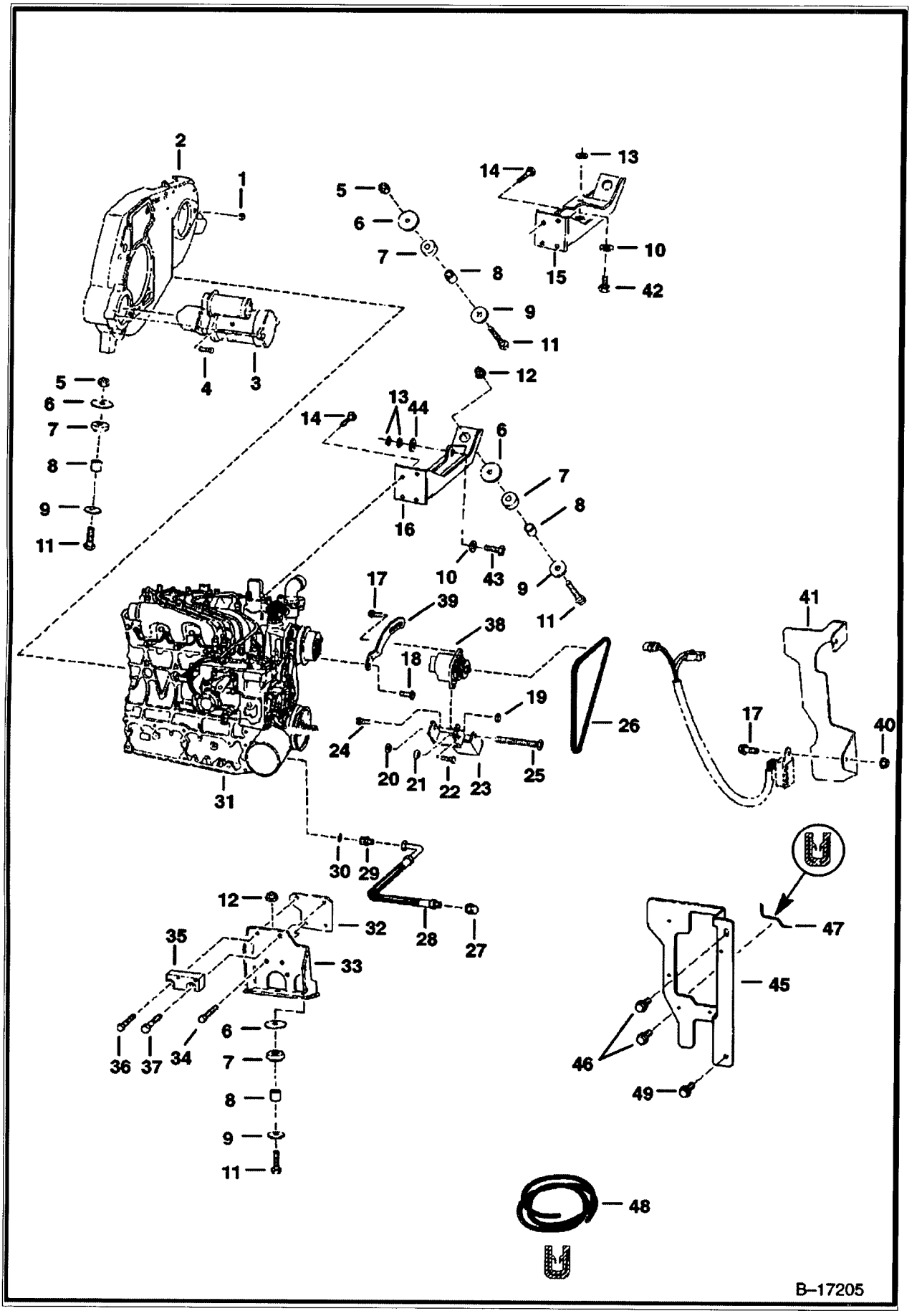

https://www.pdfmanual4trucks.com/

ENGINE & ATTACHING PARTS (Cont'd)
(Engine Mounts)

f NO	Part Number	Description	Remarks	Serial Number	Qty
1	85D8	NUT 5			2
2	6700541	MOUNT			1
3		STARTER	See Illustration STARTER/ D2119		1
4	35C620	BOLT 5			3
5	6652918	NUT			2
6	6705106	WASHER			4
7	6661785	MOUNT			4
8	6706043	SPACER			4
9	6661787	WASHER			4
10	742640B	WASHER			1
11	17C000848B	SCREW	Was 17C000844B [B]		4
12	83D8	NUT 5			2
13	25E21	WASHER 5	use 3 max. for vertical mount		x
13	25E21	WASHER 5	use 2 max. for horizontal mount		x
14	6CM01225B	BOLT			4
15	6703585	MOUNT	for vertical mount		1
16	7104568	MOUNT	engine & hyd. pump - for horizontal hardware mounting of hydrostatic pump - Was 6712161 [A]		1
17	35C516	BOLT 10			3
18	1CM870	BOLT			1
19	57D000005B	NUT			1
20	85D6	LOCK NUT			1
21	6568877	WASHER			1
22	1CM00890B	BOLT			1
23	6562257	MOUNT			1
24	17C000556B	BOLT			1
25	17C000648B	BOLT			1
26	6704720	BELT	See Illustration HIGH FLOW HYDRAULICS/ TS1149 ALTERNATOR		1
27	36K6	CAP			1
28	6704012	HOSE	See Illustration HIGH FLOW HYDRAULICS/ TS1149 FOR HIGH HORSEPOWER HYDRAULICS OPT.		1
29	15K6	ADAPTER	See Illustration HIGH FLOW HYDRAULICS/ TS1149 W/Ref. 30 - FLAT BOSS FACE - FOR HIGH HORSEPOWER HYDRAULICS OPT.		1
29	15KN00006B	ADAPTER	See Illustration HIGH FLOW HYDRAULICS/ TS1149 W/Ref. 30 - TAPERED BOSS FACE - FOR HIGH HORSEPOWER HYDRAULICS OPT.		1
29	97K8	O-RING	flared end		1
30	79K8	O RING 10	flat boss face		1
30	99K8	O-RING	tapered boss face		x
31		ENGINE	See Illustration ENGINE & GASKET KITS/ B16450		1
32	6700535	SPACER			1
33	6703981	MOUNT		& Below	1
33	6703981	MOUNT	W/Ref. 32	& Above	1
34	6CM01230B	BOLT			2
35	6704322	MOUNT	fuel filter		1
36	5CM01035B	BOLT			1
37	6CM01235B	BOLT			1
38		ALTERNATOR	See Illustration ALTERNATOR/ C3312		1
39	6705711	BRACKET			1
40	83D5	NUT 5			2
41	6704918	SHIELD	bolts to hinge - two pc. rear door		1
42	17C820	BOLT	hyd. pump mount - vertical		1
43	17C000830B	BOLT	hyd. pump mount - horizontal		1
44	6703140	WASHER			1
45		SHIELD	NAP - bolts to frame - one pc. rear door - Order	5158 11001-18163	1

https://www.pdfmanual4trucks.com/

ENGINE & ATTACHING PARTS (Cont'd)
(Engine Mounts)

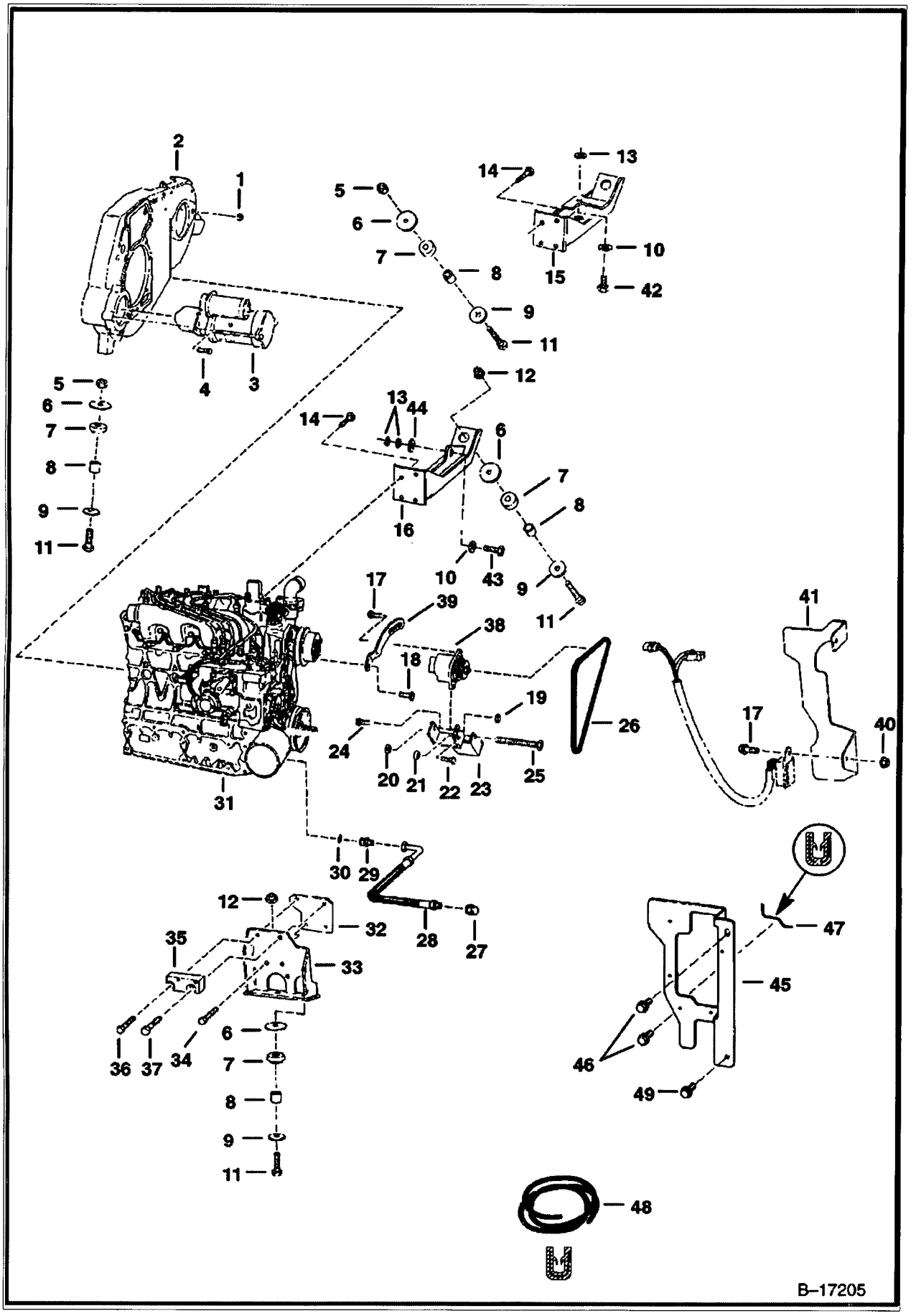

https://www.pdfmanual4trucks.com/

ENGINE & ATTACHING PARTS (Cont'd)
(Engine Mounts)

,f No	Part Number	Description	Remarks	Serial Number	Qty
			6717812 Shield & relocate timer solenoid - Was 6714890 [A]		
45		SHIELD	NAP - bolts to frame - one pc. rear door - Order 6717812 Shield & relocate timer solenoid - Was 6714890 [A]	5162 11001-12220	1
45	6731060	SHIELD	bolts to frame - one pc. rear door - Was 6717812 [A]	5162 12221-19999	1
45	6731060	SHIELD	bolts to frame - one pc. rear door - Was 6717812 [A]	5158 18164-29999	1
46	84G3712	BOLT			2
47		MOULDING	NAP - 5.5" (139,7 mm) long - Order Ref. 48		1
48	6654139	MOULDING	bulk - sold per foot		x
49	84G3716	SCREW 5			2

https://www.pdfmanual4trucks.com/

ENGINE & ATTACHING PARTS
(Belt Drive System)

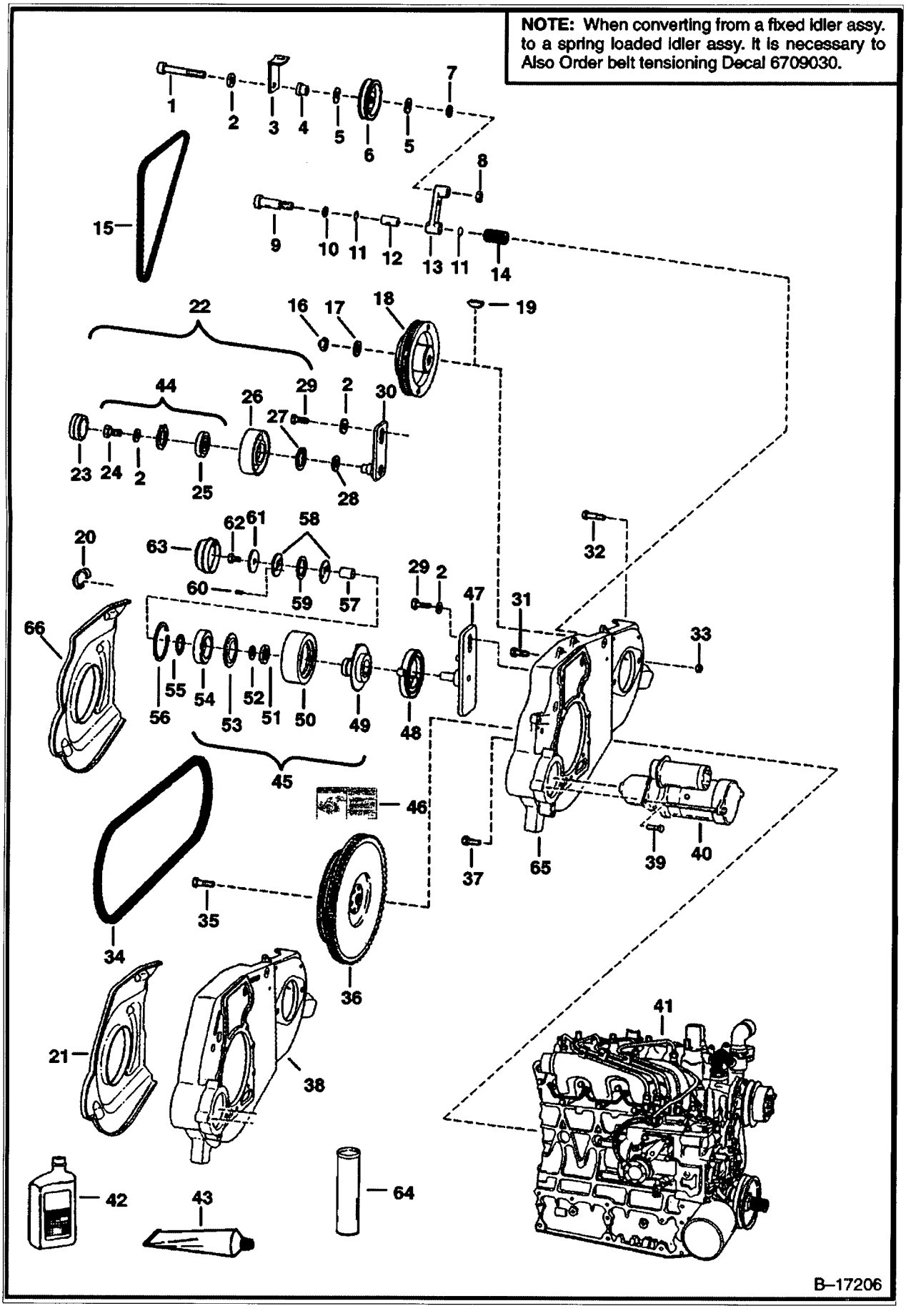

https://www.pdfmanual4trucks.com/

ENGINE & ATTACHING PARTS (Cont'd)
(Belt Drive System)

f No	Part Number	Description	Remarks	Serial Number	Qty
1	73G000656B	BOLT			1
2	6704484	WASHER	thrust		3
3	6702474	RETAINER	fan drive idler belt		1
4	6704443	BUSHING	spacer		1
5	6660995	GREASE RING	grease		2
6	6662997	PULLEY	fan drive idler		1
7	6704444	WASHER			1
8	61D000006B	NUT			1
9	38C000820B	BOLT	shoulder		1
10	6655781	BEARING			1
11	6704820	O-RING			2
12		BEARING	NAP - bronze - Was 6655780 [A]		1
12	6670682	BEARING	nylon		1
13	6725212	ARM	W/Ref. 12 - Was 6703507 [A]		1
14	6700115	SPRING			1
15	6669034	BELT	fan - 41.3" (1049 mm) long - Was 6701158 [A]		1
16	92D000012B	NUT			1
7	6576033	WASHER			1
8	6704424	PULLEY	to hyd. pump		1
19	6J000807B	KEY			1
20	6703022	CLIP			3
21	6704450	SHIELD			1
22		IDLER ASSY.	NAP - fixed - Ref. 2, 23-28 & 30 - Order Ref. 45 & 46 - SEE NOTE - Was 6708376 [A]	5086 31363 & Bel	1
22		IDLER ASSY.	NAP - fixed - Ref. 2, 23-28 & 30 - Order Ref. 45 & 46 - SEE NOTE - Was 6708376 [A]	5114 76618 & Bel	1
22		IDLER ASSY.	NAP - fixed - Ref. 2, 23-28 & 30 - Order Ref. 45 & 46 - SEE NOTE - Was 6708376 [A]	5127 26695 & Bel	1
23	6660967	CAP	grease	5086 31363 & Bel	1
23	6660967	CAP	grease	5114 76618 & Bel	1
23	6660967	CAP	grease	5127 26695 & Bel	1
24	35C000612B	BOLT		5127 26695 & Bel	1
24	35C000612B	BOLT		5114 76618 & Bel	1
24	35C000612B	BOLT		5086 31363 & Bel	1
25		BEARING	NAP - Order Ref. 44	5127 26695 & Bel	1
25		BEARING	NAP - Order Ref. 44	5114 76618 & Bel	1
25		BEARING	NAP - Order Ref. 44	5086 31363 & Bel	1
26	6704416	PULLEY	idler - Also Order Ref. 44	5127 26695 & Bel	1
26	6704416	PULLEY	idler - Also Order Ref. 44	5086 31363 & Bel	1
26	6704416	PULLEY	idler - Also Order Ref. 44	5114 76618 & Bel	1
27	6661066	SEAL	Also Order Ref. 28	5127 26695 & Bel	1
27	6661066	SEAL	Also Order Ref. 28	5086 31363 & Bel	1
27	6661066	SEAL	Also Order Ref. 28	5114 76618 & Bel	1
28	6661070	SLEEVE		5086 31363 & Bel	1
28	6661070	SLEEVE		5114 76618 & Bel	1
28	6661070	SLEEVE		5127 26695 & Bel	1
29	17C620	BOLT			1
30	6708625	BRACKET	Was 6705447 [A]	5086 31363 & Bel	1
30	6708625	BRACKET	Was 6705447 [A]	5114 76618 & Bel	1
30	6708625	BRACKET	Was 6705447 [A]	5127 26695 & Bel	1
31	6CM01230B	BOLT			2
32	17C000828B	BOLT	hyd. pump mount		2
33	85D8	NUT 5			2
4	6660994	BELT	pump drive - 3 groove	5086 93001-95347	1
34	6660994	BELT	pump drive - 3 groove	5139 13845 & Abv	1
34	6660994	BELT	pump drive - 3 groove	5114 76001 & Abv	1
1	6660994	BELT	pump drive - 3 groove	5127 16001 & Abv	1

https://www.pdfmanual4trucks.com/

ENGINE & ATTACHING PARTS (Cont'd)
(Belt Drive System)

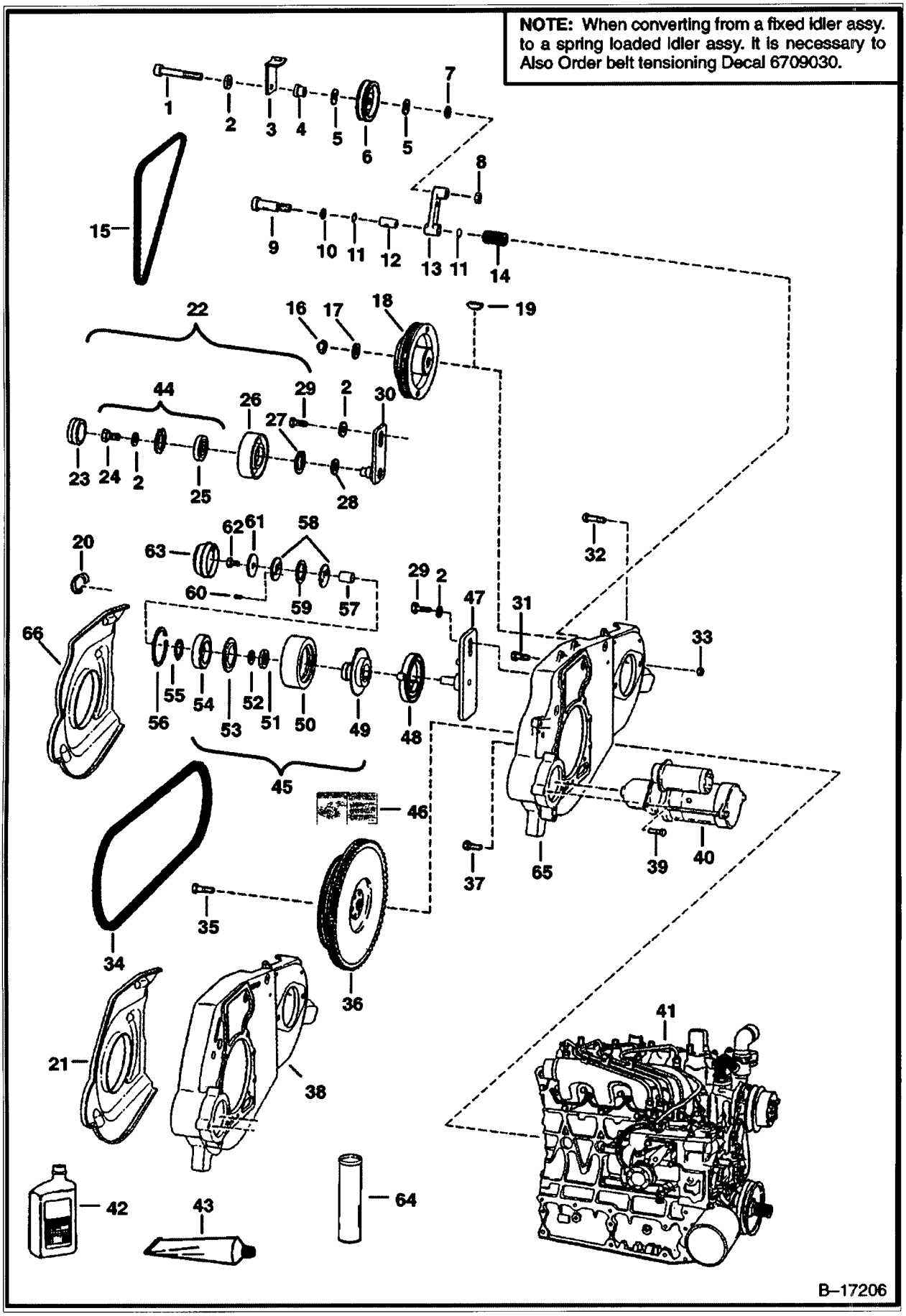

https://www.pdfmanual4trucks.com/

ENGINE & ATTACHING PARTS (Cont'd)
(Belt Drive System)

f No	Part Number	Description	Remarks	Serial Number	Qty
4	6660994	BELT	pump drive - 3 groove	5158 11001-13844	1
34	6672021	BELT	pump drive	5086 95348 & Abv	1
34	6672021	BELT	pump drive	5158 13845-29999	1
34	6672021	BELT	pump drive	5162 11001-19999	1
35	6598275	BOLT	Was 6652487 [A]		6
36	6704874	FLYWHEEL ASSY.	W/Ring gear - 3 groove - W/ 9.4" dia. pulley	5086 93001-95347	1
36	6704874	FLYWHEEL ASSY.	W/Ring gear - 3 groove - W/ 9.4" dia. pulley	5114 76001 & Abv	1
36	6704874	FLYWHEEL ASSY.	W/Ring gear - 3 groove - W/ 9.4" dia. pulley	5127 16001 & Abv	1
36	6704874	FLYWHEEL ASSY.	W/Ring gear - 3 groove - W/ 9.4" dia. pulley	5139 11001 & Abv	1
36	6704874	FLYWHEEL ASSY.	W/Ring gear - 3 groove - W/ 9.4" dia. pulley	5158 13844 & Bel	1
36	6510470	RING GEAR			1
36	6715165	FLYWHEEL	W/Ring gear - W/ 7.62" dia. pulley	5086 95348 & Abv	1
3	6715165	FLYWHEEL	W/Ring gear - W/ 7.62" dia. pulley	5158 13845-29999	1
36	6715165	FLYWHEEL	W/Ring gear - W/ 7.62" dia. pulley	5162 11001-19999	1
36	6510470	RING GEAR			1
37	5CM1025	BOLT			7
38		MOUNT	NAP - Order Ref. 65 & 66 - Was 6700541 [A]		1
39	35C620	BOLT 5			3
40	6649676	STARTER	See Illustration STARTER/ D2119		1
41		ENGINE	See Illustration ENGINE & GASKET KITS/ B16450		1
42	6661405	OIL	Use W/Ref. 22		x
3	6633583	SEALANT	Use W/Ref. 23 & 26 and 28 & 30		x
4	6722248	REPAIR KIT	bearing - Ref. 23, 25, 27 & 28	5127 26695 & Bel	1
44	6722248	REPAIR KIT	bearing - Ref. 23, 25, 27 & 28	5086 31363 & Bel	1
44	6722248	REPAIR KIT	bearing - Ref. 23, 25, 27 & 28	5114 76618 & Bel	1
45	6735884	IDLER ASSY.	spring loaded - Ref. 47-63 - Also Order Ref. 46 - SEE NOTE - Was 6711698 [A]	5086 31364 & Abv	1
45	6735884	IDLER ASSY.	spring loaded - Ref. 47-63 - Also Order Ref. 46 - SEE NOTE - Was 6711698 [A]	5114 76619 & Abv	1
45	6735884	IDLER ASSY.	spring loaded - Ref. 47-63 - Also Order Ref. 46 - SEE NOTE - Was 6711698 [A]	5127 26696 & Abv	1
5	6735884	IDLER ASSY.	spring loaded - Ref. 47-63 - Also Order Ref. 46 - SEE NOTE - Was 6711698 [A]	5158 11001-29999	1
45	6735884	IDLER ASSY.	spring loaded - Ref. 47-63 - Also Order Ref. 46 - SEE NOTE - Was 6711698 [A]	5162 11001-19999	1
45	6714212	PULLEY ASSY.	Ref. 49 - 57		1
46	6709030	DECAL	belt tension	5086 31364 & Abv	1
46	6709030	DECAL	belt tension	5114 76619 & Abv	1
46	6709030	DECAL	belt tension	5158 11001-29999	1
46	6709030	DECAL	belt tension	5162 11001-19999	1
46	6709030	DECAL	belt tension	5127 26696 & Abv	1
47	6735883	BRACKET	Was 6708767 [A]	5127 26696 & Abv	1
47	6735883	BRACKET	Was 6708767 [A]	5086 31364 & Abv	1
47	6735883	BRACKET	Was 6708767 [A]	5114 76619 & Abv	1
47	6735883	BRACKET	Was 6708767 [A]	5158 11001-29999	1
47	6735883	BRACKET	Was 6708767 [A]	5162 11001-19999	1
48	6705491	SPRING	torsion	5127 26696 & Abv	1
48	6705491	SPRING	torsion	5086 31364 & Abv	1
8	6705491	SPRING	torsion	5114 76619 & Abv	1
48	6705491	SPRING	torsion	5158 11001-29999	1
48	6705491	SPRING	torsion	5162 11001-19999	1
9	6711699	HUB ASSY.		5127 26696 & Abv	1

https://www.pdfmanual4trucks.com/

ENGINE & ATTACHING PARTS (Cont'd)
(Belt Drive System)

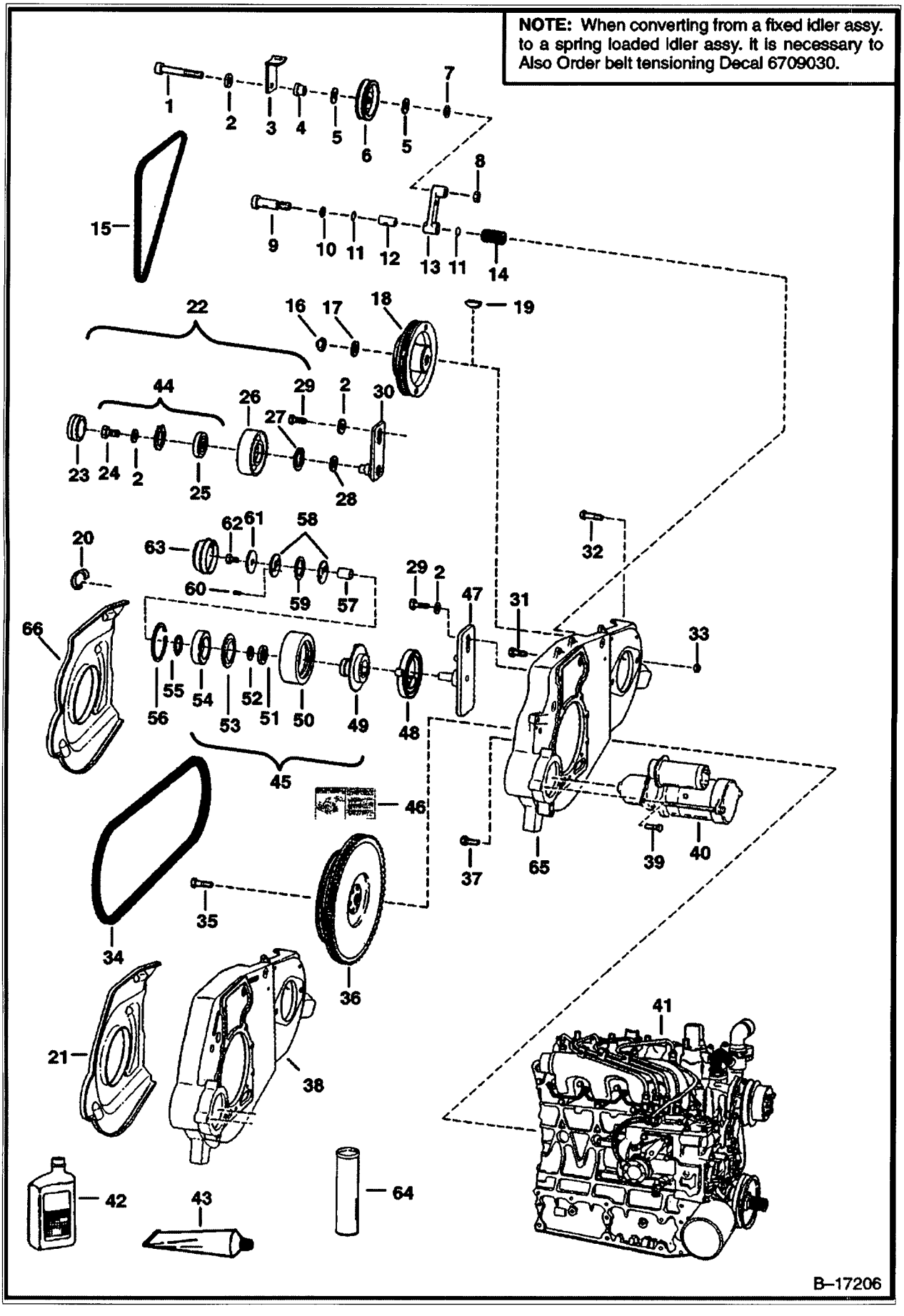

https://www.pdfmanual4trucks.com/

ENGINE & ATTACHING PARTS (Cont'd)
(Belt Drive System)

f No	Part Number	Description	Remarks	Serial Number	Qty
9	6711699	HUB ASSY.		5086 31364 & Abv	1
49	6711699	HUB ASSY.		5114 76619 & Abv	1
49	6711699	HUB ASSY.		5158 11001-29999	1
49	6711699	HUB ASSY.		5162 11001-19999	1
50	6704391	PULLEY	idler	5127 26696 & Abv	1
50	6704391	PULLEY	idler	5086 31364 & Abv	1
50	6704391	PULLEY	idler	5114 76619 & Abv	1
50	6704391	PULLEY	idler	5158 11001-29999	1
50	6704391	PULLEY	idler	5162 11001-19999	1
51	6685735	SEAL	Was 6661112 [A]	5127 26696 & Abv	1
51	6685735	SEAL	Was 6661112 [A]	5086 31364 & Abv	1
51	6685735	SEAL	Was 6661112 [A]	5114 76619 & Abv	1
51	6685735	SEAL	Was 6661112 [A]	5158 11001-29999	1
51	6685735	SEAL	Was 6661112 [A]	5162 11001-19999	1
52	6703168	BEARING	thrust	5127 26696 & Abv	1
52	6703168	BEARING	thrust	5086 31364 & Abv	1
52	6703168	BEARING	thrust	5114 76619 & Abv	1
?	6703168	BEARING	thrust	5158 11001-29999	1
52	6703168	BEARING	thrust	5162 11001-19999	1
53	6664209	SEAL		5127 26696 & Abv	1
53	6664209	SEAL		5086 31364 & Abv	1
53	6664209	SEAL		5114 76619 & Abv	1
53	6664209	SEAL		5158 11001-29999	1
53	6664209	SEAL		5162 11001-19999	1
54	6668114	BEARING	ball - Order Ref. 45	5127 26696 & Abv	1
54	6668114	BEARING	ball - Order Ref. 45	5086 31364 & Abv	1
54	6668114	BEARING	ball - Order Ref. 45	5114 76619 & Abv	1
54	6668114	BEARING	ball - Order Ref. 45	5158 11001-29999	1
54	6668114	BEARING	ball - Order Ref. 45	5162 11001-19999	1
55	6658536	RING		5127 26696 & Abv	1
55	6658536	RING		5086 31364 & Abv	1
55	6658536	RING		5114 76619 & Abv	1
55	6658536	RING		5158 11001-29999	1
55	6658536	RING		5162 11001-19999	1
56	6658847	RING		5127 26696 & Abv	1
56	6658847	RING		5086 31364 & Abv	1
56	6658847	RING		5114 76619 & Abv	1
)	6658847	RING		5158 11001-29999	1
56	6658847	RING		5162 11001-19999	1
57	6682442	SLEEVE	bronze sleeve - Was 6704393 [A]	5127 26696 & Abv	1
57	6682442	SLEEVE	bronze sleeve - Was 6704393 [A]	5086 31364 & Abv	1
57	6682442	SLEEVE	bronze sleeve - Was 6704393 [A]	5114 76619 & Abv	1
57	6682442	SLEEVE	bronze sleeve - Was 6704393 [A]	5158 11001-29999	1
57	6682442	SLEEVE	bronze sleeve - Was 6704393 [A]	5162 11001-19999	1
57	6704393	BEARING		5162 11001 19999	1
58	6705231	WASHER		5127 26696 & Abv	2
58	6705231	WASHER		5086 31364 & Abv	2
58	6705231	WASHER		5114 76619 & Abv	2
58	6705231	WASHER		5158 11001-29999	2
58	6705231	WASHER		5162 11001-19999	2
59	6710585	WASHER	wave spring - Was 6709008 [A]	5127 26696 & Abv	1
59	6710585	WASHER	wave spring - Was 6709008 [A]	5086 31364 & Abv	1
59	6710585	WASHER	wave spring - Was 6709008 [A]	5114 76619 & Abv	1
)	6710585	WASHER	wave spring - Was 6709008 [A]	5158 11001-29999	1

https://www.pdfmanual4trucks.com/

ENGINE & ATTACHING PARTS (Cont'd)
(Belt Drive System)

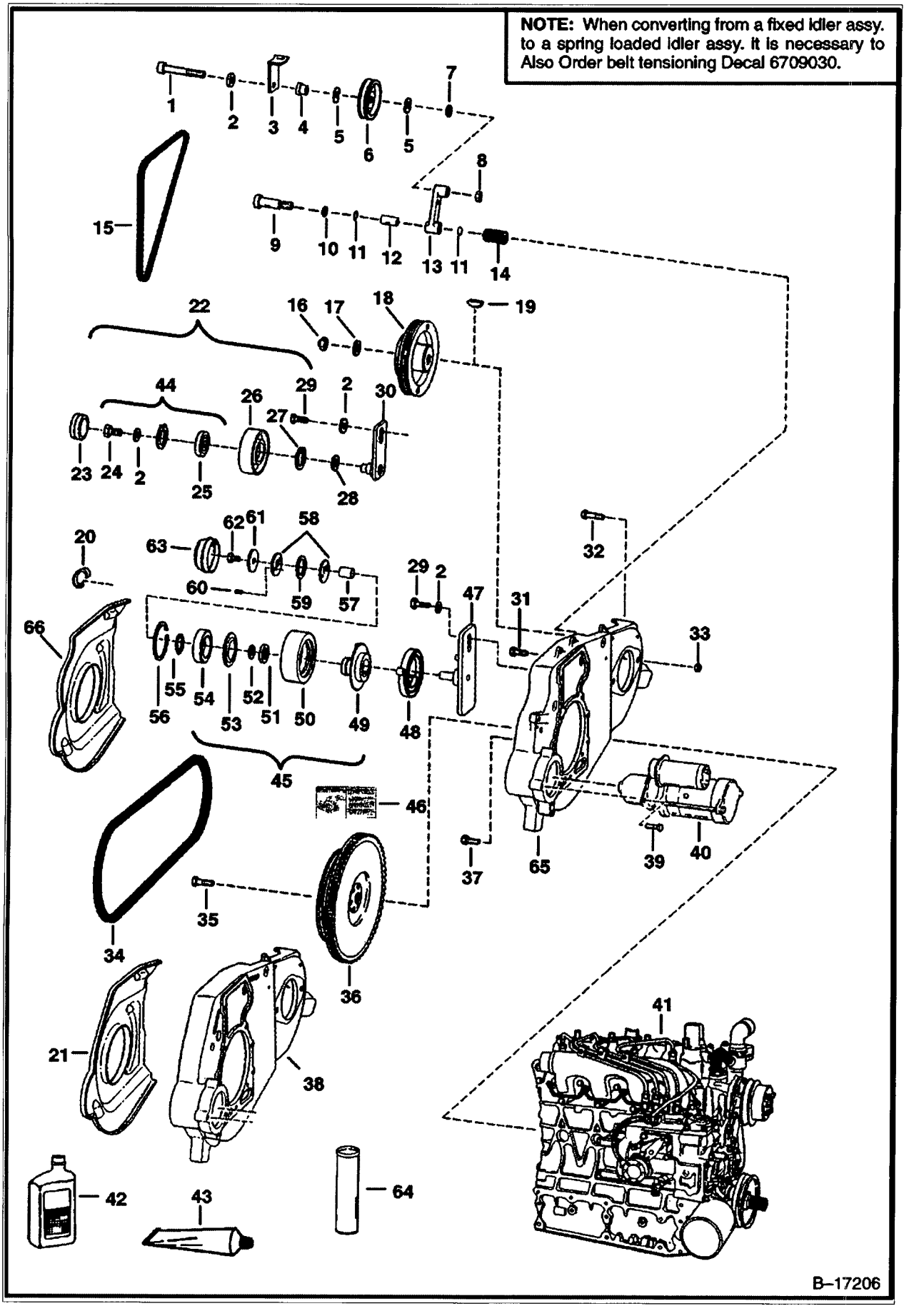

https://www.pdfmanual4trucks.com/

ENGINE & ATTACHING PARTS (Cont'd)
(Belt Drive System)

f No	Part Number	Description	Remarks	Serial Number	Qty
59	6710585	WASHER	wave spring - Was 6709008 [A]	5162 11001-19999	1
60	6713370	PIN	Was 14J001808B [B]	5127 26696 & Abv	2
60	6713370	PIN	Was 14J001808B [B]	5086 31364 & Abv	2
60	6713370	PIN	Was 14J001808B [B]	5114 76618 & Bel	2
60	6713370	PIN	Was 14J001808B [B]	5158 11001-29999	2
60	6713370	PIN	Was 14J001808B [B]	5162 11001-19999	2
61	6705232	WASHER		5127 26696 & Abv	1
61	6705232	WASHER		5086 31364 & Abv	1
61	6705232	WASHER		5114 76619 & Abv	1
61	6705232	WASHER		5158 11001-29999	1
61	6705232	WASHER		5162 11001-19999	1
62	17C000610B	BOLT		5127 26696 & Abv	1
62	17C000610B	BOLT		5086 31364 & Abv	1
62	17C000610B	BOLT		5114 76619 & Abv	1
62	17C000610B	BOLT		5158 11001-29999	1
62	17C000610B	BOLT		5162 11001-19999	1
63	6708770	CAP	dust	5127 26696 & Abv	1
3	6708770	CAP	dust	5086 31364 & Abv	1
63	6708770	CAP	dust	5114 76619 & Abv	1
63	6708770	CAP	dust	5158 11001-29999	1
63	6708770	CAP	dust	5162 11001-19999	1
64	6599719	GREASE	Use W/Ref. 45		x
65	6726613	MOUNT	Was 6728062 [A]		1
66	7109712	SHIELD	Was 6726938 [A]		1

https://www.pdfmanual4trucks.com/

THROTTLE

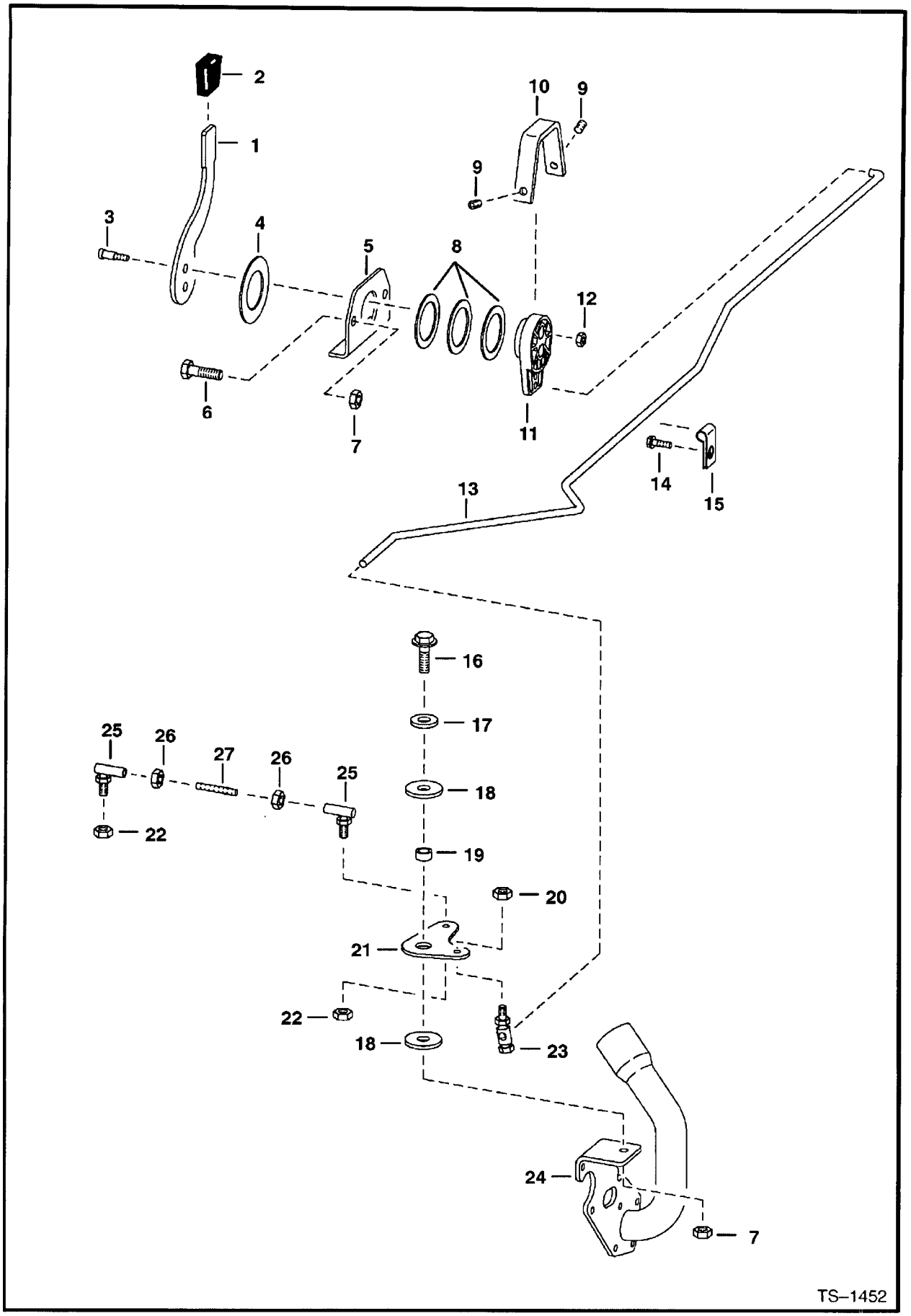

https://www.pdfmanual4trucks.com/

THROTTLE (Cont'd)

Ref No	Part Number	Description	Remarks	Serial Number	Qty
1	6705452	LEVER			1
2	6564452	GRIP			1
3	38C000610B	BOLT	shoulder		2
4	6567962	WASHER			1
5	6576262	MOUNT			1
6	17C000626B	BOLT			2
7	95D000006B	NUT	Was 91D000006B [A]		3
8	6630945	WASHER			3
9	6706572	SET SCREW			2
10	6734520	COVER	Was 6576261 [A]		1
11		LEVER	NAP - 2-hole rod attachment - Order 6734416 lever - Was 6709022 [A]		1
11	6734416	LEVER	3-hole rod attachment		1
12	85D5	NUT 5			2
13	6702397	ROD			1
14	84G3712	BOLT			1
15	30H000023B	CLAMP			1
16	84G3716	SCREW 5			1
17	25E000018B	WASHER			1
18	6700170	WASHER	plastic		2
19	6564343	SPACER			1
20	85D000004B	NUT			1
21	6578268	BELLCRANK			1
22	86D000004B	NUT			2
23	6557291	BALL JOINT			1
24	6719048	MOUNT	See Illustration GEARCASE/ B13160 FUEL SHUTOFF SOLENOID & OIL FILL - WAS 6703738 [A]		1
25	6554858	BALL JOINT			2
26	62D000004B	NUT			2
27	6576252	ROD			1

https://www.pdfmanual4trucks.com/

COOLING FAN DRIVE ASSY.

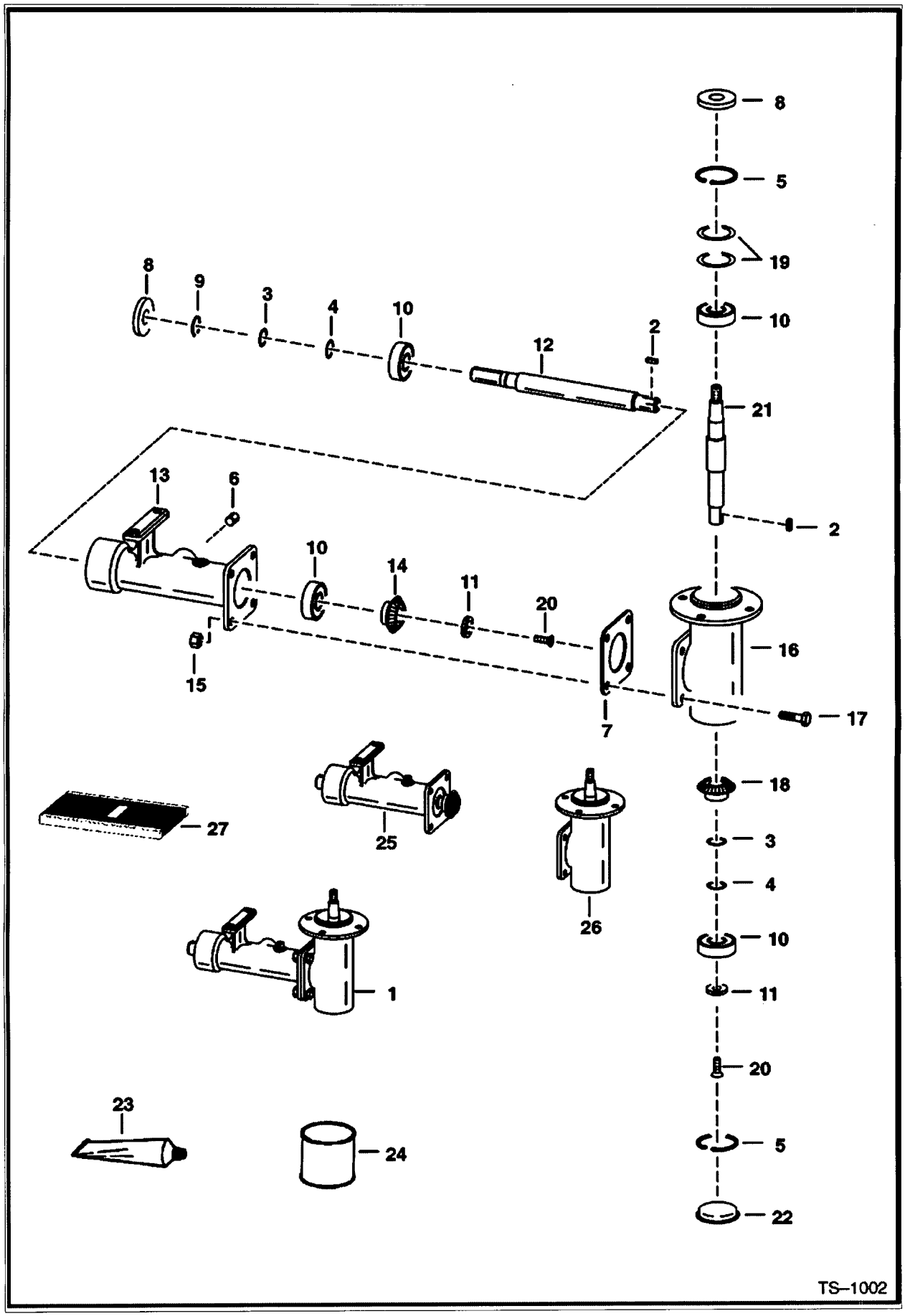

https://www.pdfmanual4trucks.com/

COOLING FAN DRIVE ASSY. (Cont'd)

;f No	Part Number	Description	Remarks	Serial Number	Qty
1		HOUSING ASSY.	See Illustration COOLING FAN DRIVE ASSY./ PE2349 NAP - REF. 2-22 - ORDER 6734104 HOUSING ASSY. - A - WAS 6702138 [A]		1
2	7J002010B	KEY			2
3	6702165	SHIM	.002" (0,05 mm) thickness - 1" (25,4 mm) O.D.		x
4	6701159	SHIM	.005" (0,13 mm) thickness - 1" (25,4 mm) O.D.		x
5	6653758	SNAP RING			2
6	16F000008B	PLUG			1
7	6578284	SHIM	.003" (0,08 mm) thickness		x
8	6653702	SEAL			2
9	6653757	SNAP RING			1
10	6646627	BEARING			4
11		WASHER	NAP - countersink - Was 6702140 [A]		2
12	6702137	SHAFT	keyed		1
13	6579641	HOUSING			1
14	6702103	GEAR	keyed		1
15	95D000006B	NUT	Was 61D000006B [B]		4
3		HOUSING	NSS - Order 6702138 Housing or Ref. 26		1
,7	17C620	BOLT			4
18	6702102	GEAR	keyed		1
19	6702166	SHIM	.002" (0,05 mm) thickness - 2" (50,8 mm) O.D.		x
19	6702144	SHIM	.005" (0,13 mm) thickness - 2" (50,8 mm) O.D.		x
20	9G000512B	SCREW			2
21	6702135	SHAFT	keyed		1
22	6700782	CAP	grease		1
23	6672486	SEALANT	Use W/Ref. 7 & 22 - Was 6633583 [A]		x
24	6903121	GEAR LUBE 12	Was 6634393 [A]		x
25	6707078	HOUSING ASSY.	half		1
26	6707077	HOUSING ASSY.	half		1
27	6669384	SPEEDY SLEEVE	repair kit		1

https://www.pdfmanual4trucks.com/

COOLING FAN DRIVE ASSY.

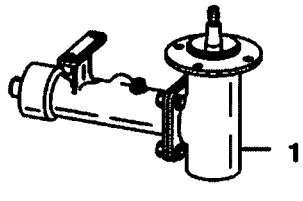

PE–2349

https://www.pdfmanual4trucks.com/

COOLING FAN DRIVE ASSY. (Cont'd)

;f No	Part Number	Description	Remarks	Serial Number	Qty
1	6734104	HOUSING ASSY.			1

https://www.pdfmanual4trucks.com/

ENGINE & GASKET KITS
(Kubota - V2203)

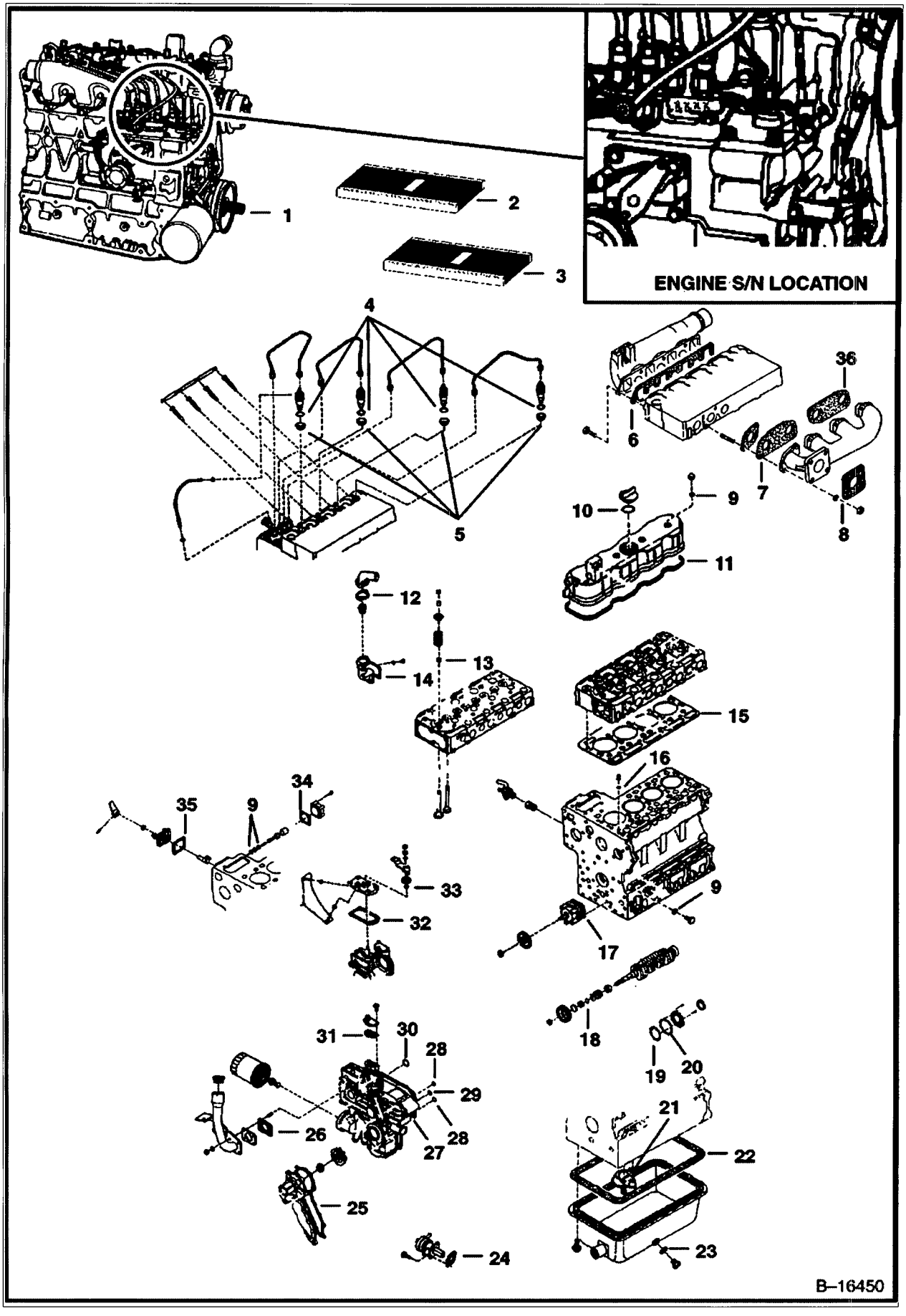

https://www.pdfmanual4trucks.com/

ENGINE & GASKET KITS (Cont'd)
(Kubota - V2203)

f No	Part Number	Description	Remarks	Serial Number	Qty
1		ENGINE	See Illustration ENGINE & GASKET KITS/ B24687 See BTI314 NAP - Does not include starter, alternator, flywheel, & flywheel housing - Was 6653482 [A]		1
1		ENGINE-V2203 TIER 2	See Illustration ENGINE & GASKET KITS/ B24687 NAP - Does not include starter, alternator, flywheel, & flywheel housing - Order 6685981 Engine - Was 6704441 [A]	5158 11001 29999	1
1		ENGINE-V2203 TIER 2	See Illustration ENGINE & GASKET KITS/ B24687 NAP - Does not include starter, alternator, flywheel, & flywheel housing - Order 6685981 Engine - Was 6704441 [A]	5162 11001 19999	1
1		SHORT BLOCK	NAP		1
2	6657401	GASKET KIT	Upper - Ref. 6-16 & 36		1
3	6657402	GASKET KIT	Lower - Does not include rear oil seal - Ref. 17-35		1
4	6655218	GASKET	See Illustration INJECTOR NOZZLES/ B13155		4
5	6655872	HEAT SEAL	See Illustration INJECTOR NOZZLES/ B13155		4
6	6666811	GASKET	See Illustration MANIFOLDS/ B13140 WAS 6655172 [A]		1
7	6666781	GASKET	See Illustration MANIFOLDS/ B13140 WAS 3974915B [A]		4
8	6575580	GASKET	See Illustration MANIFOLDS/ B13140 MUFFLER		1
9	3974095	MET-GASK	See Illustration CRANKCASE/ B13159 See Illustration ROCKER ARM COVER/ B13158 See Illustration ENGINE STOP LEVER/ B13139		7
10	3966602B	O-RING	See Illustration ROCKER ARM COVER/ B13158		1
11	6598136	GASKET	See Illustration ROCKER ARM COVER/ B13158 WAS 3975419B [A]		1
12	6732199	GASKET	See Illustration WATER FLANGE & THERMOSTAT/ B13141 THERMOSTAT COVER - WAS 6666790 [A]		1
13	6653830	SEAL	See Illustration VALVE ROCKER ARM/ C2547 VALVE STEM		8
14	6666802	GASKET	See Illustration WATER FLANGE & THERMOSTAT/ B13141 WATER FLANGE - WAS 3974987B [A]		1
15	6655159	GASKET	See Illustration CYLINDER HEAD/ B13153 CYLINDER HEAD		1
16	3974038B	O-RING	See Illustration CRANKCASE/ B13159		1
17	3974456B	GASKET	See Illustration CRANKCASE/ B13159		1
18	3974577B	O-RING	See Illustration PISTON & CRANKSHAFT/ B13145		1
19	6684788	GASKET	See Illustration PISTON & CRANKSHAFT/ B13145 Was 6655165 [A]		1
20	6655167	GASKET	See Illustration PISTON & CRANKSHAFT/ B13145		1
21	3966516B	O-RING	See Illustration OIL PAN/ B13148		1
22	3975449B	GASKET	See Illustration OIL PAN/ B13148 OIL PAN		1
23	3974403	GASKET	See Illustration OIL PAN/ B13148		1
24	3974502B	GASKET	See Illustration FUEL & INJECTION PUMPS/ B13157 FUEL PUMP		1
25	3974995B	GASKET	See Illustration WATER PUMP/ B13142		1
26	6714543	GASKET	See Illustration GEARCASE/ B13160 WAS 3974461B [A]		1
27	6653806	GASKET	See Illustration GEARCASE/ B13160 GEARCASE - WAS 6655481 [A]		1
28	3966515B	O-RING	See Illustration GEARCASE/ B13160		2
29	6655162	O-RING	See Illustration GEARCASE/ B13160		1
30	3966530B	O-RING	See Illustration GEARCASE/ B13160		1
31	3974895B	GASKET	See Illustration GEARCASE/ B13160 WATER RETURN FLANGE		1

https://www.pdfmanual4trucks.com/

ENGINE & GASKET KITS (Cont'd)
(Kubota - V2203)

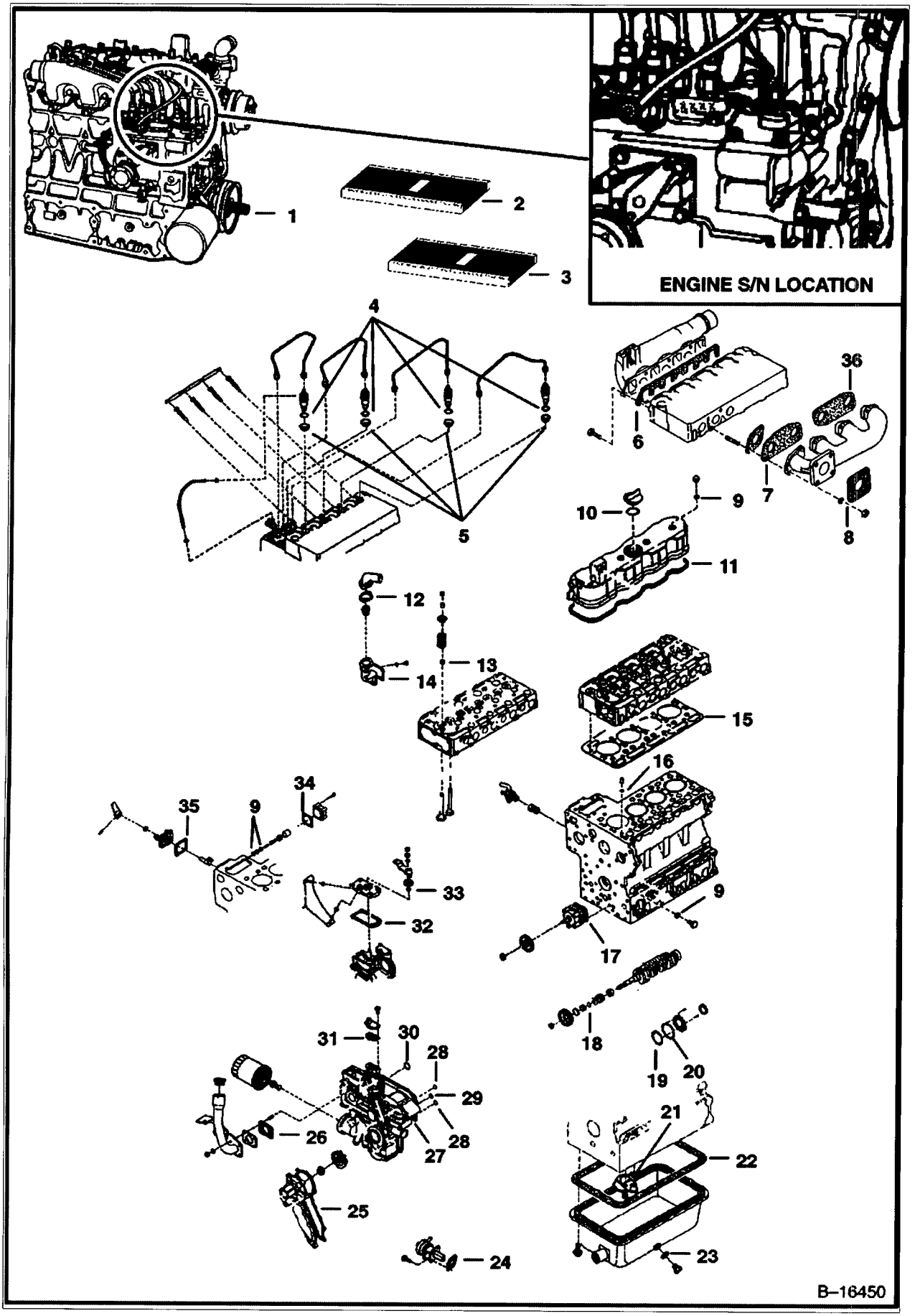

https://www.pdfmanual4trucks.com/

ENGINE & GASKET KITS (Cont'd)
(Kubota - V2203)

;f No	Part Number	Description	Remarks	Serial Number	Qty
'2	6666792	GASKET	See Illustration SPEED CONTROL PLATE/ B13137 Was 6635392 [A]		1
33	3966512B	O-RING	See Illustration SPEED CONTROL PLATE/ B13137		1
34	3974630B	GASKET	See Illustration FUEL CAMSHAFT/ B13144		1
35	3974601B	GASKET	See Illustration ENGINE STOP LEVER/ B13139 PUMP COVER		1
36	6666791	GASKET	See Illustration MANIFOLDS/ B13140		1

https://www.pdfmanual4trucks.com/

GEARCASE

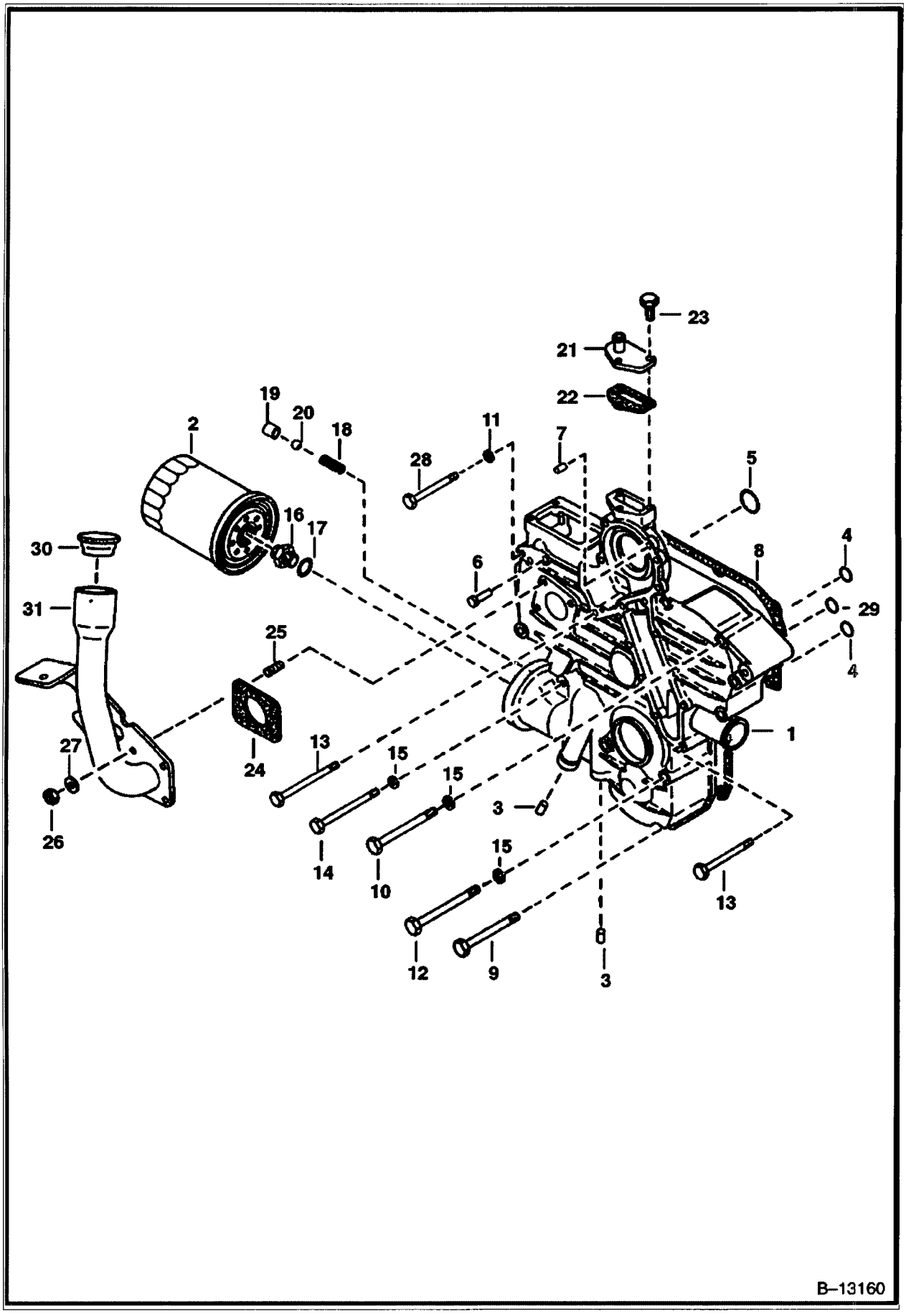

https://www.pdfmanual4trucks.com/

f No	Part Number	Description	Remarks	Serial Number	Qty
1		CASE ASSY.	NAP - Was 6674164 [A]		1
2	6675517	OIL FILTER12	oil filter - 6 Pack - Was 3974896B [A]		1
3	6667425	PLUG	pin - Was 6652591 [A]		2
4	3966515B	O-RING			2
5	3966530B	O-RING			1
6	6652592	PIN	start spring		1
7	3974395B	PIN	straight		2
8	6666800	GASKET	gearcase - Was 6653806 [A]		1
9	3974888B	BOLT			2
10	1CM870	BOLT			5
11	2EM00008B	WASHER			1
12	1CM880	BOLT			2
13	6653808	BOLT			3
14	1CM00895B	BOLT			2
15	6EM00080B	WASHER			9
16	6653809	ADAPTER			1
17	15EM00180B	WASHER			1
3	6652652	SPRING			1
9	3974893B	SEAT	valve		1
20	10J000013B	BALL			1
21	3974894B	FLANGE	water return		1
22	3974895B	GASKET	water return flange		1
23	4CM00620B	BOLT			3
24	6714543	GASKET	Was 3974461B [A]		1
25	6652764	STUD			4
26	1DM6	NUT			4
7	6EM60	WASHER, SPRING	spring		4
28	6653807	BOLT			1
29	6655162	O-RING			1
30	6703736	CAP			1
31	6719048	MOUNT	Was 6703738 [A]		1

https://www.pdfmanual4trucks.com/

CRANKCASE

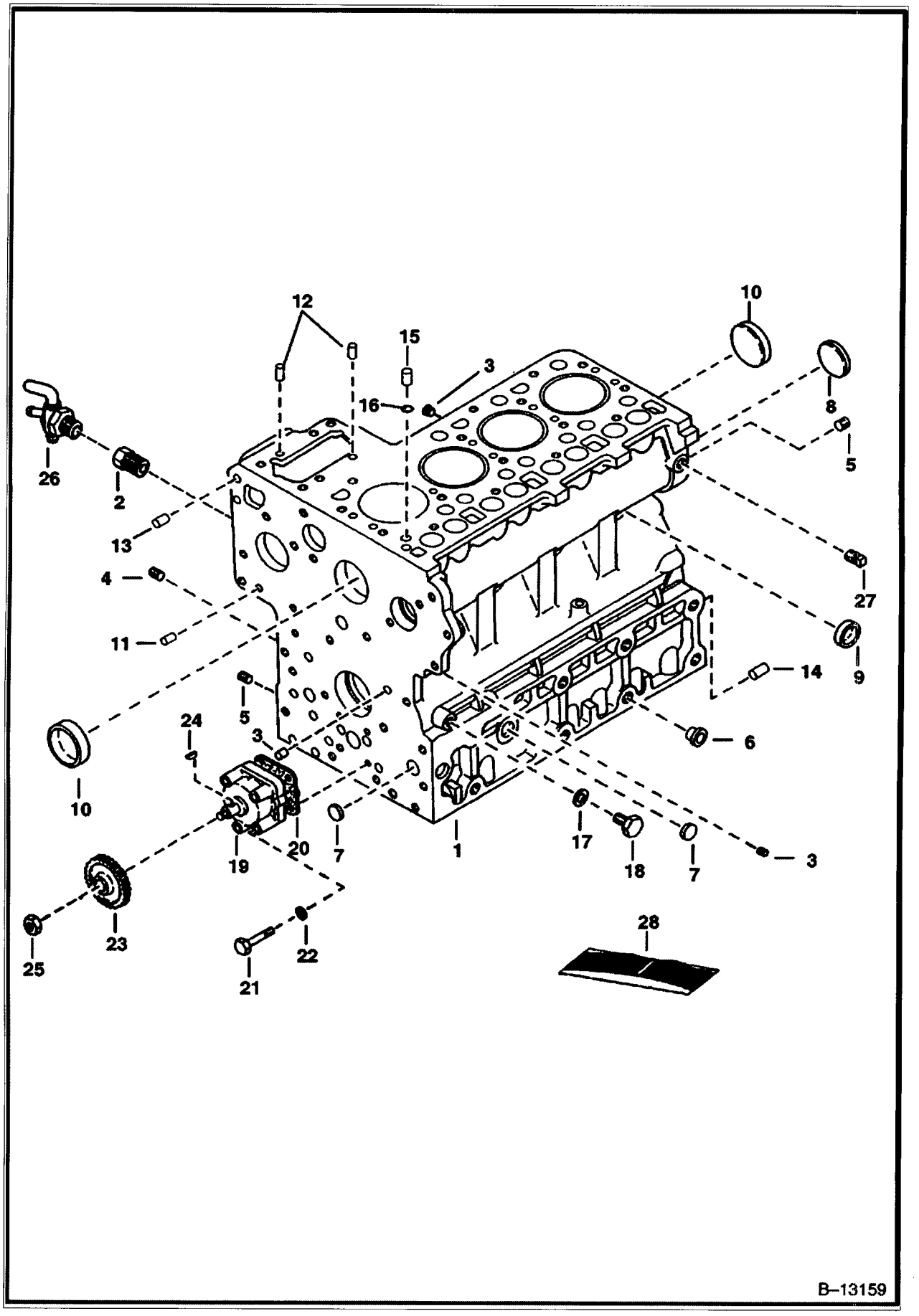

https://www.pdfmanual4trucks.com/

CRANKCASE (Cont'd)

f ..o	Part Number	Description	Remarks	Serial Number	Qty
1	6655149	CRANKCASE	assy. - W/Ref. 2-15		1
2	3974871B	ADAPTER			1
3	6652574	PLUG			6
4	6655869	PLUG			12
5	6652575	PLUG			2
6	6598187	PLUG			21
7	4FM00018B	PLUG	expansion		3
8	4FM45	PLUG	expansion		1
9	3974389B	GASKET	sealing		6
10	3974390B	CAP	sealing		2
11	3974393B	PIN	straight		2
12	3974394B	PIN	straight		2
13	3974395B	PIN	straight		2
14	3974868B	PIN	straight		1
15	3974037B	PIN	pipe		1
16	3974038B	O-RING			1
17	3974095	MET-GASK			1
9	6655884	PLUG	Was 3974051B [A]		1
9	3975426B	OIL PUMP			1
20	6666782	GASKET	Was 3974456B [A]		1
21	6655195	BOLT			4
22	6EM60	WASHER, SPRING			4
23	3975441B	GEAR			1
24	6969805	KEY,FEATHER	Was 15JM00410B [A]		1
25	3DM00012B	NUT			1
26	3975447B	DRAINCOCK			1
7	16F000002B	PLUG			1
28	6657402	GASKET KIT	See Illustration ENGINE & GASKET KITS/ B16450 LOWER - DOES NOT INCLUDE REAR OIL SEAL		1

https://www.pdfmanual4trucks.com/

ROCKER ARM COVER

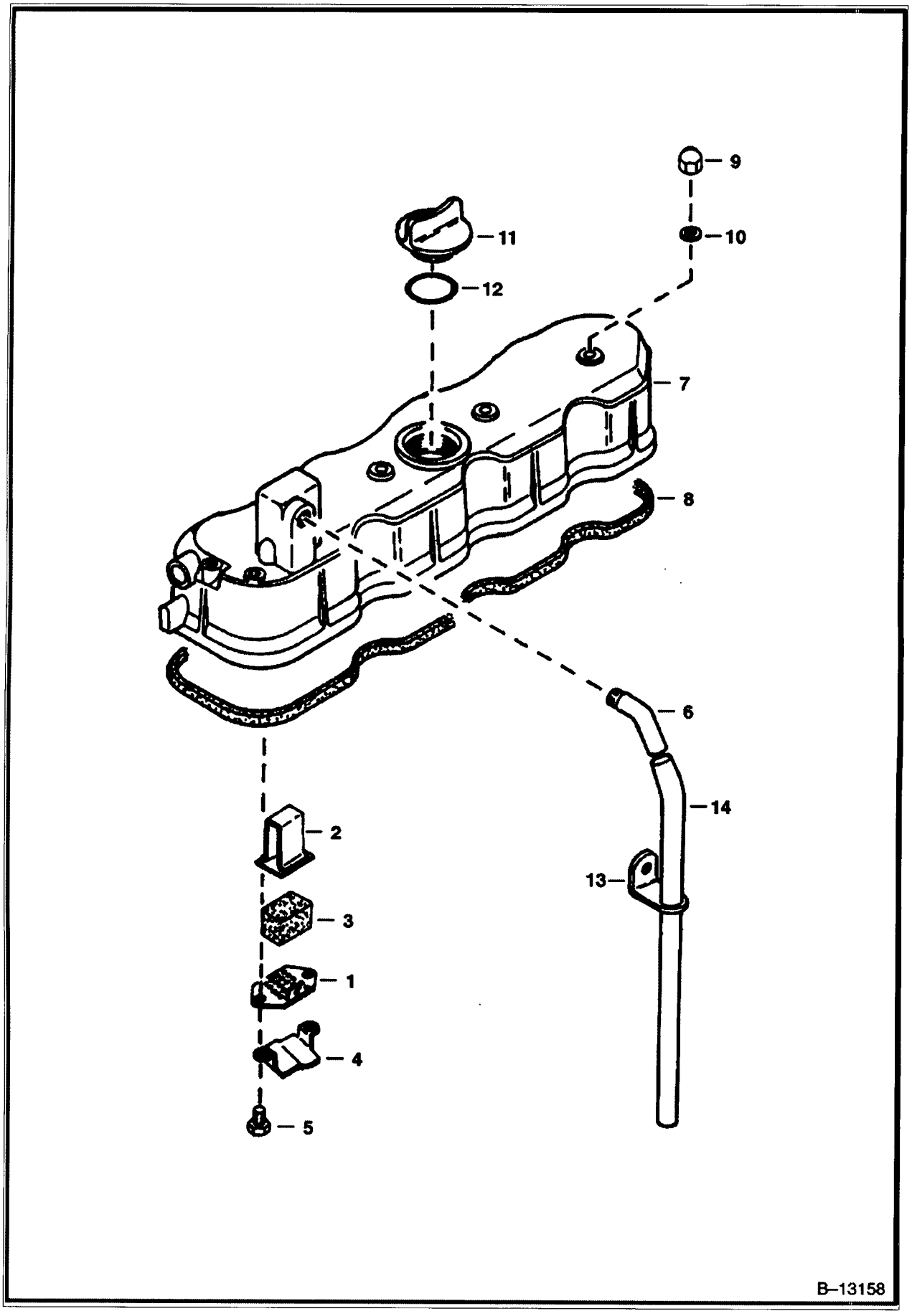

https://www.pdfmanual4trucks.com/

If No	Part Number	Description	Remarks	Serial Number	Qty
1	3974924B	PLATE	element		1
2	3974925B	PLATE	element		1
3	3974926B	ELEMENT	breather		1
4	3974927B	SHIELD	breather		1
5	3975436B	SCREW	W/Washer		2
6	6652624	JOINT	breather pipe		1
7	6655175	COVER	valve		1
8	6598136	GASKET	Was 3975419B [A]		1
9	3974923B	NUT	cap		4
10	3974095	MET-GASK			4
11	6652653	PLUG	oil filler		1
12	3966602B	O-RING			1
13	3974931B	CLAMP	pipe		1
14	3974930B	PIPE	breather		1

https://www.pdfmanual4trucks.com/

VALVE ROCKER ARM

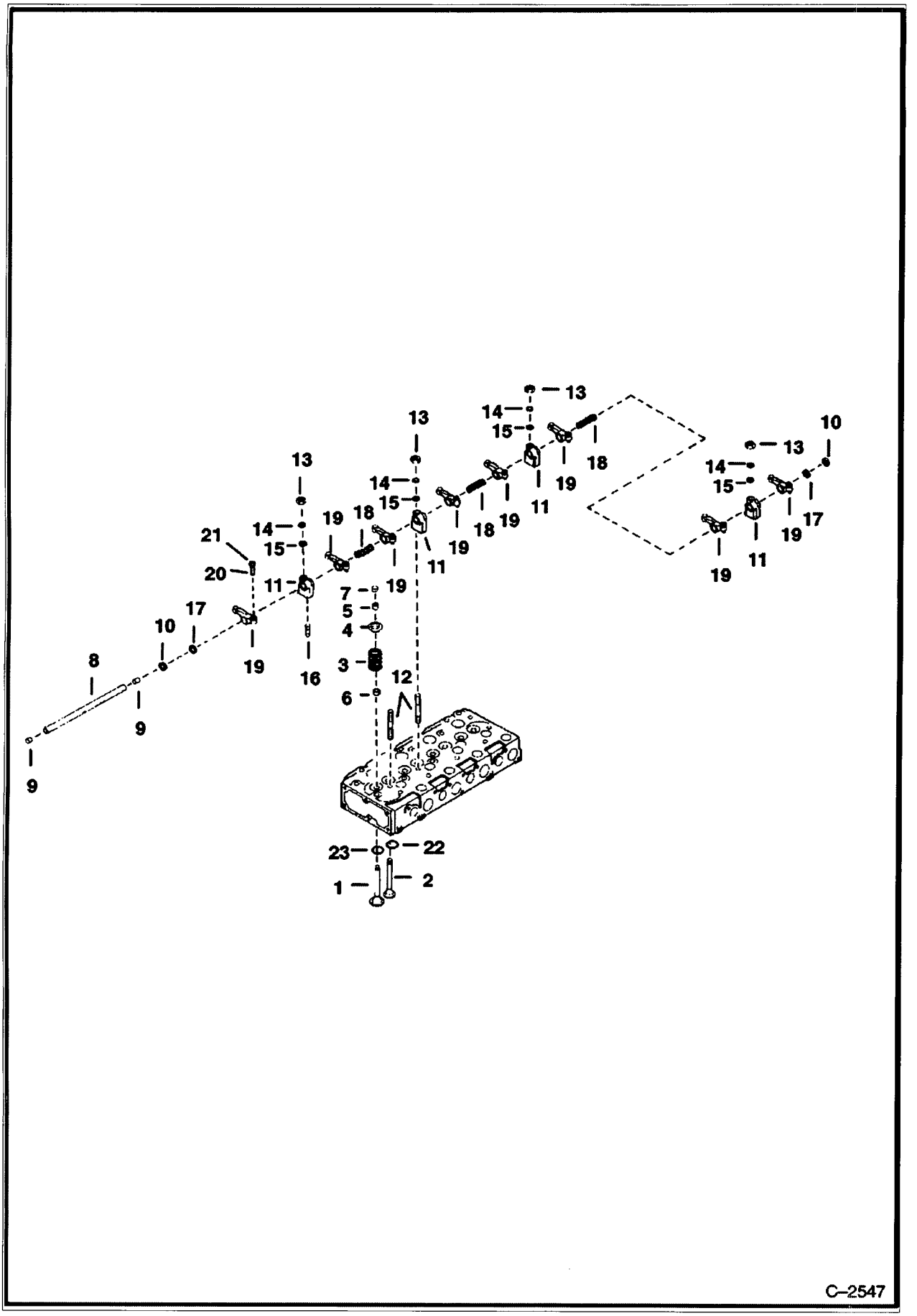

https://www.pdfmanual4trucks.com/

VALVE ROCKER ARM (Cont'd)

,f No	Part Number	Description	Remarks	Serial Number	Qty
1	6655173	VALVE	inlet		4
2	6655174	VALVE	exhaust		4
3	3974514B	SPRING	valve		8
4	3974515B	RETAINER	valve spring		8
5	6684874	COLLAR	valve spring - complete set - Was 3974516B [A]		1
6	6653830	SEAL	valve stem		8
7	3974518B	CAP	valve		8
8		SHAFT	NAP - rocker arm - W/Ref. 9 - Order 6682545 shaft & 6667461 pin - Was 3974519B [A]		1
9	25GM08010B	SET SCREW			2
10	5JM00014B	CIR-CLIP	external		2
11	3974521B	BRACKET	rocker arm		4
12	6653832	STUD			4
13	6652792	NUT			4
14	6EM00080B	WASHER	spring		4
15	2EM00008B	WASHER	plain		4
16	3974523B	ORIFICE			1
7	3974524B	WASHER			2
,8	3974525B	SPRING	rocker arm		3
19	6655870	ROCKER ARM	W/Ref 20 W/Ref 21 rocker		8
20	3974920B	SCREW	adjusting		8
21	2DM00008B	NUT			8
22	6655156	SEAT	valve exhaust		4
23	6655155	SEAT	valve inlet		4

https://www.pdfmanual4trucks.com/

CYLINDER HEAD

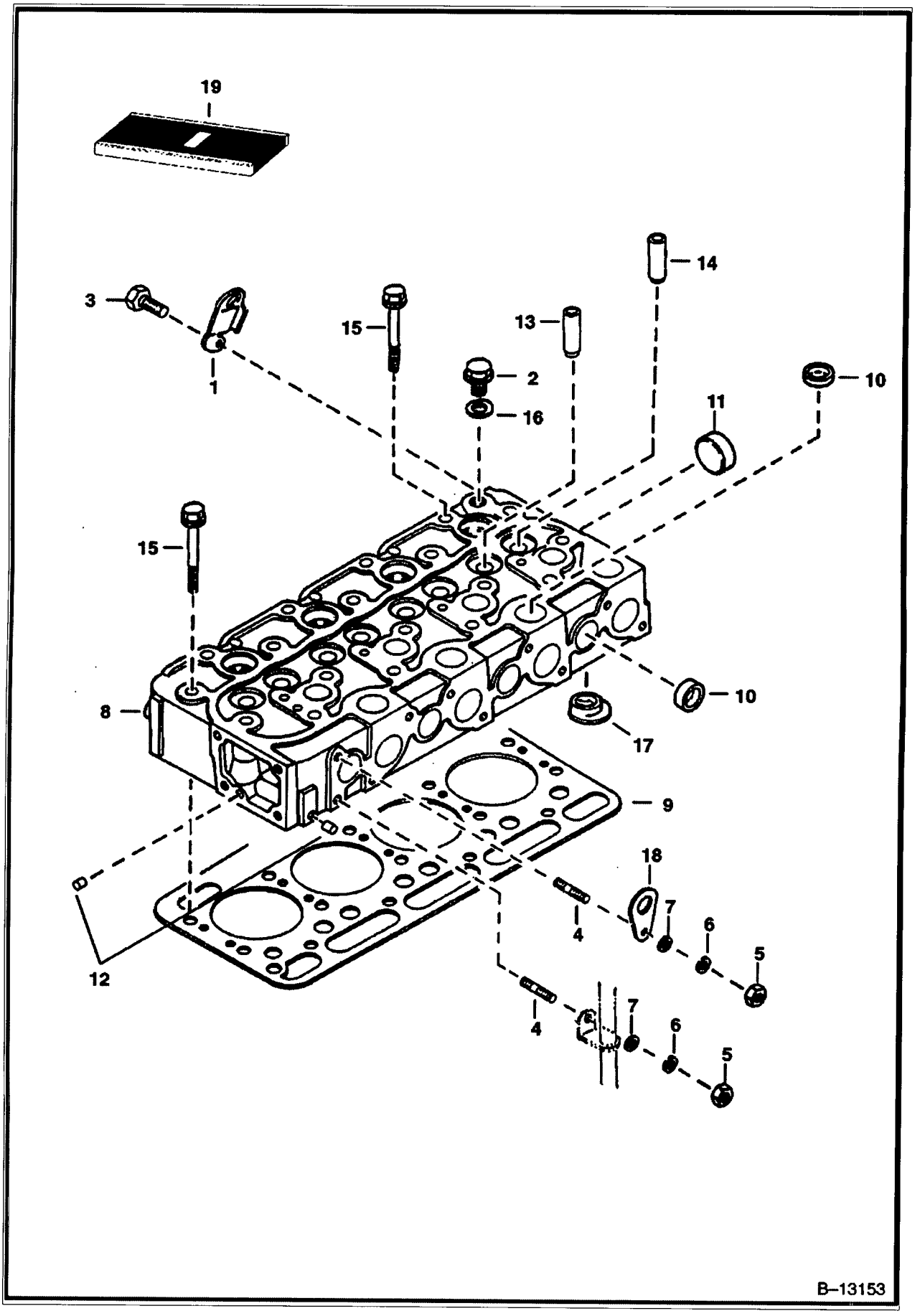

https://www.pdfmanual4trucks.com/

Ref No	Part Number	Description	Remarks	Serial Number	Qty
1	6655152	HOOK	engine		1
2	6655160	PLUG			1
3	4CM00816B	BOLT			1
4	6652670	STUD			2
5	6652792	NUT			2
6	6EM00080B	WASHER	spring		2
7	2EM00008B	WASHER	plain		2
8	6655153	HEAD	cylinder - W/Ref. 10-14 & 17		1
9	6655159	GASKET	cylinder head		1
10	3974432B	CAP	sealing		12
11	3974433B	CAP	sealing		1
12	6598116	PLUG	Was 6652797 [A]		2
13	6655154	GUIDE	intake valve		4
14	6653803	GUIDE	exhaust valve		4
15	6655158	BOLT			18
16	6655161	WASHER			1
17	6667480	CHAMBER	combustion - Was 6655157 [A]		4
3	3974882B	BRACKET			1
19	6657401	GASKET KIT	See Illustration ENGINE & GASKET KITS/ B16450 UPPER		1

https://www.pdfmanual4trucks.com/

OIL PAN

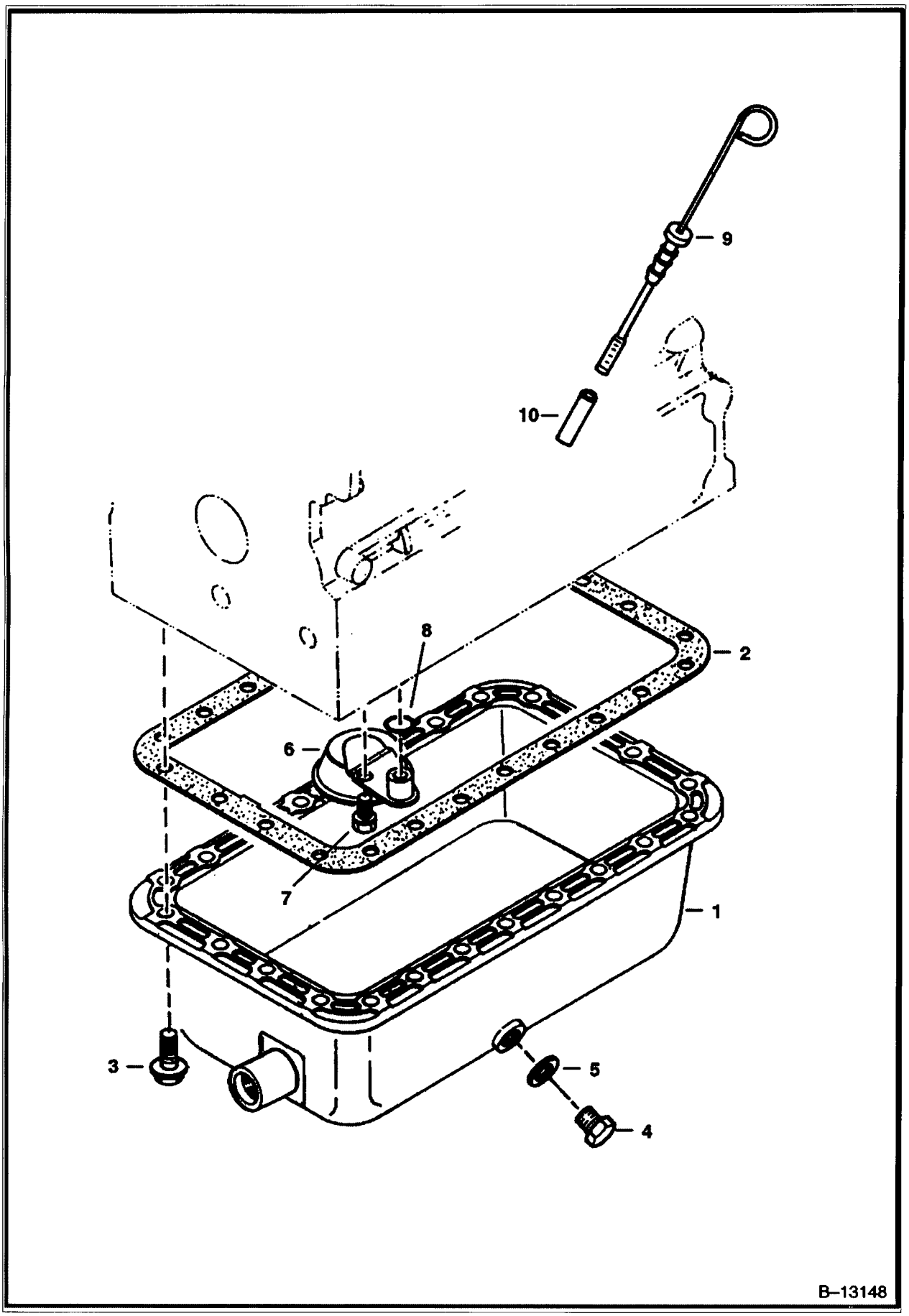

https://www.pdfmanual4trucks.com/

OIL PAN (Cont'd)

f ıvo	Part Number	Description	Remarks	Serial Number	Qty
1	6655151	OIL PAN			1
2	3975449B	GASKET	oil pan		1
3	6653798	BOLT			24
4	3974402B	PLUG	drain - Was 6652583 [A]		1
5	3974403	GASKET			1
6	6655194	OIL FILTER			1
7	4CM00816B	BOLT			1
8	3966516B	O-RING			1
9		DIPSTICK	NAP - oil - Order 6677202 Dipstick & Ref. 10 - Was 6658245 [A]		1
9	6677202	DIPSTICK	oil - long		1
10	6677203	GUIDE	for long dipstick		1

https://www.pdfmanual4trucks.com/

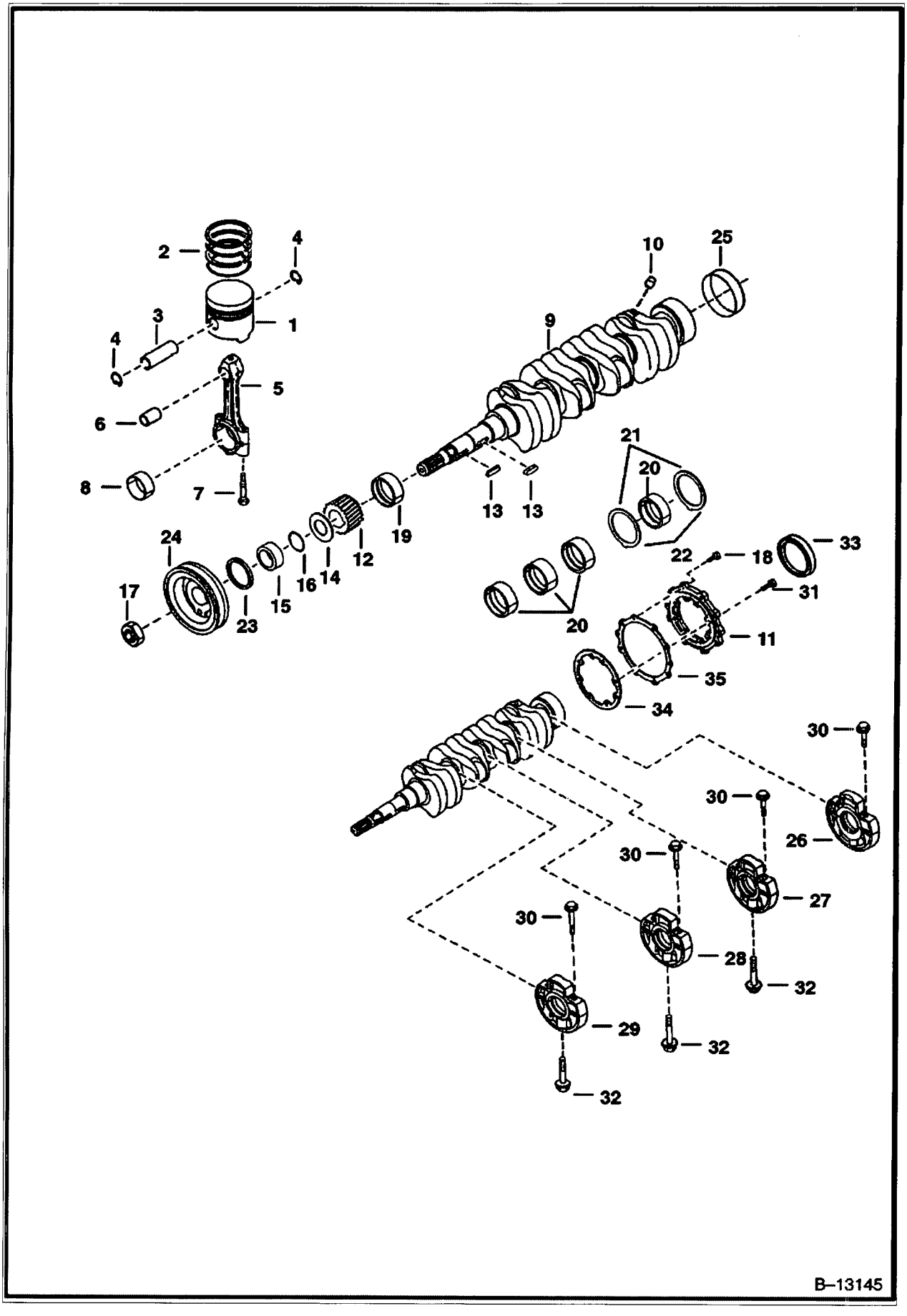

https://www.pdfmanual4trucks.com/

PISTON & CRANKSHAFT (Cont'd)

f ..o	Part Number	Description	Remarks	Serial Number	Qty
1		PISTON	NAP - Std. - Order 6689595 piston and (2) of 6686997 cir-clip - Was 6655177. [A]		4
1		PISTON	NAP - (0,5 mm - .0197) - Was 6657695 [A]		4
2	6678075	RINGS	piston - Std. - Was 6655178 [A]		4
2	6657696	RINGS	piston - (0,5 mm - .0197)		4
3	6655179	PIN			4
4	6655180	CIR-CLIP			8
5	6655181	ROD	connecting - W/Ref. 6, 7, & 8		4
6	6655243	BUSHING			4
7	6655498	BOLT			8
8	6655183	PIN	rod - Std.		4
8	6655236	PIN	rod (0,2 mm-.0079)		4
8	6655237	PIN	rod (0,4 mm-.0157)		4
9	6655184	CRANKSHAFT	Ref. 10 & 25 - Ref. 10 must be installed before using		1
10	6652633	BALL	Must be installed before using Ref. 9 crankshaft - See S/L dated 3 Jan 85		4
11	6655166	COVER			1
2	6598142	GEAR			1
3	3974546B	KEY			1
14	6653861	SLINGER	oil - Was 6598141 [A]		1
15	3975337B	COLLAR			1
16	3974577B	O-RING			1
17	3974671B	NUT			1
18	4CM00825B	BOLT			8
19	6655185	BEARING	main - Std.		1
19	6655238	BEARING	main (0,2 mm-.0079)		1
19	6655239	BEARING	main (0,4 mm-.0157)		1
0	6655186	BEARING	main - Std.		4
20	6655240	BEARING	main (0,2 mm-.0079)		4
20	6655241	BEARING	main (0,4 mm-.0157)		4
21	3974945B	WASHER	thrust - Std.		2
21	3975021B	WASHER	thrust (0,2 mm-.0079)		2
21	3975022B	WASHER	thrust (0,4 mm-.0157)		2
22	6653865	WASHER	thrust - Std.		2
22	6654002	WASHER	thrust (0,2 mm-.0079)		2
22	6654003	WASHER	thrust (0,4 mm-.0157)		2
23	6631664	SEAL	oil		1
1	6655235	PULLEY			1
5	3975334B	SLEEVE			1
26	6655163	CASE	main bearing - W/Ref. 30		1
27	6655170	CASE	main bearing - W/Ref. 30		1
28	6655169	CASE	main bearing - W/Ref. 30		1
29	6655168	CASE	main bearing - W/Ref. 30		1
30	6655164	BOLT			8
31	4CM00828B	BOLT			8
32	6653821	BOLT			3
33	6649300	SEAL	oil		1
34	6684788	GASKET	Was 6655165 [A]		1
35	6666814	GASKET	Was 6655167 [A]		1

https://www.pdfmanual4trucks.com/

FUEL CAMSHAFT

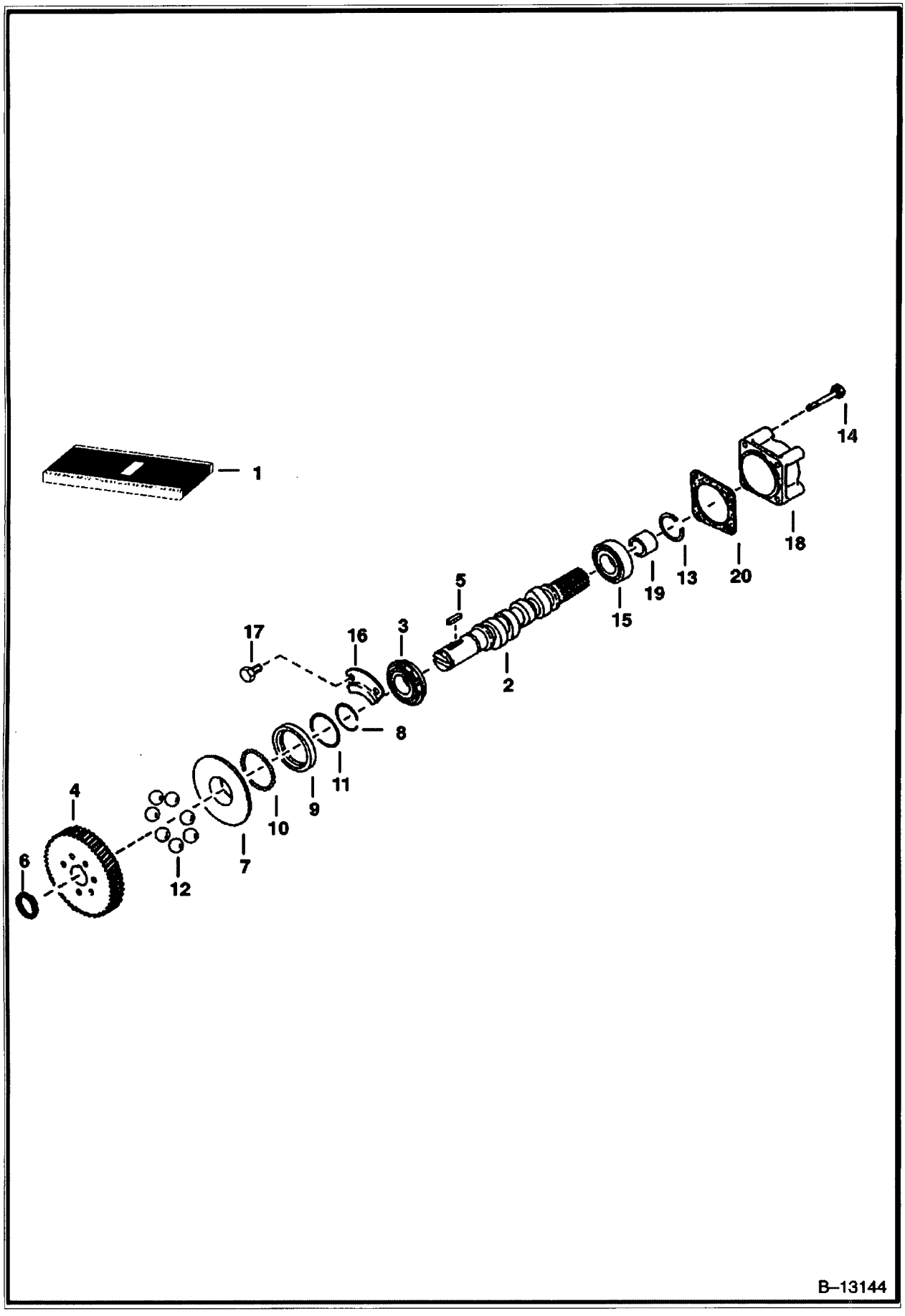

https://www.pdfmanual4trucks.com/

FUEL CAMSHAFT (Cont'd)

f .o	Part Number	Description	Remarks	Serial Number	Qty
1	6655211	CAMSHAFT	assy. - Ref. 2-14		1
2	6655875	CAMSHAFT	fuel		1
3	851242B	BEARING			1
4	6655212	GEAR	injection pump		1
5	6598099	KEY			1
6	5JM00024B	CIRCLIP	external		1
7	6655213	SLEEVE	governor		1
8	3974618B	CIRCLIP	sleeve		1
9	6655214	CASE	governor ball		1
10	10J000005B	BALL			39
11	3974620B	CIRCLIP	ball case		1
12	6655215	BALL			7
13	6598158	CIRCLIP	governor ball - Was 3975432B [A]		1
14	6651934	BOLT			7
15	6598101	BALL BEARING			1
16	3974624B	STOPPER			1
17	4CM00814B	BOLT			2
9	3974996B	COVER	fuel camshaft		1
9	3975442B	COLLAR			1
20	3974630B	GASKET			1

https://www.pdfmanual4trucks.com/

CAMSHAFT

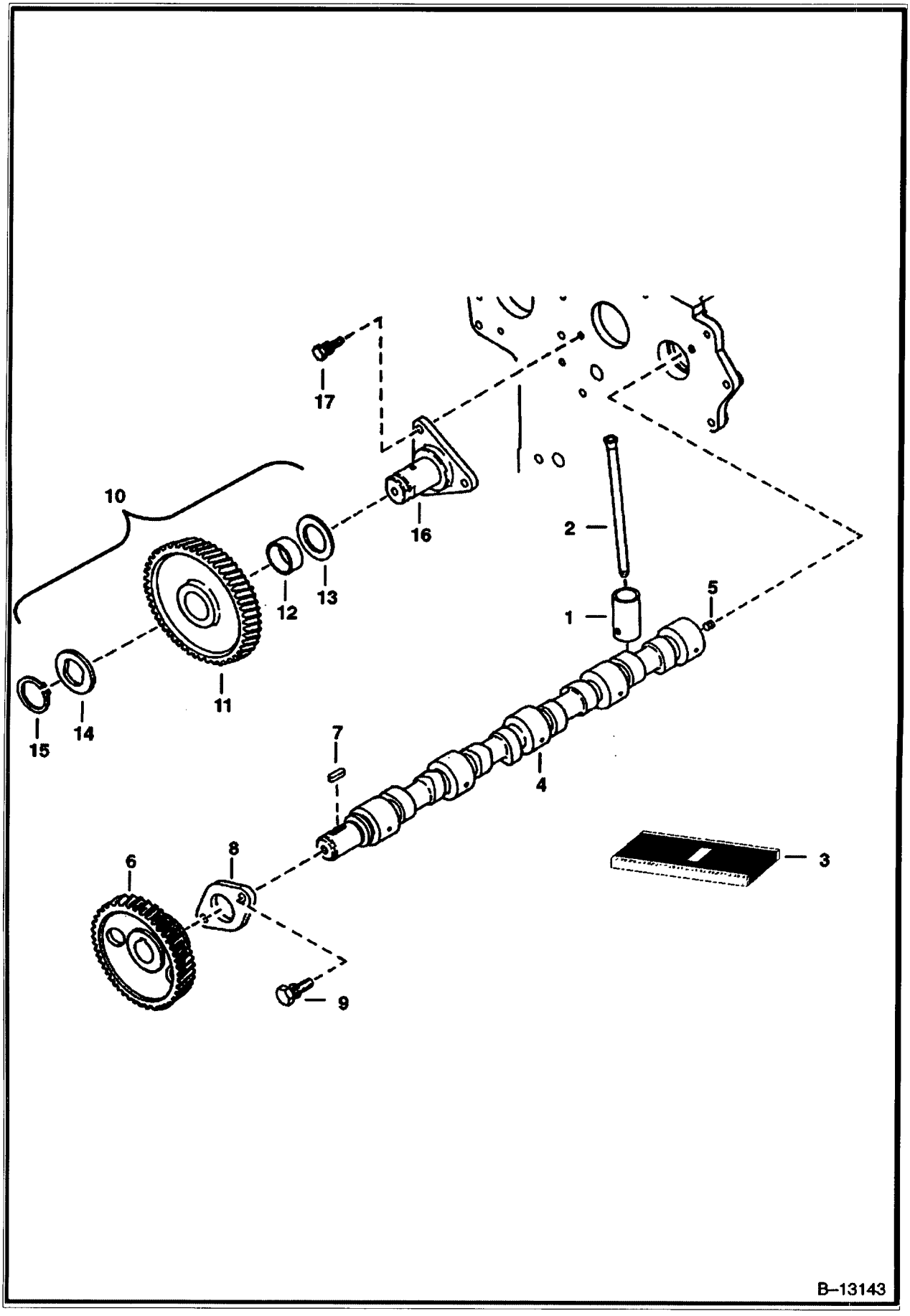

https://www.pdfmanual4trucks.com/

CAMSHAFT (Cont'd)

f No	Part Number	Description	Remarks	Serial Number	Qty
1	6667428	TAPPET	Was 3974540B [A]		8
2	6655176	PUSHROD			8
3	6655427	CAMSHAFT	assy. - Ref. 4-8		1
4		CAMSHAFT	NAP - Was 6655384 [A]		1
5	6653839	SCREW	seat		1
6	6653840	GEAR	camshaft		1
7	3974546B	KEY			1
8	3974547B	STOPPER	camshaft - Was 6653843 [A]		1
9	4CM00818B	BOLT			2
10		GEAR ASSY.	NAP - idle - W/Ref. 11 & 12 - Was 6655187 [A]		1
11		GEAR	NSS - idle - Order Ref. 10		2
12	6655242	BUSHING	idle gear		1
13	6655190	COLLAR			1
14	6655191	COLLAR			1
15	6655192	CIR-CLIP	external		1
16	6655193	SHAFT	idle gear		1
17	4CM00816B	BOLT			3

https://www.pdfmanual4trucks.com/

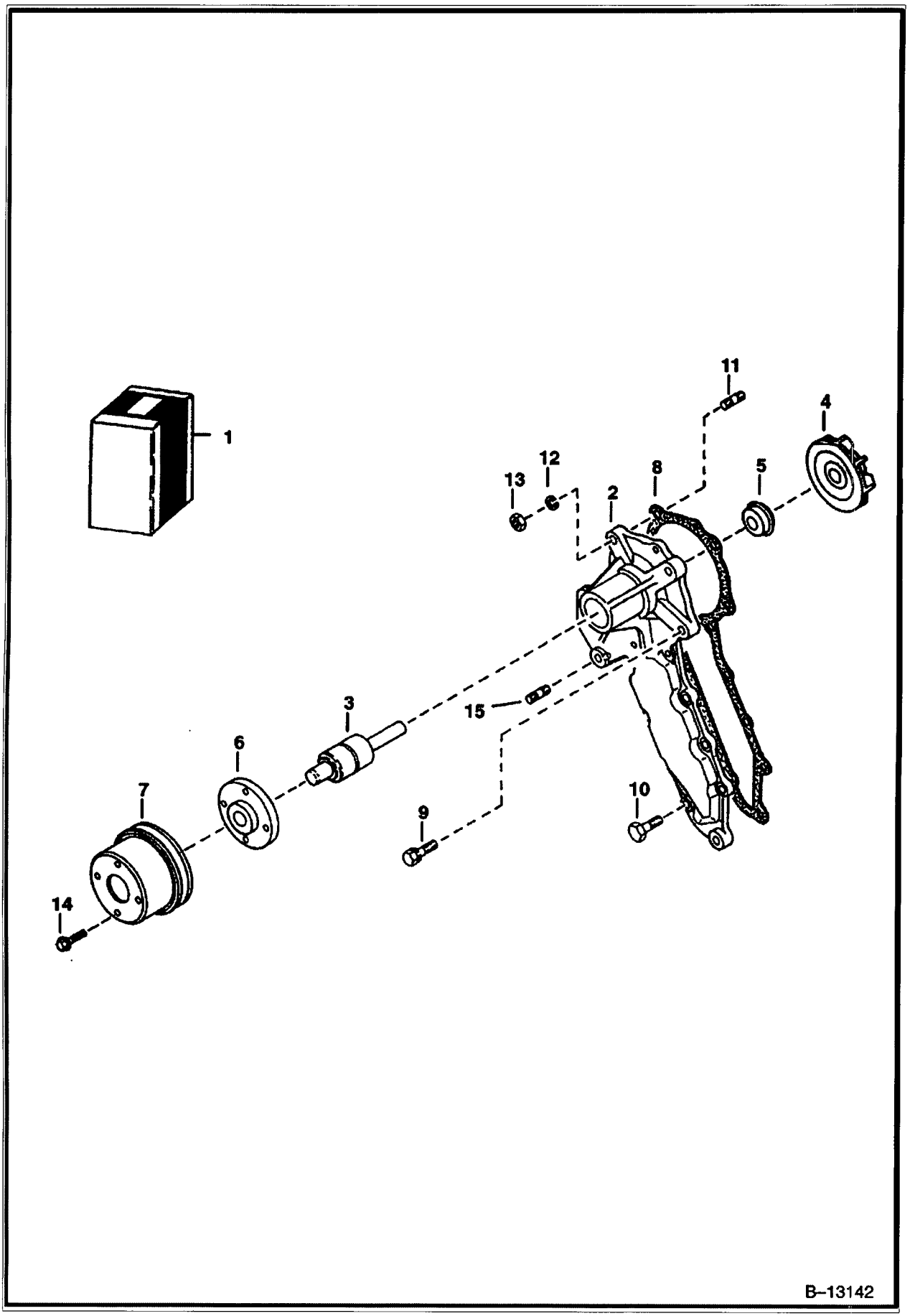

https://www.pdfmanual4trucks.com/

WATER PUMP (Cont'd)

Ref No	Part Number	Description	Remarks	Serial Number	Qty
1	6684225	WATER PUMP	Ref. 2-6 - Was 6653941 [A]		1
2		BODY	NAP		1
3	3974991B	BEARING			1
4	6653944	IMPELLER			1
4	6667460	FAN	for one piece seal Ref. 5		1
5	6653945	SET SEAL			1
5	6667465	SEAL	one piece		1
6	3974992B	FLANGE			1
7	6651487	PULLEY	fan		1
8	6666804	GASKET	Was 3974995B [A]		1
9	4CM00828B	BOLT			2
10	6652580	BOLT			6
11	6653946	STUD			2
12	6EM00080B	WASHER	spring		2
13	6652792	NUT			2
14	6652762	BOLT			4
15	6683174	ROLL PIN			1

https://www.pdfmanual4trucks.com/

WATER FLANGE & THERMOSTAT

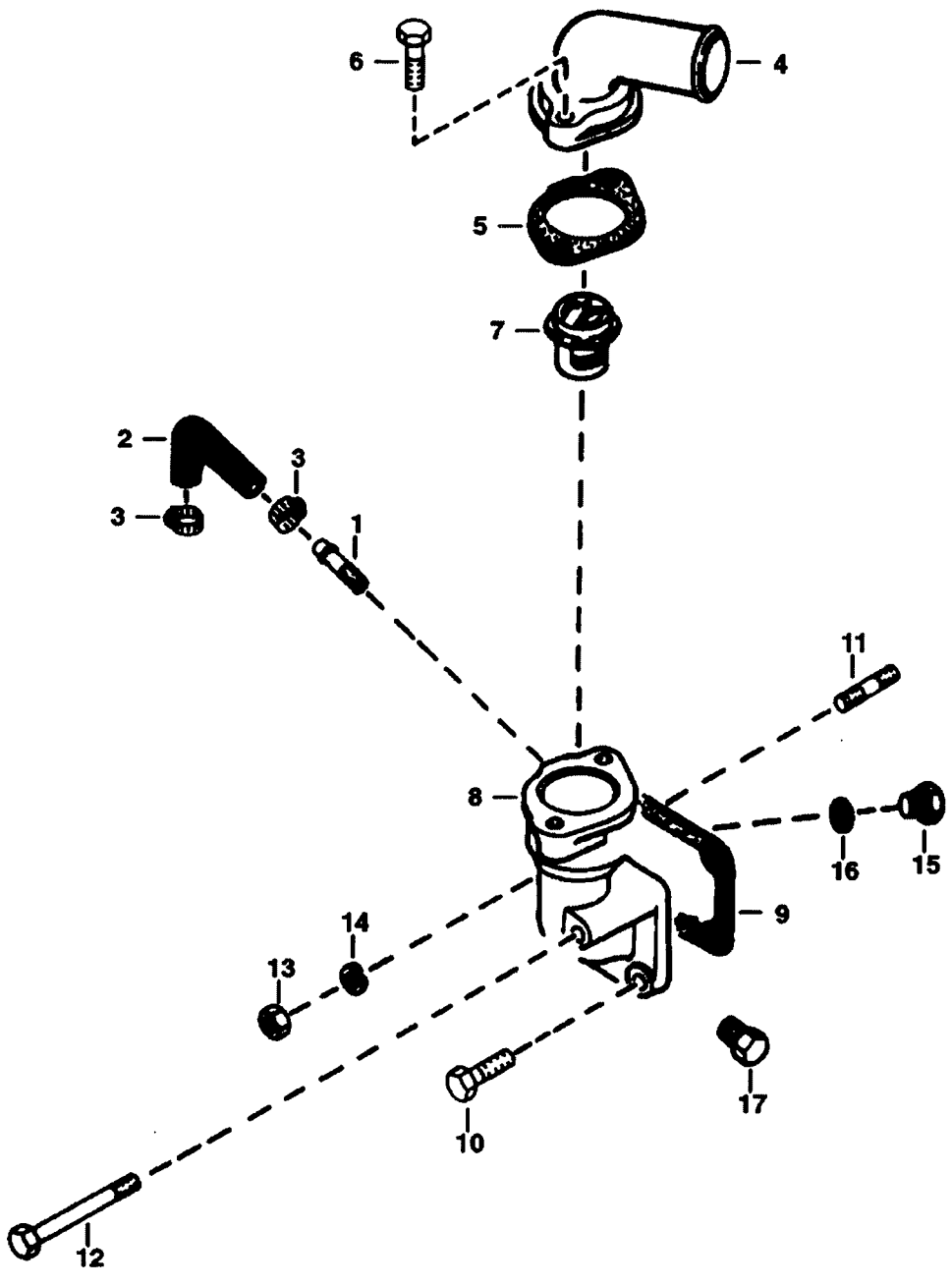

https://www.pdfmanual4trucks.com/

WATER FLANGE & THERMOSTAT (Cont'd)

Ref No	Part Number	Description	Remarks	Serial Number	Qty
1	6655880	PIPE	water return		1
2	3974988B	PIPE	water return		1
3	3974679B	BAND	pipe		2
4	6651489	COVER	thermostat		1
5	6732199	GASKET	thermostat cover - Was 6666790 [A]		1
6	1CM00835B	BOLT			2
7	6653948	THERMOSTAT			1
7	6630184	THERMOSTAT	203 degree F - Used W/cab heater		1
8	6674167	FLANGE	W/Ref. 1 - Was 6655966 [A]		1
9	6666802	GASKET	water flange - Was 3974987B [A]		1
10	4CM00822B	BOLT			2
11	3974627B	STUD			1
12	1CM00865B	BOLT			1
13	6652792	NUT			1
14	6EM00080B	WASHER			1
15	6649536	PLUG			1
16	6653562	GASKET			1
7	40K000002B	PLUG			1

https://www.pdfmanual4trucks.com/

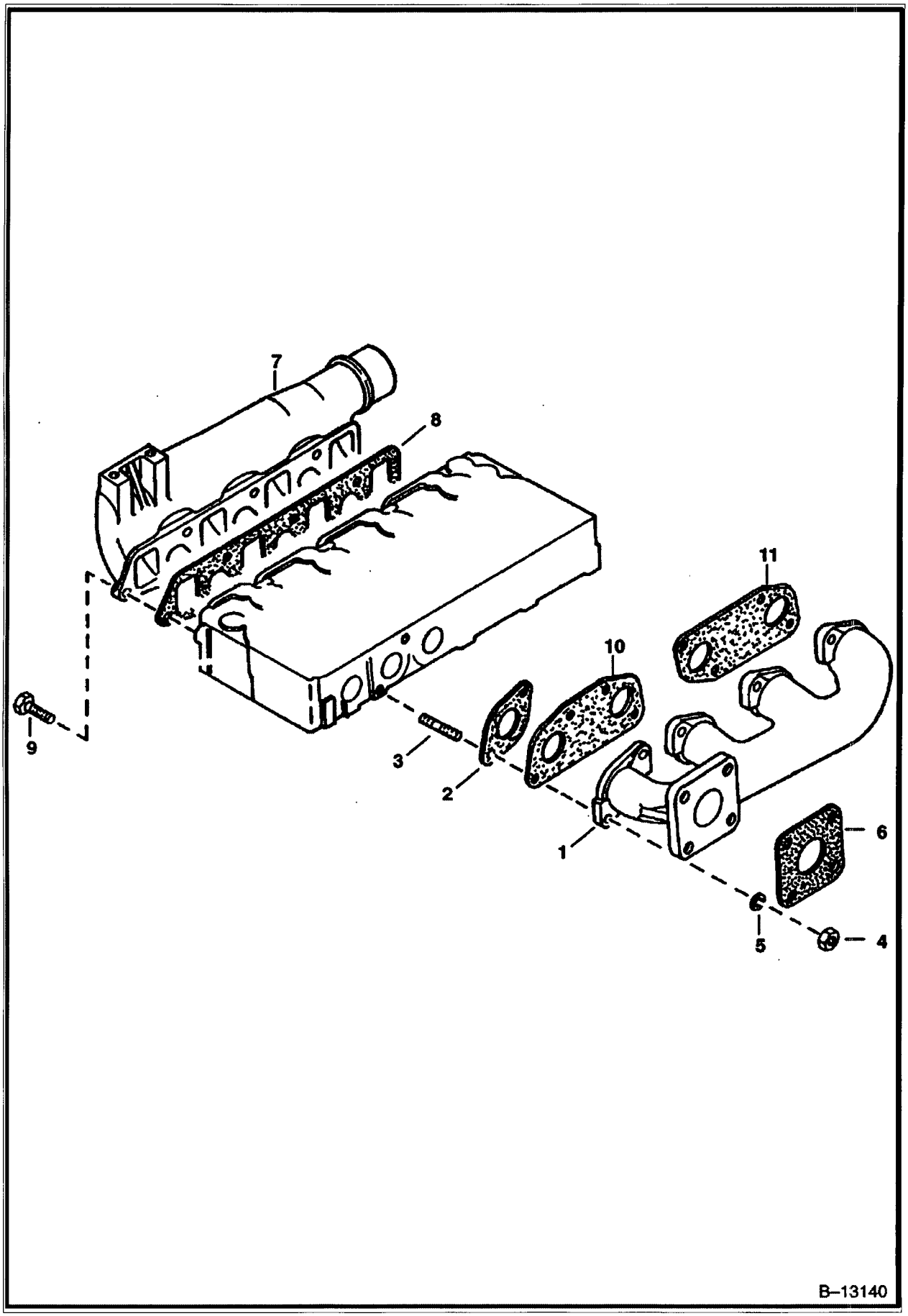

https://www.pdfmanual4trucks.com/

MANIFOLDS (Cont'd)

f No	Part Number	Description	Remarks	Serial Number	Qty
1	6651482	MANIFOLD	exhaust		1
2		GASKET	NAP - Order Ref. 10 & 11 - Was 3974915B [A]		4
3	6652670	STUD			8
4	6652792	NUT			8
5	6EM00080B	WASHER	spring		12
6	6575580	GASKET	muffler		1
7	6655171	MANIFOLD	intake		1
8	6666811	GASKET	Was 6655172 [A]		1
9	4CM00822B	BOLT			7
10	6666781	GASKET			1
11	6666791	GASKET			1

https://www.pdfmanual4trucks.com/

ENGINE STOP LEVER

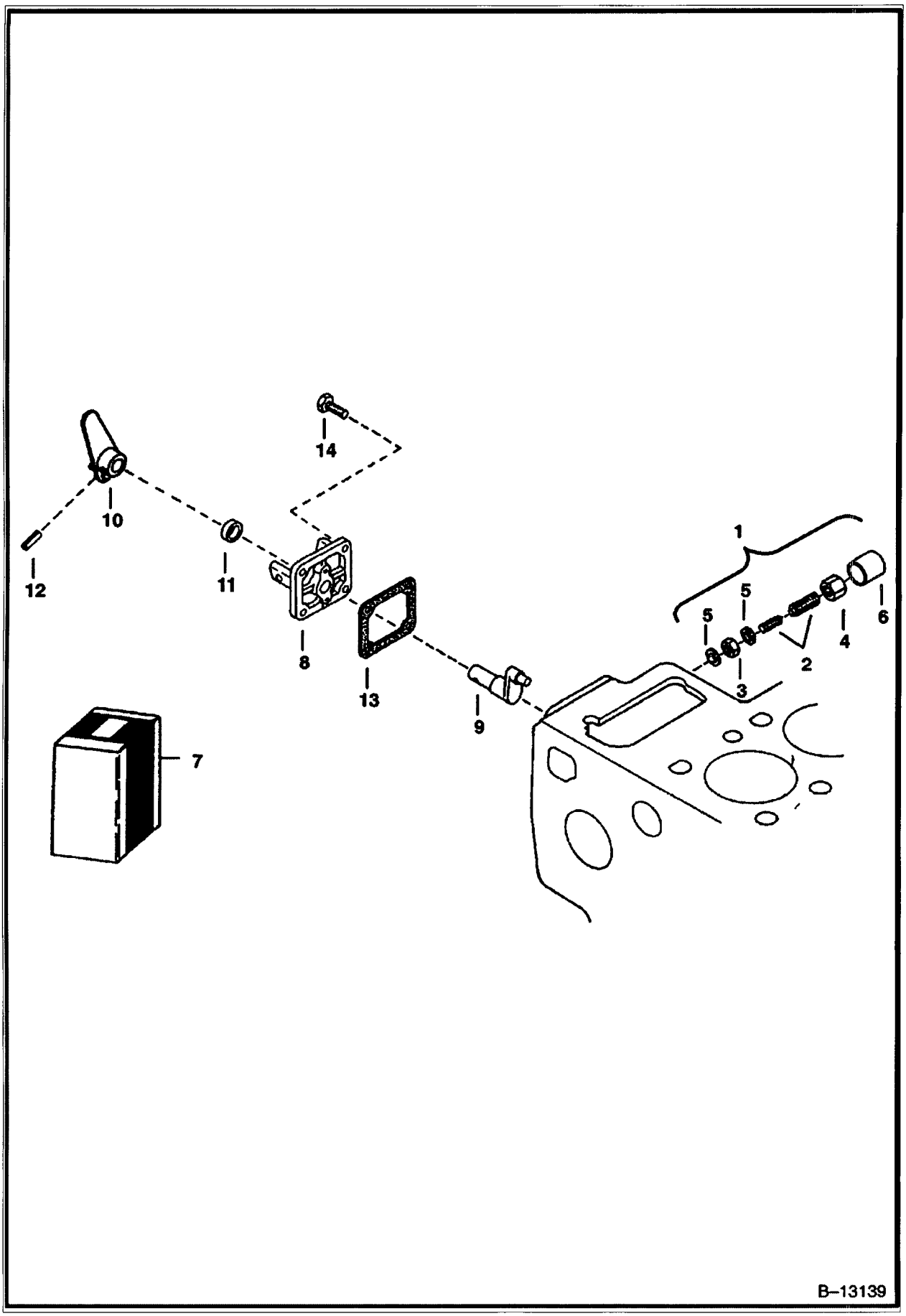

https://www.pdfmanual4trucks.com/

ENGINE STOP LEVER (Cont'd)

f ıvo	Part Number	Description	Remarks	Serial Number	Qty
1	3974975B	APPARATUS	assy., idle - Ref. 2-6		1
2	6653906	BOLT ASSY.	adjusting		1
3	2DM00008B	NUT	adjusting		1
4	3974978B	NUT			1
5	3974095	MET-GASK			2
6	3974979B	CAP			1
7	6676060	LEVER ASSY.	eng. stop - Ref. 8-12 - Was 6655879 [A]		1
8	6655230	COVER	injection pump		1
9	6655231	SHAFT	lever		1
10	6655232	LEVER	engine stop		1
11	6598703	SEAL	oil		1
12	6598098	PIN	spring		1
13	3974601B	GASKET	pump cover		1
14	6652580	BOLT			3

https://www.pdfmanual4trucks.com/

GOVERNOR

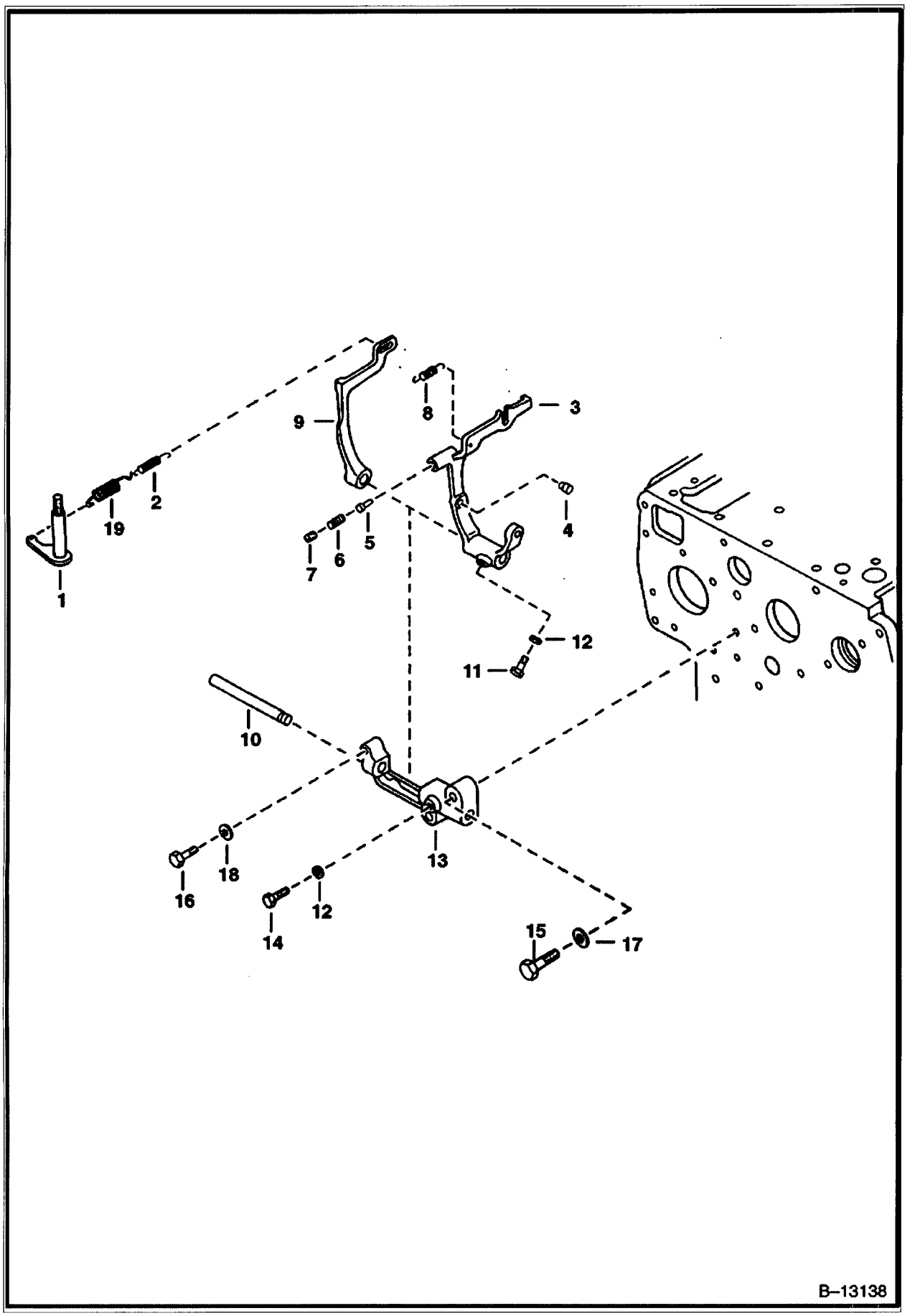

https://www.pdfmanual4trucks.com/

GOVERNOR (Cont'd)

f no	Part Number	Description	Remarks	Serial Number	Qty
1	6598174	LEVER	governor		1
2	6655227	SPRING			1
3	6655224	LEVER	fork - W/Ref. 4-7 - Was 6655876 [A]		1
4		PIN	NSS		2
5		PIN	NSS		1
6		SPRING	NSS		1
7		SCREW	NSS		1
8	6655225	SPRING			1
9	6655877	LEVER			1
10	3974658B	SHAFT			1
11	3974659B	BOLT			1
12	6EM60	WASHER, SPRING			2
13	6653916	HOLDER	Was 3974661B [A]		1
14	3974192B	BOLT			1
15	6598355	BOLT			2
16	4CM00628B	BOLT			1
7	2EM00008B	WASHER			2
8	1EM00060B	WASHER			1
19	6655878	SPRING	governor		1

https://www.pdfmanual4trucks.com/

SPEED CONTROL PLATE

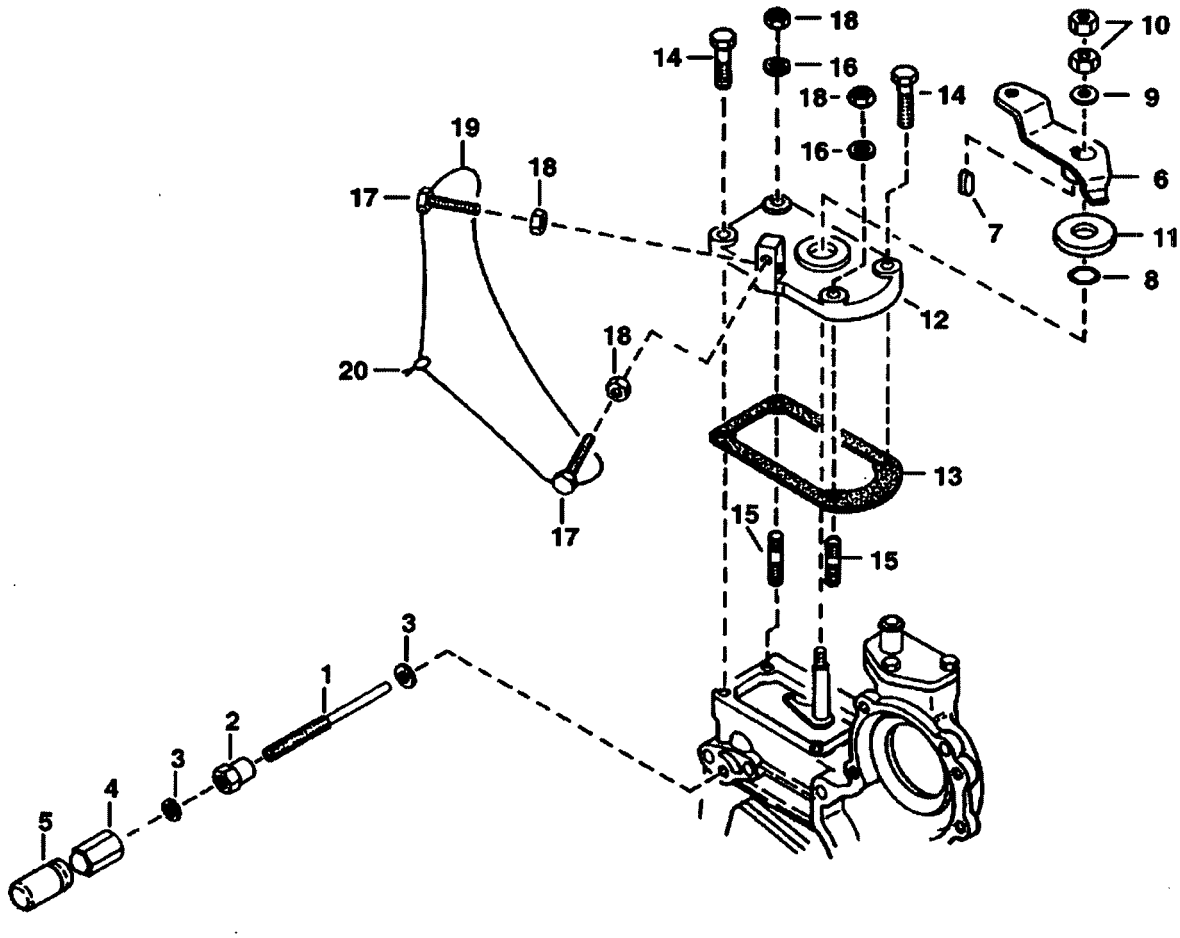

https://www.pdfmanual4trucks.com/

SPEED CONTROL PLATE (Cont'd)

f No	Part Number	Description	Remarks	Serial Number	Qty
1	3974970B	SCREW	adjusting		1
2	3974971B	NUT			1
3	3974972B	GASKET			2
4	6655223	NUT	cap		1
5	6653905	CAP			1
6	6598176	LEVER	speed control		1
7	15JM00048B	KEY	feather		1
8	3966512B	O-RING			1
9	1EM80	WASHER	plain		1
10	1DM8	NUT	Was 25DM00008B [A]		2
11	3974644B	PLATE	friction		1
12	6641231	PLATE	speed control		1
13	6666792	GASKET	Was 6635392 [A]		1
14	4CM00620B	BOLT			2
15	6652764	STUD			2
16	6EM60	WASHER, SPRING	spring		2
7	6655228	STOPPER			2
.8	1DM6	NUT			4
19		WIRE	NAP		1
20		LEAD	NAP - sealing		1

https://www.pdfmanual4trucks.com/

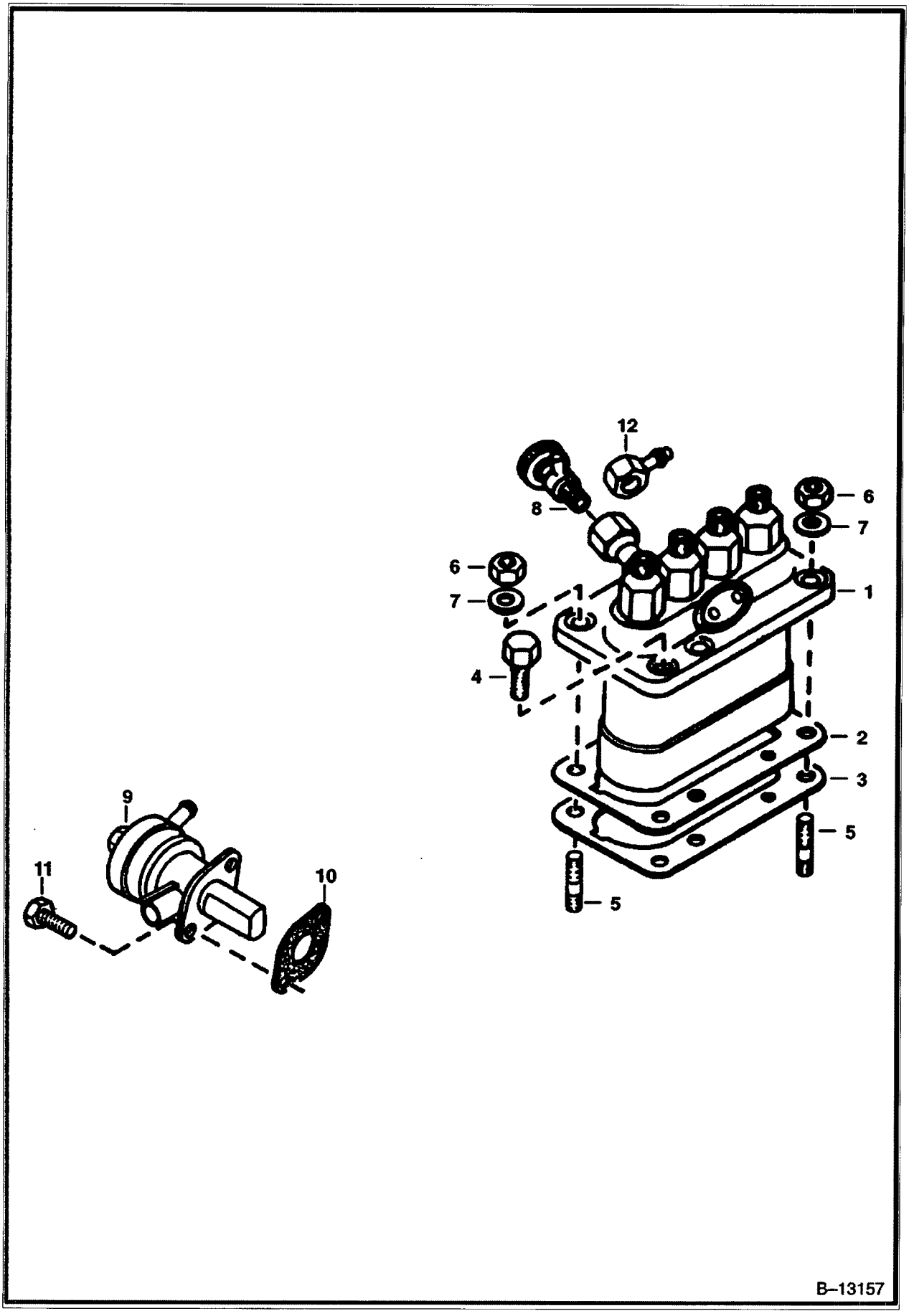

https://www.pdfmanual4trucks.com/

FUEL & INJECTION PUMPS (Cont'd)

f NO	Part Number	Description	Remarks	Serial Number	Qty
1		PUMP	See Illustration INJECTION PUMP/ B13156		1
2	3974626B	SHIM	0.15 mm		2
3	6655210	SHIM	0.45 mm		1
4	4CM00822B	BOLT			4
5	6652670	STUD			2
6	6652792	NUT			2
7	6EM00080B	WASHER	spring		2
8	6598102	VALVE	jet start		1
9	6655216	FUEL PUMP			1
10	3974502B	GASKET	fuel pump		1
11	4CM00616B	BOLT			2
12	6655515	JOINT	See Illustration FUEL SYSTEM/ B17193 - connects to Ref. 25		1

https://www.pdfmanual4trucks.com/

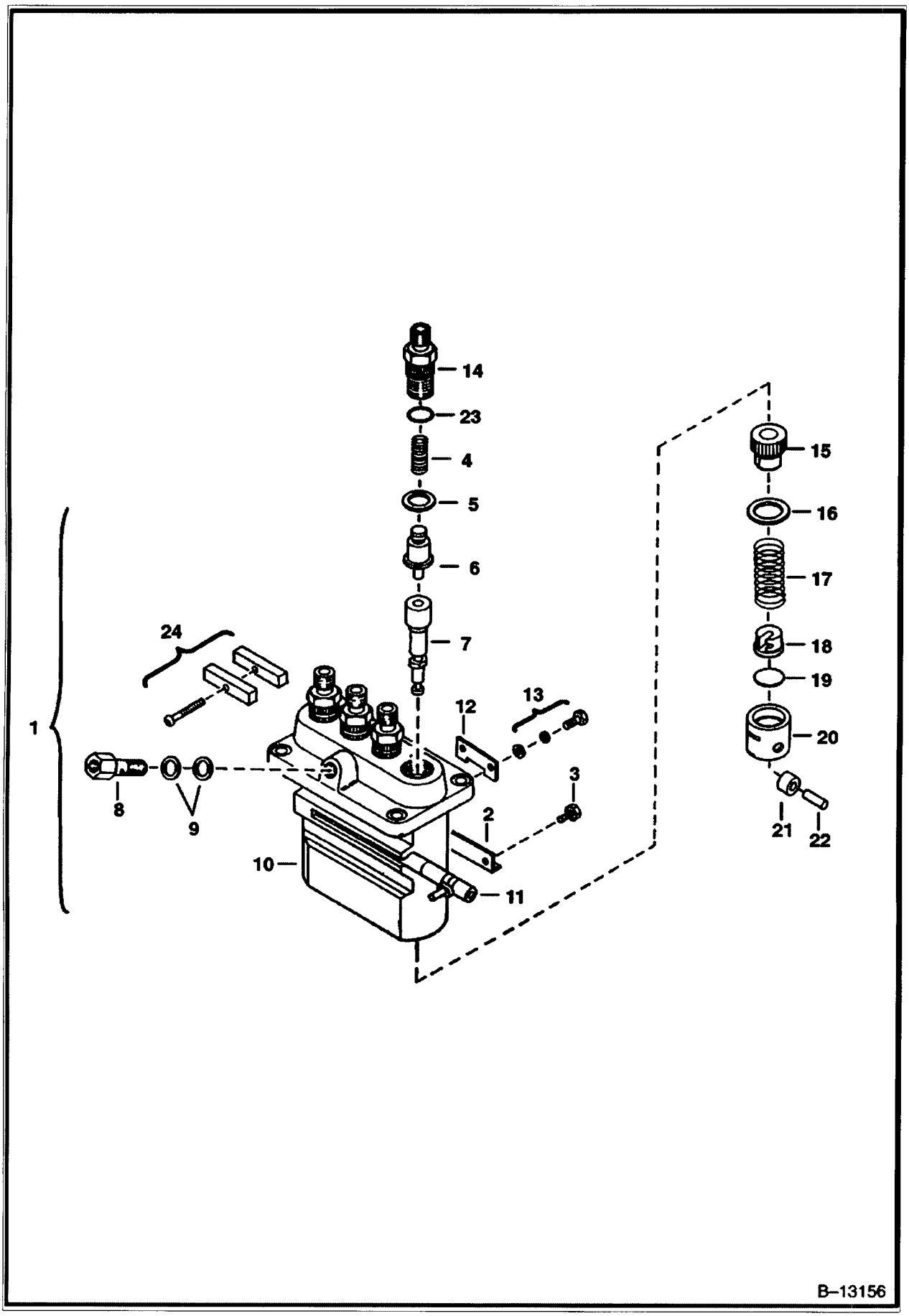

https://www.pdfmanual4trucks.com/

INJECTION PUMP (Cont'd)

Ref No	Part Number	Description	Remarks	Serial Number	Qty
1	6655199	PUMP	injection - Ref. 2-24	E/60896 & Bel	1
1	6667996	PUMP	injection - No serviceable parts available - Take to specialist	E/60897 & Abv	1
1	6674676	PUMP	injection	E/0XA001 & Abv	1
2	6655207	PLATE	adjust		3
3	6655206	BOLT			3
4	6655203	SPRING	delivery valve		4
5	3974368B	GASKET	delivery valve		4
6	6655202	VALVE	delivery		4
7	6655201	ELEMENT	pump		4
8	3975428B	SCREW			1
9	3975389B	GASKET			2
10		HOUSING	NSS - pump		1
11	3974787B	RACK	control		1
12	6655209	PLATE	adjusting		3
13	3974366B	BOLT			3
14	6655204	HOLDER	delivery valve		4
15	6653894	SLEEVE	control		4
16	3974381B	SEAT	spring - Upper		4
17	3974382B	SPRING	plunger		4
18	3974383B	SEAT	spring - Under		4
19	3974384B	SHIM			4
20	3974385B	TAPPET	W/Ref. 21, 22		4
21		ROLLER	NSS		4
22		PIN	NSS		4
23	6655518	O-RING	Was 6646730 [A]		4
24	6655205	PLATE ASSY.			2

https://www.pdfmanual4trucks.com/

INJECTOR NOZZLES

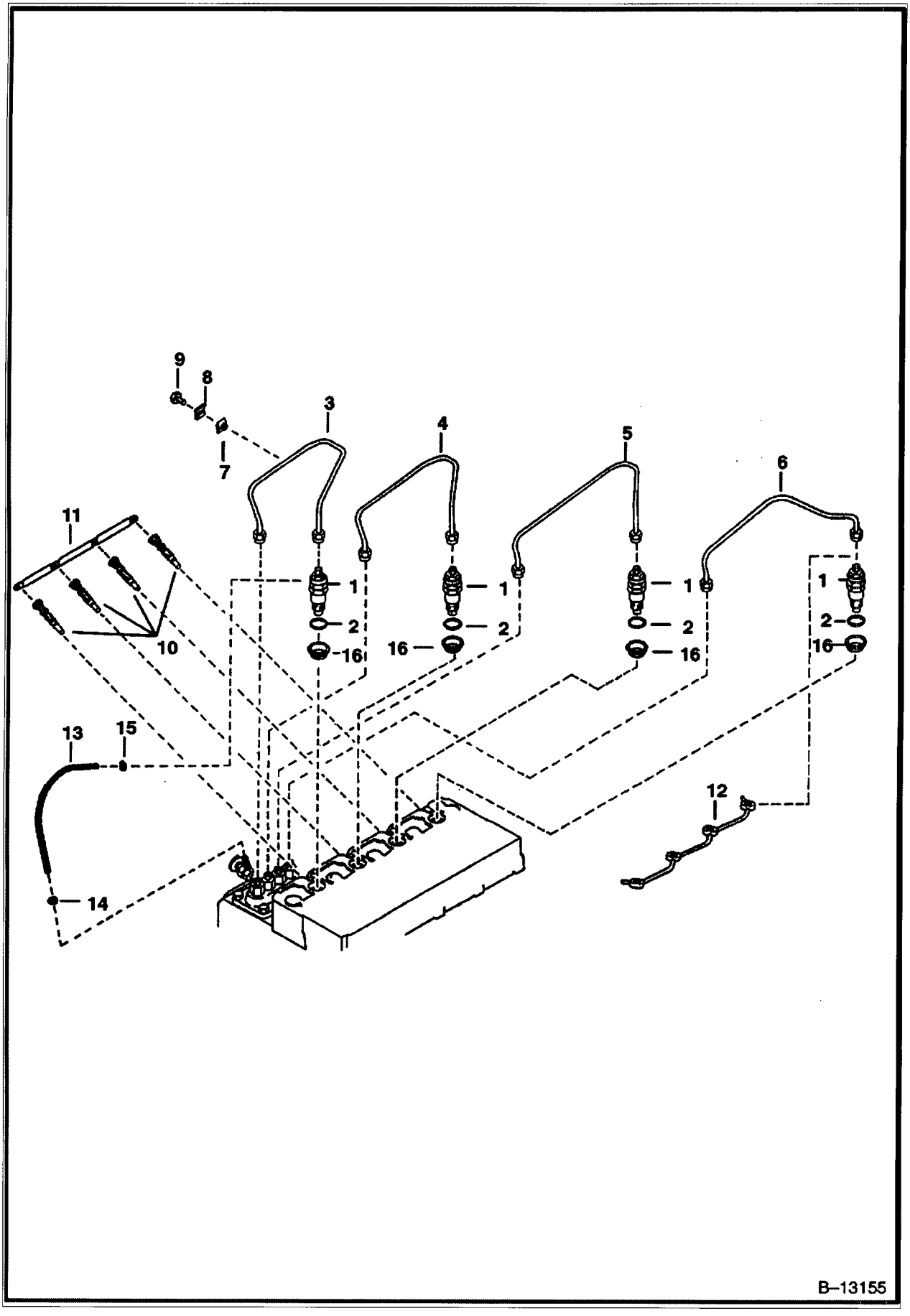

https://www.pdfmanual4trucks.com/

INJECTOR NOZZLES (Cont'd)

f No	Part Number	Description	Remarks	Serial Number	Qty
1	6722147	HOLDER KIT	See Illustration INJECTOR HOLDER/ B13154 NOZZLE-W/REF. 2 & 16		4
2	6655218	GASKET			4
3	6655219	PIPE	injection (1)		1
4	6655220	PIPE	injection (2)		1
5	6655221	PIPE	injection (3)		1
6	6655222	PIPE	injection (4)		1
7	6652688	CLAMP	pipe (1)		3
8	6652689	CLAMP	pipe (2)		3
9	3974260B	BOLT	with washer		3
10	6655233	GLOW PLUG			4
11	6655234	CORD	glow plug - Was 6686987 [A]		1
12	6655198	PIPE	fuel over flow		1
13	6598146	PIPE	fuel over flow (2)		1
14	6680795	CLAMP	pipe - Was 6599136 [A]		1
15	6654718	CLAMP	pipe		1
16	6655872	HEAT SEAL			4

https://www.pdfmanual4trucks.com/

INJECTOR HOLDER

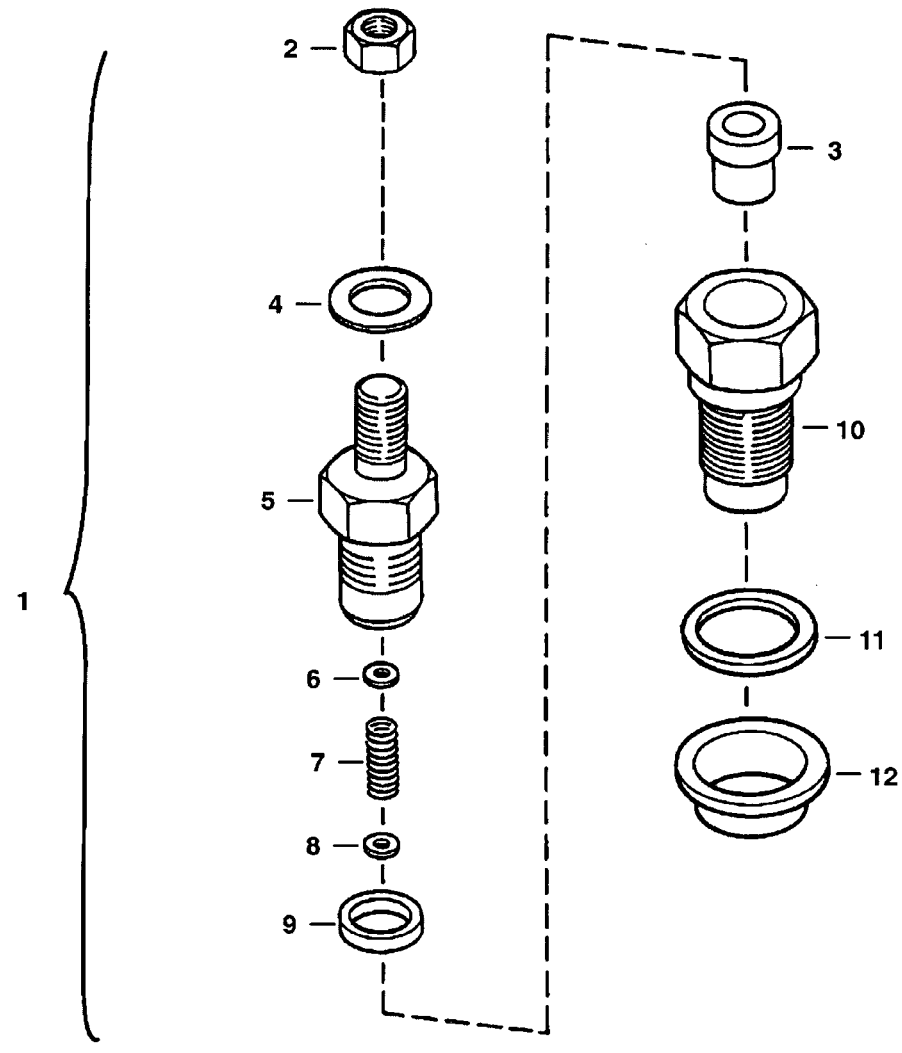

B–13154

https://www.pdfmanual4trucks.com/

INJECTOR HOLDER (Cont'd)

f no	Part Number	Description	Remarks	Serial Number	Qty
1	6722147	HOLDER KIT	nozzle - Ref. 2-12		4
2	6657460	NUT			1
3	6655873	PIECE	nozzle		1
4	6657463	WASHER	W/(2) bleeder holes		1
5		BODY	NSS - nozzle holder		1
6	6657742	KIT	washer - (.900mm thru 1.950mm)		x
6	6656126	WASHER	adj. (1.00 mm)		x
6	6656127	WASHER	adj. (1.05 mm)		x
6	6656128	WASHER	adj. (1.10 mm)		x
6	6656129	WASHER	adj. (1.15 mm)		x
6	6656130	WASHER	adj. (1.20 mm)		x
6	6656131	WASHER	adj. (1.25 mm)		x
6	6656132	WASHER	adj. (1.30 mm)		x
7		SPRING	NSS - nozzle		1
8		PIECE	NSS - distance		1
9		PUSH ROD	NSS		1
10		NUT	NSS - nozzle		1
1	6655218	GASKET			1
2	6655872	HEAT SEAL			1

https://www.pdfmanual4trucks.com/

ENGINE & GASKET KITS
(Kubota - V2203 2EB - Tier II Replacement)

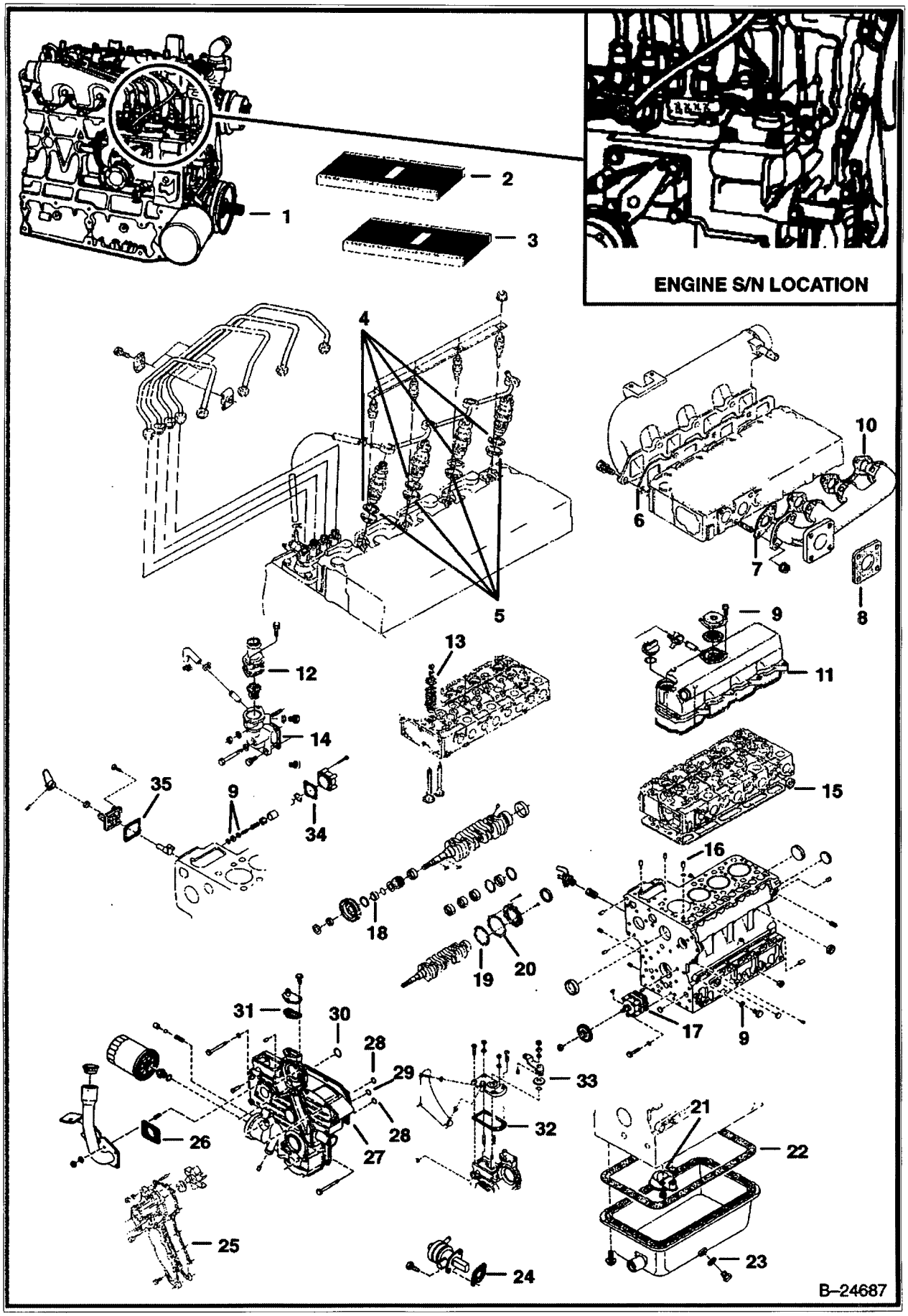

https://www.pdfmanual4trucks.com/

ENGINE & GASKET KITS (Cont'd)
(Kubota - V2203 2EB - Tier II Replacement)

f No	Part Number	Description	Remarks	Serial Number	Qty
1	6685981	ENGINE-V2203 TIER 2	Does not include starter, alternator, flywheel, & flywheel housing		1
1		SHORT BLOCK	NAP		1
2		GASKET KIT	Upper		1
3		GASKET KIT	Lower - Does not include rear oil seal		1
4	6655218	GASKET			4
5	6655872	HEAT SEAL			4
6	6685876	GASKET			1
7	6685878	GASKET			4
8	6684879	GASKET	muffler		1
9	3974095	MET-GASK			7
10	6684782	O-RING			1
11	6684780	GASKET			1
12	6684863	GASKET	thermostat cover		1
13	6653830	SEAL	valve stem		8
14	6666802	GASKET	water flange - Was 6684860 [A]		1
15	6655159	GASKET	cylinder head		1
16	3974038B	O-RING			1
17	6684786	GASKET			1
18	3974577B	O-RING			1
19	6684788	GASKET			1
20	6666814	GASKET			1
21	6684754	O-RING			1
22	6684753	GASKET	oil pan		1
23	6680484	GASKET			1
24	6686037	GASKET	fuel pump		1
25	6666804	GASKET			1
26	6714543	GASKET			1
27	6666800	GASKET	gearcase		1
28	6685466	O-RING			2
29	6686981	O-RING			1
30	6685468	O-RING			1
31	6684774	GASKET	water return flange		1
32	6666792	GASKET			1
33	3966512B	O-RING	Was 6686986 [A]		1
34	6684813	GASKET			1
35	6666783	GASKET	pump cover		1

https://www.pdfmanual4trucks.com/

GEARCASE
(Kubota - V2203 2EB - Tier II Replacement)

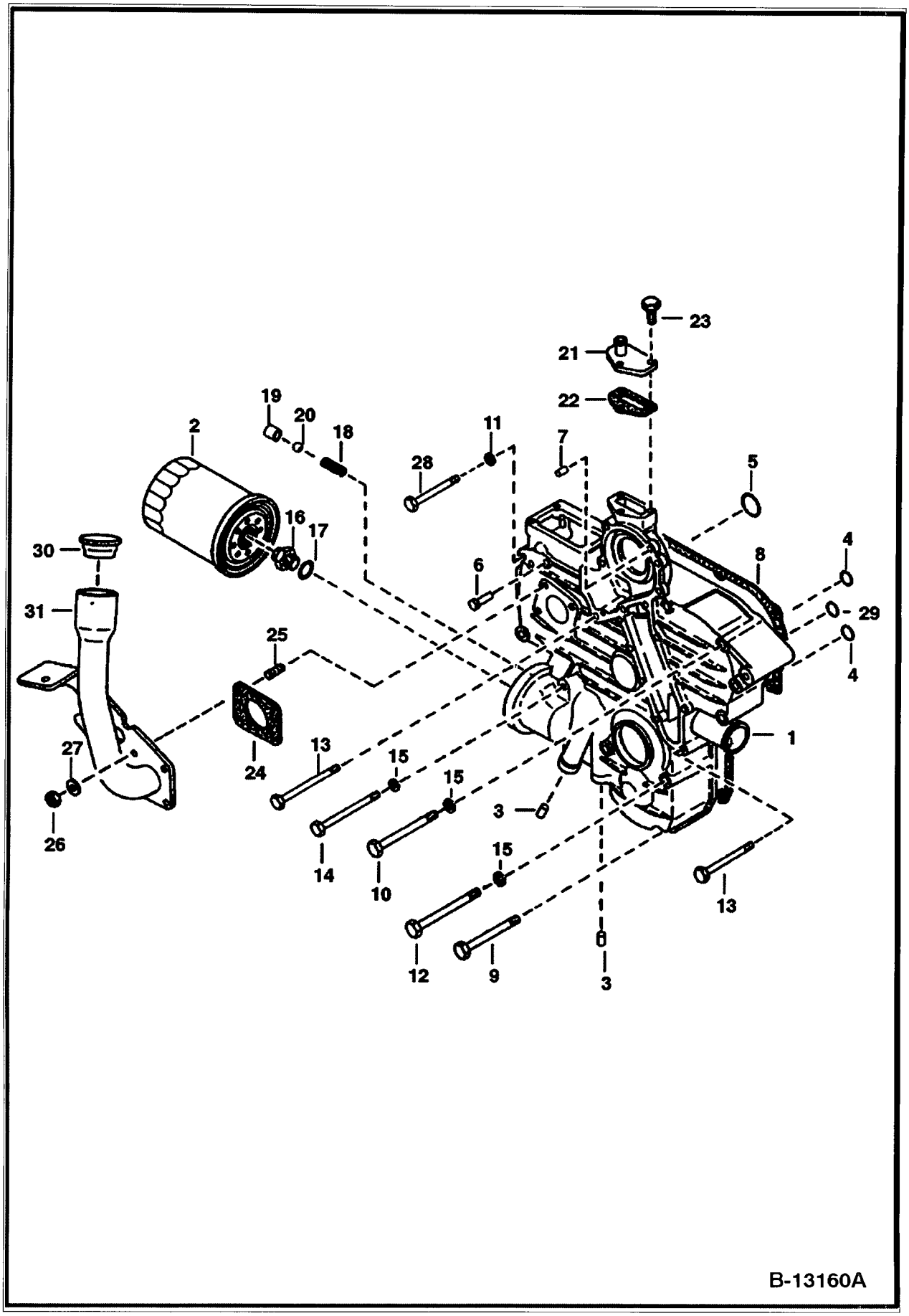

https://www.pdfmanual4trucks.com/

GEARCASE (Cont'd)
(Kubota - V2203 2EB - Tier II Replacement)

Ref No	Part Number	Description	Remarks	Serial Number	Qty
1		CASE ASSY.	NAP - Was 6674164 [A]		1
2	6675517	FILTER			1
3	6667425	PLUG	pin		2
4	6685466	O-RING			2
5	6685468	O-RING			1
6	6680774	PIN	start spring		1
7	3974395B	PIN	straight		2
8	6666800	GASKET	gearcase		1
9	3974888B	BOLT			2
10	1CM870	BOLT			5
11	2EM00008B	WASHER			1
12	1CM880	BOLT			2
13	6653808	BOLT			3
14	1CM00895B	BOLT			2
15	6667422	WASHER			9
16	6653809	ADAPTER			1
17	6685501	WASHER			1
18	6652652	SPRING			1
19	3974893B	SEAT	valve		1
20	10J000013B	BALL			1
21	3974894B	FLANGE	water return		1
22	6684774	GASKET	water return flange		1
23	4CM00620B	BOLT			3
24	6714543	GASKET			1
25	6652764	STUD			4
26	1DM6	NUT			4
27	6EM60	WASHER, SPRING	spring		4
28	6653807	BOLT			1
29	6686981	O-RING			1
30	6703736	CAP			1
31	6719048	MOUNT			1

https://www.pdfmanual4trucks.com/

CRANKCASE
(Kubota - V2203 2EB - Tier II Replacement)

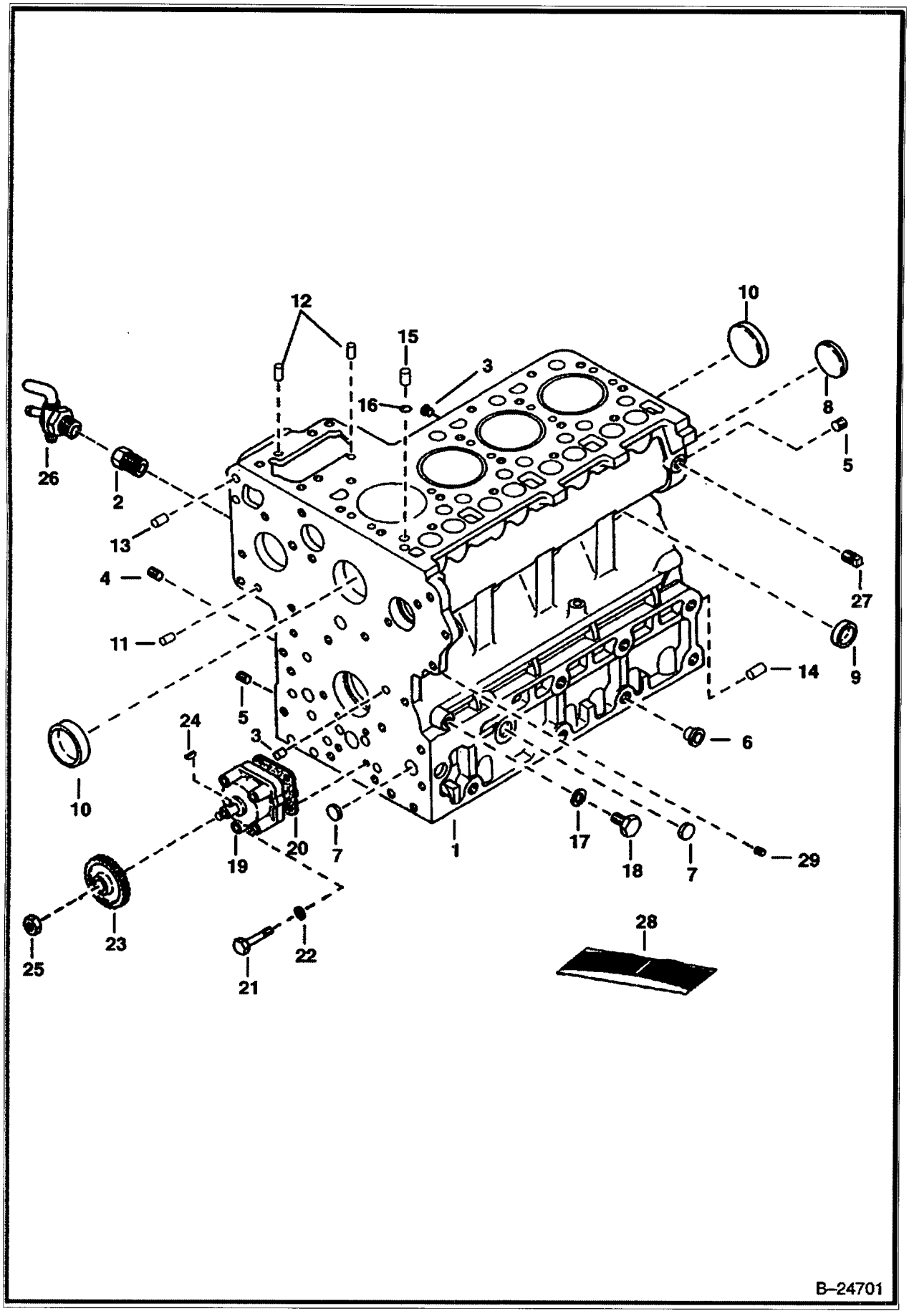

https://www.pdfmanual4trucks.com/

CRANKCASE (Cont'd)
(Kubota - V2203 2EB - Tier II Replacement)

f No	Part Number	Description	Remarks	Serial Number	Qty
1	6655149	CRANKCASE	assy. - W/Ref. 2 - 15		1
2	3974871B	ADAPTER			1
3	6652574	PLUG			5
4	6655869	PLUG			12
5	6652575	PLUG			2
6	6598187	PLUG			21
7	6667418	PLUG	expansion		3
8	6657663	PLUG	expansion		1
9	3974389B	GASKET	sealing		6
10	3974390B	CAP	sealing - Was 6680639 [A]		2
11	3974393B	PIN	straight		2
12	3974394B	PIN	straight		2
13	3974395B	PIN	straight		2
14	3974868B	PIN	straight		1
15	3974037B	PIN	pipe		1
16	3974038B	O-RING			1
17	3974095	MET-GASK			1
3	6683104	PLUG			1
9	3975426B	OIL PUMP			1
20	6684786	GASKET			1
21	6655195	BOLT			4
22	6667419	WASHER			4
23	3975441B	GEAR			1
24	6969805	KEY,FEATHER	Was 15JM00410B [A]		1
25	6653888	NUT			1
26	6630177	DRAINCOCK			1
7	16F000002B	PLUG			1
8		GASKET KIT	Lower - Does not include rear oil seal		1
29	6685477	PLUG			1

https://www.pdfmanual4trucks.com/

ROCKER ARM COVER
(Kubota - V2203 2EB - Tier II Replacement)

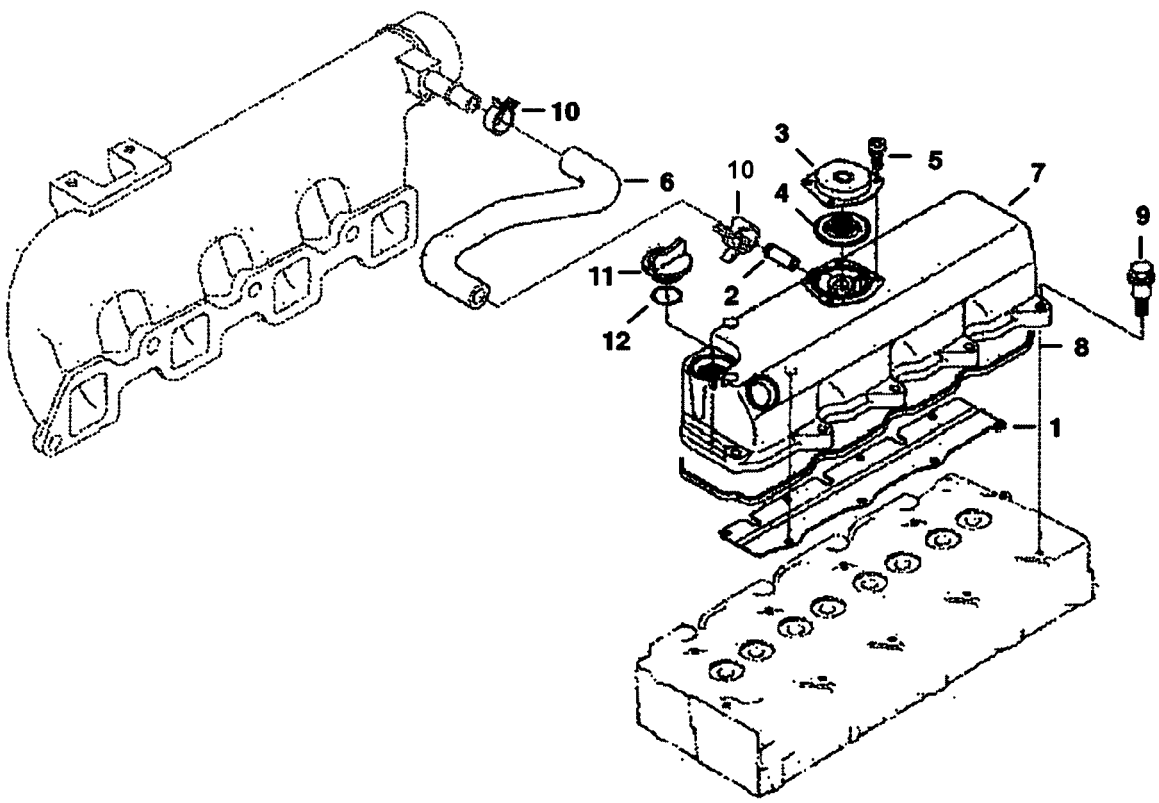

https://www.pdfmanual4trucks.com/

ROCKER ARM COVER (Cont'd)
(Kubota - V2203 2EB - Tier II Replacement)

If No	Part Number	Description	Remarks	Serial Number	Qty
1	6684779	SHIELD	breather		1
2	6655880	PIPE			1
3	6969803	COVER, BREATHER	Was 6685086 [A]		1
4	6685087	VALVE			1
5	3975436B	SCREW	W/Washer - Was 3974928B [A]		4
6	6685524	PIPE	breather		1
7	6685085	COVER	valve		1
8	6684780	GASKET			1
9	6684781	BOLT			10
10	3974679B	BAND	pipe		2
11	6652653	PLUG	oil filler		1
12	6684782	O-RING			1

https://www.pdfmanual4trucks.com/

VALVE ROCKER ARM
(Kubota - V2203 2EB - Tier II Replacement)

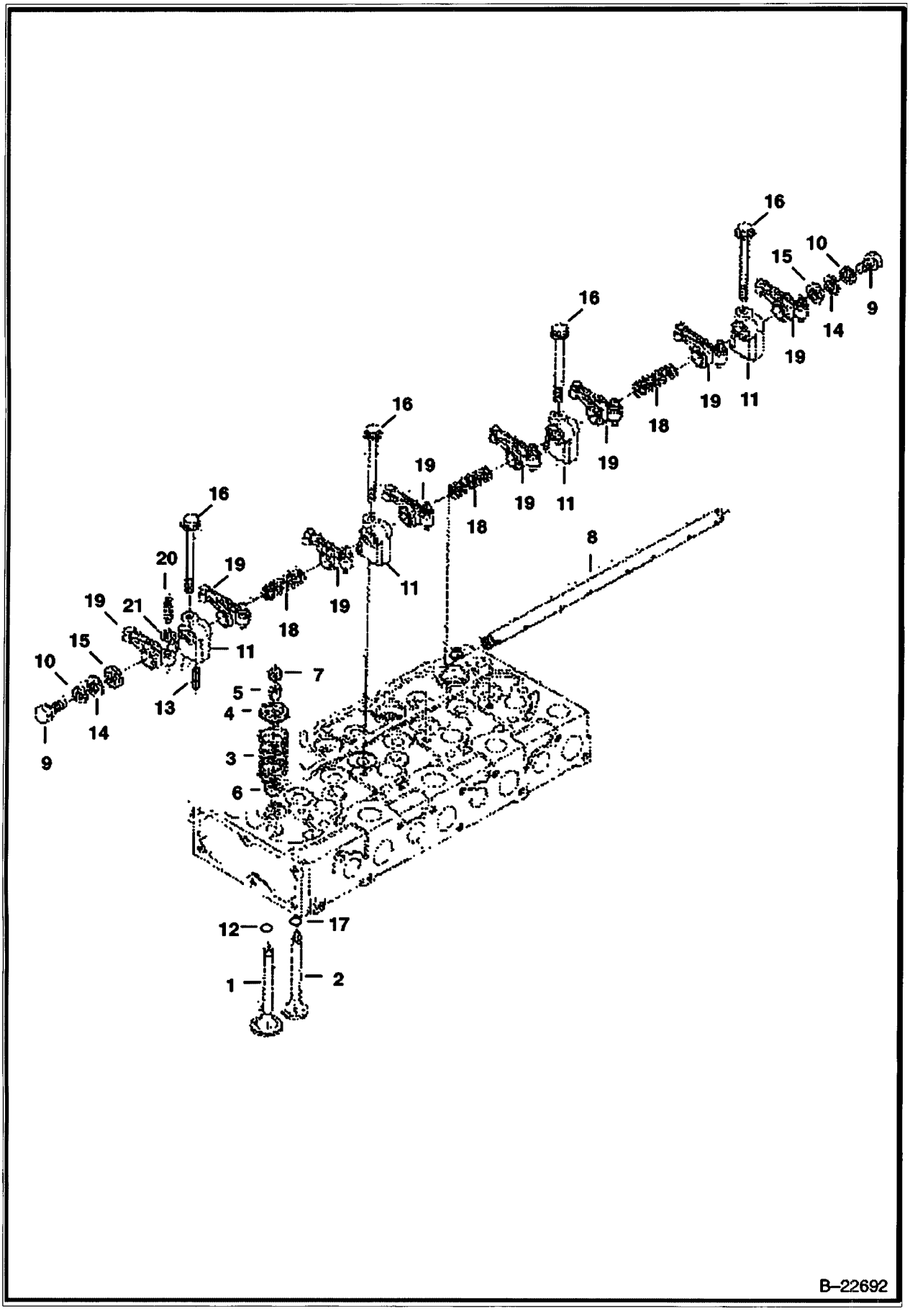

https://www.pdfmanual4trucks.com/

VALVE ROCKER ARM (Cont'd)
(Kubota - V2203 2EB - Tier II Replacement)

Ref No	Part Number	Description	Remarks	Serial Number	Qty
1	6655173	VALVE	inlet		4
2	6655174	VALVE	exhaust		4
3	3974514B	SPRING	valve		8
4	3974515B	RETAINER	valve spring		8
5	6684874	COLLAR	valve spring - complete set		1
6	6653830	SEAL	valve stem		8
7	3974518B	CAP	valve		8
8	6684875	SHAFT	rocker arm		1
9	5CM00812B	BOLT			2
10	6667422	WASHER	external		2
11	3974521B	BRACKET	rocker arm		4
12	6655155	SEAT	valve inlet		4
13	6667461	PIN	spring		4
14	6667451	WASHER	spring		4
15	3974524B	WASHER			2
16	6680685	BOLT			1
17	6655156	SEAT	valve exhaust		4
3	6653833	SPRING	rocker arm		3
19	6655870	ROCKER ARM	rocker - W/Ref. 20 & 21		8
20	3974920B	SCREW	adjusting		8
21	2DM00008B	NUT	Was 6680874 [A]		8

https://www.pdfmanual4trucks.com/

CYLINDER HEAD
(Kubota - V2203 2EB - Tier II Replacement)

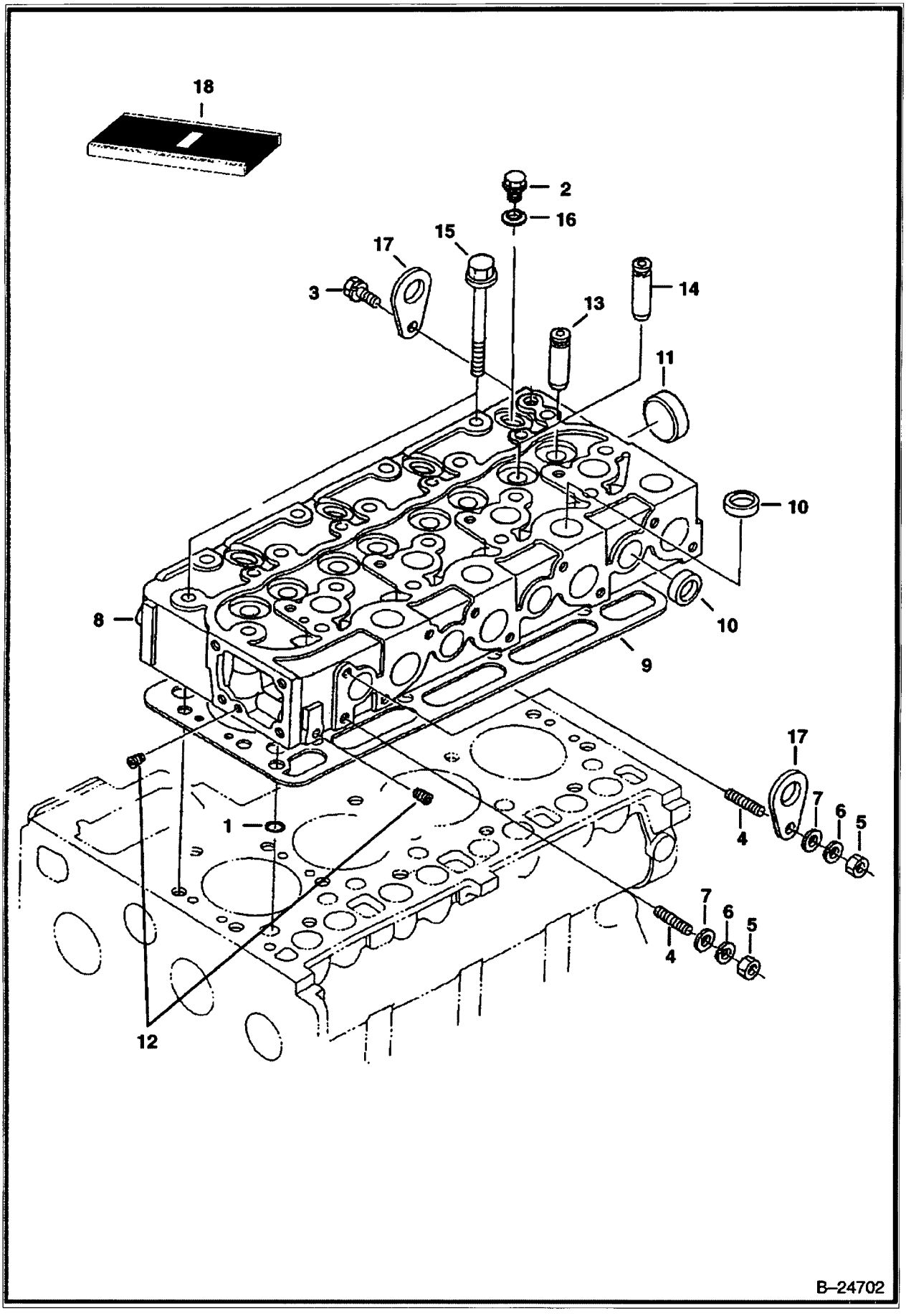

https://www.pdfmanual4trucks.com/

CYLINDER HEAD (Cont'd)
(Kubota - V2203 2EB - Tier II Replacement)

f No	Part Number	Description	Remarks	Serial Number	Qty
1	3974038B	O-RING			1
2	6655160	PLUG			1
3	6667421	BOLT			1
4	6652670	STUD			2
5	6652792	NUT			2
6	6667422	WASHER	spring		2
7	2EM00008B	WASHER	plain		2
8	6686996	HEAD	cylinder - W/Ref. 10-13		1
9	6655159	GASKET	cylinder head		1
10	3974432B	CAP	sealing - Was 6680665 [A]		12
11	6680666	PLUG	sealing		1
12	6598116	PLUG			2
13	6653803	GUIDE	exhaust valve		4
14	6655154	GUIDE	intake valve		4
15	6655158	BOLT			18
16	6655161	WASHER			1
17	3974882B	BRACKET			1
3		GASKET KIT	upper		1

https://www.pdfmanual4trucks.com/

OIL PAN
(Kubota - V2203 2EB - Tier II Replacement)

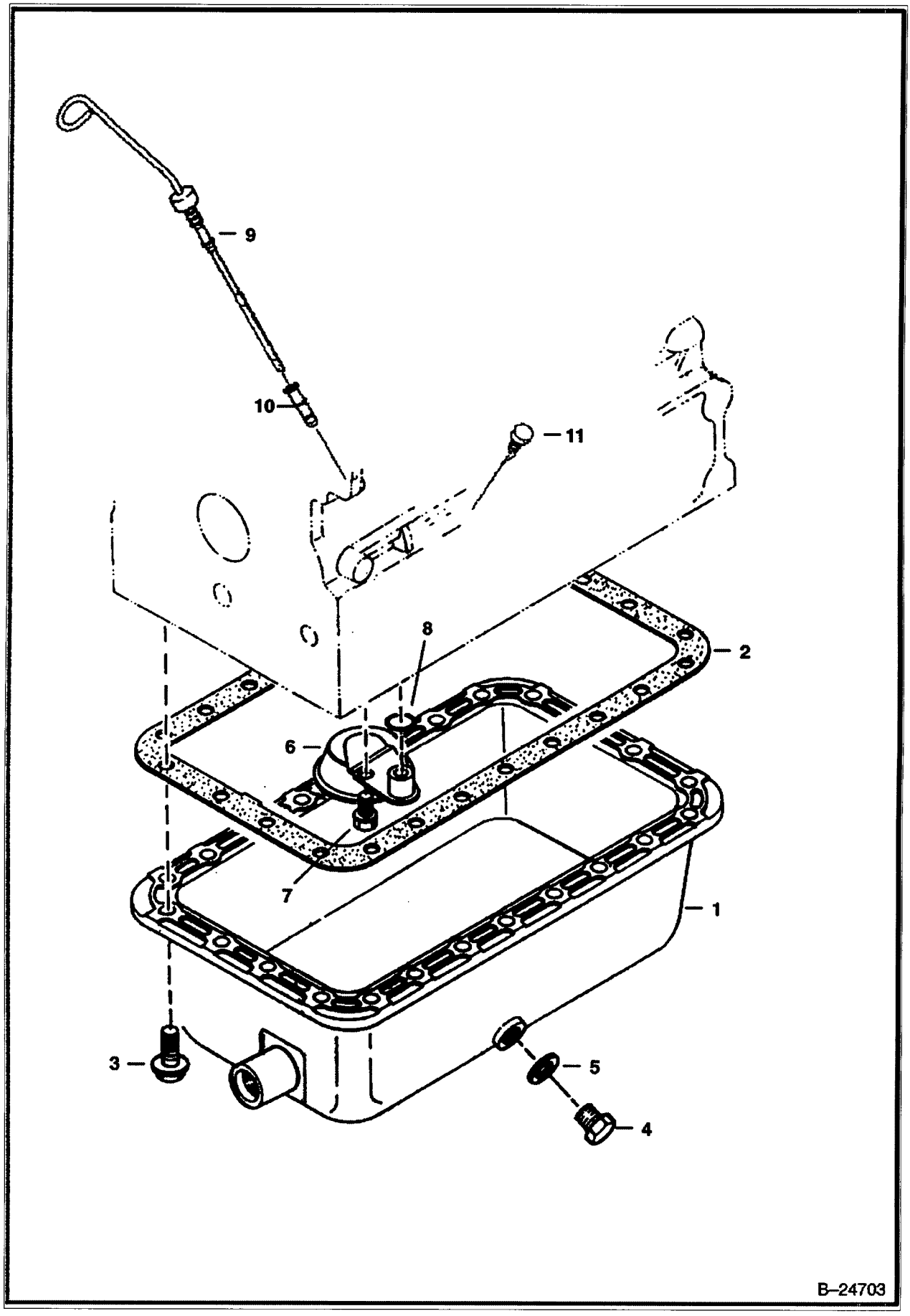

https://www.pdfmanual4trucks.com/

OIL PAN (Cont'd)
(Kubota - V2203 2EB - Tier II Replacement)

:f No	Part Number	Description	Remarks	Serial Number	Qty
1	6655151	OIL PAN			1
2	6684753	GASKET	oil pan		1
3	6653798	BOLT			24
4	6686979	PLUG	drain		1
5	6680484	GASKET			1
6	6653568	FILTER			1
7	6667421	BOLT			1
8	6684754	O-RING			1
9	6684784	GAUGE	oil		1
10	6677203	GUIDE	for long dipstick		1
11	6969804	PLUG,OIL GAUGE	Was 6684785 [A]		1

https://www.pdfmanual4trucks.com/

PISTON & CRANKSHAFT
(Kubota - V2203 2EB - Tier II Replacement)

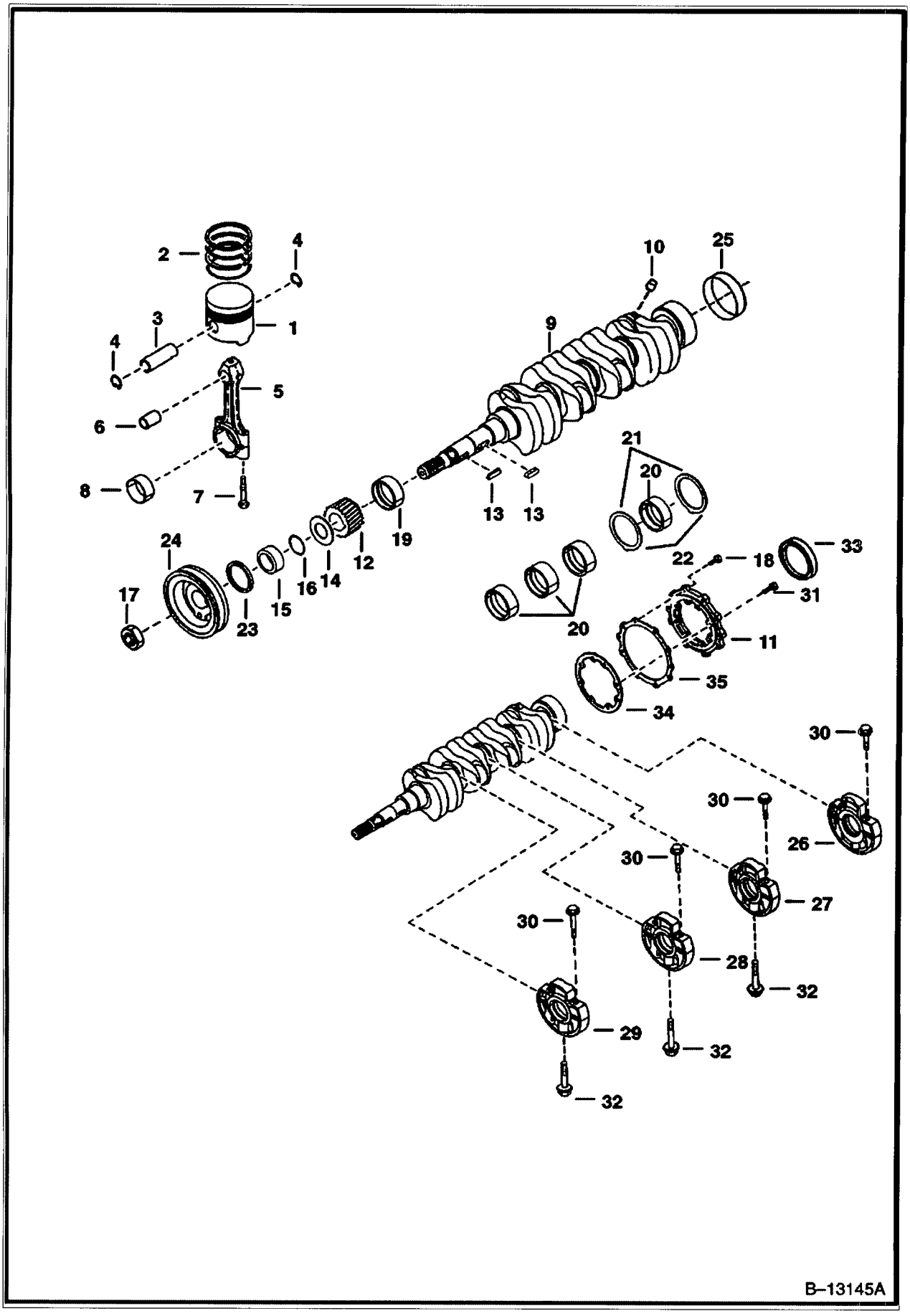

https://www.pdfmanual4trucks.com/

PISTON & CRANKSHAFT (Cont'd)
(Kubota - V2203 2EB - Tier II Replacement)

Ref No	Part Number	Description	Remarks	Serial Number	Qty
1		PISTON	NAP - Std. - Was 6667435 [A]		4
1		PISTON	NAP - (0,5 mm - .0197) - Was 6667436 [A]		4
2	6678075	RINGS	piston - Std.		4
2	6657696	RINGS	piston - (0,5 mm - .0197)		4
3	6655179	PIN			4
4	6686997	CIR-CLIP			8
5	6655181	ROD	connecting - W/Ref. 6, 7 & 8		4
6	6655243	BUSHING			4
7	6655498	BOLT			8
8	6655183	PIN	rod - Std.		4
8	6655236	PIN	rod (0,2 mm-.0079)		4
8	6655237	PIN	rod (0,4 mm-.0157)		4
9	6667437	CRANKSHAFT	Ref. 10 & 25 - Ref. 10 must be installted before using		1
10	6652633	BALL	Must be installed before using Ref. 9 crankshaft - See S/L dated 3 Jan 85		4
11	6685515	COVER			1
12	6598142	GEAR			1
13	3974546B	KEY			1
14	6653861	SLINGER	oil		1
15	3975337B	COLLAR			1
16	3974577B	O-RING			1
17	3974671B	NUT			1
18	4CM00825B	BOLT			8
19	6685486	BEARING	main - Std.		1
19	6685490	BEARING	main (0,2 mm-.0079)		1
19	6685491	BEARING	main (0,4 mm-.0157)		1
20	6685487	BEARING	main - Std.		4
20	6685492	BEARING	main (0,2 mm-.0079)		4
20	6685493	BEARING	main (0,4 mm-.0157)		4
21	6685488	WASHER	thrust - Std.		2
21	6685494	WASHER	thrust (0,2 mm-.0079)		2
21	6685495	WASHER	thrust (0,4 mm-.0157)		2
22	6685489	WASHER	thrust - Std.		2
22	6685496	WASHER	thrust (0,2 mm-.0079)		2
22	6685497	WASHER	thrust (0,4 mm-.0157)		2
23	6631664	SEAL	oil		1
24	6655235	PULLEY			1
25	6684807	BUSHING			1
26	6689503	CASE MAIN BRG	main bearing - W/Ref. 30 - Was 6685480 [A]		1
27	6685485	CASE	main bearing - W/Ref. 30		1
28	6685484	CASE	main bearing - W/Ref. 30		1
29	6685483	CASE	main bearing - W/Ref. 30		1
30	6685482	BOLT			8
31	4CM00828B	BOLT			8
32	6653821	BOLT			3
33	6684789	SEAL	oil		1
34	6684788	GASKET			1
35	6666814	GASKET			1

https://www.pdfmanual4trucks.com/

FUEL CAMSHAFT
(Kubota - V2203 2EB - Tier II Replacement)

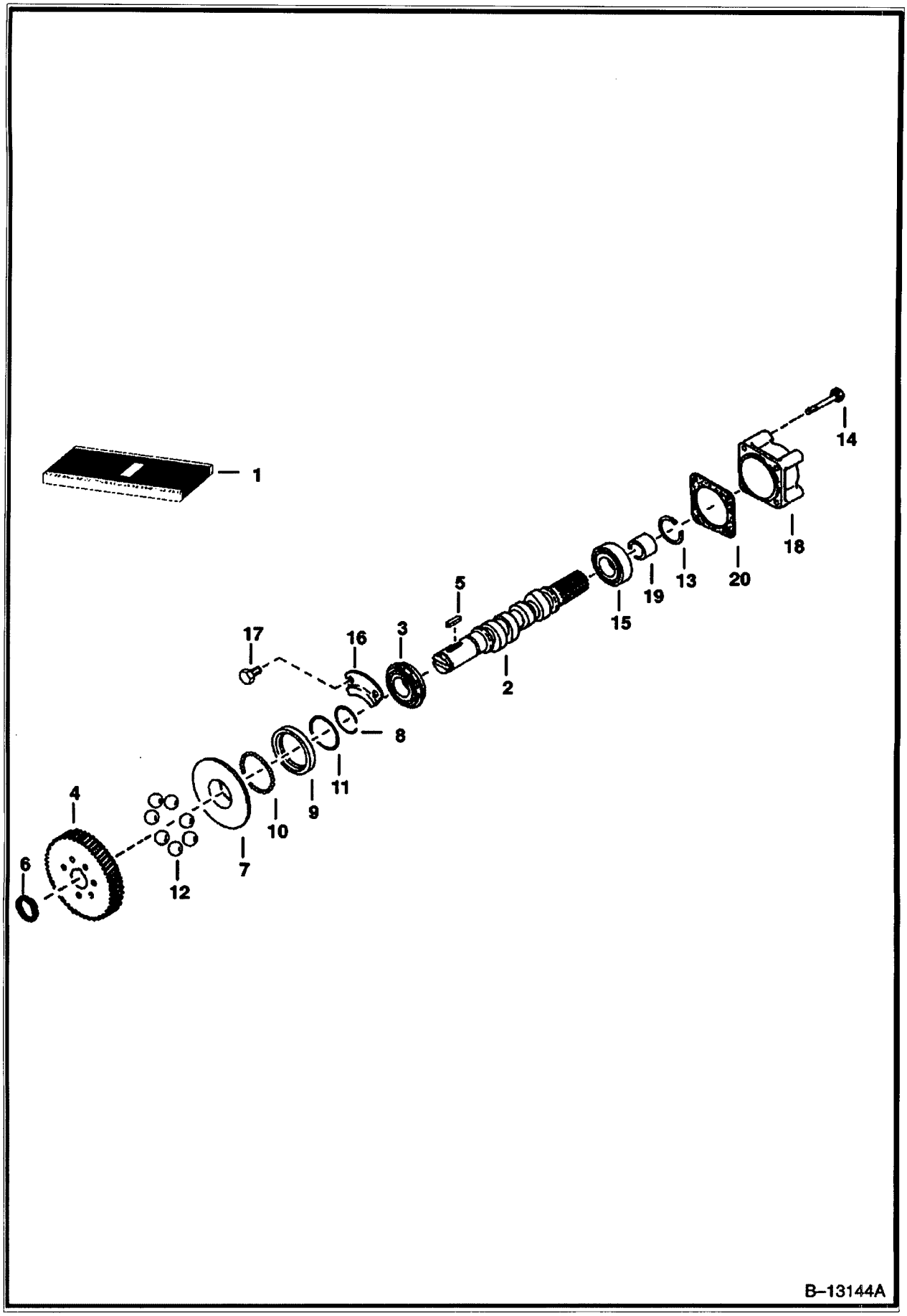

https://www.pdfmanual4trucks.com/

FUEL CAMSHAFT (Cont'd)
(Kubota - V2203 2EB - Tier II Replacement)

;f No	Part Number	Description	Remarks	Serial Number	Qty
1	6655211	CAMSHAFT	assy. - Ref. 2-14		1
2	6655875	CAMSHAFT	fuel		1
3	851242B	BEARING			1
4	6655212	GEAR	injection pump		1
5	6598099	KEY			1
6	5JM00024B	CIRCLIP	external		1
7	6655213	SLEEVE	governor		1
8	3974618B	CIRCLIP	sleeve		1
9	6655214	CASE	governor ball		1
10	10J000005B	BALL			39
11	3974620B	CIRCLIP	ball case		1
12	6655215	BALL			7
13	6598158	CIRCLIP	governor ball		1
14	6651934	BOLT			7
15	6684812	BALL BEARING			1
16	3974624B	STOPPER			1
17	6667420	BOLT			2
3	6666804	GASKET	fuel camshaft		1
,9	6598179	COLLAR			1
20	6684813	GASKET			1

https://www.pdfmanual4trucks.com/

CAMSHAFT
(Kubota - V2203 2EB - Tier II Replacement)

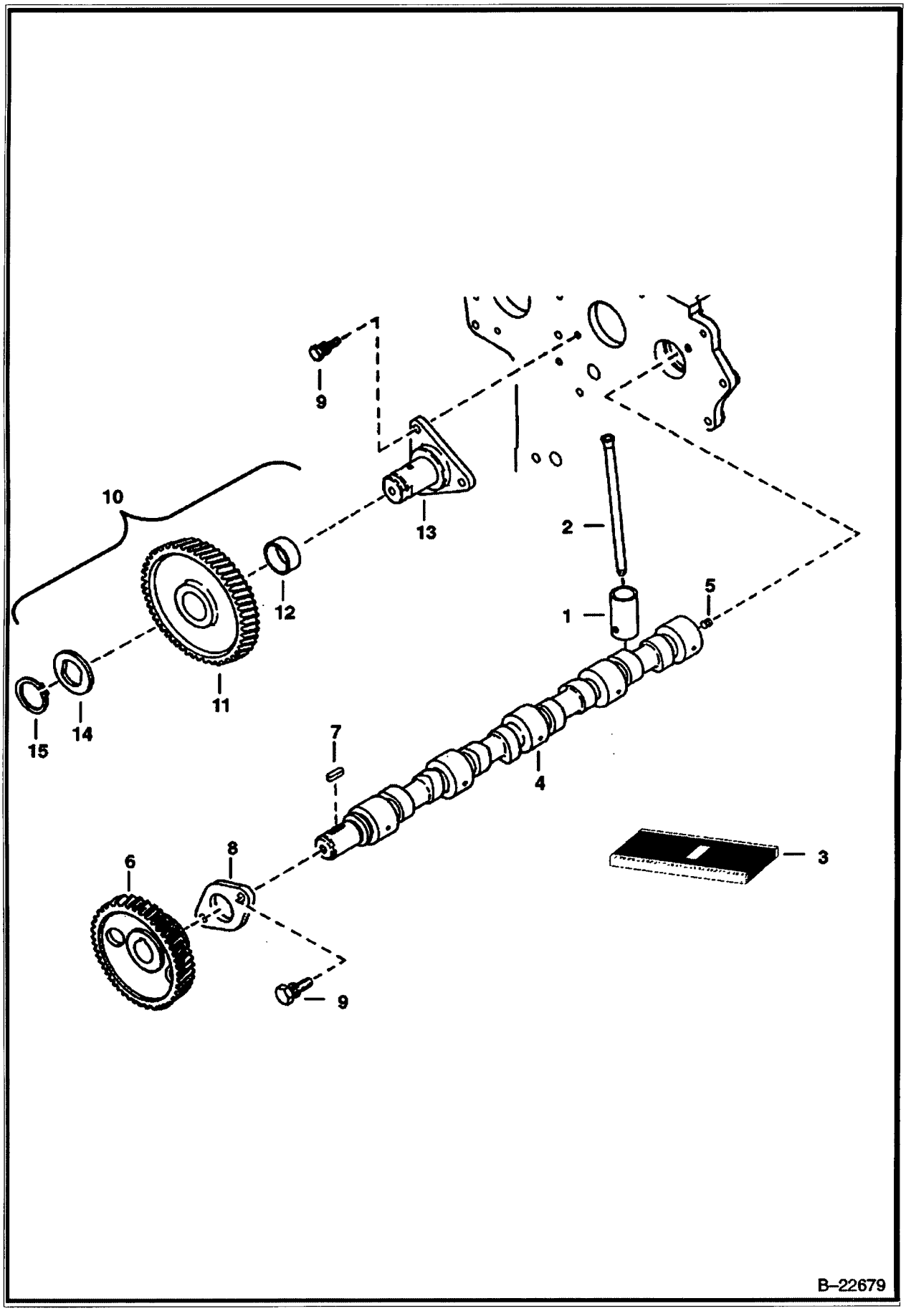

https://www.pdfmanual4trucks.com/

CAMSHAFT (Cont'd)
(Kubota - V2203 2EB - Tier II Replacement)

Ref No	Part Number	Description	Remarks	Serial Number	Qty
1	6667428	TAPPET	Was 6680707 [A]		8
2	6655176	PUSHROD			8
3	6655427	CAMSHAFT	assy. - Ref. 4-8		1
4		CAMSHAFT	NAP - Was 6655384 [A]		1
5	6652633	BALL			1
6	6653840	GEAR	camshaft		1
7	3974546B	KEY			1
8	3974547B	STOPPER	camshaft		1
9	1CM00818B	BOLT			2
10	6684793	GEAR	idle - W/Ref. 11 & 12		1
11		GEAR	NSS - idle - Order Ref. 10		2
12	6655242	BUSHING	idle gear		1
13	6684796	SHAFT			1
14	6684795	COLLAR			1
15	6667433	CIRCLIP	external		1

https://www.pdfmanual4trucks.com/

WATER PUMP
(Kubota - V2203 2EB - Tier II Replacement)

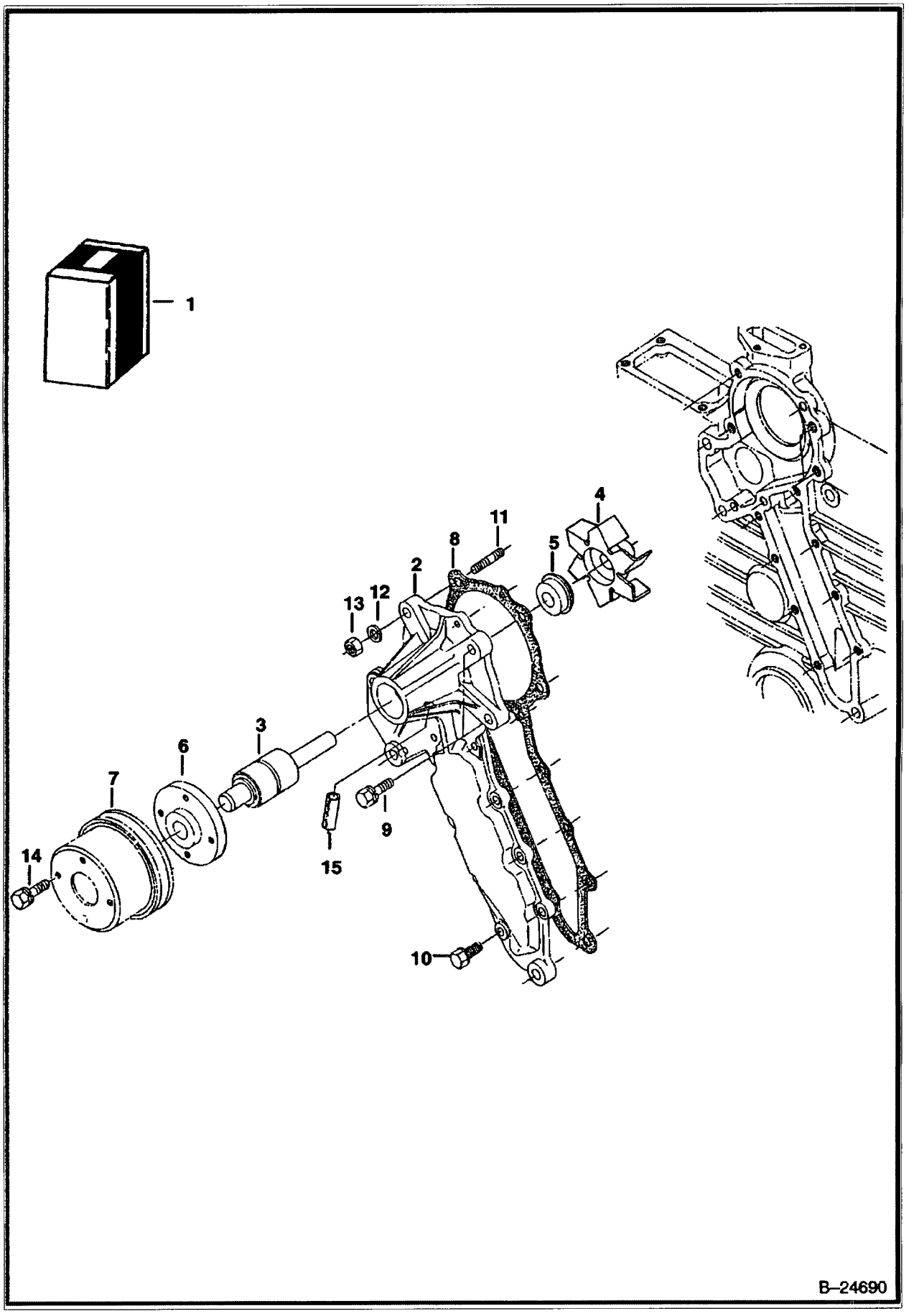

https://www.pdfmanual4trucks.com/

WATER PUMP (Cont'd)
(Kubota - V2203 2EB - Tier II Replacement)

,f No	Part Number	Description	Remarks	Serial Number	Qty
1	6686989	WATER PUMP	Ref. 2-6		1
2		BODY	NAP		1
3	6685474	BEARING			1
4	6667460	FAN	Was 6684867 [A]		1
5	6684868	SEAL			1
6	6684869	FLANGE			1
7	6674169	PULLEY	fan		1
8	6666804	GASKET			1
9	4CM00828B	BOLT			2
10	6652580	BOLT			6
11	3974267B	STUD			2
12	6667422	WASHER	spring		2
13	6652792	NUT			2
14	29CM612	BOLT			4
15	6683174	ROLL PIN			1

https://www.pdfmanual4trucks.com/

WATER FLANGE & THERMOSTAT
(Kubota - V2203 2EB - Tier II Replacement)

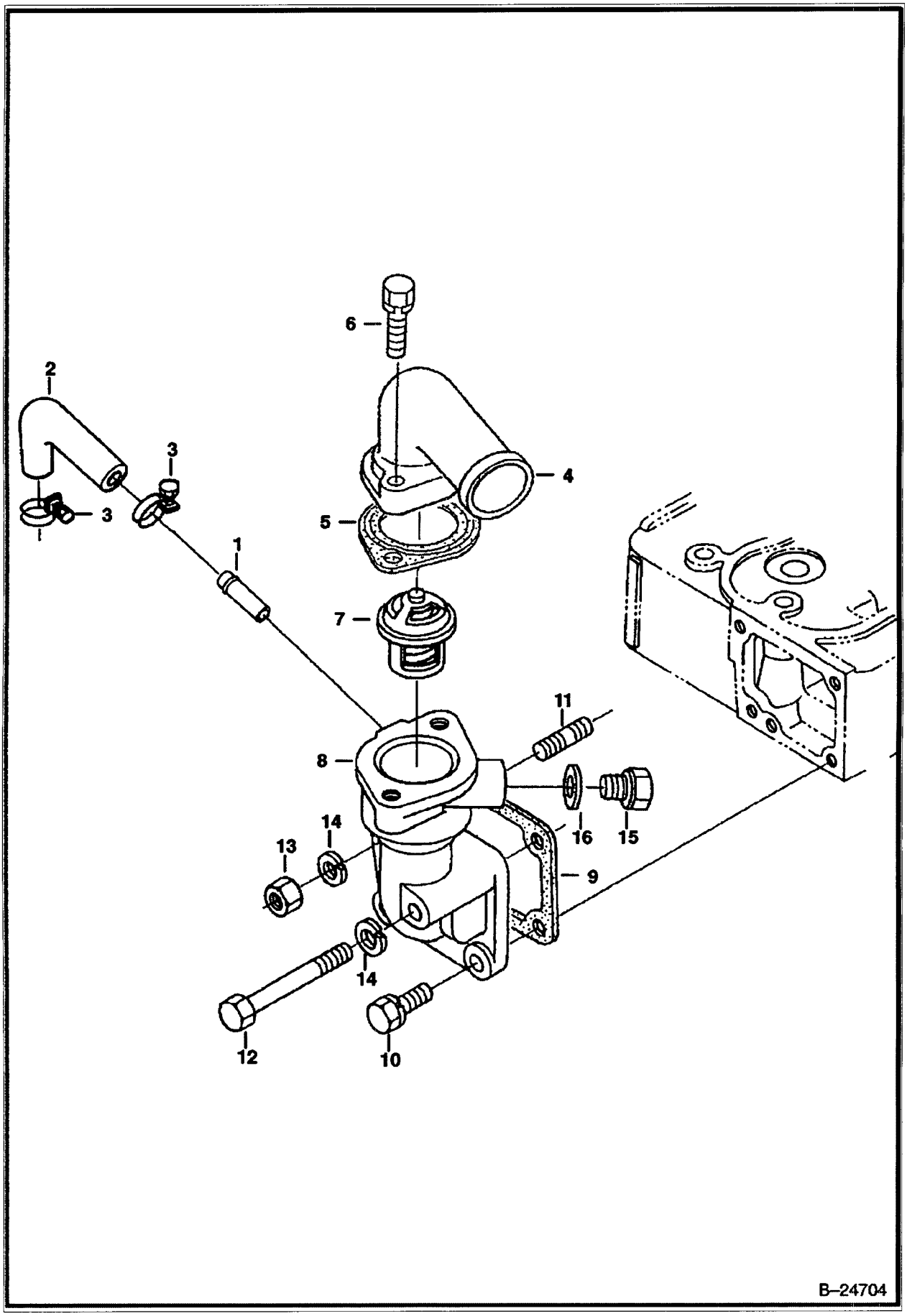

https://www.pdfmanual4trucks.com/

WATER FLANGE & THERMOSTAT (Cont'd)
(Kubota - V2203 2EB - Tier II Replacement)

f ..o	Part Number	Description	Remarks	Serial Number	Qty
1	6655880	PIPE	water return		1
2	6686988	PIPE	water return		1
3	3974679B	BAND	pipe		2
4	6651489	COVER	thermostat		1
5	6684863	GASKET	thermostat cover		1
6	1CM00835B	BOLT			2
7	6674172	THERMOSTAT			1
8	6674167	FLANGE	W/Ref. 1		1
9	6666802	GASKET	water flange - Was 6684860 [A]		1
10	4CM00822B	BOLT			2
11	6652670	STUD			1
12	1CM00865B	BOLT			1
13	6652792	NUT			1
14	6667422	WASHER			1
15	6649536	PLUG			1
16	6653562	GASKET			1

https://www.pdfmanual4trucks.com/

MANIFOLDS
(Kubota - V2203 2EB - Tier II Replacement)

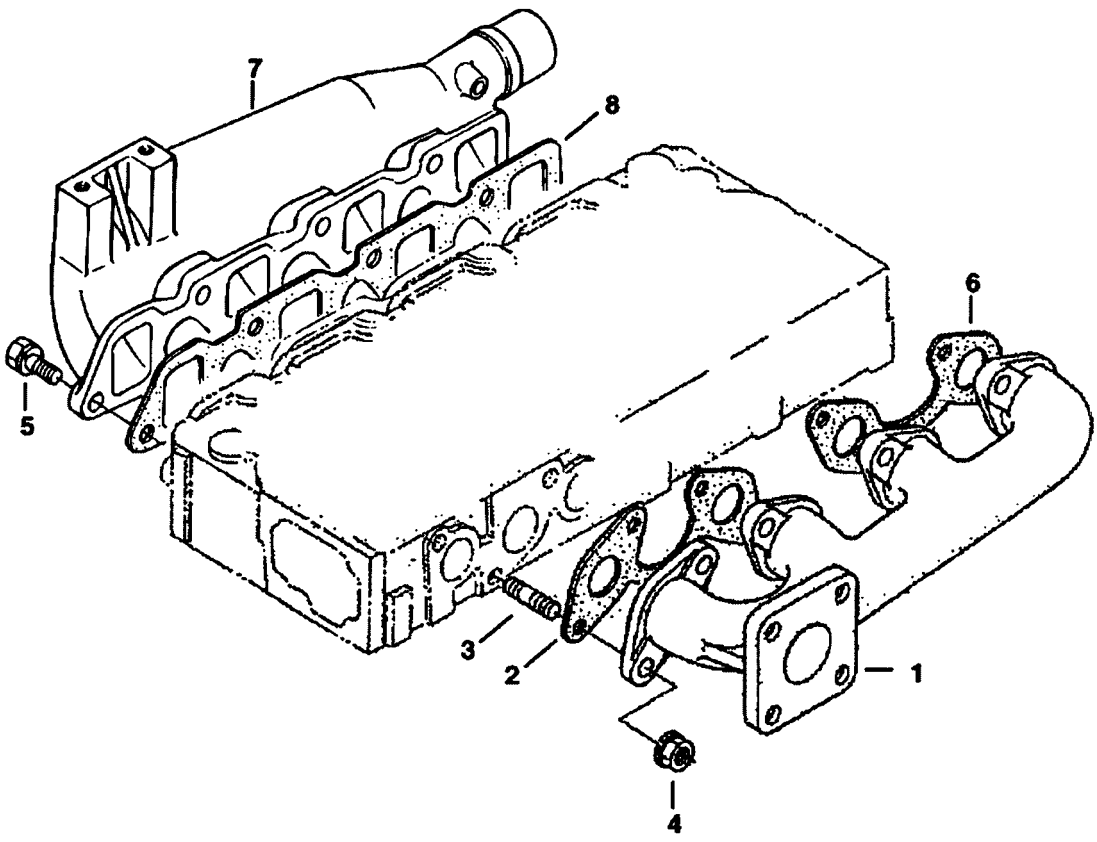

B–24705

https://www.pdfmanual4trucks.com/

MANIFOLDS (Cont'd)
(Kubota - V2203 2EB - Tier II Replacement)

f .o	Part Number	Description	Remarks	Serial Number	Qty
1	6685475	MANIFOLD	exhaust		1
2	6685878	GASKET			4
3	6652670	STUD			8
4	6682532	NUT			8
5	4CM00822B	BOLT			7
6	6684879	GASKET	muffler		1
7	6686990	MANIFOLD	intake		1
8	6685876	GASKET			1

https://www.pdfmanual4trucks.com/

ENGINE STOP LEVER
(Kubota - V2203 2EB - Tier II Replacement)

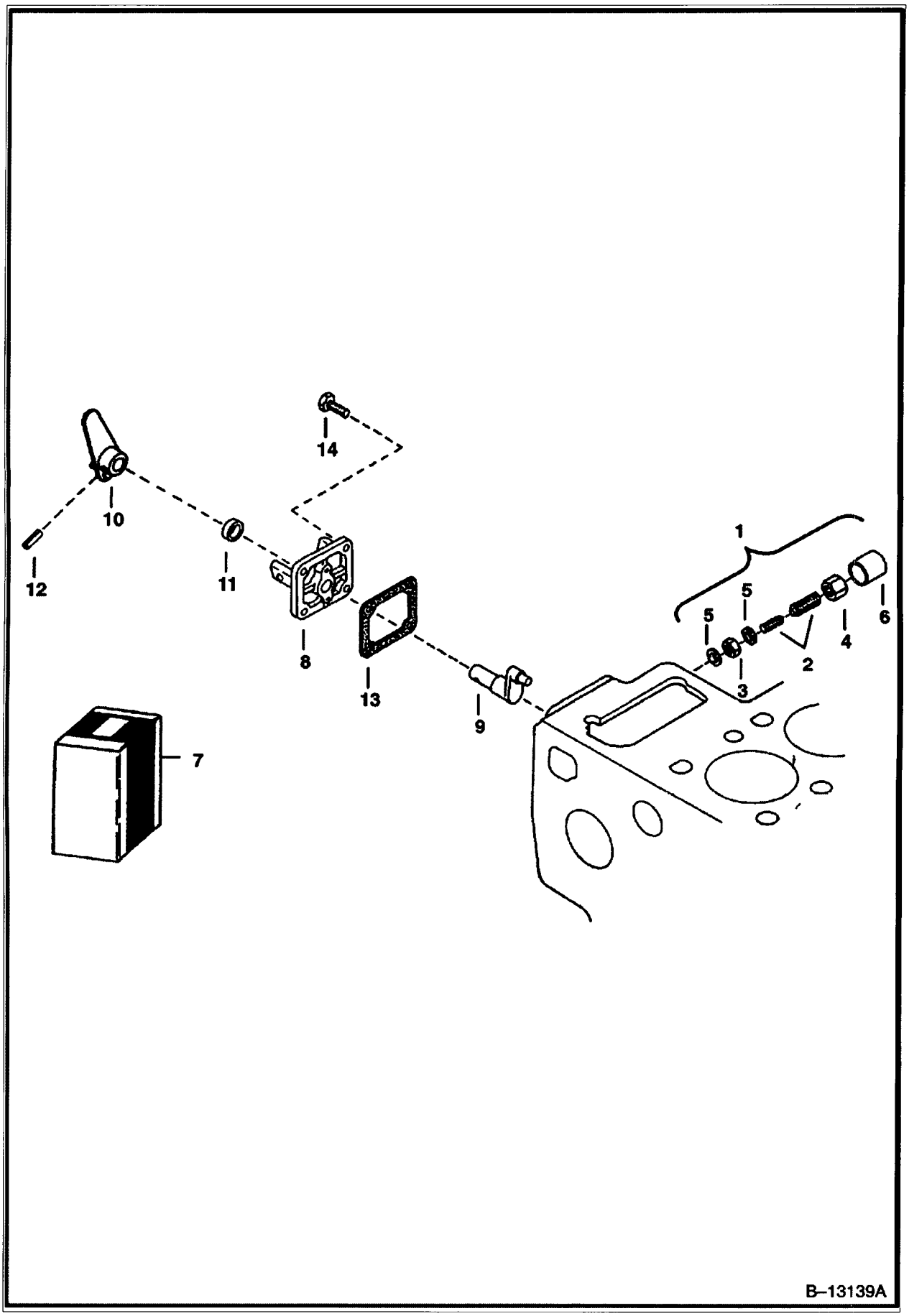

https://www.pdfmanual4trucks.com/

ENGINE STOP LEVER (Cont'd)
(Kubota - V2203 2EB - Tier II Replacement)

f No	Part Number	Description	Remarks	Serial Number	Qty
1	3974975B	APPARATUS	assy., idle - Ref. 2-6		1
2	6653906	BOLT ASSY.	adjusting		1
3	3974425B	NUT	adjusting		1
4	3974978B	NUT			1
5	3974095	MET-GASK			2
6	3974979B	CAP			1
7	6676060	LEVER ASSY.	eng. stop - Ref. 8-12		1
8	6655540	COVER	injection pump		1
9	6655231	SHAFT	lever		1
10	6655232	LEVER	engine stop		1
11	6685476	SEAL	oil		1
12	6598098	PIN	spring		1
13	6666783	GASKET	pump cover		1
14	6652580	BOLT			3

https://www.pdfmanual4trucks.com/

GOVERNOR
(Kubota - V2203 2EB - Tier II Replacement)

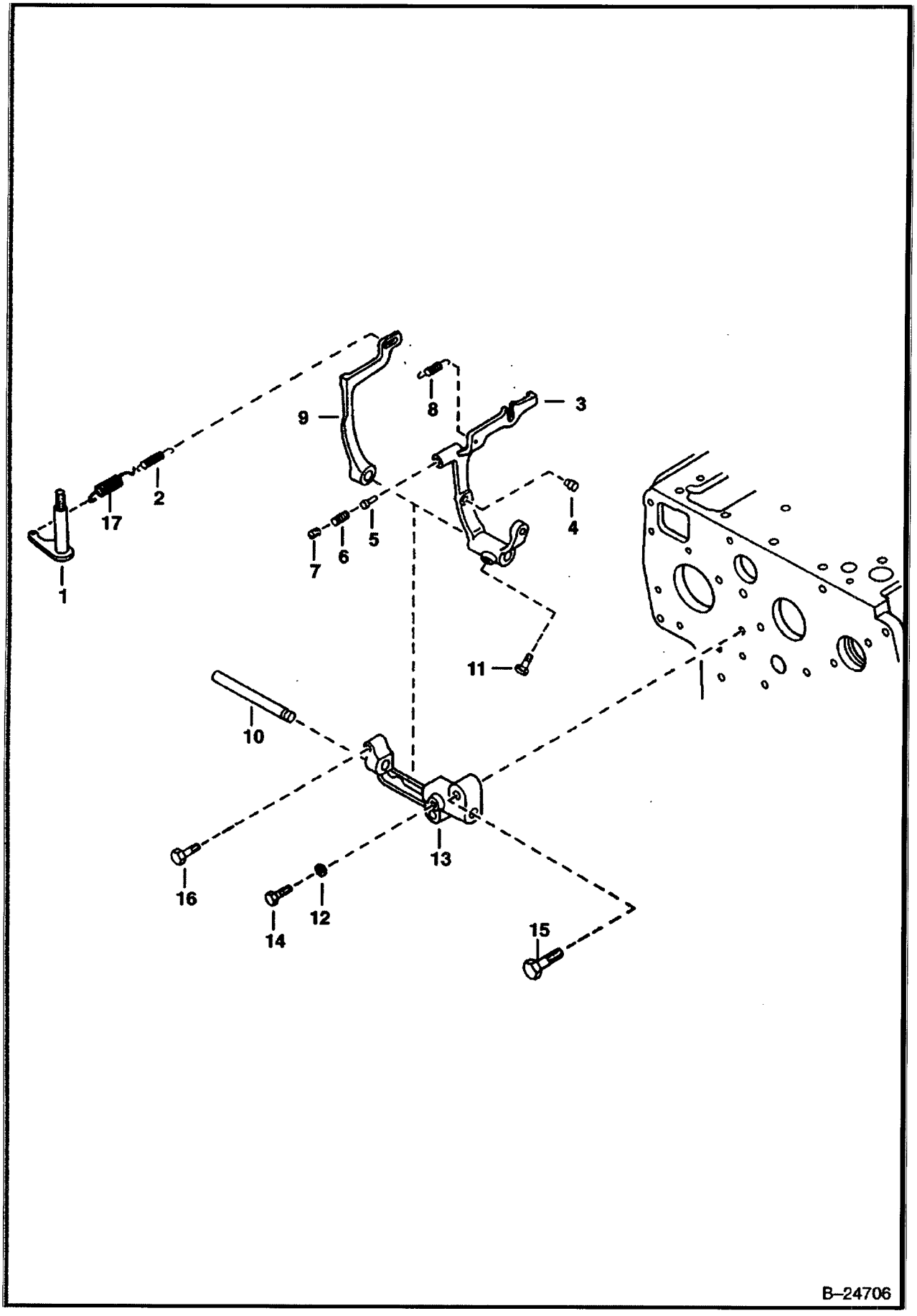

https://www.pdfmanual4trucks.com/

GOVERNOR (Cont'd)
(Kubota - V2203 2EB - Tier II Replacement)

f NO	Part Number	Description	Remarks	Serial Number	Qty
1	6598174	LEVER	governor		1
2	6655227	SPRING			1
3	6655224	LEVER	fork - W/Ref. 4-7		1
4		PIN	NSS		2
5		PIN	NSS		1
6		SPRING	NSS		1
7		SCREW	NSS		1
8	6655225	SPRING			1
9	6655877	LEVER			1
10	6684833	SHAFT			1
11	6680830	BOLT			1
12	6667419	WASHER			2
13	6653916	HOLDER	Was 6684834 [A]		1
14	3974192B	BOLT			1
15	6680706	BOLT			2
16	6685464	BOLT			1
17	6655878	SPRING	governor		1

https://www.pdfmanual4trucks.com/

SPEED CONTROL PLATE
(Kubota - V2203 2EB - Tier II Replacement)

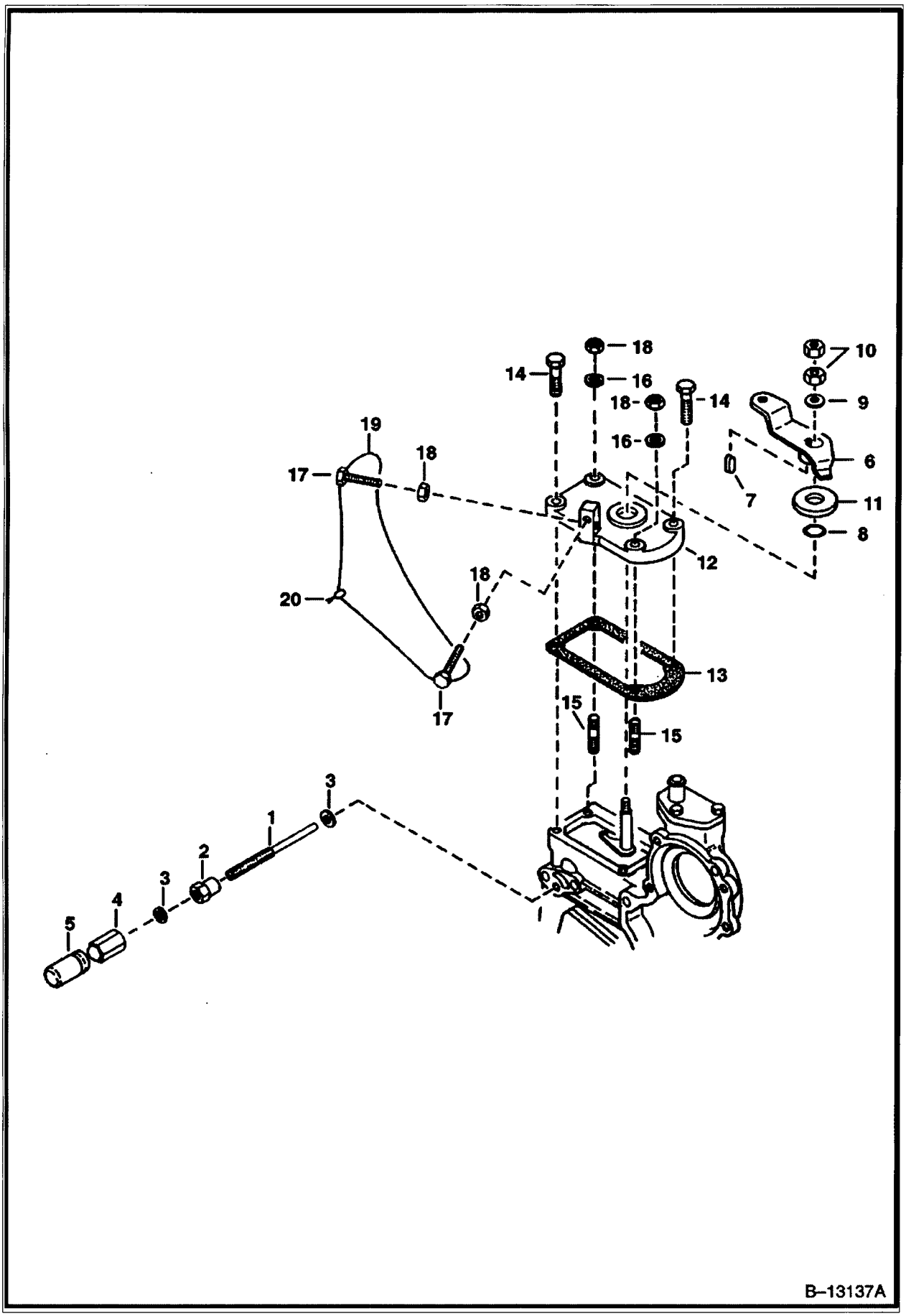

https://www.pdfmanual4trucks.com/

SPEED CONTROL PLATE (Cont'd)
(Kubota - V2203 2EB - Tier II Replacement)

.f No	Part Number	Description	Remarks	Serial Number	Qty
1	6684836	BOLT	adjusting		1
2	3974971B	NUT			1
3	3974972B	GASKET			2
4	6655223	NUT	cap		1
5	6653905	CAP			1
6	6598176	LEVER	speed control		1
7	15JM00048B	KEY	feather		1
8	3966512B	O-RING	Was 6686986 [A]		1
9	6667451	WASHER	plain		1
10	1DM8	NUT			2
11	3974644B	PLATE	friction		1
12	6641231	PLATE	speed control		1
13	6666792	GASKET			1
14	4CM00620B	BOLT			2
15	6652764	STUD			2
16	6667419	WASHER	spring		2
17	6655228	STOPPER			2
3	1DM6	NUT			4
19		WIRE	NAP		1
20		LEAD	NAP - sealing		1

https://www.pdfmanual4trucks.com/

FUEL & INJECTION PUMPS
(Kubota - V2203 2EB - Tier II Replacement)

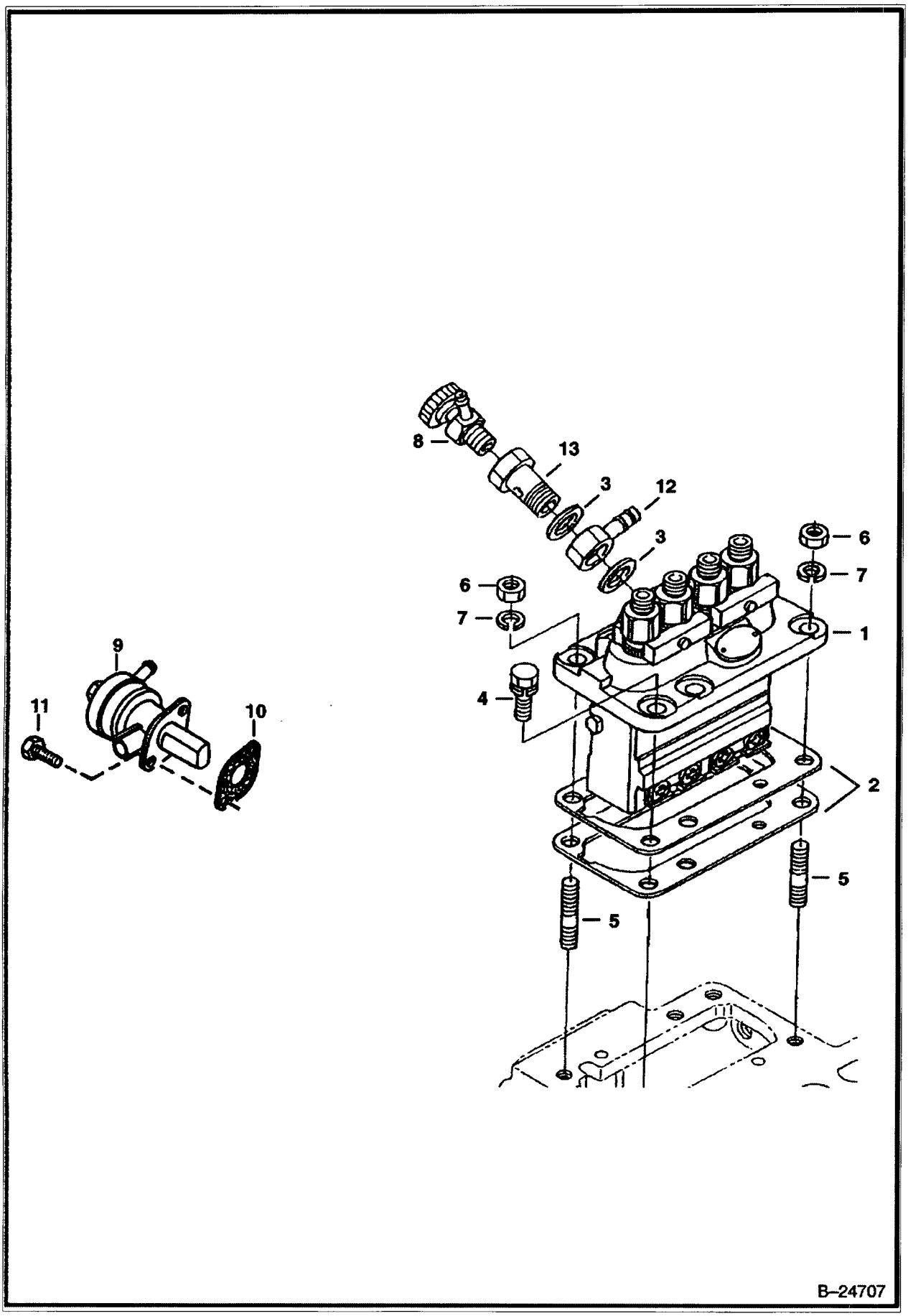

https://www.pdfmanual4trucks.com/

FUEL & INJECTION PUMPS (Cont'd)
(Kubota - V2203 2EB - Tier II Replacement)

Ref No	Part Number	Description	Remarks	Serial Number	Qty
1	6674676	PUMP			1
2	6682514	SHIM	0.20 mm		x
2	6682515	SHIM	0.25 mm		x
2	6655210	SHIM	0.30 mm		x
3	3975389B	GASKET			2
4	4CM00822B	BOLT			4
5	6652670	STUD			2
6	6652792	NUT			2
7	6667422	WASHER	spring		2
8	6598102	VALVE	jet start		1
9	6655216	FUEL PUMP			1
10	6686037	GASKET	fuel pump		1
11	4CM00615B	BOLT			2
12	6655515	JOINT	eye		1
13	3975428B	SCREW	hollow		1

https://www.pdfmanual4trucks.com/

INJECTOR NOZZLES
(Kubota - V2203 2EB - Tier II Replacement)

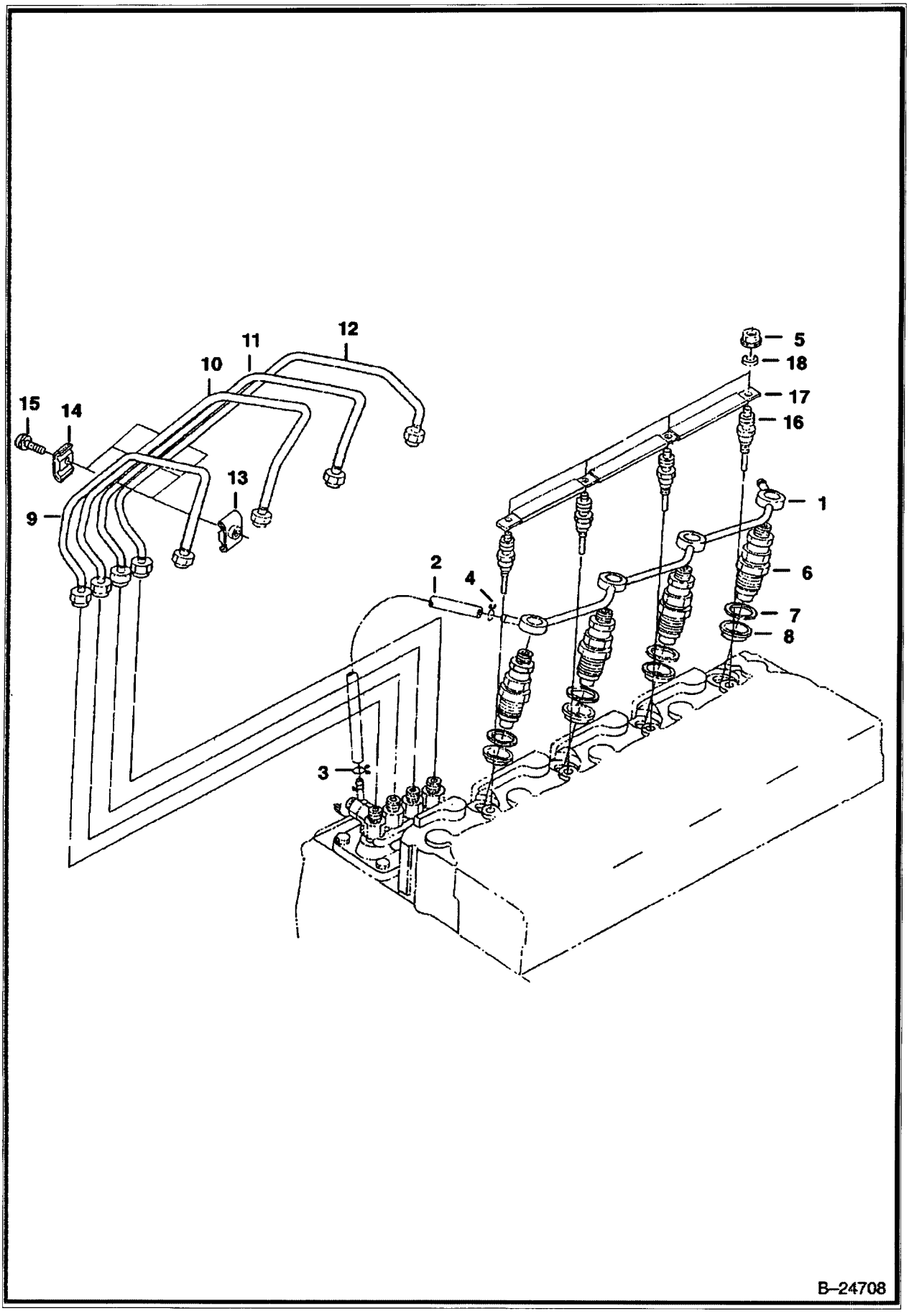

https://www.pdfmanual4trucks.com/

INJECTOR NOZZLES (Cont'd)
(Kubota - V2203 2EB - Tier II Replacement)

f No	Part Number	Description	Remarks	Serial Number	Qty
1	6682521	PIPE			1
2	6681931	PIPE	fuel over flow		1
3	6680795	CLAMP	pipe		1
4	6654718	CLAMP	pipe		1
5	6670472	NUT			4
6	6722147	HOLDER KIT	nozzle		4
7	6655218	GASKET			4
8	6655872	HEAT SEAL			4
9	6655219	PIPE	injection		1
10	6655220	PIPE	injection		1
11	6655221	PIPE			1
12	6655222	PIPE	injection		1
13	6652688	CLAMP	pipe		3
14	6680786	CLAMP	pipe		3
15	3974260B	BOLT			3
16	6655233	GLOW PLUG			4
17	6655234	CORD	glow plug - Was 6686987 [A]		3
3	6670473	WASHER			1

https://www.pdfmanual4trucks.com/

AIR CLEANER

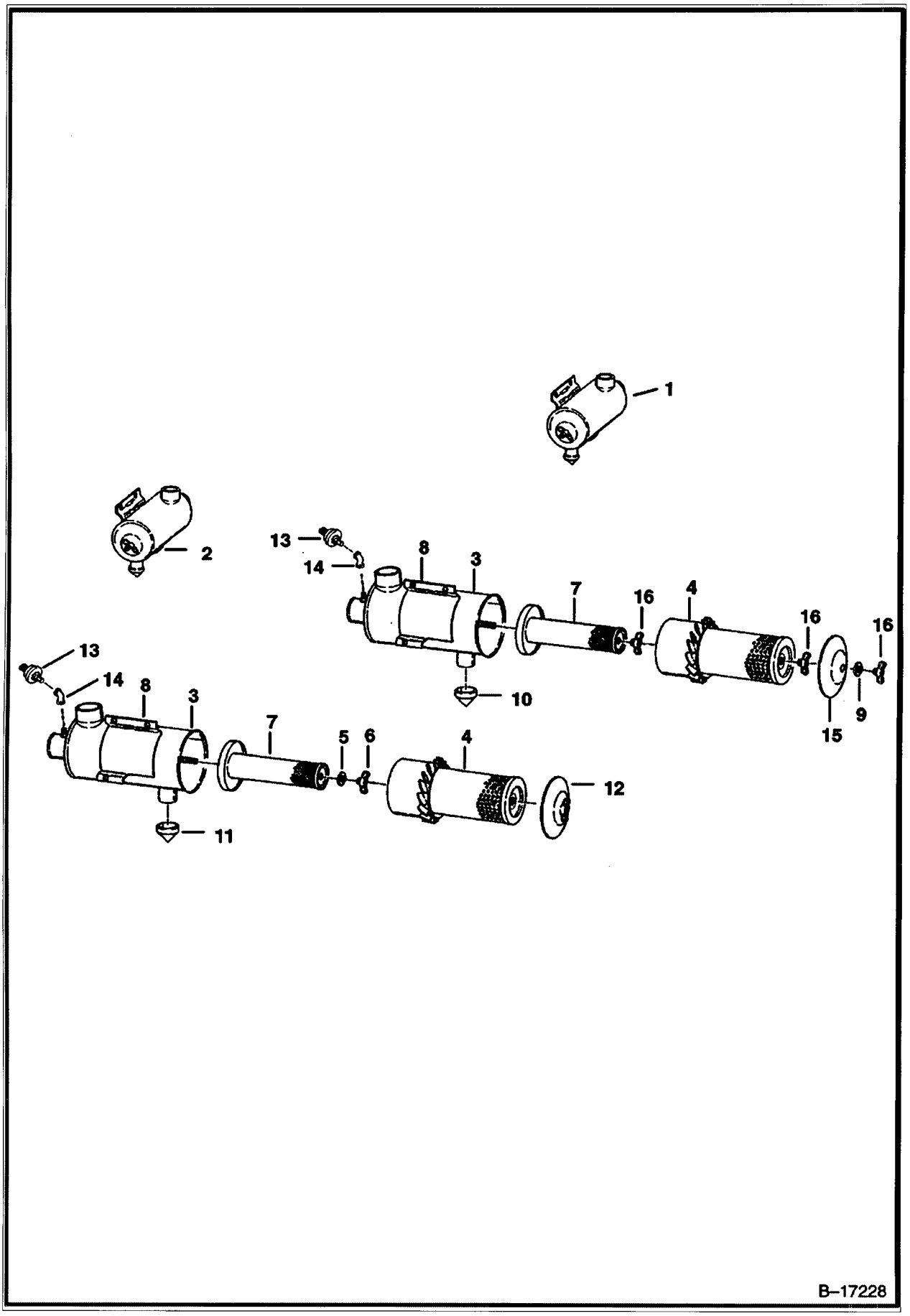

https://www.pdfmanual4trucks.com/

AIR CLEANER (Cont'd)

Ref No	Part Number	Description	Remarks	Serial Number	Qty
1	6700711	AIR CLEANER	W/ 1.5" (38,1 mm) evacuator valve - Ref. 3, 4, 7-10, 15 & 16 - Was 6661400 [A]		1
2		AIR CLEANER	NAP - W/ 2" (50,8 mm) evacuator valve - Ref. 3-8 & 11-14 - Order Ref. 1 - Was 6653506 [A]		1
3		TANK	NAP		1
4	6598492	ELEMENT			1
5	888527	SHIM	Was 886527B [A]		2
6	3291290B	WING NUT			2
7	6598362	ELEMENT			1
8	866028B	CLAMP			1
9	6661244	WASHER			1
10	6655938	VALVE	evacuator - 1.5" (38,1 mm) I.D.		1
11	6655937	VALVE	evacuator - 2" (50,8 mm) I.D.		1
12	6630941	COVER	W/wing nut		1
13	6665371	SWITCH	condition indicator		1
14	6725502	ELBOW	Was 23F000001B [A]		1
15	6661242	COVER			1
6	6661243	WING NUT			3

https://www.pdfmanual4trucks.com/

ACCESS COVER
(Cleanout - Lower Front of Chaincase)

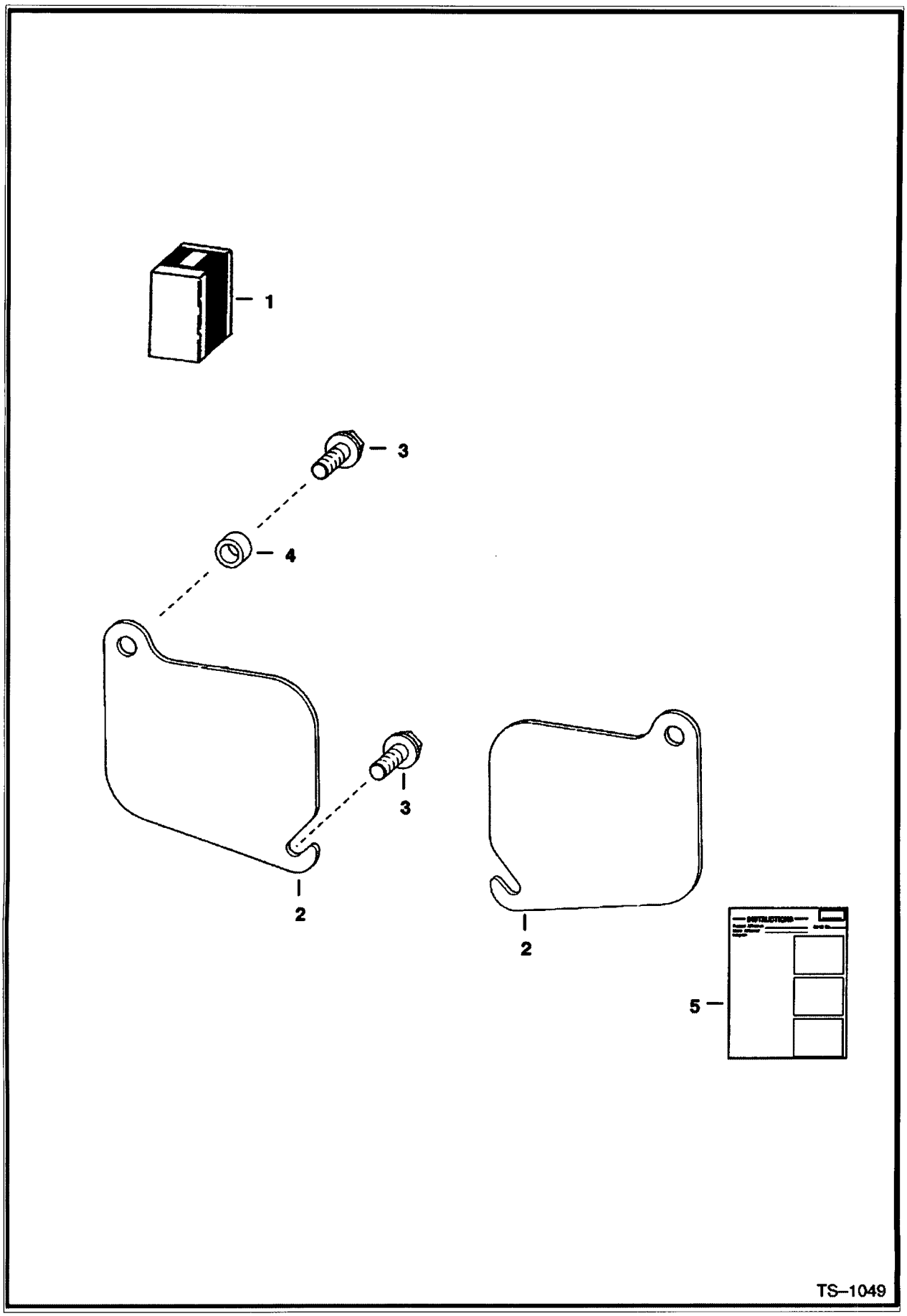

https://www.pdfmanual4trucks.com/

ACCESS COVER (Cont'd)
(Cleanout - Lower Front of Chaincase)

Ref No	Part Number	Description	Remarks	Serial Number	Qty
1	6577880	KIT	Ref. 2-5		1
2		COVER	NAP - W/Ref. 4 - Was 6577812		2
2	6737088	COVER			2
3	84G3720	BOLT			4
4	6562619	BUSHING	not in kit		2
5	6570931	INSTRUCTIONS			1

https://www.pdfmanual4trucks.com/

ACCESS COVER
(Hyd. Tank Fill Cap)

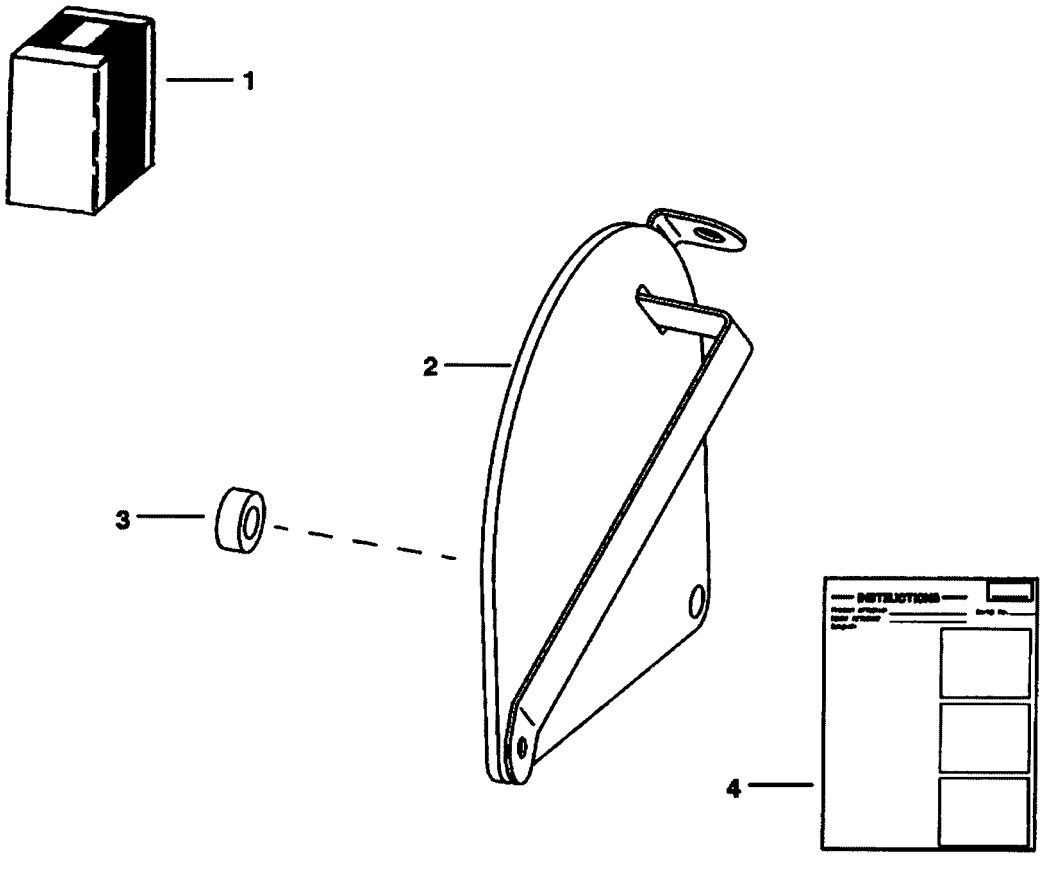

TS–1133

https://www.pdfmanual4trucks.com/

ACCESS COVER (Cont'd)
(Hyd. Tank Fill Cap)

f No	Part Number	Description	Remarks	Serial Number	Qty
1	6700710	KIT	Ref. 2-4		1
2	6700347	COVER			1
3	6700704	BUSHING			1
4	6720185	INSTRUCTIONS			1

https://www.pdfmanual4trucks.com/

AIR DEFLECTOR KIT

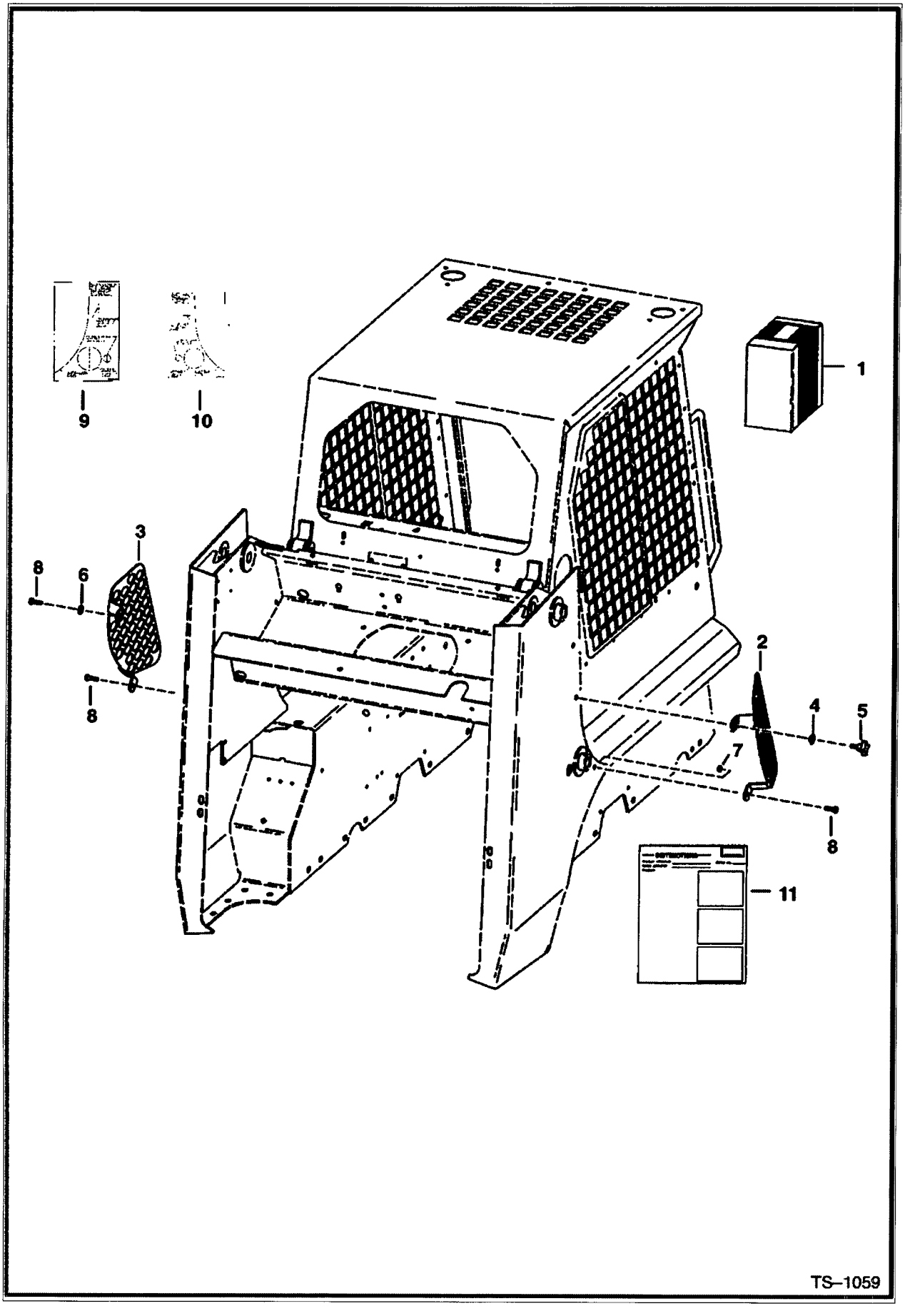

https://www.pdfmanual4trucks.com/

AIR DEFLECTOR KIT (Cont'd)

⁄f No	Part Number	Description	Remarks	Serial Number	Qty
1	6702351	KIT	air deflector		1
2	6702346	SCREEN	R.H.		1
3	6702347	SCREEN	L.H.		1
4	6702986	NUT	spacer		1
5	6703090	HANDLE			1
6	27E6	WASHER 5			1
7	61D000006B	NUT			1
8	84G3716	SCREW 5			3
9		TEMPLATE	NAP - R.H. - Order Ref. 11		1
10		TEMPLATE	NAP - L.H. - Order Ref. 11		1
11	6720621	INSTRUCTIONS			1

https://www.pdfmanual4trucks.com/

AXLE SEAL KIT

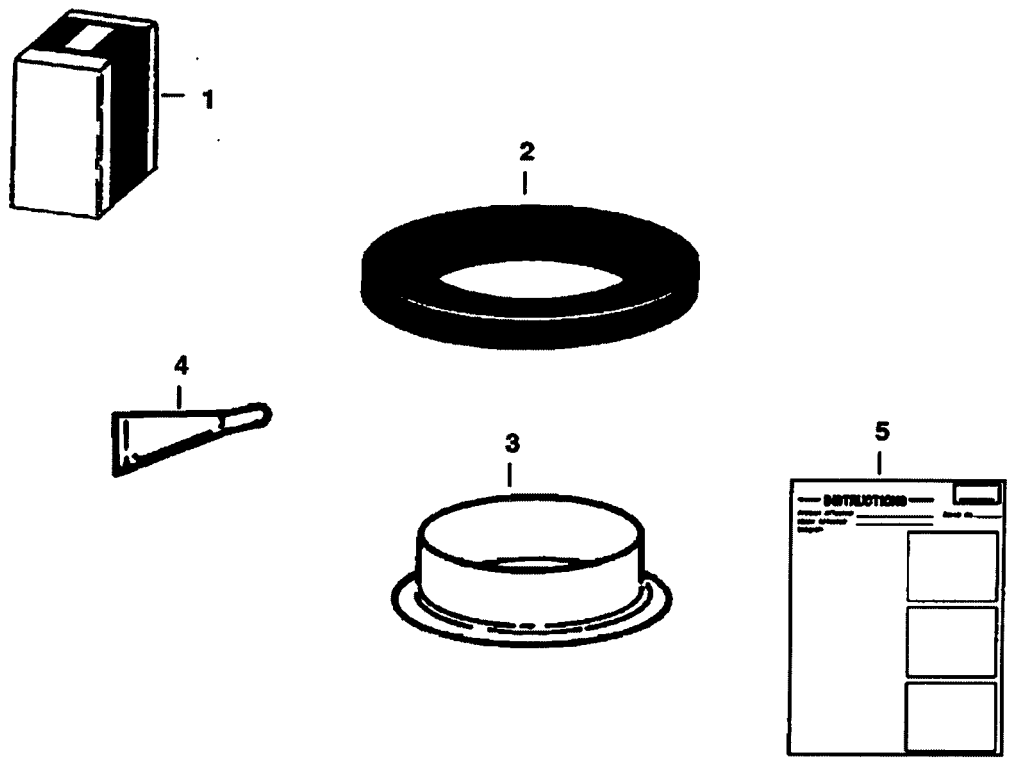

B–4041

https://www.pdfmanual4trucks.com/

AXLE SEAL KIT (Cont'd)

f No	Part Number	Description	Remarks	Serial Number	Qty
1	6722907	KIT	Ref. 2-5		1
2	6658228	SEAL			1
3	6662306	RING			1
4	6598485	SEALANT			1
5	6722908	INSTRUCTIONS			1

https://www.pdfmanual4trucks.com/

BACK-UP ALARM
(S/N 5127 16001 & Abv, 5086 30001-95347, 5139 11001 & Abv, 5114 76001 & Abv

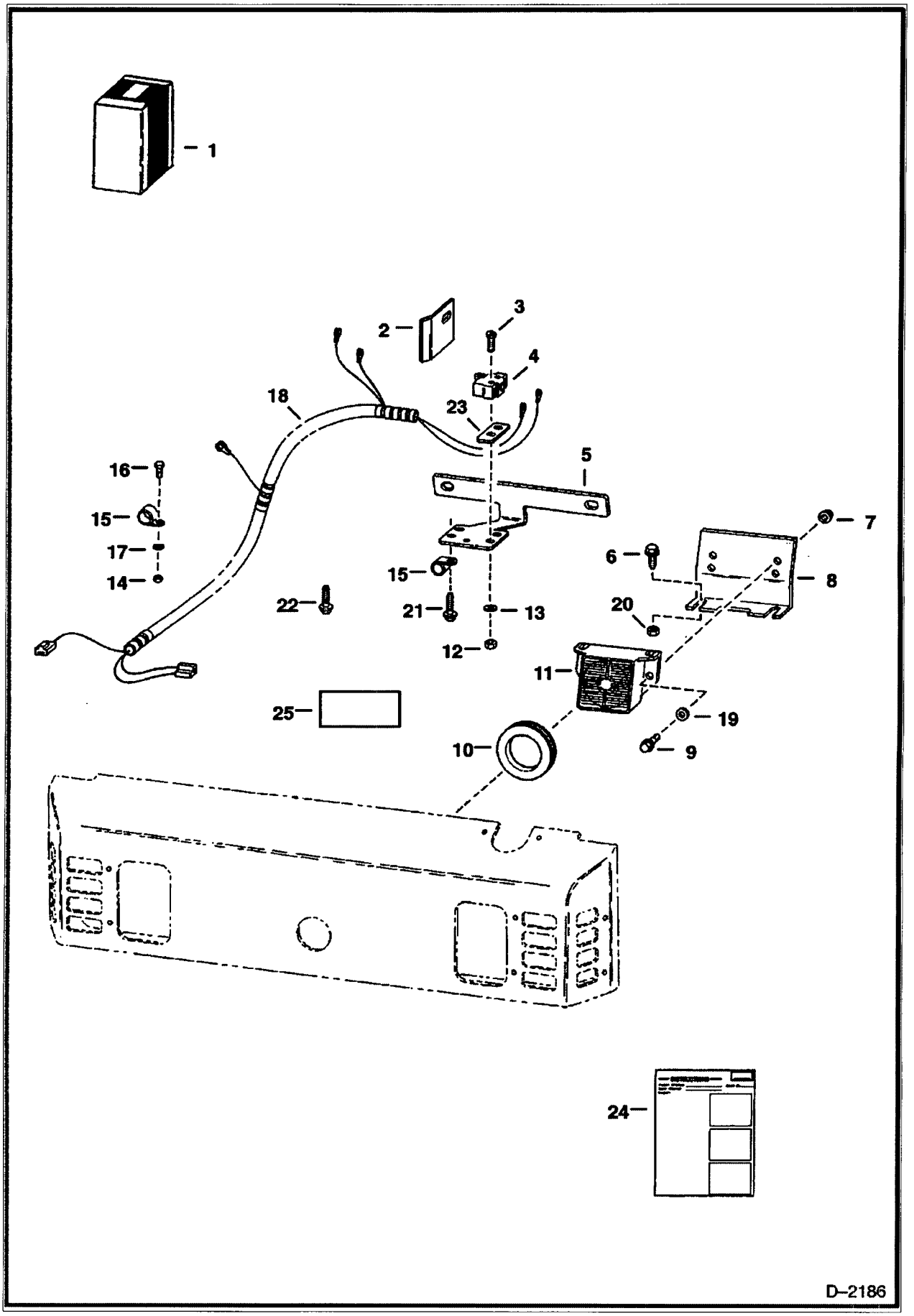

https://www.pdfmanual4trucks.com/

BACK-UP ALARM (Cont'd)
(S/N 5127 16001 & Abv, 5086 30001-95347, 5139 11001 & Abv, 5114 76001 & Abv

Ref No	Part Number	Description	Remarks	Serial Number	Qty
1	6704442	KIT	Ref. 2 - 24		1
2		BRACKET	See Illustration BACK-UP ALARM/ C3487 NAP - switch - 2.75" (69,9 mm) wide - Order 7100153 mount & (2) of 6713793 bracket - Was 6578589 [A]		2
2		BRACKET	See Illustration BACK-UP ALARM/ C3487 NAP - switch - for BICS loaders - 2" (50,8 mm) wide - Order 7100153 mount & (2) of 6713793 bracket - Was 6710285 [A]		2
3	85G000616B	SCREW			4
3	59G000616B	BOLT			4
4	6646781	SWITCH	alarm		2
5		MOUNT	See Illustration BACK-UP ALARM/ C3487 NAP - USE W/ 2.75" (69,9 MM) WIDE 6578589 BRACKET, Ref. 2 - ORDER 7100153 MOUNT & (2) OF 6713793 BRACKET - WAS 6578588 [A]		1
5		MOUNT	See Illustration BACK-UP ALARM/ C3487 NAP - USE W/ 2"(50,8 MM) WIDE 6710285 BRACKET, Ref. 2 - FOR BICS LOADERS - ORDER 7100153 MOUNT & (2) OF 6713793 BRACKET - WAS 6710284 [A]		1
5	7100153	MOUNT			1
6	35C516	BOLT 10			2
7	83D4	NUT 10			2
8	6704163	MOUNT	switch		1
9	17C000410B	BOLT			2
10	6577545	GROMMET			1
11	6599931	ALARM			1
11	6668879	DECAL			1
2	12D000006B	NUT	no longer in kit - Used W/Ref. 3 (85G-616 bolt)		4
13	17E000006B	WASHER	no longer in kit - Used W/Ref. 3 (85G-616 Bolt)		4
14	61D4	NUT 5			1
15	30H000021B	CLAMP			2
16	17C412	BOLT 5			1
17	6E4	WASHER 10			1
18	6704358	HARNESS			1
19	25E13	WASHER 5			2
20	61D5	NUT			2
21	84G3112	BOLT 5			1
??	25G000412B	BOLT			1
_3	6702593	SPACER			2
24	6722083	INSTRUCTIONS			1
25	6737189	DECAL	Warning		1

https://www.pdfmanual4trucks.com/

BACK-UP ALARM
(S/N 5158 11001-29999, 5162 11001-19999, 5086 95348 & Abv)

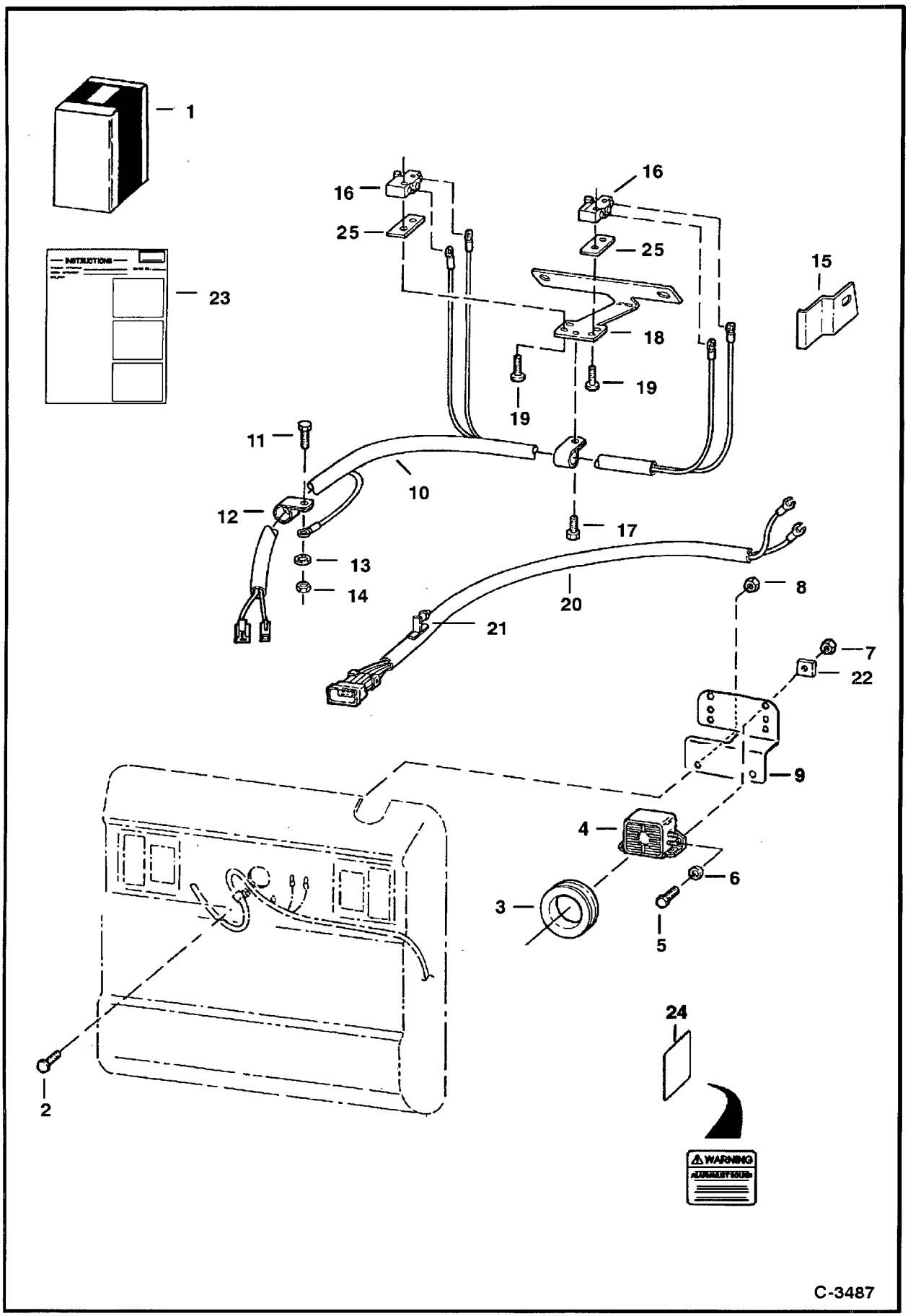

https://www.pdfmanual4trucks.com/

BACK-UP ALARM (Cont'd)
(S/N 5158 11001-29999, 5162 11001-19999, 5086 95348 & Abv)

Ref No	Part Number	Description	Remarks	Serial Number	Qty
1	6714980	KIT	backup alarm - Ref. 2-23		1
2	37C512	BOLT			2
3	6577545	GROMMET			1
4	6599931	ALARM	backup		1
4	6668879	DECAL			1
5	35C410	BOLT 5	Was 17C000410B [B]		2
6	25E13	WASHER 5	not in kit		2
7	61D5	NUT			2
8	97D000004B	NUT	Was 83D000004B [B]		2
9	6733970	MOUNT	Was 6707726 [A]		1
10	6704358	HARNESS			1
11	17C412	BOLT 5			1
12	30H000019B	CLAMP	insulated - Was 30H000021B [B,D]		2
13	6E4	WASHER 10			1
14	61D4	NUT 5			1
15	6713793	BRACKET	switch		2
16	6646781	SWITCH	alarm		2
17	84G3112	BOLT 5			1
18	7100153	MOUNT	switch - Was 6713792 [A]		1
19	59G000616B	BOLT			4
20	6715659	HARNESS	For loaders W/O rear lights - comes W/Ref. 21		1
21	6672492	RETAINER			1
22	774220	NUT			2
23	6722083	INSTRUCTIONS			1
24	6737189	DECAL	warning		1
25	6702593	SPACER			2

https://www.pdfmanual4trucks.com/

BEACON LIGHT

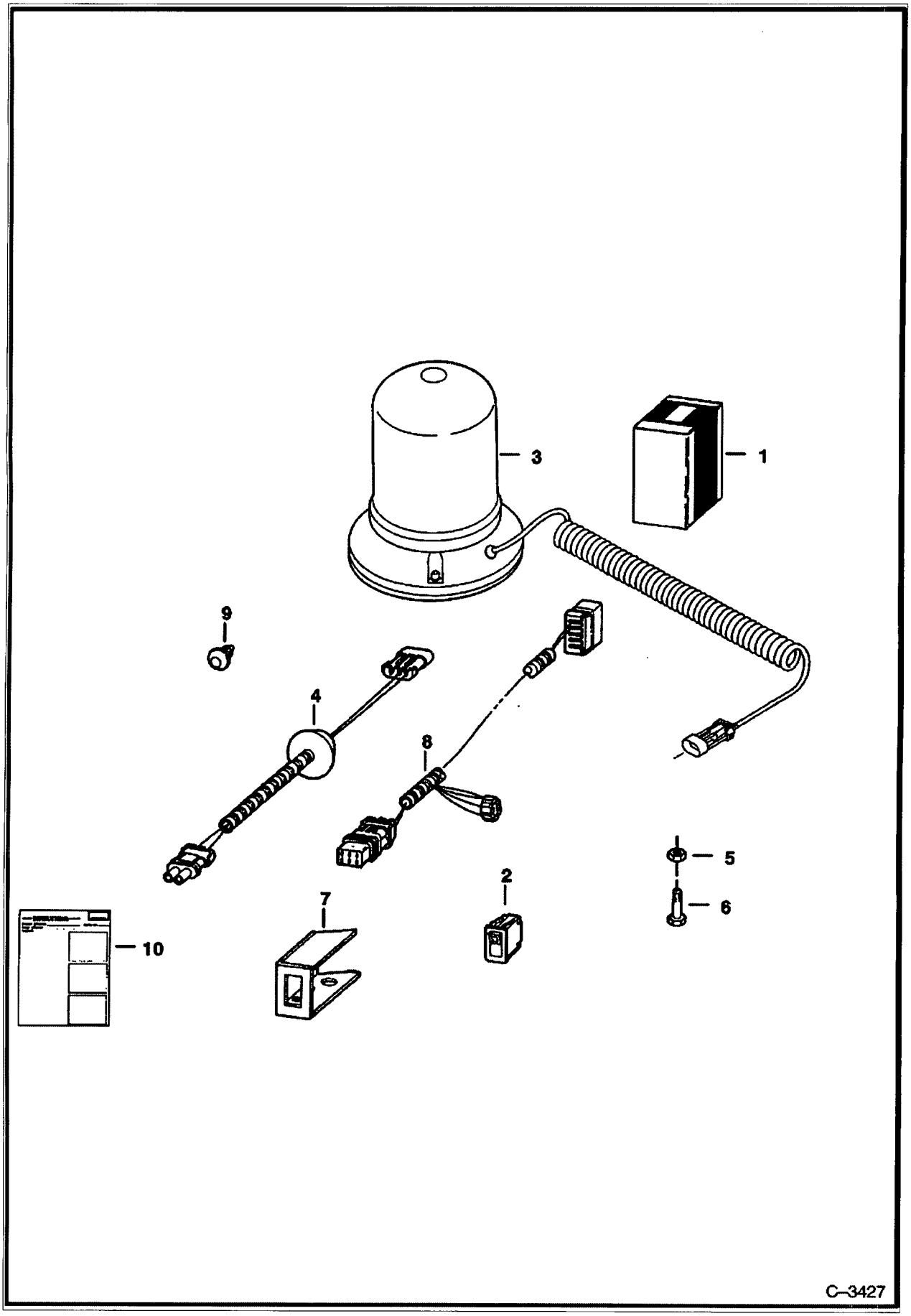

https://www.pdfmanual4trucks.com/

BEACON LIGHT (Cont'd)

f No	Part Number	Description	Remarks	Serial Number	Qty
1	6712692	BEACON KIT	Ref. 2-10 - Was 6708342 [A]		1
2	6668816	SWITCH	Was 6665317 [A]		1
3	6665730	LIGHT			1
3	6666571	BULB			1
3	6666572	LENS	amber		1
4	6708318	HARNESS	beacon		1
5	6660988	RETAINER			2
6	35C412	BOLT			2
7	6711708	MOUNT			1
8	6712258	HARNESS	strobe		1
9	6669308	RETAINER	snap in		1
10	6724071	INSTRUCTIONS			1

https://www.pdfmanual4trucks.com/

BLOCK HEATER
(Engine)

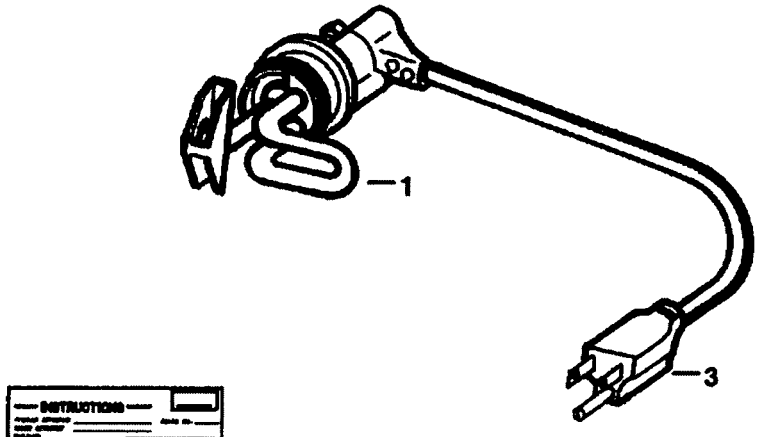

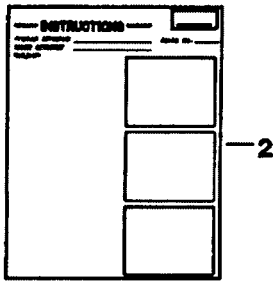

B–12299

https://www.pdfmanual4trucks.com/

BLOCK HEATER (Cont'd)
(Engine)

Ref No	Part Number	Description	Remarks	Serial Number	Qty
1	6720736	PLUG	W/Ref. 2 & 3		1
2	6720038	INSTRUCTIONS			1
3	6668881	CORD			1

https://www.pdfmanual4trucks.com/

BOB-TACH LEVERS
(For Use W/Industrial Grapple Fork)

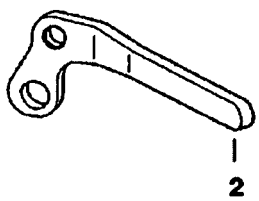

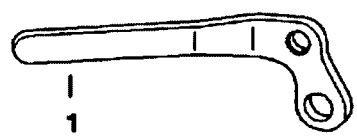

TS–1019

https://www.pdfmanual4trucks.com/

BOB-TACH LEVERS (Cont'd)
(For Use W/Industrial Grapple Fork)

Ref No	Part Number	Description	Remarks	Serial Number	Qty
1	6578139	LEVER	R.H.		1
2	6578140	LEVER	L.H.		1

https://www.pdfmanual4trucks.com/

BUCKET POSITION ON-OFF KIT

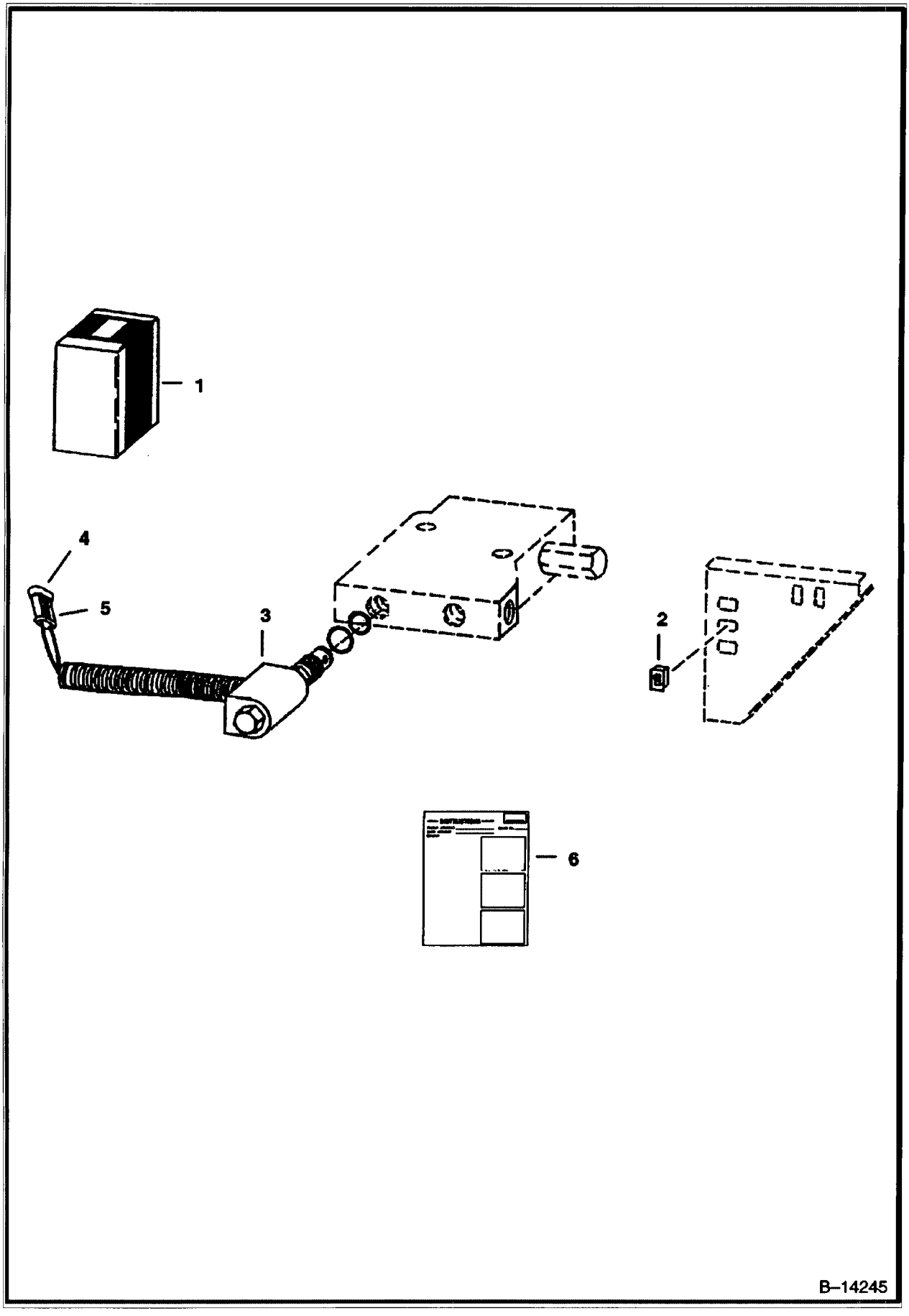

https://www.pdfmanual4trucks.com/

BUCKET POSITION ON-OFF KIT (Cont'd)

Ref No	Part Number	Description	Remarks	Serial Number	Qty
1	6712678	KIT	Ref. 2-5 - Was 6707682 [A]		1
2	6668814	SWITCH	Was 6665319 [A]		1
3	6672863	SOLENOID	W/Ref. 4 & 5 - Was 6708271 [A]		1
3	6670634	SEAL KIT			1
3	6671527	NUT			1
4	6641179	CONNECTOR	2-pin - Was 6519548 [B]		1
5	6641180	LOCK	2-pin - Was 1732366B [B]		1
6	6720321	INSTRUCTIONS			1

https://www.pdfmanual4trucks.com/

BUCKET POSITIONING VALVE KIT
(S/N 5127 27420 & Below, 5086 94508 & Below)

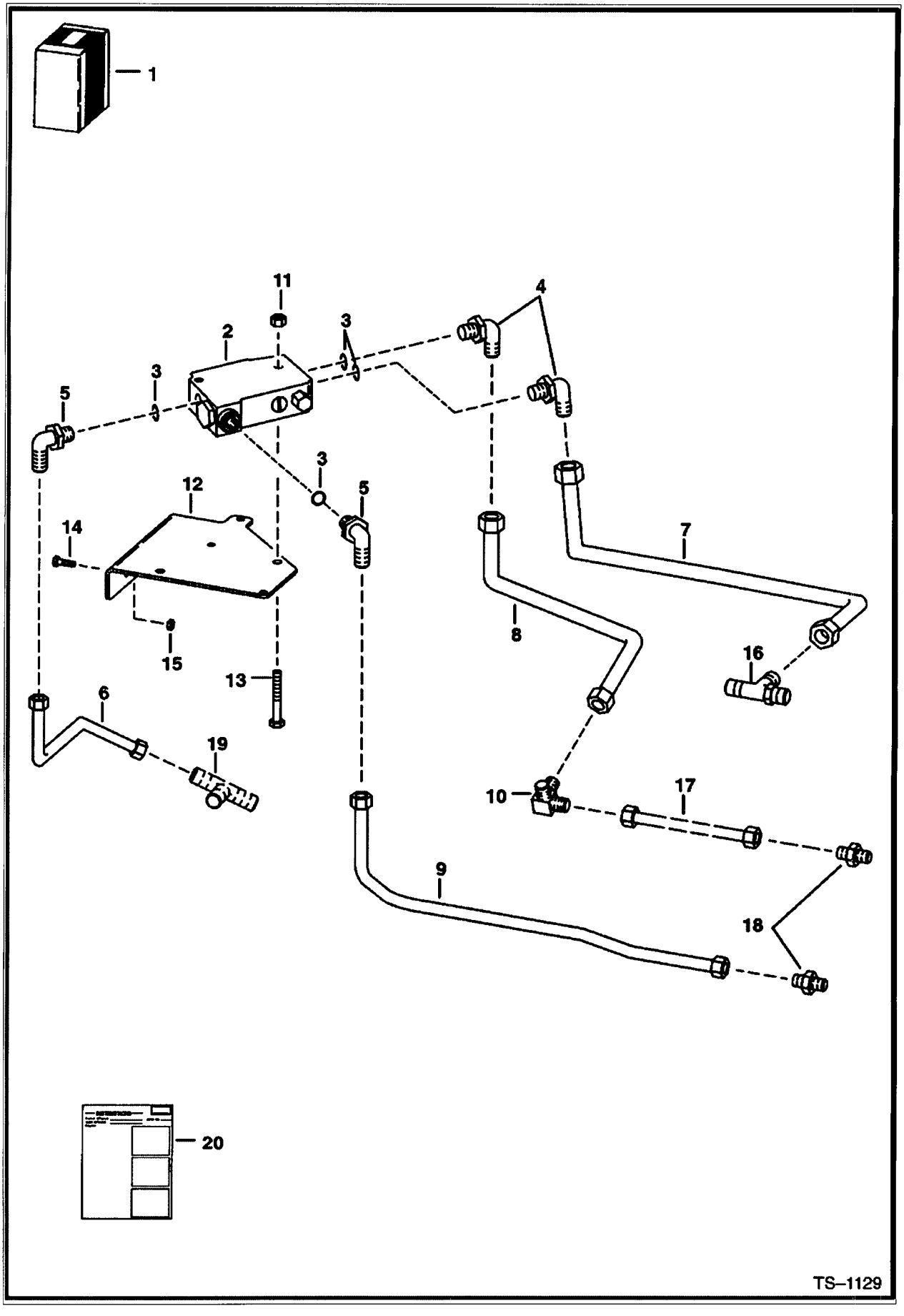

https://www.pdfmanual4trucks.com/

BUCKET POSITIONING VALVE KIT (Cont'd)
(S/N 5127 27420 & Below, 5086 94508 & Below)

Ref No	Part Number	Description	Remarks	Serial Number	Qty
1	6705191	KIT	Ref. 2-15 & 20		1
2	6666341	VALVE	BUCKET POS. - WAS 6645249 [A]		1
3	79K10	O RING 10			x
4	17K7	ELBOW	W/Ref. 3		2
5	784568B	ELBOW	W/Ref. 3 - Was 6634982 [A]		2
6	6705068	TUBE			1
7	6704840	TUBE			1
8	6704839	TUBE	753 ONLY		1
8	6706748	TUBE	773 ONLY		1
9	6704837	TUBE			1
10	6705070	TEE			1
11	57D000005B	NUT			2
12	6704833	BRACKET			1
13	35C000536B	BOLT	35C000540B [B]		2
14	35C412	BOLT			2
15	57D000004B	NUT			2
16		TEE	See Illustration HYDRAULIC CIRCUITRY/ E2228 Ref. 52 - Not in Kit		1
17		TUBE	See Illustration HYDRAULIC CIRCUITRY/ E2228 Ref. 42 - Not in Kit		1
18		ADAPTER	See Illustration HYDRAULIC CIRCUITRY/ E2228 Ref. 20 - Not in Kit		2
19	10K000006B	TEE	See Illustration HYDRAULIC CIRCUITRY/ E2228 Ref. 38 - Not in Kit		1
20	6722303	INSTRUCTIONS			1

https://www.pdfmanual4trucks.com/

BUCKET POSITIONING VALVE KIT
(S/N 5127 27421 & Above, 5086 94509 & Above) (For BICS Combo Control Valve)
(S/N 5158 11001-29999. 5162 11001-19999)

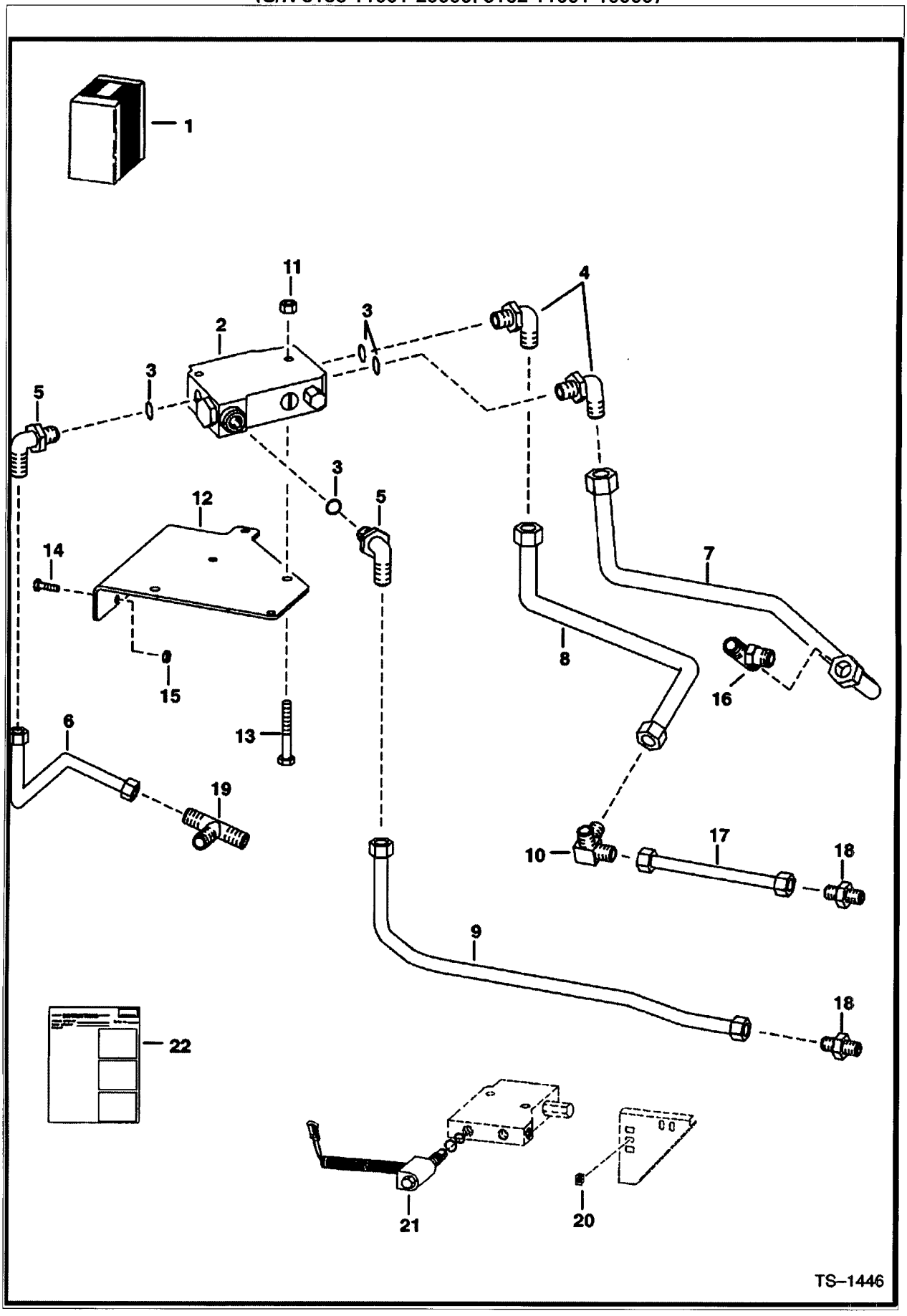

https://www.pdfmanual4trucks.com/

BUCKET POSITIONING VALVE KIT (Cont'd)
(S/N 5127 27421 & Above, 5086 94509 & Above) (For BICS Combo Control Valve)
(S/N 5158 11001-29999, 5162 11001-19999)

Ref No	Part Number	Description	Remarks	Serial Number	Qty
1	6712050	KIT	Ref. 2-15 & 20-22		1
2	6666341	VALVE	See Illustration BUCKET POSITIONING VALVE/ MS1943 BUCKET POS.		1
3	79K10	O RING 10	flat boss face		x
3	99K10	O'RING	tapered boss face		x
4	17K7	ELBOW	W/Ref. 3 - flat boss face		2
4		ELBOW	NAP - W/Ref. 3 - tapered boss face - Was 17KV00007B [A]		2
4	97K10	O-RING 10	flared end		2
4	17KB1010	ELBOW	W/Ref. 3 - flat boss face		2
5	784568B	ELBOW	W/Ref. 3 - flat boss face		2
5		ELBOW	NAP - W/Ref. 3 - flat boss face - Was 6715716 [A]		2
5	97K8	O-RING	flared end		2
5	17KB810	ELBOW	W/Ref. 3 - flat boss face		2
6	6705068	TUBE			1
7	6710583	TUBE			1
8	6704839	TUBE			1
9	6710584	TUBE			1
10	6705070	TEE			1
11	57D000005B	NUT			2
12	6704833	BRACKET			1
13	35C000536B	BOLT			2
14	35C412	BOLT			2
15	55D4	NUT			2
16		TEE	See Illustration HYDRAULIC CIRCUITRY/ E2315 Ref. 53 - Not in Kit		1
17		TUBE	See Illustration HYDRAULIC CIRCUITRY/ E2315 Ref. 28 - Not in Kit		1
18		ADAPTER	See Illustration HYDRAULIC CIRCUITRY/ E2315 Ref. 20 - Not in Kit		2
19	10K000006B	TEE	See Illustration HYDRAULIC CIRCUITRY/ E2315 Ref. 38 - Not in Kit		1
20	6668814	SWITCH	See Illustration BUCKET POSITION ON-OFF KIT/ B14245		1
21	6672863	SOLENOID	See Illustration BUCKET POSITION ON-OFF KIT/ B14245 WAS 6708271 [A]		1
21	6670634	SEAL KIT			1
1	6671527	NUT			1
22	6724522	INSTRUCTIONS			1

https://www.pdfmanual4trucks.com/

BUMPERS
(Rear Door)

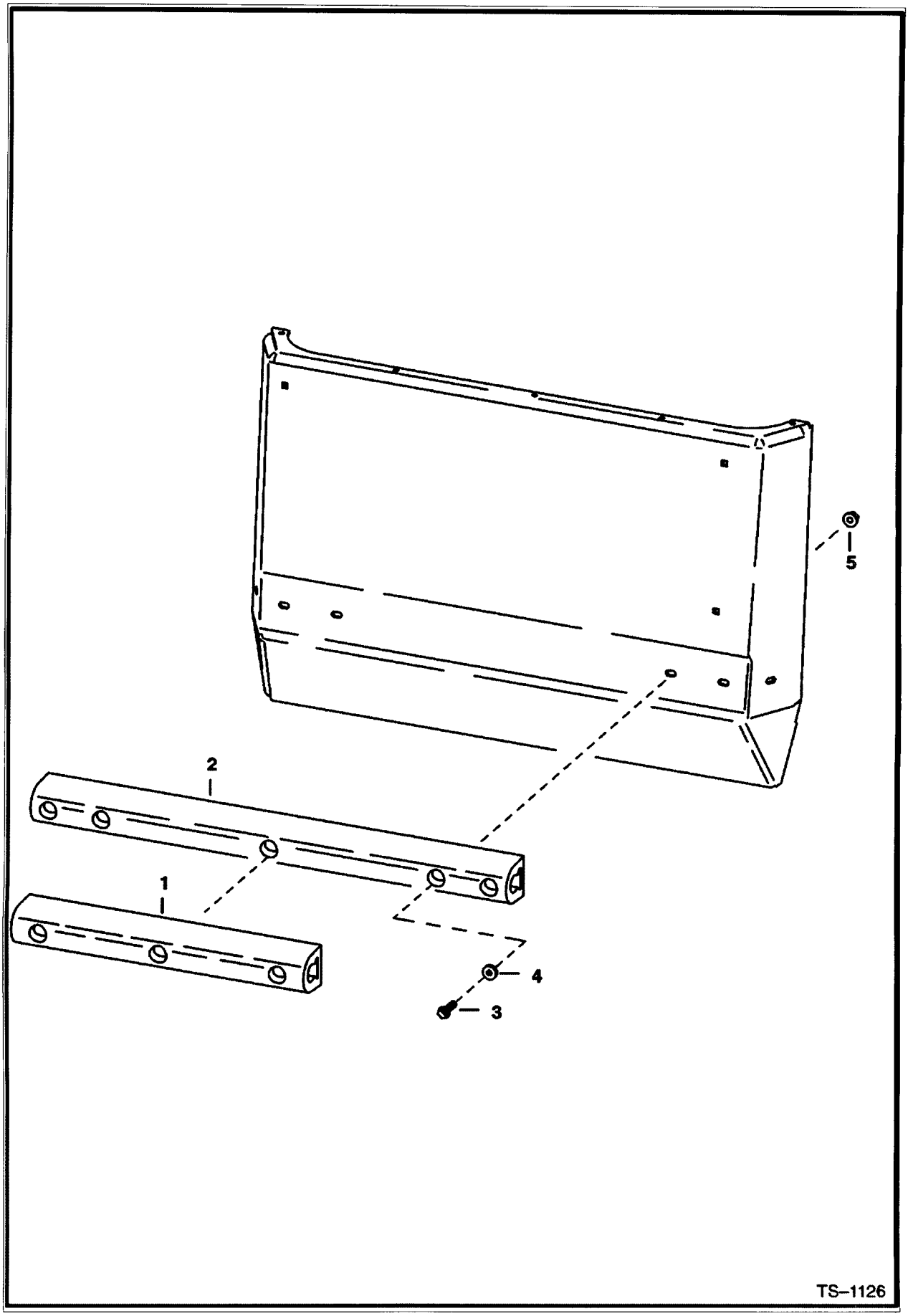

https://www.pdfmanual4trucks.com/

BUMPERS (Cont'd)
(Rear Door)

f No	Part Number	Description	Remarks	Serial Number	Qty
1	6705166	BUMPER	22" (558,8 mm) long		1
2	6705167	BUMPER	36" (919,4 mm) long		1
3	17C000628B	BOLT	See BTI270		x
4	25E000018B	WASHER	See BTI270		x
5	83D6	NUT 5	See BTI270		x

https://www.pdfmanual4trucks.com/

CAB ENCLOSURE
(Envelope)

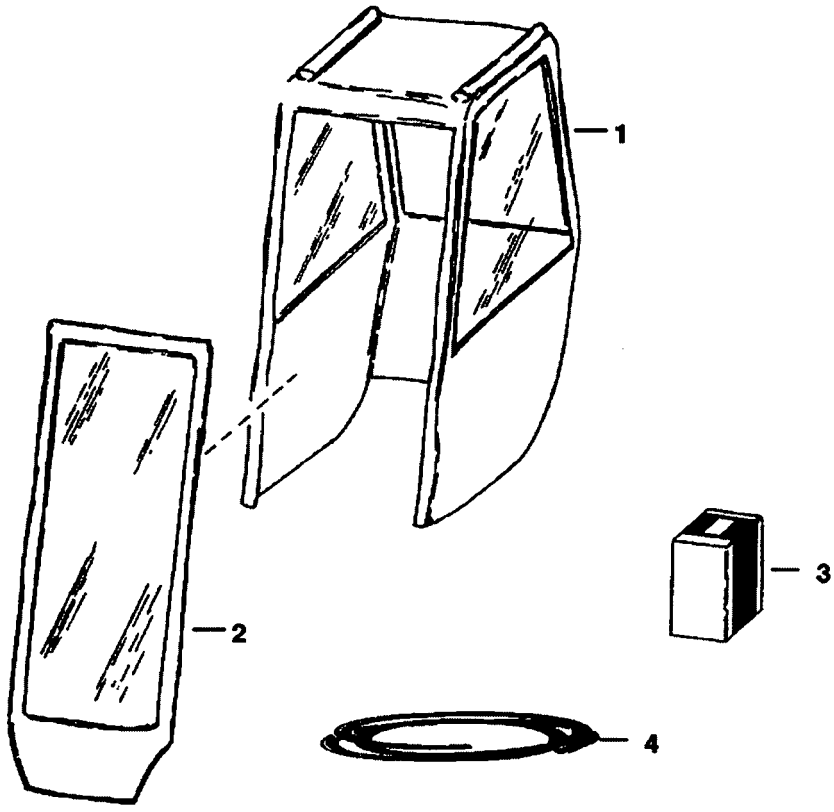

B–1413

https://www.pdfmanual4trucks.com/

CAB ENCLOSURE (Cont'd)
(Envelope)

Ref No	Part Number	Description	Remarks	Serial Number	Qty
1	6565270	VINYL CAB	fastens inside of cab W/velcro - W/Ref. 2		1
1	6660340	VINYL CAB	fits over cab - W/Ref. 2		1
2	6599721	DOOR	vinyl		1
3	6662839	HINGE KIT			1
4	6722597	VELCRO	27 feet (8,2 m)		1

https://www.pdfmanual4trucks.com/

CAB DOOR
(R.H. Hinged)

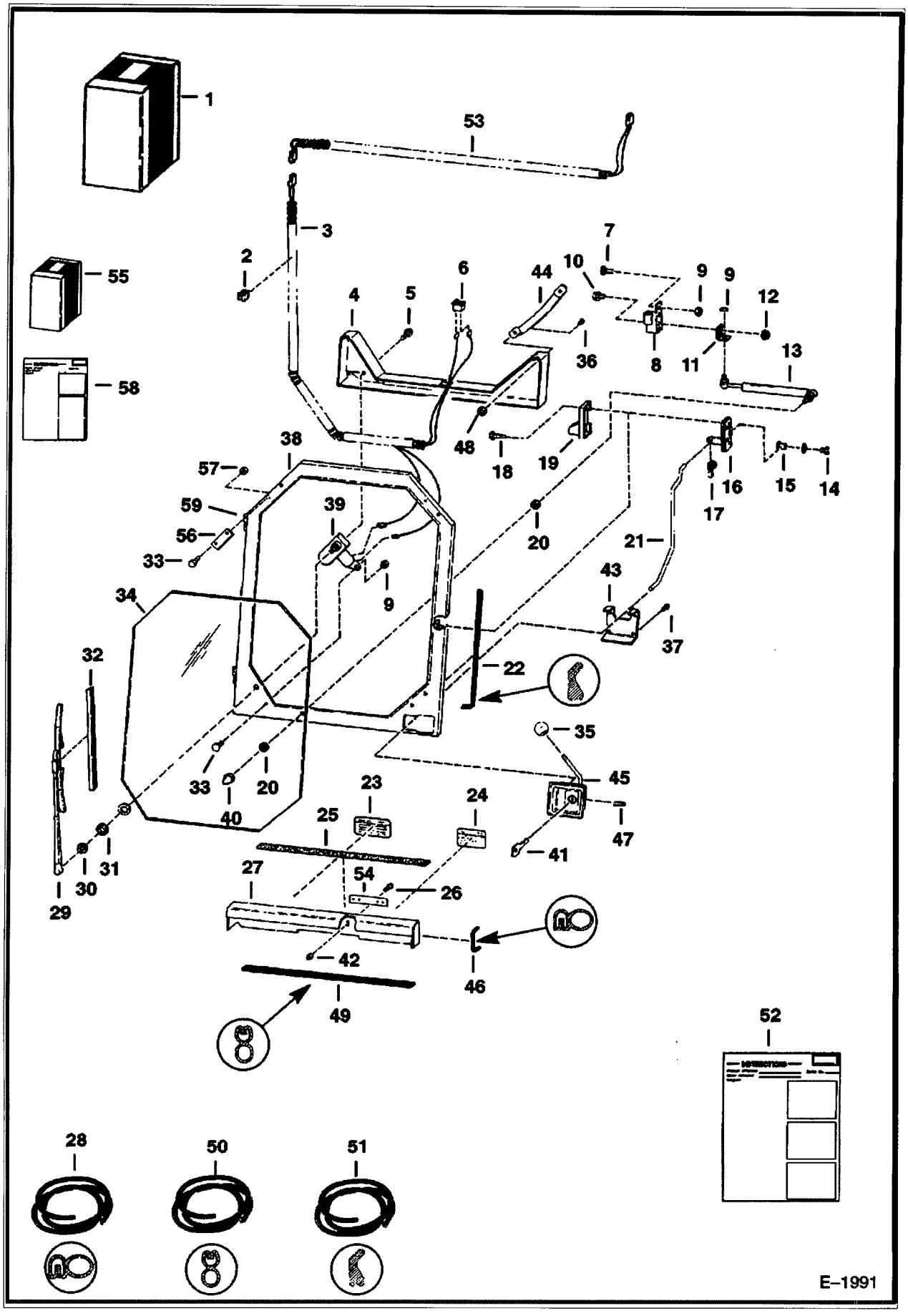

https://www.pdfmanual4trucks.com/

CAB DOOR (Cont'd)
(R.H. Hinged)

ef No	Part Number	Description	Remarks	Serial Number	Qty
1		KIT	See Illustration CAB DOOR/ B17624 NAP - REF. 2-53 - ORDER 6708973 KIT, 6708975 SHIELD KIT & 6708225 HARNESS - WAS 6579342 [A]		1
2	30H000037B	CLAMP			1
3	6568739	HARNESS			1
4	6704428	SHIELD			1
5	84G3112	BOLT 5			2
6	6631009	SWITCH			1
7	10C000512B	BOLT	Was 6553808 [A]		4
8	6571715	HINGE			2
9	83D5	NUT 5			6
10	35C412	BOLT			2
11	6568055	BRACKET			1
12	83D4	NUT 10			2
13	6630797	GAS SPRING			1
13	6632221	STUD	ball		2
13	2756257B	RETAINER	spring		2
14	17C000712B	BOLT			1
15	6568047	NUT	bushing		1
16	6660932	LATCH			1
17	6512274	CLIP			1
18	35C000416B	BOLT			4
19	6568728	SHIELD			1
20	25E000016B	WASHER			2
21	6704425	ROD			1
22		SEAL	NAP - 100" (2540 mm) long - Order Ref. 51		x
23	6579510	DECAL			1
24	6563410	DECAL			1
25	6564833	SAFETY TREAD			1
26	35C616	BOLT 5			2
27	6579324	SHIELD			1
28	6555351	SEAL	bulk - Sold Per Foot		x
29	6631008	ARM			1
30		NUT	NSS		1
31		SEAL	NSS		1
32	6630943	BLADE	wiper		1
33	25G000510B	SCREW			8
34	6568705	WINDOW	See BTI293 1/4 " plastic - Was 6568075 [D]		1
35	6647635	KNOB			1
36	7G000416B	BOLT			2
37	45G001008B	BOLT			4
38	6704430	DOOR	Also Order Ref. 34 & 55 - Was 6704431 [A]		1
39	6620642	MOTOR	wiper - W/Ref. 30 & 31		1
39	6631927	GEAR			1
39	961528B	HARDWARE			1
39	6631928	SHAFT			1
40	46D000005B	NUT			1
41	6632560	KEY			x
42	83D6	NUT 5	Was 57D000006B [B]		2
43	6704426	RETAINER			1
44	6631935	HANDLE			1
45	6641274	LATCH			1
46		SEAL	NAP - 6" (154,4 mm)long - Order Ref. 28		2
47	6662834	SPRING			1
48	6660988	RETAINER			2
49		SEAL	NAP - 28" (711,2mm)long - Order Ref. 50		1

https://www.pdfmanual4trucks.com/

CAB DOOR (Cont'd)
(R.H. Hinged)

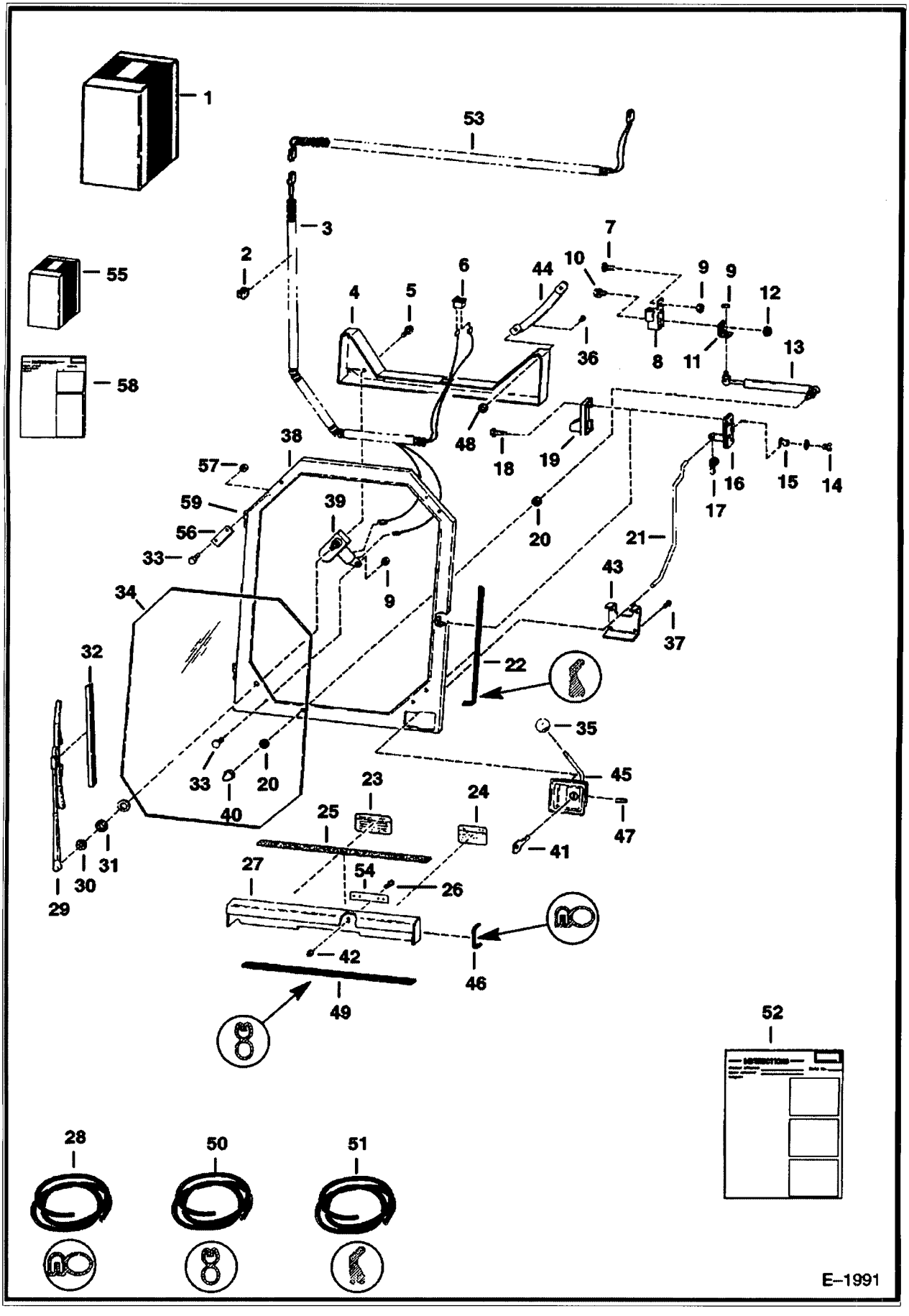

https://www.pdfmanual4trucks.com/

CAB DOOR (Cont'd)
(R.H. Hinged)

f No	Part Number	Description	Remarks	Serial Number	Qty
0	6513152	SEAL	bulk - Sold Per Foot		x
51	6568704	MOULDING	bulk - Sold Per Foot		x
52	6570929	INSTRUCTIONS			1
53	6708225	HARNESS	for R.H. hinged door		1
54	6703775	SHIM			3
55	6708990	KIT	window retainer - Ref. 33 & 56-58		1
56	6708850	RETAINER			4
57	61D5	NUT			7
58	6724279	INSTRUCTIONS			1
59	6571717	HINGE	weld on		2

https://www.pdfmanual4trucks.com/

CAB DOOR
(L.H. Hinged)

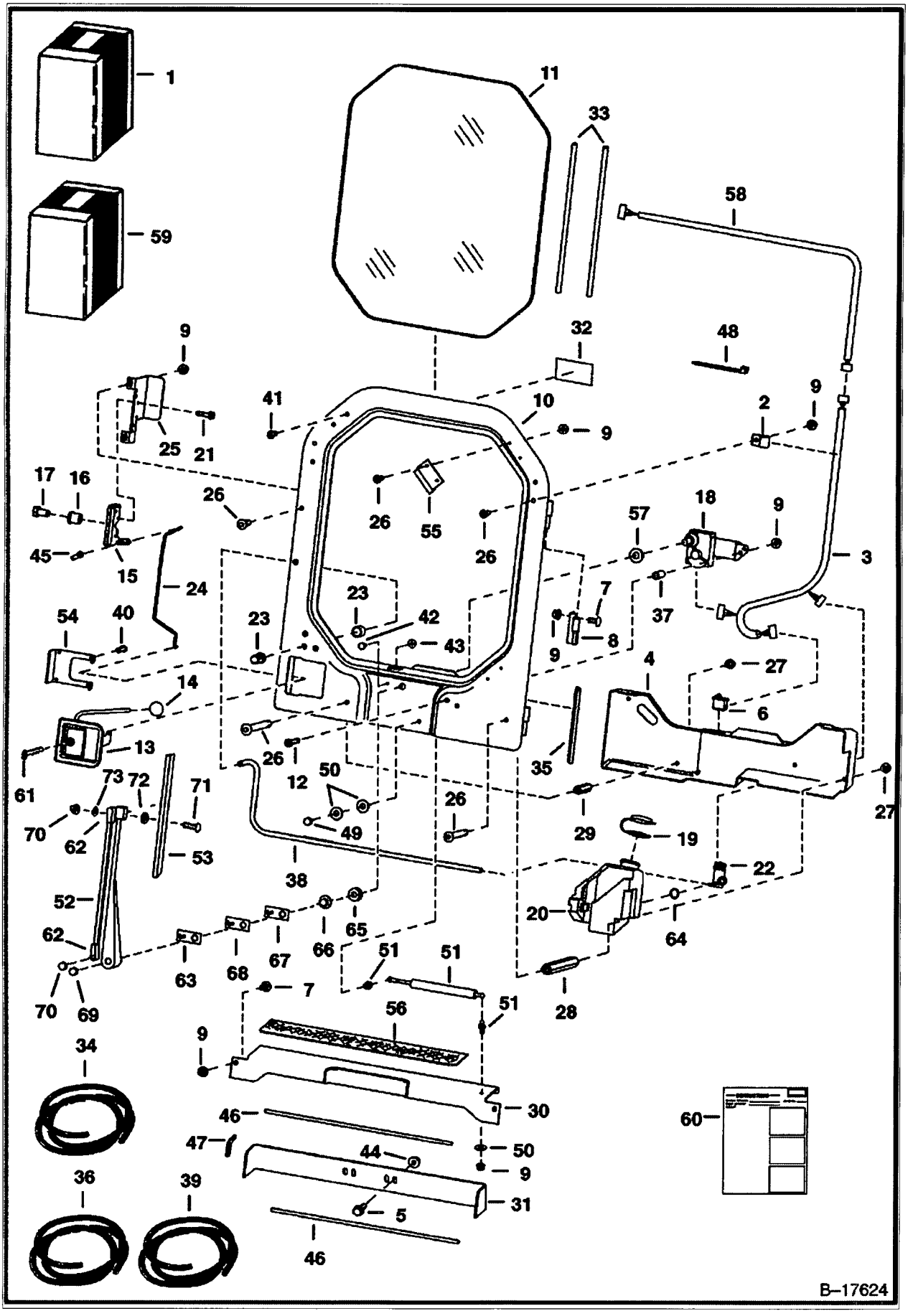

https://www.pdfmanual4trucks.com/

CAB DOOR (Cont'd)
(L.H. Hinged)

Ref No	Part Number	Description	Remarks	Serial Number	Qty
1	6708973	KIT	door - Ref. 2-4, 6-29, 32-35, 37-43, 45, 48-55, 57, 59 & 64 - Also Order Ref. 58 - Was 6708443 [A]		1
1		KIT	SALES - door - special applications - Ref. 4, 5, 7-17, 21, 24-37, 40-51, 54-56 & 64 - Also Order Ref. 58 - SEE NOTE		1
2	30H000037B	CLAMP			1
2	30H000019B	CLAMP			1
3		HARNESS	NAP - Order 6712259 Harness - Was 6708269 [A]		1
3	6712259	HARNESS	W/2 diodes		1
4	6707179	SHIELD			1
5	35C616	BOLT 5			2
6	6665707	SWITCH			1
7	10C000512B	BOLT			6
8	6707216	HINGE			2
9	83D5	NUT 5	for standard door		10
9	83D5	NUT 5	for special applications door		15
10	6707220	DOOR			1
11	6707225	WINDOW	.25" thick - safety glass - for standard door		1
11	6708499	WINDOW	.5" thick - plexiglass - for special applications door		1
12	25G000528B	BOLT			1
13	6665530	LATCH	W/Ref. 14 - Also Order Ref. 61		1
14	6647635	KNOB			1
15	6665531	LATCH			1
16	6568047	NUT	bushing		1
17	17C000712B	BOLT			1
18	6665532	MOTOR	wiper - w/splined shaft	& Bel.	1
18	6631927	GEAR			1
18	6670163	SHAFT			1
18	6670164	LINK			1
18	6670165	CLIP			1
18	6679814	MOTOR	W/ tapered shaft	& Abv	1
19	6665605	CAP			1
20	6707178	TANK			1
21	35C000416B	BOLT			4
21	35C412	BOLT			4
22	6664554	PUMP	wiper washer		1
23	6666767	NOZZLE	washer - Was 6664555 [A]		1
24	6707221	ROD	latch release		1
25	6707222	MOUNT	latch		1
26	25G512	SCREW	for standard door		7
26	25G512	SCREW	for special applications door		14
27	35C000510B	BOLT			4
28	6707223	COUPLING			2
29	6707224	COUPLING			2
30	6707239	SHIELD	bolts to cab		1
31	6707236	SHIELD	bolts to main frame		1
32	6707852	DECAL			1
33		SEAL	NAP - 91" (2311 mm) long - Order Ref. 34		1
33		CORD	NAP - 91" (2311 mm) - Order Ref. 34		1
34	6665568	EXTRUSION	bulk - Sold Per Foot		x
34	6554149	CORD	bulk - Sold Per Foot		x
35		SEAL	NAP - 137" (3480 mm) - For Ref. 36		1
36	6513152	SEAL	bulk - Sold Per Foot		x
37	6708096	BUSHING			1
38		HOSE	NAP - 26" (660,4 mm) long - Order Ref. 39		1
39	6676003	HOSE	bulk - sold per foot - Was 6708310 [A]		x
40	45G001008B	BOLT			4

https://www.pdfmanual4trucks.com/

CAB DOOR (Cont'd)
(L.H. Hinged)

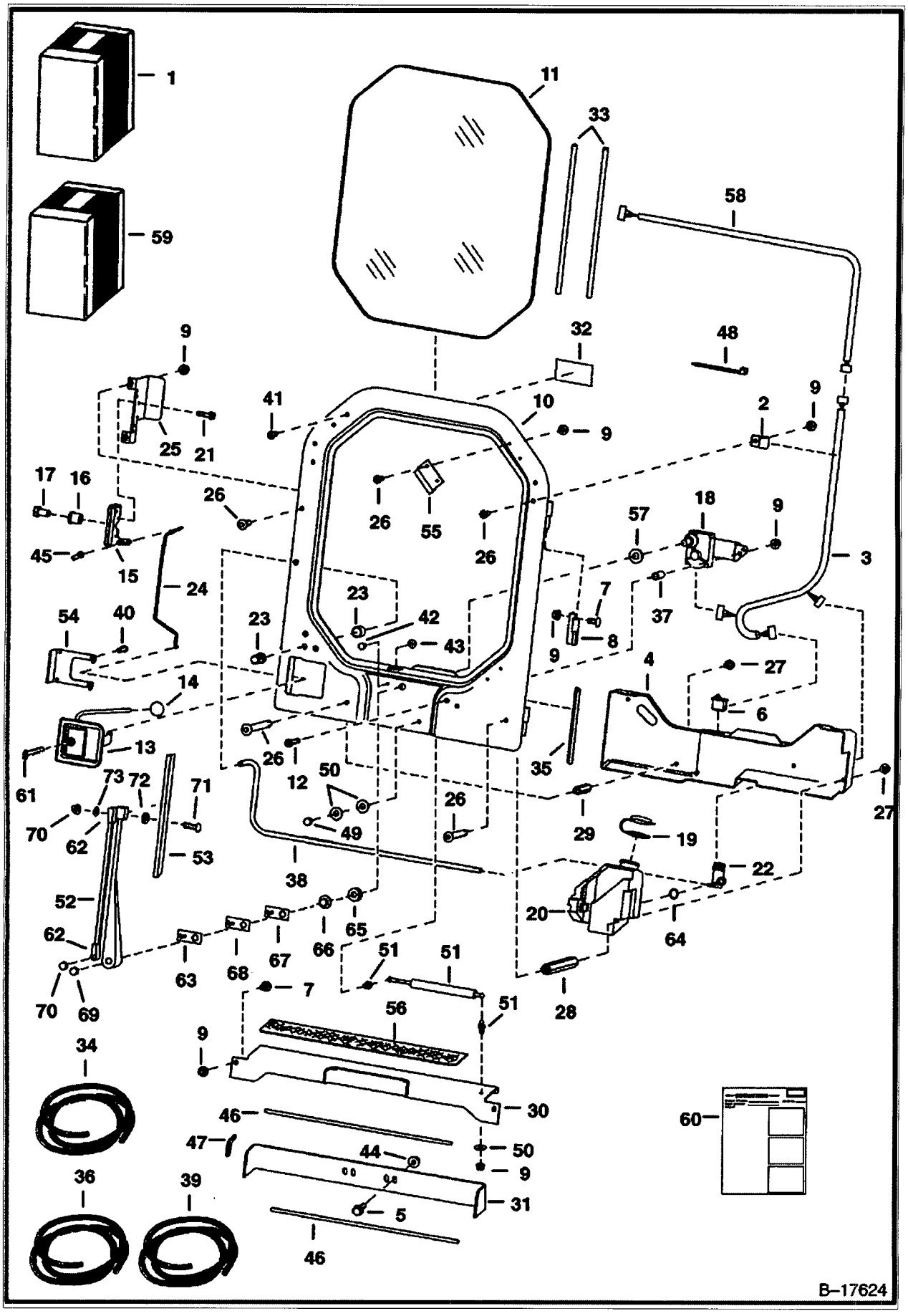

https://www.pdfmanual4trucks.com/

CAB DOOR (Cont'd)
(L.H. Hinged)

;f No	Part Number	Description	Remarks	Serial Number	Qty
11	5289686B	PLUG	black		11
42	1CM616	BOLT	Was 17C408 [B,D]		1
43	43DM6	NUT	Was 55D4 [D]		1
44	83D6	NUT 5			2
45	6512274	CLIP			1
46		SEAL	NAP - 28" (711 mm) long - Order Ref. 36		2
47		SEAL	NAP - 5" (127 mm) long - Order Ref. 36		2
48	6610510	TIE			1
49	46D000005B	NUT			1
50	25E000016B	WASHER			3
51	6630797	GAS SPRING			1
51	6632221	STUD	ball		2
51	2756257B	RETAINER	spring		2
52	6664095	ARM	wiper - W/Ref. 62 & 63 - for splined motor shaft	& Bel	1
52	6679816	ARM	wiper - for tapered motor shaft	& Abv	1
53	6664096	BLADE	wiper - for splined motor shaft	& Bel	1
53	6679815	BLADE	wiper - for tapered motor shaft	& Abv	1
4	6703751	RETAINER			1
5	6708500	CLAMP	for special applications door		4
56	6564833	SAFETY TREAD	Was 6703757 [B]		1
57	27E000010B	WASHER			1
58	6708975	KIT	shields - Ref. 5, 7, 9, 30, 31, 44, 46, 47, 56 & 64		1
59	6709527	KEY			1
60	6708225	HARNESS	not in kit - for non BICS loaders only		1
61	6670288	END	plastic		2
62	6670289	BRACKET		& Bel	2
63	6666766	GROMMET		& Bel	1
64	6724029	INSTRUCTIONS			1
65	6677842	NUT		& Abv	1
66	6678326	RAIN SHIELD		& Abv	1
67	6677839	GASKET		& Abv	1
68	6677840	SWIVEL		& Abv	1
69	6677843	NUT		& Abv	1
70	6677844	NUT		& Abv	2
71	6678198	BOLT		& Abv	1
72	6664085	BUSHING		& Abv	1
73	6677841	WASHER		& Abv	1

https://www.pdfmanual4trucks.com/

CAB ENCLOSURE
(Special Applications - R.H. Hinged Door)

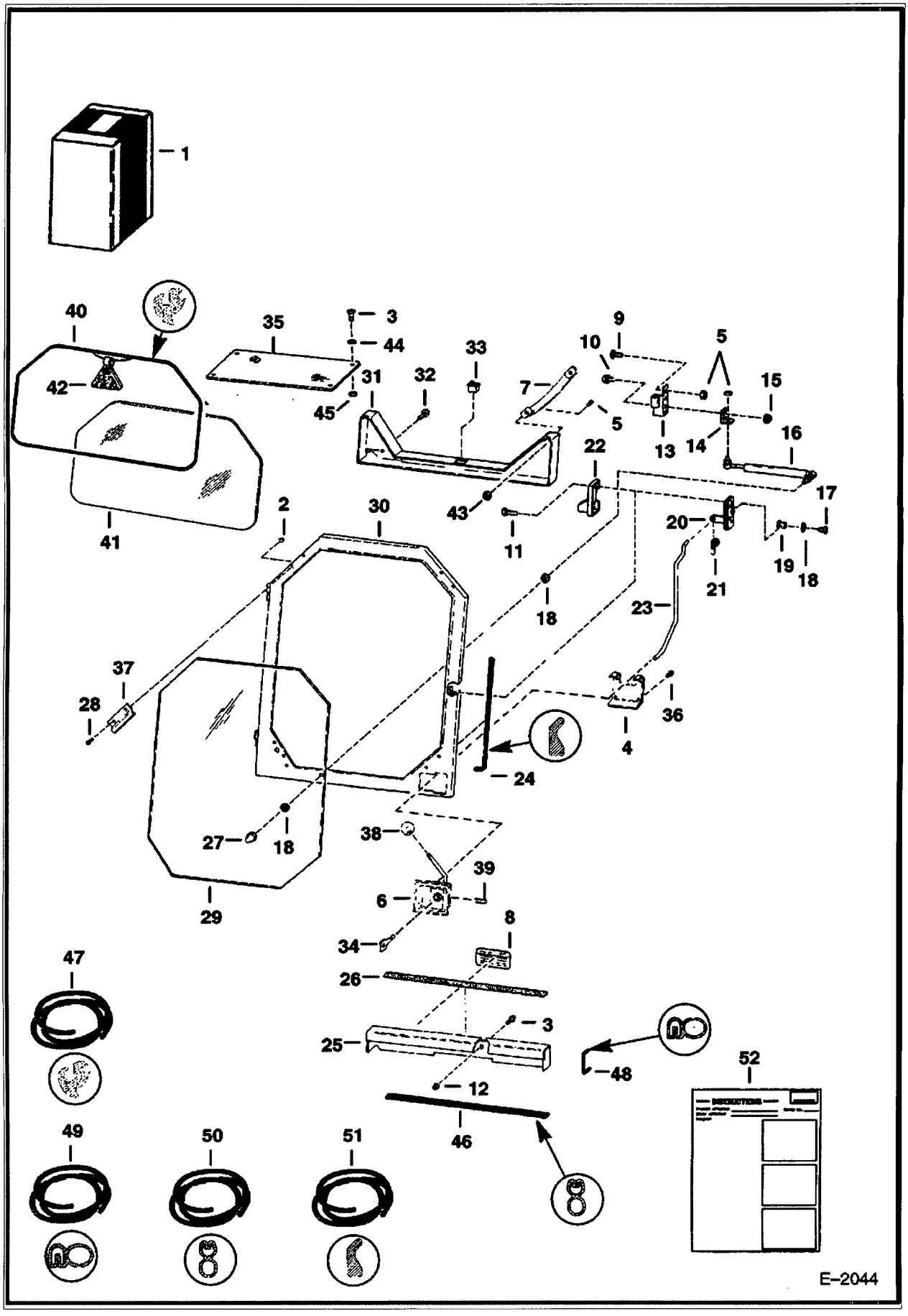

https://www.pdfmanual4trucks.com/

CAB ENCLOSURE (Cont'd)
(Special Applications - R.H. Hinged Door)

f No	Part Number	Description	Remarks	Serial Number	Qty
1	6708703	KIT			1
2	57D000005B	NUT			8
3	35C616	BOLT 5			6
4	6578398	RETAINER			1
5	7G000416B	BOLT			2
6	6641274	LATCH			1
7	6631935	HANDLE			1
8	6563410	DECAL			1
9	10C000512B	BOLT	Was 6553808 [A]		4
10	35C412	BOLT			2
11	35C000416B	BOLT			4
12	57D6	NUT 5			2
13	6571715	HINGE			2
14	6568055	BRACKET			1
15	83D4	NUT 10			2
16	6630797	GAS SPRING			1
17	17C000714B	BOLT			1
8	25E000019B	WASHER			3
9	6568047	NUT	bushing		1
20	6660932	LATCH			1
21	6512274	CLIP			1
22	6568728	SHIELD			1
23	6576470	ROD			1
24		SEAL	NAP - 100" (2540 mm)long - Order Ref. 54		x
25	6579324	SHIELD			1
26	6564833	SAFETY TREAD			2
27	46D000005B	NUT			1
28	25G000510B	SCREW			1
29	6569033	WINDOW	.5" polycarbonate - Was NSS [D]		1
30		DOOR	NAP - W/Ref. 29 - Was 6704434 [A]		1
31	6576471	SHIELD			1
32	84G3112	BOLT 5			2
33	6631009	SWITCH			1
34	6632560	KEY			1
35	6705216	WINDOW	top - 15" x 20.42" (381 mm x 518,7 mm)		1
36	45G001008B	BOLT			4
37	6576238	CLIP			2
3	6647635	KNOB			1
39	6662834	SPRING			1
40		EXTRUSION	NAP - 81.5" (2070 mm) long - Order Ref. 47		x
40		CORD	NAP - 81.5" (2070 mm) long - Order Ref. 47		x
41	6579325	WINDOW	.25" thick poly carbonate		1
42	6731478	EXIT TAG	Was 6559515 [A]		1
43	6660988	RETAINER			2
44	25E000018B	WASHER			4
45	83D6	NUT 5			4
46		SEAL	NAP - 28" (711,2mm) long - Order Ref. 50		1
47	6665568	EXTRUSION	bulk - Sold Per Foot - Was 6658352 [B]		x
47	6554149	CORD	bulk - Sold Per Foot		x
48		SEAL	NAP - 6" (152,4 mm) long - Order Ref. 49		1
49	6555351	SEAL	bulk - Sold Per Foot		x
50	6513152	SEAL	bulk - Sold Per Foot		x
51	6568704	MOULDING	bulk - Sold Per Foot		x
2	6570929	INSTRUCTIONS			1

https://www.pdfmanual4trucks.com/

CAB ENCLOSURE

NOTE: Order Special Application Kit from Gwinner Sales # 6708703. Order Cab Enclosure Kit from Gwinner Sales # 6708702.

NOTE: Wiper is not included in Special Application Door. Wiper may scratch Special Application Window.

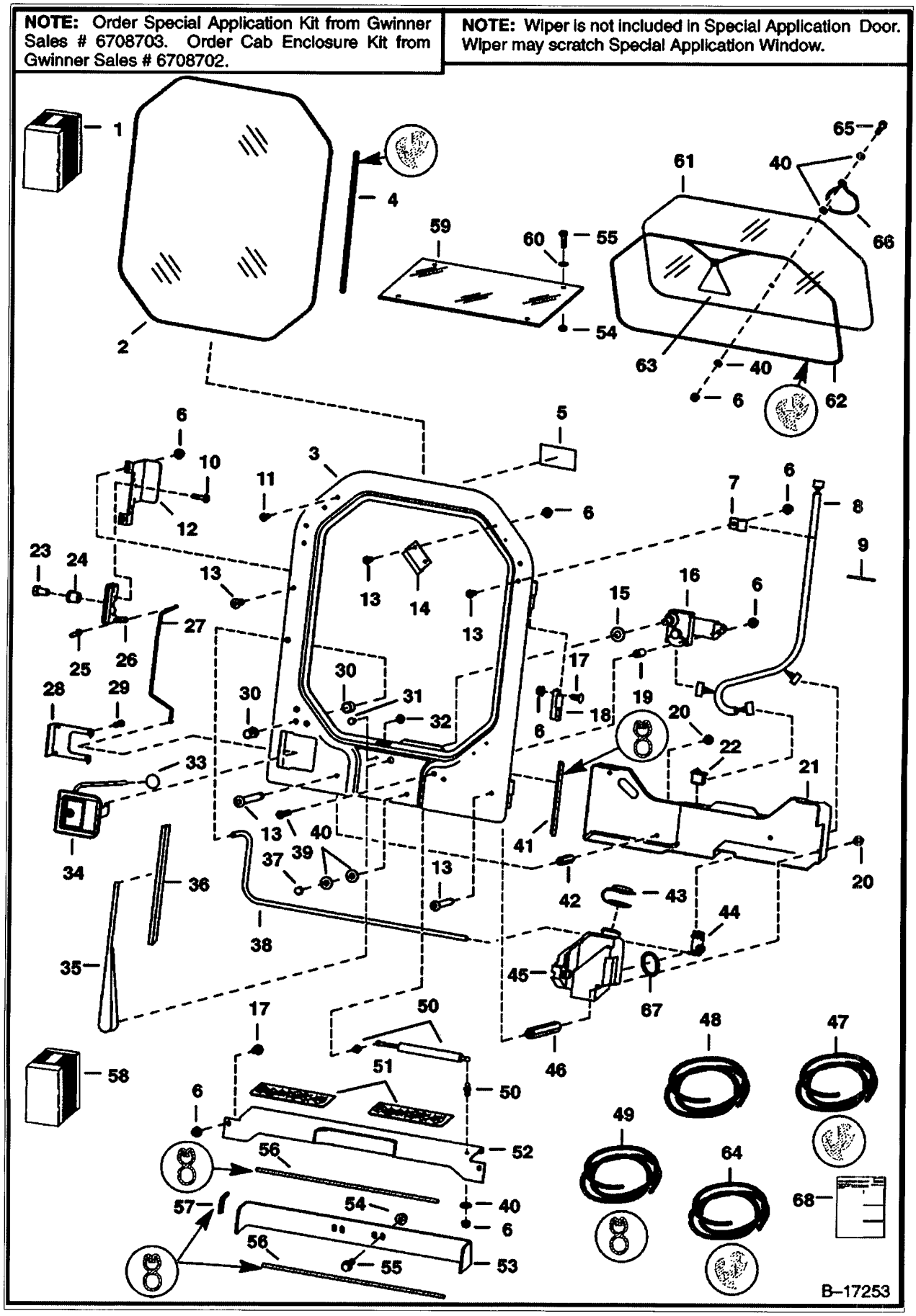

https://www.pdfmanual4trucks.com/

CAB ENCLOSURE (Cont'd)

:f No	Part Number	Description	Remarks	Serial Number	Qty
1		KIT	SALES - cab enclosure - Ref. 2-68 - SEE NOTE		1
1		KIT	SALES - cab enclosure - Special Applications - Does not include wiper - SEE NOTE		1
2	6707225	WINDOW	.25" thick - safety glass - for standard door		1
2	6708499	WINDOW	.5" thick - plexiglass - for special applications door		1
3	6707220	DOOR			1
4		EXTRUSION	NAP - 91" (2311 mm) - Order Ref. 47		1
4		CORD	NAP - 91" (2311 mm) - Order Ref. 47		1
5	6707852	DECAL			1
6	83D5	NUT 5	for standard door		10
6	83D5	NUT 5	for special applications door		15
7	30H000037B	CLAMP			1
8	6708269	HARNESS			1
9	6610510	TIE			1
10	35C000416B	BOLT			4
11	5289686B	PLUG	black		11
12	6707222	MOUNT	latch		1
3	25G512	SCREW	for standard door		7
.3	25G512	SCREW	for special applications door		14
14	6708500	CLAMP	for special applications door		4
15	27E000010B	WASHER			1
16	6665532	MOTOR	wiper		1
16	6631927	GEAR			1
16	6670163	SHAFT	W/spline		1
16	6670164	LINK			1
16	6670165	CLIP			1
'7	10C000512B	BOLT			6
.8	6707216	HINGE			2
19	6708096	BUSHING			1
20	35C000510B	BOLT			4
21	6707179	SHIELD			1
22	6665707	SWITCH			1
23	17C000712B	BOLT			1
24	6568047	NUT	bushing		1
25	6512274	CLIP			1
26	6665531	LATCH			1
27	6707221	ROD	latch release		1
3	6703751	RETAINER			1
29	45G001008B	BOLT			4
30	6666767	NOZZLE	washer - Was 6664555 [A]		1
31	17C408	BOLT			1
32	55D4	NUT			1
33	6647635	KNOB			1
34	6665530	LATCH	W/ Key & Ref. 33		1
34	6709527	KEY	Was 6632560 [B,D]		1
35	6664095	ARM	wiper		1
36	6664096	BLADE	wiper		1
37	46D000005B	NUT			1
38		HOSE	NAP - 26" (660,4 mm) long - Order Ref. 48		1
39	25G000528B	BOLT			1
40	25E000016B	WASHER			3
41		SEAL	NAP - 137" (3480mm) long - Order Ref. 49		1
42	6707224	COUPLING			2
3	6665605	CAP			1
44	6664554	PUMP	wiper washer		1

https://www.pdfmanual4trucks.com/

CAB ENCLOSURE (Cont'd)

NOTE: Order Special Application Kit from Gwinner Sales # 6708703. Order Cab Enclosure Kit from Gwinner Sales # 6708702.

NOTE: Wiper is not included in Special Application Door. Wiper may scratch Special Application Window.

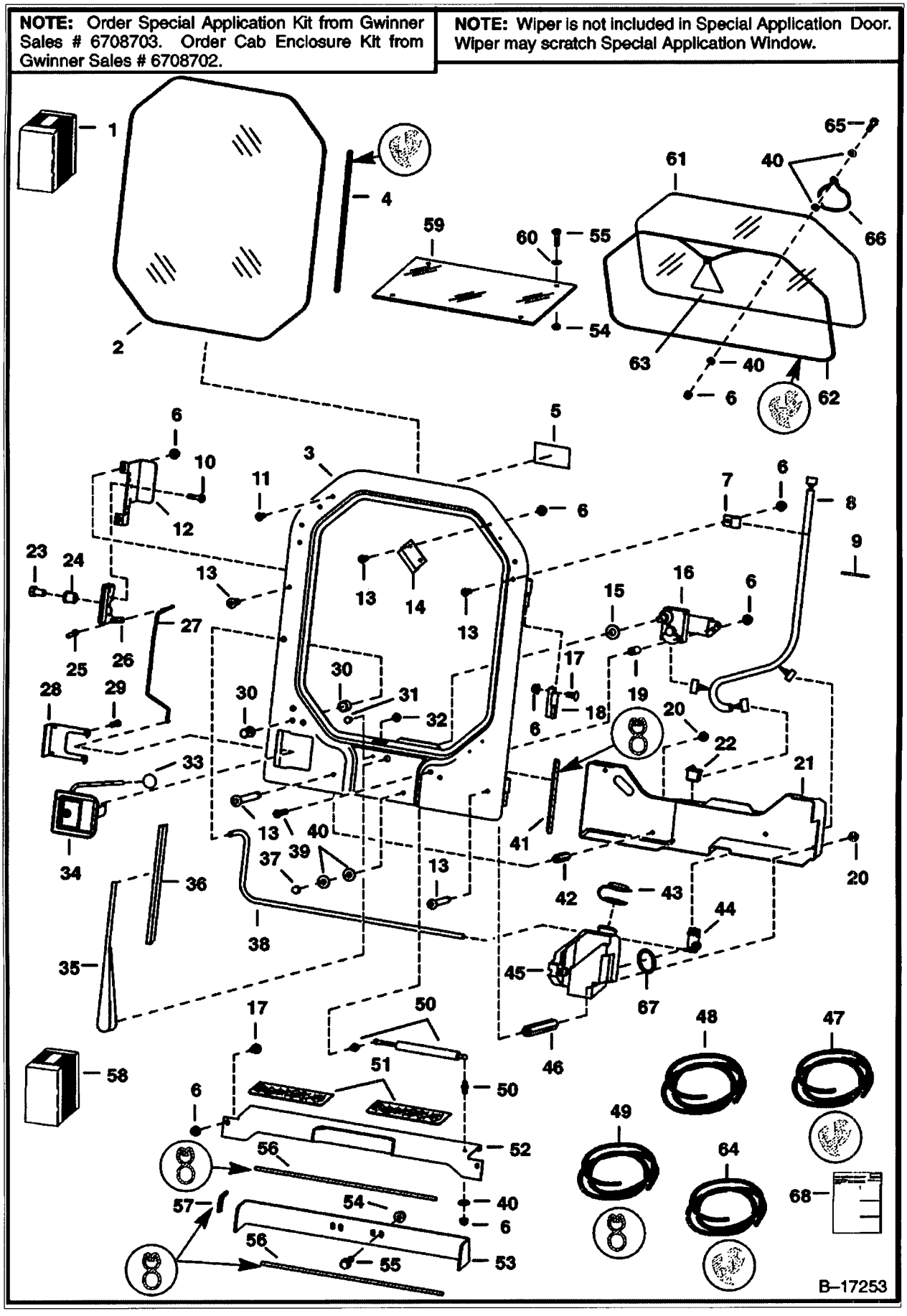

https://www.pdfmanual4trucks.com/

CAB ENCLOSURE (Cont'd)

:f No	Part Number	Description	Remarks	Serial Number	Qty
45	6707178	TANK			1
46	6707223	COUPLING			2
47	6665568	EXTRUSION	bulk - Sold Per Foot		x
47	6554149	CORD	bulk - Sold Per Foot		x
48	6708310	HOSE	bulk - Sold Per Foot - 5/32" I.D.		x
49	6513152	SEAL	bulk - Sold Per Foot		x
50	6630797	GAS SPRING			1
50	6632221	STUD	ball		2
50	2756257B	RETAINER	spring		2
51	6703757	SAFETY TREAD			2
52	6707239	SHIELD			1
53	6707236	SHIELD			1
54	83D6	NUT 5			2
55	35C616	BOLT 5			2
56		SEAL	NAP - 28"(711,2mm)long - Order Ref. 49		2
57		SEAL	NAP - 5" (127 mm) long - Order Ref. 49		1
58	6708975	KIT	shield - Ref. 6, 17, 51 - 57 & 59		1
9	6705216	WINDOW	top		1
60	25E000018B	WASHER			4
61	6579325	WINDOW	rear - .25" thick poly carbonate		1
62		EXTRUSION	NAP - 100"(2540 mm) long - Order Ref. 64		1
62		CORD	NAP - 100"(2540 mm) long - Order Ref. 64		1
63	6731478	EXIT TAG	Was 6559515 [A]		1
64	6658352	MOULDING	bulk - Sold Per Foot		x
64	6554149	CORD	bulk - Sold Per Foot		x
65	35C516	BOLT 10			1
66	6555331	WIRE ROPE			1
67	6666766	GROMMET			1
68	6724556	INSTRUCTIONS			1

https://www.pdfmanual4trucks.com/

CAB WINDOWS

NOTE: Order Top WIndow Kit from Gwinner Sales # 6702953.
Order Rear Window Kit from Gwinner Sales # 6701514.
Order Side Window Kit from Gwinner Sales # 6706993.

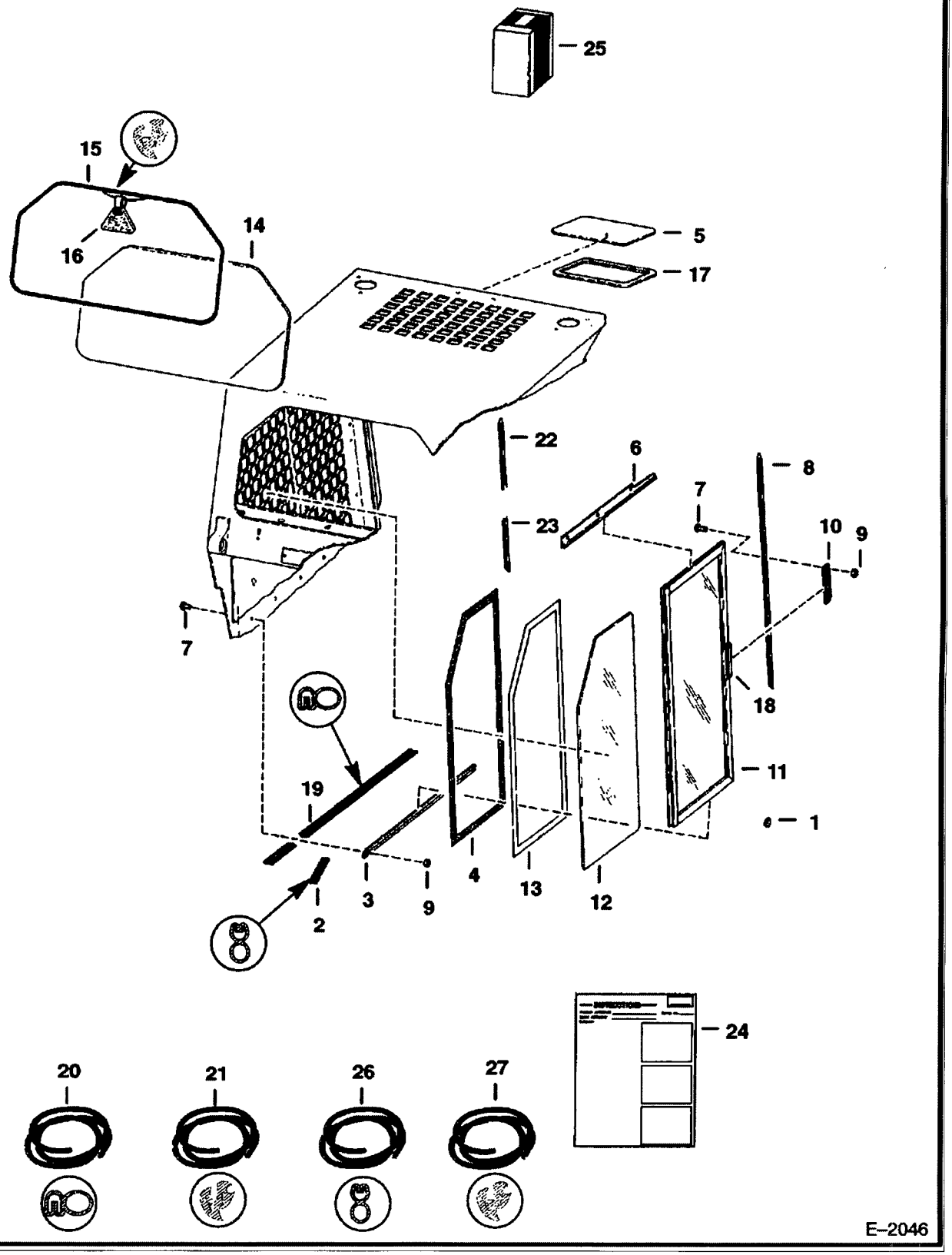

https://www.pdfmanual4trucks.com/

CAB WINDOWS (Cont'd)

Ref No	Part Number	Description	Remarks	Serial Number	Qty
1	6632265	PLUG	button		2
2		SEAL	NAP - 8" (203,2 mm) long - Order Ref. 26		2
3	6661689	TRACK	L.H.		1
3	6661690	TRACK	R.H.		1
4	6631549	HOOK	scotchmate		2
5	6705735	WINDOW	use W/Ref. 17 - 8.6" x 15.5" (218,4 mm x 393,7 mm) opening in cab		1
6	6703160	TRACK	L.H.		1
6	6703159	TRACK	R.H.		1
7	35C410	BOLT 5			26
8	6630919	TRACK	R.H.		1
8	6630918	TRACK	L.H.		1
9	83D4	NUT 10			26
10	6630924	BRACKET			2
11	6658143	WINDOW	L.H.		1
11	6658142	WINDOW	R.H.		1
12	6702731	WINDOW			2
13	6631548	LOOP	scotchmate		2
14		WINDOW	NAP - rear - .25" thick safety glass - 15" x 27.5" (381 mm x 698,5 mm) - Order 6729730 window & Ref. 27 extrusion and cord - Was 6701651 [A]		1
14	6729730	WINDOW	rear - .25" thick saftey glass - 14.4" x 26.84" (365,76 mm x 681,74 mm)		1
15		EXTRUSION	NAP - 81.5" (2070 mm) long - Order Ref. 21 or 27		x
15		CORD	NAP - 81.5" (2070 mm) long - Order Ref. 21 or 27		x
16	6731478	EXIT TAG	Was 6559515 [A]		1
17	6664351	SEAL	Used W/Cab Headliner		1
17	6665012	SEAL	Used W/O Cab Headliner		1
18	6659949	LATCH			2
19		SEAL	NAP - 24.5" (622mm) long - Order Ref. 20		1
20	6555351	SEAL	bulk - sold per foot		x
21	6665568	EXTRUSION	bulk - sold per foot - Used W/Ref. 14 (NAP/6701651 window) - Was 6658352 [B]		x
21	6554149	CORD	bulk - sold per foot		x
22	6706744	TRACK	L.H. - top half		1
23	6706745	TRACK	L.H. - bottom half		1
24	6566957	INSTRUCTIONS	INSTRUCTIONS Side Window		1
24	6720320	INSTRUCTIONS	INSTRUCTIONS Rear Window		1
24	6720598	INSTRUCTIONS	INSTRUCTIONS Top Window		1
25		KIT	SALES - Side Window - SEE NOTE		1
25		KIT	SALES - Top Window - SEE NOTE		1
25		KIT	SALES - Rear Door - SEE NOTE		1
26	6513152	SEAL	bulk - sold per foot		x
27	6675387	EXTRUSION	bulk - sold per foot - Used W/Ref. 14 (6729730 window)		x
27	6554149	CORD	bulk - sold per foot		x

https://www.pdfmanual4trucks.com/

CLOSED ALTERNATOR
(30 Amp. Motorola or Prestolite)

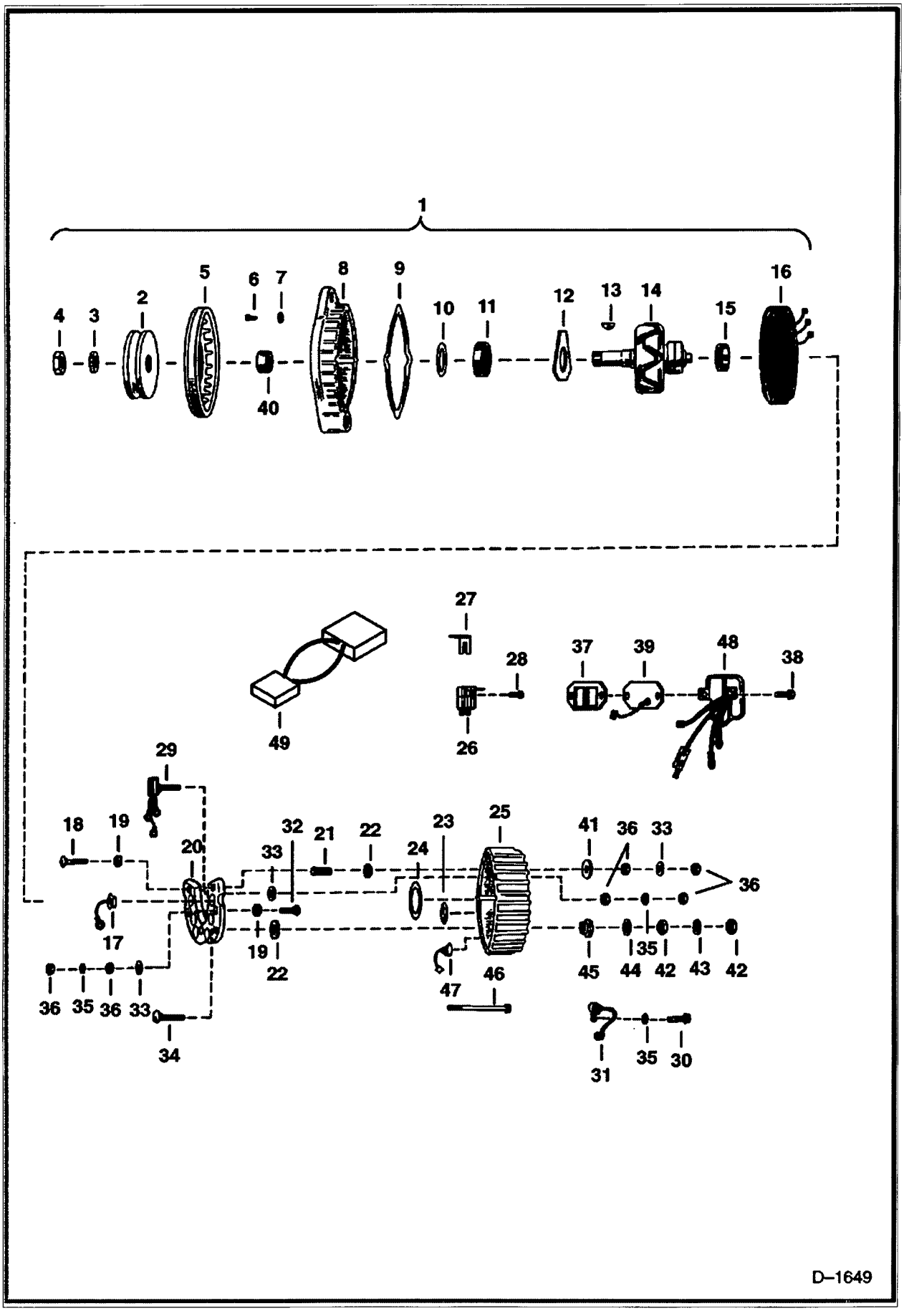

https://www.pdfmanual4trucks.com/

CLOSED ALTERNATOR (Cont'd)
(30 Amp. Motorola or Prestolite)

;f No	Part Number	Description	Remarks	Serial Number	Qty
1		ALTERNATOR	See BTI212 NAP - REF. 3-47 - WAS 6662990 [A]		1
2	6630163	PULLEY			1
3	6635557	WASHER	Was 896978B [A]		1
4	896979B	NUT			1
5		FAN	NAP - Was 899157B [A]		1
6	41G000806B	SCREW			3
7	17E000008B	WASHER			3
8	6630340	HOUSING			1
9	6630345	GASKET			1
10	899374B	SEAL			1
11	889163B	BEARING			1
12	6630343	RETAINER			1
13	6J000405B	KEY			1
14	899163B	ROTOR			1
15	1991038B	BEARING			1
16	6630341	STATOR			1
17	899375B	DIODE			3
8	7C000322B	BOLT			1
.9	897245B	INSULATOR			4
20	899167B	SINK	heat		1
21	897239B	SLEEVE			1
22	899376B	WASHER			2
23	899165B	INSULATOR			3
24	896992B	RETAINER			1
25	6630342	HOUSING			1
26	6630344	BRUSH ASSY.			1
?7	899169B	INSULATOR			1
:8	84G001608B	SCREW			2
29	6630350	DIODE	field		1
30	84G001906B	SCREW			1
31		CAPACITOR	NAP - Was 6630348 [A]		1
32	7C000312B	BOLT			3
33	896996B	WASHER			5
34	899377B	BOLT			1
35	17E000010B	WASHER			5
36	12D000010B	NUT			10
37	899170B	GASKET			1
3	84G001910B	SCREW			2
39	6630346	COVER			1
40	6649459	CONNECTOR			1
41	896990B	WASHER			1
42	62D000004B	NUT			2
43	4E000004B	WASHER			1
44	897732B	WASHER			1
45	897719B	INSULATOR			1
46	896984B	BOLT	thru		4
47	899378B	DIODE			3
48	6630349	REGULATOR	voltage		1
49	6713803	HARNESS	Was 6704887 [A]		1

https://www.pdfmanual4trucks.com/

COUNTERWEIGHT KIT
(Front Axle)

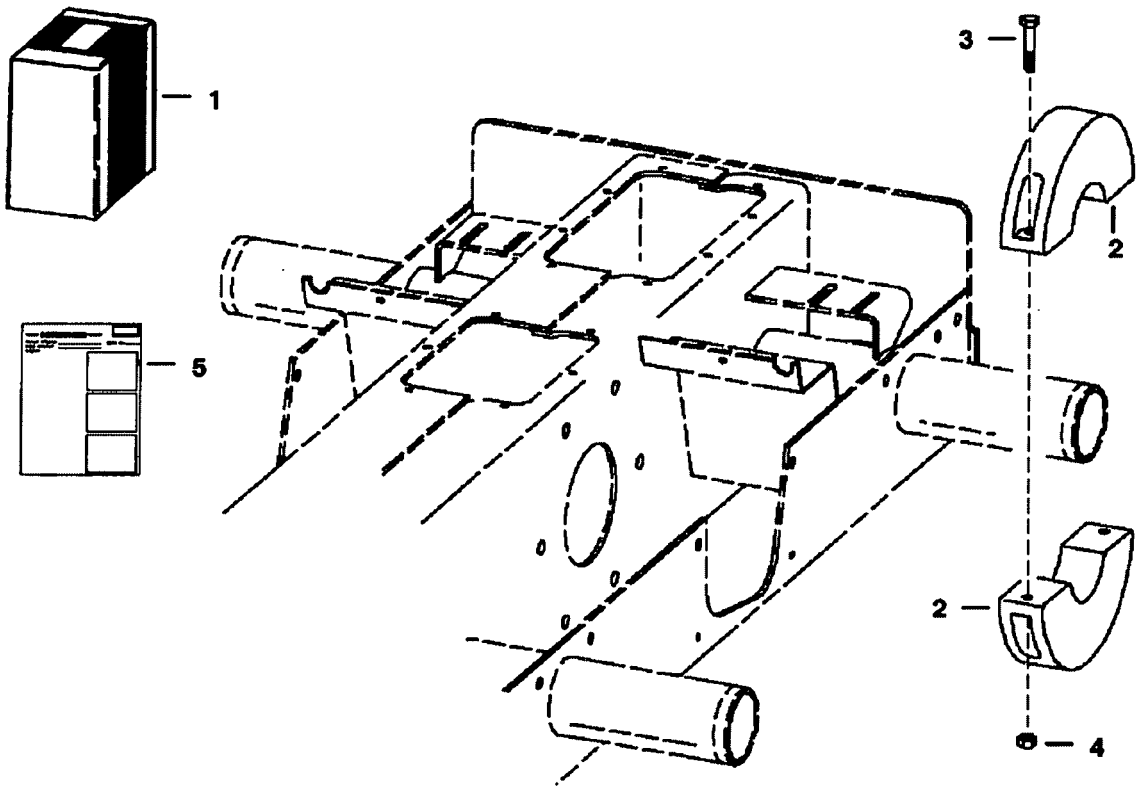

TS–1020

https://www.pdfmanual4trucks.com/

COUNTERWEIGHT KIT (Cont'd)
(Front Axle)

f ..o	Part Number	Description	Remarks	Serial Number	Qty
1	6704284	KIT	counterweight - Was SALES		1
2		WEIGHT	NAP - front axle - 19.1 lbs (8,7 kg) - 2.25" (57,2 mm) wide - Was 6702453 [A]		8
2	6714361	WEIGHT	38.7 lbs (17,6 kg) - 4.5" (114,3 mm) wide		4
3	17C640	BOLT 5			8
4	61D000006B	NUT			8
5	6900366	INSTRUCTIONS			1

https://www.pdfmanual4trucks.com/

COUNTERWEIGHT KIT
(1400 lb.)

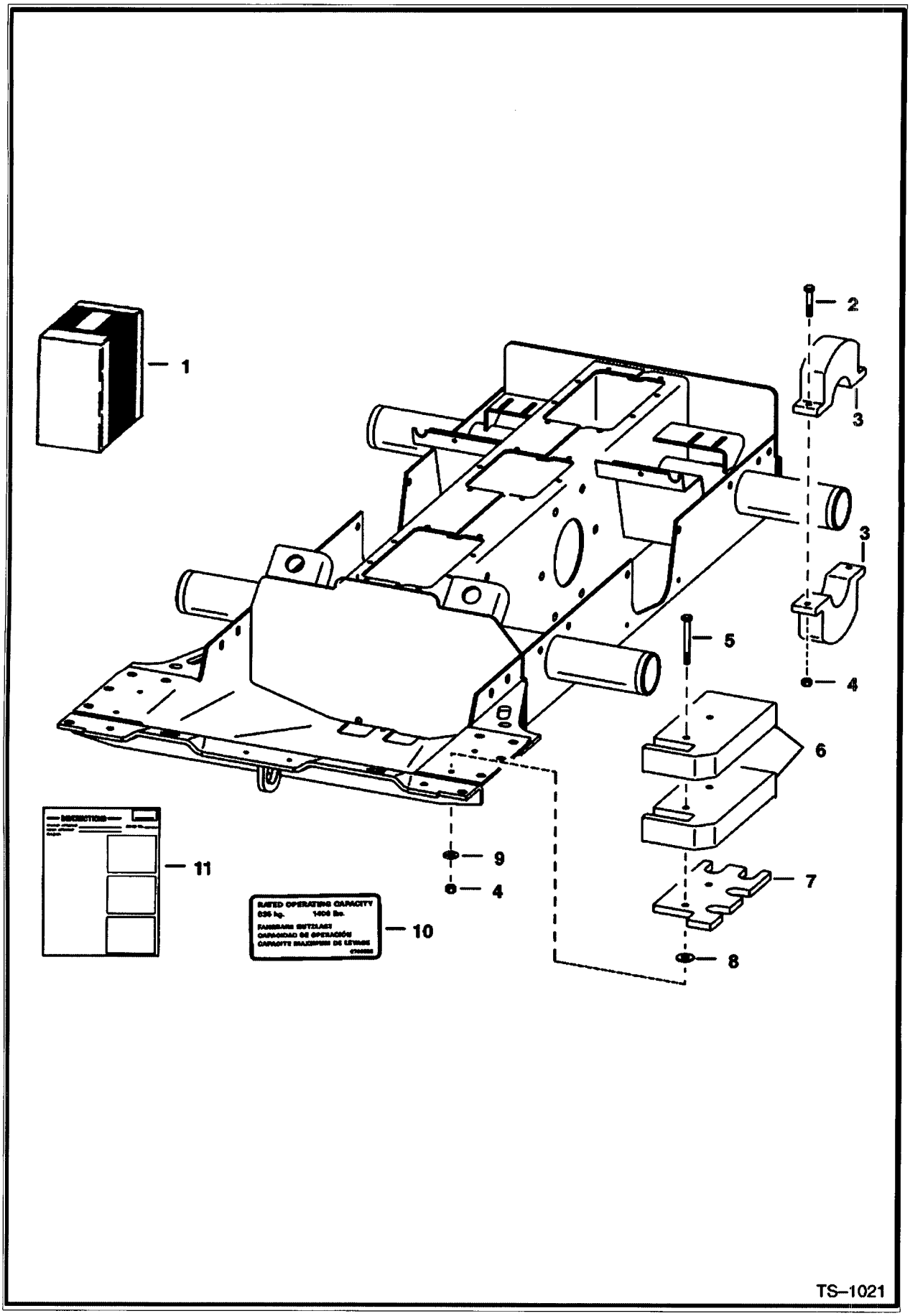

https://www.pdfmanual4trucks.com/

COUNTERWEIGHT KIT (Cont'd)
(1400 lb.)

Ref No	Part Number	Description	Remarks	Serial Number	Qty
1		KIT	NAP - counterweight - Was SALES [D]		1
2	17C640	BOLT 5			8
3		WEIGHT	NAP - front axle - 19.1 lbs (8,7 kg) - 2.25" (57,2 mm) wide - Was 6702453 [A]		8
4	61D000006B	NUT			10
5	17C006104B	BOLT			2
6	6702454	WEIGHT	rear - 55.1 lbs. (25,0 kg)		2
7	6702455	WEIGHT	rear - 11.2 lbs. (5,1 kg)		1
8	6701097	WASHER			1
9	27E6	WASHER 5			2
10	6703586	DECAL	capacity		1
11	6720470	INSTRUCTIONS			1

https://www.pdfmanual4trucks.com/

COUNTERWEIGHT KIT
(1400 lb. For Two Piece Rear Door)

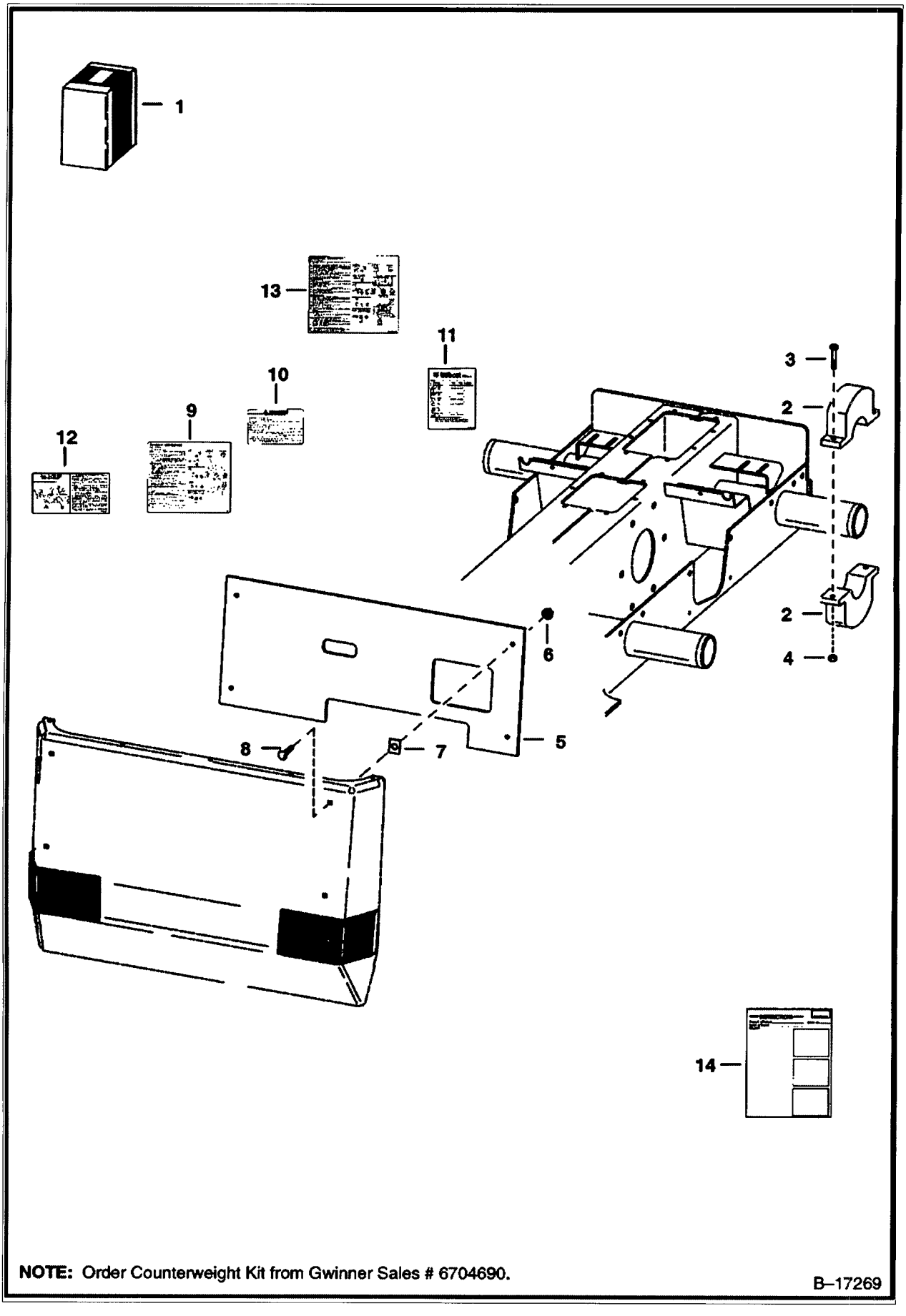

NOTE: Order Counterweight Kit from Gwinner Sales # 6704690.

B–17269

https://www.pdfmanual4trucks.com/

COUNTERWEIGHT KIT (Cont'd)
(1400 lb. For Two Piece Rear Door)

f No	Part Number	Description	Remarks	Serial Number	Qty
1		KIT	SALES - counterweight - SEE NOTE		1
2		WEIGHT	NAP - front axle - 19.1 lbs (8,7 kg) - 2.25" (57,2 mm) wide - Was 6702453 [A]		8
2	6714361	WEIGHT	38.7 lbs (17,6 kg) - 4.5" (114,3 mm) wide		4
3	17C640	BOLT 5			x
4	61D000006B	NUT			x
5	6712177	WEIGHT	Was 6704638 [A]		3
6	57D6	NUT 5			4
7	1612281B	NUT	spring		4
8	37C628	BOLT			4
9	6708212	DECAL	service - Was 6578218 [A]		1
10	6579511	DECAL	warning		1
11	6709781	DECAL	filters - Was 6700237 [A]		1
12	6705220	DECAL	belt tension - for fixed idler - Not in Kit		1
12	6709030	DECAL	belt tension - for spring loaded idler - Was 6711905 [B,D]		1
13	6703480	DECAL	service		1
1	6900366	INSTRUCTIONS	Was 6722194 [A]		1

https://www.pdfmanual4trucks.com/

DECALS

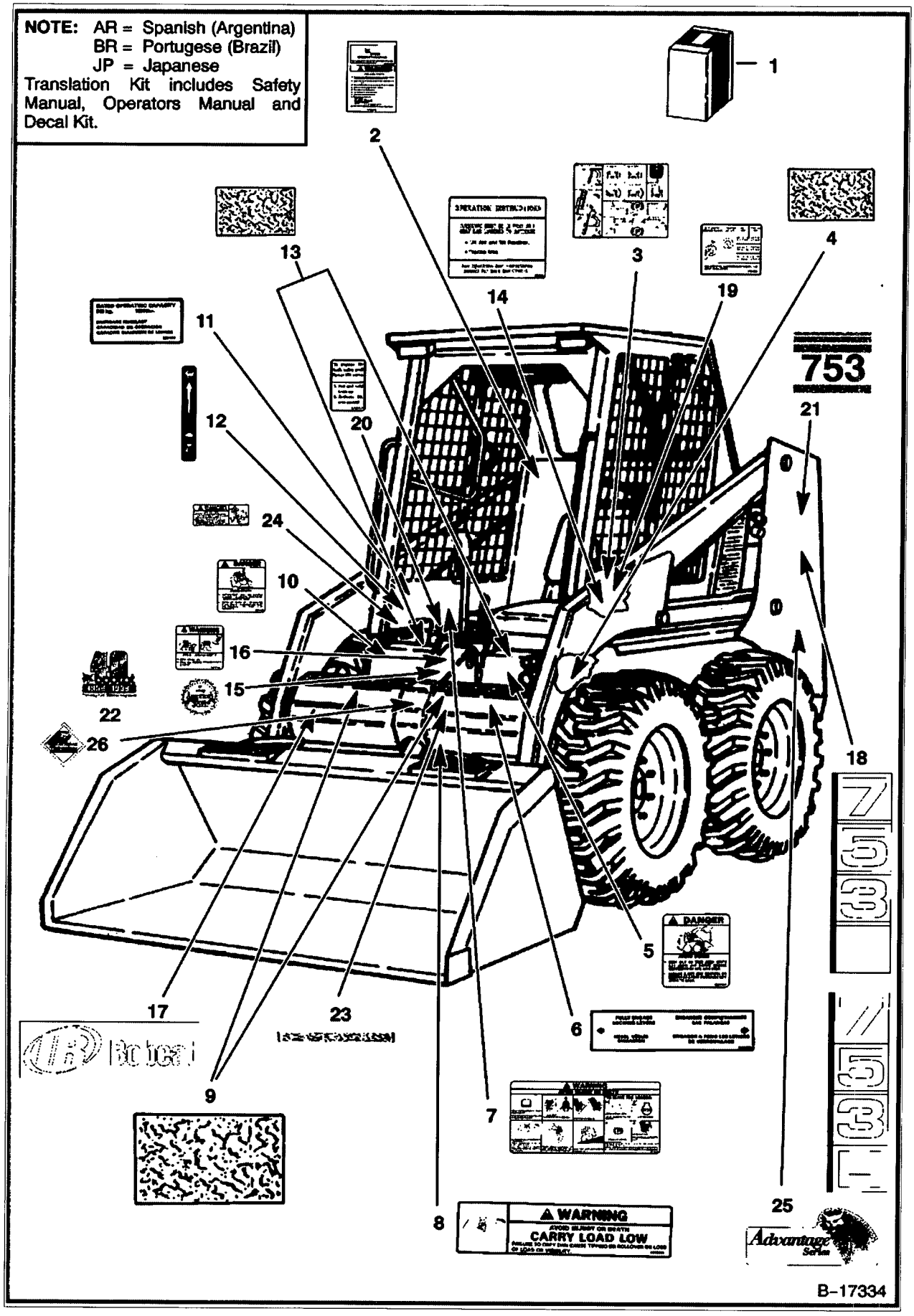

https://www.pdfmanual4trucks.com/

DECALS (Cont'd)

;f No	Part Number	Description	Remarks	Serial Number	Qty
1	6900501	KIT	decal		1
1	6716210AR	KIT	decal - SEE NOTE		1
1	6716210BR	KIT	decal - SEE NOTE		1
1	6716210JP	KIT	decal - SEE NOTE		1
1	6716211AR	KIT	translation - SEE NOTE		1
1	6716211BR	KIT	translation - SEE NOTE		1
2	6708154	KIT	handbook - W/Wire Rope - Was 6704831 [B]		1
2	6708154ES	KIT	handbook - Wire Rope - Spanish		1
2	6558309	WIRE ROPE	33" (838,2 mm) long - bulk - sold per foot - Also Order (2) of 6558310 sleeve		x
2	6558310	SLEEVE	wire rope		2
2	17C000512B	BOLT			1
2	61D5	NUT			1
3	6703723	DECAL	operating		1
4	6554100	TREAD	3" x 6" (76,2 mm x 152,4 mm)		4
5	6579639	DECAL	danger		1
6	6561383	DECAL	Bob-tach		1
7	6579510	DECAL	warning		1
8	6579528	DECAL	carry load low		1
9	6577947	SAFETY TREAD	7.5" x 15" (190,5 mm x 381,0 mm)		2
10	6579509	DECAL	danger		1
11	6714919	DECAL	capacity - 753 - Was 6561377 [A]		1
11	6703586	DECAL	capacity - 753H		1
12	6735140	DECAL	throttle - Was 6557565 [A]		1
13	6577949	SAFETY TREAD	6.8" x 8.75" - (172,7 mm x 222,3 mm)		2
14	6707255	DECAL	seat bar operating - W/seat sensor - Was NAP [D]		1
4	6727926	DECAL	seat bar operating - W/O seat sensor - Was 6718703 [A]		1
14	6717639	DECAL	seat bar operating - W/O seat sensor - AHC		1
15	6705088	DECAL	America's Best		1
16	6710358	DECAL	warning		1
17	6727310	DECAL	Ingersoll Rand -Was 6711329 [A]		1
18	6702825	DECAL	model no. - 753 - L.H.		1
18	6705362	DECAL	model no. - 753H - L.H. - Not in Kit		1
19	6708105	DECAL	pre heat - Not in Kit - Was 6705712 [A]		1
20	6706809	DECAL	lift lock	5127 27420 & Bel	1
0	6706809	DECAL	lift lock	5086 94508 & Bel	1
)	6711840	DECAL	lift lock	5127 27421 & Abv	1
20	6711840	DECAL	lift lock	5086 93509 & Abv	1
20	6711840	DECAL	lift lock	5158 11001-29999	1
20	6711840	DECAL	lift lock	5162 11001-11352	1
21	6714532	DECAL	model		2
22	6715912	DECAL	40th anniversary		1
23	6710746	SAFETY TREAD	1.25" x 15" (31,8 mm x 381,0 mm)		2
23	6727917	SAFETY TREAD	1.25" x 10.5" (31,8mm x 266,7mm)		2
24	6717343	DECAL	danger		2
25	6718271	DECAL	advantage series - L.H. - Not in Kit		1
26	6718275	DECAL	Bobcat advantage		1

https://www.pdfmanual4trucks.com/

DECALS

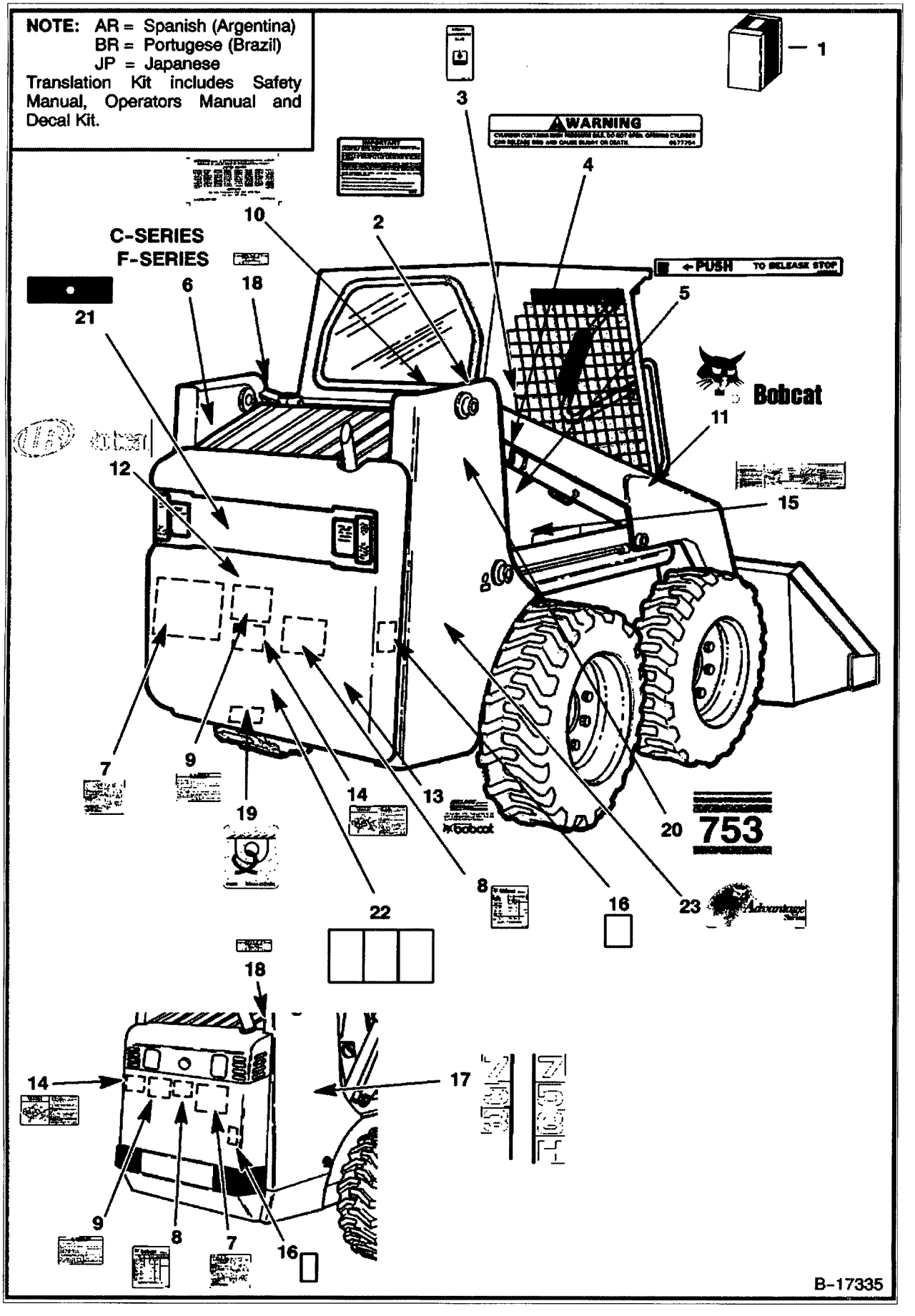

https://www.pdfmanual4trucks.com/

Ref No	Part Number	Description	Remarks	Serial Number	Qty
1	6900501	KIT	decal		1
1	6716210AR	KIT	decal - SEE NOTE		1
1	6716210BR	KIT	decal - SEE NOTE		1
1	6716210JP	KIT	decal - SEE NOTE		1
1	6716211AR	KIT	translation - SEE NOTE		1
1	6716211BR	KIT	translation - SEE NOTE		1
2	6560573	DECAL	spark arrestor		1
3	6565990	DECAL	hydraulic/hydrostatic fluid		1
4	6577754	DECAL	gas spring warning		2
5	6578368	DECAL	push		1
6	6708207	DECAL	"C" Series		1
6		DECAL	NAP - "C" Series - Export - Not in Kit - Was 6709796 [A]		1
6	6709797	DECAL	"C" Series - Export - Not in Kit		1
6	6714858	DECAL	"F"-Series		1
7	6708212	DECAL	service - Was 6578218 [A]		1
8	6709781	DECAL	filters - Was 6708209 [A]		1
9	6579511	DECAL	warning		1
10	6557224	DECAL	patent		1
11	6727309	DECAL	R.H. - Was 6702826 [A]		1
11	6727308	DECAL	L.H. - Was 6702827 [A]		1
12	6727307	DECAL	Bobcat Logo - for two piece rear door - Was 6711327 [A]		1
12	6727311	DECAL	Bobcat Logo - for one piece rear door - Was 6714139 [A]		1
13	6565200	DECAL	engine oil filter		1
14	6705220	DECAL	belt tension - for fixed idler		1
14	6709030	DECAL	belt tension - for spring loaded idler - Was 6711905 [B,D]		1
15	6706558	DECAL	boom stop		1
16	6715991	DECAL	fuse - Was 6707786 [A]		1
17	6702824	DECAL	model no. - 753 - R.H. - Not in Kit		1
17	6705361	DECAL	model no. - 753H - R.H. - Not in Kit		1
18	6708929	DECAL	propylene gylcol antifreeze		1
19	6727595	DECAL	tie down - Was 6595014 [B]		1
20	6714532	DECAL	model - Was 6714533 [B,D]	5158 11001-29999	2
20	6714532	DECAL	model - Was 6714533 [B,D]	5162 11001-19999	2
21	6714242	DECAL	for one piece rear door only		1
22	6734534	DECAL	warning/service schedule/ service parts - Was 6718398 [A]		1
23	6718272	DECAL	advantage series - R.H. - Not in Kit		1

https://www.pdfmanual4trucks.com/

ELECTRICAL CONTROLS KIT
(Attachments)

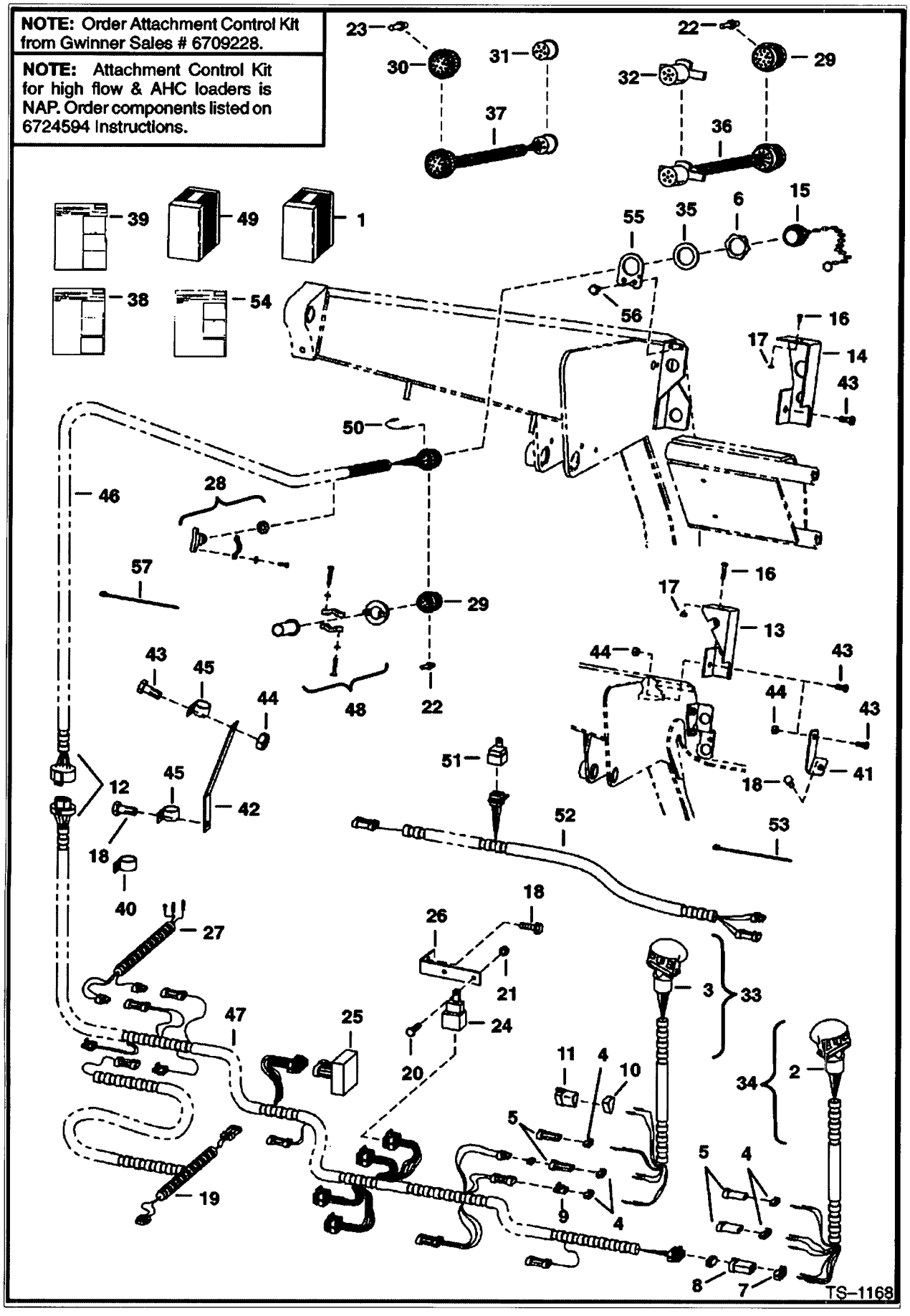

https://www.pdfmanual4trucks.com/

ELECTRICAL CONTROLS KIT (Cont'd)
(Attachments)

f No	Part Number	Description	Remarks	Serial Number	Qty
1		KIT	SALES - controls - W/handles - Ref. 2-29 - SEE NOTE		1
1		KIT	NAP - controls-W/O handles - Ref. 12-29 - SEE NOTE - Was SALES [D]		1
2	6680413	HANDLE ASSY	R.H. - Also Order Ref. 4, 5, 7 & 8 - Was 6706340 [A]		1
2	6640690	PIN			9
2	6641176	SEAL			9
3	6680412	HANDLE ASSY	L.H. - Also Order Ref. 4, 5 & 9-11 - Was 6707976 [A]		1
3	6640690	PIN			5
3	6640691	PIN			2
3	6641176	SEAL			7
3	6662257	PIN			3
3	6680447	DECAL	Was 6677370 [A]		1
4	6641180	LOCK	2 - pin		2
4	6640700	LOCK	3 - pin		2
5	6641179	CONNECTOR	2 - pin		2
5	6640699	CONNECTOR	3 - pin		2
6	6664036	NUT			1
7	6641181	LOCK	6 - pin		1
8	6641173	CONNECTOR	6 - pin		1
9	6641178	CONNECTOR	2 - pin		1
10	6664800	LOCK	3 - pin triangle - Was 6664186 [B]		1
11	6664599	CONNECTOR	3 - pin triangle - Was 6664184 [B]		1
12		HARNESS	NAP - One piece - Order Ref. 46, 47, 6711621 mount & (4) of 6670312 solenoid - Was 6705901 [A]		1
13	6706753	MOUNT	Used W/Ref. 12		1
14	6711621	MOUNT	Used W/Ref. 46		1
15	6664035	CAP			1
16	45G000508B	BOLT			1
17	50D000005B	NUT			1
18	84G3712	BOLT	Was 84G003716B [B]		1
19	6706552	HARNESS	for grader - Not in Kit		1
20	45G001212B	BOLT			2
21	50D000012B	NUT			2
22	6664040	PIN	male		x
23	6664041	SOCKET	female		x
24	6651975	SWITCH	relay - Used W/Ref. 12		4
1	6670312	RELAY	relay - Used W/Ref. 46		1
25	6664388	DIODE	memory		1
26	6702650	MOUNT			1
27	6706446	HARNESS	Not in Kit		1
28	6649028	CLAMP			1
29	6667569	CONNECTOR	Order (14) of Ref. 22 - W/Ref. 48		1
30	6665001	CONNECTOR	Also Order (6) of Ref. 23 - Not in Kits - W/Ref. 48		1
31	6664181	CONNECTOR	trailer style - Not in Kits		1
32	6664182	CONNECTOR	trailer style - Not in Kits		1
33	6706568	KIT	handle - Ref. 3-5, 9-11 & 38		1
34	6706567	KIT	handle - W/Ref. 2, 4, 5, 7, 8 & 38		1
35	6664037	WASHER			1
36	6706392	HARNESS	connects old loader harness to new attachment harness - W/Ref. 29 & 32 - Not in Kits		1
37	6706391	HARNESS	connects new loader harness to old attachment harness - W/Ref. 30 & 31 - Not in Kits		1
38	6722759	INSTRUCTIONS	INSTRUCTIONS FOR REF. 3 - 5 & 9 - 11		1
39	6722758	INSTRUCTIONS	INSTRUCTIONS for control elec. kit		1
40	30H000049B	CLAMP			1
41	6709176	BRACKET			1

https://www.pdfmanual4trucks.com/

ELECTRICAL CONTROLS KIT (Cont'd)
(Attachments)

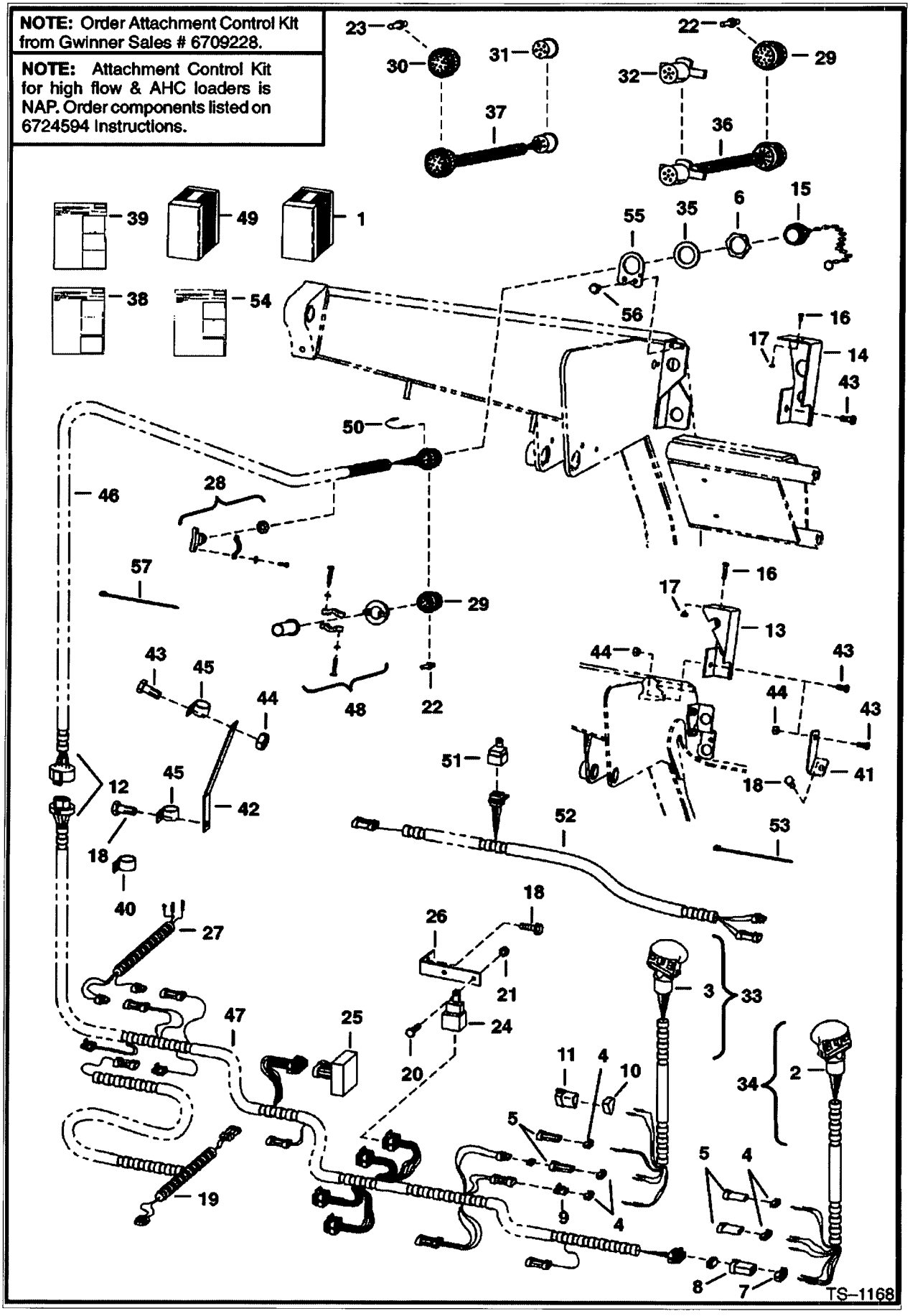

https://www.pdfmanual4trucks.com/

ELECTRICAL CONTROLS KIT (Cont'd)
(Attachments)

Ref No	Part Number	Description	Remarks	Serial Number	Qty
42	6709177	BRACKET			1
43	17C612	BOLT 5			2
44	85D6	LOCK NUT			2
45	30H46	CLIP			2
46	6710299	HARNESS			1
47	6710300	HARNESS			1
48	6669286	CLAMP	W/saddles		1
49	6716799	KIT	dual functions - Ref. 50-54		1
50	6716844	HARNESS	jumper		1
51	6670312	RELAY	relay		1
52	6716798	HARNESS	KP diverter		1
53	6624289	CABLE TIE			6
54	6900601	INSTRUCTIONS			1
55	6714999	MOUNT			1
56	84G3112	BOLT 5			2
57	6610510	TIE			6

https://www.pdfmanual4trucks.com/

ENGINE MOUNT KIT
(For Rough Applications)

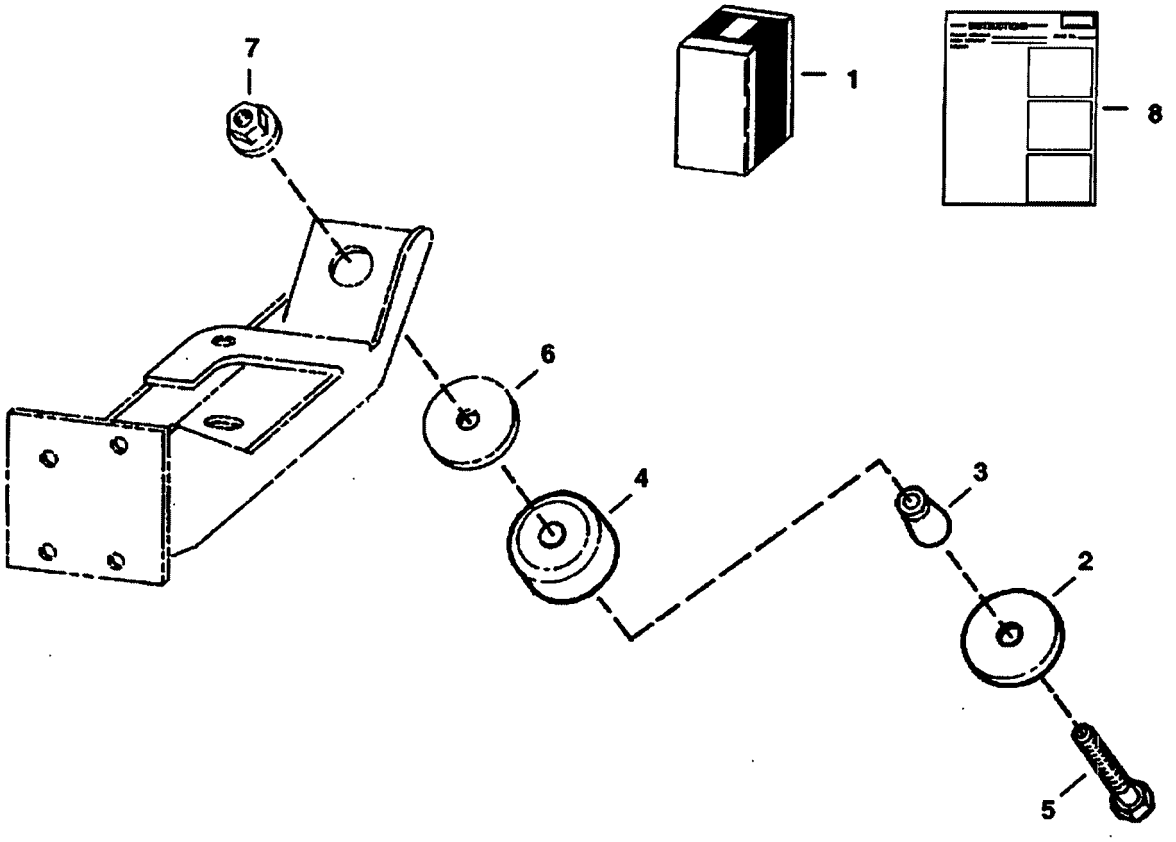

B–14623

https://www.pdfmanual4trucks.com/

ENGINE MOUNT KIT (Cont'd)
(For Rough Applications)

;f No	Part Number	Description	Remarks	Serial Number	Qty
1	6711632	MOUNTING KIT	engine mounting - Ref. 2-8		1
2	6661787	WASHER			4
3	7110276	SPACER	tapered - Was 6715287 [A]		4
4	6668104	MOUNT			4
5	43C000852B	BOLT	Not in Kit - Was 17C000844B [B]		4
6	6705106	WASHER	Not in Kit		4
7	6652918	NUT	Not in Kit - Was 83D000008B [B]		4
8	6724482	INSTRUCTION	INSTRUCTION		1

https://www.pdfmanual4trucks.com/

EUROPEAN ACCESSORIES

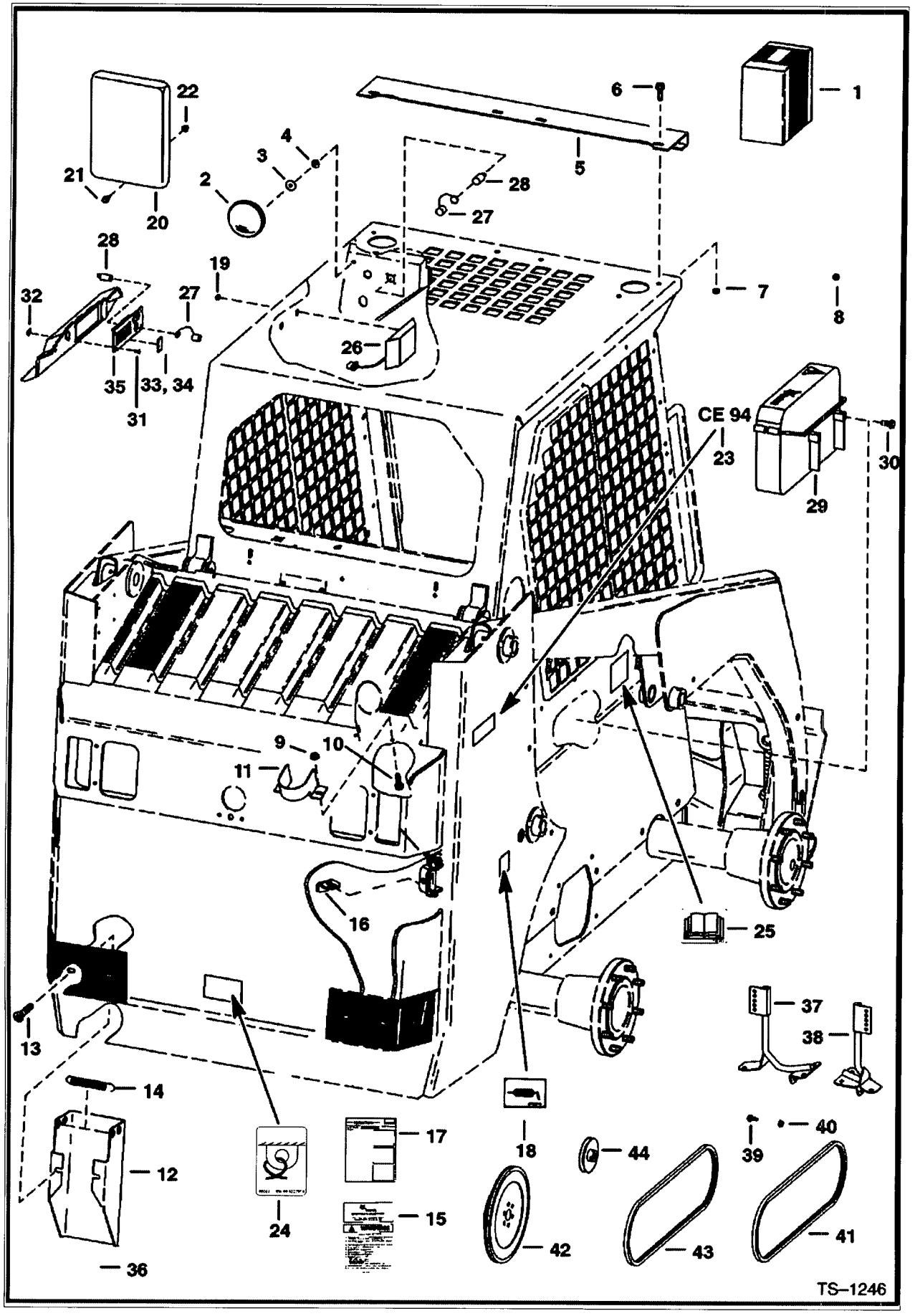

https://www.pdfmanual4trucks.com/

EUROPEAN ACCESSORIES (Cont'd)

f No	Part Number	Description	Remarks	Serial Number	Qty
1		KIT	NAP - European Accessories - Ref. 2-18 - Order individual parts - Was SALES [D]		1
2	6653388	MIRROR	convex		1
3	6518952	WASHER	.26" I.D. - 1" O.D.		1
4	25E13	WASHER 5	.25" I.D. - .75" O.D.		1
5	6701852	SHIELD			1
6	35C616	BOLT 5			4
7	61D000006B	NUT			4
8		COVER	NAP - grease - Order Ref. 18		14
9	57D000004B	NUT	Use W/6709092 Exhaust Shield		x
9	61D5	NUT	Use W/6714624 Exhaust Shield		2
10	35C412	BOLT	Use W/6709092 Exhaust Shield		2
10	37C512	BOLT	Use W/6714624 Exhaust Shield		2
11	6709092	SHIELD	exhaust - Use W/Steel Hood - Was 6704653 [A]		1
11	6714624	SHIELD	exhaust - one piece rear door		1
12	6709379	TOOL HOLDER	two piece rear door - Was 6705100 [A]		1
12	6715318	TOOL HOLDER	one piece rear door		1
3	9G000636B	BOLT	Use W/6709379 Tool Holder		2
13	37C000612B	BOLT	Use W/6714624 Exhaust Shield		2
14	6579072	SPRING	Was 6700743 [B]		1
15	6708155	KIT	handbook - Was 6704832 [A]		1
16	6701883	STOP	rear door - not required for one piece rear door		1
17	6722300	INSTRUCTIONS	For Ref. 12-14		1
18	6705340	DECAL	lube		1
19	6664221	RETAINER	snap in		2
20		CONTAINER	NAP - manuals - Order Ref. 29 & (2) of Ref. 30 - Was 6633394 [A]		1
21	35C410	BOLT 5			4
22	83D4	NUT 10			4
23		DECAL	NAP - CE94 - Was 6707814 [A]		1
24	6595014	DECAL	tow hook - Was 6707867 [A]		1
25		DECAL	NAP - operator manual - located inside of cab - Was 6707971 [A]		1
26	6680326	LIGHT	dome - Was 6664368 [A]		1
26	6665367	BULB			1
26	6665353	SWITCH			1
27	6664224	CAP			2
3	6664223	OUTLET			2
29	6708827	CONTAINER	manuals		1
30	6702642	SCREW			2
31	6669224	BOLT			4
32	6669091	CLIP			4
33	6668742	SWITCH	travel control		1
34	6665314	PLUG			3
35	6710527	PANEL			1
36	55D6	NUT			2
37	6712985	MOUNT	mirror - Japan		1
38	6712987	MOUNT	mirror - Japan		1
39	35C512	BOLT	Japan		6
40	83D5	NUT 5			6
41	6672021	BELT	pump drive		1
42	6715165	FLYWHEEL	W/Ring gear		1
42	6510470	RING GEAR			1
3	6715478	BELT	fan drive		1
44	6712970	PULLEY	fan drive - 4.75" (120,65 mm) O.D.		1

https://www.pdfmanual4trucks.com/

EUROPEAN ACCESSORIES
(Caliper Brake Kit)

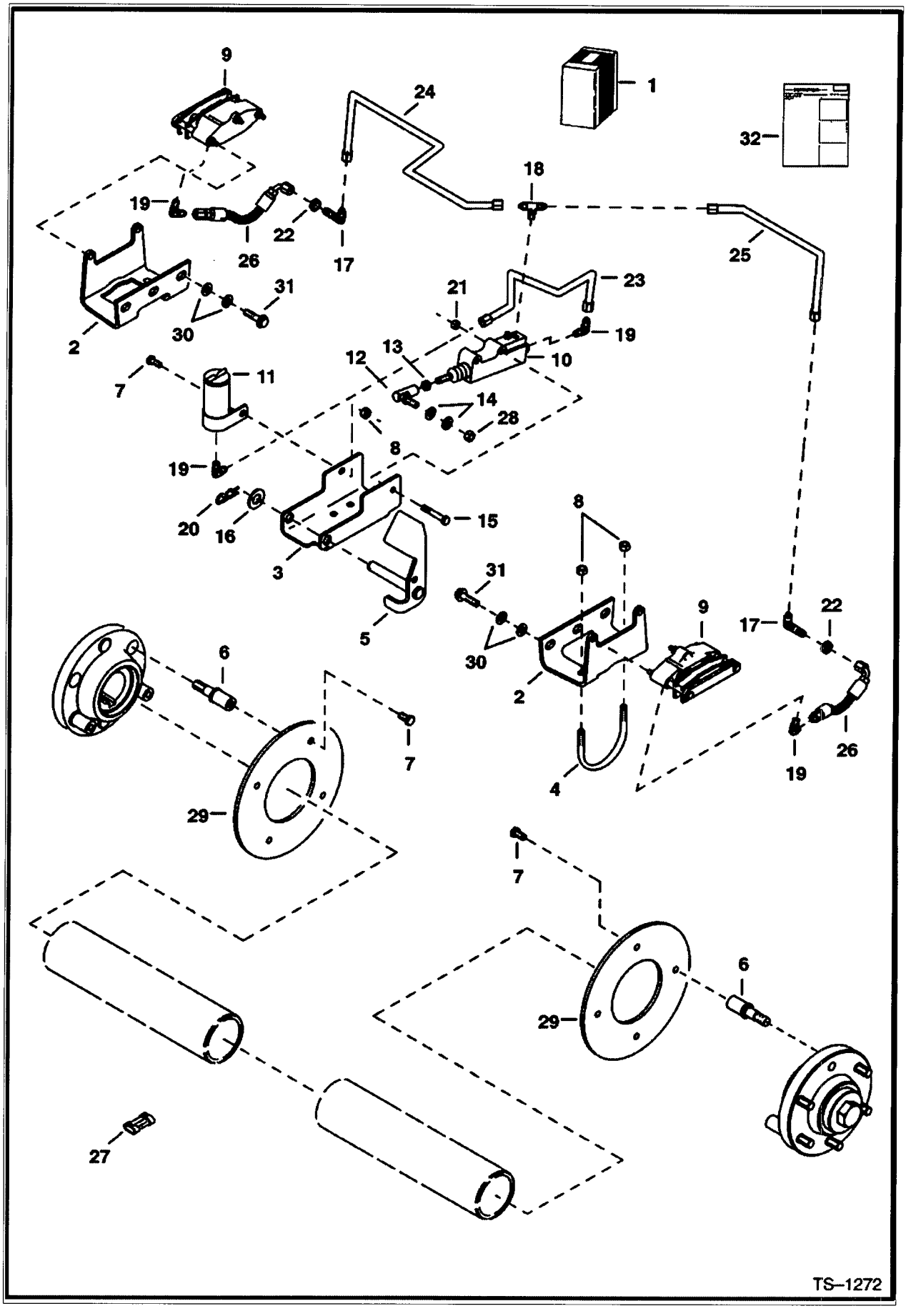

https://www.pdfmanual4trucks.com/

EUROPEAN ACCESSORIES (Cont'd)
(Caliper Brake Kit)

f No	Part Number	Description	Remarks	Serial Number	Qty
1	6709242	KIT	Ref. 2-32 - Was NAP [D]		1
2	6710467	MOUNT ASSY.	caliper		2
3	6709236	MOUNT	pedal		1
4	6709237	CLAMP			2
5	6709239	PEDAL ASSY.	brake		1
6	6709229	BOLT	wheel		8
7	17C612	BOLT 5			9
8	95D000006B	NUT	Was 91D000006B [A]		5
9	6666932	BRAKE	See Illustration EUROPEAN ACCESSORIES/ B14851		2
10	6666933	CYLINDER	See Illustration EUROPEAN ACCESSORIES/ C3403 MASTER		1
11	6661117	TANK			1
12	6599744	BALL JOINT			1
13	8D000006B	NUT			1
14	25E000017B	WASHER			2
15	17C532	BOLT 5			2
16	25E000025B	WASHER			1
7	88F3	ELBOW 5	W/O O-rings		2
17	88FN00003B	ELBOW	W/ O-rings		2
17	97K4	O'RING	flared end		4
18	98F000003B	TEE			1
19	83F000003B	ELBOW			4
20	1318565B	PIN			1
21	91D000005B	NUT			2
22	86F3	LOCKNUT			2
23	6709400	TUBE			1
24	6709409	TUBE			1
25	6709410	TUBE			1
26	6709544	HOSE			2
27	6667139	CAP			1
28	62D000006B	NUT			1
29	6709234	DISC	brake		2
30	27E000008B	WASHER			8
31	31C824	BOLT 10			4
32	6901702	INSTRUCTIONS	INSTRUCTIONS Was 6724380 [A]		1

https://www.pdfmanual4trucks.com/

EUROPEAN ACCESSORIES
(Brake)

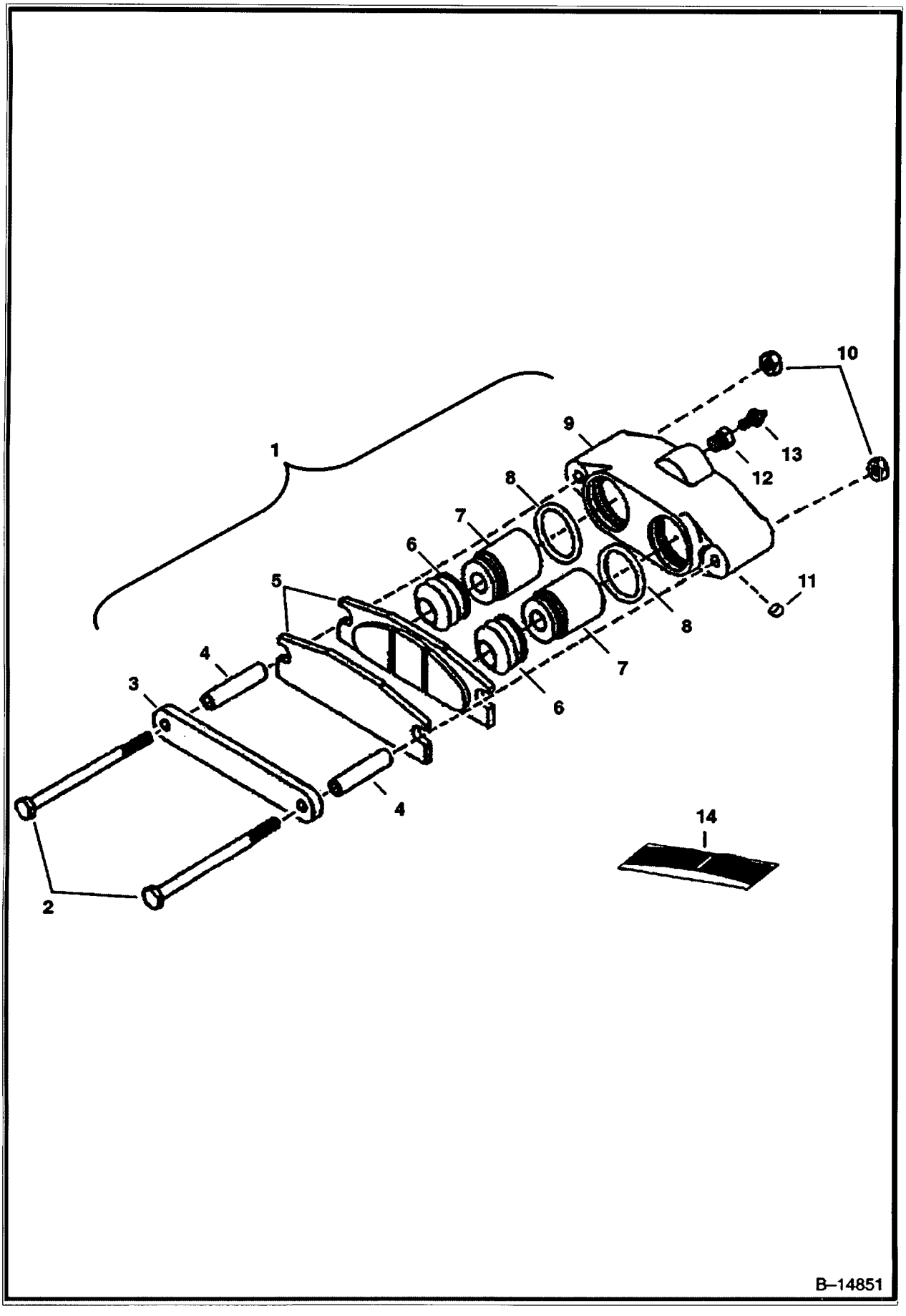

https://www.pdfmanual4trucks.com/

EUROPEAN ACCESSORIES (Cont'd)
(Brake)

;f No	Part Number	Description	Remarks	Serial Number	Qty
1	6666932	BRAKE	W/Ref. 2-13		1
2	6669154	BOLT			2
3	6669155	PLATE			1
4	6669156	SPACER			2
5	6669184	STATOR ASSY.			1
6		BOOT	NSS - Order Ref. 14		2
7	6669159	PISTON			2
8		O-RING	NSS - Order Ref. 14		2
9		HOUSING	NSS - Order Ref. 1		1
10	6669162	NUT			2
11	6669163	PLUG			1
12	6669164	ADAPTER			1
13	6669165	SCREW	bleeder		1
14	6669185	SEAL KIT	W/Ref. 6 & 8		1

https://www.pdfmanual4trucks.com/

EUROPEAN ACCESSORIES
(Master Cylinder - Caliper Brakes)

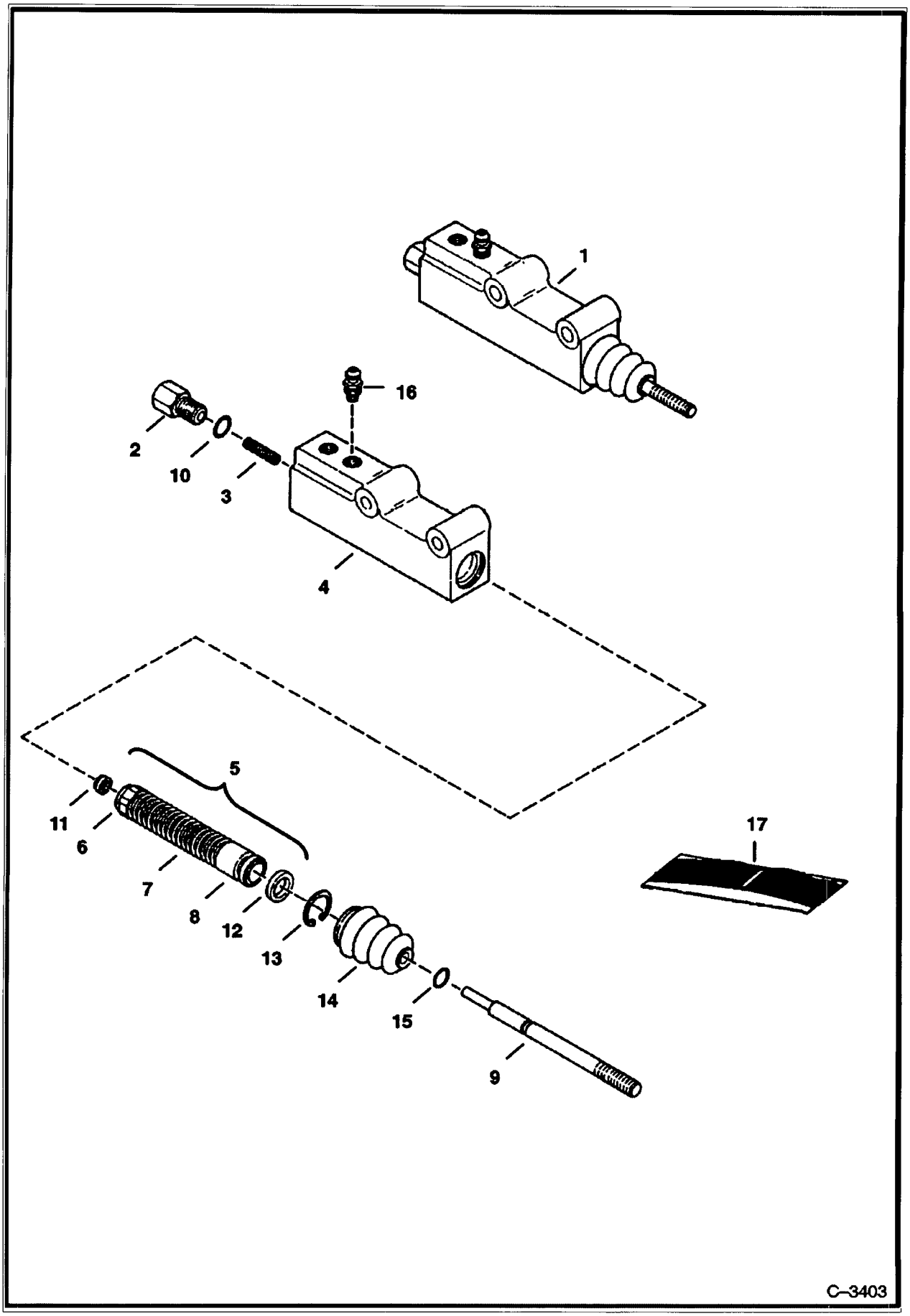

https://www.pdfmanual4trucks.com/

EUROPEAN ACCESSORIES (Cont'd)
(Master Cylinder - Caliper Brakes)

›f ..o	Part Number	Description	Remarks	Serial Number	Qty
1	6666933	CYLINDER	master brake - Ref. 2-16		1
2		ADAPTER	NSS		1
3		SPRING	NSS		1
4		BODY	NSS		1
5		SPRING ASSY.	NSS - Ref. 6-8 & 11		1
6		RETAINER	NSS		1
7		SPRING	NSS		1
8		PISTON	NSS		1
9		PUSH ROD	NSS		1
10		O-RING	NSS		1
11		SEAT	NSS		1
12		CUP	NSS		1
13		SNAP RING	NSS		1
14		BOOT	NSS		1
15		O-RING	NSS		1
16	6668097	SCREW	bleeder		1
17	6661608	SEAL KIT	Ref. 10-15		1

https://www.pdfmanual4trucks.com/

EUROPEAN ACCESSORIES
(Counterweight Kit) (1400 lb. - For One Piece Rear Door)

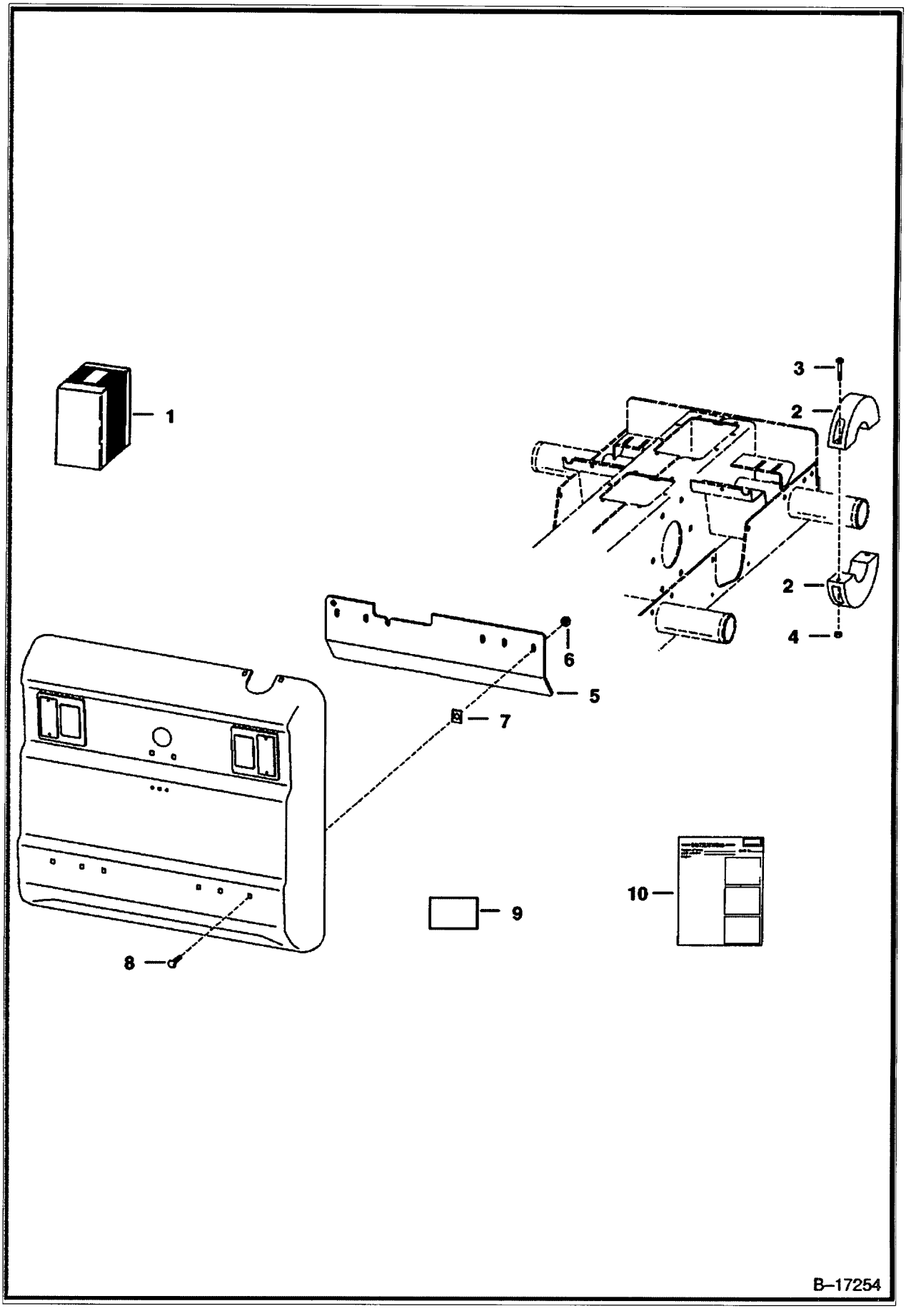

https://www.pdfmanual4trucks.com/

EUROPEAN ACCESSORIES (Cont'd)
(Counterweight Kit) (1400 lb. - For One Piece Rear Door)

Ref No	Part Number	Description	Remarks	Serial Number	Qty
1	6714932	KIT	counterweight		1
2	6714361	WEIGHT	front axle - 38.7 lbs. (17,6 kg) - 4.5" (114,3 mm) wide		4
3	17C640	BOLT 5			4
4	61D000006B	NUT			4
5	6714053	WEIGHT			3
6	57D6	NUT 5			3
7	1612281B	NUT	spring		3
8	37C628	BOLT			3
9	6703586	DECAL	1400 lb. - Not in Kit		1
9	6707481	DECAL	1600 lb. - Not in Kit		1
9	6705102	DECAL	1800 lb. - Not in Kit		1
10	6900410	INSTRUCTIONS			1

https://www.pdfmanual4trucks.com/

EUROPEAN ACCESSORIES
(Seat Rail Cover - Grammer Suspension Seat)

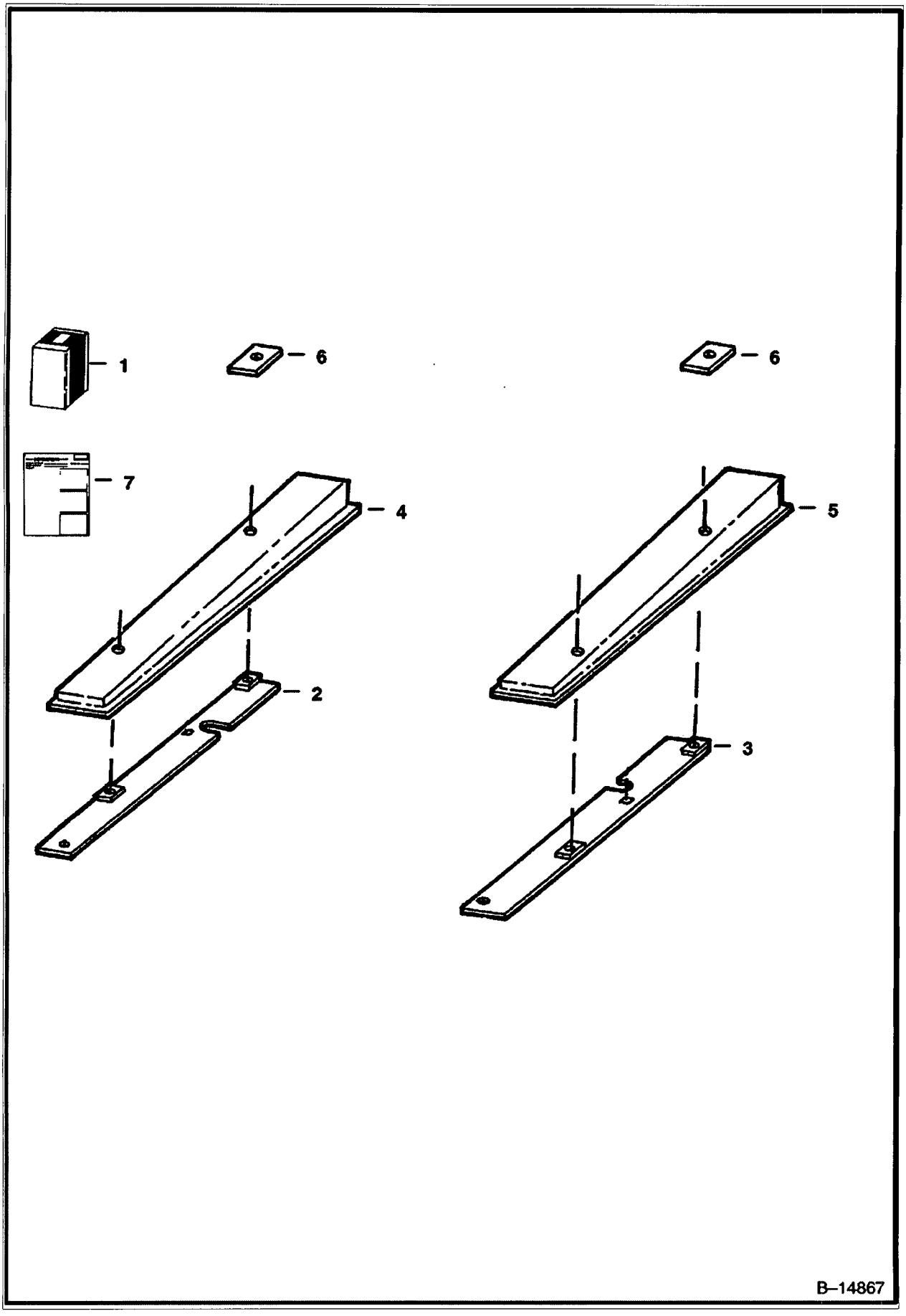

https://www.pdfmanual4trucks.com/

EUROPEAN ACCESSORIES (Cont'd)
(Seat Rail Cover - Grammer Suspension Seat)

Ref No	Part Number	Description	Remarks	Serial Number	Qty
1	6712875	KIT	rail cover - Ref. 2-7		1
2	6712183	MOUNT	R.H.		1
3	6712186	MOUNT	L.H.		1
4	6712070	COVER	R.H.		1
5	6712068	COVER	L.H.		1
6	6712146	WASHER	square		2
7	6724880	INSTRUCTIONS			1

https://www.pdfmanual4trucks.com/

EUROPEAN ACCESSORIES
(Road Lights)

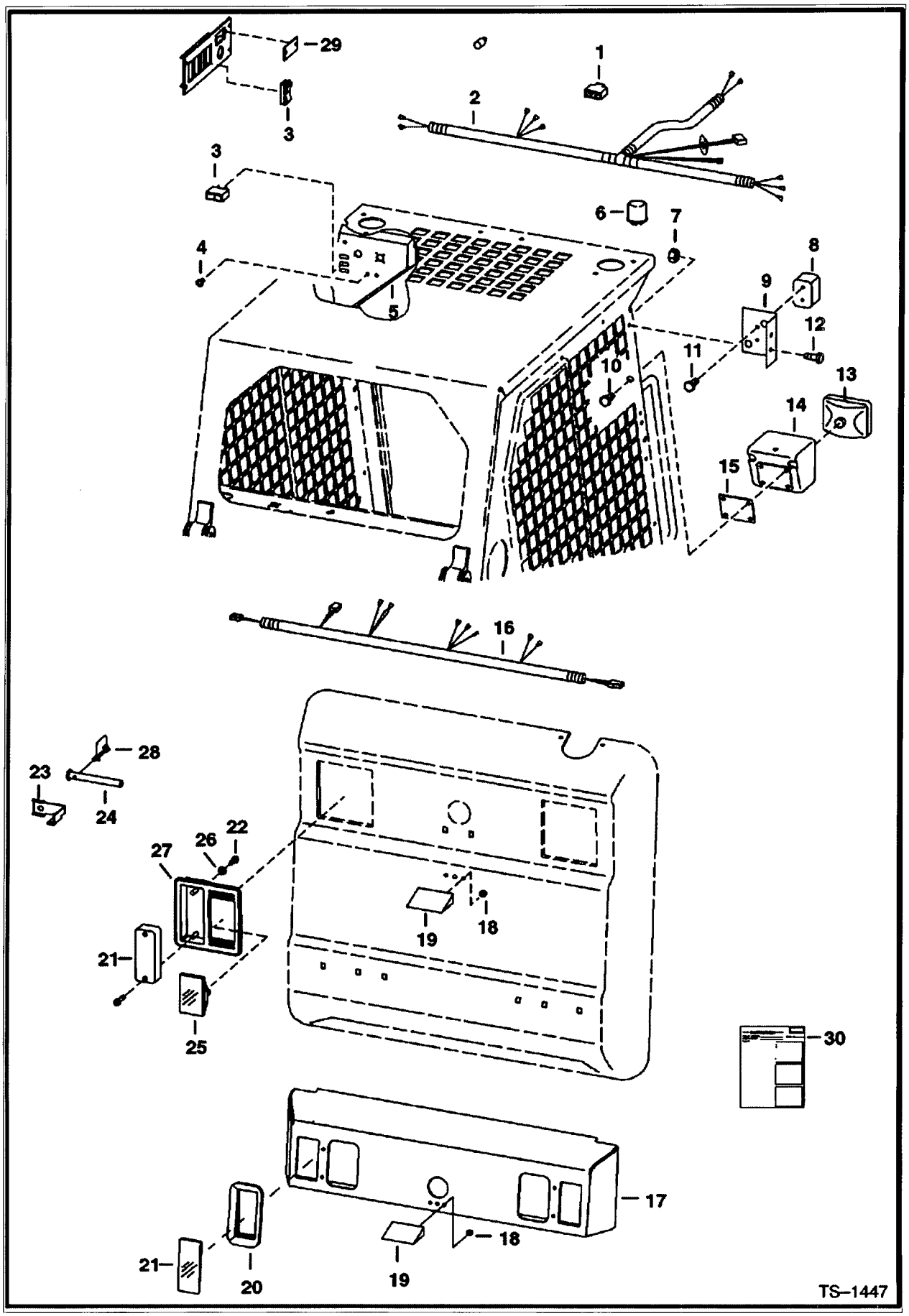

https://www.pdfmanual4trucks.com/

EUROPEAN ACCESSORIES (Cont'd)
(Road Lights)

;f No	Part Number	Description	Remarks	Serial Number	Qty
1	6519548	CONNECTOR			1
2	6707672	HARNESS			1
3	6665316	SWITCH	hazard		1
3	6665315	SWITCH	head light		1
4	6665757	LIGHT	indicator		2
5	6708426	PANEL	See Illustration CAB ELECTRICAL CIRCUITRY/ E2221 L.H. - W/O BOSS OPTION	5086 94556 & Bel	1
5	6712152	PANEL	See Illustration CAB ELECTRICAL CIRCUITRY/ E2221 L.H. - W/O BOSS OPTION	5086 94557 & Abv	1
5	6708428	PANEL	See Illustration CAB ELECTRICAL CIRCUITRY/ E2221 L.H. - W/BOSS OPTION	5086 94556 & Bel	1
6	6557904	FLASHER			1
7	83D4	NUT 10			2
8	6665727	LIGHT	front turn		2
8		BULB	NAP - 5W - Order 6666568 bulb - Was 6666567 [A]		2
8	6666568	BULB	21W		2
8	6666563	LENS			2
9	6707706	MOUNT	light		2
10	17C000508B	BOLT			4
11	58G000808B	SCREW			4
12	35C410	BOLT 5			2
13	6665728	LIGHT	front		2
13	6666570	BULB	40/45W		2
13	6666564	HOUSING			2
13	6666565	LENS			2
13	6666566	GASKET			2
14	6707804	HOUSING	light		2
15	6708824	MOUNT			2
16	6709048	HARNESS	for two piece rear door		1
16	6718198	HARNESS	for one piece rear door - Was 6714546 [A]		1
17	6705776	HOOD			1
18	1DM6	NUT			2
19	6665729	LIGHT	license plate		1
19	6666569	BULB	5W		2
20	6705774	MOUNT			2
21	6707789	LIGHT			2
21	6666568	BULB	21W		2
21	6667887	BULB	21/5W		2
21	6668007	SCREW			2
21	6668010	LENS			1
22	4DM00005B	NUT			4
23	6713736	BRACKETS	light switch		1
24	6714008	PIN	Bob-Tach lock		1
25	6671027	LIGHT			2
26	25E000011B	WASHER			4
27	6672279	MOUNT	rubber		1
28	6670668	PIN	snapper		1
29			NAP - fuse out - Was 6669143 [D]		1
29	6669144	INDICATOR	fuse/flasher		1
30	6724072	INSTRUCTIONS			1

https://www.pdfmanual4trucks.com/

EUROPEAN ACCESSORIES
(Sound Option)

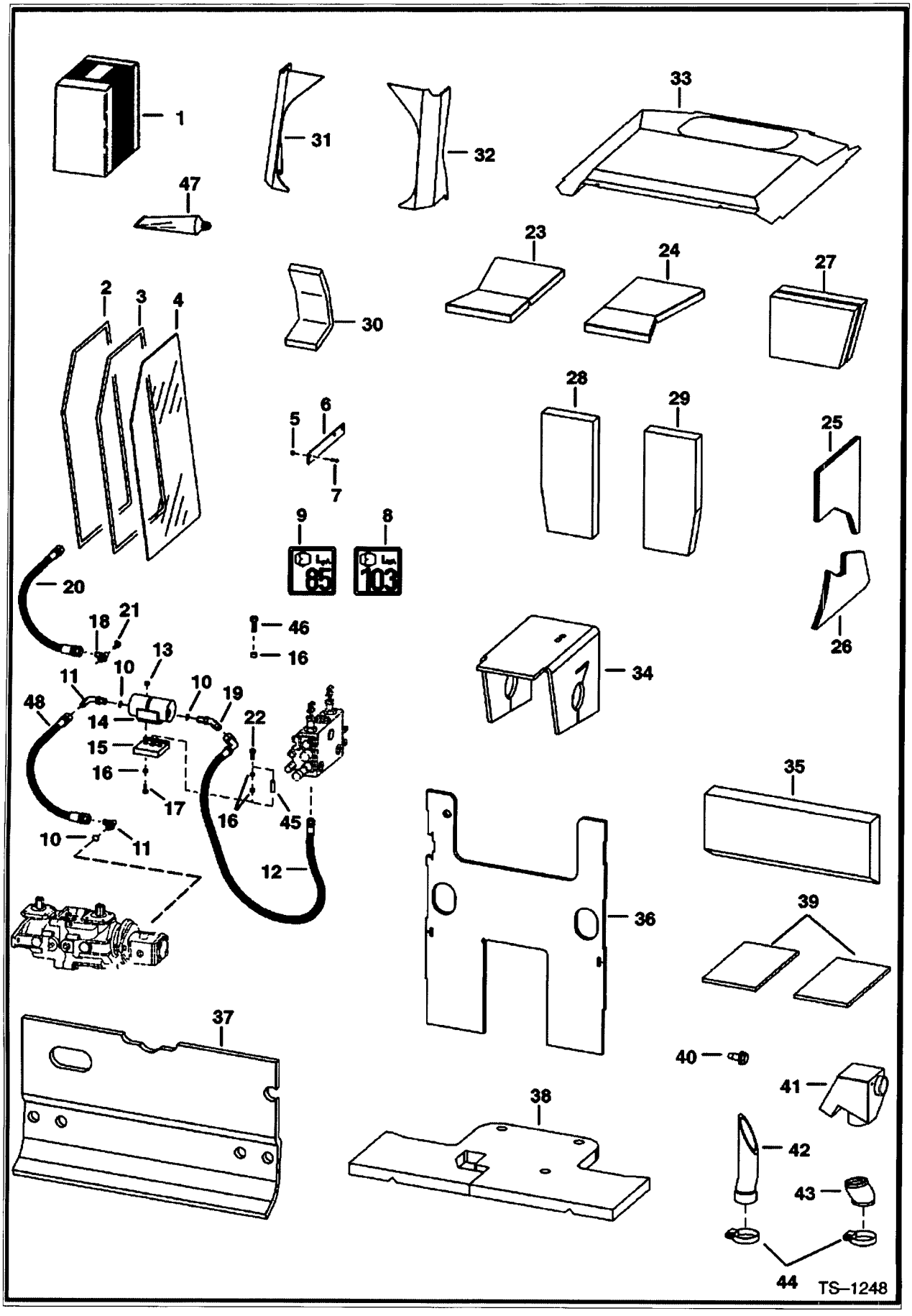

https://www.pdfmanual4trucks.com/

EUROPEAN ACCESSORIES (Cont'd)
(Sound Option)

Ref No	Part Number	Description	Remarks	Serial Number	Qty
1		KIT	NAP - Ref. 2-11 & 13-38 - Order individual parts - Was SALES [D]		1
2	6631549	HOOK	scotchmate		2
3	6631548	LOOP	scotchmate		2
4	6702731	WINDOW	cab		2
5	83D4	NUT 10			4
6	6700875	RETAINER	window		2
7	35C410	BOLT 5			4
8	6579403	DECAL	sound level warning - 103 decibel	& Bel	1
8	6733220	DECAL	sound level warning - 102 decibel - Was 6579402 [A]	& Abv	1
9	6579385	DECAL	sound level warning - 85 decibel	& Bel	1
9	6579399	DECAL	sound level warning - 83 decibel	& Abv	1
10	79K12	O RING 10	flat boss face		x
10	99K000012B	O-RING	tapered boss face		x
11	17K8	FITTING	W/Ref. 10 - flat boss face		1
11	17KN00008B	ELBOW	W/Ref. 10 - tapered boss face		1
1	97K000012B	O-RING	flared end		1
12	6729147	HOSE	Was 6707233 [A]		1
13	85D6	LOCK NUT			2
14	6659982	MUFFLER	Was 6703648 [A]		1
15	6705333	MOUNT	rubber		1
16	6562619	BUSHING			2
17	35C616	BOLT 5			2
18	6700599	ELBOW	W/Ref. 10		1
19	18K000008B	ELBOW	W/Ref. 10 - flat boss face		1
9	18KV00008B	ELBOW	W/Ref. 10 - tapered boss face		1
19	97K000012B	O-RING	flared end		1
20		HOSE	NAP - Order Ref. 11 & 48 - Was 6707231 [A]		1
21	6707895	ELBOW			1
22	84G3724	BOLT			1
23	6732723	INSULATION	crossmember - R.H. - Was 6704722 [A]		1
24	6732722	INSULATION	crossmember - L.H. - Was 6704721 [A]		1
25	6719332	INSULATION	blower housing - Was 6704725 [A]		1
26	6704769	INSULATION	blower housing		1
27	6705848	INSULATION	transmission		2
8	6705849	INSULATION	brace - L.H.		1
)	6705850	INSULATION	brace - R.H.		1
30	6703331	INSULATION	air inlet		1
31	6715097	INSULATION	cab corner		1
32	6715098	INSULATION	cab corner		1
33	6715094	INSULATION	cab top		1
34	6715372	INSULATION	transmission		1
35	6715096	INSULATION	cab back - Was 6706903 [A]		1
36	6715099	INSULATION	steering panel		1
37	6715106	INSULATION	rear door		1
38	6715095	INSULATION	seat pan - Was 6706983 [A]		1
39	6715371	INSULATION	pedal		2
40	84G3112	BOLT 5	Was 84G003712B [B]		2
41	6715250	MUFFLER	intake		1
42	6715239	HOSE	intake		1
43	6715240	HOSE	air cleaner		1
44	42HL00300B	CLAMP	Was 6598799 [A]		4
5	6715744	BUSHING			1
46	84G3716	SCREW 5			2
47	6633583	SEALANT			x

https://www.pdfmanual4trucks.com/

EUROPEAN ACCESSORIES (Cont'd)
(Sound Option)

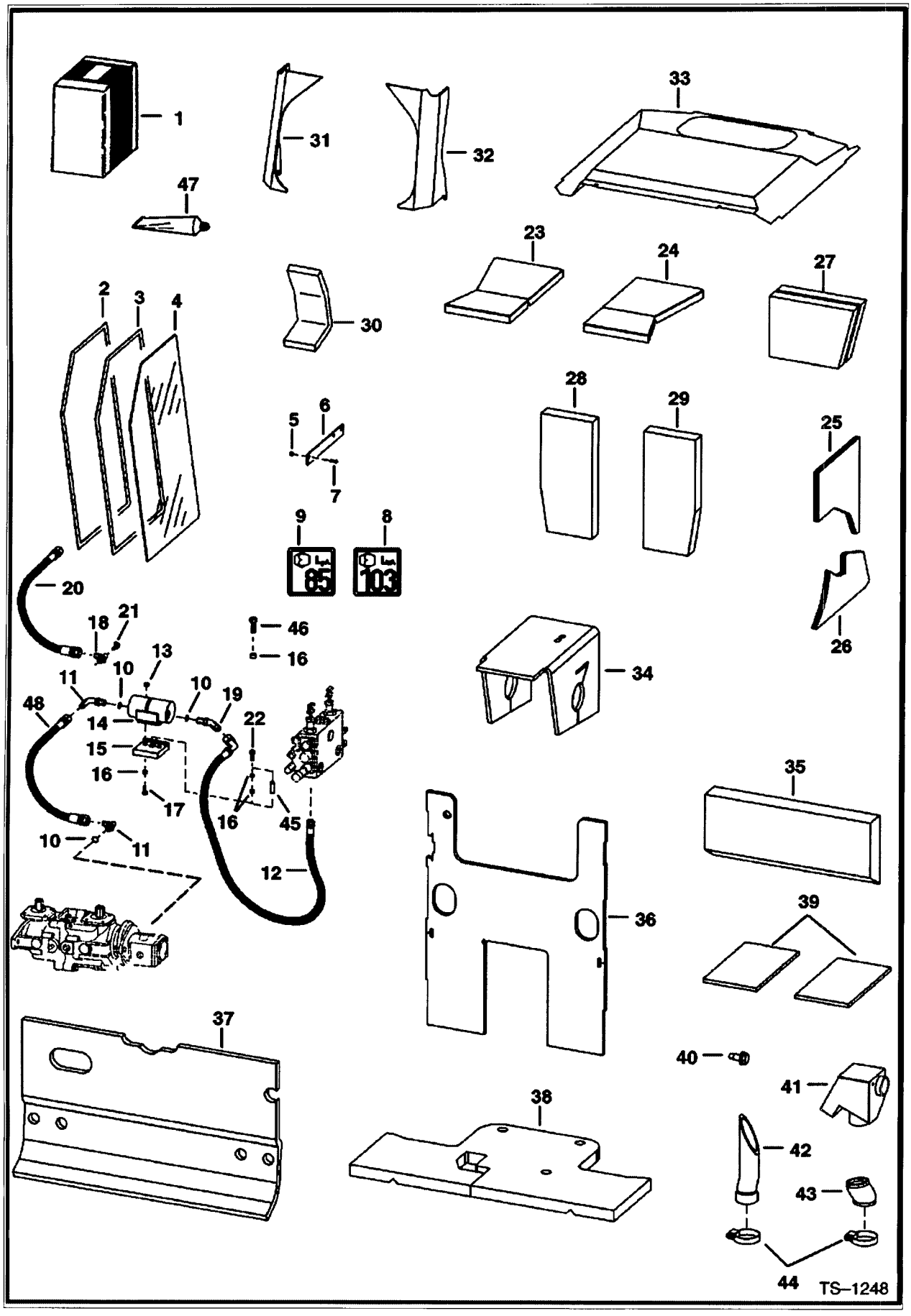

https://www.pdfmanual4trucks.com/

EUROPEAN ACCESSORIES (Cont'd)
(Sound Option)

f No	Part Number	Description	Remarks	Serial Number	Qty
18	6729144	HOSE			1

https://www.pdfmanual4trucks.com/

FIRE EXTINGUISHER

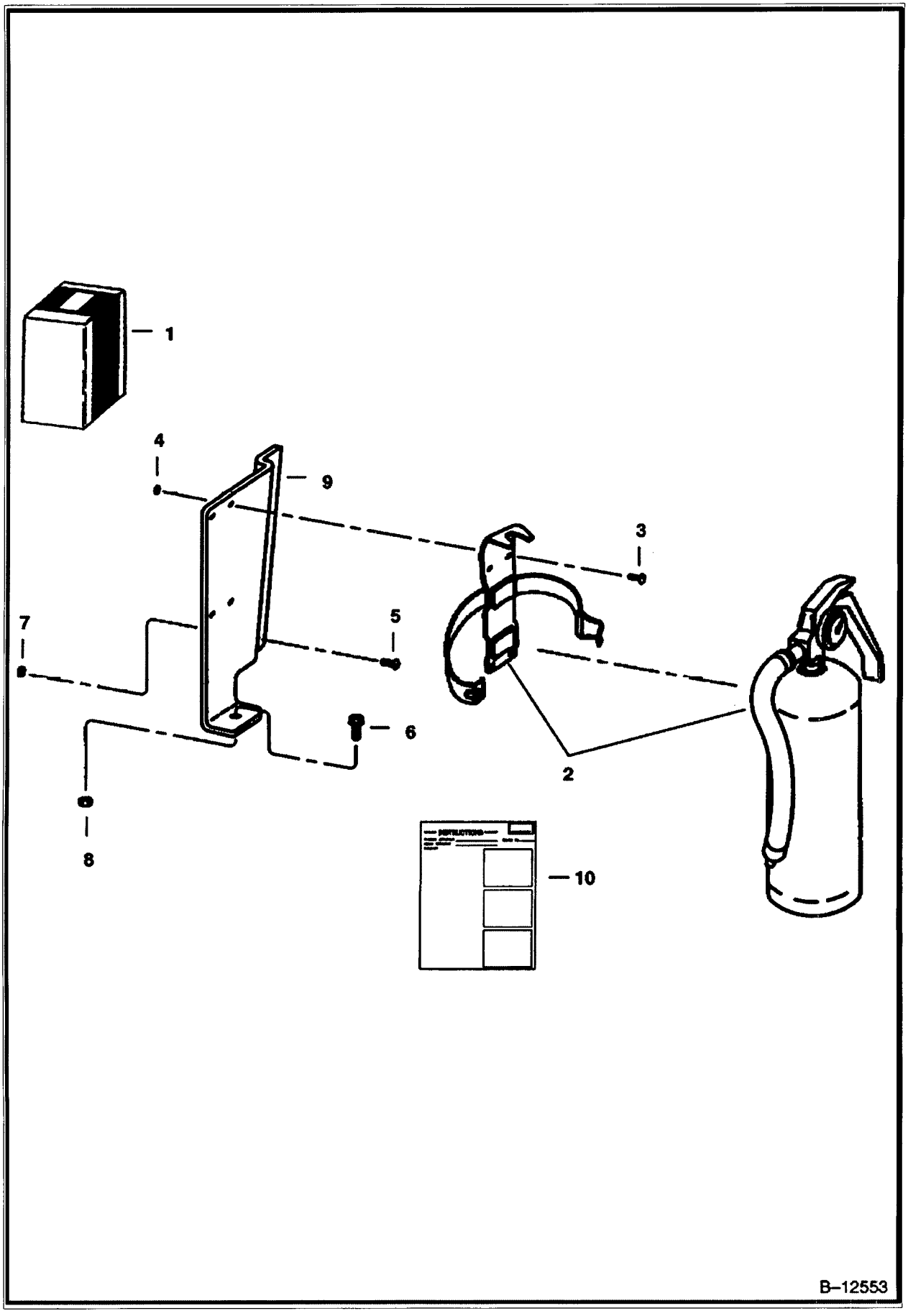

https://www.pdfmanual4trucks.com/

FIRE EXTINGUISHER (Cont'd)

;f No	Part Number	Description	Remarks	Serial Number	Qty
1	6569112	KIT	fire extinguisher - Ref. 2-10		1
2	1908806B	EXTINGUISHER	fire		1
3	85G001008B	BOLT			4
4	12D000010B	NUT			4
5	25G000410B	BOLT			2
6	35C516	BOLT 10			1
7	83D4	NUT 10			2
8	83D5	NUT 5			1
9	6569095	MOUNT			1
10	6570040	INSTRUCTIONS			1

https://www.pdfmanual4trucks.com/

FLASHER LIGHTS
(S/N 5127 27612 & Below)

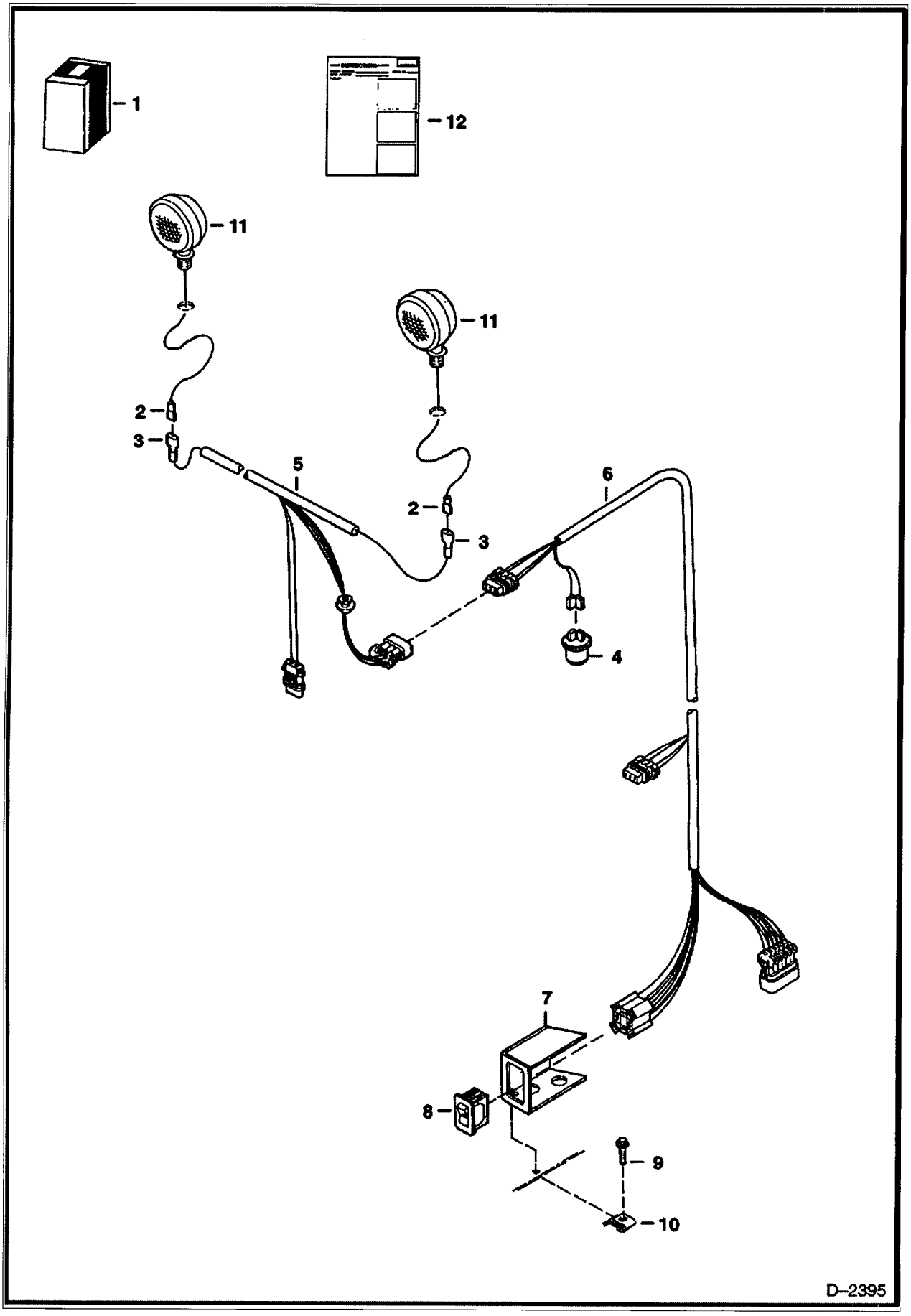

https://www.pdfmanual4trucks.com/

FLASHER LIGHTS (Cont'd)
(S/N 5127 27612 & Below)

Ref No	Part Number	Description	Remarks	Serial Number	Qty
1	6558076	KIT	flasher - Ref. 2-12		1
2	614142B	SLEEVE			2
3	6515131	TERMINAL			2
4	6557904	FLASHER			1
5	6714213	HARNESS			1
6	6712288	HARNESS			1
7	6711708	MOUNT			1
8	6668815	SWITCH			1
9	31C000420B	BOLT			2
10	6660988	RETAINER			2
11	6517516	LIGHT			2
12	6556222	INSTRUCTIONS			1

https://www.pdfmanual4trucks.com/

FLASHER LIGHTS
(4-Way) (S/N 5127 27673 & Above, 5158 11001-29999, 5162 11001-19999)

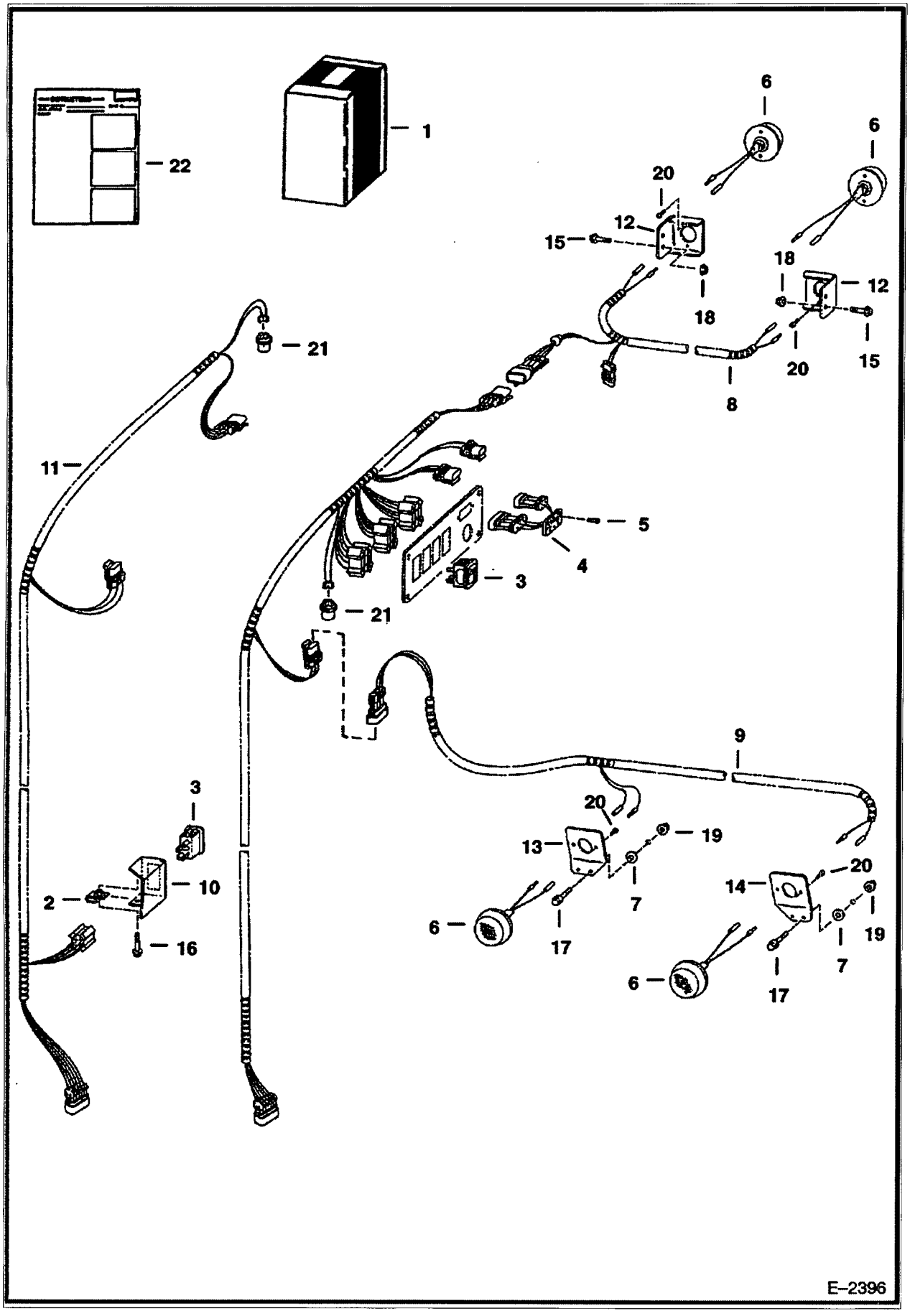

https://www.pdfmanual4trucks.com/

FLASHER LIGHTS (Cont'd)
(4-Way) (S/N 5127 27673 & Above, 5158 11001-29999, 5162 11001-19999)

Ref No	Part Number	Description	Remarks	Serial Number	Qty
1	6712698	KIT	Ref. 2-22		1
2	6660988	RETAINER			2
3	6668815	SWITCH	hazard		1
4	6669144	INDICATOR	flasher		1
5	6669225	BOLT			2
6	6670732	LAMP			4
6	6675097	BULB			1
7	6704484	WASHER			4
8	6710905	HARNESS			1
9	6711160	HARNESS			1
10	6711708	MOUNT	switch		1
11	6712288	HARNESS			1
12	6714300	MOUNT			2
13	6714463	MOUNT	left rear		1
14	6714467	MOUNT	right rear		1
15	35C410	BOLT 5			2
16	31C000420B	BOLT			2
7	35C000520B	BOLT			4
8	83D4	NUT 10			2
19	83D5	NUT 5			4
20	58G000808B	SCREW			8
21	6557904	FLASHER			1
22	6900398	INSTRUCTION	INSTRUCTION		1

https://www.pdfmanual4trucks.com/

FRONT AUXILIARY KIT
(Poppet Couplers)(S/N 5127 16001-25786, 5114 76001-76618, 5086 30001-31363)

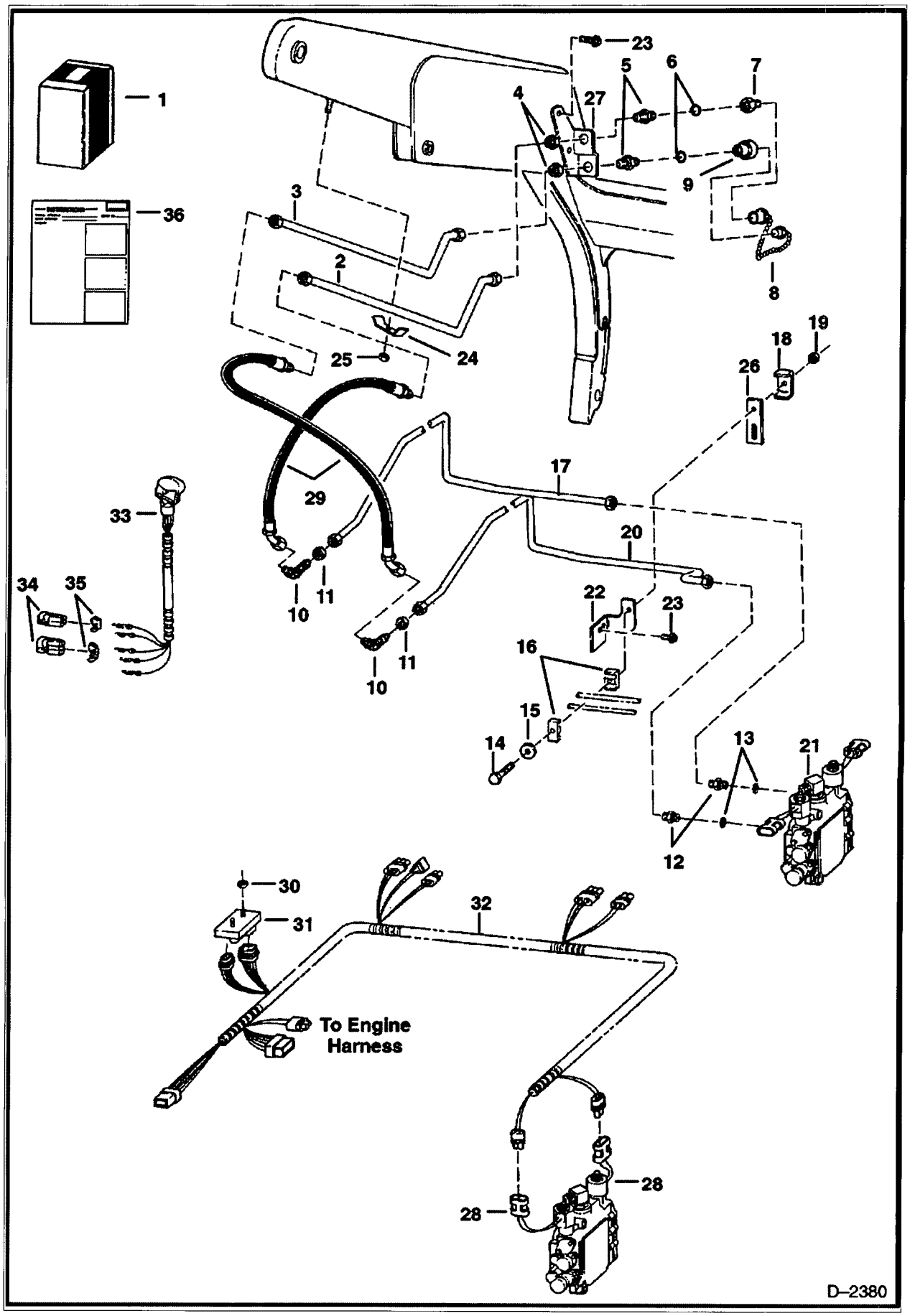

https://www.pdfmanual4trucks.com/

FRONT AUXILIARY KIT (Cont'd)
(Poppet Couplers)(S/N 5127 16001-25786, 5114 76001-76618, 5086 30001-31363)

Ref No	Part Number	Description	Remarks	Serial Number	Qty
1		KIT	NAP - front aux Ref. 2-11, 13, 14, 18, 20 & 24-36 - Was 6709053 [A]		1
2	6704409	TUBE			1
3	6704410	TUBE			1
4	86F000007B	NUT			2
5	45K000007B	FITTING	W/Ref. 6		2
6	79K10	O RING 10			4
7	6598757	QUICK COUPLER	Male		1
8	6513709	CAP PLUG	Assy. (Rubber)		1
8	6515167	PLUG	Steel		1
8	6515168	CAP	Steel		1
9	6598758	QUICK COUPLER	Female		1
9	48K16	O RING 10			1
9	6665430	BACKUP RING			1
10	46K000008B	ELBOW			2
11	86F000008B	NUT			2
12		ADAPTER	W/Ref. 13 - Not in Kit		2
13	79K12	O RING 10			2
14	17C000552B	BOLT			1
15	872229	WASHER	Not in Kit		1
16	6701892	CLAMP	Not in Kit		2
17	6706154	TUBE			1
18	6568476	CLAMP			1
19	85D5	NUT 5	Not in Kit		2
20	6706153	TUBE			1
21		VALVE	See Illustration HYDRAULIC CONTROL VALVE/ E2229 NOT IN KIT		1
22	6704619	MOUNT	Not in Kit		1
23	84G3112	BOLT 5	Not in Kit		4
24	6502203	CLAMP			2
25	59D6	NUT			2
26	6702548	PAD			2
27	6705700	MOUNT			1
28	6717708	COIL	14 volt - Was 6665759 [A]		2
28	6679961	NUT	w/nut		2
29	6729153	HOSE	Was 6714577 [A]		2
30	85D000004B	NUT			2
31	6671669	MODULE	Was 6669529 [C]		1
32	6710365	HARNESS	Was 6707676 [A]		1
33	6680414	HANDLE ASSY.	Was 6705921 [A]		1
33	6640690	PIN			5
33	6641176	SEAL			5
34	6641179	CONNECTOR	2-pin		1
34	6640699	CONNECTOR	3-pin		1
35	6641180	LOCK	2-pin		1
35	6640700	LOCK	3-pin		1
36	6724529	INSTRUCTIONS	INSTRUCTIONS - Was 6724285 [A]		1

https://www.pdfmanual4trucks.com/

FRONT AUXILIARY KIT
(W/FF Couplers) (S/N 5127 25787-27420, 5086 93001-94508)

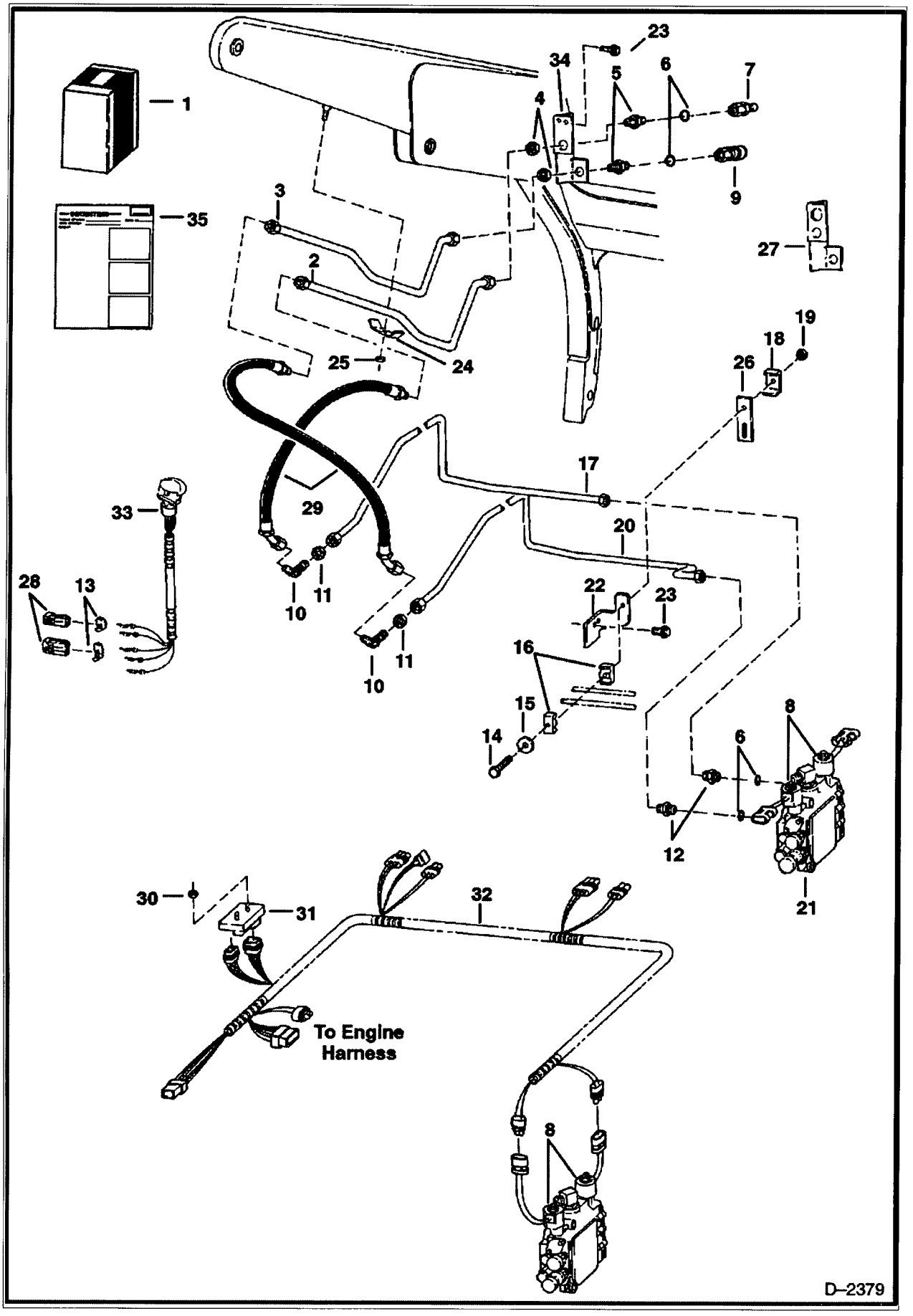

https://www.pdfmanual4trucks.com/

FRONT AUXILIARY KIT (Cont'd)
(W/FF Couplers) (S/N 5127 25787-27420, 5086 93001-94508)

;f No	Part Number	Description	Remarks	Serial Number	Qty
1		KIT	NAP - front aux - Ref. 2-7, 9-11, 13, 14, 18, 20 & 23-35 - Order 6712386 Kit - Was 6712091 [A]		1
1	6712386	KIT			1
2	6711735	TUBE			1
3	6711736	TUBE			1
4	86F000007B	NUT			2
5		FITTING	NAP - W/Ref. 6 - Was 6711625 [A]		2
5	6812816	ADAPTER	W/Ref. 6 - flat boss face		2
6	79K12	O RING 10			4
7	6674688	COUPLER	Male - Was 6667808 [A]		1
7	6672026	O-RING	Was 6669655 [A]		1
8	6717708	COIL	14 volt - Was 6665759 [A]		2
8	6679961	NUT	W/nut		2
9	6672960	COUPLER	Female - Was 6667807 [A]		1
10	46K000008B	ELBOW			2
10	16K000008B	ADAPTER			2
11	86F000008B	NUT			2
2		ADAPTER	W/Ref. 6 - Not in Kit		2
.3	6641180	LOCK	2-pin		1
13	6640700	LOCK	3-pin		1
14	17C000552B	BOLT			1
15	872229	WASHER	Not in Kit		1
16	6701892	CLAMP	Not in Kit		2
17	6706154	TUBE			1
18	6568476	CLAMP			1
19	85D5	NUT 5			2
?0	6706153	TUBE			1
:1		VALVE	See Illustration HYDRAULIC CONTROL VALVE/ E2229 NOT IN KIT		1
22	6704619	MOUNT			1
23	84G3112	BOLT 5			4
24	6502203	CLAMP			2
25	59D6	NUT			2
26	6702548	PAD			2
27		MOUNT	NAP - Order Ref. 34 - Was 6711672 [A]		1
28	6641179	CONNECTOR	2-pin		1
?8	6640699	CONNECTOR	3-pin		1
)	6729153	HOSE	Was 6714577 [A]		2
30	85D000004B	NUT			2
31	6671669	MODULE	Was 6669529 [C]		1
32	6710365	HARNESS			1
33	6680414	HANDLE ASSY.	Was 6705921 [A]		1
33	6640690	PIN			5
33	6641176	SEAL			5
34	6713850	MOUNT			1
35	6724526	INSTRUCTIONS			1

https://www.pdfmanual4trucks.com/

FRONT AUXILIARY KIT
(W/FF Couplers)
(S/N 5127 27421 & Abv. 5086 94509 & Abv. 5158 11001-29999, 5162 11001-19999

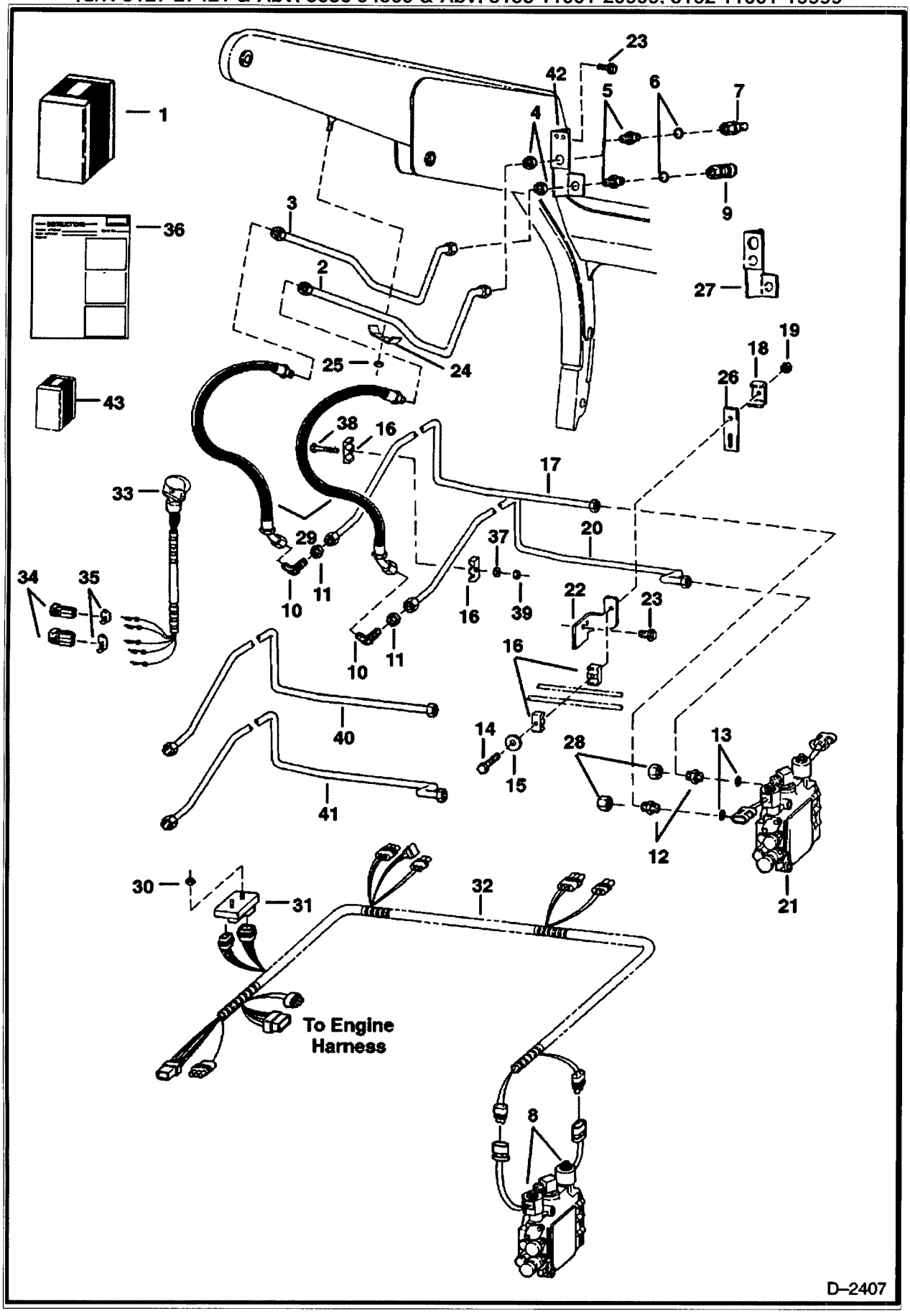

https://www.pdfmanual4trucks.com/

FRONT AUXILIARY KIT (Cont'd)
(W/FF Couplers)
(S/N 5127 27421 & Abv. 5086 94509 & Abv. 5158 11001-29999. 5162 11001-19999

:f .vo	Part Number	Description	Remarks	Serial Number	Qty
1	6712387	KIT	front aux - Ref. 2-7, 9-11, 13, 14, 16-18, 20 & 23-39		1
2	6711735	TUBE			1
3	6711736	TUBE			1
4	86F000007B	NUT			2
5		FITTING	NAP - W/Ref. 6 - flat boss face - Was 6711625 [A]		2
5		CONNECTOR	NAP - W/Ref. 6 - tapered boss face - Was 6715185 [A]		2
5	97K10	O-RING 10	flared end		2
5	6812816	ADAPTER	W/Ref. 6 - flat boss face		2
6	79K12	O RING 10	flat boss face		4
6	99K000012B	O-RING	tapered boss face		x
7	6674688	COUPLER	Male - Was 6667808 [A]		1
7	6672026	O-RING	Was 6669655 [A]		1
8	6717708	COIL	14 volt - Was 6665759 [A]		2
8	6679961	NUT	W/nut		2
9	6672960	COUPLER	Female - Was 6667807 [A]		1
10	46K000008B	ELBOW	W/O O-rings		2
0		ELBOW	NAP - W/ O-rings - Was 46KN00008B [A]		2
0	97K000012B	O-RING	flared end		4
11	86F000008B	NUT			2
12		ADAPTER	W/Ref. 6 - Not in Kit		2
13	79K12	O RING 10			2
14	17C000552B	BOLT			1
15	872229	WASHER	Not in Kit		1
16	6592506	CLAMP			2
17	6713754	TUBE			1
18	6568476	CLAMP			1
9	85D5	NUT 5	Not in Kit		2
20	6713755	TUBE			1
21		VALVE	See Illustration HYDRAULIC CONTROL VALVE/ E2229 NOT IN KIT		1
22	6704619	MOUNT	Not in Kit		1
23	84G3112	BOLT 5			2
24	6502203	CLAMP			2
25	59D6	NUT			3
26	6702548	PAD			2
27		MOUNT	NAP - Order Ref. 42 - Was 6711672 [A]		1
3	36K000008B	CAP			2
9	6729153	HOSE	Was 6714577 [A]		2
30	85D000004B	NUT			2
31	6671669	MODULE	Was 6669529 [C]		1
32	6719149	HARNESS	Was 6712136 [A]		1
33	6680414	HANDLE ASSY.	Was 6705921 [A]		1
33	6640690	PIN			5
33	6641176	SEAL			5
34	6641179	CONNECTOR	2-pin		1
34	6640699	CONNECTOR	3-pin		1
35	6641180	LOCK	2-pin		1
35	6640700	LOCK	3-pin		1
36	6724529	INSTRUCTIONS	INSTRUCTIONS Was 6724525 [B]		1
37	872229	WASHER			1
38	37C000540B	BOLT			1
39	83D5	NUT 5			1
0		TUBE	NAP - Order Ref. 17 & 20 - Was 6710575 [A]		1
1		TUBE	NAP - Order Ref. 17 & 20 - Was 6710579 [A]		1
42	6713850	MOUNT			1

https://www.pdfmanual4trucks.com/

FRONT AUXILIARY KIT (Cont'd)
(W/FF Couplers)
(S/N 5127 27421 & Abv. 5086 94509 & Abv. 5158 11001-29999, 5162 11001-19999

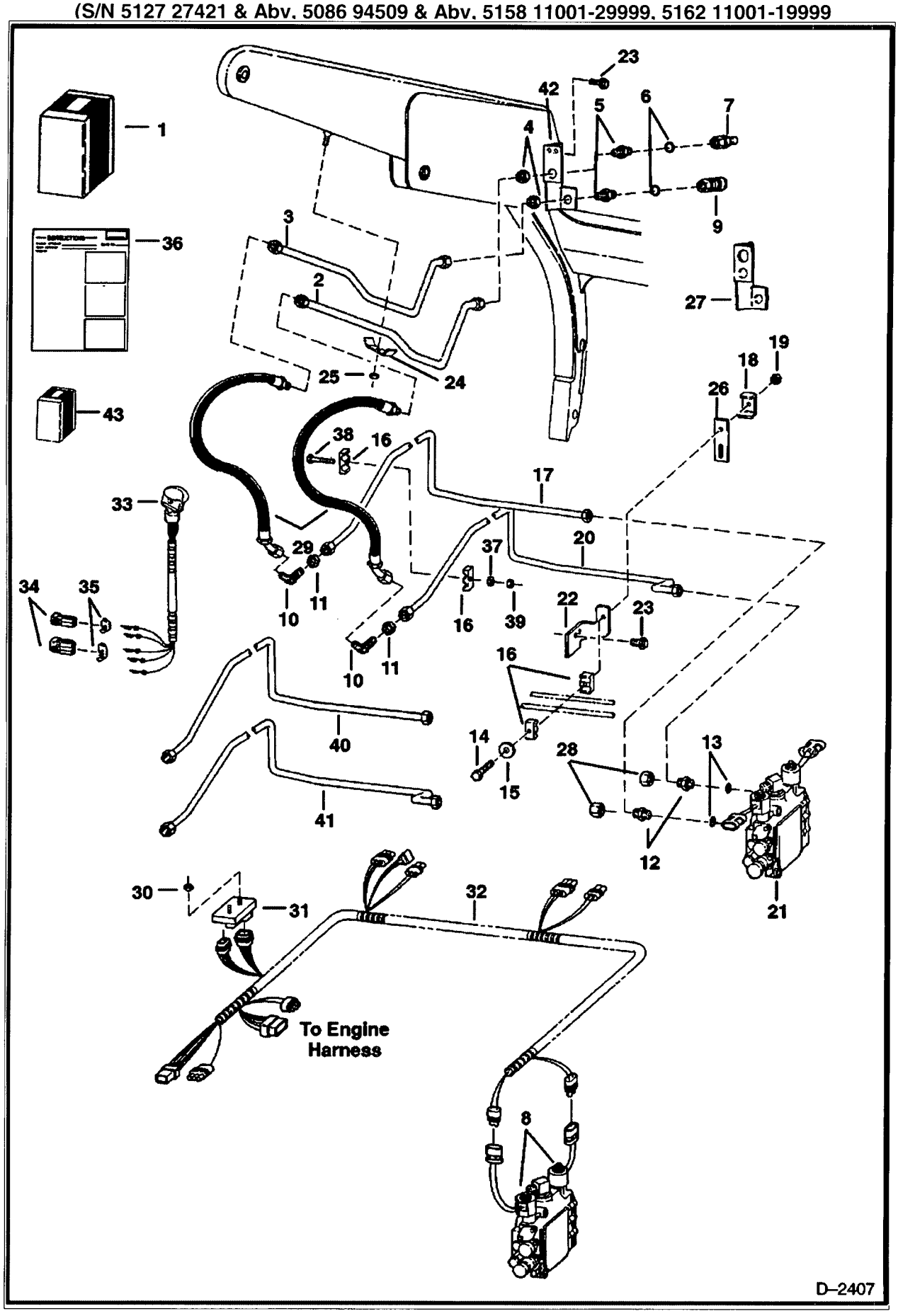

https://www.pdfmanual4trucks.com/

FRONT AUXILIARY KIT (Cont'd)
(W/FF Couplers)
(S/N 5127 27421 & Abv. 5086 94509 & Abv. 5158 11001-29999. 5162 11001-19999

f No	Part Number	Description	Remarks	Serial Number	Qty
3	6718240	KIT	See Illustration PRESSURE RELEASE KIT/ B17257 FRONT AUX. PRESSURE RELEASE		1

https://www.pdfmanual4trucks.com/

HAND CONTROL KIT

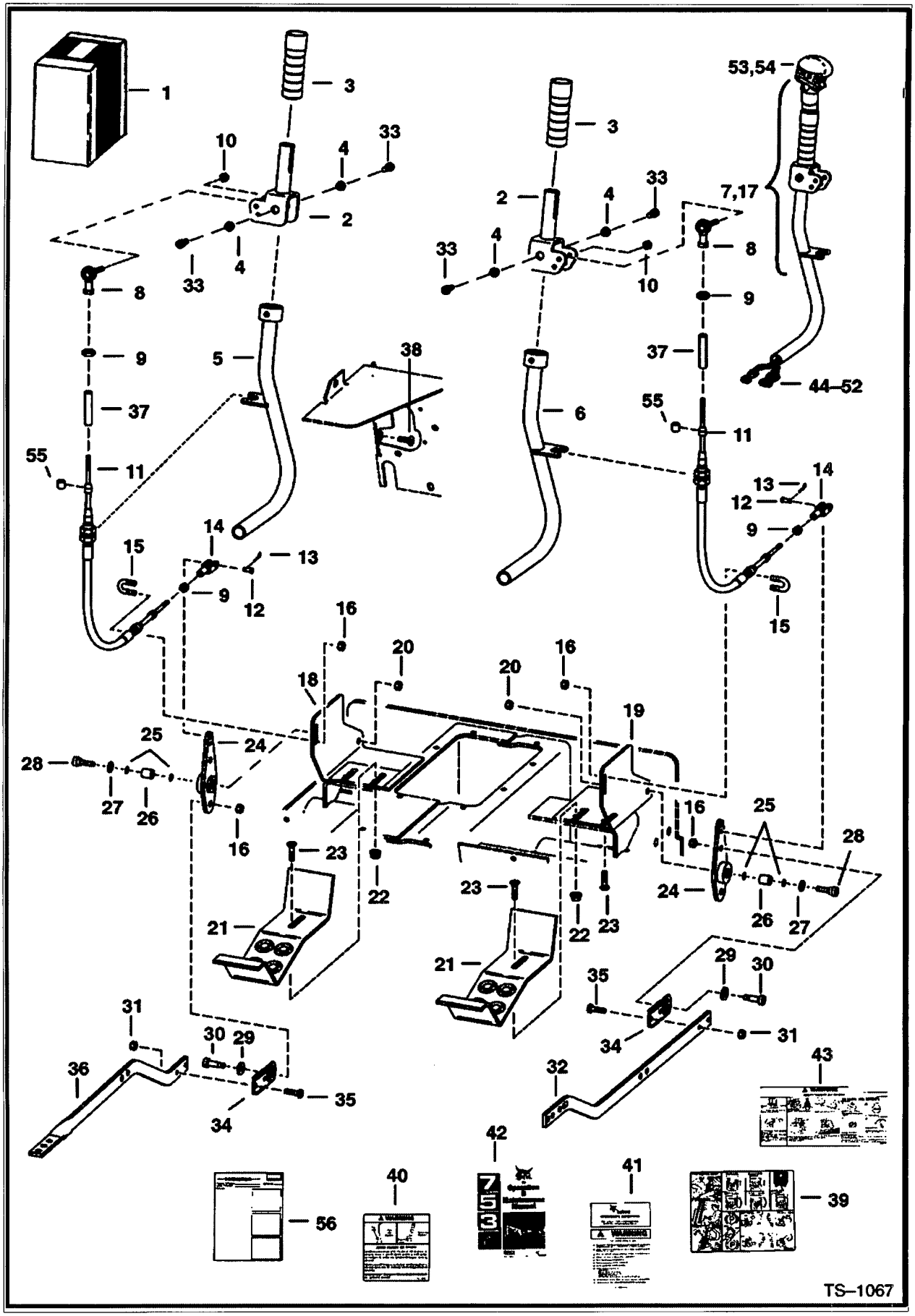

https://www.pdfmanual4trucks.com/

HAND CONTROL KIT (Cont'd)

f No	Part Number	Description	Remarks	Serial Number	Qty
1		KIT	NAP - Ref. 2-55 - Multi-switch handles - Order components - Was 6708345 [A]		1
2	6707349	LEVER	Was 6702786 [A]		2
3	6707367	GRIP	Was 6702621 [A]		2
4	6702990	BUSHING	bronze sleeve		4
5	6707351	LEVER	Was 6702787 [A]		1
6	6707352	LEVER	Was 6702791 [A]		1
7		LEVER ASSY.	NAP - L.H. Multi-switch - W/Ref. 2-5, 33 & 44-50 - Order component parts - Was 6707366 [A]		1
8	6631036	JOINT			2
9	8D000004B	NUT			4
10	86D000004B	NUT			2
11	6666379	CABLE	Was 6658613 [A]		2
12	4F004051B	PIN			2
13	6513495	COTTER PIN			2
14	2J004200B	ROD END			2
15	6592766	U-BOLT			2
6	83D5	NUT 5			6
7		LEVER ASSY.	NAP - R.H. Multi-switch - W/Ref. 2-4, 6, 33, & 44-56- Order component parts - Was 6707365 [A]		1
18	6706420	MOUNT	cable		1
19	6706421	MOUNT	cable		1
20	85D6	LOCK NUT			2
21	6702776	BRACKET			2
22	57D6	NUT 5			6
23	37C620	BOLT	carriage		6
24	6706281	BELLCRANK	W/Ref. 26		2
5	58K14	O RING 10			4
26	6702782	BUSHING	bronze - Not in Kit		2
27	6655781	BEARING	thrust		2
28	38C000816B	BOLT	shoulder		2
29	6563914	WASHER			2
30	38C000610B	BOLT	Was 6704285 [A]		2
31	85D000004B	NUT			4
32	6702774	LINK	tilt		1
33	38C000606B	SCREW	shoulder		4
34	6658682	BEARING	swivel		2
5	17C000410B	BOLT			4
6	6702773	LINK	lift		1
37	6658930	BOOT			2
38	25G000612B	BOLT	socket hex head		2
39	6703724	DECAL	operating		1
40	6703726	DECAL	warning		1
41	6708159	HANDBOOK KIT	W/wire rope - Was 6703678 [A]		1
41	6558309	WIRE ROPE	33" (838,2 mm) long - Bulk - Sold Per Foot - Also Order (2) of 6558310 sleeve		x
41	6558310	SLEEVE	wire rope		2
42	6724033	MANUAL	operator - Was 6900369 [B,D]		1
43	6703725	DECAL	warning		1
44	6641180	LOCK	2 - pin		3
45	6640700	LOCK	3 - pin		2
46	6641179	CONNECTOR	2 - pin		2
47	6640699	CONNECTOR	3 - pin		2
8	6641178	CONNECTOR	2 - pin		1
9	6664599	CONNECTOR	3 - pin triangle		1
50	6664800	LOCK	3 - pin triangle		1
1	6641173	CONNECTOR	3 - pin		1

https://www.pdfmanual4trucks.com/

HAND CONTROL KIT (Cont'd)

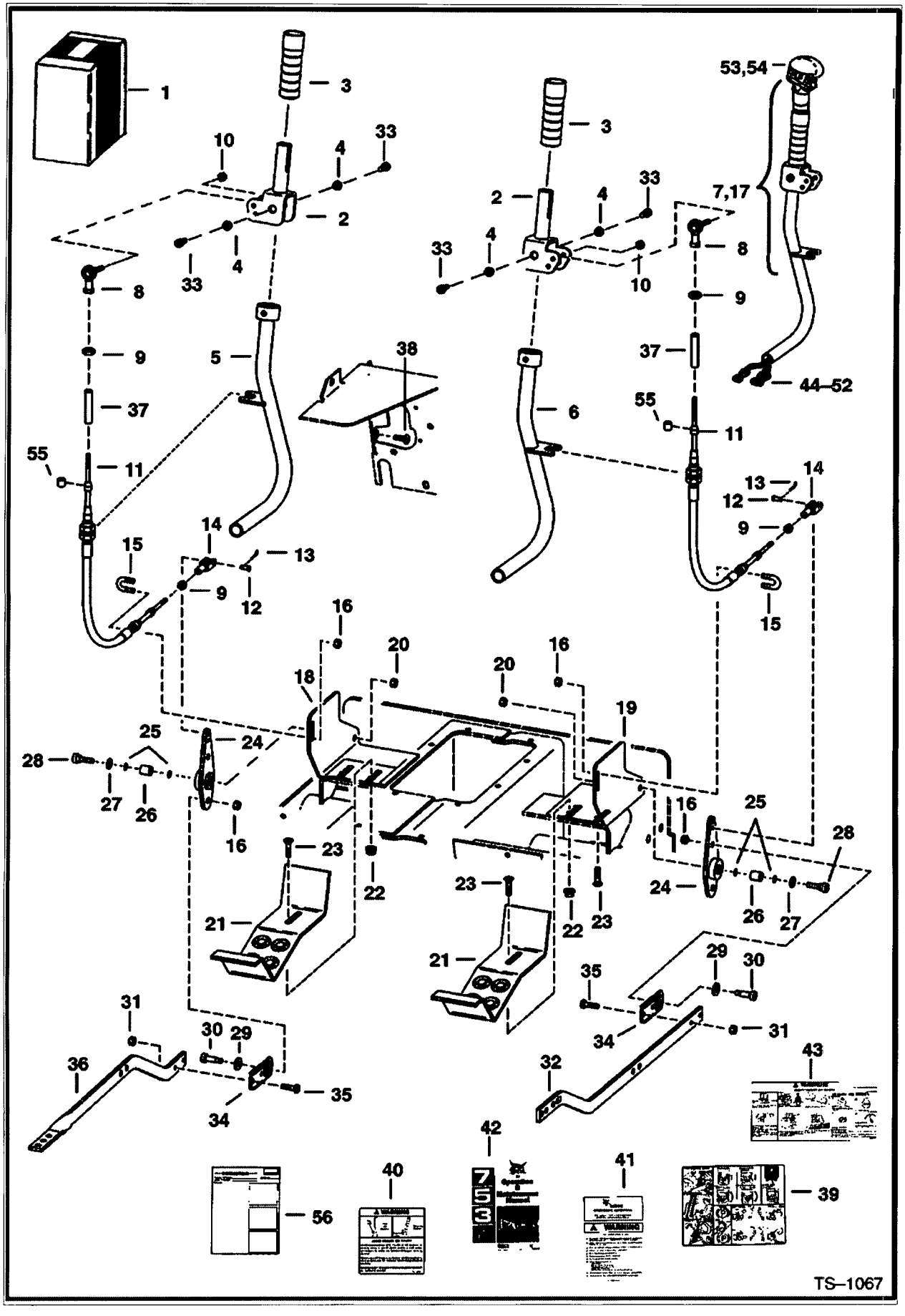

https://www.pdfmanual4trucks.com/

HAND CONTROL KIT (Cont'd)

Ref No	Part Number	Description	Remarks	Serial Number	Qty
52	6641181	LOCK	3 - pin		1
53	6680412	HANDLE ASSY	Multi-switch - L.H. - Was 6707976 [A]		1
53	6640690	PIN			5
53	6640691	PIN			2
53	6641176	SEAL			7
53	6662257	PIN			3
53	6706568	KIT	See Illustration HANDLE KITS/ TS1190 MULTI-SWITCH - INCLUDES REF. 48-50		1
53	6680447	DECAL	Was 6677370 [A]		1
54	6680413	HANDLE ASSY	Multi-switch - R.H. - Was 6706340 [A]		1
54	6640690	PIN			9
54	6641176	SEAL			9
54	6706567	KIT	See Illustration HANDLE KITS/ TS1190 MULTI-SWITCH - INCLUDES REF. 44-47 & 54		1
55	6666534	SEAL			4
56	6724043	INSTRUCTIONS	INSTRUCTIONS - Was 6722847 [A]		1

https://www.pdfmanual4trucks.com/

HAND CONTROL KIT
(For Loaders Equipped W/Advanced Hand Controls) (Push Button Float)

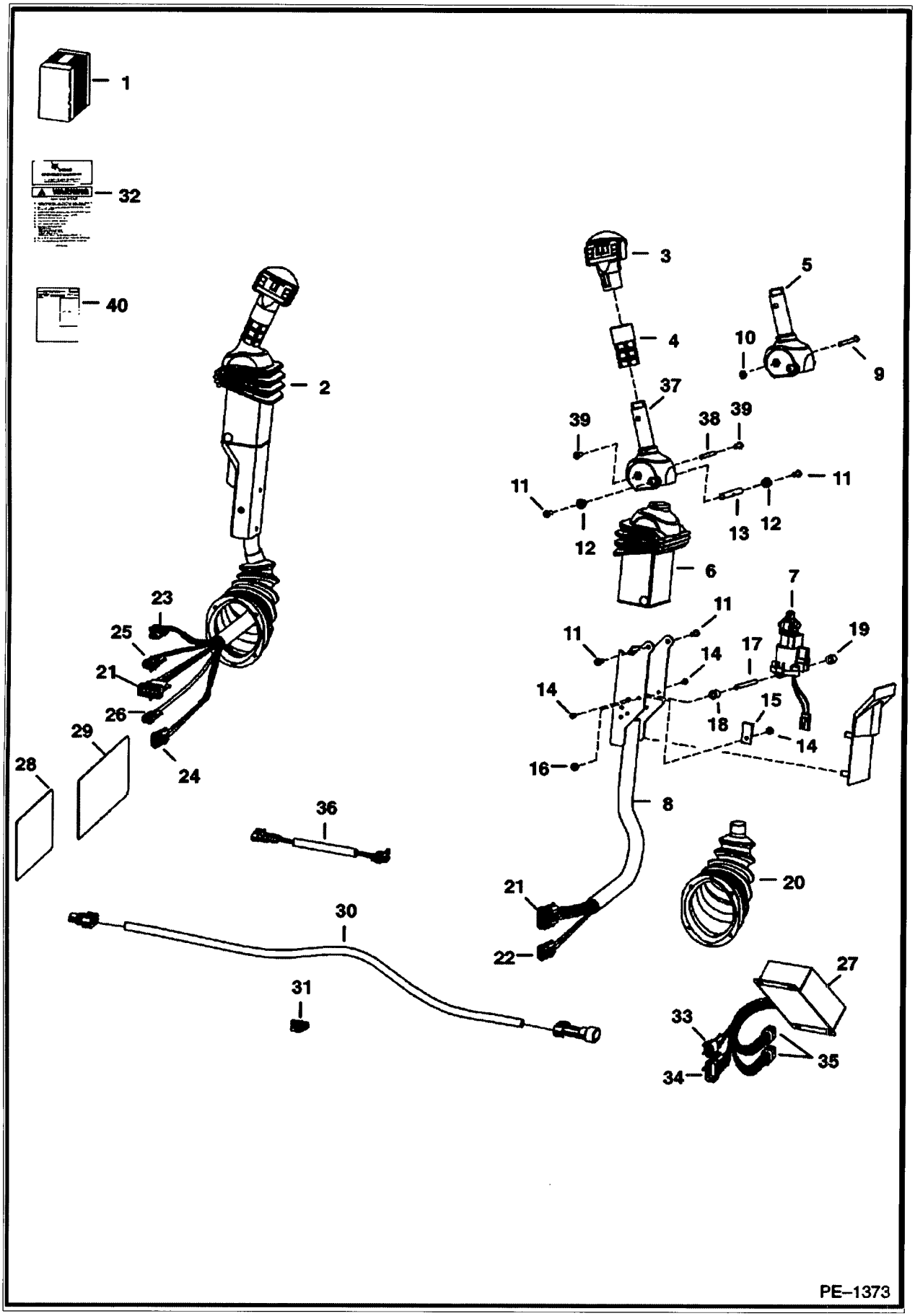

https://www.pdfmanual4trucks.com/

HAND CONTROL KIT (Cont'd)
(For Loaders Equipped W/Advanced Hand Controls) (Push Button Float)

f No	Part Number	Description	Remarks	Serial Number	Qty
1	6727297	KIT	Also order 6900969 O/M with revised date of 6/00 or newer		1
2	6684919	LEVER	tilt - R.H. - Was 6675748 [A]		1
2	6684918	LEVER	lift - L.H. - Was 6675747 [A]		1
3	6680459	HNDL/TILT AHC	lift - R.H. - Was 6675515 [A]		1
3	6680461	HANDLE	lift - L.H. - Was 6675746 [A]		1
4		GRIP	NAP - Order 6702621 grip & cut to 2.8" long - Was 6713349 [A]		2
5	6729594	HANDLE	R.H.		1
5	6729595	HANDLE	L.H.		1
6	6680471	COVER	Was 6713898 [A]		2
7	6684910	SENSOR	Was 6675741 [A]		2
7	6670706	CONNECTOR			1
7	6670715	PIN			3
7	6670710	LOCK			1
8	6680481	CHANNEL	R.H. - Was 6719712 [A]		1
8	6680480	CHANNEL	L.H. - Was 6719711 [A]		1
9	6670709	CONNECTOR	8 pin		2
0	6680469	SPACER			2
11	25GT00410B	BOLT			8
12	6702990	BUSHING			4
13	6713043	SPACER			4
14	6665321	RIVET	male		2
15	6665000	CLIP			2
16	6665322	RIVET	female		2
17	6719834	SPACER	threaded		2
18	6727065	BOLT			6
9	6719835	SLEEVE			4
20	6532127	BOOT			2
21	6640696	CONNECTOR	8-pin		2
21	6661183	LOCK			1
22	6641173	CONNECTOR	6-pin		1
22	6641181	LOCK			1
23	6641179	CONNECTOR	2-pin		1
23	6661180	LOCK			3
24	6640699	CONNECTOR	3-pin		1
24	6640700	LOCK			1
5	6641178	CONNECTOR	2-pin		1
25	6641180	LOCK			1
26	6630838	CONNECTOR	1-pin		1
27	6676442	CONTROLLER			1
28	6727155	DECAL			1
29	6727243	DECAL			1
30	6727327	HARNESS			1
31	6670707	CONNECTOR	3-pin		1
31	6670715	PIN			3
31	6670711	LOCK			1
32	6708159	HANDBOOK KIT	operator handbook		1
33	6640692	CONNECTOR	10-pin		1
33	6640690	PIN			9
33	6640694	LOCK			1
33	6641176	SEAL			9
33	6646582	PLUG	cavity		1
4	6648307	CONNECTOR	2-pin		1
35	6670709	CONNECTOR	8-pin		2
36	6730272	HARNESS	W/Capacitor		1

https://www.pdfmanual4trucks.com/

HAND CONTROL KIT (Cont'd)
(For Loaders Equipped W/Advanced Hand Controls) (Push Button Float)

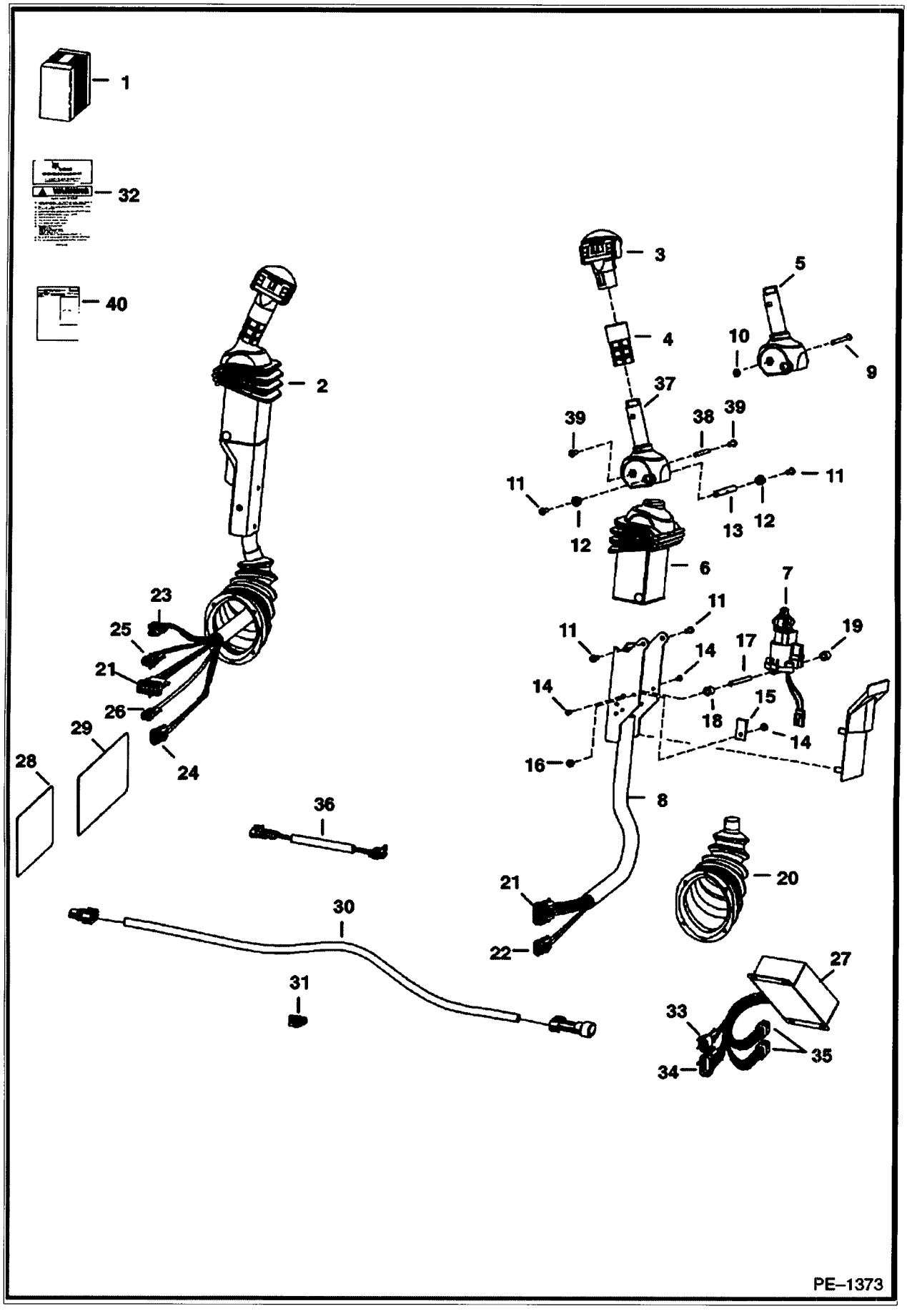

https://www.pdfmanual4trucks.com/

HAND CONTROL KIT (Cont'd)
(For Loaders Equipped W/Advanced Hand Controls) (Push Button Float)

Ref No	Part Number	Description	Remarks	Serial Number	Qty
7	6729594	HANDLE	R.H.	& Abv	1
37	6729595	HANDLE	L.H.	& Abv	1
38	6729600	SPACER			2
39	6727065	BOLT		& Abv	2
40	6901099	INSTRUCTIONS			1

https://www.pdfmanual4trucks.com/

HANDLE KITS

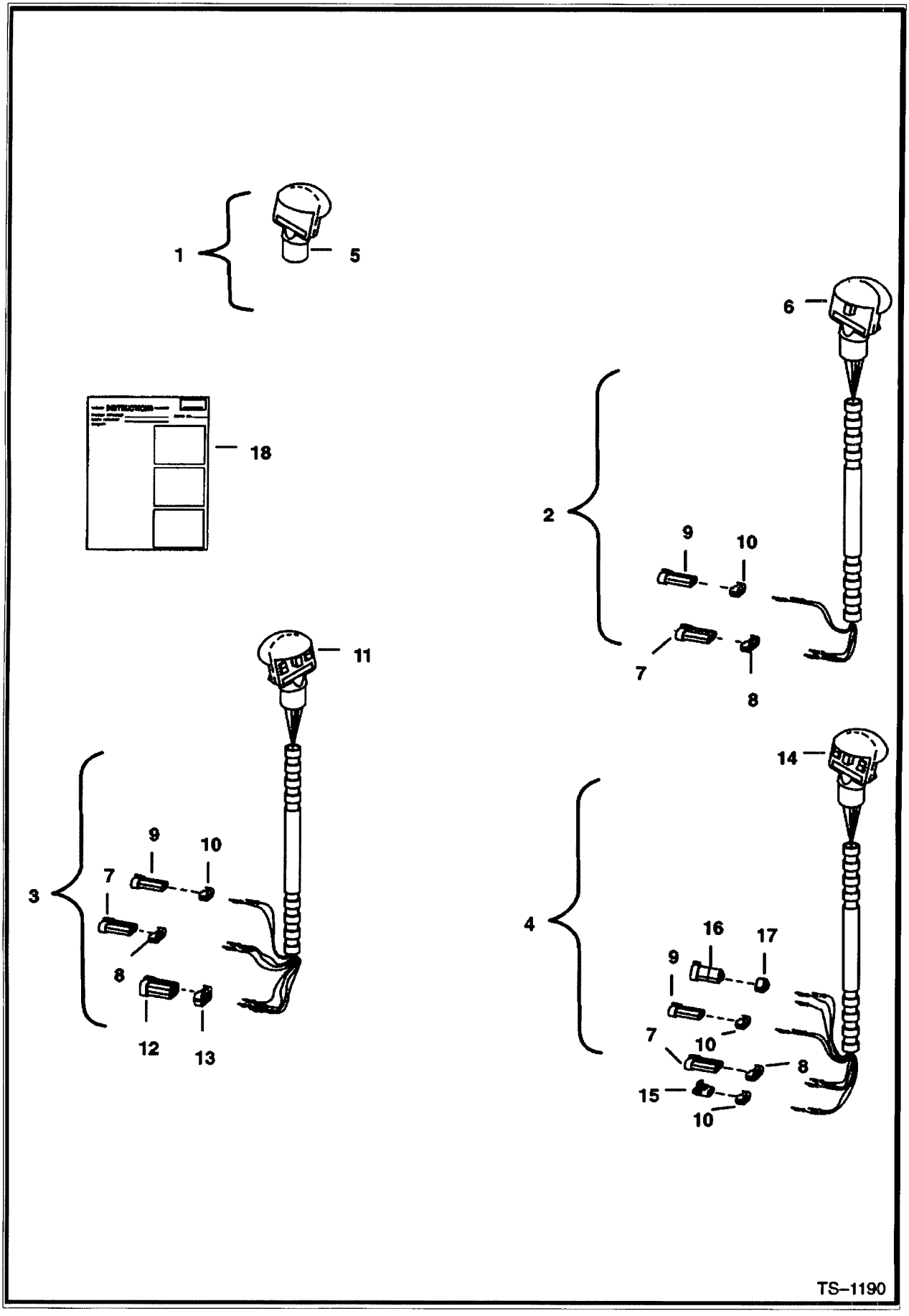

https://www.pdfmanual4trucks.com/

HANDLE KITS (Cont'd)

ıf No	Part Number	Description	Remarks	Serial Number	Qty
1	6706565	KIT	Ref. 5 & 18		1
2	6706566	KIT	Ref. 6-10 & 18		1
3	6706567	KIT	R.H. - Ref. 7-13 & 18		1
4	6706568	KIT	L.H. - Ref. 7-10 & 14-18		1
5	6680415	HANDLE	blank - Was 6705920 [A]		1
6	6680414	HANDLE ASSY.	2 - switch - Was 6705921 [A]		1
6	6640690	PIN			5
6	6641176	SEAL			5
7	6640699	CONNECTOR	3 - pin		1
8	6640700	LOCK	3 - pin		1
9	6641179	CONNECTOR	2 - pin		1
10	6641180	LOCK	2 - pin		1
11	6680413	HANDLE ASSY	R.H. deluxe - multi switch - Was 6706340 [A]		1
11	6640690	PIN			9
11	6641176	SEAL			9
12	6641173	CONNECTOR	6 - pin		1
13	6641181	LOCK	6 - pin		1
4	6680412	HANDLE ASSY	L.H. deluxe - multi switch - Was 6707976 [A]		1
.4	6640690	PIN			5
14	6640691	PIN			2
14	6641176	SEAL			7
14	6662257	PIN			3
14	6680447	DECAL	Was 6677370 [A]		1
15	6641178	CONNECTOR	2 - pin		1
16	6664599	CONNECTOR	3 - pin triangle - Was 6664184 [B]		1
17	6664800	LOCK	3 - pin triangle - Was 6664186 [B]		1
18	6722759	INSTRUCTIONS			1

https://www.pdfmanual4trucks.com/

HEATER KIT
(Fresh Air)

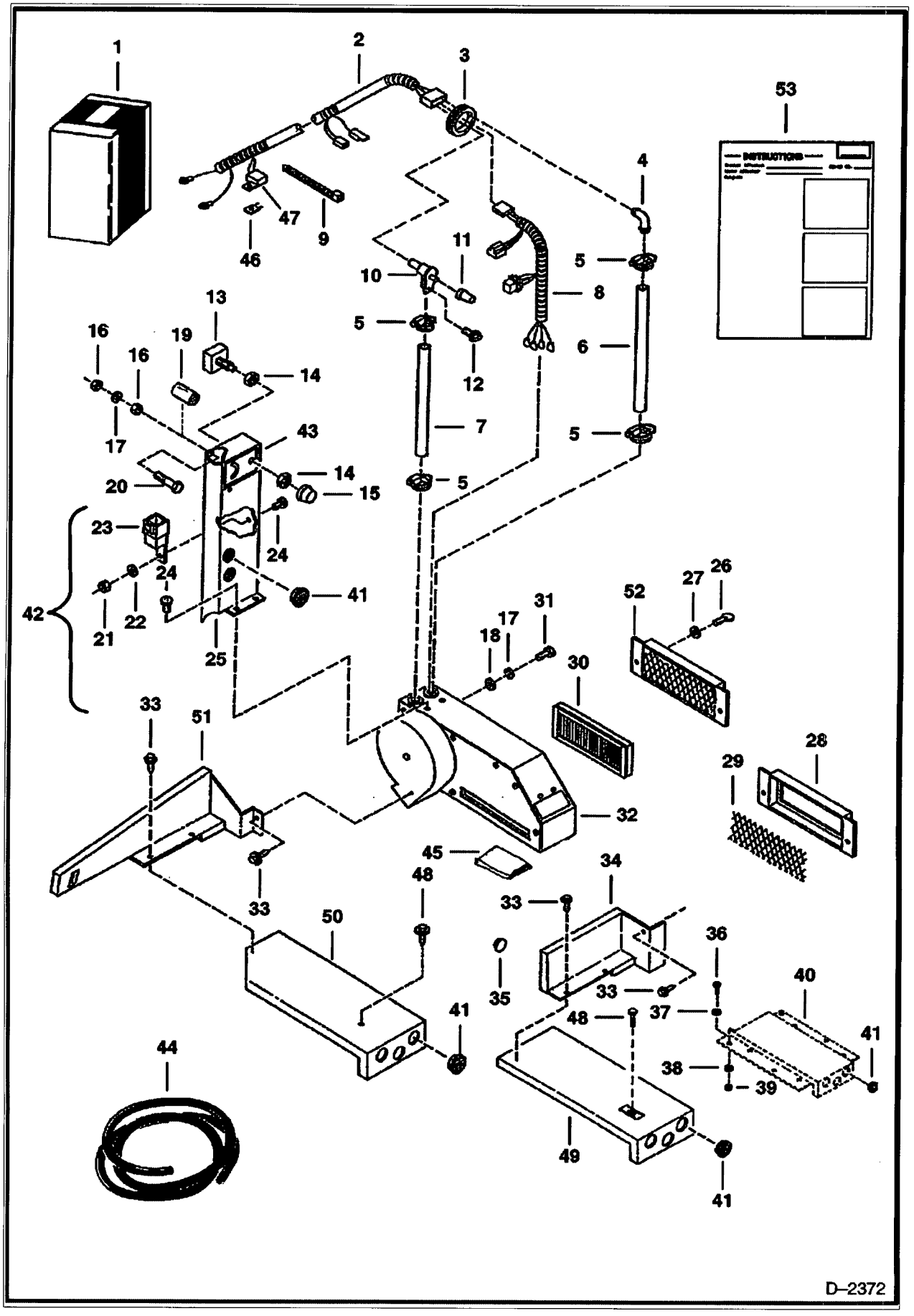

https://www.pdfmanual4trucks.com/

HEATER KIT (Cont'd)
(Fresh Air)

;f No	Part Number	Description	Remarks	Serial Number	Qty
1		KIT	See Illustration HEATER PLUMBING KIT/ C3304 for heater plumbing kit - NAP - Ref. 2-49 & 53 - Order 6713379 heater kit - Was 6709836 [A]		1
1	6713379	KIT	Ref. 2-18, 20-33, 36-39, 42-48 & 50-53		1
2	6660894	HARNESS	W/Ref. 46 & 47		1
3	6512067	GROMMET			1
4	6660879	ELBOW			1
5	42H000010B	CLAMP	worm gear		4
5	5HM00024B	CLAMP	constant tension		4
6		HOSE	NAP - 17" (431,8 mm) long - Order Ref. 44		1
7		HOSE	NAP - 19" (482,6 mm) long - Order Ref. 44		1
8	6660892	HARNESS			1
9	6660883	TIE			6
10	6654191	VALVE			1
11	6660881	KNOB	water valve		1
12	6660884	SCREW			1
13	6660659	SWITCH	fan		1
4	6624435	NUT			2
.4	6624435	NUT	For Ref. 1 (6713379 Heater Kit)		2
15	6660822	KNOB			1
16	61D4	NUT 5			6
16	6670142	NUT	For Ref. 1 (6713379 Heater Kit)		2
17	4E000004B	WASHER			5
18	25E14	WSHR			5
19	6660893	SPACER	For Ref. 1 (NAP/6709836 Heater Kit)		2
20	17C000424B	BOLT	Used W/ Ref. 19		2
20	17C000416B	BOLT	Used W/O Ref. 19		2
20	6670144	BOLT	For Ref. 1 (6713379 Heater Kit)		2
21	6641065	NUT			1
22	6641072	WASHER			1
23	6651975	SWITCH	relay		1
24	6641066	SCREW			2
25	6660864	COVER	W/O vent holes		1
25	6850026	COVER	Also Order (2) Ref. 41		1
26	6660930	THUMBSCREW			2
27	25E000010B	WASHER			2
28		COVER	NAP - Order Ref. 52 - Was 6660886 [A]		1
3		SCREEN	NAP - Order Ref. 52 - Was 6660891 [A]		1
30	6660880	FILTER			1
31	17C412	BOLT 5			3
32		HEATER	See Illustration HEATER/ D2181		1
33	6705792	SCREW			3
34	6660888	VENT	side-use W/2.32" (58,9 mm) wide heater blower housing - For Ref. 1 (NAP/6709836 heater kit)		1
34	6708914	VENT	side-use W/1.95" (49,5 mm) wide heater blower housing - For Ref. 1 (NAP/6709836 heater kit)		1
35	6657719	PLUG			1
36	17C516	BOLT			2
37	25E000016B	WASHER			2
38	4E5	WASHER			2
39	61D5	NUT			2
40		DUCT	NAP - Order Ref. 49 - For Ref. 1 (NAP/6709836 heater kit) - Was 6665220 [A]		1
1	6660885	LOUVER			5
42	6660890	COVER ASSY.	Ref. 21-23, 25 & 43		1
43	6660865	DECAL	fan & valve		1
4	6578172	HOSE	bulk - Sold Per Foot - Was 889269B [A]		x

https://www.pdfmanual4trucks.com/

HEATER KIT (Cont'd)
(Fresh Air)

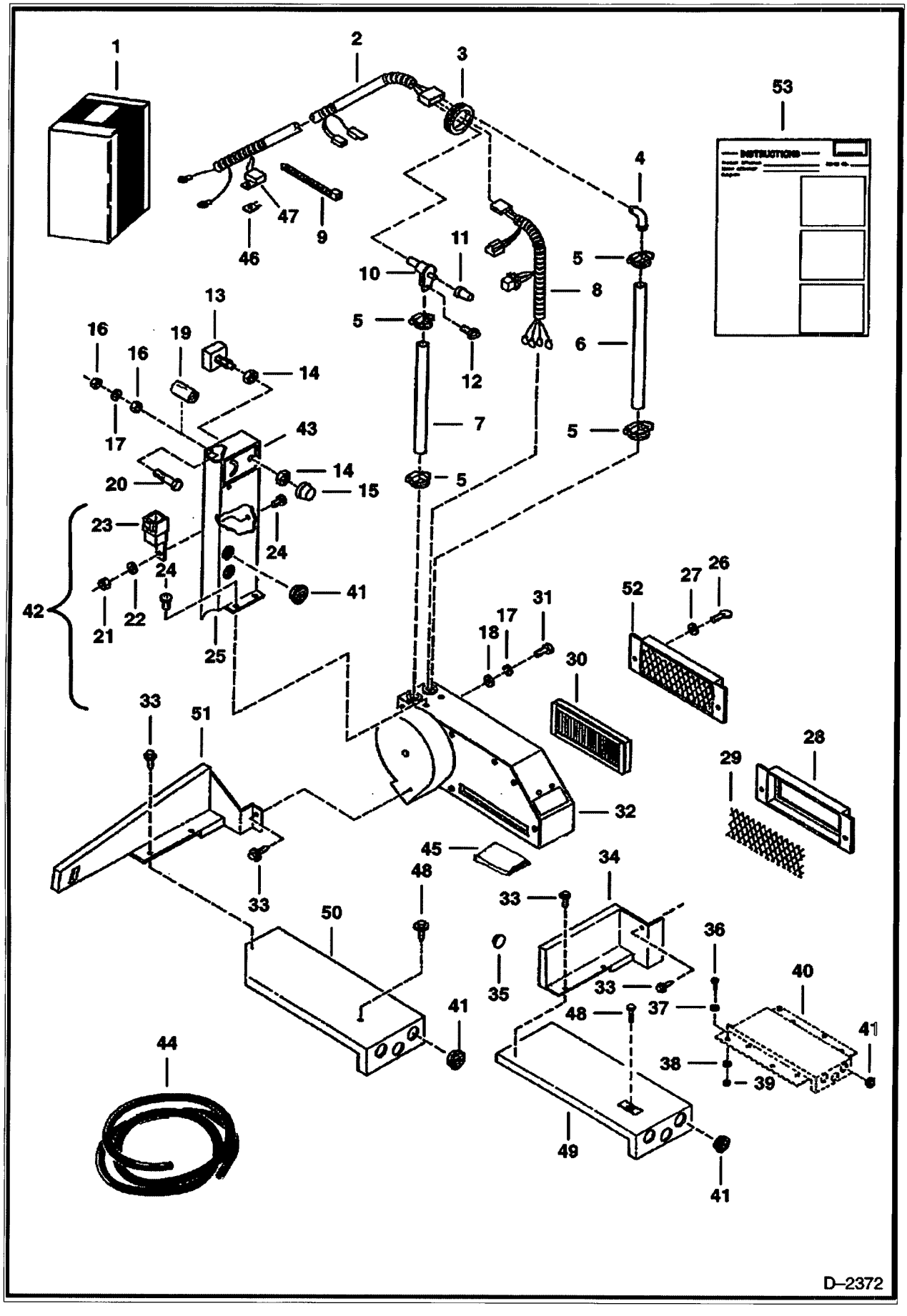

https://www.pdfmanual4trucks.com/

HEATER KIT (Cont'd)
(Fresh Air)

Ref No	Part Number	Description	Remarks	Serial Number	Qty
45		MOULDING	NAP		1
46	6702444	FUSE	25 amp		1
47	6657306	CAP	fuse		1
48	84G003120B	BOLT			1
49	6711732	DUCT	under seat - For Ref. 1 (NAP/6709836 heater kit)		1
50	6669652	DUCT	under seat - for 6713379 heater kit - Also Order (3) Ref. 41		1
51	6669650	VENT	side - for 6713379 heater kit		1
52	6674151	COVER			1
53	6724384	INSTRUCTIONS	INSTRUCTIONS - Was 6722058 [B]		1

https://www.pdfmanual4trucks.com/

HEATER
(Fresh Air)

NOTE: 6667183 Heater has a 1.95" (49,5 mm) wide blower housing, Ref. 26. This narrower housing allows clearance for use with the Side Pivot Seat Kit.

NOTE: If 2.5" (63,5 mm) thick core is used in older heater housing, drill two .312" (7,9 mm) dia. holes 1" (25,4 mm) above existing holes, for Ref. 7 & 8.

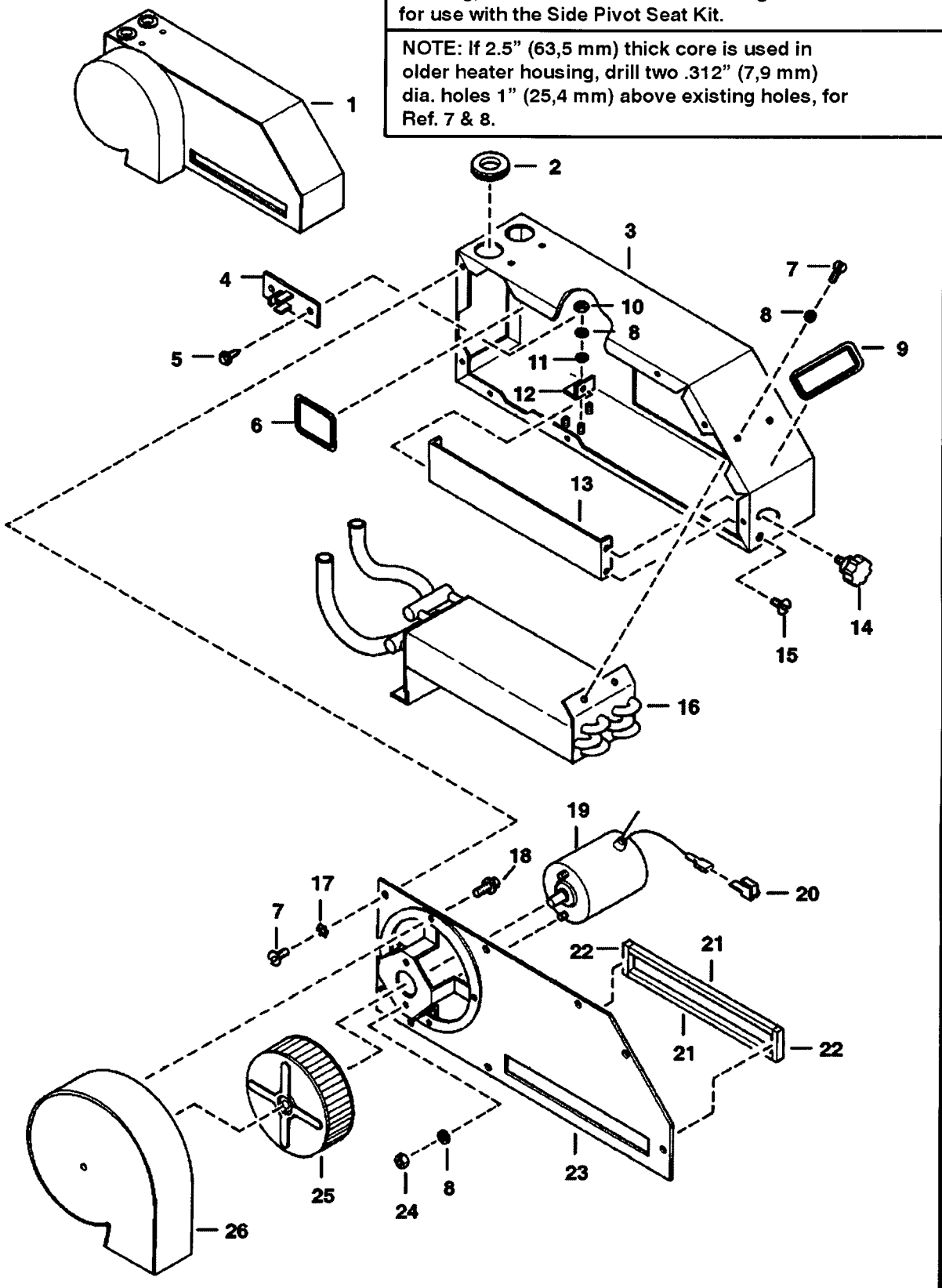

https://www.pdfmanual4trucks.com/

HEATER (Cont'd)
(Fresh Air)

Ref No	Part Number	Description	Remarks	Serial Number	Qty
1		HEATER	NAP - Ref. 2-26 - 18.3" (464,8 mm) long - Order 6667183 heater & 6708914 vent - SEE NOTE - Was 6664414 [A]		1
1	6667183	HEATER	Ref. 2-26 - This heater has a 1.95" (49,5 mm) wide blower housing, Ref. 26 - This narrower housing allows clearance for use with the Side Pivot Seat Kit		1
1	6669689	HEATER	Ref. 2-26 - W/rear hole in blower wheel housing & 2.5" (63,5 mm) thick heater core		1
2	6641056	GROMMET			2
3	6660874	HOUSING	heater - If 2.5" (63,5 mm) thick heater core is used in this older heater housing, drill two holes above existing holes for Ref. 7 & 8		1
3	6664806	HOUSING	heater - 18.3" (464,8 mm) long		1
4	6632584	RESISTOR			1
5	6705792	SCREW			3
6	6660656	DECAL	wiring schematic		1
7	6641066	SCREW			10
8	6641072	WASHER			7
9	6660868	DECAL	recirculation		1
10	6641065	NUT			3
11	25E000010B	WASHER			3
12	6660873	BRACKET	door		1
13	6660872	DOOR			1
13	6664808	DOOR	10.5" (266,7 mm) long		1
14	6660869	KNOB			1
15	6648470	SCREW			1
16		CORE	NAP - Order 6670140 core & redrill holes in Ref. 3 - Was 6660866 [A]		1
16	6670140	CORE	2.5" (63,5 mm) thick		1
17	12E000010B	WASHER			8
18	6641062	SCREW			4
19	6660876	MOTOR			1
20	6660654	CONNECTOR			1
21	6660877	MOULDING			1
22	6660878	MOULDING			1
23	6660875	COVER			1
23	6664807	COVER	18.4" (467,4 mm) long - 1.40" (35,6 mm) wide		1
23	6667567	COVER	18.4" (467,4 mm) long - 1.125" (28,6 mm) wide		1
24	6641073	NUT			2
25		BLOWER	NAP - 1.75" (44,4 mm) wide - Order 6667565 blower - Was 6660867 [A]		1
25	6667565	BLOWER	1.50" (38,1 mm) wide		1
26	6660871	HOUSING	blower - 2.32" (58,9 mm) wide - for 6667183 heater		1
26	6667566	HOUSING	blower - 1.95" (49,5 mm) wide - for 6667183 heater		1
26	6850027	HOUSING	blower - W/rear hole - for 6669689 heater		1

https://www.pdfmanual4trucks.com/

HEATER PLUMBING KIT
(Fresh Air)

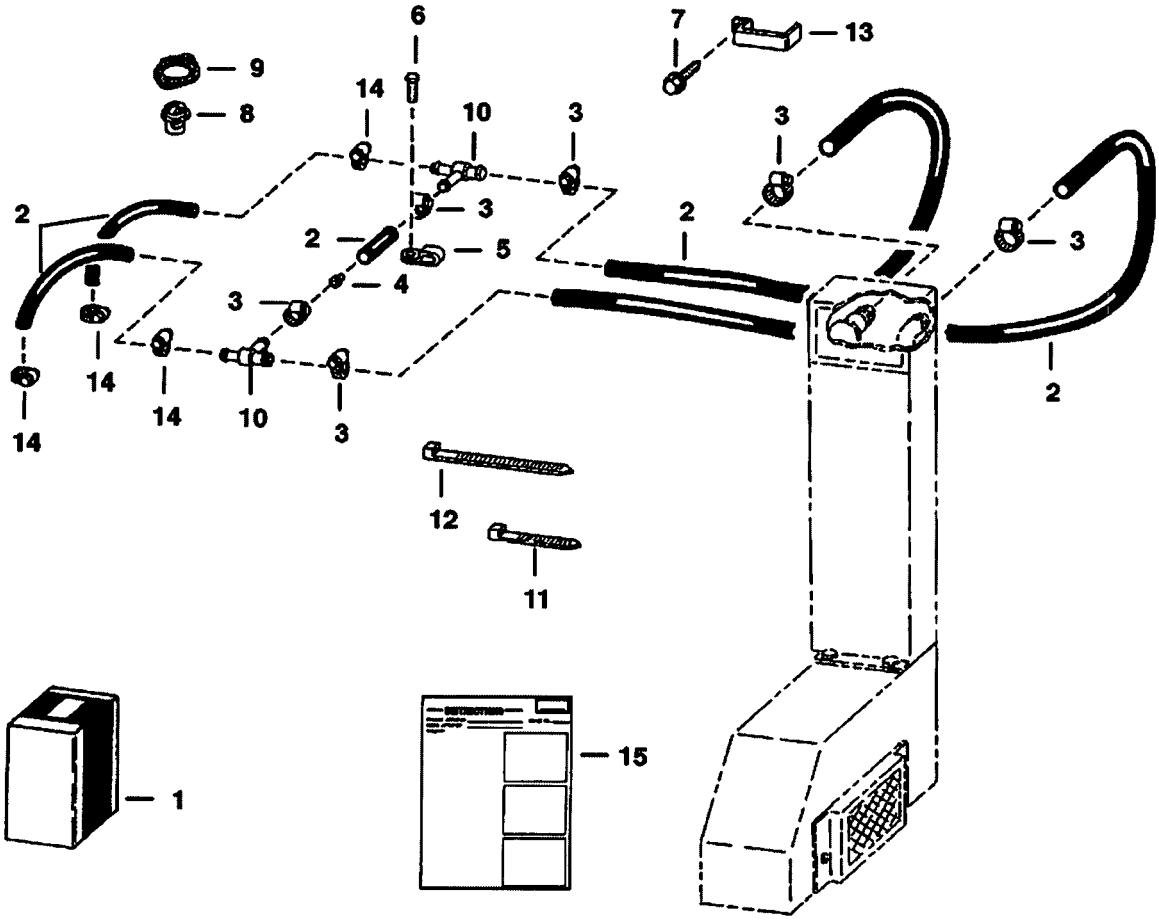

https://www.pdfmanual4trucks.com/

HEATER PLUMBING KIT (Cont'd)
(Fresh Air)

If No	Part Number	Description	Remarks	Serial Number	Qty
1	6660777	KIT	See Illustration HEATER KIT/ D2372 for heater kit - REF. 2-15		1
2	889269B	HOSE	bulk - Sold Per Foot		x
3	42H000010B	CLAMP	worm gear		10
3	5HM00024B	CLAMP	constant tension		6
4	6585223	ORIFICE			1
5	30H50	CLIP			1
6	1CM820	BOLT			1
7	84G3712	BOLT			1
8	6630184	THERMOSTAT	180 - 203 degree F		1
9	6732199	GASKET	Was 6666790 [A]		1
10	6648485	TEE	Was 6564697 [A]		2
11	6660883	TIE			10
12	6624289	CABLE TIE			1
13	6660795	GUIDE			1
14	5HM20	CLAMP	constant tension		4
15	6722058	INSTRUCTIONS			1

https://www.pdfmanual4trucks.com/

HEATER KIT

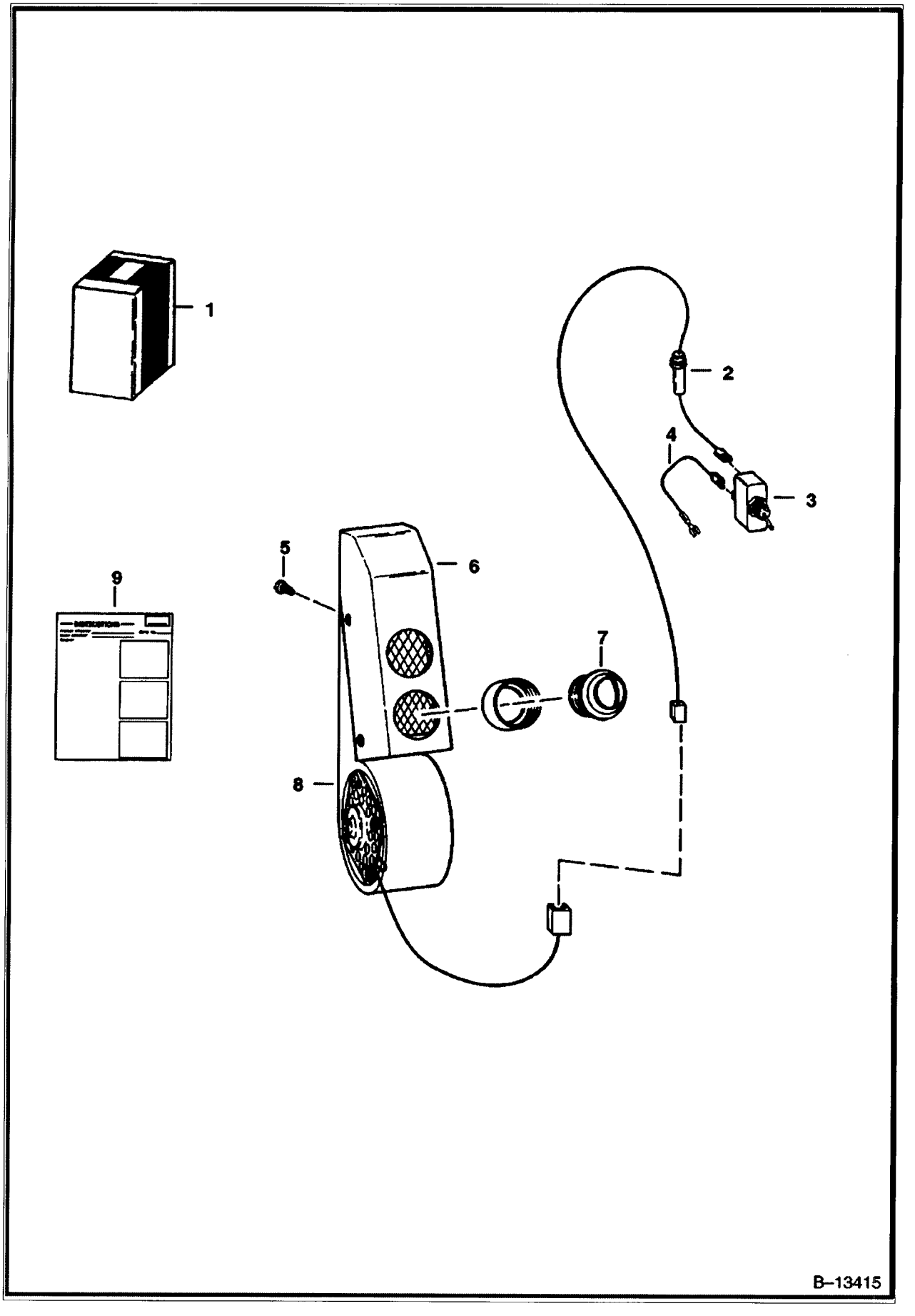

https://www.pdfmanual4trucks.com/

HEATER KIT (Cont'd)

Ref No	Part Number	Description	Remarks	Serial Number	Qty
1	6703046	KIT	See Illustration HEATER PLUMBING KIT/ C3250 for heater plumbing kit - Ref. 2-9		1
2	6703041	WIRE	fused		1
3	6515521	SWITCH			1
4	6564517	WIRE			1
5	17C412	BOLT 5			3
6	6702975	VENT			1
7	6632587	BALL	louvered		2
8	6658693	HEATER	See Illustration HEATER/ B13521		1
9	6720656	INSTRUCTIONS			1

https://www.pdfmanual4trucks.com/

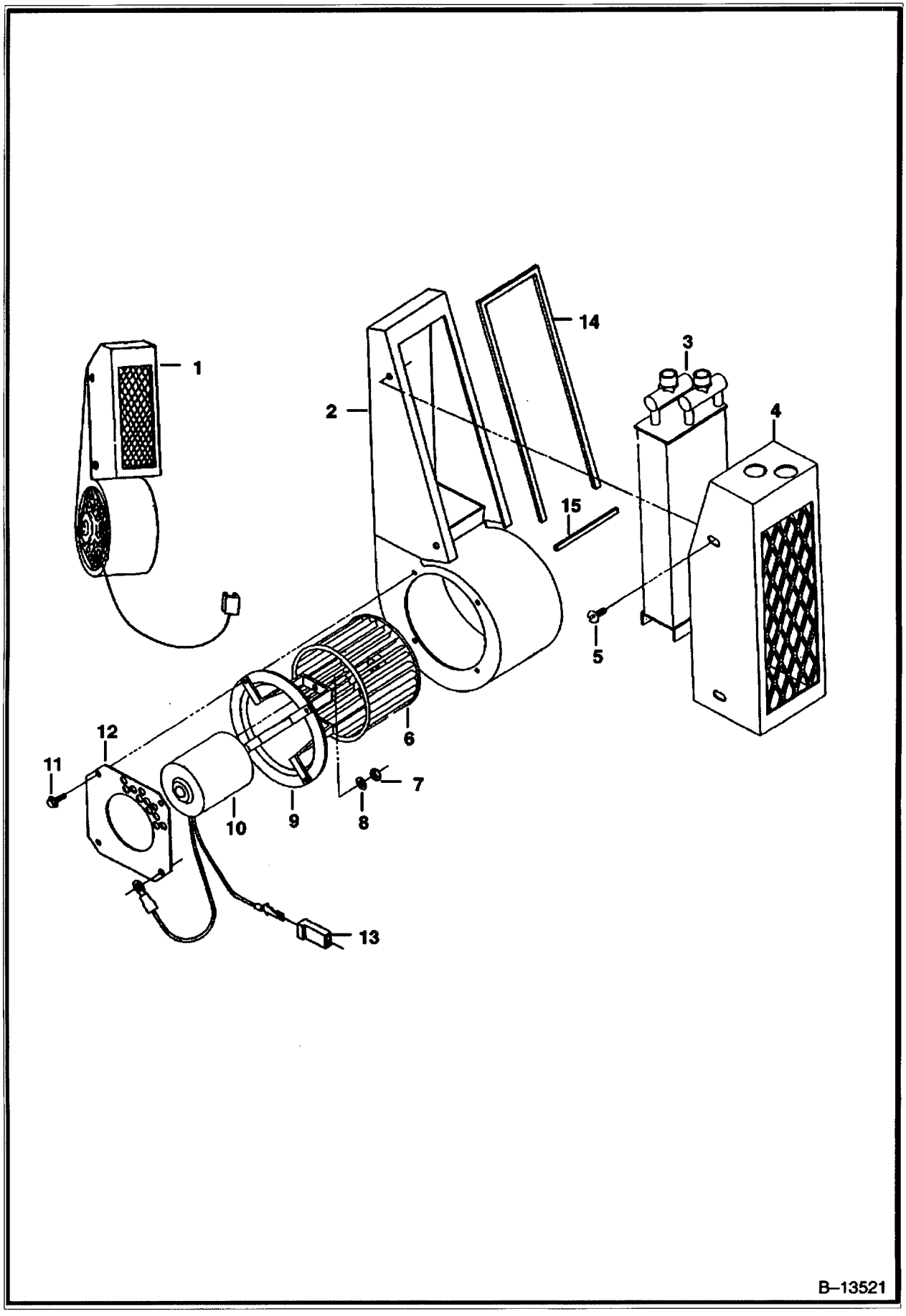

https://www.pdfmanual4trucks.com/

Ref No	Part Number	Description	Remarks	Serial Number	Qty
1	6658693	HEATER			1
2	6648469	HOUSING			1
3	6648471	CORE			1
4	6648472	COVER			1
5	6648470	SCREW			4
6	6648468	FAN			1
7	6641073	NUT			2
8	6641072	WASHER			2
9	6648467	MOUNT			1
10	6648466	MOTOR			1
11	6641062	SCREW			4
12	6659890	SHIELD			1
13	6648460	CONNECTOR			1
14	6659891	MOULDING			1
15	6659892	MOULDING			1

https://www.pdfmanual4trucks.com/

HEATER PLUMBING KIT

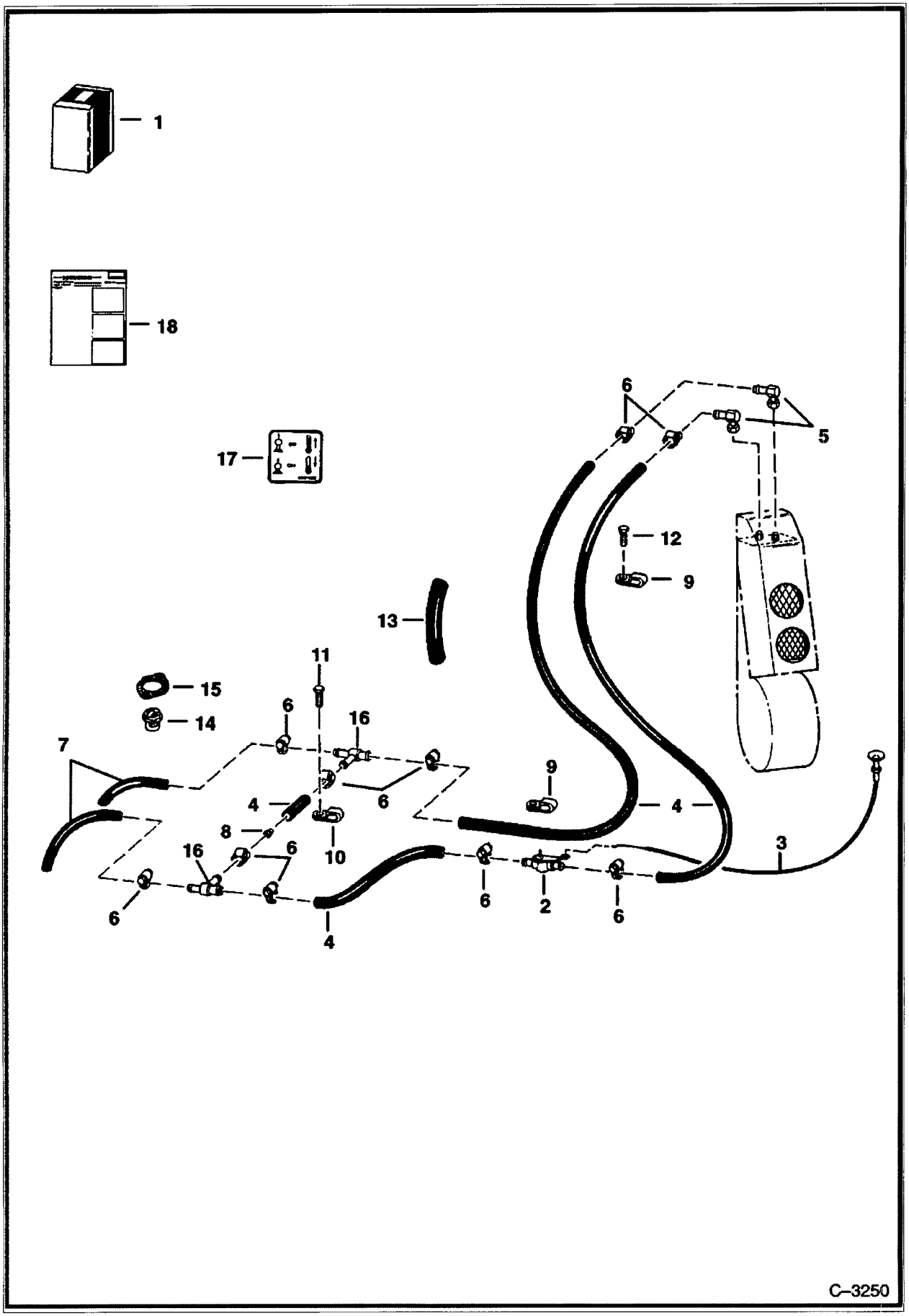

https://www.pdfmanual4trucks.com/

HEATER PLUMBING KIT (Cont'd)

:f No	Part Number	Description	Remarks	Serial Number	Qty
1	6703045	KIT	See Illustration HEATER KIT/ B13415 for heater kit - REF. 2-18		1
2	6648483	VALVE			1
3	6648482	CABLE			1
4	889269B	HOSE	bulk - sold per foot		x
5	6648474	ELBOW			2
5	6648475	O-RING			2
6	42H000010B	CLAMP			10
7	6565977	HOSE	bulk - sold per foot		x
8	6585223	ORIFICE			1
9	31H000052B	CLIP			2
10	30H50	CLIP			1
11	1CM820	BOLT			1
12	84G3712	BOLT			1
13	6652367	HOSE COVER	bulk - sold per foot		x
14	6630184	THERMOSTAT	180 - 203 degree F		1
15	3974693B	GASKET			1
6	6564697	TEE			2
7	6564527	DECAL			1
18	6720656	INSTRUCTIONS			1

https://www.pdfmanual4trucks.com/

HORN KIT

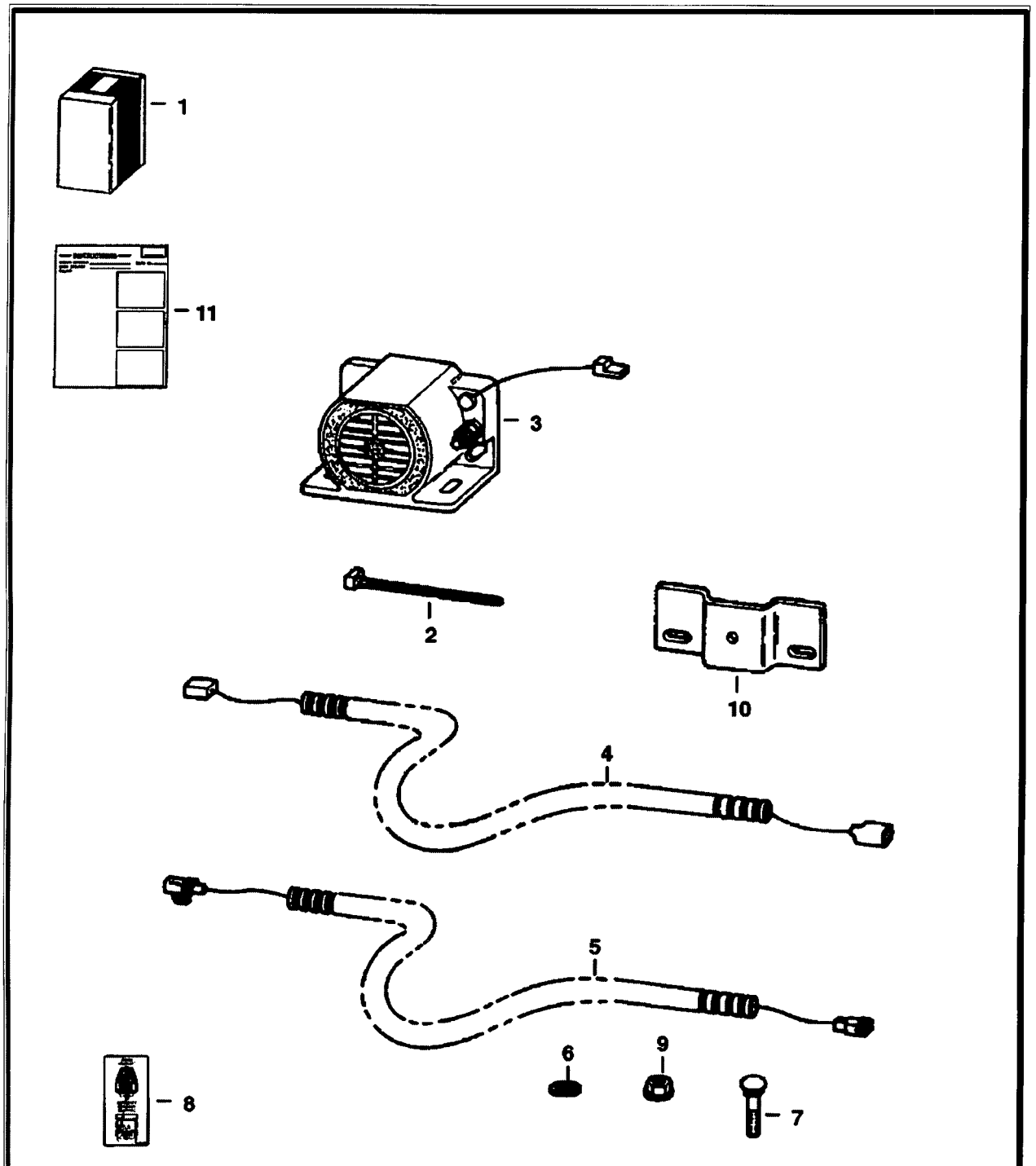

NOTE: This Kit required if loader is equipped W/2–switch or Multi–switch left control lever handle and/or High Horsepower Hydraulics.

C–3267

https://www.pdfmanual4trucks.com/

HORN KIT (Cont'd)

Ref No	Part Number	Description	Remarks	Serial Number	Qty
1	6703162	HORN KIT	Ref. 2-11 - SEE NOTE		1
2	6610510	TIE			2
3	6660294	HORN			1
4	6701961	HARNESS	113" (2870,2 mm) long		1
5	6704408	HARNESS	54" (1371,6 mm) long		1
6	25E13	WASHER 5			1
7	84G002516B	BOLT			2
8	6703727	DECAL	horn/aux.		1
9	59D4	NUT 5			2
10	6704641	MOUNT			1
11	6720761	INSTRUCTIONS			1

https://www.pdfmanual4trucks.com/

HORN KIT

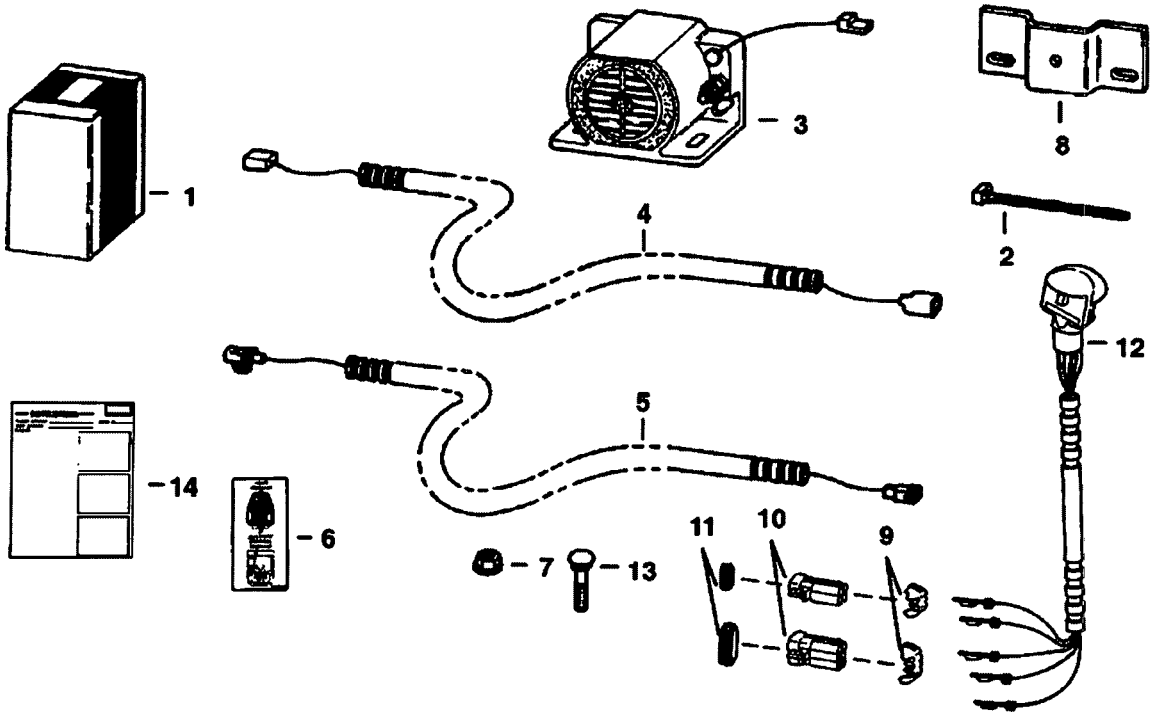

NOTE: This kit required for all loaders equipped W/blank left hand control lever handle.

B–17256

https://www.pdfmanual4trucks.com/

HORN KIT (Cont'd)

;f No	Part Number	Description	Remarks	Serial Number	Qty
1	6706679	HORN KIT	Ref. 2-14 - SEE NOTE		1
2	6610510	TIE			2
3	6660294	HORN			1
4	6701961	HARNESS	113" (2870,2 mm) long		1
5	6704408	HARNESS	54" (1371,6 mm) long		1
6	6703727	DECAL	horn/aux.		1
7	59D4	NUT 5			2
8	6704641	MOUNT			1
9	6641180	LOCK	2 - pin		1
9	6640700	LOCK	3 - pin		1
10	6641179	CONNECTOR	2 - pin		1
10	6640699	CONNECTOR	3 - pin		1
11	6649683	SEAL	For use W/2 - pin connector - Not in Kit		1
11	6659553	SEAL	For use W/3 - pin connector - Not in Kit		1
12	6680414	HANDLE ASSY.	Was 6705921 [A]		1
12	6640690	PIN			5
12	6641176	SEAL			5
3	84G002516B	BOLT			2
ı4	6720761	INSTRUCTIONS			1

https://www.pdfmanual4trucks.com/

HOURMETER KIT

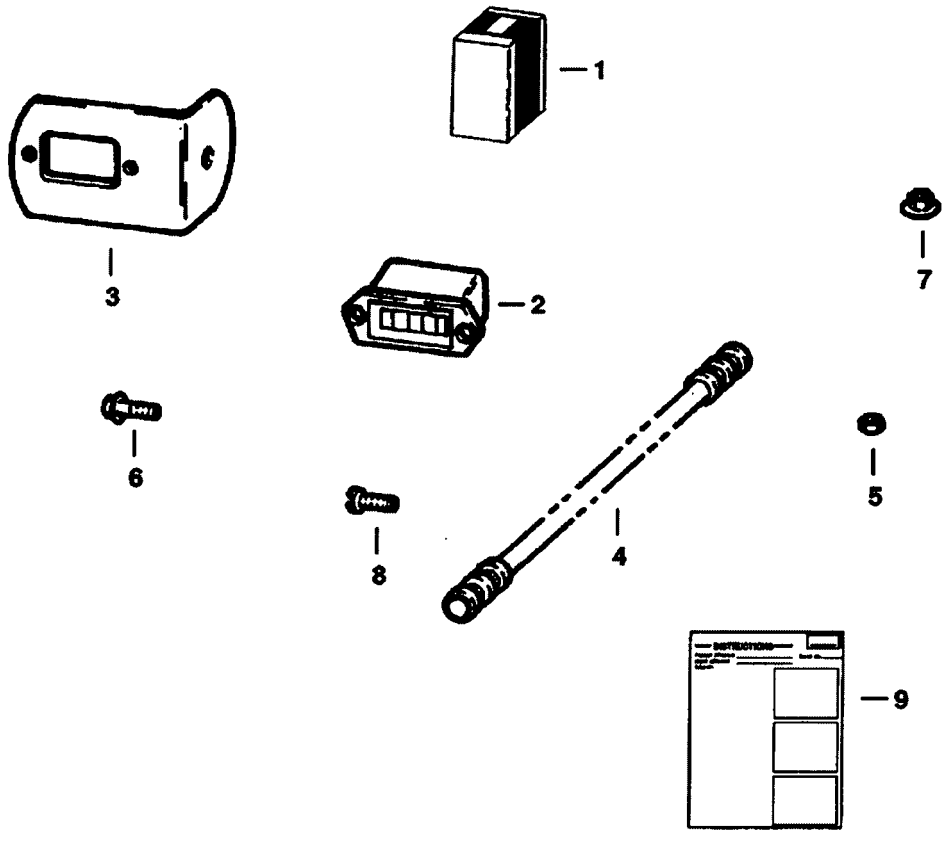

https://www.pdfmanual4trucks.com/

HOURMETER KIT (Cont'd)

ɟf No	Part Number	Description	Remarks	Serial Number	Qty
1	6700229	KIT	Ref. 2-9		1
2	6664886	HOURMETER			1
3	6552906	BRACKET			1
4	6700228	HARNESS			1
5	12D000006B	NUT			2
6	35C000716B	BOLT			1
7	55D7	NUT			1
8	85G000608B	SCREW			2
9	6720451	INSTRUCTIONS			1

https://www.pdfmanual4trucks.com/

INSECT SCREEN KIT

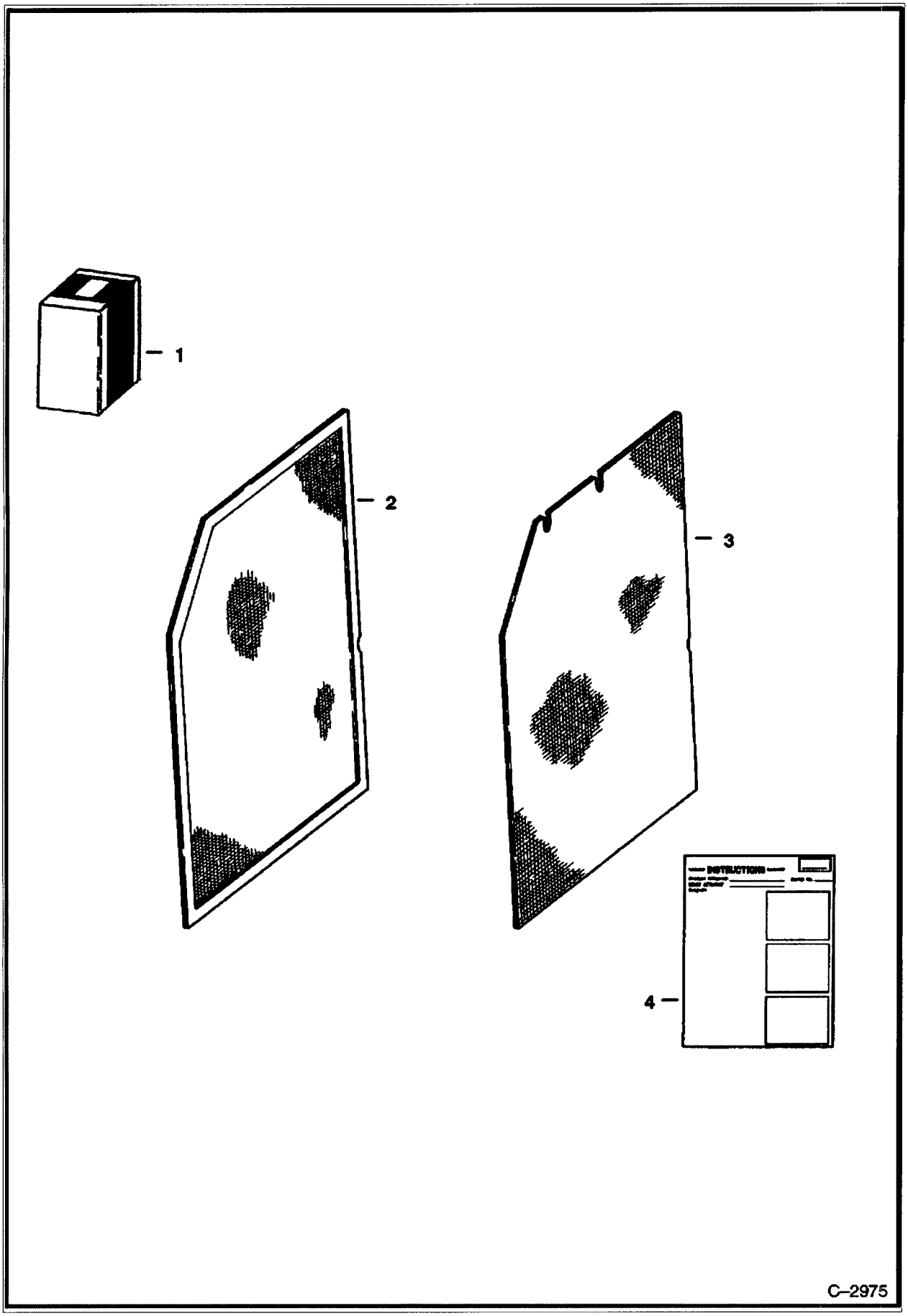

https://www.pdfmanual4trucks.com/

INSECT SCREEN KIT (Cont'd)

Ref No	Part Number	Description	Remarks	Serial Number	Qty
1		KIT	NAP - insect screen - Ref. 2-4 - Was 6571597 [A]		1
2		SCREEN	NAP - insect - R.H. - Was 6569935 [A]		1
3		SCREEN	NAP - insect - L.H. - Was 6569936 [A]		1
4	6570223	INSTRUCTIONS			1

https://www.pdfmanual4trucks.com/

KEYLESS IGNITION

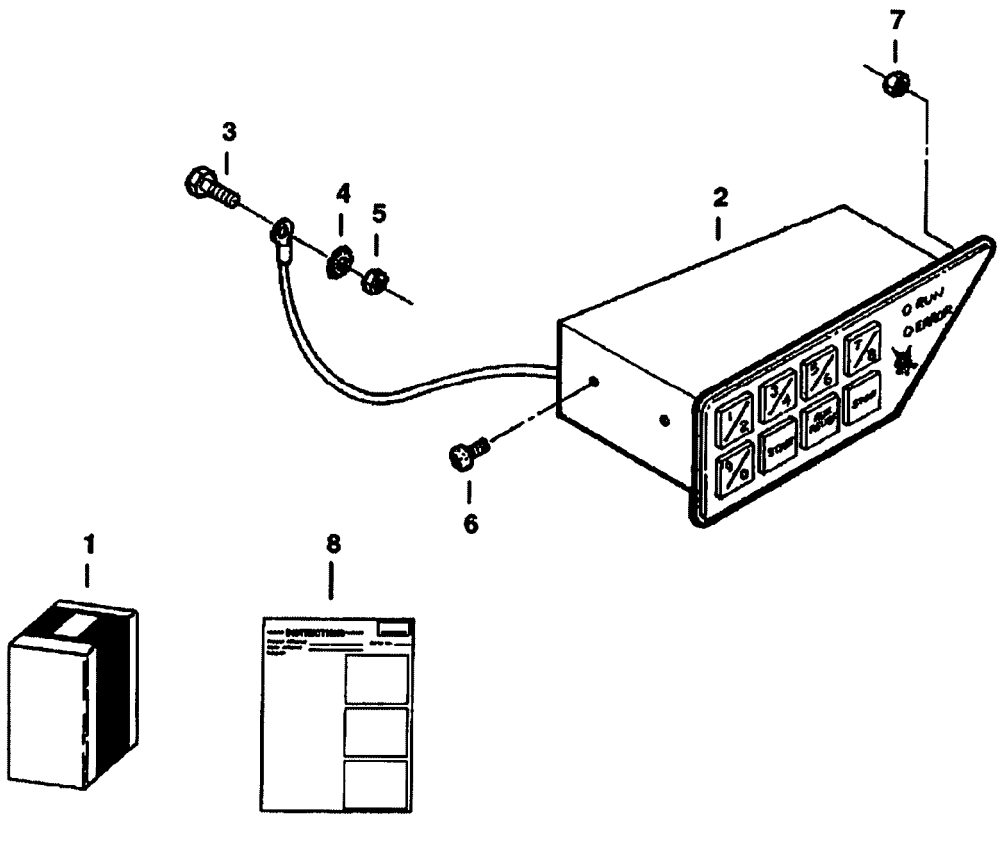

B–14598

https://www.pdfmanual4trucks.com/

KEYLESS IGNITION (Cont'd)

;f No	Part Number	Description	Remarks	Serial Number	Qty
1		KIT	NAP - Keyless Ignition - W/Ref. 2-8 - Was 6712972 [A]		1
2		MODULE	NSS - Order Ref. 1		1
3	35C410	BOLT 5			1
4	6E4	WASHER 10	Star		1
5	83D4	NUT 10			1
6	87G000806B	BOLT			2
7	12D000006B	NUT			1
8	6724586	INSTRUCTIONS			1

https://www.pdfmanual4trucks.com/

LIFT KIT
(Four Point - .75" Thick Lift Eyes)

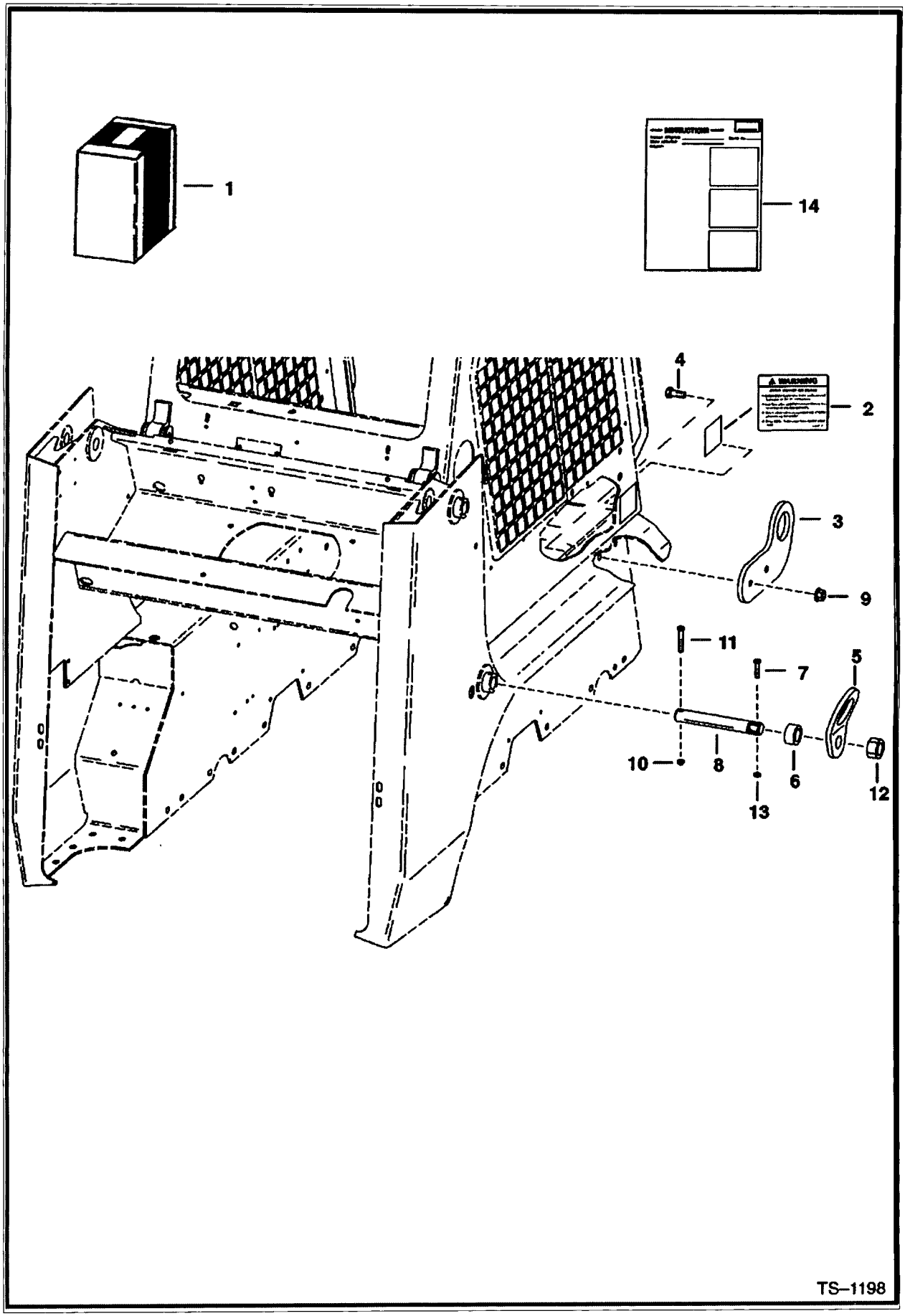

https://www.pdfmanual4trucks.com/

LIFT KIT (Cont'd)
(Four Point - .75" Thick Lift Eyes)

Ref No	Part Number	Description	Remarks	Serial Number	Qty
1		KIT	See Illustration LIFT KIT/ TS1198A to Order 6725224 kit - NAP - Ref. 2-14 - Was 6707000 [A]		1
2	6726423	DECAL	Was 6702916 [A]		2
3	6706826	LIFT EYE	front		2
4	17C001028B	BOLT			4
5	6706825	LIFT EYE	rear		2
6	6702921	SPACER			2
7	17C000540B	BOLT			2
8	6706807	PIN			2
9	83D000010B	NUT			4
10	85D6	LOCK NUT			2
11	17C640	BOLT 5			2
12	4D000020B	NUT			2
13	87D000005B	NUT			2
14	6722872	INSTRUCTIONS			1

https://www.pdfmanual4trucks.com/

LIFT KIT
(Four Point - .75" Thick Lift Eyes)

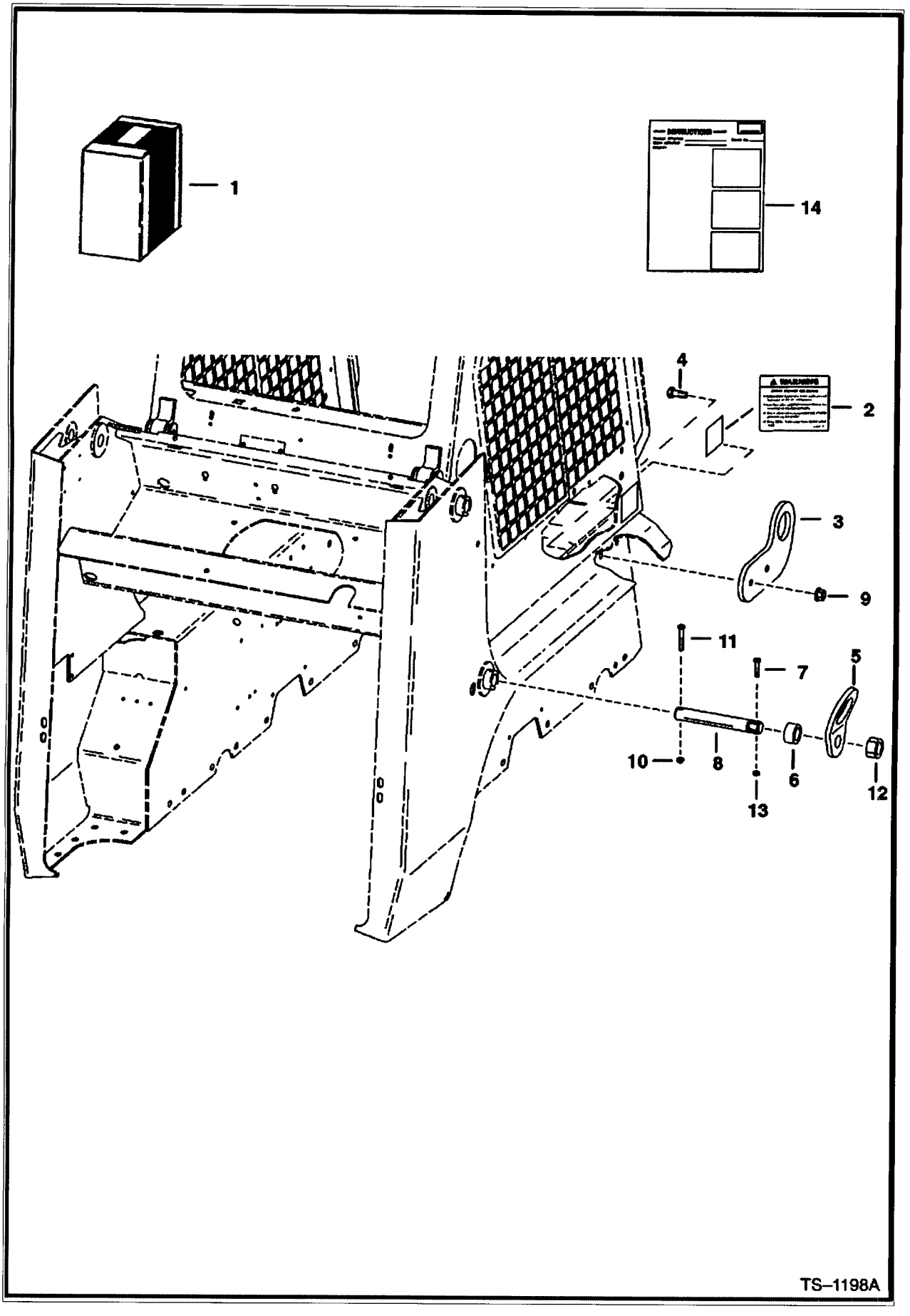

https://www.pdfmanual4trucks.com/

LIFT KIT (Cont'd)
(Four Point - .75" Thick Lift Eyes)

Ref No	Part Number	Description	Remarks	Serial Number	Qty
1	6725224	KIT	Ref. 2-14		1
2	6726423	DECAL	Was 6702916 [A]		2
3	6719490	LIFT EYE	front		2
4	17C001028B	BOLT			4
5	6706825	LIFT EYE	rear		2
6	6702921	SPACER	1.00" thick - 751 & 753 loaders		2
6	6719906	SPACER	.70" thick - 763 loaders		2
7	17C000540B	BOLT			2
8	6706807	PIN			2
9	83D000010B	NUT			4
10	85D6	LOCK NUT			2
11	17C640	BOLT 5			2
12	4D000020B	NUT			2
13	87D000005B	NUT			2
14	6722872	INSTRUCTIONS			1

https://www.pdfmanual4trucks.com/

LIFT KIT
(Single Point)

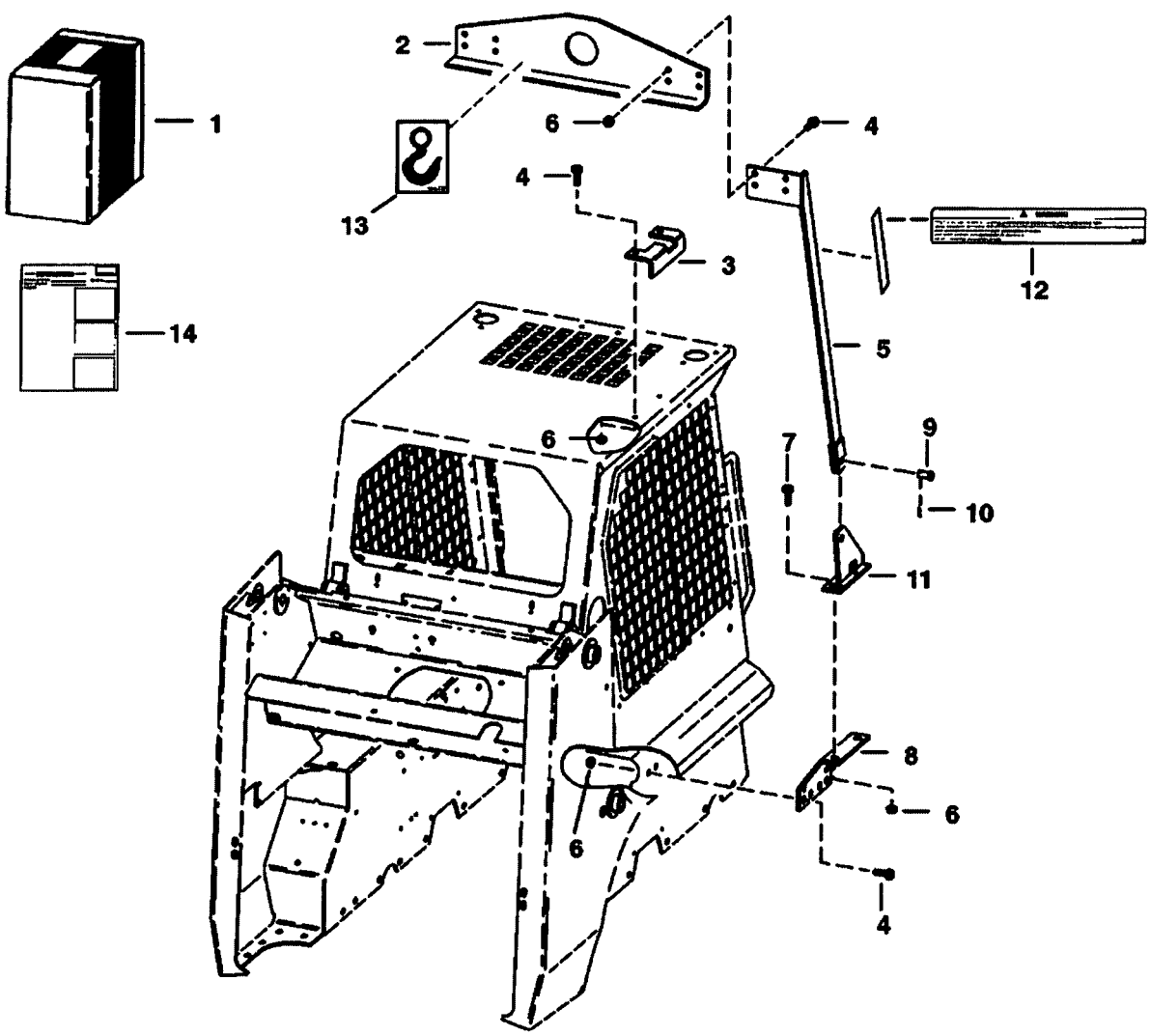

https://www.pdfmanual4trucks.com/

LIFT KIT (Cont'd)
(Single Point)

Ref No	Part Number	Description	Remarks	Serial Number	Qty
1	6704153	KIT	Ref. 2-14		1
2	6567827	ANGLE			1
3	6704154	BRACKET	L.H.		1
3	6704148	BRACKET	R.H.		1
4	31C824	BOLT 10			16
5	6704146	BRACKET	R.H.		1
5	6704147	BRACKET	L.H.		1
6	57D000008B	NUT			20
7	31C000828B	BOLT			4
8	6704149	BRACKET			2
9	6567838	PIN			2
10	1320075	COTTER PIN			2
11	6704151	BRACKET			2
12	6704786	DECAL	warning		2
13	6533898	DECAL			1
14	6722105	INSTRUCTIONS			1

https://www.pdfmanual4trucks.com/

LIGHT KIT
(S/N 5127 16001 & Abv, 5086 93001-95347, 5139 11001 & Abv, 5114 76001 & Abv

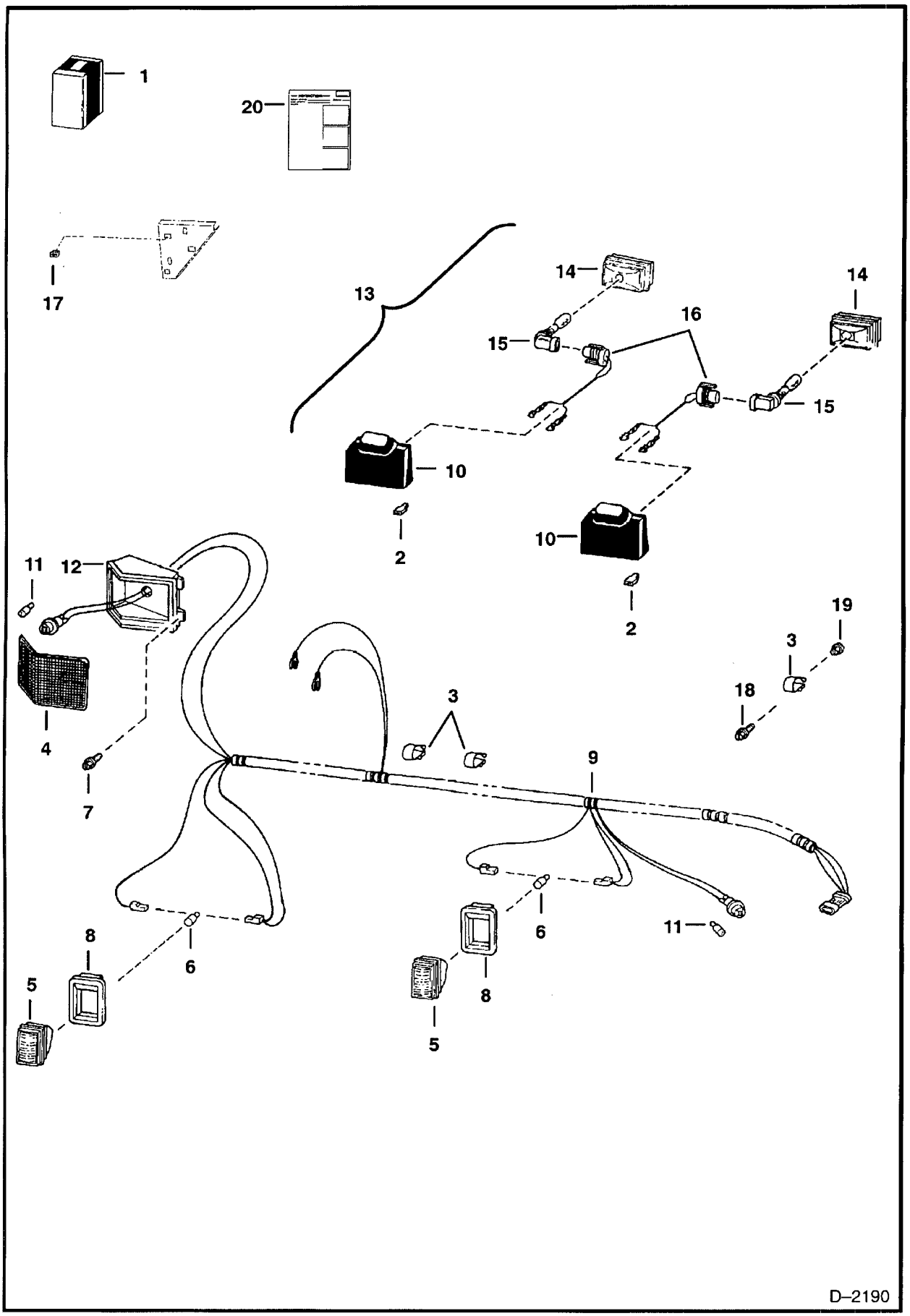

https://www.pdfmanual4trucks.com/

LIGHT KIT (Cont'd)
(S/N 5127 16001 & Abv, 5086 93001-95347, 5139 11001 & Abv, 5114 76001 & Abv

;f No	Part Number	Description	Remarks	Serial Number	Qty
1	6707663	LIGHT KIT	front & rear - Ref. 2-20		1
2	6519548	CONNECTOR			2
3	30H000042B	CLAMP	Was 30H000035B [B]		4
4	6703797	LENS			2
5	6665922	LAMP	W/Ref. 6 - Was 6661353 [A]		2
5	6665431	SOCKET	threaded bulb		2
6	898731B	BULB			2
7	6706517	SCREW	self tapping - Was 6704400 [A]		8
8	6703796	MOUNT			2
9	6707669	HARNESS	lights		1
9	6701952	SOCKET			x
10	6578824	HOUSING	rubber		2
11	6649481	BULB			2
12	6704362	HOUSING	light		2
13	6577801	LIGHT	Ref. 10 & 14-16		2
14	6649478	BULB HOUSING			2
15	6667934	BULB	Was 6650111 [A]		2
6	6578528	HARNESS	light		2
;7	6665410	SWITCH	See Illustration CAB ELECTRICAL CIRCUITRY/ E2220 LIGHT		1
18	17C000614B	BOLT			1
19	83D6	NUT 5			1
20	6900651	INSTRUCTIONS	INSTRUCTIONS - Was 6722198 [B]		1

https://www.pdfmanual4trucks.com/

LIGHT KIT
(S/N 5158 11001-29999, 5162 11001-19999, 5086 95348 & Abv)

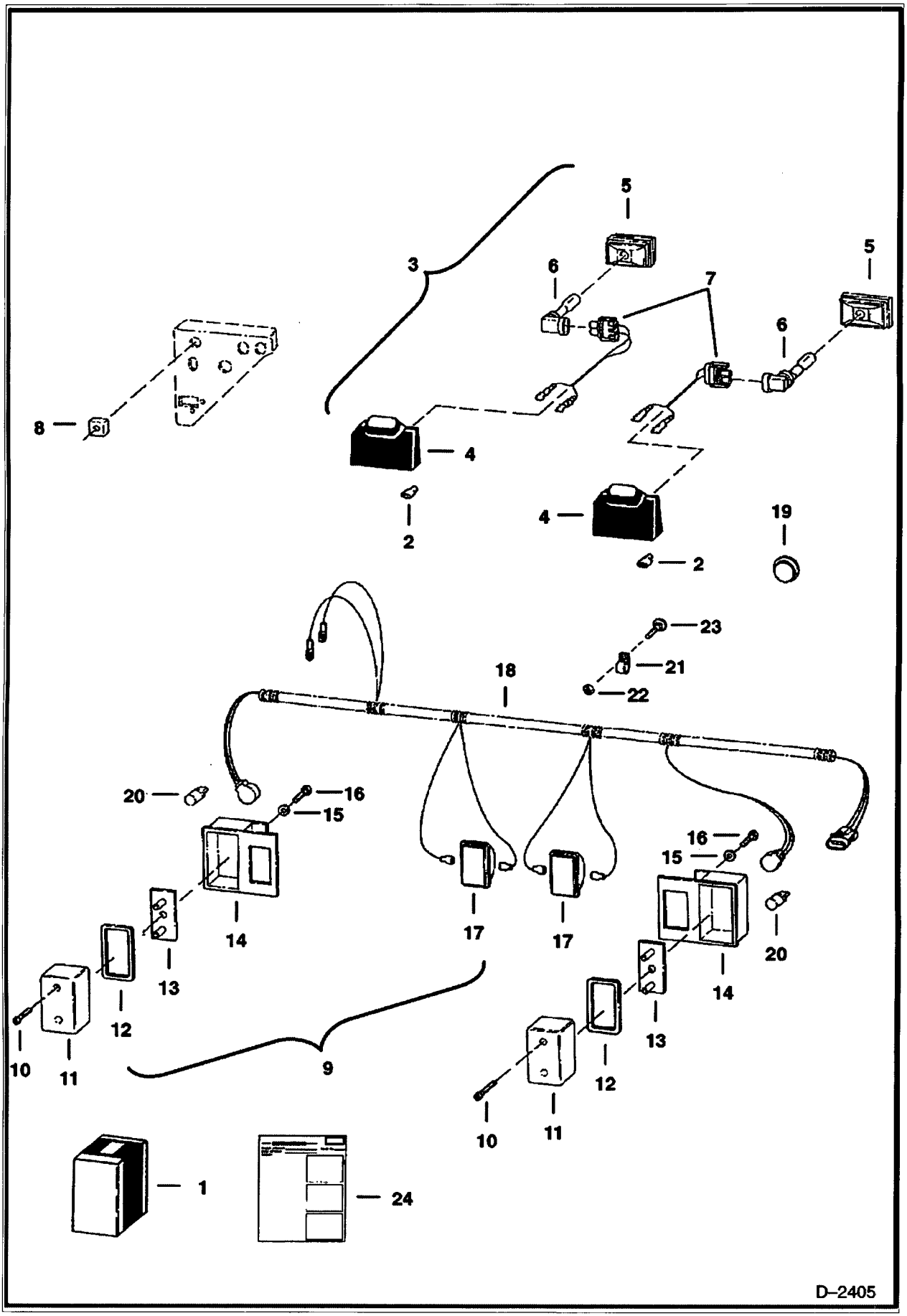

https://www.pdfmanual4trucks.com/

LIGHT KIT (Cont'd)
(S/N 5158 11001-29999, 5162 11001-19999, 5086 95348 & Abv)

ef No	Part Number	Description	Remarks	Serial Number	Qty
1	6714985	LIGHT KIT	Ref. 2-24		1
2	6519548	CONNECTOR			4
3	6577801	LIGHT	Ref. 4-7		2
4	6578824	HOUSING	lights		2
5	6649478	BULB HOUSING			2
6	6667934	BULB			2
7	6578528	HARNESS	light		2
8	6665410	SWITCH			1
9	6670284	LIGHT ASSY	Ref. 10-17		2
10	6672273	SCREW			2
11	6672276	LENS	red		2
12	6672275	GASKET			2
13	6672277	BRACKET			2
14	6672279	MOUNT	rubber		2
15	6672272	WASHER			4
16	6672274	SCREW			4
17	6672278	LIGHT ASSY.	W/bulb - white		2
7	898731B	BULB			2
18	6714350	HARNESS			1
19	6718796	PLUG	Was 6660646 [A]		1
20	6649481	BULB			1
21	30H35	CLAMP 10			1
22	37C512	BOLT			1
23	61D5	NUT			1
24	6900653	INSTRUCTIONS	INSTRUCTIONS - Was 6722198 [B]		1

https://www.pdfmanual4trucks.com/

MUFFLER/PURIFIER KIT

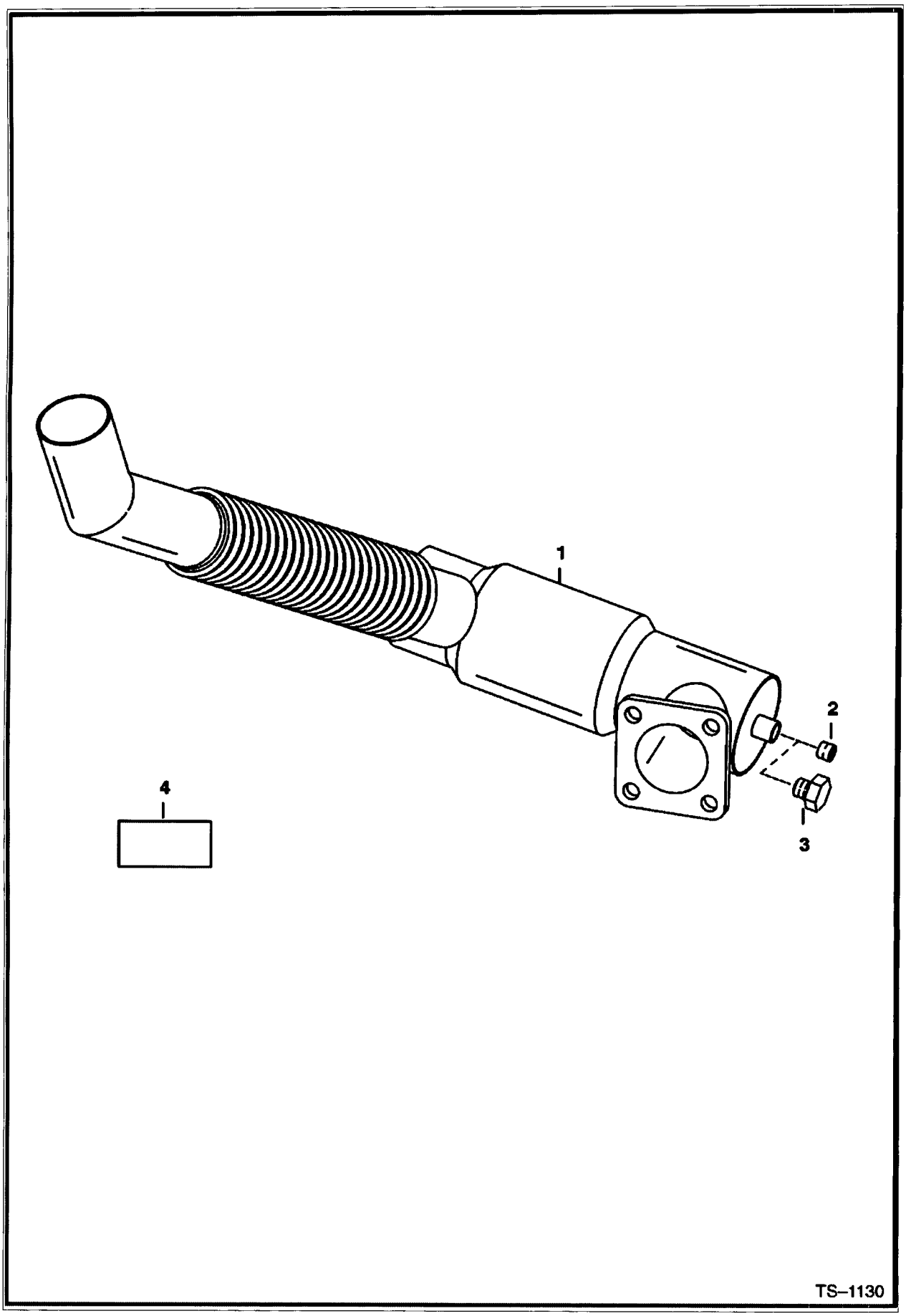

https://www.pdfmanual4trucks.com/

MUFFLER/PURIFIER KIT (Cont'd)

Ref No	Part Number	Description	Remarks	Serial Number	Qty
1		MUFFLER	NAP - W/Ref. 2 - Was 6661616 [A]		1
2		PLUG	NAP - 1/8" brass - allen head - Order Ref. 3		1
3	6659543	PLUG	1/8" brass - hex head		1
4	6667573	DECAL			1

https://www.pdfmanual4trucks.com/

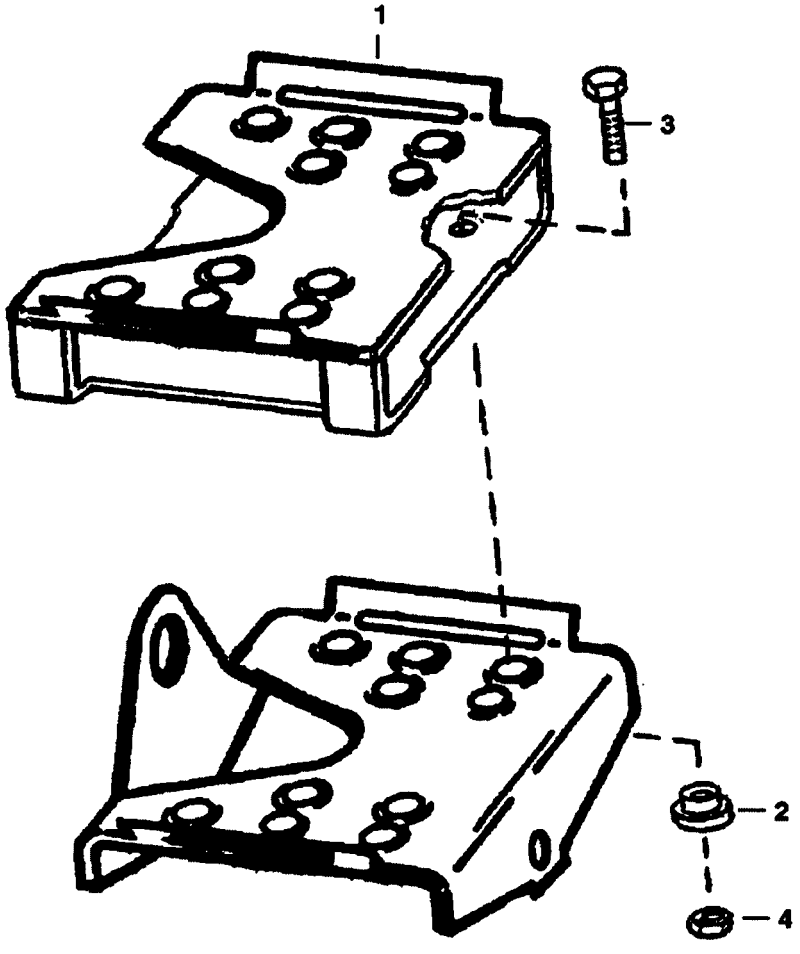

https://www.pdfmanual4trucks.com/

PEDAL EXTENDERS (Cont'd)

;f No	Part Number	Description	Remarks	Serial Number	Qty
1	6713115	PEDAL	extender		2
2	6713116	BUSHING			8
3	17C516	BOLT			8
4	85D5	NUT 5			8

https://www.pdfmanual4trucks.com/

PRESSURE RELEASE KIT
(Front Auxiliary)

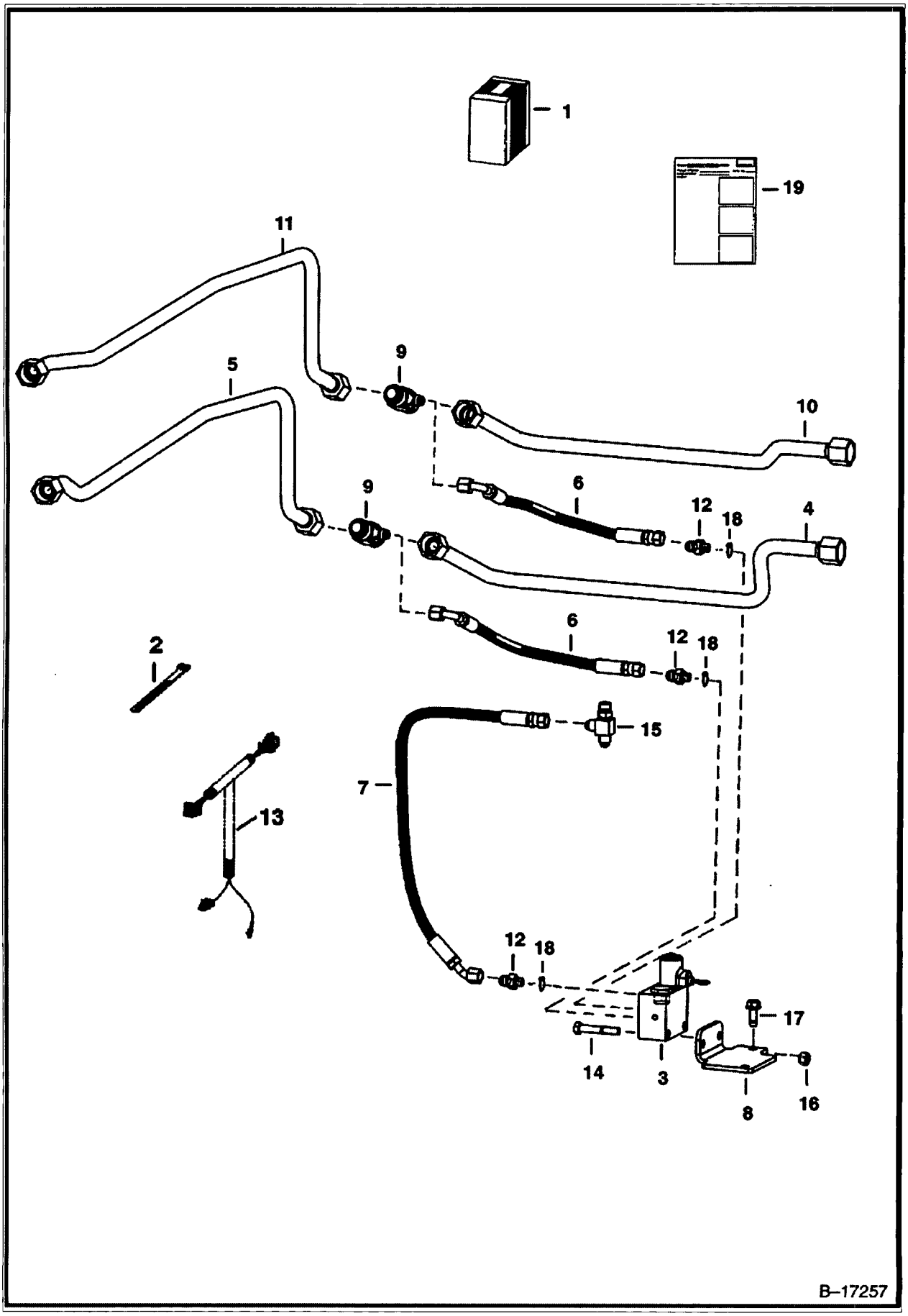

https://www.pdfmanual4trucks.com/

PRESSURE RELEASE KIT (Cont'd)
(Front Auxiliary)

;f ,ıo	Part Number	Description	Remarks	Serial Number	Qty
1	6718240	KIT	front aux. press. release - Ref. 2-18		1
2	6610510	TIE			3
3		VALVE	See Illustration PRESSURE RELEASE VALVE/ PE1017 NAP - W/.4375" threaded ports - Order 6678150 valve & (3) of 15KB606 adapter - Was 6674372 [A]		1
3	6678150	VALVE	See Illustration PRESSURE RELEASE VALVE/ PE1017 W/.5675" threaded ports		1
4	6717915	TUBE			1
5	6717916	TUBE			1
6	6717919	HOSE			2
7	6717921	HOSE			1
8	6717922	BRACKET			1
9	6717923	TEE			2
10	6717917	TUBE			1
11	6717918	TUBE			1
12		CONNECTOR	NAP - W/Ref, 18 - flat boss face - Use W/Ref. 3 (NAP/6674372 Valve) - Was 6718109 [A]		3
2	15KB604	CONNECTOR	W/Ref. 18 - flat boss face		3
12	99K6	O'RING			3
12	15KV00005B	ADAPTER	W/Ref. 18 - tapered boss face - Use W/Ref. 3 (6678150 Valve)		3
12	99K6	O'RING			3
13	6718111	HARNESS			1
14	17C000636B	BOLT			2
15	21KN00005B	TEE			1
15	97K6	O'RING	flared end		2
6	61D000006B	NUT			2
17	84G3716	SCREW 5			1
18	79K4	O RING 10	flat boss face		3
18	99K6	O'RING	tapered boss face		3
19	6900841	INSTRUCTIONS			1

https://www.pdfmanual4trucks.com/

PRESSURE RELEASE VALVE
(Front Auxiliary)

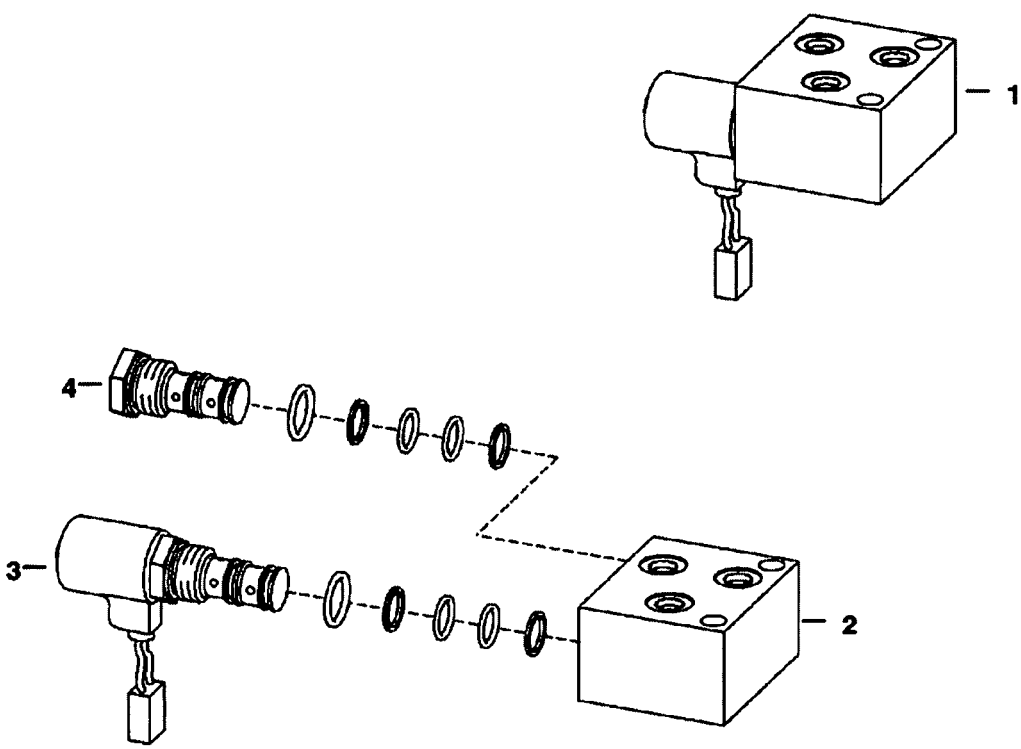

PE–1017

https://www.pdfmanual4trucks.com/

PRESSURE RELEASE VALVE (Cont'd)
(Front Auxiliary)

Ref No	Part Number	Description	Remarks	Serial Number	Qty
1		VALVE	NAP - W/.4375" threaded ports - Order 6678150 Valve & (3) of 15KB606 adapter - Was 6674372 [A]		1
1	6678150	VALVE	W/.5625" threaded ports		1
2		BLOCK	NSS		1
3		VALVE	NSS - solenoid		1
3	6675285	STEM			1
3	6676564	SEAL KIT			1
3	6672962	COIL			1
3	6676566	NUT			1
4	6675284	SHUTTLE VALVE			1
4	6657409	SEAL KIT			1

https://www.pdfmanual4trucks.com/

PRESSURE RELEASE KIT
(High Horsepower Hydraulics)

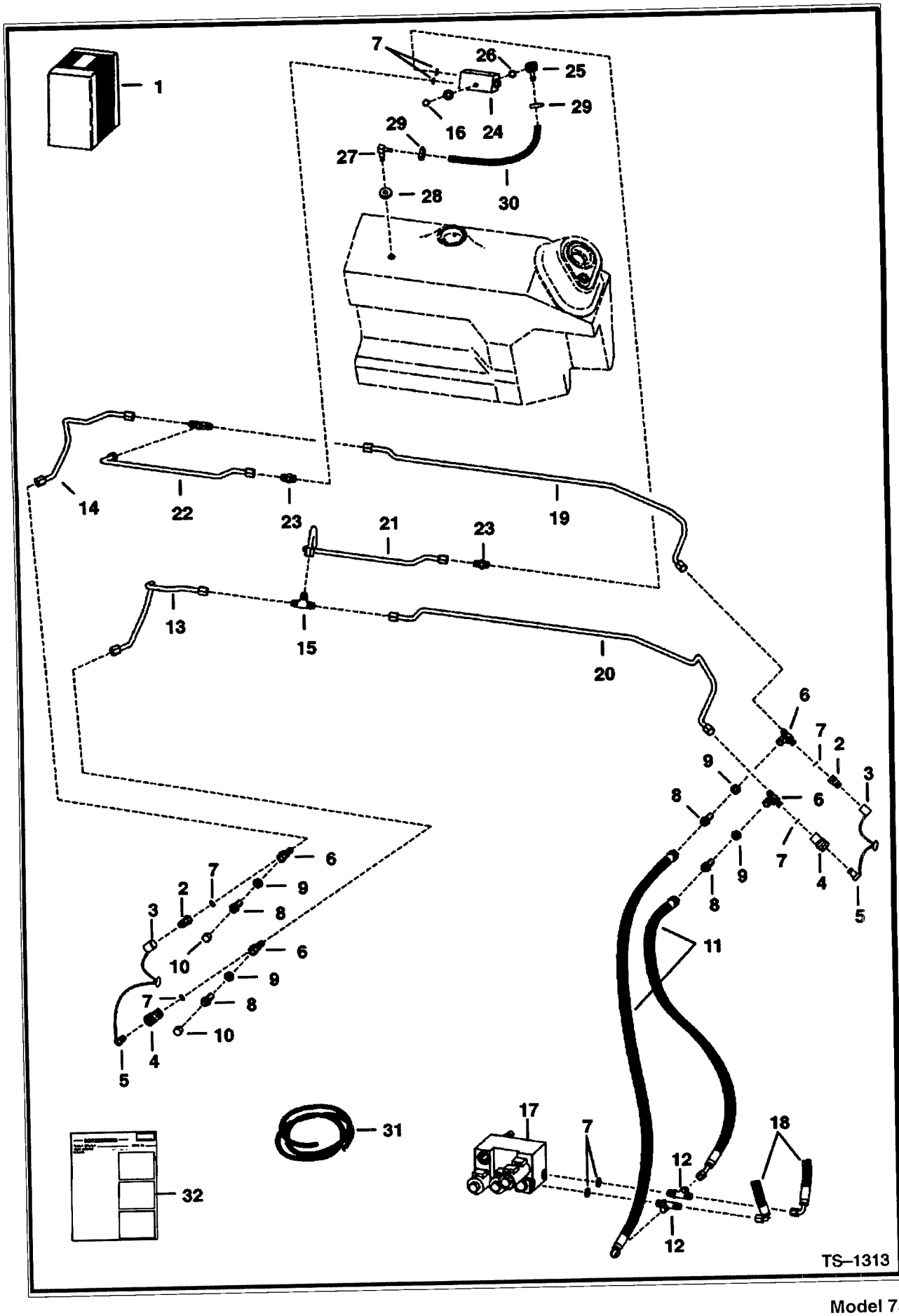

https://www.pdfmanual4trucks.com/

PRESSURE RELEASE KIT (Cont'd)
(High Horsepower Hydraulics)

ef No	Part Number	Description	Remarks	Serial Number	Qty
1		KIT	NAP - pressure release - Ref. 2-37 - Order components - Was 6710293 [A]		1
2	6648969	QUICK COUPLER	male		2
3	1513549B	CAP			2
4	6648967	QUICK COUPLER	male		2
4	6655795	SEAL KIT			2
5	1519324	PLUG			2
6	6706220	TEE	W/Ref. 7 - check boss face to determine correct replacement o-ring		4
7	79K6	O RING 10	flat boss face		x
7	99K6	O'RING	tapered boss face		x
8	51E000404B	ADAPTER			4
9	61E000004B	NUT			4
10	63E000004B	PLUG			2
11	6706089	HOSE			2
12	21K000005B	TEE	W/Ref. 7		2
13	6709085	TUBE			1
4	6709084	TUBE			1
15	10K000005B	TEE	W/O O-rings		2
15	10KN00005B	TEE	W/ O-rings		2
15	97K6	O'RING	flared end		6
16	17C000510B	BOLT			1
17	6662695	VALVE	See Illustration HIGH FLOW HYDRAULICS/ TS1144 NOT IN KIT		1
18		HOSE	See Illustration HIGH FLOW HYDRAULICS/ TS1247 EXISTING HOSE - REF. 58		1
19	6709083	TUBE			1
20	6709082	TUBE			1
21	6709081	TUBE			1
22	6709080	TUBE			1
23	15K5	FITTING	W/Ref. 7		2
24	6666611	VALVE	pressure release		1
25		ELBOW	NAP - W/Ref. 26 - flat boss face - Was 6657083 [A]		1
25	6715183	ELBOW	W/Ref. 26 - check boss face to determine correct replacement o-ring		1
26	79K000005B	O-RING	tapered boss face		x
26	99K000005B	O-RING	flat boss face		x
7	6598908	ELBOW			1
28	6553411	BUSHING			1
29	6515575	CLAMP			2
30		HOSE	NAP - 9" (222,6 mm) long - Order Ref. 31		1
31	6577821	HOSE	bulk - Sold Per Foot		x
32	6724400	INSTRUCTIONS			1

https://www.pdfmanual4trucks.com/

PUSH TO OPERATE KIT
(Mechanical Hand Controls)

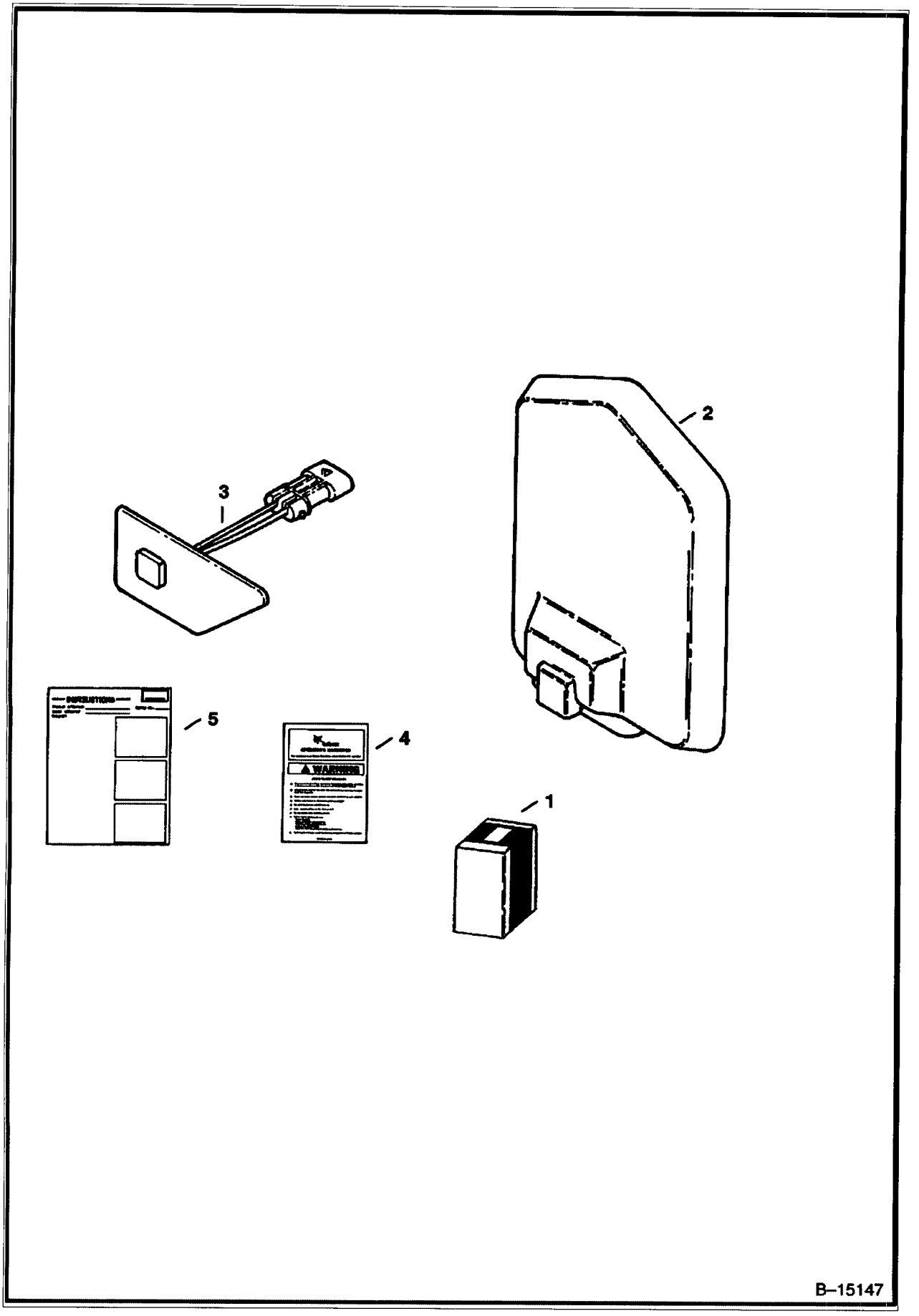

https://www.pdfmanual4trucks.com/

PUSH TO OPERATE KIT (Cont'd)
(Mechanical Hand Controls)

;f No	Part Number	Description	Remarks	Serial Number	Qty
1	6717702	KIT	Ref. 2-5		1
2	6680411	CONTROLLER	Was 6674222 [A]		1
3	6674220	SWITCH			1
4	6708159	HANDBOOK KIT	Operator		1
5	6900804	INSTRUCTIONS			1

https://www.pdfmanual4trucks.com/

PUSH TO OPERATE KIT
(Foot Pedals)

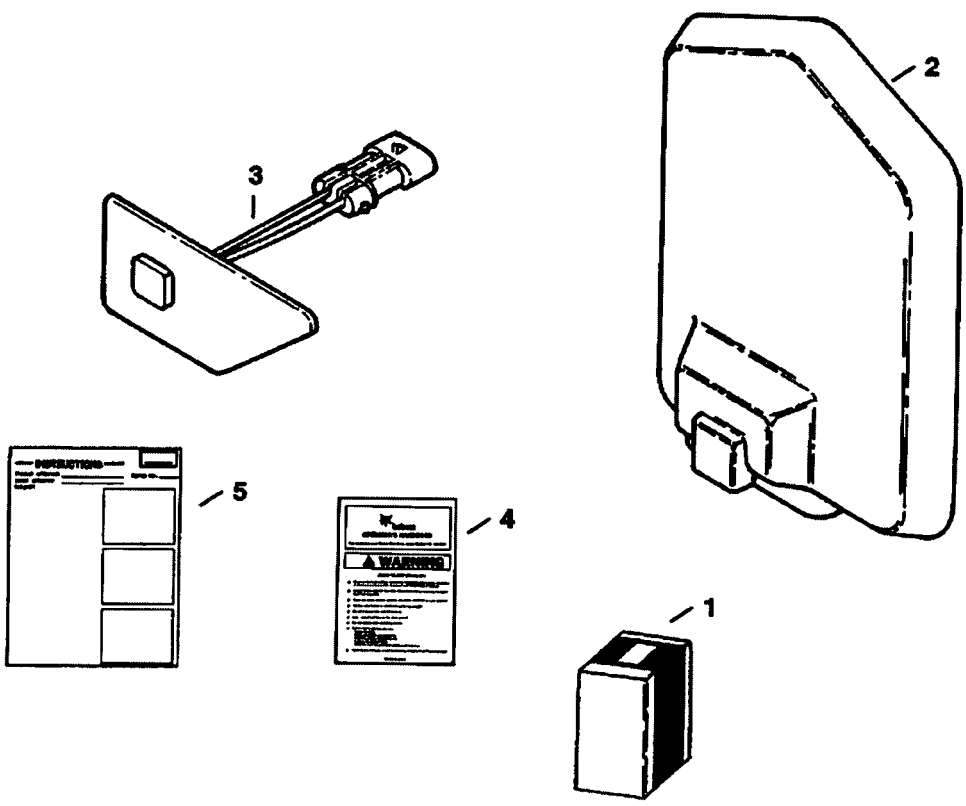

https://www.pdfmanual4trucks.com/

PUSH TO OPERATE KIT (Cont'd)
(Foot Pedals)

;f No	Part Number	Description	Remarks	Serial Number	Qty
1	6717700	KIT	Ref. 2-5		1
2		CONTROLLER	Was 6674222 [A]		1
3	6674220	SWITCH			1
4	6708154	KIT	Operator		1
5	6900804	INSTRUCTIONS			1

https://www.pdfmanual4trucks.com/

RADIATOR SCREEN KIT

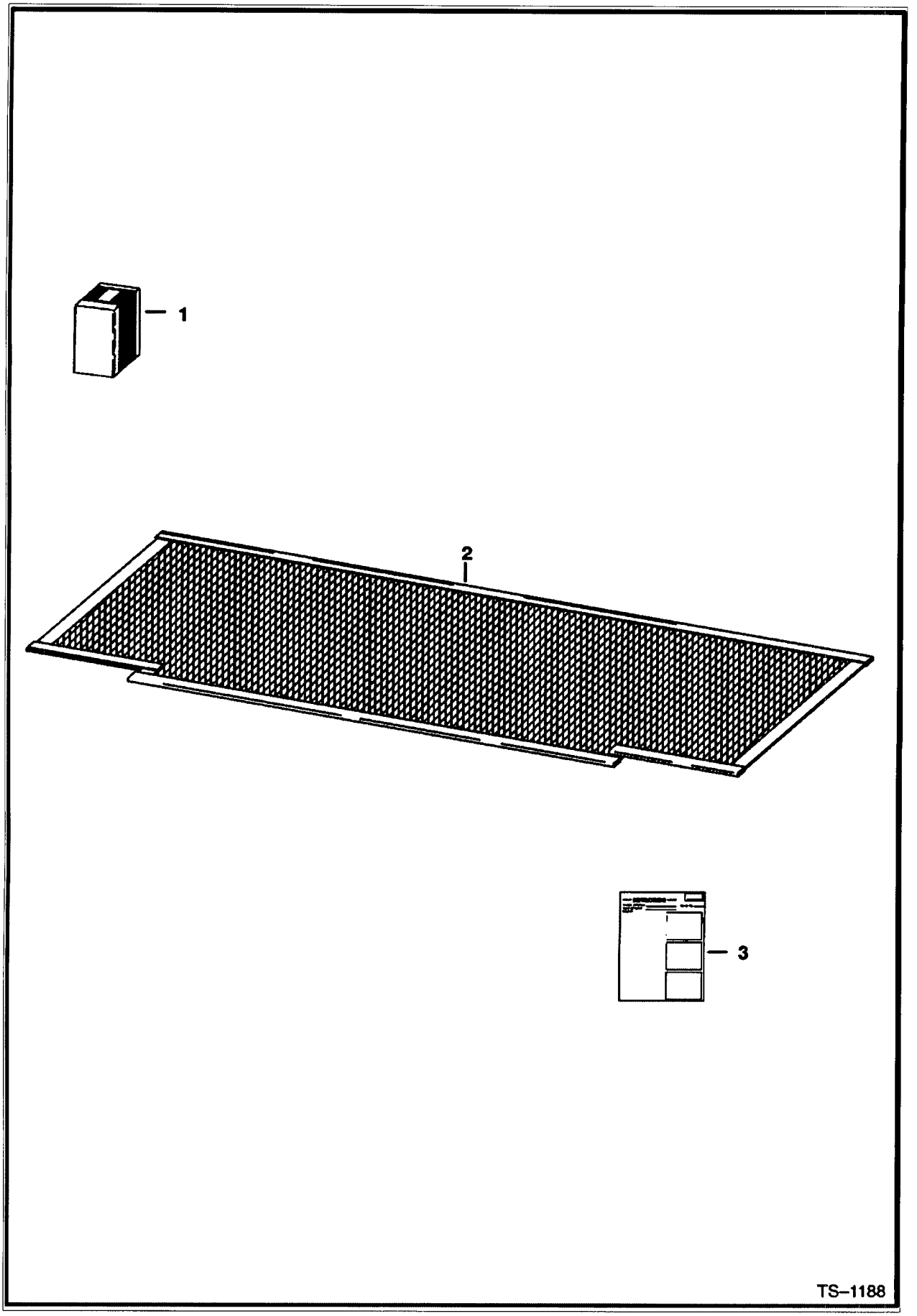

https://www.pdfmanual4trucks.com/

RADIATOR SCREEN KIT (Cont'd)

;f No	Part Number	Description	Remarks	Serial Number	Qty
1	6706939	KIT	Ref. 2 & 3		1
2	6706285	SCREEN			1
3	6722861	INSTRUCTIONS			1

https://www.pdfmanual4trucks.com/

REAR AUXILIARY
(W/Poppet Couplers)

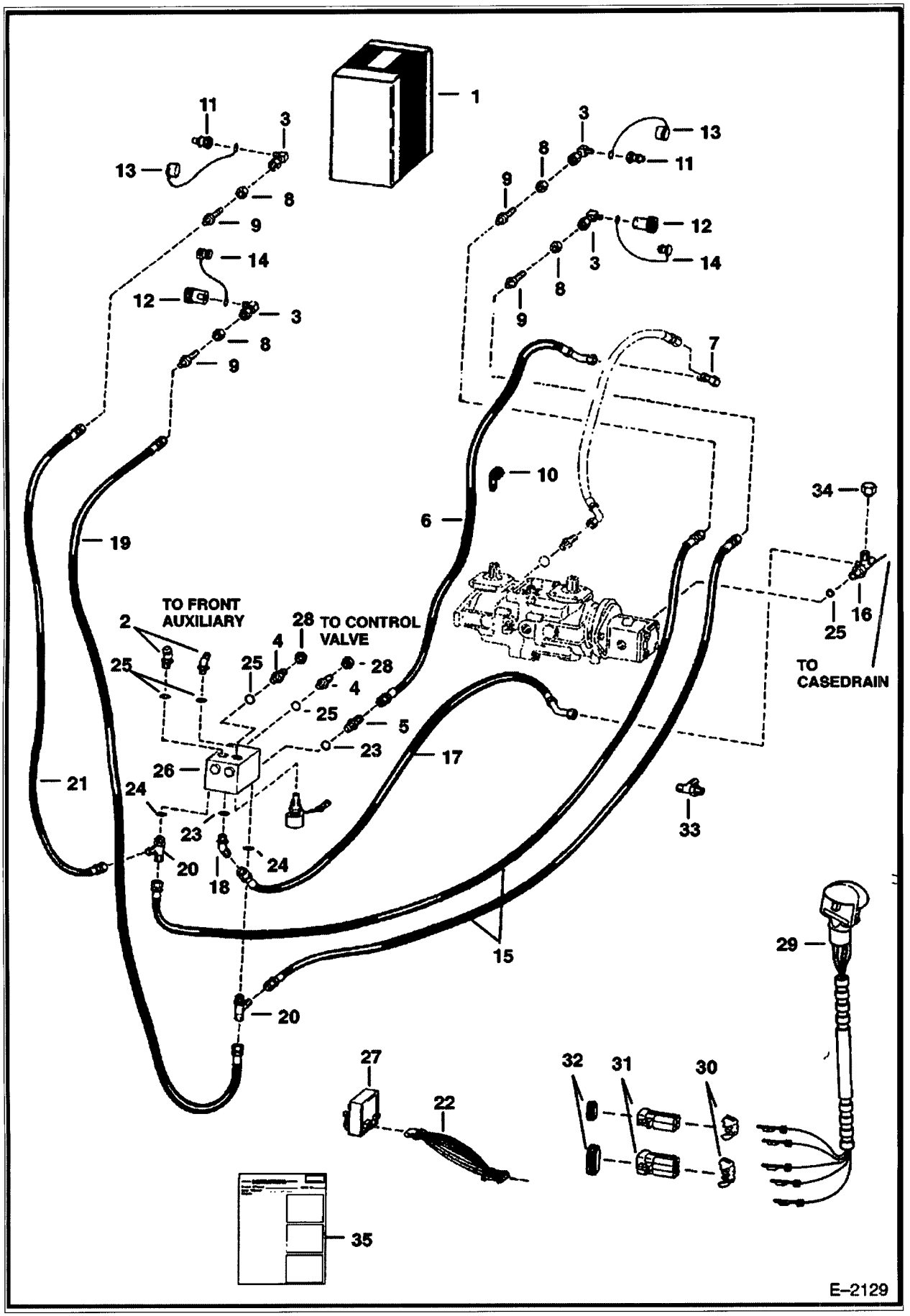

https://www.pdfmanual4trucks.com/

REAR AUXILIARY (Cont'd)
(W/Poppet Couplers)

Ref No	Part Number	Description	Remarks	Serial Number	Qty
1		KIT	See Illustration REAR AUXILIARY/ B17258 NAP - REF. 2-26 & 29 - WAS SALES [D]		1
2	18K000008B	ELBOW	W/Ref. 25		2
3	6703827	ELBOW	Use W/Connect Under Pressure Couplers		4
3	1631632B	ELBOW			4
4	45K000008B	ADAPTER	W/O O-rings		2
4	45KN00008B	ADAPTER	W/ O-rings		2
4	97K000012B	O-RING	flared end		4
5	15K000003B	CONNECTOR	W/Ref. 25		1
6	6704727	HOSE			1
7	13K5	TEE			1
8	86F000005B	NUT			4
9	45K000005B	ADAPTER			4
10	31H000034B	CLAMP	Was 30H000034B [B]		1
11		QUICK COUPLER	NAP - male - Connect Under Pressure - Was 6657037 [A]		2
11	2341398	COUPLER	male		2
2		QUICK COUPLER	NAP - female - Connect Under Pressure - Was 6657038 [A]		2
12	2342026B	COUPLER	female		2
13	1513549B	CAP			2
14	1519324	PLUG			2
15	6578174	HOSE			2
16	6704693	TEE	W/Ref. 25 - check out boss face to determine correct replacement O-ring - Was 6717103 [D]		1
17	6578185	HOSE			1
18	18K000003B	ELBOW	W/Ref. 23		1
19	6618194	HOSE			1
20	21K000005B	TEE	W/Ref. 24		2
21	6578173	HOSE			1
22	6704114	HARNESS			1
23	79K4	O RING 10			x
24	79K6	O RING 10			x
25	79K12	O RING 10	flat boss face		x
25	99K000012B	O-RING	tapered boss face		x
26		VALVE	See Illustration REAR AUXILIARY VALVE/ B12959 tapered boss face		1
7		MODULE	See Illustration CONTROLS ELECTRICAL/ D2296 NOT IN KIT		1
28	86F000008B	NUT	Not in Kit		2
29	6680414	HANDLE ASSY.	R.H. - Also Order Ref. 30-32 - Was 6705921 [A]		1
29	6640690	PIN			5
29	6641176	SEAL			5
30	6641180	LOCK	2 - pin		2
30	6640700	LOCK	3 - pin		2
31	6641179	CONNECTOR	2 - pin		2
31	6640699	CONNECTOR	3 - pin		2
32	6649683	SEAL	For use W/2 - pin connector		2
32	6659553	SEAL	For use W/3 - pin connector		2
33	21K000003B	TEE			1
34	36K000008B	CAP			1
35	6720951	INSTRUCTIONS			1

https://www.pdfmanual4trucks.com/

REAR AUXILIARY
(W/Pressure Relief Features & FF Couplers)

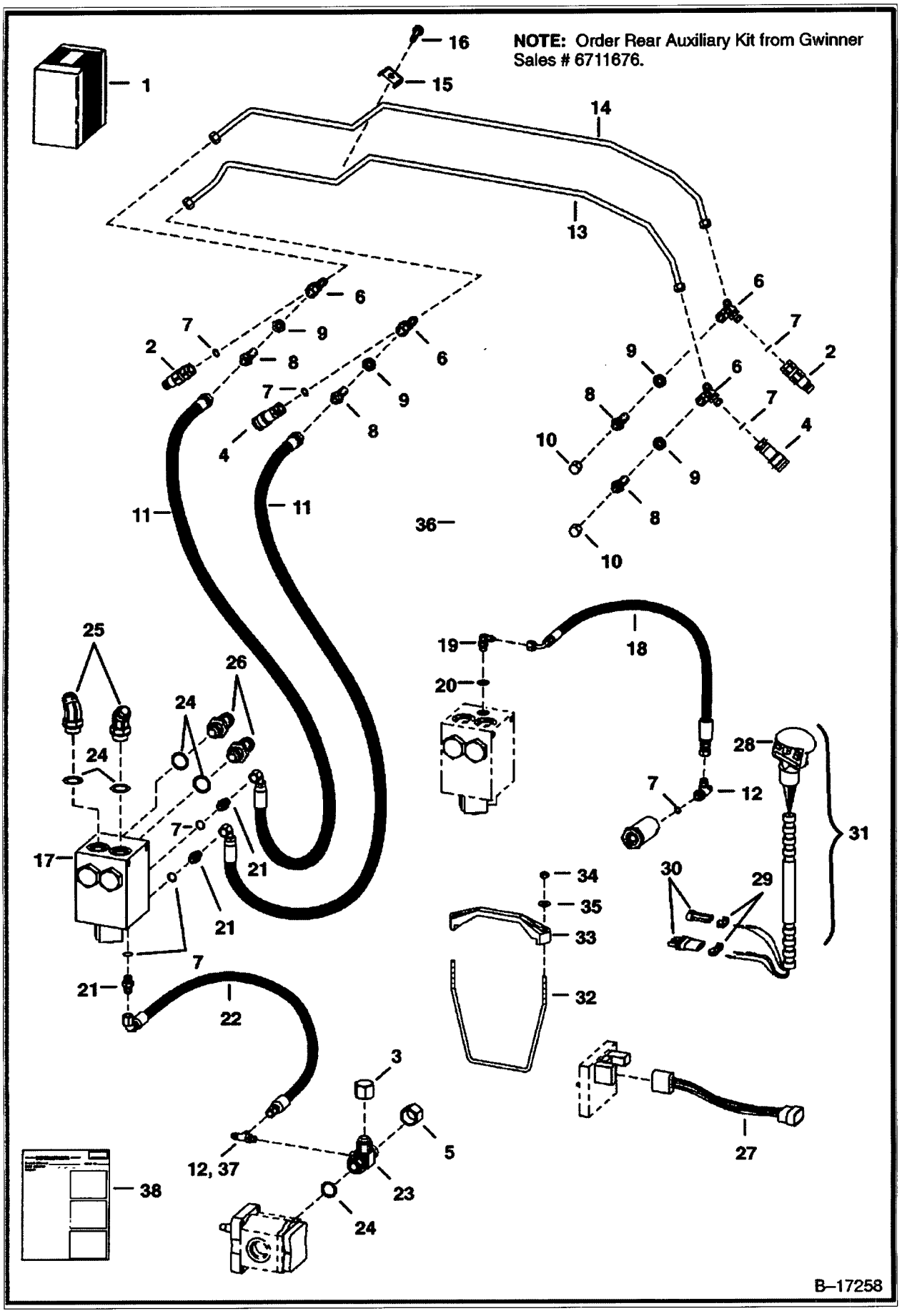

https://www.pdfmanual4trucks.com/

REAR AUXILIARY (Cont'd)
(W/Pressure Relief Features & FF Couplers)

ef No	Part Number	Description	Remarks	Serial Number	Qty
1	6711676	KIT	Ref. 2-38 - SEE NOTE - Was SALES [A]		1
2	6667804	COUPLER	male		2
2	6669657	SEAL KIT			1
3	36K000008B	CAP	Used W/ hyd. muffler		1
4	6667803	COUPLER	female		2
5	36K000008B	CAP	Used W/O hyd. muffler		1
6	6706220	TEE	W/Ref. 7 - check boss face to determine correct replacement O-ring		4
7	79K6	O RING 10	flat boss face		x
7	99K6	O'RING	tapered boss face		x
8	51E000404B	ADAPTER			4
9	61E000004B	NUT			4
10	63E000004B	PLUG			2
11	6706089	HOSE			2
12	21K000005B	TEE	W/Ref. 7 - flat boss face		1
12		TEE	NAP - W/Ref. 7 - tapered boss face - Was 21KV-5 [A]		1
12	21KB606	TEE	W/Ref. 7 - flat boss face		1
3	6705358	TUBE			1
14	6705357	TUBE			1
15	6500989	CLAMP			1
16	84G3716	SCREW 5			1
17		VALVE	See Illustration REAR AUXILIARY VALVE/ TS1362		1
18	6711681	HOSE			1
19	17K000003B	ELBOW	W/Ref. 20 - flat boss face		1
19		ELBOW	W/Ref. 20 - tapered boss face - Was 17KV-3 [A]		1
19	97K4	O'RING	flared end		1
19	17KB404	ELBOW	W/Ref. 20 - flat boss face		1
20	79K4	O RING 10	flat boss face		x
20	99K000004B	O-RING	tapered boss face		x
21	15K5	FITTING	W/Ref. 7 - flat boss face		3
21		ADAPTER	NAP - W/Ref. 7 - tapered boss face - Was 15KV00005B [A]		3
21	97K6	O'RING	flared end		3
21	15KB606	ADAPTER	W/Ref. 7 - flat boss face		3
22	6702962	HOSE			1
23	6707103	CONNECTOR	W/Ref. 24 - W/BICS combo valve		1
23	6704693	TEE	W/Ref. 24 - W/remote located BICS valve - check boss face to determine correct replacement O-ring		1
24	79K12	O RING 10	flat boss face		x
24	99K000012B	O-RING	tapered boss face		x
25	18K000008B	ELBOW	W/Ref. 24 - flat boss face		2
25		ELBOW	NAP - W/Ref. 24 - tapered boss face [A]		2
25	97K000012B	O-RING	flared end		2
25	18KB01212B	ELBOW	W/Ref. 24 - flat boss face		2
26	45K000008B	ADAPTER	W/O O-rings		2
26		ADAPTER	NAP - W/ O-rings - Was 45KN-8 [A]		2
26	97K000012B	O-RING	flared end		4
27	6704114	HARNESS			1
28	6680414	HANDLE ASSY.	two-switch - for L.H. steering lever - Was 6705921 [A]		1
29	6641180	LOCK	2-pin		1
29	6640700	LOCK	3-pin		1
30	6641179	CONNECTOR	2-pin		1
0	6640699	CONNECTOR	3-pin		1
31	6706566	KIT	two-switch - Ref. 28-30		1
32	6712640	BRACKET			2
3	6569203	CLAMP			1

https://www.pdfmanual4trucks.com/

REAR AUXILIARY (Cont'd)
(W/Pressure Relief Features & FF Couplers)

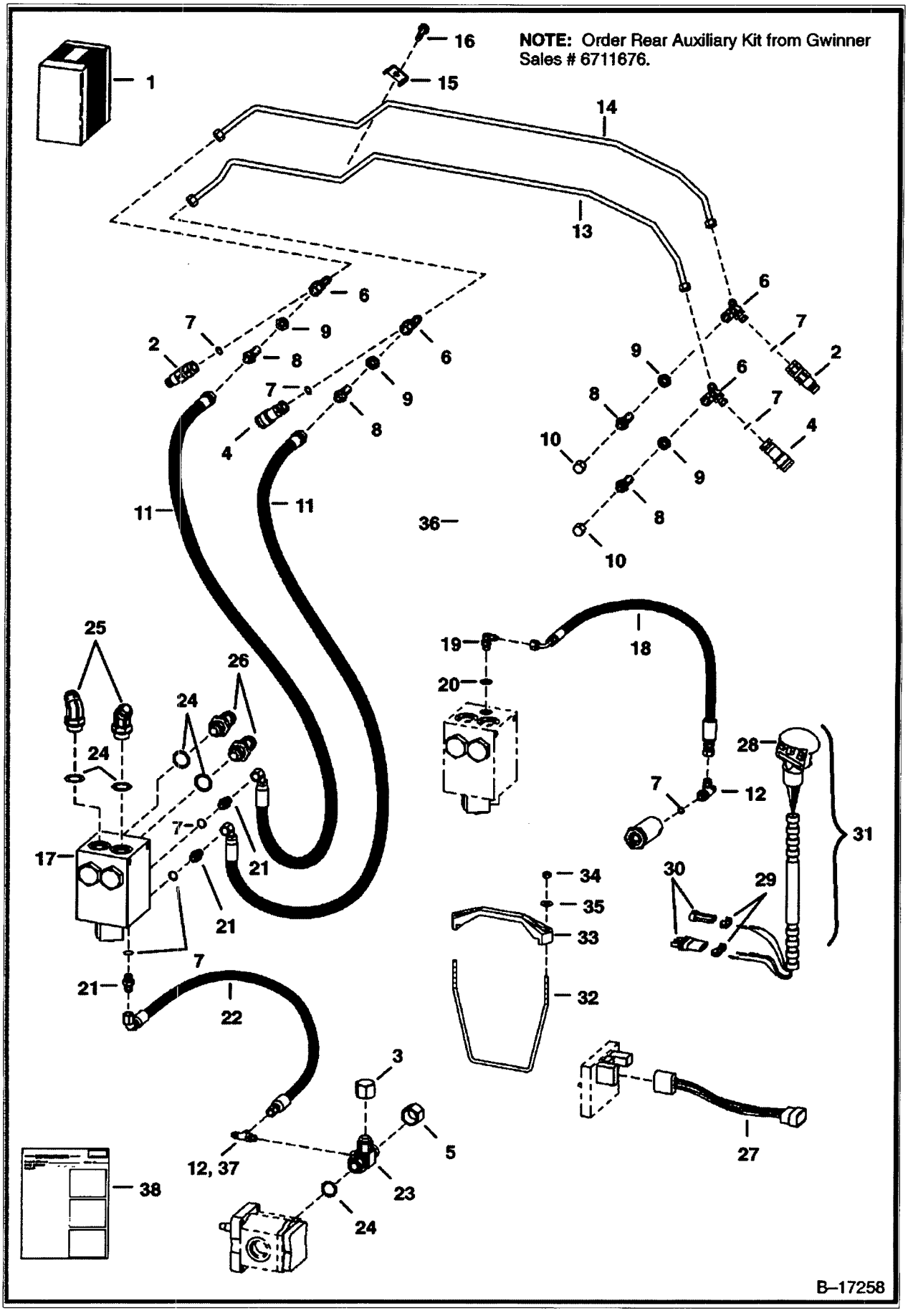

https://www.pdfmanual4trucks.com/

REAR AUXILIARY (Cont'd)
(W/Pressure Relief Features & FF Couplers)

Ref No	Part Number	Description	Remarks	Serial Number	Qty
34	59D5	NUT 5			2
35	25E15	WASHER			2
36	6710435	HARNESS			1
37	15K000003B	CONNECTOR	W/Ref. 20 - flat boss face - W/BICS combo valve		1
37		ADAPTER	NAP - W/Ref. 20 - tapered boss face - W/BICS combo valve - Was 15KN-3 [A]		1
37	97K4	O'RING	flared end		1
37	15KB404	CONNECTOR	W/Ref. 20 - flat boss face		1
38	6724487	INSTRUCTIONS			1

https://www.pdfmanual4trucks.com/

REAR AUXILIARY
(High Horsepower Hydraulics)

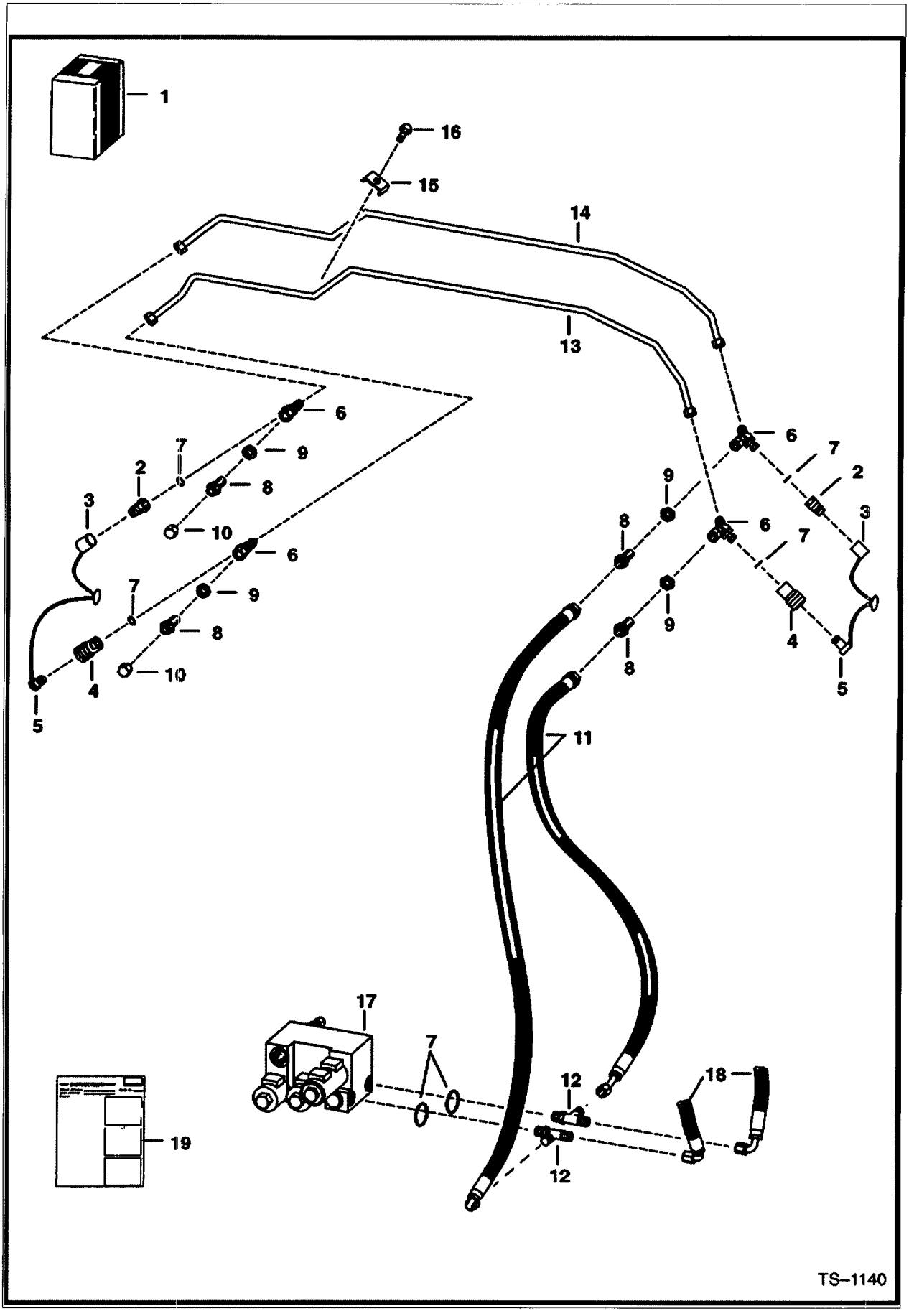

https://www.pdfmanual4trucks.com/

REAR AUXILIARY (Cont'd)
(High Horsepower Hydraulics)

;f No	Part Number	Description	Remarks	Serial Number	Qty
1	6705373	KIT	Ref. 2-37 - Was SALES [D]		1
2		QUICK COUPLER	NAP - male - Was 6657937 [A]		2
2	6648969	QUICK COUPLER	male		2
3	1513549B	CAP			2
4		QUICK COUPLER	NAP - female		2
4	6648967	QUICK COUPLER	female		2
4	6655795	SEAL KIT			2
5	1519324	PLUG			2
6	6706220	TEE	W/Ref. 7 - check boss face to determine correct replacement O-ring		4
7	79K6	O RING 10	flat boss face		x
7	99K6	O'RING	tapered boss face		x
8	51E000404B	ADAPTER			4
9	61E000004B	NUT			4
10	63E000004B	PLUG			2
11	6706089	HOSE			2
12	21K000005B	TEE	W/Ref. 7		2
3	6705358	TUBE			1
14	6705357	TUBE			1
15	6500989	CLAMP			1
16	84G3716	SCREW 5			1
17	6662695	VALVE	See Illustration HIGH FLOW HYDRAULICS/ TS1144 NOT IN KIT		1
18		HOSE	See Illustration HIGH FLOW HYDRAULICS/ TS1247 EXISTING HOSE - REF. 58		1
19	6722411	INSTRUCTIONS			1

https://www.pdfmanual4trucks.com/

REAR AUXILIARY VALVE
(For Use W/Poppet Couplers)

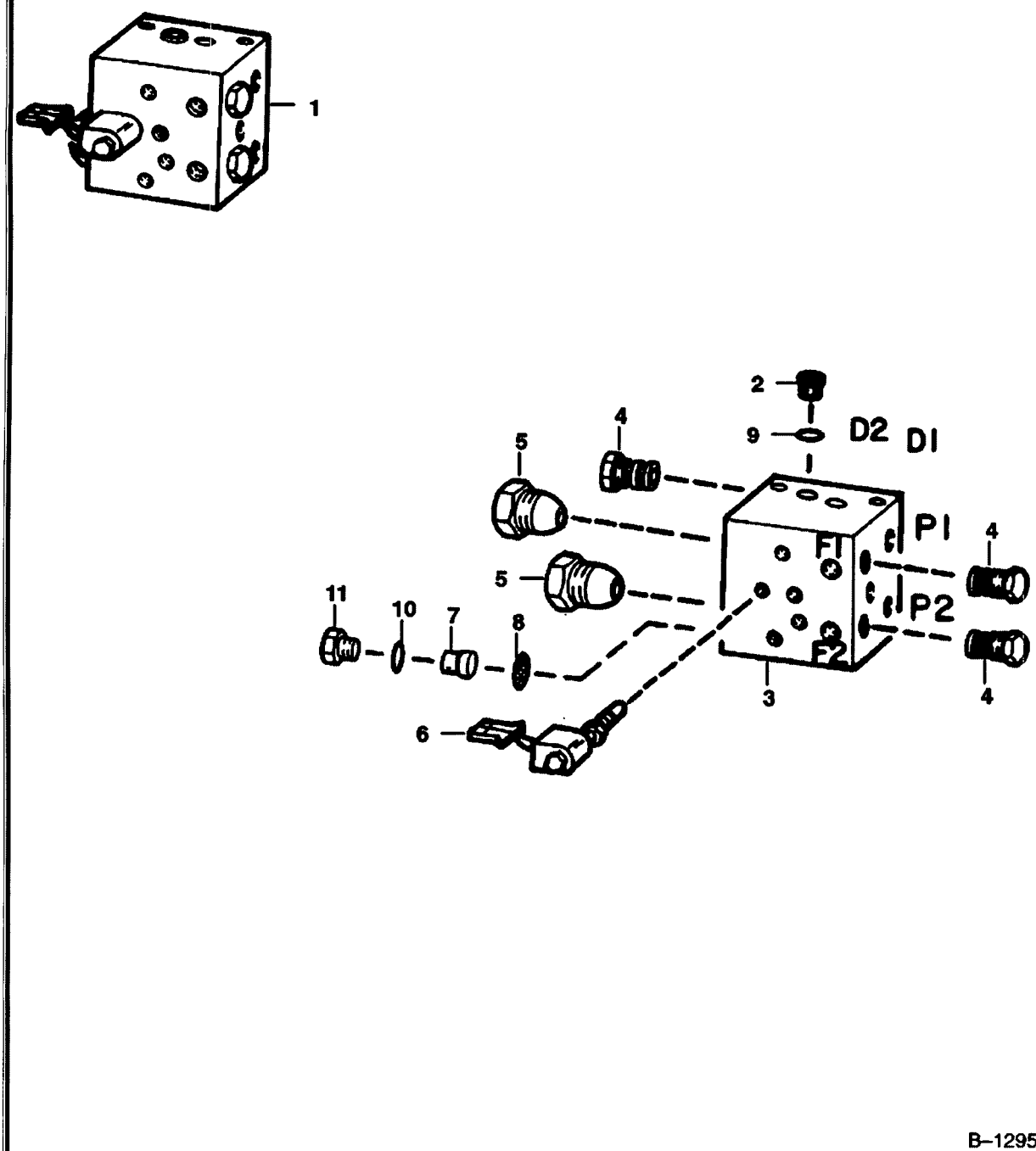

https://www.pdfmanual4trucks.com/

REAR AUXILIARY VALVE (Cont'd)
(For Use W/Poppet Couplers)

ef No	Part Number	Description	Remarks	Serial Number	Qty
1	6649686	VALVE	diverter		1
2	6676152	PLUG	W/Ref. 9 - Was 6653490 [A]		11
3		BODY	NSS		1
4	6664212	CHECK VALVE			3
4	6653487	SEAL KIT			2
5	6653484	VALVE			2
5	6653485	SEAL KIT			2
6	6653488	VALVE	solenoid - W/Connector		1
6	6653489	COIL			1
6	6657409	SEAL KIT			1
7	6657720	TUBE			1
8	6657721	DISC	filtered		1
9	79K000002B	O-RING			11
10	79K000005B	O-RING			1
11	24K000004B	PLUG			1

https://www.pdfmanual4trucks.com/

REAR AUXILIARY VALVE
(For Use W/FF Couplers)

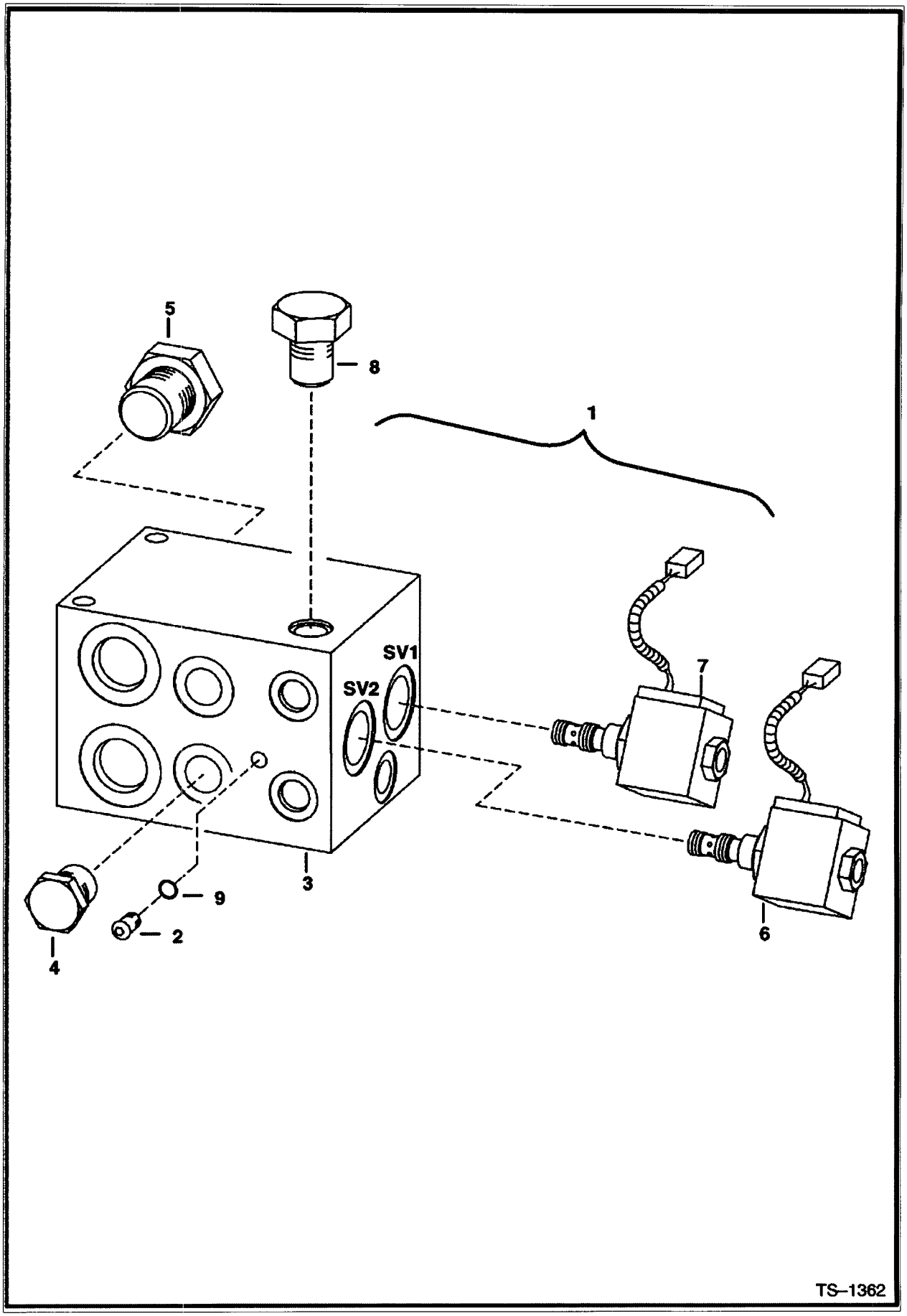

https://www.pdfmanual4trucks.com/

REAR AUXILIARY VALVE (Cont'd)
(For Use W/FF Couplers)

;f No	Part Number	Description	Remarks	Serial Number	Qty
1		VALVE	NAP - diverter - silver - rear pressure release - Was 6665572 [A]		1
1	6675073	VALVE	diverter - gold - front & rear pressure release		1
2	6676152	PLUG	W/Ref. 9 - For Ref. 1 (NAP/6665572 Valve) - Was 6653490 [A]		18
2	6676152	PLUG	W/Ref. 9 - For Ref. 1 (6675073 Valve)		27
3		BODY	NSS		1
4	6664212	CHECK VALVE			2
4	6653487	SEAL KIT			2
5	6653484	VALVE			2
5	6653485	SEAL KIT			2
6	6669219	VALVE	solenoid - W/Connector - SV1 Port		1
6	6669190	COIL			1
6	6669189	STEM			1
6	6669216	SEAL KIT			1
7	6669218	VALVE	solenoid - W/Connector - SV2 Port		1
7	6669190	COIL	For Ref. 1 - (NAP/6665572 Valve)		1
7	6676151	COIL	For Ref. 1 - (6675073 Valve)		1
7	6669188	STEM			1
7	6669217	SEAL KIT			1
8	6669187	VALVE			1
8	6653487	SEAL KIT			1
9	79K000002B	O-RING			x

https://www.pdfmanual4trucks.com/

REAR DOOR LOCK
(Two Piece Rear Door)

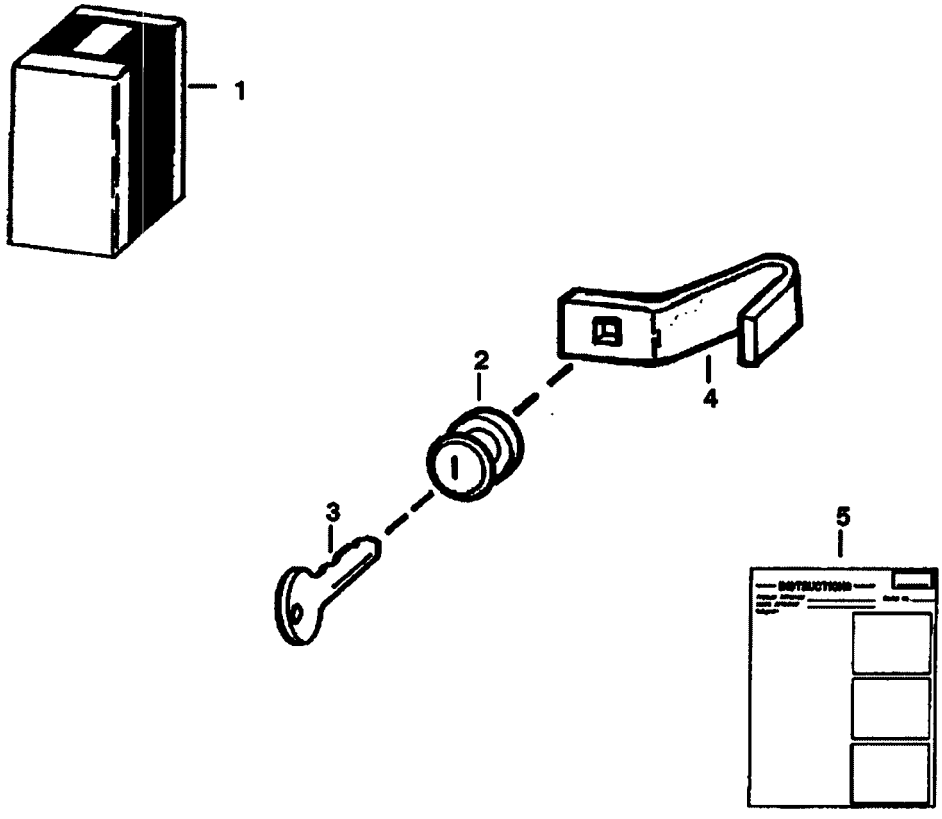

B–12953

https://www.pdfmanual4trucks.com/

REAR DOOR LOCK (Cont'd)
(Two Piece Rear Door)

;f No	Part Number	Description	Remarks	Serial Number	Qty
1	6578802	KIT	lock - Ref. 2-5		1
2	6670726	LOCK	Was 6649555 [A]		1
3	6659327	KEY			1
4	6700108	LATCH			1
5	6901656	INSTRUCTIONS	INSTRUCTIONS - Was 6570762 [A]		1

https://www.pdfmanual4trucks.com/

REAR DOOR LOCK
(One Piece Rear Door)

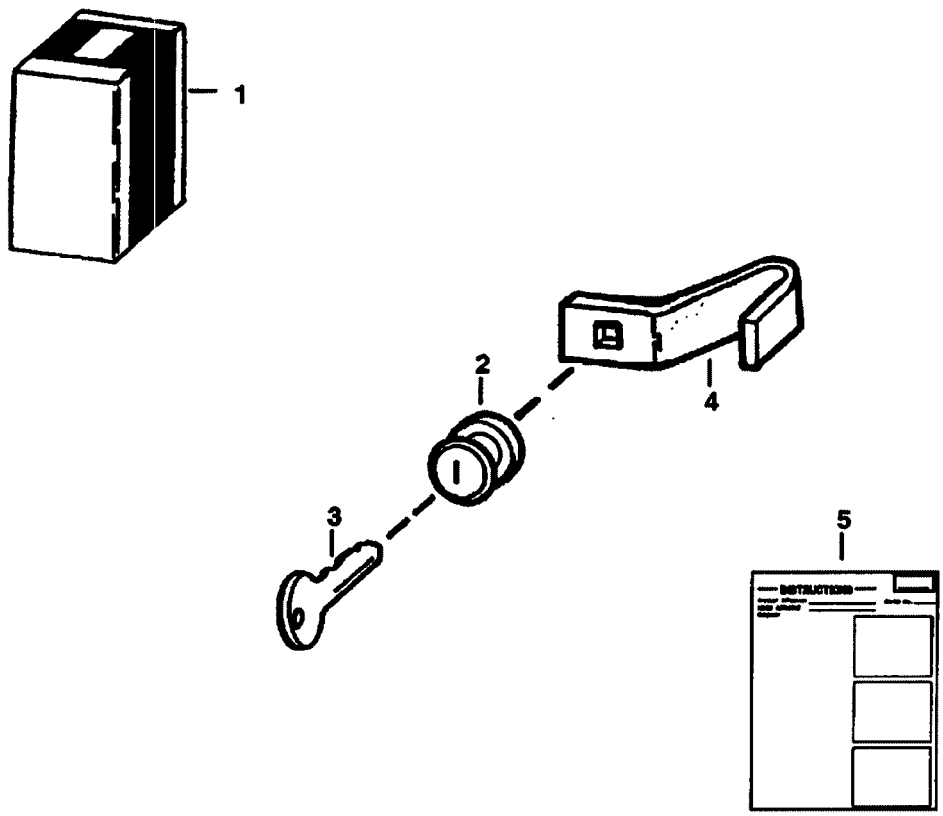

B–12953A

https://www.pdfmanual4trucks.com/

REAR DOOR LOCK (Cont'd)
(One Piece Rear Door)

ɔf No	Part Number	Description	Remarks	Serial Number	Qty
1	6732001	KIT	lock - Ref. 2-5 - Was 6714973 [A]		1
2	6670726	LOCK			1
3	6672345	KEY	Not in Kit - Used on early locks		1
3	6709527	KEY	ignition		1
4	6714037	LATCH	Use W/6711524 rear door		1
4	6729688	LATCH	Use W/6729991 rear door		1
5	6901656	INSTRUCTIONS	INSTRUCTIONS - Was 6570762 [B]		1

https://www.pdfmanual4trucks.com/

REAR WIPER KIT
(S/N 5127 16001 & Abv, 5086 93001-95347, 5139 11001 & Abv, 5147 76001 & Abv

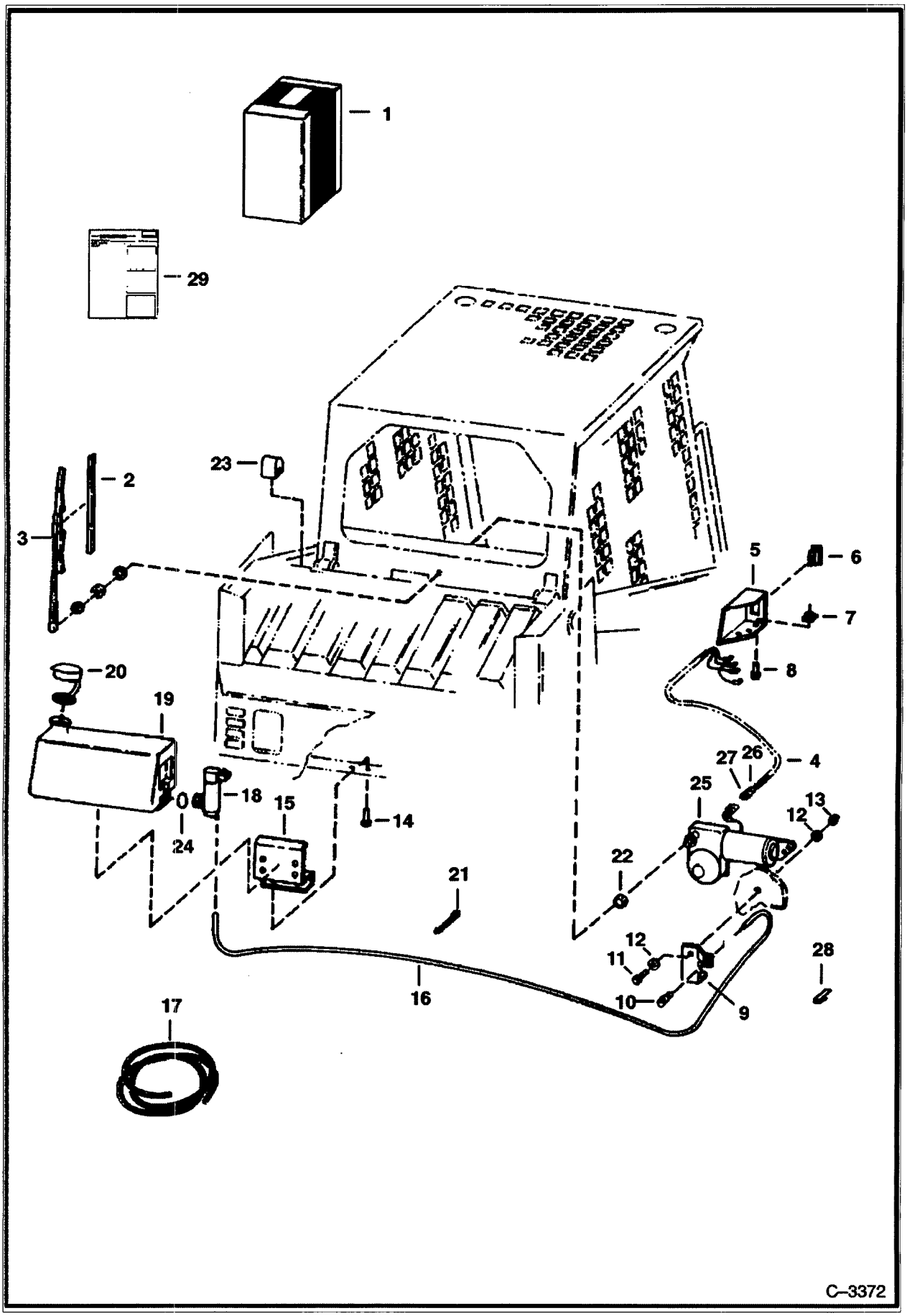

https://www.pdfmanual4trucks.com/

REAR WIPER KIT (Cont'd)
(S/N 5127 16001 & Abv, 5086 93001-95347, 5139 11001 & Abv, 5147 76001 & Abv

of No	Part Number	Description	Remarks	Serial Number	Qty
1	6712688	KIT	rear wiper - Ref. 2-23 & 25-29		1
2	6665688	BLADE			1
3	6665687	ARM	Was 1744552B [A]		1
4		HARNESS	NAP - W/2 pin connector - Order 6712260 Harness, Ref. 26 & 27 - Was 6708285 [A]		1
4	6712260	HARNESS	W/10 pin connector - W/(2) diodes		1
5	6708280	MOUNT	switch		1
6	6668817	SWITCH	rocker - Was 6665706 [A]		1
7	6660988	RETAINER	retaining		2
8	35C412	BOLT			2
9	6708286	MOUNT	nozzle		1
10	6666767	NOZZLE	Was 6664555 [A]		1
11	17C000514B	BOLT	Was 35C000514B [A]		1
12	25E15	WASHER			2
13	83D5	NUT 5			1
14	84G3710	SCREW			2
15	6708044	MOUNT	tank		1
16		HOSE	NAP - 84" (2133,6mm) long - Order Ref. 17		1
17	6708310	HOSE	bulk - sold per foot - clear - 0.15" (3,81mm) I.D.		x
18	6664554	PUMP			1
19	6708035	TANK			1
20	6665605	CAP			1
21	6610510	TIE			5
22	6708069	BUSHING			1
23	6708272	STOP	cab		2
24	6666766	GROMMET	Not in Kit		1
25	6665602	MOTOR			1
26	6641179	CONNECTOR	2-pin		1
27	6641180	LOCK	2-pin		1
28	6669308	RETAINER			2
29	6724788	INSTRUCTIONS			1

https://www.pdfmanual4trucks.com/

RENTAL KIT

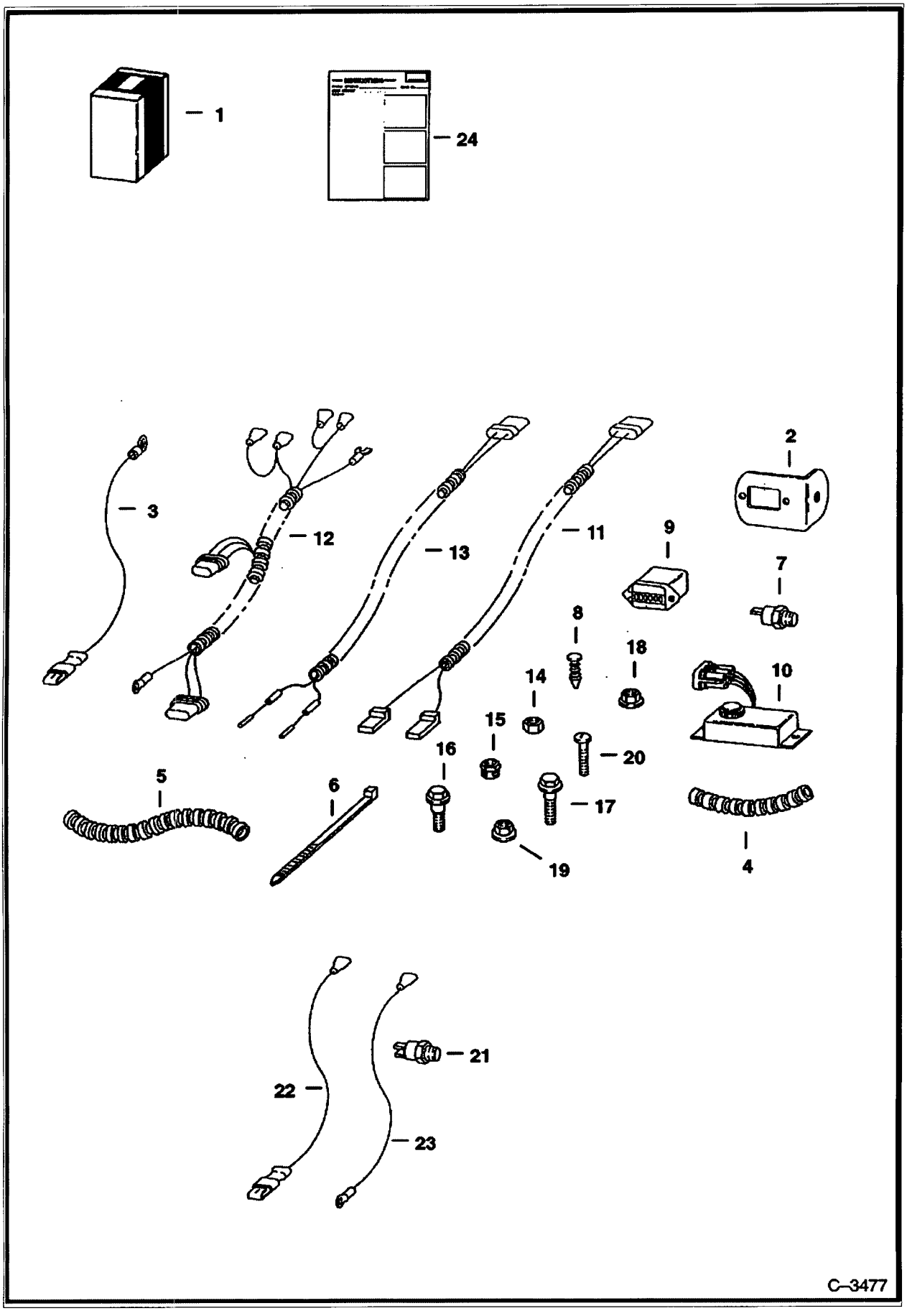

https://www.pdfmanual4trucks.com/

RENTAL KIT (Cont'd)

ef No	Part Number	Description	Remarks	Serial Number	Qty
1	6712750	KIT	W/Ref. 2-24		1
2	6552906	BRACKET			1
3	6567968	WIRE	assy.		1
3	614142B	SLEEVE			1
3	733611B	TERMINAL	female		1
3	6517924	CONNECTOR			1
3	30R000107B	TERMINAL			1
4		CONDUIT	NAP - 76.50" (1943,1 mm) - bulk - Sold Per Foot - Order Ref. 5		x
5	6584978	CONDUIT			1
6	6610510	TIE			12
7	6630821	SWITCH	temp.		1
8	6664221	RETAINER			1
9	6664886	HOURMETER			1
10	6669420	CONTROLLER			1
11	6700228	HARNESS	Hourmeter		1
11	733611B	TERMINAL	female		1
1	6517924	CONNECTOR			1
11	6640690	PIN	male		x
11	6641176	SEAL	cable		x
11	6641179	CONNECTOR			x
11	6641180	LOCK			x
12	6714038	HARNESS			1
12	733616	TERMINAL	male		x
12	6640691	PIN	female		x
12	6641176	SEAL	cable		x
12	6641178	CONNECTOR			x
12	6641180	LOCK			x
12	6641181	LOCK			x
13	6714039	HARNESS			1
13	6640690	PIN	male		x
13	6641176	SEAL	cable		x
13	6641179	CONNECTOR			x
13	6641180	LOCK			x
14	12D000006B	NUT			2
15	19F000005B	REDUCER			1
16	35C000408B	BOLT			2
7	35C000716B	BOLT			1
18	55D4	NUT			2
19	55D7	NUT			1
20	85G000608B	SCREW			2
21	6671964	SENDER	800 Models only		1
22	6714990	WIRE	800 Models only		1
23	6714991	WIRE	800 Models only		1
24	6900133	INSTRUCTIONS			1

https://www.pdfmanual4trucks.com/

SEAT
(Suspension - Grammer)

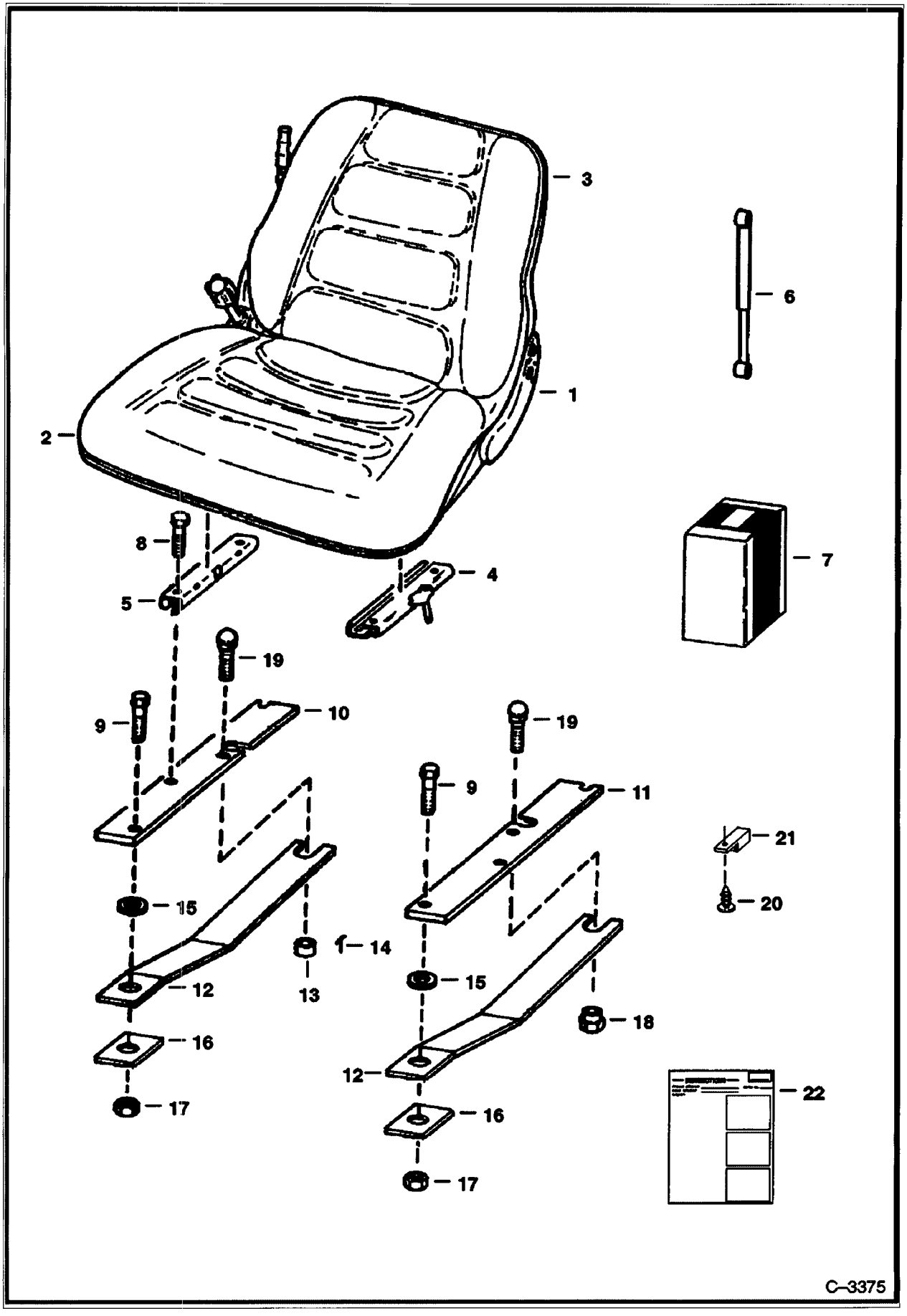

https://www.pdfmanual4trucks.com/

SEAT (Cont'd)
(Suspension - Grammer)

;f No	Part Number	Description	Remarks	Serial Number	Qty
1	6632388	SEAT	Also Order Ref. 7 Seat Mount Kit for first time seat conversion.		1
2	3737010B	CUSHION	seat		1
3	3737081B	CUSHION	backrest		1
4	3737000B	TRACK	W/Adjusting Handle		1
5	3737001B	TRACK	W/O Adjusting Handle		1
6	6660348	GAS SPRING			1
7	6708523	KIT	seat mount - Ref. 9-11, 16 & 19-22 - used to relocate seat sensor forward a distance of 4.6" (116,8 mm) & widens mount holes to 12.91" (328 mm)		1
8	17C000512B	BOLT			4
9	17C000508B	BOLT			4
10	6712183	MOUNT	R.H. - Was 6708503 [A]		1
11	6712186	MOUNT	L.H. - Was 6708504 [A]		1
12	6706966	SPRING	plate		2
13	6710751	BUSHING	spacer - Was 6706686 [A]		1
14	6680523	KEY,MAGNETIC	magnet bushing - Was 6664881 [A]		1
5	6706890	WASHER			2
.6	6710622	WASHER	square - Was 6712146 [A]		2
17	61D5	NUT			2
18	6707319	NUT	spacer		1
19	37C000516B	BOLT	carriage		2
20	6664221	RETAINER			1
21	6665000	CLIP			1
22	6724161	INSTRUCTIONS			1

https://www.pdfmanual4trucks.com/

SEAT
(Suspension - Michigan)

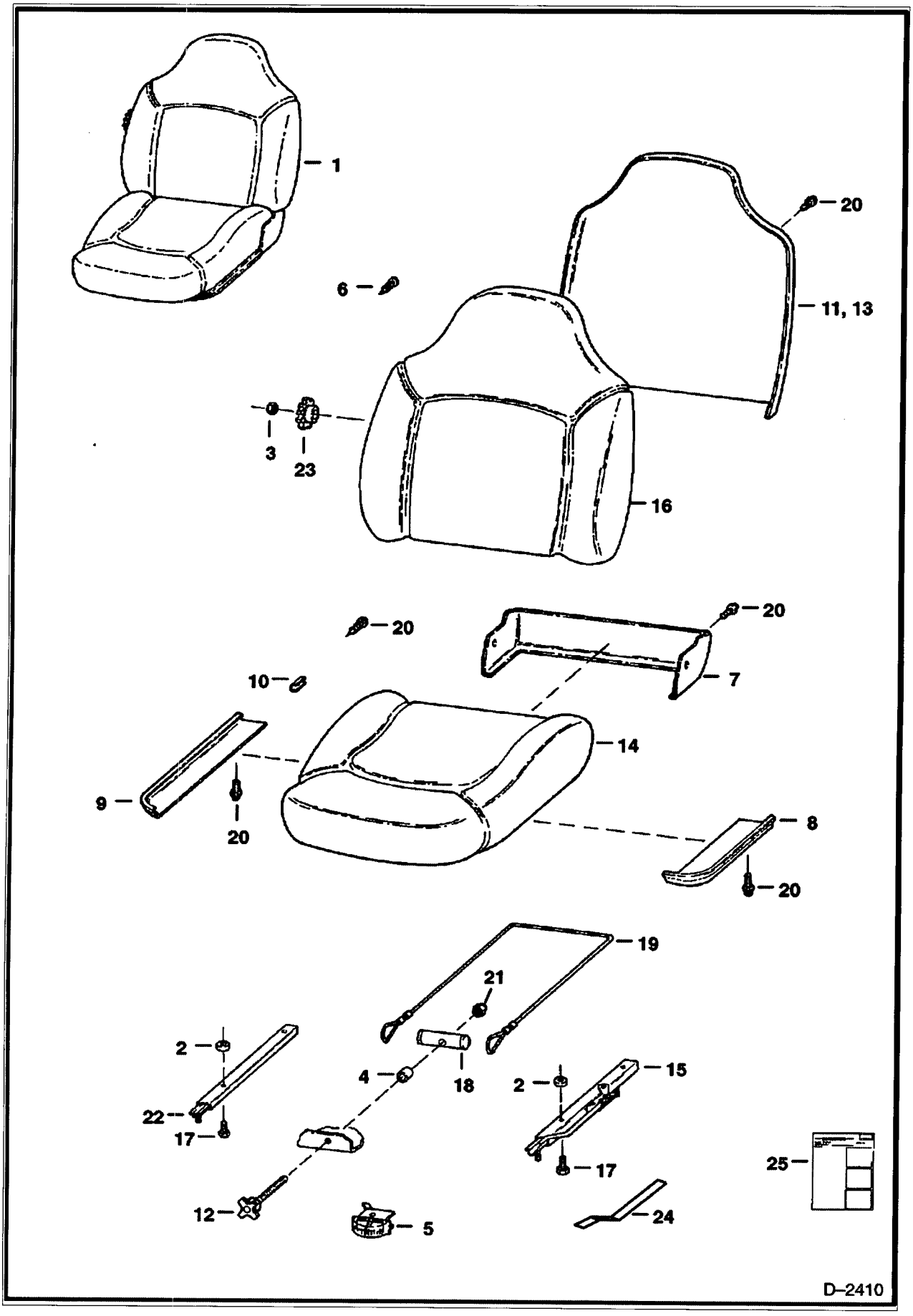

https://www.pdfmanual4trucks.com/

SEAT (Cont'd)
(Suspension - Michigan)

ɜf No	Part Number	Description	Remarks	Serial Number	Qty
1	6674019	SEAT	Ref. 2-23 - Also Order Ref. 24 & 25 if loader is equipped W/seat sensor - Was 6670113 [A]		1
2	6672715	SPACER			4
3	6672738	NUT			1
4	6672717	SPACER			1
5	6672718	INDICATOR			1
6	6672719	CLIP			7
7	6672720	COVER			1
8	6672721	FENDER	L.H.		1
9	6672722	FENDER	R.H.		1
10	6672723	CLIP			2
11	6672724	PANEL			1
12	6672725	KNOB			1
13	6672726	FRAME			1
14	6672727	CUSHION	seat		1
15		TRACK	NAP - L.H. - W/10" (254 mm) latch - Was 6674013 [A]		1
15	6674013	TRACK	L.H. - W/8" (203,2 mm) latch		1
6	6672729	CUSHION	back		1
,7	6672730	BOLT			4
18	6672731	BAR			1
19	6672732	CABLE			2
20	6672733	BOLT			14
21		NUT	NAP - Was 6672734 [A]		1
22	6669089	TRACK	Was 6672735 [A]		1
23	6674263	KNOB	Was 6672737 [A]		1
23	6672736	DECAL			1
?4	6706966	SPRING	plate		1
,5	6724017	INSTRUCTIONS			1

https://www.pdfmanual4trucks.com/

SEAT
(Suspension - Milsco)

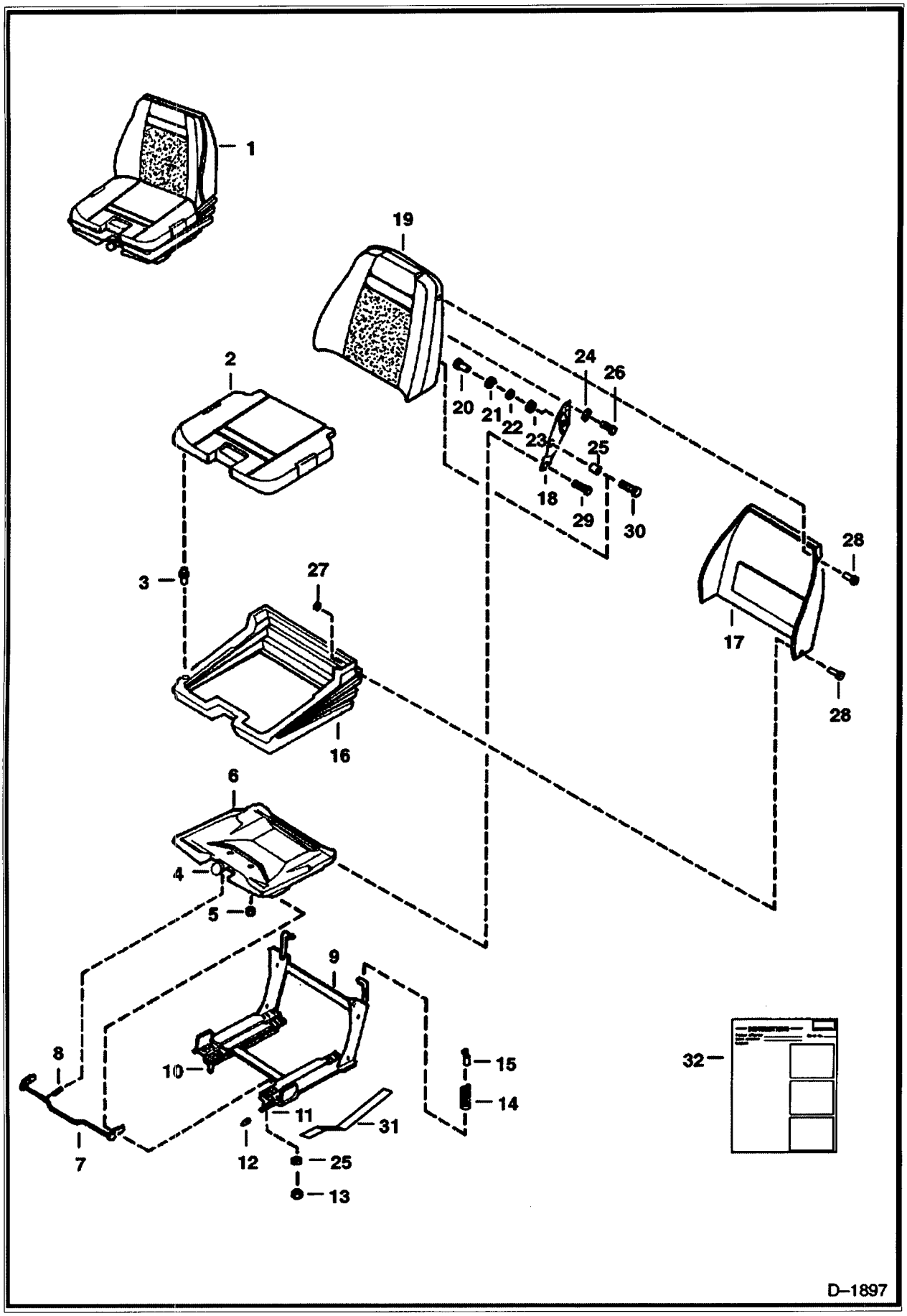

https://www.pdfmanual4trucks.com/

SEAT (Cont'd)
(Suspension - Milsco)

Ref No	Part Number	Description	Remarks	Serial Number	Qty
1		SEAT	See Illustration SEAT/ D2410 NAP - REF. 2-30 ORDER 6674019 SEAT - WAS 6647432 [A]		1
2	6650226	SEAT CUSHION	W/Ref. 3		1
3	6650231	CLIP			x
4	6650219	KNOB KIT	W/Nut, Bushing		1
5	6650241	PUSH NUT			2
6	6650230	SEAT PAN	W/Mounting Hardware		1
7	6650221	LATCH TILT	W/Ref. 8 - W/Mounting Hardware		1
8	6650229	SPRING			1
9		FRAME	NSS		1
10	6650228	TRACK			1
11	6599779	ADJUSTER	Was 6650227 [A]		1
12	6650242	TIP			1
13	61D5	NUT			4
14	6650222	SPRING			1
15	6650223	CABLE			1
16	6650243	BOOT			1
17	6650220	SHROUD	W/Mounting Hardware		1
18		SUPPORT	NAP - R.H. & L.H. Backrest - Was 6650224 [A]		1
19	6650225	BACK CUSHION	W/Mounting Hardware		1
20		NUT	NAP - Was 6650244 [A]		2
21	6650245	WASHER			2
22	6650246	WASHER			2
23	6650247	WASHER			2
24	6650248	SPACER			2
25	6650249	SPACER			2
26	17C000510B	BOLT			4
27	6650250	WASHER			5
28	6650251	CLIP			7
29	6668717	SCREW	shoulder		4
30		BOLT	NAP - hex head bolt - 5/16" x 5/8" - grade 5 - Was 31C000510B [A]		2
31	6706966	SPRING	PLATE		1
32	6724017	INSTRUCTIONS			1

https://www.pdfmanual4trucks.com/

SEAT BAR KIT
(Compression Spring)

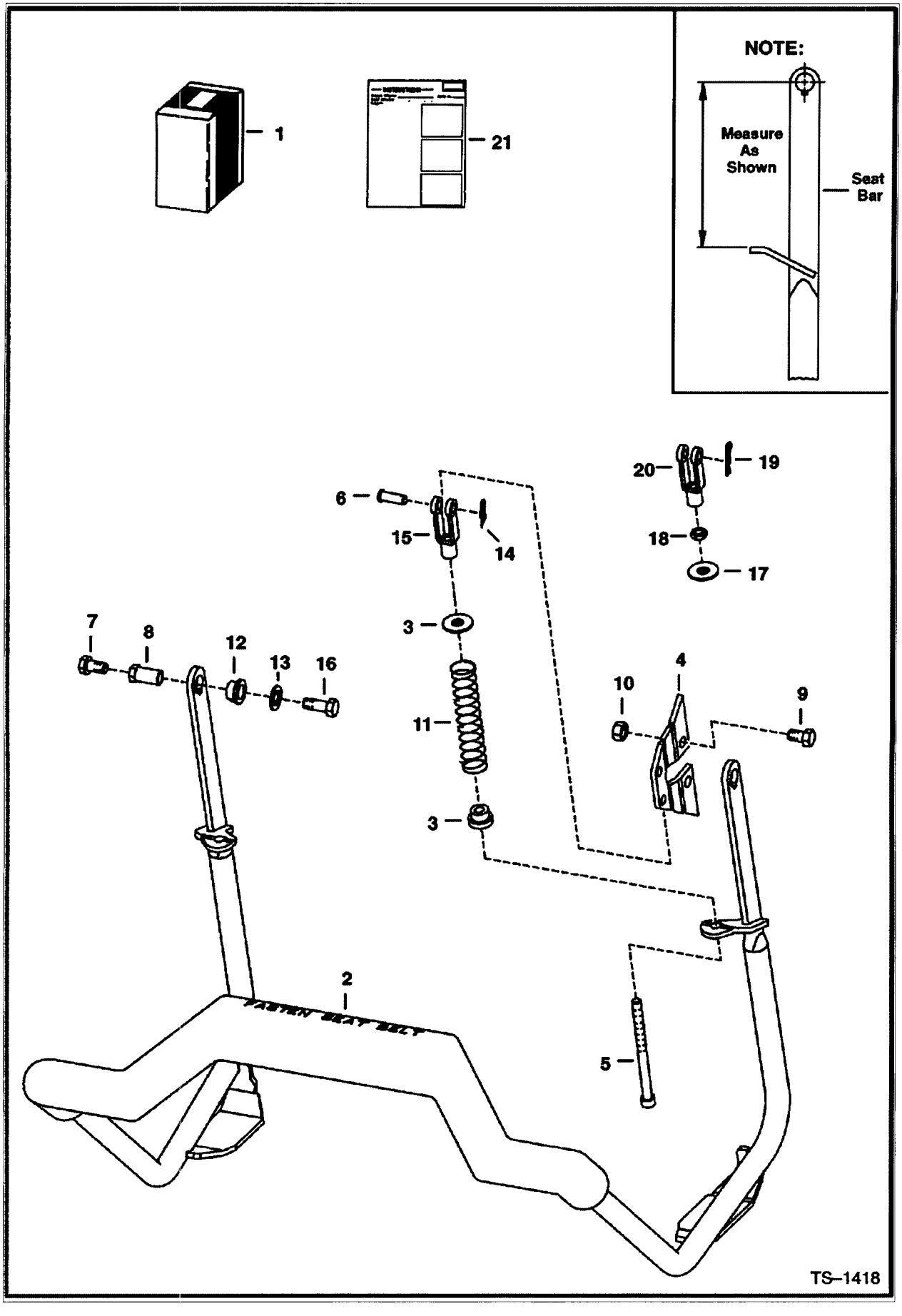

https://www.pdfmanual4trucks.com/

SEAT BAR KIT (Cont'd)
(Compression Spring)

Ref No	Part Number	Description	Remarks	Serial Number	Qty
1	6713853	KIT	Ref. 2-18 & 21		1
2		SEAT BAR	NAP - 6.88" (174,8 mm) center of top hole to weld on tab - SEE NOTE - Order 6716777 Seat Bar & (2) ea. of Ref. 3, 5, 14 & 15 - Was 6710661 [A]		1
2	6716777	SEAT BAR	6.13" (155,7 mm) center of top hole to weld on tab - SEE NOTE - Was 6713609 [A]		1
3	6710659	BUSHING	Used W/Ref. 2 (NAP/6710661 seat bar)		2
3	6710659	BUSHING	Used W/Ref. 2 (6716777 seat bar)		4
4	6710660	MOUNT			2
5	6713887	BOLT	Was 6711897 [A]		2
6	4F6106	PIN	clevis		2
7	35C000608B	BOLT			2
8	6706962	BUSHING			1
9	17C000712B	BOLT			2
10	95D000007B	NUT	Was 91D000007B [A]		2
11	6701535	SPRING			2
12	6680441	BUSHING	Was 6664882 [A]		2
13	25E000017B	WASHER			2
14	6631418	PIN	Used W/Ref. 2 (6716777 seat bar)		2
15	6713589	CLEVIS	2.09" (53,1 mm) long - Used W/Ref. 2 (6716777 seat bar)		2
16	17C612	BOLT 5			2
17	6571991	GUIDE	Used W/Ref. 2 (NAP/6710661 seat bar)		2
18	8D000006B	NUT	jam - Used W/Ref. 2 (NAP/6710661 seat bar)		2
19	1306637B	PIN	cotter - Used W/Ref. 2 (NAP/6710661 seat bar) - Not in Kit		2
20	2J006208B	CLEVIS	2.85" (72,4 mm) long - Used W/Ref. 2 (NAP/6710661 seat bar) - Not in Kit		2
21	6900096	INSTRUCTIONS			1

https://www.pdfmanual4trucks.com/

SEAT BAR KIT
(Forward Position Compression Spring)

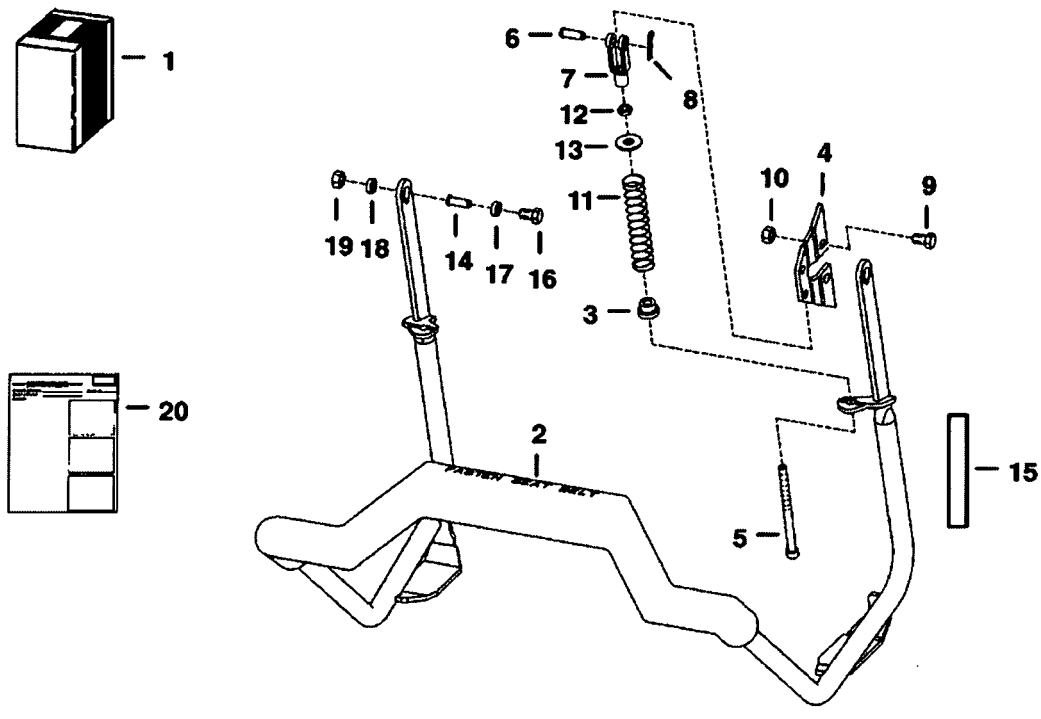

B–17259

https://www.pdfmanual4trucks.com/

SEAT BAR KIT (Cont'd)
(Forward Position Compression Spring)

If No	Part Number	Description	Remarks	Serial Number	Qty
1	6714285	KIT			1
2	6716779	SEAT BAR	Was 6714282 [A]		1
3	6710659	BUSHING			2
4	6710660	MOUNT			2
5	6713887	BOLT			2
6	4F6106	PIN	clevis		2
7	6713589	CLEVIS			2
8	6631418	PIN			2
9	17C000712B	BOLT			2
10	91D000007B	NUT			2
11	6701535	SPRING			2
12	8D000006B	NUT	jam		2
13	6571991	GUIDE			2
14	6680441	BUSHING	Was 6664882 [A]		2
15	6714629	DECAL			1
16	17C612	BOLT 5			2
17	25E000017B	WASHER			2
18	6706962	BUSHING			1
19	35C000608B	BOLT			2
20	6900096	INSTRUCTIONS	Was 6900328 [B]		1

https://www.pdfmanual4trucks.com/

SEAT BELT
(3" Wide)

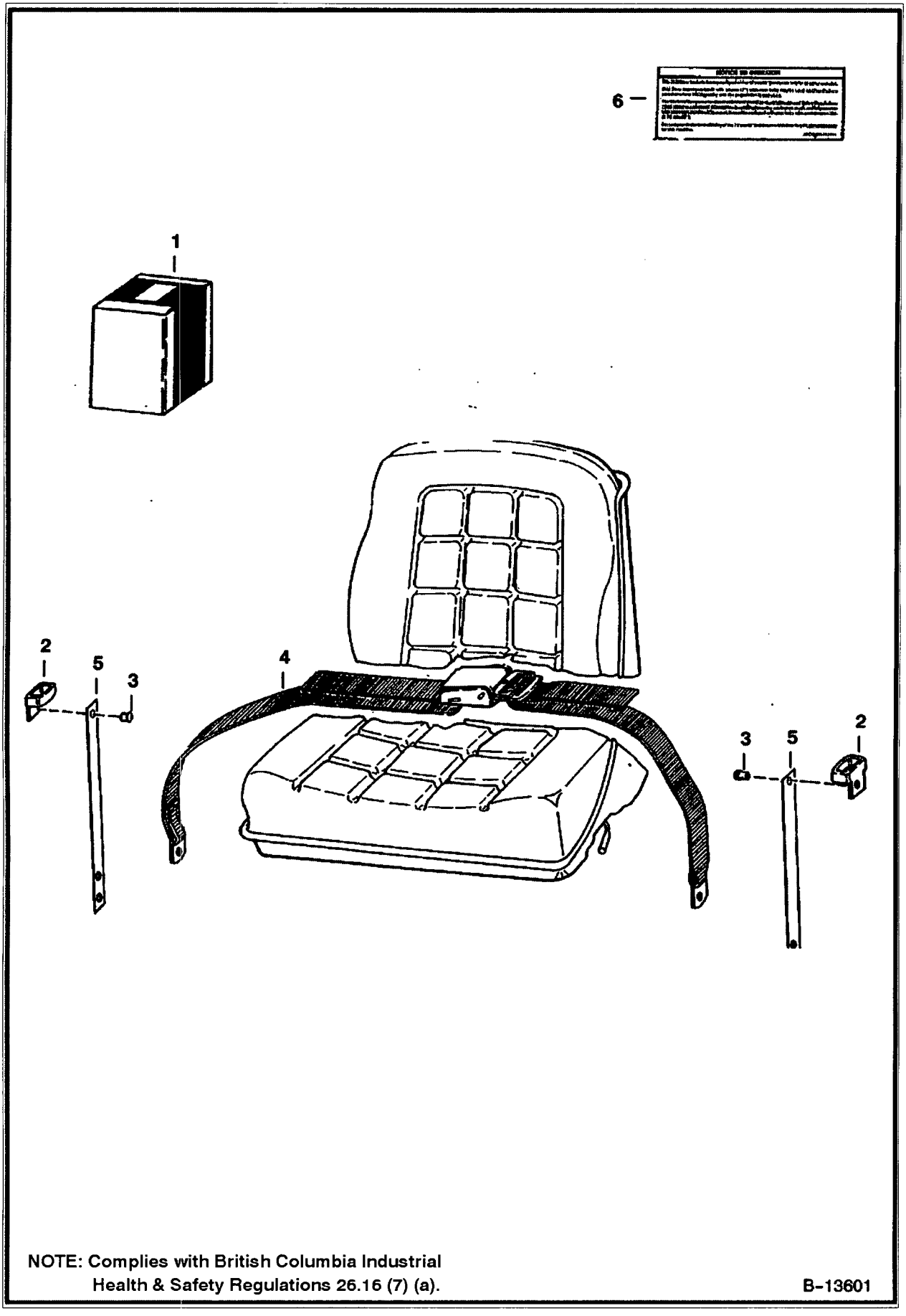

NOTE: Complies with British Columbia Industrial Health & Safety Regulations 26.16 (7) (a).

B-13601

https://www.pdfmanual4trucks.com/

SEAT BELT (Cont'd)
(3" Wide)

;f No	Part Number	Description	Remarks	Serial Number	Qty
1	6703640	KIT	W/Ref. 2-6		1
2	6703703	GUIDE			2
3	6512797	RIVET			4
4	6659999	BELT			1
5	6711908	SPRING PLATE			2
6	6703641	DECAL			1

https://www.pdfmanual4trucks.com/

SEAT KIT
(Side Pivot) (For Standard & Suspension Seats)

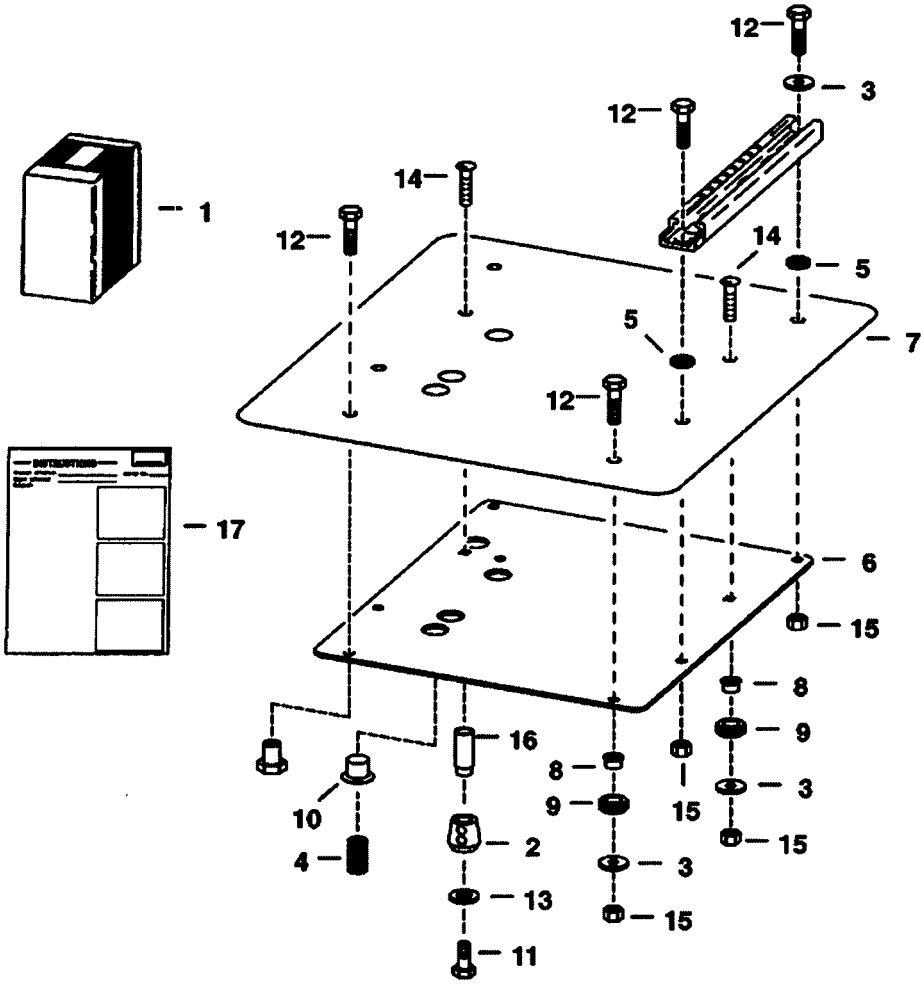

MC–2108

https://www.pdfmanual4trucks.com/

SEAT KIT (Cont'd)
(Side Pivot) (For Standard & Suspension Seats)

ef No	Part Number	Description	Remarks	Serial Number	Qty
1		KIT	See Illustration PUSH TO OPERATE KIT/ B15147 See Illustration PUSH TO OPERATE KIT/ B15147A NAP - SIDE PIVOT SEAT - ORDER PUSH TO OPERATE KIT - WAS 6708913 [A]		1
2	6680472	SENSOR	magnet - Was 6666608 [A]		1
3	6701174	WASHER			4
4	6702430	SPRING			3
5	6706890	WASHER			4
6		MOUNT	NAP - seat - Was 6708447 [A]		1
7		COVER	NAP - mount - Was 6708460 [A]		1
8	6708465	BUSHING	seat		2
9	6708622	GROMMET			2
10	6708680	GUIDE	spring		3
11	17C000508B	BOLT			1
12	17C516	BOLT			6
13	25E000016B	WASHER			1
14	37C000516B	BOLT			2
15	61D5	NUT			6
16	6710751	BUSHING	spacer		1
17	6724258	INSTRUCTIONS			1

https://www.pdfmanual4trucks.com/

SEAT RAIL COVER KIT

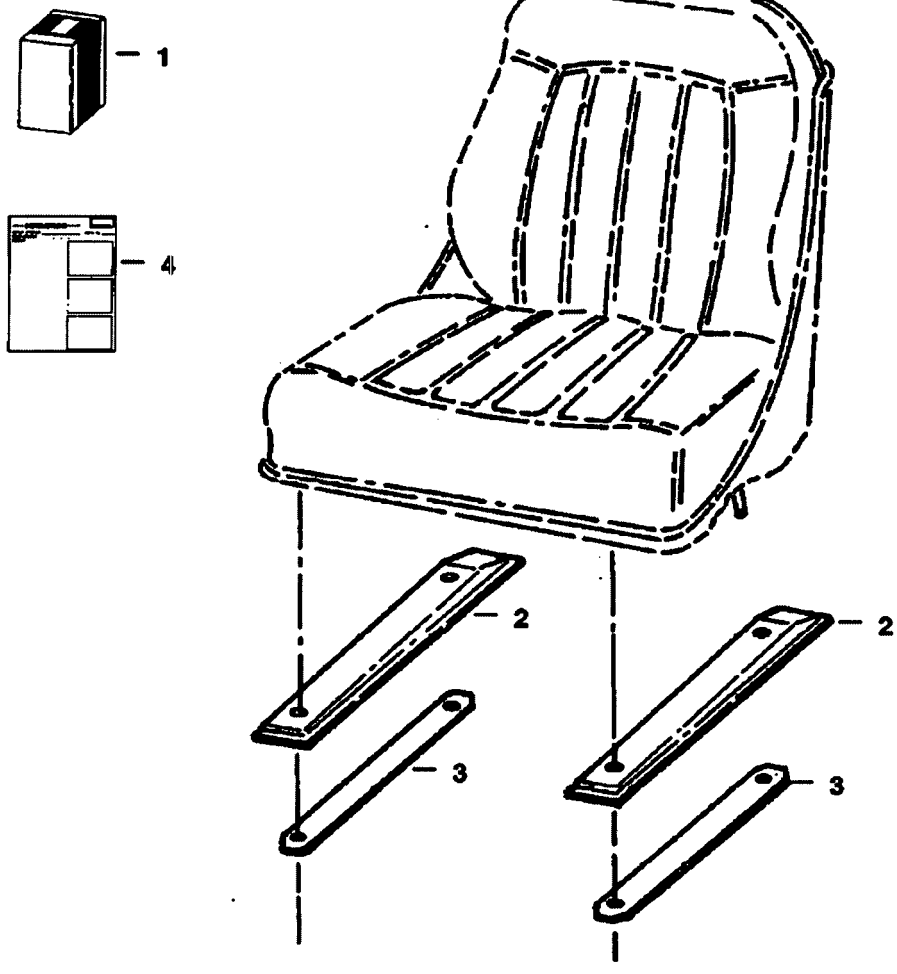

B–14724

https://www.pdfmanual4trucks.com/

SEAT RAIL COVER KIT (Cont'd)

ɛf No	Part Number	Description	Remarks	Serial Number	Qty
1	6712184	KIT			1
2	6711729	COVER			2
3	6711730	STRIP			2
4	6724800	INSTRUCTIONS			1

https://www.pdfmanual4trucks.com/

SEAT SENSOR OVERRIDE
(Mechanical Hand Controls)

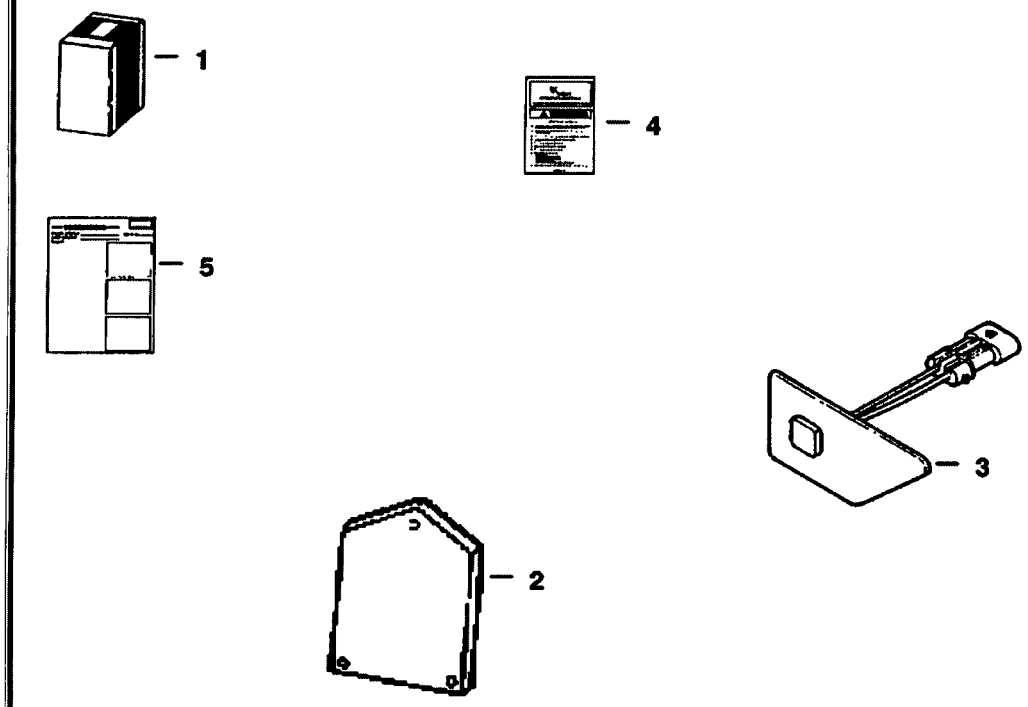

B–17268

https://www.pdfmanual4trucks.com/

SEAT SENSOR OVERRIDE (Cont'd)
(Mechanical Hand Controls)

ef No	Part Number	Description	Remarks	Serial Number	Qty
1		KIT	See Illustration PUSH TO OPERATE KIT/ B15147 NAP - REF. 2-5 - ORDER 6717702 KIT - WAS 6716460 [A]		1
2		CONTROLLER	NAP - Was 6673002 [A]		1
3		SWITCH	NAP - Was 6673005 [A]		1
4	6708021	HANDBOOK	Operator		1
5		INSTRUCTIONS	NAP - Was 6900589 [A]		1

https://www.pdfmanual4trucks.com/

SEAT SENSOR OVERRIDE
(Foot Pedals)

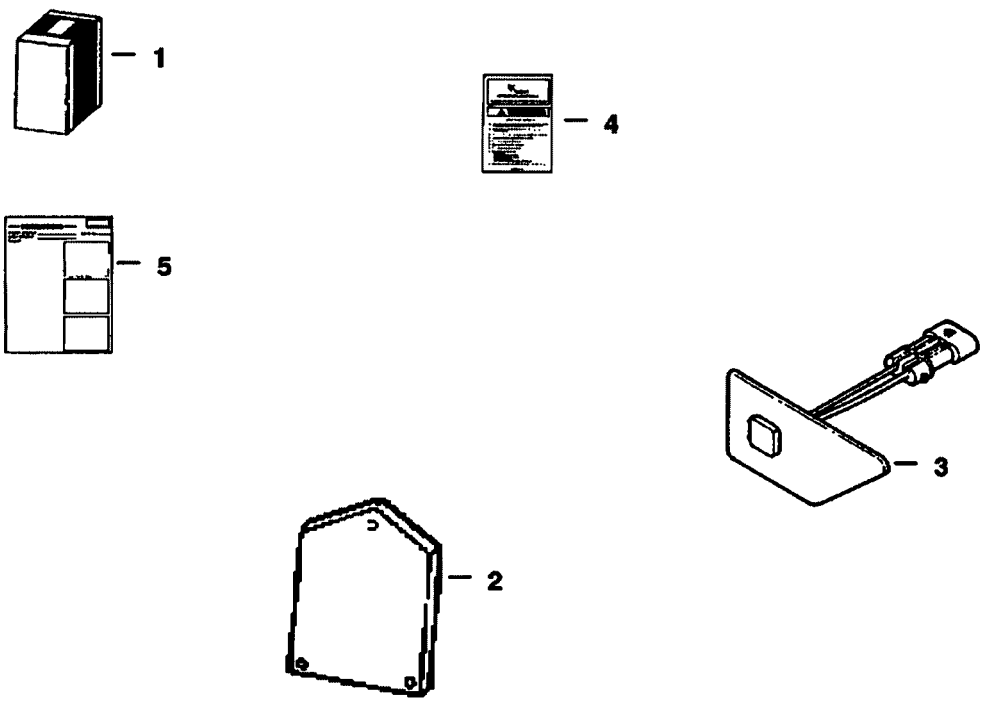

B–17268A

https://www.pdfmanual4trucks.com/

SEAT SENSOR OVERRIDE (Cont'd)
(Foot Pedals)

Ref No	Part Number	Description	Remarks	Serial Number	Qty
1		KIT	See Illustration PUSH TO OPERATE KIT/ B15147A NAP - REF. 2-5 - ORDER 6717700 KIT - WAS 6716458 [A]		1
2		CONTROLLER	NAP - Was 6673002 [A]		1
3		SWITCH	NAP - Was 6673005 [A]		1
4	6708158	HANDBOOK	Operator		1
5		INSTRUCTIONS	NAP - Was 6900589 [A]		1

https://www.pdfmanual4trucks.com/

SIDE CONSOLE KIT
S/N 5127 27673 & Abv, 5086 94557 & Abv, 5158 11001-29999, 5162 11001-19999)

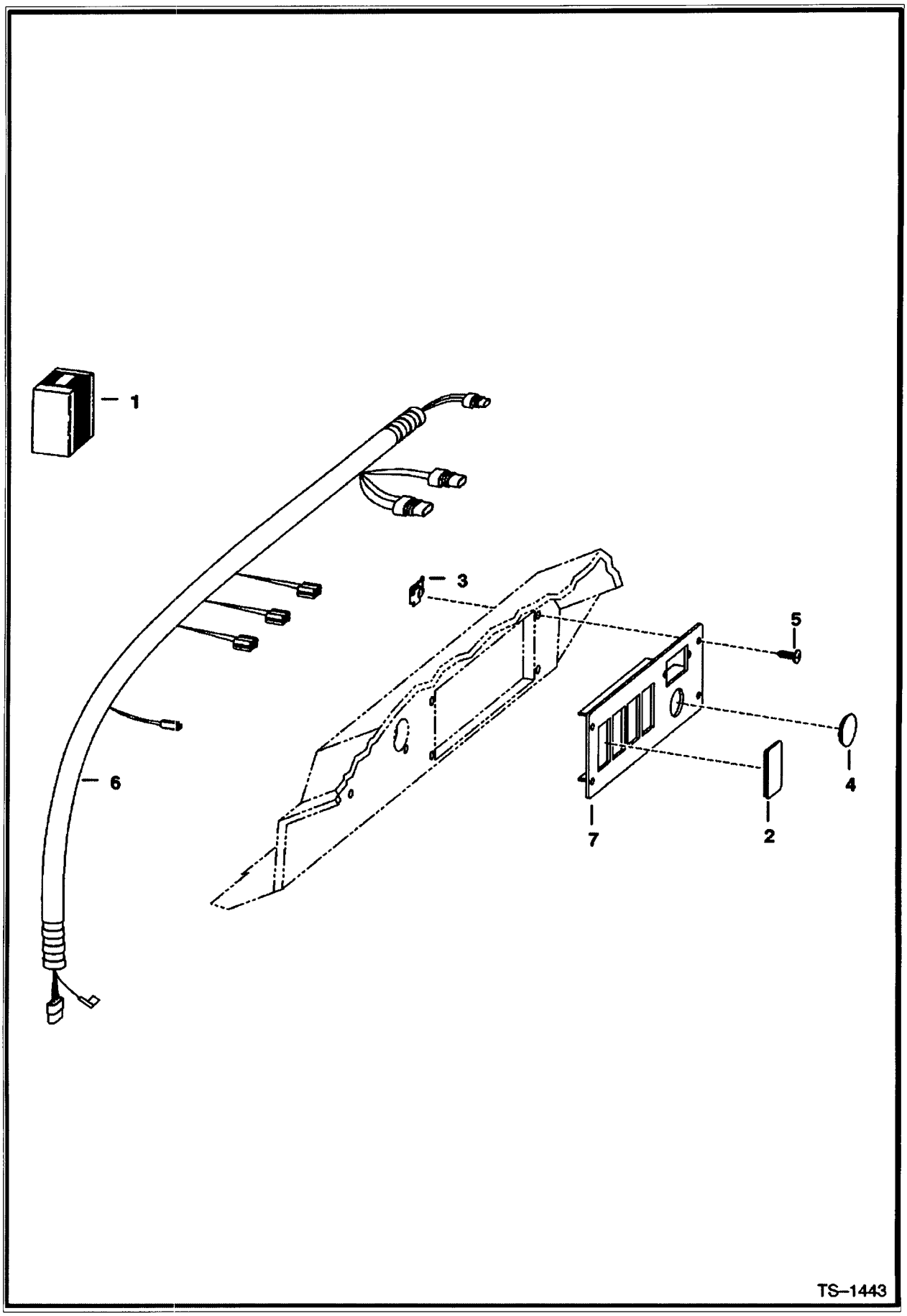

https://www.pdfmanual4trucks.com/

SIDE CONSOLE KIT (Cont'd)
S/N 5127 27673 & Abv, 5086 94557 & Abv, 5158 11001-29999, 5162 11001-19999)

ɜf No	Part Number	Description	Remarks	Serial Number	Qty
1	6712700	KIT	side console		1
2	6665314	PLUG	rocker switch		5
3	6669091	CLIP			4
4	6669146	PLUG			1
5	6669224	BOLT			4
6	6710481	HARNESS			1
7	6710527	PANEL			1

https://www.pdfmanual4trucks.com/

SOUND KIT

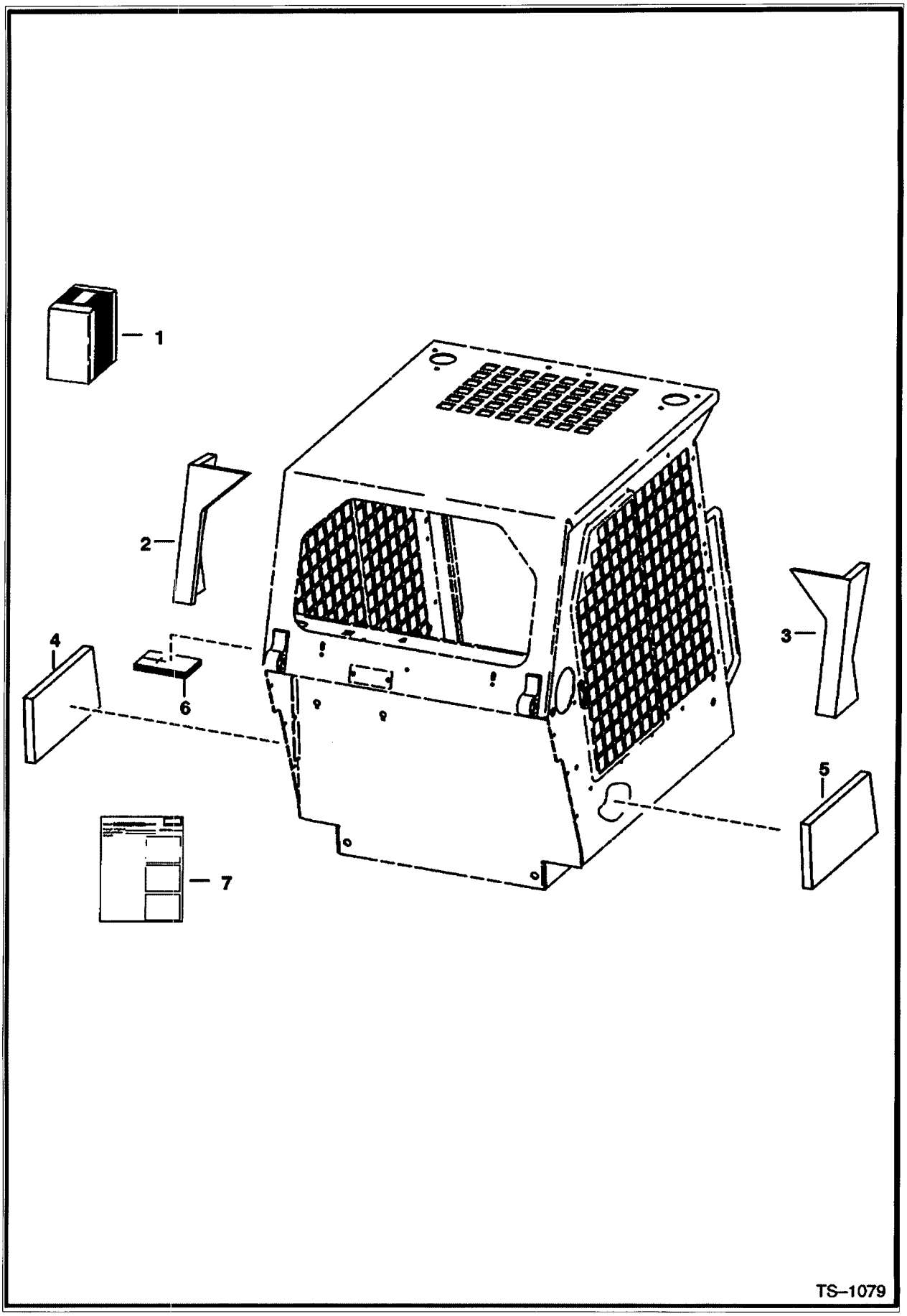

https://www.pdfmanual4trucks.com/

SOUND KIT (Cont'd)

Ref No	Part Number	Description	Remarks	Serial Number	Qty
1	6704125	SOUND KIT	Ref. 2-7		1
2	6703449	INSULATION	cab back		1
3	6703450	INSULATION	cab back		1
4	6703451	INSULATION	cab back		1
5	6703452	INSULATION	cab back		1
6	6703455	INSULATION	cab back		1
7	6720961	INSTRUCTIONS			1

https://www.pdfmanual4trucks.com/

SOUND REDUCTION HARDHAT

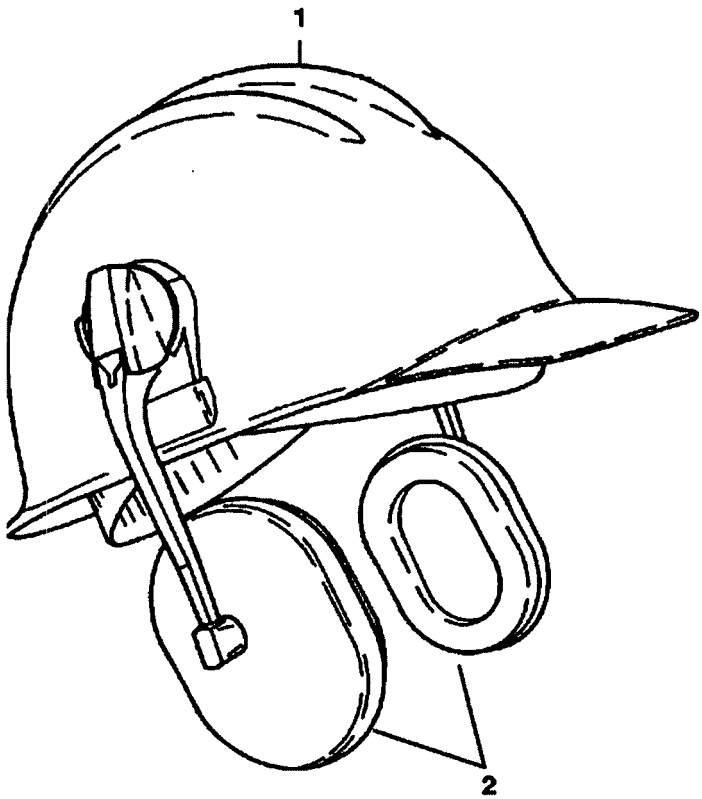

B–3111

https://www.pdfmanual4trucks.com/

SOUND REDUCTION HARDHAT (Cont'd)

:f No	Part Number	Description	Remarks	Serial Number	Qty
1	6902390	HARD HAT WHITE	Was 6559552 [A]		1
2	6559775	EARMUFFS			1

https://www.pdfmanual4trucks.com/

STROBE LIGHT
(Amber - 3414 ALW)

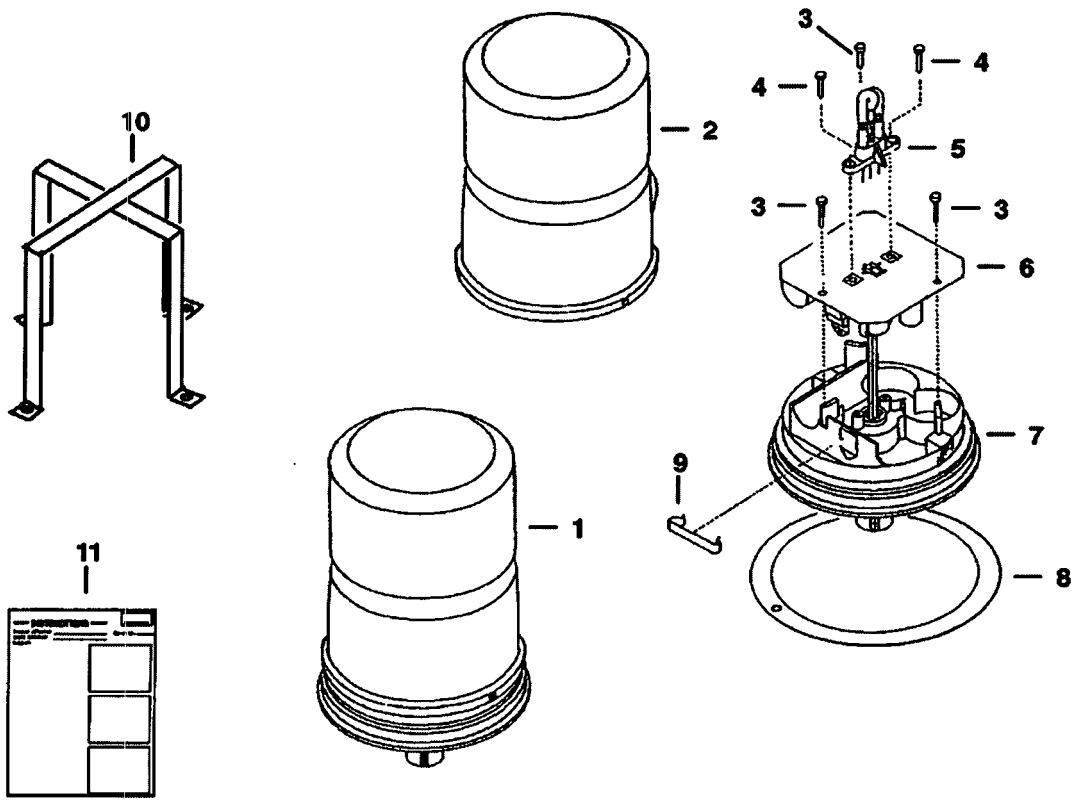

B–20246

https://www.pdfmanual4trucks.com/

STROBE LIGHT (Cont'd)
(Amber - 3414 ALW)

Ref No	Part Number	Description	Remarks	Serial Number	Qty
1	6587526	KIT	Strobe light - Ref. 2-9 & 11		1
2	6665021	LENS	Amber		1
2	6665025	LENS	Blue - Not in kit		1
3		SCREW	NSS		3
4		SCREW	NSS		1
5	6665022	FLASH TUBE			1
6		POWER SUPPLY	NSS		1
7		BASE	NSS		1
8	6665023	GASKET			1
9		RETAINER	NSS		1
10	6665024	BRANCH GUARD	Not in Kit		1
11	6720856	INSTRUCTIONS			1

https://www.pdfmanual4trucks.com/

STROBE LIGHT

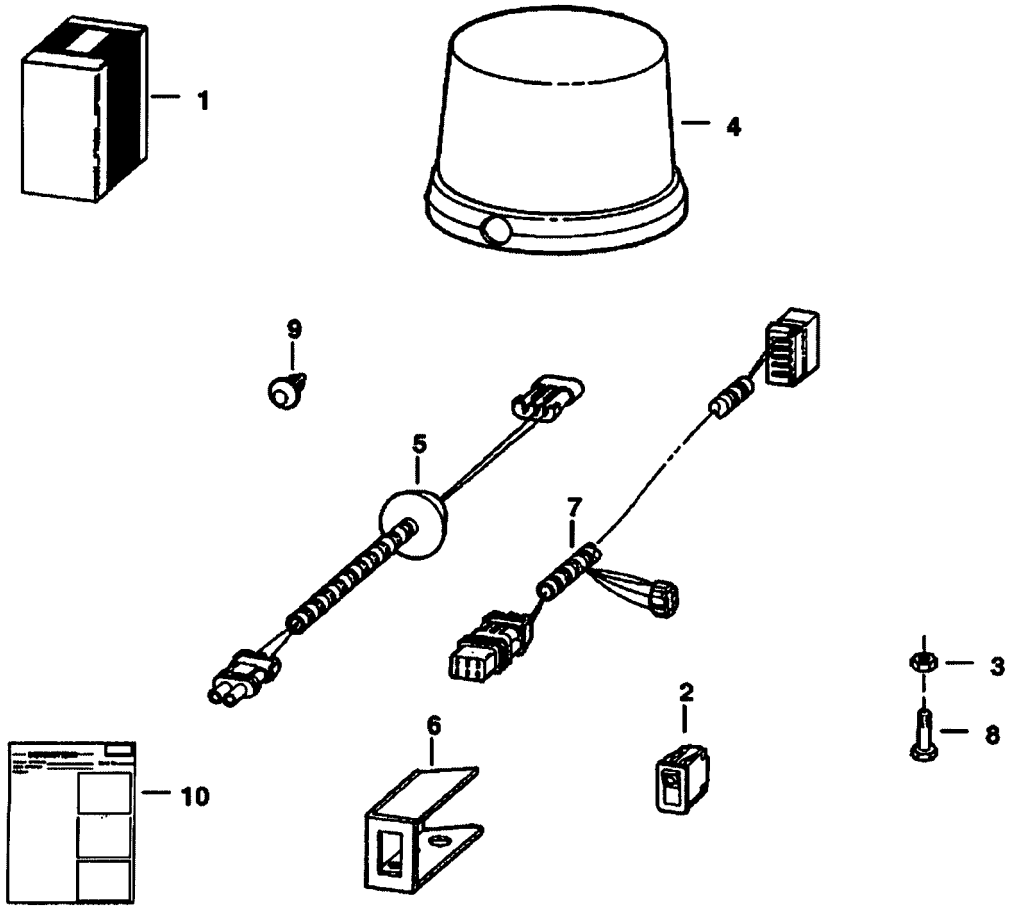

https://www.pdfmanual4trucks.com/

STROBE LIGHT (Cont'd)

ef No	Part Number	Description	Remarks	Serial Number	Qty
1	6712696	STROBE KIT	Strobe light - Ref. 2-10		1
2	6668816	SWITCH			1
3	6660988	RETAINER			2
4	6669191	LIGHT	Strobe - magnetic base		1
4	6665022	FLASH TUBE	bulb		1
5	6708318	HARNESS	beacon		1
6	6711708	MOUNT	switch		1
7	6712258	HARNESS	strobe		1
8	35C412	BOLT			2
9	6669308	RETAINER			2
10	6724071	INSTRUCTIONS			1

https://www.pdfmanual4trucks.com/

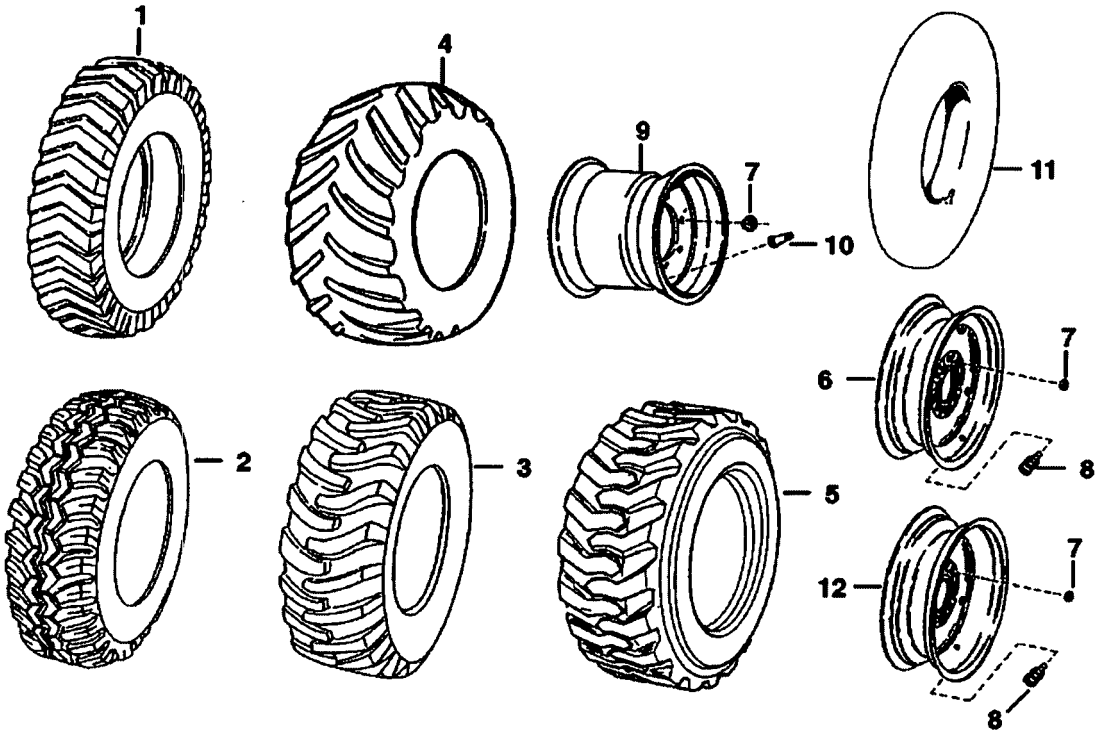

https://www.pdfmanual4trucks.com/

ef No	Part Number	Description	Remarks	Serial Number	Qty
1		TIRE	NAP - 7.00-15, 6 Ply Rating - Steel Cap Bar Lug Tread - Firestone Brand - Was 6515899 [A]		4
1		TIRE	NAP - 7.00-15, 6 Ply Rating - Steel Cap Bar Lug Tread - Dico Brand - Was 6659473 [A]		4
1	6665724	TIRE	7.00-15, 6 Ply Rating - Dico - IDT (Industrial Brand Tread)		4
2		TIRE	NAP - 10.00-16.5, 4 Ply Rating - flot. Super All Traction - Order Ref. 3		4
3	6550826	TIRE	10.00-16.5, 6 Ply Rating - Gerneral Brand		4
3		TIRE	NAP - 10.00-16.5, 6 Ply Rating - Steel Cap - Dico Brand - Was 6550828 [A]		4
3		TIRE	NAP - 10.00-16.5, 6 Ply Rating - Firestone Brand - Was 6646601 [A]		4
3		TIRE	NAP - 10.00-16.5, 8 Ply Rating - heavy duty - DICO - Was 6667889 [A]		4
4	6513971	TIRE	31-15, 8 Ply Rating - Terra Grip - Goodyear Brand - Order 6677675 Tire or 6729035 Tire - Was NAP [D]		4
4	6666668	TIRE	31-15.5, 8 Ply Rating - Ultra Tread Grip - Goodyear Brand - Order 6677675 Tire or 6729035 Tire - Was NAP [D]		4
5		TIRE	NAP - 10.00-16.5, 8 Ply Rating - heavy duty - Bobcat Brand - Order 6729896 Tire or 6729901 Tire - Was 6661287 [A]		4
5	6729896	TIRE	10.00-16.5, 8 Ply Rating - Bobcat Brand		4
5	6729901	TIRE	10.00-16.5, 10 Ply Rating - Bobcat Brand		4
6	6730771	RIM	Use W/Ref. 2 & 3 & 5 - Was 6565239 [A]		4
6	6562777	RIM	Use W/Ref. 1		4
7	6564669	NUT	wheel		32
8	1614765B	STEM	tubeless tire		4
9	6561095	RIM	Use W/Ref. 4		4
10	6591447	STEM	valve - Use W/Ref. 9		4
11	6515045	TUBE	Use W/Ref. 1		4
11	6516033	TUBE	Use W/Ref. 2 & 3		4
12	6730775	RIM	inverted - Use W/Ref. 3 & 5 - For 54" width - Was 6705109 [A]		4

https://www.pdfmanual4trucks.com/

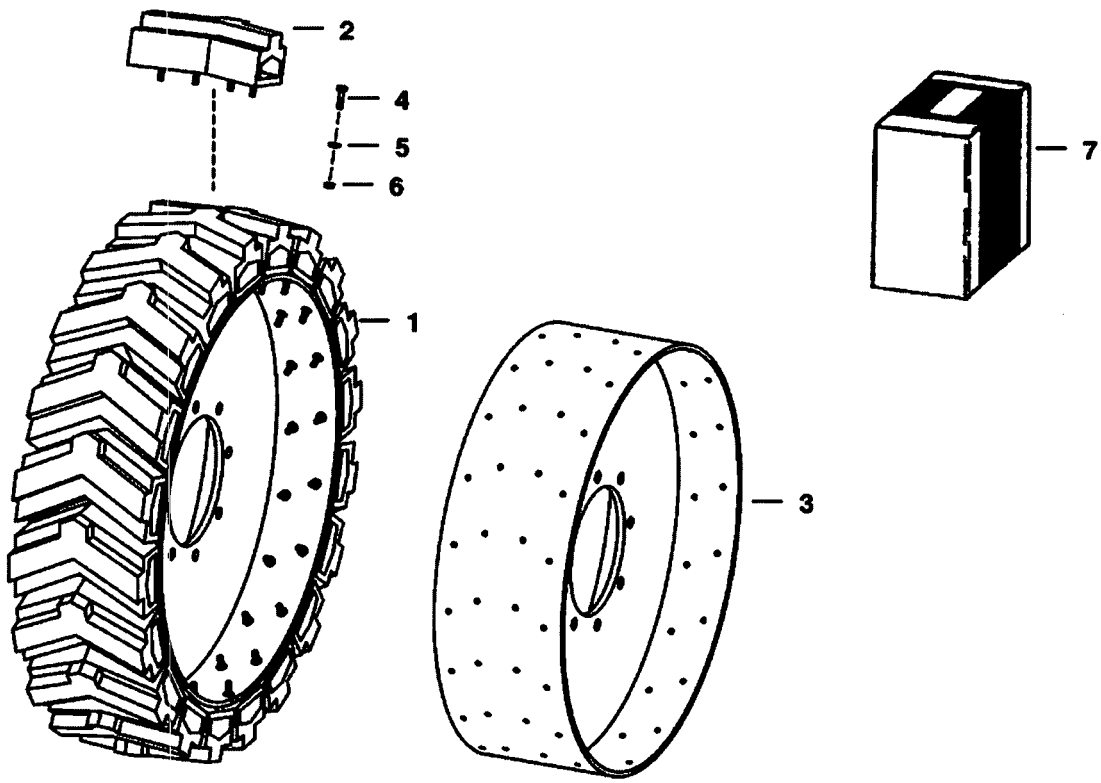

TS–1082

https://www.pdfmanual4trucks.com/

TIRES & RIMS (Cont'd)
(Solid Tire)

ef No	Part Number	Description	Remarks	Serial Number	Qty
1	6682856	TIRE & RIM	Assy. - R.H. - 7.5 x 15 - Was 6664993 [A]		2
1	6682857	TIRE & RIM	Assy. - L.H. - 7.5 x 15 - Was 6664994 [A]		2
1	6674003	TIRE & RIM	Assy. - R.H. - 10 x 16.5 - Was 6670616 [A]		2
1	6674004	TIRE & RIM	Assy. - L.H. - 10 x 16.5 - Was 6670617 [A]		2
2		KIT	NAP - Box of ( ) segments - 7.5 x 15 W/Ref. 4 - 6 ( ) segments/tire - Was 6664995 [A]		x
2	6674007	KIT	Box of (10) segments - 10 x 16.5 W/Ref. 4 - 6 (20) segments/tire - Was 6670618 [A]		x
3		RIM	NAP - R.H. - 7.5 x 15 - Order Ref. 1		2
3		RIM	NAP - L.H. - 7.5 x 15 - Order Ref. 1		2
3		RIM	NAP - R.H. - 10 x 16.5 - Order Ref. 1		2
3		RIM	NAP - L.H. - 10 x 16.5 - Order Ref. 1		2
4	1CM00830B	BOLT			x
5	25E15	WASHER			x
6	40DM00008B	NUT			x
7		KIT	NAP - wheel - Set of (4) 7.5 x 15 Tire & Rim Assys. - Ref. 1 - (2) R.H. & (2) L.H. - Was 6707172 [A]		1
7	6718298	KIT	wheel - Set of (4) 10 x 16.5 Tire & Rim Assys. - Ref. 1 - (2) R.H. & (2) L.H. - Was 6713885 [A]		1

https://www.pdfmanual4trucks.com/

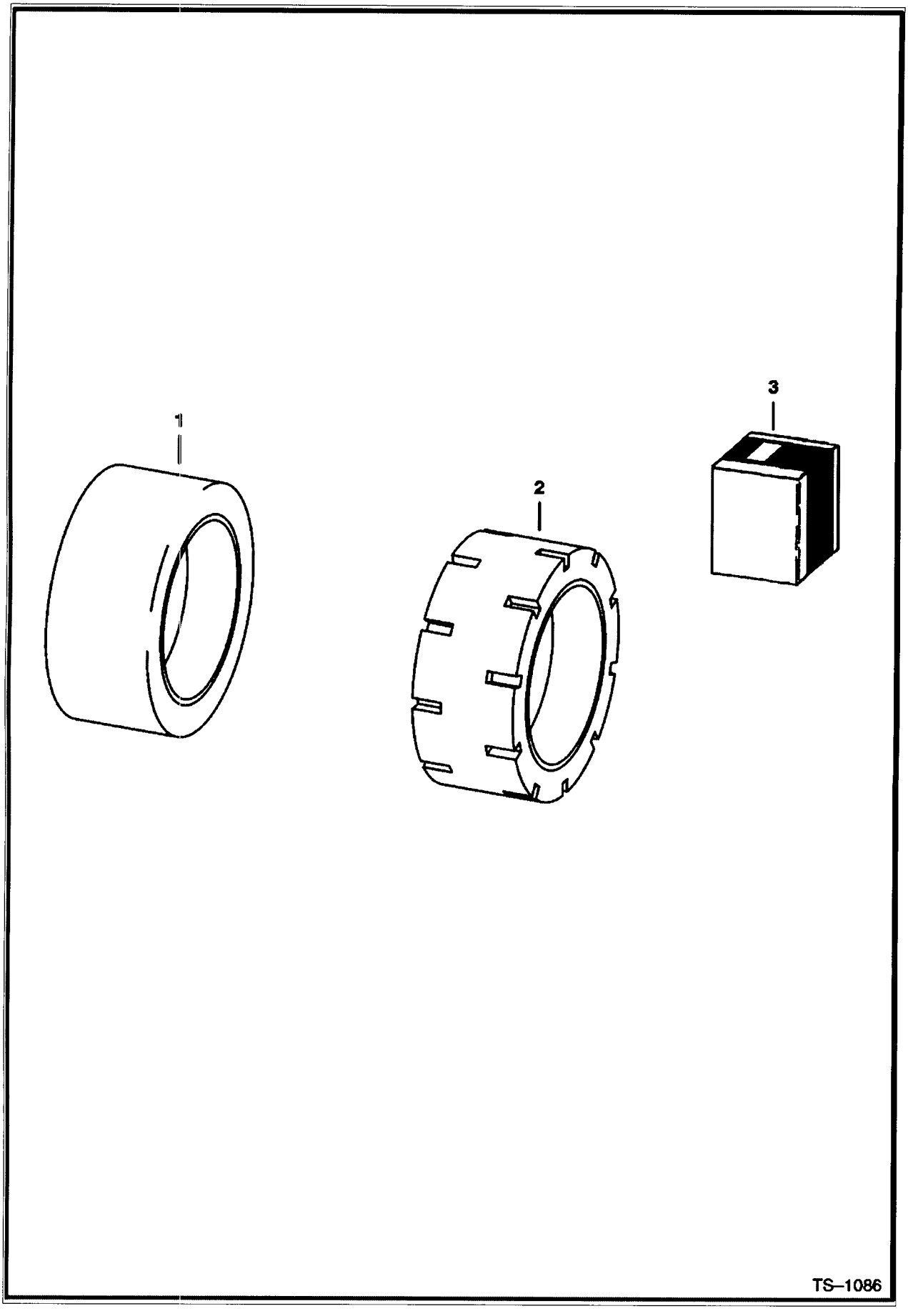

https://www.pdfmanual4trucks.com/

TIRES & RIMS (Cont'd)
(Solid Tire - Setco)

ef No	Part Number	Description	Remarks	Serial Number	Qty
1	6704167	TIRE & RIM	10 X 31 Slick W/Wire		4
2	6704168	TIRE & RIM	10 X 31 Staggered Gear Lug		4
3		TIRE & RIM	NAP - 10 X 31 Slick W/Wire - Set of (4) - Was 6722149 [A]		4
3		TIRE & RIM	NAP - 10 X 31 Staggered Gear Lug - Set of (4) - Was 6722150 [A]		1

https://www.pdfmanual4trucks.com/

TOOL BOX

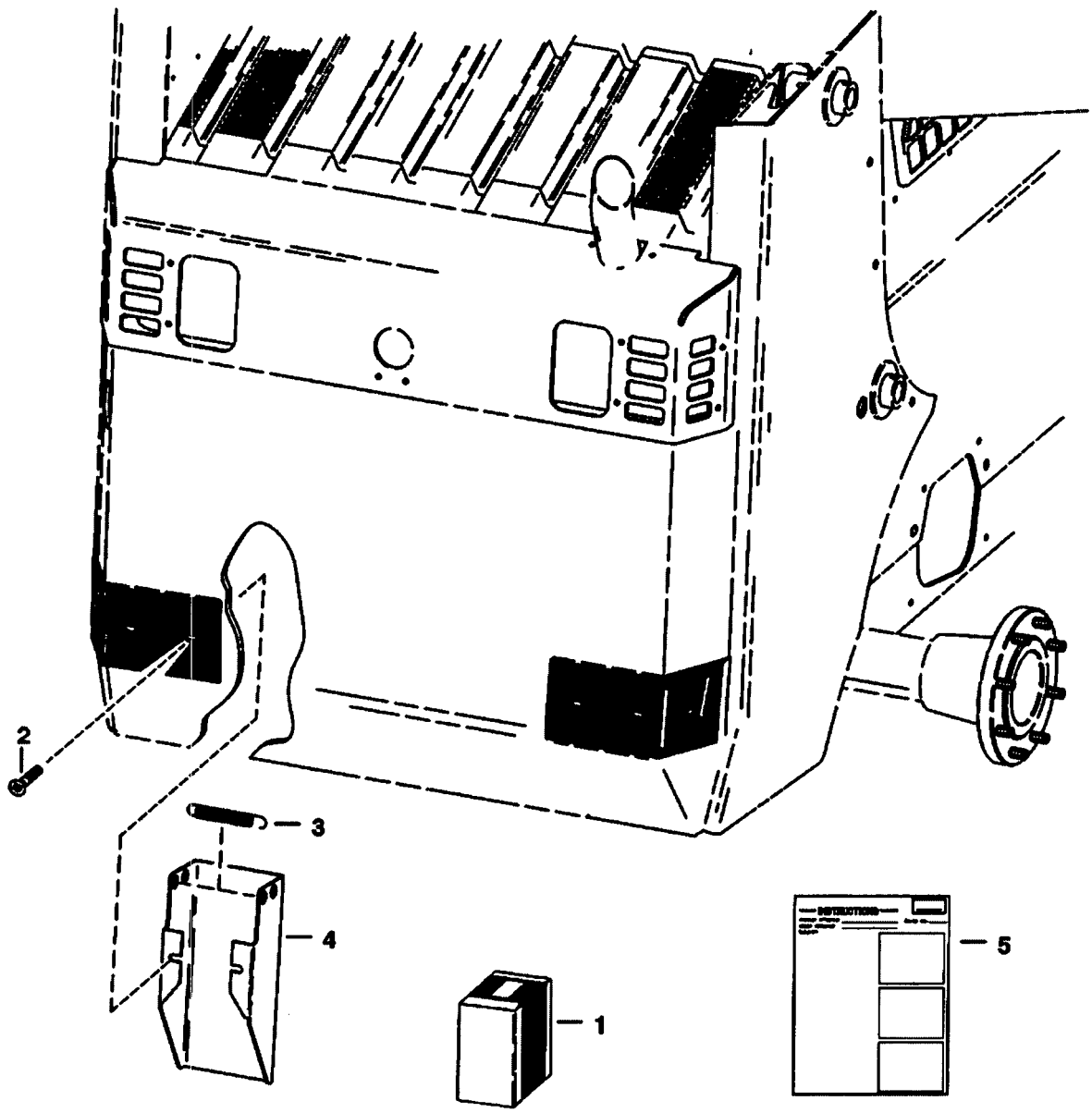

https://www.pdfmanual4trucks.com/

TOOL BOX (Cont'd)

ɛf No	Part Number	Description	Remarks	Serial Number	Qty
1	6705108	KIT	Ref. 2-5		1
2	9G000636B	BOLT			2
3	6700743	SPRING			1
4	6709379	TOOL HOLDER	Was 6705100 [A]		1
5	6722300	INSTRUCTIONS			1

https://www.pdfmanual4trucks.com/

BULK ITEMS
(SEE NOTE)

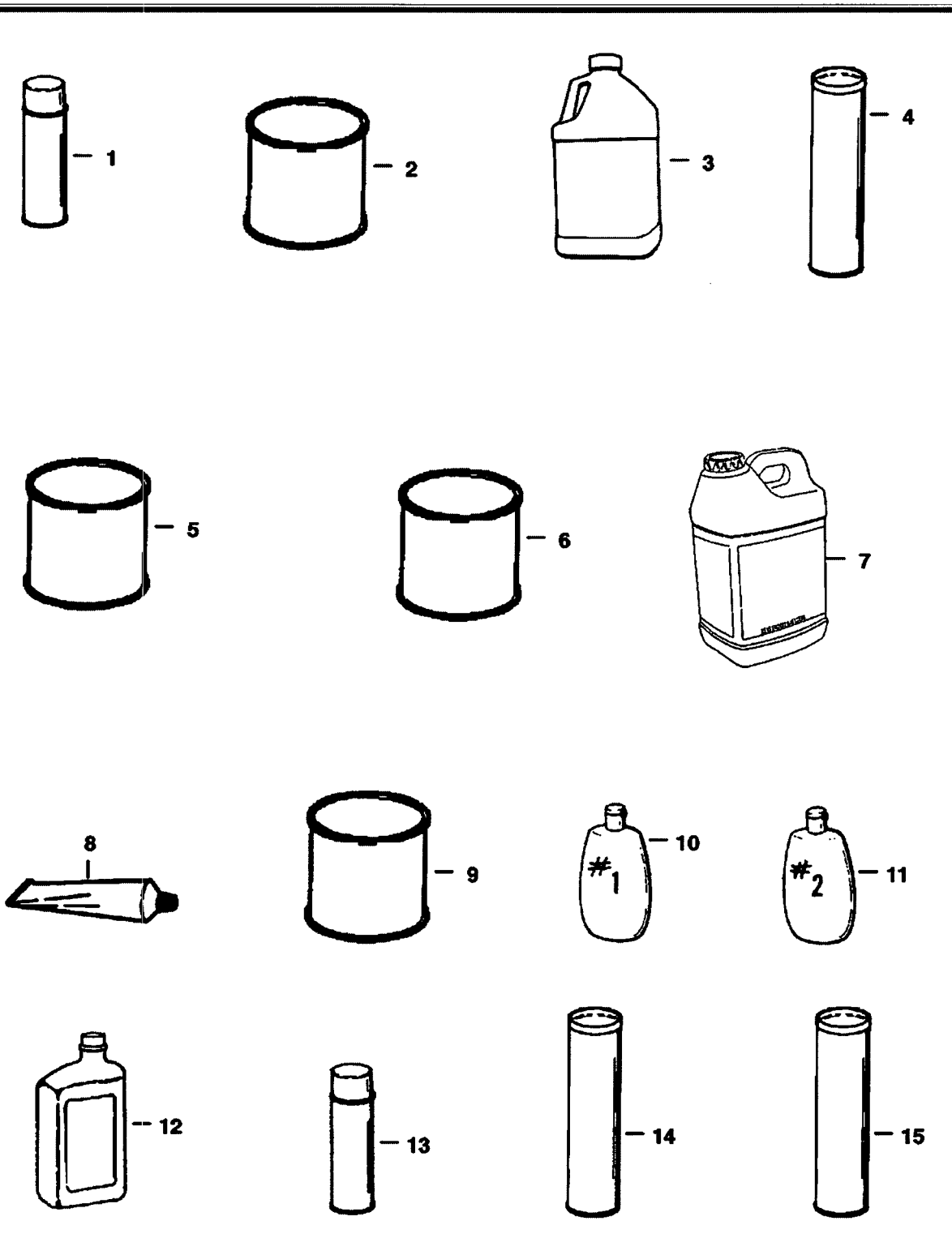

NOTE: Some of these bulk items may not be used on this particular model Bobcat.

NOTE: See Merchandising catalog for more products & information.

NOTE: Paint spray cans are packaged 6 per box.
Motor oil quarts are packaged 12 per box.
Motor oil 1 gal. jugs are packaged 6 per box.
Motor oil 2.5 gal. jugs are packaged 2 per box.

B–16462R

https://www.pdfmanual4trucks.com/

BULK ITEMS (Cont'd)
(SEE NOTE)

;f No	Part Number	Description	Remarks	Serial Number	Qty
1	6902228	PAINT	orange - Spray Can - SEE NOTE - Was 6722783 [A]		x
1	6902229	PAINT	charcoal - Spray Can-SEE NOTE- Was 6722786 [A]		x
1	6902230	PAINT	white - Spray Can - SEE NOTE - Was 6722789 [A]		x
2		PAINT	NAP - ORANGE - GALLON - Also Order Ref. 5 - Was 6722781 [A]		x
2	6902233	PAINT	orange - Qt. - Was 6722782 [A]		x
2		PAINT	NAP - charcoal - Gallon - Also Order Ref. 5 - Was 6722784 [A]		x
2	6902234	PAINT	charcoal - Qt. - Was 6722785 [A]		x
2		PAINT	NAP - WHITE - GALLON - Also Order Ref. 5 - Was 6722787 [A]		x
2	6902235	PAINT	white - Qt. - Was 6722788 [A]		x
3	6724094	ANTI-FREEZE	1 gal. premixed PG - Was 6658230 [A]		x
3	6724354	ANTI-FREEZE	1 gal. PG concentrate		x
4	6633583	SEALANT	chaincase covers		x
5		REDUCER	NAP - gallon - Was 6653517 [A]		x
6		PRIMER	NAP - gallon - Was 6653518 [A]		x
7	6903117	HYD FLUID 2.5 GAL. 2	Was 6563328 [A]		x
7	6903118	HYD. FLUID 5GAL	Was 6722344 [A]		x
7		FLUID	NAP - 30 Gallon Drum		x
7	6903119	HYD. FLUID 55GAL	Was 6563330 [A]		x
8	6599360	SEALANT	electrical - 3 oz. tube		x
9	6903121	GEAR LUBE 12	Was 6634393 [A]		x
10	6630188	POLISH	window - #1 (8 oz.)		x
10	6630190	POLISH	window-1 (64 oz.)		x
11	6630189	POLISH	window - #2 (8 oz.) - scratch remover		x
11	6630191	POLISH	window-2 (64 oz.) - scratch remover		x
12	6903109	OIL 30W QT. 12	30W - 1 Qt. - SEE NOTE - Was 6657303 [A]		x
12	6903110	OIL 30W GAL. 6	Was 6724559 [A]		x
12	6903111	OIL 30W 2.5 GAL 2	Was 6674206 [A]		x
12	6903107	OIL 10W30 QT. 12	Was 6657301 [A]		x
2	6903108	OIL 10W30 GAL. 6	Was 6724557 [A]		x
12	6903112	OIL 10W30 2.5 GAL 2	Was 6674205 [A]		x
12	6903105	OIL 15W40 QT. 12	Was 6657299 [A]		x
12	6903106	OIL 15W40 GAL. 6	Was 6724558 [A]		x
12	6903113	OIL 15W40 2.5 GAL. 2	Was 6674204 [A]		x
13	6675380	ADHESIVE	spray can - Was 6652818 [A]		x
14	6903122	GREASE 10	Was 6658266 [A]		x
15	6599719	GREASE	14.5 oz. cartridge - For fan idler brg. & spring loaded drive idler		x
16	6650407	ADHESIVE	1 oz. tube		x
17	6650388	SEALANT	flange		x
8	6736644	PAINT	orange - 5 oz. spray can		x
18	6736641	PAINT	charcoal - 5 oz. spray can		x
18	6736642	PAINT	white - 5 oz. spray can		x
8	6736645	PAINT	red - 5 oz. spray can		x

https://www.pdfmanual4trucks.com/

https://www.pdfmanual4trucks.com/

NUMERICAL INDEX

Part No.	Description	Was	Code	Page
10C000412B	BOLT			198, 202, 216
10C000512B	BOLT	6553808	A	370, 374, 378, 380
10C000512B	BOLT			370, 374, 378, 380
10H000035B	GREASE ZERK			26, 30, 160
10H25	GREASE ZERK			26, 52, 56, 58, 62
10J000005B	BALL			280, 320
10J000013B	BALL			266, 306
10K000005B	TEE			488
10K000006B	TEE			52, 56, 58, 62, 362, 364
10KN00005B	TEE			488
10KN00006B	TEE			58, 62
11H15	GREASE FITTING			26, 52, 56, 58, 62
12D000006B	NUT			350, 464, 468, 514
12D000008B	NUT			44, 204
12D000010B	NUT			224, 386, 422
12E000010B	WASHER			450
12H15	GREASE FITTING			26, 52, 56, 58, 62
1303932B	GROMMET			236
1306637B	PIN			14, 84, 522
1316263B	ADAPTER			128
1318565B	PIN			406
1320075	COTTER PIN			474
1321499B	ELBOW	6567884	A	131, 132
13GM00404B	SCREW			230
13GM00408B	SCREW			230
13K5	TEE			496
14J002512B	ROLL PIN			10
14J005032B	PIN			30
1513549B	CAP			128, 488, 496, 502
1519324	PLUG			129, 130, 488, 496, 502
1530265B	PISTON SEAL			78, 80
15EM00180B	WASHER			266
15JM00048B	KEY			294, 334
15K000003B	CONNECTOR			496, 500
15K5	FITTING			66, 67, 68, 130, 154, 488, 498
15K6	ADAPTER			244
15K7	FITTING			52, 56, 58, 62, 66
15K8	FITTING			68, 70, 128, 154
15KB404	CONNECTOR			500
15KB604	CONNECTOR			484
15KB606	ADAPTER			68, 154, 498
15KB612	ADAPTER			154
15KN00006B	ADAPTER			244
15KN00008B	ADAPTER			68, 70, 154
15KV00005B	ADAPTER			484
15KV00007B	CONNECTOR			58, 62
1612281B	NUT			152, 392, 412
1614765B	STEM			546
1631632B	ELBOW			496
16F000002B	PLUG			268, 308
16F000008B	PLUG			258
16K000008B	ADAPTER			430
17C000410B	BOLT			210, 216, 350, 436
17C000416B	BOLT			446

Code for disposition of old part number
A -- Use up
B -- Use on other application (See PNI)
C -- File PDR Report with Bobcat Parts Sales
D -- Part Number Error

https://www.pdfmanual4trucks.com/

Part No.	Description	Was	Code	Page
17C000424B	BOLT			22, 446
17C000508B	BOLT			12, 416, 516, 528
17C000510B	BOLT			488, 520
17C000512B	BOLT			8, 32, 394, 516
17C000514B	BOLT	35C000514B	A	512
17C000524B	BOLT			132
17C000540B	BOLT			52, 58, 62, 470, 472
17C000552B	BOLT			70, 428, 430, 432
17C000556B	BOLT			244
17C000560B	BOLT			66
17C000568B	BOLT	17C000572B	B	66
17C000608B	BOLT			14, 240, 242
17C000610B	BOLT			44, 158, 254
17C000614B	BOLT			476
17C000616B	BOLT			10, 132, 158, 160, 236
17C000624B	BOLT			84
17C000626B	BOLT			160, 256
17C000628B	BOLT			366
17C000632B	BOLT			154
17C000636B	BOLT			484
17C000644B	BOLT			30
17C000648B	BOLT			26, 244
17C000660B	BOLT			30
17C000680B	BOLT			162
17C000712B	BOLT			14, 370, 374, 380, 522, 524
17C000714B	BOLT			378
17C000720B	BOLT			132
17C000724B	BOLT			132
17C000816B	BOLT			132
17C000828B	BOLT			36, 248
17C000830B	BOLT			244
17C000848B	SCREW	17C000844B	B	244
17C001028B	BOLT			470, 472
17C006104B	BOLT			390
17C006116B	BOLT			236
17C1056	BOLT			6
17C408	BOLT			226, 380
17C412	BOLT 5	17C000410B	B	22, 43, 44, 47, 48, 226, 350, 352, 446, 454
17C412	BOLT 5			22, 43, 44, 47, 48, 226, 350, 352, 446, 454
17C428	BOLT	6710539	A	10, 60, 64, 68
17C428	BOLT			10, 60, 64, 68
17C516	BOLT			446, 482, 528
17C532	BOLT 5			52, 56, 58, 62, 154, 406
17C612	BOLT 5			10, 14, 32, 84, 128, 160, 236, 400, 406, 522, 524
17C620	BOLT	4F006106B	B,D	26, 44, 84, 132, 162, 248, 258
17C620	BOLT			26, 44, 84, 132, 162, 248, 258
17C640	BOLT 5			4, 25, 26, 152, 388, 390, 392, 412, 470, 472
17C716	BOLT	17C000715B	D	10
17C820	BOLT			44, 244
17E000006B	WASHER			350
17E000008B	WASHER			202, 386
17E000010B	WASHER			386
17K000003B	ELBOW			498
17K5	ELBOW			60, 64, 68, 128, 156

Code for disposition of old part number
A -- Use up
B -- Use on other application (See PNI)
C -- File PDR Report with Bobcat Parts Sales
D -- Part Number Error

https://www.pdfmanual4trucks.com/

Part No.	Description	Was	Code	Page
17K7	ELBOW			52, 56, 60, 66, 132, 362, 364
17K8	FITTING			418
17KB000810B	ELBOW			60
17KB01210B	ELBOW	6714901	A	158
17KB1010	ELBOW			60, 364
17KB404	ELBOW			498
17KB810	ELBOW			364
17KN00008B	ELBOW			418
17KV00005B	ELBOW			60, 64, 68, 156
18C001224B	BOLT			49, 50
18C001632B	BOLT			50
18C1636	BOLT			50
18K000003B	ELBOW			496
18K000005B	ELBOW			128, 142, 146, 150, 156
18K000008B	ELBOW			68, 128, 418, 496, 498
18KB01212B	ELBOW			498
18KV00005B	FITTING			156
18KV00008B	ELBOW			68, 418
1908806B	EXTINGUISHER			422
1991038B	BEARING			386
19F000004B	ADAPTER			208
19F000005B	REDUCER			514
19K000005B	TEE			66
19K000007B	TEE			60, 64
19KN00007B	TEE			60, 64
1CM00650B	BOLT			230
1CM00818B	BOLT			322
1CM00830B	BOLT			548
1CM00835B	BOLT			286, 326
1CM00865B	BOLT			286, 326
1CM00890B	BOLT			244
1CM00895B	BOLT			266, 306
1CM616	SCREW	17C408	B,D	376
1CM820	BOLT			160, 182, 186, 452, 458
1CM870	BOLT			244, 266, 306
1CM880	BOLT			266, 306
1DM6	NUT			266, 294, 306, 334, 416
1DM8	NUT	25DM00008B	A	294, 334
1DM8	NUT			294, 334
1EM00060B	WASHER			230, 292
1EM80	WASHER			294
21K000003B	TEE			496
21K000005B	TEE			128, 488, 496, 498, 502
21K000007B	FITTING			52, 66
21KB606	TEE			498
21KN00005B	TEE			484
225855B	SEAL			26, 74, 76, 78, 80
22E000004B	WASHER			86, 90, 140, 144
2341398	COUPLER			496
2342026B	COUPLER			496
2356058B	BOOT			210, 216
23F000001B	ELBOW			218
23G000812B	SCREW			44
24K000004B	PLUG			504

Code for disposition of old part number
A -- Use up
B -- Use on other application (See PNI)
C -- File PDR Report with Bobcat Parts Sales
D -- Part Number Error

https://www.pdfmanual4trucks.com/

Part No.	Description	Was	Code	Page
24K000008B	PLUG			104
24KN00008B	PLUG			104
25E000008B	WASHER			44
25E000010B	WASHER			12, 238, 446, 450
25E000011B	WASHER			416
25E000016B	WASHER			12, 370, 376, 380, 446, 528
25E000017B	WASHER	25E000018B	B	12, 406, 522, 524
25E000017B	WASHER			12, 406, 522, 524
25E000018B	WASHER			256, 366, 378, 382
25E000019B	WASHER			378
25E000025B	WASHER			406
25E13	WASHER 5			8, 44, 48, 208, 216, 350, 352, 404, 460
25E14	WSHR			446
25E15	WASHER			132, 210, 216, 500, 512, 548
25E21	WASHER 5			84, 132, 244
25G000410B	BOLT			422
25G000412B	BOLT			200, 204, 350
25G000510B	SCREW			370, 378
25G000528B	BOLT			374, 380
25G000612B	BOLT			436
25G512	SCREW			18, 374, 380
25G520	SCREW			18
25GM08010B	SET SCREW			272
25GT00410B	BOLT			224, 440
25K020010B	SEAL			154
25K020016B	O-RING			86, 90, 94, 102, 110, 114, 140, 144, 148
25K030202B	O-RING			36, 38, 164
25K030300B	O-RING			78
25K030508B	O-RING			38
2756257B	RETAINER			370, 376, 382
27E000008B	WASHER			406
27E000010B	WASHER			376, 380
27E6	WASHER 5			346, 390
29CM612	BOLT			324
29G000412B	SCREW	6588163	B	94, 98, 102, 108, 110, 114, 148
29G000412B	SCREW			94, 98, 102, 108, 110, 114, 148
29G000416B	SCREW	6588982	B	94, 98, 102, 108, 110, 114, 148
29G000416B	SCREW			94, 98, 102, 108, 110, 114, 148
2DM00008B	NUT	6680874	A	272, 290, 312
2DM00008B	NUT			272, 290, 312
2EM00008B	WASHER			266, 272, 274, 292, 306, 314
2J004200B	ROD END			436
2J006208B	CLEVIS			14, 522
30G000416B	BOLT	6588166	B	94, 98, 102, 106, 110, 114, 148
30G000416B	BOLT			94, 98, 102, 106, 110, 114, 148
30H000019B	CLAMP	30H000021B	B,D	352, 374
30H000019B	CLAMP			352, 374
30H000021B	CLAMP			350
30H000023B	CLAMP			44, 130, 256
30H000029B	CLAMP			198
30H000036B	CLAMP			32
30H000037B	CLAMP			370, 374, 380
30H000040B	CLAMP			132
30H000042B	CLAMP	30H000035B	B	128, 220, 476

Code for disposition of old part number
A -- Use up
B -- Use on other application (See PNI)
C -- File PDR Report with Bobcat Parts Sales
D -- Part Number Error

https://www.pdfmanual4trucks.com/

Part No.	Description	Was	Code	Page
30H000042B	CLAMP			128, 220, 476
30H000048B	CLAMP			208, 218
30H000049B	CLAMP			398
30H000054B	CLAMP			204
30H000056B	CLAMP			198
30H000057B	CLAMP	30H000050B	B	218
30H35	CLAMP 10			213, 214, 478
30H46	CLIP			400
30H50	CLIP			452, 458
30H60	CLIP			211, 212, 218
30R000107B	TERMINAL			514
31C000420B	BOLT			22, 24, 424, 426
31C000828B	BOLT			474
31C001064B	BOLT	17C001064B	B	26
31C001264B	BOLT			26
31C820	BOLT			4
31C824	BOLT 10			4, 406, 474
31H000034B	CLAMP	30H000034B	B	496
31H000052B	CLIP			458
3291290B	WING NUT			340
32DM00010B	NUT			232
35C000408B	BOLT			514
35C000416B	BOLT	35C000516B	B	208, 218, 370, 374, 378, 380
35C000416B	BOLT			208, 218, 370, 374, 378, 380
35C000508B	BOLT			236
35C000510B	BOLT			374, 380
35C000520B	BOLT			426
35C000536B	BOLT		B	60, 362, 364
35C000536B	BOLT			60, 362, 364
35C000540B	BOLT	35C000536B	B	52
35C000608B	BOLT			10, 208, 218, 522, 524
35C000610B	BOLT			132
35C000612B	BOLT	31C000612B	B	10, 84, 162, 240, 242, 248
35C000612B	BOLT			10, 84, 162, 240, 242, 248
35C000716B	BOLT			464, 514
35C001032B	BOLT			36, 38
35C410	BOLT 5	17C000410B	B	6, 10, 198, 204, 352, 384, 404, 416, 418, 426, 468
35C410	BOLT 5			6, 10, 198, 204, 352, 384, 404, 416, 418, 426, 468
35C412	BOLT			52, 60, 354, 362, 364, 370, 374, 378, 404, 512, 544
35C512	BOLT			404
35C516	BOLT 10			132, 244, 350, 382, 422
35C616	BOLT 5			370, 374, 378, 382, 404, 418
35C620	BOLT 5			208, 220, 244, 250
3679001B	CAP			128
36K000008B	CAP			72, 432, 496, 498
36K6	CAP			244
36K7	FITTING			64, 66, 132
3737000B	TRACK			516
3737001B	TRACK			516
3737010B	CUSHION			516
3737081B	CUSHION			516
37C000516B	BOLT			516, 528

Code for disposition of old part number
A -- Use up
B -- Use on other application (See PNI)
C -- File PDR Report with Bobcat Parts Sales
D -- Part Number Error

https://www.pdfmanual4trucks.com/

Part No.	Description	Was	Code	Page
37C000540B	BOLT			432
37C000612B	BOLT			24, 404
37C000632B	BOLT	37C000628B	A	24
37C000820B	BOLT			22, 24
37C512	BOLT			220, 352, 404, 478
37C620	BOLT			436
37C628	BOLT			152, 392, 412
38C000606B	SCREW			226, 436
38C000610B	BOLT	6704285	A	256, 436
38C000610B	BOLT			256, 436
38C000816B	BOLT			436
38C000820B	BOLT			248
38C000856B	SCREW			22, 24
3966512B	O-RING	6686986	A	264, 294, 304, 334
3966512B	O-RING			264, 294, 304, 334
3966515B	O-RING			262, 266
3966516B	O-RING			262, 276
3966530B	O-RING			262, 266
3966602B	O-RING			262, 270
3974037B	PIN			268, 308
3974038B	O-RING			262, 268, 304, 308, 313, 314
3974095	MET-GASK			262, 268, 270, 290, 304, 308, 330
3974192B	BOLT			292, 332
3974260B	BOLT			300, 338
3974267B	STUD			324
3974366B	BOLT			298
3974368B	GASKET			298
3974381B	SEAT			298
3974382B	SPRING			298
3974383B	SEAT			298
3974384B	SHIM			298
3974385B	TAPPET			298
3974389B	GASKET			268, 308
3974390B	CAP	6680639	A	268, 308
3974390B	CAP			268, 308
3974393B	PIN			268, 308
3974394B	PIN			268, 308
3974395B	PIN			266, 268, 306, 308
3974402B	PLUG	6652583	A	276
3974403	GASKET			262, 276
3974425B	NUT			330
3974432B	CAP	6680665	A	274, 314
3974432B	CAP			274, 314
3974433B	CAP			274
3974456B	GASKET			262
3974502B	GASKET			262, 296
3974514B	SPRING			272, 312
3974515B	RETAINER			272, 312
3974518B	CAP			272, 312
3974521B	BRACKET			272, 312
3974523B	ORIFICE			272
3974524B	WASHER			272, 312
3974525B	SPRING			272
3974546B	KEY			278, 282, 318, 322

Code for disposition of old part number
A -- Use up
B -- Use on other application (See PNI)
C -- File PDR Report with Bobcat Parts Sales
D -- Part Number Error

https://www.pdfmanual4trucks.com/

Part No.	Description	Was	Code	Page
3974547B	STOPPER	6653843	A	282, 322
3974547B	STOPPER			282, 322
3974577B	O-RING			262, 278, 304, 318
3974601B	GASKET			264, 290
3974618B	CIRCLIP			280, 320
3974620B	CIRCLIP			280, 320
3974624B	STOPPER			280, 320
3974626B	SHIM			296
3974627B	STUD			286
3974630B	GASKET			264, 280
3974644B	PLATE			294, 334
3974658B	SHAFT			292
3974659B	BOLT			292
3974671B	NUT			278, 318
3974679B	BAND			286, 310, 326
3974693B	GASKET			458
3974787B	RACK			298
3974868B	PIN			268, 308
3974871B	ADAPTER			268, 308
3974882B	BRACKET			274, 314
3974888B	BOLT			266, 306
3974893B	SEAT			266, 306
3974894B	FLANGE			266, 306
3974895B	GASKET			262, 266
3974920B	SCREW			272, 312
3974923B	NUT			270
3974924B	PLATE			269, 270
3974925B	PLATE			270
3974926B	ELEMENT			270
3974927B	SHIELD			270
3974930B	PIPE			270
3974931B	CLAMP			270
3974945B	WASHER			278
3974970B	SCREW			293, 294
3974971B	NUT			294, 334
3974972B	GASKET			294, 334
3974975B	APPARATUS			289, 290, 329, 330
3974978B	NUT			290, 330
3974979B	CAP			290, 330
3974988B	PIPE			286
3974991B	BEARING			284
3974992B	FLANGE			284
3974995B	GASKET			262
3974996B	COVER			280
3975021B	WASHER			278
3975022B	WASHER			278
3975334B	SLEEVE			278
3975337B	COLLAR			278, 318
3975389B	GASKET			298, 336
3975426B	OIL PUMP			268, 308
3975428B	SCREW			298, 336
3975436B	SCREW	3974928B	A	270, 310
3975436B	SCREW			270, 310
3975441B	GEAR			268, 308

Code for disposition of old part number
A -- Use up
B -- Use on other application (See PNI)
C -- File PDR Report with Bobcat Parts Sales
D -- Part Number Error

https://www.pdfmanual4trucks.com/

Part No.	Description	Was	Code	Page
3975442B	COLLAR			280
3975447B	DRAINCOCK			268
3975449B	GASKET			262, 276
3DM00012B	NUT			268
40DM00008B	NUT			548
40K000002B	PLUG			286
40K000006B	PLUG			238
41G000806B	SCREW			386
42H000010B	CLAMP			32, 446, 452, 458
42H000016B	CLAMP			128, 132
42H000032B	CLAMP	6513595	A	32, 240, 242
42H000052B	CLAMP			240, 242
42HL00300B	CLAMP	6598799	A	240, 418
43C000524B	BOLT			118
43C000532B	BOLT			68, 118
43C000852B	BOLT	17C000844B	B	402
43DM6	NUT	55D4	D	376
44H20	CLAMP	6666864	A	154
45C000620B	BOLT	45C000624B .	B,D	160
45G000508B	BOLT			398
45G001008B	BOLT			370, 374, 378, 380
45G001212B	BOLT			210, 218, 398
45K000005B	ADAPTER			128, 496
45K000007B	FITTING			70, 428
45K000008B	ADAPTER			158, 496, 498
45KN00008B	ADAPTER			158, 496
46D000005B	NUT			370, 376, 378, 380
46K000008B	ELBOW			70, 128, 428, 430, 432
47C000820B	BOLT			48
47K000008B	PLUG			172, 182, 186
48K16	O RING 10			70, 130, 428
4CM00615B	BOLT			336
4CM00616B	BOLT			296
4CM00620B	BOLT			266, 294, 306, 334
4CM00628B	BOLT			292
4CM00814B	BOLT			280
4CM00816B	BOLT			274, 276, 282
4CM00818B	BOLT			282
4CM00822B	BOLT			286, 288, 296, 326, 328, 336
4CM00825B	BOLT			278, 318
4CM00828B	BOLT			278, 284, 318, 324
4D000020B	NUT			470, 472
4DM00005B	NUT			208, 216, 416
4DM10	NUT			208, 216
4E000004B	WASHER			226, 386, 446
4E5	WASHER			446
4F004051B	PIN			436
4F005062B	PIN			12
4F6106	PIN			14, 522, 524
4FM00018B	PLUG			268
4FM45	PLUG			268
50D000005B	NUT			398
50D000012B	NUT			10, 210, 218, 398
51E000404B	ADAPTER			488, 498, 502

Code for disposition of old part number
A -- Use up
B -- Use on other application (See PNI)
C -- File PDR Report with Bobcat Parts Sales
D -- Part Number Error

https://www.pdfmanual4trucks.com/

Part No.	Description	Was	Code	Page
5289686B	PLUG			20, 375, 376, 380
52E001212B	ADAPTER	52E000012B	D	154
53D10	NUT	83D000010B	B	6
54K020002B	O-RING			88, 92, 94, 96, 98, 108, 110, 114, 140, 144, 148
54K020028B	O-RING			118
54K030300B	O-RING			80
54K060304B	O-RING			80
54K30118	O-RING	NSS	D	82
54K30226	O-RING	25K030226B	A	74, 76
54K30226	O-RING			74, 76
54K40124	O-RING	25K040124B	A	82
54K40300	O-RING	58K000234B	A	74, 76
54K40300	O-RING			74, 76
55D4	NUT			52, 364, 380, 514
55D6	NUT			24, 404
55D7	NUT			464, 514
55K000204B	O-RING			104, 108, 110, 114, 118
55K000212B	O-RING			104, 108, 110, 114, 118
57D000004B	NUT			22, 60, 362, 404
57D000005B	NUT			52, 60, 244, 362, 364, 378
57D000008B	NUT			474
57D6	NUT 5			22, 24, 84, 152, 232, 378, 392, 412, 436
58G000808B	SCREW			416, 426
58K000017B	O-RING			86, 90, 94, 102, 110, 114, 140, 144, 148
58K000018B	O-RING			154
58K000116B	O-RING	80K000116B	B	126
58K000124B	O-RING			88, 92, 96, 98, 102, 106, 112, 114, 142, 146, 148
58K000127B	O-RING	6595663	A	92, 96, 98, 104, 107, 108, 112, 114, 146, 150
58K000127B	O-RING			92, 96, 98, 104, 107, 108, 112, 114, 146, 150
58K000243B	O-RING			36, 164
58K000338B	O-RING			78
58K14	O RING 10			86, 90, 94, 98, 102, 106, 110, 114, 140, 144, 148, 436
59D4	NUT 5			460, 462
59D5	NUT 5			210, 216, 498, 499, 500
59D6	NUT			22, 24, 52, 56, 58, 62, 70, 428, 430, 432
59D8	NUT 5			6
59G000616B	BOLT			350, 352
5CM00812B	BOLT			312
5CM01035B	BOLT			244
5CM1025	BOLT			250
5HM00024B	CLAMP			446, 452
5HM00042B	CLAMP			154, 236
5HM20	CLAMP			452
5JM00014B	CIR-CLIP			272
5JM00024B	CIRCLIP			280, 320
614142B	SLEEVE			424, 514
619021B	WASHER			30, 84, 160
61D000006B	NUT			4, 26, 32, 152, 236, 248, 346, 388, 390, 392, 404, 412, 484
61D4	NUT 5			198, 204, 208, 218, 226, 350, 352, 446
61D5	NUT			10, 24, 240, 242, 350, 352, 372, 394, 404, 446, 478, 516, 520, 528

Code for disposition of old part number
A -- Use up
B -- Use on other application (See PNI)
C -- File PDR Report with Bobcat Parts Sales
D -- Part Number Error

https://www.pdfmanual4trucks.com/

Part No.	Description	Was	Code	Page
61E000004B	NUT			488, 498, 502
62D000004B	NUT			208, 216, 256, 386
62D000006B	NUT			132, 162, 406
62D000008B	NUT			132
63E000004B	PLUG			488, 498, 502
6500989	CLAMP			498, 502
6502203	CLAMP			52, 56, 58, 62, 70, 428, 430, 432
6505813	CONNECTOR			240
6510171	LINK			36, 38
6510470	RING GEAR			250, 404
6511855	SEAL			156, 236, 240, 242
6512026	BUSHING			84
6512067	GROMMET			446
6512274	CLIP			370, 376, 378, 380
6512797	RIVET			526
6512809	KEY			198, 202
6512954	ROD END			132
6513152	SEAL			371, 372, 374, 378, 382, 384
6513466	SEAL			74, 76
6513495	COTTER PIN			84, 436
6513510	PISTON			164
6513532	POPPET			164, 166, 168, 170
6513533	SPRING			164, 166, 168, 170
6513709	CAP PLUG			70, 428
6513971	TIRE	NAP	D	546
6515007	GAUGE			240
6515045	TUBE			546
6515131	TERMINAL			424
6515167	PLUG			70, 428
6515168	CAP			70, 428
6515521	SWITCH			454
6515575	CLAMP			32, 236, 488
6515598	PLUG	6515590	D	128
6515599	CAP			128
6515817	WASHER			6
6516033	TUBE			546
6516231	RING			82
6517516	LIGHT			424
6517924	CONNECTOR			514
6518200	GREASE ZERK			160
6518460	PIN			172, 176, 182, 186
6518820	CLAMP			236
6518952	WASHER			404
6519178	BUMPER			26
6519548	CONNECTOR			204, 415, 416, 476, 478
6531270	SLEEVE			86, 90, 94, 98, 102, 106, 140, 144, 148
6532127	BOOT			20, 224, 440
6533898	DECAL			474
6534559	SEAL KIT			104
6534630	RESTRICTOR			86, 90, 94, 98, 104, 108, 112, 114, 140, 144, 148
6535451	HOSE			60, 64, 68
6537096	WASHER			88, 92, 96, 98, 102, 103, 104, 142, 146, 148, 149, 150
6538141	SEAL			78

Code for disposition of old part number
A -- Use up
B -- Use on other application (See PNI)
C -- File PDR Report with Bobcat Parts Sales
D -- Part Number Error

https://www.pdfmanual4trucks.com/

Part No.	Description	Was	Code	Page
6538466	BUSHING			88, 142
6539144	TUBE			74, 76
6539185	HEAD			74, 76
6539299	SPACER			82
6539304	ROD			82
6539323	HEAD			82
6539932	PISTON			78
6539934	HEAD			78, 80
654299B	BEARING			180, 186
6544654	BUSHING			44, 84
6550826	TIRE			546
6552871	WASHER			50
6552906	BRACKET			464, 514
6553411	BUSHING			4, 32, 44, 48, 238, 488
6553412	ELBOW			238
6553709	WASHER			6
6554100	TREAD			394
6554149	CORD			7, 8, 374, 378, 382, 384
6554858	BALL JOINT			256
6555331	WIRE ROPE			382
6555351	SEAL			370, 378, 384
6555455	WASHER			26, 208, 216
6555987	BUSHING			4, 26
6555989	BUSHING			26
6556222	INSTRUCTIONS			424
6557224	DECAL			396
6557291	BALL JOINT			256
6557720	HOSE			240
6557831	WASHER			30, 160
6557904	FLASHER			416, 424, 426
6558076	KIT			423, 424
6558309	WIRE ROPE			394, 436
6558310	SLEEVE			394, 436
6559447	WASHER			154
6559479	NUT			10, 44
6559775	EARMUFFS			540
6560172	COVER			208, 216
6560416	WASHER			26
6560573	DECAL			396
6560633	DAMPENER			6
6561095	RIM			546
6561218	SHUTTLE			164, 168
6561383	DECAL			394
6562257	MOUNT			244
6562266	CLAMP			74, 76, 78, 80
6562602	BUSHING			6
6562619	BUSHING			342, 418
6562777	RIM			546
6562905	CABLE			210, 216
6563128	SPRING			22
6563148	BLOCK			10
6563151	LINK			10
6563410	DECAL			370, 378
6563452	FITTING			240

Code for disposition of old part number
A -- Use up
B -- Use on other application (See PNI)
C -- File PDR Report with Bobcat Parts Sales
D -- Part Number Error

https://www.pdfmanual4trucks.com/

Part No.	Description	Was	Code	Page
6563505	CONDUIT			208, 216
6563606	WASHER			50
6563914	WASHER			84, 160, 436
6563920	FILTER			208, 218
6563922	SNUBBER			208, 218
6564343	SPACER			256
6564452	GRIP			256
6564517	WIRE			454
6564527	DECAL			458
6564657	PIN			84
6564669	NUT			50, 546
6564697	TEE			458
6564833	SAFETY TREAD	6703757	B	370, 376, 378
6564833	SAFETY TREAD			370, 376, 378
6564991	CABLE			208, 216
6565170	CABLE			210, 216
6565200	DECAL			396
6565270	VINYL CAB			367, 368
6565355	GUIDE			10
6565977	HOSE			458
6565990	DECAL			396
6566957	INSTRUCTIONS			384
6567604	SPACER			6
6567743	PIN			6, 240, 242
6567827	ANGLE			474
6567838	PIN			474
6567962	WASHER			256
6567968	WIRE			514
6568047	NUT			370, 374, 378, 380
6568055	BRACKET			370, 378
6568476	CLAMP			70, 428, 430, 432
6568704	MOULDING			372, 378
6568705	WINDOW	6568075	D	370
6568728	SHIELD			370, 378
6568739	HARNESS			370
6568877	WASHER			244
6569033	WINDOW	NSS	D	378
6569095	MOUNT			422
6569112	KIT			421, 422
6569203	CLAMP			210, 216, 498
6569219	SCREEN			32, 154
6569465	AXLE			50
6570040	INSTRUCTIONS			422
6570223	INSTRUCTIONS			466
6570929	INSTRUCTIONS			372, 378
6570931	INSTRUCTIONS			342
6571536	PULLEY			228
6571715	HINGE			370, 378
6571717	HINGE			372
6571744	BOB-TACH			30
6571851	SNAP RING			40, 42
6571852	SNAP RING			40, 42
6571991	GUIDE			14, 522, 524
6575580	GASKET			240, 242, 262, 288

Code for disposition of old part number
A -- Use up
B -- Use on other application (See PNI)
C -- File PDR Report with Bobcat Parts Sales
D -- Part Number Error

https://www.pdfmanual4trucks.com/

Part No.	Description	Was	Code	Page
6576028	HOSE			236
6576033	WASHER			248
6576194	LINK	6706194	B,D	160
6576195	LINK			160
6576196	MOUNT			160, 186
6576238	CLIP			378
6576252	ROD			256
6576262	MOUNT			256
6576280	BOLT			210, 216
6576302	BAR			84
6576386	HOSE			32
6576470	ROD			378
6576471	SHIELD			378
6576660	TANK			236
6577058	PIN			160
6577204	SPROCKET			35, 36, 37, 38, 50
6577227	INLET			236
6577230	BRACKET			160
6577382	SPACER			236
6577394	BRACKET			4
6577395	HINGE			22
6577400	BUMPER			22
6577401	BUMPER			22
6577446	BUSHING			30
6577456	KIT			228
6577459	DIPSTICK			154
6577545	GROMMET			350, 352
6577585	BAND			154
6577669	HOSE			52, 56, 58, 62
6577671	HOSE			52, 56, 58, 62
6577690	TUBE			88, 92, 96, 104, 112, 142, 146, 150, 154
6577754	DECAL			12, 396
6577801	LIGHT			204, 476, 478
6577813	BAR			84
6577821	HOSE			32, 488
6577822	HOSE			32, 236
6577880	KIT			341, 342
6577947	SAFETY TREAD			394
6577949	SAFETY TREAD			394
6577954	PIN			26
6577961	GROMMET			20
6578139	LEVER			357, 358
6578140	LEVER			358
6578150	LOCK			10
6578169	HOSE			32
6578172	HOSE	889269B	A	32, 446
6578172	HOSE			32, 446
6578173	HOSE			496
6578174	HOSE			496
6578183	TEE			52, 56, 66
6578185	HOSE			496
6578253	SPRING	6562018	A	30
6578268	BELLCRANK			256
6578278	PAD			32

Code for disposition of old part number
A -- Use up
B -- Use on other application (See PNI)
C -- File PDR Report with Bobcat Parts Sales
D -- Part Number Error

https://www.pdfmanual4trucks.com/

Part No.	Description	Was	Code	Page
6578279	HOSE			236
6578280	HOSE			236
6578284	SHIM			258
6578327	HOSE			156
6578356	BUSHING			26
6578357	BULB			204
6578363	ROD END			208, 216
6578366	BALL JOINT			208, 216
6578368	DECAL			396
6578398	RETAINER			378
6578505	COVER			4, 44
6578528	HARNESS			202, 476, 478
6578689	HUB			50
6578780	CROSSMEMBER			200
6578802	KIT			507, 508
6578804	HOSE			60, 64, 68
6578812	ADAPTER			154
6578824	HOUSING			201, 202, 476, 478
6579072	SPRING	6700743	B	404
6579104	SHIM			30
6579106	SHIM			30
6579324	SHIELD			370, 378
6579325	WINDOW			378, 382
6579326	MOUNT			240, 242
6579385	DECAL			418
6579399	DECAL			418
6579403	DECAL			418
6579509	DECAL			394
6579510	DECAL			370, 394
6579511	DECAL			152, 392, 396
6579528	DECAL			394
6579613	STOP			6
6579639	DECAL			394
6579641	HOUSING			258
658128B	SNAP RING			180, 186
6584978	CONDUIT			44, 514
6585223	ORIFICE			452, 458
6585860	SPRING			44
6586459	SEAL KIT			88, 92, 96, 110, 142, 146, 150
6586575	CYLINDER			81, 82
6586576	TUBE			82
6586577	CASE			82
6586586	TUBE			78, 80
6586588	ROD			78
6586906	PISTON			74
6586910	ROD			74
6586918	SCREW			86, 90, 91, 92, 94, 98, 102, 106, 140, 144, 148
6587458	KEY			32
6587523	WASHER			86, 90, 94, 98, 102, 106, 110, 114, 140, 144, 148
6587526	KIT			541, 542
6587575	ADAPTER			86, 90, 94, 98, 102, 106, 140, 144, 148
6587580	SPRING			86, 90, 94, 98, 102, 106, 110, 114, 140, 144, 148
6587633	BONNET			94, 140, 144, 148

Code for disposition of old part number
A -- Use up
B -- Use on other application (See PNI)
C -- File PDR Report with Bobcat Parts Sales
D -- Part Number Error

https://www.pdfmanual4trucks.com/

Part No.	Description	Was	Code	Page
6587763	BOOT			86, 90, 94, 98, 102, 106, 110, 114, 140, 144, 148
6587888	TEE			140
6587889	TEE			150
6588074	SPOOL	6589663	B	86, 90, 94, 98, 102, 106, 110, 114, 140, 144, 148
6588074	SPOOL	6589663	B,D	86, 90, 94, 98, 102, 106, 110, 114, 140, 144, 148
6588074	SPOOL			86, 90, 94, 98, 102, 106, 110, 114, 140, 144, 148
6588163	SCREW			90, 144
6588165	SCREW			86, 140
6588166	SCREW			86, 90, 140, 144
6588197	SPRING			88, 92, 96, 98, 102, 142, 146, 150
6588781	END CAP			106, 112, 114
6588981	END CAP			86, 92, 94, 98, 102, 140, 144, 145, 146, 148
6588982	SCREW			88, 90, 142, 144
6589045	SPRING			110, 114
6589226	BONNET			86, 90, 94, 98, 102, 106, 140, 144, 148
6589564	RETAINER			90, 94, 98, 102, 106, 110, 114, 144, 148
6589565	BUSHING			92, 96, 98, 102, 106, 110, 114, 146, 150
6589665	BUSHING	6534387	A	30, 74, 78
6589665	BUSHING			30, 74, 78
6591447	STEM			546
6592098	WASHER			86, 90, 94, 98, 102, 106, 140, 144, 148
6592100	COLLAR			86, 90, 94, 98, 102, 106, 110, 114, 140, 144, 148
6592105	BALL			86, 90, 94, 98, 102, 106, 140, 144, 148
6592107	SPRING			86, 90, 94, 98, 102, 106, 140, 144, 148
6592109	ADAPTER			86, 90, 94, 98, 102, 106, 110, 114, 140, 144, 148
6592115	SEAT			86, 90, 94, 98, 102, 106, 110, 114, 140, 144, 148
6592116	NUT			86, 90, 94, 98, 102, 106, 110, 114, 140, 144, 148
6592117	SPRING			86, 90, 94, 98, 102, 106, 110, 114, 140, 144, 148
6592123	RETAINER			86, 140
6592506	CLAMP			432
6592720	PLUG			88, 92, 96, 98, 104, 106, 112, 114, 140, 146, 148
6592766	U-BOLT			436
6593013	SPACER	6706650	A	66
6595014	DECAL	6707867	A	404
6595663	BUSHING			92, 96, 98, 102, 106, 112, 114, 146, 150
6596311	SEAL KIT			96
6596332	SPRING			106, 112, 114
6596436	VALVE			97, 98
6596569	SEAT			106, 110, 114
6596807	PLUG		B	88, 92, 96, 98, 102, 106, 140, 144, 148
6596807	PLUG			88, 92, 96, 98, 102, 106, 140, 144, 148
6598098	PIN			290, 330
6598099	KEY			280, 320
6598101	BALL BEARING			280
6598102	VALVE			296, 336

Code for disposition of old part number
A -- Use up
B -- Use on other application (See PNI)
C -- File PDR Report with Bobcat Parts Sales
D -- Part Number Error

https://www.pdfmanual4trucks.com/

Part No.	Description	Was	Code	Page
6598116	PLUG	6652797	A	274, 314
6598116	PLUG			274, 314
6598136	GASKET	3975419B	A	262, 270
6598142	GEAR			278, 318
6598146	PIPE			300
6598158	CIRCLIP	3975432B	A	280, 320
6598158	CIRCLIP			280, 320
6598174	LEVER			291, 292, 331, 332
6598176	LEVER			294, 334
6598179	COLLAR			320
6598187	PLUG			268, 308
6598275	BOLT	6652487	A	250
6598355	BOLT			292
6598362	ELEMENT			2, 340
6598485	SEALANT			348
6598492	ELEMENT			2, 340
6598703	SEAL			290
6598721	NUT			198, 202
6598757	QUICK COUPLER			70, 130, 428
6598758	QUICK COUPLER			70, 130, 428
6598908	ELBOW			488
6599161	RELIEF VALVE			86, 90, 94, 102, 110, 140, 144, 148
6599360	SEALANT			554
6599365	KIT			194, 196
6599645	PLUG			4, 32
6599652	BOOT			210, 216
6599696	SOCKET & BULB			200
6599719	GREASE			254, 554
6599721	DOOR			368
6599741	WASHER			160
6599744	BALL JOINT			160, 406
6599779	ADJUSTER	6650227	A	520
6599780	TRACK			16
6599931	ALARM			350, 352
65G000608B	BOLT			200
6610510	TIE			52, 56, 58, 62, 198, 204, 208, 210, 214, 220, 238, 376, 380, 400, 460, 462, 484, 512, 514
6617736	HOSE			154
6618194	HOSE			496
6620642	MOTOR			370
6624289	CABLE TIE			128, 400, 452
6624435	NUT			446
6626631	CLAMP			238
6628571	VALVE ASSY			68, 102, 106, 110, 114, 117, 118
6630153	BATTERY CAP			210, 216
6630163	PULLEY			386
6630168	COUPLER			158
6630177	DRAINCOCK			308
6630184	THERMOSTAT			286, 452, 458
6630188	POLISH			554
6630189	POLISH			554
6630190	POLISH			554
6630191	POLISH			554
6630207	RIVET			10, 20
6630340	HOUSING			386

Code for disposition of old part number
A -- Use up
B -- Use on other application (See PNI)
C -- File PDR Report with Bobcat Parts Sales
D -- Part Number Error

https://www.pdfmanual4trucks.com/

Part No.	Description	Was	Code	Page
6630341	STATOR			386
6630342	HOUSING			386
6630343	RETAINER			386
6630344	BRUSH ASSY.			386
6630345	GASKET			386
6630346	COVER			386
6630349	REGULATOR			386
6630350	DIODE			386
6630367	CAP			158
6630465	CUSHION			16
6630468	CUSHION			16
6630469	TRACK			16
6630797	GAS SPRING			370, 376, 378, 382
6630821	SWITCH			514
6630838	CONNECTOR			440
6630918	TRACK			384
6630919	TRACK			384
6630924	BRACKET			384
6630941	COVER			340
6630943	BLADE			370
6630945	WASHER			256
6631008	ARM			370
6631009	SWITCH			370, 378
6631010	SWITCH			208
6631036	JOINT			436
6631418	PIN			6, 12, 14, 240, 242, 522, 524
6631548	LOOP			384, 418
6631549	HOOK			384, 418
6631561	NUT			126
6631598	SEAL KIT			138
6631664	SEAL			278, 318
6631927	GEAR			370, 374, 380
6631928	SHAFT			370
6631935	HANDLE			370, 378
6632053	SWITCH			194, 210
6632218	BEARING			40, 42
6632221	STUD			370, 376, 382
6632265	PLUG			383, 384
6632271	PLUG			164
6632279	SEAL KIT			88, 92, 96, 104, 108, 114, 142, 146, 150
6632323	WASHER			228
6632388	SEAT			515, 516
6632417	BEARING			234
6632418	BEARING			234
6632419	HOUSING ASSY.			234
6632420	BRUSH HOLDER			234
6632421	SPRING			234
6632428	PINION			234
6632429	RETAINER			234
6632430	ROLLER			234
6632432	PLUNGER			234
6632433	GASKET			234
6632434	COVER			234
6632436	SPRING			234

Code for disposition of old part number
A -- Use up
B -- Use on other application (See PNI)
C -- File PDR Report with Bobcat Parts Sales
D -- Part Number Error

https://www.pdfmanual4trucks.com/

Part No.	Description	Was	Code	Page
6632441	SPRING			234
6632541	RACE			40, 42
6632560	KEY			370, 378
6632584	RESISTOR			450
6632587	BALL			454
6632633	SWITCH			208
6632946	TERMINAL			210, 218
6633583	SEALANT			250, 418, 554
6635557	WASHER	896978B	A	386
6636018	LIGHT			200
6640690	PIN			222, 224, 398, 428, 430, 432, 438, 440, 444, 462, 496, 514
6640691	PIN			222, 224, 398, 438, 444, 514
6640692	CONNECTOR			440
6640694	LOCK			440
6640696	CONNECTOR			224, 440
6640699	CONNECTOR			222, 224, 398, 428, 430, 432, 436, 440, 444, 462, 496, 498
6640700	LOCK			222, 224, 398, 428, 430, 432, 436, 440, 444, 462, 496, 498
6641056	GROMMET			450
6641062	SCREW			450, 456
6641065	NUT			446, 450
6641066	SCREW			446, 450
6641072	WASHER			446, 450, 456
6641073	NUT			450, 456
6641173	CONNECTOR			222, 224, 398, 436, 440, 444
6641176	SEAL			222, 224, 398, 428, 430, 432, 438, 440, 444, 462, 496, 514
6641178	CONNECTOR			222, 224, 398, 436, 440, 444, 514
6641179	CONNECTOR	6519548	B	126, 222, 224, 360, 398, 428, 430, 432, 436, 440, 444, 462, 496, 498, 512, 514
6641179	CONNECTOR			126, 222, 224, 360, 398, 428, 430, 432, 436, 440, 444, 462, 496, 498, 512, 514
6641180	LOCK	1732366B	B	126, 222, 224, 360, 398, 428, 430, 432, 436, 440, 444, 462, 496, 498, 512, 514
6641180	LOCK			126, 222, 224, 360, 398, 428, 430, 432, 436, 440, 444, 462, 496, 498, 512, 514
6641181	LOCK			222, 224, 398, 436, 437, 438, 440, 444, 514
6641231	PLATE			294, 334
6641274	LATCH			370, 378
6645080	O-RING	6669412	A	176, 177, 178, 186, 188
6645080	O-RING			176, 177, 178, 186, 188
6645081	O-RING			174, 182
6645086	PLUG	6657081	B	174, 176, 182, 184
6645086	PLUG			174, 176, 182, 184
6646383	CONNECTOR			210, 218
6646582	PLUG			440
6646627	BEARING			258
6646678	CAP			236
6646705	SEAL			240, 242
6646781	SWITCH			350, 352
6647635	KNOB			370, 374, 378, 380
6647777	PIN			126
6647778	CAP			126

Code for disposition of old part number
A -- Use up
B -- Use on other application (See PNI)
C -- File PDR Report with Bobcat Parts Sales
D -- Part Number Error

https://www.pdfmanual4trucks.com/

Part No.	Description	Was	Code	Page
6647783	LOAD CHECK			126
6647784	PLUG			126
6647785	SPRING			126
6647786	SEAL KIT			126
6648293	SCREW			126
6648294	SPRING			126
6648307	CONNECTOR			440
6648326	SWITCH			214
6648348	PLUG			20
6648460	CONNECTOR			456
6648466	MOTOR			456
6648467	MOUNT			456
6648468	FAN			456
6648469	HOUSING			456
6648470	SCREW			450, 456
6648471	CORE			456
6648472	COVER			456
6648474	ELBOW			458
6648475	O-RING			458
6648482	CABLE			458
6648483	VALVE			458
6648485	TEE	6564697	A	452
6648636	HOSE			156
6648967	QUICK COUPLER			128, 488, 502
6648968	QUICK COUPLER			128
6648969	QUICK COUPLER			128, 488, 502
6648970	QUICK COUPLER			128
6649028	CLAMP			398
6649244	STUD			12, 240, 242
6649300	SEAL			278
6649331	SOCKET			204
6649402	MOULDING			236
6649420	LATCH			22
6649459	CONNECTOR			386
6649478	BULB HOUSING			202, 476, 478
6649481	BULB			216, 476, 478
6649536	PLUG			286, 326
6649551	SHOCK			162
6649676	STARTER			250
6649683	SEAL			462, 496
6649686	VALVE			503, 504
6649835	ADHESIVE			22
6650107	SEAL			210, 218
6650219	KNOB KIT			520
6650220	SHROUD			520
6650221	LATCH TILT			520
6650222	SPRING			520
6650223	CABLE			520
6650225	BACK CUSHION			520
6650226	SEAT CUSHION			520
6650228	TRACK			520
6650229	SPRING			520
6650230	SEAT PAN			520
6650231	CLIP			520

Code for disposition of old part number
A -- Use up
B -- Use on other application (See PNI)
C -- File PDR Report with Bobcat Parts Sales
D -- Part Number Error

https://www.pdfmanual4trucks.com/

Part No.	Description	Was	Code	Page
6650239	SCREEN			32
6650241	PUSH NUT			520
6650242	TIP			520
6650243	BOOT			520
6650245	WASHER			520
6650246	WASHER			520
6650247	WASHER			520
6650248	SPACER			520
6650249	SPACER			520
6650250	WASHER			520
6650251	CLIP			520
6650388	SEALANT			554
6650407	ADHESIVE			238, 554
6650626	SEAL			172
6650627	PLATE			172, 176, 180, 184
6650629	PIN			172, 176, 180, 184
6650630	RETAINER			172, 176, 180, 184
6650634	GASKET			172, 176, 180, 184
6650635	BEARING			174, 176, 182, 186
6650636	PIN			172, 176, 182, 184
6650637	BOLT			174, 176, 182, 184
6650640	BEARING			172, 176
6650641	SNAP RING			172, 176
6650645	SHAFT			176
6650646	O-RING			174, 182
6650647	O-RING			174, 182
6650648	PLUG			174, 182
6650649	SHIM			174
6650650	SHIM			174
6650652	POPPET			174, 180
6650653	END CAP			176
6650665	BOLT			186
6650668	BOLT			172, 176, 180, 186
6650670	CAP			174
6650671	SHAFT			172
6650675	COUPLER			172, 182
6650677	COUPLER			176, 186
6650679	BOLT			188
6651482	MANIFOLD			287, 288
6651487	PULLEY			284
6651489	COVER			286, 326
6651542	BALL			164, 166, 168, 170
6651544	GEROLER			164
6651549	SEAL			164
6651552	O-RING			164
6651703	CAP			204
6651709	SEAL			26
6651934	BOLT			280, 320
6651975	SWITCH			398, 446
6652018	BOLT			176, 186
6652019	SNAP RING			172, 176
6652367	HOSE COVER			128, 458
6652574	PLUG			268, 308
6652575	PLUG			268, 308

Code for disposition of old part number
A -- Use up
B -- Use on other application (See PNI)
C -- File PDR Report with Bobcat Parts Sales
D -- Part Number Error

https://www.pdfmanual4trucks.com/

Part No.	Description	Was	Code	Page
6652580	BOLT			284, 290, 324, 330
6652592	PIN			266
6652624	JOINT			270
6652633	BALL			278, 318, 322
6652652	SPRING			266, 306
6652653	PLUG			270, 310
6652670	STUD			274, 288, 296, 314, 326, 328, 336
6652688	CLAMP			300, 338
6652689	CLAMP			300
6652762	BOLT			284
6652764	STUD			266, 294, 306, 334
6652792	NUT			272, 274, 284, 286, 288, 296, 314, 324, 326, 336
6652818	ADHESIVE			6
6652918	NUT	83D000008B	B	244, 402
6652918	NUT			244, 402
6652935	EDGING			16
6653388	MIRROR			404
6653395	VALVE			88, 92, 96, 104, 110, 142, 146, 150
6653484	VALVE			504, 506
6653485	SEAL KIT			504, 506
6653487	SEAL KIT			504, 506
6653488	VALVE			504
6653489	COIL			504
6653562	GASKET			286, 326
6653568	FILTER			316
6653702	SEAL			258
6653757	SNAP RING			258
6653758	SNAP RING			258
6653798	BOLT			276, 316
6653803	GUIDE			274, 314
6653806	GASKET	6655481	A	262
6653807	BOLT			266, 306
6653808	BOLT			266, 306
6653809	ADAPTER			266, 306
6653821	BOLT			278, 318
6653830	SEAL			262, 272, 304, 312
6653832	STUD			272
6653833	SPRING			312
6653839	SCREW			282
6653840	GEAR			282, 322
6653861	SLINGER	6598141	A	278, 318
6653861	SLINGER			278, 318
6653865	WASHER			278
6653888	NUT			308
6653894	SLEEVE			298
6653905	CAP			294, 334
6653906	BOLT ASSY.			290, 330
6653916	HOLDER	3974661B	A	292, 332
6653916	HOLDER	6684834	A	292, 332
6653944	IMPELLER			284
6653945	SET SEAL			284
6653946	STUD			284
6653948	THERMOSTAT			286
6654002	WASHER			278

Code for disposition of old part number
A -- Use up
B -- Use on other application (See PNI)
C -- File PDR Report with Bobcat Parts Sales
D -- Part Number Error

https://www.pdfmanual4trucks.com/

Part No.	Description	Was	Code	Page
6654003	WASHER			278
6654117	SEAL			26, 78
6654139	MOULDING			8, 246
6654191	VALVE			446
6654200	SENSOR			216
6654201	SENSOR			216
6654205	HOSE			158
6654374	KEY			32
6654718	CLAMP			300, 338
6655149	CRANKCASE			267, 268, 307, 308
6655151	OIL PAN			275, 276, 315, 316
6655152	HOOK			273, 274
6655153	HEAD			274
6655154	GUIDE			274, 314
6655155	SEAT			272, 312
6655156	SEAT			272, 312
6655158	BOLT			274, 314
6655159	GASKET			262, 274, 304, 314
6655160	PLUG			274, 314
6655161	WASHER			274, 314
6655162	O-RING			262, 266
6655163	CASE			278
6655164	BOLT			278
6655166	COVER			278
6655167	GASKET			262
6655168	CASE			278
6655169	CASE			278
6655170	CASE			278
6655171	MANIFOLD			288
6655173	VALVE			271, 272, 311, 312
6655174	VALVE			272, 312
6655175	COVER			270
6655176	PUSHROD			282, 322
6655179	PIN			278, 318
6655180	CIR-CLIP			278
6655181	ROD			278, 318
6655183	PIN			278, 318
6655184	CRANKSHAFT			278
6655185	BEARING			278
6655186	BEARING			278
6655190	COLLAR			282
6655191	COLLAR			282
6655192	CIR-CLIP			282
6655193	SHAFT			282
6655194	OIL FILTER			276
6655195	BOLT			268, 308
6655198	PIPE			300
6655199	PUMP			297, 298
6655201	ELEMENT			298
6655202	VALVE			298
6655203	SPRING			298
6655204	HOLDER			298
6655205	PLATE ASSY.			298
6655206	BOLT			298

Code for disposition of old part number
A -- Use up
B -- Use on other application (See PNI)
C -- File PDR Report with Bobcat Parts Sales
D -- Part Number Error

https://www.pdfmanual4trucks.com/

Part No.	Description	Was	Code	Page
6655207	PLATE			298
6655209	PLATE			298
6655210	SHIM			296, 336
6655211	CAMSHAFT			279, 280, 319, 320
6655212	GEAR			280, 320
6655213	SLEEVE			280, 320
6655214	CASE			280, 320
6655215	BALL			280, 320
6655216	FUEL PUMP			32, 296, 336
6655218	GASKET			262, 300, 302, 304, 338
6655219	PIPE			300, 338
6655220	PIPE			300, 338
6655221	PIPE			300, 338
6655222	PIPE			300, 338
6655223	NUT			294, 334
6655224	LEVER	6655876	A	292, 332
6655224	LEVER			292, 332
6655225	SPRING			292, 332
6655227	SPRING			292, 332
6655228	STOPPER			294, 334
6655230	COVER			290
6655231	SHAFT			290, 330
6655232	LEVER			290, 330
6655233	GLOW PLUG			300, 338
6655234	CORD	6686987	A	300, 338
6655235	PULLEY			278, 318
6655236	PIN			278, 318
6655237	PIN			278, 318
6655238	BEARING			278
6655239	BEARING			278
6655240	BEARING			278
6655241	BEARING			278
6655242	BUSHING			282, 322
6655243	BUSHING			278, 318
6655427	CAMSHAFT			282, 322
6655498	BOLT			278, 318
6655515	JOINT			296, 336
6655518	O-RING	6646730	A	298
6655540	COVER			330
6655781	BEARING			248, 436
6655795	SEAL KIT			128, 488, 502
6655796	SEAL KIT			128
6655869	PLUG			268, 308
6655870	ROCKER ARM			272, 312
6655872	HEAT SEAL			262, 300, 302, 304, 338
6655873	PIECE			302
6655875	CAMSHAFT			280, 320
6655877	LEVER			292, 332
6655878	SPRING			292, 332
6655880	PIPE			285, 286, 310, 325, 326
6655884	PLUG	3974051B	A	268
6655937	VALVE			340
6655938	VALVE			340
6656126	WASHER			302

Code for disposition of old part number
A -- Use up
B -- Use on other application (See PNI)
C -- File PDR Report with Bobcat Parts Sales
D -- Part Number Error

https://www.pdfmanual4trucks.com/

Part No.	Description	Was	Code	Page
6656127	WASHER			302
6656128	WASHER			302
6656129	WASHER			302
6656130	WASHER			302
6656131	WASHER			302
6656132	WASHER			302
6656155	HOSE COVER			52, 56, 58, 62
6657028	O-RING			172, 176, 182, 184
6657067	COVER			172, 176, 182, 184
6657068	COVER			172, 176, 180, 186
6657074	ADAPTER			172
6657077	HOUSING			176
6657079	O-RING			172
6657306	CAP			448
6657376	ELBOW			236, 237, 238
6657401	GASKET KIT			262, 274
6657402	GASKET KIT			262, 268
6657409	SEAL KIT			486, 504
6657460	NUT			302
6657463	WASHER			302
6657663	PLUG			308
6657696	RINGS			278, 318
6657719	PLUG			20, 446
6657720	TUBE			504
6657721	DISC			504
6657734	PUMP			32
6657742	KIT			302
6658092	SEAL KIT			174, 178, 182, 186
6658142	WINDOW			384
6658143	WINDOW			384
6658180	BREATHER			32
6658228	SEAL			50, 348
6658252	QUICK COUPLER			128
6658253	QUICK COUPLER			128
6658301	SPRING			174, 182
6658302	SHIM			174
6658352	MOULDING			382
6658365	HOSE			154
6658536	RING			252
6658564	HOLDER			230
6658565	BRUSH			230
6658566	BRUSH			230
6658567	BUSHING			230
6658568	SPRING			230
6658569	BEARING			230
6658570	BEARING			230
6658571	SUPPORT			230
6658572	LEVER			230
6658573	STOP			230
6658574	ARMATURE			230
6658575	FRAME			230
6658576	SHAFT			230
6658577	SUPPORT			230
6658579	HOUSING			230

Code for disposition of old part number
A -- Use up
B -- Use on other application (See PNI)
C -- File PDR Report with Bobcat Parts Sales
D -- Part Number Error

https://www.pdfmanual4trucks.com/

Part No.	Description	Was	Code	Page
6658580	FRAME			230
6658581	O-RING			230
6658582	SOLENOID			230
6658672	SNAP RING			44, 48
6658682	BEARING			436
6658693	HEATER			454, 455, 456
6658818	SENDER			208
6658847	RING			252
6658930	BOOT			436
6659327	KEY			508
6659371	NUT			228
6659372	WASHER			228
6659374	SPACER			228
6659375	FAN			228
6659376	BRACKET			228
6659378	BOLT			228
6659379	BEARING			228
6659380	ROTOR			228
6659381	STATOR			228
6659382	BRACKET			228
6659384	RECTIFIER			228
6659385	SCREW			228
6659386	HOLDER			228
6659387	NUT			228
6659388	CONDENSER			228
6659390	HOLDER			228
6659391	NUT			228
6659392	BOLT			228
6659393	REGULATOR			228
6659394	BRUSH			228
6659395	SPRING			228
6659396	SCREW			228
6659397	TERMINAL			228
6659398	COVER			228
6659399	SCREW			228
6659400	CONNECTOR			228
6659459	CHECK VALVE			128
6659476	BACK-UP RING			164
6659477	O-RING			164
6659478	DISC			164
6659482	DOWEL PIN			164
6659483	BACK-UP RING			164
6659484	O-RING			164
6659485	BACK-UP RING			164
6659543	PLUG			480
6659553	SEAL			462, 496
6659574	SEAL KIT			134
6659578	SHIM			174, 178
6659579	SHIM			174, 178
6659580	SHIM			174, 178
6659581	SHIM			174, 178
6659582	SPACER			174, 178
6659601	SEAL KIT			164
6659890	SHIELD			456

Code for disposition of old part number
A -- Use up
B -- Use on other application (See PNI)
C -- File PDR Report with Bobcat Parts Sales
D -- Part Number Error

https://www.pdfmanual4trucks.com/

Part No.	Description	Was	Code	Page
6659891	MOULDING			456
6659892	MOULDING			456
6659949	LATCH			384
6659982	MUFFLER	6703648	A	418
6659999	BELT			526
6660117	BEARING			174, 178
6660204	SENSOR			216
6660260	SWITCH			196, 218
6660294	HORN			460, 462
6660340	VINYL CAB			368
6660348	GAS SPRING			516
6660594	BUTTON			198, 204
6660644	CAP			88, 92, 96, 98, 102, 106, 142, 146, 150
6660654	CONNECTOR			450
6660656	DECAL			450
6660659	SWITCH			446
6660777	KIT			451, 452
6660795	GUIDE			452
6660797REM	STARTER			230
6660814	O-RING			172, 176, 180, 186
6660815	SHIM KIT			172, 176
6660822	KNOB			446
6660864	COVER			446
6660865	DECAL			446
6660868	DECAL			450
6660869	KNOB			450
6660871	HOUSING			450
6660872	DOOR			450
6660873	BRACKET			450
6660874	HOUSING			450
6660875	COVER			450
6660876	MOTOR			450
6660877	MOULDING			450
6660878	MOULDING			450
6660879	ELBOW			446
6660880	FILTER			446
6660881	KNOB			446
6660883	TIE			446, 452
6660884	SCREW			446
6660885	LOUVER			446
6660888	VENT			446
6660890	COVER ASSY.			446
6660892	HARNESS			446
6660893	SPACER			446
6660894	HARNESS			446
6660930	THUMBSCREW			446
6660932	LATCH			370, 378
6660967	CAP			248
6660988	RETAINER			354, 370, 378, 424, 426, 512, 544
6660994	BELT			248, 249, 250
6660995	GREASE RING			248
6661020	KEY			138
6661022	FILTER			156, 191, 192
6661062	PLUG			240, 242

Code for disposition of old part number
A -- Use up
B -- Use on other application (See PNI)
C -- File PDR Report with Bobcat Parts Sales
D -- Part Number Error

https://www.pdfmanual4trucks.com/

Part No.	Description	Was	Code	Page
6661066	SEAL			248
6661070	SLEEVE			248
6661076	HOSE			156
6661114	CAP			32
6661117	TANK			406
6661180	LOCK			440
6661183	LOCK			224, 440
6661209	RIVET			236
6661213	RING			32
6661225	VALVE			130, 140, 144, 148
6661238	OIL COOLER			158
6661242	COVER			340
6661243	WING NUT			340
6661244	WASHER			340
6661247	FILTER			195, 196
6661248	ELEMENT			2, 158, 194, 196
6661328	SEAL KIT			112
6661334	FILTER ASSY			193, 194
6661382	ELBOW			32
6661405	OIL			250
6661448	SEAL KIT			136
6661481	O-RING			182
6661518	SENSOR			218
6661608	SEAL KIT			410
6661611	ALTERNATOR			227, 228
6661686	SUPPORT			230
6661688	DRIVE			230
6661689	TRACK			384
6661690	TRACK			384
6661694	PISTON			82
6661696	CAP			32
6661758	BLOCK ASSY			172, 176, 182, 184
6661785	MOUNT			244
6661787	WASHER			244, 402
6661807	KIT			192
6661808	KIT			192
6662257	PIN			222, 398, 438, 444
6662306	RING			50, 348
6662349REM	PUMP REM / CORE EXCHANGE REQUIRED	6662349	A	172, 176
6662437	WASHER			234
6662695	VALVE			130, 132, 135, 136, 488, 502
6662834	SPRING			370, 378
6662839	HINGE KIT			368
6662848	CAP			88, 92, 96, 98, 104, 108, 112, 114, 142, 146, 150
6662997	PULLEY			248
6664004	CLAMP			240, 242
6664024	STEM			136
6664025	STEM			136
6664026	CHECK VALVE			136
6664032	SEAL KIT			136
6664035	CAP			398
6664036	NUT			398

Code for disposition of old part number
A -- Use up
B -- Use on other application (See PNI)
C -- File PDR Report with Bobcat Parts Sales
D -- Part Number Error

https://www.pdfmanual4trucks.com/

Part No.	Description	Was	Code	Page
6664037	WASHER			398
6664040	PIN			200, 204, 398
6664041	SOCKET			210, 218, 398
6664085	BUSHING			376
6664095	ARM			376, 380
6664096	BLADE			376, 380
6664181	CONNECTOR			398
6664182	CONNECTOR			398
6664205	GAS SPRING			6
6664207	GAS SPRING			12
6664209	SEAL			252
6664212	CHECK VALVE			504, 506
6664221	RETAINER			12, 404, 514, 516
6664223	OUTLET			404
6664224	CAP			404
6664286	BOOT	6675280	A	210, 218, 226
6664286	BOOT			210, 218, 226
6664310	CLIP			6
6664351	SEAL			6, 384
6664373	VALVE			88, 92, 96, 104, 142, 146, 150
6664374	PLUG			6
6664388	DIODE			398
6664554	PUMP			374, 380, 512
6664584	CONNECTOR	6665683	A	200, 204
6664585	CONNECTOR	6665682	A	210, 218
6664599	CONNECTOR	6664184	B	222, 398, 436, 444
6664599	CONNECTOR	6664184	B,D	222, 398, 436, 444
6664599	CONNECTOR			222, 398, 436, 444
6664800	LOCK	6664186	B	222, 398, 436, 444
6664800	LOCK	6664186	B,D	222, 398, 436, 444
6664800	LOCK			222, 398, 436, 444
6664806	HOUSING			450
6664807	COVER			450
6664808	DOOR			450
6664815	SEAL			166, 168, 170
6664827	PIN			200, 204
6664828	SOCKET			210, 218
6664849	VALVE			52, 53, 54, 56, 66, 119, 120
6664850	VALVE			52, 56, 66, 121, 122
6664886	HOURMETER			200, 464, 514
6665000	CLIP			12, 200, 204, 224, 440, 516
6665001	CONNECTOR			398
6665012	SEAL			6, 384
6665021	LENS			542
6665022	FLASH TUBE			542, 544
6665023	GASKET			542
6665024	BRANCH GUARD			542
6665025	LENS			542
6665031	BATTERY			210, 216
6665032	BATTERY			2
6665033	SENDER			218
6665086	SEAL			74, 76, 78, 80
6665089	SEAL			88, 142
6665208	SEAL			82

Code for disposition of old part number
A -- Use up
B -- Use on other application (See PNI)
C -- File PDR Report with Bobcat Parts Sales
D -- Part Number Error

https://www.pdfmanual4trucks.com/

Part No.	Description	Was	Code	Page
6665314	PLUG			198, 404, 536
6665315	SWITCH			416
6665316	SWITCH			416
6665318	SWITCH	6719038	D	200
6665321	RIVET			200, 204, 224, 440
6665322	RIVET			200, 204, 224, 440
6665353	SWITCH			404
6665356	BLOCK			210, 218
6665357	LOCK			210, 218
6665358	COVER			210, 218
6665367	BULB			404
6665369	MOUNT			210, 218
6665371	SWITCH			214, 340
6665410	SWITCH			202, 476, 478
6665411	WEDGE			210, 218
6665430	BACKUP RING			70, 130, 428
6665431	SOCKET			214, 476
6665487	SEAL KIT			66, 120
6665489	ADAPTER			66, 120
6665490	VALVE			66, 122
6665527	TIE			200, 204
6665530	LATCH			374, 380
6665531	LATCH			374, 380
6665532	MOTOR			374, 380
6665568	EXTRUSION	6658352	B	6, 374, 378, 382, 384
6665568	EXTRUSION			6, 374, 378, 382, 384
6665569	WASHER			86, 90, 94, 102, 110, 114, 140, 144, 148
6665570	RING			86, 90, 94, 102, 110, 114, 140, 144, 148
6665602	MOTOR			512
6665605	CAP			374, 380, 512
6665606	SWITCH			198, 202
6665609	CHECK VALVE			66, 120, 122
6665610	VALVE			66, 120, 122
6665611	SEAL KIT			66, 120, 122
6665612	SEAL KIT			66, 120, 122
6665656	CLIP			16
6665687	ARM	1744552B	A	512
6665688	BLADE			512
6665701	BUSHING	6630081	A	84, 160
6665707	SWITCH			374, 380
6665719	PLUG			136
6665724	TIRE			546
6665727	LIGHT			416
6665728	LIGHT			416
6665729	LIGHT			416
6665730	LIGHT			354
6665757	LIGHT			416
6665758	VALVE			86, 90, 94, 104, 140, 144, 148
6665846	SEAL			96
6665922	LAMP	6661353	A	214, 476
6666290	PLATE	6650672	C	172
6666291	VALVE PLATE	6650673	C	176
6666338	WASHER			174, 178, 180, 184
6666339	BOLT	6650679	A	176, 186

Code for disposition of old part number
A -- Use up
B -- Use on other application (See PNI)
C -- File PDR Report with Bobcat Parts Sales
D -- Part Number Error

https://www.pdfmanual4trucks.com/

Part No.	Description	Was	Code	Page
6666339	BOLT			176, 186
6666340	SEAL KIT	6655421	A	188
6666341	VALVE	6645249	A	52, 60, 125, 126, 362, 364
6666341	VALVE			52, 60, 125, 126, 362, 364
6666379	CABLE	6658613	A	436
6666384	RADIATOR			236
6666534	SEAL			438
6666547	COIL			112
6666563	LENS			416
6666564	HOUSING			416
6666565	LENS			416
6666566	GASKET			416
6666568	BULB			416
6666569	BULB			416
6666570	BULB			416
6666571	BULB			354
6666572	LENS			354
6666576	SPOOL	6666588	B	90, 144
6666576	SPOOL	6666588	B,D	90, 144
6666579	SPOOL	6666591	B,D	86, 90, 140, 144
6666579	SPOOL			86, 90, 140, 144
6666580	SPOOL	6666592	B,D	86, 90, 140, 144
6666580	SPOOL			86, 90, 140, 144
6666581	SPOOL	6666593	B,D	86, 90, 140, 144
6666581	SPOOL			86, 90, 140, 144
6666588	SPOOL	6666576	A	86, 94, 98, 102, 106, 140, 148
6666588	SPOOL			86, 94, 98, 102, 106, 140, 148
6666589	SPOOL	6666577	A	86, 90, 94, 98, 102, 106, 140, 144, 148
6666589	SPOOL	6666577 Was 6666577 Was 6666577	A	86, 90, 94, 98, 102, 106, 140, 144, 148
6666589	SPOOL			86, 90, 94, 98, 102, 106, 140, 144, 148
6666590	SPOOL	6666578	A	86, 90, 94, 98, 102, 106, 140, 144, 148
6666590	SPOOL			86, 90, 94, 98, 102, 106, 140, 144, 148
6666591	SPOOL			94, 98, 102, 106, 148
6666592	SPOOL			94, 98, 102, 106, 148
6666593	SPOOL			94, 98, 102, 106, 148
6666599	VALVE			136
6666611	VALVE			488
6666616	STEM			110
6666621	ARMATURE			234
6666622	DRIVE			234
6666628	NUT			234
6666629	WASHER			234
6666630	WASHER			234
6666631	WASHER			234
6666632	O-RING			234
6666633	BOLT			234
6666634	BOLT			234
6666635	BOLT			234
6666636	BOLT			234
6666637	NUT			234
6666668	TIRE	NAP	D	546
6666766	GROMMET			376, 382, 512
6666767	NOZZLE	6664555	A	374, 380, 512
6666781	GASKET	3974915B	A	262, 288

Code for disposition of old part number
A -- Use up
B -- Use on other application (See PNI)
C -- File PDR Report with Bobcat Parts Sales
D -- Part Number Error

https://www.pdfmanual4trucks.com/

Part No.	Description	Was	Code	Page
6666781	GASKET			262, 288
6666782	GASKET	3974456B	A	268
6666783	GASKET			304, 330
6666791	GASKET			264, 288
6666792	GASKET	6635392	A	262, 263, 264, 294, 304, 334
6666792	GASKET			262, 263, 264, 294, 304, 334
6666800	GASKET	6653806	A	266, 304, 306
6666800	GASKET			266, 304, 306
6666802	GASKET	3974987B	A	262, 286, 304, 326
6666802	GASKET	6684860	A	262, 286, 304, 326
6666804	GASKET	3974995B	A	284, 304, 320, 324
6666804	GASKET			284, 304, 320, 324
6666811	GASKET	6655172	A	262, 288
6666814	GASKET	6655167	A	278, 304, 318
6666814	GASKET			278, 304, 318
6666828	SEAL KIT			66, 122
6666916	BOSS	6722444	A	216, 217, 218
6666918	BOSS			218
6666932	BRAKE			406, 407, 408
6666933	CYLINDER			406, 409, 410
6667127	PLUG			66, 120, 122
6667132	O-RING			120
6667139	CAP			406
6667176	PLUG			126
6667183	HEATER			450
6667189	HOSE			238
6667324	SEAL	6665184	A	82
6667326	SEAL	6538141	A	74, 76, 80
6667326	SEAL			74, 76, 80
6667352	FILTER FUEL	6647773	A	2, 32
6667352	FILTER FUEL			2, 32
6667353	FILTER ASSY	6657020	A	32
6667382	PUMP	6662693	A	132, 137, 138
6667418	PLUG			308
6667419	WASHER			308, 332, 334
6667420	BOLT			320
6667421	BOLT			314, 316
6667422	WASHER			306, 312, 314, 324, 326, 336
6667425	PLUG	6652591	A	266, 306
6667425	PLUG			266, 306
6667428	TAPPET	3974540B	A	281, 282, 321, 322
6667428	TAPPET	6680707	A	281, 282, 321, 322
6667433	CIRCLIP			322
6667437	CRANKSHAFT			318
6667451	WASHER			312, 334
6667460	FAN	6684867	A	284, 324
6667460	FAN			284, 324
6667461	PIN			312
6667465	SEAL			284
6667480	CHAMBER	6655157	A	274
6667549	VALVE	6661345	B	86, 90, 94, 102, 110, 140, 144, 148
6667549	VALVE			86, 90, 94, 102, 110, 140, 144, 148
6667565	BLOWER			450
6667566	HOUSING			450

Code for disposition of old part number
A -- Use up
B -- Use on other application (See PNI)
C -- File PDR Report with Bobcat Parts Sales
D -- Part Number Error

https://www.pdfmanual4trucks.com/

Part No.	Description	Was	Code	Page
6667567	COVER			450
6667569	CONNECTOR			398
6667573	DECAL			480
6667676	COVER			126
6667677	O-RING			126
6667680	SNAP RING			126
6667687	STEM	6665004	A	66, 118, 120
6667687	STEM			66, 118, 120
6667803	COUPLER			498
6667804	COUPLER			498
6667828	BOSS	6661214	A	216
6667844	VALVE ASSY			68, 123, 124
6667887	BULB			416
6667903	SWITCH	6700603	A	198, 202
6667904	SWITCH			198, 202
6667905	SWITCH	6706995	A	198, 204
6667934	BULB	6650111	A	202, 476, 478
6667934	BULB			202, 476, 478
6667996	PUMP			298
6668007	SCREW			416
6668010	LENS			416
6668079	PLUG			166, 168, 170
6668080	SHIM			168, 170
6668082	POPPET	6685064	A	168, 170
6668082	POPPET			168, 170
6668088	PISTON			168
6668089	PLUG			166, 168, 170
6668097	SCREW			410
6668104	MOUNT			402
6668114	BEARING			252
6668717	SCREW			520
6668719	PIN			210, 219, 220
6668720	PIN			210, 220
6668725	VALVE	6661443	B,D	136
6668742	SWITCH			404
6668791	ORIFICE			118
6668813	SWITCH	6665320	A	128, 204
6668814	SWITCH	6665319	A	200, 360, 364
6668814	SWITCH			200, 360, 364
6668815	SWITCH			424, 426
6668816	SWITCH	6665317	A	354, 544
6668816	SWITCH			354, 544
6668817	SWITCH	6665706	A	512
6668820	NUT			118, 120
6668879	DECAL			350, 352
6668881	CORD			356
6668927	PLUG			200
6668953	BRACKET			18
6669034	BELT	6701158	A	236, 248
6669057	CHECK VALVE			118
6669076	O-RING			120
6669085	VALVE			124
6669087	SEAL KIT			124
6669089	TRACK	6672735	A	18, 518

Code for disposition of old part number
A -- Use up
B -- Use on other application (See PNI)
C -- File PDR Report with Bobcat Parts Sales
D -- Part Number Error

https://www.pdfmanual4trucks.com/

Part No.	Description	Was	Code	Page
6669089	TRACK			18, 518
6669091	CLIP			404, 536
6669135	SEAT			18
6669144	INDICATOR			416, 426
6669146	PLUG			536
6669154	BOLT			408
6669155	PLATE			408
6669156	SPACER			408
6669159	PISTON			408
6669162	NUT			408
6669163	PLUG			408
6669164	ADAPTER			408
6669165	SCREW			408
6669184	STATOR ASSY.			408
6669185	SEAL KIT			408
6669187	VALVE			506
6669188	STEM			506
6669189	STEM			506
6669190	COIL			506
6669191	LIGHT			544
6669216	SEAL KIT			506
6669217	SEAL KIT			506
6669218	VALVE			506
6669219	VALVE			506
6669224	BOLT			226, 404, 536
6669225	BOLT	58G000408B	A	198, 204, 426
6669225	BOLT			198, 204, 426
6669286	CLAMP			400
6669308	RETAINER			8, 354, 512, 544
6669354	SHAFT			234
6669359	TERMINAL			234
6669360	BUSHING			234
6669365	BOOT			234
6669372	COVER			234
6669384	SPEEDY SLEEVE			258
6669385	PUMP			188
6669400	VALVE PLATE			184
6669401	VALVE PLATE			180, 181, 182
6669402	HOUSING			180
6669403	HOUSING			186
6669404	SWASH PLATE			180, 184, 185, 186
6669405	END CAP			184
6669406	END PLATE			182
6669407	SHAFT			186
6669409	WASHER			180
6669410	SHIM KIT			182
6669411	BEARING			174, 178, 180, 186
6669415	TIMER			212, 220
6669420	CONTROLLER			514
6669442	HOUSING			168
6669444	SPRING			168
6669446	O-RING			168
6669447	PLATE			168
6669448	PLATE			168

Code for disposition of old part number
A -- Use up
B -- Use on other application (See PNI)
C -- File PDR Report with Bobcat Parts Sales
D -- Part Number Error

https://www.pdfmanual4trucks.com/

Part No.	Description	Was	Code	Page
6669449	O-RING			168
6669450	RING			168
6669451	FLANGE			168
6669452	O-RING			166, 168, 170
6669453	SEAL			168
6669454	RING			168
6669455	SEAL KIT			168
6669464	PUMP			180, 184
6669469	SHAFT			168
6669470	BOLT			168
6669615	ORIFICE	6665719	A	136
6669650	VENT			448
6669652	DUCT			448
6669657	SEAL KIT			498
6669663	GAUGE	6658817	A	198
6669664	VOLTMETER	6658819	A	198
6669665	FUEL GUAGE	6658820	A	198
6669685	BOSS	6669166	A	218
6669686	BOSS	6669167	A	216
6669687	BOSS	6667363	A	218
6669689	HEATER			450
6669722	CLAMP			210, 220
6669723	CLAMP			210, 220
6669724	CLAMP			210, 220
6669732	SEAL KIT			118
6669733	SEAL KIT			118
6669734	SEAL KIT			118
6670140	CORE			450
6670142	NUT			446
6670144	BOLT			446
6670160	CUSHION			18
6670163	SHAFT			374, 380
6670164	LINK			374, 380
6670165	CLIP			374, 380
6670284	LIGHT ASSY			478
6670287	COVER			24
6670288	END			376
6670289	BRACKET			376
6670312	RELAY	6665005	A	210, 214, 398, 400
6670312	RELAY			210, 214, 398, 400
6670472	NUT			338
6670473	WASHER			338
6670558	TERMINAL			232
6670634	SEAL KIT			126, 360, 364
6670668	PIN			416
6670682	BEARING			248
6670684	CHECK VALVE			174, 178, 182, 186
6670705	SWITCH	6665372	A	208
6670706	CONNECTOR			224, 440
6670707	CONNECTOR			226, 440
6670709	CONNECTOR			440
6670710	LOCK			224, 226, 440
6670711	LOCK			440
6670715	PIN			224, 440

Code for disposition of old part number
A -- Use up
B -- Use on other application (See PNI)
C -- File PDR Report with Bobcat Parts Sales
D -- Part Number Error

https://www.pdfmanual4trucks.com/

Part No.	Description	Was	Code	Page
6670726	LOCK	6649555	A	508, 510
6670726	LOCK			508, 510
6670732	LAMP			426
6670808	FUSE			212, 220
6670830	ADAPTER			158
6670831	ELBOW			158
6670867	LATCH			24
6671019REM	PUMP REM / CORE EXCHANGE REQUIRED	6671019	A	180, 184
6671025	COIL			66, 118, 120
6671026	COIL			136
6671027	LIGHT			416
6671037	TIE			214
6671041	SEAL KIT			188
6671042	SEAL KIT	6666340	B	188, 190
6671042	SEAL KIT	6666340	B,D	188, 190
6671116	TERMINALS			234
6671117	TERMINALS			234
6671118	PINION			234
6671119	CLUTCH ASSY.			234
6671120	TERMINAL			234
6671121	COVER			234
6671122	BALL			234
6671123	HOUSING			234
6671124	HOUSING			234
6671125	WASHER			234
6671126	SCREW			234
6671127	BEARING			234
6671128	BEARING			234
6671129	BEARING			234
6671509	COUPLER	6671519	B,D	186
6671510	RELIEF VALVE			182, 186
6671512	BLOCK ASSY			182, 184
6671516	SEAL KIT			182, 186
6671518	BOLT			182
6671527	NUT			126, 360, 364
6671528	SEAL			210, 220
6671619	HOSE			154
6671669	MODULE	6669529	C	222, 428, 430, 432
6671907	SWASH PLATE			172, 176
6671964	SENDER			514
6672021	BELT			250, 404
6672026	O-RING	6669655	A	70, 430, 432
6672051	PUMP			180, 184
6672126	GEROLER			168
6672272	WASHER			478
6672273	SCREW			478
6672274	SCREW			478
6672275	GASKET			478
6672276	LENS			478
6672277	BRACKET			478
6672278	LIGHT ASSY.			478
6672279	MOUNT			416, 478
6672281	CLAMP			154

Code for disposition of old part number
A -- Use up
B -- Use on other application (See PNI)
C -- File PDR Report with Bobcat Parts Sales
D -- Part Number Error

https://www.pdfmanual4trucks.com/

Part No.	Description	Was	Code	Page
6672345	KEY			510
6672471	VALVE	6672456	A	66, 118, 120
6672471	VALVE			66, 118, 120
6672486	SEALANT	6633583	A	258
6672492	RETAINER			352
6672513	PUMP			189, 190
6672515	SEAL KIT	6664033	A	136
6672715	SPACER	7000010	A	18, 518
6672715	SPACER			18, 518
6672717	SPACER			518
6672718	INDICATOR			518
6672719	CLIP			518
6672720	COVER			518
6672721	FENDER			518
6672722	FENDER			518
6672723	CLIP			518
6672724	PANEL			518
6672725	KNOB			518
6672726	FRAME			518
6672727	CUSHION			518
6672729	CUSHION			518
6672730	BOLT			518
6672731	BAR			518
6672732	CABLE			518
6672733	BOLT			518
6672736	DECAL			518
6672738	NUT			518
6672863	SOLENOID	6708271	A	126, 360, 364
6672863	SOLENOID			126, 360, 364
6672960	COUPLER	6667807	A	70, 430, 432
6672962	COIL			486
6673828	HOSE			158
6673959	VALVE			126
6673990	PISTON	6664028	A	136
6674003	TIRE & RIM	6670616	A	548
6674004	TIRE & RIM	6670617	A	548
6674007	KIT	6670618	A	548
6674013	TRACK			18, 518
6674019	SEAT	6670113	A	517, 518
6674099	BREAKER			210, 218
6674150	OIL COOLER			157, 158
6674151	COVER			448
6674167	FLANGE	6655966	A	286, 326
6674167	FLANGE			286, 326
6674169	PULLEY			324
6674172	THERMOSTAT			326
6674202	NUT			198, 202
6674220	SWITCH			198, 204, 490, 492
6674263	KNOB	6672737	A	518
6674285	GAS SPRING	6661805	A	240, 242
6674297	SPOOL			110
6674298	SPOOL			110
6674299	SPOOL			110
6674302	SPOOL			110

Code for disposition of old part number
A -- Use up
B -- Use on other application (See PNI)
C -- File PDR Report with Bobcat Parts Sales
D -- Part Number Error

https://www.pdfmanual4trucks.com/

Part No.	Description	Was	Code	Page
6674331	COIL			126
6674676	PUMP			298, 335, 336
6674688	COUPLER	6667808	A	70, 430, 432
6674798	REPAIR KIT			158
6675073	VALVE			506
6675074	SEAT BELT			10
6675097	BULB			426
6675129	CONTROLLER	6674211	A	224
6675257	CLEVIS			6
6675284	SHUTTLE VALVE			486
6675285	STEM			486
6675332	LINK			36, 38
6675340	VALVE PLATE	6671515	A	182
6675380	ADHESIVE	6652818	A	554
6675387	EXTRUSION			384
6675517	OIL FILTER12	3974896B	A	1, 2, 266, 306
6675517	OIL FILTER12			1, 2, 266, 306
6675780	CARTRIDGE	6676545	A	126
6676003	HOSE	6708310	A	374
6676060	LEVER ASSY.	6655879	A	290, 330
6676060	LEVER ASSY.			290, 330
6676151	COIL			506
6676152	PLUG	6653490	A	504, 506
6676152	PLUG			504, 506
6676196	VALVE	6659328	A	94
6676442	CONTROLLER			440
6676543	PLUG	6647780	A	126
6676564	SEAL KIT			486
6676566	NUT			486
6676871	SEAL KIT			106
6677106	O-RING			86, 90, 94, 98, 102, 106, 110, 114
6677202	DIPSTICK			276
6677203	GUIDE			276, 316
6677363	CLAMP	657904B	A	240, 242
6677839	GASKET			376
6677840	SWIVEL			376
6677841	WASHER			376
6677842	NUT			376
6677843	NUT			376
6677844	NUT			376
6678000	SEAL			166, 170
6678001	PLATE			166
6678003	PLATE			166
6678004	PLATE			166, 170
6678006	BACK-UP RING			166, 170
6678067	BUSHING			160
6678075	RINGS	6655178	A	278, 318
6678075	RINGS			278, 318
6678150	VALVE			484, 486
6678198	BOLT			376
6678226	SEAL	6673881	A	172, 176, 182, 186
6678326	RAIN SHIELD			376
6679814	MOTOR			374
6679815	BLADE			376

Code for disposition of old part number
A -- Use up
B -- Use on other application (See PNI)
C -- File PDR Report with Bobcat Parts Sales
D -- Part Number Error

https://www.pdfmanual4trucks.com/

NUMERICAL INDEX (Cont'd)

Part No.	Description	Was	Code	Page
6679816	ARM			376
6679961	NUT			88, 92, 104, 142, 428, 430, 432
6680326	LIGHT	6664368	A	404
6680411	CONTROLLER	6674222	A	200, 204, 490
6680412	HANDLE ASSY	6707976	A	222, 398, 438, 444
6680413	HANDLE ASSY	6706340	A	222, 398, 438, 444
6680414	HANDLE ASSY.	6705921	A	222, 428, 430, 432, 444, 462, 496, 498
6680415	HANDLE	6705920	A	222, 444
6680438	SENSOR	6674209	A	210, 216
6680441	BUSHING	6664882	A	12, 522, 524
6680445	CONTROLER	6674224	A	200, 223, 224
6680447	DECAL	6677370	A	222, 224, 398, 438, 444
6680453	SENSOR FUEL	6658958	A	214
6680459	HNDL/TILT AHC	6675515	A	440
6680461	HANDLE	6675746	A	440
6680463	HANDLE	6713262	A	224
6680469	SPACER	6729600	A	226, 440
6680469	SPACER			226, 440
6680471	COVER	6713898	A	224, 440
6680472	SENSOR	6666608	A	12, 528
6680473	BUSHING	6671135	A	10
6680480	CHANNEL	6719711	A	440
6680481	CHANNEL	6719712	A	440
6680484	GASKET			304, 316
6680523	KEY,MAGNETIC	6664881	A	12, 516
6680666	PLUG			314
6680685	BOLT			312
6680706	BOLT			332
6680774	PIN			306
6680786	CLAMP			338
6680795	CLAMP	6599136	A	300, 338
6680795	CLAMP			300, 338
6680830	BOLT			332
6680970	BREATHER	6670627	A	4, 44, 48, 238
6680970	BREATHER			4, 44, 48, 238
6681512	SOLENOID	6667992	A	44, 48
6681512	SOLENOID			44, 48
6681513	SOLENOID	6667993	A	208, 216
6681605	MOTOR			165, 166
6681931	PIPE			338
6682034	MOTOR			169, 170
6682260	SHAFT			180
6682261	KEY			180
6682442	SLEEVE	6704393	A	252
6682514	SHIM			336
6682515	SHIM			336
6682521	PIPE			337, 338
6682532	NUT			328
6682856	TIRE & RIM	6664993	A	547, 548
6682857	TIRE & RIM	6664994	A	548
6682860	O-RING			166, 170
6682862	SHAFT, DRIVE			166, 170
6682863	BOLT			170
6682897	SEAL			166, 170

Code for disposition of old part number
A -- Use up
B -- Use on other application (See PNI)
C -- File PDR Report with Bobcat Parts Sales
D -- Part Number Error

https://www.pdfmanual4trucks.com/

Part No.	Description	Was	Code	Page
6683104	PLUG			308
6683174	ROLL PIN			284, 324
6683274	SEAL	6665846	A	92, 98, 102, 106, 112, 114, 150
6683724	COUPLER,6G-8FJX90S	6665846	A	146
6684037	SENSOR	6658260	B	218
6684225	WATER PUMP	6653941	A	283, 284
6684753	GASKET			304, 316
6684754	O-RING			304, 316
6684774	GASKET			304, 306
6684779	SHIELD			309, 310
6684780	GASKET			304, 310
6684781	BOLT			310
6684782	O-RING			304, 310
6684784	GAUGE			316
6684786	GASKET			304, 308
6684788	GASKET	6655165	A	262, 278, 304, 318
6684788	GASKET			262, 278, 304, 318
6684789	SEAL			318
6684793	GEAR			322
6684795	COLLAR			322
6684796	SHAFT			322
6684807	BUSHING			318
6684812	BALL BEARING			320
6684813	GASKET			304, 320
6684833	SHAFT			332
6684836	BOLT			333, 334
6684863	GASKET			304, 326
6684868	SEAL			324
6684869	FLANGE			324
6684874	COLLAR	3974516B	A	272, 312
6684874	COLLAR			272, 312
6684875	SHAFT			312
6684879	GASKET			304, 328
6684910	SENSOR	6675741	A	440
6684918	LEVER	6675747	A	440
6684919	LEVER	6675748	A	440
6685063	HOUSING			166
6685065	SHUTTLE			166, 170
6685066	PISTON			166, 168, 170
6685067	GEROLER			166
6685068	FLANGE			170
6685069	RING,BACK-UP			166, 170
6685070	KIT, SEAL COMPLETE			170
6685085	COVER			310
6685087	VALVE			310
6685344	SWASH PLATE	6671513	A	180, 186
6685372	SEAL			48
6685464	BOLT			332
6685466	O-RING			304, 306
6685468	O-RING			304, 306
6685474	BEARING			324
6685475	MANIFOLD			327, 328
6685476	SEAL			330

Code for disposition of old part number
A -- Use up
B -- Use on other application (See PNI)
C -- File PDR Report with Bobcat Parts Sales
D -- Part Number Error

https://www.pdfmanual4trucks.com/

Part No.	Description	Was	Code	Page
6685477	PLUG			308
6685482	BOLT			318
6685483	CASE			318
6685484	CASE			318
6685485	CASE			318
6685486	BEARING			318
6685487	BEARING			318
6685488	WASHER			318
6685489	WASHER			318
6685490	BEARING			318
6685491	BEARING			318
6685492	BEARING			318
6685493	BEARING			318
6685494	WASHER			318
6685495	WASHER			318
6685496	WASHER			318
6685497	WASHER			318
6685501	WASHER			306
6685515	COVER			318
6685524	PIPE			310
6685553	FLANGE			166
6685735	SEAL	6661112	A	252
6685876	GASKET			304, 328
6685878	GASKET			304, 328
6685981	ENGINE-V2203 TIER 2			303, 304
6686037	GASKET			304, 336
6686360	VALVE	6685017	A	86, 90, 98, 102, 106, 110, 114, 132
6686360	VALVE			86, 90, 98, 102, 106, 110, 114, 132
6686403	SEAL KIT			166
6686404	BOLT			166
6686979	PLUG			316
6686981	O-RING			304, 306
6686988	PIPE			326
6686989	WATER PUMP			323, 324
6686990	MANIFOLD			328
6686996	HEAD			314
6686997	CIR-CLIP			318
6687191	SEAL	6645090	A	180
6688521	SPRING			170
6689503	CASE MAIN BRG	6685480	A	318
6689601	VALVE	6670685	A	174, 178, 182, 186
6689638	RACE	6634609	A	50
6689649	CHAIN			36, 38
6689651	CHAIN			36, 38
6689697	HOUSING	6685063	B,D	170
6689698	PLATE	6678001	B,D	170
6689700	PLATE	6678003	B,D	170
6689739	VALVE	6668765	A	118
6689775	BEARING	6519925	A	50
6690709	LINK			36, 38
6690949	O-RING			158
6691063	SCREW			202
6691343	GEROLER	6685067	B,D	170
669863B	SNAP RING			180, 186

Code for disposition of old part number
A -- Use up
B -- Use on other application (See PNI)
C -- File PDR Report with Bobcat Parts Sales
D -- Part Number Error

https://www.pdfmanual4trucks.com/

Part No.	Description	Was	Code	Page
6700039	CUP			26
6700108	LATCH			508
6700115	SPRING			248
6700170	WASHER			10, 44, 256
6700171	GAS SPRING			6
6700182	COVER			4
6700228	HARNESS			464, 514
6700229	KIT			463, 464
6700279	BRACKET			22
6700329	HOUSING			236
6700330	COVER			4, 44
6700347	COVER			344
6700463	CUP			26
6700469	SPACER			26
6700487	SHIELD			204
6700535	SPACER			244
6700541	MOUNT			244
6700599	ELBOW			68, 158, 418
6700631	GASKET			156
6700704	BUSHING			344
6700710	KIT			343, 344
6700711	AIR CLEANER	6661400	A	339, 340
6700743	SPRING	6579072	D	22, 26, 552
6700743	SPRING			22, 26, 552
6700782	CAP			258
6700875	RETAINER			418
6701097	WASHER	6803867	A	4, 36, 236, 390
6701097	WASHER			4, 36, 236, 390
6701123	SCREW			240, 242
6701145	LEVER			160
6701151	PIPE			240, 242
6701159	SHIM			258
6701174	WASHER			6, 10, 528
6701449	FILLER TUBE			32
6701535	SPRING			14, 160, 522, 524
6701552	BAFFLE			156
6701651	WINDOW			6
6701852	SHIELD			404
6701883	STOP			404
6701892	CLAMP			52, 56, 58, 62, 70, 428, 430
6701893	CLAMP			52, 56, 58, 62
6701952	SOCKET			214, 476
6701957	OPERATOR CAB			5, 6
6701961	HARNESS			460, 462
6702079	HOSE			66
6702102	GEAR			258
6702103	GEAR			258
6702135	SHAFT			258
6702137	SHAFT			258
6702144	SHIM			258
6702165	SHIM			258
6702166	SHIM			258
6702346	SCREEN			346
6702347	SCREEN			346

Code for disposition of old part number
A -- Use up
B -- Use on other application (See PNI)
C -- File PDR Report with Bobcat Parts Sales
D -- Part Number Error

https://www.pdfmanual4trucks.com/

Part No.	Description	Was	Code	Page
6702351	KIT			345, 346
6702397	ROD			256
6702430	SPRING			10, 528
6702444	FUSE			448
6702454	WEIGHT			390
6702455	WEIGHT			390
6702474	RETAINER			248
6702543	LEVER			159, 160
6702548	PAD			70, 428, 430, 432
6702583	BUSHING			4
6702584	BUSHING			4
6702593	SPACER			350, 352
6702621	GRIP			222, 224
6702642	SCREW			8, 198, 204, 404
6702650	MOUNT			398
6702660	PANEL			202
6702678	PLATE			202
6702716	BLOCK			160
6702731	WINDOW			384, 418
6702773	LINK			436
6702774	LINK			436
6702776	BRACKET			436
6702782	BUSHING			436
6702797	CAP			236
6702824	DECAL			396
6702825	DECAL			394
6702903	LEVER	6578855	A	30
6702904	LEVER	6578855	A	30
6702921	SPACER			470, 472
6702958	BUSHING			30
6702962	HOSE			498
6702971	BOLT			6
6702975	VENT			454
6702986	NUT			346
6702990	BUSHING			224, 436, 440
6703012	TUBE			158
6703022	CLIP			248
6703041	WIRE			454
6703045	KIT			457, 458
6703046	KIT			453, 454
6703090	HANDLE			346
6703097	GASKET			44
6703140	WASHER			36, 244
6703159	TRACK			6, 384
6703160	TRACK			6, 384
6703162	HORN KIT			459, 460
6703168	BEARING			252
6703331	INSULATION			418
6703363	BUSHING			26
6703427	FOAM FILTER			156
6703449	INSULATION			538
6703450	INSULATION			538
6703451	INSULATION			6, 538
6703452	INSULATION			6, 538

Code for disposition of old part number
A -- Use up
B -- Use on other application (See PNI)
C -- File PDR Report with Bobcat Parts Sales
D -- Part Number Error

https://www.pdfmanual4trucks.com/

Part No.	Description	Was	Code	Page
6703455	INSULATION			6, 538
6703480	DECAL			392
6703483	PULLEY			132
6703585	MOUNT			244
6703586	DECAL			390, 394, 412
6703610	TUBE			130
6703611	TUBE			130
6703615	CLAMP			130
6703640	KIT			525, 526
6703641	DECAL			526
6703703	GUIDE			526
6703719	ROD			132
6703722	ARM			132
6703723	DECAL			394
6703724	DECAL			436
6703725	DECAL			436
6703726	DECAL			436
6703727	DECAL			460, 462
6703736	CAP			266, 306
6703751	RETAINER			376, 380
6703757	SAFETY TREAD			382
6703775	SHIM			372
6703796	MOUNT			214, 476
6703797	LENS			22, 214, 476
6703827	ELBOW			496
6703868	HOOD	6709093	D	21, 22, 239, 240, 241, 242
6703868	HOOD			21, 22, 239, 240, 241, 242
6703879	BUSHING			160
6703885	HOSE			132
6703898	HARNESS			130
6703899	DIODE			128
6703981	MOUNT			244
6704010	BLOCK			128
6704012	HOSE			244
6704013	ELBOW			128
6704016	MOUNT			132
6704114	HARNESS			496, 498
6704122	DIODE			130
6704125	SOUND KIT			537, 538
6704146	BRACKET			474
6704147	BRACKET			474
6704148	BRACKET			474
6704149	BRACKET			474
6704151	BRACKET			474
6704153	KIT			473, 474
6704154	BRACKET			474
6704155	TUBE			158
6704158	TEE			158
6704159	HOSE			158
6704163	MOUNT			350
6704164	ELBOW			158
6704167	TIRE & RIM			549, 550
6704168	TIRE & RIM			550
6704240	PIVOT ASSY.	6576456	C	30

Code for disposition of old part number
A -- Use up
B -- Use on other application (See PNI)
C -- File PDR Report with Bobcat Parts Sales
D -- Part Number Error

https://www.pdfmanual4trucks.com/

Part No.	Description	Was	Code	Page
6704248	PIVOT	6576454	A	30
6704284	COUNTER WEIGHT KIT	SALES		387, 388
6704288	PIN			26
6704322	MOUNT			244
6704332	WASHER			22
6704335	HOSE			52, 56, 58, 62
6704336	HOSE			52, 56, 58, 62
6704341	MOUNT			158
6704358	HARNESS			350, 352
6704362	HOUSING			22, 216, 476
6704391	PULLEY			252
6704393	BEARING			252
6704403	STOP			28
6704408	HARNESS			460, 462
6704409	TUBE			70, 71, 72, 428
6704410	TUBE			72, 428
6704416	PULLEY			248
6704424	PULLEY			248
6704425	ROD			370
6704426	RETAINER			370
6704428	SHIELD			370
6704430	DOOR	6704431	A	370
6704435	WEAR CAM			160
6704436	PAD			26, 226
6704442	KIT			349, 350
6704443	BUSHING			248
6704444	WASHER			248
6704450	SHIELD			248
6704453	SPRING	6578252	C	30
6704464	GUIDE			22
6704484	WASHER			248, 426
6704491	HOUSING	6704492	B,D	40
6704492	HOUSING			42
6704600	STOP	6701451	A	30
6704601	STOP	6701468	A	30
6704607	BELT			132
6704619	MOUNT			70, 428, 430, 432
6704630	HOSE			154
6704631	HOSE			156
6704638	WEIGHT			152
6704641	MOUNT			460, 462
6704680	COVER			4, 154, 155, 156
6704682	COVER			22
6704683	COVER			22
6704693	TEE	6717103	D	66, 496, 498
6704693	TEE			66, 496, 498
6704696	ELBOW			158
6704720	BELT			134, 244
6704727	HOSE			496
6704753	PLUG			238
6704769	INSULATION			418
6704786	DECAL			474
6704820	O-RING			248
6704823	BRACKET			240

Code for disposition of old part number
A -- Use up
B -- Use on other application (See PNI)
C -- File PDR Report with Bobcat Parts Sales
D -- Part Number Error

https://www.pdfmanual4trucks.com/

Part No.	Description	Was	Code	Page
6704833	BRACKET			52, 60, 362, 364
6704836	TUBE			52, 56
6704837	TUBE			52, 362
6704839	TUBE			52, 60, 362, 364
6704840	TUBE			52, 362
6704874	FLYWHEEL ASSY.			250
6704878	GASKET			36, 38
6704892	RIVET			204
6704918	SHIELD			244
6704921	TEE			128
6704931	HARNESS			218
6705029	BRACKET			128
6705030	BRACKET			128
6705052	BALL STUD			240, 242
6705062	TUBE			128
6705063	TUBE			128
6705064	TUBE			128
6705065	SHAFT			40
6705068	TUBE			52, 58, 362, 364
6705069	TUBE			52, 56
6705070	TEE			52, 58, 362, 364
6705088	DECAL			394
6705089	LIFT ARM STOP			26
6705091	TAB			26
6705102	DECAL			412
6705106	WASHER			244, 402
6705108	KIT			551, 552
6705112	COUPLER			132
6705129	COUPLER			132
6705141	TUBE			56
6705161	TUBE			132
6705164	GROMMET			132
6705166	BUMPER			365, 366
6705167	BUMPER			366
6705168	MOUNT			132
6705191	KIT			361, 362
6705216	WINDOW			378, 382
6705220	DECAL			152, 392, 396
6705223	PIN			26
6705231	WASHER			252
6705232	WASHER			254
6705280	TUBE			128
6705281	HOSE			240, 242
6705333	MOUNT			418
6705340	DECAL			404
6705357	TUBE			498, 502
6705358	TUBE			498, 502
6705361	DECAL			396
6705362	DECAL			394
6705373	KIT	SALES	D	501, 502
6705436	TUBE			132
6705442	HOSE			132
6705452	LEVER			255, 256
6705471	MOUNT			132

Code for disposition of old part number
A -- Use up
B -- Use on other application (See PNI)
C -- File PDR Report with Bobcat Parts Sales
D -- Part Number Error

https://www.pdfmanual4trucks.com/

Part No.	Description	Was	Code	Page
6705474	LOCK SHIELD			10
6705487	HOSE			128
6705489	BOLT			10
6705491	SPRING			250
6705497	HOSE			132
6705700	MOUNT			70, 428
6705711	BRACKET			244
6705720	DECAL			12
6705735	WINDOW			6, 384
6705749	SHIELD			58, 62
6705774	MOUNT			416
6705776	HOOD			416
6705780	PULLEY			132
6705792	SCREW			446, 450
6705847	SEAL			40, 42
6705848	INSULATION			418
6705849	INSULATION			418
6705850	INSULATION			418
6705896	GUIDE			44
6705897	BLOCK			44
6705898	BLOCK			44
6706042	COVER			4, 44
6706043	SPACER			244
6706089	HOSE			488, 498, 502
6706093	HOSE			130
6706095	MOUNT			160
6706096	MOUNT			162, 182
6706098	GUIDE			160
6706103	LEVER			84
6706104	RETAINING NUT			84
6706105	YOKE			84
6706106	MOUNT			160
6706153	TUBE			70, 428, 430
6706154	TUBE			70, 428, 430
6706155	INSULATION			6
6706175	HOSE			127, 128
6706220	TEE			488, 498, 502
6706281	BELLCRANK			436
6706285	SCREEN			494
6706349	MOUNT			6
6706388	BRACKET			12
6706391	HARNESS			398
6706392	HARNESS			398
6706393	SHIELD			240, 242
6706394	SHIELD			240, 242
6706420	MOUNT			436
6706421	MOUNT			436
6706446	HARNESS			398
6706450	TANK			153, 154
6706485	HOOK			4
6706508	DECAL			128
6706517	SCREW	6579119	A	22, 32, 214, 236, 476
6706517	SCREW	6704400	A	22, 32, 214, 236, 476
6706517	SCREW	6704400	B	22, 32, 214, 236, 476

Code for disposition of old part number
A -- Use up
B -- Use on other application (See PNI)
C -- File PDR Report with Bobcat Parts Sales
D -- Part Number Error

https://www.pdfmanual4trucks.com/

Part No.	Description	Was	Code	Page
6706522	TUBE			52, 56
6706523	TUBE			52, 56
6706526	TUBE			52, 56
6706527	TUBE			52, 56
6706528	TUBE			52, 56
6706552	HARNESS			398
6706558	DECAL			396
6706565	KIT			221, 222, 443, 444
6706566	KIT			222, 444, 498
6706567	KIT			222, 398, 438, 444
6706568	KIT			222, 398, 438, 444
6706572	SET SCREW			256
6706582	MOUNT			66
6706674	HOSE	6576374	B,D	32
6706679	HORN KIT			461, 462
6706680	LINK	6564544	A	84
6706685	BUSHING			10
6706718	MOUNT			44, 48
6706737	GASKET			44, 48
6706744	TRACK			384
6706745	TRACK			384
6706748	TUBE			362
6706750	BRACKET			130
6706753	MOUNT			398
6706788	TUBE			66
6706807	PIN			470, 472
6706809	DECAL			394
6706825	LIFT EYE			470, 472
6706826	LIFT EYE			470
6706828	HARNESS			200, 204
6706876	HARNESS			198, 202
6706890	WASHER			12, 516, 528
6706896	PANEL			198
6706939	KIT			493, 494
6706962	BUSHING			12, 522, 524
6706966	SPRING			12, 516, 518, 520
6706968	GASKET			44
6707040	ELBOW			208, 216
6707077	HOUSING ASSY.			258
6707078	HOUSING ASSY.			258
6707101	SEAL			66, 68, 124
6707103	CONNECTOR			498
6707134	DECAL			12
6707178	TANK			374, 381, 382
6707179	SHIELD			374, 380
6707216	HINGE			374, 380
6707220	DOOR			374, 380
6707221	ROD			374, 380
6707222	MOUNT			374, 380
6707223	COUPLING			374, 382
6707224	COUPLING			374, 380
6707225	WINDOW			374, 380
6707232	HOSE			128
6707234	HOSE			154

Code for disposition of old part number
A -- Use up
B -- Use on other application (See PNI)
C -- File PDR Report with Bobcat Parts Sales
D -- Part Number Error

https://www.pdfmanual4trucks.com/

Part No.	Description	Was	Code	Page
6707235	TUBE			66
6707236	SHIELD			374, 382
6707239	SHIELD			374, 382
6707241	TUBE			66
6707255	DECAL	NAP	D	394
6707313	PEDAL MOUNT			44
6707314	PEDAL			44
6707315	ANGLE			44
6707316	PLATE			19, 20
6707318	GUIDE	6571991	B,D	14
6707319	NUT			10, 11, 12, 516
6707337	SWITCH			44
6707349	LEVER	6702786	A	436
6707351	LEVER	6702787	A	436
6707352	LEVER	6702791	A	436
6707367	GRIP	6702621	A	436
6707369	TUBE	6706641	A	66
6707481	DECAL			412
6707514	SHIM			30
6707620	FUSE			210, 218
6707621	FUSE			210, 218
6707622	FUSE			210, 218
6707623	FUSE			210, 218
6707649	MOUNT			210, 218
6707663	LIGHT KIT			475, 476
6707664	PLATE			200, 202
6707665	HARNESS			197, 198
6707668	HARNESS			214
6707669	HARNESS			214, 476
6707671	HARNESS			202
6707672	HARNESS			416
6707674	PLUG	6707644	D	8, 200, 204
6707674	PLUG			8, 200, 204
6707700	HOSE			66
6707706	MOUNT			416
6707787	DECAL			210, 218
6707789	LIGHT			416
6707804	HOUSING			416
6707852	DECAL			374, 380
6707879	COVER			8
6707895	ELBOW			418
6708009	LINK			84
6708015	GUIDE			44, 45, 46
6708016	GASKET			44, 48
6708018	SPRING			44, 48
6708021	HANDBOOK			532
6708035	TANK			512
6708044	MOUNT			512
6708069	BUSHING			512
6708096	BUSHING			374, 380
6708105	DECAL	6705712	A	394
6708154	KIT	6704831	B	2, 394, 492
6708154	KIT			2, 394, 492
6708154ES	KIT			394

Code for disposition of old part number
A -- Use up
B -- Use on other application (See PNI)
C -- File PDR Report with Bobcat Parts Sales
D -- Part Number Error

https://www.pdfmanual4trucks.com/

Part No.	Description	Was	Code	Page
6708155	KIT	6704832	A	404
6708158	HANDBOOK			226, 534
6708159	HANDBOOK KIT	6703678	A	436, 440, 490
6708159	HANDBOOK KIT			436, 440, 490
6708189	TUBE	6701175	A	6
6708207	DECAL			396
6708212	DECAL	6578218	A	152, 392, 396
6708225	HARNESS			372, 376
6708267	BOLT			44, 48
6708269	HARNESS			380
6708272	STOP			512
6708280	MOUNT			512
6708286	MOUNT			512
6708307	SHIELD			132
6708310	HOSE			382, 512
6708318	HARNESS			354, 544
6708425	PANEL	6707658	A	198
6708426	PANEL			198, 416
6708427	PANEL	6707660	A	202
6708428	PANEL			202, 416
6708437	CLIP			210, 218
6708465	BUSHING			528
6708499	WINDOW			374, 380
6708500	CLAMP			376, 380
6708523	KIT			516
6708622	GROMMET			528
6708624	REAR DOOR	6704639	A	22
6708625	BRACKET	6705447	A	248
6708680	GUIDE			528
6708682	INSULATION	6707326	A	6
6708693	PLATE			202
6708703	KIT			377, 378
6708748	TUBE	6706671	A	158
6708770	CAP			254
6708824	MOUNT			416
6708827	CONTAINER			8, 404
6708850	RETAINER			372
6708914	VENT			446
6708929	DECAL			396
6708973	KIT	6708443	A	373, 374
6708975	KIT			376, 382
6708981	BRACKET	6703471	A	240, 242
6708987	HINGE			4
6708990	KIT			372
6709027	PLATE	6708693	A	200
6709030	DECAL	6711905	B,D	250, 392, 396
6709030	DECAL			250, 392, 396
6709048	HARNESS			416
6709080	TUBE			488
6709081	TUBE			488
6709082	TUBE			488
6709083	TUBE			488
6709084	TUBE			488
6709085	TUBE			488

Code for disposition of old part number
A -- Use up
B -- Use on other application (See PNI)
C -- File PDR Report with Bobcat Parts Sales
D -- Part Number Error

https://www.pdfmanual4trucks.com/

Part No.	Description	Was	Code	Page
6709092	SHIELD	6704653	A	404
6709170	STUD	6559502	A	50
6709176	BRACKET			398
6709177	BRACKET			398, 399, 400
6709215	BOB-TACH			30
6709229	BOLT			406
6709234	DISC			406
6709236	MOUNT			406
6709237	CLAMP			406
6709239	PEDAL ASSY.			406
6709242	KIT	NAP	D	405, 406
6709379	TOOL HOLDER	6705100	A	22, 404, 552
6709400	TUBE			406
6709409	TUBE			406
6709410	TUBE			406
6709415	MOUNT	6571814	A	236
6709527	KEY	6632560	B,D	198, 202, 376, 380, 510
6709527	KEY	6666202	A	198, 202, 376, 380, 510
6709527	KEY			198, 202, 376, 380, 510
6709544	HOSE			406
6709781	DECAL	6700237	A	152, 392, 396
6709781	DECAL	6708209	A	152, 392, 396
6709797	DECAL			396
6710299	HARNESS			400
6710300	HARNESS			400
6710312	HARNESS			200, 204
6710313	HARNESS			198, 202
6710358	DECAL			394
6710365	HARNESS	6707676	A	222, 428, 430
6710365	HARNESS	6707676	B,D	222, 428, 430
6710365	HARNESS			222, 428, 430
6710366	HARNESS	6707681	A	128
6710435	HARNESS			500
6710467	MOUNT ASSY.			406
6710481	HARNESS			536
6710483	HARNESS			202
6710527	PANEL			404, 536
6710573	TUBE			58, 62
6710576	TUBE			58, 62
6710577	TUBE			58, 62
6710578	TUBE			58, 62
6710580	TUBE			58, 62
6710581	TUBE			58, 62
6710582	TUBE			58, 62
6710583	TUBE			60, 364
6710584	TUBE			60, 364
6710585	WASHER	6709008	A	252, 253, 254
6710616	TUBE			62
6710622	WASHER	6712146	A	516
6710653	HOSE			32
6710659	BUSHING			14, 522, 524
6710660	MOUNT			12, 13, 14, 522, 524
6710665	PULLEY			238
6710746	SAFETY TREAD			394

Code for disposition of old part number
A -- Use up
B -- Use on other application (See PNI)
C -- File PDR Report with Bobcat Parts Sales
D -- Part Number Error

https://www.pdfmanual4trucks.com/

Part No.	Description	Was	Code	Page
6710751	BUSHING	6706686	A	12, 516, 528
6710751	BUSHING			12, 516, 528
6710905	HARNESS			426
6711160	HARNESS			426
6711280	MOUNT			60, 64, 68
6711524	REAR DOOR			242
6711527	LATCH PLATE			24
6711621	MOUNT			398
6711632	MOUNTING KIT			401, 402
6711643	CAM			162
6711651	TEE			58, 62
6711656	HOSE			68
6711664	GUIDE			24
6711676	KIT	SALES	A	497, 498
6711681	HOSE			498
6711699	HUB ASSY.			250, 251, 252
6711708	MOUNT			354, 424, 426, 544
6711729	COVER			12, 530
6711730	STRIP			12, 530
6711732	DUCT			448
6711735	TUBE			70, 430, 432
6711736	TUBE			70, 430, 432
6711767	HARNESS			198
6711774	HARNESS			202
6711840	DECAL			394
6711908	SPRING PLATE			10, 526
6712050	KIT			363, 364
6712068	COVER			414
6712070	COVER			414
6712134	HARNESS			200, 204
6712146	WASHER			414
6712152	PANEL			198, 416
6712177	WEIGHT	6704638	A	392
6712183	MOUNT	6708503	A	414, 516
6712183	MOUNT			414, 516
6712184	KIT			529, 530
6712186	MOUNT	6708504	A	414, 516
6712186	MOUNT			414, 516
6712258	HARNESS			354, 544
6712259	HARNESS			374
6712260	HARNESS			512
6712288	HARNESS			424, 426
6712365	STEP			224
6712386	KIT			430
6712387	KIT			431, 432
6712523	HARNESS			200, 204, 205, 206
6712536	PAN	6577809	A	208, 216
6712640	BRACKET			210, 220, 498
6712678	KIT	6707682	A	359, 360
6712688	KIT			511, 512
6712692	BEACON KIT	6708342	A	353, 354
6712696	STROBE KIT			543, 544
6712698	KIT			425, 426
6712700	KIT			535, 536

Code for disposition of old part number
A -- Use up
B -- Use on other application (See PNI)
C -- File PDR Report with Bobcat Parts Sales
D -- Part Number Error

https://www.pdfmanual4trucks.com/

Part No.	Description	Was	Code	Page
6712750	KIT			513, 514
6712875	KIT			413, 414
6712970	PULLEY			404
6712985	MOUNT			404
6712987	MOUNT			404
6713040	SPRING			30
6713043	SPACER			224, 440
6713115	PEDAL			481, 482
6713116	BUSHING			482
6713261	HANDLE ASSY			224
6713370	PIN	14J001808B	B	254
6713379	KIT			446
6713456	SHAFT			42
6713488	WIRE			232
6713589	CLEVIS			14, 522, 524
6713736	BRACKETS			416
6713754	TUBE			72, 432
6713755	TUBE			72, 432
6713780	ROD			232
6713793	BRACKET			352
6713794	WIRING KIT			212, 220
6713803	HARNESS	6704887	A	386
6713821	CABLE			232
6713850	MOUNT			72, 430, 432
6713853	KIT			521, 522
6713887	BOLT	6711897	A	14, 522, 524
6713887	BOLT			14, 522, 524
6714008	PIN			416
6714037	LATCH			510
6714038	HARNESS			514
6714039	HARNESS			514
6714053	WEIGHT			412
6714062	KIT			6
6714126	DOOR STOP			24
6714210	SPRING			24
6714212	PULLEY ASSY.			250
6714213	HARNESS			424
6714242	DECAL			396
6714278	GUIDE			44, 48
6714285	KIT			523, 524
6714300	MOUNT			426
6714350	HARNESS			478
6714361	WEIGHT			4, 152, 388, 392, 412
6714423	HOSE	6705466	C	128
6714454	BUMPER			24
6714463	MOUNT			426
6714467	MOUNT			426
6714532	DECAL	6714533	B,D	394, 396
6714532	DECAL			394, 396
6714543	GASKET	3974461B	A	262, 266, 304, 306
6714543	GASKET			262, 266, 304, 306
6714624	SHIELD			404
6714629	DECAL			524
6714726	GROMMET			224

Code for disposition of old part number
A -- Use up
B -- Use on other application (See PNI)
C -- File PDR Report with Bobcat Parts Sales
D -- Part Number Error

https://www.pdfmanual4trucks.com/

Part No.	Description	Was	Code	Page
6714810	PIN	6578457	A	26
6714858	DECAL			396
6714874	BUSHING			26
6714890	SHIELD			132
6714902	ELBOW	69E000012B	A	156
6714904	TEE	6706466	A	128
6714905	ELBOW	6707409	A	154
6714919	DECAL	6561377	A	394
6714932	COUNTER WEIGHT KIT			411, 412
6714980	KIT			351, 352
6714985	LIGHT KIT			477, 478
6714990	WIRE			514
6714991	WIRE			514
6714999	MOUNT			400
6715094	INSULATION	6712537	A	6, 418
6715094	INSULATION			6, 418
6715095	INSULATION	6706982	B	6, 418
6715095	INSULATION	6706983	A	6, 418
6715096	INSULATION	6706903	A	418
6715097	INSULATION	6706157	A	6, 418
6715097	INSULATION			6, 418
6715098	INSULATION	6706156	A	6, 418
6715098	INSULATION			6, 418
6715099	INSULATION			418
6715106	INSULATION			418
6715142	FAN	6700334	A	236
6715143	SET SCREW	16G000506B	B	238
6715157	STRIKER ASSY.	6579969	A	22, 24
6715163	BUSHING			162
6715164	SLEEVE			162
6715165	FLYWHEEL			250, 404
6715183	ELBOW			32, 488
6715184	ADAPTER			58, 62
6715191	ELBOW			154
6715239	HOSE			418
6715240	HOSE			418
6715250	MUFFLER			418
6715251	HOSE			156
6715318	TOOL HOLDER			24, 404
6715371	INSULATION			418
6715372	INSULATION			418
6715478	BELT			236, 404
6715653	TEE			158
6715655	ELBOW			158
6715656	TEE			58
6715659	HARNESS			352
6715714	ELBOW			158
6715744	BUSHING			418
6715880	HARNESS			208
6715881	HARNESS			214
6715892	HARNESS			208
6715893	HARNESS			214
6715912	DECAL			394
6715924	PULLEY			238

Code for disposition of old part number
A -- Use up
B -- Use on other application (See PNI)
C -- File PDR Report with Bobcat Parts Sales
D -- Part Number Error

https://www.pdfmanual4trucks.com/

Part No.	Description	Was	Code	Page
6715940	DECAL			224
6715941	DECAL			224
6715944	DECAL			226
6715957	COVER			224
6715991	DECAL	6707786	A	224, 225, 226, 396
6715991	DECAL			224, 225, 226, 396
6716052	PIN			226
6716210AR	KIT			394, 396
6716210BR	KIT			394, 396
6716210JP	KIT			394, 396
6716211AR	KIT			394, 396
6716211BR	KIT			394, 396
6716423	HOSE	6706452	A	154
6716473	ADAPTER			154
6716545	ROD			160
6716571	LOUVER			236
6716572	LOUVER			236
6716601	PIN			28
6716777	SEAT BAR	6713609	A	12, 522
6716778	SEAT BAR	6706358	A	12
6716779	SEAT BAR	6714282	A	524
6716798	HARNESS			400
6716799	KIT			400
6716826	BOLT			224
6716843	WASHER	6569461	A	50
6716844	HARNESS			400
6716902	MOUNT			226
6717043	DECAL			226
6717055	LEVER			224
6717056	LEVER			224
6717343	DECAL			394
6717378	BOLT			224
6717401	PLUG			32
6717402	BUSHING			32
6717567	MOUNT			224
6717569	DIODE			226
6717579	GASKET			32, 210, 216
6717639	DECAL			226, 394
6717666	BUSHING			26, 27, 28
6717700	KIT			491, 492
6717702	KIT			489, 490
6717706	COIL	6665759	A	146, 150
6717708	COIL	6665759	A	88, 92, 96, 104, 142, 428, 430, 432
6717734	KIT			46
6717814	TIE			210, 220
6717915	TUBE			484
6717916	TUBE			484
6717917	TUBE			484
6717918	TUBE			484
6717919	HOSE			484
6717921	HOSE			484
6717922	BRACKET			484
6717923	TEE			484
6718111	HARNESS			484

Code for disposition of old part number
A -- Use up
B -- Use on other application (See PNI)
C -- File PDR Report with Bobcat Parts Sales
D -- Part Number Error

https://www.pdfmanual4trucks.com/

Part No.	Description	Was	Code	Page
6718198	HARNESS	6714546	A	416
6718237	HOSE	6703332	A	240, 242
6718240	KIT			433, 434, 483, 484
6718271	DECAL			394
6718272	DECAL			396
6718275	DECAL			394
6718291	GRILL	6705131	A	240, 242
6718298	KIT	6713885	A	548
6718446	COVER			20
6718489	INSULATION	6709020	A	6
6718723	WASHER			26
6718789	PIN	6547593	B	26
6718796	PLUG	6660646	A	22, 240, 242, 478
6718889	HARNESS	6717177	A	226
6718954	HOSE	6578808	A	52, 56, 58, 62
6719048	MOUNT	6703738	A	256, 266, 306
6719048	MOUNT			256, 266, 306
6719056	BLOCK			44, 48
6719057	BLOCK			44, 48
6719108	HOSE	6706142	A	128
6719149	HARNESS	6712136	A	222, 432
6719211	TUBE			156
6719332	INSULATION	6704725	A	418
6719490	LIFT EYE			472
6719766	STOP			24
6719834	SPACER			440
6719835	SLEEVE			440
6719906	SPACER			472
6720038	INSTRUCTIONS			356
6720185	INSTRUCTIONS			344
6720320	INSTRUCTIONS			384
6720321	INSTRUCTIONS			360
6720451	INSTRUCTIONS			464
6720470	INSTRUCTIONS			390
6720598	INSTRUCTIONS			384
6720621	INSTRUCTIONS			346
6720656	INSTRUCTIONS			454, 458
6720736	PLUG			355, 356
6720761	INSTRUCTIONS			460, 462
6720856	INSTRUCTIONS			542
6720951	INSTRUCTIONS			496
6720961	INSTRUCTIONS			538
6722058	INSTRUCTIONS			452
6722075	INSTRUCTIONS			174, 178
6722083	INSTRUCTIONS			350, 352
6722105	INSTRUCTIONS			474
6722147	HOLDER KIT			299, 300, 301, 302, 338
6722194	INSTRUCTIONS			152
6722248	REPAIR KIT			250
6722300	INSTRUCTIONS			404, 552
6722303	INSTRUCTIONS			362
6722392	INSTRUCTIONS			12
6722411	INSTRUCTIONS			502
6722597	VELCRO			368

Code for disposition of old part number
A -- Use up
B -- Use on other application (See PNI)
C -- File PDR Report with Bobcat Parts Sales
D -- Part Number Error

https://www.pdfmanual4trucks.com/

Part No.	Description	Was	Code	Page
6722758	INSTRUCTIONS			398
6722759	INSTRUCTIONS			222, 398, 444
6722861	INSTRUCTIONS			494
6722872	INSTRUCTIONS			470, 472
6722907	KIT			50, 347, 348
6722908	INSTRUCTIONS			348
6724017	INSTRUCTIONS			518, 520
6724029	INSTRUCTIONS			376
6724033	MANUAL	6900369	B,D	436
6724043	INSTRUCTIONS	6722847	A	438
6724067	753 P/M			2
6724071	INSTRUCTIONS			354, 544
6724072	INSTRUCTIONS			416
6724094	ANTI-FREEZE	6658230	A	554
6724161	INSTRUCTIONS			516
6724258	INSTRUCTIONS			528
6724279	INSTRUCTIONS			372
6724282	SWITCH KIT			200, 204
6724354	ANTI-FREEZE			554
6724384	INSTRUCTIONS	6722058	B	448
6724400	INSTRUCTIONS			488
6724482	INSTRUCTION			402
6724487	INSTRUCTIONS			500
6724522	INSTRUCTIONS			364
6724526	INSTRUCTIONS			430
6724529	INSTRUCTIONS	6724285	A	428, 432
6724529	INSTRUCTIONS	6724525	B	428, 432
6724556	INSTRUCTIONS			382
6724586	INSTRUCTIONS			468
6724775	LEVER KIT			30
6724776	LEVER KIT			30
6724788	INSTRUCTIONS			512
6724800	INSTRUCTIONS			530
6724880	INSTRUCTIONS			414
6724979	INSTRUCTIONS			232
6725212	ARM	6703507	A	248
6725224	KIT			471, 472
6725256	COUNTERWEIGHT	6714053	A	23, 24
6725373	SPRING PLATE			10
6725502	ELBOW	23F000001B	A	340
6726423	DECAL	6702916	A	470, 472
6726433	SPACER	6704829	A	236
6726613	MOUNT	6728062	A	254
6726679	MOUNT	6564658	A	84
6727065	BOLT			226, 440, 442
6727155	DECAL			440
6727243	DECAL			440
6727297	KIT			439, 440
6727307	DECAL	6711327	A	396
6727308	DECAL	6702827	A	396
6727309	DECAL	6702826	A	396
6727310	DECAL	6711329	A	394
6727311	DECAL	6714139	A	396
6727327	HARNESS			440

Code for disposition of old part number
A -- Use up
B -- Use on other application (See PNI)
C -- File PDR Report with Bobcat Parts Sales
D -- Part Number Error

https://www.pdfmanual4trucks.com/

Part No.	Description	Was	Code	Page
6727345	MOUNT	6704342	A	158
6727475	CAP	6577785	A	154
6727544	PLATE			28
6727545	PLATE			28
6727595	DECAL	6595014	B	396
6727840	TUBE	6703608	A	52, 56, 58, 62
6727841	TUBE	6703609	A	52, 56, 58, 62
6727917	SAFETY TREAD			394
6727926	DECAL	6718703	A	394
6728149	CAP	6532508	A	156
6728473	BOLT	6578166	A	30
6729144	HOSE			419, 420
6729147	HOSE	6707233	A	418
6729153	HOSE	6714577	A	69, 70, 428, 430, 432
6729154	HOSE	6714594	A	68, 154
6729594	HANDLE			226, 440, 441, 442
6729595	HANDLE			226, 440, 442
6729600	SPACER			442
6729688	LATCH			510
6729730	WINDOW			384
6729896	TIRE			546
6729901	TIRE			546
6729956	LEVER			162
6730263	PIN			26
6730272	HARNESS			440
6730769	HOSE			156
6730771	RIM	6565239	A	546
6730775	RIM	6705109	A	546
6730797	LIFT ARM			26
6730997	BUSHING			30
6730999	TUBE ASSY	6576029	A	236
6731060	SHIELD	6717812	A	132, 133, 134, 246
6731121	PLUG	11F12	A	4
6731254	BUSHING			28
6731478	EXIT TAG	6559515	A	6, 378, 382, 384
6731979	BUSHING			30
6732001	KIT	6714973	A	509, 510
6732012	PIN			26
6732199	GASKET	6666790	A	262, 286, 452
6732318	SPACER			238
6732446	BUSHING			30
6732457	WASHER			238
6732722	INSULATION	6704721	A	418
6732723	INSULATION	6704722	A	418
6732997	U-BOLT	6700768	A	160
6733220	DECAL	6579402	A	418
6733575	HINGE	6711526	A	24
6733621	SHAFT			48
6733701	COVER	6704695	A	4
6733970	MOUNT	6707726	A	352
6734104	HOUSING ASSY.	6702138	A	236, 259, 260
6734104	HOUSING ASSY.			236, 259, 260
6734416	LEVER			256
6734520	COVER	6576261	A	256

Code for disposition of old part number
A -- Use up
B -- Use on other application (See PNI)
C -- File PDR Report with Bobcat Parts Sales
D -- Part Number Error

https://www.pdfmanual4trucks.com/

Part No.	Description	Was	Code	Page
6734534	DECAL	6718398	A	396
6735140	DECAL	6557565	A	394
6735612	CHAINCASE COVER			48
6735883	BRACKET	6708767	A	250
6735884	IDLER ASSY.	6711698	A	250
6736126	COVER			8
6736641	PAINT			554
6736642	PAINT			554
6736644	PAINT			554
6736645	PAINT			554
6736659	TANK	6717572	A	32
6737088	COVER			342
6737189	DECAL			350, 352
6737191	WEDGE	6704242	A	30
6737360	MAINFRAME			4
6737524	KNOB	6668913	A	66, 68, 124
6737524	KNOB			66, 68, 124
6737623	BUSHING	6704287	A	26
6801167	PLUG			110, 114
6803092	BONNET			110, 114
6803329	SEAL KIT	6589831	A	82
6803605	SEAL KIT	6596310	A	96
6804605	SEAL KIT	6589792	A	74, 76
6804605	SEAL KIT			74, 76
6804630	CYLINDER			79, 80
6804631	ROD			80
6804632	PISTON			80
6804633	CASE			80
6804692	CYLINDER			75, 76
6804699	PISTON			76
6804703	CASE			76
6804704	ROD			76
6805150	BUSHING			76, 80
6805243	TEE	6805696	B,D	88, 92, 96, 142, 146, 156
6805243	TEE			88, 92, 96, 142, 146, 156
6805696	TEE			88, 92, 94, 95, 96, 104, 112, 144, 148, 154
6808046	VALVE			105, 106
6809425	SEAL KIT	6586461	A	88, 92, 96, 100, 104, 108, 112, 115, 116, 142, 146, 150
6809425	SEAL KIT			88, 92, 96, 100, 104, 108, 112, 115, 116, 142, 146, 150
6810026	VALVE			113, 114
6810539	NUT	6804592	A	74, 76, 78, 80
6812171	PLUG			80
6812816	ADAPTER			70, 430, 432
6816250	SEAL KIT	6803605	A	88, 92, 100, 104, 108, 112, 114, 142, 146, 150
6816253	SEAL KIT	6809448	A	104, 108, 116
6816323	SEAL KIT	6804606	A	78, 80
6816715	SEAL KIT	6596311	A	88, 92, 100, 112, 142, 146, 150
6816855	PLUG			80
6817553	CROSS	6805241	A	104, 112
6850026	COVER			446
6850027	HOUSING			450
6900090	753 S/M			2
6900096	INSTRUCTIONS	6900328	B	522, 524

Code for disposition of old part number
A -- Use up
B -- Use on other application (See PNI)
C -- File PDR Report with Bobcat Parts Sales
D -- Part Number Error

https://www.pdfmanual4trucks.com/

Part No.	Description	Was	Code	Page
6900096	INSTRUCTIONS			522, 524
6900133	INSTRUCTIONS			514
6900366	INSTRUCTIONS	6722194	A	388, 392
6900366	INSTRUCTIONS			388, 392
6900374	753/753H			2
6900398	INSTRUCTION			426
6900410	INSTRUCTIONS			412
6900438	753 O/M			2
6900501	KIT			393, 394, 395, 396
6900601	INSTRUCTIONS			400
6900651	INSTRUCTIONS	6722198	B	476
6900653	INSTRUCTIONS	6722198	B	478
6900787	753 O/M			2
6900804	INSTRUCTIONS			490, 492
6900805	INSTRUCTIONS			46
6900841	INSTRUCTIONS			484
6901099	INSTRUCTIONS			442
6901656	INSTRUCTIONS	6570762	A	508, 510
6901656	INSTRUCTIONS	6570762	B	508, 510
6901702	INSTRUCTIONS	6724380	A	406
6902228	PAINT	6722783	A	553, 554
6902229	PAINT	6722786	A	554
6902230	PAINT	6722789	A	554
6902233	PAINT	6722782	A	554
6902234	PAINT	6722785	A	554
6902235	PAINT	6722788	A	554
6902390	HARD HAT WHITE	6559552	A	539, 540
6903105	OIL 15W40 QT. 12	6657299	A	2, 554
6903106	OIL 15W40 GAL. 6	6724558	A	2, 554
6903107	OIL 10W30 QT. 12	6657301	A	2, 554
6903108	OIL 10W30 GAL. 6	6724557	A	2, 554
6903109	OIL 30W QT. 12	6657303	A	2, 554
6903110	OIL 30W GAL. 6	6724559	A	2, 554
6903111	OIL 30W 2.5 GAL 2	6674206	A	2, 554
6903112	OIL 10W30 2.5 GAL 2	6674205	A	2, 554
6903113	OIL 15W40 2.5 GAL. 2	6674204	A	2, 554
6903117	HYD FLUID 2.5 GAL. 2	6563328	A	2, 554
6903118	HYD. FLUID 5GAL	6722344	A	2, 554
6903119	HYD. FLUID 55GAL	6563330	A	2, 554
6903121	GEAR LUBE 12	6634393	A	258, 554
6903122	GREASE 10	6658266	A	554
6904890	INSTRUCTIONS			202
6969803	COVER, BREATHER	6685086	A	310
6969804	PLUG,OIL GAUGE	6684785	A	316
6969805	KEY,FEATHER	15JM00410B	A	268, 308
69G000414B	SCREW	6588164	A	86, 140
6CM01225B	BOLT			244
6CM01230B	BOLT			244, 248
6CM01235B	BOLT			244
6CM1220	BOLT	1CM01220B	B	208, 216
6E4	WASHER 10			350, 352, 468
6E6	WASHER			210, 220

Code for disposition of old part number
A -- Use up
B -- Use on other application (See PNI)
C -- File PDR Report with Bobcat Parts Sales
D -- Part Number Error

https://www.pdfmanual4trucks.com/

Part No.	Description	Was	Code	Page
6EM00080B	WASHER			266, 272, 274, 284, 286, 288, 296
6EM60	WASHER, SPRING			266, 268, 292, 294, 306
6J000405B	KEY			386
6J000807B	KEY			172, 180, 248
6J1664	KEY			50
7100153	MOUNT	6713792	A	350, 352
7100153	MOUNT			350, 352
7100573	HOSE			240, 242
7100840	MUFFLER	6598799	A	240, 242
7100840	MUFFLER	6671667	A	240, 242
7101291	ELBOW	6598908	A	32
7101345	BONNET	6587633	A	86, 90, 98, 102, 106, 110, 114
7102200	SHIELD	6719851	A	238
7104568	MOUNT	6712161	A	244
7104842	ACTUATOR			224
7105252	SENSOR	6670652	A	10
7106687	SHIELD	6717208	A	20
7107175	INLET	6717478	A	236
7108242	TILT SPOOL	6677662	A	110, 114
7108242	TILT SPOOL	6677662		110, 114
7108242	TILT SPOOL	6677663	A	110, 114
7108251	SPOOL	6677660	A	114
7108251	SPOOL	6677661	A	114
7108780	SLEEVE	6595951	A	106, 112, 114
7109712	SHIELD	6726938	A	254
7110276	SPACER	6715287	A	402
7110571	BELLCRANK			160
7115219	PEDAL	6726680	A	84
7120111	BRAKE	6716228	A	46, 48
7121779	PAD			162
7128600	BRACKET			162
7128601	BRACKET			162
7129987	COVER	6733956	A	48
7130298	COVER	7121926	A	48
7131641	LCD DISPLAY KIT			202
72F000001B	DRAIN COCK			32
731794B	FITTING			58, 62
733611B	TERMINAL			514
733616	TERMINAL			514
73G000656B	BOLT			247, 248
73G828	BOLT			162
73K000338B	RING	80K000338B	A	78, 80
73K224	RING			82
742640B	WASHER			244
743332B	GREASE ZERK			26, 30
75K000007B	O-RING			80
75K6	O-RING			80
763818B	ELBOW			132
774220	NUT			352
77F000007B	ELBOW			56, 62
77FN00007B	ELBOW			62
784568B	ELBOW	6634982	A	52, 60, 362, 364
784568B	ELBOW			52, 60, 362, 364
799119B	SNAP RING			86, 90, 94, 98, 102, 106, 140, 144, 148

Code for disposition of old part number
A -- Use up
B -- Use on other application (See PNI)
C -- File PDR Report with Bobcat Parts Sales
D -- Part Number Error

https://www.pdfmanual4trucks.com/

Part No.	Description	Was	Code	Page
79K000002B	O-RING			504, 506
79K000005B	O-RING			32, 166, 168, 170, 488, 504
79K000007B	O-RING			86, 87, 88, 92, 96, 104, 142, 146, 150
79K000014B	O-RING	25K040102B	B	32, 210, 214, 216
79K10	O RING 10			52, 56, 58, 62, 66, 70, 86, 90, 94, 98, 102, 106, 110, 114, 126, 128, 132, 140, 144, 148, 158, 174, 182, 362, 364, 428
79K12	O RING 10	17K-16	B	66, 68, 70, 104, 110, 128, 132, 154, 158, 172, 182, 186, 418, 428, 430, 432, 496, 498
79K12	O RING 10			66, 68, 70, 104, 110, 128, 132, 154, 158, 172, 182, 186, 418, 428, 430, 432, 496, 498
79K16	O RING 10			128, 132, 154
79K4	O RING 10			66, 484, 496, 498
79K6	O RING 10	6634874	B,D	58, 62, 66, 68, 74, 78, 82, 88, 92, 96, 104, 112, 126, 128, 140, 141, 142, 146, 148, 154, 158, 164, 166, 168, 170, 488, 496, 498, 502
79K6	O RING 10			58, 62, 66, 68, 74, 78, 82, 88, 92, 96, 104, 112, 126, 128, 140, 141, 142, 146, 148, 154, 158, 164, 166, 168, 170, 488, 496, 498, 502
79K8	O RING 10			86, 90, 94, 98, 102, 106, 110, 114, 126, 140, 144, 148, 172, 176, 182, 184, 244
7C000312B	BOLT			386
7C000322B	BOLT			386
7C000620B	BOLT	6704349	B	84
7D000004B	NUT			66, 124
7D000006B	NUT			236
7D000008B	NUT			136
7DM00006B	NUT			230
7G000416B	BOLT			370, 378
7J002010B	KEY			258
7J002108B	KEY			238
80K000014B	RING			86, 90, 94, 98, 102, 106, 110, 114, 140, 144, 148
80K000234B	RING	73K000234B	B	74, 76
80K000234B	RING			74, 76
82K000238B	O-RING 10	58K000238B	A	78, 80
82K136	O-RING	58K136	B	82
82K236	O-RING	58K000236B	A	74, 76
83D000007B	NUT			132
83D000010B	NUT			470, 472
83D4	NUT 10	83D000005B	B	6, 10, 60, 64, 68, 198, 208, 218, 350, 370, 378, 384, 404, 416, 418, 422, 426, 468
83D4	NUT 10			6, 10, 60, 64, 68, 198, 208, 218, 350, 370, 378, 384, 404, 416, 418, 422, 426, 468
83D5	NUT 5			6, 66, 132, 244, 370, 374, 380, 404, 422, 426, 432, 436, 512
83D6	NUT 5	57D000006B	B	10, 160, 240, 242, 366, 370, 376, 378, 382, 476
83D6	NUT 5			10, 160, 240, 242, 366, 370, 376, 378, 382, 476
83D8	NUT 5			4, 22, 24, 244
83F000003B	ELBOW			406
84G001608B	SCREW			386
84G001906B	SCREW			386
84G001910B	SCREW			386

Code for disposition of old part number
A -- Use up
B -- Use on other application (See PNI)
C -- File PDR Report with Bobcat Parts Sales
D -- Part Number Error

https://www.pdfmanual4trucks.com/

Part No.	Description	Was	Code	Page
84G002516B	BOLT			460, 462
84G003120B	BOLT			448
84G003708B	BOLT			236, 240, 242
84G003732B	BOLT			52, 56, 58, 62
84G3110	SCREW			156
84G3112	BOLT 5	84G003712B	B	6, 26, 68, 70, 130, 240, 242, 350, 352, 370, 378, 400, 418, 428, 430, 432
84G3112	BOLT 5			6, 26, 68, 70, 130, 240, 242, 350, 352, 370, 378, 400, 418, 428, 430, 432
84G3710	SCREW			156, 512
84G3712	BOLT	84G003716B	B	4, 20, 44, 60, 64, 128, 132, 154, 158, 208, 218, 240, 242, 246, 256, 398, 452, 458
84G3712	BOLT			4, 20, 44, 60, 64, 128, 132, 154, 158, 208, 218, 240, 242, 246, 256, 398, 452, 458
84G3716	SCREW 5			22, 44, 48, 59, 60, 63, 64, 66, 68, 134, 208, 209, 210, 216, 246, 256, 346, 418, 484, 498, 502
84G3720	BOLT			44, 48, 342
84G3724	BOLT			52, 56, 58, 62, 418
851242B	BEARING			280, 320
85D000004B	NUT			210, 216, 222, 256, 428, 430, 432, 436
85D5	NUT 5			12, 52, 56, 58, 62, 70, 220, 256, 428, 430, 432, 482
85D6	LOCK NUT			10, 26, 30, 132, 244, 400, 418, 436, 470, 472
85D7	NUT			10
85D8	NUT 5			6, 132, 243, 244, 248
85G000608B	SCREW			464, 514
85G000616B	SCREW			350
85G001008B	BOLT			422
866028B	CLAMP			340
86D000004B	NUT			256, 436
86D000008B	NUT			236
86F000005B	NUT			128, 496
86F000007B	NUT			70, 428, 430, 432
86F000008B	NUT			70, 128, 158, 428, 430, 432, 496
86F3	LOCKNUT			406
872229	WASHER			52, 56, 58, 62, 70, 428, 430, 432
87D000005B	NUT			470, 472
87FN00005B	ADAPTER			156
87G000806B	BOLT			468
888527	SHIM	886527B	A	340
889163B	BEARING			386
889269B	HOSE			452, 458
88F000008B	ELBOW			158
88F3	ELBOW 5			406
88FN00003B	ELBOW			406
88FN00008B	ELBOW			158
895771B	BULB			200
896979B	NUT			386
896984B	BOLT			386
896990B	WASHER			386
896992B	RETAINER			386
896996B	WASHER			386
897239B	SLEEVE			386
897245B	INSULATOR			386

Code for disposition of old part number
A -- Use up
B -- Use on other application (See PNI)
C -- File PDR Report with Bobcat Parts Sales
D -- Part Number Error

https://www.pdfmanual4trucks.com/

NUMERICAL INDEX (Cont'd)

Part No.	Description	Was	Code	Page
897719B	INSULATOR			386
897732B	WASHER			386
898731B	BULB			214, 476, 478
899163B	ROTOR			386
899165B	INSULATOR			386
899167B	SINK			386
899169B	INSULATOR			386
899170B	GASKET			386
899374B	SEAL			386
899375B	DIODE			386
899376B	WASHER			386
899377B	BOLT			386
899378B	DIODE			386
8C000616B	BOLT			160
8D000004B	NUT			436
8D000006B	NUT			14, 160, 161, 162, 406, 522, 524
90K000005B	PLUG	47K000005B	B	74, 78, 80, 82
90K000005B	PLUG			74, 78, 80, 82
90KV00008B	PLUG			106, 110, 114
90KV5	PLUG			74, 76, 78, 82
91D000005B	NUT			406
91D000007B	NUT			14, 524
91G000412B	BOLT			198, 199, 200, 202, 203, 204
91G000416B	BOLT			6
92D000012B	NUT			82, 248
93G000616B	BOLT			160
93G824	BOLT	73G824	A	38, 162
945412B	WASHER			138
95D000006B	NUT	61D000006B	B	44, 74, 76, 78, 80, 83, 84, 160, 256, 258, 406
95D000006B	NUT	91D000006B	A	44, 74, 76, 78, 80, 83, 84, 160, 256, 258, 406
95D000007B	NUT	91D000007B	A	522
95K000012B	O-RING			106, 110, 114
95K4	O-RING	79K000003B	B,D	120, 122, 136
95K4	O-RING	79K000004B	B	120, 122, 136
95K6	O'RING			74, 76, 78, 80, 82
961528B	HARDWARE			370
97D000004B	NUT	83D000004B	B	352
97K000012B	O-RING			68, 70, 154, 158, 418, 432, 496, 498
97K10	O-RING 10			58, 60, 62, 64, 70, 364, 432
97K4	O'RING			406, 498, 500
97K6	O'RING			60, 64, 68, 88, 92, 96, 104, 112, 142, 144, 146, 148, 154, 156, 484, 488, 498
97K8	O-RING			58, 60, 62, 244, 364
98F000003B	TEE			406
99K000004B	O-RING			498
99K000005B	O-RING			32, 488
99K000012B	O-RING			66, 68, 70, 104, 110, 154, 158, 418, 432, 496, 498
99K10	O'RING			58, 62, 364
99K16	O-RING			154
99K6	O'RING			58, 62, 68, 104, 112, 128, 154, 484, 488, 498, 502
99K8	O-RING			244
9G000512B	SCREW			258
9G000620B	BOLT			22, 30

Code for disposition of old part number
A -- Use up
B -- Use on other application (See PNI)
C -- File PDR Report with Bobcat Parts Sales
D -- Part Number Error

https://www.pdfmanual4trucks.com/

Part No.	Description	Was	Code	Page
9G000628B	BOLT			22
9G000636B	BOLT			22, 404, 552

Code for disposition of old part number
A -- Use up
B -- Use on other application (See PNI)
C -- File PDR Report with Bobcat Parts Sales
D -- Part Number Error

https://www.pdfmanual4trucks.com/

Part No.	Description	Was	Code	Page
17K7	ELBOW			52, 56, 60, 66, 132, 362, 364
17K8	FITTING			418
17KB000810B	ELBOW			60
17KB01210B	ELBOW	6714901	A	158
17KB1010	ELBOW			60, 364
17KB404	ELBOW			498
17KB810	ELBOW			364
17KN00008B	ELBOW			418
17KV00005B	ELBOW			60, 64, 68, 156
18C001224B	BOLT			49, 50
18C001632B	BOLT			50
18C1636	BOLT			50
18K000003B	ELBOW			496
18K000005B	ELBOW			128, 142, 146, 150, 156
18K000008B	ELBOW			68, 128, 418, 496, 498
18KB01212B	ELBOW			498
18KV00005B	FITTING			156
18KV00008B	ELBOW			68, 418
1908806B	EXTINGUISHER			422
1991038B	BEARING			386
19F000004B	ADAPTER			208
19F000005B	REDUCER			514
19K000005B	TEE			66
19K000007B	TEE			60, 64
19KN00007B	TEE			60, 64
1CM00650B	BOLT			230
1CM00818B	BOLT			322
1CM00830B	BOLT			548
1CM00835B	BOLT			286, 326
1CM00865B	BOLT			286, 326
1CM00890B	BOLT			244
1CM00895B	BOLT			266, 306
1CM616	SCREW	17C408	B,D	376
1CM820	BOLT			160, 182, 186, 452, 458
1CM870	BOLT			244, 266, 306
1CM880	BOLT			266, 306
1DM6	NUT			266, 294, 306, 334, 416
1DM8	NUT	25DM00008B	A	294, 334
1DM8	NUT			294, 334
1EM00060B	WASHER			230, 292
1EM80	WASHER			294
21K000003B	TEE			496
21K000005B	TEE			128, 488, 496, 498, 502
21K000007B	FITTING			52, 66
21KB606	TEE			498
21KN00005B	TEE			484
225855B	SEAL			26, 74, 76, 78, 80
22E000004B	WASHER			86, 90, 140, 144
2341398	COUPLER			496
2342026B	COUPLER			496
2356058B	BOOT			210, 216
23F000001B	ELBOW			218
23G000812B	SCREW			44
24K000004B	PLUG			504

Code for disposition of old part number
A -- Use up
B -- Use on other application (See PNI)
C -- File PDR Report with Bobcat Parts Sales
D -- Part Number Error

https://www.pdfmanual4trucks.com/

Part No.	Description	Was	Code	Page
24K000008B	PLUG			104
24KN00008B	PLUG			104
25E000008B	WASHER			44
25E000010B	WASHER			12, 238, 446, 450
25E000011B	WASHER			416
25E000016B	WASHER			12, 370, 376, 380, 446, 528
25E000017B	WASHER	25E000018B	B	12, 406, 522, 524
25E000017B	WASHER			12, 406, 522, 524
25E000018B	WASHER			256, 366, 378, 382
25E000019B	WASHER			378
25E000025B	WASHER			406
25E13	WASHER 5			8, 44, 48, 208, 216, 350, 352, 404, 460
25E14	WSHR			446
25E15	WASHER			132, 210, 216, 500, 512, 548
25E21	WASHER 5			84, 132, 244
25G000410B	BOLT			422
25G000412B	BOLT			200, 204, 350
25G000510B	SCREW			370, 378
25G000528B	BOLT			374, 380
25G000612B	BOLT			436
25G512	SCREW			18, 374, 380
25G520	SCREW			18
25GM08010B	SET SCREW			272
25GT00410B	BOLT			224, 440
25K020010B	SEAL			154
25K020016B	O-RING			86, 90, 94, 102, 110, 114, 140, 144, 148
25K030202B	O-RING			36, 38, 164
25K030300B	O-RING			78
25K030508B	O-RING			38
2756257B	RETAINER			370, 376, 382
27E000008B	WASHER			406
27E000010B	WASHER			376, 380
27E6	WASHER 5			346, 390
29CM612	BOLT			324
29G000412B	SCREW	6588163	B	94, 98, 102, 108, 110, 114, 148
29G000412B	SCREW			94, 98, 102, 108, 110, 114, 148
29G000416B	SCREW	6588982	B	94, 98, 102, 108, 110, 114, 148
29G000416B	SCREW			94, 98, 102, 108, 110, 114, 148
2DM00008B	NUT	6680874	A	272, 290, 312
2DM00008B	NUT			272, 290, 312
2EM00008B	WASHER			266, 272, 274, 292, 306, 314
2J004200B	ROD END			436
2J006208B	CLEVIS			14, 522
30G000416B	BOLT	6588166	B	94, 98, 102, 106, 110, 114, 148
30G000416B	BOLT			94, 98, 102, 106, 110, 114, 148
30H000019B	CLAMP	30H000021B	B,D	352, 374
30H000019B	CLAMP			352, 374
30H000021B	CLAMP			350
30H000023B	CLAMP			44, 130, 256
30H000029B	CLAMP			198
30H000036B	CLAMP			32
30H000037B	CLAMP			370, 374, 380
30H000040B	CLAMP			132
30H000042B	CLAMP	30H000035B	B	128, 220, 476

Code for disposition of old part number
A -- Use up
B -- Use on other application (See PNI)
C -- File PDR Report with Bobcat Parts Sales
D -- Part Number Error

https://www.pdfmanual4trucks.com/

Part No.	Description	Was	Code	Page
30H000042B	CLAMP			128, 220, 476
30H000048B	CLAMP			208, 218
30H000049B	CLAMP			398
30H000054B	CLAMP			204
30H000056B	CLAMP			198
30H000057B	CLAMP	30H000050B	B	218
30H35	CLAMP 10			213, 214, 478
30H46	CLIP			400
30H50	CLIP			452, 458
30H60	CLIP			211, 212, 218
30R000107B	TERMINAL			514
31C000420B	BOLT			22, 24, 424, 426
31C000828B	BOLT			474
31C001064B	BOLT	17C001064B	B	26
31C001264B	BOLT			26
31C820	BOLT			4
31C824	BOLT 10			4, 406, 474
31H000034B	CLAMP	30H000034B	B	496
31H000052B	CLIP			458
7291290B	WING NUT			340
32DM00010B	NUT			232
35C000408B	BOLT			514
35C000416B	BOLT	35C000516B	B	208, 218, 370, 374, 378, 380
35C000416B	BOLT			208, 218, 370, 374, 378, 380
35C000508B	BOLT			236
35C000510B	BOLT			374, 380
35C000520B	BOLT			426
35C000536B	BOLT		B	60, 362, 364
35C000536B	BOLT			60, 362, 364
35C000540B	BOLT	35C000536B	B	52
35C000608B	BOLT			10, 208, 218, 522, 524
35C000610B	BOLT			132
35C000612B	BOLT	31C000612B	B	10, 84, 162, 240, 242, 248
35C000612B	BOLT			10, 84, 162, 240, 242, 248
35C000716B	BOLT			464, 514
35C001032B	BOLT			36, 38
35C410	BOLT 5	17C000410B	B	6, 10, 198, 204, 352, 384, 404, 416, 418, 426, 468
35C410	BOLT 5			6, 10, 198, 204, 352, 384, 404, 416, 418, 426, 468
35C412	BOLT			52, 60, 354, 362, 364, 370, 374, 378, 404, 512, 544
35C512	BOLT			404
35C516	BOLT 10			132, 244, 350, 382, 422
35C616	BOLT 5			370, 374, 378, 382, 404, 418
35C620	BOLT 5			208, 220, 244, 250
3679001B	CAP			128
36K000008B	CAP			72, 432, 496, 498
36K6	CAP			244
36K7	FITTING			64, 66, 132
3737000B	TRACK			516
3737001B	TRACK			516
3737010B	CUSHION			516
3737081B	CUSHION			516
37C000516B	BOLT			516, 528

Code for disposition of old part number
A -- Use up
B -- Use on other application (See PNI)
C -- File PDR Report with Bobcat Parts Sales
D -- Part Number Error

https://www.pdfmanual4trucks.com/

Part No.	Description	Was	Code	Page
37C000540B	BOLT			432
37C000612B	BOLT			24, 404
37C000632B	BOLT	37C000628B	A	24
37C000820B	BOLT			22, 24
37C512	BOLT			220, 352, 404, 478
37C620	BOLT			436
37C628	BOLT			152, 392, 412
38C000606B	SCREW			226, 436
38C000610B	BOLT	6704285	A	256, 436
38C000610B	BOLT			256, 436
38C000816B	BOLT			436
38C000820B	BOLT			248
38C000856B	SCREW			22, 24
3966512B	O-RING	6686986	A	264, 294, 304, 334
3966512B	O-RING			264, 294, 304, 334
3966515B	O-RING			262, 266
3966516B	O-RING			262, 276
3966530B	O-RING			262, 266
3966602B	O-RING			262, 270
3974037B	PIN			268, 308
3974038B	O-RING			262, 268, 304, 308, 313, 314
3974095	MET-GASK			262, 268, 270, 290, 304, 308, 330
3974192B	BOLT			292, 332
3974260B	BOLT			300, 338
3974267B	STUD			324
3974366B	BOLT			298
3974368B	GASKET			298
3974381B	SEAT			298
3974382B	SPRING			298
3974383B	SEAT			298
3974384B	SHIM			298
3974385B	TAPPET			298
3974389B	GASKET			268, 308
3974390B	CAP	6680639	A	268, 308
3974390B	CAP			268, 308
3974393B	PIN			268, 308
3974394B	PIN			268, 308
3974395B	PIN			266, 268, 306, 308
3974402B	PLUG	6652583	A	276
3974403	GASKET			262, 276
3974425B	NUT			330
3974432B	CAP	6680665	A	274, 314
3974432B	CAP			274, 314
3974433B	CAP			274
3974456B	GASKET			262
3974502B	GASKET			262, 296
3974514B	SPRING			272, 312
3974515B	RETAINER			272, 312
3974518B	CAP			272, 312
3974521B	BRACKET			272, 312
3974523B	ORIFICE			272
3974524B	WASHER			272, 312
3974525B	SPRING			272
3974546B	KEY			278, 282, 318, 322

Code for disposition of old part number
A -- Use up
B -- Use on other application (See PNI)
C -- File PDR Report with Bobcat Parts Sales
D -- Part Number Error

https://www.pdfmanual4trucks.com/

Part No.	Description	Was	Code	Page
3974547B	STOPPER	6653843	A	282, 322
3974547B	STOPPER			282, 322
3974577B	O-RING			262, 278, 304, 318
3974601B	GASKET			264, 290
3974618B	CIRCLIP			280, 320
3974620B	CIRCLIP			280, 320
3974624B	STOPPER			280, 320
3974626B	SHIM			296
3974627B	STUD			286
3974630B	GASKET			264, 280
3974644B	PLATE			294, 334
3974658B	SHAFT			292
3974659B	BOLT			292
3974671B	NUT			278, 318
3974679B	BAND			286, 310, 326
3974693B	GASKET			458
3974787B	RACK			298
3974868B	PIN			268, 308
3974871B	ADAPTER			268, 308
3974882B	BRACKET			274, 314
3974888B	BOLT			266, 306
3974893B	SEAT			266, 306
3974894B	FLANGE			266, 306
3974895B	GASKET			262, 266
3974920B	SCREW			272, 312
3974923B	NUT			270
3974924B	PLATE			269, 270
3974925B	PLATE			270
3974926B	ELEMENT			270
3974927B	SHIELD			270
3974930B	PIPE			270
3974931B	CLAMP			270
3974945B	WASHER			278
3974970B	SCREW			293, 294
3974971B	NUT			294, 334
3974972B	GASKET			294, 334
3974975B	APPARATUS			289, 290, 329, 330
3974978B	NUT			290, 330
3974979B	CAP			290, 330
3974988B	PIPE			286
3974991B	BEARING			284
3974992B	FLANGE			284
3974995B	GASKET			262
3974996B	COVER			280
3975021B	WASHER			278
3975022B	WASHER			278
3975334B	SLEEVE			278
3975337B	COLLAR			278, 318
3975389B	GASKET			298, 336
3975426B	OIL PUMP			268, 308
3975428B	SCREW			298, 336
3975436B	SCREW	3974928B	A	270, 310
3975436B	SCREW			270, 310
3975441B	GEAR			268, 308

Code for disposition of old part number
A -- Use up
B -- Use on other application (See PNI)
C -- File PDR Report with Bobcat Parts Sales
D -- Part Number Error

https://www.pdfmanual4trucks.com/

Part No.	Description	Was	Code	Page
3975442B	COLLAR			280
3975447B	DRAINCOCK			268
3975449B	GASKET			262, 276
3DM00012B	NUT			268
40DM00008B	NUT			548
40K000002B	PLUG			286
40K000006B	PLUG			238
41G000806B	SCREW			386
42H000010B	CLAMP			32, 446, 452, 458
42H000016B	CLAMP			128, 132
42H000032B	CLAMP	6513595	A	32, 240, 242
42H000052B	CLAMP			240, 242
42HL00300B	CLAMP	6598799	A	240, 418
43C000524B	BOLT			118
43C000532B	BOLT			68, 118
43C000852B	BOLT	17C000844B	B	402
43DM6	NUT	55D4	D	376
44H20	CLAMP	6666864	A	154
45C000620B	BOLT	45C000624B .	B,D	160
45G000508B	BOLT			398
45G001008B	BOLT			370, 374, 378, 380
45G001212B	BOLT			210, 218, 398
45K000005B	ADAPTER			128, 496
45K000007B	FITTING			70, 428
45K000008B	ADAPTER			158, 496, 498
45KN00008B	ADAPTER			158, 496
46D000005B	NUT			370, 376, 378, 380
46K000008B	ELBOW			70, 128, 428, 430, 432
47C000820B	BOLT			48
47K000008B	PLUG			172, 182, 186
48K16	O RING 10			70, 130, 428
4CM00615B	BOLT			336
4CM00616B	BOLT			296
4CM00620B	BOLT			266, 294, 306, 334
4CM00628B	BOLT			292
4CM00814B	BOLT			280
4CM00816B	BOLT			274, 276, 282
4CM00818B	BOLT			282
4CM00822B	BOLT			286, 288, 296, 326, 328, 336
4CM00825B	BOLT			278, 318
4CM00828B	BOLT			278, 284, 318, 324
4D000020B	NUT			470, 472
4DM00005B	NUT			208, 216, 416
4DM10	NUT			208, 216
4E000004B	WASHER			226, 386, 446
4E5	WASHER			446
4F004051B	PIN			436
4F005062B	PIN			12
4F6106	PIN			14, 522, 524
4FM00018B	PLUG			268
4FM45	PLUG			268
50D000005B	NUT			398
50D000012B	NUT			10, 210, 218, 398
51E000404B	ADAPTER			488, 498, 502

Code for disposition of old part number
A -- Use up
B -- Use on other application (See PNI)
C -- File PDR Report with Bobcat Parts Sales
D -- Part Number Error

https://www.pdfmanual4trucks.com/

Part No.	Description	Was	Code	Page
5289686B	PLUG			20, 375, 376, 380
52E001212B	ADAPTER	52E000012B	D	154
53D10	NUT	83D000010B	B	6
54K020002B	O-RING			88, 92, 94, 96, 98, 108, 110, 114, 140, 144, 148
54K020028B	O-RING			118
54K030300B	O-RING			80
54K060304B	O-RING			80
54K30118	O-RING	NSS	D	82
54K30226	O-RING	25K030226B	A	74, 76
54K30226	O-RING			74, 76
54K40124	O-RING	25K040124B	A	82
54K40300	O-RING	58K000234B	A	74, 76
54K40300	O-RING			74, 76
55D4	NUT			52, 364, 380, 514
55D6	NUT			24, 404
55D7	NUT			464, 514
55K000204B	O-RING			104, 108, 110, 114, 118
55K000212B	O-RING			104, 108, 110, 114, 118
57D000004B	NUT			22, 60, 362, 404
57D000005B	NUT			52, 60, 244, 362, 364, 378
57D000008B	NUT			474
57D6	NUT 5			22, 24, 84, 152, 232, 378, 392, 412, 436
58G000808B	SCREW			416, 426
58K000017B	O-RING			86, 90, 94, 102, 110, 114, 140, 144, 148
58K000018B	O-RING			154
58K000116B	O-RING	80K000116B	B	126
58K000124B	O-RING			88, 92, 96, 98, 102, 106, 112, 114, 142, 146, 148
58K000127B	O-RING	6595663	A	92, 96, 98, 104, 107, 108, 112, 114, 146, 150
58K000127B	O-RING			92, 96, 98, 104, 107, 108, 112, 114, 146, 150
58K000243B	O-RING			36, 164
58K000338B	O-RING			78
58K14	O RING 10			86, 90, 94, 98, 102, 106, 110, 114, 140, 144, 148, 436
59D4	NUT 5			460, 462
59D5	NUT 5			210, 216, 498, 499, 500
59D6	NUT			22, 24, 52, 56, 58, 62, 70, 428, 430, 432
59D8	NUT 5			6
59G000616B	BOLT			350, 352
5CM00812B	BOLT			312
5CM01035B	BOLT			244
5CM1025	BOLT			250
5HM00024B	CLAMP			446, 452
5HM00042B	CLAMP			154, 236
5HM20	CLAMP			452
5JM00014B	CIR-CLIP			272
5JM00024B	CIRCLIP			280, 320
614142B	SLEEVE			424, 514
619021B	WASHER			30, 84, 160
61D000006B	NUT			4, 26, 32, 152, 236, 248, 346, 388, 390, 392, 404, 412, 484
61D4	NUT 5			198, 204, 208, 218, 226, 350, 352, 446
61D5	NUT			10, 24, 240, 242, 350, 352, 372, 394, 404, 446, 478, 516, 520, 528

Code for disposition of old part number
A -- Use up
B -- Use on other application (See PNI)
C -- File PDR Report with Bobcat Parts Sales
D -- Part Number Error

https://www.pdfmanual4trucks.com/

Part No.	Description	Was	Code	Page
61E000004B	NUT			488, 498, 502
62D000004B	NUT			208, 216, 256, 386
62D000006B	NUT			132, 162, 406
62D000008B	NUT			132
63E000004B	PLUG			488, 498, 502
6500989	CLAMP			498, 502
6502203	CLAMP			52, 56, 58, 62, 70, 428, 430, 432
6505813	CONNECTOR			240
6510171	LINK			36, 38
6510470	RING GEAR			250, 404
6511855	SEAL			156, 236, 240, 242
6512026	BUSHING			84
6512067	GROMMET			446
6512274	CLIP			370, 376, 378, 380
6512797	RIVET			526
6512809	KEY			198, 202
6512954	ROD END			132
6513152	SEAL			371, 372, 374, 378, 382, 384
6513466	SEAL			74, 76
6513495	COTTER PIN			84, 436
6513510	PISTON			164
6513532	POPPET			164, 166, 168, 170
6513533	SPRING			164, 166, 168, 170
6513709	CAP PLUG			70, 428
6513971	TIRE	NAP	D	546
6515007	GAUGE			240
6515045	TUBE			546
6515131	TERMINAL			424
6515167	PLUG			70, 428
6515168	CAP			70, 428
6515521	SWITCH			454
6515575	CLAMP			32, 236, 488
6515598	PLUG	6515590	D	128
6515599	CAP			128
6515817	WASHER			6
6516033	TUBE			546
6516231	RING			82
6517516	LIGHT			424
6517924	CONNECTOR			514
6518200	GREASE ZERK			160
6518460	PIN			172, 176, 182, 186
6518820	CLAMP			236
6518952	WASHER			404
6519178	BUMPER			26
6519548	CONNECTOR			204, 415, 416, 476, 478
6531270	SLEEVE			86, 90, 94, 98, 102, 106, 140, 144, 148
6532127	BOOT			20, 224, 440
6533898	DECAL			474
6534559	SEAL KIT			104
6534630	RESTRICTOR			86, 90, 94, 98, 104, 108, 112, 114, 140, 144, 148
6535451	HOSE			60, 64, 68
6537096	WASHER			88, 92, 96, 98, 102, 103, 104, 142, 146, 148, 149, 150
6538141	SEAL			78

Code for disposition of old part number
A -- Use up
B -- Use on other application (See PNI)
C -- File PDR Report with Bobcat Parts Sales
D -- Part Number Error

https://www.pdfmanual4trucks.com/

Part No.	Description	Was	Code	Page
6538466	BUSHING			88, 142
6539144	TUBE			74, 76
6539185	HEAD			74, 76
6539299	SPACER			82
6539304	ROD			82
6539323	HEAD			82
6539932	PISTON			78
6539934	HEAD			78, 80
654299B	BEARING			180, 186
6544654	BUSHING			44, 84
6550826	TIRE			546
6552871	WASHER			50
6552906	BRACKET			464, 514
6553411	BUSHING			4, 32, 44, 48, 238, 488
6553412	ELBOW			238
6553709	WASHER			6
6554100	TREAD			394
6554149	CORD			7, 8, 374, 378, 382, 384
6554858	BALL JOINT			256
6555331	WIRE ROPE			382
6555351	SEAL			370, 378, 384
6555455	WASHER			26, 208, 216
6555987	BUSHING			4, 26
6555989	BUSHING			26
6556222	INSTRUCTIONS			424
6557224	DECAL			396
6557291	BALL JOINT			256
6557720	HOSE			240
6557831	WASHER			30, 160
6557904	FLASHER			416, 424, 426
6558076	KIT			423, 424
6558309	WIRE ROPE			394, 436
6558310	SLEEVE			394, 436
6559447	WASHER			154
6559479	NUT			10, 44
6559775	EARMUFFS			540
6560172	COVER			208, 216
6560416	WASHER			26
6560573	DECAL			396
6560633	DAMPENER			6
6561095	RIM			546
6561218	SHUTTLE			164, 168
6561383	DECAL			394
6562257	MOUNT			244
6562266	CLAMP			74, 76, 78, 80
6562602	BUSHING			6
6562619	BUSHING			342, 418
6562777	RIM			546
6562905	CABLE			210, 216
6563128	SPRING			22
6563148	BLOCK			10
6563151	LINK			10
6563410	DECAL			370, 378
6563452	FITTING			240

Code for disposition of old part number
A -- Use up
B -- Use on other application (See PNI)
C -- File PDR Report with Bobcat Parts Sales
D -- Part Number Error

https://www.pdfmanual4trucks.com/

Part No.	Description	Was	Code	Page
6563505	CONDUIT			208, 216
6563606	WASHER			50
6563914	WASHER			84, 160, 436
6563920	FILTER			208, 218
6563922	SNUBBER			208, 218
6564343	SPACER			256
6564452	GRIP			256
6564517	WIRE			454
6564527	DECAL			458
6564657	PIN			84
6564669	NUT			50, 546
6564697	TEE			458
6564833	SAFETY TREAD	6703757	B	370, 376, 378
6564833	SAFETY TREAD			370, 376, 378
6564991	CABLE			208, 216
6565170	CABLE			210, 216
6565200	DECAL			396
6565270	VINYL CAB			367, 368
6565355	GUIDE			10
6565977	HOSE			458
6565990	DECAL			396
6566957	INSTRUCTIONS			384
6567604	SPACER			6
6567743	PIN			6, 240, 242
6567827	ANGLE			474
6567838	PIN			474
6567962	WASHER			256
6567968	WIRE			514
6568047	NUT			370, 374, 378, 380
6568055	BRACKET			370, 378
6568476	CLAMP			70, 428, 430, 432
6568704	MOULDING			372, 378
6568705	WINDOW	6568075	D	370
6568728	SHIELD			370, 378
6568739	HARNESS			370
6568877	WASHER			244
6569033	WINDOW	NSS	D	378
6569095	MOUNT			422
6569112	KIT			421, 422
6569203	CLAMP			210, 216, 498
6569219	SCREEN			32, 154
6569465	AXLE			50
6570040	INSTRUCTIONS			422
6570223	INSTRUCTIONS			466
6570929	INSTRUCTIONS			372, 378
6570931	INSTRUCTIONS			342
6571536	PULLEY			228
6571715	HINGE			370, 378
6571717	HINGE			372
6571744	BOB-TACH			30
6571851	SNAP RING			40, 42
6571852	SNAP RING			40, 42
6571991	GUIDE			14, 522, 524
6575580	GASKET			240, 242, 262, 288

Code for disposition of old part number
A -- Use up
B -- Use on other application (See PNI)
C -- File PDR Report with Bobcat Parts Sales
D -- Part Number Error

https://www.pdfmanual4trucks.com/

Part No.	Description	Was	Code	Page
6576028	HOSE			236
6576033	WASHER			248
6576194	LINK	6706194	B,D	160
6576195	LINK			160
6576196	MOUNT			160, 186
6576238	CLIP			378
6576252	ROD			256
6576262	MOUNT			256
6576280	BOLT			210, 216
6576302	BAR			84
6576386	HOSE			32
6576470	ROD			378
6576471	SHIELD			378
6576660	TANK			236
6577058	PIN			160
6577204	SPROCKET			35, 36, 37, 38, 50
6577227	INLET			236
6577230	BRACKET			160
6577382	SPACER			236
6577394	BRACKET			4
6577395	HINGE			22
6577400	BUMPER			22
6577401	BUMPER			22
6577446	BUSHING			30
6577456	KIT			228
6577459	DIPSTICK			154
6577545	GROMMET			350, 352
6577585	BAND			154
6577669	HOSE			52, 56, 58, 62
6577671	HOSE			52, 56, 58, 62
6577690	TUBE			88, 92, 96, 104, 112, 142, 146, 150, 154
6577754	DECAL			12, 396
6577801	LIGHT			204, 476, 478
6577813	BAR			84
6577821	HOSE			32, 488
6577822	HOSE			32, 236
6577880	KIT			341, 342
6577947	SAFETY TREAD			394
6577949	SAFETY TREAD			394
6577954	PIN			26
6577961	GROMMET			20
6578139	LEVER			357, 358
6578140	LEVER			358
6578150	LOCK			10
6578169	HOSE			32
6578172	HOSE	889269B	A	32, 446
6578172	HOSE			32, 446
6578173	HOSE			496
6578174	HOSE			496
6578183	TEE			52, 56, 66
6578185	HOSE			496
6578253	SPRING	6562018	A	30
6578268	BELLCRANK			256
6578278	PAD			32

Code for disposition of old part number
A -- Use up
B -- Use on other application (See PNI)
C -- File PDR Report with Bobcat Parts Sales
D -- Part Number Error

https://www.pdfmanual4trucks.com/

Part No.	Description	Was	Code	Page
6578279	HOSE			236
6578280	HOSE			236
6578284	SHIM			258
6578327	HOSE			156
6578356	BUSHING			26
6578357	BULB			204
6578363	ROD END			208, 216
6578366	BALL JOINT			208, 216
6578368	DECAL			396
6578398	RETAINER			378
6578505	COVER			4, 44
6578528	HARNESS			202, 476, 478
6578689	HUB			50
6578780	CROSSMEMBER			200
6578802	KIT			507, 508
6578804	HOSE			60, 64, 68
6578812	ADAPTER			154
6578824	HOUSING			201, 202, 476, 478
6579072	SPRING	6700743	B	404
6579104	SHIM			30
6579106	SHIM			30
6579324	SHIELD			370, 378
6579325	WINDOW			378, 382
6579326	MOUNT			240, 242
6579385	DECAL			418
6579399	DECAL			418
6579403	DECAL			418
6579509	DECAL			394
6579510	DECAL			370, 394
6579511	DECAL			152, 392, 396
6579528	DECAL			394
6579613	STOP			6
6579639	DECAL			394
6579641	HOUSING			258
658128B	SNAP RING			180, 186
6584978	CONDUIT			44, 514
6585223	ORIFICE			452, 458
6585860	SPRING			44
6586459	SEAL KIT			88, 92, 96, 110, 142, 146, 150
6586575	CYLINDER			81, 82
6586576	TUBE			82
6586577	CASE			82
6586586	TUBE			78, 80
6586588	ROD			78
6586906	PISTON			74
6586910	ROD			74
6586918	SCREW			86, 90, 91, 92, 94, 98, 102, 106, 140, 144, 148
6587458	KEY			32
6587523	WASHER			86, 90, 94, 98, 102, 106, 110, 114, 140, 144, 148
6587526	KIT			541, 542
6587575	ADAPTER			86, 90, 94, 98, 102, 106, 140, 144, 148
6587580	SPRING			86, 90, 94, 98, 102, 106, 110, 114, 140, 144, 148
6587633	BONNET			94, 140, 144, 148

Code for disposition of old part number
A -- Use up
B -- Use on other application (See PNI)
C -- File PDR Report with Bobcat Parts Sales
D -- Part Number Error

https://www.pdfmanual4trucks.com/

Part No.	Description	Was	Code	Page
6587763	BOOT			86, 90, 94, 98, 102, 106, 110, 114, 140, 144, 148
6587888	TEE			140
6587889	TEE			150
6588074	SPOOL	6589663	B	86, 90, 94, 98, 102, 106, 110, 114, 140, 144, 148
6588074	SPOOL	6589663	B,D	86, 90, 94, 98, 102, 106, 110, 114, 140, 144, 148
6588074	SPOOL			86, 90, 94, 98, 102, 106, 110, 114, 140, 144, 148
6588163	SCREW			90, 144
6588165	SCREW			86, 140
6588166	SCREW			86, 90, 140, 144
6588197	SPRING			88, 92, 96, 98, 102, 142, 146, 150
6588781	END CAP			106, 112, 114
6588981	END CAP			86, 92, 94, 98, 102, 140, 144, 145, 146, 148
6588982	SCREW			88, 90, 142, 144
6589045	SPRING			110, 114
6589226	BONNET			86, 90, 94, 98, 102, 106, 140, 144, 148
6589564	RETAINER			90, 94, 98, 102, 106, 110, 114, 144, 148
6589565	BUSHING			92, 96, 98, 102, 106, 110, 114, 146, 150
6589665	BUSHING	6534387	A	30, 74, 78
6589665	BUSHING			30, 74, 78
6591447	STEM			546
6592098	WASHER			86, 90, 94, 98, 102, 106, 140, 144, 148
6592100	COLLAR			86, 90, 94, 98, 102, 106, 110, 114, 140, 144, 148
6592105	BALL			86, 90, 94, 98, 102, 106, 140, 144, 148
6592107	SPRING			86, 90, 94, 98, 102, 106, 140, 144, 148
6592109	ADAPTER			86, 90, 94, 98, 102, 106, 110, 114, 140, 144, 148
6592115	SEAT			86, 90, 94, 98, 102, 106, 110, 114, 140, 144, 148
6592116	NUT			86, 90, 94, 98, 102, 106, 110, 114, 140, 144, 148
6592117	SPRING			86, 90, 94, 98, 102, 106, 110, 114, 140, 144, 148
6592123	RETAINER			86, 140
6592506	CLAMP			432
6592720	PLUG			88, 92, 96, 98, 104, 106, 112, 114, 140, 146, 148
6592766	U-BOLT			436
6593013	SPACER	6706650	A	66
6595014	DECAL	6707867	A	404
6595663	BUSHING			92, 96, 98, 102, 106, 112, 114, 146, 150
6596311	SEAL KIT			96
6596332	SPRING			106, 112, 114
6596436	VALVE			97, 98
6596569	SEAT			106, 110, 114
6596807	PLUG		B	88, 92, 96, 98, 102, 106, 140, 144, 148
6596807	PLUG			88, 92, 96, 98, 102, 106, 140, 144, 148
6598098	PIN			290, 330
6598099	KEY			280, 320
6598101	BALL BEARING			280
6598102	VALVE			296, 336

Code for disposition of old part number
A -- Use up
B -- Use on other application (See PNI)
C -- File PDR Report with Bobcat Parts Sales
D -- Part Number Error

https://www.pdfmanual4trucks.com/

Part No.	Description	Was	Code	Page
6598116	PLUG	6652797	A	274, 314
6598116	PLUG			274, 314
6598136	GASKET	3975419B	A	262, 270
6598142	GEAR			278, 318
6598146	PIPE			300
6598158	CIRCLIP	3975432B	A	280, 320
6598158	CIRCLIP			280, 320
6598174	LEVER			291, 292, 331, 332
6598176	LEVER			294, 334
6598179	COLLAR			320
6598187	PLUG			268, 308
6598275	BOLT	6652487	A	250
6598355	BOLT			292
6598362	ELEMENT			2, 340
6598485	SEALANT			348
6598492	ELEMENT			2, 340
6598703	SEAL			290
6598721	NUT			198, 202
6598757	QUICK COUPLER			70, 130, 428
6598758	QUICK COUPLER			70, 130, 428
6598908	ELBOW			488
6599161	RELIEF VALVE			86, 90, 94, 102, 110, 140, 144, 148
6599360	SEALANT			554
6599365	KIT			194, 196
6599645	PLUG			4, 32
6599652	BOOT			210, 216
6599696	SOCKET & BULB			200
6599719	GREASE			254, 554
6599721	DOOR			368
6599741	WASHER			160
6599744	BALL JOINT			160, 406
6599779	ADJUSTER	6650227	A	520
6599780	TRACK			16
6599931	ALARM			350, 352
65G000608B	BOLT			200
6610510	TIE			52, 56, 58, 62, 198, 204, 208, 210, 214, 220, 238, 376, 380, 400, 460, 462, 484, 512, 514
6617736	HOSE			154
6618194	HOSE			496
6620642	MOTOR			370
6624289	CABLE TIE			128, 400, 452
6624435	NUT			446
6626631	CLAMP			238
6628571	VALVE ASSY			68, 102, 106, 110, 114, 117, 118
6630153	BATTERY CAP			210, 216
6630163	PULLEY			386
6630168	COUPLER			158
6630177	DRAINCOCK			308
6630184	THERMOSTAT			286, 452, 458
6630188	POLISH			554
6630189	POLISH			554
6630190	POLISH			554
6630191	POLISH			554
6630207	RIVET			10, 20
6630340	HOUSING			386

Code for disposition of old part number
A -- Use up
B -- Use on other application (See PNI)
C -- File PDR Report with Bobcat Parts Sales
D -- Part Number Error

https://www.pdfmanual4trucks.com/

Part No.	Description	Was	Code	Page
6630341	STATOR			386
6630342	HOUSING			386
6630343	RETAINER			386
6630344	BRUSH ASSY.			386
6630345	GASKET			386
6630346	COVER			386
6630349	REGULATOR			386
6630350	DIODE			386
6630367	CAP			158
6630465	CUSHION			16
6630468	CUSHION			16
6630469	TRACK			16
6630797	GAS SPRING			370, 376, 378, 382
6630821	SWITCH			514
6630838	CONNECTOR			440
6630918	TRACK			384
6630919	TRACK			384
6630924	BRACKET			384
6630941	COVER			340
6630943	BLADE			370
6630945	WASHER			256
6631008	ARM			370
6631009	SWITCH			370, 378
6631010	SWITCH			208
6631036	JOINT			436
6631418	PIN			6, 12, 14, 240, 242, 522, 524
6631548	LOOP			384, 418
6631549	HOOK			384, 418
6631561	NUT			126
6631598	SEAL KIT			138
6631664	SEAL			278, 318
6631927	GEAR			370, 374, 380
6631928	SHAFT			370
6631935	HANDLE			370, 378
6632053	SWITCH			194, 210
6632218	BEARING			40, 42
6632221	STUD			370, 376, 382
6632265	PLUG			383, 384
6632271	PLUG			164
6632279	SEAL KIT			88, 92, 96, 104, 108, 114, 142, 146, 150
6632323	WASHER			228
6632388	SEAT			515, 516
6632417	BEARING			234
6632418	BEARING			234
6632419	HOUSING ASSY.			234
6632420	BRUSH HOLDER			234
6632421	SPRING			234
6632428	PINION			234
6632429	RETAINER			234
6632430	ROLLER			234
6632432	PLUNGER			234
6632433	GASKET			234
6632434	COVER			234
6632436	SPRING			234

Code for disposition of old part number
A -- Use up
B -- Use on other application (See PNI)
C -- File PDR Report with Bobcat Parts Sales
D -- Part Number Error

https://www.pdfmanual4trucks.com/

Part No.	Description	Was	Code	Page
6632441	SPRING			234
6632541	RACE			40, 42
6632560	KEY			370, 378
6632584	RESISTOR			450
6632587	BALL			454
6632633	SWITCH			208
6632946	TERMINAL			210, 218
6633583	SEALANT			250, 418, 554
6635557	WASHER	896978B	A	386
6636018	LIGHT			200
6640690	PIN			222, 224, 398, 428, 430, 432, 438, 440, 444, 462, 496, 514
6640691	PIN			222, 224, 398, 438, 444, 514
6640692	CONNECTOR			440
6640694	LOCK			440
6640696	CONNECTOR			224, 440
6640699	CONNECTOR			222, 224, 398, 428, 430, 432, 436, 440, 444, 462, 496, 498
6640700	LOCK			222, 224, 398, 428, 430, 432, 436, 440, 444, 462, 496, 498
6641056	GROMMET			450
6641062	SCREW			450, 456
6641065	NUT			446, 450
6641066	SCREW			446, 450
6641072	WASHER			446, 450, 456
6641073	NUT			450, 456
6641173	CONNECTOR			222, 224, 398, 436, 440, 444
6641176	SEAL			222, 224, 398, 428, 430, 432, 438, 440, 444, 462, 496, 514
6641178	CONNECTOR			222, 224, 398, 436, 440, 444, 514
6641179	CONNECTOR	6519548	B	126, 222, 224, 360, 398, 428, 430, 432, 436, 440, 444, 462, 496, 498, 512, 514
6641179	CONNECTOR			126, 222, 224, 360, 398, 428, 430, 432, 436, 440, 444, 462, 496, 498, 512, 514
6641180	LOCK	1732366B	B	126, 222, 224, 360, 398, 428, 430, 432, 436, 440, 444, 462, 496, 498, 512, 514
6641180	LOCK			126, 222, 224, 360, 398, 428, 430, 432, 436, 440, 444, 462, 496, 498, 512, 514
6641181	LOCK			222, 224, 398, 436, 437, 438, 440, 444, 514
6641231	PLATE			294, 334
6641274	LATCH			370, 378
6645080	O-RING	6669412	A	176, 177, 178, 186, 188
6645080	O-RING			176, 177, 178, 186, 188
6645081	O-RING			174, 182
6645086	PLUG	6657081	B	174, 176, 182, 184
6645086	PLUG			174, 176, 182, 184
6646383	CONNECTOR			210, 218
6646582	PLUG			440
6646627	BEARING			258
6646678	CAP			236
6646705	SEAL			240, 242
6646781	SWITCH			350, 352
6647635	KNOB			370, 374, 378, 380
6647777	PIN			126
6647778	CAP			126

Code for disposition of old part number
A -- Use up
B -- Use on other application (See PNI)
C -- File PDR Report with Bobcat Parts Sales
D -- Part Number Error

https://www.pdfmanual4trucks.com/

Part No.	Description	Was	Code	Page
6647783	LOAD CHECK			126
6647784	PLUG			126
6647785	SPRING			126
6647786	SEAL KIT			126
6648293	SCREW			126
6648294	SPRING			126
6648307	CONNECTOR			440
6648326	SWITCH			214
6648348	PLUG			20
6648460	CONNECTOR			456
6648466	MOTOR			456
6648467	MOUNT			456
6648468	FAN			456
6648469	HOUSING			456
6648470	SCREW			450, 456
6648471	CORE			456
6648472	COVER			456
6648474	ELBOW			458
6648475	O-RING			458
6648482	CABLE			458
6648483	VALVE			458
6648485	TEE	6564697	A	452
6648636	HOSE			156
6648967	QUICK COUPLER			128, 488, 502
6648968	QUICK COUPLER			128
6648969	QUICK COUPLER			128, 488, 502
6648970	QUICK COUPLER			128
6649028	CLAMP			398
6649244	STUD			12, 240, 242
6649300	SEAL			278
6649331	SOCKET			204
6649402	MOULDING			236
6649420	LATCH			22
6649459	CONNECTOR			386
6649478	BULB HOUSING			202, 476, 478
6649481	BULB			216, 476, 478
6649536	PLUG			286, 326
6649551	SHOCK			162
6649676	STARTER			250
6649683	SEAL			462, 496
6649686	VALVE			503, 504
6649835	ADHESIVE			22
6650107	SEAL			210, 218
6650219	KNOB KIT			520
6650220	SHROUD			520
6650221	LATCH TILT			520
6650222	SPRING			520
6650223	CABLE			520
6650225	BACK CUSHION			520
6650226	SEAT CUSHION			520
6650228	TRACK			520
6650229	SPRING			520
6650230	SEAT PAN			520
6650231	CLIP			520

Code for disposition of old part number
A -- Use up
B -- Use on other application (See PNI)
C -- File PDR Report with Bobcat Parts Sales
D -- Part Number Error

https://www.pdfmanual4trucks.com/

Part No.	Description	Was	Code	Page
6650239	SCREEN			32
6650241	PUSH NUT			520
6650242	TIP			520
6650243	BOOT			520
6650245	WASHER			520
6650246	WASHER			520
6650247	WASHER			520
6650248	SPACER			520
6650249	SPACER			520
6650250	WASHER			520
6650251	CLIP			520
6650388	SEALANT			554
6650407	ADHESIVE			238, 554
6650626	SEAL			172
6650627	PLATE			172, 176, 180, 184
6650629	PIN			172, 176, 180, 184
6650630	RETAINER			172, 176, 180, 184
6650634	GASKET			172, 176, 180, 184
6650635	BEARING			174, 176, 182, 186
6650636	PIN			172, 176, 182, 184
6650637	BOLT			174, 176, 182, 184
6650640	BEARING			172, 176
6650641	SNAP RING			172, 176
6650645	SHAFT			176
6650646	O-RING			174, 182
6650647	O-RING			174, 182
6650648	PLUG			174, 182
6650649	SHIM			174
6650650	SHIM			174
6650652	POPPET			174, 180
6650653	END CAP			176
6650665	BOLT			186
6650668	BOLT			172, 176, 180, 186
6650670	CAP			174
6650671	SHAFT			172
6650675	COUPLER			172, 182
6650677	COUPLER			176, 186
6650679	BOLT			188
6651482	MANIFOLD			287, 288
6651487	PULLEY			284
6651489	COVER			286, 326
6651542	BALL			164, 166, 168, 170
6651544	GEROLER			164
6651549	SEAL			164
6651552	O-RING			164
6651703	CAP			204
6651709	SEAL			26
6651934	BOLT			280, 320
6651975	SWITCH			398, 446
6652018	BOLT			176, 186
6652019	SNAP RING			172, 176
6652367	HOSE COVER			128, 458
6652574	PLUG			268, 308
6652575	PLUG			268, 308

Code for disposition of old part number
A -- Use up
B -- Use on other application (See PNI)
C -- File PDR Report with Bobcat Parts Sales
D -- Part Number Error

https://www.pdfmanual4trucks.com/

Part No.	Description	Was	Code	Page
6652580	BOLT			284, 290, 324, 330
6652592	PIN			266
6652624	JOINT			270
6652633	BALL			278, 318, 322
6652652	SPRING			266, 306
6652653	PLUG			270, 310
6652670	STUD			274, 288, 296, 314, 326, 328, 336
6652688	CLAMP			300, 338
6652689	CLAMP			300
6652762	BOLT			284
6652764	STUD			266, 294, 306, 334
6652792	NUT			272, 274, 284, 286, 288, 296, 314, 324, 326, 336
6652818	ADHESIVE			6
6652918	NUT	83D000008B	B	244, 402
6652918	NUT			244, 402
6652935	EDGING			16
6653388	MIRROR			404
6653395	VALVE			88, 92, 96, 104, 110, 142, 146, 150
6653484	VALVE			504, 506
6653485	SEAL KIT			504, 506
6653487	SEAL KIT			504, 506
6653488	VALVE			504
6653489	COIL			504
6653562	GASKET			286, 326
6653568	FILTER			316
6653702	SEAL			258
6653757	SNAP RING			258
6653758	SNAP RING			258
6653798	BOLT			276, 316
6653803	GUIDE			274, 314
6653806	GASKET	6655481	A	262
6653807	BOLT			266, 306
6653808	BOLT			266, 306
6653809	ADAPTER			266, 306
6653821	BOLT			278, 318
6653830	SEAL			262, 272, 304, 312
6653832	STUD			272
6653833	SPRING			312
6653839	SCREW			282
6653840	GEAR			282, 322
6653861	SLINGER	6598141	A	278, 318
6653861	SLINGER			278, 318
6653865	WASHER			278
6653888	NUT			308
6653894	SLEEVE			298
6653905	CAP			294, 334
6653906	BOLT ASSY.			290, 330
6653916	HOLDER	3974661B	A	292, 332
6653916	HOLDER	6684834	A	292, 332
6653944	IMPELLER			284
6653945	SET SEAL			284
6653946	STUD			284
6653948	THERMOSTAT			286
6654002	WASHER			278

Code for disposition of old part number
A -- Use up
B -- Use on other application (See PNI)
C -- File PDR Report with Bobcat Parts Sales
D -- Part Number Error

https://www.pdfmanual4trucks.com/

Part No.	Description	Was	Code	Page
6654003	WASHER			278
6654117	SEAL			26, 78
6654139	MOULDING			8, 246
6654191	VALVE			446
6654200	SENSOR			216
6654201	SENSOR			216
6654205	HOSE			158
6654374	KEY			32
6654718	CLAMP			300, 338
6655149	CRANKCASE			267, 268, 307, 308
6655151	OIL PAN			275, 276, 315, 316
6655152	HOOK			273, 274
6655153	HEAD			274
6655154	GUIDE			274, 314
6655155	SEAT			272, 312
6655156	SEAT			272, 312
6655158	BOLT			274, 314
6655159	GASKET			262, 274, 304, 314
6655160	PLUG			274, 314
6655161	WASHER			274, 314
6655162	O-RING			262, 266
6655163	CASE			278
6655164	BOLT			278
6655166	COVER			278
6655167	GASKET			262
6655168	CASE			278
6655169	CASE			278
6655170	CASE			278
6655171	MANIFOLD			288
6655173	VALVE			271, 272, 311, 312
6655174	VALVE			272, 312
6655175	COVER			270
6655176	PUSHROD			282, 322
6655179	PIN			278, 318
6655180	CIR-CLIP			278
6655181	ROD			278, 318
6655183	PIN			278, 318
6655184	CRANKSHAFT			278
6655185	BEARING			278
6655186	BEARING			278
6655190	COLLAR			282
6655191	COLLAR			282
6655192	CIR-CLIP			282
6655193	SHAFT			282
6655194	OIL FILTER			276
6655195	BOLT			268, 308
6655198	PIPE			300
6655199	PUMP			297, 298
6655201	ELEMENT			298
6655202	VALVE			298
6655203	SPRING			298
6655204	HOLDER			298
6655205	PLATE ASSY.			298
6655206	BOLT			298

Code for disposition of old part number
A -- Use up
B -- Use on other application (See PNI)
C -- File PDR Report with Bobcat Parts Sales
D -- Part Number Error

https://www.pdfmanual4trucks.com/

Part No.	Description	Was	Code	Page
6655207	PLATE			298
6655209	PLATE			298
6655210	SHIM			296, 336
6655211	CAMSHAFT			279, 280, 319, 320
6655212	GEAR			280, 320
6655213	SLEEVE			280, 320
6655214	CASE			280, 320
6655215	BALL			280, 320
6655216	FUEL PUMP			32, 296, 336
6655218	GASKET			262, 300, 302, 304, 338
6655219	PIPE			300, 338
6655220	PIPE			300, 338
6655221	PIPE			300, 338
6655222	PIPE			300, 338
6655223	NUT			294, 334
6655224	LEVER	6655876	A	292, 332
6655224	LEVER			292, 332
6655225	SPRING			292, 332
6655227	SPRING			292, 332
6655228	STOPPER			294, 334
6655230	COVER			290
6655231	SHAFT			290, 330
6655232	LEVER			290, 330
6655233	GLOW PLUG			300, 338
6655234	CORD	6686987	A	300, 338
6655235	PULLEY			278, 318
6655236	PIN			278, 318
6655237	PIN			278, 318
6655238	BEARING			278
6655239	BEARING			278
6655240	BEARING			278
6655241	BEARING			278
6655242	BUSHING			282, 322
6655243	BUSHING			278, 318
6655427	CAMSHAFT			282, 322
6655498	BOLT			278, 318
6655515	JOINT			296, 336
6655518	O-RING	6646730	A	298
6655540	COVER			330
6655781	BEARING			248, 436
6655795	SEAL KIT			128, 488, 502
6655796	SEAL KIT			128
6655869	PLUG			268, 308
6655870	ROCKER ARM			272, 312
6655872	HEAT SEAL			262, 300, 302, 304, 338
6655873	PIECE			302
6655875	CAMSHAFT			280, 320
6655877	LEVER			292, 332
6655878	SPRING			292, 332
6655880	PIPE			285, 286, 310, 325, 326
6655884	PLUG	3974051B	A	268
6655937	VALVE			340
6655938	VALVE			340
6656126	WASHER			302

Code for disposition of old part number
A -- Use up
B -- Use on other application (See PNI)
C -- File PDR Report with Bobcat Parts Sales
D -- Part Number Error

https://www.pdfmanual4trucks.com/

Part No.	Description	Was	Code	Page
6656127	WASHER			302
6656128	WASHER			302
6656129	WASHER			302
6656130	WASHER			302
6656131	WASHER			302
6656132	WASHER			302
6656155	HOSE COVER			52, 56, 58, 62
6657028	O-RING			172, 176, 182, 184
6657067	COVER			172, 176, 182, 184
6657068	COVER			172, 176, 180, 186
6657074	ADAPTER			172
6657077	HOUSING			176
6657079	O-RING			172
6657306	CAP			448
6657376	ELBOW			236, 237, 238
6657401	GASKET KIT			262, 274
6657402	GASKET KIT			262, 268
6657409	SEAL KIT			486, 504
6657460	NUT			302
6657463	WASHER			302
6657663	PLUG			308
6657696	RINGS			278, 318
6657719	PLUG			20, 446
6657720	TUBE			504
6657721	DISC			504
6657734	PUMP			32
6657742	KIT			302
6658092	SEAL KIT			174, 178, 182, 186
6658142	WINDOW			384
6658143	WINDOW			384
6658180	BREATHER			32
6658228	SEAL			50, 348
6658252	QUICK COUPLER			128
6658253	QUICK COUPLER			128
6658301	SPRING			174, 182
6658302	SHIM			174
6658352	MOULDING			382
6658365	HOSE			154
6658536	RING			252
6658564	HOLDER			230
6658565	BRUSH			230
6658566	BRUSH			230
6658567	BUSHING			230
6658568	SPRING			230
6658569	BEARING			230
6658570	BEARING			230
6658571	SUPPORT			230
6658572	LEVER			230
6658573	STOP			230
6658574	ARMATURE			230
6658575	FRAME			230
6658576	SHAFT			230
6658577	SUPPORT			230
6658579	HOUSING			230

Code for disposition of old part number
A -- Use up
B -- Use on other application (See PNI)
C -- File PDR Report with Bobcat Parts Sales
D -- Part Number Error

https://www.pdfmanual4trucks.com/

Part No.	Description	Was	Code	Page
6658580	FRAME			230
6658581	O-RING			230
6658582	SOLENOID			230
6658672	SNAP RING			44, 48
6658682	BEARING			436
6658693	HEATER			454, 455, 456
6658818	SENDER			208
6658847	RING			252
6658930	BOOT			436
6659327	KEY			508
6659371	NUT			228
6659372	WASHER			228
6659374	SPACER			228
6659375	FAN			228
6659376	BRACKET			228
6659378	BOLT			228
6659379	BEARING			228
6659380	ROTOR			228
6659381	STATOR			228
6659382	BRACKET			228
6659384	RECTIFIER			228
6659385	SCREW			228
6659386	HOLDER			228
6659387	NUT			228
6659388	CONDENSER			228
6659390	HOLDER			228
6659391	NUT			228
6659392	BOLT			228
6659393	REGULATOR			228
6659394	BRUSH			228
6659395	SPRING			228
6659396	SCREW			228
6659397	TERMINAL			228
6659398	COVER			228
6659399	SCREW			228
6659400	CONNECTOR			228
6659459	CHECK VALVE			128
6659476	BACK-UP RING			164
6659477	O-RING			164
6659478	DISC			164
6659482	DOWEL PIN			164
6659483	BACK-UP RING			164
6659484	O-RING			164
6659485	BACK-UP RING			164
6659543	PLUG			480
6659553	SEAL			462, 496
6659574	SEAL KIT			134
6659578	SHIM			174, 178
6659579	SHIM			174, 178
6659580	SHIM			174, 178
6659581	SHIM			174, 178
6659582	SPACER			174, 178
6659601	SEAL KIT			164
6659890	SHIELD			456

Code for disposition of old part number
A -- Use up
B -- Use on other application (See PNI)
C -- File PDR Report with Bobcat Parts Sales
D -- Part Number Error

https://www.pdfmanual4trucks.com/

Part No.	Description	Was	Code	Page
6659891	MOULDING			456
6659892	MOULDING			456
6659949	LATCH			384
6659982	MUFFLER	6703648	A	418
6659999	BELT			526
6660117	BEARING			174, 178
6660204	SENSOR			216
6660260	SWITCH			196, 218
6660294	HORN			460, 462
6660340	VINYL CAB			368
6660348	GAS SPRING			516
6660594	BUTTON			198, 204
6660644	CAP			88, 92, 96, 98, 102, 106, 142, 146, 150
6660654	CONNECTOR			450
6660656	DECAL			450
6660659	SWITCH			446
6660777	KIT			451, 452
6660795	GUIDE			452
6660797REM	STARTER			230
6660814	O-RING			172, 176, 180, 186
6660815	SHIM KIT			172, 176
6660822	KNOB			446
6660864	COVER			446
6660865	DECAL			446
6660868	DECAL			450
6660869	KNOB			450
6660871	HOUSING			450
6660872	DOOR			450
6660873	BRACKET			450
6660874	HOUSING			450
6660875	COVER			450
6660876	MOTOR			450
6660877	MOULDING			450
6660878	MOULDING			450
6660879	ELBOW			446
6660880	FILTER			446
6660881	KNOB			446
6660883	TIE			446, 452
6660884	SCREW			446
6660885	LOUVER			446
6660888	VENT			446
6660890	COVER ASSY.			446
6660892	HARNESS			446
6660893	SPACER			446
6660894	HARNESS			446
6660930	THUMBSCREW			446
6660932	LATCH			370, 378
6660967	CAP			248
6660988	RETAINER			354, 370, 378, 424, 426, 512, 544
6660994	BELT			248, 249, 250
6660995	GREASE RING			248
6661020	KEY			138
6661022	FILTER			156, 191, 192
6661062	PLUG			240, 242

Code for disposition of old part number
A -- Use up
B -- Use on other application (See PNI)
C -- File PDR Report with Bobcat Parts Sales
D -- Part Number Error

https://www.pdfmanual4trucks.com/

Part No.	Description	Was	Code	Page
6661066	SEAL			248
6661070	SLEEVE			248
6661076	HOSE			156
6661114	CAP			32
6661117	TANK			406
6661180	LOCK			440
6661183	LOCK			224, 440
6661209	RIVET			236
6661213	RING			32
6661225	VALVE			130, 140, 144, 148
6661238	OIL COOLER			158
6661242	COVER			340
6661243	WING NUT			340
6661244	WASHER			340
6661247	FILTER			195, 196
6661248	ELEMENT			2, 158, 194, 196
6661328	SEAL KIT			112
6661334	FILTER ASSY			193, 194
6661382	ELBOW			32
6661405	OIL			250
6661448	SEAL KIT			136
6661481	O-RING			182
6661518	SENSOR			218
6661608	SEAL KIT			410
6661611	ALTERNATOR			227, 228
6661686	SUPPORT			230
6661688	DRIVE			230
6661689	TRACK			384
6661690	TRACK			384
6661694	PISTON			82
6661696	CAP			32
6661758	BLOCK ASSY			172, 176, 182, 184
6661785	MOUNT			244
6661787	WASHER			244, 402
6661807	KIT			192
6661808	KIT			192
6662257	PIN			222, 398, 438, 444
6662306	RING			50, 348
6662349REM	PUMP REM / CORE EXCHANGE REQUIRED	6662349	A	172, 176
6662437	WASHER			234
6662695	VALVE			130, 132, 135, 136, 488, 502
6662834	SPRING			370, 378
6662839	HINGE KIT			368
6662848	CAP			88, 92, 96, 98, 104, 108, 112, 114, 142, 146, 150
6662997	PULLEY			248
6664004	CLAMP			240, 242
6664024	STEM			136
6664025	STEM			136
6664026	CHECK VALVE			136
6664032	SEAL KIT			136
6664035	CAP			398
6664036	NUT			398

Code for disposition of old part number
A -- Use up
B -- Use on other application (See PNI)
C -- File PDR Report with Bobcat Parts Sales
D -- Part Number Error

https://www.pdfmanual4trucks.com/

Part No.	Description	Was	Code	Page
6664037	WASHER			398
6664040	PIN			200, 204, 398
6664041	SOCKET			210, 218, 398
6664085	BUSHING			376
6664095	ARM			376, 380
6664096	BLADE			376, 380
6664181	CONNECTOR			398
6664182	CONNECTOR			398
6664205	GAS SPRING			6
6664207	GAS SPRING			12
6664209	SEAL			252
6664212	CHECK VALVE			504, 506
6664221	RETAINER			12, 404, 514, 516
6664223	OUTLET			404
6664224	CAP			404
6664286	BOOT	6675280	A	210, 218, 226
6664286	BOOT			210, 218, 226
6664310	CLIP			6
6664351	SEAL			6, 384
6664373	VALVE			88, 92, 96, 104, 142, 146, 150
6664374	PLUG			6
6664388	DIODE			398
6664554	PUMP			374, 380, 512
6664584	CONNECTOR	6665683	A	200, 204
6664585	CONNECTOR	6665682	A	210, 218
6664599	CONNECTOR	6664184	B	222, 398, 436, 444
6664599	CONNECTOR	6664184	B,D	222, 398, 436, 444
6664599	CONNECTOR			222, 398, 436, 444
6664800	LOCK	6664186	B	222, 398, 436, 444
6664800	LOCK	6664186	B,D	222, 398, 436, 444
6664800	LOCK			222, 398, 436, 444
6664806	HOUSING			450
6664807	COVER			450
6664808	DOOR			450
6664815	SEAL			166, 168, 170
6664827	PIN			200, 204
6664828	SOCKET			210, 218
6664849	VALVE			52, 53, 54, 56, 66, 119, 120
6664850	VALVE			52, 56, 66, 121, 122
6664886	HOURMETER			200, 464, 514
6665000	CLIP			12, 200, 204, 224, 440, 516
6665001	CONNECTOR			398
6665012	SEAL			6, 384
6665021	LENS			542
6665022	FLASH TUBE			542, 544
6665023	GASKET			542
6665024	BRANCH GUARD			542
6665025	LENS			542
6665031	BATTERY			210, 216
6665032	BATTERY			2
6665033	SENDER			218
6665086	SEAL			74, 76, 78, 80
6665089	SEAL			88, 142
6665208	SEAL			82

Code for disposition of old part number
A -- Use up
B -- Use on other application (See PNI)
C -- File PDR Report with Bobcat Parts Sales
D -- Part Number Error

https://www.pdfmanual4trucks.com/

Part No.	Description	Was	Code	Page
6665314	PLUG			198, 404, 536
6665315	SWITCH			416
6665316	SWITCH			416
6665318	SWITCH	6719038	D	200
6665321	RIVET			200, 204, 224, 440
6665322	RIVET			200, 204, 224, 440
6665353	SWITCH			404
6665356	BLOCK			210, 218
6665357	LOCK			210, 218
6665358	COVER			210, 218
6665367	BULB			404
6665369	MOUNT			210, 218
6665371	SWITCH			214, 340
6665410	SWITCH			202, 476, 478
6665411	WEDGE			210, 218
6665430	BACKUP RING			70, 130, 428
6665431	SOCKET			214, 476
6665487	SEAL KIT			66, 120
6665489	ADAPTER			66, 120
6665490	VALVE			66, 122
6665527	TIE			200, 204
6665530	LATCH			374, 380
6665531	LATCH			374, 380
6665532	MOTOR			374, 380
6665568	EXTRUSION	6658352	B	6, 374, 378, 382, 384
6665568	EXTRUSION			6, 374, 378, 382, 384
6665569	WASHER			86, 90, 94, 102, 110, 114, 140, 144, 148
6665570	RING			86, 90, 94, 102, 110, 114, 140, 144, 148
6665602	MOTOR			512
6665605	CAP			374, 380, 512
6665606	SWITCH			198, 202
6665609	CHECK VALVE			66, 120, 122
6665610	VALVE			66, 120, 122
6665611	SEAL KIT			66, 120, 122
6665612	SEAL KIT			66, 120, 122
6665656	CLIP			16
6665687	ARM	1744552B	A	512
6665688	BLADE			512
6665701	BUSHING	6630081	A	84, 160
6665707	SWITCH			374, 380
6665719	PLUG			136
6665724	TIRE			546
6665727	LIGHT			416
6665728	LIGHT			416
6665729	LIGHT			416
6665730	LIGHT			354
6665757	LIGHT			416
6665758	VALVE			86, 90, 94, 104, 140, 144, 148
6665846	SEAL			96
6665922	LAMP	6661353	A	214, 476
6666290	PLATE	6650672	C	172
6666291	VALVE PLATE	6650673	C	176
6666338	WASHER			174, 178, 180, 184
6666339	BOLT	6650679	A	176, 186

Code for disposition of old part number
A -- Use up
B -- Use on other application (See PNI)
C -- File PDR Report with Bobcat Parts Sales
D -- Part Number Error

https://www.pdfmanual4trucks.com/

Part No.	Description	Was	Code	Page
6666339	BOLT			176, 186
6666340	SEAL KIT	6655421	A	188
6666341	VALVE	6645249	A	52, 60, 125, 126, 362, 364
6666341	VALVE			52, 60, 125, 126, 362, 364
6666379	CABLE	6658613	A	436
6666384	RADIATOR			236
6666534	SEAL			438
6666547	COIL			112
6666563	LENS			416
6666564	HOUSING			416
6666565	LENS			416
6666566	GASKET			416
6666568	BULB			416
6666569	BULB			416
6666570	BULB			416
6666571	BULB			354
6666572	LENS			354
6666576	SPOOL	6666588	B	90, 144
6666576	SPOOL	6666588	B,D	90, 144
6666579	SPOOL	6666591	B,D	86, 90, 140, 144
6666579	SPOOL			86, 90, 140, 144
6666580	SPOOL	6666592	B,D	86, 90, 140, 144
6666580	SPOOL			86, 90, 140, 144
6666581	SPOOL	6666593	B,D	86, 90, 140, 144
6666581	SPOOL			86, 90, 140, 144
6666588	SPOOL	6666576	A	86, 94, 98, 102, 106, 140, 148
6666588	SPOOL			86, 94, 98, 102, 106, 140, 148
6666589	SPOOL	6666577	A	86, 90, 94, 98, 102, 106, 140, 144, 148
6666589	SPOOL	6666577 Was 6666577 Was 6666577	A	86, 90, 94, 98, 102, 106, 140, 144, 148
6666589	SPOOL			86, 90, 94, 98, 102, 106, 140, 144, 148
6666590	SPOOL	6666578	A	86, 90, 94, 98, 102, 106, 140, 144, 148
6666590	SPOOL			86, 90, 94, 98, 102, 106, 140, 144, 148
6666591	SPOOL			94, 98, 102, 106, 148
6666592	SPOOL			94, 98, 102, 106, 148
6666593	SPOOL			94, 98, 102, 106, 148
6666599	VALVE			136
6666611	VALVE			488
6666616	STEM			110
6666621	ARMATURE			234
6666622	DRIVE			234
6666628	NUT			234
6666629	WASHER			234
6666630	WASHER			234
6666631	WASHER			234
6666632	O-RING			234
6666633	BOLT			234
6666634	BOLT			234
6666635	BOLT			234
6666636	BOLT			234
6666637	NUT			234
6666668	TIRE	NAP	D	546
6666766	GROMMET			376, 382, 512
6666767	NOZZLE	6664555	A	374, 380, 512
6666781	GASKET	3974915B	A	262, 288

Code for disposition of old part number
A -- Use up
B -- Use on other application (See PNI)
C -- File PDR Report with Bobcat Parts Sales
D -- Part Number Error

https://www.pdfmanual4trucks.com/

Part No.	Description	Was	Code	Page
6666781	GASKET			262, 288
6666782	GASKET	3974456B	A	268
6666783	GASKET			304, 330
6666791	GASKET			264, 288
6666792	GASKET	6635392	A	262, 263, 264, 294, 304, 334
6666792	GASKET			262, 263, 264, 294, 304, 334
6666800	GASKET	6653806	A	266, 304, 306
6666800	GASKET			266, 304, 306
6666802	GASKET	3974987B	A	262, 286, 304, 326
6666802	GASKET	6684860	A	262, 286, 304, 326
6666804	GASKET	3974995B	A	284, 304, 320, 324
6666804	GASKET			284, 304, 320, 324
6666811	GASKET	6655172	A	262, 288
6666814	GASKET	6655167	A	278, 304, 318
6666814	GASKET			278, 304, 318
6666828	SEAL KIT			66, 122
6666916	BOSS	6722444	A	216, 217, 218
6666918	BOSS			218
6666932	BRAKE			406, 407, 408
6666933	CYLINDER			406, 409, 410
6667127	PLUG			66, 120, 122
6667132	O-RING			120
6667139	CAP			406
6667176	PLUG			126
6667183	HEATER			450
6667189	HOSE			238
6667324	SEAL	6665184	A	82
6667326	SEAL	6538141	A	74, 76, 80
6667326	SEAL			74, 76, 80
6667352	FILTER FUEL	6647773	A	2, 32
6667352	FILTER FUEL			2, 32
6667353	FILTER ASSY	6657020	A	32
6667382	PUMP	6662693	A	132, 137, 138
6667418	PLUG			308
6667419	WASHER			308, 332, 334
6667420	BOLT			320
6667421	BOLT			314, 316
6667422	WASHER			306, 312, 314, 324, 326, 336
6667425	PLUG	6652591	A	266, 306
6667425	PLUG			266, 306
6667428	TAPPET	3974540B	A	281, 282, 321, 322
6667428	TAPPET	6680707	A	281, 282, 321, 322
6667433	CIRCLIP			322
6667437	CRANKSHAFT			318
6667451	WASHER			312, 334
6667460	FAN	6684867	A	284, 324
6667460	FAN			284, 324
6667461	PIN			312
6667465	SEAL			284
6667480	CHAMBER	6655157	A	274
6667549	VALVE	6661345	B	86, 90, 94, 102, 110, 140, 144, 148
6667549	VALVE			86, 90, 94, 102, 110, 140, 144, 148
6667565	BLOWER			450
6667566	HOUSING			450

Code for disposition of old part number
A -- Use up
B -- Use on other application (See PNI)
C -- File PDR Report with Bobcat Parts Sales
D -- Part Number Error

https://www.pdfmanual4trucks.com/

Part No.	Description	Was	Code	Page
6667567	COVER			450
6667569	CONNECTOR			398
6667573	DECAL			480
6667676	COVER			126
6667677	O-RING			126
6667680	SNAP RING			126
6667687	STEM	6665004	A	66, 118, 120
6667687	STEM			66, 118, 120
6667803	COUPLER			498
6667804	COUPLER			498
6667828	BOSS	6661214	A	216
6667844	VALVE ASSY			68, 123, 124
6667887	BULB			416
6667903	SWITCH	6700603	A	198, 202
6667904	SWITCH			198, 202
6667905	SWITCH	6706995	A	198, 204
6667934	BULB	6650111	A	202, 476, 478
6667934	BULB			202, 476, 478
6667996	PUMP			298
6668007	SCREW			416
6668010	LENS			416
6668079	PLUG			166, 168, 170
6668080	SHIM			168, 170
6668082	POPPET	6685064	A	168, 170
6668082	POPPET			168, 170
6668088	PISTON			168
6668089	PLUG			166, 168, 170
6668097	SCREW			410
6668104	MOUNT			402
6668114	BEARING			252
6668717	SCREW			520
6668719	PIN			210, 219, 220
6668720	PIN			210, 220
6668725	VALVE	6661443	B,D	136
6668742	SWITCH			404
6668791	ORIFICE			118
6668813	SWITCH	6665320	A	128, 204
6668814	SWITCH	6665319	A	200, 360, 364
6668814	SWITCH			200, 360, 364
6668815	SWITCH			424, 426
6668816	SWITCH	6665317	A	354, 544
6668816	SWITCH			354, 544
6668817	SWITCH	6665706	A	512
6668820	NUT			118, 120
6668879	DECAL			350, 352
6668881	CORD			356
6668927	PLUG			200
6668953	BRACKET			18
6669034	BELT	6701158	A	236, 248
6669057	CHECK VALVE			118
6669076	O-RING			120
6669085	VALVE			124
6669087	SEAL KIT			124
6669089	TRACK	6672735	A	18, 518

Code for disposition of old part number
A -- Use up
B -- Use on other application (See PNI)
C -- File PDR Report with Bobcat Parts Sales
D -- Part Number Error

https://www.pdfmanual4trucks.com/

Part No.	Description	Was	Code	Page
6669089	TRACK			18, 518
6669091	CLIP			404, 536
6669135	SEAT			18
6669144	INDICATOR			416, 426
6669146	PLUG			536
6669154	BOLT			408
6669155	PLATE			408
6669156	SPACER			408
6669159	PISTON			408
6669162	NUT			408
6669163	PLUG			408
6669164	ADAPTER			408
6669165	SCREW			408
6669184	STATOR ASSY.			408
6669185	SEAL KIT			408
6669187	VALVE			506
6669188	STEM			506
6669189	STEM			506
6669190	COIL			506
6669191	LIGHT			544
6669216	SEAL KIT			506
6669217	SEAL KIT			506
6669218	VALVE			506
6669219	VALVE			506
6669224	BOLT			226, 404, 536
6669225	BOLT	58G000408B	A	198, 204, 426
6669225	BOLT			198, 204, 426
6669286	CLAMP			400
6669308	RETAINER			8, 354, 512, 544
6669354	SHAFT			234
6669359	TERMINAL			234
6669360	BUSHING			234
6669365	BOOT			234
6669372	COVER			234
6669384	SPEEDY SLEEVE			258
6669385	PUMP			188
6669400	VALVE PLATE			184
6669401	VALVE PLATE			180, 181, 182
6669402	HOUSING			180
6669403	HOUSING			186
6669404	SWASH PLATE			180, 184, 185, 186
6669405	END CAP			184
6669406	END PLATE			182
6669407	SHAFT			186
6669409	WASHER			180
6669410	SHIM KIT			182
6669411	BEARING			174, 178, 180, 186
6669415	TIMER			212, 220
6669420	CONTROLLER			514
6669442	HOUSING			168
6669444	SPRING			168
6669446	O-RING			168
6669447	PLATE			168
6669448	PLATE			168

Code for disposition of old part number
A -- Use up
B -- Use on other application (See PNI)
C -- File PDR Report with Bobcat Parts Sales
D -- Part Number Error

https://www.pdfmanual4trucks.com/

NUMERICAL INDEX (Cont'd)

Part No.	Description	Was	Code	Page
6669449	O-RING			168
6669450	RING			168
6669451	FLANGE			168
6669452	O-RING			166, 168, 170
6669453	SEAL			168
6669454	RING			168
6669455	SEAL KIT			168
6669464	PUMP			180, 184
6669469	SHAFT			168
6669470	BOLT			168
6669615	ORIFICE	6665719	A	136
6669650	VENT			448
6669652	DUCT			448
6669657	SEAL KIT			498
6669663	GAUGE	6658817	A	198
6669664	VOLTMETER	6658819	A	198
6669665	FUEL GUAGE	6658820	A	198
6669685	BOSS	6669166	A	218
6669686	BOSS	6669167	A	216
6669687	BOSS	6667363	A	218
6669689	HEATER			450
6669722	CLAMP			210, 220
6669723	CLAMP			210, 220
6669724	CLAMP			210, 220
6669732	SEAL KIT			118
6669733	SEAL KIT			118
6669734	SEAL KIT			118
6670140	CORE			450
6670142	NUT			446
6670144	BOLT			446
6670160	CUSHION			18
6670163	SHAFT			374, 380
6670164	LINK			374, 380
6670165	CLIP			374, 380
6670284	LIGHT ASSY			478
6670287	COVER			24
6670288	END			376
6670289	BRACKET			376
6670312	RELAY	6665005	A	210, 214, 398, 400
6670312	RELAY			210, 214, 398, 400
6670472	NUT			338
6670473	WASHER			338
6670558	TERMINAL			232
6670634	SEAL KIT			126, 360, 364
6670668	PIN			416
6670682	BEARING			248
6670684	CHECK VALVE			174, 178, 182, 186
6670705	SWITCH	6665372	A	208
6670706	CONNECTOR			224, 440
6670707	CONNECTOR			226, 440
6670709	CONNECTOR			440
6670710	LOCK			224, 226, 440
6670711	LOCK			440
6670715	PIN			224, 440

Code for disposition of old part number
A -- Use up
B -- Use on other application (See PNI)
C -- File PDR Report with Bobcat Parts Sales
D -- Part Number Error

https://www.pdfmanual4trucks.com/

Part No.	Description	Was	Code	Page
6670726	LOCK	6649555	A	508, 510
6670726	LOCK			508, 510
6670732	LAMP			426
6670808	FUSE			212, 220
6670830	ADAPTER			158
6670831	ELBOW			158
6670867	LATCH			24
6671019REM	PUMP REM / CORE EXCHANGE REQUIRED	6671019	A	180, 184
6671025	COIL			66, 118, 120
6671026	COIL			136
6671027	LIGHT			416
6671037	TIE			214
6671041	SEAL KIT			188
6671042	SEAL KIT	6666340	B	188, 190
6671042	SEAL KIT	6666340	B,D	188, 190
6671116	TERMINALS			234
6671117	TERMINALS			234
6671118	PINION			234
6671119	CLUTCH ASSY.			234
6671120	TERMINAL			234
6671121	COVER			234
6671122	BALL			234
6671123	HOUSING			234
6671124	HOUSING			234
6671125	WASHER			234
6671126	SCREW			234
6671127	BEARING			234
6671128	BEARING			234
6671129	BEARING			234
6671509	COUPLER	6671519	B,D	186
6671510	RELIEF VALVE			182, 186
6671512	BLOCK ASSY			182, 184
6671516	SEAL KIT			182, 186
6671518	BOLT			182
6671527	NUT			126, 360, 364
6671528	SEAL			210, 220
6671619	HOSE			154
6671669	MODULE	6669529	C	222, 428, 430, 432
6671907	SWASH PLATE			172, 176
6671964	SENDER			514
6672021	BELT			250, 404
6672026	O-RING	6669655	A	70, 430, 432
6672051	PUMP			180, 184
6672126	GEROLER			168
6672272	WASHER			478
6672273	SCREW			478
6672274	SCREW			478
6672275	GASKET			478
6672276	LENS			478
6672277	BRACKET			478
6672278	LIGHT ASSY.			478
6672279	MOUNT			416, 478
6672281	CLAMP			154

Code for disposition of old part number
A -- Use up
B -- Use on other application (See PNI)
C -- File PDR Report with Bobcat Parts Sales
D -- Part Number Error

https://www.pdfmanual4trucks.com/

Part No.	Description	Was	Code	Page
6672345	KEY			510
6672471	VALVE	6672456	A	66, 118, 120
6672471	VALVE			66, 118, 120
6672486	SEALANT	6633583	A	258
6672492	RETAINER			352
6672513	PUMP			189, 190
6672515	SEAL KIT	6664033	A	136
6672715	SPACER	7000010	A	18, 518
6672715	SPACER			18, 518
6672717	SPACER			518
6672718	INDICATOR			518
6672719	CLIP			518
6672720	COVER			518
6672721	FENDER			518
6672722	FENDER			518
6672723	CLIP			518
6672724	PANEL			518
6672725	KNOB			518
6672726	FRAME			518
6672727	CUSHION			518
6672729	CUSHION			518
6672730	BOLT			518
6672731	BAR			518
6672732	CABLE			518
6672733	BOLT			518
6672736	DECAL			518
6672738	NUT			518
6672863	SOLENOID	6708271	A	126, 360, 364
6672863	SOLENOID			126, 360, 364
6672960	COUPLER	6667807	A	70, 430, 432
6672962	COIL			486
6673828	HOSE			158
6673959	VALVE			126
6673990	PISTON	6664028	A	136
6674003	TIRE & RIM	6670616	A	548
6674004	TIRE & RIM	6670617	A	548
6674007	KIT	6670618	A	548
6674013	TRACK			18, 518
6674019	SEAT	6670113	A	517, 518
6674099	BREAKER			210, 218
6674150	OIL COOLER			157, 158
6674151	COVER			448
6674167	FLANGE	6655966	A	286, 326
6674167	FLANGE			286, 326
6674169	PULLEY			324
6674172	THERMOSTAT			326
6674202	NUT			198, 202
6674220	SWITCH			198, 204, 490, 492
6674263	KNOB	6672737	A	518
6674285	GAS SPRING	6661805	A	240, 242
6674297	SPOOL			110
6674298	SPOOL			110
6674299	SPOOL			110
6674302	SPOOL			110

Code for disposition of old part number
A -- Use up
B -- Use on other application (See PNI)
C -- File PDR Report with Bobcat Parts Sales
D -- Part Number Error

https://www.pdfmanual4trucks.com/

Part No.	Description	Was	Code	Page
6674331	COIL			126
6674676	PUMP			298, 335, 336
6674688	COUPLER	6667808	A	70, 430, 432
6674798	REPAIR KIT			158
6675073	VALVE			506
6675074	SEAT BELT			10
6675097	BULB			426
6675129	CONTROLLER	6674211	A	224
6675257	CLEVIS			6
6675284	SHUTTLE VALVE			486
6675285	STEM			486
6675332	LINK			36, 38
6675340	VALVE PLATE	6671515	A	182
6675380	ADHESIVE	6652818	A	554
6675387	EXTRUSION			384
6675517	OIL FILTER12	3974896B	A	1, 2, 266, 306
6675517	OIL FILTER12			1, 2, 266, 306
6675780	CARTRIDGE	6676545	A	126
6676003	HOSE	6708310	A	374
6676060	LEVER ASSY.	6655879	A	290, 330
6676060	LEVER ASSY.			290, 330
6676151	COIL			506
6676152	PLUG	6653490	A	504, 506
6676152	PLUG			504, 506
6676196	VALVE	6659328	A	94
6676442	CONTROLLER			440
6676543	PLUG	6647780	A	126
6676564	SEAL KIT			486
6676566	NUT			486
6676871	SEAL KIT			106
6677106	O-RING			86, 90, 94, 98, 102, 106, 110, 114
6677202	DIPSTICK			276
6677203	GUIDE			276, 316
6677363	CLAMP	657904B	A	240, 242
6677839	GASKET			376
6677840	SWIVEL			376
6677841	WASHER			376
6677842	NUT			376
6677843	NUT			376
6677844	NUT			376
6678000	SEAL			166, 170
6678001	PLATE			166
6678003	PLATE			166
6678004	PLATE			166, 170
6678006	BACK-UP RING			166, 170
6678067	BUSHING			160
6678075	RINGS	6655178	A	278, 318
6678075	RINGS			278, 318
6678150	VALVE			484, 486
6678198	BOLT			376
6678226	SEAL	6673881	A	172, 176, 182, 186
6678326	RAIN SHIELD			376
6679814	MOTOR			374
6679815	BLADE			376

Code for disposition of old part number
A -- Use up
B -- Use on other application (See PNI)
C -- File PDR Report with Bobcat Parts Sales
D -- Part Number Error

https://www.pdfmanual4trucks.com/

NUMERICAL INDEX (Cont'd)

Part No.	Description	Was	Code	Page
6679816	ARM			376
6679961	NUT			88, 92, 104, 142, 428, 430, 432
6680326	LIGHT	6664368	A	404
6680411	CONTROLLER	6674222	A	200, 204, 490
6680412	HANDLE ASSY	6707976	A	222, 398, 438, 444
6680413	HANDLE ASSY	6706340	A	222, 398, 438, 444
6680414	HANDLE ASSY.	6705921	A	222, 428, 430, 432, 444, 462, 496, 498
6680415	HANDLE	6705920	A	222, 444
6680438	SENSOR	6674209	A	210, 216
6680441	BUSHING	6664882	A	12, 522, 524
6680445	CONTROLER	6674224	A	200, 223, 224
6680447	DECAL	6677370	A	222, 224, 398, 438, 444
6680453	SENSOR FUEL	6658958	A	214
6680459	HNDL/TILT AHC	6675515	A	440
6680461	HANDLE	6675746	A	440
6680463	HANDLE	6713262	A	224
6680469	SPACER	6729600	A	226, 440
6680469	SPACER			226, 440
6680471	COVER	6713898	A	224, 440
6680472	SENSOR	6666608	A	12, 528
6680473	BUSHING	6671135	A	10
6680480	CHANNEL	6719711	A	440
6680481	CHANNEL	6719712	A	440
6680484	GASKET			304, 316
6680523	KEY,MAGNETIC	6664881	A	12, 516
6680666	PLUG			314
6680685	BOLT			312
6680706	BOLT			332
6680774	PIN			306
6680786	CLAMP			338
6680795	CLAMP	6599136	A	300, 338
6680795	CLAMP			300, 338
6680830	BOLT			332
6680970	BREATHER	6670627	A	4, 44, 48, 238
6680970	BREATHER			4, 44, 48, 238
6681512	SOLENOID	6667992	A	44, 48
6681512	SOLENOID			44, 48
6681513	SOLENOID	6667993	A	208, 216
6681605	MOTOR			165, 166
6681931	PIPE			338
6682034	MOTOR			169, 170
6682260	SHAFT			180
6682261	KEY			180
6682442	SLEEVE	6704393	A	252
6682514	SHIM			336
6682515	SHIM			336
6682521	PIPE			337, 338
6682532	NUT			328
6682856	TIRE & RIM	6664993	A	547, 548
6682857	TIRE & RIM	6664994	A	548
6682860	O-RING			166, 170
6682862	SHAFT, DRIVE			166, 170
6682863	BOLT			170
6682897	SEAL			166, 170

Code for disposition of old part number
A -- Use up
B -- Use on other application (See PNI)
C -- File PDR Report with Bobcat Parts Sales
D -- Part Number Error

https://www.pdfmanual4trucks.com/

Part No.	Description	Was	Code	Page
6683104	PLUG			308
6683174	ROLL PIN			284, 324
6683274	SEAL	6665846	A	92, 98, 102, 106, 112, 114, 150
6683724	COUPLER,6G-8FJX90S	6665846	A	146
6684037	SENSOR	6658260	B	218
6684225	WATER PUMP	6653941	A	283, 284
6684753	GASKET			304, 316
6684754	O-RING			304, 316
6684774	GASKET			304, 306
6684779	SHIELD			309, 310
6684780	GASKET			304, 310
6684781	BOLT			310
6684782	O-RING			304, 310
6684784	GAUGE			316
6684786	GASKET			304, 308
6684788	GASKET	6655165	A	262, 278, 304, 318
6684788	GASKET			262, 278, 304, 318
6684789	SEAL			318
6684793	GEAR			322
6684795	COLLAR			322
6684796	SHAFT			322
6684807	BUSHING			318
6684812	BALL BEARING			320
6684813	GASKET			304, 320
6684833	SHAFT			332
6684836	BOLT			333, 334
6684863	GASKET			304, 326
6684868	SEAL			324
6684869	FLANGE			324
6684874	COLLAR	3974516B	A	272, 312
6684874	COLLAR			272, 312
6684875	SHAFT			312
6684879	GASKET			304, 328
6684910	SENSOR	6675741	A	440
6684918	LEVER	6675747	A	440
6684919	LEVER	6675748	A	440
6685063	HOUSING			166
6685065	SHUTTLE			166, 170
6685066	PISTON			166, 168, 170
6685067	GEROLER			166
6685068	FLANGE			170
6685069	RING,BACK-UP			166, 170
6685070	KIT, SEAL COMPLETE			170
6685085	COVER			310
6685087	VALVE			310
6685344	SWASH PLATE	6671513	A	180, 186
6685372	SEAL			48
6685464	BOLT			332
6685466	O-RING			304, 306
6685468	O-RING			304, 306
6685474	BEARING			324
6685475	MANIFOLD			327, 328
6685476	SEAL			330

Code for disposition of old part number
A -- Use up
B -- Use on other application (See PNI)
C -- File PDR Report with Bobcat Parts Sales
D -- Part Number Error

https://www.pdfmanual4trucks.com/

Part No.	Description	Was	Code	Page
6685477	PLUG			308
6685482	BOLT			318
6685483	CASE			318
6685484	CASE			318
6685485	CASE			318
6685486	BEARING			318
6685487	BEARING			318
6685488	WASHER			318
6685489	WASHER			318
6685490	BEARING			318
6685491	BEARING			318
6685492	BEARING			318
6685493	BEARING			318
6685494	WASHER			318
6685495	WASHER			318
6685496	WASHER			318
6685497	WASHER			318
6685501	WASHER			306
6685515	COVER			318
6685524	PIPE			310
6685553	FLANGE			166
6685735	SEAL	6661112	A	252
6685876	GASKET			304, 328
6685878	GASKET			304, 328
6685981	ENGINE-V2203 TIER 2			303, 304
6686037	GASKET			304, 336
6686360	VALVE	6685017	A	86, 90, 98, 102, 106, 110, 114, 132
6686360	VALVE			86, 90, 98, 102, 106, 110, 114, 132
6686403	SEAL KIT			166
6686404	BOLT			166
6686979	PLUG			316
6686981	O-RING			304, 306
6686988	PIPE			326
6686989	WATER PUMP			323, 324
6686990	MANIFOLD			328
6686996	HEAD			314
6686997	CIR-CLIP			318
6687191	SEAL	6645090	A	180
6688521	SPRING			170
6689503	CASE MAIN BRG	6685480	A	318
6689601	VALVE	6670685	A	174, 178, 182, 186
6689638	RACE	6634609	A	50
6689649	CHAIN			36, 38
6689651	CHAIN			36, 38
6689697	HOUSING	6685063	B,D	170
6689698	PLATE	6678001	B,D	170
6689700	PLATE	6678003	B,D	170
6689739	VALVE	6668765	A	118
6689775	BEARING	6519925	A	50
6690709	LINK			36, 38
6690949	O-RING			158
6691063	SCREW			202
6691343	GEROLER	6685067	B,D	170
669863B	SNAP RING			180, 186

Code for disposition of old part number
A -- Use up
B -- Use on other application (See PNI)
C -- File PDR Report with Bobcat Parts Sales
D -- Part Number Error

https://www.pdfmanual4trucks.com/

Part No.	Description	Was	Code	Page
6700039	CUP			26
6700108	LATCH			508
6700115	SPRING			248
6700170	WASHER			10, 44, 256
6700171	GAS SPRING			6
6700182	COVER			4
6700228	HARNESS			464, 514
6700229	KIT			463, 464
6700279	BRACKET			22
6700329	HOUSING			236
6700330	COVER			4, 44
6700347	COVER			344
6700463	CUP			26
6700469	SPACER			26
6700487	SHIELD			204
6700535	SPACER			244
6700541	MOUNT			244
6700599	ELBOW			68, 158, 418
6700631	GASKET			156
6700704	BUSHING			344
6700710	KIT			343, 344
6700711	AIR CLEANER	6661400	A	339, 340
6700743	SPRING	6579072	D	22, 26, 552
6700743	SPRING			22, 26, 552
6700782	CAP			258
6700875	RETAINER			418
6701097	WASHER	6803867	A	4, 36, 236, 390
6701097	WASHER			4, 36, 236, 390
6701123	SCREW			240, 242
6701145	LEVER			160
6701151	PIPE			240, 242
6701159	SHIM			258
6701174	WASHER			6, 10, 528
6701449	FILLER TUBE			32
6701535	SPRING			14, 160, 522, 524
6701552	BAFFLE			156
6701651	WINDOW			6
6701852	SHIELD			404
6701883	STOP			404
6701892	CLAMP			52, 56, 58, 62, 70, 428, 430
6701893	CLAMP			52, 56, 58, 62
6701952	SOCKET			214, 476
6701957	OPERATOR CAB			5, 6
6701961	HARNESS			460, 462
6702079	HOSE			66
6702102	GEAR			258
6702103	GEAR			258
6702135	SHAFT			258
6702137	SHAFT			258
6702144	SHIM			258
6702165	SHIM			258
6702166	SHIM			258
6702346	SCREEN			346
6702347	SCREEN			346

Code for disposition of old part number
A -- Use up
B -- Use on other application (See PNI)
C -- File PDR Report with Bobcat Parts Sales
D -- Part Number Error

https://www.pdfmanual4trucks.com/

Part No.	Description	Was	Code	Page
6702351	KIT			345, 346
6702397	ROD			256
6702430	SPRING			10, 528
6702444	FUSE			448
6702454	WEIGHT			390
6702455	WEIGHT			390
6702474	RETAINER			248
6702543	LEVER			159, 160
6702548	PAD			70, 428, 430, 432
6702583	BUSHING			4
6702584	BUSHING			4
6702593	SPACER			350, 352
6702621	GRIP			222, 224
6702642	SCREW			8, 198, 204, 404
6702650	MOUNT			398
6702660	PANEL			202
6702678	PLATE			202
6702716	BLOCK			160
6702731	WINDOW			384, 418
6702773	LINK			436
6702774	LINK			436
6702776	BRACKET			436
6702782	BUSHING			436
6702797	CAP			236
6702824	DECAL			396
6702825	DECAL			394
6702903	LEVER	6578855	A	30
6702904	LEVER	6578855	A	30
6702921	SPACER			470, 472
6702958	BUSHING			30
6702962	HOSE			498
6702971	BOLT			6
6702975	VENT			454
6702986	NUT			346
6702990	BUSHING			224, 436, 440
6703012	TUBE			158
6703022	CLIP			248
6703041	WIRE			454
6703045	KIT			457, 458
6703046	KIT			453, 454
6703090	HANDLE			346
6703097	GASKET			44
6703140	WASHER			36, 244
6703159	TRACK			6, 384
6703160	TRACK			6, 384
6703162	HORN KIT			459, 460
6703168	BEARING			252
6703331	INSULATION			418
6703363	BUSHING			26
6703427	FOAM FILTER			156
6703449	INSULATION			538
6703450	INSULATION			538
6703451	INSULATION			6, 538
6703452	INSULATION			6, 538

Code for disposition of old part number
A -- Use up
B -- Use on other application (See PNI)
C -- File PDR Report with Bobcat Parts Sales
D -- Part Number Error

https://www.pdfmanual4trucks.com/

Part No.	Description	Was	Code	Page
6703455	INSULATION			6, 538
6703480	DECAL			392
6703483	PULLEY			132
6703585	MOUNT			244
6703586	DECAL			390, 394, 412
6703610	TUBE			130
6703611	TUBE			130
6703615	CLAMP			130
6703640	KIT			525, 526
6703641	DECAL			526
6703703	GUIDE			526
6703719	ROD			132
6703722	ARM			132
6703723	DECAL			394
6703724	DECAL			436
6703725	DECAL			436
6703726	DECAL			436
6703727	DECAL			460, 462
6703736	CAP			266, 306
6703751	RETAINER			376, 380
6703757	SAFETY TREAD			382
6703775	SHIM			372
6703796	MOUNT			214, 476
6703797	LENS			22, 214, 476
6703827	ELBOW			496
6703868	HOOD	6709093	D	21, 22, 239, 240, 241, 242
6703868	HOOD			21, 22, 239, 240, 241, 242
6703879	BUSHING			160
6703885	HOSE			132
6703898	HARNESS			130
6703899	DIODE			128
6703981	MOUNT			244
6704010	BLOCK			128
6704012	HOSE			244
6704013	ELBOW			128
6704016	MOUNT			132
6704114	HARNESS			496, 498
6704122	DIODE			130
6704125	SOUND KIT			537, 538
6704146	BRACKET			474
6704147	BRACKET			474
6704148	BRACKET			474
6704149	BRACKET			474
6704151	BRACKET			474
6704153	KIT			473, 474
6704154	BRACKET			474
6704155	TUBE			158
6704158	TEE			158
6704159	HOSE			158
6704163	MOUNT			350
6704164	ELBOW			158
6704167	TIRE & RIM			549, 550
6704168	TIRE & RIM			550
6704240	PIVOT ASSY.	6576456	C	30

Code for disposition of old part number
A -- Use up
B -- Use on other application (See PNI)
C -- File PDR Report with Bobcat Parts Sales
D -- Part Number Error

https://www.pdfmanual4trucks.com/

Part No.	Description	Was	Code	Page
6704248	PIVOT	6576454	A	30
6704284	COUNTER WEIGHT KIT	SALES		387, 388
6704288	PIN			26
6704322	MOUNT			244
6704332	WASHER			22
6704335	HOSE			52, 56, 58, 62
6704336	HOSE			52, 56, 58, 62
6704341	MOUNT			158
6704358	HARNESS			350, 352
6704362	HOUSING			22, 216, 476
6704391	PULLEY			252
6704393	BEARING			252
6704403	STOP			28
6704408	HARNESS			460, 462
6704409	TUBE			70, 71, 72, 428
6704410	TUBE			72, 428
6704416	PULLEY			248
6704424	PULLEY			248
6704425	ROD			370
6704426	RETAINER			370
6704428	SHIELD			370
6704430	DOOR	6704431	A	370
6704435	WEAR CAM			160
6704436	PAD			26, 226
6704442	KIT			349, 350
6704443	BUSHING			248
6704444	WASHER			248
6704450	SHIELD			248
6704453	SPRING	6578252	C	30
6704464	GUIDE			22
6704484	WASHER			248, 426
6704491	HOUSING	6704492	B,D	40
6704492	HOUSING			42
6704600	STOP	6701451	A	30
6704601	STOP	6701468	A	30
6704607	BELT			132
6704619	MOUNT			70, 428, 430, 432
6704630	HOSE			154
6704631	HOSE			156
6704638	WEIGHT			152
6704641	MOUNT			460, 462
6704680	COVER			4, 154, 155, 156
6704682	COVER			22
6704683	COVER			22
6704693	TEE	6717103	D	66, 496, 498
6704693	TEE			66, 496, 498
6704696	ELBOW			158
6704720	BELT			134, 244
6704727	HOSE			496
6704753	PLUG			238
6704769	INSULATION			418
6704786	DECAL			474
6704820	O-RING			248
6704823	BRACKET			240

Code for disposition of old part number
A -- Use up
B -- Use on other application (See PNI)
C -- File PDR Report with Bobcat Parts Sales
D -- Part Number Error

https://www.pdfmanual4trucks.com/

Part No.	Description	Was	Code	Page
6704833	BRACKET			52, 60, 362, 364
6704836	TUBE			52, 56
6704837	TUBE			52, 362
6704839	TUBE			52, 60, 362, 364
6704840	TUBE			52, 362
6704874	FLYWHEEL ASSY.			250
6704878	GASKET			36, 38
6704892	RIVET			204
6704918	SHIELD			244
6704921	TEE			128
6704931	HARNESS			218
6705029	BRACKET			128
6705030	BRACKET			128
6705052	BALL STUD			240, 242
6705062	TUBE			128
6705063	TUBE			128
6705064	TUBE			128
6705065	SHAFT			40
6705068	TUBE			52, 58, 362, 364
6705069	TUBE			52, 56
6705070	TEE			52, 58, 362, 364
6705088	DECAL			394
6705089	LIFT ARM STOP			26
6705091	TAB			26
6705102	DECAL			412
6705106	WASHER			244, 402
6705108	KIT			551, 552
6705112	COUPLER			132
6705129	COUPLER			132
6705141	TUBE			56
6705161	TUBE			132
6705164	GROMMET			132
6705166	BUMPER			365, 366
6705167	BUMPER			366
6705168	MOUNT			132
6705191	KIT			361, 362
6705216	WINDOW			378, 382
6705220	DECAL			152, 392, 396
6705223	PIN			26
6705231	WASHER			252
6705232	WASHER			254
6705280	TUBE			128
6705281	HOSE			240, 242
6705333	MOUNT			418
6705340	DECAL			404
6705357	TUBE			498, 502
6705358	TUBE			498, 502
6705361	DECAL			396
6705362	DECAL			394
6705373	KIT	SALES	D	501, 502
6705436	TUBE			132
6705442	HOSE			132
6705452	LEVER			255, 256
6705471	MOUNT			132

Code for disposition of old part number
A -- Use up
B -- Use on other application (See PNI)
C -- File PDR Report with Bobcat Parts Sales
D -- Part Number Error

https://www.pdfmanual4trucks.com/

Part No.	Description	Was	Code	Page
6705474	LOCK SHIELD			10
6705487	HOSE			128
6705489	BOLT			10
6705491	SPRING			250
6705497	HOSE			132
6705700	MOUNT			70, 428
6705711	BRACKET			244
6705720	DECAL			12
6705735	WINDOW			6, 384
6705749	SHIELD			58, 62
6705774	MOUNT			416
6705776	HOOD			416
6705780	PULLEY			132
6705792	SCREW			446, 450
6705847	SEAL			40, 42
6705848	INSULATION			418
6705849	INSULATION			418
6705850	INSULATION			418
6705896	GUIDE			44
6705897	BLOCK			44
6705898	BLOCK			44
6706042	COVER			4, 44
6706043	SPACER			244
6706089	HOSE			488, 498, 502
6706093	HOSE			130
6706095	MOUNT			160
6706096	MOUNT			162, 182
6706098	GUIDE			160
6706103	LEVER			84
6706104	RETAINING NUT			84
6706105	YOKE			84
6706106	MOUNT			160
6706153	TUBE			70, 428, 430
6706154	TUBE			70, 428, 430
6706155	INSULATION			6
6706175	HOSE			127, 128
6706220	TEE			488, 498, 502
6706281	BELLCRANK			436
6706285	SCREEN			494
6706349	MOUNT			6
6706388	BRACKET			12
6706391	HARNESS			398
6706392	HARNESS			398
6706393	SHIELD			240, 242
6706394	SHIELD			240, 242
6706420	MOUNT			436
6706421	MOUNT			436
6706446	HARNESS			398
6706450	TANK			153, 154
6706485	HOOK			4
6706508	DECAL			128
6706517	SCREW	6579119	A	22, 32, 214, 236, 476
6706517	SCREW	6704400	A	22, 32, 214, 236, 476
6706517	SCREW	6704400	B	22, 32, 214, 236, 476

Code for disposition of old part number
A -- Use up
B -- Use on other application (See PNI)
C -- File PDR Report with Bobcat Parts Sales
D -- Part Number Error

https://www.pdfmanual4trucks.com/

Part No.	Description	Was	Code	Page
6706522	TUBE			52, 56
6706523	TUBE			52, 56
6706526	TUBE			52, 56
6706527	TUBE			52, 56
6706528	TUBE			52, 56
6706552	HARNESS			398
6706558	DECAL			396
6706565	KIT			221, 222, 443, 444
6706566	KIT			222, 444, 498
6706567	KIT			222, 398, 438, 444
6706568	KIT			222, 398, 438, 444
6706572	SET SCREW			256
6706582	MOUNT			66
6706674	HOSE	6576374	B,D	32
6706679	HORN KIT			461, 462
6706680	LINK	6564544	A	84
6706685	BUSHING			10
6706718	MOUNT			44, 48
6706737	GASKET			44, 48
6706744	TRACK			384
6706745	TRACK			384
6706748	TUBE			362
6706750	BRACKET			130
6706753	MOUNT			398
6706788	TUBE			66
6706807	PIN			470, 472
6706809	DECAL			394
6706825	LIFT EYE			470, 472
6706826	LIFT EYE			470
6706828	HARNESS			200, 204
6706876	HARNESS			198, 202
6706890	WASHER			12, 516, 528
6706896	PANEL			198
6706939	KIT			493, 494
6706962	BUSHING			12, 522, 524
6706966	SPRING			12, 516, 518, 520
6706968	GASKET			44
6707040	ELBOW			208, 216
6707077	HOUSING ASSY.			258
6707078	HOUSING ASSY.			258
6707101	SEAL			66, 68, 124
6707103	CONNECTOR			498
6707134	DECAL			12
6707178	TANK			374, 381, 382
6707179	SHIELD			374, 380
6707216	HINGE			374, 380
6707220	DOOR			374, 380
6707221	ROD			374, 380
6707222	MOUNT			374, 380
6707223	COUPLING			374, 382
6707224	COUPLING			374, 380
6707225	WINDOW			374, 380
6707232	HOSE			128
6707234	HOSE			154

Code for disposition of old part number
A -- Use up
B -- Use on other application (See PNI)
C -- File PDR Report with Bobcat Parts Sales
D -- Part Number Error

https://www.pdfmanual4trucks.com/

Part No.	Description	Was	Code	Page
6707235	TUBE			66
6707236	SHIELD			374, 382
6707239	SHIELD			374, 382
6707241	TUBE			66
6707255	DECAL	NAP	D	394
6707313	PEDAL MOUNT			44
6707314	PEDAL			44
6707315	ANGLE			44
6707316	PLATE			19, 20
6707318	GUIDE	6571991	B,D	14
6707319	NUT			10, 11, 12, 516
6707337	SWITCH			44
6707349	LEVER	6702786	A	436
6707351	LEVER	6702787	A	436
6707352	LEVER	6702791	A	436
6707367	GRIP	6702621	A	436
6707369	TUBE	6706641	A	66
6707481	DECAL			412
6707514	SHIM			30
6707620	FUSE			210, 218
6707621	FUSE			210, 218
6707622	FUSE			210, 218
6707623	FUSE			210, 218
6707649	MOUNT			210, 218
6707663	LIGHT KIT			475, 476
6707664	PLATE			200, 202
6707665	HARNESS			197, 198
6707668	HARNESS			214
6707669	HARNESS			214, 476
6707671	HARNESS			202
6707672	HARNESS			416
6707674	PLUG	6707644	D	8, 200, 204
6707674	PLUG			8, 200, 204
6707700	HOSE			66
6707706	MOUNT			416
6707787	DECAL			210, 218
6707789	LIGHT			416
6707804	HOUSING			416
6707852	DECAL			374, 380
6707879	COVER			8
6707895	ELBOW			418
6708009	LINK			84
6708015	GUIDE			44, 45, 46
6708016	GASKET			44, 48
6708018	SPRING			44, 48
6708021	HANDBOOK			532
6708035	TANK			512
6708044	MOUNT			512
6708069	BUSHING			512
6708096	BUSHING			374, 380
6708105	DECAL	6705712	A	394
6708154	KIT	6704831	B	2, 394, 492
6708154	KIT			2, 394, 492
6708154ES	KIT			394

Code for disposition of old part number
A -- Use up
B -- Use on other application (See PNI)
C -- File PDR Report with Bobcat Parts Sales
D -- Part Number Error

https://www.pdfmanual4trucks.com/

Part No.	Description	Was	Code	Page
6708155	KIT	6704832	A	404
6708158	HANDBOOK			226, 534
6708159	HANDBOOK KIT	6703678	A	436, 440, 490
6708159	HANDBOOK KIT			436, 440, 490
6708189	TUBE	6701175	A	6
6708207	DECAL			396
6708212	DECAL	6578218	A	152, 392, 396
6708225	HARNESS			372, 376
6708267	BOLT			44, 48
6708269	HARNESS			380
6708272	STOP			512
6708280	MOUNT			512
6708286	MOUNT			512
6708307	SHIELD			132
6708310	HOSE			382, 512
6708318	HARNESS			354, 544
6708425	PANEL	6707658	A	198
6708426	PANEL			198, 416
6708427	PANEL	6707660	A	202
6708428	PANEL			202, 416
6708437	CLIP			210, 218
6708465	BUSHING			528
6708499	WINDOW			374, 380
6708500	CLAMP			376, 380
6708523	KIT			516
6708622	GROMMET			528
6708624	REAR DOOR	6704639	A	22
6708625	BRACKET	6705447	A	248
6708680	GUIDE			528
6708682	INSULATION	6707326	A	6
6708693	PLATE			202
6708703	KIT			377, 378
6708748	TUBE	6706671	A	158
6708770	CAP			254
6708824	MOUNT			416
6708827	CONTAINER			8, 404
6708850	RETAINER			372
6708914	VENT			446
6708929	DECAL			396
6708973	KIT	6708443	A	373, 374
6708975	KIT			376, 382
6708981	BRACKET	6703471	A	240, 242
6708987	HINGE			4
6708990	KIT			372
6709027	PLATE	6708693	A	200
6709030	DECAL	6711905	B,D	250, 392, 396
6709030	DECAL			250, 392, 396
6709048	HARNESS			416
6709080	TUBE			488
6709081	TUBE			488
6709082	TUBE			488
6709083	TUBE			488
6709084	TUBE			488
6709085	TUBE			488

Code for disposition of old part number
A -- Use up
B -- Use on other application (See PNI)
C -- File PDR Report with Bobcat Parts Sales
D -- Part Number Error

https://www.pdfmanual4trucks.com/

Part No.	Description	Was	Code	Page
6709092	SHIELD	6704653	A	404
6709170	STUD	6559502	A	50
6709176	BRACKET			398
6709177	BRACKET			398, 399, 400
6709215	BOB-TACH			30
6709229	BOLT			406
6709234	DISC			406
6709236	MOUNT			406
6709237	CLAMP			406
6709239	PEDAL ASSY.			406
6709242	KIT	NAP	D	405, 406
6709379	TOOL HOLDER	6705100	A	22, 404, 552
6709400	TUBE			406
6709409	TUBE			406
6709410	TUBE			406
6709415	MOUNT	6571814	A	236
6709527	KEY	6632560	B,D	198, 202, 376, 380, 510
6709527	KEY	6666202	A	198, 202, 376, 380, 510
6709527	KEY			198, 202, 376, 380, 510
6709544	HOSE			406
6709781	DECAL	6700237	A	152, 392, 396
6709781	DECAL	6708209	A	152, 392, 396
6709797	DECAL			396
6710299	HARNESS			400
6710300	HARNESS			400
6710312	HARNESS			200, 204
6710313	HARNESS			198, 202
6710358	DECAL			394
6710365	HARNESS	6707676	A	222, 428, 430
6710365	HARNESS	6707676	B,D	222, 428, 430
6710365	HARNESS			222, 428, 430
6710366	HARNESS	6707681	A	128
6710435	HARNESS			500
6710467	MOUNT ASSY.			406
6710481	HARNESS			536
6710483	HARNESS			202
6710527	PANEL			404, 536
6710573	TUBE			58, 62
6710576	TUBE			58, 62
6710577	TUBE			58, 62
6710578	TUBE			58, 62
6710580	TUBE			58, 62
6710581	TUBE			58, 62
6710582	TUBE			58, 62
6710583	TUBE			60, 364
6710584	TUBE			60, 364
6710585	WASHER	6709008	A	252, 253, 254
6710616	TUBE			62
6710622	WASHER	6712146	A	516
6710653	HOSE			32
6710659	BUSHING			14, 522, 524
6710660	MOUNT			12, 13, 14, 522, 524
6710665	PULLEY			238
6710746	SAFETY TREAD			394

Code for disposition of old part number
A -- Use up
B -- Use on other application (See PNI)
C -- File PDR Report with Bobcat Parts Sales
D -- Part Number Error

https://www.pdfmanual4trucks.com/

Part No.	Description	Was	Code	Page
6710751	BUSHING	6706686	A	12, 516, 528
6710751	BUSHING			12, 516, 528
6710905	HARNESS			426
6711160	HARNESS			426
6711280	MOUNT			60, 64, 68
6711524	REAR DOOR			242
6711527	LATCH PLATE			24
6711621	MOUNT			398
6711632	MOUNTING KIT			401, 402
6711643	CAM			162
6711651	TEE			58, 62
6711656	HOSE			68
6711664	GUIDE			24
6711676	KIT	SALES	A	497, 498
6711681	HOSE			498
6711699	HUB ASSY.			250, 251, 252
6711708	MOUNT			354, 424, 426, 544
6711729	COVER			12, 530
6711730	STRIP			12, 530
6711732	DUCT			448
6711735	TUBE			70, 430, 432
6711736	TUBE			70, 430, 432
6711767	HARNESS			198
6711774	HARNESS			202
6711840	DECAL			394
6711908	SPRING PLATE			10, 526
6712050	KIT			363, 364
6712068	COVER			414
6712070	COVER			414
6712134	HARNESS			200, 204
6712146	WASHER			414
6712152	PANEL			198, 416
6712177	WEIGHT	6704638	A	392
6712183	MOUNT	6708503	A	414, 516
6712183	MOUNT			414, 516
6712184	KIT			529, 530
6712186	MOUNT	6708504	A	414, 516
6712186	MOUNT			414, 516
6712258	HARNESS			354, 544
6712259	HARNESS			374
6712260	HARNESS			512
6712288	HARNESS			424, 426
6712365	STEP			224
6712386	KIT			430
6712387	KIT			431, 432
6712523	HARNESS			200, 204, 205, 206
6712536	PAN	6577809	A	208, 216
6712640	BRACKET			210, 220, 498
6712678	KIT	6707682	A	359, 360
6712688	KIT			511, 512
6712692	BEACON KIT	6708342	A	353, 354
6712696	STROBE KIT			543, 544
6712698	KIT			425, 426
6712700	KIT			535, 536

Code for disposition of old part number
A -- Use up
B -- Use on other application (See PNI)
C -- File PDR Report with Bobcat Parts Sales
D -- Part Number Error

https://www.pdfmanual4trucks.com/

Part No.	Description	Was	Code	Page
6712750	KIT			513, 514
6712875	KIT			413, 414
6712970	PULLEY			404
6712985	MOUNT			404
6712987	MOUNT			404
6713040	SPRING			30
6713043	SPACER			224, 440
6713115	PEDAL			481, 482
6713116	BUSHING			482
6713261	HANDLE ASSY			224
6713370	PIN	14J001808B	B	254
6713379	KIT			446
6713456	SHAFT			42
6713488	WIRE			232
6713589	CLEVIS			14, 522, 524
6713736	BRACKETS			416
6713754	TUBE			72, 432
6713755	TUBE			72, 432
6713780	ROD			232
6713793	BRACKET			352
6713794	WIRING KIT			212, 220
6713803	HARNESS	6704887	A	386
6713821	CABLE			232
6713850	MOUNT			72, 430, 432
6713853	KIT			521, 522
6713887	BOLT	6711897	A	14, 522, 524
6713887	BOLT			14, 522, 524
6714008	PIN			416
6714037	LATCH			510
6714038	HARNESS			514
6714039	HARNESS			514
6714053	WEIGHT			412
6714062	KIT			6
6714126	DOOR STOP			24
6714210	SPRING			24
6714212	PULLEY ASSY.			250
6714213	HARNESS			424
6714242	DECAL			396
6714278	GUIDE			44, 48
6714285	KIT			523, 524
6714300	MOUNT			426
6714350	HARNESS			478
6714361	WEIGHT			4, 152, 388, 392, 412
6714423	HOSE	6705466	C	128
6714454	BUMPER			24
6714463	MOUNT			426
6714467	MOUNT			426
6714532	DECAL	6714533	B,D	394, 396
6714532	DECAL			394, 396
6714543	GASKET	3974461B	A	262, 266, 304, 306
6714543	GASKET			262, 266, 304, 306
6714624	SHIELD			404
6714629	DECAL			524
6714726	GROMMET			224

Code for disposition of old part number
A -- Use up
B -- Use on other application (See PNI)
C -- File PDR Report with Bobcat Parts Sales
D -- Part Number Error

https://www.pdfmanual4trucks.com/

Part No.	Description	Was	Code	Page
6714810	PIN	6578457	A	26
6714858	DECAL			396
6714874	BUSHING			26
6714890	SHIELD			132
6714902	ELBOW	69E000012B	A	156
6714904	TEE	6706466	A	128
6714905	ELBOW	6707409	A	154
6714919	DECAL	6561377	A	394
6714932	COUNTER WEIGHT KIT			411, 412
6714980	KIT			351, 352
6714985	LIGHT KIT			477, 478
6714990	WIRE			514
6714991	WIRE			514
6714999	MOUNT			400
6715094	INSULATION	6712537	A	6, 418
6715094	INSULATION			6, 418
6715095	INSULATION	6706982	B	6, 418
6715095	INSULATION	6706983	A	6, 418
6715096	INSULATION	6706903	A	418
6715097	INSULATION	6706157	A	6, 418
6715097	INSULATION			6, 418
6715098	INSULATION	6706156	A	6, 418
6715098	INSULATION			6, 418
6715099	INSULATION			418
6715106	INSULATION			418
6715142	FAN	6700334	A	236
6715143	SET SCREW	16G000506B	B	238
6715157	STRIKER ASSY.	6579969	A	22, 24
6715163	BUSHING			162
6715164	SLEEVE			162
6715165	FLYWHEEL			250, 404
6715183	ELBOW			32, 488
6715184	ADAPTER			58, 62
6715191	ELBOW			154
6715239	HOSE			418
6715240	HOSE			418
6715250	MUFFLER			418
6715251	HOSE			156
6715318	TOOL HOLDER			24, 404
6715371	INSULATION			418
6715372	INSULATION			418
6715478	BELT			236, 404
6715653	TEE			158
6715655	ELBOW			158
6715656	TEE			58
6715659	HARNESS			352
6715714	ELBOW			158
6715744	BUSHING			418
6715880	HARNESS			208
6715881	HARNESS			214
6715892	HARNESS			208
6715893	HARNESS			214
6715912	DECAL			394
6715924	PULLEY			238

Code for disposition of old part number
A -- Use up
B -- Use on other application (See PNI)
C -- File PDR Report with Bobcat Parts Sales
D -- Part Number Error

https://www.pdfmanual4trucks.com/

Part No.	Description	Was	Code	Page
6715940	DECAL			224
6715941	DECAL			224
6715944	DECAL			226
6715957	COVER			224
6715991	DECAL	6707786	A	224, 225, 226, 396
6715991	DECAL			224, 225, 226, 396
6716052	PIN			226
6716210AR	KIT			394, 396
6716210BR	KIT			394, 396
6716210JP	KIT			394, 396
6716211AR	KIT			394, 396
6716211BR	KIT			394, 396
6716423	HOSE	6706452	A	154
6716473	ADAPTER			154
6716545	ROD			160
6716571	LOUVER			236
6716572	LOUVER			236
6716601	PIN			28
6716777	SEAT BAR	6713609	A	12, 522
6716778	SEAT BAR	6706358	A	12
6716779	SEAT BAR	6714282	A	524
6716798	HARNESS			400
6716799	KIT			400
6716826	BOLT			224
6716843	WASHER	6569461	A	50
6716844	HARNESS			400
6716902	MOUNT			226
6717043	DECAL			226
6717055	LEVER			224
6717056	LEVER			224
6717343	DECAL			394
6717378	BOLT			224
6717401	PLUG			32
6717402	BUSHING			32
6717567	MOUNT			224
6717569	DIODE			226
6717579	GASKET			32, 210, 216
6717639	DECAL			226, 394
6717666	BUSHING			26, 27, 28
6717700	KIT			491, 492
6717702	KIT			489, 490
6717706	COIL	6665759	A	146, 150
6717708	COIL	6665759	A	88, 92, 96, 104, 142, 428, 430, 432
6717734	KIT			46
6717814	TIE			210, 220
6717915	TUBE			484
6717916	TUBE			484
6717917	TUBE			484
6717918	TUBE			484
6717919	HOSE			484
6717921	HOSE			484
6717922	BRACKET			484
6717923	TEE			484
6718111	HARNESS			484

Code for disposition of old part number
A -- Use up
B -- Use on other application (See PNI)
C -- File PDR Report with Bobcat Parts Sales
D -- Part Number Error

https://www.pdfmanual4trucks.com/

Part No.	Description	Was	Code	Page
6718198	HARNESS	6714546	A	416
6718237	HOSE	6703332	A	240, 242
6718240	KIT			433, 434, 483, 484
6718271	DECAL			394
6718272	DECAL			396
6718275	DECAL			394
6718291	GRILL	6705131	A	240, 242
6718298	KIT	6713885	A	548
6718446	COVER			20
6718489	INSULATION	6709020	A	6
6718723	WASHER			26
6718789	PIN	6547593	B	26
6718796	PLUG	6660646	A	22, 240, 242, 478
6718889	HARNESS	6717177	A	226
6718954	HOSE	6578808	A	52, 56, 58, 62
6719048	MOUNT	6703738	A	256, 266, 306
6719048	MOUNT			256, 266, 306
6719056	BLOCK			44, 48
6719057	BLOCK			44, 48
6719108	HOSE	6706142	A	128
6719149	HARNESS	6712136	A	222, 432
6719211	TUBE			156
6719332	INSULATION	6704725	A	418
6719490	LIFT EYE			472
6719766	STOP			24
6719834	SPACER			440
6719835	SLEEVE			440
6719906	SPACER			472
6720038	INSTRUCTIONS			356
6720185	INSTRUCTIONS			344
6720320	INSTRUCTIONS			384
6720321	INSTRUCTIONS			360
6720451	INSTRUCTIONS			464
6720470	INSTRUCTIONS			390
6720598	INSTRUCTIONS			384
6720621	INSTRUCTIONS			346
6720656	INSTRUCTIONS			454, 458
6720736	PLUG			355, 356
6720761	INSTRUCTIONS			460, 462
6720856	INSTRUCTIONS			542
6720951	INSTRUCTIONS			496
6720961	INSTRUCTIONS			538
6722058	INSTRUCTIONS			452
6722075	INSTRUCTIONS			174, 178
6722083	INSTRUCTIONS			350, 352
6722105	INSTRUCTIONS			474
6722147	HOLDER KIT			299, 300, 301, 302, 338
6722194	INSTRUCTIONS			152
6722248	REPAIR KIT			250
6722300	INSTRUCTIONS			404, 552
6722303	INSTRUCTIONS			362
6722392	INSTRUCTIONS			12
6722411	INSTRUCTIONS			502
6722597	VELCRO			368

Code for disposition of old part number
A -- Use up
B -- Use on other application (See PNI)
C -- File PDR Report with Bobcat Parts Sales
D -- Part Number Error

https://www.pdfmanual4trucks.com/

Part No.	Description	Was	Code	Page
6722758	INSTRUCTIONS			398
6722759	INSTRUCTIONS			222, 398, 444
6722861	INSTRUCTIONS			494
6722872	INSTRUCTIONS			470, 472
6722907	KIT			50, 347, 348
6722908	INSTRUCTIONS			348
6724017	INSTRUCTIONS			518, 520
6724029	INSTRUCTIONS			376
6724033	MANUAL	6900369	B,D	436
6724043	INSTRUCTIONS	6722847	A	438
6724067	753 P/M			2
6724071	INSTRUCTIONS			354, 544
6724072	INSTRUCTIONS			416
6724094	ANTI-FREEZE	6658230	A	554
6724161	INSTRUCTIONS			516
6724258	INSTRUCTIONS			528
6724279	INSTRUCTIONS			372
6724282	SWITCH KIT			200, 204
6724354	ANTI-FREEZE			554
6724384	INSTRUCTIONS	6722058	B	448
6724400	INSTRUCTIONS			488
6724482	INSTRUCTION			402
6724487	INSTRUCTIONS			500
6724522	INSTRUCTIONS			364
6724526	INSTRUCTIONS			430
6724529	INSTRUCTIONS	6724285	A	428, 432
6724529	INSTRUCTIONS	6724525	B	428, 432
6724556	INSTRUCTIONS			382
6724586	INSTRUCTIONS			468
6724775	LEVER KIT			30
6724776	LEVER KIT			30
6724788	INSTRUCTIONS			512
6724800	INSTRUCTIONS			530
6724880	INSTRUCTIONS			414
6724979	INSTRUCTIONS			232
6725212	ARM	6703507	A	248
6725224	KIT			471, 472
6725256	COUNTERWEIGHT	6714053	A	23, 24
6725373	SPRING PLATE			10
6725502	ELBOW	23F000001B	A	340
6726423	DECAL	6702916	A	470, 472
6726433	SPACER	6704829	A	236
6726613	MOUNT	6728062	A	254
6726679	MOUNT	6564658	A	84
6727065	BOLT			226, 440, 442
6727155	DECAL			440
6727243	DECAL			440
6727297	KIT			439, 440
6727307	DECAL	6711327	A	396
6727308	DECAL	6702827	A	396
6727309	DECAL	6702826	A	396
6727310	DECAL	6711329	A	394
6727311	DECAL	6714139	A	396
6727327	HARNESS			440

Code for disposition of old part number
A -- Use up
B -- Use on other application (See PNI)
C -- File PDR Report with Bobcat Parts Sales
D -- Part Number Error

https://www.pdfmanual4trucks.com/

NUMERICAL INDEX (Cont'd)

Part No.	Description	Was	Code	Page
6727345	MOUNT	6704342	A	158
6727475	CAP	6577785	A	154
6727544	PLATE			28
6727545	PLATE			28
6727595	DECAL	6595014	B	396
6727840	TUBE	6703608	A	52, 56, 58, 62
6727841	TUBE	6703609	A	52, 56, 58, 62
6727917	SAFETY TREAD			394
6727926	DECAL	6718703	A	394
6728149	CAP	6532508	A	156
6728473	BOLT	6578166	A	30
6729144	HOSE			419, 420
6729147	HOSE	6707233	A	418
6729153	HOSE	6714577	A	69, 70, 428, 430, 432
6729154	HOSE	6714594	A	68, 154
6729594	HANDLE			226, 440, 441, 442
6729595	HANDLE			226, 440, 442
6729600	SPACER			442
6729688	LATCH			510
6729730	WINDOW			384
6729896	TIRE			546
6729901	TIRE			546
6729956	LEVER			162
6730263	PIN			26
6730272	HARNESS			440
6730769	HOSE			156
6730771	RIM	6565239	A	546
6730775	RIM	6705109	A	546
6730797	LIFT ARM			26
6730997	BUSHING			30
6730999	TUBE ASSY	6576029	A	236
6731060	SHIELD	6717812	A	132, 133, 134, 246
6731121	PLUG	11F12	A	4
6731254	BUSHING			28
6731478	EXIT TAG	6559515	A	6, 378, 382, 384
6731979	BUSHING			30
6732001	KIT	6714973	A	509, 510
6732012	PIN			26
6732199	GASKET	6666790	A	262, 286, 452
6732318	SPACER			238
6732446	BUSHING			30
6732457	WASHER			238
6732722	INSULATION	6704721	A	418
6732723	INSULATION	6704722	A	418
6732997	U-BOLT	6700768	A	160
6733220	DECAL	6579402	A	418
6733575	HINGE	6711526	A	24
6733621	SHAFT			48
6733701	COVER	6704695	A	4
6733970	MOUNT	6707726	A	352
6734104	HOUSING ASSY.	6702138	A	236, 259, 260
6734104	HOUSING ASSY.			236, 259, 260
6734416	LEVER			256
6734520	COVER	6576261	A	256

Code for disposition of old part number
A -- Use up
B -- Use on other application (See PNI)
C -- File PDR Report with Bobcat Parts Sales
D -- Part Number Error

https://www.pdfmanual4trucks.com/

Part No.	Description	Was	Code	Page
6734534	DECAL	6718398	A	396
6735140	DECAL	6557565	A	394
6735612	CHAINCASE COVER			48
6735883	BRACKET	6708767	A	250
6735884	IDLER ASSY.	6711698	A	250
6736126	COVER			8
6736641	PAINT			554
6736642	PAINT			554
6736644	PAINT			554
6736645	PAINT			554
6736659	TANK	6717572	A	32
6737088	COVER			342
6737189	DECAL			350, 352
6737191	WEDGE	6704242	A	30
6737360	MAINFRAME			4
6737524	KNOB	6668913	A	66, 68, 124
6737524	KNOB			66, 68, 124
6737623	BUSHING	6704287	A	26
6801167	PLUG			110, 114
6803092	BONNET			110, 114
6803329	SEAL KIT	6589831	A	82
6803605	SEAL KIT	6596310	A	96
6804605	SEAL KIT	6589792	A	74, 76
6804605	SEAL KIT			74, 76
6804630	CYLINDER			79, 80
6804631	ROD			80
6804632	PISTON			80
6804633	CASE			80
6804692	CYLINDER			75, 76
6804699	PISTON			76
6804703	CASE			76
6804704	ROD			76
6805150	BUSHING			76, 80
6805243	TEE	6805696	B,D	88, 92, 96, 142, 146, 156
6805243	TEE			88, 92, 96, 142, 146, 156
6805696	TEE			88, 92, 94, 95, 96, 104, 112, 144, 148, 154
6808046	VALVE			105, 106
6809425	SEAL KIT	6586461	A	88, 92, 96, 100, 104, 108, 112, 115, 116, 142, 146, 150
6809425	SEAL KIT			88, 92, 96, 100, 104, 108, 112, 115, 116, 142, 146, 150
6810026	VALVE			113, 114
6810539	NUT	6804592	A	74, 76, 78, 80
6812171	PLUG			80
6812816	ADAPTER			70, 430, 432
6816250	SEAL KIT	6803605	A	88, 92, 100, 104, 108, 112, 114, 142, 146, 150
6816253	SEAL KIT	6809448	A	104, 108, 116
6816323	SEAL KIT	6804606	A	78, 80
6816715	SEAL KIT	6596311	A	88, 92, 100, 112, 142, 146, 150
6816855	PLUG			80
6817553	CROSS	6805241	A	104, 112
6850026	COVER			446
6850027	HOUSING			450
6900090	753 S/M			2
6900096	INSTRUCTIONS	6900328	B	522, 524

Code for disposition of old part number
A -- Use up
B -- Use on other application (See PNI)
C -- File PDR Report with Bobcat Parts Sales
D -- Part Number Error

https://www.pdfmanual4trucks.com/

Part No.	Description	Was	Code	Page
6900096	INSTRUCTIONS			522, 524
6900133	INSTRUCTIONS			514
6900366	INSTRUCTIONS	6722194	A	388, 392
6900366	INSTRUCTIONS			388, 392
6900374	753/753H			2
6900398	INSTRUCTION			426
6900410	INSTRUCTIONS			412
6900438	753 O/M			2
6900501	KIT			393, 394, 395, 396
6900601	INSTRUCTIONS			400
6900651	INSTRUCTIONS	6722198	B	476
6900653	INSTRUCTIONS	6722198	B	478
6900787	753 O/M			2
6900804	INSTRUCTIONS			490, 492
6900805	INSTRUCTIONS			46
6900841	INSTRUCTIONS			484
6901099	INSTRUCTIONS			442
6901656	INSTRUCTIONS	6570762	A	508, 510
6901656	INSTRUCTIONS	6570762	B	508, 510
6901702	INSTRUCTIONS	6724380	A	406
6902228	PAINT	6722783	A	553, 554
6902229	PAINT	6722786	A	554
6902230	PAINT	6722789	A	554
6902233	PAINT	6722782	A	554
6902234	PAINT	6722785	A	554
6902235	PAINT	6722788	A	554
6902390	HARD HAT WHITE	6559552	A	539, 540
6903105	OIL 15W40 QT. 12	6657299	A	2, 554
6903106	OIL 15W40 GAL. 6	6724558	A	2, 554
6903107	OIL 10W30 QT. 12	6657301	A	2, 554
6903108	OIL 10W30 GAL. 6	6724557	A	2, 554
6903109	OIL 30W QT. 12	6657303	A	2, 554
6903110	OIL 30W GAL. 6	6724559	A	2, 554
6903111	OIL 30W 2.5 GAL 2	6674206	A	2, 554
6903112	OIL 10W30 2.5 GAL 2	6674205	A	2, 554
6903113	OIL 15W40 2.5 GAL. 2	6674204	A	2, 554
6903117	HYD FLUID 2.5 GAL. 2	6563328	A	2, 554
6903118	HYD. FLUID 5GAL	6722344	A	2, 554
6903119	HYD. FLUID 55GAL	6563330	A	2, 554
6903121	GEAR LUBE 12	6634393	A	258, 554
6903122	GREASE 10	6658266	A	554
6904890	INSTRUCTIONS			202
6969803	COVER, BREATHER	6685086	A	310
6969804	PLUG,OIL GAUGE	6684785	A	316
6969805	KEY,FEATHER	15JM00410B	A	268, 308
69G000414B	SCREW	6588164	A	86, 140
6CM01225B	BOLT			244
6CM01230B	BOLT			244, 248
6CM01235B	BOLT			244
6CM1220	BOLT	1CM01220B	B	208, 216
6E4	WASHER 10			350, 352, 468
6E6	WASHER			210, 220

Code for disposition of old part number
A -- Use up
B -- Use on other application (See PNI)
C -- File PDR Report with Bobcat Parts Sales
D -- Part Number Error

https://www.pdfmanual4trucks.com/

NUMERICAL INDEX (Cont'd)

Part No.	Description	Was	Code	Page
6EM00080B	WASHER			266, 272, 274, 284, 286, 288, 296
6EM60	WASHER, SPRING			266, 268, 292, 294, 306
6J000405B	KEY			386
6J000807B	KEY			172, 180, 248
6J1664	KEY			50
7100153	MOUNT	6713792	A	350, 352
7100153	MOUNT			350, 352
7100573	HOSE			240, 242
7100840	MUFFLER	6598799	A	240, 242
7100840	MUFFLER	6671667	A	240, 242
7101291	ELBOW	6598908	A	32
7101345	BONNET	6587633	A	86, 90, 98, 102, 106, 110, 114
7102200	SHIELD	6719851	A	238
7104568	MOUNT	6712161	A	244
7104842	ACTUATOR			224
7105252	SENSOR	6670652	A	10
7106687	SHIELD	6717208	A	20
7107175	INLET	6717478	A	236
7108242	TILT SPOOL	6677662	A	110, 114
7108242	TILT SPOOL	6677662		110, 114
7108242	TILT SPOOL	6677663	A	110, 114
7108251	SPOOL	6677660	A	114
7108251	SPOOL	6677661	A	114
7108780	SLEEVE	6595951	A	106, 112, 114
7109712	SHIELD	6726938	A	254
7110276	SPACER	6715287	A	402
7110571	BELLCRANK			160
7115219	PEDAL	6726680	A	84
7120111	BRAKE	6716228	A	46, 48
7121779	PAD			162
7128600	BRACKET			162
7128601	BRACKET			162
7129987	COVER	6733956	A	48
7130298	COVER	7121926	A	48
7131641	LCD DISPLAY KIT			202
72F000001B	DRAIN COCK			32
731794B	FITTING			58, 62
733611B	TERMINAL			514
733616	TERMINAL			514
73G000656B	BOLT			247, 248
73G828	BOLT			162
73K000338B	RING	80K000338B	A	78, 80
73K224	RING			82
742640B	WASHER			244
743332B	GREASE ZERK			26, 30
75K000007B	O-RING			80
75K6	O-RING			80
763818B	ELBOW			132
774220	NUT			352
77F000007B	ELBOW			56, 62
77FN00007B	ELBOW			62
784568B	ELBOW	6634982	A	52, 60, 362, 364
784568B	ELBOW			52, 60, 362, 364
799119B	SNAP RING			86, 90, 94, 98, 102, 106, 140, 144, 148

Code for disposition of old part number
A -- Use up
B -- Use on other application (See PNI)
C -- File PDR Report with Bobcat Parts Sales
D -- Part Number Error

https://www.pdfmanual4trucks.com/

Part No.	Description	Was	Code	Page
79K000002B	O-RING			504, 506
79K000005B	O-RING			32, 166, 168, 170, 488, 504
79K000007B	O-RING			86, 87, 88, 92, 96, 104, 142, 146, 150
79K000014B	O-RING	25K040102B	B	32, 210, 214, 216
79K10	O RING 10			52, 56, 58, 62, 66, 70, 86, 90, 94, 98, 102, 106, 110, 114, 126, 128, 132, 140, 144, 148, 158, 174, 182, 362, 364, 428
79K12	O RING 10	17K-16	B	66, 68, 70, 104, 110, 128, 132, 154, 158, 172, 182, 186, 418, 428, 430, 432, 496, 498
79K12	O RING 10			66, 68, 70, 104, 110, 128, 132, 154, 158, 172, 182, 186, 418, 428, 430, 432, 496, 498
79K16	O RING 10			128, 132, 154
79K4	O RING 10			66, 484, 496, 498
79K6	O RING 10	6634874	B,D	58, 62, 66, 68, 74, 78, 82, 88, 92, 96, 104, 112, 126, 128, 140, 141, 142, 146, 148, 154, 158, 164, 166, 168, 170, 488, 496, 498, 502
79K6	O RING 10			58, 62, 66, 68, 74, 78, 82, 88, 92, 96, 104, 112, 126, 128, 140, 141, 142, 146, 148, 154, 158, 164, 166, 168, 170, 488, 496, 498, 502
79K8	O RING 10			86, 90, 94, 98, 102, 106, 110, 114, 126, 140, 144, 148, 172, 176, 182, 184, 244
7C000312B	BOLT			386
7C000322B	BOLT			386
7C000620B	BOLT	6704349	B	84
7D000004B	NUT			66, 124
7D000006B	NUT			236
7D000008B	NUT			136
7DM00006B	NUT			230
7G000416B	BOLT			370, 378
7J002010B	KEY			258
7J002108B	KEY			238
80K000014B	RING			86, 90, 94, 98, 102, 106, 110, 114, 140, 144, 148
80K000234B	RING	73K000234B	B	74, 76
80K000234B	RING			74, 76
82K000238B	O-RING 10	58K000238B	A	78, 80
82K136	O-RING	58K136	B	82
82K236	O-RING	58K000236B	A	74, 76
83D000007B	NUT			132
83D000010B	NUT			470, 472
83D4	NUT 10	83D000005B	B	6, 10, 60, 64, 68, 198, 208, 218, 350, 370, 378, 384, 404, 416, 418, 422, 426, 468
83D4	NUT 10			6, 10, 60, 64, 68, 198, 208, 218, 350, 370, 378, 384, 404, 416, 418, 422, 426, 468
83D5	NUT 5			6, 66, 132, 244, 370, 374, 380, 404, 422, 426, 432, 436, 512
83D6	NUT 5	57D000006B	B	10, 160, 240, 242, 366, 370, 376, 378, 382, 476
83D6	NUT 5			10, 160, 240, 242, 366, 370, 376, 378, 382, 476
83D8	NUT 5			4, 22, 24, 244
83F000003B	ELBOW			406
84G001608B	SCREW			386
84G001906B	SCREW			386
84G001910B	SCREW			386

Code for disposition of old part number
A -- Use up
B -- Use on other application (See PNI)
C -- File PDR Report with Bobcat Parts Sales
D -- Part Number Error

https://www.pdfmanual4trucks.com/

NUMERICAL INDEX (Cont'd)

Part No.	Description	Was	Code	Page
84G002516B	BOLT			460, 462
84G003120B	BOLT			448
84G003708B	BOLT			236, 240, 242
84G003732B	BOLT			52, 56, 58, 62
84G3110	SCREW			156
84G3112	BOLT 5	84G003712B	B	6, 26, 68, 70, 130, 240, 242, 350, 352, 370, 378, 400, 418, 428, 430, 432
84G3112	BOLT 5			6, 26, 68, 70, 130, 240, 242, 350, 352, 370, 378, 400, 418, 428, 430, 432
84G3710	SCREW			156, 512
84G3712	BOLT	84G003716B	B	4, 20, 44, 60, 64, 128, 132, 154, 158, 208, 218, 240, 242, 246, 256, 398, 452, 458
84G3712	BOLT			4, 20, 44, 60, 64, 128, 132, 154, 158, 208, 218, 240, 242, 246, 256, 398, 452, 458
84G3716	SCREW 5			22, 44, 48, 59, 60, 63, 64, 66, 68, 134, 208, 209, 210, 216, 246, 256, 346, 418, 484, 498, 502
84G3720	BOLT			44, 48, 342
84G3724	BOLT			52, 56, 58, 62, 418
851242B	BEARING			280, 320
85D000004B	NUT			210, 216, 222, 256, 428, 430, 432, 436
85D5	NUT 5			12, 52, 56, 58, 62, 70, 220, 256, 428, 430, 432, 482
85D6	LOCK NUT			10, 26, 30, 132, 244, 400, 418, 436, 470, 472
85D7	NUT			10
85D8	NUT 5			6, 132, 243, 244, 248
85G000608B	SCREW			464, 514
85G000616B	SCREW			350
85G001008B	BOLT			422
866028B	CLAMP			340
86D000004B	NUT			256, 436
86D000008B	NUT			236
86F000005B	NUT			128, 496
86F000007B	NUT			70, 428, 430, 432
86F000008B	NUT			70, 128, 158, 428, 430, 432, 496
86F3	LOCKNUT			406
872229	WASHER			52, 56, 58, 62, 70, 428, 430, 432
87D000005B	NUT			470, 472
87FN00005B	ADAPTER			156
87G000806B	BOLT			468
888527	SHIM	886527B	A	340
889163B	BEARING			386
889269B	HOSE			452, 458
88F000008B	ELBOW			158
88F3	ELBOW 5			406
88FN00003B	ELBOW			406
88FN00008B	ELBOW			158
895771B	BULB			200
896979B	NUT			386
896984B	BOLT			386
896990B	WASHER			386
896992B	RETAINER			386
896996B	WASHER			386
897239B	SLEEVE			386
897245B	INSULATOR			386

Code for disposition of old part number
A -- Use up
B -- Use on other application (See PNI)
C -- File PDR Report with Bobcat Parts Sales
D -- Part Number Error

https://www.pdfmanual4trucks.com/

Part No.	Description	Was	Code	Page
897719B	INSULATOR			386
897732B	WASHER			386
898731B	BULB			214, 476, 478
899163B	ROTOR			386
899165B	INSULATOR			386
899167B	SINK			386
899169B	INSULATOR			386
899170B	GASKET			386
899374B	SEAL			386
899375B	DIODE			386
899376B	WASHER			386
899377B	BOLT			386
899378B	DIODE			386
8C000616B	BOLT			160
8D000004B	NUT			436
8D000006B	NUT			14, 160, 161, 162, 406, 522, 524
90K000005B	PLUG	47K000005B	B	74, 78, 80, 82
90K000005B	PLUG			74, 78, 80, 82
90KV00008B	PLUG			106, 110, 114
90KV5	PLUG			74, 76, 78, 82
91D000005B	NUT			406
91D000007B	NUT			14, 524
91G000412B	BOLT			198, 199, 200, 202, 203, 204
91G000416B	BOLT			6
92D000012B	NUT			82, 248
93G000616B	BOLT			160
93G824	BOLT	73G824	A	38, 162
945412B	WASHER			138
95D000006B	NUT	61D000006B	B	44, 74, 76, 78, 80, 83, 84, 160, 256, 258, 406
95D000006B	NUT	91D000006B	A	44, 74, 76, 78, 80, 83, 84, 160, 256, 258, 406
95D000007B	NUT	91D000007B	A	522
95K000012B	O-RING			106, 110, 114
95K4	O-RING	79K000003B	B,D	120, 122, 136
95K4	O-RING	79K000004B	B	120, 122, 136
95K6	O'RING			74, 76, 78, 80, 82
961528B	HARDWARE			370
97D000004B	NUT	83D000004B	B	352
97K000012B	O-RING			68, 70, 154, 158, 418, 432, 496, 498
97K10	O-RING 10			58, 60, 62, 64, 70, 364, 432
97K4	O'RING			406, 498, 500
97K6	O'RING			60, 64, 68, 88, 92, 96, 104, 112, 142, 144, 146, 148, 154, 156, 484, 488, 498
97K8	O-RING			58, 60, 62, 244, 364
98F000003B	TEE			406
99K000004B	O-RING			498
99K000005B	O-RING			32, 488
99K000012B	O-RING			66, 68, 70, 104, 110, 154, 158, 418, 432, 496, 498
99K10	O'RING			58, 62, 364
99K16	O-RING			154
99K6	O'RING			58, 62, 68, 104, 112, 128, 154, 484, 488, 498, 502
99K8	O-RING			244
9G000512B	SCREW			258
9G000620B	BOLT			22, 30

Code for disposition of old part number
A -- Use up
B -- Use on other application (See PNI)
C -- File PDR Report with Bobcat Parts Sales
D -- Part Number Error

https://www.pdfmanual4trucks.com/

Part No.	Description	Was	Code	Page
9G000628B	BOLT			22
9G000636B	BOLT			22, 404, 552

Code for disposition of old part number
A -- Use up
B -- Use on other application (See PNI)
C -- File PDR Report with Bobcat Parts Sales
D -- Part Number Error