RUTHZIL TRATOR COMERCIAL DE PEÇAS LTDA 11 97083-6812 ROLANDO

OUTUBRO 2003

753

Bobcat®

G-SERIES

Parts Manual

S/N 5158 30001 & Above
S/N 5162 20001 & Above

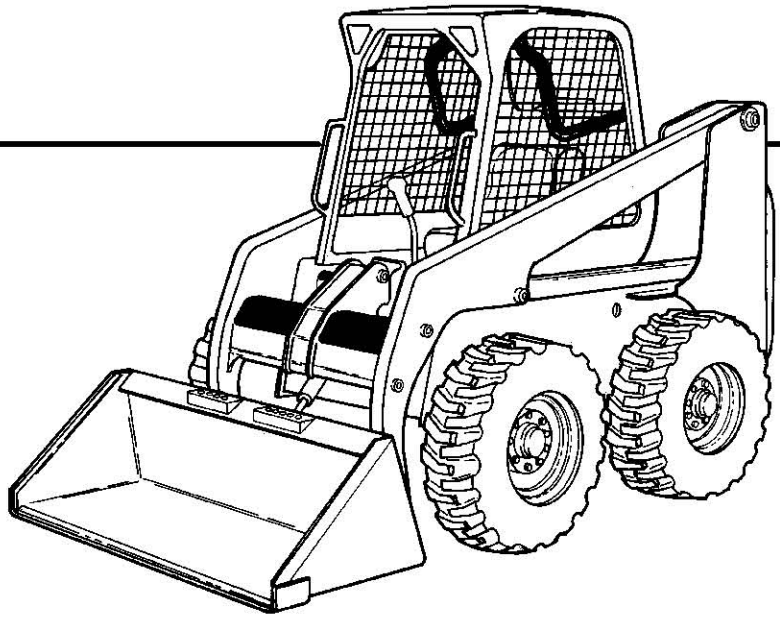

EQUIPPED WITH BOBCAT INTERLOCK CONTROL SYSTEM (BICS™)

IR Bobcat®

6900984 (2-03) Revised (10-03)

J.S.A.

© Bobcat Company 2003

753 G-SERIES CONTENTS

MAIN FRAME 12-45
MAINTENANCE ITEMS 12-13
MAINTENANCE SCHEDULE ITEMS 14-17
MAIN FRAME 18-19
OPERATOR CAB 20-23
SEAT & SEAT BAR 24-25
SEAT 26-27
PANELS 28-29
REAR DOOR 30-33
LIFT ARM & BOB-TACH 34-37
BOB-TACH 38-41
FUEL SYSTEM 42-45
DRIVE TRAIN 46-57
DRIVE TRAIN 46-47
MOTOR CARRIER 48-51
DISC BRAKE 52-55
AXLE 56-57
HYDRAULIC CIRCIUTRY 58-147
HYDRAULIC CIRCUITRY 58-73
MANUAL LIFT RELEASE SYSTEM 74-77
AUXILIARY HYDRAULICS 78-85
TILT CYLINDER 86-87
LIFT CYLINDER 88-91
CONTROL PEDALS 92-93
HYDRAULIC CONTROL VALVE 94-139
BICS CONTROL VALVE 140-141
MANUAL LIFT RELEASE VALVE 142-143
PRESSURE RELEASE VALVE 144-145
BUCKET POSITIONING VALVE 146-147
HYDROSTATIC CIRCUITRY 148-185
HYDROSTATIC CIRCUITRY 148-161
HAND CONTROLS 162-165
HYDROSTATIC MOTOR 166-167
HYDROSTATIC PUMP 168-175
GEAR PUMP 176-179
HYDROSTATIC OIL FILTER 180-185
ELECTRICAL SYSTEM 186-229
CAB ELECTRICAL CIRCUITRY 186-189
ENGINE ELECTRICAL CIRCUITRY 190-199
CONTROLS ELECTRICAL 200-221
ALTERNATOR 222-225
STARTER 226-229
POWER UNIT 230-289
COOLING SYSTEM 230-233
ENGINE & ATTACHING PARTS 234-243
THROTTLE 244-245
COOLING FAN DRIVE ASSY. 246-247
ENGINE & GASKET KITS 248-249
GEARCASE 250-251
CRANKCASE 252-253
ROCKER ARM COVER 254-255
VALVE ROCKER ARM 256-257
CYLINDER HEAD 258-259

POWER UNIT (Cont'd) 230-289
OIL PAN 260-261
PISTON & CRANKSHAFT 262-263
FUEL CAMSHAFT 264-265
CAMSHAFT 266-267
WATER PUMP 268-269
WATER FLANGE & THERMOSTAT 270-271
MANIFOLDS 272-273
ENGINE STIOP LEVER 274-275
GOVERNOR 276-277
SPEED CONTROL PLATE 278-279
INJECTION PUMP 280-283
INJECTOR NOZZLES 284-285
INJECTOR HOLDER 286-287
AIR CLEANER 288-289
ACCECCORIES & OPTIONS 293-458
ACS CONVERSION KIT 293-294
ACCESS COVER 295-296
ACCESSORIES HARNESS 297-298
AIR DEFLECTOR KIT 299-300
AXLE SEAL KIT 301-302
BACK-UP ALARM 303-304
BEACON 305-306
BLOCK HEATER 307-308
BOB-TACH LEVERS 309-310
BUCKET POSITIONING VALVE KIT 311-314
CAB DOOR 315-330
CAB ENCLOSURE 331-334
CAB WINDOWS 335-340
COUNTERWEIGHT KIT 341-342
DECALS 343-346
DELUXE CAB 347-350
ELECTRICAL CONNECTOR KIT 351-352
ELECTRICAL CONTROLS KIT 353-362
ENGINE MOUNT KIT 363-364
EUROPEAN ACCESSORIES 365-370
FIRE EXTINGUISHER 371-372
F.O.P.S. KIT 373-374
FLASHER LIGHTS 375-376
GAS SPRING KIT 377-378
HAND CONTROL KIT 379-382
HEATER KIT 383-386
HEATER 387-394
HEATER PLUMBING KIT 395-398
HORN KIT 399-400
LIFT KIT 401-404
LIGHT KIT 405-406
MUFFLER/PURIFIER KIT 407-408
POWER BOB-TACH KIT 409-412
POWER BOB-TACH 413-418
RADIATOR SCREEN KIT 419-420
REAR AUXILIARY KIT 421-426
REAR AUXILIARY VALVE 427-428
REAR DOOR LOCK 429-430

ACCECCORIES & OPTIONS (Cont'd) 293-458
REAR WIPER 431-432
SEAL ENCLOSURE KIT 433-434
SEAT 435-438
SEAT BELT 439-444
SOUND KIT 445-446
SOUND OPTION 447-448
SOUND REDUCTION HARDHAT 449-450
STROBE LIGHT 451-452
TIRES & RIMS 453-456
BULK ITEMS 457-458
NUMERICAL INDEX 459-513
NUMERICAL INDEX 459-513

753 G-SERIES CONTENTS

MAIN FRAME 12-45
MAINTENANCE ITEMS 12-13
MAINTENANCE SCHEDULE ITEMS 14-17
MAIN FRAME 18-19
OPERATOR CAB 20-23
SEAT & SEAT BAR 24-25
SEAT 26-27
PANELS 28-29
REAR DOOR 30-33
LIFT ARM & BOB-TACH 34-37
BOB-TACH 38-41
FUEL SYSTEM 42-45
DRIVE TRAIN 46-57
DRIVE TRAIN 46-47
MOTOR CARRIER 48-51
DISC BRAKE 52-55
AXLE 56-57
HYDRAULIC CIRCIUTRY 58-147
HYDRAULIC CIRCUITRY 58-73
MANUAL LIFT RELEASE SYSTEM 74-77
AUXILIARY HYDRAULICS 78-85
TILT CYLINDER 86-87
LIFT CYLINDER 88-91
CONTROL PEDALS 92-93
HYDRAULIC CONTROL VALVE 94-139
BICS CONTROL VALVE 140-141
MANUAL LIFT RELEASE VALVE 142-143
PRESSURE RELEASE VALVE 144-145
BUCKET POSITIONING VALVE 146-147
HYDROSTATIC CIRCUITRY 148-185
HYDROSTATIC CIRCUITRY 148-161
HAND CONTROLS 162-165
HYDROSTATIC MOTOR 166-167
HYDROSTATIC PUMP 168-175
GEAR PUMP 176-179
HYDROSTATIC OIL FILTER 180-185
ELECTRICAL SYSTEM 186-229
CAB ELECTRICAL CIRCUITRY 186-189
ENGINE ELECTRICAL CIRCUITRY 190-199
CONTROLS ELECTRICAL 200-221
ALTERNATOR 222-225
STARTER 226-229
POWER UNIT 230-289
COOLING SYSTEM 230-233
ENGINE & ATTACHING PARTS 234-243
THROTTLE 244-245
COOLING FAN DRIVE ASSY. 246-247
ENGINE & GASKET KITS 248-249
GEARCASE 250-251
CRANKCASE 252-253
ROCKER ARM COVER 254-255
VALVE ROCKER ARM 256-257
CYLINDER HEAD 258-259

POWER UNIT (Cont'd) 230-289
OIL PAN 260-261
PISTON & CRANKSHAFT 262-263
FUEL CAMSHAFT 264-265
CAMSHAFT 266-267
WATER PUMP 268-269
WATER FLANGE & THERMOSTAT 270-271
MANIFOLDS 272-273
ENGINE STIOP LEVER 274-275
GOVERNOR 276-277
SPEED CONTROL PLATE 278-279
INJECTION PUMP 280-283
INJECTOR NOZZLES 284-285
INJECTOR HOLDER 286-287
AIR CLEANER 288-289
ACCECCORIES & OPTIONS 293-458
ACS CONVERSION KIT 293-294
ACCESS COVER 295-296
ACCESSORIES HARNESS 297-298
AIR DEFLECTOR KIT 299-300
AXLE SEAL KIT 301-302
BACK-UP ALARM 303-304
BEACON 305-306
BLOCK HEATER 307-308
BOB-TACH LEVERS 309-310
BUCKET POSITIONING VALVE KIT 311-314
CAB DOOR 315-330
CAB ENCLOSURE 331-334
CAB WINDOWS 335-340
COUNTERWEIGHT KIT 341-342
DECALS 343-346
DELUXE CAB 347-350
ELECTRICAL CONNECTOR KIT 351-352
ELECTRICAL CONTROLS KIT 353-362
ENGINE MOUNT KIT 363-364
EUROPEAN ACCESSORIES 365-370
FIRE EXTINGUISHER 371-372
F.O.P.S. KIT 373-374
FLASHER LIGHTS 375-376
GAS SPRING KIT 377-378
HAND CONTROL KIT 379-382
HEATER KIT 383-386
HEATER 387-394
HEATER PLUMBING KIT 395-398
HORN KIT 399-400
LIFT KIT 401-404
LIGHT KIT 405-406
MUFFLER/PURIFIER KIT 407-408
POWER BOB-TACH KIT 409-412
POWER BOB-TACH 413-418
RADIATOR SCREEN KIT 419-420
REAR AUXILIARY KIT 421-426
REAR AUXILIARY VALVE 427-428
REAR DOOR LOCK 429-430

ACCECCORIES & OPTIONS (Cont'd) 293-458
REAR WIPER 431-432
SEAL ENCLOSURE KIT 433-434
SEAT 435-438
SEAT BELT 439-444
SOUND KIT 445-446
SOUND OPTION 447-448
SOUND REDUCTION HARDHAT 449-450
STROBE LIGHT 451-452
TIRES & RIMS 453-456
BULK ITEMS 457-458
NUMERICAL INDEX 459-513
NUMERICAL INDEX 459-513

GENERAL INFORMATION

When using the machine serial number, use the complete number.

Some Serial Number breaks are not available at time of printing. These are listed as & Below or & Above.

The number shown in the quantity column in this manual is the number of parts needed for the illustration on the page. For some parts an "x" will be shown in the quantity column. This "x" indicates that the quantity to be used is "As Needed".

When references L.H. and R.H. are used in this manual, it is done from the operator's seat in the forward operating position.

Some of the illustrations and information found in this parts manual were supplied to Bobcat by machine component companies.



Domestic

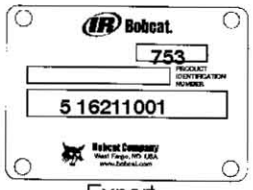

Export

ABBREVIATIONS & SYMBOLS

SALES = Order from Gwinner Sales Department

NSS = Not Serviced Seperately

NAP = Not Available as Parts

***** = Changed or Added Sections, Pages or Part Numbers

Disposition Code Definition (Found in the Remarks Column

[A] = Use Up

[B] = Use Up on Other Appplication (See PNI)

[C] = File PDR Report With Bobcat Parts Sales

[D] = Part Number Error

Explications en francais	Grid Nb	3
Erklärungen auf deutsch	Grid Nb	4
Spiegazioni in italiano	Grid Nb	5
Explicaciones en espanol	Grid Nb	6
Verklaring in het Nederlands	Grid Nb	7

NOTE D'INFORMATION

Pour toute référence au numéro de série de l'engin, toujours donner le numéro complet.

Le chiffré apparaissant dans la colonne des quantités de ce manuel représentent le nombre de pièces nécessaires pour l'illustration reprise sur la page. Dans certains cas, on lira un "x" dans la colonne des quantités. Cet "x" indique que la quantité nécessaire est "selon besoin".

Pour toute référence vers la GAUCHE ou la DROITE dans ce manuel, considérer que la personne se trouve assise dans le siège de l'opérateur, en position de fonctionnement en marche avant.

Certaines illustrations et informations reprises dans ce manuel de pièces de rechange ont été fournies à Bobcat/Ingersoll-Rand par des fabricants de composants.

ABREVIATIONS & SYMBOLES

SALES	= Commander au Service Ventes à Bruxelles
NSS	= Pas vendu séparément
NAP	= Non disponible comme pièce de rechange
*	= Chapitre, page ou numéro de pièce modifié ou supplémentaire
BTI	= Bobcat Technical Information Bulletin : voir à la fin de la microfiché du modèle concerné ou la microfiche générale reprenant l' ensemble des "BTI".
was 6535403	= était avant 6535403
adj. (adjustment)	= réglage
Assembly	= ensemble
available W/Ref.	= disponible avec réf.
bulk/sold per foot	= en vrac/vendu par pied
does not include	= ne comprend pas
included with	= compris dans
I.D.	= D.I. (diamètre intérieur)
O.D.	= D.E. (diamètre extérieur)
not in kit	= pas en kit
W/ - WO/	= inclus/ - non inclus/
Qty	= quantité requise
see page/ref.	= voir page/réf.
used with ref/	= utilisé avec réf.
0,05 inch thickness	= 0,05 pouce d'épaisseur (un pouce = 25.4 mm)
weld on	= à souder

ALLGEMEINE INFORMATIONEN

Bei Angabe der Maschinen-Seriennummer stets die komplette Nummer angeben.

Bei der in der Mengenspalte (Anzahl) in diesem Handbuch angegebenen Zahl handelt es sich um die Anzahl von Teilen, die für die Abbildung auf der betreffenden Seite benötigt werden. Bei manchen Teilen in der Mengenspalte ist ein “x” angegeben. Dieses “x” weist darauf hin, dass sich die Anzahl der verwendeten Teile auf den “Bedarf” bezieht.

Bei Verwendung der Seitenangaben links und rechts in diesem Handbuch gelten diese für die Blickrichtung vom Fahrersitz aus, und zwar in Vorwärts-Betriebsrichtung.

Einige der in diesem Ersatzteilhandbuch aufgeführten Abbildungen und Informationen wurden der Bobcat/Ingersoll-Rand von den Herstellern von Maschinenbauteilen zur Verfügung gestellt.

ABKÜRZUNGEN UND SYMBOLE

SALES	= Bestellung bei der Verkaufsabteilung in Brüssel
NSS	= Nicht einzeln erhältlich
NAP	= Nicht als Ersatzteil erhältlich
*	= Geänderte oder hinzugefügte Abschnitte, Seiten oder Teilenummern
BTI	= Bobcat Technical Information Bulletin : Siehe am Ende der Mikrokarte des jeweiligen Modells oder der allgemeinen Mikrokarte der BTI.
was 6535403	= War 6535403
adj.	= Einstellung
Assembly	= Baugruppe
available W/Ref.	= erhältlich mit der Referenz
bulk/sold per foot	= Mengenabnahme / Verkauf pro Fuss
does not include	= beinhaltet nicht
included with	= enthalten in
I.D.	= Innendurchmesser
O.D.	= Aussendurchmesser
not in kit	= nicht in Bausatz
W/ - WO/	= mit/ - ohne/
Qty	= Anzahl
see page/ref.	= Siehe Seite / Referenz
used with ref.	= verwendet mit Referenz
0.05 inch thickness	= Dicke : 0.05 Zoll (ein Zoll = 25.4 mm)
weld on	= anschweissen

INFORMAZIONI GENERALI

Quando si usa il numero di serie della macchina usare il numero completo.

Il numero mostrato nella colonna della quantità di questo manuale corrisponde al numero di componenti necessari per l'illustrazione della pagina. Per alcuni componenti appare "X" nella colonna delle quantità. Questa "X" indica che la quantità da usare è "come necessario".

See in questo manuale si fa riferimento alla parte destra o sinistra, si intende dal sedile dell'operatore nella posizione in avanti di funzionamento.

Alcune delle illustrazioni e informazioni trovate in questo manuale di componenti sono state fornite alla Bobcat/Ingersoll-Rand da società di componenti di macchine.

SIMBOLI E ABBREVIAZIONI

SALES	= Ordinare al servizio vendite di Bruxelles
NSS	= Non vendute separatamente
NAP	= Non disponibile come componente
*	= Sezioni, pagine o numeri di componente cambiati o aggiunti
BTI	= (Bobcat Technical information) Ved. al termine del microfiche del modello relativo oppure microfiche generale
was 6535403	= era 6535403
adj. (adjustment)	= regol. (regolazione)
Assembly	= Complessivo
available W/Ref.	= disponibile con rif.
bulk/sold per foot	= alla rinfusa/venduto al piede
does not include	= non comprende
Included with	= compreso con
I.D.	= d. i.
O.D.	= d. e.
not in kit	= non fa parte del kit
W/ - WO/	= con - senza
Qty	= Qtà
see page/ref	= ved. pagina/rif.
used with ref.	= usato con il rif.
0,05 inch thickness	= spessore 0,05 pollici (un pollice = 25,4 mm)
weld on	= a saldare

INFORMACION GENERAL

Al utilizar el número de serie de la máquina, debe emplearse el número completo.

El número que figura en la columna de “Unidades” en este manual es el número de piezas que se necesitan para la ilustración que consta en la página. En algunas piezas aparece una “x” en la columna de “Unidades”. Esta “x” indica que las unidades a utilizar son “según sea necesario”.

Cuando se empleen las referencias izq. y dcha., éstas se entienden mirando desde el asiento del conductor, en posición de marcha adelante.

Algunas de las ilustraciones y la información que figuran en este manual de piezas han sido facilitadas a Bobcat/Ingersoll-Rand por empresas de componentes de máquinas.

ABREVIATURAS Y SIMBOLOS

VENTAS	= Pedido al Departamento de Ventas de Bruselas
NSS	= No se vende por separado
NAP	= No disponible como pieza de repuesto
*	= Secciones, páginas o referencias modificadas o añadidas
BTI	= (Bobcat Tecnical Information) Ver al final de la microficha del modelo afectado o en la microficha general “Boletín de Información Técnica Bobcat”.
was 6535403	= era anteriormente el 6535403
adj. (adjustment)	= ajuste
assembly	= conjunto
available W/Ref.	= disponible con la ref.
bulk/sold per foot	= a granel/vendido por pies
does not include	= no incluye
included with	= incluido en
I.D.	= diámetro interior
O.D.	= diámetro exterior
not in kit	= no en el kit
W/ - WO/	= con/ - sin
Qty	= Unidades
see page /ref.	= ver página/ref.
used with ref.	= empleado con la ref.
0,05 inch thickness	= 0,05 pulgadas de espesor (1 pulgada = 25,4 mm)
weld on	= debe ser soldado

ALGEMENE INFORMATIE

Als u het serienummer van de machine gebruikt, geef dan het gehele serienummer.

Het cijfer dat voorkomt in de kolom “Aantal”, in deze handleiding, is het aantal onderdelen dat nodig is van de illustratie op de pagina. Voor sommige onderdelen staat er een “x” in de kolom “Aantal”. Deze “x” betekent dat er een aantal “zoals nodig” vereist is.

Wanneer er in deze handleiding naar “links” en naar “rechts” gerefereerd wordt, moet dit verstaan worden voor een bestuurder die in de bestuurdersstoel zit in de voorwaartse bedrijfsstand.

Sommige van de illustraties en informatie in deze onderdelen-handleiding werden door firma’s van machine-componenten geleverd aan Bobcat/Ingersoll-Rand.

AFKORTINGEN EN SYMBOLEN

SALES	= Bestellen bij de Verkoopafdeling te Brussel
NSS	= Niet afzonderlijk te verkrijgen
NAP	= Niet beschikbaar als onderdeel
*	= Gewijzigde of toegevoegde paragrafen, pagina’s of onderdeelnummers
BTI	= Bobcat Technical Information Bulletin : Zie einde van de microfiche van het desbetreffende model of einde van de algemene microfiche die het geheel van alle “BTI” herneemt.
was 6535403	= was vroeger 6535403
adj. (adjustment)	= afstelling
Assembly	= geheel
available W/Ref.	= beschikbaar met ref.
bulk/sold per foot	= bulk/aan de meter verkocht
does not include	= bevat niet
includes with	= is bevat in
I.D.	= ϕ inw. (inwendige diameter)
O.D.	= ϕ uitw. (uitwendige diameter)
not in kit	= niet in de kit
W/ - WO/	= met/ - zonder/
Qty	= vereiste aantal
see page/ref.	= zie pagina/ref.
used with ref/	= gebruikt met ref.
0,05 inch thickness	= 0.05 inch dik (een inch = 25.4 mm)
weld on	= te lassen

Use only Bobcat belts and hoses to maintain maximum service life.

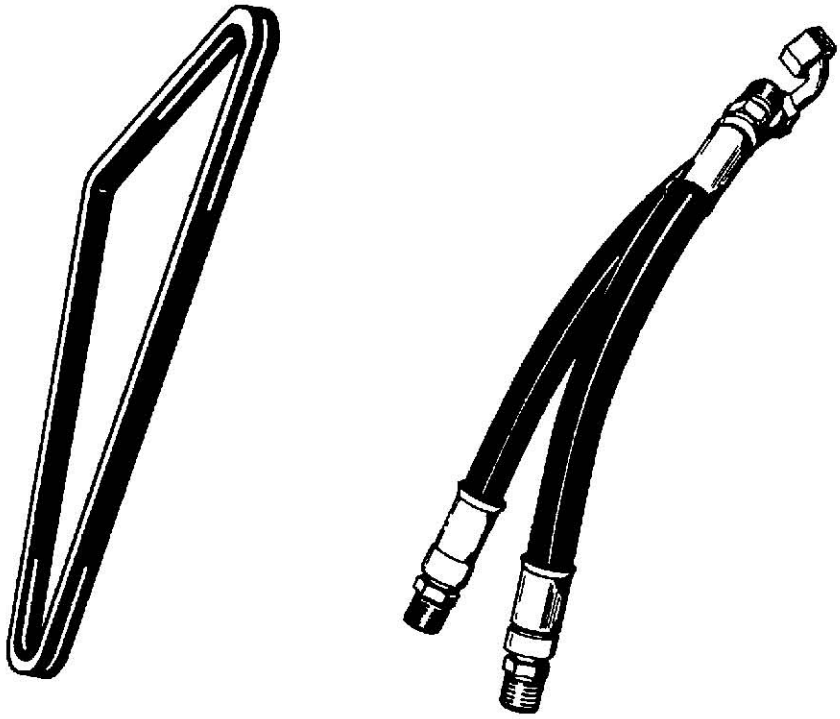

Available from Bobcat Parts.

Bobcat

Model 753G
Loader Parts

753 G-SERIES ALPHABETICAL INDEX

ADHESIVE 456
AIR CLEANER 234
ALTERNATOR 222, 224, 236
ANTI-FREEZE 456
AXLE 56

BELT, ALTERNATOR 236
BELT, PUMP DRIVE 240
BLACK GOLD 456
BLOCK HEATER 306
BOB-TACH 36, 38

CAB 20, 22
CAB DOOR 314, 322
CAB ENCLOSURE 332
CABLE, BATTERY 190, 196
CAMSHAFT 264, 266
CAP, FUEL 42
CAP, HYD. OIL 148, 154
CAP, RADIATOR 230
CHAIN, DRIVE 46
CHAINCASE 18, 46
COOLING FAN DRIVE ASSY. 246
COUNTER WEIGHTS 340
CYLINDER BLOCK 252
CYLINDER, BOBTACH 412
CYLINDER, LIFT 88, 90
CYLINDER, TILT 86

DIPSTICK, ENG. OIL 260
DOOR, CAB 314, 322
DOOR, REAR 30, 32
DRIVE MOUNT ASSY. 48

ENGINE 242
EXT RMVL R WIN KIT, 338
EXTINGUISHER 370

FAN 230
FILTER, AIR 288
FILTER, ENG. OIL 250
FILTER, FUEL 42
FILTER, HYD. OIL 156
FIRE EXTINGUISHER 370
FLASHER LIGHTS 374
FUEL SYSTEM 42

GAS SPRING 20, 314, 322
GASKET KIT, ENG. 248
GLOW PLUG 284
GUAGE, ENG. TEMP. 186, 188
GUAGE, FUEL 186, 188

HARNESS, CAB 186, 188
HARNESS, CONTROLS 204
HARNESS, ENGINE 190, 194
HARNESS, LIGHTS 404
HEAD, CYLINDER 258
HEATER 382, 386
HORN 398
HUB, AXLE 56

INJECTION NOZZLES 284, 286

LATCH, REAR DOOR 30, 32
LEVER, PINTLE 162
LIFT KITS 400, 402
LIGHT KIT 404
LIGHTS, FLASHER 374
LOCK, REAR DOOR 428
LUBRICANT 456

MANIFOLD 272
MOUNT, ENGINE 236
MOUNT, HYDRO. PUMP 236, 242
MUFFLER 234

OIL 456
OIL COOLER 156, 160

PAINT 456
PAN, OIL 260
PANEL, INSTRUMENT 186, 188
PEDALS, CONTROL 92
PISTON, ENGINE 262
POLISH 456
PUMP, FUEL 42, 280
PUMP, GEAR 176
PUMP, HYDRO. 168
PUMP, OIL 252
PUMP, WATER 268

RIM, WHEEL 452
RING GEAR 242

SEALANT 456
SEAT 26
SEAT BELT 22, 434, 442
SENDER, ENG. TEMP. 190, 194
SENDER, FUEL 44
SENSOR, RPM 190, 194
SHOCK CONTROLS 164
SOLENOID 190, 194
SPROCKET, AXLE 46, 56
STARTER 190, 196, 226, 242
STOP, LIFT ARM 34
SWITCH, ENG. OIL PRESS. 190
SWITCH, HYD. PRESS. 190, 194
SWITCH, HYD. TEMP. 190, 194
SWITCH, IGNITION 186, 188

TANK, COOLANT 230
THERMOSTAT 270
THROTTLE 244

VALVE COVER 254
VALVE, ENGINE 256
VALVE, HYD. CONTROL 94-136

WINDOW, REAR 334, 348
WINDOW, SIDE 334
WIPER, WINDSHIELD 318

MAINTENANCE ITEMS
753G

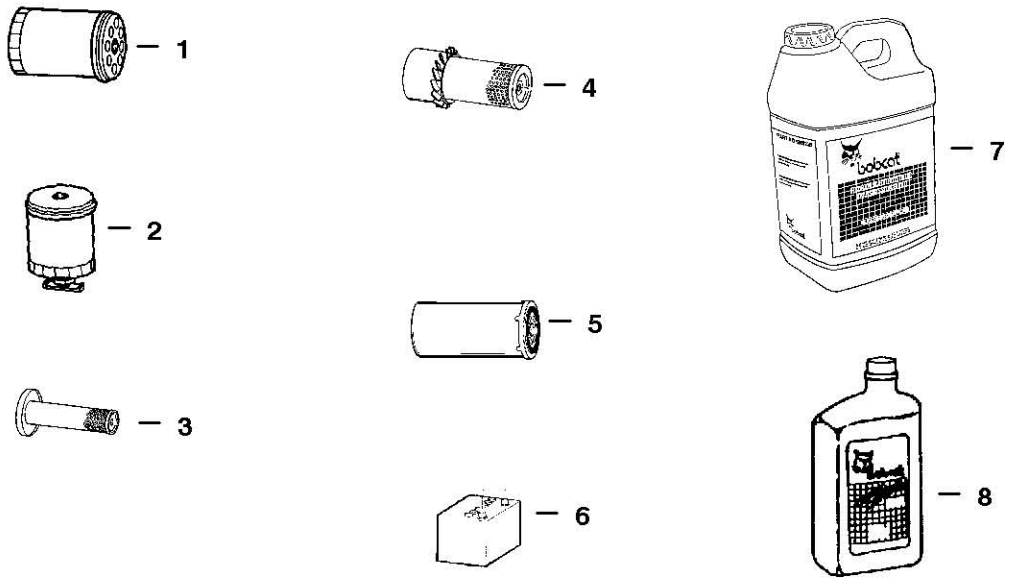

B-21592

MAINTENANCE ITEMS

Ref.N°	Part N°	Description	Remarks	Serial N°	Qty.
1	6675517	FILTER	Engine Oil (6 Pack) - See Page GEARCASE(1)		x
1	6675517	FILTER	engine oil (6 Pack) - See Page GEARCASE(1)		x
2	6667352	FILTER	Fuel - See Page FUEL SYSTEM(1)		x
2	6657301	MOTOR OIL	10W30 CE/SG - 1 Qt. - See Page BULK ITEMS(1)		x
2	6724557	MOTOR OIL	10W30 CE/SG - 1 Gallon - See Page BULK ITEMS(1)		x
2	6674205	MOTOR OIL	10W30 CE/SG - 2.5 Gal. - See Page BULK ITEMS(1)		x
2	6657299	MOTOR OIL	15W40 CE/SG - 1 Qt. - See Page BULK ITEMS(1)		x
2	6724558	MOTOR OIL	15W40 CE/SG - 1 Gallon - See Page BULK ITEMS(1)		x
2	6674204	MOTOR OIL	15W40 CE/SG - 2.5 Gal. - See Page BULK ITEMS(1)		x
2	6657303	MOTOR OIL	30 CE/SG - 1 Qt. - See Page BULK ITEMS(1)		x
2	6724559	MOTOR OIL	30 CE/SG - 1 Gal - See Page BULK ITEMS(1)		x
2	6674206	MOTOR OIL	30 CE/SG - 2.5 Gal. - See Page BULK ITEMS(1)		x
2					x
2			'250 HOURFcom3N }H~10{M		x
2			'SERVICE SCHEDULENcom31 }H~10{M		x
2					x
3	6598362	CARTRIDGE	Inner Air Cleaner -See Page AIR CLEANER(1)		x
3	6658266	GREASE	steering lever pivots - See Page BULK ITEMS(1)		x
4	6598492	CARTRIDGE	Outer Air Cleaner -See Page AIR CLEANER(1)		x
4	6726898	BELT	eng./hydro. drive - See Page ENGINE & ATTACHING PARTS(1)		x
5	6661248	ELEMENT	Hydrostatic # 3 Media - See Page HYDROSTATIC OIL FILTER(1)		x
5	6634393	LUBRICANT	cooling fan drive gearbox - See Page BULK ITEMS(1)		x
6	6674687	BATTERY	See Page ENGINE ELECTRICAL CIRCUITRY(1)		x
6	6675837	BELT	alternator - See Page ENGINE & ATTACHING PARTS (1)		x
7	6563328	BLACK GOLD	Hyd./Hydro. - (2) 2.5 Gal. - - See Page BULK ITEMS(1)		x
7	6722344	BLACK GOLD	Hyd./Hydro. - (5 Gal.) - See Page BULK ITEMS(1)		x
7	6563330	BLACK GOLD	Hyd./Hydro. - 55 Gallon Drum - See Page BULK ITEMS(1)		x
7	6675517	FILTER	engine oil (6 Pack) - See Page GEARCASE(1)		x
8	6657301	MOTOR OIL	10W30 CE/SG - 1 Qt. - See Page BULK ITEMS(1)		x
8	6724557	MOTOR OIL	10W30 CE/SG - 1 Gallon - See Page BULK ITEMS(1)		x
8	6674205	MOTOR OIL	10W30 CE/SG - 2.5 Gal. - See Page BULK ITEMS(1)		x
8	6657299	MOTOR OIL	15W40 CE/SG - 1 Qt. - See Page BULK ITEMS(1)		x
8	6724558	MOTOR OIL	15W40 CE/SG - 1 Gallon - See Page BULK ITEMS(1)		x
8	6674204	MOTOR OIL	15W40 CE/SG - 2.5 Gal. - See Page BULK ITEMS(1)		x
8	6657303	MOTOR OIL	30 CE/SG - 1 Qt. - See Page BULK ITEMS(1)		x
8	6724559	MOTOR OIL	30 CE/SG - 1 Gallon - See Page BULK ITEMS(1)		x
8	6674206	MOTOR OIL	30 CE/SG - 2.5 Gal. - See Page BULK ITEMS(1)		x
8			'50 HOUREcom3N }H~10{M		x
8			'SERVICE SCHEDULENcom31 }H~10{M		x
8					x
8	6657301	MOTOR OIL	10W30 CE/SG - 1 Qt. - See Page BULK ITEMS(1)		x
8	6724557	MOTOR OIL	10W30 CE/SG - 1 Gallon - See Page BULK ITEMS(1)		x
8	6674205	MOTOR OIL	10W30 CE/SG - 2.5 Gal. - See Page BULK ITEMS(1)		x
8	6657299	MOTOR OIL	15W40 CE/SG - 1 Qt. - See Page BULK ITEMS(1)		x
8	6724558	MOTOR OIL	15W40 CE/SG - 1 Gallon - See Page BULK ITEMS(1)		x
8	6674204	MOTOR OIL	15W40 CE/SG - 2.5 Gal. - See Page BULK ITEMS(1)		x
8	6657303	MOTOR OIL	30 CE/SG - 1 Qt. - See Page BULK ITEMS(1)		x

MAINTENANCE ITEMS

Ref.N°	Part N°	Description	Remarks	Serial N°	Qty.
8	6724559	MOTOR OIL	30 CE/SG - 1 Gal -See Page BULK ITEMS(1)		x
8	6674206	MOTOR OIL	30 CE/SG - 2.5 Gal. - See Page BULK ITEMS(1)		x
9	6667352	FILTER	fuel - See Page FUEL SYSTEM(1)		x
9			'500 HOURFcom3N@ }H~10{M		x
9			'SERVICE SCHEDULENcom31@ }H~10{M		x
9					x
10	6727475	CAP	hyd. reservoir breather - See Page HYDROSTATIC CIRCUITRY(1)		x
11	6661248	ELEMENT	hyd./hydro. - See Page HYDROSTATIC OIL FILTER(1)		x
11					x
11			'1000 HOURGcom3N@ }H~10{M		x
11			'SERVICE SCHEDULENcom31@ }H~10{M		x
11					x
12	6563328	BLACK GOLD	Hyd./Hydro. - (2) 2.5 Gal. - - See Page BULK ITEMS(1)		x
12	6722344	BLACK GOLD	Hyd./Hydro. - (5 Gal.) - See Page BULK ITEMS(1)		x
12	6563330	BLACK GOLD	Hyd./Hydro. - 55 Gallon Drum - See Page BULK ITEMS(1)		x
13	6661022	FILTER	case drain - See Page HYDROSTATIC OIL FILTER(1)		x

MAIN FRAME

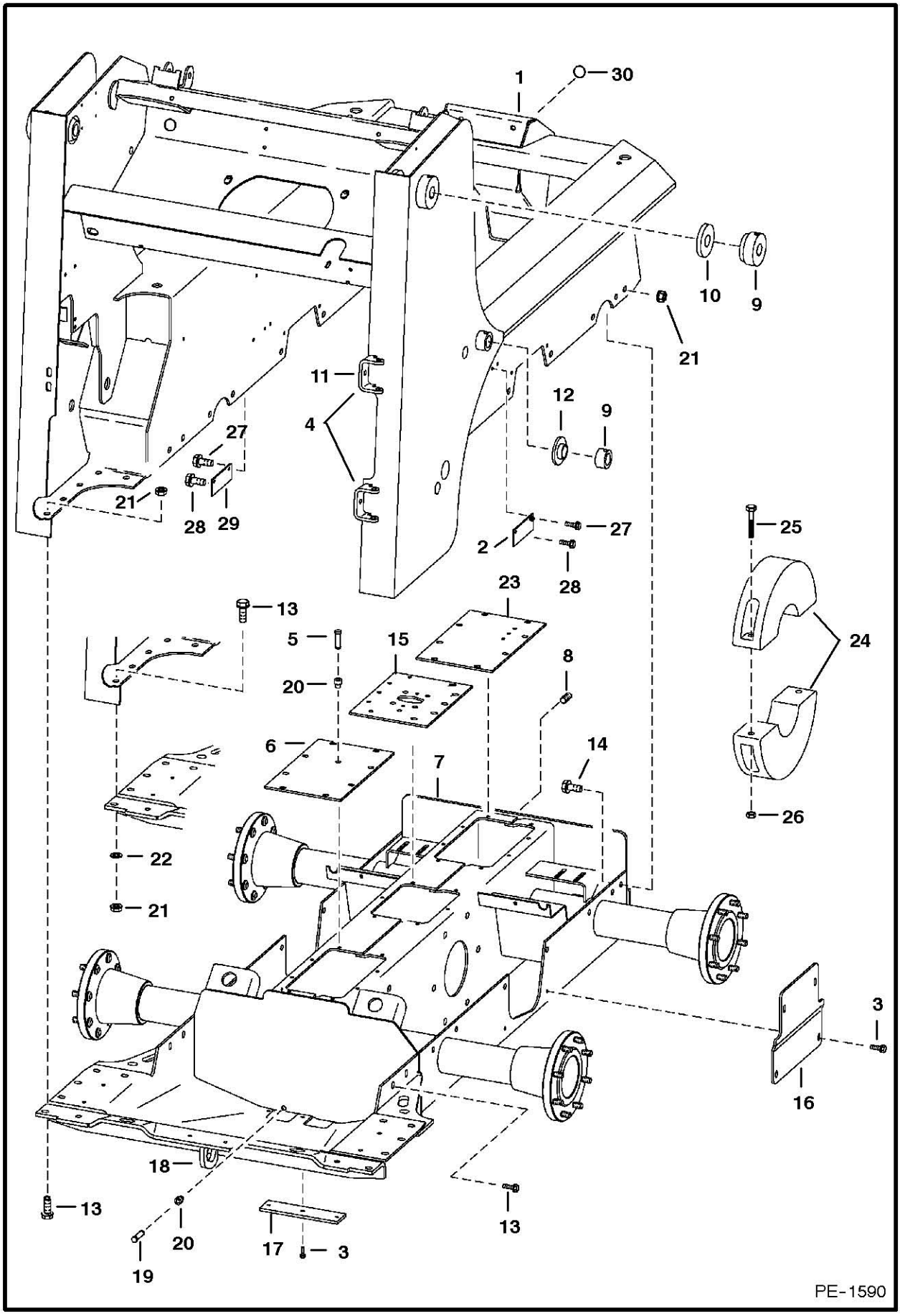
1
30
10
9
21
11
4
12
9
27
21
28
29
2
27
28
25
24
26
23
13
5
15
20
8
6
7
14
22
21
3
16
18
13
20
19
17
3
13
PE-1590

MAIN FRAME

Ref.N°	Part N°	Description	Remarks	Serial N°	Qty.
1	6714590	MAIN FRAME			1
2	6704680	COVER		& Bel	2
3	84G-3712	BOLT			11
4	6708987	BRACKET	hinge - bottom & top - weld on	& Bel	2
4	6708987	BRACKET	hinge - bottom - weld on	&Abv	1
5	6680970	BREATHER	See Page DISC BRAKE(1) - Was 6670627 [A]		1
6	6700330	COVER			1
7	6712827	CHAINCASE	See Page DRIVE TRAIN(1)		1
8	6731121	PLUG	chaincase fill - Was 11F-12 [A]		1
9	6702584	BUSHING	weld on		4
10	6702583	BUSHING	weld on		2
11	6577394	BRACKET	hinge - top - weld on	-	1
12	6555987	BUSHING	weld on		2
13	31C-824	BOLT			12
14	31C-820	BOLT			28
15	6706042	COVER	See Page DISC BRAKE(1)		1
16	6733701	COVER	Was 6704695 [A]		2
17	6700182	COVER			1
18	6706485	HOOK	tie down - weld on		2
19	6599645	PLUG	chaincase drain		1
20	6553411	BUSHING			2
21	83D-8	NUT			26
22	6701097	WASHER		& Bel	10
23	6578505	COVER	See Page DISC BRAKE(1)		1
24	6714361	WEIGHT	front axle - standard - 38.7 lbs (17,6 kg) - 4.5'(114,3 mm) wide	& Bel	4
25	17C-640	BOLT			8
26	61D-6	NUT			8
27	84G-3110	BOLT	R.H. side	& Bel	2
27	84G-3112	BOLT	L.H. side	& Bel	2
27	84G-3710	BOLT		& Abv	2
28	17C-620	BOLT	Was 6717378 [A]		2
29	6727837	COVER		5158 - 45424	2
29				5162 - 26372	2
29	6734420	COVER		5158 45425 & Abv	2
29				5162 26373 & Abv	2
30	6718796	PLUG			1

OPERATOR CAB

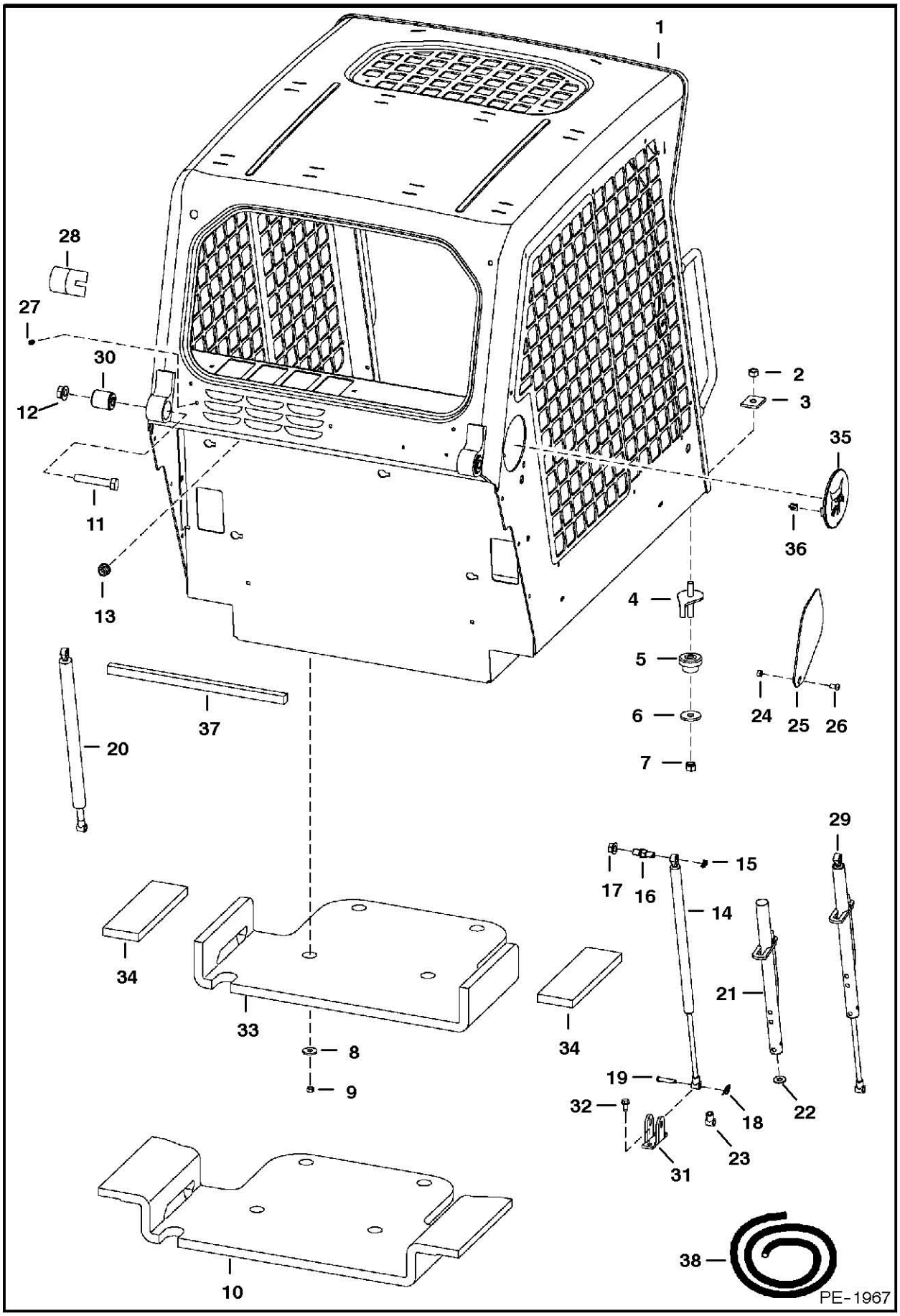

OPERATOR CAB

Ref.N°	Part N°	Description	Remarks	Serial N°	Qty.
1	6719672	OPERATOR CAB	includes cab decals		1
2	59D-8	NUT			2
3	6553709	WASHER	rectangular		2
4	6702971	BOLT			2
5	6560633	MOUNT			2
6	6515817	WASHER			2
7	85D-8	NUT			2
8	619021	WASHER			4
9	59D-5	NUT			4
10	NAP	INSULATION	seat pan - Order Ref. OPERATOR CAB(33) & (2) of Ref. OPERATOR CAB(34) - Was 6719360 [A]		1
11	17C-1056	BOLT			2
12	53D-10	NUT			2
13	53D-6	NUT			4
14	6675135	GAS SPRING	R.H.		1
15	6675140	SNAP RING			2
16	6719064	MOUNT	Was 6719005 [A]		2
17	83D-8	NUT			2
18	6631418	PIN	ring		2
19	6567743	PIN			2
20	6675134	GAS SPRING	L.H.		1
20	6675136	GAS SPRING	L.H. - heavy duty		1
21	6708189	TUBE	stop - R.H.		1
22	6701174	WASHER			1
23	6675257	ROD END			1
24	95D-5	NUT			2
25	6718784	COVER			2
26	25G-512	BOLT	Was 25G-510 [B]		2
27	6675033	INSERT			2
28	6579613	STOP			2
29	NAP	GAS SPRING	R.H. - W/latch - Order Ref. OPERATOR CAB(14) & OPERATOR CAB(21)-OPERATOR CAB(23) - Was 6719072 [A]		1
30	6562602	BUSHING			2
31	6706349	MOUNT	gas spring		2
32	84G-3112	BOLT			4
33	6729013	INSULATION	seat pan		1
34	6729012	INSULATION	seat pan		1
35	6733107	PLUG	W/Ref. OPERATOR CAB(36)		2
36	6679990	CLIP			6
37	NAP	SEAL	31'(787,4 mm) long - Order Ref. OPERATOR CAB(38)		1
38	6679994	SEAL	bulk - Sold Per Foot		x

OPERATOR CAB

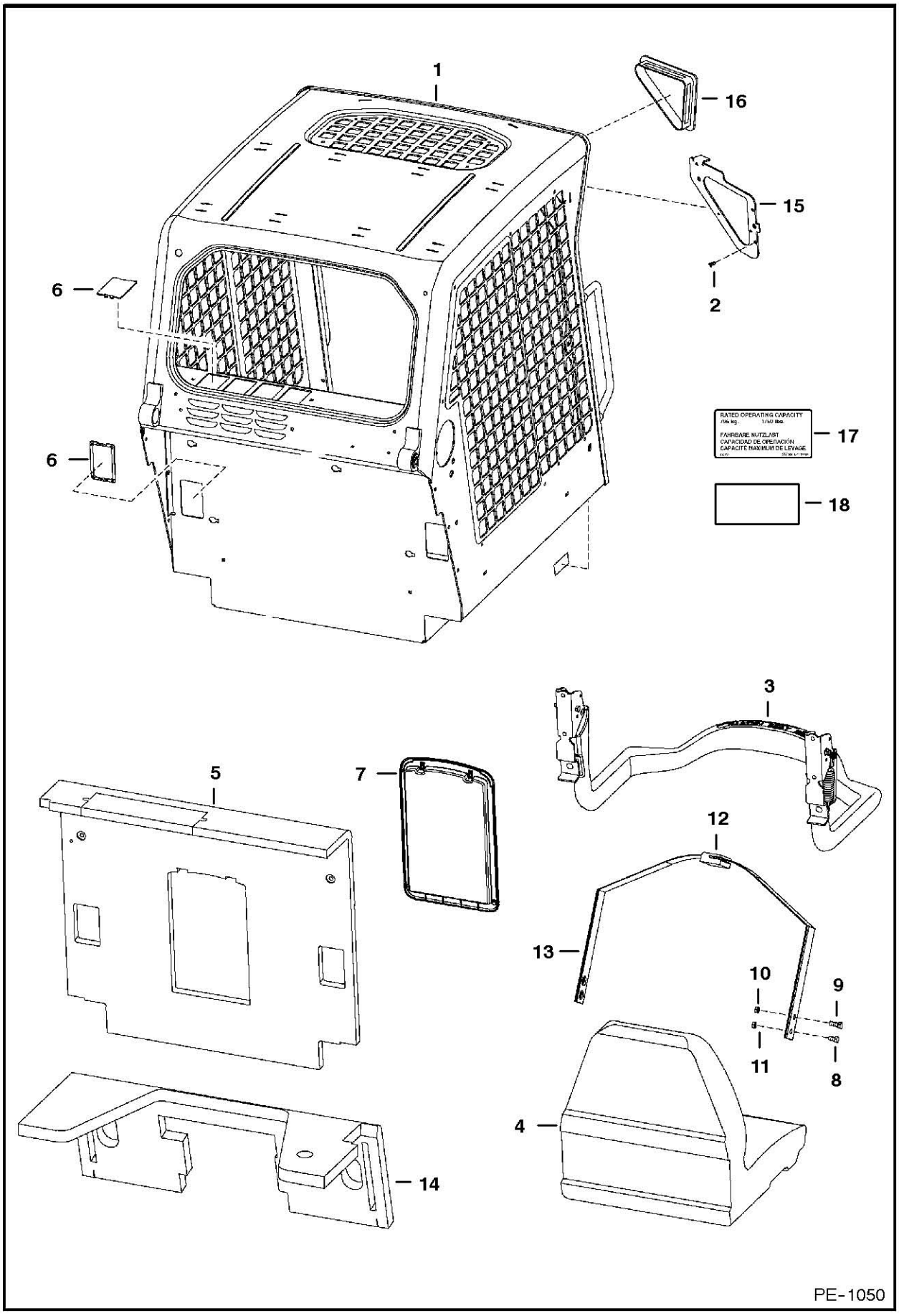

OPERATOR CAB

Ref.N°	Part N°	Description	Remarks	Serial N°	Qty.
1	6719672	OPERATOR CAB	includes cab decals		1
2	6675033	INSERT	See Page CAB ELECTRICAL CIRCUITRY(1)		6
3		SEAT BAR	See Page SEAT & SEAT BAR(1)		1
4	6669135	SEAT	See Page SEAT(1)		1
5	6719504	INSULATION	W/Ref. OPERATOR CAB(7)		1
6	6718101	COVER			6
7	6719503	CONTAINER	manuals		1
7	6675524	CLIP			2
7	6725301	COVER			1
7	6725303	FRAME			1
8	17C-612	BOLT			2
9	17C-716	BOLT			2
10	85D-7	NUT			2
11	85D-6	NUT			2
12	NAP	SEAT BELT	Order 6675074inD1 Seat Belt & (2) of Ref. OPERATOR CAB(13) (6725373inD1 Spring Plate) - Was 6667875 [A]		1
12	NAP	SEAT BELT	W/spring plates - Order 6675074inD1 Seat Belt & (2) of Ref. OPERATOR CAB(13) (6725373inD1 Spring Plate) - Was 6725403 [A]		1
12	6675074	SEAT BELT	W/O spring plates		1
13	NAP	GUIDE	Order 6711908inD1}m Spring Plate, 6565355inD1}o Guide & (2) of 6630207inD1}7 Rivet - Was 6711907 [A]		2
13	6711908	SPRING PLATE	Use W/Ref. OPERATOR CAB(12) (NAP/6667875 Seat Belt)		1
13	6565355	GUIDE			1
13	6630207	RIVET			2
13	6725373	SPRING PLATE	Use W/Ref. OPERATOR CAB(12) (6675074inD1 Seat Belt)		2
14	6718489	INSULATION	steering panel		1
15	NSS	PLATE	R.H. - weld on		1
15	NSS	PLATE	L.H. - weld on		1
16	6674403	COVER	no lights		2
17	NAP	DECAL	load - Was 6718200 [A]		1
18	6804790	DECAL	capacity		1

SEAT & SEAT BAR

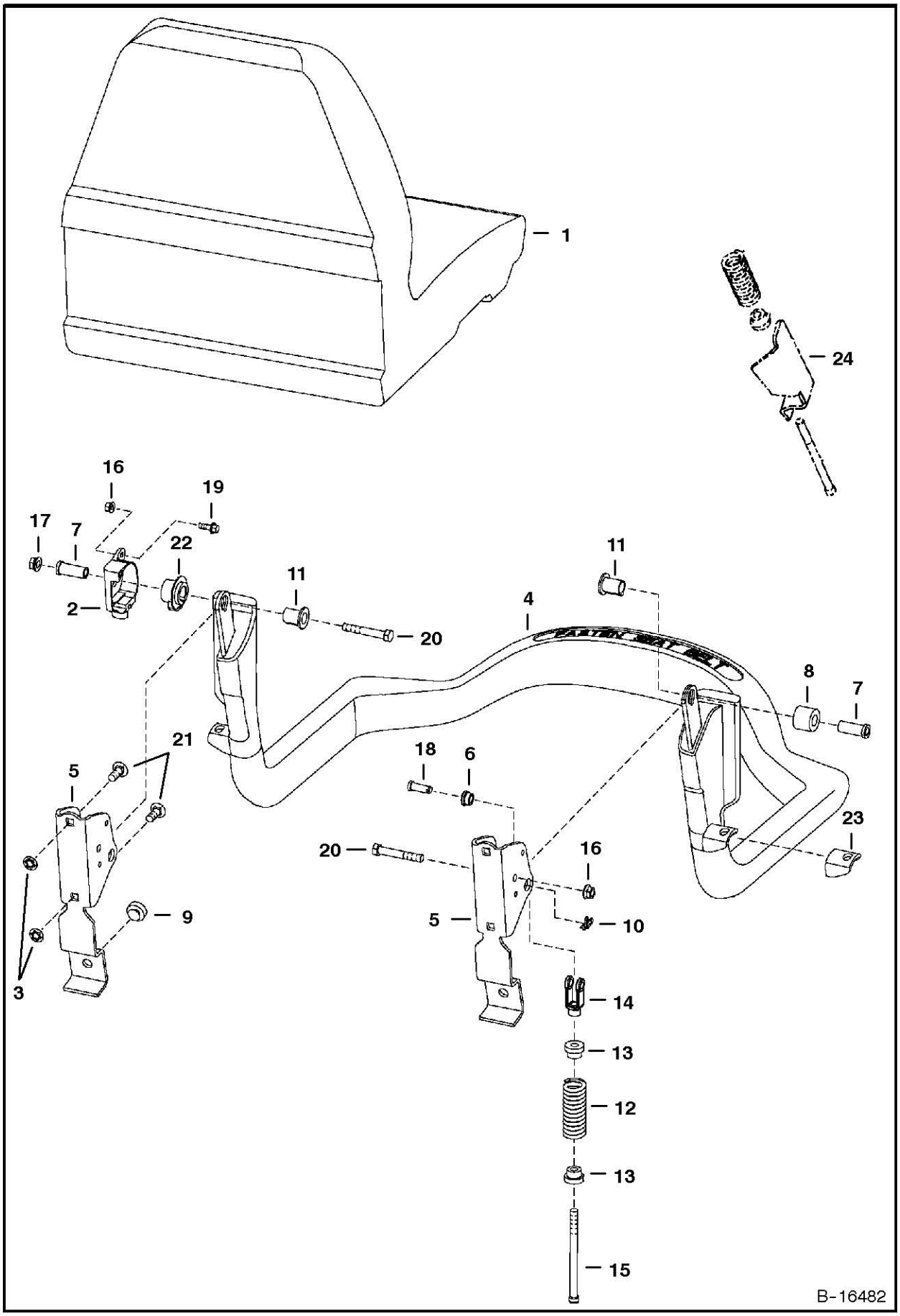

SEAT & SEAT BAR

Ref.N°	Part N°	Description	Remarks	Serial N°	Qty.
1	6669135	SEAT	See Page SEAT(1)		1
2	6680429	SENSOR	Was 6674406 [A]		1
3	6684033	NUT	Was 6674894 [A]		4
4	6715860	SEAT BAR			1
5	6715863	BRACKET			1
6	6715864	BUSHING			2
7	6715865	BUSHING			2
8	6715866	BUSHING			1
9	6519178	BUMPER			2
10	6631418	PIN	ring		2
11	6680441	BUSHING	keyed - Was 6664882 [A]		2
12	6701535	SPRING			2
13	6710659	BUSHING			2
14	6713589	CLEVIS			2
15	6713887	BOLT			2
16	83D-4	NUT			1
17	53D-6	NUT			2
18	4F-6106	PIN			2
19	35C-412	BOLT			1
20	17C-640	BOLT			2
21	10C-616	BOLT			4
22	6680443	BUSHING	Was 6674405 [A]		1
23	NAP	MOUNT	Order Ref. SEAT & SEAT BAR(4)	& Abv	1
24	NAP	MOUNT	Order Ref. SEAT & SEAT BAR(4)	& Bel	1

SEAT
(Michigan)

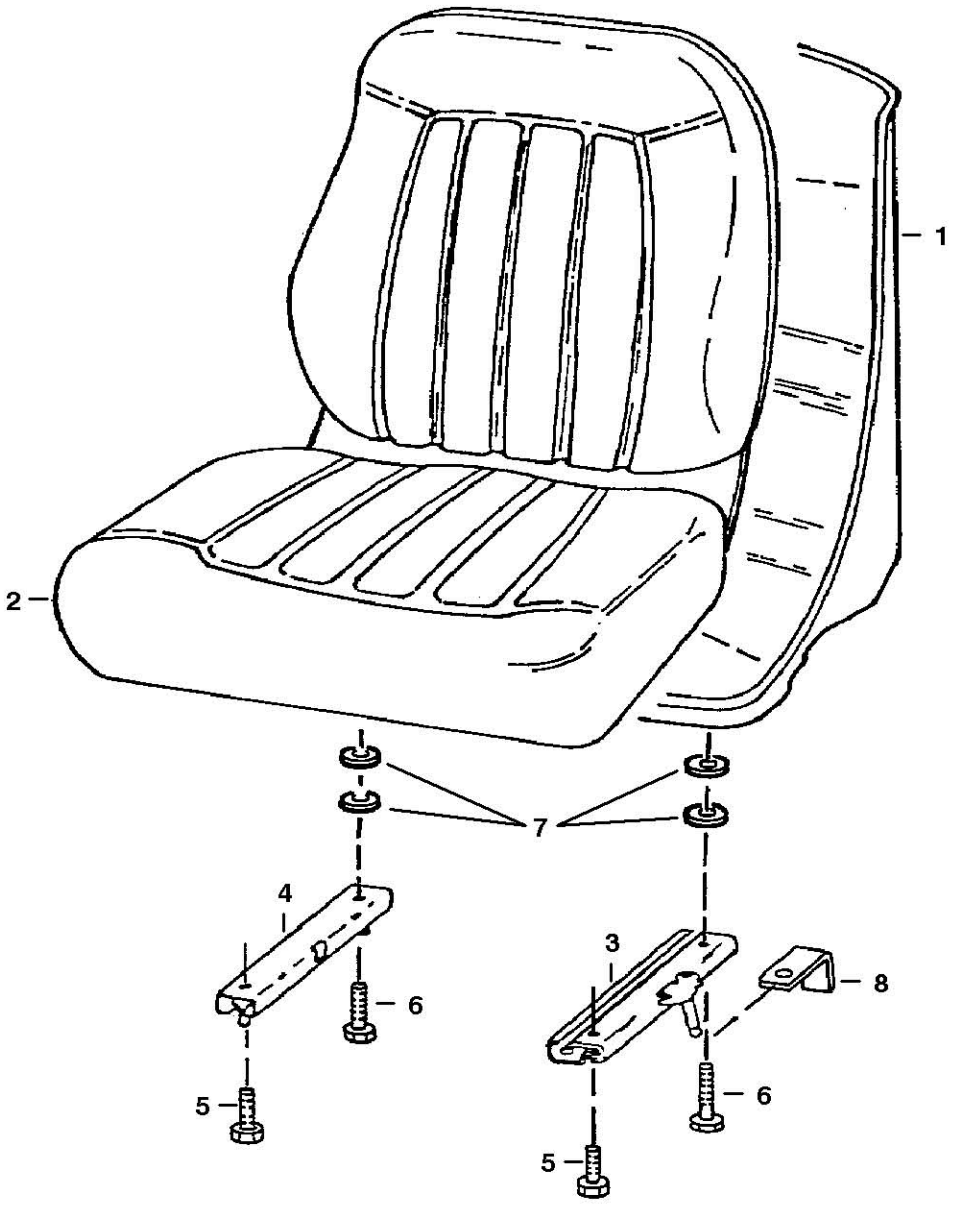

B-14720

SEAT

Ref.N°	Part N°	Description	Remarks	Serial N°	Qty.
1	6669135	SEAT	W/Ref. SEAT(2)-SEAT(7)		1
2	6670160	CUSHION	W/edging, clip & (2) grommets		1
2	NSS	EDGING			1
2	NSS	CLIP			1
3	6674013	TRACK	L.H. - W/8'(203,2 mm) latch		1
4	6669089	TRACK	R.H. - W/O Latch		1
5	25G-512	BOLT			2
6	25G-520	BOLT			2
7	6672715	SPACER	Was 7000010 [A]		4
8	6668953	BRACKET	See S/L Dated 16 April 1996		2

PANELS

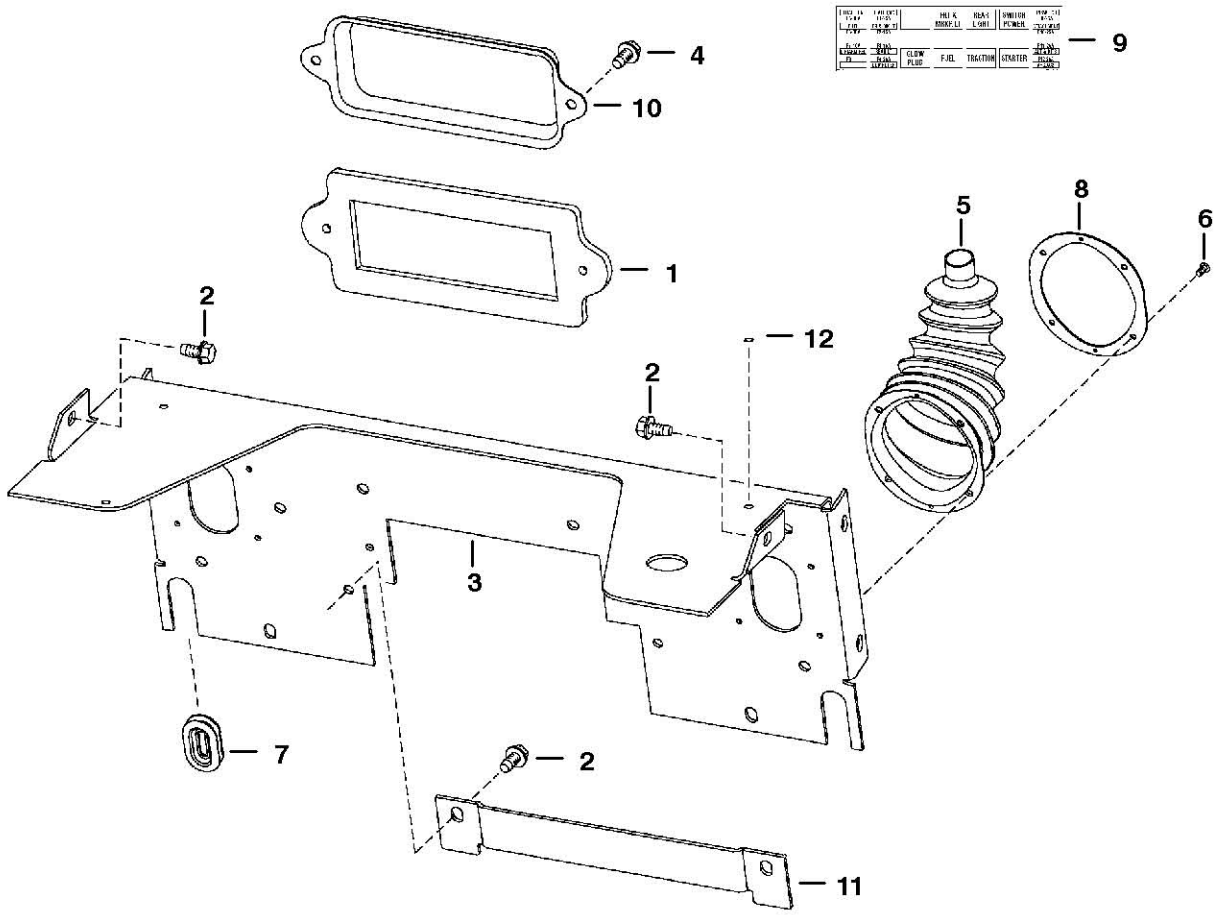

PANELS

Ref.N°	Part N°	Description	Remarks	Serial N°	Qty.
1	6725302	GASKET			1
2	84G-3712	BOLT			16
3	6717208	SHIELD			1
4	84G-3112	BOLT			2
5	6532127	BOOT	W/Ref. PANELS(8)		2
6	6630207	RIVET			12
7	6577961	GROMMET			2
8	NAP	PLATE	Order Ref. PANELS(5)		2
9	NAP	DECAL	fuse/relay - 2.10' x 9.40' (53,3 mm x 238,8 mm) - Order 6718774inD1} Decal		1
9	6718774	DECAL	fuse/relay - 2' x 7' (50,8 mm x 177,8 mm)		1
10	6716621	COVER	fuse/relay		1
10	6736071	KIT	extreme conditions		1
10	6718774	DECAL	relay/fuse		1
10	6731275	INSULATION			1
11	6718760	COVER			1
12	6657719	PLUG	for .75'(19,05 mm) dia. hole		2
12	6648348	PLUG	for .812'(20,62 mm) dia. hole		2

REAR DOOR

NOTE: Counterweight is standard on rear door.

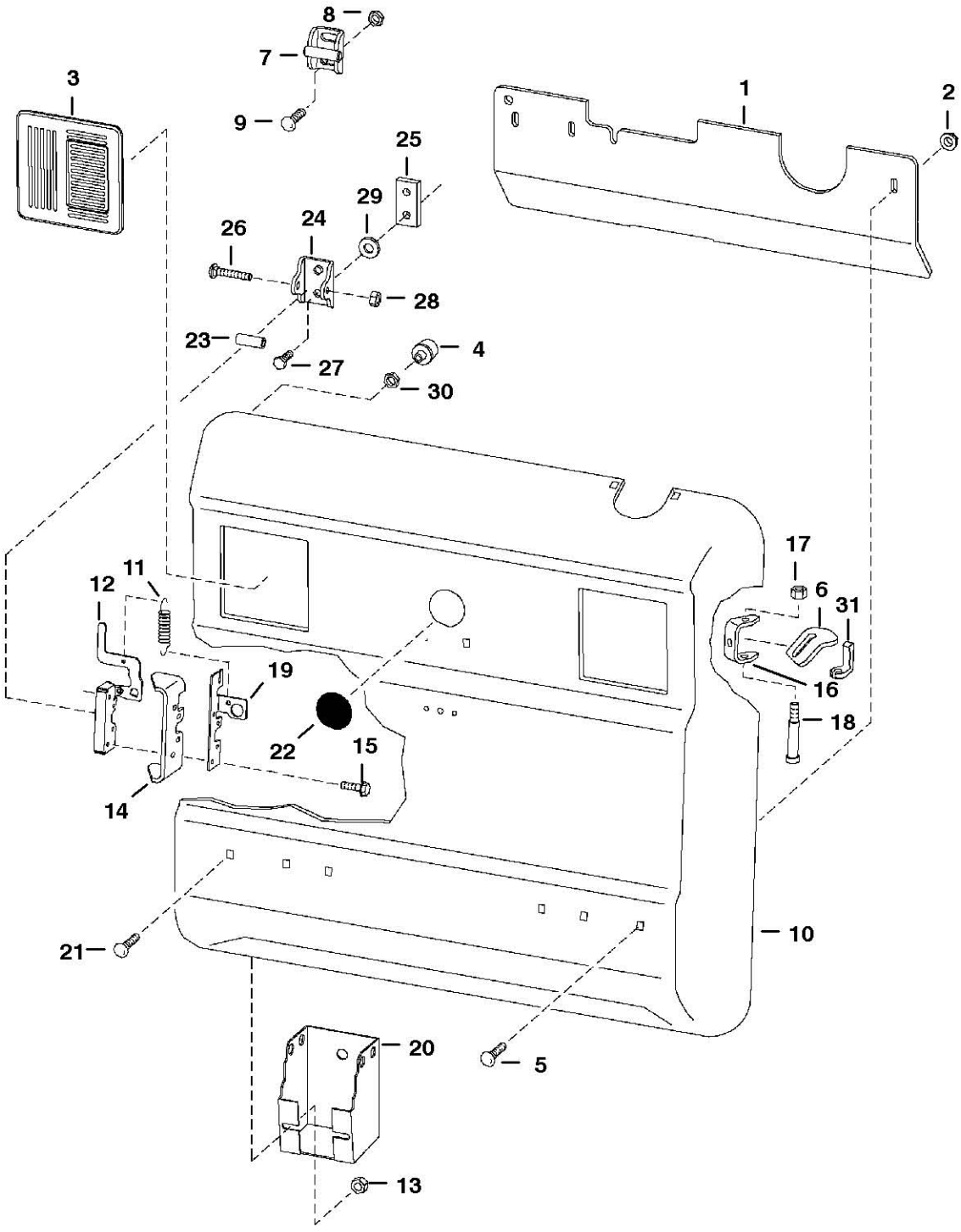

PE-1591

REAR DOOR

Ref.N°	Part N°	Description	Remarks	Serial N°	Qty.
1	6725256	WEIGHT	SEE NOTE		1
2	57D-6	NUT			3
3	6670287	COVER			2
4	6655399	BUMPER	Was 6714454 [B,D]		2
5	37C-632	BOLT	2'(50,8 mm) long		3
5	37C-628	BOLT	1.75'(44,45 mm) long		2
5	37C-624	BOLT	1.5'(38,1 mm) long		2
6	6714126	DOOR STOP			1
7	NAP	STRIKER ASSY.	Order Ref. REAR DOOR(23) - REAR DOOR(29) - Was 6579969 [A]		1
8	83D-8	NUT			2
9	37C-820	BOLT			2
10	6711524	REAR DOOR			1
11	6714210	SPRING			1
12	6670867	LATCH			1
13	55D-6	NUT			2
14	6711527	LATCH PLATE	weld-on		1
15	31C-420	BOLT			4
16	6733575	HINGE	weld on - Was 6711526 [A]		2
17	59D-6	NUT			2
18	6809845	SCREW	Was 38C-856 [A]		2
19	6711664	GUIDE	latch		1
20	6715318	TOOL HOLDER			1
21	37C-612	BOLT			2
22	6718796	PLUG			1
23	6719550	TUBE	striker		1
24	6719524	STRIKER			1
25	6719525	BAR	threaded striker		1
26	37C-644	BOLT	carriage		1
27	17C-820	BOLT			2
28	61D-6	NUT			2
29	6675273	WASHER	lock		2
30	61D-5	NUT			2
31	6719766	STOP			1

REAR DOOR

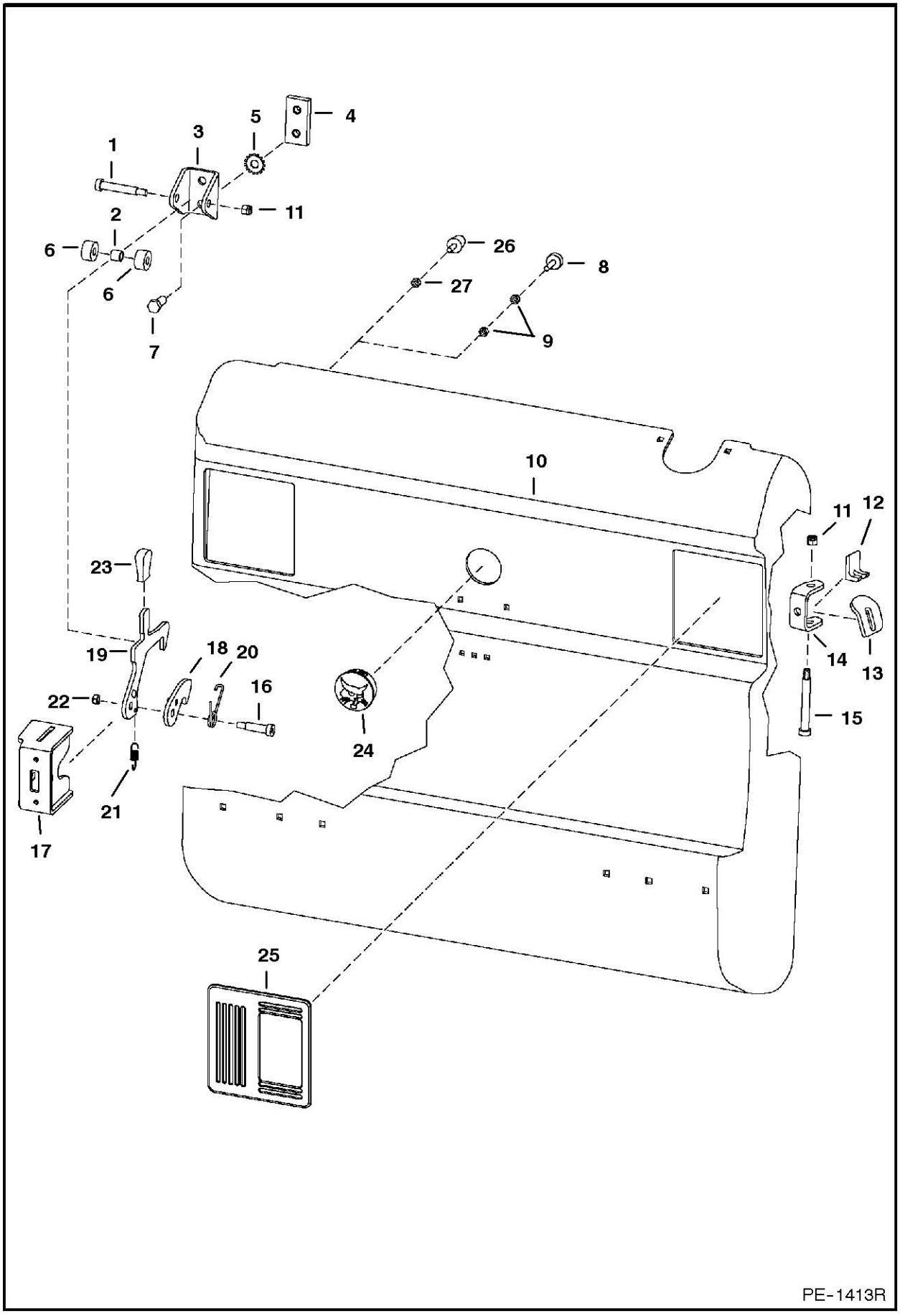
1
2
3
4
5
6
6
7
8
9
10
11
11
12
13
14
15
16
17
18
19
20
21
22
23
24
25
26
27
PE-1413R

REAR DOOR

Ref.N°	Part N°	Description	Remarks	Serial N°	Qty.
1	38C-840	BOLT	carriage		1
2	6809734	BUSHING			1
3	6809727	CHANNEL			1
4	6719525	BAR	threaded striker		1
5	6675273	WASHER	lock		2
6	6809726	ROLLER			2
7	17C-820	BOLT			2
8	6655399	BUMPER	flat - Use W/Ref. REAR DOOR(10) (NAP/Rear Door)		2
9	61D-5	NUT			4
10	NAP	REAR DOOR	W/two hole bumper braces - Order 6729991 Rear Door & (2) ea. of Ref. REAR DOOR(26) & REAR DOOR(27) -Was 6729991 [A]		1
10	6729991	REAR DOOR	W/one hole bumper braces		1
11	59D-6	NUT			3
12	6719766	STOP			1
13	6714126	DOOR STOP			1
14	6733575	HINGE	weld on - Was 6711526 [A]		2
15	6809845	SCREW	Was 38C-856 [A]		2
16	38C-824	SCREW			1
17	6729939	LATCH PLATE	weld on		1
18	6733667	LATCH	latch - Was 6811910 [A]		1
19	6732715	LATCH	Was 6729685 [A]		1
20	6810132	SPRING			1
21	6810141	SPRING			1
22	85D-6	NUT			1
23	6564452	GRIP			1
24	6718796	PLUG			1
25	6670287	COVER			2
26	6733616	BUMPER	tapered - Use W/Ref. REAR DOOR(10) (6729991 Rear Door)		2
27	61D-6	NUT			2

LIFT ARM & BOB-TACH

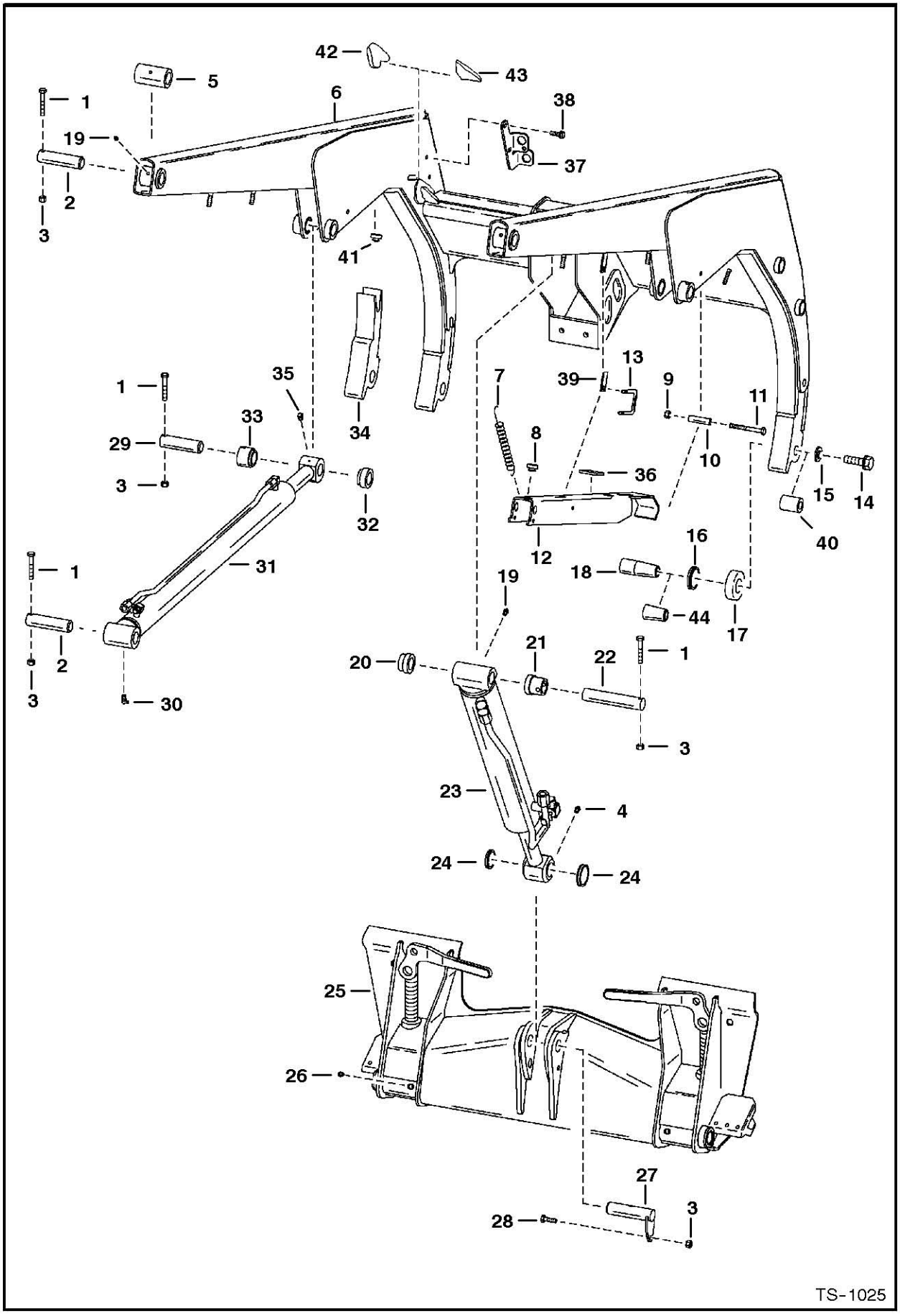

LIFT ARM & BOB-TACH

Ref.N°	Part N°	Description	Remarks	Serial N°	Qty.
1	17C-640	BOLT			8
2	6577954	PIN			4
3	85D-6	NUT			9
4	10H-35	GREASE ZERK			1
5	6578356	BUSHING	Weld On		2
6	NAP	LIFT ARM	1.25' (31,8 mm) dia. Bob-Tach pins - Order 6730797in D1 Lift Arm & (2) each of Ref. LIFT ARM & BOB-TACH(15) (6560416 Washer) & R	5158 39917 & Bel	1
6				5162 23755 & Bel	1
6	6730797	LIFT ARM	1.50' (38,1 mm) dia. Bob-Tach pins	5158 39918 & Abv	1
6				5162 23756 & Abv	1
7	6700743	SPRING			1
8	6519178	BUMPER	rubber		1
9	61D-6	NUT			1
10	6700469	SPACER			1
11	17C-648	BOLT			1
12	6705089	LIFT ARM STOP			1
13	6714810	PIN	retainer		1
14	17C-1064	BOLT	for 1.25'(31,8 mm) dia. Bob-Tach pins	5158 39917 & Bel	2
14				5162 23755 & Bel	1
14	31C-1264	BOLT	for 1.50'(38,1 mm) dia. Bob-Tach pins	5158 39918 & Abv	2
14				5162 23756 & Abv	1
15	6555455	WASHER	for 1.25'(31,8 mm) dia. Bob-Tach pins	5158 39917 & Bel	2
15				5162 23755 & Bel	1
15	6560416	WASHER	for 1.25'(31,8 mm) dia. Bob-Tach pins when used W/Ref. LIFT ARM & BOB-TACH(44)	5158 39917 & Bel	2
15				5162 23755 & Bel	1
15	6718723	WASHER	for 1.50'(38,1 mm) dia. Bob-Tach pins	5158 39918 & Abv	2
15				5162 23756 & Abv	1
16	6651709	SEAL			2
17	6700039	CUP	seal - for 1.25'(31,8 mm) dia. Bob-Tach pins	5158 39917 & Bel	2
17				5162 23755 & Bel	1
17	6700463	CUP	seal - for 1.50'(38,1 mm) dia. Bob-Tach pins	5158 39918 & Abv	2
17				5162 23756 & Abv	1
18	NAP	PIN	1.25'(31,8mm)dia.-4.00'(101,6mm) long - Order 67320 12 Pin - Was 6707042 [A]	5158 39917 & Bel	2
18				5162 23755 & Bel	1
18	6732012	PIN	1.25'(31,8mm)dia.-3.88'(98,6mm)		2
18	6730263	PIN	1.50'(38,1 mm) dia.	5158 39918 & Abv	2
18				5162 23756 & Abv	1
19	10H-25	GREASE ZERK			3
20	6703363	BUSHING	Weld On - Also Order Ref. LIFT ARM & BOB-TACH(22)		1
21	6704287	BUSHING	Weld On - Also Order Ref. LIFT ARM & BOB-TACH(22)		1
22	6704288	PIN	1.25'(31,8 mm) dia. - 7'(177,8 mm) long		1
23		CYLINDER	tilt - See Page TILT CYLINDER(1)		1
24	225855	SEAL			2
25		BOB-TACH	See Page BOB-TACH(1)		1
26	743332	GREASE ZERK			2
27	6716601	PIN			1
28	17C-620	BOLT			1

LIFT ARM & BOB-TACH

Ref.N°	Part N°	Description	Remarks	Serial N°	Qty.
29	6547593	PIN			2
30	11H-15	GREASE ZERK			2
31		CYLINDER	lift - See Page LIFT CYLINDER(1)		2
32	6555989	BUSHING	Weld On		2
33	6555987	BUSHING	Weld On		2
34	NAP	ARM	R.H. - Weld On		1
34	NAP	ARM	L.H. - Weld On		1
35	12H-15	GREASE ZERK			2
36	6704436	PAD	foam - self adhesive		1
37	6713850	MOUNT			1
38	84G-3112	BOLT			2
39	6705091	TAB	weld on		1
40	6714874	BUSHING	weld on - W/tapered hole - for 1.25'(31,8 mm) dia. pin		2
41	6704403	STOP	weld on		2
42	6727544	PLATE	weld on		2
43	6727545	PLATE	weld on		2
44	6731254	BUSHING	tapered - allows 1.25' (31,8 mm) dia. Bob-Tach pins to be used in 1.50' (38,1 mm) dia. Lift Arm holes		2

BOB-TACH

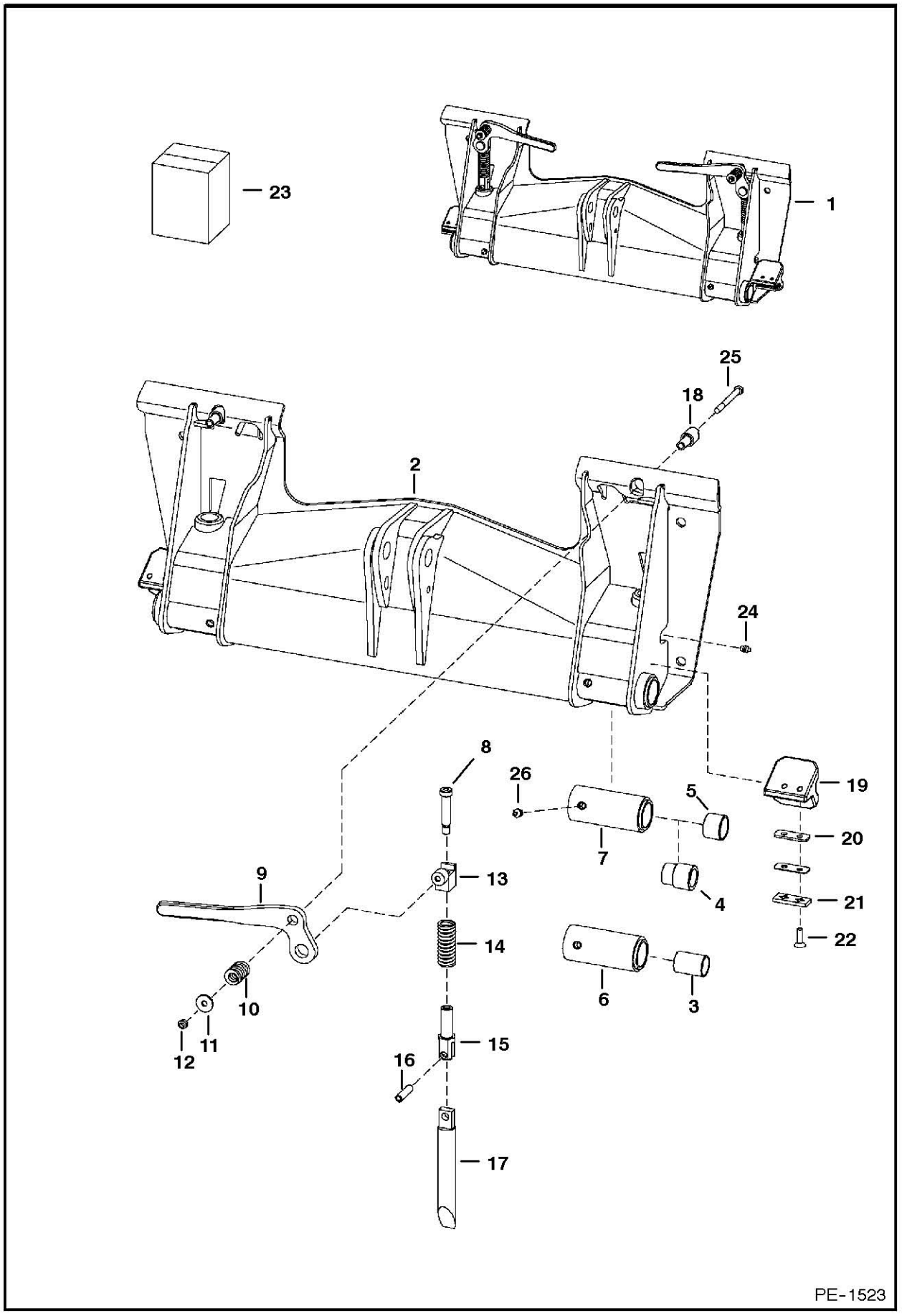

BOB-TACH

Ref.N°	Part N°	Description	Remarks	Serial N°	Qty.
1	NAP	BOB-TACH	For 1.25'(31,8 mm) dia. lift armpin - W/Ref. BOB-TACH(6)(NAP/6577445 Bushing) - 2.25'(57,15 mm) O.D. weld on bushing -Order 65		1
1					x
1	6571744	BOB-TACH	For 1.25'(31,8 mm) or 1.50' (38,1 mm) dia. lift arm pin - W/Ref. BOB-TACH(7) - 2.50'(63,5 mm) O.D. weld on bushings - Also Or	5158 39917 & Bel	1
1				5162 23755 & Bel	1
1	6709215	BOB-TACH	For 1.50'(38,1 mm) dia. lift arm pin - W/Ref. BOB-TACH(5) & BOB-TACH(7) - 2.50' (63,5 mm) O.D. weld on bushings - Also Order 6	5158 39918 & Abv	1
1				5162 23756 & Abv	1
2	NAP	FRAME			1
3	6589665	BUSHING	press fit - 1.25'(31,8 mm) I.D. - straight O.D. -2'(50,8 mm) long - Was 6534387 [A]	5158 39917 & Bel	2
3				5162 23755 & Bel	1
4	6732446	BUSHING	press fit - 1.25'(31,8 mm) I.D. - stepped O.D.		2
4					x
5	6730997	BUSHING	press fit - 1.50'(38,1 mm) I.D. - straight O.D. - 1.26'(32 mm) long		2
5					x
6	NAP	BUSHING	weld-on -W/Ref. BOB-TACH(3) - for 1.25' (31,8 mm) dia. lift arm pin - 2.25' (57,15 mm) O.D. - Order 65774 46 Bushing & Ref. BOB		2
6	6577446	BUSHING	weld on - W/O Ref. BOB-TACH(3) - for 1.25' (31,8 mm) dia. lift arm pin - 2.25' (57,15 mm) O.D. - Also Order Ref. BOB-TACH(3)		2
6					x
7	6731979	BUSHING	weld on - W/O Ref. BOB-TACH(4) or BOB-TACH(5) - for 1.25'(31,8 mm) or 1.50'(38,1 mm) dia. lift arm pin - 2.50'(63,5 mm) O.D.		2
7					x
8	6728473	SCREW	shoulder - Was 6578166 [A]		2
9	6702904	LEVER	R.H. - Was 6578855 [A]		1
9	6702903	LEVER	L.H. - Was 6578855 [A]		1
10	6704453	SPRING	Used W/Ref. BOB-TACH(25) (17C-644 Bolt) - Was 6578252 [C]		2
10	6713040	SPRING	Used W/Ref. BOB-TACH(25) (17C-660 Bolt)		2
11	6557831	WASHER	Used W/Ref. BOB-TACH(25) (17C-644 Bolt)		2
11	619021	WASHER	Used W/Ref. BOB-TACH(25) (17C-660 Bolt)		2
12	85D-6	NUT			2
13	6704240	PIVOT ASSY	Was 6576456 [C]		2
14	6562018	SPRING	Was 6578253 [A]		2
15	6704248	PIVOT	wedge - Was 6576454 [A]		2
16	14J-5032	PIN			2
17	6704242	WEDGE ASSY.	Was 6702877 [A]		2
18	6702958	BUSHING	weld on		2
19	6704600	STOP	R.H. - Weld on - Shown - Was 6701451 [A]		1
19	6704601	STOP	L.H. - Weld on - Not shown - Was 6701468 [A]		1
20	6707514	SHIM	.060		2
20	6579106	SHIM	.125		2
21	6579104	SHIM	.25		2
22	9G-620	BOLT			4
23	6724775	LEVER KIT	R.H. - Bob-Tach - Ref. BOB-TACH(8)-BOB-TACH(17) & BOB-TACH(25)		1

BOB-TACH

Ref.N°	Part N°	Description	Remarks	Serial N°	Qty.
23	6724776	LEVER KIT	L.H. - Bob-Tach - Ref. BOB-TACH(8)-BOB-TACH(17) & BOB-TACH(25)		1
24	10H-35	GREASE ZERK			2
25	17C-644	BOLT	See Ref. BOB-TACH(10) & BOB-TACH(11) - 2.75" (69,9mm) long		2
25	17C-660	BOLT	See Ref. BOB-TACH(10) & BOB-TACH(11) - 3.75" (95,3mm) long		2
26	743332	GREASE ZERK			2

FUEL SYSTEM

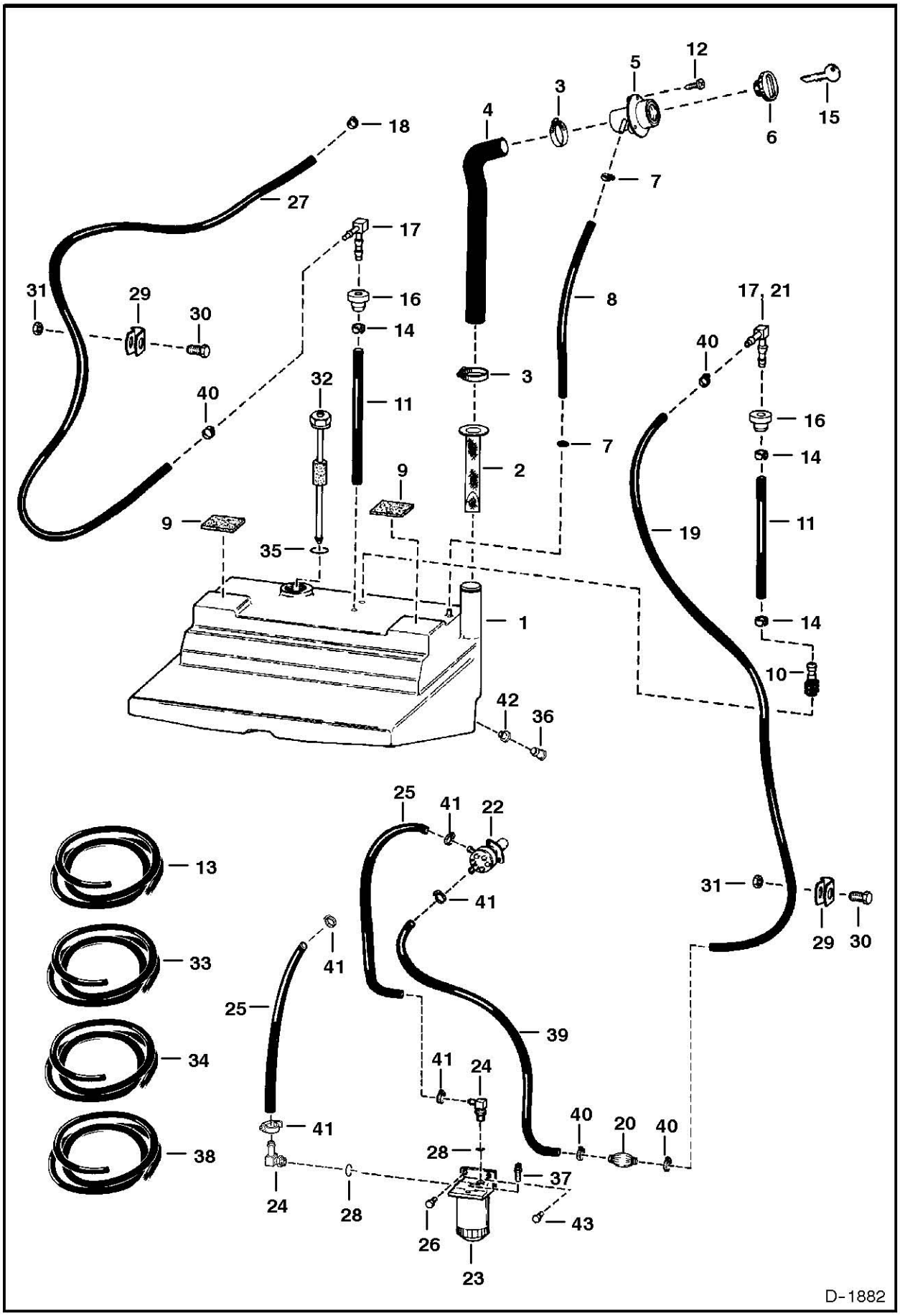
1
2
3
4
5
6
7
8
9
10
11
12
13
14
15
16
17
18
19
20
21
22
23
24
25
26
27
28
29
30
31
32
33
34
35
36
37
38
39
40
41
42
43
D-1882

FUEL SYSTEM

Ref.N°	Part N°	Description	Remarks	Serial N°	Qty.
1	6736659	TANK	Was 6717572 [A]		1
2	6569219	SCREEN			1
3	42H-32	CLAMP	worm gear		2
3	5HM-58	CLAMP	constant tension		2
4	6710653	HOSE			1
5	6701449	FILLER TUBE			1
6	6661114	CAP	green		1
6	NAP	CAP	locking -W/Ref. FUEL SYSTEM(15) Code GC020		1
6	6661696	FUEL CAP	locking - W/Ref. FUEL SYSTEM(15) Code PK510		1
7	42H-10	CLAMP	worm gear		2
7	5HM-24	CLAMP	constant tension		2
8	NAP	HOSE	21.5'' (546,1 mm) long - Order Ref. FUEL SYSTEM(13)		1
9	6578278	PAD	self adhesive one side		2
10	6650239	SCREEN		& Bel	1
11	NAP	HOSE	8.5'-9.5'(215,9 mm - 241,3 mm) long - Order 6729853inD1} Hose - Was 6576386 [B]	& Bel	2
11	NAP	HOSE	9.75'(247,7 mm) long - Was 6729853 [A]	-	2
11	6729853	HOSE	10.25'(260,4 mm) long	& Abv	2
12	6706517	SCREW			3
13	6578172	HOSE	bulk - Sold Per Foot		x
14	6661213	CLAMP			3
15	6654374	KEY	Code GC020		1
15	6587458	KEY SET	Code PK510		1
16	6553411	BUSHING	.5' I.D.		2
17	6681462	ELBOW	Was 6598908 [A]		2
18	42HS-4	CLAMP	Was 6515575 [B]		2
19	NAP	HOSE	35'' (889,0 mm) long - Order Ref. FUEL SYSTEM(33)		1
20	6657734	PUMP	hand primer		1
21	6661382	ELBOW		& Bel	1
22	6655216	FUEL PUMP	See Page INJECTION PUMP(1)		1
23	6667353	FILTER ASSY			1
23	6667352	FILTER			1
23	72F-1	DRAIN COCK			1
24	6715183	ELBOW	W/Ref. FUEL SYSTEM(28) - check boss face to determine correct replacement O-ring		2
25	NAP	HOSE	13''(330,2 mm)long-Order Ref. FUEL SYSTEM(34) - end of hose connects to Ref. INJECTION PUMP(12) See Page INJECTION PUMP(1)		2
26	17C-516	BOLT	Used when Ref. ENGINE & ATTACHING PARTS(35) See Page ENGINE & ATTACHING PARTS(1) has threaded thru holes	& Bel	2
26	84G-3112	BOLT		& Abv	1
26	17C-512	BOLT			2
27	NAP	HOSE	53''(1346, 2mm)long-Order Ref. FUEL SYSTEM(38)		1
28	99K-5	O-RING	tapered boss face		x
28	79K-5	O-RING	flat boss face		x
29	30H-35	CLIP			2
30	17C-612	BOLT			2
31	61D-6	NUT			1
32	6680438	SENSOR	fuel - W/Ref. FUEL SYSTEM(35) - See Page ENGINE ELECTRICAL CIRCUITRY(1) - Was 6674209 [A]		1
33	6577821	HOSE	bulk - Sold Per Foot		x

FUEL SYSTEM

Ref.N°	Part N°	Description	Remarks	Serial N°	Qty.
34	6577822	HOSE	bulk - Sold Per Foot		x
35	6717579	GASKET			1
36	6599645	PLUG	fuel drain - .5' O.D.		1
36	6717401	PLUG	fuel drain - .75' O.D.		1
37	6658180	PLUG	breather		1
38	6578169	HOSE	bulk - Sold Per Foot		x
39	NAP	HOSE	18'' (457,2 mm) - Order Ref. FUEL SYSTEM(33)		1
40	5HM-13	CLAMP			4
41	5HM-14	CLAMP			5
42	6717402	BUSHING	.75' I.D.		1
43	84G-3116	BOLT		& Abv	1

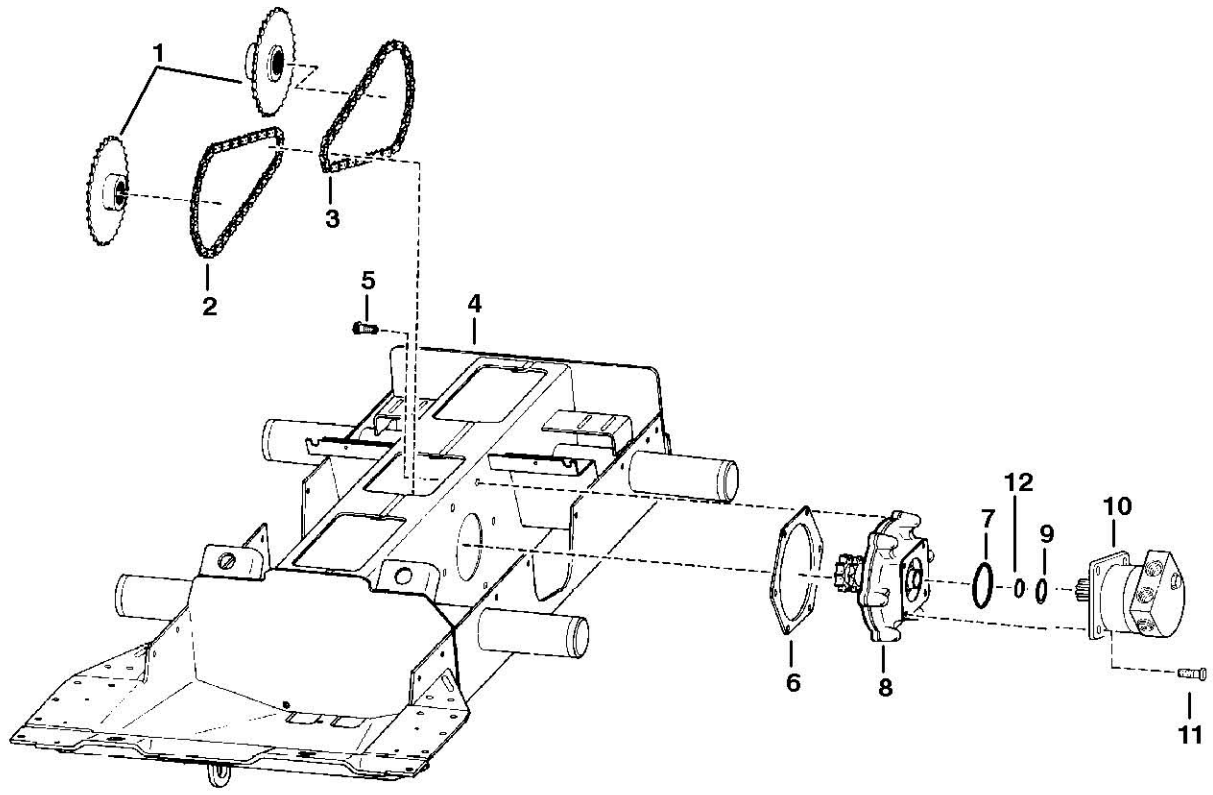

D-1886R

DRIVE TRAIN

Ref.N°	Part N°	Description	Remarks	Serial N°	Qty.
1	6577204	SPROCKET			4
2	6579126	CHAIN	58 pitch - hour glass shape link		2
2	6731219	CHAIN	58 pitch - oval shape link		2
3	6579127	CHAIN	62 pitch - hour glass shape link		2
3	6731218	CHAIN	62 pitch - oval shape link		2
3	6510171	LINK	conn. - hour glass shape		x
3	6675332	LINK	conn. - oval shape		x
4	6712827	CHAINCASE			1
5	35C-1032	BOLT			12
6	6704878	GASKET	install W/rib toward chaincase		2
7	25K-30508	O-RING			2
8		MOUNT ASSY.	drive motor-See Page MOTOR CARRIER(1)		2
9	25K-30202	O-RING	Supplied W/Motor		2
10		MOTOR	See Page HYDROSTATIC MOTOR(1) - W/Ref. DRIVE TRAIN(9)		2
11	93G-824	BOLT	Was 73G-824 [B]		8
12	6735505	SPACER	hardened .25' thick x 1.25' O.D.	5158 45767-	2
12				5162 26511-	2

MOTOR CARRIER
(Drive Motor Mount Assy.)

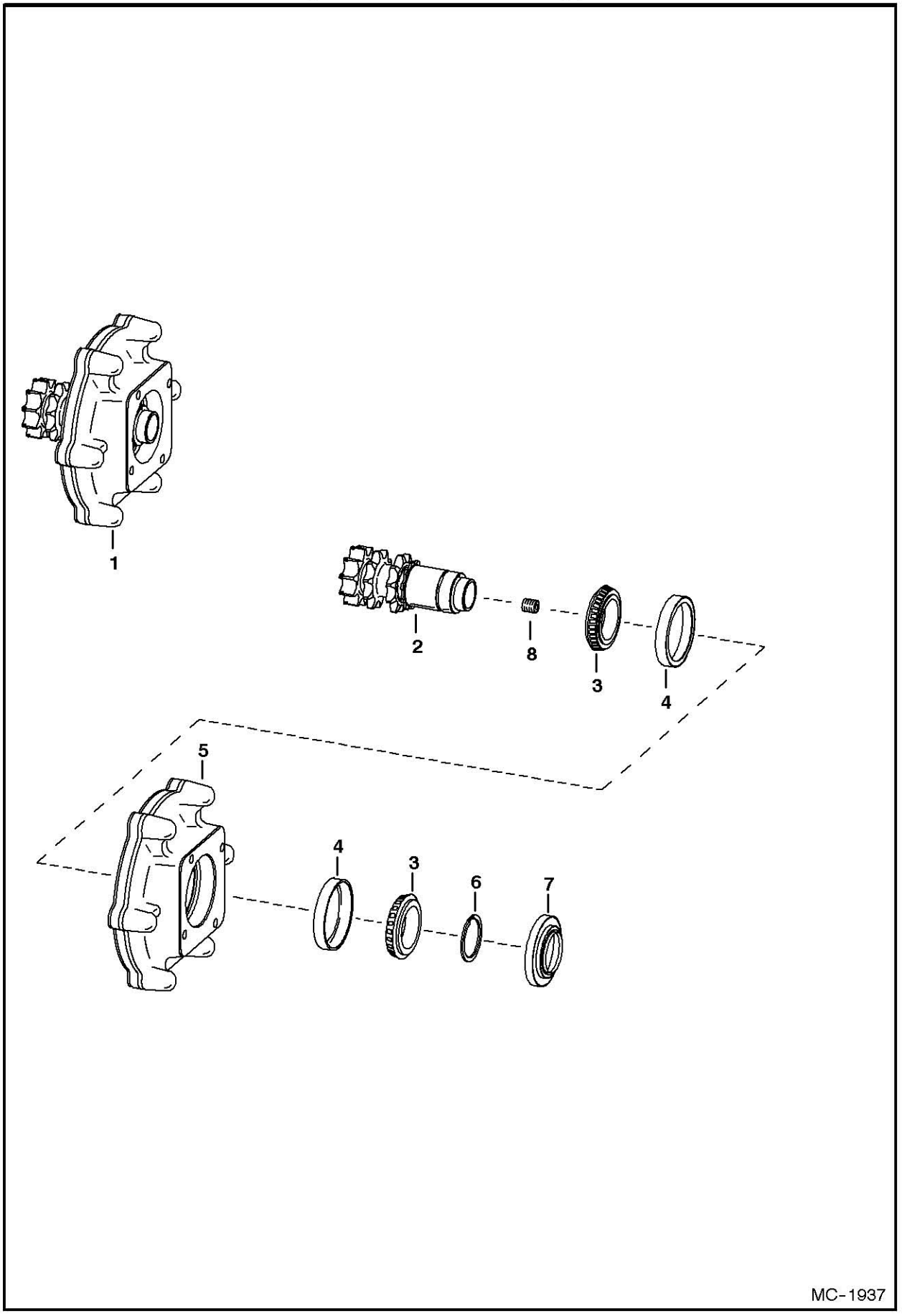

MOTOR CARRIER

Ref.N°	Part N°	Description	Remarks	Serial N°	Qty.
1	NAP	MOUNT ASSY.	drive motor - Ref. MOTOR CARRIER(2) - MOTOR CARRIER(8) - Order 6733695 Mount Assy. & 6733701 Cover - Was 6712402 [A]		1
2	6713456	SHAFT	W/double snap ring groove		1
3	6632218	BEARING			2
4	6632541	RACE			2
5	6704492	HOUSING			1
6	6571851	SNAP RING	.118' (3,0 mm) thickness		1
6	6571852	SNAP RING	.125' (3,2 mm) thickness		1
7	6705847	SEAL			1
8	NSS	PLUG	Was 16F-6 [B]		1

* MOTOR CARRIER
(Drive Motor Mount Assy.)

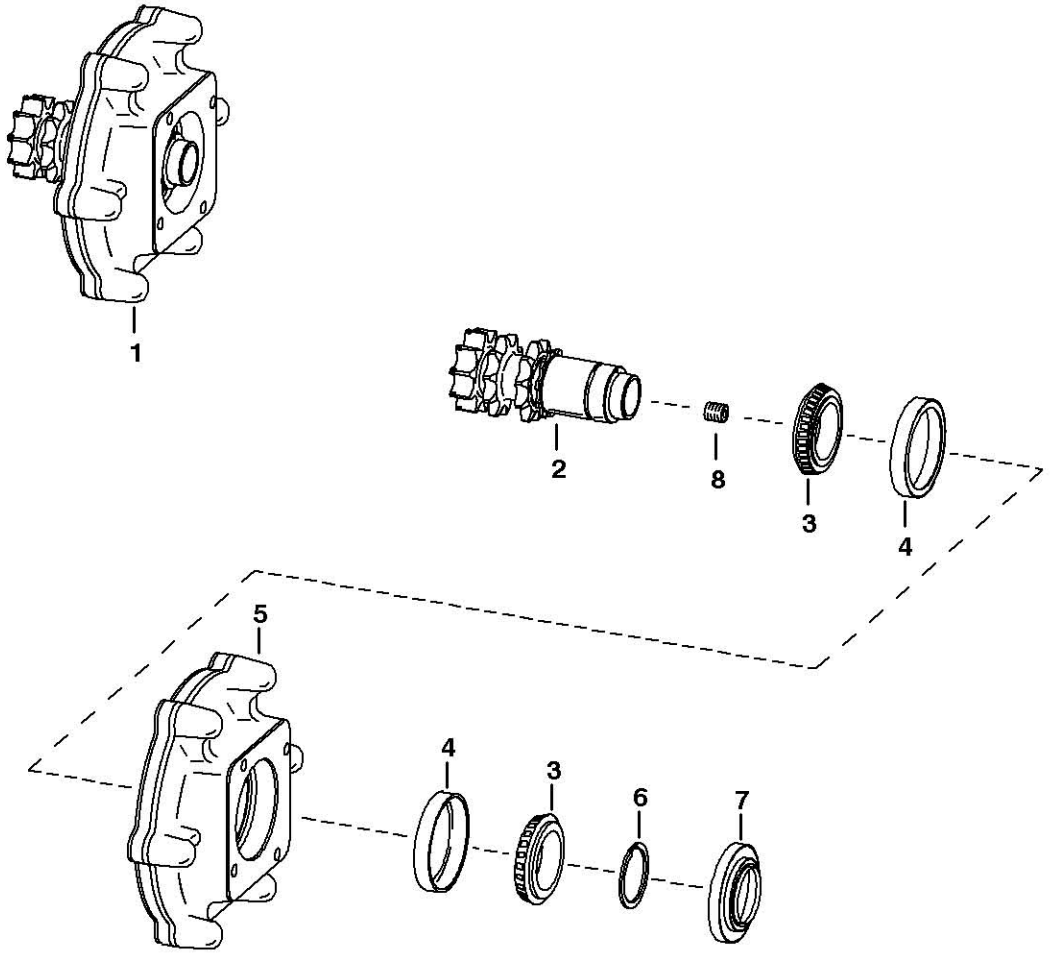

MC-1937A

* MOTOR CARRIER

Ref.N°	Part N°	Description	Remarks	Serial N°	Qty.
1	6733695	MOUNT ASSY.	drive motor - Ref. * MOTOR CARRIER(2) - * MOTOR CARRIER(8)		1
2	6733621	SHAFT	W/double snap ring groove		1
3	6632218	BEARING			2
4	6632541	RACE			2
5	6733694	HOUSING			1
6	6571851	SNAP RING	.118' (3,0 mm) thickness		1
6	6571852	SNAP RING	.125' (3,2 mm) thickness		1
7	6705847	SEAL			1
8	NSS	PLUG	Was 16F-6 [B]		1

DISC BRAKE

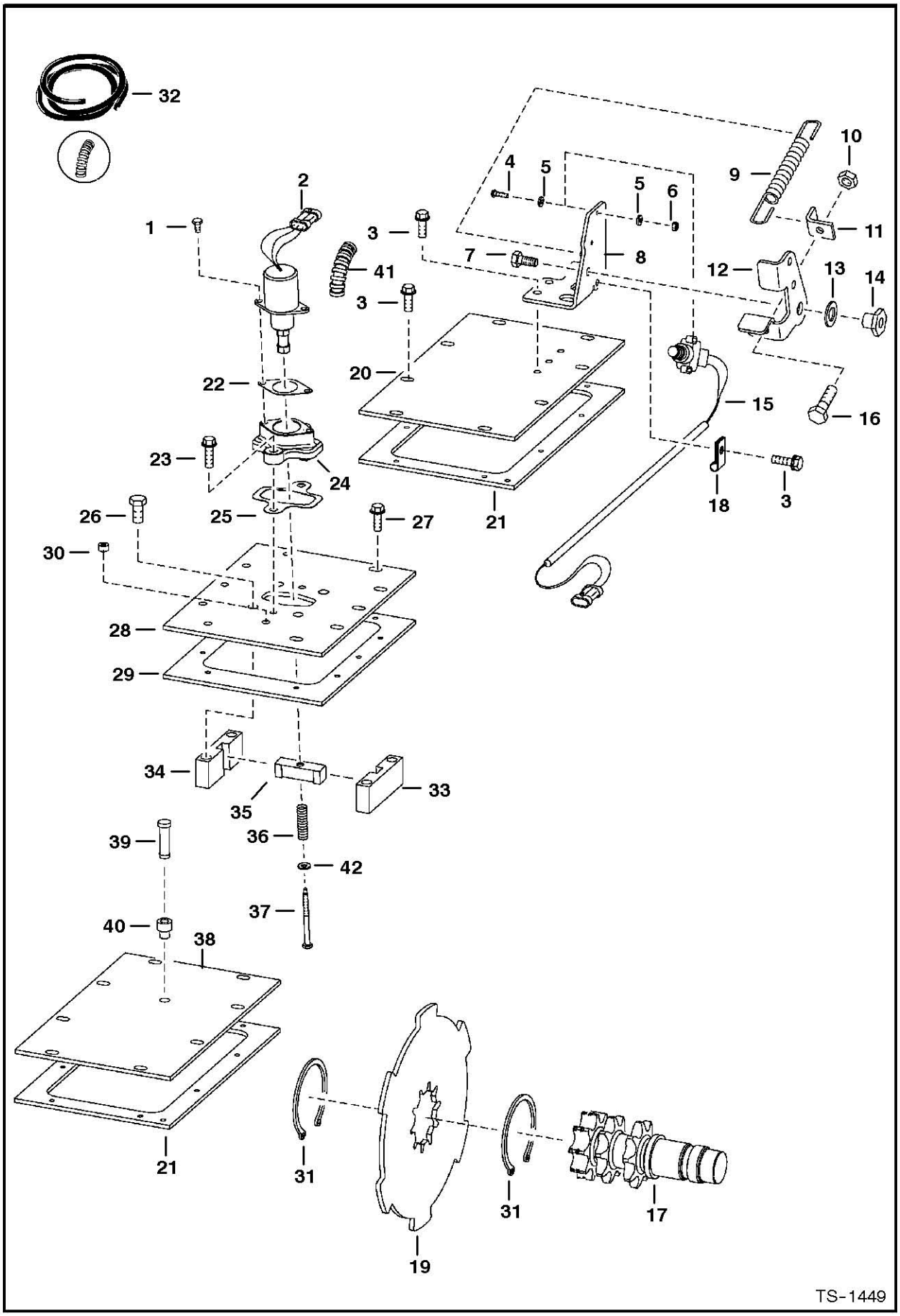
32
2
1
3
41
3
22
20
23
24
25
26
27
30
28
29
34
35
33
39
36
42
37
40
38
21
31
19
31
17
4
5
5
6
9
10
11
12
13
14
7
8
15
16
18
3
21
TS-1449

DISC BRAKE

Ref.N°	Part N°	Description	Remarks	Serial N°	Qty.
1	17C-412	BOLT			2
2	6681512	SOLENOID	W/Ref. DISC BRAKE(41) - Was 6667992 [A]		1
3	84G-3712	BOLT			18
4	23G-812	SCREW			2
5	25E-8	WASHER			4
6	12D-8	NUT			2
7	17C-610	BOLT			5
8	6707313	PEDAL MOUNT			1
9	6585860	SPRING			1
10	95D-6	NUT			2
11	6707315	ANGLE			1
12	6707314	PEDAL	brake		1
13	6700170	WASHER	plastic		2
14	6559479	NUT			1
15	6707337	SWITCH			1
16	17C-620	BOLT			2
17	6713456	SHAFT	See Page MOTOR CARRIER(1)		2
18	30H-23	CLAMP			1
19	6716228	BRAKE	disc		2
20	6578505	COVER			1
21	6703097	GASKET			2
22	6706737	GASKET			1
23	84G-3720	BOLT			2
24	6706718	MOUNT			1
25	6708016	GASKET			1
26	17C-820	BOLT			4
26	47C-820	BOLT			4
27	84G-3716	BOLT			10
28	6706042	COVER			1
29	6706968	GASKET			1
30	6544654	BUSHING	spacer		1
31	6658672	SNAP RING			4
32	6584978	CONDUIT	bulk - Sold Per Foot		x
33	6719057	BLOCK	guide - R.H.		1
34	6719056	BLOCK	guide - L.H.		1
35	6714278	WEDGE			1
36	6708018	SPRING			1
37	6708267	BOLT			1
38	6700330	COVER			1
39	6680970	BREATHER	See Page MAIN FRAME(1) - Was 6670627 [A]		1
40	6553411	BUSHING			1
41	NAP	CONDUIT	5'(127 mm) long - Order Ref. DISC BRAKE(32)		1
42	25E-13	WASHER			1

DISC BRAKE

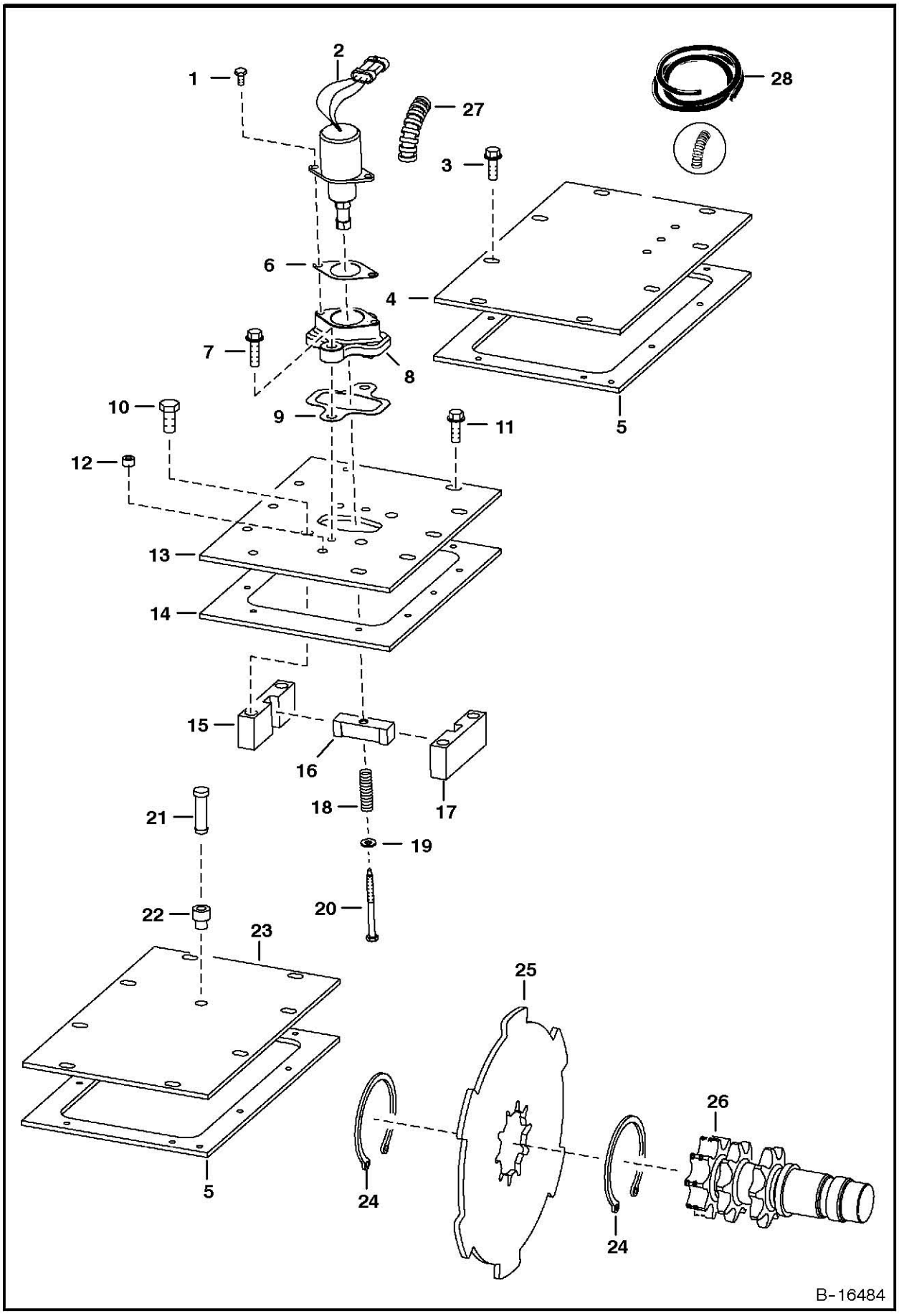
1
2
3
4
5
6
7
8
9
10
11
12
13
14
15
16
17
18
19
20
21
22
23
24
25
26
27
28
B-16484

DISC BRAKE

Ref.N°	Part N°	Description	Remarks	Serial N°	Qty.
1	17C-412	BOLT			2
2	6681512	SOLENOID	Was 6667992 [A]		1
3	84G-3712	BOLT			14
4	6729173	COVER			1
5	6703097	GASKET			2
6	6706737	GASKET			1
7	84G-3720	BOLT			2
8	6706718	MOUNT			1
9	6708016	GASKET			1
10	17C-820	BOLT			4
10	47C-820	BOLT			4
11	84G-3716	BOLT			10
12	6544654	BUSHING	spacer		1
13	6706042	COVER			1
14	6706968	GASKET			1
15	6719057	BLOCK	guide - L.H.		1
16	6714278	WEDGE			1
17	6719056	BLOCK	guide - R.H.		1
18	6708018	SPRING			1
19	25E-13	WASHER			1
20	6708267	BOLT			1
21	6680970	BREATHER	Was 6670627 [A]		1
22	6553411	BUSHING			1
23	6700330	COVER			1
24	6658672	SNAP RING			4
25	6716228	BRAKE	disc		2
26	6713456	SHAFT	double snap ring groove - See Page MOTOR CARRIE R(1)		2
27	NAP	CONDUIT	5' (127 mm) long - Order Ref. DISC BRAKE(28)		1
28	6584978	CONDUIT	bulk - Sold Per Foot		x

AXLE

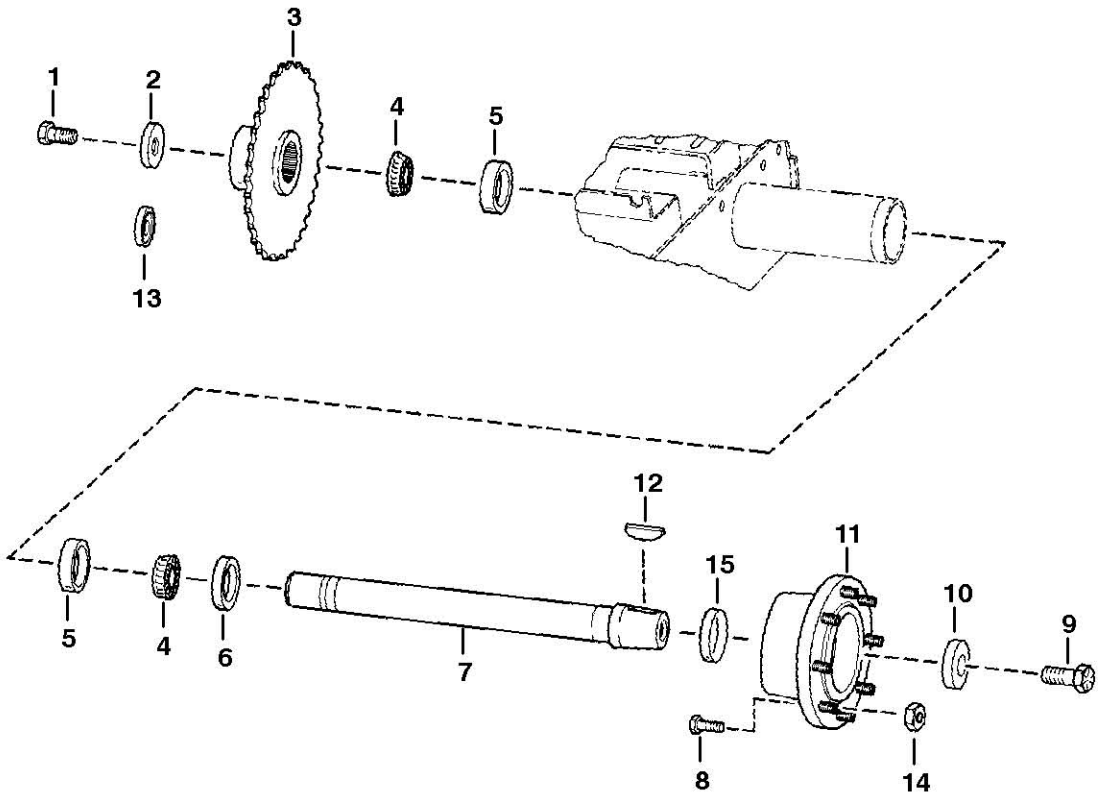

C-3270

AXLE

Ref.N°	Part N°	Description	Remarks	Serial N°	Qty.
1	18C-1224	BOLT	1.50'(38,1 mm) long	& Bel	1
1	6679247	BOLT	1.75'(44,5 mm) long & plated	& Abv	1
2	6552871	WASHER			1
3	6577204	SPROCKET			1
4	6519925	BEARING	Was 6669050 [A]		2
5	6634609	RACE			2
6	6658228	SEAL			1
7	NAP	AXLE	W/.75' dia. x 1.25'(31,8 mm) deep full threaded end - Use W/Ref. AXLE(1) (18C-1224 Bolt) - Was 6569465 [A]		1
7	6569465	AXLE	W/.75' dia. x 1.50'(38,1 mm) deep full threaded end - Use W/Ref. AXLE(1) (6679247 Bolt)		1
8	6709170	STUD	wheel		8
9	18C-1636	BOLT			1
10	6716843	WASHER	recessed		1
11	6578689	HUB			1
12	6J-1664	KEY			1
13	6563606	WASHER	recessed - Used to take up .005 or .010 end play on axle		1
14	6564669	NUT	wheel		8
15	6662306	RING	wear - service part only		1
15	6722907	KIT	axle seal & wear sleeve - See Page AXLE SEAL KIT(1)		4

HYDRAULIC CIRCUITRY
(W/O Bucket Positioning Valve)

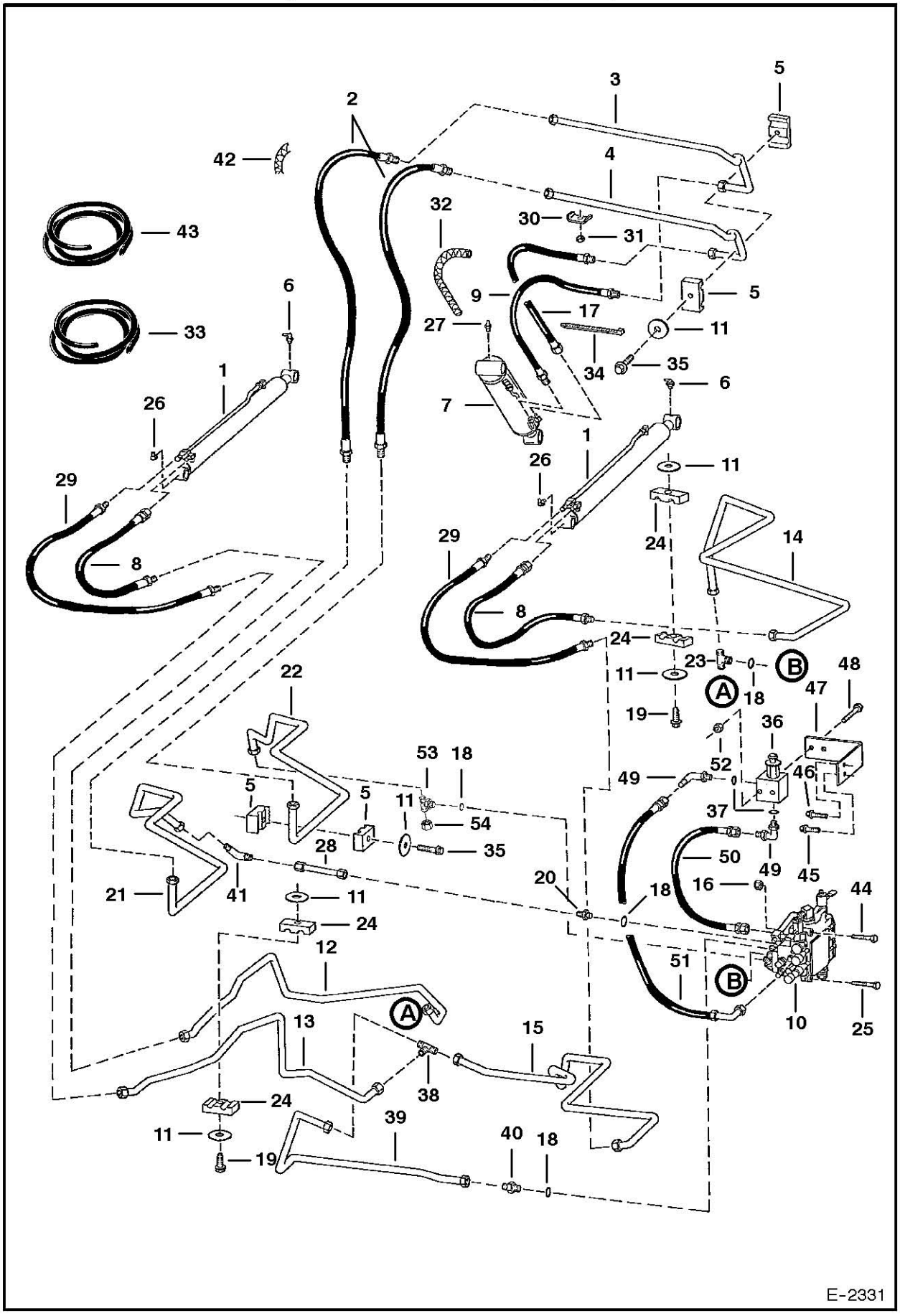

HYDRAULIC CIRCUITRY

Ref.N°	Part N°	Description	Remarks	Serial N°	Qty.
1		CYLINDER	lift - See Page LIFT CYLINDER(1)		2
2	6577669	HOSE			2
3	6727840	TUBE	Was 6703608 [A]		1
4	6727841	TUBE	Was 6703609 [A]		1
5	6701893	CLAMP			4
6	12H-15	GREASE ZERK			2
7		CYLINDER	tilt - See Page TILT CYLINDER(1)		1
8	6577671	HOSE	.75' O.D. - .75' ends	& Bel	2
8	6730972	HOSE	.75' O.D. - .5625' ends	-	2
9	6704335	HOSE			1
10		VALVE	See Page HYDRAULIC CONTROL VALVE(1)		1
11	872229	WASHER			8
12	6718492	TUBE			1
13	6718491	TUBE			1
14	6710581	TUBE			1
15	6710578	TUBE			1
16	85D-5	NUT			3
17	6704336	HOSE			1
18	99K-10	O-RING	tapered boss face		4
18	79K-10	O-RING	flat boss face		4
19	84G-3732	BOLT			2
20	NAP	ADAPTER	W/Ref. HYDRAULIC CIRCUITRY(18) - tapered boss face		2
20	97K-10	O-RING	flared end		2
20	15KB-1010	ADAPTER	W/Ref. HYDRAULIC CIRCUITRY(18) - flat boss face		2
21	6710577	TUBE			1
22	6710576	TUBE			1
23	6711651	TEE	W/Ref. HYDRAULIC CIRCUITRY(18)		1
24	6701892	CLAMP			4
25	17C-532	BOLT			2
26	11H-15	GREASE ZERK			2
27	10H-25	GREASE ZERK			1
28	6710573	TUBE			1
29	6718954	HOSE	.75' ends - Was 6578808 [A]	& Bel	2
29	6730971	HOSE	.5625' ends	-	2
30	6502203	CLAMP			2
31	59D-6	NUT			2
32	NAP	COVER	18' (457,2 mm) - Order Ref. HYDRAULIC CIRCUITRY (33)		2
33	6656155	COVER	bulk - Sold Per Foot		x
34	6610510	NYLON TIE			4
35	84G-3724	BOLT			1
36		VALVE	lift lock - See Page MANUAL LIFT RELEASE VALVE(1)		1
37	99K-6	O-RING	tapered boss face		x
37	79K-6	O-RING	flat boss face		4
38	NAP	TEE	tapered boss face - Was 10KN-6 [A]		1
38	97K-8	O-RING	flared end		3
38	10K-6	TEE	flat boss face		1
39	6718099	TUBE			1
40	6715184	ADAPTER	W/Ref. HYDRAULIC CIRCUITRY(18)		1

HYDRAULIC CIRCUITRY

Ref.N°	Part N°	Description	Remarks	Serial N°	Qty.
40	97K-8	O-RING	flared end		1
41	NAP	ELBOW	tapered boss face - Was 77FN-7 [A]		1
41	97K-10	O-RING	flared end		1
41	77F-7	ELBOW	flat boss face		1
42	NAP	COVER	36'(914,4 mm) - Order Ref. HYDRAULIC CIRCUITRY(43)		1
43	6705749	COVER	bulk-Sold Per Foot		x
44	17C-540	BOLT			2
45	84G-3716	BOLT			1
46	84G-3712	BOLT			1
47	6711280	MOUNT			1
48	17C-428	BOLT			2
49	NAP	ELBOW	W/Ref. HYDRAULIC CIRCUITRY(37) - tapered boss face - Was 17KV-5 [A]		1
49	97K-6	O-RING	flared end		1
49	17KB-606	ELBOW	W/Ref. HYDRAULIC CIRCUITRY(37) - flat boss face		1
50	6535451	HOSE			1
51	6578804	HOSE			1
52	83D-4	NUT			2
53	NAP	TEE	W/Ref. HYDRAULIC CIRCUITRY(18) - tapered boss face - Was 19KN-7 [A]		1
53	97K-10	O-RING	flared end		1
53	19KB-1010	TEE	W/Ref. HYDRAULIC CIRCUITRY(18) - flat boss face		1
54	36K-7	CAP			1

HYDRAULIC CIRCUITRY
(W/O Bucket Positioning Valve)

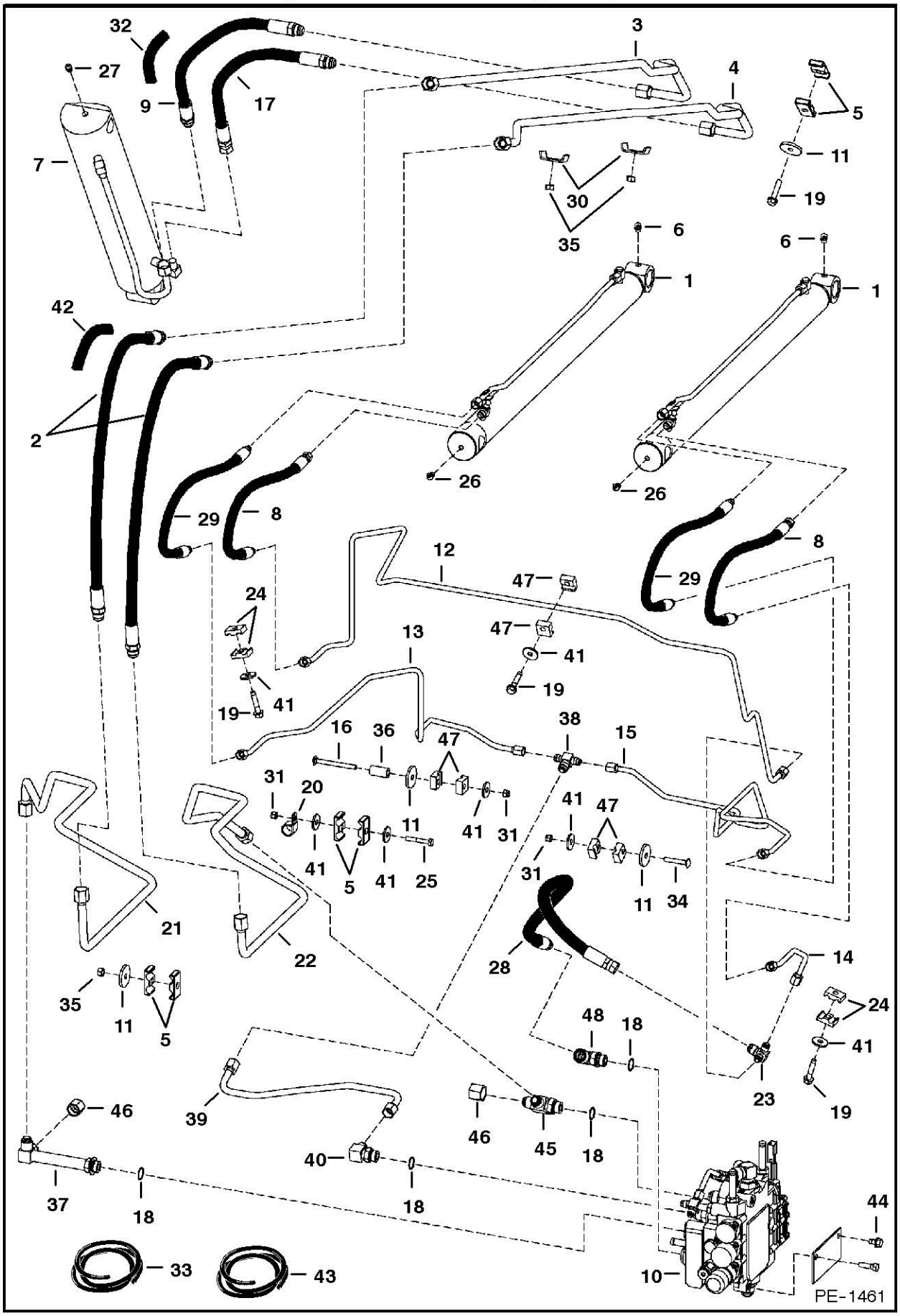

HYDRAULIC CIRCUITRY

Ref.N°	Part N°	Description	Remarks	Serial N°	Qty.
1		CYLINDER	lift - See Page LIFT CYLINDER(1)		2
2	6577669	HOSE			2
3	6727840	TUBE		5158 40212-44249	1
3				5162 23852-26049	1
3	6733356	TUBE		5158 44250 & Abv	1
3				5162 26050 & Abv	1
4	6727841	TUBE		5158 40212-44249	1
4				5162 23852-26049	1
4	6733357	TUBE		5158 44250 & Abv	1
4				5162 26050 & Abv	1
5	6701893	CLAMP			6
6	12H-15	GREASE ZERK			2
7		CYLINDER	tilt - See Page TILT CYLINDER(1)		1
8	6727686	HOSE			2
9	6704335	HOSE			1
10		VALVE	See Page HYDRAULIC CONTROL VALVE(1)		1
11	872229	WASHER			3
12	6727635	TUBE			1
13	6727634	TUBE			1
14	6727633	TUBE			1
15	6733271	TUBE	Was 6727632 [A]		1
16	37C-556	BOLT			1
17	6704336	HOSE			1
18	99K-10	O-RING	tapered boss face		4
18	79K-10	O-RING	flat boss face		4
19	84G-3728	BOLT			3
20	30H-46	CLAMP			1
21	6727636	TUBE		5158 40212-44249	1
21				5162 23852-26049	1
21	6734377	TUBE		5158 44250 & Abv	1
21				5162 26050 & Abv	1
22	6729902	TUBE		5158 40212-44249	1
22				5162 23852-26049	1
22	6734376	TUBE		5158 44250 & Abv	1
22				5162 26050 & Abv	1
23	6729903	TEE	W/Ref. HYDRAULIC CIRCUITRY(18)		1
23	97K-10	O-RING	flared end		3
24	6726277	CLAMP			4
25	17C-532	BOLT			1
26	11H-15	GREASE ZERK			2
27	10H-25	GREASE ZERK			1
28	6729905	HOSE			1
29	6727687	HOSE			2
30	6502203	CLAMP			2
31	59D-5	NUT			3
32	NAP	COVER	18' (457,2 mm) - Order Ref. HYDRAULIC CIRCUITRY (33)		2
33	6656155	COVER	bulk - Sold Per Foot		x
34	37C-532	BOLT			1
35	95D-6	NUT			2

HYDRAULIC CIRCUITRY

Ref.N°	Part N°	Description	Remarks	Serial N°	Qty.
36	6714428	SPACER			1
37	6730142	TEE	W/Ref. HYDRAULIC CIRCUITRY(18)		1
38	6727659	TEE			1
39	6727630	TUBE			1
40	NAP	ELBOW	W/Ref. HYDRAULIC CIRCUITRY(18) - tapered boss face - Was 6715716 [A]		1
40	97K-8	O-RING	flared end		1
40	17KB-810	ELBOW	W/Ref. HYDRAULIC CIRCUITRY(18) - flat boss face		1
41	619021	WASHER			7
42	NAP	COVER	36'(914,4 mm) - Order Ref. HYDRAULIC CIRCUITRY(43)		1
43	6705749	COVER	bulk-Sold Per Foot		x
44	17C-620	BOLT			2
45	NAP	TEE	W/Ref. HYDRAULIC CIRCUITRY(18) - tapered boss face - Was 21KN-7 [A]		1
45	97K-10	O-RING	flared end		1
45	21KB-1010	TEE	W/Ref. HYDRAULIC CIRCUITRY(18) - flat boss face		1
46	36K-7	CAP			2
47	6727707	CLAMP			6
48	NAP	ELBOW	W/Ref. HYDRAULIC CIRCUITRY(18) - W/1.0' Nut - tapered boss face - Was 6727639 [A]		1
48	6814531	ELBOW	W/Ref. HYDRAULIC CIRCUITRY(18) - W/1.0625' Nut - flat boss face		1

HYDRAULIC CIRCUITRY
(W/Bucket Positioning Valve)

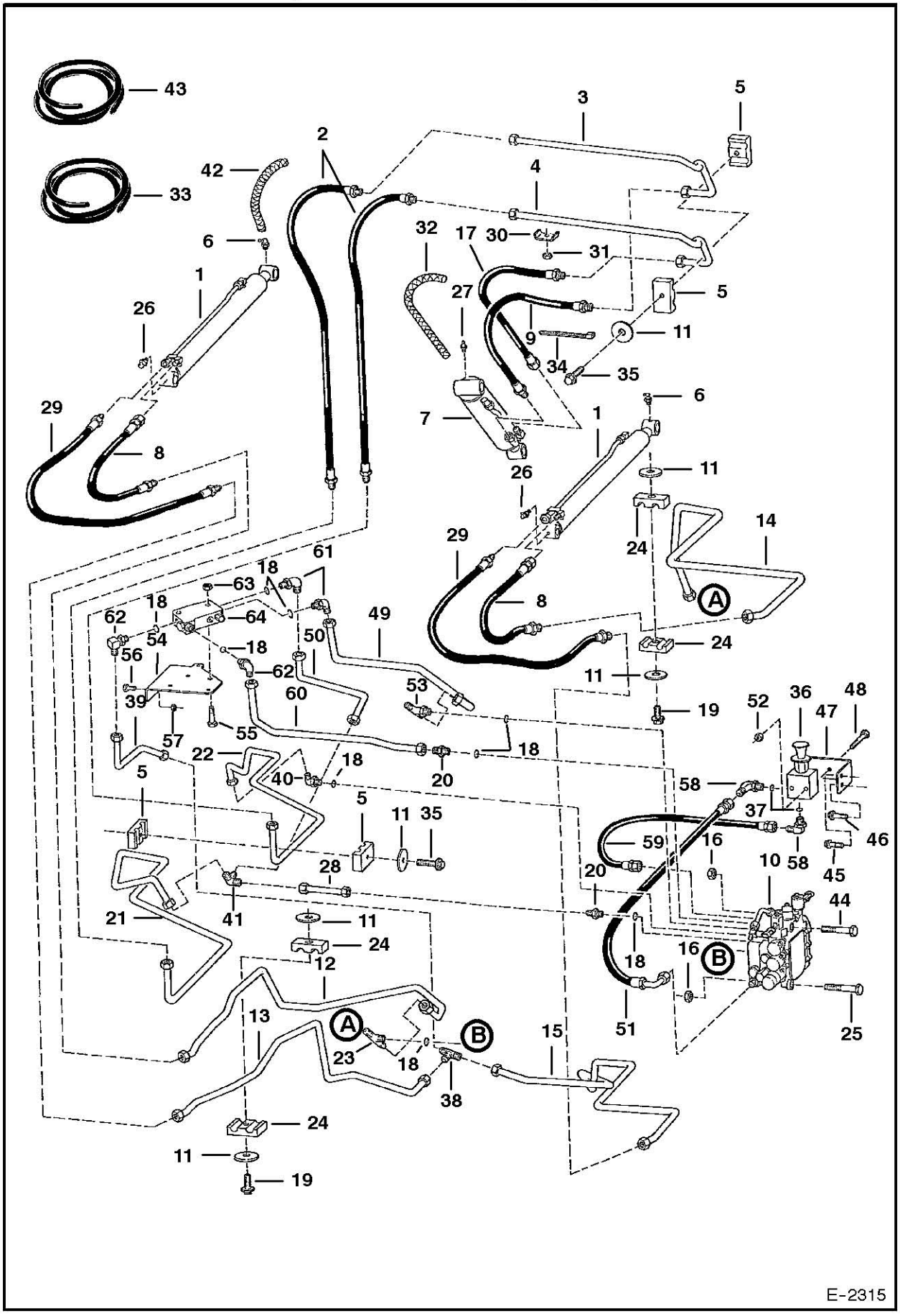

HYDRAULIC CIRCUITRY

Ref.N°	Part N°	Description	Remarks	Serial N°	Qty.
1		CYLINDER	lift - See Page LIFT CYLINDER(1)		2
2	6577669	HOSE			2
3	6727840	TUBE	Was 6703608 [A]		1
4	6727841	TUBE	Was 6703609 [A]		1
5	6701893	CLAMP			4
6	12H-15	GREASE ZERK			2
7		CYLINDER	tilt - See Page TILT CYLINDER(1)		1
8	6577671	HOSE		& Bel	2
8	6730972	HOSE		-	2
9	6704335	HOSE			1
10		VALVE	See Page HYDRAULIC CONTROL VALVE(1)		1
11	872229	WASHER			8
12	6718492	TUBE			1
13	6718491	TUBE			1
14	6710581	TUBE			1
15	6710578	TUBE			1
16	85D-5	NUT			3
17	6704336	HOSE			1
18	99K-10	O-RING	tapered boss face		4
18	79K-10	O-RING	flat boss face		4
19	84G-3732	BOLT			2
20	NAP	ADAPTER	W/Ref. HYDRAULIC CIRCUITRY(18) - tapered boss face - Was 15KV-7 [A]		2
20	97K-10	O-RING	flared end		2
20	15KB-1010	ADAPTER	W/Ref. HYDRAULIC CIRCUITRY(18) - flat boss face		2
21	6710577	TUBE			1
22	6710576	TUBE			1
23	6715656	TEE	W/Ref. HYDRAULIC CIRCUITRY(18)	& Bel	1
23	97K-10	O-RING	flared end		1
23	6727639	ELBOW	W/Ref. HYDRAULIC CIRCUITRY(18)	-	1
24	6701892	CLAMP			4
25	17C-532	BOLT			2
26	11H-15	GREASE ZERK			2
27	10H-25	GREASE ZERK			1
28	6710573	TUBE			1
29	6718954	HOSE	Was 6578808 [A]	& Bel	2
29	6730971	HOSE		-	2
30	6502203	CLAMP			2
31	59D-6	NUT			2
32	NAP	COVER	18' (457,2 mm) - Order Ref. HYDRAULIC CIRCUITRY (33)		2
33	6656155	COVER	bulk-Sold Per Foot		x
34	6610510	NYLON TIE			4
35	84G-3724	BOLT			1
36		VALVE	Manual lift release - See Page MANUAL LIFT RELEA SE VALVE(1)		1
37	99K-6	O-RING	tapered boss face		x
37	79K-6	O-RING	flat boss face		4
38	NAP	TEE	tapered boss face - Was 10KN-6 [A]		1
38	97K-8	O-RING	flared end		3
38	10K-6	TEE	flat boss face		1

HYDRAULIC CIRCUITRY

Ref.N°	Part N°	Description	Remarks	Serial N°	Qty.
39	6705068	TUBE			1
40	6715184	ADAPTER	W/Ref. HYDRAULIC CIRCUITRY(18)		1
40	97K-8	O-RING	flared end		1
41	6705070	TEE			1
42	NAP	COVER	36'(914,4 mm) - Order Ref. HYDRAULIC CIRCUITRY(43)		1
43	6705749	COVER	bulk-Sold Per Foot		x
44	17C-540	BOLT			2
45	84G-3716	BOLT			1
46	84G-3712	BOLT			1
47	6711280	MOUNT			1
48	17C-428	BOLT			2
49	6710583	TUBE			1
50	6704839	TUBE			1
51	6578804	HOSE			1
52	83D-4	NUT			1
53	NAP	TEE	W/Ref. HYDRAULIC CIRCUITRY(18) - tapered boss face - Was 19KN-7 [A]		1
53	97K-10	O-RING	flared end		1
53	19KB-1010	TEE	W/Ref. HYDRAULIC CIRCUITRY(18) - flat boss face		1
54	6704833	BRACKET			1
55	35C-536	BOLT			2
56	35C-412	BOLT			2
57	57D-4	NUT			2
58	NAP	ELBOW	W/Ref. HYDRAULIC CIRCUITRY(37) - tapered boss face - Was 17KV-5 [A]		1
58	97K-6	O-RING	flared end		1
58	17KB-606	ELBOW	W/Ref. HYDRAULIC CIRCUITRY(37) - flat boss face		1
59	6535451	HOSE			1
60	6710584	TUBE			1
61	NAP	ELBOW	W/Ref. HYDRAULIC CIRCUITRY(18) - tapered boss face - Was 17KV-7 [A]		2
61	97K-10	O-RING	flared end		2
61	17KB-1010	ELBOW	W/Ref. HYDRAULIC CIRCUITRY(18) - flat boss face		2
62	NAP	ELBOW	W/Ref. HYDRAULIC CIRCUITRY(18) - tapered boss face - Was 6715716 [A]		1
62	97K-8	O-RING	flared end		1
62	17KB-810	ELBOW	W/Ref. HYDRAULIC CIRCUITRY(18) - flat boss face		2
63	57D-5	NUT			2
64	6666341	VALVE	bucket pos. - See Page BUCKET POSITIONING VALVE(1)		1

HYDRAULIC CIRCUITRY
(W/Bucket Positioning Valve)

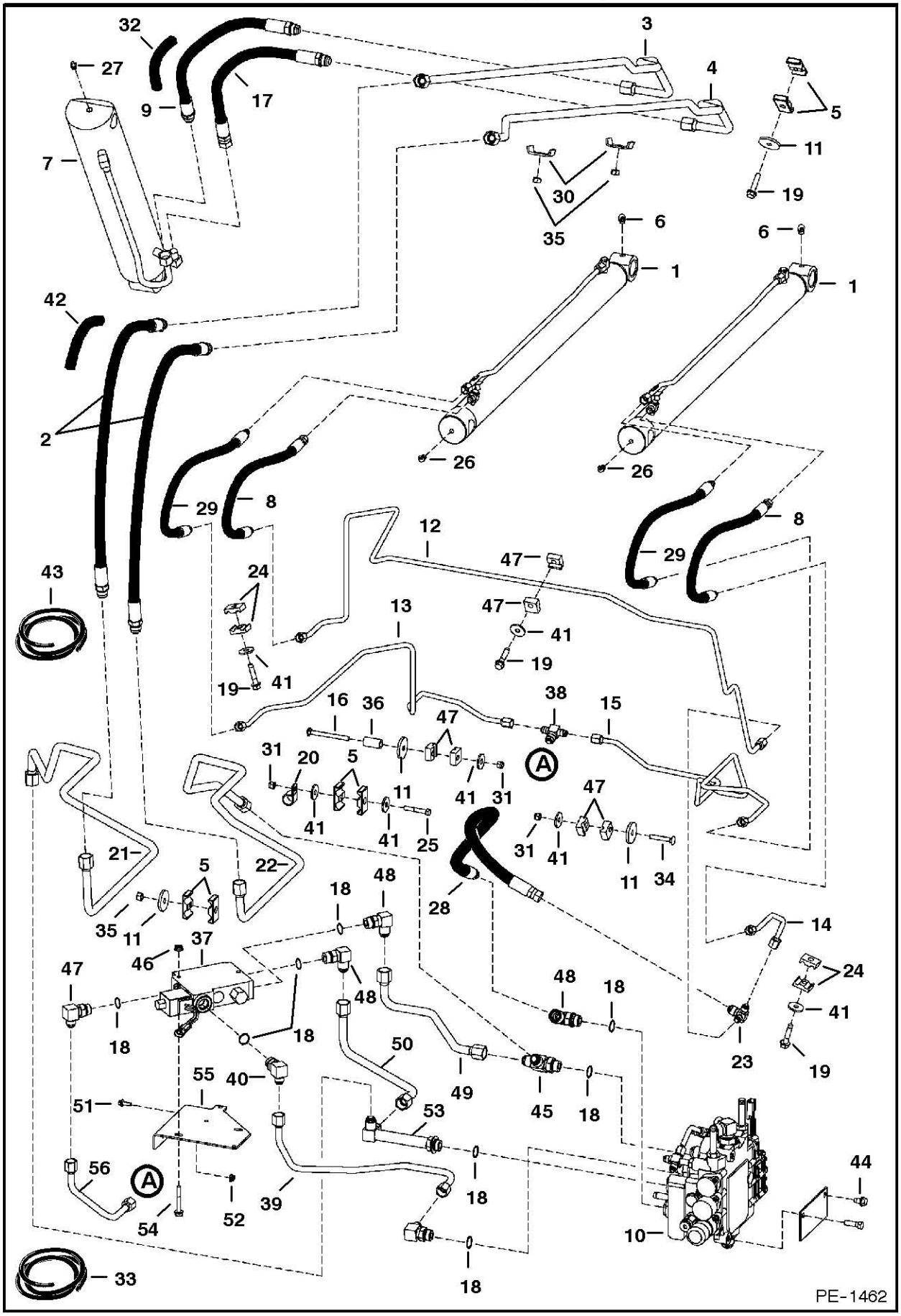

HYDRAULIC CIRCUITRY

Ref.N°	Part N°	Description	Remarks	Serial N°	Qty.
1		CYLINDER	lift - See Page LIFT CYLINDER(1)		2
2	6577669	HOSE			2
3	6727840	TUBE	Was 6703608 [A]	5158 40212-44249	1
3				5162 23852-26049	1
3	6733356	TUBE		5158 44250 & Abv	1
3				5162 23852-26049	1
4	6727841	TUBE	Was 6703609 [A]	5158 40212-44249	1
4				5162 23852-26049	1
4	6733357	TUBE		5158 44250 & Abv	1
4				5162 26050 & Abv	1
5	6701893	CLAMP			6
6	12H-15	GREASE ZERK			2
7		CYLINDER	tilt - See Page TILT CYLINDER(1)		1
8	6727686	HOSE			2
9	6704335	HOSE			1
10		VALVE	See Page HYDRAULIC CONTROL VALVE(1)		1
11	872229	WASHER			3
12	6727635	TUBE			1
13	6727634	TUBE			1
14	6727633	TUBE			1
15	6733271	TUBE	Was 6727632 [A]		1
16	37C-556	BOLT			1
17	6704336	HOSE			1
18	99K-10	O-RING	tapered boss face		4
18	79K-10	O-RING	flat boss face		4
19	84G-3728	BOLT			3
20	30H-46	CLAMP			1
21	6727636	TUBE		5158 40212-44249	1
21				5162 23852-26049	1
21	6734377	TUBE		5158 44250 & Abv	1
21				5162 23852-26049	1
22	6729902	TUBE		5158 40212-44249	1
22				5162 23852-26049	1
22	6734376	TUBE		5158 44250 & Abv	1
22				5162 23852-26049	1
23	6729903	TEE	W/Ref. HYDRAULIC CIRCUITRY(18)		1
23	97K-10	O-RING	flared end		3
24	6726277	CLAMP			4
25	17C-532	BOLT			1
26	11H-15	GREASE ZERK			2
27	10H-25	GREASE ZERK			1
28	6729905	HOSE			1
29	6727687	HOSE			2
30	6502203	CLAMP			2
31	59D-5	NUT			3
32	NAP	COVER	18' (457,2 mm) - Order Ref. HYDRAULIC CIRCUITRY (33)		2
33	6656155	COVER	bulk - Sold Per Foot		x
34	37C-532	BOLT			1
35	95D-6	NUT			2

HYDRAULIC CIRCUITRY

Ref.N°	Part N°	Description	Remarks	Serial N°	Qty.
36	6714428	SPACER			1
37	6666341	VALVE	bucket pos. - See Page BUCKET POSITIONING VALVE(1)		1
38	6727659	TEE			1
38	97K-8	O-RING	flared end		1
39	6727628	TUBE			1
40	NAP	ELBOW	W/Ref. HYDRAULIC CIRCUITRY(18) - tapered boss face - Was 6715716 [A]		1
40	97K-8	O-RING	flared end		1
40	17KB-810	ELBOW	W/Ref. HYDRAULIC CIRCUITRY(18) - flat boss face		1
41	619021	WASHER			7
42	NAP	COVER	36'(914,4 mm) - Order Ref. HYDRAULIC CIRCUITRY(43)		1
43	6705749	COVER	bulk-Sold Per Foot		x
44	17C-620	BOLT			2
45	NAP	TEE	W/Ref. HYDRAULIC CIRCUITRY(18) - tapered boss face - Was 21KN-7 [A]		1
45	97K-10	O-RING	flared end		1
45	21KB-1010	TEE	W/Ref. HYDRAULIC CIRCUITRY(18) - flat boss face		1
46	57D-5	NUT			2
47	6727707	CLAMP			6
48	NAP	ELBOW	W/Ref. HYDRAULIC CIRCUITRY(18) - tapered boss face - Was 17KV-7 [A]		3
48	97K-10	O-RING	flared end		3
48	17KB-1010	ELBOW	W/Ref. HYDRAULIC CIRCUITRY(18) - flat boss face		3
49	6727629	TUBE			1
50	6727626	TUBE			1
51	35C-412	BOLT			2
52	55D-4	NUT			2
53	6730142	TEE			1
54	35C-536	BOLT			2
55	6704833	BRACKET			1
56	6727627	TUBE			1

MANUAL LIFT RELEASE SYSTEM

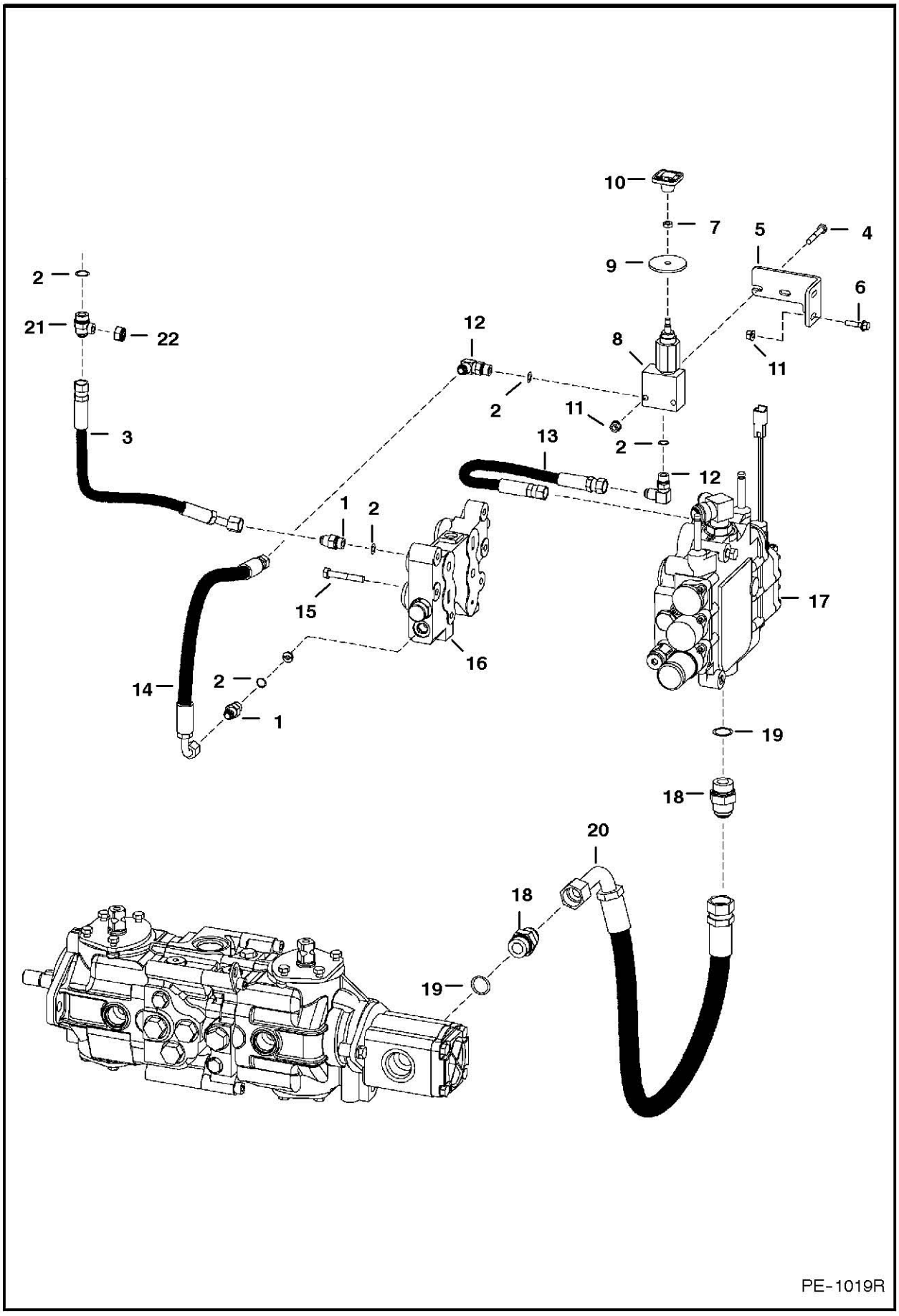

MANUAL LIFT RELEASE SYSTEM

Ref.N°	Part N°	Description	Remarks	Serial N°	Qty.
1	NAP	ADAPTER	W/Ref. MANUAL LIFT RELEASE SYSTEM(2) - tapered boss face - Was 15KV-5 [A]		2
1	97K-6	O-RING	flared end		2
1	15KB-606	ADAPTER	W/Ref. MANUAL LIFT RELEASE SYSTEM(2) - flat boss face		2
2	99K-6	O-RING	tapered boss face		x
2	79K-6	O-RING	flat boss face		x
3	6711656	HOSE			1
4	17C-428	BOLT			2
5	6711280	MOUNT			1
6	35C-416	BOLT	Was 84G-3716 [B]		2
7	7D-4	NUT			1
8	6667844	VALVE	'manual lift release - See Page MANUAL LIFT RELEASE VALVE(1)		1
9	6707101	WASHER	neoprene		1
10	6668913	KNOB	red square		1
11	83D-4	NUT			2
12	NAP	ELBOW	W/Ref. MANUAL LIFT RELEASE SYSTEM(2) - tapered boss face - Was 17KV-5 [A]		2
12	97K-6	O-RING	flared end		2
12	17KB-606	ELBOW	W/Ref. MANUAL LIFT RELEASE SYSTEM(2) - flat boss face		2
13	6535451	HOSE			1
14	6578804	HOSE			1
15	43C-532	BOLT			6
16	6628571	VALVE	BICS control - See Page BICS CONTROL VALVE(1)		1
17	NSS	VALVE	control - Order 6806836inD1}9 Valve - See Page HYDRAULIC CONTROL VALVE(1)		1
18	NAP	ADAPTER	W/Ref. MANUAL LIFT RELEASE SYSTEM(19) - tapered boss face - Was 15KV-8 [A]		3
18	97K-12	O-RING	flared end		3
18	15KB-1212	ADAPTER	W/Ref. MANUAL LIFT RELEASE SYSTEM(19) - flat boss face		3
19	99K-12	O-RING	tapered boss face		2
19	79K-12	O-RING	flat boss face		x
20	6729154	HOSE	Was 6714594 [A]		1
21	NAP	TEE	W/Ref. MANUAL LIFT RELEASE SYSTEM(2) - connects to bottom of hydraulic reservoir - tapered boss face - Was 21KV-5 [A]		1
21	97K-6	O-RING	flared end		2
21	21KB-606	TEE	W/Ref. MANUAL LIFT RELEASE SYSTEM(2) - flat boss face		1
22	36K-5	CAP			1

MANUAL LIFT RELEASE SYSTEM

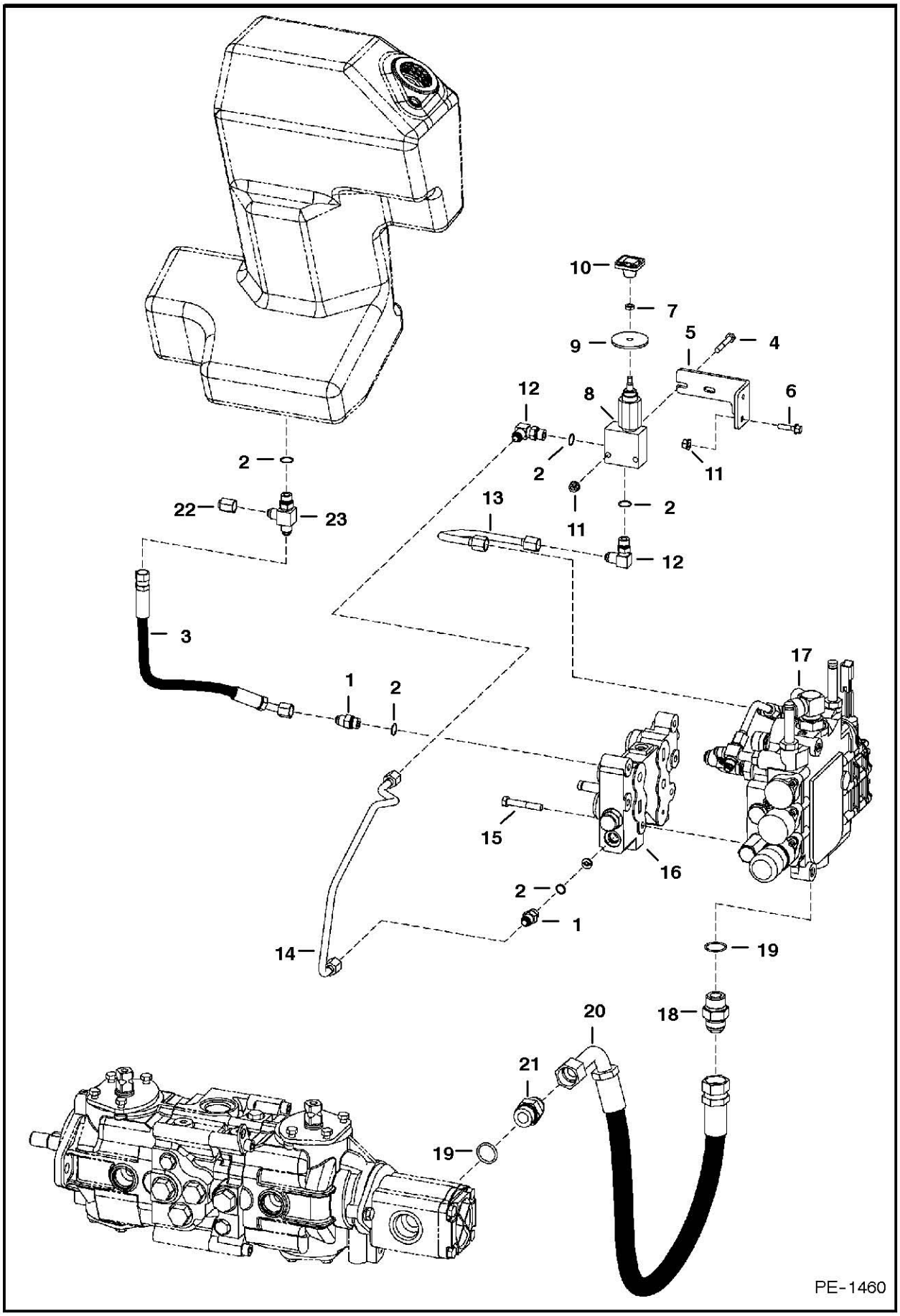

MANUAL LIFT RELEASE SYSTEM

Ref.N°	Part N°	Description	Remarks	Serial N°	Qty.
1	NAP	ADAPTER	W/Ref. MANUAL LIFT RELEASE SYSTEM(2) - tapered boss face - Was 15KV-5 [A]		2
1	97K-6	O-RING	flared end		2
1	15KB-606	ADAPTER	W/Ref. MANUAL LIFT RELEASE SYSTEM(2) - flat boss face		2
2	99K-6	O-RING	tapered boss face		x
2	79K-6	O-RING	flat boss face		x
3	6719653	HOSE		5158 40212-48433	1
3				5162 23852-27397	1
3	6801366	HOSE		5158 48434 & Abv	1
3				5162 27398 & Abv	1
4	17C-428	BOLT			2
5	6729908	MOUNT			1
6	35C-416	BOLT			2
7	7D-4	NUT			1
8	6667844	VALVE	'manual lift release - See Page MANUAL LIFT RELEASE VALVE(1)		1
9	6707101	WASHER	neoprene		1
10	6668913	KNOB	red square		1
11	83D-4	NUT			4
12	NAP	ELBOW	W/Ref. MANUAL LIFT RELEASE SYSTEM(2) - tapered boss face - Was 17KV-5 [A]		2
12	97K-6	O-RING	flared end		2
12	17KB-606	ELBOW	W/Ref. MANUAL LIFT RELEASE SYSTEM(2) - flat boss face		2
13	6727702	TUBE			1
14	6729909	TUBE			1
15	43C-532	BOLT			6
16	6628571	VALVE	BICS control - See Page BICS CONTROL VALVE(1)		1
17	NSS	VALVE	control - Order 6806836inD1}9 Valve - See Page HYDRAULIC CONTROL VALVE(1)		1
18	NAP	ADAPTER	W/Ref. MANUAL LIFT RELEASE SYSTEM(19) - tapered boss face - Was 15KV-8 [A]		1
18	97K-12	O-RING	flared end		1
18	15KB-1212	ADAPTER	W/Ref. MANUAL LIFT RELEASE SYSTEM(19) - flat boss face		3
19	99K-12	O-RING	tapered boss face		2
19	79K-12	O-RING	flat boss face		x
20	6734246	HOSE	Was 6729154 [B]		1
21	NAP	ELBOW	W/Ref. MANUAL LIFT RELEASE SYSTEM(19) - tapered boss face - Was 18KV-8 [A]		1
21	97K-12	O-RING	flared end		1
21	18KB-1212	ELBOW	W/Ref. MANUAL LIFT RELEASE SYSTEM(19) - flat boss face		1
22	36K-5	CAP			2
23	NAP	TEE	W/Ref. MANUAL LIFT RELEASE SYSTEM(2) - connects to bottom of hydraulic reservoir - tapered boss face - Was 21KV-5 [A]		1
23	97K-6	O-RING	flared end		2
23	21KB-606	TEE	W/Ref. MANUAL LIFT RELEASE SYSTEM(2) - flat boss face		1

AUXILIARY HYDRAULICS

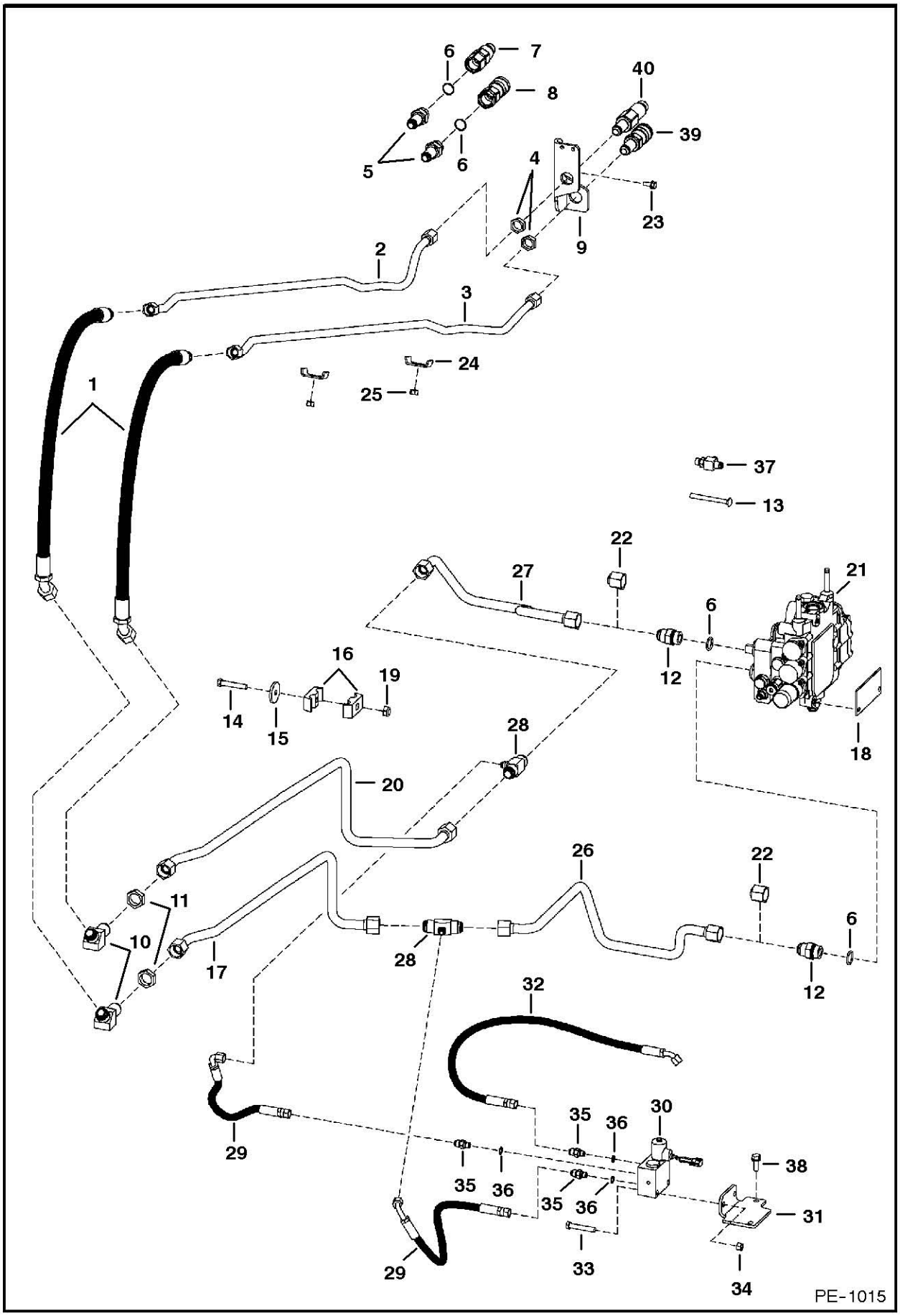

AUXILIARY HYDRAULICS

Ref.N°	Part N°	Description	Remarks	Serial N°	Qty.
1	6729153	HOSE	Was 6714577 [A]		2
2	6711735	TUBE			1
3	6711736	TUBE			1
4	86F-7	NUT			2
5	NAP	ADAPTER	W/Ref. AUXILIARY HYDRAULICS(6) - flat boss face - Was 6715185 [A]		2
5	97K-10	O-RING	flared end		2
5	6812816	ADAPTER	W/Ref. AUXILIARY HYDRAULICS(6) - flat boss face		2
6	99K-12	O-RING	tapered boss face		4
6	79K-12	O-RING	flat boss face		4
7	NAP	QUICK COUPLER	FF Male - Order Ref. AUXILIARY HYDRAULICS(40) - Was 6667808 [B]		1
7	6672026	O-RING			1
8	NAP	QUICK COUPLER	FF Female - Order Ref. AUXILIARY HYDRAULICS(39) Was 6672960 [B]		1
9	6713850	MOUNT			1
10	NAP	ELBOW	tapered boss face - Was 46KN-8 [A]		2
10	97K-12	O-RING	flared end		4
10	46K-8	ELBOW	flat boss face		2
11	86F-8	NUT			2
12	NAP	ADAPTER	W/Ref. AUXILIARY HYDRAULICS(6) - tapered boss face - Was 15KV-8 [A]		1
12	97K-12	O-RING	flared end		2
12	15KB-1212	ADAPTER	W/Ref. AUXILIARY HYDRAULICS(6) - flat boss face		3
13	37C-556	BOLT			1
14	17C-552	BOLT			1
15	872229	WASHER			1
16	6701893	CLAMP			2
17	6718087	TUBE			1
18	6704680	COVER			1
19	85D-5	NUT			2
20	6718089	TUBE			1
21		VALVE	See Page HYDRAULIC CONTROL VALVE(1)		1
22	36K-8	CAP			2
23	84G-3112	BOLT			4
24	6502203	CLAMP			2
25	59D-6	NUT			2
26	6718086	TUBE			1
27	6718088	TUBE			1
28	6717923	TEE			2
29	6717919	HOSE			2
30	NAP	VALVE	W/.4375' threaded ports - Order 6678150 Valve & (3) of Ref. AUXILIARY HYDRAULICS(35) (15KB-606 Adapter) - See Page PRESSURE REL		1
30	6678150	VALVE	W/.5625'threaded ports - See Page PRESSURE RELEASE VALVE(1)		1
31	6717922	BRACKET			1
32	6719251	HOSE			1
33	17C-636	BOLT			2
34	61D-6	NUT			1
35	6718109	CONNECTOR	W/Ref. AUXILIARY HYDRAULICS(36) (79K-6 O-ring) - Use W/Ref. AUXILIARY HYDRAULICS(30) (NAP/6674 372 Valve)		3

AUXILIARY HYDRAULICS

Ref.N°	Part N°	Description	Remarks	Serial N°	Qty.
35	97K-6	O-RING	flared end		3
35	NAP	ADAPTER	W/Ref. AUXILIARY HYDRAULICS(36) - tapered boss face - Use W/Ref. AUXILIARY HYDRAULICS(30) (6678150 Valve) - Was 15KV-5 [A]		3
35	97K-6	O-RING	flared end		3
35	15KB-606	ADAPTER	W/Ref. AUXILIARY HYDRAULICS(36) - flat boss face		3
36	79K-6	O-RING	flat boss face		3
36	99K-6	O-RING	tapered boss face		3
37	NAP	TEE	W/Ref. MANUAL LIFT RELEASE SYSTEM(2) - tapered boss face - Was 21KV-5 [A]		1
37	97K-6	O-RING	flared end		2
37	21KB-606	TEE	W/Ref. MANUAL LIFT RELEASE SYSTEM(2) - flat boss face		1
38	84G-3716	BOLT			3
39	6676446	QUICK COUPLER	FF Female	5158 35805-40211	1
39				5162 22163-23851	1
40	6676444	QUICK COUPLER	FF Male	5158 35805-40211	1
40				5162 22163-23851	1

AUXILIARY HYDRAULICS

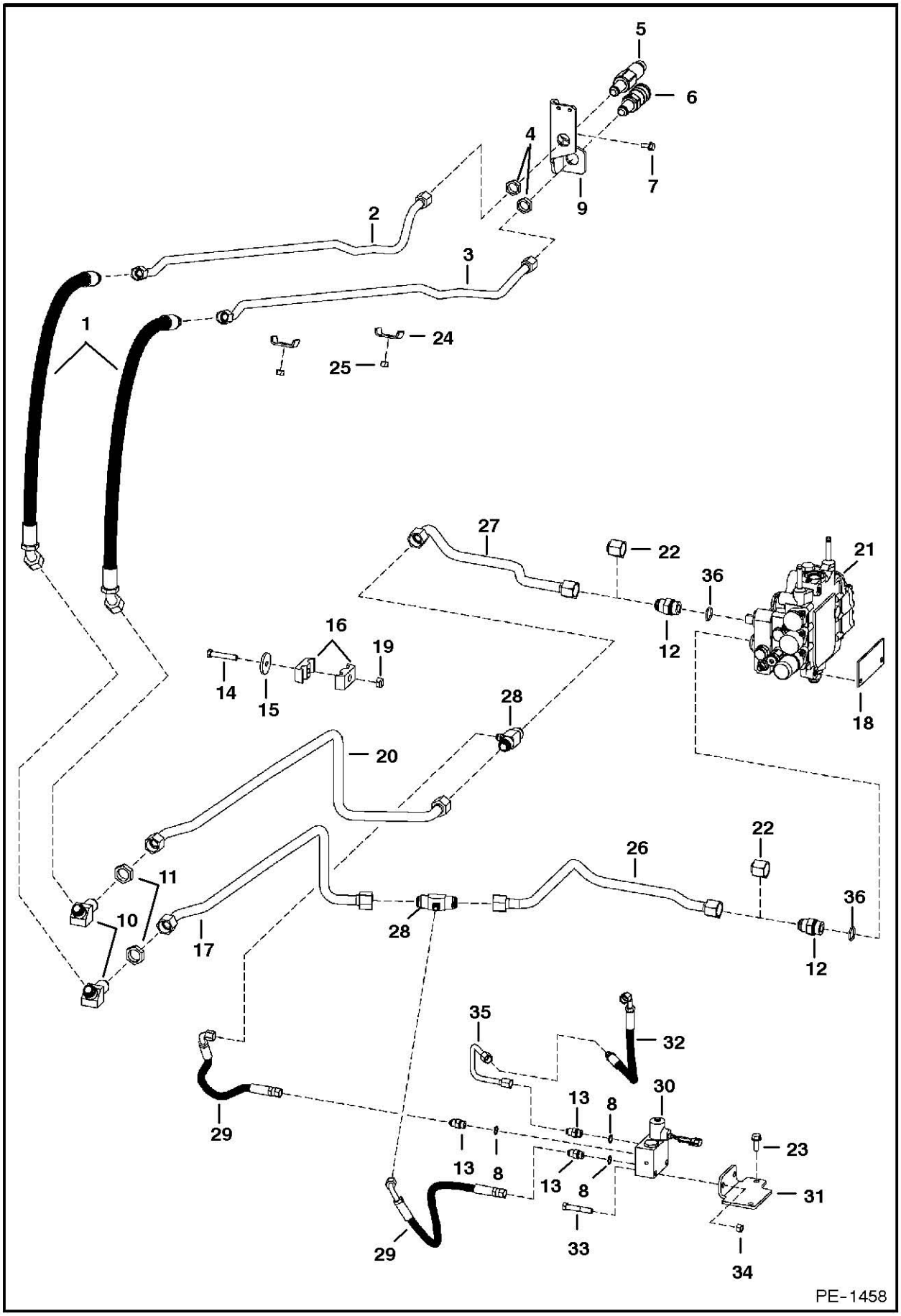

AUXILIARY HYDRAULICS

Ref.N°	Part N°	Description	Remarks	Serial N°	Qty.
1	6729153	HOSE			2
2	6711735	TUBE			1
3	6711736	TUBE			1
4	86F-7	NUT			2
5	6676444	QUICK COUPLER			1
6	6676446	QUICK COUPLER			1
7	84G-3112	BOLT			2
8	99K-4	O-RING	tapered boss face		3
8	79K-4	O-RING	flat boss face		3
9	6713850	MOUNT			1
10	NAP	ELBOW	tapered boss face - Was 46KN-8 [A]		2
10	97K-12	O-RING	flared end		4
10	46K-8	ELBOW	flat boss face		2
11	86F-8	NUT			2
12	NAP	ADAPTER	W/Ref. AUXILIARY HYDRAULICS(36) - tapered boss face - Was 15KV-8 [A]		2
12	97K-12	O-RING	flared end		2
13	NAP	ADAPTER	W/Ref. AUXILIARY HYDRAULICS(36) - tapered boss face - Was 15KV-5 [A]		3
13	97K-6	O-RING	flared end		3
13	15KB-606	ADAPTER	W/Ref. AUXILIARY HYDRAULICS(36) - flat boss face		3
14	17C-552	BOLT			1
15	872229	WASHER			1
16	6592506	CLAMP			2
17	6718087	TUBE			1
18	6727837	COVER			1
19	85D-5	NUT			2
20	6718089	TUBE			1
21		VALVE	See Page HYDRAULIC CONTROL VALVE(1)		1
22	36K-8	CAP			2
23	84G-3716	BOLT			3
24	6502203	CLAMP			2
25	59D-6	NUT			2
26	6727641	TUBE			1
27	6729904	TUBE			1
28	6717923	TEE			2
29	6717919	HOSE			2
30	6678150	VALVE	See Page PRESSURE RELEASE VALVE(1)		1
31	6717922	BRACKET			1
32	6719655	HOSE			1
33	17C-636	BOLT			2
34	61D-6	NUT			1
35	6719211	TUBE			1
36	99K-12	O-RING	tapered boss face		4
36	79K-12	O-RING	flat boss face		4

AUXILIARY HYDRAULICS
(W/Pressure Relief)

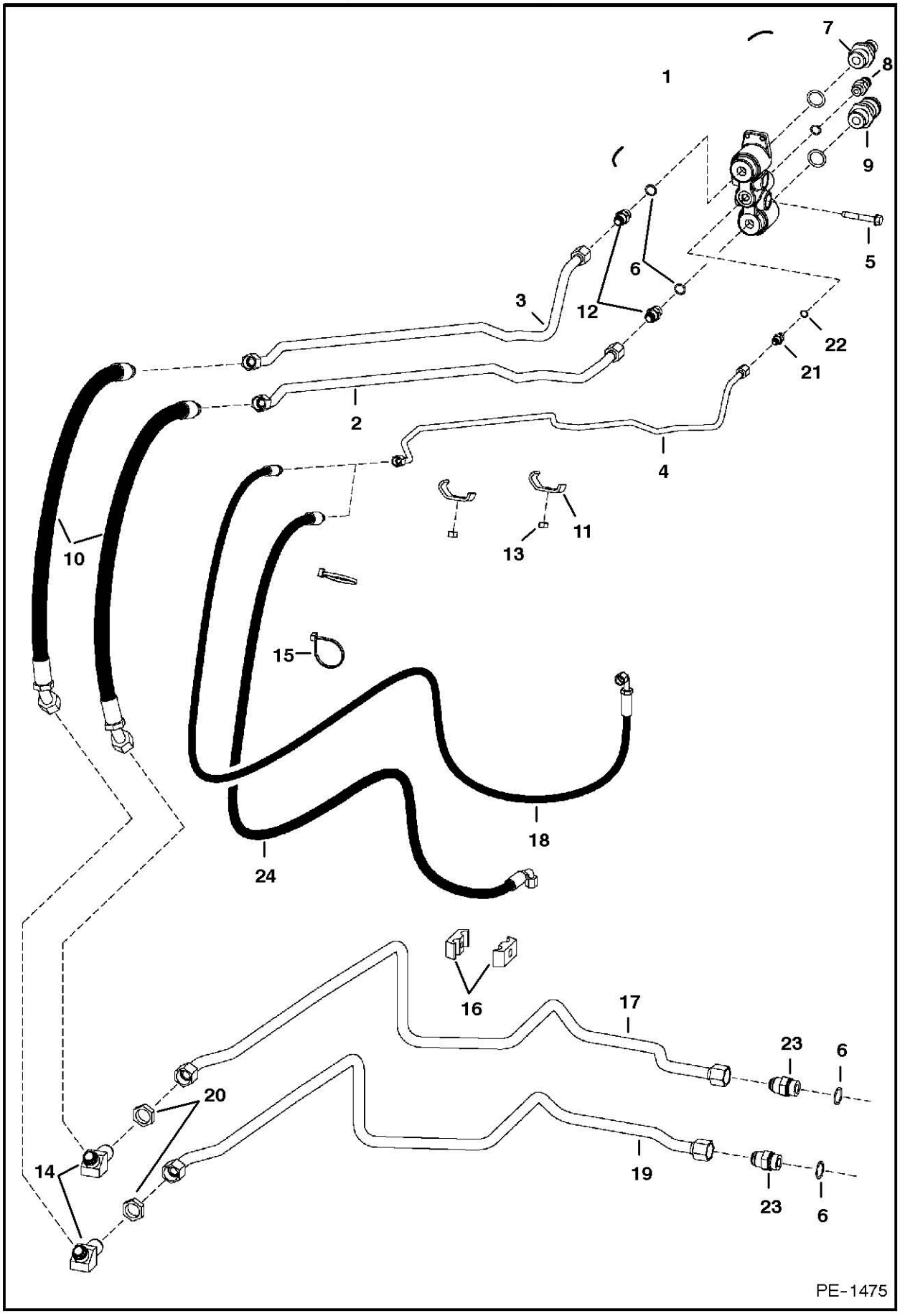

AUXILIARY HYDRAULICS

Ref.N°	Part N°	Description	Remarks	Serial N°	Qty.
1	6678951	BLOCK ASSY.	coupler		1
2	6731730	TUBE			1
3	6731731	TUBE			1
4	6731908	TUBE			1
5	84G-3740	BOLT			2
6	79K-12	O-RING	flat boss face		x
6	99K-12	O-RING	tapered boss face		x
7	6679837	KIT	coupler - male		1
8	6679838	KIT	coupler - male		1
9	6679839	KIT	coupler - female		1
10	6729153	HOSE	W/cover		2
11	6731732	CLAMP			2
12	6679835	KIT	adapter - W/NSS spring & Ref. AUXILIARY HYDRAULICS(6) - flat boss face		2
12	97K-6	O-RING	flared end		2
13	91D-6	NUT			2
14	NAP	ELBOW	tapered boss face - Was 46KN-8 [A]		2
14	97K-8	O-RING	flared end		4
14	46K-8	ELBOW	flat boss face		2
15	6624289	STA-STRAP			4
16	6592506	CLAMP			2
17	6731729	TUBE			1
18	6731769	HOSE			1
19	6731728	TUBE			1
20	86F-8	NUT			2
21	NAP	ADAPTER	W/Ref. AUXILIARY HYDRAULICS(22) - tapered boss face - Was 15KV-5 [A]		2
21	97K-6	O-RING	flared end		2
21	15KB-606	ADAPTER	W/Ref. AUXILIARY HYDRAULICS(22) - flat boss face		2
22	99K-6	O-RING	tapered boss face		1
22	79K-6	O-RING	flat boss face		4
23	15KB-1212	ADAPTER	W/Ref. AUXILIARY HYDRAULICS(6) - flat boss face		2
24	6732220	HOSE		& Abv	1

TILT CYLINDER

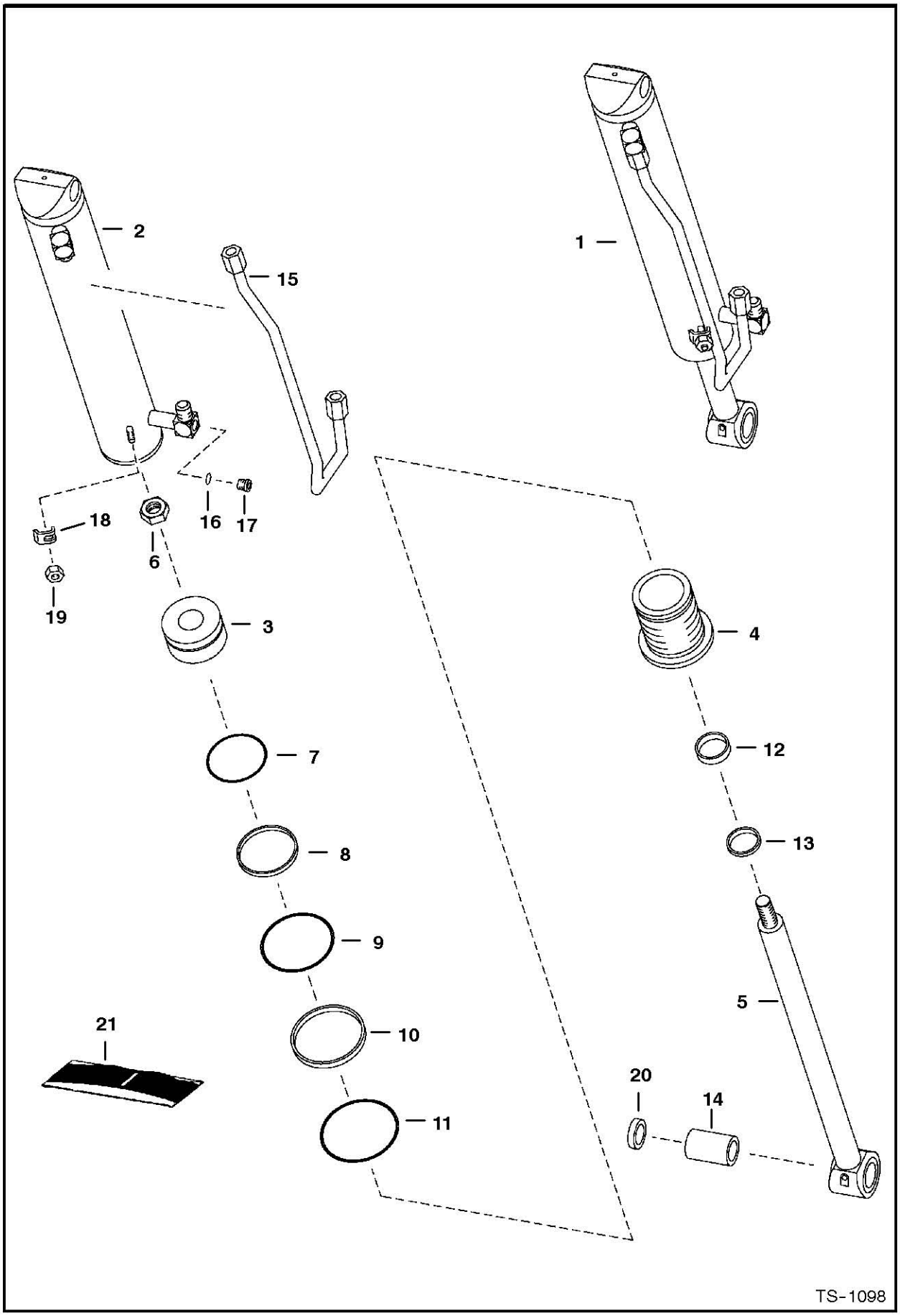

TILT CYLINDER

Ref.N°	Part N°	Description	Remarks	Serial N°	Qty.
1	6804630	CYLINDER	tilt - Ref. TILT CYLINDER(2)-TILT CYLINDER(19)		1
2	NAP	CASE	3.5' (88,9 mm) I.D. - Order Ref. TILT CYLINDER(1) - Was 6804633 [A]		1
3	6804632	PISTON	1.125' (28,6 mm) I.D.		1
4	6539934	HEAD			1
5	6804631	ROD	1.5' (38,1 mm) O.D - W/Ref. TILT CYLINDER(14)- W/ grease zerk hole		1
6	6810539	NUT	Was 6804592 [A]		1
7	54K-30300	O-RING			1
8	1530265	SEAL	piston		1
9	54K-60304	O-RING			1
10	80K-338	WASHER	back-up		1
11	58K-238	O-RING			1
12	6667326	SEAL			1
13	6665086	SEAL	wiper		1
14	6805150	BUSHING	wear - W/ grease zerk hole		1
15	6586586	TUBE			1
16	95K-6	O-RING	tapered boss face		2
16	75K-6	O-RING	flat boss face		2
17	NAP	PLUG	W/Ref. TILT CYLINDER(16) - tapered boss face - allen socket head - Was 90KV-5 [A]		2
17	90K-5	PLUG	W/Ref. TILT CYLINDER(16) - flat boss face - allen socket head		2
17	6812171	PLUG	W/Ref. TILT CYLINDER(16) - flat boss face - hex head		2
18	6562266	CLAMP			1
19	95D-6	NUT			1
20	225855	SEAL			2
21	6816323	SEAL KIT	Ref. TILT CYLINDER(6) - TILT CYLINDER(13) - Was 6804606 [A]		1

LIFT CYLINDER

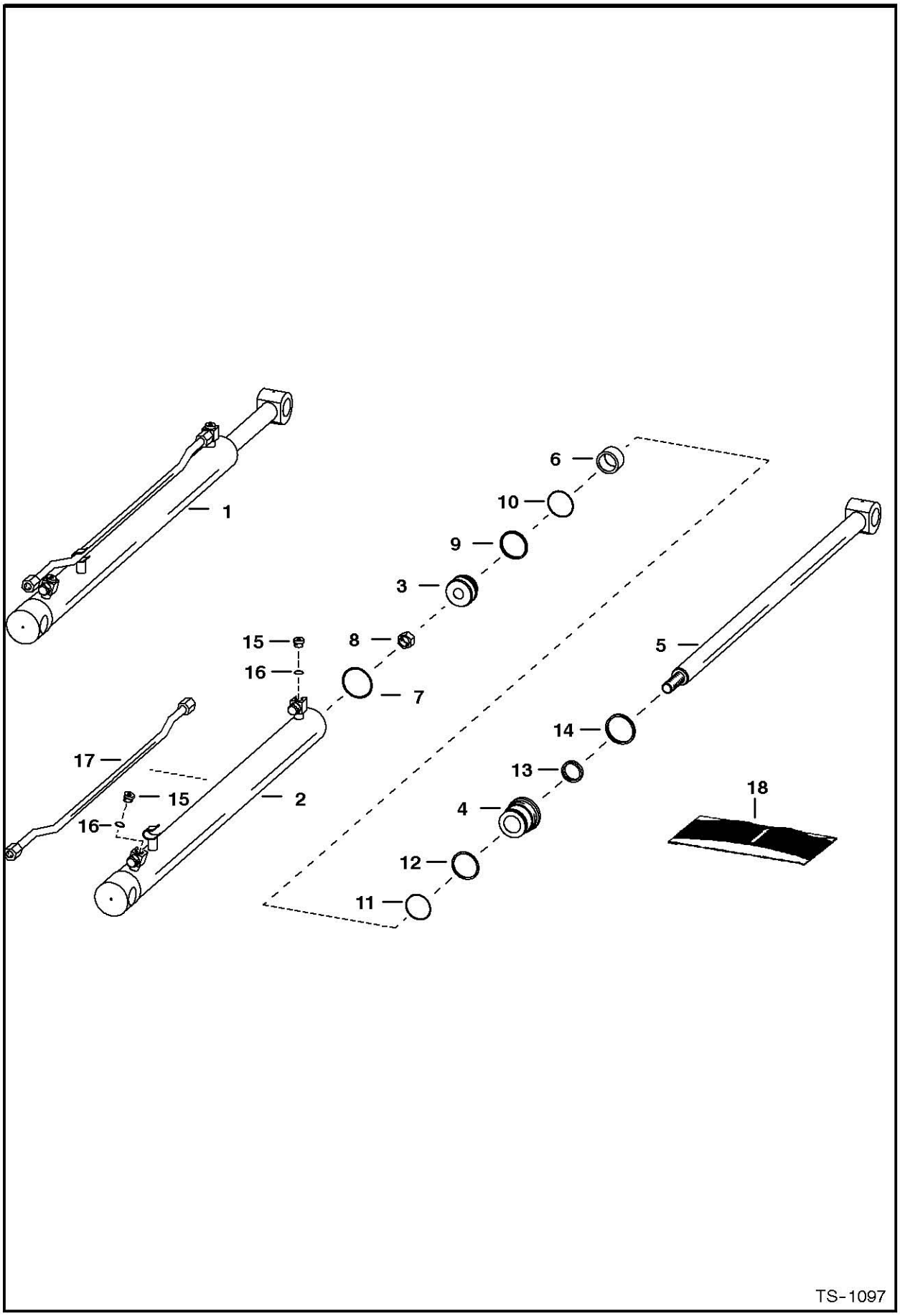

LIFT CYLINDER

Ref.N°	Part N°	Description	Remarks	Serial N°	Qty.
1	6586575	CYLINDER	Ref. LIFT CYLINDER(2) - LIFT CYLINDER(7) - W/.75' threaded elbows		2
2	6586577	CASE			1
3	6661694	PISTON	'W/Ref. LIFT CYLINDER(9) & LIFT CYLINDER(10) - W/Non- Replaceable wear sleeves		1
4	6539323	HEAD			1
5	6539304	ROD	1.25' dia.		1
6	6539299	SPACER			1
7	58K-136	O-RING			1
8	92D-12	NUT			1
9	6516231	O-RING			1
10	54K-30118	RING			1
11	54K-40124	O-RING			1
12	73K-224	WASHER	back-up		1
13	6667324	SEAL	rod		1
14	6665208	SEAL	wiper		1
15	NAP	PLUG	W/Ref. LIFT CYLINDER(16) - tapered boss face - allen socket head - Was 90KV-5 [A]		2
15	6812171	PLUG	W/Ref. LIFT CYLINDER(16) - flat boss face - hex head		2
16	95K-6	O-RING	tapered boss face		2
16	75K-6	O-RING	flat boss face		2
17	6586576	TUBE			1
18	6803329	SEAL KIT	Ref. LIFT CYLINDER(7) - LIFT CYLINDER(14)		1

LIFT CYLINDER

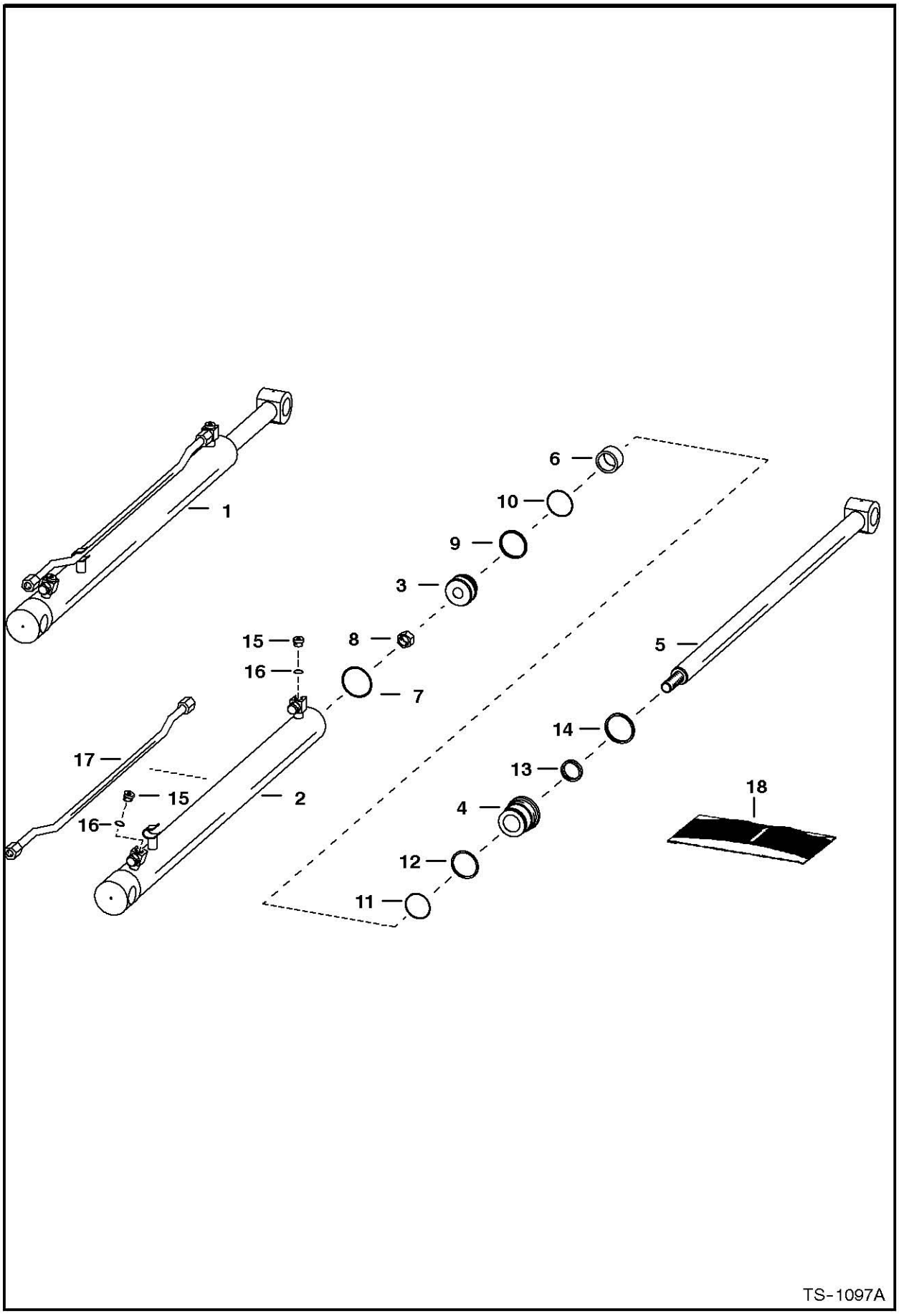

LIFT CYLINDER

Ref.N°	Part N°	Description	Remarks	Serial N°	Qty.
1	6809201	CYLINDER	Ref. LIFT CYLINDER(2) - LIFT CYLINDER(7) - W/.562 5' threaded elbows		2
2	6809209	CASE			1
3	6677195	PISTON	'W/Ref. LIFT CYLINDER(9) & LIFT CYLINDER(10) - W/Non- Replaceable wear sleeves		1
4	6539323	HEAD			1
5	6809759	ROD	1.25' dia.		1
6	6539299	SPACER			1
7	58K-136	O-RING			1
8	92D-14	NUT			1
9	6516231	O-RING			1
10	54K-30118	RING			1
11	54K-40124	O-RING			1
12	73K-224	WASHER	back-up		1
13	6667324	SEAL	rod		1
14	6665208	SEAL	wiper		1
15	NAP	PLUG	W/Ref. LIFT CYLINDER(16) - tapered boss face - allen socket head - Was 90KV-2 [A]		2
15	6812170	PLUG	W/Ref. LIFT CYLINDER(16) - flat boss face - hex head		2
16	95K-3	O-RING	tapered boss face		2
16	75K-3	O-RING	flat boss face		2
17	6809202	TUBE			1
18	6804927	SEAL KIT	Ref. LIFT CYLINDER(7) - LIFT CYLINDER(14)		1

CONTROL PEDALS

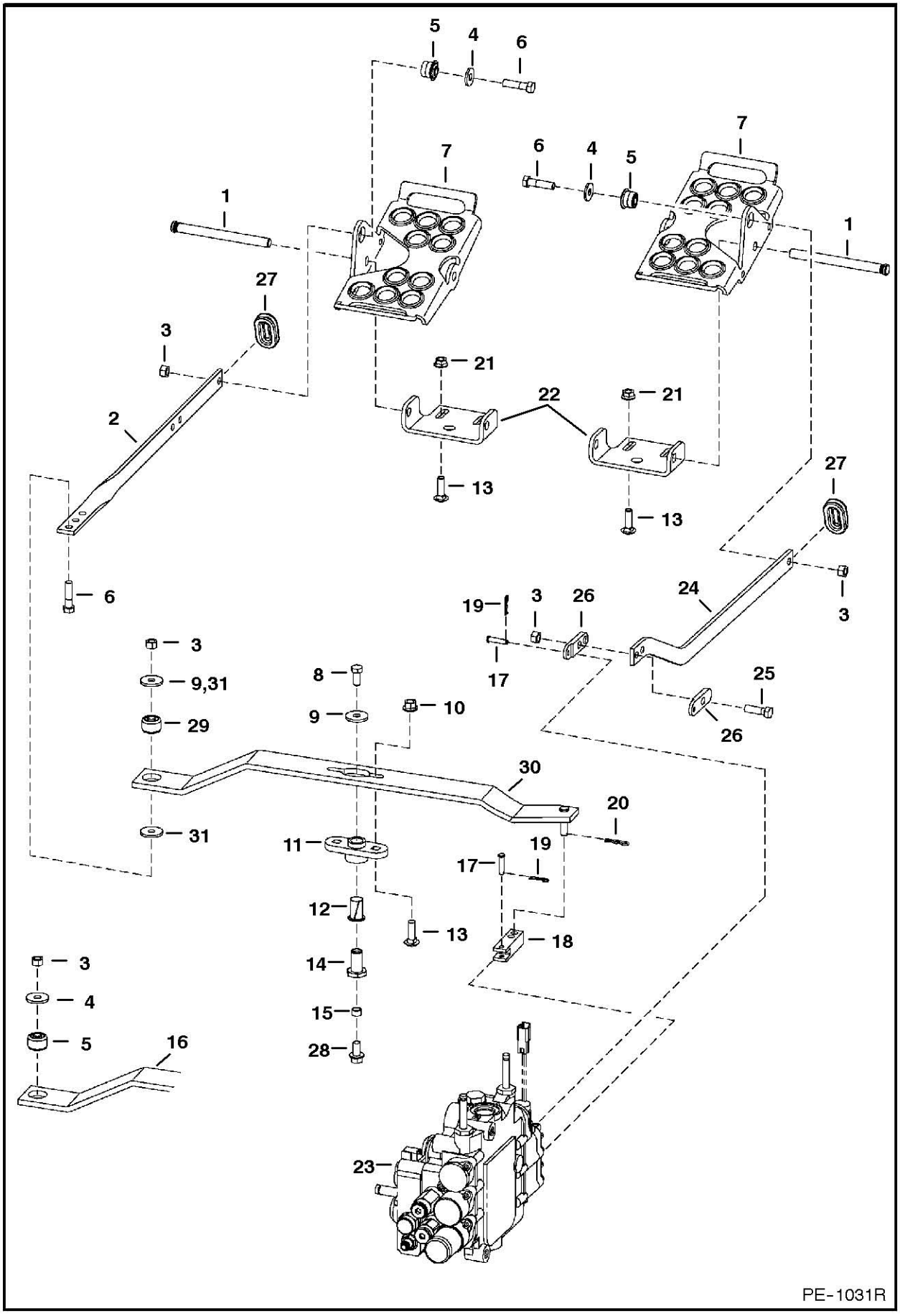

CONTROL PEDALS

Ref.N°	Part N°	Description	Remarks	Serial N°	Qty.
1	6564657	PIN			2
2	6576302	BAR			1
3	95D-6	NUT			5
4	6563914	WASHER		& Bel	3
4	6563914	WASHER		& Abv	2
5	6665701	BUSHING		& Bel	3
5	6665701	BUSHING		& Abv	2
6	17C-624	BOLT			3
7	6726680	PEDAL	Was 6564656 [A]		2
8	6665839	BOLT	Was 17C-612 [B]		1
9	619021	WASHER		& Bel	1
9	619021	WASHER		& Abv	2
10	83D-6	NUT			2
11	6708043	BUSHING	flange		1
12	6512026	BUSHING			1
13	37C-620	BOLT			6
14	6706104	RETAINING NUT			1
15	6544654	BUSHING	spacer		1
16	6717822	LEVER	Was 6706103 [A]	& Bel	1
17	6564654	PIN			2
18	6706105	YOKE			1
19	6513495	COTTER PIN			2
20	1306637	PIN			1
21	57D-6	NUT			4
22	6726679	BRACKET	Was 6564658 [A]		2
23		VALVE	See Page HYDRAULIC CONTROL VALVE(1)		1
24	6577813	BAR			1
25	17C-620	BOLT			1
26	6708009	LINK	2.69'(68,3 mm) long		2
27	6577961	GROMMET			2
28	35C-612	BOLT			1
29	6678067	BUSHING	torsion - 1.060'(26,924 mm) O.D.		1
30	6733942	LEVER			1

HYDRAULIC CONTROL VALVE
(BICS Combo Valve)

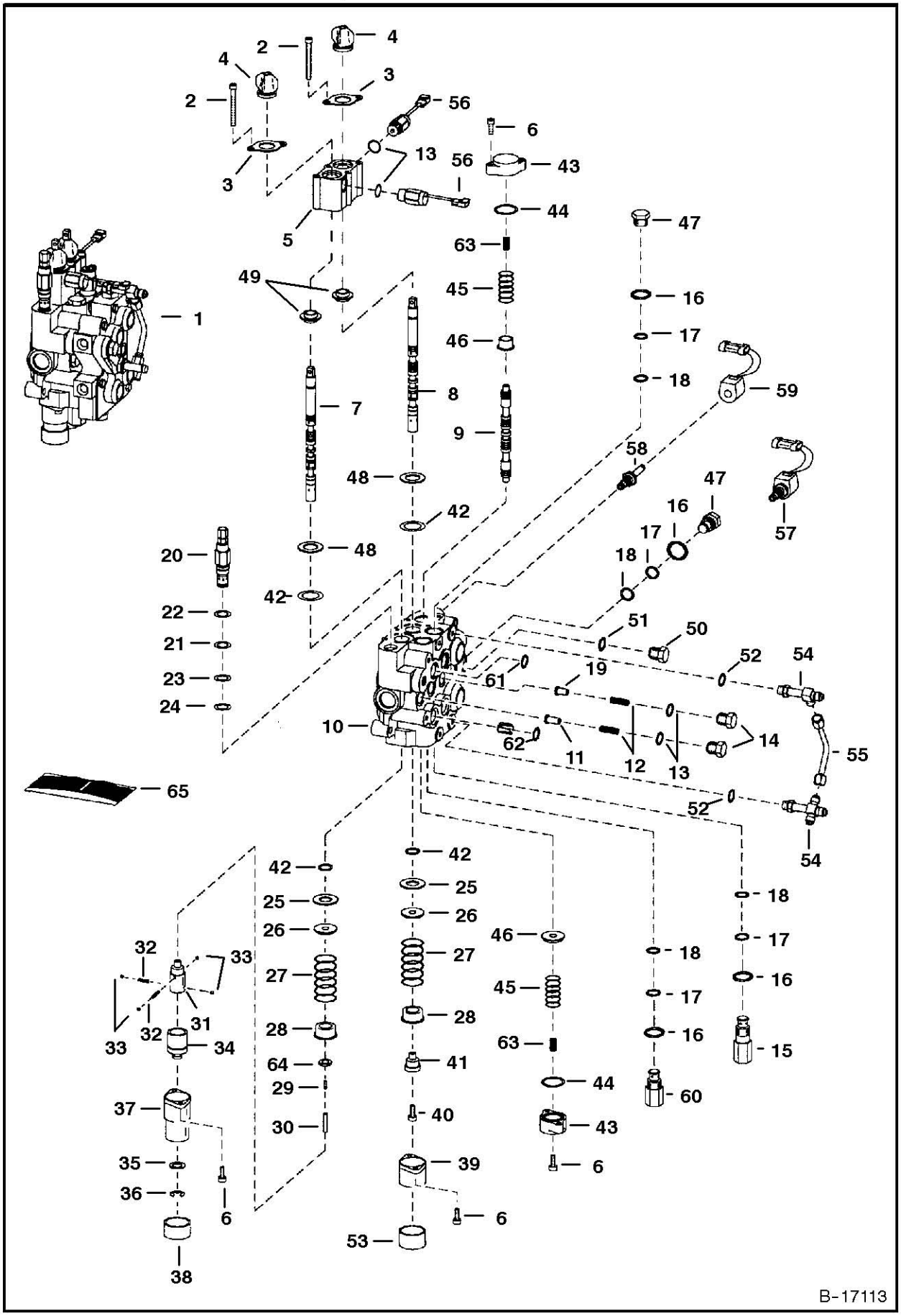

HYDRAULIC CONTROL VALVE

Ref.N°	Part N°	Description	Remarks	Serial N°	Qty.
1	NAP	VALVE	W/Fittings - Ref. HYDRAULIC CONTROL VALVE(2) - HYDRAULIC CONTROL VALVE(55), HYDRAULIC CONTROL VALVE(58) & HYDRAULIC CONTROL VALV		1
1	6628571	VALVE	BICS control - See Page BICS CONTROL VALVE(1)		1
2	29G-444	BOLT			4
3	6589564	RETAINER			2
4	6587763	BOOT			2
5	6812031	BLOCK	lock - Was 6805657 [A]		1
6	29G-416	SCREW			8
7	6674808	SPOOL	lift - # 1 or Red		1
7	6674809	SPOOL	lift - # 2 or Green		1
7	6674810	SPOOL	lift - # 3 or Black		1
8	6674814	SPOOL	tilt - # 1 or Red		1
8	6674815	SPOOL	tilt - # 2 or Green		1
8	6674816	SPOOL	tilt - # 3 or Black		1
9	6588074	SPOOL	auxiliary		3
10	NSS	BODY			1
11	6592115	SEAT	load check		2
12	6592117	SPRING			3
13	79K-8	O-RING			3
14	6592116	NUT	load check		3
15	6667549	VALVE	anti-cavity check -W/Ref. HYDRAULIC CONTROL VALVE(16)-HYDRAULIC CONTROL VALVE(18)		1
16	79K-10	O-RING			2
17	80K-14	WASHER	back-up		5
18	58K-14	O-RING	back-up washer required		5
18	6677106	O-RING	back-up washer not required		5
19	6596569	SEAT	aux. load check		1
20	6678571	VALVE	main relief - W/Ref. HYDRAULIC CONTROL VALVE(21)-HYDRAULIC CONTROL VALVE(24) - Was 6676196 [B]		1
21	58K-17	O-RING			1
22	6665569	WASHER	back-up		1
23	25K-20016	O-RING			1
24	6665570	RING	glide		1
25	6595663	BUSHING			2
26	6587523	WASHER			2
27	6587580	SPRING			2
28	6592100	COLLAR			2
29	6596807	PLUG			1
30	6586918	SCREW			1
31	6587575	ADAPTER			1
32	6592107	SPRING			2
33	6592105	BALL			4
34	6531270	SLEEVE			1
35	6592098	WASHER			1
36	799119	RETAINER			1
37	6589226	BONNET	.625' flange		1
38	6660644	CAP			1
39	6587633	BONNET			1
40	30G-416	SCREW			1

HYDRAULIC CONTROL VALVE

Ref.N°	Part N°	Description	Remarks	Serial N°	Qty.
41	6592109	ADAPTER			1
42	6683274	SEAL	Was 6665846 [A]		4
43	6588781	END CAP			2
44	58K-124	O-RING			2
45	6806007	SPRING			2
46	6595951	SLEEVE			2
47	6592720	PLUG	W/Ref. HYDRAULIC CONTROL VALVE(16)-HYDRAULIC CONTROL VALVE(18)		1
48	58K-127	O-RING			2
49	6805102	BUSHING			1
50	NAP	PLUG	W/Ref. HYDRAULIC CONTROL VALVE(51) - socket head - tapered boss face - Was 90KV-8 [A]		1
50	90K-8	PLUG	W/Ref. HYDRAULIC CONTROL VALVE(51) - socket head - flat boss face		1
51	95K-12	O-RING	tapered boss face - Was 99K-12 [B]		1
51	75K-12	O-RING	flat boss face		1
52	99K-6	O-RING	tapered boss face		x
52	79K-6	O-RING	flat boss face		4
53	6662848	CAP			1
54	6805241	CROSS	W/Ref. HYDRAULIC CONTROL VALVE(52) - flat boss face		2
54	97K-6	O-RING	flared end		6
55	6577690	TUBE			1
56	NAP	SOLENOID	W/Ref. HYDRAULIC CONTROL VALVE(13) - 3'(76,2 mm) wire - Order 6677383inD1}U Solenoid - Was 6674786 [A]		2
56	6677383	SOLENOID	W/Ref. HYDRAULIC CONTROL VALVE(13) - 5'(127 mm) wire - Was 6674786 [A]		2
57	6665084	VALVE	solenoid - W/Ref. HYDRAULIC CONTROL VALVE(58) & HYDRAULIC CONTROL VALVE(59) - Was 6653395 [B,D]		2
57	6586459	SEAL KIT			x
58	6666616	STEM			2
58	79K-7	O-RING			2
59	6717706	COIL	10 volt - W/Nut - Was 6665759 [A]		2
60	6678574	VALVE	optional - port relief & anti-cav. W/Ref. HYDRAULIC CONTROL VALVE(16)-HYDRAULIC CONTROL VALVE(18) - 3500 PSI - use in tilt cylin		1
61	55K-204	O-RING	See Page BICS CONTROL VALVE(1)		1
62	55K-212	O-RING	See Page BICS CONTROL VALVE(1)		4
63	6596332	SPRING			2
64	54K-20002	O-RING			1
65	6816252	SEAL KIT	two spool - Ref. HYDRAULIC CONTROL VALVE(2), HYDRAULIC CONTROL VALVE(4), HYDRAULIC CONTROL VALVE(29), HYDRAULIC CONTROL VALVE(42		x
65	6632279	SEAL KIT	main relief - Ref. HYDRAULIC CONTROL VALVE(21)-HYDRAULIC CONTROL VALVE(24)		x
65	6809425	SEAL KIT	Ref. HYDRAULIC CONTROL VALVE(13) & HYDRAULIC CONTROL VALVE(16)-HYDRAULIC CONTROL VALVE(18) - Was 6586461 [A]		x
65	6816253	SEAL KIT	complete - Ref. HYDRAULIC CONTROL VALVE(2), HYDRAULIC CONTROL VALVE(4), HYDRAULIC CONTROL VALVE(6), HYDRAULIC CONTROL VALVE(13),		x

HYDRAULIC CONTROL VALVE
(BICS Combo Valve)

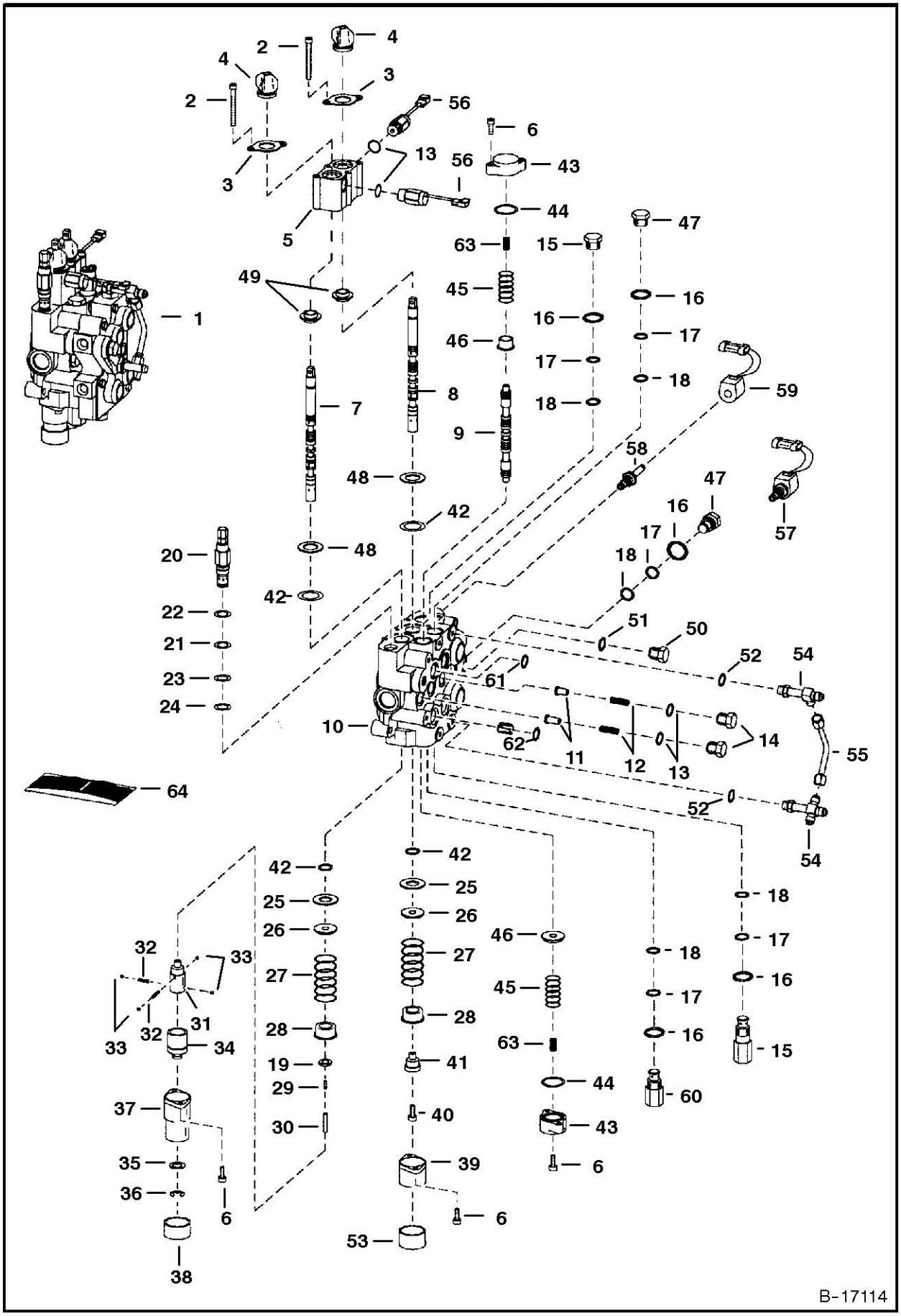

HYDRAULIC CONTROL VALVE

Ref.N°	Part N°	Description	Remarks	Serial N°	Qty.
1	NAP	VALVE	W/Fittings - Ref. HYDRAULIC CONTROL VALVE(2) - HYDRAULIC CONTROL VALVE(56), HYDRAULIC CONTROL VALVE(58) & HYDRAULIC CONTROL VALV	5158 40212-41999	1
1				5162 23852-24999	1
1	NAP	VALVE	W/Fittings - Ref. HYDRAULIC CONTROL VALVE(2) - HYDRAULIC CONTROL VALVE(56), HYDRAULIC CONTROL VALVE(58) & HYDRAULIC CONTROL VALV	5158 42000 & Abv	1
1				5162 25000 & Abv	1
1	6628571	VALVE	BICS control - See Page BICS CONTROL VALVE(1)		1
2	29G-444	BOLT			4
3	6589564	RETAINER			2
4	6587763	BOOT			2
5	6812031	BLOCK	lock - Was 6805657 [A]		1
6	29G-416	SCREW			8
7	6674808	SPOOL	lift - # 1 or Red		1
7	6674809	SPOOL	lift - # 2 or Green		1
7	6674810	SPOOL	lift - # 3 or Black		1
8	6674814	SPOOL	tilt - # 1 or Red		1
8	6674815	SPOOL	tilt - # 2 or Green		1
8	6674816	SPOOL	tilt - # 3 or Black		1
9	6588074	SPOOL	auxiliary		3
10	NSS	BODY			1
11	6592115	SEAT	load check		3
12	6592117	SPRING			3
13	79K-8	O-RING			3
14	6592116	NUT	load check		3
15	6667549	VALVE	anti-cavity check -W/Ref. HYDRAULIC CONTROL VALVE(16)-HYDRAULIC CONTROL VALVE(18)		2
16	79K-10	O-RING			2
17	80K-14	WASHER	back-up		5
18	58K-14	O-RING	back-up washer required		5
19	54K-20002	O-RING			1
20	6678571	VALVE	main relief - W/Ref. HYDRAULIC CONTROL VALVE(21)-HYDRAULIC CONTROL VALVE(24)		1
21	58K-17	O-RING			1
22	6665569	WASHER	back-up		1
23	25K-20016	O-RING			1
24	6665570	RING	glide		1
25	6595663	BUSHING			2
26	6587523	WASHER			2
27	6587580	SPRING			2
28	6592100	COLLAR			2
29	6596807	PLUG			1
30	6586918	SCREW			1
31	6587575	ADAPTER			1
32	6592107	SPRING			2
33	6592105	BALL			4
34	6531270	SLEEVE			1
35	6592098	WASHER			1
36	799119	RETAINER			1
37	6589226	BONNET	.625' flange		1

HYDRAULIC CONTROL VALVE

Ref.N°	Part N°	Description	Remarks	Serial N°	Qty.
38	6660644	CAP			1
39	6587633	BONNET			1
40	30G-416	SCREW			1
41	6592109	ADAPTER			1
42	6683274	SEAL	Was 6665846 [A]		4
43	6588781	END CAP			2
44	58K-124	O-RING			2
45	6806007	SPRING			2
46	6595951	SLEEVE			2
47	6592720	PLUG	W/Ref. HYDRAULIC CONTROL VALVE(16)-HYDRAULIC CONTROL VALVE(18)		2
48	58K-127	O-RING			2
49	6805102	BUSHING			2
50	NAP	PLUG	W/Ref. HYDRAULIC CONTROL VALVE(51) - socket head - tapered boss face - Was 90KV-8 [A]		1
50	90K-8	PLUG	W/Ref. HYDRAULIC CONTROL VALVE(51) - socket head - flat boss face		1
51	95K-12	O-RING	tapered boss face		1
51	75K-12	O-RING	flat boss face		1
52	99K-6	O-RING	tapered boss face		x
52	79K-6	O-RING	flat boss face		4
53	6662848	CAP			1
54	6805241	CROSS	W/Ref. HYDRAULIC CONTROL VALVE(52)		2
54	97K-6	O-RING	flared end		6
55	6577690	TUBE			1
56	6677383	SOLENOID	W/Ref. HYDRAULIC CONTROL VALVE(13) - 5'(127 mm) wire		2
57	6665084	VALVE	solenoid - W/Ref. HYDRAULIC CONTROL VALVE(58) (6666661 Stem) & HYDRAULIC CONTROL VALVE(59)	5158 40212-41999	2
57				5162 23852-24999	2
57	6586459	SEAL KIT		5158 40212-41999	x
57				5162 23852-24999	x
57	6678893	SOLENOID	solenoid - W/Ref. HYDRAULIC CONTROL VALVE(58) (6666661 Stem) & HYDRAULIC CONTROL VALVE(59)	5158 42000 & Abv	2
57				5162 25000 & Abv	2
57		SEAL KIT		5158 42000 & Abv	x
57				5162 25000 & Abv	x
58	6666616	STEM	W/O screen	5158 40212-41999	2
58				5162 23852-24999	2
58	79K-10	O-RING		5158 40212-41999	2
58				5162 23852-24999	2
58	6678892	STEM	W/screen	5158 42000 & Abv	2
58				5162 25000 & Abv	2
58	79K-10	O-RING	Was 79K-7 [D]	5158 42000 & Abv	2
58				5162 25000 & Abv	2
59	6717706	COIL	10 volt - W/Nut	5158 40212-41999	2
59				5162 23852-24999	2
59	6678891	COIL	10 volt - W/Nut	5158 42000 & Abv	2
59				5162 25000 & Abv	2

HYDRAULIC CONTROL VALVE

Ref.N°	Part N°	Description	Remarks	Serial N°	Qty.
60	6673184	VALVE	optional - port relief & anti-cav. W/Ref. HYDRAULIC CONTROL VALVE(16)-HYDRAULIC CONTROL VALVE(18) - 3500 PSI - use in tilt cylin		1
61	55K-204	O-RING	See Page BICS CONTROL VALVE(1)		1
62	55K-212	O-RING	See Page BICS CONTROL VALVE(1)		4
63	6596332	SPRING			2
64	6816252	SEAL KIT	two spool-Ref. HYDRAULIC CONTROL VALVE(2),HYDRAULIC CONTROL VALVE(4),HYDRAULIC CONTROL VALVE(19),HYDRAULIC CONTROL VALVE(29),HYD		x
64	6632279	SEAL KIT	main relief - Ref. HYDRAULIC CONTROL VALVE(21)-HYDRAULIC CONTROL VALVE(24)		x
64	6809425	SEAL KIT	Ref. HYDRAULIC CONTROL VALVE(13) & HYDRAULIC CONTROL VALVE(16)-HYDRAULIC CONTROL VALVE(18)		x
64	6816253	SEAL KIT	complete - Ref. HYDRAULIC CONTROL VALVE(2), HYDRAULIC CONTROL VALVE(4), HYDRAULIC CONTROL VALVE(13), HYDRAULIC CONTROL VALVE(16)		x

* HYDRAULIC CONTROL VALVE
(BICS Combo Valve)

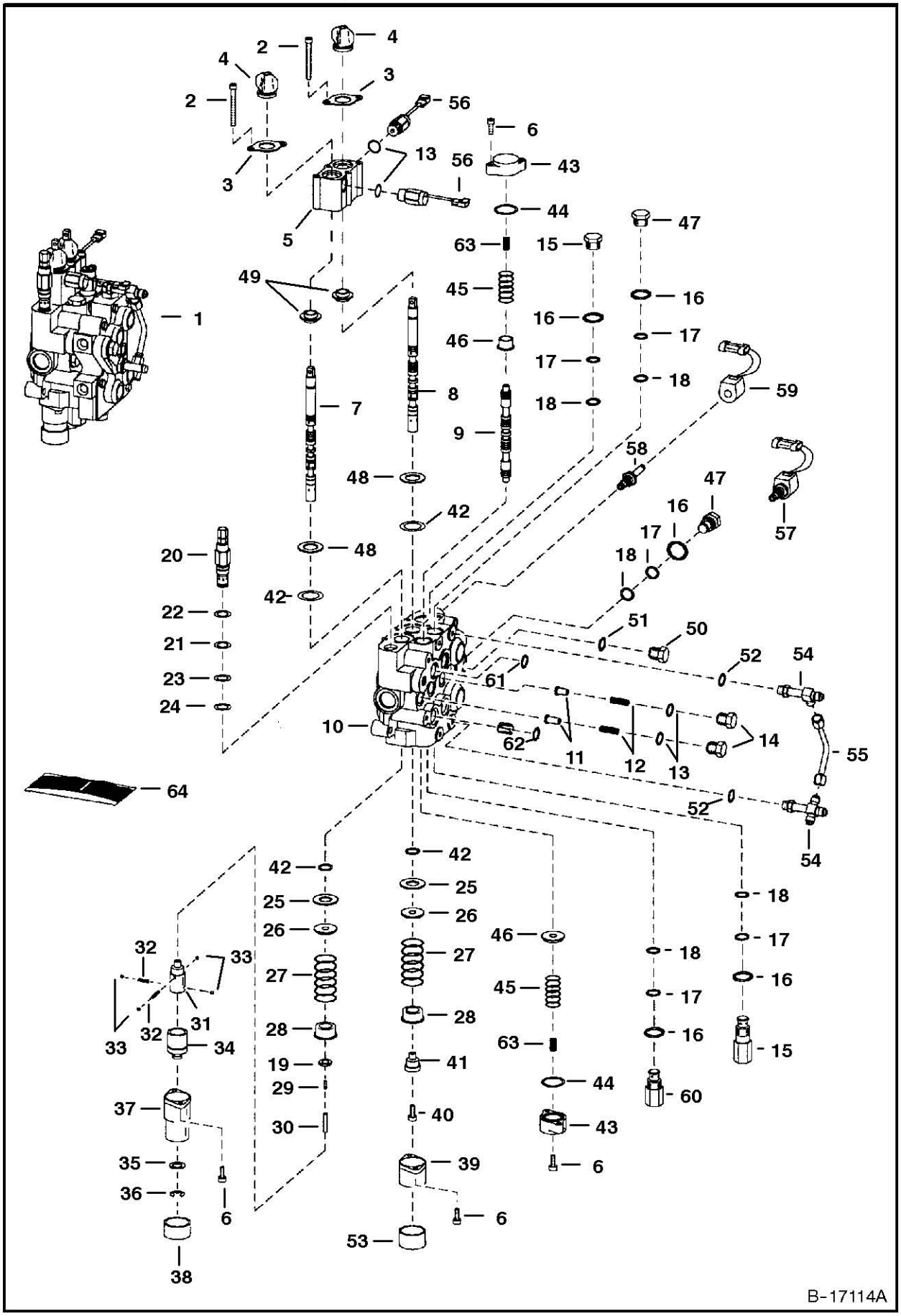

* HYDRAULIC CONTROL VALVE

Ref.N°	Part N°	Description	Remarks	Serial N°	Qty.
1	6814995	VALVE	W/Fittings - Ref. HYDRAULIC CONTROL VALVE(2) - HYDRAULIC CONTROL VALVE(56), HYDRAULIC CONTROL VALVE(58) & HYDRAULIC CONTROL VALV		1
1	6628571	VALVE	BICS control - See Page BICS CONTROL VALVE(1)		1
2	29G-444	BOLT			4
3	6589564	RETAINER			2
4	6587763	BOOT			2
5	6812031	BLOCK	lock		1
6	29G-416	SCREW			8
7	6674808	SPOOL	lift - # 1 or Red		1
7	6674809	SPOOL	lift - # 2 or Green		1
7	6674810	SPOOL	lift - # 3 or Black		1
8	6674814	SPOOL	tilt - # 1 or Red		1
8	6674815	SPOOL	tilt - # 2 or Green		1
8	6674816	SPOOL	tilt - # 3 or Black		1
9	6588074	SPOOL	auxiliary		3
10	NSS	BODY			1
11	6592115	SEAT	load check		3
12	6592117	SPRING			3
13	79K-8	O-RING			3
14	6592116	NUT	load check		3
15	6667549	VALVE	anti-cavity check -W/Ref. HYDRAULIC CONTROL VALVE(16)-HYDRAULIC CONTROL VALVE(18)		2
16	79K-10	O-RING			2
17	80K-14	WASHER	back-up		5
18	58K-14	O-RING	back-up washer required		5
19	54K-20002	O-RING			1
20	6678571	VALVE	main relief - W/Ref. HYDRAULIC CONTROL VALVE(21)-HYDRAULIC CONTROL VALVE(24)		1
21	58K-17	O-RING			1
22	6665569	WASHER	back-up		1
23	25K-20016	O-RING			1
24	6665570	RING	glide		1
25	6595663	BUSHING			2
26	6587523	WASHER			2
27	6587580	SPRING			2
28	6592100	COLLAR			2
29	6596807	PLUG			1
30	6586918	SCREW			1
31	6587575	ADAPTER			1
32	6592107	SPRING			2
33	6592105	BALL			4
34	6531270	SLEEVE			1
35	6592098	WASHER			1
36	799119	RETAINER			1
37	6589226	BONNET	.625' flange		1
38	6660644	CAP			1
39	6587633	BONNET			1
40	30G-416	SCREW			1
41	6592109	ADAPTER			1
42	6683274	SEAL			4

* HYDRAULIC CONTROL VALVE

Ref.N°	Part N°	Description	Remarks	Serial N°	Qty.
43	6588781	END CAP			2
44	58K-124	O-RING			2
45	6806007	SPRING			2
46	6595951	SLEEVE			2
47	6592720	PLUG	W/Ref. HYDRAULIC CONTROL VALVE(16)-HYDRAULIC CONTROL VALVE(18)		2
48	58K-127	O-RING			2
49	6805102	BUSHING			2
50	NAP	PLUG	W/Ref. * HYDRAULIC CONTROL VALVE(51) - socket head - tapered boss face - Was 90KV-8 [A]		1
50	90K-8	PLUG	W/Ref. * HYDRAULIC CONTROL VALVE(51) - socket head - flat boss face		1
51	95K-12	O-RING	tapered boss face		1
51	75K-12	O-RING	flat boss face		1
52	99K-6	O-RING	tapered boss face		x
52	79K-6	O-RING	flat boss face		4
53	6662848	CAP			1
54	6805241	CROSS	W/Ref. HYDRAULIC CONTROL VALVE(52)		2
54	97K-6	O-RING	flared end		6
55	6577690	TUBE			1
56	6677383	SOLENOID	W/Ref. HYDRAULIC CONTROL VALVE(13) - 5'(127 mm) wire		2
57		VALVE	solenoid - W/Ref. HYDRAULIC CONTROL VALVE(58) & HYDRAULIC CONTROL VALVE(59)		2
57		SEAL KIT			x
58	6681932	STEM	W/O screen		2
58	79K-10	O-RING			2
59		COIL	10 volt - W/Nut		2
60	6678574	VALVE	optional - port relief & anti-cav. W/Ref. HYDRAULIC CONTROL VALVE(16)-HYDRAULIC CONTROL VALVE(18) - 3500 PSI - use in tilt cylin		1
61	55K-204	O-RING	See Page BICS CONTROL VALVE(1)		1
62	55K-212	O-RING	See Page BICS CONTROL VALVE(1)		4
63	6596332	SPRING			2
64	6816253	SEAL KIT	complete - Ref. HYDRAULIC CONTROL VALVE(2), HYDRAULIC CONTROL VALVE(4), HYDRAULIC CONTROL VALVE(13), HYDRAULIC CONTROL VALVE(16)		x
64	6816252	SEAL KIT	two spool-Ref. HYDRAULIC CONTROL VALVE(2),HYDRAULIC CONTROL VALVE(4),HYDRAULIC CONTROL VALVE(19),HYDRAULIC CONTROL VALVE(29),HYD		x
64	6632279	SEAL KIT	main relief - Ref. HYDRAULIC CONTROL VALVE(21)-HYDRAULIC CONTROL VALVE(24)		x
64	6809425	SEAL KIT	Ref. HYDRAULIC CONTROL VALVE(13) & HYDRAULIC CONTROL VALVE(16)-HYDRAULIC CONTROL VALVE(18)		x

HYDRAULIC CONTROL VALVE
(Service Valve) (BICS Combo Valve)

NOTE: 6812927 Valve is minus all fittings, relief valves, anti-cav valves, solenoid coils and solenoid spools. Remove and use existing parts from old valve or order new parts as necessary.

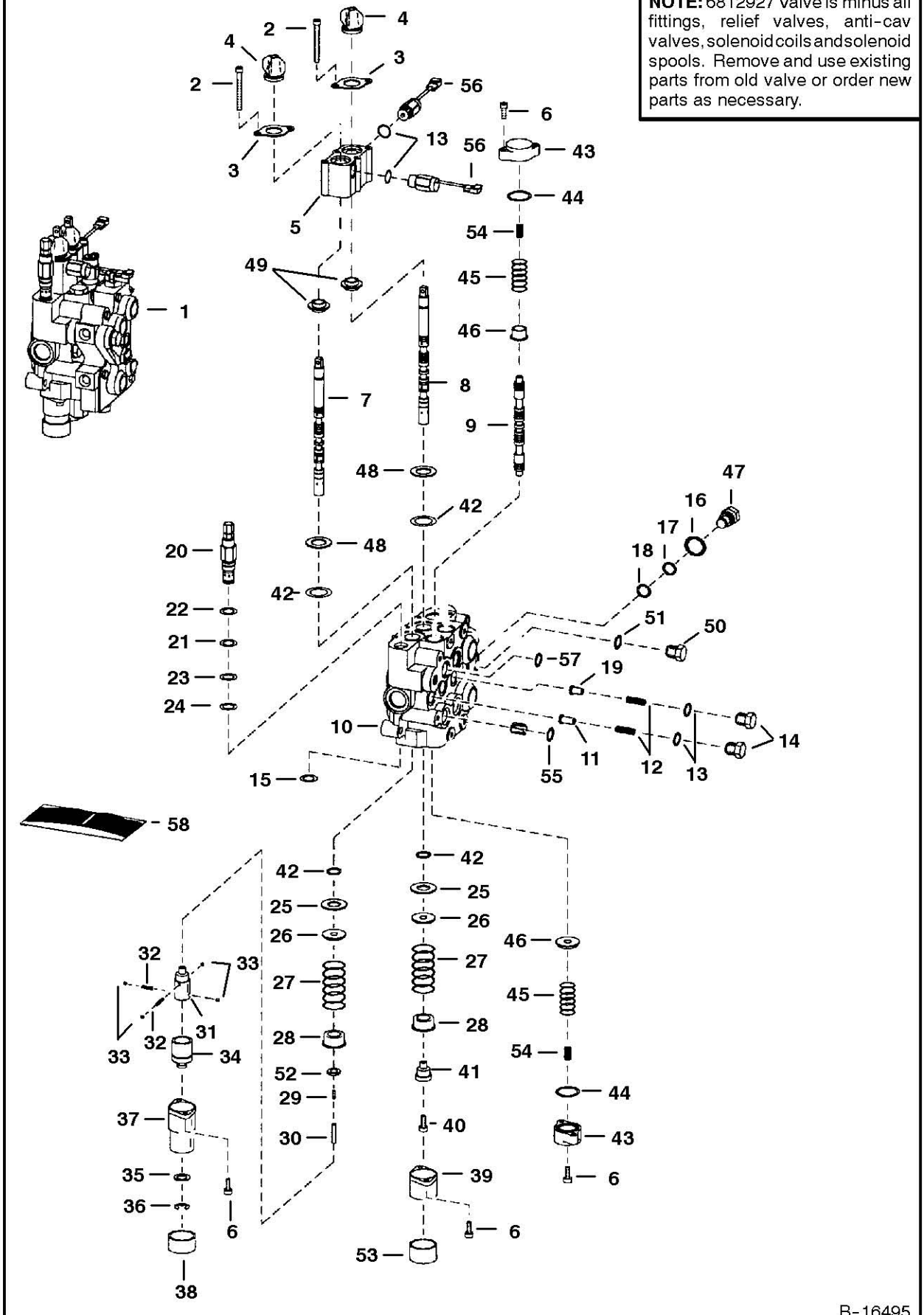

HYDRAULIC CONTROL VALVE

Ref.N°	Part N°	Description	Remarks	Serial N°	Qty.
1	6812927	VALVE	service - SEE NOTE		1
1	NSS	BLOCK	BICS control - See Page BICS CONTROL VALVE(1)		1
2	29G-444	BOLT			4
3	6589564	RETAINER			2
4	6587763	BOOT			2
5	6812031	BLOCK			1
6	29G-416	SCREW			8
7	6674808	SPOOL	lift - # 1 or Red		1
7	6674809	SPOOL	lift - # 2 or Green		1
7	6674810	SPOOL	lift - # 3 or Black		1
8	6674814	SPOOL	tilt - # 1 or Red		1
8	6674815	SPOOL	tilt - # 2 or Green		1
8	6674816	SPOOL	tilt - # 3 or Black		1
9	6588074	SPOOL	auxiliary		3
10	NSS	BODY			1
11	6592115	SEAT	load check		3
12	6592117	SPRING			3
13	79K-8	O-RING			3
14	6592116	NUT	load check		3
15	6668791	ORIFICE			1
16	79K-10	O-RING			2
17	80K-14	WASHER	back-up		5
18	58K-14	O-RING			5
19	6596569	SEAT			1
20	NAP	VALVE	main relief - W/Ref. HYDRAULIC CONTROL VALVE(21)-HYDRAULIC CONTROL VALVE(24) - pressure preset at factory - Was 6676199 [A]		1
20	6685017	VALVE	main relief - W/Ref. HYDRAULIC CONTROL VALVE(21)-HYDRAULIC CONTROL VALVE(24) - pressure to be set in field		1
21	58K-17	O-RING			1
22	6665569	WASHER	back-up		1
23	25K-20016	O-RING			1
24	6665570	RING	glide		1
25	6595663	BUSHING			2
26	6587523	WASHER			2
27	6587580	SPRING			2
28	6592100	COLLAR			2
29	6596807	PLUG			1
30	6586918	SCREW			1
31	6587575	ADAPTER			1
32	6592107	SPRING			2
33	6592105	BALL			4
34	6531270	SLEEVE			1
35	6592098	WASHER			1
36	799119	RETAINER			1
37	6589226	BONNET	.625' flange		1
38	6660644	CAP			1
39	6587633	BONNET			1
40	30G-416	SCREW			1
41	6592109	ADAPTER			1

HYDRAULIC CONTROL VALVE

Ref.N°	Part N°	Description	Remarks	Serial N°	Qty.
42	6683274	SEAL	Was 6665846 [A]		4
43	6588781	END CAP			2
44	58K-124	O-RING			2
45	6806007	SPRING			2
46	6595951	SLEEVE			2
47	6592720	PLUG	W/Ref. HYDRAULIC CONTROL VALVE(16)-HYDRAULIC CONTROL VALVE(18)		1
48	58K-127	O-RING			2
49	6805102	BUSHING			2
50	NAP	PLUG	W/Ref. HYDRAULIC CONTROL VALVE(51) - socket head - tapered boss face - Was 90KV-8 [A]		1
50	90K-8	PLUG	W/Ref. HYDRAULIC CONTROL VALVE(51) - socket head - flat boss face		1
51	95K-12	O-RING	tapered boss face		1
51	75K-12	O-RING	flat boss face		1
52	54K-20002	O-RING			1
53	6662848	CAP			1
54	6596332	SPRING			2
55	55K-212	O-RING	See Page BICS CONTROL VALVE(1)		4
56	6677383	SOLENOID	spool lock - 5' (127 mm) wire		2
57	55K-204	O-RING	See Page BICS CONTROL VALVE(1)		1
58	6816252	SEAL KIT	two spool - Ref. HYDRAULIC CONTROL VALVE(2), HYDRAULIC CONTROL VALVE(4), HYDRAULIC CONTROL VALVE(29), HYDRAULIC CONTROL VALVE(42		x
58	6632279	SEAL KIT	main relief - Ref. HYDRAULIC CONTROL VALVE(21)-HYDRAULIC CONTROL VALVE(24)		x
58	6809425	SEAL KIT	Ref. HYDRAULIC CONTROL VALVE(13) & HYDRAULIC CONTROL VALVE(16)-HYDRAULIC CONTROL VALVE(18)		x
58	6816715	SEAL KIT	complete - Ref. HYDRAULIC CONTROL VALVE(4), HYDRAULIC CONTROL VALVE(13), HYDRAULIC CONTROL VALVE(16)-HYDRAULIC CONTROL VALVE(18)		x

*HYDRAULIC CONTROL VALVE
(Service Valve) (BICS Combo Valve)

NOTE: 6815480 Valve is minus all fittings, relief valves, anti-cav valves, solenoid coils and solenoid spools. Remove and use existing parts from old valve or order new parts as necessary.

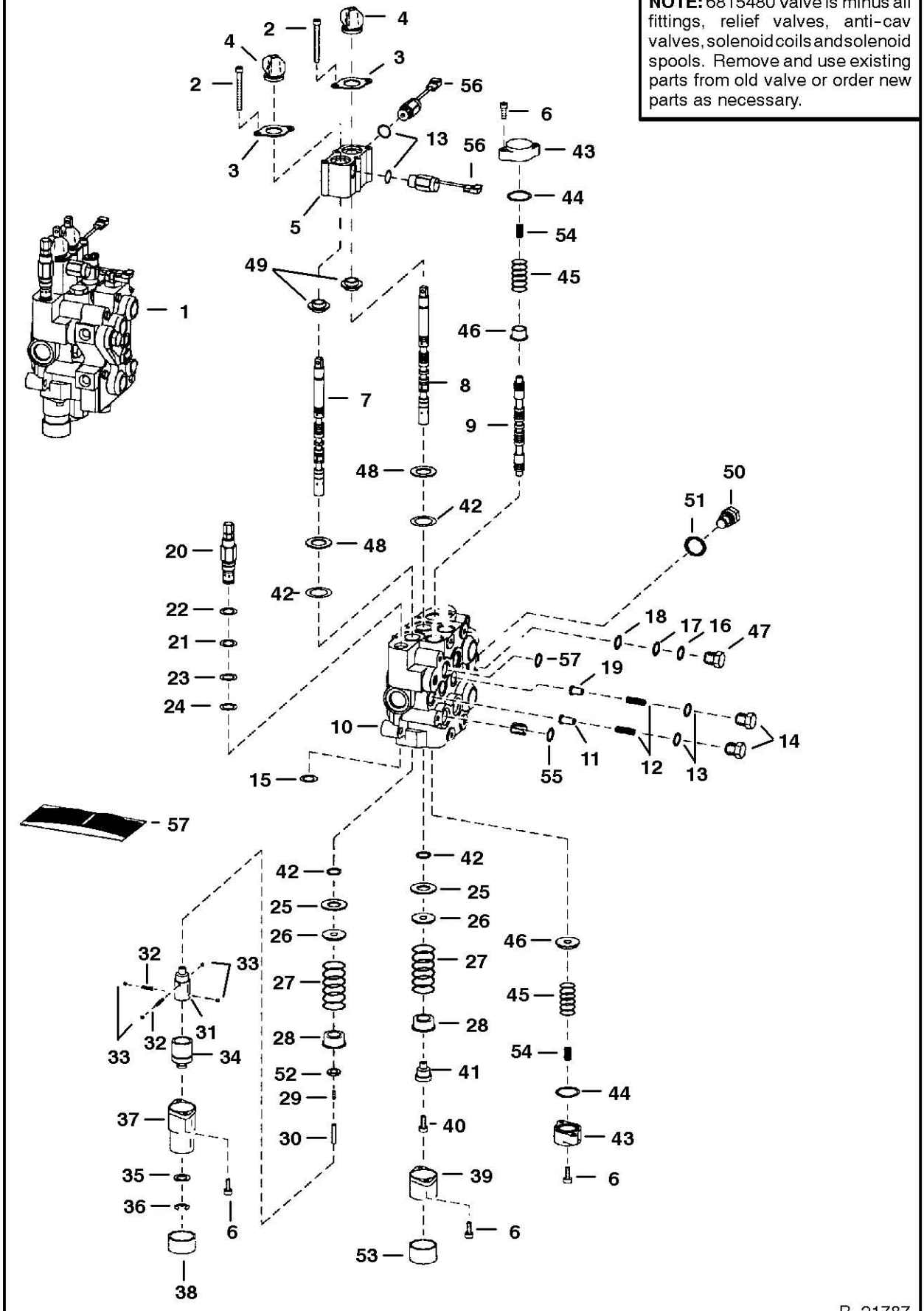

*

Ref.N°	Part N°	Description	Remarks	Serial N°	Qty.
1	6815480	VALVE	service - SEE NOTE		1
1	NSS	BLOCK	BICS control - See Page BICS CONTROL VALVE(1)		1
2	29G-444	BOLT			4
3	6589564	RETAINER			2
4	6587763	BOOT			2
5	6812031	BLOCK			1
6	29G-416	SCREW			8
7	6674808	SPOOL	lift - # 1 or Red		1
7	6674809	SPOOL	lift - # 2 or Green		1
7	6674810	SPOOL	lift - # 3 or Black		1
8	6674814	SPOOL	tilt - # 1 or Red		1
8	6674815	SPOOL	tilt - # 2 or Green		1
8	6674816	SPOOL	tilt - # 3 or Black		1
9	6588074	SPOOL	auxiliary		3
10	NSS	BODY			1
11	6592115	SEAT	load check		3
12	6592117	SPRING			3
13	79K-8	O-RING			3
14	6592116	NUT	load check		3
15	6668791	ORIFICE			1
16	79K-10	O-RING			2
17	80K-14	WASHER	back-up		5
18	58K-14	O-RING			5
19	55K-204	O-RING	See Page BICS CONTROL VALVE(1)		1
20	6685017	VALVE	main relief - W/Ref. HYDRAULIC CONTROL VALVE(21)-HYDRAULIC CONTROL VALVE(24) - pressure to be set in field		1
21	58K-17	O-RING			1
22	6665569	WASHER	back-up		1
23	25K-20016	O-RING			1
24	6665570	RING	glide		1
25	6595663	BUSHING			2
26	6587523	WASHER			2
27	6587580	SPRING			2
28	6592100	COLLAR			2
29	6596807	PLUG			1
30	6586918	SCREW			1
31	6587575	ADAPTER			1
32	6592107	SPRING			2
33	6592105	BALL			4
34	6531270	SLEEVE			1
35	6592098	WASHER			1
36	799119	RETAINER			1
37	6589226	BONNET	.625' flange		1
38	6660644	CAP			1
39	6587633	BONNET			1
40	30G-416	SCREW			1
41	6592109	ADAPTER			1
42	6683274	SEAL			4
43	6588781	END CAP			2
44	58K-124	O-RING			2

*

Ref.N°	Part N°	Description	Remarks	Serial N°	Qty.
45	6596332	SPRING			2
46	6595951	SLEEVE			2
47	6592720	PLUG	W/Ref. HYDRAULIC CONTROL VALVE(16)-HYDRAULIC CONTROL VALVE(18)		1
48	58K-127	O-RING			2
49	6805102	BUSHING			2
50	6806561	PLUG	W/Ref. HYDRAULIC CONTROL VALVE(51) - socket head		1
51	95K-12	O-RING			1
52	54K-20002	O-RING			1
53	6662848	CAP			1
54	6806007	SPRING	blue		2
55	55K-212	O-RING	See Page BICS CONTROL VALVE(1)		4
56	6677383	SOLENOID	spool lock - 5' (127 mm) wire		2
57	6816252	SEAL KIT	two spool - Ref. HYDRAULIC CONTROL VALVE(2), HYDRAULIC CONTROL VALVE(4), HYDRAULIC CONTROL VALVE(29), HYDRAULIC CONTROL VALVE(42		x
57	6632279	SEAL KIT	main relief - Ref. HYDRAULIC CONTROL VALVE(21)-HYDRAULIC CONTROL VALVE(24)		x
57	6809425	SEAL KIT	Ref. HYDRAULIC CONTROL VALVE(13) & HYDRAULIC CONTROL VALVE(16)-HYDRAULIC CONTROL VALVE(18)		x
57	6816715	SEAL KIT	complete - Ref. HYDRAULIC CONTROL VALVE(4), HYDRAULIC CONTROL VALVE(13), HYDRAULIC CONTROL VALVE(16)-HYDRAULIC CONTROL VALVE(18)		x

HYDRAULIC CONTROL VALVE
(AHC) (W/BICS Valve)

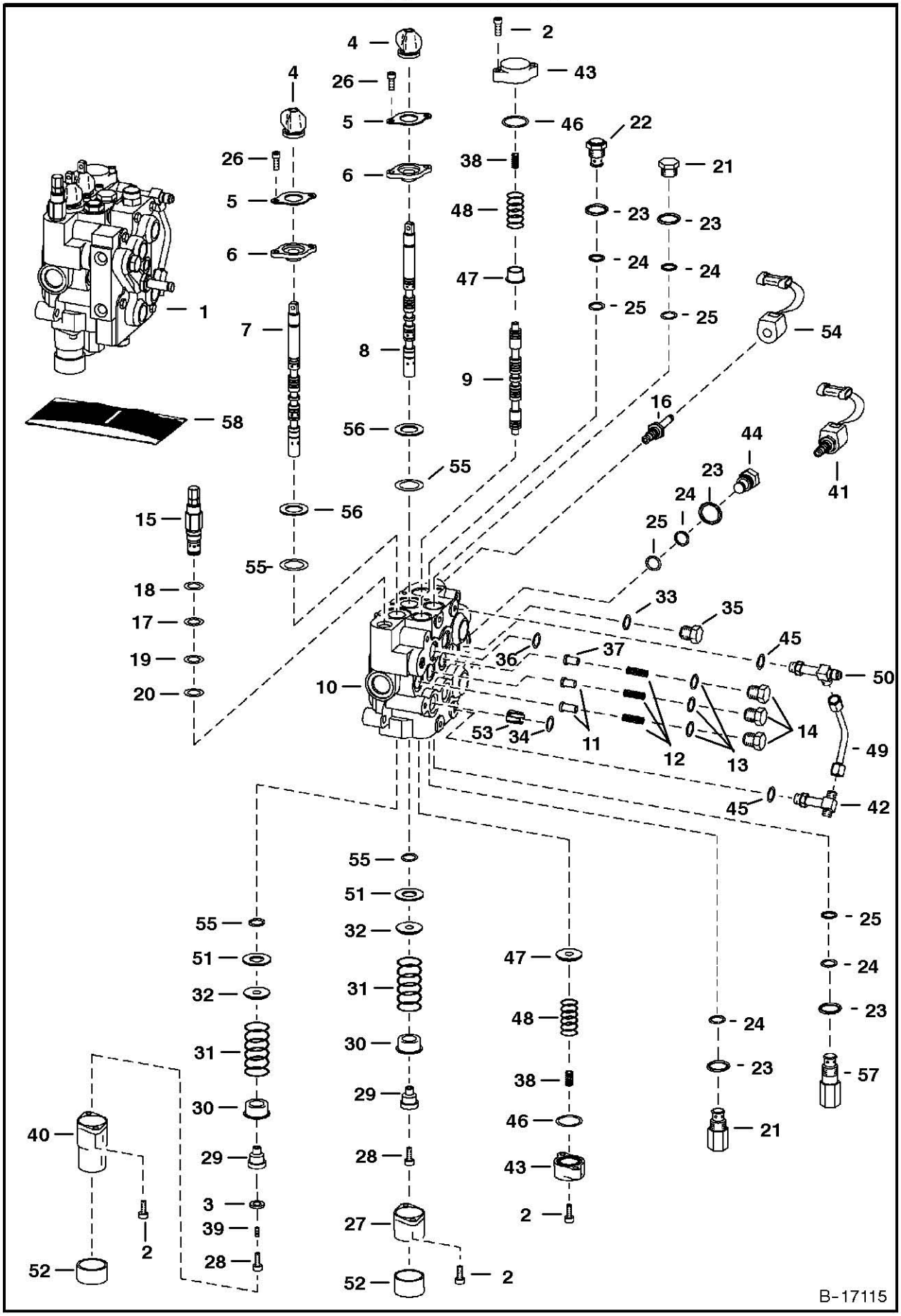

HYDRAULIC CONTROL VALVE

Ref.N°	Part N°	Description	Remarks	Serial N°	Qty.
1	NAP	VALVE	W/Fittings - Ref. HYDRAULIC CONTROL VALVE(2)-HYDRAULIC CONTROL VALVE(38), HYDRAULIC CONTROL VALVE(40)-HYDRAULIC CONTROL VALVE(53		1
1	6628571	VALVE	BICS control - See Page BICS CONTROL VALVE(1)		1
2	29G-416	SCREW			8
3	54K-20002	O-RING			1
4	6587763	BOOT			2
5	6589564	RETAINER			2
6	6589565	RETAINER	seal		2
7	6674297	SPOOL	lift - # 1 or Red		1
7	6674298	SPOOL	lift - # 2 or Green		1
7	6674299	SPOOL	lift - # 3 or Black		1
8	6677662	SPOOL	tilt -# 1 or Red-Was 6674300 [A]		1
8	6677663	SPOOL	'tilt -# 2 or Green-Was 6674301 [A]		1
8	6674302	SPOOL	tilt -# 3 or Black		1
9	6588074	SPOOL	auxiliary		3
10	NSS	BODY			1
11	6592115	SEAT	load check		2
12	6592117	SPRING			3
13	79K-8	O-RING			3
14	6592116	NUT	load check		3
15	6678571	VALVE	main relief - W/Ref. HYDRAULIC CONTROL VALVE(17)-HYDRAULIC CONTROL VALVE(20) 2025 PSI - Was 6676196 [B]		1
16	6666616	STEM			2
17	58K-17	O-RING			1
18	6665569	WASHER	back-up		1
19	25K-20016	O-RING			1
20	6665570	RING	glide		1
21	6678574	VALVE	port relief - 3400-3600 PSI - W/Ref. HYDRAULIC CONTROL VALVE(23) & HYDRAULIC CONTROL VALVE(24) -Was 6673184 [A]		1
22	6667549	VALVE	anti-cavity check -W/Ref. HYDRAULIC CONTROL VALVE(23)-HYDRAULIC CONTROL VALVE(25)		2
23	79K-10	O-RING			2
24	80K-14	WASHER	back-up		5
25	58K-14	O-RING	back-up washer required		5
25	6677106	O-RING	back-up washer not required		5
26	29G-412	SCREW			4
27	6587633	BONNET			1
28	30G-416	SCREW			2
29	6592109	ADAPTER			2
30	6592100	COLLAR			2
31	6587580	SPRING			2
32	6587523	WASHER			2
33	95K-12	O-RING	tapered boss face - Was 99K-12 [B]		1
33	75K-12	O-RING	flat boss face		1
34	55K-212	O-RING	See Page BICS CONTROL VALVE(1)		4
35	NAP	PLUG	W/Ref. HYDRAULIC CONTROL VALVE(33) - socket head - tapered boss face - Was 90KV-8 [A]		1
35	90K-8	PLUG	W/Ref. HYDRAULIC CONTROL VALVE(33) - socket head - flat boss face		1

HYDRAULIC CONTROL VALVE

Ref.N°	Part N°	Description	Remarks	Serial N°	Qty.
36	55K-204	O-RING	See Page BICS CONTROL VALVE(1)		1
37	6596569	SEAT			1
38	6806007	SPRING	white		2
39	6653395	VALVE	solenoid - W/Ref. HYDRAULIC CONTROL VALVE(58) & HYDRAULIC CONTROL VALVE(59)		2
39	6586459	SEAL KIT			x
40	6803092	BONNET	.625' flange		1
41	6801167	PLUG	plastic		1
42	6805696	TEE	W/Ref. HYDRAULIC CONTROL VALVE(6)		1
43	6588781	END CAP			2
44	6592720	PLUG	W/Ref. HYDRAULIC CONTROL VALVE(23)-HYDRAULIC CONTROL VALVE(25)		2
45	99K-6	O-RING	tapered boss face		x
45	79K-6	O-RING	flat boss face		x
46	58K-124	O-RING			2
47	6595951	SLEEVE			2
48	6596332	SPRING			2
49	6577690	TUBE			1
50	6805241	CROSS	W/Ref. HYDRAULIC CONTROL VALVE(45) - flat boss face		1
50	97K-6	O-RING	flared end		1
51	6595663	BUSHING			2
52	6662848	CAP			2
53	6534630	RESTRICTOR	.183/.187		1
54	6666547	COIL			2
55	6683274	SEAL	Was 6665846 [A]		4
56	58K-127	O-RING			2
57	6816250	SEAL KIT	one spool - Ref. HYDRAULIC CONTROL VALVE(2), HYDRAULIC CONTROL VALVE(4), HYDRAULIC CONTROL VALVE(26), HYDRAULIC CONTROL VALVE(55		x
57	6661328	SEAL KIT	main relief - Ref. HYDRAULIC CONTROL VALVE(17)-HYDRAULIC CONTROL VALVE(20) - main relief		x
57	6809425	SEAL KIT	Ref. HYDRAULIC CONTROL VALVE(13) & HYDRAULIC CONTROL VALVE(23)-HYDRAULIC CONTROL VALVE(25) - Was 6586461 [A]		x
57	6816715	SEAL KIT	complete - Ref. HYDRAULIC CONTROL VALVE(4), HYDRAULIC CONTROL VALVE(13), (HYDRAULIC CONTROL VALVE(17)-HYDRAULIC CONTROL VALVE(20		x

HYDRAULIC CONTROL VALVE
(ACS) (W/BICS Combo Valve)

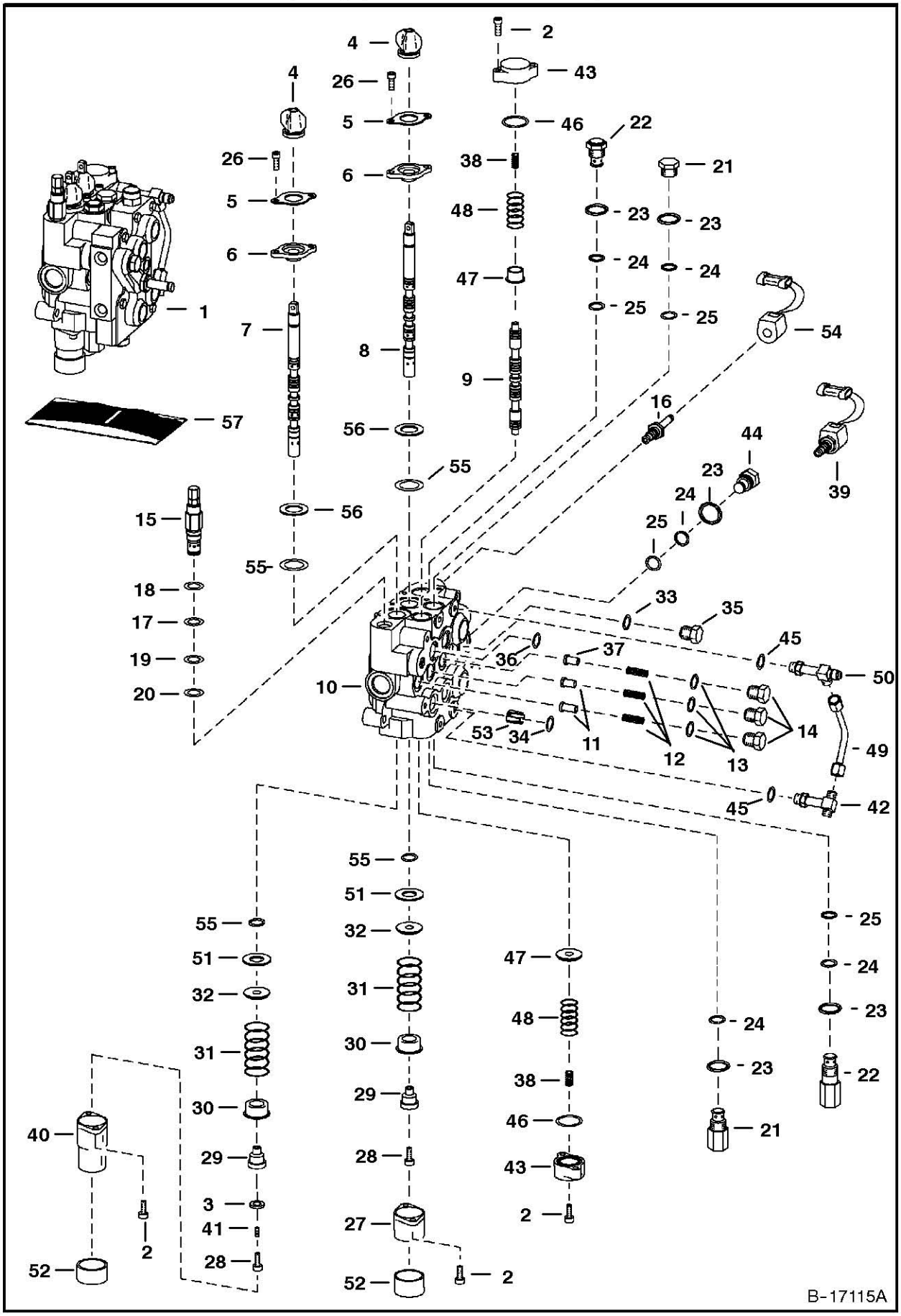

HYDRAULIC CONTROL VALVE

Ref.N°	Part N°	Description	Remarks	Serial N°	Qty.
1	NAP	VALVE	W/Fittings - Ref. HYDRAULIC CONTROL VALVE(2)-HYDRAULIC CONTROL VALVE(38), HYDRAULIC CONTROL VALVE(40)-HYDRAULIC CONTROL VALVE(53		1
1	NAP	VALVE	W/Fittings - Ref. HYDRAULIC CONTROL VALVE(2)-HYDRAULIC CONTROL VALVE(38) & HYDRAULIC CONTROL VALVE(40)-HYDRAULIC CONTROL VALVE(5		1
1	6628571	VALVE	BICS control - See Page BICS CONTROL VALVE(1)		1
2	29G-416	SCREW			8
3	54K-20002	O-RING			1
4	6587763	BOOT			2
5	6589564	RETAINER			2
6	6589565	RETAINER	seal		2
7	6677660	SPOOL	lift - # 1 or Red		1
7	6677661	SPOOL	lift - # 2 or Green		1
8	6677662	SPOOL	tilt - # 1 or Red		1
8	6677663	SPOOL	tilt - # 2 or Green		1
9	6588074	SPOOL	auxiliary		3
10	NSS	BODY			1
11	6592115	SEAT	load check		2
12	6592117	SPRING			3
13	79K-8	O-RING			3
14	6592116	NUT	load check		3
15	6678571	VALVE	main relief - W/Ref. HYDRAULIC CONTROL VALVE(17)-HYDRAULIC CONTROL VALVE(20) '2025 PSI - Was 6676196 [B]		1
16	6666616	STEM			2
17	58K-17	O-RING			1
18	6665569	WASHER	back-up		1
19	25K-20016	O-RING			1
20	6665570	RING	glide		1
21	6678574	VALVE	port relief - 3400-3600 PSI - W/Ref. HYDRAULIC CONTROL VALVE(23) & HYDRAULIC CONTROL VALVE(24)-Was 6673184 [A]		2
22	6667549	VALVE	anti-cavity check -W/Ref. HYDRAULIC CONTROL VALVE(23)-HYDRAULIC CONTROL VALVE(25)		2
23	79K-10	O-RING			2
24	80K-14	WASHER	back-up		5
25	58K-14	O-RING	back-up washer required		5
25	6677106	O-RING	back-up washer not required		5
26	29G-412	SCREW			4
27	6587633	BONNET			1
28	30G-416	SCREW			2
29	6592109	ADAPTER			1
30	6592100	COLLAR			2
31	6587580	SPRING			2
32	6587523	WASHER			2
33	95K-12	O-RING	tapered boss face - Was 99K-12 [B]		x
33	75K-12	O-RING	flat boss face		1
34	55K-212	O-RING			4
35	NAP	PLUG	W/Ref. HYDRAULIC CONTROL VALVE(33) - socket head - tapered boss face - Was 90KV-8 [A]		1

HYDRAULIC CONTROL VALVE

Ref.N°	Part N°	Description	Remarks	Serial N°	Qty.
35	90K-8	PLUG	W/Ref. HYDRAULIC CONTROL VALVE(33) - socket head - flat boss face		1
36	55K-204	O-RING			1
37	6596569	SEAT			1
38	6806007	SPRING	white		2
39	6653395	VALVE	solenoid - W/Ref. HYDRAULIC CONTROL VALVE(16) & HYDRAULIC CONTROL VALVE(54)		2
39	6586459	SEAL KIT			x
40	6803092	BONNET	.625' flange		1
41	6801167	PLUG	plastic		1
42	6805696	TEE	W/Ref. HYDRAULIC CONTROL VALVE(45)		1
42	97K-6	O-RING	flared end		1
43	6588781	END CAP			2
44	6592720	PLUG	W/Ref. HYDRAULIC CONTROL VALVE(23)-HYDRAULIC CONTROL VALVE(25)		1
45	99K-6	O-RING	tapered boss face		x
45	79K-6	O-RING	flat boss face		x
46	58K-124	O-RING			2
47	6595951	SLEEVE			2
48	6596332	SPRING			2
49	6577690	TUBE			1
50	6805241	CROSS	W/Ref. HYDRAULIC CONTROL VALVE(45) - flat boss face		1
50	97K-6	O-RING	flared end		1
51	6595663	BUSHING			2
52	6662848	CAP			1
53	6534630	RESTRICTOR	.183/.187		1
54	6666547	COIL			2
55	6683274	SEAL	Was 6665846 [A]		4
56	58K-127	O-RING			2
57	6816250	SEAL KIT	one spool - Ref. HYDRAULIC CONTROL VALVE(2), HYDRAULIC CONTROL VALVE(4), HYDRAULIC CONTROL VALVE(26), HYDRAULIC CONTROL VALVE(55		x
57	6632279	SEAL KIT	main relief - Ref. HYDRAULIC CONTROL VALVE(17)-HYDRAULIC CONTROL VALVE(20) - main relief		x
57	6809425	SEAL KIT	Ref. HYDRAULIC CONTROL VALVE(13) & HYDRAULIC CONTROL VALVE(23)-HYDRAULIC CONTROL VALVE(25) - Was 6586461 [A]		x
57	6816253	SEAL KIT	complete - Ref. HYDRAULIC CONTROL VALVE(4), HYDRAULIC CONTROL VALVE(6), HYDRAULIC CONTROL VALVE(13), (HYDRAULIC CONTROL VALVE(17		x

HYDRAULIC CONTROL VALVE
(ACS) (W/BICS Combo Valve)

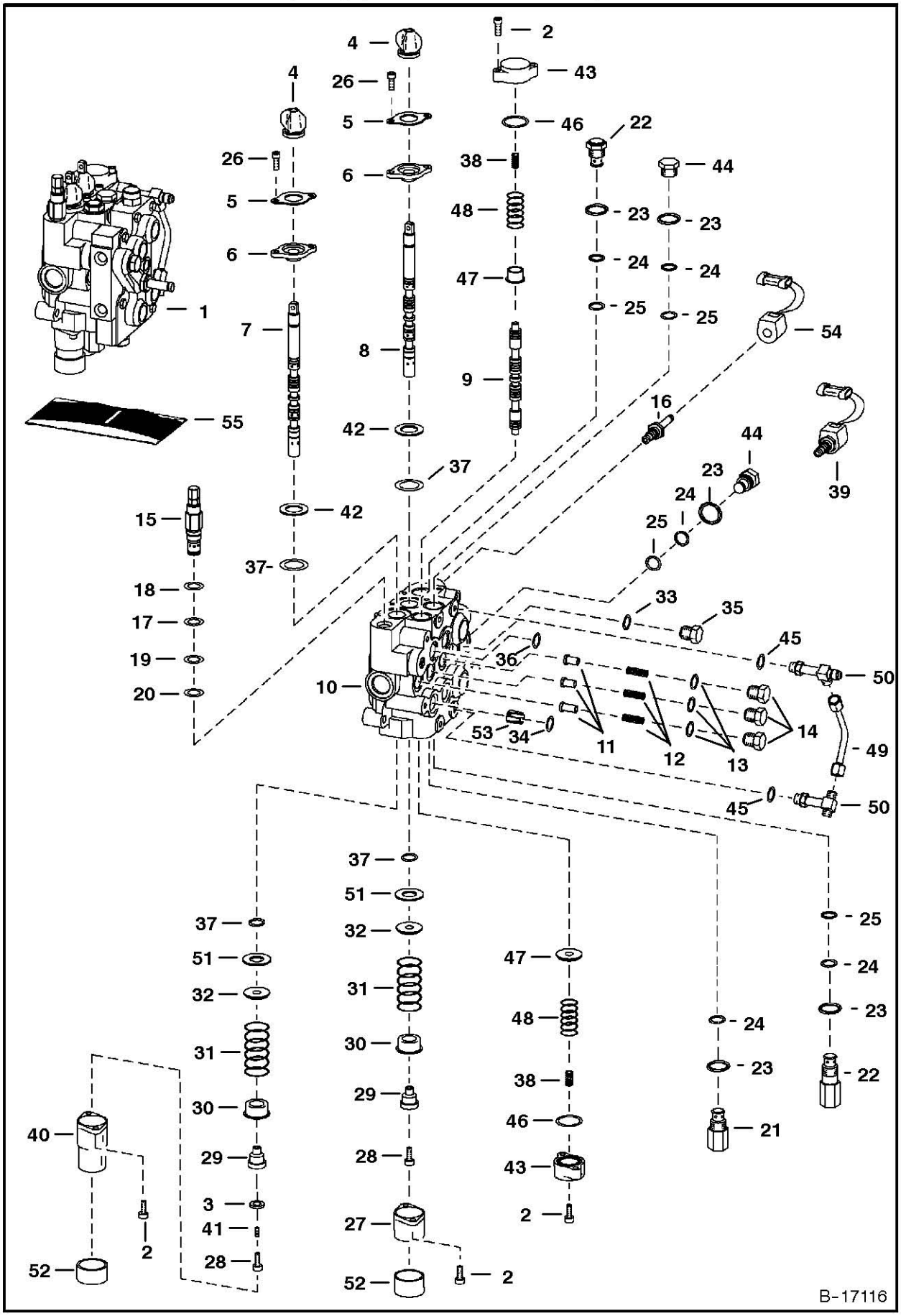

HYDRAULIC CONTROL VALVE

Ref.N°	Part N°	Description	Remarks	Serial N°	Qty.
1	NAP	VALVE	Order 6815690 Service Valve - See Page Was 6812664 [A]		1
1	6628571	VALVE	BICS control - See Page BICS CONTROL VALVE(1)		1
2	29G-416	SCREW			8
3	54K-20002	O-RING			1
4	6587763	BOOT			2
5	6589564	RETAINER			2
6	6589565	RETAINER	seal		2
7	6677660	SPOOL	lift - # 1 or Red		1
7	6677661	SPOOL	lift - # 2 or Green		1
8	6677662	SPOOL	tilt - # 1 or Red		1
8	6677663	SPOOL	tilt - # 2 or Green		1
9	6588074	SPOOL	auxiliary		3
10	NSS	BODY			1
11	6592115	SEAT	load check		3
12	6592117	SPRING			3
13	79K-8	O-RING			3
14	6592116	NUT	load check		3
15	6678571	VALVE	main relief - W/Ref. HYDRAULIC CONTROL VALVE(17)-HYDRAULIC CONTROL VALVE(20) 2025 PSI		1
16	6678892	STEM			2
17	58K-17	O-RING			1
18	6665569	WASHER	back-up		1
19	25K-20016	O-RING			1
20	6665570	RING	glide		1
21	6678574	VALVE	port relief - 3400-3600 PSI - W/Ref. HYDRAULIC CONTROL VALVE(23) & HYDRAULIC CONTROL VALVE(24) -Was 6673184 [A]		1
22	6667549	VALVE	anti-cavity check -W/Ref. HYDRAULIC CONTROL VALVE(23)-HYDRAULIC CONTROL VALVE(25)		2
23	79K-10	O-RING			2
24	80K-14	WASHER	back-up		5
25	58K-14	O-RING	back-up washer required		5
25	6677106	O-RING	back-up washer not required		5
26	29G-412	SCREW			4
27	6587633	BONNET			1
28	30G-416	SCREW			2
29	6592109	ADAPTER			2
30	6592100	COLLAR			2
31	6587580	SPRING			2
32	6587523	WASHER			2
33	95K-12	O-RING	tapered boss face		x
33	75K-12	O-RING	flat boss face		1
34	55K-212	O-RING			4
35	com3G}H~10{M				x
35	90K-8	PLUG	W/Ref. HYDRAULIC CONTROL VALVE(33) - socket head - flat boss face		1
36	55K-204	O-RING			1
37	6683274	SEAL	Was 6665846 [A]		4
38	6806007	SPRING	white		2
39	6678893	SOLENOID	solenoid - W/Ref. HYDRAULIC CONTROL VALVE(16) & HYDRAULIC CONTROL VALVE(54)		2

HYDRAULIC CONTROL VALVE

Ref.N°	Part N°	Description	Remarks	Serial N°	Qty.
39	6586459	SEAL KIT			x
40	6803092	BONNET	.625' flange		1
41	6801167	PLUG	plastic		1
42	58K-127	O-RING			2
43	6588781	END CAP			2
44	6592720	PLUG	W/Ref. HYDRAULIC CONTROL VALVE(23)-HYDRAULIC CONTROL VALVE(25)		2
45	99K-6	O-RING	tapered boss face		x
45	79K-6	O-RING	flat boss face		x
46	58K-124	O-RING			2
47	6595951	SLEEVE			2
48	6596332	SPRING			2
49	6577690	TUBE			1
50	6805241	CROSS	W/Ref. HYDRAULIC CONTROL VALVE(45)		2
50	97K-6	O-RING	flared end		2
51	6595663	BUSHING			2
52	6662848	CAP			2
53	6534630	RESTRICTOR	.183/.187		1
54	6678891	COIL	10 volt - W/nut		2
55	6816250	SEAL KIT	one spool - Ref. HYDRAULIC CONTROL VALVE(2), HYDRAULIC CONTROL VALVE(4), HYDRAULIC CONTROL VALVE(26), HYDRAULIC CONTROL VALVE(37		x
55	6632279	SEAL KIT	main relief - Ref. HYDRAULIC CONTROL VALVE(17)-HYDRAULIC CONTROL VALVE(20) - main relief		x
55	6809425	SEAL KIT	Ref. HYDRAULIC CONTROL VALVE(13) & HYDRAULIC CONTROL VALVE(23)-HYDRAULIC CONTROL VALVE(25)		x
55	6816253	SEAL KIT	complete - Ref. HYDRAULIC CONTROL VALVE(4), HYDRAULIC CONTROL VALVE(13), (HYDRAULIC CONTROL VALVE(17)-HYDRAULIC CONTROL VALVE(20		x

* HYDRAULIC CONTROL VALVE
(ACS) (W/BICS Combo Valve)

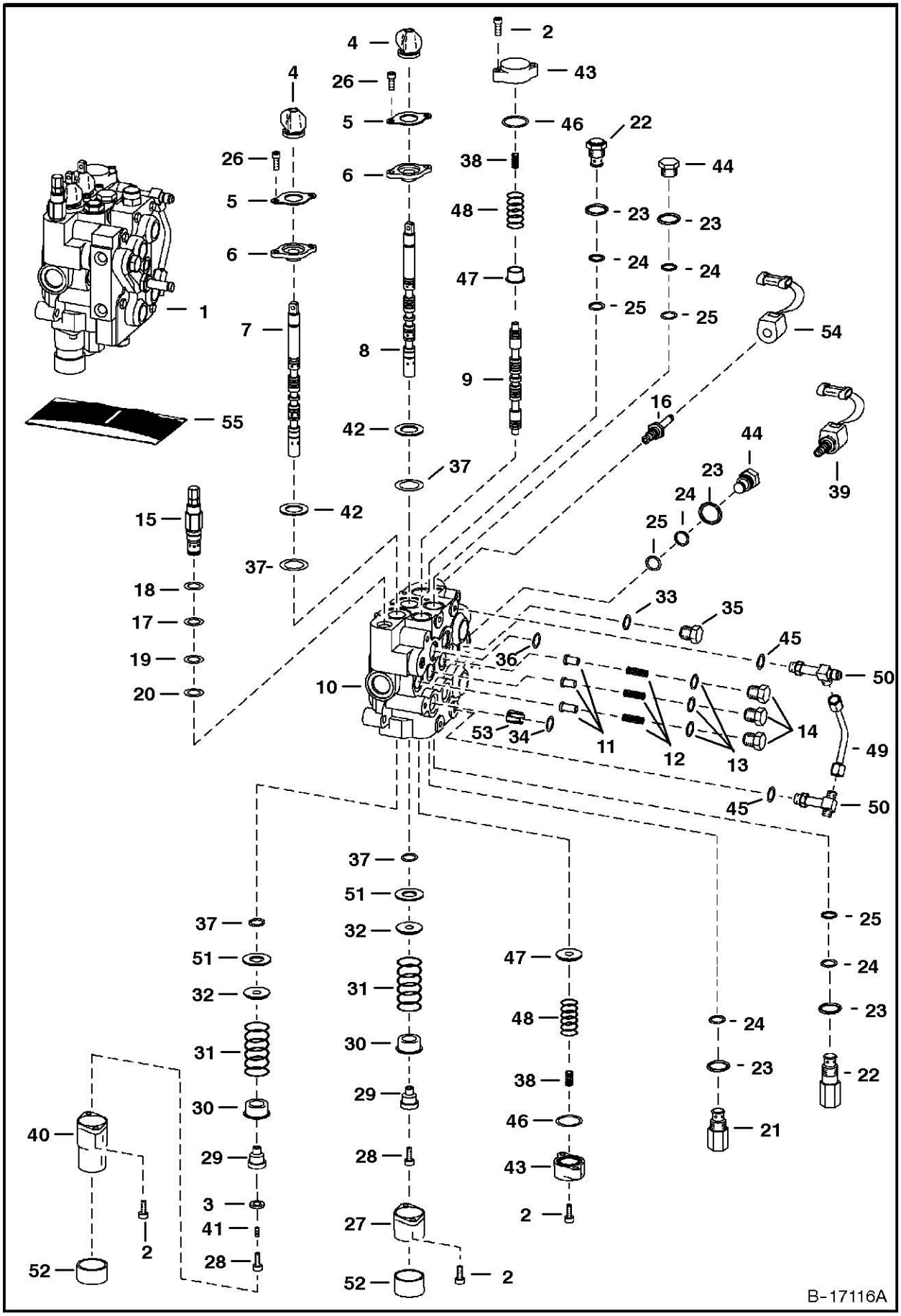

* HYDRAULIC CONTROL VALVE

Ref.N°	Part N°	Description	Remarks	Serial N°	Qty.
1	6814997	VALVE			1
1	6628571	VALVE	BICS control - See Page BICS CONTROL VALVE(1)		1
2	29G-416	SCREW			8
3	54K-20002	O-RING			1
4	6587763	BOOT			2
5	6589564	RETAINER			2
6	6589565	RETAINER	seal		2
7	6677660	SPOOL	lift - # 1 or Red		1
7	6677661	SPOOL	lift - # 2 or Green		1
8	6677662	SPOOL	tilt - # 1 or Red		1
8	6677663	SPOOL	tilt - # 2 or Green		1
9	6588074	SPOOL	auxiliary		3
10	NSS	BODY			1
11	6592115	SEAT	load check		3
12	6592117	SPRING			3
13	79K-8	O-RING			3
14	6592116	NUT	load check		3
15	6678571	VALVE	main relief - W/Ref. HYDRAULIC CONTROL VALVE(17)-HYDRAULIC CONTROL VALVE(20) 2025 PSI		1
16	6681932	STEM			2
17	58K-17	O-RING			1
18	6665569	WASHER	back-up		1
19	25K-20016	O-RING			1
20	6665570	RING	glide		1
21	6678574	VALVE	port relief - 3400-3600 PSI - W/Ref. HYDRAULIC CONTROL VALVE(23) & HYDRAULIC CONTROL VALVE(24)		1
22	6667549	VALVE	anti-cavity check -W/Ref. HYDRAULIC CONTROL VALVE(23)-HYDRAULIC CONTROL VALVE(25)		2
23	79K-10	O-RING			2
24	80K-14	WASHER	back-up		5
25	58K-14	O-RING	back-up washer required		5
25	6677106	O-RING	back-up washer not required		5
26	29G-412	SCREW			4
27	6587633	BONNET			1
28	30G-416	SCREW			2
29	6592109	ADAPTER			2
30	6592100	COLLAR			2
31	6587580	SPRING			2
32	6587523	WASHER			2
33	75K-12	O-RING	flat boss face		1
34	55K-212	O-RING			4
35	90K-8	PLUG	W/Ref. HYDRAULIC CONTROL VALVE(33) - socket head - flat boss face		1
36	55K-204	O-RING			1
37	6683274	SEAL	Was 6665846 [A]		4
38	6806007	SPRING	white		2
39		VALVE	solenoid - W/Ref. HYDRAULIC CONTROL VALVE(16) & HYDRAULIC CONTROL VALVE(54)		2
39		SEAL KIT			x
40	6803092	BONNET	.625' flange		1
41	6801167	PLUG	plastic		1

* HYDRAULIC CONTROL VALVE

Ref.N°	Part N°	Description	Remarks	Serial N°	Qty.
42	58K-127	O-RING			2
43	6588781	END CAP			2
44	6592720	PLUG	W/Ref. HYDRAULIC CONTROL VALVE(23)-HYDRAULIC CONTROL VALVE(25)		2
45	99K-6	O-RING	tapered boss face		x
45	79K-6	O-RING	flat boss face		x
46	58K-124	O-RING			2
47	6595951	SLEEVE			2
48	6596332	SPRING			2
49	6577690	TUBE			1
50	6805241	CROSS	W/Ref. * HYDRAULIC CONTROL VALVE(45)		2
50	97K-6	O-RING	flared end		2
51	6595663	BUSHING			2
52	6662848	CAP			2
53	6534630	RESTRICTOR	.183/.187		1
54		COIL	10 volt - W/nut		2
55	6816250	SEAL KIT	one spool - Ref. HYDRAULIC CONTROL VALVE(2), HYDRAULIC CONTROL VALVE(4), HYDRAULIC CONTROL VALVE(26), HYDRAULIC CONTROL VALVE(37		x
55	6632279	SEAL KIT	main relief - Ref. HYDRAULIC CONTROL VALVE(17)-HYDRAULIC CONTROL VALVE(20) - main relief		x
55	6809425	SEAL KIT	Ref. HYDRAULIC CONTROL VALVE(13) & HYDRAULIC CONTROL VALVE(23)-HYDRAULIC CONTROL VALVE(25)		x
55	6816253	SEAL KIT	complete - Ref. HYDRAULIC CONTROL VALVE(4), HYDRAULIC CONTROL VALVE(13), (HYDRAULIC CONTROL VALVE(17)-HYDRAULIC CONTROL VALVE(20		x

HYDRAULIC CONTROL VALVE
(Service Valve) (ACS)

NOTE: 6810026 Valve is minus all fittings, relief valves, anti-cav valves, solenoid coils and solenoid spools. Remove and use existing parts from old valve or order new parts as necessary.

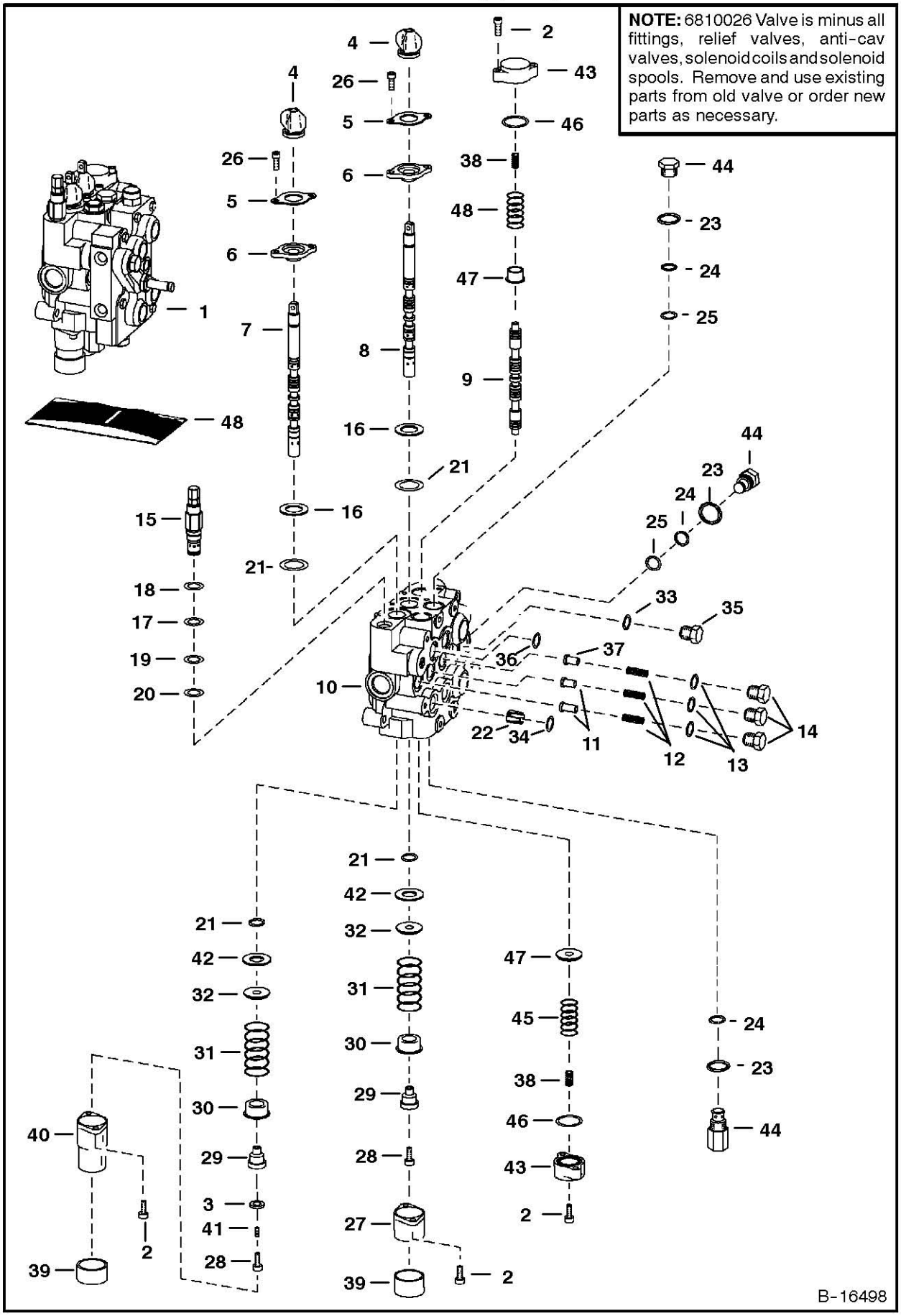

HYDRAULIC CONTROL VALVE

Ref.N°	Part N°	Description	Remarks	Serial N°	Qty.
1	6810026	VALVE			1
1	NSS	BODY	BICS control - See Page BICS CONTROL VALVE(1) - Was 6628571 [D]		1
2	29G-416	SCREW			8
3	54K-20002	O-RING			1
4	6587763	BOOT			2
5	6589564	RETAINER			2
6	6589565	RETAINER	seal		2
7	6677660	SPOOL	lift - # 1 or Red		1
7	6677661	SPOOL	lift - # 2 or Green		1
8	6677662	SPOOL	tilt - # 1 or Red		1
8	6677663	SPOOL	tilt - # 2 or Green		1
9	6588074	SPOOL	auxiliary		3
10	NSS	BODY			1
11	6592115	SEAT	load check		2
12	6592117	SPRING			3
13	79K-8	O-RING			3
14	6592116	NUT	load check		3
15	NAP	VALVE	main relief - W/Ref. HYDRAULIC CONTROL VALVE(17)-HYDRAULIC CONTROL VALVE(20) - pressure preset at factory - Was 6676196 [A]		1
15	6685017	VALVE	main relief - W/Ref. HYDRAULIC CONTROL VALVE(17)-HYDRAULIC CONTROL VALVE(20) - pressure to be set in field		1
16	58K-127	O-RING			2
17	58K-17	O-RING			1
18	6665569	WASHER	back-up		1
19	25K-20016	O-RING			1
20	6665570	RING	glide		1
21	6683274	SEAL	Was 6665846 [A]		4
22	6534630	RESTRICTOR	.134/.141		1
23	79K-10	O-RING			2
24	80K-14	WASHER	back-up		5
25	58K-14	O-RING	back-up washer required		5
25	6677106	O-RING	back-up washer not required		5
26	29G-412	SCREW			4
27	6587633	BONNET			1
28	30G-416	SCREW			2
29	6592109	ADAPTER			1
30	6592100	COLLAR			2
31	6587580	SPRING			2
32	6587523	WASHER			2
33	95K-12	O-RING	tapered boss face		x
33	75K-12	O-RING	flat boss face		1
34	55K-212	O-RING			4
35	NAP	PLUG	W/Ref. HYDRAULIC CONTROL VALVE(33) - socket head - tapered boss face - Was 90KV-8 [A]		1
35	90K-8	PLUG	W/Ref. HYDRAULIC CONTROL VALVE(33) - socket head - flat boss face		1
36	55K-204	O-RING			1
37	6596569	SEAT			1
38	6589045	SPRING	white		2

HYDRAULIC CONTROL VALVE

Ref.N°	Part N°	Description	Remarks	Serial N°	Qty.
39	6662848	CAP			1
40	6803092	BONNET	.625' flange		1
41	6801167	PLUG	plastic		1
42	6595663	BUSHING			2
43	6588781	END CAP			2
44	6592720	PLUG	W/Ref. HYDRAULIC CONTROL VALVE(23)-HYDRAULIC CONTROL VALVE(25)		5
45	6596332	SPRING			2
46	58K-124	O-RING			2
47	6595951	SLEEVE			2
48	6816250	SEAL KIT	one spool - Ref. HYDRAULIC CONTROL VALVE(2), HYDRAULIC CONTROL VALVE(4), HYDRAULIC CONTROL VALVE(16), HYDRAULIC CONTROL VALVE(21		x
48	6632279	SEAL KIT	main relief - Ref. HYDRAULIC CONTROL VALVE(17)-HYDRAULIC CONTROL VALVE(20) - main relief		x
48	6809425	SEAL KIT	Ref. HYDRAULIC CONTROL VALVE(13) & HYDRAULIC CONTROL VALVE(23)-HYDRAULIC CONTROL VALVE(25)		x
48	6816253	SEAL KIT	complete - Ref. HYDRAULIC CONTROL VALVE(2), HYDRAULIC CONTROL VALVE(4), HYDRAULIC CONTROL VALVE(13), HYDRAULIC CONTROL VALVE(16)		x

* HYDRAULIC CONTROL VALVE
(Service Valve) (ACS)

NOTE: 6815690 Valve is minus all fittings, relief valves, anti-cav valves, solenoid coils and solenoid spools. Remove and use existing parts from old valve or order new parts as necessary.

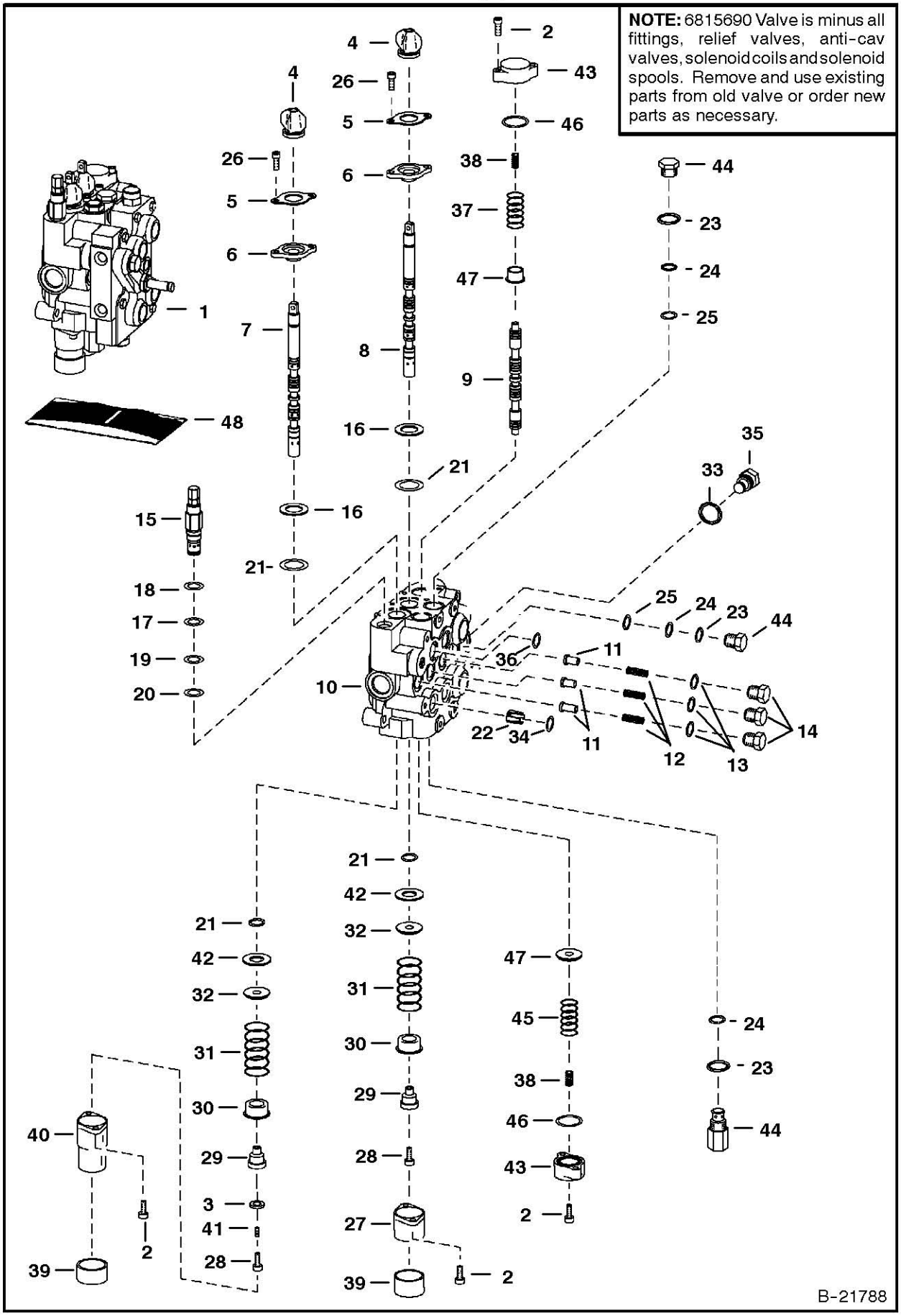

* HYDRAULIC CONTROL VALVE

Ref.N°	Part N°	Description	Remarks	Serial N°	Qty.
1	6815690	VALVE			1
1	NSS	BODY	BICS control - See Page BICS CONTROL VALVE(1) - Was 6628571 [D]		1
2	29G-416	SCREW			8
3	54K-20002	O-RING			1
4	6587763	BOOT			2
5	6589564	RETAINER			2
6	6589565	RETAINER	seal		2
7	6677660	SPOOL	lift - # 1 or Red		1
7	6677661	SPOOL	lift - # 2 or Green		1
8	6677662	SPOOL	tilt - # 1 or Red		1
8	6677663	SPOOL	tilt - # 2 or Green		1
9	6588074	SPOOL	auxiliary		3
10	NSS	BODY			1
11	6592115	SEAT	load check		2
12	6592117	SPRING			3
13	79K-8	O-RING			3
14	6592116	NUT	load check		3
15	NAP	VALVE	main relief - W/Ref. HYDRAULIC CONTROL VALVE(17)-HYDRAULIC CONTROL VALVE(20) - pressure preset at factory - Was 6676196 [A]		1
15	6685017	VALVE	main relief - W/Ref. HYDRAULIC CONTROL VALVE(17)-HYDRAULIC CONTROL VALVE(20) - pressure to be set in field		1
16	58K-127	O-RING			2
17	58K-17	O-RING			1
18	6665569	WASHER	back-up		1
19	25K-20016	O-RING			1
20	6665570	RING	glide		1
21	6683274	SEAL	Was 6665846 [A]		4
22	6534630	RESTRICTOR	.134/.141		1
23	79K-10	O-RING			2
24	80K-14	WASHER	back-up		5
25	58K-14	O-RING	back-up washer required		5
25	6677106	O-RING	back-up washer not required		5
26	29G-412	SCREW			4
27	6587633	BONNET			1
28	30G-416	SCREW			2
29	6592109	ADAPTER			1
30	6592100	COLLAR			2
31	6587580	SPRING			2
32	6587523	WASHER			2
33	95K-12	O-RING	tapered boss face		x
33	75K-12	O-RING	flat boss face		1
34	55K-212	O-RING			4
35	NAP	PLUG	W/Ref. HYDRAULIC CONTROL VALVE(33) - socket head - tapered boss face - Was 90KV-8 [A]		1
35	90K-8	PLUG	W/Ref. HYDRAULIC CONTROL VALVE(33) - socket head - flat boss face		1
36	55K-204	O-RING			1
37	6596569	SEAT			1
38	6589045	SPRING	white		2

* HYDRAULIC CONTROL VALVE

Ref.N°	Part N°	Description	Remarks	Serial N°	Qty.
39	6662848	CAP			1
40	6803092	BONNET	.625' flange		1
41	6801167	PLUG	plastic		1
42	6595663	BUSHING			2
43	6588781	END CAP			2
44	6592720	PLUG	W/Ref. HYDRAULIC CONTROL VALVE(23)-HYDRAULIC CONTROL VALVE(25)		5
45	6596332	SPRING			2
46	58K-124	O-RING			2
47	6595951	SLEEVE			2
48	6596332	SPRING			2
49	6816250	SEAL KIT	one spool - Ref. HYDRAULIC CONTROL VALVE(2), HYDRAULIC CONTROL VALVE(4), HYDRAULIC CONTROL VALVE(16), HYDRAULIC CONTROL VALVE(21		x
49	6632279	SEAL KIT	main relief - Ref. HYDRAULIC CONTROL VALVE(17)-HYDRAULIC CONTROL VALVE(20) - main relief		x
49	6809425	SEAL KIT	Ref. HYDRAULIC CONTROL VALVE(13) & HYDRAULIC CONTROL VALVE(23)-HYDRAULIC CONTROL VALVE(25)		x
49	6816253	SEAL KIT	complete - Ref. HYDRAULIC CONTROL VALVE(2), HYDRAULIC CONTROL VALVE(4), HYDRAULIC CONTROL VALVE(13), HYDRAULIC CONTROL VALVE(16)		x

BICS CONTROL VALVE

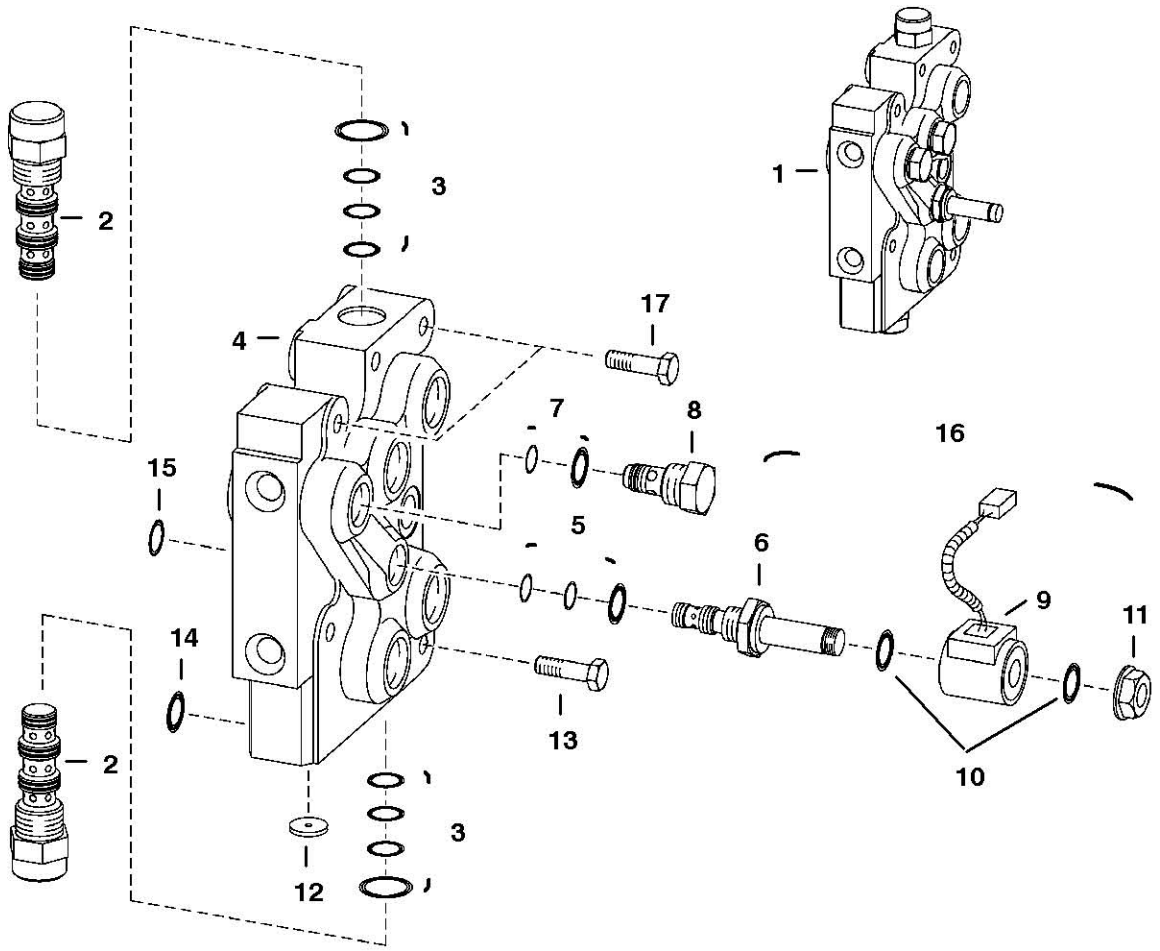

BICS CONTROL VALVE

Ref.N°	Part N°	Description	Remarks	Serial N°	Qty.
1	6628571	VALVE	Ref. BICS CONTROL VALVE(2) - BICS CONTROL VALVE(8)		1
2	6668765	VALVE	pilot operated		2
3	6669734	SEAL KIT			x
4	NSS	BODY			1
5	6669732	SEAL KIT			x
6	6667687	STEM	solenoid valve		1
7	6669733	SEAL KIT			x
8	6669057	CHECK VALVE	filter		1
9	6671025	COIL	W/ diode		x
10	54K-20028	O-RING			2
11	6668820	NUT			1
12	6668791	ORIFICE			1
13	43C-532	BOLT			4
14	55K-212	O-RING			4
15	55K-204	O-RING			1
16	6672471	SOLENOID	solenoid - Ref. BICS CONTROL VALVE(5), BICS CONTROL VALVE(6) & BICS CONTROL VALVE(9) - BICS CONTROL VALVE(11)		x
17	43C-524	BOLT			2

MANUAL LIFT RELEASE VALVE

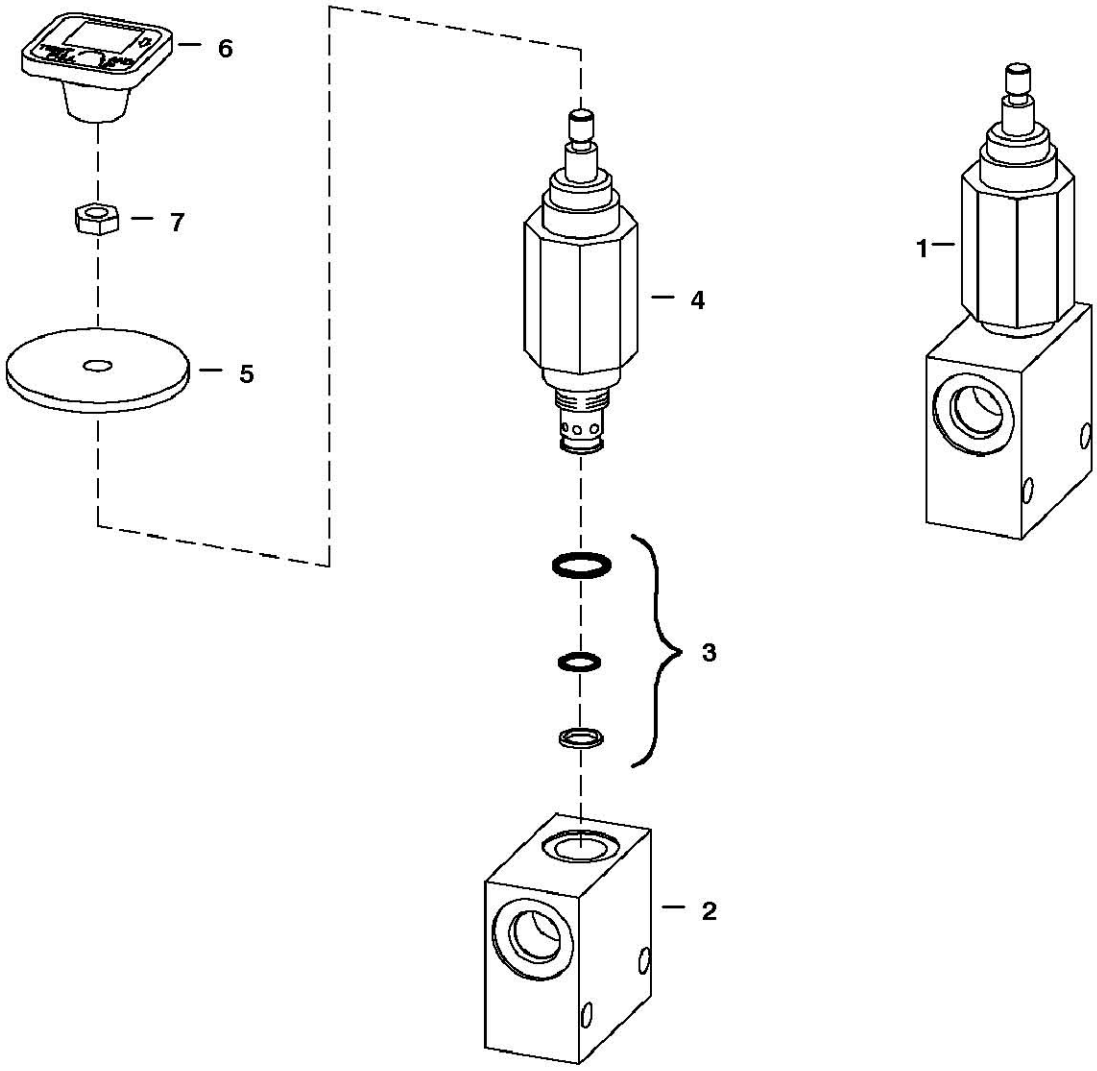

PE-1547

MANUAL LIFT RELEASE VALVE

Ref.N°	Part N°	Description	Remarks	Serial N°	Qty.
1	6667844	VALVE	Ref. MANUAL LIFT RELEASE VALVE(2)-MANUAL LIFT RELEASE VALVE(4)		1
2	NSS	BLOCK			1
3	6669087	SEAL KIT			1
4	6669085	VALVE			1
5	6707101	WASHER	neoprene		1
6	6668913	KNOB	red square		1
7	7D-4	NUT			1

PRESSURE RELEASE VALVE
(Front Auxiliary)

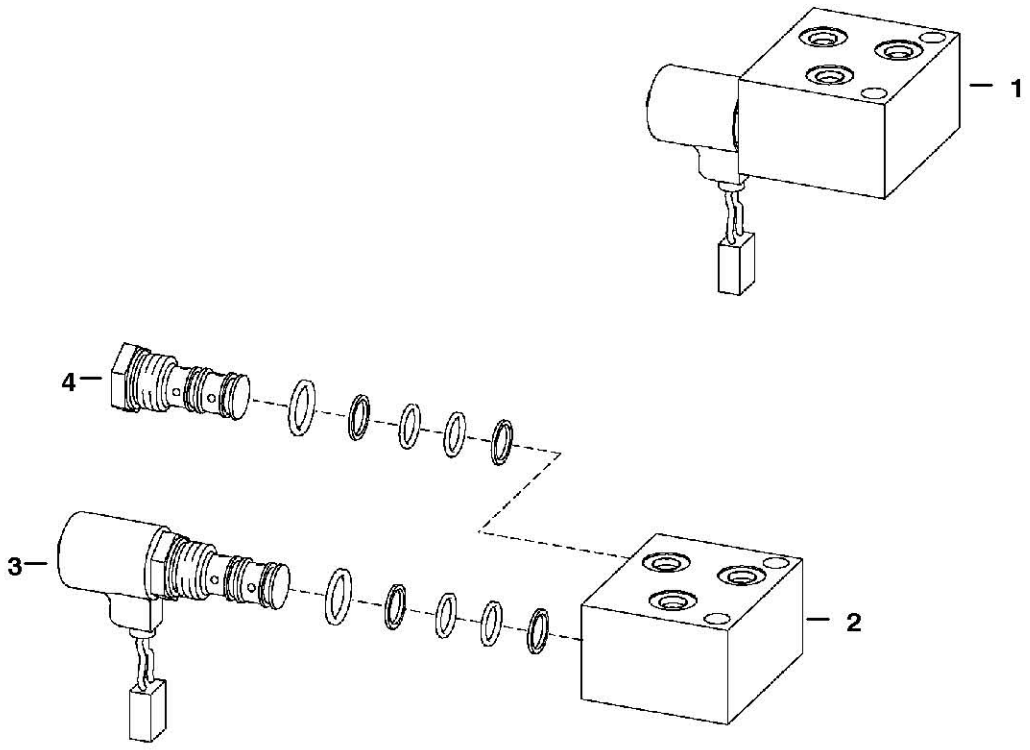

PE-1017

PRESSURE RELEASE VALVE

Ref.N°	Part N°	Description	Remarks	Serial N°	Qty.
1	NAP	VALVE	W/.4375' threaded ports - Order 6678150 Valve & (3) of '15KV-5 Adapter -Was 6674372 [A]		1
1	6678150	VALVE	W/.5625' threaded ports		1
2	NSS	BLOCK			1
3	NSS	VALVE	solenoid		1
3	6675285	STEM			1
3	6676564	SEAL KIT			1
3	6672962	COIL			1
3	6676566	NUT			1
4	6675284	SHUTTLE VALVE			1
4	6657409	SEAL KIT			1

BUCKET POSITIONING VALVE

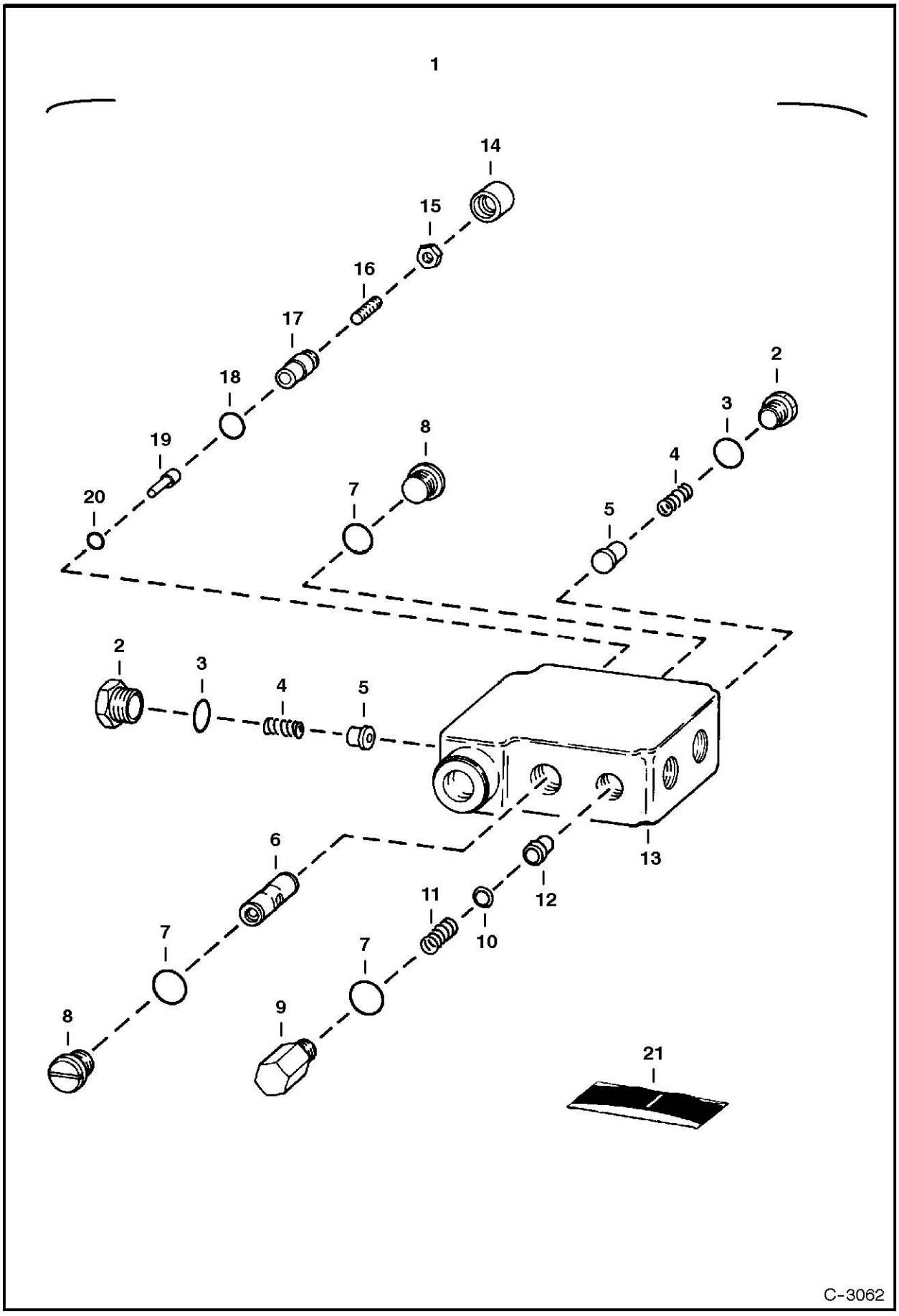

BUCKET POSITIONING VALVE

Ref.N°	Part N°	Description	Remarks	Serial N°	Qty.
1	6666341	VALVE	Ref. BUCKET POSITIONING VALVE(2)-BUCKET POSITIONING VALVE(20)		1
2	6647784	PLUG	W/Ref. BUCKET POSITIONING VALVE(3)		2
3	79K-8	O-RING			2
4	6647785	SPRING			2
5	6647783	LOAD CHECK			2
6	NSS	SPOOL			1
7	58K-116	O-RING	backup - Was 80K-116 [B]		3
8	6647780	PLUG	W/Ref. BUCKET POSITIONING VALVE(7)		2
9	6667176	PLUG	W/Ref. BUCKET POSITIONING VALVE(7)		1
10	6667680	SNAP RING			1
11	6648294	SPRING			1
12	NSS	SPOOL			1
13	NSS	BODY			1
14	6667676	COVER			1
15	6631561	NUT			1
16	6648293	SCREW			1
17	6647778	CAP			1
18	79K-6	O-RING	Was 6634874 [A]		1
19	6647777	PIN			1
20	6667677	O-RING			1
21	6647786	SEAL KIT	Ref. BUCKET POSITIONING VALVE(3), BUCKET POSITIONING VALVE(7), BUCKET POSITIONING VALVE(14), BUCKET POSITIONING VALVE(18) & BUCK		1

HYDROSTATIC CIRCUITRY

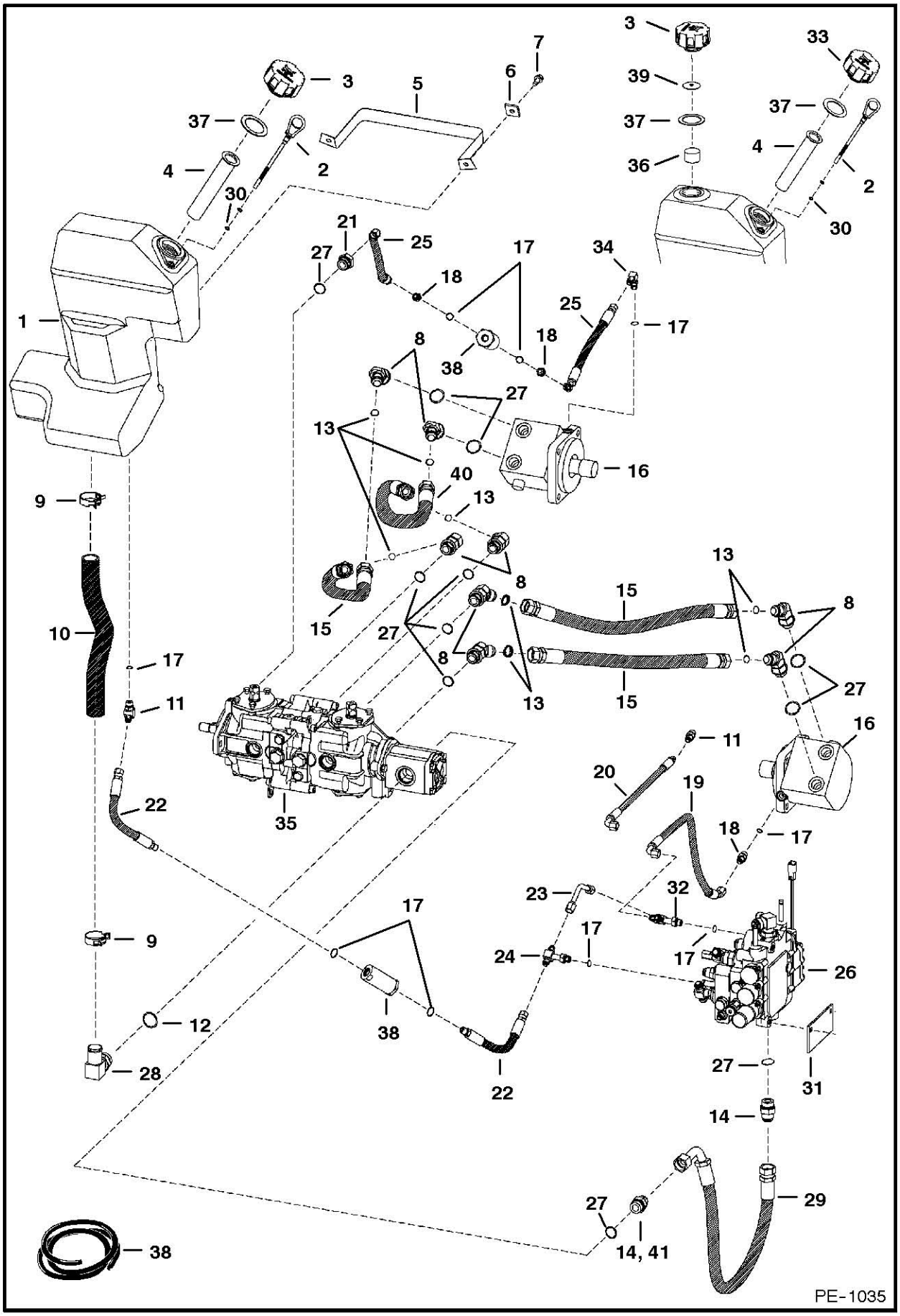

HYDROSTATIC CIRCUITRY

Ref.N°	Part N°	Description	Remarks	Serial N°	Qty.
1	NAP	TANK	.93' I.D. Suction Outlet - W/vented fill cap & breather cap - Order 6732278 Tank,6728149 Cap, 6701552 Baffle, 6700631 Gasket &	5158 30001-	1
1				5162 20001-	1
1	NAP	TANK	W/vented fill cap - Order 6732278 Tank,6728149 Cap, 6701552 Baffle, 6700631 Gasket & 6703427 Foam Filter - See Page * HYDROSTATI	5158 -44249	1
1				5162 -26049	1
2	6577459	DIPSTICK	W/Ref. HYDROSTATIC CIRCUITRY(30)		1
3	6727475	CAP	breather - Also Order Ref. HYDROSTATIC CIRCUITRY(37) - Was 6577785 [B]	5158 30001-	1
3				5162 20001-	1
3	6727475	CAP	breather - Also Order Ref. HYDROSTATIC CIRCUITRY(37)	5158 -44249	1
3				5162 -26049	1
4	6569219	SCREEN			1
5	6718518	BAND			1
6	6559447	WASHER			2
7	84G-3712	BOLT			2
8	6714902	ELBOW	W/Ref. HYDROSTATIC CIRCUITRY(27) - flat boss face - face seal - Was 52E-1212 [A]	5158 30001-	8
8				5162 20001-	1
8	6718181	ELBOW	W/Ref. HYDROSTATIC CIRCUITRY(27) - check boss face to determine correct replacement O-ring - mega seal	5158 -44249	8
8				5162 -26049	1
9	5HM-42	CLAMP	constant tension		2
9	6672281	CLAMP	constant torque		2
10	6718354	HOSE	1.25' (31,8 mm) I.D.		1
11	NAP	ELBOW	W/Ref. HYDROSTATIC CIRCUITRY(17) - tapered boss face - Was 18KV-5 [A]		1
11	97K-6	O-RING	flared end		1
11	18KB-606	ELBOW	W/Ref. HYDROSTATIC CIRCUITRY(17) - flat boss face		1
12	99K-16	O-RING	tapered boss face		x
12	79K-16	O-RING	flat boss face		x
13	58K-18	O-RING	Use W/Ref. HYDROSTATIC CIRCUITRY(8) (52E-1212inD1} Elbow)		8
14	NAP	ADAPTER	W/Ref. HYDROSTATIC CIRCUITRY(27) - tapered boss face - Was 15KV-8 [A]	5158 30001-	2
14				5162 20001-	2
14	97K-12	O-RING	flared end		2
14	15KB-1212	ADAPTER	W/Ref. HYDROSTATIC CIRCUITRY(27) - flat boss face - Was 6812646 [A]	5158 -44249	1
14				5162 -26049	1
15	6671619	HOSE	face seal - Use W/Ref. HYDROSTATIC CIRCUITRY(8) (52E-1212inD1} Elbow)		3
15	6726378	HOSE	mega seal - Use W/Ref. HYDROSTATIC CIRCUITRY(8) (6718181inD1} Elbow)		3
16		MOTOR	See Page HYDROSTATIC MOTOR(1)		2
17	99K-6	O-RING	tapered boss face		x
17	79K-6	O-RING	flat boss face		x
18	NAP	ADAPTER	W/Ref. HYDROSTATIC CIRCUITRY(17) - tapered boss face - Was 15KV-5 [A]		3
18	97K-6	O-RING	flared end		3

HYDROSTATIC CIRCUITRY

Ref.N°	Part N°	Description	Remarks	Serial N°	Qty.
18	15KB-606	ADAPTER	W/Ref. HYDROSTATIC CIRCUITRY(17) - flat boss face		3
19	6715251	HOSE			1
20	NAP	HOSE	Order Ref. HYDROSTATIC CIRCUITRY(18) & HYDROSTATIC CIRCUITRY(19) - Was 6707234 [A]		1
21	NAP	ADAPTER	W/Ref. HYDROSTATIC CIRCUITRY(27) tapered boss face - Was 6715186 [A]		1
21	97K-6	O-RING	flared end		1
21	15KB-612	ADAPTER	W/Ref. HYDROSTATIC CIRCUITRY(27) flat boss face		1
22	6725192	HOSE	Was 6719654 [A]		2
23	6577690	TUBE			1
24	6805696	TEE	W/Ref. HYDROSTATIC CIRCUITRY(17)		1
24	97K-6	O-RING	flared end		2
25	NAP	HOSE	13.5' (342,9 mm) long - Order 6730769inD1 Hose - Was 6712414 [A]		2
25	6730769	HOSE	14.5' (368,3 mm) long		2
26		VALVE	hyd. control - W/Ref. HYDROSTATIC CIRCUITRY(23) , HYDROSTATIC CIRCUITRY(24) & HYDROSTATIC CIRCUITRY(32) - See Page HYDRAULIC CONT		1
27	99K-12	O-RING	tapered boss face		x
27	79K-12	O-RING	flat boss face		x
28	6715191	ELBOW	W/Ref. HYDROSTATIC CIRCUITRY(12) - check boss face to determine correct replacement O-ring		1
29	NAP	HOSE	29'(736,6 mm) long - Order 6729154inD1 Hose - Was 6714594 [D]		2
29	6729154	HOSE	31'(787,4 mm) long - Was 6714594 [A]		2
30	25K-20010	O-RING			1
31		COVER	on outside of main frame - See Page MAIN FRAME(1)		1
32	6805243	TEE	W/Ref. HYDROSTATIC CIRCUITRY(17)		1
32	97K-6	O-RING	flared end		2
33	6728149	CAP	fill - Also Order Ref. HYDROSTATIC CIRCUITRY(37) - Was 6532508 [A]	& Bel	1
34	NAP	ELBOW	W/Ref. HYDROSTATIC CIRCUITRY(17) - tapered boss face - Was 17KV-5 [A]		2
34	97K-6	O-RING	flared end		2
34	17KB-606	ELBOW	W/Ref. HYDROSTATIC CIRCUITRY(17) - flat boss face		2
35		PUMP	See Page HYDROSTATIC PUMP(1)		1
36	6701552	BAFFLE		& Bel	1
37	6700631	GASKET		& Bel	2
37	6700631	GASKET		& Abv	1
38	6661022	FILTER	in-line - See Page HYDROSTATIC OIL FILTER(1)		2
39	6703427	FOAM FILTER			1
40	6661076	HOSE	face seal - Use W/Ref. HYDROSTATIC CIRCUITRY(8) (52E-1212inD1} Elbow)		1
40	6726379	HOSE	mega seal - Use W/Ref. HYDROSTATIC CIRCUITRY(8) (6718181inD1} Elbow)		1
41	NAP	ELBOW	W/Ref. HYDROSTATIC CIRCUITRY(27) - tapered boss face - Was 18KV-8 [A]	& Abv	1
41	97K-12	O-RING	flared end		1
41	18KB-1212	ELBOW	W/Ref. HYDROSTATIC CIRCUITRY(27) - flat boss face		1

* HYDROSTATIC CIRCUITRY

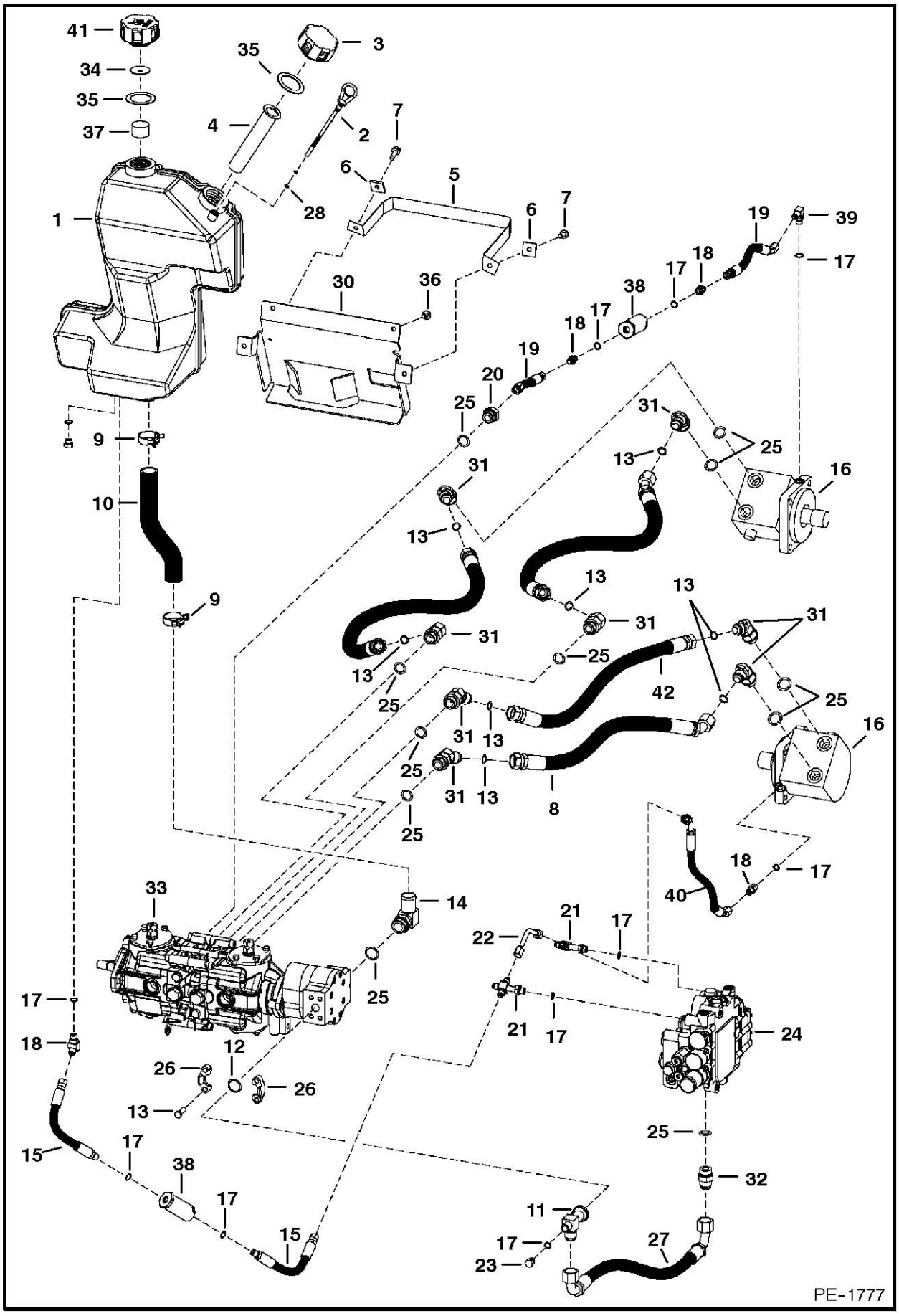

* HYDROSTATIC CIRCUITRY

Ref.N°	Part N°	Description	Remarks	Serial N°	Qty.
1	6732278	TANK	W/vented breather cap & non vented fill cap		1
2	6577459	DIPSTICK	W/Ref. * HYDROSTATIC CIRCUITRY(28)		1
3	6728149	CAP	breather		1
4	6569219	SCREEN			1
5	6732805	BAND			1
6	6559447	WASHER			2
7	84G-3716	BOLT			2
8	6675144	HOSE	mega seal - Use W/Ref. * HYDROSTATIC CIRCUITRY(31) (6718181 Elbow)		2
9	5HM-42	CLAMP	constant tension		2
10	6732804	HOSE	1.25' (31,8 mm) I.D.		1
11	6717662	TEE	split flange		1
12	55K-214	O-RING			1
13	17C-620	BOLT			4
14	6715191	ELBOW	W/Ref. * HYDROSTATIC CIRCUITRY(25)		1
15	6725192	HOSE			2
16		MOTOR	See Page HYDROSTATIC MOTOR(1)		2
17	79K-6	O-RING			x
18	15KB-606	ADAPTER	W/Ref. * HYDROSTATIC CIRCUITRY(17)		4
18	21KB-606	TEE	W/Ref. * HYDROSTATIC CIRCUITRY(17) - for Rear Aux. Option - See Page REAR AUXILIARY KIT(1)		2
19	6730769	HOSE	14.5'(368,3 mm) long		2
20	15KB-612	ADAPTER	W/Ref. * HYDROSTATIC CIRCUITRY(25)		1
21	6805241	CROSS	W/Ref. * HYDROSTATIC CIRCUITRY(17)		2
22	6577690	TUBE			1
23	24K-5	PLUG	W/Ref. * HYDROSTATIC CIRCUITRY(17)		1
24		VALVE	See Page * HYDRAULIC CONTROL VALVE(1)		1
25	79K-12	O-RING			8
26	19J-12	CLAMP			2
27	6734273	HOSE			2
28	25K-20010	O-RING			1
29		COVER	side of main frame - See Page MAIN FRAME(1)		1
30	6732806	BRACKET	tank		1
31	6718181	ELBOW	W/Ref. * HYDROSTATIC CIRCUITRY(25) - mega seal		8
32	15KB-1212	ADAPTER	W/Ref. * HYDROSTATIC CIRCUITRY(25)		1
33		PUMP	See Page HYDROSTATIC PUMP(1)		1
34	6701552	BAFFLE			1
35	6700631	GASKET			2
36	84G-3712	BOLT			3
37	6703427	FOAM FILTER			1
38	6661022	FILTER	in-line - See Page HYDROSTATIC OIL FILTER(1)		2
39	17KB-606	ELBOW	W/Ref. * HYDROSTATIC CIRCUITRY(17)		1
40	6715251	HOSE			1
41	6577785	CAP	W/Ref. * HYDROSTATIC CIRCUITRY(17)		1
42	6675143	HOSE	mega seal - Use W/Ref. * HYDROSTATIC CIRCUITRY(31) (6718181inD1} Elbow)		2

HYDROSTATIC CIRCUITRY

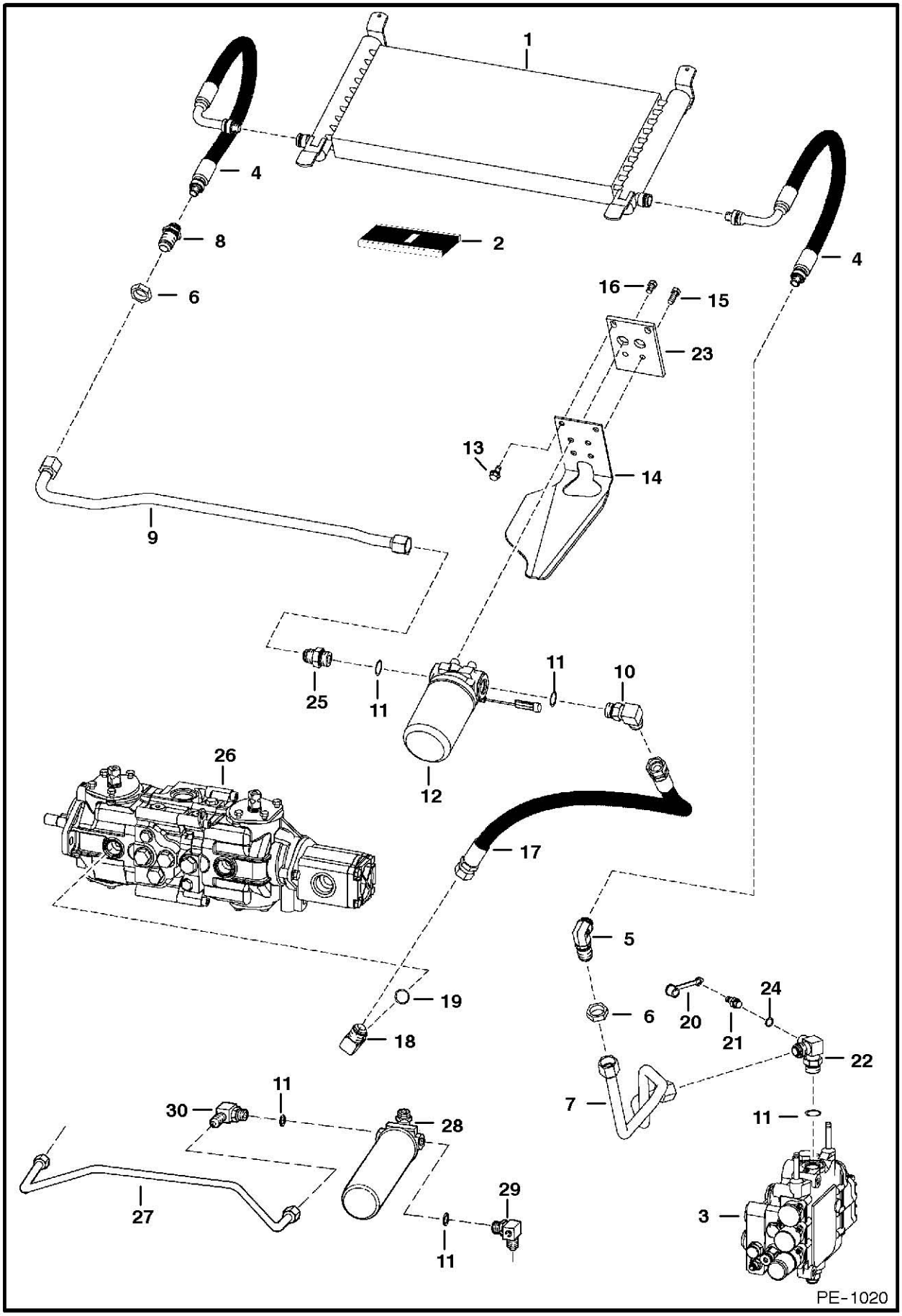

HYDROSTATIC CIRCUITRY

Ref.N°	Part N°	Description	Remarks	Serial N°	Qty.
1	6674150	OIL COOLER			1
2	6674798	REPAIR KIT	For Ref. HYDROSTATIC CIRCUITRY(1), HYDROSTATIC CIRCUITRY(5) or HYDROSTATIC CIRCUITRY(8) - includes internal retaining ring (1),		x
3		VALVE	hyd. control - See Page HYDRAULIC CONTROL VALVE(1)		1
4	6673828	HOSE			2
5	6670831	ELBOW			1
5	97K-12	O-RING	flared end		2
6	86F-8	NUT			2
7	6708748	TUBE	Was 6706671 [A]		1
8	6670830	ADAPTER			1
8	97K-12	O-RING	flared end		2
9	6727347	TUBE		5158 35000-44249	1
9				5162 22000-26049	1
10	NAP	ELBOW	W/Ref. HYDROSTATIC CIRCUITRY(11) - tapered boss face - Was 17KV-8 [A]	5158 35000-44249	1
10				5162 22000-26049	1
10	97K-12	O-RING	flared end		2
10	17KB-1212	ELBOW	W/Ref. HYDROSTATIC CIRCUITRY(11) - flat boss face		1
11	99K-12	O-RING	tapered boss face		x
11	79K-12	O-RING	flat boss face		x
12	6676969	FILTER ASSY	See Page HYDROSTATIC OIL FILTER(1)	5158 35000-44249	1
12				5162 22000-26049	1
12	6661248	ELEMENT			1
13	84G-3712	BOLT			2
14	6727345	MOUNT	filter drain - Was 6704342 [A]		1
15	17C-616	BOLT			2
16	17C-610	BOLT			2
17	6704159	HOSE			1
18	NAP	ELBOW	W/Ref. HYDROSTATIC CIRCUITRY(19) - flat boss face - Was 6714901 [A]		1
18	17KB-1210	ELBOW	W/Ref. HYDROSTATIC CIRCUITRY(19) - flat boss face		1
19	79K-10	O-RING	flat boss face		x
20	6630367	DUST CAP			1
21	6630168	COUPLER	diagnostic - W/Ref. HYDROSTATIC CIRCUITRY(30)		1
22	6715653	TEE	W/Ref. HYDROSTATIC CIRCUITRY(11) - check boss face to determine correct replacement O-ring		1
22	97K-12	O-RING	flared end		1
23	6704341	MOUNT			1
24	79K-6	O-RING			1
25	NAP	ADAPTER	W/Ref. HYDROSTATIC CIRCUITRY(11) - tapered boss face - Was 15KV-8 [A]	5158 35000-44249	1
25				5162 22000-26049	1
25	97K-12	O-RING	flared end		2
25	15KB-1212	ADAPTER	W/Ref. HYDROSTATIC CIRCUITRY(11) - flat boss face		1
26		PUMP	See Page HYDROSTATIC PUMP(1)		1
27	6704155	TUBE		5158 30001-34999	1
28	6661247	FILTER ASSY.	See Page HYDROSTATIC OIL FILTER(1)	5158 30001-34999	1
28	6661248	ELEMENT			1

HYDROSTATIC CIRCUITRY

Ref.N°	Part N°	Description	Remarks	Serial N°	Qty.
29	6718661	ELBOW	W/Ref. HYDROSTATIC CIRCUITRY(11) - Was 67156 55 [B,D]	5158 30001-34999	1
29	97K-12	O-RING	flared end		1
30	6700599	ELBOW	W/Ref. HYDROSTATIC CIRCUITRY(11) - Was 67157 14 [B,D]	5158 30001-34999	1
30	97K-12	O-RING	flared end		1

*HYDROSTATIC CIRCUITRY

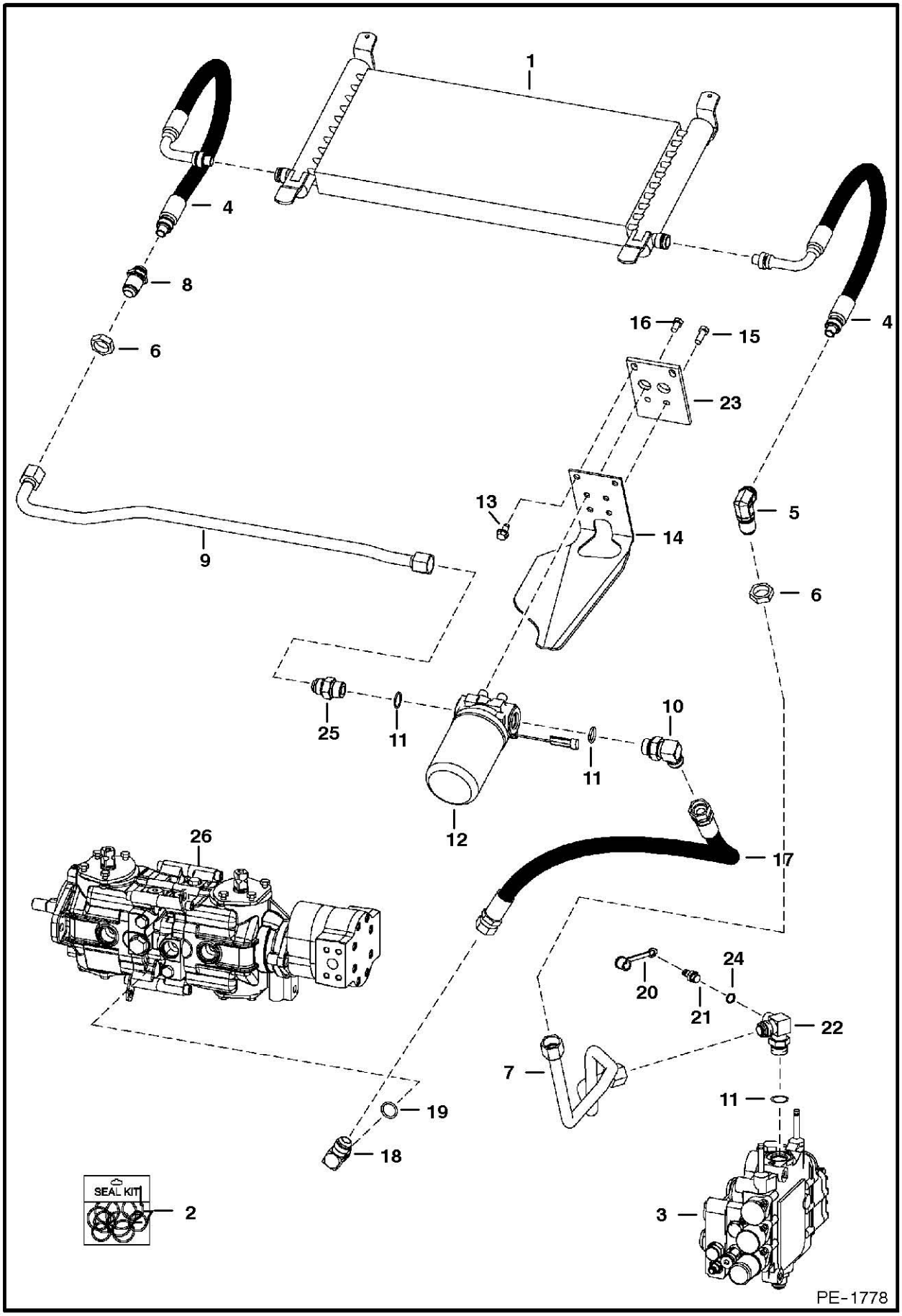

*

Ref.N°	Part N°	Description	Remarks	Serial N°	Qty.
1	6674150	OIL COOLER			1
2	6674798	REPAIR KIT	For Ref. HYDROSTATIC CIRCUITRY(1), HYDROSTATIC CIRCUITRY(5) or HYDROSTATIC CIRCUITRY(8) - includes internal retaining ring (1),		x
3		VALVE	hyd. control - See Page HYDRAULIC CONTROL VALVE(1)		1
4	6673828	HOSE			2
5	6670831	ELBOW			1
5	97K-12	O-RING	flared end		2
6	86F-8	NUT			2
7	6708748	TUBE			1
8	6670830	ADAPTER			1
8	97K-12	O-RING	flared end		2
9	6727347	TUBE			1
10	17KB-1212	ELBOW	W/Ref. HYDROSTATIC CIRCUITRY(11)		1
11	79K-12	O-RING			x
12	6676969	FILTER ASSY	See Page HYDROSTATIC OIL FILTER(1)		1
12					1
12	6661248	ELEMENT			1
13	84G-3712	BOLT			2
14	6727345	MOUNT	filter drain		1
15	17C-616	BOLT			2
16	17C-610	BOLT			2
17	6704159	HOSE			1
18	17KB-1210	ELBOW	W/Ref. HYDROSTATIC CIRCUITRY(19)		1
19	79K-10	O-RING			x
20	6630367	DUST CAP			1
21	6630168	COUPLER	diagnostic - W/Ref. HYDROSTATIC CIRCUITRY(30)		1
22	6715653	TEE	W/Ref. HYDROSTATIC CIRCUITRY(11)		1
23	6704341	MOUNT			1
24	79K-6	O-RING			1
25	15KB-1212	ADAPTER	W/Ref. HYDROSTATIC CIRCUITRY(11)		1
26		PUMP	See Page HYDROSTATIC PUMP(1)		1

HAND CONTROLS

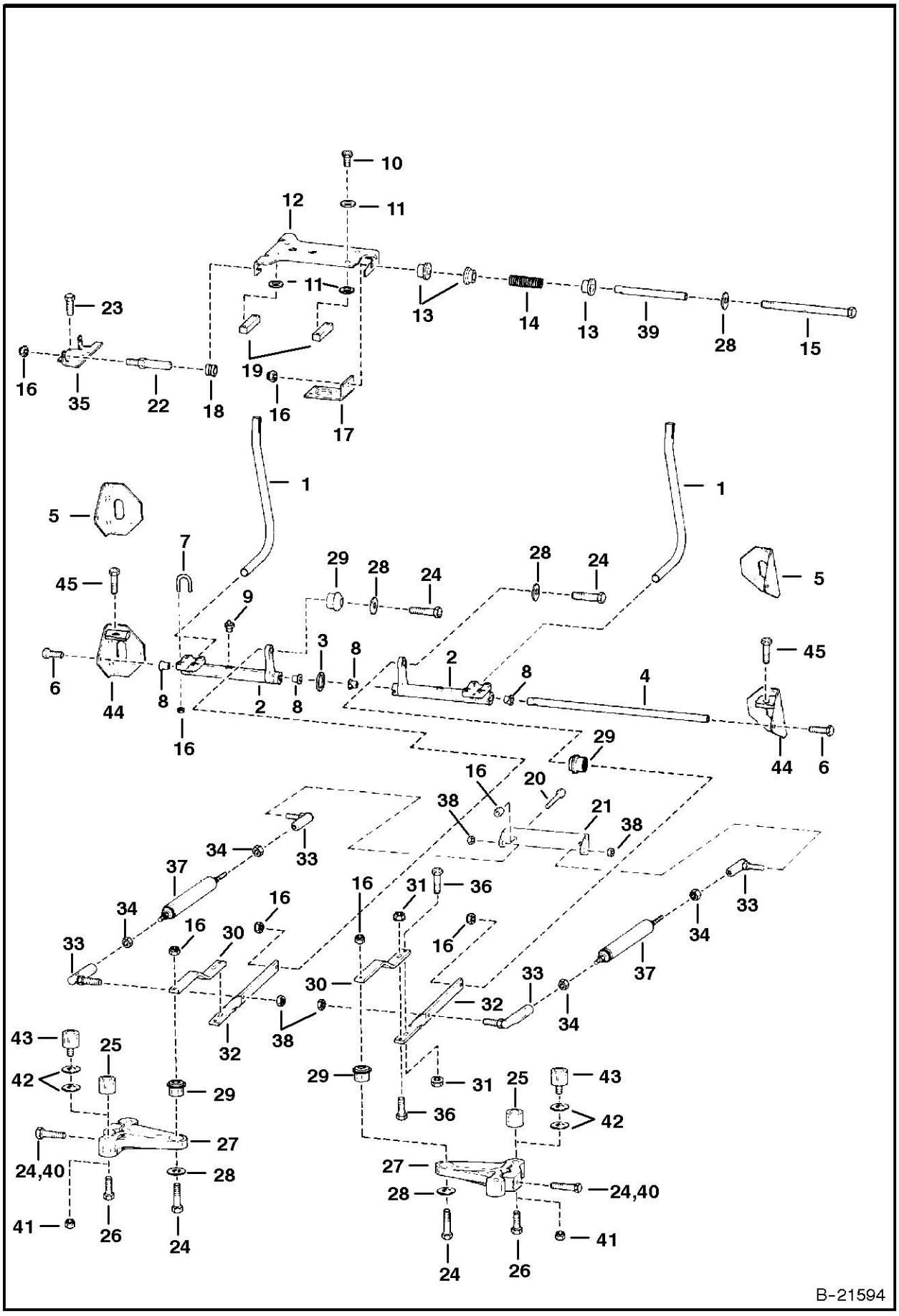

HAND CONTROLS

Ref.N°	Part N°	Description	Remarks	Serial N°	Qty.
1	6702543	LEVER			2
2	NAP	BELLCRANK	W/Notch for bushing tab - Order 6729957inD1}U Bellcrank, Ref. HAND CONTROLS(28) (619021inD1}O Washer) & Ref. HAND CONTROLS(29) (		2
2	6729957	BELLCRANK	W/ Notch for bushing tab		2
2	6716977	BELLCRANK	W/O Notch for bushing tab		2
3	6599741	WASHER	wave		1
4	6716545	ROD			1
5	6577230	MOUNT			2
6	45C-624	BOLT	Was 45C-620 [B]		2
7	6732997	U-BOLT	Was 6700768 [A]		4
8	6703879	BUSHING			4
9	6518200	GREASE ZERK			2
10	8C-616	BOLT			4
11	6557831	WASHER			8
12	6706095	MOUNT			1
13	6715163	BUSHING			3
14	6701535	SPRING			1
15	17C-680	BOLT			1
16	95D-6	NUT			15
17	6576196	BRACKET			1
18	6706098	GUIDE			2
19	6702716	BLOCK			2
20	17C-612	BOLT			2
21	6706106	MOUNT			1
22	6577058	PIN			2
23	1CM-820	BOLT			8
24	17C-626	BOLT			6
25	6711643	CAM			4
26	35C-612	BOLT			4
27	NAP	LEVER	.8725' (22,2 mm) I.D. hole for Ref. HAND CONTROLS (29) (6665701 Bushing) - Order 6729956 Lever, Ref. HAND CONTROLS(28) (619021in		2
27	6729956	LEVER	1.0475' (26,5 mm) I.D. hole for Ref. HAND CONTROLS(29) (6678067 Bushing)		2
28	6563914	WASHER	1.00' (25,4 mm) O.D.		4
28	619021	WASHER	1.25' (31,8 mm) O.D.		4
29	6665701	BUSHING	neoprene - .885' (22,5 mm) O.D.		4
29	6678067	BUSHING	neoprene -1.060' (26,8 mm) O.D.		4
30	6576194	LINK	Was 6702372 [B,D]		2
31	83D-6	NUT			4
32	6576195	LINK			2
33	6599744	BALL JOINT			4
34	8D-6	NUT			4
35	6706096	MOUNT			1
36	17C-620	BOLT			4
37	6649551	DAMPENER			2
38	62D-6	NUT			2
39	6715164	SLEEVE			1
40	35C-624	BOLT			2
41	98D-6	NUT	AHC - See Page CONTROLS ELECTRICAL(1)		4
42	25E-17	WASHER	AHC - See Page CONTROLS ELECTRICAL(1)		8

HAND CONTROLS

Ref.N°	Part N°	Description	Remarks	Serial N°	Qty.
43	6673789	BEARING	roller - AHC - See Page CONTROLS ELECTRICAL(1)		4
44	6733022	BRACKET	R.H.	5158 44473 & Abv	1
44				5162 26066 & Abv	1
44	6733024	BRACKET	L.H.	5158 44473 & Abv	1
44				5162 26066 & Abv	1
45	73G-824	BOLT		5158 44473 & Abv	2
45				5162 26066 & Abv	2

HYDROSTATIC MOTOR

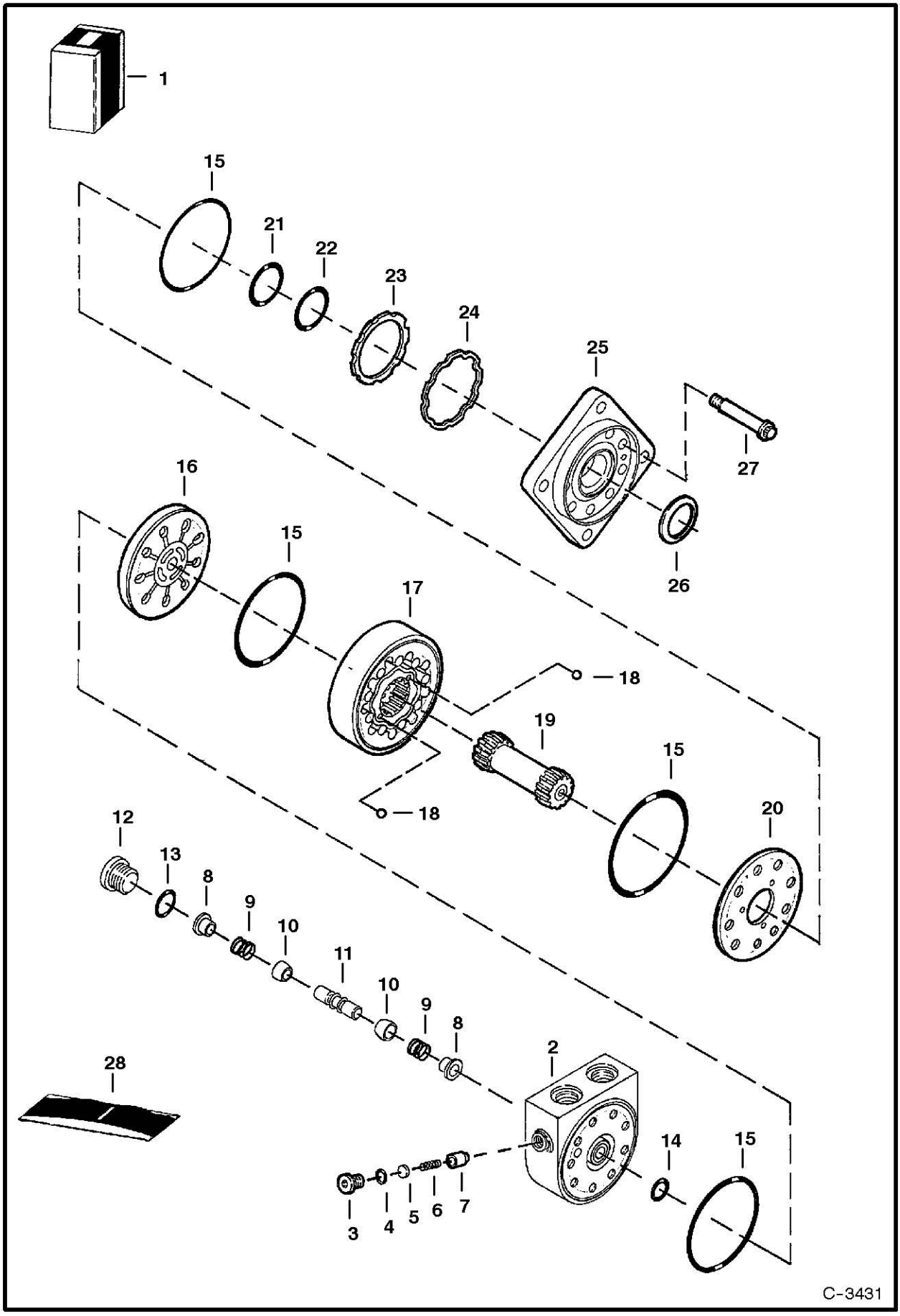

HYDROSTATIC MOTOR

Ref.N°	Part N°	Description	Remarks	Serial N°	Qty.
1	6671617	MOTOR	Ref. HYDROSTATIC MOTOR(2) - HYDROSTATIC MOTOR(27)		1
2	6669442	HOUSING	W/Ref. HYDROSTATIC MOTOR(3)-HYDROSTATIC MOTOR(7)		1
3	6668079	PLUG	W/Ref. HYDROSTATIC MOTOR(4)		1
4	79K-5	O-RING			1
5	6668080	SHIM			x
6	6669444	SPRING			1
7	6668082	POPPET			1
8	6561218	SHUTTLE			2
9	6513533	SPRING			2
10	6513532	POPPET			2
11	6668088	PISTON	shuttle		1
12	6668089	PLUG	W/Ref. HYDROSTATIC MOTOR(13)		1
13	79K-6	O-RING			1
14	6669452	O-RING			1
15	6669446	O-RING			4
16	6669447	PLATE	valve		1
17	6672126	GEROLER			1
18	6651542	BALL			2
19	6669469	SHAFT			1
20	6669448	PLATE	balance		1
21	6669450	RING	backup		1
22	6669449	O-RING			1
23	6669453	SEAL			1
24	6669454	RING	backup		1
25	6669451	FLANGE	mounting		1
26	6664815	SEAL			1
27	6669470	BOLT			9
28	6669455	SEAL KIT	W/Ref. HYDROSTATIC MOTOR(4), HYDROSTATIC MOTOR(13), HYDROSTATIC MOTOR(14), HYDROSTATIC MOTOR(21)-HYDROSTATIC MOTOR(24) & HYDROST		1

HYDROSTATIC PUMP

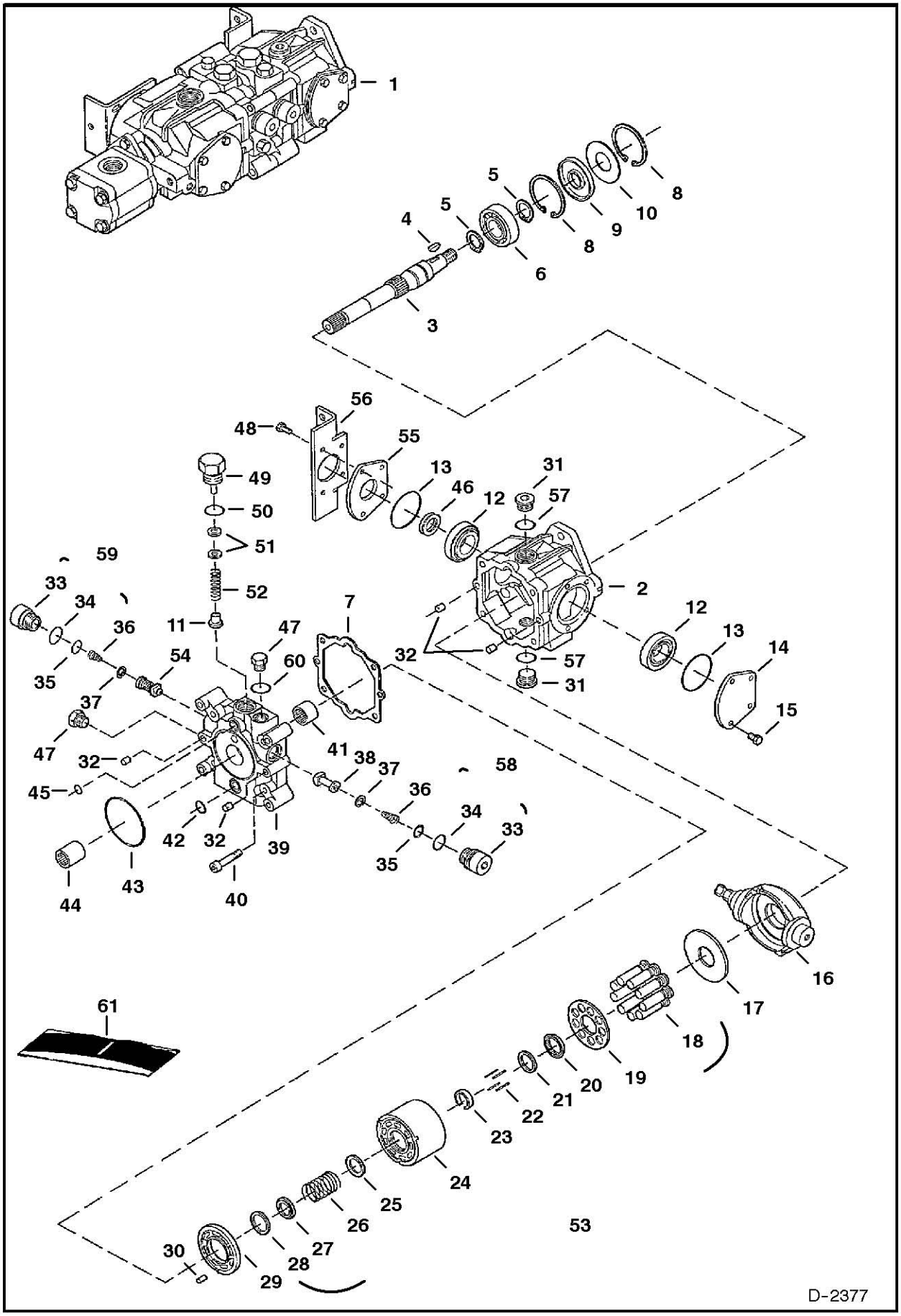

HYDROSTATIC PUMP

Ref.N°	Part N°	Description	Remarks	Serial N°	Qty.
1	6672051	PUMP	Model 4445050 - W/aluminum gear pump	5158 30001-44249	1
1				5162 20001-26049	1
1	NAP	PUMP	Model 4445132 - W/cast iron gear pump - Order 66850 32 Pump - Also must replace Ref. HYDROSTATIC PUMP(56) (6706096 Bracket) & Ref	5158 44250 & Abv	1
1				5162 26050 & Abv	1
1	6685032	PUMP	Model 4445160		1
2	6669402	HOUSING			1
3	NAP	SHAFT	W/woodruff key - Order 6682260 Shaft & 6682261 Key - Was 6669408 [A]		1
3	6682260	SHAFT	W/square key		1
4	6J-807	KEY	woodruff		1
4	6682261	KEY	square		1
5	658128	SNAP RING			2
6	654299	BEARING			1
7	6650634	GASKET			1
8	669863	SNAP RING			2
9	6645090	SEAL			1
10	6669409	WASHER			1
11	6650652	RELIEF	charge		1
12	6669411	BEARING	W/cup		2
13	6660814	O-RING			2
14	6657068	COVER			2
15	6650668	BOLT			4
16	6671513	SWASH PLATE			1
17	6650627	PLATE			1
18	NAP	PISTON ASSY.	Order Ref. HYDROSTATIC PUMP(53)		1
19	NAP	RETAINER	Order Ref. HYDROSTATIC PUMP(53)		1
20	NAP	RETAINER	guide - Order Ref. HYDROSTATIC PUMP(53)		1
21	6666338	WASHER			1
22	6650629	PIN			4
23	6650630	RETAINER			1
24	NAP	BLOCK	Order Ref. HYDROSTATIC PUMP(53)		1
25	NAP	WASHER	Order Ref. HYDROSTATIC PUMP(53)		1
26	NAP	SPRING	Order Ref. HYDROSTATIC PUMP(53)		1
27	NAP	WASHER	Order Ref. HYDROSTATIC PUMP(53)		1
28	NAP	WASHER	Order Ref. HYDROSTATIC PUMP(53)		1
29	6675340	VALVE PLATE	Was 6671515 [A]		1
30	6650636	PIN			1
31	47K-8	PLUG	W/Ref. HYDROSTATIC PUMP(57)		2
32	6518460	PIN			4
33	NAP	PLUG	Order Ref. HYDROSTATIC PUMP(58) or HYDROSTATIC PUMP(59)		2
34	6657028	O-RING			2
35	79K-8	O-RING			2
36	NAP	SPRING	Order Ref. HYDROSTATIC PUMP(58) or HYDROSTATIC PUMP(59)		2
37	NAP	RETAINER	Order Ref. HYDROSTATIC PUMP(58) or HYDROSTATIC PUMP(59)		2
38	NAP	CHECK VALVE	poppet - Order Ref. HYDROSTATIC PUMP(58)		1
39	6669406	END PLATE			1
40	6650637	BOLT			4

HYDROSTATIC PUMP

Ref.N°	Part N°	Description	Remarks	Serial N°	Qty.
41	6650635	BEARING			1
42	6650647	O-RING			1
43	6645081	O-RING			1
44	6650675	COUPLER			1
45	6650646	O-RING			1
46	6673881	SEAL			1
47	6645086	PLUG	W/Ref. HYDROSTATIC PUMP(60)		2
48	6671518	BOLT			1
49	6650648	PLUG	charge relief		1
50	79K-10	O-RING			1
51	6669410	SHIM KIT	charge relief		1
52	6658301	SPRING			1
53	6671512	BLOCK ASSY			1
54	NAP	RELIEF VALVE	5000 PSI (345 bar) for Pump - Order Ref. HYDROSTATIC PUMP(59)		1
55	6657067	COVER			1
56	6706096	MOUNT	For Pump Models 4445050 & 4445132		1
56	6736764	BRACKET	For Pump Model 4445160		1
57	79K-12	O-RING			2
58	6670684	CHECK VALVE			1
59	6671510	RELIEF VALVE			1
60	6661481	O-RING			2
61	6671516	SEAL KIT	Ref. HYDROSTATIC PUMP(7), HYDROSTATIC PUMP(9), HYDROSTATIC PUMP(13), HYDROSTATIC PUMP(34), HYDROSTATIC PUMP(35), HYDROSTATIC PUM		1

HYDROSTATIC PUMP

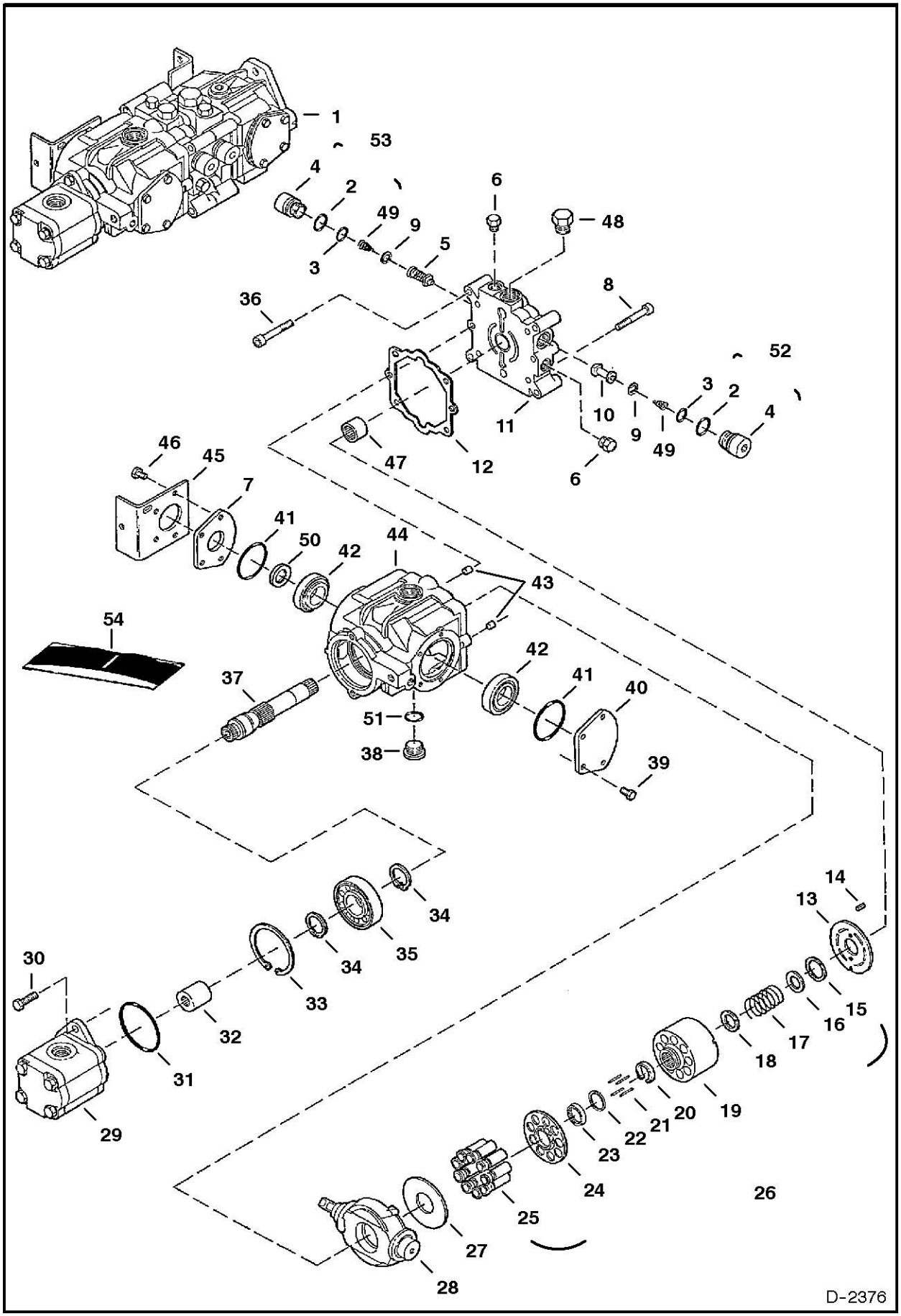

HYDROSTATIC PUMP

Ref.N°	Part N°	Description	Remarks	Serial N°	Qty.
1	6672051	PUMP	Model 4445050 - W/aluminum gear pump	5158 30001-44249	1
1				5162 20001-26049	1
1	NAP	PUMP	Model 4445132 - W/cast iron gear pump - Order 66850 32 Pump - Also must replace Ref. HYDROSTATIC PUMP(45) (6576196 Bracket) & Ref	5158 44250 & Abv	1
1				5162 26050 & Abv	1
1	6685032	PUMP	Model 4445160		1
2	6657028	O-RING			2
3	79K-8	O-RING			2
4	NAP	PLUG	Order Ref. HYDROSTATIC PUMP(52) or HYDROSTA TIC PUMP(53)		2
5	NAP	RELIEF VALVE	5000 PSI (345 bar) for Pump - Order Ref. HYDROSTA TIC PUMP(53)		1
6	6645086	PLUG			4
7	6657067	COVER			1
8	6650637	BOLT			2
9	NAP	RETAINER	Order Ref. HYDROSTATIC PUMP(52) or HYDROSTA TIC PUMP(53)		4
10	NAP	CHECK VALVE	poppet - Order Ref. HYDROSTATIC PUMP(52)		1
11	6669405	END CAP			1
12	6650634	GASKET			1
13	6671514	VALVE PLATE			1
14	6650636	PIN			2
15	NAP	RETAINER	Order Ref. HYDROSTATIC PUMP(26)		1
16	NAP	WASHER	Order Ref. HYDROSTATIC PUMP(26)		1
17	NAP	SPRING	Order Ref. HYDROSTATIC PUMP(26)		1
18	NAP	WASHER	Order Ref. HYDROSTATIC PUMP(26)		1
19	NAP	BLOCK	Order Ref. HYDROSTATIC PUMP(26)		1
20	6650630	RETAINER			1
21	6650629	PIN			4
22	6666338	WASHER			1
23	NAP	RETAINER	Order Ref. HYDROSTATIC PUMP(26)		1
24	NAP	RETAINER	Order Ref. HYDROSTATIC PUMP(26)		1
25	NAP	PISTON ASSY.	Order Ref. HYDROSTATIC PUMP(26)		1
26	6671512	BLOCK ASSY			1
27	6650627	PLATE			1
28	6671513	SWASH PLATE			1
29		GEAR PUMP	See Page GEAR PUMP(1)		1
30	6666339	BOLT			2
31	6645080	O-RING			1
32	6671509	COUPLER			1
33	669863	SNAP RING			1
34	658128	SNAP RING			2
35	654299	BEARING			1
36	6652018	BOLT			4
37	6669407	SHAFT			1
38	47K-8	PLUG	W/Ref. HYDROSTATIC PUMP(51)		1
39	6650668	BOLT			4
40	6657068	COVER			1
41	6660814	O-RING			2
42	6669411	BEARING	W/cup		2
43	6518460	PIN			2

HYDROSTATIC PUMP

Ref.N°	Part N°	Description	Remarks	Serial N°	Qty.
44	6669403	HOUSING			1
45	6576196	BRACKET	For Pump Models 4445050 & 4445132		1
45	6734742	BRACKET	For Pump Model 4445160		1
46	6650668	BOLT			1
47	6650635	BEARING			1
48	6645086	PLUG			1
49	NAP	SPRING	Order Ref. HYDROSTATIC PUMP(52) or HYDROSTATIC PUMP(53)		2
50	6673881	SEAL			1
51	79K-12	O-RING			1
52	6670684	CHECK VALVE			1
53	6671510	RELIEF VALVE			1
54	6671516	SEAL KIT	Ref. HYDROSTATIC PUMP(2), HYDROSTATIC PUMP(3), HYDROSTATIC PUMP(12), HYDROSTATIC PUMP(31), HYDROSTATIC PUMP(41) & HYDROSTATIC PU		1

GEAR PUMP

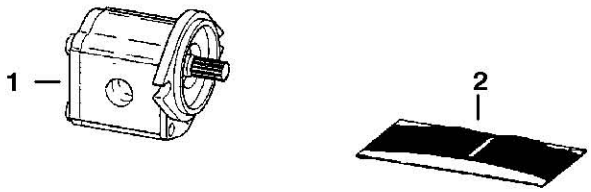

TS-1022

GEAR PUMP

Ref.N°	Part N°	Description	Remarks	Serial N°	Qty.
1	6672513	PUMP	aluminum - Model B5501-36836 - Use W/6672051 Pump - See Page HYDROSTATIC PUMP(1)		1
2	6671042	SEAL KIT			1

Fixsomething

* GEAR PUMP

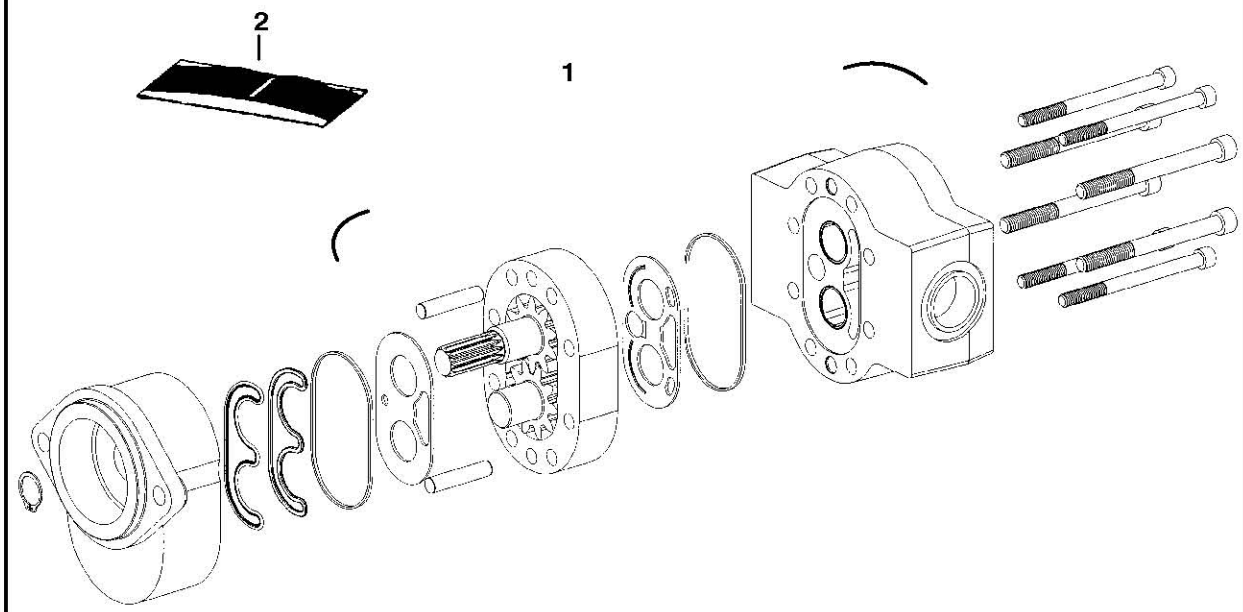

B-16050

* GEAR PUMP

Ref.N°	Part N°	Description	Remarks	Serial N°	Qty.
1	NAP	PUMP	cast iron - Model 163D-1286 - Use W/(NAP/6681635in D1 Pump) See Page HYDROSTATIC PUMP(1) - Was 6681580 [A]		1
1	6681602	PUMP	cast iron - Model 163D-1309 - Use W/(NAP/6681635 Pump) & 6685032 Pump - See Page HYDROSTATIC PUMP(1)		1
2	6681581	SEAL KIT			1

Fixsomething

HYDROSTATIC OIL FILTER
(In-Line)

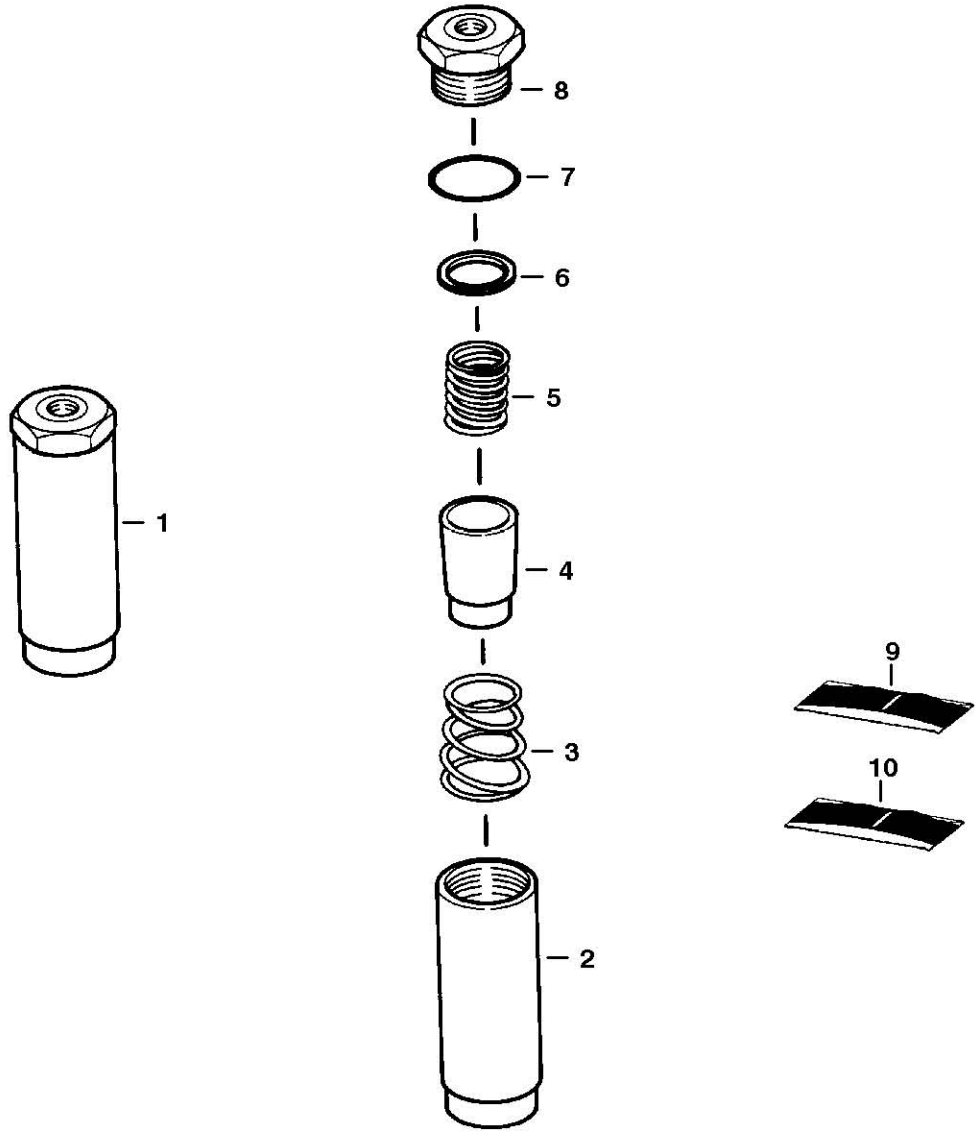

B-13527

HYDROSTATIC OIL FILTER

Ref.N°	Part N°	Description	Remarks	Serial N°	Qty.
1	6661022	FILTER	Ref. HYDROSTATIC OIL FILTER(2) - HYDROSTATIC OIL FILTER(8)		1
2	NAP	HOUSING			1
3	NAP	SPRING			1
4	NAP	ELEMENT			1
5	NAP	SPRING			1
6	NAP	GASKET			1
7	NAP	O-RING			1
8	NAP	PLUG			1
9	6661807	KIT	element - Ref. HYDROSTATIC OIL FILTER(4), HYDROSTATIC OIL FILTER(6) & HYDROSTATIC OIL FILTER(7)		1
10	6661808	KIT	spring - Ref. HYDROSTATIC OIL FILTER(3) & HYDROSTATIC OIL FILTER(5)		1

Fixsomething

HYDROSTATIC OIL FILTER

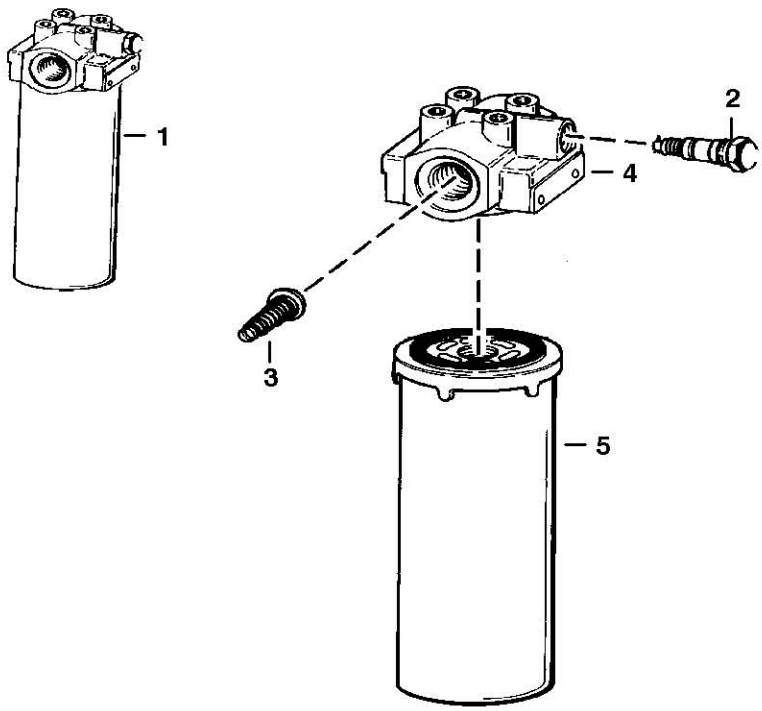

B-16487

HYDROSTATIC OIL FILTER

Ref.N°	Part N°	Description	Remarks	Serial N°	Qty.
1	6661247	FILTER ASSY.	W/Ref. HYDROSTATIC OIL FILTER(2) - HYDROSTATIC OIL FILTER(5) (50 PSI by-pass & switch)		1
2	6660260	SWITCH	pressure - Normally closed		1
2	6599365	KIT	Nut, washer & o-rings for 6660260 switch		1
3	NAP	VALVE	by-pass (50 PSI - Order Ref. HYDROSTATIC OIL FILTER(1))		1
4	NSS	HEAD	Order Ref. HYDROSTATIC OIL FILTER(1)		1
5	6661248	ELEMENT			1

Fixsomething

HYDROSTATIC OIL FILTER

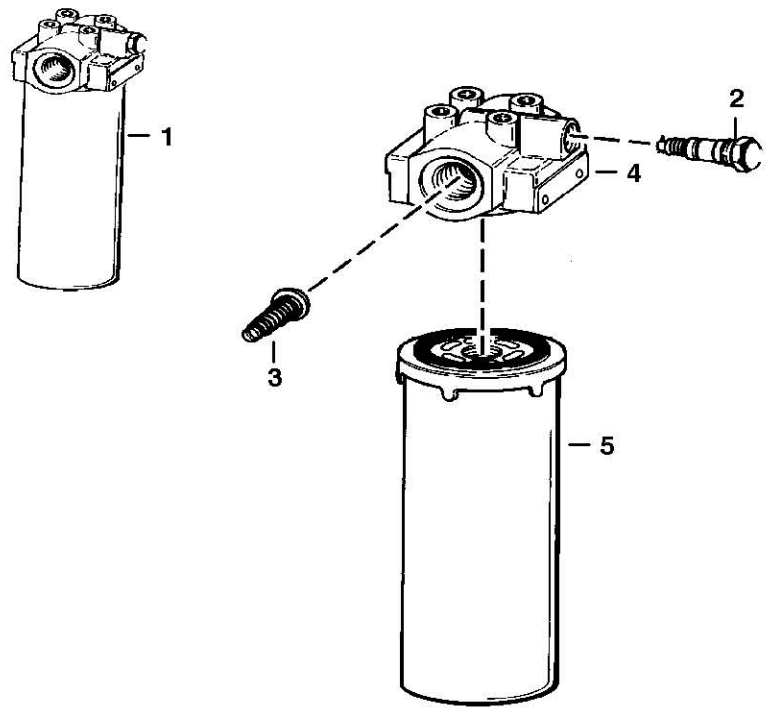

B-16487A

HYDROSTATIC OIL FILTER

Ref.N°	Part N°	Description	Remarks	Serial N°	Qty.
1	6676969	FILTER ASSY	W/Ref. HYDROSTATIC OIL FILTER(2) - HYDROSTATIC OIL FILTER(5) (50 PSI by-pass & switch)		1
2	6660260	SWITCH	pressure - normally open		1
3	NAP	VALVE	by-pass (50 PSI - Order Ref. HYDROSTATIC OIL FILTER(1))		1
4	NSS	HEAD	Order Ref. HYDROSTATIC OIL FILTER(1)		1
5	6661248	ELEMENT			1

Fixsomething

CAB ELECTRICAL CIRCUITRY

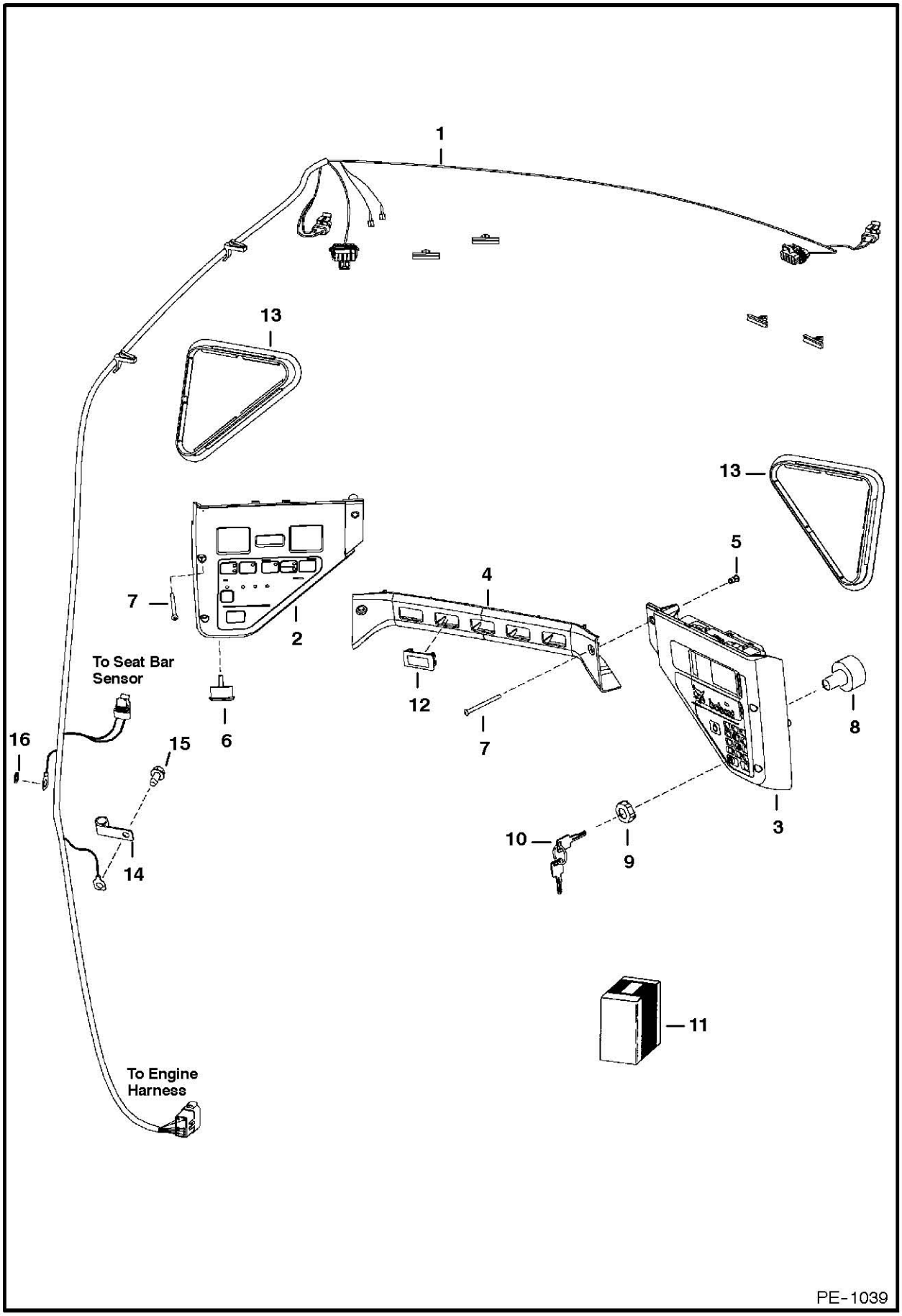

CAB ELECTRICAL CIRCUITRY

Ref.N°	Part N°	Description	Remarks	Serial N°	Qty.
1	6718870	HARNESS			1
2	6678680	PANEL	%L.H. - W/Ref. CAB ELECTRICAL CIRCUITRY(6) - Was 6672346 [A]		1
2	6675982	PLUG	backlighting service hole		1
2	6679855	BULB	Was 6675337 [A]		2
3	6678681	PANEL	R.H. - keyed - W/Ref. CAB ELECTRICAL CIRCUITRY (8) & CAB ELECTRICAL CIRCUITRY(9) - Was 6677175 [A]		1
3	6683395	PANEL	R.H. - deluxe - keyless - Was 6678682 [A]		1
3	NAP	INSTRUCTIONS	for deluxe panel - See Service Manual - Was 6900860 [A]		1
4	NAP	CROSSMEMBER	Order 6679845 Crossmember - See Page CAB ELECTRICAL CIRCUITRY(1) - Was 6674317 [A]		1
5	6675033	INSERT	threaded		6
6	6679856	ALARM	W/nut - Was 6675390 [A]		1
7	6719084	BOLT			6
8	6679842	SWITCH	ignition - W/Ref. CAB ELECTRICAL CIRCUITRY(9) - Was 6675470 [A]		1
9	6674202	NUT			2
10	6709527	KEY	ignition		1
11	NAP	KIT	keyless ign. - Order 6672348inD1}I Panel - See Service Manual for proper installation		1
12	6665314	PLUG	cover - Was 6719038 [A]		5
13	6674403	COVER			2
14	6675171	CLAMP			1
15	84G-3712	BOLT			1
16	6E-5	WASHER			1

Fixsomething

CAB ELECTRICAL CIRCUITRY

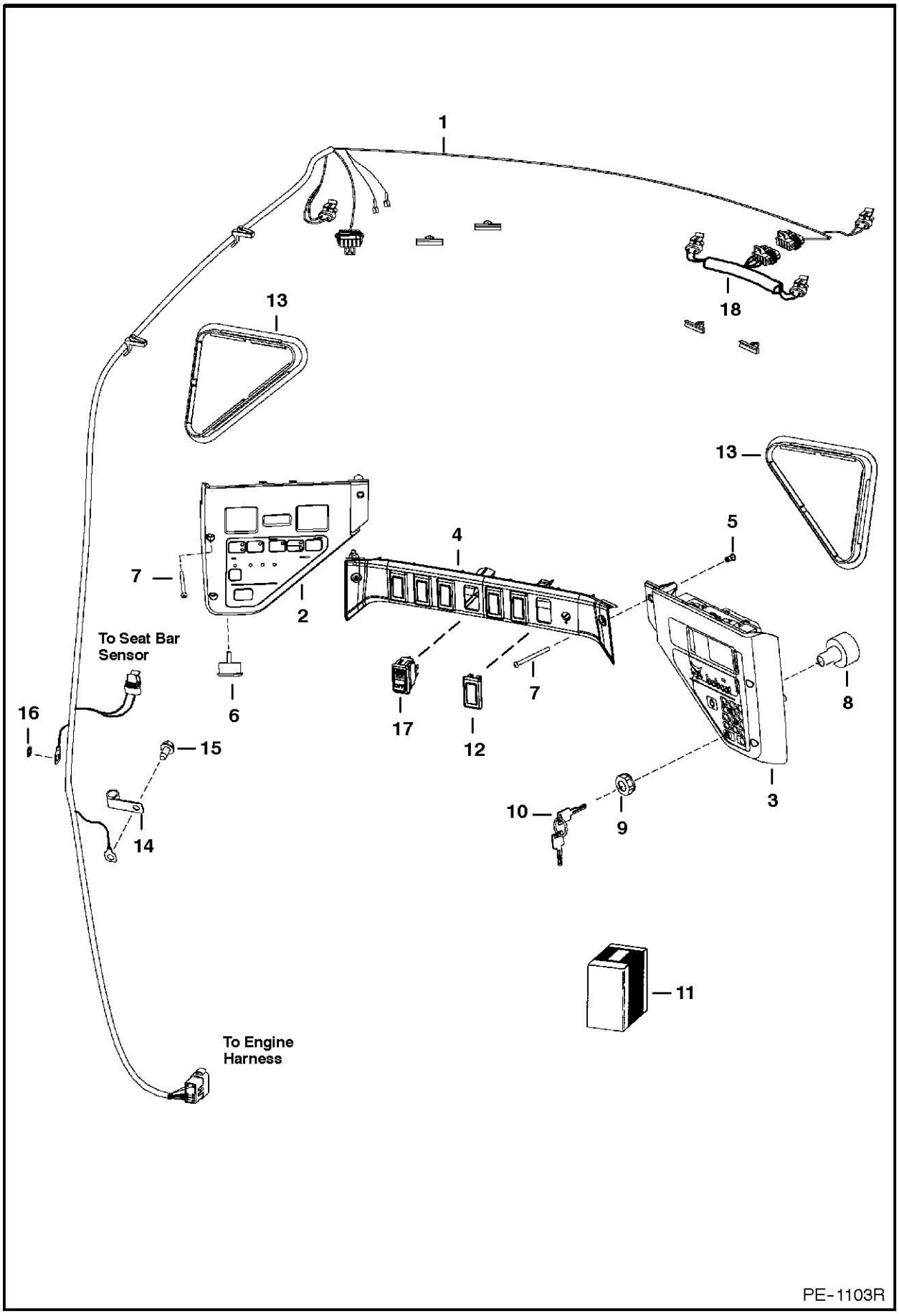

CAB ELECTRICAL CIRCUITRY

Ref.N°	Part N°	Description	Remarks	Serial N°	Qty.
1	6727178	HARNESS			1
2	6678680	PANEL	%L.H. - W/Ref. CAB ELECTRICAL CIRCUITRY(6) - Was 6672346 [A]		1
2	6675982	PLUG	backlighting service hole		1
2	6679855	BULB	Was 6675337 [A]		2
3	6678681	PANEL	R.H. - keyed - W/Ref. CAB ELECTRICAL CIRCUITRY (8) & CAB ELECTRICAL CIRCUITRY(9) - Was 6677175 [A]		1
3	6683395	PANEL	R.H. - deluxe - keyless - Was 6678682 [A]		1
3	NAP	INSTRUCTIONS	for deluxe panel - See Service Manual - Was 6900860 [A]		1
4	6679845	CROSSMEMBER	Was 6676723 [A]		1
5	6675033	INSERT	threaded		6
6	6679856	ALARM	W/nut - Was 6675390 [A]		1
7	6719084	BOLT			6
8	6675470	SWITCH	ignition - W/Ref. CAB ELECTRICAL CIRCUITRY(9)		1
9	6674202	NUT			2
10	6709527	KEY	ignition		1
11	NAP	KIT	keyless ign. - Order 6672348inD1}I Panel - See Service Manual		1
12	6665314	PLUG	cpver - Was 6719038 [A]		x
13	6674403	COVER			2
14	6675171	CLAMP			1
15	84G-3712	BOLT			1
16	6E-5	WASHER			1
17	6676536	SWITCH	park brake		1
18	6683171	CONTROLLER	boost -For Ref. CAB ELECTRICAL CIRCUITRY(3) (NAP/6678682 Panel)	5158 45133-	1
18				5162 26351-	1

Fixsomething

ENGINE ELECTRICAL CIRCUITRY

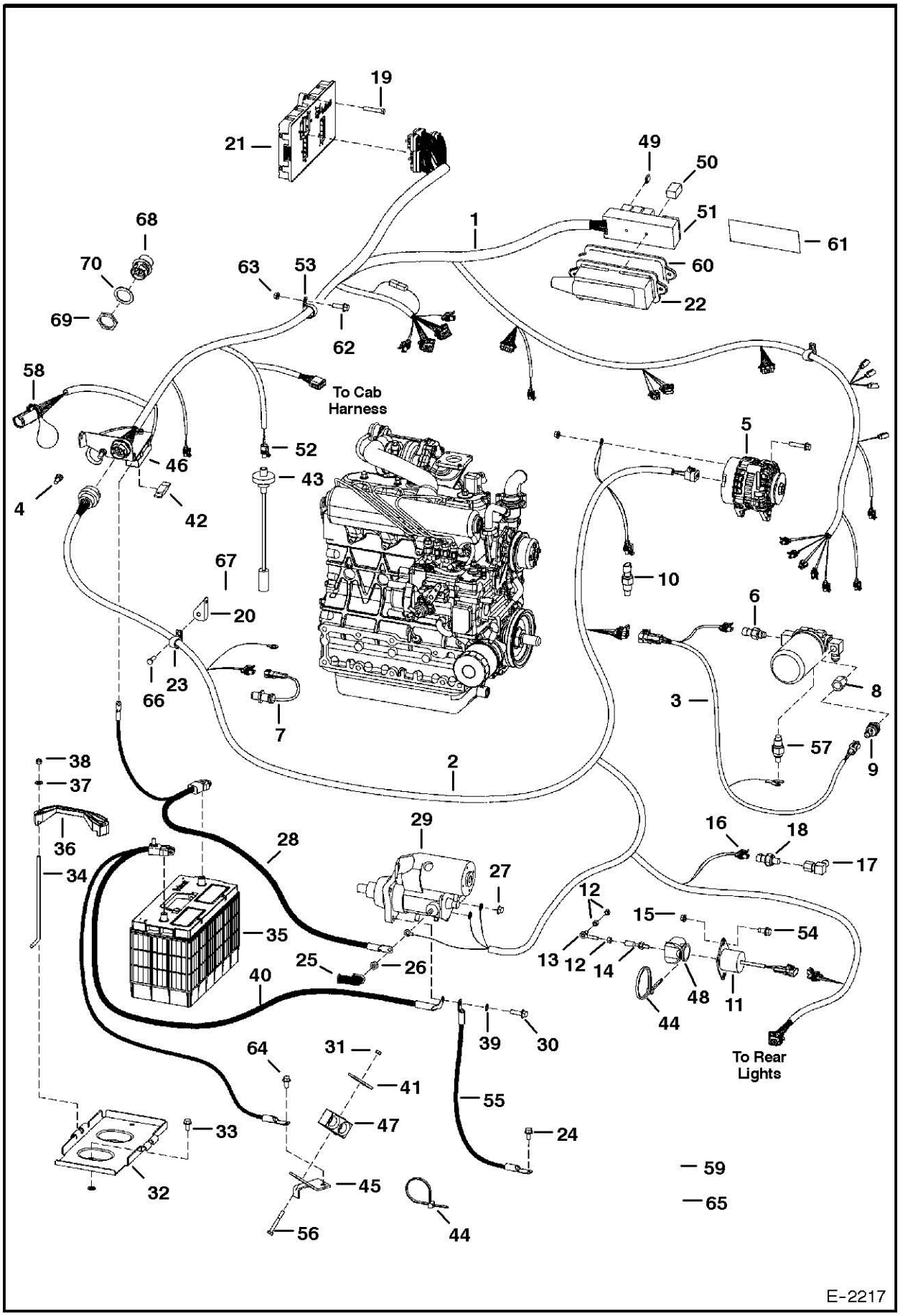

ENGINE ELECTRICAL CIRCUITRY

Ref.N°	Part N°	Description	Remarks	Serial N°	Qty.
1	6719802	HARNESS	W/Ref. ENGINE ELECTRICAL CIRCUITRY(50) - ENGINE ELECTRICAL CIRCUITRY(52) & ENGINE ELECTRICAL CIRCUITRY(54) - See Page CONTROL S E		1
1	6719803	HARNESS	W/Ref. ENGINE ELECTRICAL CIRCUITRY(50) - ENGINE ELECTRICAL CIRCUITRY(52) & ENGINE ELECTRICAL CIRCUITRY(54) - AHC See Page CONTRO		1
2	6718871	HARNESS	engine - W/Ref. ENGINE ELECTRICAL CIRCUITRY(20), ENGINE ELECTRICAL CIRCUITRY(67) & ENGINE ELECTRICAL CIRCUITRY(68)		1
3	6715975	HARNESS	filter		1
4	84G-3712	BOLT			2
5		ALTERNATOR	See Page ALTERNATOR(1)		1
6	6718417	SENDER	hyd. temp. - Was 6727869 [A]		1
7	6684037	SENSOR	rpm - Was 6658260 [A]		1
8	6718948	ADAPTER	W/filter		1
8	6675278	FILTER			1
9	6674316	SWITCH	%hyd. chg. press. - 3-pin molded connector		1
10	6718415	SWITCH	eng. temp.		1
11	6681513	SOLENOID	fuel shut off - Was 6667993 [A]		1
12	62D-4	NUT			3
13	6578363	ROD END	swivel		1
14	6578366	BALL JOINT			1
15	61D-4	NUT			2
16	6672750	CONNECTOR			1
17	6707040	ELBOW			1
18	6674315	SWITCH	eng. oil press.		1
19	43C-616	BOLT	Was 35C-616 [B]		3
20	6714979	BRACKET			1
21	6678673	CONTROLLER	Bobcat - Was 6678068 [A]	5158 30001-43086	1
22				5162 20001-25447	1
22	6678674	CONTROLLER		5158 43087& Abv	1
22				5162 25448 & Abv	1
23	6718659	HOUSING	fuse - boot		1
24	6675171	CLAMP			1
25	1CM-1220	BOLT			1
26	6560172	COVER			1
27	4DM-10	NUT			1
28	4DM-5	NUT			1
29	6719060	CABLE	pos.		1
30		STARTER	See Page STARTER(1) - SEE BTI 342		1
31	35C-620	BOLT			3
32	91D-5	NUT			1
33	6718260	BATTERY PAN			1
34	84G-3716	BOLT			2
35	6576280	BOLT			2
36	6674687	BATTERY			1
36		BATTERY CAP			2
37	6569203	CLAMP			1
38	25E-15	WASHER			2
39	59D-5	NUT			2
40	6E-6	WASHER			1

Elysee Nething

ENGINE ELECTRICAL CIRCUITRY

Ref.N°	Part N°	Description	Remarks	Serial N°	Qty.
41	6719059	CABLE	ground		1
42	6715132	RETAINER			1
43	6675155	FUSE	100 amp		1
43	6675154	HOLDER	high amp fuse		1
44	6680438	SENSOR	fuel - W/gasket - Was 6674209 [A]		1
44	6717579	GASKET			1
45	6610510	NYLON TIE			3
46	6719230	BRACKET			1
47	6726503	BRACKET	Was 6718970 [A]		1
48	6715197	CLAMP			1
49	6664286	BOOT	Also Order Ref. ENGINE ELECTRICAL CIRCUITRY(45)		1
50	6654806	FUSE	15 amp		2
50	6702444	FUSE	25 amp		6
50	6718034	FUSE	30 amp		2
51	6679820	SWITCH	relay - Was 6674376 [A]		7
52	6673200	FUSE BLOCK			1
53	6646383	CONNECTOR	fuel sender		1
53	6648330	TERMINAL	female - Was 6632946 [B]		2
54	6674673	CLAMP			1
55	17C-410	BOLT			2
56	6713821	CABLE			1
57	6716744	BOLT			1
58	6660260	SWITCH	diagnostic - Was 6674376 [A]		1
59	6667533	COVER			1
60	6675096	GROMMET			1
61	6725302	GASKET	See Page PANELS(1)		1
62	NAP	DECAL	fuse/relay - 2.10' x 9.40' (53,3 mm x 238,8 mm) - Order 6718774inD1} Decal		1
62	6718774	DECAL	fuse/relay - 2' x 7' (50,8 mm x 177,8 mm) - See Page PANELS(1)		1
63	35C-616	BOLT			1
64	91D-6	NUT			1
65	57D-6	NUT			1
66	30H-48	CLAMP			1
67	17C-512	BOLT			2
68	85D-5	NUT			2
69	6664584	CONNECTOR	21-pin		1
70	6664972	NUT			1
71	6664971	WASHER			1

ENGINE ELECTRICAL CIRCUITRY

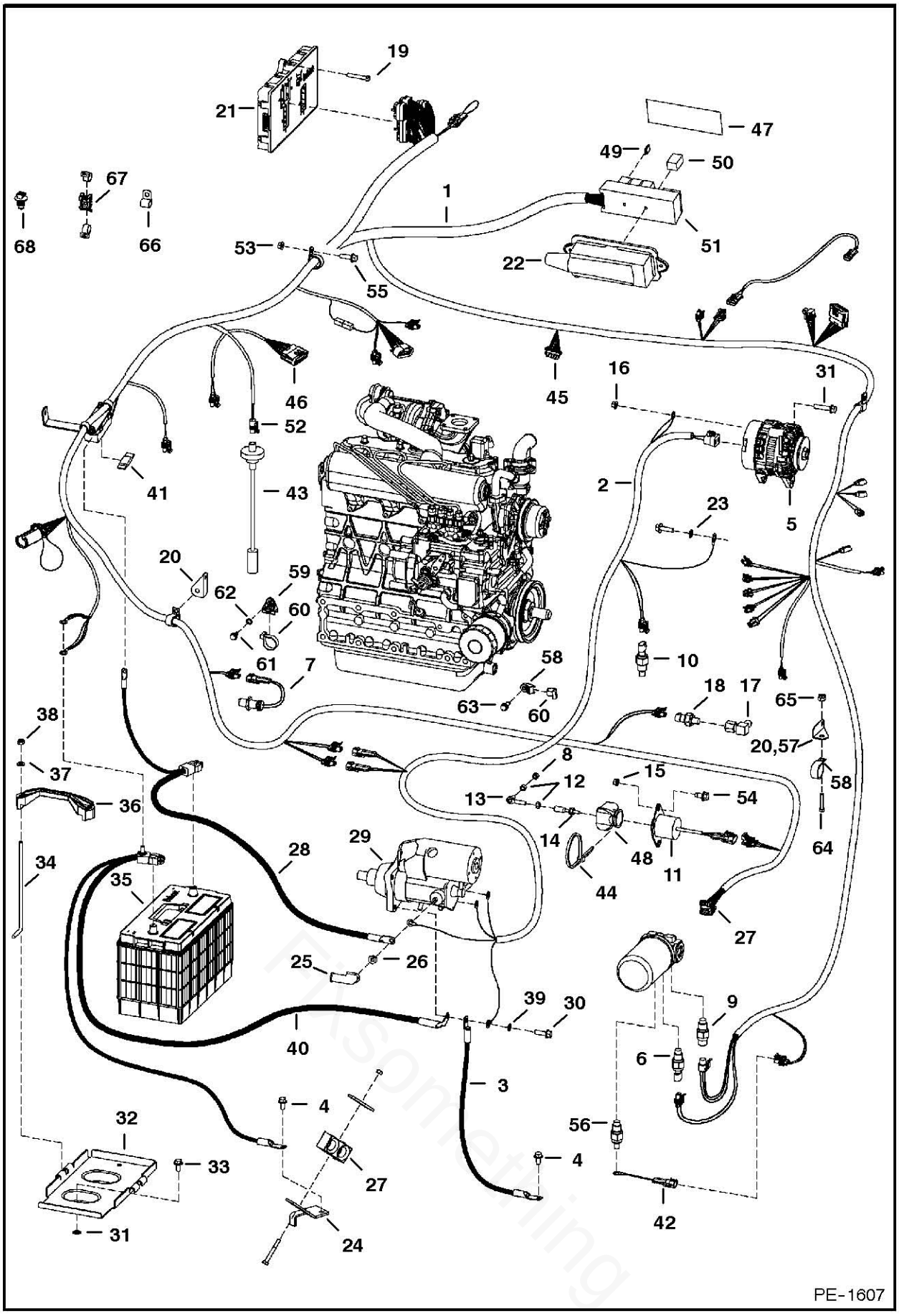

Parsonething

ENGINE ELECTRICAL CIRCUITRY

Ref.N°	Part N°	Description	Remarks	Serial N°	Qty.
1	6729055	HARNESS	main frame - W/Ref. ENGINE ELECTRICAL CIRCUIT RY(20) - 4-connectors for controller	5158 35000-40149	1
1				5162 22000-23191	1
1	6729962	HARNESS	main frame - 4-connectors for controller	5158 40150-43086	1
1				5162 23192-25447	1
1	6732801	HARNESS	main frame - 2-connectors for controller	5158 43087 & Abv	1
1				5162 25448 & Abv	1
2	6726601	HARNESS	starter/alt.	5158 35000-40149	1
2				5162 22000-23191	1
2	6729973	HARNESS	starter/alt.	5158 40150 & Abv	1
2				5162 23192 & Abv	1
3	6565170	CABLE	neg.		1
4	84G-3712	BOLT			4
5		ALTERNATOR	See Page ALTERNATOR(1)		1
6	6727869	SENDER	hyd. temp.		1
7	6684037	SENSOR	rpm - Was 6658260 [A]		1
8	66D-4	NUT			1
9	6674316	SWITCH	%hyd. chg. press. - 3-pin molded connector		1
10	6718415	SWITCH	eng. temp.		1
11	6681513	SOLENOID	fuel shut off - Was 6667993 [A]		1
12	62D-4	NUT			2
13	6578363	ROD END	swivel		1
14	6578366	BALL JOINT			1
15	61D-4	NUT			2
16	43DM-8	NUT			1
17	6707040	ELBOW			1
18	6674315	SWITCH	eng. oil press.		1
19	43C-616	BOLT			3
20	6714979	BRACKET	Use W/Ref. ENGINE ELECTRICAL CIRCUITRY(1) (6729055 Harness)	5158 35000-40149	2
20				5162 22000-23191	1
21	NAP	CONTROLLER	Bobcat - SEE BTI 339 - Was 6678068 [A]	5158 35000-40149	1
21				5162 22000-23191	1
21	6678673	CONTROLLER	Bobcat - 4-connector	5158 40150-43086	1
21				5162 23192-25447	1
21	6678674	CONTROLLER	Bobcat - 2-connector	5158 43087 & Abv	1
21				5162 25448 & Abv	1
21		CONTROLLER	Bobcat - AHC & ACS Option - See Page CONTROLS ELECTRICAL(1)		1
22	6718659	HOUSING	fuse - boot		1
23	6E-5	WASHER			1
24	6727508	BRACKET			1
25	6560172	COVER			1
26	4DM-10	NUT			1
27	6715197	CLAMP			1
28	6727528	CABLE	%pos. - Use W/Starter See Page STARTER(1)		1
28	6731256	CABLE	%pos. - Use W/Starter See Page STARTER(1)		1
29		STARTER	See Page STARTER(1) - SEE BTI 342		1
30	35C-620	BOLT			3
31	616783	WASHER			2
32	6718260	BATTERY PAN			1

ENGINE ELECTRICAL CIRCUITRY

Ref.N°	Part N°	Description	Remarks	Serial N°	Qty.
33	84G-3716	BOLT			2
34	6576280	BOLT			2
35	6674687	BATTERY			1
36	6569203	CLAMP			1
37	25E-15	WASHER			2
38	59D-5	NUT			2
39	6E-6	WASHER			1
40	6729008	CABLE	ground		1
41	6675155	FUSE	100 amp		1
41	6675154	HOLDER	high amp fuse		1
42	6728626	HARNESS			1
43	6680438	SENSOR	fuel -W/gasket -Was 6674209 [A]		1
43	6717579	GASKET			1
44	6610510	NYLON TIE			3
45	6676400	CONNECTOR	16 pin		x
46	6677216	CONNECTOR	16 pin		x
47	6718774	DECAL	2' x 7' (50,8 mm x 177,8 mm) - See Page PANELS(1)		1
48	6664286	BOOT	Also Order Ref. ENGINE ELECTRICAL CIRCUITRY(45)		1
49	6654806	FUSE	15 amp		2
49	6702444	FUSE	25 amp		6
49	6718034	FUSE	30 amp		2
50	6679820	SWITCH	relay - Was 6674376 [A]		7
51	6673200	FUSE BLOCK			1
52	6646383	CONNECTOR	fuel sender		1
52	6648330	TERMINAL	female		2
53	91D-6	NUT			2
54	17C-410	BOLT			2
55	35C-616	BOLT			1
56	6660260	SWITCH	Was 6674376 [A]		1
57	6714979	BRACKET	Use W/Ref. ENGINE ELECTRICAL CIRCUITRY(1) (6729962 Harness and/or 6732801 Harness)	5158 40150 & Abv	1
57				5162 23192 & Abv	1
58	6678667	MOUNT	Use W/Ref. ENGINE ELECTRICAL CIRCUITRY(1) (6729962 Harness and/or 6732801 Harness)	5158 40150 & Abv	3
59				5162 23192 & Abv	3
60	6678818	MOUNT	Use W/Ref. ENGINE ELECTRICAL CIRCUITRY(1) (6729962 Harness and/or 6732801 Harness)	5158 40150 & Abv	1
60				5162 23192 & Abv	1
61	6624289	STA-STRAP	Use W/Ref. ENGINE ELECTRICAL CIRCUITRY(1) (6729962 Harness and/or 6732801 Harness)	5158 40150 & Abv	10
61				5162 23192 & Abv	10
62	1CM-825	BOLT	Use W/Ref. ENGINE ELECTRICAL CIRCUITRY(1) (6729962 Harness and/or 6732801 Harness)	5158 40150 & Abv	1
62				5162 23192 & Abv	1
63	25E-14	WASHER	Use W/Ref. ENGINE ELECTRICAL CIRCUITRY(1) (6729962 Harness and/or 6732801 Harness)	5158 40150 & Abv	1
63				5162 23192 & Abv	1
64	1CM-870	BOLT	Use W/Ref. ENGINE ELECTRICAL CIRCUITRY(1) (6729962 Harness and/or 6732801 Harness)	5158 40150 & Abv	2
64				5162 23192 & Abv	2
65	17C-516	BOLT	Use W/Ref. ENGINE ELECTRICAL CIRCUITRY(1) (6729962 Harness and/or 6732801 Harness)	5158 40150 & Abv	1

ENGINE ELECTRICAL CIRCUITRY

Ref.N°	Part N°	Description	Remarks	Serial N°	Qty.
65				5162 23192 & Abv	1
66	85D-5	NUT	Use W/Ref. ENGINE ELECTRICAL CIRCUITRY(1) (6729962 Harness and/or 6732801 Harness)	5158 40150 & Abv	1
66				5162 23192 & Abv	1
67	30H-60	CLIP	Use W/Ref. ENGINE ELECTRICAL CIRCUITRY(1) (6729962 Harness and/or 6732801 Harness)	5158 40150 & Abv	2
67				5162 23192 & Abv	2
68	6678668	STRAP	Use W/Ref. ENGINE ELECTRICAL CIRCUITRY(1) (6729962 Harness and/or 6732801 Harness)	5158 40150 & Abv	1
68				5162 23192 & Abv	1
69	6678666	MOUNT	Use W/Ref. ENGINE ELECTRICAL CIRCUITRY(1) (6729962 Harness and/or 6732801 Harness)	5158 40150 & Abv	1
69				5162 23192 & Abv	1

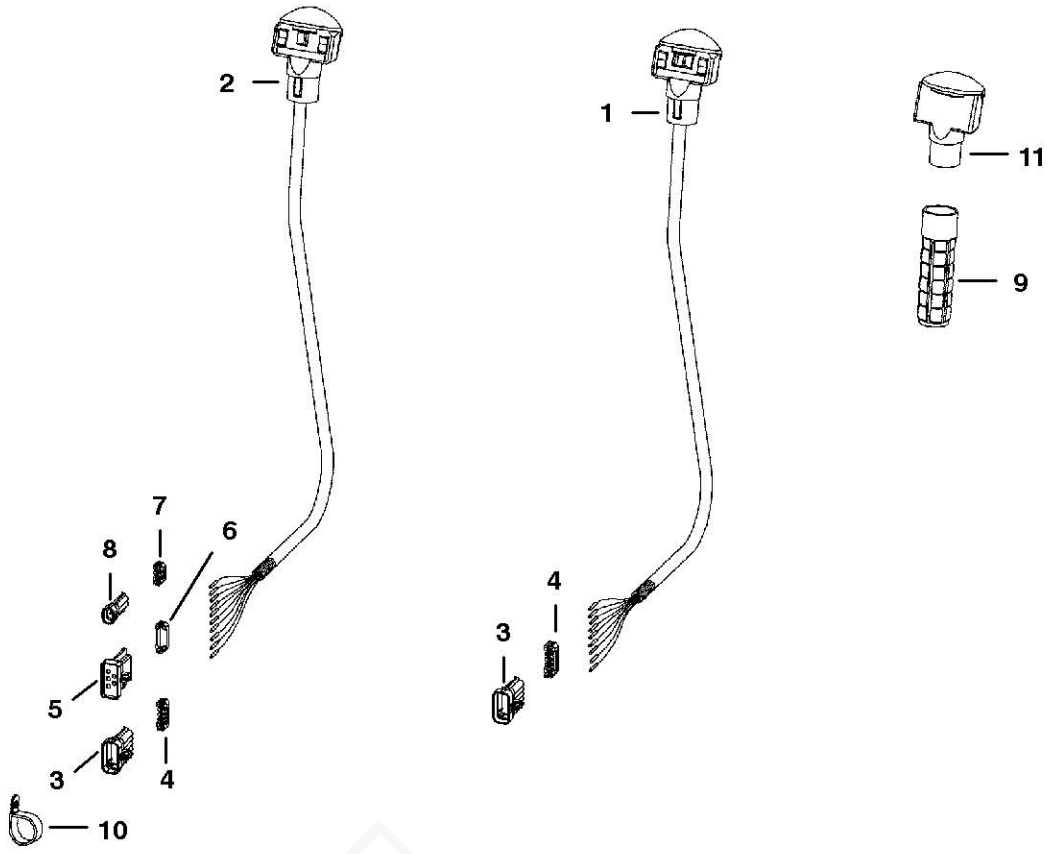

PE-1041

Fixsomething

CONTROLS ELECTRICAL

Ref.N°	Part N°	Description	Remarks	Serial N°	Qty.
1	6680418	HANDLE ASSY.	R.H. - %Also Order Ref. CONTROLS ELECTRICAL(3) & CONTROLS ELECTRICAL(4) - Was 6675468 [A]%		1
1	6640690	PIN			9
1	6641176	SEAL			9
2	6680419	HANDLE ASSY.	L.H. - Also Order Ref. %CONTROLS ELECTRICAL(3), CONTROLS ELECTRICAL(4), CONTROLS ELECTRICAL(6) & CONTROLS ELECTRICAL(7) - Was 66		1
2	6640690	PIN			10
2	6641176	SEAL			10
2	6680447	DECAL	Was 6677370 [A]		1
3	6640692	CONNECTOR	10-pin		2
4	6640694	LOCK	10-pin		2
5	6667144	CONNECTOR	5 - way		1
6	6667145	LOCK	5 - way		1
7	6641180	LOCK	2 - pin		1
8	6641179	CONNECTOR	2 - pin		2
9	6702621	GRIP			2
10	6674000	CLAMP			2
11	6680415	HANDLE	L.H. - blank - Was 6705920 [A]		2

CONTROLS ELECTRICAL
(AHC) (W/O Push Button Float)

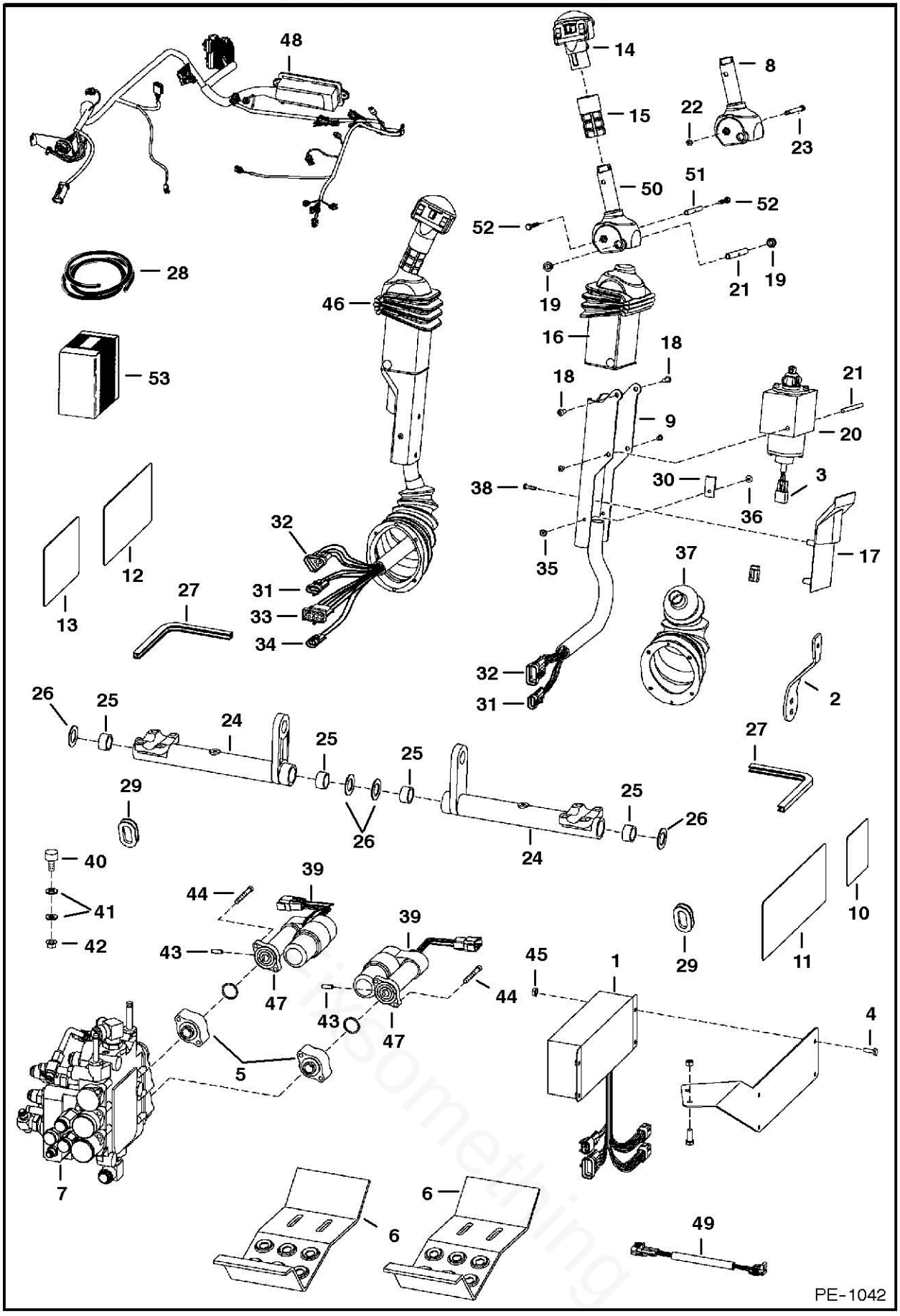

Illustration Only

CONTROLS ELECTRICAL

Ref.N°	Part N°	Description	Remarks	Serial N°	Qty.
1	6674804	CONTROLLER			1
2	6717393	LEVER	throttle		1
3	6670707	CONNECTOR	3-way		2
3	6670710	LOCK	3-way		2
4	17C-412	BOLT			4
5	6725128	ADAPTER	actuator - Was 6718801 [A]		2
6	6712365	STEP			2
7		VALVE	AHC - See Page HYDRAULIC CONTROL VALVE(1)		1
8	NAP	HANDLE	R.H. - tilt - Order Ref. CONTROLS ELECTRICAL(50) - CONTROLS ELECTRICAL(52) - Was 6597774 [A]		1
8	NAP	HANDLE	L.H. - lift - Order Ref. CONTROLS ELECTRICAL(50) - CONTROLS ELECTRICAL(52) - Was 6717163 [A]		1
9	NAP	LEVER	R.H. - tilt - L shaped - Order 6597775 Lever - Was 6717055 [A]		1
9	6597775	LEVER	R.H. tilt - S shaped		1
9	NAP	LEVER	L.H. - lift - L shaped - Order 6597776inD1}. Lever - Was 6717056 [A]		1
9	6597776	LEVER	L.H. lift - S shaped		1
10	6718706	DECAL	warning		1
11	6728539	DECAL	Was 6718699 [A]		1
12	6718702	DECAL	operation		1
13	6718704	DECAL	opeation		1
14	NAP	HANDLE ASSY	R.H. - tilt - SEE BTI 335inD1} - Was 6675469 [A]		1
14	6640690	PIN			11
14	6670715	SOCKET			3
14	6641176	SEAL			11
14	6680455	HANDLE ASSY	L.H. - lift - Was 6675250 [A]		1
14	6640690	PIN			13
14	6670715	SOCKET			3
14	6641176	SEAL			13
14	6677370	DECAL			1
15	NAP	GRIP	Order 6702621 Grip & cut to 2.8' (71,1 mm) long-Was 6713349 [A]		2
16	6680471	COVER	Was 6713898 [A]		2
17	6715957	COVER			2
18	25GT-410	BOLT			8
19	6702990	BUSHING			4
20	NAP	CONTROL	%R.H.- tilt- Order 6727298 AHC Kit- See Page HAND CONTROL KIT(1) - Was 6712398 [A]		4
20	NAP	CONTROL	L.H.- lift-% Order 6727298 AHC Kit- See Page HAND CONTROL KIT(1) - Was 6712397 [A]		1
21	6713043	SPACER			4
22	12D-10	NUT		& Bel	2
23	6716826	BOLT		& Bel	2
24	6716977	BELLCRANK			2
25	6673710	BEARING	needle		4
26	6716916	WASHER	plastic		4
27	NAP	MOULDING	10.5'(266 mm) long - Order Ref. CONTROLS ELECTRICAL(28)		2
28	6654139	MOULDING	bulk - Sold Per Foot		x
29	6714726	PLUG			2
30	6665000	CLIP			2
31	6640699	CONNECTOR			1

CONTROLS ELECTRICAL

Ref.N°	Part N°	Description	Remarks	Serial N°	Qty.
31	6640700	LOCK			1
32	6640692	CONNECTOR			2
32	6640694	LOCK			2
33	6667144	CONNECTOR			1
33	6667145	LOCK			1
34	6641179	CONNECTOR			1
34	6641180	LOCK			1
35	6665322	RIVET	female		2
36	6665321	RIVET	male		2
37	6532127	BOOT			2
38	6669224	BOLT			4
39	6678775	ACTUATOR	Was 6674838 [A]		2
40	6673789	BEARING			4
41	25E-17	WASHER			8
42	98D-6	NUT			4
43	6718506	PIN			2
44	69G-436	BOLT			4
45	61D-4	NUT			5
46	NAP	LEVER ASSY	R.H. - tilt - L shaped - Order 6718201inD1}, Lever Assy. - Was 6718195 [A]		1
46	NAP	LEVER ASSY	R.H. - lift - S shaped - Order 6727298inD1} AHC Kit - See Page HAND CONTROL KIT(1)- Was 6718201 [A]		1
46	NAP	LEVER ASSY	L.H. - lift - L shaped - Order 6718202inD1}* Lever Assy. - Was 6718194 [A]		1
46	NAP	LEVER ASSY	L.H. - lift - S shaped - Order 6727298inD1} AHC Kit - See Page HAND CONTROL KIT(1) - Was 6718202 [A]		1
47	NAP	FLANGE			4
48	6719803	HARNESS	AHC - Was 6718913 [B,D]		1
48	6717569	DIODE	6 amp		1
49	6728742	HARNESS	jumper - enhance boom lift		1
50	6729594	HANDLE	R.H.	& Abv	1
50	6729595	HANDLE	L.H.	& Abv	1
51	6680469	SPACER	Was 6729600 [A]	& Abv	1
52	6727065	BOLT		& Abv	2
53	6727298	KIT	AHC - See Page HAND CONTROL KIT(1)		1

Fixsomething

CONTROLS ELECTRICAL
(AHC) (W/ Push Button Float)

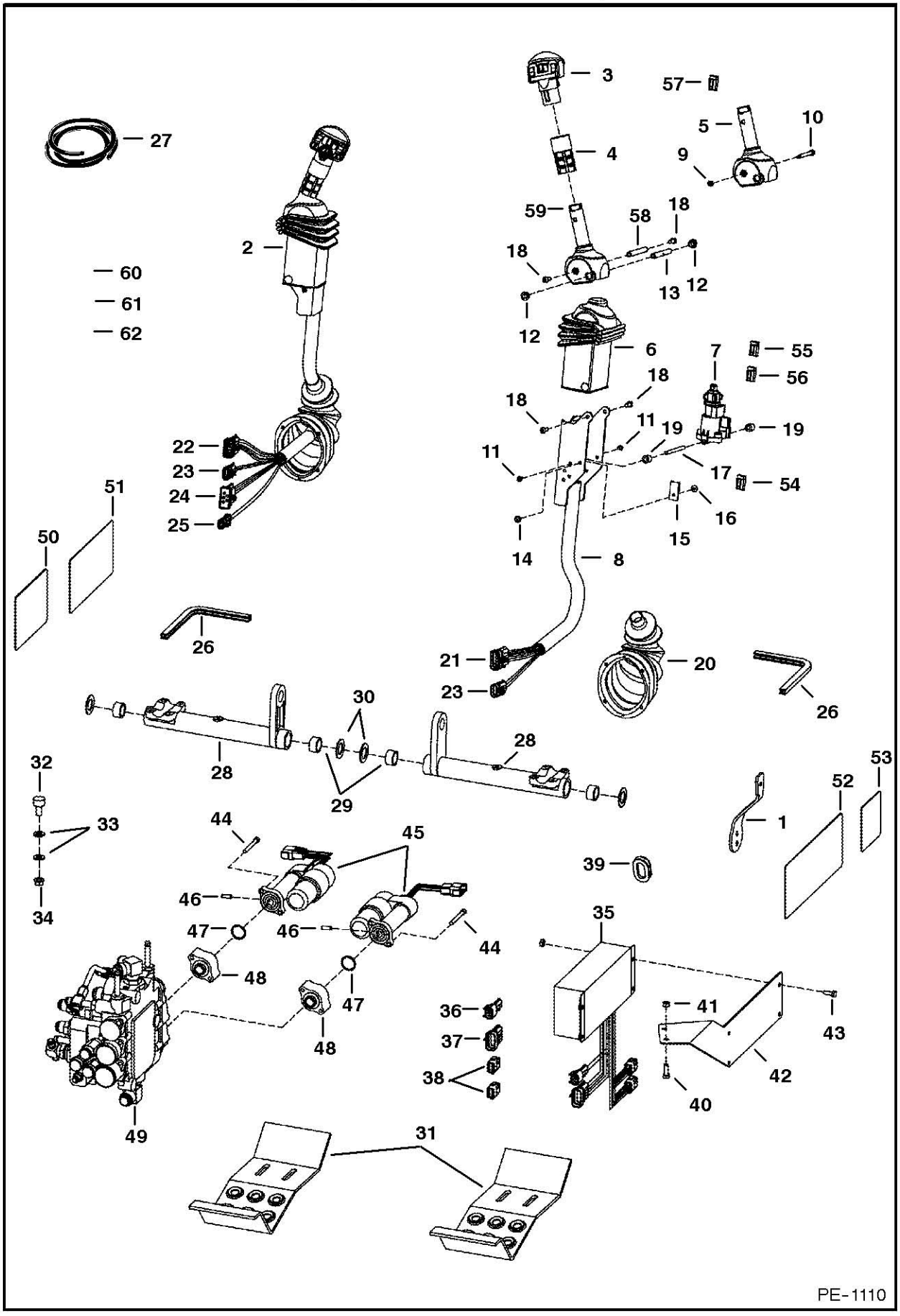

CONTROLS ELECTRICAL

Ref.N°	Part N°	Description	Remarks	Serial N°	Qty.
1	6717393	LEVER	throttle		1
2	6680426	LEVER	tilt - R.H. - Was 6675742 [A]		1
2	6680425	LEVER	lift - L.H. - Was 6675750 [A]		1
3	NAP	HANDLE	lift - R.H. - SEE BTIinD1 335 - Was 6675469 [A]		1
3	6680417	HANDLE	lift - L.H. - Was 6675749 [A]		1
4	NAP	GRIP	Order 6702621 Grip & cut to 2.8' (71,1 mm) long-Was 6713349 [A		2
5	NAP	HANDLE	R.H. - Order Ref. CONTROLS ELECTRICAL(58)-CONTROLS ELECTRICAL(60) - Was 6597774 [A]	& Bel	1
5	NAP	HANDLE	L.H. - Order Ref. CONTROLS ELECTRICAL(58)-CONTROLS ELECTRICAL(60) - Was 6717163 [A]	& Bel	1
6	6680471	COVER	Was 6713898 [A]		2
7	6680472	SENSOR	Was 6675741 [A]		2
7	6670706	CONNECTOR			1
7	6670715	SOCKET			3
7	6670710	LOCK			1
8	6680481	CHANNEL	R.H. - Was 6719712 [A]		1
8	6680480	CHANNEL	L.H. - Was 6719711 [A]		1
9	12D-10	NUT		& Bel	2
10	6716826	BOLT		& Bel	2
11	25GT-410	BOLT			8
12	6702990	BUSHING			4
13	6713043	SPACER			4
14	6665321	RIVET	male		2
15	6665000	CLIP			2
16	6665322	RIVET	female		2
17	6719834	SPACER	threaded		2
18	6727065	BOLT			4
19	6719835	SLEEVE			4
20	6532127	BOOT			2
21	6640692	CONNECTOR	10-pin		1
21	6640690	PIN			8
21	6640694	LOCK			1
21	6641176	SEAL			8
21	6646582	PLUG	cavity		1
22	6640692	CONNECTOR	10-pin		1
22	6640690	PIN			6
22	6640694	LOCK			1
22	6641176	SEAL			6
22	6646582	PLUG	cavity		4
23	6640699	CONNECTOR	3-pin		2
23	6640690	PIN			3
23	6641176	SEAL			3
23	6640700	LOCK			3
24	6667144	CONNECTOR	5-pin		2
24	6640690	PIN			3
24	6641176	SEAL			3
24	6646582	PLUG	cavity		1
24	6667145	LOCK			1
25	6641179	CONNECTOR	2-pin		1
25	6640690	PIN			2

Fixsomething

CONTROLS ELECTRICAL

Ref.N°	Part N°	Description	Remarks	Serial N°	Qty.
25	6641176	SEAL			2
25	6641180	LOCK			1
26	NAP	MOULDING	%10.5'(266,7 mm)long-Order Ref. HAND CONTROL KIT(27)		1
27	6654139	MOULDING	bulk - Sold Per Foot		x
28	6716977	BELLCRANK			2
29	6673710	BEARING			4
30	6716916	WASHER	plastic		4
31	6712365	STEP			2
32	6673789	BEARING			4
33	25E-17	WASHER			8
34	98D-6	NUT			4
35	6676153	CONTROLLER		5158 35000-36424	1
35				5162 22000-22355	1
35	6680410	CONTROLLER	Was 6676337 [A]	5158 36425-37343	1
35				5162 22356-22766	1
36	6640692	CONNECTOR	10-pin		1
36	6640690	PIN			9
36	6640694	LOCK			1
36	6641176	SEAL			9
36	6646582	PLUG	cavity		1
37	6648307	CONNECTOR	2-pin		1
38	6670709	CONNECTOR	8-pin		2
39	6714726	PLUG			1
40	17C-612	BOLT			2
41	61D-6	NUT			2
42	6725165	MOUNT			1
43	17C-412	BOLT			4
44	69G-436	BOLT			4
45	6678775	ACTUATOR	Was 6674838 [A]		2
46	6718506	PIN			2
47	58K-120	O-RING			2
48	6725128	ADAPTER			2
49		VALVE	See Page HYDRAULIC CONTROL VALVE(1)		1
50	6718704	DECAL			1
51	6727155	DECAL			1
52	6728539	DECAL	Was 6718699 [A]		1
53	6718706	DECAL			1
54	6670707	CONNECTOR	3-pin		1
54	6670715	SOCKET			3
54	6670711	LOCK			1
55	6677364	CONNECTOR	3-pin		1
55	6676640	SEAL			3
56	6676870	CONNECTOR	3-pin		1
56	6676640	SEAL			1
56	6670715	SOCKET			1
56	6670711	LOCK			1
57	6676537	SWITCH	ACS		1
58	6680469	SPACER	Was 6729600 [A]	& Abv	1
59	6729594	HANDLE	R.H.	& Abv	1

CONTROLS ELECTRICAL

Ref.N°	Part N°	Description	Remarks	Serial N°	Qty.
59	6729595	HANDLE	L.H.	& Abv	1
60	6729054	HARNESS	W/capacitor - Use W/Ref. CONTROLS ELECTRICAL(35) (6676153 Controller)	5158 35000-36424	1
60				5162 22000-22355	1
61	6728742	HARNESS	jumper - to enhance boom lift		1
62				5162 22000 & Abv	1
62	6727129	HARNESS	Was 6727130 [B]	5158 34999 & Bel	1
62				5162 21999 & Bel	1
62	6733292	HARNESS	Was 6726925 [A]	5158 35000 & Abv	1

Fixsomething

CONTROLS ELECTRICAL
(AHC) (ACS)

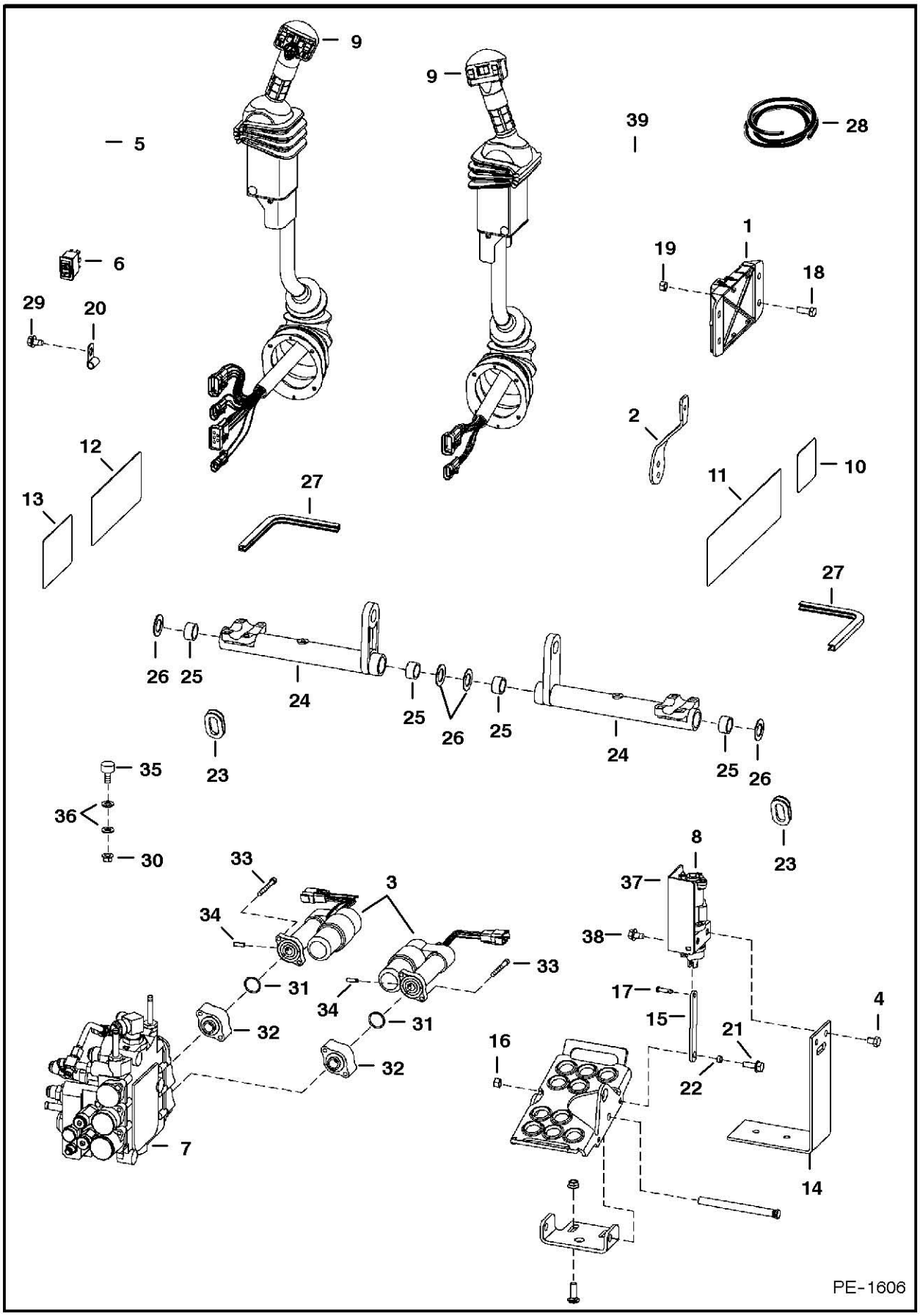

CONTROLS ELECTRICAL

Ref.N°	Part N°	Description	Remarks	Serial N°	Qty.
1	6680410	CONTROLLER	metal - Was 6676337 [A]		1
2	6717393	LEVER	throttle		1
3	6678775	ACTUATOR			2
4	17C-608	BOLT			4
5	6729023	HARNESS			1
6	6676537	SWITCH			2
7		VALVE	See Page HYDRAULIC CONTROL VALVE(1)		1
8	6680420	SENSOR	foot pedal - R.H. - See Page CONTROLS ELECTRICAL(1) - Was 6676493 [A]		1
8	6676029	SOLENOID			1
8	6680421	SENSOR	foot pedal - L.H. - See Page CONTROLS ELECTRICAL(1) - Was 6676492 [A]		1
8	6676029	SOLENOID			1
9	6680424	LEVER	tilt - R.H. - See Page CONTROLS ELECTRICAL(1) - Was 6676333 [A]		1
9	6680423	LEVER	lift - L.H. - See Page CONTROLS ELECTRICAL(1) - Was 6676497 [A]		1
10	6718706	DECAL			1
11	6728539	DECAL			1
12	6727926	DECAL			1
13	6727941	DECAL			1
14	6726573	BRACKET			2
15	6726681	LINK			2
16	95D-5	NUT			2
17	6727496	PIN			2
18	17C-616	BOLT			2
19	95D-6	NUT			6
20	30H-62	CLIP			4
21	17C-514	BOLT			2
22	6729467	SPACER			2
23	6714726	PLUG			2
24	6716977	BELLCRANK			2
25	6673710	BEARING			4
26	6716916	WASHER	plastic		4
27	NAP	MOULDING	%10.5'(266,7 mm) long - Order Ref. CONTROLS ELECTRICAL(28)		1
28	6654139	MOULDING	bulk - Sold Per Foot		x
29	84G-3710	BOLT			6
30	98D-6	NUT			2
31	58K-120	O-RING			2
32	6725128	ADAPTER			2
33	69G-436	BOLT			4
34	6718506	PIN			2
35	6673789	BEARING			4
36	25E-17	WASHER			8
37	6680478	SHIELD	R.H. - Was 6727231 [A]		1
37	6680479	SHIELD	L.H. - Was 6727284 [A]		1
38	43C-408	BOLT			4
39	17C-612	BOLT			2
40	6727580	MOUNT	controller	5158 37343-	1
40				5162 22766-	1

Partsomething

CONTROLS ELECTRICAL
(AHC) (ACS) (Handle Assembly)

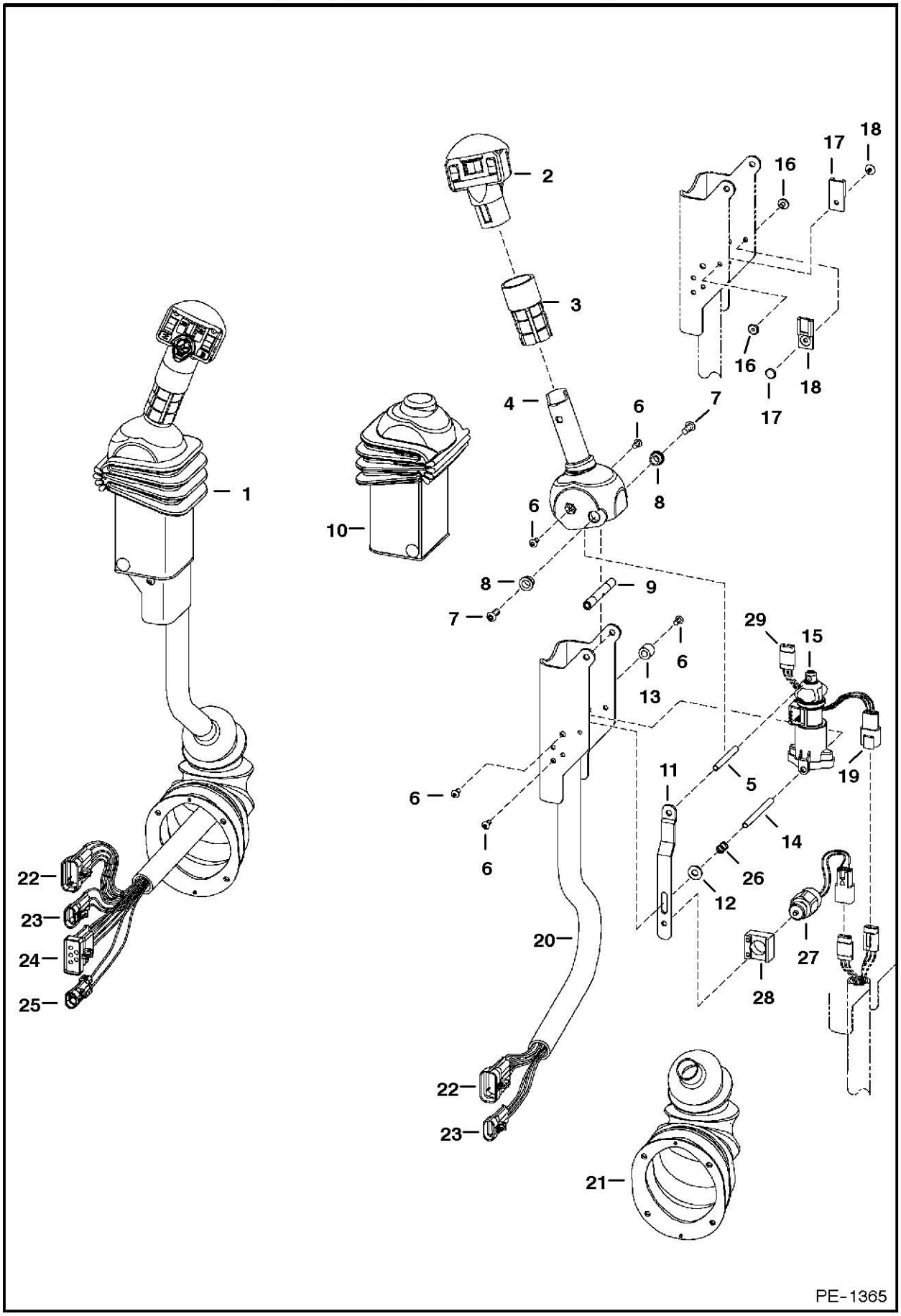

CONTROLS ELECTRICAL

Ref.N°	Part N°	Description	Remarks	Serial N°	Qty.
1	6680424	LEVER	tilt - R.H. - Was 6676333 [A]		1
1	6680423	LEVER	lift - L.H. - Was 6676497 [A]		1
2	6680462	HANDLE	lift - R.H. - Was 6677536 [A]		1
2	6680417	HANDLE	lift - L.H. - Was 6675749 [A]		1
3	NAP	GRIP	Order 6702621 Grip & cut to 2.8' (71,1 mm) long - Was 6713349 [A]		2
4	6729594	HANDLE	R.H.		1
4	6729595	HANDLE	L.H.		1
5	6680469	SPACER	threaded - Was 6729600 [A]		1
6	6727065	BOLT			6
7	25GT-410	BOLT			8
8	6702990	BUSHING			4
9	6713043	SPACER			4
10	6680471	COVER	Was 6713898 [A]		2
11	6680477	STRAP	stop - Was 6719715 [A]		1
12	25E-13	WASHER			1
13	6719835	SLEEVE			4
14	6719834	SPACER	threaded		2
15	6680422	SENSOR	Was 6675741 [A]		2
15	6670706	CONNECTOR			1
15	6670715	SOCKET			3
15	6670710	LOCK			1
16	6665322	RIVET	female		2
17	6665321	RIVET	male		2
18	6665000	CLIP			2
19	6670707	CONNECTOR			1
19	6670715	SOCKET			3
19	6670711	LOCK			1
20	6680481	CHANNEL	R.H. - Was 6719712 [A]		1
20	6680480	CHANNEL	L.H. - Was 6719711 [A]		1
21	6532127	BOOT			2
22	6640692	CONNECTOR	10-pin		1
22	6640690	PIN			8
22	6640694	LOCK			1
22	6641176	SEAL			8
22	6646582	PLUG	cavity		1
23	6640699	CONNECTOR	3-pin		2
23	6640690	PIN			3
23	6641176	SEAL			3
23	6640700	LOCK			3
24	6667144	CONNECTOR	5-pin		2
24	6640690	PIN			3
24	6641176	SEAL			3
24	6646582	PLUG	cavity		1
24	6641180	LOCK			1
25	6641179	CONNECTOR	2-pin		1
25	6640690	PIN			2
25	6641176	SEAL			2
25	6641180	LOCK			1
26	6680470	SPRING	Was 6675745 [A]		1

Fixsomething

CONTROLS ELECTRICAL

Ref.N°	Part N°	Description	Remarks	Serial N°	Qty.
27	6676029	SOLENOID			1
28	6680468	MOUNT	Was 6719716 [A]		1
29	6676870	CONNECTOR	3-pin		1
29	6670711	LOCK			1
29	6670715	SOCKET			1
29	6676640	SEAL			5

CONTROLS ELECTRICAL
(AHC) (ACS) (Foot Pedal Assy.)

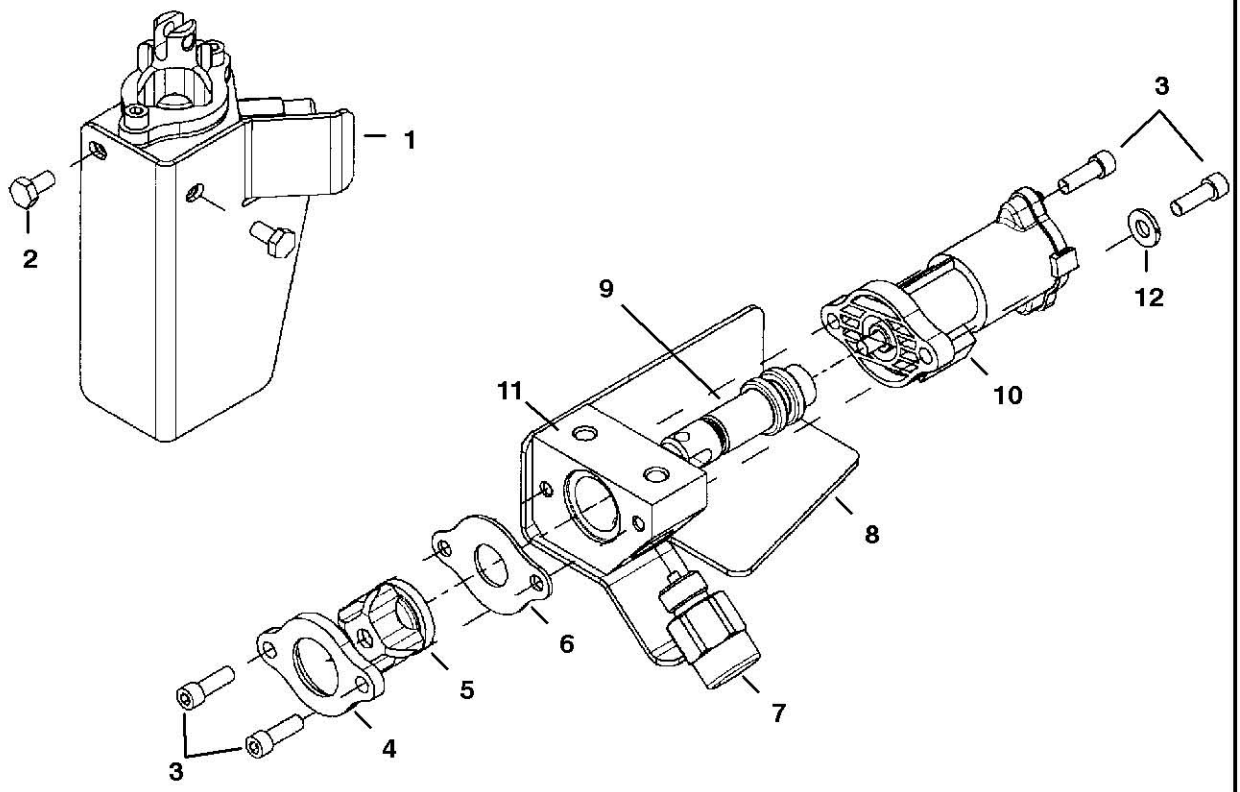

PE-1553

Fixsomething

CONTROLS ELECTRICAL

Ref.N°	Part N°	Description	Remarks	Serial N°	Qty.
1	6680420	SENSOR	foot pedal - R.H. - Was 6676493 [A]		1
1	6680421	SENSOR	foot pedal - L.H. - Was 6676492 [A]		1
2	43C-408	BOLT			2
3	98G-412	BOLT			4
4	NAP	RETAINER	boot - Was 6726574 [A]		1
5	6587763	BOOT			1
6	NAP	STOP PLATE	Was 6726695 [A]		1
7	6676029	SOLENOID			1
8	6680478	SHIELD	R.H. - Was 6727231 [A]		1
8	6680479	SHIELD	L.H. - Was 6727284 [A]		1
9	NSS	SPOOL			1
10	NSS	SENSOR			1
11	NSS	BLOCK			1
12	25E-13	WASHER			2

ALTERNATOR
(Bobcat)

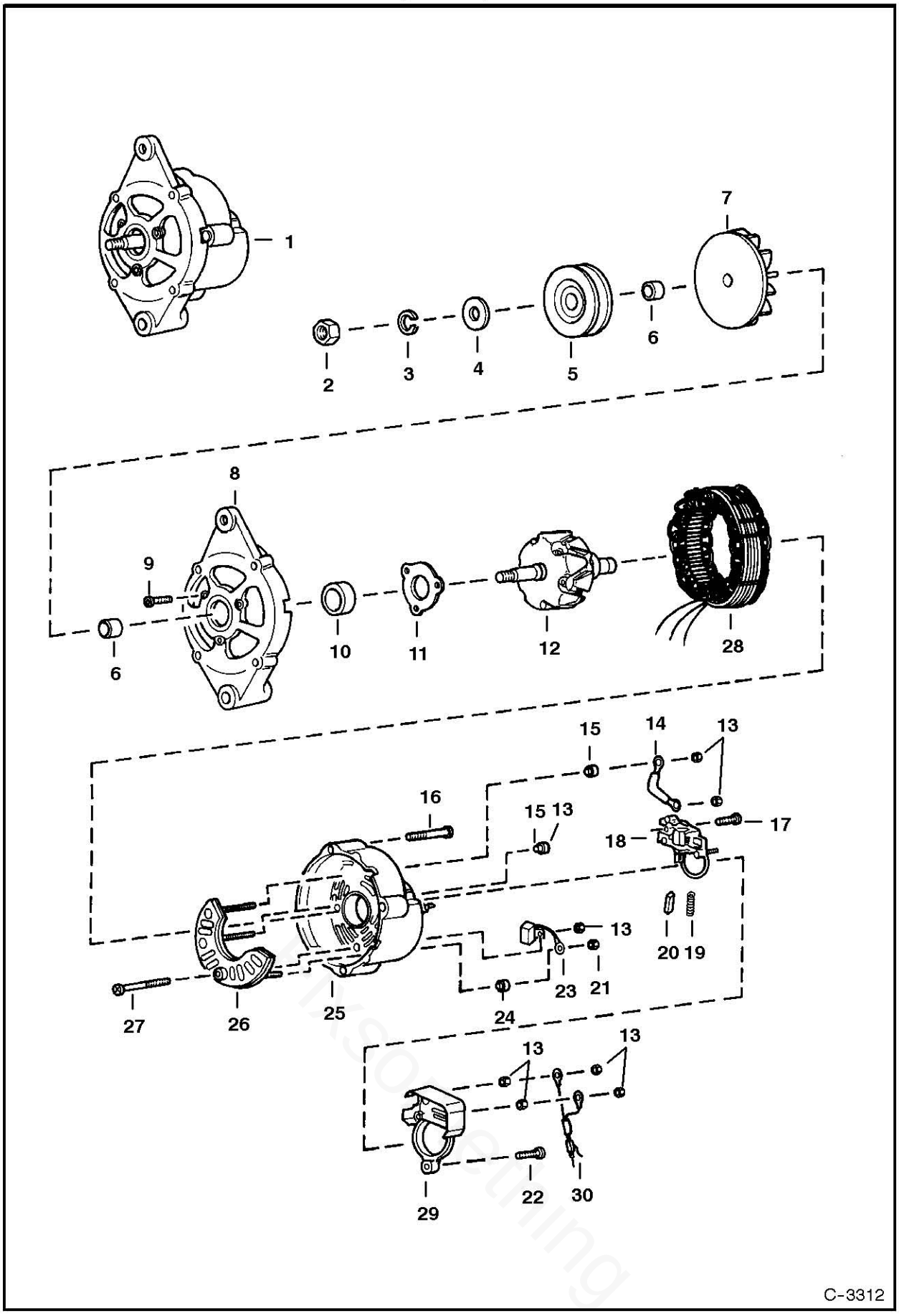

ALTERNATOR

Ref.N°	Part N°	Description	Remarks	Serial N°	Qty.
1	6661611	ALTERNATOR	Less Fan & Pulley		1
2	6659371	NUT			1
3	6659372	WASHER			1
4	6632323	WASHER			1
5	6571536	PULLEY			1
6	6659374	SPACER			2
7	6659375	FAN			1
8	6659376	BRACKET	W/Ref. ALTERNATOR(9) - ALTERNATOR(11)		1
9	6659378	BOLT			3
10	6659379	BEARING			1
11	6632228	RETAINER			1
12	6659380	ROTOR			1
13	6659387	NUT			7
14	6659397	TERMINAL			1
15	6659386	HOLDER			2
16	6659392	BOLT			3
17	6659396	SCREW			2
18	6659393	REGULATOR	W.Ref. ALTERNATOR(19) & ALTERNATOR(20)		1
19	6659395	SPRING			2
20	6659394	BRUSH			2
21	6659391	NUT			1
22	6659399	SCREW			1
23	6659388	CONDENSER			1
24	6659390	HOLDER			1
25	6659382	BRACKET	rear -W/Ref. ALTERNATOR(13), ALTERNATOR(15), ALTERNATOR(21) & ALTERNATOR(23) - ALTERNATOR(27)		1
26	6659384	RECTIFIER			1
27	6659385	SCREW			1
28	6659381	STATOR			1
29	6659398	COVER			1
30	6659400	CONNECTOR	assy.		1

ALTERNATOR

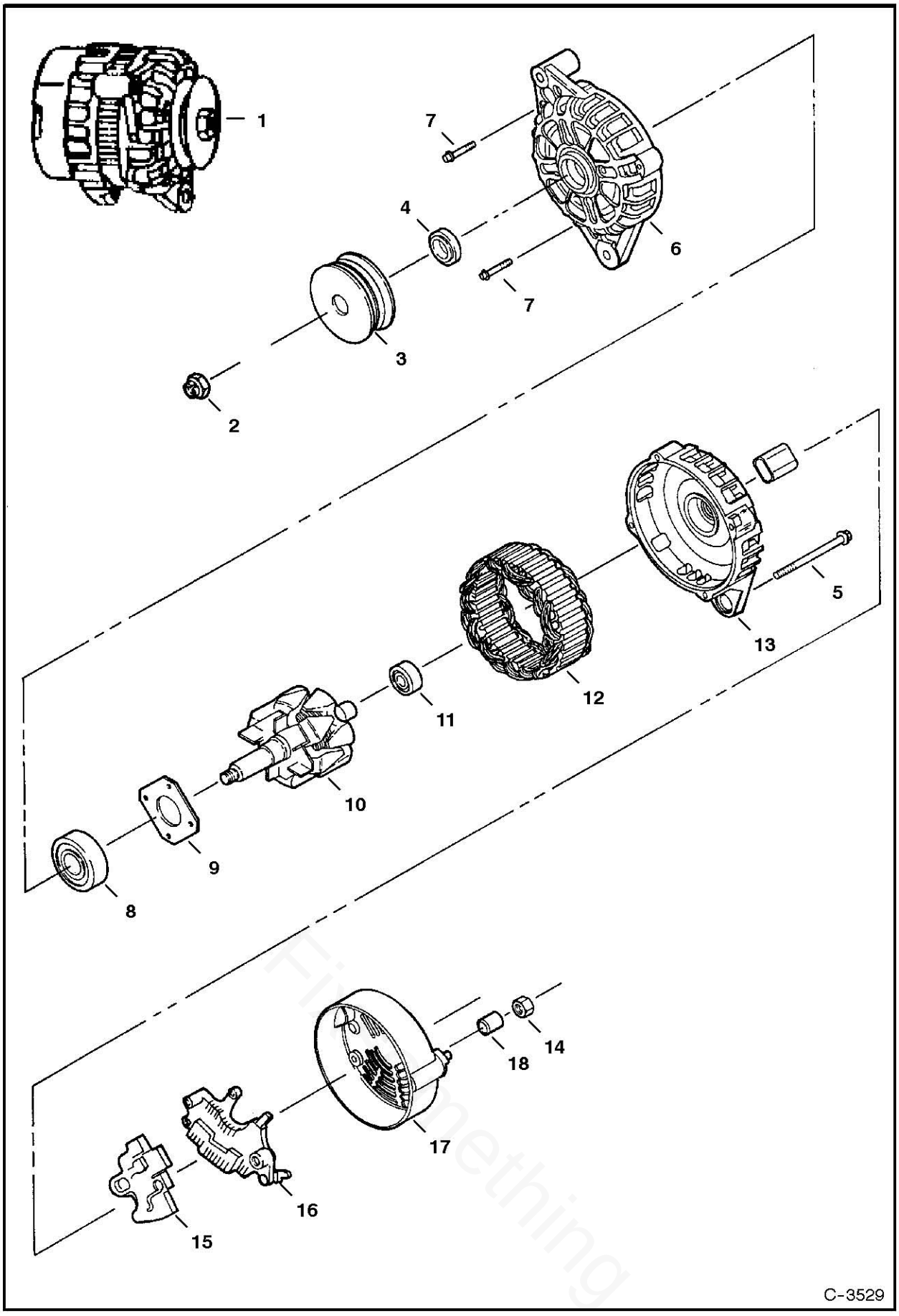

ALTERNATOR

Ref.N°	Part N°	Description	Remarks	Serial N°	Qty.
1	6678205	ALTERNATOR	90 amp - Was 6675292 [A]		1
2	6677497	NUT			1
3	6677496	PULLEY			1
4	6677495	SPACER	front		1
5	6677494	BOLT			4
6	6677491	BRACKET	rear		1
7	6677817	BOLT			4
8	6677818	BEARING			1
9	6677819	RETAINER			1
10	6677492	ROTOR ASSY			1
11	6677820	BEARING			1
12	6677493	STATOR ASSY			1
13	6677490	BRACKET			1
14	6677486	NUT			1
15	NAP	'REGULATOR ASSY	Order Ref. ALTERNATOR(1) - Was 6677489 [A]		1
16	6677488	RECTIFIER ASSY			1
17	6677487	COVER			1
18	6677485	SPACER	rear		1

STARTER
(Nippondenso)

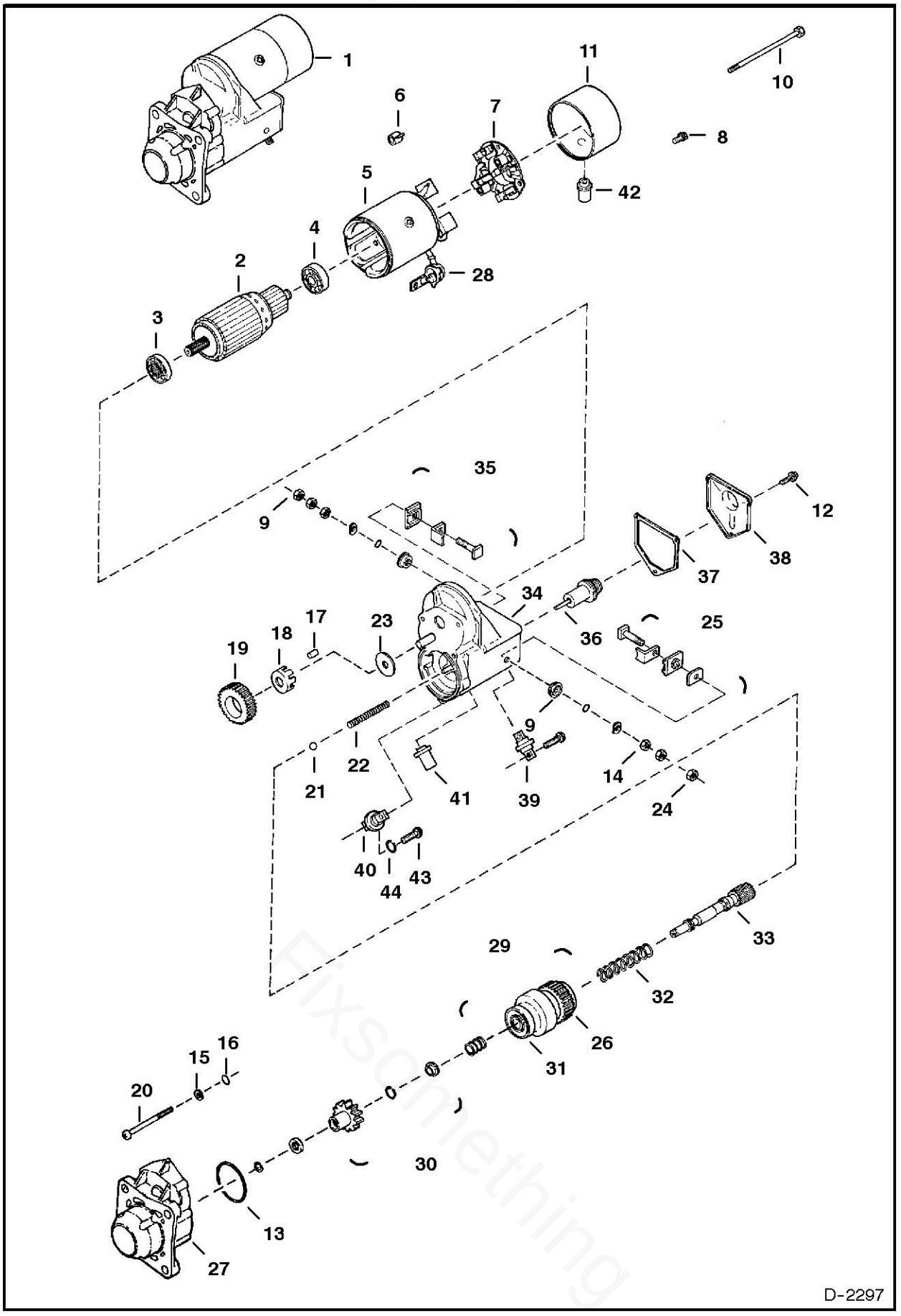

Fixsomething

STARTER

Ref.N°	Part N°	Description	Remarks	Serial N°	Qty.
1	NAP	STARTER	SEE BTI 342 - Was 6667587 [A]		1
2	6666621	ARMATURE	W/Ref. STARTER(3) & STARTER(4)		1
3	6632417	BEARING			1
4	6632418	BEARING			1
4	6671128	BEARING			1
4	6671129	BEARING			1
5	6632419	HOUSING ASSY.			1
6	6632421	SPRING			4
7	6632420	BRUSH HOLDER	W/Ref. STARTER(6)		1
8	6666634	BOLT	5mm x 9,4 mm		2
9	6666637	NUT			1
10	6666636	BOLT	6mm x 181mm		2
11	6671121	COVER			1
12	6666635	BOLT	5mm x 8mm		1
13	6666632	O-RING			1
14	6666630	WASHER	10mm		1
15	6666629	WASHER			3
16	6666631	O-RING			3
17	6632430	ROLLER			5
18	6632429	RETAINER			1
19	6632428	PINION			1
20	6666633	BOLT	6mm x 50mm		3
21	6671122	BALL			3
22	6632436	SPRING			1
23	6662437	WASHER			1
24	6666628	NUT	10mm		1
25	6671117	TERMINALS			1
26	6666622	DRIVE			1
27	6671124	HOUSING			1
28	6669365	BOOT			1
29	6671119	CLUTCH ASSY.	Ref. STARTER(26) & STARTER(30) - STARTER(33)		1
30	6671118	PINION			1
31	6671127	BEARING			1
32	6632441	SPRING			1
33	6669354	SHAFT			1
34	6671123	HOUSING			1
35	6671116	TERMINALS			1
36	6632432	PLUNGER			1
37	6632433	GASKET			1
38	6632434	COVER			1
39	6669359	TERMINAL			1
40	6671120	TERMINAL			1
41	6669360	BUSHING			1
42	6669372	COVER			1
43	6671126	SCREW			1
44	6671125	WASHER			1

STARTER
(Valeo)

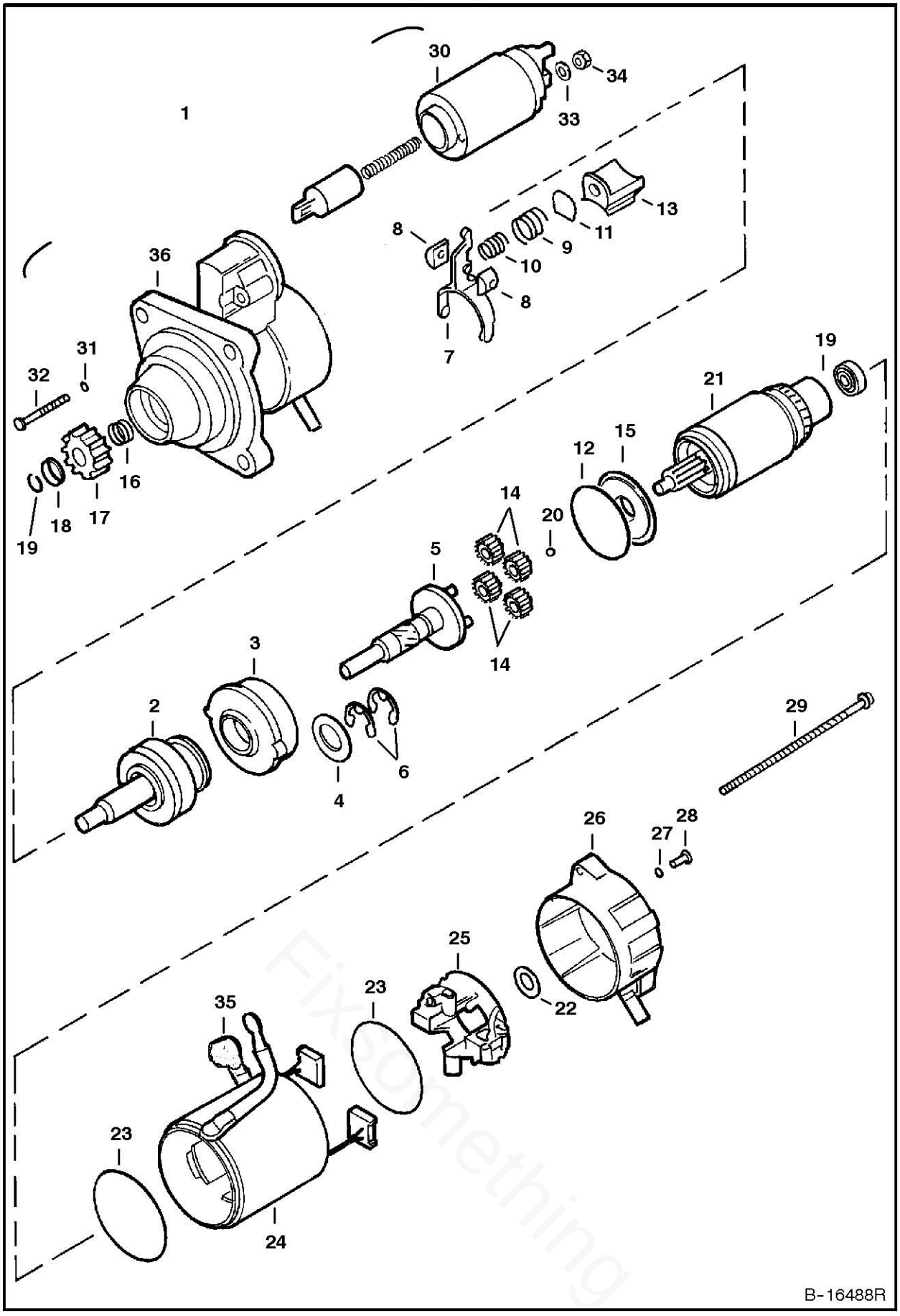

Fix Something

STARTER

Ref.N°	Part N°	Description	Remarks	Serial N°	Qty.
1	6685190	STARTER	SEE BTI 342 - Was 6676957 [A]		1
2	6680375	SHAFT	O.R.C. assy.		1
3	6680367	GEAR			1
4	6680378	WASHER			1
5	6680365	SHAFT			1
6	6680368	STOP RING			2
7	NSS	LEVER	Was 6680364 [D]		1
8	NSS	HOLDER	Was 6680357 [D]		2
9	NSS	SPRING	Was 6680381 [D]		1
10	NSS	SPRING	Was 6680382 [D]		1
11	NSS	PLATE	Was 6680370 [D]		1
12	6680369	SEAL			1
13	6680371	LEVER			1
14	6680366	GEAR			4
15	6680372	BRACKET			1
16	6680361	SPRING			1
17	6680390	GEAR			1
18	6680360	STOP			1
19	6680359	STOP RING			1
20	6680362	BALL			1
21	6680374	ARMATURE			1
22	6680363	WASHER			1
23	6680380	SEAL			2
24	6680373	YOKE			1
25	6680377	HOLDER			1
26	6680389	BRACKET			1
27	6680358	RING	rubber		2
28	6680384	BOLT			2
29	6680356	BOLT			2
30	6680376	SWITCH			1
31	6680379	SEAL			2
32	6680383	BOLT			2
33	6EM-80	WASHER			1
34	4DM-8	NUT			1
35	6680355	BOOT			1
36	6680388	BRACKET	W/Ref. STARTER(7)-STARTER(11)		1

COOLING SYSTEM

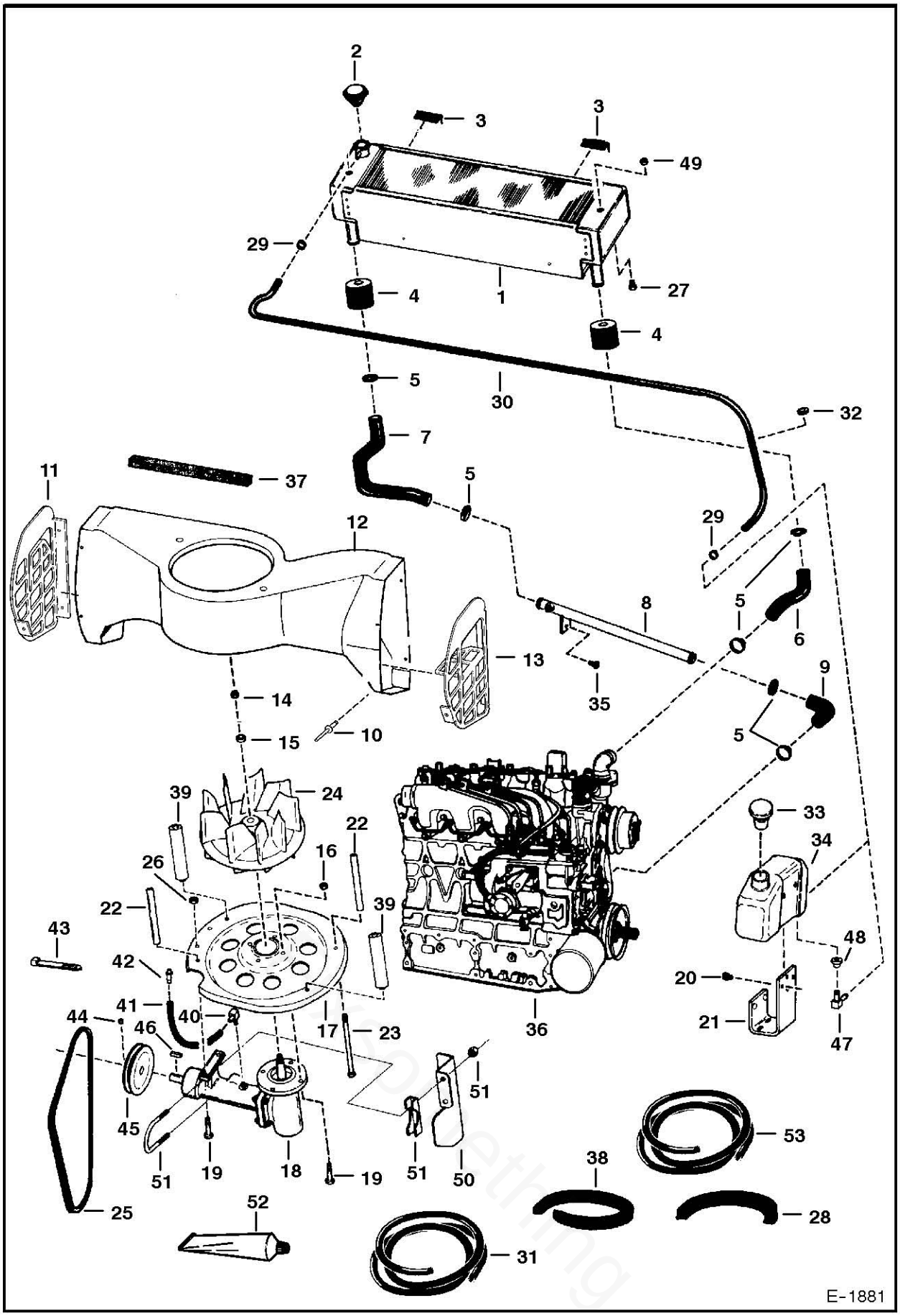

COOLING SYSTEM

Ref.N°	Part N°	Description	Remarks	Serial N°	Qty.
1	6666384	RADIATOR			1
2	6646678	CAP	14 PSI		1
3	NAP	MOULDING	3" (76,2 mm) long -Order Ref. COOLING SYSTEM(28)		2
4	6726433	SPACER	Was 6704829 [A]		2
5	6518820	CLAMP	worm gear		6
5	5HM-42	CLAMP	constant tension		6
6	6578280	HOSE			1
7	6578279	HOSE			1
8	6730999	TUBE ASSY	Was 6576029 [A]		1
9	6576028	HOSE			1
10	6706517	SCREW			8
11	6716571	LOUVER	L.H. - plastic		1
12	6700329	HOUSING			1
13	6716572	LOUVER	R.H. - plastic		1
14	86D-8	NUT			1
15	6701097	WASHER	Was 6803867 [A]		1
16	7D-6	NUT			4
17	6717478	INLET	4 slot		1
18	6734104	HOUSING ASSY.	See Page COOLING FAN DRIVE ASSY.(1) - Was 6702138 [A]		1
19	17C-616	BOLT			6
20	84G-3708	BOLT			2
21	6709415	MOUNT			1
22	6577382	SPACER			2
23	17C-6116	BOLT			4
24	6715142	FAN			1
25	6715478	BELT	fan - 40'(1016 mm) long - Use W/Ref. COOLING SYSTEM(45) (6715924 Pulley)		1
25	6732416	BELT	fan - 41'(1041,4 mm) long - Use W/Ref. COOLING SYSTEM(45) (6703483 Pulley)		1
26	61D-6	NUT			4
27	35C-508	BOLT			2
28	6649402	MOULDING	bulk - Sold Per Foot		x
29	42HS-04	CLAMP	Was 6515575 [A]		2
30	NAP	HOSE	62" (1574,8 mm) long - Order Ref. COOLING SYSTE M(53)		1
31	6577822	HOSE	bulk - Sold Per Foot		x
32	1303932	GROMMET			1
33	6702797	CAP			1
34	6576660	TANK			1
35	17C-612	BOLT			1
36		ENGINE	See Page ENGINE & GASKET KITS(1)		1
37	NAP	FOAM	42"(1067mm)long -Order Ref. COOLING SYSTEM(38)		1
38	6511855	FOAM STRIP	bulk - Sold Per Foot - self adhesive		x
39	6704907	SPACER			2
40	6657376	ELBOW			1
41	NAP	HOSE	19-1/2" (495,3 mm) long - Order Ref. COOLING SYSTEM(31)		1
42	6680970	BREATHER	Was 6670627 [A]		1
43	6610510	NYLON TIE		& Bel	1
43	6624289	STA-STRAP		& Abv	2
44	6715143	SET SCREW			1

COOLING SYSTEM

Ref.N°	Part N°	Description	Remarks	Serial N°	Qty.
45	6715924	PULLEY	4.5'(114,3 mm) O.D. - Use W/Ref. COOLING SYSTEM(25) (6715478 Bolt)		1
45	6703483	PULLEY	5.25'(133,35 mm) O.D. - Use W/Ref. COOLING SYSTEM(25) (6732416 Bolt)		1
46	7J-2108	KEY			1
47	6553412	ELBOW	alternate design		1
48	6553411	BUSHING	alternate design		1
49	6704753	PLUG	brass - .25'		1
50	6719851	SHIELD	belt		1
51	6626631	CLAMP			1
52	6650407	ADHESIVE	1oz. tube		x
53	6667189	HOSE	bulk - Sold Per Foot		x

Fixsomething

ENGINE & ATTACHING PARTS
(Air Cleaner, Muffler & Grill)

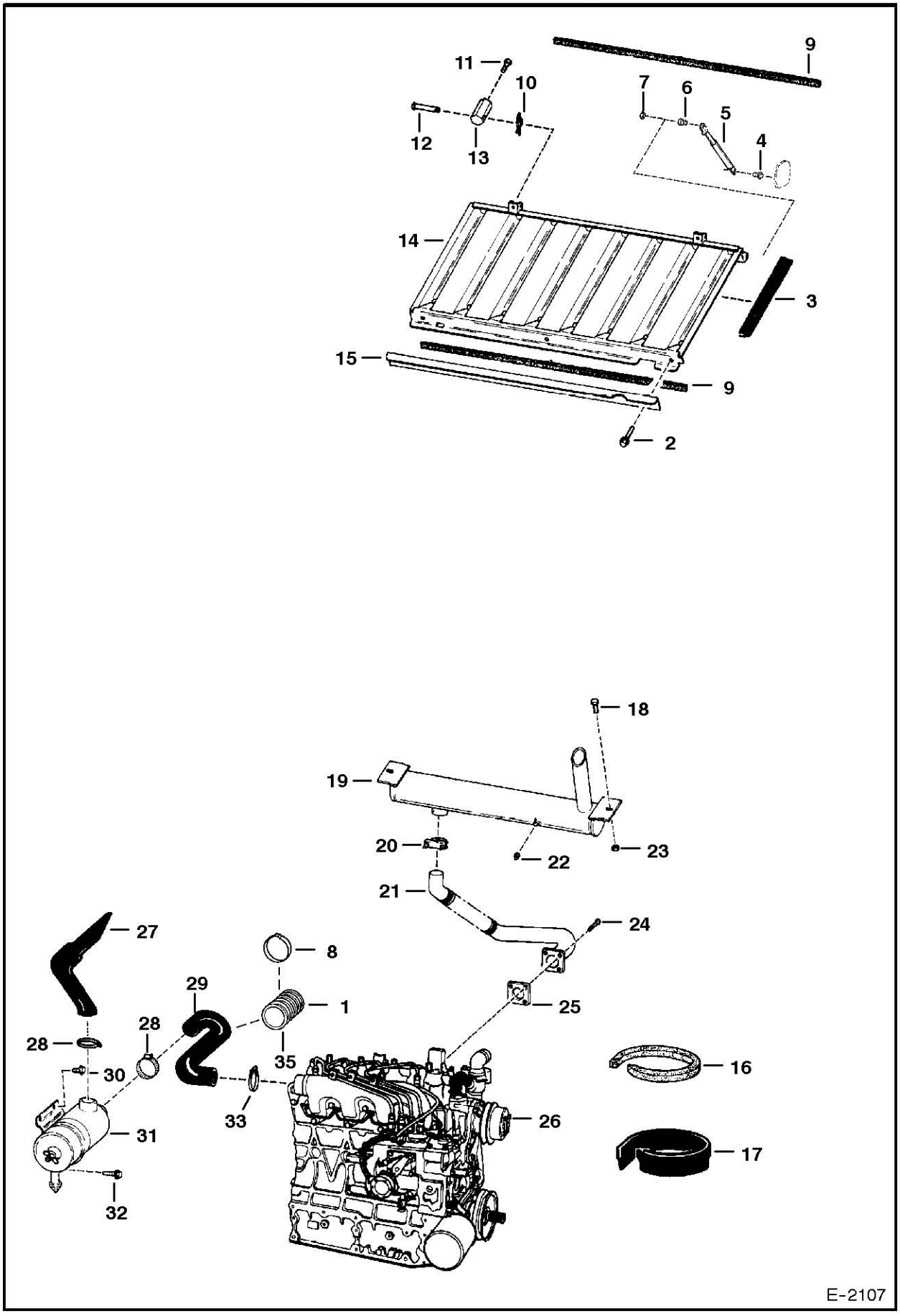

ENGINE & ATTACHING PARTS

Ref.N°	Part N°	Description	Remarks	Serial N°	Qty.
1	6706393	SHIELD	5'(127 mm) long		1
2	84G-3112	BOLT			3
3	NAP	MOULDING	14.65'' (372,1 mm) long - Order Ref. ENGINE & ATTACHING PARTS(17)		2
4	6705052	BALL STUD	weld on		1
5	6674285	GAS SPRING			1
6	6649244	BALL STUD			1
7	61D-5	NUT			1
8	6664004	CLAMP			1
9	NAP	FOAM STRIP	34.5'' (876,3 mm) long - Order Ref. ENGINE & ATTACHING PARTS(16)		2
10	6631418	PIN			2
11	17C-608	BOLT			2
12	6567743	PIN			2
13	6579326	MOUNT			2
14	6718291	GRILL			1
15	6708981	BRACKET			1
16	6511855	FOAM STRIP	bulk - Sold Per Foot - self adhesive		x
17	6646705	MOULDING	bulk - Sold Per Foot		x
18	35C-612	BOLT			2
19	6671667	MUFFLER			1
20	6677363	CLAMP	Was 657904 [A]		1
21	6701151	PIPE			1
22	6661062	PLUG	brass 3/8'' (9,5 mm)		1
23	83D-6	NUT			2
24	6701123	BOLT			4
25	6727752	GASKET	Was 6575580 [A]		1
26		ENGINE	See Page ENGINE & GASKET KITS(1)		1
27	6718237	HOSE			1
28	6598799	CLAMP			2
28	42H-52	CLAMP			2
28	42H-44	CLAMP			2
29	6714889	HOSE	W/Ref. ENGINE & ATTACHING PARTS(1) & ENGINE & ATTACHING PARTS(8)		1
30	84G-3708	BOLT			2
31		AIR CLEANER	See Page AIR CLEANER(1)		1
32	84G-3712	BOLT			1
33	42H-32	CLAMP			1

Partsomething

ENGINE & ATTACHING PARTS
(Engine Mounts)

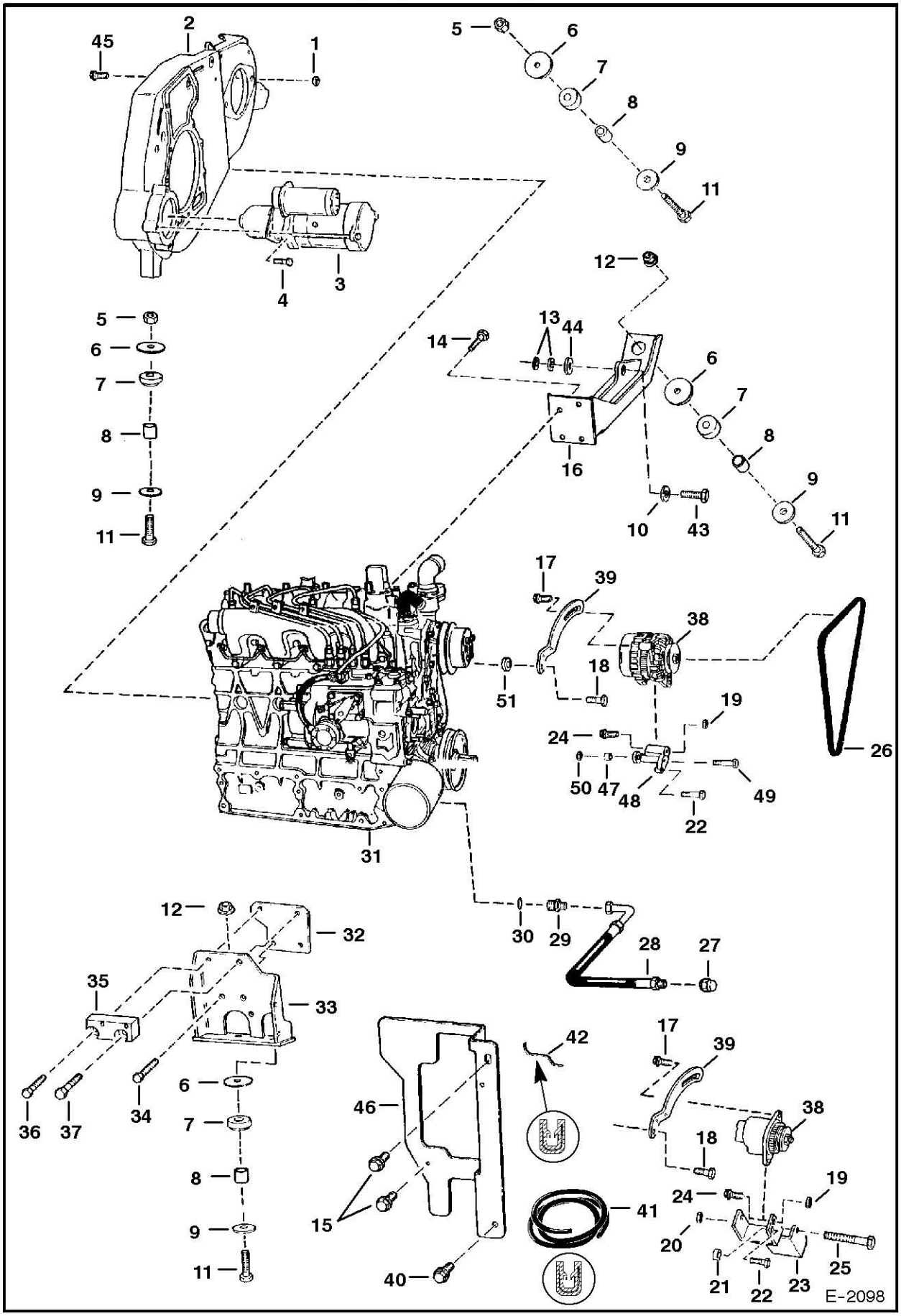

ENGINE & ATTACHING PARTS

Ref.N°	Part N°	Description	Remarks	Serial N°	Qty.
1	85D-8	NUT			2
2		MOUNT	See Page ENGINE & ATTACHING PARTS(1)		1
3		STARTER	See Page STARTER(1)		1
4	35C-620	BOLT			3
5	6652918	NUT			2
6	6705106	WASHER			4
7	6661785	MOUNT			4
8	6706043	BUSHING			4
9	6661787	WASHER			4
10	742640	WASHER	.25' thick - Use W/Ref. ENGINE & ATTACHING PARTS(43) (17C-830 Bolt)		1
10	6716408	WASHER	.40' thick - Use W/Ref. ENGINE & ATTACHING PARTS(43) (47C-832 Bolt)		1
10	6728337	SPACER	.58' thick - Use W/Ref. ENGINE & ATTACHING PARTS(43) (6675221 Bolt)		1
10	6734432	SPACER	1.0' thick		1
11	43C-852	BOLT	Was 43C-848 [B]		4
12	83D-8	NUT			2
13	25E-21	WASHER	use 2 max.		x
14	6719827	BOLT	Was 6CM-1225 [B]		4
15	84G-3712	BOLT			2
16	6712161	MOUNT			1
17	35C-516	BOLT			3
18	1CM-870	BOLT			1
18	29CM-820	BOLT	90 amp. alt.		1
19	57D-5	NUT			1
20	85D-6	NUT			1
21	6568877	WASHER			1
22	1CM-890	BOLT			1
23	6562257	MOUNT			1
24	17C-556	BOLT			1
25	17C-648	BOLT			1
26	6704720	BELT	alternator		1
26	6675837	BELT	alternator - 90 amp.		1
27	36K-6	CAP			1
28	6704012	HOSE			1
29	NAP	ADAPTER	W/Ref. ENGINE & ATTACHING PARTS(30) - tapered boss face - Was 15KN-6 [A]		1
29	97K-8	O-RING	flared end		1
29	15KB-808	ADAPTER	W/Ref. ENGINE & ATTACHING PARTS(30) - flat boss face		1
30	99K-8	O-RING	tapered boss face		x
30	79K-8	O-RING	flat boss face		x
31		ENGINE	See Page ENGINE & GASKET KITS(1)		1
32	6700535	SPACER			1
33	6703981	MOUNT			1
34	6719828	BOLT	Was 6CM-1230 [B]		2
35	6704322	MOUNT	fuel filter		1
36	6719826	BOLT	Was 5CM-1035 [B]		1
37	6719829	BOLT	Was 6CM-1235 [B]		1
38		ALTERNATOR	See Page ALTERNATOR(1)		1
39	6705711	BRACKET			1

Fitzgerald

ENGINE & ATTACHING PARTS

Ref.N°	Part N°	Description	Remarks	Serial N°	Qty.
39	6727084	BRACKET	alt. - 90 amp.		1
40	84G-3716	BOLT			2
41	6654139	MOULDING	bulk - Sold Per Foot		x
42	NAP	MOULDING	7.7'(196 mm) long- Order Ref. ENGINE & ATTACHIN G PARTS(41)		1
43	17C-830	BOLT	hyd. pump mount - 1.875' long		1
43	47C-832	BOLT	hyd. pump mount - 2' long		1
43	6675221	BOLT	hyd. pump mount - 2.25' long		1
44	6703140	WASHER			1
45	17C-828	BOLT	hyd. pump mount		1
46	6731060	SHIELD	bolts to frame - Was 6717812 [A]		1
47	6675838	BUSHING	90 amp. alt.		1
48	6725427	BRACKET	90 amp. alt.		1
49	1CM-8100	BOLT			2
50	53DM-8	NUT			2
51	6E-5	WASHER	90 amp. alt.		1

ENGINE & ATTACHING PARTS
(Belt Drive System)

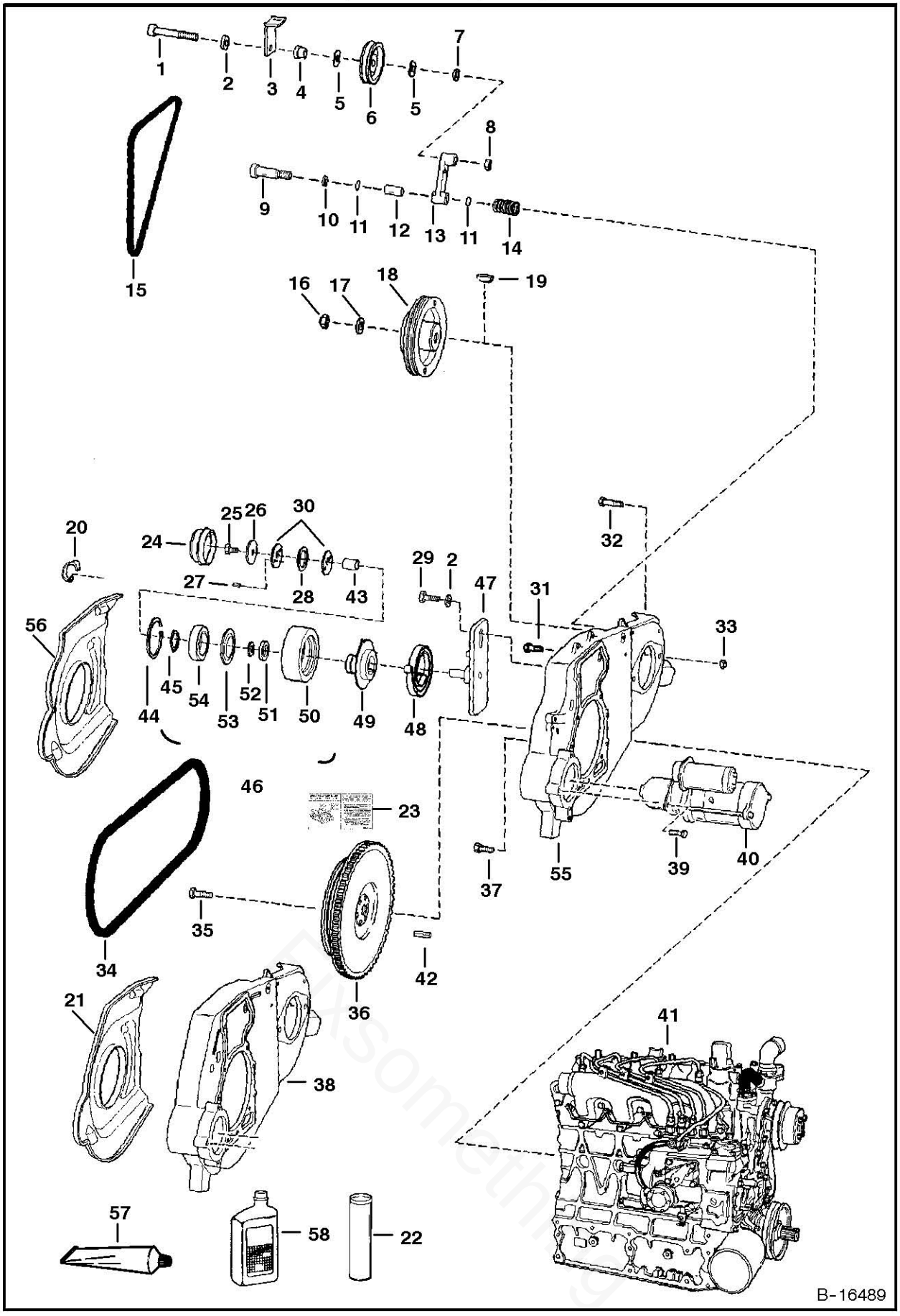

Ersomething

ENGINE & ATTACHING PARTS

Ref.N°	Part N°	Description	Remarks	Serial N°	Qty.
1	73G-656	BOLT			1
2	6704484	WASHER	thrust		3
3	6702474	RETAINER	fan drive idler belt		1
4	6704443	BUSHING	spacer		1
5	6660995	RING	grease		2
6	6662997	PULLEY	fan drive idler		1
7	6704444	WASHER			1
8	61D-6	NUT			1
9	38C-820	BOLT	shoulder		1
10	6655781	BEARING			1
11	6704820	O-RING			2
12	6670682	BEARING	nylon		1
13	6725212	IDLER ARM	W/Ref. ENGINE & ATTACHING PARTS(12) - Was 6703507 [A]		1
14	6700115	SPRING			1
15		BELT	fan drive - See Page COOLING SYSTEM(1) Ref. COOLING SYSTEM(25)		1
16	92D-12	NUT			1
17	6576033	WASHER			1
18	6704424	PULLEY	7.40' (188 mm) dia. - to hyd. pump - 3 groove	5158 33894 & Bel	1
18				5162 20976 & Bel	1
18	6726539	PULLEY	7.95' (202 mm) dia. - to hyd. pump - 3 groove	5158 33895 & Abv	1
18				5162 20977 & Abv	1
19	6J-807	KEY			1
20	6703022	CLIP			3
21	6704450	SHIELD	Use W/Ref. ENGINE & ATTACHING PARTS(18) (6704424 Pulley)	5158 33894 & Bel	1
21				5162 20976 & Bel	1
21	6726938	SHIELD	Use W/Ref. ENGINE & ATTACHING PARTS(18) (6726539 Pulley)	5158 33895 & Abv	1
21				5162 20977 & Abv	1
22	6599719	GREASE	Use W/Ref. ENGINE & ATTACHING PARTS(46)		x
23	6709030	DECAL	belt tension		1
24	6708770	CAP	dust		1
25	17C-610	BOLT			1
26	6705232&	WASHER			1
27	6713370	PIN			2
28	6710585	WASHER	wave spring		1
29	17C-620	BOLT			1
30	6705231	WASHER			2
31	6719828	BOLT	Was 6CM-1230 [B]		2
32	17C-828	BOLT	hyd. pump mount		2
33	85D-8	NUT			2
34	6672021	BELT	pump drive - 3 groove - Use W/Ref. ENGINE & ATTACHING PARTS(18) (6704424 Pulley) - Was 6672445 [D]	5158 33894 & Bel	1
34				5162 20976 & Bel	1
34	6726898	BELT	pump drive - 3 groove - Use W/Ref. ENGINE & ATTACHING PARTS(18) (6726539 Pulley)	5158 33895 & Abv	1
34				5162 20977 & Abv	1
35	6598275	BOLT	Was 6652487 [A]		6

ENGINE & ATTACHING PARTS

Ref.N°	Part N°	Description	Remarks	Serial N°	Qty.
36	6715165	FLYWHEEL	W/Ring Gear & Ref. ENGINE & ATTACHING PARTS(42)- 3 groove - Use W/Ref. ENGINE & ATTACHING PARTS(18) (6704424 Pulley)	5158 33894 & Bel	1
36				5162 20976 & Bel	1
36	6510470	RING GEAR			1
36	6726933	FLYWHEEL	W/Ring Gear & Ref. ENGINE & ATTACHING PARTS(42)- 3 groove - Use W/Ref. ENGINE & ATTACHING PARTS(18) (6726539 Pulley)	5158 33895 & Abv	1
36				5162 20977 & Abv	1
36	6510470	RING GEAR			1
37	6719825	BOLT	Was 5CM-1025 [B]		7
38	NAP	MOUNT	Use W/Ref. ENGINE & ATTACHING PARTS(18) (6704424 Pulley) - Order Ref. ENGINE & ATTACHING PARTS(55) & ENGINE & ATTACHING PARTS(56	5158 33894 & Bel	1
38				5162 20976 & Bel	1
38	6728062	MOUNT	Use W/Ref. ENGINE & ATTACHING PARTS(18) (6726539 Pulley) - Was 6726613 [A]		1
39	35C-620	BOLT			3
40		STARTER	See Page STARTER(1)		1
41		ENGINE	See Page ENGINE & GASKET KITS(1)		1
42	6713370	PIN			1
43	6682442	BEARING	bronze sleeve - Was 6704393 [A]		1
44	6658847	SNAP RING			1
45	6658536	SNAP RING			1
46	6735884	IDLER ASSY.	spring loaded - Ref. ENGINE & ATTACHING PARTS(24) - ENGINE & ATTACHING PARTS(28), ENGINE & ATTACHING PARTS(30), ENGINE & ATTACHI		1
46	6714212	PULLEY ASSY.	Ref. ENGINE & ATTACHING PARTS(49) - ENGINE & ATTACHING PARTS(43)		1
47	6735883	BRACKET	Was 6708767 [A]		1
48	6705491	SPRING	torsion		1
49	6711699	HUB ASSY.	Order Ref. ENGINE & ATTACHING PARTS(46)		1
50	6704391	PULLEY	idler		1
51	6661112	SEAL			1
52	6703168	BEARING	thrust		1
53	6664209	SEAL			1
54	6668114	BEARING	ball		1
55	6728062	MOUNT		5158 33895 & Abv	1
55				5162 20977 & Abv	1
56	6726938	SHIELD		5158 33895 & Abv	1
56				5162 20977 & Abv	1
57	6633583	SEALANT			x
58	6661405	OIL			x

Fixsomething

THROTTLE

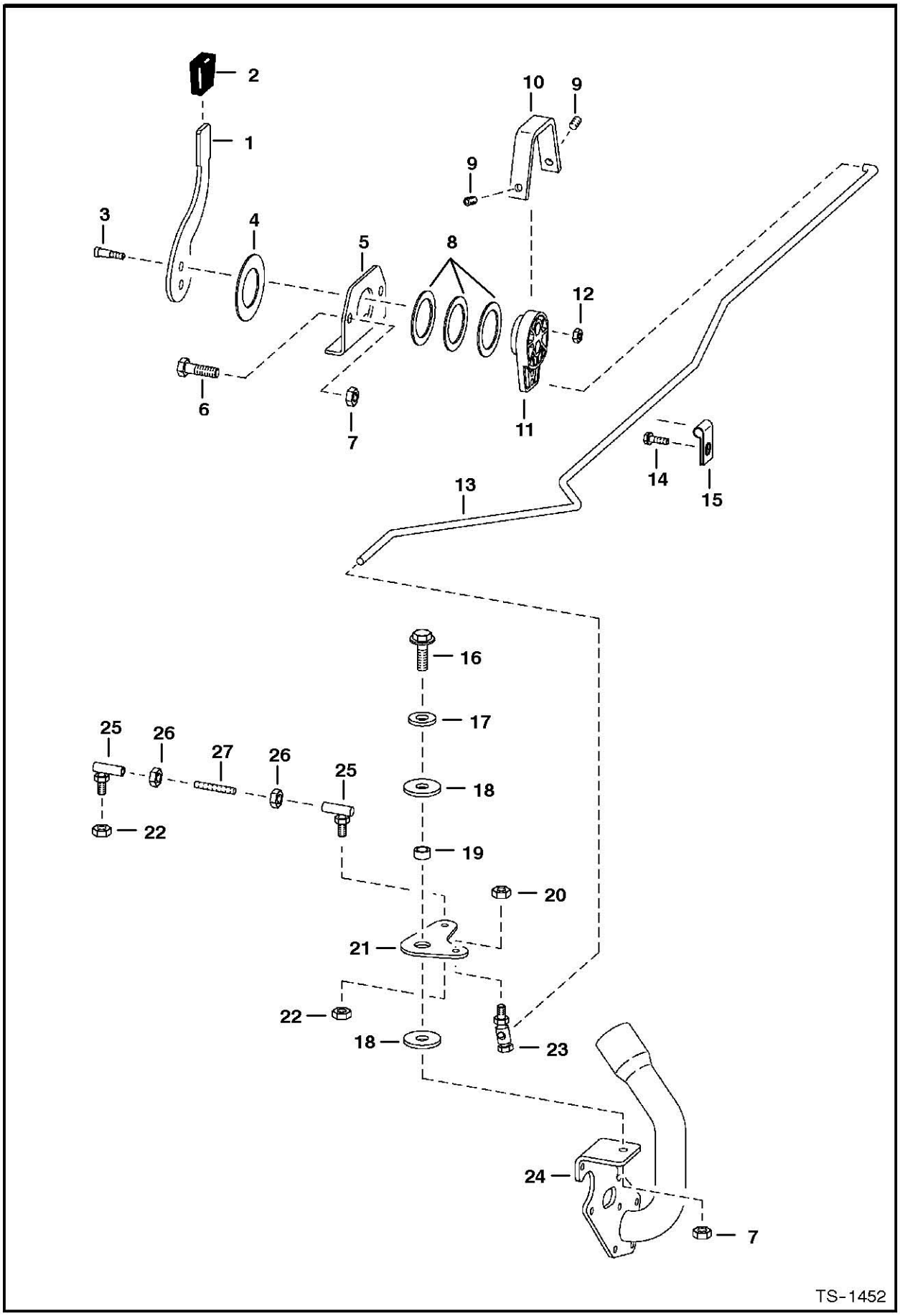
2
1
10
9
9
3
4
5
8
12
6
7
11
14
15
13
16
17
25
26
27
26
25
18
22
19
20
21
22
18
23
24
7
TS-1452

THROTTLE

Ref.N°	Part N°	Description	Remarks	Serial N°	Qty.
1	6705452	LEVER			1
2	6564452	GRIP			1
3	38C-610	BOLT	shoulder		2
4	6567962	WASHER			1
5	6576262	MOUNT			1
6	17C-626	BOLT			2
7	95D-6	NUT			3
8	6630945	WASHER			3
9	6706572	SET SCREW			2
10	6576261	COVER			1
11	6709022	LEVER			1
12	85D-5	NUT			2
13	6702397	ROD			1
14	84G-3712	BOLT			1
15	30H-23	CLAMP			1
16	84G-3716	BOLT			1
17	25E-18	WASHER			1
18	6700170	WASHER	plastic		2
19	6564343	BUSHING			1
20	59D-4	NUT	Was 85D-4 [B]		1
21	6578268	BELLCRANK			1
22	66D-4	NUT	Was 86D-4 [B]		2
23	6557291	BALL JOINT			1
24	6719048	MOUNT	fuel shutoff solenoid & oil fill - See Page GEARCASE(1)		1
25	6554858	BALL JOINT			2
26	62D-4	NUT			2
27	6576252	ROD			1

Fixsomething

COOLING FAN DRIVE ASSY.

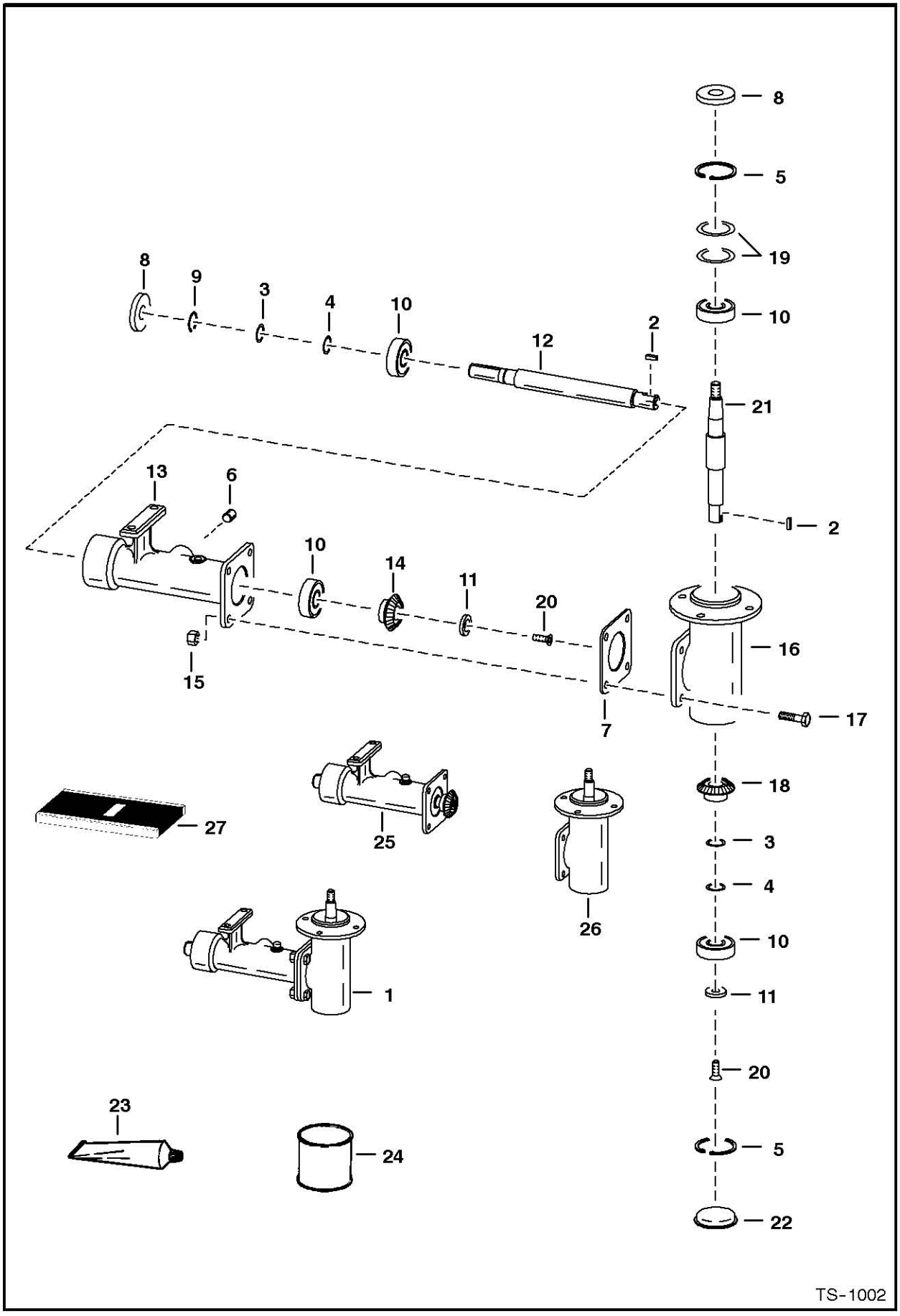

COOLING FAN DRIVE ASSY.

Ref.N°	Part N°	Description	Remarks	Serial N°	Qty.
1	6734104	HOUSING ASSY.	Ref. COOLING FAN DRIVE ASSY.(2) - COOLING FAN DRIVE ASSY.(22) - Was 6702138 [A]		1
2	7J-2010	KEY			2
3	6702165	SHIM	.002'(0,05 mm) thickness - 1'(25,4 mm) O.D.		x
4	6701159	SHIM	.005'(0,13 mm) thickness - 1'(25,4 mm) O.D.		x
5	6653758	SNAP RING			2
6	16F-8	PLUG			1
7	6578284	SHIM	.003'' (0,08 mm) thickness		x
8	6653702	SEAL			2
9	6653757	SNAP RING			1
10	6646627&	BEARING			4
11	6702140	WASHER	countersink		2
12	6702137	SHAFT	keyed		1
13	6579641	HOUSING			1
14	6702103	GEAR	keyed		1
15	95D-6	NUT			4
16	NSS	HOUSING	'Order 6702138 Housing or Ref. COOLING FAN DRIVE ASSY.(26)		1
17	17C-620	BOLT			4
18	6702102	GEAR	keyed		1
19	6702166	SHIM	.002'' (0,05 mm) thickness - 2'(50,8 mm) O.D.		x
19	6702144	SHIM	.005'' (0,13 mm) thickness - 2'(50,8 mm) O.D.		x
20	9G-512	SCREW			2
21	6702135	SHAFT	keyed		1
22	6700782	CAP	grease		1
23	6672486	SEALANT	Use W/Ref. COOLING FAN DRIVE ASSY.(7) & COOLING FAN DRIVE ASSY.(22)		x
24	6634393	LUBRICANT	gear - 1 pint		x
25	6707078	HOUSING ASSY.	half		1
26	6707077	HOUSING ASSY.	half		1
27	6669384	SPEEDY SLEEVE	repair kit		1

Fixsomething

ENGINE & GASKET KITS
(Kubota - V2203)

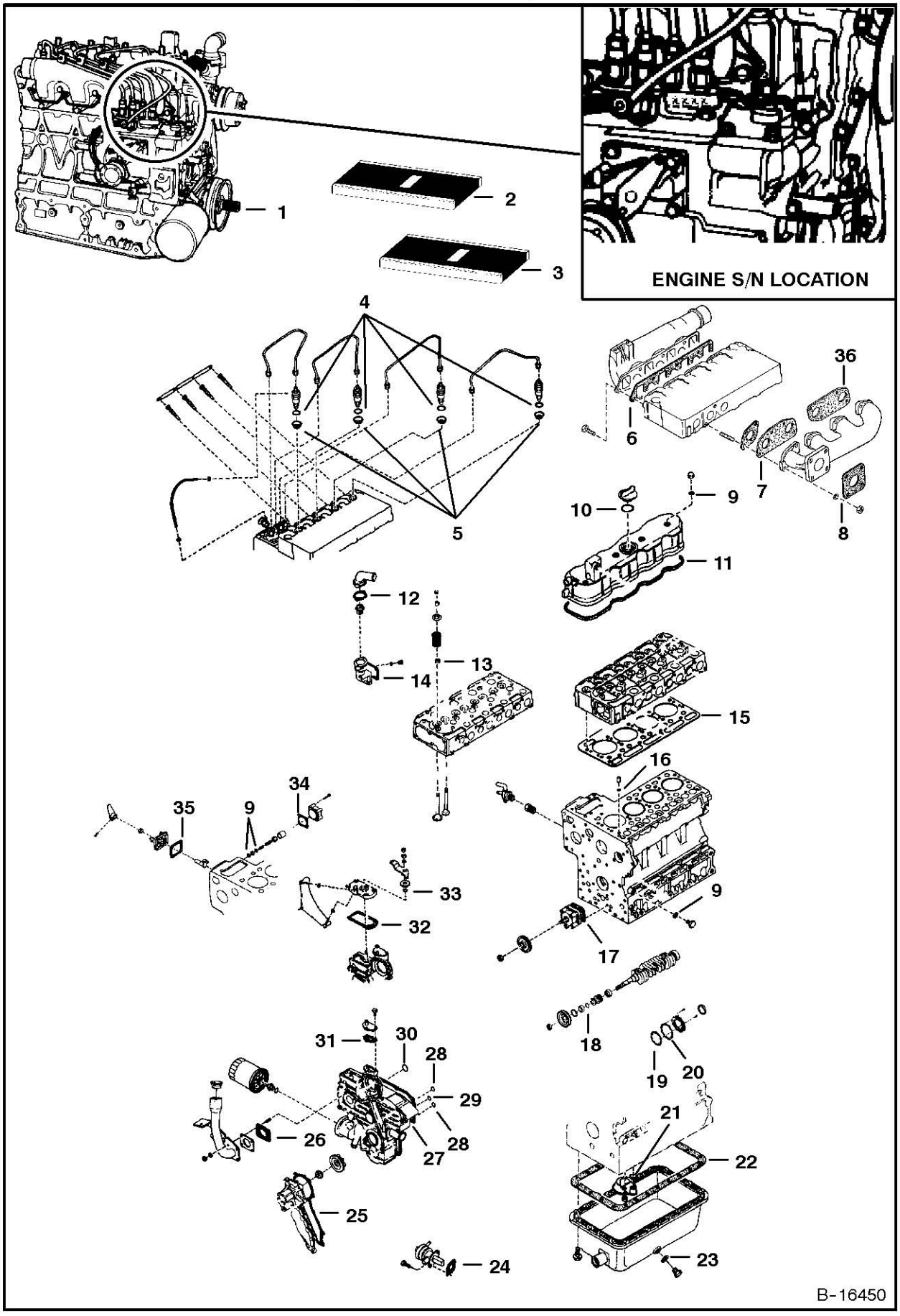

ENGINE & GASKET KITS

Ref.N°	Part N°	Description	Remarks	Serial N°	Qty.
1	6704441	ENGINE	Does not include starter, alternator, flywheel, & flywhe el housing		1
1	NAP	SHORT BLOCK			1
2	6657401	GASKET KIT	Upper - Ref. ENGINE & GASKET KITS(6)-ENGINE & GASKET KITS(16) & ENGINE & GASKET KITS(36)		1
3	6657402	GASKET KIT	Lower - Does not include rear oil seal - Ref. ENGINE & GASKET KITS(17)-ENGINE & GASKET KITS(35)		1
4	6655218	GASKET	See Page INJECTOR NOZZLES(1)		4
5	6655872	SHIELD	See Page INJECTOR NOZZLES(1)		4
6	6666811	GASKET	See Page MANIFOLDS(1)		1
7	6666781	GASKET	See Page MANIFOLDS(1)		4
8	6575580	GASKET	muffler - See Page MANIFOLDS(1)		1
9	3974095	GASKET	See Page CRANKCASE(1) , ROCKER ARM COVER(1) & ENGINE STOP LEVER(1)		7
10	3966602	O-RING	See Page ROCKER ARM COVER(1)		1
11	6598136	GASKET	See Page ROCKER ARM COVER(1)		1
12	6732199	GASKET	thermostat cover -See Page WATER FLANGE & THERMOSTAT(1) - Was 6666790 [A]		1
13	6653830	SEAL	valve stem - See Page VALVE ROCKER ARM(1)		8
14	6666802	GASKET	water flange - See Page WATER FLANGE & THERM OSTAT(1)		1
15	6655159	GASKET	cylinder head - See Page CYLINDER HEAD(1)		1
16	3974038	O-RING	See Page CRANKCASE(1)		1
17	3974456	GASKET	See Page CRANKCASE(1)		1
18	3974577	O-RING	See Page PISTON & CRANKSHAFT(1)		1
19	6655165	GASKET	See Page PISTON & CRANKSHAFT(1)		1
20	6655167	GASKET	See Page PISTON & CRANKSHAFT(1)		1
21	3966516	O-RING	See Page OIL PAN(1)		1
22	3975449	GASKET	oil pan - See Page OIL PAN(1)		1
23	3974403	GASKET	See Page OIL PAN(1)		1
24	3974502	GASKET	fuel pump - See Page INJECTION PUMP(1)		1
25	3974995	GASKET	See Page WATER PUMP(1)		1
26	6714543	GASKET	See Page GEARCASE(1)		1
27	6653806	GASKET	gearcase - See Page GEARCASE(1)		1
28	3966515	O-RING	See Page GEARCASE(1)		2
29	6655162	O-RING	See Page GEARCASE(1)		1
30	3966530	O-RING	See Page GEARCASE(1)		1
31	3974895	GASKET	water return flange - See Page GEARCASE(1)		1
32	6666792	GASKET	See Page SPEED CONTROL PLATE(1) - Was 66353 92 [A]		1
33	3966512	O-RING	See Page SPEED CONTROL PLATE(1)		1
34	3974630	GASKET	See Page FUEL CAMSHAFT(1)		1
35	3974601	GASKET	pump cover - See Page ENGINE STOP LEVER(1)		1
36	6666791	GASKET	See Page MANIFOLDS(1)		1

GEARCASE

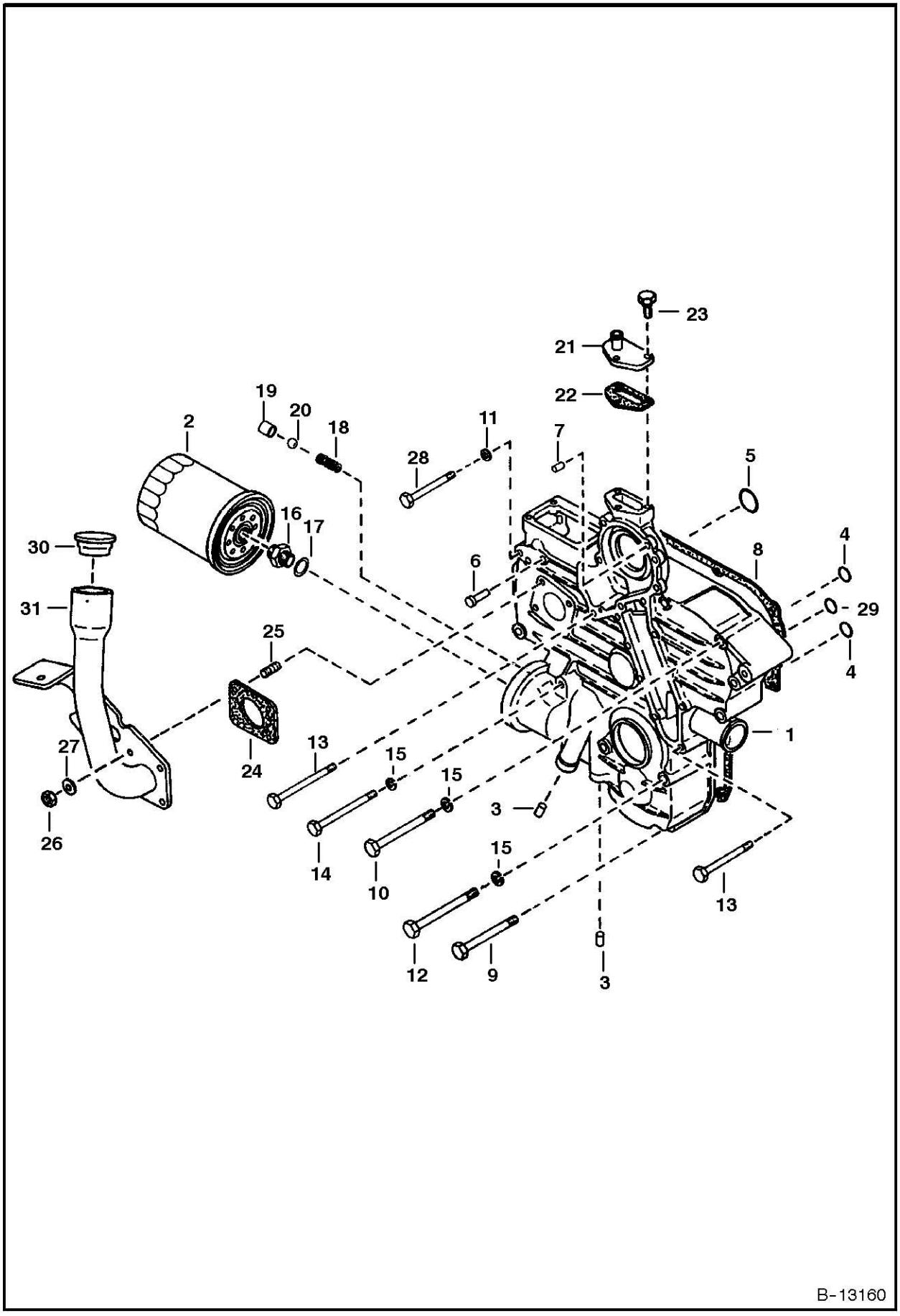
23
21
22
19
20
18
2
11
28
7
5
16
17
30
6
8
4
31
29
25
4
1
27
24
13
15
15
3
26
14
10
15
13
12
9
3
B-13160

GEARCASE

Ref.N°	Part N°	Description	Remarks	Serial N°	Qty.
1	6674164	CASE ASSY.			1
2	6675517	FILTER	oil - 6 Pack - Was 3974896 [A]		1
3	6667425	PLUG	pin		2
4	3966515	O-RING			2
5	3966530	O-RING			1
6	6652592	PIN	start spring		1
7	3974395	PIN	straight		2
8	6653806	GASKET	gearcase		1
9	3974888	BOLT			2
10	1CM-870	BOLT			5
11	2EM-8	WASHER			1
12	1CM-880	BOLT			2
13	6653808	BOLT			3
14	1CM-895	BOLT			2
15	6EM-80	WASHER			9
16	6653809	ADAPTER			1
17	15EM-180	WASHER			1
18	6652652	SPRING			1
19	3974893	SEAT	valve		1
20	10J-13	BALL			1
21	3974894	FLANGE	water return		1
22	3974895	GASKET	water return flange		1
23	4CM-620	BOLT			3
24	6714543	GASKET			1
25	6652764	STUD			4
26	1DM-6	NUT			4
27	6EM-60	WASHER	spring		4
28	6653807	BOLT			1
29	6655162	O-RING			1
30	6703736	CAP			1
31	6719048	MOUNT			1

Fixsomething

CRANKCASE

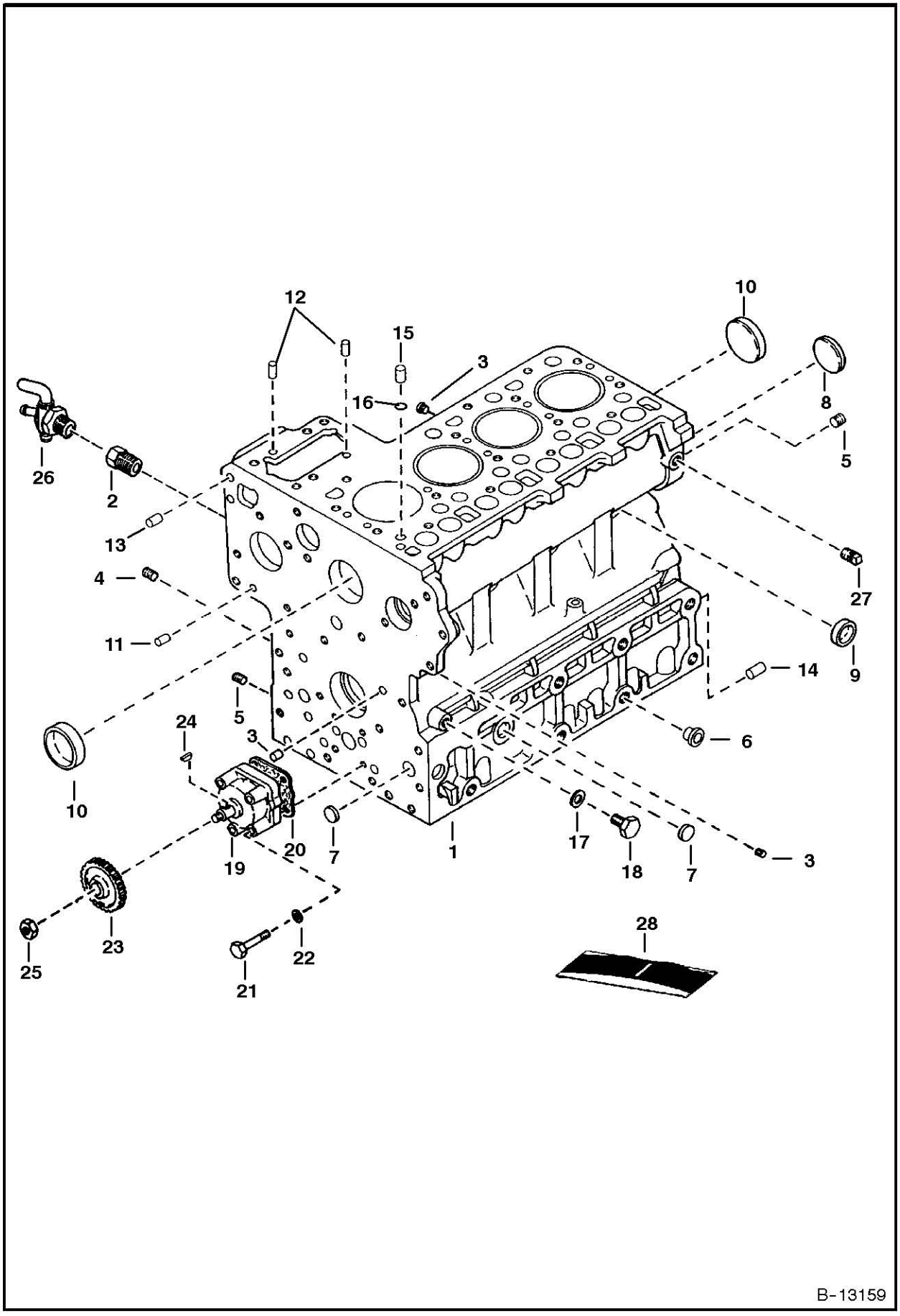
12
15
3
16
10
8
5
26
2
13
4
11
27
9
14
6
24
5
3
10
20
7
1
17
18
7
3
19
23
25
22
21
28
B-13159

CRANKCASE

Ref.N°	Part N°	Description	Remarks	Serial N°	Qty.
1	6655149	CRANKCASE	assy. - W/Ref. CRANKCASE(2) - CRANKCASE(15)		1
2	3974871	ADAPTER			1
3	6652574	PLUG			6
4	6655869	PLUG			12
5	6652575	PLUG			2
6	6598187	PLUG			21
7	4FM-18	PLUG	expansion		3
8	4FM-45	PLUG	expansion		1
9	3974389	CAP	sealing		6
10	3974390	CAP	sealing		2
11	3974393	PIN	straight		2
12	3974394	PIN	straight		2
13	3974395	PIN	straight		2
14	3974868	PIN	straight		1
15	3974037	PIN	pipe		1
16	3974038	O-RING			1
17	3974095	GASKET			1
18	6655884	PLUG			1
19	3975426	OIL PUMP			1
20	6666782	GASKET			1
21	6655195	BOLT			4
22	6EM-60	WASHER			4
23	3975441	GEAR			1
24	15JM-410	KEY			1
25	3DM-12	NUT			1
26	3975447	DRAINCOCK			1
27	16F-2	PLUG			1
28	6657402	GASKET KIT	Lower - Does not include rear oil seal - See Page ENGINE & GASKET KITS(1)		1

Fixsomething

ROCKER ARM COVER

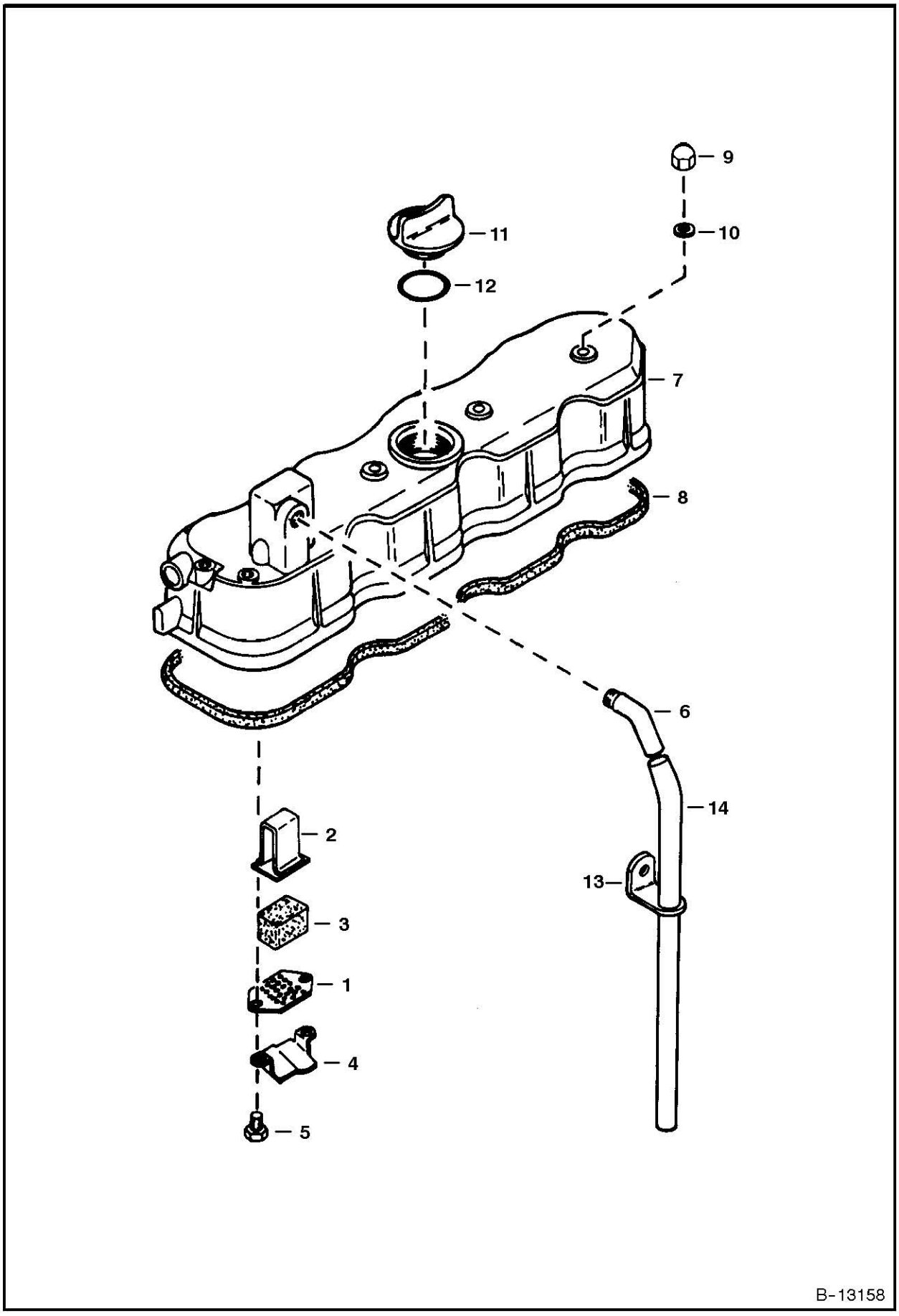

ROCKER ARM COVER

Ref.N°	Part N°	Description	Remarks	Serial N°	Qty.
1	3974924	PLATE	element		1
2	3974925	PLATE	element		1
3	3974926	ELEMENT	breather		1
4	3974927	SHIELD	breather		1
5	3975436	SCREW	W/Washer		2
6	6652624	JOINT	breather pipe		1
7	6655175	COVER	valve		1
8	6598136	GASKET			1
9	3974923	NUT	cap		4
10	3974095	GASKET			4
11	6652653	PLUG	oil filler		1
12	3966602	O-RING			1
13	3974931	CLAMP	pipe		1
14	3974930	PIPE	breather		1

Fixsomething

VALVE ROCKER ARM

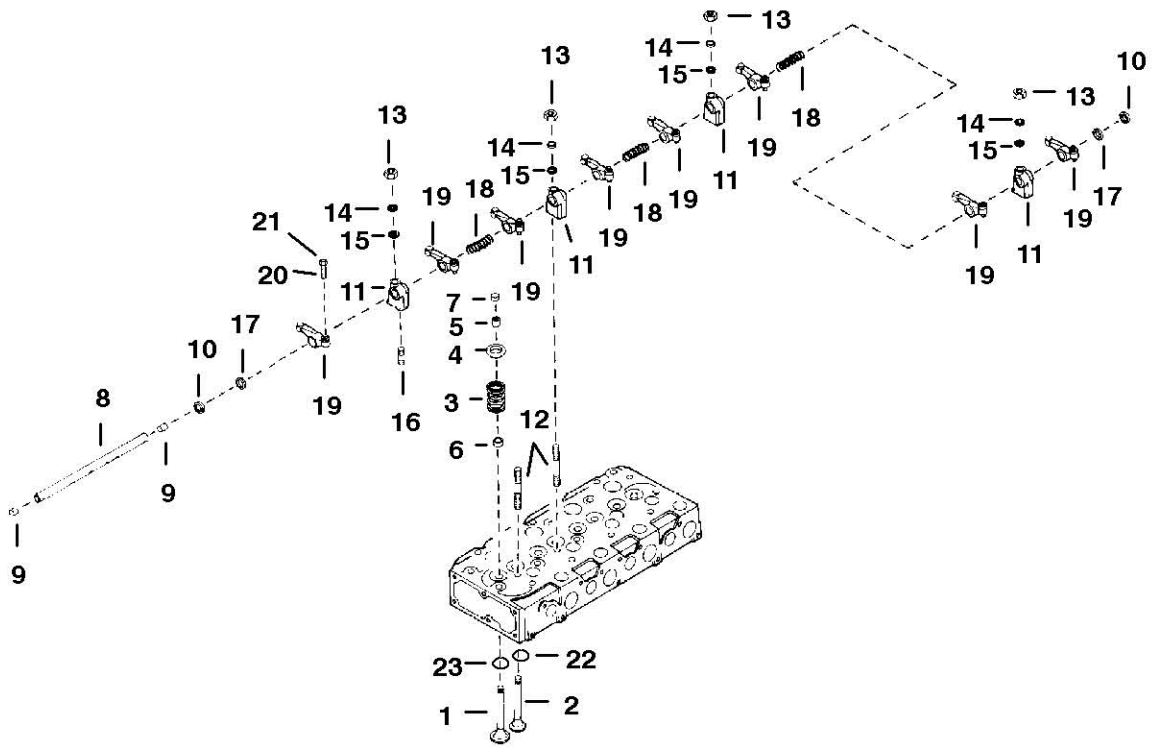

C-2547

VALVE ROCKER ARM

Ref.N°	Part N°	Description	Remarks	Serial N°	Qty.
1	6655173	VALVE	inlet		4
2	6655174	VALVE	exhaust		4
3	3974514	SPRING	valve		8
4	3974515	RETAINER	valve spring		8
5	3974516	COLLET	valve spring - complete set		1
6	6653830	SEAL	valve stem		8
7	3974518	CAP	valve		8
8	NAP	SHAFT	rocker arm - W/Ref. VALVE ROCKER ARM(9) - Order 6682545 Shaft & 6667461 Pin - Was 3974519 [A]		1
9	25GM-8010	SET SCREW			2
10	5JM-14	CIR-CLIP	external		2
11	3974521	BRACKET	rocker arm		4
12	6653832	STUD			4
13	6652792	NUT			4
14	6EM-80	WASHER	spring		4
15	2EM-8	WASHER	plain		4
16	3974523	ORIFICE			1
17	3974524	WASHER			2
18	6653833	SPRING	rocker arm - Was 3974525 [A]		3
19	6655870	ARM	rocker - W/Ref. VALVE ROCKER ARM(20) & VALVE ROCKER ARM(21)		8
20	3974920	SCREW	adjusting		8
21	2DM-8	NUT			8
22	6655156	SEAT	valve exhaust		4
23	6655155	SEAT	valve inlet		4

Fixsomething

CYLINDER HEAD

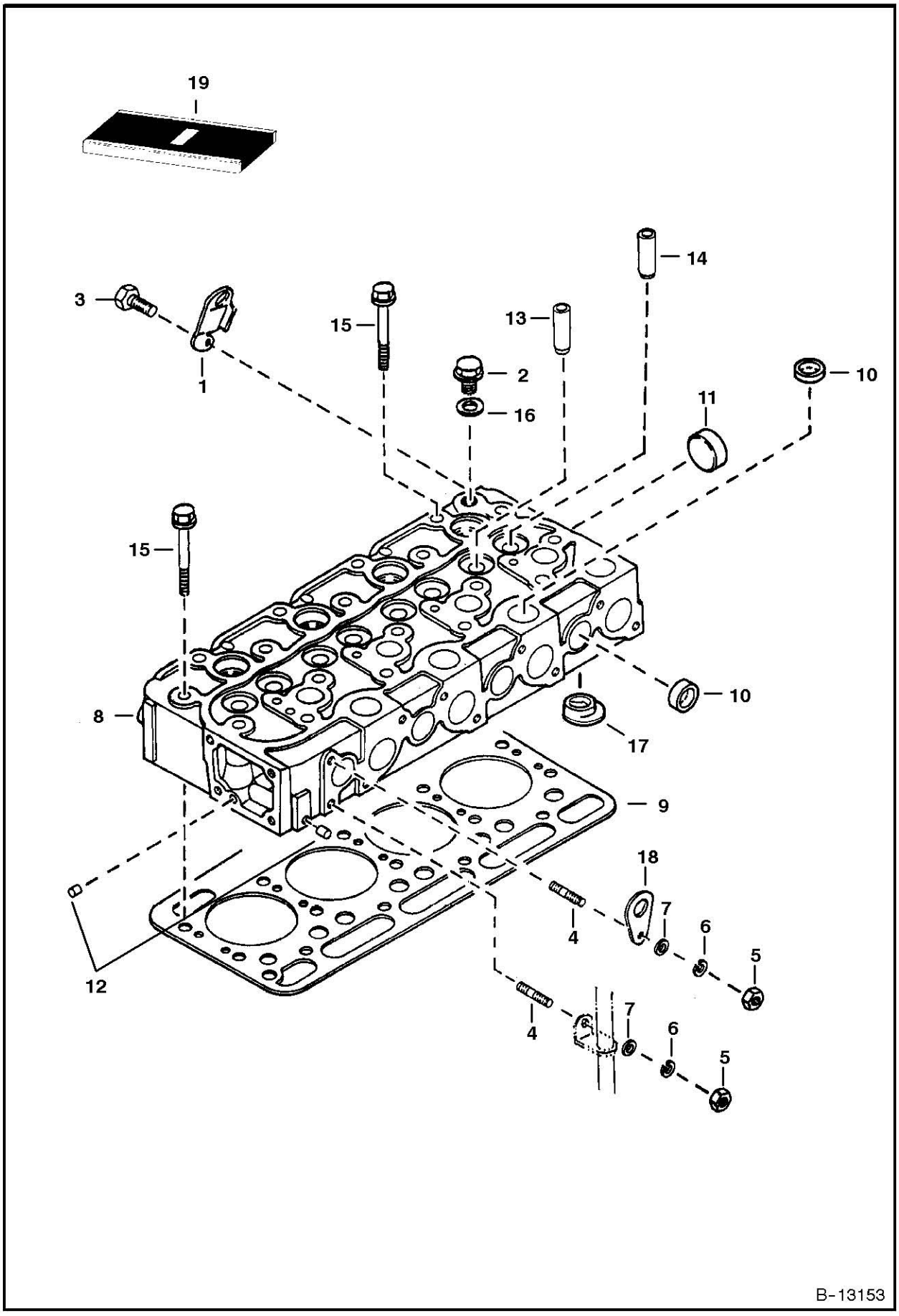

CYLINDER HEAD

Ref.N°	Part N°	Description	Remarks	Serial N°	Qty.
1	6655152	HOOK	engine		1
2	6655160	PLUG			1
3	4CM-816	BOLT			1
4	6652670	STUD			2
5	6652792	NUT			2
6	6EM-80	WASHER	spring		2
7	2EM-8	WASHER	plain		2
8	6655153	HEAD	cylinder - W/Ref. CYLINDER HEAD(10) - CYLINDER HEAD(14)		1
9	6655159	GASKET	cylinder head		1
10	3974432	CAP	sealing		12
11	3974433	CAP	sealing		1
12	6598116	PLUG	Was 6652797 [A]		2
13	6655154	GUIDE	intake valve		4
14	6653803	GUIDE	exhaust valve		4
15	6655158	BOLT			18
16	6655161	WASHER			1
17	6667480	CHAMBER	combustion		4
18	3974882	HOOK			1
19	6657401	GASKET KIT	upper - See Page ENGINE & GASKET KITS(1)		1

Fixsomething

OIL PAN

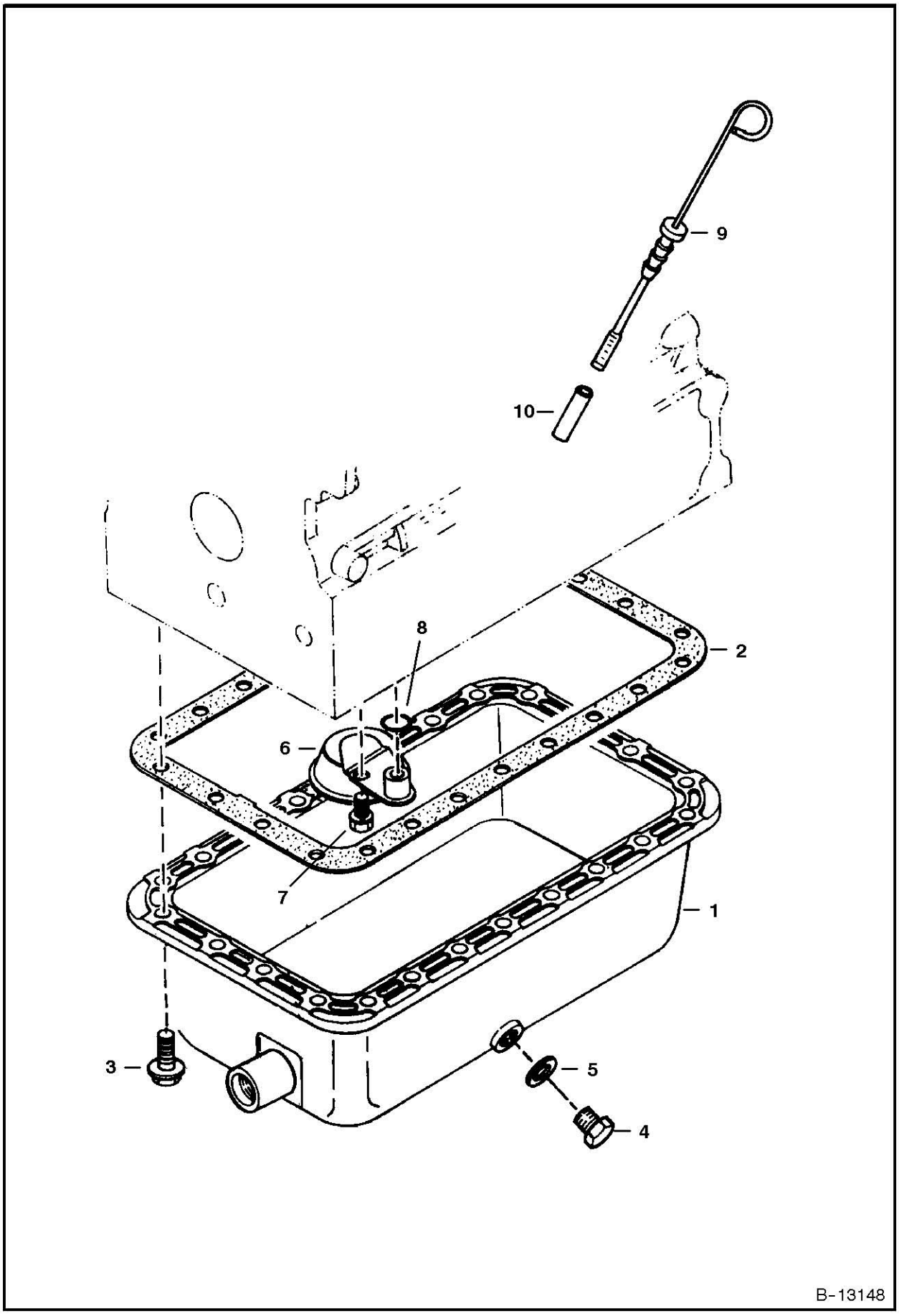

OIL PAN

Ref.N°	Part N°	Description	Remarks	Serial N°	Qty.
1	6655151	OIL PAN			1
2	3975449	GASKET	oil pan		1
3	6653798	BOLT			24
4	3974402	PLUG	drain		1
5	3974403	GASKET			1
6	6655194	OIL FILTER			1
7	4CM-816	BOLT			1
8	3966516	O-RING			1
9	NAP	DIPSTICK	oil - Order 6677202 Dipstick & Ref. OIL PAN(10) - Was 6658245 [A]		1
9	6677202	DIPSTICK	oil		1
10	6677203	TUBE	Use W/Ref. OIL PAN(9) (6677202inD1 Dipstick)		1

Fixsomething

PISTON & CRANKSHAFT

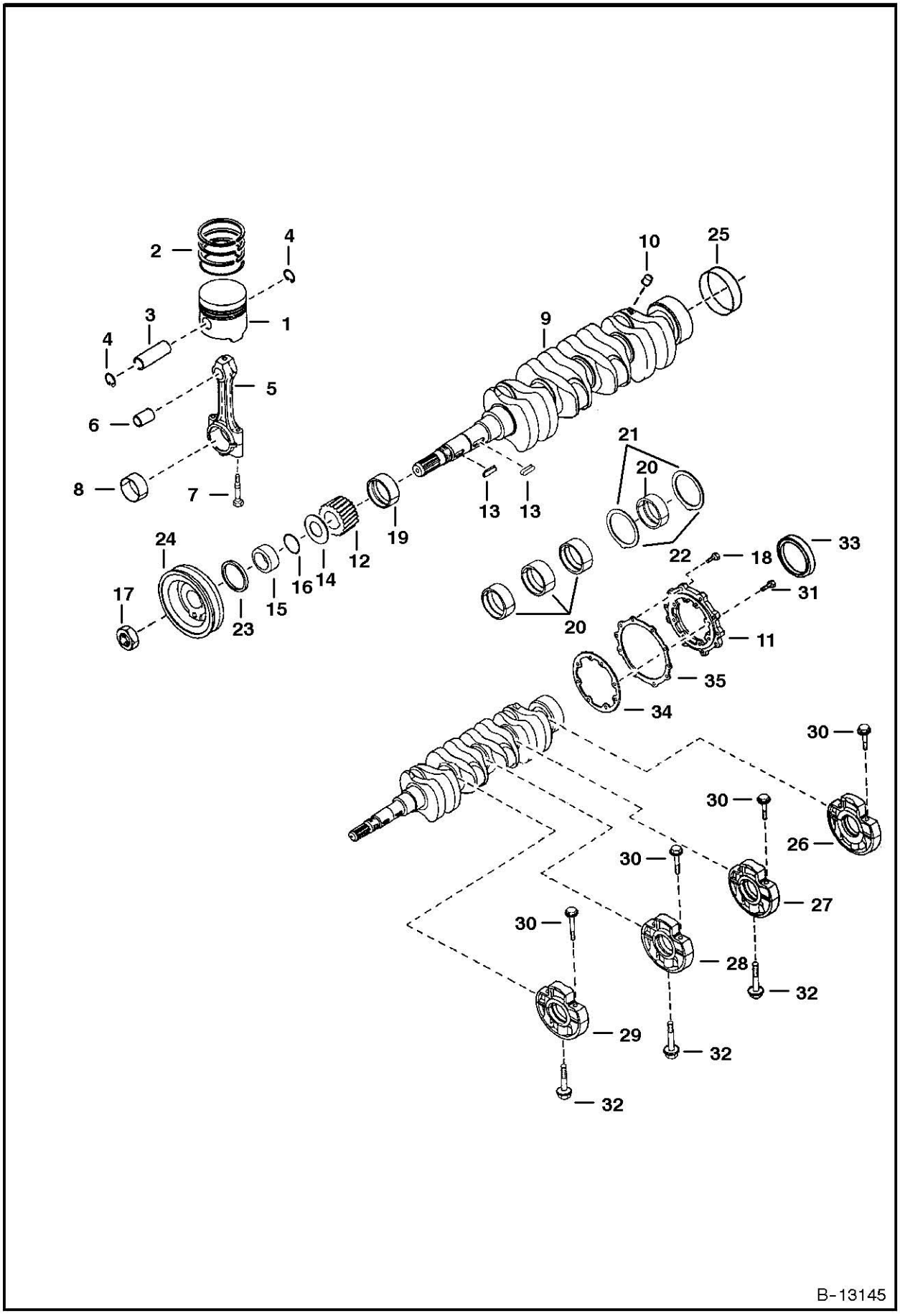

PISTON & CRANKSHAFT

Ref.N°	Part N°	Description	Remarks	Serial N°	Qty.
1	6655177	PISTON	Std.		4
1	6657695	PISTON	(0,5 mm - .0197)		4
2	6678075	RINGS	piston - Std. - Was 6655178 [A]		4
2	6657696	RINGS	piston - (0,5 mm - .0197)		4
3	6655179	PIN			4
4	6655180	CIR-CLIP			8
5	6655181	ROD	connecting - W/Ref. PISTON & CRANKSHAFT(6), PISTON & CRANKSHAFT(7) & PISTON & CRANKSHAFT(8)		4
6	6655243	BUSHING			4
7	6655498	BOLT			8
8	6655183	BEARING	rod - Std.		4
8	6655236	BEARING	rod (0,2 mm-.0079)		4
8	6655237	BEARING	rod (0,4 mm-.0157)		4
9	6655184	CRANKSHAFT	Ref. PISTON & CRANKSHAFT(10) & PISTON & CRANKSHAFT(25) - Ref. PISTON & CRANKSHAFT(10) must be installted before using		1
10	6652633	PLUG	Must be installed before using Ref. PISTON & CRANKSHAFT(9) crankshaft - See S/L dated 3 Jan 85		4
11	6655166	COVER			1
12	6598142	GEAR			1
13	3974546	KEY			2
14	6653861	SLINGER	oil		1
15	3975337	COLLAR			1
16	3974577	O-RING			1
17	3974671	NUT			1
18	4CM-825	BOLT			8
19	6655185	BEARING	main - Std.		1
19	6655238	BEARING	main (0,2 mm-.0079)		1
19	6655239	BEARING	main (0,4 mm-.0157)		1
20	6655241	BEARING	main (0,4 mm-.0157)		4
20	6655186	BEARING	main - Std.		4
20	6655240	BEARING	main (0,2 mm-.0079)		4
21	3974945	WASHER	thrust - Std.		2
21	3975021	WASHER	thrust (0,2 mm-.0079)		2
21	3975022	WASHER	thrust (0,4 mm-.0157)		2
22	6653865	WASHER	thrust - Std.		2
22	6654002	WASHER	thrust (0,2 mm-.0079)		2
22	6654003	WASHER	thrust (0,4 mm-.0157)		2
23	6631664	SEAL	oil		1
24	6655235	PULLEY			1
25	3975334	SLEEVE			1
26	6655163	CASE	main bearing - W/Ref. PISTON & CRANKSHAFT(30)		1
27	6655170	CASE	main bearing - W/Ref. PISTON & CRANKSHAFT(30)		1
28	6655169	CASE	main bearing - W/Ref. PISTON & CRANKSHAFT(30)		1
29	6655168	CASE	main bearing - W/Ref. PISTON & CRANKSHAFT(30)		1
30	6655164	BOLT			8
31	4CM-828	BOLT			8
32	6653821	BOLT			3
33	6649300	SEAL	oil		1
34	6655165	GASKET			1
35	6666814	GASKET			1

FUEL CAMSHAFT

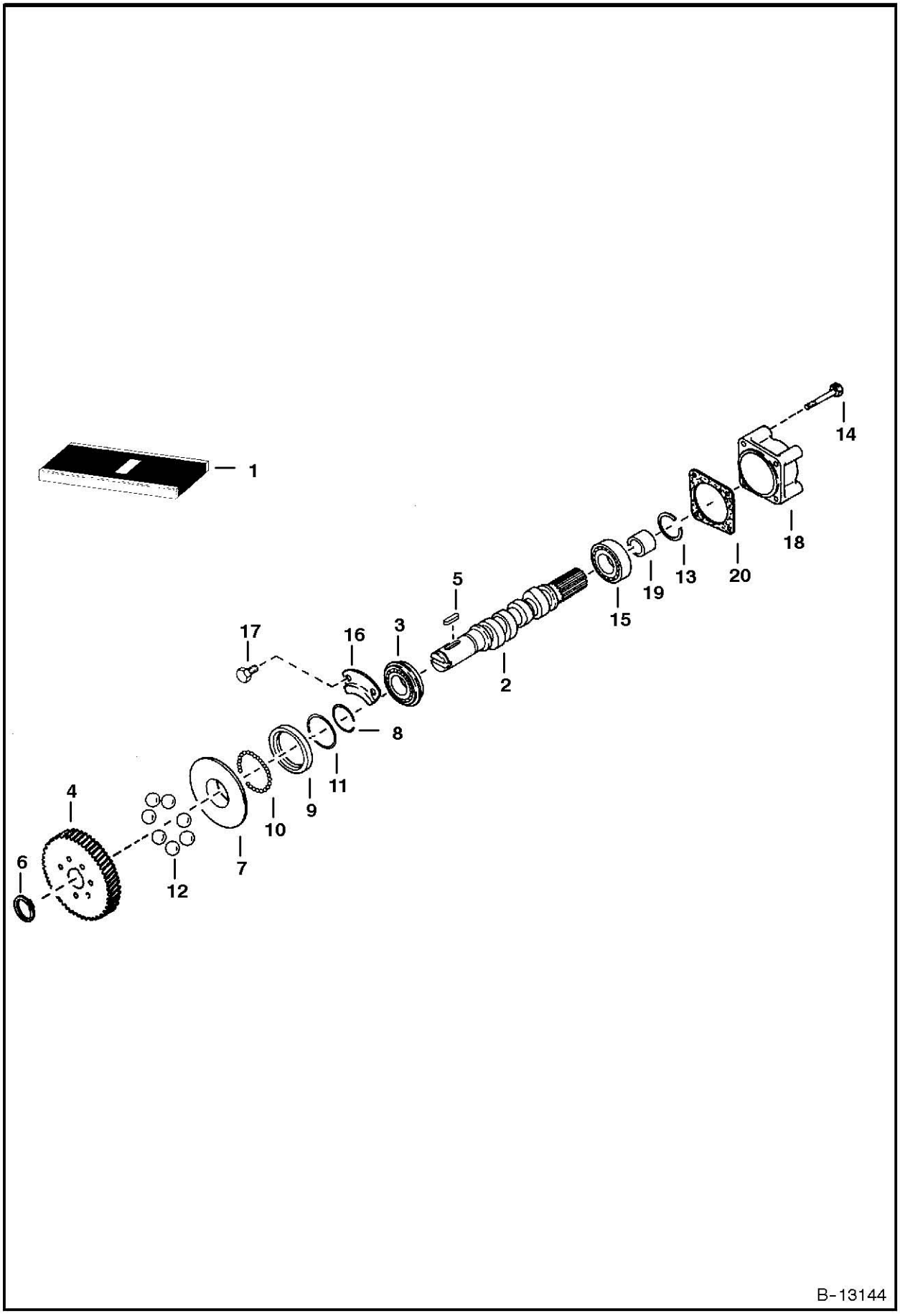

FUEL CAMSHAFT

Ref.N°	Part N°	Description	Remarks	Serial N°	Qty.
1	6655211	CAMSHAFT	assy. - Ref. FUEL CAMSHAFT(2)-FUEL CAMSHAFT(14)		1
2	6655875	CAMSHAFT	fuel		1
3	851242	BEARING			1
4	6655212	GEAR	injection pump		1
5	6598099	KEY			1
6	5JM-24	CIR-CLIP	external		1
7	6655213	SLEEVE	governor		1
8	3974618	CIR-CLIP	sleeve		1
9	6655214	CASE	governor ball		1
10	10J-5	BALL			39
11	3974620	CIR-CLIP	ball case		1
12	6655215	BALL			7
13	6598158	CIR-CLIP	governor ball - Was 3975432 [A]		1
14	6651934	RIVET			7
15	6598101	BALL BEARING			1
16	3974624	STOPPER			1
17	4CM-814	BOLT			2
18	3974996	COVER	fuel camshaft		1
19	3975442	COLLAR			1
20	3974630	GASKET			1

Fixsomething

CAMSHAFT

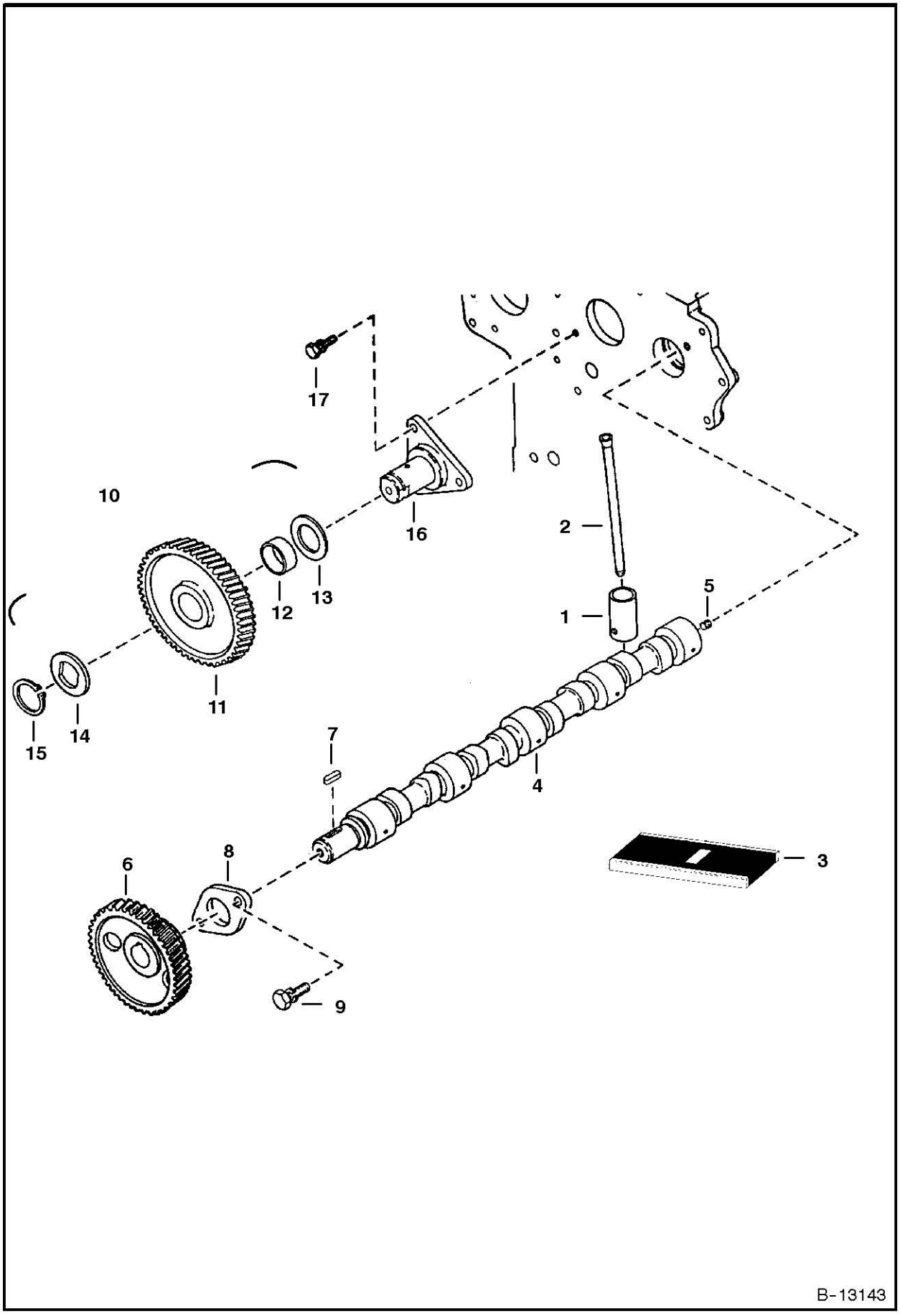

CAMSHAFT

Ref.N°	Part N°	Description	Remarks	Serial N°	Qty.
1	6667428	TAPPET			8
2	6655176	PUSH ROD			8
3	6655427	CAMSHAFT	assy. - Ref. CAMSHAFT(4)-CAMSHAFT(8)		1
4	6655384	CAMSHAFT			1
5	6653839	PLUG	seat		1
6	6653840	GEAR	camshaft		1
7	3974546	KEY			1
8	6653843	STOPPER	camshaft		1
9	4CM-818	BOLT			2
10	6655187	GEAR ASSY.	idle - W/Ref. CAMSHAFT(11) & CAMSHAFT(12)		1
11	NSS	GEAR	idle - Order Ref. CAMSHAFT(10)		2
12	6655242	BUSHING	idle gear		1
13	6655190	COLLAR			1
14	6655191	COLLAR			1
15	6655192	CIR-CLIP	external		1
16	6655193	SHAFT	idle gear		1
17	4CM-816	BOLT			3

Fixsomething

WATER PUMP

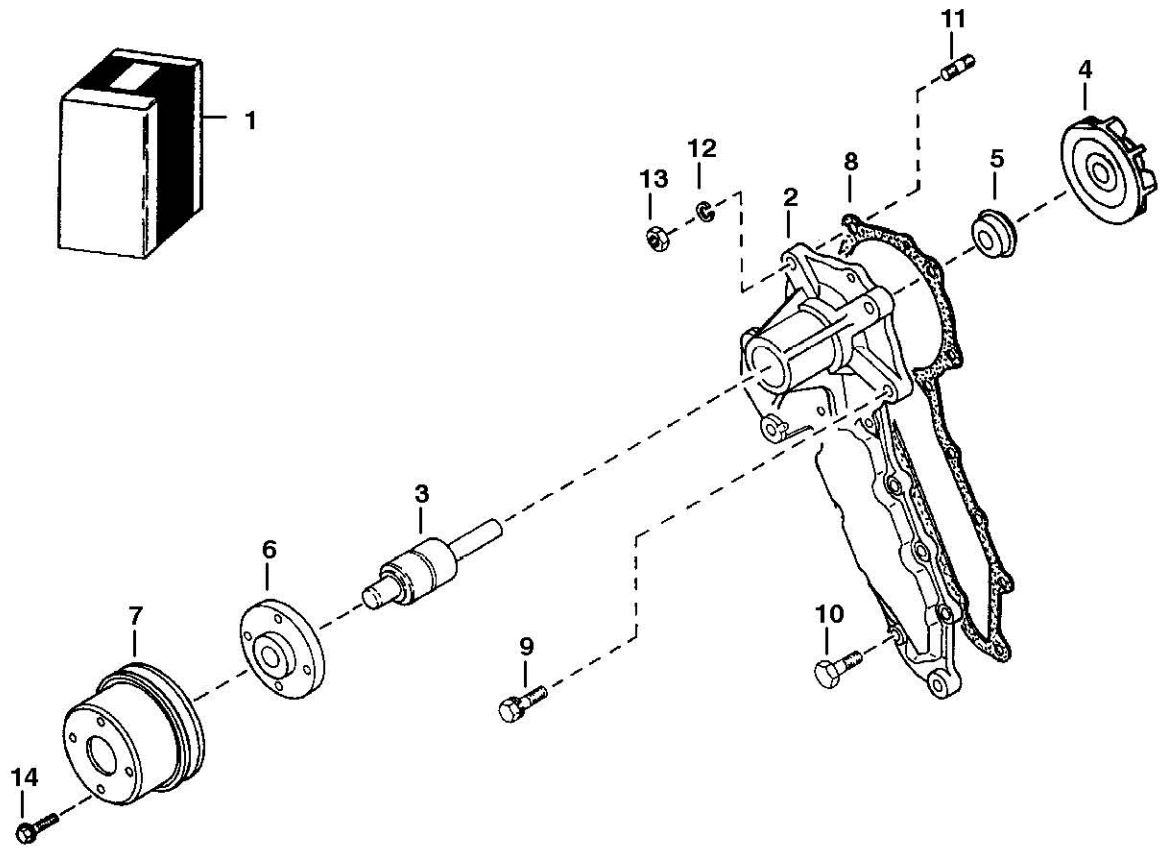

B-13142

WATER PUMP

Ref.N°	Part N°	Description	Remarks	Serial N°	Qty.
1	6653941	WATER PUMP	Ref. WATER PUMP(2)-WATER PUMP(6)		1
2	NAP	BODY			1
3	3974991	BEARING			1
4	6653944	IMPELLER			1
4	6667460	IMPELLER	for one piece seal Ref. WATER PUMP(5)		1
5	6653945	SET SEAL			1
5	6667465	SEAL	one piece		1
6	3974992	FLANGE			1
7	6651487	PULLEY	fan		1
8	3974995	GASKET			1
9	4CM-828	BOLT			2
10	6652580	BOLT			6
11	6653946	STUD			2
12	6EM-80	WASHER	spring		2
13	6652792	NUT			2
14	6652762	BOLT			4

Fixsomething

WATER FLANGE & THERMOSTAT

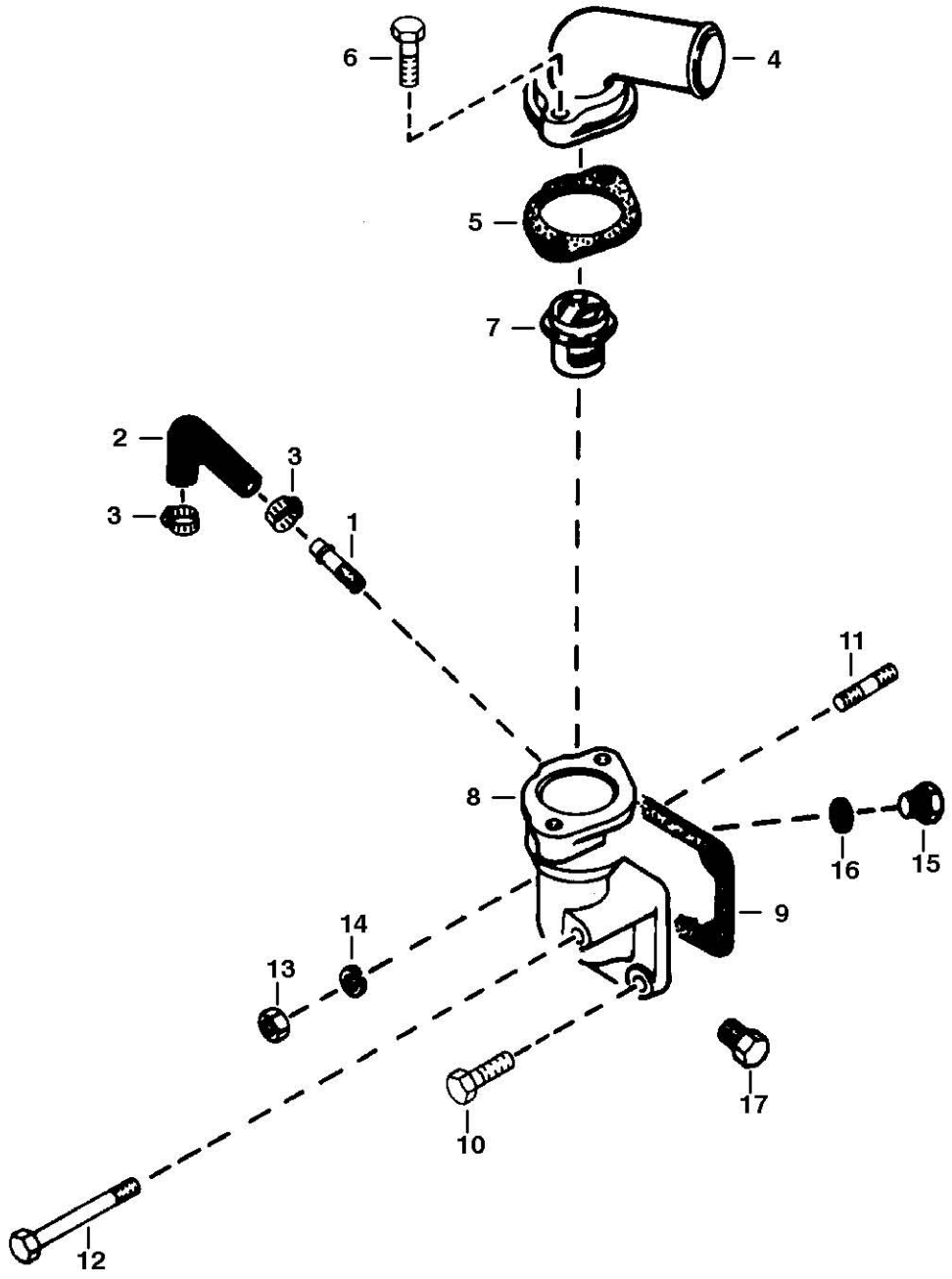

WATER FLANGE & THERMOSTAT

Ref.N°	Part N°	Description	Remarks	Serial N°	Qty.
1	6655880	PIPE	water return		1
2	3974988	PIPE	water return		1
3	3974679	BAND	pipe		2
4	6651489	COVER	thermostat		1
5	6732199	GASKET	'thermostat - Was 6666790 [A]'		1
6	1CM-835	BOLT			2
7	6653948	THERMOSTAT			1
7	6630184	THERMOSTAT	'203(_' F -Used W/cab heater		1
8	6674167	FLANGE	W/Ref. WATER FLANGE & THERMOSTAT(1)		1
9	6666802	GASKET	water flange		1
10	4CM-822	BOLT			2
11	3974627	STUD			1
12	1CM-865	BOLT			1
13	6652792	NUT			1
14	6EM-80	WASHER			1
15	6649536	PLUG			1
16	6653562	GASKET			1
17	40K-2	PLUG			1

Fixsomething

MANIFOLDS

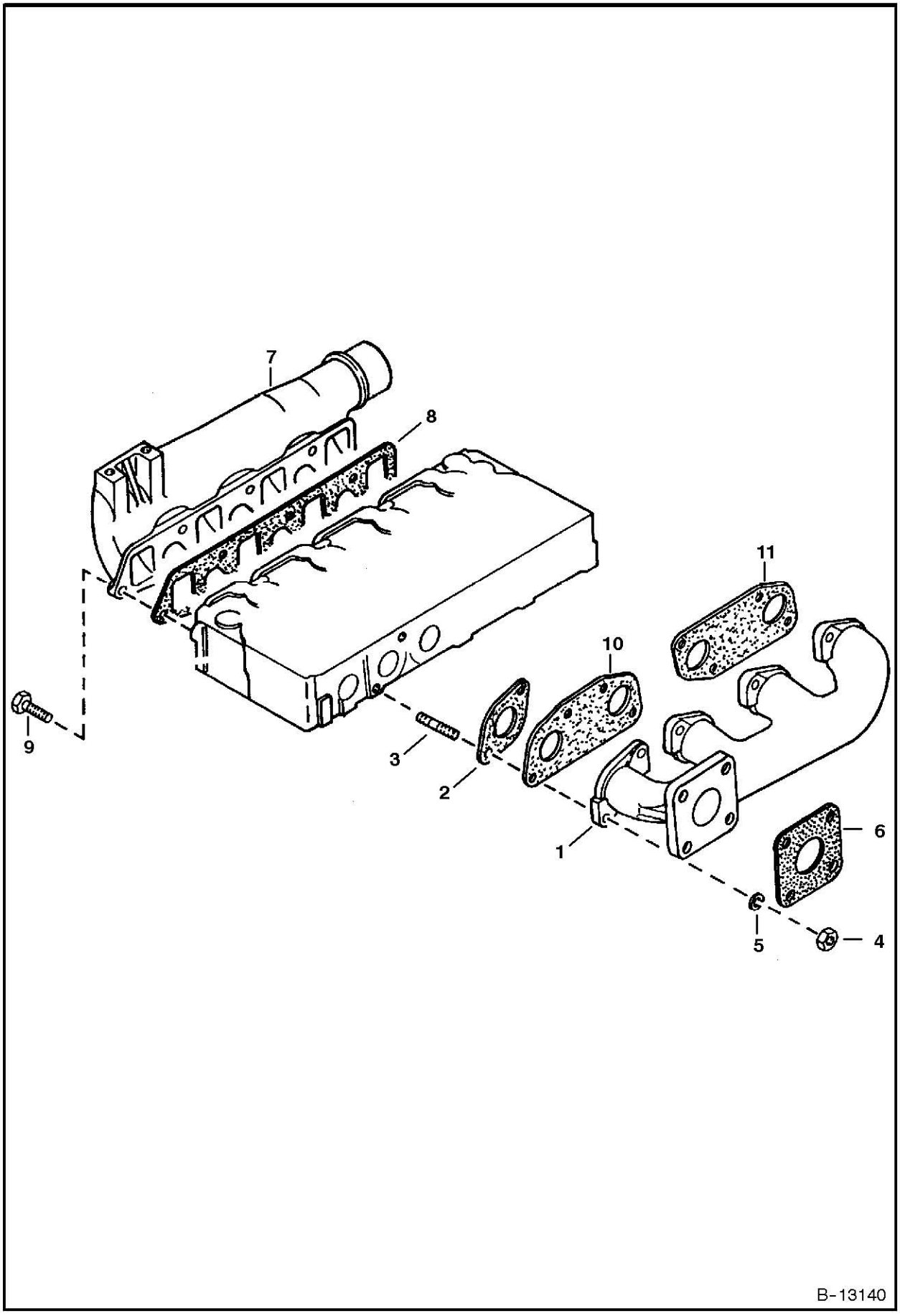

MANIFOLDS

Ref.N°	Part N°	Description	Remarks	Serial N°	Qty.
1	6651482	MANIFOLD	exhaust		1
2	NAP	GASKET	Order Ref. MANIFOLDS(10) & MANIFOLDS(11)		4
3	6652670	STUD			8
4	6652792	NUT			8
5	6EM-80	WASHER	spring		12
6	6727752	GASKET	muffler - Was 6575580 [A]		1
7	6655171	MANIFOLD	intake		1
8	6666811	GASKET			1
9	4CM-822	BOLT			7
10	6666781	GASKET			1
11	6666791	GASKET			1

Fixsomething

ENGINE STOP LEVER

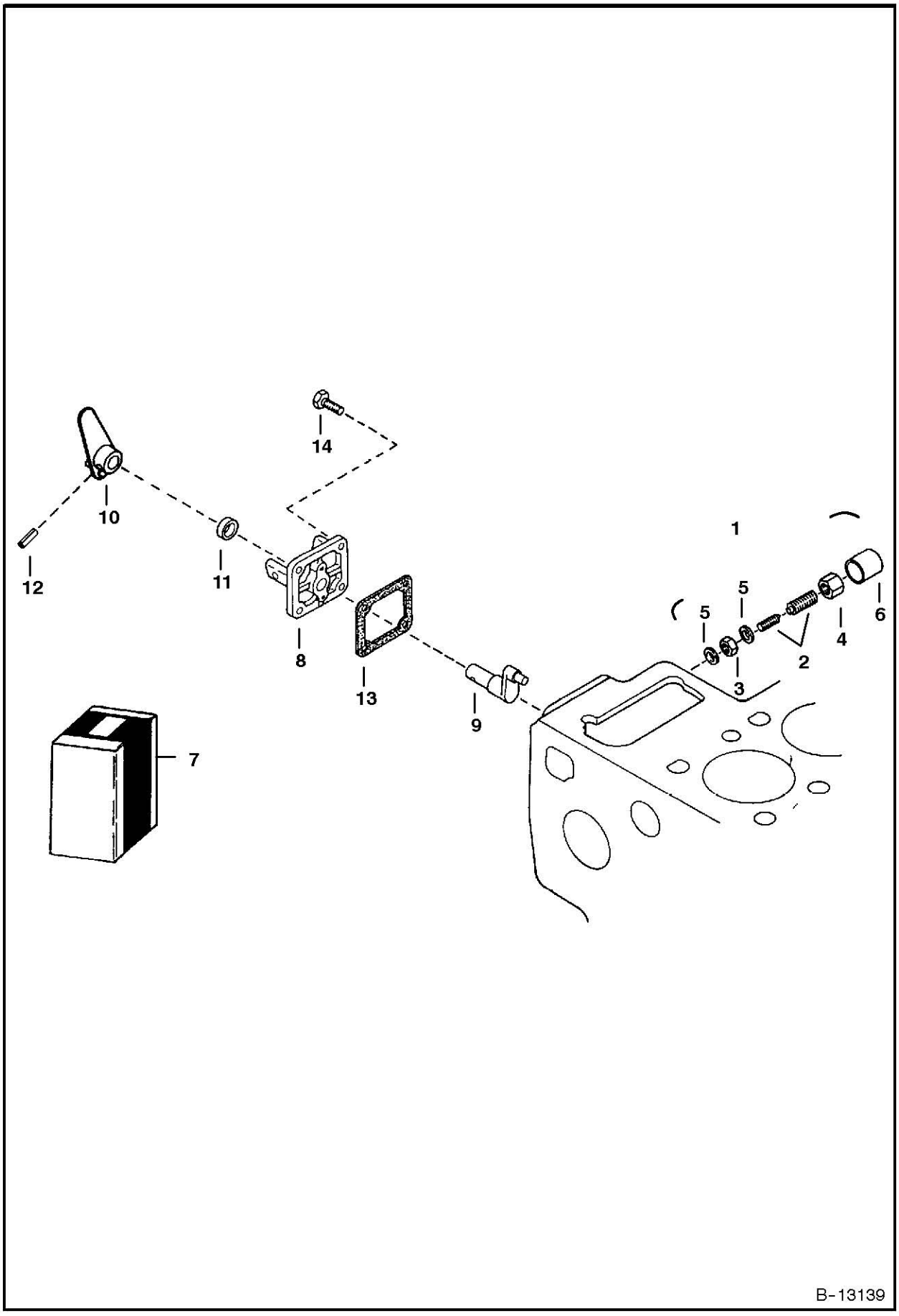

ENGINE STOP LEVER

Ref.N°	Part N°	Description	Remarks	Serial N°	Qty.
1	3974975	APPARATUS	assy., idle - Ref. ENGINE STOP LEVER(2)-ENGINE STOP LEVER(6)		1
2	6653906	BOLT ASSY.	adjusting		1
3	2DM-8	NUT	adjusting		1
4	3974978	NUT			1
5	3974095	GASKET			2
6	3974979	CAP			1
7	6676060	LEVER ASSY.	eng. stop - Ref. ENGINE STOP LEVER(8)-ENGINE STOP LEVER(12) - Was 6655879 [A]		1
8	6655230	COVER	injection pump		1
9	6655231	SHAFT	lever		1
10	6655232	LEVER	engine stop		1
11	6598703	SEAL	oil		1
12	6598098	PIN	spring		1
13	3974601	GASKET	pump cover		1
14	6652580	BOLT			3

Fixsomething

GOVERNOR

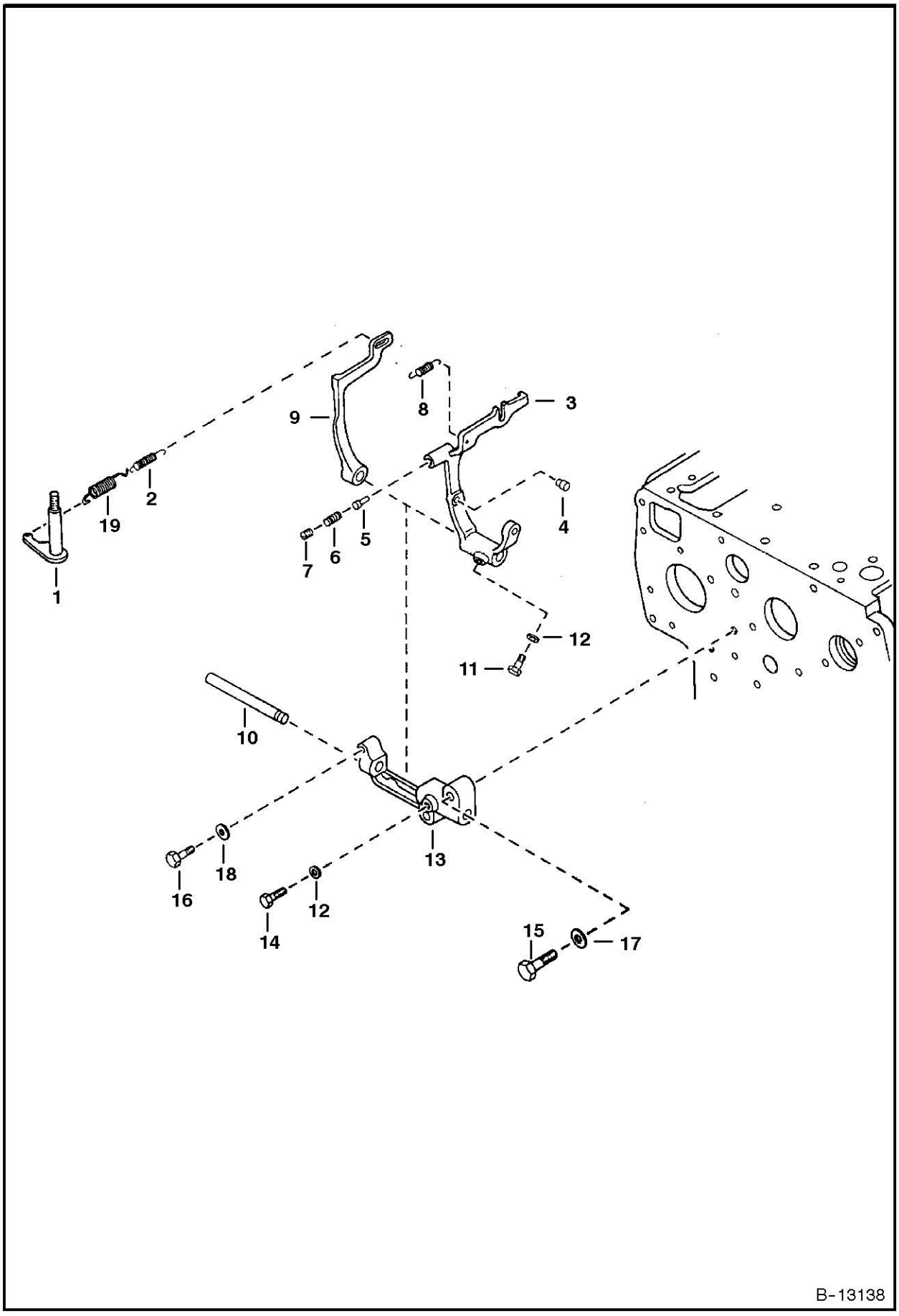

GOVERNOR

Ref.N°	Part N°	Description	Remarks	Serial N°	Qty.
1	6598174	LEVER	governor		1
2	6655227	SPRING			1
3	6655224	LEVER	fork - W/Ref. GOVERNOR(4)-GOVERNOR(7)		1
4	NSS	PIN			2
5	NSS	PIN			1
6	NSS	SPRING			1
7	NSS	SCREW			1
8	6655225	SPRING			1
9	6655877	LEVER			1
10	3974658	SHAFT			1
11	3974659	BOLT			1
12	6EM-60	WASHER			2
13	6653916	HOLDER	Was 3974661 [A]		1
14	3974192	BOLT			1
15	6598355	BOLT			2
16	4CM-628	BOLT			1
17	2EM-8	WASHER			2
18	1EM-60	WASHER			1
19	6655878	SPRING	governor		1

Fixsomething

SPEED CONTROL PLATE

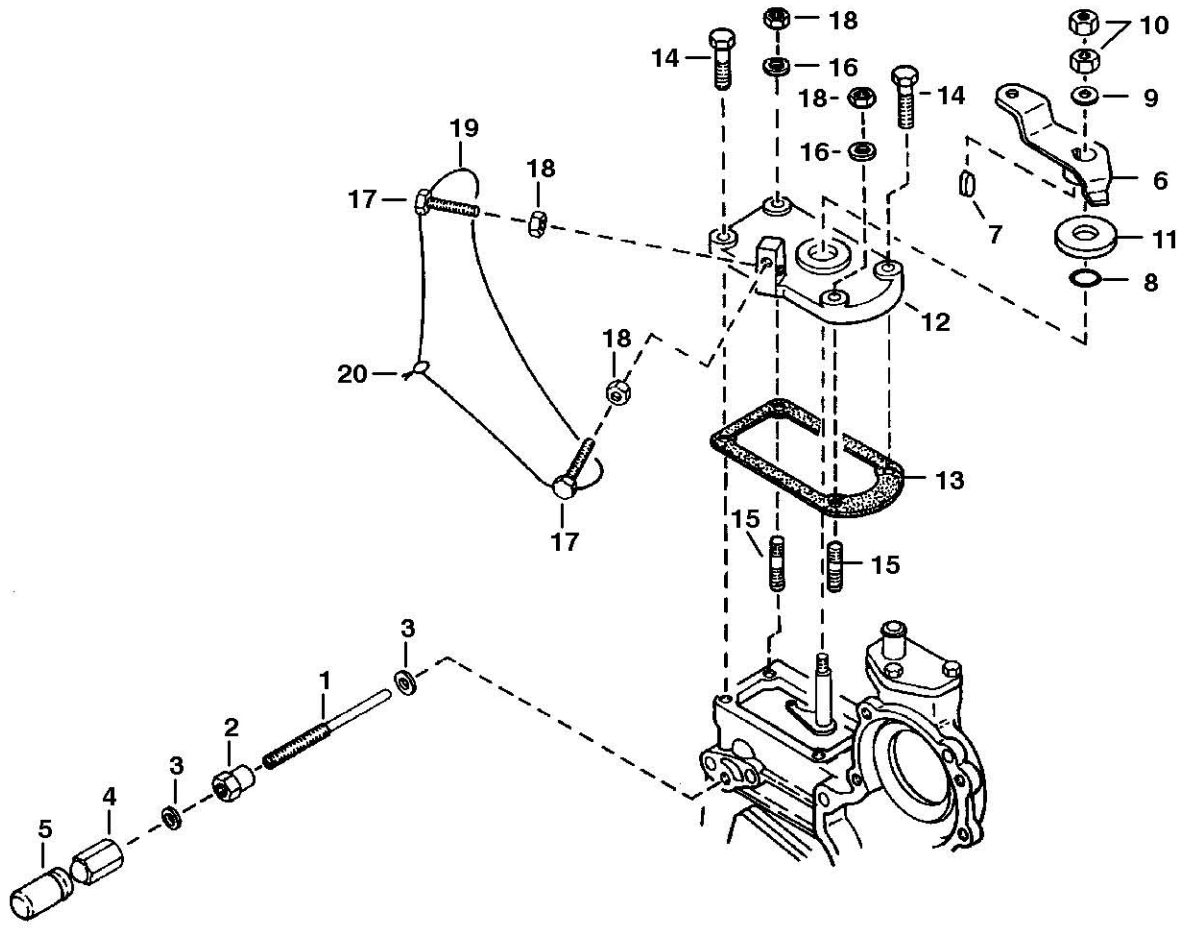

SPEED CONTROL PLATE

Ref.N°	Part N°	Description	Remarks	Serial N°	Qty.
1	3974970	BOLT	adjusting		1
2	3974971	NUT			1
3	3974972	GASKET			2
4	6655223	NUT	cap		1
5	6653905	CAP			1
6	6598176	LEVER	speed control		1
7	15JM-48	KEY	feather		1
8	3966512	O-RING			1
9	1EM-80	WASHER	plain		1
10	1DM-8	NUT			2
11	3974644	PLATE	friction		1
12	6641231	PLATE	speed control		1
13	6666792	GASKET	Was 6635392 [A]		1
14	4CM-620	BOLT			2
15	6652764	STUD			2
16	6EM-60	WASHER	spring		2
17	6655228	BOLT			2
18	1DM-6	NUT			4
19	NAP	WIRE			1
20	NAP	LEAD	sealing		1

Fixsomething

INJECTION PUMP

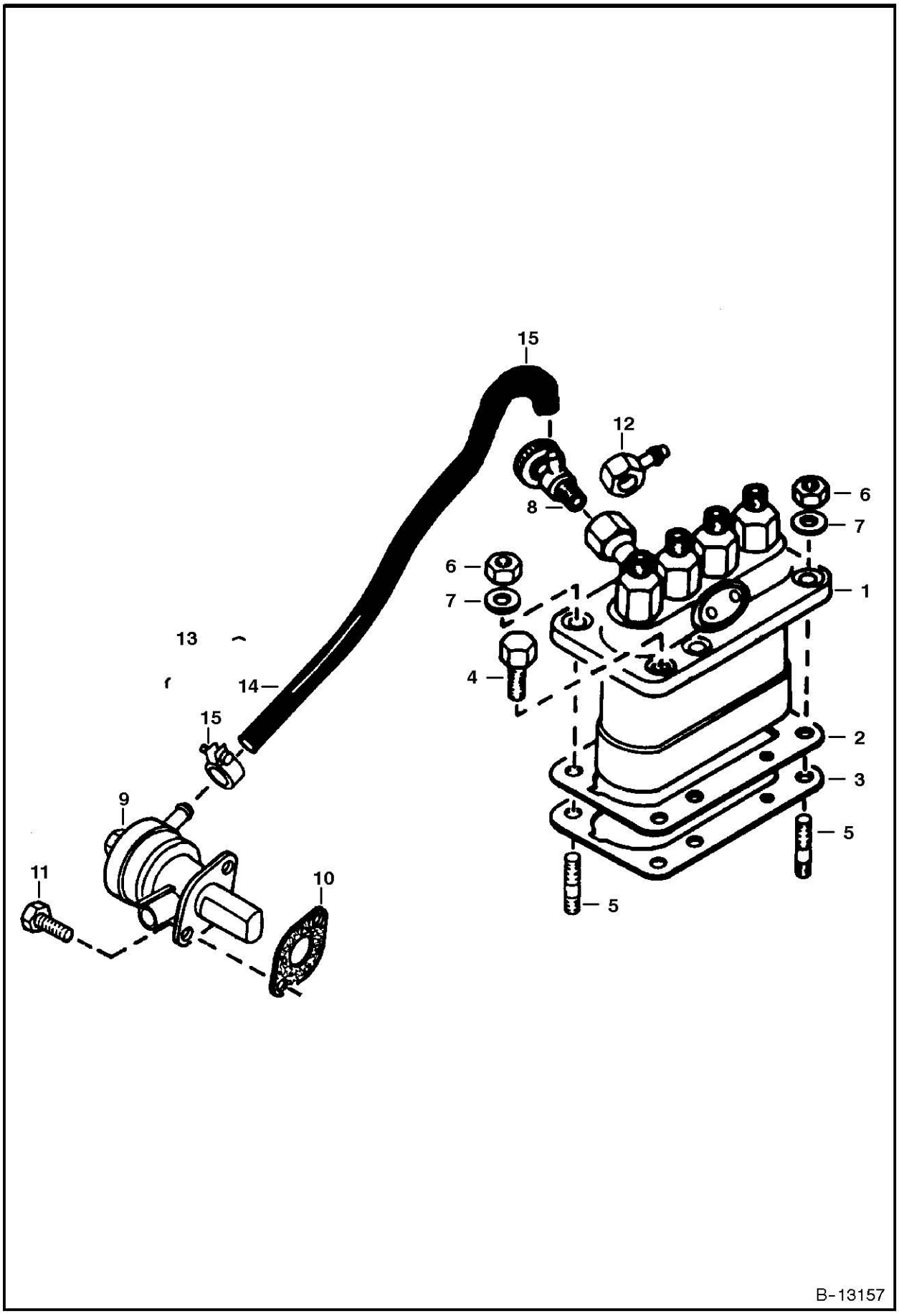

INJECTION PUMP

Ref.N°	Part N°	Description	Remarks	Serial N°	Qty.
1	6674676	PUMP	See Page INJECTION PUMP(1)		1
2	3974626	SHIM	0.15 mm		2
3	6655210	SHIM	0.45 mm		1
4	4CM-822	BOLT			4
5	6652670	STUD			2
6	6652792	NUT			2
7	6EM-80	WASHER	spring		2
8	6598102	COCK	jet start		1
9	6655216	FUEL PUMP			1
10	3974502	GASKET	fuel pump		1
11	4CM-616	BOLT			2
12	6655515	JOINT	eye - connect to Ref. FUEL SYSTEM(25) See Page FUEL SYSTEM(1)		1
13	6655197	PIPE ASSY.	fuel - W/Ref INJECTION PUMP(13) & INJECTION PUMP(14)		1
14	NSS	PIPE	fuel		1
15	6655874	CLIP	pipe		2

Fixsomething

INJECTION PUMP

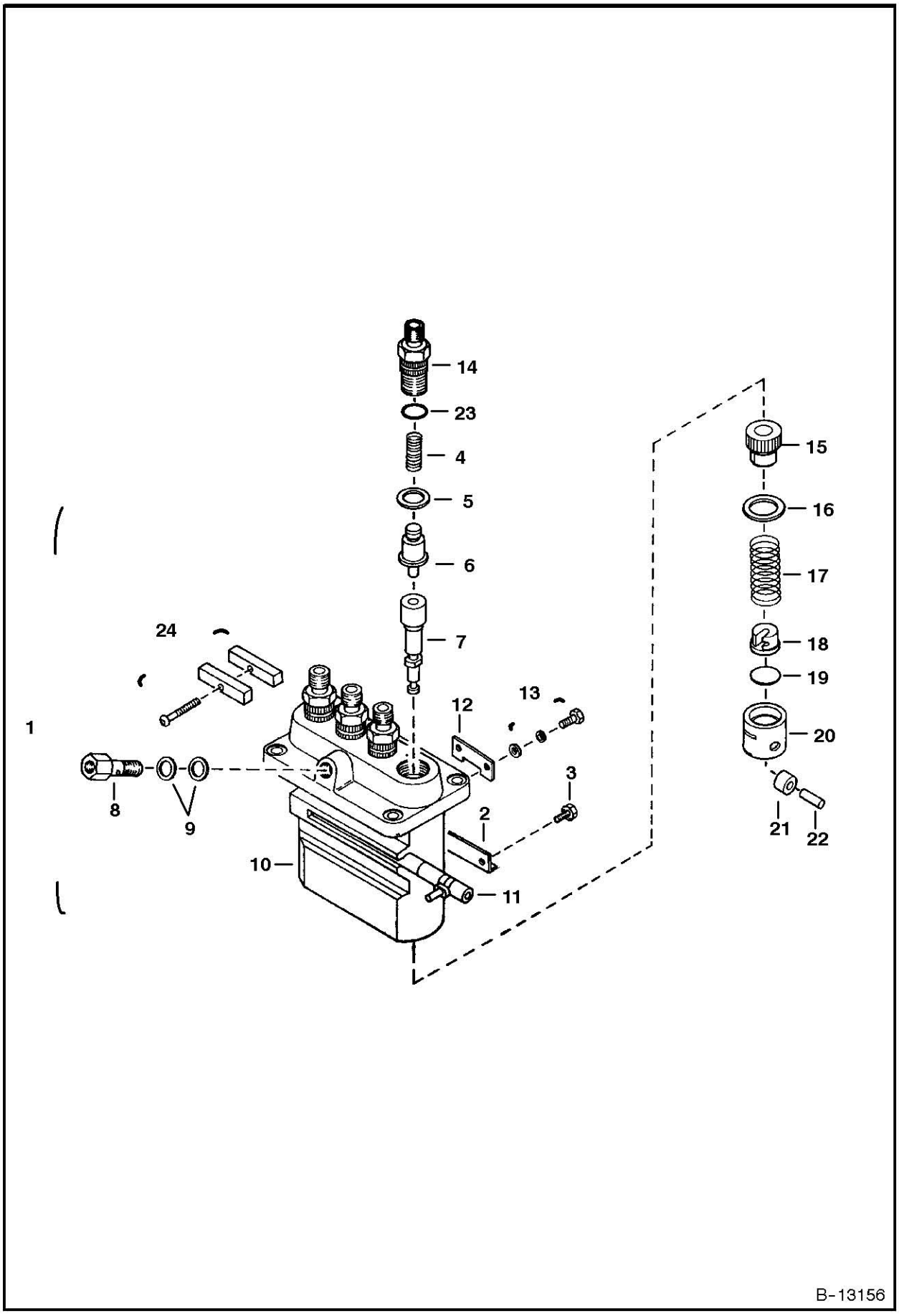

INJECTION PUMP

Ref.N°	Part N°	Description	Remarks	Serial N°	Qty.
1	6674676	PUMP	injection - No serviceable parts available - Take to injection pump specialist		1
2	6655207	PLATE	adjust		3
3	6655206	BOLT			3
4	6655203	SPRING	delivery valve		4
5	3974368	GASKET	delivery valve		4
6	6655202	VALVE	delivery		4
7	6655201	ELEMENT	pump		4
8	3975428	SCREW			1
9	3975389	GASKET			2
10	NSS	HOUSING	pump		1
11	3974787	RACK	control		1
12	6655209	PLATE	adjusting		3
13	3974366	BOLT			3
14	6655204	HOLDER	delivery valve		4
15	6653894	SLEEVE	control		4
16	3974381	SEAT	spring - Upper		4
17	3974382	SPRING	plunger		4
18	3974383	SEAT	spring - Under		4
19	3974384	SHIM			4
20	3974385	TAPPET	W/Ref. INJECTION PUMP(21), INJECTION PUMP(22)		4
21	NSS	ROLLER			4
22	NSS	PIN			4
23	6655518	O-RING			4
24	6655205	PLATE ASSY.			2

Fixsomething

INJECTOR NOZZLES

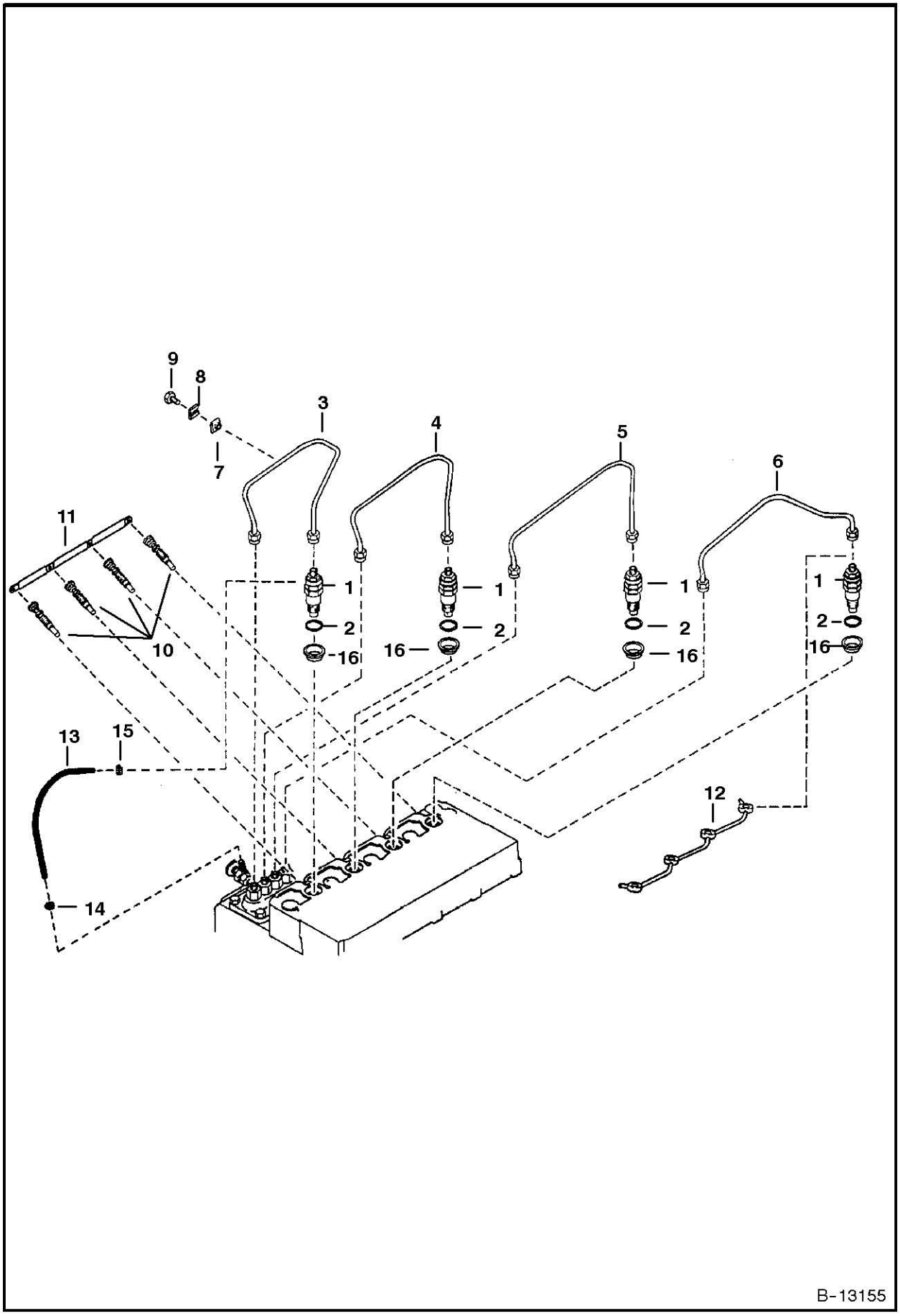

INJECTOR NOZZLES

Ref.N°	Part N°	Description	Remarks	Serial N°	Qty.
1	6722147	HOLDER KIT	nozzle-W/Ref. INJECTOR NOZZLES(2) & INJECTOR NOZZLES(16) - See Page INJECTOR HOLDER(1)		4
2	6655218	GASKET			4
3	6655219	PIPE	injection (1)		1
4	6655220	PIPE	injection (2)		1
5	6655221	PIPE	injection (3)		1
6	6655222	PIPE	injection (4)		1
7	6652688	CLAMP	pipe (1)		3
8	6652689	CLAMP	pipe (2)		3
9	3974260	SCREW	with washer		3
10	6655233	GLOW PLUG			4
11	6655234	CORD	glow plug		1
12	6655198	PIPE	fuel over flow		1
13	6598146	PIPE	fuel over flow (2)		1
14	6599136	CLAMP	pipe		1
15	6654718	CLIP	pipe		1
16	6655872	SHIELD			4

Fixsomething

INJECTOR HOLDER

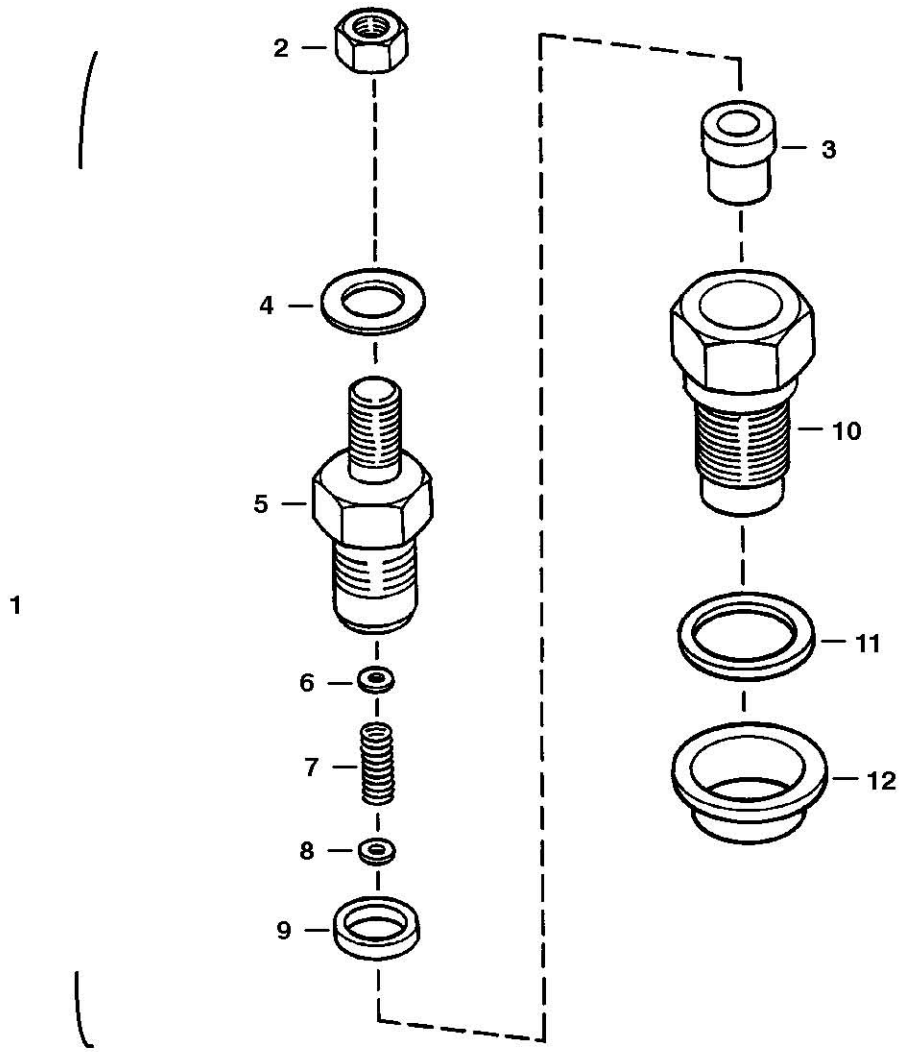

INJECTOR HOLDER

Ref.N°	Part N°	Description	Remarks	Serial N°	Qty.
1	6722147	HOLDER KIT	nozzle - Ref. INJECTOR NOZZLES(2) - INJECTOR HOLDER(12)		4
2	6657460	NUT			1
3	6655873	PIECE	nozzle		1
4	6657463	WASHER	plain		1
5	NSS	BODY	nozzle holder		1
6	6657742	WASHER ASSY	washer - (.900mm thru 1.950mm)		x
6	6656126	WASHER	adj. (1.00 mm)		x
6	6656127	WASHER	adj. (1.05 mm)		x
6	6656128	WASHER	adj. (1.10 mm)		x
6	6656129	WASHER	adj. (1.15 mm)		x
6	6656130	WASHER	adj. (1.20 mm)		x
6	6656131	WASHER	adj. (1.25 mm)		x
6	6656132	WASHER	adj. (1.30 mm)		x
7	NSS	SPRING	nozzle		1
8	NSS	PIECE	distance		1
9	NSS	PUSH ROD			1
10	NSS	NUT	nozzle		1
11	6655218	GASKET			1
12	6655872	SHIELD			1

Fixsomething

AIR CLEANER

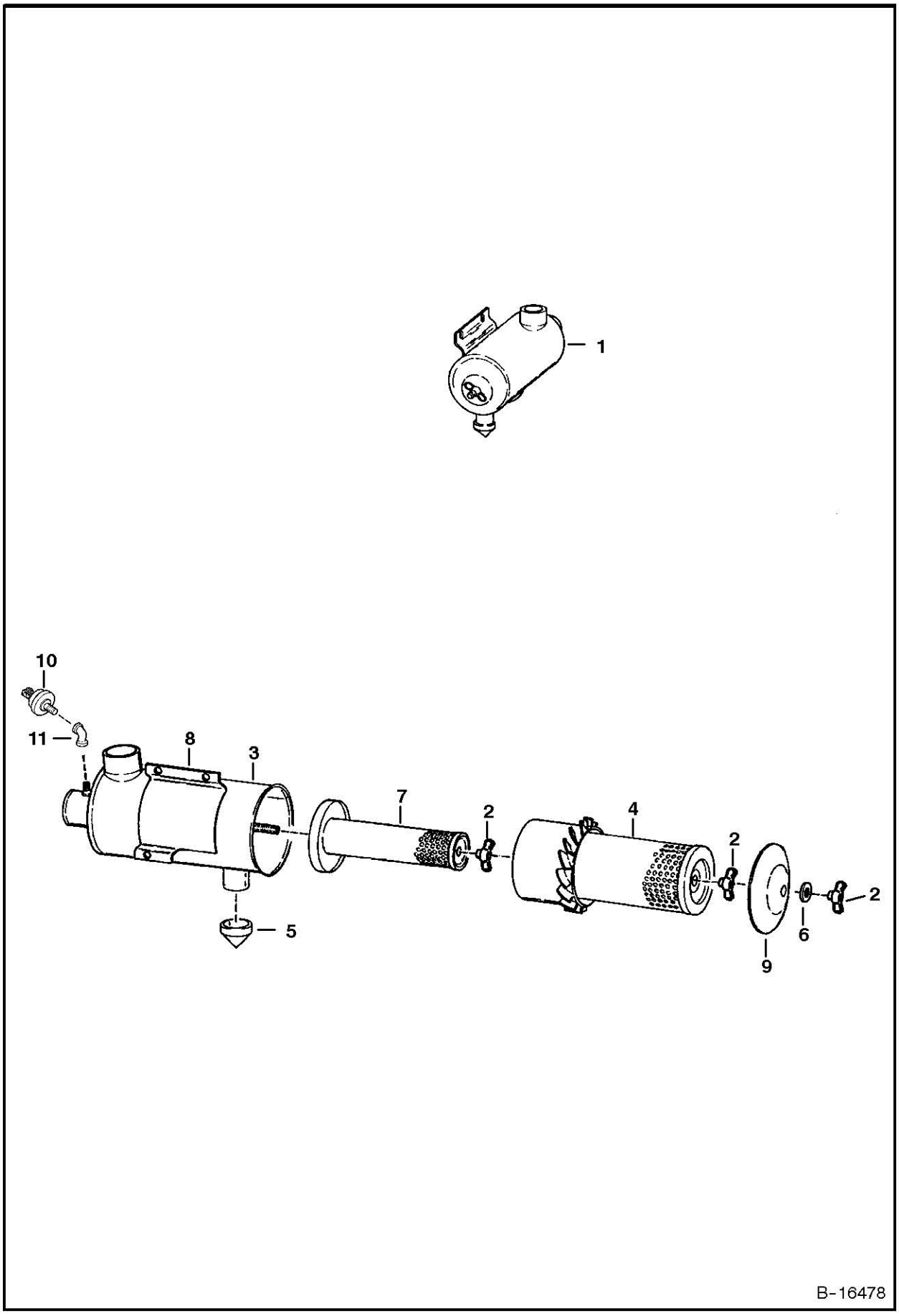

AIR CLEANER

Ref.N°	Part N°	Description	Remarks	Serial N°	Qty.
1	6700711	AIR CLEANER			1
1	6735285	AIR CLEANER	European		1
2	6661243	WING NUT			3
3	NAP	TANK			1
4	6598492	CARTRIDGE	outer		1
5	6655938	VALVE			1
6	6661244	WASHER			1
7	6598362	CARTRIDGE	inner		1
8	866028	CLAMP			1
9	6661242	COVER			1
10	6665371	SWITCH			1
11	6725502	ELBOW	Was 23F-1 [A]		1

ACS CONVERSION KIT

NOTE: Loader must be equipped W/Advanced Hand Control Option for this kit to function.

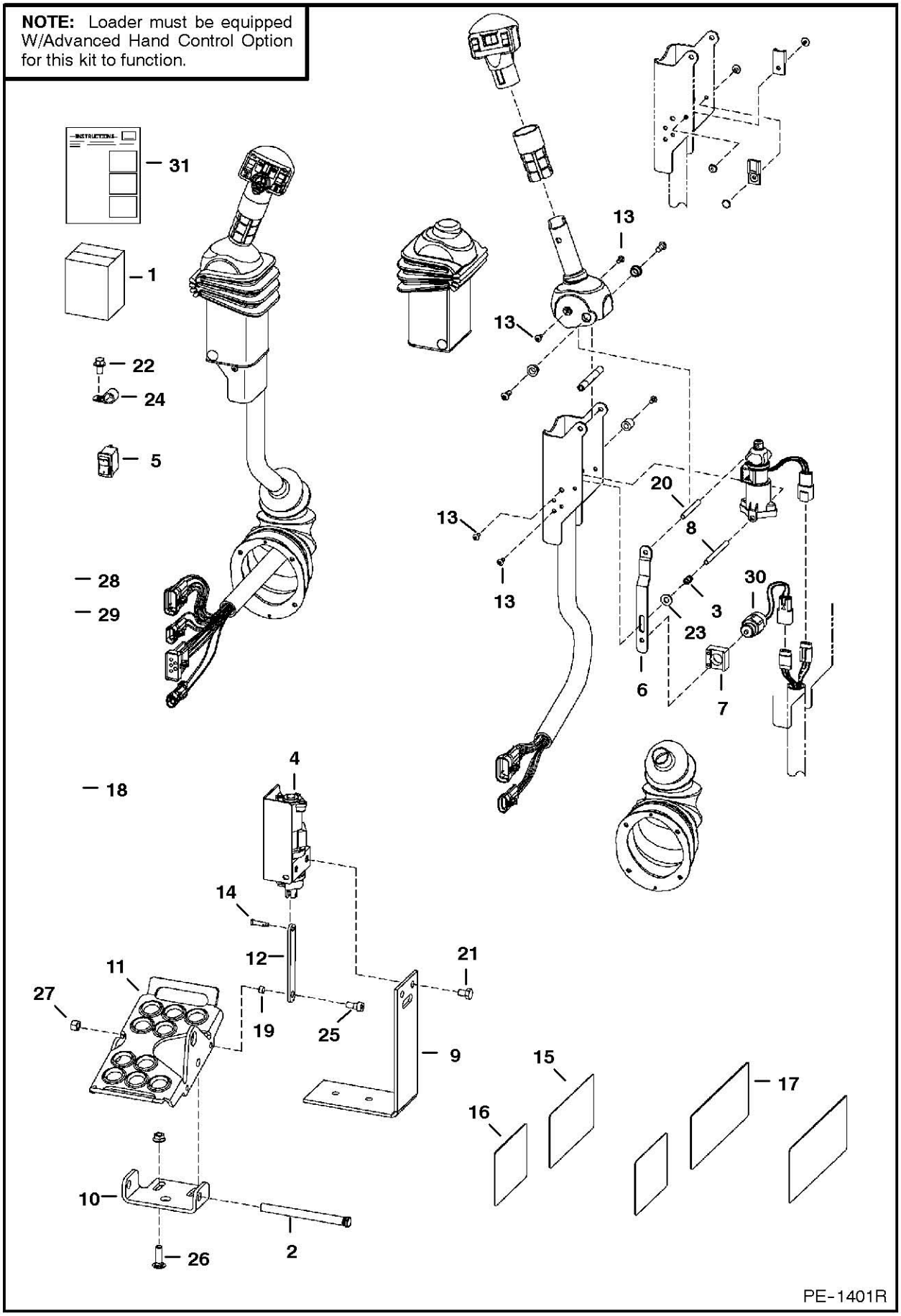

ACS CONVERSION KIT

Ref.N°	Part N°	Description	Remarks	Serial N°	Qty.
1	6731150	KIT	foot control - SEE NOTE		1
2	6564657	PIN			2
3	6680470	SPRING	Was 6675745 [A]		2
4	6680420	SENSOR	foot pedal - R.H. - Was 6676493 [A]		1
4	6676029	SOLENOID			1
4	6680421	SENSOR	foot pedal - L.H. - Was 6676492 [A]		1
4	6676029	SOLENOID			1
5	6676537	SWITCH			2
6	6680477	STRAP	Was 6719715 [A]		2
7	6680468	MOUNT	solenoid - Was 6719716 [A]		2
8	6719834	SPACER	threaded - Was 6719835 [D]		2
9	6726573	BRACKET			2
10	6726679	BRACKET	pedal		2
11	6726680	PEDAL			2
12	6726681	LINK			2
13	6727065	BOLT			12
14	6727496	PIN			2
15	6727926	DECAL			1
16	6727941	DECAL			1
17	6728539	DECAL			1
18	6733430	HARNESS	Was 6729023 [A]		1
19	6729467	SPACER			2
20	6680469	SPACER	threaded - Was 6729600 [A]		2
21	17C-608	BOLT			4
22	17C-612	BOLT			4
23	25E-13	WASHER			2
24	30H-38	CLAMP			4
25	17C-514	BOLT			2
26	37C-620	BOLT			4
27	57D-6	NUT			4
28	95D-5	NUT			2
29	95D-6	NUT			4
30	6676029	SOLENOID			2
31	6901492	INSTRUCTIONS			1

ACCESS COVER
(Cleanout - Lower Front of Chaincase)

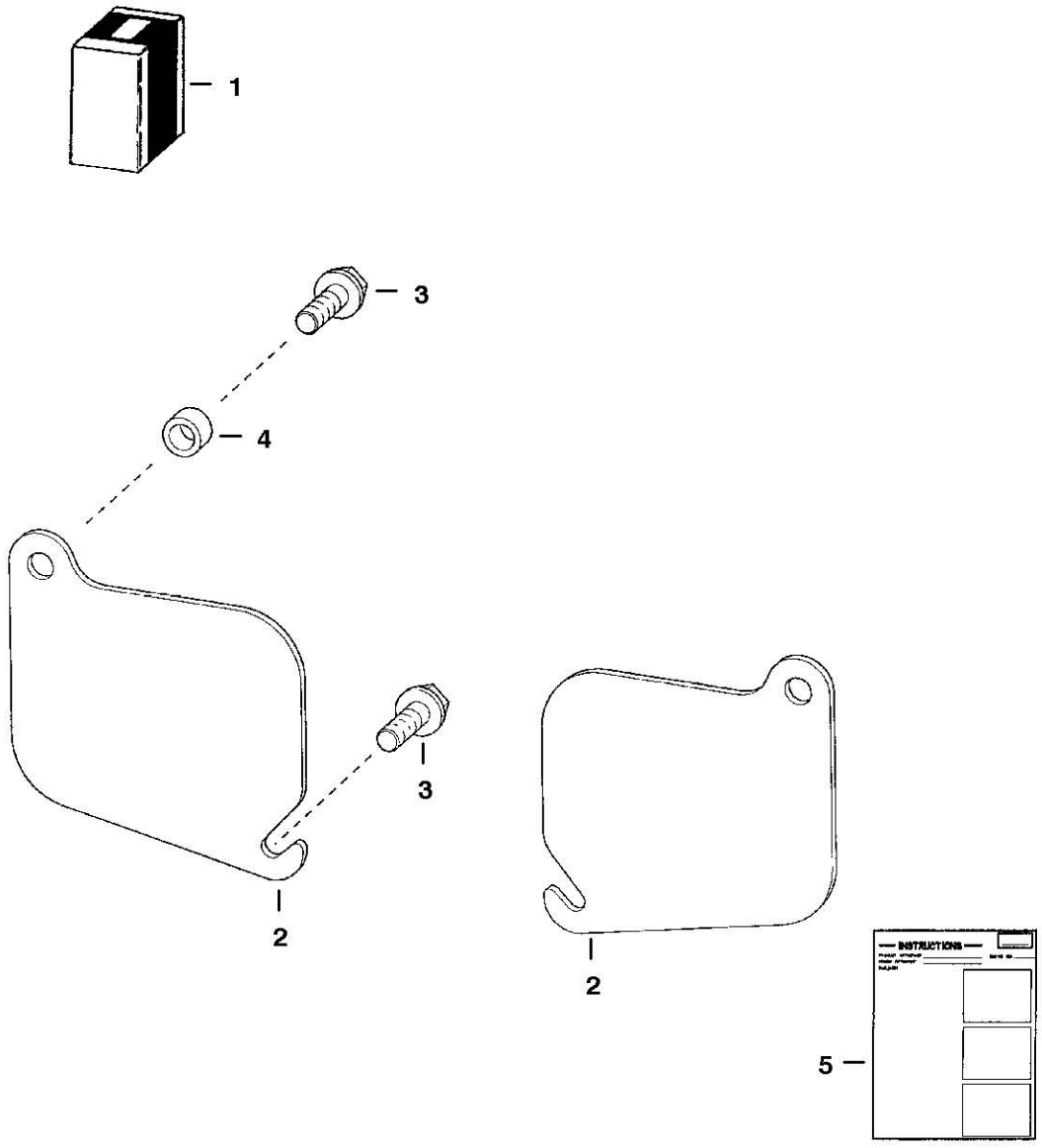

TS-1049

ACCESS COVER

Ref.N°	Part N°	Description	Remarks	Serial N°	Qty.
1	6577880	KIT	Ref. ACCESS COVER(2)-ACCESS COVER(5)		1
2	6577812	COVER			2
3	84G-3720	BOLT			4
4	6562619	BUSHING			2
5	6570931	INSTRUCTIONS			1

ACCESSORIES HARNESS
(Standard - Non Deluxe Cab)

NOTE: If loader is not equipped with Deluxe Cab Option, this harness must be used to run Flasher Lights, Turn Indicators, Hazard LIghts, Rotating Beacon and/or Strobe Lights.

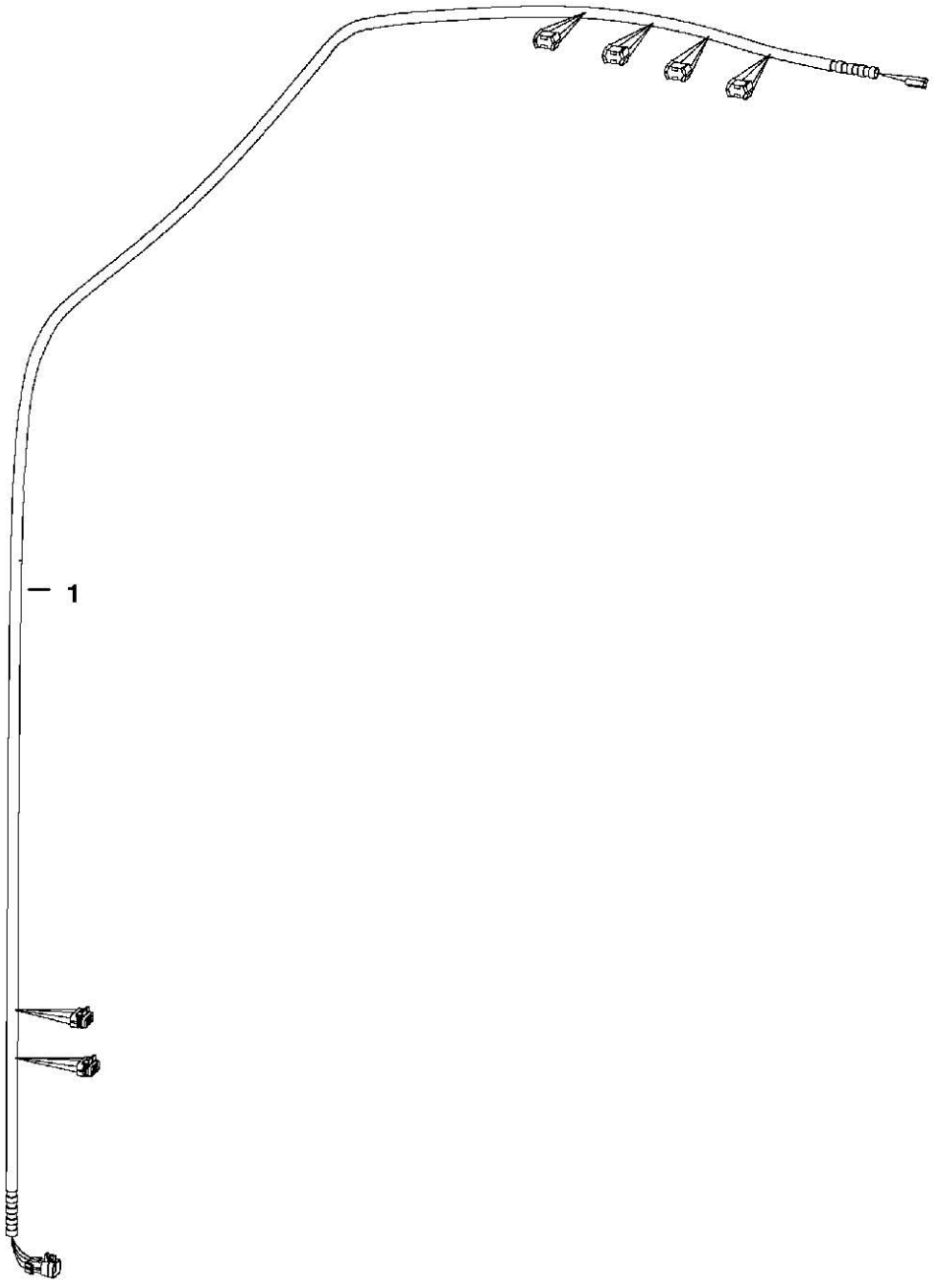

PE-1557

ACCESSORIES HARNESS

Ref.N°	Part N°	Description	Remarks	Serial N°	Qty.
1	6715365	HARNESS	SEE NOTE - W/8 pin connector for main frame harness	5158 33001-34999	1
1				5162 20001-21999	1
1	6727468	HARNESS	SEE NOTE - W/16 pin connector to main frame harness	5158 35000 & Abv	1
1				5162 22000 & Abv	1

AIR DEFLECTOR KIT

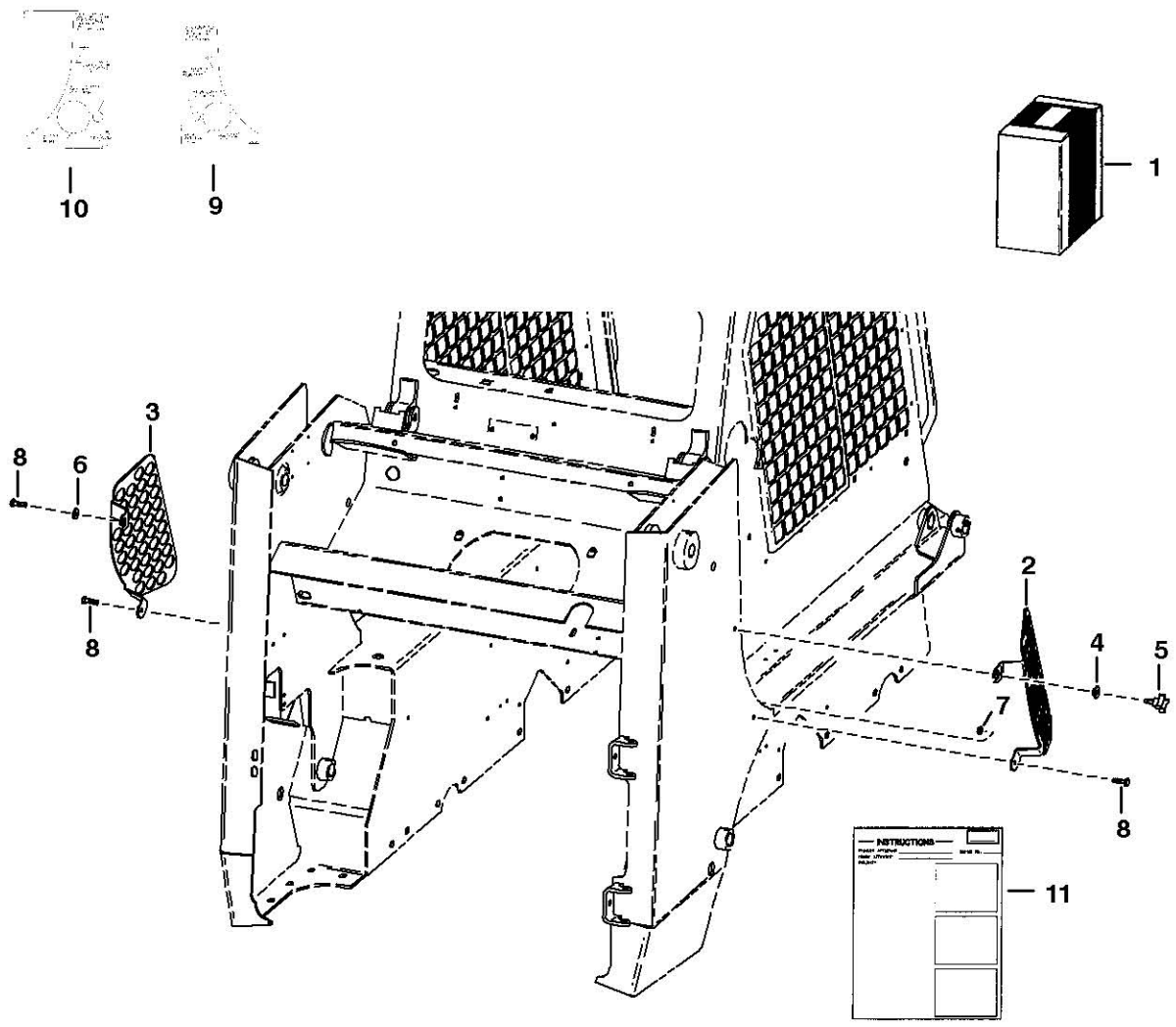

TS-1116

AIR DEFLECTOR KIT

Ref.N°	Part N°	Description	Remarks	Serial N°	Qty.
1	6702351	KIT	air deflector		1
2	6702346	SCREEN	R.H.		1
3	6702347	SCREEN	L.H.		1
4	6702986	NUT	spacer		1
5	6703090	HANDLE			1
6	27E-6	WASHER			1
7	61D-6	NUT			1
8	84G-3716	BOLT			3
9	NAP	TEMPLATE	R.H.-Order Ref. AIR DEFLECTOR KIT(11)		1
10	NAP	TEMPLATE	L.H.-Order Ref. AIR DEFLECTOR KIT(11)		1
11	6720621	INSTRUCTIONS			1

AXLE SEAL KIT

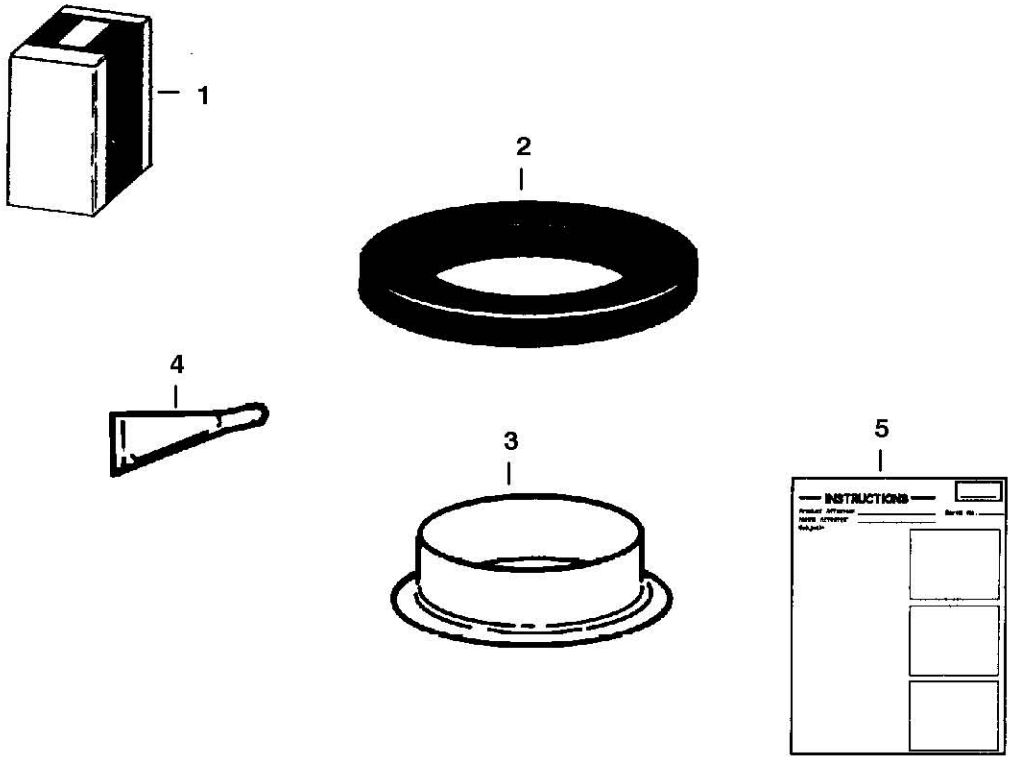

B-4041

AXLE SEAL KIT

Ref.N°	Part N°	Description	Remarks	Serial N°	Qty.
1	6722907	KIT	Ref. AXLE SEAL KIT(2) - AXLE SEAL KIT(5)		1
2	6658228	SEAL			1
3	6662306	RING			1
4	6598485	SEALANT			1
5	6722908	INSTRUCTIONS			1

BACK-UP ALARM

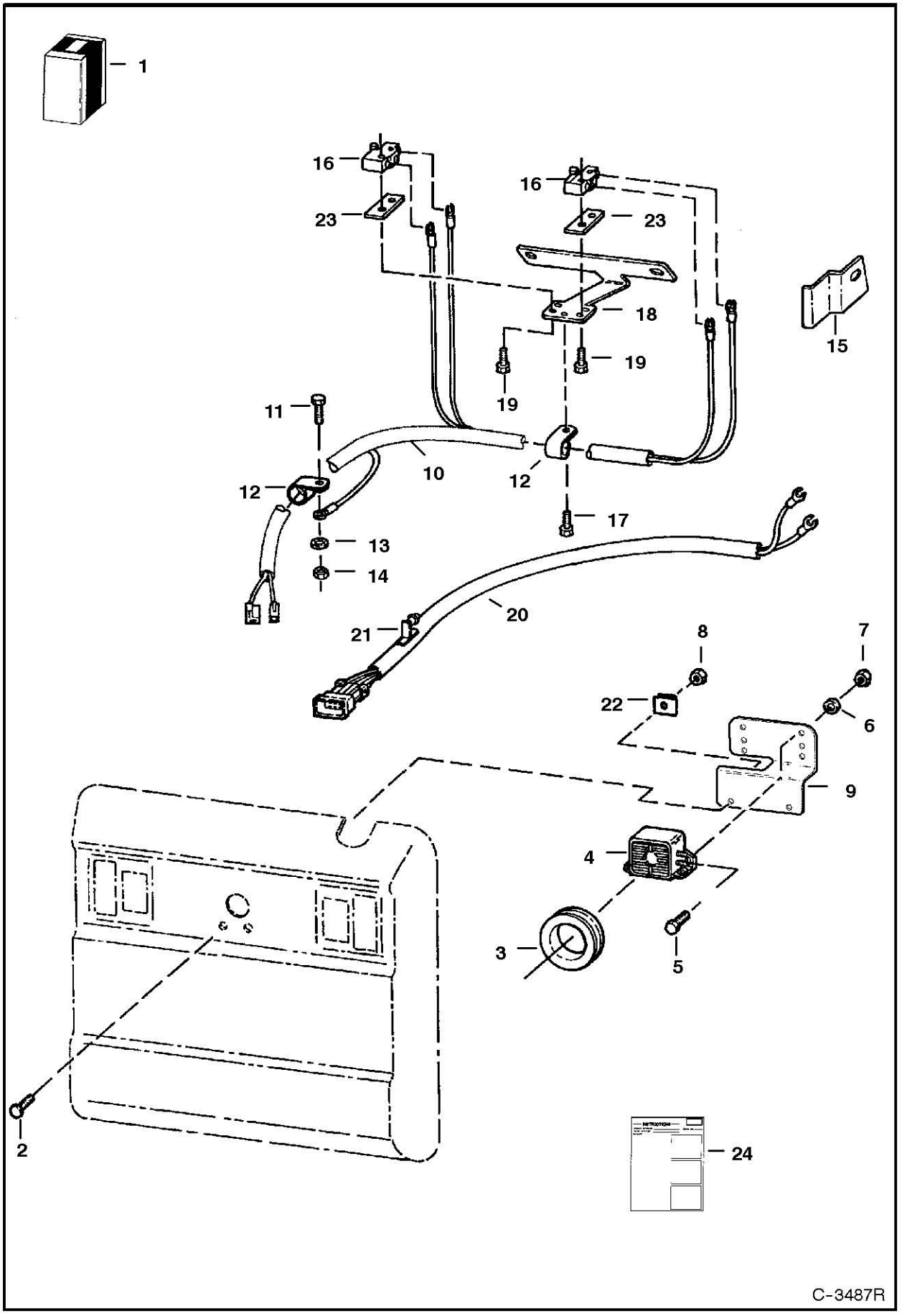

BACK-UP ALARM

Ref.N°	Part N°	Description	Remarks	Serial N°	Qty.
1	6718822	KIT	backup alarm - Ref. BACK-UP ALARM(2) - BACK-UP ALARM(24)		1
2	37C-512	BOLT			2
3	6577545	GROMMET			1
4	6599931	ALARM	backup		1
4	6668879	DECAL			1
5	17C-410	BOLT		& Bel	2
5	35C-410	BOLT		& Abv	2
6	25E-13	WASHER	Not in Kit		2
7	61D-5	NUT			2
8	83D-4	NUT		& Bel	2
8	97D-4	NUT		& Abv	2
9	6733970	MOUNT	Was 6707726 [A]		1
10	6718820	HARNESS			1
11	17C-412	BOLT			1
12	30H-19	CLAMP	insulated		2
13	6E-4	WASHER			1
14	61D-4	NUT			1
15	6713793	BRACKET	switch		2
16	6646781	SWITCH	alarm		2
17	84G-3112	BOLT			1
18	7100153	MOUNT	switch - Was 6713792 [A]		1
19	59G-616	BOLT			4
20	6715659	HARNESS	Used on loaders W/O rear lights - comes W/Ref. BACK-UP ALARM(21)		1
21	6672492	RETAINER			1
22	774220	NUT			2
23	6702593	SPACER			2
24	6900857	INSTRUCTIONS			1

BEACON

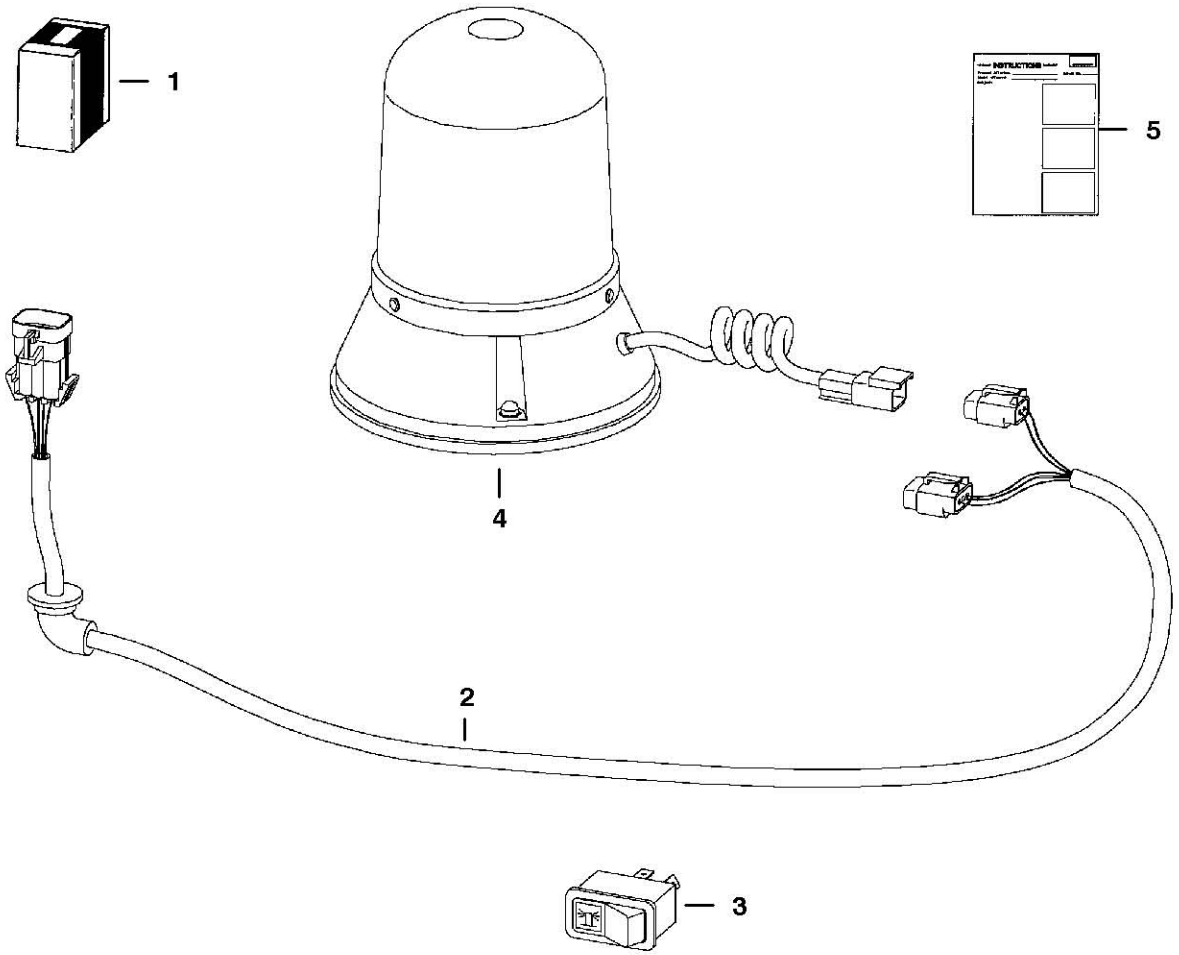

TS-1978

BEACON

Ref.N°	Part N°	Description	Remarks	Serial N°	Qty.
1	6719854	KIT	rotating beacon - If loader is not equipped W/Deluxe Cab Option also order 6727468 Harness - See Page ACCESSORIES HARNESS(1)		1
2	6718872	HARNESS			1
3	6665317	SWITCH	horizontal		1
3	6668816	SWITCH	vertical		1
4	6675523	BEACON			1
4	6666571	BULB			1
5	6900991	INSTRUCTIONS			1

BLOCK HEATER
(Engine)

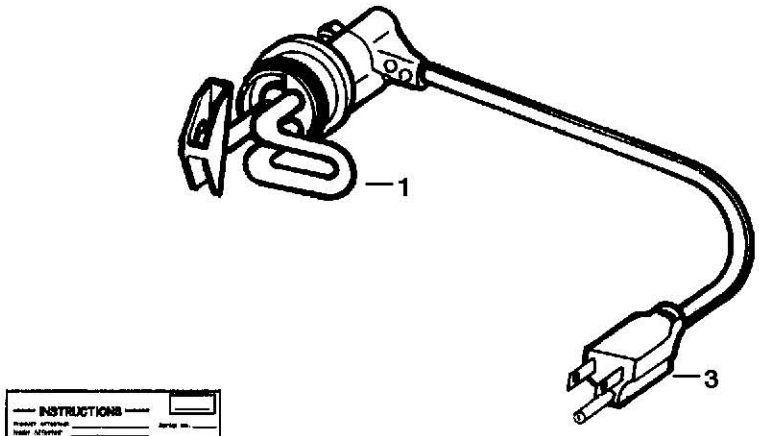

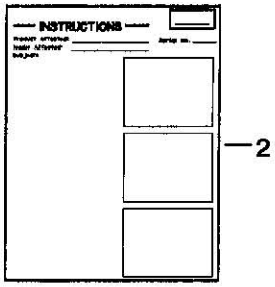

B-12299

BLOCK HEATER

Ref.N°	Part N°	Description	Remarks	Serial N°	Qty.
1	6720736	HEATER	W/Ref. BLOCK HEATER(2) & BLOCK HEATER(3)		1
2	6720038	INSTRUCTIONS			1
3	6668881	CORD			1

BOB-TACH LEVERS
(For Use W/Industrial Grapple Fork)

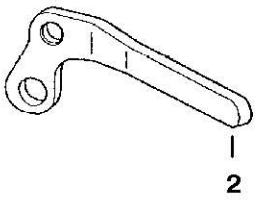

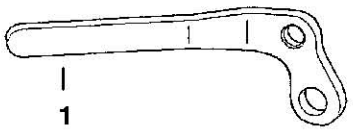

TS-1019

BOB-TACH LEVERS

Ref.N°	Part N°	Description	Remarks	Serial N°	Qty.
1	6578139	LEVER	R.H.		1
2	6578140	LEVER	L.H.		1

BUCKET POSITIONING VALVE KIT

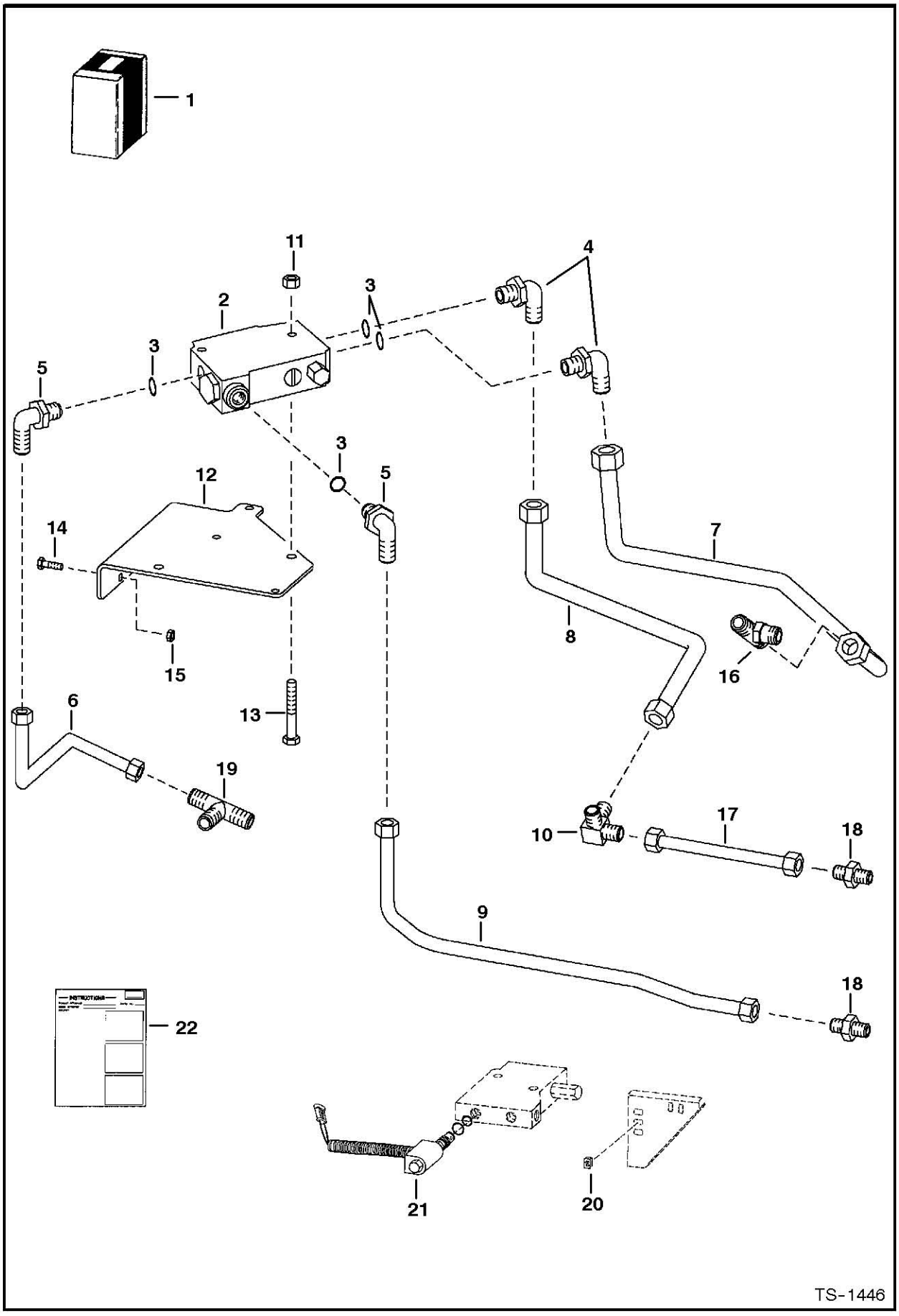

BUCKET POSITIONING VALVE KIT

Ref.N°	Part N°	Description	Remarks	Serial N°	Qty.
1	6712050	KIT	Ref. BUCKET POSITIONING VALVE KIT(2) - BUCKET POSITIONING VALVE KIT(15) & BUCKET POSITIONING VALVE KIT(20) - BUCKET POSITIONING		1
2	6666341	VALVE	bucket pos. - See Page BUCKET POSITIONING VALVE(1)		1
3	99K-10	O-RING			x
3	79K-10	O-RING			x
4	NAP	ELBOW	W/Ref. BUCKET POSITIONING VALVE KIT(3) - tapered boss face - Was 17KV-7 [A]		2
4	97K-10	O-RING	flared end		2
4	17KB-1010	ELBOW	W/Ref. BUCKET POSITIONING VALVE KIT(3) - flat boss face		2
5	NAP	ELBOW	W/Ref. BUCKET POSITIONING VALVE KIT(3) - flat boss face - Was 6715716 [A]		2
5	97K-8	O-RING	flared end		2
5	17KB-810	ELBOW	W/Ref. BUCKET POSITIONING VALVE KIT(3) - flat boss face		2
6	6705068	TUBE			1
7	6710583	TUBE			1
8	6704839	TUBE			1
9	6710584	TUBE			1
10	6705070	TEE			1
11	57D-5	NUT			2
12	6704833	BRACKET			1
13	35C-536	BOLT			2
14	35C-412	BOLT			2
15	55D-4	NUT			2
16		TEE	Not in Kit - See Page HYDRAULIC CIRCUITRY(1)		1
17		TUBE	Not in Kit - See Page HYDRAULIC CIRCUITRY(1)		1
18		ADAPTER	Not in Kit - See Page HYDRAULIC CIRCUITRY(1)		2
19		TEE	Not in Kit - See Page HYDRAULIC CIRCUITRY(1)		1
20	6668814	SWITCH			1
21	6672863	SOLENOID			1
21	6670634	SEAL KIT			1
21	6671527	NUT			1
22	6724522	INSTRUCTIONS			1

BUCKET POSITIONING VALVE KIT

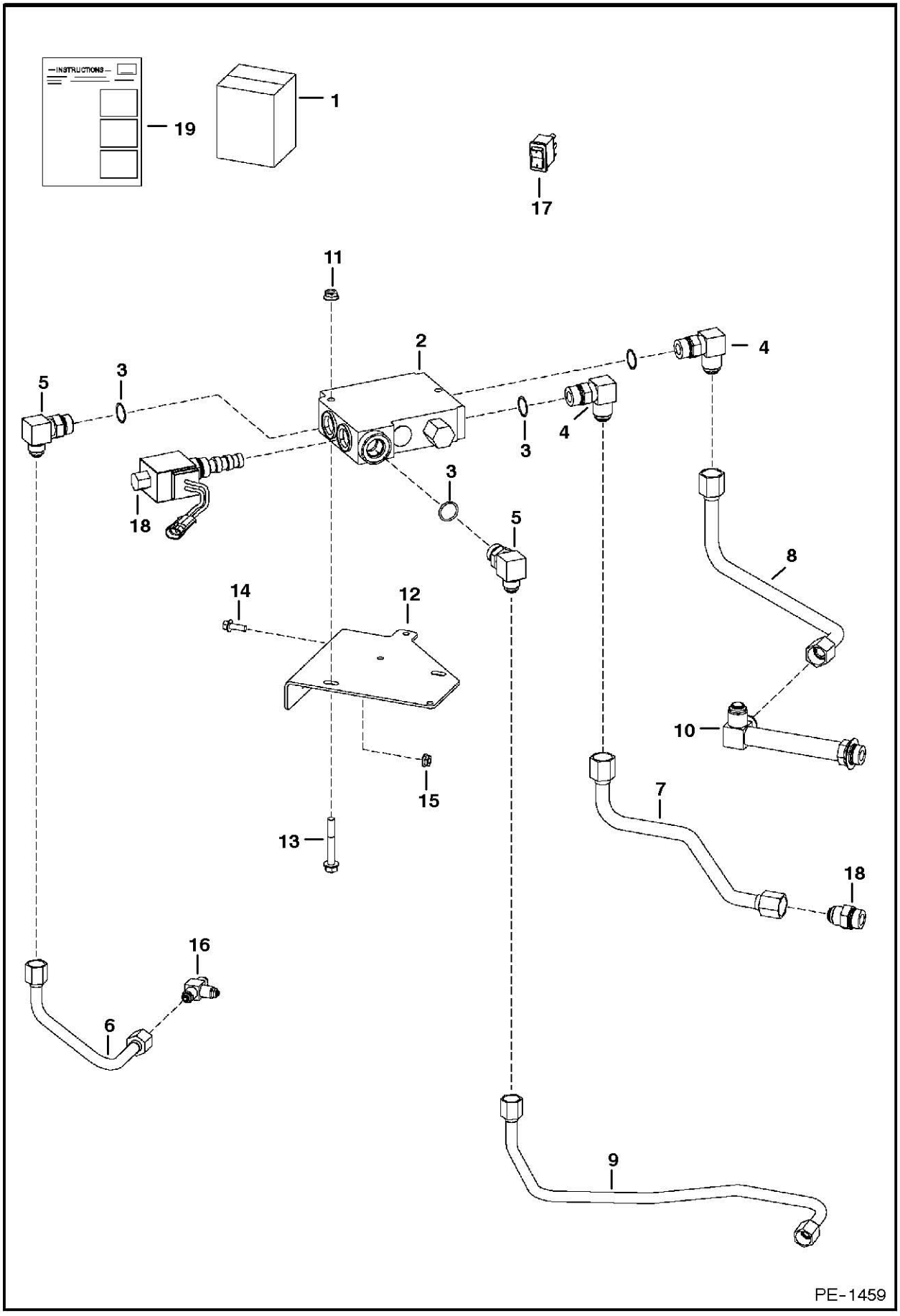

BUCKET POSITIONING VALVE KIT

Ref.N°	Part N°	Description	Remarks	Serial N°	Qty.
1	6727619	KIT	Ref. BUCKET POSITIONING VALVE KIT(2) - BUCKET POSITIONING VALVE KIT(15) & BUCKET POSITIONING VALVE KIT(20) - BUCKET POSITIONING		1
2	6666341	VALVE	bucket pos. - See Page BUCKET POSITIONING VALVE(1)		1
3	99K-10	O-RING	tapered boss face		x
3	79K-10	O-RING	flat boss face		x
4	NAP	ELBOW	W/Ref. BUCKET POSITIONING VALVE KIT(3) - tapered boss face - Was 17KV-7 [A]		2
4	97K-10	O-RING	flared end		2
4	17KB-1010	ELBOW	W/Ref. BUCKET POSITIONING VALVE KIT(3) - flat boss face		2
5	NAP	ELBOW	W/Ref. BUCKET POSITIONING VALVE KIT(3) - flat boss face - Was 6715716 [A]		2
5	97K-8	O-RING	flared end		2
5	17KB-810	ELBOW	W/Ref. BUCKET POSITIONING VALVE KIT(3) - flat boss face		2
6	6727627	TUBE			1
7	6727629	TUBE			1
8	6727626	TUBE			1
9	6727628	TUBE			1
10	6730142	TEE	Not in Kit		1
11	57D-5	NUT			2
12	6704833	BRACKET			1
13	35C-536	BOLT			2
14	35C-412	BOLT			2
15	55D-4	NUT			2
16		TEE	Not in Kit - See Page HYDRAULIC CIRCUITRY(1)		1
17	6668814	SWITCH			1
18	6672863	SOLENOID			1
18	6670634	SEAL KIT			1
18	6671527	NUT			1
19	6902324	INSTRUCTIONS	Was 6724522 [B]		1

CAB DOOR

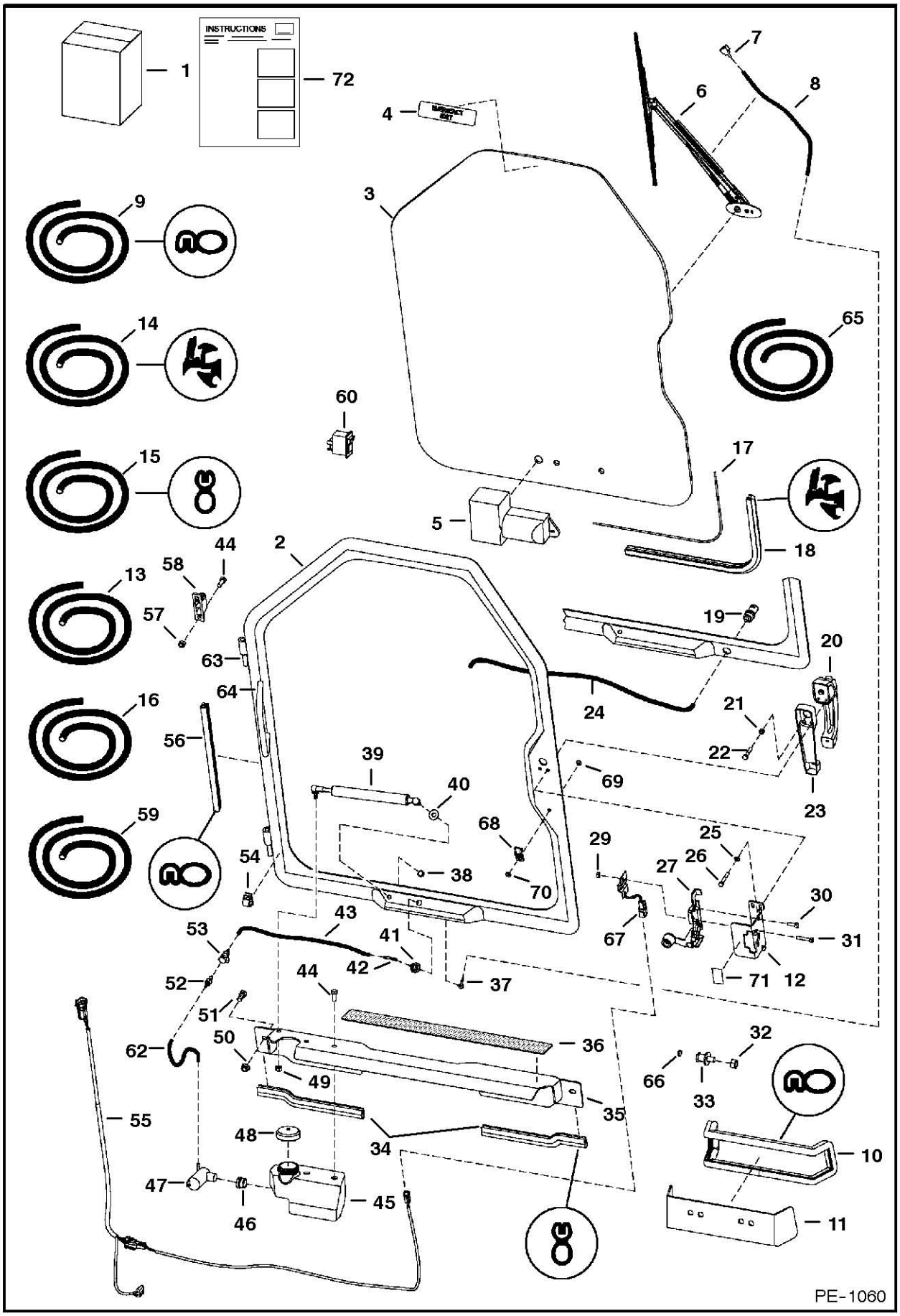
INSTRUCTIONS
1
72
4
7
6
8
3
9
65
14
60
15
17
5
18
44
2
58
13
57
19
20
63
64
24
21
16
56
22
23
39
40
69
59
68
29
25
54
38
70
26
27
30
43
53
41
67
31
52
42
37
71
12
44
51
32
50
36
62
49
66
33
35
55
48
34
10
47
45
46
11
PE-1060

CAB DOOR

Ref.N°	Part N°	Description	Remarks	Serial N°	Qty.
1	6718808	KIT	door - Ref. CAB DOOR(1) - CAB DOOR(65) & CAB DOOR(72) - Was 6718807 [B,D]		1
2	NAP	DOOR	.5' longer than 6726435inD1}c Door - Was 6717590 [A]		1
2	6726435	DOOR	'.5' shorter than NAP/6717590 Door		1
3	6717360	WINDOW	.25' thick - glass - See Page CAB DOOR(1)		1
4	6707852	DECAL	exit		1
5		MOTOR	See Page CAB DOOR(1)		1
6		ARM	wiper - See Page CAB DOOR(1)		1
7		NOZZLE	'wiper arm mounted -See Page CAB DOOR(1)		1
8		HOSE	See Page CAB DOOR(1)		1
9	6555351	SEAL	bulk - Sold Per Foot		x
10	NAP	SEAL	'40'(1016 mm) long - Order Ref. CAB DOOR(9)		1
11	6725200	PLATE			1
12	6717369	BRACKET	latch		1
13	6676918	HOSE	'50' (15,240 mm) long roll - .125' I.D. - black		x
14	6665568	SEAL	bulk - Sold Per Foot		x
15	6675558	SEAL	bulk - Sold Per Foot - Was 6669390 [A]		x
16	6554149	CORD	bulk - Sold Per Foot		x
17	NAP	CORD	window - 113.3' (2877,8mm) - Order Ref. CAB DOOR(16)		1
18	NAP	SEAL	window - 113.3' (2877,8mm) - Order Ref. CAB DOOR(14)		1
19	6664555	NOZZLE	washer		1
20	6674667	HANDLE			1
20	6709527	KEY	ign. & rear door		1
21	61D-4	NUT			1
22	17C-420	BOLT			1
23	6717146	SPACER	handle		1
24	NAP	HOSE	25.25' (641,4 mm) long - Order Ref. CAB DOOR(59)		1
25	6EM-60	WASHER			3
26	1CM-640	BOLT			3
27	6674666	LATCH			1
28	6718520	COVER	latch	& Bel	1
29	4DM-6	NUT			2
30	1CM-620	BOLT			2
31	4CM-635	BOLT	Was 1CM-635 [A]		2
32	91D-7	NUT			1
33	6677194	BOLT	Was 6654170 [A]		1
34	NAP	SEAL	threshold - 11' (279,4mm) - Order Ref. CAB DOOR(15)		2
35	6725042	SHIELD			1
36	6542731	SAFETY TREAD			1
37	6676500	ELBOW			1
38	46D-5	NUT	acorn		1
39	6682586	GAS SPRING	Was 6674938 [A]		1
39	6678548	SOCKET	ball		2
39	6649244	BALL STUD			2
39	6649245	CLIP	spring		2
40	25E-16	WASHER			1
41	6676499	GROMMET	wiper		1
42	6676917	ELBOW			1

CAB DOOR

Ref.N°	Part N°	Description	Remarks	Serial N°	Qty.
43	NAP	HOSE	18.25' (463,6 mm) long - Order Ref. CAB DOOR(59)		1
44	17C-512	BOLT			6
45	6730830	TANK	washer - Was 6718627 [A]		1
46	6666766	GROMMET			1
47	6664554	PUMP	washer bottle		1
48	6674993	CAP	vented		1
49	61D-5	NUT			5
50	61D-6	NUT	Was 61D-8 [B]		2
51	17C-612	BOLT	Was 17C-812 [B]		2
52	6675299	COUPLER	insert		1
53	6675298	COUPLER	body		1
54	6675378	CLIP	Use W/door mounted nozzle	& Bel	2
54	6675378	CLIP	Use W/door mounted nozzle	& Abv	3
54	6675378	CLIP	Use W/wiper arm mounted nozzle		1
55	6718295	HARNESS	wiper - W/18'(457,2 mm) long 3-pin connector extension - Use W/Ref. CAB DOOR(5) (6668137 Motor)		1
55	6729739	HARNESS	Use W/Ref. CAB DOOR(5) (6677835 Motor)		1
55	6730885	HARNESS			1
56	NAP	SEAL	127.3'(3233,4mm) -Order Ref. CAB DOOR(15)		1
57	59D-5	NUT			4
58	6717593	HINGE	base		2
59	6676003	HOSE	bulk - Sold Per Foot - .109' I.D. - black - Was 6708310 [A]		x
60	6665707	SWITCH	front wiper		1
61	6664097	COVER	wiper		1
62	NAP	HOSE	washer - 4.25' (108 mm) long - Order Ref. CAB DOOR(65)		1
63	6718376	HINGE	door		2
64	6718521	HANDLE	grab		1
65	6708310	HOSE	bulk - Sold Per Foot - clear		1
66	6677192	MAGNET		5158 44933 & Abv	1
66				5162 26237 & Abv	1
67	6731212	SWITCH	door	5158 44933 & Abv	1
67				5162 26237 & Abv	1
67	6677193	RIVET	plastic	5158 44933 & Abv	2
67				5162 26237 & Abv	1
68	6665000	CLIP		5158 44933 & Abv	1
68				5162 26237 & Abv	1
69	6665321	RIVET	male plastic	5158 44933 & Abv	1
69				5162 26237 & Abv	1
70				5162 26237 & Abv	1
70	6665322	RIVET	female plastic	5158 44933 & Abv	1
71	6732975	DECAL	door switch	5158 44933 & Abv	1
71				5162 26237 & Abv	1
72	6901013	INSTRUCTIONS	Was 6900854 [A]		1

CAB DOOR
(Window & Wiper)

NOTE: It is necessary to identify the correct style of wiper motor before ordering wiper replacement parts.
Components for wipers W/threaded shaft ends & built in fuse are shown on the upper half ot this page.
Components for wipers W/knurled shaft ends are shown on the lower half of this page.

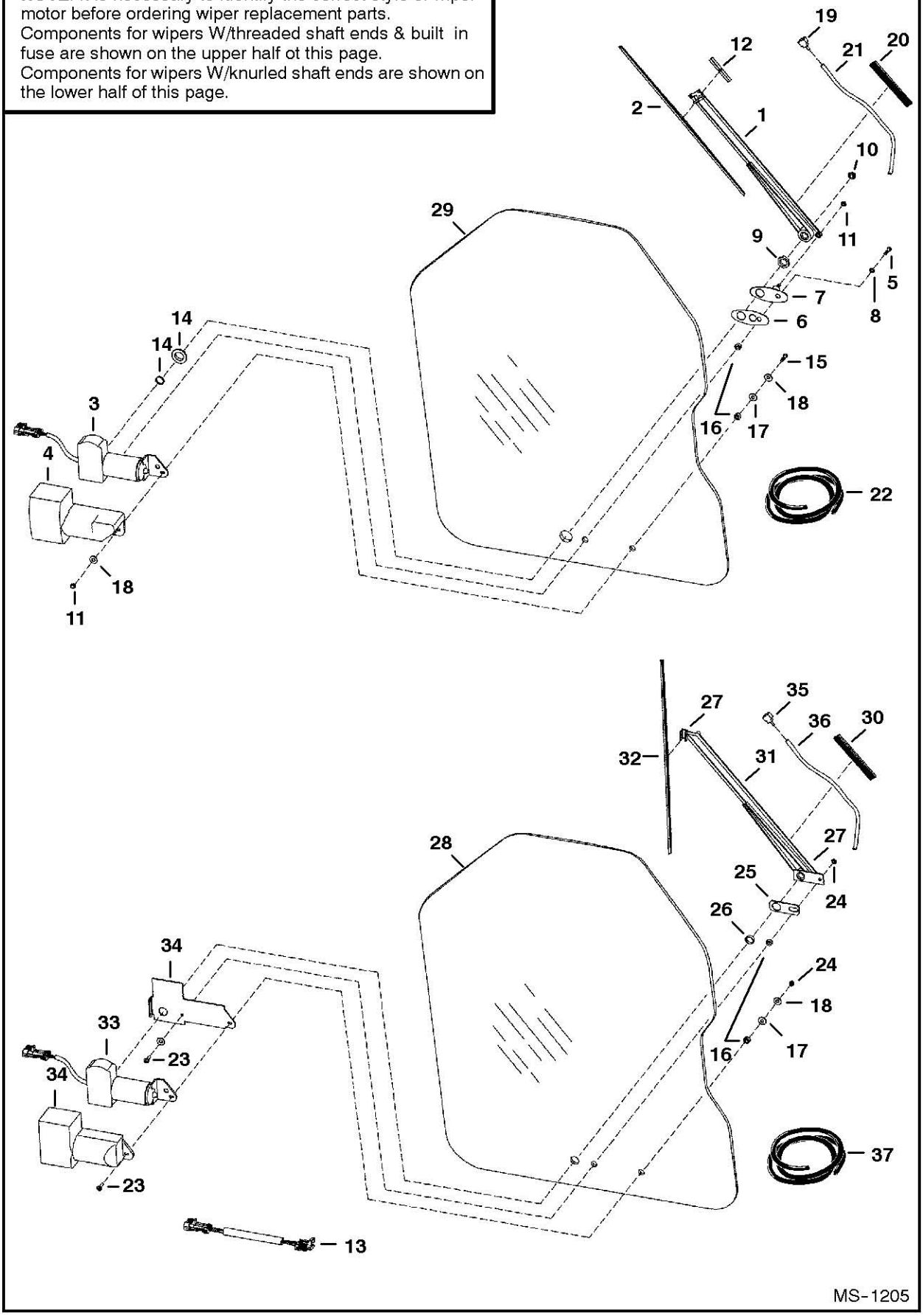

CAB DOOR

Ref.N°	Part N°	Description	Remarks	Serial N°	Qty.
1	6677833	ARM ASSY	W/Ref. CAB DOOR(19) - CAB DOOR(21)		1
2	6677834	BLADE	Also Order Ref. CAB DOOR(12)		1
3	6679476	MOTOR	W/threaded shaft end & built in 'fuse-SEE NOTE-Was 6677835 [A]		1
4	6677836	MOTOR			1
5	6677837	BOLT			1
6	6677839	GASKET			1
7	6677840	SWIVEL ASSY			1
8	6677841	WASHER	tooth lock		1
9	6677842	NUT	M18		1
10	6677843	NUT	M8		1
11	6677844	NUT	M5		2
12	6677845	ADAPTER	arm		1
13	6730123	HARNESS	7'(177,8 mm) long wiper jumper - W/fuse - Use W/Ref. CAB DOOR(33)		1
14	6677848	SLEEVE	rubber - Use W/Ref. CAB DOOR(3) & Ref. CAB DOOR(28)		1
14	6677847	GROMMET	rubber - Use W/Ref. CAB DOOR(3) & Ref. CAB DOOR(29)		1
15	6678198	BOLT			1
16	6664085	BUSHING	nylon		2
17	6801059	WASHER	neoprene		1
18	6678739	WASHER	steel - Was 6664065 [A]		2
19	6678920	NOZZLE	For Ref. CAB DOOR(1)		1
20	6678921	GUIDE	hose		1
21	NAP	HOSE	18'(457,2mm)long -Order Ref. CAB DOOR(22)		x
22	6676003	HOSE	bulk - Sold Per Foot - .109' I.D. - black		x
23	6664566	SCREW			2
24	6664103	NUT	acorn		2
25	6664178	GASKET			1
26	6667201	SPACER	nylon - Use W/Ref. CAB DOOR(28) & Ref. CAB DOOR(33)		1
27	6670288	END	plastic		2
28	NAP	WINDOW	.25' thick glass W/.77' dia. wiper motor shaft hole - Order Ref. CAB DOOR(14) (6677847 Grommet) & Ref. CAB DOOR(29) - Was 6717		1
29	6729776	WINDOW	.25' thick glass W/1.00' dia. wiper motor shaft hole		1
30	6676501	CLIP			1
31	6664095	ARM	W/Ref. CAB DOOR(27) & CAB DOOR(30)		1
32	6664096	BLADE			1
33	6668137	MOTOR	wiper - W/knurled shaft end - Use W/Ref. CAB DOOR(13) - SEE NOTE - SEE BTlinD1|x 337		1
33	6631928	SHAFT			1
33	6631927	GEAR			1
33	6670164	LINK			1
33	961528	HARDWARE			1
34	6664097	COVER			1
35	6676498	NOZZLE	For Ref. CAB DOOR(31)		1
36	NAP	HOSE	10.25'(260,4 mm) long - Order Ref. CAB DOOR(37)		1
37	6676918	HOSE	50' (15,240 mm) long roll - .125' I.D. - black		x

CAB DOOR
(Special Applications)

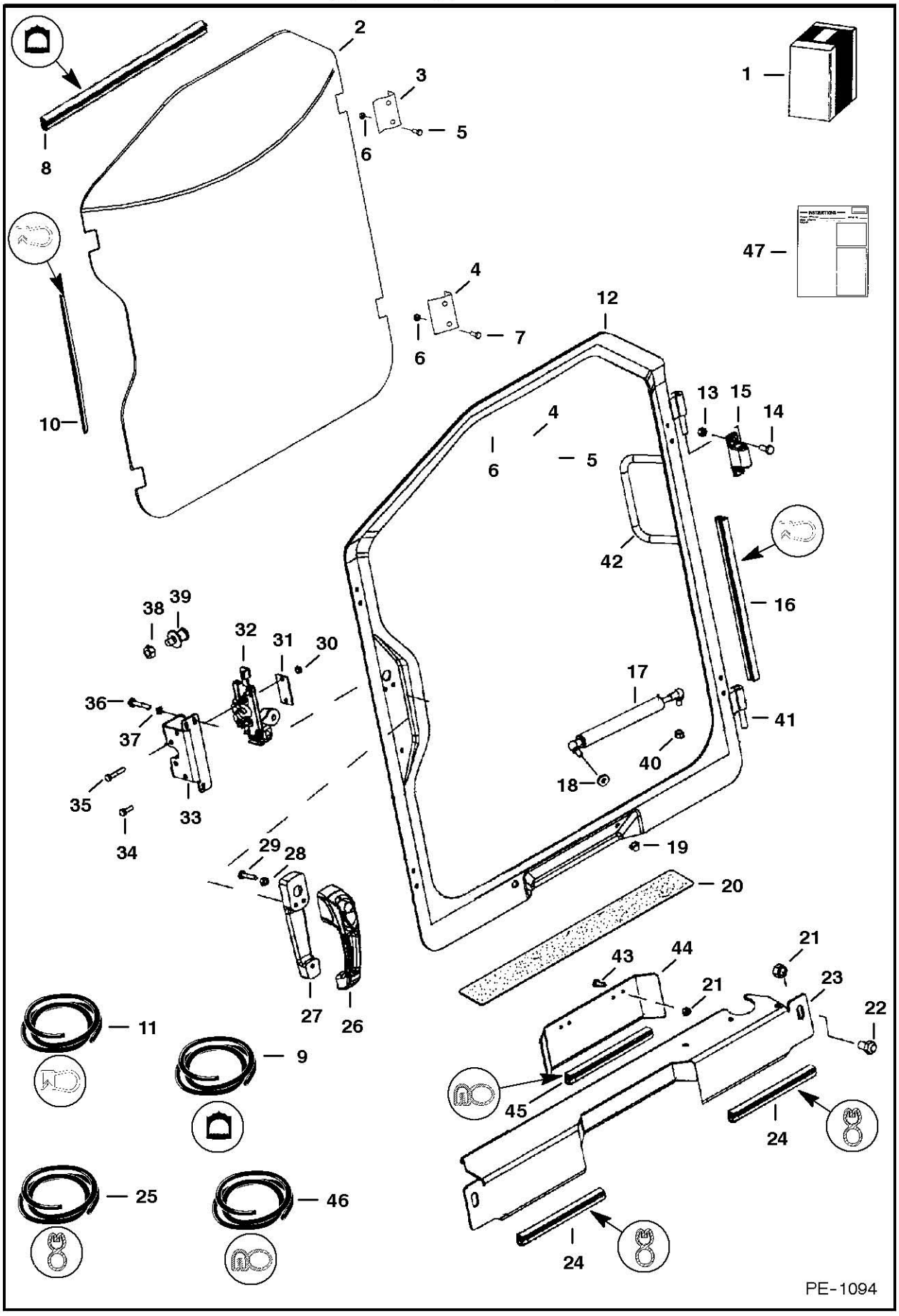

CAB DOOR

Ref.N°	Part N°	Description	Remarks	Serial N°	Qty.
1	6725941	KIT	door		1
2	NAP	WINDOW	.5' thick polycarbonate -W/O top notch - Order 673235 1 Window, Ref. CAB DOOR(4) & (2) each of Ref. CAB DOOR(5) & CAB DOOR(6) -		1
2	6732351	WINDOW	.5' thick polycarbonate - W/top notch - Was 6725935 [A]		1
3	6725938	CLAMP			2
4	6725937	CLAMP			3
5	17C-628	BOLT			6
6	95D-6	NUT			10
7	17C-624	BOLT			4
8	NAP	SEAL	'12'(304,8 mm) long - Order Ref. CAB DOOR(9) - Used W/Ref. CAB DOOR(2) W/O top notch		1
9	6670759	SEAL	bulk - Sold Per Foot		x
10	NAP	SEAL	'115'(2921 mm) long -Order Ref. CAB DOOR(11)		1
11	6675558	SEAL	bulk - Sold Per Foot		x
12	6726932	DOOR	W/Ref. CAB DOOR(41) & CAB DOOR(42)		1
13	59D-5	NUT			4
14	17C-512	BOLT			6
15	6717593	HINGE	base		2
16	NAP	SEAL	127.3'(3233,4 mm) long - Order Ref. CAB DOOR(11)		1
17	6682586	GAS SPRING	Was 6674938 [A]		1
17	6678548	SOCKET	ball		2
17	6649245	CLIP	spring		2
18	25E-16	WASHER			1
19	46D-5	NUT	acorn		1
20	6542731	SAFETY TREAD			1
21	55D-6	NUT			4
22	17C-612	BOLT			2
23	6725042	SHIELD			1
24	NAP	SEAL	'11'(279,4 mm) long -Order Ref. CAB DOOR(25)		2
25	6513152	SEAL	bulk - Sold Per Foot		x
26	6674667	HANDLE			1
26	6709527	KEY	ign. & rear door		1
27	6717146	SPACER	handle		1
28	61D-4	NUT			1
29	17C-420	BOLT			1
30	4DM-6	NUT			2
31	6718520	COVER	latch		1
32	6674666	LATCH			1
33	6717369	BRACKET	latch		1
34	1CM-620	BOLT			2
35	1CM-635	BOLT			2
36	1CM-640	BOLT			3
37	6EM-60	WASHER			3
38	91D-7	NUT			1
39	6654170	STRIKER BOLT			1
40	61D-5	NUT			5
41	6718376	HINGE	door		2
42	6718521	HANDLE	grab		1
43	35C-620	BOLT			2

CAB DOOR

Ref.N°	Part N°	Description	Remarks	Serial N°	Qty.
44	6725200	PLATE			1
45	NAP	SEAL	'40'(1016 mm) long - Order Ref. CAB DOOR(46)		1
46	6555351	SEAL	bulk - Sold Per Foot		x
47	6901013	INSTRUCTIONS			1

CAB DOOR
(Lexan Window)

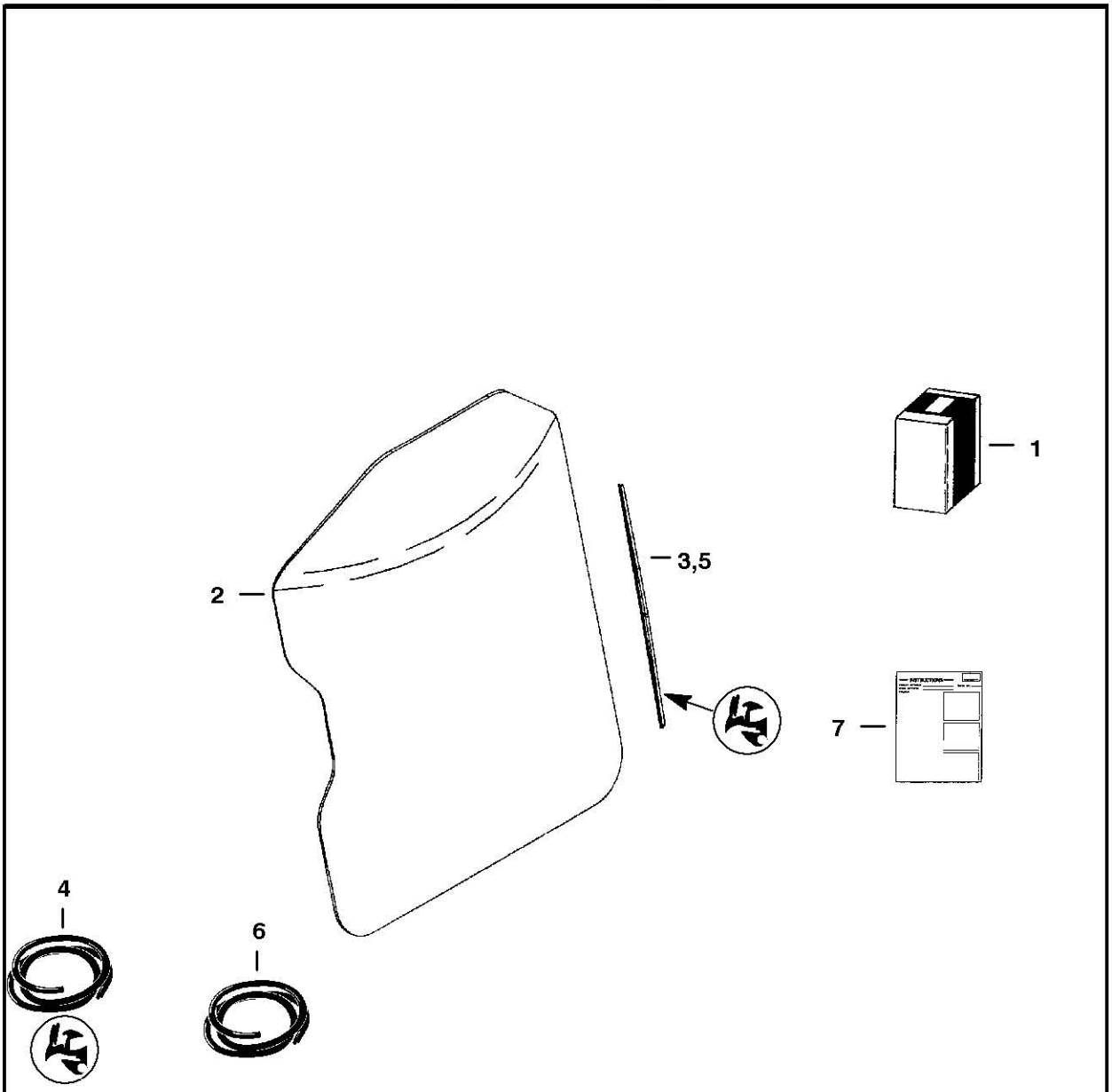

NOTE: This Lexan window is NOT approved as a Special Applications Kit. This window does not provide additional protection from materials entering cab openings.

PE-1558

CAB DOOR

Ref.N°	Part N°	Description	Remarks	Serial N°	Qty.
1	6726427	KIT	Ref. CAB DOOR(2) - CAB DOOR(7) - SEE NOTE		1
2	6732350	WINDOW	lexan - Was 6675215 [A]		1
3	NAP	SEAL	113.3'(2877,8 mm) long - Order Ref. CAB DOOR(4)		1
4	6665568	SEAL	bulk - Sold Per Foot		x
5	NAP	CORD	113.3'(2877,8 mm) long - Order Ref. CAB DOOR(6)		1
6	6554149	CORD	bulk - Sold Per Foot		x
7	6901036	INSTRUCTIONS			1

* CAB DOOR
(Sensor Kit)

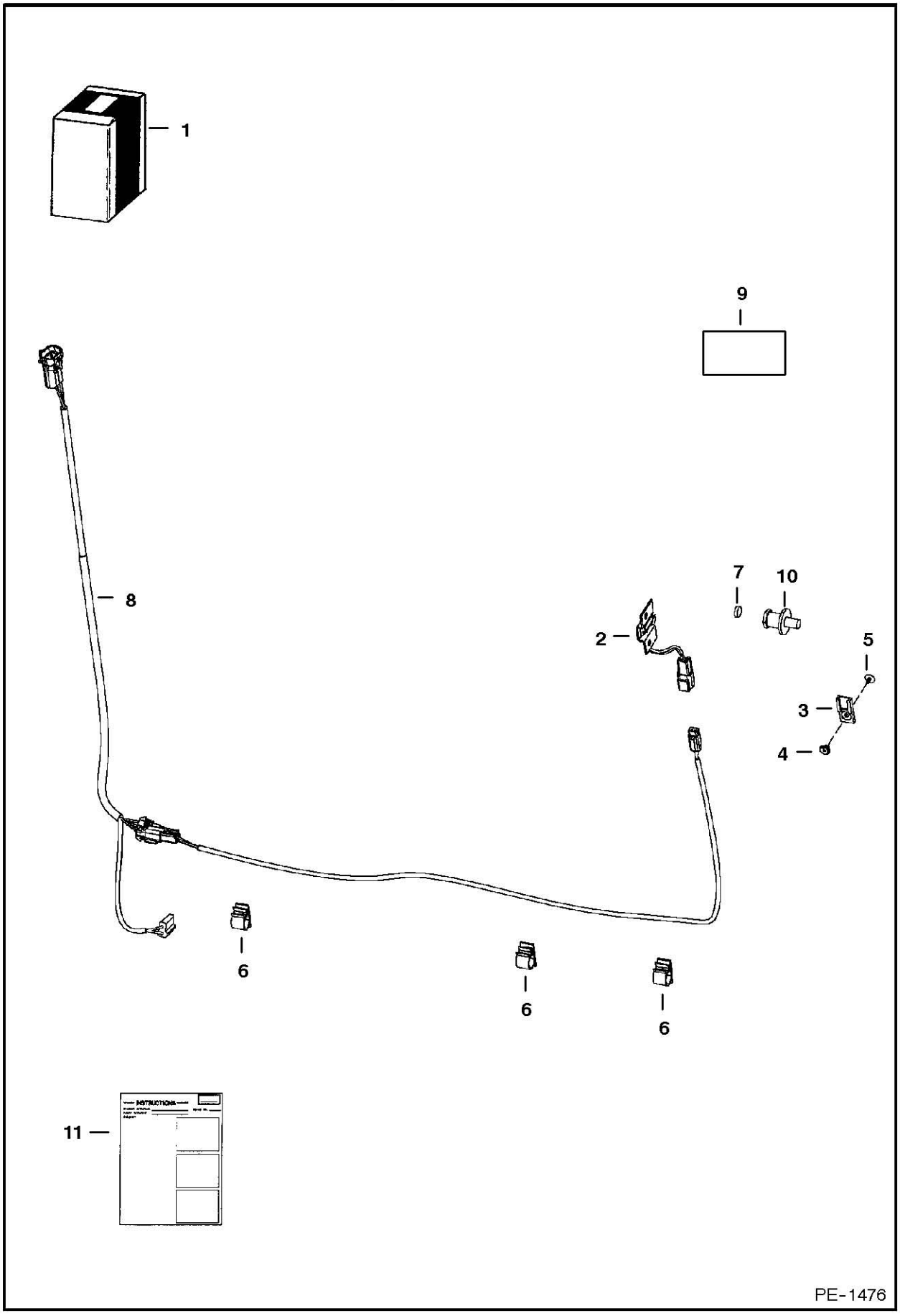

* CAB DOOR

Ref.N°	Part N°	Description	Remarks	Serial N°	Qty.
1	6732451	KIT			1
2	6731212	SWITCH			1
2	6677193	RIVET	plastic		2
3	6665000	CLIP			1
4	6665322	RIVET			1
5	6665321	RIVET			1
6	6675378	CLIP			1
7	6677192	MAGNET			1
8	6730885	HARNESS			1
9	6732975	DECAL			1
10	6677194	BOLT			1
11	6901734	INSTRUCTION			1

CAB ENCLOSURE

NOTE: Order Cab Enclosure Kit from Gwinner SALES #6719667.
Order Special Applications Kit from Gwinner SALES # 6719390.

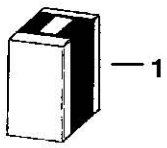

B-16410

CAB ENCLOSURE

Ref.N°	Part N°	Description	Remarks	Serial N°	Qty.
1	SALES	KIT	cab enclosure - SEE NOTE - includes items See Pages CAB DOOR(1) See Page CAB WINDOWS(1)		1
1	SALES	KIT	special cab enclosure - SEE NOTE - includes items See Page CAB DOOR(1) See Page CAB WINDOWS(1)		1

CAB ENCLOSURE
(Envelope)

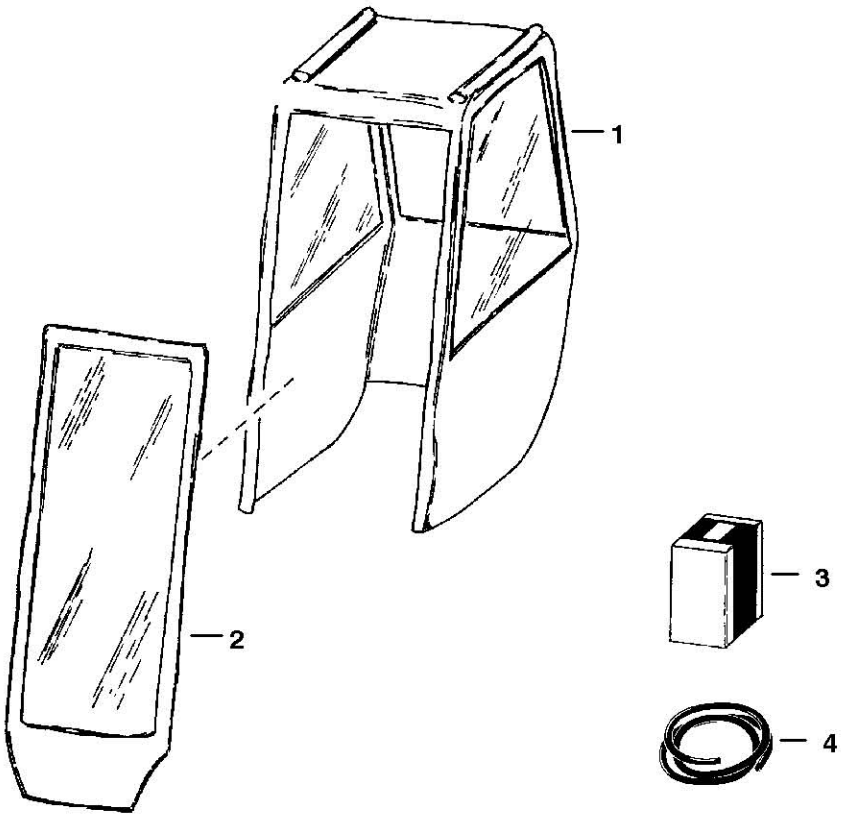

B-1413

CAB ENCLOSURE

Ref.N°	Part N°	Description	Remarks	Serial N°	Qty.
1	6675544	VINYLCAB	fastens inside of cab W/velcro - W/Ref. CAB ENCLOSURE(2) - Was 6565270 [B,D]		1
2	6675590	DOOR	vinyl - Was 6599721 [B,D]		1
3	6675591	HINGE KIT	Was 6662839 [B,D]		1
4	6722597	VELCRO	27' (8229,6 mm) roll		1

CAB WINDOWS

NOTE: Order Top & Rear Window Kit from Gwinner Sales # 6718805.
Order Side Window Kit from Gwinner Sales # 6718806.

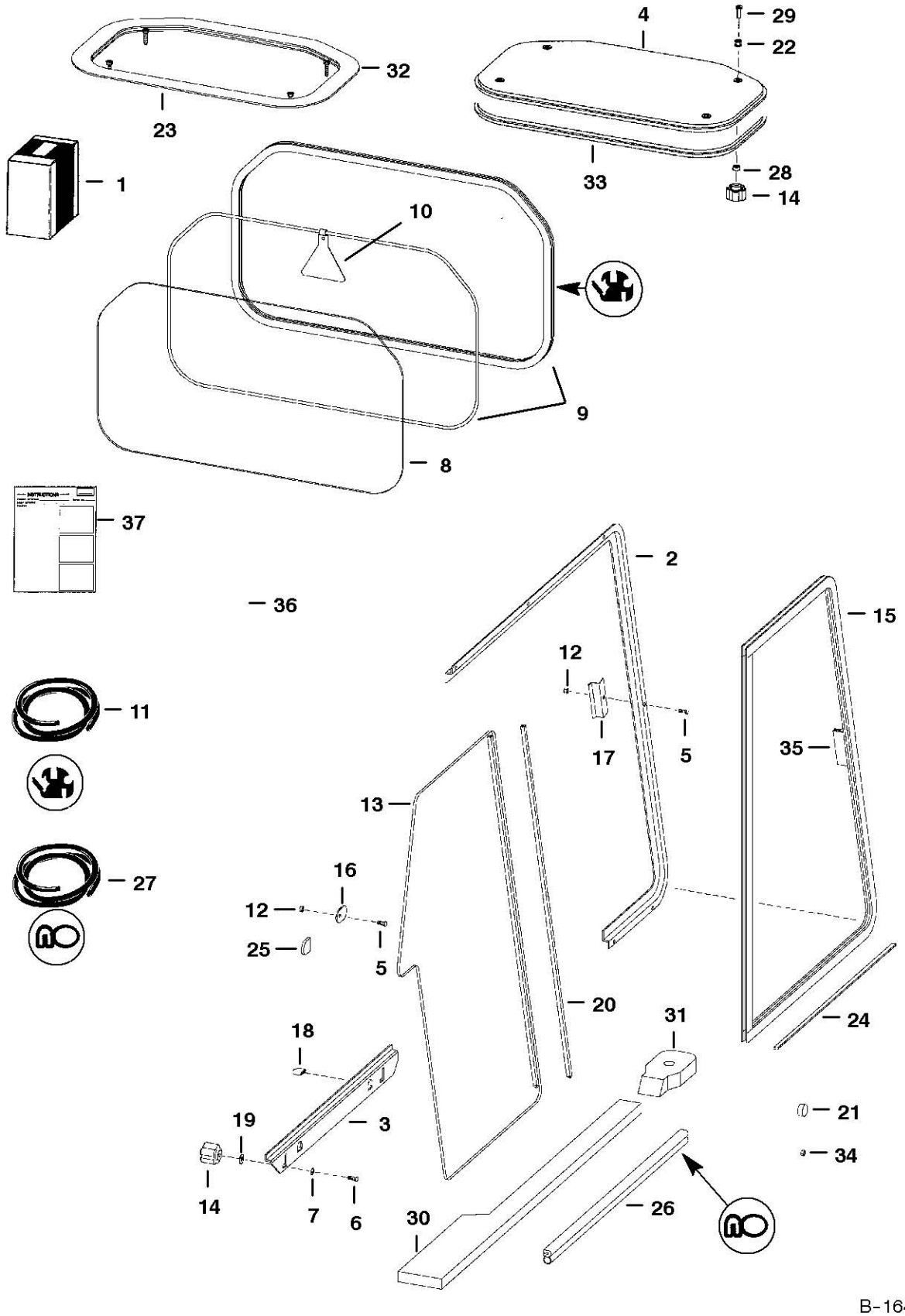

CAB WINDOWS

Ref.N°	Part N°	Description	Remarks	Serial N°	Qty.
1	SALES	KIT	Top & Rear Window - SEE NOTE		1
1	SALES	KIT	Side Window - SEE NOTE		1
2	6717870	TRACK	L.H. side		1
2	6717872	TRACK	R.H. side		1
3	6717871	TRACK	L.H. bottom		1
3	6717873	TRACK	R.H. bottom		1
4	6728629	WINDOW	assy. - lexan - W/Ref. CAB WINDOWS(22) & CAB WINDOWS(33)		1
5	10C-410	BOLT	carriage		18
6	10C-416	BOLT	carriage		4
7	25E-14	WASHER			4
8	6717874	WINDOW	rear		1
8	6719413	WINDOW	rear - lexan		1
9	NAP	EXTRUSION	75.75'(1924 mm) long - Order Ref. CAB WINDOWS(11)		x
9	NAP	CORD	75.75'(1924 mm) long - Order Ref. CAB WINDOWS(11)		x
10	6731478	EXIT TAG	Was 6559515 [A]		1
11	6675387	SEA;	bulk - Sold Per Foot - Was 6674524 [A]		x
11	6554149	CORD	bulk - Sold Per Foot		x
12	59D-4	NUT			18
13	6674520	WINDOW	L.H. rear - W/Ref. CAB WINDOWS(24)		1
13	6674522	WINDOW	R.H. rear - W/Ref. CAB WINDOWS(24)		1
14	NAP	KNOB	5/8' deep threads - Was 6674741 [A]		8
14	6681614	KNOB	11/16' deep threads		8
15	6674519	WINDOW	L.H. front		1
15	6674521	WINDOW	R.H. front		1
16	6719063	STOP			2
17	6719037	STRIKER			2
18	6719065	COVER	tab		4
19	6675212	RETAINER	bolt		4
20	6675833	SEAL	rear window dual wiper W/tape		2
21	6657719	PLUG	for .75' dia. hole		2
22	6675545	GROMMET			4
23	NAP	SEAL	bulk - Sold Per Foot - Order Ref. CAB WINDOWS(4) - Was 6675546 [A]		x
24	6676927	FELT STRIP	20.38' (517,7 mm) long		2
25	6677198	CAP	tab		2
26	NAP	SEAL	24'(609,6 mm) long - Order Ref. CAB WINDOWS(27)	& Bel	1
27	6555351	SEAL	bulk - Sold Per Foot		x
28	6664085	BUSHING	nylon		4
29	91G-416	BOLT	'Use W/Ref. CAB WINDOWS(14)(NAP/6674741 Knob)		4
29	91G-420	BOLT	'Use W/Ref. CAB WINDOWS(14)(6681614 Knob)		4
30	6729010	SEAL	L.H. - cab to main frame - foam	& Abv	1
30	6729009	SEAL	R.H. - cab to main frame - foam	& Abv	1
31	6729011	SEAL	cab mount	& Abv	2
32	NAP	WINDOW	top - Order Ref. CAB WINDOWS(4) - Was 6725360 [A]		1
33	NAP	SEAL	Order Ref. CAB WINDOWS(4)		1
34	6677973	PLUG	for .22' dia. hole		2
35	6678283	HANDLE	'side window - W/tape & instructions		2

CAB WINDOWS

Ref.N°	Part N°	Description	Remarks	Serial N°	Qty.
36	NAP	ADHESIVE	top window - Was 6675694 [B]		1
37	6901013	INSTRUCTIONS	Was 6900854 [A]		1
37	6900853	INSTRUCTIONS	Side Windows		1

CAB WINDOWS
(Rear Window Removal Kit)

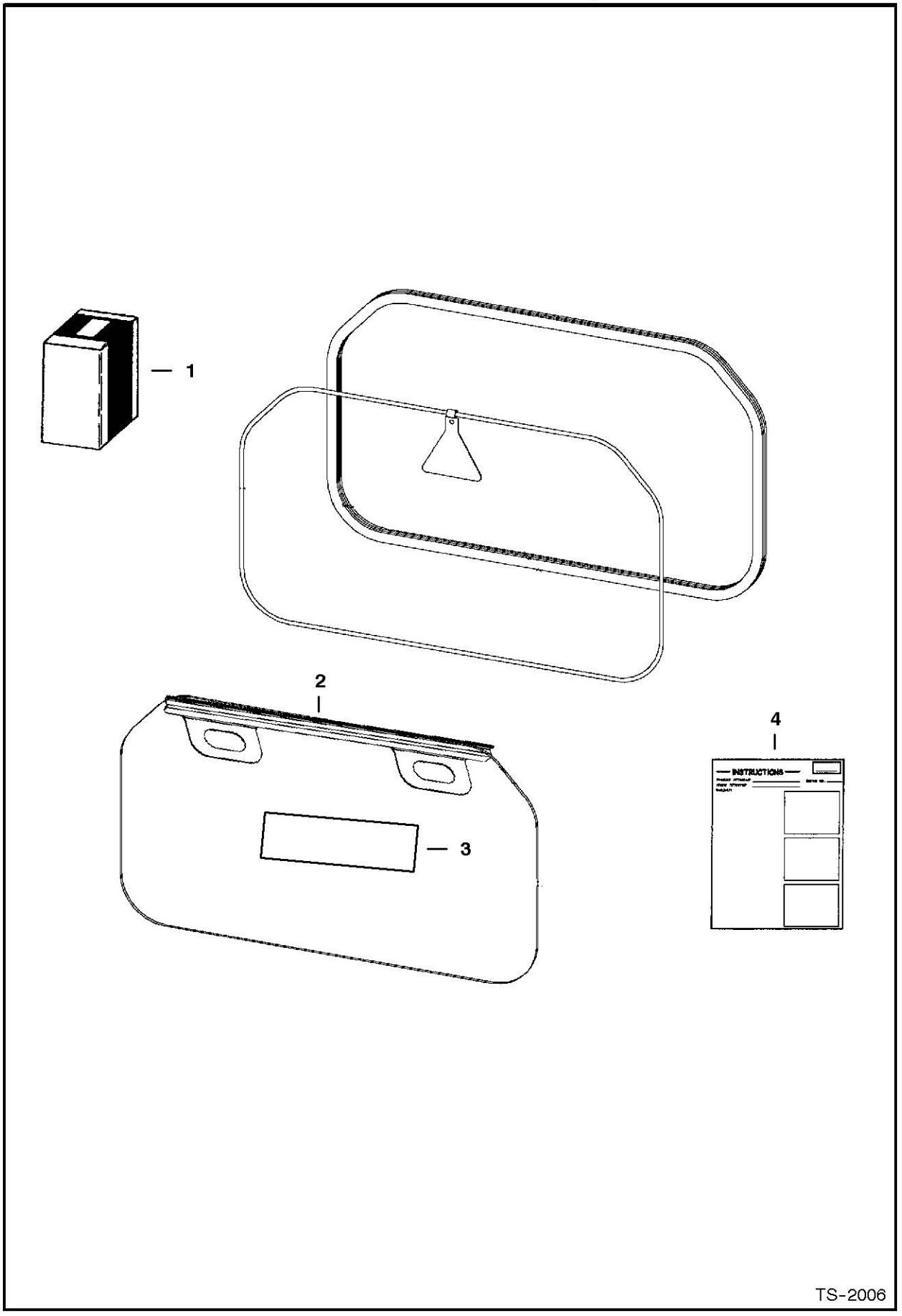

CAB WINDOWS

Ref.N°	Part N°	Description	Remarks	Serial N°	Qty.
1	6725946	KIT	Ref. CAB WINDOWS(2) - CAB WINDOWS(4)		1
2	6725421	HANDLE			1
3	6726303	DECAL			1
4	6901029	INSTRUCTIONS			1

COUNTERWEIGHT KIT
(1400 lb.)

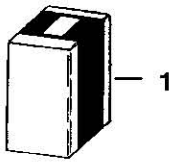

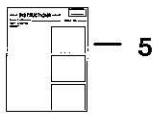

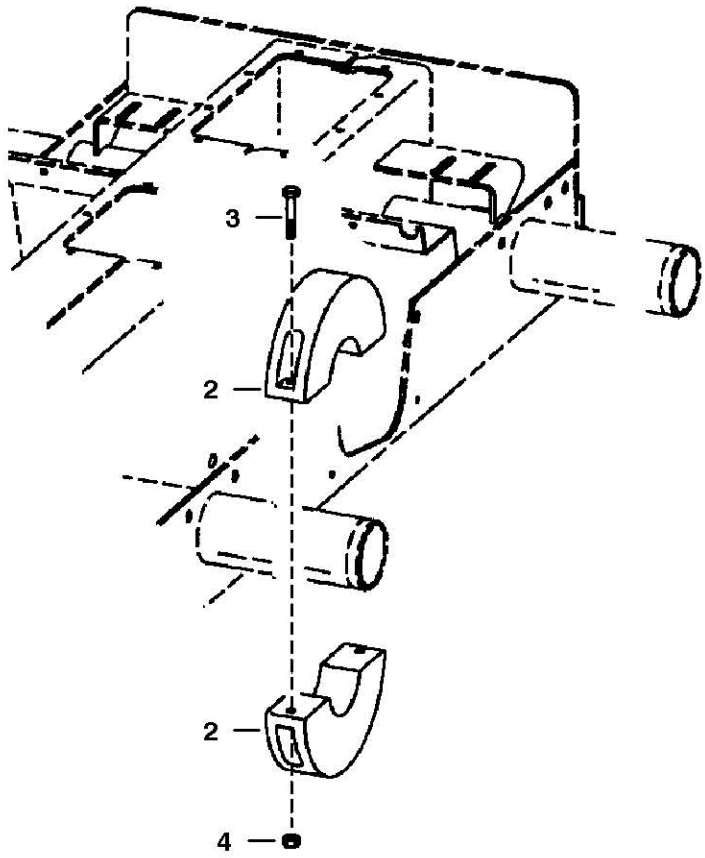

NOTE: Order Counterweight Kit from Gwinner Sales # 6704284.
NOTE: 1400 lb. R.O.C.is achieved W/(1) rear door counterweight & (1) set of rear axle weights.

TS-1491

COUNTERWEIGHT KIT

Ref.N°	Part N°	Description	Remarks	Serial N°	Qty.
1	SALES	KIT	counterweight - SEE NOTE		1
2	6714361	WEIGHT	rear axle - 38.7 lbs (17,6 kg) - 4.5'(114,3 mm) wide		4
3	17C-640	BOLT			4
4	61D-6	NUT			4
5	6900366	INSTRUCTIONS			1

DECALS
1

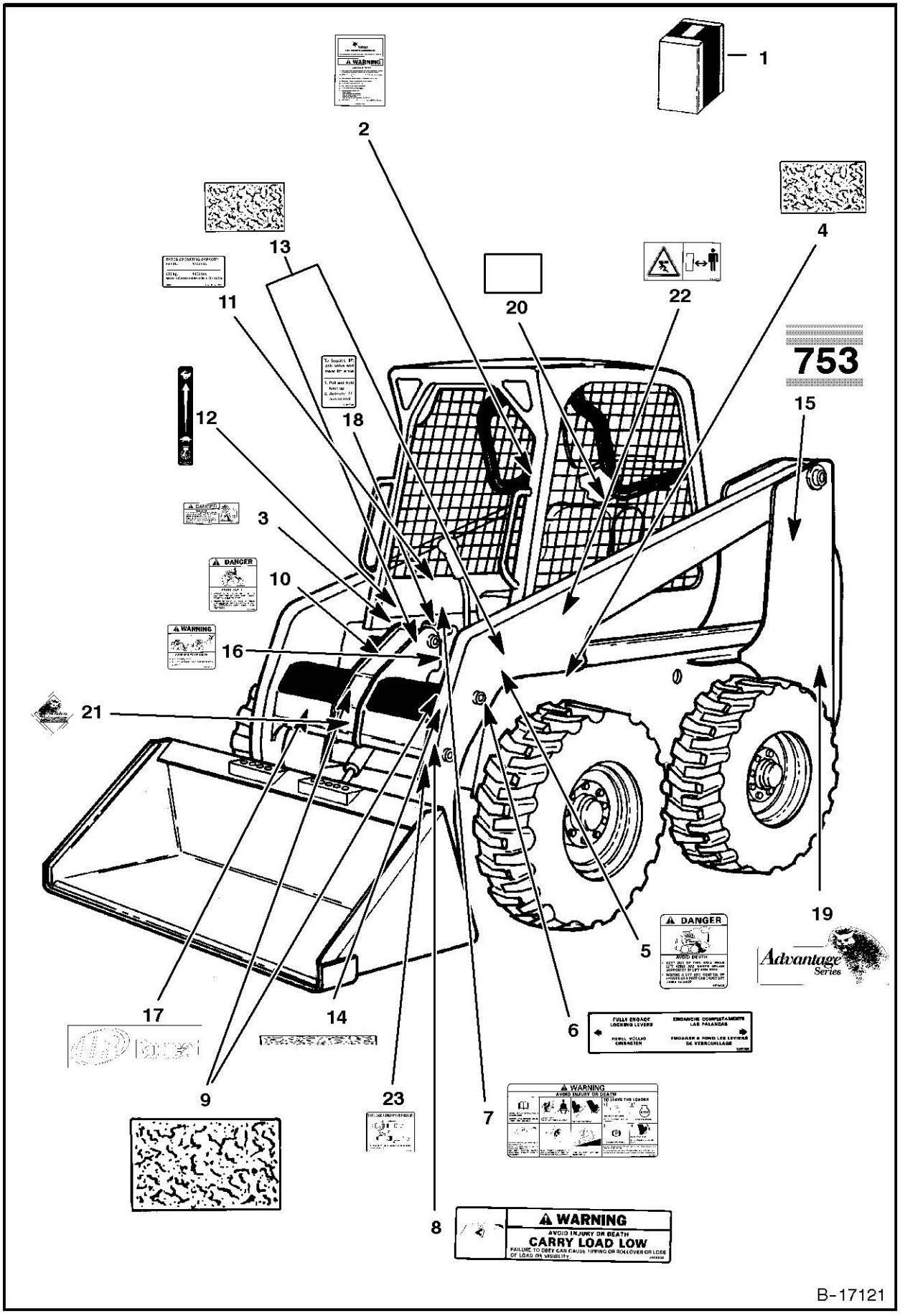
1
2
4
13
11
20
22
753
12
18
15
3
10
16
21
19
5
17
14
6
9
23
7
8
WARNING
AVOID INJURY OR DEATH
CARRY LOAD LOW
FAILURE TO OBEY CAN CAUSE TIPPING OR ROLLOVER OR LOSS OF LOAD OR VISIBILITY
DANGER
Advantage Series
B-17121

DECALS

Ref.N°	Part N°	Description	Remarks	Serial N°	Qty.
1	6901066	KIT	decal		1
1	6725366AR	KIT	decal		1
1	6725366BR	KIT	decal		1
1	6725366JP	KIT	decal		1
1	6725500AR	KIT	translation		1
1	6725500BR	KIT	translation		1
2	6719563	KIT	handbook - W/Wire Rope - Was 6704831 [B]		1
2	6558309	WIRE ROPE	33' (838,2 mm) long - Bulk - Sold Per Foot - Also Order (2) of 6558310		x
2	6558310	SLEEVE	wire rope		2
2	17C-512	BOLT			1
2	61D-5	NUT			1
3	6717343	DECAL	danger		2
4	6554100	SAFETY TREAD	6' x 6' (152,4 mm x 152,4 mm)		4
5	6579639	DECAL	danger		1
6	6561383	DECAL	Bob-tach		1
7	6728539	DECAL	warning - Was 6718698 [A]		1
8	6579528	DECAL	carry load low		1
9	6577947	SAFETY TREAD	7.5' x 15' (190,5 mm x 381,0 mm) - Not in Kit		2
10	6579509	DECAL	danger		1
11	6714919	DECAL	capacity - 753 - 1350 lb.		1
11	6727223	DECAL	capacity - W/ counterweights (1400 lb.) & W/O counter weights (1300 lb.)		1
12	6735140	DECAL	throttle - Was 6557565 [A]		1
13	6577949	SAFETY TREAD	6.8' x 8.75' - (172,7 mm x 222,3 mm)		2
14	6710746	SAFETY TREAD	1.25' x 15'(31,8 mm x 381,0 mm) - Not in Kit		2
14	6727917	SAFETY TREAD	1.25'x10.5'(31,8 mm x 266,7 mm)		2
15	6714532	DECAL	model		2
16	6710358	DECAL	warning		1
17	6727310	DECAL	Ingersoll Rand - Not in Kit - Was 6711329 [A]		1
18	6711840	DECAL	lift lock		1
19	6718271	DECAL	advantage series - L.H. - 14'(355,6 mm) wide - Not in Kit		1
20	6804790	DECAL	capacity		1
21	6718275	DECAL	advantage logo - Not in Kit		1
22	6713507	DECAL	stay clear -European - Not in Kit		2
23	6731757	DECAL	front aux. coupler block - Not in Kit		1

DECALS

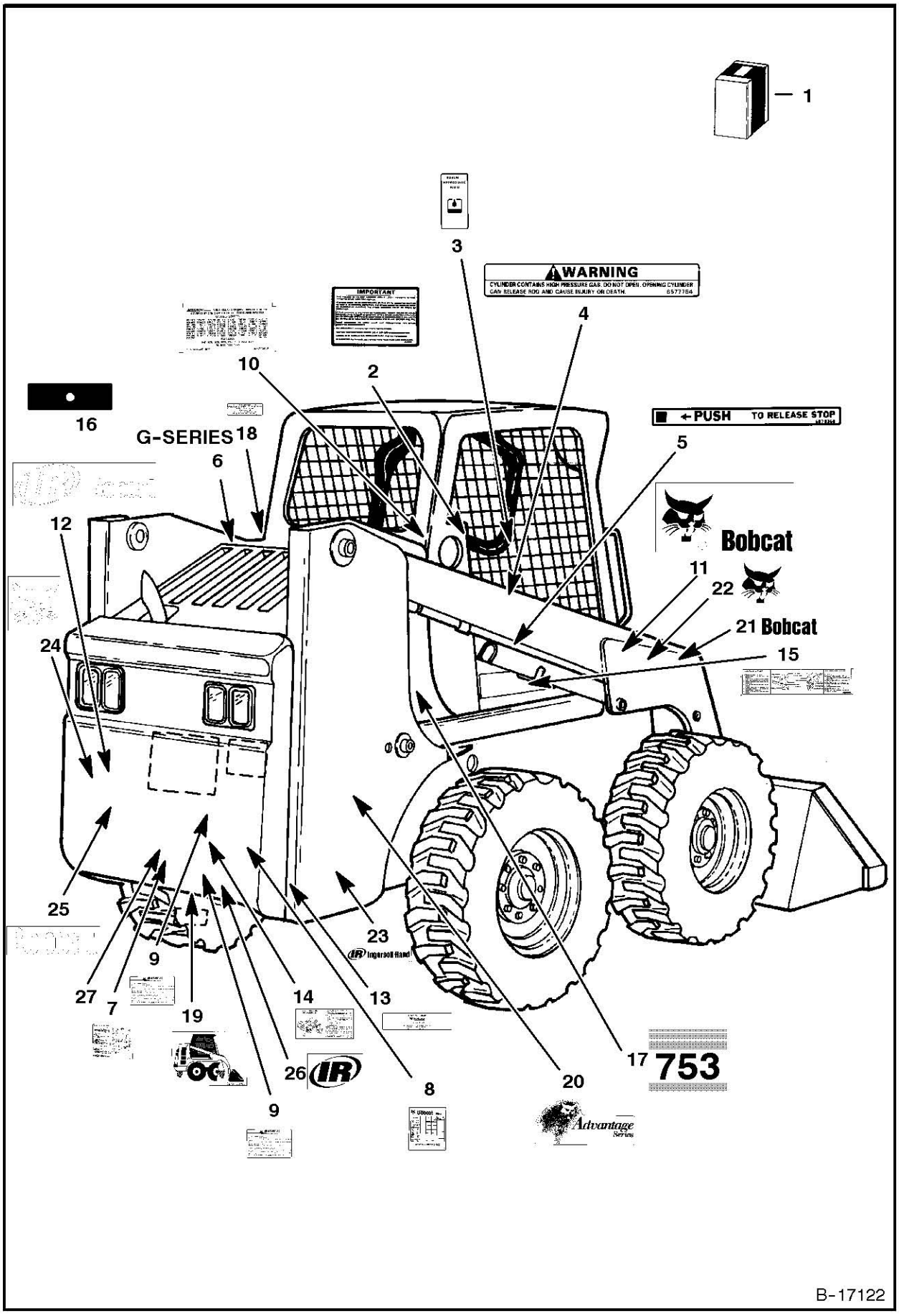
1
3
WARNING
CYLINDER CONTAINS HIGH PRESSURE GAS. DO NOT OPEN. OPENING CYLINDER CAN RELEASE ROD AND CAUSE INJURY OR DEATH.
4
IMPORTANT
10
2
16
G-SERIES
18
6
PUSH TO RELEASE STOP
5
12
Bobcat
11
22
21 Bobcat
24
15
25
23
Ingersoll Rand
9
27
7
19
14
13
26
IR
8
20
17
753
9
Advantage
B-17122

DECALS

Ref.N°	Part N°	Description	Remarks	Serial N°	Qty.
1	6901066	KIT	decal		1
1	6725366AR	KIT	decal		1
1	6725366BR	KIT	decal		1
1	6725366JP	KIT	decal		1
1	6725500AR	KIT	translation		1
1	6725500BR	KIT	translation		1
2	6560573	DECAL	spark arrestor		1
3	6565990	DECAL	hydraulic fluid		1
4	6577754	DECAL	gas spring warning		2
5	6578368	DECAL	push		1
6	6717907	DECAL	'G'-Series		1
7	6727926	DECAL	operations - Was 6728327 [A]		1
8	NAP	DECAL	operations - W/Ref. DECALS(7) - Was 6718703 [A]		1
9	6734534	DECAL	warning/service schedule/ service parts - Was 671839 8 [A]		1
10	6557224	DECAL	patent		1
11	6727309	DECAL	R.H. - Not in Kit - Was 6702826 [A]		1
11	6727308	DECAL	L.H. - Not in Kit - Was 6702827 [A]		1
12	6727311	DECAL	Logo - Not in Kit - Was 6714139 [A]		1
13	6565200	DECAL	engine oil filter		1
14	6709030	DECAL	belt tension		1
15	6706558	DECAL	boom stop		1
16	6714242	DECAL	Not in Kit		1
17	6714532	DECAL	model		2
18	6708929	DECAL	propylene gylcol antifreeze		1
19	6595014	DECAL	tow hook - Was 6707867 [A]		1
20	6718272	DECAL	advantage series - R.H. - 14'(355,6 mm) wide - Not in Kit		1
21	6731507	DECAL	R.H. - Bobcat head - black		1
21	6731508	DECAL	L.H. - Bobcat head - black		1
22	6731509	DECAL	Bobcat - black		2
23	6735864	DECAL	IR - black - Was 6732424 [A]		2
24	NAP	DECAL	Bobcat head - white - Order Ref. DECALS(27) - Was 6732420 [A]		1
25	NAP	DECAL	Bobcat - white - Order Ref. DECALS(27) - Was 673241 9 [A]		1
26	6732423	DECAL	IR - white		1
27	6735901	DECAL	Bobcat W/head - white		1

DELUXE CAB

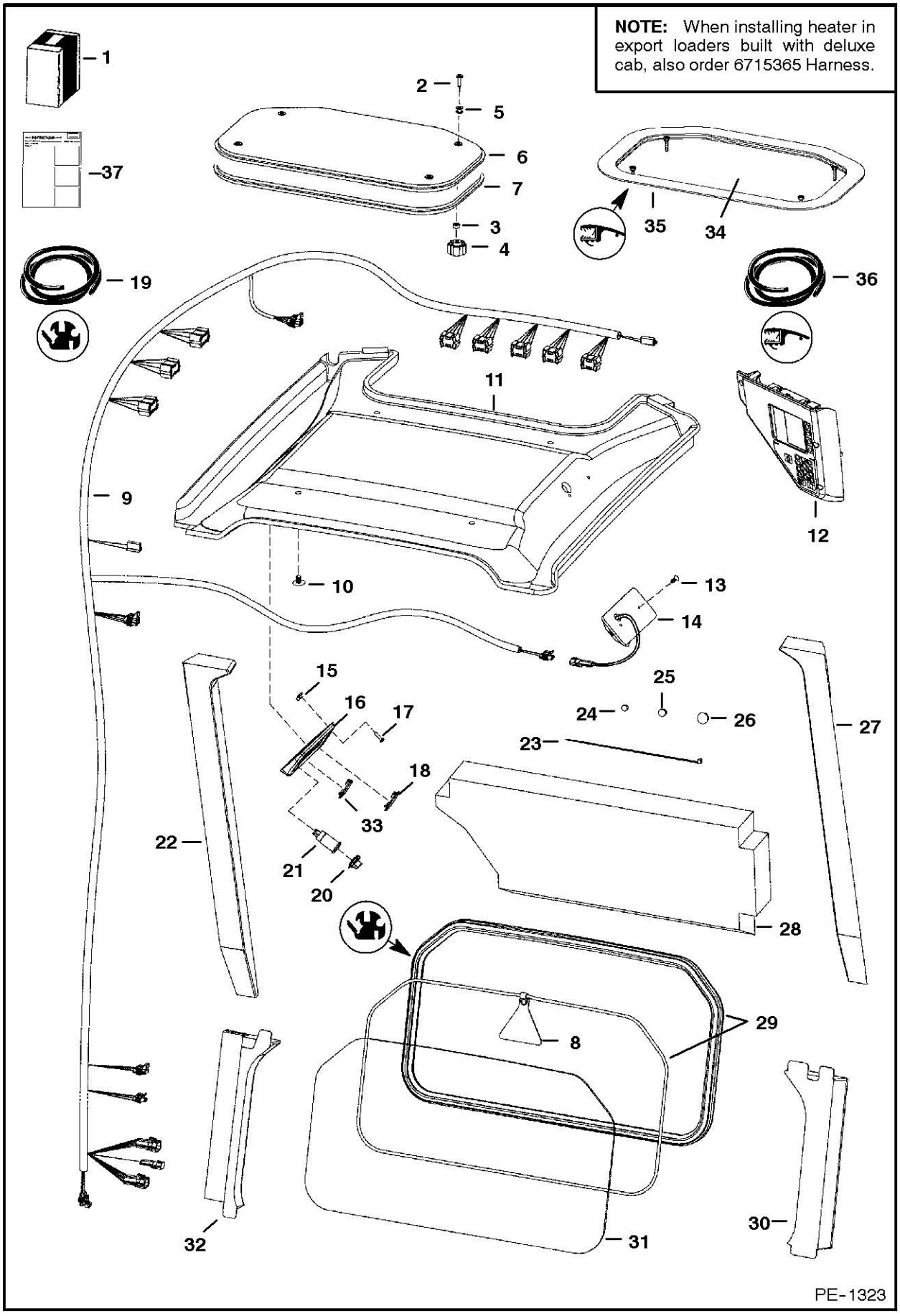
NOTE: When installing heater in export loaders built with deluxe cab, also order 6715365 Harness.
1
2
5
6
7
3
4
37
35
34
19
36
11
9
12
10
13
14
15
16
17
25
24
26
27
23
18
33
22
21
20
28
8
29
32
31
30
PE-1323

DELUXE CAB

Ref.N°	Part N°	Description	Remarks	Serial N°	Qty.
1	6718804	KIT	deluxe cab - Ref. DELUXE CAB(8) - DELUXE CAB(37)	5158 34999 & Bel	1
1				5162 21999 & Bel	1
1	6729233	KIT	deluxe cab	5158 35000 & Abv	1
1				5162 22000 & Abv	1
2	91G-416	BOLT	Use W/Ref. DELUXE CAB(4) (NAP/6674741 Knob) - Was 88G-1216 [B,D]		4
2	91G-420	BOLT	Use W/Ref. DELUXE CAB(4) (6681614 Knob)		4
3	6664085	BUSHING	nylon		4
4	NAP	KNOB	5/8' deep thread - Was 6674741 [A]		4
4	6681614	KNOB	11/16' deep thread		4
5	6675545	GROMMET			4
6	6728629	WINDOW	assy. - W/Ref. DELUXE CAB(5) & DELUXE CAB(7)		1
7	NAP	SEAL	Order Ref. DELUXE CAB(6)		x
8	6731478	EXIT TAG	Was 6559515 [A]		1
9	6727190	HARNESS	deluxe accessories	5158 35000 & Abv	1
9				5162 22000 & Abv	1
9	NAP	HARNESS	'Order 6725273inD1}Z Harness & 6725275inD1}X Harness - Was 6715366 [A]	5158 -	1
9				5162 -	1
9	6725273	HARNESS		5158 - 34999	1
9				5162 - 21999	1
10	6674895	RETAINER	snap in		4
11	6717515	INSULATION	headliner		1
12	6683395	PANEL	R.H. - deluxe - keyless - Was 6678682 [A]		1
12	NAP	INSTRUCTIONS	See Loader Service Manual - Was 6900860 [A]		1
13	6664221	RETAINER	snap in		2
14	6680326	LIGHT	dome - Was 6664368 [A]		1
14	6665367	BULB			1
15	6669091	CLIP			4
16	6718580	PANEL			1
17	6669224	BOLT			4
18	6665314	PLUG	Was 6719038 [A]		5
19	6675387	SEA;	bulk - Sold Per Foot - Was 6674524 [A]		x
19	6554149	CORD	bulk - Sold Per Foot		x
20	6664224	CAP			1
21	6664223	OUTLET			1
22	6717519	INSULATION			1
23	6610510	NYLON TIE			6
24	5289686	PLUG	black		5
25	6649949	PLUG			2
26	6657719	PLUG			1
27	6717520	INSULATION			1
28	6727299	INSULATION	cab back - Was 6719425 [A]		1
29	NAP	EXTRUSION	75.75'(1924 mm) long - Order Ref. DELUXE CAB(19)		x
29	NAP	CORD	75.75'(1924 mm) long - Order Ref. DELUXE CAB(19)		x
30	6717518	INSULATION			1
31	6717874	WINDOW	rear		1
32	6717517	INSULATION			1
33	6668742	SWITCH	travel control - export		1
34	NAP	WINDOW	Order Ref. DELUXE CAB(6) - Was 6725360 [A]		1
35	NAP	SEAL	Order Ref. DELUXE CAB(6)		x

DELUXE CAB

Ref.N°	Part N°	Description	Remarks	Serial N°	Qty.
36	NAP	SEAL	bulk - Sold Per Foot - Order Ref. DELUXE CAB(6) - Was 6675546 [A]		x
37	6900851	INSTRUCTIONS			1

ELECTRICAL CONNECTOR KIT
(7-Pin)

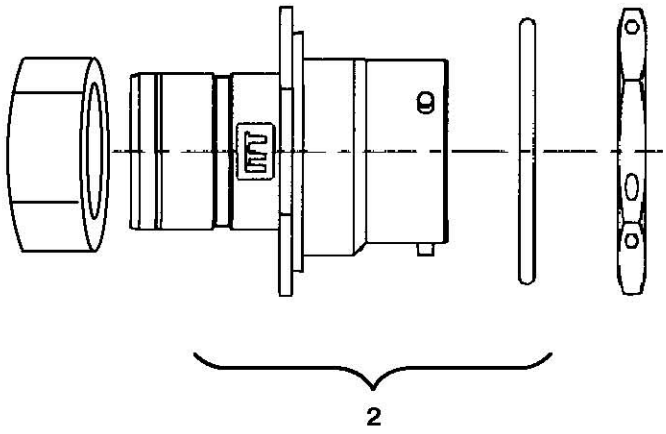

2

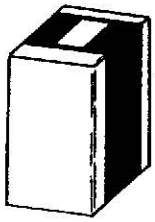

1

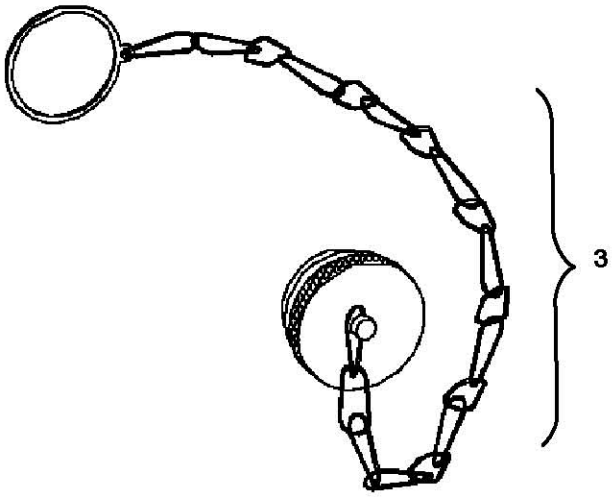

3

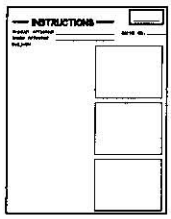

4

P-16385

ELECTRICAL CONNECTOR KIT

Ref.N°	Part N°	Description	Remarks	Serial N°	Qty.
1	6727176	KIT			1
2	6674802	CONNECTOR	7-pin		1
2	6669549	SOCKET	small		4
2	6677136	SOCKET	12 ga		3
3	6675026	CAP			1
4	6901076	INSTRUCTIONS			1

* ELECTRICAL CONTROLS KIT
(14 Pin Attachments)

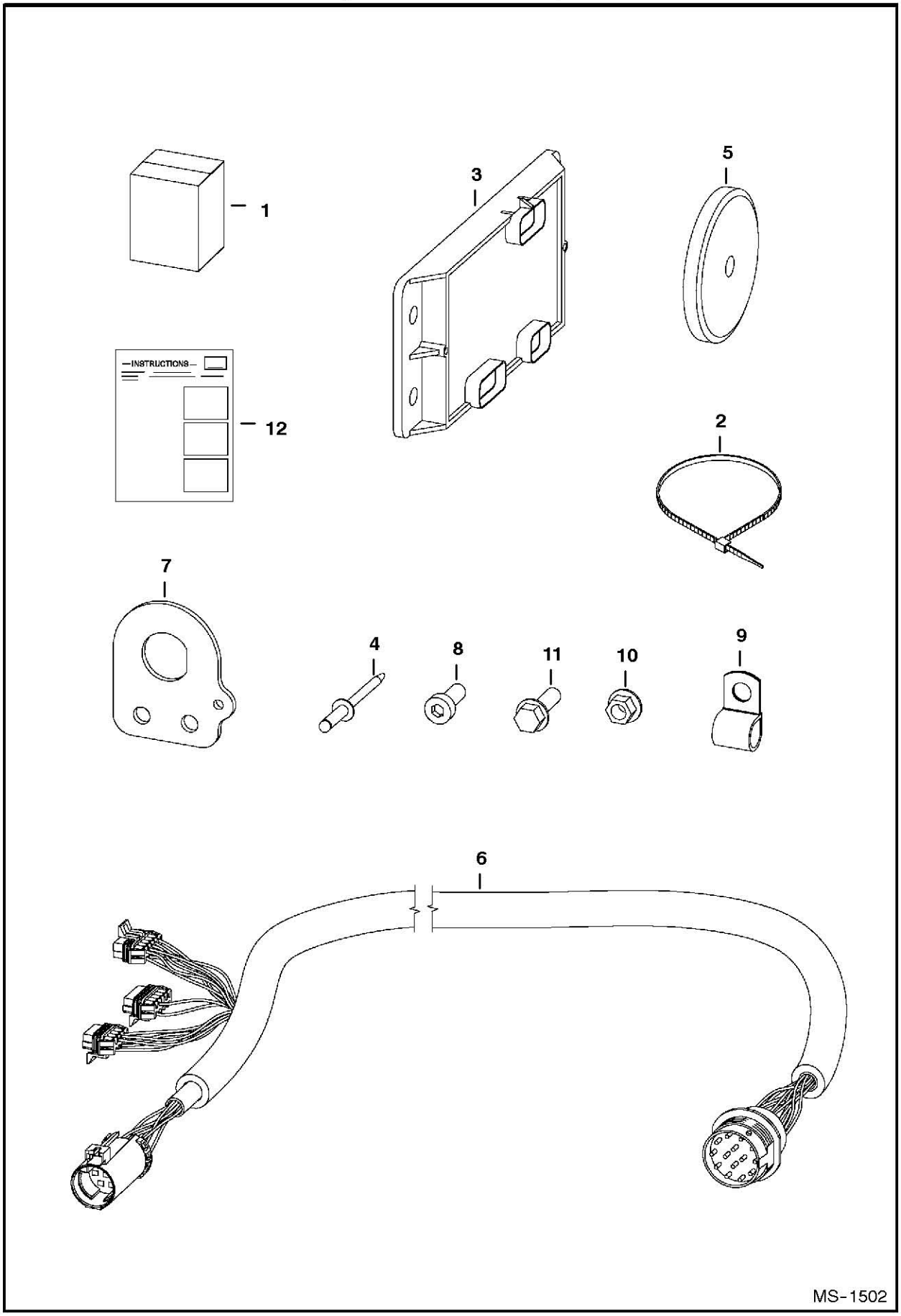

* ELECTRICAL CONTROLS KIT

Ref.N°	Part N°	Description	Remarks	Serial N°	Qty.
1	6733136	KIT			1
2	6624289	STA-STRAP			7
3	6678675	CONTROLLER			1
4	6704892	RIVET			1
5	6719448	MAGNET			2
6	6732730	HARNESS			1
7	6733144	MOUNT			1
8	25G-612	BOLT			2
9	30H-50	CLAMP			6
10	83D-6	NUT			2
11	84G-3112	BOLT			2
12	6901872	INSTRUCTIONS			1

ELECTRICAL CONTROLS KIT
(To Run "G" Series Attachments & Old Attachments) (W/Toggle Switch)

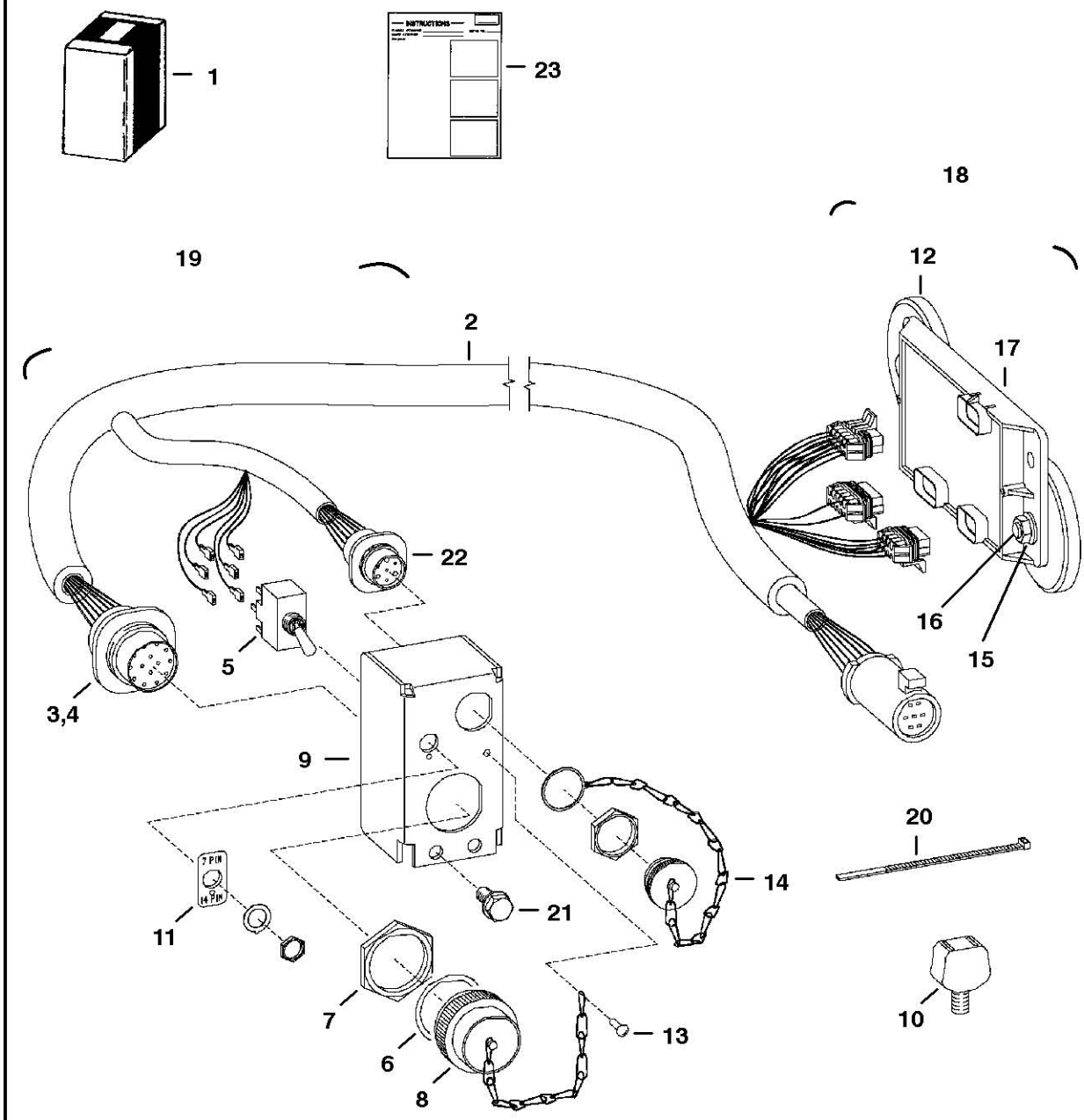

TS-1955

ELECTRICAL CONTROLS KIT

Ref.N°	Part N°	Description	Remarks	Serial N°	Qty.
1	NAP	KIT	Order 6727739inD1}V Kit -See Page ELECTRICAL CONTROLS KIT(1) Was 6719431 [A]		1
2	6719434	HARNESS	W/Ref. ELECTRICAL CONTROLS KIT(3), ELECTRIC AL CONTROLS KIT(4), ELECTRICAL CONTROLS KIT(6) - ELECTRICAL CONTROLS KIT(8) & ELECTRI		1
3	6667569	CONNECTOR	Also Order (14) of Ref. ELECTRICAL CONTROLS KIT(4)		1
4	6664040	PIN	male		x
5	6675389	SWITCH			1
6	6664037	WASHER			2
7	6664036	NUT			2
8	6664035	CAP			1
9	6719442	MOUNT			1
10	6675281	MOUNT			1
11	6719441	DECAL			1
12	6719448	MAGNET	100 lb. force		4
13	6704892	RIVET	Was 84G-1908 [B]		1
14	6675026	CAP			2
15	83D-6	NUT			2
16	25G-612	BOLT			2
17	6678675	CONTROLLER	Was 6676514 [A]		1
18	NAP	CONTROLLER	assy - Ref. ELECTRICAL CONTROLS KIT(12) & ELECTRICAL CONTROLS KIT(15) - ELECTRICAL CONTROLS KIT(17) - Order 'Ref. ELECTRICAL CO		1
19	NAP	CONTROL	assy - Order Ref. ELECTRICAL CONTROLS KIT(2), ELECTRICAL CONTROLS KIT(5), ELECTRICAL CONTROLS KIT(9), ELECTRICAL CONTROLS KIT(1 1		1
20	6624289	STA-STRAP	Was 6610510 [B]		8
21	84G-3112	BOLT			2
22	6674802	CONNECTOR	7-pin - See Page ELECTRICAL CONNECTOR KIT(1)		1
22	6669549	SOCKET	small		4
22	6677136	SOCKET	12 ga		3
23	6900921	INSTRUCTIONS			1

ELECTRICAL CONTROLS KIT
(To Run "G" Series Attachments & Old Attachments) (W/O Toggle Switch)

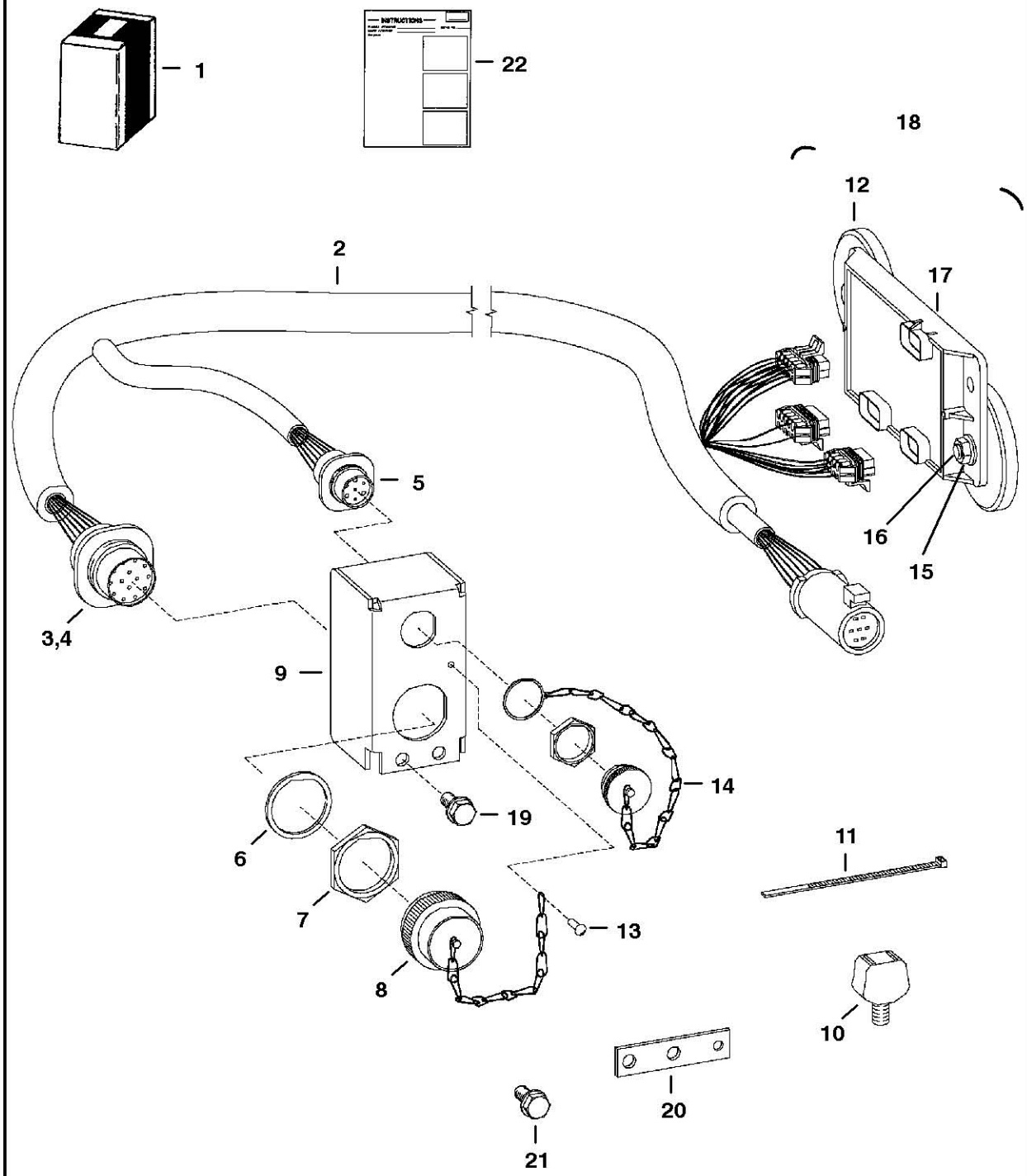

ELECTRICAL CONTROLS KIT

Ref.N°	Part N°	Description	Remarks	Serial N°	Qty.
1	6727739	KIT			1
2	6729380	HARNESS	W/Ref. ELECTRICAL CONTROLS KIT(3) - ELECTRIC AL CONTROLS KIT(7) & ELECTRICAL CONTROLS KIT(14) - Was 6727177 [A]		1
3	6667569	CONNECTOR	Also Order (14) of Ref. ELECTRICAL CONTROLS KIT(4)		1
4	6664040	PIN	male		x
5	6674802	CONNECTOR	7-pin - See Page ELECTRICAL CONNECTOR KIT(1)		1
5	6669549	SOCKET	small		4
5	6677136	SOCKET	large - 12 ga.		3
6	6664037	WASHER			2
7	6664036	NUT			2
8	6664035	CAP			1
9	6726945	MOUNT			1
10	6675281	MOUNT	773G only		1
11	6624289	STA-STRAP			8
12	6719448	MAGNET	100 lb. force		4
13	6704892	RIVET			1
14	6675026	CAP			2
15	83D-6	NUT			2
16	25G-612	BOLT			2
17	6678675	CONTROLLER	Was 6676514 [A]		1
18	NAP	CONTROLLER	assy - Ref. ELECTRICAL CONTROLS KIT(12) & ELECTRICAL CONTROLS KIT(15) - ELECTRICAL CONTROLS KIT(17) - Order 'Ref. ELECTRICAL CO		1
19	84G-3112	BOLT			2
20	6730291	BRACKET	873G & 883 only		1
21	35C-512	BOLT			2
22	6901116	INSTRUCTIONS			1

ELECTRICAL CONTROLS KIT
(Electronic Attachments)

NOTE: This kit will be used for chipper and mixer attachments.

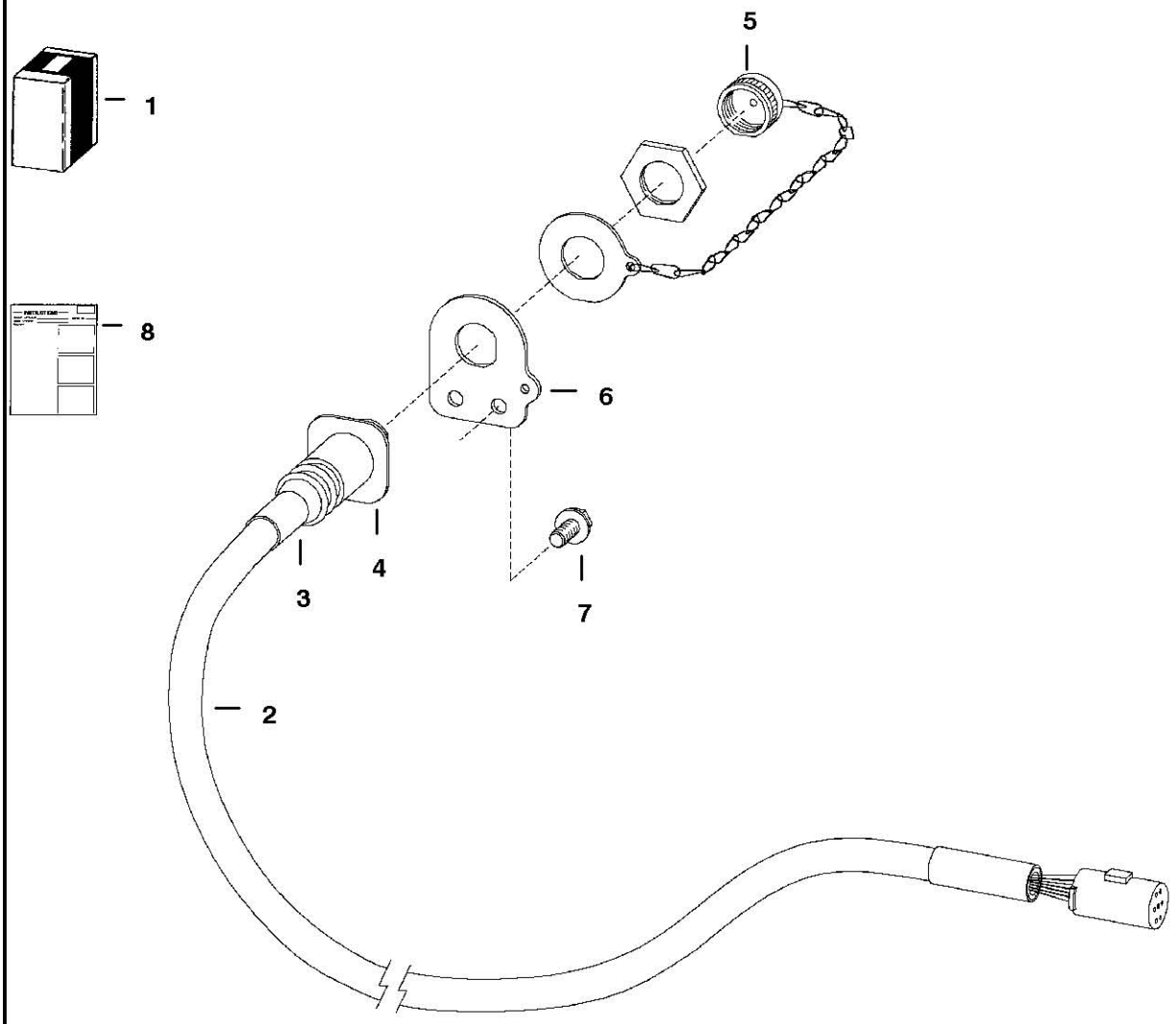

TS-1935

ELECTRICAL CONTROLS KIT

Ref.N°	Part N°	Description	Remarks	Serial N°	Qty.
1	NAP	KIT	Ref. ELECTRICAL CONTROLS KIT(2) - ELECTRICAL CONTROLS KIT(8) - Order 6733142 Kit - See Page ELECTRICAL CONTROLS KIT(1) - Was 671		1
2	6718426	HARNESS			1
3	6674799	ADAPTER	heat shrink		1
4	6674802	CONNECTOR	7-pin		1
4	6669549	SOCKET	small		4
4	6677136	SOCKET	12 ga		3
5	6675026	CAP			1
6	6718750	MOUNT			1
7	84G-3112	BOLT			2
8	NAP	INSTRUCTIONS	Order 6901871 Instructions - See Page ELECTRICAL CONTROLS KIT(1) - Was 6900855 [A]		1

ELECTRICAL CONTROLS KIT
(7 Pin Attachments)

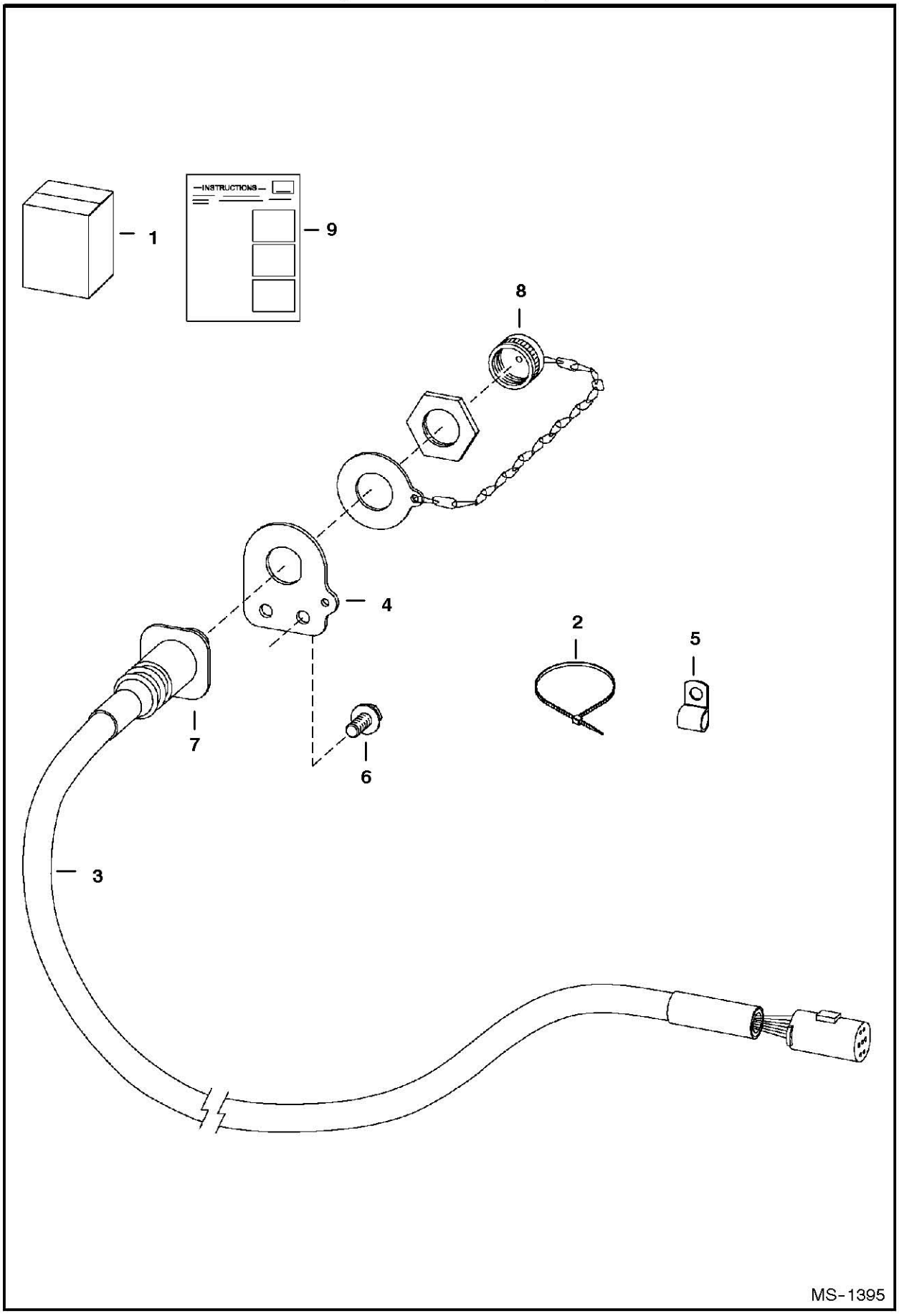

ELECTRICAL CONTROLS KIT

Ref.N°	Part N°	Description	Remarks	Serial N°	Qty.
1	6733142	KIT	Ref. ELECTRICAL CONTROLS KIT(2)-ELECTRICAL CONTROLS KIT(8)		1
2	6624289	STA-STRAP			4
3	6718426	HARNESS	W/Ref. ELECTRICAL CONTROLS KIT(4)		1
4	6718750	MOUNT			1
5	30H-27	CLAMP			6
6	84G-3112	BOLT			8
7	6674802	CONNECTOR	7pin		1
7	6669549	SOCKET	small		4
7	6677136	SOCKET	large - 12 ga.		3
8	6675026	CAP			1
9	6674799	ADAPTER	heat shrink		1
10	6901871	INSTRUCTIONS			1

ENGINE MOUNT KIT
(For Rough Application)

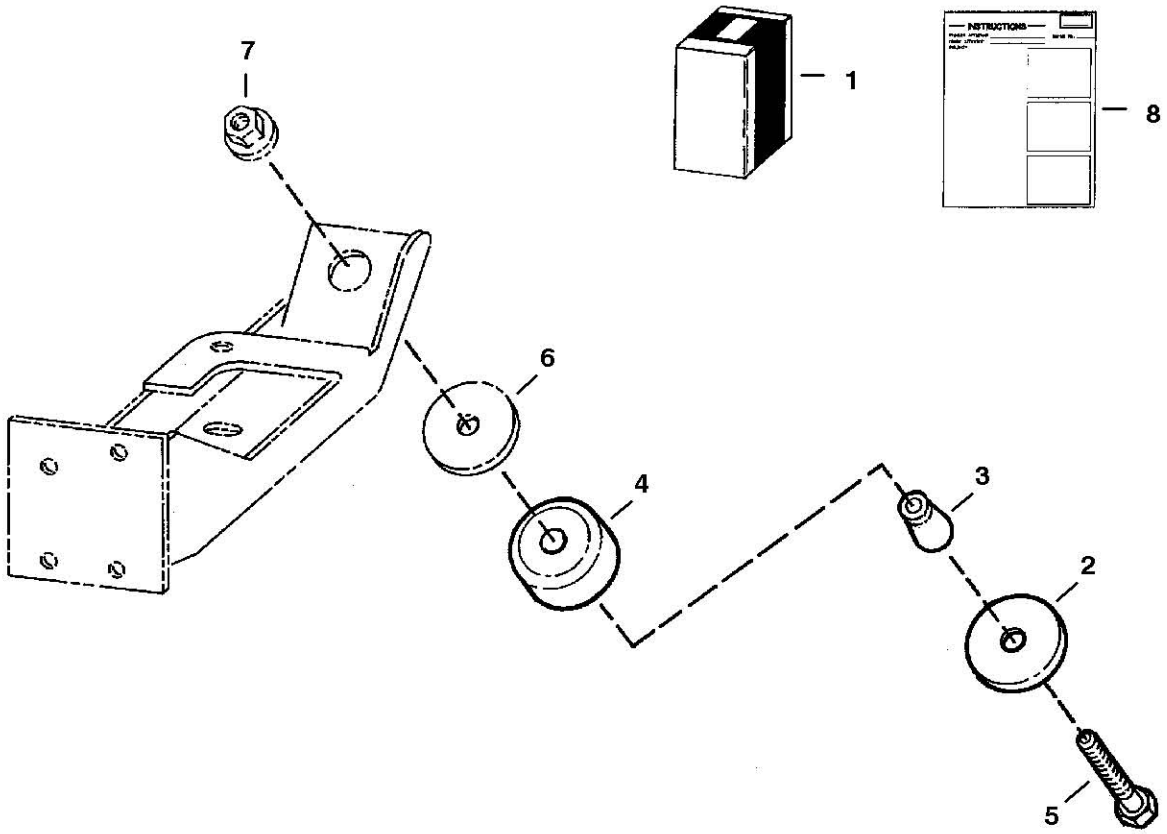

B-14623

ENGINE MOUNT KIT

Ref.N°	Part N°	Description	Remarks	Serial N°	Qty.
1	6711632	MOUNTING KIT	Ref. ENGINE MOUNT KIT(2) - ENGINE MOUNT KIT(8)		1
2	6661787	WASHER			4
3	6715287	SPACER			4
4	6668104	MOUNT			4
5	43C-852	BOLT			4
6	6705106	WASHER			4
7	6652918	NUT			4
8	6724482	INSTRUCTION			1

* EUROPEAN ACCESSORIES
(Road Kit)

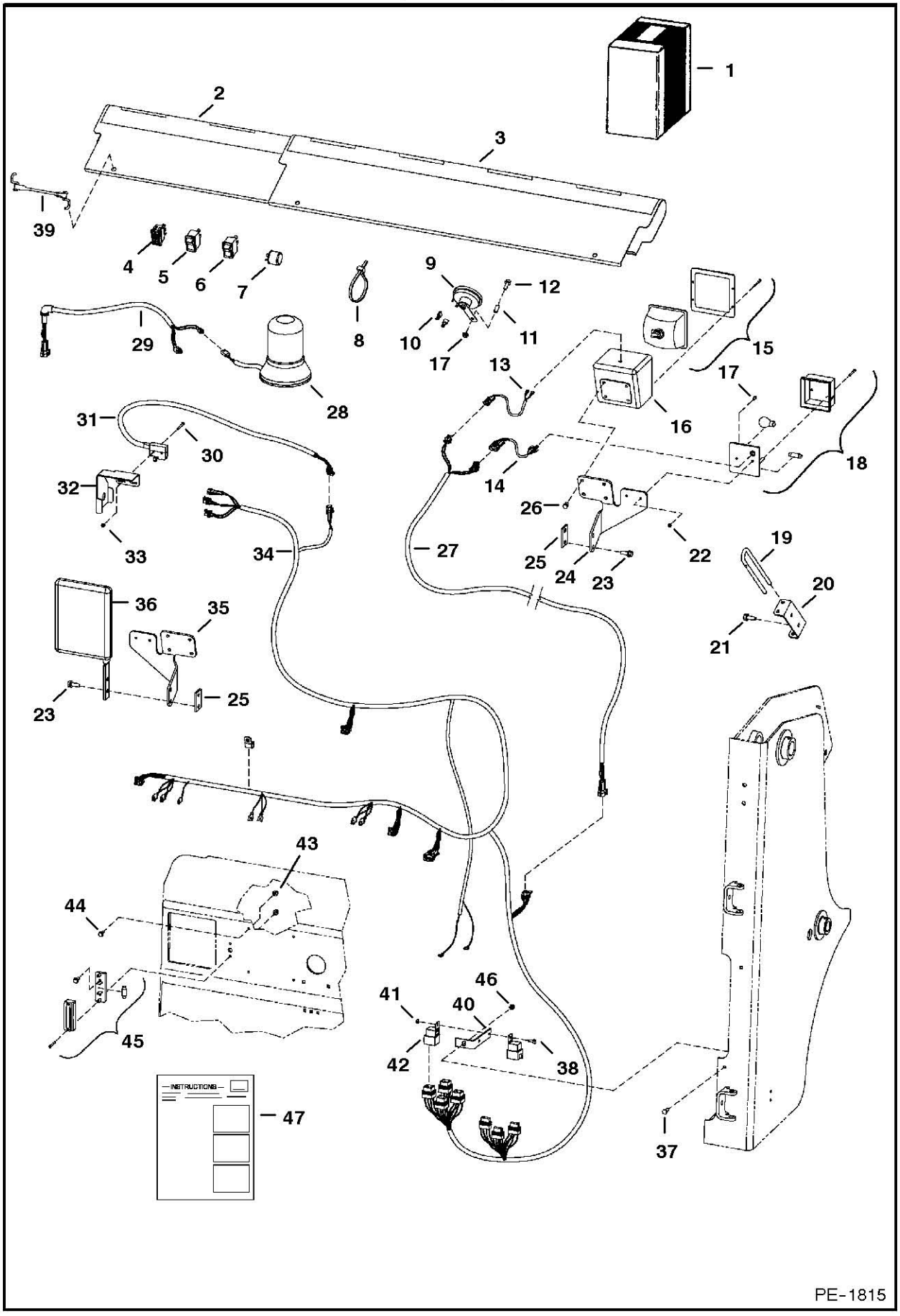

* EUROPEAN ACCESSORIES

Ref.N°	Part N°	Description	Remarks	Serial N°	Qty.
1	SALES	KIT			1
2	6713841	SHIELD	bucket		1
3	6714820	SHIELD	bucket		1
3	6713840	DECAL			1
4	6676872	TURN SIGNAL			1
5	6668815	SWITCH	hazard		1
6	6668816	SWITCH	beacon		1
7	6557904	FLASHER			1
8	6624289	STA-STRAP			26
9	6671106	HORN			1
10	6675064	TERMINAL			2
11	6732206	SPACER			1
12	35C-536	BOLT			1
13	6713994	ADAPTER	adapter - headlight		2
14	6713993	ADAPTER	adapter - light		2
15	6665728	LIGHT	front		2
16	6707804	HOUSING			2
17	85G-808	SCREW			4
18	6665727	LIGHT	front turn		2
19	6731222	PIN	Bob-tach		1
20	6731973	HOLDER	pin		1
21	84G-3712	BOLT			2
22	12D-8	NUT			4
23	84G-3716	BOLT			4
24	6713151	MOUNT	light - R.H.		1
25	6735825	SPACER			2
26	17C-508	BOLT			8
27	6731239	HARNESS	boom light		2
28	6675523	BEACON	light		1
29	6718872	HARNESS	cab exterior		1
30	85G-616	BOLT			2
31	6661150	SWITCH			1
32	6713736	BRACKET			1
33	12D-6	NUT			2
34	6726430	HARNESS	engine/tail - Italian		1
35	6713150	MOUNT	light - L.H.		1
36	6665860	SIDE MIRROR	side mirror		1
37	17C-512	BOLT			1
38	17C-410	BOLT			2
39	6731819	STRAP	rubber		3
40	6702650	BRACKET	fuse		1
41	85D-4	NUT			2
42	6670312	SOLENOID	magnetic		4
43	83D-4	NUT			4
44	35C-410	BOLT			4
45	6665729	LIGHT	license plate		1
46	55D-5	NUT			2
47	6901663	INSTRUCTIONS			1

EUROPEAN ACCESSORIES
(Sound Option)

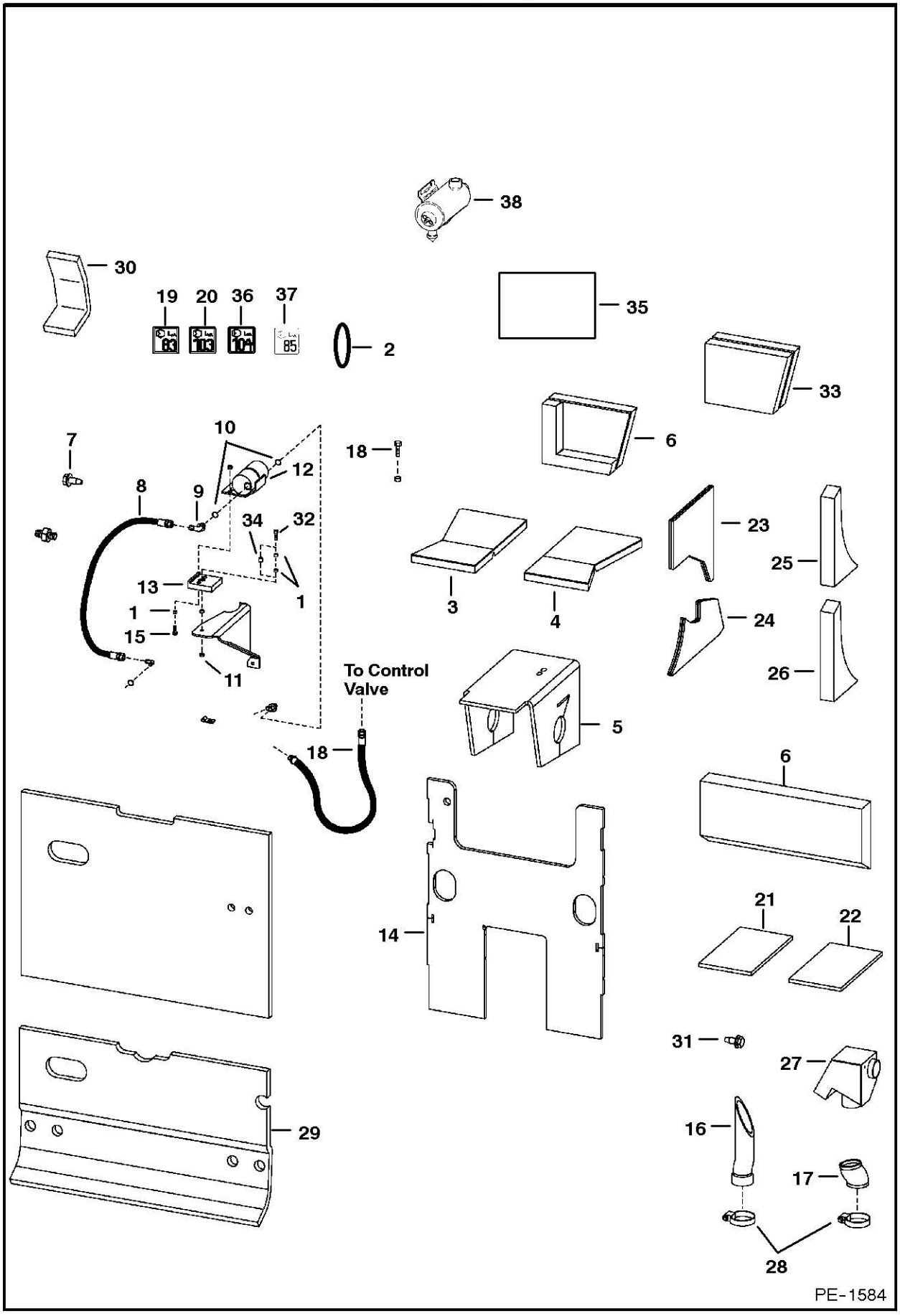

EUROPEAN ACCESSORIES

Ref.N°	Part N°	Description	Remarks	Serial N°	Qty.
1	6562619	BUSHING			2
2	6712970	PULLEY	4.75'(120,7 mm) O.D.		1
2	6712971	PULLEY	5.00'(127 mm) O.D. - Use W/6715478 Fan Belt		1
2	6703483	PULLEY	5.25'(133,35 mm) O.D - Use W/6732416 Fan Belt		1
3	6732722	INSULATION	cross member - L.H. - Was 6704721 [A]		1
4	6732723	INSULATION	cross member - R.H. - Was 6704722 [A]		1
5	6715372	INSULATION	pedal		1
6	6725316	INSULATION	transmission		1
7	84G-3716	BOLT			2
8	6729144	HOSE	pump to hyd. muffler - Was 6707231 [A]		1
9	NAP	ELBOW	W/Ref. EUROPEAN ACCESSORIES(10) - tapered boss face Was 17KV-8 [A]		1
9	97K-12	O-RING	flared end		1
9	17KB-1212	ELBOW	W/Ref. EUROPEAN ACCESSORIES(10) - flat boss face		1
10	99K-12	O-RING	tapered boss face		x
11	85D-6	NUT			2
12	6659982	MUFFLER	hydraulic		1
13	6705333	MOUNT	rubber		1
14	6719372	INSULATION	steering panel		1
15	35C-616	BOLT			2
16	NAP	HOSE	intake - Order Ref. EUROPEAN ACCESSORIES(38) - Was 6715239 [A]	& Bel	1
17	NAP	HOSE	air cleaner - Order Ref. EUROPEAN ACCESSORIES(38) - Was 6715240 [A]	& Bel	1
18	6729155	HOSE	muffler to control valve - Was 6714594 [A]		1
19	6579399	DECAL	83 db noise level - Was 6579384 [B]		1
20	6579403	DECAL	103 db noise level - Was 6579402 [B]		1
21	6705849	INSULATION	brace		1
22	6705850	INSULATION	brace		1
23	6719332	INSULATION	blower housing		1
24	6704769	INSULATION	blower housing		1
25	6707923	INSULATION	upright		1
26	6707924	INSULATION	upright		1
27	NAP	MUFFLER	intake - Order Ref. EUROPEAN ACCESSORIES(38) - Was 6715250 [A]	& Bel	1
28	42H-52	CLAMP		& Bel	2
28	42H-44	CLAMP		& Abv	2
29	6715106	INSULATION	rear door		1
30	6703331	INSULATION	air inlet		1
31	84G-3112	BOLT		& Bel	1
32	84G-3724	BOLT			1
33	6705848	INSULATION	transmission		2
34	6715744	BUSHING			1
35	6715371	INSULATION	transmission		1
36	6731994	DECAL	104 db noise level		1
37	6579385	DECAL	85db		1
38	6735285	AIR CLEANER		& Abv	1

FIRE EXTINGUISHER

Ref.N°	Part N°	Description	Remarks	Serial N°	Qty.
1	6725898	KIT	fire extinguisher - Ref. FIRE EXTINGUISHER(2) - FIRE EXTINGUISHER(7)		1
2	6675581	EXTINGUISHER			1
3	45G-1006	BOLT			4
4	12D-10	NUT			4
5	6725906	BRACKET			1
6	31C-410	BOLT			2
7	6901025	INSTRUCTIONS			1

F.O.P.S. KIT

Ref.N°	Part N°	Description	Remarks	Serial N°	Qty.
1	6718924	KIT	Ref. F.O.P.S. KIT(2) - F.O.P.S. KIT(7)		1
2	17C-616	BOLT	Was 17C-612 [B]		14
3	83D-6	NUT			14
4	6702402	SHIELD			1
5	6718833	BRACKET	L.H.		1
6	6718834	BRACKET	R.H.		1
7	6720592	INSTRUCTIONS			1

FLASHER LIGHTS

Ref.N°	Part N°	Description	Remarks	Serial N°	Qty.
1	6718411	KIT	Ref. FLASHER LIGHTS (2), FLASHER LIGHTS (3) & FLASHER LIGHTS (5)-FLASHER LIGHTS (16) - If loader is equipped W/Deluxe Cab Option		1
2	6517516	LIGHT			2
3	6718326	MOUNT			1
4	30H-21	CLAMP	Not in Kit		3
5	35C-412	BOLT			4
6	37C-412	BOLT			3
7	59D-4	NUT			7
8	6718872	HARNESS	ext. cab		1
9	6718873	HARNESS	4-way flasher		1
10	6665316	SWITCH	horizontal		1
10	6668815	SWITCH	vertical		1
11	6557904	FLASHER			1
12	614142	SLEEVE			1
13	6515131	TERMINAL			1
14	6675835	TURN SIGNAL	dash - horizontal		1
14	6676872	TURN SIGNAL	dash - vertical		1
15	6E-5	WASHER			1
16	6900848	INSTRUCTIONS			1

* GAS SPRING KIT

Ref.N°	Part N°	Description	Remarks	Serial N°	Qty.
1	6732928	KIT			1
2	6567743	PIN			1
3	6631418	PIN			2
4	6678292	GAS SPRING			1
5	6719064	MOUNT			1
6	6729141	MOUNT			1
7	97D-8	NUT			1
8	21G-804	BOLT			1
9	6901816	INSTRUCTIONS			1

HAND CONTROL KIT

Ref.N°	Part N°	Description	Remarks	Serial N°	Qty.
1	6727298	KIT	SEE NOTE		1
2	6680426	LEVER	tilt - R.H. - Was 6675742 [A]		1
2	6680425	LEVER	lift - L.H. - Was 6675750 [A]		1
3	NAP	HANDLE	lift - R.H. - SEE BTIinD1u 335 - Was 6675469 [A]		1
3	6680417	HANDLE	lift - L.H. - Was 6675749 [A]		1
4	NAP	GRIP	Order 6702621 Grip & cut to 2.8' (71,12 mm) - Was 6713349 [A]		2
5	NAP	HANDLE	R.H. - Order Ref. HAND CONTROL KIT(38) - HAND CONTROL KIT(40) - Was 6597774 [A]	& Bel	1
5	NAP	HANDLE	L.H. - Order Ref. HAND CONTROL KIT(38) - HAND CONTROL KIT(40) - Was 6717163 [A]	& Bel	1
6	6680471	COVER	Was 6713898 [A]		2
7	6680422	SENSOR	Was 6675741 [A]		2
7	6670706	CONNECTOR	3pin		1
7	6670714	PIN			3
7	6670710	LOCK			1
8	6680481	CHANNEL	R.H. - Was 6719712 [A]		1
8	6680480	CHANNEL	L.H. - Was 6719711 [A]		1
9	12D-10	NUT		& Bel	2
10	6716826	BOLT		& Bel	2
11	25GT-410	BOLT			8
12	6702990	BUSHING			4
13	6713043	SPACER			4
14	6665321	RIVET	male		2
15	6665000	CLIP			2
16	6665322	RIVET	female		2
17	6719834	SPACER	threaded		2
18	6727065	BOLT			4
19	6719835	SLEEVE			4
20	6532127	BOOT			2
21	6640692	CONNECTOR	10pin		1
21	6640690	PIN			8
21	6640694	LOCK			1
21	6641176	SEAL			8
21	6646582	PLUG	cavity		2
22	6640692	CONNECTOR	10pin		1
22	6640690	PIN			6
22	6640694	LOCK			1
22	6641176	SEAL			6
22	6646582	PLUG	cavity		4
23	6640699	CONNECTOR	3pin		2
23	6640690	PIN			3
23	6641176	SEAL			3
23	6640700	LOCK			3
24	6667144	CONNECTOR	5pin		1
24	6640690	PIN			3
24	6641176	SEAL			3
24	6646582	PLUG	cavity		1
24	6667145	LOCK			1
25	6641179	CONNECTOR	2pin		1
25	6640690	PIN			2

HAND CONTROL KIT

Ref.N°	Part N°	Description	Remarks	Serial N°	Qty.
25	6641176	SEAL			2
25	6641180	LOCK			1
26	6610510	NYLON TIE			11
27	6676153	CONTROLLER			1
28	6727155	DECAL			1
29	6719563	KIT	handbook		1
30	6727328	HARNESS			1
31	6670707	CONNECTOR	3pin		1
31	6670715	SOCKET			3
31	6670711	LOCK			1
32	6640692	CONNECTOR	10pin		1
32	6640690	PIN			9
32	6640694	LOCK			1
32	6641176	SEAL			9
32	6646582	PLUG	cavity		1
33	6648307	CONNECTOR	2pin		1
34	6670709	CONNECTOR	8pin		2
35	6728742	HARNESS	W/capacitor		1
36	6677364	CONNECTOR	3-pin		1
36	6676640	SEAL			3
37	6676870	CONNECTOR	3-pin		1
37	6676640	SEAL			3
37	6670715	SOCKET			1
37	6670711	LOCK			1
38	6729594	HANDLE	R.H.	& Abv	1
38	6729595	HANDLE	L.H.	& Abv	1
39	6680469	SPACER	Was 6729600 [A]	& Abv	1
40	6727065	BOLT		& Abv	2
41	6901100	INSTRUCTIONS			1

HEATER KIT

Ref.N°	Part N°	Description	Remarks	Serial N°	Qty.
1	6718803	HEATER KIT	'Ref. HEATER KIT(2)-HEATER KIT(12), HEATER KIT(16)-HEATER KIT(34) & HEATER KIT(36)-HEATE R KIT(39)-If loader is not equipped W/D		1
2	6725933	HARNESS	hvac - W/Ref. HEATER KIT(17) - Was 6717877 [A]		1
2	6725273	HARNESS	AHC - Not in Kit		1
3	6669091	CLIP	retainer		3
4	6669224	BOLT			3
5	6674228	PANEL	control		1
5	6640699	CONNECTOR			1
5	6718579	DECAL			1
5	6718887	PANEL	A/C		1
5	6675176	SWITCH	blower		1
5	6675177	KNOB			1
5	6675846	POTENTIOMETER	Was 6675178 [A]		1
6	6675181	PLUG	switch hole		1
7	NAP	KNOB	5/8' deep threads - Was 6674741 [A]		2
7	6681614	KNOB	11/16' deep threads		2
8	83D-4	NUT			2
9	6718175	SCREEN	filter		1
10	NAP	FILTER	recirculation - Order Ref. HEATER KIT(39) - Was 6674229 [A]		1
11	6718837	SPACER			2
12	37C-424	BOLT			2
13	87G-1008	SCREW			2
14	NAP	COVER	filter - Order Ref. HEATER KIT(31), HEATER KIT(32) & (2) ea. of Ref. HEATER KIT(33) & HEATER KIT(34) - Was 6674236 [A]		1
15	NAP	FILTER	Order Ref. HEATER KIT(31), HEATER KIT(32) & (2) each of Ref. HEATER KIT(33) & HEATER KIT(34) - Was 6674230 [A]		1
16		HEATER	See Page HEATER(1)		1
17	6670312	SOLENOID	relay		1
18	6682459	VALVE	Was 6675684 [A]		1
18	6640699	CONNECTOR			1
18	6675175	BRACKET			1
18	6675172	BRACKET			1
18	6675173	ACTUATOR	pig tail plug		1
18	6680054	ACTUATOR	square plug		1
18	6675174	BODY			1
19	6717644	DUCT	L.H. - W/Ref. HEATER KIT(21) - HEATER KIT(23)		1
20	6717643	DUCT	R.H. - W/Ref. HEATER KIT(21) - HEATER KIT(23)		1
21	6675179	FLANGE			4
22	57G-608	SCREW			16
23	6674231	VENT	round		4
24	37C-512	BOLT			4
25	59D-5	NUT			4
26	35C-410	BOLT			4
27	84G-3110	BOLT			2
28	774220	NUT	spring		2
29	6725513	DECAL PACKAGE			1
30	6725390	HARNESS	jumper - 72'(1828,8 mm) long		1
31	6727140	FILTER			1

HEATER KIT

Ref.N°	Part N°	Description	Remarks	Serial N°	Qty.
32	6726608	COVER			1
33	6726386	KNOB			2
34	6676516	NUT	push		2
35	6725934	HARNESS	jumper - 4' (101,6 mm) long - 'connects Ref. HEATER KIT(2) (6725933inD1}$ Harness) & Ref. HEATER KIT(18) (NAP/6674227inD1}b Va		1
35	6725936	HARNESS	jumper - 8' (203,2 mm) long - 'connects Ref. HEATER KIT(2) (6725933inD1}$ Harness) & Ref. HEATER KIT(18) (6682459inD1}' Valve		1
36	6677983	FILTER			1
37	6727847	COVER			1
38	6678207	FILTER	recirculation		1
39	6900850	INSTRUCTIONS			1

HEATER

Ref.N°	Part N°	Description	Remarks	Serial N°	Qty.
1	6674933	HEATER	Ref. HEATER(2) - HEATER(22)		1
2	6675508	HARNESS			1
3	6675506	MOUNT			1
4	6675507	COVER			2
5	6675504	RING			4
6	6675505	BLOWER WHEEL			2
6	6676618	CLIP			2
7	6675509	MOTOR			1
8	6675503	HOUSING			1
9	NAP	SEAL	'14.75'(375 mm)long- Order Ref. HEATER(22)		1
10	NAP	SEAL	8.5'(215 mm)long - Order Ref. HEATER(22)		2
11	6675499	HOUSING	W/Ref. HEATER(23) - HEATER(25) & HEATER(27) - HEATER(30)		1
12	6675502	PLATE	cover		1
13		BOLT			x
14	6675510	CLAMP			2
15	6675511	DRAIN VALVE			2
16	6675512	CLAMP			2
17	6675513	GROMMET			2
18	6675501	PLATE	cover		1
19	NAP	COIL	See Page HEATER(1) - Was 6675498 [A]		1
20	6675500	COVER	W/Ref. HEATER(26), HEATER(27) & HEATER(30)		1
21	6675497	BLOWER	Ref. HEATER(2) - HEATER(8)		1
22	6675514	SEAL	bulk - Sold Per Foot		x
23	6675607	INSULATION			1
24	6675608	INSULATION			1
25	6675609	INSULATION			1
26	6675610	INSULATION			1
27	6675611	SEAL	bulk - Sold Per Foot		x
28	6675612	INSULATION			2
29	6675613	INSULATION			1
30	6675614	INSULATION			2
31	NAP	SEAL	15' (381 mm) long- Order Ref. HEATER(27)		1
32	NAP	SEAL	5.5'(140 mm) long- Order Ref. HEATER(27)		1
33	NAP	SEAL	4'(101,6 mm) long- Order Ref. HEATER(27)		1
34	6728567	KIT	See Page HEATER(1)		1

HEATER

Ref.N°	Part N°	Description	Remarks	Serial N°	Qty.
1	6676562	HEATER	assy - Ref. HEATER(2)-HEATER(22)		1
2	6677108	HOUSING			1
3	6675497	BLOWER	assy - See Page HEATER(1)		1
4	NAP	COIL	heater - See Page HEATER(1) - Was 6676603 [A]		1
5	6676539	CLIP			2
6	NAP	SEAL	Order 6678152inD1}& Seal & Ref. HEATER(19) '(6678 151inD1}$ Cover) - Was 6677114 [A]		1
6	6678152	SEAL			1
7	6677115	RECEPTACLE			6
8	NAP	SEAL	'22.6'(575mm) long - Order Ref. HEATER(9)		1
9	6677111	SEAL	bulk - Sold Per Foot		x
10	NAP	SEAL	25'(635mm) long - Order Ref. HEATER(9)		1
11	6677118	SCREW	w/washer		3
12	6677119	SCREW	sheetmetal		7
13	6677105	COVER	Was 6677120 [A]		1
14	6675510	CLAMP	drain hose		2
15	6675511	DRAIN VALVE			2
16	6675512	CLAMP	hose		2
17	6676653	SCREW			1
18	6677504	COVER	Was 6676604 [A]		1
19	NAP	COVER	Order 6678151inD1}$ Cover & Ref. HEATER(6) (6678 152inD1}& Seal)- Was 6677109 [A]		1
19	6678151	COVER			1
20	6677116	RETAINER			6
21	6677117	SCREW	captive		6
22	6676606	SPACER			1

HEATER

Ref.N°	Part N°	Description	Remarks	Serial N°	Qty.
1	6728567	KIT	blower seal - W/Ref. HEATER(2), HEATER(3) & HEATER(10)		1
2	NSS	FLANGE SEAL	assy - Ref. HEATER(4), HEATER(5), HEATER(6) & HEATER(9) - Order Ref. HEATER(1)		1
3	6726621	SCREW			7
4	NAP	SEAL	27'(686mm) long - Order Ref. HEATER(8)		1
5	NAP	SEAL	21'(534mm) long - Order Ref. HEATER(8)		1
6	NAP	SEAL	15'(384mm) long - Order Ref. HEATER(7)		1
7	6675611	SEAL	bulk - Sold Per Foot		x
8	6677111	SEAL	bulk - Sold Per Foot		x
9	NSS	FLANGE	Order Ref. HEATER(1)		1
10	6901213	INSTRUCTIONS			1

HEATER

Ref.N°	Part N°	Description	Remarks	Serial N°	Qty.
1	6727786	KIT	heater coil - W/Ref. HEATER(2)-HEATER(9) - Was 6728990 [A]		1
2	NSS	HEATER COIL	Order Ref. HEATER(1)		1
3	6677504	COVER	.279'(7,1mm) thickness		1
4	NAP	INSULATION	6'(152.4mm) long - Order Ref. HEATER(5)		1
5	6676538	INSULATION	bulk - Sold Per Foot		x
6	6676606	SPACER			1
7	6726621	SCREW			2
8	6676653	SCREW			1
9	6901120	INSTRUCTIONS			1

HEATER PLUMBING KIT

Ref.N°	Part N°	Description	Remarks	Serial N°	Qty.
1	NAP	KIT	Ref. HEATER PLUMBING KIT(2)-HEATER PLUMBIN G KIT(17) - Order 6731158 Kit See Page HEATER PLUMBING KIT(1) & 6730999 Tube See Page		1
2	6719144				1
3	6719080	HOSE			1
4	12K-6	ELBOW	Was 12KN-6 [A]		2
5	6624289	STA-STRAP			4
6	5HM-20	CLAMP	hose		8
7	6718578	TEE			2
8	NAP	HOSE	8.3'(210,8 mm) long - Order Ref. HEATER PLUMBING KIT(14)		x
9	NAP	HOSE	10.5'(266,7 mm) long -Order Ref. HEATER PLUMBIN G KIT(14)		1
10	NAP	HOSE	3'(76,2 mm) long - Order Ref. HEATER PLUMBING KIT(14)		1
11	6717987	HOSE			1
12	1CM-820	BOLT			1
13	30H-64	CLAMP	insulated		1
14	6674905	HOSE	bulk - Sold Per Foot		x
15	6592852	ORIFICE			1
16	6630184	THERMOSTAT			1
17	6732199	GASKET	thermostat - Was 6666790 [A]		1
18	17C-512	BOLT	Not in Kit		2
18	95D-5	NUT	Not in Kit		2
19		VALVE	Not in Kit - See Page HEATER KIT(1)		1

HEATER PLUMBING KIT

Ref.N°	Part N°	Description	Remarks	Serial N°	Qty.
1	6731158	KIT	Ref. HEATER PLUMBING KIT(2)-HEATER PLUMBIN G KIT(5) - For Heater Kit See Page HEATER KIT(1)		1
2	6730996	HOSE	W/10' spring guard		1
3	6730998	HOSE			1
4	5HM-20	CLAMP	hose		2
5	6EM-80	WASHER			2
6	6731085	ELBOW	45+5		2
7	1CM-870	BOLT			2
8	6731049	ADAPTER			1
9	6732199	GASKET	thermostat		2
10	6624289	STA-STRAP			3
11	30H-45	CLAMP	insulated		1
12	6719144		34'(863,6 mm) long - W/spring guard		1
13		VALVE	Not in Kit - See Page HEATER KIT(1)		1
14		HOUSING	thermostat - Not in Kit - See Page HEATER KIT(1)		1
15	6900850	INSTRUCTIONS	Not in Kit		1
16	30H-50	CLAMP	'Not in Kit - Used in factory option only		1
17	6732023	CONNECTOR	'Not in Kit - Used in factory option only		1
18	5HM-20	CLAMP	'Not in Kit - Used in factory option only		2
19	84G-3712	BOLT	'Not in Kit - Used in factory option only		1

HORN KIT

Ref.N°	Part N°	Description	Remarks	Serial N°	Qty.
1	6719043	HORN KIT	Ref. HORN KIT(2) - HORN KIT(16)		1
2	17C-410	BOLT			2
3	6675099	HORN			1
4	6719151	HARNESS	113'(2870,2 mm) long		1
5	25E-13	WASHER			1
6	30H-23	CLAMP			1
7	83D-5	NUT	Was 61D-5 [B]		2
8	6733970	MOUNT	Was 6707726 [A]		1
9	6641180	LOCK	2 - pin		2
9	6640700	LOCK	3 - pin		2
10	6640699	CONNECTOR	3 - pin		2
10	6641179	CONNECTOR	2 - pin		2
11	35C-512	BOLT			2
12	6680414	HANDLE ASSY.	Was 6705921 [A]		1
12	6640690	PIN			5
12	6641176	SEAL			5
13	83D-4	NUT			2
14	6703727	DECAL			1
15	6577545	GROMMET			1
16	6900913	INSTRUCTIONS			1

LIFT KIT

Ref.N°	Part N°	Description	Remarks	Serial N°	Qty.
1	6725224	KIT	Ref. LIFT KIT(2) - LIFT KIT(14)		1
2	6726423	DECAL	Was 6702916 [A]		2
3	6719490	LIFT EYE	front		2
4	17C-1028	BOLT			4
5	6706825	LIFT EYE	rear		2
6	6702921	SPACER	1.00' thick - 751 & 753		2
6	6719906	SPACER	.70' thick - 763		2
7	17C-540	BOLT			2
8	6706807	PIN			2
9	83D-10	NUT			4
10	85D-6	NUT	Not in Kit		2
11	17C-640	BOLT	Not in Kit		2
12	4D-20	NUT			2
13	87D-5	NUT			2
14	6722872	INSTRUCTIONS			1

LIFT KIT

Ref.N°	Part N°	Description	Remarks	Serial N°	Qty.
1	6719323	KIT	Ref. LIFT KIT(2) - LIFT KIT(17)		1
2	6567827	ANGLE			1
3	6719184	BRACKET	L.H.		1
3	6719185	BRACKET	R.H.		1
4	31C-824	BOLT			12
4	31C-824	BOLT		& Abv	16
5	NAP	BRACKET	R.H. - Was 6704146 [B,D]	& Bel	1
5	6725299	BRACKET	R.H.	& Abv	1
5	NAP	BRACKET	L.H. - Was 6704147 [B,D]	& Bel	1
5	6725300	BRACKET	L.H.	& Abv	1
6	57D-8	NUT			12
7	57D-6	NUT			8
8	6704149	BRACKET			2
9	6567838	PIN			2
10	1320075	COTTER PIN			2
11	17C-632	BOLT			8
12	6704786	DECAL	warning		2
13	6533898	DECAL	hook		1
14	NAP	SPACER	Was 6719324 [A]	& Bel	2
15	31C-844	BOLT	Was 31C-841 [B]	& Bel	4
16	NAP	BRACKET	Was 6704151 [A]	& Bel	2
16	6725297	BRACKET		& Abv	2
17	6900888	INSTRUCTIONS			1

LIGHT KIT

Ref.N°	Part N°	Description	Remarks	Serial N°	Qty.
1	NAP	KIT	Ref.		1
2	6670284	LIGHT	rear		2
3	6649481	BULB			2
4	6716419	HARNESS			1
5	37C-512	BOLT			1
6	85D-5	NUT			1
7	30H-42	CLAMP			1
8	NAP	LIGHT ASSY	R.H. - Ref. LIGHT KIT(9) & LIGHT KIT(10)		1
8	NAP	LIGHT ASSY	L.H. - Ref. LIGHT KIT(9) & LIGHT KIT(10)		1
9	6674401	HOUSING	R.H.		1
9	6675336	BULB	55 watt		1
9	6674400	HOUSING	L.H.		1
9	6675336	BULB	55 watt		1
10	6674402	MOUNT			1
11	6672279	MOUNT	rubber		2
12	6672276	LENS	red		2
13	6672274	SCREW			4
14	6672273	SCREW			2
15	6672275	GASKET			2
16	6672277	BRACKET			2
17	6672272	WASHER			4
18	6661353	LIGHT ASSY	W/bulb - white		2
18	898731	LIGHT BULB			2
19	NAP	INSTRUCTIONS			1

MUFFLER/PURIFIER KIT

Ref.N°	Part N°	Description	Remarks	Serial N°	Qty.
1	6661616	MUFFLER	W/Ref. MUFFLER/PURIFIER KIT(2)		1
2	NAP	PLUG	1/8' brass Allen Head - Order Ref. MUFFLER/PURIFIER KIT(3)		1
3	6659543	PLUG	1/8' brass - hex head		1
4	6667573	DECAL			1

* POWER BOB-TACH KIT

Ref.N°	Part N°	Description	Remarks	Serial N°	Qty.
1	NAP	KIT	Ref. * POWER BOB-TACH KIT(2) - * POWER BOB-TACH KIT(35) - Order components		1
2		VALVE	See Page * POWER BOB-TACH(18)		1
3	18KB-606	ELBOW	W/Ref. * POWER BOB-TACH KIT(13)		1
4	6703615	CLAMP			2
5	6733354	TUBE			1
6	6733355	TUBE			1
7	6554100	SAFETY TREAD			1
8	6624289	STA-STRAP			4
9		CYLINDER	See Page * POWER BOB-TACH(37)		1
10	619021	WASHER			2
11	NAP	COVER	32'(813 mm) long - Order Ref. * POWER BOB-TACH KIT(12)		1
12	6656155	COVER			x
13	79K-6	O-RING			x
14	79K-12	O-RING			x
15	35C-616	BOLT			2
16	31H-42	CLAMP			1
17	11H-25	GREASE ZERK			2
18	6719884	BRACKET			1
19	6806987	HOSE			1
20	6733360	HOSE			1
21	6714477	HOSE			1
22	84G-3724	BOLT			1
23	17KB-404	ELBOW	W/Ref. * POWER BOB-TACH KIT(25)		1
24	18KB-404	ELBOW	W/Ref. * POWER BOB-TACH KIT(25)		1
25	79K-4	O-RING			x
26	6725907	DECAL			1
27	6676732	SWITCH	vertical		1
28	6730770	HARNESS			1
29	15KB-1212	ADAPTER	W/Ref. * POWER BOB-TACH KIT(14)		1
30	73G-656	BOLT			4
31	6719888	DECAL	power Bob-tach		1
32	6725198	HOSE			1
33	6725199	HOSE			1
34	6733359	HOSE		& Bel	1
34	6734247	HOSE		& Abv	1
35	6901815	INSTRUCTIONS			1

* POWER BOB-TACH KIT

Ref.N°	Part N°	Description	Remarks	Serial N°	Qty.
1	6735459	KIT	Ref. * POWER BOB-TACH KIT(2) - * POWER BOB-TACH KIT(36)		1
2		VALVE	See Page * POWER BOB-TACH(1)		1
3	15KB-606	ADAPTER	W/Ref. * POWER BOB-TACH KIT(13)		1
4	6703615	CLAMP			2
5	6733354	TUBE			1
6	6733355	TUBE			1
7	6554100	SAFETY TREAD			1
8	6624289	STA-STRAP			6
9		CYLINDER	See Page * POWER BOB-TACH(37)		1
10	619021	WASHER			2
11	NAP	COVER	32'(813 mm) long - Order Ref. * POWER BOB-TACH KIT(12)		1
12	6656155	COVER			x
13	79K-6	O-RING			x
14	79K-12	O-RING			x
15	35C-616	BOLT			2
16	31H-42	CLAMP			1
17	12H-25	GREASE ZERK			2
18	6719884	BRACKET			1
19	6806987	HOSE			1
20	6806403	HOSE			1
21	6731082	HOSE			1
22	84G-3724	BOLT			1
23	17KB-404	ELBOW	W/Ref. * POWER BOB-TACH KIT(25)		1
24	18KB-404	ELBOW	W/Ref. * POWER BOB-TACH KIT(25)		1
25	79K-4	O-RING			x
26	6725907	DECAL			1
27	6676732	SWITCH	vertical		1
28	6730770	HARNESS			1
29	15KB-1212	ADAPTER	W/Ref. * POWER BOB-TACH KIT(14)		1
30	73G-656	BOLT			4
31	6719888	DECAL	power Bob-tach		1
32	6725198	HOSE			1
33	6725199	HOSE			1
34	6734247	HOSE			1
35	15KB-612	ADAPTER	W/Ref. * POWER BOB-TACH KIT(14)		1
36	6901815	INSTRUCTIONS			1

* POWER BOB-TACH

Ref.N°	Part N°	Description	Remarks	Serial N°	Qty.
1	6810611	CYLINDER	Ref. * POWER BOB-TACH(2)-* POWER BOB-TACH(16)		1
2	6810349	CASE	1.75' I.D.		1
3	6586543	PISTON			1
4	6586542	HEAD			1
5	6810612	ROD	18.6' (472mm) long - W/ .25' grease zerk hole		1
6	6810356	SPACER			1
7	92D-10	NUT			1
8	54K-30110	O-RING			1
9	6532453	RING			1
10	54K-40116	O-RING			1
11	73K-222	WASHER	backAup		1
12	58K-132	O-RING			1
13	6667323	SEAL	rod		1
14	6666542	SEAL	wiper		1
15	90KV-2	PLUG	W/Ref. * POWER BOB-TACH(16)		2
16	79K-3	O-RING			2
17	6803473	SEAL KIT	Ref. * POWER BOB-TACH(7)-* POWER BOB-TACH(14)		1

* POWER BOB-TACH

Ref.N°	Part N°	Description	Remarks	Serial N°	Qty.
1	6678554	VALVE	Ref. * POWER BOB-TACH(2)-* POWER BOB-TACH(31)		1
2	6679245	RELIEF VALVE			1
3	6679244	BALL ASSY.			2
4	6678709	O-RING			x
5	6678695	O-RING			1
6	NSS	SEAT	relief loctited		2
7	99K-5	O-RING			x
8	6678701	ORIFICE	screw in plug W/ screen		1
9	6678708	COMPENSATOR			1
10	6678694	FLOW CONTROL			1
10	6677150	SEAL KIT			1
11	6678698	PLUG	W/Ref. * POWER BOB-TACH(35)		3
12	95K-8	O-RING			x
13	6678706	PLUG	W/Ref. * POWER BOB-TACH(12)		1
14	6678702	ORIFICE			1
15	6671628	NUT			1
16	6671025	COIL			2
17	6678711	SPACER			1
18	6678697	STEM	W/Ref. * POWER BOB-TACH(33)		1
19	6678712	COIL	W/ male connector		1
20	6678705	BALL			1
21	6678704	SPRING			1
22	6677159	PLUG	W/Ref. * POWER BOB-TACH(37)		3
23	6678703	SHUTTLE			1
24	6678717	PISTON			1
25	6678718	SPRING			1
26	6678710	TIE			1
27	6678707	SPRING			1
28	6678700	PISTON			1
29	6678699	PLUG	W/Ref. * POWER BOB-TACH(36)		4
30	6678692	SPRING			1
31	6678693	SPRING			1
32	6679246	SEAL KIT	complete		1
33	6672756	SEAL KIT			1
34	NSS	BLOCK			1
35	95K-6	O-RING			x
36	95K-2	O-RING			x
37	95K-4	O-RING			x

* POWER BOB-TACH

Ref.N°	Part N°	Description	Remarks	Serial N°	Qty.
1	6681864	VALVE			1
2	6684743	SOLENOID	W/male connector		1
3	6684744	SOLENOID	W/female connector		1
4	6684742	NUT			1
5	NSS	STEM			x
6	79K-8	O-RING			x
7	NSS	STEM			x
8	NSS	RETAINER			x
9	NSS	SPRING			x
10	NSS	WASHER			x
11	NSS	PISTON			x
12	NSS	PLUG			x
13	NSS	O-RING			x
14	NSS	PLUG			x
15	NSS	BALL			x
16	NSS	SPRING			x
17	NSS	VALVE			x
18	NSS	O-RING			x
19	NSS	RINGS			x
20	6684745	PISTON			1
21	NSS	RINGS			x
22	79K-7	O-RING			x
23	6684746	CHECK VALVE	W/Ref. * POWER BOB-TACH(22)		1
24	NSS	BLOCK			x
25	NSS	STEM			x
26	NSS	SPRING			x
27	NSS	POPPET			x
28	79K-10	O-RING			x
29	NSS	PLUG			x
30	NSS	POPPET			x
31	NSS	SPRING			x
32	NSS	PLUG			x
33	NSS	O-RING			x
34	NSS	PLUG			x
35	NSS	POPPET			x
36	NSS	O-RING			x
37	NSS	PLUG			x
38	6684747	SEAL KIT	complete		1

RADIATOR SCREEN KIT

Ref.N°	Part N°	Description	Remarks	Serial N°	Qty.
1	6706939	KIT	Ref. RADIATOR SCREEN KIT(2) & RADIATOR SCREEN KIT(3)		1
2	6706285	SCREEN			1
3	6722861	INSTRUCTIONS			1

REAR AUXILIARY KIT

Ref.N°	Part N°	Description	Remarks	Serial N°	Qty.
1	6727648	KIT	SEE NOTE		1
2	6667804	QUICK COUPLER			2
2	6669657	O-RING			x
3	NAP	ADAPTER	europe - W/Ref. REAR AUXILIARY KIT(7) - tapered boss face - Was 6804359 [A]		1
3	15KB-406	ADAPTER	W/Ref. REAR AUXILIARY KIT(7) - flat boss face		1
4	6667803	QUICK COUPLER			2
5	36K-5	CAP			3
6	6706220	TEE	W/Ref. REAR AUXILIARY KIT(7) - check boss face to determine correct replacement O-ring		4
7	99K-6	O-RING	tapered boss face		x
7	79K-6	O-RING	flat boss face		x
8	51E-404	ADAPTER			4
9	61E-4	NUT			4
10	63E-4	PLUG			2
11	6706089	HOSE			2
12	NAP	ELBOW	W/Ref. REAR AUXILIARY KIT(7) - tapered boss face - Was 13 KN-5 [A]		1
12	97K-6	O-RING	flared end		1
12	13K-5	TEE	W/Ref. REAR AUXILIARY KIT(7) - flat boss face		1
13	6718570	TUBE			1
14	6718571	TUBE			1
15	6500989	CLAMP			1
16	84G-3712	BOLT			2
17		VALVE	See Page REAR AUXILIARY VALVE(1)		1
18	6727108	HOSE	Was 6711681 [B]		1
19	NAP	ELBOW	W/Ref. REAR AUXILIARY KIT(20) - tapered boss face - Was 17KV-3 [A]		1
19	97K-4	O-RING	flared end		1
19	17KB-404	ELBOW	W/Ref. REAR AUXILIARY KIT(20) - flat boss face		1
20	99K-4	O-RING	tapered boss face		x
20	79K-4	O-RING	flat boss face		x
21	NAP	ADAPTER	W/Ref. REAR AUXILIARY KIT(7) - tapered boss face - Was 15KV-5 [A]		4
21	97K-6	O-RING	flared end		4
21	15KB-606	ADAPTER	W/Ref. REAR AUXILIARY KIT(7) - flat boss face		4
22	6702962	HOSE			1
23	6704693	TEE	W/Ref. REAR AUXILIARY KIT(24)		1
23	6715653	TEE	W/Ref. REAR AUXILIARY KIT(24) - europe		1
24	79K-12	O-RING	flat boss face		x
24	99K-12	O-RING	tapered boss face		x
25	NAP	ELBOW	W/Ref. REAR AUXILIARY KIT(24) - tapered boss face - Was 18KV-8 [A]		2
25	97K-12	O-RING	flared end		2
25	18KB-1212	ELBOW	W/Ref. REAR AUXILIARY KIT(24) - flat boss face		2
26	NAP	ADAPTER	tapered boss face - Was 45KN-8 [A]		2
26	97K-12	O-RING	flared end		2
26	45K-8	CONNECTOR	flat boss face		2
27	6718645	HARNESS			1
28	6624289	STA-STRAP			4
29	6901221	INSTRUCTIONS	Was 6901009 [A]		1

REAR AUXILIARY KIT

Ref.N°	Part N°	Description	Remarks	Serial N°	Qty.
1	6732937	KIT	SEE NOTE		1
2	6667804	QUICK COUPLER			2
2	6669657	O-RING			x
3	6624289	STA-STRAP			4
4	6667803	QUICK COUPLER			2
5	17KB-606	ELBOW	W/Ref. REAR AUXILIARY KIT(7)		1
6	6706220	TEE	W/Ref. REAR AUXILIARY KIT(7)		4
7	79K-6	O-RING			x
8	51E-404	ADAPTER			4
9	61E-4	NUT			4
10	63E-4	PLUG			2
11	6706089	HOSE			2
12	21KB-606	TEE	W/Ref. REAR AUXILIARY KIT(7)		1
13	6718570	TUBE			1
14	6718571	TUBE			1
15	6500989	CLAMP			1
16	84G-3716	BOLT			2
17		VALVE	See Page REAR AUXILIARY VALVE(1)		1
18	6727108	HOSE			1
19	17KB-404	ELBOW	W/Ref. REAR AUXILIARY KIT(20)		1
20	79K-4	O-RING			x
21	15KB-606	ADAPTER	W/Ref. REAR AUXILIARY KIT(7)		3
22	6728337	SPACER			1
23	6717662	TEE	Not in Kit		1
24	79K-12	O-RING			x
25	18KB-1212	ELBOW	W/Ref. REAR AUXILIARY KIT(24)		2
26	45K-8	CONNECTOR			2
27	6718645	HARNESS			1
28	6901814	INSTRUCTIONS			1

REAR AUXILIARY VALVE

Ref.N°	Part N°	Description	Remarks	Serial N°	Qty.
1	6665572	VALVE	diverter - silver - rear pressure 'release function -Was 6665572 [A]		1
1	6675073	VALVE	diverter - gold - front & rear pressure release function		1
2	6653490	PLUG	W/Ref. REAR AUXILIARY VALVE(9) - For Ref. REAR AUXILIARY VALVE(1) (NAP/ 6665572inD1}! Valve)		18
2	6676152	PLUG	W/Ref. REAR AUXILIARY VALVE(9) - For Ref. REAR AUXILIARY VALVE(1) (6675073inD1}# Valve)		27
3	NSS	BODY			1
4	6664212	CHECK VALVE			2
4	6653487	SEAL KIT			2
5	6653484	VALVE			2
5	6653485	SEAL KIT			2
6	6669218	VALVE	solenoid - W/Connector - SV2 port		1
6	6669190	COIL	For Ref. REAR AUXILIARY VALVE(1) (NAP/6665572inD1}! Valve)		1
6	6676151	COIL	For Ref. REAR AUXILIARY VALVE(1) (6675073inD1}# Valve)		1
6	6669188	STEM			1
6	6669217	SEAL KIT			1
7	6669219	VALVE	solenoid - W/Connector - SV1 port		1
7	6669190	COIL			1
7	6669189	STEM			1
7	6669216	SEAL KIT			1
8	6669187	VALVE			1
8	6653487	SEAL KIT			1
9	79K-2	O-RING			x

REAR DOOR LOCK

Ref.N°	Part N°	Description	Remarks	Serial N°	Qty.
1	6732001	KIT	lock - Ref. REAR DOOR LOCK(2)-REAR DOOR LOCK(6) - Was 6714973 [A]		1
2	6670726	LOCK			1
3	6709527	KEY	ignition		1
4	6714037,	LATCH	Use W/6711524 Rear Door		1
5	6729688	LATCH	Use W/6729991 Rear Door		1
6	6901656	INSTRUCTIONS	Was 6570762 [A]		1

REAR WIPER

Ref.N°	Part N°	Description	Remarks	Serial N°	Qty.
1	6726655	KIT	rear wiper		1
2	NAP	HOSE	96'(2438,4 mm) long - Order Ref. REAR WIPER(18)		1
3	6719317	WINDOW			1
4	6676000	TEE			1
5	6557493	GROMMET			1
6	6676028	NOZZLE			1
7	6676001	ARM			1
8	6676002	BLADE			1
9	6667201	SPACER	nylon		1
10	6664097	COVER	wiper		1
11	6665602	MOTOR			1
12	6664566	SCREW			1
13	6664103	NUT			1
14	6664065	WASHER	nylon		1
15	6801059	WASHER	neoprene		1
16	6664085	BUSHING	nylon		1
17	6675999	SWITCH			1
18	6676003	HOSE	bulk - Sold Per Foot		x
19	6901061	INSTRUCTIONS			1

* SEAL ENCLOSURE KIT

Ref.N°	Part N°	Description	Remarks	Serial N°	Qty.
1	6732717	KIT	enclosure		1
2	6732658	SEAL	panel		2
3	6901774	INSTRUCTIONS			1

SEAT

Ref.N°	Part N°	Description	Remarks	Serial N°	Qty.
1	NAP	KIT	vinyl seat - Order Ref. SEAT(2), SEAT(3) & SEAT(64) - Was 6718868 [A]		1
1	NAP	KIT	fabric seat - Order Ref. SEAT(2), SEAT(3) & SEAT(64) - Was 6718869 [A]		1
2	NAP	SEAT	vinyl - W/Ref. SEAT(4) - SEAT(61) - W/R.H. recliner lever - Order 6675595inD1}A Seat - Was 6674896 [A]		1
2	6675595	SEAT	vinyl - W/Ref. SEAT(4) - SEAT(61) - W/L.H. recliner lever		1
2	NAP	SEAT	fabric - W/Ref. SEAT(4) - SEAT(61) - W/R.H. recliner lever - Order 6675596inD1}C Seat - Was 6674404 [A]		1
2	6675596	SEAT	fabric - W/Ref. SEAT(4) - SEAT(61) - W/L.H. recliner lever		1
3	6675170	SEAT BELT	lap		1
4	6675320	SEAT	seat - fabric		1
4	6675322	SEAT	seat - vinyl		1
5	6675319	SEAT	backrest - fabric - W/Ref. SEAT(58)		1
5	6675321	SEAT	backrest - vinyl - W/Ref. SEAT(58)		1
6	6675317	SCISSORS			1
7	6675323	KNOB	recliner		1
8	NSS	NUT			6
9	619021	WASHER			2
10	NSS	SLIDE	slave		1
11	NSS	BOLT			4
12	NSS	SLIDE	locking		1
13	NSS	NUT			2
14	NSS	BELT	tether		2
15	NSS	WASHER	cross pivot		4
16	NSS	BOLT	pivot		2
17	NSS	RING	retaining		2
18	NSS	ROLLER			4
19	NSS	NUT			2
20	NSS	BUSHING	wt adjustment		4
21	NSS	RIVET			2
22	NSS	BLOCK	up stop		2
23	NSS	WASHER			3
24	NSS	STOP	armrest		1
25	NSS	PUSHNUT			2
26	NSS	BUMPER			1
27	NSS	NUT			1
28	NSS	SHAFT	bearing		1
29	NSS	RIVET	female snap		1
30	NSS	INDICATOR	weight		1
31	NSS	RIVET	male snap		1
32	NSS	DIAL	weight indicator		1
33	NSS	POP RIVET			2
34	NSS	SPACER			1
35	NSS	NUT			1
36	NSS	BEARING	thrust		1
37	NSS	RACE	thrust		2
38	NSS	SHEAR PIN			1
39	NSS	HANDLE	weight adjustment		1
40	NSS	PLATE	wear		1

SEAT

Ref.N°	Part N°	Description	Remarks	Serial N°	Qty.
41	NSS	SHAFT	torsion		1
42	NSS	DRIVE GEAR			1
43	NSS	BUSHING	torsion		1
44	NSS	RACK	wt adjustment		1
45	NSS	BOLT			2
46	NSS	SPACER	recliner		1
47	NSS	BRACKET	back tilt		1
48	NSS	NUT			2
49	NSS	WASHER	plastic		2
50	NSS	BOSS	back pan pivot		2
51	NSS	HANDLE	recliner (RH)		1
52	NSS	LATCH	recliner		1
53	NSS	SPRING	extension		1
54	NSS	SPRING	tilt latch		1
55	NSS	CLIP			6
56	NSS	WIRE	boot support		1
57	NSS	SUSPENSION	boot		1
58	NSS	SCREW			2
59	NSS	HOUSING	upper		1
60	NSS	HOUSING	lower		1
61	NSS	BACK PAN			1
62	6676338	GAS SPRING			1
63	6675309	KIT	slides - W/Ref. SEAT(8) - SEAT(12)		1
63	6675310	KIT	tether belt - W/Ref. SEAT(9), SEAT(13) & SEAT(14)		1
63	6675311	KIT	suspension rollers & bearings - W/Ref. SEAT(15) - SEAT(20)		1
63	6675312	KIT	suspension bumpers & stops - W/Ref. SEAT(21) - SEAT(27)		1
63	6675313	KIT	rear tube - W/Ref. SEAT(17), SEAT(20) & SEAT(28)		1
63	6675314	KIT	weight adj. indicator - W/Ref. SEAT(29) - SEAT(33)		1
63	6675315	KIT	weight adj. handle - W/Ref. SEAT(34) - SEAT(39)		1
63	6675316	KIT	weight adj. - W/Ref. SEAT(17), SEAT(20) & SEAT(40) - SEAT(44)		1
63	NAP	KIT	R.H. recliner - Ref. SEAT(7), SEAT(8) & SEAT(45) - SEAT(54) - Order 6676034inD1}E Kit - Was 6675318 [A]		1
63	6676034	KIT	L.H. recliner - Ref. SEAT(7), SEAT(8) & SEAT(45) - SEAT(54)		1
63	6675308	KIT	susp. boot - W/Ref. SEAT(55) - SEAT(57)		1
64	6900861	INSTRUCTIONS			1

SEAT BELT

Ref.N°	Part N°	Description	Remarks	Serial N°	Qty.
1	6732219	KIT	three point retractable seat belt - Use W/Sears brand suspension seat W/L.H. reliner lever - See Page SEAT(1) - Was 6725168 [A]		1
2	6674407	SHOULDER BELT			1
3	6679308	SEAT BELT	Was 6674408 [A]		1
4	6725370	DECAL			1
5	35C-612	BOLT			1
6	6901010	INSTRUCTIONS			1

SEAT BELT

Ref.N°	Part N°	Description	Remarks	Serial N°	Qty.
1	6675562	SEAT BELT	3' wide retractable- Use W/Sears brand suspension seat W/L.H. reliner lever - See Page SEAT(1)		1
2	6901011	INSTRUCTIONS			1

SEAT BELT

Ref.N°	Part N°	Description	Remarks	Serial N°	Qty.
1	6703640	KIT	W/Ref. 2-5		1
2	6703703	GUIDE			2
3	6512797	RIVET			4
4	6659999	BELT			1
5	6703641	DECAL			1

SOUND KIT

Ref.N°	Part N°	Description	Remarks	Serial N°	Qty.
1	6725485	KIT			1
2	6703331	INSULATION	air inlet		1
3	NAP	HOSE	intake - Order Ref. SOUND KIT(30) - Was 6715239 [A]	& Bel	1
4	42H-44	CLAMP		& Abv	2
4	42H-52	CLAMP		& Bel	2
5	NAP	MUFFLER	intake - Order Ref. SOUND KIT(30) - Was 6715250 [A]	& Bel	1
6	NAP	HOSE	air cleaner - Order Ref. SOUND KIT(30) - Was 6715240 [A]	& Bel	1
7	84G-3112	BOLT		& Bel	1
8	6719332	INSULATION	blower housing		1
9	6704769	INSULATION	blower housing		1
10	6712970	PULLEY	4.75'(120,7 mm) O.D.		1
10	6712971	PULLEY	5.00'(127 mm) O.D.		1
11	6732722	INSULATION	cross member - L.H. - Was 6704721 [A]		1
12	6732723	INSULATION	cross member - R.H. - Was 6704722 [A]		1
13	6719372	INSULATION	steering panel		1
14	84G-3716	BOLT			2
15	6562619	BUSHING			2
16	6715372	INSULATION	pedal		1
17	6725316	INSULATION	transmission		1
18	6705848	INSULATION	transmission		1
19	6715371	INSULATION	transmission		2
20	6705850	INSULATION	brace		1
21	6705849	INSULATION	brace		1
22	6715106	INSULATION	rear door		1
23	6579384	DECAL	noise level		1
24	6579399	DECAL	noise level		1
25	6579402	DECAL	noise level		1
26	6579403	DECAL	noise level		1
27	6715428	DECAL	dynamic level		1
28	6709030	DECAL	belt tension idler		1
29	6734534	DECAL	warning/service schedule/service parts - Was 6718398 [A]		1
30	6735285	AIR CLEANER		& Abv	1
31	6901003	INSTRUCTIONS			1

SOUND OPTION

Ref.N°	Part N°	Description	Remarks	Serial N°	Qty.
1	6562619	BUSHING			2
2	42H-52	CLAMP		& Bel	2
2	42H-44	CLAMP		& Abv	2
3	6732722	INSULATION	cross member - L.H. - Was 6704721 [A]		1
4	6732723	INSULATION	cross member - R.H. - Was 6704722 [A]		1
5	6719332	INSULATION	blower housing		1
6	6704769	INSULATION	blower housing		1
7	6705849	INSULATION	brace		1
8	6705850	INSULATION	brace		1
9	6725316	INSULATION	transmission		1
10	6715106	INSULATION	rear door		1
11	6703331	INSULATION	air inlet		1
12	84G-3112	BOLT		& Bel	1
13	6705848	INSULATION	transmission		2
14	6719372	INSULATION	steering panel		1
15	NAP	HOSE	air cleaner - Order Ref. SOUND OPTION(35) - Was 6715240 [A]	& Bel	1
16	NAP	HOSE	intake - Order Ref. SOUND OPTION(35) - Was 6715239 [A]	& Bel	1
17	NAP	MUFFLER	intake - Order Ref. SOUND OPTION(35) - Was 6715250 [A]	& Bel	1
18	84G-3716	BOLT			2
19	6715371	INSULATION	transmission		1
20	6715372	INSULATION	pedal		1
21	6579399	DECAL	sound level warning - 83 db		1
22	6579403	DECAL	sound level warning -103 db		1
23	6712970	PULLEY	4.75'(120,7 mm) O.D.		1
23	6712971	PULLEY	5.00'(127 mm) O.D.		1
24	6715428	DECAL			1
25	6659982	MUFFLER	hyd.		1
26	6705333	MOUNT	rubber		1
27	6729144	HOSE	Was 6707231 [A]		1
28	6715744	BUSHING			1
29	NAP	ELBOW	W/Ref. SOUND OPTION(30) - tapered boss face - Was 17KV-8 [A]		2
29	97K-12	O-RING	flared end		2
29	17KB-1212	ELBOW	W/Ref. SOUND OPTION(30) - flat boss face		2
30	99K-12	O-RING	tapered boss face		2
30	79K-12	O-RING	flat boss face		2
31	35C-616	BOLT			2
32	84G-3724	BOLT			1
33	85D-6	NUT			2
34	6729154	HOSE	Was 6729147 [B]		1
35	6735285	AIR CLEANER		& Abv	1
36	6735349	HOSE		& Abv	1
37	6901003	INSTRUCTIONS			1

SOUND REDUCTION HARDHAT

Ref.N°	Part N°	Description	Remarks	Serial N°	Qty.
1	6559552	HARDHAT			1
2	6559775	EARMUFFS			1

STROBE LIGHT

Ref.N°	Part N°	Description	Remarks	Serial N°	Qty.
1	6719857	KIT	'strobe light - If loader is equipped W/Deluxe Cab Option also order 6727468 Harness - See Page ACCESSORIES HARNESS(1) - Was 67		1
2	6718872	HARNESS			1
3	6665317	SWITCH	horizontal		1
3	6668816	SWITCH	vertical		1
4	6675522	STROBE			1
4	6675858	FLASH TUBE			1
5	6900992	INSTRUCTIONS			1

TIRES & RIMS

Ref.N°	Part N°	Description	Remarks	Serial N°	Qty.
1	NAP	TIRE	10.00-16.5, 6 Ply - Firestone - Order Ref. TIRES & RIMS(3) (6729896 Tire) - Was 6646601 [A]		4
1	NAP	TIRE	10.00-16.5, 8 ply '- Dico Heavy Duty - Order Ref. TIRES & RIMS(3) (6729896 Tire) '- Was 6667889 [A]		4
2	6730106	TIRE	10.00 - 16.5 - 10 ply - Bobcat brand - severe duty		4
3	NAP	TIRE	10.00-16.5, 8 ply - Bobcat Brand - Heavy Duty - Order 6729896inD1}U Tire or 6729900inD1}S Tire - Was 6661287 [A]		4
3	6729896	TIRE	10.00-16.5, 8 ply - Bobcat Brand - standard duty		4
3	6729900	TIRE	10.00-16.5, 10 ply - Bobcat Brand - heavy duty		4
4	6730771	RIM	Used W/Ref. TIRES & RIMS(1) & TIRES & RIMS(3) - Was 6565239 [A]		4
4	6730772	RIM	Used W/Ref. TIRES & RIMS(11)		4
5	6564669	NUT	wheel		32
6	1614765	VALVE	tubeless tire		4
7	6658846	RIM	Use W/Ref. TIRES & RIMS(12)		4
8	6591447	STEM	valve - Use W/Ref. TIRES & RIMS(7)		4
9	NAP	TIRE	10 x 16.5 Bar Lug Flotation (Dico)		4
10	6730775	RIM	inverted - Use W/Ref. TIRES & RIMS(3) - For 60' width - Was 6705109 [A]		4
11	NAP	TIRE	31.5 - 13 x 16.5 - Galaxy Brand - Order 6730107inD1} Q Tire - Was 6729035 [A]		4
11	6730107	TIRE	31 - 13 x 16.5 - Bobcat Brand - hippo super float		4
12	NAP	TIRE	31-15, 8 Ply - Terra Grip- Goodyear Brand - Order Ref. TIRES & RIMS(11) (6730107inD1}Q Tire) - Was 6513971 [A]		4
12	NAP	TIRE	.31-15.5, 8 Ply - Ultra Tread Grip - Goodyear - Order Ref. TIRES & RIMS(11) (6730107inD1}Q Tire) - Was 6666668 [A]		4

TIRES & RIMS

Ref.N°	Part N°	Description	Remarks	Serial N°	Qty.
1	NAP	TIRE & RIM	Assy. - R.H. - 7.5 x 15 - Was 6664993 [A]		2
1	NAP	TIRE & RIM	Assy. - L.H. - 7.5 x 15 - Was 6664994 [A]		2
1	6674003	TIRE & RIM	Assy. - R.H. - 10 x 16.5		2
1	6674004	TIRE & RIM	Assy. - L.H. - 10 x 16.5		2
2	NAP	KIT	Box of (9) segments - 7.5 x 15 W/Ref. TIRES & RIMS(4) - TIRES & RIMS(6) (12) segments/tire - Was 66649 95 [A]		x
2	6674007	KIT	Box of (10) segments - 10 x 16.5 W/Ref. TIRES & RIMS(4) - TIRES & RIMS(6) (20) segments/tire		x
3	NAP	RIM	R.H. - 7.5 x 15 - Order Ref. TIRES & RIMS(1)		2
3	NAP	RIM	L.H. - 7.5 x 15 - Order Ref. TIRES & RIMS(1)		2
3	NAP	RIM	R.H. - 10 x 16.5 - Order Ref. TIRES & RIMS(1)		2
3	NAP	RIM	L.H. - 10 x 16.5 - Order Ref. TIRES & RIMS(1)		2
4	1CM-830	BOLT			x
5	25E-15	WASHER			x
6	40DM-8	NUT			x
7	NAP	KIT	wheel - Set of (4) 7.5 x 15 Tire & Rim Assys. - Ref. TIRES & RIMS(1) - (2) R.H. & (2) L.H. - Was 6707172 [A]		1
7	6718298	KIT	wheel - Set of (4) 10 x 16.5 Tire & Rim Assys. - Ref. TIRES & RIMS(1) - (2) R.H. & (2) L.H.		1

BULK ITEMS

Ref.N°	Part N°	Description	Remarks	Serial N°	Qty.
1	6902228	PAINT	orange - Spray Can - SEE NOTE		x
1	6902229	PAINT	charcoal -Spray Can -SEE NOTE		x
1	6902230	PAINT	white - Spray Can - SEE NOTE		x
2	6902233	PAINT	orange - Qt. - Also Order Ref. BULK ITEMS(5)		x
2	6902234	PAINT	'charcoal - Qt. - Also Order Ref. BULK ITEMS(5)		x
2	6902235	PAINT	white - Qt. Also Order Ref. BULK ITEMS(5)		x
3	6724094	ANTI-FREEEZE	gallon - PG - premixed		x
3	6724354	ANTI-FREEZE	gallon - PG - concentrate		x
4	6633583	SEALANT	chaincase covers		x
5	NAP	REDUCER	gallon - Was 6653517 [A]		x
6	NAP	PRIMER	gallon - Was 6653518 [A]		x
6	6653519	PRIMER	Qt.		x
7	6563328	BLACK GOLD	Hydraulic/Hydrostatic Transmission Fluid - 5 Gallons - 2-2 1/2 Gallon Containers		x
7	6722344	BLACK GOLD	Hydraulic/Hydrostatic Trans. Fluid - 5 Gal. Container		x
7	6563330	BLACK GOLD	55 Gallon Drum		x
8	6599360	SEALANT	electrical - 3 oz. tube		x
9	6634393	LUBRICANT	90 wt. gear - pint - For use in cooling fan drive assy.		x
10	6630188	POLISH	window-1 (8 oz.)		x
10	NAP	POLISH	'window-1 (64 oz.) -Order 6630188inD1}) Polish - Was 6630190 [A]		x
11	6630189	POLISH	window-2 (8 oz.) - scratch remover		x
11	NAP	POLISH	window-2 (64 oz.) - scratch remover - Order 6630189inD1}$ Polish - Was 6630191 [A]		x
12	6674205	MOTOR OIL	10W30 CE/SG-'2.5 Gal.-SEE NOTE		x
12	6657299	MOTOR OIL	15W40 CE/SG - 1 Qt. -SEE NOTE		x
12	6724558	MOTOR OIL	SAE 15W40 - 1 Gal. - SEE NOTE		x
12	6674204	MOTOR OIL	15W40 CE/SG-'2.5 Gal.-SEE NOTE		x
12	6657303	MOTOR OIL	30 CE/SG - 1 Qt. - SEE NOTE		x
12	6724559	MOTOR OIL	SAE 30 - 1 Gal.		x
12	6674206	MOTOR OIL	30 CE/SG - 2.5 Gal. - SEE NOTE		x
12	6657301	MOTOR OIL	10W30 CE/SG - 1 Qt. -SEE NOTE		x
12	6724557	MOTOR OIL	SAE 10W30 - 1 Gal. - SEE NOTE		x
13	6652818	ADHESIVE	insulation - spray can		x
14	6658266	GREASE	general purpose		x
15	6599719	GREASE	14.5 oz. cartridge - For fan idler bearing & spring loaded drive idler		x
16	6650407	ADHESIVE	1 oz. tube		x
17	6650388	SEALANT	flange		x
18	6736644	PAINT	orange - .5 oz. spray can		x
18	6736641	PAINT	charcoal - .5 oz. spray can		x
18	6736642	PAINT	white - .5 oz. spray can		x
18	6736645	PAINT	red - .5 oz. spray can		x