MICHIGAN

RUTHZIL TRATOR COMERCIAL DE PEÇAS LTDA 11 97083-6812 ROLANDO CITRANGULO

MODEL 75A TRACTOR SHOVEL

PARTS MANUAL

No. 1188

Record Your Machine Serial Number and Engine Model Specification and Serial Number Here
Machine Serial.....
Engine Model.....
Engine Serial.....

CLARK EQUIPMENT

CLARK EQUIPMENT COMPANY
Construction Machinery Division
BENTON HARBOR, MICHIGAN, U.S.A.

MICHIGAN

WHEN ORDERING REPAIR PARTS

Order through your nearest Clark Distributor, for THE MICHIGAN LINE.
Always give serial number of machine.
Furnish: Quantity, Part Number and Description.

WHEN PARTS ARE RECEIVED

Check immediately for quantity, correctness and condition.
Advise your Michigan Distributor of any error.
Claims for damages, during shipment, should be made to the carrier immediately.

INDEX

MODEL 75 SERIES

Page

A

Accelerator Pedal and Linkage — DIESEL 17
Accelerator Pedal and Linkage — GAS 18
Adaptor, Steering Booster — MODEL 75B 77, 78
Adaptor, Steering Booster — MODEL 75R 79, 80
Air Cleaner and Attaching Parts 15
Armature — Generator 1
Armature — Starter 3
Axle Assembly — F.D. — MODEL 75A and 75B 41
Axle Assembly — F.S. — MODEL 75R 43
Axle Assembly — R.D. — MODEL 75R 41, 53
Axe Assembly — R.D.S. — MODEL 75A 45, 47
Axle Assembly — R.S. — MODEL 75B 49, 51

B

Back Up Lamp Assembly 102
Battery, Holder, Wiring and Parts 102
Body Panels, Counterweight and Grille 9
Boom and Guide Bar Assembly 10
Boom Cylinder Assembly 91
Boom Pipe Assembly — R.H. 10
Boom Pipe Assembly — L.H. 10
Booster Pump — Steering 81, 82
Brake Assembly — Front 93
Brake Assembly — Rear 94
Brake Controls — MODEL 75A 95, 98
Brake Controls — MODEL 75B and 75R 98
Brake Cylinder Assembly — Front 93
Brake Cylinder Assembly — Rear 94
Brake Lines and Fittings — MODEL 75A 97, 98
Brake Lines and Fittings — MODEL 75B and 75R 98
Brush — Generator 1
Brush — Starter 3
Bucket and Boom Hydraulic Pump 84, 85
Bucket and Boom Hydraulic System 86, 87
Bucket and Carrier Assembly 11
Bucket Cylinder Assembly 92
Bucket Indicator 12

C

Cables, Battery 102
Cables, Ignition 2
Cap, Distributor 2
Carburetor 2
Carburetor Repair Kit 2
Carrier Assembly and Bucket 11
Cartridge Kit — Lube Oil Filter 4
Cartridge Kit — Primary Filter 4
Cartridge Kit — Secondary Filter 4
Cartridge Kit — Trans and Torque Converter 62, 63
Coil, Ignition 2
Control Cover Parts — Transmission 31
Control Valve Assembly 89
Converter Charging Hydraulic Pump 82
Counterweight, Grille and Body Panels 9
Cutting Edge Replacement Kit — Bucket 11
Cylinder Assembly — Boom 91
Cylinder Assembly — Bucket 92

D

Differential and Carrier Assembly 57
Distributor and Parts 2
Drag Link Assembly 74

E

Engine Accessories 1, 2, 3, 4
Engine Assembly 1
Engine Support Parts 1
Engine Temperature Sending Unit 1
Ether Start Panel Assembly 107

F

Filter, Lube Oil 3
Filter, Primary Fuel 4
Filter, Secondary Fuel 4
Filter, Third Stage Fuel 4
Filter, Trans. and Torque Converter Oil 62, 63
Floorboards 105
Frame Assembly — MODEL 75A 5
Frame Assembly — MODEL 75B 6
Frame Assembly — MODEL 75R 7
Front Brake Assembly 93
Fuel Injection Pump 3
Fuel Injector 3

Page

Fuel Lines — DIESEL 19, 21
Fuel Lines — GAS 22
Fuel Pump Assembly 2
Fuel Pump Repair Kit 3
Fuel Tank Assembly 105
Fuel Tank Mounting Kit 105

G

Gasket Kit, Carburetor 2
Gauges, Instrument Panel 101
Gear Shift Levers and Linkage 58
Generator Armature 1
Generator Assembly 1
Generator Brush 1
Glow Plugs 3
Grille, Counterweight and Body Panels 9
Guide Bar and Boom Assembly 10

H

Head Lamp Assembly 102
Hood Assembly 9
Horn, Floorboard and Fuel Tank Assembly 105
Hourmeter and Parts 1
Hub Assembly — MODEL 75B and 75R 54
Hydraulic Oil Reservoir and Parts 83
Hydraulic Pump — Bucket and Boom 84, 85
Hydraulic Pump — Converter Charging 82
Hydraulic Pump — Steering Booster 81, 82
Hydraulic System — Bucket and Boom 86, 87
Hydraulic System — Steering — MODEL 75A 75, 76
Hydraulic System — Steering — MODEL 75B 77, 78
Hydraulic System — Steering — MODEL 75R 79, 80
Hydraulic System — Trans. and Torque Converter 62, 64

I

Ignition Cables 2
Ignition Coil 2
Injector, Fuel 3
Instrument Panel Assembly and Parts 101

L

Lights and Mountings 102
Lube Oil Filter Assembly 3
Lube Oil Filter Cartridge Kit 4

M

Main Hydraulic Pump 84, 85
Master Cylinder — Brake — Model 75A 95, 98
Master Cylinder — Brake — Model 75B and 75R 98
Mechanical Starter Pedal and Linkage 106
Muffler and Parts 15

O

Oil Filter Cartridge Kit — Lube 4
Oil Filter — Lube 3
Oil Reservoir, Hydraulic 83

P

Parking Brake Controls 96
Planet Spider Assembly 55
Point Set, Distributor 2
Primary Fuel Filter 4
Primary Fuel Filter Cartridge Kit 4
Propeller Shaft Assemblies 61
Pump, Fuel 2

Page

Pump, Fuel Injection 3
Pump, Hydraulic — Bucket and Boom 84, 85
Pump, Hydraulic — Converter Charging 82
Pump, Hydraulic — Steering Booster 81, 82
Push Rod Assembly — Steering Booster — Axle 72

R

Radiator and Parts 13
Rear Brake Assembly 94
Regulator, Voltage 2
Repair Kit, Carburetor 2
Repair Kit, Fuel Pump 3
Repair Kit, Master Cylinder 95, 98
Repair Kit, Steering Booster 67, 69, 71
Repair Kit, Wheel Cylinder — Front 93
Repair Kit, Wheel Cylinder — Rear 94
Reservoir, Hydraulic Oil 83
Ring Gear and Pinion Set 57

S

Secondary Fuel Filter 4
Secondary Fuel Filter Cartridge Kit 4
Sender Unit, Engine Temperature 1
Sender Unit, Torque Converter Temperature 62, 63
Starter Brush 3
Starter Armature 3
Starter Assembly 3
Starter Pedal and Linkage — Mechanical 106
Start Panel Assembly — Ether 107
Steering Booster Adaptor — MODEL 75B 77, 78
Steering Booster Adaptor — MODEL 75R 79, 80
Steering Booster Assembly 67, 69, 71
Steering Booster Hydraulic Pump 81, 82
Steering Booster Push Rod Assembly 72
Steering Gear Assembly and Parts 65
Steering Hydraulic System — MODEL 75A 75, 76
Steering Hydraulic System — MODEL 75B 77, 78
Steering Hydraulic System — MODEL 75R 79, 80
Steering Wheel 65

T

Tail Lamp Assembly 102
Third Stage Fuel Filter 4
Tie Rod End Assembly 73
Tire and Wheel Assembly 103
Tools 102
Torque Converter Assembly 33, 34, 35, 37, 38, 39
Torque Converter Mounting Parts 35, 39
Torque Converter Temperature Sender Unit 62, 63
Trans. and Torque Converter Hydraulic System 62, 63
Trans. Control Levers and Linkage — MODEL 75A 59
Trans. Control Levers and Linkage — MODEL 75B and 75R 60
Transmission Assembly — MODEL 75A 25, 26, 27
Transmission Assembly — MODEL 75B and 75R 28
Transmission Control Cover Parts 31
Transmission Mounting Parts 27

V

Voltage Regulator 2
Valve Assembly - Control 89

W

Wheel Assembly and Tire 103
Wheel, Steering 65

ENGINE ASSEMBLY

All orders for engine assembly or components thereof should be placed with the nearest Waukesha Motor Co. distributor or dealer. Always give model, specifications and serial number of your engine. This data will be found stamped on name plate attached to side of engine.

ENGINE SUPPORT PARTS

Item No.	Part No.	Description	No. Req'd.
1	550697	Support Assembly — L. H.	1
2	551777	Support Assembly — R. H.	1
3	1C-824	Bolt, Support to Flywheel Hsg.	8
4	4E-08	Lkwshr, Support to Flywheel Hsg.	8
5	2C-832	Bolt, Support to Frame	4
6	21D-08	Nut, Support to Frame	4
7	550698	Pad, Support to Frame	2
8	619029	Washer, Trunnion to Frame	2
9	2C-832	Bolt, Trunnion to Frame	2
10	21D-08	Nut, Trunnion to Frame	2

ENGINE ACCESSORIES

11	551323	Sending Unit, Engine Temperature.	1
12	550832	Sending Unit, Oil Pressure	1
13	940323	Meter, Hour	1
14	953130	Gasket, Hourmeter	1
15	552837	Screw, Hourmeter Mtg.	4
16	552839	Washer, Hourmeter Mtg.	4
17		*Generator Assembly*	1
	940318	For Serial:	
		75A-8123 & thereafter	
		75B-6123 thru 6200	
		75R-7123 & thereafter	
	664858	Effective with Serial:	
		75B-6201 & thereafter	

ENGINE ACCESSORIES (Continued)

Item No.	Part No.	Description	No. Req'd.
18		*Armature, Generator*	1
	940588	For Serial:	
		75A-8123 & thereafter	
		75B-6123 thru 6200	
		75R-7123 & thereafter	
	871535	Effective with Serial:	
		75B-6201 & thereafter	
19		*Brush, Generator*	2
	940136	For Serial:	
		75A-8123 & thereafter	
		75B — 6123 thru 6200	
		75R-7123 & thereafter	
	871541	Effective with Serial:	
		75B-6201 & thereafter	
20	619052	Fan, Gen. — For 940318 Gen. Only	1
21	630506	Baffle, Gen. — For 940318 Gen. Only	1
22		*Pulley, Generator*	1
	940134	For Serial:	
		75A-8123 & thereafter	
		75B-6123 thru 6200	
		75R-7123 & thereafter	
	940713	Effective with Serial:	
		75B-6201 & thereafter	
23	6J-405	Key, Pulley	1
24	940714	Washer, Pulley	1
25	850311	Nut, Pulley	1
26	957243	Strap, Gen. Adjusting	1
27	1C-512	Bolt, Adj. Strap	2
28	619019	Washer, Adj. Strap	1
29	4E-05	Lkwshr, Adj. Strap	2
30	1C-516	Bolt, Rear Mounting	1
31	4E-05	Lkwshr, Rear Mounting	1

ENGINE ACCESSORIES (Continued)

Item No.	Part No.	Description	No. Req'd.
32	2C-524	Bolt, Front Mounting	1
33	552885	Spacer, Front Mounting	1
34	2D-05	Nut, Front Mounting	1
35	4E-05	Lkwshr, Front Mounting	1
36	550850	Wiring Harness, Gen. to Volt Reg.	1
37		*Voltage Regulator*	1
	940105	For Serial:	
		75A-8123 & thereafter	
		75B-6123 thru 6200	
		75R-7123 & thereafter	
	941520	Effective with Serial:	
		75B-6201 & thereafter	
38	550862	Bracket, Regulator Mtg.	1
39	2C-620	Bolt, Bracket to Frame	2
40	2D-06	Nut, Bracket to Frame	2
41	4E-06	Lkwshr, Bracket to Frame	2
42	2C-412	Bolt, Reg. to Bracket	3
43	2D-04	Nut, Reg. to Bracket	3
44	4E-04	Lkwshr, Reg. to Bracket	3
45	551530	Magnetic Switch (Solenoid)	1
46	2C-414	Bolt, Switch Mtg.	2
47	2D-04	Nut, Switch Mtg.	2
48	4E-04	Lkwshr, Switch Mtg.	2

ENGINE ACCESSORIES — GAS MODEL ONLY

49	940331	Distributor	1
50	953129	Gasket, Distributor	1
51	552842	Clamp, Distributor	2
52	1C-618	Bolt, Clamp	2
53	4E-06	Lkwshr, Clamp	2
54	857852	Cap, Distributor	1
55	940026	Point Set, Distributor	1
56	850091	Rotor, Distributor	1
57	853586	Housing, Cover (Inc. 58 & 59)	1
58	853599	Gasket	1
59	858150	Seal, Felt	1
60	850085	Condenser	1
61	552856	Ignition Cable Kit (Inc. 62 thru 68)	1
62	552844	Cable — 1 & 6 Cyl.	2
63	552845	Cable — 2 & 5 Cyl.	2
64	552846	Cable — 3 Cyl.	1
65	552847	Cable — 4 Cyl.	1
66	652772	Cable, Distributor to Coil	1
67	610097	Nipple, Distributor	7
68	610098	Nipple, Coil	1
69	940104	Coil, Ignition	1
70	2C-510	Bolt, Coil to Bracket	2
71	2D-05	Nut, Coil to Bracket	2
72	4E-05	Lkwshr, Coil to Bracket	2
73	940177	Carburetor	1
74	952797	Gasket, Carb. to Manifold	1
75	552825	Stud, Carb. to Manifold	2
76	2D-05	Nut, Carb. to Manifold	2
77	4E-05	Lkwshr, Carb. to Manifold	2
78	940178	‡Repair Kit, Carburetor	
79	940179	‡Gasket, Kit, Carburetor	
80	853227	Main Jet, Adjustable	1
81	552826	Fuel Line Assy., Pump to Carb.	1
82	552838	Clip, Fuel Line	1
83	1C-410	Bolt, Fuel Line Clip	1
84	4E-04	Lkwshr, Fuel Line Clip	1
85	62F-4	Elbow, Fuel Line to Carb. & Pump	2
86	941591	Fuel Pump Assy. (Inc. 87)	1

‡ — As Required

ENGINE ACCESSORIES (Continued)

Item No.	Part No.	Description	No. Req'd.
87	952721	Gasket, Fuel Pump	1
88	620558	Elbow	1
89	1C-516	Bolt, Pump Mtg.	2
90	952779	Washer, Copper	2
91	941945	‡Repair Kit, Fuel Pump (Inc. 92)	
92	941944	‡Repair Kit, Diaphragm	
93	553348	*Starter Assembly	1

*#940137 Starter Assy used on Serial 8123 thru 9082. Use item 93 for replacement, removing #552884 Spacer Item 94.

94	552884	Spacer, Starter — See Note Above.	1
95	957361	Stud, Mtg. — Use only with #940137 Starter	3
96	2D-06	Nut, Mtg. — Use only with #940137 Starter	3
97	4E-06	Lkwshr, Mtg.	3
98	1C-620	Bolt, Mounting	3
99	850813	Armature, Starter	1
100	852135	Drive Assembly	1
101	553349	Housing, Drive—Note—when using with #940137 Starter, Remove Spacer Item 94	1
102	940139	Brush, Starter	4

ENGINE ACCESSORIES — DIESEL ONLY

103		*Pump, Fuel Injection*	1
	940897	For Serial: 75A-8123D thru 9638D & 9889D; 75B-6123D thru 6180D; 75R-7123D thru 7150D	
	941943	Effective with Serial: 75A-9639D & thereafter except 9889D; 75B-6181D & thereafter; 75R-7151D & thereafter	
104		*Injector, Fuel*	6
	953127	For Serial: 75A-8123D thru 9638D & 9889D; 75B-6123D thru 6180D; 75R-7123D thru 7150D	
	954601	Effective with Serial: 75A-9639D & thereafter except 9889D; 75B-6181D & thereafter; 75R-7151D & thereafter	
105	552814	Glow Plugs	6
106	953103	Gasket, Glow Plugs	6
107	553139	Harness, Glow Plugs	1
108	552941	Bracket, Glow Plug Harness	1
109	2G-1210	Screw, Bracket Attaching	1
110	14D-12	Nut, Bracket Attaching	1
111	2E-04	Lkwshr, Bracket Attaching	1
112	648382	Starter Assembly	1
113	552884	Spacer, Mounting	1
114	1C-628	Bolt, Starter Mtg.	3
115	4E-06	Lkwshr, Starter Mtg.	3
116	864539	Armature, Starter	1
117	864519	Switch, Solenoid	1
118	864548	Drive Assy.	1
119	864559	Housing, Drive	1
120	864525	Brush	4
121	940582	Lube Oil Filter Assy.	1
122	956814	Gasket, Bracket to Crankcase	1

‡ — As Required

ENGINE ACCESSORIES (Continued)

Item No.	Part No.	Description	No. Req'd.
123	940034	Cartridge Kit, Lube Oil Filter.....	2
124	957299	Gasket, Oil Filter Shell.....	1
125	551331	Fuel Filter, Primary	1
126	940107	Cartridge Kit, Primary Fuel Filter...	1
127		*Fuel Filter, Secondary*.....	1
	940183	For Serial:	
		75A-8123D thru 9638D & 9889D	
		75B-6123D thru 6180D	
		75R-7123D thru 7150D	
	553858	Effective with Serial:	
		75A-9639D & thereafter except 9889D	
		75B-6181D & thereafter	
		75R-7151D & thereafter	
128		*Cartridge Kit, Secondary Filter*....	1
	940027	For Serial:	
		75A-8123D thru 9638D & 9889D	
		75B-6123D thru 6180D	
		75R-7123D thru 7150D	
	958485	Effective with Serial:	
		75A-9639D & thereafter except 9889D	
		75B-6181D & thereafter	
		75R-7151D & thereafter	
129		*Fuel Filter, Third Stage*.....	1
	958166	For Serial:	
		75A-8123D thru 9638D & 9889D	
		75B-6123D thru 6180D	
		75R-7123D thru 7150D	

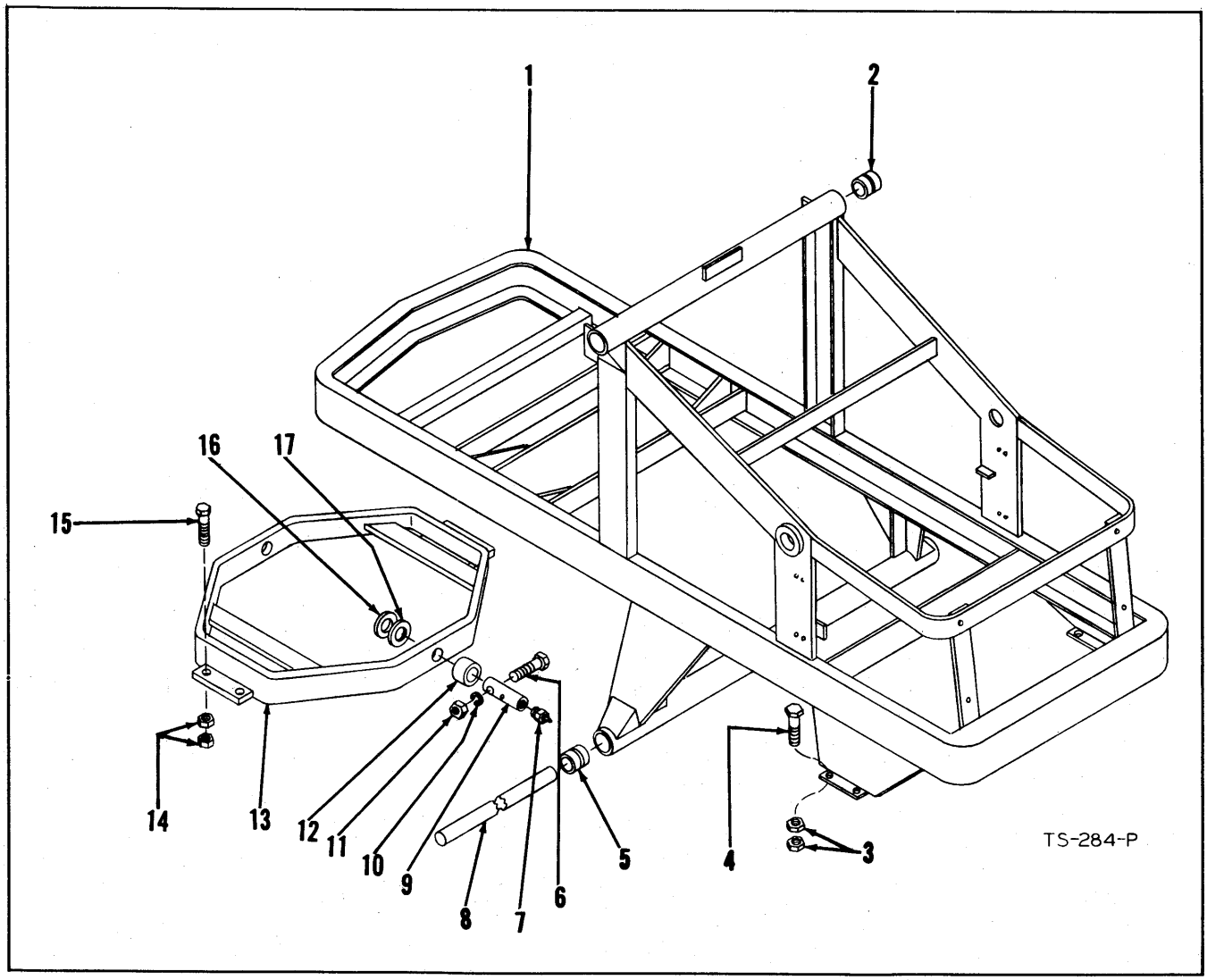

FRAME ASSEMBLY
MODEL 75A

Item No.	Part No.	Description	No. Req'd.
1		*Frame Assembly*	1
	550000	For Serial 8123 thru 10222, 10240 & 10247 thru 10251	
	514265	Effective with Serial 10223 thru 10239, 10241 thru 10246, 10252 & thereafter	
2	550010	Bushing, Boom Pivot Tube	2
3	2D-12	Nut, Axle Mtg.	16
4	550263	Bolt, Axle Mtg.	8
5	550010	Bushing, Boom Cyl. Pivot Shaft	2
6	2C-856	Bolt, Cradle Pivot Pin	2
7	15H-15	Fitting, Cradle Pivot Pin Grease	2
8	550070	Shaft, Boom Cyl. Pivot	1
9	550069	Pin, Cradle Pivot	2
10	4E-08	Lkwshr, Cradle Pivot Pin	2
11	2D-08	Nut, Cradle Pivot Pin	2
12	550066	Bushing, Cradle Pivot Pin	2
13	550062	Drive Steer Axle Cradle Assembly	1
14	2D-12	Nut, Axle Mtg.	16
15	550254	Bolt, Axle Mtg.	8
16	551348	‡Washer, Cradle to Frame	
17	551347	‡Washer, Cradle to Frame	
18	550253	†Pad, Axle Mtg.	2

‡ — As Required
† — Not Illustrated

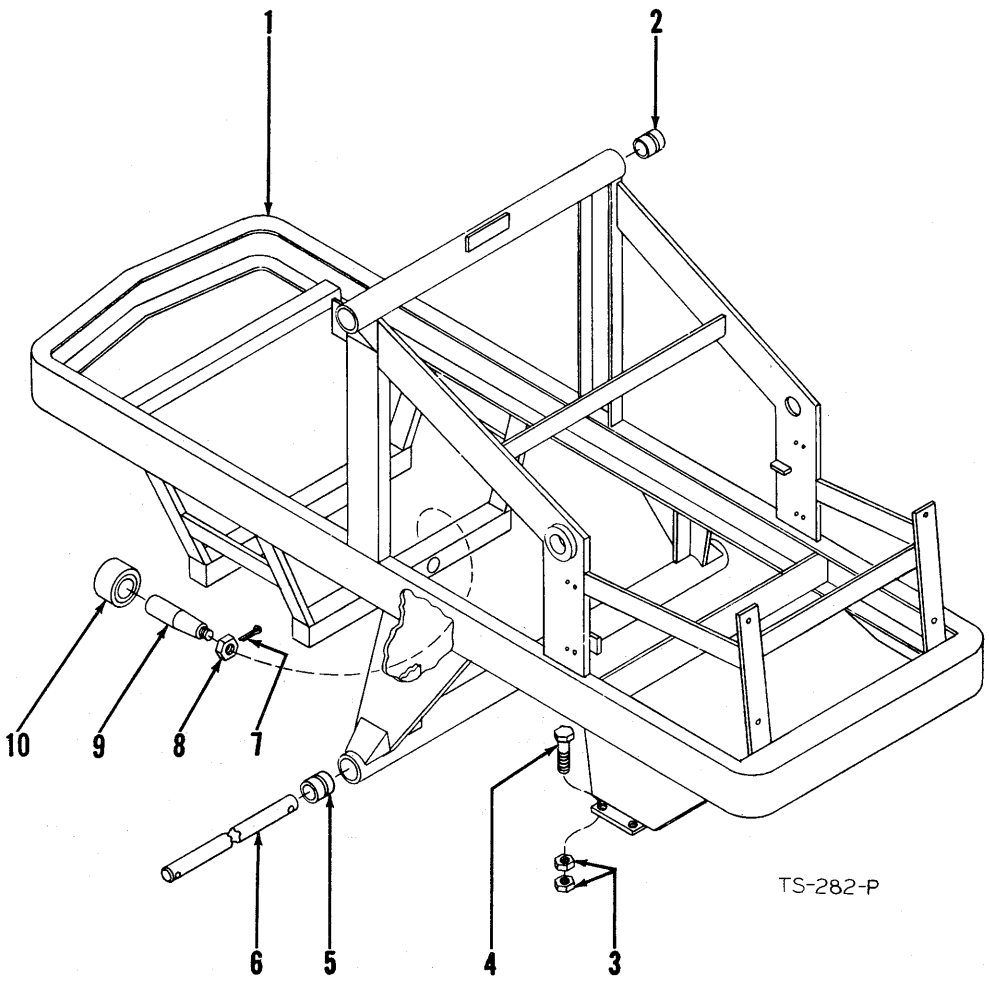

FRAME ASSEMBLY
MODEL 75B

Item No.	Part No.	Description	No. Req'd.
1		*Frame Assembly*	1
	550105	For Serial 6123 thru 6200	
	517076	Effective with Serial 6201 & thereafter	
2	550010	Bushing, Boom Pivot Tube	2
3	2D-12	Nut, Drive Axle to Frame	16
4	550263	Bolt, Drive Axle to Frame	8
5	550010	Bushing, Boom Pivot Tube	2
6	550070	Shaft, Boom Cyl. Pivot	1
7	1F-848	Cotter, Pivot Pin	2
8	4D-24	Nut, Pivot Pin	2
9	626561	Bushing & Pivot Pin Assy. (Inc. 9A & 10)	2
9A	626515	Pivot Pin	2
10	626516	Extended End Silent Block	2
11	10H-2	†Grease Fitting	4

† — Not Illustrated

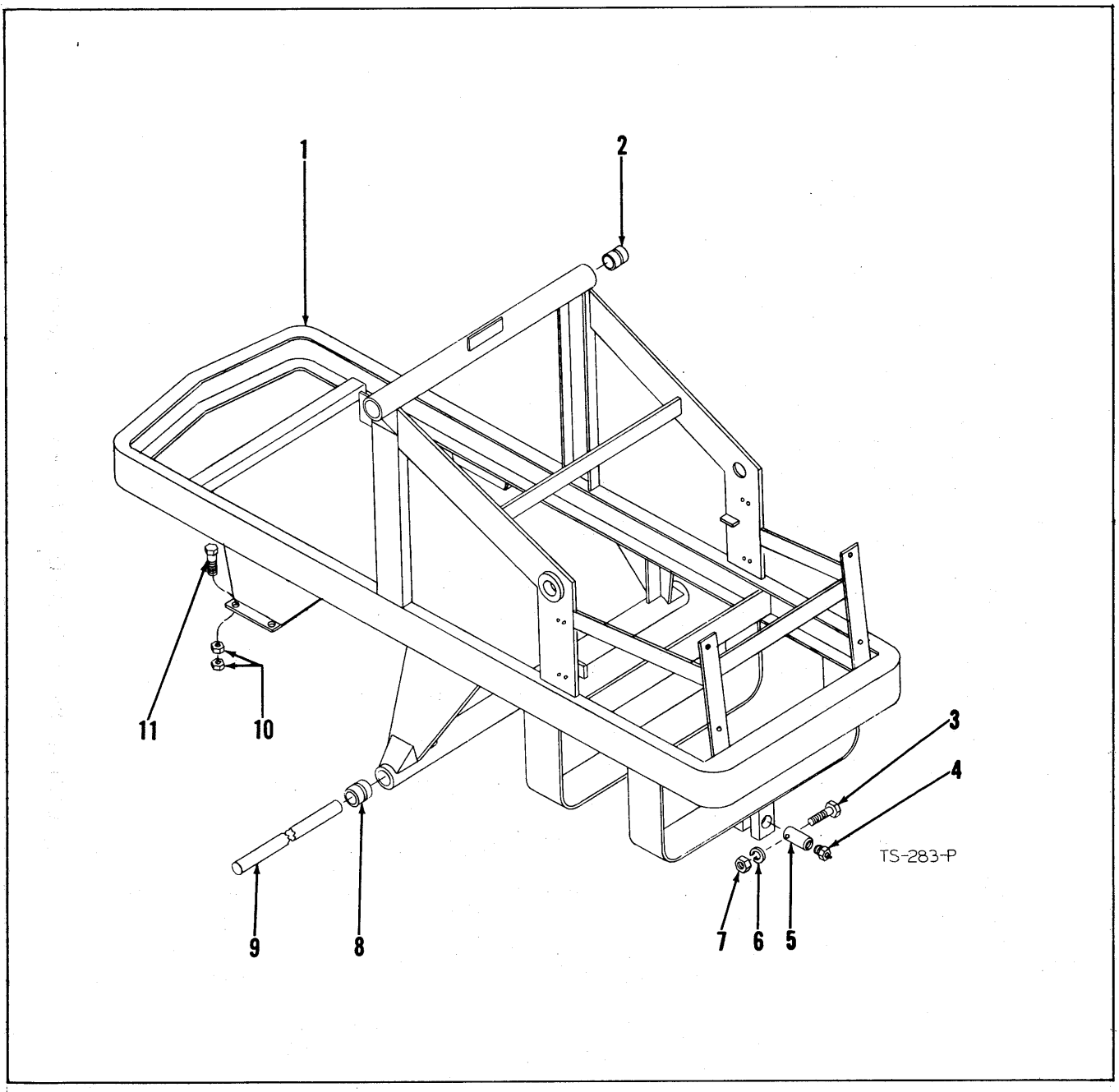

FRAME ASSEMBLY
MODEL 75R

Item No.	Part No.	Description	No. Req'd.
1		*Frame Assembly*	1
	550112	For Serial 7123 Thru 7154	
	517087	Effective with Serial 7155 & thereafter	
2	550010	Bushing, Boom Pivot Tube	2
3	2C-672	Bolt, Axle Pivot Pin	2
4	11H-15	Fitting, Axle Pivot Pin Grease	2
5	550120	Pin, Axle Pivot	2
6	4E-06	Lkwshr, Axle Pivot Pin	2
7	2D-06	Nut, Axle Pivot Pin	2
8	550010	Bushing, Boom Cyl. Pivot Pin	2
9	550070	Shaft, Boom Cyl. Pivot	1
10	2D-12	Nut, Axle to Frame	16
11	550263	Bolt, Axle to Frame	8
12	10H-2	Grease Fitting	4

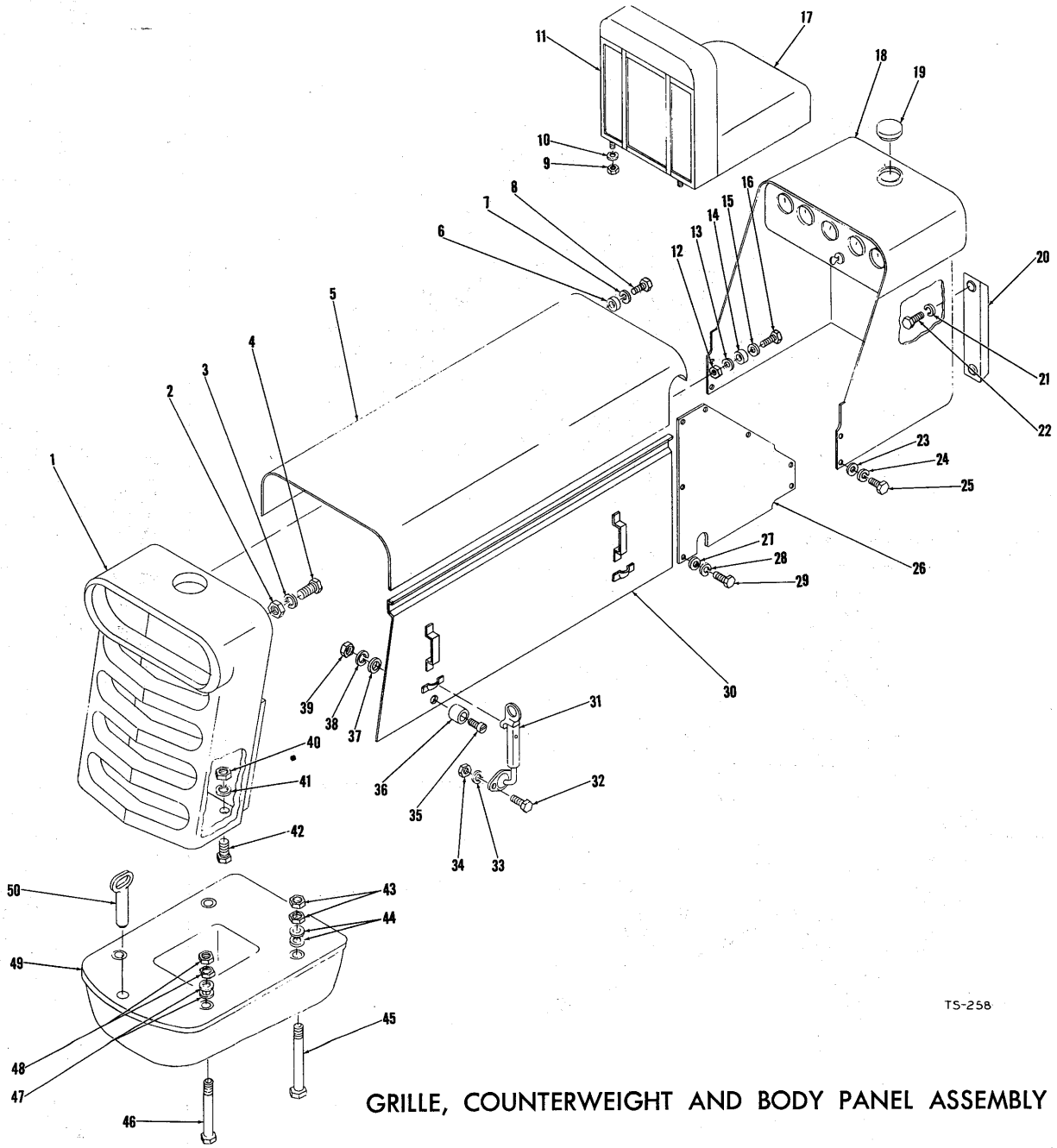

GRILLE, COUNTERWEIGHT AND BODY PANEL ASSEMBLY

GRILLE, COUNTERWEIGHT AND BODY PANEL ASSEMBLY

Item No.	Part No.	Description	No. Req'd.
1	550252	Grille	1
2	2D-06	Nut, Hood to Rear Grille	6
3	4E-06	Lkwshr, Hood to Rear Grille	6
4	2C-620	Bolt, Hood to Rear Grille	6
5		*Hood Assembly — GAS*	1
	550890	For Serial: *75A* — 8123 thru 10222, 10240 & 10247 thru 10251 *75B* — 6123 thru 6200 *75R* — 7123 thru 7154	
	514428	Effective with Serial: *75A* — 10223 thru 10239, 10241 thru 10246, 10252 and thereafter *75B* — 6201 and thereafter *75R* — 7155 and thereafter	
5A		*Hood Assembly — DIESEL*	1
	550889	For Serial: *75A*—8123D thru 10222D, 10240D and 10247D thru 10251D *75B*—6123D thru 6200D *75R*—7123D thru 7154D	
	514429	Effective with Serial: *75A*—10223D thru 10239D, 10241D thru 10246D, 10252D and thereafter *75B*—6201D and thereafter *75R*—7123D and thereafter	
6	518233	Pad, Hood to Frame	2
7	4E-08	Lkwshr, Hood to Frame	2
8	2C-824	Bolt, Hood to Frame	2
9	2D-06	Nut, Back Rest Cushion	2
10	4E-06	Lkwshr, Backrest Cushion	2
11	550635	Cushion, Back Rest	1
12	103376	Nut, Hood to Frame Lock	2
13	551835	Washer, Hood to Frame	2
14	518233	Pad, Hood to Frame	2
15	551835	Washer, Hood to Frame	2
16	2C-622	Bolt, Hood to Frame	2
17	550634	Cushion, Seat	1
17A	553744	†Seat Support Assembly	1
17B	2C-616	†Bolt, Seat Support Assembly	4
17C	2D-06	†Nut, Seat Support Assembly	4
17D	4E-06	†Lkwshr, Seat Support Assembly	4
18	550833	Front Shroud Ass'y. (Inc. Item 19)	1
19	551544	Cap, Fuel Tank	1
20	551539	Bar, Bumper	2
21	4E-08	Lkwshr, Bumper Bar to Brace	4
22	2C-836	Bolt, Bumper Bar to Brace	4
23	103293	Washer, Shroud to Frame	4
24	4E-06	Lkwshr, Shroud to Frame	4
25	2C-610	Bolt, Shroud to Frame	4
26	550893	Side Panel	2
27	103293	Washer, Side Panel	12
28	4E-06	Lkwshr, Side Panel	12
29	2C-610	Bolt, Side Panel	12
30		*Hood Side Panel Assembly — R.H.*	1
	550883	For Serial: *75A*—8123 thru 10222, 10240 and 10247 thru 10251 *75B*—6123 thru 6200 *75R*—7123 thru 7154	
	514226	Effective with Serial: *75A*—10223 thru 10239, 10241 thru 10246, 10252 and thereafter *75B*—6201 and thereafter *75R*—7155 and thereafter	
30A		*Hood Side Panel Assembly—L.H.*	1
	550886	For Serial: *75A*—8123 thru 10222, 10240 and 10247 thru 10251 *75B*—6123 thru 6200 *75R*—7123 thru 7154	
	514427	Effective with Serial: *75A*—10223 thru 10239, 10241 thru 10246, 10252 and thereafter *75B*—6201 and thereafter *75R*—7155 and thereafter	
31	552336	Hood Catch Assembly	4
32	2G-1014	Screw, Hood Catch Assembly	8
33	12E-10	Lkwshr, Hood Catch Assembly	8
34	14D-10	Nut, Hood Catch Assembly	8
35	2G-1014	Screw, Bumper	4
36	551434	Bumper, Hood Side Panel	4
37	616775	Washer, Bumper	4
38	13E-10	Lkwshr, Bumper	4
39	14D-10	Nut, Bumper	4
40	2D-10	Nut, Grille	2
41	4E-10	Lkwshr, Grille	2
42	2C-1052	Bolt, Grille	2
42	2D-12	Nut, Counterweight to Frame	4
44	616813	Washer, Counterweight to Frame	2
45	16C-12180	Bolt, Counterweight to Frame	2
46	16C-12224	Bolt, Counterweight to Frame	2
47	616813	Washer, Counterweight to Frame	2
48	2D-12	Nut, Counterweight to Frame	4
49	550583	Counterweight	1
50	550586	Drawbar Pin Assembly	1

† — Not Illustrated

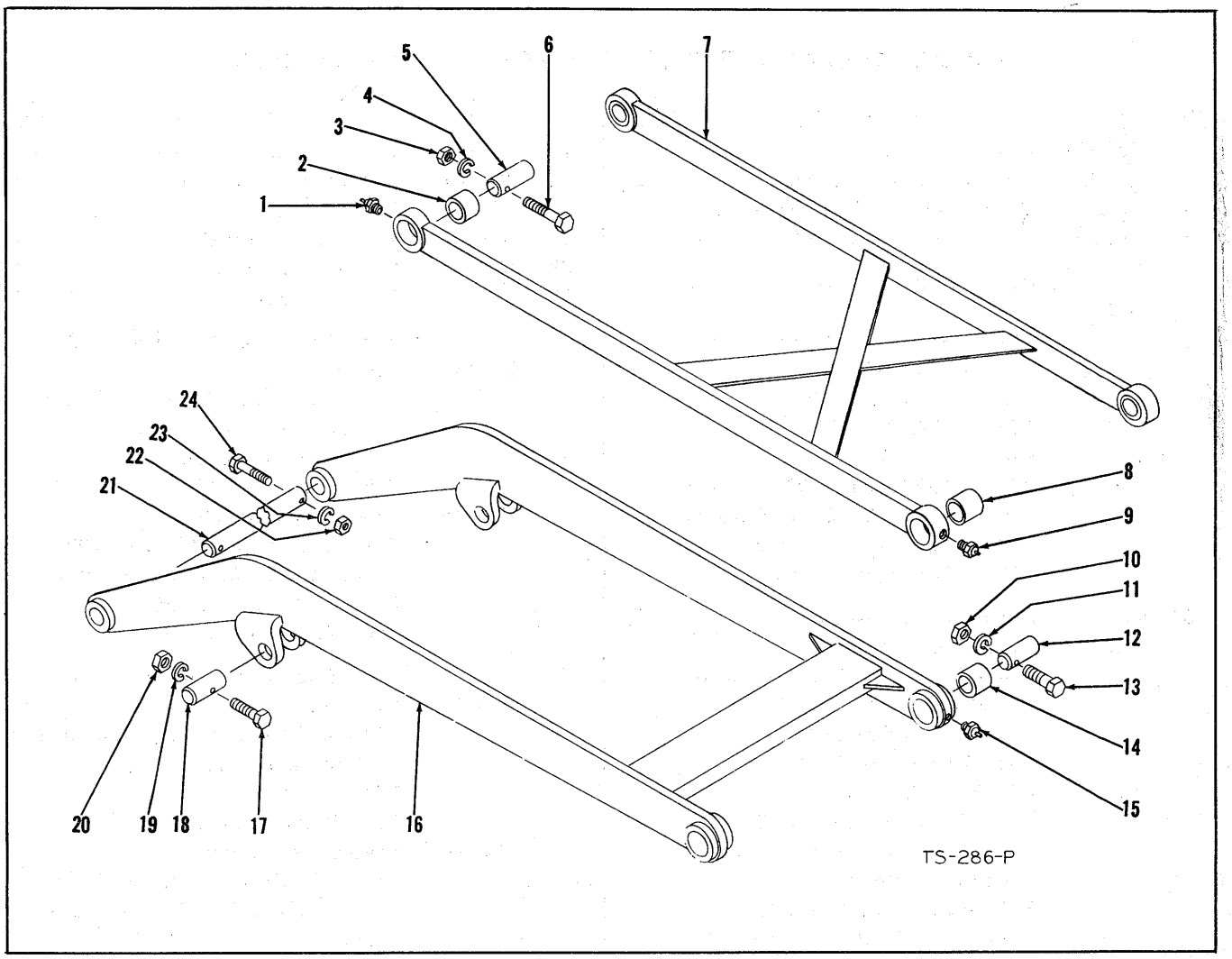

BOOM AND GUIDE BAR ASSEMBLY

Item No.	Part No.	Description	No. Req'd.
1	10H-35	Grease Fitting — ¼-28 — For use on Guide Bar Bosses with ¼" — 28 thread	2
1A	11H-15	Grease Fitting — ⅛ P.T. — For use on Guide Bar Bosses with ⅛ Pipe Thread	2
2	550191	Bushing, Guide Bar to Frame	2
3	2D-08	Nut, Pin Retaining	2
4	4E-08	Lkwshr, Pin Retaining	2
5	550188	Pin, Guide Bar to Frame	2
6	2C-876	Bolt, Pin Retaining	2
7	512991	Guide Bar Assembly (Inc. 2 & 8)	1
8	550143	Bushing, Guide Bar to Bucket	2
9	10H-25	Fitting, Carrier to Guide Bar Grease	2
10	2D-06	Nut, Pin Retaining	2
11	4E-06	Lkwshr, Pin Retaining	2
12	550207	Pin, Carrier to Boom	2
13	2C-648	Bolt, Pin Retaining	2
14	550143	Bushing, Boom to Carrier	2
15	10H-25	Fitting, Carrier to Boom Grease	2
16	550130	Boom & Pipe Assembly (Inc. 14, 16A & 16B)	1
16A	550144	†Boom Pipe Assembly — R.H.	1
16B	550176	†Boom Pipe Assembly — L.H.	1
17	2C-648	Bolt, Pin Retaining	2
18	550179	Pin, Boom to Cylinder	2
19	4E-06	Lkwshr, Pin Retaining	2
20	2D-06	Nut, Pin Retaining	2
21	550178	Shaft, Boom Pivot	1
22	2D-08	Nut, Shaft Retaining	2
23	4E-08	Lkwshr, Shaft Retaining	2
24	2C-876	Bolt, Shaft Retaining	2

† — Not Illustrated

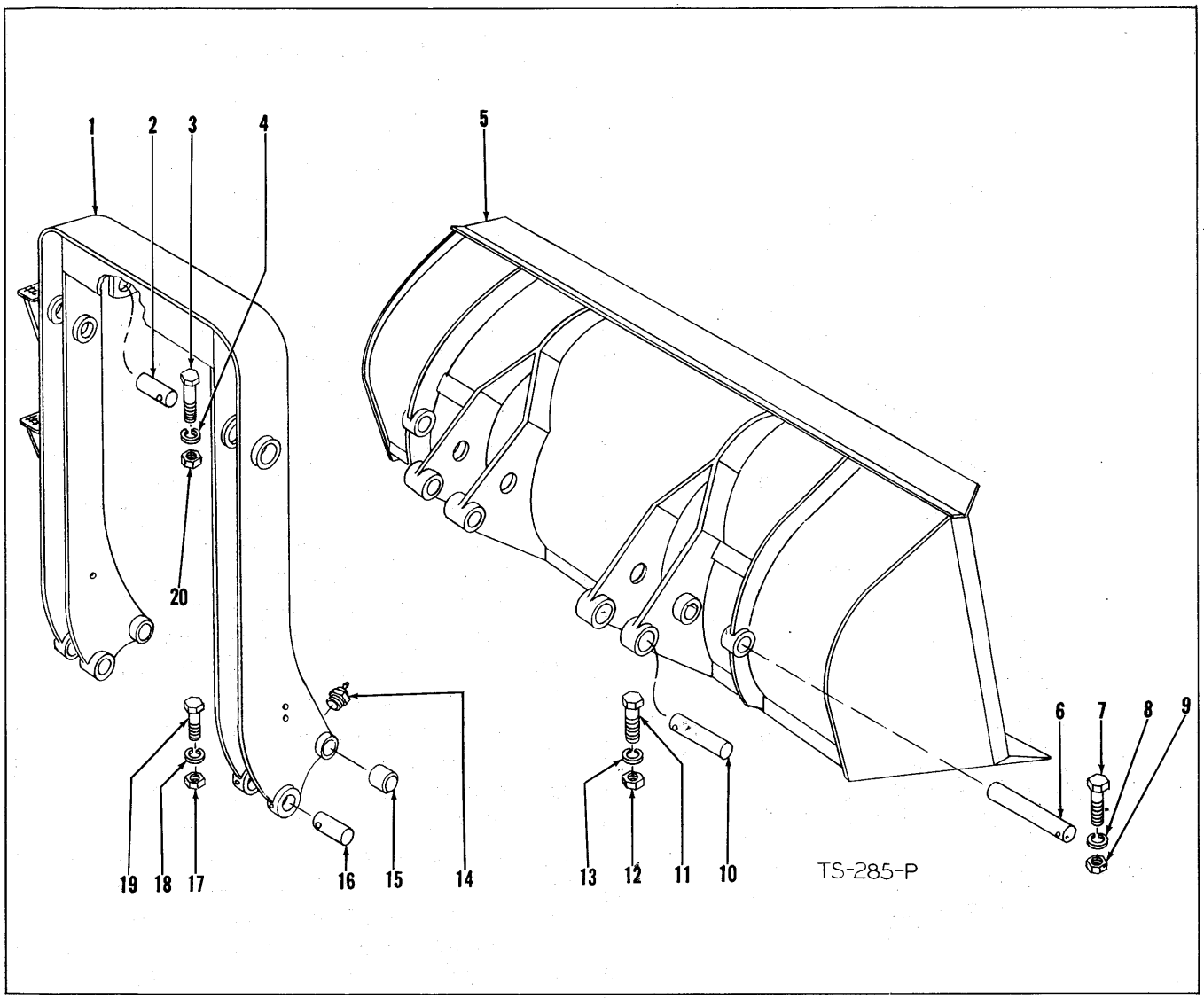

BUCKET AND CARRIER ASSEMBLY

Item No.	Part No.	Description	No. Req'd.
1	550193	Bucket Carrier Assembly	1
2	550208	Pin, Cylinder To Carrier	2
3	2C-672	Bolt, Pin Retainer	2
4	4E-06	Lkwshr, Pin Retainer	2
5		Bucket Assembly — See Chart Below	
6	552550	Pin, Carrier To Bucket	2
7	2C-648	Bolt, Pin Retainer	2
8	4E-06	Lkwshr, Pin Retainer	2
9	2D-06	Nut, Pin Retainer	2
10	550231	Pin, Cylinder To Bucket	2
11	2C-656	Bolt, Pin Retainer	2
12	2D-06	Nut, Pin Retainer	2
13	4E-06	Lkwshr, Pin Retainer	2
14	10H-25	Fitting, Carrier Grease	2
15	550206	Bushing, Carrier To Bucket	4
16	550207	Pin, Carrier To Guide Bar	2
17	2D-06	Nut, Pin Retainer	2
18	4E-06	Lkwshr, Pin Retainer	2
19	2C-648	Bolt, Pin Retainer	2
20	2D-06	Nut, Pin Retainer	2

BUCKET ASSEMBLY — DATA

Width	Bucket Assembly No.	Cutting Edge Replacement Kit No.
60"	552863	940383
73"	550210	940174
79"	551717 Standard	940334
85"	551711	940175

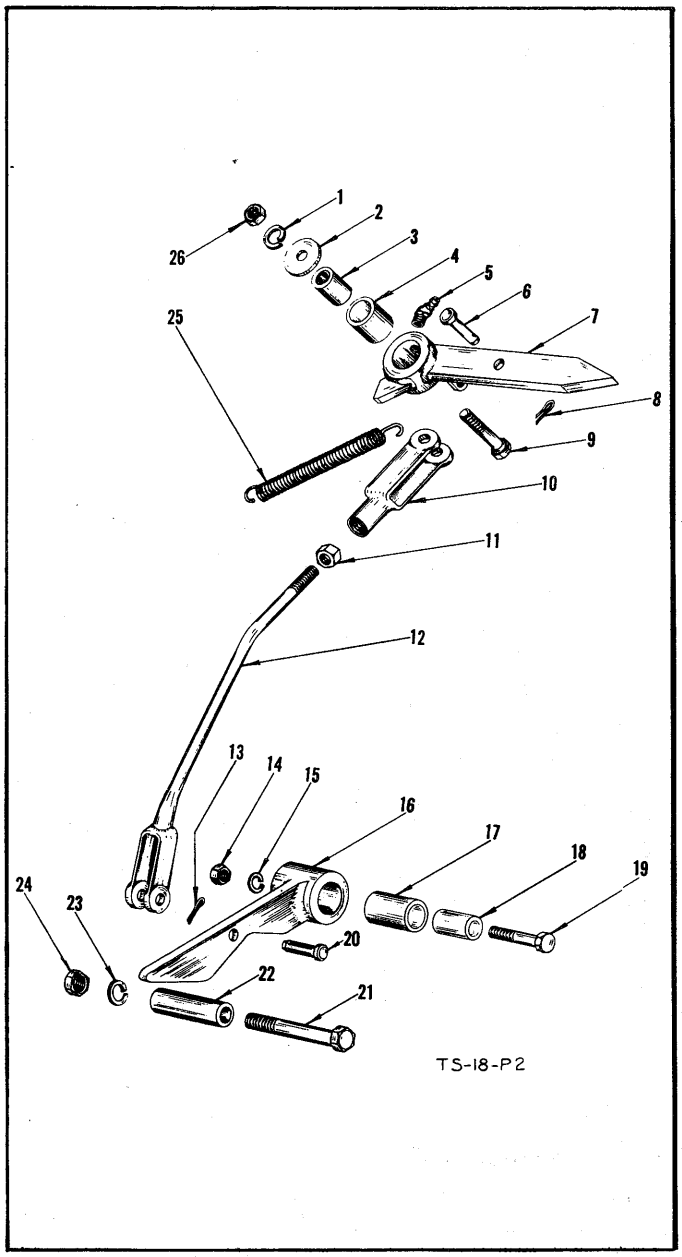

BUCKET INDICATOR

Item No.	Part No.	Description	No. Req'd.
1	4E-08	Lkwshr, Pointer Arm to Bucket	1
2	616796	Washer, Pointer Arm to Bucket	2
3	550646	Sleeve, Pointer Arm Mtg.	1
4	551373	Bushing, Pointer Arm Mtg.	1
5	12H-15	Fitting, Pointer Arm Grease	1
6	4F-08127	Pin, Clevis	1
7	551521	*Pointer Arm Assembly	1
7A	551520	*Pointer Assembly (Inc. 4, 5, & 7)	1
8	1F-414	Cotter, Clevis Pin	1
9	2C-840	Bolt, Pointer Arm to Bucket	1
10	4J-8300	Clevis, Rod End	1
11	8D-08	Nut, Rod End Clevis Jam	1
12	551613	Indicator Rod Assy. (Inc. 10 & 11)	1
13	1F-414	Cotter, Clevis Pin	1
14	2D-08	Nut, Cam Assembly Mtg.	1
15	4E-08	Lkwshr, Cam Assembly Mtg.	1
16	551515	Cam Assembly (Inc. 16A & 17)	1
16A	12H-15	Fitting, Cam Assembly Grease	1
17	551373	Bushing, Cam Assembly Mtg.	1
18	550646	Sleeve, Cam Assembly Mtg.	1
19	2C-844	Bolt, Cam Assembly to Bucket	1
20	4F-08127	Pin, Clevis	1
21	1C-1072	Bolt, Tube to Bucket Carrier	1
22	551523	Tube	1
23	4E-10	Lkwshr, Tube to Bucket Carrier	1
24	1D-10	Nut, Tube to Bucket Carrier	1
25	551644	Spring	1
26	2D-08	Nut, Pointer Arm to Bucket	1

For 60" Bucket Assembly Use:

7	552878	Pointer Arm Assembly	1
7A	552880	Pointer Assembly (Inc. 4, 5 & 7)	1

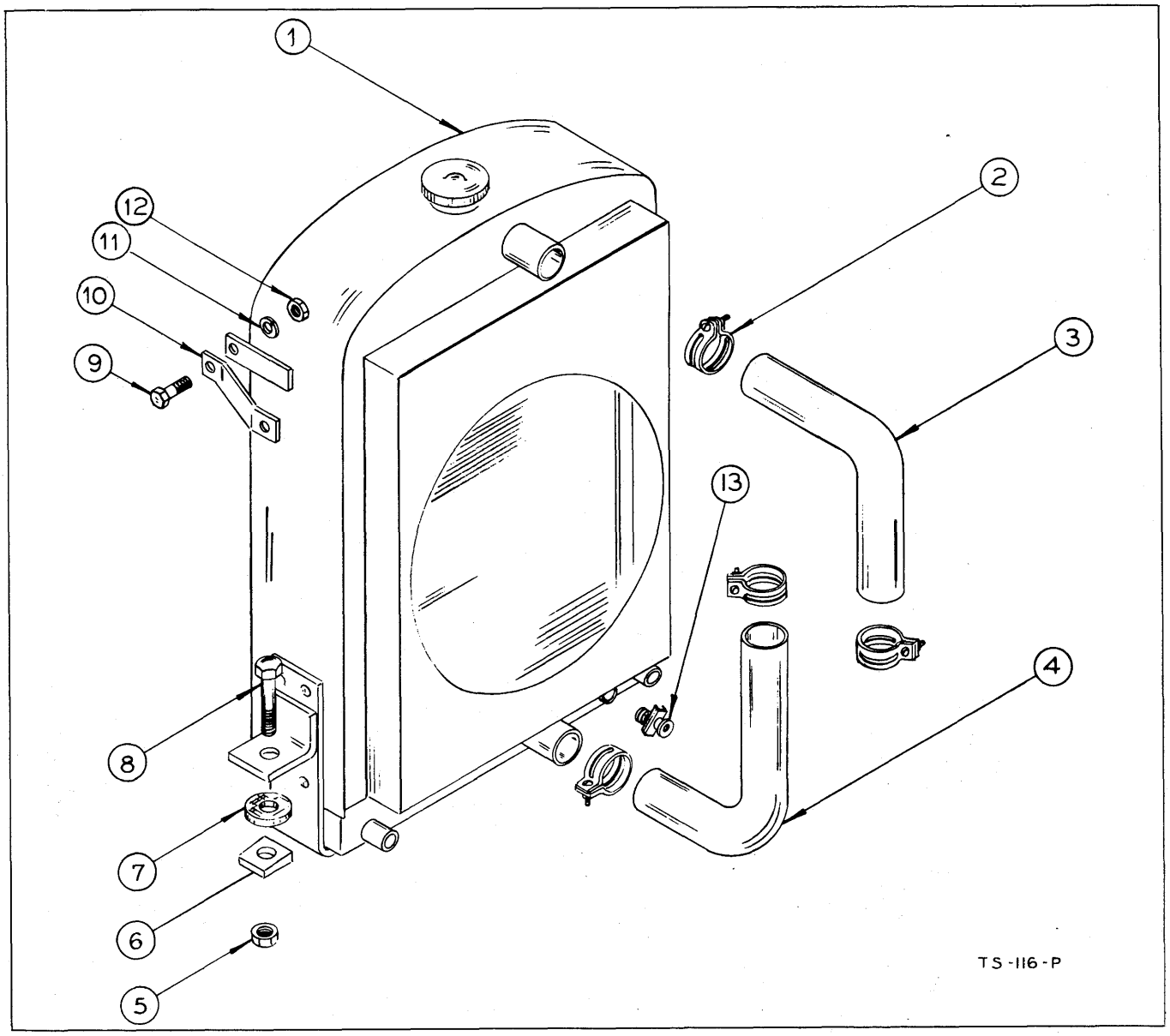

RADIATOR AND PARTS

Item No.	Part No.	Description	No. Req'd.
1	550588	Radiator	1
2	4H-30	Clamp, Radiator Hose	4
3	550590	Hose, Radiator — Upper	1
4	550591	Hose, Radiator — Lower	1
5	21D-08	Nut, Radiator to Frame	2
6		Omit	
7	518233	Pad, Radiator to Frame	2
8	2C-828	Bolt, Radiator to Frame	2
9	2C-620	Bolt, Clip to Radiator	2
10		*Clip, Radiator to Grille*	2
	550589	For Serial:	
		75A-8123 thru 10222, 10240 & 10247 thru 10251	
		75B-6123 thru 6200	
		75R-7123 thru 7154	
	514658	Effective with Serial:	
		75A-10223 thru 10239, 10241 thru 10246, 10252 & thereafter	
		75B-6201 & thereafter	
		75R-7155 & thereafter	
11	4E-06	Lkwshr, Clip to Radiator	2
12	2D-06	Nut, Clip to Radiator	2
13	73F-2	Drain Cock, Radiator	1

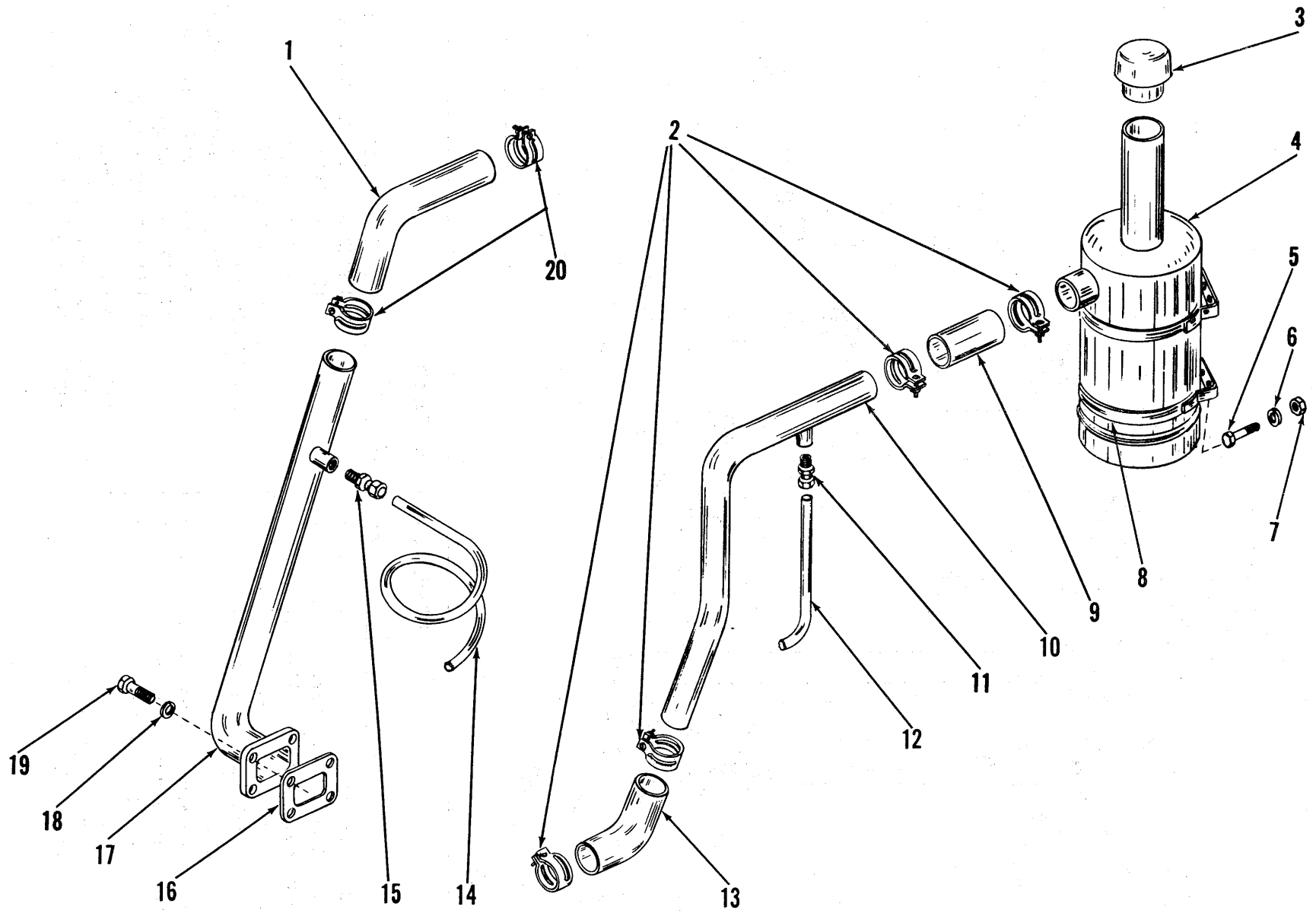

AIR CLEANER AND ATTACHING PARTS

TS-146-PI

AIR CLEANER AND ATTACHING PARTS

Item No.	Part No.	Description	No. Req'd.
1		*Hose, Air Cleaner* — DIESEL	1
	552896	For Serial: *75A*—8123D thru 10222D, 10240D & 10247D thru 10251D *75B*—6123D thru 6200D *75R*—7123D thru 7154D	
	514603	Effective with Serial: *75A*—10223D thru 10239D, 10241D thru 10246D, 10252D & thereafter *75B*—6201D & thereafter *75R*—7155D & thereafter	
2	4H-38	Clamp, Hose — GAS	4
3	550653	Cap, Air Cleaner	1
4	550654	Air Cleaner	1
5	2C-410	Bolt, Cleaner to Reservoir	4
6	4E-04	Lkwshr, Cleaner to Reservoir	4
7	2D-04	Nut, Cleaner to Reservoir	4
8	550659	Strap, Air Cleaner	2
9		*Hose, Air Cleaner* — GAS	1
	550658	For Serial: *75A*—8123 thru 10222, 10240 & 10247 thru 10251 *75B*—6123 thru 6200 *75R*—7123 thru 7154	
	1M-16050	Effective with Serial: *75A*—10223 thru 10239, 10241 thru 10246, 10252 and thereafter *75B*—6201 & thereafter *75R*—7155 & thereafter	
10	550655	Tube Assembly, Air Cleaner — GAS	1
11	550660	*Connector*—GAS ONLY—For Serial: *75A*—8123 thru 10222, 10240 & 10247 thru 10251 *75B*—6123 thru 6200 *75R*—7123 thru 7154	2
11A	655281	*Hose Nipple* — GAS ONLY — Effective with Serial: *75A*—10223 thru 10239, 10241 thru 10246, 10252 & thereafter *75B*—6201 & thereafter *75R*—7155 & thereafter	2
12		*Breather Hose Kit* — GAS	1
	942416	For Serial: *75A*—8123 thru 10222, 10240 & 10247 thru 10251 *75B*—6123 thru 6200 *75R*—7123 thru 7154	
	712175	Effective with Serial: *75A*—10223 thru 10239, 10241 thru 10246, 10252 & thereafter *75B*—6201 & thereafter *75R*—7155 & thereafter	
12A	4H-15	†Clamp, Valve Cover Breather Hose — GAS	2
13	550657	Hose, Tube to Carburetor — GAS	1
14		*Breather Hose Kit* — DIESEL	1
	942417	For Serial: *75A*—8123D thru 10222D, 10240D & 10247D thru 10251D *75B*—6123D thru 6200D *75R*—7123D thru 7154D	
	516432	Effective with Serial: *75A*—10223D thru 10239D, 10241D thru 10246D, 10252D & thereafter *75B*—6201D & thereafter *75R*—7155D & thereafter	
15	550660	*Connector* — DIESEL — For Serial: *75A*—8123D thru 10222D, 10240D & 10247D thru 10251D *75B*—6123D thru 6200D *75R*—7123D thru 7154D	2
15A	655281	*Hose Nipple* — DIESEL — Effective with Serial: *75A*—10223D thru 10239D, 10241D thru 10246D, 10252D & thereafter *75B*—6201D & thereafter *75R*—7155D & thereafter	2
16	551756	Gasket, Adaptor to Manifold — DIESEL	1
17	550765	Intake Manifold Adaptor Assy. — DIESEL	1
18	4E-05	Lkwshr, Adaptor to Manifold — DIESEL	4
19	1C-512	Bolt, Adaptor to Manifold — DIESEL	4
20		*Clamp, Hose* — DIESEL	2
	4H-28	For Serial: *75A*—8123D thru 10222D, 10240D & 10247D thru 10251D *75B*—6123D thru 6200D *75R*—7123D thru 7154D	
	4H-35	Effective with Serial: *75A*—10223D thru 10239D, 10241D thru 10246D, 10252D & thereafter *75B*—6201D & thereafter *75R*—7155D & thereafter	

MUFFLER AND PARTS

Item No.	Part No.	Description	No. Req'd.
21	550650	Muffler	1
22	550651	Manifold Adaptor — GAS	1
23	550764	Manifold Adaptor — DIESEL	1
24	550652	Clamp, Adaptor to Muffler	1
25	551528	Clamp, Tail Pipe to Brace	1

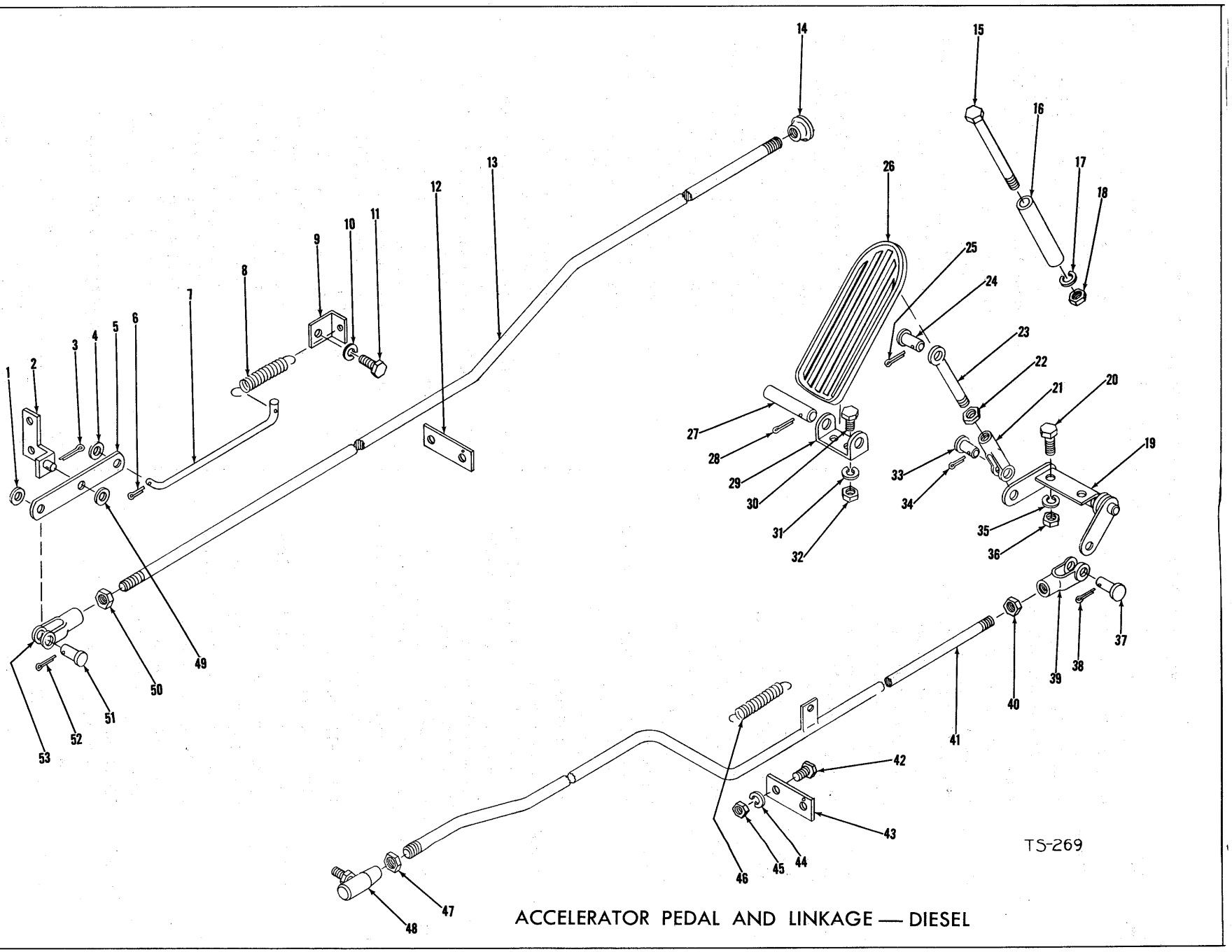

ACCELERATOR PEDAL AND LINKAGE — DIESEL

ACCELERATOR PEDAL AND LINKAGE — DIESEL

Item No.	Part No.	Description	No. Req'd.
1	619018	Washer, Bell Crank Arm	1
2	513005	Bell Crank Bracket Ass'y	1
3	1F-310	Cotter, Bracket to Bell Crank Arm	1
4	619018	Washer, Bell Crank Arm	1
5	513007	Bell Crank Arm	1
6	1F-310	Cotter, Rod to Bell Crank Arm	1
7	513003	Rod, Connector	1
8	551090	Spring, Shut Off Return	1
9	513002	Clip, Spring Return	1
10	4E-04	Lkwshr, Spring Return Clip	1
11	1C-409	Bolt, Spring Return Clip	1
12	550624	Guide, Shut Off Rod	1
13		*Shut Off Rod Assembly*	1
	553967	Cable — For Serial: 75A — 9639D thru 9987D except 9889D 75B — 6181D thru 6189D	
	513008	For Serial: 75A—9988D thru 10222D, 10240D & 10247D thru 10251D 75B — 6190D thru 6200D 75R — 7151D thru 7154D	
	514620	Effective with Serial: 75A — 10223D thru 10239D, 10241D thru 10246D, 10252D & thereafter 75B — 6201D & thereafter 75R — 7155D & thereafter	
14	551178	Knob, Shut Off Rod	1
15	2C-448	Bolt, Pedal Stop	1
16	551016	Stop, Pedal	1
17	4E-04	Lkwshr, Pedal Stop	1
18	2D-04	Bolt, Pedal Stop	1
19	550616	Bell Crank Ass'y	1
20	2C-410	Bolt, Bell Crank Mtg	2
21	2J-4200	Yoke, Pedal Rod	1
22	8D-04	Nut, Pedal Rod Yoke Jam	1
23	550619	Rod, Pedal	1
24	4F-04051	Pin, Pedal Rod to Pedal	1
25	1F-207	Cotter, Pedal Rod to Pedal Pin	1
26	623829	Pedal, Accelerator	1
27	623762	Pin, Pedal to Bracket	1
28	1F-316	Cotter, Pedal to Bracket Pin	1
29	551015	Bracket, Pedal Pivot	1
30	2C-410	Bolt, Bracket to Floorboard	2
31	4E-04	Lkwshr, Bracket to Floorboard	2
32	2D-04	Nut, Bracket to Floorboard	2
33	4F-04051	Pin, Pedal Rod Yoke	1
34	1F-207	Cotter, Pedal Rod Yoke Pin	1
35	4E-04	Lkwshr, Bell Crank	2
36	2D-04	Nut, Bell Crank	2
37	4F-04051	Pin, Accel. Rod Yoke	1
38	1F-207	Cotter, Accel. Rod Yoke Pin	1
39	2J-4200	Yoke, Accel. Rod	1
40	8D-04	Nut, Yoke Jam	1
41		*Accelerator Rod Assembly*	1
	551759	For Serial: 75A — 8123D thru 9638D & 9889D 75B — 6123D thru 6180D 75R — 7123D thru 7150D	
	553988	For Serial: 75A — 9639D thru 9888D 9890D thru 10222D, 10240D & 10247D thru 10251D 75B — 6181D thru 6200D 75R — 7151D thru 7154D	
	514617	Effective with Serial: 75A — 10223D thru 10239D, 10241D thru 10246D, 10252D & thereafter 75B — 6201D & thereafter 75R — 7155D & thereafter	
42	2C-516	Bolt, Accel. Rod Guide	1
43	550624	Guide, Accel. Rod	1
44	4E-05	Lkwshr, Accel. Rod Guide	1
45	2D-05	Nut, Accel. Rod Guide	1
46	551090	Spring, Pedal Return	1
47	8D-04	Nut	1
48	941484	Ball Joint, Accel. Rod to Pump—For Serial — 9639D thru 9888D, 9890D thru 10222D, 10240D & 10247D thru 10251D	1
48A	2J-4200	†Yoke, Accel. Rod to Pump — For Serial 8123D thru 9638D & 9889D	1
48B	4F-04051	†Pin, Accel. Rod to Pump Yoke — For Serial 8123D thru 9638D & 9889D	1
48C	1F-207	†Cotter, Accel. Rod to Pump Yoke Pin —For Serial—8123D thru 9638D & 9889D	1
49	619018	Washer, Bell Crank Arm	1
50	14D-10	Nut, Clevis Jam	1
51	4F-03038	Pin, Clevis	1
52	1F-208	Cotter, Clevis Pin	1
53	2J-10109	Clevis	1

† — Not Illustrated

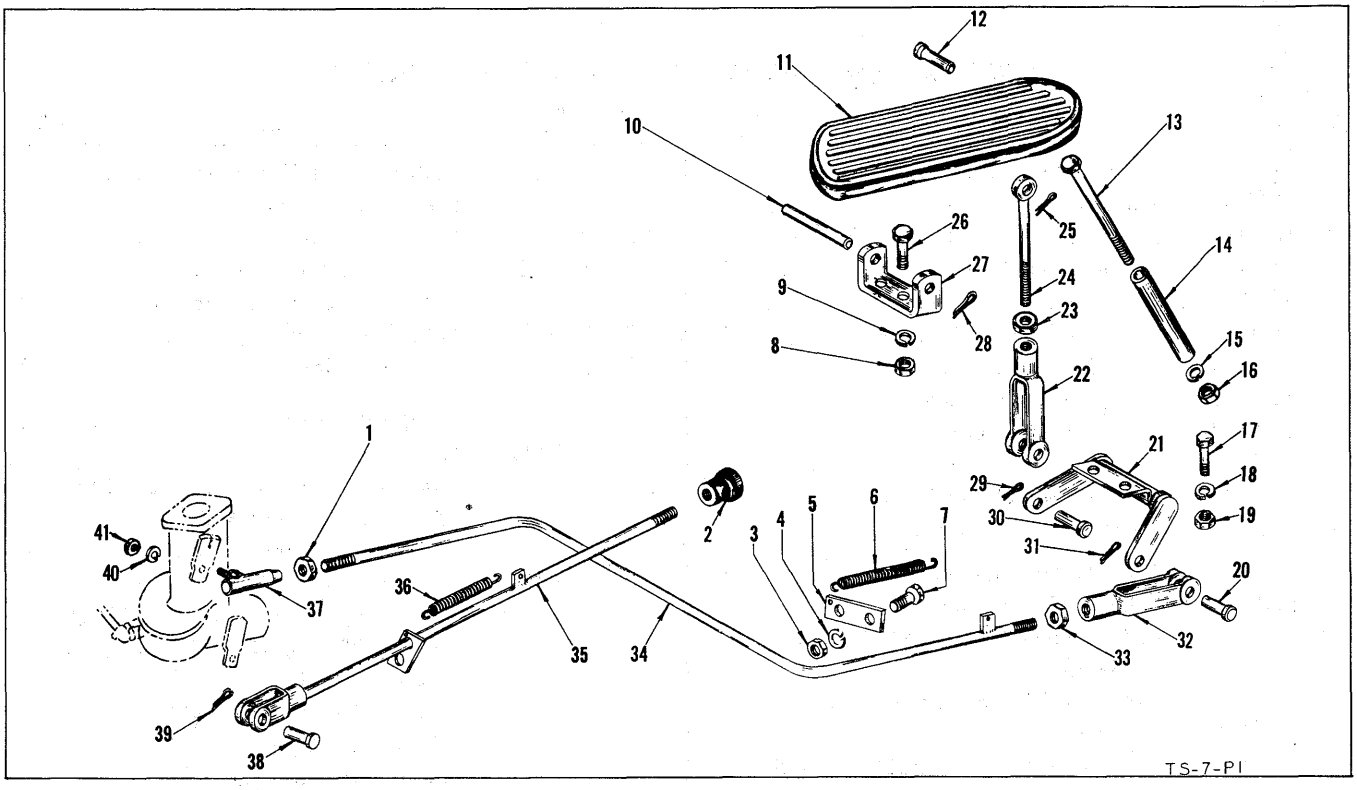

ACCELERATOR PEDAL AND LINKAGE — GAS

Item No.	Part No.	Description	No. Req'd.
1	8D-04	Nut, Ball Joint Jam	1
2	551178	Knob, Choke Rod	1
3	2D-06	Nut, Accel. Rod Guide	1
4	4E-06	Lkwshr, Accel. Rod Guide	1
5	550624	Guide, Accel. Rod	1
6	551090	Spring, Pedal Return	1
7	2C-616	Bolt, Accel. Rod Guide	1
8	2D-04	Nut, Bracket to Floorboard	2
9	4E-04	Lkwshr, Bracket to Floorboard	2
10	623762	Pin, Bracket to Pedal	1
11	623829	Pedal, Accelerator	1
12	4F-04051	Pin, Pedal to Rod	1
13	2C-448	Bolt, Pedal Stop	1
14	551016	Stop, Pedal	1
15	4E-04	Lkwshr, Pedal Stop	1
16	2D-04	Nut, Pedal Stop	1
17	2C-410	Bolt, Bell Crank Mtg.	2
18	4E-04	Lkwshr, Bell Crank Mtg.	2
19	2D-04	Nut, Bell Crank Mtg.	2
20	4F-04051	Pin, Accelerator Rod Yoke	1
21	550616	Bell Crank Assembly	1
22	4J-4200	Yoke, Pedal Rod	1
23	8D-04	Nut, Pedal Rod Yoke Jam	1
24	550619	Rod, Pedal	1
25	1F-207	Cotter, Pedal to Rod Pin	1
26	2C-410	Bolt, Bracket to Floorboard	2
27	551015	Bracket, Pedal Pivot	1
28	1F-316	Cotter, Pedal Pin	1
29	1F-207	Cotter, Pedal Rod Yoke	1
30	4F-04051	Pin, Pedal Rod Yoke	1
31	1F-207	Cotter, Accel. Rod Yoke	1
32	4J-4200	Yoke, Accel. Rod	1
33	8D-04	Nut, Accel. Rod Yoke Jam	1
34		*Accelerator Rod Assembly*	1
	511945	For Serial: 75A-8123 thru 10222, 10240 & 10247 thru 10251; 75B-6123 thru 6200; 75R-7123 thru 7154	
	514622	Effective with Serial: 75A-10223 thru 10239, 10241 thru 10246, 10252 & thereafter; 75B-6201 & thereafter; 75R-7155 & thereafter	
35		*Choke Rod Assembly*	1
	551512	For Serial: 75A-8123 thru 10222, 10240 & 10247 thru 10251; 75B-6123 thru 6200; 75R-7123 thru 7154	
	514624	Effective with Serial: 75A-10223 thru 10239, 10241 thru 10246, 10252 & thereafter; 75B-6201 & thereafter; 75R-7155 & thereafter	
36	551090	Spring, Choke Rod Return	1
37	941484	Ball Joint, Accel. Rod to Carb.	1
38	4F-03038	Pin, Choke Rod to Carb.	1
39	1F-208	Cotter, Choke Rod to Carb. Pin	1
40	4E-04	Lkwshr, Ball Joint to Carb.	1
41	8D-04	Nut, Ball Joint to Carb.	1

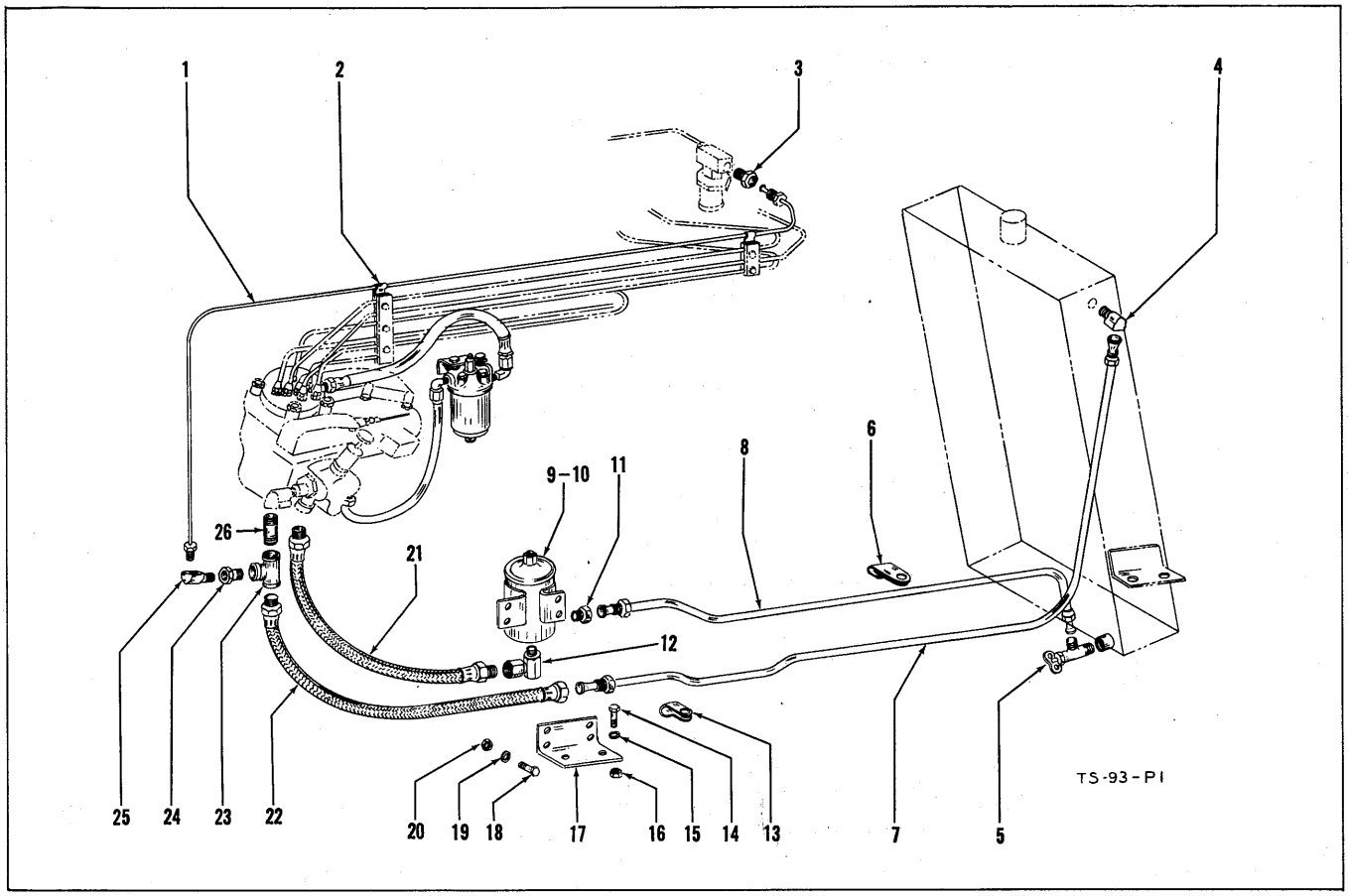

FUEL LINES — DIESEL

For Serial:

75A — 8123D Thru 9638D and 9889D

75B — 6123D Thru 6180D

75R — 7123D Thru 7150D

Item No.	Part No.	Description	No. Req'd.
1	552017	Return Line, Injector to Main Return Line	1
2	6H-1	Clip, Tubes	2
3	59F-2	Connector, Inverted Flare Tube	1
4	62F-5	Elbow — 90°	1
5	69F-5	Shut Off Valve	1
6	552732	Clip, Fuel Line	2
6A	1C-416	†Bolt, Fuel Line Clip	1
6B	1D-04	†Nut, Fuel Line Clip	1
6C	4E-04	†Lkwshr, Fuel Line Clip	1
7	552302	Return Line Assembly, Engine to Tank	1
8	940393	Fuel Line Assembly Kit — For Serial 8123D thru 8498D	1
8A	552300	Fuel Line Assembly — For Serial 8499D thru 9638D & 9889D	1
9	551331	Filter, Primary Fuel	1
10	940107	Cartridge, Primary Fuel Filter	1
11	59F-6	Connector, Inverted Flare Tube	1
12	31F-2	Elbow — 90°	1
13	6H-9	Clip, Return Line	1
14	2C-616	Bolt, Bracket to Frame	2
15	4E-06	Lkwshr, Bracket to Frame	2
16	2D-06	Nut, Bracket to Frame	2
17	550757	Bracket, Filter Mtg.	1
18	2C-512	Bolt, Filter to Bracket	4
19	4E-05	Lkwshr, Filter to Bracket	4
20	2D-05	Nut, Filter to Bracket	4
21	551336	Hose, Filter to Pump	1
22	550983	Hose, Engine to Return Line	1
23	18F-2	Pipe Tee — ¼ x ¼ x ¼	1
24	19F-1	Bushing, Reducing — ¼ x ⅛	1
25	62F-2	Elbow — 90°	1
26	5K-207	Nipple — ¼	1

† — Not Illustrated

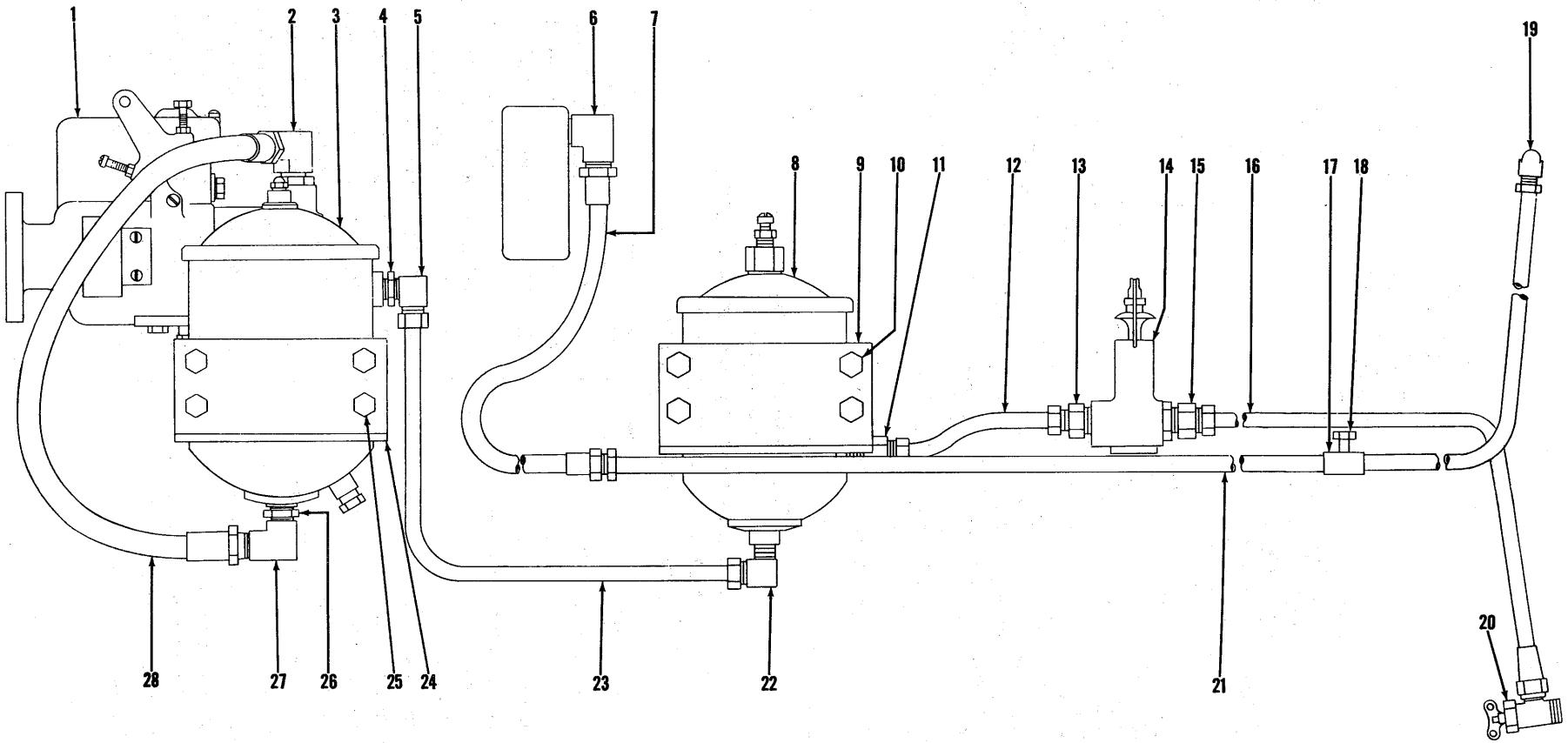

FUEL LINES — DIESEL

TS-267

FUEL LINES — DIESEL

Effective with Serial

75A — 9639D and Thereafter Except 9889D
75B — 6181D and Thereafter
75R — 7151D and Thereafter

Item No.	Part No.	Description	No. Req'd.
1		Fuel Injection Pump — See Index..	1
2	29F-1	Elbow — 90°	1
3	553858	Filter, Secondary	1
3A	958485	Cartridge, Secondary Filter	1
4	19F-3	Bushing, Reducing — ⅜ x ¼	1
5	62F-6	Elbow — 90°	1
6	29F-1	Elbow — 90°	1
7	550984	Hose, Pump to Return Line.....	1
8	551331	Filter, Primary	1
8A	940107	Cartridge, Primary Filter	1
9	550757	Bracket, Primary Filter Mtg.	1
10	2C-512	Bolt, Filter to Bracket	4
10A	2D-05	†Nut, Filter to Bracket	4
10B	4E-05	†Lkwshr, Filter to Bracket	4
10C	2C-616	†Bolt, Bracket to Frame	2
10D	2D-06	†Nut, Bracket to Frame	2
10E	4E-06	†Lkwshr, Bracket to Frame.....	2
11	59F-6	Connector, Inverted Flare Tube....	1
12		*Fuel Line Assembly*	1
	553985	For Serial:
		75A — 9639D thru 9888D, 9890D thru 10222D, 10240D & 10247 thru 10251D
		75B — 6181D thru 6200D
		75R — 7151D thru 7154D
	514605	Effective with Serial:
		75A — 10223D thru 10239D, 10241D thru 10246D, 10252D & thereafter
		75B — 6201D & thereafter
		75R — 7155D & thereafter
13	59F-6	Connector, Inverted Flare Tube....	1
14	692843	Pump, Hand Primer	1
14A	553986	†Bracket, Hand Primer Pump Mtg. ..	1
14B	2C-1018	†Bolt, Pump to Bracket	2
14C	14D-10	†Nut, Pump to Bracket.....	2
14D	12E-10	†Lkwshr, Pump to Bracket.....	2
14E	2C-620	†Bolt, Bracket to Frame	1
14F	2D-06	†Nut, Bracket to Frame	1
14G	4E-06	†Lkwshr, Bracket to Frame	1
15	59F-6	Connector, Inverted Flare Tube....	1
16	553984	Fuel Line Assembly, Tank to Hand Primer	1
17	552732	Clip, Fuel Line to Frame.....	2
18	2C-620	Bolt, Clip to Frame	1
18A	2D-06	†Nut, Clip to Frame	1
18B	4E-06	†Lkwshr, Clip to Frame	1
19	62F-5	Elbow — 90°	1
20	69F-5	Shut Off Valve	1
21		*Return Line Assembly*	1
	552302	For Serial:
		75A — 9639D thru 9888D, 9890D thru 10222D, 10240D & 10247D thru 10251D
		75B — 6181D thru 6200D
		75R — 7151D thru 7154D
	514606	Effective Serial:
		75A — 10223D thru 10239D, 10241D thru 10246D, 10252D & thereafter
		75B — 6201D & thereafter
		75R — 7155D & thereafter
22	62F-6	Elbow — 90°	1
23	553982	Fuel Line Ass'y, Primary to Secondary Filter	1
24	550757	Bracket, Secondary Filter Mtg.	1
25	2C-512	Bolt, Filter to Bracket	4
25A	2D-05	†Nut, Filter to Bracket	4
25B	4E-05	†Lkwshr, Filter to Bracket	4
25C	2C-616	†Bolt, Bracket to Frame	2
25D	2D-06	†Nut, Bracket to Frame	2
25E	4E-06	†Lkwshr, Bracket to Frame.....	2
26	19F-3	Bushing, Reducing — ⅜ x ¼	1
27	29F-1	Elbow — 90°	1
28	550876	Hose, Secondary Filter to Pump ...	1

† — Not Illustrated

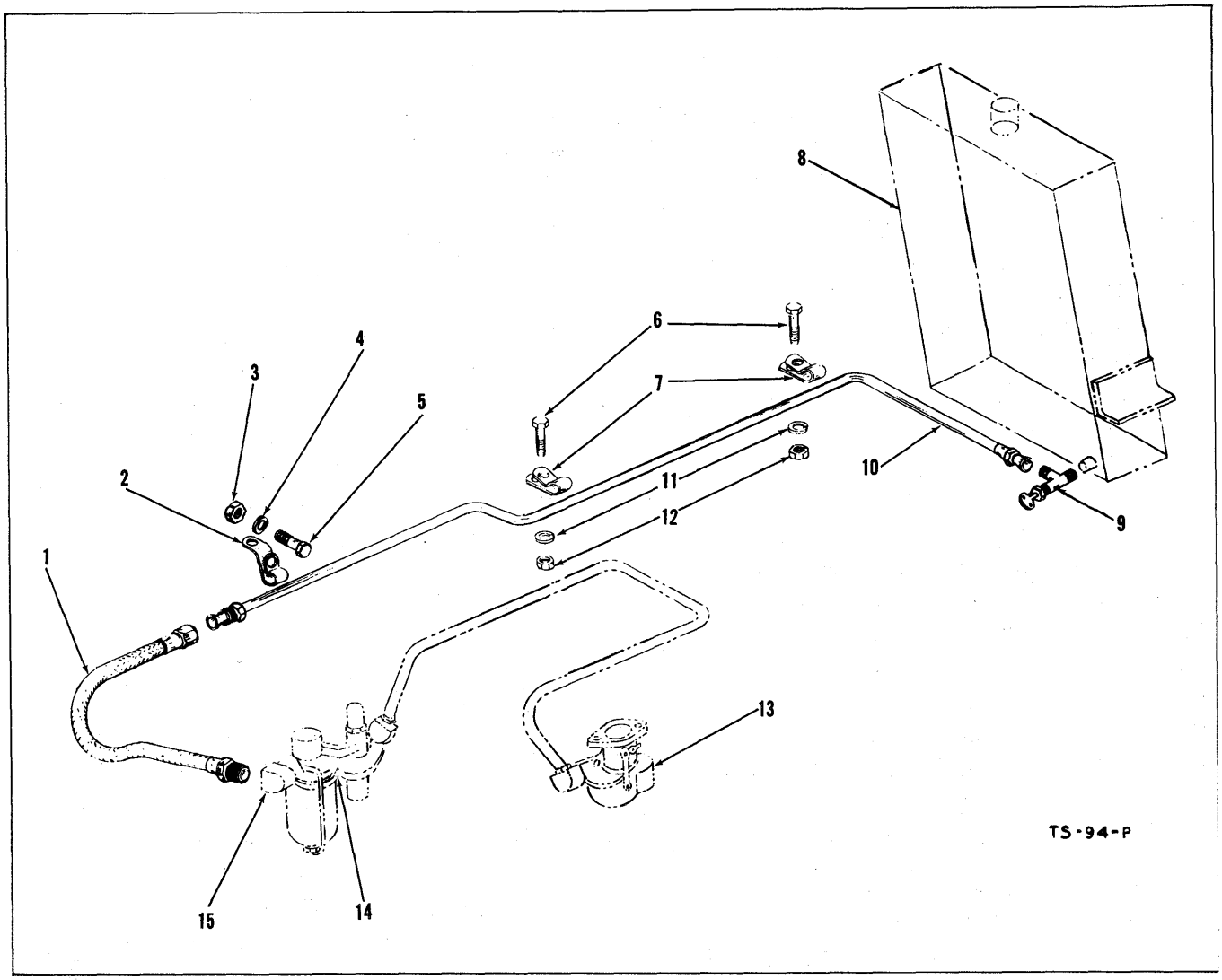

FUEL LINES — GAS

Item No.	Part No.	Description	No. Req'd.
1	550984	Hose, Fuel Line to Engine	1
2		Omit	
3	1D-04	Nut, Clip to Fuel Line	1
4	4E-04	Lkwshr, Clip to Fuel Line	1
4A	619018	†Washer, Clip to Fuel Line	2
5	1C-410	Bolt, Clip to Fuel Line	1
6	2C-616	Bolt, Clip to Frame	2
7	6H-9	Clip, Fuel Line	3
8		Fuel Tank — See Index	
8A	13F-04	†Pipe Plug, Fuel Tank	2
9	69F-4	Shut Off Valve	1
10		*Fuel Line Ass'y, Tank to Fuel Pump*	1
	552298	For Serial:	
		75A — 8499 thru 10222, 10240 & 10247 thru 10251	
		75B — 6123 thru 6200	
		75R — 7123 thru 7154	
	514608	For Serial:	
		75A — 10223 thru 10239, 10241 thru 10246, 10252 & thereafter	
		75B — 6201 & thereafter	
		75R — 7155 & thereafter	
11	4E-06	Lkwshr, Clip to Frame	2
12	2D-06	Nut, Clip to Frame	2
13		Carburetor — See Index	
14		Fuel Pump — See Index	
15	620558	Elbow, Hose to Pump	1

† — Not Illustrated

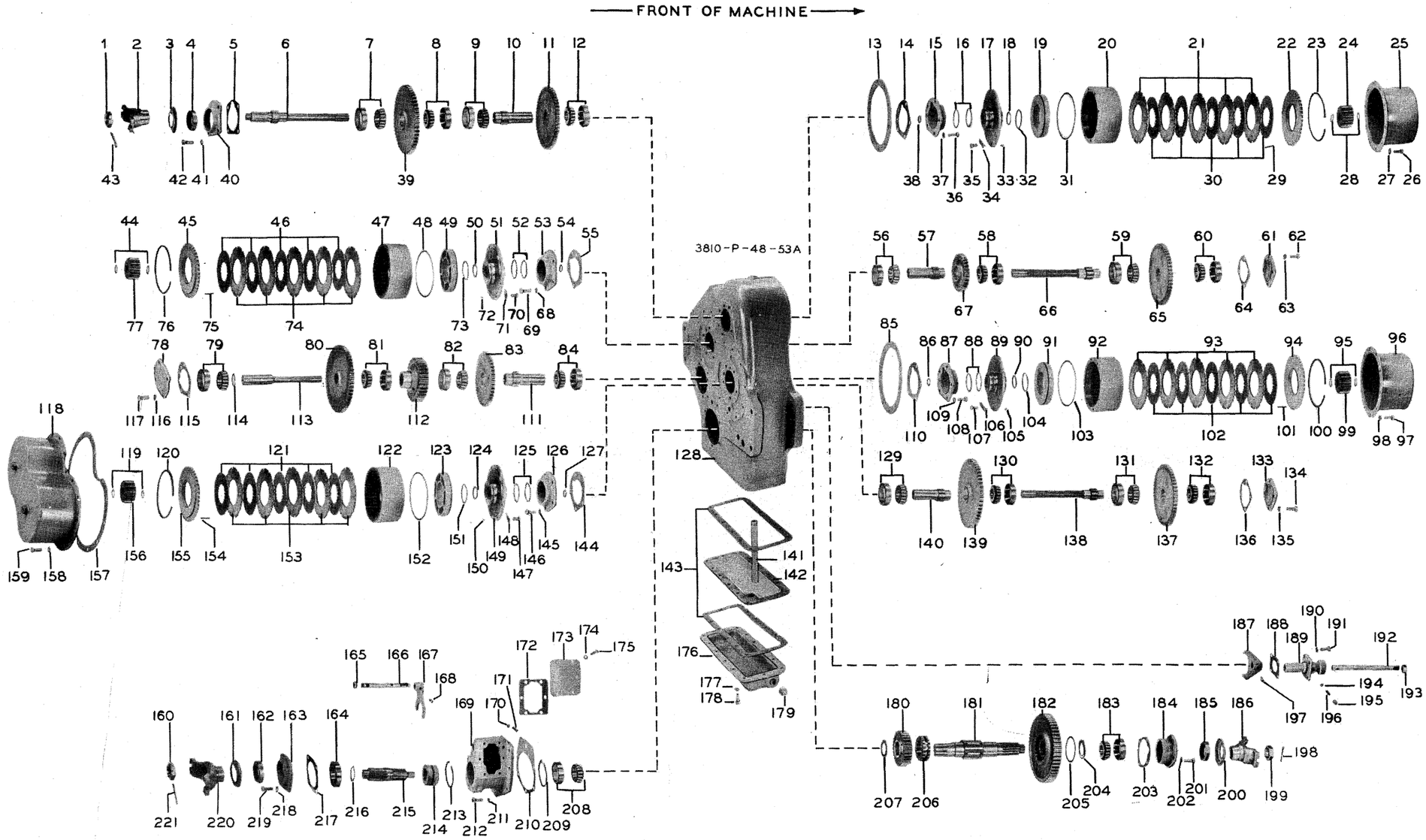

TRANSMISSION

TRANSMISSION ASSEMBLY
MODEL 75A

Item No.	Part No.	Description	No. Req'd.
A		*Transmission Assembly*	1
	*T-75A1	For Serial 8123 thru 9230 except 9180, 9191, 9195 thru 9213, 9218, 9222, 9226 & 9229.	
	T-75A3	(280071) Effective with Serial — 9180, 9191, 9195 thru 9213, 9218, 9222, 9226 9229, 9231 & thereafter	
*Same as T-75A3 except for items 141 and 142 — See below. For complete replacement use T-75A3.			
1	201951	Nut, Flange	1
2	209343	Input Flange & Deflector Assy. (Inc. 3)	1
3	100949	Deflector, Input Flange	1
4	206864	Oil Seal, Input Shaft	1
5	209340	‡Shim, Bearing Cap (.004)	
5A	209341	‡Shim, Bearing Cap (.007)	
5B	209342	‡Shim, Bearing Cap (.010)	
6		*Shaft, Input*	1
	800810	For Serial Group "A" (See page 27)	
	220542	For Serial Group "B" (See page 27)	
7	SK203-97	Bearing, Input Shaft	1
8	SK203-97	Bearing, Input Shaft	1
9	SK203-96	Bearing, Quill Shaft	1
10	209368	Shaft, Quill	1
11	209369	Gear, Input Shaft Reverse (43 Teeth)	1
12	SK203-96	Bearing, Quill Shaft	1
13	221401	Gasket, Cover	1
14	209392	‡Shim, Clutch Bearing Cap (.004)	
14A	209393	‡Shim, Clutch Bearing Cap (.007)	
14B	209394	‡Shim, Clutch Bearing Cap (.010)	
14C	221208	‡Shim, Clutch Bearing Cap (.020)	
15	209391	Cap, Clutch Bearing	1
16	209387	Ring, Hub Oil Sealing	2
17		§Clutch Drum Hub Ass'y (See 224)	1
18	SK251-92	Ring, Hub Retainer	1
19	208775	Piston, Clutch	1
20	209385	Drum, Clutch	1
21	208773	Disc, Clutch Outer	5
22	208760	Plate, Clutch Disc End	1
23	SK250-91	Ring, End Plate Retainer	1
24		*Hub, Clutch Disc*	1
	800810	For Serial Group "A" (See page 27)	
	220539	For Serial Group "B" (See page 27)	
25	209358	Clutch Cover Assy.	1
26	1C-614	Bolt, Cover	10
27	4E-06	Lkwshr, Cover	10
28	SK251-63	Ring, Disc Hub Retainer	2
29	209709	Spring, Clutch Release	10
30	209928	Disc, Clutch Inner	5
31	208776	Ring, Piston Outer Sealing	1
32	208777	Ring, Piston Inner Sealing	1
33	209932	Pin, Relief	1
34	209389	Spring, Relief	1
34A	209937	†Washer, Relief Spring	1
34B	220678	†Guard, Relief Spring	1
34C	619023	†Washer, Clutch Drum Balance	4
35	100284	Bolt, Drum to Hub	8
36	1C-718	Bolt, Bearing Cap	4
37	4E-07	Lkwshr, Bearing Cap	4
38	25K-30016	"O" Ring, Bearing Cap	1
39	209377	Gear, Input Shaft Forward (45T)	1
40	209339	Cap, Input Shaft Bearing	1
41	4E-07	Lkwshr, Bearing Cap	4
42	1C-718	Bolt, Bearing Cap	4
43	1F-424	Cotter, Flange Nut	1
44	SK251-63	Ring, Disc Hub Retainer	2
45	208760	Plate, Clutch Disc End	1
46	209928	Disc, Clutch Inner	5
47	209385	Drum, Clutch	1
48	208776	Ring, Piston Outer Sealing	1
49	208775	Piston, Clutch	1
50	SK251-92	Ring, Hub Retainer	1
51		§Clutch Drum Hub Assy (See 224)	1
52	209387	Ring, Hub Oil Sealing	1
53	209391	Cap, Clutch Bearing	1
54	25K-30016	"O" Ring, Bearing Cap	1
55	209392	‡Shim, Clutch Bearing Cap	
55A	209393	‡Shim, Clutch Bearing Cap	
55B	209394	‡Shim, Clutch Bearing Cap	
55C	221208	‡Shim, Clutch Bearing Cap	
56	SK203-96	Bearing, 1st — 3rd Shaft	1
57	209368	Shaft, Quill	1
58	SK203-96	Bearing, 1st — 3rd Shaft	1
59	SK203-97	Bearing, 1st — 3rd Shaft	1
60	SK203-97	Bearing, 1st — 3rd Shaft	1
61	209364	Cap, 1st — 3rd Shaft Bearing	1
62	1C-718	Bolt, Bearing Cap	4
63	4E-07	Lkwshr, Bearing Cap	4
64	209365	‡Shim, Bearing Cap (.004)	
64A	209366	‡Shim, Bearing Cap (.007)	
64B	209367	‡Shim, Bearing Cap (.010)	
65	209375	Gear, 1st — 3rd Drop (44T)	1
66		*Shaft, 1st — 3rd Drive*	1
	800809	For Serial Group "A" (See page 27)	
	220541	For Serial Group "B" (See page 27)	
67	209374	Gear, 1st — 3rd Drive (29T)	1
68	4E-07	Lkwshr, Bearing Cap	4
69	1C-718	Bolt, Bearing Cap	4
70	100284	Bolt, Drum to Hub	8
71	209389	Spring, Relief	1
71A	209937	†Washer, Relief Spring	1
71B	220678	†Guard, Relief Spring	1

† — Not Illustrated
‡ — As Required
§ — Not Sold Separately

TRANSMISSION ASSEMBLY (Continued)
MODEL 75A

Item No.	Part No.	Description	No. Req'd.
71C	619023	†Washer, Clutch Drum Balance	4
72	209932	Pin, Relief	1
73	208777	Ring, Piston Inner Sealing	1
74	208773	Disc, Clutch Outer	5
75	209709	Spring, Clutch Release	10
76	SK250-91	Ring, End Plate Retainer	1
77		*Hub, Clutch Disc*	1
	800809	For Serial Group "A" (See page 27)	
	220539	For Serial Group "B" (See page 27)	
78	209416	Cap, 2nd — 4th Shaft Bearing	1
79	SK203-98	Bearing, 2nd — 4th Shaft	1
80	209421	Gear, 2nd — 4th High (57T)	1
81	SK203-99	Bearing, 2nd — 4th Shaft	1
82	SK203-96	Bearing, 2nd — 4th Shaft	1
83	209369	Gear, 2nd — 4th Drive (43T)	1
84	SK202-96	Bearing, 2nd — 4th Shaft	1
85	221401	Gasket, Cover	1
86	25K-30016	"O" Ring, Bearing Cap	1
87	209391	Cap, Clutch Bearing	1
88	209387	Ring, Hub Oil Sealing	2
89		§Clutch Drum Assy. (See 224)	1
90	SK251-92	Ring, Hub Retainer	1
91	208775	Piston, Clutch	1
92	209385	Drum, Clutch	1
93	208773	Disc, Clutch Outer	5
94	208760	Plate, Clutch Disc End	1
95	SK250-63	Ring, Disc Hub Retainer	2
96	209358	Clutch Cover Assy.	1
97	1C-614	Bolt, Cover	4
98	4E-06	Lkwshr, Cover	4
99		*Hub, Clutch Disc*	1
	800811	For Serial Group "A" (See page 27)	
	220539	For Serial Group "B" (See page 27)	
100	SK250-91	Ring, End Plate Retainer	1
101	209709	Spring, Clutch Release	10
102	209928	Disc, Clutch Inner	5
103	208776	Ring, Piston Outer Sealing	1
104	208777	Ring, Piston Inner Sealing	1
105	209932	Pin, Relief	1
106	209389	Spring, Relief	1
106A	209937	†Washer, Relief Spring	1
106B	220678	†Guard, Relief Spring	1
106C	619023	†Washer, Clutch Drum Balance	4
107	100284	Bolt, Drum to Hub	8
108	1C-718	Bolt, Bearing Cap	4
109	4E-07	Lkwshr, Bearing Cap	4
110	209392	‡Shim, Clutch Bearing Cap (.004)	
110A	209393	‡Shim, Clutch Bearing Cap (.007)	
110B	209394	‡Shim, Clutch Bearing Cap (.010)	
110C	221208	‡Shim, Clutch Bearing Cap (.020)	
111	209368	Shaft, Quill	1
112	220395	Gear, 2nd — 4th Shaft (32T)	1
113		*Shaft, 2nd - 4th Drive*	1
	800811	For Serial Group "A" (See page 27)	
	220543	For Serial Group "B" (See page 27)	
114	SK251-26	Ring, 2nd — 4th Gear Locating	1
115	209417	‡Shim, Bearing Cap (.004)	
115A	209418	‡Shim, Bearing Cap (.007)	
115B	209419	‡Shim, Bearing Cap (.010)	
116	4E-07	Lkwshr, Bearing Cap	4
117	1C-718	Bolt, Bearing Cap	4
118	209357	Clutch Cover Assy.	1
119	SK251-63	Ring, Disc Cover Retainer	2
120	SK250-91	Ring, End Plate Retainer	1
121	209928	Disc, Clutch Inner	5
122	209385	Drum, Clutch	1
123	208775	Piston, Clutch	1
124	SK251-92	Ring, Hub Retainer	1
125	209387	Ring, Hub Oil Sealing	2
126	209391	Cap, Clutch Bearing	1
127	25K-30016	"O" Ring, Bearing Cap	1
128		§Transmission Case Assy. (See 222)	1
129	SK203-96	Bearing, Reverse Shaft	1
130	SK203-96	Bearing, Reverse Shaft	1
131	SK203-97	Bearing, Reverse Shaft	1
132	SK203-97	Bearing, Reverse Shaft	1
133	209364	Cap, Reverse Shaft Bearing	1
134	1C-718	Bolt, Bearing Cap	4
135	4E-07	Lkwshr, Bearing Cap	4
136	209365	‡Shim, Bearing Cap (.004)	
136A	209366	‡Shim, Bearing Cap (.007)	
136B	209367	‡Shim, Bearing Cap (.010)	
137	209372	Gear, Reverse Idler (52T)	1
138		*Shaft, Reverse Drive*	1
	800809	For Serial Group "A" (See page 27)	
	220541	For Serial Group "B" (See page 27)	
139	209371	Gear, Reverse Drive (54T)	1
140	209368	Shaft, Quill	1
141		*Pipe, Sump Intake*	1
	209103	T-75A1	
	220673	T-75A3	
142		*Oil Screen & Frame Assembly*	1
	209354	T-75A1	
	220669	T-75A3	
143	209353	Gasket, Sump Cover	2
144	209392	‡Shim, Clutch Bearing Cap (.004)	
144A	209393	‡Shim, Clutch Bearing Cap (.007)	
144B	209394	‡Shim, Clutch Bearing Cap (.010)	
144C	221208	‡Shim, Clutch Bearing Cap (.020)	
145	4E-07	Lkwshr, Bearing Cap	4
146	1C-718	Bolt, Bearing Cap	4
147	100284	Bolt, Drum to Hub	8
148	209389	Spring, Relief	1
148A	209937	†Washer, Relief Spring	1
148B	220678	†Guard, Relief Spring	1
148C	619023	†Washer, Clutch Drum Balance	4
149		§Clutch Drum Hub Assy. (See 244)	1
150	209932	Pin, Relief	1
151	208777	Ring, Piston Inner Sealing	1

‡ — As Required
† — Not Illustrated
§ — Not Sold Separately

TRANSMISSION ASSEMBLY (Continued)
MODEL 75A

Item No.	Part No.	Description	No. Req'd.
152	208776	Ring, Piston Outer Sealing	1
153	208773	Disc, Clutch Outer	5
154	209709	Spring, Clutch Release	10
155	208760	Plate, Clutch Disc End	1
156		*Hub, Clutch Disc*	1
	800809	For Serial Group "A"	
	220539	For Serial Group "B"	
157	209370	Gasket, Cover	1
158	4E-06	Lkwshr, Cover	16
159	1C-614	Bolt, Cover	16
160	205928	Nut, Flange	1
161	100949	Deflector, Out-put Flange	1
162	206864	Oil Seal, Out-Put Shaft	1
163	209428	Cap, Rear Out-Put Bearing	1
164	713997	Bearing, Out-Put Shaft	1
165	209435	Oil Seal, Shift Shaft	1
166	209434	Shift Rail, 2 & 4 Wheel Drive	1
167	209433	Shift Fork, 2 & 4 Wheel Drive	1
168	201566	Screw, Shift Fork	1
169	209430	Housing, Rear Out-Put Shaft	1
170	10J-12	Ball, Mesh Lock	1
171	201844	Spring, Mesh Lock	1
172	209432	Gasket, Cover Plate	1
173	209431	Plate, Rear Housing Cover	1
174	4E-06	Lkwshr, Cover Plate	6
175	1C-612	Bolt, Cover Plate	6
176	209352	Sump Cover	1
177	4E-06	Lkwshr, Sump Cover	14
178	1C-616	Bolt, Sump Cover	14
179	201120	Drain Plug (Magnetic)	1
180	209396	High Gear & Bushing Assy. (29T)	1
180A	209398	†Bushing, High Gear (29T)	1
181	209423	Out-Put Shaft & Bushing Assy.	1
181A	209425	†Bushing, Out-Put Shaft	1
182	209399	Low Gear & Bushing Assy. (55T)	1
182A	209402	†Bushing, Low Gear (55T)	1
183	SK203-96	Bearing, Out-Put Shaft	1
184	209692	Cap, Out-Put Shaft Bearing	1
185	206864	Oil Seal, Out-Put Shaft	1
186	209414	Out-Put Flange & Deflector Assy. (Inc. 200)	1
187	209403	Fork, High & Low Shift	1
188	209406	Gasket, Hi & Low Support	1
189	209405	Support, Hi & Low Shift Shaft	1
190	4E-06	Lkwshr, Support	1
191	1C-616	Bolt, Support	1
192	209404	Shaft, Hi & Low Shift	1
193	208871	Oil Seal, Support	1
194	10J-12	Ball, Mesh Lock (Support)	1
195	13F-04	Plug, Mesh Lock (Support)	1
196	201844	Spring, Mesh Lock (Support)	1
197	201566	Lock Screw, Shift Fork	1
198	1F-432	Cotter, Flange Nut	1
199	205928	Nut, Flange	1
200	100949	Deflector, Flange	1
201	1C-718	Bolt, Out-Put Shaft Bearing Cap	4
202	4E-07	Lkwshr, Out-Put Shaft Bearing Cap	4
203	209701	‡Shim, Bearing Cap (.004)	
203A	209702	‡Shim, Bearing Cap (.007)	
203B	209703	‡Shim, Bearing Cap (.010)	
204	209407	Thrust Washer, Out-Put Gear	1
205	209673	Oil Ring, Low Gear	1
206	209409	Hub, Hi & Low Shift	1
207	209407	Thrust Washer, Out-Put Gear	1
208	SK203-96	Bearing, Out-Put Shaft	1
209	SK250-30	Retainer Ring, Out-Put Shaft Bearing	1
210	209411	Shim, Rear Out-Put Shaft Housing	1
211	4E-07	Lkwshr, Rear Housing	7
212	1C-720	Bolt, Rear Housing	7
213	SK251-64	Locating Ring, Out-Put Shaft Bearing	1
214	209427	Shift Hub, Rear Out-Put Shaft	1
215	209426	Shaft, Rear Out-Put	1
216	SK250-74	Ring, Rear Out-Put Shaft Locating	1
217	209429	Gasket, Bearing Cap	1
218	4E-07	Lkwshr, Bearing Cap	4
219	1C-718	Bolt, Bearing Cap	4
220	209414	Flange & Deflector Assy. (Inc. 161)	1
221	1F-432	Cotter, Out-Put Flame Nut	1
222	800815	Transmission Case Assy. (Inc. 128, 141, 142, 143, 176, 177, 178, 179, 226 & 227)	1
223	209362	Clutch Group Assy. (Inc. 14 thru 38)	1
224	800648	Clutch Hub & Ring Assy. (Inc. 16 & 17)	1
225	800656	Low Gear & Oil Ring Assy. (Inc. 182 & 205)	1
226	19F-8	†Reducing Bushing ⅜ x ¾"	1
227	19F-16	†Reducing Bushing 1 x 1¼"	1
234	13F-12	†Oil Level Plug (¾" Square projecting)	1

TRANSMISSION MOUNTING PARTS

235	550572	†Trans. Mtg. Bracket Assy. — R.H.	1
236	550576	†Trans. Mtg. Bracket Assy. — L.H.	1
237	550575	†Trans. Mtg. Pad	2
238	14C-840	†Bolt, Mtg. Bracket to Frame	4
239	2D-08	†Nut, Mtg. Bracket to Frame	8
240	2C-1044	†Bolt, Mtg. Bracket to Trans.	8
241	2D-10	†Nut, Mtg. Bracket to Trans.	8
242	4E-10	†Lkwshr, Mtg. Bracket to Trans.	8

Serial Group "A"

8123 thru 9253, 9255 thru 9267, 9269 thru 9284, 9290, 9291, 9297, 9299, 9300, 9302, 9304, 9313, 9316, 9322, 9326, 9354, 9359, 9361, 9362, 9377, 9397, 9417, 9494, 9521, 9522 & 9524.

Serial Group "B"

9254, 9268, 9285 thru 9289, 9292 thru 9296, 9298, 9301, 9303, 9305 thru 9312, 9314, 9315, 9317 thru 9321, 9323, 9324, 9325, 9327 thru 9353, 9355 thru 9358, 9360, 9363 thru 9376, 9378 thru 9396, 9398 thru 9416, 9418 thru 9493, 9495 thru 9520, 9523, 9525 and thereafter.

† — Not Illustrated
‡ — As Required
§ — Not Sold Separately

TRANSMISSION ASSEMBLY

MODEL 75B

Item No.	Part No.	Description	No. Req'd.
A		*Transmission Assembly*	1
	*T-75B1	For Serial — 6123 thru 6163 — Same as T-75A1 except the following parts are not used.	
	T-75B2	Effective with Serial — 6164 and thereafter — Same as T-75A3 except the following parts are not used.	

*For complete replacement use T-75B2

162	206864	Oil Seal	1
163	209428	Cap, Rear Output Bearing	1
164	713997	Bearing, Output Shaft	1
165	209435	Oil Seal, Shift Shaft	1
166	209434	Shift Rail, 2 & 4 Wheel Drive	1
167	209433	Shift Fork, 2 & 4 Wheel Drive	1
168	201556	Screw, Shift Fork	1
169	209430	Housing, Rear Output Shaft	1
170	10J-12	Ball, Mesh Lock	1
171	201844	Spring, Mech. Lock	1
172	209432	Gasket, Cover Plate	1
173	209431	Plate, Rear Housing Cover	1
181	209423	Output Shaft & Bushing Assy.	1
186	209414	Output Flange & Deflector Assy.	1
200	100949	Deflector, Flange	1
209	SK250-30	Retaining Ring, Output Shaft Bearing	1
213	SK251-64	Locating Ring, Output Shaft Bearing	1
214	209427	Shift Hub, Rear Output Shaft	1
215	209426	Shaft, Rear Output	1
216	SK250-74	Locating Ring, Rear Output Shaft	1
217	209429	Gasket, Bearing Cap	1
		The following parts are added:	
181	209408	Shaft, Rear Output	1
181A	209410	†Retainer, Output Shaft Bearing	1
181B	209412	†Cap, Output Shaft Rear Oil	1
181C	209413	†Spacer, Output Shaft	1

† — Not Illustrated

MODEL 75R

Item No.	Part No.	Description	No. Req'd.
B		*Transmission Assembly*	1
	*T-75R1	For Serial — 7123 thru 7145 — Same as T-75A1 except the following parts are not used.	
	T-75R2	Effective with Serial — 7146 and thereafter — Same as T-75A3 except the following parts are not used.	

*For complete replacement use T-75R2

162	206864	Oil Seal	1
163	209428	Cap, Rear Output Bearing	1
164	713997	Bearing, Output Shaft	1
165	209435	Oil Seal, Shift Shaft	1
166	209434	Shift Rail, 2 & 4 Wheel Drive	1
167	209433	Shift Fork, 2 & 4 Wheel Drive	1
168	201556	Screw, Shift Fork	1
169	209430	Housing, Rear Output Shaft	1
170	10J-12	Ball, Mesh Lock	1
171	201844	Spring, Mesh Lock	1
172	209432	Gasket, Cover Plate	1
173	209431	Plate, Rear Housing Cover	1
181	209423	Output Shaft & Bushing Assy.	1
186	209414	Output Flange & Deflector Assy.	1
200	100949	Deflector, Flange	1
209	SK250-30	Retaining Ring, Output Shaft Brg.	1
213	SK251-64	Locating Ring, Output Shaft Brg.	1
214	209427	Shift Hub, Rear Output Shaft	1
215	209426	Shaft, Rear Output	1
216	SK250-74	Locating Ring, Rear Output Shaft	1
217	209429	Gasket, Bearing Cap	1
		The following parts are added:	
181	209408	Shaft, Rear Output	1
181A	209410	†Retainer, Output Shaft Brg.	1
181B	209412	†Cap, Output Shaft Rear Oil	1
181C	209413	†Spacer, Output Shaft	1

† — Not Illustrated

NOTES

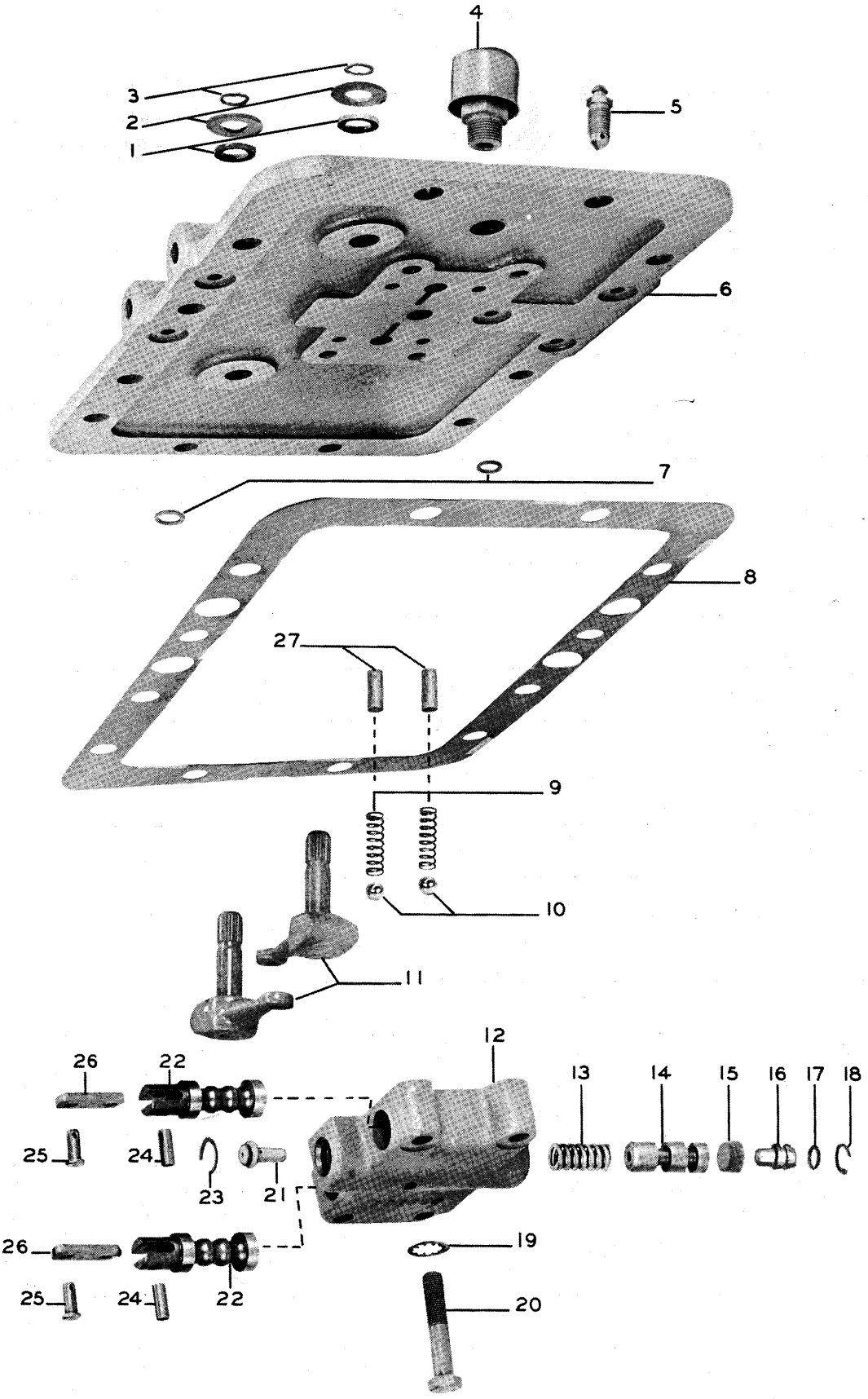

CONTROL COVER

3816-P-48-55G

TRANSMISSION CONTROL COVER PARTS

Item No.	Part No.	Description	No. Req'd.
A	800657	Control Cover & Valve Assy. (Inc. 1 thru 29)	1
1	208812	Seal, Selector Arm Shaft Oil	2
2	619027	Washer, Selector Arm Shaft	2
3	SK251-90	Ring, Selector Arm Shaft Washer Retaining	2
4	104942	Breather Assembly	1
5	208805	Valve, Bleeder	1
6	209378	Cover, Control	1
7	25K-30016	"O" Ring	5
8	209379	Gasket, Control Cover	1
9	203647	Spring, Selector Valve Detent	2
10	10J-12	Ball, Selector Valve Detent Spring	2
11	209690	Selector Arm & Shaft Assy.	2
12	209380	Housing, Selector Valve	1
13	220363	Spring, Shutoff Valve	1
14	208815	Valve, Shutoff	1
15	208820	Cup, Shutoff Valve Sealing	1
16	209878	Stop, Shutoff Valve	1
17	617337	Seal, Shutoff Valve Stop	1
18	SK250-93	Ring, Shutoff Valve Stop Retaining	1
19	6E-06	Lkwshr, Control Valve Bolt	4
20	1C-626	Bolt, Control Valve	4
21	209894	Guide, Valve Spring	1
22	208807	Selector Valve (See 29)	2
23	SK250-93	Ring, Shutoff Valve Spring Retaining	1
24	208809	Pin, Selector Valve Link	2
25	208810	Pin, Selector Valve Link Clevis	2
26	209382	Link, Selector Valve	2
27	209874	Ball Stop, Selector Valve Detent	1
28	1F-208	†Cotter, Valve Link Clevis	2
29	209381	Selector Valve Assy. (Inc. 22, 24, & 26)	2
30	13F-02	†Plug, Control Cover Oil Passage	5
31	1C-718	†Bolt, Control Cover to Case	9
32	4E-07	†Lkwshr, Control Cover to Case	9
33	800653	Selector Control Valve Assy. (Inc. 12 thru 18, 21 thru 24 & 26)	1

† — Not Illustrated

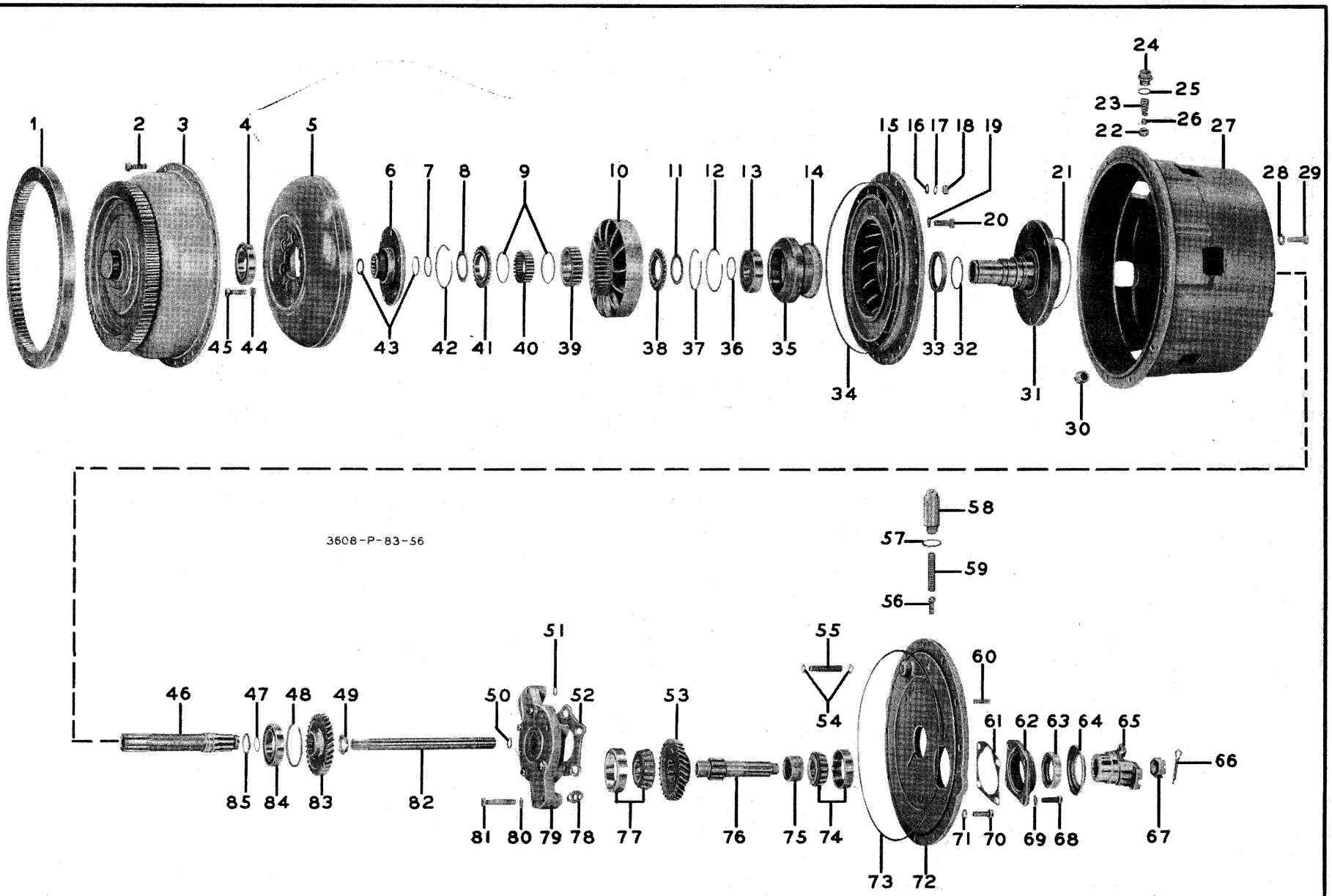

3608-P-83-56 TORQUE CONVERTER

TORQUE CONVERTER ASSEMBLY
MODEL 75 SERIES

	75-A	75-B	75-R
Column 1 For Serial No.	8123 thru 8348, 8351, 8352, 8356, 8364 thru 8367, 8458 & 8461	6123 thru 6139	7123 thru 7144
Column 2 For Serial No.	8349, 8350, 8353, 8354, 8355, 8357 thru 8363, 8368 thru 8430, 8432 thru 8457, 8459, 8460, 8462 thru 8476, 8481 & 8483	.....	.....
Column 3 For Serial No.	8431, 8477 thru 8480, 8482, 8484 thru 9484, 9519 thru 9532	6140 thru 6175	7145 thru 7150
Column 4 For Serial No.	9485 thru 9518, 9533 thru 10222, 10240 & 10247 thru 10251	6176 thru 6200	7151 thru 7154
Use C-303-1 list for Serial No.	10223 thru 10239, 10241 thru 10246, 10252 & thereafter	6201 & thereafter	7155 & thereafter

Column 1 is complete as to part number listings.
Columns 2, 3, and 4 use same items as indicated in Column 1 except where indicated.

Item No.	Description	No. Req'd	1	2	3	4
	TORQUE CONVERTER MODEL		**C-75-1**	**C-75-2**	**C-75-3**	**C-75-6**
1	Converter Drive Gear	1	See Note "A"	See Note "A"	See Note "A"	213445
2	Bolt, Impeller to Drive Disc	30	2C-618			
3	Converter Disc Assembly	1	See Note "A"	See Note "A"	See Note "A"	220483
4	Bearing, Drive Disc Hub	1	SK200-36			
5	Converter Turbine	1	209596	209596	209332	209332
6	Hub, Converter Turbine	1	209688	209688	209333	209333
7	Ring, Thrust Washer Ret. — Front	1	SK251-23			
8	Washer, End Plate Thrust — Front	1	209319			
9	Spring, Sprag	2	209948			
10	Converter Member	1	209597	209597	209321	209321
11	Washer, End Plate Thrust — Rear	1	209320			
12	Ring, Hub Bearing Ret.	1	SK250-8			
13	Bearing, Converter Impeller Hub	1	SK200-36			
14	"O" Ring, Impeller to Hub	1	25K-40508			
15	Impeller, Converter	1	209595	209595	209311	209311
16	Washer, Impeller to Drive Disc	30	619023			
17	Lockwasher, Impeller to Drive Disc	30	6E-06			
18	Nut, Impeller to Drive Disc	30	2D-06			
19	Washer, Impeller to Hub	6	619023			
20	Bolt, Impeller to Hub	6	209313			
20A	†Lockwire, Impeller to Hub Bolt	1	201553			
21	"O" Ring, Converter Support	1	25K-40600			

Note "A" — Use 940548 Kit for Gas Powered and 940549 Kit for Diesel Powered units. This kit includes necessary parts to convert converter disc assembly, converter drive and driven gears and flywheel to latest design identified by 13⅛ bolt circle on converter drive gear. After conversion has been made use column 4 for replacement items.
† — Not Illustrated

TORQUE CONVERTER ASSEMBLY
MODEL 75 SERIES

Item No.	Description	No. Req'd	1	2	3	4
	TORQUE CONVERTER MODEL		**C-75-1**	**C-75-2**	**C-75-3**	**C-75-6**
22	Seat, Pressure Relief Ball (See Item 87)	1	NSS			
23	Spring, Oil Pressure Relief	1	209188			
24	Plug, Oil Cooler Line	1	208783			
25	Seal, Oil Cooler Line Plug	1	208789	221023	221023	221023
26	Ball, Oil Pressure Relief	1	10J-16			
27	Housing, Converter (See Item 87)	1	NSS			
28	Lockwasher, Converter Hsg. to Support	6	6E-08			
29	Bolt, Converter Hsg. to Support	6	2C-820			
30	Plug, Filler	1	13F-12			
31	Converter Support Assembly	1	220706			
32	Ring, Converter Support Oil	1	209307			
33	Seal, Converter Support Oil	1	209778			
34	"O" Ring, Impeller to Drive Disc	1	209322			
35	Hub, Converter Impeller	1	209775	209775	209782	209782
36	Ring, Impeller Hub Bearing Locating	1	SK251-70			
37	Ring, End Plate Retainer	1	SK250-9			
38	Overrunning Clutch End Plate and Bushing Assembly	1	209316			
39	Outer Race, Overrunning Clutch	1	209315			
40	Overrunning Clutch Assembly (Inc. Item 9)	1	209314			
41	Overrunning Clutch End Plate and Bushing Assembly	1	209316			
42	Ring, End Plate Retainer	1	SK250-9			
43	Ring, Turbine Hub Retainer	1	SK251-28			
44	Washer, Turbine to Hub	6	619023			
45	Bolt, Turbine to Hub	6	209313			
45A	†Lockwire, Turbine to Hub Bolt	1	201553			
46	Shaft, Main Drive Gear	1	220491			
47	Ring, Main Drive Gear Bearing Ret.	1	SK251-38			
48	Ring, Main Drive Gear Bearing Loc.	AR	SK250-96			
48A	Ring, Main Drive Gear Bearing Loc.	AR	SK250-97			
48B	Ring, Main Drive Gear Bearing Loc.	AR	SK250-98			
48C	Ring, Main Drive Gear Bearing Loc.	AR	SK250-99			
49	Nut, Main Drive Gear Retainer	1	207949			
50	Ring, Oil Pump Shaft Piston	1	209781			
51	"O" Ring, Converter Unit Pump	1	25K-30020			
52	Gasket, Converter Unit Pump	1	220701			
53	Gear, Output Shaft	1	209336			
54	"O" Ring, Oil Tube	2	25K-30016	25K-30018	25K-30018	25K-30018
55	Oil Tube, Cover to Case	1	209338	209869	209869	209869
56	Valve, Pressure Regulator	1	209815			
57	Seal, Pressure Regulator Plug	1	209818			
58	Plug, Pressure Regulator	1	209817			
59	Spring, Pressure Regulator	1	209816			
60	Stud, Vehicle Pump Mounting	6	205096			

† — Not Illustrated N.S.S. — Not Sold Separately AR — As Required

TORQUE CONVERTER ASSEMBLY
MODEL 75 SERIES

Item No.	Description	No. Req'd	1	2	3	4
	TORQUE CONVERTER MODEL		**C-75-1**	**C-75-2**	**C-75-3**	**C-75-6**
61	Shim, Output Shaft Bearing Cap	AR	209340			
61A	Shim, Output Shaft Bearng Cap	AR	209341			
61B	Shim, Output Shaft Bearing Cap	AR	209342			
62	Cap, Output Shaft Bearing	1	209339			
63	Seal, Output Shaft Oil	1	206864			
64	Deflector	1	100949			
65	Flange & Deflector Assy. (Inc. Item 64)	1	209343			
66	Cotter, Flange Nut	1	1F-432			
67	Nut, Output Shaft Flange	1	201951			
68	Bolt, Output Shaft Bearing Cap	4	1C-720			
69	Lockwasher, Output Shaft Bearing Cap	4	4E-07			
70	Bolt, Cover to Housing	12	1C-720			
71	Lockwasher, Cover to Housing	12	4E-07			
72	Cover, Housing	1	NSS			
73	"O" Ring, Housing Cover	1	209294			
74	Bearing, Output Shaft	1	SK203-97			
75	Spacer, Output Shaft Gear	1	209337			
76	Shaft, Output	1	209334			
77	Bearing, Output Shaft	1	SK203-97			
78	Gasket, Converter Unit Pump	2	220699			
79	Converter Unit Pump Assembly (Inc. Items 51, 52 and 78)	1	940384			
80	Lockwasher, Pump to Converter Cover	6	6E-06			
81	Bolt, Pump to Converter Cover	6	1C-636			
82	Shaft, Oil Pump	1	209779			
83	Gear, Main Drive	1	209299			
84	Bearing, Main Drive Gear	1	658016			
85	Ring, Main Drive Gear Shaft Oil	1	209304			
86	Plug, Drain-Magnetic	1	201120			
87	Converter Housing Cover Assembly (Inc Items 22, 27, 70, 71 and 72)	1	800655			
88	Dowel, Housing to Cover	1	102381			

TORQUE CONVERTER MOUNTING PARTS

Item No.	Description	No. Req'd	1	2	3	4
	TORQUE CONVERTER MODEL		**C-75-1**	**C-75-2**	**C-75-3**	**C-75-6**
89	Bolt, Torque Converter to Flywheel	8	1C-616			
90	Lockwasher, Torque Converter to Flywheel	8	4E-06			
91	Bolt, Torque Converter to Flywheel Housing	12	1C-620			
92	Lockwasher, Torque Converter to Flywheel Housing	12	4E-06			

AR — As Required N.S.S. — Not Sold Separately

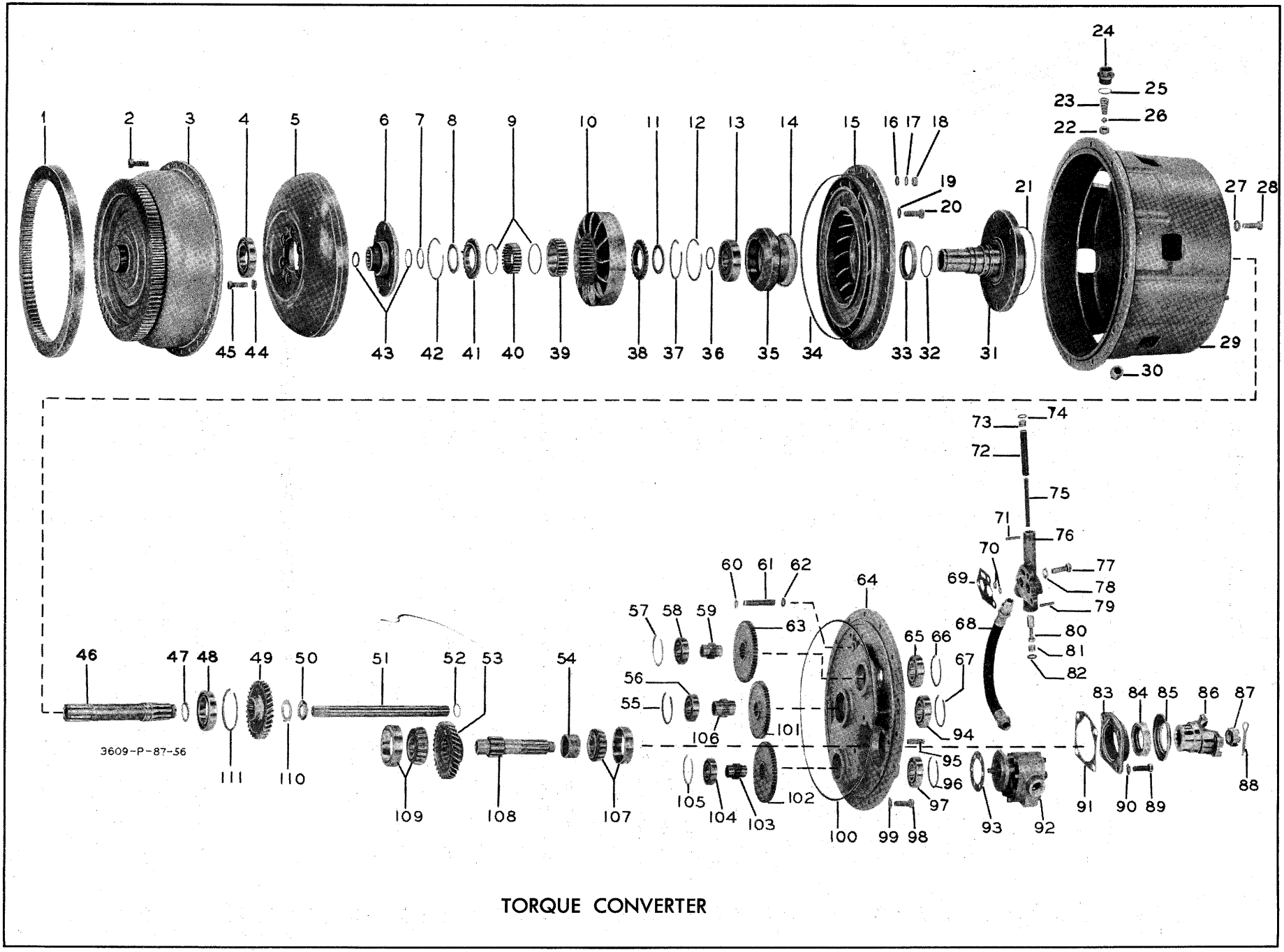

TORQUE CONVERTER

TORQUE CONVERTER ASSEMBLY
MODEL 75 SERIES

Effective with Serial:
75-A — 10223 thru 10239, 10241 thru 10246, 10252 and thereafter
75-B — 6201 and thereafter
75-R — 7155 and thereafter

Item No.	Part No.	Description	No. Req'd
	C-303-1	Torque Converter Assembly (280453)	1
1	213445	Gear, Converter Drive (See 120)	1
2	2C-618	Bolt, Impeller to Drive Disc	30
3	220483	Converter Disc Assembly (See 120)	1
4	SK200-36	Bearing, Disc Hub	1
5	220507	Turbine, Converter	1
6	220493	Hub, Turbine	1
7	SK251-23	Ring, Front Thrust Washer, Retaining	1
8	209319	Washer, Front Thrust	1
9	209948	Spring, Sprag	2
10	220488	Reaction Member, Converter (See 122)	1
11	209320	Washer, Rear Thrust	1
12	SK250-8	Ring, Impeller Hub Bearing, Retainer	1
13	SK200-36	Bearing, Impeller Hub	1
14	25K-40508	"O" Ring, Impeller to Hub	1
15	209311	Impeller, Converter	1
16	619023	Washer, Impeller to Drive Disc	30
17	6E-06	Lkwshr, Impeller to Drive Disc	30
18	2D-06	Nut, Impeller to Drive Disc	30
19	619023	Washer, Impeller to Hub	6
20	209313	Bolt, Impeller to Hub	6
20A	201553	Lockwire, Impeller to Hub N.I.	AR
21	25K-40600	"O" Ring, Converter Support	1
22	208788	Seat, By-Pass Ball	1
23	209188	Spring, By-Pass	1
24	220847	Fitting, By-Pass Plug	1
25	221023	Seal, By-Pass Plug	1
26	10J-16	Ball, By-Pass	1
27	6E-08	Lkwshr, Converter Support to Housing	6
28	2C-820	Bolt, Converter Support to Housing	6
29	800872	Housing, Converter (See 121)	1
30	201120	Plug, Magnetic Drain	1
31	220706	Converter Support Assembly	1
32	209307	Ring, Converter Support Oil	1
33	209778	Seal, Converter Support Oil	1
34	209322	"O" Ring, Impeller to Drive Disc	1
35	209782	Hub, Converter Impeller	1
36	SK251-70	Ring, Impeller Hub Bearing Locating	1
37	SK250-116	Ring, End Plate Retainer	1
38	220480	End Plate and Bushing Assembly	1
39	220479	Outer Race, Reaction Member (See 122)	1
40	221947	Over-running Clutch Assembly (Inc. Item 9)	1
41	220480	End Plate & Bushing Assembly	1
42	SK250-116	Ring, End Plate Retainer	1
43	SK251-28	Ring, Turbine Hub Retainer	2
44	619023	Washer, Turbine to Hub	8
45	209313	Bolt, Turbine to Hub	8

N.I. — Not Illustrated
AR — As Required

TORQUE CONVERTER ASSEMBLY
MODEL 75 SERIES

Item No.	Part No.	Description	No. Req'd
45A	201553	Lockwire, Turbine to Hub ..... N.I.	AR
46	221073	Shaft, Main Drive Gear	1
47	209304	Oil Ring, Main Drive Shaft	1
48	658016	Bearing, Main Drive Gear Retainer	1
49	220492	Gear, Main Drive (33T)	1
50	221074	Nut, Main Drive Gear Retainer	1
51	209779	Shaft, Oil Pump	1
52	209781	Piston Ring, Oil Pump Shaft	1
53	209336	Gear, Output Shaft (32T)	1
54	209337	Spacer, Output Gear	1
55	SK250-12	Ring, Oil Pump Drive Gear Hub Retainer	1
56	SK200-48	Bearing, Oil Pump Drive Gear Hub	1
57	SK250-130	Ring, Oil Pump Driven Gear Hub Brg. Retainer	1
58	851240	Bearing, Oil Pump Driven Gear Hub	1
59	220987	Hub, Oil Pump Driven Gear	1
60	25K-30018	"O" Ring, Oil Cross-Over Tube	1
61	209869	Tube, Oil Cross-Over	1
62	25K-30018	"O" Ring, Oil Cross-Over Tube	1
63	221082	Gear, Oil Pump Driven (43T)	1
64	221072	Cover, Converter Housing	1
65	851240	Bearing, Oil Pump Driven Gear Hub	1
66	SK250-130	Ring, Oil Pump Driven Gear Hub Brg. Retainer	1
67	SK250-12	Ring, Oil Pump Drive Gear Hub Brg. Retainer	1
68	221084	Hose, Valve Body to Converter Pump	1
69	220978	Gasket, Valve Body	1
70	25K-40024	"O" Ring, Valve Body to Converter Housing	2
71	660178	Roll Pin, Regulating Valve Body	1
72	220981	Spring, Regulating Valve, Outer	1
73	220983	Stop, Regulating Valve Piston	1
74	25K-30018	"O" Ring, Regulating Valve Stop	1
75	220982	Spring, Regulating Valve, Inner	1
76	N.S.S.	Body, Regulating Valve (See 123)	1
77	1C-820	Bolt, Regulating Valve Body	2
77A	1C-840	Bolt, Regulating Valve Body	1
78	4E-08	Lkwshr, Regulating Valve Body	3
79	660178	Roll Pin, Regulating Valve Body	1
80	220980	Piston, Regulating Valve Body	1
81	220983	Stop, Regulating Valve Body	1
82	25K-30018	"O" Ring, Regulating Valve Stop	1
83	221076	Cap, Output Shaft	1
84	206864	Oil Seal, Output Shaft	1
85	100949	Deflector, Output Shaft	1
86	209343	Flange & Deflector Assembly (Inc. Item 85)	1
87	201951	Nut, Output Shaft Flange	1
88	1F-432	Cotter, Flange Nut	1
89	1C-720	Bolt, Output Shaft Bearing Cap	4
90	4E-07	Lkwshr, Bearing Cap	4
91	221077	Shim, Output Bearing Cap (.004)	AR
91A	221078	Shim, Output Bearing Cap (.007)	AR
91B	221079	Shim, Output Bearing Cap (.010)	AR
92	941653	Oil Pump Assembly (Inc. 93)	1
93	551906	Gasket, Oil Pump	1
94	SK200-48	Bearing, Oil Pump Drive Gear Hub	1

N.I. — Not Illustrated
AR — As Required
N.S.S. — Not Sold Separately

TORQUE CONVERTER ASSEMBLY
MODEL 75 SERIES

Item No.	Part No.	Description	No. Req'd
95	205096	Stud, Oil Pump Mounting	6
96	SK250-130	Ring, Oil Pump Driven Gear Hub Retainer	1
97	851240	Bearing, Oil Pump Driven Gear Hub	1
98	1C-720	Bolt, Cover to Housing	12
99	4E-07	Lkwshr, Cover to Housing	12
100	209294	"O" Ring, Housing to Cover Sealing	1
101	221080	Gear, Oil Pump Drive (46T)	1
102	221082	Gear, Oil Pump Driven (43T)	1
103	220987	Hub, Oil Pump Driven Gear	1
104	851240	Bearing, Oil Pump Driven Gear Hub	1
105	SK250-130	Ring, Oil Pump Driven Gear Hub Brg. Retainer	1
106	221081	Hub, Oil Pump Drive Gear	1
107	SK203-97	Bearing, Output Shaft	1
108	209334	Shaft, Output	1
109	SK203-97	Bearing, Output Shaft	1
110	221075	Washer, Main Drive Gear Nut Retainer	1
111	SK250-96	Ring, Main Drive Gear Bearing (.088-.090)	AR
111A	SK250-97	Ring, Main Drive Gear Bearing (.091-.093)	AR
111B	SK250-98	Ring, Main Drive Gear Bearing (.094-.096)	AR
111C	SK250-99	Ring, Main Drive Gear Bearing (.097-.099)	AR
112	SK251-38	Ring, Main Drive Gear Brg. Retainer N.I.	1
113	220979	Dowel, Housing to Cover N.I.	1
114	207647	Stud, Vehicle Pump Mounting N.I.	6
115	659041	Ring, Oil Pump Shaft Retainer N.I.	1
116	89F-8	Connector, Hydraulic Tube N.I.	1
117	8D-06	Nut, Converter Oil Pump N.I.	6
118	4E-06	Lkwshr, Converter Oil Pump N.I.	6
119	221083	Spacer, Oil Pump Drive Gear N.I.	1
120	800840	Gear Set, Converter Drive & Driven (Inc. Items 1, 3 and 34)	1
121	800880	Converter Housing and Back Cover Assy. (Inc. Items 22, 29, 64, 98, 99, 100 and 113)	1
122	800881	Reaction Member and Race Assy. (Inc. Items 10, 37, 38)	1
123	800877	Pressure Regulator Valve Assy. (Inc. Items 69 thru 76 and 79 thru 82)	1

TORQUE CONVERTER MOUNTING PARTS

Item No.	Part No.	Description	No. Req'd
124	1C-624	Bolt, Torque Converter to Flywheel N.I.	8
125	4E-06	Lkwshr, Torque Converter to Flywheel N.I.	8
126	1C-620	Bolt, Torque Converter to Flywheel Housing N.I.	12
127	4E-06	Lkwshr, Torque Converter to Flywheel Housing N.I.	12

N.I. — Not Illustrated
AR — As Required
N.S.S. — Not Sold Separately

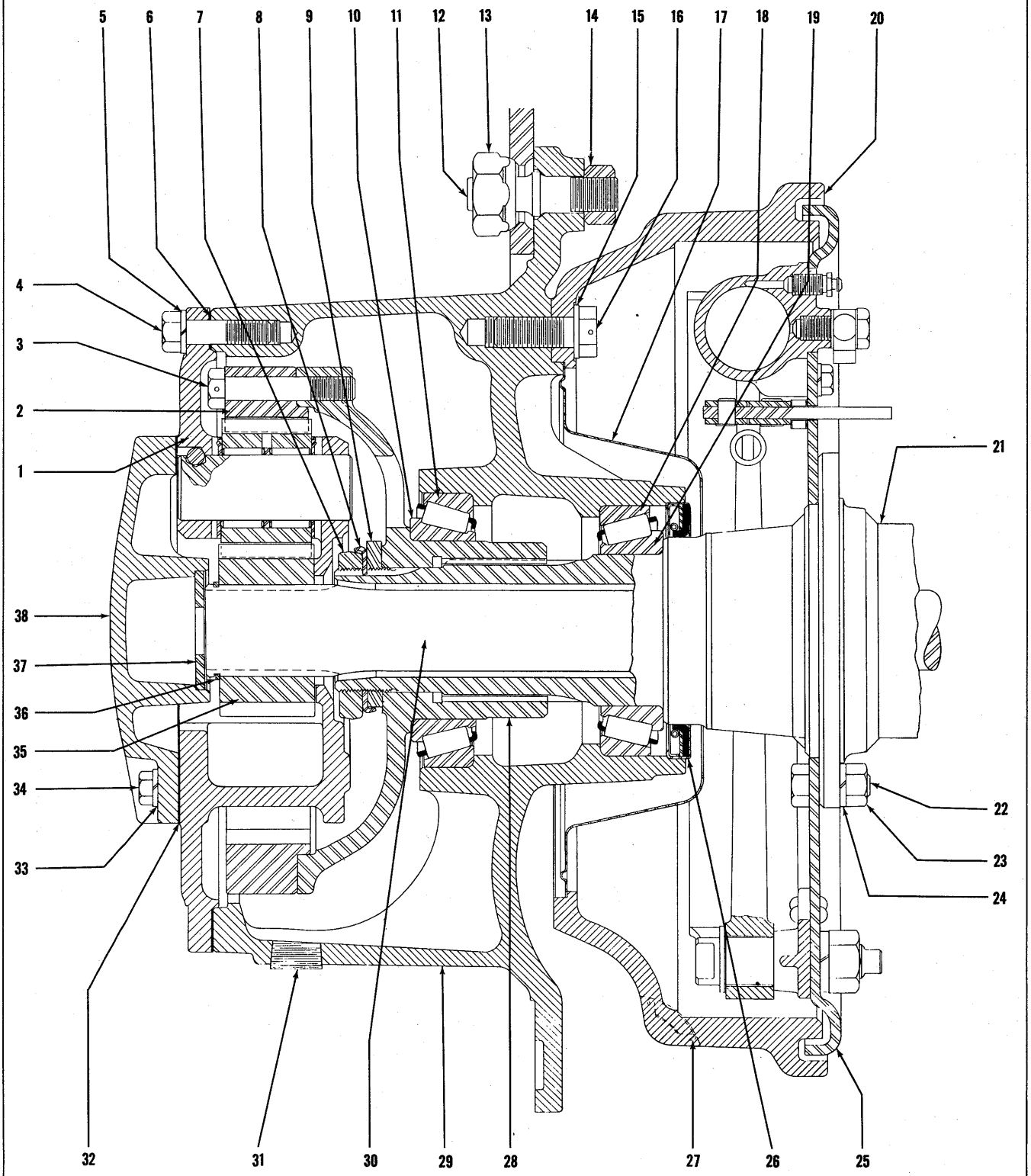

TS-206

AXLE ASSEMBLY — FRONT DRIVE

AXLE ASSEMBLY — FRONT DRIVE

Effective with Serial:

75A — 8123 and Thereafter
75B — 6123 and Thereafter
75R — 7156 and Thereafter

Item No.	Part No.	Description	No. Req'd.
A	130064	Front Drive Axle Assembly — Complete	1
1	106346	Planet Spider Assembly—See Index	2
2	106059	Gear, Internal	2
3	106880	Bolt, Internal Gear	16
3A		Lockwire — 18 Gauge	8
4	100970	Bolt, Planet Spider	20
5	7E-08	Lkwshr, Planet Spider	20
6	106066	Gasket, Planet Spider	2
7	100966	Nut, Housing Tube — Outer	2
8	100967	Lock, Housing Tube Nut	2
9	100965	Nut, Housing Tube — Inner	2
10	47896	Cone, Hub Bearing — Outer	2
11	47820	Cup, Hub Bearing — Outer	2
12	103445	Stud, Wheel	20
13	103522	Nut, Wheel	20
14	103076	Nut, Wheel Stud	20
15	104412	Washer, Brake Drum	12
16	107256	Bolt, Brake Drum	12
17	101597	Oil Throw	2
18	47620	Cup, Hub Bearing — Inner	2
19	47681	Cone, Hub Bearing — Inner	2
20	106344	Brake Drum	2
21	105111	Housing, Axle	1
21A	106082	Axle Housing Assy. (Inc. 7, 8, 9, 21 & 44)	1
22	101092	Bolt, Brake Attaching	16
23	2D-08	Nut, Brake Attaching	16
24	4E-08	Lkwshr, Brake Attaching	16
25	106336	Brake Assembly — L.H.—See Index	1
25A	106335	Brake Assembly — R.H.—See Index	1
26	106092	Seal, Hub Oil	2
27	107608	Clip, Inspection Hole Cover	2
28	940330	Internal Gear Hub & Bolt Kit (Inc. 3)	2
29	106793	Hub & Cup Assy. (Inc. 11 & 18)	2
29A	106343	Hub & Drum Assy. (Inc. 15, 16, 20, 27 & 29)	2
30	106087	Shaft, Axle	2
31	13F-12	Plug, Hub Drain & Filler	2
32	106068	Gasket, Thrust Cap	2
33	4E-07	Lkwshr, Thrust Cap	12
34	1C-720	Bolt, Thrust Cap	12
35	106058	Sun Gear	2
36	SK251-23	Snap Ring, Sun Gear	2
37	106455	Washer, Sun Gear Thrust Cap	2
38	106067	Cap, Sun Gear Thrust	2
38A	106454	Sun Gear Thrust Cap Assy. (Inc. 37 & 38)	2
39	101004	†Gasket, Differential Carrier	1
40	14F-12	†Plug, Housing Drain	1
41	13F-12	†Plug, Housing Filler	1
42	1C-808	†Bolt, Puller Hole	4
43	3E-08	†Lkwshr, Puller Hole Bolt	4
44	106656	†Breather Assembly	1
45	1C-722	†Bolt, Differential Carrier	6
46	1C-728	†Bolt, Differential Carrier	8
47	4E-07	†Lkwshr, Differential Carrier	14
48	550406	†Tee, Brake Line	1
49	106102	†Differential & Carrier Assembly — See Index	1

† — Not Illustrated

TS-65

AXLE ASSEMBLY — FRONT STEER

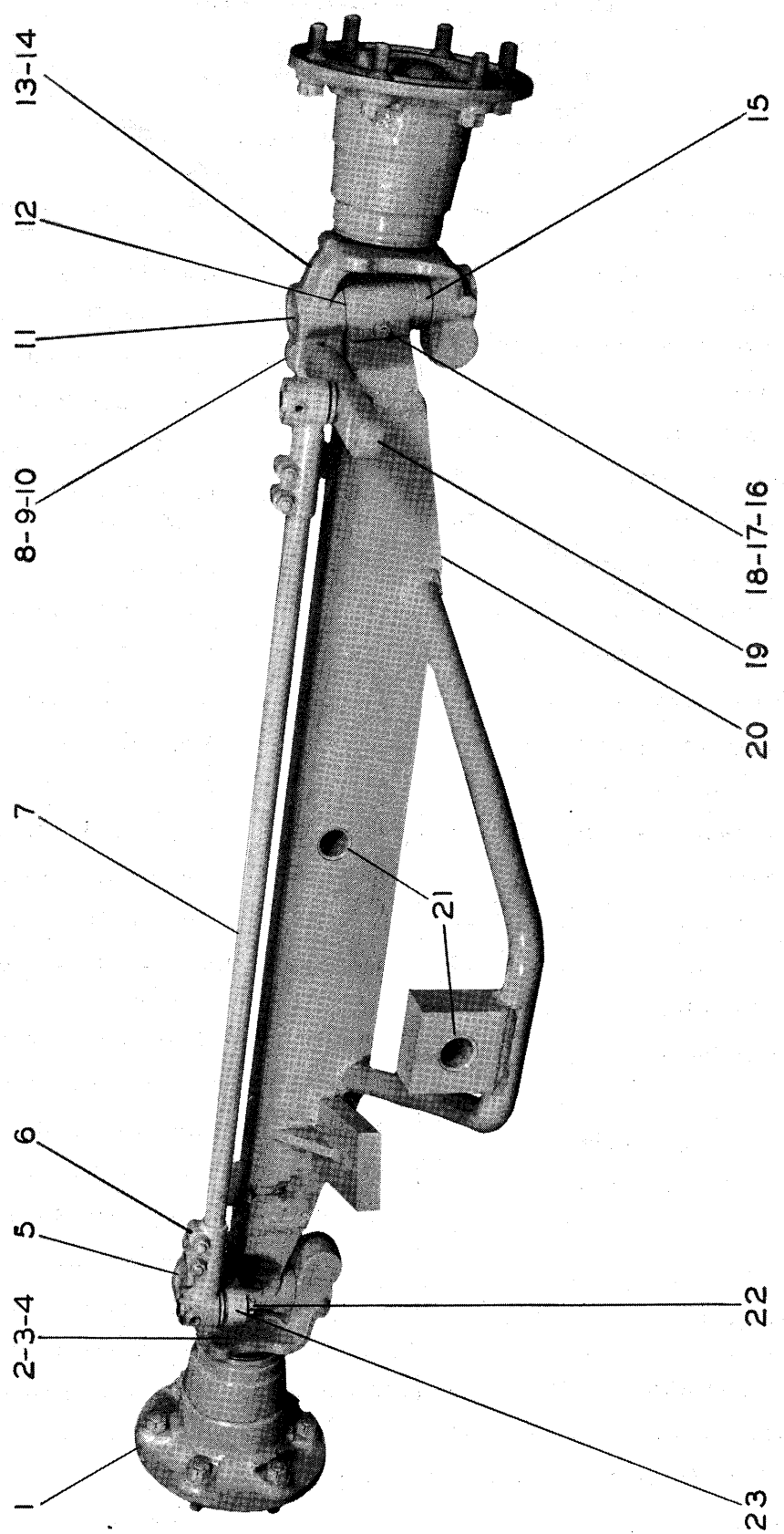

AXLE ASSEMBLY — FRONT STEER
MODEL 75R

Item No.	Part No.	Description	No. Req'd.
A	130148	Front Steering Axle Assy. (Inc. all following items)	1
1	106158	Hub Assembly — See Index	2
2	106140	Steering Knuckle Assy. — L.H. (Inc. 3 & 4)	1
3	106142	Steering Knuckle — L.H.	1
4	102225	Bushing, Steering Knuckle	4
5	12F-110	Plug, Steering Knuckle Expansion	4
6		Tie Rod End Assy. — See Index	
7	106143	Tie Rod Assembly (Inc. 6 & 7A)	1
7A	106144	Tie Rod	1
8	4D-16	Nut, Tie Rod Arm	2
9	1F-628	Cotter, Tie Rod Arm	2
10	7J-3108	Key, Tie Rod Arm	2
11	106162	Pin, Knuckle	2
12	102252	‡Shim, Knuckle	
13	106139	Steering Knuckle Assy. — R.H. (Inc. 4 & 14)	1
14	106141	Steering Knuckle — R.H.	1
15	T-138	Thrust Bearing	2
16	102250	Key, Draw	2
17	4E-06	Lkwshr, Draw Key	2
18	2D-06	Nut, Draw Key	2
19	106163	Arm, Tie Rod — R.H.	1
20	106149	Axle Center Assy. (Inc. 21)	1
21	550066	Bushing	2
22	1F-416	Cotter, Tie Rod	2
23	106164	Arm, Tie Rod — L.H.	1
24	10H-25	†Fitting, Tie Rod Grease	2

‡ — As Required
† — — Not Illustrated

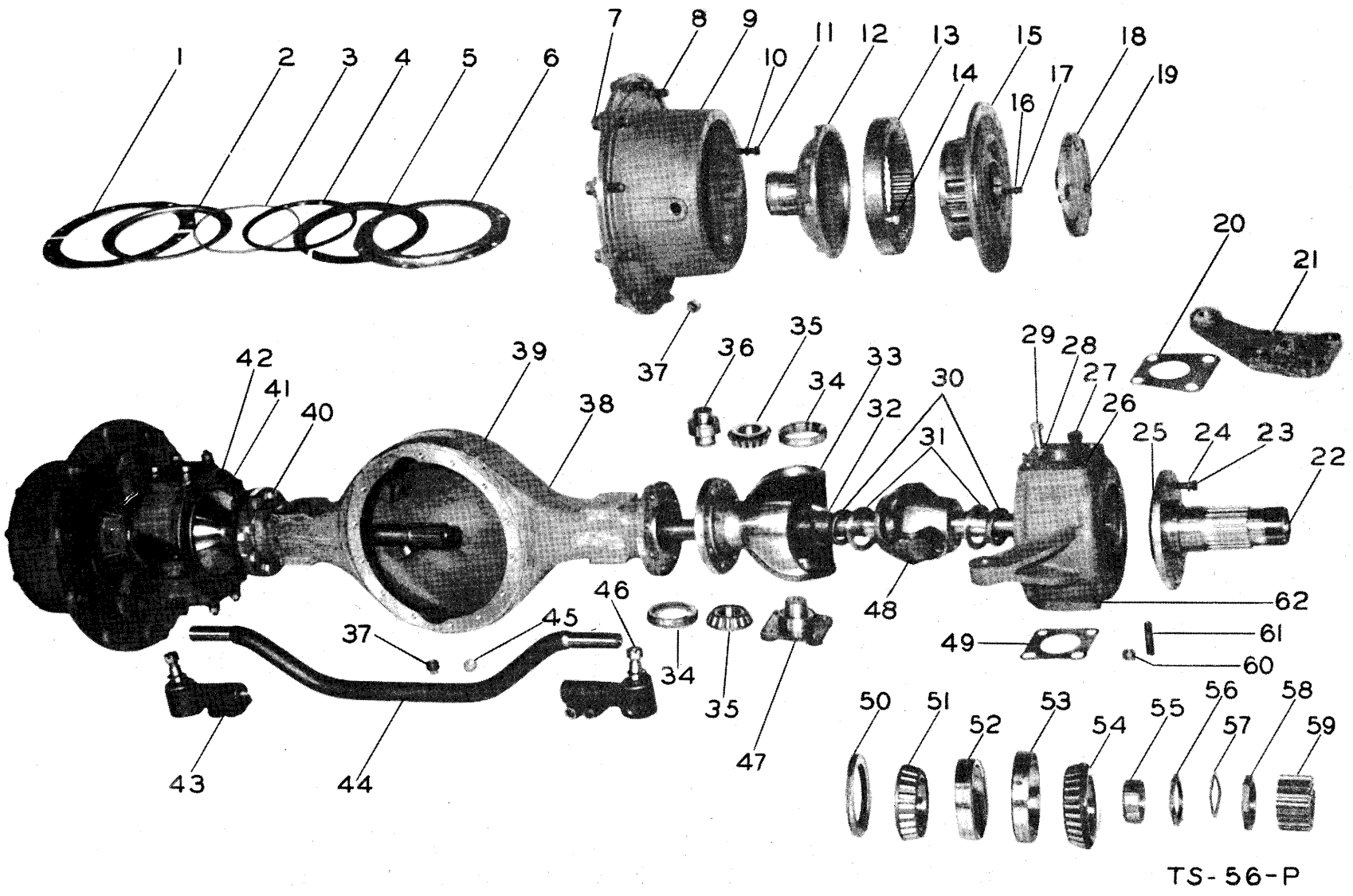

AXLE ASSEMBLY — REAR DRIVE AND STEER

AXLE ASSEMBLY — REAR DRIVE AND STEER
MODEL 75A

For Serial 8123 Thru 8609

Item No.	Part No.	Description	No. Req'd.
A	130048	Rear Drive & Steer Axle Ass'y. (Inc. All Following Items)	1
1	106136	Retainer Ring, Outer End Seal	4
2	106135	Retainer, Outer End Dust Seal	2
3	106134	Spring, Outer End Dust Seal	2
4	106132	Seal, Outer End Oil	2
5	106133	Seal, Outer End Dust	2
6	106130	Retainer, Outer End Oil Seal	2
6A	106131	Gasket, Outer End Oil Seal Retainer	2
7	103076	Nut, Wheel Stud	20
8	103445	Stud, Wheel	20
8A	103522	Nut, Wheel	20
9	106106	Hub & Cup Assembly (Inc. 7, 8, 8A, 52 & 53)	2
10	7E-08	Lkwshr, Planet Spider	20
11	100970	Bolt, Planet Spider	20
12	940330	Internal Gear Hub & Screw Kit (Inc. 14)	2
13	106059	Gear, Internal	2
14	106880	Bolt, Internal Gear	16
15		Planet Spider — See Index	
15A	106066	†Gasket, Planet Spider	2
15B	1C-808	†Bolt, Puller Hole	4
15C	3E-08	†Lkwshr, Puller Hole Bolt	4
16	4E-07	Lkwshr, Thrust Cap	12
17	1C-720	Bolt, Thrust Cap	12
18	106183	Cap, Sun Gear Thrust	2
18A	106068	Gasket, Sun Gear Thrust Cap	2
19	14F-04	Plug, Oil Level — Thrust Cap	2
20	106319	‡Shim, Steering Arm — Thick	
20A	106320	‡Shim, Steering Arm — Medium	
20B	106321	‡Shim, Steering Arm — Thin	
21	106790	Arm, Steering	1
22	106097	Steering Spindle Ass'y. (Inc. 22A)	2
22A	106099	Bushing, Steering Spindle	2
23	106539	Bolt, Steering Spindle	20
24	106762	Washer, Steering Spindle	20
25	106095	Gasket, Steering Spindle	2
26	104549	Washer, Steering Arm — Inner	2
27	106322	Bolt, Steering Arm — Inner	2
28	102766	Washer, Steering Arm — Outer	2
29	106313	Bolt, Steering Arm — Outer	2
30	106127	Seal, Universal Joint Shaft Oil	4
31	106129	Washer, Universal Joint Thrust	4
32	106128	Washer, Oil Seal	2
33	106117	Housing Outer End	2
33A	106121	Retainer, Steering Trunnion Oil	2
34	M903310	Cup, Steering Trunnion Bearing	4
35	M903345	Cone, Steering Trunnion Bearing	4
36	106120	Steering Trunnion	1
37	13F-12	Filler Plug	3
38	106116	Housing	1
39	106656	Breather Assembly	1
40	106735	Bolt, Housing Outer End	16
40A	4E-10	†Lkwshr, Housing Outer End	16
40B	2D-10	†Nut, Housing Outer End	16
41	106100	Steering Spindle Support Ass'y. — R.H. (Inc. 41A & 61)	1
41A	106111	Steering Spindle Support — R.H.	1
42	1C-612	Bolt, Outer End	24
42A	4E-06	Lkwshr, Outer End	24
43		Tie Rod End Asseembly—See Index	
44	106108	Tie Rod Assembly (Inc. 43 & 44A)	1
44A	106109	Tie Rod	1
45	14F-12	Plug, Housing Drain	1
46	1F-424	Cotter, Tie Rod	2
47	106119	Steering Trunnion — Flanged	3
48	106096	Axle Shaft & Universal Joint Ass'y.	2
49	106123	‡Shim, Steering Trunnion — Thick	
49A	106124	‡Shim, Steering Trunnion — Medium	
49B	106125	‡Shim, Steering Trunnion — Thin	
50	106092	Seal, Hub Oil	2
51	47681	Cone, Hub Bearing — Inner	2
52	47620	Cup, Hub Bearing — Inner	2
53	47820	Cup, Hub Bearing — Outer	2
54	47896	Cone, Hub Bearing — Outer	2
55		Not Applicable This Model	
56	100965	Nut, Steering Spindle — Inner	2
57	100967	Lock, Steering Spindle Nut	2
58	100966	Nut, Steering Spindle — Outer	2
59	106058	Gear, Sun	2
60	2D-09	Nut, Steering Trunnion	12
60A	4E-09	Lkwshr, Steering Trunnion	12
61	106115	Stud, Steering Trunnion	12
62	106101	Steering Spindle Support Ass'y. — L.H. (Inc. 61 & 62A)	1
62A	106112	Steering Spindle Support — L.H.	1
63	13F-12	†Filler Plug, Spindle Support	2
64	106075	Diff. & Carrier Ass'y. — See Index.	1
65	101004	†Gasket, Diff. Carrier	1
66	1C-722	†Bolt, Diff. Carrier	10
67	1C-728	†Bolt, Diff. Carrier	4
68	4E-07	†Lockwasher, Diff. Carrier	14
69	12F-204	†Plug, Housing Expansion	1
70	10H-25	†Fitting, Tie Rod Grease	2

† — Not Illustrated
‡ — As Required

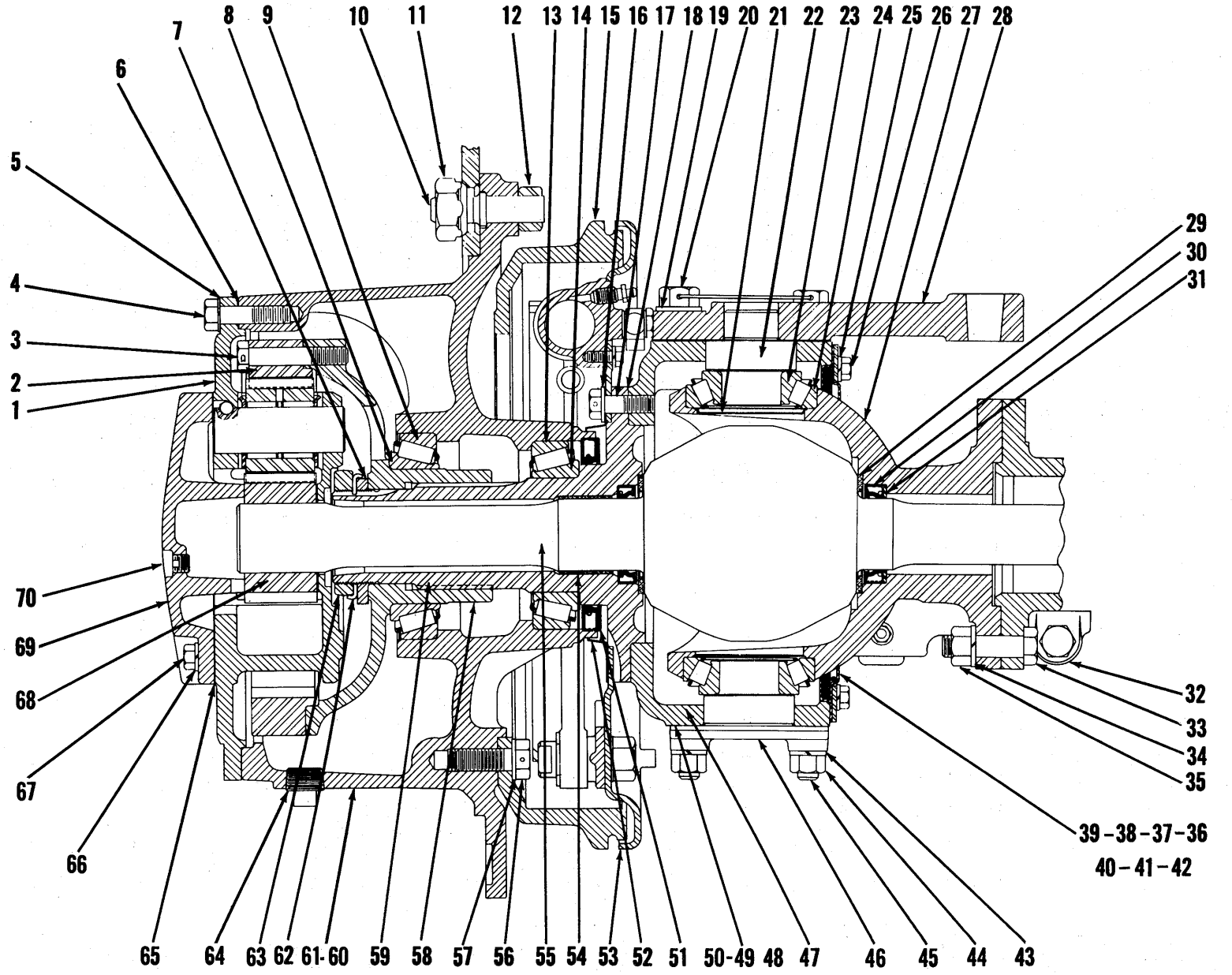
1
2
3
4
5
6
7
8
9
10
11
12
13
14
15
16
17
18
19
20
21
22
23
24
25
26
27
28
29
30
31
32
33
34
35
39-38-37-36
40-41-42
43
44
45
46
47
48
50-49
51
52
53
54
55
56
57
58
59
60-61
62
63
64
65
66
67
68
69
70
TS-136

AXLE ASSEMBLY — REAR DRIVE STEER
MODEL 75A
Effective with Serial 8610 and Thereafter

Item No.	Part No.	Description	No. Req'd.
A	130049	Rear Drive & Steer Axle Assembly (Inc. all following Items)	1
1		Planet Spider Assembly—See Index	2
1A	1C-808	Bolt, Puller Hole	4
1B	3E-08	Lkwshr, Puller Hole Bolt	4
2	106059	Gear, Internal	2
3	106880	Bolt, Internal Geqr	16
3A		Lockwire — 18 Gauge	8
4	100970	Bolt, Planet Spider	20
5	7E-08	Lkwshr, Planet Spider	20
6	106066	Gasket, Planet Spider	2
7	100965	Nut, Steering Spindle — Inner	2
8	47896	Cone, Hub Bearing — Outer	2
9	47820	Cup, Bearing — Outer	2
10	103445	Stud, Wheel	20
11	103522	Nut, Wheel	20
12	103076	Nut, Wheel Stud	20
13	47620	Cup, Bearing — Inner	2
14	47681	Cone, Hub Bearing — Inner	2
15	106815	Brake Drum	2
16	106762	Washer, Steering Spindle	20
17	106539	Bolt, Steering Spindle	20
17A		Lockwire, Spindle Bolt — 18 Gauge	10
18	106095	Gasket, Steering Spindle	2
19	102766	Washer, Steering Arm Bolt — Outer	2
19A	104549	Washer, Steering Arm Bolt — Inner	2
20	106313	Bolt, Steering Arm — Outer	2
20A	106322	Bolt, Steering Arm — Inner	2
20B		Lockwire, Steering Arm Bolt — 18 Gauge	2
21	106121	Retainer, Steering Trunnion Oil	2
22	106120	Steering Trunnion	1
23	M903345	Cone, Steering Trunnion Bearing	4
24	M903310	Cup, Steering Trunnion Bearing	4
25	4E-06	Lkwshr, Outer End	24
26	1C-612	Bolt, Outer End	24
27	106117	Housing, Outer End	2
27A	13F-12	Filler Plug, Outer End Housing	2
28	106790	Steering Arm	1
28A	106319	‡Shim, Steering Arm — Thick	
28B	106320	‡Shim, Steering Arm — Medium	
28C	106321	‡Shim, Steering Arm — Thin	
29	106129	Washer, Universal Joint Thrust	4
30	106127	Oil Seal, Universal Joint Shaft	4
31	106128	Washer, Oil Seal	2
32		Tie Rod End Assembly — See Index	2
32A	106109	†Tie Rod	1
32B	106108	†Tie Rod Assembly (Inc. 32 & 32A)	1
32C	1F-424	†Cotter, Tie Rod End	2
32D	10H-25	†Fitting, Tie Rod End Grease	2
33	106735	Bolt, Outer End	16
34		Omit	
35	106998	Nut, Outer End	16
36	106130	Retainer, Outer End Oil Seal	2
37	106131	Gasket, Outer End Oil Seal Retainer	2
38	106132	Seal, Outer End Oil	2
39	106133	Seal, Outer End Dust	2
40	106134	Spring, Outer End Dust Seal	2
41	106135	Retainer, Outer End Dust Seal	2
42	106136	Ring, Outer End Seal Retainer	4
43	4E-09	Lkwshr, Steering Trunnion Stud	12
44	2D-09	Nut, Steering Trunnion Stud	12
45	106115	Stud, Steering Trunnion	12
46	106119	Steering Trunnion — Flanged	3
47	106100	Steering Spindle Support Ass'y. — R.H. (Inc. 45 & 47B)	1
47A	106101	Steering Spindle Support Ass'y — L.H. (Inc. 45 & 47C)	1
47B	106111	Steering Spindle Support — R.H.	1
47C	106112	Steering Spindle Support — L.H.	1
48	106123	‡Shim, Steering Trunnion — Thick	
49	106124	‡Shim, Steering Trunnion — Medium	
50	106125	‡Shim, Steering Trunnion — Thin	
51	106092	Seal, Hub Oil	2
52	106820	Oil Slinger	2
53	106816	Brake Disc Assembly — See Index	2
54	106099	Bushing, Steering Spindle	2
55	106096	Axle Shaft & Universal Joint Ass'y.	2
56	107256	Bolt, Brake Drum	12
57	104412	Washer, Brake Drum	12
58	106879	Hub, Internal Gear	2
59	106821	Steering Spindle Ass'y. (Inc. 54)	2
60	106814	Hub & Drum Ass'y. (Inc. 15, 60A & 61)	2
60A	100320	†Clip, Inspection Hole	2
61	106793	Hub & Cup Ass'y. (Inc. 9 & 13)	2
62	100967	Lock, Steering Spindle Nut	2
63	100966	Nut, Steering Spindle — Outer	2
64	13F-12	Plug, Wheel Hub Filler	2
65	106068	Gasket, Sun Gear Thrust Cap	2
66	4E-07	Lkwshr, Thrust Cap	12
67	1C-720	Bolt, Thrust Cap	12
68	106058	Sun Gear	2
69	106183	Cap, Sun Gear Thrust	2
70	14F-4	Plug, Oil Level	2
71	13F-12	†Plug, Housing Filler	1
72	14F-12	†Plug, Housing Drain	1
73	12F-204	†Plug, Housing Expansion	1
74	106656	†Breather	1
75	101004	†Gasket, Differential Carrier	1
76	1C-722	†Bolt, Differential Carrier	6
77	1C-728	†Bolt, Differential Carrier	8
78	4E-07	†Lkwshr, Differential Carrier	14
79	106116	†Housing, Differential Carrier	1
80	106075	Differential & Carrier Ass'y. — See Index	1

‡ — As Required
† — Not Illustrated

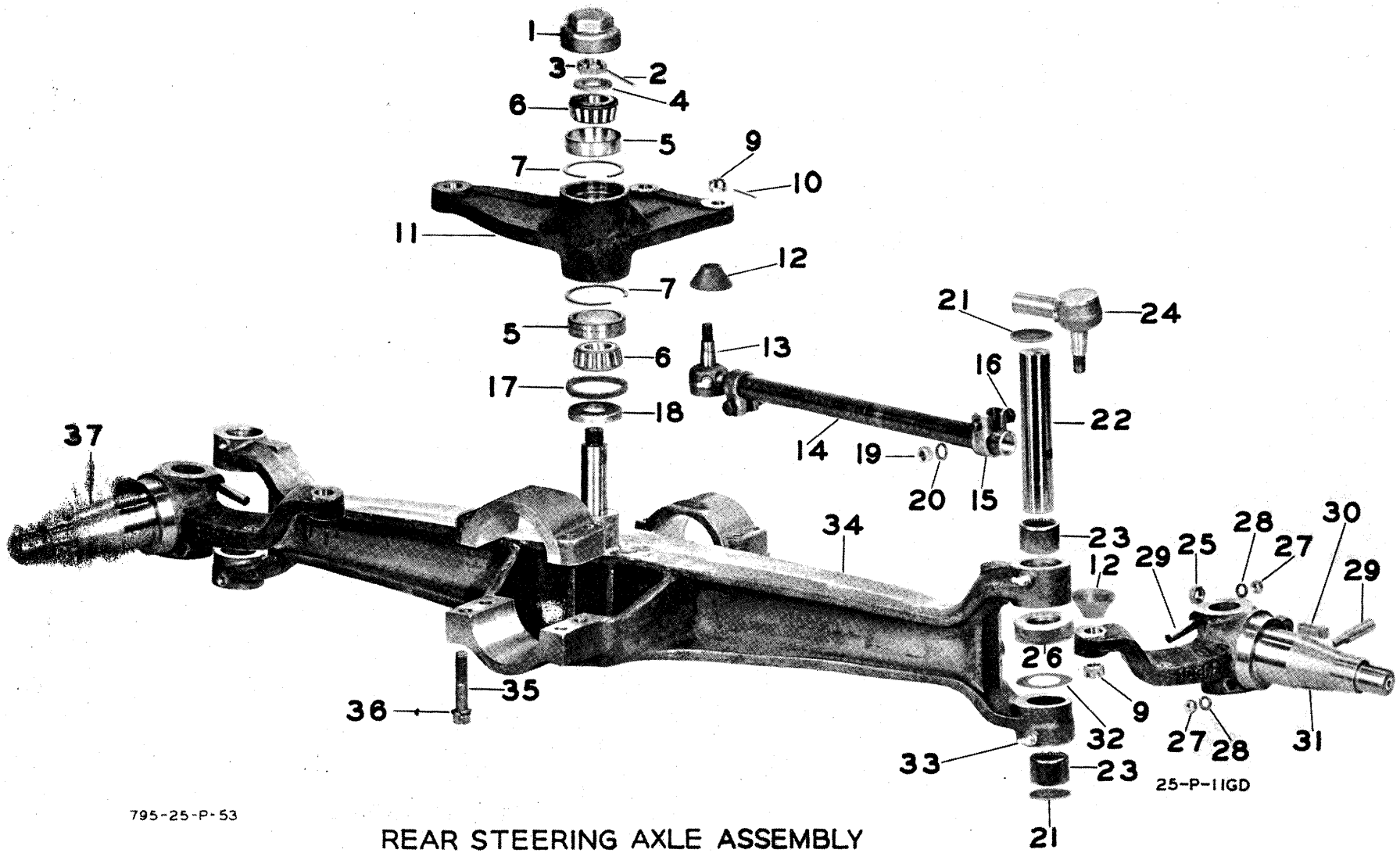

REAR STEERING AXLE ASSEMBLY

AXLE ASSEMBLY — REAR STEERING

AXLE ASSEMBLY — REAR STEERING
MODEL 75B
For Serial — 6123 thru 6127, 6129 thru 6133, 6135 thru 6138, 6140 thru 6143, 6146, 6147, 6148, 6150, 6153, 6154, 6156, 6160, 6161, 6164, 6166, 6169, 6170, 6176 and 6179

Item No.	Part No.	Description	No. Req'd.
A	*130144	Rear Steering Axle Assembly (Inc. all following items)	1
1	100323	Cap, Spider Hub Grease	1
2	1F-428	Cotter, Spider Nut	1
3	100575	Nut, Spider	1
4	100588	Washer, Spider	1
5	25821	Bearing Cup, Spider	2
6	25877	Bearing Cone, Spider	2
7	SK250-27	Snap Ring, Spider Bearing	2
8		Omit	
9	100857	Nut, Tie Rod End	4
10	1F-416	Cotter, Tie Rod End Ball Bolt	4
11	106167	Steering Spider	1
12	103166	Cover, Tie Rod End Ball	4
13	103227	Tie Rod End Assy. — L.H. (Inc. 9 & 12)	2
13A	106165	Tie Rod Assy. (Inc. 9, 12 thru 16, 19, 20 & 24)	2
13B	15H-1	Fitting, Tie Rod End Grease	4
14	106166	Tie Rod	2
15	103165	Clamp, Tie Rod	4
16	2C-836	Bolt, Tie Rod Clamp	4
17	103953	Felt, Spider Hub	1
18	103954	Cup, Spider Hub Felt	1
19	2D-08	Nut, Tie Rod Clamp Bolt	4
20	4E-08	Lkwshr, Tie Rod Clamp Bolt	4
21	12F-200	Plug, Axle Center Expansion	4
22	103929	Knuckle Pin	2
23	B-2420	Bearing, Steering Knuckle Pin	4
24	103228	Tie Rod End Assy. — R.H. (Inc. 9 & 12)	2
25	11D-08	Nut, Knuckle Stop Screw	2
26	T-151	Bearing, Knuckle Thrust	2
27	2D-06	Nut, Knuckle Pin Draw Key	4
28	4E-06	Lkwshr, Knuckle Pin Draw Key	4
29	102594	Key, Knuckle Pin Draw	4
30	13G-820	Screw, Knuckle Stop	2
31	103927	Steering Knuckle — R.H.	1
32	103942	‡Shim, Knuckle	
33	11H-1	Fitting, Knuckle Pin Grease	4
34	103917	Axle Center Assy. (Inc. 23, 35 & 36)	1
35	1C-1048	Bolt, Axle Center Bearing Mtg. Cap	8
36	4E-10	Lkwshr, Axle Center Brg. Mtg. Cap	8
37	103928	Steering Knuckle — L.H.	1
38	106160	Hub Assembly — See Index	

*Kit #107609 is available to convert #130144 Axle to new style #130151 Axle. When #107609 is installed, use #130151 list for replacement Parts.

‡ — As Required

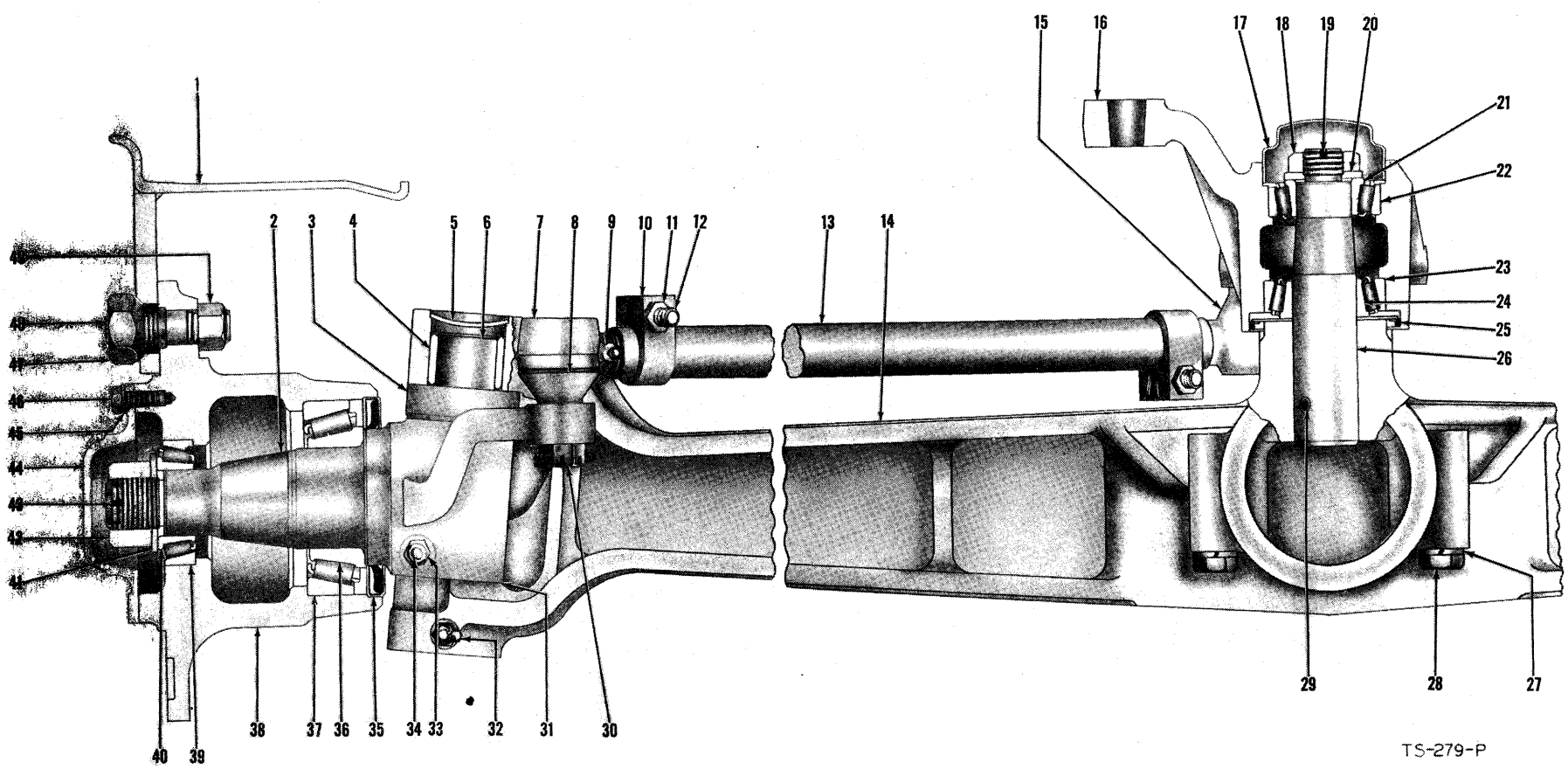

AXLE ASSEMBLY — REAR STEERING

AXLE ASSEMBLY — REAR STEERING
MODEL 75B
For Serial — 6128, 6134, 6139, 6144, 6145, 6149, 6151, 6152, 6155, 6157, 6158, 6159, 6162, 6163, 6165, 6167, 6168, 6171 thru 6175, 6177, 6178, 6180 & Thereafter

Item No.	Part No.	Description	No. Req'd.
A	130151	Rear Steering Axle Assembly (Inc. all following items)	1
1		Wheel & Rim Assy. — See Index	
2	103928	Steering Knuckle — L.H.	1
2A	103927	Steering Knuckle — R.H.	1
2B	13G-820	†Screw, Knuckle Stop	2
2C	7D-08	†Nut, Knuckle Stop Screw	2
3	T-151	Bearing, Knuckle Thrust	2
4	B-2420	Bearing, Knuckle Pin	4
5	12F-200	Expansion Plug, Axle Center	4
6	103929	Pin, Knuckle	2
7	103227	Tie Rod End Assembly — L.H. (Inc. 8 & 30)	2
7A	106165	Tie Rod Assembly (Inc. Items 7, 8, 10 thru 13, 15 & 30)	2
8	103166	Cover, Tie Rod End Ball	4
9	15H-1	Fitting, Tie Rod End Grease	4
10	103165	Clamp, Tie Rod	4
11	2D-08	Nut, Tie Rod Clamp Bolt	4
12	2C-836	Bolt, Tie Rod Clamp	4
12A	4E-08	Lkwshr, Tie Rod Clamp Bolt	4
13	106166	Tie Rod	2
14	107447	Axle Center Assembly (Inc. 4 & 26 thru 29)	2
15	103228	Tie Rod End Assembly — R.H. (Inc. 8 & 30)	2
16	107451	Steering Spider	1
16A	107450	Steering Spider & Cup Assy. (Inc. 22 & 23)	1
17	100323	Cap, Spider Hub Grease	1
18	100575	Nut, Spider	1
19	1F-428	Cotter, Spider Nut	1
20	100588	Washer, Spider	1
21	25877	Cone, Spider Bearing — Upper	1
22	25821	Cup, Spider Bearing — Upper	1
23	26822	Cup, Spider Bearing — Lower	1
24	26882	Cone, Spider Bearing — Lower	1
25	107461	Seal, Spider	1
26	107449	Pin, Steering Arm	1
27	4E-10	Lkwshr, Axle Center Brg. Mtg. Cap	8
28	1C-1048	Bolt, Axle Center Brg. Mtg. Cap	8
29	650737	Pin, Steering Arm Pin Lock	1
30	100857	Nut, Tie Rod End Ball Bolt	4
30A	1F-416	Cotter, Tie Rod End Ball Bolt	4
31	103942	‡Shim, Knuckle	
32	11H-1	Fitting, Knuckle Pin Grease	4
33	2D-06	Nut, Knuckle Pin Draw Key	4
33A	4E-06	Lkwshr, Knuckle Pin Draw Key	4
34	102594	Draw Key, Knuckle Pin	4
35	103935	Seal, Inner Hub Oil	2
36	559	Cone, Inner Hub Bearing	2
37	552A	Cup, Inner Hub Bearing	2
38	106160	Hub Assembly (Inc. 37, 38A, 39 & 44 thru 49)	2
38A	106342	Hub	2
39	26822	Cup, Outer Hub Bearing	2
40	26882	Cone, Outer Hub Bearing	2
41	102251	Washer, Knuckle	2
42	4D-20	Nut, Knuckle	2
43	1F-632	Cotter, Knuckle	2
44	103188	Cap, Hub Grease	2
45	6E-06	Lkwshr, Hub Grease Cap	10
46	1C-614	Bolt, Hub Grease Cap	10
47	103522	Nut, Wheel Cap	12
48	103445	Stud, Wheel Mount	12
49	103076	Nut, Wheel Stud	12

‡ — As Required
† — Not Illustrated

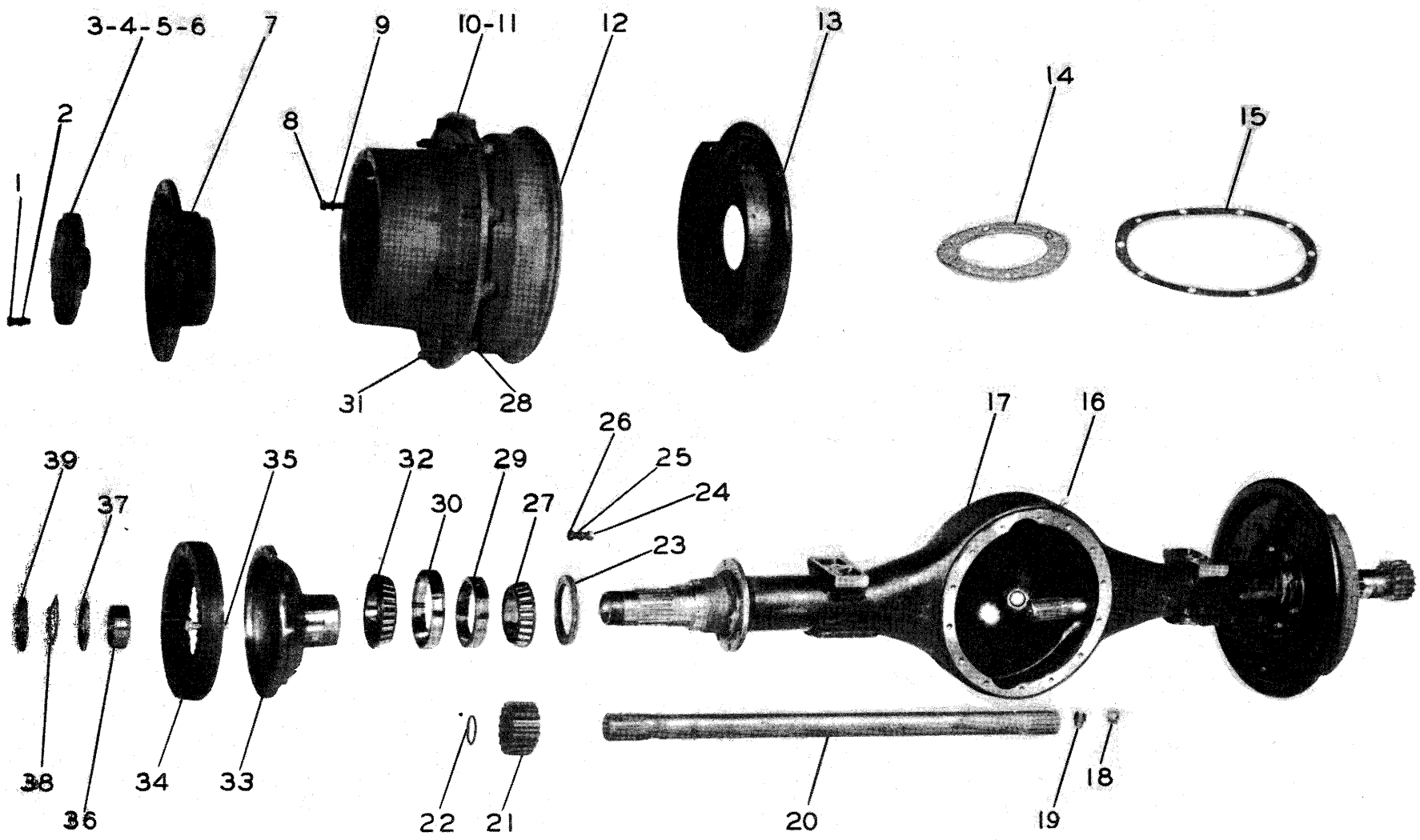

AXLE ASSEMBLY — REAR DRIVE

AXLE ASSEMBLY — REAR DRIVE
MODEL 75R
For Serial 7123 thru 7155

Item No.	Part No.	Description	No. Req'd.
A	130056	Axle Ass'y. — Rear Drive (Inc. All Following Items)	1
1	1C-720	Bolt, Thrust Cap	12
2	4E-07	Lkwshr, Thrust Cap	12
3	106454	Sun Gear Thrust Cap Ass'y. (Inc. 4 & 5)	2
4	106067	Cap, Sun Gear Thrust	2
5	106455	Washer, Sun Gear Thrust Cap	2
6	106068	Gasket	2
7		Planet Spider Ass'y. — See Index.	2
8	100970	Bolt, Spider	20
9	7E-08	Lkwshr, Spider	20
10	106343	Hub & Drum Assembly (Inc. 11 thru 12D & 28 thru 31A)	2
11	106793	Hub & Cup Assembly (Inc. 29 & 30)	2
12	106344	Drum, Brake	2
12A	107256	Bolt, Brake Drum	12
12B	104412	Washer, Brake Drum	12
12C	101597	Oil Throw	2
12D	107608	Clip, Inspection Hole Cover	2
13	106336	Brake Assembly — L.H.	1
13A	106335	Brake Assembly — R.H.	1
14	106066	Gasket, Spider	2
15	101004	Gasket, Differential Carrier	1
16	106656	Breather Assembly	1
17	106082	Axle Housing Ass'y. (Inc. 16 thru 17A & 37 thru 39)	1
17A	105111	Housing, Axle	1
18	14F-12	Plug, Housing Drain	1
19	13F-12	Plug, Housing Filler	1
20	106087	Shaft, Axle	2
21	106058	Gear, Sun	2
22	SK251-23	Snap Ring, Sun Gear	2
23	106092	Seal, Hub Oil	2
24	2D-08	Nut, Brake Attaching	16
25	4E-08	Lkwshr, Brake Attaching	16
26	101092	Bolt, Brake Attaching	16
27	47681	Cone, Hub Bearing — Inner	2
28	103076	Nut, Wheel Stud	20
29	47620	Cup, Hub Bearing — Inner	2
30	47820	Cup, Hub Bearing — Outer	2
31	103445	Stud, Wheel	20
31A	103522	Nut, Wheel	20
32	47896	Cone, Hub Bearing — Outer	2
33	940330	Internal Gear Hub & Screw Kit (Inc. 35)	2
34	106059	Gear, Internal	2
35	106880	Bolt, Internal Gear	16
36		Omit	
37	100965	Nut, Housing Tube — Inner	2
38	100967	Lock, Housing Tube Nut	2
39	100966	Nut, Housing Tube — Outer	2
40	1C-808	†Bolt, Puller Hole	4
41	3E-08	†Lkwshr, Puller Hole Bolt	4
42	106075	Differential & Carrier Ass'y. — See Index	1
43		Planet Spider Ass'y. — See Index.	2
44	1C-722	†Bolt, Differential Carrier	6
45	1C-728	†Bolt, Differential Carrier	8
46	4E-07	†Lkwshr, Differential Carrier	14
47	550406	Tee, Brake Line	1

† — Not Illustrated

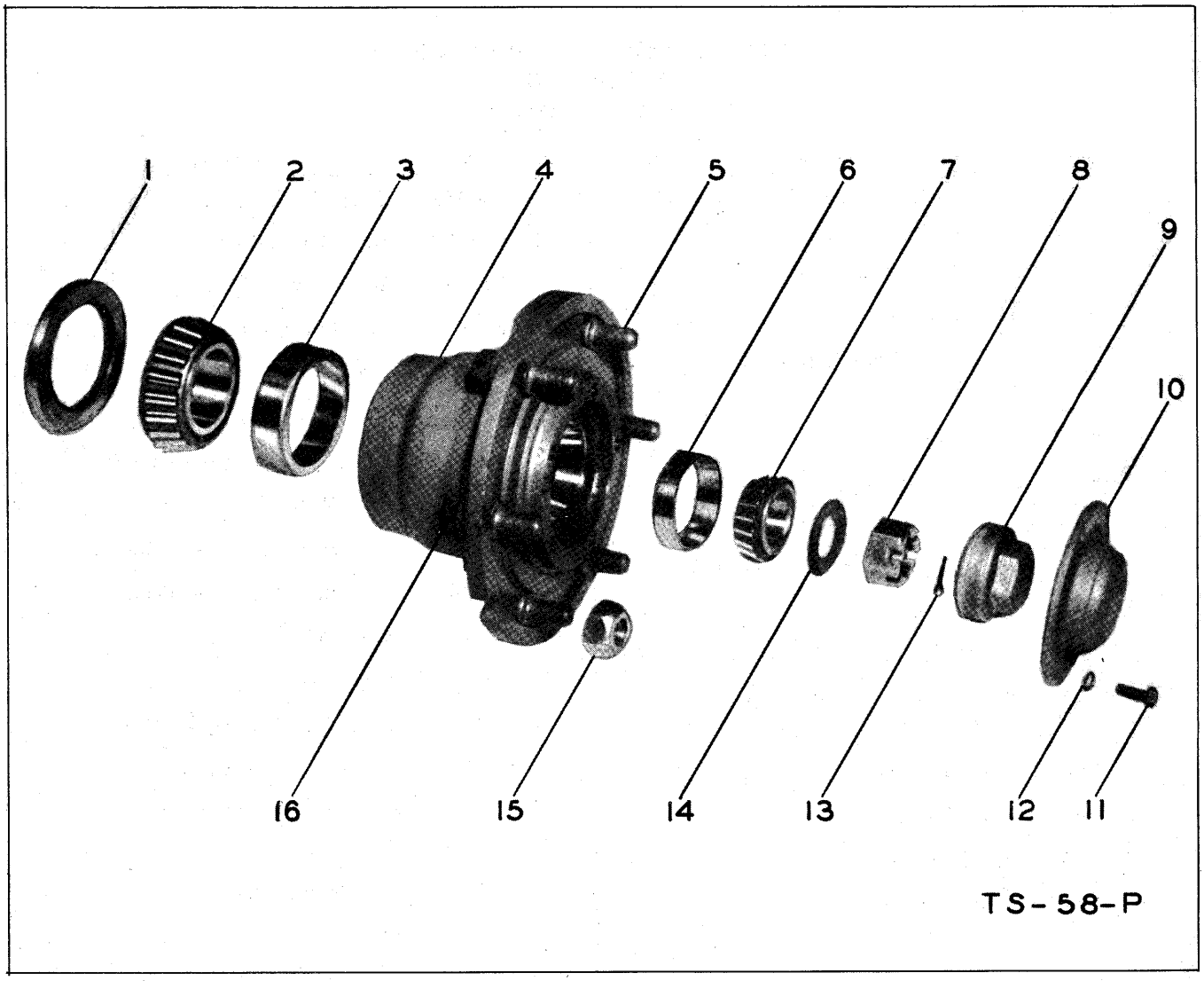

HUB ASSEMBLY

MODEL 75B

Item No.	Part No.	Description	No. Req'd.
A	106160	Hub Assembly (Inc. 3 thru 6, 10 thru 12, 15 & 16)	2
1	103935	Seal, Inner Hub Oil	2
2	559	Cone, Inner Hub Bearing	2
3	552A	Cup, Inner Hub Bearing	2
4	106342	Hub	2
5	103445	Stud, Wheel Mount	12
6	26822	Cup, Outer Hub Bearing	2
7	26882	Cone, Outer Hub Bearing	2
8	4D-20	Nut, Knuckle	2
9		Not Applicable This Model	
10	103188	Cap, Hub Grease	2
11	1C-614	Bolt, Hub Grease Cap	10
12	6E-06	Lkwshr, Hub Grease Cap	10
13	1F-632	Cotter, Knuckle	2
14	102251	Washer, Knuckle	2
15	103522	Nut, Wheel Cap	12
16	103076	Nut, Wheel Stud	12

MODEL 75R

Item No.	Part No.	Description	No. Req'd.
B	106158	Hub Assembly (Inc. 3 thru 6, 15 & 16)	2
1	102157	Seal, Hub Oil — Inner	2
2	539	Cone, Hub Bearing — Inner	2
3	532X	Cup, Hub Bearing — Inner	2
4	102156	Hub	2
5	103445	Stud, Wheel	12
6	3328	Cup, Hub Bearing — Outer	2
7	3386	Cone, Hub Bearing — Outer	2
8	4D-20	Nut, Knuckle	2
9	102159	Cap, Hub Grease	2
10 thru 12		Not Applicable This Model	
13	1F-632	Cotter, Knuckle	2
14	102251	Washer, Knuckle	2
15	103522	Nut, Wheel	12
16	103076	Nut, Stud	12

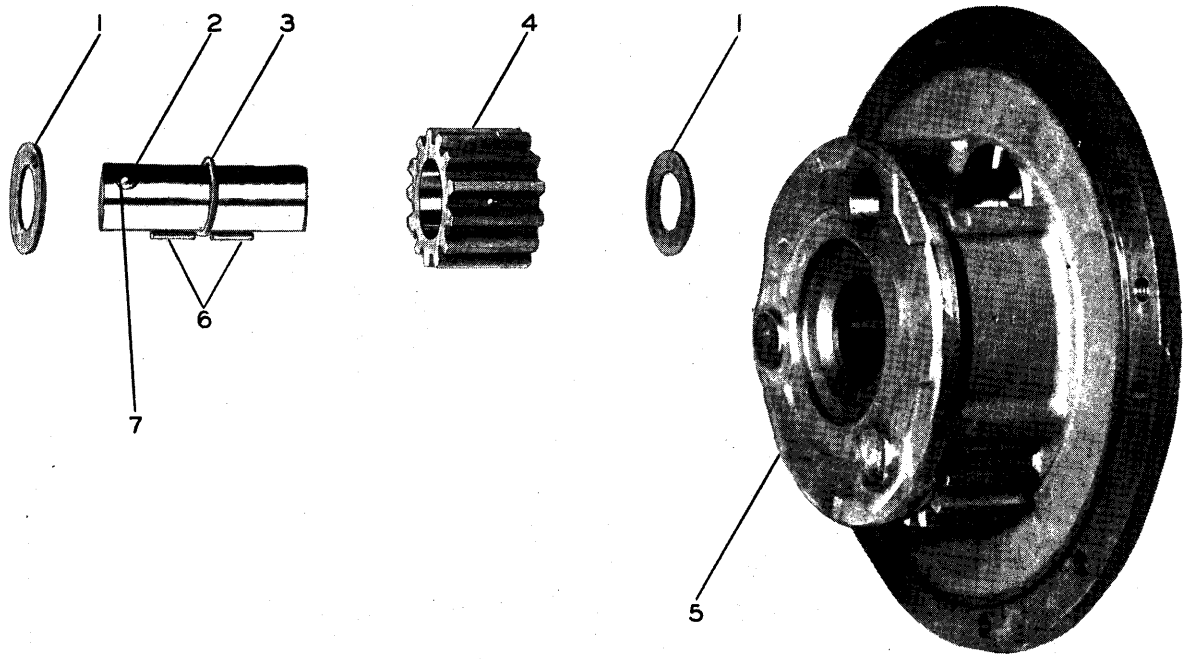

TS-59-P

PLANET SPIDER ASSEMBLY

Item No.	Part No.	Description	No. Req'd.
	106346	Planet Spider Assembly (Inc. all of following items)	2
1	106350	Pinion Thrust Washer	12
2	106349	Pinion Shaft	6
3	106352	Roller Spacer	6
4	106348	Planet Pinion	6
5	106347	Planet Spider	2
6	106351	Pinion Roller	348
7	10J-12	Pinion Shaft Ball	6

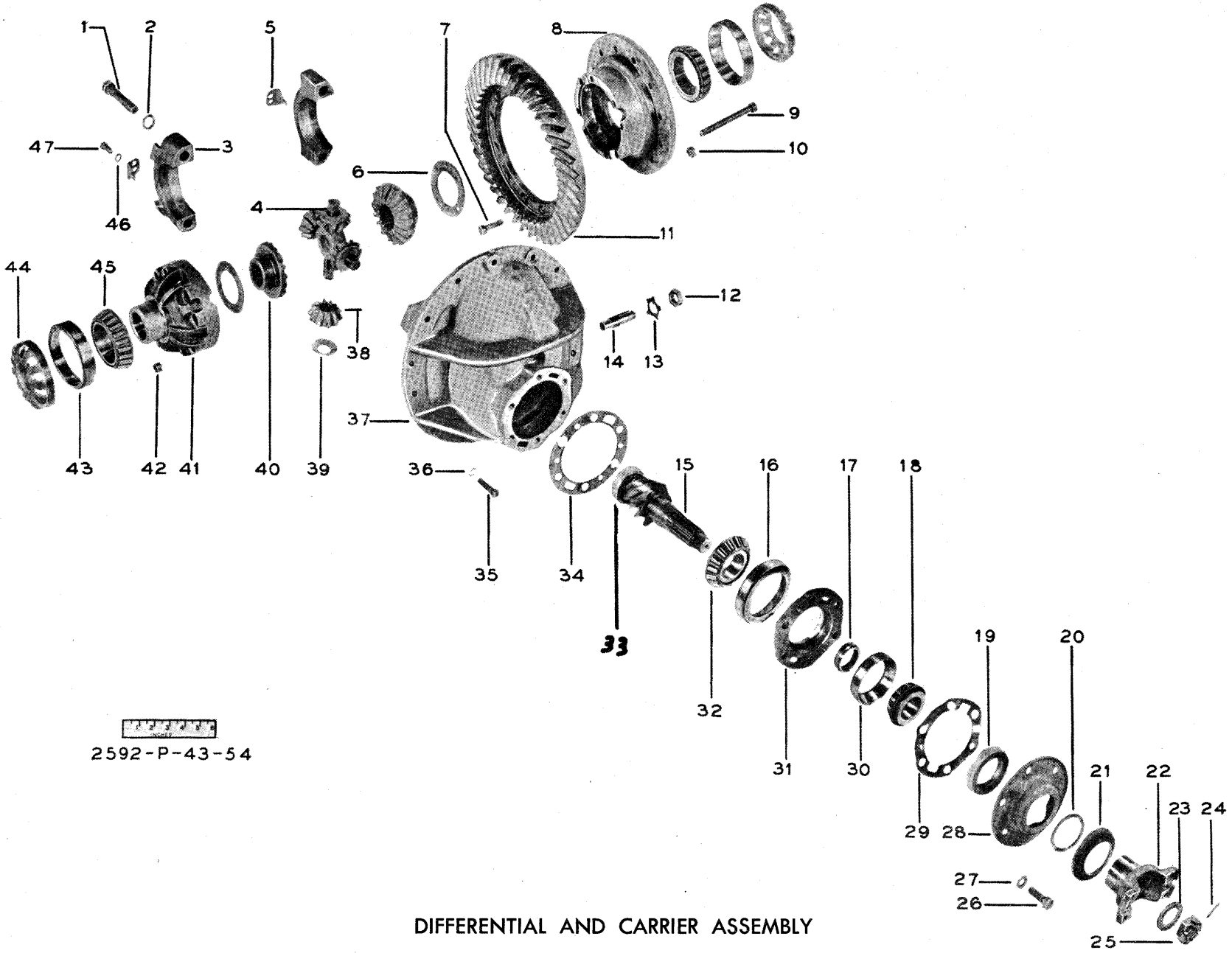

DIFFERENTIAL AND CARRIER ASSEMBLY

DIFFERENTIAL AND CARRIER ASSEMBLY

Item No.	Part No.	Description	No. Req'd.
A	*106102	Differential & Carrier Ass'y. — Front Drive	1
B	*106075	Differential & Carrier Ass'y. — Rear Drive	1
*(The Above Assemblies Inc. 1 thru 34 & 37 thru 52)			
1	100937	Bolt, Diff. Carrier Cap Mtg.	4
2	102766	Washer, Diff. Carrier Cap Mtg.	4
3		Cap, Diff Carrier (See 49)	2
4	100171	Spider, Diff.	1
5	100941	Lock, Diff. Adjusting Nut	2
6	100173	Washer, Thrust — Diff. Side Gear	2
7	100176	Bolt, Ring Gear	12
8		Diff. Case — Flanged Half (See 53)	1
9	100174	Bolt, Diff. Case	8
10	21D-08	Nut, Ring Gear Bolt	12
11		Gear, Ring (See 52)	1
12	8D-14	Nut, Diff. Thrust Screw	1
13	100954	Lock, Diff. Thrust Screw Nut	1
14	100953	Screw, Diff. Thrust	1
15		Pinion (See 52)	1
16	55443	Cup, Pinion Center Bearing	1
17	100952	Spacer, Pinion Bearing	1
18	53178	Cone, Pinion Outer Bearing	1
19	100944	Seal, Pinion Oil	1
20	100945	Gasket, Pinion Oil Seal	1
21	100949	Shield, Pinion Dust	1
22	106081	Flange, Companion	1
23	100951	Washer, Pinion Shaft	1
24	1F-428	Cotter, Pinion Shaft	1
25	100950	Nut, Pinion Shaft	1
26	1C-928	Bolt, Pinion Oil Seal Retainer	5
26A	1C-828	Bolt, Pinion Oil Seal Retainer Locating	1
27	4E-09	Lkwshr, Pinion Oil Seal Retainer	5
27A	4E-08	Lkwshr, Pinion Oil Seal Retainer Locating	1
28	100942	Retainer, Pinion Oil Seal	1
29	100943	Gasket, Pinion Oil Seal Retainer	1
30	53375	Cup, Pinion Outer Bearing	1
31		§Cage, Outer Pinion Bearing (See 48)	1
32	55187	Cone, Pinion Center Bearing	1
33	UC-1306TAM	Bearing, Pinion Inner	1
34	100946	‡Shim, Bearing Cage — Thin	
34A	100947	‡Shim, Bearing Cage — Medium	
34B	100948	‡Shim, Bearing Cage — Thick	
35	1C-722	Bolt, Carrier to Axle Housing	6
35A	1C-728	Bolt, Carrier to Axle Housing	8
36	4E-07	Lkwshr, Carrier to Axle Housing	14
37		Diff. Carrier (See 49)	1
38	100169	Pinion, Diff.	4
39	100172	Washer, Diff. Pinion Thrust	4
40	100170	Gear, Side — Diff.	2
41		Plain Half — Diff. Case (See 53)	1
42	21D-08	Nut, Diff. Case Bolt	8
43	33462	Cup, Diff. Bearing	2
44	100940	Nut, Diff. Adjusting	2
45	33281	Cone, Diff. Bearing	2
46	4E-06	Lkwshr, Diff. Adj. Nut Lock	2
47	204432	Bolt, Diff. Adj. Nut Lock	2
48	100938	Bearing Cage & Cup Assy. (Inc. 30 & 31)	1
49	106042	Diff. Carrier & Cap Assy. (Inc. 1, 2, 3 & 37)	1
50	100160	Diff. Body Sub Assy. (Inc. 4, 6, 8, 9, 10 & 38 thru 41)	1
51		*Differential Assembly* (Inc. 7, 11, 15, 42 & 50)	1
	106103	Front Drive	
	106076	Rear Drive	
52		*Ring Gear & Pinion Set* (Inc. 11 & 15)	1
	815202	Front Drive	
	815204	Rear Drive	
53	815203	Diff. Case Kit (Inc. Items 8 & 41)	1

§ — Not Sold Separately
‡ — As Required

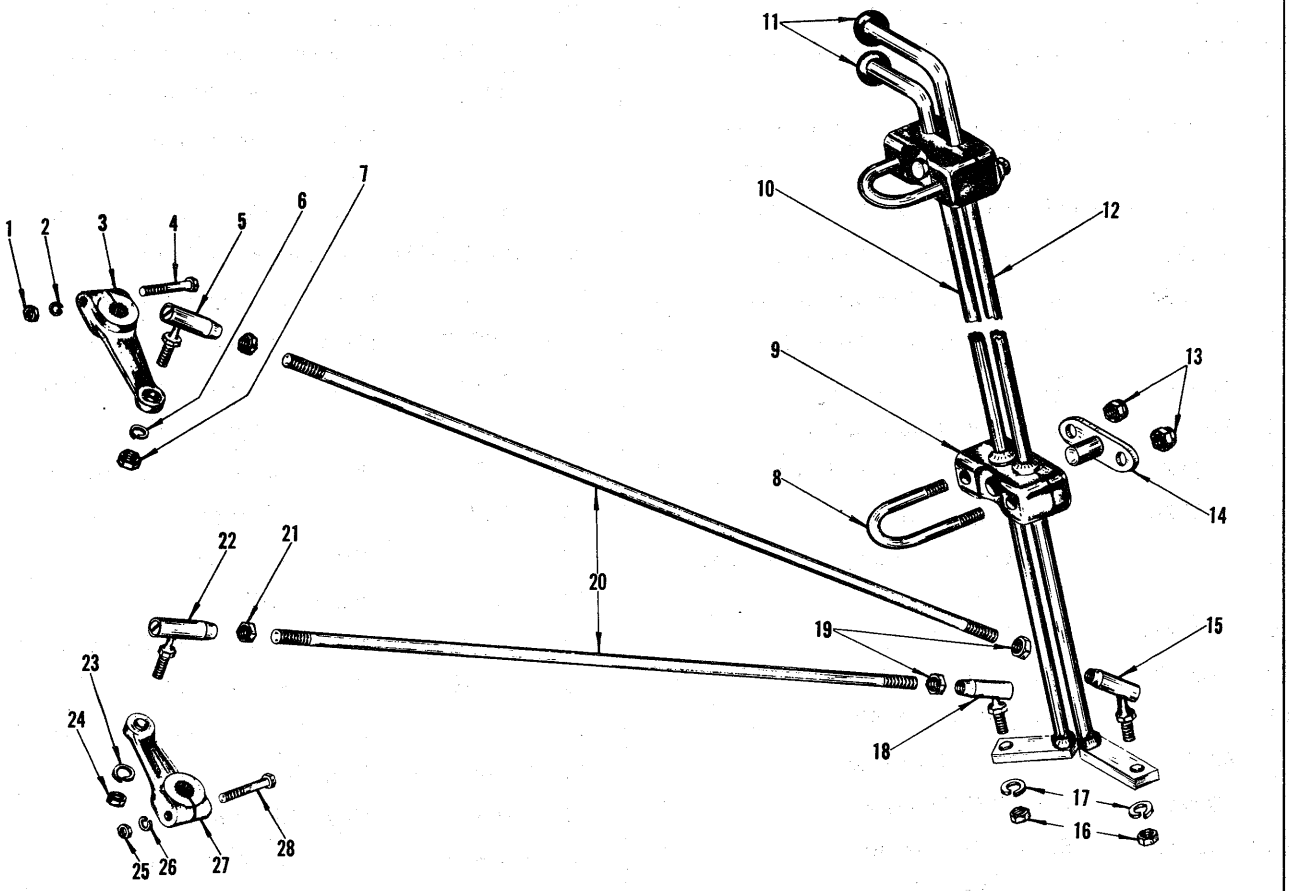

GEAR SHIFT LEVERS AND LINKAGE

Item No.	Part No.	Description	No. Req'd.
1	2D-04	Nut, Speed Selector Shift Lever....	1
2	4E-04	Lkwshr, Speed Selector Shift Lever.	1
3	550803	Lever, Speed Selector Shift.....	1
4	2C-424	Bolt, Speed Selector Shift Lever...	1
5	550675	Ball Socket	1
6	4E-06	Lkwshr, Ball Socket.....	1
7	8D-06	Nut, Ball Socket	1
8	550672	U-Bolt, Steering Column	2
9	550129	Support, Shift Levers	2
10	550667	High & Low Lever Assembly.....	1
11	300208	Knob, Levers	2
12	550663	Forward & Reverse Lever Assembly.	1
13	18D-05	Nut, U-Bolt	4
14	550669	Plate Assembly, Shift Lever Support.	2
15	550675	Ball Socket	1
16	8D-06	Nut, Ball Socket	2
17	4E-06	Lkwshr, Ball Socket	2
18	550675	Ball Socket	1
19	8D-06	Nut, Ball Socket	2
20	550674	Rod, Shift	2
21	8D-06	Nut, Ball Socket	2
22	550675	Ball Socket	1
23	4E-06	Lkwshr, Ball Socket	1
24	8D-06	Nut, Ball Socket	1
25	2D-04	Nut, Speed Selector Shift Lever...	1
26	4E-04	Lkwshr, Speed Selector Shift Lever.	1
27	550803	Lever, Speed Selector Shift.....	1
28	2C-424	Bolt, Speed Selector Shift Lever...	1

† — Not Illustrated

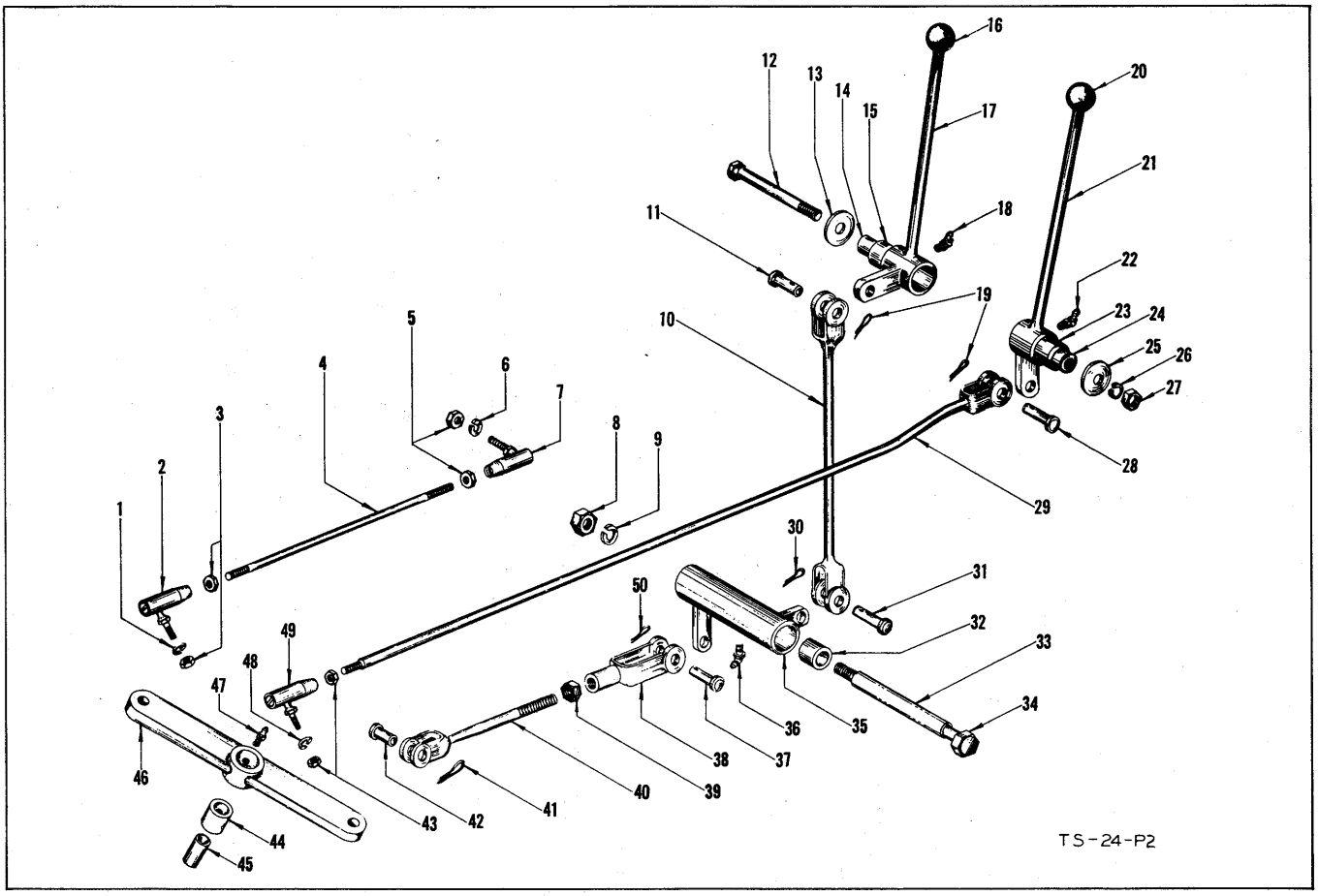

TRANSMISSION CONTROL LEVERS AND LINKAGE
MODEL 75A

Item No.	Part No.	Description	No. Req'd.
1	4E-06	Lkwshr, Ball Socket	1
2	550675	Ball Socket	1
3	8D-06	Nut, Ball Socket	2
4	550691	Rod, Crank to Transmission	1
5	8D-06	Nut, Ball Socket	2
6	4E-06	Lkwshr, Ball Socket	1
7	550675	Ball Socket	1
8	2D-10	Nut, Bell Crank Mtg.	1
9	4E-10	Lkwshr, Bell Crank Mtg.	1
10	550679	Shift Rod Assembly	1
11	4F-08127	Pin, Shift Rod to Lever	1
12	2C-868	Bolt, Lever Mtg.	1
13	616796	Washer, Lever Mtg.	1
14	550646	Sleeve, Lever Mtg.	1
15	551373	Bushing, Lever Mtg.	1
16	300208	Knob, Range Lever	1
17	550677	Range Lever Assembly (Inc. 15)	1
18	12H-15	Fitting, Range Lever Grease	1
19	1F-414	Cotter, Clevis Pin	2
20	300208	Knob, 4WD Lever	1
21	550685	Lever Assembly, 4WD (Inc. 23)	1
22	12H-15	Fitting, 4WD Lever Grease	1
23	551373	Bushing, Lever Mtg.	1
24	550646	Sleeve, Lever Mtg.	1
25	616796	Washer, Lever Mtg.	1
26	4E-08	Lkwshr, Lever Mtg.	1
27	2D-08	Nut, Lever Mtg.	1
28	4F-08127	Pin, Shift Rod to 4WD Lever Clevis.	1
29	550687	Shift Rod Assembly	1
30	1F-414	Cotter, Clevis Pin	1
31	4F-08127	Pin, Shift Rod to Bell Crank Clevis.	1
32	551373	Bushing, Bell Crank Mtg.	2
33	551496	Sleeve, Bell Crank Mtg.	1
34	551497	Bolt, Bell Crank Mtg.	1
35	551494	Bell Crank Assembly (Inc. 32)	1
36	12H-15	Fitting, Bell Crank Grease	1
37	4F-08127	Pin, Yoke to Bell Crank Clevis	1
38	4J-8300	Yoke, Shift Rod to Bell Crank	1
39	8D-08	Nut, Yoke Jam	1
40	550683	Shift Rod Assembly	1
41	1F-310	Cotter, Clevis Pin	1
42	4F-06106	Pin, Shift Rod to Crank Clevis	1
43	8D-06	Nut, Ball Socket	2
44	551373	Bushing, Crank Mtg.	1
45	550646	Sleeve, Crank Mtg.	1
46	550689	Crank Assembly (Inc. 44)	1
47	12H-15	Fitting, Crank Grease	1
48	4E-06	Lkwshr, Ball Socket	1
49	550675	Ball Socket	1
50	1F-414	Cotter, Clevis Pin	1
51	4C-844	†Bolt, Crank Mtg.	1
52	2D-08	†Nut, Crank Mtg.	1
53	4E-08	†Lkwshr, Crank Mtg.	1
54	616796	†Washer, Crank Mtg.	1

† — Not Illustrated

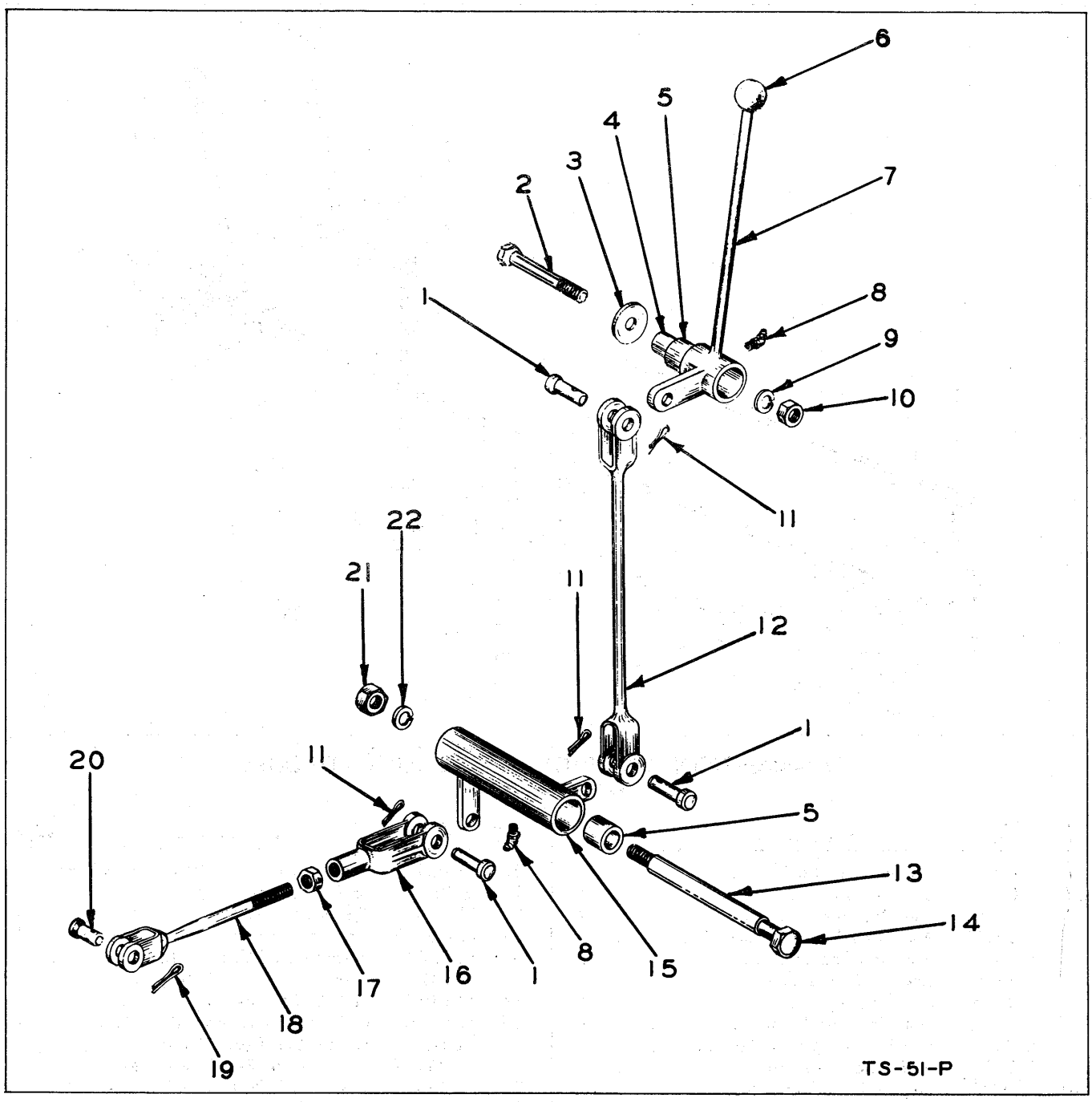

TRANSMISSION CONTROL LEVER AND LINKAGE
MODEL 75B AND 75R

Item No.	Part No.	Description	No. Req'd.
1	4F-08127	Pin, Clevis	3
2	2C-844	Bolt, Lever Mtg.	1
3	616796	Washer, Lever Mtg.	1
4	550646	Sleeve, Lever Mtg.	1
5	551373	Bushing, Lever & Bell Crank Mtg.	3
6	300208	Knob, Range Lever	1
7	550677	Range Lever Assembly (Inc. 5)	1
8	12H-15	Fitting, Range Lever Grease	2
9	4E-08	Lkwshr, Lever Mtg.	1
10	2D-08	Nut, Lever Mtg.	1
11	1F-414	Cotter, Clevis Pin	3
12	550679	Shift Rod Assembly	1
13	551496	Sleeve, Bell Crank Mtg.	1
14	551497	Bolt, Bell Crank Mtg.	1
15	551494	Bell Crank Assembly (Inc. 5)	1
16	4J-8300	Yoke, Shift Rod to Bell Crank	1
17	8D-08	Nut, Yoke Jam	1
18	550683	Shift Rod Assembly	1
19	1F-310	Cotter, Clevis Pin	1
20	4F-06106	Pin, Clevis	1
21	2D-10	Nut, Bell Crank Mtg.	1
22	4E-10	Lkwshr, Bell Crank Mtg.	1

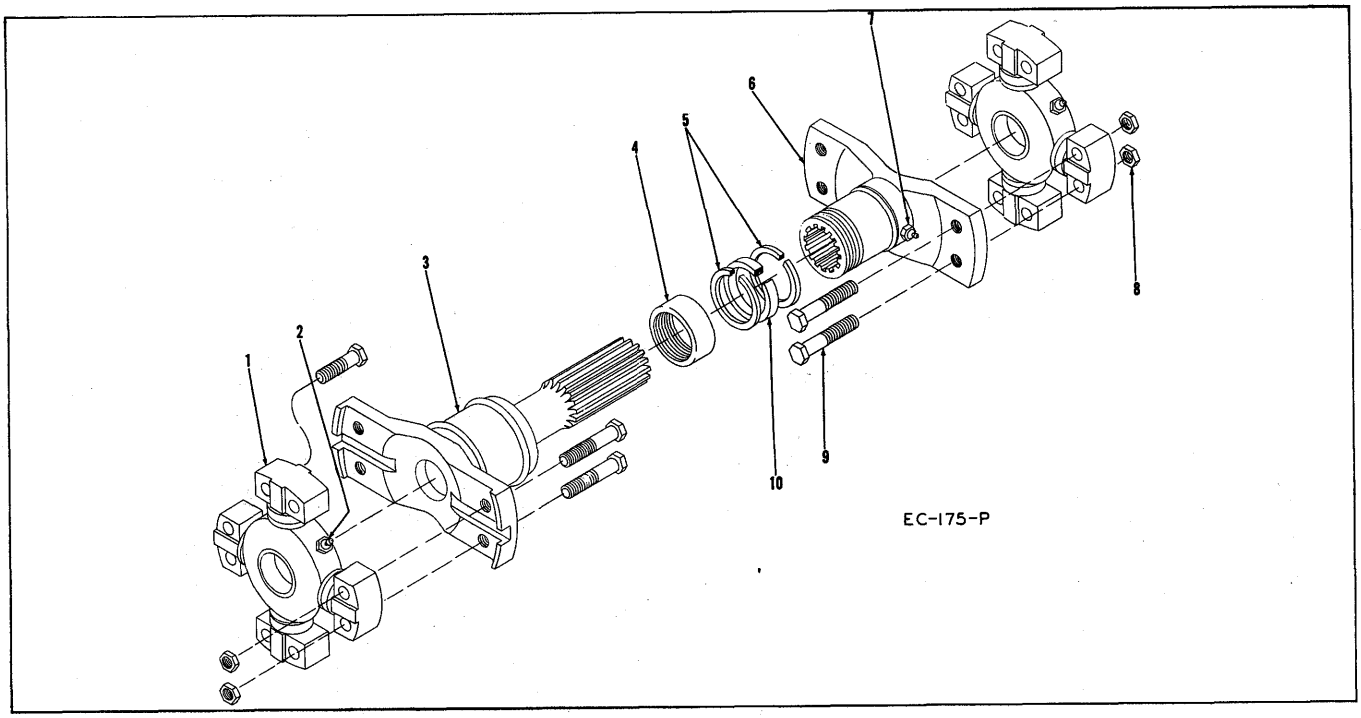

PROPELLER SHAFT ASSEMBLY

Item No.	Part No.	Description	No. Req'd.
A	550579	*Propeller Shaft Assembly, Engine to Trans.*	
		For Serial:	
		75A — 8123 thru 10222, 10240 & 10247 thru 10251	1
		75B — 6123 thru 6200	1
		75R — 7123 thru 7154	1
1	943221	Spider & Bearing Assembly (Inc. 1A)	2
1A	940076	Cork Washer	8
2	10H-25	Fitting, Spider & Bearing Grease	2
3	940085	Stub Yoke	1
4	940080	Retainer, Felt	1
5		Omit	
6	940082	Slip Yoke Assembly	1
7	10H-25	Fitting, Slip Yoke Grease	1
8		Omit	
9	695811	Bolt	16
9A	940078	†Lkwshr,	16
10	940081	Felt Washer	1
B	514268	*Propeller Shaft Assembly, Engine to Trans.*	
		Effective with Serial:	
		75A — 10223 thru 10239, 10241 thru 10246, 10252 and thereafter	1
		75B — 6201 & thereafter	1
		75R — 7155 & thereafter	1
1	943221	Spider & Bearing Assembly (Inc. 1A)	2
1A	940076	Cork Washer	8
2	10H-25	Fitting, Spider & Bearing Grease	2
3	942659	Stub Yoke	1
4	940654	Retainer, Felt	1
5	940653	Washer, Felt Retainer	2
6	943222	Slip Yoke Assembly	1
7	10H-25	Fitting, Slip Yoke Grease	1
8		Omit	
9	695811	Bolt	16
9A	940078	†Lkwshr	16
10	940081	Felt Washer	1
C	550580	*Propeller Shaft Assembly, Trans. to Axles*	
		75A	2
		75B	1
1	941572	Spider & Bearing Assembly (Inc. 1A)	2
1A	940249	Cork Washer	8
2	10H-25	Fitting, Spider & Bearing Grease	2
3	940084	Tube Assembly	1
4	940090	Retainer, Felt	1
5	940091	Washer, Felt Retainer	2
6	942660	Slip Yoke Assembly	1
7	10H-25	Fitting, Slip Yoke Grease	1
8	940088	Nut	16
9	940089	Bolt	16
10	940092	Washer, Felt	1
D	550778	*Propeller Shaft Assembly, Trans. to Axle — 75R*	1
1	941572	Spider & Bearing Assembly (Inc. 1A)	2
1A	940249	Cork Washer	8
2	10H-25	Fitting, Spider & Bearing Grease	2
3	940230	Tube Assembly	1
4	940090	Retainer, Felt	1
5	940091	Washer, Felt Retainer	2
6	942660	Slip Yoke Assembly	1
7	10H-25	Fitting, Slip Yoke Grease	1
8	940088	Nut	16
9	940089	Bolt	16
10	940092	Felt Washer	1

† — Not Illustrated

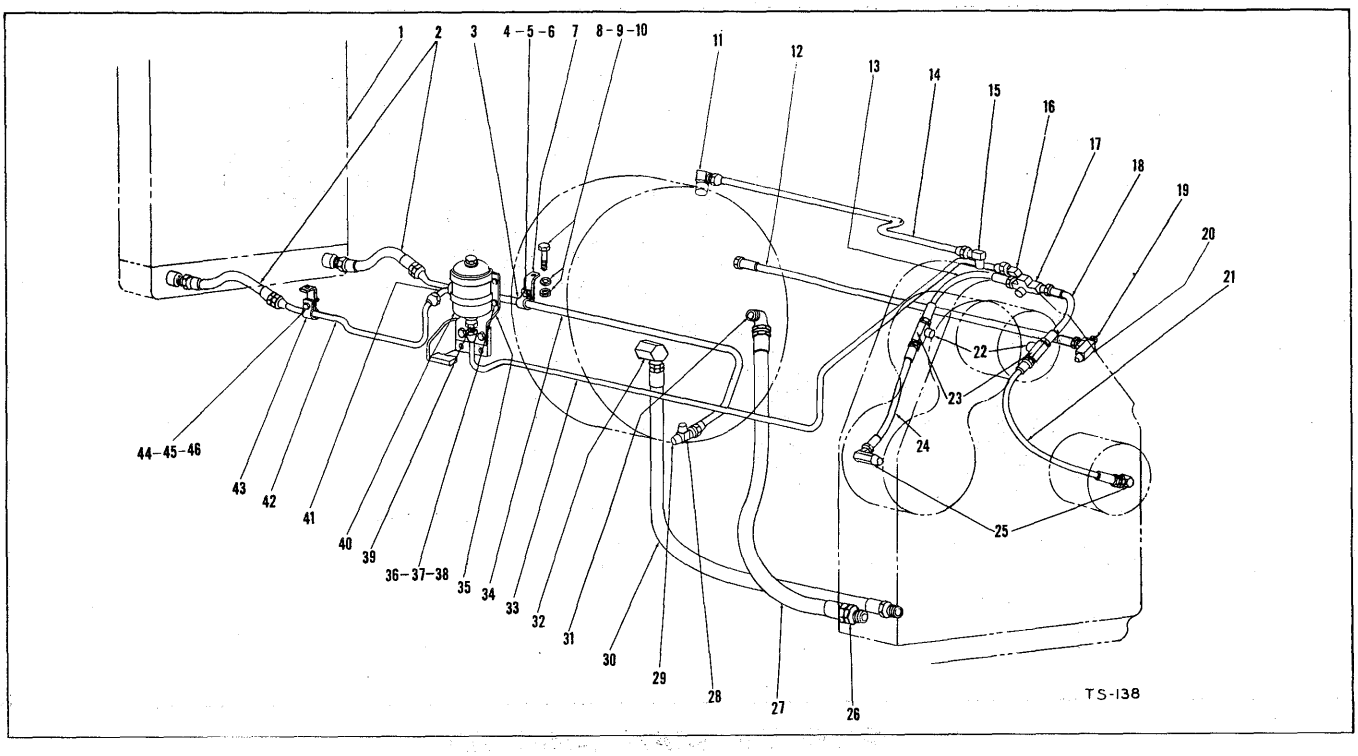

HYDRAULIC SYSTEM TRANSMISSION AND TORQUE CONVERTER

For Serial:
75A — 8123 thru 10222, 10240 & 10247 thru 10251
75B — 6123 thru 6200
75R — 7123 thru 7154

Item No.	Part No.	Description	No. Req'd.
1		Radiator — See Index	
2	552296	Hose, Cooler Lines to Radiator	2
3	6H-16	Clip, Cooler Line to Bracket	1
4	2C-612	Bolt, Clip to Bracket	1
5	2D-06	Nut, Clip to Bracket	1
6	4E-06	Lkwshr, Clip to Bracket	1
7	551996	Bracket, Clip to Frame	2
8	2C-620	Bolt, Bracket to Frame	2
9	2D-06	Nut, Bracket to Frame	2
10	4E-06	Lkwshr, Bracket to Frame	2
11	83F-6	Elbow, Torque Conv. to Overflow Line	1
12	712750	Hose, Torque Conv. to Trans.	1
13	550875	Hose, Trans. Clutch	1
14	551873	Overflow Line Assembly	1
15	83F-6	Elbow, Overflow Line to Trans.	1
16	83F-7	Elbow, Cooler Return Line to Trans.	1
17	550866	Special Cross, Trans.	1
18	550758	Hose, Trans. Clutch	1
19	13F-04	Pipe Plug, Tee	1
20	30F-1	Tee, Trans. — 1/4"	1
21	550758	Hose, Trans. Clutch	1
22	5K-207	Close Nipple, Trans. Clutch Tee	2
23	28F-1	Tee, Trans. Clutch	2
24	550874	Hose, Trans. Clutch	1
25	31F-2	Adaptor Union, Trans. Clutch	2
26	36F-5	Adaptor Union, Trans. to Torque Conv.	1
27	550724	Hose, Trans. to Torque Conv.	1
28	551896	Special Tee	1
29	551323	Temperature Sender Unit	1
30	550873	Hose — For Units with 1/2" P.T.	1
30A	553324	Hose — For Units with 3/4" P.T.	1
31	26F-5	Elbow, Torque Conv.	1
32	31F-4	Adaptor Union — 1/2"-90° — For Units With 1/2" P.T.	1
32A	31F-5	Adaptor Union — 3/4"-90° — For Units With 3/4" P.T.	1
33	*552191	Cooler Return Line Assembly, Filter to Trans.	1
34	*552290	Cooler Line Assembly	1
35	552473	Bracket, Filter	1
36	2C-514	Bolt, Filter to Bracket	4
37	2D-05	Nut, Filter to Bracket	4
38	4E-05	Lkwshr, Filter to Bracket	4
39	89F-7	Connector, Tube — 37° Flare	1
40	552470	Filter, Oil	1
40A	957577	Cartridge Kit	1
41	84F-7	Elbow, Rad. to Filter	1
42	552474	Cooler Return Line, Rad. to Filter	1
43	6H-16	Clip, Cooler Return Line to Bracket	1
44	2C-612	Bolt, Clip to Bracket	1
45	2D-06	Nut, Clip to Bracket	1
46	4E-06	Lkwshr, Clip to Bracket	1

*For Machines not equipped with Filter, Items 33 and 34 are as follows:

33	551872	Cooler Return Line Assembly	1
34	551876	Cooler Line Assembly	1
34A	89F-7	†Connector, Tube — At Radiator	1

† — Not Illustrated

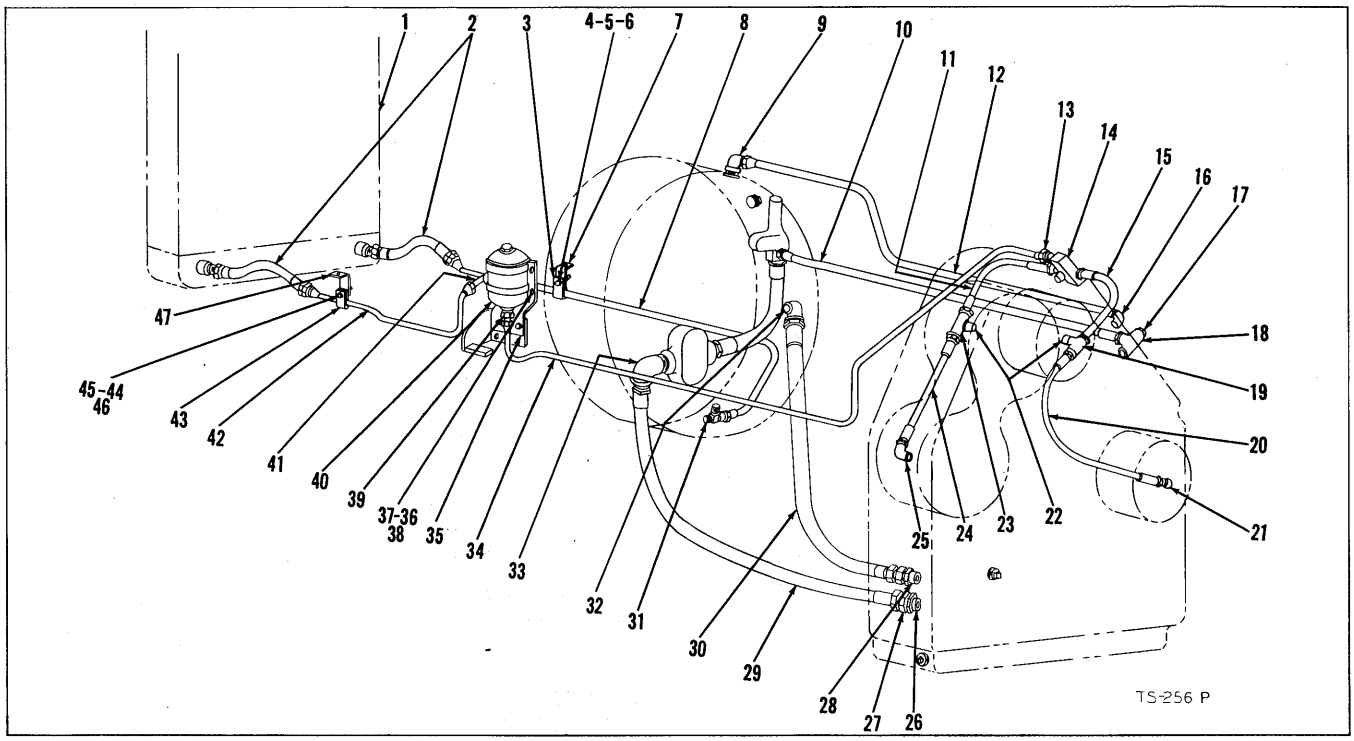

HYDRAULIC SYSTEM TRANSMISSION AND TORQUE CONVERTER

Effective with Serial:

75A — 10223 thru 10249, 10241 thru 10246, 10252 & thereafter
75B — 6201 & Thereafter
75R — 7155 & Thereafter

Item No.	Part No.	Description	No. Req'd.
1		Radiator — See Index	
2	552296	Hose, Cooler Lines to Radiator	2
3	6H-16	Clip, Cooler Line to Bracket	1
4	2C-612	Bolt, Clip to Bracket	1
5	2D-06	Nut, Clip to Bracket	1
6	4E-06	Lkwshr, Clip to Bracket	1
7	551996	Bracket, Clip to Frame	1
7A	2C-620	†Bolt, Bracket to Frame	1
7B	2D-06	†Nut, Bracket to Frame	1
7C	4E-06	†Lkwshr, Bracket to Frame	1
8	552290	Cooler Line Assembly — Torque Conv. to Rad.	1
9	85F-8	Elbow, Torque Conv. to Overflow Line	1
10	712170	Hose, Torque Conv. to Trans.	1
11	550875	Hose, Trans. to Torq. Conv.	1
12	514613	Overflow Line Assembly	1
13	83F-7	Elbow, Cooler Line to Trans.	1
14	550866	Special Cross, Trans.	1
15	550758	Hose, Trans.	1
16	83F-8	Elbow, Overflow Line to Trans.	1
17	13F-04	Plug, Pipe — Trans. Tee	1
18	30F-1	Tee, Trans. — 1/4"	1
19	28F-1	Tee, Trans. Clutch — 1/4"	1
20	550758	Hose, Trans. Clutch	1
21	31F-2	Adaptor Union, Trans. Clutch	1
22	5K-207	Close Nipple, Trans. Clutch Tee	2
23	28F-1	Tee, Trans. Clutch	1
24	550874	Hose, Trans.	1
25	31F-2	Adaptor Union, Trans. Clutch	1
26	97F-20	Bushing, Pipe Reducing — 1" to 1 1/4"	1
27	36F-6	Adaptor Union, Trans. to Torque Conv.	1
28	36F-5	Adaptor Union, Torque Conv. to Trans.	1
29	552156	Hose, Trans. to Torque Conv.	1
30	550724	Hose, Torque Conv. to Trans.	1
31	551896	Tee, Special	1
32	26F-5	Elbow, Street — 3/4"	1
33	26F-6	Elbow, Trans. to Torque Conv. Pump	1
34	514614	Cooler Line Assy., Filter to Trans.	1
35	552473	Bracket, Filter	1
36	2C-514	Bolt, Filter to Bracket	4
37	2D-05	Nut, Filter to Bracket	4
38	4E-05	Lkwshr, Filter to Bracket	4
39	89F-7	Flare Tube Connector — 37°	1
40	552470	Filter, Oil	1
40A	957577	†Cartridge Kit	1
41	84F-7	Elbow, Cooler Return Line to Filter	1
42	552474	Cooler Return Line — Rad. to Filter	1
43	6H-16	Clip, Cooler Return Line to Bracket	1
44	2C-612	Bolt, Clip to Bracket	1
45	2D-06	Nut, Clip to Bracket	1
46	4E-06	Lkwshr, Clip to Bracket	1
47	551996	Bracket, Cooler Return Line	1
47A	2C-620	†Bolt, Bracket to Frame	1
47B	2D-06	†Nut, Bracket to Frame	1
47C	4E-06	†Lkwshr, Bracket to Frame	1
48	551323	†Sender Unit, Torque Converter Temp.	1

† — Not Illustrated

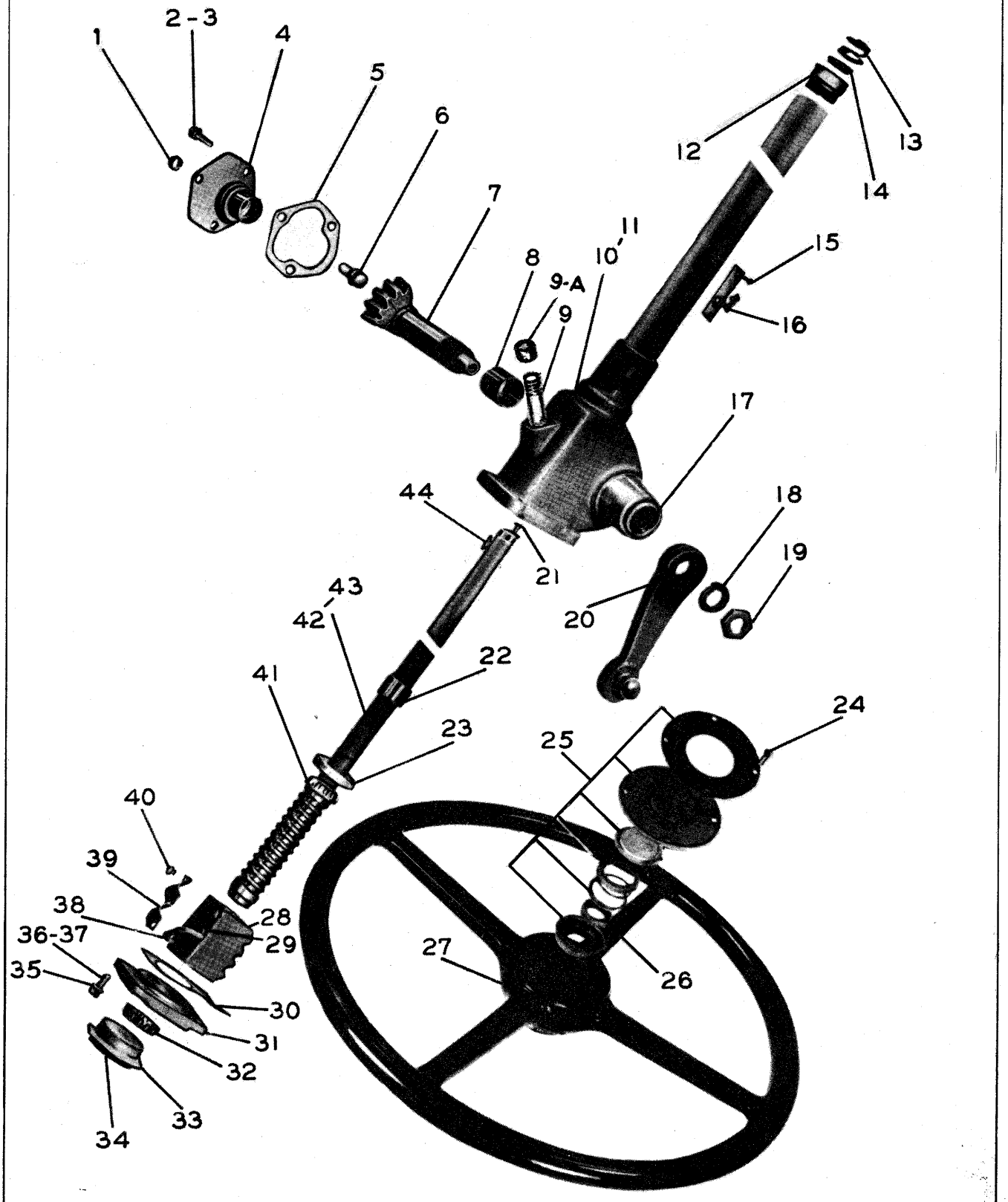

STEERING GEAR

TS-30-P-1

STEERING GEAR ASSEMBLY

Item No.	Part No.	Description	No. Req'd.
A	940109	Steering Gear Assembly (Less 15, 16, 20, 25, 27 & 45 thru 49)	1
1	8D-07	Nut, Lash Adjuster	1
2	1C-612	Bolt, Side Cover	3
3	2E-06	Lkwshr, Side Cover	3
4	853182	Cover Assembly, Housing Side — Inc. Bushings	1
5	851756	Gasket, Side Cover	1
6	851770	Lash Adjuster	1
7	940111	Gear, Pitman Shaft	1
8	853357	Bushing, Pitman Shaft	2
9	5K-432	Extension, Filler	1
9A	22F-4	Cap, Filler	1
10	940112	Housing Assembly (Inc. 8, 11 & 23)	1
11	940113	Jacket, Column	1
12	857729	Bearing Assembly — Upper	1
13	853395	Spring, Upper Bearing	1
14	853394	Seat, Upper Bearing Spring	1
14A	853187	Lash Adjuster Shim Kit	1
15	622027	Screw, Horn Connector	2
16	622026	Connector Assembly, Horn Cable	1
16A	622028	†Cover, Horn Cable Connector	1
16B	622029	†Screw	2
16C	17E-10	†Lkwshr	2
16D	518346	†Gasket, Connector Assy.	1
17	853391	Seal, Pitman Shaft Grease	1
18	3E-18	Lkwshr, Pitman Arm	1
19	850756	Nut, Pitman Arm	1
20	940114	Pitman Arm Assembly — 75A	1
20A	940125	Pitman Arm Assembly — 75B	1
20B	940127	Pitman Arm Assembly — 75R	1
21	853368	Terminal Assembly, Horn	1
22	940115	Contact Assembly, Horn Cable and	1
23	853379	Cup, Worm Thrust Bearing	1
24	695930	Screw, Horn Button	1
25	639796	Horn Button Assembly	1
26	648304	Nut, Steering Wheel	1
27	518331	Steering Wheel	1
28	853408	Ball Nut	1
29	10J-09	Ball	106
30	853380	Gasket, End Cover	1
31	853376	Cover, Housing End	1
32	853373	Bearing, Worm Thrust	1
33	853385	Nut, Worm Bearing Adjuster Lock	1
34	853372	Adjuster, Worm Bearing	1
35	3E-07	Lkwshr, End Cover	4
36	1C-718	Bolt, End Cover — Short	3
37	1C-726	Bolt, End Cover — Long	1
37A	940119	†Spacer, End Cover	1
37B	940120	†Nut, Block Lock	1
38	853412	Guide, Ball Return	4
39	853464	Clamp, Ball Return Guide	1
40	851762	Bolt and Washer Assembly	3
41	853373	Bearing, Worm Thrust	1
42	940122	Shaft Assembly — Ball Nut, Contact and Steering (Inc. 21, 22, 28, 29, 38 thru 41 & 43)	1
43	940123	Shaft Ass'y., Worm & Steering (Inc. 21, 22 & 41)	1
44	853384	Key, Steering Wheel	1
45	550594	†U-Bolt, Steering Gear	1
46	550044	†Clamp, Steering Gear	1
47	2C-832	†Bolt	2
48	2D-08	†Nut	4
49	4E-08	†Lkwshr	4

† — Not Illustrated

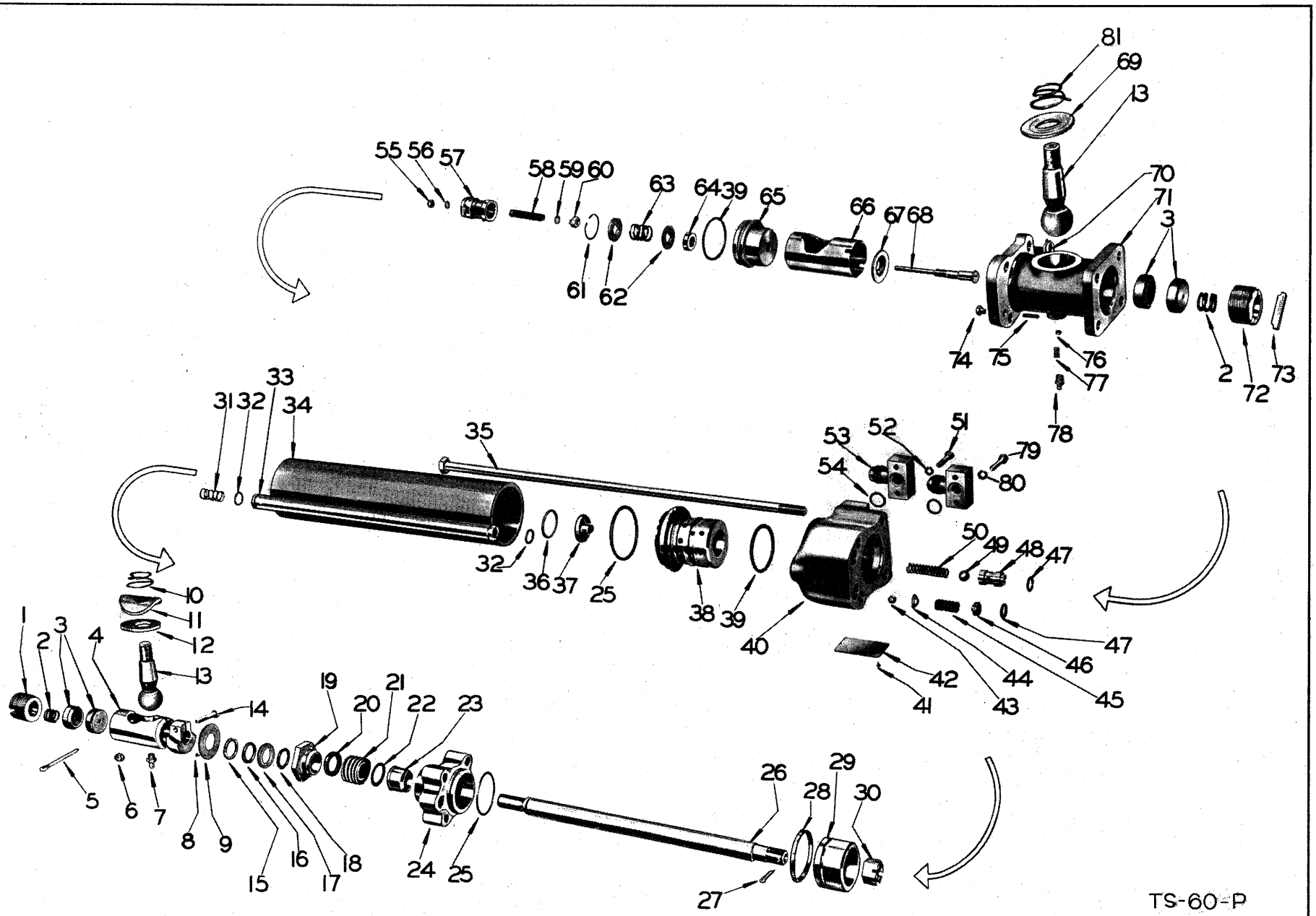

STEERING BOOSTER ASSEMBLY

STEERING BOOSTER ASSEMBLY

For Serial:
75A — 8123 Thru 8768
75B — 6123 Thru 6144
75R — 7123 Thru 7141

Item No.	Part No.	Description	No. Req'd.
A	*550596	Steering Booster Assembly	1
		*For Replacement Use 513228	
1	858302	Plug, Housing	1
2	858225	Spring, Housing Seat Pressure	2
3	858226	Seat, Housing	4
4	858227	Housing	1
5	1F-848	Cotter, Housing Plug	1
6	18D-06	Nut, Set Screw	1
7	10H-2	Fitting, Housing Grease	1
8	858264	Screw, Retainer Plate	4
9	858232	Plate, Retainer	1
10	858233	Spring, Shield	2
11	858234	Shield	1
12	858235	Cover	1
13	858236	Ball Stud	2
14	858237	Screw, Set	1
15	858238	Garter, Spring	1
16	858239	Wiper—Leather	1
17	858240	Spacer	1
18	858241	Wiper — Felt	1
19	858242	Retainer	1
20	858243	Adaptor — Upper	1
21	858244	Packing	6
22	858245	Adaptor — Lower	1
23	858246	Bushing, Cap	1
24	858247	Cap	1
25	25K-40216	"O" Ring	2
26	858249	Rod	1
27	1F-424	Cotter, Rod Nut	1
28	858251	Ring	1
29	858252	Piston	1
30	858253	Nut, Rod	1
31	858254	Spring	1
32	25K-30018	"O" Ring	2
33	858256	Tube	1
34	858257	Cylinder	1
35	940146	Bolt	4
36	858259	Snap Ring	1
37	858260	Cap	1
38	940147	Sleeve	1
39	25K-40204	"O" Ring	2
40	858263	Cylinder Head	1
41		Omit	
42		Omit	
43	10J-12	Ball	1
44	858266	Guide	1
45	858267	Spring	1
46	858268	Guide	1
47	25K-30016	"O" Ring	2
48	858270	Seat	1
49	858271	Ball	1
50	858272	Spring	1
51	940141	Screw, Flange — Long	4
52	858274	Washer, Flange Screw	4
53	862257	Flange — ½ P. Tap	1
54	25K-30020	"O" Ring	2
55	940145	Nut	1
56	858278	Washer	1
57	858279	Spool	1
58	858280	Spring	1
59	858281	Washer	1
60	858282	Nut	1
61	858283	Snap Ring	1
62	858284	Guide	2
63	585285	Spring	1
64	858286	Oil Seal	1
65	858287	Retainer	1
66	858288	Sleeve	1
67	858289	End Plate	1
68	858290	Stem	1
69	858291	Cover	1
70	17D-6	Nut, Stay Bolt	4
71	858293	Body	1
72	858294	Plug	1
73	858295	Key, Plug	1
74	858296	Nut, Set Screw	1
75	17G-416	Screw, Set	1
76	858298	Pad	1
77	858299	Spring	1
78	10H-2	Grease Fitting	1
79		Omit	
80		Omit	
81	940148	Spring	1
82	940149	†Washer, Rubber	1
83	940128	S6-H Sub Assembly (Inc. 10 thru 12, 51, 52 & 69)	1
84	940079	Repair Kit (Inc. 20, 21, 22, 25, 32, 47, 54 & 64)	1
85	6D-14	†Nut, Ball Stud	2
86	1F-428	†Cotter, Ball Stud Nut	2

† — Not Illustrated

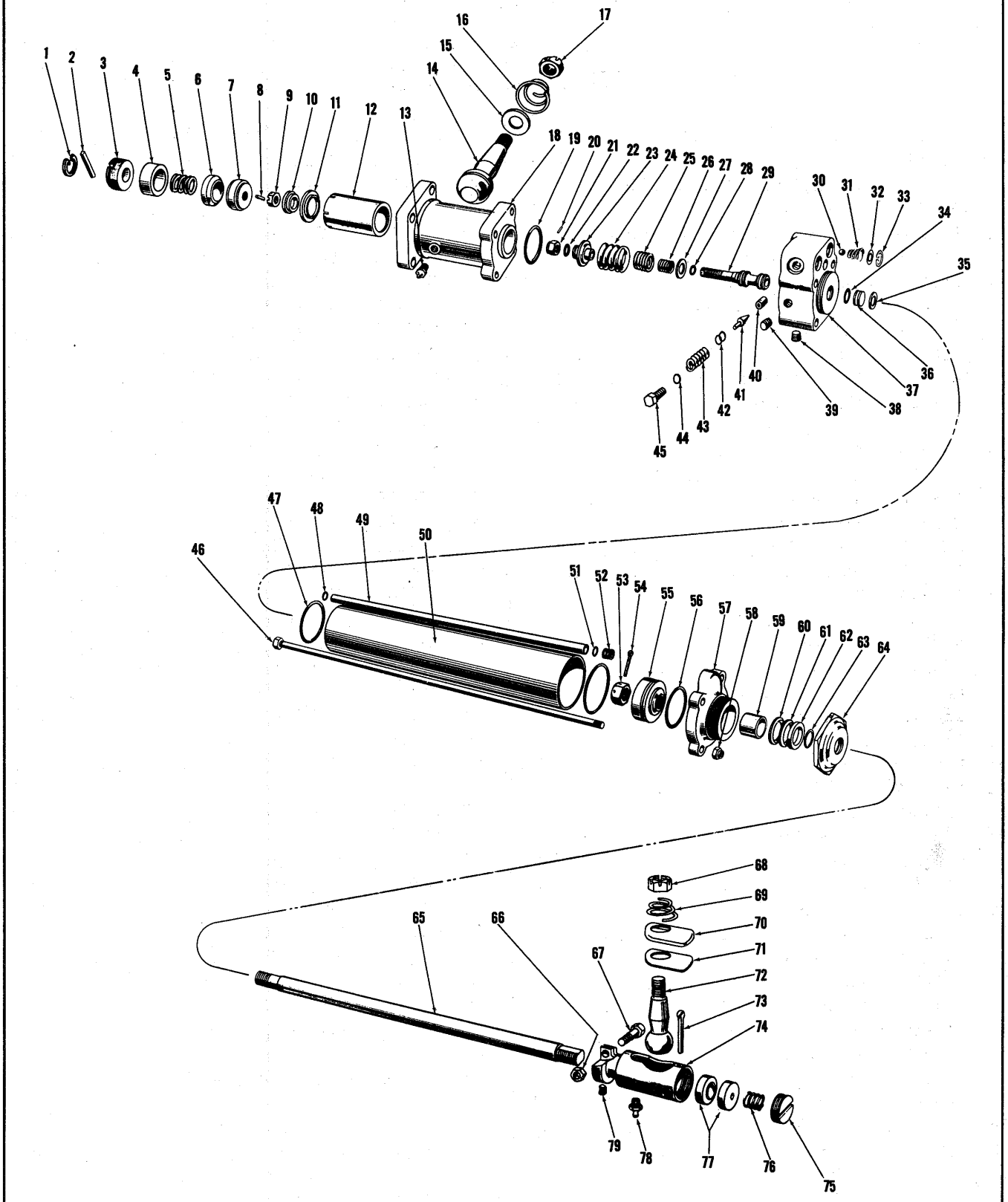

STEERING BOOSTER ASSEMBLY

STEERING BOOSTER ASSEMBLY

For Serial:

75A — 8769 Thru 10082 & 10085 Thru 10089
75B — 6145 Thru 6195
75R — 7142 Thru 7150

Item No.	Part No.	Description	No. Req'd.
A	*552944	Steering Booster Assembly	1
*For Replacement Use 513228			
1	867580	Snap Ring	1
2	869021	Key	1
3	869020	Plug	1
4	869019	Spacer	1
5	869018	Spring	1
6	869017	Seat, Ball Stud	1
7	869016	Seat, Ball Stud	1
8	869015	Key	1
9	869014	Nut	1
10	869013	Washer	1
11	869012	Retainer	1
12	869011	Sleeve	1
13	10H-2	Grease Fitting	1
14	868982	Ball Stud	1
15	858291	Cover, Dust	1
16	868981	Spring	1
17	868980	Nut	1
18	869010	Retainer	1
19	25K-40204	"O" Ring	1
20	664131	Pin, Roll	1
21	2D-07	Nut	1
22	25K-30020	"O" Ring	1
23	868984	Retainer, Spring	1
24	940663	Spring	1
25		Omit	
26	940664	Spring	1
27	868986	Washer	1
28	25K-20010	"O" Ring	1
29	868988	Valve Spool	1
30	12J-12	Ball	1
31	868992	Spring	1
32	868991	Washer	1
33	664138	Snap Ring	1
34	25K-40028	"O" Ring	1
35	868993	Snap Ring	1
36	868994	Plug	1
37	940665	Valve Body	1
38	16F-04	Plug — 1/4" Pipe	3
39	16F-02	Plug — 1/8" Pipe	1
40	940666	Seat	1
41	940667	Poppet	1
42	940668	‡Shim	
43	940669	Spring	1
44	91F-5	Seal	1
45	940670	Plug	1
46	869006	J-Stay Bolt Sub — Assembly	4
47	25K-40216	"O" Ring	2
48	25K-30016	"O" Ring	1
49	869007	Tube, Oil Passage	1
50	869005	Cylinder	1
51	25K-30016	"O" Ring	1
52	869008	Spring	1
53	4D-14	Nut	1
54	1F-424	Cotter	1
55	868996	Piston	1
56	858251	Piston Ring	1
57	868997	Cap	1
58	869000	Nut	4
59	664769	Bushing — Oilite	1
60	858245	Male Packing	1
61	858244	Chevron Packing	5
62	858243	Female Packing	1
63	*858241	Felt Wiper	1
64	*868999	Packing Nut	1
65	*869004	Piston Rod	1
66	18D-06	Nut	1
67	*858237	Screw	1
68	868980	Nut	1
69	868981	Spring	1
70	869001	Shield	1
71	858235	Dust Cover	1
72	858236	Ball Stud	1
73	1F-848	Cotter	1
74	*858227	Housing, Ball Joint	1
75	858302	Plug	1
76	858225	Spring	1
77	858226	Seat, Ball Stud	2
78	10H-2	Grease Fitting	1
79	15G-612	Set Screw	1
80	940671	‡Repair Kit (Inc. 19, 22, 28, 34, 44, 47, 48, 51 & 60 thru 63)	
		*For machine serial numbers listed below items marked * are as indicated below:	
		75A	
		9148 thru 10082	
		75B	
		6160 thru 6195	
		75R	
		7142 thru 7150	
63	870732	Felt Wiper	1
64	870740	Packing Nut	1
65	870739	Piston Rod	1
67	870730	Screw	1
74	870736	Housing, Ball Joint	1

‡ — As Required

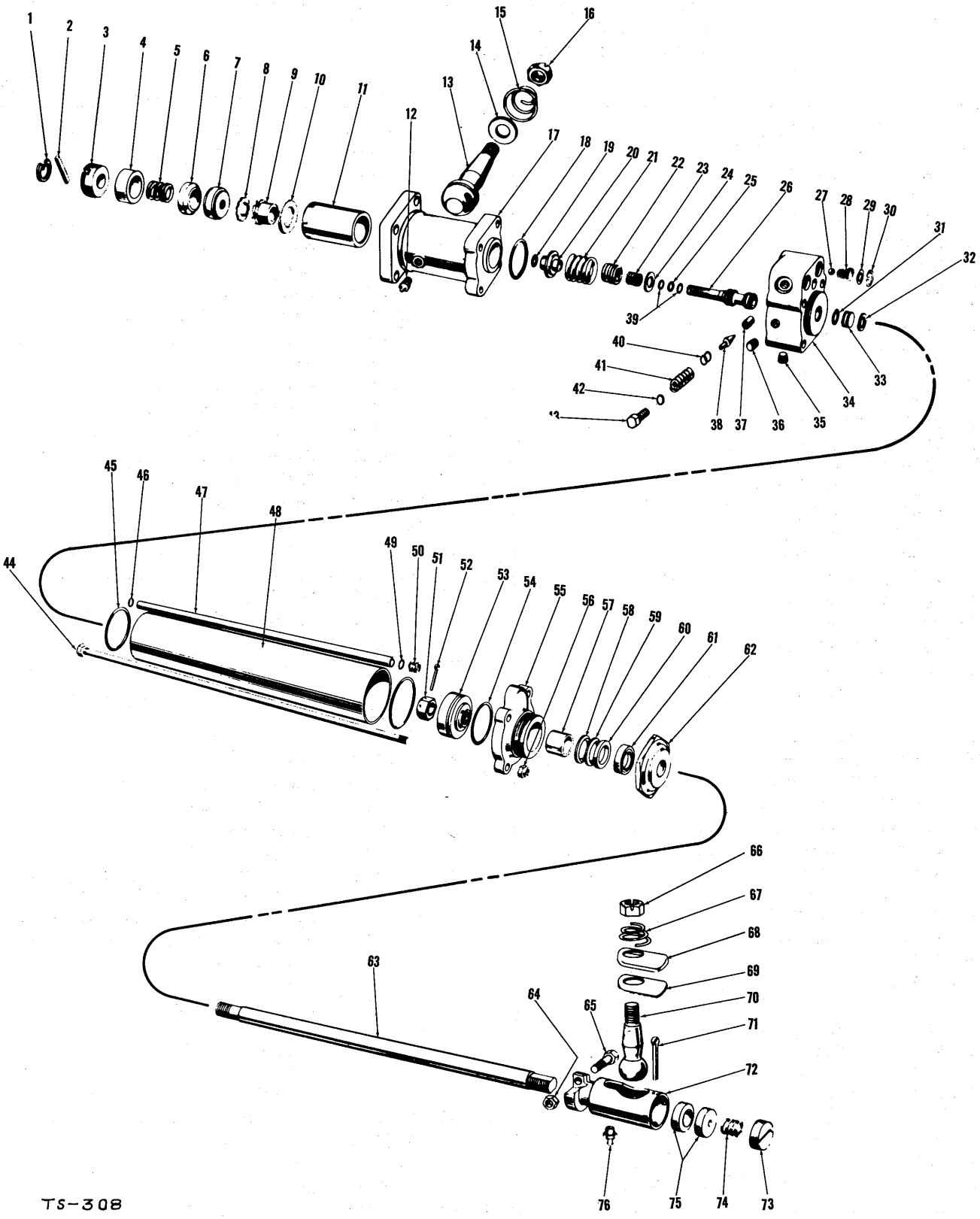

STEERING BOOSTER ASSEMBLY

STEERING BOOSTER ASSEMBLY

Effective with Serial:

75A — 10083, 10084, 10090 and Thereafter

75B — 6196 and Thereafter

75R — 7151 and Thereafter

Item No.	Part No.	Description	No. Req'd.
	513228	Steering Booster Assembly	1
1	867580	Snap Ring	1
2	869021	Key	1
3	869020	Plug	1
4	869019	Spacer	1
5	869018	Spring	1
6	869017	Ball Stud Seat	1
7	941818	Ball Stud Seat	1
8	941816	Lkwshr	1
9	941815	Nut, Spool Adjusting	1
10	941817	Retainer	1
11	896011	Sleeve	1
12	10H-2	Grease Fitting	1
13	868982	Ball Stud	1
14	858291	Dust Cover	1
15	868981	Spring	1
16	868980	Nut	1
17	869010	Retainer	1
18	25K-40204	"O" Ring	1
19	25K-30020	"O" Ring	1
20	868984	Spring Retainer	1
21	940663	Spring	1
22		Omit	
23	940664	Spring	1
24	868986	Washer	1
25	25K-20010	"O" Ring	1
26	942779	Valve Spool	1
27	10J-12	Ball	1
28	868992	Spring	1
29	868991	Washer	1
30	664138	Snap Ring	1
31	25K-40028	"O" Ring	1
32	868993	Snap Ring	1
33	868994	Plug	1
34	870744	Valve Body (Inc. 37)	1
35	16F-04	Plug — 1/4" Pipe	3
36	16F-02	Plug — 1/8" Pipe	1
37	940666	Seat	1
38	940667	Poppet	1
39	942806	Back Up Washer	2
40	940668	Shim	AR
41	940669	Spring	1
42	91F-5	"O" Ring	1
43	861811	Plug	1
44	869006	J-stay Bolt Sub-assy.	4
45	25K-40216	"O" Ring	2
46	25K-30016	"O" Ring	1
47	869007	Tube, Oil Passage	1
48	869005	Cylinder	1
49	25K-30016	"O" Ring	1
50	869008	Spring	1
51	1D-14	Nut	1
52	1F-424	Cotter Pin	1
53	868996	Piston	1
54	858251	Piston Ring	1
55	868997	Cap	1
56	869000	Nut	4
57	664769	Oilite Bushing	1
58	858245	Male Chevron Adaptor	1
59	858244	Chevron Packing	5
60	858243	Female Chevron Adaptor	1
61	870732	Wiper Seal	1
62	870740	Packing Nut	1
63	870739	Piston Rod	1
64	18D-06	Nut	1
65	870730	Bolt	1
66	868980	Nut	1
67	868981	Spring	1
68	869001	Shield	1
69	858235	Dust Cover	1
70	858236	Ball Stud	1
71	1F-848	Cotter Pin	1
72	870736	Housing, Ball Joint	1
73	858302	Plug	1
74	858225	Spring	1
75	858226	Ball Stud Seat	2
76	10H-2	Grease Fitting	1
77	942672	"O" Ring Repair Kit (Inc. 18, 19, 25, 31, 39, 42, 45, 46, 49)	AR
78	942668	Chevron Packing Repair Kit (Inc. 58, 59, 60, 61)	AR

AR — As Required

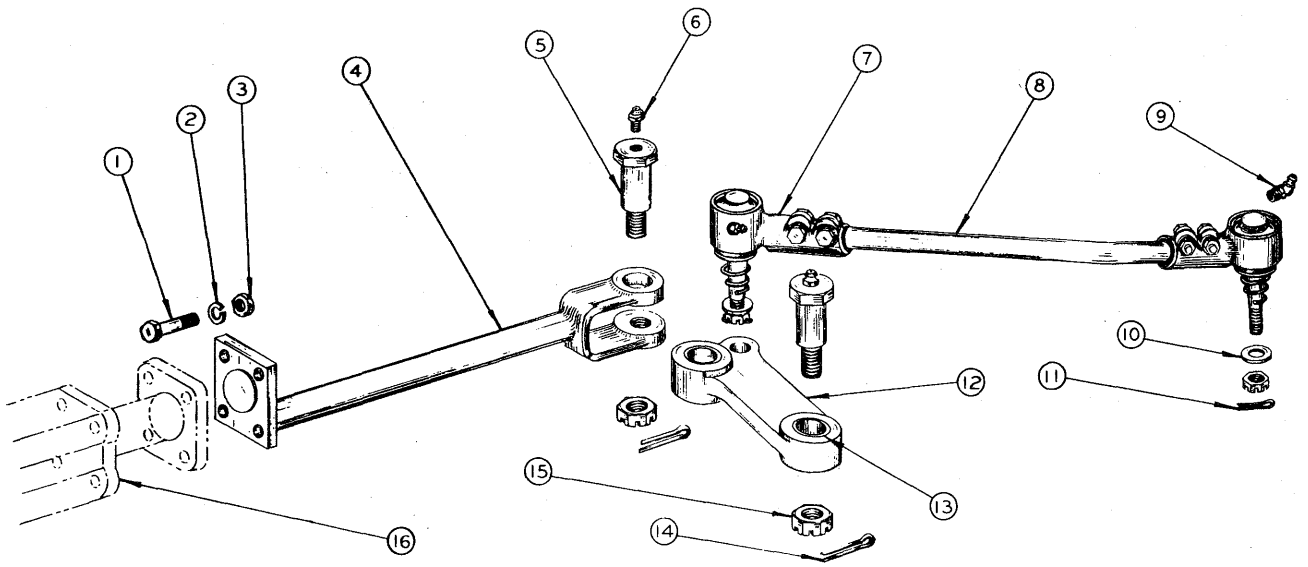

PUSH ROD ASSEMBLY — STEERING BOOSTER — AXLE

Item No.	Part No.	Description	No. Req'd.
1	2C-832	Bolt, Push Rod to Booster	4
2	4E-08	Lkwshr, Push Rod to Booster	4
3	2D-08	Nut, Push Rod to Booster	4
4	550597	Push Rod Ass'y., Booster to Crank	1
5	550602	Pin	2
6	10H-25	Grease Fitting	2
7	106110	Tie Rod End Ass'y. — See Index	2
8	550604	Rod	1
9	11H-15	Fitting, Tie Rod End Grease	2
10	616813	Washer	2
11	1F-426	Cotter	2
12	550600	Bell Crank Assembly (Inc. 12A & 13)	1
12A	550187	Bell Crank	1
13	550601	Bushing	2
14	1F-424	Cotter	2
15	617863	Nut	2
16		Steering Booster — See Index	

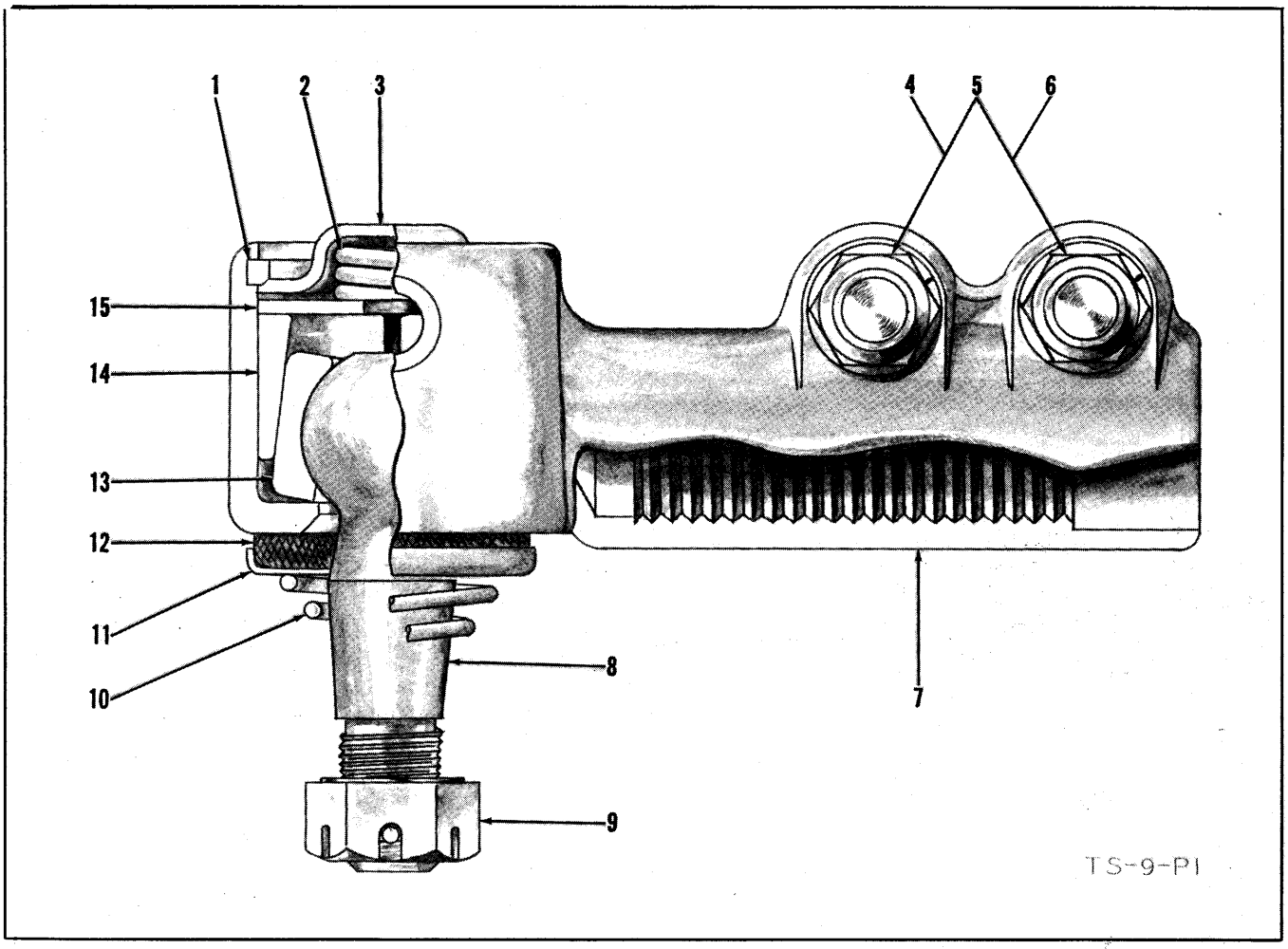

TIE ROD END ASSEMBLY

MODEL 75A AND 75B

Item No.	Part No.	Description	No. Req'd.
A	106110	Tie Rod End Ass'y. (Inc. 1 thru 15)	
		MODEL 75A	4
		MODEL 75B	2
1	106094	Snap Ring	1
2	106091	Spring	1
3	106093	Cap	1
4	2C-1040	Bolt	2
5	4E-10	Lkwshr	2
6	2D-10	Nut	2
7	106113	Housing	1
8	106080	Ball Stud	1
9	4D-12	Nut, Ball Stud	1
10	106182	Spring, Retainer	1
11	106138	Retainer, Felt	1
12	106137	Felt	1
13	106114	Socket, Ball Stud	2
14	106079	Retainer, Ball Stud Socket	2
15	106088	Washer	1

MODEL 75R

Item No.	Part No.	Description	No. Req'd.
B	106145	Tie Rod End Ass'y. — R.H. (Inc. 1 thru 7 & 8 thru 15)	3
C	106146	Tie Rod End Ass'y. — L.H. (Inc. 1 thru 6 & 7A thru 15)	1
1	940152	Snap Ring	1
2	940153	Spring	1
3	940154	Cap	1
4	1C-832	Bolt	2
5	4E-08	Lkwshr	2
6	1D-08	Nut	2
7	106147	Housing	1
7A	106148	Housing	1
8	940155	Ball Stud	1
9	100857	Nut, Ball Stud	1
10	102438	Spring, Retainer	1
11	102435	Retainer, Felt	1
12	102436	Felt	1
13	940156	Socket, Ball Stud	2
14	940157	Retainer, Ball Stud Socket	2
15	940158	Washer	1

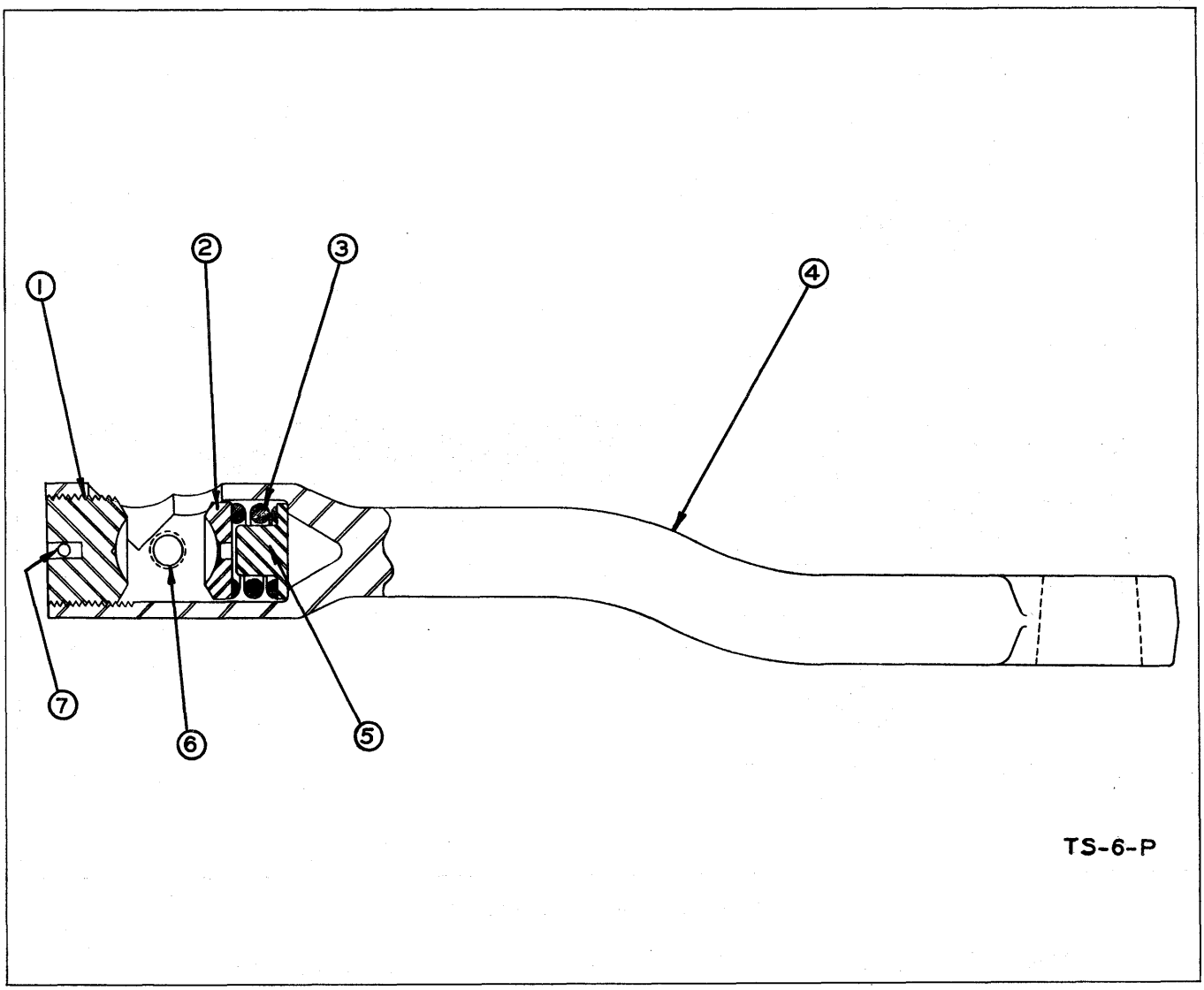

DRAG LINK ASSEMBLY

Item No.	Part No.	Description	No. Req'd.
A		*Drag Link Assembly* (Inc. 1 thru 5)	1
	550595	MODEL 75A	
	550781	MODEL 75B	
	550788	MODEL 75R	
1	940011	Plug, Ball Seat Adjustment	1
2	940015	Ball Seat	1
3	940016	Spring	1
4		*Drag Link Forging*	1
	940017	MODEL 75A	
	940131	MODEL 75B	
	940132	MODEL 75R	
5	940018	Plug, Safety	1
6	10H-2	Fitting, Drag Link Grease	1
7	1F-432	Cotter	1

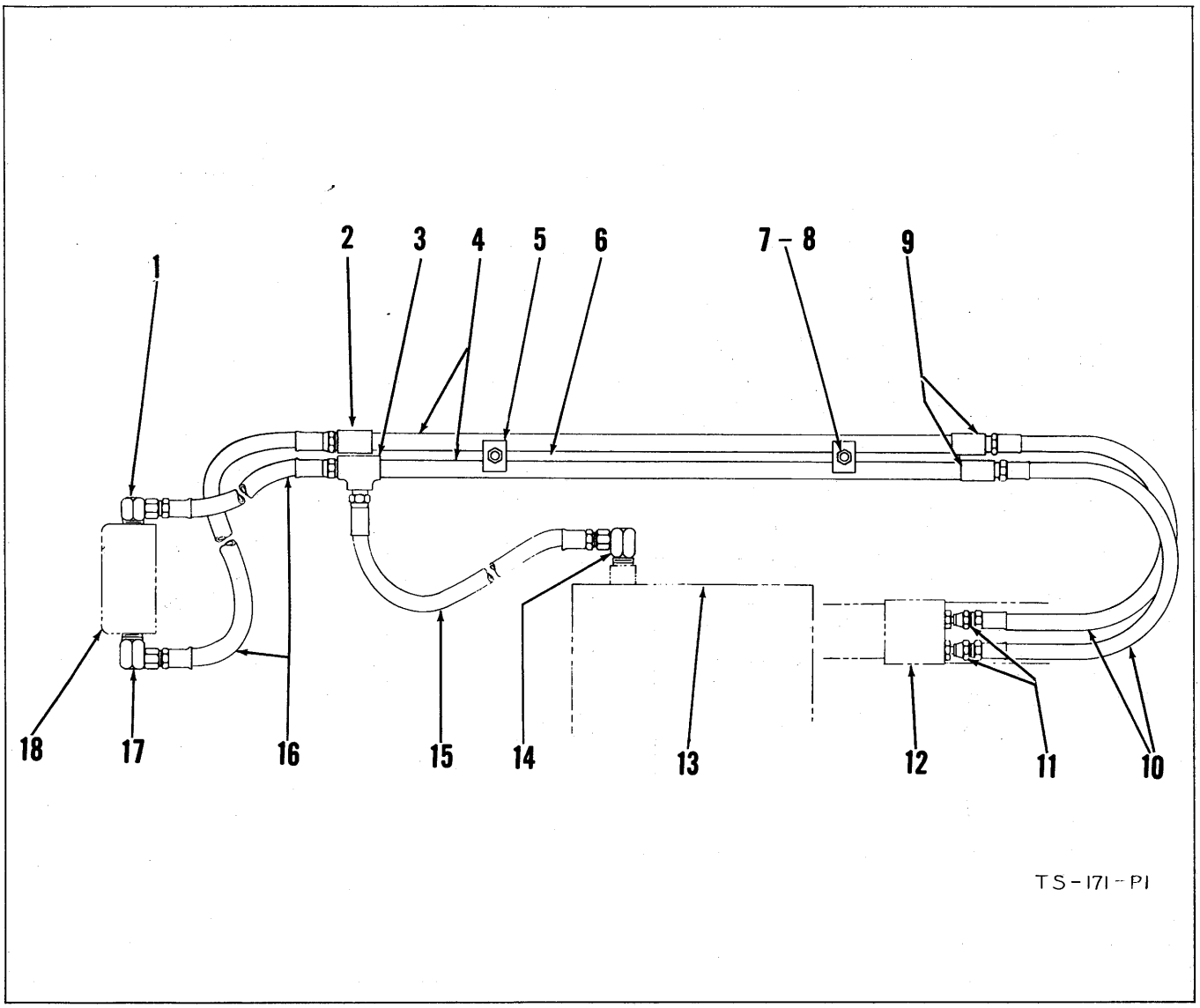

HYDRAULIC SYSTEM — STEERING
MODEL 75A
For Serial 8123 Thru 10222, 10240 and 10247 Thru 10251

Item No.	Part No.	Description	No. Req'd.
1	550700	Adaptor Union — Special — 90°	1
2	550612	Coupling	1
3	550610	Tee	1
4	550611	Tube, Steering Booster	2
5	550614	Lug, Steering Booster Tube	2
6	550608	Hydraulic Line Assembly (Inc. 2 thru 5 & 9)	1
7	552152	Bolt, Lug Attaching	2
8	4E-06	Lkwshr, Lug Attaching	2
9	550612	Coupling	2
10	661559	Hose, Line Ass'y. to Steering Booster	2
11	661564	Union Adaptor, "O" Ring Seal — For Serial 8769 thru 10222, 10240 & 10247 thru 10251	2
11A	91F-6	†"O" Ring — For Serial 8769 thru 10222, 10240 & 10247 thru 10251	2
12		Steering Booster — See Index	
13		Hydraulic Oil Reservoir—See Index	
14	31F-4	Adaptor Union — ½" — 90°	1
15	661560	Hose, Return Line to Reservoir	1
16	661559	Hose, Pump to Hydraulic Line	2
17	31F-4	Adaptor Union — ½" — 90°	1
18		Booster Pump — See Index	

† — Not Illustrated

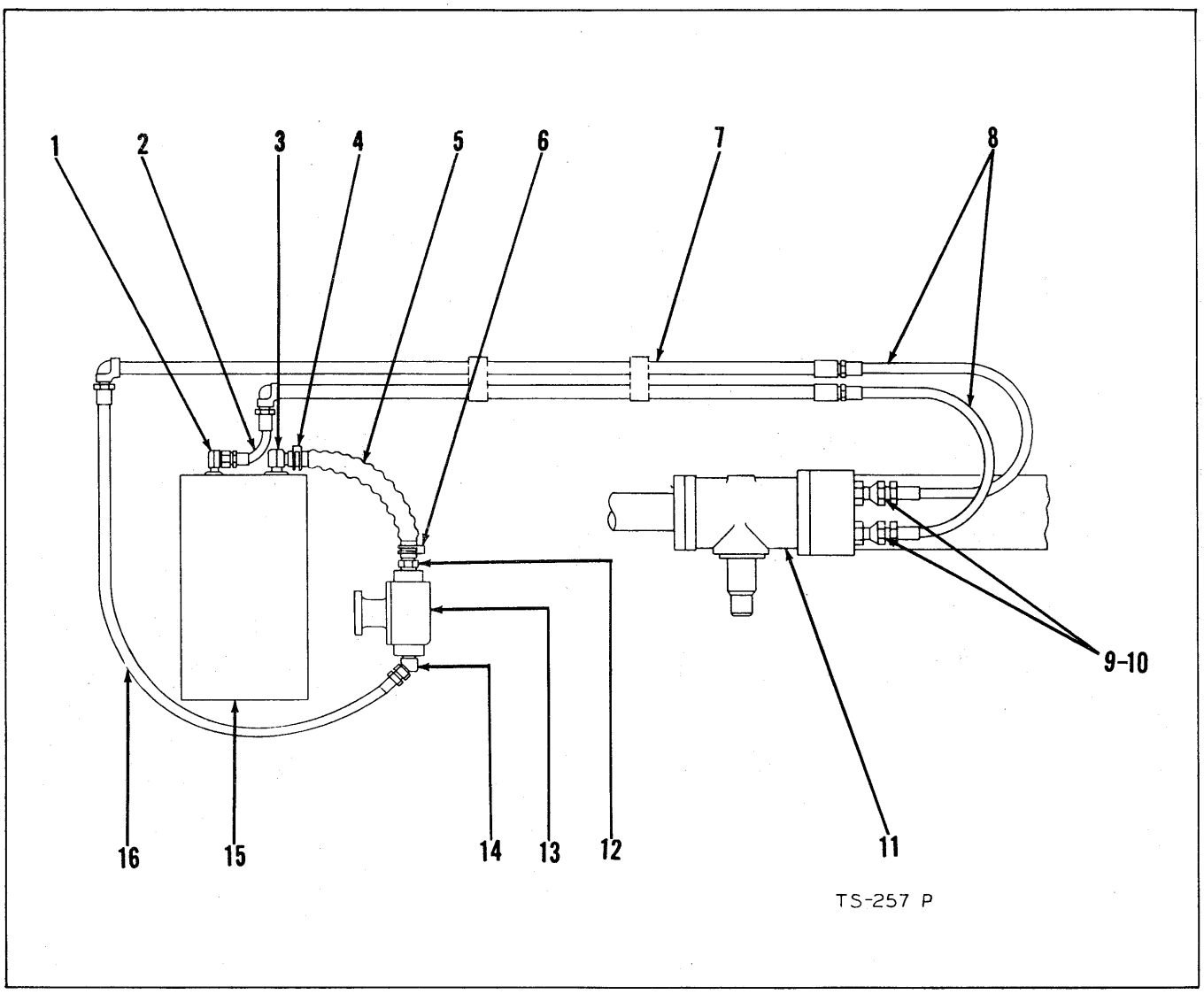

HYDRAULIC SYSTEM — STEERING
MODEL 75A
Effective With Serial 10223 Thru 10239, 10241 Thru 10246, 10252 And Thereafter

Item No.	Part No.	Description	No. Req'd.
1	31F-4	Adaptor Union — ½" — 90°	1
2	712766	Hose, Pipe Assembly to Reservoir	1
3	666846	Nipple, Reservoir to Pump Hose	1
4	21H-24	Clamp, Reservoir to Pump Hose	1
5	516159	Hose, Reservoir to Pump	1
6	21H-24	Clamp, Reservoir to Pump Hose	1
7	514610	Pipe Assembly	1
7A	2C-624	†Bolt, Pipe Assembly to Frame	2
7B	2D-06	†Nut, Pipe Assembly to Frame	2
7C	4E-06	†Lkwshr, Pipe Assembly to Frame	2
8	661559	Hose, Pipe Assembly to Booster	2
9	661564	Union Adaptor, "O" Ring Seal	2
10	91F-6	"O" Ring	2
11		Steering Booster Assembly—See Index	
12	666858	Nipple, Reservoir to Pump Hose	1
13		Hydraulic Steering Pump—See Index	
14	514788	Adaptor Union	1
15		Hydraulic Oil Reservoir—See Index	
16	661563	Hose, Pump to Pipe Assembly	1

† — Not Illustrated

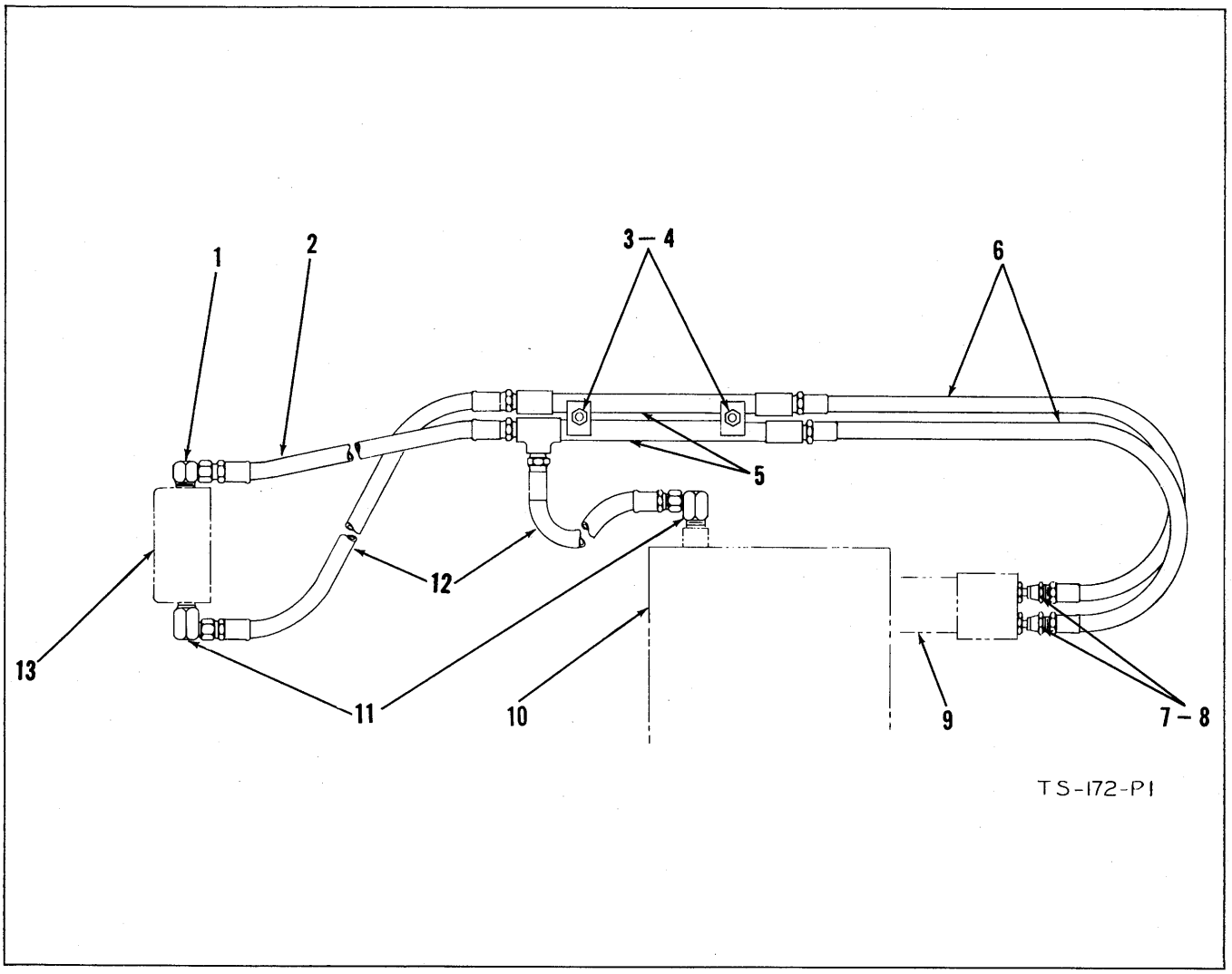

HYDRAULIC SYSTEM — STEERING
MODEL 75B
For Serial — 6123 Thru 6200

Item No.	Part No.	Description	No. Req'd.
1	550700	Adaptor Union, Pump Suction Line.	1
2	661560	Hose, Pump Suction Line.....	1
3	552152	Bolt, Hydraulic Line Mtg.....	2
4	4E-06	Lkwshr, Hydraulic Line Mtg.....	2
5	550809	Hydraulic Line Assembly.....	1
6	661559	Hose, Booster to Hydraulic Line....	2
7	661564	Union Adaptor, "O" Ring Seal — for Serial 6145 thru 6200.....	2
8	91F-6	"O" Ring — For Serial 6145 thru 6200	2
9		Steering Booster — See Index	
10		Hydraulic Oil Reservoir—See Index	
11	31F-4	Adaptor Union — ½" — 90° ...	2
12	661559	Hose	2
13		Hyd. Pump — Steering Booster — See Index	
14	550782	†Adaptor, Steering Booster.....	1
15	2C-828	†Bolt, Booster to Adaptor.....	4
16	2D-08	†Nut, Booster to Adaptor.....	4
17	4E-08	†Lkwshr, Booster to Adaptor.....	4
18	1F-424	†Cotter	1
19	10H-25	†Grease Fitting	1

† — Not Illustrated

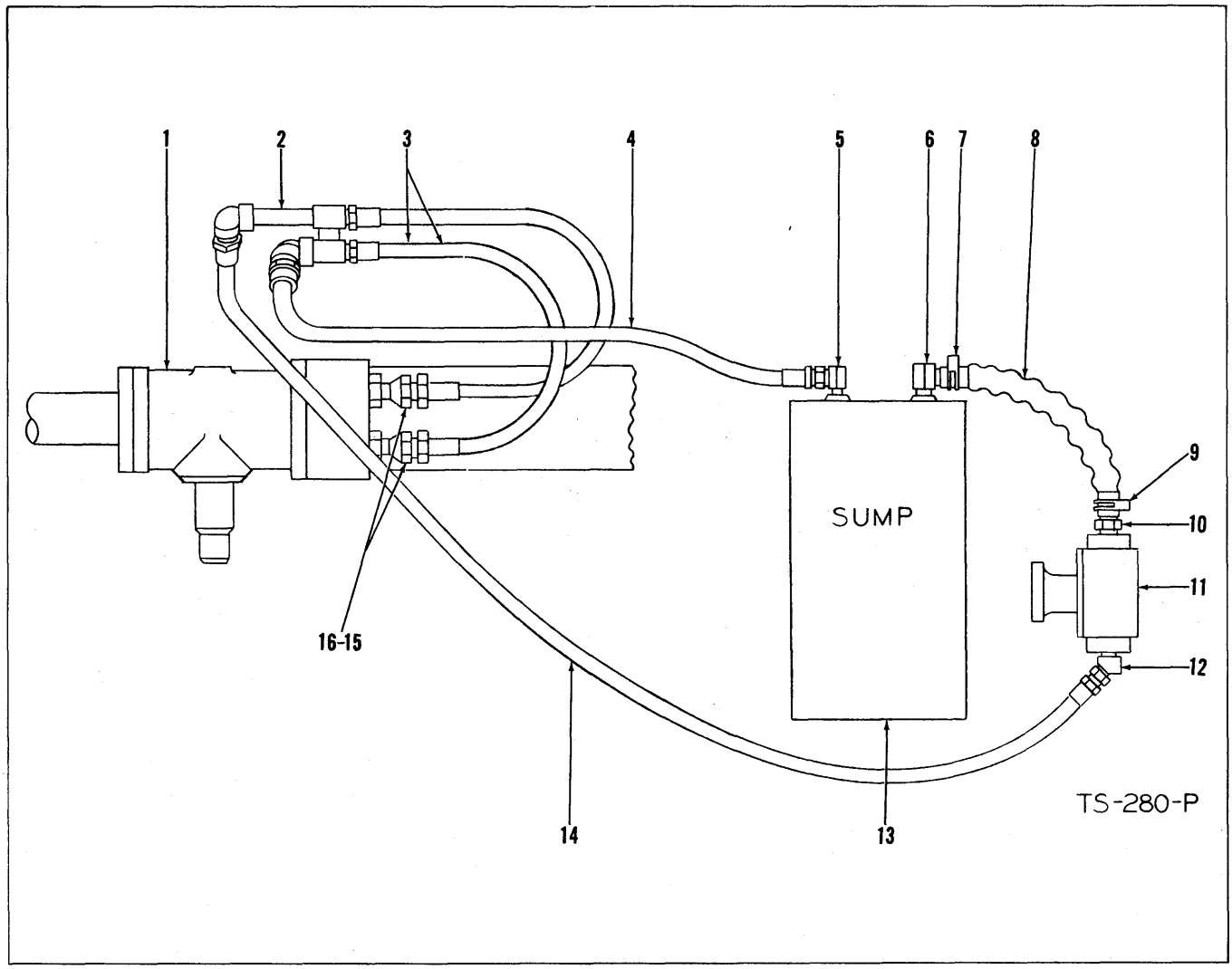

HYDRAULIC SYSTEM — STEERING
MODEL 75B
Effective with Serial 6201 and Thereafter

Item No.	Part No.	Description	No. Req'd.
1		Steering Booster — See Index	
2	517119	Steering Pipe Coupling Assy.	1
2A	2C-624	†Bolt, Booster Pipe to Frame	1
2B	2D-06	†Nut, Booster Pipe to Frame	1
2C	4E-06	†Lkwshr, Booster Pipe to Frame	1
3	661559	Hose, Booster Lines	2
4	672806	Hose, Return Line	1
5	31F-4	Adaptor Union, Tank to Return Hose —½" x 90°	1
6	666846	Nipple, Uncoupled Hose — Tank to Pump	1
7	21H-24	Clamp, Pump Suction Line Hose	1
8	516159	Hose, Pump Suction Line	1
9	21H-24	Clamp, Pump Suction Line Hose	1
10	666858	Nipple, Uncoupled Hose — Suction Hose to Pump	1
11		Hyd. Pump — Steering Booster — See Index	
12	514788	Adaptor Union, Pump to Pressure Hose	1
13		Hydraulic Oil Reservoir—See Index	
14	661563	Hose, Pump Pressure Line	1
15	661564	Union Adaptor, "O" Ring Seal	2
16	91F-6	"O" Ring	2
17	550782	†Adaptor, Steering Booster	1
18	2C-828	†Bolt, Booster to Adaptor	4
19	2D-08	†Nut, Booster to Adaptor	4
20	4E-08	†Lkwshr, Booster to Adaptor	4
21	1F-424	†Cotter	1
22	10H-25	†Grease Fitting	1

† — Not Illustrated

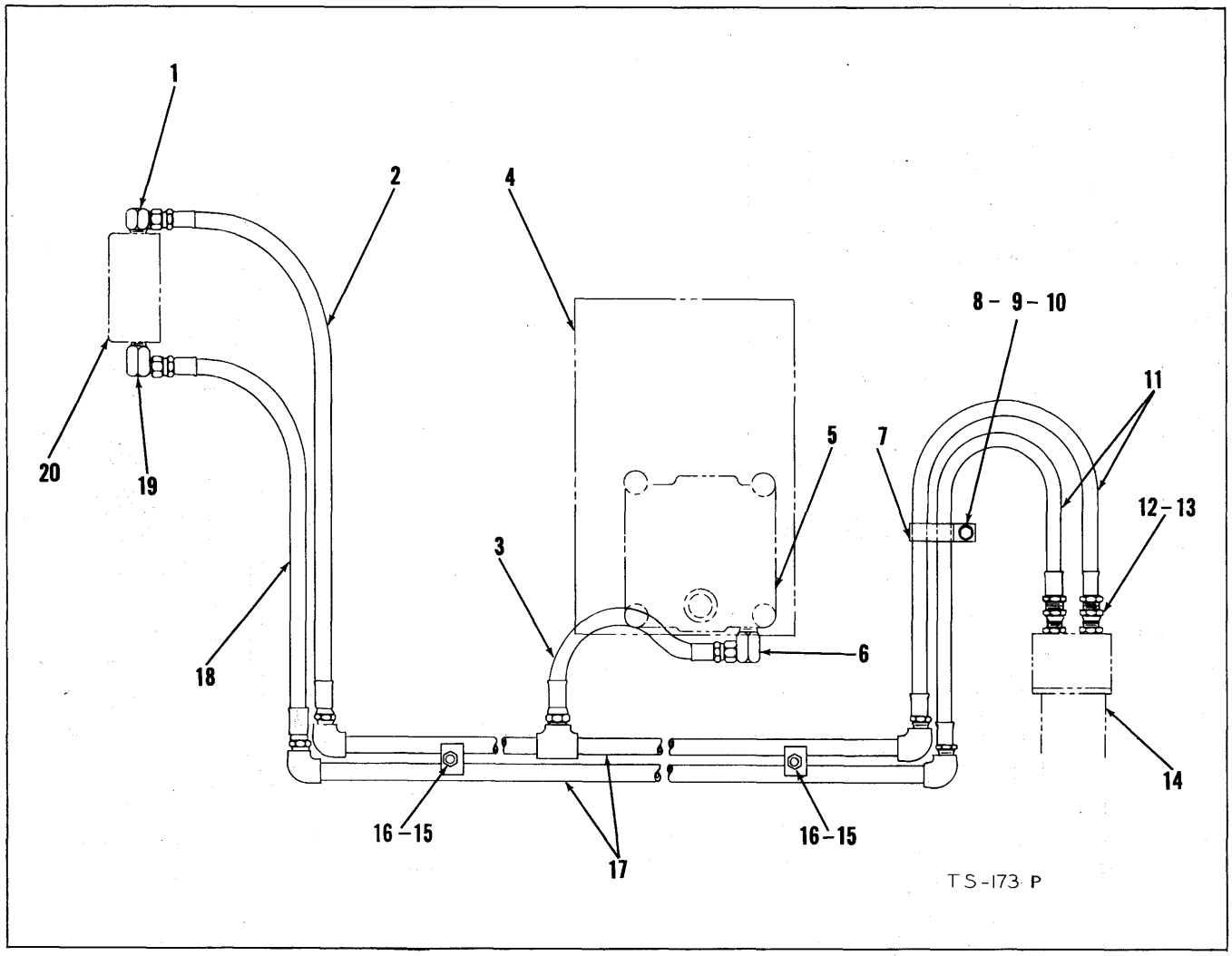

HYDRAULIC SYSTEM — STEERING
MODEL 75R
For Serial — 7123 Thru 7154

Item No.	Part No.	Description	No. Req'd.
1	550700	Adaptor Union, Pump Suction Line.	1
2	661562	Hose, Pump Suction Line.	1
3	661568	Hose, Pump Suction Line.	1
4		Hydraulic Oil Reservoir—See Index	
5		Control Valve Assembly—See Index	
6	31F-4	Adaptor Union, Valve to Pump Suction Line.	1
7	552149	Clip, Booster Lines.	2
8	2C-516	Bolt, Clip	1
9	2D-05	Nut, Clip	1
10	4E-05	Lkwshr, Clip	1
11	661563	Hose, Booster Lines.	2
12	661564	Union Adaptor, "O" Ring Seal (For Serial 7142 & thereafter).	2
13	91F-6	"O" Ring (For Serial 7142 & thereafter)	2
14		Steering Booster—See Index	
15	552152	Bolt, Hydraulic Line Assy. Mtg.	2
16	4E-06	Lkwshr, Hydraulic Line Assy. Mtg. . .	2
17	550814	Hydraulic Line Assy.	1
18	661561	Hose, Pump Pressure Line.	1
19	31F-4	Adaptor Union, Pump to Pressure Hose	1
20		Hyd. Pump — Steering — See Index	
21	550789	†Adaptor, Steering Booster.	1
22	2C-828	†Bolt, Steering Booster to Adaptor. .	4
23	2D-08	†Nut, Steering Booster to Adaptor. .	4
24	4E-08	†Lkwshr, Steering Booster to Adaptor	4
25	1F-424	†Cotter	1
26	10H-25	†Grease Fitting	1

† — Not Illustrated

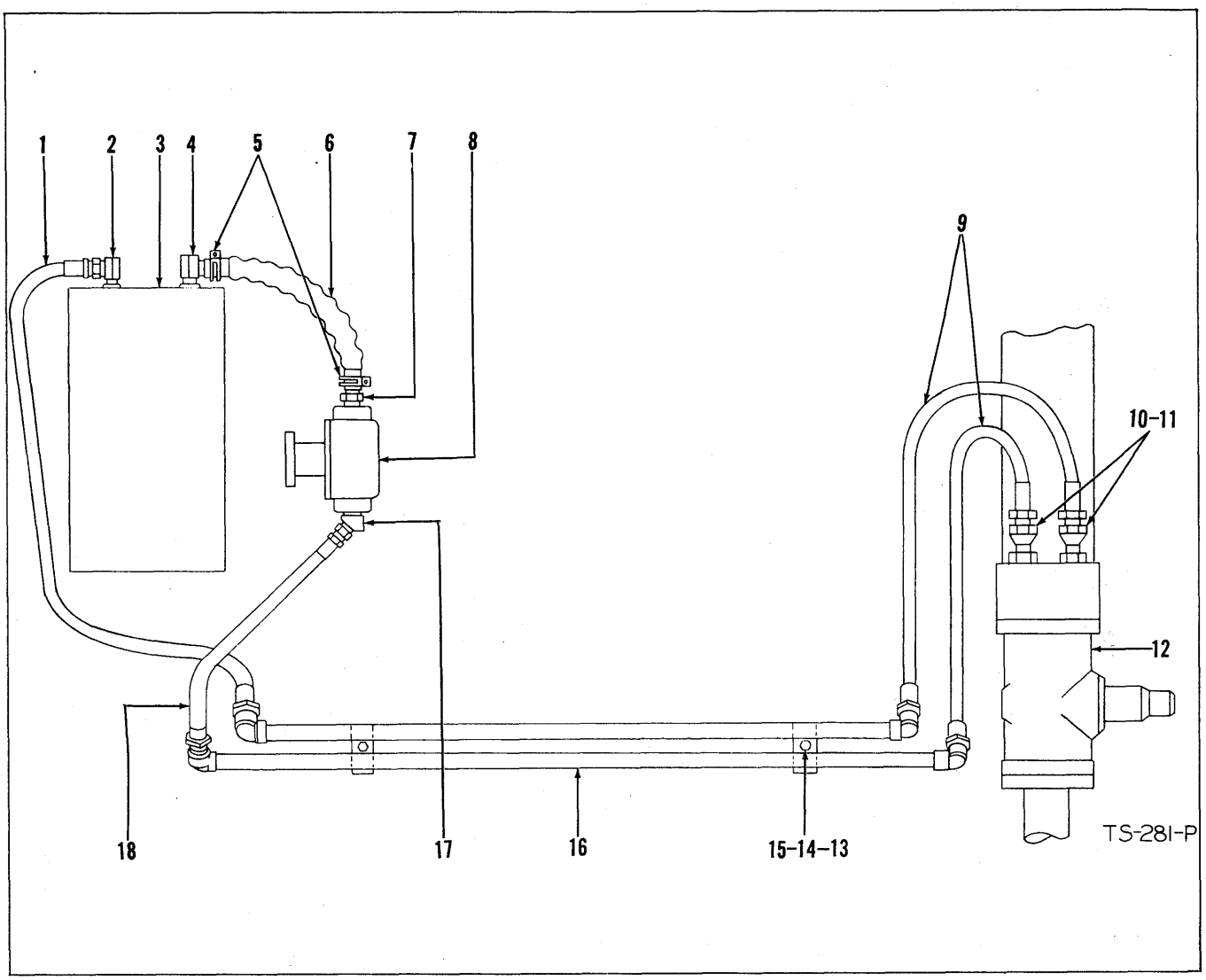

HYDRAULIC SYSTEM — STEERING
MODEL 75R
Effective with Serial — 7155 and Thereafter

Item No.	Part No.	Description	No. Req'd.
1	661563	Hose, pump Pressure Line	1
2	31F-4	Adaptor Union, Reservoir	1
3		Hydraulic Oil Reservoir — See Index	
4	666846	Uncoupled Hose Nipple, Reservoir	1
5	21H-24	Clamp, Pump Suction Line Hose	2
6	516159	Hose, Pump Suction Line	1
7	666858	Uncoupled Hose Nipple, Pump	1
8		Steering Booster Pump — See Index	
9	661563	Hose, Booster Line	2
10	661564	Union Adaptor, "O" Ring Seal	2
11	91F-6	"O" Ring	2
12		Steering Booster — See Index	
13	2C-624	Bolt, Booster Pipe to Frame	2
14	4E-06	Lkwshr, Booster Pipe to Frame	2
15	2D-06	Nut, Booster Pipe to Frame	2
16	517157	Pipe Assembly, Steering Booster	1
17	514788	Adaptor Union, Pump	1
18	672712	Hose, Return Line	1
19	550789	†Adaptor, Steering Booster	1
20	2C-828	†Bolt, Booster to Adaptor	4
21	2D-08	†Nut, Booster to Adaptor	4
22	4E-08	†Lkwshr, Booster to Adaptor	4
23	1F-424	†Cotter	1
24	10H-25	†Grease Fitting	1

† — Not Illustrated

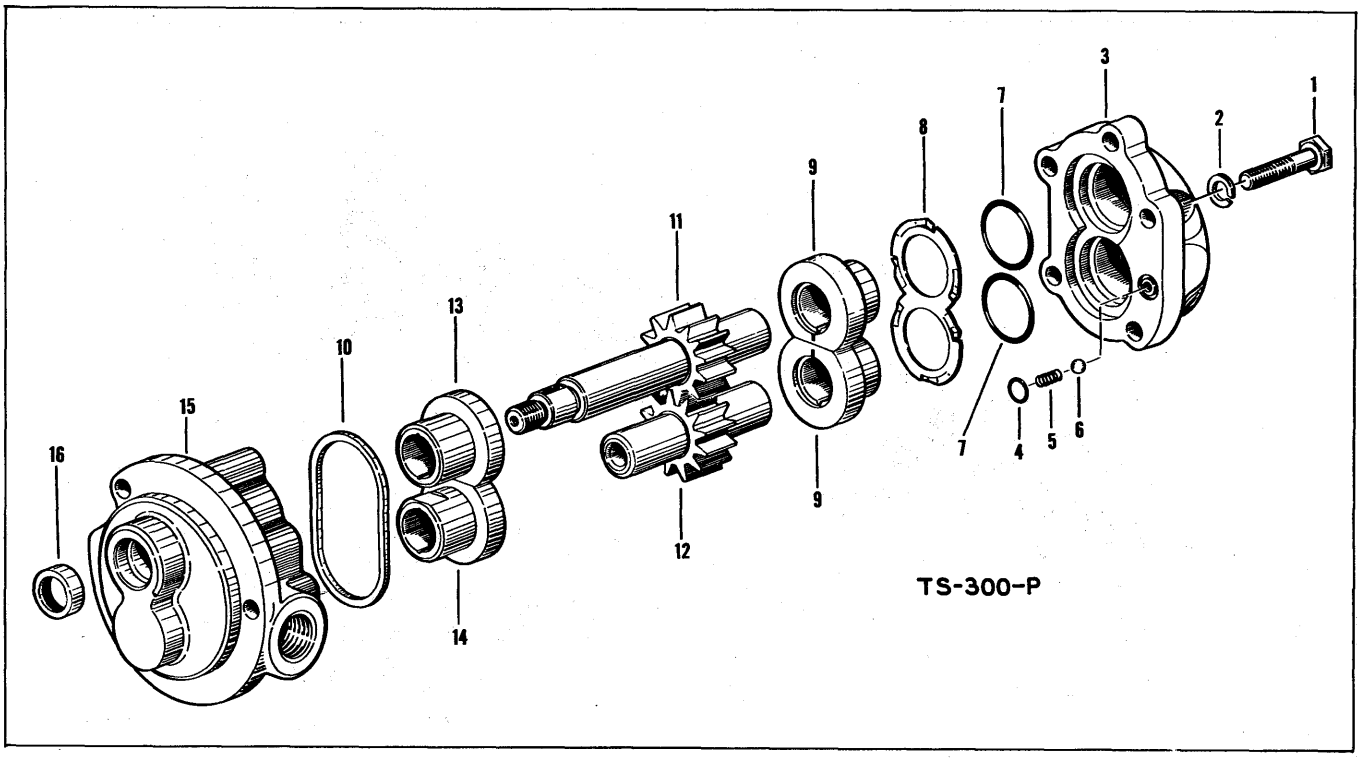

HYDRAULIC PUMP — STEERING

For Serial:

75A — 8123 Thru 10222, 10240 and 10247 Thru 10251
75B — 6123 Thru 6200
75R — 7123 Thru 7154

Item No.	Part No.	Description	No. Req'd.
A	*550243	Hydraulic Gear Pump (Inc. 1 thru 19)	
B	*941640	Minor Repair Kit (Inc. 4, 7, 10, 16)	
C	*941652	Major Repair Kit (Inc. 1, 2, 4, 7, 8, 9, 10, 13, 14, 16)	
D	*942428	Drive & Driven Gear Set (Inc. 11 & 12)	
1	940056	Bolt, 3/8" — 16 x 1 1/4" hex head	5
2	713134	Washer	5
3	*940052	Cover	1
4	940057	Seal Ring, Seal Relief	1
5	°	Omit	
6	°	Omit	
7	940051	Seal Ring, Bearing	2
8	940050	Spring, Bearing	1
9	940058	Bearing, Cover Drive & Driven	2
10	940047	Seal Ring, Cover	1
11	940049	Gear, Drive	1
12	940059	Gear, Driven	1
13	940048	Bearing, Body Drive	1
14	940060	Bearing, Body Driven	1
15	*942364	Body	1
16	940045	Shaft Seal	1
17	941770	†Retainer, Shaft Seal	1
18	941771	†Screw, Retainer	2
19	NPN	†Lockwire, Retainer Screw	1
20	551479	†Gasket, Pump Mounting	1
21	6J-404	†Key, Gear Drive — No. 4 Woodruff	1
22	551480	†Washer, Gear	1
23	4D-06	†Nut, Gear	1
24	1F-316	†Cotter, Nut	1

* — Only these items available as replacement parts.
° — Spring & Ball to be omitted from all pumps when rebuilt.
† — Not Illustrated
NPN — No Part Number

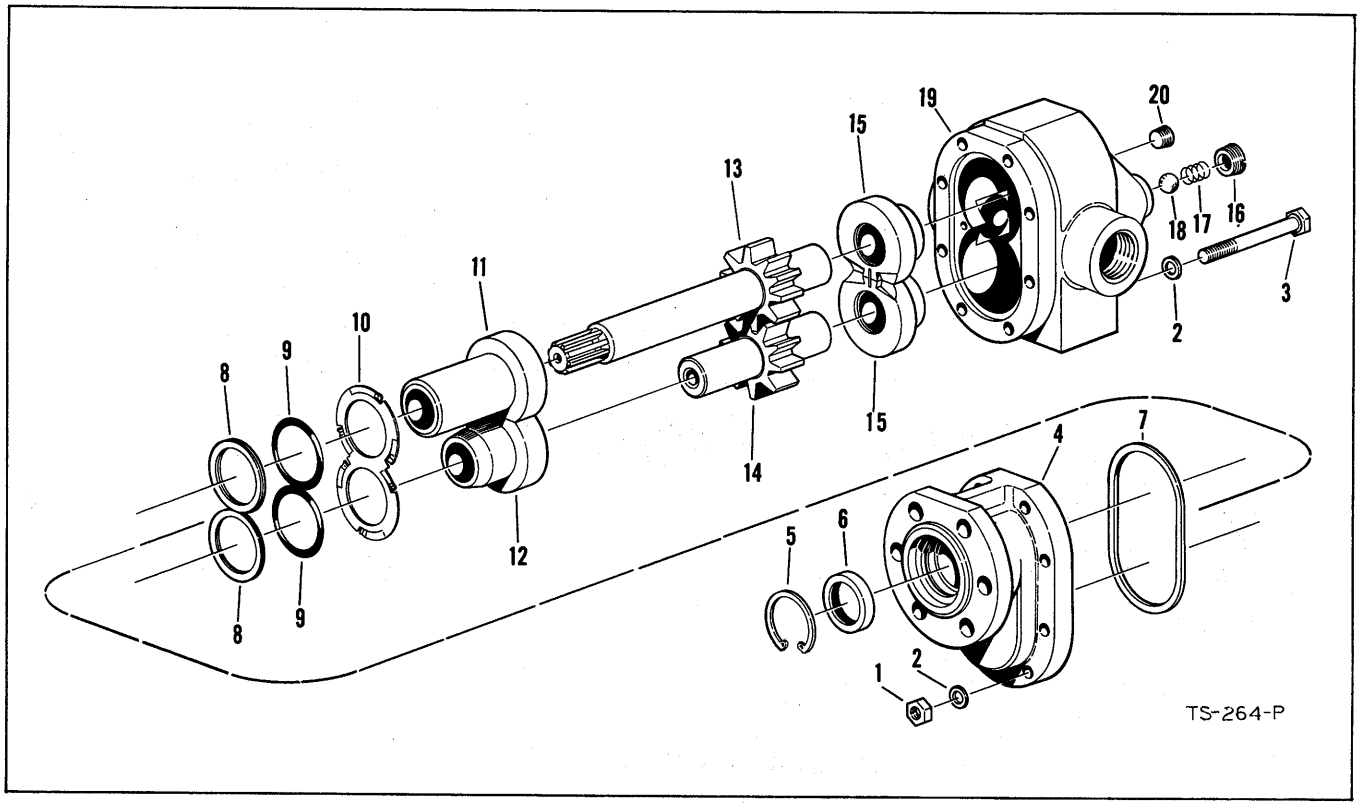

HYDRAULIC PUMP CONVERTER CHARGING AND STEERING BOOSTER

Effective with Serial:

75A — 10223 Thru 10239, 10241 Thru 10246, 10252 and Thereafter
75B — 6201 and Thereafter
75R — 7155 and Thereafter

Item No.	Part No.	Description	No. Req'd.
A	*941653	Hydraulic Gear Pump (Inc. 1 thru 22)	
B	*942403	Minor Repair Kit (Inc. 5 thru 9)	
C	*942404	Major Repair Kit (Inc. 1, 2, 3, 5 thru 12, 15, 17, 18)	
D	*942432	Drive & Driven Gear Set (Inc. 13 & 14)	
1	2D-06	Nut, 3/8" — 24 hex	8
2	713134	Washer	16
3	2C-656	Bolt, 3/8" — 24 x 3 1/2" hex head	8
4	*942513	Cover	1
5	713133	Ring, Seal Retainer	1
6	942648	Shaft Seal	1
7	942649	Seal Ring, Cover	1
8	942650	Back Up Washer	2
9	942651	Seal Ring, Cover Bearing	2
10	942514	Spring, Bearing	1
11	942515	Bearing, Cover Drive	1
12	942516	Bearing, Cover Driven	1
13	942517	Gear, Drive	1
14	942518	Gear, Driven	1
15	942519	Bearing, Body Drive & Driven	2
16	942652	Plug, Seal Relief	1
17	942520	Spring, Seal Relief	1
18	10J-10	Ball, Seal Relief — 5/16"	1
19	*942670	Body	1
20	16F-02	Plug, Seal Chamber	1
21	551906	†Gasket, Pump Mounting	1
22	514788	†Adaptor Union	1

* — Only these items available as replacement parts
† — Not Illustrated

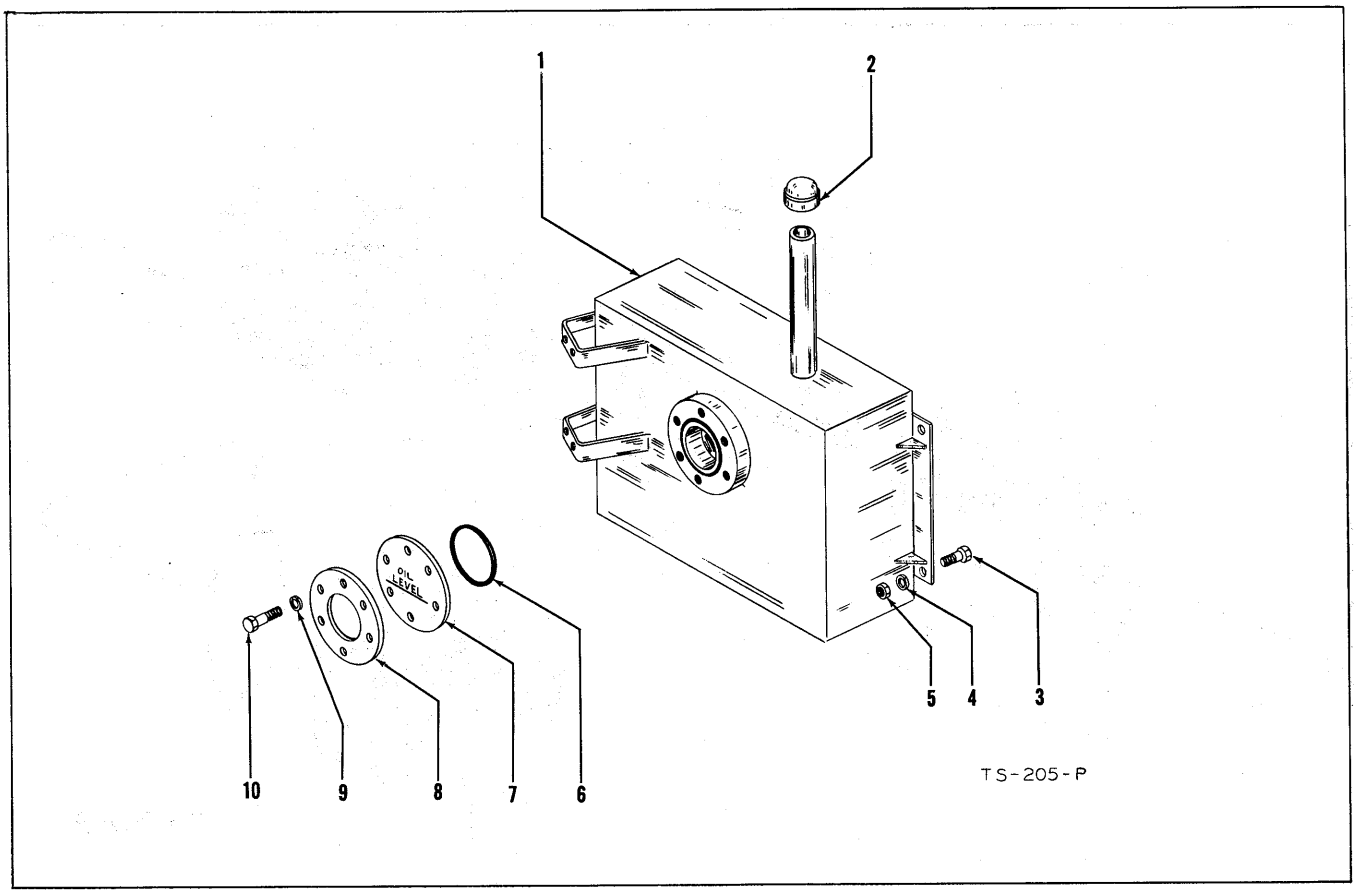

HYDRAULIC OIL RESERVOIR AND PARTS

Item No.	Part No.	Description	No. Req'd.
1	940396	*Oil Reservoir Kit* (Inc. 1A, 6A, 7, 8, 9A, 10 & 11)	1
		For Serial:	
		75A — 8123 thru 9279	
		75B — 6123 thru 6162	
		75R — 7123 thru 7141	
1A	553284	*Oil Reservoir*	1
		Effective with Serial:	
		75A — 9280 and thereafter	
		75B — 6163 and thereafter	
		75R — 7142 and thereafter	
2	550388	Cap, Breather	1
3	2C-820	Bolt, Reservoir Mtg.	3
4	4E-08	Lkwshr, Reservoir Mtg.	3
5	2D-08	Nut, Reservoir Mtg.	3
6	550397	*Gasket, Inspection* Cover	1
		For Serial:	
		75A — 8123 thru 9279	
		75B — 6123 thru 6162	
		75R — 7123 thru 7141	
6A	25K-40428	"O' *Ring, Inspection* Cover	1
		Effective with Serial:	
		75A — 9280 and thereafter	
		75B — 6163 and thereafter	
		75R — 7142 and thereafter	
7	550389	Cover, Inspection	1
8	550398	Clamp Ring, Inspection Cover	1
9	618319	*Copper Washer, Inspection* Cover	6
		For Serial:	
		75A — 8123 thru 9279	
		75B — 6123 thru 6162	
		75R — 7123 thru 7141	
	4E-06	*Lkwshr, Inspection* Cover	6
		For Serial:	
		75A — 9280 and thereafter	
		75B — 6163 and thereafter	
		75R — 7142 and thereafter	
10	2C-616	Bolt, Inspection Cover	6
11	11F-12	Pipe Plug — For Serial	1
		75A — 9280 thru 10222, 10240 and 10247 thru 10251	
		75B — 6163 thru 6200	
		75R — 7142 thru 7154	

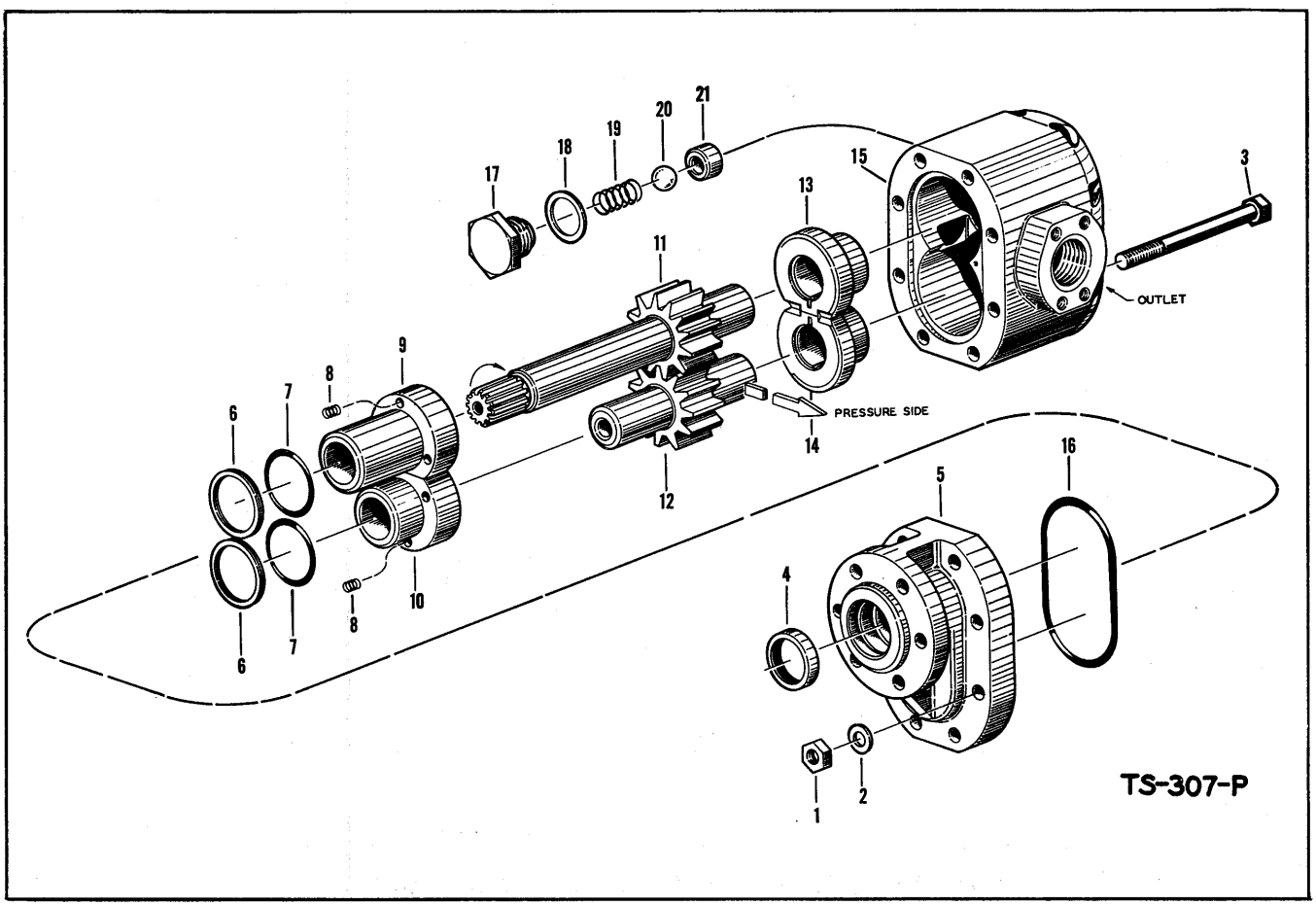

HYDRAULIC PUMP — BUCKET AND BOOM

For Serial:

75A — 8123 Thru 9745
75B — 6123 Thru 6184
75R — 7123 Thru 7150

Item No.	Part No.	Description	No. Req'd.
A	°*550242	Hydraulic Gear Pump (Inc. 1 thru 21)	
B	°941643	Minor Repair Kit (Inc. 4, 6, 7, 16, 18)	
C	°941645	Major Repair Kit (Inc. 1, 2, 3, 4, 6 thru 10, 13, 14, 16 thru 20)	
D	°942427	Drive & Driven Gear Set (Inc. 11 & 12)	
1	940006	Nut, 7/16" — 14 Hex	8
2	940008	Washer	8
3	940000	Bolt, 7/16"—14 x 4½" Hex Head	8
4	940005	Shaft Seal	1
5	°940009	Cover	1
6	941566	Back up washer	2
7	940010	Seal Ring	2
8	853433	Spring	6
9	940586	Bearing, Cover Drive	1
10	940587	Bearing, Cover Driven	1
11	940003	Gear, Drive	1
12	940013	Gear, Driven	1
13	940584	Bearing, Body Drive	1
14	940585	Bearing, Body Driven	1
15	°942356	Body	1
16	940014	Seal Ring, Cover	1
17	853753	Retainer, Seal Relief	1
18	853749	Gasket, Seal Relief	1
19	853751	Spring, Seal Relief	1
20	10J-10	Ball, Seal Relief — 5/16"	1
21	853754	Seat, Ball	1

* — Use 553417 For Complete Pump Replacement
° — Only these items available as replacement parts

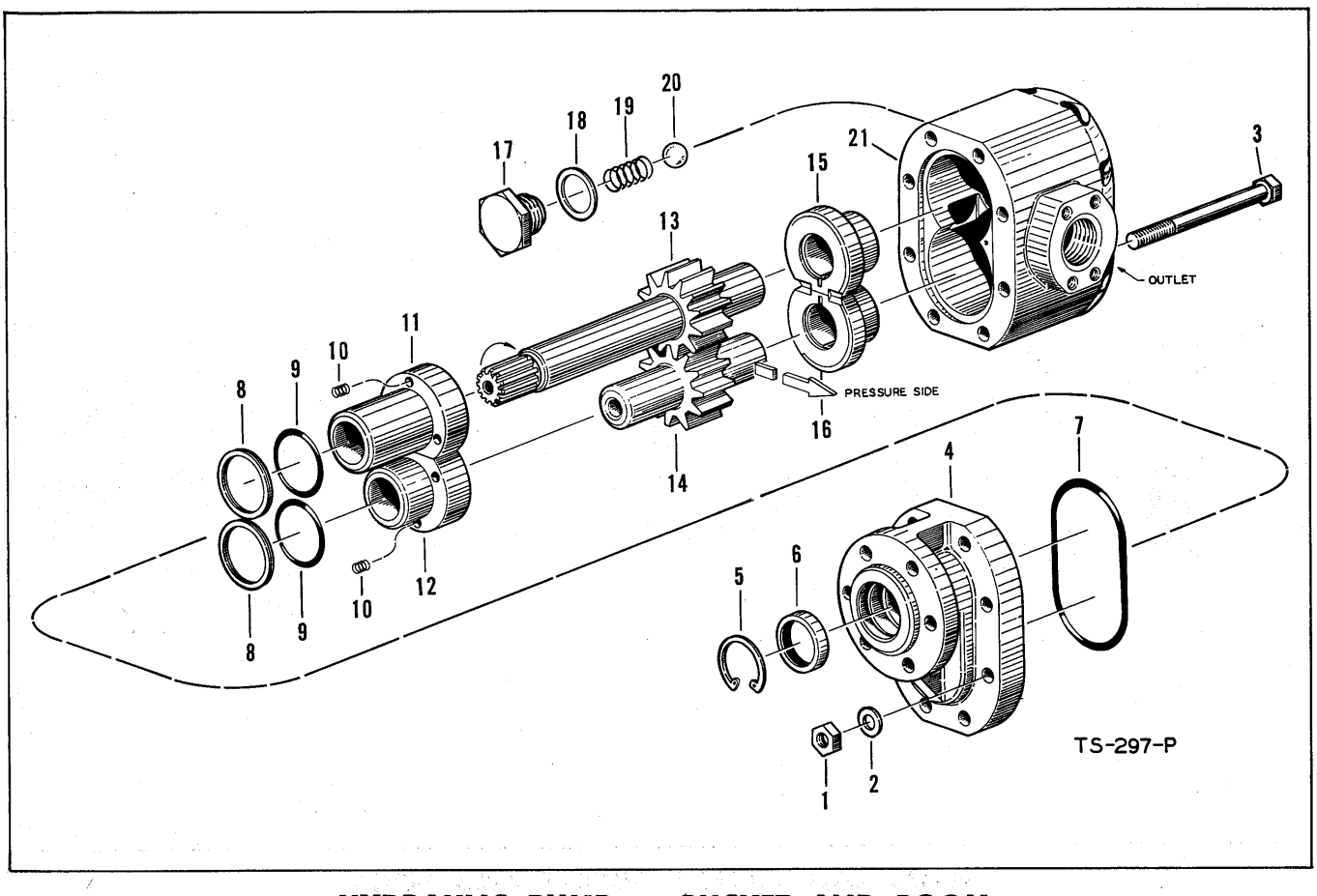

HYDRAULIC PUMP — BUCKET AND BOOM

Effective with Serial
75A — 9746 and Thereafter
75B — 6185 and Thereafter
75R — 7151 and Thereafter

Item No.	Part No.	Description	No. Req'd.
A	*553417	Hydraulic Gear Pump (Inc. 1 thru 21)	
B	*941644	Minor Repair Kit (Inc. 5 thru 9, 18)	
C	*941646	Major Repair Kit (Inc. 1, 2, 3, 5 thru 12, 15, 16, 18, 19, 20)	
D	*942431	Drive & Driven Gear Set (Inc. 13 & 14)	
1	940006	Nut, 7/16" — 14 Hex	8
2	942357	Washer	8
3	940000	Bolt, 7/16" — 14 x 4½" Hex Head	8
4	*941556	Cover	1
5	666542	Ring, Seal Retainer	1
6	941564	Shaft Seal	1
7	940014	Seal Ring, Cover	1
8	941566	Back Up Washer	2
9	940010	Seal Ring, Bearing	2
10	853433	Spring, Cover Bearing	6
11	941563	Bearing, Cover Drive	1
12	941562	Bearing, Cover Driven	1
13	941560	Gear, Drive	1
14	941557	Gear, Driven	1
15	941561	Bearing, Body Drive	1
16	941561	Bearing, Body Driven	1
17	941558	Retainer, Seal Relief	1
18	941555	Gasket, Seal Relief	1
19	941565	Spring, Seal Relief	1
20	941552	Ball, Seal Relief — ½"	1
21	*941559	Body	1

* — Only these items available as replacement parts.

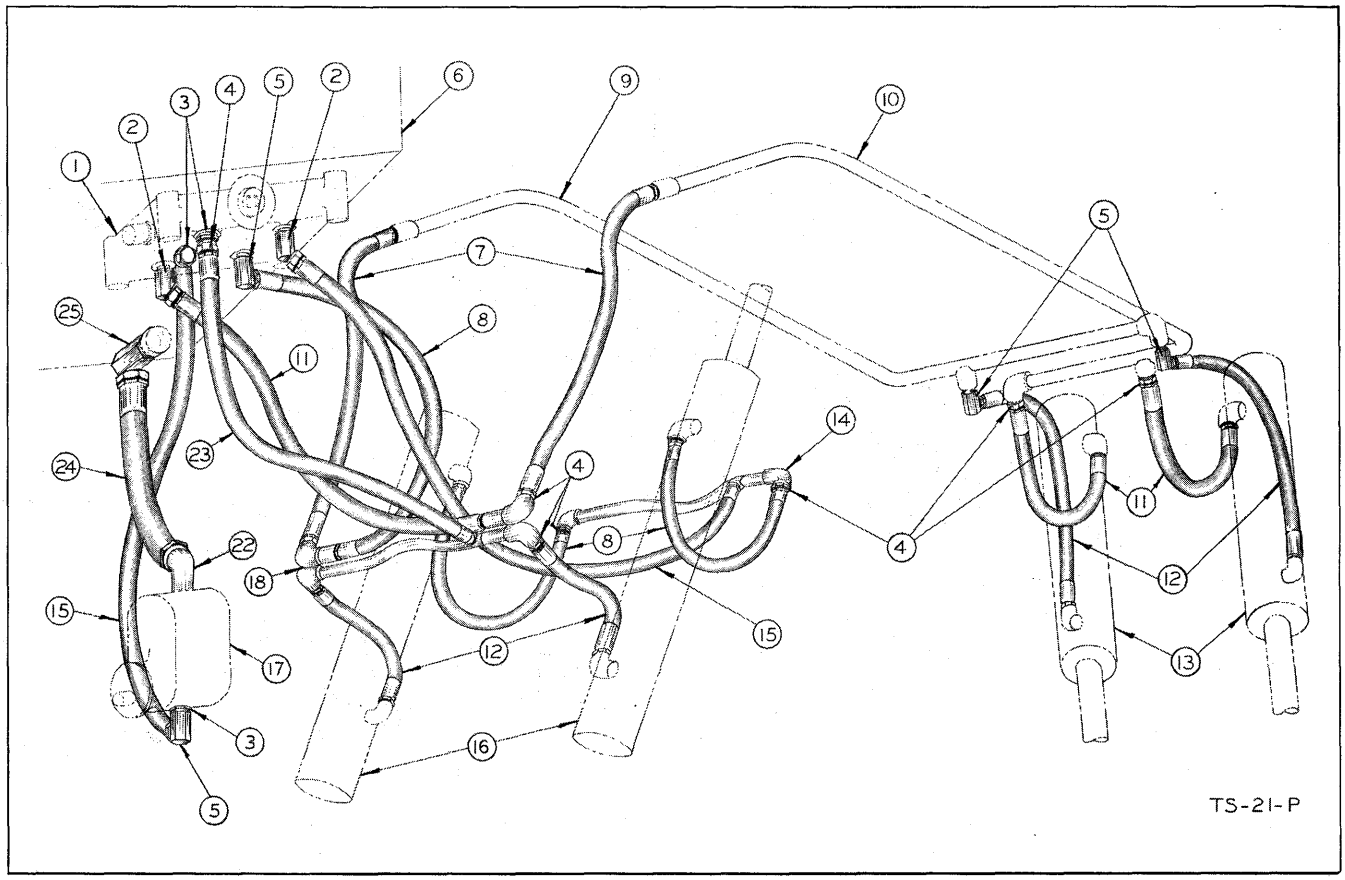

HYDRAULIC SYSTEM BUCKET AND BOOM

For Serial:

75A — 8123 Thru 9745
75B — 6123 Thru 6184
75R — 7123 Thru 7150

Item No.	Part No.	Description	No. Req'd.
1		Control Valve — See Index.....	
2	33F-5	Adaptor Union — ¾" - 45°.....	2
3	512108	Bushing, Pipe Reducing— ¾" to 1"	3
4	36F-5	Adaptor Union — Straight — ¾".	10
5	31F-5	Adaptor Union — ¾" - 90°.....	4
6		Hydraulic Oil Reservoir — See Index	
7	550723	Hose — 36".....	2
8	616533	Hose — 27".....	3
9		Boom Pipe Assembly — L. H. — See Index	
10		Boom Pipe Assembly — R. H. — See Index	
11	645432	Hose — 22"	3
12	691800	Hose — 24"	4
13		Bucket Cylinder — See Index.....	
14	550728	Crosspipe Assembly, Control Valve to Boom Cyl. Rod End.....	1
15	550724	Hose — 34".....	2
16		Boom Cylinder — See Index.....	
17		Main Hydraulic Pump — See Index	
18	550725	Crosspipe Assembly, Control Valve to Boom Cyl. Head End.....	1
19	2C-620	†Bolt, Crosspipe Mounting	4
20	2D-06	†Nut, Crosspipe Mounting	4
21	4E-06	†Lkwshr, Crosspipe Mounting.....	4
		For Serial #8123 thru #9279	
22	25F-7	Adaptor Union — 1¼" - 45°....	1
23	610386	Hose — 18".....	1
24	550718	Hose, Sump to Pump — 17½".....	1
25	31F-7	Adaptor Union — 1¼" - 90°....	1
		For Machine Serial #9280 thru #9745	
22	553339	Nipple, Special	1
23	610386	Hose — 18".....	1
24	553340	Hose, Suction	1
24A	941449	Clamp, Suction Hose	2
25		Omit	

† — Not Illustrated

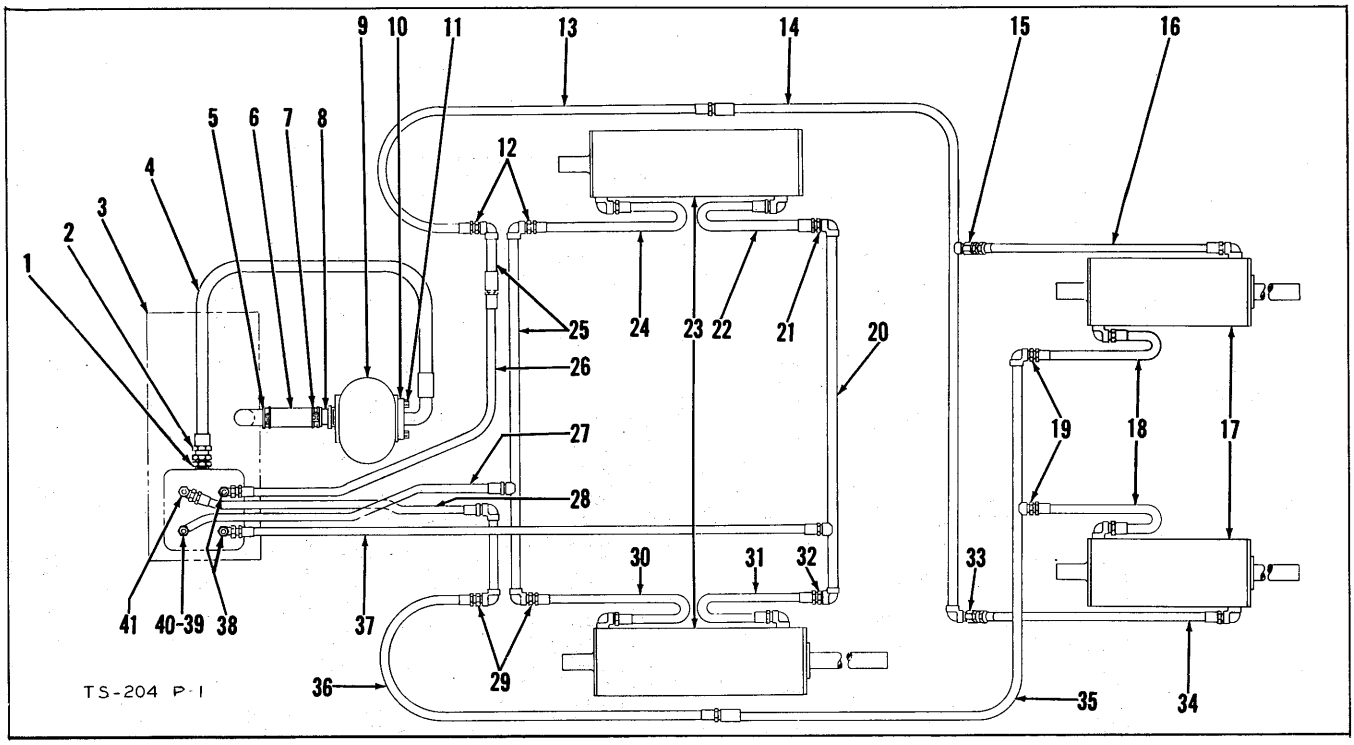

HYDRAULIC SYSTEM — BUCKET AND BOOM

Effective with Serial:

75A — 9746 and Thereafter
75B — 6185 and Thereafter
75R — 7151 and Thereafter

Item No.	Part No.	Description	No. Req'd.
1	512108	Bushing, Pipe Reducing	1
2	36F-5	Adaptor Union, Valve to Pump	1
3		Hydraulic Oil Reservoir—See Index	
4	553419	Hose, Pump to Valve	1
5	941449	Clamp, Reservoir to Pump Hose	1
6	553340	Hose, Reservoir to Pump	1
7	941449	Clamp, Reservoir to Pump Hose	1
8	553339	Nipple Assembly, Pump	1
9		Main Hydraulic Pump — See Index	
10	663093	Split Flange Half	2
10A	25K-40110	†"O" Ring	1
11	1C-620	Bolt, Flange to Pump	4
11A	4E-06	†Lkwshr, Flange to Pump	4
12	36F-5	Adaptor Union — Straight — ¾"	2
13	550723	Hose, Crosspipe to L.H. Boom Pipe	1
14		Boom Pipe Assembly, L.H. — See Index	
15	31F-5	Adaptor Union, Boom Pipe to Cyl.	1
16	691800	Hose, L.H. Boom Pipe to Bucket Cyl.	1
17		Bucket Cylinder Assembly — See Index	
18	645432	Hose, R.H. Boom Pipe to Bucket Cyl.	2
19	36F-5	Adaptor Union, Boom Pipe to Cyl.	2
20	550728	Crosspipe Assembly, Cyl. Rod End	1
20A	2C-620	†Bolt, Crosspipe to Frame	2
20B	2D-06	†Nut, Crosspipe to Frame	2
20C	4E-06	†Lkwshr, Crosspipe to Frame	2
21	36F-5	Adaptor Union, Crosspipe to Cyl.	1
22	616533	Hose, Crosspipe to Boom Cyl.	1
23		Boom Cylinder Assembly — See Index	
24	691800	Hose, Crosspipe to Boom Cyl.	1
25	550725	Crosspipe Assembly, Cyl Head End	1
25A	2C-620	†Bolt, Crosspipe to Frame	2
25B	2D-06	†Nut, Crosspipe to Frame	2
25C	4E-06	†Lkwshr, Crosspipe to Frame	2
26	616533	Hose, Valve to L.H. Boom Pipe	1
27	610386	Hose, Valve to Cyl. Head End Crosspipe	1
28	645432	Hose, Valve to R.H. Boom Pipe	1
29	36F-5	Adaptor Union — Straight — ¾"	2
30	691800	Hose, Crosspipe to Boom Cyl.	1
31	616533	Hose, Crosspipe to Boom Cyl.	1
32	36F-5	Adaptor Union, Crosspipe to Cyl.	1
33	31F-5	Adaptor Union, Boom Pipe to Cyl.	1
34	691800	Hose, L.H. Boom Pipe to Bucket Cyl.	1
35		Boom Pipe Assembly — R.H. See Index	
36	550723	Hose, Crosspipe to R.H. Boom Pipe	1
37	550724	Hose, Valve to Cyl. Rod End Crosspipe	1
38	33F-5	Adaptor Union — ¾" - 45°	2
39	512108	Bushing, Pipe Reducing	1
40	36F-5	Adaptor Union, Valve to Crosspipe	1
41	31F-5	Adaptor Union, Valve to Boom Pipe	1

† — Not Illustrated

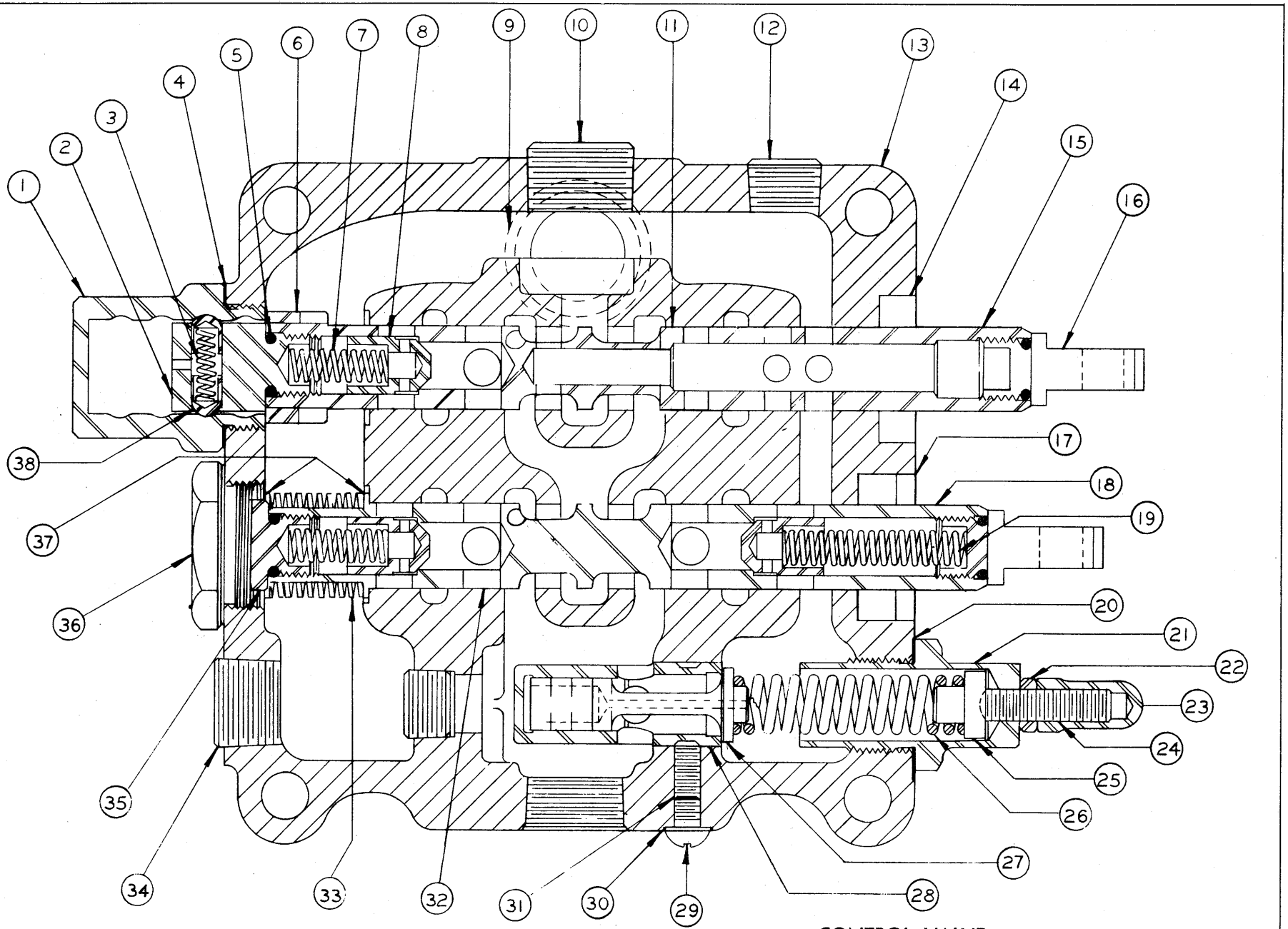

CONTROL VALVE

TS-14-P

CONTROL VALVE ASSEMBLY

Item No.	Part No.	Description	No. Req'd.
A	550282	Control Valve Assembly — Complete	1
1	940040	Cap, Detent	1
2	940023	Cap, Detent Valve	1
3	940024	Spring, Detent	1
4	940041	Gasket	2
5	940061	Seal Ring	4
6	940062	Spacer, Plunger	1
7	940063	Spring	2
8	940064	Plunger, Check Valve	3
9	25K-40116	Seal Ring	1
10	16F-16	Pipe Plug	1
11		§Operating Plunger (See A)	1
12	16F-08	Pipe Plug	2
13		§Housing (See A)	1
14	862092	Seal	2
15		§Operating Plunger Ass'y. — Float	1
16	940068	Plunger Eye	2
17	940022	Seal Assembly	1
18		§Operating Plunger Ass'y. — D.A. (See A)	1
19	940070	Spring	1
20	940031	Gasket	1
21	940025	Cap, Adjustment	1
22	8D-06	Nut, Jam	1
23	863045	Nut, Acorn	1
24	940028	Screw, Adjustment	1
25	940029	Guide, Spring	1
26	940030	Spring	1
27	940032	Plunger, Relief Valve	1
28	940033	Seat, Relief Valve	1
29	863052	Screw	1
30	863053	Gasket	1
31	863051	Screw, Set	1
32		§Operating Plunger (See A)	1
33	940072	Spring	1
34	16F-12	Pipe Plug	1
35	940073	Cap	1
36	940039	Cap	1
37	940074	Washer	2
38	940075	Poppet, Detent Plunger	2
39	16F-06	†Pipe Plug	1
40	2C-856	†Bolt, Valve to Reservoir	3
41	4E-08	†Lkwshr, Valve to Reservoir	3

§ — Not Sold Separately

† — Not Illustrated

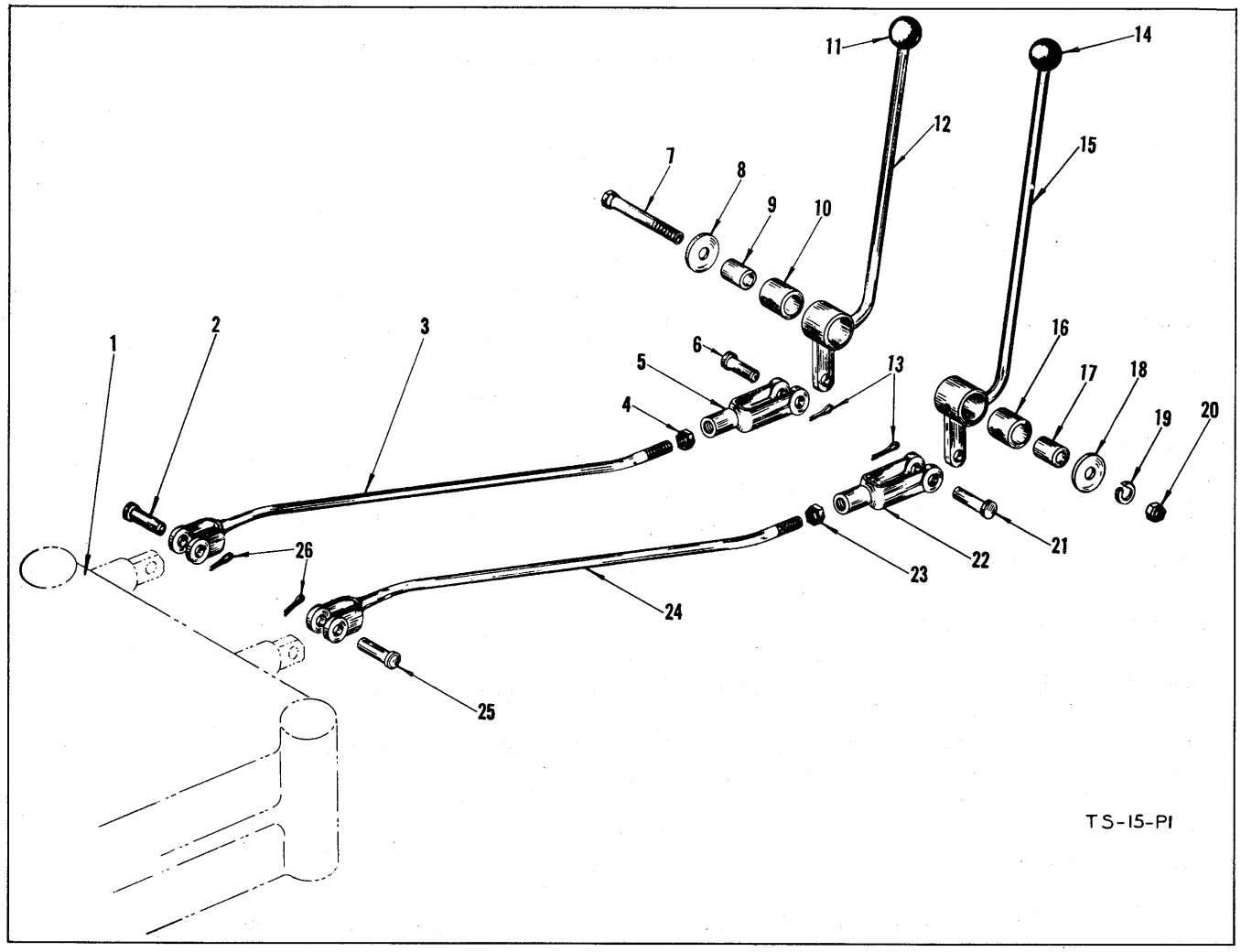

VALVE CONTROL LEVERS AND LINKAGE

Item No.	Part No.	Description	No. Req'd.
1		Control Valve Assembly—See Index	
2	4F-08127	Pin, Valve Rod to Valve Clevis	1
3	550647	Valve Rod Assembly	1
4	8D-08	Nut, Yoke Jam	1
5	4J-8300	Yoke, Valve Rod	1
6	4F-08127	Pin, Yoke Clevis	1
7	2C-868	Bolt, Lever Mtg.	1
8	616796	Washer, Lever Mtg.	1
9	550646	Sleeve, Lever Mtg.	1
10	554081	Bushing, Lever Mtg.	1
11	300208	Knob, Bucket Valve Lever	1
12	550644	Valve Lever Ass'y., Bucket	1
13	1F-414	Cotter, Clevis Pin	1
14	300208	Knob, Boom Valve Lever	1
15	550640	Valve Lever Ass'y., Boom	1
16	554081	Bushing, Lever Mtg.	1
17	550646	Sleeve, Lever Mtg.	1
18	616796	Washer, Lever Mtg.	1
19	4E-08	Lkwshr, Lever Mtg.	1
20	2D-08	Nut, Lever Mtg.	1
21	4F-08127	Pin, Yoke Clevis	1
22	4J-8300	Yoke, Valve Rod	1
23	8D-08	Nut, Yoke Jam	1
24	550647	Valve Rod Assembly	1
25	4F-08127	Pin, Valve Rod to Valve Clevis	1
26	1F-414	Cotter, Clevis Pin	2

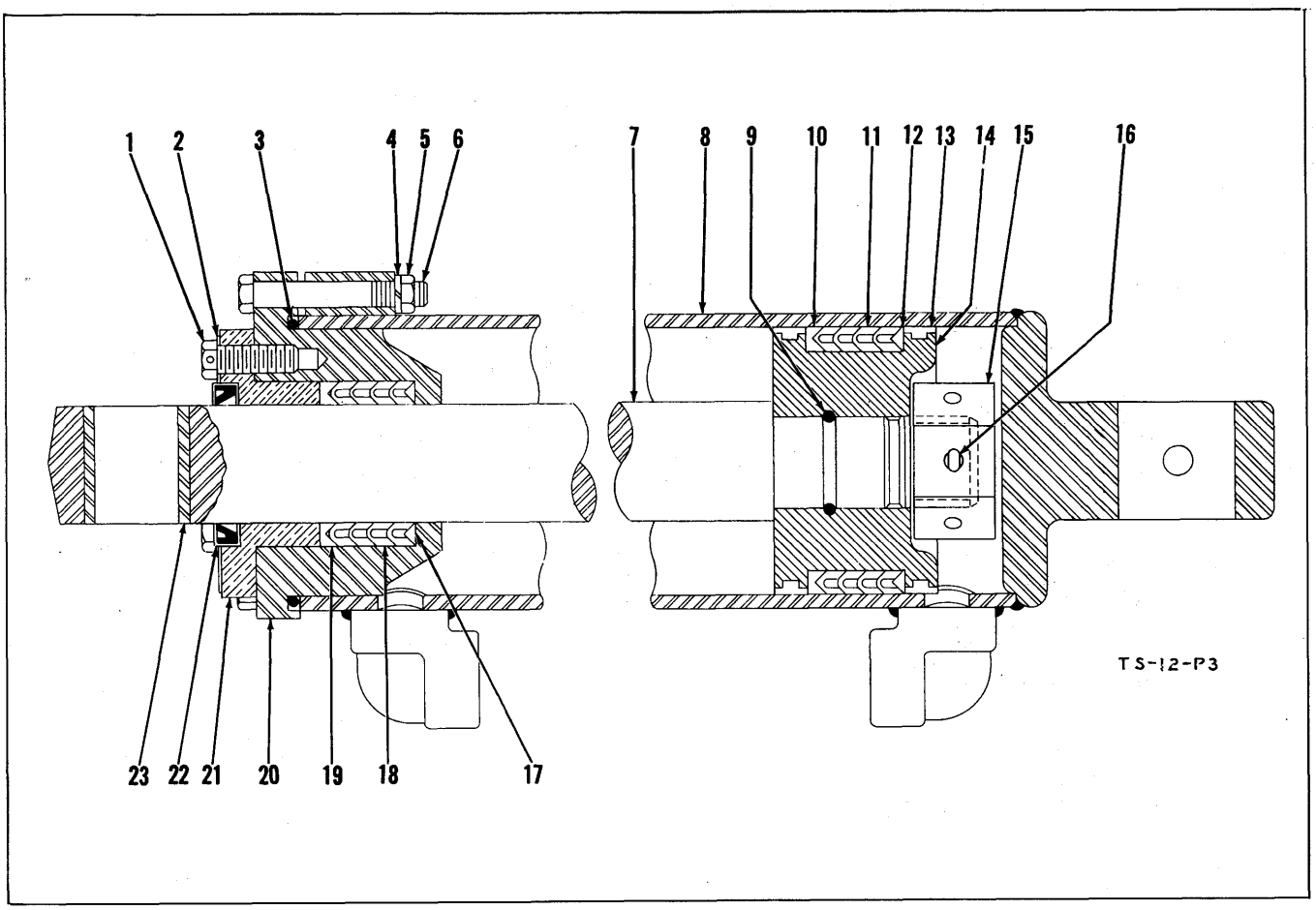

BOOM CYLINDER ASSEMBLY

Item No.	Part No.	Description	No. Req'd.
A	551991	Boom Cylinder Ass'y. (Inc. 1 thru 23)	2
1	4C-616	Bolt, Retainer	8
1A	550099	Lockwire, Retainer Bolt	2
2	550089	Retainer, Piston Rod Wiper	2
3	25K-40416	"O" Ring, Cylinder Cap	2
4	4E-08	Lkwshr, Cylinder Cap	8
5	2D-08	Nut, Cylinder Cap	8
6	2C-852	Bolt, Cylinder Cap	8
7	550083	Piston Rod Ass'y. (Inc. 23)	2
8	551992	Boom Cylinder	2
9	25K-40112	"O" Ring, Piston Rod	2
10	514741	"T" Ring, Chevron Packing Adaptor	2
11	514742	Packing, Chevron	8
12	514740	"V' Ring, Chevron Packing Adaptor	2
12A	514743	†Shim	2
13	550081	Ring, Piston Wear	4
14	550080	Piston	2
15	551605	Nut, Piston Rod	2
16	1F-648	Cotter, Piston Rod Nut	2
17	552487	"V" Ring, Chevron Packing Adaptor	2
18	552483	Packing, Chevron	8
19	552486	"T" Ring, Chevron Packing Adaptor	2
19A	552982	†Shim	2
20	550085	Cap, Cylinder	2
21	550087	Packing Gland	2
22	550088	Wiper, Piston Rod	2
23	550066	Bushing, Piston Rod	2
24	942408	‡Chevron Packing & Adaptor Kit (Inc. 10 Thru 12A)	
25	942409	‡Chevron Packing Kit (Inc. 11 & 12A)	
26	942406	‡Chevron Packing & Adaptor Kit (Inc. 17 Thru 19A)	
27	942407	‡Chevron Packing Kit (Inc. 18 & 19A)	
28	2C-872	†Bolt, Pivot Shaft to Cyl.	2
29	2D-08	†Nut, Pivot Shaft to Cyl.	2
30	4E-08	†Lkwshr, Pivot Shaft to Cyl.	2

‡ — As Required
† — Not Illustrated

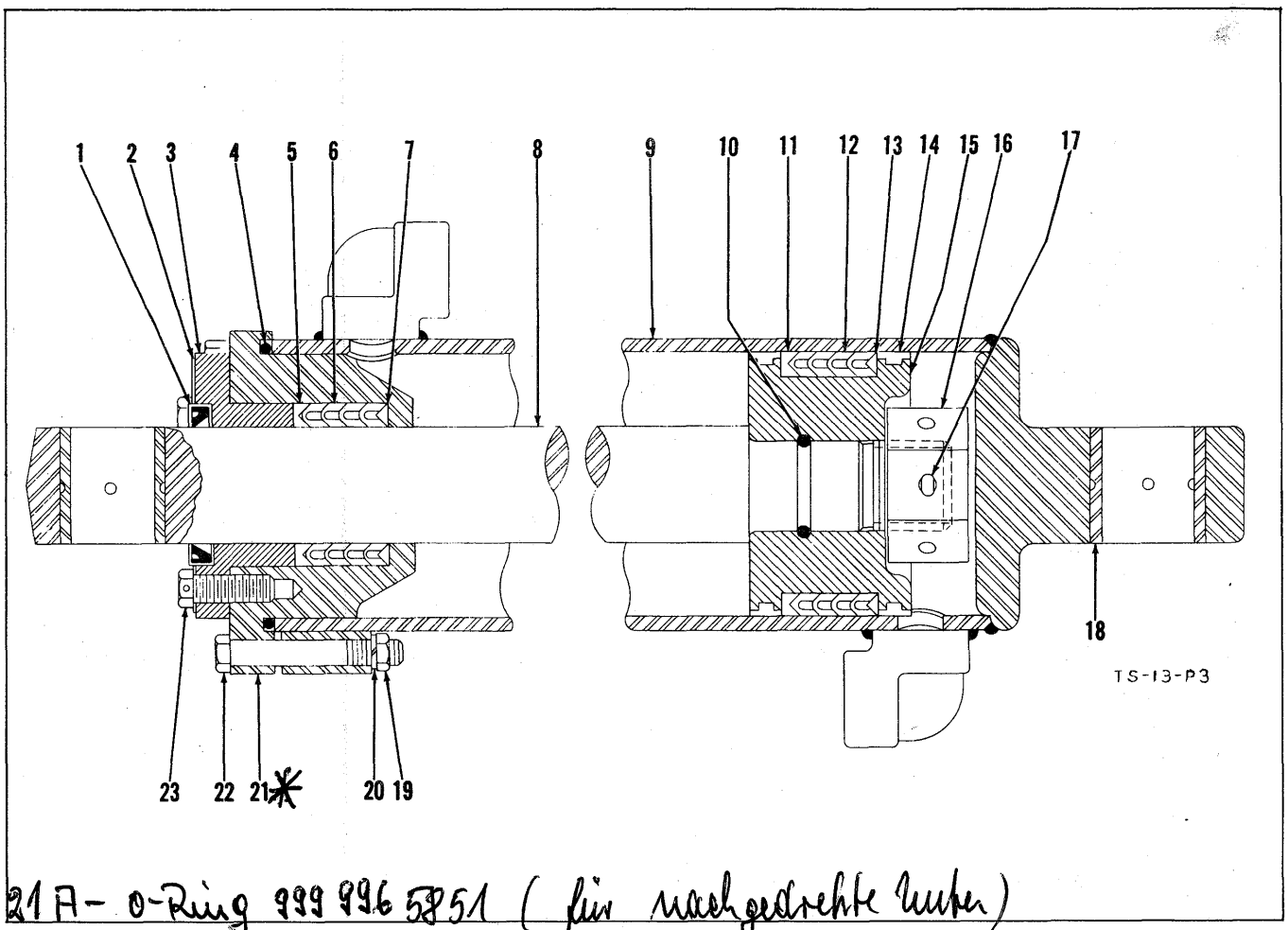

21A- O-Ring 999 996 5851 (für nachgedrehte Nuten)

BUCKET CYLINDER ASSEMBLY

Item No.	Part No.	Description	No. Req'd.
A	514166	Bucket Cylinder Ass'y. (Inc. 1 thru 24)	2
1	550088	Wiper, Piston Rod	2
2	550089	Retainer, Piston Rod Wiper	2
3	550087	Packing Gland	2
4	25K-40416	"O" Ring, Cylinder Cap	2
5	552486	"T" Ring, Chevron Packing Adaptor	2
6	552483	Packing, Chevron	8
7	552487	"V" Ring, Chevron Packing Adaptor	2
7A	552982	†Shim	2
8	550097	Piston Rod Assy. (Inc. 18 & 25)	2
9	514167	Cylinder & Bushing Ass'y. (Inc. 18 & 25)	2
10	25K-40112	"O" Ring, Piston Rod	2
11	514741	"T" Ring, Chevron Packing Adaptor	2
12	514742	Packing, Chevron	8
13	514740	"V" Ring, Chevron Packing Adaptor	2
13A	514743	†Shim	2
14	550081	Ring, Piston Wear	4
15	550080	Piston	2
16	551605	Nut, Piston Rod	2
17	1F-648	Cotter, Piston Rod Nut	2
18	550229	Bushing	4
19	2D-08	Nut, Cylinder Cap	8
20	4E-08	Lkwshr, Cylinder Cap	8
21	550085	Cap, Cylinder	2
22	2C-852	Bolt, Cylinder Cap	8
23	4C-616	Bolt, Retainer	8
23A	550099	Lockwire, Retainer Bolt	2
24	10H-25	†Fitting, Grease	4
25	942408	‡Chevron Packing & Adaptor Kit (Inc. 11 thru 13A)	
26	942409	‡Chevron Packing Kit (Inc. 12 & 13A)	
27	942406	‡Chevron Packing & Adaptor Kit (Inc. 5 thru 7A)	
28	942407	‡Chevron Packing Kit (Inc. 6 & 7A)	

‡ — As Required
† — Not Illustrated

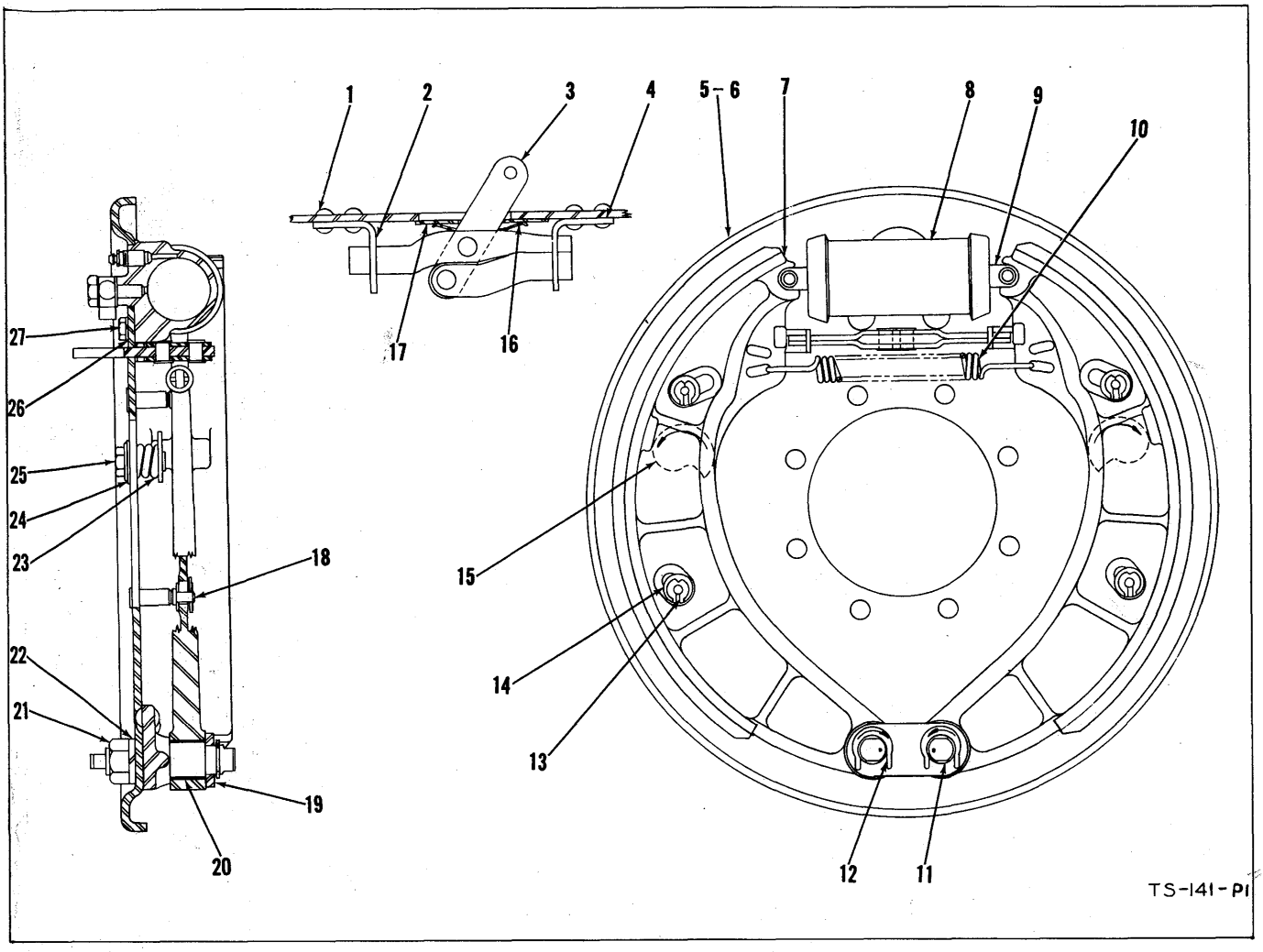

BRAKE ASSEMBLY — FRONT

Item No.	Part No.	Description	No. Req'd.
A	106335	Brake Assembly — R.H. (Inc. 1 thru 5 & 7 thru 27)	1
B	106336	Brake Assembly — L.H. (Inc. 1 thru 4 & 6 thru 27)	1
1	1H-410	Rivet, Link Support	4
2	106180	Link Support	1
3	106526	Link Assembly	1
4	106179	Link Support	1
5	106337	Brake Disc Assembly — R.H. (Inc. 1, 2, 4, 15 & 23 thru 25)	1
6	106338	Brake Disc Assembly — L.H. (Inc. 1, 2, 4, 15 & 23 thru 25)	1
7	107611	Brake Shoe Assembly (Inc. 7A, 7B & 20)	2
7A	107612	Lining, Brake	2
7B	106184	Rivet, Brake Lining	36
8	107014	Brake Cylinder (Inc. 9)	1
8A	940130	‡Repair Kit, Brake Cylinder	
9	957212	Connector Link, Brake Cylinder	2
10	106216	Spring, Release	1
11	106969	Pin, Anchor	2
12	101332	"C" Washer, Anchor Pin	2
13	100878	"C" Washer, Guide Pin	4
14	102322	Washer, Guide Pin	8
15	100864	Cam, Shoe Adjusting	2
16	106185	Spring, Shield	1
17	104524	Dust Shield	1
18	106373	Guide Pin	4
19	106970	Strut, Anchor Pin	1
20	100872	Bushing, Brake Shoe	2
21	2D-12	Nut, Anchor Pin	2
22	4E-12	Lkwshr, Anchor Pin	2
23	100865	Cam Spring	2
24	100867	Washer, Cam Pin	2
25	106372	Cam Pin	2
26	4E-06	Lkwshr, Brake Cylinder	2
27	1C-610	Bolt, Brake Cylinder	2

‡ — As Required

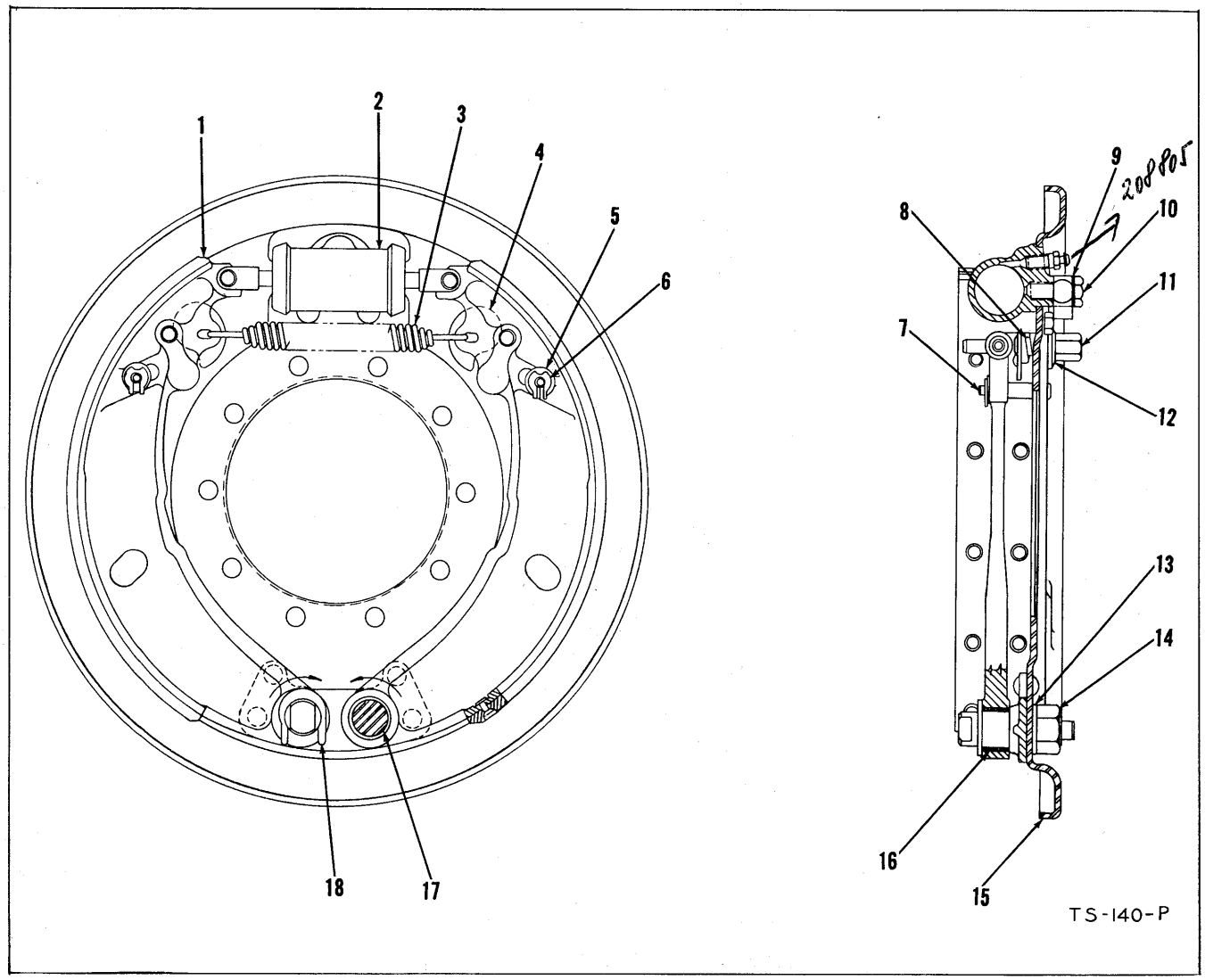

BRAKE ASSEMBLY — REAR

Item No.	Part No.	Description	No. Req'd.
A	106816	Brake Ass'y. (Inc. all following items)	2
1	106824	Brake Shoe Assembly (Inc. 1A, 1B & 16)	4
1A	106823	Lining, Brake	4
1B	106184	Rivet, Brake Lining	48
2	102488	Cylinder, Brake (Inc. 2A)	2
2A	853402	†Connector Link, Brake Cylinder	4
2B	853405	‡Brake Cylinder Repair Kit	
3	100879	Spring, Release	2
4	100864	Cam, Shoe Adjusting	4
5	102322	Washer, Guide Pin	8
6	100878	"C" Washer, Guide Pin	4
7	100877	Pin, Guide	4
8	100865	Spring, Brake Shoe Adj. Cam	4
9	4E-05	Lkwshr, Cylinder Mtg.	4
9a	208805	Entlüftungsschraube	
10	1C-510	Bolt, Cylinder Mtg.	4
11	101012	Pin, Brake Shoe Adj. Cam	4
12	100867	Washer, Brake Shoe Adj. Cam Pin	4
13	6E-12	Lkwshr, Anchor Pin	4
14	2D-12	Nut, Anchor Pin	4
15	106817	Brake Disc Ass'y. (Inc. 4, 8, 11 & 12)	2
16	102497	Bushing, Brake Shoe	4
17	102498	Pin, Anchor	4
18	100613	"C" Washer, Anchor Pin	4

‡ — As Required
† — Not Illustrated

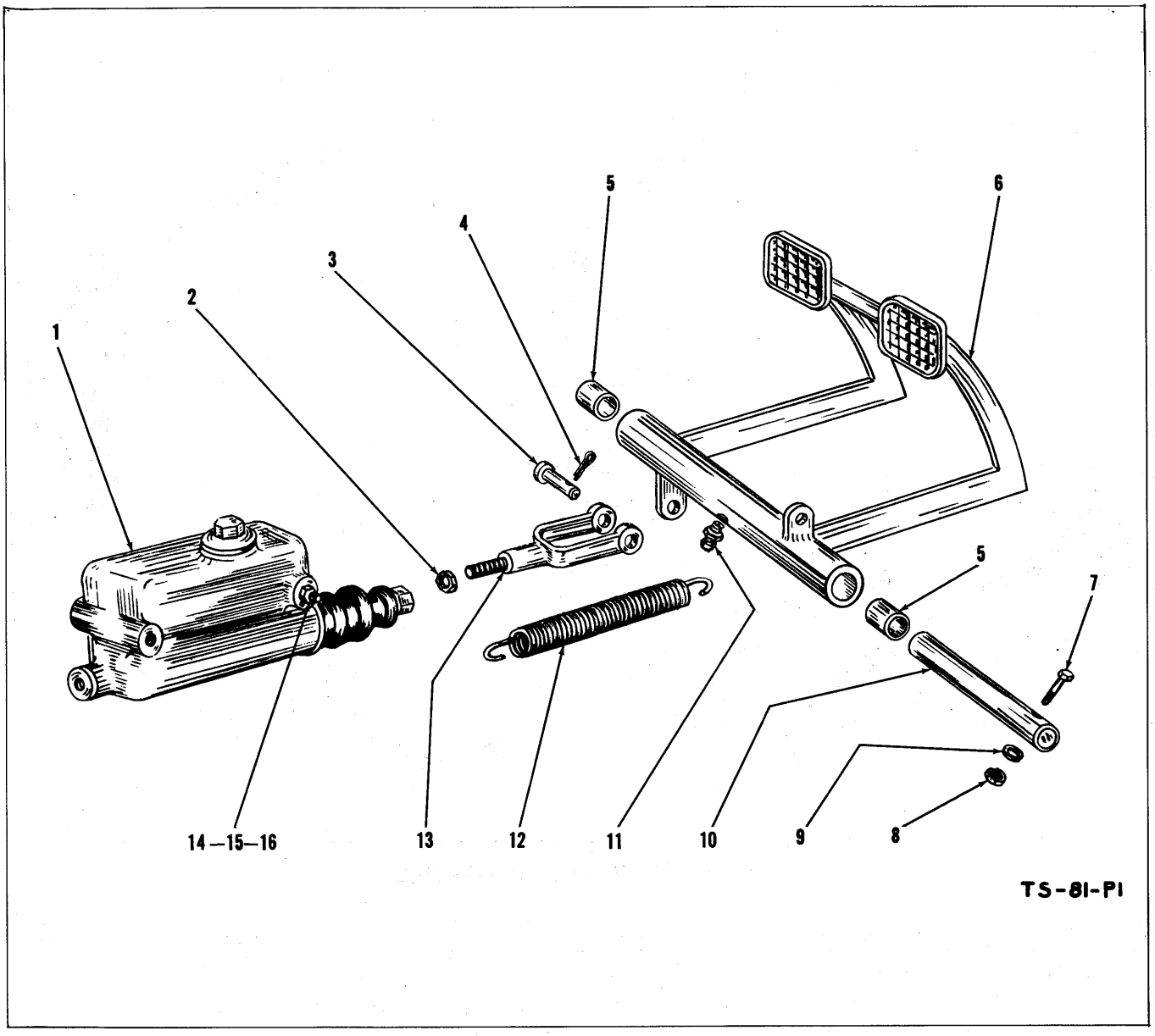

BRAKE CONTROLS

Model 75A

Effective with Serial 8610 and Thereafter

Item No.	Part No.	Description	No. Req'd.
1	552373	Master Cylinder	1
1A	869449	‡Repair Kit, Master Cylinder	
2	8D-07	Nut, Clevis Jam	1
3	4F-08127	Pin, Clevis	1
4	1F-412	Cotter, Clevis Pin	1
5	551373	Bushing, Brake Pedal Mtg.	2
6	550292	Brake Pedal Ass'y. (Inc. 5)	1
7	2C-640	Bolt, Shaft Retaining	1
8	2D-06	Nut, Shaft Retaining	1
9	4E-06	Lkwshr, Shaft Retaining	1
10	550299	Shaft, Brake Pedal	1
11	11H-15	Fitting, Brake Pedal Grease	1
12	550301	Spring, Pedal Return	1
13	552377	Clevis, Master Cyl. Push Rod	1
14	2C-760	Bolt, Master Cyl. Mtg.	1
15	2D-07	Nut, Master Cyl. Mtg.	1
16	4E-07	Lkwshr, Master Cyl. Mtg.	1
17	1C-614	† Bolt, Master Cyl. Mtg.	1
18	4E-06	† Lkwshr, Master Cyl. Mtg.	1

† —Not Illustrated
‡ — As Required

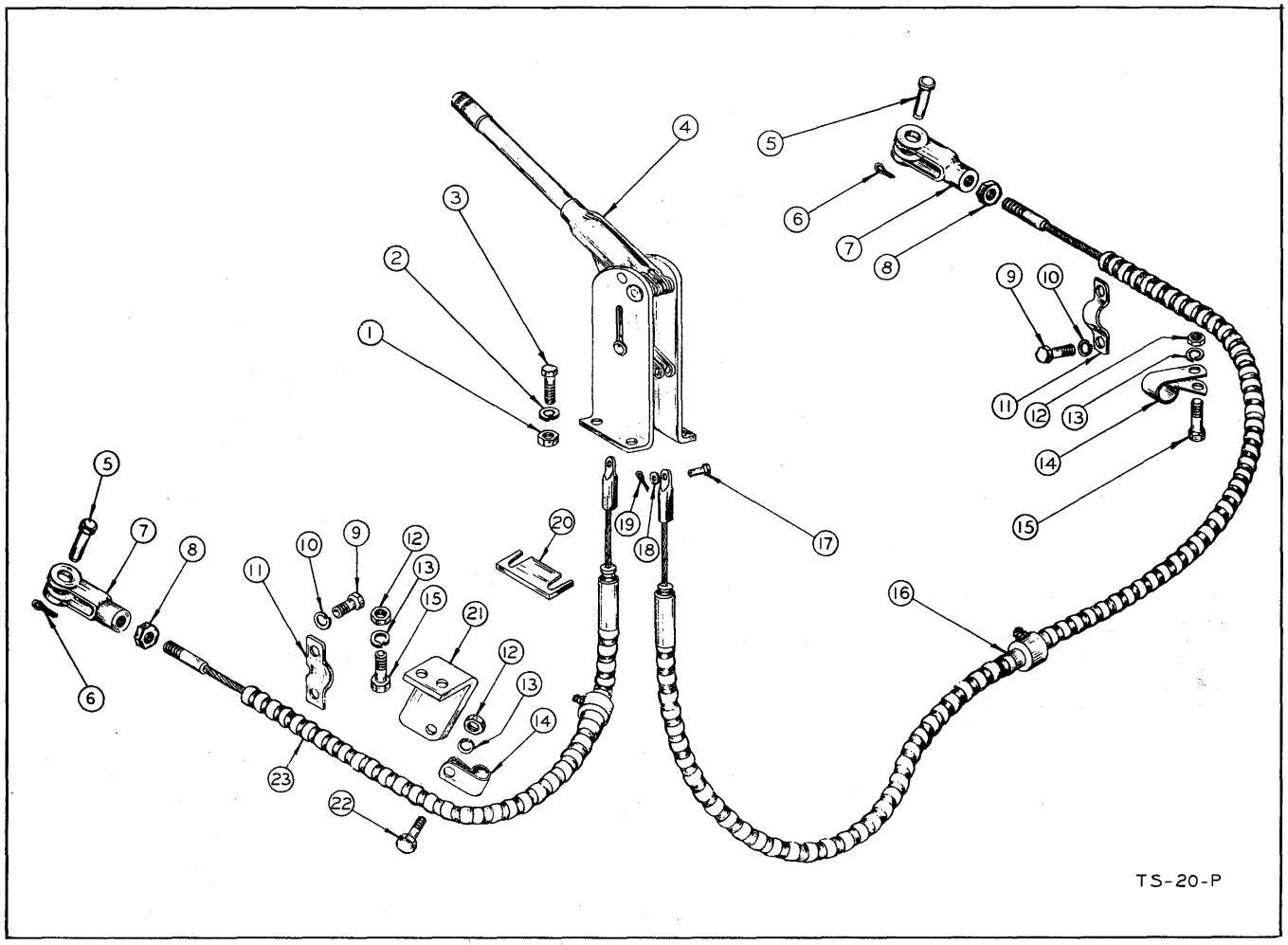

PARKING BRAKE CONTROLS

Item No.	Part No.	Description	No. Req'd.
1	2D-05	Nut, Lever Mtg.	4
2	4E-05	Lkwshr, Lever Mtg.	4
3	2C-524	Bolt, Lever Mtg.	4
4	551742	Parking Brake Lever	1
5	4F-06106	Pin, Clevis	2
6	1F-312	Cotter, Clevis Pin	2
7	4J-6208	Clevis	2
8	8D-06	Nut, Clevis Jam	2
9	1C-510	Bolt, Bracket	4
10	4E-05	Lkwshr, Bracket	4
11	104645	Bracket, Conduit Mtg.	2
12	2D-06	Nut — MODEL 75A & B	4
12A	2D-06	Nut — MODEL 75R	3
13	4E-06	Lkwshr — MODEL 75A & B	4
13A	4E-06	Lkwshr — MODEL 75R	3
14	551834	Clip — MODEL 75A & B	2
14A	551834	Clip — MODEL 75R	4
15	2C-616	Bolt — MODEL 75A & B	3
15A	2C-616	Bolt — MODEL 75R — GAS	1
15B	2C-616	Bolt — MODEL 75R — DIESEL	2
16	551689	Cable & Conduit Assy. — R.H. — MODEL 75A & B	1
16A	551746	Cable & Conduit Assy. — R.H. — MODEL 75R	1
17	4F-04051	Pin, Clevis	2
18	619016	Washer	2
19	1F-208	Cotter	2
20	551696	Retainer	1
21	551837	Bracket — MODEL 75A & B	1
22	2C-610	Bolt	1
23	551688	Cable & Conduit Assy. — L.H. — MODEL 75A & B	1
23A	551745	Cable & Conduit Assy — L.H. — MODEL 75R	1

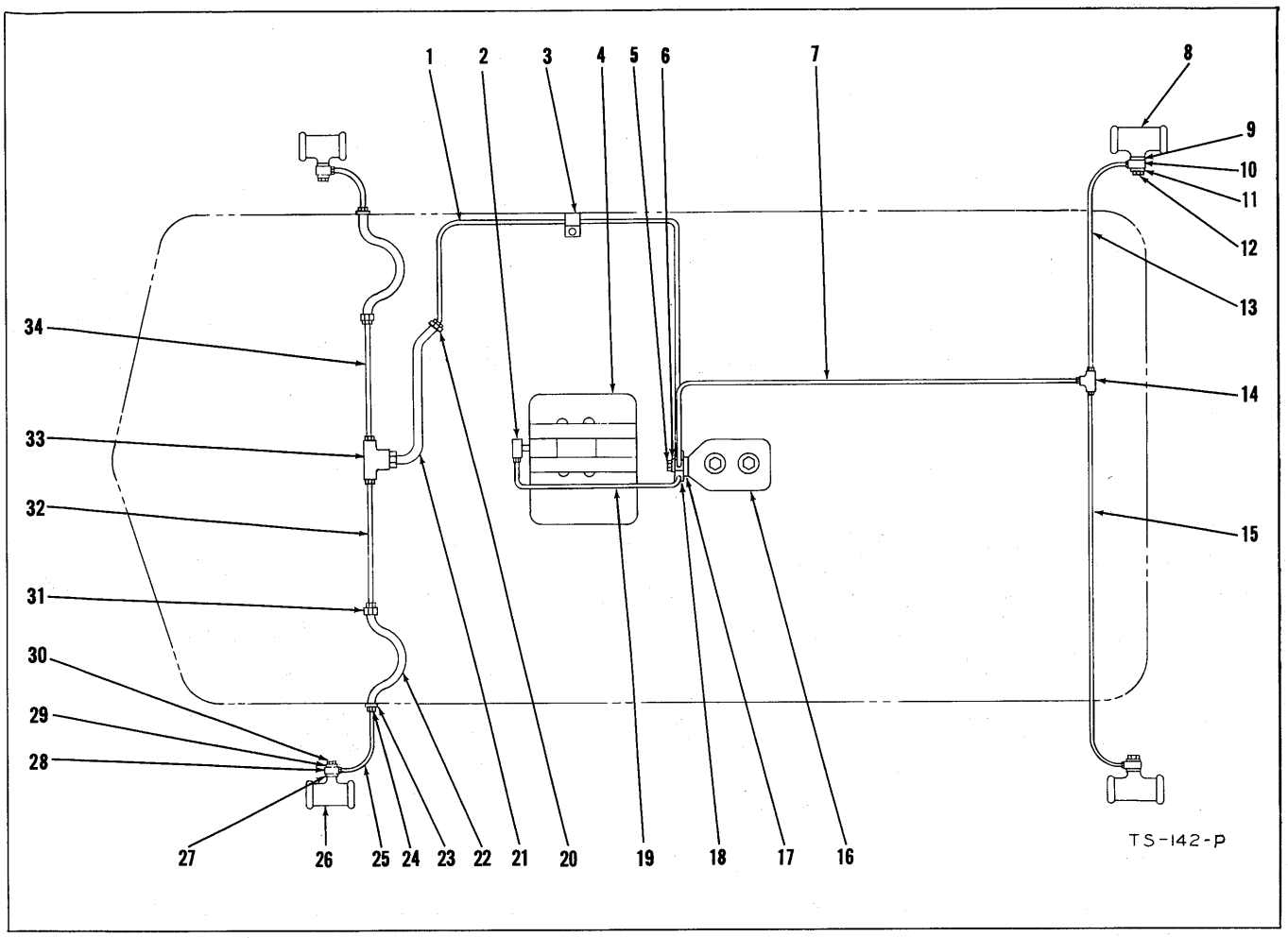

BRAKE LINES AND FITTINGS

Model 75A

Effective with Serial 8610 and Thereafter

Item No.	Part No.	Description	No. Req'd.
1	552384	Brake Line, Master Cyl. to Rear Axle	1
2	62F-3	Elbow, Master Cyl. to Trans.	1
3	6H-4	Clip, Brake Line	1
4		Transmission — See Index	
5	550310	Bolt, Master Cyl. Fitting	1
6	620238	Copper Gasket, Outer Master Cyl.	1
7	552383	Brake Line, Master Cyl. to Front Axle	1
8	107014	Wheel Cylinder, Front Axle	2
9	613750	Copper Gasket, Inner Wheel Cyl.	2
10	620235	Fitting, Wheel Cyl.	2
11	620238	Copper Gasket, Outer Wheel Cyl.	2
12	692722	Bolt, Wheel Cyl. Fitting	2
13	550405	Brake Line, Front Axle — L.H.	1
14	550406	Tee, Front Axle	1
15	550404	Brake Line, Front Axle — R.H.	1
16		Master Cyl. — See Index	
17	613750	Copper Gasket, Inner Master Cyl.	1
18	552264	Fitting, Master Cyl.	1
19	552382	Brake Line, Master Cyl. to Trans.	1
20	8D-10	Nut, Brake Hose	1
21	550324	Hose, Frame to Axle	1
22	552374	Hose, Rear Axle Brake	2
23	550325	Clip, Axle Brake Hose	2
24	8D-10	Nut, Brake Hose	2
25		*Brake Line, Frame to Wheel Cyl.*	2
	518173	For Serial 10593 thru 10640 & 10643 thru 10648	
	552387	For Serial 8610 thru 10592, 10641, 10642, 10649 & thereafter	
26	102488	Wheel Cyl., Rear Axle	2
27	613750	Copper Gasket, Inner Wheel Cyl.	2
28	620235	Fitting, Wheel Cyl.	2
29	620238	Copper Gasket, Outer Wheel Cyl.	2
30	692722	Bolt, Fitting	2
31	8D-10	Nut, Brake Hose	2
32	552385	Brake Line, Rear Axle — R.H.	1
33	550320	Tee, Rear Axle	1
34	552386	Brake Line, Rear Axle — L.H.	1

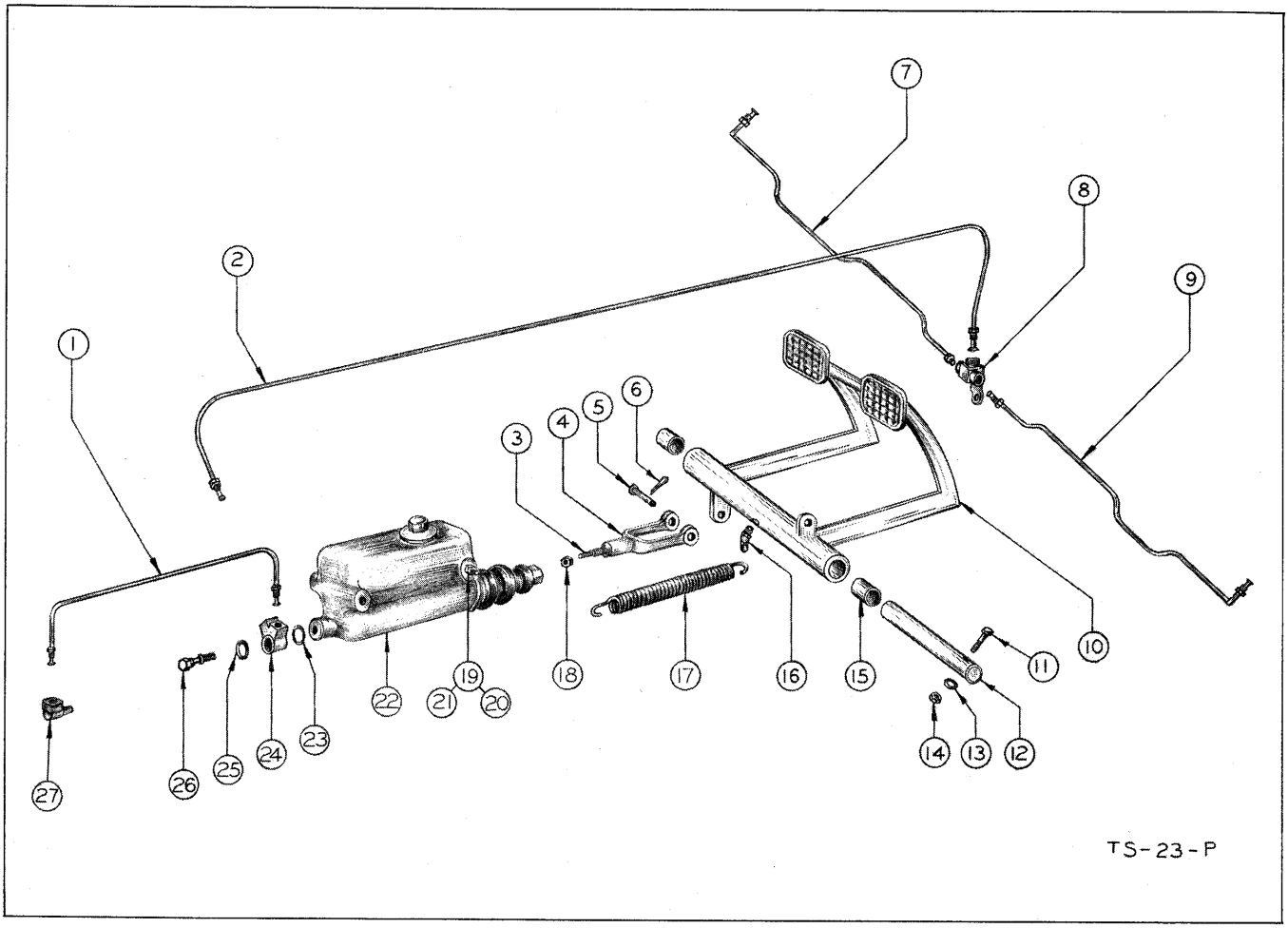

BRAKE CONTROLS AND LINES

For Serial:
75A — 8123 Thru 8609
75B — 6123 and Thereafter
75R — 7123 and Thereafter

Item No.	Part No.	Description	No. Req'd.
1	550402	Brake Line, Master Cyl. to Trans...	1
2	550403	Brake Line, Master Cyl. to Axle Tee — 75A & B only.....	1
2A	550407	Brake Line, Master Cyl. to Axle Tee — 75R only	1
3		Omit (Part of Item 4)	
4	940356	Clevis & Nut Assembly (Inc. 18)....	1
5	4F-08127	Pin, Clevis	1
6	1F-412	Cotter, Clevis Pin.....	1
7	550405	Brake Line, Axle — L.H.....	1
8	550406	Tee, Axle	1
9	550404	Brake Line, Axle — R.H.....	1
10	550292	Brake Pedal Assembly (Inc. 15)....	1
11	2C-640	Bolt, Shaft Retaining.....	1
12	550299	Shaft, Brake Pedal.....	1
13	4E-06	Lkwshr, Shaft Retaining.....	1
14	2D-06	Nut, Shaft Retaining.....	1
15	551373	Bushing, Brake Pedal Mtg.....	2
16	11H-15	Fitting, Brake Pedal Grease.....	1
17	550301	Spring, Pedal Return.....	1
18	8D-07	Nut, Clevis Jam.....	1
19	2C-652	Bolt, Master Cyl. Mtg.....	2
20	2D-06	Nut, Master Cyl. Mtg.....	2
21	4E-06	Lkwshr, Master Cyl. Mtg.....	2
22	550985	Master Cyl. Assembly.....	1
22A	940129	‡Repair Kit, Master Cyl.....	
23	620238	Copper Gasket, Inner Master Cyl...	1
24	550309	Fitting, Master Cyl.....	1
25	513750	Copper Gasket, Outer Master Cyl..	1
26	550310	Bolt, Fitting	1
27	62F-3	Elbow — 90°	1

‡ — As Required

NOTES

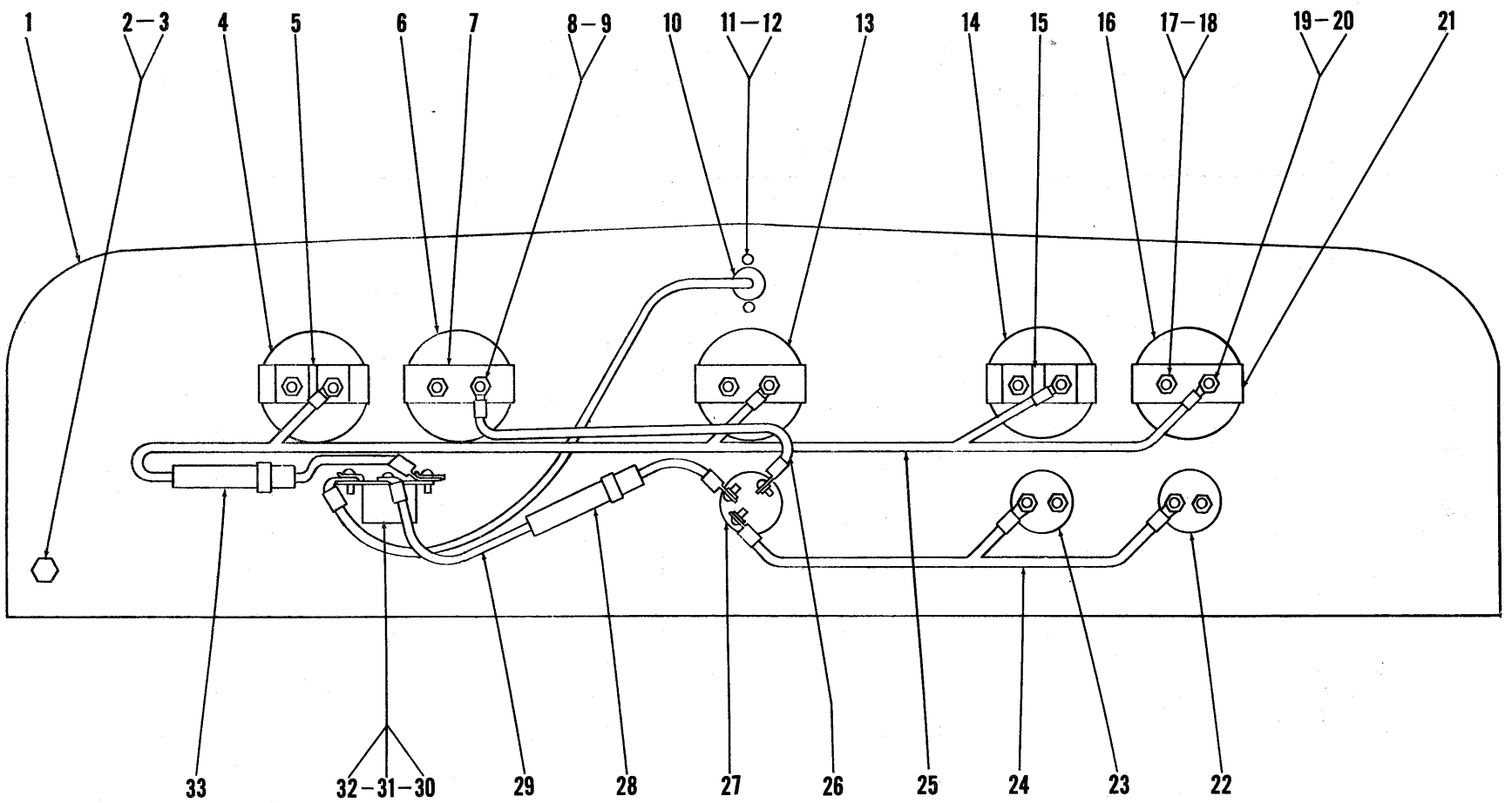

INSTRUMENT PANEL ASSEMBLY

INSTRUMENT PANEL ASSEMBLY

Item No.	Part No.	Description	No. Req'd.
1		*Instrument Panel*	1
	550733	For Serial:	
		75A — 8123 and thereafter	
		75B — 6123 thru 6200	
		75R — 7123 and thereafter	
	512468	Effective with Serial:	
		75B — 6201 & thereafter	
2	2C-710	Bolt, Panel to Shroud	3
2A	2C-616	Bolt, Panel to Shroud	1
3	4E-07	Lkwshr, Panel to Shroud	3
3A	4E-06	Lkwshr, Panel to Shroud	1
3B	2D-06	Nut, Panel to Shroud	1
4	551320	Gauge, Fuel	1
5	602350	Terminal Separator, Fuel Gauge	1
6	550735	Ammeter	1
7	601212	Clamp, Ammeter	1
8	14D-10	Nut, Ammeter Terminal	4
9	12E-10	Lkwshr, Ammeter Terminal	2
10	551503	Dash Lamp	1
11	18G-606	Screw, Dash Lamp	2
12	12E-6	Lkwshr, Dash Lamp	2
13	551321	Gauge, Torque Conv. Temp.	1
14	551319	Gauge, Oil Pressure	1
15	602350	Terminal Separator, Oil Pressure Gauge	1
16	551322	Gauge, Engine Temperature	1
17	14D-10	Nut, Sender Terminal	8
18	12E-10	Lkwshr, Sender Terminal	4
19	12D-8	Nut, Ignition Terminal	8
20	12E-8	Lkwshr, Ignition Terminal	4
21	626530	Clamp, Instruments	4
22	550775	Plug Button — GAS	1
22A	600259	Push Button, Glow Plug — DEISEL	1
23	600259	Push Button, Starter	1
24	550746	Wire, Ign. Switch to Starter Button — GAS	1
24A	552938	Wire, Ign. Switch to Starter & Glow Plug Buttons — DIESEL	1
25	552935	Wire, Light Switch to Instruments	1
26	550744	Wire, Ammeter to Ign. Switch	1
27		*Ignition Switch*	1
	550740	For Serial:	
		75A — 8123 and thereafter	
		75B — 6123 thru 6200	
		75R — 7123 and thereafter	
	553361	Effective with Serial:	
		75B — 6201 & thereafter	
28	611074	Fuse, Ign. Switch to Light Switch	1
29	552946	Wire, Ign. Switch to Light Switch	1
30	550741	Light Switch	1
31	550742	Rod, Light Switch	1
32	550743	Bushing, Light Switch	1
33	661555	Fuse, Light Switch to Instruments	1

BATTERY, HOLDER, WIRING AND PARTS

Item No.	Part No.	Description	No. Req'd.
1	550842	Battery — GAS	2
2	550360	Battery — DIESEL	2
3	550843	Box, Battery — GAS	1
4	550858	Box, Battery — DIESEL	1
5	2C-612	Bolt, Battery Box to Frame	4
6	2D-06	Nut, Battery Box to Frame	4
7	4E-06	Lkwshr, Battery Box to Frame	4
8	550844	Battery Hold Down — GAS	2
9	550859	Battery Hold Down — DIESEL	2
10	600183	Stud, Battery Hold Down	4
11	619019	Washer, Battery Hold Down Stud	4
12	4E-05	Lkwshr, Battery Hold Down Stud	4
13	1D-05	Nut, Battery	12
14	550845	Cable, Battery to Ground	1
15	550846	Cable, Battery Connector	1
16	554016	Cable, Battery to Solenoid	1
17	550847	Cable, Solenoid Switch to Starter — GAS	1
18	553466	Cable, Starter to Magnetic Switch — DIESEL	1
19	550848	Cable, Engine to Ground	1
20	2C-616	Bolt, Ground Cable	1
21	4E-06	Lkwshr, Ground Cable	1
22	2D-06	Nut, Ground Cable	1
23	553144	Wiring Harness — For Units with Solenoid Starter — GAS	1
24	550860	Wiring Harness — For Units with Mechanical Starter — DIESEL	1
25	553145	Wiring Harness — For Units with Solenoid Starter — DIESEL	1
26	552380	Clip, Wiring Harness — GAS	3
26A	552380	Clip, Wiring Harness — DIESEL	2
27	552381	Clip, Wiring Harness	4
28	2C-652	Bolt, Clip to Valve	1
29	2D-06	Nut, Clip to Valve	1
30	4E-06	Lkwshr, Clip to Valve	1
31	550850	Wiring Harness, Gen. to Voltage Reg.	1
32	550851	Wire, Light Switch to Head Lamp	1
33	550852	Wire, Fuel Gauge to Tank Unit	1
34	550854	Wire, Steering Column to Horn Relay	1
35	550855	Wire, Horn Relay to Horn	1

LIGHTS AND MOUNTINGS

Item No.	Part No.	Description	No. Req'd.
1	551510	Light Mounting Plate Assembly (Inc. 2, 3, 5, 6, 7 & 8)	1
2	550880	Light Mounting Plate	1
3	551284	Back Up Lamp Assembly (Inc. 4)	2
4	551243	Sealed Beam Unit, Back Up Lamp	2
5	550745	Wire, Back Up Lamp Ground	2
6	550853	Wire, Back Up Lamp Jumper	1
7	12D-8	Nut, Lamp to Plate	6
8	12E-8	Lkwshr, Lamp to Plate	6
9	1C-510	Bolt, Plate to Grille	4
10	1C-520	Bolt, Plate to Grille	2
11	4E-05	Lkwshr, Plate to Grille	6
12	1D-05	Nut, Plate to Grille	2
13	551281	Head Lamp Assembly (Inc. 14)	2
14	551242	Sealed Beam Unit, Head Lamp	2
15	3G-808	Screw, Ground Wire	2
16	13E-8	Lkwshr, Ground Wire	2
17	12D-8	Nut, Ground Wire	2
18	550882	Tail Lamp Assembly	2
19	551314	Bracket, Tail Lamp Mtg.	2
20	1C-610	Bolt, Bracket to Grille	4
21	4E-06	Lkwshr, Bracket to Grille	4
22	1D-04	Nut, Lamp to Bracket	4
23	4E-04	Lkwshr, Lamp to Bracket	4

TOOLS

Item No.	Part No.	Description	No. Req'd.
1	553412	Wrench, Wheel	1
2	552164	Handle, Wheel Wrench	1
3	552172	Wrench, Hub Bearing	1
4	552165	Hammer	1
5	552166	Pliers	1
6	552167	Screwdriver	1
7	551971	Grease Gun	1
8	552171	Tool Bag	1

Model 75A

WHEEL ASSEMBLY AND TIRE DATA — TUBELESS

		Grader Lug 14:00 x 24 8 PR.	Sure Grip Grader 14:00 x 24 12 PR.	Rock Lug 14:00 x 24 12 PR.	No. Req'd.
1	Wheel Assembly — Complete	942478	942478	942478	4
2	Wheel Disc and Rim Base	942485	942485	942485	4
3	Lock Ring	941325	941325	941325	4
4	Flange	941326	941326	941326	4
5	"O" Ring	941329	941329	941329	4
6	Tire	511847	554023	554071	4
7	Valve Stem — For Serial 8123 thru 10718	941422	.....	941422	4
7A	Valve Stem — Effective with Serial 10719 & thereafter	517963	517963	517963	4
8	Valve Stem Adaptor	551684	551684	551684	4
9	Valve Cap	551685	551685	551685	4
10	Wheel Nut	103522	103522	103522	40

Model 75A

WHEEL ASSEMBLY AND TIRE DATA — WITH TUBE

		Grader Lug 13:00 x 24 8 PR.	Rock Grader Lug 13:00 x 24 16 PR.	Grader Lug 14:00 x 24 8 PR.	No. Req'd.
11	Wheel Assembly — Complete	940375	940375	940375	4
12	Wheel Disc and Rim Base	552696	552696	552696	4
13	*Lock Ring	552602	552602	552602	8
14	Tire	550258	552041	550278	4
15	Tube	550259	550259	550158	4
16	Wheel Nut	103522	103522	103522	40
	*For machines equipped with Firestone Rims, this item as follows:				
13	Lock Ring	551541	551541	551541	4
13A	Side Ring	551542	551542	551542	4

Models 75B and 75R

WHEEL ASSEMBLY AND TIRE DATA — WITH TUBE

		75B Truck Type 9:00 x 16 8 PR.	75R Heavy Duty Transport 9:00 x 20 10 PR.	Ground Grip Road Builders 13:00 x 24 8 PR.	No. Req'd.
17	Wheel Assembly — Complete	940376	941621	940375	2
18	Wheel Disc and Rim Base	551111	941480	552696	2
19	Side Ring	552650	941481	———	2
20	Lock Ring	———	———	**552602	4
21	Tire	551114	550266	550258	2
22	Tube	551115	550267	550259	2
23	Flap	551116	550268	———	2
24	Wheel Nut	103522	103522	103522	20
	**For machines equipped with Firestone Rims, this item as follows:				
20	Lock Ring	———	———	551541	4
20A	Side Ring	———	———	551542	4

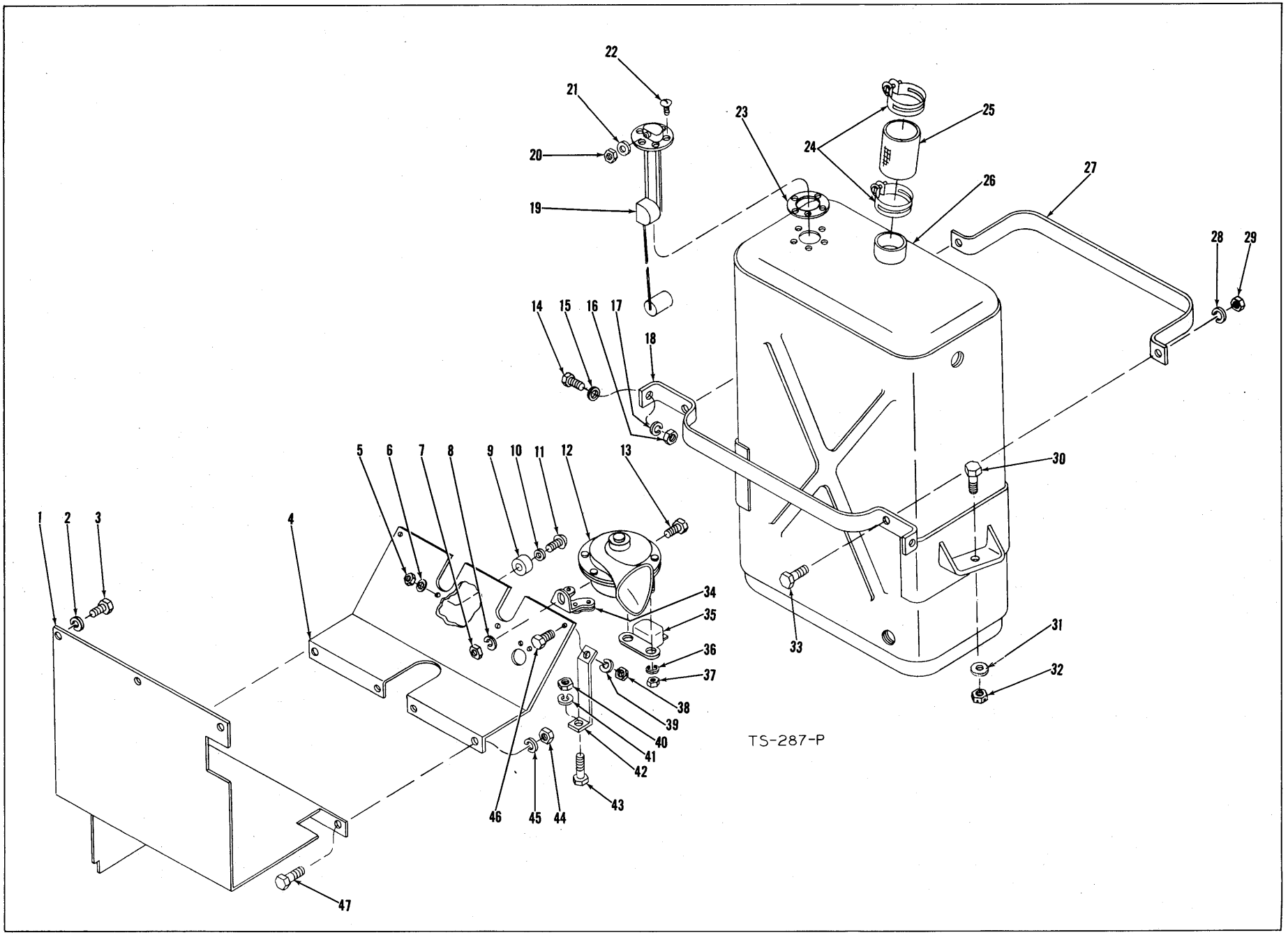
1
2
3
4
5
6
7
8
9
10
11
12
13
14
15
16
17
18
19
20
21
22
23
24
25
26
27
28
29
30
31
32
33
34
35
36
37
38
39
40
41
42
43
44
45
46
47
TS-287-P

FLOORBOARD, HORN AND FUEL TANK ASSEMBLY

Item No.	Part No.	Description	No. Req'd.
1		*Floorboard Assembly — Rear*	1
	550626	For Serial: 75A — 8123 thru 8609 75B — 6123 and thereafter 75R — 7123 and thereafter	
	552375	Effective with Serial: 75A — 8610 and thereafter	
2	4E-06	Lkwshr, Floorboard to Frame	3
3	1C-612	Bolt, Floorboard to Frame	3
4		*Floorboard Assembly — Front*	1
	550748	Mechanical Starter	
	550631	Solenoid Starter	
5	14D-10	Nut, Bumper Mtg.	2
6	13E-10	Lkwshr, Bumper Mtg.	2
7	2D-06	Nut, Horn to Floorboard	1
8	4E-06	Lkwshr, Horn to Floorboard	1
9	302568	Bumper, Brake Pedal Return Stop	2
10	616775	Washer, Bumper Mtg.	2
11	2G-1010	Screw, Bumper Mtg.	2
12	647300	Horn	1
13	2C-612	Bolt, Horn to Floorboard	1
14	2C-616	Bolt, Tank Mtg. Strap to Shroud	2
15	103293	Washer, Tank Mtg. Strap to Shroud	2
16	2D-06	Nut, Tank Mtg. Strap to Shroud	2
17	4E-06	Lkwshr, Tank Mtg. Strap to Shroud	2
18	517616	Mounting Strap, Fuel Tank	1
19	551384	Fuel Gauge, Tank	1
20	14D-10	Nut, Fuel Gauge Terminal	1
21	12E-10	Lkwshr, Fuel Gauge Terminal	1
22	3G-1008	Screw, Fuel Gauge to Tank	8
23	627982	Gasket, Fuel Gauge to Tank	1
24	4H-54	Clamp, Fuel Filler Hose	2
25	550712	Hose, Fuel Filler	1
26	*517073	Fuel Tank Assembly	1
26A	942424	Fuel Tank Mtg. Kit (Inc. Items 14 thru 18 & 27 thru 33)	1
27	517617	Tie Strap, Fuel Tank	1
28	4E-06	Lkwshr, Tie Strap to Mtg. Strap	2
29	2D-06	Nut, Tie Strap to Mtg. Strap	2
30		*Bolt, Fuel Tank to Frame*	4
	2C-832	For Serial: 75A — 8123 thru 10557 75B — 6123 thru 6210 75R — 7123 thru 7157	
	2C-828	Effective with Serial: 75A — 10558 and thereafter 75B — 6211 and thereafter 75R — 7158 and thereafter	2
31		*Pad, Fuel Tank to Frame*	2
	550711	For Serial: 75A — 8123 thru 10557 75B — 6123 thru 6210 75R — 7123 thru 7157	
	518233	Effective with Serial: 75A — 10558 and thereafter 75B — 6211 and thereafter 75R — 7158 and thereafter	
32	21D-08	Nut, Fuel Tank to Frame	2
33	2C-616	Bolt, Tie Strap to Mtg. Strap	2
34	621279	Bracket, Horn Mtg.	1
35	647310	Relay, Horn	1
36	4E-04	Lkwshr, Horn Bracket to Horn	2
37	2D-04	Nut, Horn Bracket to Horn	2
38	2D-06	Nut, Floorboard to Bracket	2
39	4E-06	Lkwshr, Floorboard to Bracket	2
40	2D-06	Nut, Bracket to Frame	2
41	4E-06	Lkwshr, Bracket to Frame	2
42	550632	Bracket, Floorboard Support	2
43	2C-620	Bolt, Bracket to Frame	2
44	2D-06	Nut, Floorboard to Frame	6
45	4E-06	Lkwshr, Floorboard to Frame	6
46	2C-616	Bolt, Floorboard to Bracket	2
47	2C-616	Bolt, Floorboard to Frame	6

*For Machine Serials listed below, use Item 26A when installing #517073 Fuel Tank.

75A — 8123 thru 10557
75B — 6123 thru 6210
75R — 7123 thru 7157

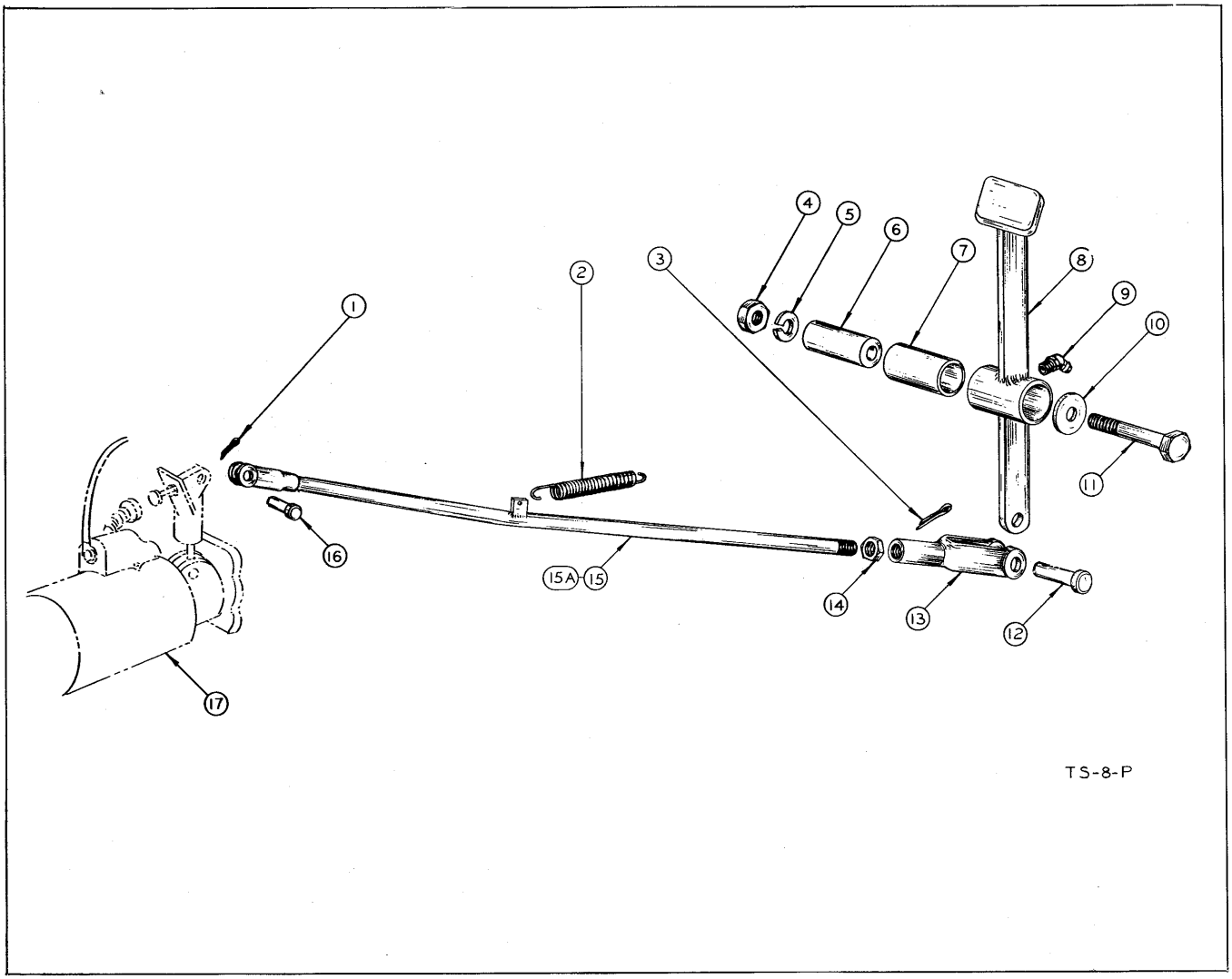

MECHANICAL STARTER PEDAL AND LINKAGE

Item No.	Part No.	Description	No. Req'd.
1	1F-310	Cotter, Start Rod to Starter Pin	1
2	552323	Spring, Start Lever Return	1
3	1F-414	Cotter, Start Rod to Start Lever	1
4	2D-08	Nut, Start Lever Mtg.	1
5	4E-08	Lkwshr, Start Lever Mtg.	1
6	550646	Sleeve, Start Lever Mtg.	1
7	551373	Bushing, Start Lever Mtg.	1
8	550796	Start Lever Ass'y. (Inc. Item 7)	1
9	12H-15	Fitting, Start Lever Grease	1
10	616795	Washer, Start Lever Mtg.	1
11	4C-844	Bolt, Lever Mtg.	1
12	4F-08127	Pin, Clevis to Start Lever	1
13	4J-8300	Clevis, Start Rod to Start Lever	1
14	8D-08	Nut, Clevis Jam	1
15	552039	Rod, Start	1
15A	550799	Start Rod Assembly (Inc. 13, 14 & 15)	1
16	4F-06106	Pin, Start Rod to Starter	1
17		Starter — See Index	

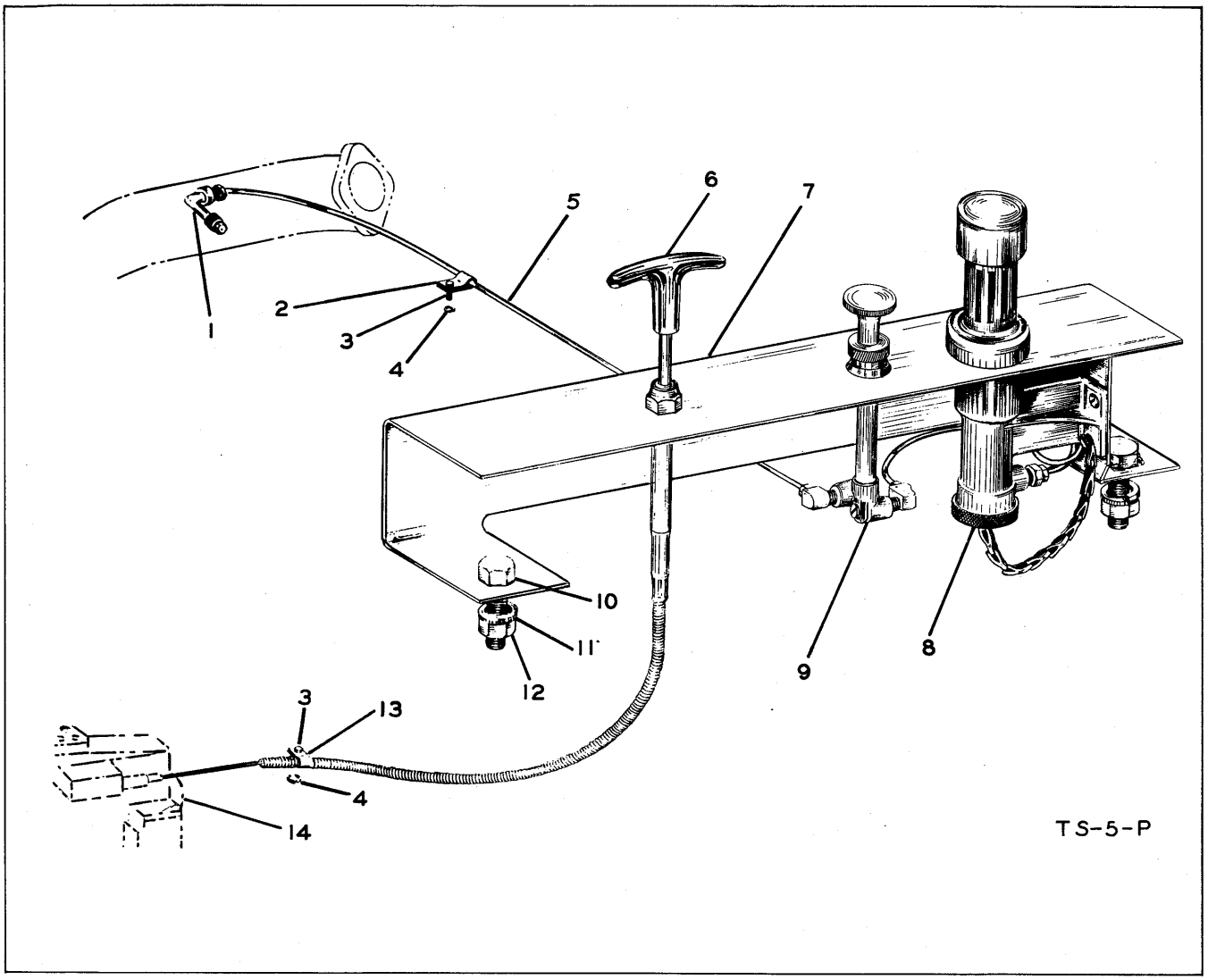

ETHER START PANEL ASSEMBLY

Item No.	Part No.	Description	No. Req'd.
1	51F-1	Elbow, Pump to Manifold	1
2	6H-2	Clip, Tube to Engine	1
3	1C-608	Bolt, Clip	2
4	4E-06	Lkwshr, Clip	2
5	551253	Tube, Ether	1
6	551022	Cable, Shut Off	1
7	550750	Start Panel	1
8	940150	Puncturing Tool, Ether Capsule	1
9	940151	Pump, Ether Priming	1
10	2C-616	Bolt, Start Panel Mtg.	2
11	4E-06	Lkwshr, Start Panel Mtg.	2
12	2D-06	Nut, Start Panel Mtg.	2
13	551902	Clip, Shut Off Cable	1
14		Fuel Injection Pump — See Index	
15	553664	†Clip, Shut Off Cable	1
16	2G-1008	†Bolt, Clip	2
17	17E-10	†Lkwshr, Clip	2
18	14D-10	†Nut, Clip	2

† — Not Illustrated

NOTES

NUMERICAL INDEX

Part No.	Description	Page No.
B-2420	Bearing	49, 51
M 903310	Cup	45, 47
M 903345	Cone	45, 47
SK 203-96	Bearing	25, 26, 27
SK 203-97	Bearing	25, 26
SK 203-98	Bearing	26
SK 203-99	Bearing	26
SK 250-27	Ring	49
SK 250-30	Ring	27, 28
SK 250-63	Ring	26
SK 250-74	Ring	27, 28
SK 250-91	Ring	25, 26
SK 250-93	Ring	31
SK 251-23	Ring	41, 53
SK 251-26	Ring	26
SK 251-63	Ring	25, 26
SK 251-64	Ring	27, 28
SK 251-90	Ring	31
SK 251-92	Ring	25, 26
T-75A1	Transmission Assy	25
T-75A3	Transmission Assy	25
T-75B1	Transmission	28
T-75B2	Transmission	28
T-75R1	Transmission	28
T-75R2	Transmission	28
T-138	Bearing	43
T-151	Bearing	49, 51
1C-409	Bolt	17
1C-410	Bolt	2, 22
1C-416	Bolt	19
1C-510	Bolt	94, 96, 102
1C-512	Bolt	1, 15
IC-516	Bolt	1, 3
1C-520	Bolt	102
1C-608	Bolt	107
1C-610	Bolt	93, 102
1C-612	Bolt	27, 45, 47, 65, 105
1C-614	Bolt	25, 26, 27, 51, 54, 95
1C-616	Bolt	27
1C-618	Bolt	2
1C-620	Bolt	3, 87
1C-626	Bolt	31
1C-628	Bolt	3
1C-718	Bolt	25, 26, 27, 31, 65
1C-720	Bolt	27, 41, 45, 47, 53
1C-722	Bolt	41, 45, 47, 53, 57
1C 726	Bolt	65
1C-728	Bolt	41, 45, 47, 53, 57
1C-808	Bolt	41, 45, 47, 53
1C-824	Bolt	1
1C-828	Bolt	57
1C-832	Bolt	73
1C-928	Bolt	57
1C-1048	Bolt	49, 51
1C-1072	Bolt	12
1D-04	Nut	19, 22, 102
1D-05	Nut	102
1D-08	Nut	73
1D-10	Nut	12
1F-207	Cotter	17, 18
1F-208	Cotter	17, 18, 31, 96
1F-310	Cotter	17, 59, 60, 106
1F-312	Cotter	96
1F-316	Cotter	17, 18, 81
1F-412	Cotter	95, 98
1F-414	Cotter	12, 59, 60, 90, 106
1F-416	Cotter	43, 49, 51
1F-424	Cotter	25, 45, 47, 67, 69, 72, 77, 78, 79, 80
1F-426	Cotter	72
1F-428	Cotter	49, 51, 57, 67
1F-432	Cotter	27, 74
1F-628	Cotter	43
1F-632	Cotter	51, 54
1F-648	Cotter	91, 92
1F-848	Cotter	6, 67, 69
1H-410	Rivet	93
1M-16050	Hose	15
2C-410	Bolt	15, 17, 18
2C-412	Bolt	2
2C-414	Bolt	2
2C-424	Bolt	58
2C-448	Bolt	17, 18
2C-510	Bolt	2
2C-512	Bolt	19, 21
2C-514	Bolt	62, 63
2C-516	Bolt	17, 79
2C-524	Bolt	2, 96
2C-610	Bolt	9, 96
2C-612	Bolt	62, 63, 102, 105
2C-616	Bolt	9, 18, 19, 21, 22, 83, 96, 101, 102, 105, 107
2C-620	Bolt	2, 9, 13, 21, 62, 63, 86, 87, 105
2C-622	Bolt	9
2C-624	Bolt	76, 78, 80
2C-640	Bolt	95, 98
2C-648	Bolt	10, 11
2C-652	Bolt	98, 102
2C-656	Bolt	11, 82
2C-672	Bolt	7, 11
2C-710	Bolt	101
2C-760	Bolt	95
2C-820	Bolt	83
2C-824	Bolt	9
2C-828	Bolt	13, 77, 78, 79, 80, 105
2C-832	Bolt	1, 65, 72, 105
2C-836	Bolt	9, 49, 51
2C-840	Bolt	12
2C-844	Bolt	12, 60
2C-852	Bolt	91, 92
2C-856	Bolt	5, 89
2C-868	Bolt	59, 90
2C-872	Bolt	91
2C-876	Bolt	10
2C-1018	Bolt	21
2C-1040	Bolt	73
2C-1044	Bolt	27
2C-1052	Bolt	9
2D-04	Nut	2, 15, 17, 18, 58, 105
2D-05	Nut	2, 17, 19, 21, 62, 63, 79, 96
2D-06	Nut	2, 3, 7, 9, 10, 11, 13, 18, 19, 21, 22, 43, 49, 51, 62, 63, 76, 78, 80, 82, 86, 87, 95, 96, 98, 101, 102, 105, 107
2D-07	Nut	69, 95
2D-08	Nut	5, 10, 12, 27, 41, 49, 51, 53, 59, 60, 65, 72, 77, 78, 79, 80, 83, 90, 91, 92, 106
2D-09	Nut	45, 47
2D-10	Nut	9, 27, 45, 59, 60, 73
2D-12	Nut	5, 6, 7, 9, 93, 94
2E-04	Lkwshr	3
2E-06	Lkwshr	65
2G-1008	Bolt	107
2G-1010	Screw	105
2G-1014	Screw	9
2G-1210	Screw	3
2J-4200	Yoke	17
2J-10109	Clevis	17
3E-07	Lkwshr	65
3E-08	Lkwshr	41, 45, 47, 53
3G-808	Screw	102
3G-1008	Screw	105
4C-616	Bolt	91, 92
4C-844	Bolt	59, 106
4D-06	Nut	81
4D-12	Nut	73
4D-14	Nut	69
4D-16	Nut	43
4D-20	Nut	51, 54
4D-24	Nut	6
4E-04	Lkwshr	2, 15, 17, 18, 19, 22, 58, 102, 105
4E-05	Lkwshr	1, 2, 15, 17, 19, 21, 62, 63, 79, 94, 96, 102
4E-06	Lkwshr	2, 3, 7, 9, 10, 11, 13, 18, 19, 21, 22, 25, 26, 27, 43, 45, 47, 49, 51, 57, 58, 59, 62, 63, 75, 76

Part No.	Description	Page No.
4E-06 (Continued)		77, 78, 79
		80, 83, 86
		87, 93, 95
		96, 98, 101
		102, 105, 107
4E-07	Lkwshr	25
		27, 31, 41
		45, 47, 53
		57, 95, 101
4E-08	Lkwshr	1, 5, 9, 10
		12, 41, 49
		51, 53, 57
		59, 60, 65
		72, 73, 77
		78, 79, 80
		83, 89, 90
		91, 92, 106
4E-09	Lkwshr	45, 47, 57
4E-10	Lkwshr	9, 12, 27
		45, 49, 51
		59, 60, 73
4E-12	Lkwshr	93
4F-03038	Pin	17, 18
4F-04051	Pin	17, 18, 96
4F-06106	Pin	59, 60, 96, 106
4F-08127	Pin	12
		59, 60, 90
		95, 98, 106
4H-15	Clamp	15
4H-30	Clamp	13
4H-35	Clamp	15
4H-38	Clamp	15
4H-54	Clamp	105
4J-4200	Yoke	18
4J-6208	Clevis	96
4J-8300	Clevis	12, 59
		60, 90, 106
5K-207	Nipple	19, 62, 63
5K-432	Extension	65
6D-14	Nut	67
6E-06	Lkwshr	31, 51, 54
6E-12	Lkwshr	94
6H-1	Clip	19
6H-2	Clip	107
6H-4	Clip	97
6H-9	Clip	19, 22
6H-16	Clip	62, 63
6J-404	Key	81
6J-405	Key	1
7D-08	Nut	51
7E-08	Lkwshr	41, 45, 47, 53
7J-3108	Key	43
8D-04	Nut	17, 18
8D-06	Nut	58, 59, 89, 96
8D-07	Nut	65, 95, 98
8D-08	Nut	12, 59
		60, 90, 106
8D-10	Nut	97
8D-14	Nut	57
10H-2	Fitting	6, 7, 67, 69, 74
10H-25	Fitting	10, 11, 43
		45, 47, 61
		72, 77, 78
		79, 80, 92
10H-35	Fitting	10
10J-09	Ball	65
10J-10	Ball	82, 84
10J-12	Ball	27, 28
		31, 55, 67
11D-08	Nut	49
11F-12	Plug	83
11H-1	Fitting	49, 51
11H-15	Fitting	7, 10
		72, 95, 98
12D-8	Nut	101, 102
12E-6	Lkwshr	101
12E-8	Lkwshr	101, 102
12E-10	Lkwshr	9, 21, 101, 105
12F-110	Plug	43
12F-200	Plug	49, 51
12F-204	Plug	45, 47
12H-15	Fitting	12, 59, 60, 106
12J-12	Ball	69
13E-8	Lkwshr	102
13E-10	Lkwshr	9, 105
13F-02	Plug	31
13F-04	Plug	22, 27, 62, 63
13F-12	Plug	27, 41
		45, 47, 53
13G-820	Screw	49, 51
14C-840	Bolt	27
14D-10	Nut	9, 17, 21
		101, 105, 107
14D-12	Nut	3
14F-04	Plug	45, 47
14F-12	Plug	41, 45, 47, 53
15G-612	Screw	69
15H-1	Fitting	49, 51
15H-15	Fitting	5
16F-02	Plug	69, 82
16F-04	Plug	69
16F-06	Plug	89
16F-08	Plug	89
16F-12	Plug	89
16F-16	Plug	89
17D-6	Nut	67
17E-10	Lkwshr	107
17G-416	Screw	67
18D-05	Nut	58
18D-06	Nut	67, 69
18F-2	Tee	19
18G-606	Screw	101
19F-1	Reducing Bushing	19
19F-3	Reducing Bushing	21
19F-8	Bushing	27
19F-16	Bushing	27
21D-08	Nut	1, 13, 57, 105
21H-24	Clamp	76, 78, 80
22F-4	Cap	65
25F-7	Adaptor Union	86
25K-20010	"O" Ring	69
25K-30016	"O" Ring	25, 26
		31, 67, 69
25K-30018	"O" Ring	67
25K-30020	"O" Ring	67, 69
25K-40028	"O" Ring	69
25K-40110	"O" Ring	87
25K-40112	"O" Ring	91, 92
25K-40116	"O" Ring	89
25K-40204	"O" Ring	67, 69
25K-40216	"O" Ring	67, 69
25K-40416	"O" Ring	91, 92
25K-40428	"O" Ring	83
26F-5	Elbow	62, 63
26F-6	Elbow	63
28F-1	Tee	62, 63
29F-1	Elbow	21
30F-1	Tee	62, 63
31F-2	Adaptor Union	19, 62, 63
31F-4	Adaptor Union	62
		75, 76, 77
		78, 79, 80
31F-5	Adaptor Union	62, 86, 87
31F-7	Adaptor Union	86
33F-5	Adaptor Union	86, 87
36F-5	Adaptor Union	62
		63, 86, 87
36F-6	Adaptor Union	63
51F-1	Elbow	107
59F-2	Connector	19
59F-6	Connector	19, 21
62F-2	Elbow	19
62F-3	Elbow	97, 98
62F-4	Elbow	2
62F-5	Elbow	19, 21
62F-6	Elbow	21
69F-4	Valve	22
69F-5	Valve	19, 21
73F-2	Drain Cock	13
83F-6	Elbow	62
83F-7	Elbow	62, 63
83F-8	Elbow	63
84F-7	Elbow	62, 63
85F-8	Elbow	63
89F-7	Connector	62, 63
91F-5	Seal	69
91F-6	"O" Ring	75, 76, 77
		78, 79, 80
97F-20	Reducing Bushing	63
532X	Cup	54
539	Cone	54
552A	Cup	51, 54
559	Cone	51, 54
3328	Cup	54
3386	Cone	54
25821	Cup	49, 51
25877	Cone	49, 51
26822	Cup	51, 54
26882	Cone	51, 54
33281	Cone	57
33462	Cup	57
47620	Cup	41, 45, 47, 53
47681	Cone	41, 45, 47, 53
47820	Cup	41, 45, 47, 53
47896	Cone	41, 45, 47, 53
53178	Cone	57
55187	Cone	57
53375	Cup	57
55443	Cup	57
100160	Diff. Body Sub Assy	57
100169	Pinion	57
100170	Gear	57
100171	Spider	57
100172	Washer	57
100173	Washer	57
100174	Bolt	57
100176	Bolt	57
100284	Bolt	25, 26
100320	Clip	47
100323	Cap	49, 51
100575	Nut	49, 51
100588	Washer	49, 51
100613	"C" Washer	94
100857	Nut	49, 51, 73
100864	Cam	93, 94
100865	Spring	93, 94
100867	Washer	93, 94
100872	Bushing	93
100877	Pin	94
100878	"C" Washer	93, 94
100879	Spring	94
100937	Bolt	57
100938	Cage & Cup Assy	57
100940	Nut	57
100941	Lock	57
100942	Retainer	57
100943	Gasket	57
100944	Seal	57
100945	Gasket	57
100946	Shim	57
100947	Shim	57
100948	Shim	57

Part No.	Description	Page No.
100949	Shield	25, 27, 28, 57
100950	Nut	57
100951	Washer	57
100952	Spacer	57
100953	Screw	57
100954	Lock	57
100965	Nut	41, 45, 47, 53
100966	Nut	41, 45, 47, 53
100967	Lock	41, 45, 47, 53
100970	Bolt	41, 45, 47, 53
101004	Gasket	41, 45, 47, 53
101012	Pin	94
101092	Bolt	41, 53
101332	"C" Washer	93
101597	Oil Throw	41, 53
102156	Hub	54
102157	Oil Seal	54
102159	Cap	54
102225	Bushing	43
102250	Key	43
102251	Washer	51, 54
102252	Shim	43
102322	Washer	93, 94
102435	Retainer	73
102436	Felt	73
102438	Spring	73
102488	Wheel Cylinder	94, 97
102497	Bushing	94
102498	Pin	94
102594	Key	49, 51
102766	Washer	45, 47, 57
103076	Nut	41, 45, 47, 51, 53, 54
103165	Clamp	49, 51
103166	Cover	47, 51
103188	Cap	51, 54
103227	Tie Rod End Assy.	49, 51
103228	Tie Rod End Assy.	49, 51
103293	Washer	9, 105
103376	Nut	9
103445	Stud	41, 45, 47, 51, 53, 54
103522	Nut	41, 45, 51, 53, 54, 103
103917	Axle Center Assy.	49
103927	Knuckle	49, 51
103928	Knuckle	49, 51
103929	Pin	49, 51
103935	Oil Seal	51, 54
103942	Shim	49, 51
103953	Felt	49
103954	Cup	49
104412	Washer	41, 47, 53
104524	Dust Shield	93
104549	Washer	45, 47
104645	Bracket	96
104942	Breather Assy.	31
105111	Housing	41, 53
106042	Diff. Carrier & Cap Assy.	57
106058	Sun Gear	41, 45, 47, 53
106059	Gear	41, 45, 47, 53
106066	Gasket	41, 45, 47, 53
106067	Cap	41, 53
106068	Gasket	41, 45, 47, 53
106075	Diff. & Carrier Assy.	45, 47, 53, 57
106076	Diff. Assy.	57
106079	Retainer	73
106080	Ball Stud	73
106081	Flange	57
106082	Housing Assy.	41, 53
106087	Shaft	41, 53
106088	Washer	73
106091	Spring	73
106092	Oil Seal	41, 45, 47, 53
106093	Cap	73
106094	Ring	73
106095	Gasket	45, 47
106096	Axle Shaft & U Joint Assy.	45, 47
106097	Spindle Assy.	45
106099	Bushing	45, 47
106100	Support Assy.	45, 47
106101	Support Assy.	45, 47
106102	Diff. & Carrier Assy.	41, 57
106103	Diff. Assy.	57
106106	Hub & Cap Assy.	45
106108	Tie Rod Assy.	45, 47
106109	Tie Rod	45, 47
106110	Tie Rod End Assy.	73
106111	Support	45, 47
106112	Support	45, 47
106113	Housing	73
106114	Socket	73
106115	Stud	45, 47
106116	Housing	45, 47
106117	Housing	45, 47
106119	Trunnion	45, 47
106120	Trunnion	45, 47
106121	Retainer	45, 47
106123	Shim	45, 47
106124	Shim	45, 47
106125	Shim	45, 47
106127	Oil Seal	45, 47
106128	Washer	45, 47
106129	Washer	45, 47
106130	Retainer	45, 47
106131	Gasket	45, 47
106132	Seal	45, 47
106133	Seal	45, 47
106134	Spring	45, 47
106135	Retainer	45, 47
106136	Ring	45, 47
106137	Felt	73
106138	Retainer	73
106139	Knuckle Assy.	43
106140	Knuckle	43
106141	Knuckle	43
106142	Knuckle	43
106143	Tie Rod Assy.	43
106144	Tie Rod	43
106145	Tie Rod End Assy.	73
106146	Tie Rod End Assy.	73
106147	Housing	73
106148	Housing	73
106149	Axle Center Assy.	43
106158	Hub Assy.	43, 54
106160	Hub Assy.	49, 51, 54
106162	Pin	43
106163	Arm	43
106164	Arm	43
106165	Tie Rod Assy.	49, 51
106166	Tie Rod	49, 51
106167	Spider	49
106179	Link Support	93
196180	Link Support	93
106182	Spring	73
106183	Cap	45, 47
106184	Rivet	93, 94
106185	Spring	93
106216	Spring	93
106313	Bolt	45, 47
106319	Shim	45, 47
106320	Shim	45, 47
106321	Shim	45, 47
106322	Bolt	45, 47
106335	Brake Assy.	41, 53, 93
106336	Brake Assy.	41, 53, 93
106337	Brake Disc Assy.	93
106338	Brake Disc Assy.	93
106342	Hub	51, 54
106343	Hub & Drum Assy.	41, 53
106344	Brake Drum	41, 53
106346	Planet Spider Assy.	41, 55
106347	Spider	55
106348	Pinion	55
106349	Shaft	55
106350	Washer	55
106351	Roller	55
106352	Spacer	55
106372	Cam Pin	93
106373	Guide Pin	93
106454	Cap Assy	41, 53
106455	Washer	41, 53
106526	Link Assy	93
106539	Bolt	45, 47
106656	Breather Assy.	41, 45, 47, 53
106735	Bolt	45, 47
106762	Washer	45, 47
106790	Arm	45, 47
106793	Hub & Cap Assy.	41, 47, 53
106814	Hub & Drum Assy.	47
106815	Brake Drum	47
106816	Brake Assy	47, 94
106817	Brake Disc Assy.	94
106820	Oil Slinger	47
106821	Spindle Assy.	47
106823	Lining	94
106824	Brake Shoe Assy.	94
106879	Hub	47
106880	Bolt	41, 45, 47, 53
106969	Pin	93
106970	Strut	93
106998	Nut	47
107014	Brake Cyl.	93, 97
107256	Bolt	41, 47, 53
107447	Axle Center Assy.	51
107449	Pin	51
107450	Spider & Cup Assy.	51
107451	Steering Spider	51
107461	Seal	51
107608	Clip	41, 53
107609	Axle Kit	49
107611	Brake Shoe Assy.	93
107612	Lining	93
130048	Axle Assy.—R.D.S.	45
130049	Axle Assy.—R.D.S.	47
130056	Axle Assy.—R.D.	53
130064	Axle Assy.—F.D.	41
130144	Axle Assy.—R.S.	49
130148	Axle Assy.—F.S.	43
130151	Axle Assy.—R.S.	51
201120	Plug	27
201566	Screw	27, 28
201844	Spring	27, 28
201951	Nut	25
203647	Spring	31
204432	Bolt	57
205928	Nut	27
206864	Oil Seal	25, 27, 28
208760	Plate	25, 26, 27
208773	Disc	25, 26, 27
208775	Piston	25, 26
208776	Ring	25, 26, 27
208777	Ring	25, 26
208805	Valve	31
208807	Valve	31
208809	Pin	31
208810	Pin	31

Part No.	Description	Page No.
208812	Seal	31
208815	Valve	31
208820	Cup	31
208871	Oil Seal	27
209103	Pipe	26
209339	Cap	25
209340	Shim	25
209341	Shim	25
209342	Shim	25
209343	Flange & Deflector Assy.	25
209352	Cover	27
209353	Gasket	26
209354	Oil Screen & Frame Assy.	26
209357	Cover Assy.	26
209358	Cover Assy.	25, 26
209362	Clutch Group Assy.	27
209364	Cap	25, 26
209365	Shim	25, 26
209366	Shim	25, 26
209367	Shim	25, 26
209368	Shaft	25, 26
209369	Gear	25, 26
209370	Gasket	27
209371	Gear	26
209372	Gear	26
209374	Gear	25
209375	Gear	25
209377	Gear	25
209378	Cover	31
209379	Gasket	31
209380	Housing	31
209381	Valve Assy.	31
209382	Link	31
209385	Drum	25, 26
209387	Ring	25, 26
209389	Spring	25, 26
209391	Cap	25, 26
209392	Shim	25, 26
209393	Shim	25, 26
209394	Shim	25, 26
209396	Gear & Bshg. Assy.	27
209398	Bushing	27
209399	Gear & Bshg. Assy.	27
209402	Bushing	27
209403	Fork	27
209404	Shaft	27
209405	Support	27
209406	Gasket	27
209407	Thrust Washer	27
209408	Shaft	28
209409	Hub	27
209410	Retainer	28
209411	Shim	27
209412	Cap	28
209413	Spacer	28
209414	Flange & Deflector Assy.	27, 28
209416	Cap	26
209417	Shim	26
209418	Shim	26
209419	Shim	26
209421	Gear	26
209423	Shaft Assy.	27, 28
209425	Bushing	27
209426	Shaft	27, 28
209427	Hub	27, 28
209428	Bearing Cap	27, 28
209429	Gasket	27, 28
209430	Housing	27, 28
209431	Plate	27, 28
209432	Gasket	27, 28
209433	Fork	27, 28
209434	Shift Rail	27, 28
209435	Oil Seal	27, 28
209673	Oil Ring	27
209690	Arm & Shaft Assy.	31
209692	Cap	27
209701	Shim	27
209702	Shim	27
209703	Shim	27
209709	Spring	25, 26, 27
209874	Ball Stop	31
209878	Stop	31
209894	Guide	31
209928	Disc	25, 26
209932	Pin	25, 26
209937	Washer	25, 26
220363	Spring	31
220395	Gear	26
220539	Hub	25, 26, 27
220541	Shaft	25, 26
220542	Shaft	25
220543	Shaft	26
220669	Oil Screen & Frame Assy.	26
220673	Pipe	26
220678	Guard	25, 26
221208	Shim	25, 26
221401	Gasket	25, 26
280071	Transmission Assy.	25
300208	Knob	58, 59, 60, 90
302568	Bumper	105
511847	Tire	103
511945	Rod Assy.	18
512108	Bushing	86, 87
512127	Wheel Disc & Rim Base	103
512468	Instrument Panel	101
512991	Guide Bar Assy.	10
513002	Clip	17
513003	Rod	17
513005	Bracket Assy.	17
513007	Arm	17
513008	Rod Assy.	17
514166	Bucket Cylinder Assy.	92
514167	Cylinder & Bushing Assy.	92
514226	Side Panel Assy.	9
514265	Frame Assy.	5
514268	Prop Shaft Assy.	61
514427	Side Panel Assy.	9
514428	Hood Assy.	9
514429	Hood Assy.	9
514603	Hose	15
514605	Line Assy.	21
514606	Line Assy.	21
514608	Line Assy.	22
514610	Pipe Assy.	76
514613	Line Assy.	63
514614	Line Assy.	63
514617	Rod Assy.	17
514620	Rod Assy.	17
514622	Rod Assy.	18
514624	Rod Assy.	18
514658	Clip	13
514740	Adaptor	91, 92
514741	Adaptor	91, 92
514742	Packing	91, 92
514743	Shim	91, 92
514788	Adaptor Union	76, 78, 80, 82
516159	Hose	76, 78, 80
516432	Hose	15
517073	Fuel Tank Assy.	105
517076	Frame Assy.	6
517087	Frame Assy.	7
517119	Coupling Assy.	78
517157	Pipe Assy.	80
517616	Strap	105
517617	Tie Strap	105
517963	Valve Stem	103
518173	Brake Line	97
518233	Pad	9, 13, 105
550000	Frame Assy.	5
550010	Bushing	5, 6, 7
550044	Clamp	65
550062	Cradle Assy.	5
550066	Bushing	5, 43, 91
550069	Pin	5
550070	Shaft	5, 6, 7
550080	Piston	91, 92
550081	Ring	91, 92
550083	Piston Rod Assy.	91
550085	Cap	91, 92
550087	Packing Gland	91, 92
550088	Wiper	91, 92
550089	Retainer	91, 92
550097	Piston Rod Assy.	92
550099	Lockwire	91, 92
550105	Frame Assy.	6
550112	Frame Assy.	7
550120	Pin	7
550129	Support	58
550130	Boom & Pipe Assy.	10
550143	Bushing	10
550144	Pipe Assy.	10
550158	Tube	103
550176	Pipe Assy.	10
550178	Shaft	10
550179	Pin	10
550187	Bell Crank	72
550188	Pin	10
550191	Bushing	10
550193	Carrier Assy.	11
550206	Bushing	11
550207	Pin	10, 11
550208	Pin	11
550210	Bucket Assy.	11
550229	Bushing	92
550231	Pin	11
550242	Hydraulic Pump	84
550243	Hydraulic Pump	81
550252	Grille	9
550253	Pad	5
550254	Bolt	5
550258	Tire	103
550259	Tube	103
550263	Bolt	5, 6, 7
550266	Tire	103
550267	Tube	103
550268	Flap	103
550278	Tire	103
550282	Control Valve Assy.	89
550292	Pedal Assy.	95, 98
550299	Shaft	95, 98
550301	Spring	95, 98
550309	Fitting	98
550310	Bolt	97, 98
550320	Tee	97
550324	Hose	97
550325	Clip	97
550360	Battery	102
550388	Cap	83
550389	Cover	83
550397	Gasket	83
550398	Clamp Ring	83
550402	Brake Line	98
550403	Brake Line	98
550404	Brake Line	97, 98
550405	Brake Line	97, 98
550406	Tee	41, 53, 97, 98
550407	Brake Line	98
550572	Bracket Assy.	27

Part No.	Description	Page No.
550575	Pad	27
550576	Bracket Assy.	27
550579	Prop Shaft Assy.	61
550580	Prop Shaft Assy.	61
550583	Counterweight	9
550584	Bolt	9
550585	Bolt	9
550586	Pin Assy.	9
550588	Radiator	13
550589	Clip	13
550590	Hose	13
550591	Hose	13
550594	U-Bolt	65
550595	Drag Link Assy.	74
550596	Steering Booster Assy.	67
550597	Push Rod Assy.	72
550600	Bell Crank Assy.	72
550601	Bushing	72
550602	Pin	72
550604	Rod	72
550605	Tie Rod End Assy.	72
550608	Hydraulic Line Assy.	75
550610	Tee	75
550611	Tube	75
550612	Coupling	75
550614	Lug	75
550616	Crank Assy.	17, 18
550619	Rod	17, 18
550624	Guide	17, 18
550626	Floorboard Assy.	105
550631	Floorboard Assy.	105
550632	Bracket	105
550634	Cushion	9
550635	Cushion	9
550640	Lever Assy.	90
550644	Lever Assy.	90
550646	Sleeve	12, 59, 60, 90, 106
550647	Rod Assy.	90
550650	Muffler	15
550651	Adaptor	15
550652	Clamp	15
550653	Cap	15
550654	Air Cleaner	15
550655	Tube Assy.	15
550657	Hose	15
550658	Hose	15
550659	Strap	15
550660	Connector	15
550663	Lever Assy.	58
550667	Lever Assy.	58
550669	Plate Assy.	58
550672	U-Bolt	58
550674	Rod	58
550675	Ball Socket	58, 59
550677	Lever Assy.	59, 60
550679	Rod Assy.	59, 60
550683	Rod Assy.	59, 60
550685	Lever Assy.	59
550687	Rod Assy.	59
550689	Crank Assy.	59
550691	Rod	59
550697	Support Assy.	1
550698	Pad	1
550700	Adaptor Union	75, 77, 79
550711	Pad	105
550712	Hose	105
550718	Hose	86
550723	Hose	86, 87
550724	Hose	62, 63, 86, 87
550725	Crosspipe Assy.	86, 87
550728	Crosspipe Assy.	86, 87
550733	Instrument Panel	101
550735	Ammeter	101
550740	Igition Switch	101
550741	Switch	101
550742	Rod	101
550743	Bushing	101
550744	Wire	101
550745	Wire	102
550746	Wire	101
550748	Floorboard Assy.	105
550750	Start Panel	107
550757	Bracket	19, 21
550758	Hose	62, 63
550764	Adaptor	15
550765	Adapter Assy.	15
550775	Plug Button	101
550781	Drag Link Assy.	74
550782	Adaptor	77, 78
550788	Drag Link Assy.	74
550789	Adoptor	79, 80
550796	Lever Assy.	106
550799	Rod Assy.	106
550803	Lever	58
550809	Hydraulic Line Assy.	77
550814	Hydraulic Line Assy.	79
550832	Sending Unit	1
550833	Shroud Assy.	9
550842	Battery	102
550843	Box	102
550844	Battery Hold Down	102
550845	Cable	102
550846	Cable	102
550847	Cable	102
550848	Cable	102
550850	Wiring Harness	2, 102
550851	Wire	102
550852	Wire	102
550853	Wire	102
550854	Wire	102
550855	Wire	102
550858	Box	102
550859	Battery Hold Down	102
550860	Wiring Harness	102
550862	Bracket	2
550866	Special Cross	62, 63
550873	Hose	62
550874	Hose	62, 63
550875	Hose	62, 63
550876	Hose	21, 62
550880	Light Mtg. Plate	102
550882	Tail Lamp Assy.	102
550883	Side Panel Assy.	9
550886	Side Panel Assy.	9
550889	Hood Assy.	9
550890	Hood Assy.	9
550893	Panel	9
550983	Hose	19
550984	Hose	21, 22
550985	Master Cyl.	98
551015	Bracket	17, 18
551016	Stop	17, 18
551022	Cable	107
551090	Spring	17, 18
551111	Wheel Disc & Rim Base	103
551114	Tire	103
551115	Tube	103
551116	Flap	103
551178	Knob	17, 18
551242	Sealed Beam Unit	102
551243	Sealed Beam Unit	102
551253	Tube	107
551281	Head Lamp Assy.	102
551284	Back Up Lamp Assy.	102
551314	Bracket	102
551319	Gauge	101
551320	Gauge	101
551321	Gauge	101
551322	Gauge	101
551323	Sender Unit	1, 62, 63
551331	Filter	4, 19, 21
551336	Hose	19
551347	Washer	5
551348	Washer	5
551373	Bushing	12, 59, 60, 95, 98, 106
551384	Fuel Gauge	105
551434	Bumper	9
551479	Gasket	81
551480	Washer	81
551494	Bell Crank Assy.	59, 60
551496	Sleeve	59, 60
551497	Bolt	59, 60
551503	Dash Lamp	101
551510	Light Mtg. Plate Assy.	102
551512	Rod Assy.	18
551515	Cam Assy.	12
551520	Pointer Assy.	12
551521	Arm Assy.	12
551523	Tube	12
551528	Clamp	15
551530	Switch	2
551539	Bar	9
551541	Lock Ring	103
551542	Side Ring	103
551544	Cap	9
551605	Nut	91, 92
551613	Rod Assy.	12
551644	Spring	12
551684	Adaptor	103
551685	Valve Cap	103
551688	Cable & Conduit Assy.	96
551689	Cable & Conduit Assy.	96
551696	Retainer	96
551711	Bucket Assy.	11
551717	Bucket Assy.	11
551742	Lever	96
551745	Cable & Conduit Assy.	96
551746	Cable & Conduit Assy.	96
551756	Gasket	15
551759	Rod Assy.	17
551777	Support Assy.	1
551834	Clip	96
551835	Washer	9
551837	Bracket	96
551872	Line Assy.	62
551873	Line Assy.	62
551876	Line Assy.	62
551896	Tee	62, 63
551902	Clip	107
551906	Gasket	82
551971	Grease Gun	102
551991	Boom Cylinder Assy.	91
551992	Boom Cylinder	91
551996	Bracket	62, 63
552017	Return Line	19
552039	Rod	106
552041	Tire	103
552149	Clip	79
552152	Bolt	75, 77, 79
552156	Hose	63
552164	Handle	102
552165	Hammer	102
552166	Pliers	102
552167	Screwdriver	102
552171	Tool Bag	102
552172	Wrench	102
552191	Line Assy.	62
552264	Fitting	97
552290	Line Assy.	62, 63
552296	Hose	62, 63

Part No.	Description	Page No.
552298	Line Assy.	22
552300	Line Assy.	19
552302	Line Assy.	19, 21
552323	Spring	106
552336	Hood Catch Assy.	9
552373	Master Cylinder	95
552374	Hose	97
552375	Floorboard Assy.	105
552377	Clevis	95
552380	Clip	102
552381	Clip	102
552382	Brake Line	97
552383	Brake Line	97
552384	Brake Line	97
552385	Brake Line	97
552386	Brake Line	97
552387	Brake Line	97
552470	Filter	62, 63
552473	Bracket	62, 63
552474	Line Assy.	62, 63
552483	Packing	91, 92
552486	Adaptor	91, 92
552487	Adaptor	91, 92
552550	Pin	11
552602	Lock Ring	103
552650	Side Ring	103
552696	Wheel Disc & Rim Base	103
552732	Clip	19, 21
552814	Glow Plugs	3
552825	Stud	2
552826	Fuel Line Assy.	2
552837	Screw	1
552838	Clip	2
552839	Washer	1
552842	Clamp	2
552844	Cable	2
552845	Cable	2
552846	Cable	2
552847	Cable	2
552856	Cable Kit	2
552863	Bucket Assy.	11
552878	Arm Assy.	12
552880	Pointer Assy.	12
552884	Spacer	3
552885	Spacer	2
552896	Hose	15
552935	Wire	101
552938	Wire	101
552941	Bracket	3
552944	Booster Assy.	69
552946	Wire	101
552982	Shim	91, 92
553139	Harness	3
553144	Wiring Harness	102
553145	Wiring Harness	102
553284	Reservoir	83
553324	Hose	62
553339	Nipple	86, 87
553340	Hose	86, 87
553348	Starter Assy.	3
553349	Housing	3
553361	Ignition Switch	101
553412	Wrench	102
553417	Hydraulic Pump	85
553419	Hose	87
553466	Cable	102
553664	Clip	107
553744	Support Assy.	9
553858	Filter	4, 21
553967	Cable	17
553982	Line Assy.	21
553984	Line Assy.	21
553985	Line Assy.	21
553986	Bracket	21
553988	Rod Assy.	17
554016	Cable	102
554023	Tire	103
554071	Tire	103
554081	Bushing	90
600183	Stud	102
600259	Push Button	101
601212	Clamp	101
602350	Separator	101
610097	Nipple	2
610098	Nipple	2
610386	Hose	86, 87
611074	Fuse	101
613750	Copper Gasket	97, 98
616533	Hose	86, 87
616775	Washer	9, 105
616795	Washer	106
616796	Washer	12, 59, 60, 90
616813	Washer	9, 72
617337	Seal	31
617863	Nut	72
618319	Copper Washer	83
619016	Washer	96
619018	Washer	17, 22
619019	Washer	1, 102
619023	Washer	25, 26
619027	Washer	31
619029	Washer	1
619052	Fan	1
620235	Fitting	97
620238	Copper Gasket	97, 98
620558	Elbow	3, 22
621279	Bracket	105
622026	Connector Assy.	65
622027	Screw	65
622028	Cover	65
622029	Screw	65
622030	Washer	65
623762	Pin	17, 18
623829	Pedal	17, 18
626515	Pin	6
626516	Silent Block	6
626530	Clamp	101
626561	Bushing	6
627982	Gasket	105
630506	Baffle	1
639796	Horn Button Assy.	65
645432	Hose	86, 87
647300	Horn	105
647310	Relay	105
648304	Nut	65
648382	Starter Assy.	3
650737	Pin	51
652772	Cable	2
655281	Nipple	15
661555	Fuse	101
661559	Hose	75, 76, 77, 78
661560	Hose	75, 77
661561	Hose	79
661562	Hose	79
661563	Hose	76, 78, 79, 80
661564	Union Adaptor	75, 76, 77, 78, 79, 80
661568	Hose	79
663093	Split Flange	87
664131	Pin	69
664138	Ring	69
664769	Bushing	69
664858	Generator Assy.	1
666542	Ring	85
666846	Nipple	76, 78, 80
666858	Nipple	76, 78, 80
672712	Hose	80
672806	Hose	78
691800	Hose	86, 87
692722	Bolt	97
692843	Pump	21
695811	Bolt	61
695914	Wheel	65
695930	Screw	65
712170	Hose	63
712175	Hose	15
712766	Hose	76
713133	Ring	82
713134	Washer	81, 82
713997	Bearing	27, 28
800648	Hub & Ring Assy.	27
800653	Control Valve Assy.	31
800656	Gear & Ring Assy.	27
800657	Cover & Valve Assy.	31
800809	Shaft & Hub Kit	25, 26, 27
800810	Shaft & Hub Kit	25
800811	Shaft & Hub Kit	26
800815	Trans. Case Assy.	27
815202	Gear & Pinion Set	57
815203	Diff. Case Kit	57
815204	Gear & Pinion Set	57
850085	Condenser	2
850091	Rotor	2
850311	Nut	1
850756	Nut	65
850813	Armature	3
851756	Gasket	65
851762	Bolt & Washer Assy.	65
851770	Lash Adjuster	65
852135	Drive Assy.	3
853182	Cover Assy.	65
853187	Shim Kit	65
853227	Main Jet	2
853357	Bushing	65
853368	Terminal Assy.	65
853372	Adjuster	65
853373	Bearing	65
853376	Cover	65
853379	Cup	65
853380	Gasket	65
853384	Key	65
853385	Nut	65
853391	Seal	65
853394	Seat	65
853395	Spring	65
853402	Connector Link	94
853405	Repair Kit	94
853408	Ball Nut	65
853412	Guide	65
853433	Spring	84, 85
853464	Clamp	65
853586	Housing	2
853599	Gasket	2
853749	Gasket	84
853751	Spring	84
853753	Retainer	84
853754	Seat	84
857243	Strap	1
857729	Bearing Assy.	65
857741	Lkwshr	65
857852	Cap	2
858150	Felt Seal	2
858225	Spring	67, 69
858226	Seat	67, 69
858227	Housing	67, 69
858232	Plate	67
858233	Spring	67
858234	Shield	67
858235	Cover	67, 69
858236	Ball Stud	67, 69
858237	Screw	67, 69
858238	Garter	67

Part No.	Description	Page No.
858239	Wiper	67
858240	Spacer	67
858241	Wiper	67, 69
858242	Retainer	67
858243	Packing	67, 69
858244	Packing	67, 69
858245	Packing	67, 69
858246	Bushing	67
858247	Cap	67
858249	Rod	67
858251	Piston Ring	67, 69
858252	Piston	67
858253	Nut	67
858254	Spring	67
858256	Tube	67
858257	Cylinder	67
858259	Ring	67
858260	Cap	67
858263	Head	67
858264	Screw	67
858266	Guide	67
858267	Spring	67
858268	Guide	67
858270	Seat	67
858271	Ball	67
858272	Spring	67
858274	Washer	67
858278	Washer	67
858279	Spool	67
858280	Spring	67
858281	Washer	67
858282	Nut	67
858283	Ring	67
858284	Guide	67
858285	Spring	67
858286	Oil Seal	67
858287	Retainer	67
858288	Sleeve	67
858289	End Plate	67
858290	Stem	67
858291	Cover	67, 69
858293	Body	67
858294	Plug	67
858295	Key	67
858296	Nut	67
858298	Pad	67
858299	Spring	67
858302	Plug	67
862092	Seal	89
862257	Flange	67
863045	Nut	89
863051	Screw	89
863052	Screw	89
863053	Gasket	89
864519	Switch	3
864525	Brush	3
864539	Armature	3
864548	Drive Assy.	3
864559	Housing	3
867580	Ring	69
868980	Nut	69
868981	Spring	69
868982	Ball Stud	69
868984	Retainer	69
868986	Washer	69
868988	Valve Spool	69
868991	Washer	69
868992	Spring	69
868993	Ring	69
868994	Plug	69
868996	Piston	69
868997	Cap	69
868999	Nut	69
869000	Nut	69
869001	Shield	69
869004	Rod	69
869005	Cylinder	69
869006	Sub-Assy.	69
869007	Tube	69
869008	Spring	69
869010	Retainer	69
869011	Sleeve	69
869012	Retainer	69
869013	Washer	69
869014	Nut	69
869015	Key	69
869016	Seat	69
869017	Seat	69
869018	Spring	69
869019	Spacer	69
869020	Plug	69
869021	Key	67
869449	Repair Kit	95
870730	Screw	69
870732	Wiper	69
870736	Housing	69
870739	Rod	69
870740	Nut	69
871535	Armature	1
871541	Brush	1
940000	Bolt	84, 85
940003	Gear	84
940005	Shaft Seal	84
940006	Nut	84, 85
940008	Washer	84
940009	Cover	84
940010	Seal Ring	84, 85
940011	Plug	74
940013	Gear	84
940014	Seal Ring	84, 85
940015	Ball Seat	74
940016	Spring	74
940017	Forging	74
940018	Plug	74
940022	Seal Assy.	89
940023	Cap	89
940024	Spring	89
940025	Cap	89
940026	Point Set	2
940027	Cartridge Kit	4
940028	Screw	89
940029	Guide	89
940030	Spring	89
940031	Gasket	89
940032	Plunger	89
940033	Seat	89
940034	Cartridge Kit	4
940039	Cap	89
940040	Cap	89
940041	Gasket	89
940045	Seal	81
940047	Seal Ring	81
940048	Bearing	81
940049	Gear	81
940050	Spring	81
940051	Seal Ring	81
940052	Cover	81
940056	Bolt	81
940057	Seal Ring	81
940058	Bearing	81
940059	Gear	81
940060	Bearing	81
940061	Seal Ring	89
940062	Spacer	89
940063	Spring	89
940064	Plunger	89
940068	Plunger Eye	89
940070	Spring	89
940072	Spring	89
940073	Cap	89
940074	Washer	89
940075	Poppet	89
940076	Cork Washer	61
940078	Lkwshr	61
940079	Repair Kit	67
940080	Retainer	61
940081	Felt Washer	61
940082	Slip Yoke Assy.	61
940083	Spider & Brg. Assy.	61
940085	Stub Yoke	61
940088	Nut	61
940089	Bolt	61
940090	Retainer	61
940091	Washer	61
940092	Felt Washer	61
940093	Slip Yoke Assy.	61
940104	Coil	2
940105	Voltage Regulator	2
940107	Cartridge	4, 19, 21
940109	Steering Gear Assy.	65
940111	Gear	65
940112	Housing Assy.	65
940113	Jacket	65
940114	Pitman Arm Assy.	65
940115	Contact Assy.	65
940119	Spacer	65
940120	Nut	65
940122	Shaft Assy.	65
940123	Shaft Assy.	65
940125	Pitman Arm Assy.	65
940127	Pitman Arm Assy.	65
940128	Sub Assy.	67
940129	Repair Kit	98
940130	Repair Kit	93
940131	Forging	74
940132	Forging	74
940134	Pulley	1
940136	Brush	1
940137	Starter Assy.	3
940139	Brush	3
940141	Screw	67
940145	Nut	67
940146	Bolt	67
940147	Sleeve	67
940148	Spring	67
940150	Puncturing Tool	107
940151	Pump	107
940152	Ring	73
940153	Spring	73
940154	Cap	73
940155	Ball Stud	73
940156	Socket	73
940157	Retainer	73
940158	Washer	73
940174	Cutting Edge Kit	11
940175	Cutting Edge Kit	11
940177	Carburetor	2
940178	Repair Kit	2
940179	Gasket Kit	2
940183	Fuel Filter	4
940230	Tube Assy.	61
940249	Cork Washer	61
940318	Generator Assy.	1
940323	Hourmeter	1
940330	Hub & Screw Kit	41, 45, 53
940331	Distributor	2
940334	Cutting Edge Kit	11
940356	Clevis & Nut Assy.	98
940375	Wheel Assy.	103
940376	Wheel Assy.	103
940383	Cutting Edge Kit	11

Part No.	Description	Page No.
940393	Line Assy. Kit	19
940396	Reservoir Kit	83
940582	Filter Assy	3
940584	Bearing	84
940585	Bearing	84
940586	Bearing	84
940587	Bearing	84
940588	Armature	1
940653	Washer	61
940654	Retainer	61
940663	Spring	69
940664	Spring	69
940665	Valve Body	69
940666	Seat	69
940667	Poppet	69
940668	Shim	69
940669	Spring	69
940670	Plug	69
940671	Repair Kit	69
940713	Pulley	1
940714	Washer	1
940813	Spider & Brg. Assy	61
940897	Pump	3
941325	Lock Ring	103
941326	Flange	103
941329	"O" Ring	103
941422	Valve Stem	103
941449	Clamp	86, 87
941480	Wheel Disc & Rim Base	103
941481	Side Ring	103
941484	Ball Joint	17, 18
941520	Voltage Regulator	2
941552	Ball	85
941555	Gasket	85
941556	Cover	85
941557	Gear	85
941558	Retainer	85
941559	Body	85
941560	Gear	85
941561	Bearing	85
941562	Bearing	85
941563	Bearing	85
941564	Shaft Seal	85
941565	Spring	85
941566	Back Up Washer	84, 85
941572	Spider & Brg. Assy	61
941591	Fuel Pump Assy	2
941621	Wheel Assy	103
941640	Minor Repair Kit	81
941643	Minor Repair Kit	84
941644	Minor Repair Kit	85
941645	Major Repair Kit	84
941646	Major Repair Kit	85
941652	Major Repair Kit	81
941653	Hydraulic Pump	82
941770	Retainer	81
941771	Screw	81
941943	Pump	3
941944	Repair Kit	3
941945	Repair Kit	3
942356	Body	84
942357	Washer	85
942364	Body	81
942403	Minor Repair Kit	82
942404	Major Repair Kit	82
942406	Packing & Adaptor Kit	91, 92
942407	Packing Kit	91, 92
942408	Packing & Adaptor Kit	91, 92
942409	Packing Kit	91, 92
942416	Hose Kit	15
942417	Hose Kit	15
942424	Fuel Tank Mtg. Kit	105
942427	Gear Set	84
942428	Gear Set	81
942431	Gear Set	85
942432	Gear Set	82
942478	Wheel Assy	103
942513	Cover	82
942514	Spring	82
942515	Bearing	82
942516	Bearing	82
942517	Gear	82
942518	Gear	82
942519	Bearing	82
942520	Spring	82
942648	Shaft Seal	82
942649	Seal Ring	82
942650	Back Up Washer	82
942651	Seal Ring	82
942652	Plug	82
942658	Slip Yoke Assy	61
942659	Stub Yoke	61
942670	Body	82
952721	Gasket	3
952779	Washer	3
952797	Gasket	2
953103	Gasket	3
953127	Injector	3
953129	Gasket	2
953130	Gasket	1
954601	Injector	3
956814	Gasket	3
957212	Connector Link	93
957299	Gasket	4
957361	Stud	3
957577	Cartridge Kit	62, 63
958166	Fuel Filter	4
958485	Cartridge Kit	4, 21
959302	Plug	69