MARÇO 1969

MICHIGAN

PARTS MANUAL

RUTHZIL TRATOR COMERCIAL DE PEÇAS LTDA 11 97083-6812 ROLANDO CITRANGULO

No. 2083

MODEL 75 III TRACTOR SHOVEL

Information contained herein pertains to Machine Serial Numbers listed below:

75 III G.M. — 7CG101 thru 7CG999

Data covering Machine Serial Ranges prefixed with designation 8CG, 9CG, etc., and machines powered with optional power plants will be found contained in Supplements at rear of this Manual.

Record Your Machine Serial Number Here

_____

CLARK EQUIPMENT

CLARK EQUIPMENT COMPANY
Construction Machinery Division
BENTON HARBOR, MICHIGAN, U.S.A.
In Canada: Canadian Clark, Ltd., St. Thomas, Ontario

MICHIGAN

2M661B1883C6194SPR-213

Printed in U.S.A.

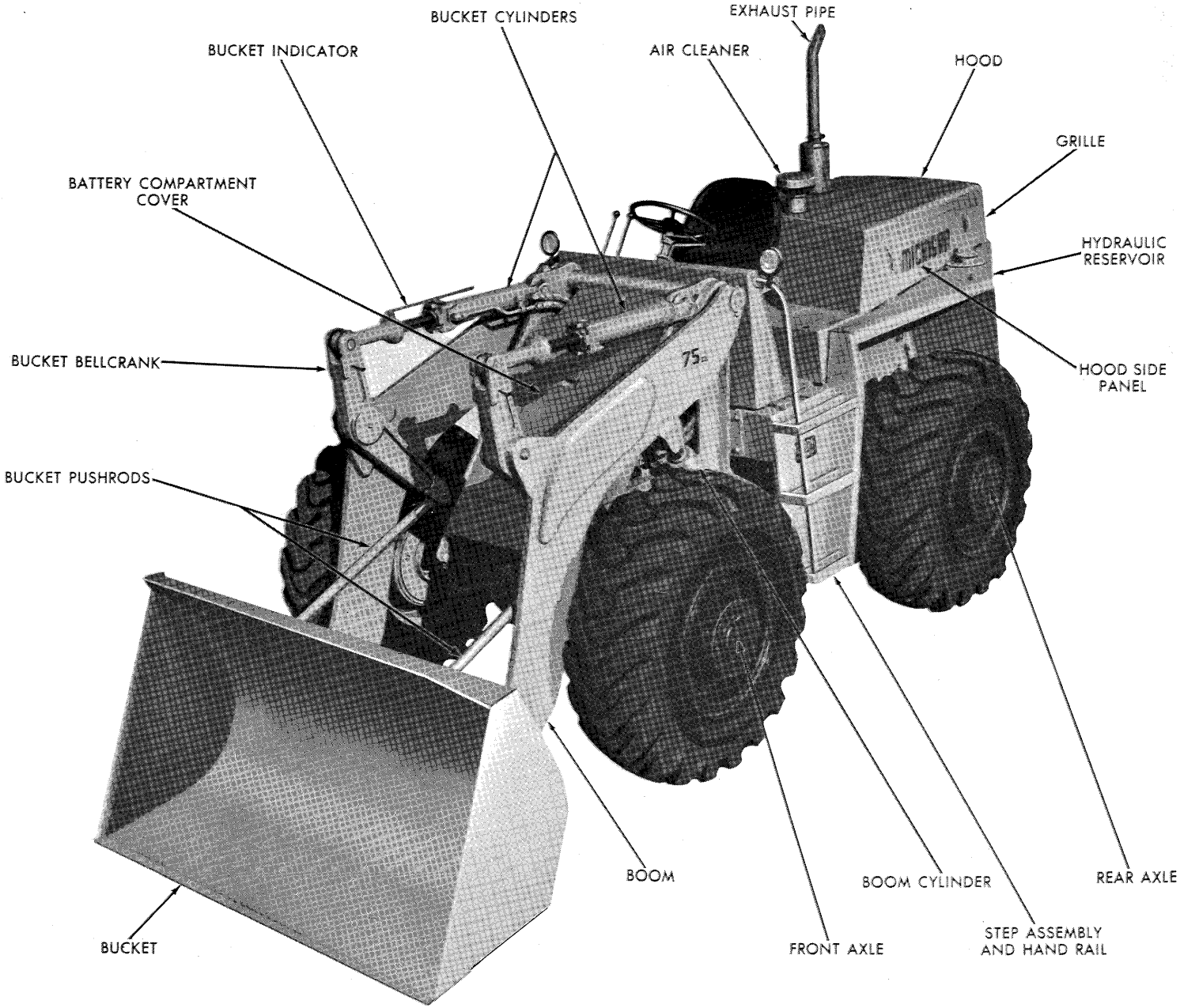

MODEL 75 III TRACTOR SHOVEL

TS-6765-P

WHEN ORDERING REPAIR PARTS

To assure the best results and to maintain the original quality built into the machine it is important that only Clark-Approved Parts be used when new parts are required.

IMPORTANT: Always furnish the distributor with the machine serial number when ordering parts.

Order through your nearest Clark Distributor, for THE MICHIGAN LINE.
Always give serial number of machine.
Furnish: Quantity, Part Number and Description.

WHEN PARTS ARE RECEIVED

Check immediately for quantity, correctness and condition.
Advise your Michigan Distributor of any error.
Claims for damages, during shipment, should be made to the carrier immediately.

INDEX MODEL 75 III

A

	Page
Accelerator Pedal and Linkage	17
Accelerator Rods	17
Accessories, Engine	1
Air Brake Pedals	50
Air Brake Valve	50
Air Breather Check Valve, Torque Converter	21, 27
Air Breather, Torque Converter	21, 27
Air Breather, Transmission	21
Air Cleaner Assembly	13
Air Cleaner Connections	12
Air Cleaner, Element	13
Air Lines, Brake	53
Air Pressure Gauge	73, 75
Air Pressure Sender Unit	53
Air Reservoir	53
Ammeter	73, 75
Axle Assembly — Front Drive	33
Axle Assembly — Rear Drive Steer	37

B

Back Rest Cushion	10
Back-Up Lamp Assembly	3
Battery, Battery Hold Down and Cables	82
Battery Cables	82
Battery Hold Down	82
Bellcranks, Boom and Push Rod	7
Boom	7
Boom Cylinder Assembly	66
Brake Air Lines	53
Brake Assembly — Front	42
Brake Assembly — Rear	43
Brake Assembly, Parking	45
Brake Controls, Parking	46
Brake Lever Assembly, Parking	47
Brake Pedals	50
Brake Valve, Air	50
Brake Valve and Controls	50
Brake Wheel Cylinder	44
Breather, Torque Converter Air	21, 27
Breather, Transmission Air	21
Bucket Assembly Data	7
Bucket and Boom Hydraulic Pump	68
Bucket and Boom Hydraulic System	65
Bucket Cutting Edges	7
Bucket Cylinder Assembly	67
Bucket Indicator	7
Bucket, Indicator, Boom, Bellcranks and Pushrods	7
Bucket Pushrods	7
Bucket, Seat	10
Bucket Seat Assembly	10
Bucket Teeth Data	7
Button, Starter	73, 75

C

Cab Assembly	79
Cab Head Lamp	79
Cab Wiring Harness	79
Cable, Emergency Shut-Off	17
Cable, Engine Shut-Off	17
Cables	82
Cap, Fuel Tank	14
Cap, Oil Reservoir	30
Cap, Radiator	11
Cap, Steering Gear Filler	61
Case, Transmission	21
Cartridge Kit, Transmission and Convertre Filter	27
Charging Pump, Converter	29
Cleaner, Air	13
Clips, Wiring, Pipe and Hose	80, 81
Clutch Group, Forward, Reverse and Low	22
Cluster Assembly — Power	51
Clutch Group — High	23
Cockpit and Inspection Plates	4, 5
Cockpit Wiring Harness	82
Column Assembly, Steering	60
Connections, Muffler, Tailpipe and Air Cleaner	12

	Page
Connections, Radiator	11
Control Valve Assembly — Transmission	24
Control Rod, Governor	17
Control Valve Assembly	71
Converter Assembly, Torque	29
Converter Charging Pump	29
Converter Pressure Regulating Valve	25
Counterweight	3
Cover Assembly, Front	9
Converter to Transmission Prop Shaft	48
Cradle Assembly	2
Cushion, Back Rest	10
Cushion, Seat	10
Cutting Edges, Main	7
Cutting Edges, Side	7
Cylinder, Brake Wheel	44
Cylinder Assembly, Boom	66
Cylinder Assembly, Bucket	67
Cylinder Assembly, Steering	63

D

Dash Lamp	73, 75
Decals and Instruction Plates	82
De-Clutch Valve, Transmission	24
Diagram, Cockpit Wiring	83, 84
Diagram, Engine Wiring	85
Differential and Carrier Assembly — Front Drive	35
Differential and Carrier Assembly — Rear Drive Steer	39
Dipstick, Fuel Tank	14
Dipstick, Oil Reservoir	30
Dipstick, Transmission Oil Level	21
Drag Link Assembly	54

E

Element, Air Cleaner	13
Element, Hydraulic Reservoir Filter	31
Element, Lighter	73, 75
Emergency Shut-Off Cable	17
Emergency Stop Plate	82
Engine and Accessories	1
Engine Oil Pressure Gauge	73, 75
Engine Hourmeter	82
Engine Shut-Off Cable	17
Engine Support Parts	1
Engine Temperature Gauge	73, 75

F

Fan Shroud, Radiator	11
Fenders	9
Filler Cap, Oil Reservoir	30
Filler Cap, Steering Gear	61
Filter Assembly, Hydraulic Reservoir Oil	31
Filter Assembly, Transmission and Converter Oil	27
Filter Element, Hydraulic Reservoir Oil	31
Forward, Reverse and Low Clutch Group	22
Foot Switch, Horn	76
Foot Valve	50
Frame and Cradle Assembly	2
Front Brake Assembly	42
Front Cover Assembly	9
Front Drive Axle Assembly	33
Front Drive Differential and Carrier Assembly	35
Front Drive Planet Carrier Assembly	41
Fuel Lines	15
Fuel Tank	14
Fuel Tank Cap	14
Fuel Tank Dipstick	14
Fuel Tank Inspection Plate	14
Fuel Tank Strainer	14
Fuse — .75 Amp	73, 75
Fuse — 20 Amp	73, 75
Fuse, Lighter	73, 75

G

Gauge, Air Pressure	73, 75
Gauge, Engine Oil Pressure	73, 75
Gauge, Engine Temperature	73, 75
Gauge, Torque Converter Temperature	73, 75
Gear Assembly, Steering	61
Glass Pattern Kit	79
Governor	53
Governor Control Rod	17
Grille and Counterweight	3
Grille and Shroud Assembly	3
Group, Seat and Support	10
Group, Steering Linkage	56

H

Hand Brake	47
Handle and Cover, Reservoir Filter	31
Hand Rails	9
Harness, Cab Wiring	79
Harness, Cockpit Wiring	82
Harness, Instrument Panel Wiring	75
Harness, Main Wiring	82
Harness, Tail Light Wiring	82
Head Lamp Assembly — Cab	79
Head Lamp Assembly — Standard	9
High Clutch Group	23
Hood, Cover, Panels, Fenders and Steps	9
Horn and Foot Switch	76
Hourmeter, Engine	82
Hourmeter Pressure Switch	1
Hydraulic Oil Reservoir	30
Hydraulic Pump — Bucket and Boom	68
Hydraulic Pump — Steering	62
Hydraulic Reservoir Filter Assembly	31
Hydraulic System — Bucket and Boom	65
Hydraulic System — Steering	59
Hydraulic System — Transmission and Torque Converter	27

I

Page

Ignition Switch 73, 75
Inspection Plates, Cockpit 45
Indicator, Bucket 7
Inspection Plate, Fuel Tank 14
Inspection Plate, Oil Reservoir 30
Instruction Plates 82
Instrument Panel Assembly 73, 75
Instrument Wiring Harness 73, 75

K

Kit, Brake Lining — Parking Brake 45
Kit, Glass Pattern 79
Kit, Horn 76
Kit, Steering Shaft Dust Cup 55
Kit, Transmission and Converter Oil Filter Cartridge 27

L

Lamp Assembly, Back-Up 3
Lamp Assembly, Cab Head 79
Lamp Assembly, Head — Standard 9
Lamp Assembly, Tail and Stop 3
Lamp, Dash 73, 75
Levers, Shift 19
Levers, Valve Control 69
Light Switch 73, 75
Lighter Element 73, 75
Lighter Fuse 73, 75
Lighter Receptacle 73, 75
Lines, Fuel 15
Link, Drag 54
Linkage, Accelerator Pedal 17
Linkage Group, Steering 56
Linkage, Transmission Control Levers 19
Linkage, Valve Control Levers 69
Lubrication Instruction Plate 82

M

Main Cutting Edges 7
Main Wiring Harness 82
Michigan Name Plate 3
Mounts, Transmission 21
Muffler, Tailpipe and Air Cleaner Connections 12

O

Oil Reservoir Cap 30
Oil Reservoir Dipstick 30
Oil Reservoir, Hydraulic 30
Oil Reservoir Inspection Plate 30
Oil Sump Assembly 21
Operating Precaution Plate 60, 82

P

Panels, Side 9
Parking Brake Assembly 45
Parking Brake Controls 46
Parking Brake Lever Assembly 47
Pedal, Accelerator 17

Page

Pedals, Brake 50
Pitman Arm, Steering Gear 61
Planet Carrier Assembly — Front Drive 41
Planet Carrier Assembly — Rear Drive Steer 41
Plate, Emergency Stop 82
Plate, Fuel Tank Inspection 14
Plate, Lubrication Instruction 82
Plate, Michigan Name 3
Plate, Oil Reservoir Inspection 30
Plate, Operating Precaution 60, 82
Plate, Patent 82
Plate, Shift Quadrant 82
Plates, Cockpit Inspection 4, 5
Power Cluster Assembly 51
Pressure Regulating Valve Assembly 25
Pressure Relief Valve — Steering System 57
Pressure Switch, Hourmeter 1
Pressure Switch, Voltage Regulator 1
Propeller Shaft Assemblies 48, 49
Pushrods, Bellcrank to Bucket 7
Pump, Bucket and Boom Hydraulic 68
Pump, Converter Charging 27
Pump, Main Hydraulic 68
Pump, Steering Hydraulic 62

Q

Quadrant, Shift 19

R

Radiator Assembly 11
Radiator Cap 11
Radiator and Connections 11
Radiator Fan Shroud 11
Rail, Hand 9
Rear Brake Assembly 43
Rear Drive Steer Axle Assembly 37
Rear Drive Steer Differential and Carrier Assembly 39
Rear Drive Steer Planet Carrier Assembly 41
Regulator, Voltage 1
Reservoir, Air 53
Reservoir, Hydraulic Oil 30
Rod Assembly, Tie 40
Rod, Governor Control 17
Rods, Accelerator 17
Rods, Shift 19
Rods, Valve Control 69

S

Seat Assembly, Bucket 10
Seat Bucket 10
Seat Cushion 10
Seat Support 10
Seat and Support Group 10
Sender Unit, Air Pressure 53
Sender Unit, Engine Oil Pressure 1
Sender Unit, Engine Temperature 1

Page

Sender Unit, Torque Converter Temperature 27
Shaft Assemblies, Propeller 48, 49
Shaft, Steering Slip 55
Shift Levers 19
Shift Quadrant 19
Shift Quadrant Plate 82
Shift Rods 19
Shroud, Radiator Fan 11
Shut-Off Cable, Emergency 17
Shut-Off Cable, Engine 17
Side Cutting Edges 7
Side Panels 9
Slip Shaft, Steering 55
Starter Button 73, 75
Steering Column Assembly 60
Steering Cylinder Assembly 63
Steering Gear Assembly 61
Steering Hydraulic System 59
Steering Linkage Group 56
Steering Pressure Relief Valve Assembly 57
Steering Slip Shaft Assembly 55
Steering System Hydraulic Pump 62
Steering Wheel 60
Steps 9
Stop Lamp Assembly 3
Strainer, Fuel Tank 14
Support, Seat 10
Supports, Engine 1
Switch, Horn Foot 76
Switch, Hourmeter Pressure 1
Switch, Ignition 73, 75
Switch, Light 73, 75
Switch, Voltage Regulator Pressure 1

T

Tail Light Wiring Harness 82
Tailpipe 12
Tailpipe Connections 12
Tail and Stop Lamp Assembly 3
Tank, Fuel 14
Tank, Oil Reservoir 30
Tie Rod Assembly 40
Tire Data 77
Torque Converter Air Breather 21, 27
Torque Converter Air Breather Check Valve 21, 27
Torque Converter Assembly 29

Page

Torque Converter Temperature Gauge 73, 75
Transmission Air Breather 21
Transmission Assembly 21
Transmission Case 21
Transmission Control Valve Assembly 24
Transmission Control Levers and Linkage 19
Transmission and Converter Oil Filter 27
Transmission De-Clutch Valve Assembly 24
Transmission Mounts 21
Transmission to Front Axle Prop Shaft 49
Transmission to Rear Axle Prop Shaft 48
Transmission and Torque Converter Hydraulic System .. 27

U

Unit, Air Pressure Sender 53
Unit, Engine Oil Pressure Sender 1
Unit, Engine Temperature Sender 1
Unit, Torque Converter Temperature Sender 27

V

Valve Assembly, Air Brake 50
Valve Assembly, Control 71
Valve Assembly, Foot 50
Valve Assembly, Pressure Regulating 25
Valve Assembly, Steering Gear 61
Valve Assembly, Steering Pressure Relief 57
Valve Assembly, Transmission De-Clutch 24
Valve Assembly, Transmission Control 24
Valve Control Levers and Linkage 69
Valve, Torque Converter Air Breather Check 21, 27
Voltage Regulator 1

W

Wheel Cylinder — Brake 44
Wheel, Steering 60
Wheel and Tire Data 77
Windshield Wiper 82
Wiring 82
Wiring Diagram — Cockpit 83, 84
Wiring Diagram — Engine 85
Wiring Harness, Cab 79
Wiring Harness, Cockpit 82
Wiring Harness, Instrument Panel 73, 75
Wiring Harness, Main 82
Wiring Harness, Tail Light 82
Wiring, Pipe and Hose Clips 80, 81

ENGINE AND ACCESSORIES

All orders for engine assembly or components thereof should be placed with the nearest G.M. Diesel Distributor. To obtain proper items, it is necessary to provide your engine model, serial number and necessary group type number for the equipment required. This data is stamped on the options and accessories plate on the rocker cover of engine.

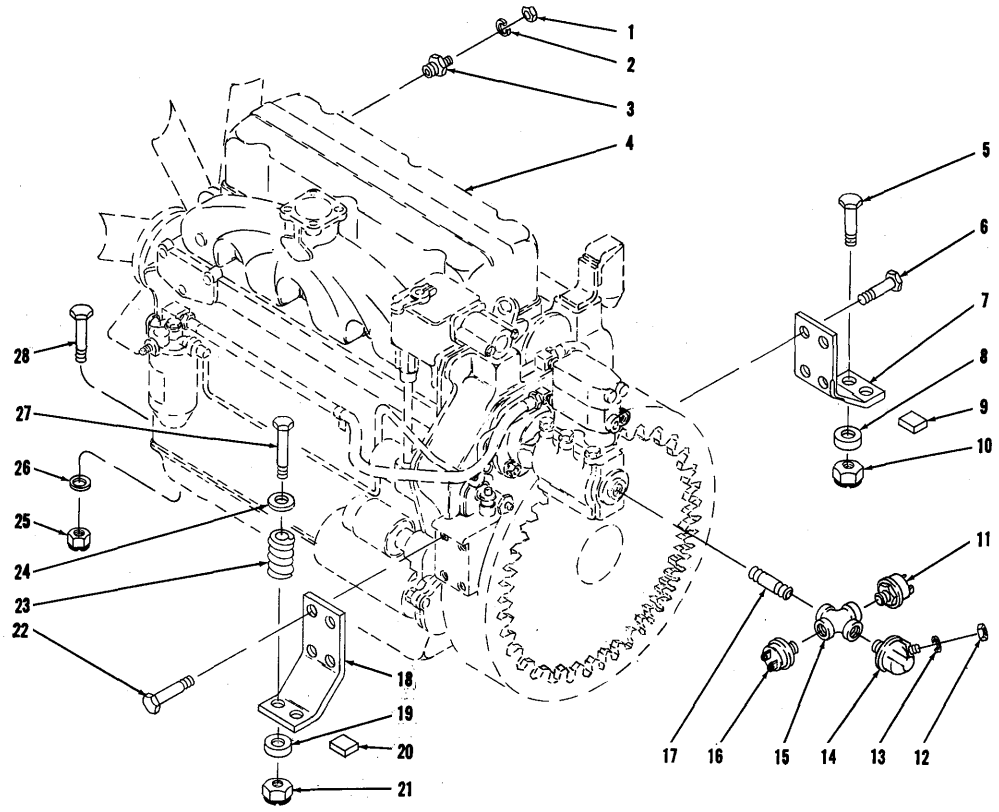

TS-6753-P

ENGINE ACCESSORIES AND SUPPORT PARTS

Item No.	Part No.	Description	No. Req'd.
1	14D-10	NUT, Sender Unit	1
2	12E-10	LKWSHR, Sender Unit	1
3	551323	SENDER UNIT, Engine Temperature	1
4	———	ENGINE — See G.M. Engine Parts Manual	—
5	18C-836	BOLT, Support to Frame — L.H.	2
6	8C-824	BOLT, Support to Engine	4
7	570938	SUPPORT, Engine	1
8	71D-08	BASE, Support Mounting	2
9	518624	BLOCK, Support Mounting — Welded to Frame Only	2
10	70D-08	NUT, Support to Frame	2
11	636260	SWITCH, Hourmeter Pressure	1
12	14D-10	NUT, Sender Unit	1
13	12E-10	LKWSHR, Sender Unit	1
14	940643	SENDER UNIT, Engine Oil Pressure	1
15	21F-1	CROSS, Connecting	1
16	636260	SWITCH, Voltage Regulator Pressure	1
17	5K-106	NIPPLE, Cross to Engine	1
18	570938	SUPPORT, Engine	1
19	71D-08	BASE, Support Mounting	2
20	518624	BLOCK, Support Mounting — Welded to Frame Only	2
21	70D-08	NUT, Support to Frame	2
22	8C-824	BOLT, Support to Engine	4
23	570935	SPRING, Engine Mounting—R.H. Only	2
24	616792	WASHER, Engine Mounting — R.H. Only	2
25	18D-08	NUT, Engine Trunnion to Frame	2
26	619029	WASHER, Engine Trunnion to Frame	2
27	18C-864	BOLT, Support to Frame — R.H.	2
28	18C-832	BOLT, Engine Trunnion to Frame	2
29	1621888	†VOLTAGE REGULATOR	1
30	18C-424	†BOLT, Regulator to Air Cleaner Bracket	3
31	18D-04	†NUT, Regulator to Air Cleaner Bracket	3

†Not Illustrated

WHEN ORDERING PARTS, ALWAYS STATE MODEL AND SERIAL NO. OF MACHINE

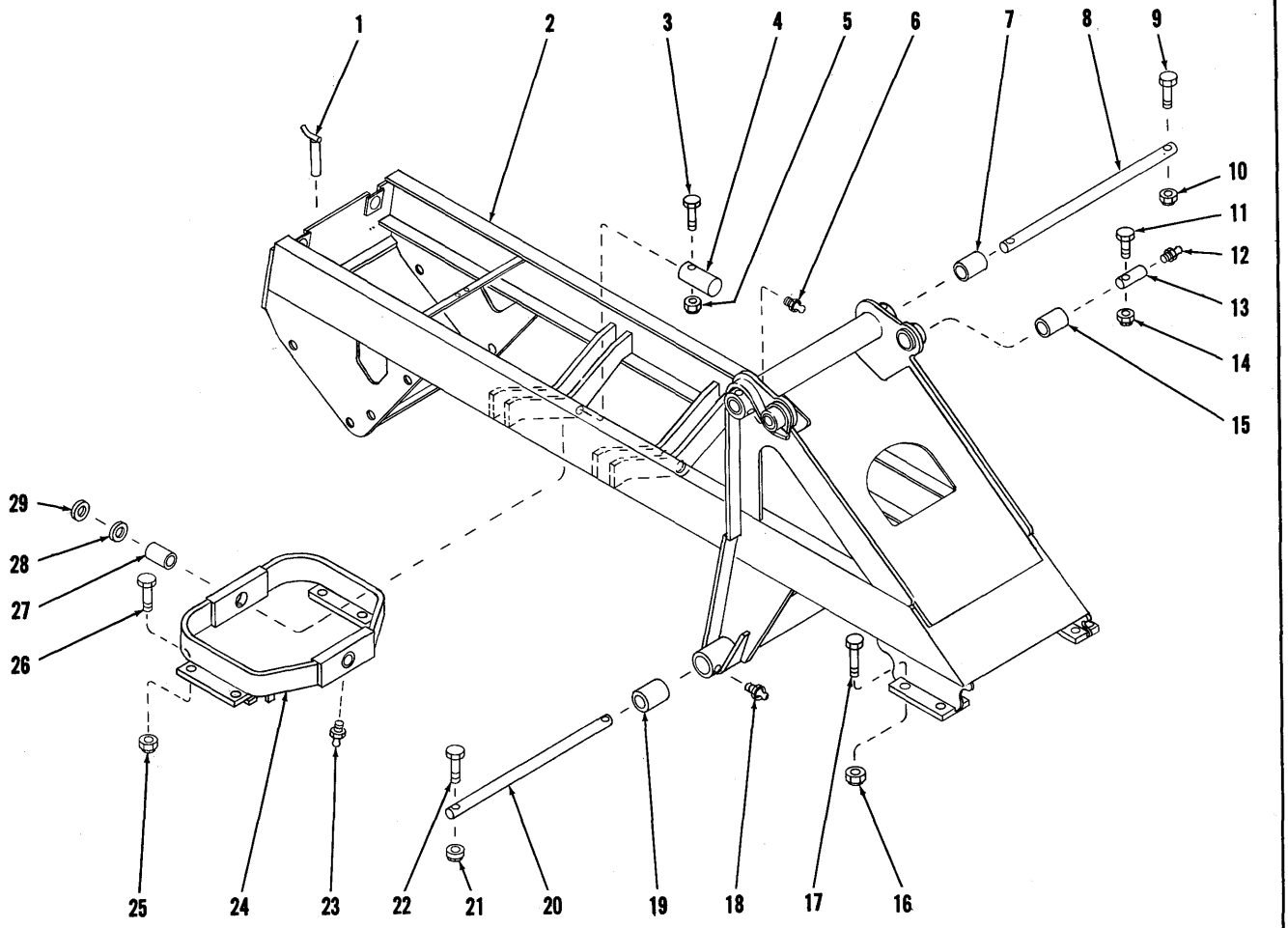

FRAME AND CRADLE ASSEMBLY

Item No.	Part No.	Description	No. Req'd.
1	549988	PIN ASSY, Drawbar	1
2	570863	FRAME ASSY (Inc. 7, 15, 19)	1
3	18C-856	BOLT, Pin Retaining	2
4	536100	PIN, Cradle Pivot	2
5	18D-08	NUT, Pin Retaining	2
6	10H-25	FITTING, Upper Pivot Tube Grease	2
7	564126	BUSHING, Upper Pivot Tube	2
8	571022	SHAFT, Boom Pivot — Upper	1
9	18C-880	BOLT, Pivot Shaft Retaining	2
10	18D-08	NUT, Pivot Shaft Retaining	2
11	18C-880	BOLT, Pivot Pin Retaining	2
12	10H-25	FITTING, Pivot Pin Grease	2
13	556960	PIN, Bucket Cylinder Pivot	2
14	18D-08	NUT, Pivot Pin Retaining	2
15	585007	BUSHING, Upper Pivot	2
16	68D-12	NUT, Front Axle to Frame	8
17	24C-12144	BOLT, Front Axle to Frame	8
18	10H-25	FITTING, Lower Pivot Tube Grease	2
19	564129	BUSHING, Lower Pivot Tube	2
20	587960	SHAFT, Cylinder Pivot	1
21	18D-08	NUT, Pivot Shaft Retaining	2
22	18C-872	BOLT, Pivot Shaft Retaining	2
23	10H-25	FITTING, Cradle Pin Grease	2
24	564137	CRADLE ASSY, Rear Axle (Inc. 27)	1
25	68D-12	NUT, Rear Axle to Cradle	8
26	18C-1252	BOLT, Rear Axle to Cradle	8
27	538585	BUSHING, Cradle Pivot	2
28	551348	‡SHIM, Cradle to Frame	—
29	551347	‡SHIM, Cradle to Frame	—

‡As Required

WHEN ORDERING PARTS, ALWAYS STATE MODEL AND SERIAL NO. OF MACHINE

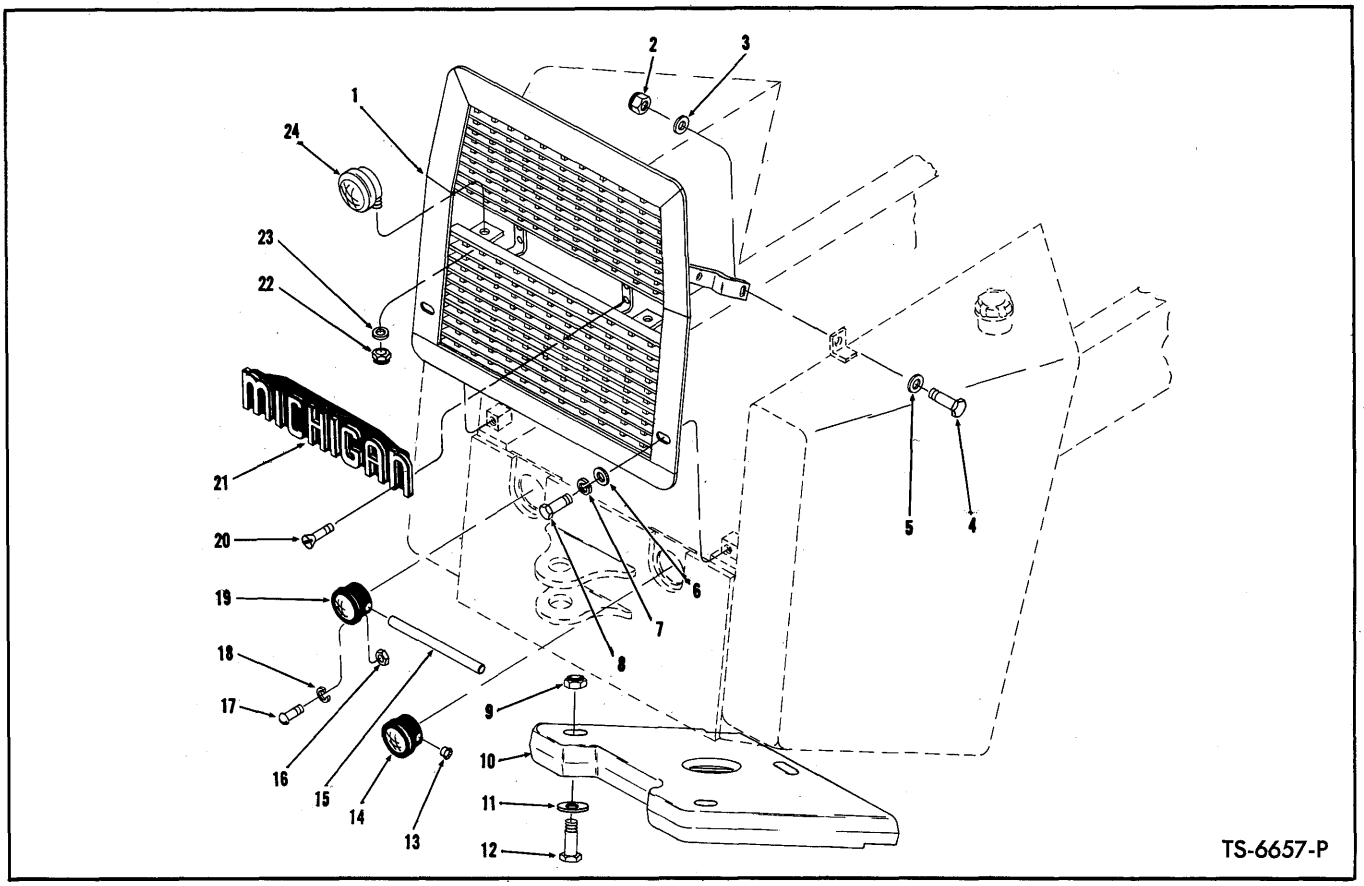

GRILLE AND COUNTERWEIGHT

Item No.	Part No.	Description	No. Req'd.
1	563881	GRILLE ASSY, Rear	1
2	18D-08	NUT, Grille to Tank	2
3	619029	WASHER, Grille to Tank	2
4	18C-824	BOLT, Grille to Tank	2
5	619029	WASHER, Grille to Tank	2
6	619029	WASHER, Grille to Frame	2
7	4E-08	LKWSHR, Grille to Frame	2
8	18C-816	BOLT, Grille to Frame	2
9	18D-02	*NUT, Counterweight to Frame	3
10	1520287	COUNTERWEIGHT	1
11	590499	*WASHER, Counterweight to Frame	3
12	24C-12168	BOLT, Counterweight to Frame	2
12A	24C-1296	*†BOLT, Counterweight to Frame	1
13	1010736	PLUG, Lamp — R.H. Only	1
14	562641	LAMP ASSY, Tail & Stop — R.H. (Inc. 14A)	1
14A	1103680	†LENS, Tail Lamp	1
14B	942746	†BULB, Tail & Stop Lamp	1
15	566849	CONDUIT, Tail & Stop Lamp Wire Protector	1
16	14D-10	NUT, Lamp Mounting	6
17	2G-1012	SCREW, Lamp Mounting	6
18	17E-10	LKWSHR, Lamp Mounting	6
19	562641	LAMP ASSY, Tail & Stop — L.H. (Inc. 19A)	1
19A	1103680	†LENS, Tail Lamp	1
19B	942746	†BULB, Tail & Stop Lamp	1
20	44G-418	SCREW, Name Plate to Grille	4
21	564011	NAME PLATE, Michigan	1
22	17D-6	NUT, Back-Up Lamp Mounting	2
23	584092	WASHER, Back-Up Lamp Mounting	2
24	547529	LAMP ASSY, Back-Up (Inc. 25)	2
25	944907	†SEALED UNIT, Head Lamp	2
26	509320	†SPACER, Back-Up Lamp	2

*NOTE: Optional Equipment — Not furnished with machine.
†Not Illustrated

WHEN ORDERING PARTS, ALWAYS STATE MODEL AND SERIAL NO. OF MACHINE

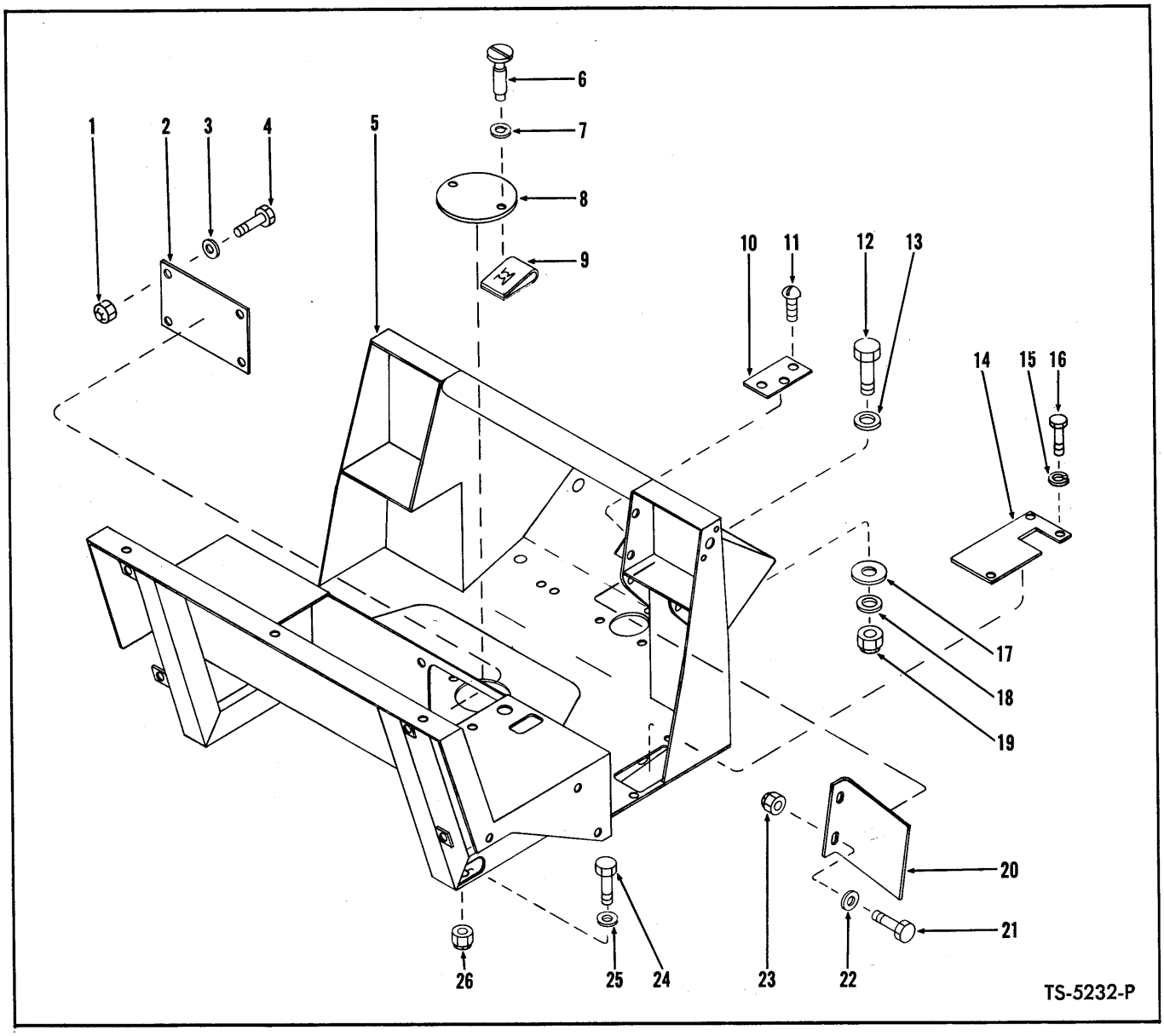

COCKPIT AND INSPECTION PLATES

For Serial 7CG101 thru 7CG196

Item No.	Part No.	Description	No. Req'd.
1	18D-04	NUT, Cover Plate Mounting	4
2	557057	PLATE, Heater Cover	1
3	664421	WASHER, Cover Plate Mounting	4
4	18C-412	BOLT, Cover Plate Mounting	4
5	588021	COCKPIT	1
6	568829	SCREW, Cover Mounting	2
7	1612583	WASHER, Cover Mounting	2
8	568828	COVER, Transmission Check (Inc. 6, 7)	1
9	568830	NUT, Cover Mounting	2
10	566649	PLATE, Steer Cover	1
11	18G-806	SCREW, Cover Plate Mounting	3
12	18C-832	BOLT, Cockpit Mounting	1
13	619029	WASHER, Cockpit Mounting	1
14	566458	PLATE, Valve Levers Cover	1
15	4E-06	LKWSHR, Cover Plate Mounting	3
16	18C-612	BOLT, Cover Plate Mounting	3
17	616798	‡SPACER, Cockpit Mounting	—
18	619029	WASHER, Cockpit Mounting	1
19	18D-08	NUT, Cockpit Mounting	1
20	589991	PLATE, Panel — R.H.	1
21	18C-616	BOLT, Plate Mounting	2
22	619024	WASHER, Plate Mounting	2
23	18D-06	NUT, Plate Mounting	2
24	18C-824	BOLT, Cockpit Mounting	4
25	619029	WASHER, Cockpit Mounting	8
26	18D-08	NUT, Cockpit Mounting	4

‡As Required

WHEN ORDERING PARTS, ALWAYS STATE MODEL AND SERIAL NO. OF MACHINE

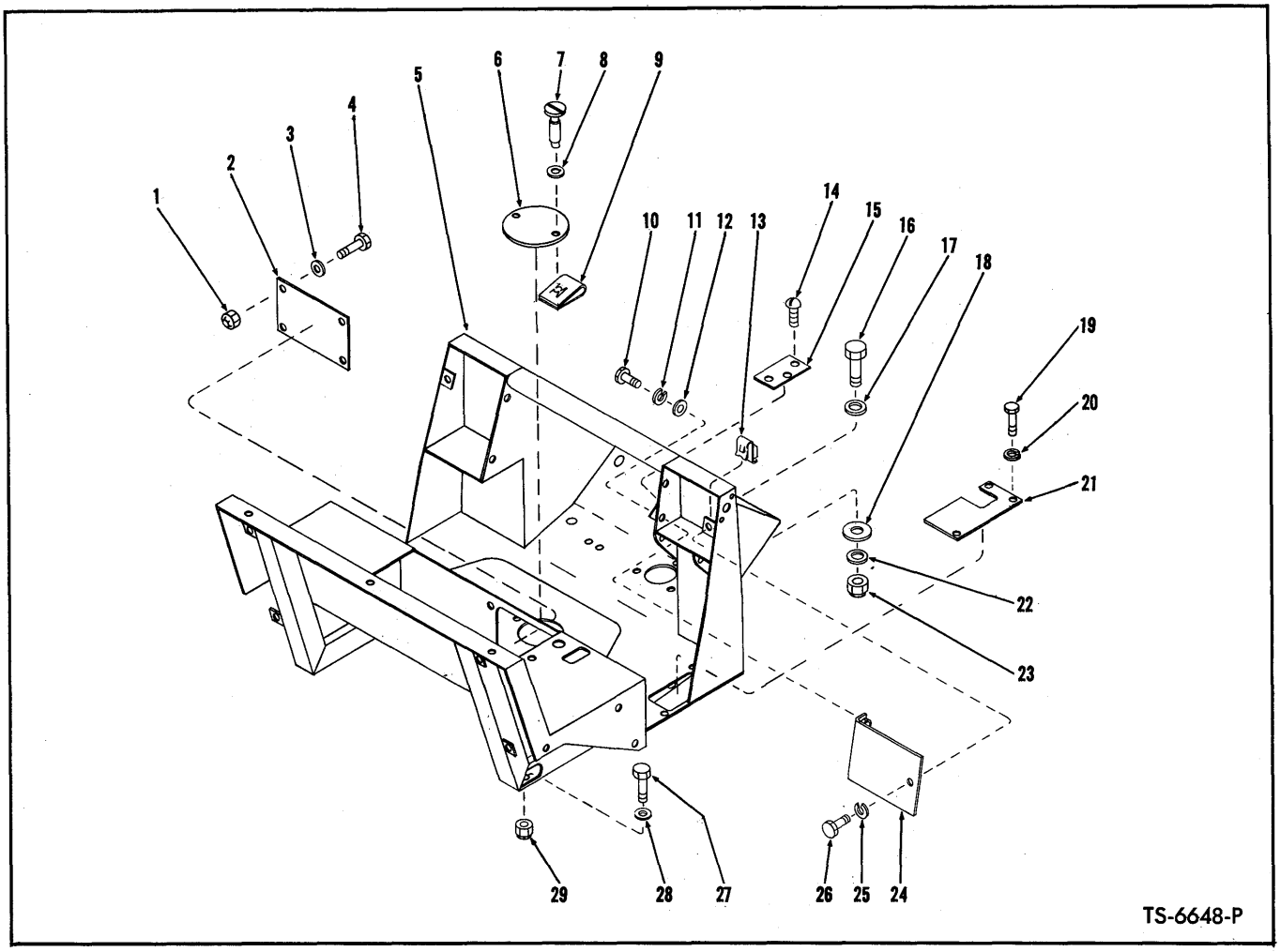

COCKPIT AND INSPECTION PLATES.

For Serial 7CG197 and Thereafter

Item No.	Part No.	Description	No. Req'd.
1	18D-04	NUT, Cover Plate Mounting	4
2	557057	PLATE, Heater Cover	1
3	664421	WASHER, Cover Plate Mounting	4
4	18C-412	BOLT, Cover Plate Mounting	4
5	588021	COCKPIT	1
6	568828	COVER, Transmission Check (Inc. 7, 8)	1
7	568829	SCREW, Cover Mounting	2
8	1612583	WASHER, Cover Mounting	2
9	568830	NUT, Cover Mounting	2
10	17C-616	BOLT, Plate Mounting	2
11	4E-06	LKWSHR, Plate Mounting	2
12	656672	WASHER, Plate Mounting	2
13	572729	NUT, Plate Mounting	1
14	18G-806	SCREW, Cover Plate Mounting	3
15	566649	PLATE, Steer Cover	1
16	18C-832	BOLT, Cockpit Mounting	1
17	619029	WASHER, Cockpit Mounting	1
18	616798	‡SPACER, Cockpit Mounting	—
19	17C-612	BOLT, Cover Plate Mounting	3
20	4E-06	LKWSHR, Cover Plate Mounting	3
21	569912	PLATE, Valve Levers Mounting	1
22	619029	WASHER, Cockpit Mounting	1
23	18D-08	NUT, Cockpit Mounting	1
24	574026	PLATE, Panel — R.H.	1
25	4E-06	LKWSHR, Plate Mounting	1
26	17C-616	BOLT, Plate Mounting	1
27	18C-828	BOLT, Cockpit Mounting	4
28	619029	WASHER, Cockpit Mounting	8
29	18D-08	NUT, Cockpit Mounting	4

‡As Required

WHEN ORDERING PARTS, ALWAYS STATE MODEL AND SERIAL NO. OF MACHINE

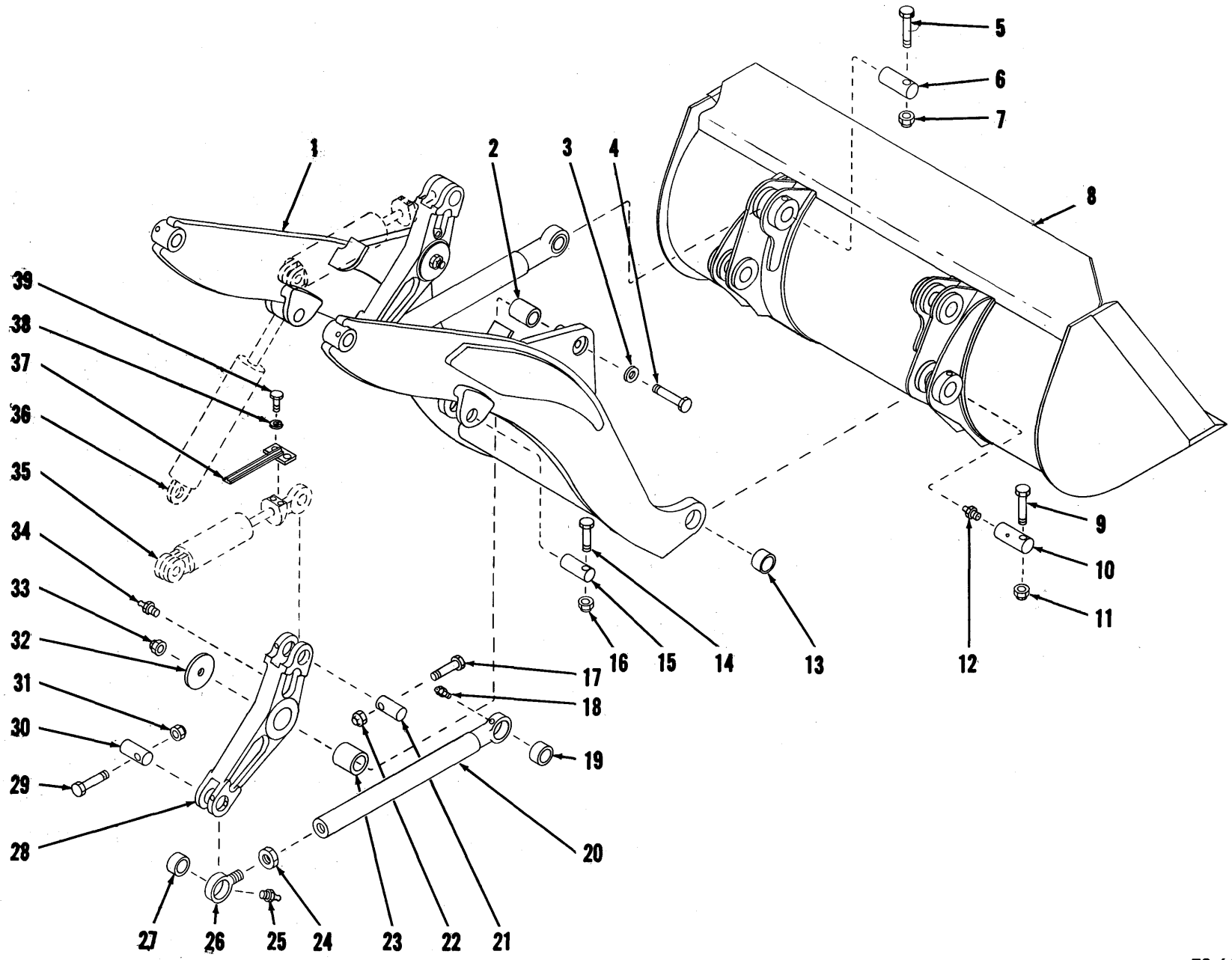

BUCKET, INDICATOR, BOOM, BELLCRANKS AND PUSHRODS

TS-6639-P

BUCKET, INDICATOR, BOOM, BELLCRANKS AND PUSHRODS

Item No.	Part No.	Description	No. Req'd.
1	587832	BOOM ASSY (Inc. 2, 13)	1
2	589023	BUSHING, Bellcrank Pivot	2
3	664428	WASHER, Bellcrank Mounting	2
4	24C-12120	BOLT, Bellcrank to Boom	2
5	18C-864	BOLT, Pin Retaining	2
6	542631	PIN, Pushrod to Bucket	2
7	18D-08	NUT, Pin Retaining	2
8	———	BUCKET — See Chart Below	—
9	18C-880	BOLT, Pin Retaining	2
10	568483	PIN, Boom to Bucket	2
11	18D-08	NUT, Pin Retaining	2
12	10H-25	FITTING, Pin Grease	2
X 13	568482	BUSHING, Boom Arm innere Schmierung	2
14	18C-656	BOLT, Pin Retaining	2
15	514921	PIN, Boom Cylinder to Boom	2
16	18D-06	NUT, Pin Retaining	2
17	18C-872	BOLT, Pin Retaining	2
18	10H-25	FITTING, Pushrod Grease	2
19	587908	BUSHING, Pushrod	2
20	570846	PUSHROD ASSY (Inc. 19)	2
21	587900	PIN, Bucket Cylinder to Bellcrank	2
22	18D-08	NUT, Pin Retaining	2
23	542031	BUSHING, Bellcrank	2
24	8D-24	NUT, Eye Jam	2
25	10H-25	FITTING, Eye Grease	2
26	570850	EYE ASSY — Pushrod (Inc. 27)	2
27	587908	BUSHING, Pushrod Eye	2
28		*BELLCRANK ASSY (Inc. 23)*	
28A	570210	RIGHT HAND	1
28B	570211	LEFT HAND	1
29	18C-672	BOLT, Pin Retaining	2
30	587901	PIN, Bellcrank to Pushrod	2
31	18D-06	NUT, Pin Retaining	2
32	557117	WASHER, Bellcrank Mounting	2
33	18D-12	NUT, Bellcrank to Boom	2
34	12H-25	FITTING, Bellcrank Grease	2
35	———	BUCKET CYLINDER — See Index	—
36	———	BOOM CYLINDER — See Index	—
37	573551	INDICATOR, Bucket	1
38	4E-06	LKWSHR, Indicator to Bucket Cylinder	2
39	18C-620	BOLT, Indicator to Bucket Cylinder	2

X 1522723 Bushing äußere Schmierung 2

BUCKET ASSEMBLY DATA — STANDARD

BUCKET			MAIN CUTTING EDGE			SIDE CUTTING EDGE			
Width	Capacity	Part No.	Part No.	Size	Approx. Weight	R.H. Part No.	L.H. Part No.	Size	Approx. Weight
90"	1¾ cu. yd.	570102	544657	1 x 9 x 91	204	570108	570110	*¾ x 6 x 42⅜	43

*NOTE: ¾" x 6" x 10" Segments are available for above side cutting edges 572141 R.H. and 572142 L.H. — Approximate weight 10 lbs.

BUCKET TEETH DATA

REPLACEABLE TOOTH ASSY NO. 1" Thick Cutting Edge	REPLACEABLE TIP NO.	REPLACEABLE TIP PIN NO.
562662	562663	562664

WHEN ORDERING PARTS, ALWAYS STATE MODEL AND SERIAL NO. OF MACHINE

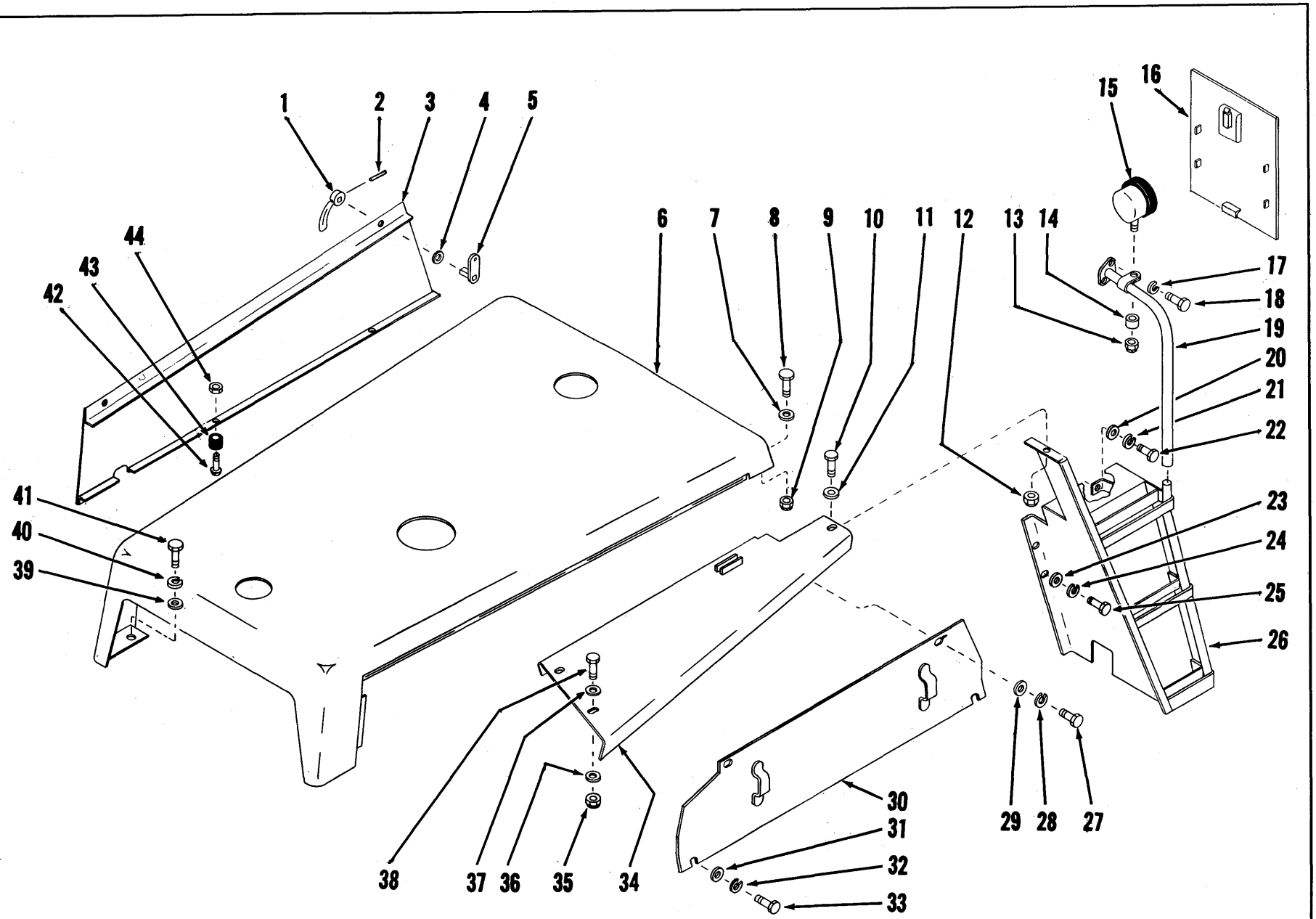

HOOD, COVER, PANELS, FENDERS AND STEPS

TS-6664-P

HOOD, COVER, PANELS, FENDERS AND STEPS

Item No.	Part No.	Description	No. Req'd.
1	142396	KIT, Handle (Inc. 2, 4, 5)	4
2	730432	PIN, Handle Roll	4
3		*PANEL, Side (Inc. 1, 2, 4, 5, 42, 43, 44)*	
3A	571646	LEFT HAND	1
3B	571645	†RIGHT HAND	1
4	———	§SPACER, Shaft	—
5	———	§SHAFT, Handle	—
6	556323	HOOD	1
7	619029	WASHER, Hood to Cockpit	2
8	18C-820	BOLT, Hood to Cockpit	2
9	18D-08	NUT, Hood to Cockpit	2
10	18C-824	BOLT, Fender to Step	2
11	619029	WASHER, Fender to Step	2
12	18D-08	NUT, Fender to Step	2
13	17D-6	NUT, Head Lamp Mounting	2
14	509320	SPACER, Head Lamp Mounting	2
15	547529	LAMP ASSY, Head (Inc. 15A)	2
15A	944907	†SEALED UNIT, Head Lamp	2
16	566764	COVER ASSY, Front	1
17	4E-06	LKWSHR, Hand Rail to Cockpit	4
18	17C-620	BOLT, Hand Rail to Cockpit	4
19		*HAND RAIL*	
19A	563980	RIGHT HAND	1
19B	563981	†LEFT HAND	1
19C	563994	CLAMP, Head Lamp to Hand Rail	2
20	619029	WASHER, Step to Frame	2
21	4E-08	LKWSHR, Step to Frame	2
22	18C-816	BOLT, Step to Frame	2
23	619029	WASHER, Step to Frame	4
24	4E-08	LKWSHR, Step to Frame	4
25	18C-816	BOLT, Step to Frame	4
26		*STEP ASSEMBLY*	
26A	556691	RIGHT HAND	1
26B	556692	†LEFT HAND	1
27	18C-812	BOLT, Panel to Fender	4
28	4E-08	LKWSHR, Panel to Fender	4
29	619029	WASHER, Panel to Fender	4
30		*SIDE PANEL*	
30A	563928	RIGHT HAND	1
30B	563929	†LEFT HAND	1
31	619029	WASHER, Panel to Frame	4
32	4E-08	LKWSHR, Panel to Frame	4
33	18C-812	BOLT, Panel to Frame	4
34		*FENDER*	
34A	557847	RIGHT HAND	1
34B	557848	†LEFT HAND	1
35	18D-08	NUT, Fender to Tank	4
36	619029	WASHER, Fender to Tank	4
37	619029	WASHER, Fender to Tank	4
38	18C-824	BOLT, Fender to Tank	4
39	619029	WASHER, Hood to Tank	2
40	4E-08	LKWSHR, Hood to Tank	2
41	18C-816	BOLT, Hood to Tank	2
42	3G-1008	SCREW, Side Panel Mounting	4
43	551433	BUMPER, Side Panel Mounting	4
44	12D-10	NUT, Side Panel Mounting	4

†Not Illustrated
‡As Required

WHEN ORDERING PARTS, ALWAYS STATE MODEL AND SERIAL NO. OF MACHINE

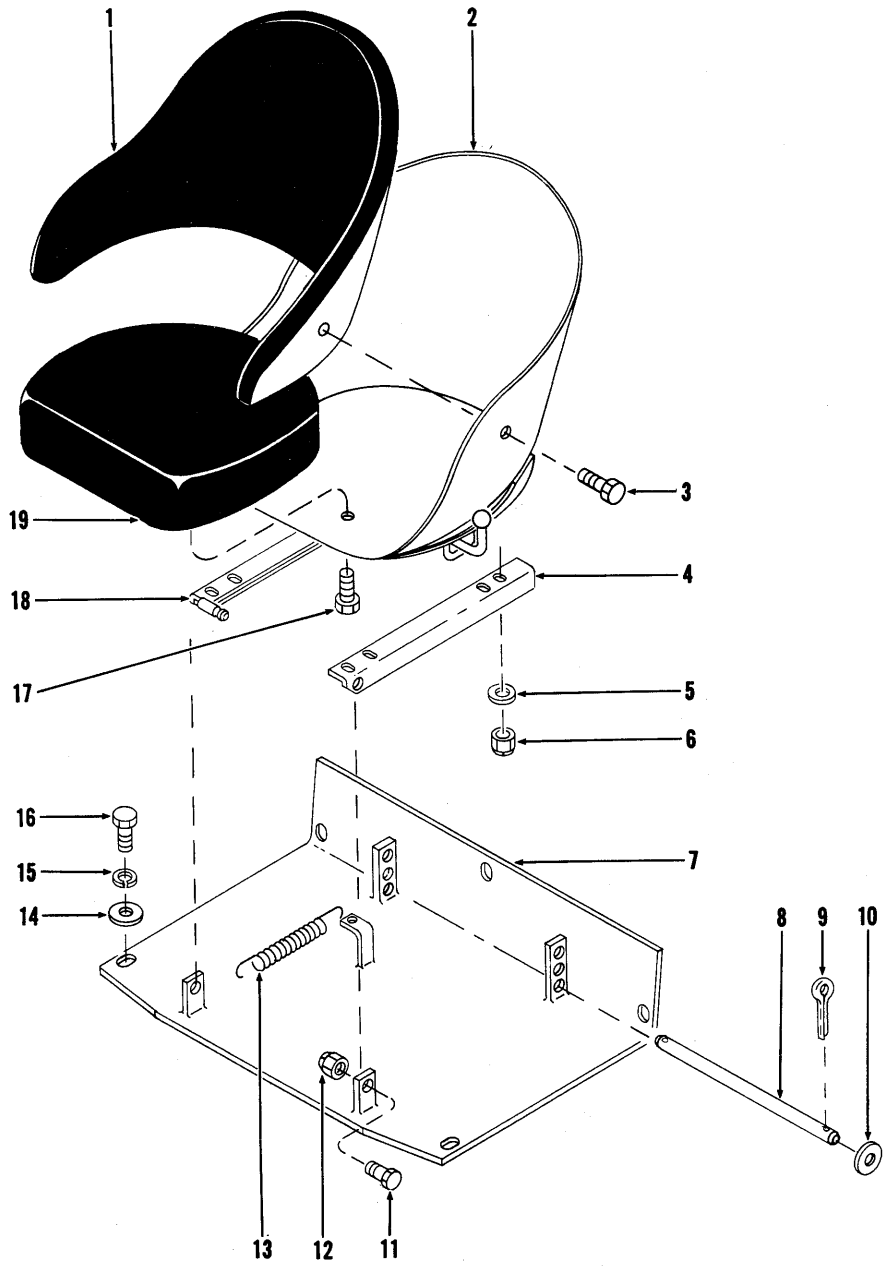

SEAT AND SUPPORT GROUP

Item No.	Part No.	Description	No. Req'd.
A	546687	SEAT ASSY, Bucket (Inc. 1, 2, 3, 17, 19)	1
1	944981	CUSHION, Back Rest	1
2	944982	BUCKET, Seat	1
3	1C-610	BOLT, Cushion Mounting	3
4	558779	ANGLE, L.H. Seat Mount	1
5	619019	WASHER, Seat Mounting	4
6	18D-05	NUT, Seat Mounting	4
7	557455	SUPPORT, Seat	1
8	557458	BAR, Seat Mounting	1
9	1F-420	COTTER, Mounting Bar	2
10	619029	WASHER, Mounting Bar	2
11	18C-824	BOLT, Angle to Support	2
12	18D-08	NUT, Angle to Support	2
13	550301	SPRING, Angle	1
14	619029	WASHER, Support to Cockpit	5
15	4E-08	LKWSHR, Support to Cockpit	5
16	17C-820	BOLT, Support to Cockpit	5
17	1C-610	BOLT, Cushion Mounting	1
18	558777	ANGLE, R.H. Seat Mount	1
19	944499	CUSHION, Seat	1

WHEN ORDERING PARTS, ALWAYS STATE MODEL AND SERIAL NO. OF MACHINE

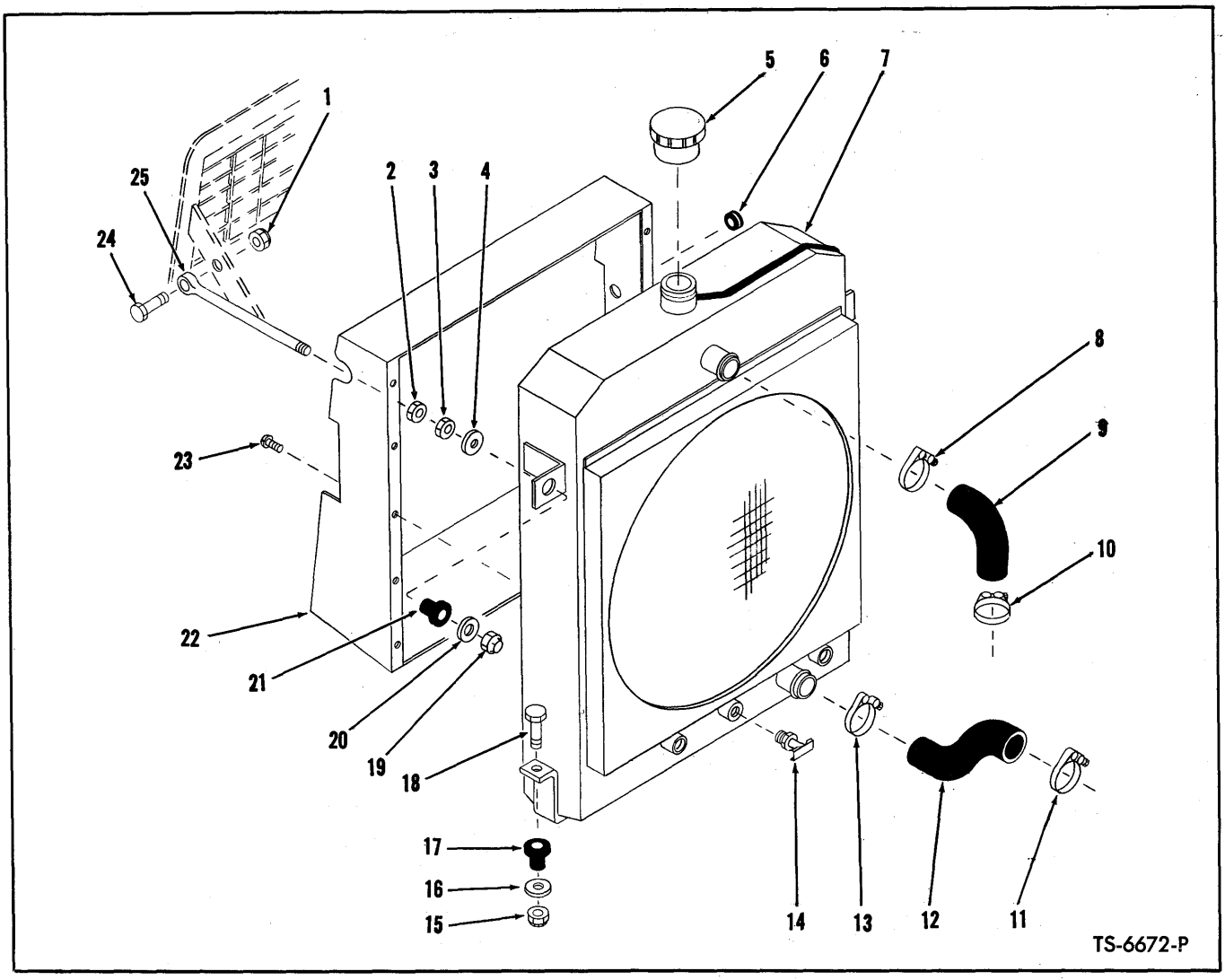

RADIATOR AND CONNECTIONS

Item No.	Part No.	Description	No. Req'd.
1	18D-08	NUT, Rod to Grille	2
2	8D-08	NUT, Rod Jam	2
3	8D-08	NUT, Rod Jam	2
4	584502	WASHER, Rod Mounting	2
5	351495	CAP, Radiator	1
6	585950	GROMMET, Radiator Shroud	1
7	564003	RADIATOR ASSY (Inc. 5, 7A)	1
7A	945460	HOSE, Overflow	1
8	540266	CLAMP, Hose	1
9	564005	HOSE, Upper Radiator	1
10	540266	CLAMP, Hose	1
11	540108	CLAMP, Hose	1
12	564006	HOSE, Lower Radiator	1
13	540108	CLAMP, Hose	1
14	73F-2	DRAIN COCK, Radiator	1
15	18D-08	NUT, Radiator to Frame	2
16	584502	WASHER, Radiator to Frame	2
17	584501	MOUNT, Radiator to Frame	2
18	18C-836	BOLT, Radiator to Frame	2
19	18D-08	NUT, Rod Mounting	2
20	584502	WASHER, Rod Mounting	2
21	584501	MOUNT, Rod to Radiator	2
22	563889	SHROUD, Radiator	1
23	18G-806	SCREW, Shroud to Radiator	10
24	18C-828	BOLT, Rod to Grille	2
25	570499	ROD, Radiator to Grille	2

WHEN ORDERING PARTS, ALWAYS STATE MODEL AND SERIAL NO. OF MACHINE

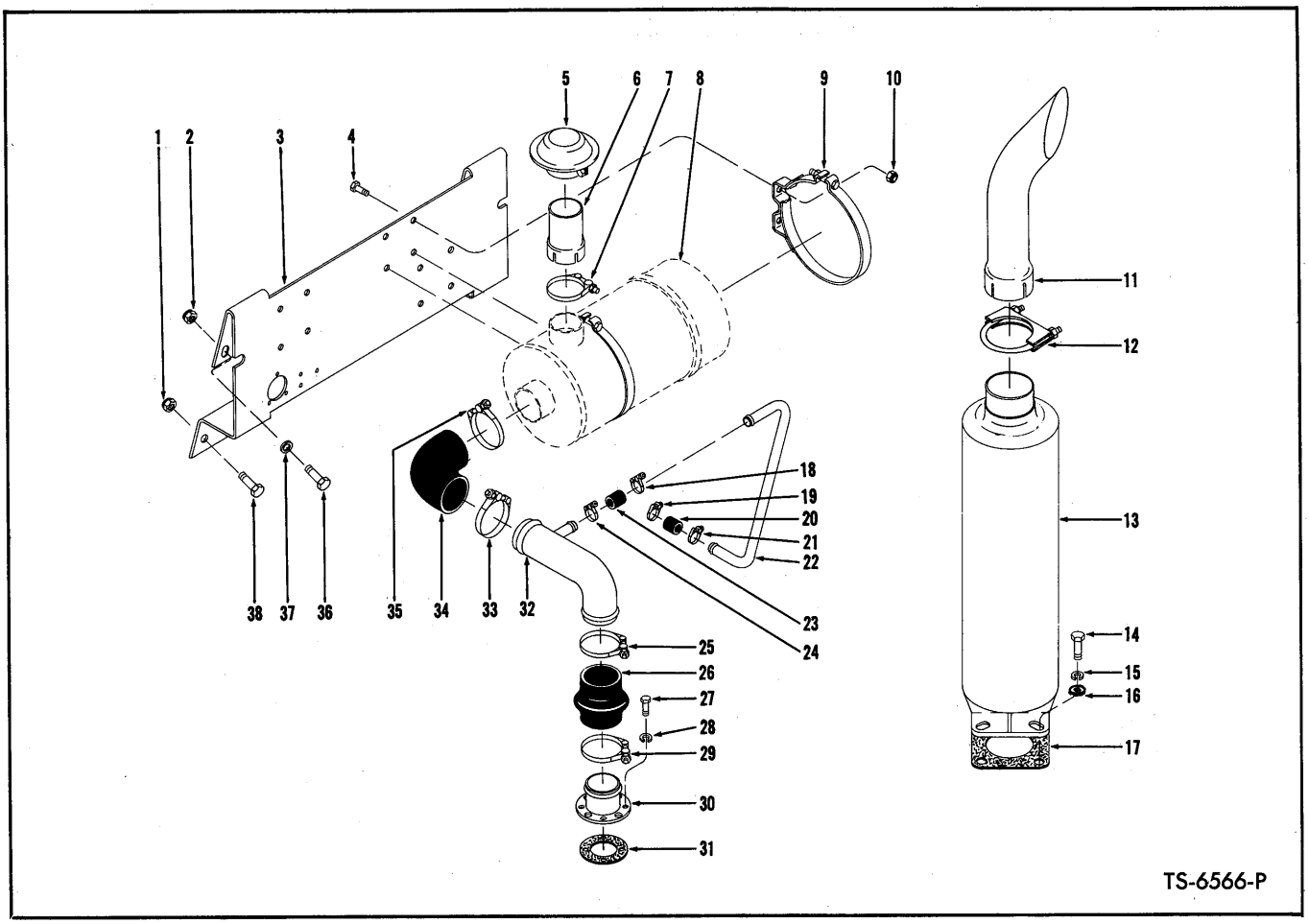

MUFFLER, TAIL PIPE AND AIR CLEANER CONNECTIONS

Item No.	Part No.	Description	No. Req'd.
1	18D-08	NUT, Bracket to Cockpit	2
2	18D-08	NUT, Bracket to Cockpit	2
3	589826	BRACKET, Air Cleaner Mounting	1
4	18C-616	BOLT, Air Cleaner to Bracket	4
5	568391	CAP, Air Inlet	1
6	543573	EXTENSION, Air Inlet	1
7	543531	CLAMP, Extension to Air Cleaner	1
8	———	AIR CLEANER — See Index	—
9	420945	BAND, Air Cleaner Mounting	2
10	18D-06	NUT, Air Cleaner to Bracket	4
10A	619029	†WASHER, Air Cleaner to Bracket	2
11	547585	TAIL PIPE	1
12	660738	CLAMP, Tail Pipe to Muffler	1
13	568806	MUFFLER	1
14	17C-620	BOLT, Muffler to Engine	4
15	4E-06	LKWSHR, Muffler to Engine	4
16	656672	WASHER, Muffler to Engine	4
17	509303	GASKET, Muffler to Engine	1
18	540103	CLAMP, Hose	1
19	540103	CLAMP, Hose	1
20	509711	HOSE, Tube to Air Compressor	1
21	540103	CLAMP, Hose	1
22	589852	TUBE, Compressor Intake	1
23	509711	HOSE, Tube to Tube	1
24	540103	CLAMP, Hose	1
25	539042	CLAMP, Hose	1
26	515424	HOSE, Tube to Adapter	1
27	17C-516	BOLT, Adapter to Engine	4
28	4E-05	LKWSHR, Adapter to Engine	4
29	539042	CLAMP, Hose	1
30	527095	ADAPTER, Air Intake	1
31	527096	GASKET, Adapter to Engine	1
32	589791	TUBE, Air Intake	1
33	539042	CLAMP, Hose	1
34	515425	ELBOW, Tube to Air Cleaner	1
35	539042	CLAMP, Hose	1
36	18C-824	BOLT, Bracket to Cockpit	2
37	619029	WASHER, Bracket to Cockpit	2
38	18C-824	BOLT, Bracket to Cockpit	2

†Not Illustrated

WHEN ORDERING PARTS, ALWAYS STATE MODEL AND SERIAL NO. OF MACHINE

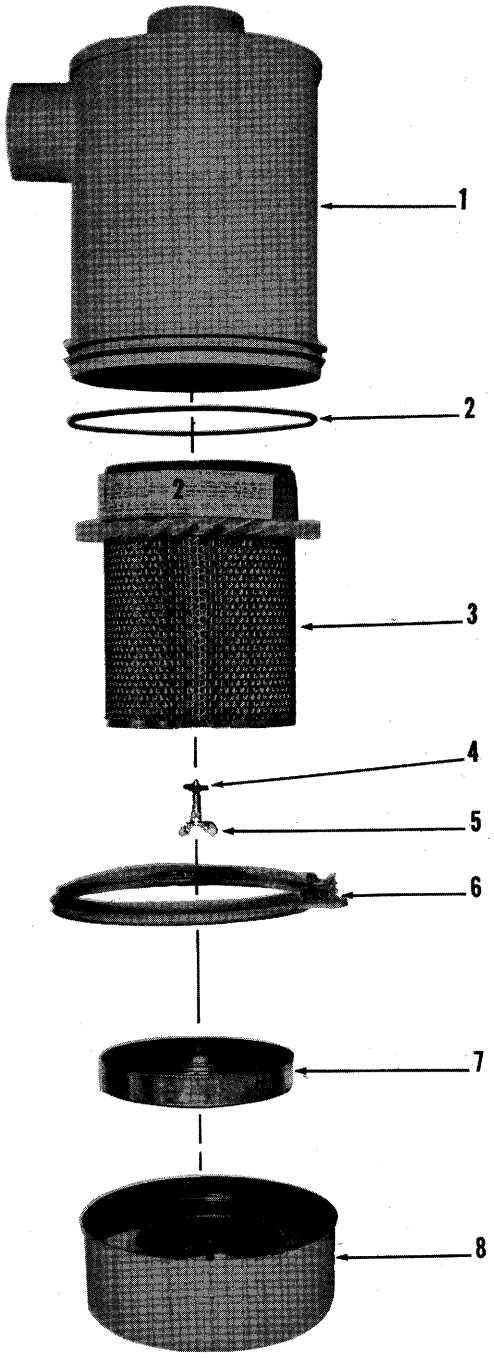

TS-5266-P

AIR CLEANER ASSEMBLY

Item No.	Part No.	Description	No. Req'd.
A	1632441	AIR CLEANER ASSY (Inc. 1 thru 8)	1
1	———	§BODY, Air Cleaner — See Item A	—
2	886288	GASKET, Air Cleaner	1
3	944954	ELEMENT	1
4	886287	WASHER, Element Attaching	1
5	886285	BOLT, Element Attaching	1
6	944955	CLAMP, Dust Cover	1
7	894653	BAFFLE	1
8	894652	CUP, Dust	1

§Not Sold Separately

WHEN ORDERING PARTS, ALWAYS STATE MODEL AND SERIAL NO. OF MACHINE

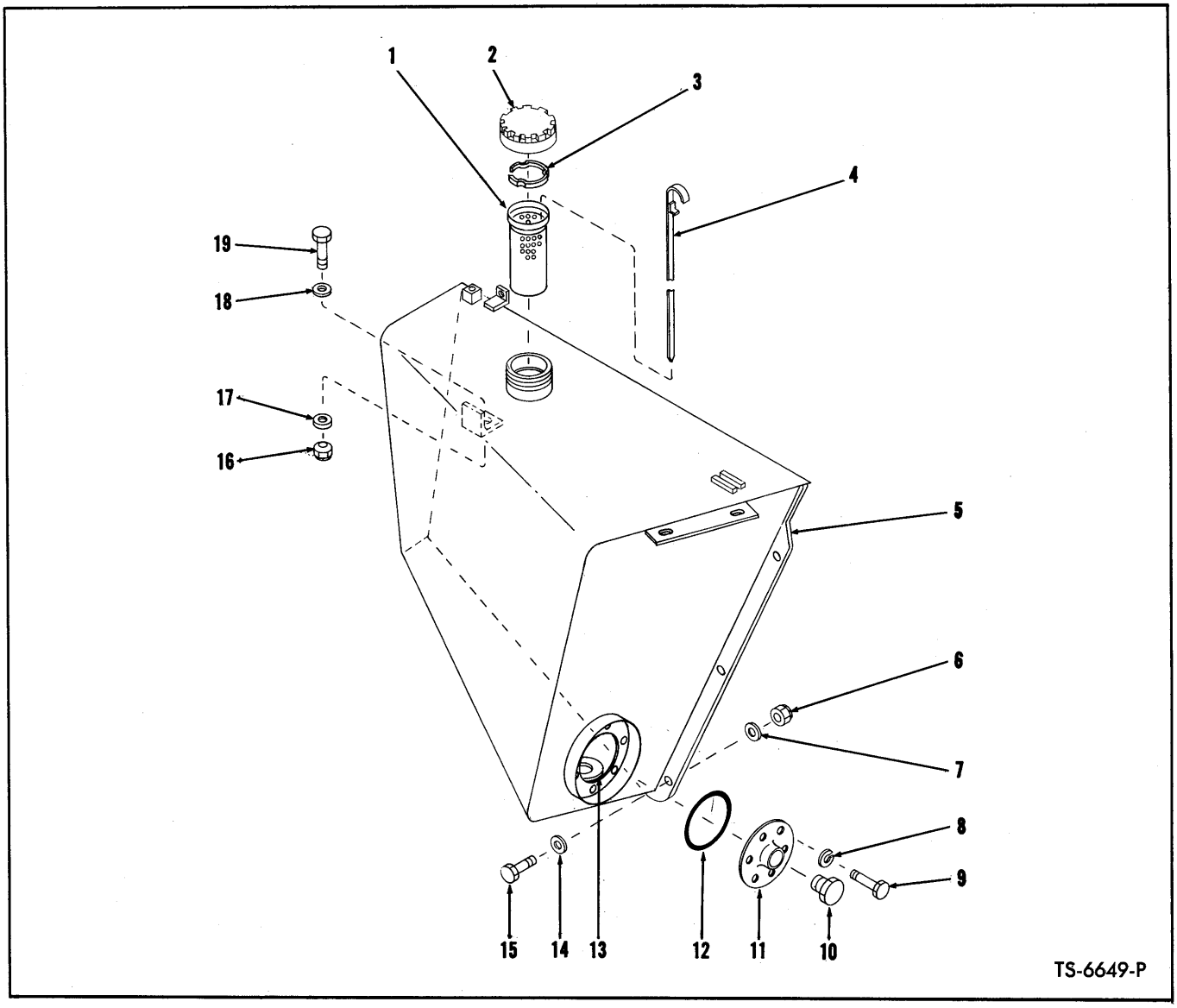

FUEL TANK

Item No.	Part No.	Description	No. Req'd.
1	943957	STRAINER, Fuel Tank	1
2	556655	CAP, Fuel Tank	1
3	569914	RING, Cap Retaining	1
4	567864	DIPSTICK	1
5	589200	FUEL TANK	1
6	18D-12	NUT, Fuel Tank to Side Plate	5
7	616813	WASHER, Fuel Tank to Side Plate	5
8	4E-06	LKWSHR, Inspection Plate to Tank	6
9	18C-612	BOLT, Inspection Plate to Tank	6
10	40K-16	PLUG, Drain	1
11	587613	PLATE, Inspection	1
12	25K-40428	"O" RING, Inspection Plate	1
13	525293	MAGNET	1
14	616813	WASHER, Fuel Tank to Side Plate	5
15	18C-1244	BOLT, Fuel Tank to Side Plate	5
16	70D-12	NUT, Tank to Frame	1
17	71D-12	BASE, Tank to Frame	1
18	616813	WASHER, Tank to Frame	1
19	18C-1244	BOLT, Tank to Frame	1

WHEN ORDERING PARTS, ALWAYS STATE MODEL AND SERIAL NO. OF MACHINE

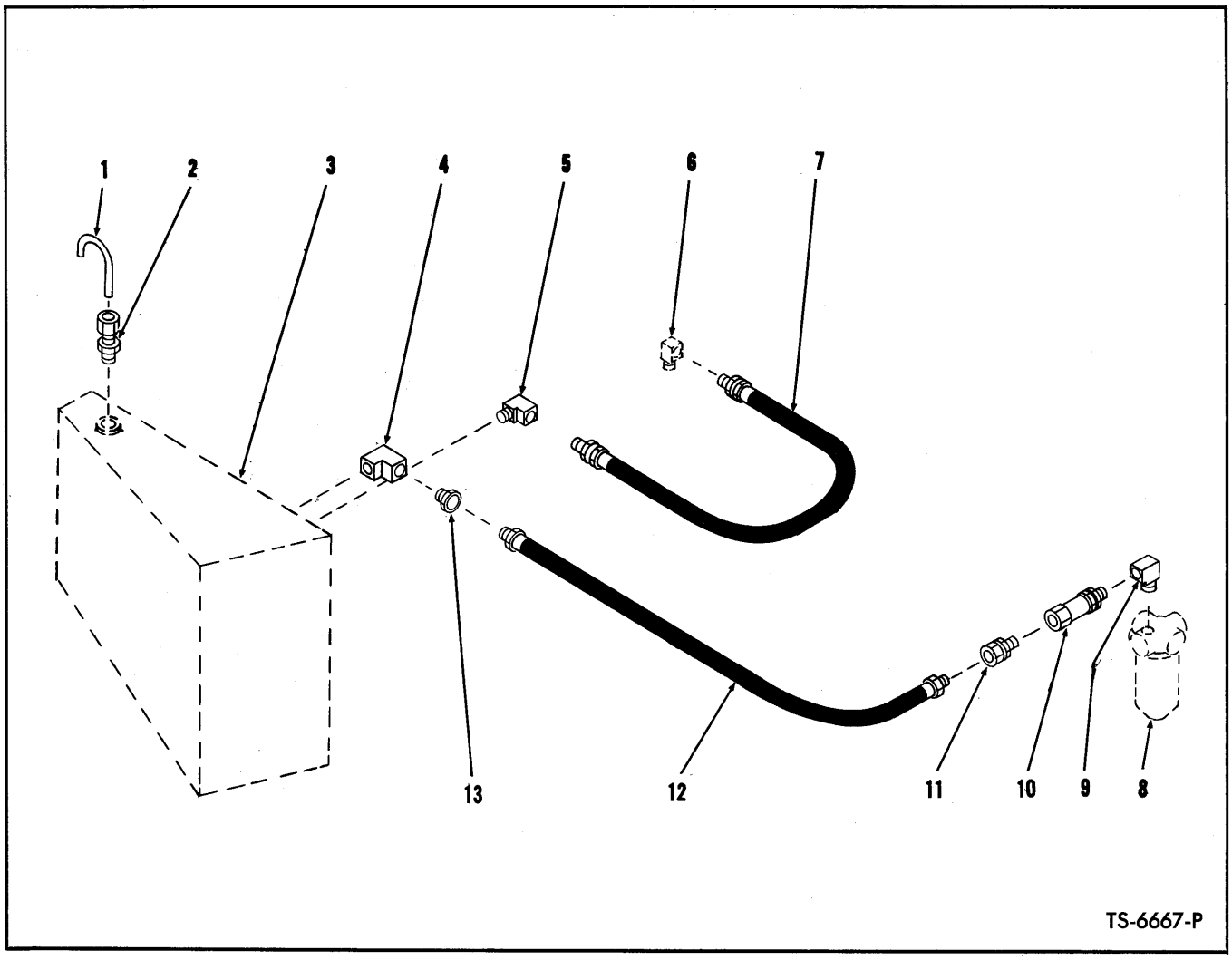

FUEL LINES

Item No.	Part No.	Description	No. Req'd.
1	567847	TUBE, Breather	1
2	49F-3	CONNECTOR, Tube to Tank	1
3	———	FUEL TANK-See Index	—
4	27F-3	ELBOW, Hose to Tank	1
5	62F-5	ELBOW, Hose to Tank	1
6	———	*MANIFOLD, Injector Drain	—
7	563903	HOSE, Fuel Return	1
8	———	*FILTER, Fuel	—
9	29F-1	ELBOW, Filter	1
10	531792	VALVE, Check	1
11	36F-2	ADAPTER UNION, Valve to Hose	1
12	610236	HOSE, Fuel Suction	1
13	19F-5	BUSHING, Tank Reducing	1

*NOTE: See your local authorized G.M. Distributor for service and replacement of these parts.

WHEN ORDERING PARTS, ALWAYS STATE MODEL AND SERIAL NO. OF MACHINE

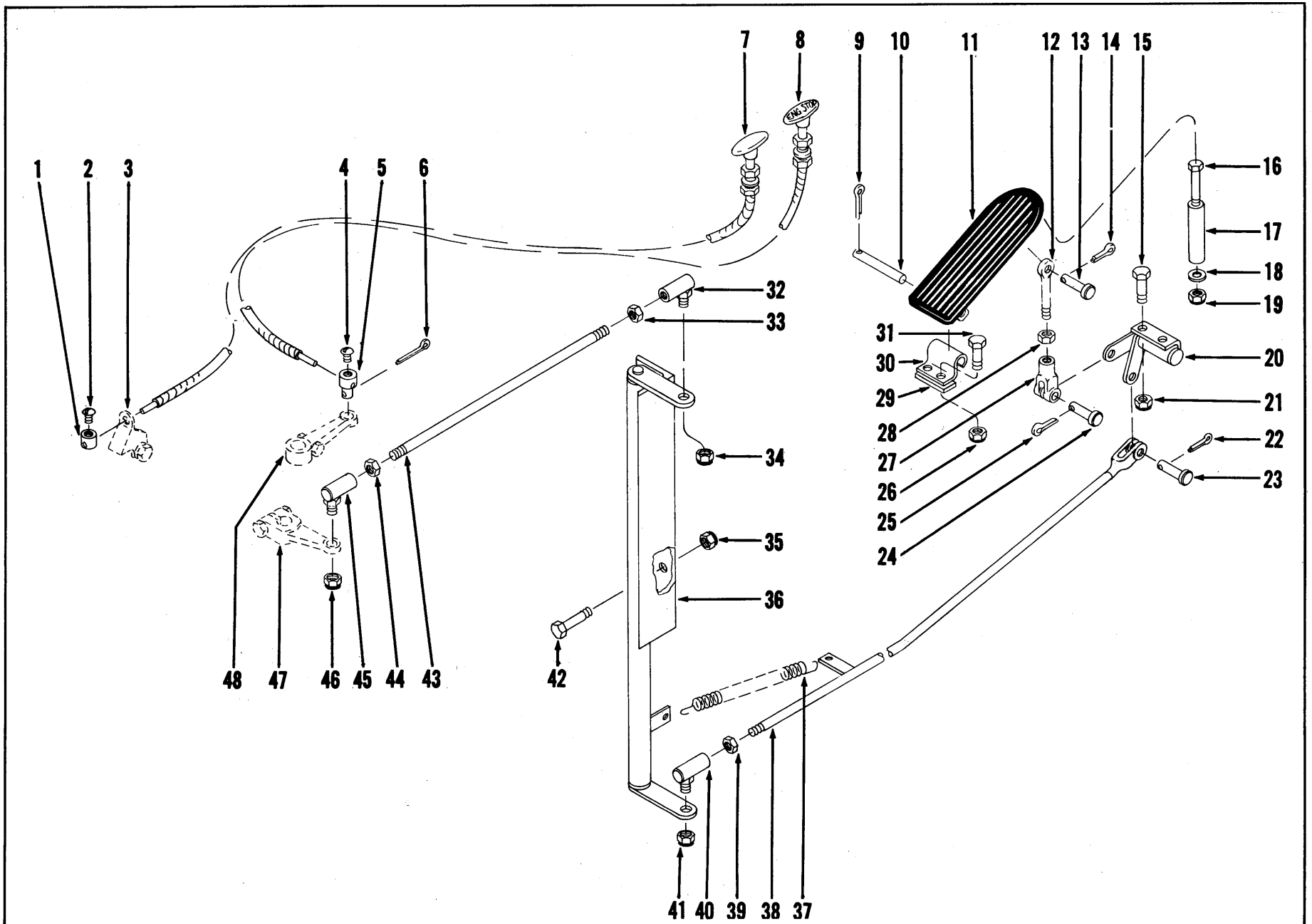

ACCELERATOR PEDAL AND LINKAGE

TS-6565-P

ACCELERATOR PEDAL AND LINKAGE

Item No.	Part No.	Description	No. Req'd.
1	535003	CONNECTOR, Cable	1
2	3G-1008	SCREW, Cable Connector	1
3	———	SHUT-OFF, Emergency — See Engine Parts Manual	—
4	3G-1008	SCREW, Cable Connector	1
5	351131	CONNECTOR, Cable	1
6	1F-308	COTTER, Cable Connector	1
7	1520190	CABLE, Emergency Shut-Off	1
8	1520193	CABLE, Engine Shut-Off	1
9	1F-316	COTTER, Pivot Pin	1
10	623762	PIN, Pedal Pivot	1
11	623829	PEDAL, Accelerator	1
12	550619	ROD, Pedal to Clevis	1
13	4F-04051	PIN, Rod to Pedal	1
14	1F-207	COTTER, Pedal Pin	1
15	18C-412	BOLT, Bellcrank to Floorboard	2
16	18C-448	BOLT, Pedal Stop	1
17	551016	STOP, Pedal	1
18	774337	WASHER, Pedal Stop	1
19	18D-04	NUT, Pedal Stop	1
20	572174	BELLCRANK, Front	1
21	18D-04	NUT, Bellcrank to Floorboard	2
22	1F-216	COTTER, Clevis Pin	1
23	4F-04051	PIN, Rod to Bellcrank	1
24	4F-04051	PIN, Clevis to Bellcrank	1
25	1F-207	COTTER, Clevis Pin	1
26	18D-04	NUT, Bracket to Floorboard	2
27	2J-4200	CLEVIS, Rod to Bellcrank	1
28	8D-04	NUT, Clevis Jam	1
29	572556	SPACER, Bracket to Floorboard	1
30	623760	BRACKET, Pedal Pivot	1
31	18C-416	BOLT, Bracket to Floorboard	2
32	1301361	BALL JOINT	1
33	8D-05	NUT, Ball Joint Jam	1
34	18D-05	NUT, Ball Joint to Bellcrank	1
35	18D-06	NUT, Bellcrank to Transmission Filter Bracket	2
36	569352	BELLCRANK, Rear	1
37	551090	SPRING	1
38	571111	ROD, Accelerator (Inc. 39, 40)	1
39	8D-05	NUT, Ball Joint Jam	1
40	1301361	BALL JOINT	1
41	18D-05	NUT, Ball Joint to Bellcrank	1
42	18C-628	BOLT, Bellcrank to Trans. Filter Bracket	2
43	571112	ROD, Governor Control (Inc. 32, 33, 44, 45)	1
44	8D-05	NUT, Ball Joint Jam	1
45	1301361	BALL JOINT	1
46	18D-05	NUT, Ball Joint to Governor Lever	1
47	———	GOVERNOR, — See Engine Parts Manual	—
48	———	SHUT-OFF, Fuel — See Engine Parts Manual	—

WHEN ORDERING PARTS, ALWAYS STATE MODEL AND SERIAL NO. OF MACHINE

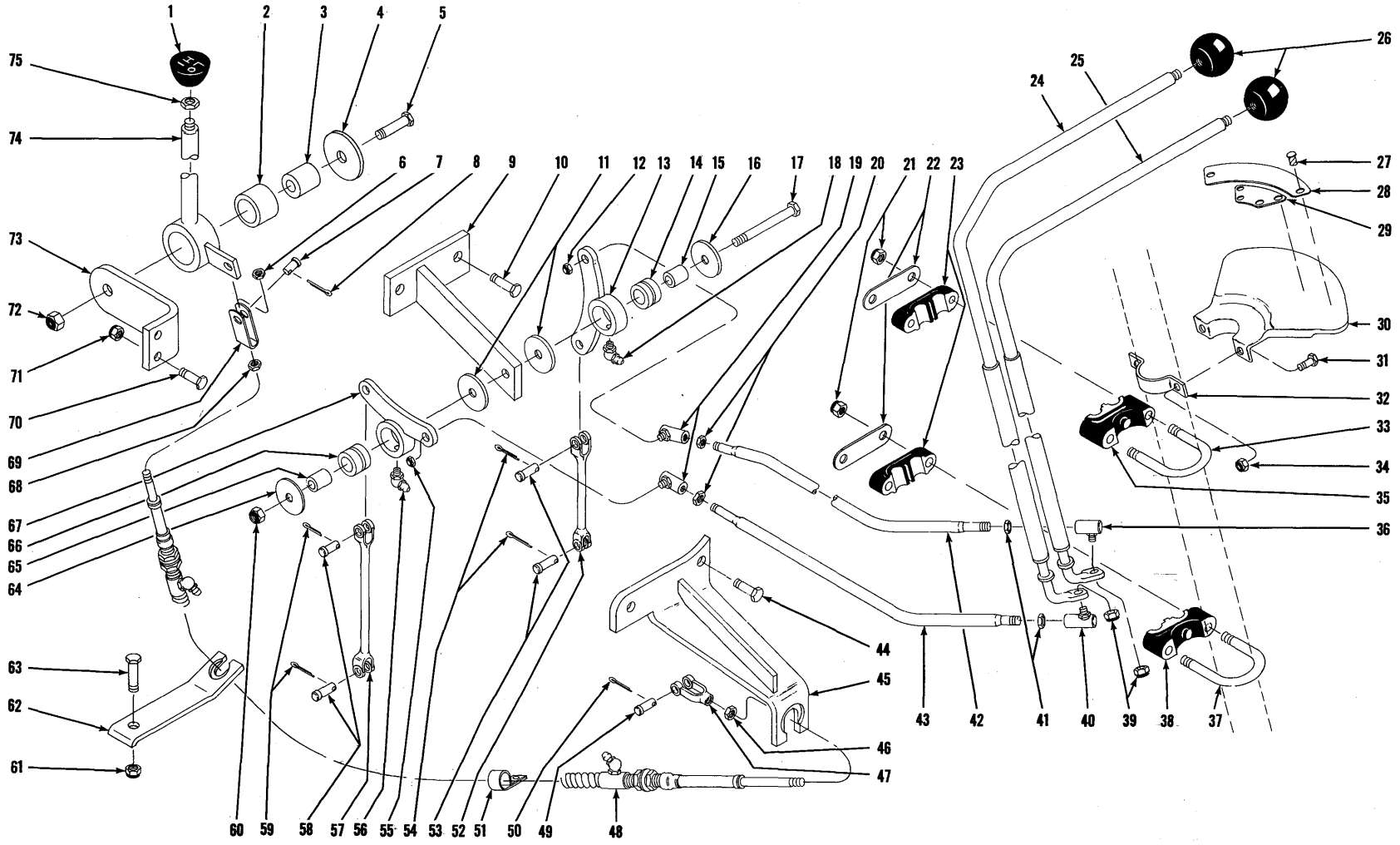

TRANSMISSION CONTROL LEVERS AND LINKAGE

TS-6673-P

TRANSMISSION CONTROL LEVERS AND LINKAGE

Item No.	Part No.	Description	No. Req'd.
1	563753	KNOB, Shift Lever	1
2	549580	BUSHING, Shift Lever	1
3	550646	SLEEVE, Shift Lever	1
4	616796	WASHER, Shift Lever Mounting	1
5	18C-844	BOLT, Shift Lever Mounting	1
6	8D-05	NUT, Control Cable Jam	1
7	4F-05062	PIN, Clevis	1
8	1F-312	COTTER, Clevis Pin	1
9	557032	BRACKET, Bellcrank Mounting	1
10	17C-724	BOLT, Bracket Mounting	2
11	616795	WASHER, Bellcrank Mounting	2
12	66D-06	NUT, Ball Joint to Bellcrank	1
13	585500	BELLCRANK	1
14	585597	BUSHING, Bellcrank	1
15	585596	SLEEVE, Bellcrank	1
16	616795	WASHER, Bellcrank Mounting	1
17	18C-856	BOLT, Bellcrank Mounting	1
18	12H-15	FITTING, Bellcrank Grease	1
19	1301362	BALL JOINT	2
20	8D-06	NUT, Ball Joint Jam	2
21	18D-05	NUT, Lever Mounting Support	4
22	589906	PLATE, Support Back-Up	2
23	581979	SUPPORT, Lever Mounting	2
24	562227	LEVER, Shift — Forward & Reverse	1
25	562224	LEVER, Shift — Four Speed	1
26	509772	KNOB, Shift Lever	2
27	6C-605	SCREW, Plate Mounting Drive	6
28	567977	PLATE, Shift Quadrant — Hi-Lo	1
29	567947	PLATE, Shift Quadrant — Forward & Reverse	1
30	567946	QUADRANT, Shift	1
31	18C-412	BOLT, Shift Quadrant Mounting	2
32	567945	CLAMP, Shift Quadrant Mounting	1
33	557246	U-BOLT, Levers to Steering Column	1
34	18D-04	NUT, Shift Quadrant Mounting	2
35	581978	SUPPORT, Lever Mounting	1
36	1301362	BALL JOINT	1
37	557246	U-BOLT, Levers to Steering Column	1
38	581978	SUPPORT, Lever Mounting	1
39	66D-06	NUT, Ball Joint to Shift Lever	2
40	1301362	BALL JOINT	1
41	8D-06	NUT, Ball Joint Jam	2
42	557030	ROD ASSY, Hi-Lo Control (Inc. 19, 20, 36, 41)	1
43	556424	ROD ASSY, Fwd. & Reverse (Inc. 19, 20, 40, 41)	1
44	17C-724	BOLT, Bracket Mounting	2
45	568803	BRACKET, Anchor (Hi-Lo Cable)	1
46	8D-05	NUT, Control Cable Jam	1
47	556413	CLEVIS, Cable End	1
48	556411	CABLE, Hi-Lo Range Control	1
49	4F-06106	PIN, Clevis	1
50	1F-312	COTTER, Clevis Pin	1
51	562608	CLIP	1
52	557034	ROD, Hi-Lo	1
53	4F-06106	PIN, Clevis	2
54	1F-312	COTTER, Clevis Pin	2
55	66D-06	NUT, Ball Joint to Bellcrank	1
56	12H-15	FITTING, Bellcrank Grease	1
57	556422	ROD, Forward & Reverse	1
58	4F-06106	PIN, Clevis	2
59	1F-312	COTTER, Clevis Pin	2
60	18D-08	NUT, Bellcrank Mounting	1
61	18D-08	NUT, Bracket Mounting	1
62	562607	BRACKET, Hi-Lo Cable Mounting	1
63	18C-864	BOLT, Bracket Mounting	1
64	616795	WASHER, Bellcrank Mounting	1
65	585596	SLEEVE, Bellcrank	1
66	585597	BUSHING, Bellcrank	1
67	585500	BELLCRANK	1
68	8D-05	NUT, Control Cable Jam	1
69	589411	FITTING, Cable End	1
70	18C-620	BOLT, Bracket Mounting	2
71	18D-06	NUT, Bracket Mounting	2
72	18D-08	NUT, Lever Mounting	1
73	562606	BRACKET, Hi-Lo Range Lever Mounting	1
74	562605	LEVER, Hi-Lo Range	1
75	7D-06	NUT, Hi-Lo Range Lever Jam	1

WHEN ORDERING PARTS, ALWAYS STATE MODEL AND SERIAL NO. OF MACHINE

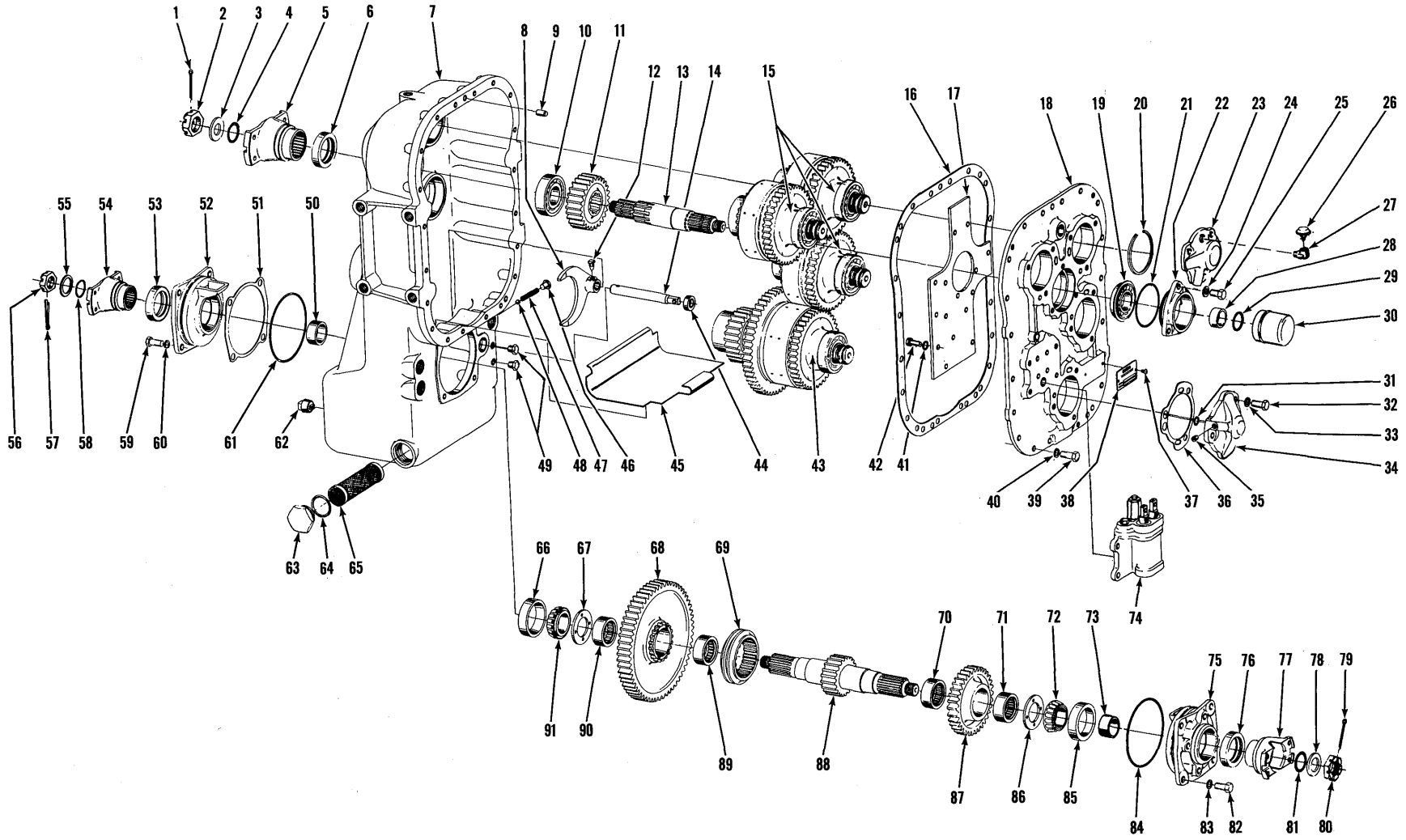

TRANSMISSION ASSEMBLY AND MOUNTING BRACKETS

TS-6775-P

TRANSMISSION ASSEMBLY AND MOUNTING BRACKETS

Item No.	Part No.	Description	No. Req'd.
A	281986	TRANSMISSION ASSY (2420-17) (Inc. 1 thru 91)	1
1	1F-428	COTTER, Flange Nut	1
2	201951	NUT, Input Flange	1
3	102745	WASHER, Input Flange	1
4	25K-40112	"O" RING, Input Flange	1
5	214940	FLANGE, Input Shaft	1
6	206864	SEAL, Input Shaft Oil	1
7	228494	CASE ASSY, Transmission (Inc. 6)	1
8	215146	FORK, Range Shift	1
9	214295	PIN, Cover to Case Dowel	2
10	225603	BEARING, Input Shaft	1
11	215166	GEAR, Input Shaft	1
12	201566	SCREW, Shift Fork Lock	1
13	217952	SHAFT, Input	1
14	215145	RAIL, Range Shift	1
15	———	CLUTCH GROUP — Foward, Reverse & Low — See Index (Inc. 20)	—
16	215144	GASKET, Cover to Case	1
17	215143	PLATE, Oil Circuit	1
X 18	~~215142~~	COVER ASSY, Trans. (Inc. 17, 41, 42)	1
19	225824	BEARING, Input Shaft Locating	1
20	945374	RING, Bearing Retaining	4
21	25K-40316	"O" RING, Input Shaft Bearing Cap	1
22	215198	CAP ASSY, Input Shaft Bearing (Inc. 22A)	1
22A	206864	†SEAL, Input Shaft Oil	1
23	228961	CAP, Distributor Bearing	1
24	———	LKWSHR, Bearing Cap — See 25	—
25	5C-718	BOLT, Bearing Cap (Inc. 24)	3
26	211433	BREATHER, Air	1
27	25F-3	ELBOW	1
28	215162	SPACER, Input Flange	1
29	659065	RING, Bearing Retaining	1
30	209412	CAP, Input Shaft	1
31	25K-30016	"O" RING, Bearing Cap	4
32	5C-718	BOLT, Bearing Cap (Inc. 33)	9
33	———	LKWSHR, Bearing Cap — See 32	—
34	215163	CAP, Distributor Bearing	3
35	16F-02	PLUG, Bearing Cap Pipe	4
36	215164	GASKET, Bearing Cap	4
37	207873	SCREW, Name Plate	2
38	220725	PLATE, Name	1
39	1C-720	BOLT, Cover to Case	20
40	4E-07	LKWSHR, Cover to Case	20
41	5E-06	LKWSHR, Plate to Cover	15
42	1C-614	BOLT, Plate to Cover	15
43	———	CLUTCH GROUP — High — See Index (Inc. 20)	—
44	225075	SEAL, Range Shift Oil	1
45	228943	PLATE, Baffle	1
46	40K-04	PLUG, Range Shift Rail Detent	1
47	215191	SPRING, Range Shift Rail Detent	1
48	10J-12	BALL, Range Shift Rail Detent	1
49	40K-04	PLUG, Oil Level	2
50	215162	SPACER, Brake Flange	1
51	215156	‡SHIM, Bearing Cap — .004"	—
51A	215157	‡SHIM, Bearing Cap — .007"	—
51B	215158	‡SHIM, Bearing Cap — .010"	—
52	215155	CAP, Output Shaft Bearing	1
53	206864	SEAL, Bearing Cap Oil	1
54	214985	FLANGE, Output	1
55	102745	WASHER, Flange Nut	1
56	201951	NUT, Flange	1
57	1F-428	COTTER, Flange Nut	1
58	25K-40112	"O" RING, Flange	1
59	1C-820	BOLT, Bearing Cap	4
60	5E-08	LKWSHR, Bearing Cap	4
61	25K-40524	"O" RING, Bearing Cap	1
62	215757	PLUG, Drain — Magnetic	1
63	219370	PLUG, Suction Screen	1
64	219373	GASKET, Suction Screen Plug	1
65	215205	SCREEN, Suction	1
66	675544	CUP, Output Shaft Bearing	1
67	215154	WASHER, Output Shaft Thrust	1
68	215150	GEAR ASSY, Low (Inc. 89, 90) (61T)	1
69	215149	HUB, Output Shaft Shift	1
70	225079	BEARING, High Gear	1
71	225079	BEARING, High Gear	1
72	675548	CONE, Output Shaft Bearing	1
73	215162	SPACER, Brake Flange	1
74	———	CONTROL VALVE — See Index	—
75	215155	CAP, Output Shaft Bearing	1
76	206864	SEAL, Bearing Cap Oil	1
77	214985	FLANGE, Output	1
78	102745	WASHER, Flange Nut	1
79	1F-428	COTTER, Flange Nut	1
80	201951	NUT, Flange	1
81	25K-40112	"O" RING, Flange	1
82	1C-820	BOLT, Bearing Cap	4
83	5E-08	LKWSHR, Bearing Cap	4
84	25K-40524	"O" RING, Bearing Cap	1
85	675544	CUP, Output Shaft Bearing	1
86	215154	WASHER, Output Shaft Thrust	1
87	215152	GEAR ASSY, High (Inc. 70, 71) (34T)	1
88	215551	SHAFT, Output	1
89	225079	BEARING, Low Gear	1
90	225079	BEARING, Low Gear	1
91	675548	CONE, Output Shaft Bearing	1
92	589573	†BRACKET, Trans. Mounting	2
93	18C-832	†BOLT, Bracket to Frame	4
94	619029	†WASHER, Bracket to Frame — L.H.	2
95	18D-08	†NUT, Bracket to Frame	4
96	17C-1228	†BOLT, Bracket to Trans.	8
97	4E-12	†LKWSHR, Bracket to Trans.	8

†Not Illustrated
‡As Required

WHEN ORDERING PARTS, ALWAYS STATE MODEL AND SERIAL NO. OF MACHINE

X 215141 ONPG 2166

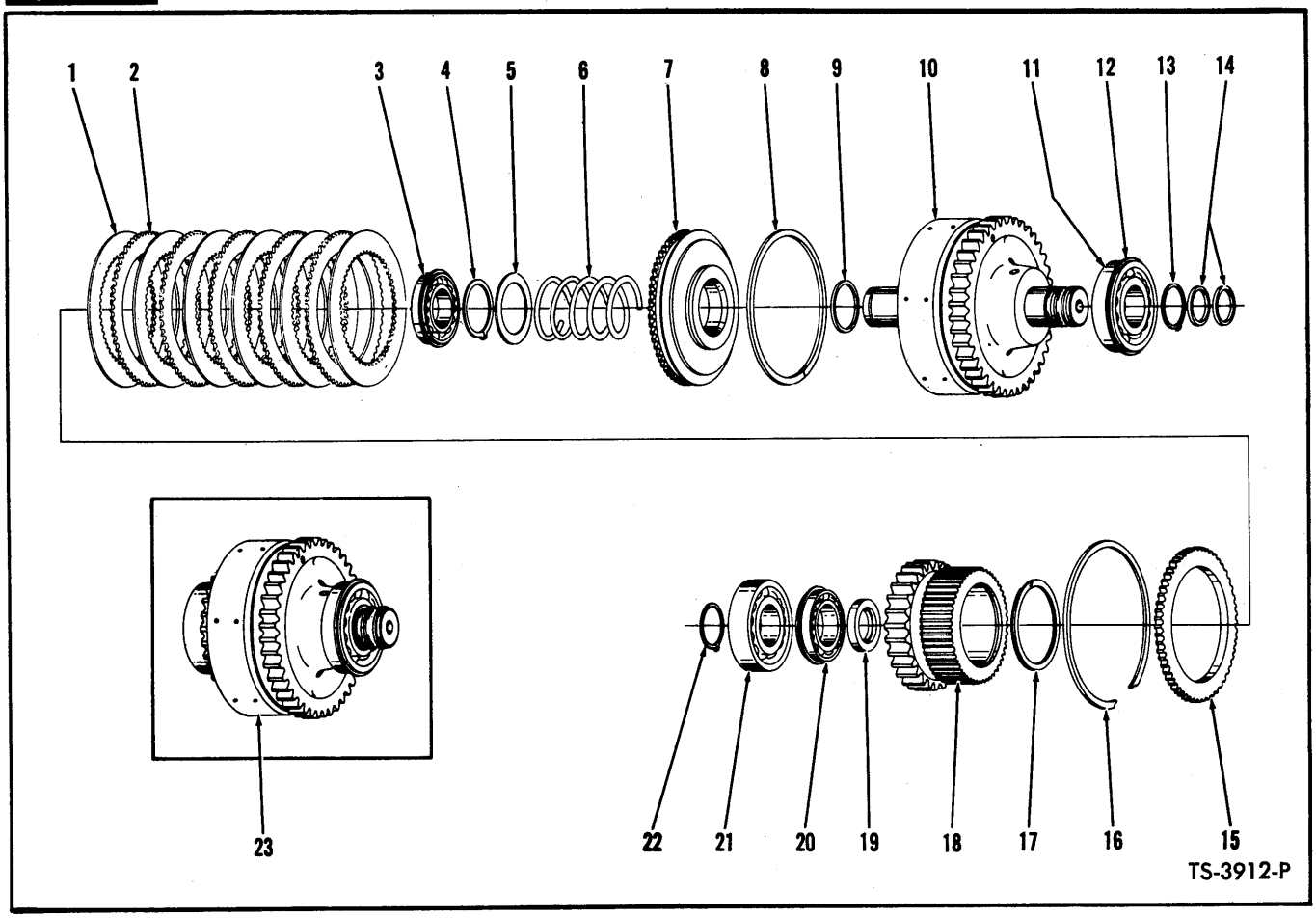

CLUTCH GROUP — FORWARD, REVERSE AND LOW

(This Group used 3 times in Transmission — Quantities listed below are for 1 Clutch Group)

Item No.	Part No.	Description	No. Req'd.
1	215178	DISC, Clutch Inner	6
2	224772	DISC, Clutch Outer	5
3	225076	BEARING, Clutch Disc Hub	1
4	654613	RING, Return Spring Retaining	1
5	616848	WASHER, Return Spring Retaining	1
6	215179	SPRING, Clutch Piston Return	1
7	215177	PISTON, Clutch	1
8	224771	RING, Piston Outer Sealing	1
9	223085	RING, Piston Inner Sealing	1
10	215663	DRUM ASSY, Clutch (Inc. 10A, 10B) (40T)	1
10A	215176	†SEAT, Bleed Valve Ball	1
10B	10J-06	†BALL, Bleed Valve	1
11	666559	BEARING, Clutch Shaft (Inc. 12)	1
12	945374	RING, Bearing Retaining	1
13	659065	RING, Clutch Shaft Bearing Retaining	1
14	215183	RING, Clutch Shaft Sealing	2
15	224774	PLATE, Clutch Disc End	1
16	215190	RING, End Plate Retaining	1
17	225077	RING, Clutch Disc Hub Oil Baffle	1
18	215180	GEAR & HUB ASSY (28T)	1
19	215182	SPACER, Clutch Disc Hub Bearing	1
20	225076	BEARING, Clutch Disc Hub	1
21	658016	BEARING, Clutch Shaft	1
22	659065	RING, Clutch Shaft Bearing Retaining	1
23	———	§CLUTCH ASSY	1

†Not Illustrated
§Not sold as an Assembly — Order individual parts.

WHEN ORDERING PARTS, ALWAYS STATE MODEL AND SERIAL NO. OF MACHINE

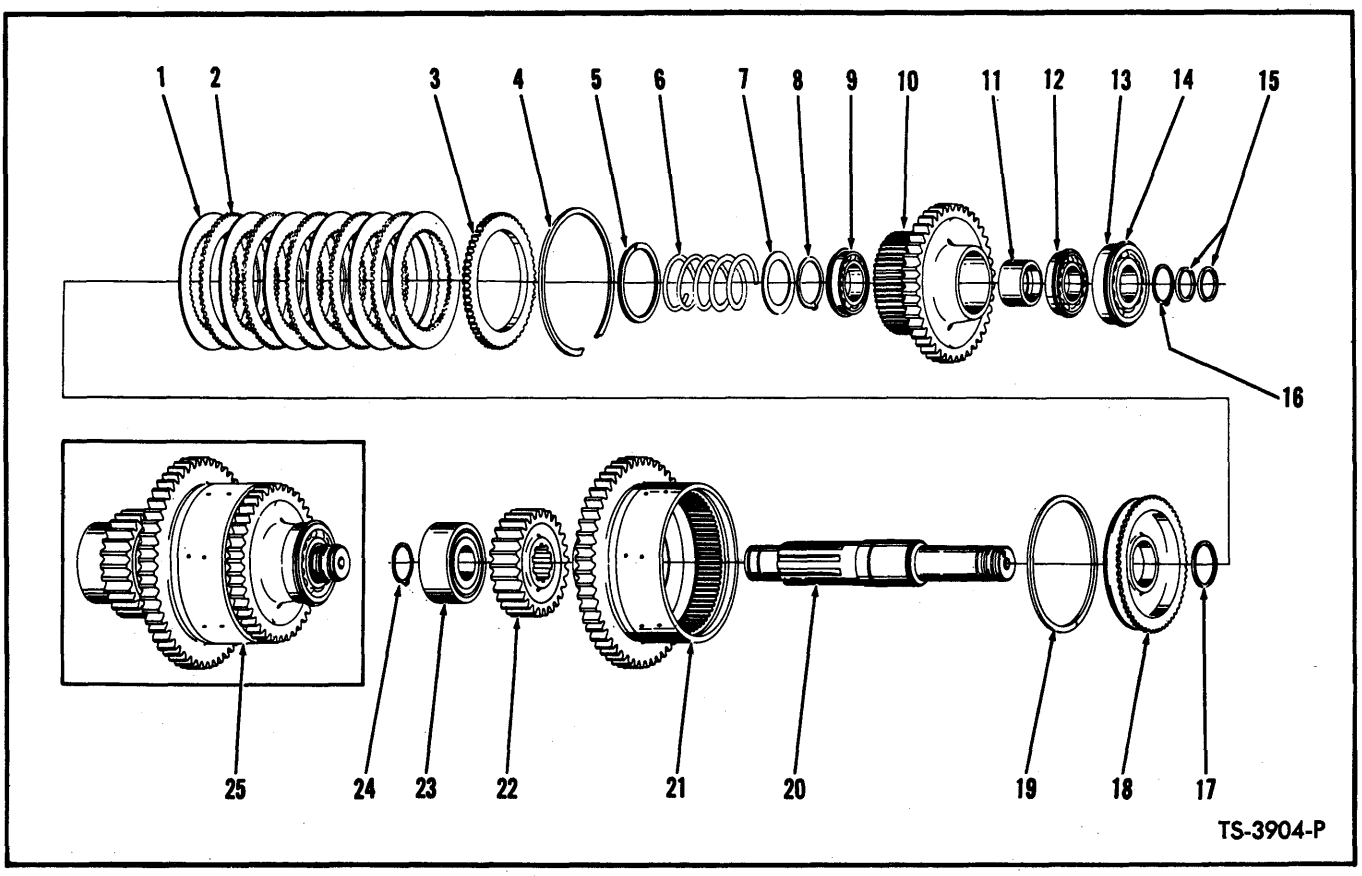

CLUTCH GROUP — HIGH

Item No.	Part No.	Description	No. Req'd.
1	215178	DISC, Clutch Inner	6
2	224772	DISC, Clutch Outer	5
3	224774	PLATE, Clutch Disc End	1
4	215190	RING, End Plate Retaining	1
5	225077	RING, Disc Hub Oil Baffle	1
6	215179	SPRING, Piston Return	1
7	616848	WASHER, Return Spring Retaining	1
8	654613	RING, Return Spring Retaining	1
9	225076	BEARING, Clutch Disc Hub	1
10	215188	HUB & GEAR, Clutch Disc (40T)	1
11	215189	SPACER, Clutch Disc Hub Bearing	1
12	225076	BEARING, Clutch Disc Hub	1
13	666559	BEARING, Clutch Shaft (Inc. 14)	1
14	945374	RING, Bearing Retaining	1
15	215183	RING, Clutch Shaft Sealing	2
16	659065	RING, Bearing Retaining	1
17	223085	RING, Piston Inner Sealing	1
18	215177	PISTON, Clutch	1
19	224771	RING, Piston Outer Sealing	1
20	215184	SHAFT, Clutch	1
21	227952	DRUM & GEAR ASSY, Clutch (Inc. 21A, 21B) (53T)	1
21A	215176	†SEAT, Bleed Valve Ball	1
21B	10J-06	†BALL, Bleed Valve	1
22	215166	GEAR, High Clutch Shaft (26T)	1
23	799595	BEARING, Clutch Shaft High Gear	1
24	659065	RING, Bearing Retaining	1
25	———	§CLUTCH ASSY	—

†Not Illustrated
§Not Sold as an Assembly — Order individual parts.

WHEN ORDERING PARTS, ALWAYS STATE MODEL AND SERIAL NO. OF MACHINE

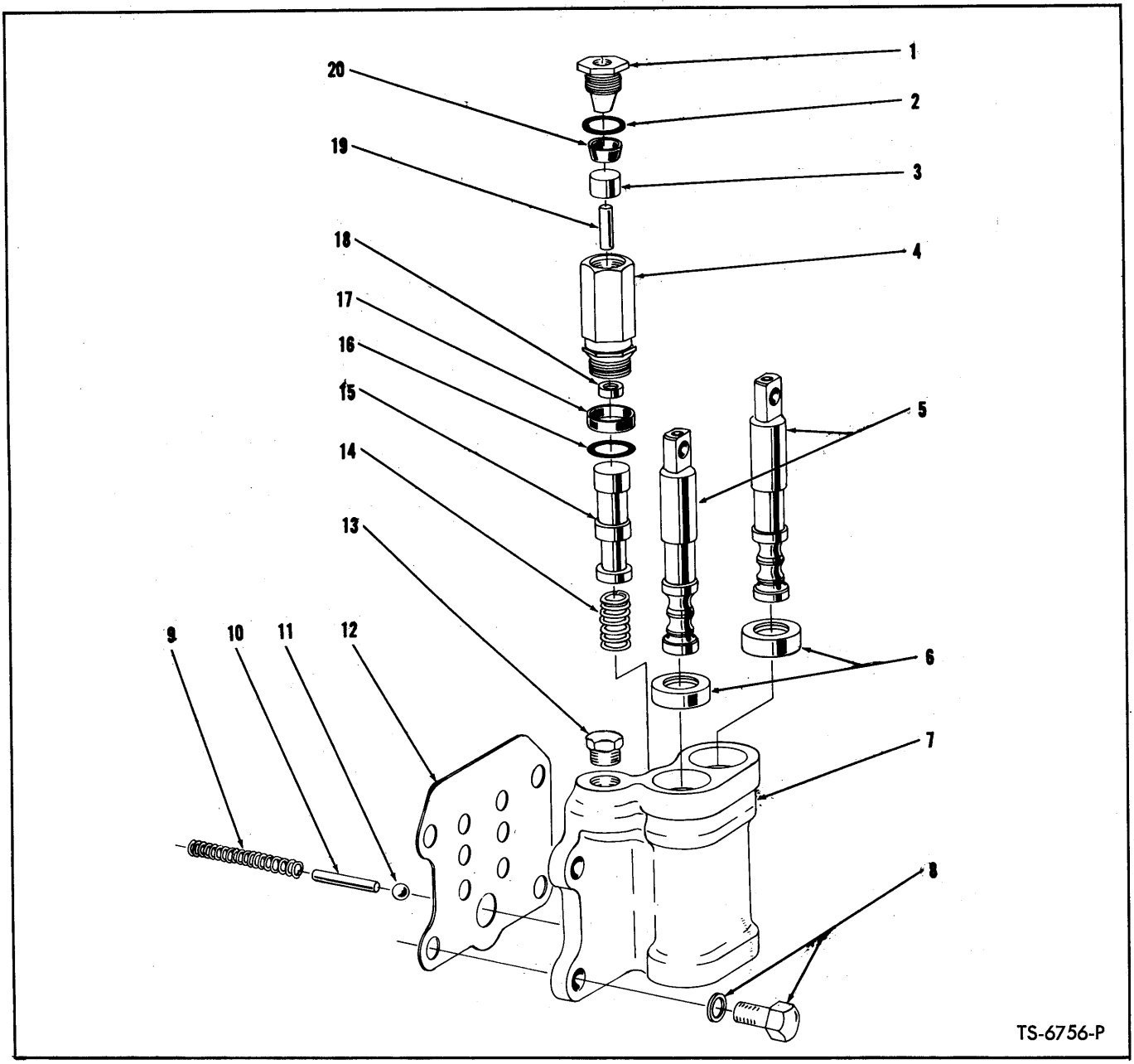

CONTROL VALVE — TRANSMISSION

Item No.	Part No.	Description	No. Req'd.
A	229047	CONTROL VALVE ASSY (Inc. 1 thru 20)	1
1	215200	PLUG, Stop	1
2	25K-30020	"O" RING	1
3	215199	SPACER, Cup	1
4	215196	VALVE, De-Clutch (Inc. 1, 2, 3, 4A, 16 thru 20)	1
4A	215197	HOUSING, Valve De-Clutch	1
5	———	§VALVE, Manual Control — See A	2
6	225075	SEAL, Manual Control Valve Oil	2
7	———	§HOUSING, Control Valve — See A	1
8	5C-718	BOLT & LKWSHR, Housing to Cover	4
9	215147	SPRING, Detent	2
10	215194	PIN, Detent Stop	2
11	10J-12	BALL, Detent	2
12	215169	GASKET, Housing to Cover	1
13	40K-02	PLUG	1
14	220363	SPRING, Control Valve	1
15	———	§VALVE, De-Clutch Control — See A	1
16	25K-30022	"O" RING	1
17	228931	SEAL, Band	1
18	224315	SEAL, Oil	1
19	106358	PIN, Push	1
20	227874	CUP, Piston	1

§Not Sold Separately

WHEN ORDERING PARTS, ALWAYS STATE MODEL AND SERIAL NO. OF MACHINE

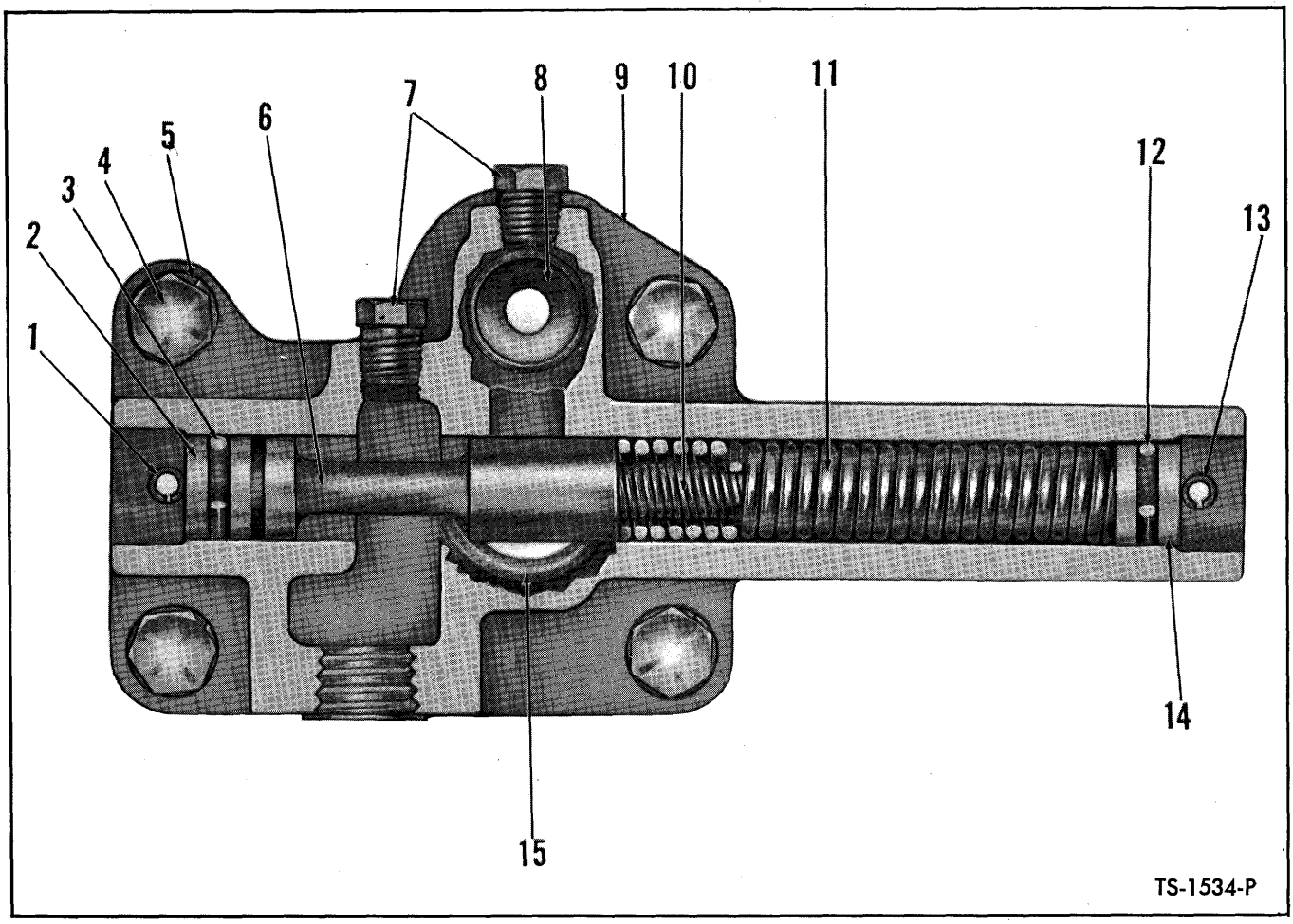

PRESSURE REGULATOR VALVE ASSEMBLY

Item No.	Part No.	Description	No. Req'd.
A	214969	VALVE ASSY, Pressure Regulator (Inc. 1, 2, 3, 6, 8 thru 15)	1
1	660178	PIN, Piston Stop	1
2	220983	STOP, Piston	1
3	25K-30018	"O" RING, Piston Stop	1
4	1C-616	BOLT, Valve to Converter	4
5	4E-06	LKWSHR, Valve to Converter	4
6	———	§PISTON, Valve — See Item "A"	—
7	40K-02	PLUG, Valve Housing	2
8	214946	SEAT, Safety Valve	1
9	———	§BODY, Valve — See Item "A"	—
10	220981	SPRING, Valve — Inner	1
11	220982	SPRING, Valve — Outer	1
12	25K-30018	"O" RING, Piston Stop	1
13	660178	PIN, Piston Stop	1
14	220983	STOP, Piston	1
15	25K-40104	"O" RING, Valve to Converter	1
16	214949	†GASKET, Valve to Housing	1

§Not Sold Separately
†Not Illustrated

WHEN ORDERING PARTS, ALWAYS STATE MODEL AND SERIAL NO. OF MACHINE

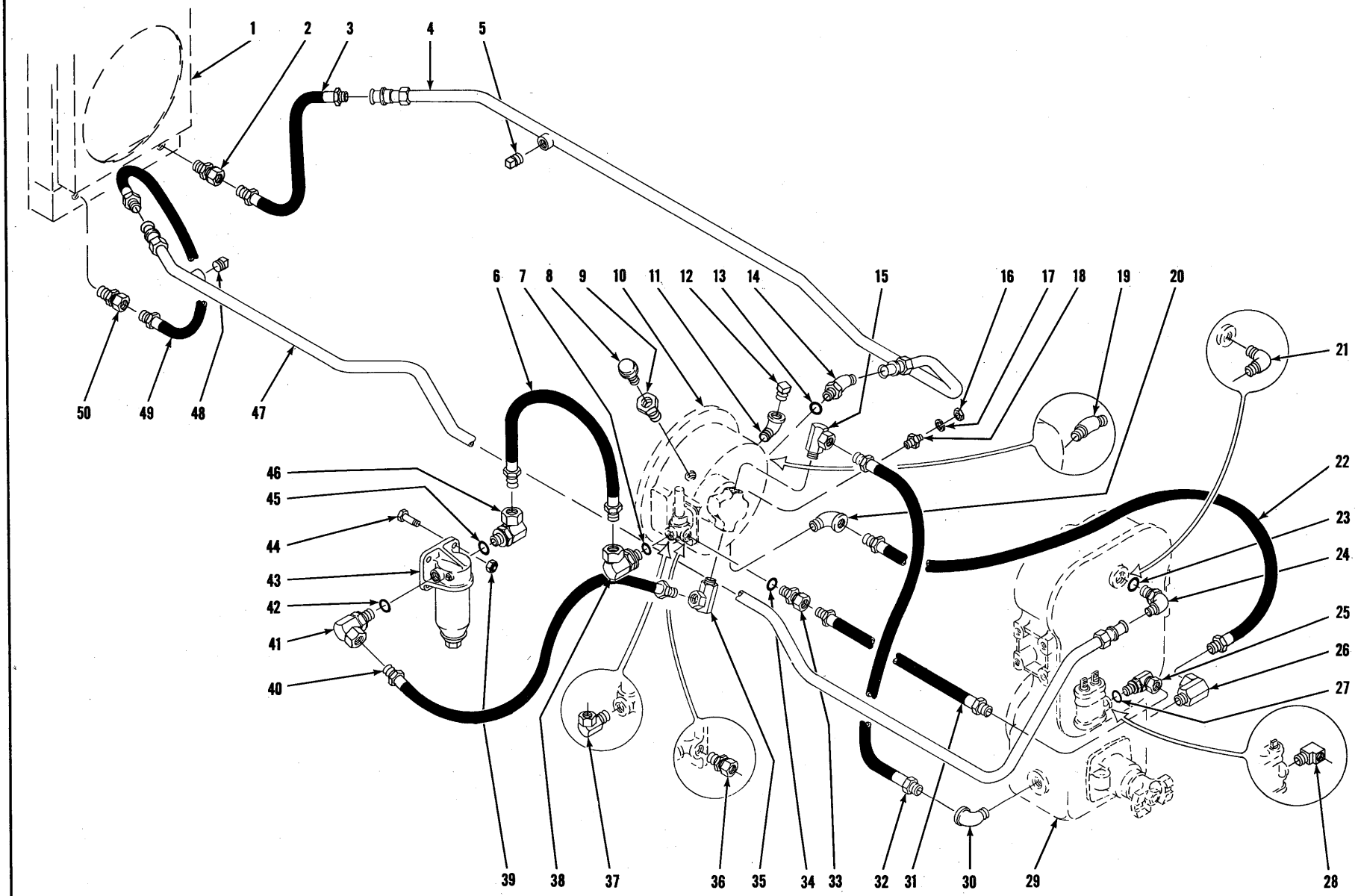

HYDRAULIC SYSTEM — TRANSMISSION AND TORQUE CONVERTER

TS-6642-P

HYDRAULIC SYSTEM — TRANSMISSION AND TORQUE CONVERTER

Item No.	Part No.	Description	No. Req'd.
1	———	RADIATOR — See Index	—
2	36F-5	ADAPTER UNION, Hose to Radiator	1
3	526847	HOSE, Radiator to Cooler Line	1
4	589477	LINE, Radiator to Converter Cooler (Inc. 5)	1
5	40K-04	PLUG, Cooler Line	1
6	546803	HOSE, Converter to Filter	1
7	91F-8	"O" RING, Elbow — See Serial Group "B" Below	1
8	211433	BREATHER, Converter Air	1
9	227265	VALVE, Air Breather Check	1
10	———	CONVERTER — See Index	—
11	25F-6	ELBOW, Converter Fill	1
12	13F-16	PLUG, Converter Fill	1
13	91F-8	"O" RING, Elbow — See Serial Group "B" Below	1
14	18K-8	ELBOW, Line to Converter (Inc. 13) — See Serial Group "B" Below	1
15	31F-6	ADAPTER UNION, Hose to Converter Pump	1
16	14D-10	NUT, Sender Unit	1
17	12E-10	LKWSHR, Sender Unit	1
18	551323	SENDER UNIT, Converter Temperature	1
19	84F-8	ELBOW, Cooler Line to Converter — See Serial Group "A" Below	1
20	26F-6	ELBOW, Hose to Converter Drain	1
21	83F-8	ELBOW, Cooler Line to Transmission — See Serial Group "C" Below	1
22	542626	HOSE, Converter Drain	1
23	91F-8	"O" RING, Elbow — See Serial Group "D" Below	1
24	17K-8	ELBOW, Cooler Line to Transmission (Inc. 23) — See Serial Group "D" Below	1
25	362653	ELBOW, Hose to Transmission (Inc. 27) See Serial Group "D" Below	1
26	31F-6	ELBOW, Drain Hose to Transmission	1
27	91F-6	"O" RING, Elbow — See Serial Group "D" Below	1
28	29F-2	ELBOW, Hose to Transmission — See Serial Group "C" Below	1
29	———	TRANSMISSION — See Index	—
30	26F-6	ELBOW, Hose to Transmission	1
31	556575	HOSE, Converter to Transmission	1
32	589367	HOSE, Converter to Transmission	1
33	690279	CONNECTOR, Hose to Converter Valve (Inc. 34) — See Serial Group "B" Below	1
34	91F-6	"O" RING, Connector — See Serial Group "B" Below	1
35	31F-5	ADAPTER UNION, Hose to Converter Pump	1
36	36F-3	CONNECTOR, Hose to Converter Valve — See Serial Group "A" Below	1
37	553843	ADAPTER UNION, Hose to Converter Valve — See Serial Group "A" Below	1
38	526676	ADAPTER UNION, Hose to Converter Valve — See Serial Group "B" Below	1
39	18D-06	NUT, Filter Mounting	4
40	546810	HOSE, Pump to Filter	1
41	526676	ELBOW, Hose to Filter (Inc. 42)	1
42	91F-8	"O" RING, Elbow	1
43	228190	FILTER, Converter & Transmission (Inc. 43A)	1
43A	215502	†CARTRIDGE KIT, Filter	1
44	18C-628	BOLT, Filter Mounting	4
45	91F-8	"O" RING, Elbow	1
46	526676	ELBOW, Hose to Filter (Inc. 45)	1
47	589476	LINE, Transmission to Radiator Cooler (Incl. 48)	1
48	40K-04	PLUG, Cooler Line	1
49	526847	HOSE, Cooler Line to Radiator	1
50	36F-5	ADAPTER UNION, Hose to Radiator	1

Serial Group "A" — For Converter with pipe fitting — 7CG101 thru 7CG158
Serial Group "B" — For Converter with "O" Ring fitting — 7CG159 and thereafter
Serial Group "C" — For Transmission with pipe fitting — 7CG101 thru 164, 169
Serial Group "D" — For Transmission with "O" Ring fitting — 7CG165 thru 7CG168, 7CG170 and thereafter

†Not Illustrated

WHEN ORDERING PARTS, ALWAYS STATE MODEL AND SERIAL NO. OF MACHINE

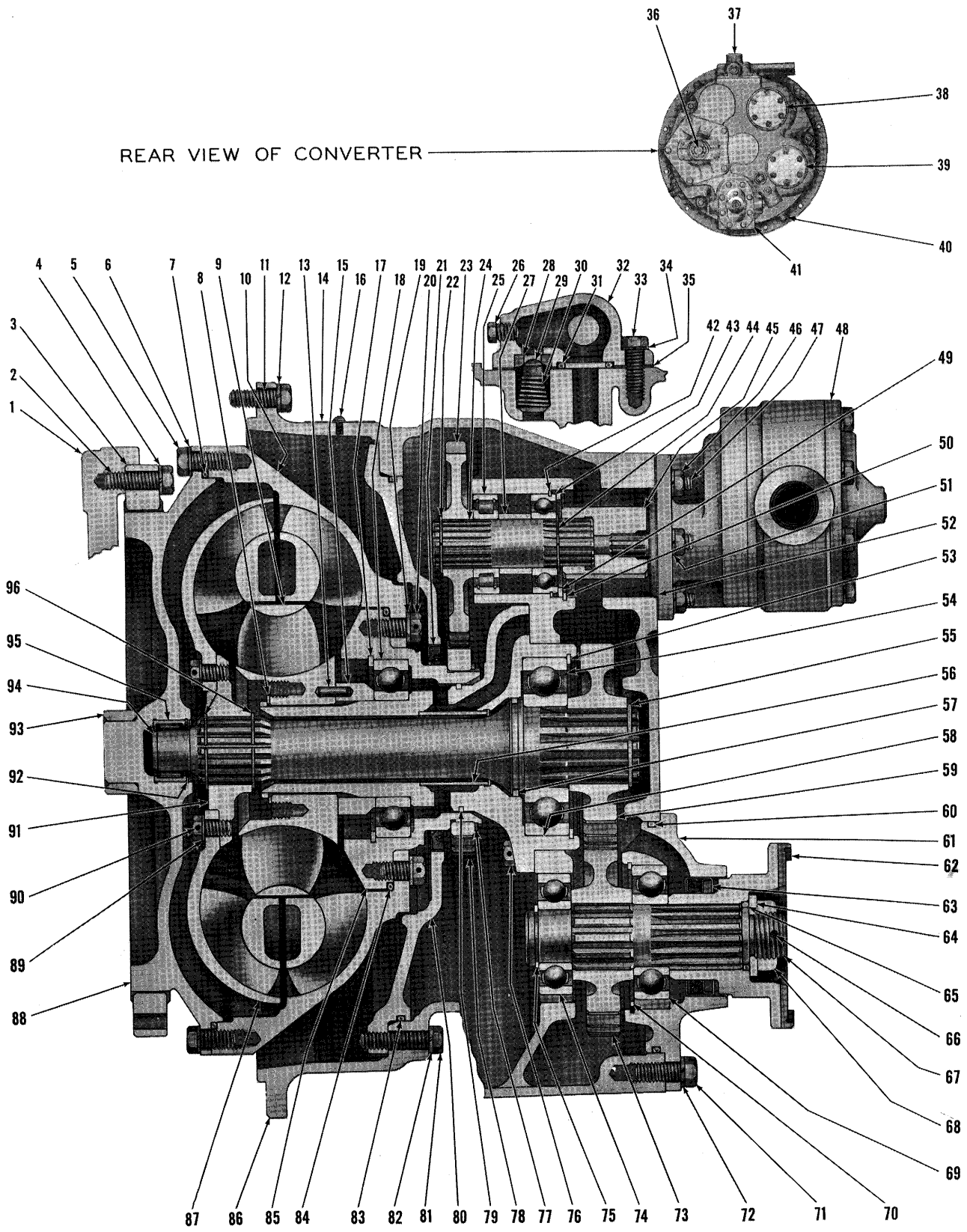

TORQUE CONVERTER ASSEMBLY TS-1566-P

TORQUE CONVERTER ASSEMBLY

Item No.	Part No.	Description	No. Req'd.
A	281022	CONVERTER ASSY, Torque (C-272-2) (Inc. 3, 5 thru 10, 13 thru 96)	1
1	———	FLYWHEEL, Engine — See Engine Parts Manual	—
2	224795	BOLT, Drive Gear to Flywheel	8
3	215264	GEAR, Converter Drive	1
4	215909	WASHER, Drive Gear to Flywheel	8
5	1C-616	BOLT, Impeller to Cover	24
6	4E-06	LKWSHR, Impeller to Cover	24
7	214939	"O" RING, Impeller to Cover	1
8	743035	RING, Reaction Member Retaining	1
9	214921	MEMBER, Reaction	1
10	214920	IMPELLER	1
11	17C-620	BOLT, Converter to Flywheel Hsg.	12
12	4E-06	LKWSHR, Converter to Flywheel Hsg.	12
13	658244	PIN, Spacer to Reaction Member Lock	1
14	220725	PLATE, Name	1
15	214934	SPACER, Reaction Member	1
16	207873	SCREW, Name Plate Drive	2
17	214953	RING, Impeller Hub Bearing Retaining	1
18	214596	BEARING, Impeller Hub	1
19	619025	WASHER, Hub to Impeller	8
20	4C-714	BOLT, Hub to Impeller	8
21	214941	SEAL, Oil Baffle	1
22	711298	RING, Gear Retaining	3
23	214931	GEAR, Pump Drive (39T)	3
24	214928	SHAFT, Pump Drive	3
25	214936	BEARING, Pump Drive Shaft	3
26	40K-02	PLUG, Valve Housing	2
27	214930	SPACER, Pump Shaft	3
28	214946	SEAT, Safety Valve	1
29	222318	PLUNGER, Safety Valve	1
30	222312	SPRING, Safety Valve	1
31	25K-40104	"O" RING, Valve to Converter	1
32	———	VALVE, Regulator — See Item 37	—
33	1C-616	BOLT, Valve Body	4
34	4E-06	LKWSHR, Valve Body	4
35	214949	GASKET, Valve to Converter	1
36	———	SHAFT, Output — See Item 67	—
37	———	VALVE ASSY, Pressure Regulator — See Index	—
38	———	COVER — Shipping	—
39	———	COVER — Shipping	—
40	13F-16	PLUG, Converter Housing	4
41	———	PUMP, Converter Charging — See Item 48	—
42	214954	RING, Bearing Retaining	3
43	214956	BEARING, Shaft	3
44	224039	RING, Bearing Retaining	3
45	214961	SLEEVE, Pump Drive Adapter	1
46	8D-06	NUT, Pump Stud	6
47	207647	STUD, Pump	6
48	450072	PUMP, Converter Charging — See Note "A"	1
49	214929	WASHER, Pump Shaft	3
50	713186	RING, Washer Retaining	3
51	4E-06	LKWSHR, Pump Stud	6
52	551906	GASKET, Pump Mounting	1
53	214953	RING, Bearing Retaining	1
54	742002	BEARING, Turbine Shaft	1
55	224026	RING, Gear Retaining	1
56	———	§SLEEVE, Stator Support — See Item 58	—
57	222079	RING, Turbine Shaft Sealing	1
58	214932	STATOR SUPPORT ASSY (Inc. 56)	1
59	214935	GEAR, Turbine Shaft (28T)	1
60	25K-40512	"O" RING, Bearing Retainer	1
61	214945	RETAINER & SEAL, Bearing (Inc. 63)	1
62	214940	FLANGE, Companion	1
63	206864	SEAL, Oil	1
64	102745	WASHER, Output Shaft	1
65	25K-40112	"O" RING, Companion Flange	1
66	1F-424	PIN, Cotter	1
67	214937	SHAFT, Output	1
68	201951	NUT, Output Shaft	1
69	743439	BEARING, Output Shaft — Rear	1
70	223901	RING, Bearing Retaining	1
71	1C-720	BOLT, Bearing Retainer	3
71A	214730	STUD, Bearing Retainer	2
71B	8D-07	NUT, Bearing Retainer	2
72	4E-07	LKWSHR, Bearing Retainer	5
73	214938	GEAR, Output Shaft (27T)	1
74	742056	BEARING, Output Shaft — Front	1
75	214955	RING, Bearing Retaining	1
76	1C-820	BOLT, Stator Support	6
76A	7E-08	†LKWSHR, Stator Support	6
77	224009	RING, Gear Retaining	1
78	214951	GEAR, Impeller Hub (41T)	1
79	221653	RING, Sealing	1
80	214925	BAFFLE, Oil	1
81	1C-628	BOLT, Oil Baffle	3
82	4E-06	LKWSHR, Oil Baffle	3
83	214939	"O" RING, Oil Baffle	1
84	25K-40616	"O" RING, Impeller Hub	1
85	214923	HUB, Impeller	1
86	801546	HOUSING, Converter	1
86A	16F-08	†PLUG, Pipe	1
86B	40K-02	†PLUG, Pipe	1
86C	13F-20	†PLUG, Pipe	1
87	222684	TURBINE	1
88	214922	COVER, Impeller	1
89	619023	WASHER, Turbine Hub	8
90	209313	BOLT, Turbine to Hub	8
91	214924	HUB, Turbine	1
92	666542	RING, Bearing Retaining	1
93	222006	SLEEVE, Impeller Cover	1
94	214933	SHAFT, Turbine	1
95	214988	BEARING, Impeller Cover	1
96	659065	RING, Turbine Hub Retaining	2
97	211433	†AIR BREATHER	1
98	227265	†CHECK VALVE, Air Breather	1

§Not Sold Separately
†Not Illustrated
*NOTE "A": When Converter Charging Pump replacement is required, only a new factory built and tested pump should be used. Proper operation of Converter and Transmission is dependent on an efficient charging pump. Damage possible by use of a field rebuilt pump can result in repair cost exceeding cost of new pump alone.

WHEN ORDERING PARTS, ALWAYS STATE MODEL AND SERIAL NO. OF MACHINE

DIESEL ENGINES
MACHINE NR. 21167

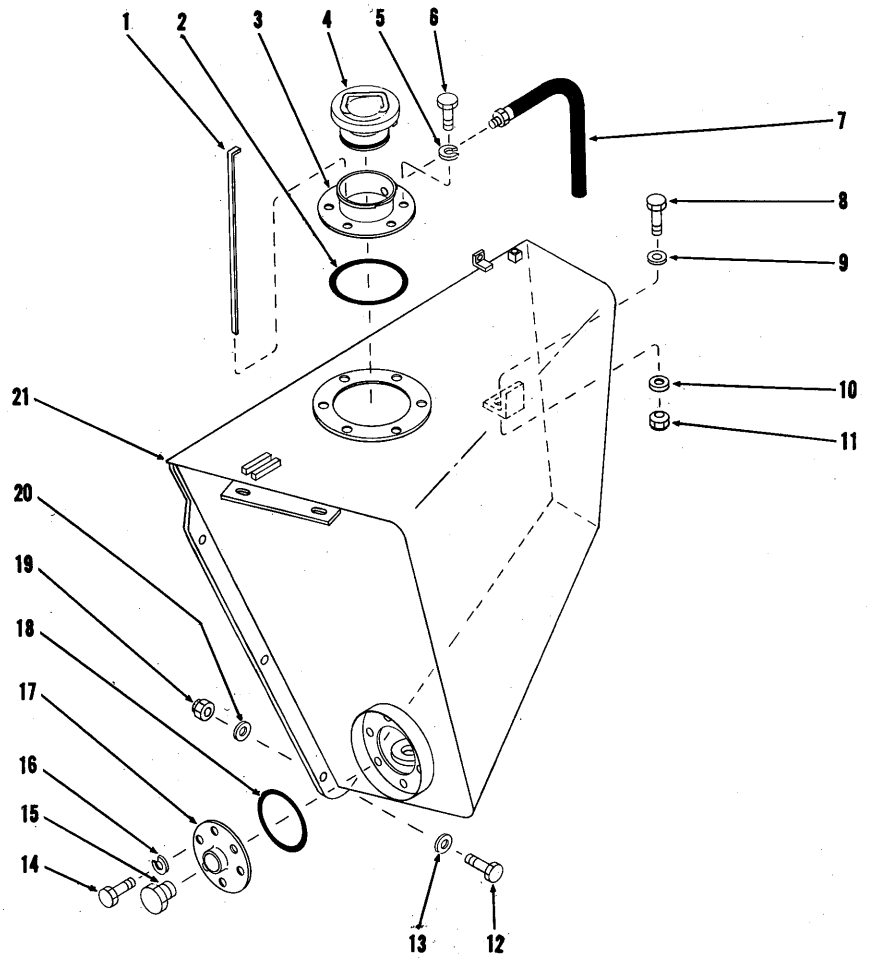

TS-6650-P

HYDRAULIC OIL RESERVOIR

Item No.	Part No.	Description	No. Req'd.
1	569425	DIPSTICK	1
2	25K-40624	"O" RING, Filler Neck	1
3	564175	NECK, Filler	1
4	569759	CAP, Oil Reservoir	1
5	4E-06	LKWSHR, Filler Neck to Tank	6
6	18C-612	BOLT, Filler Neck to Tank	6
7	569927	HOSE, Overflow	1
8	18C-1244	BOLT, Tank to Frame	1
9	616813	WASHER, Tank to Frame	1
10	71D-12	BASE, Tank to Frame	1
11	70D-12	NUT, Tank to Frame	1
12	18C-1244	BOLT, Tank to Side Plate	5
13	616813	WASHER, Tank to Side Plate	5
14	18C-612	BOLT, Inspection Plate to Tank	6
15	40K-16	PLUG, Drain	1
16	4E-06	LKWSHR, Inspection Plate to Tank	6
17	587613	PLATE, Inspection	1
18	25K-40428	"O" RING, Inspection Plate	1
19	18D-12	NUT, Tank to Side Plate	5
20	616813	WASHER, Tank to Side Plate	5
21	589186	OIL RESERVOIR	1
22	525293	†MAGNET	1

†Not Illustrated

WHEN ORDERING PARTS, ALWAYS STATE MODEL AND SERIAL NO. OF MACHINE

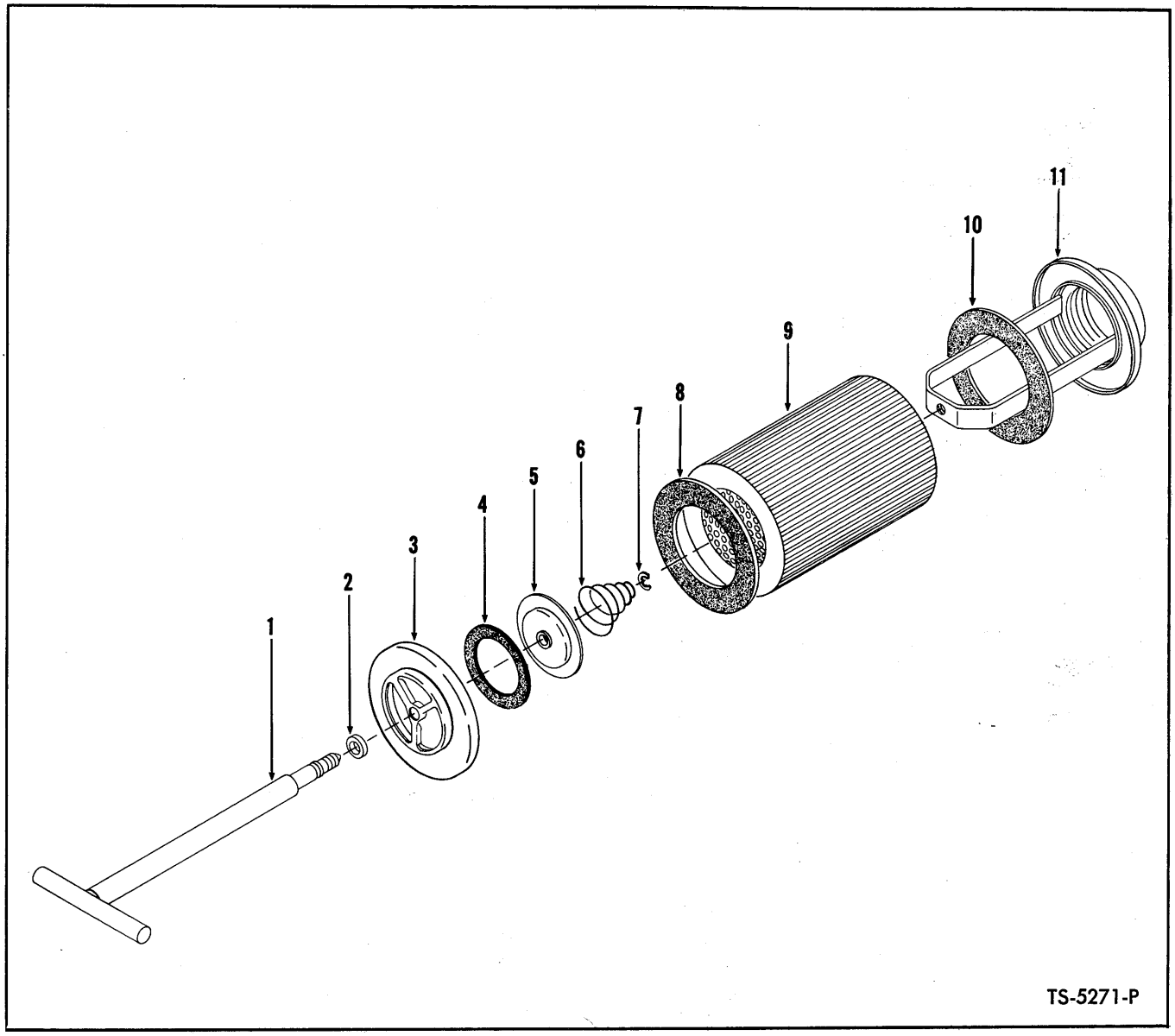

HYDRAULIC RESERVOIR FILTER ASSEMBLY

Item No.	Part No.	Description	No. Req'd.
A	562118	FILTER ASSY (Inc. 1 thru 11)	1
B	946105	HANDLE & COVER ASSY (Inc. 1 thru 7)	1
1	———	§HANDLE, Filter — See Item B	1
2	946060	LKWSHR, Handle & Cover	1
3	———	§COVER, Filter — See Item B	1
4	946058	GASKET, Cover	1
5	946057	PLATE, Cover Valve	1
6	946056	SPRING, Cover	1
7	1303459	"E" RING, Cover	1
8	946062	GASKET, Element	1
9	946108	ELEMENT, Filter (Inc. 8, 10)	1
10	946062	GASKET, Element	1
11	946106	BASE, Filter	1

§Not Sold Separately

WHEN ORDERING PARTS, ALWAYS STATE MODEL AND SERIAL NO. OF MACHINE

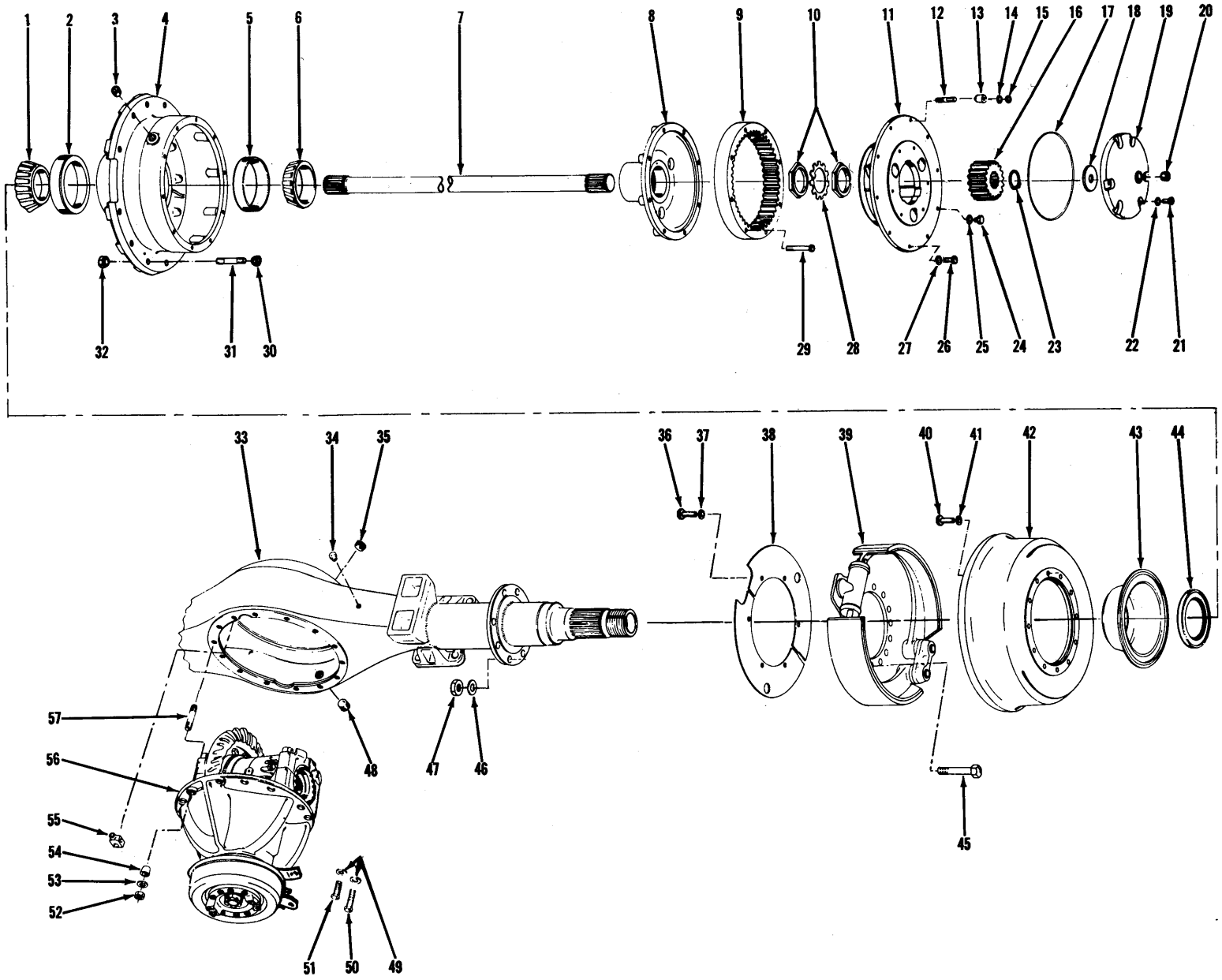

AXLE ASSEMBLY — FRONT DRIVE

TS-6763-P

AXLE ASSEMBLY — FRONT DRIVE

Item No.	Part No.	Description	No. Req'd.
A	131597	AXLE ASSY (Inc. 1 thru 57)	1
1	799408	CONE, Inner Hub Bearing	2
2	658985	CUP, Inner Hub Bearing	2
3	11F-12	PLUG, Hub Filler	2
4	112073	HUB ASSY (Inc. 2, 5)	2
5	672181	CUP, Outer Hub Bearing	2
6	672182	CONE, Outer Hub Bearing	2
7	112054	AXLE SHAFT	2
8	106060	HUB, Internal Gear	2
9	106059	GEAR, Internal	2
10	114433	NUT, Inner Spindle	4
11	———	PLANET CARRIER — See Index	—
12	116419	STUD, Planet Carrier Mounting	10
13	112287	DOWEL, Planet Carrier Mounting	10
14	106762	LKWSHR, Planet Carrier Mounting	10
15	64D-08	NUT, Planet Carrier Mounting	10
16	106058	GEAR, Sun	2
17	114089	"O" RING, Cap to Carrier	2
18	106455	WASHER, Sun Gear Thrust Cap	2
19	945129	KIT, Sun Gear Thrust Cap (Inc. 17, 18, 20)	2
20	11F-04	PLUG, Thrust Cap	2
21	1C-720	BOLT, Thrust Cap	12
22	112278	LKWSHR, Thrust Cap	12
23	224028	RING, Sun Gear Retaining	2
24	1C-808	BOLT, Planet Puller Hole	4
25	3E-08	LKWSHR, Planet Puller Hole	4
26	100970	BOLT, Planet Carrier to Hub	10
27	106762	WASHER, Planet Carrier to Hub	10
28	101274	LOCK, Spindle Nut	2
29	106880	BOLT, Internal Gear to Hub	16
30	103522	NUT, Wheel	20
31	103445	STUD, Wheel	20
32	103076	NUT, Wheel Stud	20
33	105705	HOUSING, Axle	1
34	106656	BREATHER, Axle Housing	1
35	11F-12	PLUG, Housing Filler	1
36	1C-612	BOLT, Dust Shield Mounting	12
37	4E-06	LKWSHR, Dust Shield Mounting	12
38	114453	SHIELD, Brake Dust	4
39	———	FRONT BRAKE ASSY — See Index	—
40	107256	BOLT, Brake Drum to Hub	24
41	104412	WASHER, Brake Drum to Hub	24
42	112075	DRUM, Brake	2
43	109055	CATCHER, Oil	2
44	112055	SEAL, Hub Oil	2
45	112058	BOLT, Spindle & Brake Attaching	16
46	104412	WASHER, Spindle & Brake Attaching	16
47	1D-10	NUT, Spindle & Brake Attaching	16
48	11F-12	PLUG, Housing Drain	1
49	112278	WASHER, Carrier to Axle Housing	11
50	17C-728	BOLT, Carrier to Axle Housing	8
51	17C-722	BOLT, Carrier to Axle Housing	3
52	64D-07	NUT, Carrier to Axle Housing	3
53	112278	WASHER, Carrier to Axle Housing	3
54	103216	DOWEL, Carrier to Axle Housing	3
55	609733	TEE, Brake Line	1
56	———	DIFF & CARRIER ASSY — See Index	—
57	112277	STUD, Carrier to Axle Housing	3

WHEN ORDERING PARTS, ALWAYS STATE MODEL AND SERIAL NO. OF MACHINE

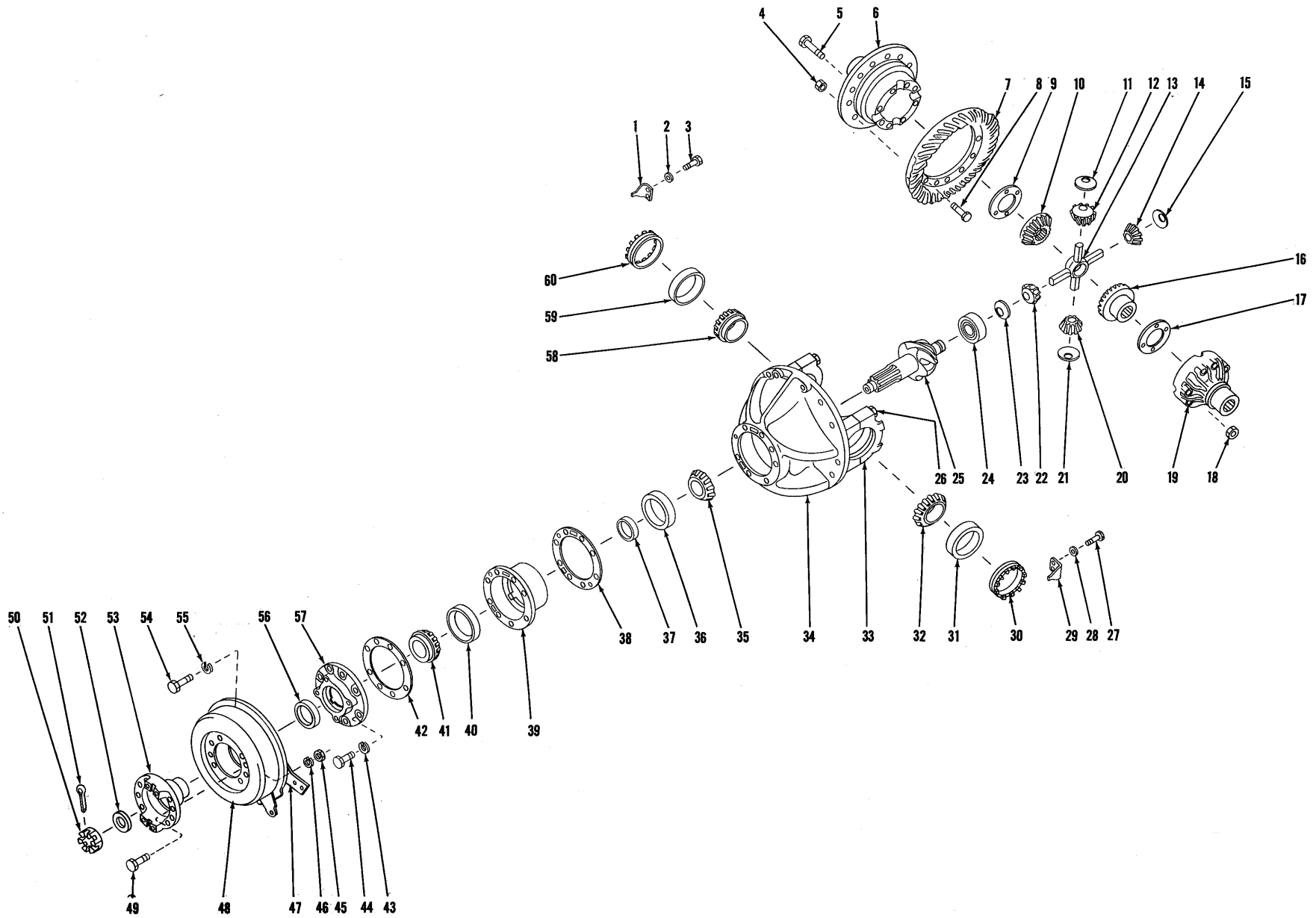

DIFFERENTIAL AND CARRIER ASSEMBLY — FRONT DRIVE

TS-6377-P

DIFFERENTIAL AND CARRIER ASSEMBLY — FRONT DRIVE

Item No.	Part No.	Description	No. Req'd.
A	117192	DIFF & CARRIER ASSY (Inc. 1 thru 60)	1
1	100941	LOCK, Adjusting Nut	1
2	4E-06	LKWSHR, Adjusting Nut Lock	1
3	3C-614	BOLT, Adjusting Nut Lock	1
4	104182	NUT, Ring Gear	12
5	100174	BOLT, Differential Case	8
6	———	§DIFF. CASE, Flange Half — See Item 64	—
7	———	§RING GEAR — See Item 63	—
8	100176	BOLT, Ring Gear	12
9	100173	WASHER, Side Gear Thrust	1
10	100170	GEAR, Differential Side	1
11	100172	WASHER, Differential Pinion Thrust	1
12	815744	PINION KIT, Differential (Inc. 14, 20, 22)	1
13	100171	SPIDER, Differential	1
14	———	§PINION, Differential — See Item 12	—
15	100172	WASHER, Differential Pinion Thrust	1
16	100170	GEAR, Differential Side	1
17	100173	WASHER, Side Gear Thrust	1
18	104182	NUT, Differential Case	8
19	———	§DIFF. CASE, Plain Half — See Item 64	—
20	———	§PINION, Differential — See Item 12	—
21	100172	WASHER, Differential Pinion Thrust	1
22	———	§PINION, Differential — See Item 12	—
23	100172	WASHER, Differential Pinion Thrust	1
24	675536	BEARING, Inner Pinion	1
25	———	§PINION — See Item 63	—
26	100937	BOLT, Carrier Cap	4
26A	111656	†WASHER, Carrier Cap	4
27	3C-614	BOLT, Adjusting Nut Lock	1
28	4E-06	LKWSHR, Adjusting Nut Lock	1
29	100941	LOCK, Adjusting Nut	1
30	100940	NUT, Differential Adjusting	1
31	675249	CUP, Differential Bearing	1
32	675248	CONE, Differential Bearing	1
33	———	§CAP, Differential — See Item 34	—
34	116712	CARRIER ASSY, Differential (Inc. 26, 26A, 33)	1
35	667277	CONE, Center Pinion Bearing	1
36	667278	CUP, Center Pinion Bearing	1
37	815040	KIT, Pinion Bearing Spacer	1
38	112354	‡SHIM, Pinion Bearing Cage (.004)	—
38A	112355	‡SHIM, Pinion Bearing Cage (.007)	—
38B	112356	‡SHIM, Pinion Bearing Cage (.010)	—
39	112350	CAGE ASSY, Pinion Bearing (Inc. 40)	1
40	675257	CUP, Outer Pinion Bearing	1
41	710288	CONE, Outer Pinion Bearing	1
42	112353	GASKET, Oil Seal Retainer	1
43	4E-09	LKWSHR, Oil Seal Retainer	5
44	1C-940	BOLT, Oil Seal Retainer	5
44A	1C-840	†BOLT, Retainer Locating	1
44B	4E-08	†LKWSHR, Retainer Locating	1
45	2D-06	NUT, Drum to Flange	6
46	2E-06	LKWSHR, Drum to Flange	6
47	———	PARKING BRAKE — See Index	—
48	107261	DRUM, Brake	1
49	101144	BOLT, Drum to Flange	6
50	100950	NUT, Pinion Shaft	1
51	1F-428	COTTER, Pinion Shaft Nut	1
52	100951	WASHER, Pinion Shaft	1
53	112871	FLANGE, Companion	1
54	1C-1022	BOLT, Brake Mounting	4
55	4E-10	LKWSHR, Brake Mounting	4
56	111720	SEAL, Pinion Oil	1
57	112357	RETAINER, Pinion Oil Seal	1
58	675248	CONE, Differential Bearing	1
59	675249	CUP, Differential Bearing	1
60	100940	NUT, Differential Adjusting	1
61	117193	†DIFFERENTIAL ASSY (Inc. 4 thru 23, 25)	1
62	106368	†DIFFERENTIAL BODY SUB-ASSY (Inc. 5, 6, 9 thru 23)	1
63	117194	†GEAR & PINION SET (Inc. 7, 25)	1
64	815259	†DIFF. CASE KIT (Inc. 5, 6, 18, 19)	1

†Not Illustrated
‡As Required
§Not Sold Separately

WHEN ORDERING PARTS, ALWAYS STATE MODEL AND SERIAL NO. OF MACHINE

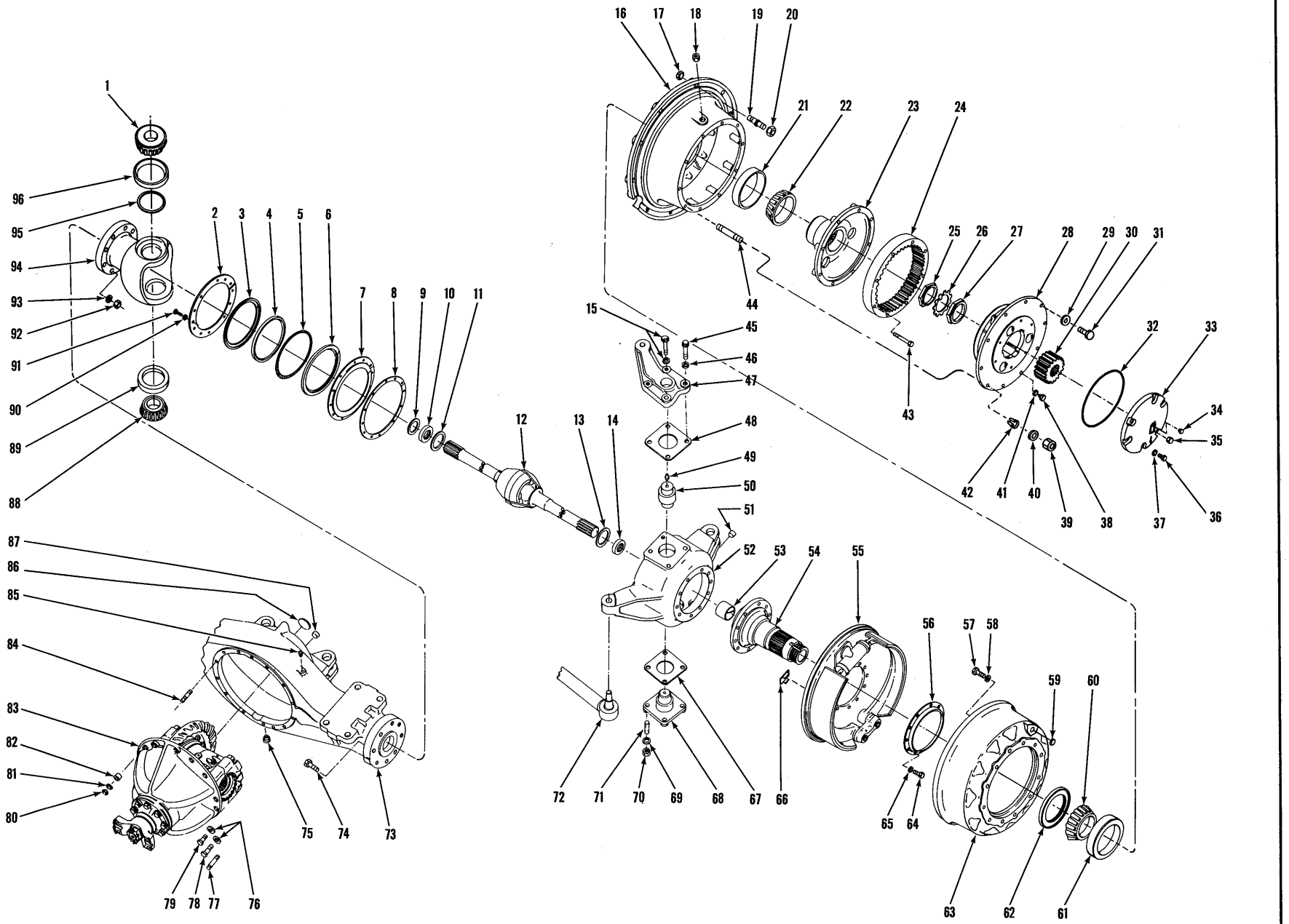

AXLE ASSEMBLY — REAR DRIVE STEER

TS-6767-P

AXLE ASSEMBLY — REAR DRIVE STEER

Item No.	Part No.	Description	No. Req'd.
A	131598	AXLE ASSY (Inc. 1 thru 97)	1
1	675305	CONE, Upper Trunnion Bearing	2
2	106136	RING, Outer End Seal Retainer	4
3	106135	RETAINER, Outer Dust Seal	2
4	106133	SEAL, Outer End Dust	2
5	106134	SPRING, Outer End Dust Seal	2
6	106132	SEAL, Outer End Oil	2
7	106130	RETAINER, Outer End Oil Seal	2
8	106131	GASKET, Outer End Oil Seal Retainer	2
9	106129	WASHER, Oil Seal	2
10	106127	SEAL, Universal Joint Shaft Oil	2
11	106128	WASHER, Universal Joint Thrust	2
12	117206	SHAFT ASSY, Axle & Universal Joint	2
13	106128	WASHER, Universal Joint Thrust	2
14	106127	SEAL, Universal Joint Shaft Oil	2
15	106322	BOLT, Steering Arm	2
15A	104549	WASHER, Steering Arm Bolt	2
16	112047	HUB ASSY (Inc. 21, 61)	2
17	103522	NUT, Wheel Stud	20
18	11F-12	PLUG, Hub Filler & Drain	2
19	103445	STUD, Wheel	20
20	103076	NUT, Wheel	20
21	675255	CUP, Outer Hub Bearing	2
22	675256	CONE, Outer Hub Bearing	2
23	106879	HUB, Internal Gear	2
24	106059	GEAR, Internal	2
25	114463	NUT, Steering Spindle	2
26	100967	LOCK, Spindle Nut	2
27	114463	NUT, Steering Spindle	2
28	———	PLANET SPIDER — See Index	—
29	106762	WASHER, Planet Spider to Hub	10
30	106058	GEAR, Sun	2
31	100970	BOLT, Planet Spider to Hub	10
32	114089	SEAL RING, Cap to Carrier	2
33	117242	CAP, Sun Gear Thrust	2
34	111805	VALVE, Thrust Cap Relief	2
35	11F-04	PLUG, Thrust Cap	2
36	1C-720	BOLT, Thrust Cap	12
37	112278	WASHER, Thrust Cap	12
38	1C-808	BOLT, Planet Puller Hole	4
39	64D-08	NUT, Planet Carrier Stud	10
40	106762	WASHER, Planet Carrier Stud	10
41	3E-08	LKWSHR, Planet Puller Hole	4
42	112287	DOWEL, Planet Carrier to Hub	10
43	106880	BOLT, Internal Gear to Hub	16
44	116419	STUD, Planet Carrier to Hub	10
45	106313	BOLT, Steering Arm	2
46	111656	WASHER, Steering Arm Bolt	2
47	110712	ARM, Steering	1
48	106319	‡SHIM, Steering Arm — THICK	—
48A	106320	†‡SHIM, Steering Arm — MEDIUM	—
48B	106321	†‡SHIM, Steering Arm — THIN	—
49	10H-25	FITTING, Upper Trunnion Grease	2
50	106120	TRUNNION, Upper Steering — L.H.	1
50A	108432	†TRUNNION, Upper Steering — R.H.	1
51	11F-12	PLUG, Spindle Support Filler	2
52	117210	SUPPORT, Spindle — L.H. (Inc. 71)	1
52A	117209	†SUPPORT, Spindle — R.H. (Inc. 71)	1
53	106099	BUSHING, Spindle	2
54	117207	SPINDLE ASSY (Inc. 53)	2
55	———	BRAKE ASSY — See Index	—
56	117214	CATCHER, Oil	2
57	107256	BOLT, Brake Drum to Hub	12
58	104412	WASHER, Brake Drum to Hub	12
59	107608	PLUG, Button Inspection Hole	1
60	675253	CONE, Inner Hub Bearing	2
61	675242	CUP, Inner Hub Bearing	2
62	111719	SEAL, Hub Oil	2
63	107646	DRUM, Brake	2
64	117213	BOLT, Spindle & Brake Attaching	20
65	106547	WASHER, Spindle & Brake Attaching	20
66	886886	COVER, Brake Adjusting Hole	8
67	106123	‡SHIM, Steering Trunnion — THICK	—
67A	106124	†‡SHIM, Steering Trunnion — MEDIUM	—
67B	106125	†‡SHIM, Steering Trunnion — THIN	—
68	106119	TRUNNION, Lower Steering	2
69	106547	WASHER, Trunnion Attaching	12
70	64D-09	NUT, Trunnion Attaching	12
71	106115	STUD, Trunnion Attaching	12
72	———	TIE ROD ASSY — See Index	—
73	112045	HOUSING, Axle	1
74	112090	BOLT, Housing to Outer End	16
75	11F-12	PLUG, Housing Drain	1
76	112278	WASHER, Carrier Attaching	11
77	112924	STUD, Brake Line Tee Attaching	1
78	17C-728	BOLT, Carrier Attaching	7
79	17C-722	BOLT, Carrier Attaching	4
80	64D-07	NUT, Carrier Stud	3
81	112278	WASHER, Carrier Stud	3
82	103216	DOWEL, Carrier Stud	3
83	———	DIFF. & CARRIER ASSY — See Index	—
84	112277	STUD, Carrier Attaching	3
85	106656	BREATHER, Axle Housing	1
86	12F-204	PLUG, Housing Expansion	1
87	11F-12	PLUG, Housing Filler	1
88	675305	CONE, Trunnion Bearing — Lower	2
89	675306	CUP, Trunnion Bearing — Lower	2
90	4E-06	LKWSHR, Outer End Retainer	24
91	1C-612	BOLT, Outer End Retainer	24
92	106998	NUT, Outer End to Housing	16
93	104412	WASHER, Outer End to Housing	16
94	118048	OUTER END, Housing	2
95	106121	RETAINER, Upper Trunnion Oil	2
96	675306	CUP, Upper Trunnion Bearing	2
97	550320	†TEE, Brake Line	1

‡As Required
†Not Illustrated

WHEN ORDERING PARTS, ALWAYS STATE MODEL AND SERIAL NO. OF MACHINE

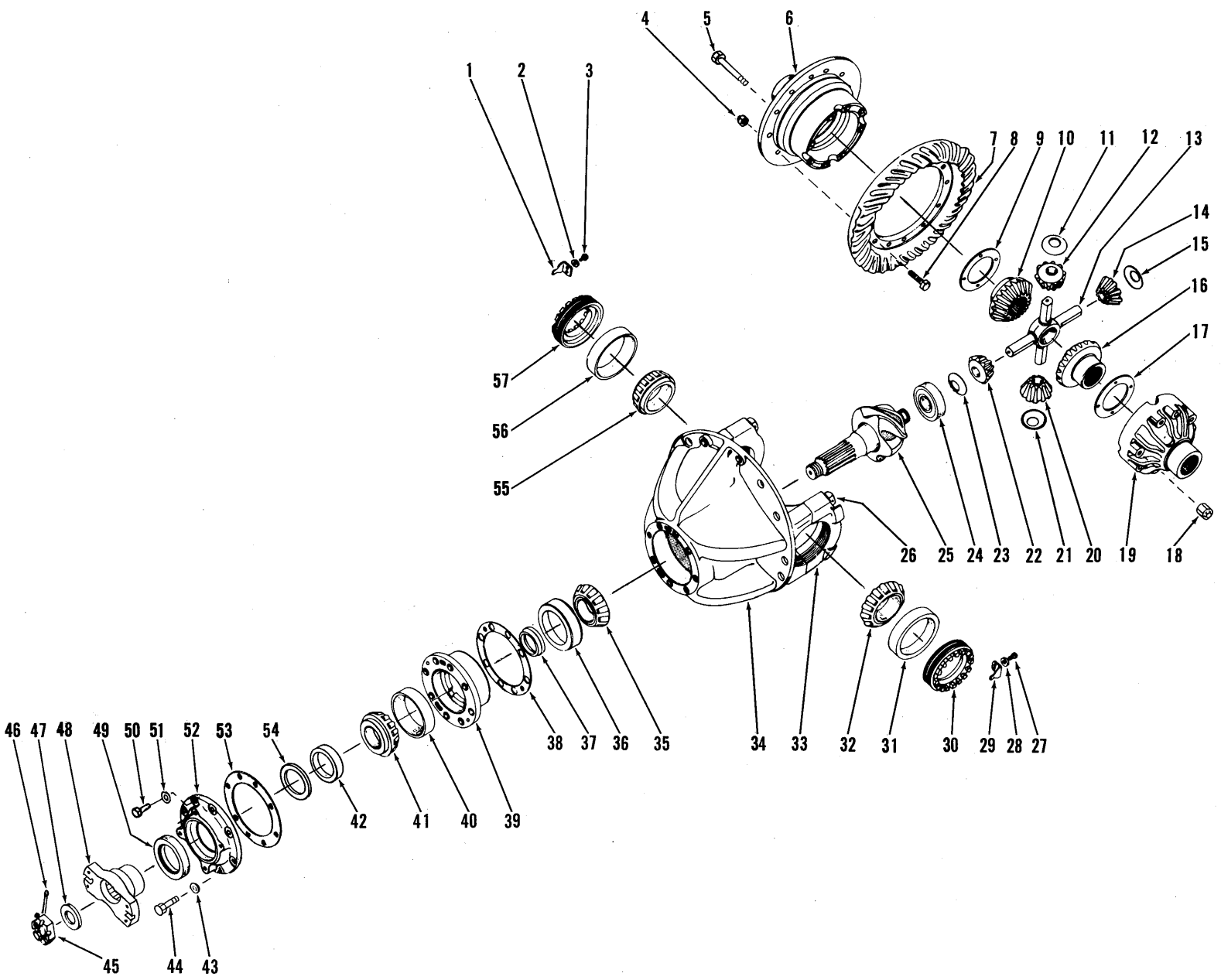

DIFFERENTIAL AND CARRIER ASSEMBLY — REAR DRIVE STEER

TS-5007-P

DIFFERENTIAL AND CARRIER ASSEMBLY — REAR DRIVE STEER

Item No.	Part No.	Description	No. Req'd.
A	117197	DIFF. & CARRIER ASSY (Inc. 1 thru 57)	1
1	100941	LOCK, Differential Adjusting Nut	1
2	4E-06	LKWSHR, Adjusting Nut Lock	1
3	3C-614	BOLT, Adjusting Nut Lock	1
4	104182	NUT, Ring Gear	12
5	100174	BOLT, Differential Case	8
6	———	§DIFF. CASE — Flange Half — See Item 61	—
7	———	§RING GEAR — See Item 60	—
8	100176	BOLT, Ring Gear	12
9	100173	WASHER, Side Gear Thrust	1
10	100170	GEAR, Differential Side	1
11	100172	WASHER, Differential Pinion Thrust	1
12	815744	PINION KIT, Differential (Inc. 14, 20, 22)	1
13	100171	SPIDER, Differential	1
14	———	§PINION, Differential — See Item 12	—
15	100172	WASHER, Differential Pinion Thrust	1
16	100170	GEAR, Differential Side	1
17	100173	WASHER, Side Gear Thrust	1
18	104182	NUT, Differential Case	8
19	———	§DIFF. CASE — Plain Half — See Item 61	—
20	———	§PINION, Differential — See Item 12	—
21	100172	WASHER, Differential Pinion Thrust	1
22	———	§PINION, Differential — See Item 12	—
23	100172	WASHER, Differential Pinion Thrust	1
24	675536	BEARING, Inner Pinion	1
25	———	§PINION, Differential — See Item 60	—
26	100937	BOLT, Differential Carrier Cap	4
26A	111656	WASHER, Differential Carrier Cap	4
27	3C-614	BOLT, Adjusting Nut Lock	1
28	4E-06	LKWSHR, Adjusting Nut Lock	1
29	100941	LOCK, Differential Adjusting Nut	1
30	100940	NUT, Differential Adjusting	1
31	675249	CUP, Differential Bearing	1
32	675248	CONE, Differential Bearing	1
33	———	CAP, Differential Carrier — See Item 34	—
34	116712	CARRIER ASSY, Diff. (Inc. 26, 26A, 33)	1
35	667277	CONE, Center Pinion Bearing	1
36	667278	CUP, Center Pinion Bearing	1
37	815040	KIT, Pinion Bearing Spacer	1
38	112354	‡SHIM, Bearing Cage (.004)	—
38A	112355	‡SHIM, Bearing Cage (.007)	—
38B	112356	‡SHIM, Bearing Cage (.010)	—
39	112350	CAGE ASSY, Pinion Bearing (Inc. 40)	1
40	675257	CUP, Outer Pinion Bearing	1
41	710288	CONE, Outer Pinion Bearing	1
42	111720	SEAL, Pinion Oil	1
43	4E-09	LKWSHR, Oil Seal Retainer	5
44	1C-928	BOLT, Oil Seal Retainer	5
45	100950	NUT, Pinion Shaft	1
46	1F-428	COTTER, Pinion Shaft Nut	1
47	100951	WASHER, Pinion Shaft Nut	1
48	106081	FLANGE, Companion	1
49	———	OMIT — Not applicable this Model	—
50	1C-828	BOLT, Oil Seal Retainer Locating	1
51	4E-08	LKWSHR, Oil Seal Retainer Locating	1
52	112352	RETAINER, Pinion Oil Seal	1
53	112353	GASKET, Oil Seal Retainer	1
54	100945	GASKET, Pinion Oil Seal	1
55	675248	CONE, Differential Bearing	1
56	675249	CUP, Differential Bearing	1
57	100940	NUT, Differential Adjusting	1
58	117198	†DIFF. ASSY (Inc. 4 thru 23, 25)	1
59	106368	†DIFF. BODY SUB ASSY (Inc. 5, 6, 9 thru 23)	1
60	117199	†GEAR & PINION SET (Inc. 7, 25)	1
61	815259	†DIFF. CASE KIT (Inc. 5, 6, 18, 19)	1

§Not Sold Separately
‡As Required
†Not Illustrated

WHEN ORDERING PARTS, ALWAYS STATE MODEL AND SERIAL NO. OF MACHINE

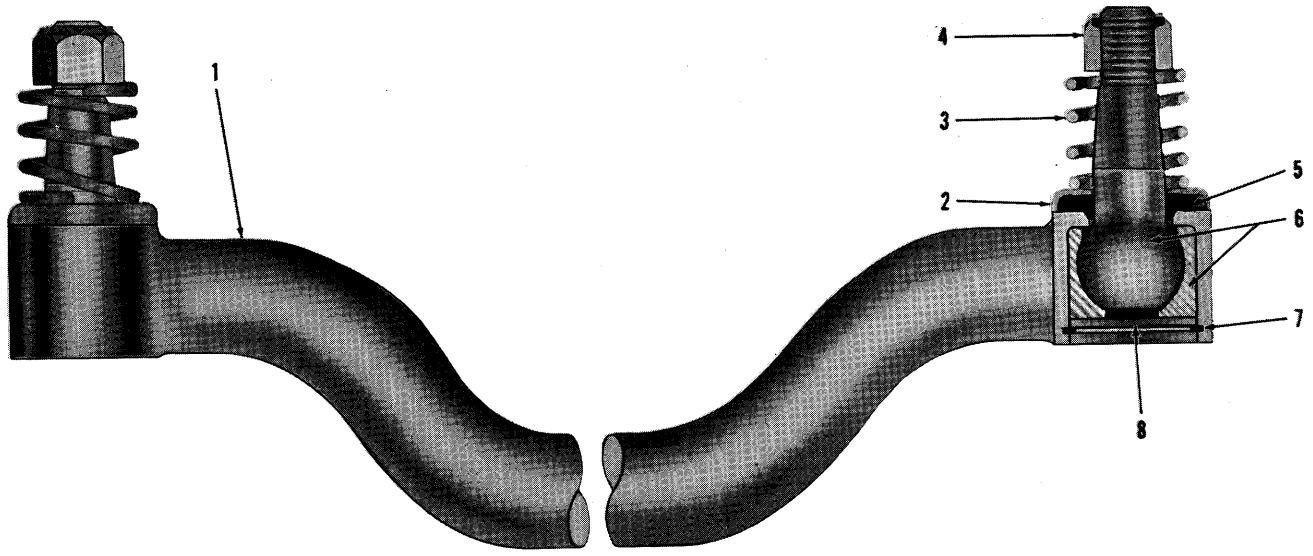

TS-3528-P

TIE ROD ASSEMBLY

Item No.	Part No.	Description	No. Req'd.
A	117226	TIE ROD ASSY (Inc. 1 thru 8)	1
1	———	§HOUSING, Tie Rod — See Item "A"	—
2	106138	RETAINER, Felt	2
3	106268	SPRING	2
4	112174	NUT, Ball Stud	2
5	106137	FELT	2
6	117228	BALL STUD	2
7	541879	PLATE, Ball Stud Retainer	2
8	507695	RING, Plate Retaining	2

§Not Sold Separately

WHEN ORDERING PARTS, ALWAYS STATE MODEL AND SERIAL NO. OF MACHINE

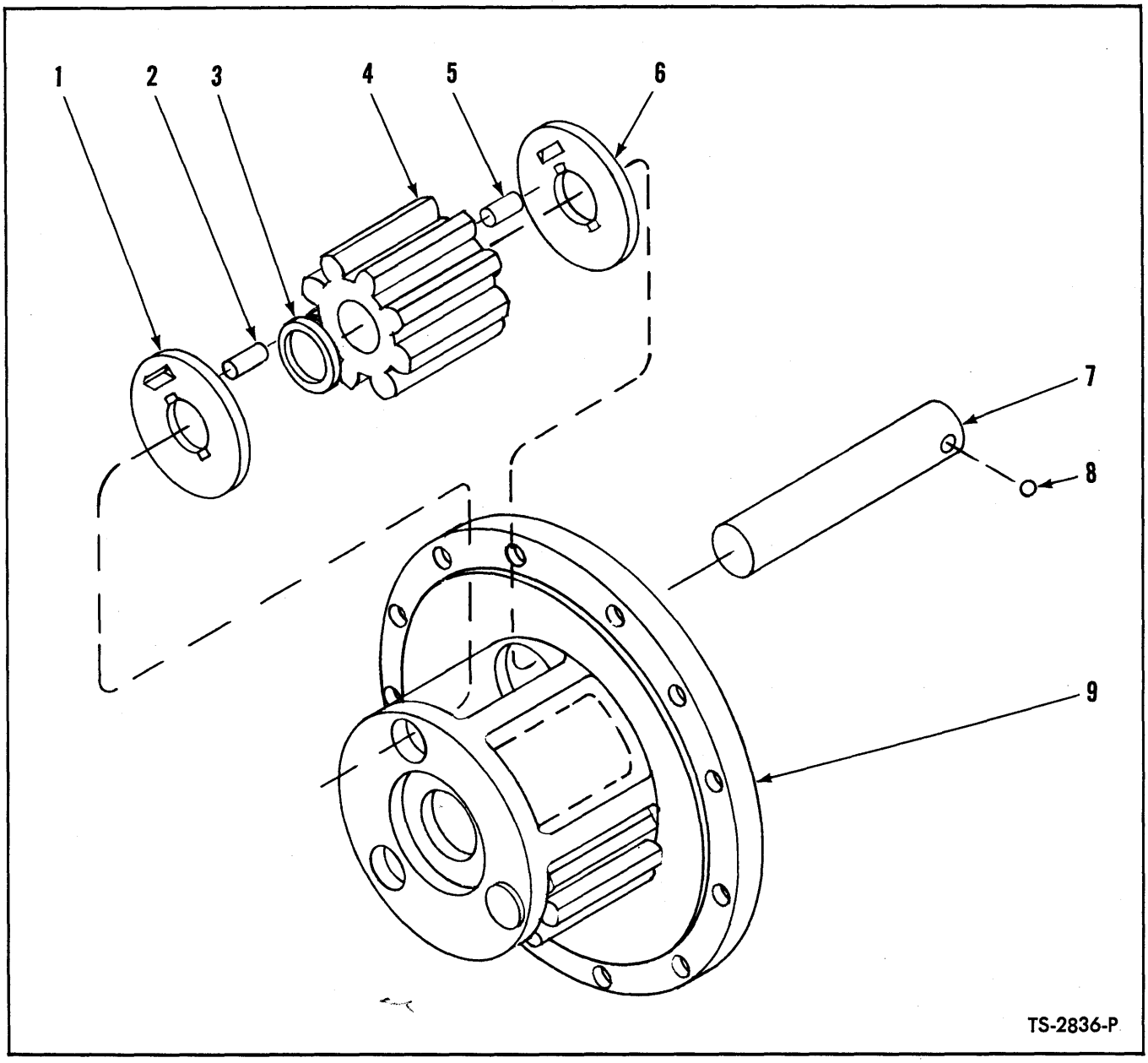

PLANET CARRIER ASSEMBLY

Item No.	Part No.	Description	No. Req'd.
A	114449	CARRIER ASSY, Planet (Inc. 1 thru 9)	4

NOTE: Four (4) Planet Carrier Assemblies used per machine. Quantities listed below are for 1 Planet Carrier.

1	106350	WASHER, Pinion Thrust	3
2	106351	ROLLER, Pinion	87
3	106352	SPACER, Pinion Roller	3
4	109088	PINION, Planet	3
5	106351	ROLLER, Pinion	87
6	106350	WASHER, Pinion Thrust	3
7	106349	SHAFT, Pinion	3
8	10J-12	BALL, Pinion Shaft	3
9	114450	SPIDER, Planet	1

WHEN ORDERING PARTS, ALWAYS STATE MODEL AND SERIAL NO. OF MACHINE

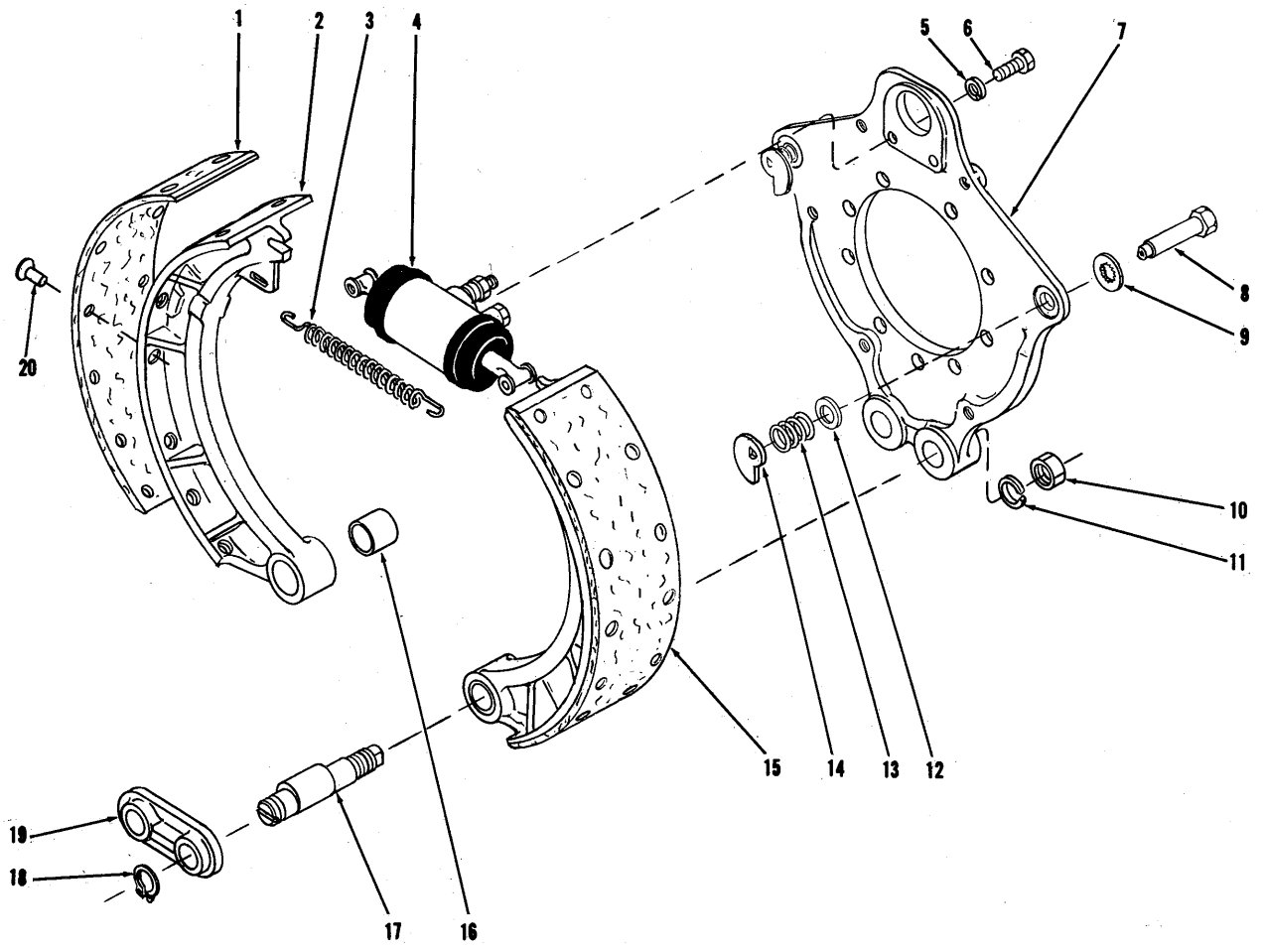

BRAKE ASSEMBLY — FRONT

Item No.	Part No.	Description	No. Req'd.
A	117150	BRAKE ASSY (Inc. 1 thru 20)	2
		NOTE: 2 Brake Assemblies used on axle — Quantities listed below are for 1 Brake Assembly	
B		*LINING KIT, Brake (Inc. 1, 20)*	
C	945614	Standard	1
D	945621	*1/16" Oversize	1
1	———	§LINING, Brake Shoe — See C & D	2
2	———	§SHOE, Brake — See 15	2
3	116949	SPRING, Brake Shoe Return	1
4	———	WHEEL CYLINDER — See Index	1
5	4E-06	LKWSHR, Wheel Cyl. Mounting	2
6	1C-614	BOLT, Wheel Cylinder Mounting	2
7	112060	SPIDER ASSY, Brake (Inc. 8, 9, 12, 13, 14)	1
8	114173	PIN ASSY, Brake Shoe Adjusting (Inc. 9)	2
9	100867	WASHER, Brake Shoe Adjusting Pin	2
10	2D-14	NUT, Anchor Pin	2
11	2E-14	LKWSHR, Anchor Pin Nut	2
12	851771	WASHER, Cam Spring	2
13	943859	KIT, Adjusting Cam Spring (Inc. 12)	2
14	112062	CAM, Shoe Adjusting	2
15	118267	SHOE ASSY, Brake (Inc. 1, 2, 16, 20)	2
16	112068	BUSHING, Brake Shoe	2
17	112069	PIN, Brake Shoe Anchor	2
18	710776	RING, Anchor Pin Retaining	2
19	112070	STRUT, Anchor Pin	1
20	23H-1008	RIVET, Lining to Shoe	40

§Not Sold Separately

*NOTE: When 945621 Lining Kit is utilized Drums must be turned down to 16.370"—16.380". **Do Not Exceed this Dimension.**

WHEN ORDERING PARTS, ALWAYS STATE MODEL AND SERIAL NO. OF MACHINE

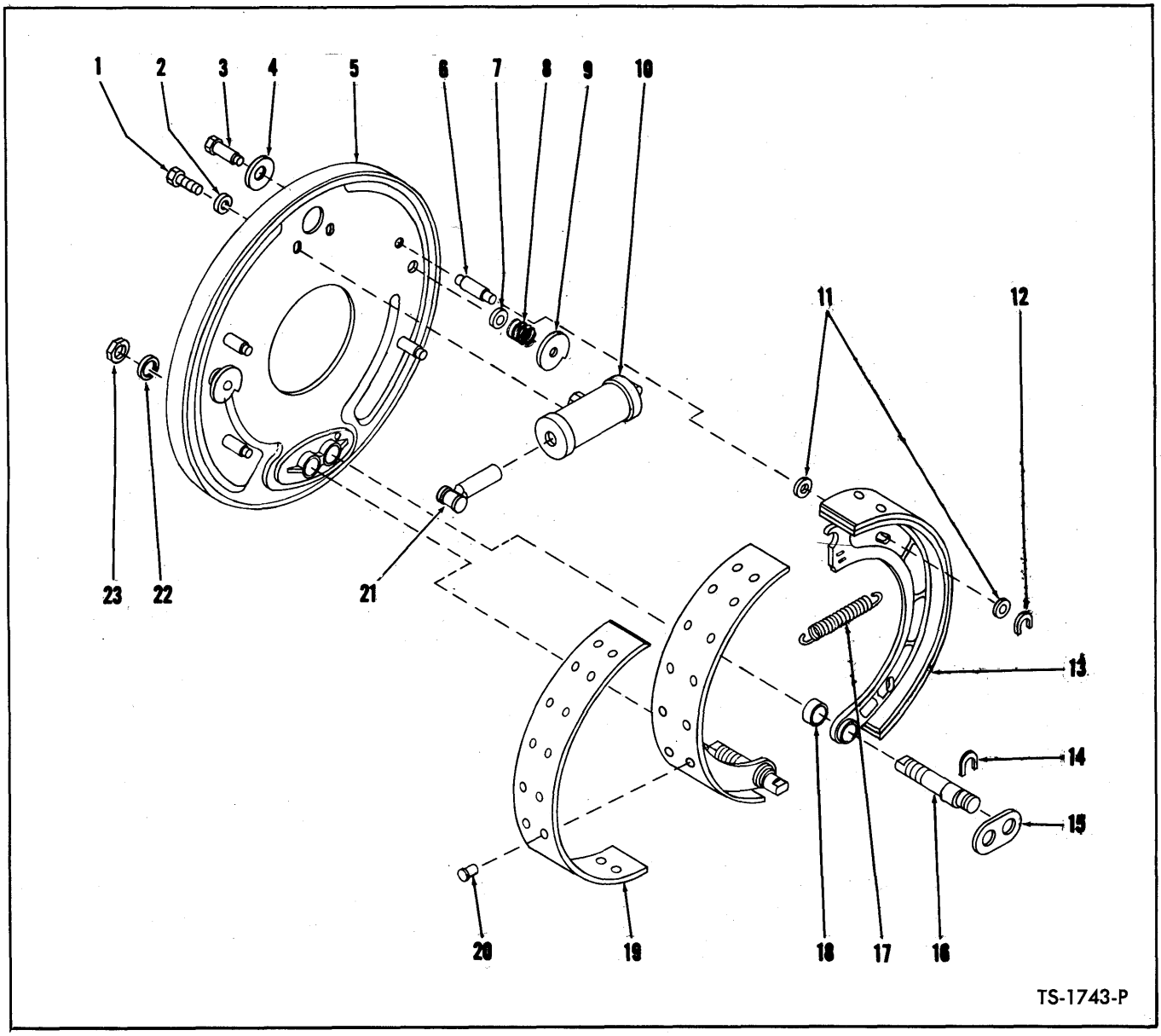

BRAKE ASSEMBLY — REAR

Item No.	Part No.	Description	No. Req'd.
A	117202	BRAKE ASSY (Inc. 1 thru 23)	2
NOTE: 2 Brake Assemblies used on axle — Quantities listed below are for 1 Brake Assembly.			
1	1C-610	BOLT, Cylinder to Brake Disc	2
2	4E-06	LKWSHR, Cylinder to Brake Disc	2
3	114169	PIN, Cam (Inc. 4)	2
4	100867	WASHER, Cam Pin	2
5	117203	DISC ASSY, Brake (Inc. 3, 4, 6 thru 9)	1
6	106373	PIN, Guide	4
7	851771	WASHER, Cam Spring	2
8	943859	KIT, Cam Spring (Inc. 7)	2
9	100864	CAM, Brake Shoe Adjusting	2
10	————	CYLINDER, Brake Wheel — See Index	—
11	102322	WASHER, Guide Pin	8
12	100878	"C" WASHER, Guide Pin	4
13	118254	SHOE ASSY, Brake (Inc. 18, 19, 20)	2
14	101332	"C" WASHER, Anchor Pin	2
15	106970	STRUT, Anchor Pin	1
16	106969	PIN, Anchor	2
17	106216	SPRING, Brake Shoe Return	1
18	100872	BUSHING, Brake Shoe	2
19		*LINING KIT, Brake (Inc. 20)*	
19A	944217	STANDARD	1
19B	945100	*1/16" Oversize	1
20	3H-1216	RIVET, Lining to Shoe	36
21	958553	LINK, Wheel Cylinder Connector	2
22	4E-12	LKWSHR, Anchor Pin	2
23	2D-12	NUT, Anchor Pin	2

*NOTE: When 945100 Lining Kit is utilized, drums must be turned down to 16.370"—16.380". DO NOT EXCEED THIS DIMENSION.

WHEN ORDERING PARTS, ALWAYS STATE MODEL AND SERIAL NO. OF MACHINE

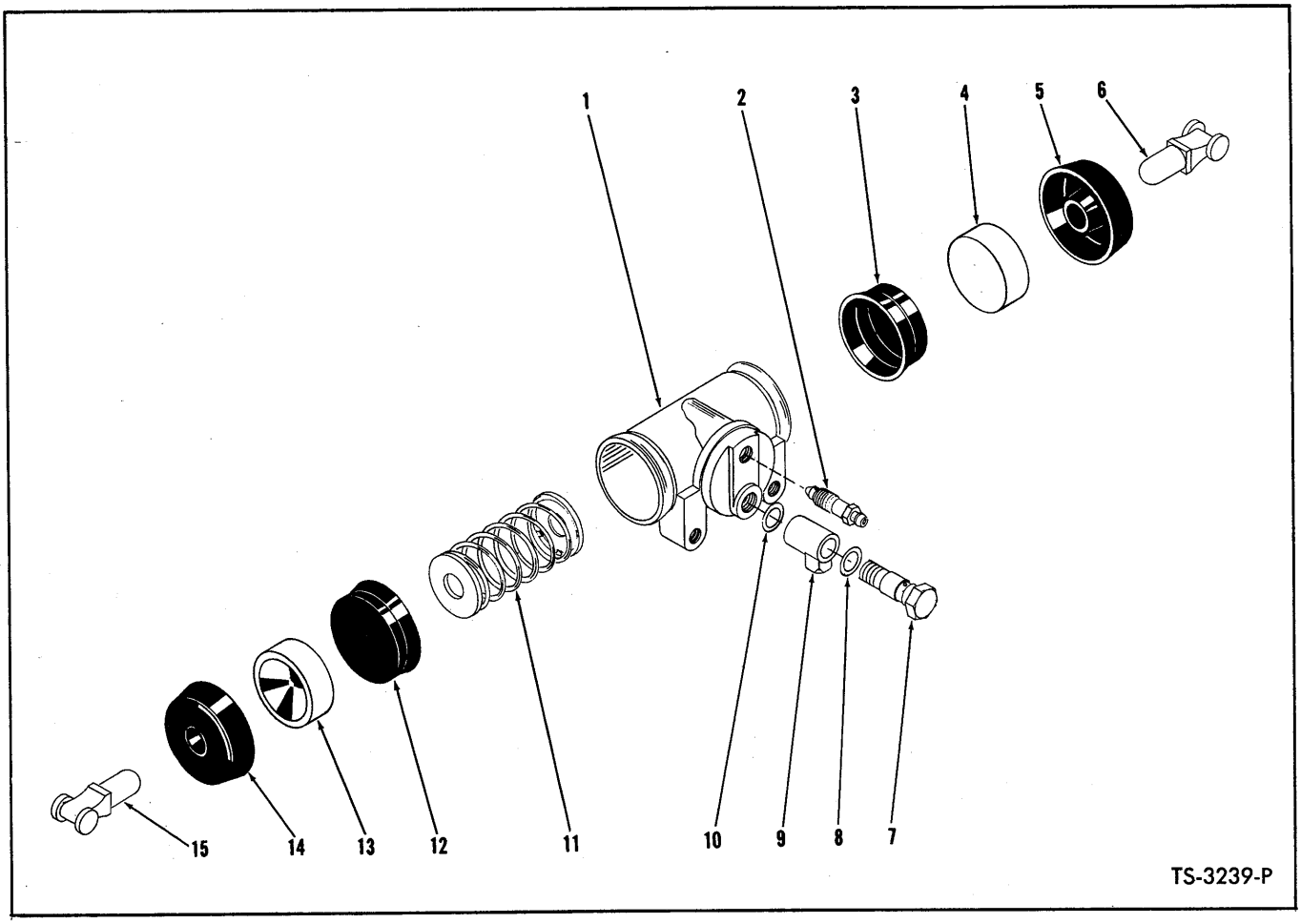

BRAKE WHEEL CYLINDER

Item No.	Part No.	Description	No. Req'd.
A		*CYLINDER ASSY (Inc. 1 thru 15)*	
B	112072	For Front Brake	2
C	107014	For Rear Brake	2
NOTE: 2 Wheel Cylinders used per axle. Quantities listed below are for 1 Wheel Cylinder			
D		*REPAIR KIT, Cylinder (Inc. 3, 5, 12, 14)*	
E	957995	For Front Cylinder	1
F	940130	For Rear Cylinder	1
1	———	§CYLINDER, Wheel — See "A"	1
2		*SCREW, Bleeder*	
2A	861356	For Front Cylinder	1
2B	208805	For Rear Cylinder	1
3	———	§CUP, Piston — See "D"	1
4	———	§PISTON — See "A"	1
5	———	§BOOT — See "D"	1
6	958553	LINK, Wheel Cylinder Connector	1
7		*BOLT, Fitting to Cylinder*	
7A	944966	For Front Cylinder	1
7B	692722	For Rear Cylinder	1
8	620238	GASKET, Outer Fitting	1
9		*FITTING, Cylinder*	
9A	944967	For Front Cylinder	1
9B	620235	For Rear Cylinder	1
10	613750	GASKET, Inner Fitting	1
11		*SPRING, Cylinder*	
11A	956664	For Front Cylinder	1
11B	956622	For Rear Cylinder	1
12	———	§CUP, Piston — See "D"	1
13	———	§PISTON — See "A"	1
14	———	§BOOT — See "D"	1
15	958553	ROD, Push	1

§Not Sold Separately

WHEN ORDERING PARTS, ALWAYS STATE MODEL AND SERIAL NO. OF MACHINE

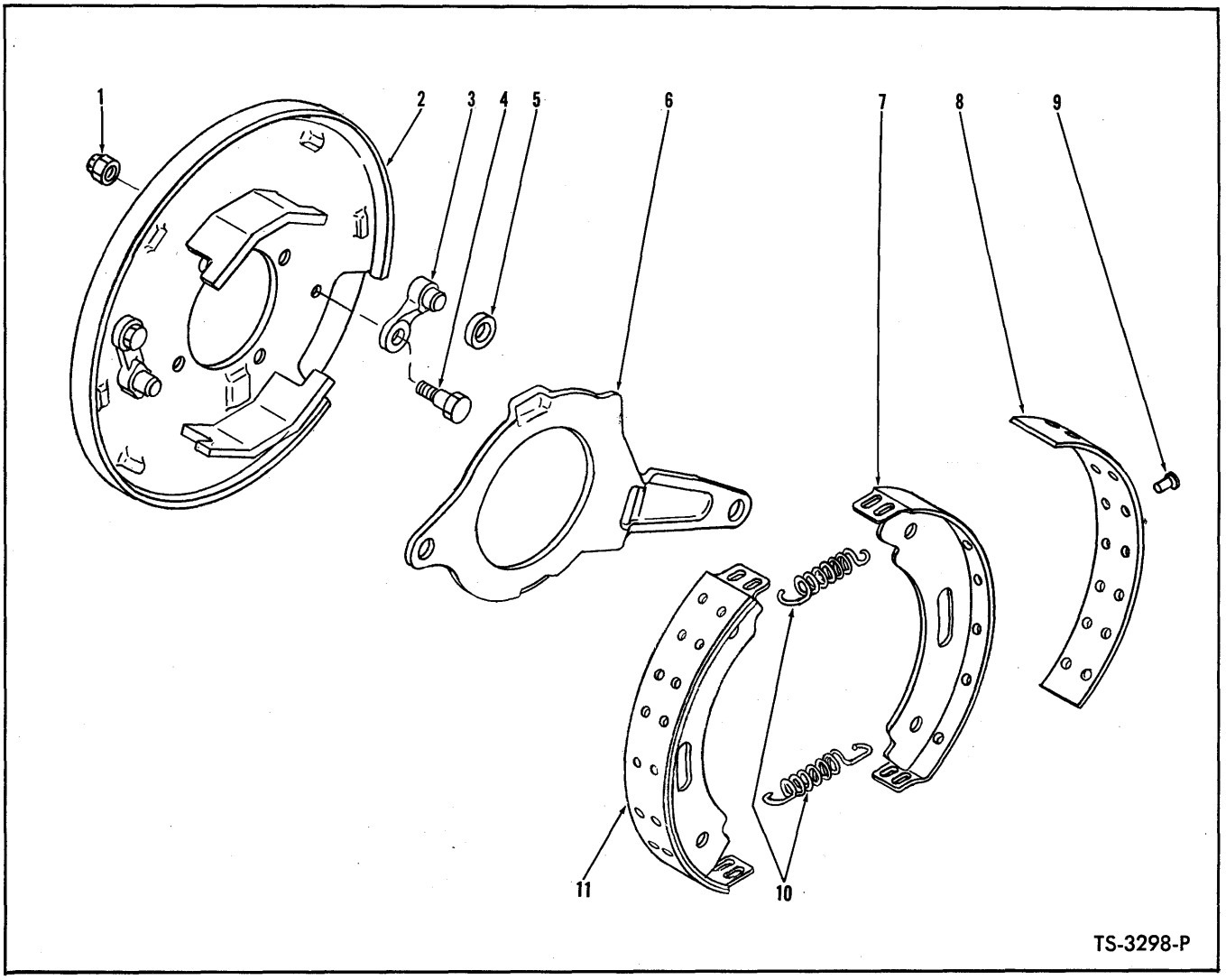

PARKING BRAKE ASSEMBLY

Item No.	Part No.	Description	No. Req'd.
A	110280	BRAKE ASSY (Inc. 1 thru 11)	1
1	———	§NUT, Pawl to Plate — See Item 3	2
2	945083	PLATE, Brake Backing	1
3	945046	PAWL KIT, Brake (Inc. 1, 4, 5)	2
4	———	§BOLT, Pawl to Plate — See Item 3	2
5	220968	ROLLER, Brake Actuating	1
6	220965	LEVER, Operating Cam	1
7	———	§SHOE, Brake — See Item 11	—
8	942405	LINING KIT, Brake (Inc. 9)	1
9	945051	RIVET, Lining to Shoe	28
10	220969	SPRING, Shoe Return	2
11	872712	SHOE ASSY, Brake (Inc. 7, 8, 9)	2

§Not Sold Separately

WHEN ORDERING PARTS, ALWAYS STATE MODEL AND SERIAL NO. OF MACHINE

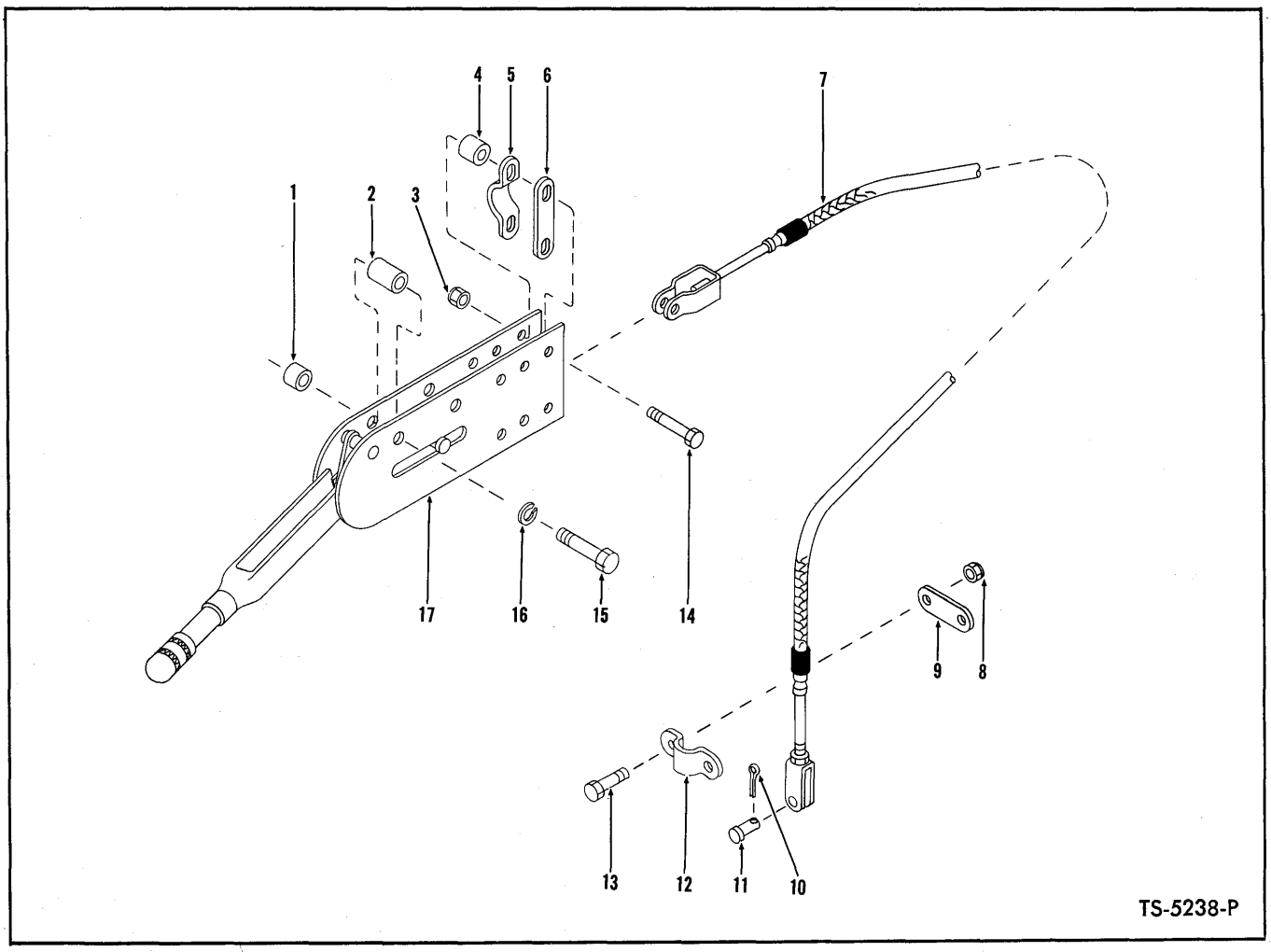

PARKING BRAKE CONTROLS

Item No.	Part No.	Description	No. Req'd.
1	545006	SPACER, Lever Mounting	2
2	545005	SPACER, Lever Mounting	2
3	18D-05	NUT, Cable Mounting	2
4	545006	SPACER, Cable Clamp	2
5	544512	CLAMP, Cable Mounting	1
6	645092	LINK, Cable Mounting	1
7	556693	CABLE, Parking Brake	1
8	18D-06	NUT, Clamp Attaching	2
9	645092	LINK, Cable Mounting	1
10	1F-312	COTTER, Clevis Pin	1
11	4F-06106	PIN, Cable Clevis Attaching	1
12	544512	CLAMP, Cable Mounting	1
13	18C-618	BOLT, Clamp Attaching	2
14	18C-528	BOLT, Cable Mounting	2
15	17C-636	BOLT, Lever Mounting	2
16	4E-06	LKWSHR, Lever Mounting	2
17	———	LEVER ASSY, Brake Hand — See Index	—

WHEN ORDERING PARTS, ALWAYS STATE MODEL AND SERIAL NO. OF MACHINE

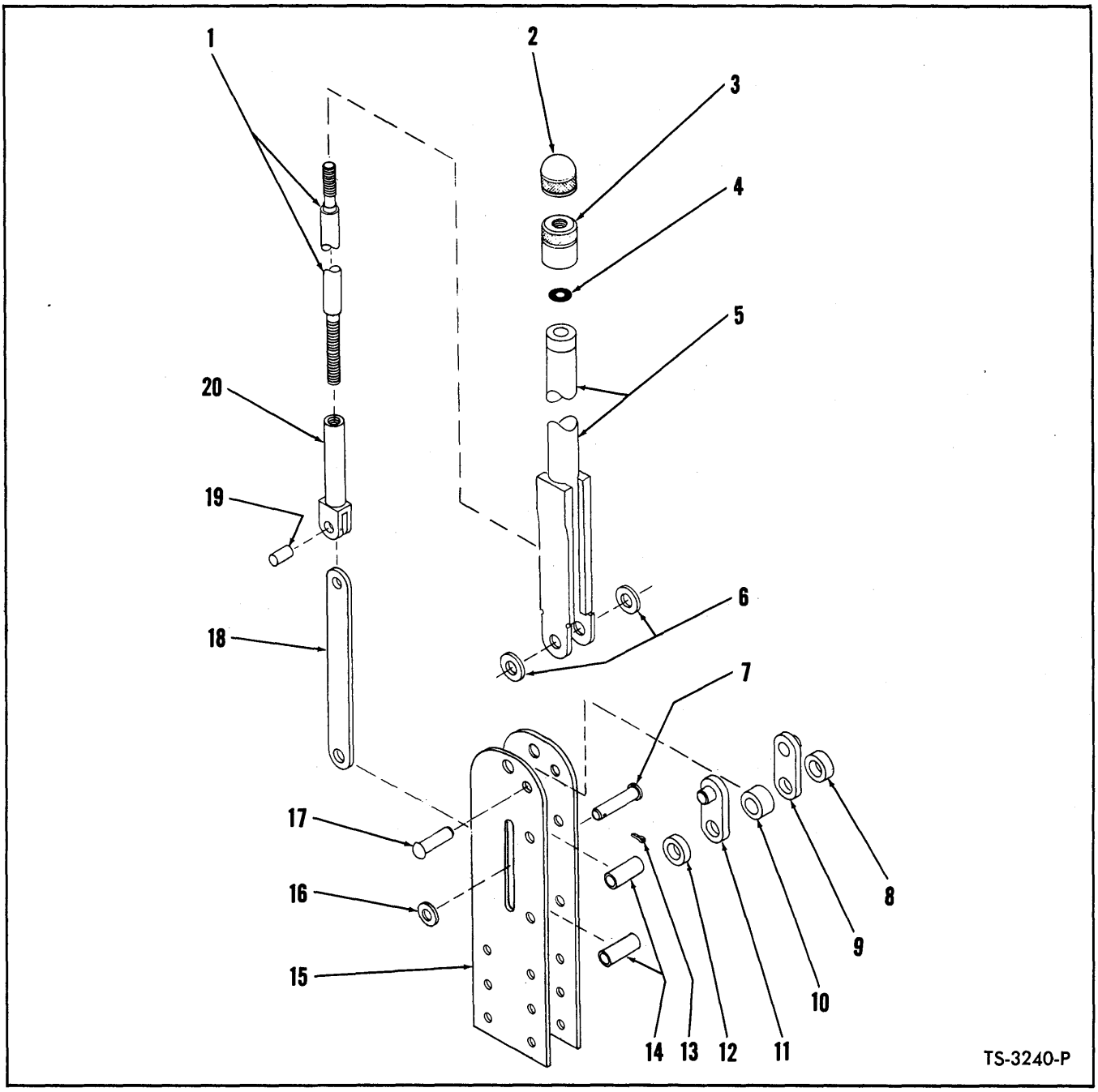

PARKING BRAKE LEVER ASSEMBLY

Item No.	Part No.	Description	No. Req'd.
A	544998	LEVER ASSY (Inc. 1 thru 20)	1
1	866349	SCREW, Adjusting	1
2	941227	CAP, Adjusting Knob	1
3	941226	BASE, Adjusting Knob	1
4	946163	WASHER, Base to Body	1
5	866348	BODY, Brake Lever	1
6	619024	WASHER, Body to Bracket	2
7	862738	PIN, Adjusting Screw Link Pivot	1
8	862656	SPACER, Pivot Bracket	1
9	862653	BRACKET, Pivot	1
10	862655	SPACER, Pivot Bracket	1
11	862653	BRACKET, Pivot	1
12	862656	SPACER, Pivot Bracket	1
13	1F-312	COTTER, Link Pivot Pin	1
14	645095	SPACER, Mounting Bracket	2
15	944969	BRACKET, Lever Mounting	2
16	619019	WASHER, Link Pivot Pin	1
17	944054	RIVET, Pivot Bracket	1
18	862652	LINK, Adjusting Screw	1
19	941238	PIN, Link to Tube	1
20	944968	TUBE, Adjusting Screw	1

WHEN ORDERING PARTS, ALWAYS STATE MODEL AND SERIAL NO. OF MACHINE

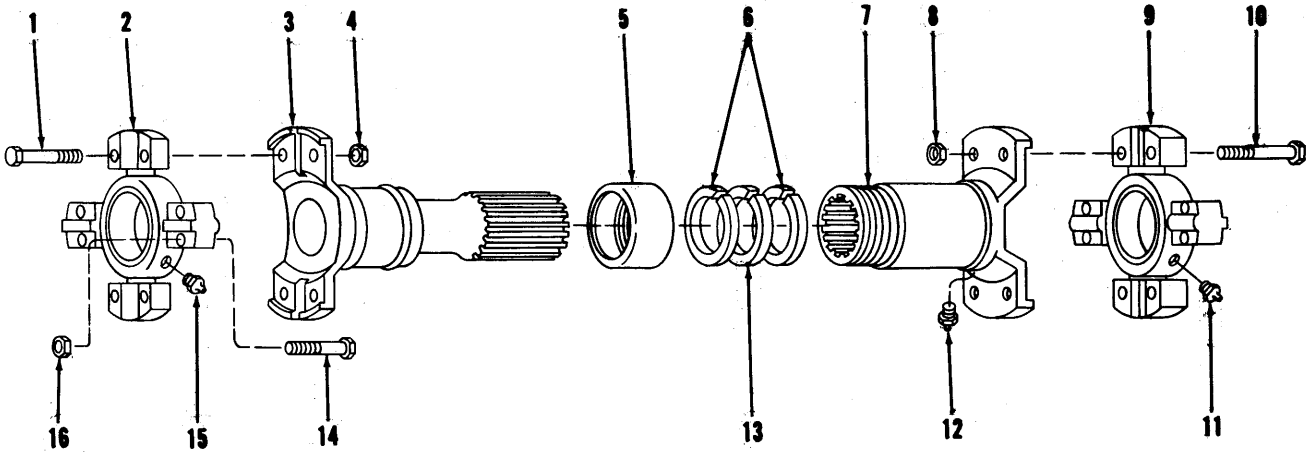

TS-1138-P

PROPELLER SHAFT ASSEMBLIES

Item No.	Description	Converter to Transmission	Transmission to Rear Axle	No. Req'd
A	PROPELLER SHAFT ASSY (Inc. 1 thru 16)	589891	589892	1
1	BOLT, Spider & Bearing to Tube	945256	940089	4
2	SPIDER & BEARING ASSY (Inc. 2A, 15)	944866	944862	1
2A	†SEAL, Spider & Bearing Grease	944863	944861	4
3	TUBE	946111	946112	1
4	NUT, Spider & Bearing to Tube	8D-05	8D-06	4
5	RETAINER, Felt	940654	940090	1
6	WASHER, Felt Retainer	940653	OMIT	2
7	SLIP YOKE (Inc. 12)	942658	946110	1
8	NUT, Spider & Bearing to Slip Yoke	8D-05	8D-06	4
9	SPIDER & BEARING ASSY (Inc. 9A, 11)	944866	944862	1
9A	†SEAL, Spider & Bearing Grease	944863	944861	4
10	BOLT, Spider & Bearing to Slip Yoke	945256	940089	4
11	FITTING, Spider & Bearing Grease	10H-35	10H-35	1
12	FITTING, Slip Yoke Grease	10H-25	10H-25	1
13	WASHER, Felt	940081	940092	1
14	BOLT, Spider & Bearing Attaching	945256	940089	8
15	FITTING, Spider & Bearing Grease	10H-35	10H-35	1
16	NUT, Spider & Bearing Attaching	18D-05	8D-06	8

†Not Illustrated

WHEN ORDERING PARTS, ALWAYS STATE MODEL AND SERIAL NO. OF MACHINE

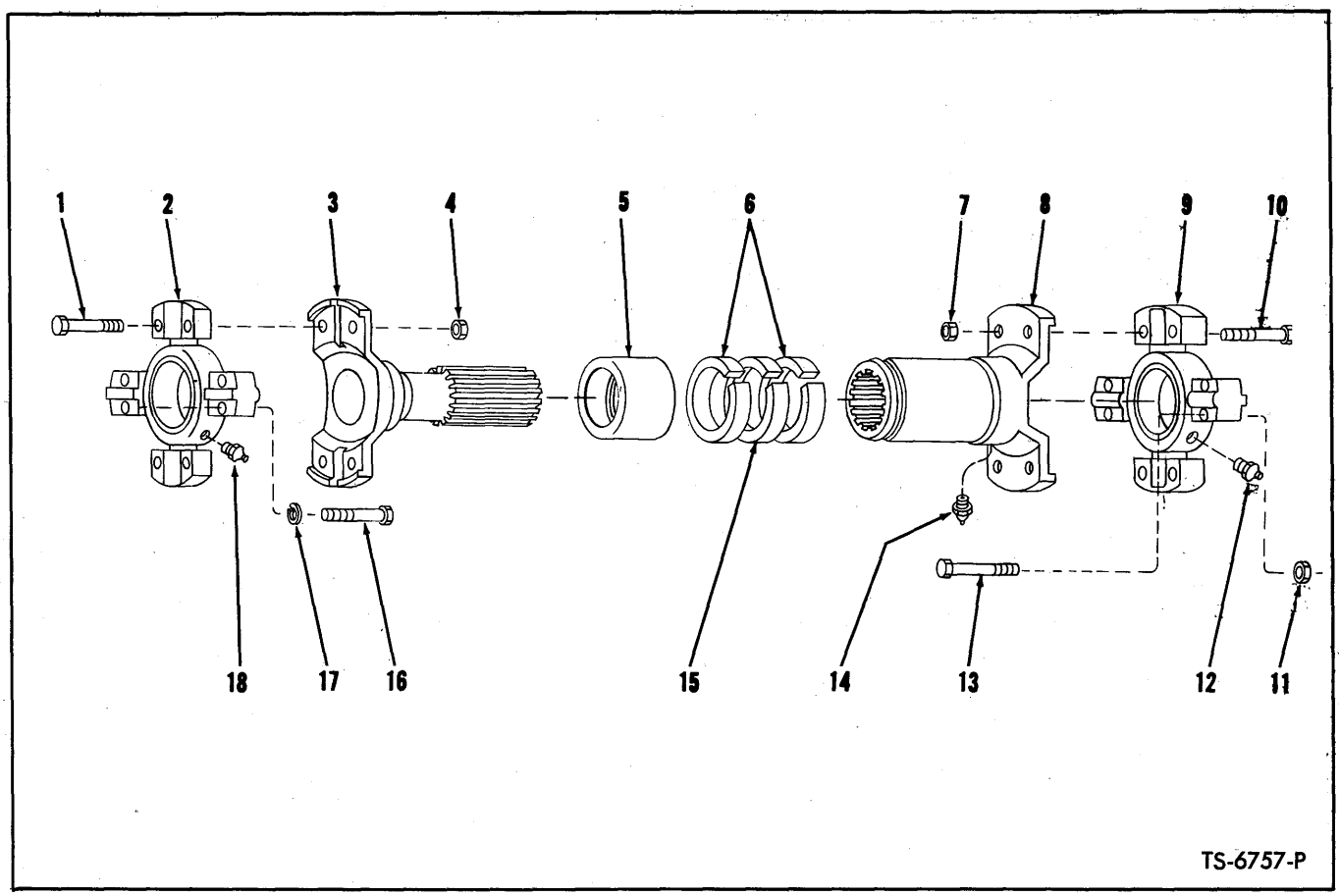

PROPELLER SHAFT ASSEMBLY

Transmission to Front Axle

Item No.	Part No.	Description	No. Req'd.
A	529864	PROPELLER SHAFT ASSY (Inc. 1 thru 16, 18)	1
1	940089	BOLT, Spider & Bearing to Tube	4
2	944862	SPIDER & BEARING ASSY (Inc. 2A, 18)	1
2A	944861	†SEAL, Spider & Bearing Grease	4
3	944168	TUBE ASSY	1
4	8D-06	NUT, Spider & Bearing to Tube	4
5	940090	RETAINER, Felt	1
6	940091	WASHER, Felt Retainer	2
7	8D-06	NUT, Spider & Bearing to Slip Yoke	4
8	940093	SLIP YOKE (Inc. 14)	1
9	944862	SPIDER & BEARING ASSY (Inc. 9A, 12)	1
9A	944861	†SEAL, Spider & Bearing Grease	4
10	940089	BOLT, Spider & Bearing to Slip Yoke	4
11	8D-06	NUT, Spider & Bearing Attaching	4
12	10H-35	FITTING, Spider & Bearing Grease	1
13	940089	BOLT, Spider & Bearing Attaching	4
14	10H-25	FITTING, Slip Yoke Grease	1
15	940092	WASHER, Felt	1
16	940089	BOLT, Spider & Bearing Attaching	4
17	4E-05	LKWSHR, Spider & Bearing Attaching	4
18	10H-35	FITTING, Spider & Bearing Grease	1

†Not Illustrated

WHEN ORDERING PARTS, ALWAYS STATE MODEL AND SERIAL NO. OF MACHINE

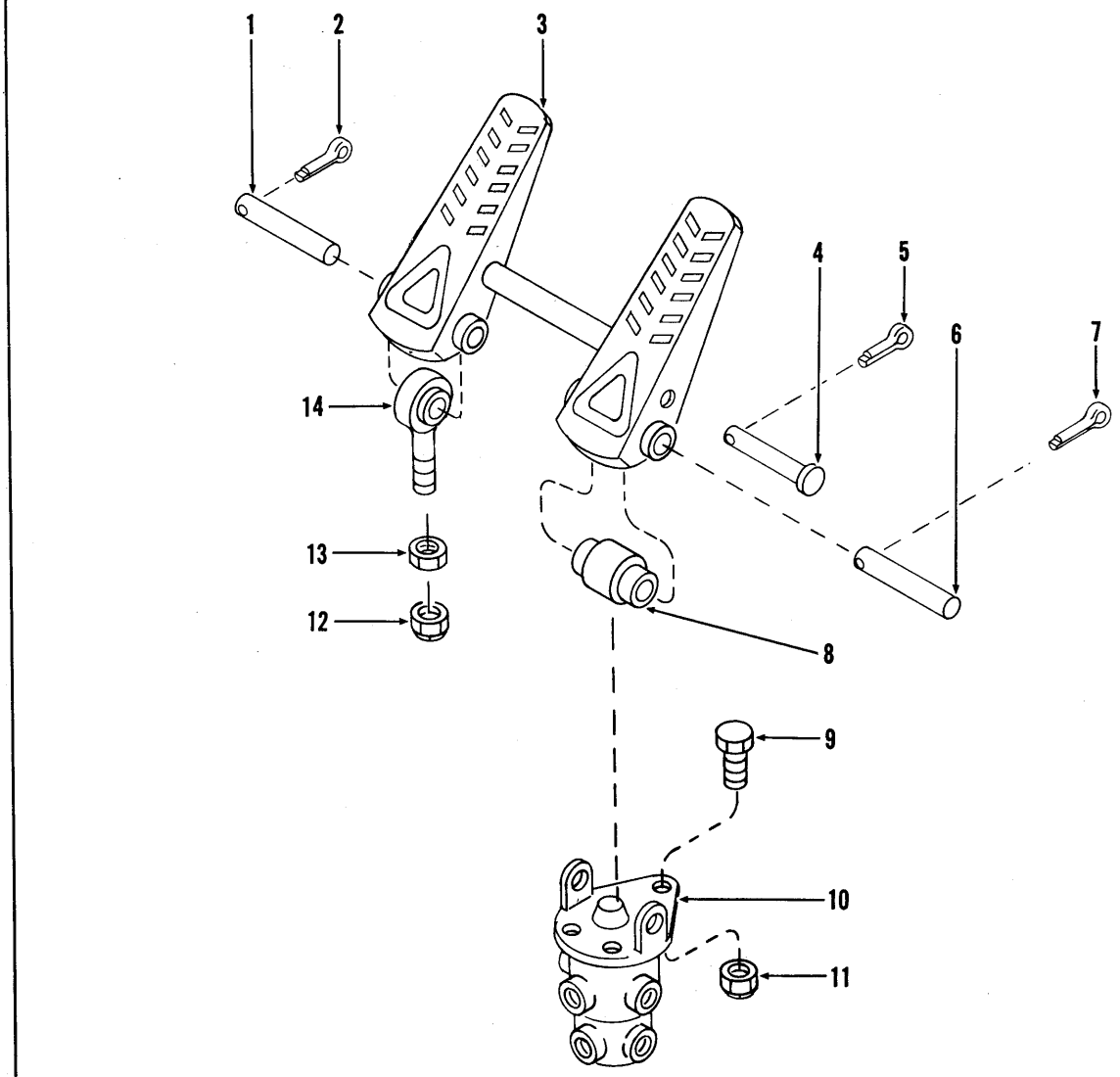

BRAKE VALVE AND CONTROLS

Item No.	Part No.	Description	No. Req'd.
1	875767	PIN, Pedal to Eye	1
2	1F-320	COTTER, Pedal Pin	1
3	589912	PEDAL, Air Brake	1
4	875766	PIN, Pedal to Roller	1
5	1F-312	COTTER, Pedal Pin	1
6	875767	PIN, Pedal to Valve	1
7	1F-320	COTTER, Pedal Pin	1
8	518259	ROLLER, Pedal	1
9	18C-516	BOLT, Valve to Cockpit	3
10	~~556562~~ 945996	*VALVE, Air Brake — B.W. #277472 CPG2159	1
11	18D-05	NUT, Valve to Cockpit	3
12	66D-06	NUT, Eye Mounting	1
13	8D-06	NUT, Eye Jam	1
14	562444	EYE, Pedal	1

*NOTE: Your local authorized Bendix-Westinghouse Distributor is equipped to service and supply this part.

WHEN ORDERING PARTS, ALWAYS STATE MODEL AND SERIAL NO. OF MACHINE

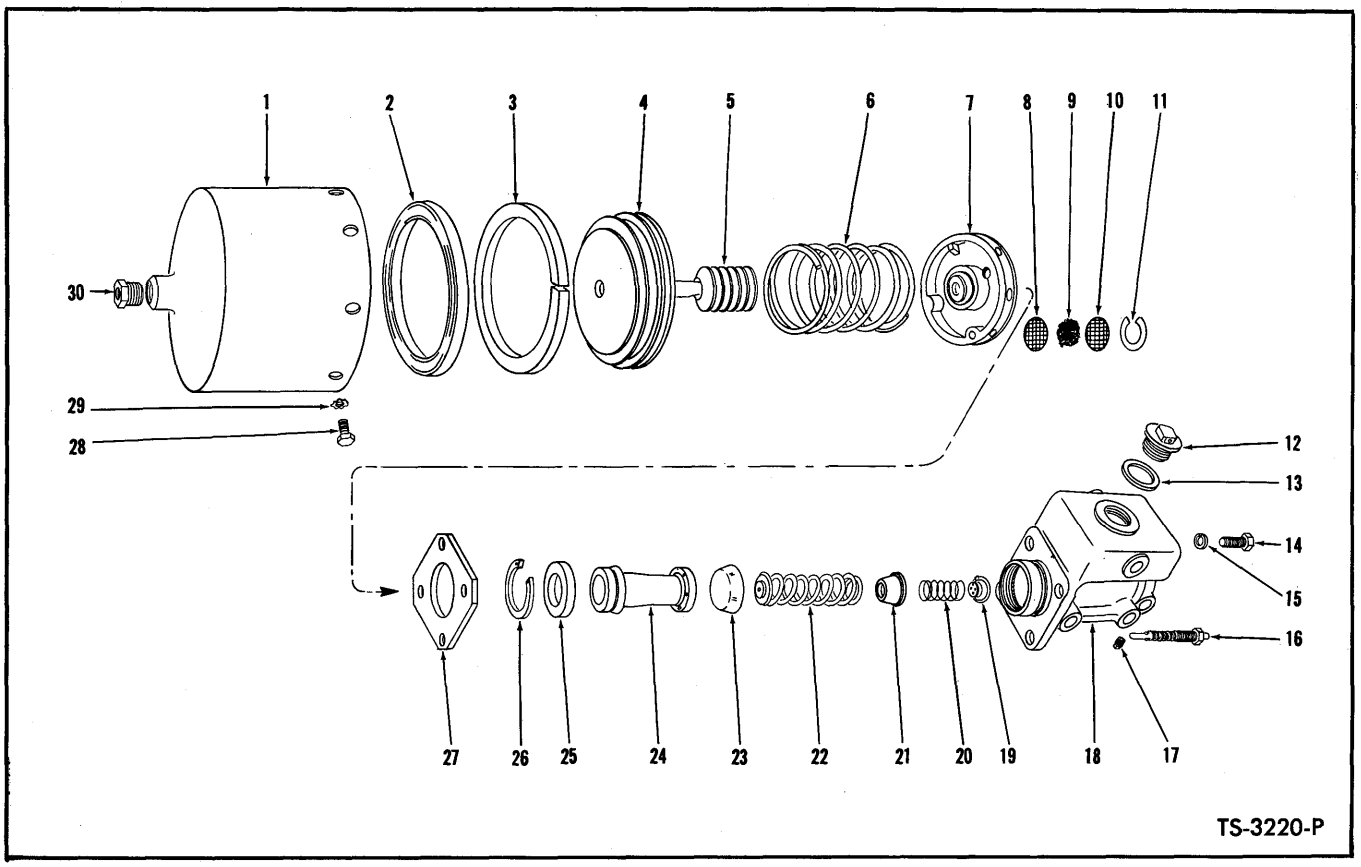

POWER CLUSTER ASSEMBLY

Item No.	Part No.	Description	No. Req'd.
A	526879	POWER CLUSTER ASSY (Inc. 1 thru 30)	1
1	945034	SHELL, Air Cylinder	1
2	———	§CUP, Piston—See 31	1
3	———	§WIPER, Piston—See 31	1
4	945035	PISTON, Air Cylinder	1
5	———	§BOOT, Piston Rod—See 31	1
6	945036	SPRING, Piston Return	1
7	945037	HEAD ASSY, Air Cylinder (Inc. 8 thru 11)	1
8	945029	SCREEN, Filtering	1
9	945044	HAIR, Filtering	1
10	945029	SCREEN, Filtering	1
11	945043	RING, Filter Retaining	1
12	858305	CAP, Master Cylinder Filler	1
13	857933	GASKET, Filler Cap	1
14	1C-624	BOLT, Master Cyl. to Air Cylinder	3
15	4E-06	LKWSHR, Master Cyl. to Air Cylinder	4
16	945038	INDICATOR, Stroke	1
17	10F-02	PLUG, Master Cylinder	1
18	945039	CASTING, Master Cylinder	1
19	———	§VALVE, Check—See 31	1
20	945026	SPRING, Check Valve	1
21	945042	RETAINER, Check Valve Spring	1
22	955321	SPRING, Piston Return	1
23	———	§CUP, Primary—See 31	1
24	———	§PISTON ASSY, Master Cyl.—See 31	—
25	955326	PLATE, Piston Stop	1
26	955323	RING, Stop Plate Retaining	1
27	945040	PLATE, Master Cyl. Mounting	1
28	1C-510	BOLT, Shell to Head	8
29	6E-05	LKWSHR, Shell to Head	8
30	356612	BUSHING, Shell Reducing	1
31	945041	REPAIR KIT (Inc. 2, 3, 5, 13, 19, 23, 24)	1
32	18C-720	†BOLT, Power Cluster Attaching	3
33	4E-07	†LKWSHR, Power Cluster Attaching	3

§Not Sold Separately
†Not Illustrated

WHEN ORDERING PARTS, ALWAYS STATE MODEL AND SERIAL NO. OF MACHINE

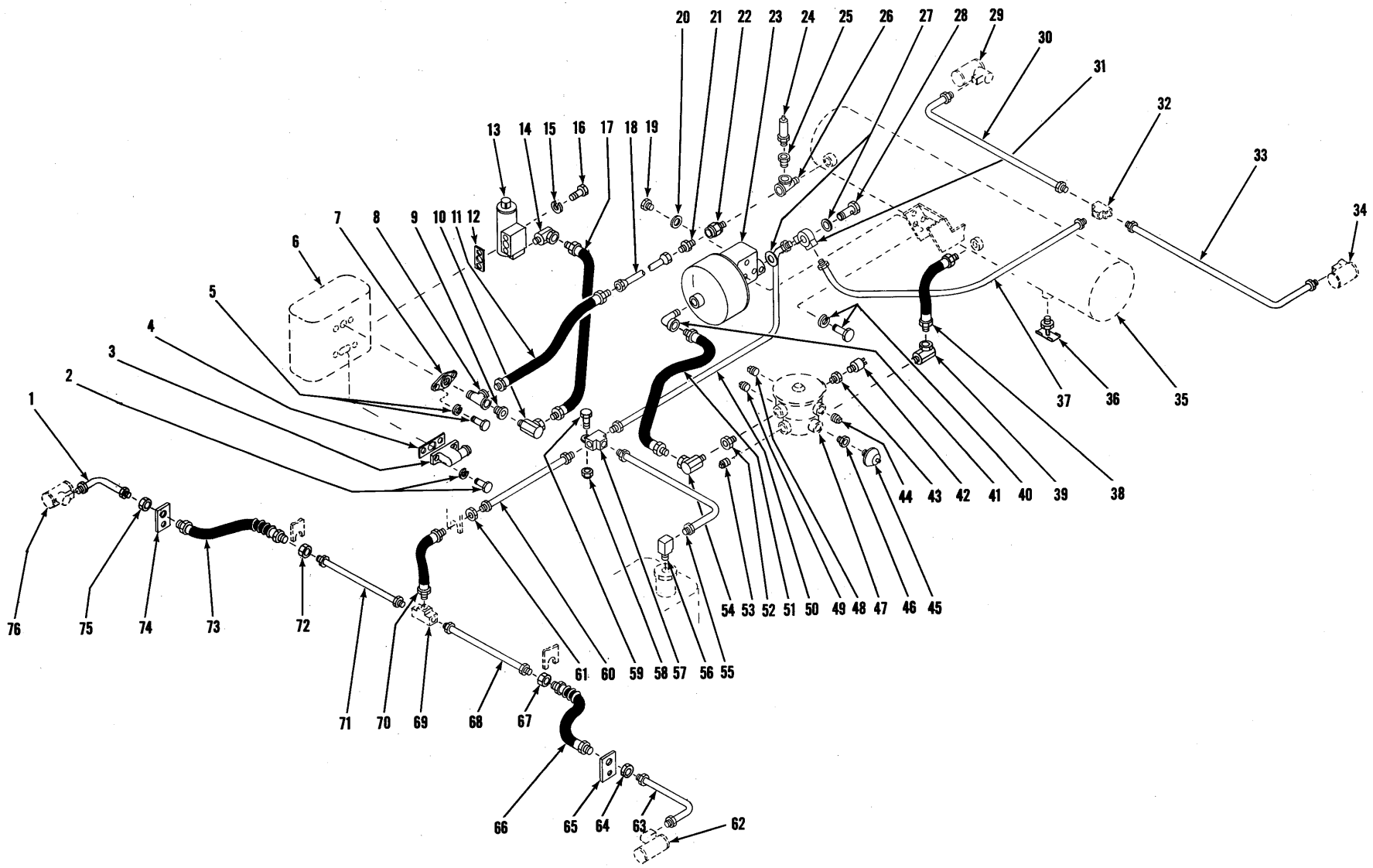

BRAKE AIR LINES

TS-6569-P

BRAKE AIR LINES

Item No.	Part No.	Description	No. Req'd.
1	558547	LINE, Hose to Wheel Cylinder — L. H. Rear Axle	1
2	17C-514	BOLT, Elbow to Compressor	2
2A	4E-05	LKWSHR, Elbow to Compressor	2
3	540664	ELBOW, Compressor Air Inlet	1
4	875012	GASKET, Elbow to Compressor	1
5	17C-516	BOLT, Flange to Compressor	2
5A	4E-05	LKWSHR, Flange to Compressor	2
6	———	AIR COMPRESSOR — See Engine Parts Manual	—
7	510452	FLANGE, Discharge (B.W. #213042)	1
8	17F-4	TEE, Connecting	1
9	19F-4	BUSHING, Reducing	1
10	31F-1	ADAPTER UNION, Hose to Tee	1
11	523786	HOSE, Tube to Tee	1
12	942646	*GASKET, Governor (B.W. #236577)	1
13	540306	*GOVERNOR, (B.W. #275200)	1
14	31F-1	ADAPTER UNION, Hose to Governor	1
15	4E-05	LKWSHR, Governor to Compressor	2
16	17C-548	BOLT, Governor to Compressor	2
17	545528	HOSE, Governor to Connecting Tee	1
18	563978	TUBE, Compressor to Air Reservoir	1
19	874007	PLUG, Master Cylinder	2
20	613750	GASKET, Master Cylinder Plug	2
21	38F-10	CONNECTOR, Tube	1
22	593370	VALVE, Check	1
23	———	POWER CLUSTER ASSY — See Index	—
24	507815	*VALVE, Safety (B.W. #205105)	1
25	19F-5	BUSHING, Tee Reducing	1
26	17F-4	TEE, Connecting	1
27	620238	GASKET, Fitting to Master Cylinder	1
27A	613750	GASKET, Bolt to Fitting	1
28	692722	BOLT, Fitting to Master Cylinder	1
29	———	CYLINDER, Wheel — See Index	—
30	535049	LINE, Tee to Wheel Cylinder — L. H. Front Axle	1
31	633242	FITTING, Connecting	1
32	609733	TEE, Brake Line — Furnished with Axle	1
33	535050	LINE, Tee to Wheel Cylinder — R.H. Front Axle	1
34	———	CYLINDER, Wheel — See Index	—
35	———	§AIR RESERVOIR — Welded to Frame	—
36	72F-4	DRAINCOCK — Air Reservoir	1
37	589429	TUBE, Power Cluster to Front Axle	1
38	574439	HOSE, Brake Valve to Air Reservoir	1
39	31F-4	ADAPTER UNION, Hose to Valve	1
40	18C-720	BOLT, Power Cluster Mounting	3
40A	4E-07	LKWSHR, Power Cluster Mounting	3
41	26F-3	ELBOW, Hose to Power Cluster	1
42	636260	SWITCH, Air Pressure	1
43	19F-4	BUSHING, Switch Reducing	1
44	13F-08	PLUG, Brake Valve	1
45	940643	SENDER UNIT, Air Pressure (Inc. 45A, 45B)	1
45A	14D-10	NUT, Sender Unit	1
45B	12E-10	LKWSHR, Sender Unit	1
46	19F-1	BUSHING, Sender Unit Reducing	1
47	———	BRAKE VALVE — See Index	—
48	13F-08	PLUG, Brake Valve	1
49	13F-04	PLUG, Brake Valve	1
50	589427	TUBE, Power Cluster to Connecting Tee	1
51	592784	HOSE, Power Cluster to Valve	1
52	19F-6	BUSHING, Valve Reducing	1
53	13F-08	PLUG, Brake Valve	1
54	31F-3	ADAPTER UNION, Hose to Valve	1
55	589428	TUBE, Tee to Declutch Valve	1
56	62F-3	ELBOW, Tube to Valve	1
57	609733	TEE, Connecting	1
58	18D-07	NUT, Tee to Frame	1
59	18C-724	BOLT, Tee to Frame	1
60	589426	TUBE, Tee to Frame Clip	1
61	8D-10	NUT, Hose Jam	1
62	———	CYLINDER, Wheel — See Index	—
63	558547	LINE, Hose to Wheel Cylinder — R.H. Rear Axle	1
64	8D-10	NUT, Hose Jam	1
65	550325	CLIP, Hose — Mounted on Axle Cradle	1
66	552374	HOSE, Line to Line	1
67	8D-10	NUT, Hose Jam	1
68	534259	LINE, Tee to Hose	1
69	550320	TEE, Brake Line — Furnished with Axle	1
70	533814	HOSE, Tube to Tee	1
71	534260	LINE, Tee to Hose	1
72	8D-10	NUT, Hose Jam	1
73	552374	HOSE, Line to Line	1
74	550325	CLIP, Hose — Mounted on Axle Cradle	1
75	8D-10	NUT, Hose Jam	1
76	———	CYLINDER, Wheel — See Index	—

§Not Sold Separately
*NOTE: Your local authorized Bendix-Westinghouse Distributor is equipped to service and supply these parts.

WHEN ORDERING PARTS, ALWAYS STATE MODEL AND SERIAL NO. OF MACHINE

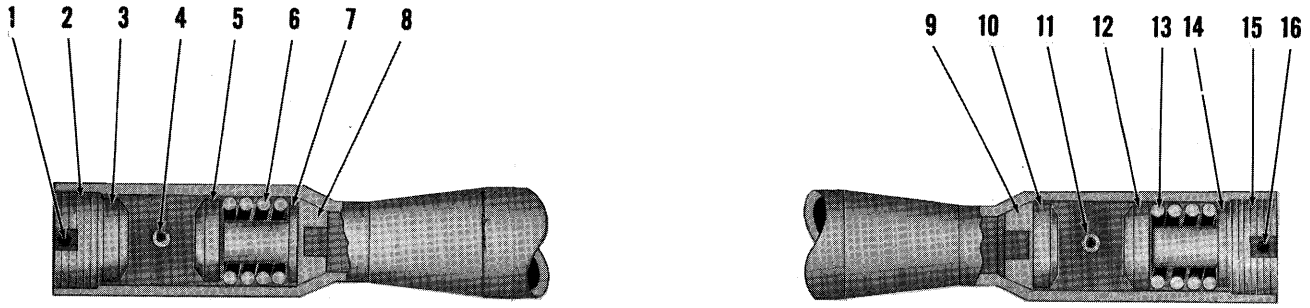

TS-1259-P

DRAG LINK

Item No.	Part No.	Description	No. Req'd.
A	589812	DRAG LINK ASSY (Inc. 2, 3, 5 thru 10, 12 thru 15)	1
1	1F-432	COTTER	1
2	876575	NUT, Adjusting	1
3	865965	SEAT, Ball Stud	1
4	10H-25	FITTING, Grease	1
5	865965	SEAT, Ball Stud	1
6	865961	SPRING	1
7	662691	SEAT, Spring	1
8	865963	SEAT	1
9	865963	SEAT	1
10	865965	SEAT, Ball Stud	1
11	10H-25	FITTING, Grease	1
12	865965	SEAT, Ball Stud	1
13	865961	SPRING	1
14	662691	SEAT, Spring	1
15	876575	NUT, Adjusting	1
16	1F-432	COTTER	1

WHEN ORDERING PARTS, ALWAYS STATE MODEL AND SERIAL NO. OF MACHINE

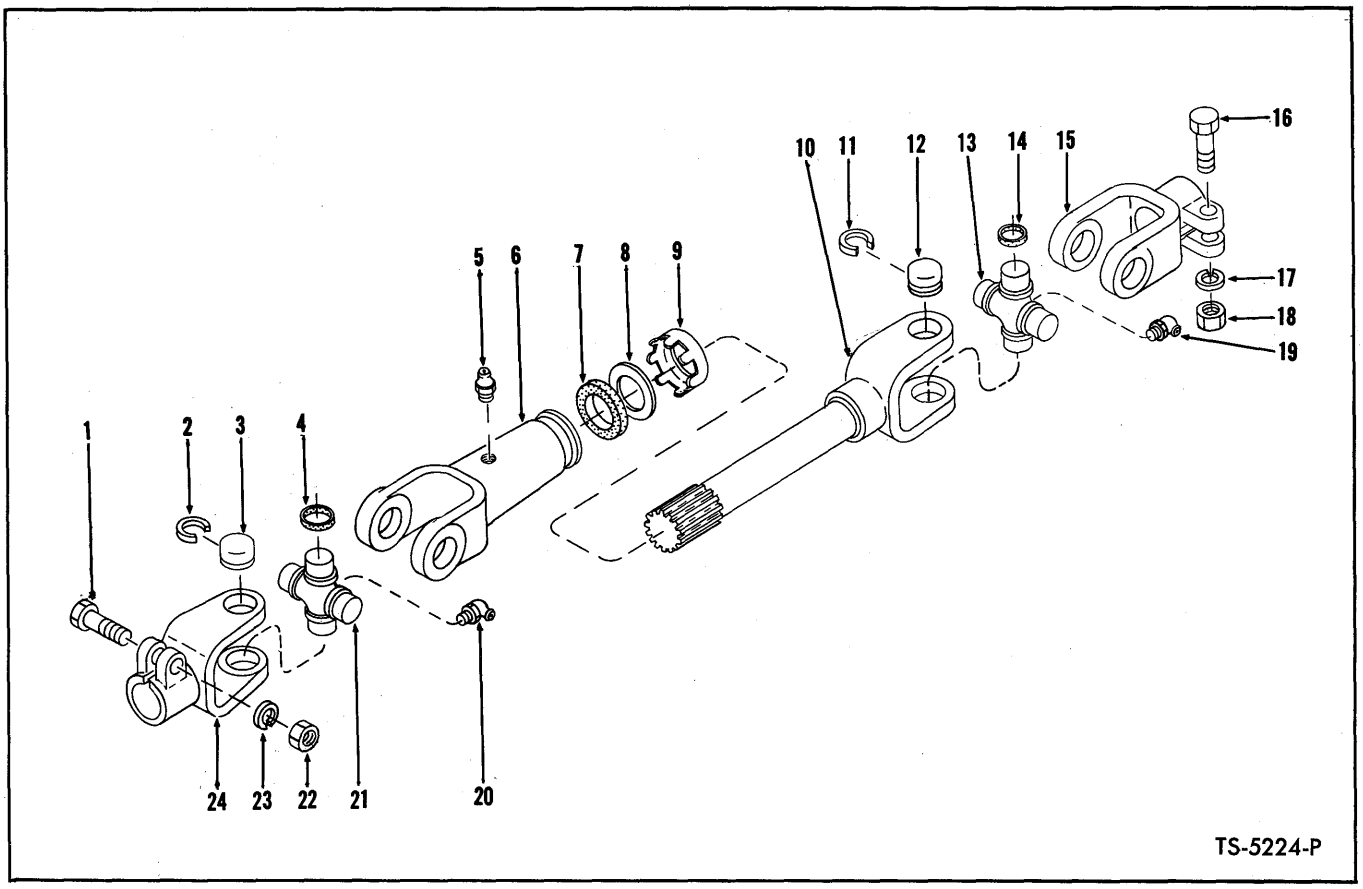

STEERING SLIP SHAFT ASSEMBLY

Item No.	Part No.	Description	No. Req'd.
A	562144	SHAFT ASSY, Slip (Inc. 1 thru 24)	1
B	946023	KIT, Dust Cap (Inc. 7, 8, 9)	1
1	18C-628	BOLT, Clamp Yoke Mounting	1
2	868214	RING, Bearing Assy Retaining	4
3	———	§BUSHING, Bearing Assy Cap — See Item 21	—
4	868215	WASHER, Bearing Assy	4
5	10H-35	FITTING, Slip Yoke Grease	1
6	946102	YOKE, Slip (Inc. 5)	1
7	———	§WASHER, Dust Cap — See Item "B"	—
8	———	§WASHER, Dust Cap — See Item "B"	—
9	———	§CAP, Dust — See Item "B"	—
10	946103	YOKE & SHAFT ASSY	1
11	868214	RING, Bearing Assy Retaining	4
12	———	§BUSHING, Bearing Assy Cap — See Item 13	—
13	946020	SPIDER & BEARING ASSY (Inc. 11, 12, 14, 19)	1
14	868215	WASHER, Bearing Assy	4
15	946021	CLAMP YOKE	1
16	18C-628	BOLT, Clamp Yoke Mounting	1
17	4E-06	LKWSHR, Clamp Yoke Mounting	1
18	8D-06	NUT, Clamp Yoke Mounting	1
19	15H-15	FITTING, Bearing Assy Grease	1
20	15H-15	FITTING, Bearing Assy Grease	1
21	946020	SPIDER & BEARING ASSY (Inc. 2, 3, 4, 20)	1
22	8D-06	NUT, Clamp Yoke Mounting	1
23	4E-06	LKWSHR, Clamp Yoke Mounting	1
24	946021	CLAMP YOKE	1

§Not Sold Separately

WHEN ORDERING PARTS, ALWAYS STATE MODEL AND SERIAL NO. OF MACHINE

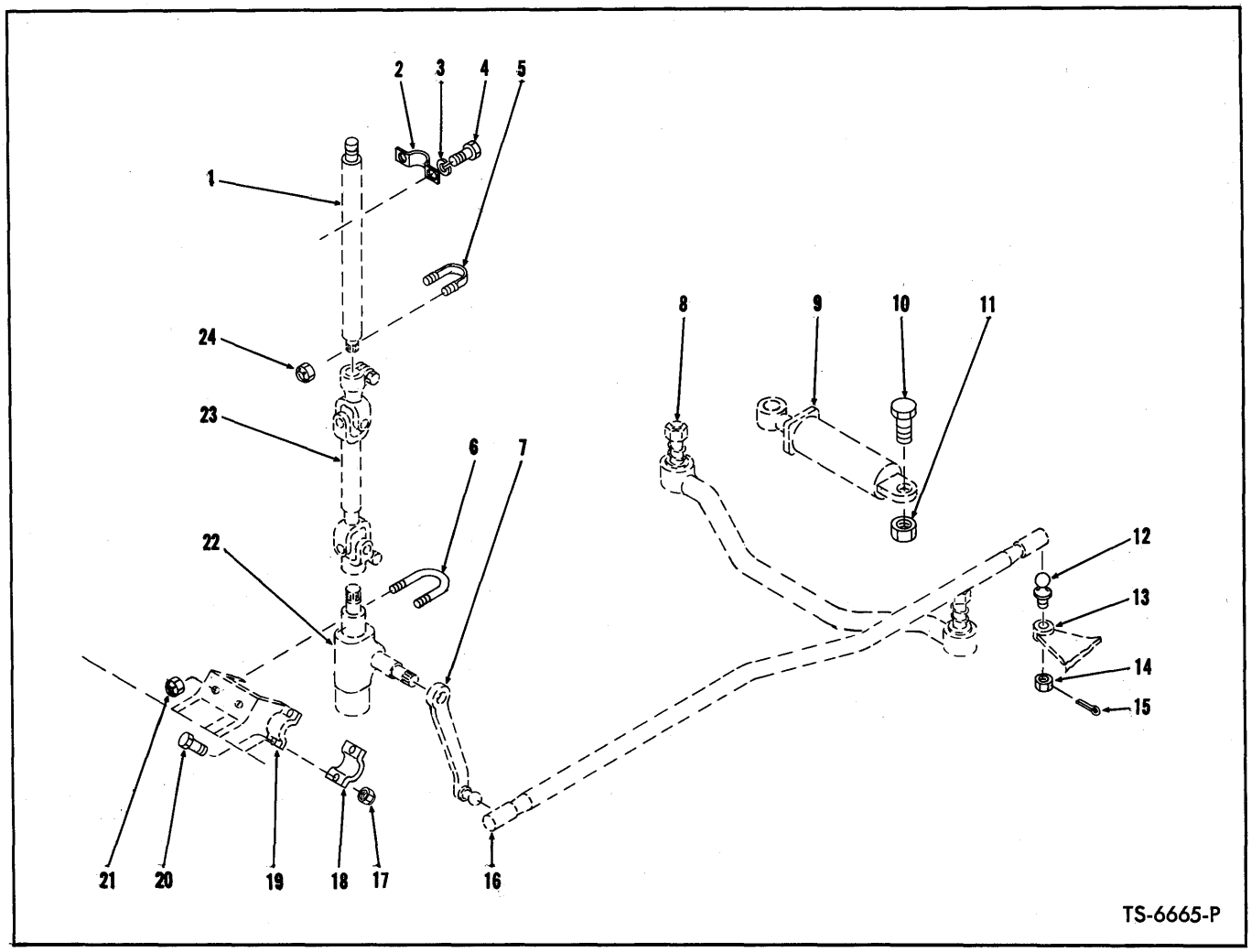

STEERING LINKAGE GROUP

Item No.	Part No.	Description	No. Req'd.
1	———	STEERING COLUMN — See Index	—
2	562443	CLAMP, Steering Column Mounting	1
3	4E-06	LKWSHR, Steering Column to Cockpit	2
4	18C-612	BOLT, Steering Column to Cockpit	2
5	557997	U-BOLT, Steering Column Mounting	1
6	545941	U-BOLT, Steering Gear Mounting	1
7	———	PITMAN ARM — See Index	—
8	———	TIE ROD — See Index	—
9	———	STEERING CYLINDER — See Index	—
10	18C-1252	BOLT, Cylinder Anchor	4
11	18D-12	NUT, Cylinder Anchor	4
12	513122	BALL STUD, Drag Link Mounting	1
13	———	§BRACKET, Rear Axle	—
14	4D-10	NUT, Drag Link Mounting	1
15	1F-332	COTTER, Ball Stud Nut	1
16	———	DRAG LINK — See Index	—
17	18D-08	NUT, Gear to Frame Bracket	2
18	550044	CLAMP, Steering Gear Mounting	1
19	———	§BRACKET, Frame Cross Member	—
20	18C-836	BOLT, Gear to Frame Bracket	2
21	18D-08	NUT, Gear to Frame Bracket	2
22	———	STEERING GEAR — See Index	—
23	———	SLIP SHAFT, Steering — See Index	—
24	18D-04	NUT, Steering Column to Cockpit	2

§Not Sold Separately

WHEN ORDERING PARTS, ALWAYS STATE MODEL AND SERIAL NO. OF MACHINE

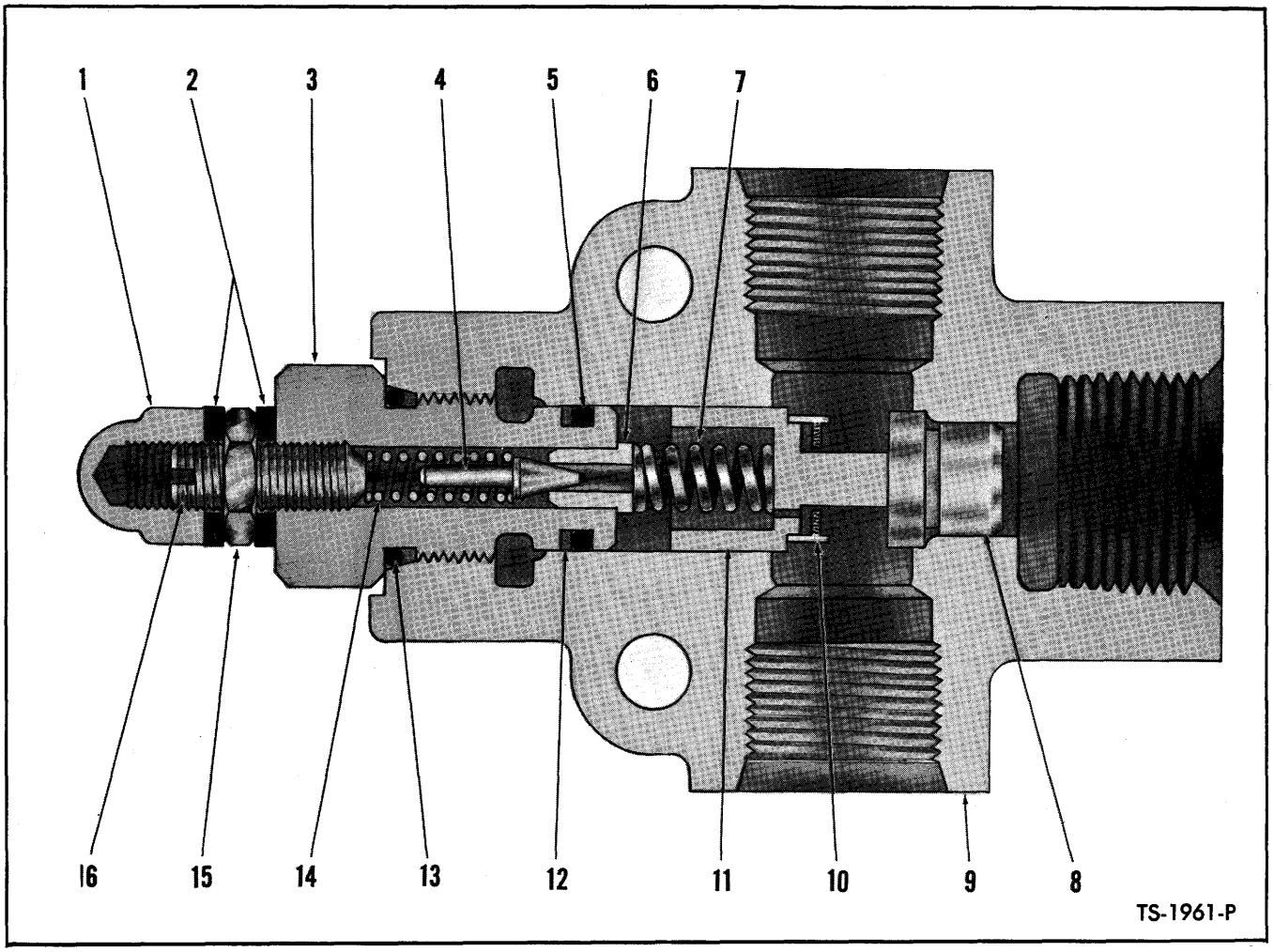

PRESSURE RELIEF VALVE — STEERING SYSTEM

Item No.	Part No.	Description	No. Req'd.
A	536539	VALVE ASSY (Inc. 1 thru 17) (Parker #VPR3-P-4F)	1
1	47D-05	NUT, Acorn	1
2	663792	WASHER, Stat-O-Seal	2
3	944467	CAP, Valve	1
4	883734	PLUNGER, Pilot	1
5	25K-20018	"O" RING	1
6	944469	SEAT, Pilot	1
7	944646	SPRING, Relief	1
8	944645	SEAT, Poppet	1
9	———	§BODY, Valve — See Item "A"	1
10	———	§SCREEN, Poppet — See Item 11	1
11	944643	POPPET ASSY (Inc. 10)	1
12	944468	RING, Back-Up	1
13	91F-6	"O" RING	1
14	944471	SPRING, Pilot	1
15	8D-05	NUT, Jam	1
16	33G-514	SCREW, Adjusting	1
17	799584	†PLUG	2

§Not Sold Separately
†Not Illustrated

WHEN ORDERING PARTS, ALWAYS STATE MODEL AND SERIAL NO. OF MACHINE

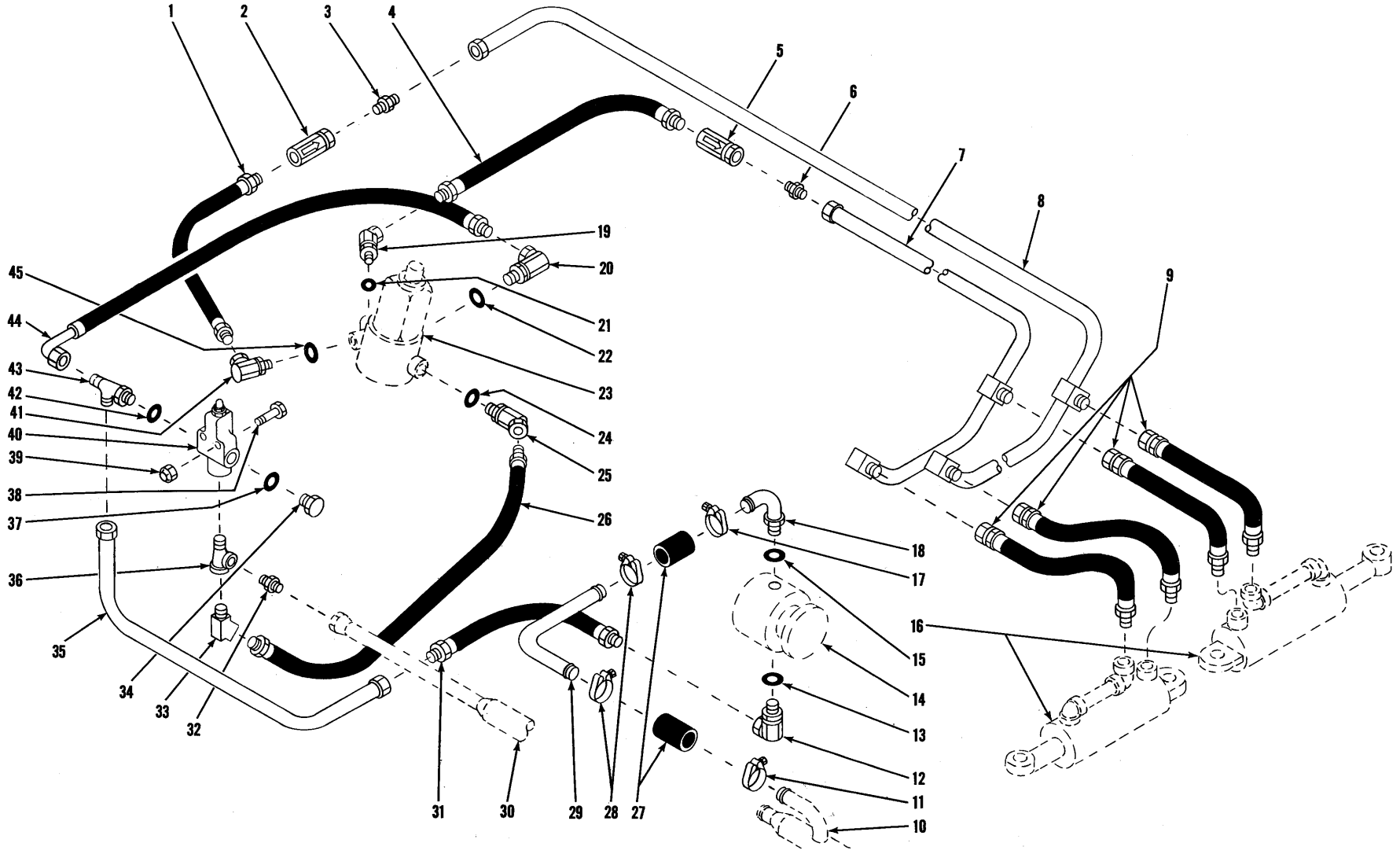

HYDRAULIC SYSTEM — STEERING

TS-6641-P

HYDRAULIC SYSTEM — STEERING

Item No.	Part No.	Description	No. Req'd.
1	784398	HOSE, Check Valve to Gear	1
2	572731	VALVE, Check	1
3	89F-7	CONNECTOR, Check Valve to Tube	1
4	784398	HOSE, Check Valve to Gear	1
5	572731	VALVE, Check	1
6	89F-7	CONNECTOR, Check Valve to Tube	1
7	589487	TUBE ASSY, Gear to Cylinder — Right Turn	1
8	589488	TUBE ASSY, Gear to Cylinder — Left Turn	1
9	533927	HOSE, Tube to Cylinder	4
10	———	TUBE ASSY, Suction — See Bucket & Boom Hydraulic System	—
11	540127	CLAMP, Hose	1
12	526676	ADAPTER UNION, Hose to Pump (Inc. 13)	1
13	91F-8	"O" RING, Adapter Union	1
14	———	STEERING PUMP — See Index	—
15	91F-11	"O" RING, Elbow	1
16	———	STEERING CYLINDER — See Index	—
17	540127	CLAMP, Hose	1
18	564087	ELBOW ASSY, Suction — Hose to Pump (Inc. 15)	1
19	535625	ADAPTER UNION, Hose to Gear (Inc. 21)	1
20	519275	ADAPTER UNION, Hose to Gear (Inc. 22)	1
21	91F-6	"O" RING, Adapter Union	1
22	91F-7	"O" RING, Adapter Union	1
23	———	STEERING GEAR — See Index	—
24	91F-7	"O" RING, Adapter Union	1
25	534894	ADAPTER UNION, Hose to Gear (Inc. 24)	1
26	542813	HOSE, Relief Valve to Gear	1
27	536749	HOSE, Stem to Tube	2
28	540127	CLAMP, Hose	2
29	589574	TUBE, Suction	1
30	———	TUBE ASSY, Return — See Bucket & Boom Hydraulic System	—
31	564107	HOSE, Pump to Tube	1
32	656532	CONNECTOR, Tube	1
33	81F-4	ELBOW, Hose to Tee	1
34	24K-7	PLUG, Relief Valve (Inc. 37)	1
35	558570	TUBE ASSY, Pump to Valve	1
36	17F-5	TEE, Relief Valve	1
37	91F-7	"O" RING, Plug	1
38	18C-540	BOLT, Relief Valve Mounting	2
39	18D-05	NUT, Relief Valve Mounting	2
40	———	VALVE, Pressure Relief — See Index	—
41	517089	ADAPTER UNION, Hose to Gear (Inc. 45)	1
42	91F-7	"O" RING, Tube Fitting Tee	1
43	21K-7	TEE, Tube Fitting (Inc. 42)	1
44	568785	HOSE, Gear to Relief Valve	1
45	91F-6	"O" RING, Adapter Union	1

WHEN ORDERING PARTS, ALWAYS STATE MODEL AND SERIAL NO. OF MACHINE

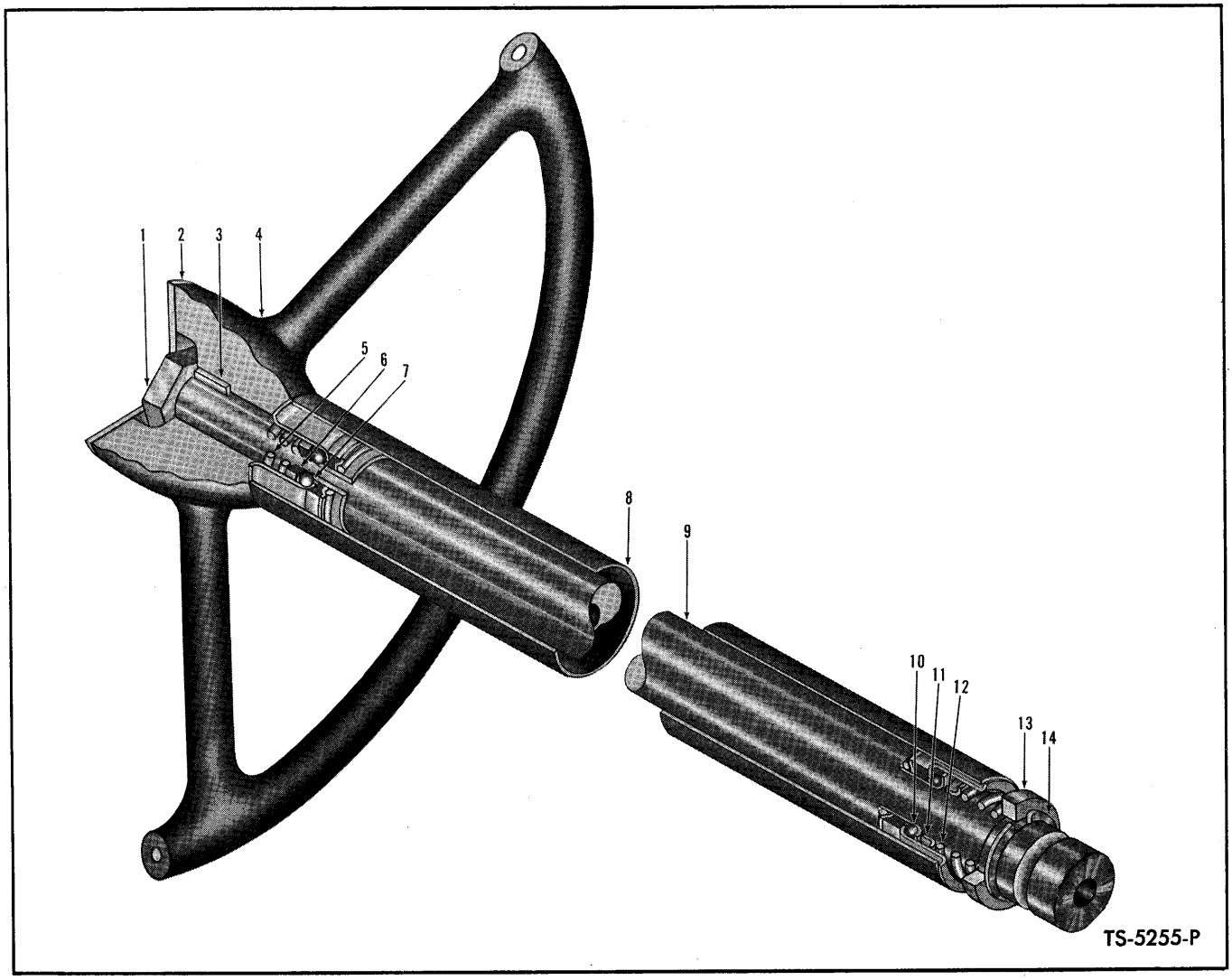

STEERING COLUMN ASSEMBLY

Item No.	Part No.	Description	No. Req'd.
A	589908	COLUMN ASSY, Steering (Inc. 1, 3, 5 thru 14)	1
1	648304	NUT, Steering Wheel	1
2	548074	PLATE, Operating Precaution	1
2A	65G-406	†SCREW, Plate Attaching	4
3	853384	KEY, Steering Wheel	1
4	518331	WHEEL, Steering	1
5	853395	SPRING, Upper Bearing	1
6	861768	WASHER, Upper Bearing	1
7	857729	BEARING ASSY, Upper	1
8	589909	JACKET, Steering Column	1
9	———	§SHAFT, Steering — See Item "A"	—
10	857729	BEARING ASSY, Lower	1
11	853394	SEAT, Bearing Spring	1
12	874121	SPRING, Lower Bearing	1
13	566589	SPACER, Steering Shaft	1
14	784075	RING, Steering Shaft Retaining	1

†Not Illustrated
§Not Sold Separately — Order complete assembly

WHEN ORDERING PARTS, ALWAYS STATE MODEL AND SERIAL NO. OF MACHINE

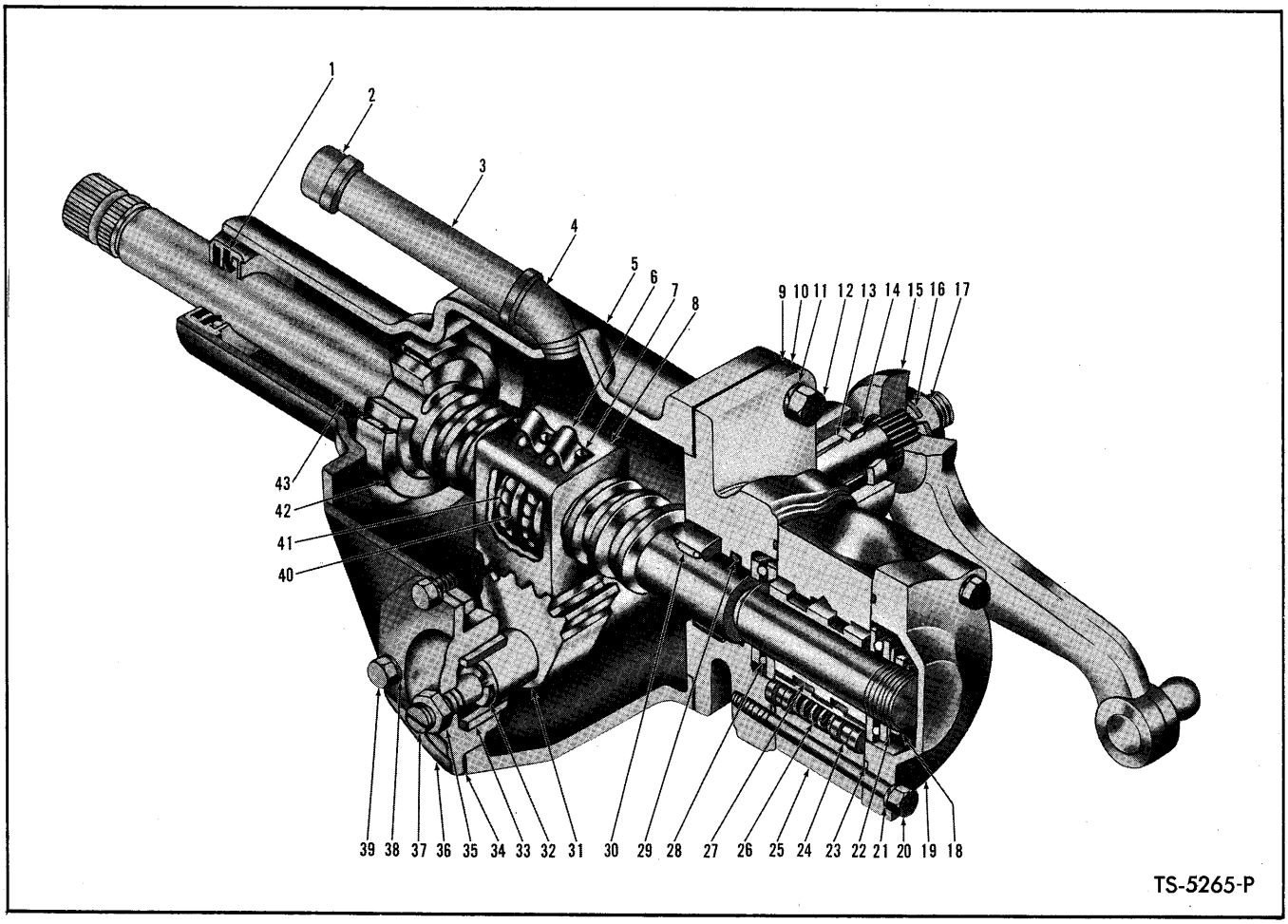

STEERING GEAR ASSEMBLY

Item No.	Part No.	Description	No. Req'd.
A	562075	GEAR ASSY (Inc. 1, 5 thru 14, 16 thru 43)	1
1	952018	SEAL, Steering Shaft	1
2	22F-4	CAP, Filler	1
3	5K-420	NIPPLE, Filler	1
4	25F-4	ELBOW, Filler	1
5	946026	HOUSING ASSY (Inc. 13, 42)	1
6	853464	CLAMP, Ball Guide Return	1
7	851762	BOLT & WASHER ASSY, Clamp	3
8	853408	NUT, Ball	1
9	853380	GASKET, Adapter	1
10	861738	ADAPTER, Valve to Housing (Inc. 29, 30)	1
11	4E-07	LKWSHR, Adapter to Housing	4
12	1C-720	BOLT, Adapter to Housing	4
13	853357	BUSHING, Pitman Shaft	2
14	853391	SEAL, Pitman Shaft Grease	1
15	589811	ARM, Pitman	1
16	853396	LKWSHR, Pitman Arm	1
17	850756	NUT, Pitman Arm	1
18	873250	NUT, Worm Bearing Lock	1
19	943667	COVER, Valve End	1
20	1C-656	BOLT, End Cover	3
21	4E-06	LKWSHR, End Cover	3
22	943429	SPRING, Valve Spool Preload	1
23	25K-40224	"O" RING, Valve to End Cover	2
24	861755	PLUNGER, Valve Centering	6
25	944052	VALVE ASSY (Inc. 24, 26, 27)	1
26	944053	SPRING, Valve Centering	3
27	———	§VALVE SPOOL — See Item 25	—
28	860997	BEARING, Worm Thrust	2
29	25K-40108	"O" RING, Adapter	1
30	861741	BEARING, Adapter	1
31	940111	GEAR, Pitman Shaft	1
32	853187	SHIM KIT, Lash Adjuster	1
33	———	§BUSHING, Housing Side Cover — See Item 36	—
34	851756	GASKET, Side Cover	1
35	8D-07	NUT, Lash Adjuster	1
36	853182	COVER ASSY, Housing Side (Inc. 33)	1
37	851770	ADJUSTER, Lash	1
38	1C-612	BOLT, Side Cover	3
39	4E-06	LKWSHR, Side Cover	3
40	853412	GUIDE, Ball Return	4
41	10J-09	BALL	106
42	730143	BEARING, Needle	1
43	946027	SHAFT ASSY (Inc. 6, 7, 8, 40, 41)	1

§Not Sold Separately

WHEN ORDERING PARTS, ALWAYS STATE MODEL AND SERIAL NO. OF MACHINE

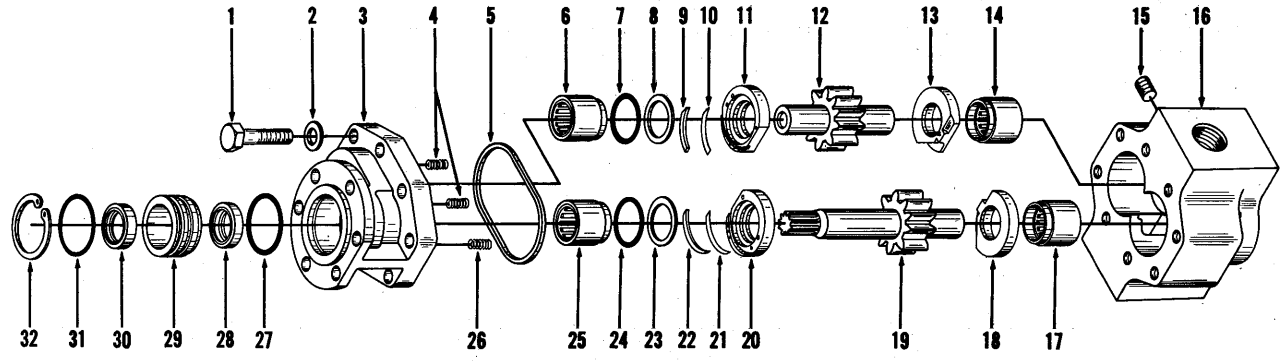

TS-4844-P

HYDRAULIC PUMP — STEERING

Item No.	Part No.	Description	No. Req'd.
A	450185	PUMP ASSY (Inc. 1 thru 32)	1
B	498203	*REPAIR KIT, Minor (Inc. 1, 2, 4, 5, 7, 8, 23, 24, 26, 27, 32)	1
C	498204	REPAIR KIT, Thrust Plate (Inc. 9, 10, 11, 13, 18, 20, 21, 22)	1
D	498113	REPAIR KIT, Shaft Seal (Inc. 27 thru 32)	1
E	498211	GEAR KIT (Inc. 12, 19)	1
F	498223	REPAIR KIT, Bearing (Inc. 6, 14, 17, 25)	1
1	———	§BOLT, Cover to Body	8
2	———	§WASHER, Cover to Body	8
3	———	**§COVER, Pump See Item "A"	1
4	———	§SPRING, Cover Thrust Plate	2
5	———	§GASKET, Cover	1
6	———	§BEARING, Cover	1
7	———	§"O" RING, Cover Thrust Plate	1
8	———	§RING, "O" Ring Back-Up	1
9	———	§RING, Mask-Off	1
10	———	§SPRING, Wave	1
11	———	§THRUST PLATE, Cover	1
12	———	§GEAR, Driven	1
13	———	§THRUST PLATE, Body	1
14	———	§BEARING, Body	1
15	47K-3	PLUG, Body	1
16	———	**§BODY, Pump — See Item "A"	1
17	———	§BEARING, Body	1
18	———	§THRUST PLATE, Body	1
19	———	§GEAR, Driven	1
20	———	§THRUST PLATE, Cover	1
21	———	§SPRING, Wave	1
22	———	§RING, Mask-Off	1
23	———	§RING, "O" Ring Back-Up	1
24	———	§"O" RING, Cover Thrust Plate	1
25	———	§BEARING, Cover	1
26	———	§SPRING, Cover Thrust Plate	1
27	———	§"O" RING, Oil Seal Retainer	1
28	———	§SEAL, Inner Shaft Oil	1
29	———	§RETAINER, Shaft Seal	1
30	———	§SEAL, Outer Shaft Oil	1
31	———	§"O" RING, Oil Seal Retainer	1
32	———	§RING, Seal Retainer Retaining	1
33	551906	†GASKET, Pump to Converter	1
34	2D-06	†NUT, Pump to Converter	6
35	9E-06	†LKWSHR, Pump to Converter	6
36	214961	†SLEEVE, Pump Drive	1

*NOTE: *Minor Repair Kit* consists of "O" Rings, Back-up Washers, Gaskets and approximately 20% of the hardware items such as bolts, nuts, springs and washers. The latter for the purpose of replacing any of these items lost or damaged in repair operation.

**NOTE: Pump Bodies and Covers will not be made available for field use since when these items are worn beyond limits permitting re-use, the cost of rebuilding the pump exceeds practical limits. In such cases a new pump assembly should be utilized.

§Not Sold Separately — Order Kits.

†Not Illustrated

WHEN ORDERING PARTS, ALWAYS STATE MODEL AND SERIAL NO. OF MACHINE

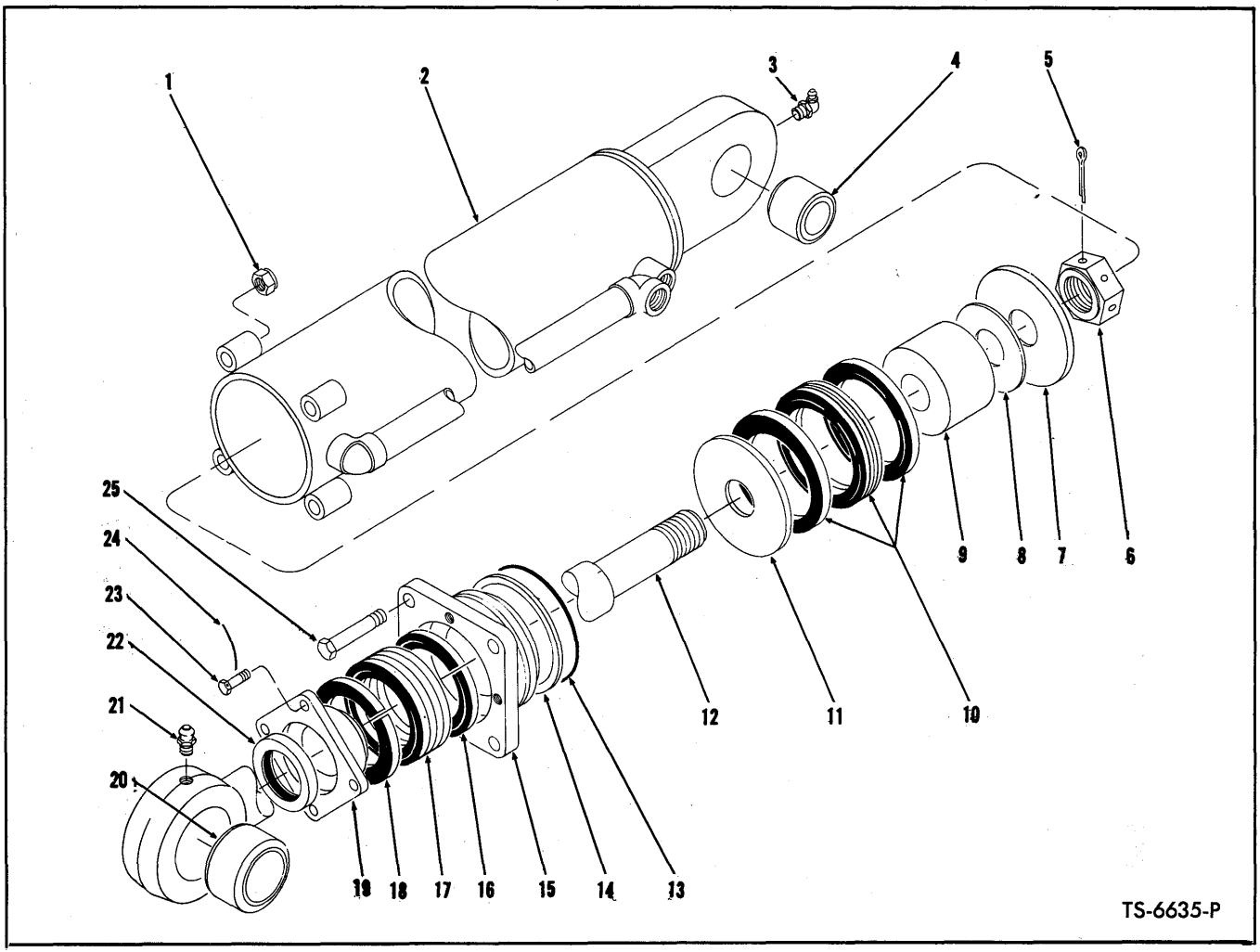

STEERING CYLINDER ASSEMBLY

2 Cylinders used on machine — Quantities listed below are for 1 Cylinder

Item No.	Part No.	Description	No. Req'd.
A	533489	CYLINDER ASSY (Inc. 1 thru 25)	1
1	68D-06	NUT, Cylinder Cap	4
2	533490	CYLINDER	1
3	12H-25	FITTING, Cylinder Grease	1
4	763451	BUSHING, Cylinder	1
5	1F-424	COTTER, Piston Rod Nut	1
6	523325	NUT, Piston Rod	1
7	526423	PLATE, Backing	1
8	526424	‡SHIM, Backing Plate	—
9	526422	SLEEVE	1
10	538697	PACKING ASSY	1
11	526423	PLATE, Backing	1
12	545155	ROD, Piston	1
13	25K-40208	"O" RING, Cylinder Cap	1
14	532948	RING, "O" Ring Back-Up	1
15	945118	CAP ASSY, Cylinder (Inc. 13, 14)	1
16	526419	ADAPTER, Male Chevron Packing	2
17	538065	PACKING SET, Cylinder Cap	1
18	526420	ADAPTER, Female Chevron Packing	2
19	526414	GLAND, Packing	1
20	763451	BUSHING, Piston Rod	1
21	10H-35	FITTING, Piston Rod Grease	1
22	526415	WIPER, Piston Rod	1
23	4C-414	BOLT, Packing Gland	4
24	———	LOCKWIRE (16 ga. x 13" lg.)	2
25	18C-648	BOLT, Cylinder Cap	4

‡As Required

WHEN ORDERING PARTS, ALWAYS STATE MODEL AND SERIAL NO. OF MACHINE

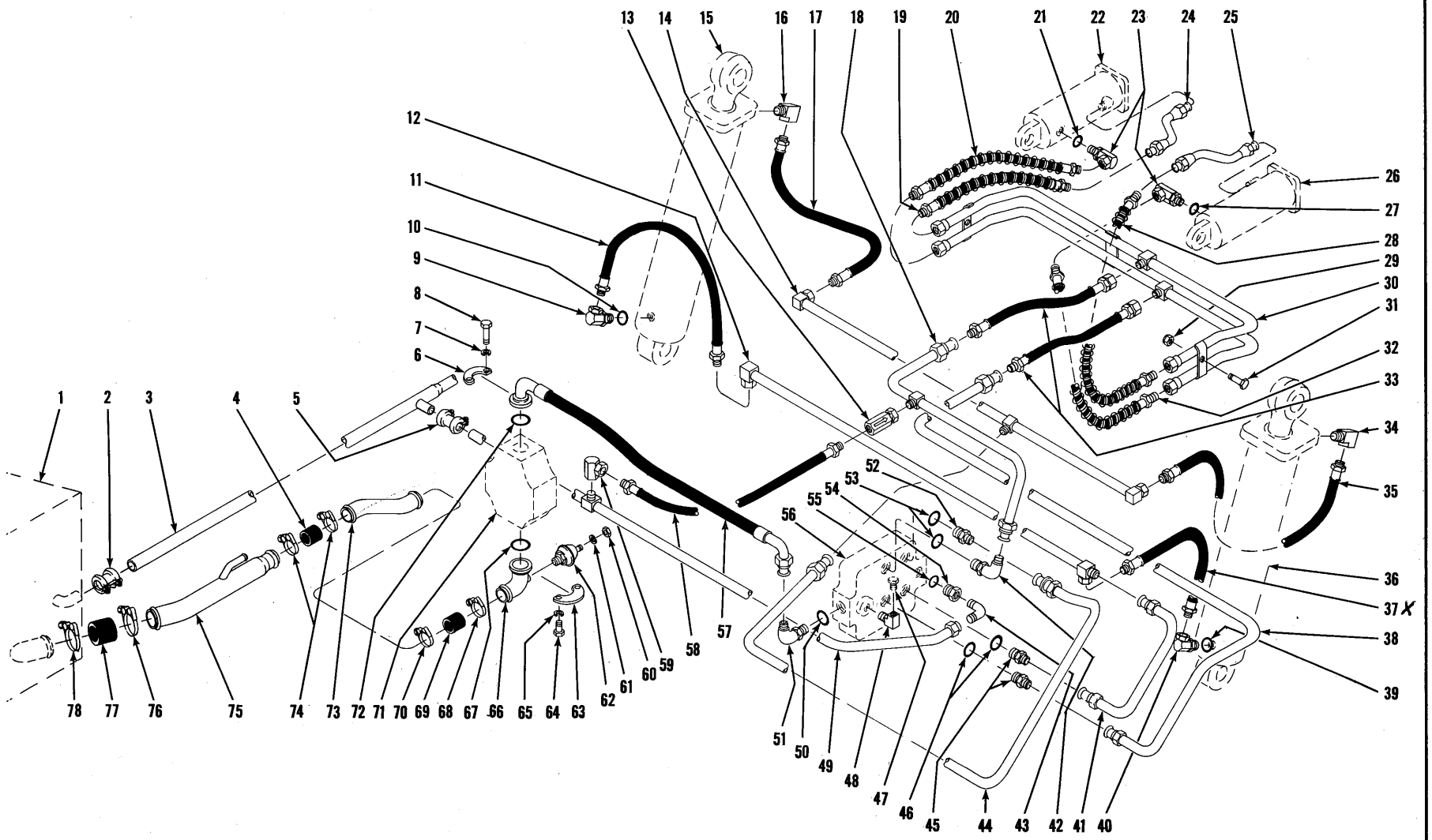

HYDRAULIC SYSTEM — BUCKET AND BOOM

TS-6636-P

HYDRAULIC SYSTEM — BUCKET AND BOOM

Item No.	Part No.	Description	No. Req'd.
1	———	RESERVOIR — See Index	—
2	573423	JOINT, Tube to Reservoir	1
3	589419	TUBE ASSY, Return	1
4	536710	HOSE, Tube to Reservoir	1
5	573422	JOINT, Tube to Tube	1
6	663094	FLANGE HALF, Hose to Pump	2
7	4E-07	LKWSHR, Flange Half to Pump	4
8	17C-724	BOLT, Flange Half to Pump	4
9	526676	ADAPTER UNION, Hose to Boom Cylinder Base (Inc. Item 10)	1
10	91F-8	"O" RING, Adapter Union	1
11	574442	HOSE, Boom Cylinder Base to Crosstube	1
12	563798	CROSSTUBE ASSY, Boom Cylinder Base	1
13	661707	VALVE, Check	1
14	563801	CROSSTUBE ASSY, Boom Cylinder Rod End	1
15	———	BOOM CYLINDER — See Index	—
16	29F-4	ELBOW, Hose to Boom Cylinder Rod End	1
17	574442	HOSE, Boom Cylinder Rod End to Crosstube	1
18	563789	TUBE ASSY, Valve to Crosstube — Bucket Rod End	1
19	563810	HOSE, Bucket Cylinder Rod End to Crosstube	1
20	571176	HOSE, Bucket Cylinder Base to Crosstube	1
21	91F-8	"O" RING, Adapter Union	1
22	———	BUCKET CYLINDER — See Index	—
23	526676	ADAPTER UNION, Hose to Bucket Cylinder Base (Inc. 21, 27)	2
24	563805	TUBE ASSY, Hose to Bucket Cylinder Rod End	1
25	563805	TUBE ASSY, Hose to Bucket Cylinder Rod End	1
26	———	BUCKET CYLINDER — See Index	—
27	91F-8	"O" RING, Adapter Union	1
28	563810	HOSE, Bucket Cylinder Rod End to Crosstube	1
29	18D-08	NUT, Bucket Crosstube Assy to Frame	2
30	563792	CROSSTUBE ASSY, Bucket Cylinder	1
31	18C-820	BOLT, Bucket Crosstube Assy to Frame	2
32	571176	HOSE, Bucket Cylinder Base to Crosstube	1
33	571207	HOSE, Bucket Cylinder Crosstube to Tube	2
34	29F-4	ELBOW, Hose to Boom Cylinder Rod End	1
35	574442	HOSE, Boom Cylinder Rod End to Crosstube	1
36	———	BOOM CYLINDER — See Index	—
37	574442	HOSE, Boom Cylinder Base to Crosstube	1
38	563788	TUBE ASSY, Bucket Cylinder Crosstube to Valve	1
39	91F-8	"O" RING, Adapter Union	1
40	526676	ADAPTER UNION, Hose to Boom Cylinder Base (Inc. 39)	1
41	563790	TUBE ASSY, Boom Cylinder Base Crosstube to Valve	1
42	17K-10	ELBOW, Tube to Valve (Inc. 53)	1
43	83F-10	ELBOW, Tube to Adapter	1
44	563791	TUBE ASSY, Boom Cylinder Rod End Crosstube to Valve	1
45	15K-10	CONNECTOR, Tube to Valve (Inc. 46)	2
46	91F-10	"O" RING, Connector	2
47	40K-04	PLUG	1
48	29F-1	ELBOW	1
49	563808	TUBE ASSY, Valve to Return Tube	1
50	91F-10	"O" RING, Elbow	1
51	17K-10	ELBOW, Hose to Valve (Inc. 50)	1
52	15K-10	CONNECTOR, Tube to Valve (Inc. 53)	1
53	91F-10	"O" RING, Connector	2
54	588399	ADAPTER (Inc. 55)	1
55	91F-13	"O" RING, Adapter	1
56	———	CONTROL VALVE — See Index	—
57	563809	HOSE, Valve to Pump	1
58	542813	HOSE, Check Valve to Tube	1
59	32F-5	ELBOW, Hose to Tube	1
60	14D-08	NUT, Indicator	1
61	12E-08	LKWSHR, Indicator	1
62	562112	INDICATOR, Reservoir Filter — Vacuum	1
63	663095	FLANGE HALF, Stem to Pump	2
64	17C-824	BOLT, Flange Half to Pump	4
65	4E-08	LKWSHR, Flange Half to Pump	4
66	569506	STEM, Suction	1
67	25K-40128	"O" RING, Stem	1
68	540130	CLAMP, Hose	1
69	536710	HOSE, Stem to Tube	1
70	540130	CLAMP, Hose	1
71	———	PUMP, Bucket & Boom — See Index	—
72	25K-40116	"O" RING, Hose	1
73	563785	TUBE, Suction — Front	1
74	540130	CLAMP, Hose	2
75	589422	TUBE ASSY, Suction — Rear	1
76	540106	CLAMP, Hose	1
77	533478	HOSE, Tube to Reservoir	1
78	540106	CLAMP, Hose	1

WHEN ORDERING PARTS, ALWAYS STATE MODEL AND SERIAL NO. OF MACHINE

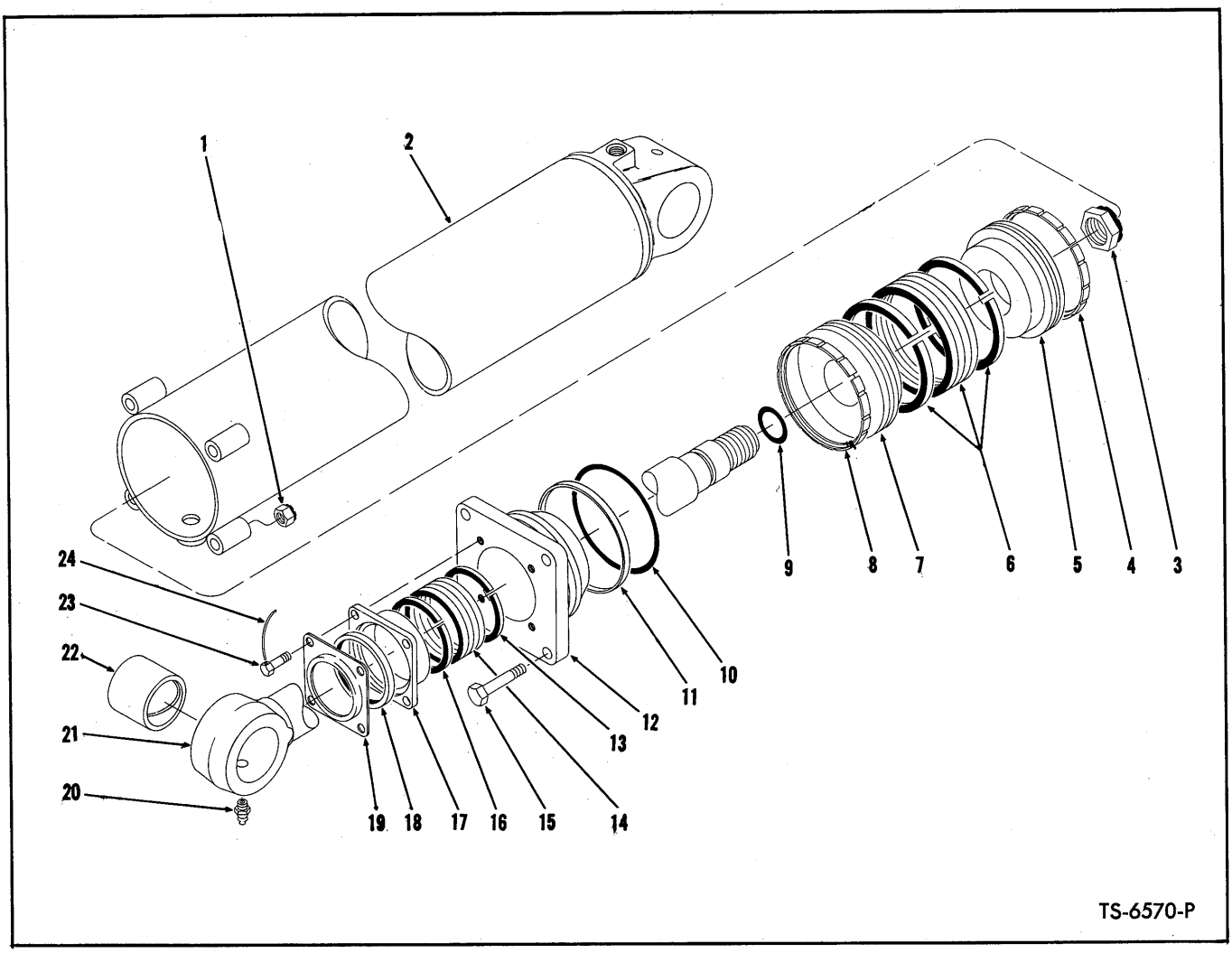

BOOM CYLINDER ASSEMBLY

2 Cylinders used on machine — Quantities listed below are for 1 Cylinder

Item No.	Part No.	Description	No. Req'd.
A	587950	CYLINDER ASSY (Inc. 1 thru 24)	1
1	18D-08	NUT, Cylinder Cap	4
2	587951	CYLINDER	1
3	18D-20	NUT, Piston Rod	1
4	550081	RING, Wear	1
5	548575	PISTON, Bottom Half	1
6	548578	PACKING ASSY	1
7	548574	PISTON, Top Half	1
8	550081	RING, Wear	1
9	25K-40112	"O" RING, Piston Rod	1
10	25K-40408	"O" RING, Cylinder Cap	1
11	548577	RING, "O" Ring Back-Up	1
12	945950	CAP ASSY, Cylinder (Inc. 10, 11)	1
13	591517	ADAPTER, Male Chevron Packing	2
14	531613	PACKING SET	1
15	18C-864	BOLT, Cylinder Cap	4
16	591516	ADAPTER, Female Chevron Packing	2
17	562700	GLAND, Packing	1
18	591525	SEAL, Piston Rod	1
19	562701	RETAINER, Seal	1
20	10H-25	FITTING, Piston Rod Grease	1
21	587955	ROD ASSY, Piston (Inc. 22)	1
22	1521218	BUSHING, Piston Rod	1
23	4C-616	BOLT, Packing Gland	4
24	———	LOCKWIRE, (16 ga. x 15" lg.)	2

WHEN ORDERING PARTS, ALWAYS STATE MODEL AND SERIAL NO. OF MACHINE

March 21, 1969

6

MODEL 75 & 85-III

AIR BUCKET LEVELER

Kit # 1502547 Consists Of:

PART NUMBER	QUANTITY	DESCRIPTION
29F-1	1	Street Elbow 90°
31F-2	2	90° Adapter Union
36F-2	1	Swivel
30F-3	1	Street Tee
18D-05	1	Nut
19F-5	1	Bushing
4E-06	4	Lockwasher
12E-10	4	Lockwasher
31H-33	1	Clip
31H-34	1	Clip
30H-58	1	Clip
18C-516	1	Bolt
18C-616	4	Bolt
2G-1010	4	Screw
559784 *	1	Air Valve
619021	4	Washer
1528868	1	Installation Drawing
1528869	1	Leveler Cam
1528870	1	Bracket
1528871	1	Bracket
1528888	1	Hose
1530094 *	1	Detent Kickout Kit
1536652	1	Hose

* Components for this item may be found in parts manual supplements.

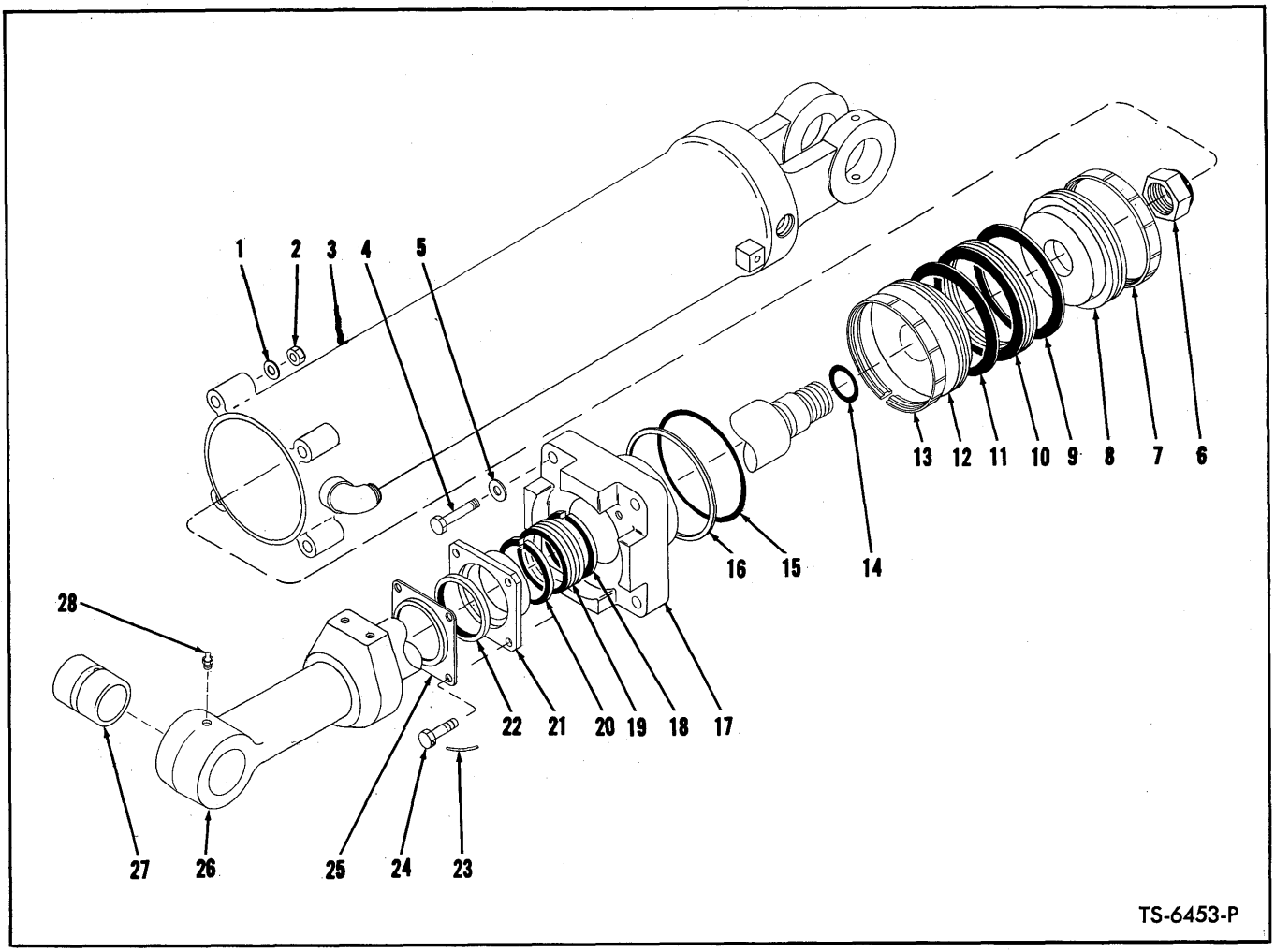

BUCKET CYLINDER ASSEMBLY

2 Cylinders used on machine — Quantities listed below are for 1 Cylinder

Item No.	Part No.	Description	No. Req'd.
A	562529	CYLINDER ASSY (Inc. 1 thru 28)	1
1	879768	WASHER, Cylinder Cap	4
2	68D-08	NUT, Cylinder Cap	4
3	~~562530~~	CYLINDER	1
4	18C-872	BOLT, Cylinder Cap	4
5	879768	WASHER, Cylinder Cap	4
6	67D-20	NUT, Piston Rod	1
7	547870	RING, Wear	1
8	547869	PISTON, Bottom Half	1
9	———	§ADAPTER — See Item 10	—
10	547836	PACKING ASSY (Inc. 9, 11)	1
11	———	§ADAPTER — See Item 10	—
12	547868	PISTON, Top Half	1
13	547870	RING, Wear	1
14	25K-40104	"O" RING, Piston Rod	1
15	25K-40324	"O" RING, Cylinder Cap	1
16	743816	RING, "O" Ring Back-Up	1
17	945951	CAP ASSY, Cylinder (Inc. 15, 16)	1
18	544892	ADAPTER, Male Chevron Packing	2
19	544891	PACKING SET	1
20	544893	ADAPTER, Female Chevron Packing	2
21	562543	GLAND, Packing	1
22	587250	SEAL, Piston Rod	1
23	———	LOCKWIRE (16 ga. x 13" lg.)	2
24	4C-620	BOLT, Packing Gland	4
25	562544	RETAINER, Seal	1
26	562536	ROD ASSY, Piston (Inc. 27)	1
27	1521241	BUSHING, Piston Rod	1
28	10H-25	FITTING, Piston Rod Grease	1

§Not Sold Separately

WHEN ORDERING PARTS, ALWAYS STATE MODEL AND SERIAL NO. OF MACHINE

X 1507805 data
1x 533463 Hose
1x 367-5 Adapter Union

PG 2185

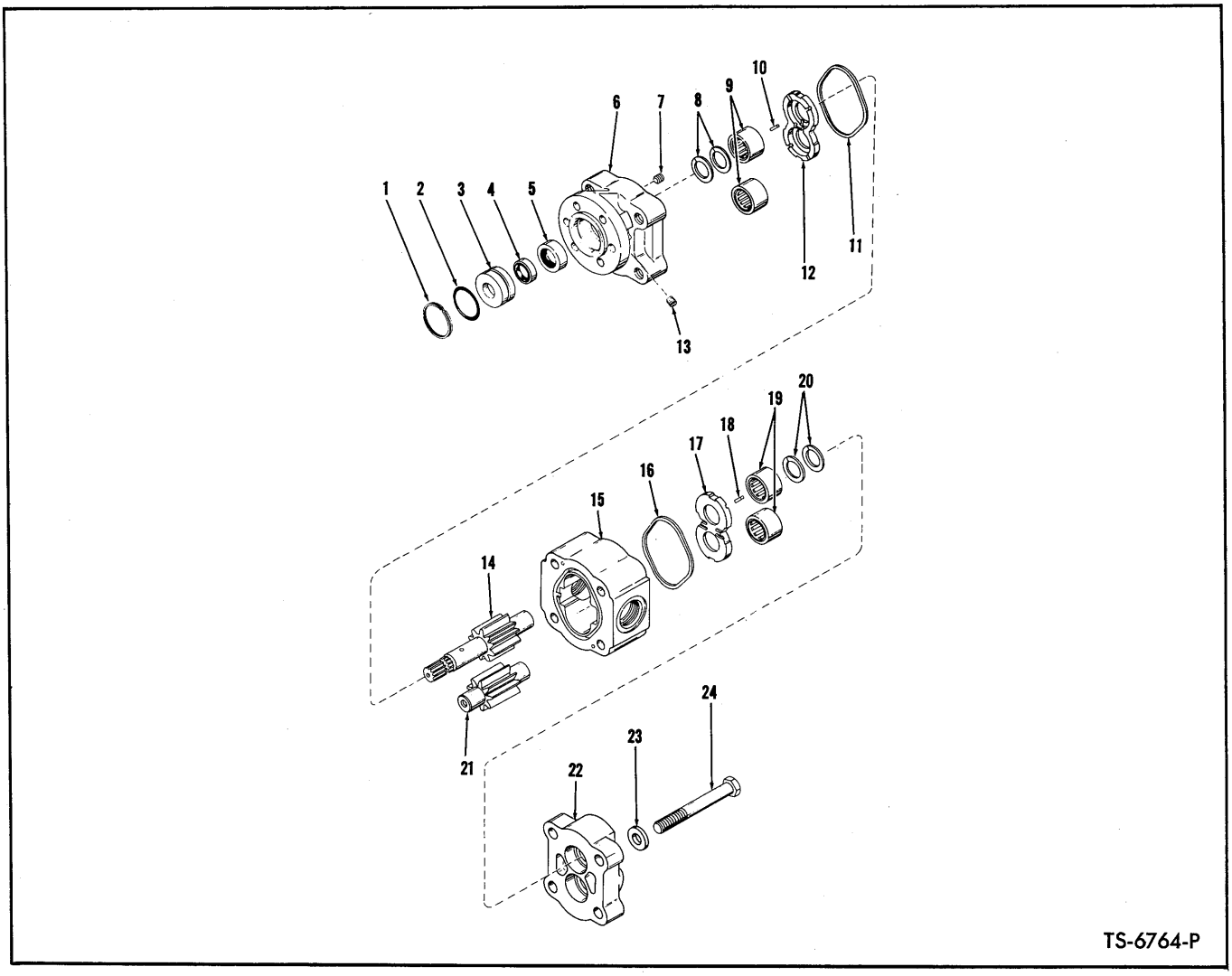

HYDRAULIC PUMP — BUCKET AND BOOM

Item No.	Part No.	Description	No. Req'd.
A	569354	PUMP ASSY (Inc. 1 thru 24)	1
B	946392	SHAFT SEAL KIT (Inc. 1 thru 5)	1
C	946393	GEAR (Inc. 14, 21)	1
D	946394	THRUST PLATE KIT (Inc. 1 thru 5, 10, 11, 12, 16, 17, 18)	1
E	946395	BEARING KIT (Inc. 1 thru 5, 8 thru 12, 16 thru 20)	1
1	876354	RING, Seal Retainer	1
2	25K-30128	"O" RING, Seal Retainer	1
3	———	§RETAINER, Seal — See Item "B"	1
4	946396	SEAL, Outer Drive Shaft	1
5	946397	SEAL, Inner Drive Shaft	1
6	946398	COVER, Shaft End	1
7	33G-706	SCREW, Set	1
8	———	§SEAL, Ring — See Item "E"	2
9	———	§BEARING, Roller — See Item "E"	2
10	———	§SEAL, Pocket — See Item "D" (Cut from Strip in Kit)	6
11	———	§SEAL, Housing — See Item "D"	1
12	———	§PLATE, Thrust — See Item "D"	1
13	———	PLUG — Shipping only	1
14	———	§GEAR, Drive — See Item "C"	1
15	946399	HOUSING, Gear	1
16	———	§SEAL, Housing — See Item "D"	1
17	———	§PLATE, Thrust — See Item "D"	1
18	———	§SEAL, Pocket — See Item "D" (Cut from Strip in Kit)	6
19	———	§BEARING, Roller — See Item "E"	2
20	———	§SEAL, Ring — See Item "E"	2
21	———	§GEAR, Driven	1
22	946400	COVER, Port End	1
23	946401	WASHER, Cover Mounting	4
24	1C-1084	BOLT, Cover Mounting	4
25	214962	†SLEEVE, Pump Drive	1
26	551906	†GASKET, Pump to Converter	1
27	8D-06	†NUT, Pump Mounting	6
28	9E-06	†LKWSHR, Pump Mounting	6

§Not Sold Separately
†Not Illustrated

WHEN ORDERING PARTS, ALWAYS STATE MODEL AND SERIAL NO. OF MACHINE

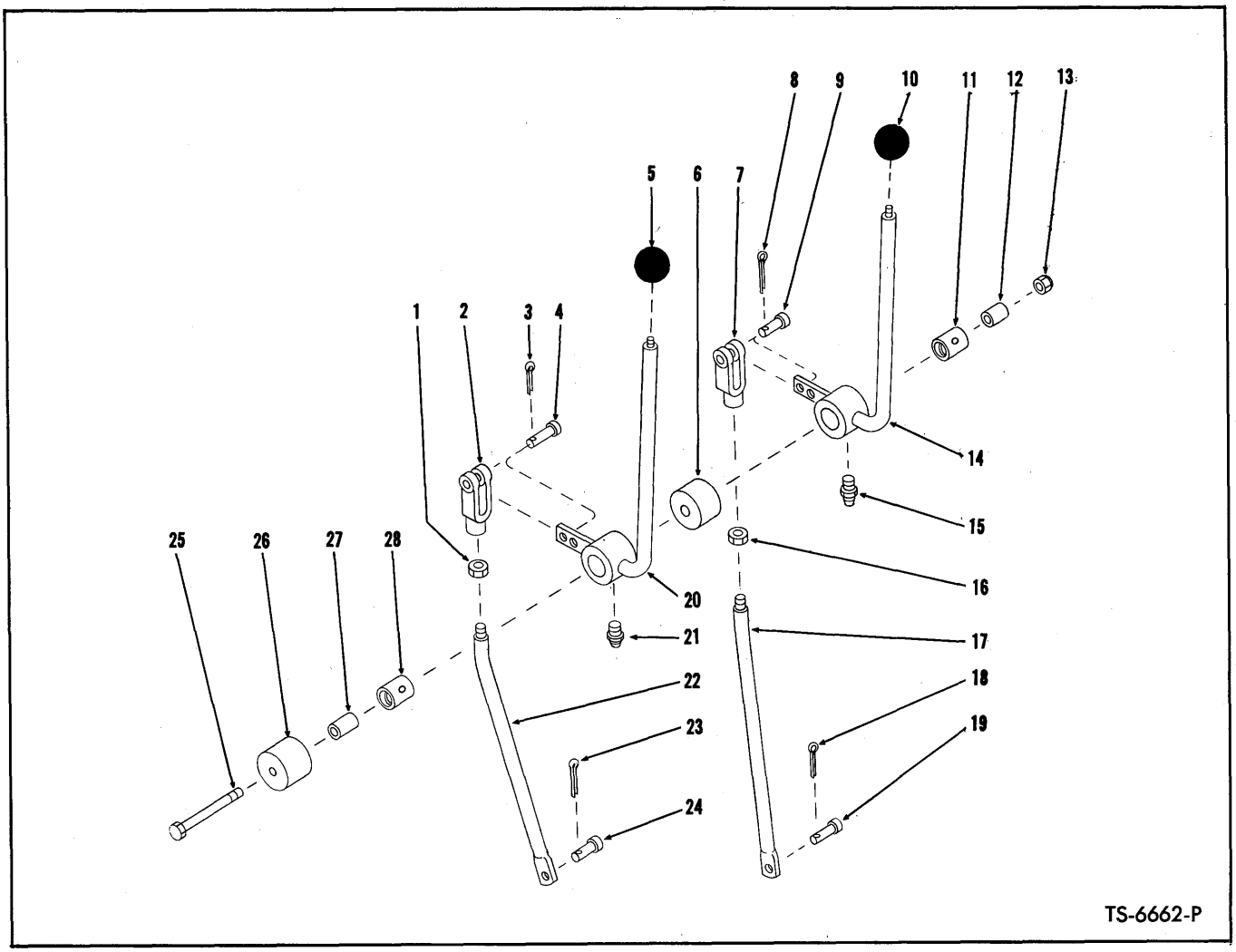

VALVE CONTROL LEVERS AND LINKAGE

Item No.	Part No.	Description	No. Req'd.
1	8D-08	NUT, Clevis Jam	1
2	2J-8300	CLEVIS, Rod to Lever	1
3	1F-414	COTTER, Clevis Pin	1
4	4F-08127	PIN, Clevis to Lever	1
5	509772	KNOB, Bucket Lever	1
6	558574	SPACER, Valve Lever Mounting	1
7	2J-8300	CLEVIS, Rod to Lever	1
8	1F-414	COTTER, Clevis Pin	1
9	4F-08127	PIN, Clevis to Lever	1
10	509772	KNOB, Boom Lever	1
11	569055	BUSHING, Valve Lever Mounting	1
12	550646	SLEEVE, Valve Lever Mounting	1
13	18D-08	NUT, Valve Lever Mounting	1
14	572708	LEVER, Boom Control (Inc. 11)	1
15	12H-15	FITTING, Lever Grease	1
16	8D-08	NUT, Clevis Jam	1
17	564268	ROD ASSY, Valve Control (Inc. 7, 16)	1
18	1F-312	COTTER, Clevis Pin	1
19	4F-06106	PIN, Rod to Valve	1
20	572708	LEVER, Bucket Control (Inc. 28)	1
21	12H-15	FITTING, Lever Grease	1
22	564271	ROD ASSY, Valve Control (Inc. 1, 2)	1
23	1F-312	COTTER, Clevis Pin	1
24	4F-06106	PIN, Rod to Valve	1
25	24C-8136	BOLT, Valve Lever Mounting	1
26	558574	SPACER, Valve Lever Mounting	1
27	550646	SLEEVE, Valve Lever Mounting	1
28	569055	BUSHING, Valve Lever Mounting	1

WHEN ORDERING PARTS, ALWAYS STATE MODEL AND SERIAL NO. OF MACHINE

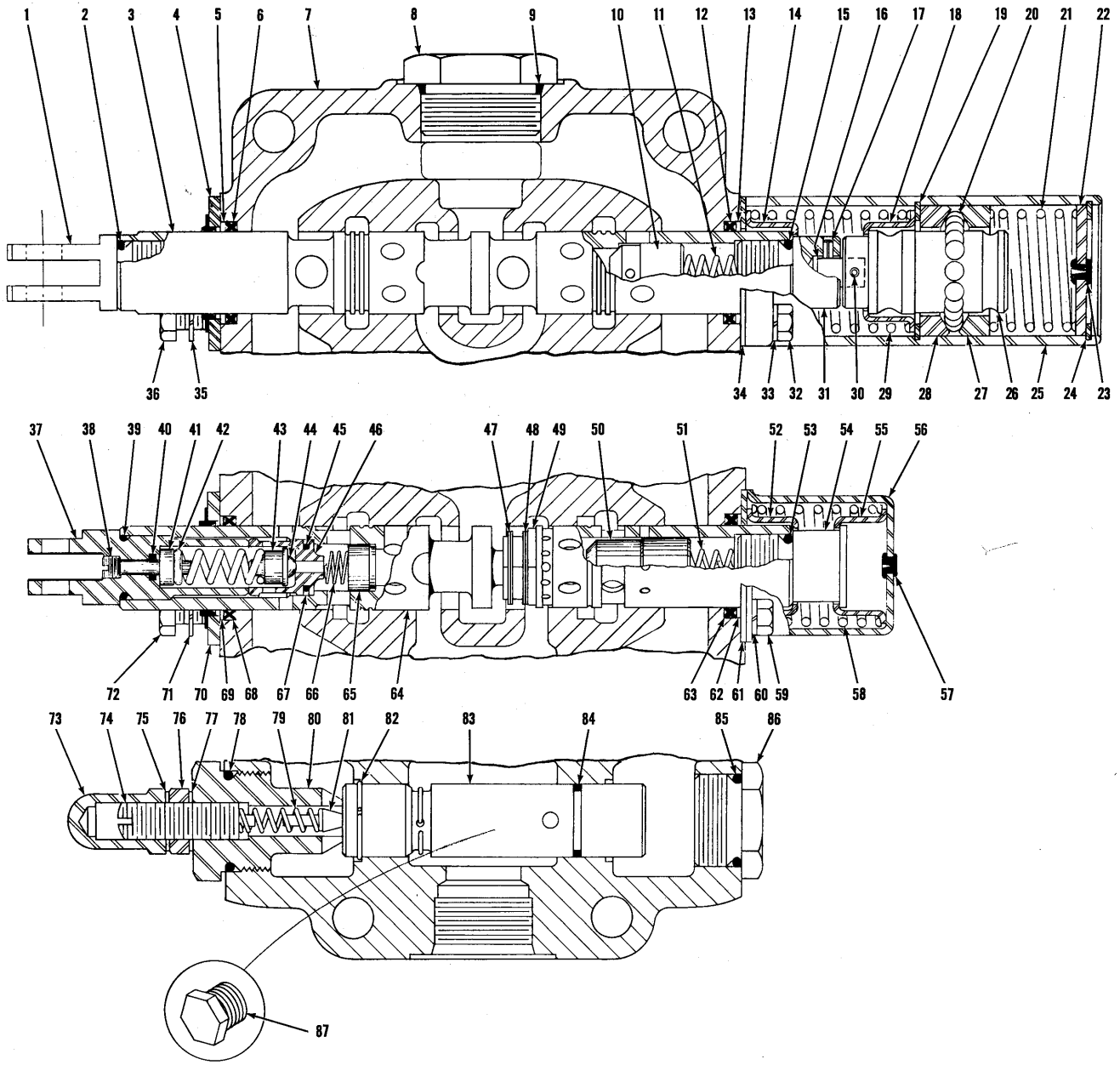

CONTROL VALVE ASSEMBLY

TS-6653-P

CONTROL VALVE ASSEMBLY

Item No.	Part No.	Description	No. Req'd.
A	558814	VALVE ASSY (Inc. 1 thru 87)	1
1	946360	EYE, Plunger	1
2	944881	"O" RING, Plunger Eye	1
3	———	§OPERATING PLUNGER—See Item "A"	—
4	893294	WIPER, Bonded	1
5	944883	RING, Back-Up	1
6	784559	QUAD RING, Plunger	1
7	———	§HOUSING, Valve — See Item "A"	—
8	24K-11	CAP, Housing	1
9	91F-11	"O" RING, Cap	1
10	944885	CHECK, Plunger	1
11	893293	SPRING, Plunger Check	1
12	784559	QUAD RING, Plunger	1
13	944883	RING, Back-Up	1
14	944878	GUIDE, Check Spring	1
15	944881	"O" RING, Operating Plunger	1
16	888449	PIN, Detent	1
17	108301	PIN, Roll	1
18	944878	GUIDE, Return Spring	1
19	1301194	RING, Retaining	1
20	10J-08	BALL, Detent	15
21	946029	SPRING, Detent	1
22	944900	PLUG, Detent	1
23	886763	PLUG, Bleeder	1
24	507695	RING, Plug Retaining	1
25	945805	COVER, Detent	1
26	946030	CAP, Detent	1
27	944897	RETAINER, Ball	1
28	944897	RETAINER, Ball	1
29	945090	SPRING, Plunger Return	1
30	108301	PIN, Roll	1
31	945095	CAP, Operating Plunger	1
32	1C-416	BOLT, Cover Attaching	4
33	4E-04	LKWSHR, Cover Attaching	4
34	944882	PLATE, Quad Ring Retaining	1
35	4E-04	LKWSHR, Wiper Retainer	2
36	1C-410	BOLT, Wiper Retainer	2
37	946361	EYE, Plunger	1
38	946362	SCREW, Adjusting	1
39	944881	"O" RING, Plunger Eye	1
40	25K-20007	"O" RING, Guide	1
41	946363	GUIDE, Check Spring	1
42	946364	SPRING, Check	1
43	946365	CHECK, Plunger (Inc. 44)	1
44	———	§BALL — See Item 43	—
45	25K-20016	"O" RING, Check Seat	1
46	946367	SEAT, Check	1
47	1308105	RING, Check Retaining	2
48	1308105	RING, Check Retaining	2
49	946032	CHECK, Plunger	2
50	946368	CHECK, Plunger	1
51	893293	SPRING, Plunger Check	1
52	945348	GUIDE, Check Spring	1
53	944881	"O" RING, Operating Plunger	1
54	944895	CAP, Operating Plunger	1
55	945348	GUIDE, Return Spring	1
56	944896	COVER, Detent	1
57	886745	PLUG, Bleeder	1
58	944879	SPRING, Plunger Return	1
59	1C-410	BOLT, Cover Retaining	4
60	4E-04	LKWSHR, Cover Retaining	4
61	944882	PLATE, Quad Ring Retaining	1
62	944883	RING, Back-Up	1
63	784559	QUAD RING, Plunger	1
64	———	§OPERATING PLUNGER—See Item "A"	—
65	946370	CHECK, Plunger	1
66	946369	SPRING, Plunger	1
67	946366	RING, Back-Up	1
68	784559	QUAD RING, Plunger	1
69	944883	RING, Back-Up	1
70	893294	WIPER, Bonded	1
71	4E-04	LKWSHR, Wiper Retainer	2
72	1C-410	BOLT, Wiper Retainer	2
73	944853	ACORN NUT	1
74	944890	SCREW, Relief Valve Adjusting	1
75	613750	WASHER, Jam Nut	1
76	8D-08	NUT, Jam	1
77	613750	WASHER, Jam Nut	1
78	25K-40100	"O" RING, Adjusting Cap	1
79	886753	SPRING, Relief Valve	1
80	893296	CAP, Relief Valve Adjusting	1
81	886739	POPPET, Relief Valve	1
82	946033	RING, Relief Valve Retaining	1
83	893298	VALVE ASSY, Relief (Inc. 82, 84)	1
84	945816	"O" RING, Relief Valve	1
85	25K-40100	"O" RING, Cap	1
86	944894	CAP, Valve Housing	1
87	40K-04	PLUG, Housing	1
88	18C-864	†BOLT, Valve Mounting	3
89	4E-08	†LKWSHR, Valve Mounting	2
90	66D-08	†NUT, Valve Mounting	1

§Not Sold Separately
†Not Illustrated

WHEN ORDERING PARTS, ALWAYS STATE MODEL AND SERIAL NO. OF MACHINE

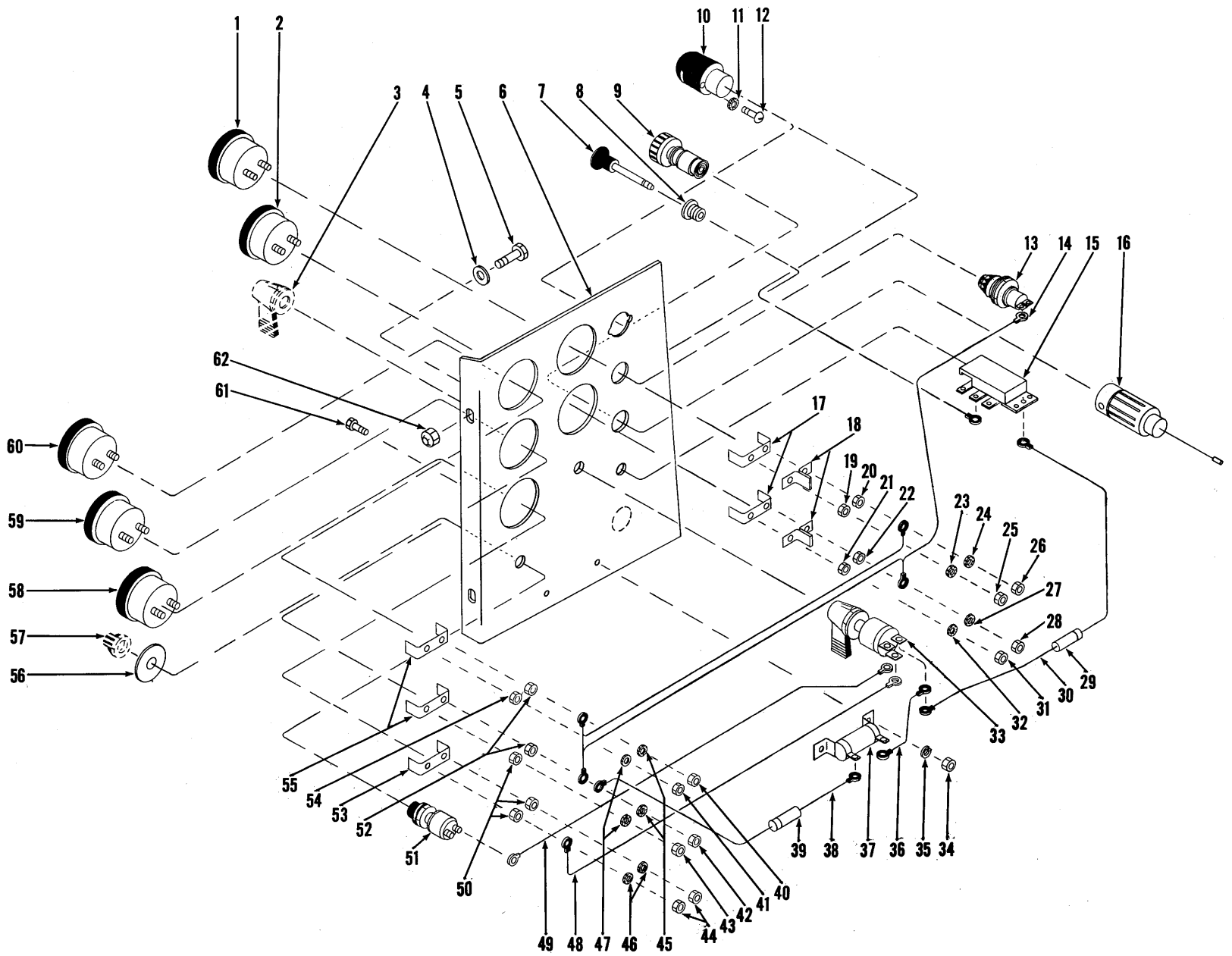

INSTRUMENT PANEL ASSEMBLY

TS-5236-P

INSTRUMENT PANEL ASSEMBLY

For Serial 7CG101 thru 7CG196

Item No.	Part No.	Description	No. Req'd.
1	523372	GAUGE, Engine Oil Pressure	1
2	517228	GAUGE, Air Pressure	1
3	———	OMIT	—
4	619024	WASHER, Instrument Panel Mounting	
5	18C-616	BOLT, Instrument Panel Mounting	2
6	589992	PANEL, Instrument	1
7	550742	ROD, Light Switch	1
8	550743	BUSHING, Light Switch	1
9	944803	ELEMENT, Lighter	1
10	574276	LAMP, Dash	1
10A	427237	†BULB, Dash Lamp (12V)	1
11	12E-6	LKWSHR, Dash Lamp Mounting	2
12	18G-606	SCREW, Dash Lamp Mounting	2
13	562141	LIGHT, Indicator	1
13A	876574	†BULB, Indicator Light	1
14	558673	HARNESS, Instrument Wiring	1
15	550741	SWITCH, Light	1
16	549024	RECEPTACLE, Lighter	1
16A	944804	†FUSE, Lighter	1
17	626530	CLAMP, Instrument Mounting	2
18	602350	SEPARATOR, Oil & Air Gauge	2
19	14D-10	NUT, Gauge to Panel Mounting	1
20	12D-8	NUT, Gauge to Panel Mounting	1
21	14D-10	NUT, Gauge to Panel Mounting	1
22	12D-8	NUT, Gauge to Panel Mounting	1
23	12E-10	LKWSHR, Terminal to Gauge	1
24	12E-8	LKWSHR, Terminal to Gauge	1
25	14D-10	NUT, Terminal to Gauge	1
26	12D-8	NUT, Terminal to Gauge	1
27	12E-8	LKWSHR, Terminal to Gauge	1
28	12D-8	NUT, Terminal to Gauge	1
29	611074	FUSE — 20 Amp	1
30	552946	WIRE, Ignition Switch to Light Switch (Inc. 29)	1
31	14D-10	NUT, Terminal to Gauge	1
32	12E-10	LKWSHR, Terminal to Gauge	1
33	573548	SWITCH, Ignition (Key)	1
34	———	OMIT — Not used on 12V System	—
35	———	OMIT — Not used on 12V System	—
36	———	OMIT — Not used on 12V System	—
37	———	OMIT — Not used on 12V System	—
38	573587	WIRE, Resistor to Temperature Gauge	1
39	571021	FUSE — .75 Amp	1
40	12D-8	NUT, Terminal to Gauge	1
41	14D-10	NUT, Terminal to Gauge	1
42	12D-8	NUT, Terminal to Gauge	1
43	14D-10	NUT, Terminal to Gauge	1
44	14D-10	NUT, Terminal to Gauge	2
45	12E-8	LKWSHR, Terminal to Gauge	2
46	12E-10	LKWSHR, Terminal to Gauge	2
47	12E-10	LKWSHR, Terminal to Gauge	2
48	553405	WIRE, Ignition Switch to Ammeter	1
49	553405	WIRE, Ignition Switch to Starter Button	1
50	14D-10	NUT, Gauge to Panel Mounting	3
51	600259	BUTTON, Starter (Inc. 51A, 57)	1
51A	857420	†RUBBER BOOT, Starter Button	1
52	12D-8	NUT, Gauge to Panel Mounting	2
53	601212	CLAMP, Ammeter Mounting	1
54	14D-10	NUT, Gauge to Panel Mounting	1
55	626530	CLAMP, Instrument Mounting	2
56	547237	PLATE, Starter Button	1
57	———	§BUTTON, Push — See Item 51	—
58	550735	AMMETER	1
59	551322	GAUGE, Engine Temperature	1
60	551321	GAUGE, Torque Converter Temp.	1
61	———	OMIT — Not used on 12V System	—
62	18D-06	NUT, Instrument Panel Mounting	2
63	565430	†WIRE, Lighter to Indicator Light	1

†Not Illustrated
§Not Sold Separately

WHEN ORDERING PARTS, ALWAYS STATE MODEL AND SERIAL NO. OF MACHINE

TS-6666-P

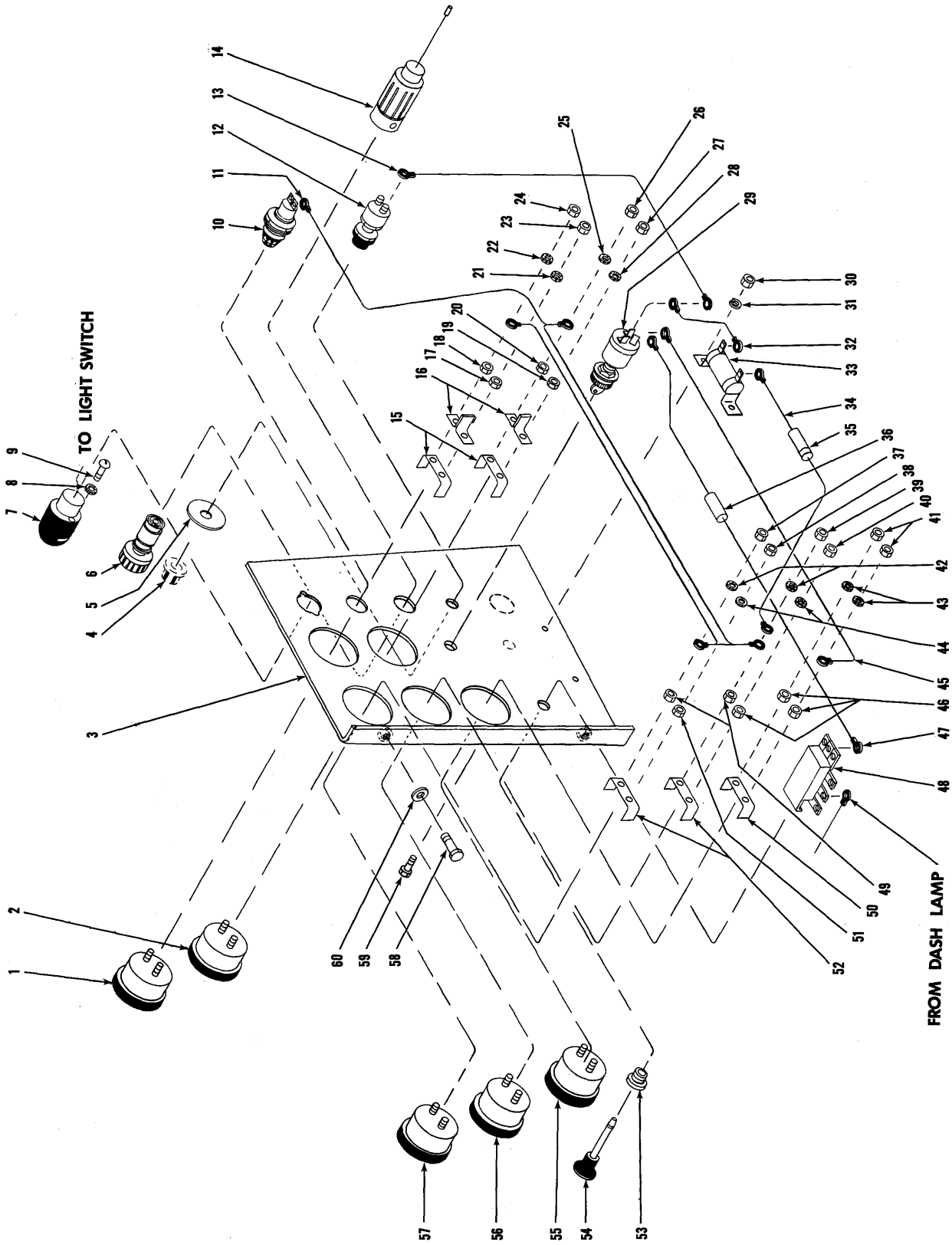

INSTRUMENT PANEL ASSEMBLY

For Serial 7CG197 and Thereafter

Item No.	Part No.	Description	No. Req'd.
1	523372	GAUGE, Engine Oil Pressure	1
2	517228	GAUGE, Air Pressure	1
3	574117	PANEL, Instrument	1
4	———	§BUTTON, Push — See Item 12	—
5	547237	PLATE, Starter Button	1
6	944803	ELEMENT, Lighter	1
7	574276	LAMP, Dash	1
7A	940316	†BULB, Dash Lamp (12V)	1
8	12E-6	LKWSHR, Dash Lamp Mounting	2
9	18G-606	SCREW, Dash Lamp Mounting	2
10	562141	LIGHT, Indicator	1
10A	427237	†BULB, Indicator Light	1
11	558673	HARNESS, Instrument Wiring	1
12	600259	BUTTON, Starter (Inc. 4, 12A)	1
12A	857420	†RUBBER BOOT, Starter Button	1
13	553405	WIRE, Ignition Switch to Starter Button	1
14	549024	RECEPTACLE, Lighter	1
14A	944804	†FUSE, Lighter	1
15	626530	CLAMP, Instrument Mounting	2
16	602350	SEPARATOR, Oil & Air Gauges	2
17	14D-10	NUT, Gauge to Panel Mounting	1
18	12D-8	NUT, Gauge to Panel Mounting	1
19	14D-10	NUT, Gauge to Panel Mounting	1
20	12D-8	NUT, Gauge to Panel Mounting	1
21	12E-10	LKWSHR, Terminal to Gauge	1
22	12E-8	LKWSHR, Terminal to Gauge	1
23	14D-10	NUT, Terminal to Gauge	1
24	12D-8	NUT, Terminal to Gauge	1
25	12E-8	LKWSHR, Terminal to Gauge	1
26	12D-8	NUT, Terminal to Gauge	1
27	14D-10	NUT, Terminal to Gauge	1
28	12E-10	LKWSHR, Terminal to Gauge	1
29	573548	SWITCH, Ignition	1
30	———	OMIT — Not used on 12V System	—
31	———	OMIT — Not used on 12V System	—
32	———	OMIT — Not used on 12V System	—
33	———	OMIT — Not used on 12V System	—
34	573587	WIRE, Ignition Switch to Temperature Gauge	1
35	571021	FUSE — .75 Amp	1
36	611074	FUSE — 20 Amp	1
37	12D-8	NUT, Terminal to Gauge	1
38	14D-10	NUT, Terminal to Gauge	1
39	12D-8	NUT, Terminal to Gauge	1
40	14D-10	NUT, Terminal to Gauge	1
41	14D-10	NUT, Terminal to Gauge	2
42	12E-8	LKWSHR, Terminal to Gauge	2
43	12E-10	LKWSHR, Terminal to Gauge	2
44	12E-10	LKWSHR, Terminal to Gauge	2
45	553405	WIRE, Ignition Switch to Ammeter	1
46	14D-10	NUT, Gauge to Panel Mounting	3
47	552946	WIRE, Ignition Switch to Light Switch (Inc. 36)	1
48	550741	SWITCH, Light	1
49	12D-8	NUT, Gauge to Panel Mounting	2
50	601212	CLAMP, Ammeter Mounting	1
51	14D-10	NUT, Gauge to Panel Mounting	1
52	626530	CLAMP, Instrument Mounting	2
53	550743	BUSHING, Light Switch	1
54	550742	ROD, Light Switch	1
55	550735	AMMETER	1
56	551322	GAUGE, Engine Temperature	1
57	551321	GAUGE, Torque Conv. Temperature	1
58	17C-616	BOLT, Instrument Panel Mounting	3
59	———	OMIT — Not used on 12V System	—
60	656672	WASHER, Instrument Panel Mounting	2
60A	4E-06	†LKWSHR, Instrument Panel Mounting	3
60B	572729	†CAGED NUT, Instrument Panel Mounting	1

§Not Sold Separately
†Not Illustrated

WHEN ORDERING PARTS, ALWAYS STATE MODEL AND SERIAL NO. OF MACHINE

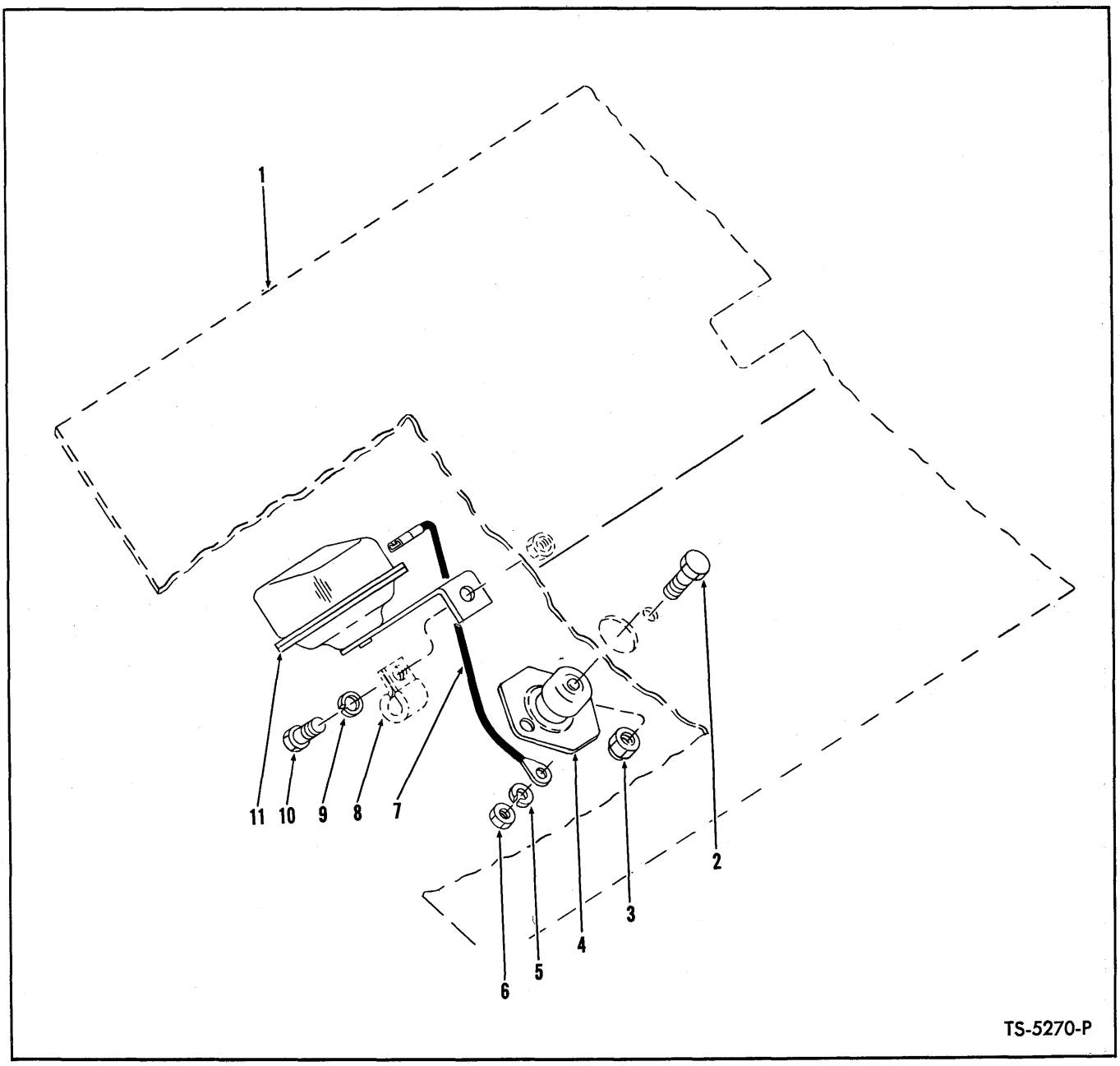

HORN AND FOOT SWITCH

Item No.	Part No.	Description	No. Req'd.
1	———	COCKPIT — See Index	—
2	18C-412	BOLT, Foot Switch to Cockpit	2
3	18D-04	NUT, Foot Switch to Cockpit	2
4	778570	SWITCH, Foot	1
5	4E-05	LKWSHR, Terminal Mounting	2
6	8D-05	NUT, Terminal Mounting	2
7	558957	WIRE, Foot Switch to Horn	1
8	———	CLIP — See Clip Chart	—
9	4E-04	LKWSHR, Horn Mounting	1
10	17C-412	BOLT, Horn Mounting	1
11	885083	HORN KIT	1

WHEN ORDERING PARTS, ALWAYS STATE MODEL AND SERIAL NO. OF MACHINE

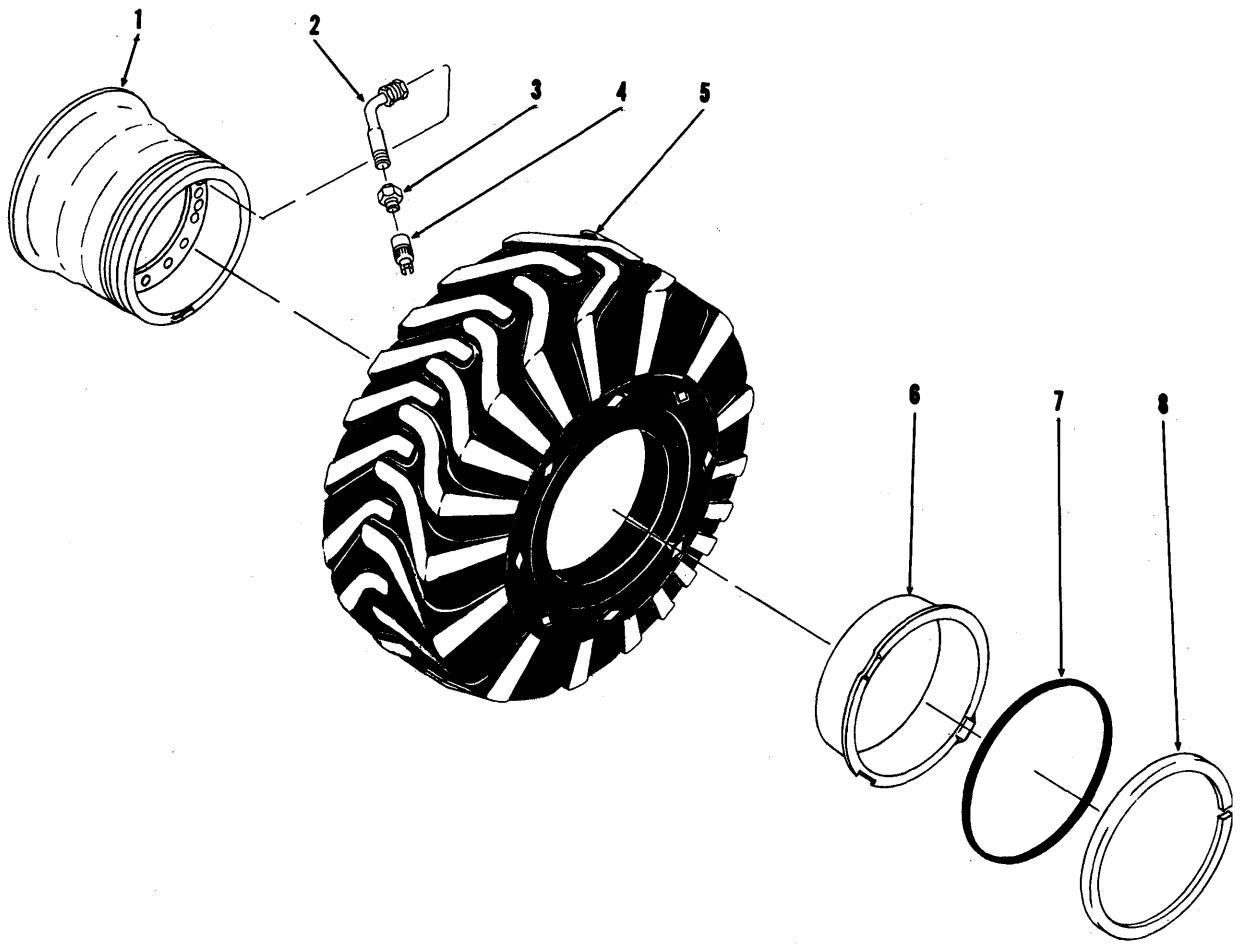

TS-6663-P

WHEEL AND TIRE DATA

Item No.	Sure Grip Grader 14.0 x 24 10 PR	Rock Grader 14.0 x 24 12 PR	Sure Grip Grader 16.0 x 24 12 PR	Loader 17.5 x 25 12 PR	Description	No. Req'd.
1	532253	532253	532253	545957	WHEEL	4
2	517963	517963	517963	509445	STEM, Valve (Inc. 3, 4)	4
3	551684	551684	551684	551684	ADAPTER, Valve Stem	4
4	551685	551685	551685	551685	CAP, Valve	4
5	———	———	———	———	§TIRE	4
6	941326	941326	941326	112461	FLANGE	4
7	941329	941329	941329	112462	"O" RING	4
8	941325	941325	941325	112460	LOCK RING	4

§Not Sold Separately

WHEN ORDERING PARTS, ALWAYS STATE MODEL AND SERIAL NO. OF MACHINE

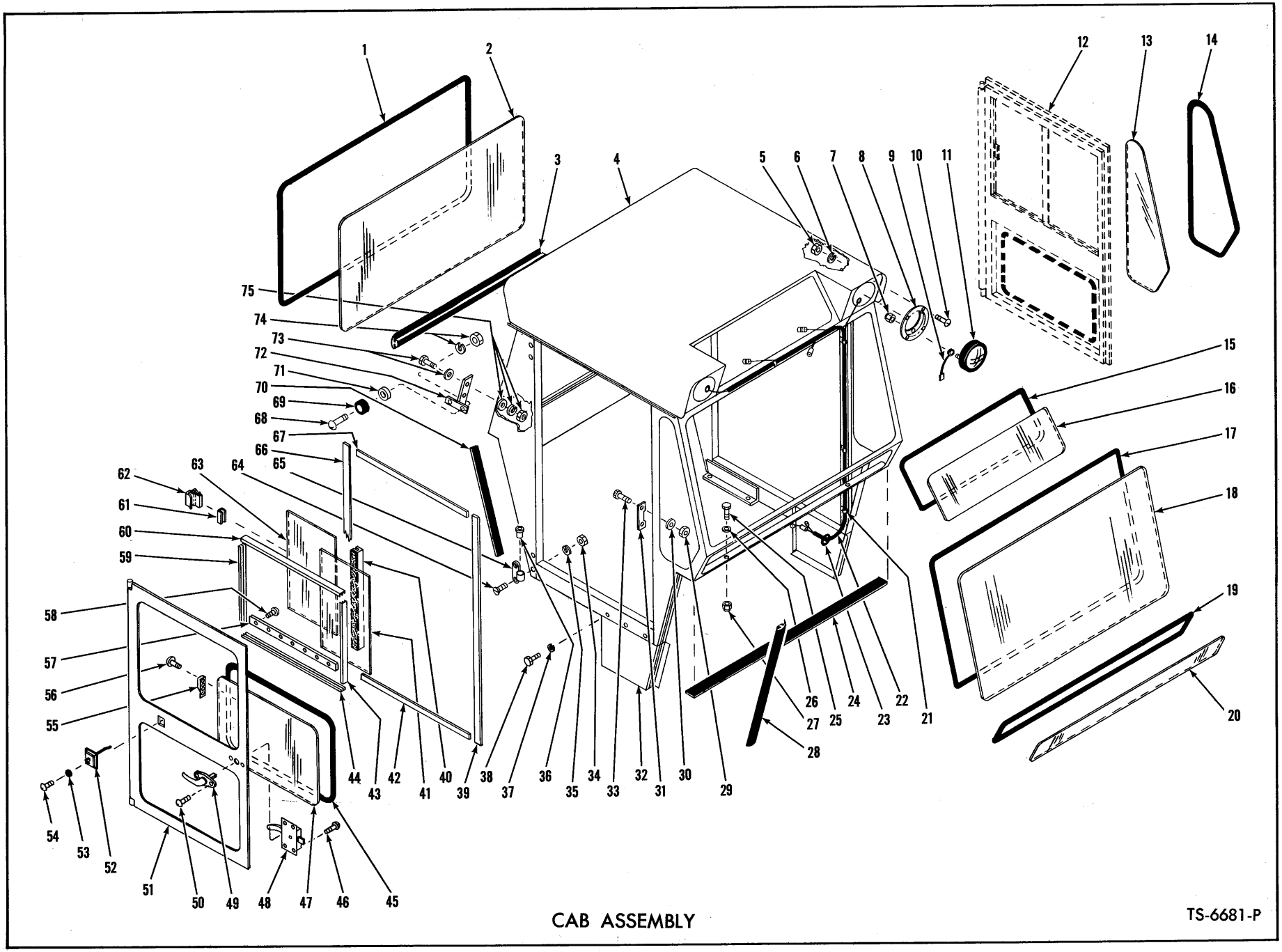

CAB ASSEMBLY

TS-6681-P

CAB ASSEMBLY

Item No.	Part No.	Description	No. Req'd.
A	568652	CAB ASSY (Inc. 1 thru 6, 8, 10, 12 thru 20, 24, 28 thru 75)	1
1	569694	MOULDING, Rear Window	11 ft.
2	———	§GLASS PATTERN, Rear Window — See Item 76	—
3	1521846	WEATHERSTRIP, Cab — Rear	5 ft.
4	———	§CAB — See Item "A"	—
5	12D-10	NUT, Head Lamp Adapter Attaching	8
6	17E-10	LKWSHR, Head Lamp Adapter Attaching	8
7	50D-10	NUT, Head Lamp Attaching	6
8	568675	ADAPTER, Head Lamp Panel	2
9	540882	WIRE, Head Lamp Ground	2
10	3G-1012	SCREW, Head Lamp Adapter Attaching	8
11	547006	HEAD LAMP ASSY — 12V (Inc. 11A, 11B)	2
11A	551242	†SEALED UNIT, Head Lamp — 12V	2
11B	944977	†RETAINER, Head Lamp	2
12	———	DOOR — See Item 51A	—
13	———	§GLASS PATTERN, Quarter Window — See Item 76	—
14	569694	MOULDING, Quarter Window	5 ft.
15	569694	MOULDING, Roof	6 ft.
16	———	§GLASS PATTERN, Roof — See Item 76	—
17	569694	MOULDING, Upper Windshield	12 ft.
18	———	§GLASS PATTERN, Upper Windshield — See Item 76	—
19	569694	MOULDING, Lower Windshield	10 ft.
20	———	§GLASS PATTERN, Lower Windshield — See Item 76	—
21	541988	CLIP, Wiring Harness	4
22	568654	WIRING HARNESS, Cab	1
23	515069	GROMMET, Cab Wiring Harness	1
24	1521844	WEATHERSTRIP, Cab to Cockpit	4 ft.
25	18C-628	BOLT, Cab Attaching — Front Mount	2
25A	18C-624	†BOLT, Cab Attaching — Side Mount	4
26	616783	WASHER, Cab Attaching	6
27	18D-06	NUT, Cab Attaching	6
28	569692	WEATHERSTRIP, Cab — Front	6 ft.
29	1D-04	NUT, Door Lock Strike Attaching	4
30	4E-04	LKWSHR, Door Lock Strike Attaching	4
31	945576	STRIKE, Door Lock	2
32	568686	PANEL, Lower Quarter — R.H.	1
32A	568687	PANEL, Lower Quarter — L.H.	1
33	47G-412	BOLT, Door Lock Strike Attaching	4
34	1D-05	NUT, Cab Door Hinge Attaching	8
35	4E-05	LKWSHR, Cab Door Hinge Attaching	8
36	568700	BUSHING, Cab Door Hinge	4
37	4E-04	LKWSHR, Lower Quarter Panel Attaching	6
38	17C-410	BOLT, Lower Quarter Panel Attaching	6
39	943623	WEATHERSTRIP, Door Front	8 ft.
40	139149	CHANNEL, Glass Divider	2 ft.
41	———	§GLASS PATTERN, Sliding Door — See Item 76	—
42	943623	WEATHERSTRIP, Door — Bottom	6 ft.
43	569696	CHANNEL, Side Glass Track	4 ft.
44	569696	CHANNEL, Bottom Glass Track	4 ft.
45	569694	MOULDING, Lower Door Glass	12 ft.
46	66G-1008	SCREW, Lock to Door Attaching	8
47	———	§GLASS PATTERN, Lower Door — See Item 76	—
48	942874	LOCK, Door — R.H.	1
48A	138249	†LOCK Door — L.H.	1
49	785904	HANDLE, Door (Less Key)	2
49A	547172	†HANDLE, Door (With Key — Optional)	2
50	32G-1008	SCREW, Handle to Door Attaching	4
51	568669	DOOR — R.H.	1
51A	568670	†DOOR — L.H.	1
52	560650	CATCH, Door	2
53	17E-10	LKWSHR, Door Catch Attaching	8
54	79G-1010	SCREW, Door Catch Attaching	8
55	557465	STRIKE, Window Lock	4
56	5G-606	SCREW & LKWSHR ASSY, Window Lock Attaching	8
57	945577	RETAINER, Door Channel	2
58	63G-1008	SCREW, Channel Retainer to Door	14
59	569696	CHANNEL, Side Glass Track	4 ft.
60	569696	CHANNEL, Top Glass Track	4 ft.
61	946115	RUBBER, Lock to Glass Mounting	1 ft.
62	589571	LOCK, Sliding Glass	4
63	———	§GLASS PATTERN, Sliding Door — See Item 76	—
64	76G-512	SCREW, Hinge Attaching	8
65	945554	HINGE, Door — R.H. Lower & L.H. Upper	2
65A	945555	HINGE, Door — R.H. Upper & L.H. Lower	2
66	943623	WEATHERSTRIP, Door — Rear	8 ft.
67	943623	WEATHERSTRIP, Door — Top	6 ft.
68	3G-1016	SCREW, Bumper to Latch Strike	2
69	560651	BUMPER, Rubber	2
70	943623	WEATHERSTRIP, Cab Seal Rear	2 ft.
71	874767	SPACER, Bumper to Latch	2
72	574992	STRIKE, Door Latch	2
73	17C-416	BOLT, Door Latch Strike Attaching	2
73A	619018	WASHER, Door Latch Strike Attaching	2
74	12D-10	NUT, Bumper to Latch Strike	2
74A	17E-10	LKWSHR, Bumper to Latch Strike	2
75	619018	WASHER, Door Latch Strike Attaching	2
75A	4E-04	LKWSHR, Door Latch Strike Attaching	2
75B	1D-04	NUT, Door Latch Strike Attaching	2
76	945903	†GLASS PATTERN KIT (Inc. 2, 13, 16, 18, 20, 41, 47, 63)	1

§Not Sold Separately
†Not Illustrated

WHEN ORDERING PARTS, ALWAYS STATE MODEL AND SERIAL NO. OF MACHINE

WIRING, PIPE AND HOSE CLIPS

The following types of clips are used in connection with the various wiring, fuel, air and hydraulic piping systems employed in this unit. When replacing clips identification can be made by checking type and physical dimensions listed to obtain part number.

INSULATED CLIP

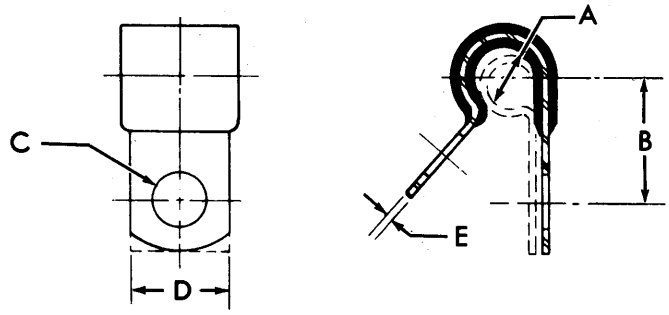

TS-5008-P

Item No.	PART NUMBER	A	B	C	D	E	F
1	30H-14	1/4	1 7/32	9/32	1/2	.036	
2	30H-16	1/4	2 1/32	1 3/32	3/4	.032	
3	30H-20	5/16	1 1/16	1 3/32	3/4	.036	
4	30H-31	1/2	2 5/32	1 3/32	3/4	.050	
5	30H-36	9/16	7/8	1 5/32	7/8	.048	
6	30H-38	5/8	2 7/32	1 3/32	3/4	.050	
7	30H-40	5/8	3 1/32	1 7/32	1	.050	
8	30H-46	1 3/16	1 5/16	1 3/32	3/4	.050	
9	30H-48	1 3/16	1 1/16	1 7/32	1	.048	
10	30H-50	1 5/16	1	1 3/32	3/4	.050	
11	30H-52	1 5/16	1 1/8	1 7/32	1	.050	
12	538234	7/16	1 5/16	1 7/32	1	.049	
13	574261	1 3/16	2	1 3/32	7/8	.062	

OPEN CLIP

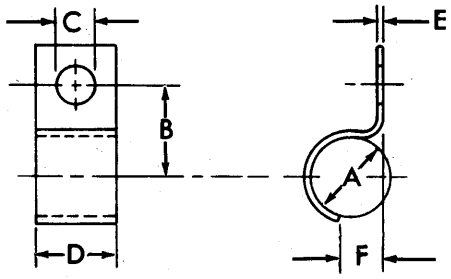

TS-5011-P

Item No.	PART NUMBER	A	B	C	D	E	F
14	533482	2 3/4	2 3/8	9/16	1 1/4	3/16	1 3/4

WIRING, PIPE AND HOSE CLIPS

The following types of clips are used in connection with the various wiring, fuel, air and hydraulic piping systems employed in this unit. When replacing clips identification can be made by checking type and physical dimensions listed to obtain part number.

INSULATED DOUBLE CLIP

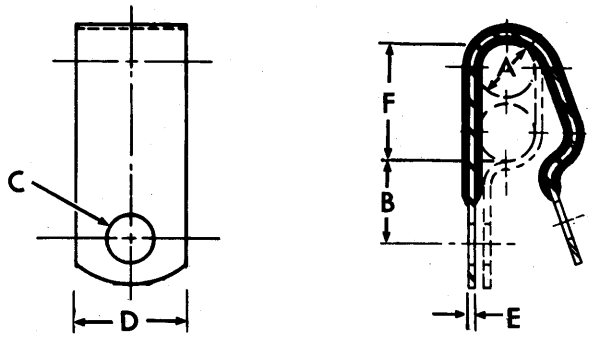

TS-6372-P

Item No.	PART NUMBER	A	B	C	D	E	F
1	31H-36	5/8	21/32	17/32	1	.050	1 1/4

INSULATED CLIP

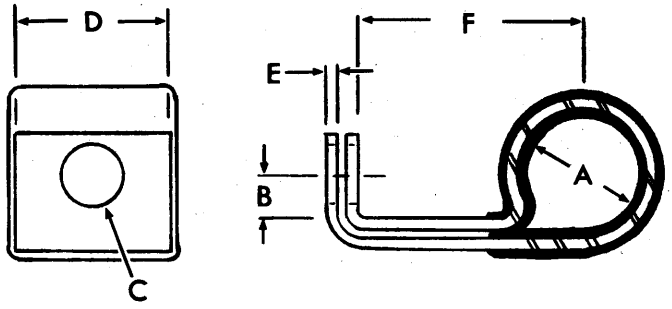

TS-6373-P

Item No.	PART NUMBER	A	B	C	D	E	F
2	562600	5/8	5/8	7/16	1	.050	1 5/8

BRACKET CLIP

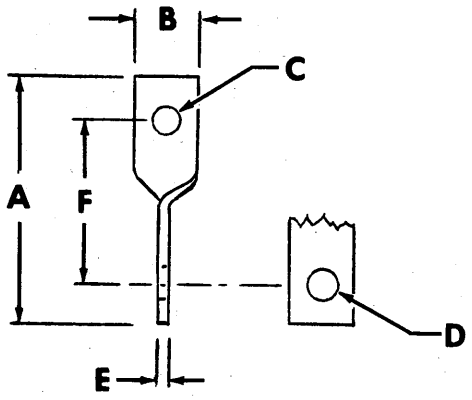

TS-6758-P

Item No.	PART NUMBER	A	B	C	D	E	F
3	574270	4 1/2	3/4	5/16	5/16	1046	3 1/2

WIRING AND CABLES

Item No.	Part No.	Description	No. Req'd.
1	558952	HARNESS, Cockpit Wiring	1
2	558674	HARNESS, Engine Wiring	1
3	562010	HARNESS, Floodlight Wiring	1
4	562008	HARNESS, Tail Light Wiring	1
5	630292	WIRE, Floodlight Ground	2
6	558960	WIRE, Hourmeter Ground	1
7	564384	WIRE, Battery to Horn Button	1
8	568462	WIRE, Head Lamp Feed	1
9	675739	CABLE, Battery Ground	1
10	566502	CABLE, Battery to Solenoid	1

BATTERY, BATTERY HOLD DOWN AND HOURMETER

Item No.	Part No.	Description	No. Req'd.
11	799044	BATTERY	1
12	572394	HOLD DOWN, Battery	1
13	536582	STUD, Battery Hold Down	2
14	8D-05	NUT, Stud Jam	2
15	18D-05	NUT, Hold Down to Battery Box	4
16	886619	HOURMETER KIT	1
17	551251	DAMPENER, Hourmeter Vibration	1
18	3G-608	SCREW, Hourmeter Mounting	3
19	12E-06	LKWSHR, Hourmeter Mounting	3

DECALS AND PLATES

Item No.	Part No.	Description	No. Req'd.
20	547852	*DECAL, Michigan	2
21	547851	*DECAL, Clark Equipment	2
22	571099	*DECAL, Model	2
23	538256	*DECAL, Transmission Drain	1
24	557461	*DECAL, Safety Wiring	1
25	547794	*DECAL, Safety Warning	1
26	569451	*DECAL, Warning Light	1
27	569331	*DECAL, Bucket Indicator	1
28	1520495	*DECAL, "Best on Earth"	2
29	569389	PLATE, Emergency Stop	1
30	6C-605	SCREW, Plate Mounting	2
31	548074	PLATE, Operating Precaution	1
32	65G-406	SCREW, Plate Mounting	4
33	542074	PLATE, Patent	1
34	6C-605	SCREW, Plate Mounting	4
35	562302	PLATE, Lubrication Instruction	1
36	6C-605	SCREW, Plate Mounting	4
37	567977	PLATE, Shift Quadrant — Hi-Lo	1
38	6C-605	SCREW, Plate Mounting	2
39	567947	PLATE, Shift Quadrant — Forward, Neutral, Reverse	1
40	6C-605	SCREW, Plate Mounting	4
40a	1503064	Hi-Low Range	1

WINDSHIELD WIPER — FRONT (OPTIONAL)

Item No.	Part No.	Description	No. Req'd.
41	568969	WIPER MOTOR (12V)	1
42	31G-428	SCREW, Mounting	3
43	8E-04	LKWSHR, Mounting	3
44	568967	WIPER ARM (15" long)	1
45	568968	WIPER BLADE (17" long)	1
46	891308	SWITCH & KNOB ASSY	1
47	546535	BRACKET, Mounting	1
48	30H-18	CLIP, Wire Mounting	1
49	784870	WIRE, Harness to Switch	1
50	18C-412	BOLT, Mounting	2
51	655629	WASHER, Mounting	2
52	18D-04	NUT, Mounting	2

WINDSHIELD WIPER — REAR (OPTIONAL)

Item No.	Part No.	Description	No. Req'd.
53	568969	WIPER MOTOR (12V)	1
54	574730	BRACKET, Wiper Motor	1
55	574729	LINK, Wiper Motor	1
56	18C-412	BOLT, Mounting	5
57	18D-04	NUT, Mounting	5
58	41G-1010	SCREW, Mounting	2
59	50D-10	NUT, Mounting	2
60	560517	WIPER ARM (14" Long)	1
61	568968	WIPER BLADE (17" Long)	1
62	891308	SWITCH & KNOB ASSY	1
63	546535	BRACKET, Switch Mounting	1
64	672313	WIRE, Harness to Switch	1
65	30H-14	CLIP, Wire Mounting	2
66	655629	WASHER, Mounting	1

*NOTE: Contact your local Michigan Distributor for the above listed Decals.

WHEN ORDERING PARTS, ALWAYS STATE MODEL AND SERIAL NO. OF MACHINE

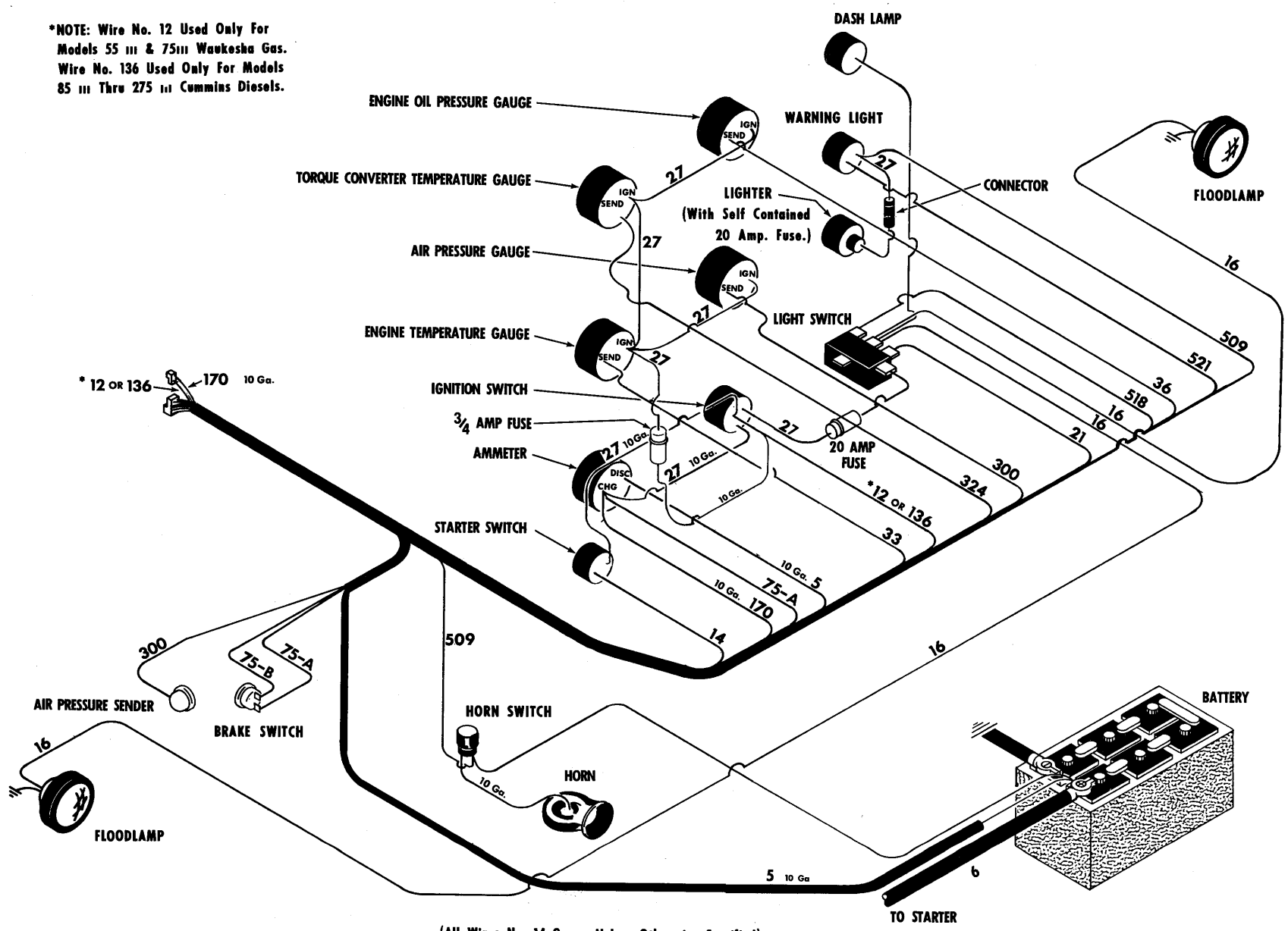

(All Wires No. 14 Gauge Unless Otherwise Specified)

WIRING DIAGRAM — COCKPIT

For Serial 7CG101 thru 7CG196

TS-6752-P

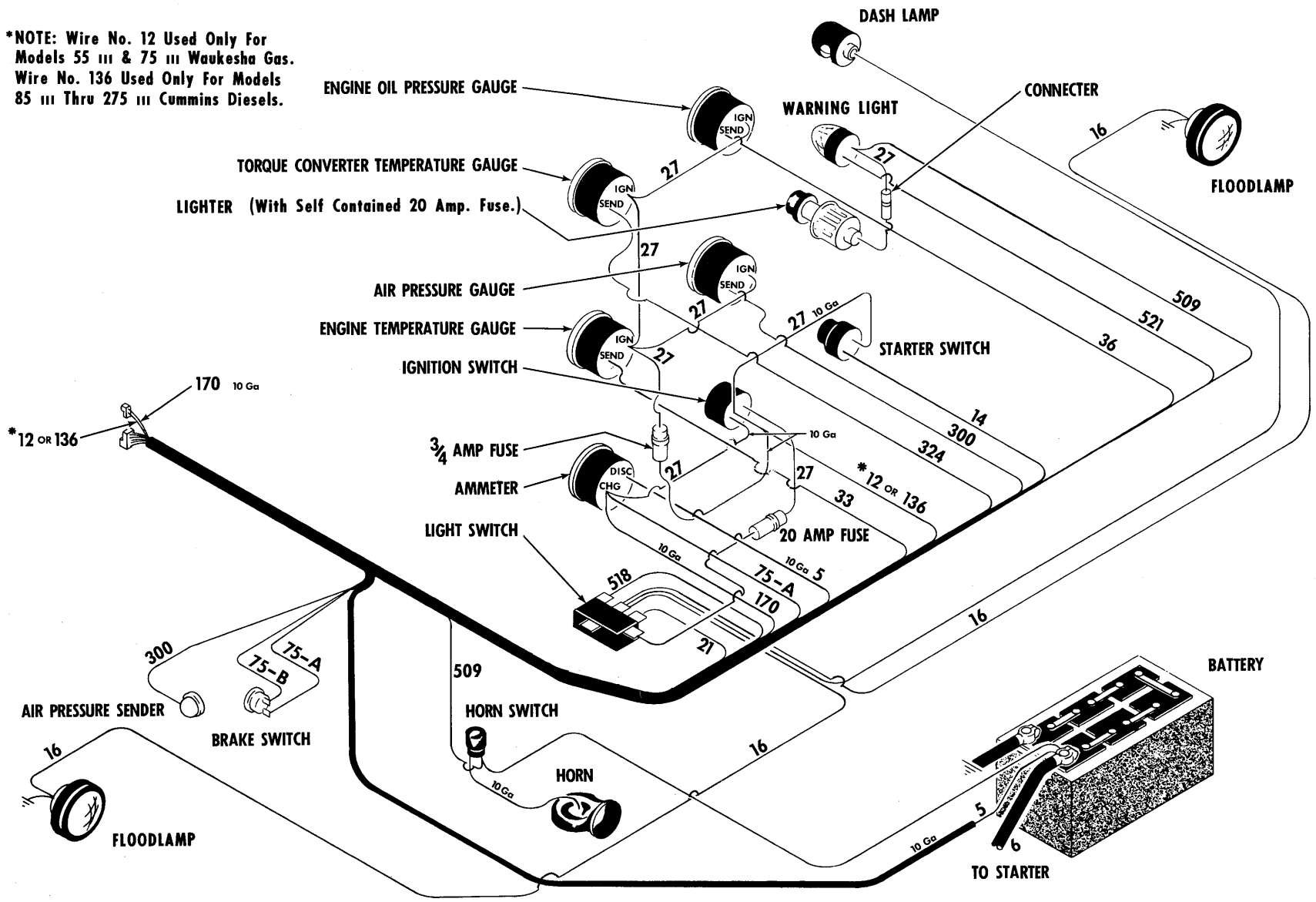

(All Wires No. 14 Gauge Unless Otherwise Specified.)

WIRING DIAGRAM — COCKPIT

For Serial 7CG197 and thereafter

TS-6669-P

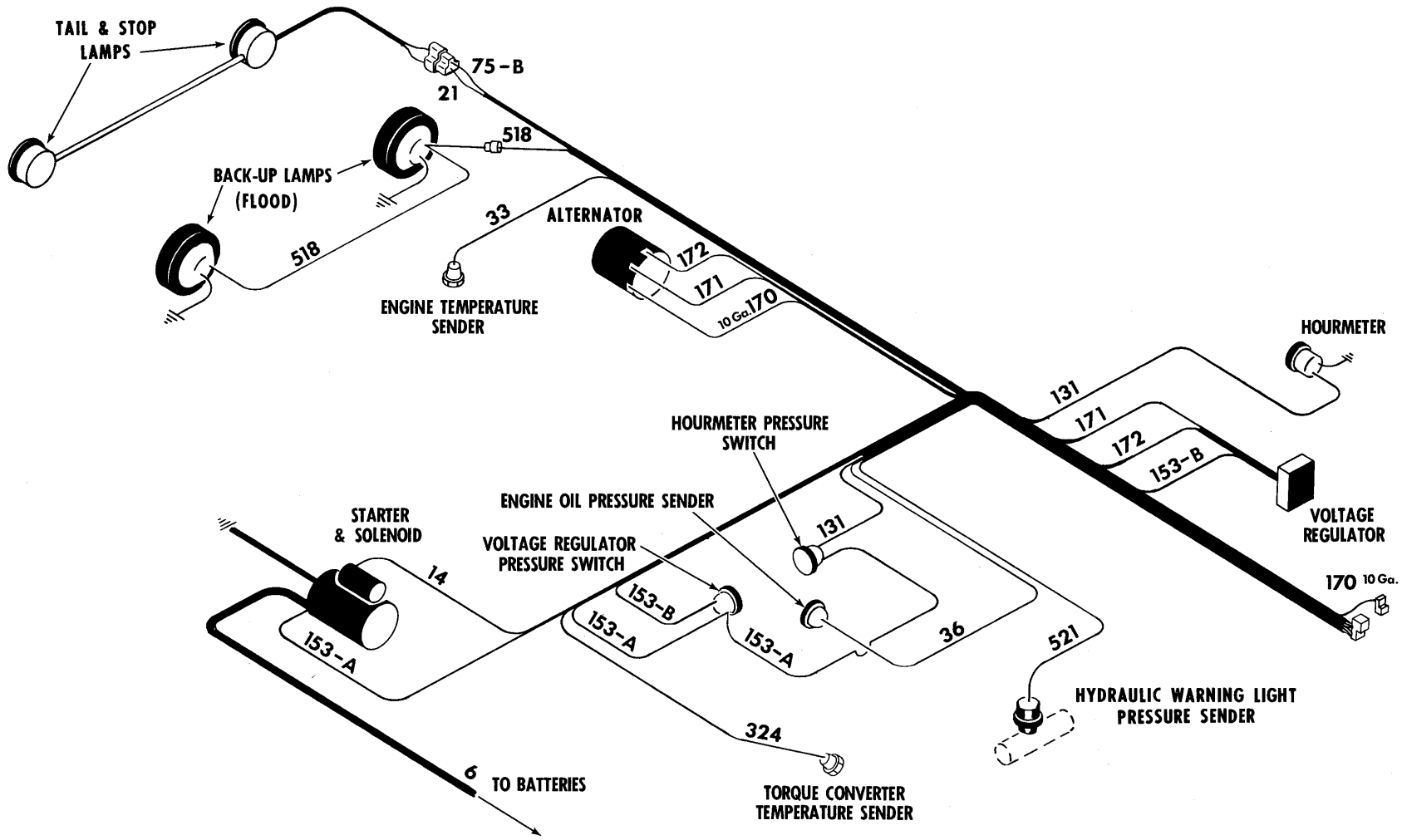

(All Wires No.14 Gauge Unless Otherwise Specified)

WIRING DIAGRAM — ENGINE

TS-6670-P

NUMERICAL INDEX

Part No.	Page No.
1C-410	71
1C-416	71
1C-510	51
1C-610	10, 43
1C-612	33, 37, 61
1C-614	21, 42
1C-616	25, 29
1C-624	51
1C-628	29
1C-656	61
1C-720	21, 29, 33, 37, 61
1C-808	33, 37
1C-820	21, 29
1C-828	39
1C-840	35
1C-928	39
1C-940	35
1C-1022	35
1C-1084	68
1D-04	79
1D-05	79
1D-10	33
1F-207	17
1F-216	17
1F-308	17
1F-312	19, 46, 47, 50, 69
1F-316	17
1F-320	50
1F-332	56
1F-414	69
1F-420	10
1F-424	29, 63
1F-428	21, 35, 39
1F-432	54
2D-06	35, 62
2D-12	43
2D-14	42
2E-06	35
2E-14	42
2G-1012	3
2J-4200	17
2J-8300	69
3C-614	35, 39
3E-08	33, 37
3G-608	82
3G-1008	9, 17
3G-1012	79
3G-1016	79
3H-1216	43
4C-414	63
4C-616	66
4C-620	67
4C-714	29
4D-10	56
4E-04	71, 76, 79
4E-05	12, 49, 53, 76, 79
4E-06	4, 5, 7, 9, 12, 14, 25, 29, 30, 33, 35, 37, 39, 42, 43, 46, 51, 55, 56, 61, 75
4E-07	21, 29, 51, 53, 61, 65
4E-08	3, 9, 10, 35, 39, 65, 71
4E-09	35, 39
4E-10	35
4E-12	21, 43
4F-04051	17
4F-05062	19
4F-06106	19, 46, 69
4F-08127	69
5C-718	21, 24
5E-06	21
5E-08	21
5G-606	79
5K-106	1
5K-420	61
6C-605	19, 82
6E-05	51
7D-06	19
7E-08	29
8C-824	1
8D-04	17
8D-05	17, 19, 48, 57, 76, 82
8D-06	19, 29, 48, 49, 50, 55, 68
8D-07	29, 61
8D-08	11, 69, 71
8D-10	53
8D-24	7
8E-04	82
9E-06	62, 68
10F-02	51
10H-25	2, 7, 37, 48, 49, 54, 66, 67
10H-35	48, 49, 55, 63
10J-06	22, 23
10J-08	71
10J-09	61
10J-12	21, 24, 41
11F-04	33, 37
11F-12	33, 37
12D-8	73, 75
12D-10	9, 79
12E-6	73, 75, 82
12E-8	73, 75
12E-08	65
12E-10	1, 27, 53, 73, 75
12F-204	37
12H-15	19, 69
12H-25	7, 63
13F-04	53
13F-08	53
13F-16	27, 29
13F-20	29
14D-08	65
14D-10	1, 3, 27, 53, 73, 75
15H-15	55
15K-10	65
16F-02	21
16F-08	29
17C-410	79
17C-412	76
17C-416	79
17C-514	53
17C-516	12, 53
17C-548	53
17C-612	5
17C-616	5, 75
17C-620	9, 12, 29
17C-636	46
17C-722	33, 37
17C-724	19, 65
17C-728	33, 37
17C-820	10
17C-824	65
17C-1228	21
17D-6	3, 9
17E-10	3, 79
17F-4	53
17F-5	59
17K-8	27
17K-10	65
18C-412	4, 5, 17, 19, 76, 82
18C-416	17
18C-424	1
18C-448	17
18C-516	50
18C-528	46
18C-540	59
18C-612	4, 14, 30, 56
18C-616	4, 12, 73
18C-618	46
18C-620	7, 19
18C-624	79
18C-628	17, 27, 55, 79
18C-648	63
18C-656	7
18C-672	7
18C-720	51, 53
18C-724	53
18C-812	9
18C-816	3, 9
18C-820	9, 65
18C-824	3, 4, 9, 10, 12
18C-828	5, 11
18C-832	1, 4, 5, 21
18C-836	1, 11, 56
18C-844	19
18C-856	2, 19
18C-864	1, 7, 19, 66, 71
18C-872	2, 7, 67
18C-880	2, 7
18C-1244	14, 30
18C-1252	2, 56
18D-04	1, 4, 5, 17, 19, 56, 76, 82
18D-05	10, 17, 19, 46, 48, 50, 59, 82
18D-06	4, 7, 12, 17, 19, 27, 46, 73, 79
18D-07	53
18D-08	1, 2, 3, 4, 5, 7, 9, 10, 11, 12, 19, 21, 56, 65, 66, 69
18D-12	3, 7, 14, 30, 56
18D-20	66
18G-606	73, 75
18G-806	4, 5, 11
18K-8	27
19F-1	53
19F-4	53
19F-5	15, 53
19F-6	53
21F-1	1
21K-7	59
22F-4	61
23H-1008	42
24C-1296	3
24C-8136	69
24C-12120	7
24C-12144	2
24C-12168	3
24K-7	59
24K-11	71
25F-3	21
25F-4	61
25F-6	27
25K-20007	71
25K-20016	71
25K-20018	57
25K-30016	21
25K-30018	25
25K-30020	24
25K-30022	24
25K-30128	68
25K-40100	71
25K-40104	25, 29, 67
25K-40108	61
25K-40112	21, 29, 66
25K-40116	65
25K-40128	65
25K-40208	63
25K-40224	61
25K-40316	21
25K-40324	67
25K-40408	66
25K-40428	14, 30
25K-40512	29
25K-40524	21
25K-40616	29
25K-40624	30
26F-3	53
26F-6	27
27F-3	15
29F-1	15, 65
29F-2	27
29F-4	65
30H-14	80, 82
30H-16	80
30H-18	82
30H-20	80
30H-31	80
30H-36	80
30H-38	80
30H-40	80
30H-46	80
30H-48	80
30H-50	80
30H-52	80
31F-1	53
31F-3	53
31F-4	53
31F-5	27
31F-6	27
31G-428	82
31H-36	81
32F-5	65
32G-1008	79
33G-514	57
33G-706	68
36F-2	15
36F-3	27
36F-5	27
38F-10	53
40K-02	24, 25, 29
40K-04	21, 27, 65, 71
40K-16	14, 30
41G-1010	82
44G-418	3
47D-05	57
47G-412	79
47K-3	62
49F-3	15
50D-10	79, 82
62F-3	53
62F-5	15
63G-1008	79
64D-07	33, 37
64D-08	33, 37
64D-09	37
65G-406	60, 82
66D-06	19, 50

Part No.	Page No.
66D-08	71
66G-1008	79
67D-20	67
68D-06	63
68D-08	67
68D-12	2
70D-08	1
70D-12	14, 30
71D-08	1
71D-12	14, 30
72F-4	53
73F-2	11
76G-512	79
79G-1010	79
81F-4	59
83F-8	27
83F-10	65
84F-8	27
89F-7	59
91F-6	27, 57, 59
91F-7	59
91F-8	27, 59, 65
91F-10	65
91F-11	59, 71
91F-13	65
100170	35, 39
100171	35, 39
100172	35, 39
100173	35, 39
100174	35, 39
100176	35, 39
100864	43
100867	42, 43
100872	43
100878	43
100937	35, 39
100940	35, 39
100941	35, 39
100945	39
100950	35, 39
100951	35, 39
100967	37
100970	33, 37
101144	35
101274	33
101332	43
102322	43
102745	21, 29
103076	33, 37
103216	33, 37
103445	33, 37
103522	33, 37
104182	35, 39
104412	33, 37
104549	37
105705	33
106058	33, 37
106059	33, 37
106060	33
106081	39
106099	37
106115	37
106119	37
106120	37
106121	37
106123	37
106124	37
106125	37
106127	37
106128	37
106129	37
106130	37
106131	37
106132	37
106133	37
106134	37
106135	37
106136	37
106137	40
106138	40
106216	43
106268	40
106313	37
106319	37
106320	37
106321	37
106322	37
106349	41
106350	41
106351	41
106352	41
106358	24
106368	35, 39
106373	43
106455	33
106547	37
106656	33, 37
106762	33,37
106879	37
106880	33, 37
106969	43
106970	43
106998	37
107014	44
107256	33, 37
107261	35
107608	37
107646	37
108301	71
108432	37
109055	33
109088	41
110280	45
110712	37
111656	35, 37, 39
111719	37
111720	35, 39
111805	37
112045	37
112047	37
112054	33
112055	33
112058	33
112060	42
112062	42
112068	42
112069	42
112070	42
112072	44
112073	33
112075	33
112090	37
112174	40
112277	33, 37
112278	33, 37
112287	33, 37
112350	35, 39
112352	39
112353	35, 39
112354	35, 39
112355	35, 39
112356	35, 39
112357	35
112460	77
112461	77
112462	77
112871	35
112924	37
114089	33, 37
114169	43
114173	42
114433	33
114449	41
114450	41
114453	33
114463	37
116419	33, 37
116712	35, 39
116949	42
117150	42
117192	35
117193	35
117194	35
117197	39
117198	39
117199	39
117202	43
117203	43
117206	37
117207	37
117209	37
117210	37
117213	37
117214	37
117226	40
117228	40
117242	37
118048	37
118254	43
118267	42
131597	33
131598	37
138249	79
139149	79
142396	9
201566	21
201951	21, 29
206864	21, 29
207647	29
207873	21, 29
208805	44
209313	29
209412	21
211433	21, 27, 29
214295	21
214596	29
214730	29
214920	29
214921	29
214922	29
214923	29
214924	29
214925	29
214928	29
214929	29
214930	29
214931	29
214932	29
214933	29
214934	29
214935	29
214936	29
214937	29
214938	29
214939	29
214940	21, 29
214941	29
214945	29
214946	25, 29
214949	25, 29
214951	29
214953	29
214954	29
214955	29
214956	29
214961	29, 62
214962	68
214969	25
214985	21
214988	29
215142	21
215143	21
215144	21
215145	21
215146	21
215147	24
215149	21
215150	21
215152	21
215154	21
215155	21
215156	21
215157	21
215158	21
215162	21
215163	21
215164	21
215166	21, 23
215169	24
215176	22, 23
215177	22, 23
215178	22, 23
215179	22, 23
215180	22
215182	22
215183	22, 23
215184	23
215188	23
215189	23
215190	22, 23
215191	21
215194	24
215196	24
215197	24
215198	21
215199	24
215200	24
215205	21
215264	29
215502	27
215551	21
215663	22
215757	21
215909	29
217952	21
219370	21
219373	21
220363	24
220725	21, 29
220965	45
220968	45
220969	45
220981	25
220982	25
220983	25
221653	29
222006	29
222079	29
222312	29
222318	29
222684	29
223085	22, 23

Part No.	Page No.
223901	29
224009	29
224026	29
224028	33
224039	29
224315	24
224771	22, 23
224772	22, 23
224774	22, 23
224795	29
225075	21, 24
225076	22, 23
225077	22, 23
225079	21
225603	21
225824	21
227265	27, 29
227874	24
227952	23
228190	27
228494	21
228931	24
228943	21
228961	21
229047	24
281022	29
281986	21
351131	17
351495	11
356612	51
362653	27
420945	12
427237	73, 75
450072	29
450185	62
498113	62
498203	62
498204	62
498211	62
498223	62
507695	40, 71
507815	53
509303	12
509320	3, 9
509445	77
509711	12
509772	19, 69
510452	53
513122	56
514921	7
515069	79
515424	12
515425	12
517089	59
517228	73, 75
517963	77
518259	50
518331	60
518624	1
519275	59
523325	63
523372	73, 75
523786	53
525293	14, 30
526414	63
526415	63
526419	63
526420	63
526422	63
526423	63
526424	63
526676	27, 59, 65
526847	27
526879	51
527095	12
527096	12
529864	49
531613	66
531792	15
532253	77
532948	63
533478	65
533482	80
533489	63
533490	63
533814	53
533927	59
534259	53
534260	53
534894	59
535003	17
535049	53
535050	53
535625	59
536100	2
536539	57
536582	82
536710	65
536749	59
538065	63
538234	80
538256	82
538585	2
538697	63
539042	12
540103	12
540106	65
540108	11
540127	59
540130	65
540266	11
540306	53
540664	53
540882	79
541879	40
541988	79
542031	7
542074	82
542626	27
542631	7
542813	59, 65
543531	12
543573	12
544512	46
544657	7
544891	67
544892	67
544893	67
544998	47
545005	46
545006	46
545155	63
545528	53
545941	56
545957	77
546535	82
546687	10
546803	27
546810	27
547006	79
547172	79
547237	73, 75
547529	3, 9
547585	12
547794	82
547836	67
547851	82
547852	82
547868	67
547869	67
547870	67
548074	60, 82
548574	66
548575	66
548577	66
548578	66
549024	73, 75
549580	19
549988	2
550044	56
550081	66
550301	10
550320	37, 53
550325	53
550619	17
550646	19, 69
550735	73, 75
550741	73, 75
550742	73, 75
550743	73, 75
551016	17
551090	17
551242	79
551251	82
551321	73, 75
551322	73, 75
551323	1, 27
551347	2
551348	2
551433	9
551684	77
551685	77
551906	29, 62, 68
552374	53
552946	73, 75
553405	73, 75
553843	27
556323	9
556411	19
556413	19
556422	19
556424	19
556562	50
556575	27
556655	14
556691	9
556692	9
556693	46
556960	2
557030	19
557032	19
557034	19
557057	4, 5
557117	7
557246	19
557455	10
557458	10
557461	82
557465	79
557847	9
557848	9
557997	56
558547	53
558570	59
558574	69
558673	73, 75
558674	82
558777	10
558779	10
558814	71
558952	82
558957	76
558960	82
560517	82
560650	79
560651	79
562008	82
562010	82
562075	61
562112	65
562118	31
562141	73, 75
562144	55
562224	19
562227	19
562302	82
562443	56
562444	50
562529	67
562530	67
562536	67
562543	67
562544	67
562600	81
562605	19
562606	19
562607	19
562608	19
562641	3
562662	7
562663	7
562664	7
562700	66
562701	66
563753	19
563785	65
563788	65
563789	65
563790	65
563791	65
563792	65
563798	65
563801	65
563805	65
563808	65
563809	65
563810	65
563881	3
563889	11
563903	15
563928	9
563929	9
563978	53
563980	9
563981	9
563994	9
564003	11
564005	11
564006	11
564011	3
564087	59
564107	59
564126	2
564129	2
564137	2
564175	30
564268	69
564271	69
564384	82
565430	73
566458	4
566502	82

Part No.	Page No.
566589	60
566649	4, 5
566764	9
566849	3
567847	15
567864	14
567945	19
567946	19
567947	19, 82
567977	19, 82
568391	12
568462	82
568482	7
568483	7
568652	79
568654	79
568669	79
568670	79
568675	79
568686	79
568687	79
568700	79
568785	59
568803	19
568806	12
568828	4, 5
568829	4, 5
568830	4, 5
568967	82
568968	82
568969	82
569055	69
569331	82
569352	17
569354	68
569389	82
569425	30
569451	82
569506	65
569692	79
569694	79
569696	79
569759	30
569912	5
569914	14
569927	30
570102	7
570108	7
570110	7
570210	7
570211	7
570499	11
570846	7
570850	7
570863	2
570935	1
570938	1
571021	73, 75
571022	2
571099	82
571111	17
571112	17
571176	65
571207	65
571645	9
571646	9
572141	7
572142	7
572174	17
572394	82
572556	17
572708	69
572729	5, 75
572731	59
573422	65
573423	65
573548	73, 75
573551	7
573587	73, 75
574026	5
574117	75
574261	80
574270	81
574276	73, 75
574439	53
574442	65
574729	82
574730	82
574992	79
581978	19
581979	19
584092	3
584501	11
584502	11
585007	2
585500	19
585596	19
585597	19
585950	11
587250	67
587613	14, 30
587832	7
587900	7
587901	7
587908	7
587950	66
587951	66
587955	66
587960	2
588021	4, 5
588399	65
589023	7
589186	30
589200	14
589367	27
589411	19
589419	65
589422	65
589426	53
589427	53
589428	53
589429	53
589476	27
589477	27
589487	59
589488	59
589571	79
589573	21
589574	59
589791	12
589811	61
589812	54
589826	12
589852	12
589891	48
589892	48
589906	19
589908	60
589909	60
589912	50
589991	4
589992	73
590499	3
591516	66
591517	66
591525	66
592784	53
593370	53
600259	73, 75
601212	73, 75
602350	73, 75
609733	33, 53
610236	15
611074	73, 75
613750	44, 53, 71
616783	79
616792	1
616795	19
616796	19
616798	4, 5
616813	14, 30
616848	22, 23
619018	79
619019	10, 47
619023	29
619024	4, 47, 73
619025	29
619029	1, 3, 4, 5, 9, 10, 12, 21
620235	44
620238	44, 53
623760	17
623762	17
623829	17
626530	73, 75
630292	82
633242	53
636260	1, 53
645092	46
645095	47
648304	60
654613	22, 23
655629	82
656532	59
656672	5, 12, 75
658016	22
658244	29
658985	33
659065	21, 22, 23, 29
660178	25
660738	12
661707	65
662691	54
663094	65
663095	65
663792	57
664421	4, 5
664428	7
666542	29
666559	22, 23
667277	35, 39
667278	35, 39
672181	33
672182	33
672313	82
675242	37
675248	35, 39
675249	35, 39
675253	37
675255	37
675256	37
675257	35, 39
675305	37
675306	37
675536	35, 39
675544	21
675548	21
675739	82
690279	27
692722	44, 53
710288	35, 39
710776	42
711298	29
713186	29
730143	61
730432	9
742002	29
742056	29
743035	29
743439	29
743816	67
763451	63
774337	17
778570	76
784075	60
784398	59
784559	71
784870	82
785904	79
799044	82
799408	33
799584	57
799595	23
801546	29
815040	35, 39
815259	35, 39
815744	35, 39
850756	61
851756	61
851762	61
851770	61
851771	42, 43
853182	61
853187	61
853357	61
853380	61
853384	60
853391	61
853394	60
853395	60
853396	61
853408	61
853412	61
853464	61
857420	73, 75
857729	60
857933	51
858305	51
860997	61
861356	44
861738	61
861741	61
861755	61
861768	60
862652	47
862653	47
862655	47
862656	47
862738	47
865961	54
865963	54
865965	54
866348	47
866349	47
868214	55
868215	55
872712	45
873250	61
874007	53
874121	60
874767	79

Part No.	Page No.
875012	53
875766	50
875767	50
876354	68
876574	73, 75
876575	54
879768	67
883734	57
885083	76
886285	13
886287	13
886288	13
886619	82
886739	71
886745	71
886753	71
886763	71
886886	37
888449	71
891308	82
893293	71
893294	71
893296	71
893298	71
894652	13
894653	13
940081	48
940089	48, 49
940090	48, 49
940091	49
940092	48, 49
940093	49
940111	61
940130	44
940643	1, 53
940653	48
940654	48
941226	47
941227	47
941238	47
941325	77
941326	77
941329	77
942405	45
942646	53
942658	48
942746	3
942874	79
943429	61
943623	79
943667	61
943859	42, 43
943957	14
944052	61
944053	61
944054	47
944168	49
944217	43
944467	57
944468	57
944469	57
944471	57
944499	10
944643	57
944645	57
944646	57
944803	73, 75
944646	57
944803	73, 75
944804	73, 75
944853	71
944861	48, 49
944862	48, 49
944863	48
944866	48
944878	71
944879	71
944881	71
944882	71
944883	71
944885	71
944890	71
944894	71
944895	71
944896	71
944897	71
944900	71
944907	3, 9
944954	13
944955	13
944966	44
944967	44
944968	47
944969	47
944977	79
944981	10
944982	10
945026	51
945029	51
945034	51
945035	51
945036	51
945037	51
945038	51
945039	51
945040	51
945041	51
945042	51
945043	51
945044	51
945046	45
945051	45
945083	45
945090	71
945095	71
945100	43
945118	63
945129	33
945256	48
945348	71
945374	21, 22, 23
945460	11
945554	79
945555	79
945576	79
945577	79
945614	42
945621	42
945805	71
945816	71
945903	79
945950	66
945951	67
946020	55
946021	55
946023	55
946026	61
946027	61
946029	71
946030	71
946032	71
946033	71
946056	31
946057	31
946058	31
946060	31
946062	31
946102	55
946103	55
946105	31
946106	31
946108	31
946110	48
946111	48
946112	48
946115	79
946163	47
946360	71
946361	71
946362	71
946363	71
946364	71
946365	71
946366	71
946367	71
946368	71
946369	71
946370	71
946392	68
946393	68
946394	68
946395	68
946396	68
946397	68
946398	68
946399	68
946400	68
946401	68
952018	61
955321	51
955323	51
955326	51
956622	44
956664	44
957995	44
958553	43, 44
1010736	3
1103680	3
1301194	71
1301361	17
1301362	19
1303459	31
1308105	71
1520190	17
1520193	17
1520287	3
1520495	82
1521218	66
1521241	67
1521844	79
1521846	79
1612583	4, 5
1621888	1
1632441	13

NOTES

NOTES

NOTES

MICHIGAN

DROTT (4 in 1) BUCKET

PARTS MANUAL SUPPLEMENT

No 2331

★

For Model 75 III

★

Bucket Part No. 1527291

★

This Supplement covers Drott (4 in 1) Bucket for 75 III MICHIGAN Tractor Shovel

★

INDEX

	Page
Bucket Assembly	2
Bucket Tooth Assembly	5
Clamp Cylinder Assembly	4
Hydraulic System	3
Three Spool Valve Installation	See P.M.S. 2113

★

Use this Supplement with 75 III Parts Manual No. 2083 and Parts Manual Supplements to Parts Manual No. 2083.

CLARK EQUIPMENT COMPANY
Construction Machinery Division

25C685B2120SPR-361

Printed in U.S.A.

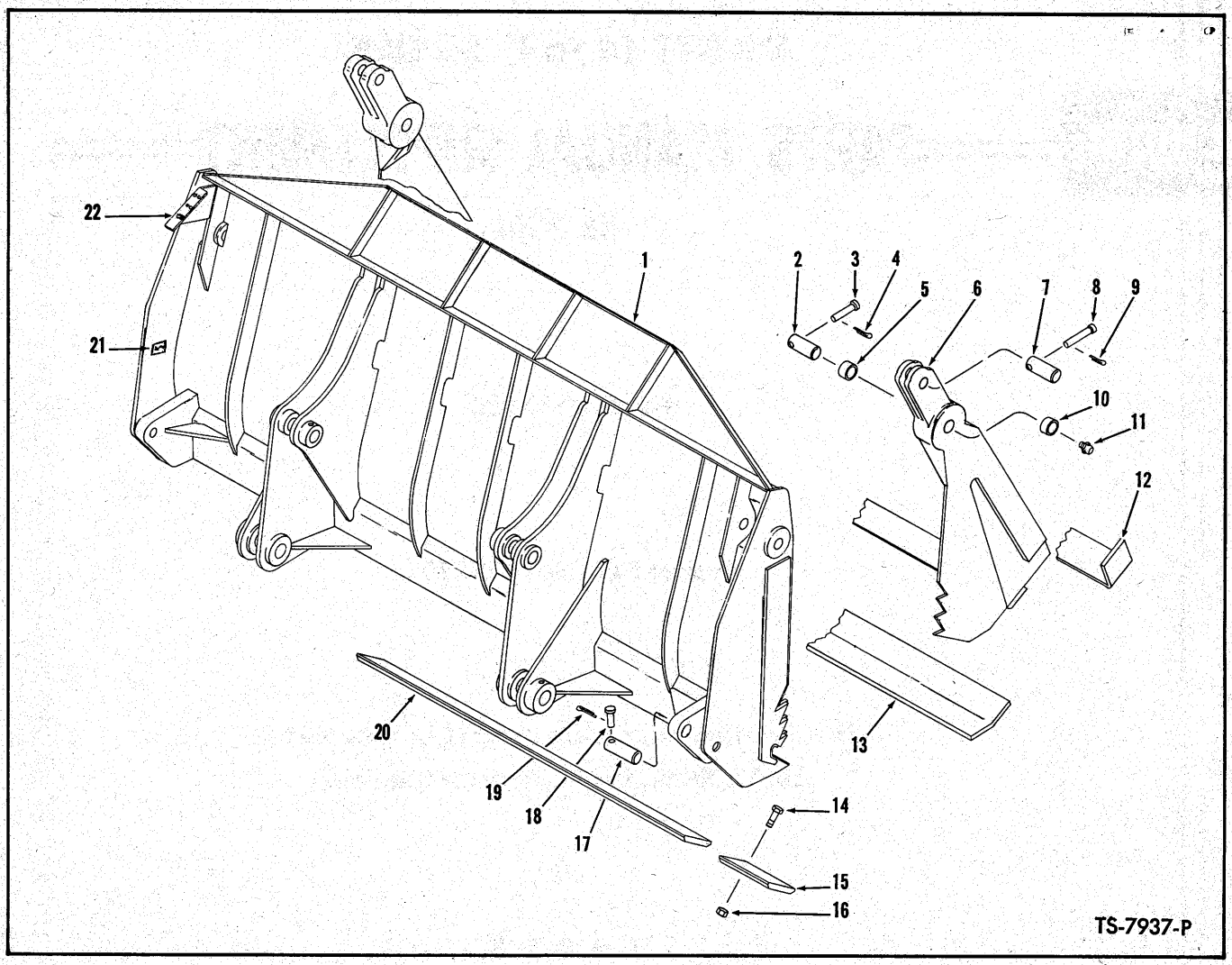

DROTT (4 in 1) BUCKET ASSEMBLY

Item No.	Part No.	Description	No. Req'd.
A	1527296	BUCKET ASSY, Less Bucket Teeth (Inc. 1 thru 24 & all items listed on pages 3, 4)	1
1	1533385	BUCKET BACK ASSY (Inc. 14 thru 16, 20)	1
2	1533353	PIN, Bucket Front to Bucket Back	2
3	1534323	PIN, Clevis	2
4	1F-416	COTTER	2
5	1533356	BUSHING, Bucket Front	2
6	1533377	BUCKET FRONT ASSY (Inc. 5, 6A, 10, 12, 13)	1
6A	1533378	HINGE EAR	2
7	1533352	PIN, Cylinder to Bucket Front	2
8	1534323	PIN, Clevis	2
9	1F-416	COTTER	2
10	1533356	BUSHING, Bucket Front	2
11	10H-25	FITTING, Grease	2
12	1533366	CUTTING EDGE — Front, Bucket Front	1
13	1533346	CUTTING EDGE — Rear, Bucket Front	1
14	513603	BOLT, Plow (Inc. 16)	19
15	1533344	CORNER BIT, Bucket Back	2
16	1D-12	NUT, Plow Bolt	19
17	1533343	PIN, Cylinder to Bucket Back	2
18	1534322	PIN, Clevis	2
19	1F-416	COTTER	2
20	1533367	CUTTING EDGE, Bucket Back	1
21	1533342	DECAL, Clean	2
22	1533380	DECAL, Clam Opening	1
23	1533384	†DECAL, Tilt Cylinder	1
24	1533383	†INDICATOR, Tilt Cylinder	1

†Not Illustrated

WHEN ORDERING PARTS, ALWAYS STATE MODEL AND SERIAL NO. OF MACHINE

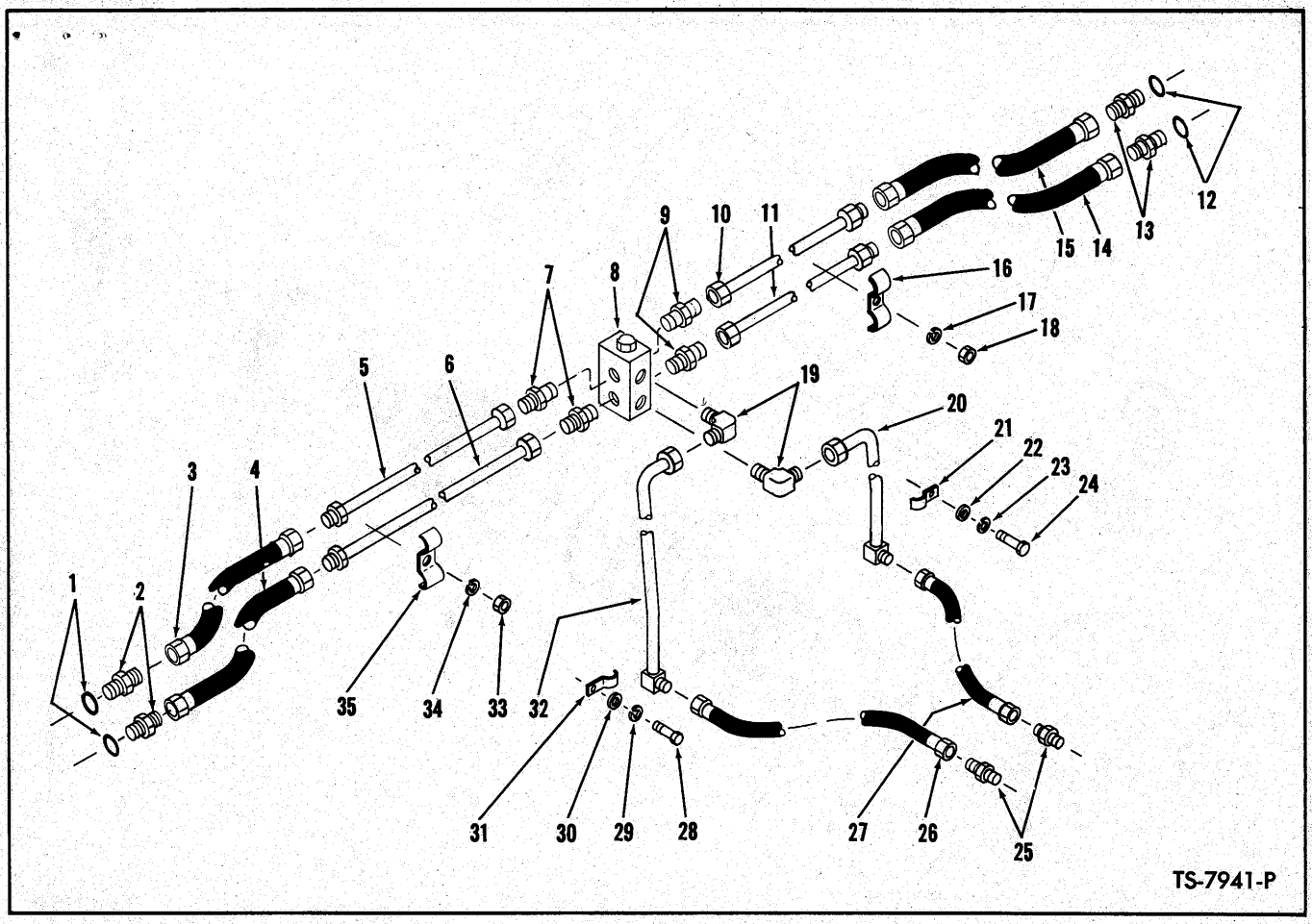

HYDRAULIC SYSTEM — DROTT BUCKET

Item No.	Part No.	Description	No. Req'd.
1	91F-6	"O" RING, Connector	2
2	15K-6	CONNECTOR, Hose to Cylinder (Inc. 1)	2
3	1533555	HOSE, Cylinder to Tube	1
4	1533555	HOSE, Cylinder to Tube	1
5	1533368	TUBE, Hose to Relief Valve	1
6	1533368	TUBE, Hose to Relief Valve	1
7	89F-7	CONNECTOR, Tube to Relief Valve	2
8	1533372	RELIEF VALVE	1
9	89F-7	CONNECTOR — Relief Valve to Tube	2
10	1533368	TUBE, Relief Valve to Hose	1
11	1533368	TUBE, Relief Valve to Hose	1
12	91F-6	"O" RING, Connector	1
13	15K-6	CONNECTOR, Hose to Cylinder (Inc. 12)	2
14	1533555	HOSE, Cylinder to Tube	1
15	1533555	HOSE, Cylinder to Tube	1
16	1533350	CLAMP, Tube Attaching	1
17	4E-06	LKWSHR, Clamp Attaching	1
18	1D-06	NUT, Clamp Attaching	1
19	730149	ELBOW, Tube to Valve	2
20	1533381	TUBE, Valve to Hose	1
21	1533347	CLAMP, Tube Attaching	1
22	664403	WASHER, Clamp Attaching	1
23	4E-06	LKWSHR, Clamp Attaching	1
24	17C-616	BOLT, Clamp Attaching	1
25	663013	ADAPTER	2
26	1306410	HOSE, Jumper	1
27	1306410	HOSE, Jumper	1
28	17C-616	BOLT, Clamp Attaching	1
29	4E-06	LKWSHR, Clamp Attaching	1
30	664403	WASHER, Clamp Attaching	1
31	1533347	CLAMP, Tube Attaching	1
32	1533382	TUBE, Valve to Hose	1
33	1D-06	NUT, Clamp Attaching	1
34	4E-06	LKWSHR, Clamp Attaching	1
35	1533350	CLAMP, Tube Attaching	1

WHEN ORDERING PARTS, ALWAYS STATE MODEL AND SERIAL NO. OF MACHINE

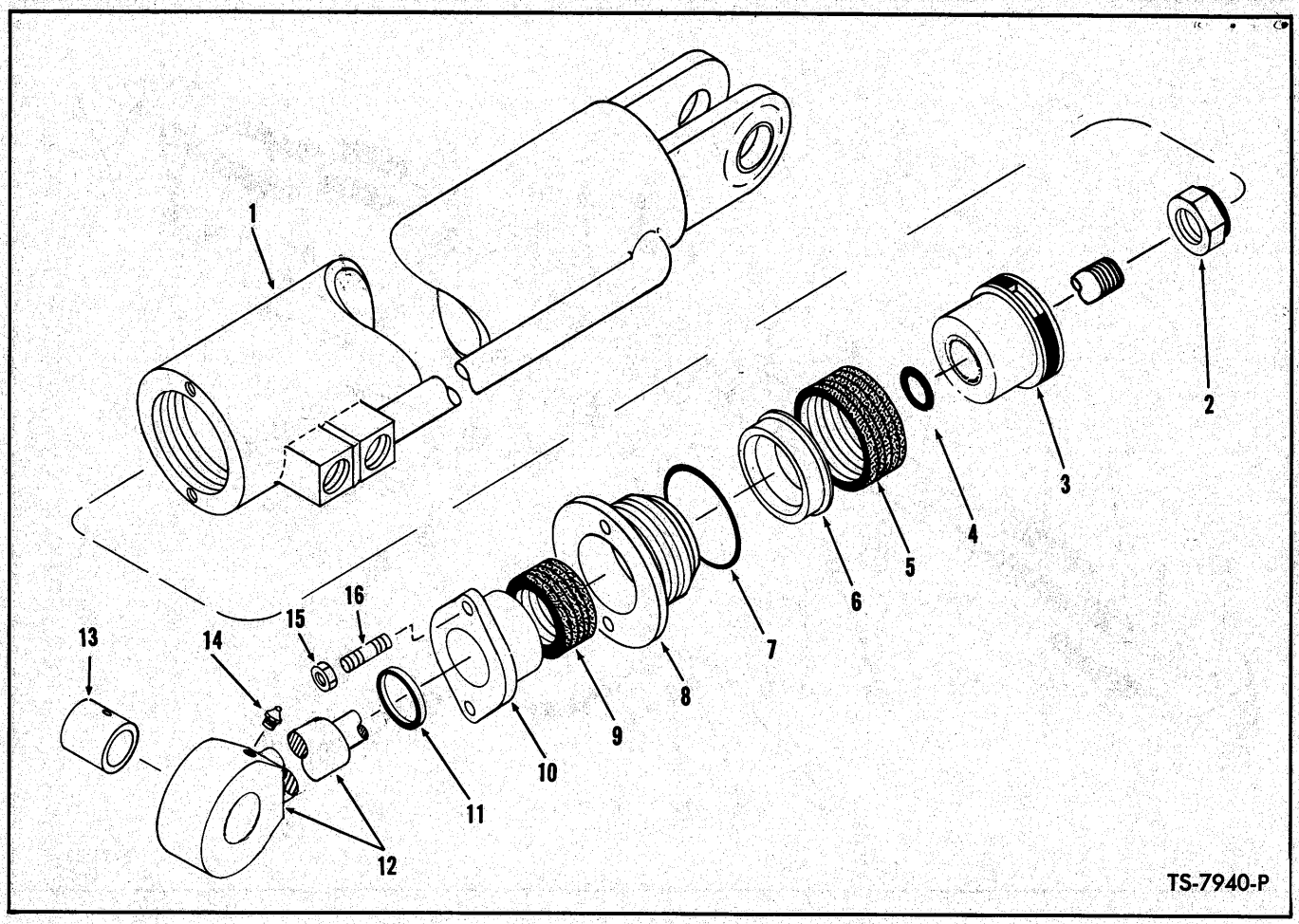

CLAMP CYLINDER ASSEMBLY

(Quantities Shown for Items 1 thru 16 for One Cylinder Only)

Item No.	Part No.	Description	No. Req'd.
A	1533374	CLAMP CYLINDER ASSY — R.H. (Inc. 1, 2 thru 16)	1
B	1533375	CLAMP CYLINDER ASSY — L.H. (Inc. 1A thru 16)	1
1	1533359	CYLINDER & BASE — R.H.	1
1A	1533360	CYLINDER & BASE — L.H.	1
2	67D-20	NUT, Piston Rod	1
3	1533363	PISTON	1
3A	1533354	WEAR RING	1
4	25K-40108	"O" RING	1
5	1533357	V-PACKING SET	1
6	1533364	PISTON	1
7	25K-40400	"O" RING	1
8	1533362	CAP, Cylinder	1
9	1533361	V-PACKING SET	1
10	1533365	FLANGE, Packing	1
11	1533340	WIPER RING	1
12	1533358	ROD, Cylinder (Inc. 13)	1
13	1533355	BUSHING, Cylinder Rod	1
14	10H-25	FITTING, Grease	1
15	66D-06	NUT, Cylinder Cap	2
16	1533339	STUD, Cylinder Cap	2

WHEN ORDERING PARTS, ALWAYS STATE MODEL AND SERIAL NO. OF MACHINE

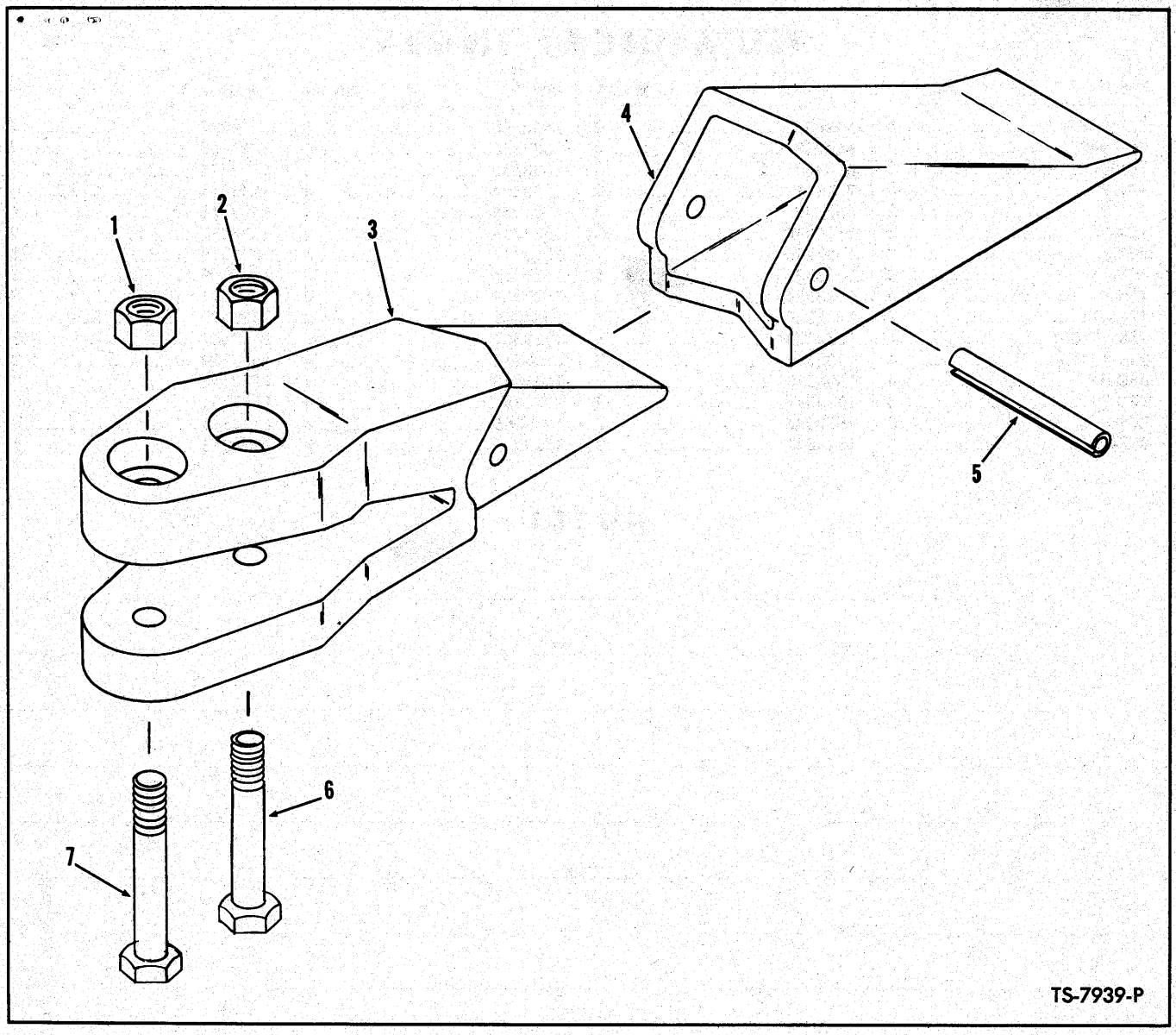

BUCKET TOOTH ASSEMBLY

No. Item	No. Part	Description	No. Req'd.
A	1533335	BUCKET TOOTH ASSY (Inc. 1 thru 7)	9
1	1D-10	NUT, Bolt Attaching	9
2	1D-10	NUT, Bolt Attaching	9
3	———	ADAPTER, Tooth — See "A"	—
4	1533336	TIP (Tooth Point)	9
5	730131	PIN, Flex	9
6	1C-1048	BOLT, Tooth Attaching	9
7	1C-1052	BOLT, Tooth Attaching	9

WHEN ORDERING PARTS, ALWAYS STATE MODEL AND SERIAL NO. OF MACHINE

NUMERICAL INDEX

Part No.	Page No.
1C-1048	5
1C-1052	5
1D-06	3
1D-10	5
1D-12	2
1F-416	2
4E-06	3
10H-25	2, 4
15K-6	3
17C-616	3
25K-40108	4
25K-40400	4
66D-06	4
67D-20	4
89F-7	3
91F-6	3
513603	2
663013	3
664403	3
730131	5
730149	3
1306410	3
1527296	2
1533335	5
1533336	5
1533339	4
1533340	4
1533342	2
1533343	2
1533344	2
1533346	2
1533347	3
1533350	3
1533352	2
1533353	2
1533354	4
1533355	4
1533356	2
1533357	4
1533358	4
1533359	4
1533360	4
1533361	4
1533362	4
1533363	4
1533364	4
1533365	4
1533366	2
1533367	2
1533368	3
1533372	3
1533374	4
1533375	4
1533377	2
1533378	2
1533380	2
1533381	3
1533382	3
1533383	2
1533384	2
1533385	2
1533555	3
1534322	2
1534323	2

NOTES

WHEN ORDERING PARTS, ALWAYS STATE MODEL AND SERIAL NO. OF MACHINE

MICHIGAN

PARTS MANUAL SUPPLEMENT

No. 2274

★

This Supplement Voids and Supersedes Parts Manual Supplement No. 2113

★

This Supplement covers Three Spool Valve Installation and Parts for 75 III and 85 III Michigan Tractor Shovels.

★

INDEX

Relief Valve Assembly 9, 13
Side Panel 4
Three Spool Control Valve Assembly 7, 9, 11, 13
Three Spool Valve Installation and Parts 5
Three Spool Valve Controls 3

★

Use this Supplement with 75 III Parts Manual No. 2083, 85 III Parts Manual No. 2086 and Parts Manual Supplements to Parts Manuals No. 2083 and 2086

★

CLARK EQUIPMENT COMPANY
Construction Machinery Division

4M684B2118SPR-360

Printed in U.S.A.

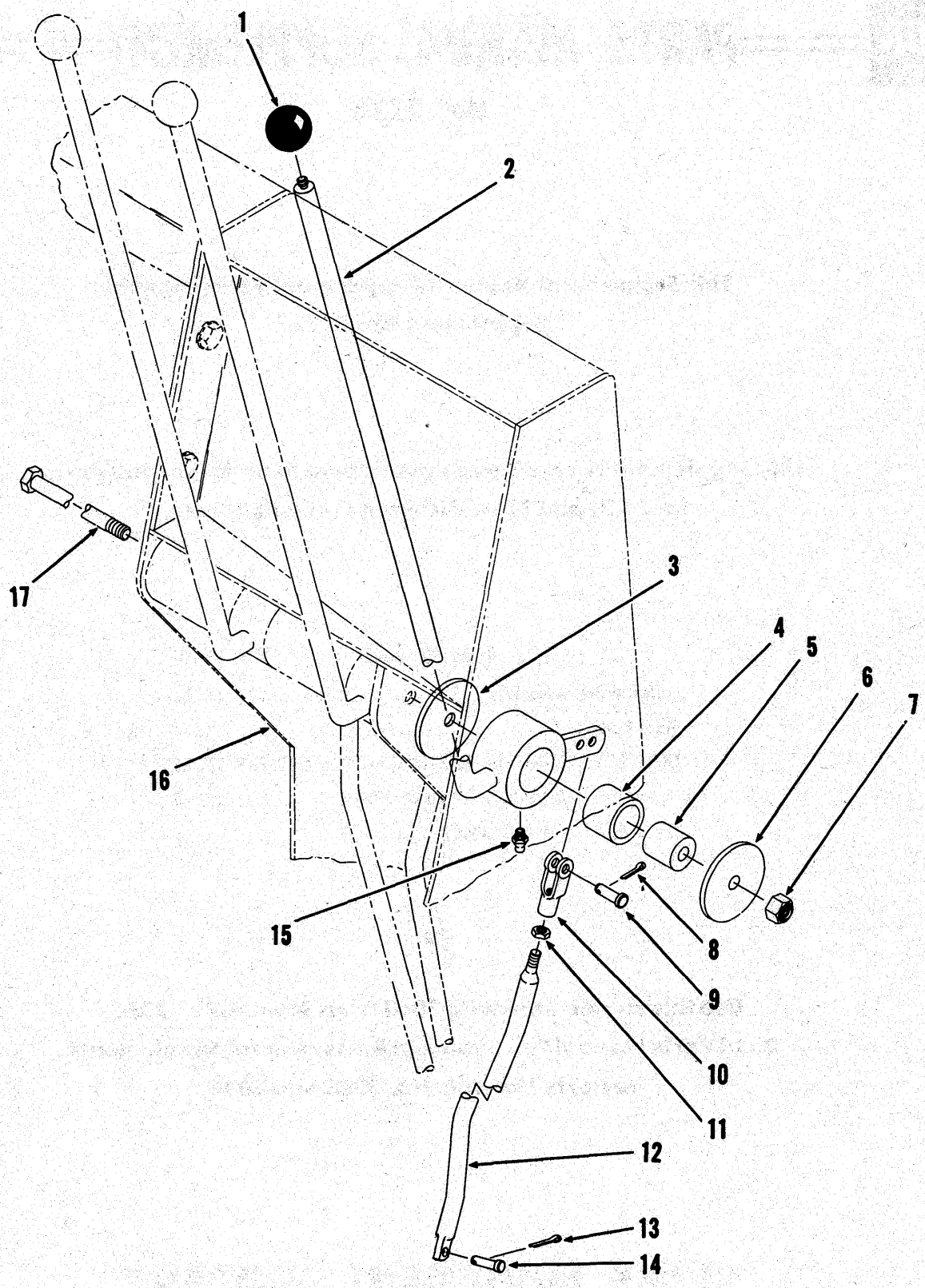

THREE SPOOL VALVE CONTROLS

TS-6932-P

THREE SPOOL VALVE CONTROLS

Item No.	Part No.	Description	No. Req'd.
1	509772	KNOB	1
2	567607	LEVER ASSY, Valve (Inc. Item 4)	1
3	616796	WASHER, Valve Lever	1
4	569055	BUSHING, Lever	1
5	550646	SLEEVE, Valve Lever	1
6	616796	WASHER, Valve Lever	1
7	18D-08	NUT	1
8	1F-414	COTTER, Clevis Pin	1
9	4F-08127	PIN, Clevis	1
10	2J-8300	CLEVIS, Valve Rod	1
11	8D-08	NUT, Clevis Jam	1
12	563640	ROD, Valve Assy (Inc. 10, 11)	1
13	1F-312	COTTER, Rod Pin	1
14	4F-06106	PIN, Valve Rod	1
15	10H-25	FITTING, Valve Lever Grease	1
16	———	COCKPIT, See Parts Manuals 2083 & 2086	—
17	18C-8160	BOLT, Valve Lever	1

NOTES

WHEN ORDERING PARTS, ALWAYS STATE MODEL AND SERIAL NO. OF MACHINE

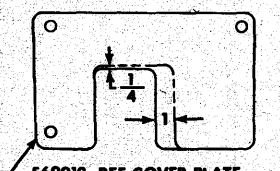

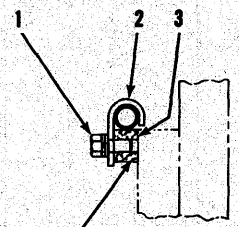

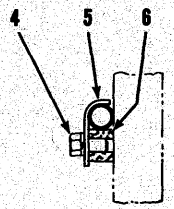

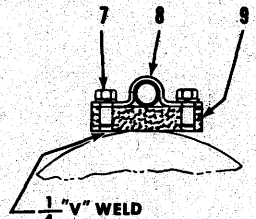

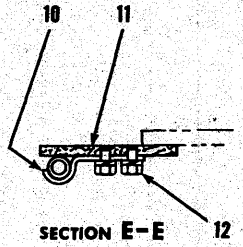

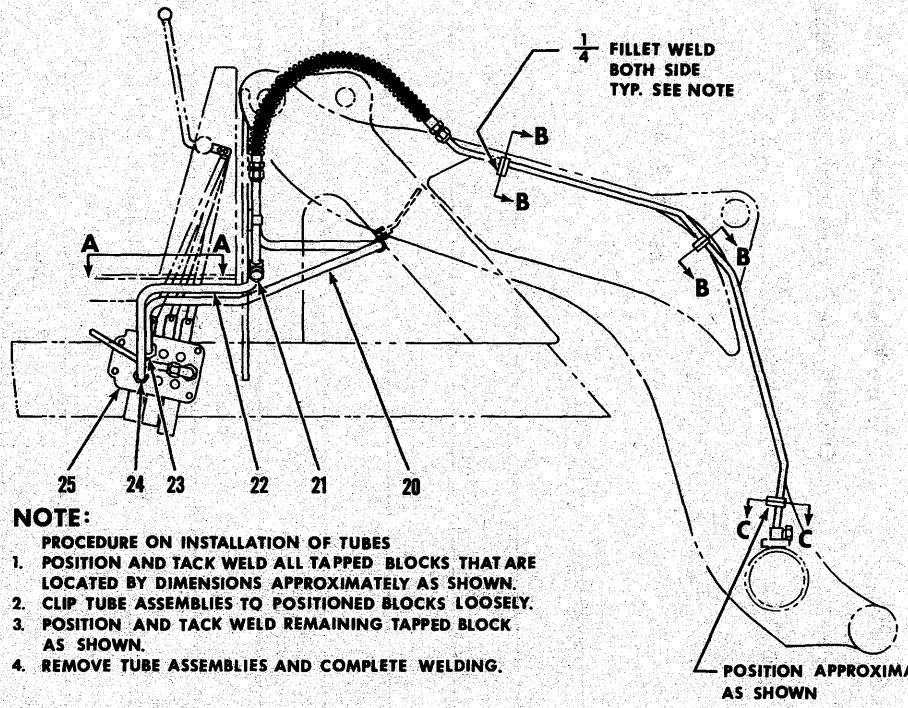

NOTE:

PROCEDURE ON INSTALLATION OF TUBES

1. POSITION AND TACK WELD ALL TAPPED BLOCKS THAT ARE LOCATED BY DIMENSIONS APPROXIMATELY AS SHOWN.
2. CLIP TUBE ASSEMBLIES TO POSITIONED BLOCKS LOOSELY.
3. POSITION AND TACK WELD REMAINING TAPPED BLOCK AS SHOWN.
4. REMOVE TUBE ASSEMBLIES AND COMPLETE WELDING.

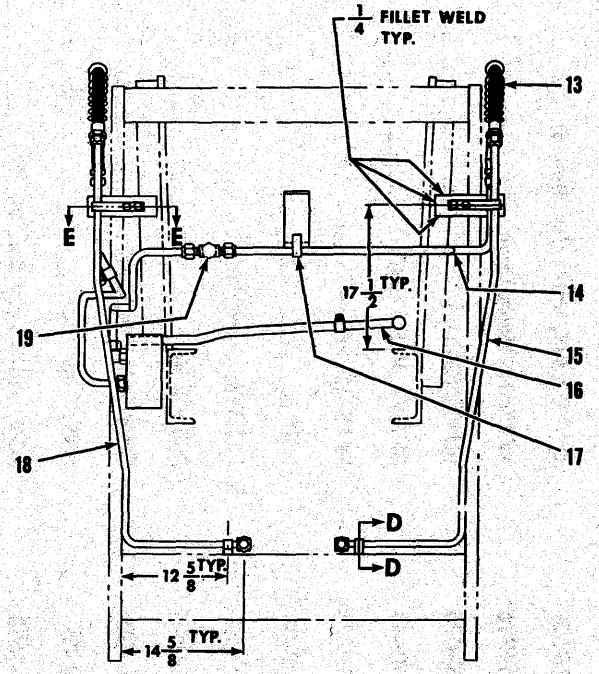

THREE SPOOL VALVE INSTALLATION AND PARTS

TS-6936-P

THREE SPOOL VALVE INSTALLATION AND PARTS

Item No.	Part No.	Description	No. Req'd.
1	18C-612	BOLT, Clamp to Block	4
1A	4E-06	†LKWSHR, Clamp to Block Bolt	4
1B	619024	†WASHER, Clamp to Block Bolt	4
2	563638	CLAMP, Tube Mounting	4
3	564771	BLOCK, Tube Mounting	4
4	18C-612	BOLT, Clamp to Block	2
4A	4E-06	†LKWSHR, Clamp to Block Bolt	2
5	563664	CLAMP, Tube Mounting	2
6	564771	BLOCK, Tube Mounting	2
7	18C-612	BOLT, Clamp to Block	4
7A	4E-06	†LKWSHR, Clamp to Block Bolt	4
8	563639	CLAMP, Tube Mounting	2
9	563634	BLOCK, Tube Mounting	2
10	563637	CLAMP, Tube Mounting	2
11	563633	BLOCK, Tube Mounting	2
12	18C-612	BOLT, Clamp to Block	4
12A	4E-06	†LKWSHR, Clamp to Block Bolt	4
13	1521360	HOSE, Tube Connecting	2
14	563647	TUBE, Cross	1
15	1521975	TUBE, L.H.	1
16	563642	TUBE, Rear	1
17	1521359	CLAMP, Tube Mounting	1
17A	———	†BOLT, Use Cockpit Mtg. Bolt	1
18	1521974	TUBE, R.H.	1
19	10K-10	TEE, Union	1
19A	36K-10	†CAP	1
20	563648	TUBE, Valve to Crosstube	1
21	36K-10	CAP	1
22	563646	TUBE, Valve to Hose	1
23	11K-10	ELBOW, 90°	1
23A	15K-10	†CONNECTOR, 37° Flare Fitting (Inc. Item 23B)	1
23B	91F-10	†"O" RING	1
24	15K-10	CONNECTOR, 37° Flare Fitting (Inc. Item 24A)	1
24A	91F-10	†"O" RING	1
25	———	VALVE ASSY, Control — See Index	1

†Not Illustrated

WHEN ORDERING PARTS, ALWAYS STATE MODEL AND SERIAL NO. OF MACHINE

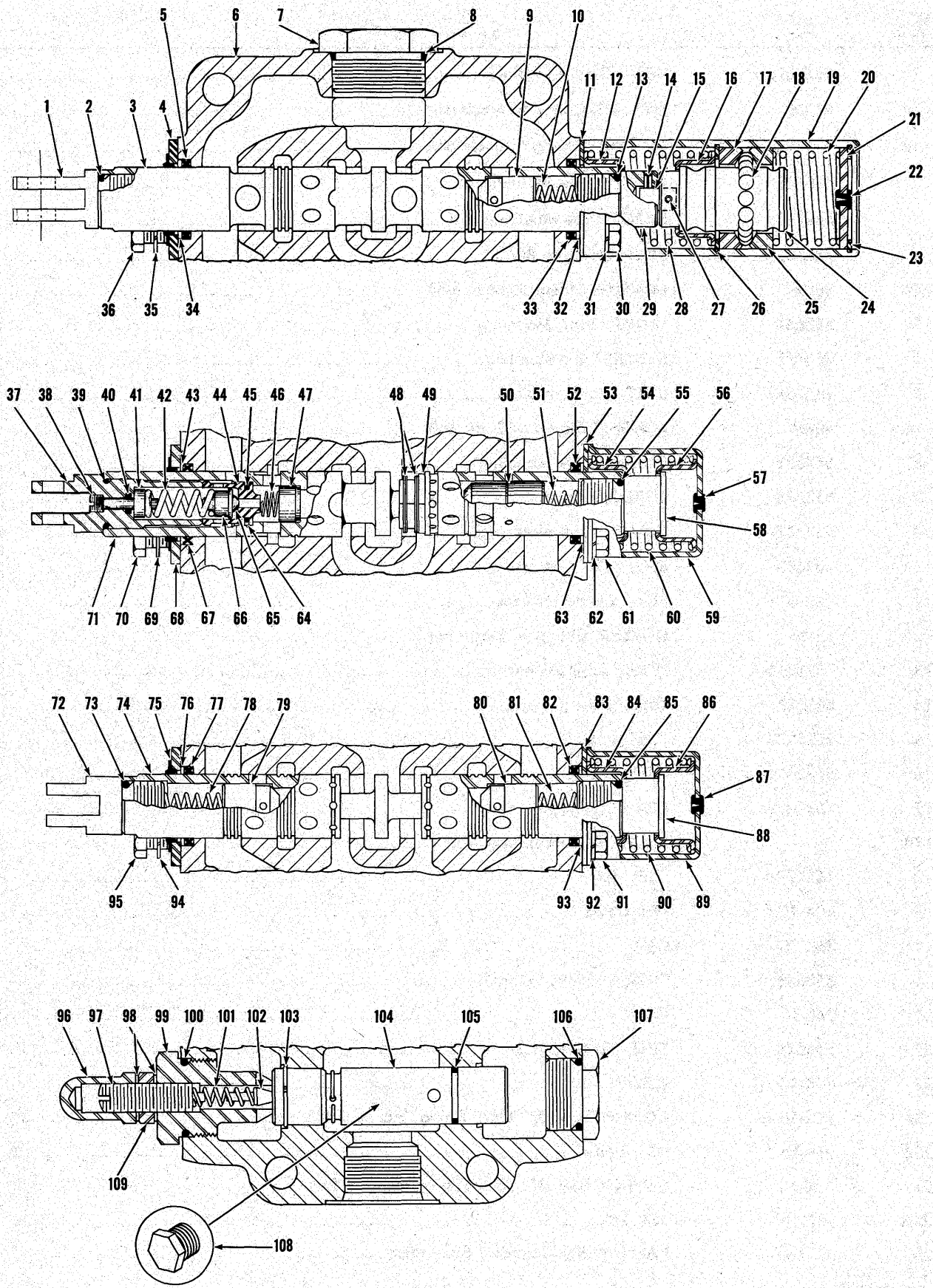

THREE SPOOL CONTROL VALVE ASSEMBLY

TS-6788-P

THREE SPOOL CONTROL VALVE ASSEMBLY

Two Varieties of Control Valves have been used for 75 III, 85 III MICHIGAN Tractor Shovel Three spool Valve Installations. These are as follows.

Clark Part Number	Hydreco Model Number
572484	V36DWF-20
1523012	V36DWF-21

To determine which Control Valve is on a given machine refer to the manufacturers' serial number plate attached to the face of the Valve where the above information is stamped. After determining which Valve is on the machine you may service accordingly from pages 7, 9, 11, 13 of this Supplement.

Item No.	Part No.	Description	No. Req'd.
A	572484	*VALVE ASSY, Control (Inc. 1 thru 109)	1
1	946360	EYE, Plunger	1
2	944881	"O" RING, Eye	1
3	———	§PLUNGER, Operating — See "A"	1
4	947228	WIPER, Plunger	1
5	946583	SEAL, Plunger Oil	1
6	———	§HOUSING — See "A"	1
7	24K-11	PLUG, Housing	1
8	91F-11	"O" RING, Plug	1
9	944885	CHECK	1
10	893293	SPRING, Check	1
11	944882	PLATE, Retaining	1
12	944878	GUIDE, Spring	1
13	944881	"O" RING, Cap	1
14	108301	ROLL PIN	1
15	888449	PIN	1
16	944878	GUIDE, Spring	1
17	944897	RETAINER, Ball	1
18	10J-08	BALL	15
19	945805	COVER, Detent	1
20	946029	SPRING, Detent	1
21	944900	PLUG	1
22	886763	PLUG, Bleeder	1
23	507695	RING, Retaining	1
24	946030	CAP, Detent	1
25	944897	RETAINER, Ball	1
26	1301194	RING, Retaining	1
27	108301	ROLL PIN	1
28	945090	SPRING	1
29	945095	CAP, Plunger	1
30	1C-416	BOLT, Cover to Housing	4
31	4E-04	LKWSHR, Cover to Housing	4
32	944883	RING, Back-up	1
33	946583	SEAL, Plunger Oil	1
34	944883	RING, Back-up	1
35	4E-04	LKWSHR, Wiper to Housing	2
36	1C-410	BOLT, Wiper to Housing	2
37	946361	EYE, Plunger	1
38	946362	SCREW, Adjusting	1
39	944881	"O" RING, Eye	1
40	25K-20007	"O" RING, Adjusting Screw	1
41	946363	GUIDE, Spring	1
42	946364	SPRING, Check	1
43	944883	RING, Back-up	1
44	946367	SEAT, Check	1
45	25K-20016	"O" RING, Seat	1
46	946369	SPRING, Check	1
47	946370	CHECK	1
48	1308105	RING, Retaining	4
49	946032	CHECK	2
50	946368	CHECK	1
51	893293	SPRING, Check	1
52	946583	SEAL, Plunger Oil	1
53	944882	PLATE, Retaining	1
54	945348	GUIDE, Spring	1
55	944881	"O" RING, Cap	1
56	945348	GUIDE, Spring	1
57	886745	PLUG, Bleeder	1
58	944895	CAP, Plunger	1
59	944896	COVER, Spring Return	1
60	944879	SPRING, Plunger Return	1
61	1C-410	BOLT, Cover Mounting	4
62	4E-04	LKWSHR, Cover Mounting	4
63	944883	RING, Back-up	1
64	946366	RING, Back-up	1
65	———	BALL (Inc. with Item 66)	1
66	946365	CHECK	1
67	946583	SEAL, Plunger Oil	1
68	947228	WIPER, Plunger	1
69	4E-04	LKWSHR, Cover Mounting	2
70	1C-410	BOLT, Cover Mounting	2
71	———	§PLUNGER, Operating — See "A"	1
72	946360	EYE, Plunger	1
73	944881	"O" RING, Eye	1
74	———	§PLUNGER, Operating — See "A"	1
75	947228	WIPER, Plunger	1
76	944883	RING, Back-up	1
77	946583	SEAL, Plunger Oil	1
78	893293	SPRING, Check	1
79	944885	CHECK	1
80	944885	CHECK	1

*NOTE: For complete replacement of 572484 Control Valve Assembly use 1523012 plus 1 — 15K-10 Connector and 1 — 11K-10 Elbow. Refer to SG-285 for installation. After replacement has been made refer to Pages 11 and 13 for service.

§Not Sold Separately

WHEN ORDERING PARTS, ALWAYS STATE MODEL AND SERIAL NO. OF MACHINE

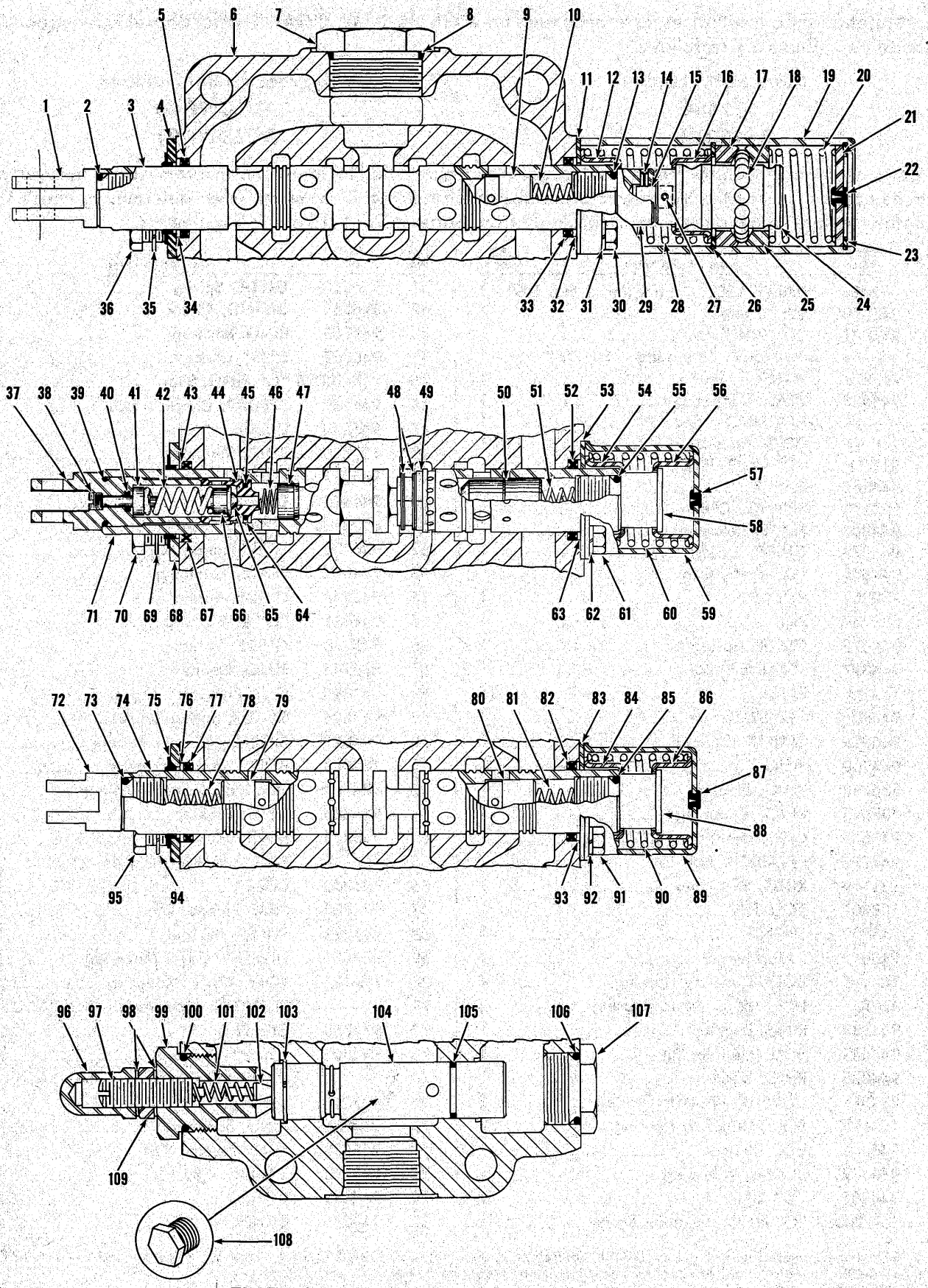

THREE SPOOL CONTROL VALVE ASSEMBLY

TS-6788-P

THREE SPOOL CONTROL VALVE ASSEMBLY (Continued)

Item No.	Part No.	Description	No. Req'd.
81	893293	SPRING, Check	1
82	946583	SEAL, Plunger	1
83	944882	PLATE, Retaining	1
84	945348	GUIDE, Spring	1
85	944881	"O" RING, Cap	1
86	945348	GUIDE, Spring	1
87	886745	PLUG, Bleeder	1
88	944895	CAP, Plunger	1
89	944896	COVER, Spring Return	1
90	944879	SPRING, Plunger Return	1
91	1C-410	BOLT, Cover Mounting	2
92	4E-04	LKWSHR, Cover Mounting	2
93	944883	RING, Back-up	1
94	4E-04	LKWSHR, Wiper Mounting	2
95	1C-410	BOLT, Wiper Mounting	2
96	944853	NUT, Acorn	1
97	944890	SCREW, Adjusting	1
98	613750	WASHER	2
99	893296	CAP, Adjusting	1
100	791553	"O" RING, Adjusting Cap	1
101	886753	SPRING, Poppet	1
102	886739	POPPET, Relief	1
103	946033	RING, Retaining	1
104	893298	VALVE ASSY, Relief (Inc. 103, 105)	1
105	945816	"O" RING, Relief Valve	1
106	791553	"O" RING, Cap	1
107	944894	CAP	1
108	40K-04	PLUG	1
109	8D-08	NUT, Jam	1

NOTES

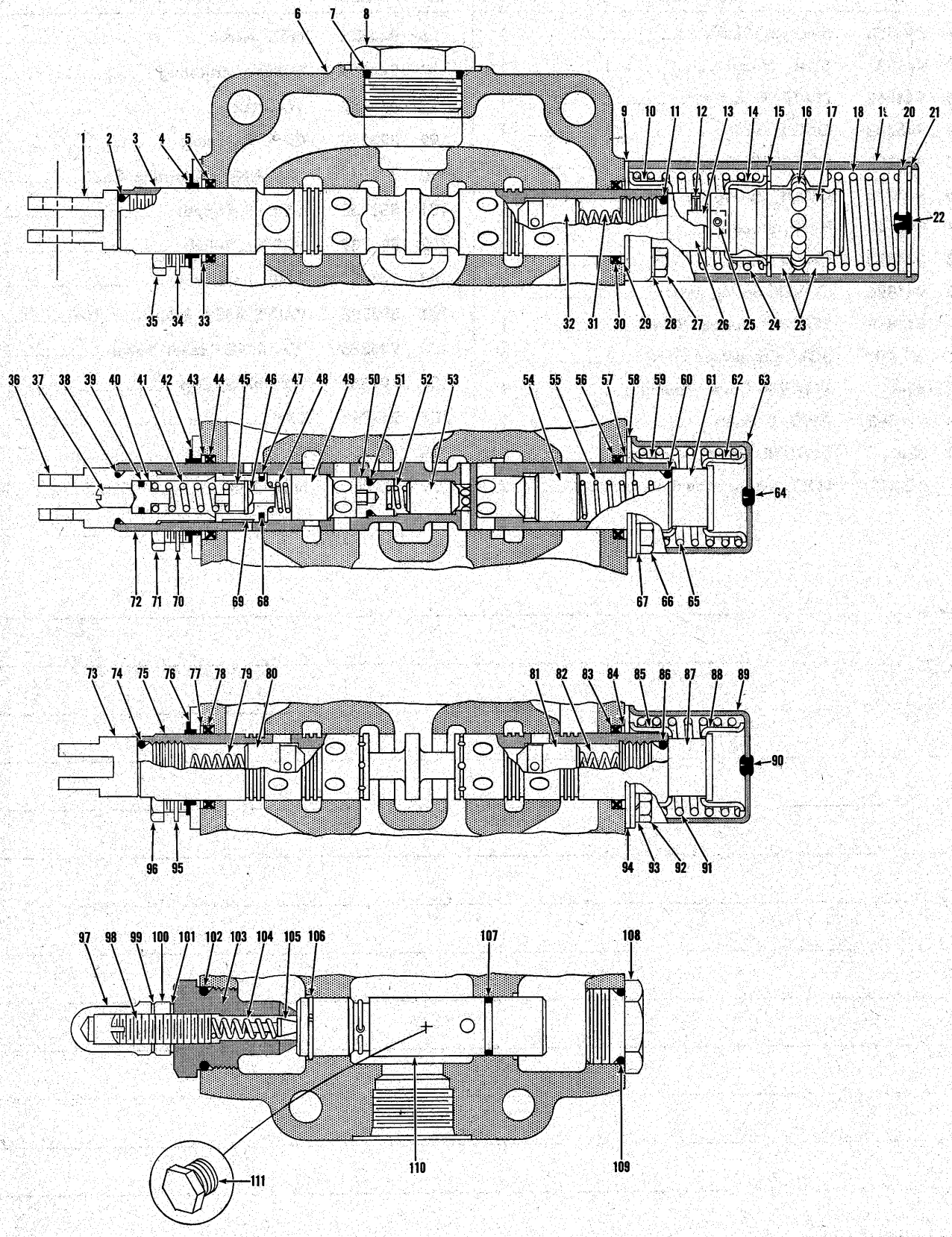

THREE SPOOL CONTROL VALVE ASSEMBLY

TS-7722-P

CONTROL VALVE ASSEMBLY

Item No.	Part No.	Description	No. Req'd.
A	1523012	VALVE ASSY (Inc. 1 thru 11)	1
1	946360	EYE, Plunger	1
2	944881	"O" RING, Plunger Eye	1
3	———	§PLUNGER, Operating — See "A"	—
4	947228	WIPER, Plunger	1
5	946583	SEAL, Plunger Oil	1
6	———	§HOUSING, Valve — See "A"	—
7	91F-11	"O" RING, Cap	1
8	24K-11	PLUG, Valve	1
9	944882	RETAINER, Plunger Oil Seal	1
10	944878	GUIDE, Spring	1
11	944881	"O" RING, Cap	1
12	108301	ROLL PIN	1
13	888449	PIN	1
14	944878	GUIDE, Spring	1
15	1301194	RING, Retaining	1
16	10J-08	BALL	15
17	946030	CAP, Detent	1
18	946029	SPRING, Detent	1
19	945805	COVER, Detent	1
20	944900	PLUG, Detent Cover	1
21	507695	RING, Plug Retaining	1
22	886763	PLUG, Bleeder	1
23	944897	RETAINER, Ball	2
24	945090	SPRING, Return	1
25	108301	ROLL PIN	1
26	945095	CAP, Plunger	1
27	1C-416	BOLT, Cover to Housing	4
28	4E-04	LKWSHR, Cover to Housing	4
29	944883	RING, Back-up	1
30	946583	SEAL, Plunger Oil	1
31	893293	SPRING, Check	1
32	944885	CHECK	1
33	944883	RING, Back-up	1
34	4E-04	LKWSHR, Wiper to Housing	2
35	1C-410	BOLT, Wiper to Housing	2
36	946361	EYE, Plunger	1
37	946541	SCREW, Adjusting	1
38	944881	"O" RING, Plunger Eye	1
39	25K-20014	"O" RING, Spring Guide	1
40	946363	GUIDE, Spring	1
41	946364	SPRING, Check	1
42	947228	WIPER, Plunger	1
43	944883	RING, Back-up	1
44	946583	SEAL, Plunger Oil	1
45	946365	CHECK (Inc. 46)	1
46	———	§BALL — See 45	—
47	946556	RING, Back-up	1
48	946545	SPRING, Check	1
49	946543	CHECK	1
50	946555	PLUG	—
51	945221	"O" RING	—
52	946536	SPRING	—
53	945590	CHECK	—
54	944885	CHECK	—
55	946544	SPRING, Check	1
56	946583	SEAL, Plunger Oil	1
57	944883	RING, Back-up	1
58	946535	RETAINER, Plunger Oil Seal	1
59	945348	GUIDE, Spring	1
60	944881	"O" RING, Cap	1
61	944895	CAP, Plunger	1
62	945348	GUIDE, Spring	1
63	944896	COVER, Detent	1
64	886745	PLUG, Bleeder	1
65	944879	SPRING	1
66	1C-410	BOLT, Cover to Housing	4
67	4E-04	LKWSHR, Cover to Housing	4
68	25K-20018	"O" RING, Seat	1
69	946542	SEAT, Check	1
70	4E-04	LKWSHR, Wiper to Housing	2
71	1C-410	BOLT, Wiper to Housing	2
72	———	§PLUNGER, Operating — See "A"	—
73	946360	EYE, Plunger	1
74	944881	"O" RING, Plunger Eye	1
75	———	§PLUNGER, Operating — See "A"	1
76	947228	WIPER, Plunger	1
77	944883	RING, Back-up	1
78	946583	SEAL, Plunger Oil	1
79	893293	SPRING, Check	1
80	944885	CHECK	1

§Not Sold Separately — Order Kits.

WHEN ORDERING PARTS, ALWAYS STATE MODEL AND SERIAL NO. OF MACHINE

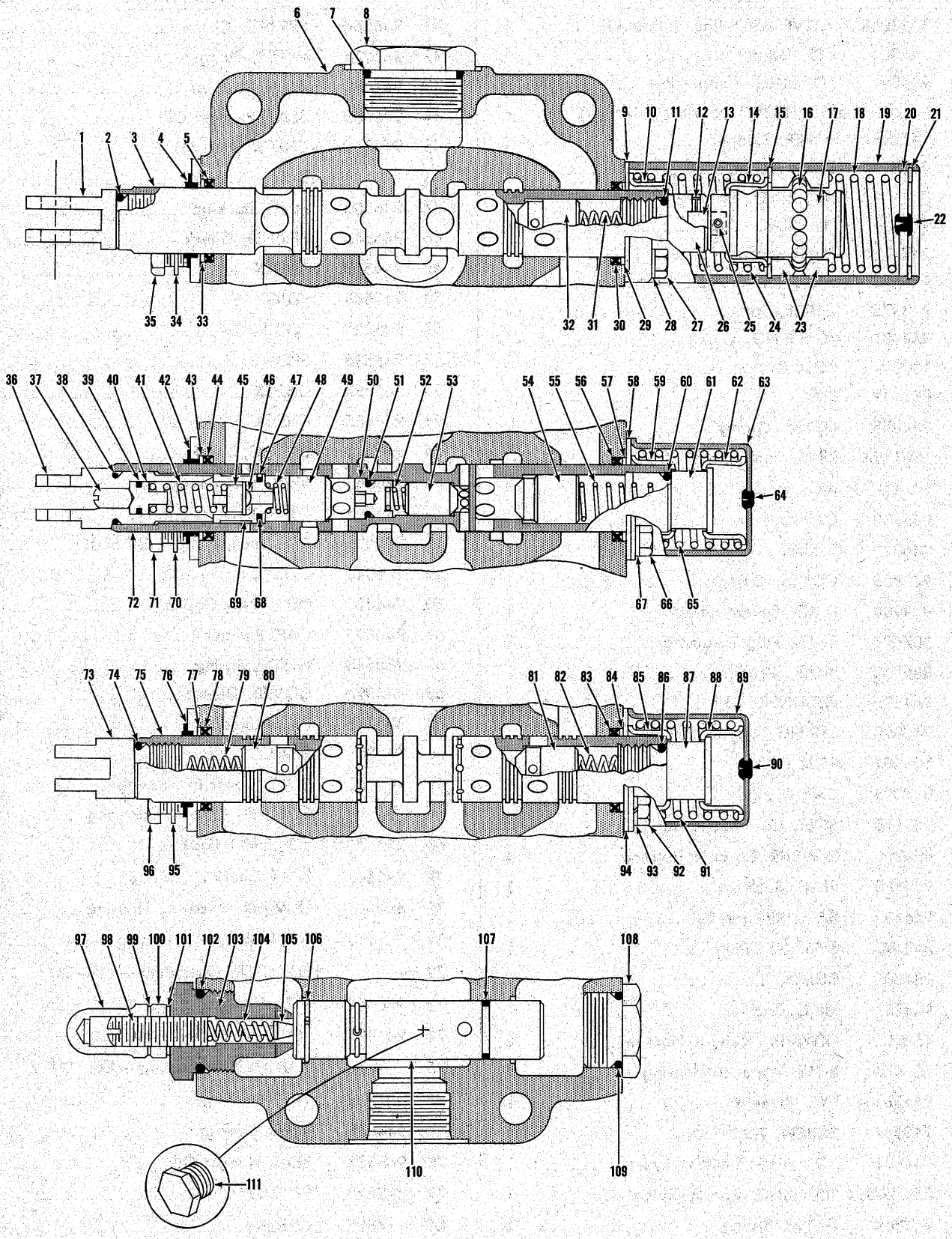

THREE SPOOL CONTROL VALVE ASSEMBLY

TS-7722-P

CONTROL VALVE ASSEMBLY (Continued)

Item No.	Part No.	Description	No. Req'd.
81	944885	CHECK	1
82	893293	SPRING, Check	1
83	946583	SEAL, Plunger Oil	1
84	944883	RING, Back-up	1
85	945348	GUIDE, Spring	1
86	944881	"O" RING, Cap	1
87	944895	CAP	1
88	945348	GUIDE, Spring	1
89	944896	COVER, Detent	1
90	886745	PLUG, Bleeder	1
91	944879	SPRING	1
92	1C-410	BOLT, Cover to Housing	4
93	4E-04	LKWSHR, Cover to Housing	4
94	944882	RETAINER, Plunger Oil Seal	1
95	4E-04	LKWSHR, Wiper to Housing	2
96	1C-410	BOLT, Wiper to Housing	2
97	944853	NUT, Acorn	1
98	944890	SCREW, Relief Valve Adjusting	1
99	613750	WASHER, Jam Nut	1
100	8D-08	NUT, Jam	1
101	613750	WASHER, Jam Nut	1
102	791553	"O" RING, Cap	1
103	893296	CAP, Relief Valve Adusting	1
104	886753	SPRING, Poppet	1
105	886739	POPPET	1
106	946033	RING, Relief Valve Retaining	1
107	945816	"O" RING, Relief Valve	1
108	944894	CAP	1
109	791553	"O" RING, Cap	1
110	893298	RELIEF VALVE (Inc. 106, 107)	1
111	40K-04	PLUG	1
112	18C-864	†BOLT, Valve Mounting	3
113	4E-08	†LKWSHR, Valve Mounting	2
114	66D-08	†NUT, Valve Mounting	1

†Not Illustrated

NOTES

NUMERICAL INDEX

Part No.	Page No.
1C-410	7, 9, 11, 13
1C-416	7, 11
1F-312	3
1F-414	3
2J-8300	3
4E-04	7, 9, 11, 13
4E-06	5
4F-06106	3
4F-08127	3
8D-08	3, 9, 13
10H-25	3
10J-08	7, 11
10K-10	5
11K-10	5, 7
15K-10	5, 7
18C-612	5
18C-864	13
18C-8160	3
18D-08	3
24K-11	7, 11
25K-2007	7
25K-20014	11
25K-20016	7
25K-20018	11
36K-10	5
40K-04	9, 13
66D-08	13
91F-10	5
91F-11	7, 11
108301	7, 11
507695	7, 11
509772	3
550646	3
563633	5
563634	5
563637	5
563638	5
563639	5
563640	3
563642	5
563646	5
563647	5
563648	5
563664	5
564771	5
567607	3
569055	3
572484	7
613750	9, 13
616796	3
619024	5
791553	9, 13
886739	9, 13
886745	7, 9, 11, 13
886753	9, 13
886763	7, 11
888449	7, 11
893293	7, 9, 11, 13
893296	9, 13
893298	9, 13
944853	9, 13
944878	7, 11
944879	7, 9, 11, 13
944881	7, 9, 11, 13
944882	7, 9, 11, 13
944883	7, 9, 11, 13
944885	7, 11, 13
944890	9, 13
944894	9, 13
944895	7, 9, 11, 13
944896	7, 9, 11, 13
944897	7, 11
944900	7, 11
945090	7, 11
945095	7, 11
945221	11
945348	7, 9, 11, 13
945590	11
945805	7, 11
945816	9, 13
946029	7, 11
946030	7, 11
946032	7
946033	9, 13
946360	7, 11
946361	7, 11
946362	7
946363	7, 11
946364	7, 11
946365	7, 11
946366	7
946367	7
946368	7
946369	7
946370	7
946535	11
946536	11
946541	11
946542	11
946543	11
946544	11
946545	11
946555	11
946556	11
946583	7, 9, 11, 13
947228	7, 11
1301194	7, 11
1308105	7
1521359	5
1521360	5
1521974	5
1521975	5
1523012	11

NOTES

WHEN ORDERING PARTS, ALWAYS STATE MODEL AND SERIAL NO. OF MACHINE

MICHIGAN

75 III TRACTOR SHOVEL

PARTS MANUAL SUPPLEMENT

No. 2091

★

This Supplement covers the 75 III MICHIGAN Tractor Shovel equipped with Waukesha Engine effective on machines listed below: WAUKESHA Machine Serial Numbers 6CA101 thru 6CA999

★

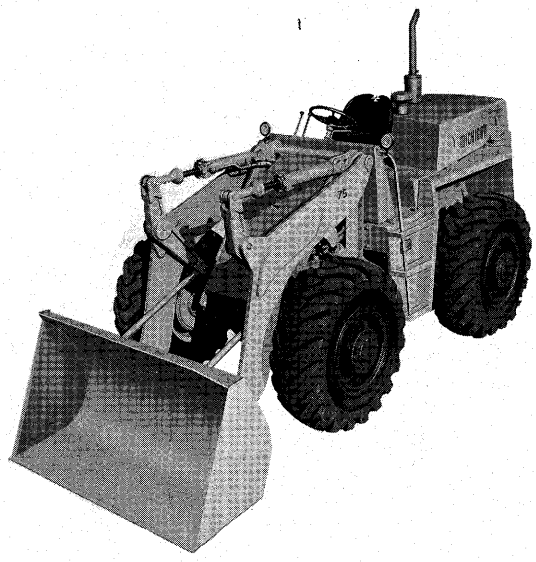

TS-6821-P

★

Use 75 III Parts Manual No. 2083 with this Supplement

★

CLARK EQUIPMENT COMPANY • *Construction Machinery Division* • **Benton Harbor, Michigan**
IN CANADA: Canadian Clark, Ltd., St. Thomas, Ontario

30C662B1883C6222SPR-220

Printed in U.S.A.

WHEN ORDERING REPAIR PARTS

To assure the best results and to maintain the original quality built into the machine it is important that only Clark-Approved Parts be used when new parts are required.

IMPORTANT: Always furnish the distributor with the machine serial number when ordering parts.

Order through your nearest Clark Distributor, for THE MICHIGAN LINE.
Always give serial number of machine.
Furnish: Quantity, Part Number and Description.

WHEN PARTS ARE RECEIVED

Check immediately for quantity, correctness and condition.
Advise your Michigan Distributor of any error.
Claims for damages, during shipment, should be made to the carrier immediately.

INDEX MODEL 75III

A	Page
Accelerator Pedal and Linkage	11
Accelerator Rods	11
Accessories, Engine	1
Air Breather Check Valve, Torque Converter	13
Air Breather, Torque Converter	13
Air Cleaner Connections	9
Air Lines, Brake	17
Air Pressure Gauge	23, 25
Air Pressure Sender Unit	17
Air Reservoir	17
Ammeter	23, 25

B	
Back-Up Lamp Assembly	3
Battery Cables	1
Brake Air Lines	17
Breather, Torque Converter Air	13
Bucket and Boom Hydraulic System	21
Button, Starter	23, 25

C	
Cable, Battery	1
Cable, Choke	11
Cap, Radiator	8
Cartridge Kit, Transmission and Converter Filter	13
Cockpit and Inspection Plates	4, 5
Connections, Muffler, Tailpipe and Air Cleaner	9
Connections, Radiator	8
Counterweight	3
Cover Assembly, Front	7
Converter to Transmission Prop Shaft	14
Cradle Assembly	2

D	
Dash Lamp	23, 25
Diagram, Cockpit Wiring	26, 27
Diagram, Engine Wiring	28

E	Page
Element, Lighter	23, 25
Engine and Accessories and Support Parts	1
Engine Oil Pressure Gauge	23, 25
Engine Hourmeter	9
Engine Support Parts	1
Engine Temperature Gauge	23, 25
Engine Wiring Harness	1

F	
Fenders	7
Filter Assembly, Transmission and Converter Oil	13
Frame and Cradle Assembly	2
Front Cover Assembly	7
Fuel Lines	10
Fuse — .75 Amp	23, 25
Fuse — 20 Amp	23, 25
Fuse, Lighter	23, 25

G	
Gauge, Air Pressure	23, 25
Gauge, Engine Oil Pressure	23, 25
Gauge, Engine Temperature	23, 25
Gauge, Torque Converter Temperature	23, 25
Governor	17
Grille and Counterweight	3

H	
Hand Rails	7
Harness, Engine Wiring	1
Harness, Instrument Panel Wiring	23, 25
Head Lamp Assembly	7
Hood, Cover, Panel, Fender and Steps	7
Hourmeter, Engine	9
Hourmeter Pressure Switch	1
Hydraulic System — Bucket and Boom	21
Hydraulic System — Steering	19
Hydraulic System — Transmission and Torque Converter	13

I

	Page
Ignition Switch	23, 25
Inspection Plates, Cockpit	4, 5
Instrument Panel Assembly	23, 25
Instrument Wiring Harness	23, 25

K

Kit, Transmission and Converter Oil Filter Cartridge	13

L

Lamp Assembly, Back-Up	3
Lamp Assembly, Head	7
Lamp Assembly, Tail and Stop	3
Lamp, Dash	23, 25
Light Switch	23, 25
Lighter Element	23, 25
Lighter Fuse	23, 25
Lighter Receptacle	23, 25
Line, Fuel	10
Linkage, Accelerator Pedal	11

M

Michigan Name Plate	3
Muffler, Tailpipe and Air Cleaner Connections	9

P

Panels, Side	7
Pedal, Accelerator	11
Plate, Michigan Name	3
Plates, Cockpit Inspection	4, 5
Pressure Switch, Hourmeter	1
Pressure Switch, Voltage Regulator	1
Propeller Shaft Assembly	14

R

Radiator and Connections	8
Radiator Cap	8
Radiator Shroud	8
Rail, Hand	7
Regulator, Voltage	9
Reservoir, Air	17
Rods, Accelerator	11

S

	Page
Sender Unit, Air Pressure	17
Sender Unit, Engine Oil Pressure	1
Sender Unit, Engine Temperature	1
Sender Unit, Torque Converter Temperature	13
Shaft Assembly, Propeller	14
Shroud, Radiator	8
Side Panel	7
Starter Button	23, 25
Steering Hydraulic System	19
Steps	7
Stop Lamp Assembly	3
Supports, Engine	1
Switch, Hourmeter Pressure	1
Switch, Ignition	23, 25
Switch, Light	23, 25
Switch, Voltage Regulator Pressure	1

T

Tailpipe	9
Tailpipe Connections	9
Tail and Stop Lamp Assembly	3
Torque Converter Air Breather	13
Torque Converter Air Breather Check Valve	13
Torque Converter Temperature Gauge	23, 25
Transmission and Converter Oil Filter	13
Transmission and Torque Converter Hydraulic System	13

U

Unit, Air Pressure Sender	17
Unit, Engine Oil Pressure Sender	1
Unit, Engine Temperature Sender	1
Unit, Torque Converter Temperature Sender	13

V

Valve, Torque Converter Air Breather Check	13
Voltage Regulator	9

W

Wiring Diagram — Cockpit	26, 27
Wiring Diagram — Engine	28
Wiring Harness, Engine	1
Wiring Harness, Instrument Panel	23, 25

NOTES

ENGINE AND ACCESSORIES — WAUKESHA GAS

All orders for engine assembly or components thereof should be placed with the nearest Waukesha Motor Co. Distributor. Always give model, specifications and serial number of your engine. This data will be found on nameplate attached to the side of the engine.

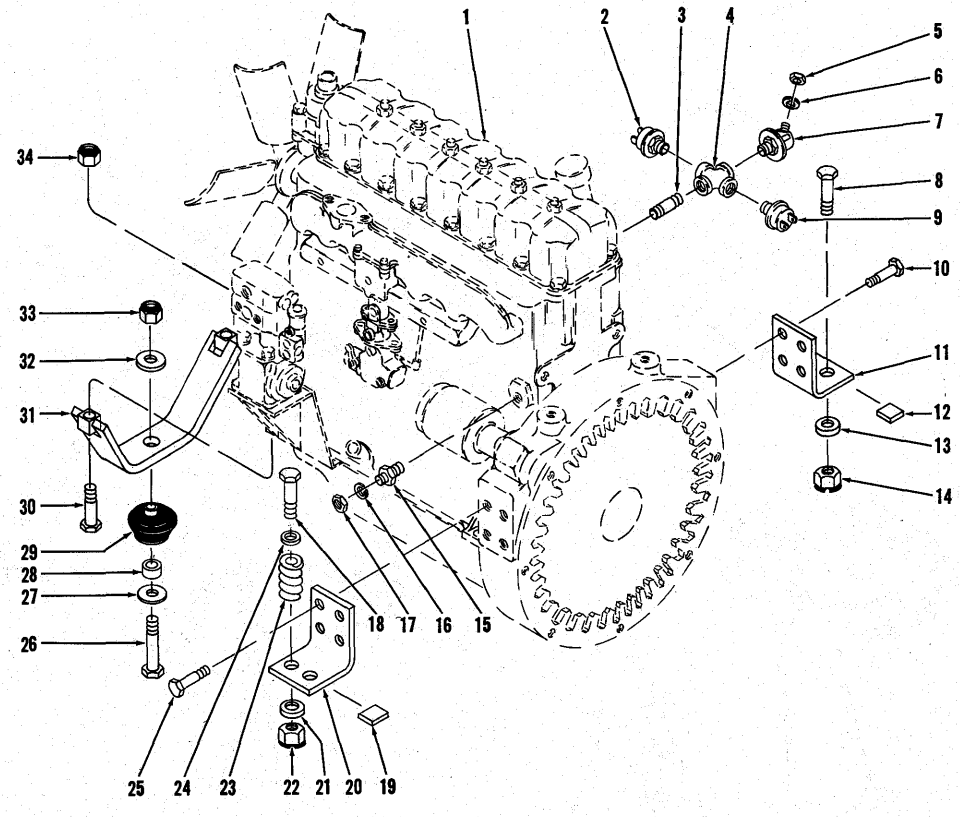

TS-6794-P

ENGINE ACCESSORIES AND SUPPORT PARTS

Item No.	Part No.	Description	No. Req'd.
1	———	ENGINE — See Waukesha Engine Parts Manual	—
2	636260	SWITCH, Hourmeter Pressure	1
3	5K-112	NIPPLE, Cross to Engine — Pipe	1
4	21F-1	CROSS, Connecting — Pipe	1
5	14D-10	NUT, Sender Unit	1
6	12E-10	LKWSHR, Sender Unit	1
7	940643	SENDER UNIT, Engine Oil Pressure	1
8	18C-836	BOLT, Support to Frame — L.H.	2
9	636260	SWITCH, Regulator Pressure	1
10	8C-824	BOLT, Support to Engine	4
11	572719	SUPPORT, Engine	1
12	518624	*BLOCK, Support Mounting — Welded to Frame Only	2
13	71D-08	BASE, Support to Frame Bolt	2
14	70D-08	NUT, Support to Frame Bolt	2
15	551323	SENDER UNIT, Engine Temperature	1
16	12E-10	LKWSHR, Sender Unit	1
17	14D-10	NUT, Sender Unit	1
18	18C-864	*BOLT, Support to Frame — R.H.	2
19	518624	*BLOCK, Support Mounting — Welded to Frame Only	2
20	572719	SUPPORT, Engine	1
21	71D-08	BASE, Support to Frame Bolt	2
22	70D-08	NUT, Support to Frame Bolt	2
23	570935	*SPRING, Engine Mounting — R.H. Only	2
24	616792	*WASHER, Engine Mounting — R.H. Only	2
25	8C-824	BOLT, Support to Engine	4
26	18C-856	BOLT, Engine Mount to Frame	1
27	1520449	WASHER, Engine Mount — Lower	1
28	567822	SLEEVE, Engine Mount	1
29	567415	MOUNT, Engine — Rubber	1
30	18C-848	BOLT, Mount to Engine	2
31	567703	MOUNT, Engine — Rear	1
32	567731	WASHER, Engine Mount — Upper	1
33	18D-08	NUT, Engine Mount to Frame Bolt	1
34	18D-08	NUT, Mount to Engine Bolt	2
35	1520607	†HARNESS, Engine Wiring	1
36	1520606	†CABLE, Battery to Solenoid	1
37	553466	†CABLE, Solenoid to Starter	1

*NOTE: Items 12, 18, 19, 23 and 24 were installed on Machine Serial 6CA101 thru 6CA116 only. For Machine Serial 6CA117 and thereafter, item 18 should be 18C-836 the same as item 8.

†Not Illustrated

WHEN ORDERING PARTS, ALWAYS STATE MODEL AND SERIAL NO. OF MACHINE

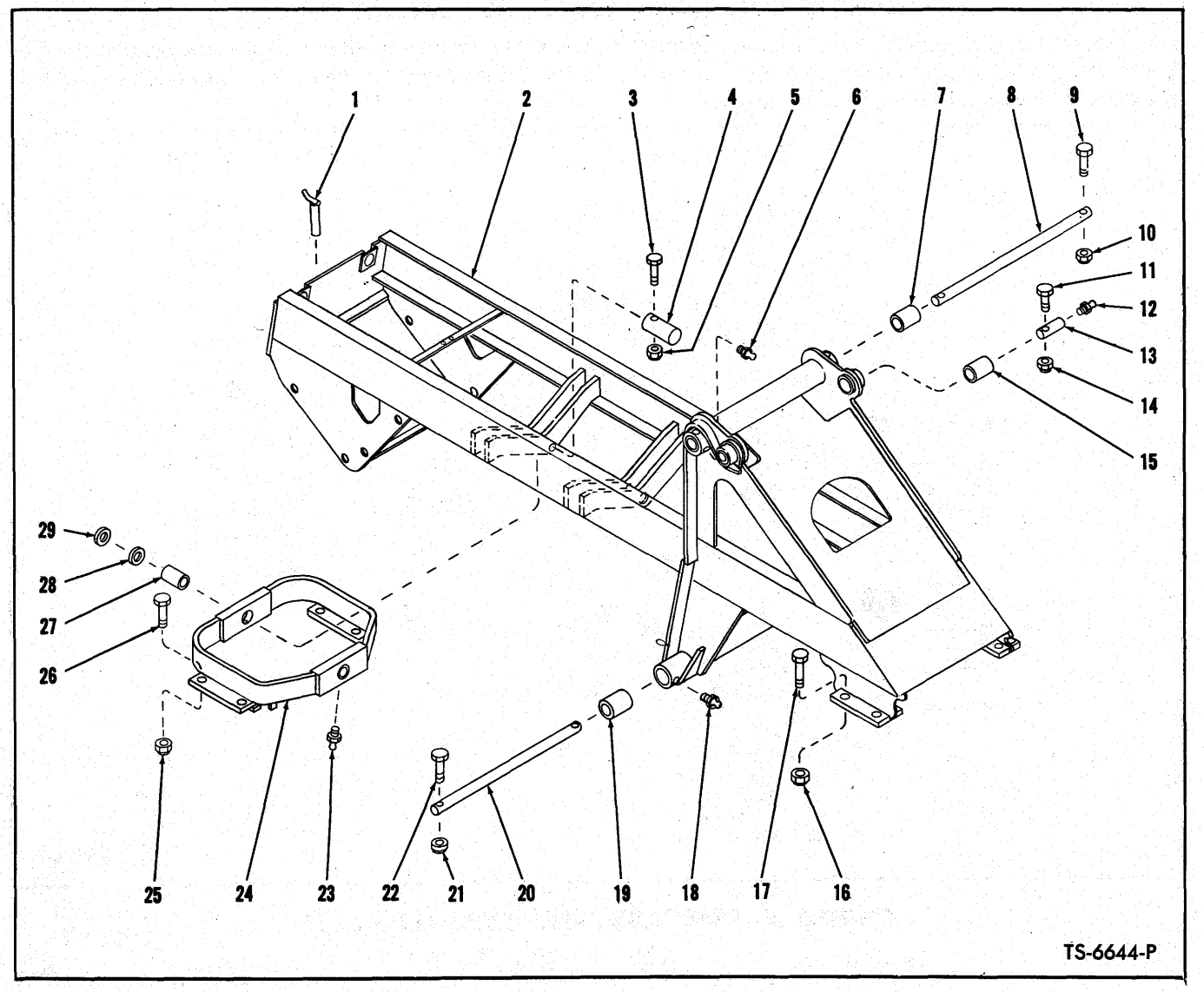

FRAME AND CRADLE ASSEMBLY

Item No.	Part No.	Description	No. Req'd.
1	549988	PIN ASSY, Drawbar	1
2	572749	FRAME ASSY (Inc. 7, 15, 19)	1
3	18C-856	BOLT, Pin Retaining	2
4	536100	PIN, Cradle Pivot	2
5	18D-08	NUT, Pin Retaining	2
6	10H-25	FITTING, Upper Pivot Tube Grease	2
7	564126	BUSHING, Upper Pivot Tube	2
8	571022	SHAFT, Boom Pivot — Upper	1
9	18C-880	BOLT, Pivot Shaft Retaining	2
10	18D-08	NUT, Pivot Shaft Retaining	2
11	18C-880	BOLT, Pivot Pin Retaining	2
12	10H-25	FITTING, Pivot Pin Grease	2
13	556960	PIN, Bucket Cylinder Pivot	2
14	18D-08	NUT, Pivot Pin Retaining	2
15	585007	BUSHING, Upper Pivot	2
16	68D-12	NUT, Front Axle to Frame	8
17	24C-12144	BOLT, Front Axle to Frame	8
18	10H-25	FITTING, Lower Pivot Tube Grease	2
19	564129	BUSHING, Lower Pivot Tube	2
20	587960	SHAFT, Cylinder Pivot	1
21	18D-08	NUT, Pivot Shaft Retaining	2
22	18C-872	BOLT, Pivot Shaft Retaining	2
23	10H-25	FITTING, Cradle Pin Grease	2
24	564137	CRADLE ASSY, Rear Axle (Inc. 27)	1
25	68D-12	NUT, Rear Axle to Cradle	8
26	18C-1252	BOLT, Rear Axle to Cradle	8
27	538585	BUSHING, Cradle Pivot	2
28	551348	‡SHIM, Cradle to Frame	—
29	551347	‡SHIM, Cradle to Frame	—

‡As Required

WHEN ORDERING PARTS, ALWAYS STATE MODEL AND SERIAL NO. OF MACHINE

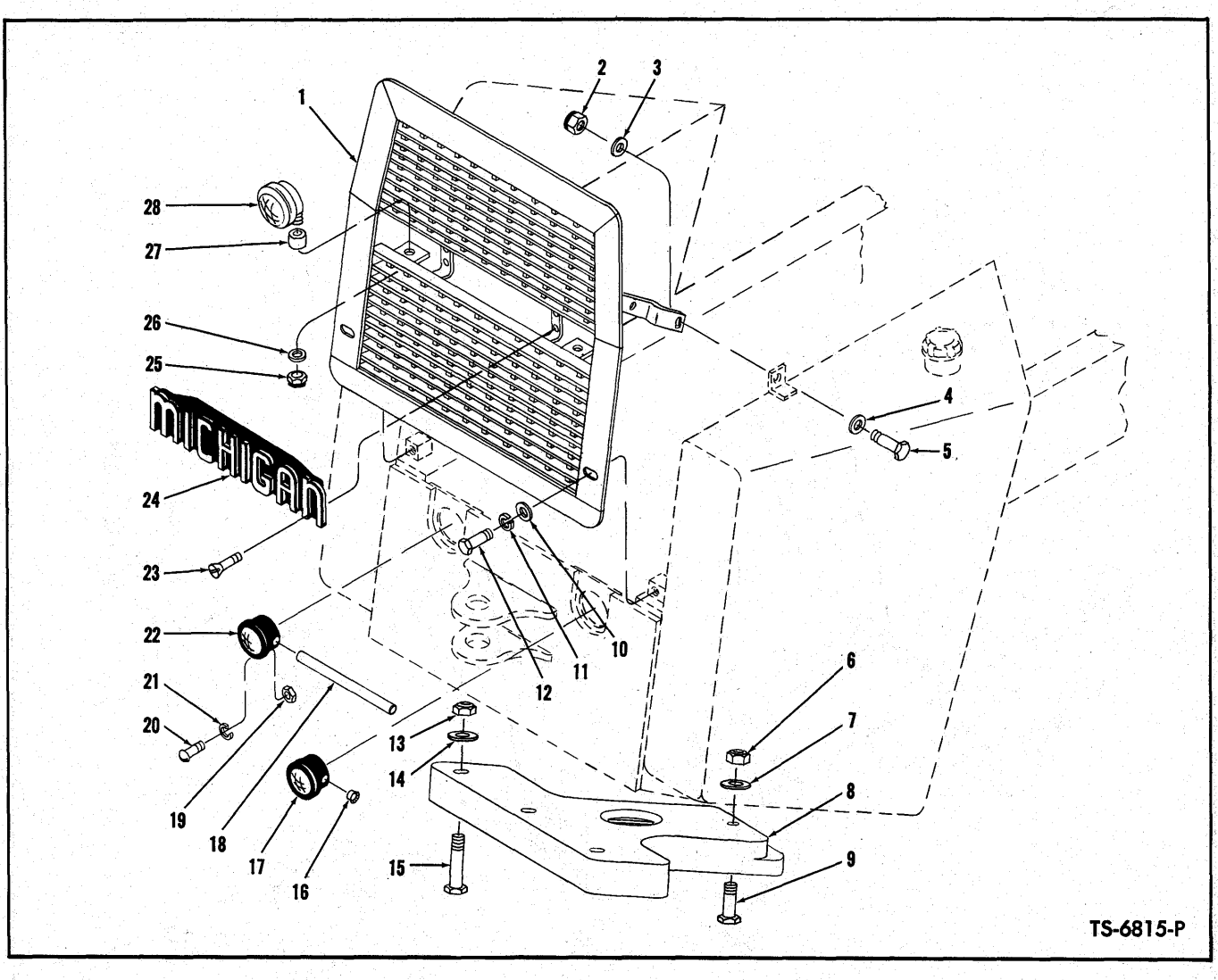

GRILLE AND COUNTERWEIGHT

Item No.	Part No.	Description	No. Req'd.
1	563881	GRILLE ASSY, Rear	1
2	18D-08	NUT, Grille to Tank Bolt	2
3	619029	WASHER, Grille to Tank Bolt	2
4	619029	WASHER, Grille to Tank Bolt	2
5	18C-824	BOLT, Grille to Tank	2
6	18D-12	NUT, Counterweight to Frame Bolt	1
7	590499	WASHER, Counterweight to Frame Bolt	1
8	1520287	COUNTERWEIGHT	1
9	24C-1296	BOLT, Counterweight to Frame	1
10	619029	WASHER, Grille to Frame Bolt	2
11	4E-08	LKWSHR, Grille to Frame Bolt	2
12	18C-816	BOLT, Grille to Frame	2
13	18D-12	NUT, Counterweight to Frame Bolt	2
14	590499	WASHER, Counterweight to Frame Bolt	2
15	24C-12168	BOLT, Counterweight to Frame	2
16	1010736	PLUG, Lamp — R.H. Only	1
17	562641	LAMP ASSY, Tail & Stop — R.H. (Inc. 17A)	1
17A	1103680	†LENS, Tail Lamp	1
17B	942746	†BULB, Tail & Stop Lamp	1
18	566849	CONDUIT, Tail & Stop Lamp Wire Protector	1
19	14D-10	NUT, Lamp Mounting Screw	6
20	2G-1012	SCREW, Lamp Mounting	6
21	17E-10	LKWSHR, Lamp Mounting Screw	6
22	562641	LAMP ASSY, Tail & Stop — L.H. (Inc. 22A)	1
22A	1103680	†LENS, Tail Lamp	1
22B	942746	†BULB, Tail & Stop Lamp	1
23	44G-418	SCREW, Name Plate to Grille	4
24	564011	NAME PLATE, Michigan	1
25	17D-6	NUT, Back — Up Lamp Mounting	2
26	584092	WASHER, Back — Up Lamp Mounting	2
27	509320	SPACER, Back — Up Lamp	2
28	547529	LAMP ASSY, Back-Up (Inc. 29)	2
29	944907	†SEALED UNIT, Back-Up Lamp	2

†Not Illustrated

WHEN ORDERING PARTS, ALWAYS STATE MODEL AND SERIAL NO. OF MACHINE

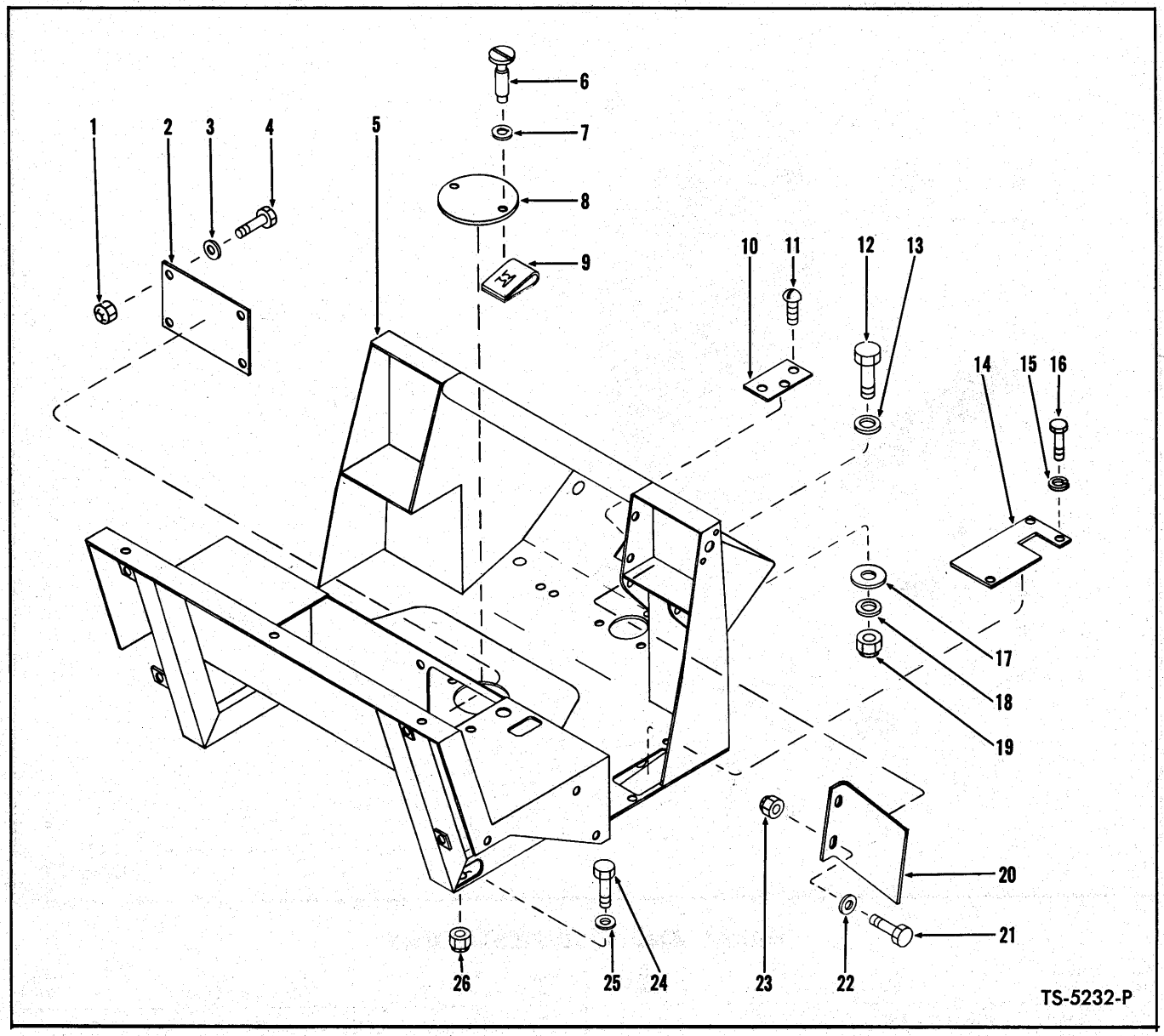

COCKPIT AND INSPECTION PLATES

For Serial 6CA101 thru 6CA106

Item No.	Part No.	Description	No. Req'd.
1	18D-04	NUT, Cover Plate Mounting	4
2	557057	PLATE, Heater Cover	1
3	664421	WASHER, Cover Plate Mounting	4
4	18C-412	BOLT, Cover Plate Mounting	4
5	588021	COCKPIT	1
6	568829	SCREW, Cover Mounting	2
7	1612583	WASHER, Cover Mounting	2
8	568828	COVER, Transmission Check (Inc. 6, 7)	1
9	568830	NUT, Cover Mounting	2
10	566649	PLATE, Steer Cover	1
11	18G-806	SCREW, Cover Plate Mounting	3
12	18C-832	BOLT, Cockpit Mounting	1
13	619029	WASHER, Cockpit Mounting	1
14	569912	PLATE, Valve Levers Cover	1
15	4E-06	LKWSHR, Cover Plate Mounting	3
16	18C-612	BOLT, Cover Plate Mounting	3
17	616798	‡SPACER, Cockpit Mounting	—
18	619029	WASHER, Cockpit Mounting	1
19	18D-08	NUT, Cockpit Mounting	1
20	589991	PLATE, Panel — R.H.	1
21	18C-616	BOLT, Plate Mounting	2
22	619024	WASHER, Plate Mounting	2
23	18D-06	NUT, Plate Mounting	2
24	18C-824	BOLT, Cockpit Mounting	4
25	619029	WASHER, Cockpit Mounting	8
26	18D-08	NUT, Cockpit Mounting	4

‡As Required

WHEN ORDERING PARTS, ALWAYS STATE MODEL AND SERIAL NO. OF MACHINE

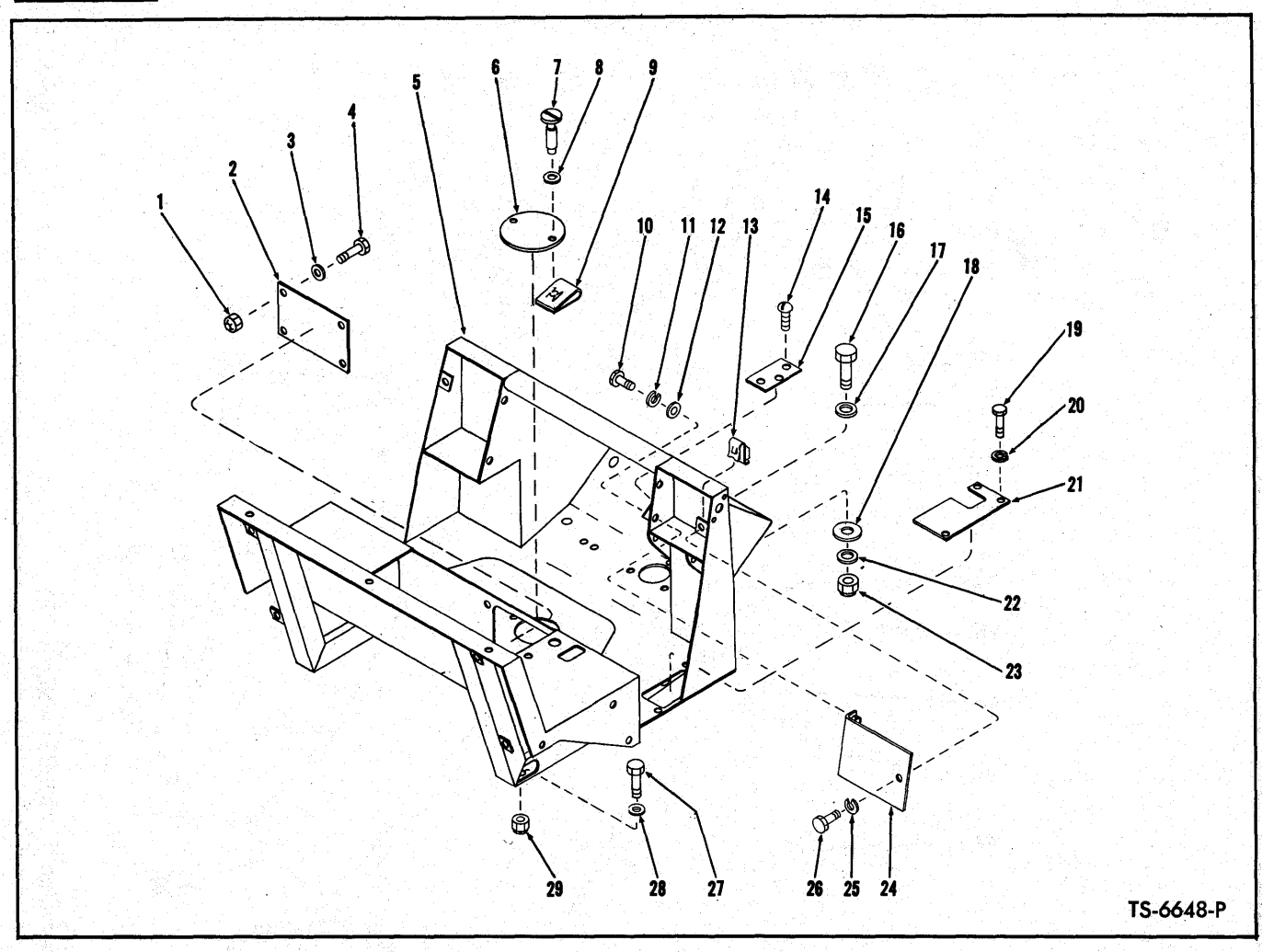

COCKPIT AND INSPECTION PLATES

For Serial 6CA107 and Thereafter

Item No.	Part No.	Description	No. Req'd.
1	18D-04	NUT, Cover Plate Mounting	4
2	557057	PLATE, Heater Cover	1
3	664421	WASHER, Cover Plate Mounting	4
4	18C-412	BOLT, Cover Plate Mounting	4
5	588021	COCKPIT	1
6	568828	COVER, Transmission Check (Inc. 7, 8)	1
7	568829	SCREW, Cover Mounting	2
8	1612583	WASHER, Cover Mounting	2
9	568830	NUT, Cover Mounting	2
10	17C-616	BOLT, Plate Mounting	2
11	4E-06	LKWSHR, Plate Mounting	2
12	656672	WASHER, Plate Mounting	2
13	572729	NUT, Plate Mounting	1
14	18G-806	SCREW, Cover Plate Mounting	3
15	566649	PLATE, Steer Cover	1
16	18C-832	BOLT, Cockpit Mounting	1
17	619029	WASHER, Cockpit Mounting	1
18	616798	‡SPACER, Cockpit Mounting	—
19	17C-612	BOLT, Cover Plate Mounting	3
20	4E-06	LKWSHR, Cover Plate Mounting	3
21	569912	PLATE, Valve Levers Mounting	1
22	619029	WASHER, Cockpit Mounting	1
23	18D-08	NUT, Cockpit Mounting	1
24	574026	PLATE, Panel — R.H.	1
25	4E-06	LKWSHR, Plate Mounting	1
26	17C-616	BOLT, Plate Mounting	1
27	18C-828	BOLT, Cockpit Mounting	4
28	619029	WASHER, Cockpit Mounting	8
29	18D-08	NUT, Cockpit Mounting	4

‡As Required

WHEN ORDERING PARTS, ALWAYS STATE MODEL AND SERIAL NO. OF MACHINE

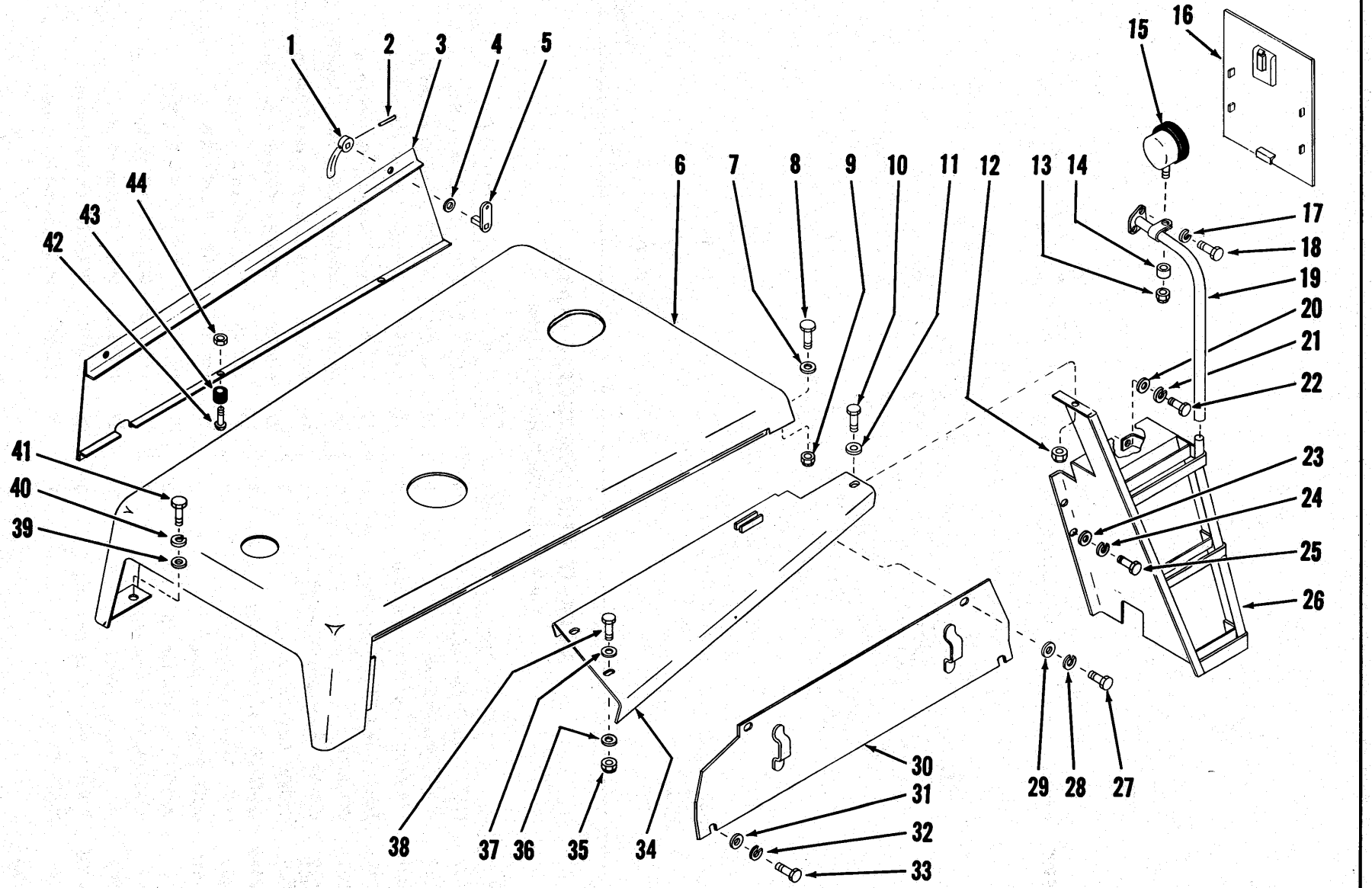

HOOD, COVER, PANELS, FENDERS AND STEPS

TS-6804-P

HOOD, COVER, PANELS, FENDERS AND STEPS

Item No.	Part No.	Description	No. Req'd.
1	142396	KIT, Handle (Inc. 2, 4, 5)	4
2	730432	PIN, Handle Roll	4
3		*PANEL, Side (Inc. 1, 2, 4, 5, 42, 43, 44)*	
3A	571646	LEFT HAND	1
3B	571645	†RIGHT HAND	1
4	———	§SPACER, Shaft	—
5	———	§SHAFT, Handle	—
6	572750	HOOD	1
7	619029	WASHER, Hood to Cockpit	2
8	18C-820	BOLT, Hood to Cockpit	2
9	18D-08	NUT, Hood to Cockpit	2
10	18C-824	BOLT, Fender to Step	2
11	619029	WASHER, Fender to Step	2
12	18D-08	NUT, Fender to Step	2
13	17D-6	NUT, Head Lamp Mounting	2
14	509320	SPACER, Head Lamp Mounting	2
15	547529	LAMP ASSY, Head (Inc. 15A)	2
15A	944907	†SEALED UNIT, Head Lamp	2
16	566764	COVER ASSY, Front	1
17	4E-06	LKWSHR, Hand Rail to Cockpit	4
18	17C-620	BOLT, Hand Rail to Cockpit	4
19		*HAND RAIL*	
19A	563980	RIGHT HAND	1
19B	563981	†LEFT HAND	1
19C	563994	CLAMP, Head Lamp to Hand Rail	2
20	619029	WASHER, Step to Frame	2
21	4E-08	LKWSHR, Step to Frame	2
22	18C-816	BOLT, Step to Frame	2
23	619029	WASHER, Step to Frame	4
24	4E-08	LKWSHR, Step to Frame	4
25	18C-816	BOLT, Step to Frame	4
26		*STEP ASSEMBLY*	
26A	556691	RIGHT HAND	1
26B	556692	†LEFT HAND	1
27	18C-812	BOLT, Panel to Fender	4
28	4E-08	LKWSHR, Panel to Fender	4
29	619029	WASHER, Panel to Fender	4
30		*SIDE PANEL*	
30A	563928	RIGHT HAND	1
30B	563929	†LEFT HAND	1
31	619029	WASHER, Panel to Frame	4
32	4E-08	LKWSHR, Panel to Frame	4
33	18C-812	BOLT, Panel to Frame	4
34		*FENDER*	
34A	557847	RIGHT HAND	1
34B	557848	†LEFT HAND	1
35	18D-08	NUT, Fender to Tank	4
36	619029	WASHER, Fender to Tank	4
37	619029	WASHER, Fender to Tank	4
38	18C-824	BOLT, Fender to Tank	4
39	619029	WASHER, Hood to Tank	2
40	4E-08	LKWSHR, Hood to Tank	2
41	18C-816	BOLT, Hood to Tank	2
42	3G-1008	SCREW, Side Panel Mounting	4
43	551433	BUMPER, Side Panel Mounting	4
44	12D-10	NUT, Side Panel Mounting	4

†Not Illustrated
‡As Required

WHEN ORDERING PARTS, ALWAYS STATE MODEL AND SERIAL NO. OF MACHINE

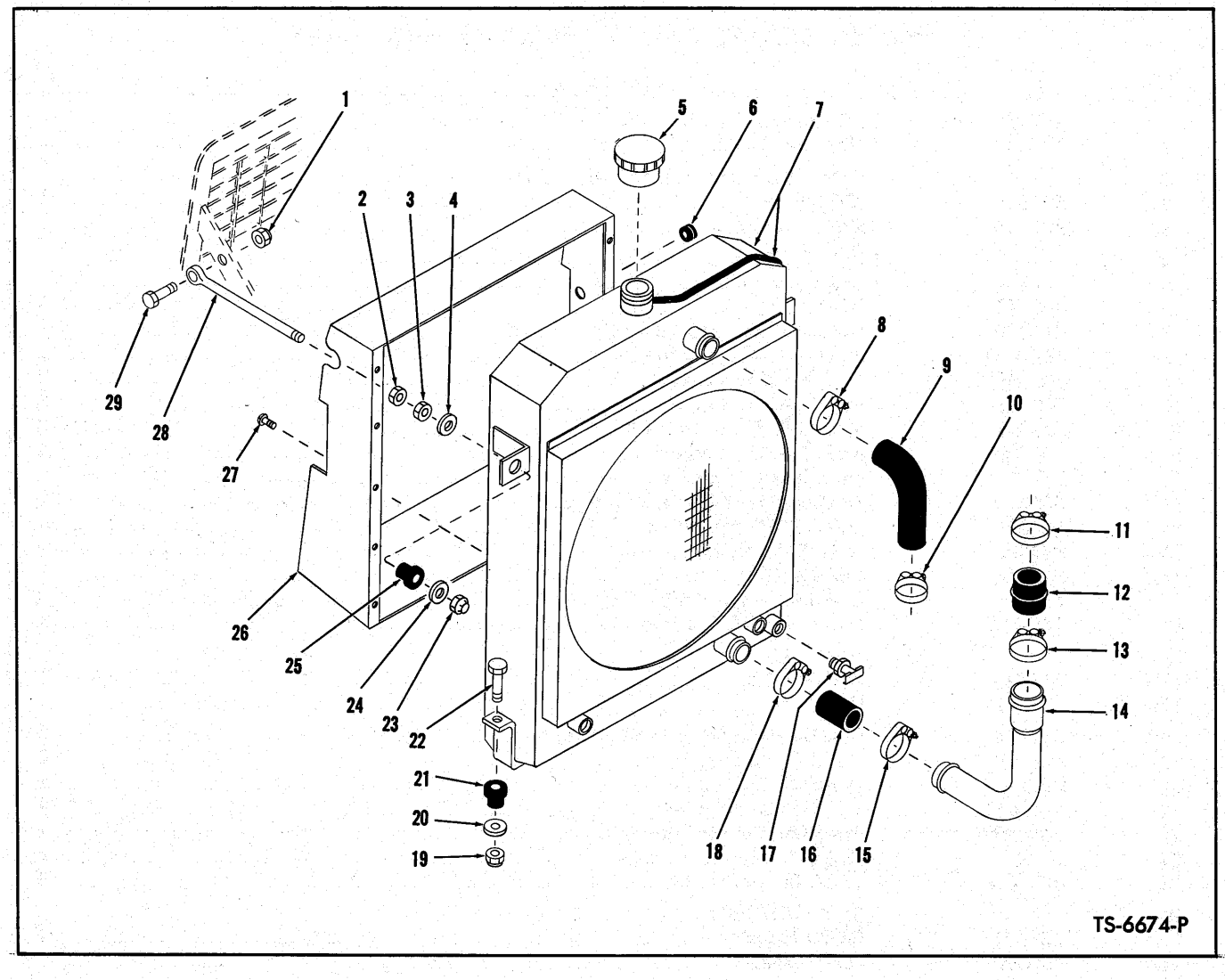

RADIATOR AND CONNECTIONS

Item No.	Part No.	Description	No. Req'd.
1	18D-08	NUT, Rod to Grille Bolt	2
2	8D-08	NUT, Rod Jam	2
3	8D-08	NUT, Rod Jam	2
4	584502	WASHER, Rod Mounting	2
5	351495	CAP, Radiator	1
6	585950	GROMMET, Radiator Shroud	1
7	571273	RADIATOR ASSY (Inc. 5, 7A)	1
7A	945460	HOSE, Overflow	1
8	540108	CLAMP, Hose	1
9	572785	HOSE, Radiator (Upper)	1
10	540108	CLAMP, Hose	1
11	540104	CLAMP, Hose	1
12	572798	HOSE, Tube to Engine	1
13	540104	CLAMP, Hose	1
14	572786	TUBE, Radiator to Engine	1
15	540128	CLAMP, Hose	1
16	535332	HOSE, Tube to Radiator	1
17	73F-2	DRAIN COCK, Radiator	1
18	540128	CLAMP, Hose	1
19	18D-08	NUT, Radiator to Frame Bolt	2
20	584502	WASHER, Radiator to Frame	2
21	584501	MOUNT, Radiator to Frame	2
22	18C-836	BOLT, Radiator to Frame	2
23	18D-08	NUT, Rod Mounting	2
24	584502	WASHER, Rod Mounting	2
25	584501	MOUNT, Rod to Radiator	2
26	572802	SHROUD, Radiator	1
27	18G-806	SCREW, Shroud to Radiator	10
28	570499	ROD, Radiator to Grille	2
29	18C-828	BOLT, Rod to Grille	2

WHEN ORDERING PARTS, ALWAYS STATE MODEL AND SERIAL NO. OF MACHINE

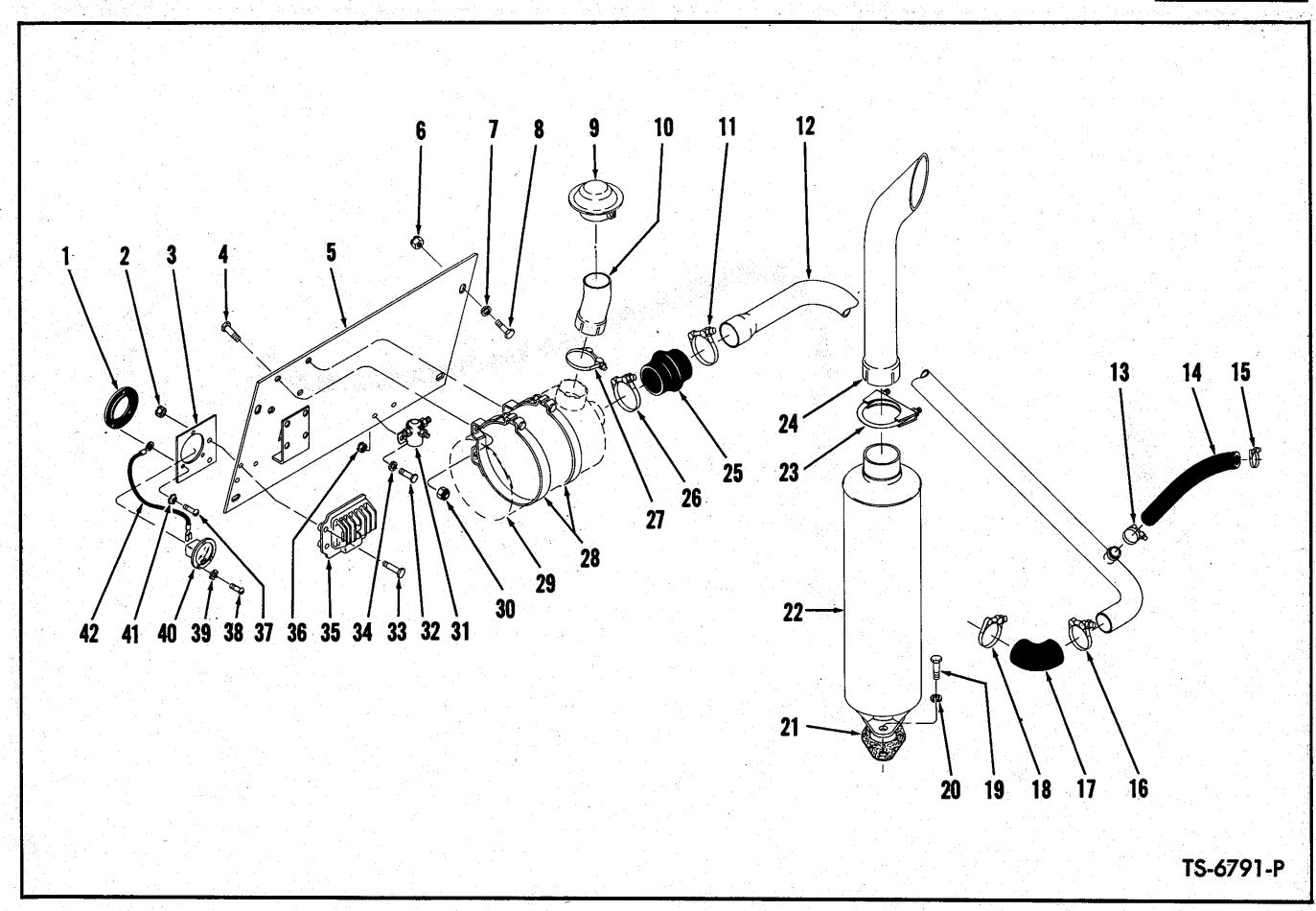

MUFFLER, TAIL PIPE AND AIR CLEANER CONNECTIONS

Item No.	Part No.	Description	No. Req'd.
1	551251	DAMPENER, Hourmeter Vibration	1
2	18D-04	NUT, Regulator Mounting Bolt	3
3	569414	BRACKET, Hourmeter Mounting	1
4	18C-616	BOLT, Mounting Band to Bracket	4
5	571389	BRACKET, Air Cleaner Mounting	1
6	18D-08	NUT, Bracket to Cockpit Bolt	4
7	619029	WASHER, Bracket to Cockpit Bolt	4
8	18C-824	BOLT, Bracket to Cockpit	4
9	568391	CAP, Air Inlet	1
10	571386	EXTENSION, Air Inlet	1
11	539042	CLAMP, Hose	1
12	1520427	TUBE, Air Intake	1
13	540103	CLAMP, Hose	1
14	1520434	HOSE, Tube to Compressor	1
15	540103	CLAMP, Hose	1
16	879717	CLAMP, Hose	1
17	571880	HOSE, Tube to Carburetor	1
18	879717	CLAMP, Hose	1
19	17C-820	BOLT, Muffler to Engine	2
20	4E-08	LKWSHR, Muffler to Engine Bolt	2
21	422079	GASKET, Muffler to Engine	1
22	572696	MUFFLER	1
23	507068	CLAMP, Tail Pipe to Muffler	1
24	543576	TAIL PIPE	1
25	515424	HOSE, Tube to Air Cleaner	1
26	539042	CLAMP, Hose	1
27	543531	CLAMP, Extension to Air Cleaner	1
28	420945	BAND, Air Cleaner Mounting	2
29	———	AIR CLEANER ASSY — See P.M. 2083	—
30	18D-06	NUT, Mounting Band to Bracket Bolt	4
31	551530	SOLENOID, Starter — Furnished With Engine	1
32	18C-412	BOLT, Solenoid to Bracket	2
33	18C-424	BOLT, Regulator to Bracket	3
34	619018	WASHER, Solenoid to Bracket Bolt	2
35	1621888	VOLTAGE REGULATOR	1
36	18D-04	NUT, Solenoid to Bracket Bolt	2
37	3G-608	SCREW, Dampener to Bracket	3
38	3G-608	SCREW, Hourmeter to Dampener	3
39	12E-6	LKWSHR, Hourmeter to Dampener Screw	3
40	886619	HOURMETER KIT (Inc. 38, 39)	1
41	12E-6	LKWSHR, Dampener to Bracket Screw	3
42	558960	WIRE, Hourmeter Ground	1

WHEN ORDERING PARTS, ALWAYS STATE MODEL AND SERIAL NO. OF MACHINE

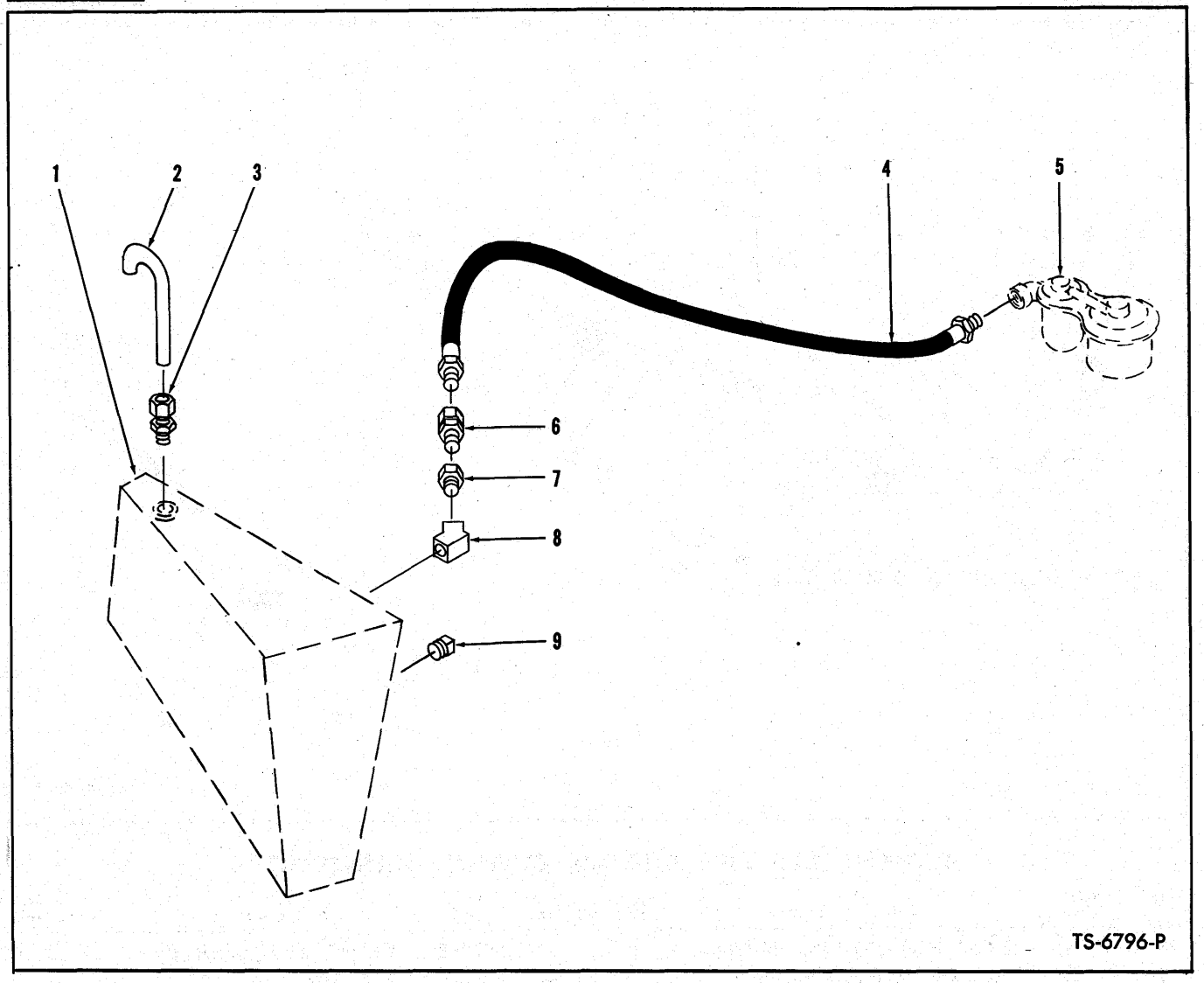

FUEL LINES

Item No.	Part No.	Description	No. Req'd.
1	———	FUEL TANK ASSY — See PM 2083	—
2	567847	TUBE, Breather	1
3	49F-3	CONNECTOR, Tube to Tank	1
4	1521606	HOSE, Tank to Pump	1
5	———	FUEL PUMP ASSY — See Waukesha Engine Parts Manual	—
6	36F-1	ADAPTER UNION, Bushing to Hose	1
7	19F-4	BUSHING, Tank Reducing	1
8	82F-3	ELBOW, Hose to Tank	1
9	13F-04	PLUG, Tank Pipe	1

WHEN ORDERING PARTS, ALWAYS STATE MODEL AND SERIAL NO. OF MACHINE

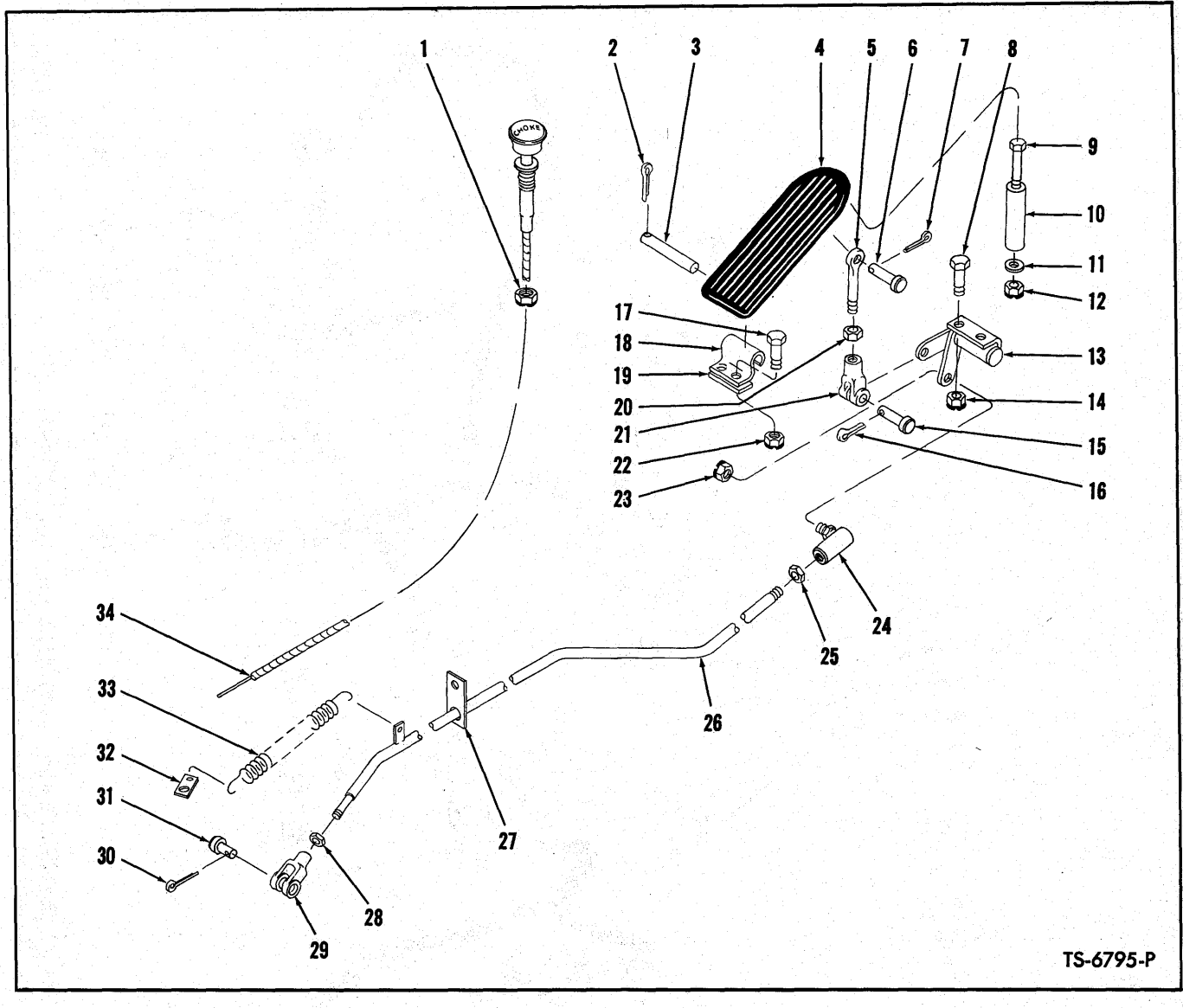

ACCELERATOR PEDAL AND LINKAGE

Item No.	Part No.	Description	No. Req'd.
1	66D-06	NUT, Cable Mounting	1
2	1F-316	COTTER, Pivot Pin	1
3	623762	PIN, Pedal Pivot	1
4	623829	PEDAL, Accelerator	1
5	550619	ROD, Pedal to Clevis	1
6	4F-04051	PIN, Rod to Pedal	1
7	1F-207	COTTER, Pedal Pin	1
8	18C-412	BOLT, Bellcrank to Floorboard	2
9	18C-448	BOLT, Pedal Stop to Floorboard	1
10	551016	STOP, Pedal	1
11	774337	WASHER, Pedal Stop Bolt	1
12	18D-04	NUT, Pedal Stop Bolt	1
13	572174	BELLCRANK	1
14	18D-04	NUT, Bellcrank Bolt	2
15	4F-04051	PIN, Clevis to Bellcrank	1
16	1F-216	COTTER, Clevis Pin	1
17	18C-416	BOLT, Bracket to Floorboard	2
18	623760	BRACKET, Pedal Pivot	1
19	572556	SPACER, Bracket to Floorboard	1
20	8D-04	NUT, Clevis Jam	1
21	2J-4200	CLEVIS, Rod to Bellcrank	1
22	18D-04	NUT, Bracket Bolt	2
23	18D-05	NUT, Ball Joint to Bellcrank	1
24	1301361	BALL JOINT	1
25	8D-05	NUT, Ball Joint Jam	1
26	1520468	ROD ASSY, Accelerator (Inc. 24, 25, 27, 28, 29)	1
27	1520450	FLAT, Rod Guide — Rectangular	1
28	8D-04	NUT, Clevis Jam	1
29	2J-4200	CLEVIS	1
30	1F-216	COTTER, Clevis Pin	1
31	2F-04051	PIN, Clevis to Carburetor	1
32	545568	ANCHOR, Spring	1
33	551090	SPRING	1
34	7H-17	CABLE, Choke	1

WHEN ORDERING PARTS, ALWAYS STATE MODEL AND SERIAL NO. OF MACHINE

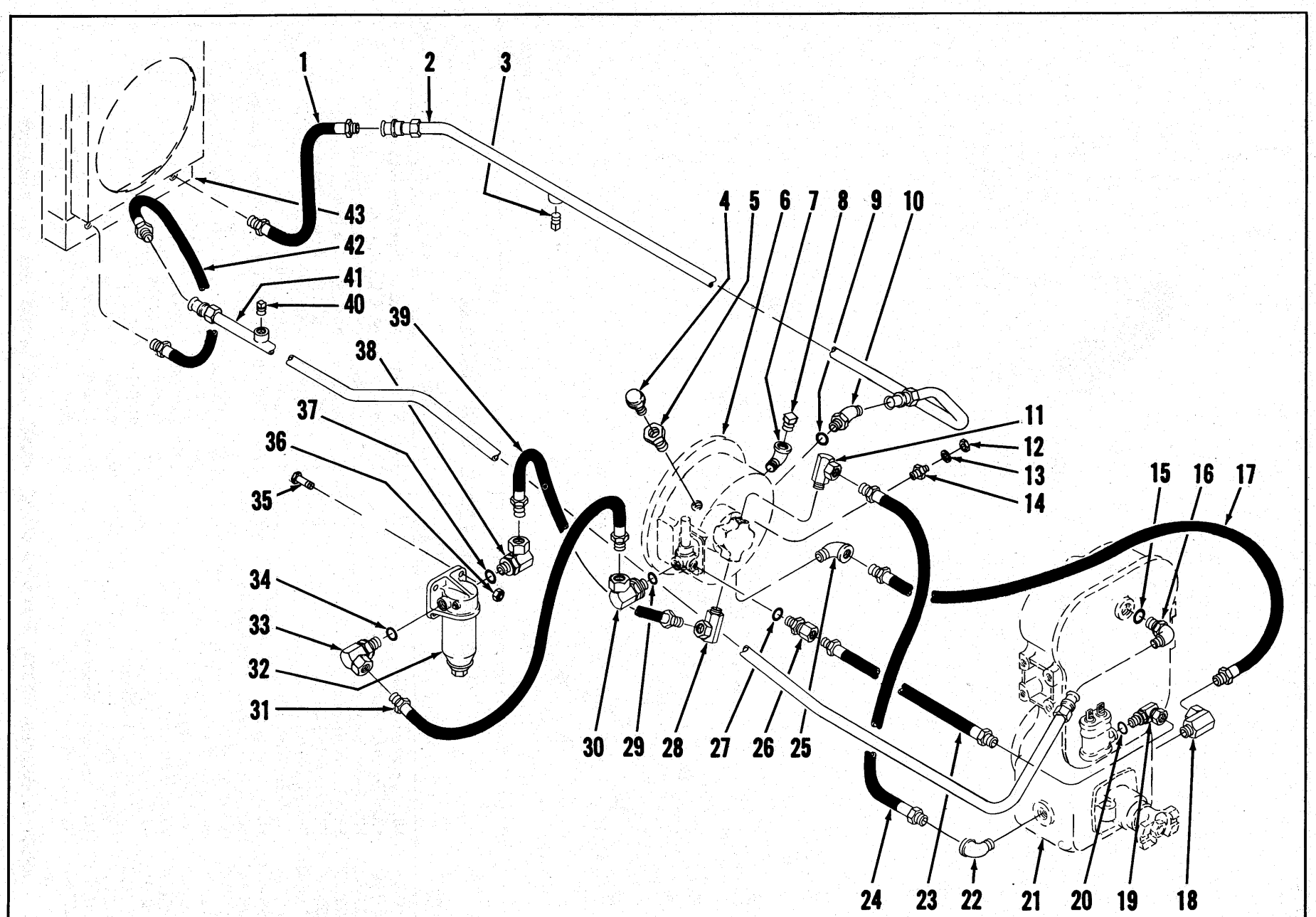

HYDRAULIC SYSTEM — TRANSMISSION AND TORQUE CONVERTER

TS-6800-P

HYDRAULIC SYSTEM — TRANSMISSION AND TORQUE CONVERTER

Item No.	Part No.	Description	No. Req'd.
1	563465	HOSE, Radiator to Cooler Line	1
2	571412	LINE, Radiator to Converter — Cooler (Inc. 3)	1
3	40K-04	PLUG, Cooler Line	1
4	211433	BREATHER, Converter Air	1
5	227265	VALVE, Air Breather Check	1
6	———	CONVERTER — See P.M. 2083	—
7	25F-6	ELBOW, Converter Fill	1
8	13F-16	PLUG, Converter Fill — Furnished With Converter	1
9	91F-8	"O" RING, Elbow	1
10	18K-8	ELBOW, Line to Converter (Inc. 9)	1
11	31F-6	ADAPTER UNION, Hose to Converter Pump	1
12	14D-10	NUT, Sender Unit	1
13	12E-10	LKWSHR, Sender Unit	1
14	551323	SENDER UNIT, Converter Temperature	1
15	91F-8	"O" RING, Elbow	1
16	17K-8	ELBOW, Cooler Line to Transmission (Inc. 15)	1
17	543280	HOSE, Converter Drain	1
18	31F-6	ADAPTER UNION, Drain Hose to Transmission	1
19	362653	ELBOW, Hose to Transmission (Inc. 20)	1
20	91F-6	"O" RING, Elbow	1
21	———	TRANSMISSION — See P.M. 2083	—
22	26F-6	ELBOW, Hose to Transmission	1
23	712699	HOSE, Converter to Transmission	1
24	589367	HOSE, Converter to Transmission	1
25	26F-6	ELBOW, Drain Hose to Converter	1
26	690279	CONNECTOR, Hose to Converter Valve (Inc. 27)	1
27	91F-6	"O" RING, Connector	1
28	31F-5	ADAPTER UNION, Hose to Converter Pump	1
29	91F-8	"O" RING, Elbow	1
30	526676	ELBOW, Hose to Converter Valve (Inc. 30)	1
31	546810	HOSE, Filter to Valve	1
32	228190	FILTER, Converter & Transmission (Inc. 32A)	1
32A	215502	†CARTRIDGE KIT, Filter	1
33	526676	ELBOW, Hose to Filter (Inc. 34)	1
34	91F-8	"O" RING, Elbow	1
35	18C-620	BOLT, Filter Mounting	4
36	66D-06	NUT, Filter Mounting Bolt	4
37	91F-8	"O" RING, Elbow	1
38	526676	ELBOW, Hose to Filter	1
39	538090	HOSE, Filter to Pump	1
40	40K-04	PLUG, Cooler Line	1
41	571523	LINE, Transmission to Radiator — Cooler (Inc. 40)	1
42	563465	HOSE, Radiator to Cooler Line	1
43	———	RADIATOR — See P.M. 2083	—

†Not Illustrated

WHEN ORDERING PARTS, ALWAYS STATE MODEL AND SERIAL NO. OF MACHINE

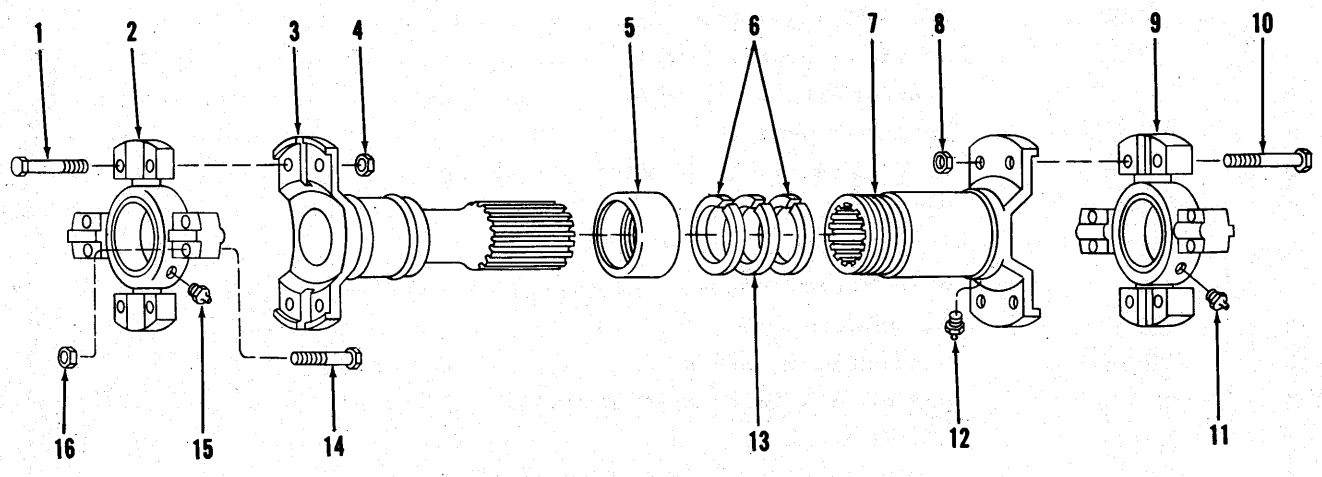

TS-1138-P

PROPELLER SHAFT ASSEMBLY — CONVERTER TO TRANSMISSION

Item No.	Part No.	Description	No. Req'd.
A	574386	PROPELLER SHAFT ASSY (Inc. 1 thru 16)	1
1	695808	BOLT, Spider & Bearing to Tube	4
2	944866	SPIDER & BEARING ASSY (Inc. 2A, 15)	1
2A	944863	†SEAL, Spider & Bearing Grease	4
3	946288	STUB END	1
4	8D-05	NUT, Spider & Bearing to Stud End	4
5	940654	RETAINER, Felt	1
6	940653	WASHER, Felt Retainer	2
7	942658	SLIP YOKE (Inc. 12)	1
8	8D-05	NUT, Spider & Bearing to Slip Yoke	4
9	944866	SPIDER & BEARING ASSY (Inc. 9A, 11)	1
9A	944863	†SEAL, Spider & Bearing Grease	4
10	695808	BOLT, Spider & Bearing to Slip Yoke	4
11	10H-35	FITTING, Spider & Bearing Grease	1
12	10H-25	FITTING, Slip Yoke Grease	1
13	940081	WASHER, Felt	1
14	~~945256~~ 947391	BOLT, Spider & Bearing SPG 2144	8
15	10H-35	FITTING, Spider & Bearing Grease	1
16	18D-05	NUT, Spider & Bearing Attaching	8

†Not Illustrated

WHEN ORDERING PARTS, ALWAYS STATE MODEL AND SERIAL NO. OF MACHINE

NOTES

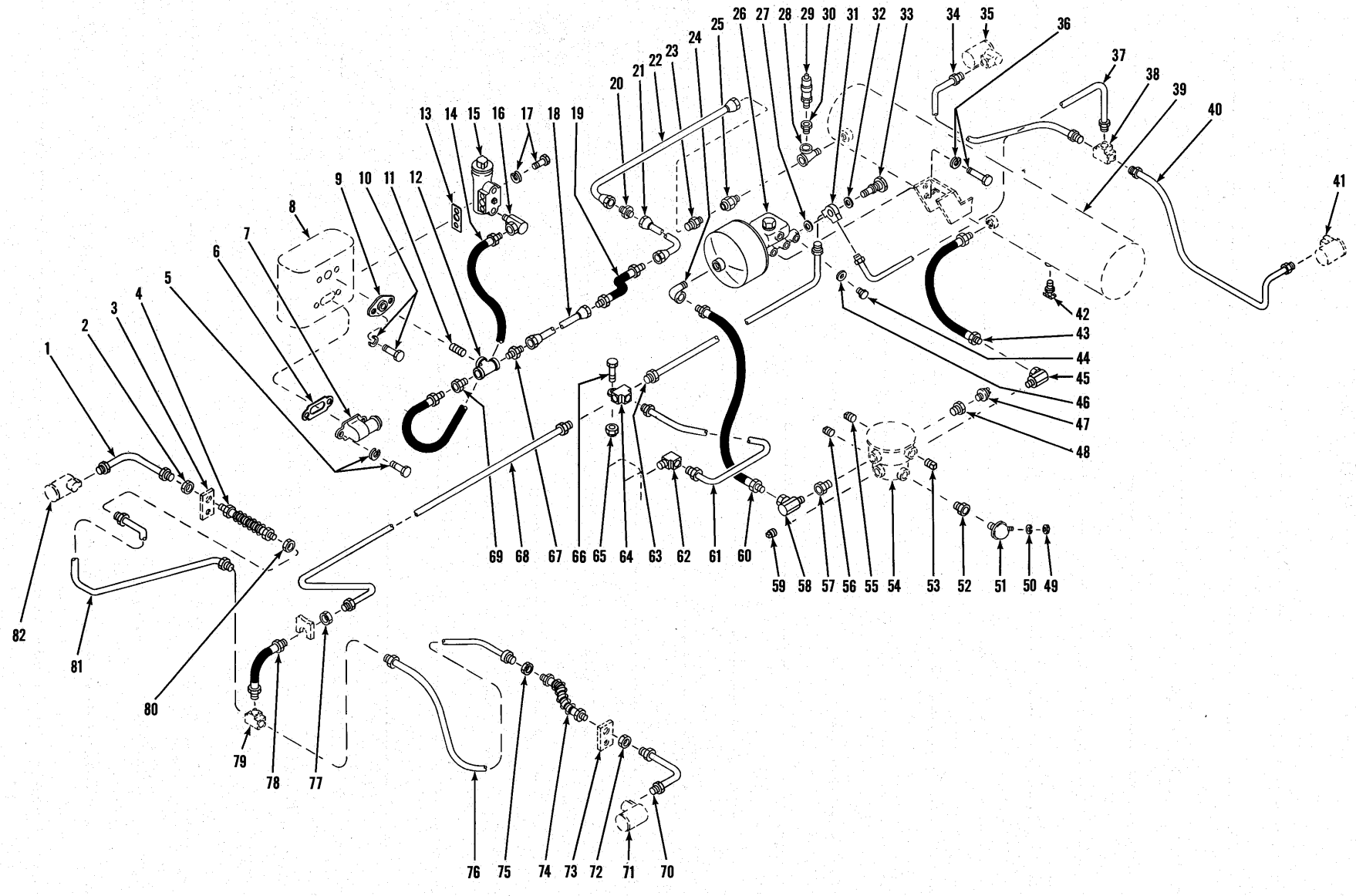

BRAKE AIR LINES

TS-6793-P

BRAKE AIR LINES

Item No.	Part No.	Description	No. Req'd.
1	558547	LINE, Hose to Wheel Cylinder — L.H. Rear Axle	1
2	8D-10	NUT, Hose Jam	1
3	550325	CLIP, Hose — Furnished with Axle	1
4	552374	HOSE, Line to Line	1
5	———	BOLT, Elbow to Compressor — Furnished with Engine	—
5A	———	LKWSHR, Elbow to Compressor Bolt — Furnished with Engine	—
6	———	GASKET, Elbow to Compressor — Furnished with Engine	—
7	540664	ELBOW, Compressor Air Inlet	1
8	———	AIR COMPRESSOR—See Engine Parts Manual — Furnished with Engine	—
9	510452	*FLANGE, Discharge (B.W.#213042)	1
10	17C-520	BOLT, Flange to Compressor	2
10A	4E-05	LKWSHR, Flange to Compressor Bolt	2
11	5K-409	NIPPLE, Tee to Compressor	1
12	18F-4	TEE, Connecting	1
13	———	GASKET, Governor — Furnished with Engine	—
14	593650	HOSE, Compressor to Governor	1
15	———	GOVERNOR — Furnished with Engine	—
16	31F-1	ADAPTER UNION, Hose to Governor	1
17	———	BOLT, Governor to Compressor — Furnished with Engine	—
17A	———	LKWSHR, Governor to Compressor Bolt — Furnished with Engine	—
18	571889	TUBE, Compressor to Hose	1
19	571882	HOSE, Tube to Tube	1
20	40F-8	ADAPTER UNION, Tube to Tube	1
21	571545	TUBE, Hose to Tube	1
22	571546	TUBE, Tube to Air Reservoir	1
23	38F-10	CONNECTOR, Tube to Valve	1
24	26F-3	ELBOW, Hose to Power Cluster	1
25	593370	VALVE, Check	1
26	———	POWER CLUSTER ASSY — See P.M. 2083	—
27	620238	GASKET, Fitting to Master Cylinder	1
28	17F-4	TEE, Valve to Air Reservoir	1
29	507815	VALVE, Safety	1
30	19F-5	BUSHING, Valve to Tee Reducing	1
31	633242	FITTING, Connecting	1
32	613750	GASKET, Bolt to Fitting	1
33	692722	BOLT, Fitting to Master Cylinder	1
34	535049	LINE, Tee to Wheel Cylinder — L.H. Front Axle	1
35	———	CYLINDER, Wheel — See P.M. 2083	—
36	18C-720	BOLT, Power Cluster to Reservoir	3
36A	4E-07	LKWSHR, Power Cluster to Reservoir Bolt	3
37	589429	TUBE, Power Cluster to Front Axle Tee	1
38	609733	TEE, Brake Line — Furnished With Axle	1
39	———	§AIR RESERVOIR — Welded to Frame	—
40	535050	LINE, Tee to Wheel Cylinder — R.H. Front Axle	1
41	———	CYLINDER, Wheel — See P.M. 2083	—
42	72F-4	DRAIN COCK, Air Reservoir	1
43	574439	HOSE, Reservoir to Brake Valve	1
44	874007	PLUG, Master Cylinder	2
45	31F-4	ADAPTER UNION, Hose to Valve	1
46	613750	GASKET, Master Cylinder Plug	2
47	636260	SWITCH, Stop Light	1
48	19F-4	BUSHING, Switch Reducing	1
49	14D-10	NUT, Sender Unit	1
50	12E-10	LKWSHR, Sender Unit	1
51	940643	SENDER UNIT, Air Pressure (Inc. 49, 50)	1
52	19F-1	BUSHING, Sender Unit Reducing	1
53	13F-08	PLUG, Brake Valve	1
54	———	BRAKE VALVE — See P.M. 2083	—
55	13F-08	PLUG, Brake Valve	1
56	13F-04	PLUG, Brake Valve	1
57	19F-6	BUSHING, Adapter Reducing	1
58	31F-3	ADAPTER UNION, Hose to Valve	1
59	13F-08	PLUG, Brake Valve	1
60	592784	HOSE, Power Cluster to Brake Valve	1
61	589428	TUBE, Tee to Declutch Valve	1
62	62F-3	ELBOW, Tube to Valve	1
63	589427	TUBE, Power Cluster to Tee	1
64	609733	TEE, Connecting	1
65	18D-07	NUT, Tee to Frame Bolt	1
66	18C-724	BOLT, Tee to Frame	1
67	38F-10	CONNECTOR, Tube	1
68	589426	TUBE, Tee to Clip	1
69	19F-4	BUSHING, Hose to Tee Reducing	1
70	558547	LINE, Hose to Wheel Cylinder — R.H. Rear Axle	1
71	———	CYLINDER, Wheel — See P.M. 2083	—
72	8D-10	NUT, Hose Jam	
73	550325	CLIP, Hose — Furnished with Axle	1
74	552374	HOSE, Line to Line	1
75	8D-10	NUT, Hose Jam	1
76	534259	LINE, Tee to Hose	1
77	8D-10	NUT, Hose Jam	1
78	533814	HOSE, Tube to Rear Axle Tee	1
79	550320	TEE, Brake Line — Furnished with Axle	1
80	8D-10	NUT, Hose Jam	1
81	534260	LINE, Tee to Hose	1
82	———	CYLINDER, Wheel — See P.M. 2083	—

*NOTE: Your local authorized Bendix-Westinghouse Distributor is equipped to service and supply these parts.
§Not Sold Separately

WHEN ORDERING PARTS, ALWAYS STATE MODEL AND SERIAL NO. OF MACHINE

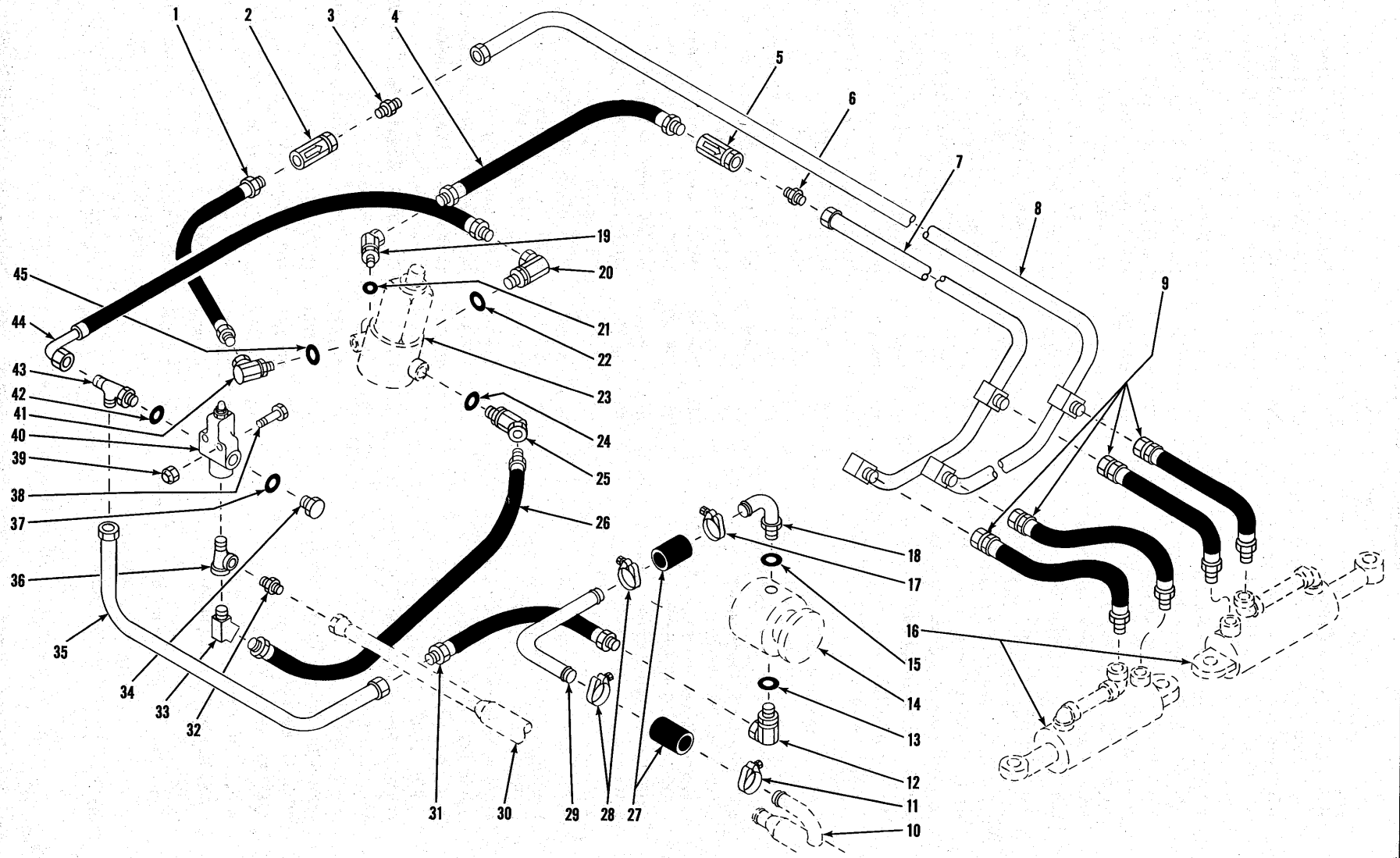

HYDRAULIC SYSTEM — STEERING

TS-6641-P

HYDRAULIC SYSTEM — STEERING

Item No.	Part No.	Description	No. Req'd.
1	784398	HOSE, Check Valve to Gear	1
2	572731	VALVE, Check	1
3	89F-7	CONNECTOR, Check Valve to Tube	1
4	784398	HOSE, Check Valve to Gear	1
5	572731	VALVE, Check	1
6	89F-7	CONNECTOR, Check Valve to Tube	1
7	589487	TUBE ASSY, Gear to Cylinder — Right Turn	1
8	589488	TUBE ASSY, Gear to Cylinder — Left Turn	1
9	533927	HOSE, Tube to Cylinder	4
10	———	TUBE ASSY, Suction — See Bucket & Boom Hydraulic System	—
11	540127	CLAMP, Hose	1
12	526676	ADAPTER UNION, Hose to Pump (Inc. 13)	1
13	91F-8	"O" RING, Adapter Union	1
14	———	STEERING PUMP — See PM No. 2083	—
15	91F-11	"O" RING, Elbow	1
16	———	STEERING CYLINDER — See PM No. 2083	—
17	540127	CLAMP, Hose	1
18	564087	ELBOW ASSY, Suction — Hose to Pump (Inc. 15)	1
19	535625	ADAPTER UNION, Hose to Gear (Inc. 21)	1
20	519275	ADAPTER UNION, Hose to Gear (Inc. 22)	1
21	91F-6	"O" RING, Adapter Union	1
22	91F-7	"O" RING, Adapter Union	1
23	———	STEERING GEAR — See PM No. 2083	—
24	91F-7	"O" RING, Adapter Union	1
25	534894	ADAPTER UNION, Hose to Gear (Inc. 24)	1
26	542813	HOSE, Relief Valve to Gear	1
27	536749	HOSE, Stem to Tube	2
28	540127	CLAMP, Hose	2
29	571411	TUBE, Suction	1
30	———	TUBE ASSY, Return — See Bucket & Boom Hydraulic System	—
31	563483	HOSE, Pump to Tube	1
32	656532	CONNECTOR, Tube	1
33	81F-4	ELBOW, Hose to Tee	1
34	24K-7	PLUG, Relief Valve (Inc. 37)	1
35	563466	TUBE ASSY, Pump to Valve	1
36	17F-5	TEE, Relief Valve	1
37	91F-7	"O" RING, Plug	1
38	18C-540	BOLT, Relief Valve Mounting	2
39	18D-05	NUT, Relief Valve Mounting	2
39A	619019	†WASHER, Relief Valve Mounting	2
40	———	VALVE, Pressure Relief — See PM No. 2083	—
41	517089	ADAPTER UNION, Hose to Gear (Inc. 45)	1
42	91F-7	"O" RING, Tube Fitting Tee	1
43	21K-7	TEE, Tube Fitting (Inc. 42)	1
44	568785	HOSE, Gear to Relief Valve	1
45	91F-6	"O" RING, Adapter Union	1

†Not Illustrated

WHEN ORDERING PARTS, ALWAYS STATE MODEL AND SERIAL NO. OF MACHINE

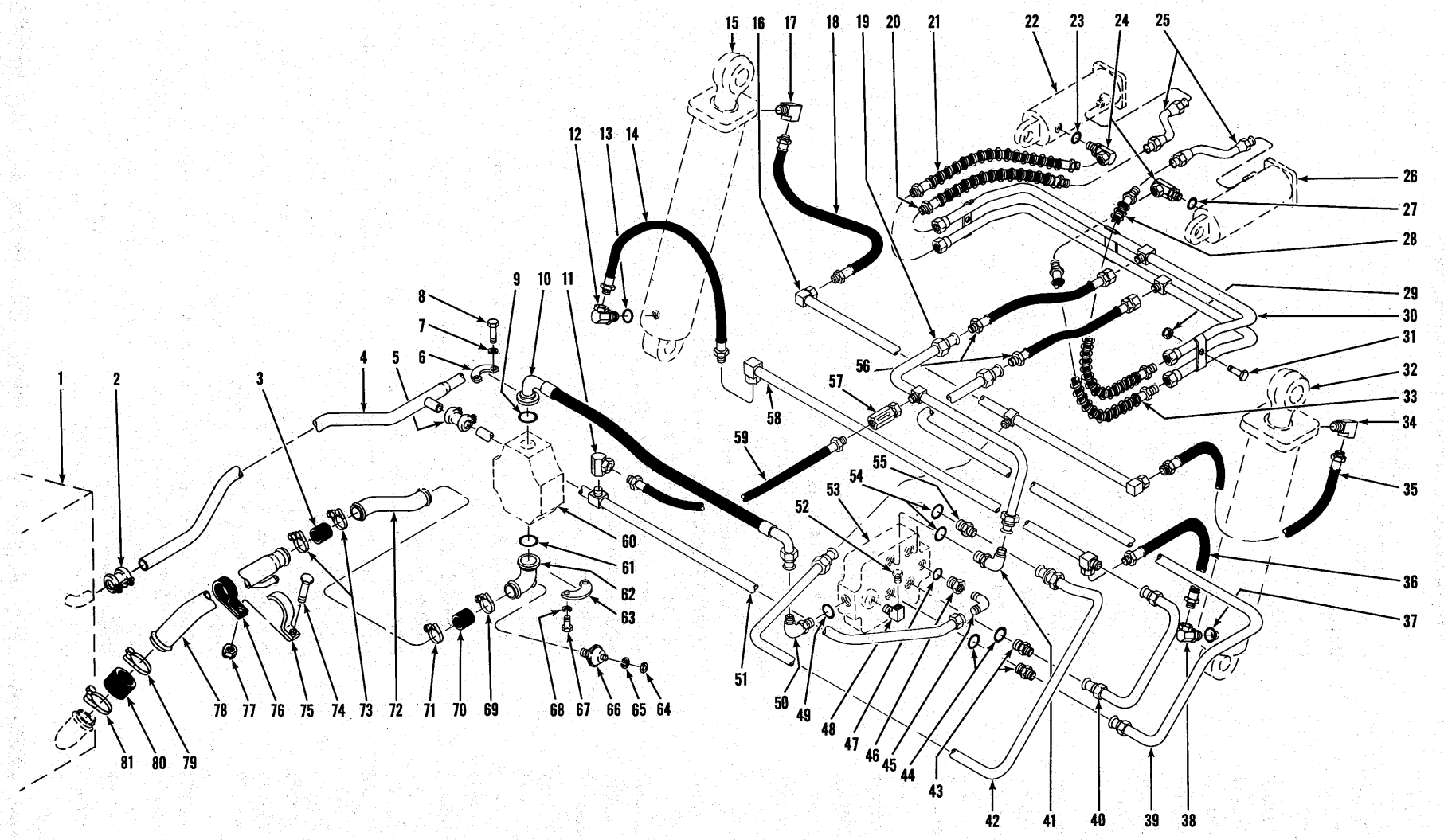

HYDRAULIC SYSTEM — BUCKET AND BOOM

TS-6803-P

HYDRAULIC SYSTEM — BOOM AND BUCKET

Item No.	Part No.	Description	No. Req'd.
1	———	RESERVOIR — See P.M. 2083	—
2	573423	JOINT, Tube to Reservoir — Return	1
3	536710	HOSE, Tube to Tube — Suction	1
4	574500	TUBE ASSY, Return	1
5	573422	JOINT, Tube to Tube — Return	1
6	663094	FLANGE HALF, Hose to Pump	2
7	4E-07	LKWSHR, Flange Half Bolt	4
8	17C-724	BOLT, Flange Half to Pump	4
9	25K-40116	"O" RING, Hose	1
10	571409	HOSE, Pump to Valve	1
11	32F-5	ELBOW, Hose to Tube	1
12	526676	ADAPTER UNION, Hose to Boom Cylinder — Base End (Inc. 13)	1
13	91F-8	"O" RING, Adapter Union	1
14	574442	HOSE, Boom Cylinder Base to Crosstube	1
15	———	BOOM CYLINDER — See P.M. 2083	—
16	563801	CROSSTUBE ASSY, Boom Cylinder — Rod End	1
17	29F-4	ELBOW, Hose to Boom Cylinder — Rod End	1
18	574442	HOSE, Boom Cylinder Rod End to Crosstube	1
19	563789	TUBE ASSY, Valve to Crosstube — Bucket Cylinder Rod End	1
20	563810	HOSE, Crosstube to Bucket Cylinder — Rod End	1
21	571176	HOSE, Crosstube to Bucket Cylinder — Base End	1
22	———	BUCKET CYLINDER — See P.M. 2083	—
23	91F-8	"O" RING, Adapter Union	1
24	526676	ADAPTER UNION, Hose to Bucket Cylinder — Base End (Inc. 23, 27)	2
25	563805	TUBE ASSY, Hose to Bucket Cylinder — Rod End	2
26	———	BUCKET CYLINDER — See P.M. 2083	—
27	91F-8	"O" RING, Adapter Union	1
28	563810	HOSE, Crosstube to Bucket Cylinder — Rod End	1
29	18D-08	NUT, Bucket Crosstube Assy to Frame Bolt	2
30	563792	CROSSTUBE ASSY, Bucket Cylinder	1
31	18C-820	BOLT, Bucket Crosstube Assy to Frame	2
32	———	BOOM CYLINDER — See P.M. 2083	—
33	571176	HOSE, Crosstube to Bucket Cylinder — Base End	1
34	29F-4	ELBOW, Hose to Boom Cylinder — Rod End	1
35	574442	HOSE, Crosstube to Boom Cylinder — Rod End	1
36	574442	HOSE, Crosstube to Boom Cylinder — Base End	1
37	91F-8	"O" RING, Adapter Union	1
38	526676	ADAPTER UNION, Hose to Boom Cylinder — Base End (Inc. 37)	1
39	563788	TUBE ASSY, Bucket Cylinder Crosstube to Valve	1
40	563790	TUBE ASSY, Boom Cylinder Base Crosstube to Valve	1
41	17K-10	ELBOW, Tube to Valve (Inc. 54)	1
42	563791	TUBE ASSY, Boom Cylinder Rod End Crosstube to Valve	1
43	15K-10	CONNECTOR, Tube to Valve (Inc. 44)	2
44	91F-10	"O" RING, Connector	2
45	83F-10	ELBOW, Tube to Adapter	1
46	588399	ADAPTER (Inc. 47)	1
47	91F-13	"O" RING, Adapter	1
48	29F-1	ELBOW	1
49	91F-10	"O" RING, Elbow	1
50	17K-10	ELBOW, Tube to Valve (Inc. 49)	1
51	563808	TUBE ASSY, Valve to Return Tube	1
52	40K-04	PLUG	1
53	———	CONTROL VALVE — See P.M. 2083	—
54	91F-10	"O" RING, Connector	2
55	15K-10	CONNECTOR, Tube to Valve (Inc. 54)	1
56	571207	HOSE, Bucket Cylinder Crosstube to Tube	2
57	661707	VALVE, Check	1
58	563798	CROSSTUBE ASSY, Boom Cylinder — Base End	1
59	542813	HOSE, Check Valve to Tube	1
60	———	PUMP, Bucket & Boom — See P.M. 2083	—
61	25K-40128	"O" RING, Stem	1
62	571407	STEM, Suction	1
63	663095	FLANGE HALF, Stem to Pump	2
64	14D-08	NUT, Indicator	1
65	12E-8	LKWSHR, Indicator	1
66	562112	INDICATOR, Reservoir Filter — Vacuum	1
67	17C-824	BOLT, Flange Half to Pump	4
68	4E-08	LKWSHR, Flange Half to Pump Bolt	4
69	540130	CLAMP, Hose	1
70	536710	HOSE, Stem to Tube — Suction	1
71	540130	CLAMP, Hose	1
72	572920	TUBE, Suction — Front	1
73	540130	CLAMP, Hose	2
74	18C-828	BOLT, Clamp Mounting	1
75	533482	CLAMP, Suction Tube	1
76	533483	STRAP, Suction Tube Clamp	1
77	18D-08	NUT, Clamp Mounting Bolt	1
78	1520362	TUBE ASSY, Suction — Rear	1
79	540106	CLAMP, Hose	1
80	533478	HOSE, Tube to Reservoir — Suction	1
81	540106	CLAMP, Hose	1

WHEN ORDERING PARTS, ALWAYS STATE MODEL AND SERIAL NO. OF MACHINE

TS-5236-P

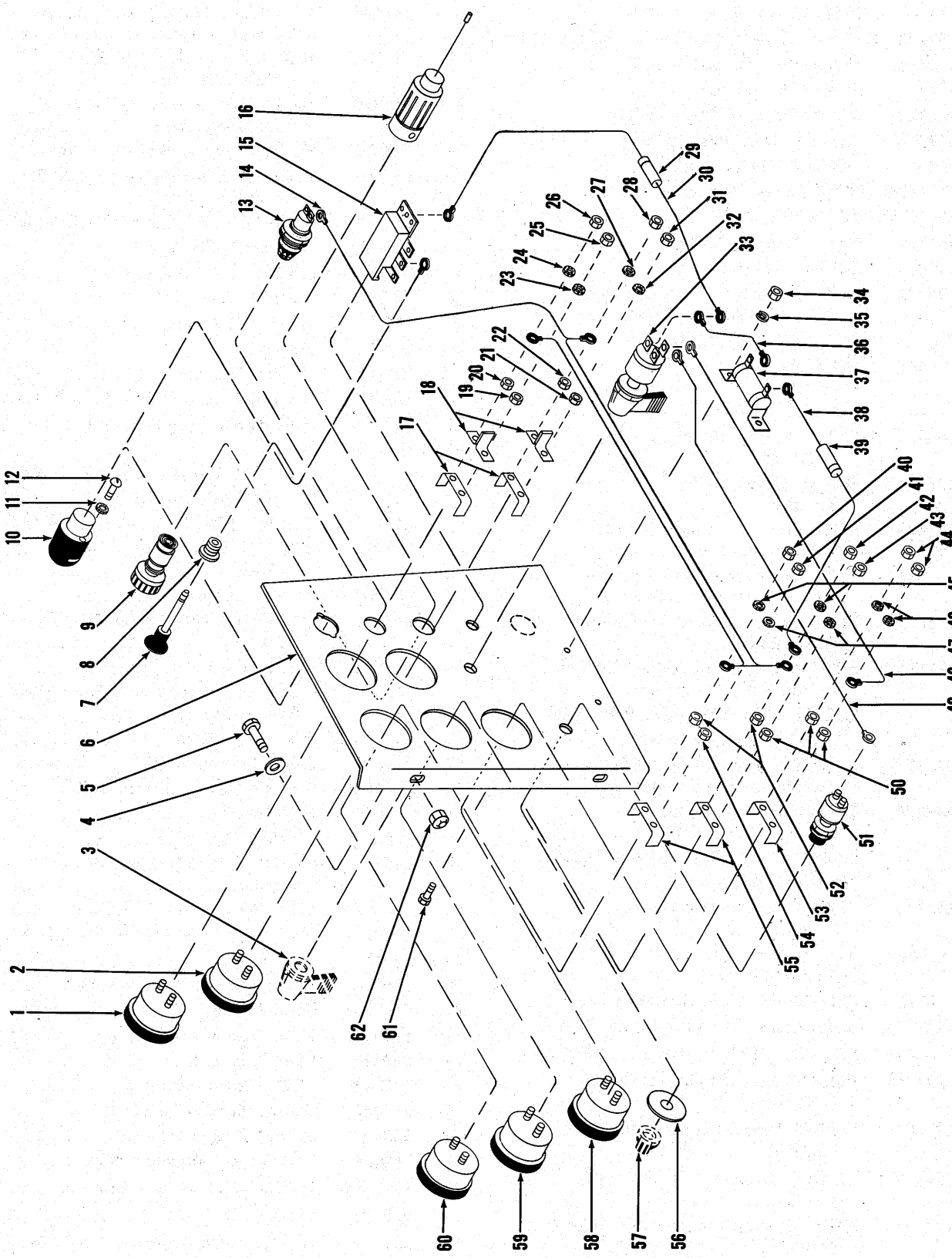

INSTRUMENT PANEL ASSEMBLY

INSTRUMENT PANEL ASSEMBLY

For Serial 6CA101 thru 6CA106

Item No.	Part No.	Description	No. Req'd.
1	523372	GAUGE, Engine Oil Pressure	1
2	517228	GAUGE, Air Pressure	1
3	———	OMIT	—
4	619024	WASHER, Instrument Panel Mounting	
5	18C-616	BOLT, Instrument Panel Mounting	2
6	589992	PANEL, Instrument	1
7	550742	ROD, Light Switch	1
8	550743	BUSHING, Light Switch	1
9	944803	ELEMENT, Lighter	1
10	574276	LAMP, Dash	1
10A	427237	†BULB, Dash Lamp (12V)	1
11	12E-6	LKWSHR, Dash Lamp Mounting	2
12	18G-606	SCREW, Dash Lamp Mounting	2
13	562141	LIGHT, Indicator	1
13A	876574	†BULB, Indicator Light	1
14	558673	HARNESS, Instrument Wiring	1
15	550741	SWITCH, Light	1
16	549024	RECEPTACLE, Lighter	1
16A	944804	†FUSE, Lighter	1
17	626530	CLAMP, Instrument Mounting	2
18	602350	SEPARATOR, Oil & Air Gauge	2
19	14D-10	NUT, Gauge to Panel Mounting	1
20	12D-8	NUT, Gauge to Panel Mounting	1
21	14D-10	NUT, Gauge to Panel Mounting	1
22	12D-8	NUT, Gauge to Panel Mounting	1
23	12E-10	LKWSHR, Terminal to Gauge	1
24	12E-8	LKWSHR, Terminal to Gauge	1
25	14D-10	NUT, Terminal to Gauge	1
26	12D-8	NUT, Terminal to Gauge	1
27	12E-8	LKWSHR, Terminal to Gauge	1
28	12D-8	NUT, Terminal to Gauge	1
29	611074	FUSE — 20 Amp	1
30	552946	WIRE, Ignition Switch to Light Switch (Inc. 29)	1
31	14D-10	NUT, Terminal to Gauge	1
32	12E-10	LKWSHR, Terminal to Gauge	1
33	573548	SWITCH, Ignition (Key)	1
34	———	OMIT — Not used on 12V System	—
35	———	OMIT — Not used on 12V System	—
36	———	OMIT — Not used on 12V System	—
37	———	OMIT — Not used on 12V System	—
38	573587	WIRE, Resistor to Temperature Gauge	1
39	571021	FUSE — .75 Amp	1
40	12D-8	NUT, Terminal to Gauge	1
41	14D-10	NUT, Terminal to Gauge	1
42	12D-8	NUT, Terminal to Gauge	1
43	14D-10	NUT, Terminal to Gauge	1
44	14D-10	NUT, Terminal to Gauge	2
45	12E-8	LKWSHR, Terminal to Gauge	2
46	12E-10	LKWSHR, Terminal to Gauge	2
47	12E-10	LKWSHR, Terminal to Gauge	2
48	553405	WIRE, Ignition Switch to Ammeter	1
49	553405	WIRE, Ignition Switch to Starter Button	1
50	14D-10	NUT, Gauge to Panel Mounting	3
51	600259	BUTTON, Starter (Inc. 51A, 57)	1
51A	857420	†RUBBER BOOT, Starter Button	1
52	12D-8	NUT, Gauge to Panel Mounting	2
53	601212	CLAMP, Ammeter Mounting	1
54	14D-10	NUT, Gauge to Panel Mounting	1
55	626530	CLAMP, Instrument Mounting	2
56	547237	PLATE, Starter Button	1
57	———	§BUTTON, Push — See Item 51	—
58	550735	AMMETER	1
59	551322	GAUGE, Engine Temperature	1
60	551321	GAUGE, Torque Converter Temp.	1
61	———	OMIT — Not used on 12V System	—
62	18D-06	NUT, Instrument Panel Mounting	2
63	565430	†WIRE, Lighter to Indicator Light	1

†Not Illustrated
§Not Sold Separately

WHEN ORDERING PARTS, ALWAYS STATE MODEL AND SERIAL NO. OF MACHINE

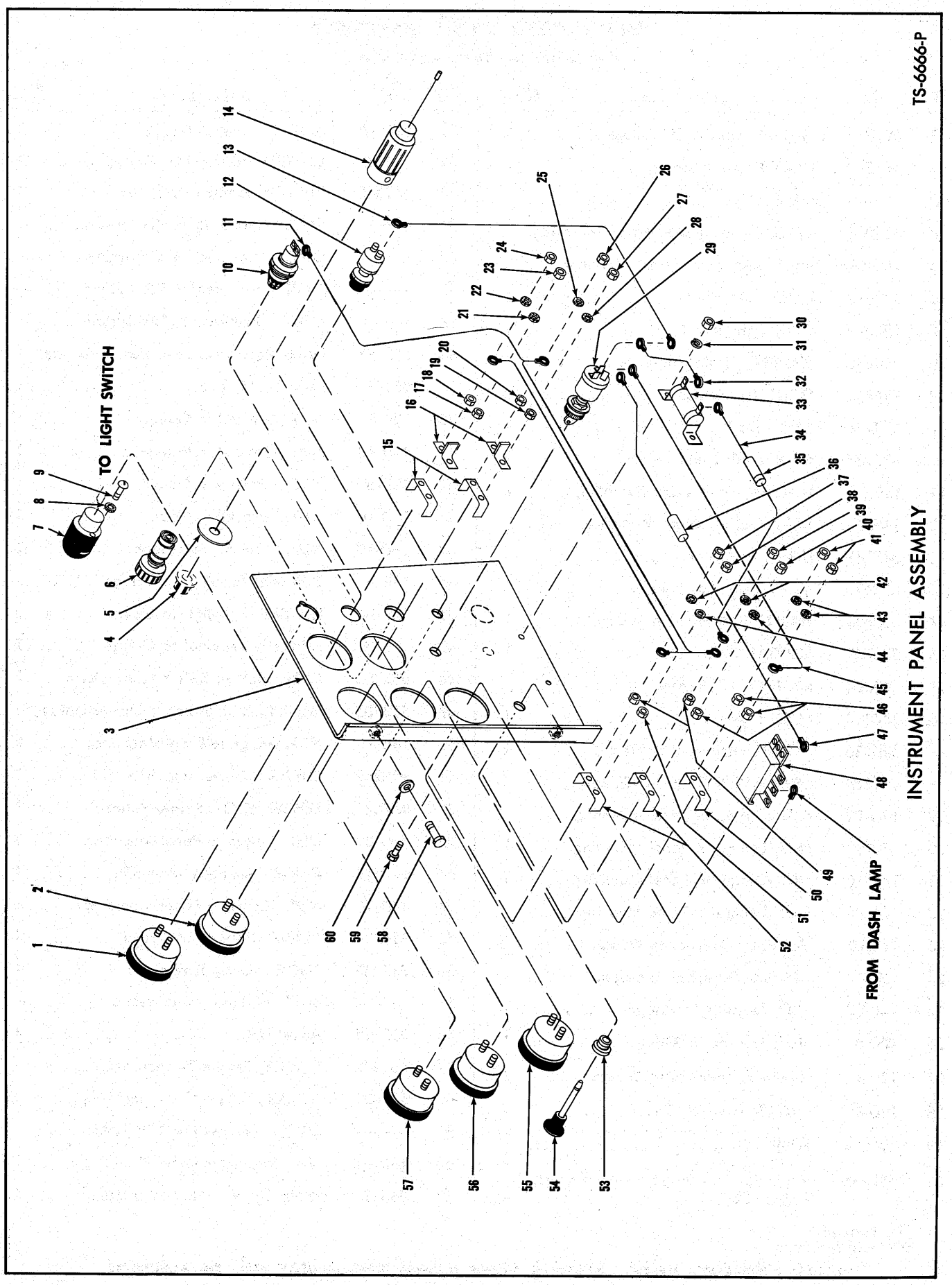
TS-6666-P
INSTRUMENT PANEL ASSEMBLY
TO LIGHT SWITCH
FROM DASH LAMP
1
2
3
4
5
6
7
8
9
10
11
12
13
14
15
16
17
18
19
20
21
22
23
24
25
26
27
28
29
30
31
32
33
34
35
36
37
38
39
40
41
42
43
44
45
46
47
48
49
50
51
52
53
54
55
56
57
58
59
60

INSTRUMENT PANEL ASSEMBLY

For Serial 6CA107 and Thereafter

Item No.	Part No.	Description	No. Req'd.
1	523372	GAUGE, Engine Oil Pressure	1
2	517228	GAUGE, Air Pressure	1
3	574117	PANEL, Instrument	1
4	———	§BUTTON, Push — See Item 12	—
5	547237	PLATE, Starter Button	1
6	944803	ELEMENT, Lighter	1
7	574276	LAMP, Dash	1
7A	427237	†BULB, Dash Lamp (12V)	1
8	12E-6	LKWSHR, Dash Lamp Mounting	2
9	18G-606	SCREW, Dash Lamp Mounting	2
10	562141	LIGHT, Indicator	1
10A	427237	†BULB, Indicator Light	1
11	558673	HARNESS, Instrument Wiring	1
12	600259	BUTTON, Starter (Inc. 4, 12A)	1
12A	857420	†RUBBER BOOT, Starter Button	1
13	553405	WIRE, Ignition Switch to Starter Button	1
14	549024	RECEPTACLE, Lighter	1
14A	944804	†FUSE, Lighter	1
15	626530	CLAMP, Instrument Mounting	2
16	602350	SEPARATOR, Oil & Air Gauges	2
17	14D-10	NUT, Gauge to Panel Mounting	1
18	12D-8	NUT, Gauge to Panel Mounting	1
19	14D-10	NUT, Gauge to Panel Mounting	1
20	12D-8	NUT, Gauge to Panel Mounting	1
21	12E-10	LKWSHR, Terminal to Gauge	1
22	12E-8	LKWSHR, Terminal to Gauge	1
23	14D-10	NUT, Terminal to Gauge	1
24	12D-8	NUT, Terminal to Gauge	1
25	12E-8	LKWSHR, Terminal to Gauge	1
26	12D-8	NUT, Terminal to Gauge	1
27	14D-10	NUT, Terminal to Gauge	1
28	12E-10	LKWSHR, Terminal to Gauge	1
29	573548	SWITCH, Ignition	1
30	———	OMIT — Not used on 12V System	—
31	———	OMIT — Not used on 12V System	—
32	———	OMIT — Not used on 12V System	—
33	———	OMIT — Not used on 12V System	—
34	573587	WIRE, Ignition Switch to Temperature Gauge	1
35	571021	FUSE — .75 Amp	1
36	611074	FUSE — 20 Amp	1
37	12D-8	NUT, Terminal to Gauge	1
38	14D-10	NUT, Terminal to Gauge	1
39	12D-8	NUT, Terminal to Gauge	1
40	14D-10	NUT, Terminal to Gauge	1
41	14D-10	NUT, Terminal to Gauge	2
42	12E-8	LKWSHR, Terminal to Gauge	2
43	12E-10	LKWSHR, Terminal to Gauge	2
44	12E-10	LKWSHR, Terminal to Gauge	2
45	553405	WIRE, Ignition Switch to Ammeter	1
46	14D-10	NUT, Gauge to Panel Mounting	3
47	552946	WIRE, Ignition Switch to Light Switch (Inc. 36)	1
48	550741	SWITCH, Light	1
49	12D-8	NUT, Gauge to Panel Mounting	2
50	601212	CLAMP, Ammeter Mounting	1
51	14D-10	NUT, Gauge to Panel Mounting	1
52	626530	CLAMP, Instrument Mounting	2
53	550743	BUSHING, Light Switch	1
54	550742	ROD, Light Switch	1
55	550735	AMMETER	1
56	551322	GAUGE, Engine Temperature	1
57	551321	GAUGE, Torque Conv. Temperature	1
58	17C-616	BOLT, Instrument Panel Mounting	3
59	———	OMIT — Not used on 12V System	—
60	656672	WASHER, Instrument Panel Mounting	2
60A	4E-06	†LKWSHR, Instrument Panel Mounting	3
60B	572729	†CAGED NUT, Instrument Panel Mounting	1

§Not Sold Separately
†Not Illustrated

WHEN ORDERING PARTS, ALWAYS STATE MODEL AND SERIAL NO. OF MACHINE

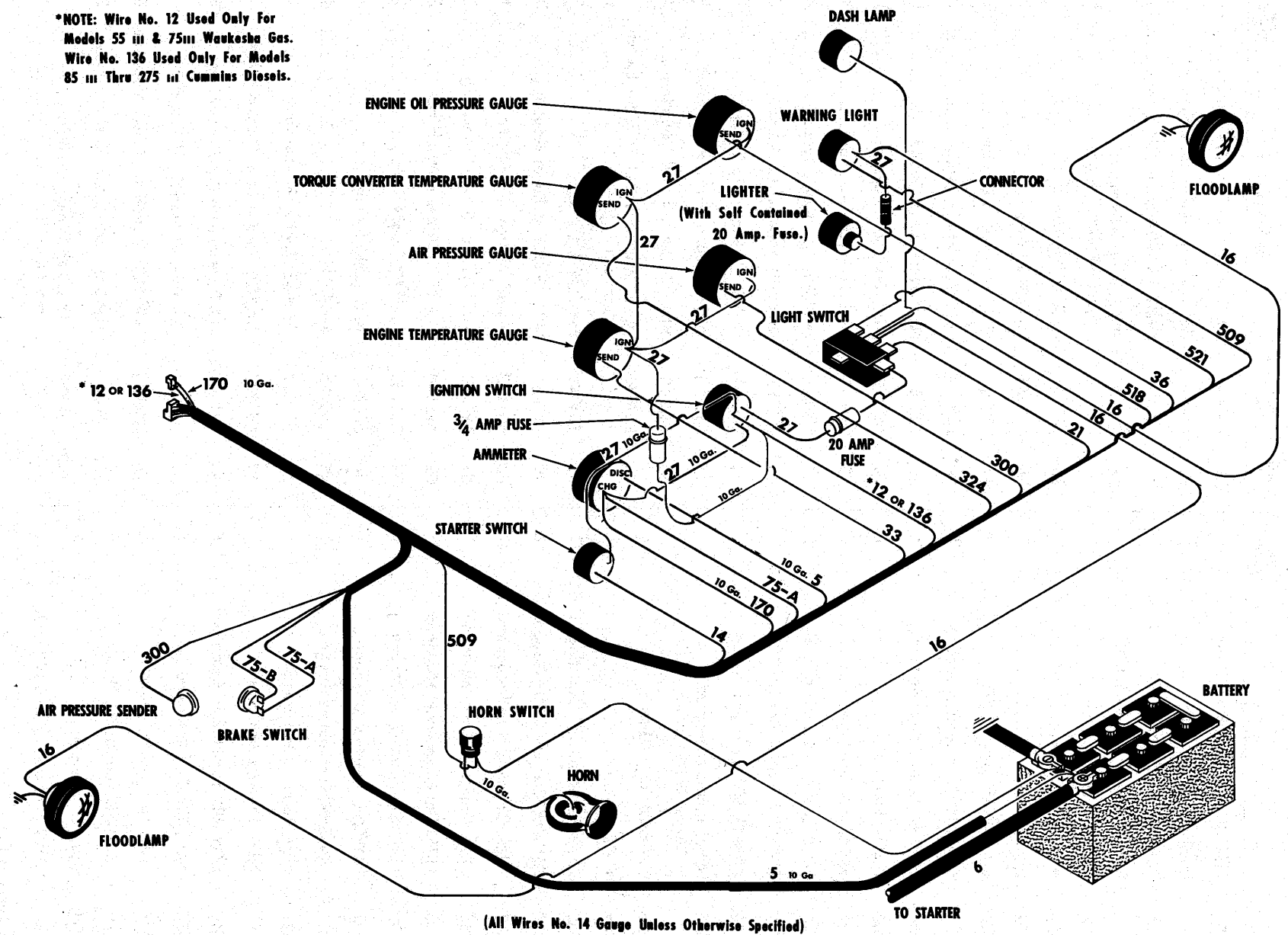

(All Wires No. 14 Gauge Unless Otherwise Specified)

WIRING DIAGRAM — COCKPIT
For Serial 6CA101 thru 6CA106

TS-6752-P

*NOTE: Wire No. 12 Used Only For Models 55 III & 75 III Waukesha Gas. Wire No. 136 Used Only For Models 85 III Thru 275 III Cummins Diesels.

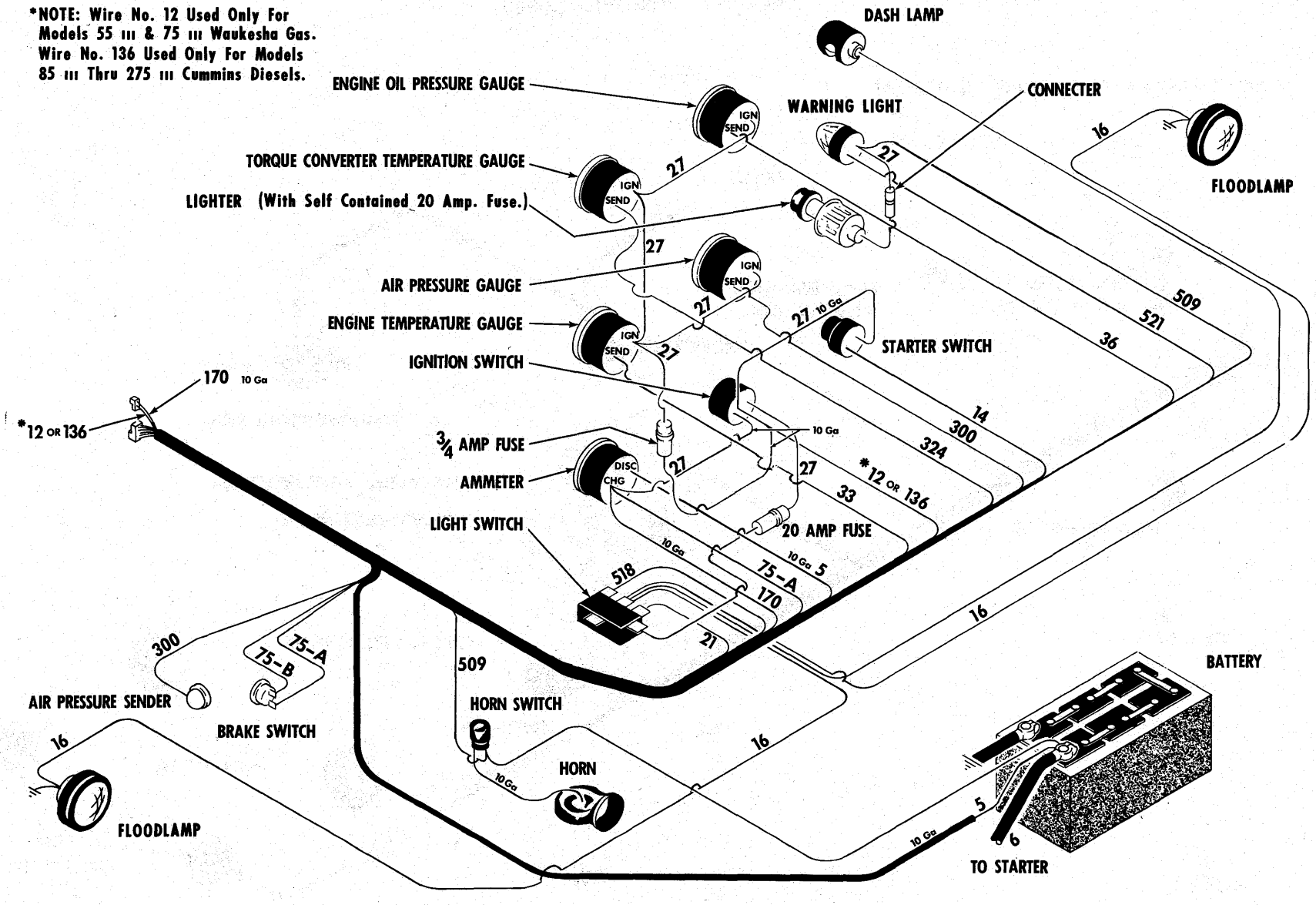

(All Wires No. 14 Gauge Unless Otherwise Specified.)

WIRING DIAGRAM — COCKPIT
For Serial 6CA107 and thereafter

TS-6669-P

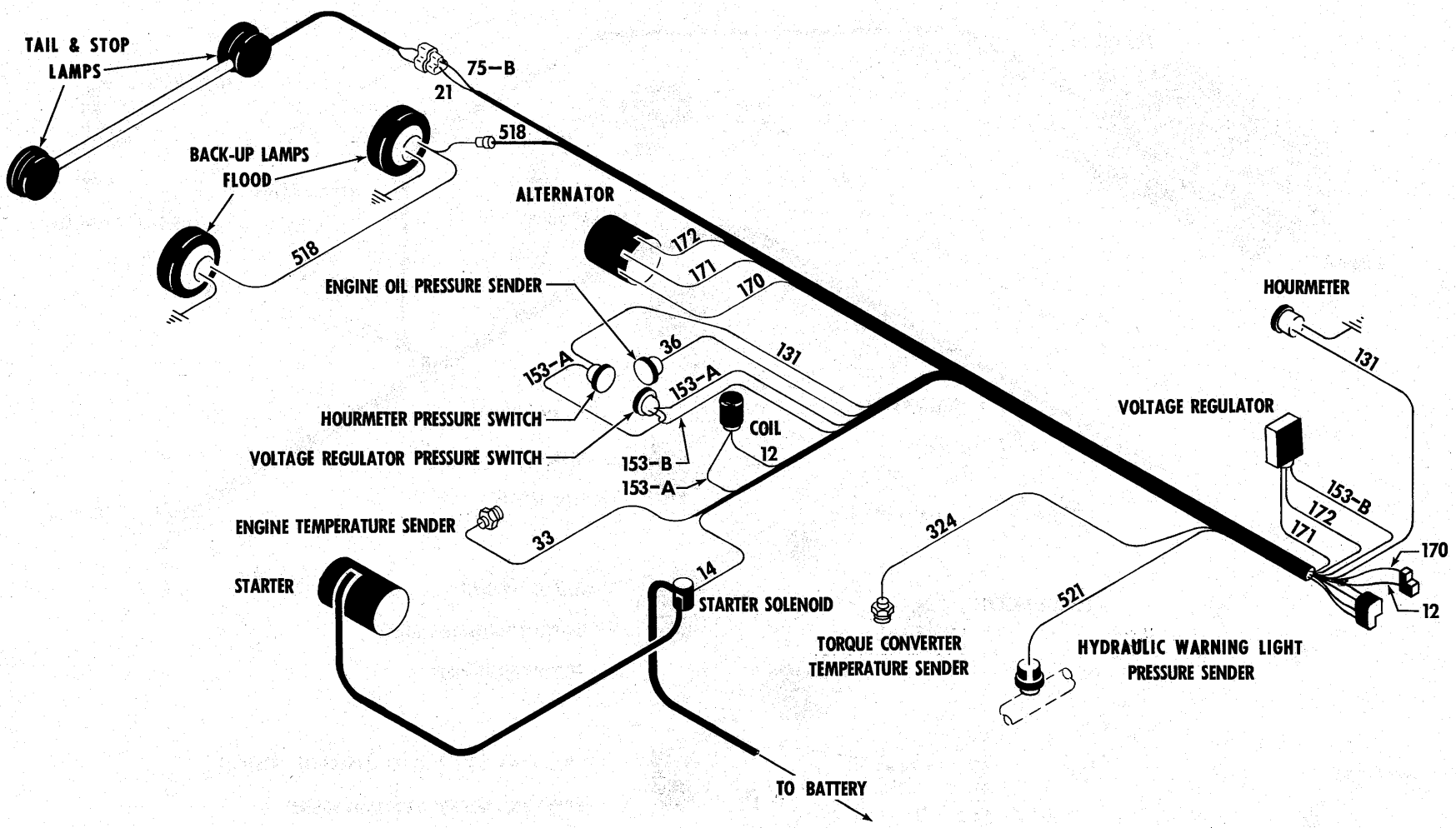

(All Wires No. 14 Gauge Unless Otherwise Specified)

WIRING DIAGRAM — ENGINE

TS-6801-P

NUMERICAL INDEX

Part No.	Page No.
1F-207	11
1F-216	11
1F-316	11
2F-04051	11
2G-1012	3
2J-4200	11
3G-608	9
3G-1008	7
4E-05	17
4E-06	4, 5, 7, 25
4E-07	17, 21
4E-08	7, 9, 21
4F-04051	11
5K-112	1
5K-409	17
7H-17	11
8C-824	1
8D-04	11
8D-05	11, 14
8D-08	8
8D-10	17
10H-25	2, 14
10H-35	14
12D-8	23, 25
12D-10	7
12E-6	9, 23, 25
12E-8	21, 23, 25
12E-10	1, 13, 17, 23, 25
13F-04	10, 17
13F-08	17
13F-16	13
14D-08	21
14D-10	1, 3, 13, 17, 23, 25
15K-10	21
17C-520	17
17C-612	5
17C-616	5, 25
17C-620	7
17C-724	21
17C-820	9
17C-824	21
17D-6	3, 7
17E-10	3
17F-4	17
17F-5	19
17K-8	13
17K-10	21
18C-412	3, 5, 9, 11
18C-416	11
18C-424	9
18C-448	11
18C-540	19
18C-612	4
18C-616	4, 23
18C-620	9, 13
18C-720	17
18C-724	17
18C-812	7
18C-816	7
18C-820	7, 21
18C-824	3, 4, 7, 9
18C-828	5, 8, 21
18C-832	4, 5
18C-836	1, 8
18C-848	1
18C-856	1, 2
18C-864	1
18C-872	2
18C-880	2
18C-1252	2
18D-04	4, 5, 9, 11
18D-05	11, 14, 19
18D-06	4, 9, 23
18D-07	17
18D-08	1, 2, 3, 4, 5, 7, 8, 9, 21
18D-12	3
18F-4	17
18G-606	23, 25
18G-806	4, 5, 8
18K-8	13
19F-1	17
19F-4	10, 17
19F-5	17
19F-6	17
21F-1	1
21K-7	19
24C-12144	2
24C-12168	3
24K-7	19
25F-6	13
25K-40116	21
25K-40128	21
26F-3	17
26F-6	13
29F-1	21
29F-4	21
31F-1	17
31F-3	17
31F-4	17
31F-5	13
31F-6	13
32F-5	21
36F-1	10
38F-10	17
40F-8	17
40K-04	13, 21
44G-418	3
49F-3	10
62F-3	17
66D-06	11, 13
68D-12	2
70D-08	1
71D-08	1
72F-4	17
73F-2	8
81F-4	19
82F-3	10
83F-10	21
89F-7	19
91F-6	13, 19
91F-7	19
91F-8	13, 19, 21
91F-10	21
91F-11	19
91F-13	21
142396	7
211433	13
215502	13
227265	13
228190	13
351495	8
362653	13
420945	9
422079	9
427237	23, 25
507068	9
507815	17
509320	3, 7
510452	17
515424	9
517089	19
517228	23, 25
518624	1
519275	19
523372	23, 25
526676	13, 19, 21
533478	21
533482	21
533483	21
533814	17
533927	19
534259	17
534260	17
534894	19
535049	17
535050	17
535332	8
535625	19
536100	2
536710	21
536749	19
538090	13
538585	2
539042	9
540103	9
540104	8
540106	21
540108	8
540127	19
540128	8
540130	21
540664	14
542813	19, 21
543280	13
543531	9
543576	9
545568	11
546810	13
547237	23, 25
547529	3, 7
549024	23, 25
549988	2
550320	17
550325	17
550619	11
550735	23, 25
550741	23, 25
550742	23, 25
550743	23, 25
551016	11
551090	11
551251	9
551321	23, 25
551322	23, 25
551323	1, 13
551347	2
551348	2
551433	7
551530	9
552374	17
552946	23, 25
553405	23, 25
553466	1
556691	7
556692	7
556960	2
557057	4, 5
557847	7
557848	7
558547	17
558673	23, 25
558960	9
562112	21
562141	23, 25
562641	3
563465	13
563466	19
563483	19
563788	21
563789	21
563790	21
563791	21
563792	21
563798	21
563801	21
563805	21
563808	21
563810	21
563881	3
563928	7
563929	7
563980	7
563981	7
563994	7
564011	3
564087	19
564126	2
564129	2
564137	2
565430	23
566649	4, 5
566764	7
566849	3
567415	1
567703	1
567731	1
567822	1
567847	10
568391	9
568785	19
568828	4, 5
568829	4, 5
568830	4, 5
569414	9
569912	4, 5
570499	8
570935	1
571021	23, 25
571022	2
571176	21
571207	21
571273	8
571386	9
571389	9
571407	21
571409	21
571411	19
571412	13
571523	13
571545	17
571546	17
571645	7
571646	7
571880	9
571882	17
571889	17
572174	11
572556	11
572696	9
572719	1

Part No.	Page No.
572729	5, 25
572731	19
572749	2
572750	7
572785	8
572786	8
572798	8
572802	8
572920	21
573422	21
573423	21
573548	23, 25
573587	23, 25
574026	5
574117	25
574276	23, 25
574386	14
574439	17
574442	21
574500	21
584092	3, 8
584501	8
584502	8
585007	2
585950	8
587960	2
588021	4, 5
588399	21
589367	13
589426	17
589427	17
589428	17
589429	17
589487	19
589488	17
589991	4
589992	23
590499	3
592784	17
593370	17
593650	17
600259	23, 25
601212	23, 25
602350	23, 25
609733	17
611074	23, 25
613750	17
616792	1
616798	4, 5
619018	9
619019	19
619024	4, 23
619029	3, 4, 5, 7, 9
623760	11
623762	11
623829	11
626530	23, 25
633242	17
636260	1, 17
656532	19
656672	5, 25
661707	21
663094	21
663095	21
664421	4, 5
670238	17
690279	13
692722	17
695808	14
712699	13
730432	7
774337	11
784398	19
857420	23, 25
874007	17
876574	23
879717	9
886619	9
940081	14
940643	1, 17
940653	14
940654	14
944803	23, 25
944804	23, 25
944863	14
944866	14
944907	3, 7
942658	14
942746	3
945256	14
945460	8
946288	14
1010736	3
1103680	3
1301361	11
1520362	21
1520427	9
1520434	9
1520449	1
1520450	11
1520468	11
1520606	1
1520607	1
1521606	10
1612583	4, 5
1621888	9

NOTES

MICHIGAN

75III TRACTOR SHOVEL

PARTS MANUAL SUPPLEMENT

No. 2188

★

This Supplement covers the 75 III MICHIGAN Tractor Shovel Machine Serial Numbers listed below:

75 III G.M. — 8CG-101 and thereafter

75 III Waukesha — 7CA-101 and thereafter

★

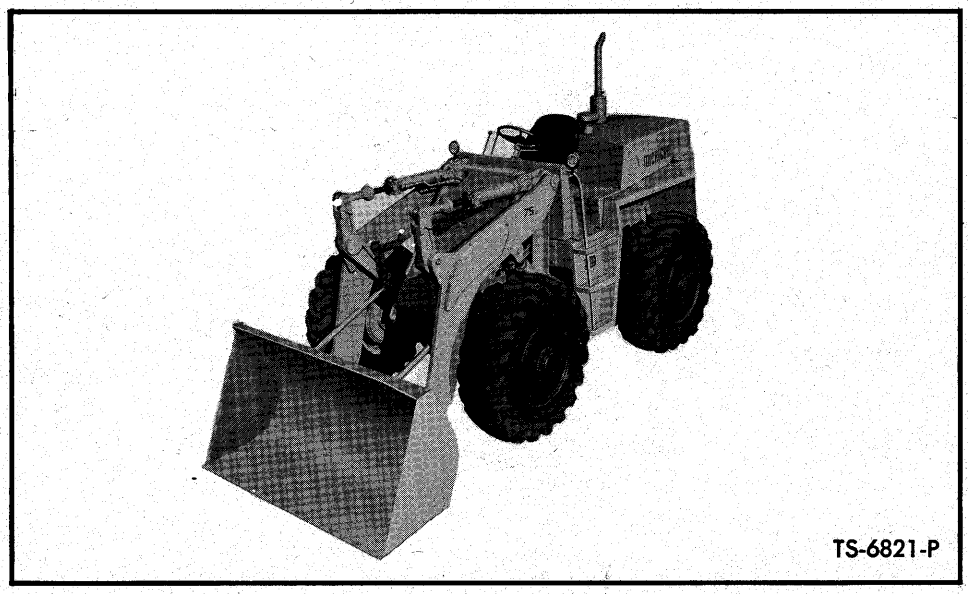

TS-6821-P

★

Use this Supplement with 75 III Parts Manual No. 2083 and Parts Manual Supplements to Parts Manual No. 2083

CLARK EQUIPMENT COMPANY
Construction Machinery Division

3M673B2014SPR-296

Printed in U.S.A.



WHEN ORDERING REPAIR PARTS

To assure the best results and to maintain the original quality built into the machine it is important that only Clark-Approved Parts be used when new parts are required.

IMPORTANT: Always furnish the distributor with the machine serial number when ordering parts.

Order through your nearest Clark Distributor, for THE MICHIGAN LINE.
Always give serial number of machine.
Furnish: Quantity, Part Number and Description.

WHEN PARTS ARE RECEIVED

Check immediately for quantity, correctness and condition.
Advise your Michigan Distributor of any error.
Claims for damages, during shipment, should be made to the carrier immediately.

INDEX MODEL 75 III

	Page
A	
Accessories, Engine	1, 2
Air Cleaner Connections	7
Air Lines, Brake	15
Air Pressure Gauge	21, 23
Air Pressure Sender Unit	15
Air Reservoir	15
Ammeter	21, 23
B	
Brake Air Lines	15
Button, Starter	21, 23
C	
Cable, Battery	24
Cap, Radiator	6
Connections, Muffler, Tailpipe and Air Cleaner	7
Cockpit Wiring Diagram	25, 26, 27
Cockpit Wiring Harness	24
Connections, Radiator	6
Control Valve Assembly — Main	19
Control Valve Assembly — Transmission	9
D	
Dash Lamp	21, 23
Decals and Nameplates	24
E	
Element, Lighter	21, 23
Engine and Accessories	1, 2
Engine Oil Pressure Gauge	21, 23
Engine Support Parts	1, 2
Engine Temperature Gauge	21, 23
Engine Wiring Harness	24
F	
Fan Shroud, Radiator	6
Frame and Cradle Assembly	3
Fuel Lines	8
Fuse, Lighter	21, 23
G	
Gauge, Air Pressure	21, 23
Gauge, Engine Oil Pressure	21, 23
Gauge, Engine Temperature	21, 23
Gauge, Torque Converter Temperature	21, 23
H	
Harness, Cockpit Wiring	24
Harness, Engine Wiring	24
Harness, Flood Light	24
Harness, Instrument Panel	21, 23
Harness, Neutral Start Switch	24
Harness, Taillight Wiring	24
Hood, Cover, Panels, Fenders and Steps	5
Hourmeter Pressure Switch	1, 2
Hydraulic Pump, Steering	10
Hydraulic System, Bucket and Boom	17
Hydraulic System, Steering	13
I	
Ignition Switch	21, 23
Instrument Panel	21, 23
Instrument Wiring Harness	21, 23
L	
Lamp Assembly, Dash	21, 23
Lamp Assembly, Head	5
Light Switch	21, 23
Lighter Element	21, 23
Lighter Fuse	21, 23
Lighter Receptacle	21, 23
Lines, Fuel	8
M	
Muffler, Tailpipe and Air Cleaner Connections	7

N

Page

Nameplates and Decals 24

P

Panels, Side 5
Pressure Switch, Hourmeter 1, 2
Pressure Switch Voltage Regulator 1, 2
Pump, Steering Hydraulic 10

R

Radiator Assembly 6
Radiator Cap 6
Radiator and Connections 6
Radiator Fan Shroud 6
Rail, Hand 5
Regulator, Voltage 7
Reservoir, Air 15

S

Sender Unit, Air Pressure 15
Sender Unit, Engine Oil Pressure 1, 2
Sender Unit, Engine Temperature 1, 2
Shroud, Radiator 6
Side Panels 5
Starter Button 21, 23
Steering Hydraulic System 13
Steering Hydraulic Pump 10

Page

Steps 5
Supports, Engine 1, 2
Switch, Hourmeter Pressure 1, 2
Switch, Ignition 21, 23
Switch, Light 21, 23
Switch, Transmission Neutral Start 9
Switch, Voltage Regulator Pressure 1, 2

T

Tailpipe and Connections 7
Transmission Control Valve Assembly 9
Transmission Neutral Start Switch 9

V

Valve Assembly, Main Control 19
Valve Assembly, Transmission Control 9

W

Wiring Diagram, Cockpit 25, 26, 27
Wiring Diagram, Engine 28, 29, 30, 31
Wiring Harness, Cockpit 24
Wiring Harness, Engine 24
Wiring Harness, Floodlight 24
Wiring Harness, Instrument Panel 21, 23
Wiring Harness, Neutral Start Switch 24
Wiring Harness, Tail Light 24

NOTES

ENGINE AND ACCESSORIES — G.M.

All orders for engine assembly or components thereof should be placed with the nearest G.M. Diesel Distributor. To obtain proper items, it is necessary to provide your engine model, serial number and necessary group type number for the equipment required. This data is stamped on the options and accessories plate on the rocker cover of engine.

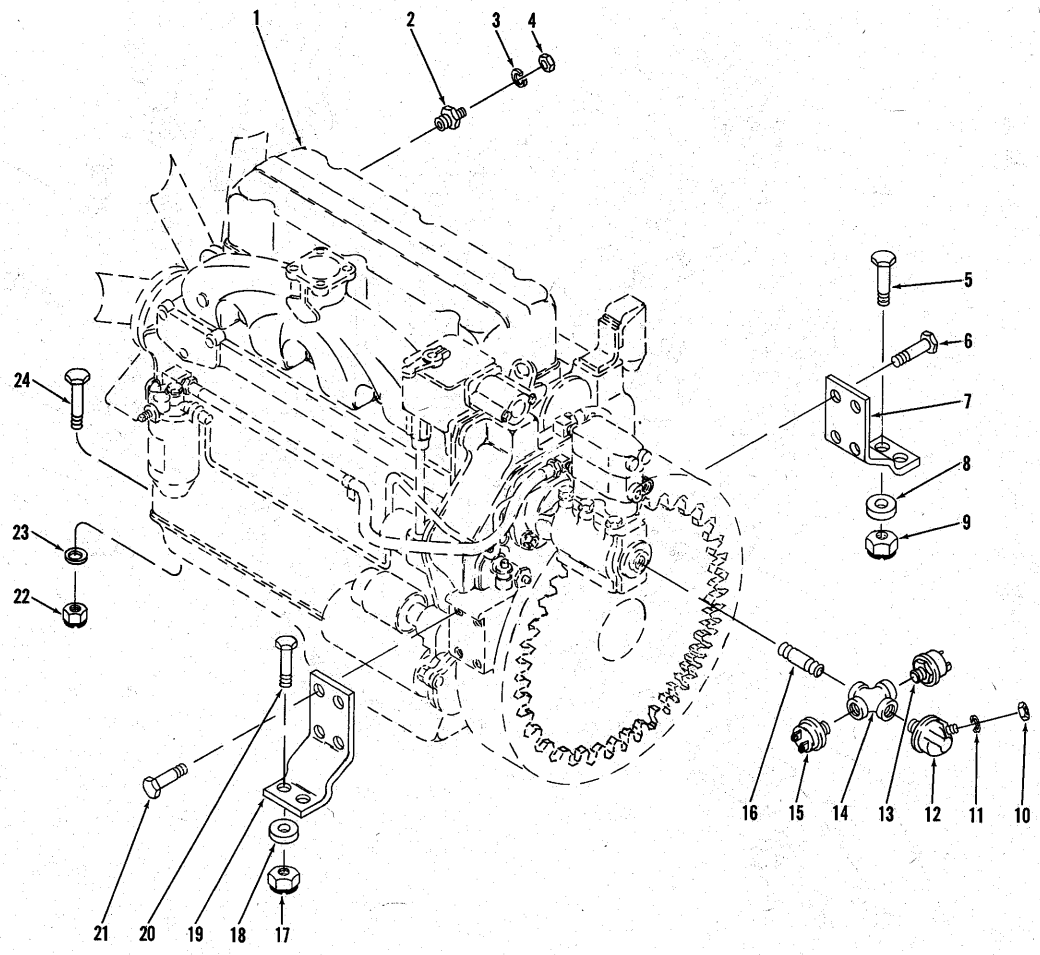

TS-7745-P

ENGINE ACCESSORIES AND SUPPORT PARTS — G.M.

Item No.	Part No.	Description	No. Req'd.
1	———	ENGINE — See G.M. Engine Parts Manual	—
2	551323	SENDER UNIT, Engine Temperature	1
3	12E-10	LKWSHR, Sender Unit	1
4	14D-10	NUT, Sender Unit	1
5	18C-836	BOLT, Support to Frame	2
6	8C-824	BOLT, Support to Engine	4
7	570938	SUPPORT, Engine	1
8	71D-08	BASE, Support to Frame	2
9	70D-08	NUT, Support to Frame	2
10	14D-10	NUT, Sender Unit	1
11	12E-10	LKWSHR, Sender Unit	1
12	550832	SENDER UNIT, Engine Oil Pressure	1
13	636260	SWITCH, Hourmeter Pressure	1
14	21F-1	CROSS, Pressure Switch and Sender Unit Connecting	1
15	636260	SWITCH, Voltage Regulator Pressure	1
16	5K-106	NIPPLE, Cross to Engine	1
17	70D-08	NUT, Support to Frame	2
18	71D-08	BASE, Support to Frame	2
19	570938	SUPPORT, Engine	1
20	18C-836	BOLT, Support to Frame	2
21	8C-824	BOLT, Support to Engine	4
22	18D-08	NUT, Engine to Frame	2
23	619029	WASHER, Engine to Frame	2
24	18C-832	BOLT, Engine to Frame	2

WHEN ORDERING PARTS, ALWAYS STATE MODEL AND SERIAL NO. OF MACHINE

ENGINE AND ACCESSORIES – WAUKESHA GAS

All orders for engine assembly or components thereof should be placed with the nearest Waukesha Motor Co. Distributor. Always give model, specifications and serial number of your engine. This data will be found on nameplate attached to the side of the engine.

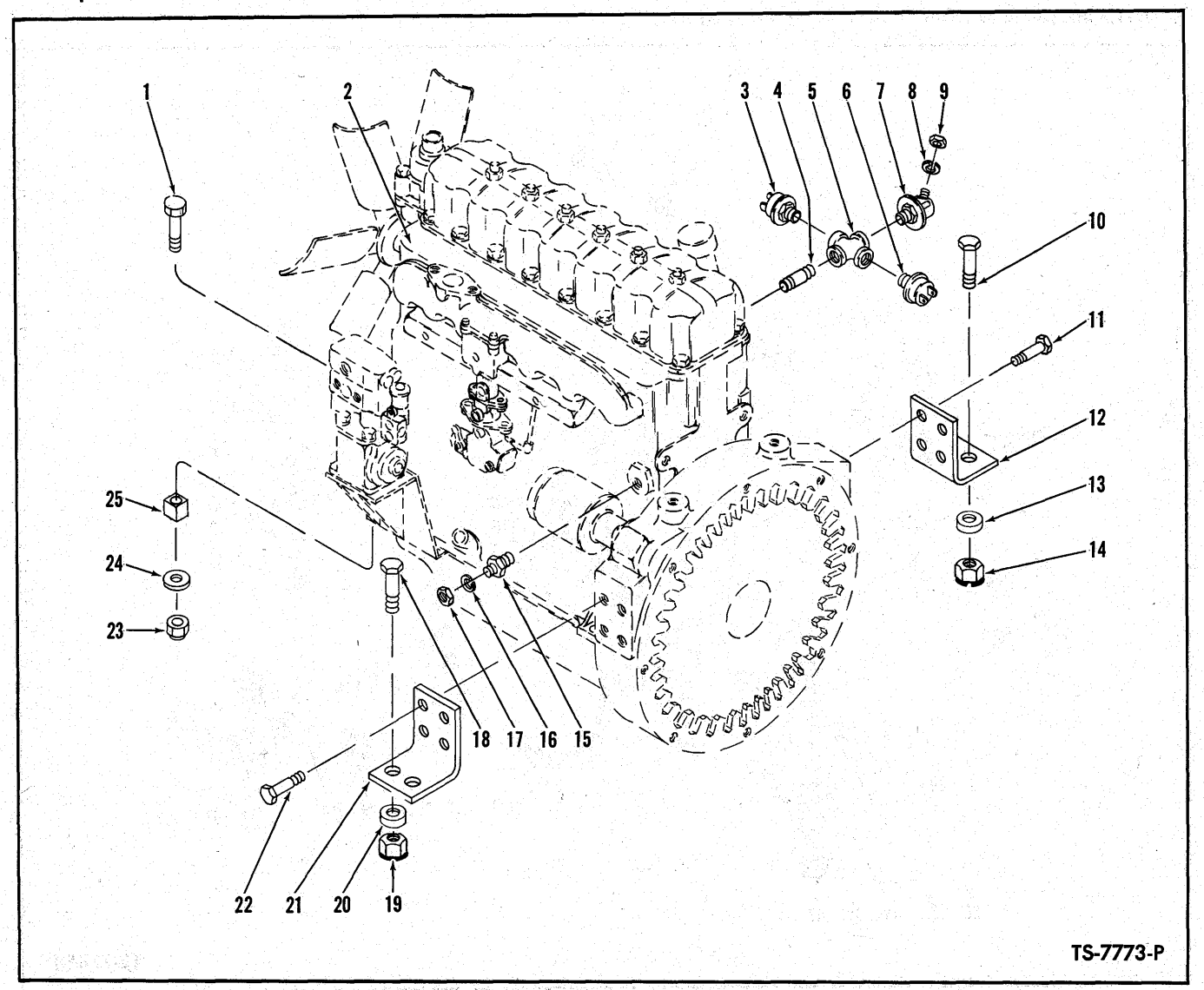

ENGINE ACCESSORIES AND SUPPORT PARTS

Item No.	Part No.	Description	No. Req'd.
1	18C-856	BOLT, Engine to Frame	2
2	———	ENGINE – See Waukesha Engine Parts Manual	–
3	636260	SWITCH, Hourmeter Pressure	1
4	5K-112	NIPPLE, Cross to Engine	1
5	21F-1	CROSS, Connecting	1
6	636260	SWITCH, Voltage Regulator Pressure	1
7	550832	SENDER UNIT, Engine Oil Pressure	1
8	12E-10	LKWSHR, Sender Unit	1
9	14D-10	NUT, Sender Unit	1
10	18C-836	BOLT, Support to Frame	2
11	8C-824	BOLT, Support to Engine	4
12	572719	SUPPORT, Engine to Frame	1
13	71D-08	BASE, Support to Frame	2
14	70D-08	NUT, Support to Frame	2
15	551323	SENDER UNIT, Engine Temperature	1
16	12E-10	LKWSHR, Sender Unit	1
17	14D-10	NUT, Sender Unit	1
18	18C-836	BOLT, Support to Frame	2
19	70D-08	NUT, Support to Frame	2
20	71D-08	BASE, Support to Frame	2
21	572719	SUPPORT, Engine to Frame	1
22	8C-824	BOLT, Support to Engine	4
23	18D-08	NUT, Engine to Frame	2
24	1520449	WASHER, Engine to Frame	2
25	546167	BLOCK, Spacer	2

WHEN ORDERING PARTS, ALWAYS STATE MODEL AND SERIAL NO. OF MACHINE

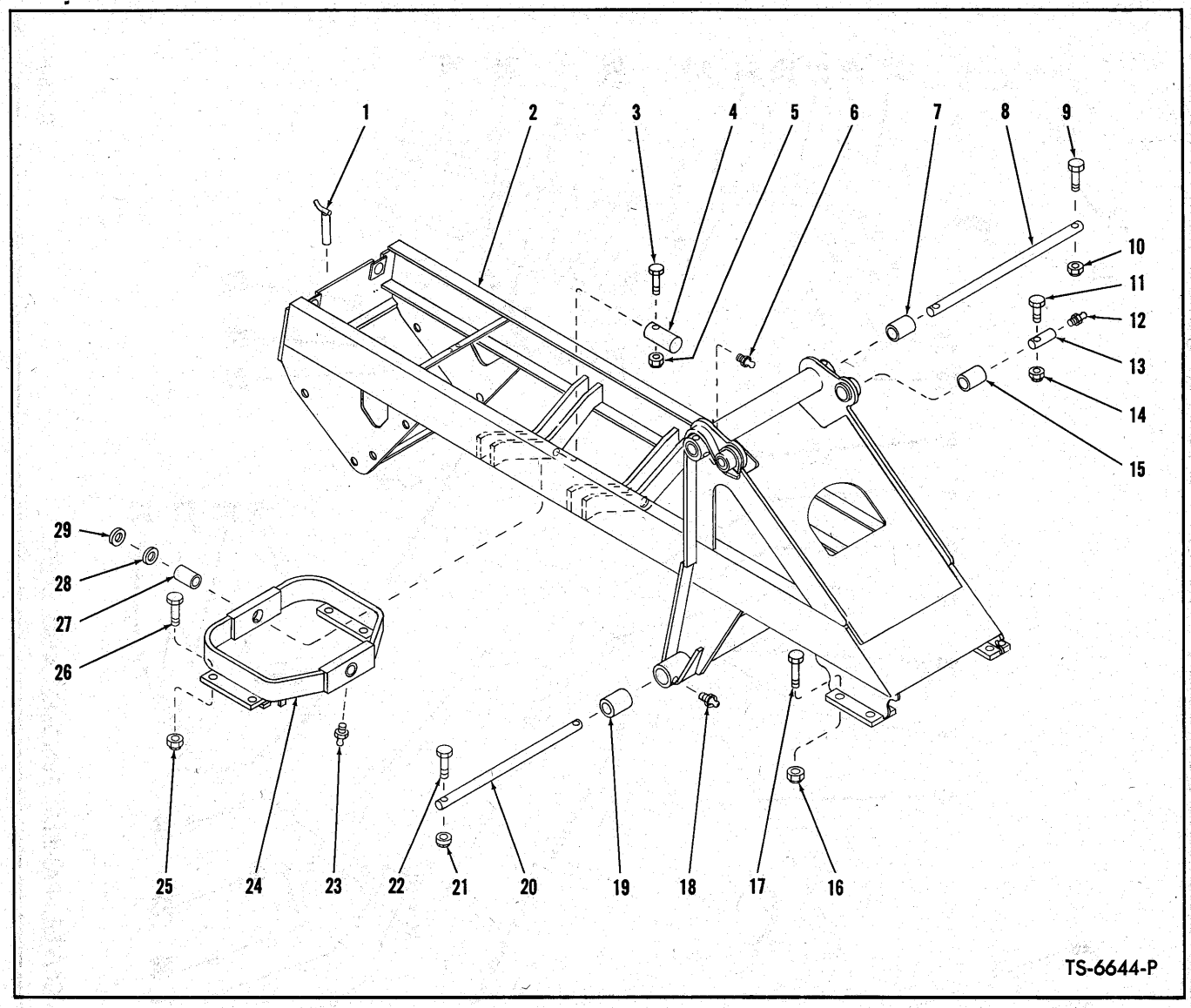

FRAME AND CRADLE ASSEMBLY

Item No.	Part No.	Description	No. Req'd.
1	549988	PIN ASSY, Drawbar	1
2		*FRAME ASSY (Inc. 7, 15, 19)*	
2A	572749	For G.M. Powered Machines	1
2B	1522640	For Waukesha Powered Machines	1
3	18C-856	BOLT, Pin Retaining	2
4	536100	PIN, Cradle Pivot	2
5	18D-08	NUT, Pin Retaining	2
6	10H-25	FITTING, Upper Pivot Tube Grease	2
7	564126	BUSHING, Upper Pivot Tube	2
8	571022	SHAFT, Boom Pivot — Upper	1
9	18C-880	BOLT, Pivot Shaft Retaining	2
10	18D-08	NUT, Pivot Shaft Retaining	2
11	18C-880	BOLT, Pivot Pin Retaining	2
12	10H-25	FITTING, Pivot Pin Grease	2
13	556960	PIN, Bucket Cylinder Pivot	2
14	18D-08	NUT, Pivot Pin Retaining	2
15	585007	BUSHING, Upper Pivot	2
16	68D-12	NUT, Front Axle to Frame	8
17	18C-12144	BOLT, Front Axle to Frame	8
18	10H-25	FITTING, Lower Pivot Tube Grease	2
19	564129	BUSHING, Lower Pivot Tube	2
20	1530602	SHAFT, Cylinder Pivot	1
21	18D-08	NUT, Pivot Shaft Retaining	2
22	18C-872	BOLT, Pivot Shaft Retaining	2
23	10H-25	FITTING, Cradle Pin Grease	2
24	564137	CRADLE ASSY, Rear Axle (Inc. 27)	1
25	68D-12	NUT, Rear Axle to Cradle	8
26	18C-1260	BOLT, Rear Axle to Cradle	8
27	538585	BUSHING, Cradle Pivot	2
28	551348	‡SHIM, Cradle to Frame	—
29	551347	‡SHIM, Cradle to Frame	—

‡As Required

WHEN ORDERING PARTS, ALWAYS STATE MODEL AND SERIAL NO. OF MACHINE

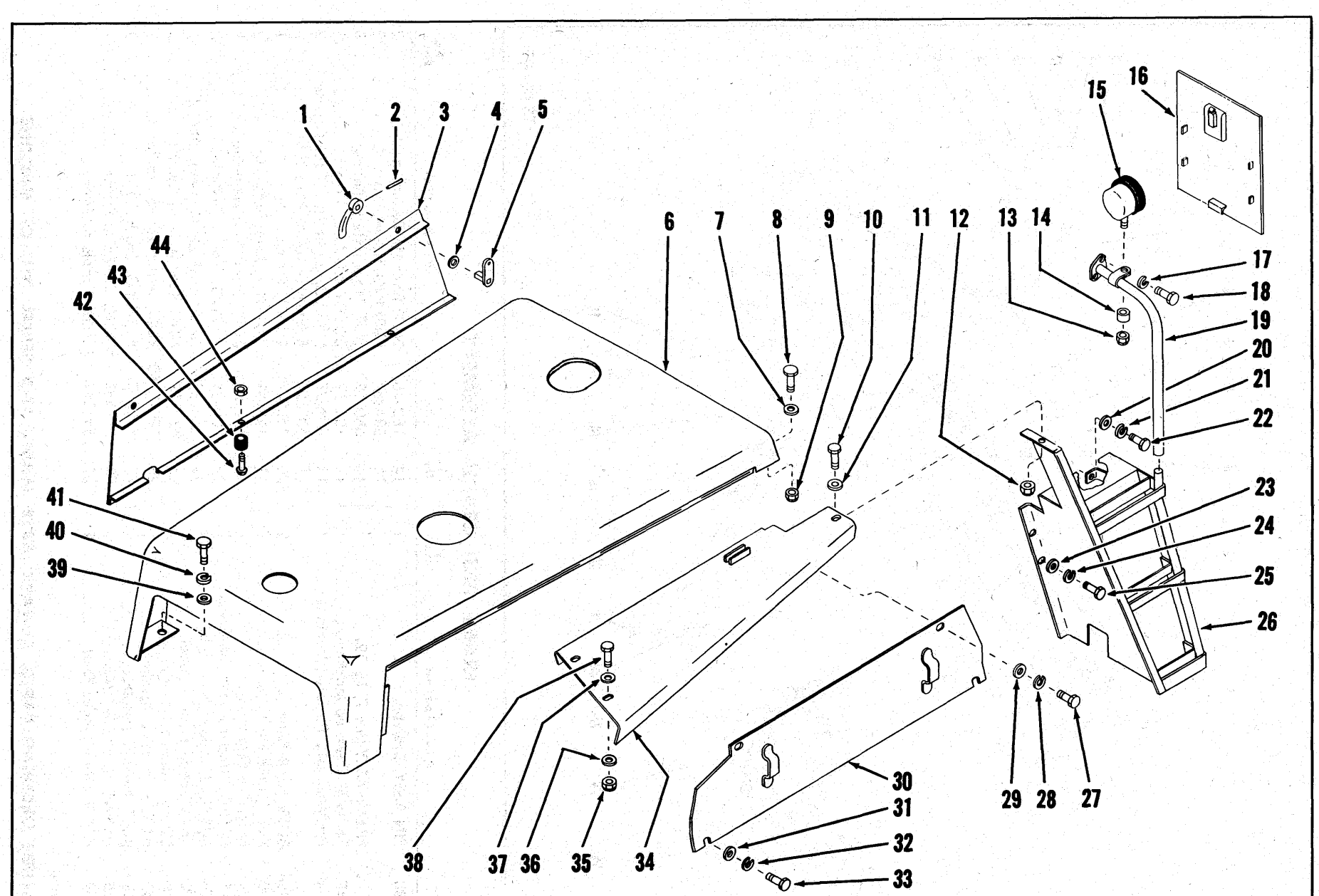

HOOD, COVER, PANELS, FENDERS AND STEPS

TS-6804-P

HOOD, COVER, PANELS, FENDERS AND STEPS

Item No.	Part No.	Description	No. Req'd.
1	142396	KIT, Handle (Inc. 2, 4, 5)	4
2	730432	PIN, Handle Roll	4
3		*PANEL, Side (Inc. 1, 2, 4, 5, 42, 43, 44)*	
3A	571646	LEFT HAND	1
3B	571645	†RIGHT HAND	1
4	———	§SPACER, Shaft — See Item "1"	—
5	———	§SHAFT, Handle — See Item "1"	—
6		*HOOD*	
6A	556323	For G.M. Powered Machines	1
6B	1522679	For Waukesha Powered Machines	1
7	619029	WASHER, Hood to Cockpit	2
8	18C-820	BOLT, Hood to Cockpit	2
9	18D-08	NUT, Hood to Cockpit	2
10	18C-824	BOLT, Fender to Step	2
11	619029	WASHER, Fender to Step	2
12	18D-08	NUT, Fender to Step	2
13	17D-6	NUT, Head Lamp Mounting	2
14	509320	SPACER, Head Lamp Mounting	2
15	547529	LAMP ASSY, Head (Inc. 15A)	2
15A	944907	†SEALED UNIT, Head Lamp	2
16	566764	COVER ASSY, Front	1
17	4E-06	LKWSHR, Hand Rail to Cockpit	4
18	17C-620	BOLT, Hand Rail to Cockpit	4
19		*HAND RAIL*	
19A	563980	RIGHT HAND	1
19B	563981	†LEFT HAND	1
19C	1522201	†CLAMP, Head Lamp to Hand Rail	2
20	619029	WASHER, Step to Frame	2
21	4E-08	LKWSHR, Step to Frame	2
22	18C-816	BOLT, Step to Frame	2
23	619029	WASHER, Step to Frame	4
24	4E-08	LKWSHR, Step to Frame	4
25	18C-816	BOLT, Step to Frame	4
26		*STEP ASSEMBLY*	
26A	556691	RIGHT HAND	1
26B	556692	†LEFT HAND	1
27	18C-812	BOLT, Panel to Fender	4
28	4E-08	LKWSHR, Panel to Fender	4
29	619029	WASHER, Panel to Fender	4
30		*SIDE PANEL*	
30A	563928	RIGHT HAND	1
30B	563929	†LEFT HAND	1
31	619029	WASHER, Panel to Frame	4
32	4E-08	LKWSHR, Panel to Frame	4
33	18C-812	BOLT, Panel to Frame	4
34		*FENDER*	
34A	557847	RIGHT HAND	1
34B	557848	†LEFT HAND	1
35	18D-08	NUT, Fender to Tank	4
36	619029	WASHER, Fender to Tank	4
37	619029	WASHER, Fender to Tank	4
38	18C-824	BOLT, Fender to Tank	4
39	571049	WASHER, Hood to Tank	2
40	4E-08	LKWSHR, Hood to Tank	2
41	18C-820	BOLT, Hood to Tank	2
42	3G-1008	SCREW, Side Panel Mounting	4
43	551433	BUMPER, Side Panel Mounting	4
44	12D-10	NUT, Side Panel Mounting	4

†Not Illustrated
‡As Required
§Not Sold Separately

WHEN ORDERING PARTS, ALWAYS STATE MODEL AND SERIAL NO. OF MACHINE

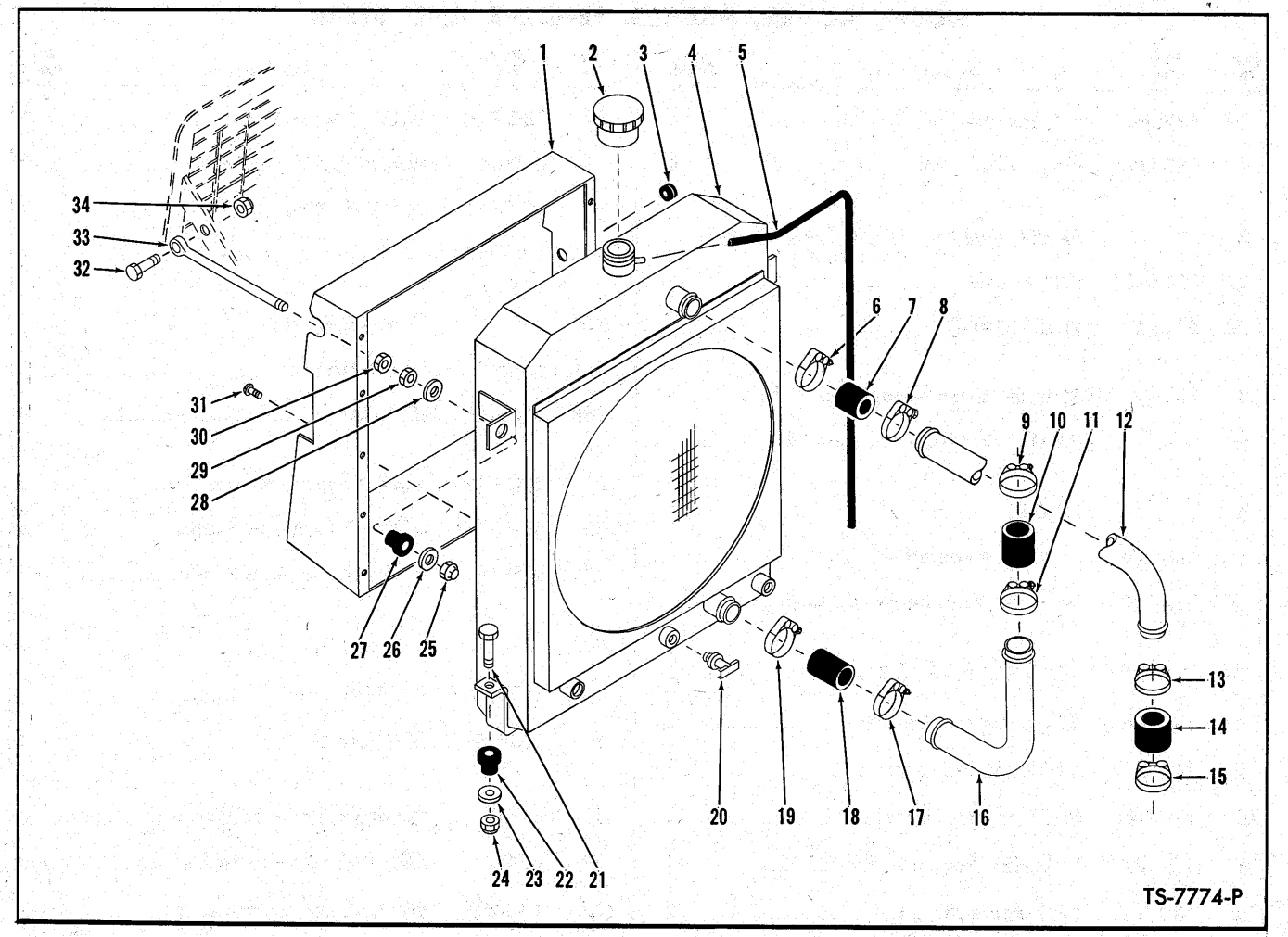

RADIATOR AND CONNECTIONS — WAUKESHA

Item No.	Part No.	Description	No. Req'd.
1	563672	SHROUD, Radiator to Grille	1
2	351495	CAP, Radiator	1
3	585950	GROMMET, Shroud	1
4	1522421	RADIATOR (Inc. 2, 5)	1
5	945460	HOSE, Overflow	1
6	540108	CLAMP, Hose to Radiator	1
7	1M-16030	HOSE, Tube to Radiator	1
8	540108	CLAMP, Hose to Tube	1
9	540108	CLAMP, Hose to Engine	1
10	1M-16030	HOSE, Tube to Engine	1
11	540108	CLAMP, Hose to Tube	1
12	1522633	TUBE, Radiator to Engine — Upper	1
13	540108	CLAMP, Hose to Tube	1
14	1M-16030	HOSE, Tube to Engine	1
15	540108	CLAMP, Hose to Engine	1
16	1522631	TUBE, Radiator to Engine — Lower	1
17	540108	CLAMP, Tube to Hose	1
18	1M-16030	HOSE, Tube to Engine	1
19	540108	CLAMP, Hose to Radiator	1
20	72F-2	DRAIN COCK	1
21	18C-836	BOLT, Radiator to Frame	2
22	584501	MOUNT, Radiator to Frame	2
23	584502	WASHER, Radiator to Frame	2
24	18D-08	NUT, Radiator to Frame	2
25	18D-08	NUT, Rod to Radiator	2
26	584502	WASHER, Rod to Radiator	2
27	584501	MOUNT, Rod to Radiator	2
28	584502	WASHER, Rod to Radiator	2
29	8D-08	NUT, Jam	2
30	8D-08	NUT, Jam	2
31	18G-806	SCREW, Shroud to Radiator	10
32	18C-828	BOLT, Rod to Grille	2
33	570499	ROD, Radiator Support	2
34	18D-08	NUT, Rod to Grille	2

WHEN ORDERING PARTS, ALWAYS STATE MODEL AND SERIAL NO. OF MACHINE

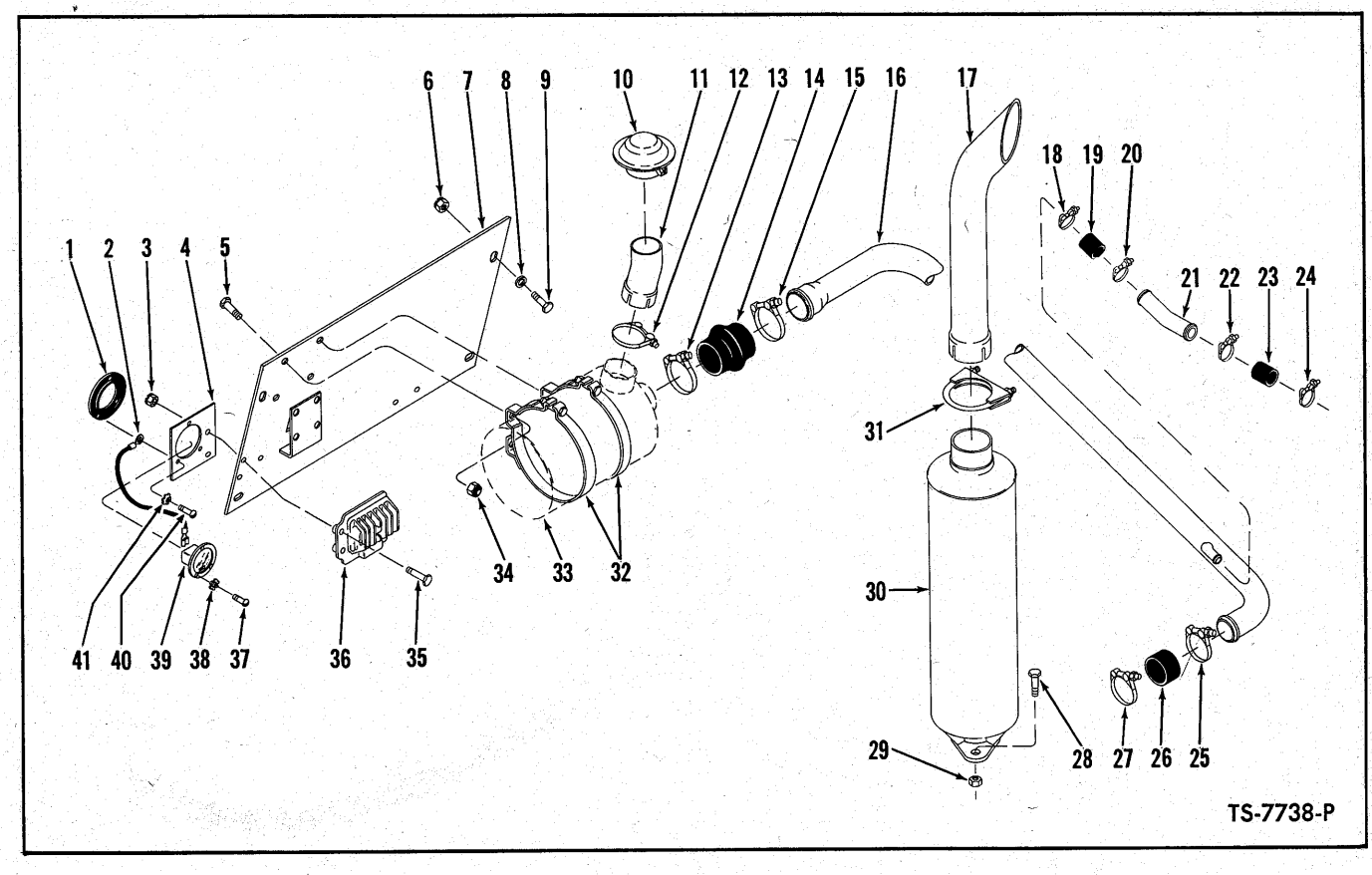

MUFFLER, TAIL PIPE AND AIR CLEANER CONNECTIONS — WAUKESHA

Item No.	Part No.	Description	No. Req'd.
1	551251	DAMPENER, Hourmeter Vibration	1
2	558960	WIRE, Hourmeter Ground	1
3	18D-04	NUT, Regulator Mounting	3
4	569414	BRACKET, Hourmeter Mounting	1
5	18C-616	BOLT, Air Cleaner to Bracket	4
6	18D-08	NUT, Bracket to Cockpit	4
7	571389	BRACKET, Air Cleaner Mounting	1
8	619029	WASHER, Bracket to Cockpit	4
9	18C-824	BOLT, Bracket to Cockpit	4
10	568391	CAP, Air Cleaner Inlet	1
11	571386	EXTENSION, Air Cleaner Inlet	1
12	543531	CLAMP, Extension to Air Cleaner	1
13	539042	CLAMP, Hose to Air Cleaner	1
14	515424	HOSE, Air Cleaner to Intake Tube	1
15	539042	CLAMP, Hose to Intake Tube	1
16	1522638	TUBE, Air Intake	1
17	543576	TAIL PIPE	1
18	540103	CLAMP, Hose to Intake Tube	1
19	524225	HOSE, Tube to Tube	1
20	540103	CLAMP, Hose to Compressor Tube	1
21	1522630	TUBE, Air Intake to Compressor	1
22	540103	CLAMP, Tube to Hose	1
23	524225	HOSE, Tube to Compressor	1
24	540103	CLAMP, Hose to Compressor	1
25	540107	CLAMP, Hose to Air Intake Tube	1
26	551627	HOSE, Intake Tube to Carburetor	1
27	540107	CLAMP, Hose to Carburetor	1
28	18C-828	BOLT, Muffler to Engine	2
29	18D-08	NUT, Muffler to Engine	2
30	1522636	MUFFLER	1
31	507068	CLAMP, Tail Pipe to Muffler	1
32	420945	BAND, Air Cleaner Mounting	2
33	———	AIR CLEANER ASSY — See P.M. 2083	—
34	18D-06	NUT, Air Cleaner to Bracket	4
35	18C-424	BOLT, Regulator Mounting	3
36	1621888	VOLTAGE REGULATOR	1
37	3G-608	SCREW, Hourmeter to Dampener	3
38	12E-6	LKWSHR, Hourmeter to Dampener	3
39	886619	HOURMETER KIT (Inc. 37, 38)	1
40	3G-608	SCREW, Dampener to Bracket	3
41	12E-6	LKWSHR, Dampener to Bracket	3

WHEN ORDERING PARTS, ALWAYS STATE MODEL AND SERIAL NO. OF MACHINE

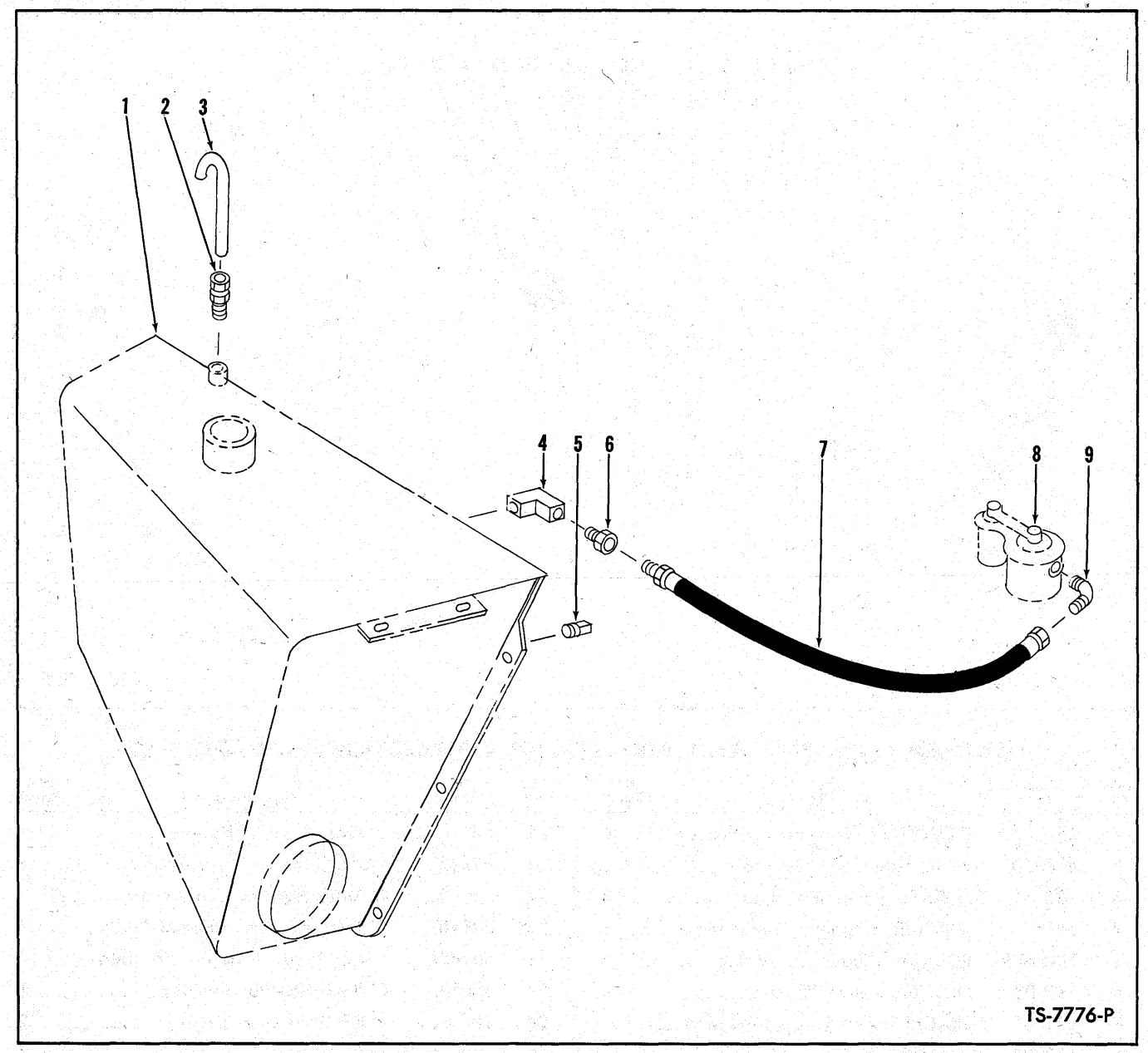

FUEL LINES — WAUKESHA

Item No.	Part No.	Description	No. Req'd.
1	———	FUEL TANK — See P.M. 2083	—
2	49F-3	CONNECTOR, Tube to Tank	1
3	567847	TUBE, Breather	1
4	27F-3	ELBOW, Hose to Tank	1
5	13F-04	PLUG, Tank	1
6	19F-4	BUSHING, Hose to Elbow	1
7	1522807	HOSE, Tank to Fuel Pump	1
8	———	FUEL PUMP — See Waukesha Engine Parts Manual	—
9	83F-3	ELBOW, Hose to Fuel Pump	1

WHEN ORDERING PARTS, ALWAYS STATE MODEL AND SERIAL NO. OF MACHINE

CONTROL VALVE — TRANSMISSION

(For Serial 8CG128 and thereafter, 7CA122 and thereafter)

For Serial 8CG101 thru 127, 7CA101 thru 121 refer to Parts Manual 2083

Item No.	Part No.	Description	No. Req'd.
A	229369	CONTROL VALVE ASSY (Inc. 1 thru 30)	1
1	215200	PLUG, Stop	1
2	25K-30020	"O" RING	1
3	227874	CUP, Piston	1
4	215199	SPACER, Cup	1
5	106358	PIN, Push	1
6	215196	VALVE, De-clutch (Inc. 1 thru 5, 7, 8, 9, 12)	1
7	224315	SEAL, Oil	1
8	228931	SEAL, Band	1
9	25K-30022	"O" RING	1
10	———	*§VALVE, De-clutch Control — See "A"	—
11	220363	SPRING, Control Valve	1
12	40K-02	PLUG	1
13	225075	SEAL, Manual Control Valve Oil	1
14	———	§VALVE, Manual Control — See "A"	—
15	———	§VALVE, Manual Control — See "A"	—
16	225075	SEAL, Manual Control Valve Oil	1
17	———	§HOUSING, Control Valve — See "A"	—
18	16F-01	PLUG	1
19	16F-01	PLUG	1
20	1C-718	BOLT, Housing to Cover	4
21	4E-07	LKWSHR, Housing to Cover	4
22	47K-3	PLUG, Detent	1
23	202200	SPRING, Detent	1
24	229010	PIN, Detent	1
25	10J-12	BALL, Detent	1
26	224620	SWITCH, Neutral Start	1
27	10J-12	BALL, Detent	1
28	215194	PIN, Detent Stop	1
29	215147	SPRING, Detent	1
30	229009	GASKET, Housing to Cover	1

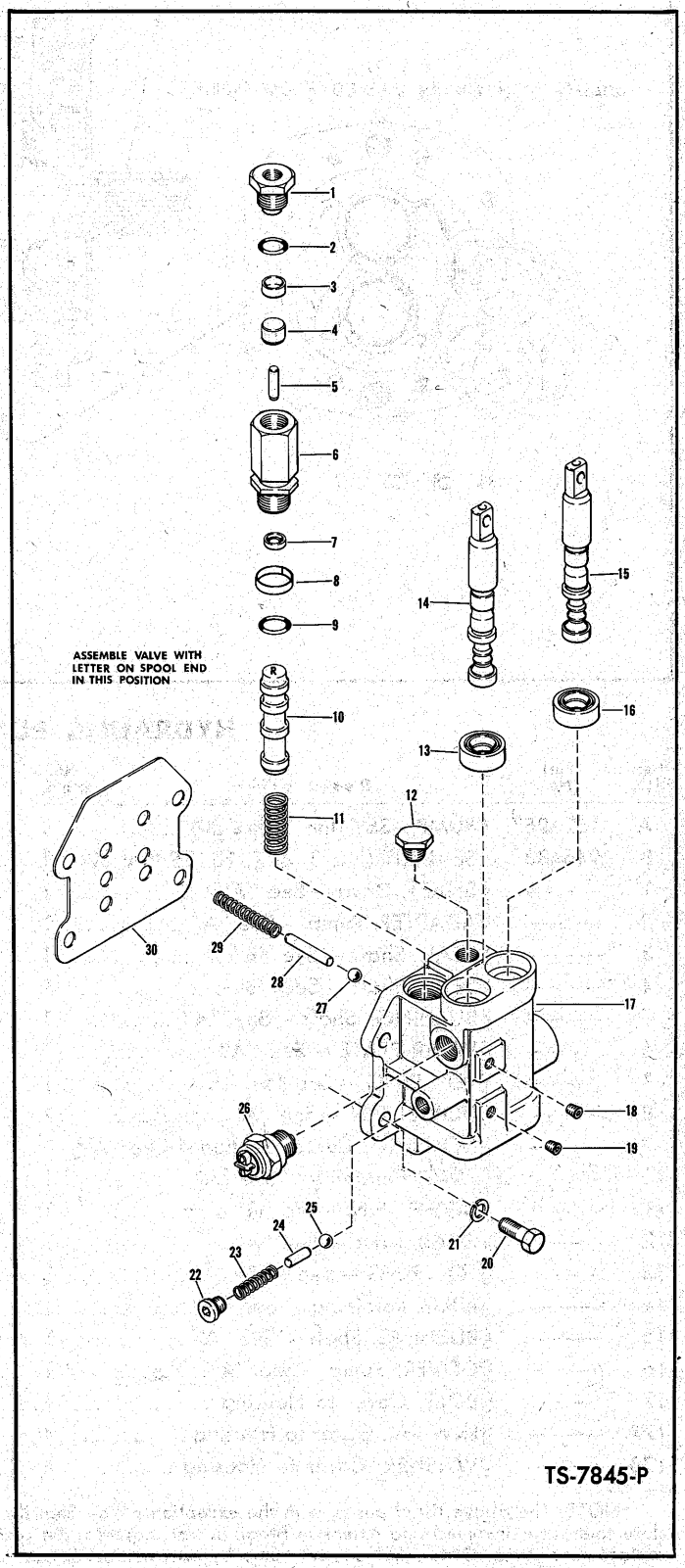

*NOTE: For correct operation of De-Clutch feature in this application Item 10 must be installed with the letter "R" in the upright position.
§Not Sold Separately

WHEN ORDERING PARTS, ALWAYS STATE MODEL AND SERIAL NO. OF MACHINE

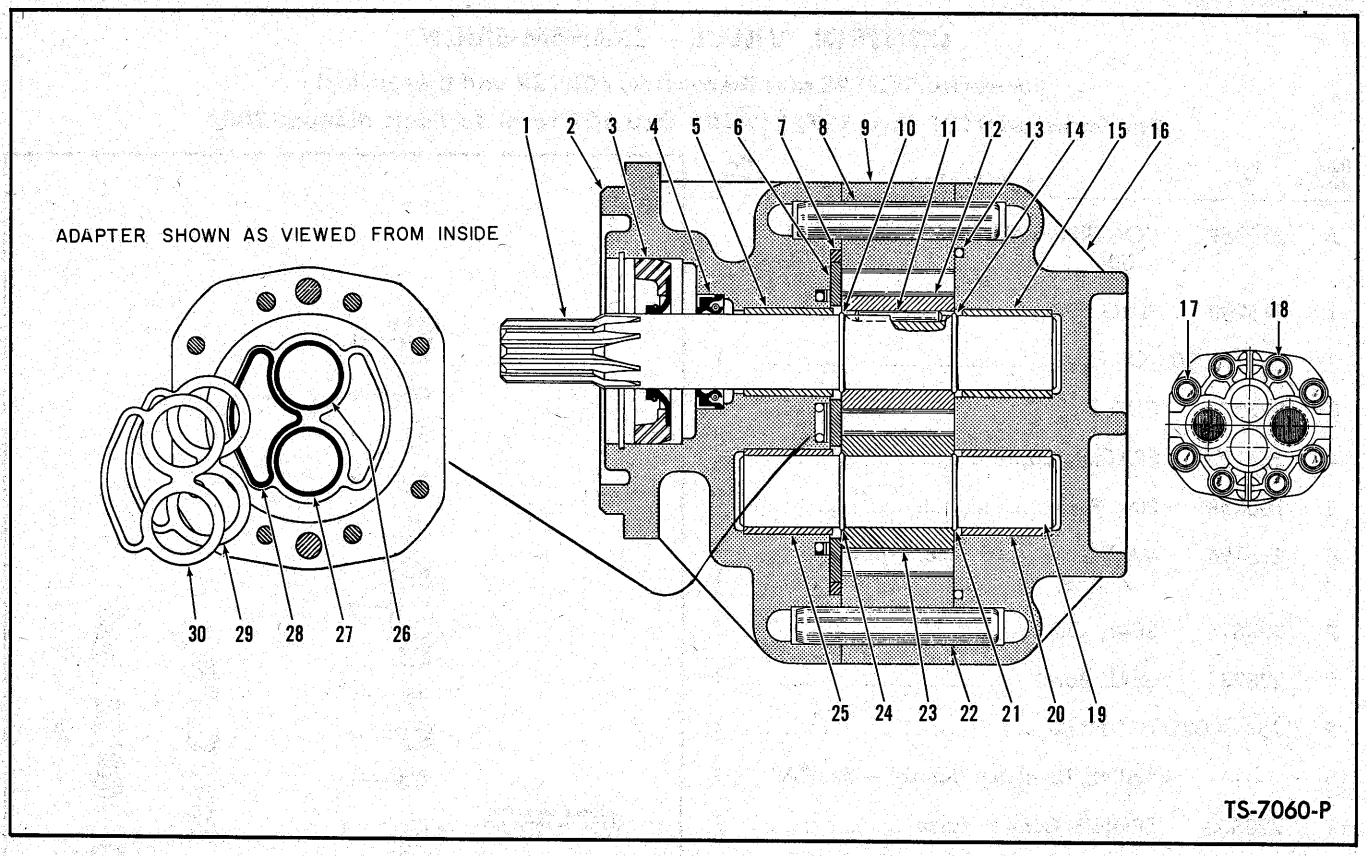

HYDRAULIC PUMP — STEERING

Item No.	Part No.	Description	No. Req'd.
A	1521257	*PUMP ASSY (Inc. 1 thru 30)	1
B	946483	SEAL KIT (Inc. 3, 4, 7, 13, 26 thru 30)	1
1	———	§SHAFT, Drive — See "A"	1
2	———	§ADAPTER, Pump — See "A"	1
3	———	§SEAL, Shaft — See "B"	1
4	———	§SEAL, Shaft — See "B"	1
5	———	§BUSHING, Shaft — See "A"	1
6	———	§WEAR PLATE — See "A"	1
7	———	§"O" RING — See "B"	1
8	———	§DOWEL PIN — See "A"	1
9	———	§HOUSING, Center Section — See "A"	1
10	———	§RING, Retaining — See "A"	1
11	———	§DOWEL PIN — See "A"	1
12	———	§GEAR, Drive — See "A"	1
13	———	§"O" RING — See "B"	1
14	———	§RING, Retaining — See "A"	1
15	———	§BUSHING, Shaft — See "A"	1
16	———	§COVER, Pump — See "A"	1
17	———	§BOLT, Cover to Housing	4
17A	———	§LKWSHR, Cover to Housing	4
17B	———	§WASHER, Cover to Housing	4
18	———	§BOLT, Cover to Housing	4
18A	———	§LKWSHR, Cover to Housing	4
18B	———	§WASHER, Cover to Housing	4
19	———	§SHAFT, Drive — See "A"	1
20	———	§BUSHING, Shaft — See "A"	1
21	———	§RING, Retaining — See "A"	1
22	———	§DOWEL PIN — See "A"	1
23	———	§GEAR, Driven — See "A"	1
24	———	§RING, Retaining — See "A"	1
25	———	§BUSHING — See "A"	1
26	———	§"O" RING — See "B"	1
27	———	§"O" RING — See "B"	1
28	———	§"O" RING — See "B"	1
29	———	§RING, Back-up — See "B"	1
30	———	§RING, Back-up — See "B"	1
31	214961	†SLEEVE, Pump Drive	1
32	551906	†GASKET, Pump to Converter	1
33	9E-06	†LKWSHR, Pump Mounting	3
34	103293	†WASHER, Pump Mounting	3
35	8D-06	†NUT, Pump Mounting	3

*NOTE: The above listed pump, with the exception of the Seal Kit listed, is not considered rebuildable in the field. Due to extremely close tolerances involved and extensive break in test required, the cost of equipment needed and parts plus labor would exceed cost of replacement pump. Order replacement Pump by part number listed.

§Not Sold Separately

†Not Illustrated

WHEN ORDERING PARTS, ALWAYS STATE MODEL AND SERIAL NO. OF MACHINE

NOTES

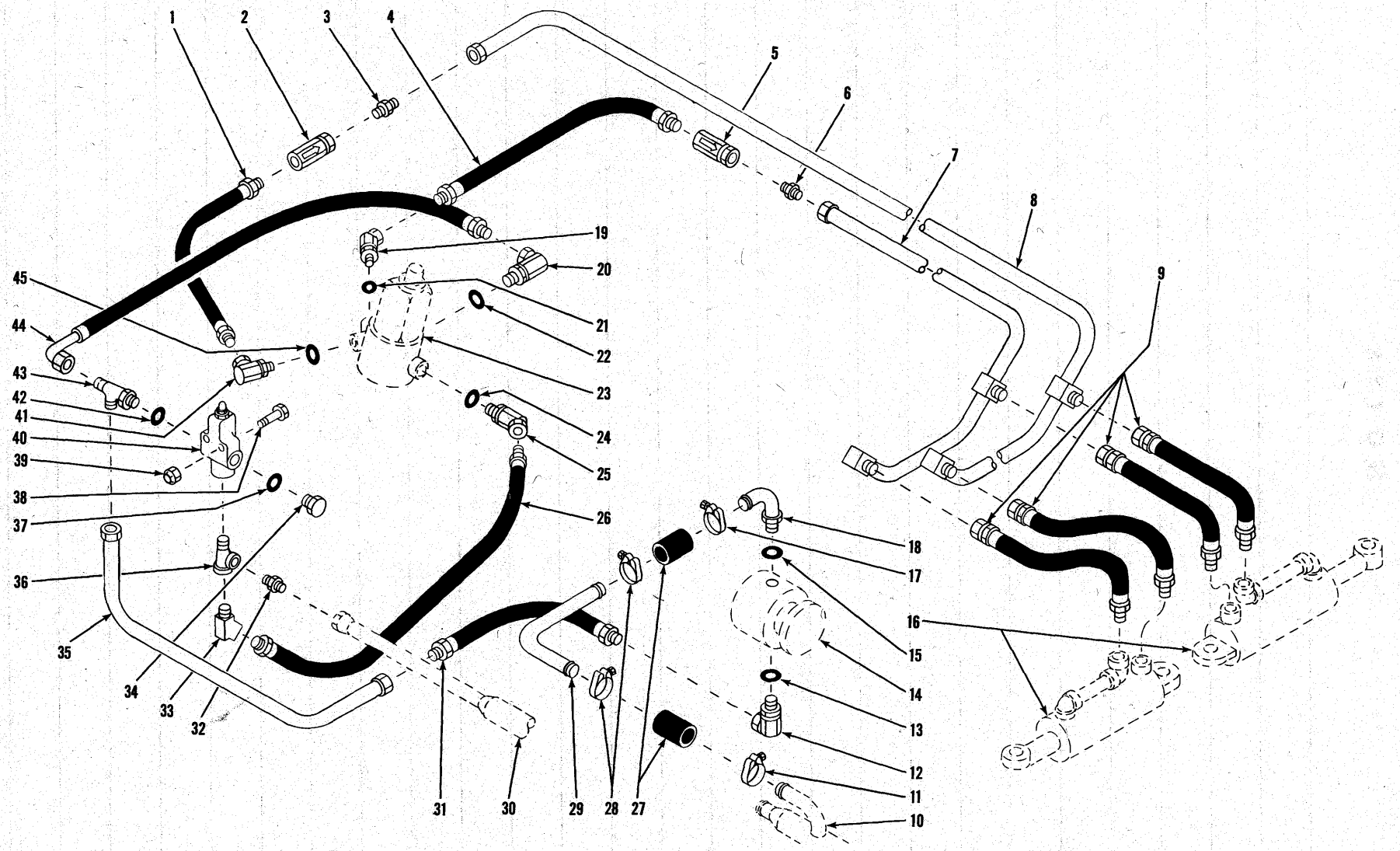

HYDRAULIC SYSTEM — STEERING

TS-6641-P

HYDRAULIC SYSTEM — STEERING

Item No.	Part No.	Description	No. Req'd.
1		*HOSE*	
1A	784398	Valve to Gear — For Serial: Waukesha — 7CA101 thru 7CA121, G.M. — 8CG101 thru 8CG155 only	1
1B	540883	†Tube to Gear — For Serial: Waukesha — 7CA122 thru 7CA999, G.M. — 8CG156 thru 8CG999	1
2	572731	VALVE, Check — For Serial: Waukesha — 7CA101 thru 7CA121 & G.M. — 8CG101 thru 8CG155 only	1
3	89F-7	CONNECTOR, Check Valve to Tube — For Serial: Waukesha — 7CA101 thru 7CA121 & G.M. — 8CG101 thru 8CG155 only	1
4		*HOSE*	
4A	784398	Valve to Gear — For Serial: Waukesha — 7CA101 thru 7CA121, G.M. — 8CG101 thru 8CG155 only	1
4B	540883	†Tube to Gear — For Serial: Waukesha — 7CA122 thru 7CA999, G.M. — 8CG156 thru 8CG999	1
5	572731	VALVE, Check — For Serial: Waukesha — 7CA101 thru 7CA121 & G.M. — 8CG101 thru 8CG155 only	1
6	89F-7	CONNECTOR, Check Valve to Tube — For Serial: Waukesha — 7CA101 thru 7CA121 & G.M. — 8CG101 thru 8CG155 only	1
7	589487	TUBE, Gear to Cylinder — Right Turn	1
8	589488	TUBE, Gear to Cylinder — Left Turn	1
9	533927	HOSE, Tube to Cylinder	4
10	———	TUBE, Suction — See Bucket & Boom Hydraulic System	—
11	540127	CLAMP, Hose	1
12	526676	ADAPTER UNION, Hose to Pump (Inc. 13)	1
13	91F-8	"O" RING, Adapter Union	1
14	———	STEERING PUMP — See Index	—
15	91F-11	"O" RING, Elbow	1
16	———	STEERING CYLINDER — See P.M. 2083	—
17	540127	CLAMP, Hose	1
18	1521254	ELBOW, Pump to Suction Tube (Inc. 15)	1
19	535625	ADAPTER UNION, Hose to Gear (Inc. 21)	1
20	519275	ADAPTER UNION, Hose to Gear (Inc. 22)	1
21	91F-6	"O" RING, Adapter Union	1
22	91F-7	"O" RING, Adapter Union	1
23	———	STEERING GEAR — See P.M. 2083	—
24	91F-7	"O" RING, Adapter Union	1
25	534894	ADAPTER UNION, Hose to Gear (Inc. 24)	1
26	542813	HOSE, Relief Valve to Steering Gear	1
27	536749	HOSE, Stem to Tube	2
28	540127	CLAMP, Hose	2
29		*TUBE, Suction*	
29A	1521354	For Waukesha Powered Machines	1
29B	1521255	For G.M. Powered Machines	1
30	———	TUBE, Return — See Bucket and Boom Hydraulic System	—
31		*HOSE, Pump to Tube*	
31A	563483	For Waukesha Powered Machines	1
31B	564107	For G.M. Powered Machines	1
32	656532	CONNECTOR, Tube	1
33	81F-4	ELBOW, Hose to Tee	1
34	24K-7	PLUG, Relief Valve (Inc. 37)	1
35		*TUBE, Pump to Valve*	
35A	563466	For Waukesha Powered Machines	1
35B	558570	For G.M. Powered Machines	1
36	17F-5	TEE, Relief Valve	1
37	91F-7	"O" RING, Plug	1
38	18C-540	BOLT, Relief Valve Mounting	2
39	18D-05	NUT, Relief Valve Mounting	2
39A	619029	†WASHER, Relief Valve Mounting	2
40	———	VALVE, Pressure Relief — See P.M. 2083	—
41	517089	ADAPTER UNION, Hose to Gear (Inc. 45)	1
42	91F-7	"O" RING, Tube Fitting Tee	1
43	21K-7	TEE, Tube Fitting	1
44	568785	HOSE, Relief Valve to Gear	1
45	91F-6	"O" RING, Adapter Union	1

†Not Illustrated

WHEN ORDERING PARTS, ALWAYS STATE MODEL AND SERIAL NO. OF MACHINE

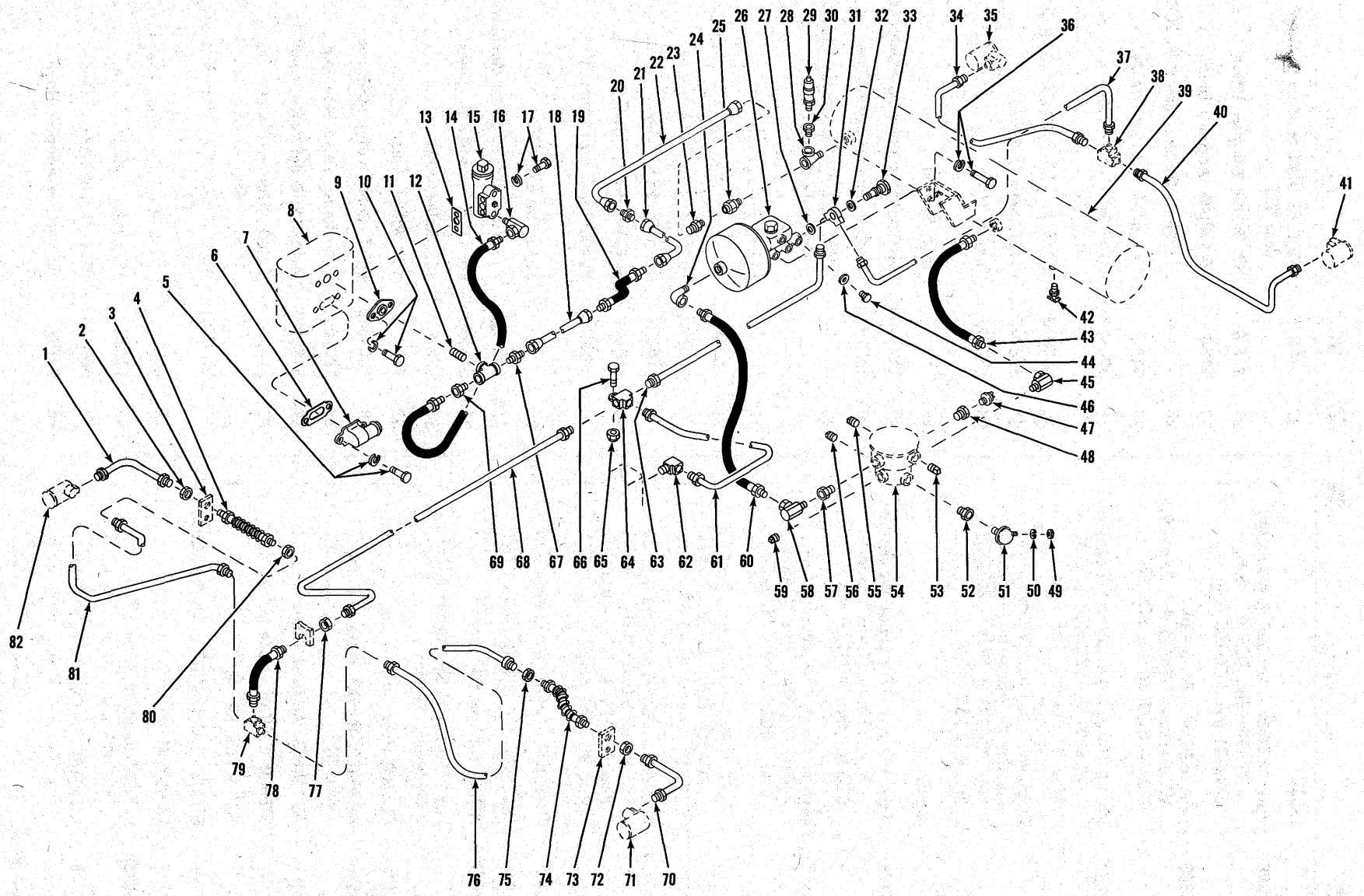

BRAKE AIR LINES — WAUKESHA

TS-6793-P

BRAKE AIR LINES — WAUKESHA

Item No.	Part No.	Description	No. Req'd.
1	558547	LINE, Hose to Wheel Cylinder	1
2	8D-10	NUT, Hose Jam	1
3	550325	CLIP, Hose to Cradle	1
4	552374	HOSE, Line to Line	1
5	———	BOLT, Elbow to Compressor — Furnished with Engine	—
5A	———	LKWSHR, Elbow to Compressor — Furnished with Engine	—
6	———	GASKET, Elbow to Compressor — Furnished with Engine	—
7	540664	ELBOW, Compressor Air Inlet	1
8	———	AIR COMPRESSOR — See Engine Parts Manual — Furnished with Engine	—
9	510452	FLANGE, Discharge	1
10	17C-516	BOLT, Flange to Compressor	2
10A	4E-05	LKWSHR, Flange to Compressor	2
11	5K-409	NIPPLE, Tee to Compressor	1
12	18F-4	TEE, Connecting	1
13	———	GASKET, Governor — Furnished with Engine	—
14	593650	HOSE, Governor to Compressor	1
15	———	GOVERNOR — Furnished with Engine	—
16	31F-1	ADAPTER UNION, Hose to Governor	1
17	———	BOLT, Governor to Compressor — Furnished with Engine	—
17A	———	LKWSHR, Governor to Compressor — Furnished with Engine	—
18	1524266	TUBE, Compressor to Hose	1
19	571882	HOSE, Tube to Tube	1
20	40F-8	ADAPTER UNION, Tube to Tube	1
21	571545	TUBE, Hose to Tube	1
22	571546	TUBE, Tube to Air Reservoir	1
23	38F-10	CONNECTOR, Tube to Valve	1
24	26F-3	ELBOW, Hose to Power Cluster	1
25	593370	VALVE, Check	1
26	———	POWER CLUSTER ASSY — See P.M. 2083	—
27	620238	GASKET, Fitting to Master Cylinder	1
28	17F-4	TEE, Valve to Air Reservoir	1
29	507815	VALVE, Safety	1
30	19F-5	BUSHING, Valve to Tee Reducing	1
31	633242	FITTING, Tube Connecting	1
32	613750	GASKET, Bolt to Fitting	1
33	692722	BOLT, Fitting to Master Cylinder	1
34	535049	LINE, Tee to Wheel Cylinder — L.H. Front Axle	1
35	———	CYLINDER, Wheel — See P.M. 2083	—
36	18C-720	BOLT, Power Cluster to Reservoir	3
36A	4E-07	LKWSHR, Power Cluster to Reservoir	3
37	589429	TUBE, Power Cluster to Front Axle Tee	1
38	———	TEE — Furnished with Axle	1
39	———	§AIR RESERVOIR — Welded to Frame	—
40	535050	LINE, Tee to Wheel Cylinder — R.H. Front Axle	1
41	———	CYLINDER, Wheel — See P.M. 2083	—
42	72F-4	DRAIN COCK, Air Reservoir	1
43	574439	HOSE, Air Reservoir to Brake Valve	1
44	874007	PLUG, Master Cylinder	2
45	31F-4	ADAPTER UNION, Hose to Valve	1
46	613750	GASKET, Master Cylinder Plug	2
47	636260	SWITCH, Stop Light	1
48	19F-4	BUSHING, Switch Reducing	1
49	14D-10	NUT, Sender Unit	1
50	12E-10	LKWSHR, Sender Unit	1
51	940643	SENDER UNIT, Air Pressure (Inc. 49, 50)	1
52	19F-1	BUSHING, Sender Unit Reducing	1
53	13F-08	PLUG, Brake Valve	1
54	———	BRAKE VALVE — See P.M. 2083	—
55	13F-08	PLUG, Brake Valve	1
56	13F-04	PLUG, Brake Valve	1
57	19F-6	BUSHING, Adapter Reducing	1
58	31F-3	ADAPTER UNION, Hose to Valve	1
59	13F-08	PLUG, Brake Valve	1
60	592784	HOSE, Power Cluster to Brake Valve	1
61	589428	TUBE, Tee to Declutch Valve	1
62	62F-3	ELBOW, Tube to Valve	1
63	589427	TUBE, Power Cluster to Tee	1
64	609733	TEE, Tube Connecting	1
65	18D-07	NUT, Tee to Frame	1
66	18C-724	BOLT, Tee to Frame	1
67	38F-10	CONNECTOR, Tube	1
68	589426	TUBE, Tee to Hose	1
69	19F-4	BUSHING, Hose to Tee Reducing	1
70	558547	LINE, Hose to Wheel Cylinder — R.H. Rear Axle	1
71	———	CYLINDER, Wheel — See P.M. 2083	—
72	8D-10	NUT, Hose Jam	1
73	550325	CLIP, Hose to Cradle	1
74	552374	HOSE, Line to Line	1
75	8D-10	NUT, Hose Jam	1
76	534259	LINE, Tee to Hose	1
77	8D-10	NUT, Hose Jam	1
78	533814	HOSE, Tube to Tee	1
79	———	TEE, Brake Line — Furnished with Axle	—
80	8D-10	NUT, Hose Jam	1
81	534260	LINE, Tee to Hose	1
82	———	CYLINDER, Wheel — See P.M. 2083	—

§Not Sold Separately

WHEN ORDERING PARTS, ALWAYS STATE MODEL AND SERIAL NO. OF MACHINE

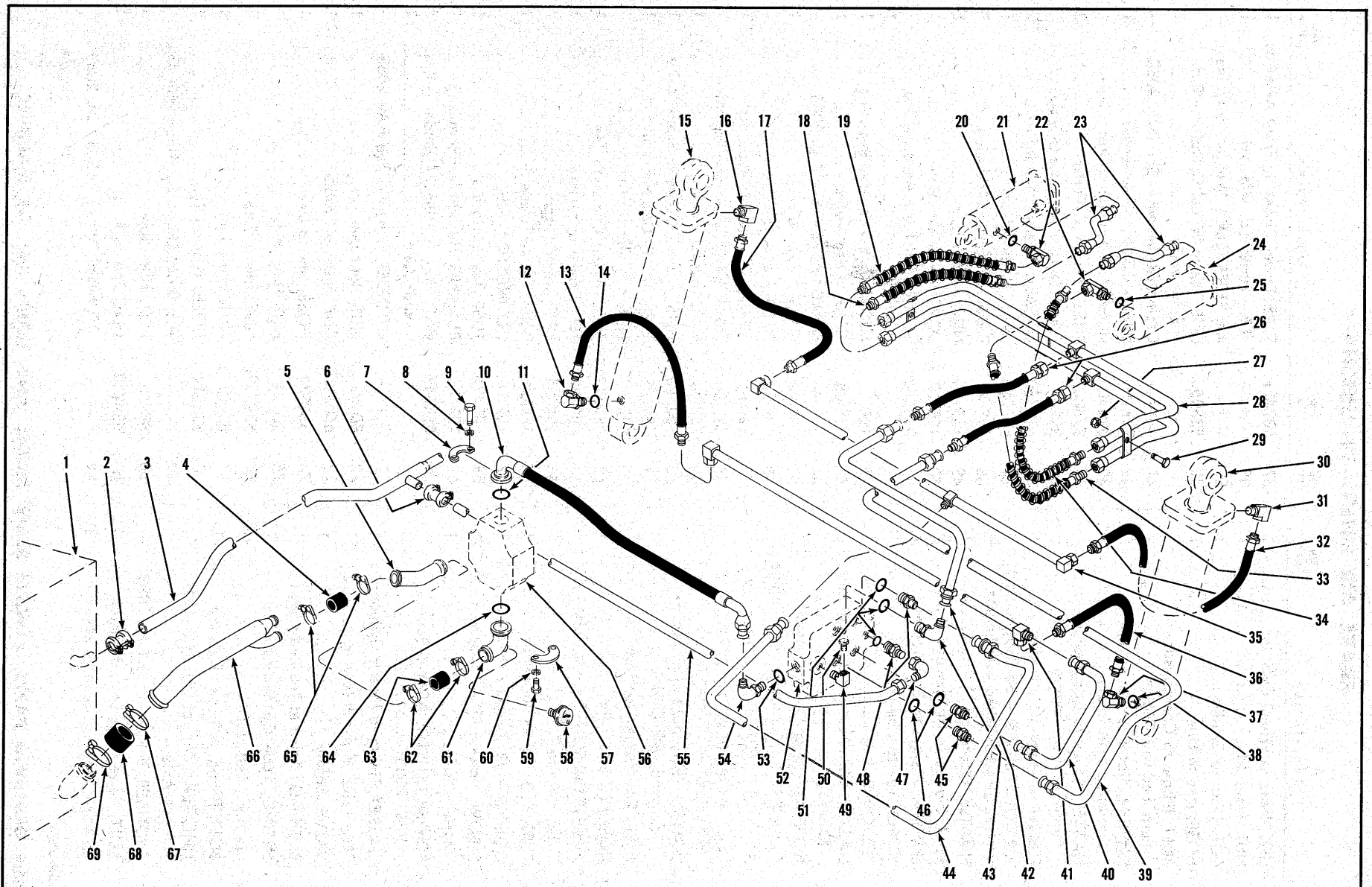

HYDRAULIC SYSTEM — BUCKET AND BOOM

TS-7823-P

HYDRAULIC SYSTEM — BUCKET AND BOOM

Item No.	Part No.	Description	No. Req'd.
1	———	RESERVOIR — See P.M. 2083	—
2	573423	JOINT, Tube to Reservoir — Return	1
3		*TUBE ASSY, Return*	
3A	574500	For Waukesha Powered Machines	1
3B	589419	For G.M. Powered Machines	1
4	536710	HOSE, Tube to Tube — Suction	1
5		*TUBE, Suction — Front*	
5A	1521392	For Waukesha Powered Machines	1
5B	563785	For G.M. Powered Machines	1
6	573422	JOINT, Tube to Tube — Return	1
7	663094	FLANGE HALF, Hose to Pump	2
8	4E-07	LKWSHR, Flange Half to Pump	4
9	17C-724	BOLT, Flange Half to Pump	4
10		*HOSE, Pump to Valve*	
10A	571409	For Waukesha Powered Machines	1
10B	563809	For G.M. Powered Machines	1
11	25K-40116	"O" RING, Hose to Pump	1
12	526676	ELBOW, Hose to Cylinder — Base End (Inc. 14)	1
13	574442	HOSE, Boom Cylinder to Crosstube	1
14	91F-8	"O" RING, Elbow	1
15	———	BOOM CYLINDER — See P.M. 2083	—
16	29F-4	ELBOW, Hose to Cylinder — Rod End	1
17	574442	HOSE, Cylinder to Crosstube	1
18	563810	HOSE, Crosstube to Bucket Cylinder — Rod End	1
19	571176	HOSE, Crosstube to Bucket Cylinder — Base End	1
20	91F-8	"O" RING, Elbow	1
21	———	BUCKET CYLINDER — See P.M. 2083	—
22	526676	ELBOW, Hose to Cylinder — Base End (Inc. 20, 25)	2
23	563805	TUBE, Hose to Cylinder — Rod End	2
24	———	BUCKET CYLINDER — See P.M. 2083	—
25	91F-8	"O" RING, Elbow	1
26	571207	HOSE, Tube to Crosstube	2
27	18D-08	NUT, Crosstube to Frame	2
28	563792	CROSSTUBE, Bucket Cylinder	1
29	18C-820	BOLT, Crosstube to Frame	2
30	———	BOOM CYLINDER — See P.M. 2083	—
31	29F-4	ELBOW, Hose to Cylinder — Rod End	1
32	574442	HOSE, Crosstube to Boom Cylinder — Rod End	1
33	571176	HOSE, Crosstube to Bucket Cylinder — Base End	1
34	563810	HOSE, Crosstube to Bucket Cylinder — Rod End	1
35	563801	CROSSTUBE, Boom Cylinder — Rod End	1
36	574442	HOSE, Crosstube to Boom Cylinder — Base End	1
37	526676	ELBOW, Hose to Cylinder — Base End (Inc. 38)	1
38	91F-8	"O" RING, Elbow	1
39	563788	TUBE, Valve to Bucket Crosstube	1
40	563790	TUBE, Valve to Boom Crosstube	1
41	563798	CROSSTUBE, Boom Cylinder — Base End	1
42	1522525	TUBE, Valve to Bucket Crosstube	1
43	17K-10	ELBOW, Tube to Valve (Inc. 51)	1
44	563791	TUBE, Valve to Boom Crosstube	1
45	15K-10	CONNECTOR, Tube to Valve (Inc. 46)	2
46	91F-10	"O" RING, Connector	2
47	11K-10	ELBOW, Tube to Connector	1
48	15K-10	CONNECTOR, Tube to Valve (Inc. 51)	2
49	29F-1	ELBOW	1
50	40K-04	PLUG — Furnished with Valve	1
51	91F-10	"O" RING, Connector	3
52	———	CONTROL VALVE — See Index	—
53	91F-10	"O" RING, Elbow	1
54	17K-10	ELBOW, Hose to Valve (Inc. 53)	1
55	1522526	TUBE, Valve Return	1
56	———	PUMP, Bucket & Boom—See P.M. 2083	—
57	663095	FLANGE HALF, Stem to Pump	2
58	562112	*INDICATOR, Reservoir Filter—Vacuum	1
59	17C-824	BOLT, Flange Half to Pump	4
60	4E-08	LKWSHR, Flange Half to Pump	4
61		*STEM, Suction*	
61A	571407	For Waukesha Powered Machines	1
61B	569506	For G.M. Powered Machines	1
62	540130	CLAMP, Hose	2
63	536710	HOSE, Stem to Tube	1
64	25K-40128	"O" RING, Stem	1
65	540130	CLAMP, Hose	2
66		*TUBE, Suction — Rear*	
66A	1521349	For Waukesha Powered Machines	1
66B	589422	For G.M. Powered Machines	1
67	540106	CLAMP, Hose	1
68	533478	HOSE, Tube to Reservoir	1
69	540106	CLAMP, Hose	1

*NOTE: 562112 Indicator used on machine serial 7CA101 thru 7CA121, 8CG101 thru 8CG140 only. For machine serial 7CA122 and thereafter, 8CG141 and thereafter one (1) 40K-04 Pipe Plug must be used in place of 562112 Indicator.

WHEN ORDERING PARTS, ALWAYS STATE MODEL AND SERIAL NO. OF MACHINE

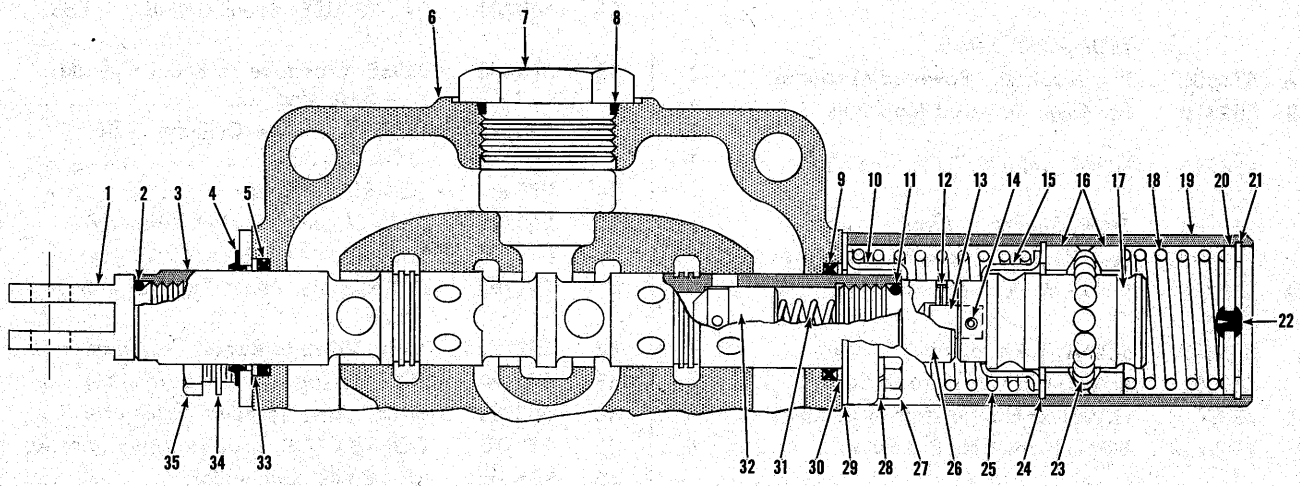

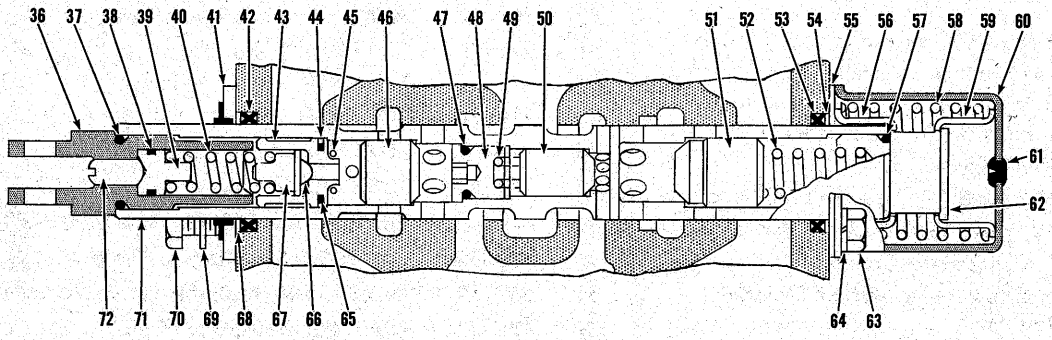

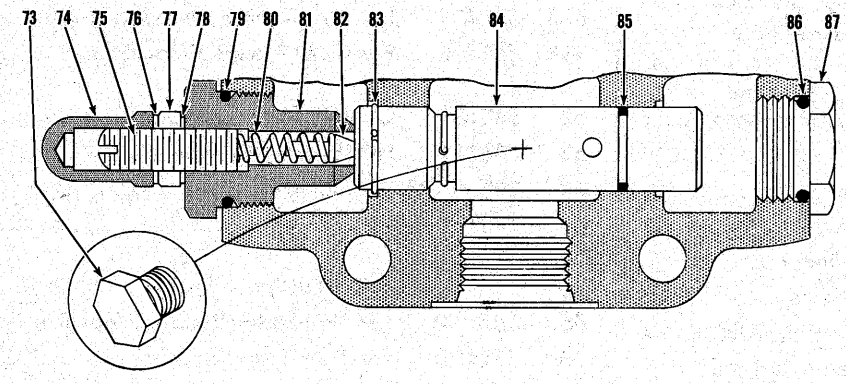

CONTROL VALVE ASSEMBLY

TS-7721-P

CONTROL VALVE ASSEMBLY

Item No.	Part No.	Description	No. Req'd.
A	1520075	VALVE ASSY (Inc. 1 thru 87)	1
1	946360	EYE, Plunger	1
2	944881	"O" RING, Plunger Eye	1
3	———	§PLUNGER, Operating — See "A"	—
4	893294	WIPER, Plunger	1
5	946583	SEAL, Plunger Oil	1
6	———	§HOUSING, Valve — See "A"	1
7	24K-11	CAP, Valve Housing	1
8	91F-11	"O" RING, Cap to Housing	1
9	946583	SEAL, Plunger Oil	1
10	944878	GUIDE, Spring	1
11	944881	"O" RING, Plunger Cap	1
12	108301	ROLL PIN	1
13	888449	PIN	1
14	108301	ROLL PIN	1
15	944878	GUIDE, Spring	1
16	944897	RETAINER, Ball	2
17	946030	CAP, Detent	1
18	946029	SPRING, Return	1
19	945805	COVER, Detent	1
20	944900	PLUG, Detent Cover	1
21	507695	RING, Plug Retaining	1
22	886763	PLUG, Bleeder	1
23	10J-08	BALL	15
24	1301194	RING, Retaining	1
25	945090	SPRING, Detent	1
26	945095	CAP, Plunger	1
27	1C-416	BOLT, Cover to Housing	4
28	4E-04	LKWSHR, Cover to Housing	4
29	944882	PLATE, Seal Retaining	1
30	944883	RING, Back-up	1
31	893293	SPRING, Check	1
32	944885	CHECK	1
33	944883	RING, Back-up	1
34	4E-04	LKWSHR, Wiper to Housing	2
35	1C-410	BOLT, Wiper to Housing	2
36	946361	EYE, Plunger	1
37	944881	"O" RING, Plunger	1
38	25K-20014	"O" RING, Spring Guide	1
39	946363	GUIDE, Spring	1
40	946364	SPRING	1
41	893294	WIPER, Plunger	1
42	946583	SEAL, Plunger Oil	1
43	946542	SEAT, Check	1
44	946556	RING, Back-up	1
45	946545	SPRING, Check	1
46	946543	CHECK	1
47	———	§"O" RING — See "A"	—
48	———	§PLUG — See "A"	—
49	———	§SPRING — See "A"	—
50	———	§CHECK — See "A"	—
51	944885	CHECK	1
52	946544	SPRING, Check	1
53	946583	SEAL, Plunger Oil	1
54	944883	RING, Back-up	1
55	946535	PLATE, Seal Retaining	1
56	945348	GUIDE, Spring	1
57	944881	"O" RING, Plunger Cap	1
58	944879	SPRING, Detent	1
59	945348	GUIDE, Spring	1
60	944896	COVER, Detent	1
61	886745	PLUG, Bleeder	1
62	944895	CAP, Plunger	1
63	1C-410	BOLT, Cover to Housing	4
64	4E-04	LKWSHR, Cover to Housing	4
65	25K-20018	"O" RING, Check Seat	1
66	———	§BALL — See 67	—
67	946365	CHECK (Inc. 66)	1
68	944883	RING, Back-up	1
69	4E-04	LKWSHR, Wiper to Housing	2
70	1C-410	BOLT, Wiper to Housing	2
71	———	§PLUNGER, Operating — See "A"	—
72	946541	SCREW, Adjusting	1
73	40K-04	PLUG, Pipe	1
74	944853	NUT, Acorn	1
75	944890	SCREW, Relief Valve Adjusting	1
76	613750	WASHER, Jam Nut	1
77	8D-08	NUT, Jam	1
78	613750	WASHER, Jam Nut	1
79	25K-40100	"O" RING, Adjusting Cap	1
80	886753	SPRING, Poppet	1
81	893296	CAP, Relief Valve Adjusting	1
82	886739	POPPET, Relief Valve	1
83	946033	RING, Relief Valve Retaining	1
84	893298	VALVE, Relief (Inc. 83, 85)	1
85	945816	"O" RING, Relief Valve	1
86	25K-40100	"O" RING, Cap	1
87	944894	CAP, Valve Housing	1
88	18C-864	†BOLT, Valve Mounting	3
89	4E-08	†LKWSHR, Valve Mounting	2
90	66D-08	†NUT, Valve Mounting	1

†Not Illustrated
§Not Sold Separately

WHEN ORDERING PARTS, ALWAYS STATE MODEL AND SERIAL NO. OF MACHINE

TS-6666-P

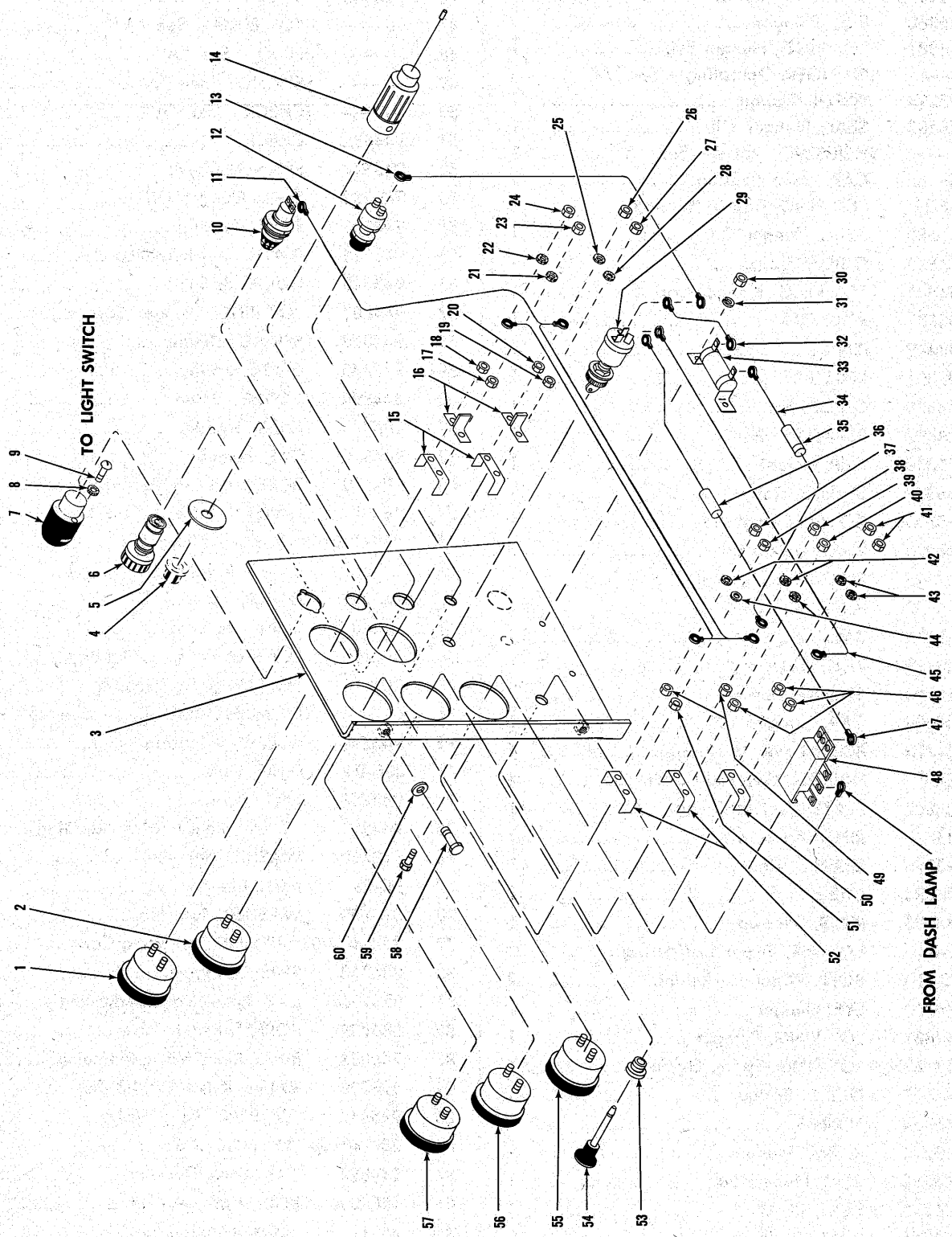

INSTRUMENT PANEL ASSEMBLY

INSTRUMENT PANEL ASSEMBLY

For Serial 7CA101 thru 7CA121, 8CG101 thru 8CG140

Item No.	Part No.	Description	No. Req'd.
1	551319	GAUGE, Engine Oil Pressure	1
2	517228	GAUGE, Air Pressure	1
3	574117	PANEL, Instrument	1
4	———	§BUTTON, Push — See Item 12	—
5	547237	PLATE, Starter Button	1
6	944803	ELEMENT, Lighter	1
7	574276	LAMP, Dash	1
7A	427237	†BULB, Dash Lamp (12V)	1
8	12E-6	LKWSHR, Dash Lamp Mounting	2
9	18G-606	SCREW, Dash Lamp Mounting	2
10	562141	LIGHT, Indicator	1
10A	427237	†BULB, Indicator Light	1
11	558673	HARNESS, Instrument Wiring	1
12	600259	BUTTON, Starter (Inc. 4, 12A)	1
12A	857420	†RUBBER BOOT, Starter Button	1
13	553405	WIRE, Ignition Switch to Starter Button	1
14	549024	RECEPTACLE, Lighter (Inc. 14A)	1
14A	944804	†FUSE, Lighter	1
15	601212	CLAMP, Instrument Mounting	2
16	601212	SEPARATOR, Oil & Air Gauges	2
17	14D-10	NUT, Gauge to Panel Mounting	1
18	12D-8	NUT, Gauge to Panel Mounting	1
19	14D-10	NUT, Gauge to Panel Mounting	1
20	12D-8	NUT, Gauge to Panel Mounting	1
21	12E-10	LKWSHR, Terminal to Gauge	1
22	12E-8	LKWSHR, Terminal to Gauge	1
23	14D-10	NUT, Terminal to Gauge	1
24	12D-8	NUT, Terminal to Gauge	1
25	12E-8	LKWSHR, Terminal to Gauge	1
26	12D-8	NUT, Terminal to Gauge	1
27	14D-10	NUT, Terminal to Gauge	1
28	12E-10	LKWSHR, Terminal to Gauge	1
29	573548	SWITCH, Ignition	1
30	———	OMIT — Not used on 12V System	—
31	———	OMIT — Not used on 12V System	—
32	———	OMIT — Not used on 12V System	—
33	———	OMIT — Not used on 12V System	—
34	573587	WIRE, Ignition Switch to Temperature Gauge	1
35	571021	FUSE — .75 Amp.	1
36	611074	FUSE — 20 Amp	1
37	12D-8	NUT, Terminal to Gauge	1
38	14D-10	NUT, Terminal to Gauge	1
39	12D-8	NUT, Terminal to Gauge	1
40	14D-10	NUT, Terminal to Gauge	1
41	14D-10	NUT, Terminal to Gauge	2
42	12E-8	LKWSHR, Terminal to Gauge	2
43	12E-10	LKWSHR, Terminal to Gauge	2
44	12E-10	LKWSHR, Terminal to Gauge	2
45	553405	WIRE, Ignition Switch to Ammeter	1
46	14D-10	NUT, Gauge to Panel Mounting	3
47	552946	WIRE, Ignition Switch to Light Switch (Inc. 36)	1
48	550741	SWITCH, Light	1
49	12D-8	NUT, Gauge to Panel Mounting	2
50	601212	CLAMP, Ammeter Mounting	1
51	14D-10	NUT, Gauge to Panel Mounting	1
52	601212	CLAMP, Instrument Mounting	2
53	550743	BUSHING, Light Switch	1
54	550742	ROD, Light Switch	1
55	550735	AMMETER	1
56	551322	GAUGE, Engine Temperature	1
57	551321	GAUGE, Torque Conv. Temperature	1
58	17C-616	BOLT, Instrument Panel Mounting	3
59	———	OMIT — Not used on 12V System	—
60	656672	WASHER, Instrument Panel Mounting	2
60A	4E-06	†LKWSHR, Instrument Panel Mounting	3
60B	572729	†CAGED NUT, Instrument Panel Mounting	1

§Not Sold Separately
†Not Illustrated

WHEN ORDERING PARTS, ALWAYS STATE MODEL AND SERIAL NO. OF MACHINE

TS-7829-P

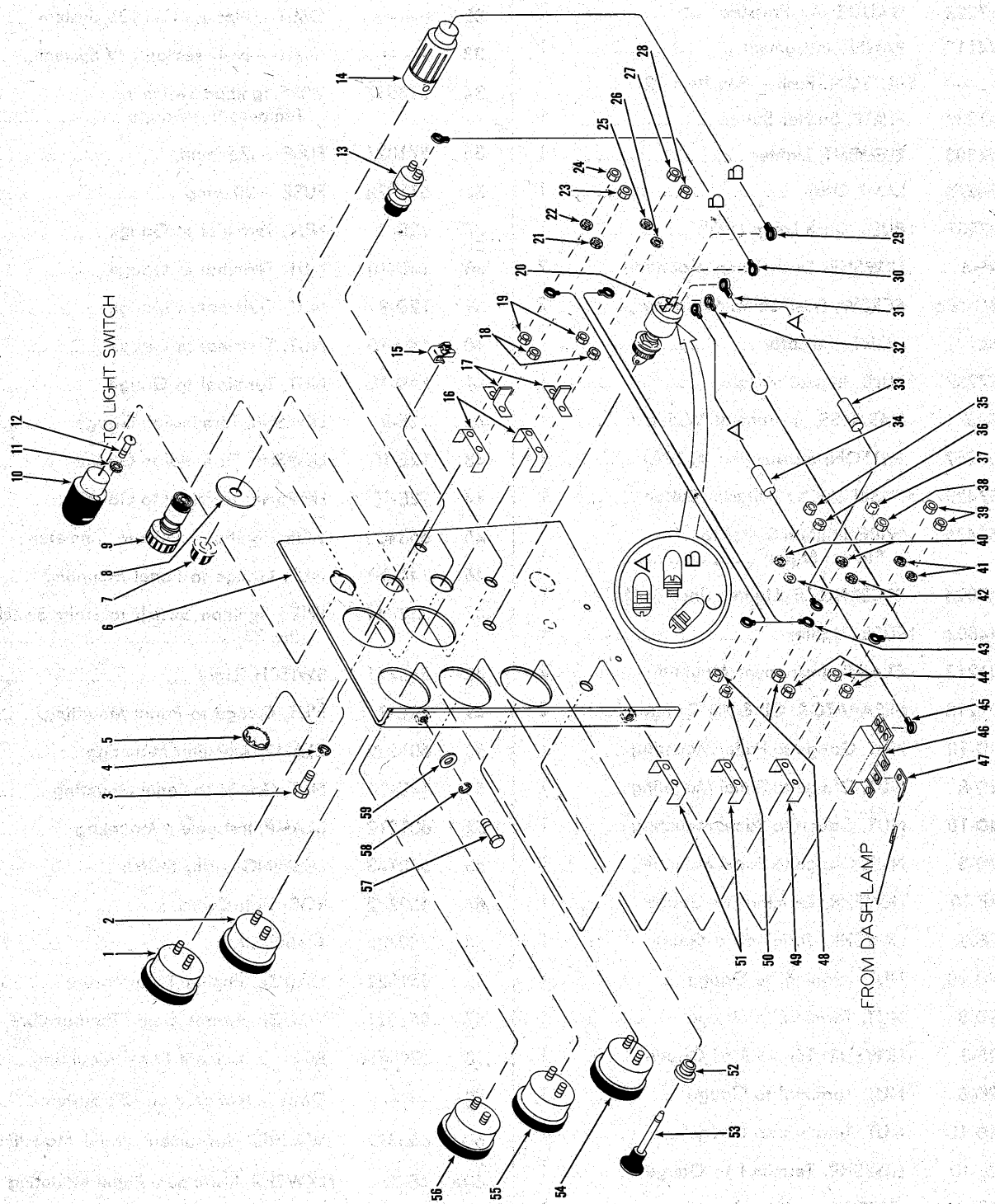

INSTRUMENT PANEL ASSEMBLY

INSTRUMENT PANEL ASSEMBLY

For Serial 7CA122 and thereafter, 8CG141 and thereafter

Item No.	Part No.	Description	No. Req'd.
1	551319	GAUGE, Engine Oil Pressure	1
2	517228	GAUGE, Air Pressure	1
3	17C-616	BOLT, Instrument Panel Mounting	1
4	4E-06	LKWSHR, Instrument Panel Mounting	1
5	742710	PLUG, Instrument Panel	1
6	574117	PANEL, Instrument	1
7	———	§BUTTON, Starter Push — See 13	—
8	547237	PLATE, Starter Button	1
9	944803	ELEMENT, Lighter	1
10	574276	LAMP, Dash	1
10A	427237	†BULB, Dash Lamp	1
11	12E-6	LKWSHR, Dash Lamp Mounting	2
12	18G-606	SCREW, Dash Lamp Mounting	2
13	600259	SWITCH, Starter Push Button (Inc. 7, 13A)	1
13A	857420	†BOOT, Starter Button	1
14	549024	RECEPTACLE, Lighter (Inc. 14A)	1
14A	944804	†FUSE, Lighter — 20 Amp	1
15	572729	CAGED NUT, Panel Retaining	1
16	601212	CLAMP, Instrument Mounting	2
17	602350	SEPARATOR, Oil & Air Gauges	2
18	14D-10	NUT, Gauge to Panel Mounting	2
19	12D-8	NUT, Gauge to Panel Mounting	2
20	573548	SWITCH, Ignition	1
21	12E-10	LKWSHR, Terminal to Gauge	1
22	12E-8	LKWSHR, Terminal to Gauge	1
23	14D-10	NUT, Terminal to Gauge	1
24	12D-8	NUT, Terminal to Gauge	1
25	12E-8	LKWSHR, Terminal to Gauge	1
26	12E-10	LKWSHR, Terminal to Gauge	1
27	12D-8	NUT, Terminal to Gauge	1
28	14D-10	NUT, Terminal to Gauge	1
29	565430	WIRE, Switch to Lighter	1
30	553405	WIRE, Switch to Starter Button	1
31	573587	WIRE, Switch to Harness (Inc. 33)	1
32	553405	WIRE, Switch to Ammeter	1
33	571021	FUSE — .75 Amp.	1
34	611074	FUSE — 20 Amp.	1
35	12D-8	NUT, Terminal to Gauge	1
36	14D-10	NUT, Terminal to Gauge	1
37	12D-8	NUT, Terminal to Gauge	1
38	14D-10	NUT, Terminal to Gauge	1
39	14D-10	NUT, Terminal to Gauge	2
40	12E-8	LKWSHR, Terminal to Gauge	2
41	12E-10	LKWSHR, Terminal to Gauge	2
42	12E-10	LKWSHR, Terminal to Gauge	2
43	558673	HARNESS, Instrument Wiring	1
44	14D-10	NUT, Gauge to Panel Mounting	3
45	552946	WIRE, Switch to Light Switch (Inc. 34)	1
46	550741	SWITCH, Light	1
47	574275	TAB, Dash Lamp Wire to Light Switch	1
48	12D-8	NUT, Gauge to Panel Mounting	2
49	601212	CLAMP, Instrument Mounting	1
50	14D-10	NUT, Gauge to Panel Mounting	1
51	601212	CLAMP, Instrument Mounting	2
52	550743	BUSHING, Light Switch	1
53	550742	ROD, Light Switch	1
54	550735	AMMETER	1
55	551322	GAUGE, Engine Temperature	1
56	551321	GAUGE, Torque Converter Temperature	1
57	17C-616	BOLT, Instrument Panel Mounting	2
58	4E-06	LKWSHR, Instrument Panel Mounting	2
59	656672	WASHER, Instrument Panel Mounting	2

†Not Illustrated
§Not Sold Separately

WHEN ORDERING PARTS, ALWAYS STATE MODEL AND SERIAL NO. OF MACHINE

WIRING AND CABLES

Item No.	Part No.	Description	No. Req'd.
1	558952	HARNESS, Cockpit	1
2		*HARNESS, Engine*	
2A	558674	For G.M. Powered Machines	1
2B	1520607	For Waukesha Powered Machines	1
3	562010	HARNESS, Floodlight	1
4	562008	HARNESS, Taillight	1
5	1526729	HARNESS, Neutral Start Switch — For Serial 8CG128 & thereafter, 7CA122 & thereafter	1
6	558960	WIRE, Hourmeter Ground	1
7	564384	WIRE, Battery to Horn Button	1
8	675739	CABLE, Battery Ground	1
9		*CABLE, Battery to Solenoid*	
9A	566502	For G.M. Powered Machines	1
9B	1520606	For Waukesha Powered Machines	1
10	553466	CABLE, Solenoid to Starter — Waukesha Powered Machines Only	1

DECALS AND NAMEPLATES

Item No.	Part No.	Description	No. Req'd.
1	547852	*DECAL, Michigan	2
2	547851	*DECAL, Clark Equipment	2
3	571099	*DECAL, Model	2
4	538256	*DECAL, Transmission Drain	1
5	557461	*DECAL, Safety Wiring	1
6	547794	*DECAL, Safety Warning	1
7	569451	*DECAL, Warning Light—For Serial 7CA101 thru 7CA121, 8CG101 thru 8CG140 only	1
8	569331	*DECAL, Bucket Indicator	1
9	1520495	*DECAL, "Best on Earth"	2
10	569389	PLATE, Emergency Stop	1
11	6C-605	SCREW, Plate Mounting	2
12	548074	PLATE, Operating Precaution	1
13	65G-406	SCREW, Plate Mounting	4
14	542074	PLATE, Patent	1
15	6C-605	SCREW, Plate Mounting	4
16	562302	PLATE, Lubrication Instruction	1
17	6C-605	SCREW, Plate Mounting	4
18	567977	PLATE, Shift Quadrant — Hi-Lo	1
19	6C-605	SCREW, Plate Mounting	2
20	567947	PLATE, Shift Quadrant — Forward, Neutral, Reverse	1
21	6C-605	SCREW, Plate Mounting	4
22	1527430	PLATE, Reservoir Strainer Service (For Serial 7CA122 & thereafter, 8CG141 & thereafter)	1
22a		Hi-Low Range	1

*NOTE: Contact your local MICHIGAN distributor for the above listed Decals.

WHEN ORDERING PARTS, ALWAYS STATE MODEL AND SERIAL NO. OF MACHINE

*NOTE: Wire No. 12 Used Only For Models 55 III & 75 III Waukesha Gas. Wire No. 136 Used Only For Models 85 III Thru 275 III Cummins Diesels.

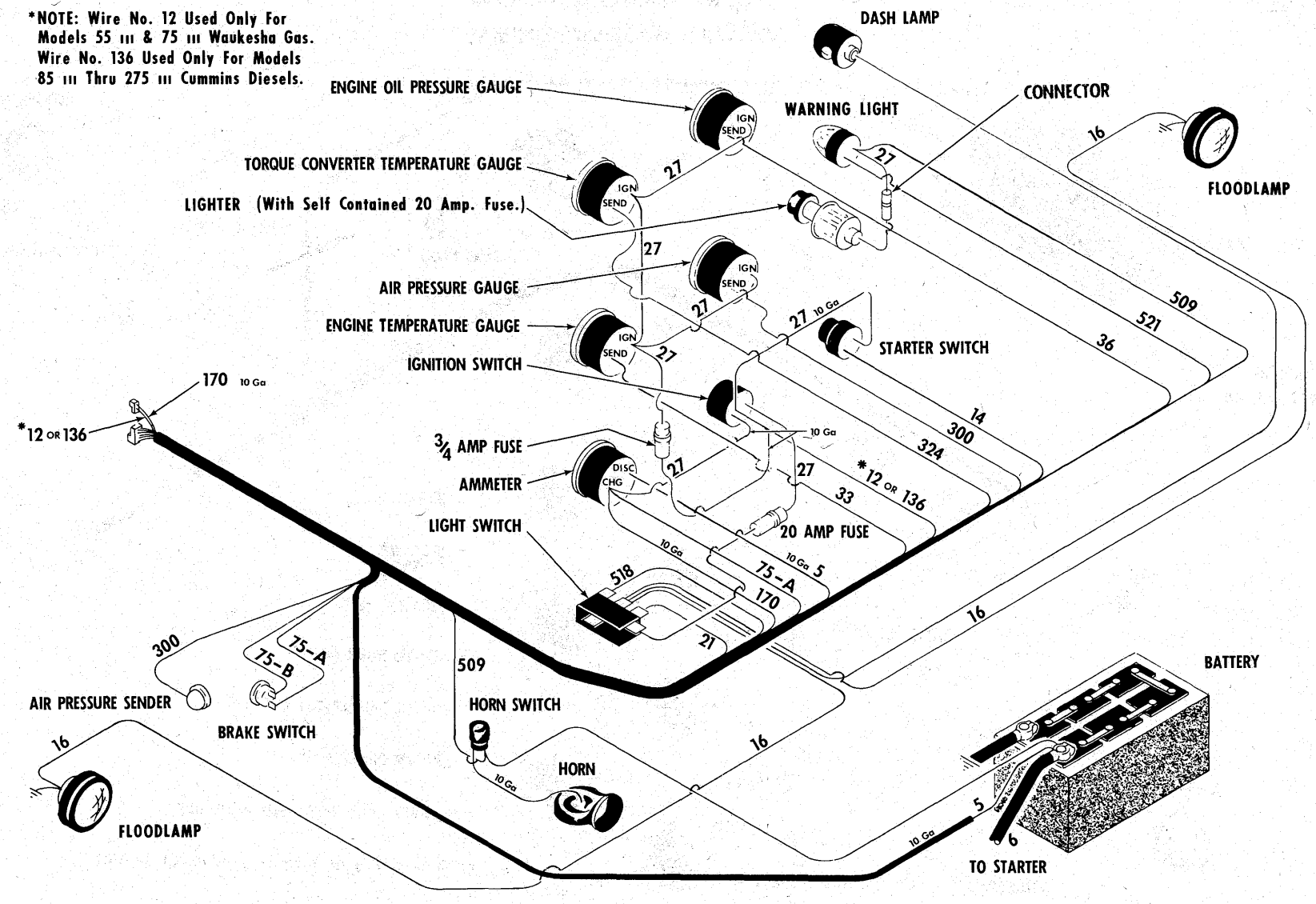

(All Wires No. 14 Gauge Unless Otherwise Specified.)

WIRING DIAGRAM — COCKPIT

For Serial 7CA101 thru 7CA121, 8CG101 thru 8CG127

TS-6669-P

*NOTE: Wire No. 12 Used Only For Models 55 III &75 III Waukesha Gas. Wire No. 136 Used Only For Models 85 III Thru 275 III Cummins Diesels.

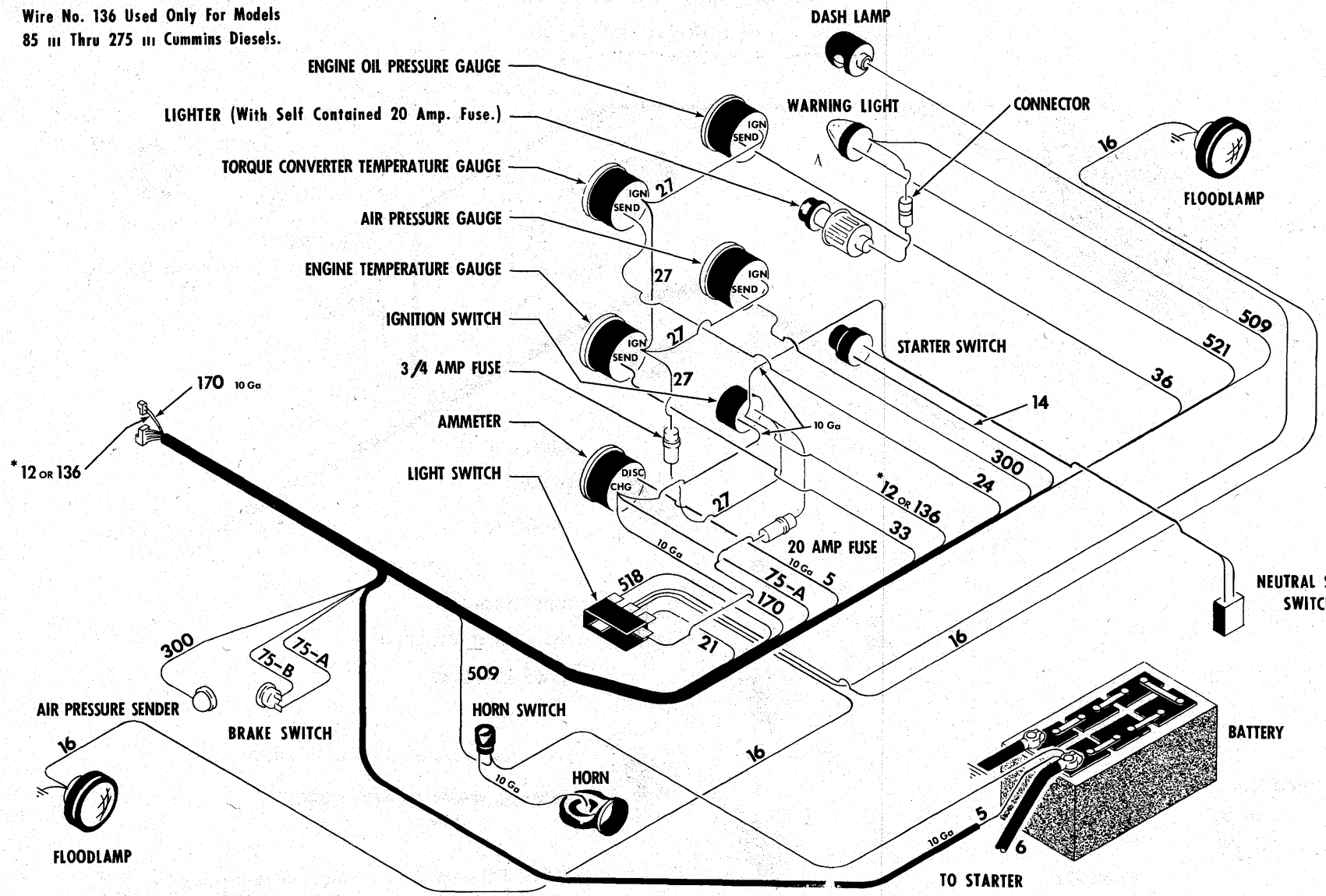

WIRING DIAGRAM — COCKPIT
For Serial 8CG128 thru 8CG140

TS-7875-P

*NOTE: Wire No. 12 Used Only For Models 55 III &75 III Waukesha Gas. Wire No. 136 Used Only For Models 85 III Thru 275 III Cummins Diesels.

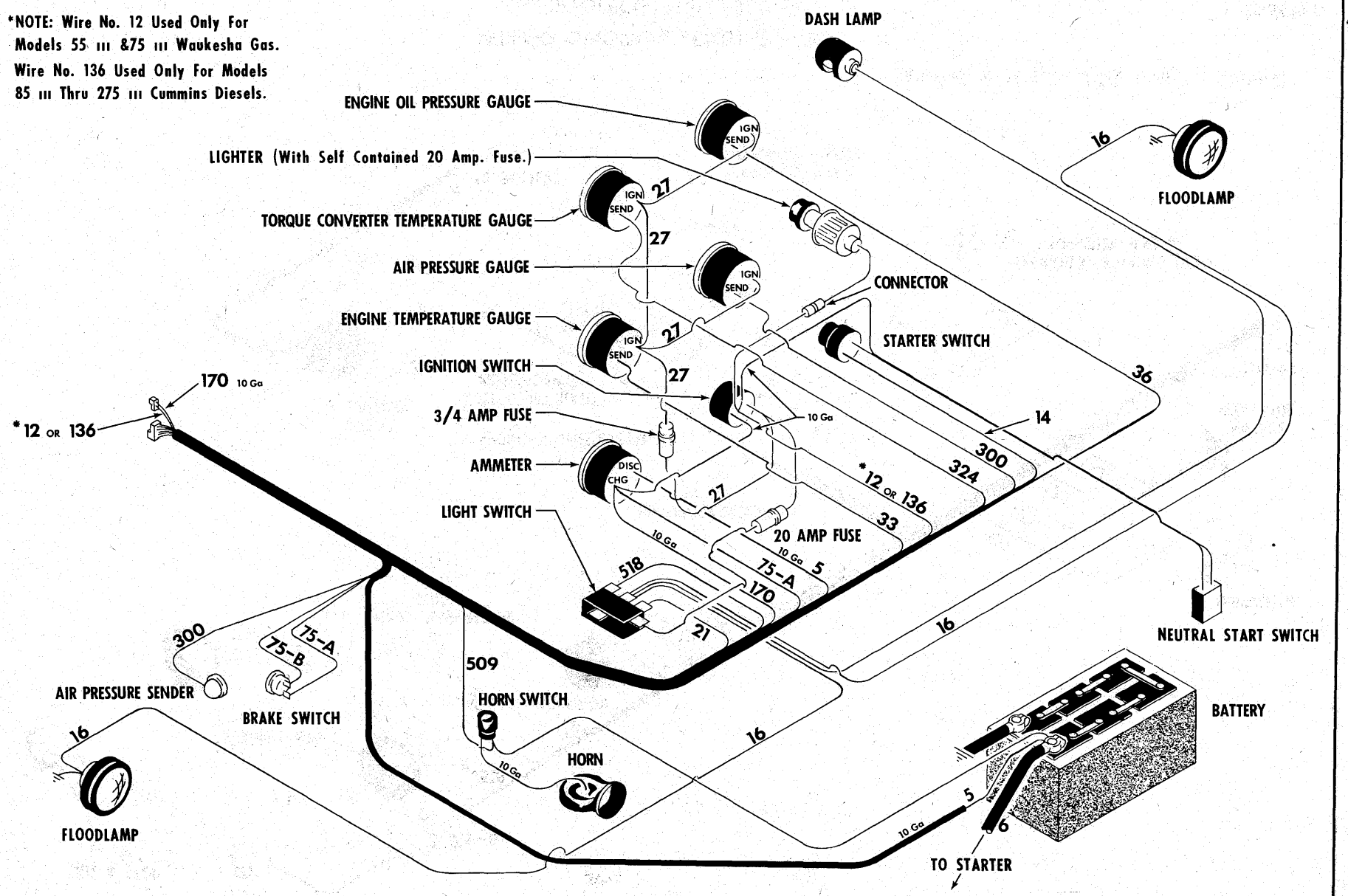

WIRING DIAGRAM — COCKPIT

For Serial 7CA122 and thereafter; 8CG141 and thereafter

TS-7868-P

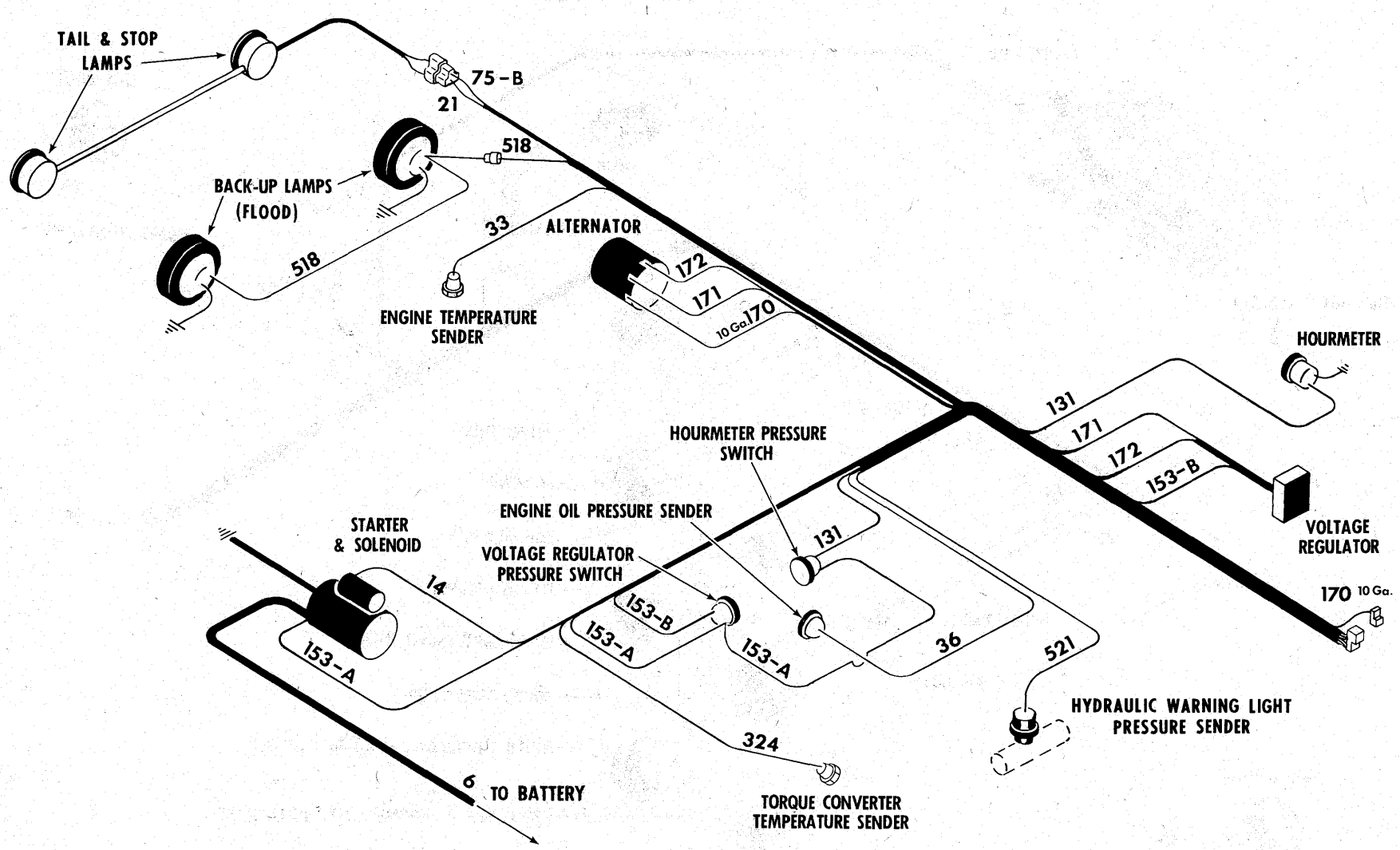

(All Wires No.14 Gauge Unless Otherwise Specified)

WIRING DIAGRAM — ENGINE — G.M.

For Serial 8CG101 thru 8CG140

TS-6670-P

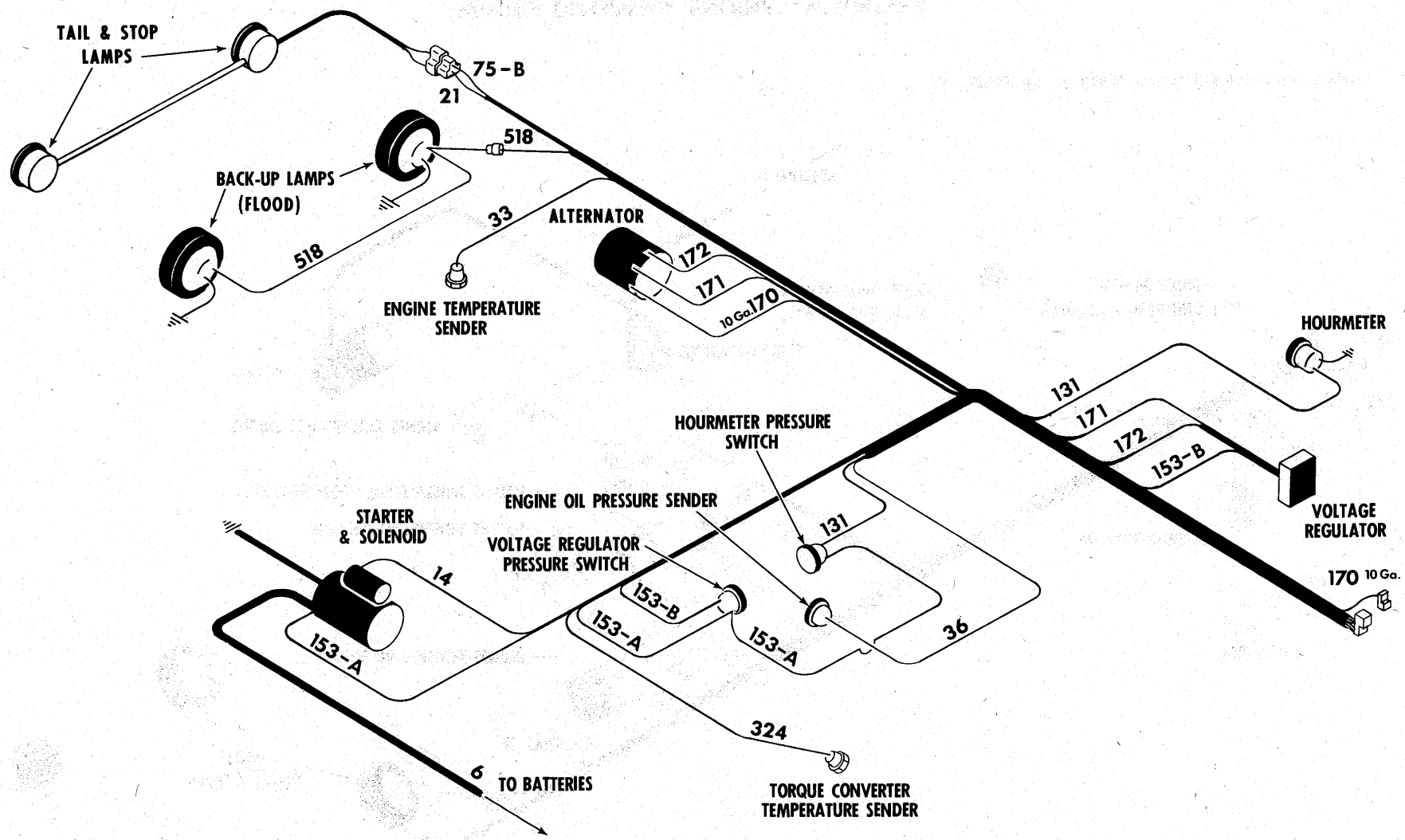

(All Wires No.14 Gauge Unless Otherwise Specified)

WIRING DIAGRAM — ENGINE — G.M.

For Serial 8CG141 & thereafter

TS-7870-P

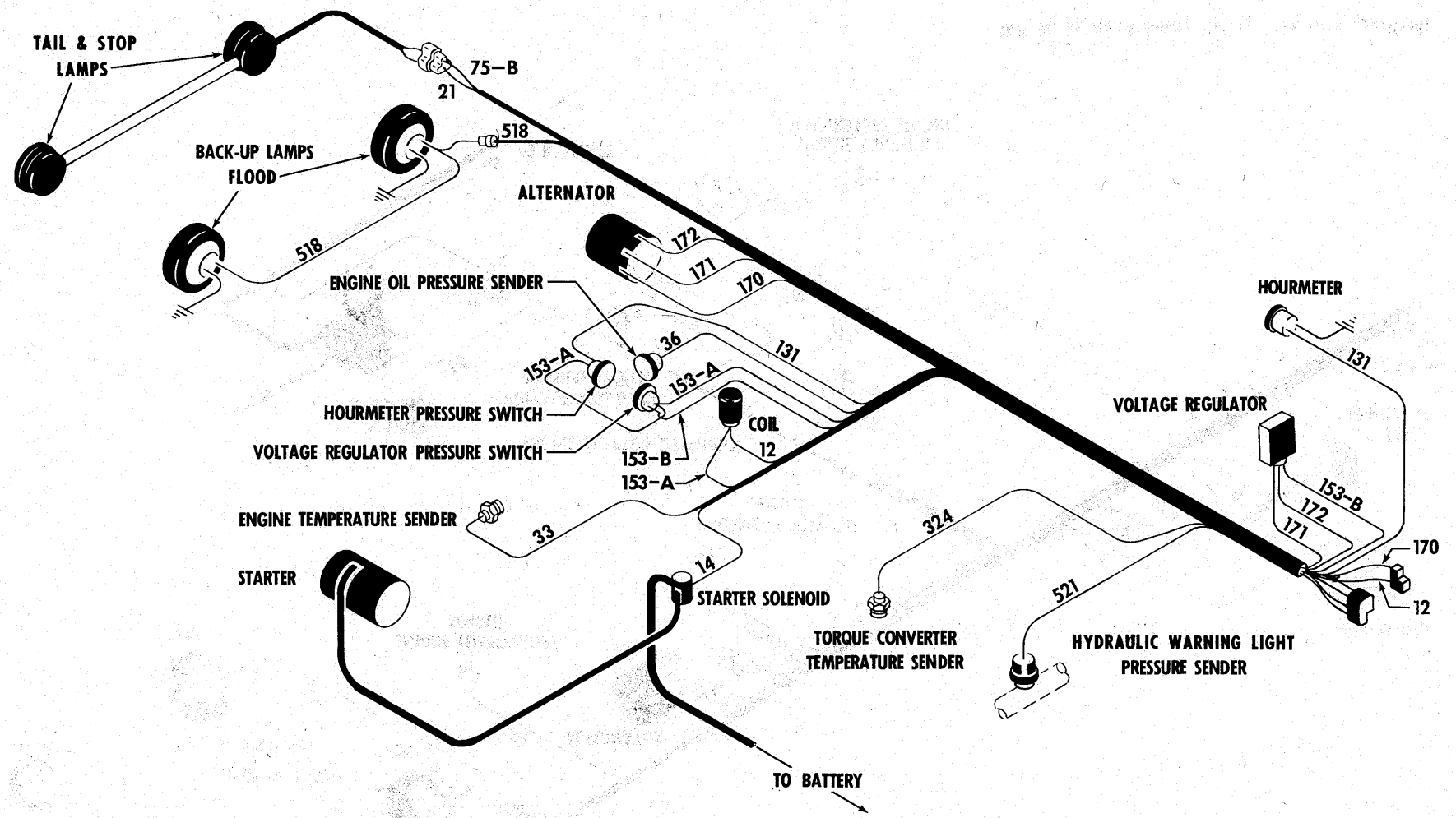

(All Wires No. 14 Gauge Unless Otherwise Specified)

WIRING DIAGRAM — ENGINE — WAUKESHA
For Serial 7CA101 thru 7CA121

TS-6801-P

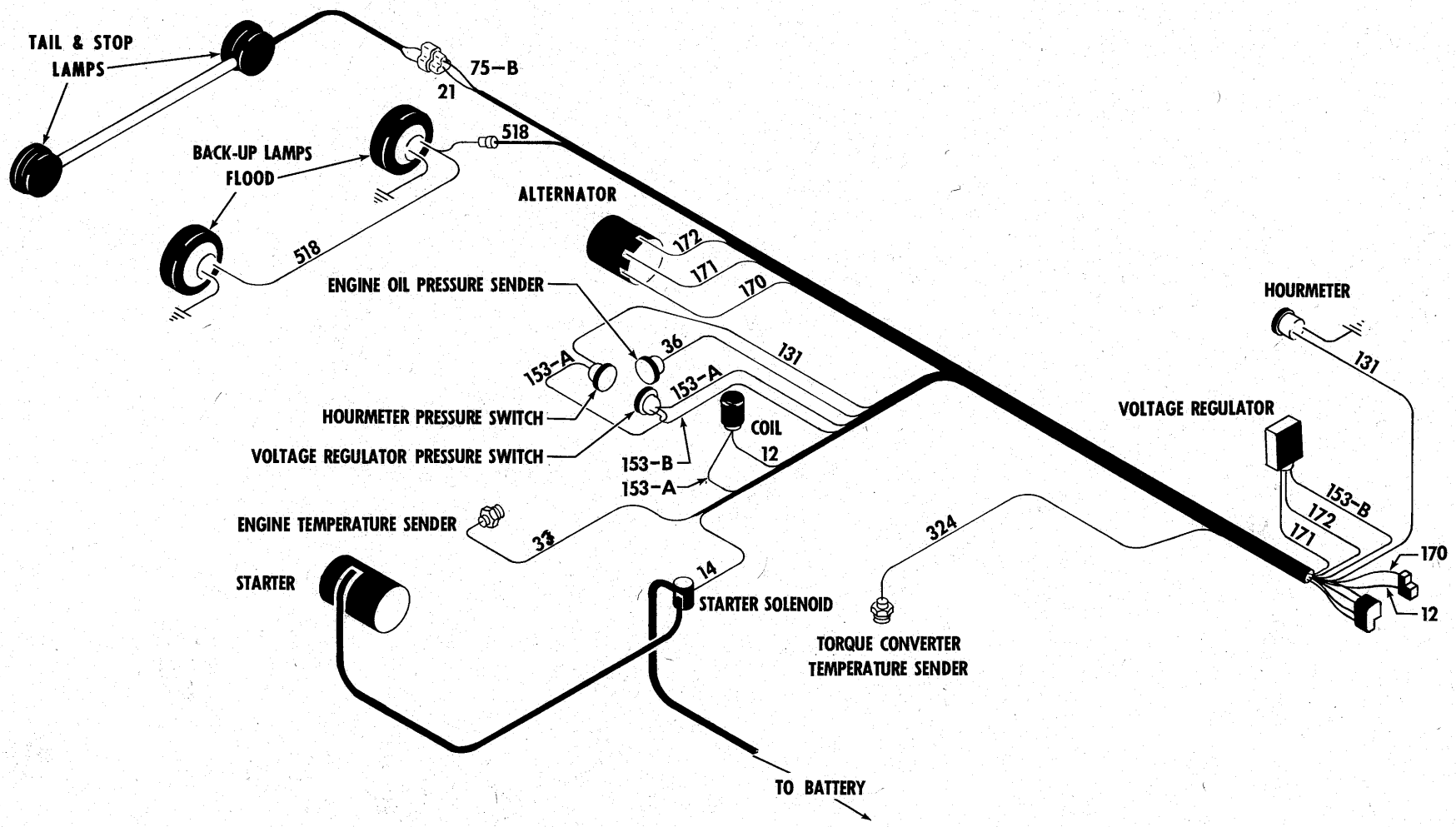

(All Wires No. 14 Gauge Unless Otherwise Specified)

WIRING DIAGRAM — ENGINE — WAUKESHA

For Serial 7CA122 and thereafter

TS-7869-P

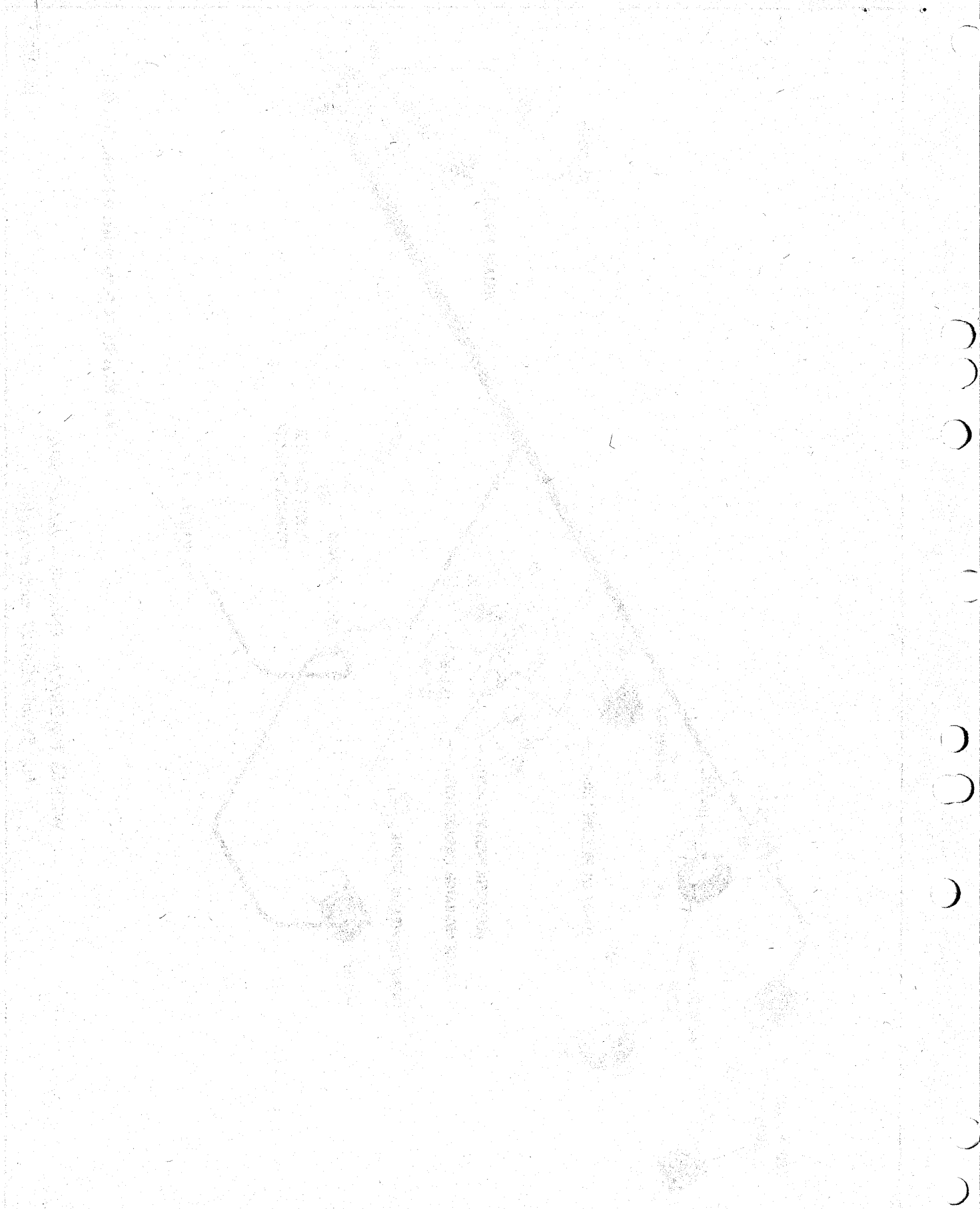

NUMERICAL INDEX

Part No.	Page No.
1C-410	19
1C-416	19
1C-718	9
1M-16030	6
3G-608	7
3G-1008	5
4E-04	19
4E-05	15
4E-06	5, 21, 23
4E-07	9, 15, 17
4E-08	5, 17, 19
5K-106	1
5K-112	2
5K-409	15
6C-605	24
8C-141	17
8C-824	1, 2
8D-06	10
8D-08	6, 19
8D-10	15
9E-06	10
10H-25	3
10J-08	19
10J-12	9
11K-10	17
12D-8	21, 23
12D-10	5
12E-6	7, 21, 23
12E-8	21, 23
12E-10	1, 2, 15, 21, 23
13F-04	8, 15
13F-08	15
14D-10	1, 2, 15, 21, 23
15K-10	17
16F-01	9
17C-516	15
17C-616	21, 23
17C-620	5
17C-724	17
17C-824	17
17D-6	5
17F-4	15
17F-5	13
17K-10	17
18C-424	7
18C-540	13
18C-616	7
18C-720	15
18C-724	15
18C-812	5
18C-816	5
18C-820	5, 17
18C-824	5, 7
18C-828	6, 7
18C-832	1
18C-836	1, 2, 6
18C-856	2, 3
18C-864	19
18C-872	3
18C-880	3
18C-1260	3
18C-12144	3
18D-04	7
18D-05	13
18D-06	7
18D-07	15
18D-08	1, 2, 3, 5, 6, 7, 17
18F-4	15
18G-606	21, 23
18G-806	6
19F-1	15
19F-4	8, 15
19F-5	15
19F-6	15
21F-1	1, 2
21K-7	13
24K-7	13
24K-11	19
25K-20014	19
25K-20018	19
25K-30020	9
25K-30022	9
25K-40100	19
25K-40116	17
25K-40128	17
26F-3	15
27F-3	8
29F-1	17
29F-4	17
31F-1	15
31F-3	15
31F-4	15
38F-10	15
40F-8	15
40K-02	9
40K-04	17, 19
47K-3	9
49F-3	8
62F-3	15
65G-406	24
66D-08	19
68D-12	3
70D-08	1, 2
71D-08	1, 2
72F-2	6
72F-4	15
81F-4	13
83F-4	8
89F-7	13
91F-6	13
91F-7	13
91F-8	13, 17
91F-10	17
91F-11	13, 19
103293	10
106358	9
108301	19
142396	5
202200	9
214961	10
215147	9
215194	9
215196	9
215199	9
215200	9
220363	9
224315	9
224620	9
225075	9
227874	9
228931	9
229009	9
229010	9
229369	9
351495	6
420945	7
427237	21, 23
507068	7
507695	19
507815	15
509320	5
510452	15
515424	7
517089	13
517228	21, 23
519275	13
524225	7
526676	13, 17
533478	17
533814	15
533927	13
534259	15
534260	15
534894	13
535049	15
535050	15
535625	13
536100	3
536710	17
536749	13
538256	24
538585	3
539042	7
540103	7
540106	17
540107	7
540108	6
540127	13
540130	17
540664	15
540883	13
542074	24
542813	13
543531	7
543576	7
547237	21, 23
547529	5
547794	24
547851	24
547852	24
548074	24
549024	21, 23
549988	3
550325	15
550735	21, 23
550741	21, 23
550742	21, 23
550743	21, 23
550832	1, 2
551251	7
551319	21, 23
551321	21, 23
551322	21, 23
551323	1, 2
551347	3
551348	3
551433	5
551627	7
551906	10
552374	15
552946	21, 23
553405	21, 23
553466	24
556323	5
556691	5
556692	5
556960	3
557461	24
557847	5
557848	5
558547	15
558570	13
558673	21, 23
558674	24
558952	24
558960	7, 24
562008	24
562010	24
562112	17
562141	21
562302	24
563466	13
563483	13
563672	6
563785	17
563788	17
563790	17
563791	17
563792	17
563798	17
563801	17
563805	17
563809	17
563810	17
563928	5
563929	5
563980	5
563981	5
564107	13
564126	3
564129	3
564137	3
564384	24
565430	23
566502	24
566764	5
567847	8
567947	24
567977	24
568391	7
568785	13
569331	24
569389	24
569414	7
569451	24
569506	17
570499	6
570938	1
571021	21, 23
571022	3
571049	5
571099	24
571176	17
571207	17
571386	7
571389	7
571407	17
571409	17
571545	15
571546	15
571645	5
571646	5
571882	15
572719	2
572729	21, 23
572731	13

Part No.	Page No.
572749	3
573422	17
573423	17
573548	21, 23
573587	21, 23
574117	21, 23
574275	23
574276	21, 23
574439	15
574442	17
574500	17
584501	6
584502	6
585007	3
585950	6
589419	17
589422	17
589426	15
589427	15
589428	15
589429	15
589487	13
589488	13
592784	15
593370	15
593650	15
600259	21, 23
601212	21, 23
602350	23
609733	15
611074	21, 23
613750	15, 19

Part No.	Page No.
619029	1, 5, 7, 13
620238	15
633242	15
636260	1, 2, 15
656532	13
656672	21, 23
663094	17
663095	17
675739	24
692722	15
730432	5
742710	23
784398	13
857420	21, 23
874007	15
886619	7
886739	19
886745	19
886753	19
886763	19
888449	19
893293	19
893294	19
893296	19
893298	19
940643	15
944803	21, 23
944804	21, 23
944853	19
944878	19
944879	19
944881	19

Part No.	Page No.
944882	19
944883	19
944885	19
944890	19
944894	19
944895	19
944896	19
944897	19
944900	19
944907	5
945090	19
945095	19
945348	19
945460	6
945805	19
945816	19
946029	19
946030	19
946033	19
946360	19
946361	19
946363	19
946364	19
946365	19
946483	10
946535	19
946541	19
946542	19
946543	19
946544	19
946545	19
946556	19

Part No.	Page No.
946583	19
1301194	19
1520075	19
1520449	2
1520495	24
1520606	24
1520607	24
1521254	13
1521255	13
1521257	10
1521349	17
1521354	13
1521392	17
1522201	5
1522421	6
1522525	17
1522526	17
1522630	7
1522631	6
1522633	6
1522636	7
1522638	7
1522640	3
1522679	5
1522807	8
1524266	15
1526729	24
1527430	24
1530602	3
1621888	7

NOTES

75 III TRACTOR SHOVEL
85 III TRACTOR SHOVEL

MICHIGAN

PARTS MANUAL SUPPLEMENT

No. 2167

★

This Supplement pertains to the Model 75 III and 85 III MICHIGAN Tractor Shovel covering revisions to the Hydraulic Oil Reservoir and Accessories which became effective on Machine Serial Numbers listed below:

75 III G.M. — 7CG297 and thereafter
75 III WAUKESHA — 7CA101 and thereafter
85 III G.M. — 6DG227 and thereafter
85 III CUMMINS — 5DC167 and thereafter

★

Use this Supplement with 75 III Parts Manual No. 2083, 85 III Parts Manual No. 2086 and Parts Manual Supplements to Parts Manuals No. 2083 and 2086

★

CLARK EQUIPMENT COMPANY
Construction Machinery Division

35C668B2001SPR- 271

Printed in U.S.A.

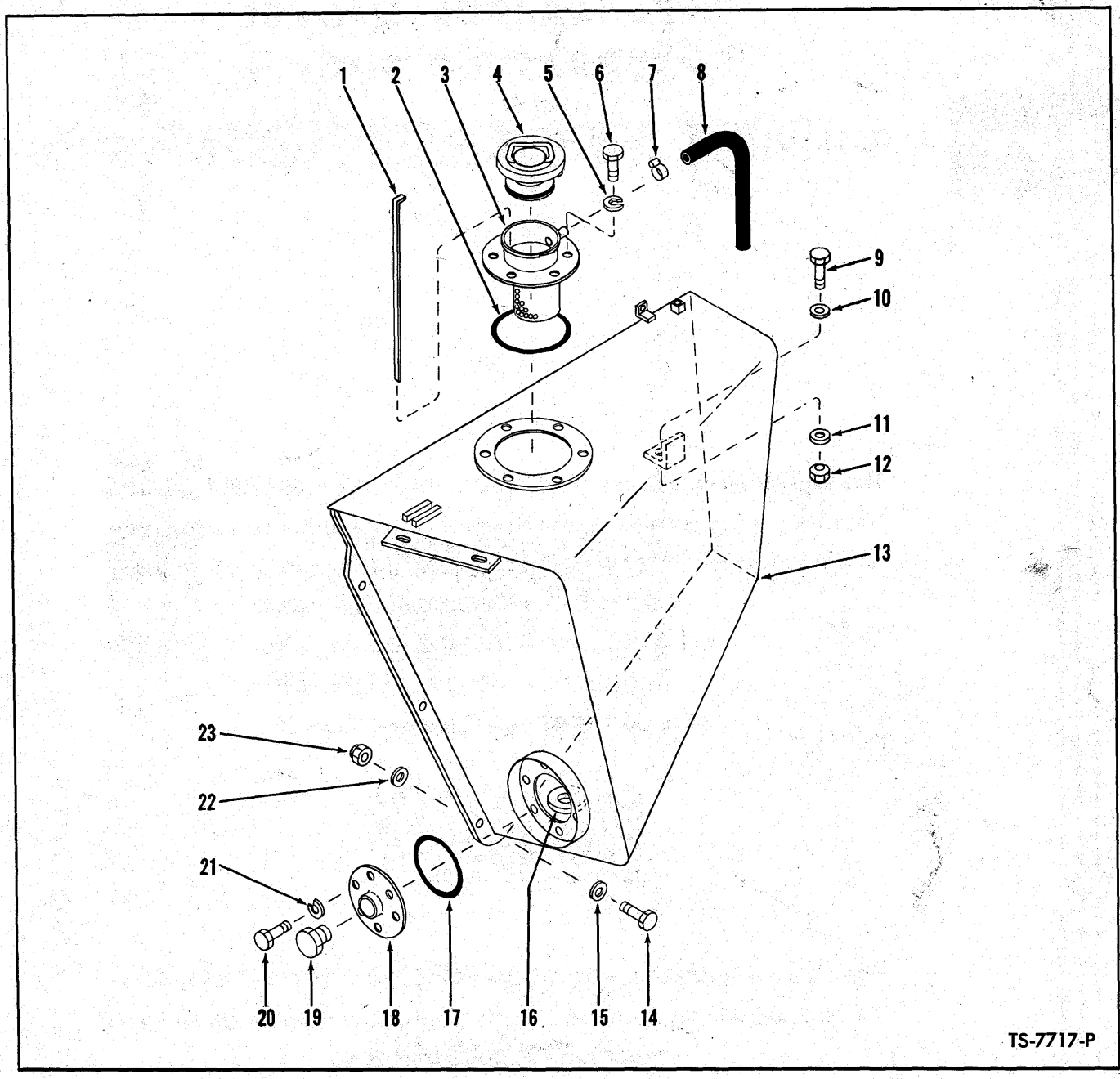

HYDRAULIC OIL RESERVOIR AND ACCESSORIES

Item No.	Part No.	Description	No. Req'd.
1	567741	DIPSTICK	1
2	25K-40624	"O" RING, Filler Neck	1
3	567742	NECK, Filler	1
4	569759	CAP, Filler	1
5	4E-06	LKWSHR, Filler Neck to Reservoir	6
6	18C-612	BOLT, Filler Neck to Reservoir	6
7	521874	CLAMP, Overflow Hose to Filler Neck	1
8	743563	HOSE, Overflow — 48" Lg.	1
9	18C-1244	BOLT, Reservoir to Frame	1
10	616813	WASHER, Reservoir to Frame	1
11	71D-12	BASE, Reservoir to Frame	1
12	70D-12	NUT, Reservoir to Frame	1
13	589186	RESERVOIR, Hydraulic Oil	1
14	18C-1244	BOLT, Reservoir to Side Plate	5
15	616813	WASHER, Reservoir to Side Plate	5
16	525293	MAGNET	1
17	25K-40428	"O" RING, Inspection Plate	1
18	587613	PLATE, Inspection	1
19	40K-16	PLUG, Inspection Plate	1
20	18C-612	BOLT, Inspection Plate to Reservoir	6
21	4E-06	LKWSHR, Inspection Plate to Reservoir	6
22	616813	WASHER, Reservoir to Side Plate	5
23	18D-12	NUT, Reservoir to Side Plate	5

WHEN ORDERING PARTS, ALWAYS STATE MODEL AND SERIAL NO. OF MACHINE

MICHIGAN

PARTS MANUAL SUPPLEMENT

No. 2113

★

This Supplement covers Three Spool Valve Installation and Parts for 75 III and 85 III Michigan Tractor Shovels.

★

INDEX

	Page
Numerical Index	8
Relief Valve Assembly	8
Side Panel	4
Three Spool Control Valve Assembly	7
Three Spool Valve Installation and Parts	5
Valve Controls Three Spool Valve Installation and Parts	3

★

Use this Supplement with 75 III Parts Manual No. 2083 and 85 III Parts Manual No. 2086

★

CLARK EQUIPMENT COMPANY • *Construction Machinery Division* • **Benton Harbor, Michigan**
IN CANADA: Clark Equipment of Canada, St. Thomas, Ontario

45C664B1921SPR-237

Printed in U.S.A.

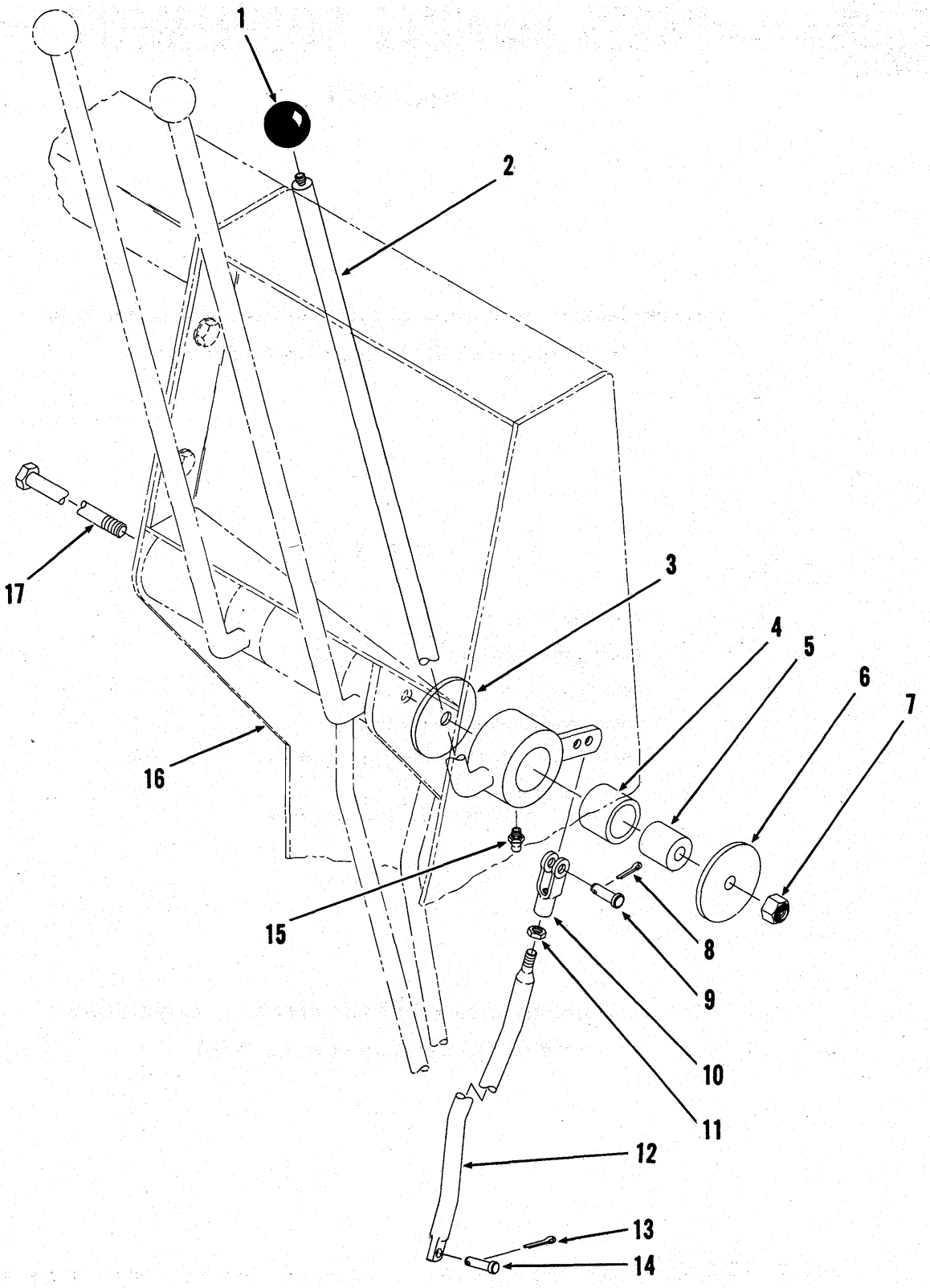

THREE SPOOL VALVE INSTALLATION AND PARTS TS-6932-P

THREE SPOOL VALVE INSTALLATION AND PARTS

Item No.	Part No.	Description	No. Req'd.
1	509772	KNOB	1
2	567607	LEVER ASSY, Valve (Inc. Item 4)	1
3	616796	WASHER, Valve Lever	1
4	569055	BUSHING, Lever	1
5	550646	SLEEVE, Valve Lever	1
6	616796	WASHER, Valve Lever	1
7	18D-08	NUT	1
8	1F-414	COTTER, Clevis Pin	1
9	4F-08127	PIN, Clevis	1
10	2J-8300	CLEVIS, Valve Rod	1
11	8D-08	NUT, Clevis Jam	1
12	563640	ROD, Valve Assy (Inc. 10, 11)	1
13	1F-312	COTTER, Rod Pin	1
14	4F-06106	PIN, Valve Rod	1
15	10H-25	FITTING, Valve Lever Grease	1
16	———	COCKPIT, See Parts Manuals 2083 & 2086	—
17	24C-8160	BOLT, Valve Lever	1

NOTES

WHEN ORDERING PARTS, ALWAYS STATE MODEL AND SERIAL NO. OF MACHINE

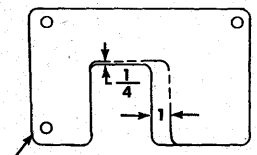

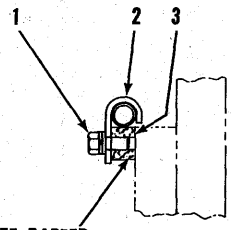

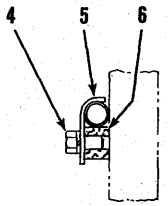

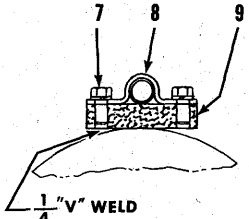

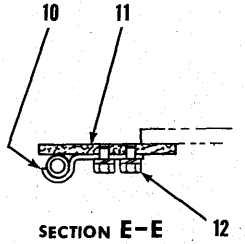

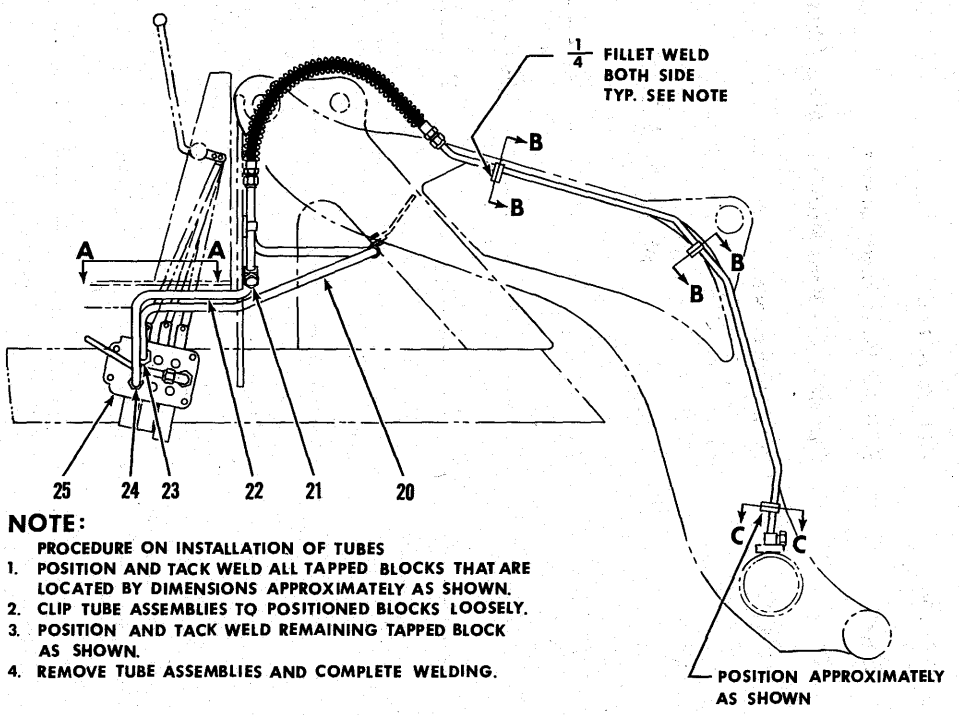

NOTE:
PROCEDURE ON INSTALLATION OF TUBES

1. POSITION AND TACK WELD ALL TAPPED BLOCKS THAT ARE LOCATED BY DIMENSIONS APPROXIMATELY AS SHOWN.
2. CLIP TUBE ASSEMBLIES TO POSITIONED BLOCKS LOOSELY.
3. POSITION AND TACK WELD REMAINING TAPPED BLOCK AS SHOWN.
4. REMOVE TUBE ASSEMBLIES AND COMPLETE WELDING.

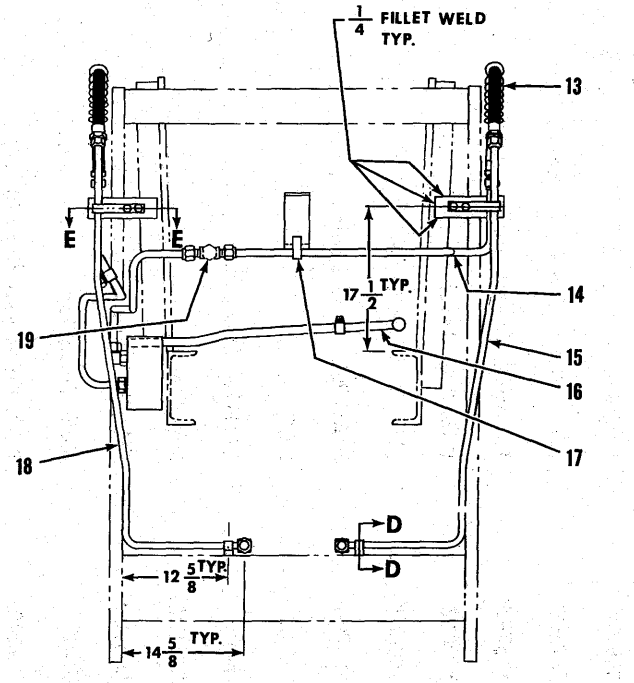

THREE SPOOL VALVE INSTALLATION AND PARTS

TS-6936-P

THREE SPOOL VALVE INSTALLATION AND PARTS

Item No.	Part No.	Description	No. Req'd.
1	18C-612	BOLT, Clamp to Block	4
1A	4E-06	†LKWSHR, Clamp to Block Bolt	4
1B	619024	†WASHER, Clamp to Block Bolt	4
2	563638	CLAMP, Tube Mounting	4
3	564771	BLOCK, Tube Mounting	4
4	18C-612	BOLT, Clamp to Block	2
4A	4E-06	†LKWSHR, Clamp to Block Bolt	2
5	563664	CLAMP, Tube Mounting	2
6	564771	BLOCK, Tube Mounting	2
7	18C-612	BOLT, Clamp to Block	4
7A	4E-06	†LKWSHR, Clamp to Block Bolt	4
8	563639	CLAMP, Tube Mounting	2
9	563634	BLOCK, Tube Mounting	2
10	563637	CLAMP, Tube Mounting	2
11	563633	BLOCK, Tube Mounting	2
12	18C-612	BOLT, Clamp to Block	4
12A	4E-06	†LKWSHR, Clamp to Block Bolt	4
13	1521360	HOSE, Tube Connecting	2
14	563647	TUBE, Cross	1
15	1521975	TUBE, L.H.	1
16	563642	TUBE, Rear	1
17	1521359	CLAMP, Tube Mounting	1
17A	———	†BOLT, Use Cockpit Mtg. Bolt	1
18	1521974	TUBE, R.H.	1
19	10K-10	TEE, Union	1
19A	36K-10	†CAP	1
20	563648	TUBE, Valve to Crosstube	1
21	36K-10	CAP	1
22	563646	TUBE, Valve to Hose	1
23	11K-10	ELBOW, 90°	1
23A	15K-10	†CONNECTOR, 37° Flare Fitting (Inc. Item 23B)	1
23B	91F-10	†"O" RING	1
24	15K-10	CONNECTOR, 37° Flare Fitting (Inc. Item 24A)	1
24A	91F-10	†"O" RING	1
25	572484	VALVE ASSY, Control	1

†Not Illustrated

WHEN ORDERING PARTS, ALWAYS STATE MODEL AND SERIAL NO. OF MACHINE

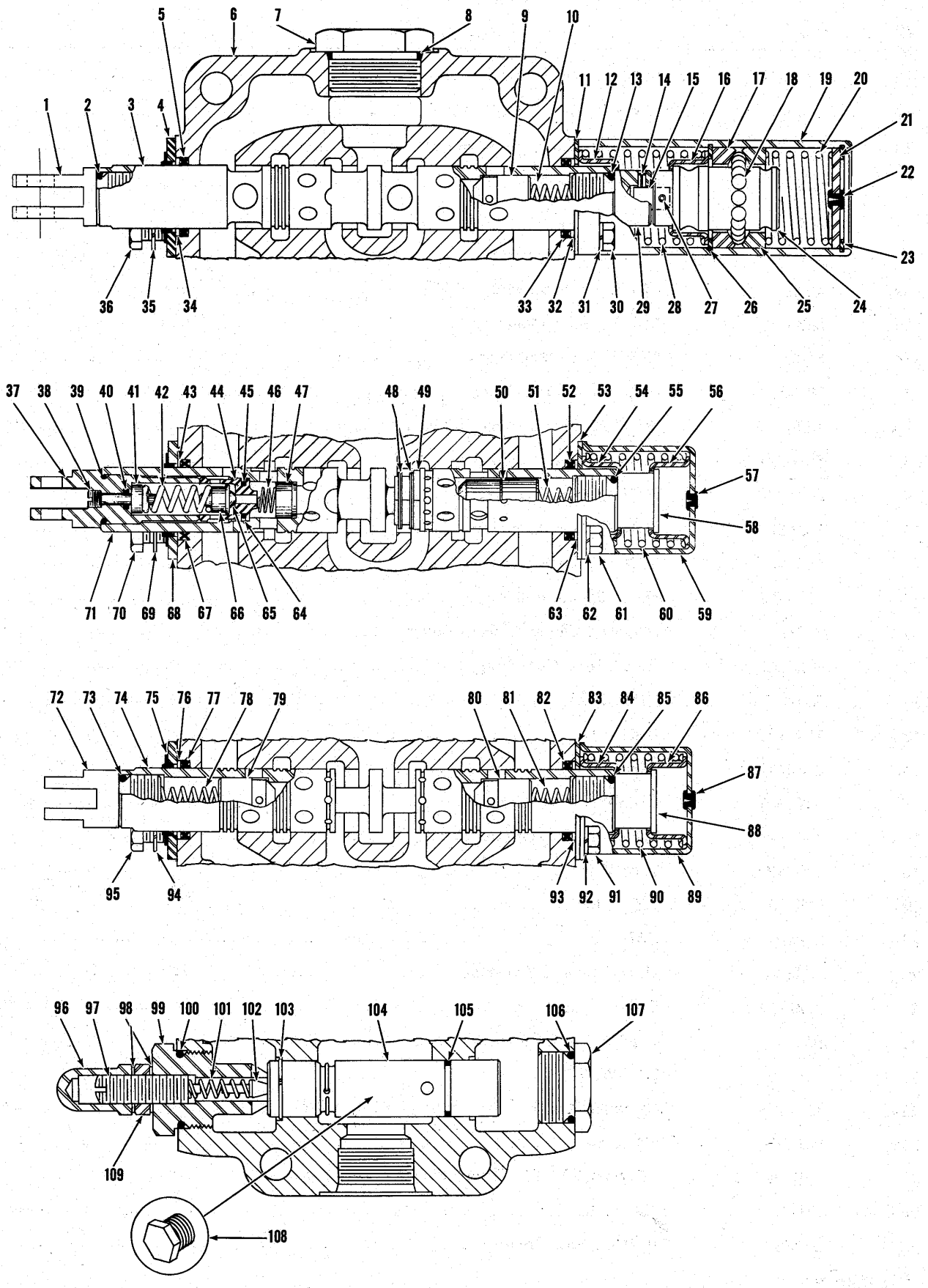

THREE SPOOL CONTROL VALVE ASSEMBLY TS-6788-P

THREE SPOOL CONTROL VALVE ASSEMBLY

Item No.	Part No.	Description	No. Req'd.
A	572484	VALVE ASSY, Control (Inc. 1 thru 109)	1
1	946360	EYE, Plunger	1
2	944881	"O" RING, Eye	1
3	———	§PLUNGER, Operating — See "A"	1
4	893294	WIPER, Plunger	1
5	784559	SEAL, Plunger Oil	1
6	———	§HOUSING — See "A"	1
7	24K-11	PLUG, to Housing	1
8	91F-11	"O" RING, Plug	1
9	944885	CHECK	1
10	893293	SPRING, Check	1
11	944882	PLATE, Retaining	1
12	944878	GUIDE, Spring	1
13	944881	"O" RING, Cap	1
14	108301	ROLL PIN	1
15	888449	PIN	1
16	944878	GUIDE, Spring	1
17	944897	RETAINER, Ball	1
18	10J-08	BALL	15
19	945805	COVER, Detent	1
20	946029	SPRING, Detent	1
21	944900	PLUG	1
22	886763	PLUG, Bleeder	1
23	507695	RING, Retaining	1
24	946030	CAP, Detent	1
25	944897	RETAINER, Ball	1
26	1301194	RING, Retaining	1
27	108301	ROLL PIN	1
28	945090	SPRING	1
29	945095	CAP, Plunger	1
30	1C-416	BOLT, Cover to Housing	4
31	4E-04	LKWSHR, Cover to Housing	4
32	944883	RING, Back-up	1
33	784559	SEAL, Plunger Oil	1
34	944883	RING, Back-up	1
35	4E-04	LKWSHR, Wiper to Housing	2
36	1C-410	BOLT, Wiper to Housing	2
37	946361	EYE, Plunger	1
38	946362	SCREW, Adjusting	1
39	944881	"O" RING, Eye	1
40	25K-20007	"O" RING, Adjusting Screw	1
41	946363	GUIDE, Spring	1
42	946364	SPRING, Check	1
43	944883	RING, Back-up	1
44	946367	SEAT, Check	1
45	25K-20016	"O" RING, Seat	1
46	946369	SPRING, Check	1
47	946370	CHECK	1
48	1308105	RING, Retaining	4
49	946032	CHECK	2
50	946368	CHECK	1
51	893293	SPRING, Check	1
52	784559	SEAL, Plunger	1
53	944882	PLATE, Retaining	1
54	945348	GUIDE, Spring	1
55	944881	"O" RING, Cap	1
56	945348	GUIDE, Spring	1
57	886745	PLUG, Bleeder	1
58	944895	CAP, Plunger	1
59	944896	COVER, Spring Return	1
60	944879	SPRING, Plunger Return	1
61	1C-410	BOLT, Cover Mounting	4
62	4E-04	LKWSHR, Cover Mounting	4
63	944883	RING, Back-up	1
64	946366	RING, Back-up	1
65	———	BALL (Inc. with Item 66)	1
66	946365	CHECK	1
67	784559	SEAL, Plunger	1
68	893294	WIPER, Plunger	1
69	4E-04	LKWSHR, Cover Mounting	2
70	1C-410	BOLT, Cover Mounting	2
71	———	§PLUNGER, Operating — See "A"	1
72	946360	EYE, Plunger	1
73	944881	"O" RING, Eye	1
74	———	§PLUNGER, Operating — See "A"	1
75	893294	WIPER, Plunger	1
76	944883	RING, Back-up	1
77	784559	SEAL, Plunger	1
78	893293	SPRING, Check	1
79	944885	CHECK	1
80	944885	CHECK	1

§Not Sold Separately

WHEN ORDERING PARTS, ALWAYS STATE MODEL AND SERIAL NO. OF MACHINE

THREE SPOOL CONTROL VALVE ASSEMBLY (Continued)

Item No.	Part No.	Description	No. Req'd.
81	893293	SPRING, Check	1
82	784559	SEAL, Plunger	1
83	944882	PLATE, Retaining	1
84	945348	GUIDE, Spring	1
85	944881	"O" RING, Cap	1
86	945348	GUIDE, Spring	1
87	886745	PLUG, Bleeder	1
88	944895	CAP, Plunger	1
89	944896	COVER, Spring Return	1
90	944879	SPRING, Plunger Return	1
91	1C-410	BOLT, Cover Mounting	2
92	4E-04	LKWSHR, Cover Mounting	2
93	944883	RING, Back-up	1
94	4E-04	LKWSHR, Wiper Mounting	2
95	1C-410	BOLT, Wiper Mounting	2
96	944853	NUT, Acorn	1
97	944890	SCREW, Adjusting	1
98	613750	WASHER	2
99	893296	CAP, Adjusting	1
100	25K-40100	"O" RING, Adjusting Cap	1
101	886753	SPRING, Poppet	1
102	886739	POPPET, Relief	1
103	946033	RING, Retaining	1
104	893298	VALVE ASSY, Relief (Inc. 103, 105)	1
105	945816	"O" RING, Relief Valve	1
106	25K-40100	"O" RING, Cap	1
107	944894	CAP	1
108	40K-04	PLUG	1
109	8D-08	NUT, Jam	1

NUMERICAL INDEX

Part No.	Page No.
1C-410	7, 8
1C-416	7
1F-312	3
1F-414	3
2J-8300	3
4E-04	7, 8
4E-06	5
4F-06106	3
4F-08127	3
8D-08	3, 8
10H-25	3
10J-08	7
10K-10	5
11K-10	5
15K-10	5
18C-612	5
18D-08	3
24C-8160	3
24K-11	7
25K-20007	7
25K-20016	7
25K-40100	8
36K-10	5
40K-04	8
91F-10	5
91F-11	7
108301	7
507695	7
509772	3
550646	3
563633	5
563634	5
563637	5
563638	5
563639	5
563640	3
563642	5
563646	5
563647	5
563648	5
563664	5
564771	5
567607	3
569055	3
572484	5, 7
613750	8
616796	3
619024	5
784559	7, 8
886739	8
886745	7, 8
886753	8
886763	7
888449	7
893293	7, 8
893294	7
893296	8
893298	8
944853	8
944878	7
944879	7, 8
944881	7, 8
944882	7, 8
944883	7, 8
944885	7
944890	8
944894	8
944895	7, 8
944896	7, 8
944897	7
944900	7
945090	7
945095	7
945348	7, 8
945805	7
945816	8
946029	7
946030	7
946032	7
946033	8
946360	7
946361	7
946362	7
946363	7
946364	7
946365	7
946366	7
946367	7
946368	7
946369	7
946370	7
1301194	7
1308105	7
1521359	5
1521360	5
1521974	5
1521975	5

WHEN ORDERING PARTS, ALWAYS STATE MODEL AND SERIAL NO. OF MACHINE

75 III TRACTOR SHOVEL
85 III TRACTOR SHOVEL

MICHIGAN

PARTS MANUAL SUPPLEMENT

No. 2353

★

This Supplement covers 1501994 Control Valve Assembly as used on Models 75 III, 85 III MICHIGAN Tractor Shovels.

★

This Control Valve Assembly became effective in production with Machine Serial Numbers listed below:

75 III — G.M. — 9CG161 and thereafter

75 III — Waukesha — 8CA101 and thereafter

85 III — G.M. — 8DG101 and thereafter

85 III — Cummins — 7DC101 and thereafter

★

Use this Supplement with 75 III Parts Manual No. 2083, 85 III Parts Manual No. 2086 and Parts Manual Supplements to Parts Manuals No. 2083 and 2086.

★

CLARK EQUIPMENT COMPANY
Construction Machinery Division

25C686B2125SPR-374

Printed in U.S.A.

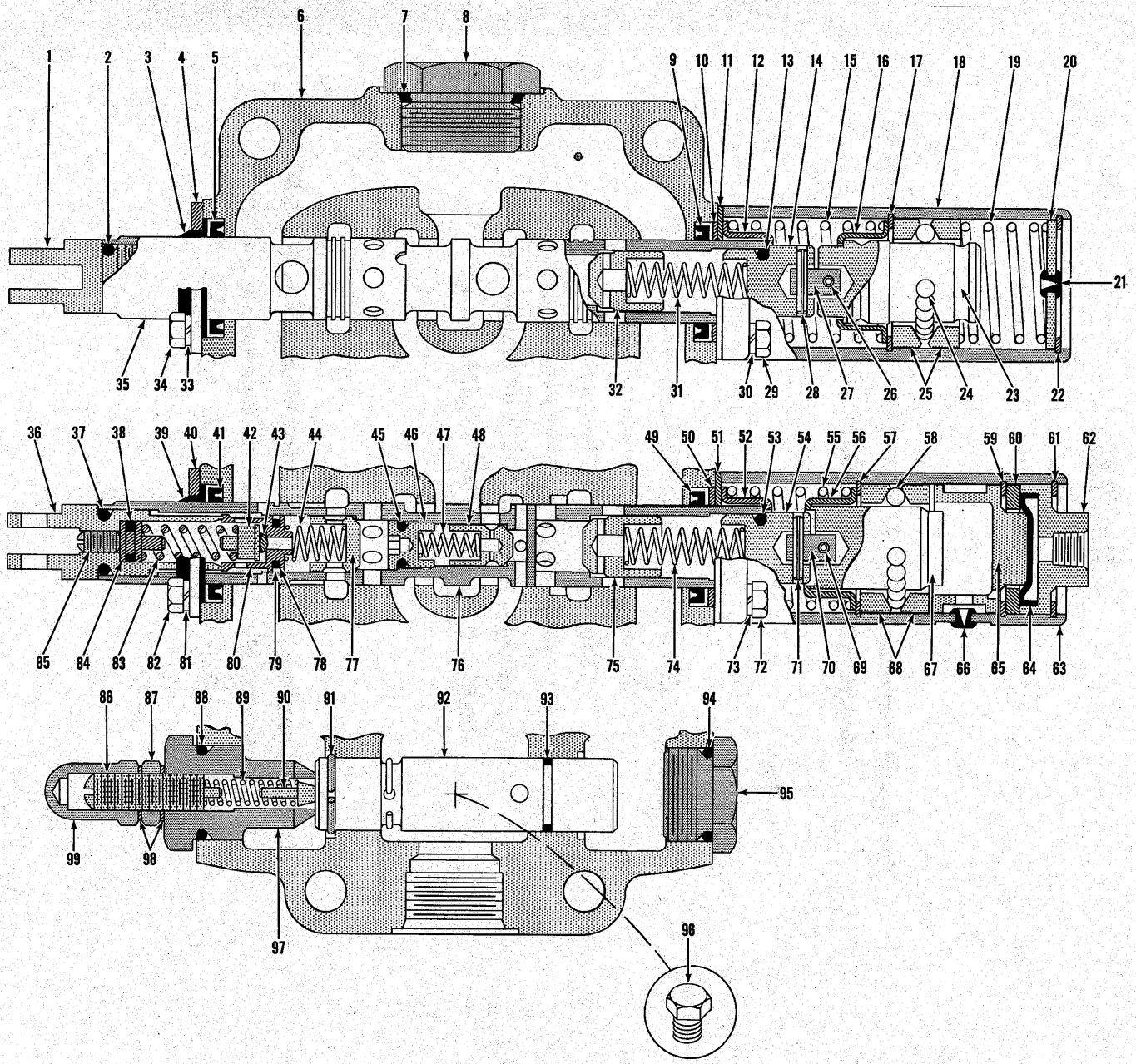

CONTROL VALVE ASSEMBLY

TS-8494-P

CONTROL VALVE ASSEMBLY

Item No.	Part No.	Description	No. Req'd.
A	1501994	CONTROL VALVE ASSY (Inc. 1 thru 99)	1
1	946360	EYE, Plunger	1
2	944881	"O" RING, Plunger Eye	1
3	946918	WIPER, Plunger	1
4	946914	PLATE, Wiper & Seal Retaining	1
5	946583	SEAL, Plunger Oil	1
6	———	§HOUSING, Valve — See "A"	—
7	91F-11	"O" RING, Cap	1
8	24K-11	CAP, Housing	1
9	946583	SEAL, Plunger Oil	1
10	944883	RING, Back-Up	1
11	944882	PLATE, Seal Retaining	1
12	944878	GUIDE, Spring	1
13	944881	"O" RING, Cap	1
14	945095	CAP, Plunger	1
15	945090	SPRING	1
16	944878	GUIDE, Spring	1
17	1301194	RING, Retaining	1
18	945805	COVER, Detent	1
19	946029	SPRING	1
20	944900	PLUG	1
21	886763	PLUG, Bleeder	1
22	507695	RING, Retaining	1
23	946030	CAP, Detent	1
24	10J-08	BALL	15
25	944897	RETAINER, Ball	2
26	108301	ROLL PIN	1
27	888449	PIN, Connecting	1
28	108301	ROLL PIN	1
29	1C-416	BOLT, Cover to Housing	4
30	4E-04	LKWSHR, Cover to Housing	4
31	893293	SPRING, Check	1
32	944885	CHECK	1
33	4E-04	LKWSHR, Plate to Housing	2
34	1C-410	BOLT, Plate to Housing	2
35	———	§PLUNGER — See "A"	—
36	946361	EYE, Plunger	1
37	944881	"O" RING, Plunger Eye	1
38	25K-20014	"O" RING, Guide	1
39	946918	WIPER, Plunger	1
40	946914	PLATE, Wiper & Seal Retaining	1
41	946583	SEAL, Plunger Oil	1
42	946884	POPPET ASSY (Inc. 43)	1
43	———	§BALL — See 42	—
44	946545	SPRING	1
45	945221	"O" RING, Cap	1
46	946555	*CAP	1
47	946536	SPRING	1
48	945590	CHECK	1
49	946583	SEAL, Plunger Oil	1
50	944883	RING, Back-Up	1
51	946535	PLATE, Seal Retaining	1
52	944878	GUIDE, Spring	1
53	944881	"O" RING, Cap	1
54	945095	CAP, Plunger	1
55	944879	SPRING	1
56	944878	GUIDE, Spring	1
57	1301194	RING, Retaining	1
58	10J-08	BALL	15
59	507695	RING, Retaining	1
60	946916	SPACER	1
61	507695	RING, Retaining	1
62	946915	PLUG	1
63	946913	COVER, Detent	1
64	946919	DIAPHRAGM	1
65	946917	PLUG	1
66	886763	PLUG, Bleeder	1
67	946912	CAP, Detent	1
68	944897	RETAINER, Ball	2
69	305307	ROLL PIN	1
70	888449	PIN, Connecting	1
71	305307	ROLL PIN	1
72	1C-416	BOLT, Cover to Housing	4
73	4E-04	LKWSHR, Cover to Housing	4
74	946544	SPRING, Check	1
75	944885	CHECK	1
76	———	§PLUNGER — See "A"	—
77	946543	CHECK	1
78	25K-20018	"O" RING, Seat	1
79	946556	RING, Sealing	1
80	946883	SEAT, Relief Valve	1
81	4E-04	LKWSHR, Plate to Housing	2
82	1C-410	BOLT, Plate to Housing	2
83	946364	SPRING	1
84	946363	GUIDE, Spring	1
85	946541	SCREW, Adjusting	1
86	944890	SCREW, Adjusting	1
87	8D-08	NUT, Jam	1
88	791553	"O" RING, Adjusting Cap	1
89	886753	SPRING, Relief	1
90	886739	POPPET, Relief	1
91	947361	SNAP RING	1
92	893298	RELIEF VALVE ASSY (Inc. 91, 93)	1
93	945816	"O" RING, Relief Valve	1
94	791553	"O" RING, Cap	1
95	944894	CAP	1
96	40K-04	PLUG	1
97	893296	CAP, Adjusting	1
98	613750	WASHER, Jam Nut	2
99	944853	NUT, Acorn	1

§Not Sold Separately
*NOTE: Torque to 25 Ft/Lbs.

WHEN ORDERING PARTS, ALWAYS STATE MODEL AND SERIAL NO. OF MACHINE

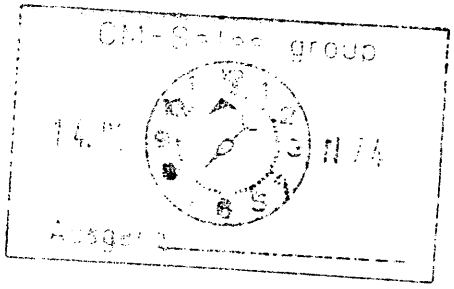

EMD

MICHIGAN

OPERATORS MANUAL SUPPLEMENT

No. 2991

★

SUBJECT: Recommended Service Interval for Cleaning Hydraulic Reservoir Suction Filters and Replacement of Return Filter Elements

Old Specification: Service every 500 operating hours.

New Specification: Service every 250 operating hours.

★

Accumulation of test data and field experience has established that 250 operating hours is the most effective interval for cleaning hydraulic reservoir suction filters and replacing return filters under all operating conditions. The data contained in this supplement provides servicing procedures to be followed at the new recommended time interval.

This supplement supersedes and replaces Operators Manual Supplement No. 2531 and information contained in existant operators manuals listed in the table below.

Use this supplement with the following operators manuals:

Model	Manual No.	Model	Manual No.
**45 B	2856-R2	125-III A	2454
55-III	2115	125 B	2921-R1
55-III A	2533-R1	175-III	2028
75-III	2097	175-III A	2139
75-III A	2592	175 B & 275 B	2653-R1
75 B	2771-R1	275-III	2081
* 75 B	2944	475 B	2827
85-III	2098	675 B	2811
85-III A	2450	280-III A	2361-R1
125-III A	2347	380-III A	2515

*Model 75 B Operators Manual No. 2944-R1 does not require this supplement.
**Model 45 B Operators Manual No. 2856-R3 does not require this supplement.

CLARK EQUIPMENT COMPANY
Construction Machinery Division

10M747BSPR590

Printed in U.S.A.

250 HOUR MAINTENANCE OPERATIONS

Service Reservoir Return Filter Assemblies: The hydraulic reservoir return filter assemblies installed inside the hydraulic reservoir consist of a head and handle assembly, "O" ring, two filter elements secured between a holder assembly with retaining plates (center and bottom), a spring and attaching hardware. The reservoir return filter assemblies are designed and installed in a manner that permits the filter assembly to act as a relief valve so that oil can be by-passed if the filter element becomes excessively plugged with foreign material.

During normal operation, hydraulic system oil flows through the return filter assemblies from inside to outside before entering the reservoir. However, when the filter elements become excessively plugged with foreign material or contaminants, a difference in pressure within the inner side of the filter elements and reservoir will be created. When the pressure differential reaches approximately 11 psi, the filter assembly is forced downward permitting the hydraulic oil to by-pass the plugged filter elements entering directly into the hydraulic reservoir.

Remove the hydraulic return filter assemblies and replace filter elements as follows, See Figure 1.

Caution: *Extreme care must be exercised when removing filter while oil is hot to prevent hands from getting burned.*

1. Remove filter assembly from hydraulic reservoir by removing mounting bolts and lockwashers.

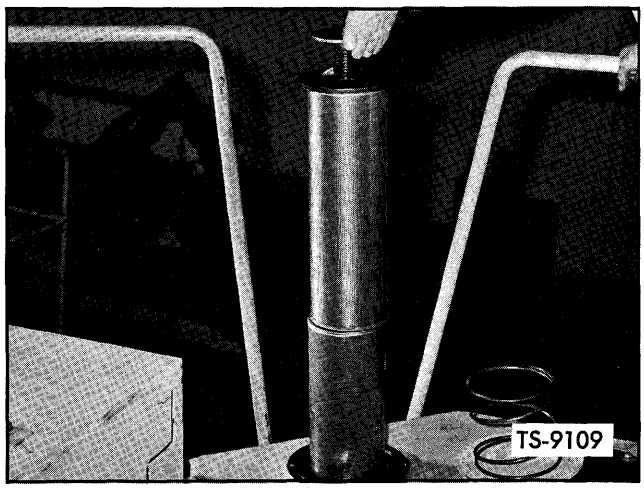

Fig. 1. Reservoir Return Filter Assembly

2. Remove attaching hardware securing the bottom retaining plate and filter elements in the holder assembly. Discard the retaining plate sealing washer.
3. Remove both filter elements and center retaining plate from holder assembly. Discard the filter elements.

   Note: *Do not attempt to clean or re-use the dirty filter elements.*
4. Reinstall new filter elements in holder assembly with the center retaining plate positioned between the top and bottom filter elements. Resecure the elements in the holder assembly with bottom retaining plate, using a new sealing washer, and attaching hardware.
5. Reinstall and secure the return filter assemblies in the hydraulic reservoir with mounting bolts and lockwashers.

Clean Hydraulic Reservoir Suction Filter Assemblies: The hydraulic reservoir filter assemblies installed inside the hydraulic reservoir consist of a pleated metal filter element with sealing gaskets secured between a mounting base and cover type relief valve.

Recommended servicing procedures for cleaning the reservoir filter element are described below.

During normal operation, oil is drawn from the reservoir through the filter element under equal pressure by the main hydraulic pump before entering the hydraulic system. However, when the filter element becomes excessively plugged with foreign material or contaminants, a difference in pressure within the reservoir and inner side of the filter element will be created. When the pressure difference reaches 2.4 psi, the cover type relief valve incorporated at the top of the filter assembly will open permitting the hydraulic oil to by-pass the plugged filter element entering directly into the hydraulic system.

1. Loosen reservoir cap **slowly** to relieve pressure in hydraulic reservoir. Remove reservoir cap, dipstick, and hand hole cover as shown in Figure 2. On models using two filters, the second filter is located under the plate next to the reservoir filler cap.
2. Unscrew filter element from element mounting base and remove filter element as shown in Figure 3.

OMS 2991
Printed in U.S.A.

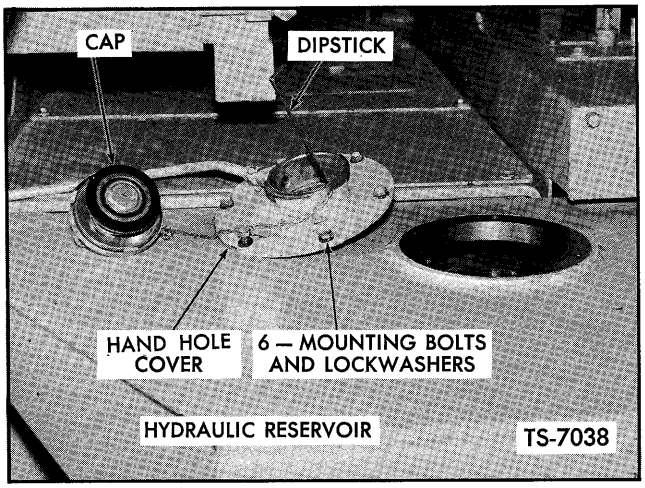

Fig. 2. Remove Reservoir Cap, Dipstick and Hand Hole Cover

3. Immerse filter element in hot soapy water. Soak and intermittently agitate element and relief valve components for approximately 30 minutes to loosen dirt particles. Remove any remaining deposits between element pleats with a stiff bristled **non-metallic** brush as shown in Figure 4. Flush element and relief valve components with clean hot water until drain water is clear.

4. Air dry element and relief valve components with filtered low pressure air as shown in Figure 5. Examine general condition of filter element checking for element cleanliness, deteriorated sealing gaskets, or screen damage. Replace deteriorated sealing gaskets with new gaskets using RUSCOE EPOXY CEMENT to secure new gaskets on element. If filter screen is damaged, replace with new element. Check relief valve components for any sign of damage replacing any component not in good serviceable condition.

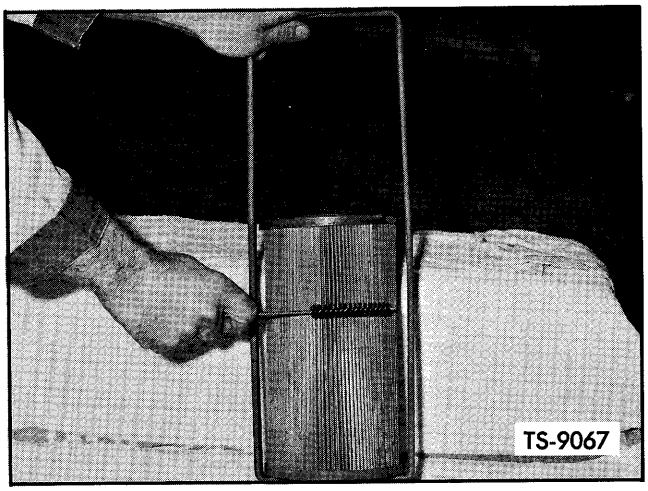

Fig. 4. Cleaning Filter Element with Stiff Bristled Brush

Note: *RUSCOE EPOXY CEMENT can be obtained in 5 and 10 Cent Stores or by ordering directly from the W. J. RUSCOE COMPANY in Akron, Ohio. RUSCOE EPOXY CEMENT is available in various sizes and can be ordered by the following assigned Catalog Numbers. 1½ oz. Tubes (Cat. # x - 1), and Piggy-Back Cans of 6 ozs. (Cat. # x - 24), 12 ozs. (Cat. # x - 48) and 18 ozs. (Cat. # x - 612). Directions for use are printed on each container. Because raw materials in Ruscoe Epoxy have a minimum degree of toxicity, precautions such as avoiding direct contact with the skin and washing hands thoroughly after use is recommended.*

Note: *Not all of the models affected by this supplement use both return and suction filters. In such cases, use only the individual application suited to the specific machine.*

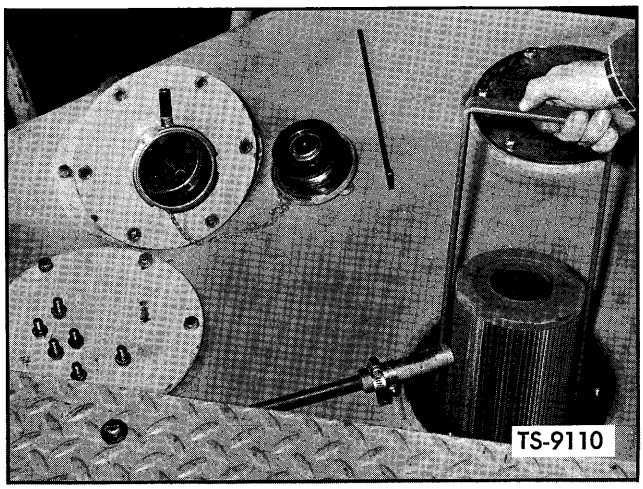

Fig. 3. Remove Filter Element

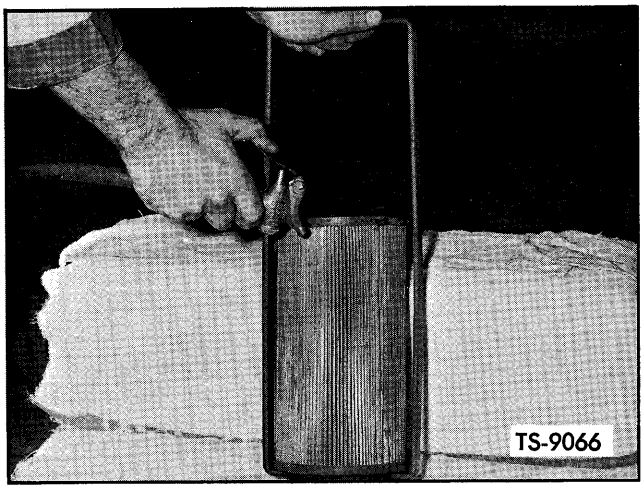

Fig. 5. Air Dry Filter Element and Inspect for Damage

OMS 2991
Printed in U.S.A.