RUTHZIL TRATOR COMERCIAL DE PEÇAS LTDA 11 97083-6812 ROLANDO

ABRIL 2002

763

Bobcat®

G-SERIES

Parts Manual

S/N 5122 50001 & ABOVE
S/N 5124 50001 & ABOVE
S/N 5126 20001 & ABOVE

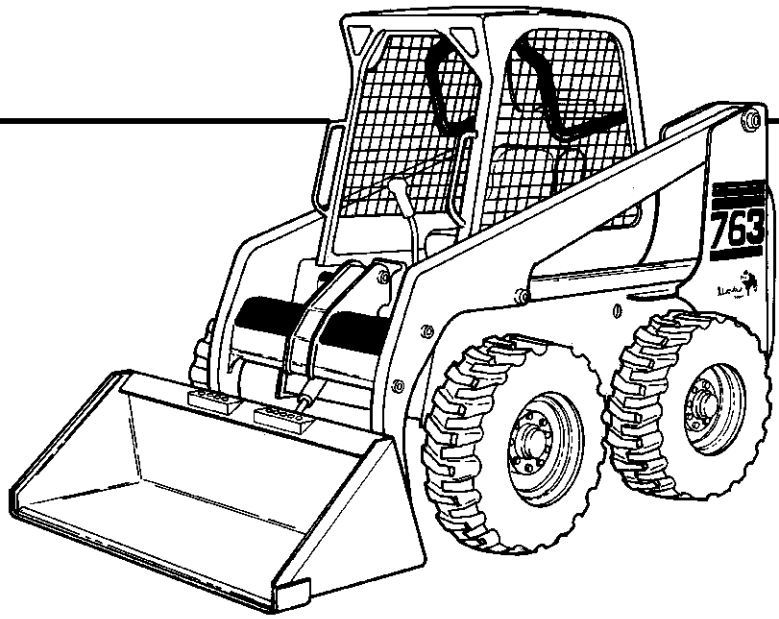

EQUIPPED WITH BOBCAT INTERLOCK CONTROL SYSTEM (BICS™)

IR Bobcat®

6900986 (11-01) Revised (4-02)

Printed in U.S.A.

© Bobcat Company 2002

763 G-SERIES ALPHABETICAL INDEX

ADHESIVE 416
AIR CLEANER 208
ALTERNATOR 196, 198, 212
ANTI–FREEZE 416

BATTERY 168, 172
BELT, ALTERNATOR 210
BELT, COOLING FAN DRIVE 204
BELT, PUMP DRIVE 214
BLACK GOLD 416
BLOCK HEATER 280
BLOWER, WHEEL 204
BOB–TACH 28, 30

CAB 14, 16
CAB DOOR 288, 296
CAB ENCLOSURE 304
CABLE, BATTERY 168, 172
CAMSHAFT 238, 240
CAP, FUEL 32
CAP, HYD. OIL 136
CAP, RADIATOR 204
CHAIN, DRIVE 36
CHAINCASE 36
COOLING FAN DRIVE ASSY. 220
COUNTER WEIGHTS 312, 314
CRANKSHAFT 236
CYLINDER BLOCK 226
CYLINDER HEAD 232
CYLINDER, LIFT 72, 74
CYLINDER, TILT 70

DECALS 316, 318
DIPSTICK, ENG. OIL 234
DOOR, CAB 288, 296
DOOR, REAR 24, 26
DRIVE MOUNT ASSY. 38

ENGINE 208, 216, 222
EXTINGUISHER 346

FILTER, AIR 262
FILTER, ENG. OIL 224
FILTER, FUEL 32
FILTER, HYD. OIL 140
FIRE EXTINGUISHER 346
FLASHER LIGHTS 350
FUEL SENDER 32

GAS SPRING 14, 288, 296
GASKET KIT, ENG. 222
GLOW PLUG 258
GUAGE, ENG. TEMP. 164, 166
GUAGE, FUEL 164, 166

HARNESS, CAB 164, 166
HARNESS, CONTROLS 180
HARNESS, ENGINE 168, 172
HARNESS, HHH 122
HARNESS, LIGHTS 378
HEAD, CYLINDER 232
HEATER 356, 360
HORN 372

INJECTION NOZZLES 258, 260

LATCH, REAR DOOR 24, 26
LEVER, PINTLE 142
LIFT ARM 28
LIFT KITS 374, 376
LIGHT KIT 378
LIGHTS, FLASHER 350
LOCK, REAR DOOR 392
LUBRICANT 416

MAIN FRAME 12
MANIFOLD 246
MOTOR, HYDRO. 146
MOUNT, ENGINE 210
MOUNT, HYDRO. PUMP 210, 216
MUFFLER 208

OIL 416
OIL COOLER 140

PAINT 416
PANEL, INSTRUMENT 164, 166
PEDALS, CONTROL 76
PISTON 236
POLISH 416
PUMP, FUEL 32, 254
PUMP, GEAR 132, 156
PUMP, HYDRO. 148
PUMP, INJECTION 254
PUMP, OIL 226
PUMP, WATER 242

RADIATOR 204
RIM, WHEEL 412
RING GEAR 214

SEAT 20
SEALANT 416
SEAT BELT 16, 394, 402
SENDER, ENG. TEMP. 168, 172
SENSOR, RPM 168, 172
SHOCK CONTROLS 144
SOLENOID 168, 172
SPROCKET, AXLE 36, 44
STARTER 168, 172, 200, 216
STOP, LIFT ARM 28
SWITCH, ENG. OIL PRESS. 168
SWITCH, HYD. PRESS. 168, 172
SWITCH, HYD. TEMP. 168, 172
SWITCH, IGNITION 164, 166

TANK, COOLANT 204
TANK, FUEL 32
THERMOSTAT 244

VALVE COVER 228
VALVE, HYD. CONTROL 78–86, 94–110
VALVE, ENGINE 230
VALVE, SELECT 130

WINDOW, REAR REMOVAL KIT .. 310
WINDOW, REAR 306, 320
WINDOW, SIDE 306
WIPER, WINDSHIELD 292

763 G-SERIES CONTENTS

MAIN FRAME 12-35
MAIN FRAME 12-13
OPERATOR CAB 14-17
SEAT & SEAT BAR 18-19
SEAT 20-21
PANELS 22-23
REAR DOOR 24-27
LIFT ARMS & BOBTACH 28-29
BOB-TACH 30-31
FUEL SYSTEM 32-35
DRIVE TRAIN 36-45
DRIVE TRAIN 36-37
MOTOR CARRIER 38-39
DISC BRAKE 40-43
AXLE 44-45
HYDRAULIC SYSTEM 46-121
HYDRAULIC CIRCUITRY (W/O BUCKET POSITIONING VALVE) 46-49
* HYDRAULIC CIRCUITRY (W/O BUCKET POSITIONING VALVE) 50-51
HYDRAULIC CIRCUITRY (W/ BUCKET POSITIONING VALVE) 52-55
* HYDRAULIC CIRCUITRY (W/ BUCKET POSITIONING VALVE) 56-59
MANUAL LIFT RELEASE SYSTEM 60-61
* MANUAL LIFT RELEASE SYSTEM 62-63
AUXILIARY HYDRAULICS 64-67
* AUXILIARY HYDRAULICS 68-69
TILT CYLINDER 70-71
LIFT CYLINDER 72-75
CONTROL PEDALS 76-77
HYDRAULIC CONTROL VALVE (BICS COMBO VALVE) 78-85
* HYDRAULIC CONTROL VALVE (BICS COMBO VALVE) 86-93
HYDRAULIC CONTROL VALVE (ADVANCED HAND CONTROL) 94-97
HYDRAULIC CONTROL VALVE (ADVANCED CONTROL SYSTEM) 98-105
* HYDRAULIC CONTROL VALVE (ADVANCED CONTROL SYSTEM) 106-109
HYDRAULIC CONTROL VALVE (SERVICE VALVE) (ACS) 110-113
BICS CONTROL VALVE 114-115
MANUAL LIFT RELEASE VALVE 116-117
PRESSURE RELEASE VALVE 118-119
BUCKET POSITIONING VALVE 120-121
HIGH FLOW HYDRAULICS 122-135
HIGH FLOW HYDRAULICS 122-135
HYDROSTATIC SYSTEM 136-163
HYDROSTATIC CIRCUITRY 136-141
HAND CONTROLS 142-145
HYDROSTATIC MOTOR 146-147
HYDROSTATIC PUMP 148-155
GEAR PUMP 156-157
HYDROSTATIC OIL FILTER 158-163
ELECTRICAL SYSTEM 164-203
CAB ELECTRICAL CIRCUITRY 164-167
ENGINE ELECTRICAL CIRCUITRY 168-175
CONTROLS ELECTRICAL 176-195
ALTERNATOR 196-199
STARTER (NIPPONDENSO) 200-201
* STARTER (VALEO) 202-203

POWER UNIT 204-263
COOLING SYSTEM 204-207
ENGINE & ATTACHING PARTS 208-217
THROTTLE 218-219
COOLING FAN DRIVE ASSY. 220-221
ENGINE & GASKET KITS 222-223
GEARCASE 224-225
CRANKCASE 226-227
ROCKER ARM COVER 228-229
VALVE ROCKER ARM 230-231
CYLINDER HEAD 232-233
OIL PAN 234-235
PISTON & CRANKSHAFT 236-237
RUEL CAMSHAFT 238-239
CAMSHAFT 240-241
WATER PUMP 242-243
WATER FLANGE & THERMOSTAT 244-245
MANIFOLDS 246-247
ENGINE STOP LEVER 248-249
GOVERNOR 250-251
SPEED CONTROL PLATE 252-253
INJECTION PUMP 254-257
INJECTOR NOZZLES 258-259
INJECTOR HOLDER 260-261
AIR CLEANER 262-263
ACCESSORIES & OPTIONS 267-418
ACS CONVERSION KIT 267-268
ACCESS COVER 269-270
ACCESSORIES HARNESS 271-272
AIR DEFLECTOR KIT 273-274
AXLE SEAL KIT 275-276
BACK-UP ALARM 277-278
BEACON 279-280
BLOCK HEATER 281-282
BOB-TACH LEVERS 283-284
BUCKET POSITIONING VALVE KIT 285-286
* BUCKET POSITIONING VALVE KIT 287-288
CAB DOOR 289-302
CAB ENCLOSURE 303-306
CAB WINDOWS 307-312
COUNTERWEIGHT KIT 313-316
DECALS 317-320
DELUXE CAB 321-324
ELECTRICAL CONTROLS KIT 325-332
ENGINE MOUNT KIT 333-334
EUROPEAN ACCESSORIES 335-346
FIRE EXTINGUISHER 347-348
FOPS KIT 349-350
FLASHER LIGHTS 351-352
HAND CONTROL KIT 353-356
HEATER KIT 357-360
HEATER 361-368
HEATER PLUMBING KIT 369-372
HORN KIT 373-374
LIFT KIT 375-378

ACCESSORIES & OPTIONS (CONTD) 267-418
LIGHT KIT 379-380
MUFFLER/PURIFIER KIT 381-382
RADIATOR SCREEN KIT 383-384
REAR AUXILIARY 385-390
REAR AUXILIARY VALVE 391-392
REAR DOOR LOCK 393-394
SEAT 395-398
SEAT BELT 399-404
SOUND KIT 405-406
SOUND OPTION 407-408
SOUND REDUCTION HARDHAT 409-410
STROBE LIGHT 411-412
TIRES 413-416
BULK ITEMS 417-418
NUMERICAL INDEX 419-470
NUMERICAL INDEX 419-470

763 G-SERIES CONTENTS

MAIN FRAME 12-35
MAIN FRAME 12-13
OPERATOR CAB 14-17
SEAT & SEAT BAR 18-19
SEAT 20-21
PANELS 22-23
REAR DOOR 24-27
LIFT ARMS & BOBTACH 28-29
BOB-TACH 30-31
FUEL SYSTEM 32-35
DRIVE TRAIN 36-45
DRIVE TRAIN 36-37
MOTOR CARRIER 38-39
DISC BRAKE 40-43
AXLE 44-45
HYDRAULIC SYSTEM 46-121
HYDRAULIC CIRCUITRY (W/O BUCKET POSITIONING VALVE) 46-49
* HYDRAULIC CIRCUITRY (W/O BUCKET POSITIONING VALVE) 50-51
HYDRAULIC CIRCUITRY (W/ BUCKET POSITIONING VALVE) 52-55
* HYDRAULIC CIRCUITRY (W/ BUCKET POSITIONING VALVE) 56-59
MANUAL LIFT RELEASE SYSTEM 60-61
* MANUAL LIFT RELEASE SYSTEM 62-63
AUXILIARY HYDRAULICS 64-67
* AUXILIARY HYDRAULICS 68-69
TILT CYLINDER 70-71
LIFT CYLINDER 72-75
CONTROL PEDALS 76-77
HYDRAULIC CONTROL VALVE (BICS COMBO VALVE) 78-85
* HYDRAULIC CONTROL VALVE (BICS COMBO VALVE) 86-93
HYDRAULIC CONTROL VALVE (ADVANCED HAND CONTROL) 94-97
HYDRAULIC CONTROL VALVE (ADVANCED CONTROL SYSTEM) 98-105
* HYDRAULIC CONTROL VALVE (ADVANCED CONTROL SYSTEM) 106-109
HYDRAULIC CONTROL VALVE (SERVICE VALVE) (ACS) 110-113
BICS CONTROL VALVE 114-115
MANUAL LIFT RELEASE VALVE 116-117
PRESSURE RELEASE VALVE 118-119
BUCKET POSITIONING VALVE 120-121
HIGH FLOW HYDRAULICS 122-135
HIGH FLOW HYDRAULICS 122-135
HYDROSTATIC SYSTEM 136-163
HYDROSTATIC CIRCUITRY 136-141
HAND CONTROLS 142-145
HYDROSTATIC MOTOR 146-147
HYDROSTATIC PUMP 148-155
GEAR PUMP 156-157
HYDROSTATIC OIL FILTER 158-163
ELECTRICAL SYSTEM 164-203
CAB ELECTRICAL CIRCUITRY 164-167
ENGINE ELECTRICAL CIRCUITRY 168-175
CONTROLS ELECTRICAL 176-195
ALTERNATOR 196-199
STARTER (NIPPONDENSO) 200-201
* STARTER (VALEO) 202-203

POWER UNIT 204-263
COOLING SYSTEM 204-207
ENGINE & ATTACHING PARTS 208-217
THROTTLE 218-219
COOLING FAN DRIVE ASSY. 220-221
ENGINE & GASKET KITS 222-223
GEARCASE 224-225
CRANKCASE 226-227
ROCKER ARM COVER 228-229
VALVE ROCKER ARM 230-231
CYLINDER HEAD 232-233
OIL PAN 234-235
PISTON & CRANKSHAFT 236-237
RUEL CAMSHAFT 238-239
CAMSHAFT 240-241
WATER PUMP 242-243
WATER FLANGE & THERMOSTAT 244-245
MANIFOLDS 246-247
ENGINE STOP LEVER 248-249
GOVERNOR 250-251
SPEED CONTROL PLATE 252-253
INJECTION PUMP 254-257
INJECTOR NOZZLES 258-259
INJECTOR HOLDER 260-261
AIR CLEANER 262-263
ACCESSORIES & OPTIONS 267-418
ACS CONVERSION KIT 267-268
ACCESS COVER 269-270
ACCESSORIES HARNESS 271-272
AIR DEFLECTOR KIT 273-274
AXLE SEAL KIT 275-276
BACK-UP ALARM 277-278
BEACON 279-280
BLOCK HEATER 281-282
BOB-TACH LEVERS 283-284
BUCKET POSITIONING VALVE KIT 285-286
* BUCKET POSITIONING VALVE KIT 287-288
CAB DOOR 289-302
CAB ENCLOSURE 303-306
CAB WINDOWS 307-312
COUNTERWEIGHT KIT 313-316
DECALS 317-320
DELUXE CAB 321-324
ELECTRICAL CONTROLS KIT 325-332
ENGINE MOUNT KIT 333-334
EUROPEAN ACCESSORIES 335-346
FIRE EXTINGUISHER 347-348
FOPS KIT 349-350
FLASHER LIGHTS 351-352
HAND CONTROL KIT 353-356
HEATER KIT 357-360
HEATER 361-368
HEATER PLUMBING KIT 369-372
HORN KIT 373-374
LIFT KIT 375-378

ACCESSORIES & OPTIONS (CONTD) 267-418
LIGHT KIT 379-380
MUFFLER/PURIFIER KIT 381-382
RADIATOR SCREEN KIT 383-384
REAR AUXILIARY 385-390
REAR AUXILIARY VALVE 391-392
REAR DOOR LOCK 393-394
SEAT 395-398
SEAT BELT 399-404
SOUND KIT 405-406
SOUND OPTION 407-408
SOUND REDUCTION HARDHAT 409-410
STROBE LIGHT 411-412
TIRES 413-416
BULK ITEMS 417-418
NUMERICAL INDEX 419-470
NUMERICAL INDEX 419-470

MAINTENANCE ITEMS
MODEL 763 G-Series

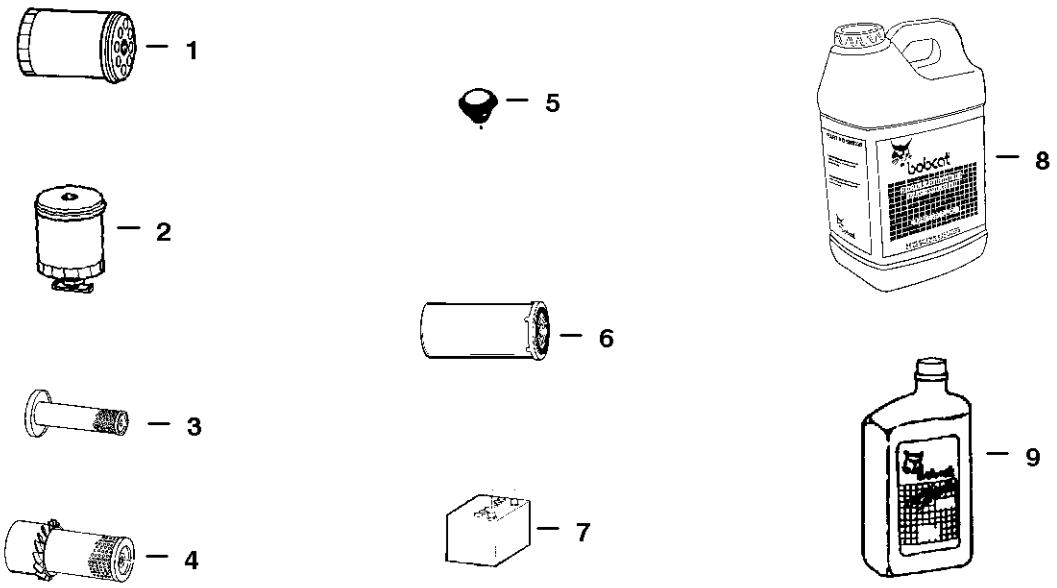

Ref.	Part Number	Description	Remarks	Page
1	6675517	FILTER	Engine Oil (6 Pack)	224
2	6667352	ELEMENT	Fuel	32
3	6598362	CARTRIDGE	Inner Air Cleaner	262
4	6598492	CARTRIDGE	Outer Air Cleaner	262
5	6646678	CAP	Radiator	204
6	6661248	ELEMENT	Hydrostatic # 3 Media	160
7	6674687	BATTERY		168
	(HYDRAULIC —RESERVOIR CAPACITY)			14.0 QTS. (13,2 L.)
	(HYDRAULIC/HYDROSTATIC SYSTEM)			8.5 GALS. (32,2 L.)
8	6563328	FLUID	Hyd./Hydro. Fluid - (2) 2.5 Gal. - (5 Gal.)	417
	6722344	FLUID	Hyd./Hydro. Fluid - (5 Gal.)	417
	6563330	FLUID	55 Gallon Drum	417
	(ENGINE OIL W/FILTER CAPACITY)			7.5 QTS. (7,1 L.)
9	6657301	MOTOR OIL	10W30 CE/SG - 1 Qt.	417
	6657299	MOTOR OIL	15W40 CE/SG - 1 Qt.	417
	6657303	MOTOR OIL	30 CE/SG - 1 Qt.	417
	6724558	MOTOR OIL	15W40 CE/SG - 1 Gallon	417
	6724557	MOTOR OIL	10W30 CE/SG - 1 Gallon	417
	6724559	MOTOR OIL	30 CE/SG - 1 Gallon	417
	6674205	MOTOR OIL	10W30 CE/SG - 2.5 Gal.	417
	6674204	MOTOR OIL	15W40 CE/SG - 2.5 Gal.	417
	6674206	MOTOR OIL	30 CE/SG - 2.5 Gal.	417

GENERAL INFORMATION

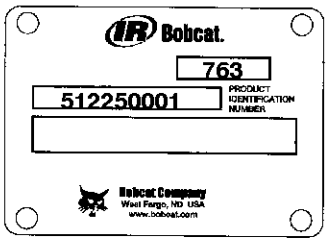

DOMESTIC

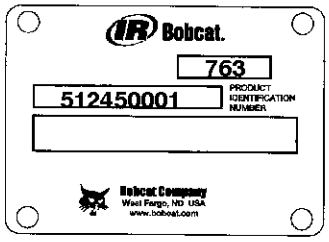

EXPORT

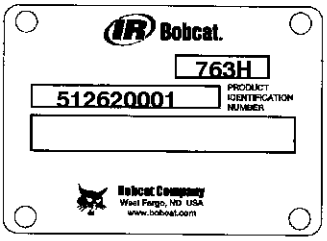

EXPORT HI FLOW

When using the machine serial number, use the complete number.

Some Serial Number breaks are not available at time of printing. These are listed as & Below or & Above.

NOTE: The 763 High Flow Hydraulic loaders are designated as 763H on the Serial number plate and have a different Serial number prefix. Use all 9 numbers when ordering parts.

Parts unique to the 763 High Flow Hydraulic loaders are labeled High Flow Hydraulics.

The number shown in the quantity column in this manual is the number of parts needed for the illustration on the page. For some parts an "x" will be shown in the quantity column. This "x" indicates that the quantity to be used is "As Needed".

When references L.H. and R.H. are used in this manual, it is done from the operator's seat in the forward operating position.

Some of the illustrations and information found in this parts manual were supplied to Bobcat Company by machine component companies.

ABBREVIATIONS & SYMBOLS

SALES = Order from Gwinner Sales Department

NSS = Not Serviced Seperately

NAP = Not Available as Parts

***** = Changed or Added Sections, Pages or Part Numbers

Disposition Code Definition (Found in the Remarks Column

[A] = Use Up

[B] = Use Up on Other Appplication (See PNI)

[C] = File PDR Report With Bobcat Parts Sales

[D] = Part Number Error

Explications en francais	Grid Nb	3
Erklärungen auf deutsch	Grid Nb	4
Spiegazioni in italiano	Grid Nb	5
Explicaciones en espanol	Grid Nb	6
Verklaring in het Nederlands	Grid Nb	7

NOTE D'INFORMATION

Pour toute référence au numéro de série de l'engin, toujours donner le numéro complet.

Le chiffré apparaissant dans la colonne des quantités de ce manuel représentent le nombre de pièces nécessaires pour l'illustration reprise sur la page. Dans certains cas, on lira un "x" dans la colonne des quantités. Cet "x" indique que la quantité nécessaire est "selon besoin".

Pour toute référence vers la GAUCHE ou la DROITE dans ce manuel, considérer que la personne se trouve assise dans le siège de l'opérateur, en position de fonctionnement en marche avant.

Certaines illustrations et informations reprises dans ce manuel de pièces de rechange ont été fournies à Bobcat Company par des fabricants de composants.

ABREVIATIONS & SYMBOLES

SALES	= Commander au Service Ventes à Bruxelles
NSS	= Pas vendu séparément
NAP	= Non disponible comme pièce de rechange
	= Chapitre, page ou numéro de pièce modifié ou supplémentaire
BTI	= Bobcat Technical Information Bulletin : voir à la fin de la microfiché du modèle concerné ou la microfiche générale reprenant l' ensemble des "BTI".
was 6535403	= était avant 6535403
adj. (adjustment)	= réglage
Assembly	= ensemble
available W/Ref.	= disponible avec réf.
bulk/sold per foot	= en vrac/vendu par pied
does not include	= ne comprend pas
included with	= compris dans
I.D.	= D.I. (diamètre intérieur)
O.D.	= D.E. (diamètre extérieur)
not in kit	= pas en kit
W/ - WO/	= inclus/ - non inclus/
Qty	= quantité requise
see page/ref.	= voir page/réf.
used with ref/	= utilisé avec réf.
0,05 inch thickness	= 0,05 pouce d'épaisseur (un pouce = 25.4 mm)
weld on	= à souder

ALLGEMEINE INFORMATIONEN

Bei Angabe der Maschinen-Seriennummer stets die komplette Nummer angeben.

Bei der in der Mengenspalte (Anzahl) in diesem Handbuch angegebenen Zahl handelt es sich um die Anzahl von Teilen, die für die Abbildung auf der betreffenden Seite benötigt werden. Bei manchen Teilen in der Mengenspalte ist ein “x” angegeben. Dieses “x” weist darauf hin, dass sich die Anzahl der verwendeten Teile auf den “Bedarf” bezieht.

Bei Verwendung der Seitenangaben links und rechts in diesem Handbuch gelten diese für die Blickrichtung vom Fahrersitz aus, und zwar in Vorwärts-Betriebsrichtung.

Einige der in diesem Ersatzteilhandbuch aufgeführten Abbildungen und Informationen wurden der Bobcat Company von den Herstellern von Maschinenbauteilen zur Verfügung gestellt.

ABKÜRZUNGEN UND SYMBOLE

SALES	= Bestellung bei der Verkaufsabteilung in Brüssel
NSS	= Nicht einzeln erhältlich
NAP	= Nicht als Ersatzteil erhältlich
	= Geänderte oder hinzugefügte Abschnitte, Seiten oder Teilenummern
BTI	= Bobcat Technical Information Bulletin : Siehe am Ende der Mikrokarte des jeweiligen Modells oder der allgemeinen Mikrokarte der BTI.
was 6535403	= War 6535403
adj.	= Einstellung
Assembly	= Baugruppe
available W/Ref.	= erhältlich mit der Referenz
bulk/sold per foot	= Mengenabnahme / Verkauf pro Fuss
does not include	= beinhaltet nicht
included with	= enthalten in
I.D.	= Innendurchmesser
O.D.	= Aussendurchmesser
not in kit	= nicht in Bausatz
W/ - WO/	= mit/ - ohne/
Qty	= Anzahl
see page/ref.	= Siehe Seite / Referenz
used with ref.	= verwendet mit Referenz
0.05 inch thickness	= Dicke : 0.05 Zoll (ein Zoll = 25.4 mm)
weld on	= anschweissen

INFORMAZIONI GENERALI

Quando si usa il numero di serie della macchina usare il numero completo.

Il numero mostrato nella colonna della quantità di questo manuale corrisponde al numero di componenti necessari per l'illustrazione della pagina. Per alcuni componenti appare "X" nella colonna delle quantità. Questa "X" indica che la quantità da usare è "come necessario".

See in questo manuale si fa riferimento alla parte destra o sinistra, si intende dal sedile dell'operatore nella posizione in avanti di funzionamento.

Alcune delle illustrazioni e informazioni trovate in questo manuale di componenti sono state fornite alla Bobcat Company da società di componenti di macchine.

SIMBOLI E ABBREVIAZIONI

SALES	= Ordinare al servizio vendite di Bruxelles
NSS	= Non vendute separatamente
NAP	= Non disponibile come componente
	= Sezioni, pagine o numeri di componente cambiati o aggiunti
BTI	= (Bobcat Technical information) Ved. al termine del microfiche del modello relativo oppure microfiche generale
was 6535403	= era 6535403
adj. (adjustment)	= regol. (regolazione)
Assembly	= Complessivo
available W/Ref.	= disponibile con rif.
bulk/sold per foot	= alla rinfusa/venduto al piede
does not include	= non comprende
Included with	= compreso con
I.D.	= d. i.
O.D.	= d. e.
not in kit	= non fa parte del kit
W/ - WO/	= con - senza
Qty	= Qtà
see page/ref	= ved. pagina/rif.
used with ref.	= usato con il rif.
0,05 inch thickness	= spessore 0,05 pollici (un pollice = 25,4 mm)
weld on	= a saldare

INFORMACION GENERAL

Al utilizar el número de serie de la máquina, debe emplearse el número completo.

El número que figura en la columna de “Unidades” en este manual es el número de piezas que se necesitan para la ilustración que consta en la página. En algunas piezas aparece una “x” en la columna de “Unidades”. Esta “x” indica que las unidades a utilizar son “según sea necesario”.

Cuando se empleen las referencias izq. y dcha., éstas se entienden mirando desde el asiento del conductor, en posición de marcha adelante.

Algunas de las ilustraciones y la información que figuran en este manual de piezas han sido facilitadas a Bobcat Company por empresas de componentes de máquinas.

ABREVIATURAS Y SIMBOLOS

VENTAS	= Pedido al Departamento de Ventas de Bruselas
NSS	= No se vende por separado
NAP	= No disponible como pieza de repuesto
	= Secciones, páginas o referencias modificadas o añadidas
BTI	= (Bobcat Tecnical Information) Ver al final de la microficha del modelo afectado o en la microficha general “Boletín de Información Técnica Bobcat”.
was 6535403	= era anteriormente el 6535403
adj. (adjustment)	= ajuste
assembly	= conjunto
available W/Ref.	= disponible con la ref.
bulk/sold per foot	= a granel/vendido por pies
does not include	= no incluye
included with	= incluido en
I.D.	= diámetro interior
O.D.	= diámetro exterior
not in kit	= no en el kit
W/ - WO/	= con/ - sin
Qty	= Unidades
see page /ref.	= ver página/ref.
used with ref.	= empleado con la ref.
0,05 inch thickness	= 0,05 pulgadas de espesor (1 pulgada = 25,4 mm)
weld on	= debe ser soldado

ALGEMENE INFORMATIE

Als u het serienummer van de machine gebruikt, geef dan het gehele serienummer.

Het cijfer dat voorkomt in de kolom “Aantal”, in deze handleiding, is het aantal onderdelen dat nodig is van de illustratie op de pagina. Voor sommige onderdelen staat er een “x” in de kolom “Aantal”. Deze “x” betekent dat er een aantal “zoals nodig” vereist is.

Wanneer er in deze handleiding naar “links” en naar “rechts” gerefereerd wordt, moet dit verstaan worden voor een bestuurder die in de bestuurdersstoel zit in de voorwaartse bedrijfsstand.

Sommige van de illustraties en informatie in deze onderdelen-handleiding werden door firma’s van machine-componenten geleverd aan Bobcat Company..

AFKORTINGEN EN SYMBOLEN

SALES	= Bestellen bij de Verkoopafdeling te Brussel
NSS	= Niet afzonderlijk te verkrijgen
NAP	= Niet beschikbaar als onderdeel
	= Gewijzigde of toegevoegde paragrafen, pagina’s of onderdeelnummers
BTI	= Bobcat Technical Information Bulletin : Zie einde van de microfiche van het desbetreffende model of einde van de algemene microfiche die het geheel van alle “BTI” herneemt.
was 6535403	= was vroeger 6535403
adj. (adjustment)	= afstelling
Assembly	= geheel
available W/Ref.	= beschikbaar met ref.
bulk/sold per foot	= bulk/aan de meter verkocht
does not include	= bevat niet
includes with	= is bevat in
I.D.	= ϕ inw. (inwendige diameter)
O.D.	= ϕ uitw. (uitwendige diameter)
not in kit	= niet in de kit
W/ - WO/	= met/ - zonder/
Qty	= vereiste aantal
see page/ref.	= zie pagina/ref.
used with ref/	= gebruikt met ref.
0,05 inch thickness	= 0.05 inch dik (een inch = 25.4 mm)
weld on	= te lassen

MAIN FRAME

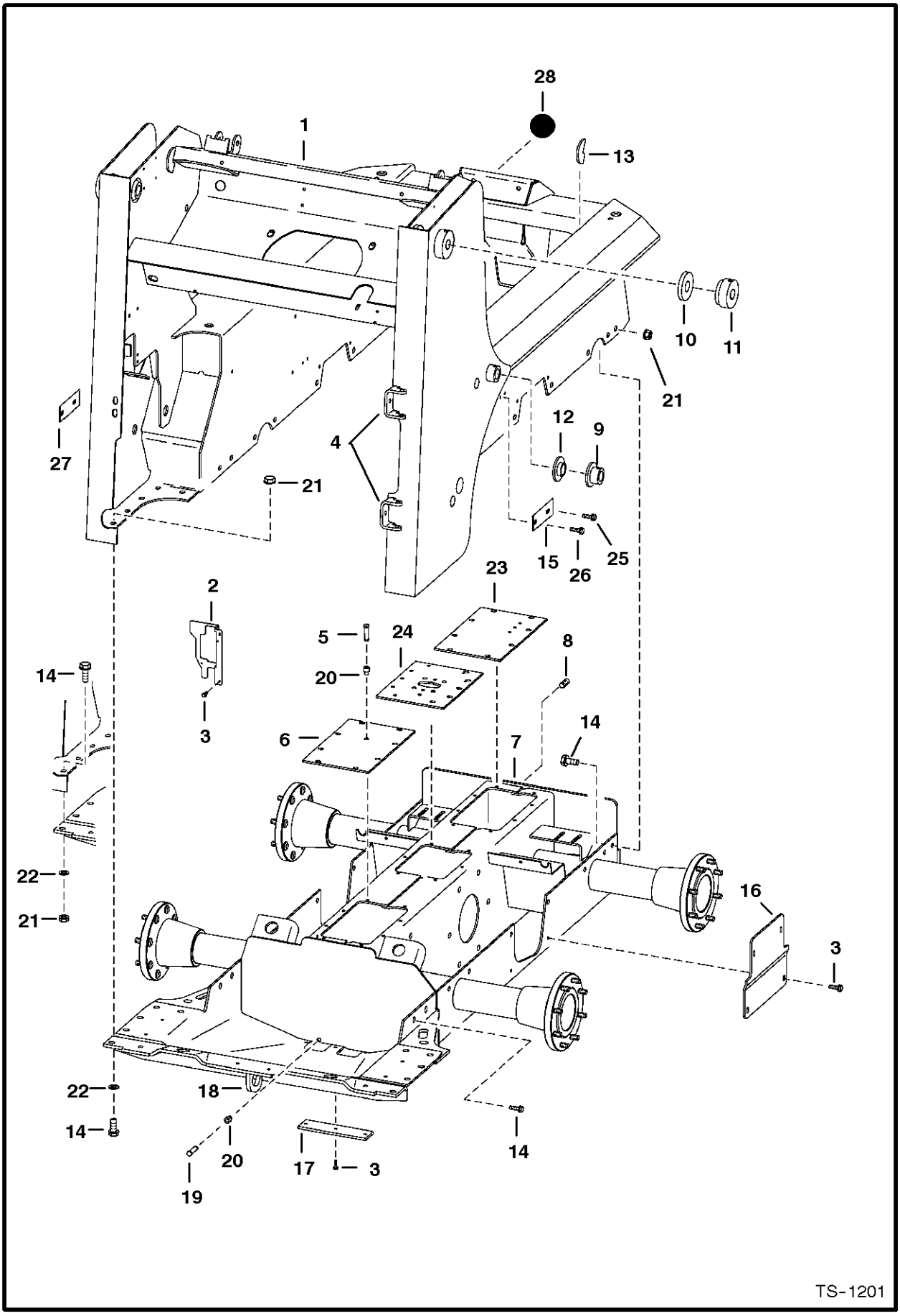
28
1
13
10
11
21
27
4
12
9
21
15
26
25
2
23
5
24
8
20
14
3
6
7
14
22
21
16
3
22
18
14
20
17
3
19
14
TS-1201

MAIN FRAME

Ref.N°	Part N°	Description	Remarks	Serial N°	Qty.
1	6714591	MAIN FRAME			1
2	6731060	SHIELD	See Page ENGINE & ATTACHING PARTS(1) - Was 6717812 [A]		1
3	84G-3712	BOLT			10
4	6708987	BRACKET	hinge - weld on		2
5	6670627	BREATHER	See Page DISC BRAKE(1)		2
6	6700330	COVER	See Page DISC BRAKE(1)		1
7	6712826	CHAINCASE			1
8	6731121	PLUG	chaincase fill - Was 11F-12 [A]		1
9	6705047	BUSHING	weld on		2
10	6702409	BUSHING	weld on		2
11	6702959	BUSHING	weld on		2
12	NAP	BUSHING	weld on -Order 6725210inD1} Bushing - Was 6707494 [A]	5122 51193 & Bel	2
12				5124 50061 & Bel	2
12				5126 20134 & Bel	2
12	6725210	BUSHING		5122 51194 & Abv	2
12				5124 50062 & Abv	2
12				5126 20135 & Abv	2
13	6707515	BRACE	frame - weld on		2
14	31C-820	BOLT			28
15	6704680	COVER	See Page HYDROSTATIC CIRCUITRY(1)	& Bel	1
16	6704695	COVER			2
17	6700182	COVER			1
18	6706485	HOOK	tie down - front & back -weld on		2
19	6599645	PLUG	chaincase drain		1
20	6553411	BUSHING			2
21	83D-8	NUT			28
22	6701097	WASHER			10
23	6578505	COVER	See Page DISC BRAKE(1)		1
24	6706042	COVER	See Page DISC BRAKE(1)		1
25	84G-3110	BOLT	R.H. side	& Bel	1
25	84G-3112	BOLT	L.H. side	& Bel	1
25	84G-3710	BOLT		& Abv	1
26	17C-620	BOLT	Was 6717378 [A]		2
27	6727837	COVER		& Abv	1
28	6718796	PLUG			1

OPERATOR CAB

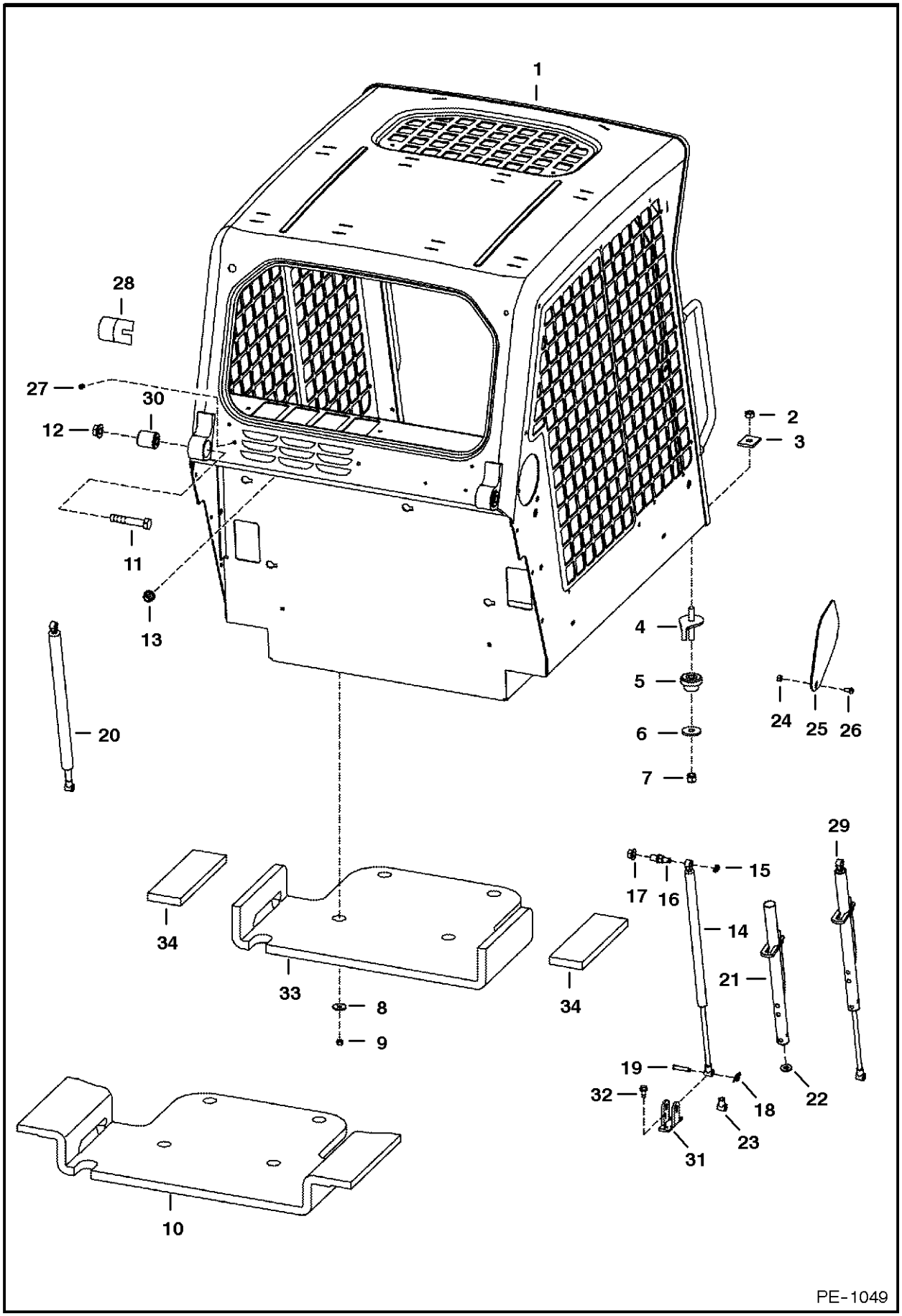

OPERATOR CAB

Ref.N°	Part N°	Description	Remarks	Serial N°	Qty.
1	6719672	OPERATOR CAB	includes cab decals		1
2	59D-8	NUT			2
3	6553709	WASHER	rectangular		2
4	6702971	BOLT			2
5	6560633	MOUNT			2
6	6515817	WASHER			2
7	85D-8	NUT			2
8	619021	WASHER			4
9	59D-5	NUT			4
10	NAP	INSULATION	Order Ref. OPERATOR CAB(33) & (2) of Ref. OPERATOR CAB(34) - Was 6719360 [A]		1
11	17C-1056	BOLT			2
12	53D-10	NUT			2
13	53D-6	NUT			4
14	6675135	GAS SPRING	R.H.		1
15	6675140	SNAP RING			2
16	6719064	MOUNT	Was 6719005 [A]		2
17	83D-8	NUT			2
18	6631418	PIN	ring		2
19	6567743	PIN			2
20	6675134	GAS SPRING	L.H.		1
20	6675136	GAS SPRING	L.H. - heavy duty		1
21	6708189	TUBE	stop - L.H.		1
22	6701174	WASHER			1
23	6675257	ROD END			1
24	95D-5	NUT			2
25	6718784	COVER			2
26	25G-512	BOLT	Was 25G-510 [B]		2
27	6675033	INSERT			2
28	6579613	STOP			2
29	NAP	GAS SPRING	R.H. - W/latch - Order Ref. OPERATOR CAB(14) & OPERATOR CAB(21)-OPERATOR CAB(23) - Was 6719072 [A]		1
30	6562602	BUSHING			2
31	6706349	MOUNT	gas spring		2
32	84G-3112	BOLT			4
33	6729013	INSULATION	seat pan		1
34	6729012	INSULATION	seat pan		2

OPERATOR CAB

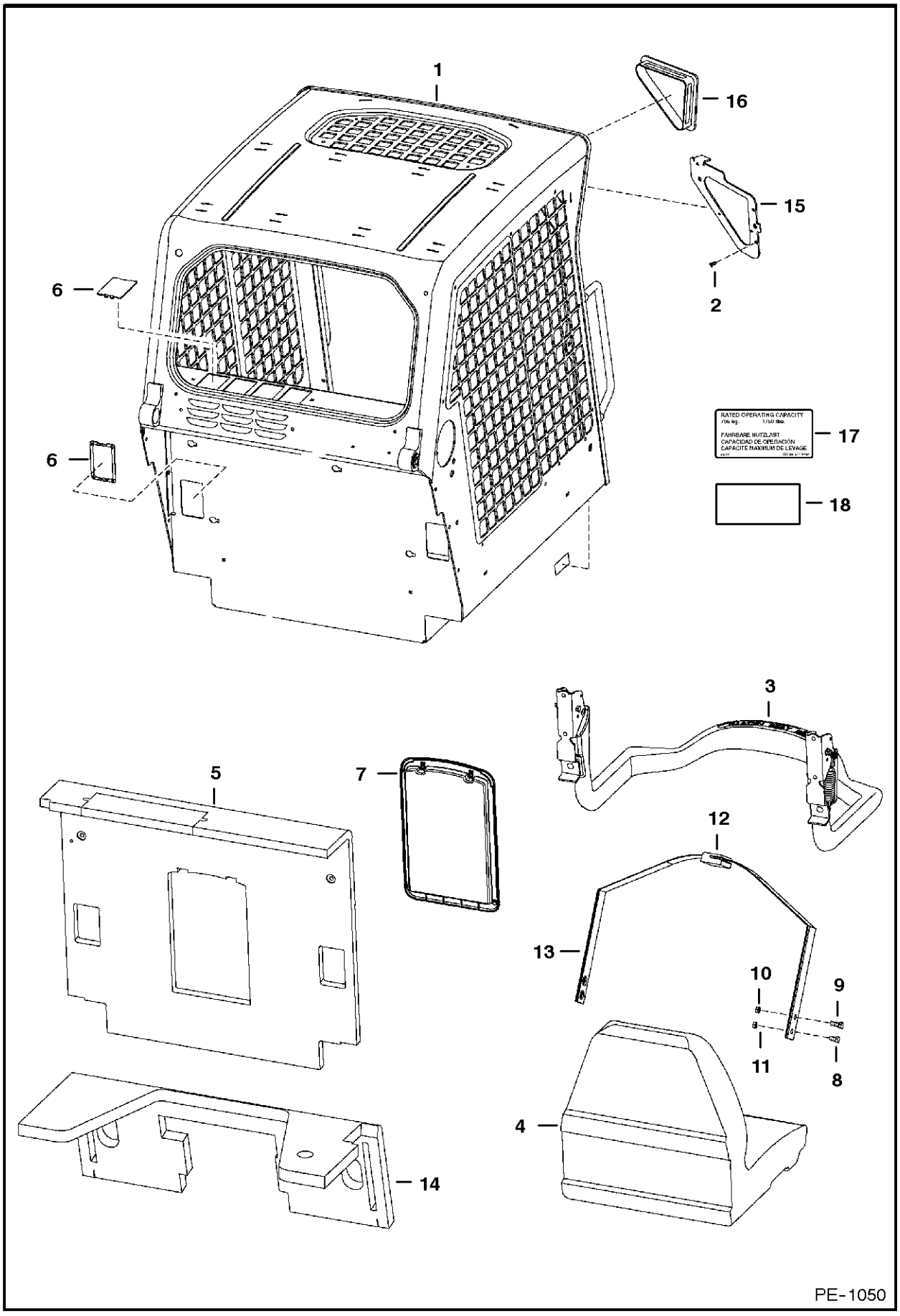

OPERATOR CAB

Ref.N°	Part N°	Description	Remarks	Serial N°	Qty.
1	6719672	OPERATOR CAB	includes cab decals		1
2	6675033	INSERT	See Page CAB ELECTRICAL CIRCUITRY(1)		6
3		SEAT BAR	See Page SEAT & SEAT BAR(1)		1
4	6669135	SEAT	See Page SEAT(1)		1
5	6719504	INSULATION	W/Ref. OPERATOR CAB(7)		1
6	6718101	COVER			6
7	6719503	CONTAINER	manuals		1
7	6675524	CLIP			2
7	6725301	COVER			1
7	6725303	FRAME			1
8	17C-612	BOLT			2
9	17C-716	BOLT			2
10	85D-7	NUT			2
11	85D-6	NUT			2
12	NAP	SEAT BELT	Order 6675074inD1} Seat Belt & (2) of Ref. OPERATOR CAB(13) (6725373inD1} Spring Plate) - Was 6667875 [A]		1
12	NAP	SEAT BELT	W/Spring Plates - Order 6675074inD1} Seat Belt - Was 6725403 [A]		1
12	6675074	SEAT BELT	W/O spring plates		1
13	NAP	GUIDE	Order 6711908inD1} Spring Plate, 6565355inD1} Guide & (2) of 6630207inD1} Rivet - Was 6711907 [A]		2
13	6711908	SPRING PLATE	Use W/Ref. OPERATOR CAB(12) (NAP/6667875 Seat Belt)		1
13	6725373	SPRING PLATE	(Use W/Ref. OPERATOR CAB(12) (6675074inD1} Seat Belt)		1
13	6565355	GUIDE			1
13	6630207	RIVET			2
14	6718489	INSULATION	steering panel		1
15	NSS	PLATE	R.H. - weld on		1
15	NSS	PLATE	L.H. - weld on		1
16	6674403	COVER	no lights		2
17	6718200	DECAL	load		1
18	6804790	DECAL	capacity		1

SEAT & SEAT BAR

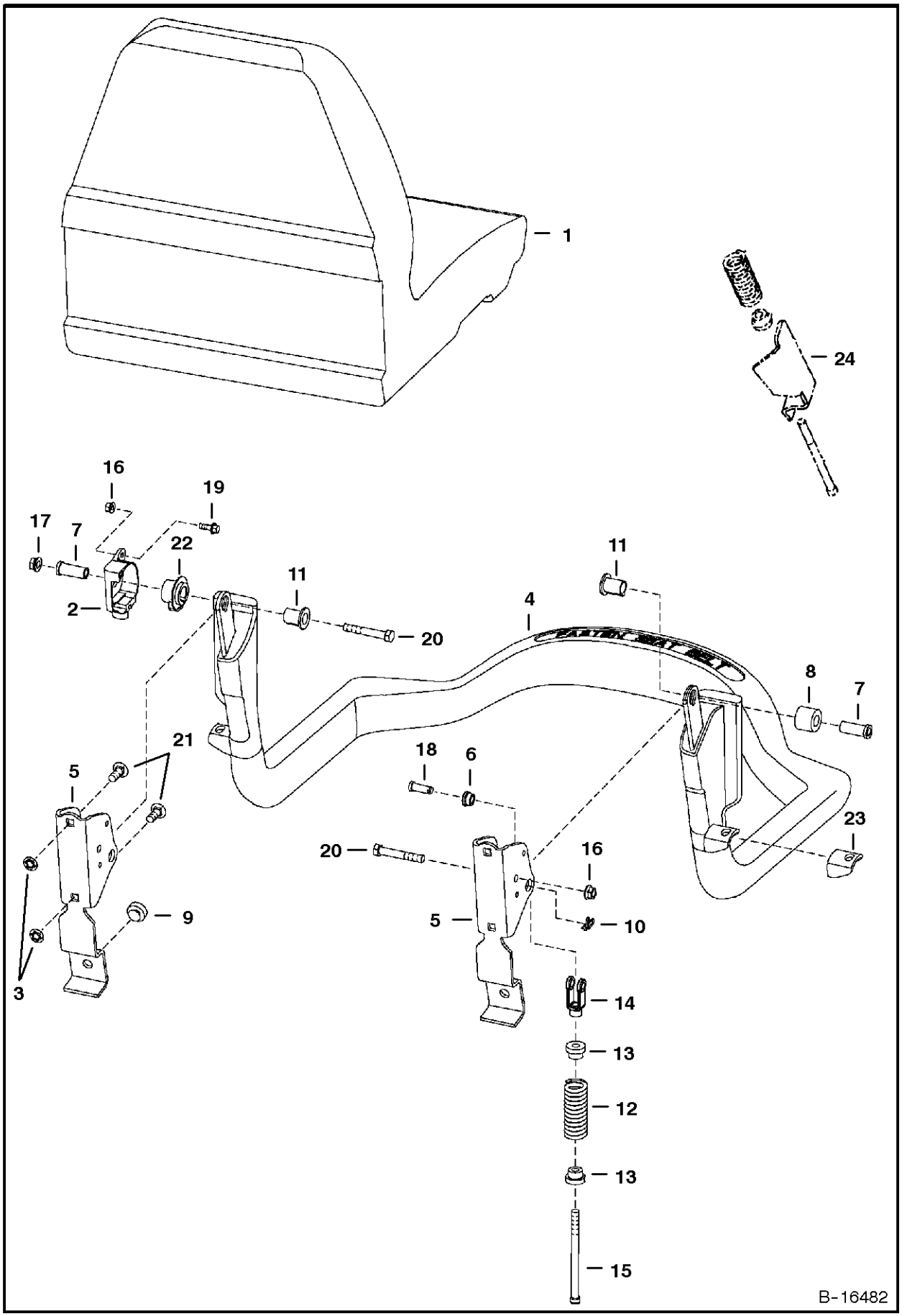

SEAT & SEAT BAR

Ref.N°	Part N°	Description	Remarks	Serial N°	Qty.
1	6669135	SEAT	See Page SEAT(1)		1
2	6674406	SENSOR			1
3	6674894	NUT			4
4	6715860	SEAT BAR			1
5	6715863	BRACKET			1
6	6715864	BUSHING			2
7	6715865	BUSHING			2
8	6715866	BUSHING			1
9	6519178	BUMPER			2
10	6631418	PIN	ring		2
11	6664882	BUSHING	keyed		2
12	6701535	SPRING			2
13	6710659	BUSHING			2
14	6713589	CLEVIS			2
15	6713887	BOLT			2
16	83D-4	NUT			1
17	53D-6	NUT			2
18	4F-6106	PIN			2
19	35C-412	BOLT			1
20	17C-640	BOLT			2
21	10C-616	BOLT			4
22	6674405	BUSHING			1
23	NAP	MOUNT	Order Ref. SEAT & SEAT BAR(4)	& Abv	1
24	NAP	MOUNT	Order Ref. SEAT & SEAT BAR(4)	& Bel	1

SEAT
(Michigan)

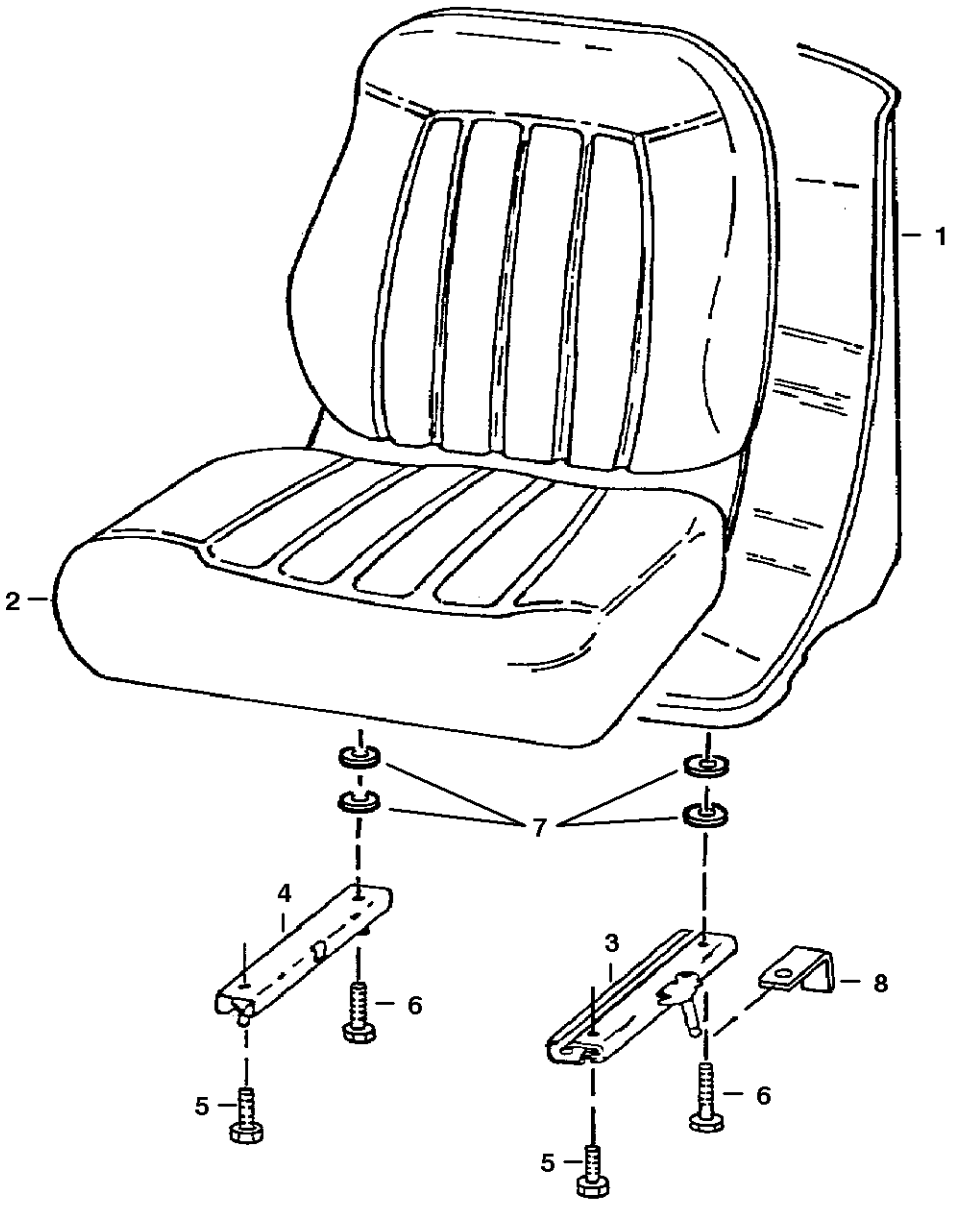

B-14720

SEAT

Ref.N°	Part N°	Description	Remarks	Serial N°	Qty.
1	6669135	SEAT	W/Ref. SEAT(2)-SEAT(7)		1
2	6670160	CUSHION	W/edging, clip & (2) grommets		1
2	NSS	EDGING			1
2	NSS	CLIP			1
3	6674013	TRACK	L.H. - W/8'(203,2 mm) Latch		1
4	6669089	TRACK	R.H. - W/O Latch		1
5	25G-512	BOLT	6669135 Seat uses (2) bolts		4
6	25G-520	BOLT			2
7	6672715	SPACER	Was 7000010 [A]		4
8	6668953	BRACKET			2

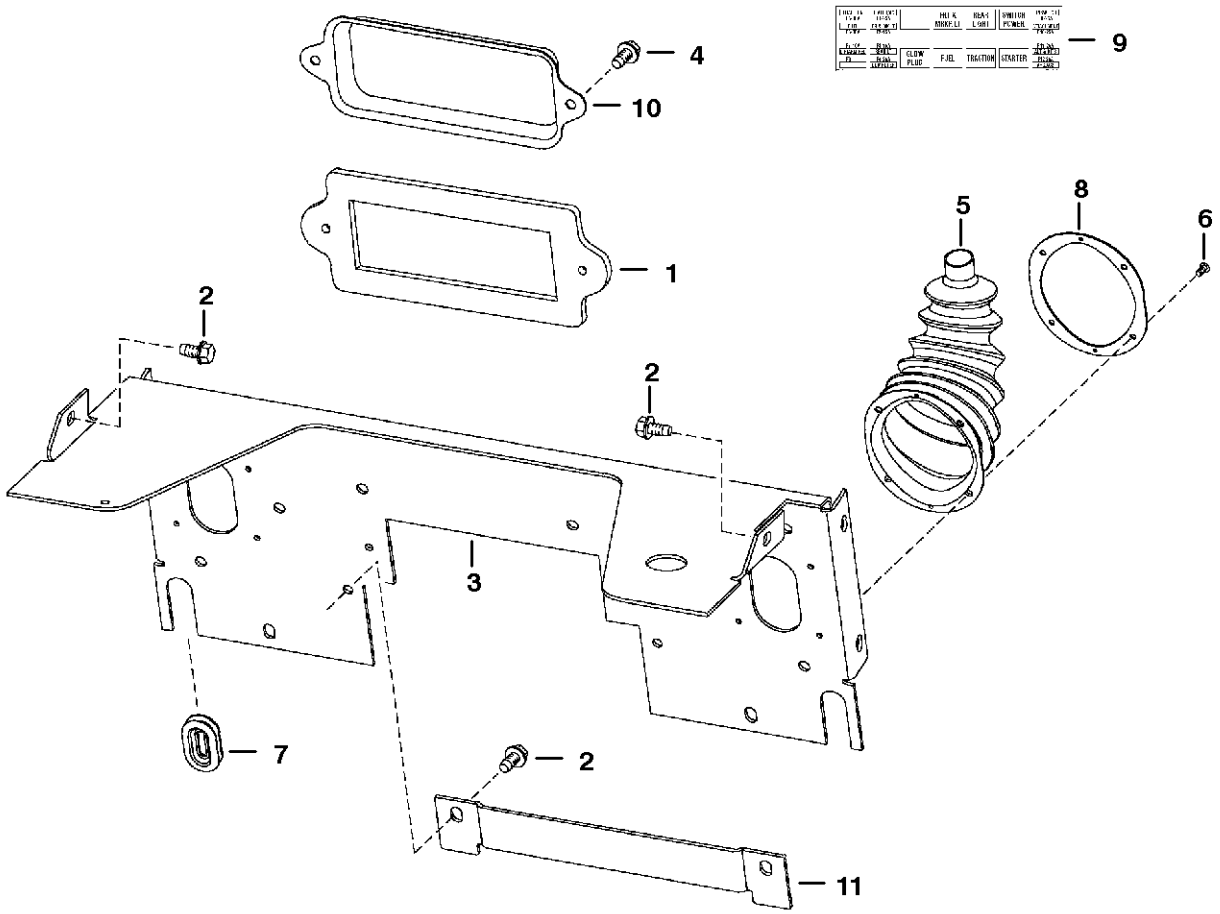
4
10
9
1
5
8
6
2
2
3
7
2
11
B-16483

PANELS

Ref.N°	Part N°	Description	Remarks	Serial N°	Qty.
1	6725302	GASKET	See Page ENGINE ELECTRICAL CIRCUITRY(1)		1
2	84G-3712	BOLT			16
3	6717208	SHIELD			1
4	84G-3112	BOLT			2
5	6532127	BOOT	W/Ref. PANELS(8)		2
6	6630207	RIVET			8
7	6577961	GROMMET			2
8	NAP	PLATE	Order Ref. PANELS(5)		2
9	NAP	DECAL	fuse/relay - 2.10' x 9.40' (53,3 mm x 238,8 mm) - Order 6718774inD1}> Decal		1
9	6718774	DECAL	fuse/relay - 2' x 7' (50,8 mm x 177,8 mm)		1
10	6716621	COVER	fuse/relay		1
11	6718760	COVER			1

REAR DOOR

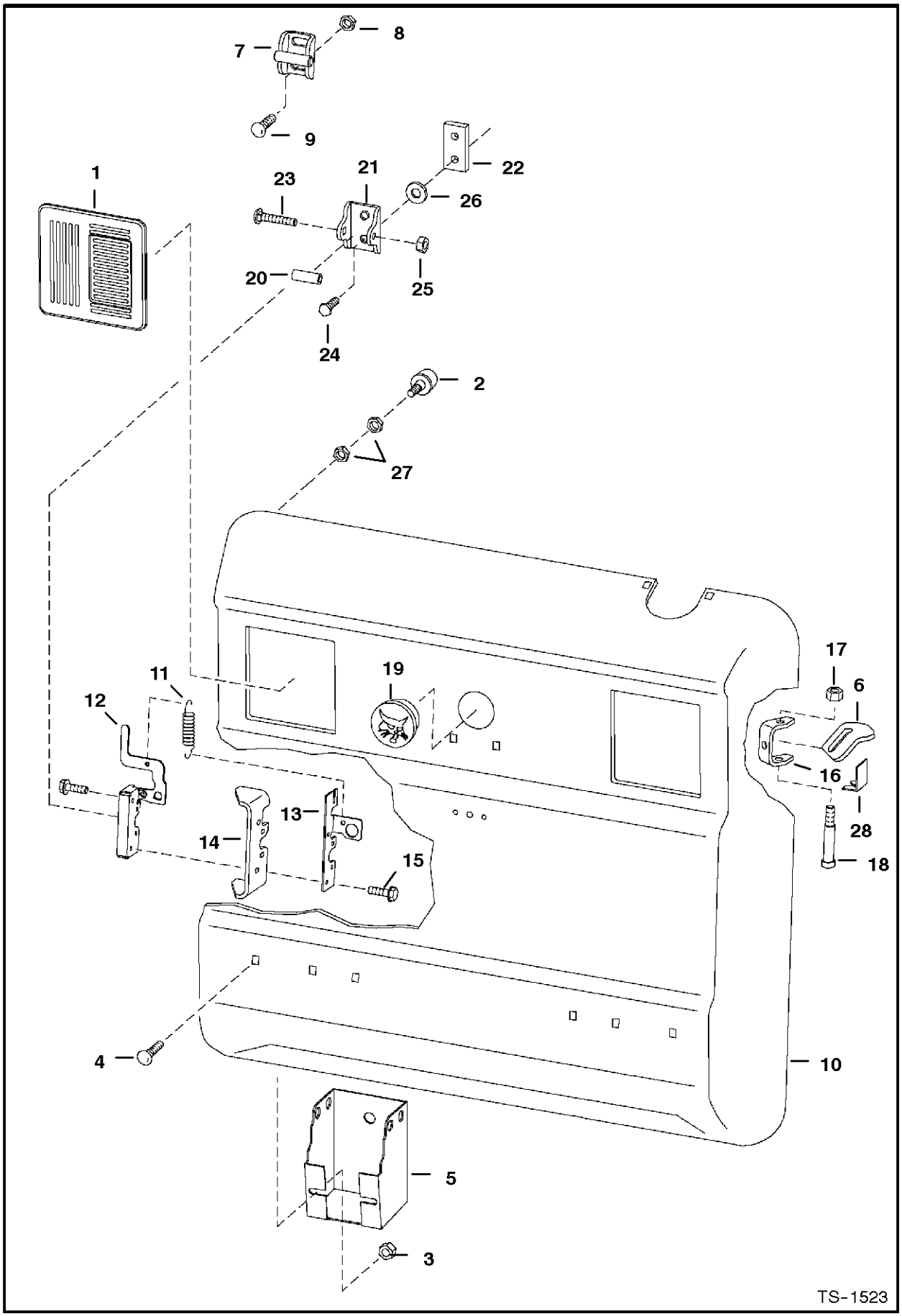
1
2
3
4
5
6
7
8
9
10
11
12
13
14
15
16
17
18
19
20
21
22
23
24
25
26
27
28
TS-1523

REAR DOOR

Ref.N°	Part N°	Description	Remarks	Serial N°	Qty.
1	6670287	COVER			2
2	6655399	BUMPER	Was 6714454 [B,D]		2
3	55D-6	NUT			2
4	37C-612	BOLT			2
5	6715318	TOOL HOLDER			1
6	6714126	DOOR STOP			1
7	NAP	STRIKER ASSY.	Order Ref. REAR DOOR(20) - REAR DOOR(26) - Was 6715157 [A]		1
8	57D-8	NUT			2
9	37C-820	BOLT	carriage		2
10	6711524	REAR DOOR			1
11	6714210	SPRING			1
12	6670867	LATCH			1
13	6711664	GUIDE	latch		1
14	6711527	LATCH PLATE	weld on		1
15	31C-420	BOLT			4
16	6711526	HINGE	weld on		2
17	59D-6	NUT			2
18	38C-856	BOLT			2
19	6718796	PLUG			1
20	6719550	TUBE	striker		1
21	6719524	STRIKER			1
22	6719525	BAR	threaded striker		1
23	37C-644	BOLT	carriage		1
24	17C-820	BOLT			2
25	61D-6	NUT			2
26	6675273	WASHER	lock		2
27	61D-5	NUT			4
28	6719766	STOP			1

REAR DOOR

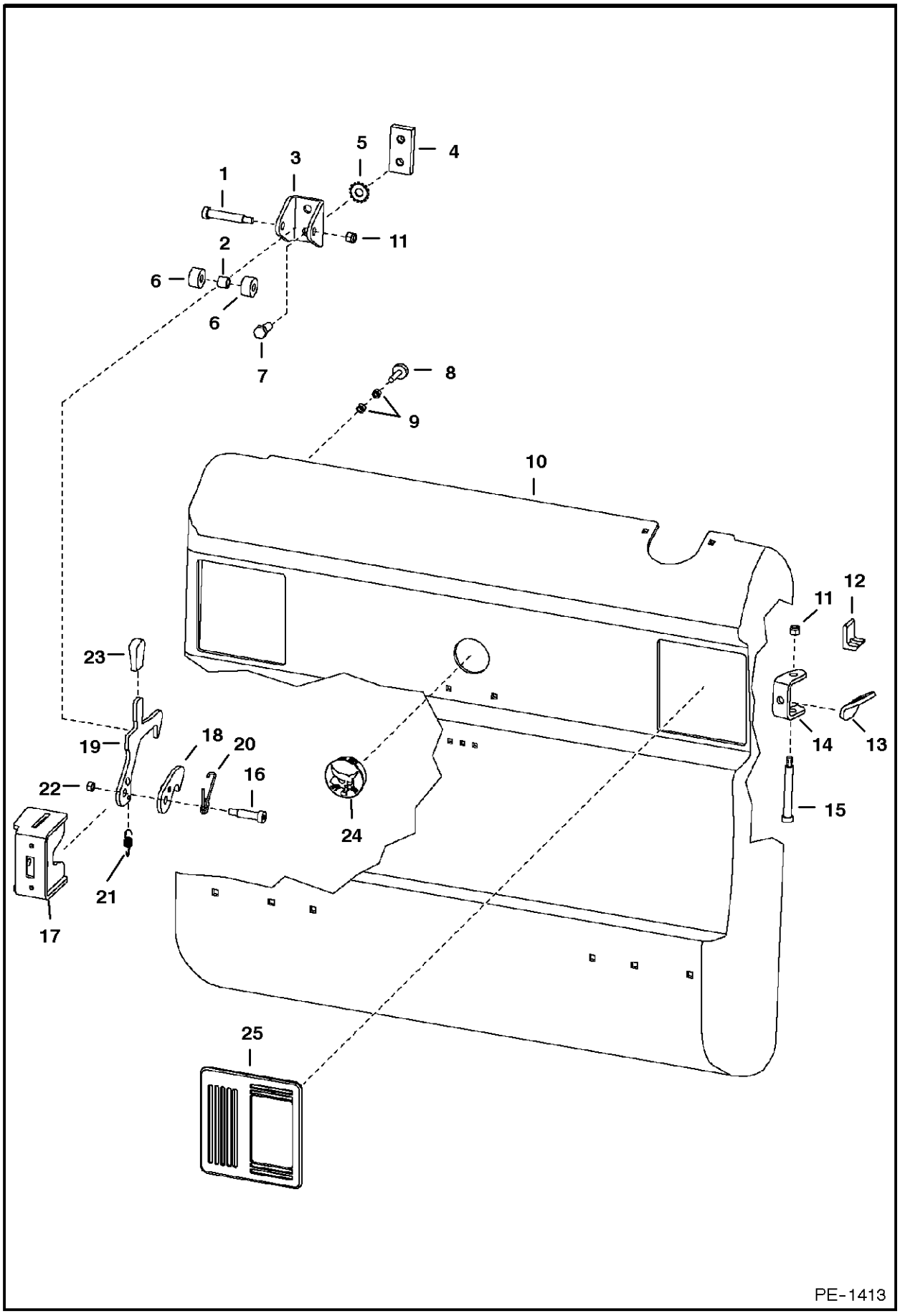
1
2
3
4
5
6
6
7
8
9
10
11
11
12
13
14
15
16
17
18
19
20
21
22
23
24
25
PE-1413

REAR DOOR

Ref.N°	Part N°	Description	Remarks	Serial N°	Qty.
1	38C-840	BOLT	carriage		1
2	6809734	BUSHING			1
3	6809727	CHANNEL			1
4	6719525	BAR	threaded striker		1
5	6675273	WASHER	lock		2
6	6809726	ROLLER			2
7	17C-820	BOLT			2
8	6655399	BUMPER			2
9	61D-5	NUT			4
10	6729991	REAR DOOR			1
11	59D-6	NUT			3
12	6719766	STOP			1
13	6714126	DOOR STOP			1
14	6711526	HINGE	weld on		2
15	38C-856	BOLT			2
16	38C-824	SCREW			1
17	6729939	LATCH PLATE	weld on		1
18	6811910	LATCH	latch		1
19	6732715	LATCH	Was 6729685 [A]		1
20	6810132	SPRING			1
21	6810141	SPRING			1
22	85D-6	NUT			1
23	6564452	GRIP			1
24	6718796	PLUG			1
25	6670287	COVER			2

LIFT ARMS & BOBTACH

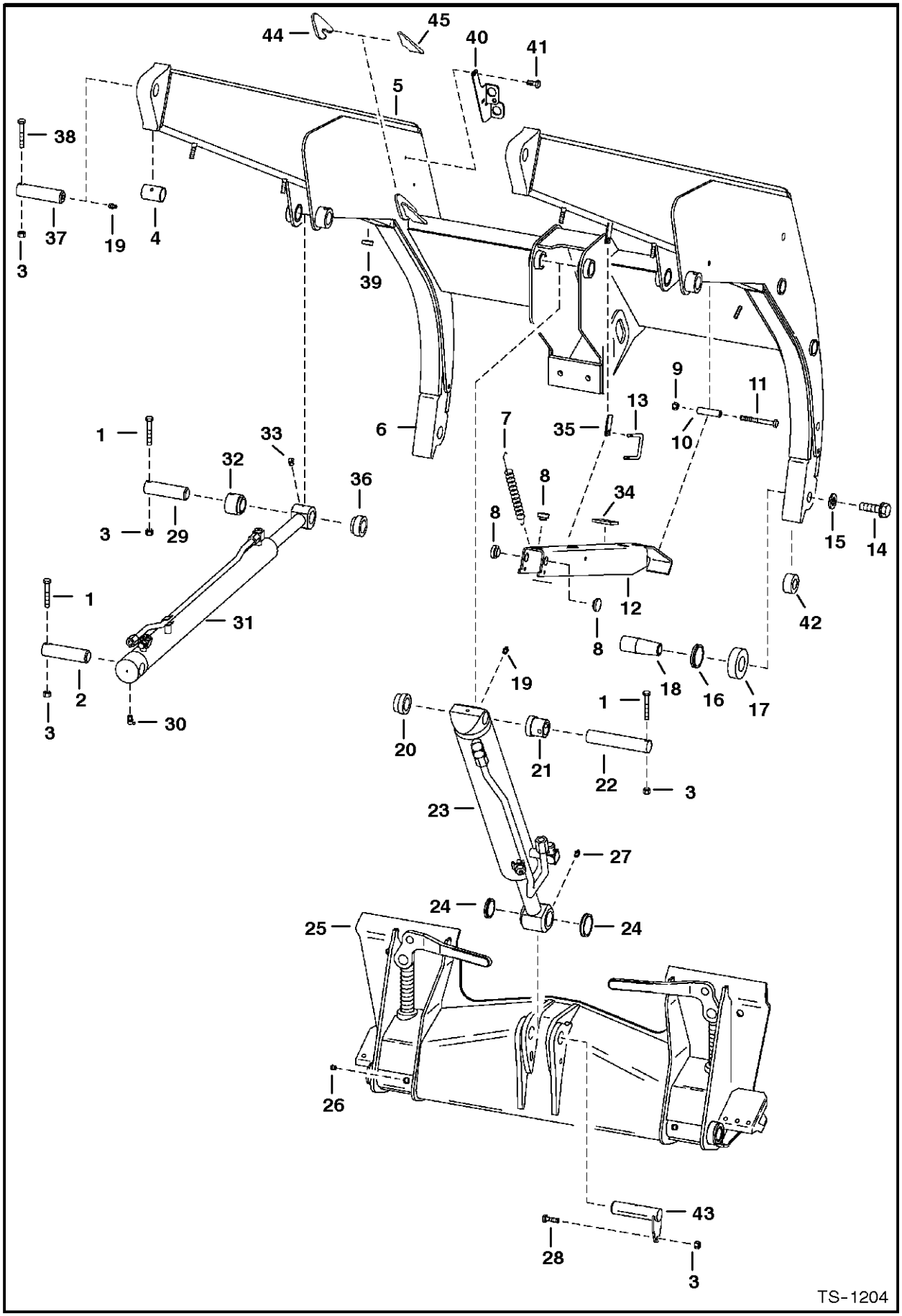

LIFT ARMS & BOBTACH

Ref.N°	Part N°	Description	Remarks	Serial N°	Qty.
1	17C-640	BOLT			5
2	6702935	PIN			2
3	85D-6	NUT			9
4	6703448	BUSHING	Wear		2
5	6708752	LIFT ARM			1
6	NSS	ARM	lower R.H. - weld on		1
6	NSS	ARM	lower L.H. - weld on		1
7	6579072	SPRING			1
8	6519178	BUMPER	rubber		3
9	61D-6	NUT			1
10	6700533	SPACER			1
11	17C-656	BOLT			1
12	6710166	LIFT ARM STOP			1
13	6714810	PIN	retainer		1
14	31C-1272	BOLT			2
15	6576033	WASHER	.15' thickness x 1.5' O.D.		2
15	6718723	WASHER	.25' thickness x 1.675 O.D.		2
16	6651709	SEAL			2
17	6700463	CUP	seal		2
18	6707180	PIN	(1.50'(38,1 mm) dia. x 4'(101,6 mm) long		2
19	10H-25	GREASE ZERK			3
20	6703363	BUSHING	weld On - Also Order Ref. LIFT ARMS & BOBTACH(22)		1
21	6704287	BUSHING	weld On - Also Order Ref. LIFT ARMS & BOBTACH(22)		1
22	6704288	PIN			1
23		CYLINDER	tilt - See Page TILT CYLINDER(1)		1
24	225855	SEAL			2
25		BOB-TACH	See Page BOB-TACH(1)		1
26	743332	GREASE ZERK			2
27	10H-35	GREASE ZERK			1
28	17C-620	BOLT			1
29	6547593	PIN			2
30	11H-15	GREASE ZERK			2
31		CYLINDER	lift - See Page LIFT CYLINDER(1)		2
32	6555987	BUSHING	Weld On		2
33	12H-15	GREASE ZERK			2
34	6704436	PAD	foam - self adhesive		1
35	6705091	TAB	weld on		1
36	6703616	BUSHING			2
37	6703572	PIN			2
38	17C-664	BOLT			2
39	6704403	STOP	weld on		2
40	6705700	MOUNT			1
41	84G-3112	BOLT			2
42	6717666	BUSHING	weld on - W/tapered hole for 1.5'(38,1 mm) dia. hole		2
43	6716601	PIN	W/O grease zerk hole		1
44	6727544	PLATE	weld on		2
45	6727545	PLATE	weld on		2

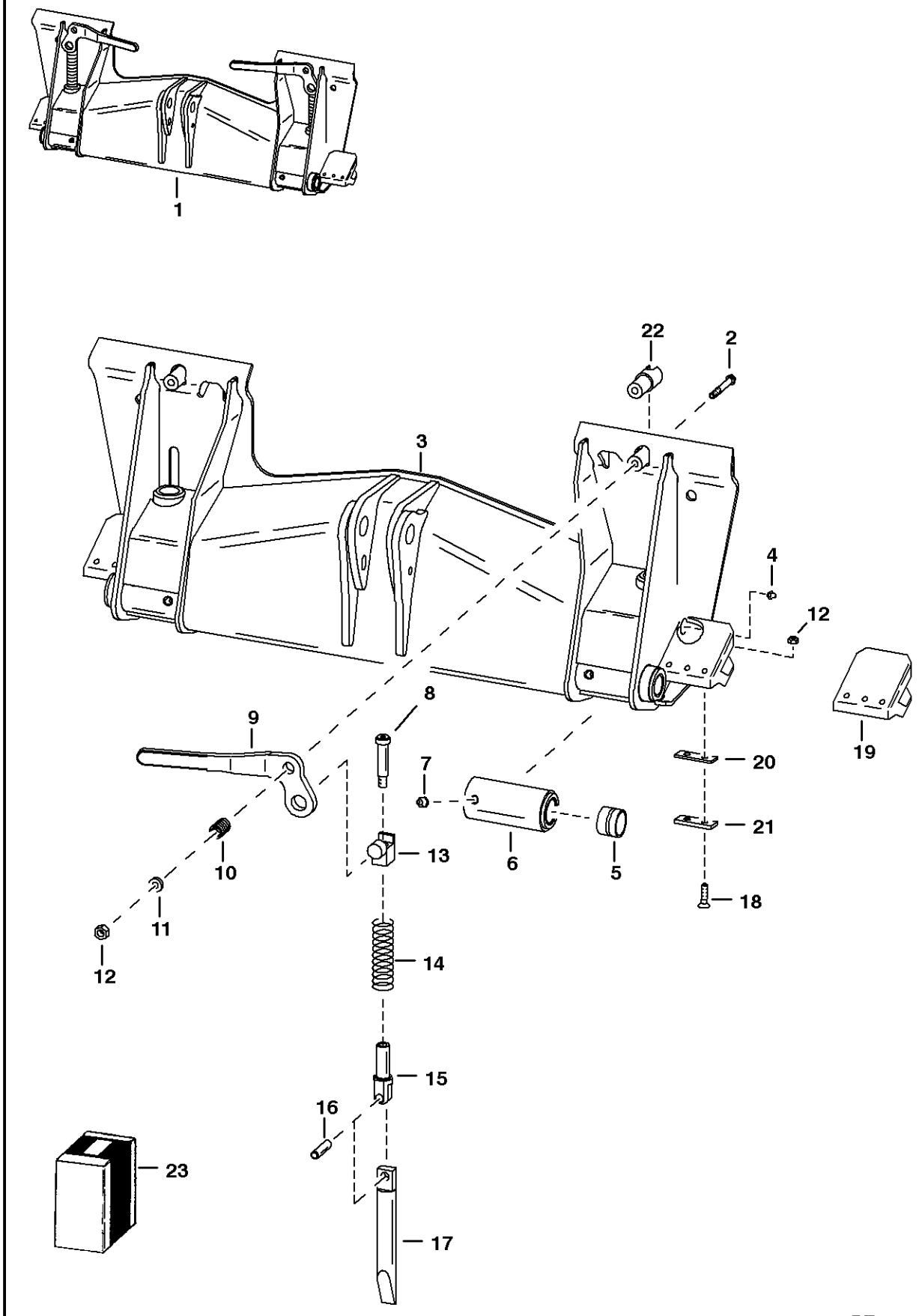
1
22
2
3
4
12
19
8
9
20
7
21
13
6
5
10
18
11
12
14
15
16
23
17
PE-1526

BOB-TACH

Ref.N°	Part N°	Description	Remarks	Serial N°	Qty.
1	6709215	BOB-TACH	Was SALES [D]		1
2	17C-660	BOLT			2
3	NAP	FRAME			1
4	10H-35	GREASE ZERK			2
5	6730997	BUSHING	Press Fit - Was 711273 [A]		2
6	NAP	BUSHING	weld-on - W/Ref. BOB-TACH (5) - Order 6731979 Bushing & Ref. BOB-TACH (5) - Was 6731155 [A]		2
6	6731979	BUSHING	weld on - Also Order Ref. BOB-TACH (5)		2
7	743332	GREASE ZERK			2
8	6728473	SCREW	shoulder - Was 38C-1036 [B]		2
9	6702904	LEVER	R.H.		1
9	6702903	LEVER	L.H.		1
10	6713040	SPRING			2
11	619021	WASHER			2
12	85D-6	NUT			6
13	6704240	PIVOT ASSY			2
14	6562018	SPRING			2
15	6704248	PIVOT	wedge		2
16	14J-5032	PIN			2
17	6704242	WEDGE ASSY.			2
18	9G-620	BOLT			4
19	6704600	STOP	R.H. - weld on		1
19	6704601	STOP	L.H. - weld on		1
20	6707514	SHIM	.060		2
20	6579106	SHIM	.125		2
21	6579104	SHIM	.250		2
22	6702958	BUSHING	weld on		2
23	6724775	LEVER KIT	)R.H. - Bob-Tach - Ref. BOB-TACH (2) & BOB-TACH (8) - BOB-TACH (17)		1
23	6724776	LEVER KIT	)L.H. - Bob-Tach - Ref. BOB-TACH (2) & BOB-TACH (8) - BOB-TACH (17)		1

FUEL SYSTEM

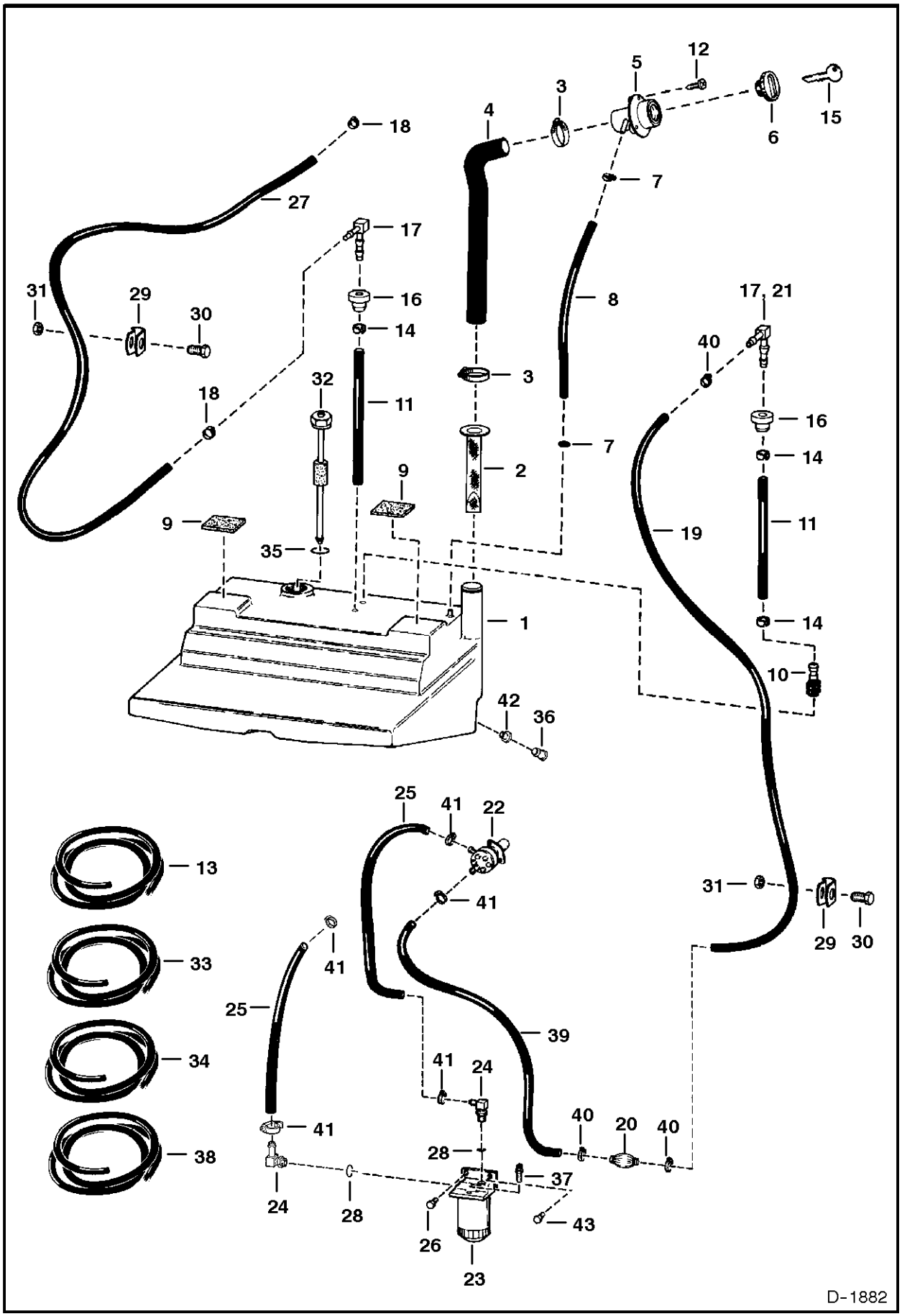
1
2
3
4
5
6
7
8
9
10
11
12
13
14
15
16
17
18
19
20
21
22
23
24
25
26
27
28
29
30
31
32
33
34
35
36
37
38
39
40
41
42
43
D-1882

FUEL SYSTEM

Ref.N°	Part N°	Description	Remarks	Serial N°	Qty.
1	6717572	TANK			1
2	6569219	SCREEN			1
3	5HM-58	CLAMP	constant tension		2
4	6710653	HOSE			1
5	6701449	FILLER TUBE			1
6	6661114	CAP	green		1
6	NAP	CAP	locking-W/Ref. FUEL SYSTEM(15)-Code GC020		1
6	6661696	FUEL CAP	locking-W/Ref. FUEL SYSTEM(15)-Code PK510		1
7	5HM-24	CLAMP	constant tension		2
8	NAP	HOSE	21.5'(546,1 mm) long - Order Ref. FUEL SYSTEM(13)		1
9	6578278	PAD	self adhesive one side		2
10	6650239	SCREEN			1
11	NAP	HOSE	8.5'-9.5'(215,9 mm - 241,3 mm) long - Order 6729853 inD1D Hose - Was 6576386 [A]	& Bel	2
11	NAP	HOSE	9.75'(247,7 mm) long - Was 6729853 [A]	-	2
11	6729853	HOSE	10.25'(260,4 mm) long	& Abv	2
12	6706517	SCREW			3
13	6578172	HOSE	bulk - Sold Per Foot		x
14	6661213	CLAMP		& Bel	3
15	6654374	KEY	Code GC020		1
15	6587458	KEY SET	Code PK510		1
16	6553411	BUSHING	.5' I.D.		2
17	6598908	ELBOW			2
18	42HS-4	CLAMP	Was 6515575 [B]		2
19	NAP	HOSE	(35''(889,0 mm) long - Order Ref. FUEL SYSTEM(33)		1
20	6657734	PUMP	hand primer		1
21	6661382	ELBOW		& Bel	1
22	6655216	FUEL PUMP	See Page INJECTION PUMP(1)		1
23	6667353	FILTER ASSY			1
23	6667352	FILTER			1
23	72F-1	DRAIN COCK			1
24	6715183	ELBOW	W/Ref. FUEL SYSTEM(28)		2
25	NAP	HOSE	13''(330,2mm)long-Order Ref. FUEL SYSTEM(34) - end of hose connects to Ref. INJECTION PUMP(12) on Page INJECTION PUMP(1)		2
26	17C-512	BOLT		& Bel	2
26	17C-516	BOLT	Use W/Ref. ENGINE & ATTACHING PARTS(35) on Page ENGINE & ATTACHING PARTS(1) W/threaded thru hole	-	2
26	84G-3112	BOLT	Use W/Ref. ENGINE & ATTACHING PARTS(35) on Page ENGINE & ATTACHING PARTS(1) W/threaded thru hole	& Abv	1
27	NAP	HOSE	53'' (1346,2 mm) long - Order Ref. FUEL SYSTEM(38)		1
28	99K-5	O-RING			x
29	30H-35	CLIP	Was 30H-36 [B]		2
30	17C-612	BOLT			2
31	61D-6	NUT			1
32	6674209	SENSOR	fuel - W/Ref. FUEL SYSTEM(35) - See Page ENGINE ELECTRICAL CIRCUITRY(1)		1
33	6577821	HOSE	bulk - Sold Per Foot		x
34	6577822	HOSE	bulk - Sold Per Foot		x
35	6717579	GASKET			1

FUEL SYSTEM

Ref.N°	Part N°	Description	Remarks	Serial N°	Qty.
36	6599645	PLUG	fuel drain - .5' O.D.		1
36	6717401	PLUG	fuel drain - .75' O.D.		1
37	6658180	PLUG	breather		1
38	6578169	HOSE	bulk - Sold Per Foot		x
39	NAP	HOSE	18"(457,2 mm)long-(Order Ref. FUEL SYSTEM(33)		1
40	5HM-13	CLAMP	constant tension		3
41	5HM-14	CLAMP	constant tension		5
42	6717402	BUSHING	.75' I.D.		1
43	84G-3116	BOLT		& Abv	1

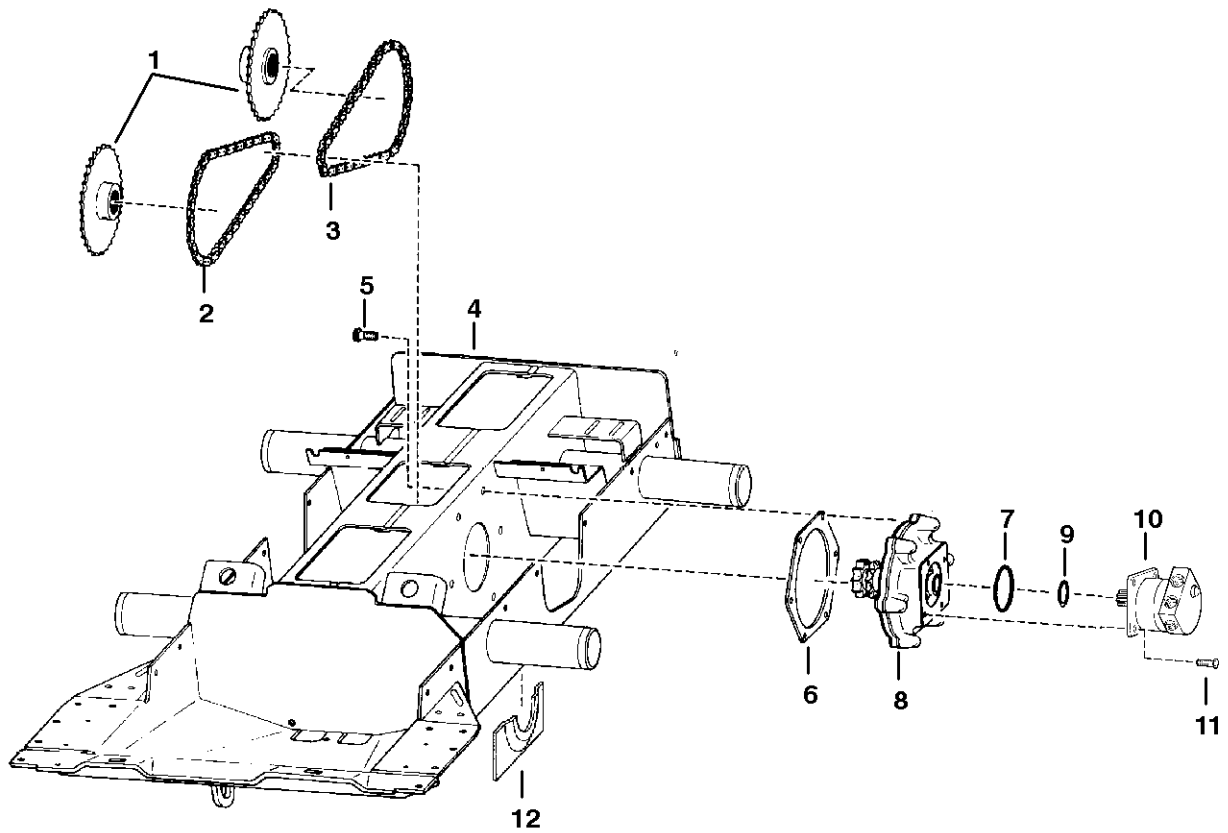

D-2143

DRIVE TRAIN

Ref.N°	Part N°	Description	Remarks	Serial N°	Qty.
1	6577204	SPROCKET			4
2	6703915	CHAIN	68 pitches - hour glass shape link		2
2	6731217	CHAIN	68 pitches - oval shape link		2
3	6579127	CHAIN	62 pitches - hour glass shape link		2
3	6731218	CHAIN	62 pitches - oval shape link		2
3	6510171	LINK	conn. - hour glass shape		x
3	6675332	LINK	conn. - oval shape		x
4	6712826	CHAINCASE			1
5	35C-1032	BOLT			12
6	6704878	GASKET	install W/rib toward chaincase		2
7	25K-30508	O-RING			2
8		MOUNT ASSY.	drive motor - See Page MOTOR CARRIER(1)		2
9	6664815	SEAL	Supplied W/Motor		1
10		MOTOR KIT	See Page HYDROSTATIC MOTOR(1) - W/Ref. DRIVE TRAIN(9)		2
11	93G-824	BOLT	Was 73G-824 [B]		8
12	6707647	BRACE	axle - weld on		4

MOTOR CARRIER
(Drive Motor Mount Assy.)

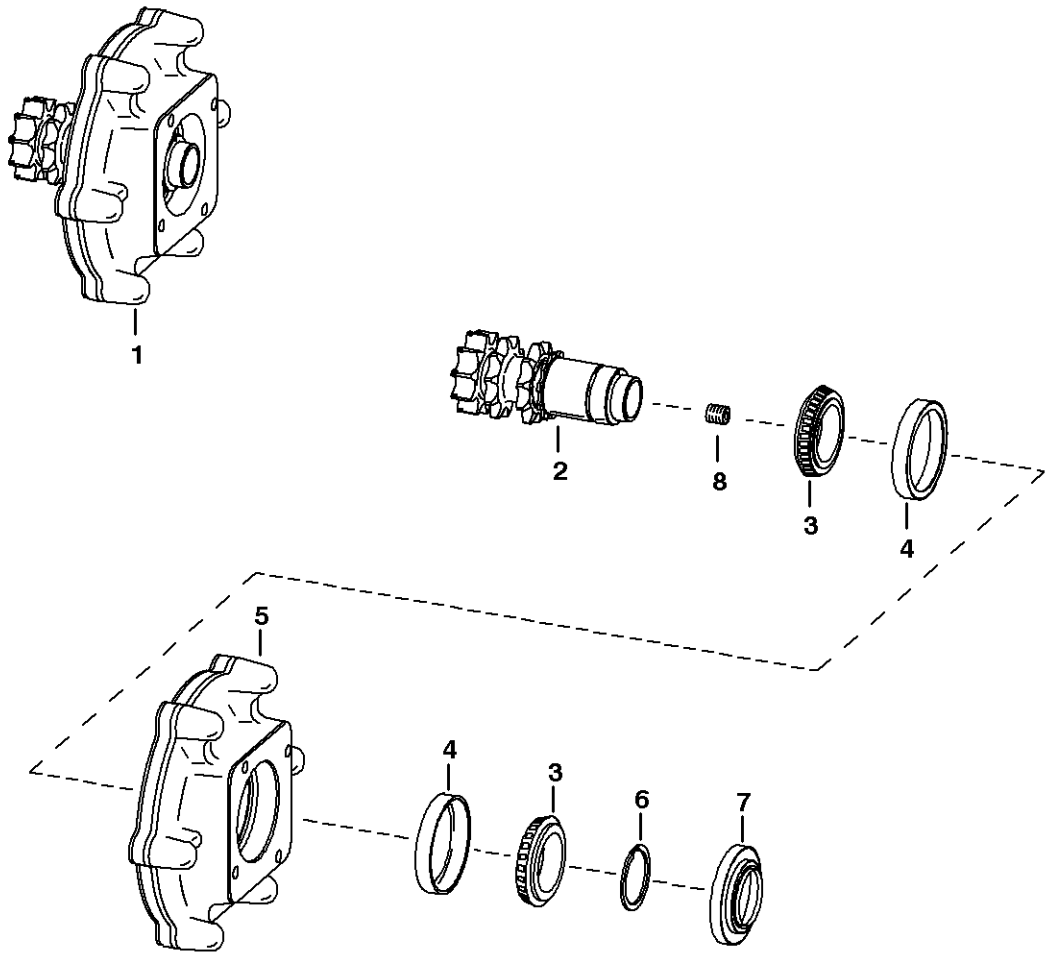

MC-1937

MOTOR CARRIER

Ref.N°	Part N°	Description	Remarks	Serial N°	Qty.
1	6712402	MOUNT ASSY.	drive motor - Ref. MOTOR CARRIER(2) - MOTOR CARRIER(7)		1
2	6713456	SHAFT	W/double snap ring groove		1
3	6632218	BEARING			2
4	6632541	RACE			2
5	6704492	HOUSING			1
6	6571851	SNAP RING	.118' (3,0 mm) thickness		1
6	6571852	SNAP RING	.125' (3,2 mm) thickness		1
7	6705847	SEAL			1
8	NSS	PLUG	Was 16F-6 [B]		1

DISC BRAKE

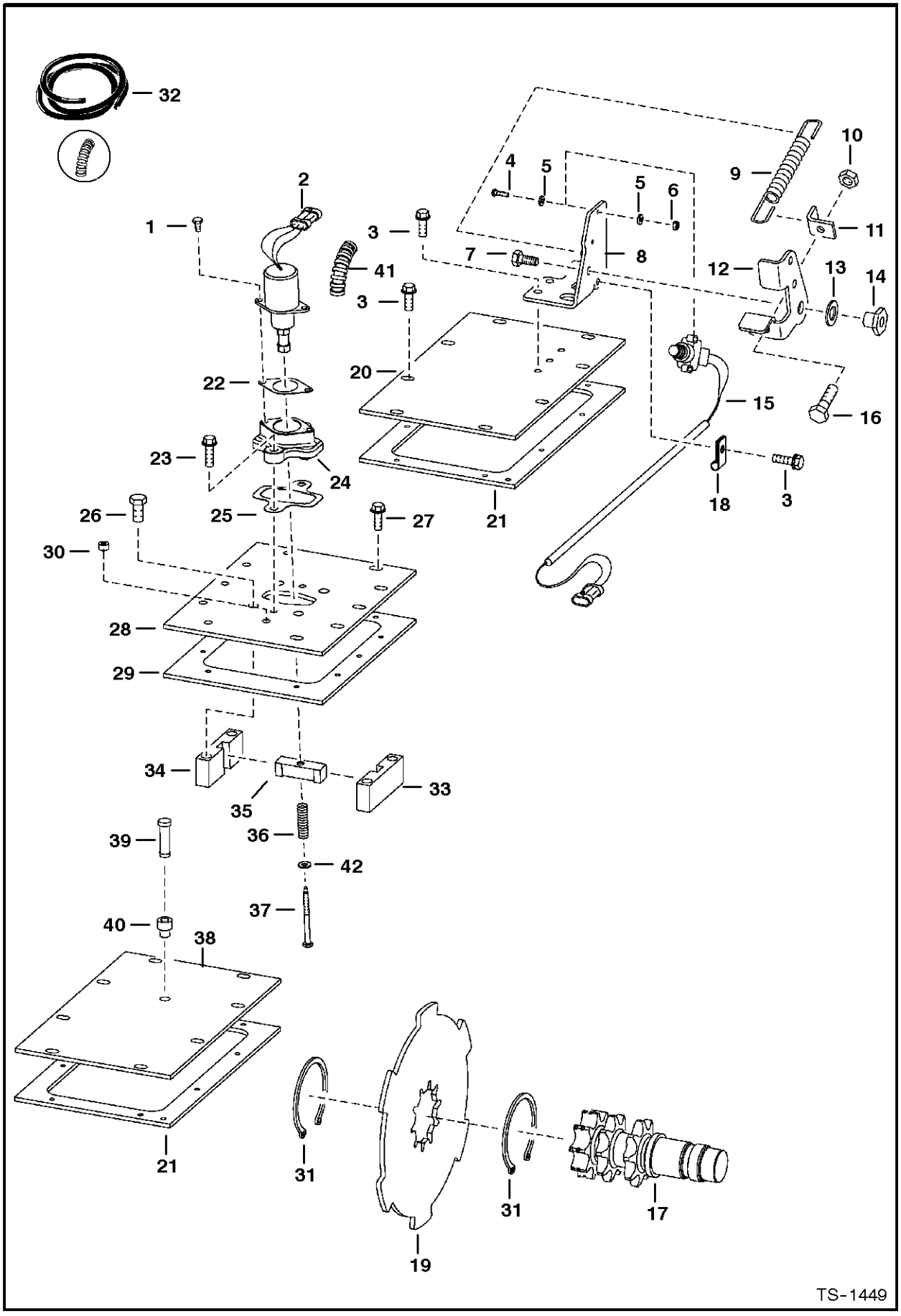
32
2
1
3
41
3
22
20
23
24
25
26
27
30
28
29
34
35
33
39
36
42
37
40
38
21
31
19
31
17
4
5
5
6
9
10
11
7
8
12
13
14
15
16
18
3
21
TS-1449

DISC BRAKE

Ref.N°	Part N°	Description	Remarks	Serial N°	Qty.
1	17C-412	BOLT			2
2	6667992	SOLENOID	W/Ref. DISC BRAKE(41)		1
3	84G-3712	BOLT			18
4	23G-812	SCREW			2
5	25E-8	WASHER			4
6	12D-8	NUT			2
7	17C-610	BOLT			1
8	6707313	PEDAL MOUNT			1
9	6585860	SPRING			1
10	95D-6	NUT			2
11	6707315	ANGLE			1
12	6707314	PEDAL	brake		1
13	6700170	WASHER	plastic		2
14	6559479	NUT			1
15	6707337	SWITCH			1
16	17C-620	BOLT			2
17	6713456	SHAFT	See Page MOTOR CARRIER(1)		2
18	30H-23	CLAMP			1
19	6716228	BRAKE	disc		2
20	6578505	COVER			1
21	6703097	GASKET			2
22	6706737	GASKET			1
23	84G-3720	BOLT			2
24	6706718	MOUNT			1
25	6708016	GASKET			1
26	17C-820	BOLT			4
26	47C-820	BOLT	W/threadlocker		4
27	84G-3716	BOLT			10
28	6706042	COVER			1
29	6706968	GASKET			1
30	6544654	BUSHING	spacer		1
31	6658672	SNAP RING			4
32	6584978	CONDUIT	bulk - Sold Per Foot		x
33	6719056	BLOCK	guide - R.H. -Was 6705898 [B,D]		1
34	6719057	BLOCK	guide - L.H. -Was 6705897 [B,D]		1
35	6714278	WEDGE	6 lobe brake disc		1
36	6708018	SPRING			1
37	6708267	BOLT			1
38	6700330	COVER			1
39	6670627	BREATHER	See Page MAIN FRAME(1)		1
40	6553411	BUSHING			1
41	NAP	CONDUIT	5' (127 mm) long - Order Ref. DISC BRAKE(32)		1
42	25E-13	WASHER			1

DISC BRAKE

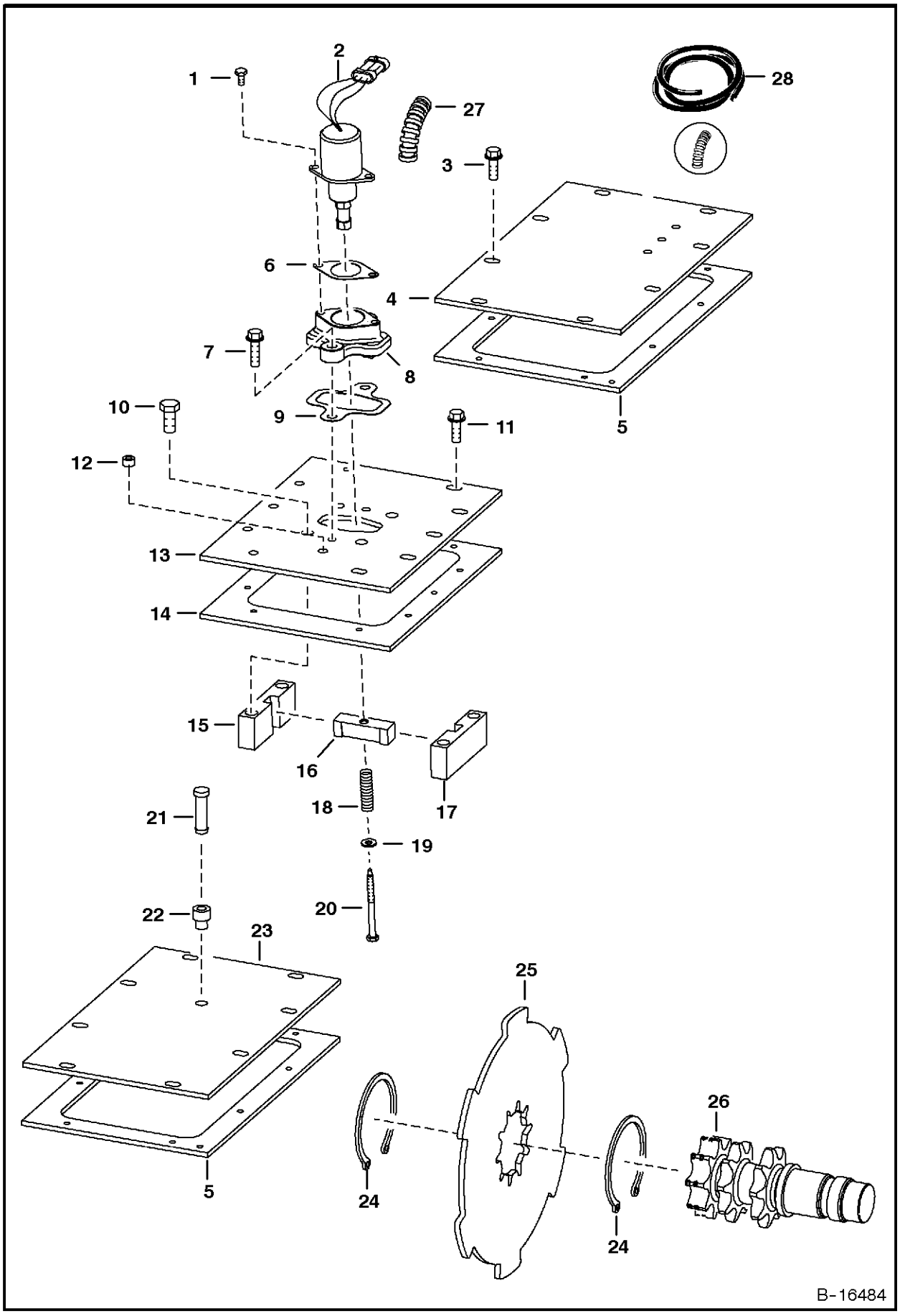
1
2
3
4
5
6
7
8
9
10
11
12
13
14
15
16
17
18
19
20
21
22
23
24
25
26
27
28
B-16484

DISC BRAKE

Ref.N°	Part N°	Description	Remarks	Serial N°	Qty.
1	17C-412	BOLT			2
2	6667992	SOLENOID	W/Ref. DISC BRAKE(27)		1
3	84G-3712	BOLT			14
4	6729173	COVER			1
5	6703097	GASKET			2
6	6706737	GASKET			1
7	84G-3720	BOLT			2
8	6706718	MOUNT			1
9	6708016	GASKET			1
10	17C-820	BOLT			4
10	47C-820	BOLT			4
11	84G-3716	BOLT			10
12	6544654	BUSHING	spacer		1
13	6706042	COVER			1
14	6706968	GASKET			1
15	6719057	BLOCK	guide - L.H.		1
16	6714278	WEDGE			1
17	6719056	BLOCK	guide - R.H.		1
18	6708018	SPRING			1
19	25E-13	WASHER			1
20	6708267	BOLT			1
21	6670627	BREATHER			1
22	6553411	BUSHING			1
23	6700330	COVER			1
24	6658672	SNAP RING			4
25	6716228	BRAKE	disc		2
26	6713456	SHAFT	double snap ring groove - See Page MOTOR CARRIE R(1)		2
27	NAP	CONDUIT	5' (127 mm) long - Order Ref. DISC BRAKE(28)		1
28	6584978	CONDUIT	bulk - Sold Per Foot		x

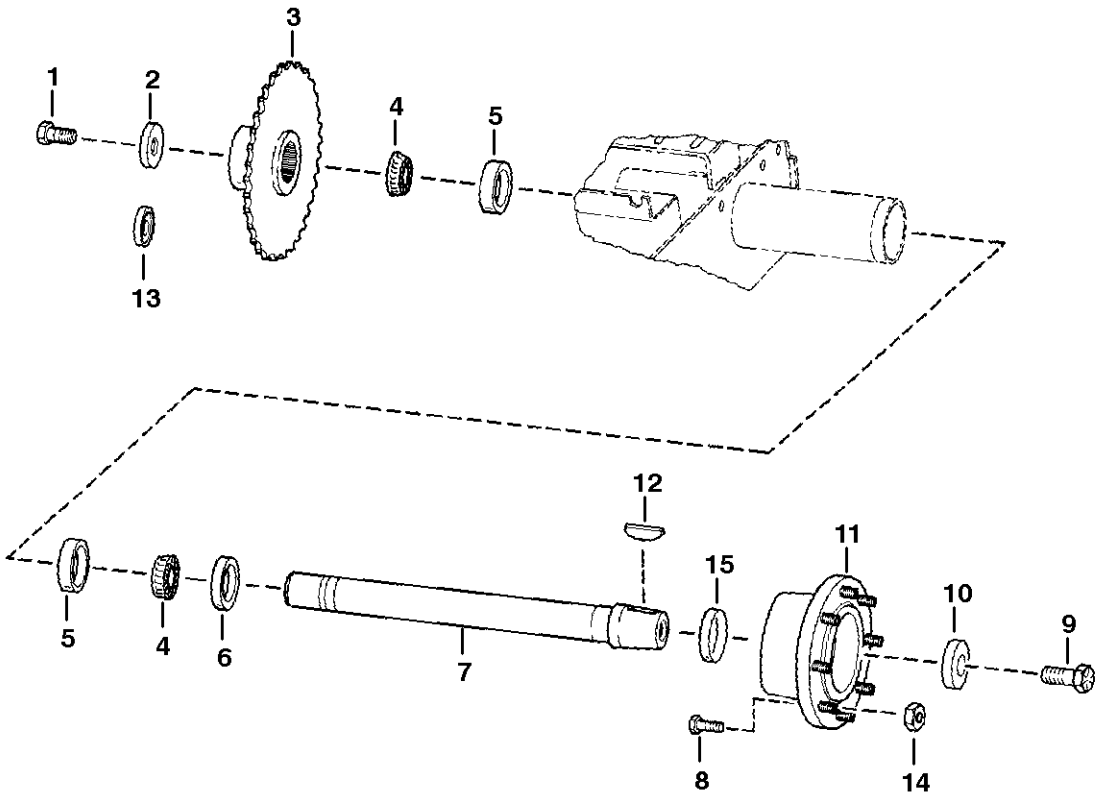

C-3270

AXLE

Ref.N°	Part N°	Description	Remarks	Serial N°	Qty.
1	18C-1224	BOLT	1.50'(38,1 mm) long	& Bel	1
1	6679247	BOLT	1.75'(44,5 mm) long	& Abv	1
2	6552871	WASHER			1
3	6577204	SPROCKET			1
4	6519925	BEARING	Was 6669050 [A]		2
5	6634609	RACE			2
6	6658228	SEAL			1
7	NAP	AXLE	W/.75' dia. x 1.25' deep full threaded end - Use W/Ref. AXLE(1) (18C-1224 Bolt) -Was 6706427 [D]	& Bel	1
7	6706427	AXLE	W/.75' dia. x 1.50' deep full threaded end - Use W/Ref. AXLE(1) (6679247 Bolt)	& Abv	1
8	6709170	STUD	wheel		8
9	18C-1636	BOLT			1
10	6716843	WASHER	recessed		1
11	6578689	HUB	W/Ref. AXLE(8)		1
12	6J-1664	KEY			1
13	6563606	WASHER	recessed - Used to take up .005 or .010 end play on axle		1
14	6564669	NUT	wheel		8
15	6662306	RING	wear - service part only		1
15	6722907	KIT	axle seal & wear sleeve See Page AXLE SEAL KIT(1)		4

HYDRAULIC CIRCUITRY
(W/O Bucket Positioning Valve)

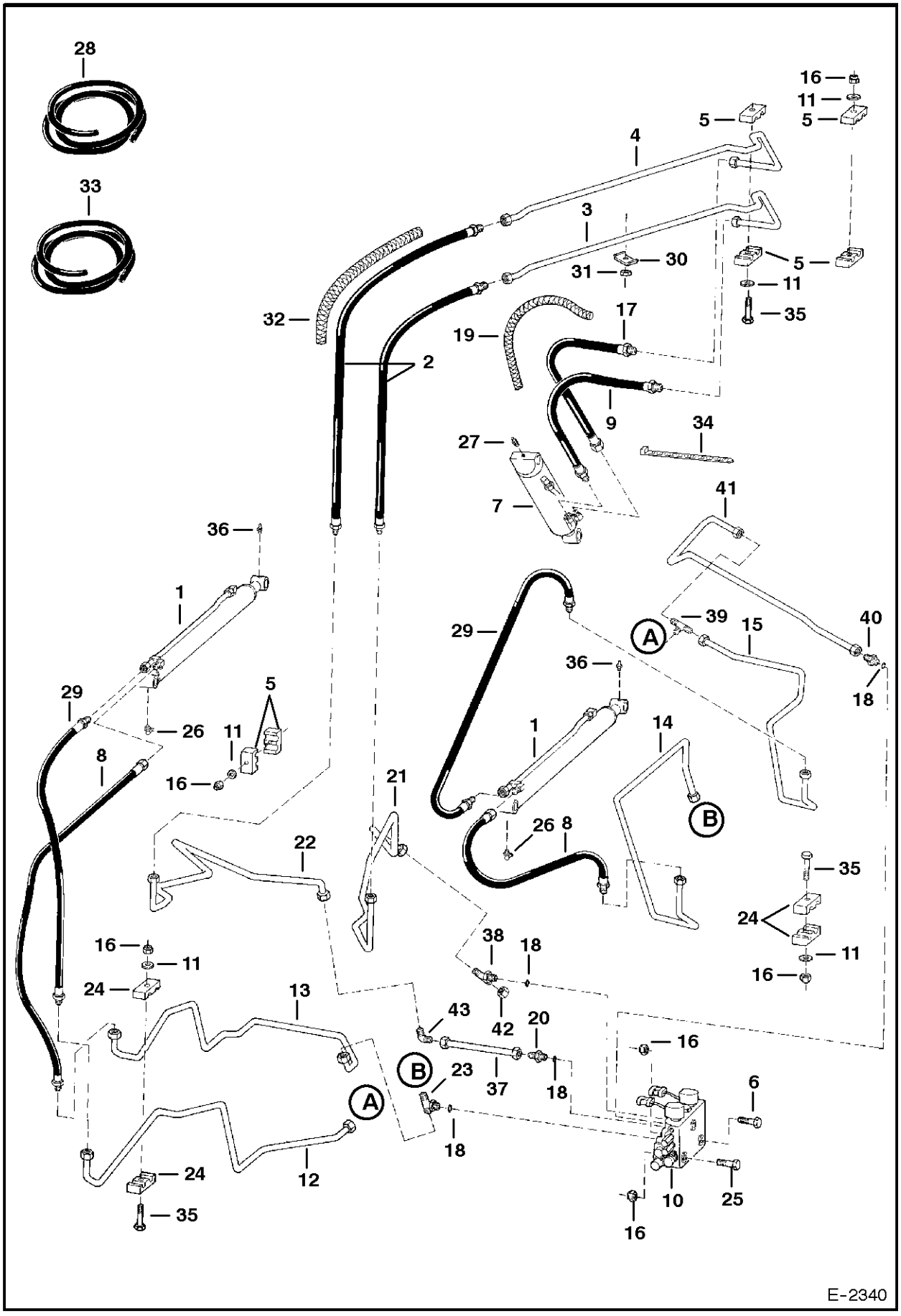

HYDRAULIC CIRCUITRY

Ref.N°	Part N°	Description	Remarks	Serial N°	Qty.
1		CYLINDER	lift - See Page LIFT CYLINDER(1)		2
2	6713338	HOSE	w/ conduit		2
3	6712981	TUBE			1
4	6712980	TUBE			1
5	6701893	CLAMP			4
6	17C-540	BOLT			1
7		CYLINDER	tilt - See Page TILT CYLINDER(1)		1
8	6577671	HOSE			2
9	6704335	HOSE			1
10		VALVE	See Page HYDRAULIC CONTROL VALVE(1)		1
11	872229	WASHER			4
12	6716628	TUBE	lift		1
13	6716627	TUBE	lift		1
14	6712706	TUBE	lift		1
15	6712705	TUBE	lift		1
16	85D-5	NUT			4
17	6704336	HOSE			1
18	99K-10	O-RING			x
19	NAP	COVER	18'(457,2 mm) long - Order Ref. HYDRAULIC CIRCUITRY(28)%		2
20	15KV-7	ADAPTER	W/Ref. HYDRAULIC CIRCUITRY(18)		1
20	97K-10	O-RING	flared end		1
21	6712703	TUBE	tilt		1
22	6712704	TUBE	tilt		1
23	6715656	TEE	W/Ref. HYDRAULIC CIRCUITRY(18) - comes W/Valve on Page HYDRAULIC CONTROL VALVE(1)		1
23	97K-10	O-RING	flared end		1
23	6727639	ELBOW	W/Ref. HYDRAULIC CIRCUITRY(18) - comes W/Valve on Page HYDRAULIC CONTROL VALVE(1)		1
23	97K-10	O-RING	flared end		1
24	6701892	CLAMP			4
25	17C-532	BOLT			2
26	11H-15	GREASE ZERK			2
27	10H-25	GREASE ZERK			1
28	6656155	COVER	1.25' I.D. - bulk - Sold Per Foot		x
29	6718954	HOSE	Was 6578808 [A]		2
30	6502203	CLAMP			2
31	95D-6	NUT			2
32	NAP	COVER	30'(762 mm) long - Order Ref. HYDRAULIC CIRCUITRY(33)		2
33	6643249	COVER	1' I.D. - bulk - Sold Per Foot		x
34	6610510	NYLON TIE			1
35	84G-3728	BOLT			4
36	12H-15	GREASE ZERK			2
37	6710573	TUBE	tilt		1
38	19KN-7	TEE	W/Ref. HYDRAULIC CIRCUITRY(18)		3
38	97K-10	O-RING	flared end		3
39	10KN-6	TEE			1
39	97K-8	O-RING	flared end		3
40	6715184	ADAPTER	W/Ref. HYDRAULIC CIRCUITRY(18)		1
40	97K-8	O-RING	flared end		1

HYDRAULIC CIRCUITRY

Ref.N°	Part N°	Description	Remarks	Serial N°	Qty.
41	6718099	TUBE	lift		1
42	36K-7	CAP			1
43	77FN-7	ELBOW			1
43	97K-10	O-RING	flared end		1

*HYDRAULIC CIRCUITRY
(W/O Bucket Positioning Valve)

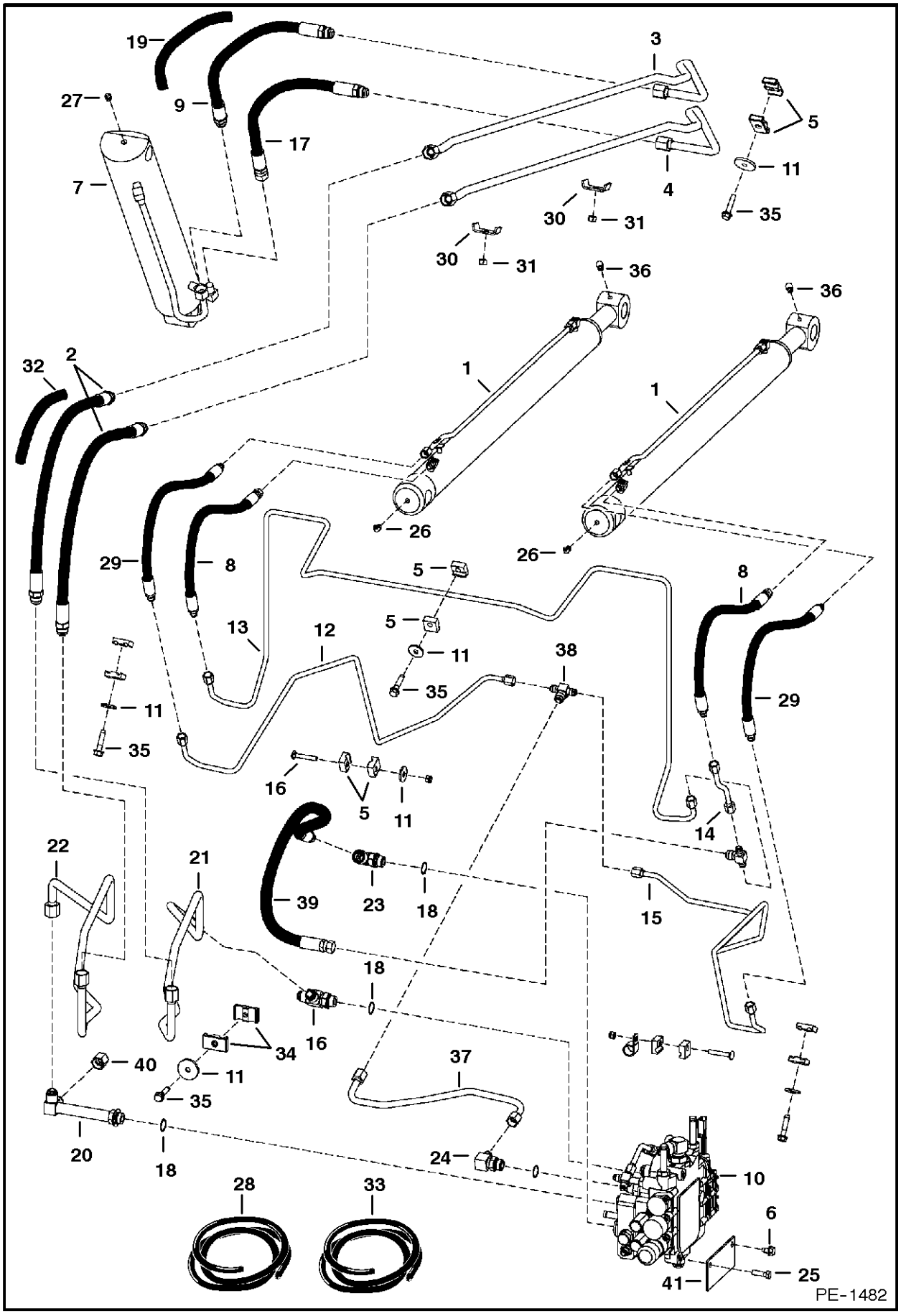

*

Ref.N°	Part N°	Description	Remarks	Serial N°	Qty.
1		CYLINDER	lift - See Page LIFT CYLINDER(1)		2
2	6713338	HOSE	w/ conduit		2
3	6712981	TUBE			1
4	6712980	TUBE			1
5	6701893	CLAMP			2
6	17C-620	BOLT			2
7		CYLINDER	tilt - See Page TILT CYLINDER(1)		1
8	6727686	HOSE			2
9	6704335	HOSE			1
10		VALVE	See Page HYDRAULIC CONTROL VALVE(1)		1
11	872229	WASHER			4
12	6729911	TUBE	lift		1
13	6730916	TUBE	lift		1
14	6730917	TUBE	lift		1
15	6729913	TUBE	lift		1
16	21KN-7	TEE	W/Ref. * (18) - comes W/valve on Page HYDRAULIC CONTROL VALVE(1)		1
17	6704336	HOSE			1
18	99K-10	O-RING			x
19	NAP	COVER	18'(457,2 mm) long - Order Ref. HYDRAULIC CIRCUITRY(28)%		2
20	6730142	TEE	W/Ref. HYDRAULIC CIRCUITRY(18)		1
20	97K-10	O-RING	flared end		1
21	6712703	TUBE	tilt		1
22	6729910	TUBE	tilt		1
23	6727639	ELBOW	W/Ref. HYDRAULIC CIRCUITRY(18) - comes W/Valve on Page HYDRAULIC CONTROL VALVE(1)		1
23	97K-10	O-RING	flared end		1
24	6715716	ELBOW			1
25	84G-3710	BOLT			3
26	11H-15	GREASE ZERK			2
27	10H-25	GREASE ZERK			1
28	6656155	COVER	1.25' I.D. - bulk - Sold Per Foot		x
29	6727687	HOSE	Was 6578808 [A]		2
30	6502203	CLAMP			2
31	95D-6	NUT			2
32	NAP	COVER	30'(762 mm) long - Order Ref. HYDRAULIC CIRCUITRY(33)		2
33	6643249	COVER	1' I.D. - bulk - Sold Per Foot		x
34	6726277	CLAMP			4
35	84G-3728	BOLT			4
36	12H-15	GREASE ZERK			2
37	6727630	TUBE	lift		1
38	6727659	TEE			2
38	97K-8	O-RING	flared end		6
39	6730915	HOSE			1
40	36K-7	CAP			2
41	6727837	COVER			2

HYDRAULIC CIRCUITRY
(W/ Bucket Positioning Valve)

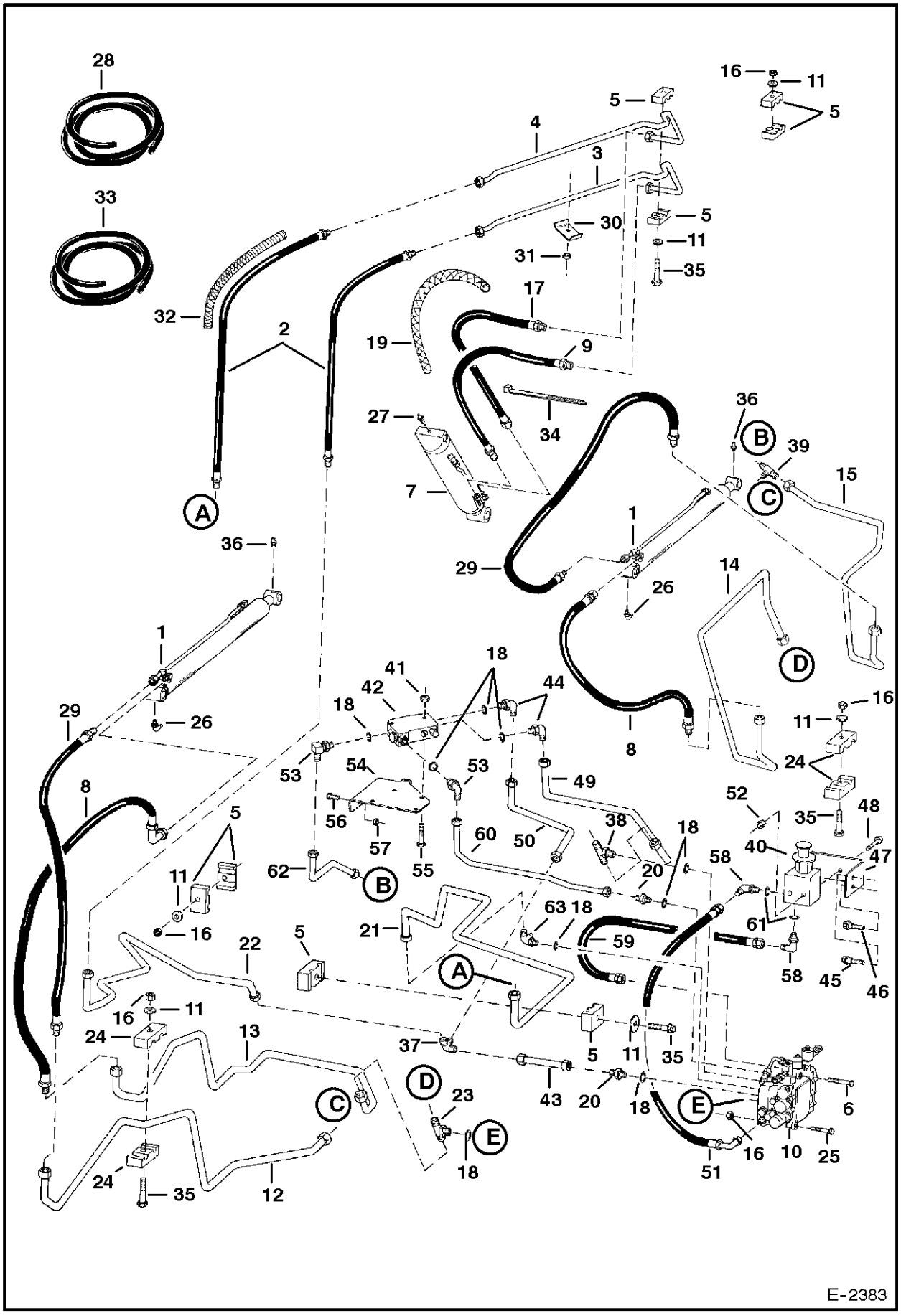

HYDRAULIC CIRCUITRY

Ref.N°	Part N°	Description	Remarks	Serial N°	Qty.
1		CYLINDER	lift - See Page LIFT CYLINDER(1)		2
2	6713338	HOSE	w/ conduit		2
3	6712981	TUBE			1
4	6712980	TUBE			1
5	6701893	CLAMP			4
6	17C-540	BOLT			1
7		CYLINDER	tilt - See Page TILT CYLINDER(1)		1
8	6577671	HOSE			2
9	6704335	HOSE			1
10		VALVE	See Page HYDRAULIC CONTROL VALVE(1)		1
11	872229	WASHER			4
12	6716628	TUBE	lift		1
13	6716627	TUBE	lift		1
14	6712706	TUBE	lift		1
15	6712705	TUBE	lift		1
16	85D-5	NUT			4
17	6704336	HOSE			1
18	99K-10	O-RING			x
19	NAP	COVER	18'(457,2 mm) long - Order Ref. HYDRAULIC CIRCUITRY(28)%		2
20	15KV-7	ADAPTER	W/Ref. HYDRAULIC CIRCUITRY(18)		2
20	97K-10	O-RING	flared end		2
21	6712703	TUBE	tilt		1
22	6712704	TUBE	tilt		1
23	6715656	TEE	W/Ref. HYDRAULIC CIRCUITRY(18) - comes W/Valve on Page HYDRAULIC CONTROL VALVE(1)		1
23	97K-10	O-RING	flared end		1
23	6727639	ELBOW	W/Ref. HYDRAULIC CIRCUITRY(18) - comes W/Valve on Page HYDRAULIC CONTROL VALVE(1)		1
23	97K-10	O-RING	flared end		1
24	6701892	CLAMP			4
25	17C-532	BOLT			2
26	11H-15	GREASE ZERK			2
27	10H-25	GREASE ZERK			1
28	6656155	COVER	1.25' I.D. - bulk - Sold Per Foot		x
29	6718954	HOSE	Was 6578808 [A]		2
30	6502203	CLAMP			2
31	95D-6	NUT			2
32	NAP	COVER	30'(762 mm) long - Order Ref. HYDRAULIC CIRCUITRY(33)		2
33	6705749	COVER	1' I.D. conduit - bulk - Sold Per Foot		x
34	6610510	NYLON TIE			1
35	84G-3728	BOLT			4
36	12H-15	GREASE ZERK			2
37	6705070	TEE	W/Ref. HYDRAULIC CIRCUITRY(18)		1
38	19KN-7	TEE	W/Ref. HYDRAULIC CIRCUITRY(18)		1
38	97K-10	O-RING	flared end		1
39	10KN-6	TEE			1
39	97K-8	O-RING	flared end		3
40		VALVE	'manual lift release - See Page MANUAL LIFT RELEASE VALVE(1)		1

HYDRAULIC CIRCUITRY

Ref.N°	Part N°	Description	Remarks	Serial N°	Qty.
41	57D-5	NUT			2
42	6666341	VALVE	bucket pos. - See Page BUCKET POSITIONING VALVE(1)		1
43	6710573	TUBE	tilt		1
44	17KV-7	ELBOW	W/Ref. HYDRAULIC CIRCUITRY(18)		2
44	97K-10	O-RING	flared end		2
45	84G-3716	BOLT			1
46	84G-3712	BOLT			1
47	6711280	MOUNT			1
48	17C-428	BOLT			2
49	6710583	TUBE			1
50	6704839	TUBE			1
51	6578804	HOSE			1
52	83D-4	NUT			1
53	6715716	ELBOW	W/Ref. HYDRAULIC CIRCUITRY(18)		2
53	97K-8	O-RING	flared end		2
54	6704833	BRACKET			1
55	35C-536	BOLT			2
56	35C-412	BOLT			2
57	57D-4	NUT			2
58	17KV-5	ELBOW	W/Ref. HYDRAULIC CIRCUITRY(61)		2
58	97K-6	O-RING	flared end		2
59	6535451	HOSE			1
60	6710584	TUBE			1
61	99K-6	O-RING			x
62	6705068	TUBE			1
63	6715184	ADAPTER	W/Ref. HYDRAULIC CIRCUITRY(18)		1
63	97K-8	O-RING	flared end		1

*HYDRAULIC CIRCUITRY
(W/ Bucket Positioning Valve)

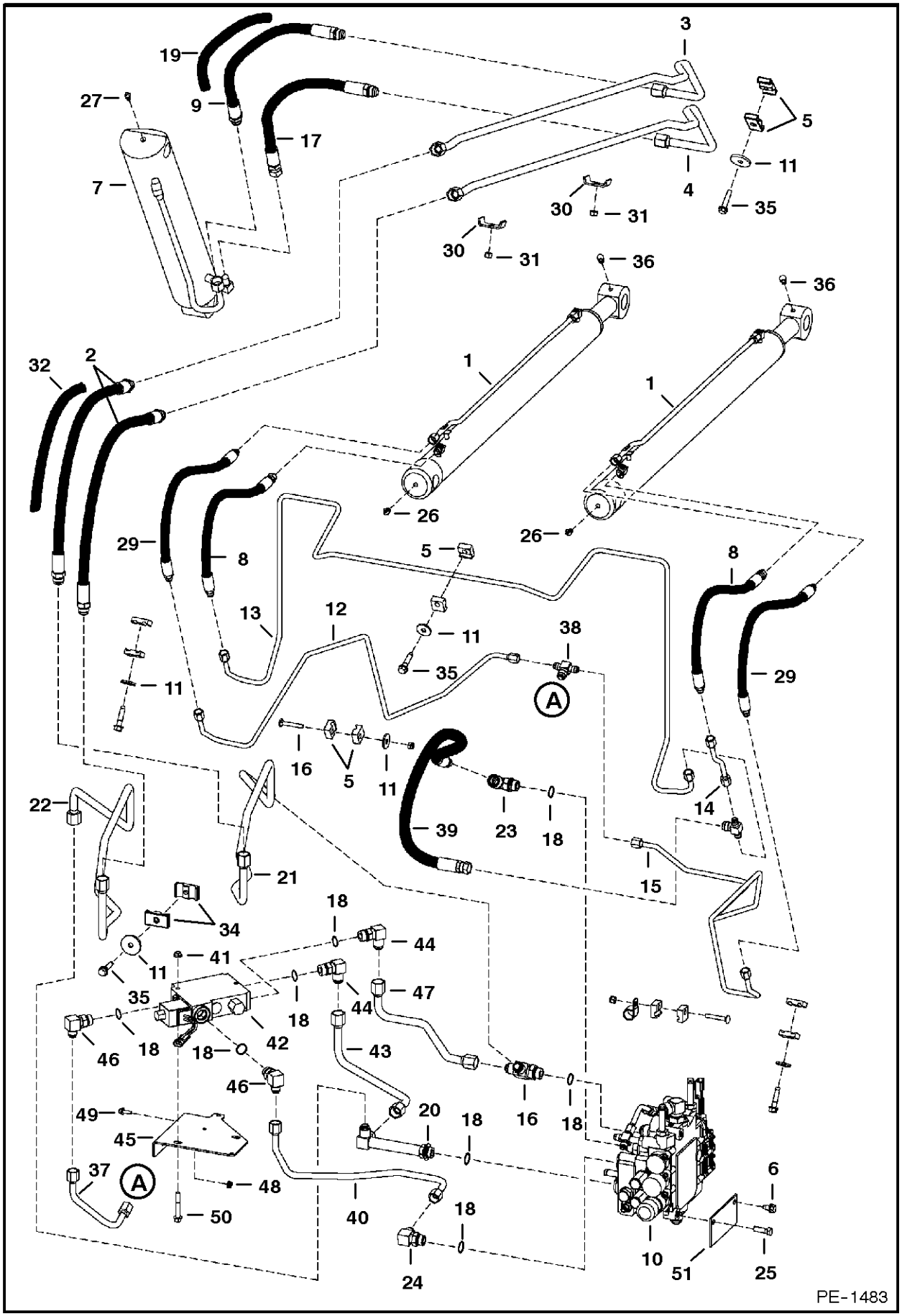

*

Ref.N°	Part N°	Description	Remarks	Serial N°	Qty.
1		CYLINDER	lift - See Page LIFT CYLINDER(1)		2
2	6713338	HOSE	w/ conduit		2
3	6712981	TUBE			1
4	6712980	TUBE			1
5	6701893	CLAMP			2
6	17C-620	BOLT			2
7		CYLINDER	tilt - See Page TILT CYLINDER(1)		1
8	6727686	HOSE			2
9	6704335	HOSE			1
10		VALVE	See Page HYDRAULIC CONTROL VALVE(1)		1
11	872229	WASHER			4
12	6729911	TUBE	lift		1
13	6730916	TUBE	lift		1
14	6730917	TUBE	lift		1
15	6729913	TUBE	lift		1
16	21KN-7	TEE	W/Ref. * (18) - comes W/valve on Page HYDRAULIC CONTROL VALVE(1)		1
17	6704336	HOSE			1
18	99K-10	O-RING			x
19	NAP	COVER	18'(457,2 mm) long - Order Ref. HYDRAULIC CIRCUI TRY(28)%		2
20	6730142	TEE	W/Ref. * (18)		1
20	97K-10	O-RING	flared end		1
21	6712703	TUBE	tilt		1
22	6729910	TUBE	tilt		1
23	6727639	ELBOW	W/Ref. * (18) - comes W/Valve on Page HYDRAULIC CONTROL VALVE(1)		1
23	97K-10	O-RING	flared end		1
24	6715716	ELBOW			1
25	84G-3710	BOLT			3
26	11H-15	GREASE ZERK			2
27	10H-25	GREASE ZERK			1
28	6656155	COVER	1.25' I.D. - bulk - Sold Per Foot		x
29	6727687	HOSE	Was 6578808 [A]		2
30	6502203	CLAMP			2
31	95D-6	NUT			2
32	NAP	COVER	30'(762 mm) long - Order Ref. HYDRAULIC CIRCUIT RY(33)		2
33	6643249	COVER	1' I.D. - bulk - Sold Per Foot		x
34	6726277	CLAMP			4
35	84G-3728	BOLT			4
36	12H-15	GREASE ZERK			2
37	6727627	TUBE	lift		1
38	6727659	TEE			2
38	97K-8	O-RING	flared end		6
39	6730915	HOSE			1
40	6727628	TUBE			1
41	57D-5	NUT			2
42	6666341	VALVE	bucket pos. - See Page BUCKET POSITIONING VALVE(1)		1
43	6727626	TUBE			1

*

Ref.N°	Part N°	Description	Remarks	Serial N°	Qty.
44	17KV-7	ELBOW	W/Ref. * (18)		2
44	97K-10	O-RING	flared end		2
45	6704833	BRACKET			1
46	6715716	ELBOW	W/Ref. * (18)		2
46	97K-8	O-RING	flared end		2
47	6727629	TUBE			1
48	57D-4	NUT			2
49	35C-412	BOLT			2
50	35C-536	BOLT			2
51	6727837	COVER			2

MANUAL LIFT RELEASE SYSTEM

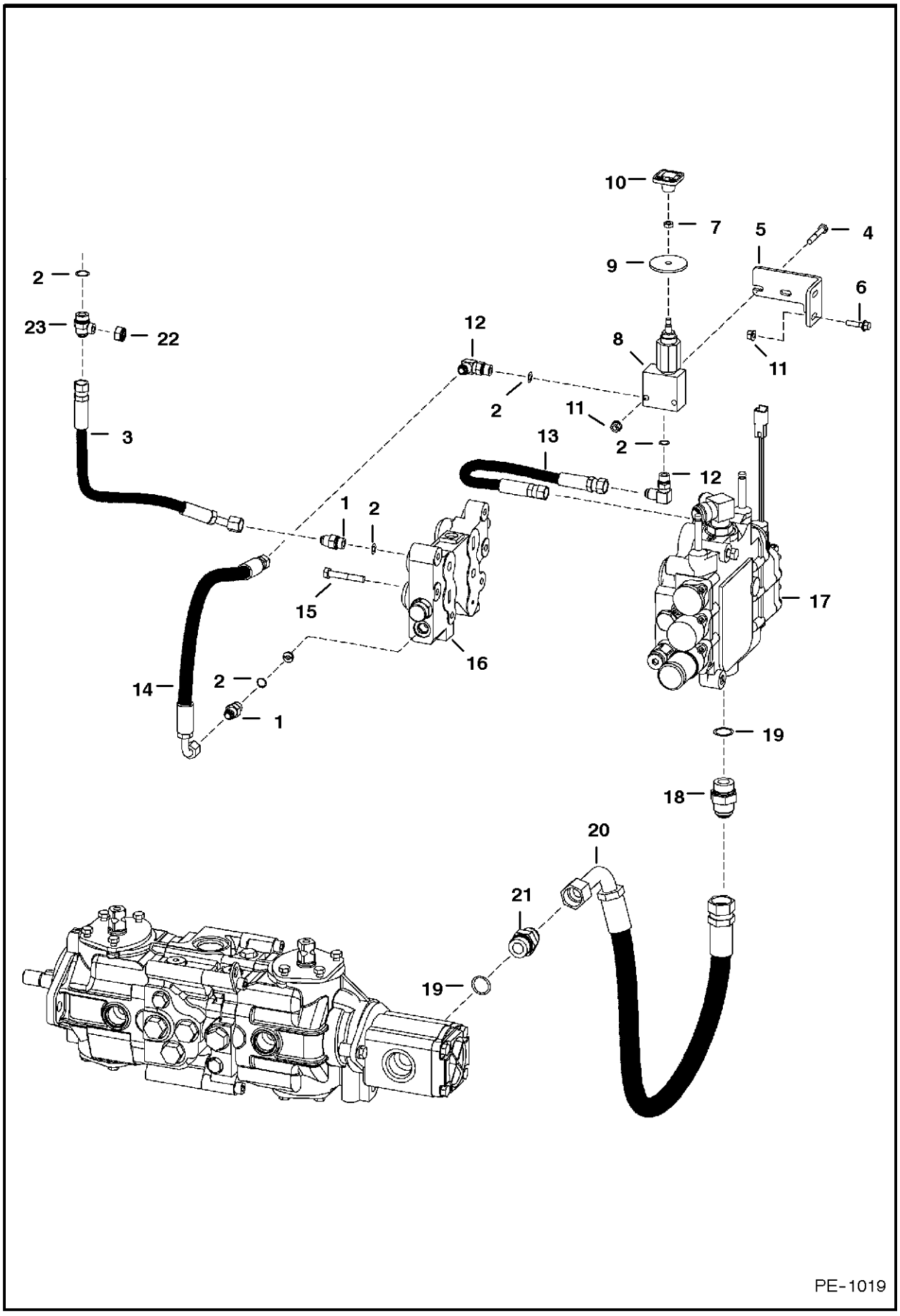

MANUAL LIFT RELEASE SYSTEM

Ref.N°	Part N°	Description	Remarks	Serial N°	Qty.
1	15KV-5	ADAPTER	W/Ref. MANUAL LIFT RELEASE SYSTEM(2)		2
1	97K-6	O-RING	flared end		2
2	99K-6	O-RING			x
3	6719653	HOSE	Was 6711656 [B,D]		1
4	17C-428	BOLT			2
5	6711280	MOUNT			1
6	35C-416	BOLT	Was 84G-3716 [B,D]		2
7	7D-4	NUT			1
8	6667844	VALVE	manual lift release - See Page MANUAL LIFT RELEASE VALVE(1)		1
9	6707101	WASHER	neoprene		1
10	6668913	KNOB	red square		1
11	83D-4	NUT			4
12	17KV-5	ELBOW	W/Ref. MANUAL LIFT RELEASE SYSTEM(2)		2
12	97K-6	O-RING	flared end		2
13	6535451	HOSE			1
14	6578804	HOSE			1
15	43C-532	BOLT			6
16	6628571	VALVE	BICS Control - See Page BICS CONTROL VALVE(1)		1
17		VALVE	control - See Page HYDRAULIC CONTROL VALVE(1)		1
18	15KN-8	ADAPTER	W/Ref. MANUAL LIFT RELEASE SYSTEM(19)		2
18	97K-12	O-RING	flared end		2
19	99K-12	O-RING			x
20	6729145	HOSE	Was 6712848 [A]		1
21	18KV-8	ELBOW	W/Ref. MANUAL LIFT RELEASE SYSTEM(19)		1
21	97K-12	O-RING	flared end		1
22	36K-5	CAP			1
23	21KV-5	TEE	W/Ref. MANUAL LIFT RELEASE SYSTEM(2) - connects to bottom of hydraulic reservoir		1
23	97K-6	O-RING	flared end		2

* MANUAL LIFT RELEASE SYSTEM

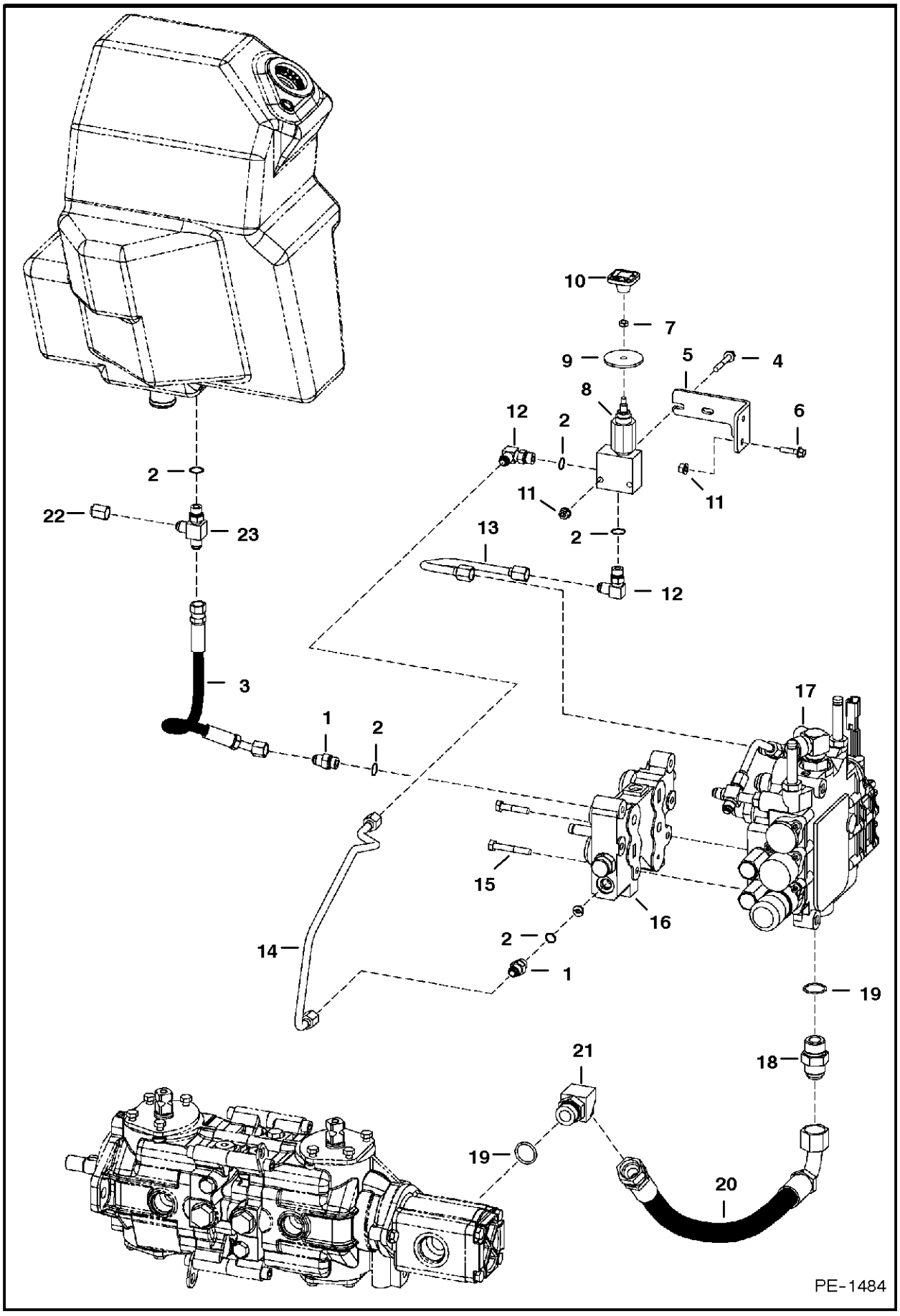

*

Ref.N°	Part N°	Description	Remarks	Serial N°	Qty.
1	15KV-5	ADAPTER	W/Ref. * (2)		2
1	97K-6	O-RING	flared end		2
2	99K-6	O-RING			x
3	6719653	HOSE			1
4	17C-428	BOLT			2
5	6729908	MOUNT			1
6	35C-416	BOLT			2
7	7D-4	NUT			1
8	6667844	VALVE	manual lift release - See Page MANUAL LIFT RELEASE VALVE(1)		1
9	6707101	WASHER	neoprene		1
10	6668913	KNOB	red square		1
11	83D-4	NUT			2
12	17KV-5	ELBOW	W/Ref. * (2)		2
12	97K-6	O-RING	flared end		2
13	6727702	TUBE			1
14	6729909	TUBE			1
15	43C-532	BOLT			6
16	6628571	VALVE	BICS Control - See Page BICS CONTROL VALVE(1)		1
17		VALVE	control - See Page HYDRAULIC CONTROL VALVE(1)		1
18	6812646	ADAPTER	W/Ref. * (19)		1
18	97K-12	O-RING	flared end		1
19	99K-12	O-RING			x
20	6729145	HOSE			1
21	18KV-8	ELBOW	W/Ref. * (19)		1
21	97K-12	O-RING	flared end		1
22	36K-5	CAP			1
23	21KV-5	TEE	W/Ref. * (2)		1
23	97K-6	O-RING	flared end		2

AUXILIARY HYDRAULICS
(W/Pressure Relief Valve)

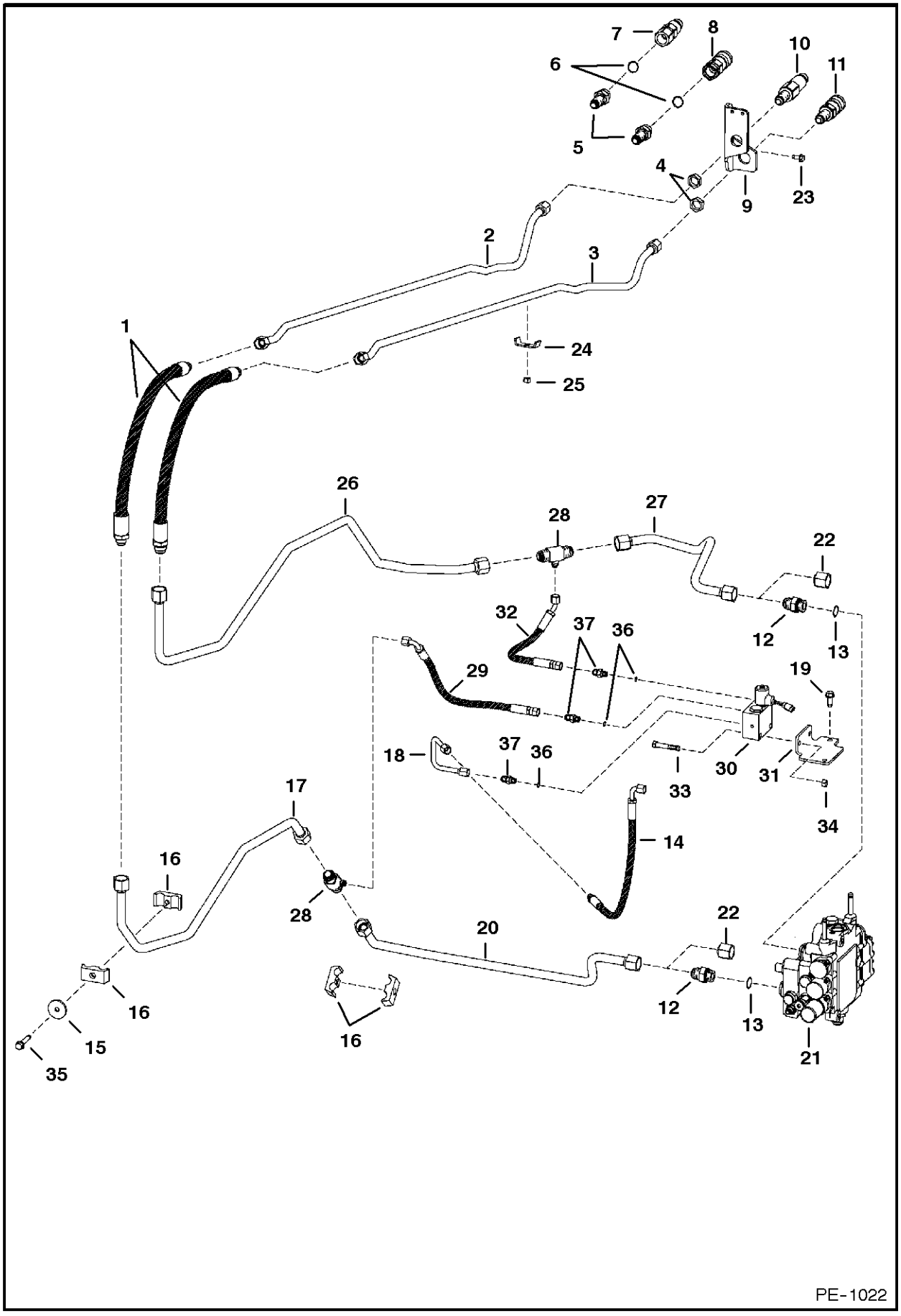

AUXILIARY HYDRAULICS

Ref.N°	Part N°	Description	Remarks	Serial N°	Qty.
1	6714595	HOSE			1
2	6711737	TUBE			1
3	6727801	TUBE	Was 6711738 [A]		1
4	86F-7	NUT			2
5	6715185	ADAPTER	W/Ref. AUXILIARY HYDRAULICS(6)		2
5	97K-10	O-RING	flared end		2
6	79K-10	O-RING			4
7	NAP	QUICK COUPLER	FF Male - Order Ref. AUXILIARY HYDRAULICS(10) - Was 6667808 [B]	5122 58540 & Bel	1
7				5124 51020 & Bel	1
7	6672026	O-RING			1
8	NAP	QUICK COUPLER	FF Female - Order Ref. AUXILIARY HYDRAULICS(11) Was 6672960 [B]	5122 58540 & Bel	1
8				5124 51020 & Bel	1
9	6713850	MOUNT			1
10	6676444	QUICK COUPLER	FF Male	5122 58541 & Abv	1
10				5124 51021 & Abv	1
11	6676446	QUICK COUPLER	FF Female	5122 58541 & Abv	1
11				5124 51021 & Abv	1
12	15KN-8	ADAPTER	W/Ref. AUXILIARY HYDRAULICS(25) (99K-12 O-ring)	& Bel	1
12	97K-12	O-RING	flared end		1
12	6812646	ADAPTER	W/Ref. AUXILIARY HYDRAULICS(25) (79K-12 O-ring)	& Abv	1
12	97K-12	O-RING	flared end		1
13	99K-12	O-RING			x
13	79K-12	O-RING			x
14	6719655	HOSE			1
15	872229	WASHER			2
16	6592506	CLAMP			4
17	6717911	TUBE			1
18	6719211	TUBE			1
19	84G-3716	BOLT			2
20	6717910	TUBE		& Bel	1
20	6729912	TUBE		& Abv	1
21		VALVE	See Page HYDRAULIC CONTROL VALVE(1)		1
22	36K-8	CAP			2
23	84G-3112	BOLT			2
24	6502203	CLAMP			2
25	95D-6	NUT	Was 59D-6 [B]		2
26	6718096	TUBE			1
27	6718097	TUBE			1
28	6717923	TEE			2
29	6717919	HOSE			1
30	NAP	VALVE	W/.4375' threaded ports - Order 6678150inD1} Valve & (3) of Ref. AUXILIARY HYDRAULICS(37) (15KV-5inD1Y Adapter) - Was 6674372 [		1
30	6678150	VALVE	W/.5625' threaded ports		1
31	6717922	BRACKET			1
32	6718842	HOSE			1
33	17C-636	BOLT			2
34	91D-6	NUT			2
35	84G-3732	BOLT			1

AUXILIARY HYDRAULICS

Ref.N°	Part N°	Description	Remarks	Serial N°	Qty.
36	79K-4	O-RING			3
36	99K-4	O-RING			3
37	6718109	CONNECTOR	W/Ref. AUXILIARY HYDRAULICS(36) (79K-4 O-ring) - Use W/Ref. AUXILIARY HYDRAULICS(30) (NAP/6674 372 Valve)		3
37	97K-6	O-RING	flared end		3
37	15KV-5	ADAPTER	W/Ref. AUXILIARY HYDRAULICS(36) (99K-6 O-ring) - Use W/Ref. AUXILIARY HYDRAULICS(30) (6678150i nD1} Valve)		3
37	97K-6	O-RING	flared end		3

* AUXILIARY HYDRAULICS
(W/Pressure Relief Coupler Block)

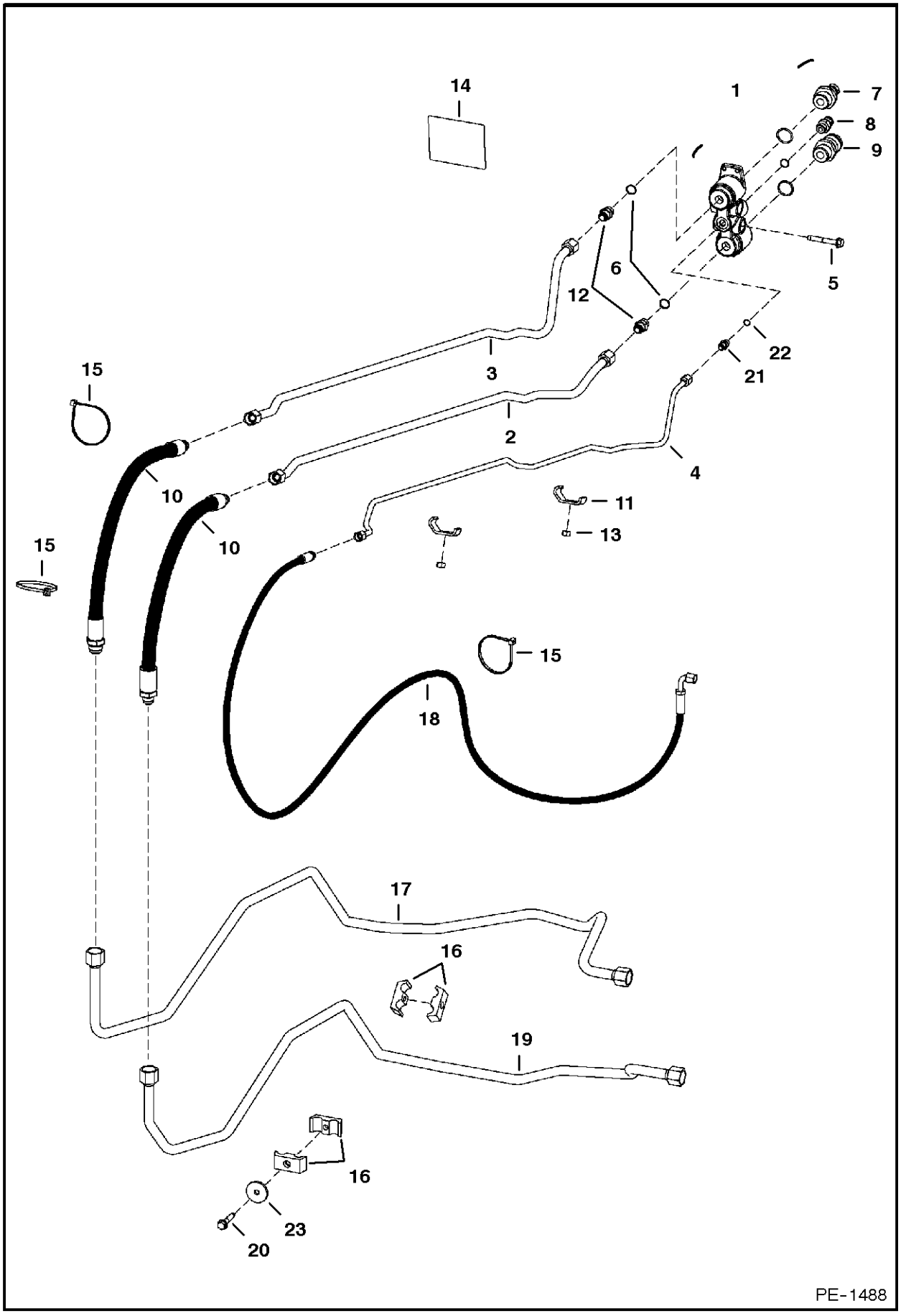

* AUXILIARY HYDRAULICS

Ref.N°	Part N°	Description	Remarks	Serial N°	Qty.
1	6678951	BLOCK ASSY.	coupler - Ref. * AUXILIARY HYDRAULICS(6) - * AUXILIARY HYDRAULICS(9) & (2) of Ref. * AUXILIARY HYDRAULICS(12)		1
2	6732129	TUBE			1
3	6732130	TUBE			1
4	6732134	TUBE			1
5	84G-3740	BOLT			2
6	99K-12	O-RING			x
6	79K-12	O-RING			x
7	6679837	KIT	coupler - male - FF		1
7	6679841	SEAL KIT	blue		1
7	6680020	SEAL KIT	(3) O-rings		1
8	6679838	KIT	coupler - male		1
8	6679840	SEAL KIT	blue		1
9	6679839	KIT	coupler - female - FF		1
9	6680020	SEAL KIT	(3) O-rings		1
9	6680018	VALVE	coupler - female - Use W/hyd. breaker		1
10	6729155	HOSE	W/cover		2
11	6731732	CLAMP			2
12	6679835	KIT	adapter - W/spring & Ref. * AUXILIARY HYDRAULICS (6) (79K-12 O-ring)		2
12	97K-6	O-RING	flared end		3
13	91D-6	NUT			2
14	6731757	DECAL			1
15	6624289	STA-STRAP			4
16	6592506	CLAMP			2
17	6732128	TUBE			1
18	6732220	HOSE			1
19	6732127	TUBE			1
20	84G-3732	BOLT			2
21	15KV-5	ADAPTER			1
21	97K-6	O-RING	flared end		3
22	99K-6	O-RING			1
23	872229	WASHER			1

TILT CYLINDER

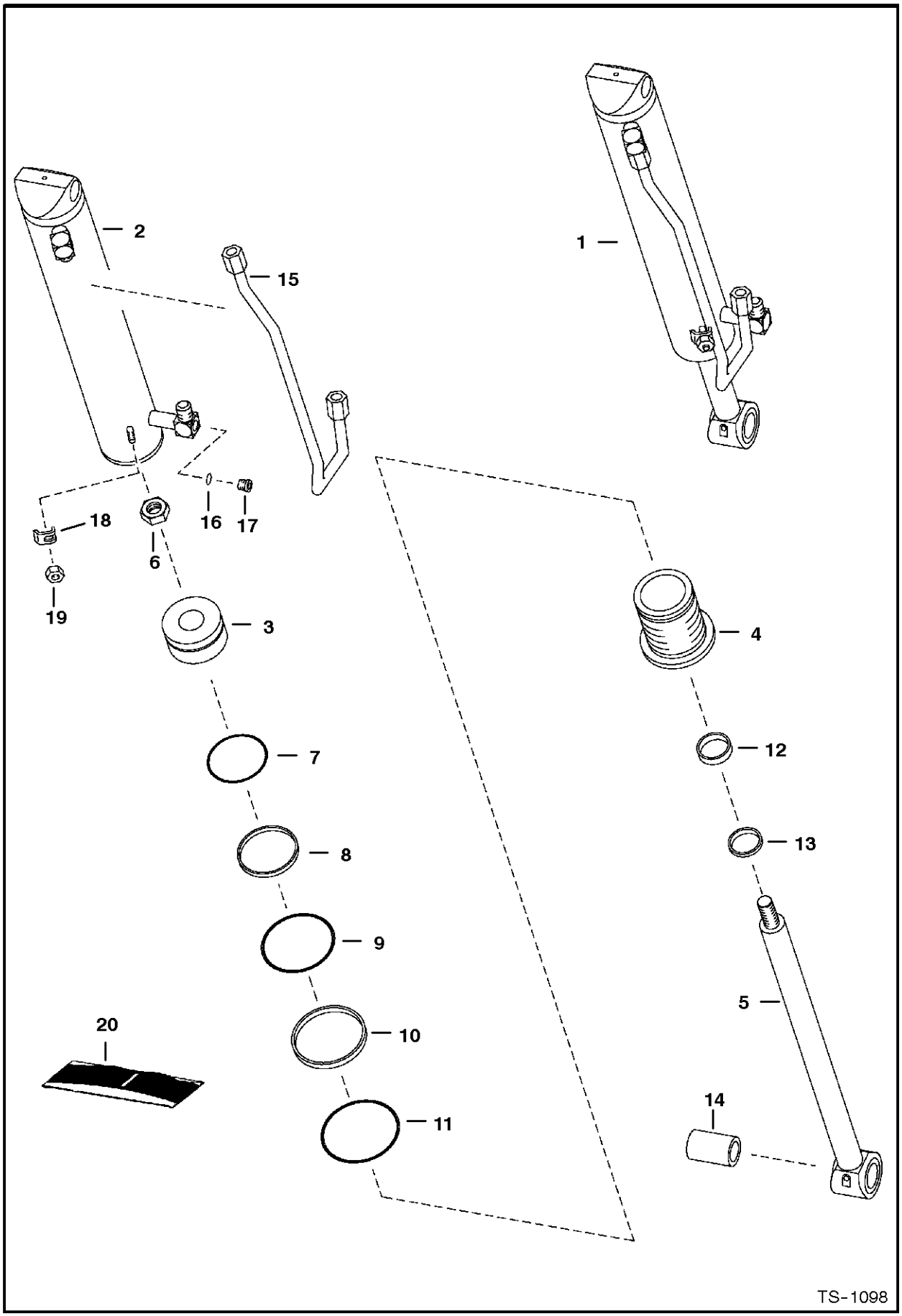

TILT CYLINDER

Ref.N°	Part N°	Description	Remarks	Serial N°	Qty.
1	6804630	CYLINDER	tilt - Ref. TILT CYLINDER(2)-TILT CYLINDER(19)		1
2	NAP	CASE	3.5' (88,9 mm) I.D. - Order 6804630inD1}U Cylinder - Was 6804633 [A]		1
3	6804632	PISTON			1
4	6539934	HEAD			1
5	6804631	ROD	1.5' (38,1 mm) - W/Ref. TILT CYLINDER(14)		1
6	6804592	NUT			1
7	54K-30300	O-RING			1
8	1530265	SEAL			1
9	54K-60304	O-RING			1
10	73K-338	RING	back-up		1
11	58K-238	O-RING			1
12	6667326	SEAL			1
13	6665086	SEAL	wiper		1
14	6805150	BUSHING			1
15	6586586	TUBE			1
16	95K-6	O-RING			2
17	90KV-5	PLUG			2
18	6562266	CLAMP			1
19	95D-6	NUT			1
20	6804606	SEAL KIT	Ref. TILT CYLINDER(6) - TILT CYLINDER(13)		1

LIFT CYLINDER

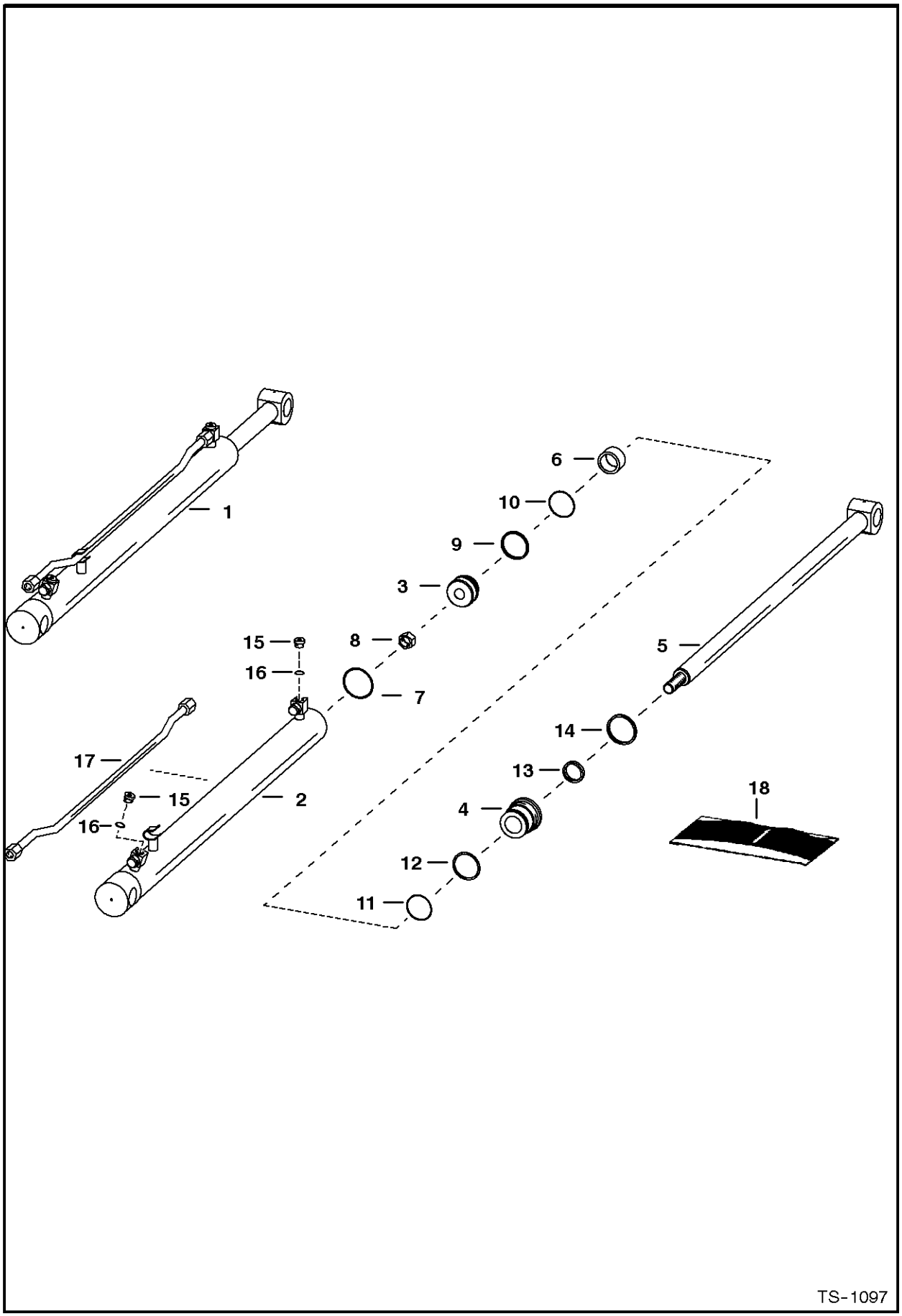

LIFT CYLINDER

Ref.N°	Part N°	Description	Remarks	Serial N°	Qty.
1	NAP	CYLINDER	Ref. LIFT CYLINDER(2) - LIFT CYLINDER(7) - W/.75' threaded fittings - Order 6812504 Cylinder - Was 6589259 [A]		2
1	6812504	CYLINDER			2
2	6589258	CASE			1
3	6661820	PISTON	'W/Ref. LIFT CYLINDER(9) & LIFT CYLINDER(10) - W/Non-Replaceable 'wear sleeves		1
4	6539236	HEAD			1
5	6589257	ROD	1.5' (38,1 mm) dia.		1
6	6539645	SPACER			1
7	58K-140	O-RING			1
8	92D-16	NUT			1
9	6519328	O-RING			1
10	54K-30126	RING			1
11	54K-60128	O-RING			1
12	73K-328	RING	back-up		1
13	6667326	SEAL	rod		1
14	6665086	SEAL	wiper		1
15	90KV-5	PLUG	W/Ref. LIFT CYLINDER(16)		2
16	95K-6	O-RING			2
17	6589308	TUBE			1
18	6803325	SEAL KIT	Ref. LIFT CYLINDER(7) - LIFT CYLINDER(14)		1

LIFT CYLINDER

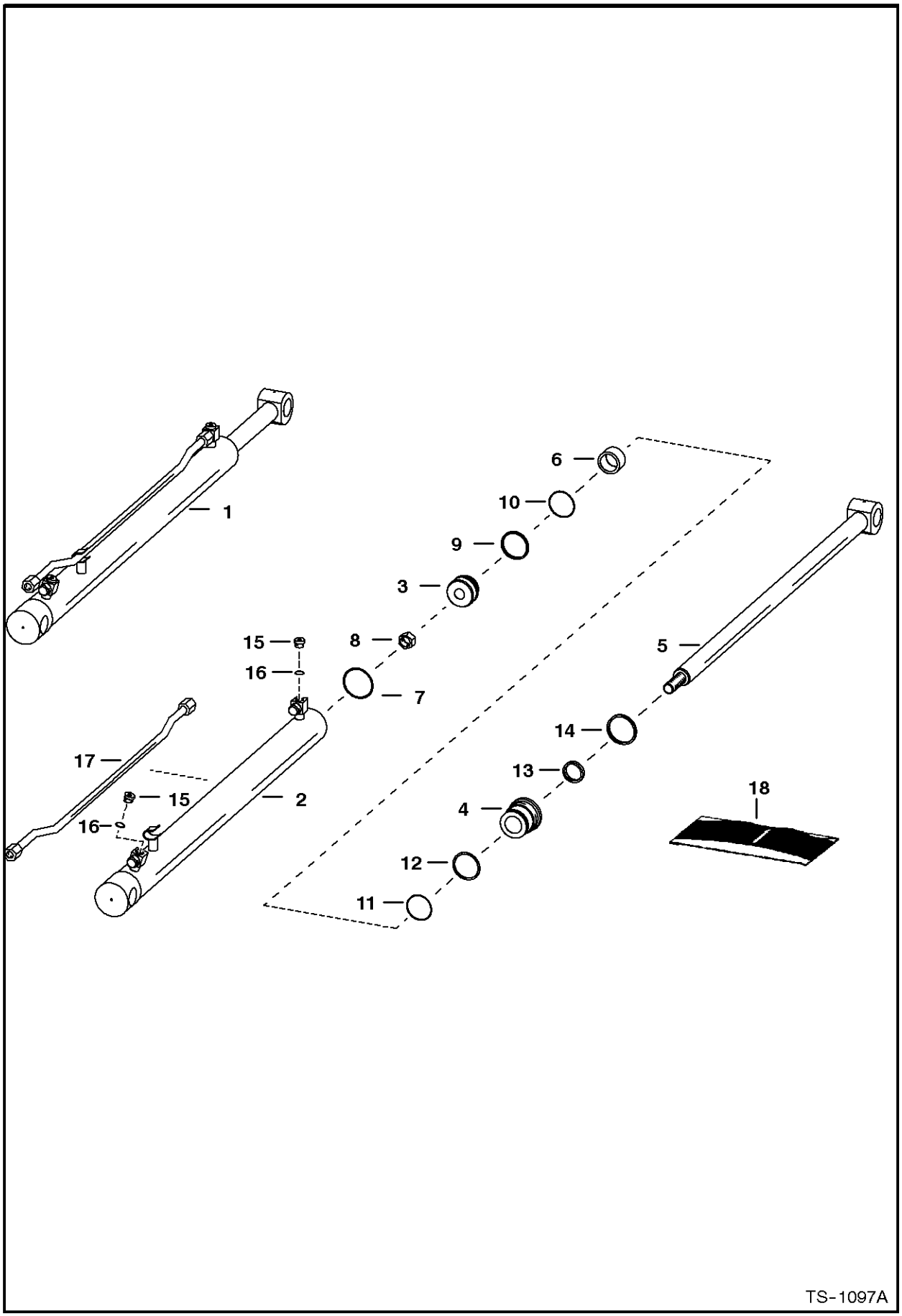

LIFT CYLINDER

Ref.N°	Part N°	Description	Remarks	Serial N°	Qty.
1	NAP	CYLINDER	Ref. LIFT CYLINDER(2) - LIFT CYLINDER(7) - W/.562 5' threaded fittings - Order 6811994 Cylinder - Was 6809207 [A]		2
1	6811994	CYLINDER			2
2	6809210	CASE			1
3	6677196	PISTON	'W/Ref. LIFT CYLINDER(9) & LIFT CYLINDER(10) - W/Non-Replaceable 'wear sleeves		1
4	6539236	HEAD			1
5	6809639	ROD	1.5' (38,1 mm) dia.		1
6	6539645	SPACER			1
7	58K-140	O-RING			1
8	92D-16	NUT			1
9	6519328	O-RING			1
10	54K-30126	RING			1
11	54K-60128	O-RING			1
12	73K-328	RING	back-up		1
13	6667326	SEAL	rod		1
14	6665086	SEAL	wiper		1
15	90KV-5	PLUG	W/Ref. LIFT CYLINDER(16)		2
16	95K-6	O-RING			2
17	6809203	TUBE			1
18	6806075	SEAL KIT	Ref. LIFT CYLINDER(7) - LIFT CYLINDER(14)		1

CONTROL PEDALS

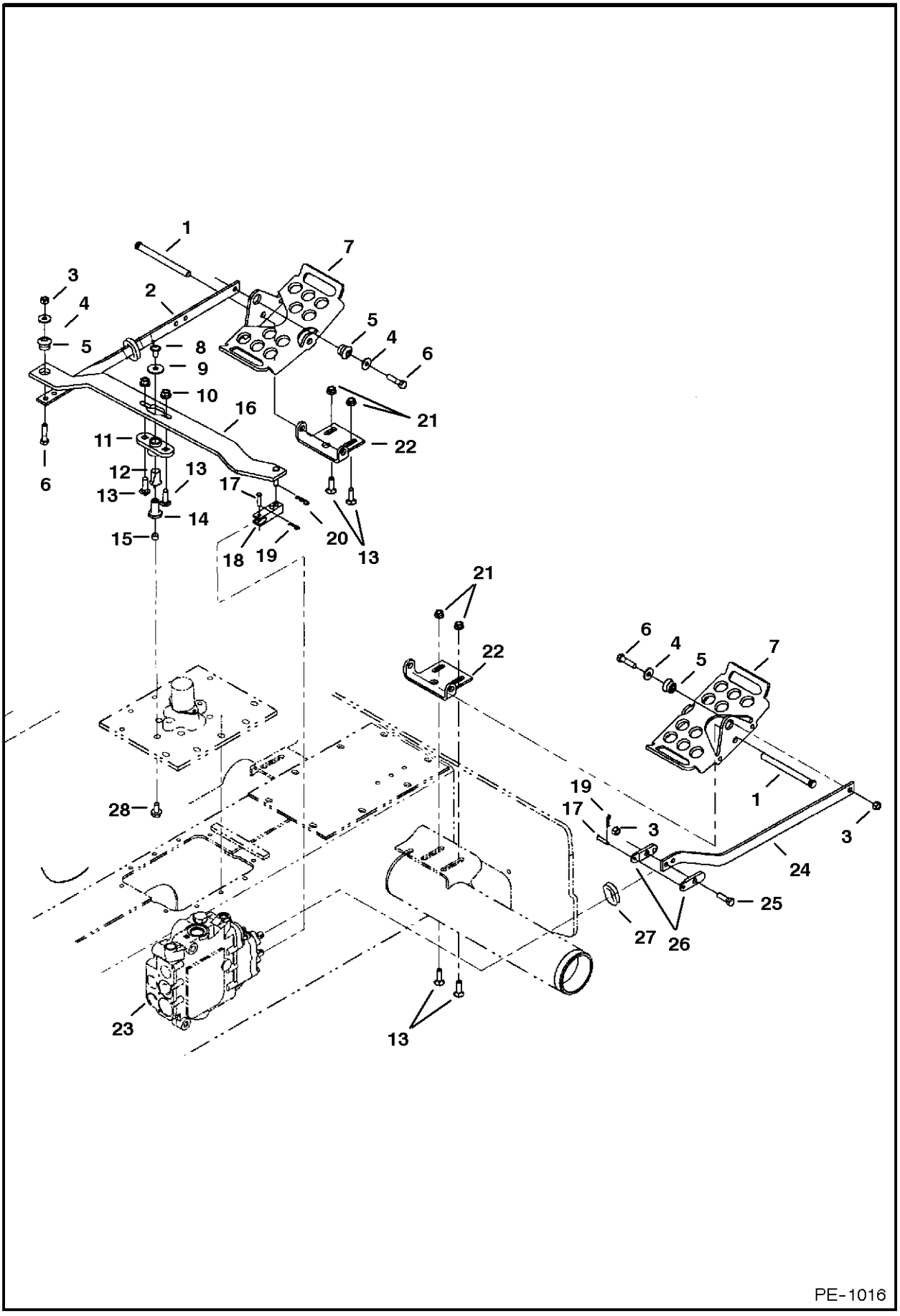

PE-1016

CONTROL PEDALS

Ref.N°	Part N°	Description	Remarks	Serial N°	Qty.
1	6564657	PIN			2
2	6576302	BAR			1
3	95D-6	NUT	Was 91D-6 [A]		5
4	6563914	WASHER			3
5	6665701	BUSHING			3
6	17C-624	BOLT			3
7	6726680	PEDAL	Was 6564656 [A]		2
8	6665839	BOLT			1
9	619021	WASHER			1
10	83D-6	NUT			2
11	6708043	BUSHING	flange		1
12	6512026	BUSHING			1
13	37C-620	BOLT			6
14	6706104	RETAINING NUT			1
15	6544654	BUSHING	spacer		1
16	6717822	LEVER			1
17	6564654	PIN			2
18	6706105	YOKE			1
19	6513495	COTTER PIN			2
20	1306637	PIN			1
21	57D-6	NUT			4
22	6726679	BRACKET	Was 6564658 [A]		2
23		VALVE	See Page HYDRAULIC CONTROL VALVE(1) & HYDRAULIC CONTROL VALVE(1)		1
24	6717820	BAR			1
25	17C-620	BOLT			1
26	6708009	LINK	2.69'(68,3 mm) long		2
27	6577961	GROMMET			2
28	35C-612	BOLT			1

HYDRAULIC CONTROL VALVE
(BICS Combo Valve)

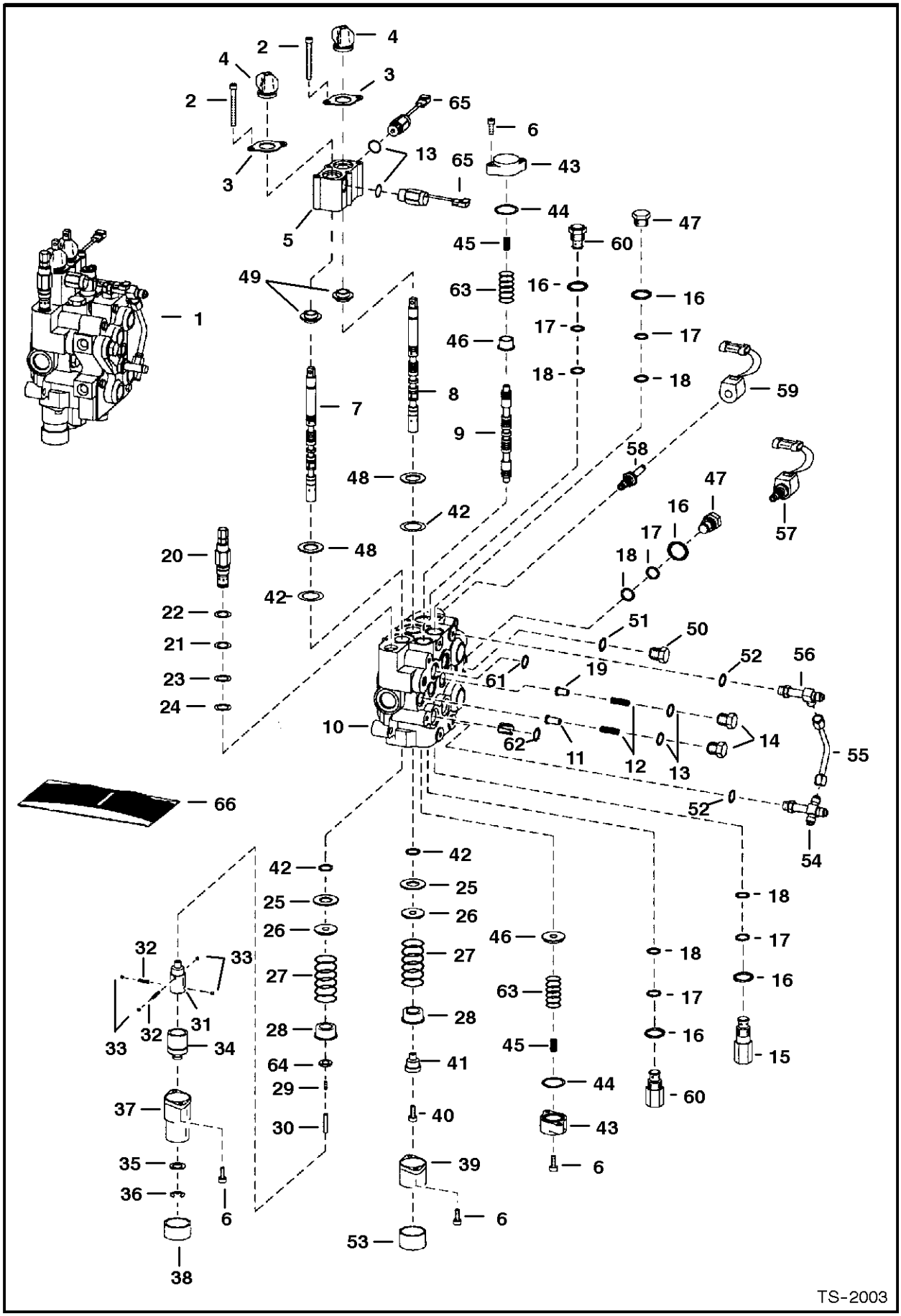

HYDRAULIC CONTROL VALVE

Ref.N°	Part N°	Description	Remarks	Serial N°	Qty.
1	NAP	VALVE	W/Fittings - Ref. HYDRAULIC CONTROL VALVE(2) - HYDRAULIC CONTROL VALVE(56), HYDRAULIC CONTROL VALVE(58) & HYDRAULIC CONTROL VALV		1
1	6628571	VALVE	BICS control - See Page BICS CONTROL VALVE(1)		1
2	29G-444	BOLT			4
3	6589564	RETAINER			2
4	6587763	BOOT			2
5	6812031	BLOCK	lock - Was 6805657 [A]		1
6	29G-416	SCREW			8
7	6674808	SPOOL	lift - # 1 or Red		1
7	6674809	SPOOL	lift - # 2 or Green		1
7	6674810	SPOOL	lift - # 3 or Black		1
8	6674814	SPOOL	tilt - # 1 or Red		1
8	6674815	SPOOL	tilt - # 2 or Green		1
8	6674816	SPOOL	tilt - # 3 or Black		1
9	6588074	SPOOL	auxiliary		3
10	NSS	BODY			1
11	6592115	SEAT	load check		2
12	6592117	SPRING			3
13	79K-8	O-RING			3
14	6592116	NUT	load check		3
15	6671632	VALVE	relief		1
16	79K-10	O-RING			2
17	80K-14	WASHER	back-up		5
18	58K-14	O-RING	back-up washer required		5
18	6677106	O-RING	back-up washer not required		5
19	6596569	SEAT	aux. load check		1
20	6676197	VALVE	main relief - W/Ref. HYDRAULIC CONTROL VALVE(21)-HYDRAULIC CONTROL VALVE(24) - Was 6661113 [A]		1
21	58K-17	O-RING			1
22	6665569	WASHER	back-up		1
23	25K-20016	O-RING			1
24	6665570	RING	glide		1
25	6595663	BUSHING			2
26	6587523	WASHER			2
27	6587580	SPRING			2
28	6592100	COLLAR			2
29	6596807	PLUG			1
30	6586918	SCREW			1
31	6587575	ADAPTER			1
32	6592107	SPRING			2
33	6592105	BALL			4
34	6531270	SLEEVE			1
35	6592098	WASHER			1
36	799119	RETAINER			1
37	6589226	BONNET	.625' flange		1
38	6660644	CAP			1
39	6587633	BONNET			1
40	30G-416	SCREW			1

HYDRAULIC CONTROL VALVE

Ref.N°	Part N°	Description	Remarks	Serial N°	Qty.
41	6592109	ADAPTER			1
42	6665846	SEAL			4
43	6588781	END CAP			2
44	58K-124	O-RING			2
45	6806007	SPRING			2
46	6595951	SLEEVE			2
47	6592720	PLUG	W/Ref. HYDRAULIC CONTROL VALVE(16)-HYDRAULIC CONTROL VALVE(18)		1
48	58K-127	O-RING			2
49	6805102	BUSHING			1
50	90KV-8	PLUG	W/Ref. HYDRAULIC CONTROL VALVE(51) - tapered boss face - socket head		1
51	95K-12	O-RING	tapered boss face - socket head - Was 99K-12 [B]		1
52	99K-6	O-RING			x
53	6662848	CAP			1
54	6805241	CROSS	W/Ref. HYDRAULIC CONTROL VALVE(52)		2
54	97K-6	O-RING	flared end		6
55	6577690	TUBE			1
56	6805696	TEE	W/Ref. HYDRAULIC CONTROL VALVE(52)		1
56	97K-6	O-RING	flared end		2
57	6665084	VALVE	solenoid - W/Ref. HYDRAULIC CONTROL VALVE(58) & HYDRAULIC CONTROL VALVE(59) - Was 6653395 [B,D]		2
57	6586459	SEAL KIT			x
58	6666616	STEM			2
58	79K-7	O-RING			2
59	6717706	COIL	10 volt -W/Nut -Was 6665759 [A]		2
60	6678574	VALVE	optional - port relief & anti-cav. W/Ref. HYDRAULIC CONTROL VALVE(16)-HYDRAULIC CONTROL VALVE(18) - 2500 PSI - use in tilt cylin		2
61	55K-204	O-RING	See Page BICS CONTROL VALVE(1)		1
62	55K-212	O-RING	See Page BICS CONTROL VALVE(1)		4
63	6596332	SPRING			2
64	54K-20002	O-RING			1
65	NAP	SOLENOID	W/Ref. HYDRAULIC CONTROL VALVE(13) - 3'(76,2 mm) wire - Order 6677383inD1}L Solenoid - Was 6674786 [A]		2
65	6677383	SOLENOID	W/Ref. HYDRAULIC CONTROL VALVE(13) - 5'(127 mm) wire		2
66	6806941	SEAL KIT	two spool - Ref. HYDRAULIC CONTROL VALVE(2), HYDRAULIC CONTROL VALVE(4) & HYDRAULIC CONTROL VALVE(42)		x
66	6632279	SEAL KIT	main relief - Ref. HYDRAULIC CONTROL VALVE(21)-HYDRAULIC CONTROL VALVE(24)		x
66	6809425	SEAL KIT	Ref. HYDRAULIC CONTROL VALVE(13) & HYDRAULIC CONTROL VALVE(16)-HYDRAULIC CONTROL VALVE(18) - Was 6586461 [A]		x
66	6809448	SEAL KIT	complete - Ref. HYDRAULIC CONTROL VALVE(2), HYDRAULIC CONTROL VALVE(4), HYDRAULIC CONTROL VALVE(13), HYDRAULIC CONTROL VALVE(16)		x

HYDRAULIC CONTROL VALVE
(BICS Combo Valve)

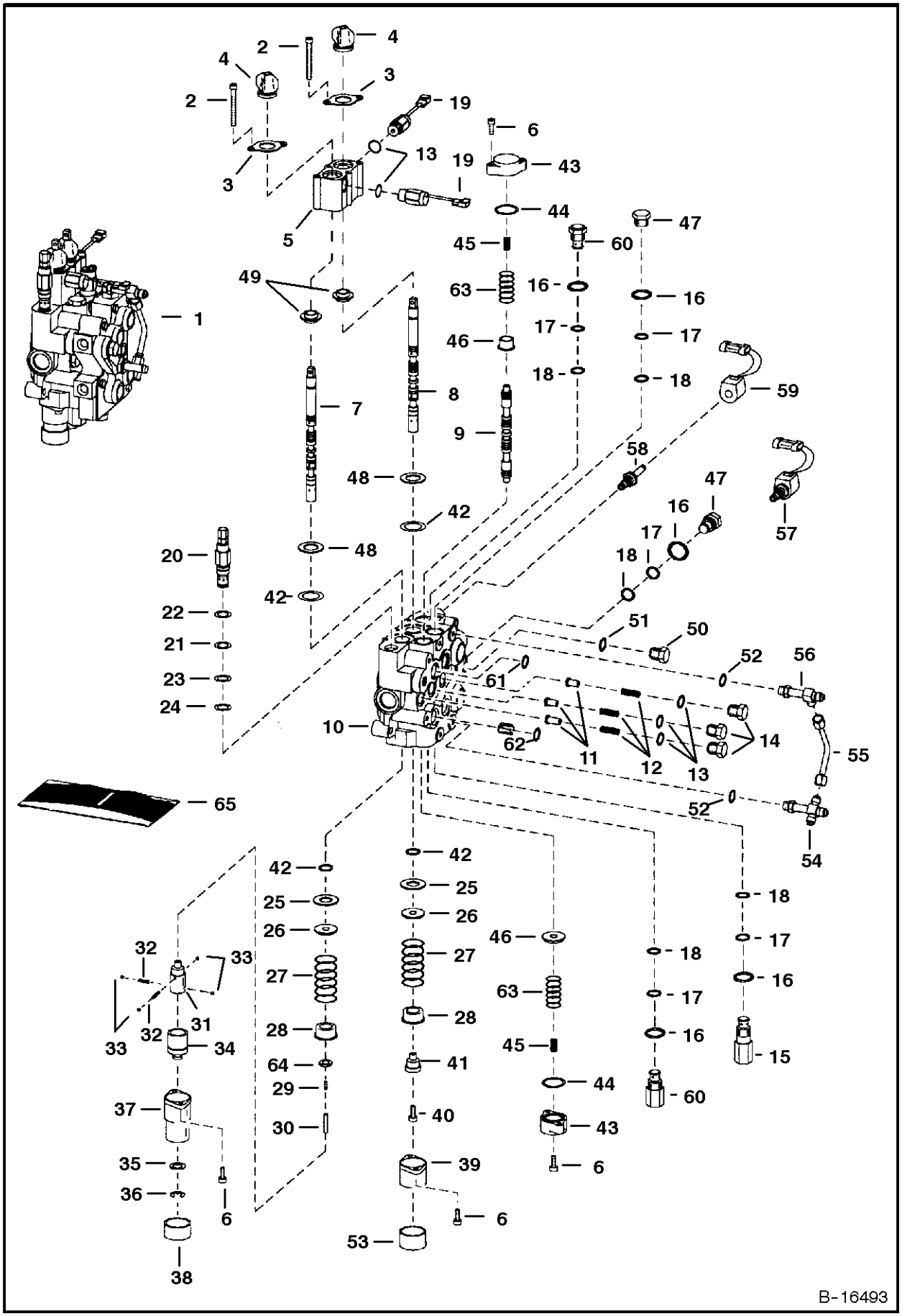

HYDRAULIC CONTROL VALVE

Ref.N°	Part N°	Description	Remarks	Serial N°	Qty.
1	NAP	VALVE	W/Fittings - Ref. HYDRAULIC CONTROL VALVE(2) - HYDRAULIC CONTROL VALVE(18), HYDRAULIC CONTROL VALVE(20) - HYDRAULIC CONTROL VALV		1
1	6628571	VALVE	BICS control - See Page BICS CONTROL VALVE(1)		1
2	29G-444	BOLT			4
3	6589564	RETAINER			2
4	6587763	BOOT			2
5	6812031	BLOCK	lock - Was 6805657 [A]		1
6	29G-416	SCREW			8
7	6674808	SPOOL	lift - # 1 or Red		1
7	6674809	SPOOL	lift - # 2 or Green		1
7	6674810	SPOOL	lift - # 3 or Black		1
8	6674814	SPOOL	tilt - # 1 or Red		1
8	6674815	SPOOL	tilt - # 2 or Green		1
8	6674816	SPOOL	tilt - # 3 or Black		1
9	6588074	SPOOL	auxiliary		3
10	NSS	BODY			1
11	6592115	SEAT	load check		3
12	6592117	SPRING			3
13	79K-8	O-RING			3
14	6592116	NUT	load check		3
15	6671632	VALVE	relief		1
16	79K-10	O-RING			2
17	80K-14	WASHER	back-up		5
18	58K-14	O-RING	back-up washer required		5
18	6677106	O-RING	back-up washer not required		5
19	6677383	SOLENOID	W/Ref. HYDRAULIC CONTROL VALVE(13) - 5'(127 mm) wire		2
20	6676197	VALVE	main relief - W/Ref. HYDRAULIC CONTROL VALVE(21)-HYDRAULIC CONTROL VALVE(24) - Was 6661113 [A]		1
21	58K-17	O-RING			1
22	6665569	WASHER	back-up		1
23	25K-20016	O-RING			1
24	6665570	RING	glide		1
25	6595663	BUSHING			2
26	6587523	WASHER			2
27	6587580	SPRING			2
28	6592100	COLLAR			2
29	6596807	PLUG			1
30	6586918	SCREW			1
31	6587575	ADAPTER			1
32	6592107	SPRING			2
33	6592105	BALL			4
34	6531270	SLEEVE			1
35	6592098	WASHER			1
36	799119	RETAINER			1
37	6589226	BONNET	.625' flange		1
38	6660644	CAP			1
39	6587633	BONNET			1
40	30G-416	SCREW			1

HYDRAULIC CONTROL VALVE

Ref.N°	Part N°	Description	Remarks	Serial N°	Qty.
41	6592109	ADAPTER			1
42	6665846	SEAL			4
43	6588781	END CAP			2
44	58K-124	O-RING			2
45	6806007	SPRING			2
46	6595951	SLEEVE			2
47	6592720	PLUG	W/Ref. HYDRAULIC CONTROL VALVE(16)-HYDRAULIC CONTROL VALVE(18)		1
48	58K-127	O-RING			2
49	6805102	BUSHING			1
50	90KV-8	PLUG	W/Ref. HYDRAULIC CONTROL VALVE(51) - tapered boss face - socket head		1
51	95K-12	O-RING	tapered boss face - socket head - Was 99K-12 [B]		1
52	99K-6	O-RING			x
53	6662848	CAP			1
54	6805241	CROSS	W/Ref. HYDRAULIC CONTROL VALVE(52)		2
54	97K-6	O-RING	flared end		6
55	6577690	TUBE			1
56	6805696	TEE	W/Ref. HYDRAULIC CONTROL VALVE(52)		1
56	97K-6	O-RING	flared end		2
57	6665084	VALVE	solenoid - W/Ref. HYDRAULIC CONTROL VALVE(58) & HYDRAULIC CONTROL VALVE(59) - Was 6653395 [B,D]		2
57	6586459	SEAL KIT			x
58	6666616	STEM			2
58	79K-10	O-RING			2
59	6717706	COIL	10 volt -W/Nut -Was 6665759 [A]		2
60	6678574	VALVE	optional - port relief & anti-cav. W/Ref. HYDRAULIC CONTROL VALVE(16)-HYDRAULIC CONTROL VALVE(18) - 2500 PSI - use in tilt cylin		2
61	55K-204	O-RING	See Page BICS CONTROL VALVE(1)		1
62	55K-212	O-RING	See Page BICS CONTROL VALVE(1)		4
63	6596332	SPRING			2
64	54K-20002	O-RING			1
65	6806941	SEAL KIT	two spool - Ref. HYDRAULIC CONTROL VALVE(2), HYDRAULIC CONTROL VALVE(4) & HYDRAULIC CONTROL VALVE(42)		x
65	6632279	SEAL KIT	main relief - Ref. HYDRAULIC CONTROL VALVE(21)-HYDRAULIC CONTROL VALVE(24)		x
65	6809425	SEAL KIT	Ref. HYDRAULIC CONTROL VALVE(13) & HYDRAULIC CONTROL VALVE(16)-HYDRAULIC CONTROL VALVE(18) - Was 6586461 [A]		x
65	6809448	SEAL KIT	complete - Ref. HYDRAULIC CONTROL VALVE(2), HYDRAULIC CONTROL VALVE(4), HYDRAULIC CONTROL VALVE(13), HYDRAULIC CONTROL VALVE(16)		x

* HYDRAULIC CONTROL VALVE
(BICS Combo Valve)

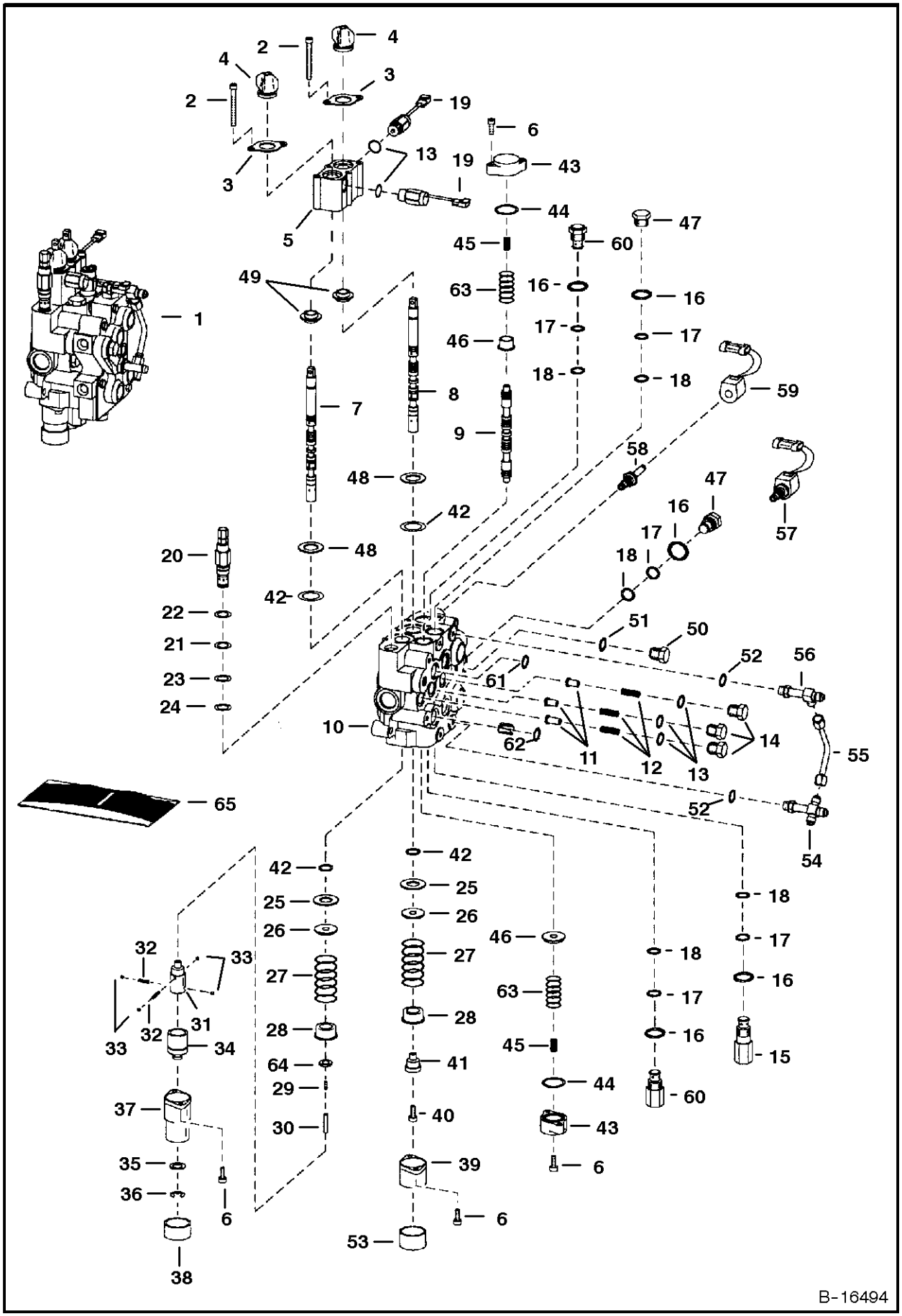

* HYDRAULIC CONTROL VALVE

Ref.N°	Part N°	Description	Remarks	Serial N°	Qty.
1	6812666	VALVE	W/Fittings - Ref. HYDRAULIC CONTROL VALVE(2) - HYDRAULIC CONTROL VALVE(18), HYDRAULIC CONTROL VALVE(20) - HYDRAULIC CONTROL VALV		1
1	6628571	VALVE	BICS control - See Page BICS CONTROL VALVE(1)		1
2	29G-444	BOLT			4
3	6589564	RETAINER			2
4	6587763	BOOT			2
5	6812031	BLOCK	lock		1
6	29G-416	SCREW			8
7	6674808	SPOOL	lift - # 1 or Red		1
7	6674809	SPOOL	lift - # 2 or Green		1
7	6674810	SPOOL	lift - # 3 or Black		1
8	6674814	SPOOL	tilt - # 1 or Red		1
8	6674815	SPOOL	tilt - # 2 or Green		1
8	6674816	SPOOL	tilt - # 3 or Black		1
9	6588074	SPOOL	auxiliary		3
10	NSS	BODY			1
11	6592115	SEAT	load check		3
12	6592117	SPRING			3
13	79K-8	O-RING			3
14	6592116	NUT	load check		3
15	6671632	VALVE	relief		1
16	79K-10	O-RING			2
17	80K-14	WASHER	back-up		5
18	58K-14	O-RING	back-up washer required		5
18	6677106	O-RING	back-up washer not required		5
19	6677383	SOLENOID	W/Ref. HYDRAULIC CONTROL VALVE(13) - 5'(127 mm) wire		2
20	6676197	VALVE	main relief - W/Ref. HYDRAULIC CONTROL VALVE(21)-HYDRAULIC CONTROL VALVE(24)		1
21	58K-17	O-RING			1
22	6665569	WASHER	back-up		1
23	25K-20016	O-RING			1
24	6665570	RING	glide		1
25	6595663	BUSHING			2
26	6587523	WASHER			2
27	6587580	SPRING			2
28	6592100	COLLAR			2
29	6596807	PLUG			1
30	6586918	SCREW			1
31	6587575	ADAPTER			1
32	6592107	SPRING			2
33	6592105	BALL			4
34	6531270	SLEEVE			1
35	6592098	WASHER			1
36	799119	RETAINER			1
37	6589226	BONNET	.625' flange		1
38	6660644	CAP			1
39	6587633	BONNET			1
40	30G-416	SCREW			1

* HYDRAULIC CONTROL VALVE

Ref.N°	Part N°	Description	Remarks	Serial N°	Qty.
41	6592109	ADAPTER			1
42	6665846	SEAL			4
43	6588781	END CAP			2
44	58K-124	O-RING			2
45	6806007	SPRING			2
46	6595951	SLEEVE			2
47	6592720	PLUG	W/Ref. HYDRAULIC CONTROL VALVE(16)-HYDRAULIC CONTROL VALVE(18)		1
48	58K-127	O-RING			2
49	6805102	BUSHING			1
50	90KV-8	PLUG	W/Ref. HYDRAULIC CONTROL VALVE(51) - tapered boss face - socket head		1
51	95K-12	O-RING	tapered boss face - socket head		1
52	99K-6	O-RING			x
53	6662848	CAP			1
54	6805241	CROSS	W/Ref. HYDRAULIC CONTROL VALVE(52)		2
54	97K-6	O-RING	flared end		6
55	6577690	TUBE			1
56	6805696	TEE	W/Ref. HYDRAULIC CONTROL VALVE(52)		1
56	97K-6	O-RING	flared end		2
57	6678893	SOLENOID	solenoid - W/Ref. HYDRAULIC CONTROL VALVE(58) & HYDRAULIC CONTROL VALVE(59)		2
57		SEAL KIT			x
58	6678892	STEM	W/screen		2
58	79K-10	O-RING			2
59	6678891	COIL	10 volt -W/Nut		2
60	6678574	VALVE	optional - port relief & anti-cav. W/Ref. HYDRAULIC CONTROL VALVE(16)-HYDRAULIC CONTROL VALVE(18) - 2500 PSI - use in tilt cylin		2
61	55K-204	O-RING	See Page BICS CONTROL VALVE(1)		1
62	55K-212	O-RING	See Page BICS CONTROL VALVE(1)		4
63	6596332	SPRING			2
64	54K-20002	O-RING			1
65	6806941	SEAL KIT	two spool - Ref. HYDRAULIC CONTROL VALVE(2), HYDRAULIC CONTROL VALVE(4) & HYDRAULIC CONTROL VALVE(42)		x
65	6632279	SEAL KIT	main relief - Ref. HYDRAULIC CONTROL VALVE(21)-HYDRAULIC CONTROL VALVE(24)		x
65	6809425	SEAL KIT	Ref. HYDRAULIC CONTROL VALVE(13) & HYDRAULIC CONTROL VALVE(16)-HYDRAULIC CONTROL VALVE(18)		x
65	6809448	SEAL KIT	complete - Ref. HYDRAULIC CONTROL VALVE(2), HYDRAULIC CONTROL VALVE(4), HYDRAULIC CONTROL VALVE(13), HYDRAULIC CONTROL VALVE(16)		x

* HYDRAULIC CONTROL VALVE
(Service Valve) (BICS Combo Valve)

NOTE: 6812927 Valve is minus all fittings, relief valves, anti-cav valves, solenoid coils and solenoid spools. Remove and use existing parts from old valve or order new parts as necessary.

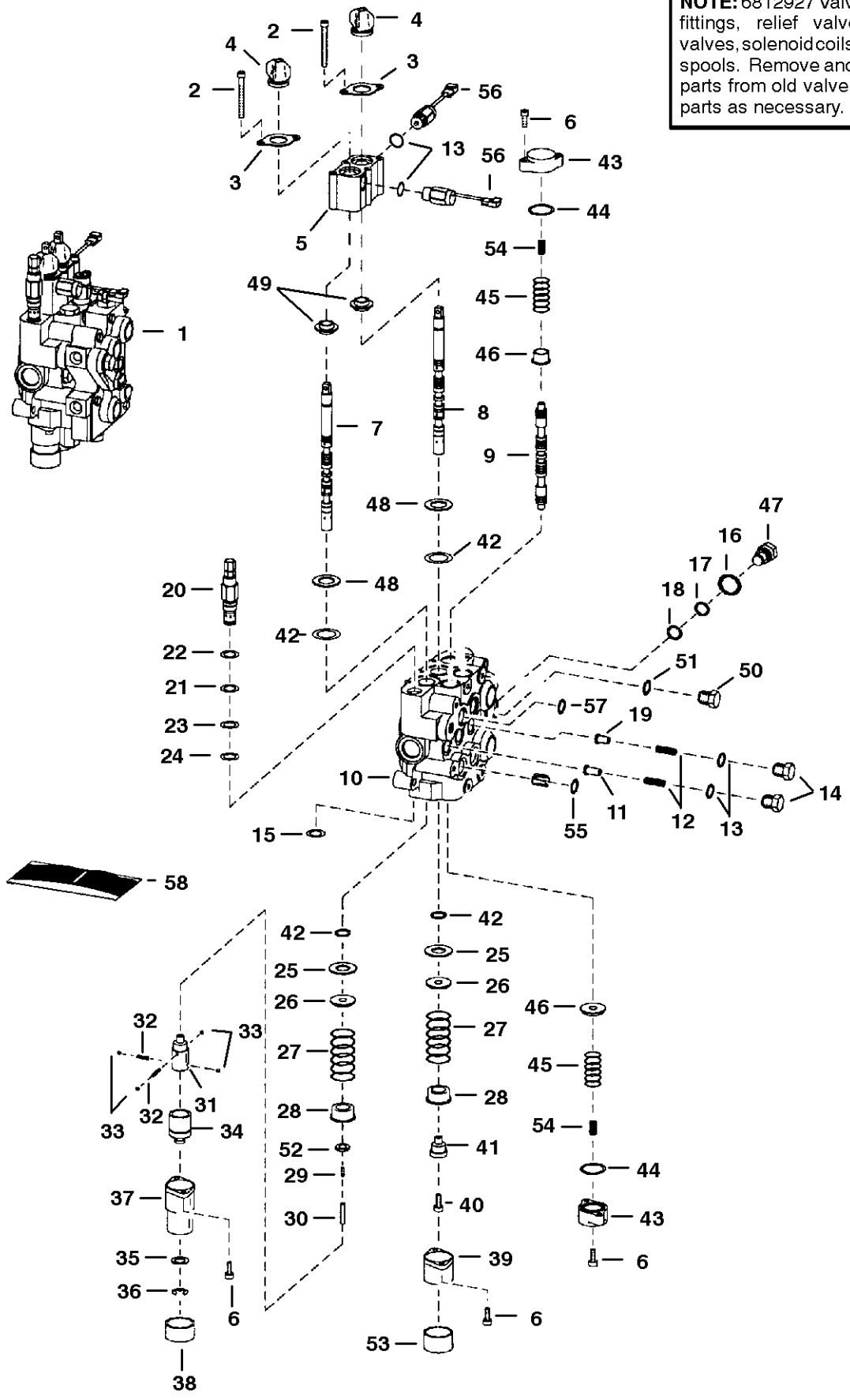

* HYDRAULIC CONTROL VALVE

Ref.N°	Part N°	Description	Remarks	Serial N°	Qty.
1	6812927	VALVE	service - SEE NOTE		1
1	NSS	BLOCK	BICS control - See Page BICS CONTROL VALVE(1)		1
2	29G-444	BOLT			4
3	6589564	RETAINER			2
4	6587763	BOOT			2
5	6812031	BLOCK			1
6	29G-416	SCREW			8
7	6674808	SPOOL	lift - # 1 or Red		1
7	6674809	SPOOL	lift - # 2 or Green		1
7	6674810	SPOOL	lift - # 3 or Black		1
8	6674814	SPOOL	tilt - # 1 or Red		1
8	6674815	SPOOL	tilt - # 2 or Green		1
8	6674816	SPOOL	tilt - # 3 or Black		1
9	6588074	SPOOL	auxiliary		3
10	NSS	BODY			1
11	6592115	SEAT	load check		3
12	6592117	SPRING			3
13	79K-8	O-RING			3
14	6592116	NUT	load check		3
15	6668791	ORIFICE			1
16	79K-10	O-RING			2
17	80K-14	WASHER	back-up		5
18	58K-14	O-RING			5
19	6596569	SEAT			1
20	6676199	RELIEF VALVE	main relief - W/Ref. * HYDRAULIC CONTROL VALVE(21)-* HYDRAULIC CONTROL VALVE(24)		1
21	58K-17	O-RING			1
22	6665569	WASHER	back-up		1
23	25K-20016	O-RING			1
24	6665570	RING	glide		1
25	6595663	BUSHING			2
26	6587523	WASHER			2
27	6587580	SPRING			2
28	6592100	COLLAR			2
29	6596807	PLUG			1
30	6586918	SCREW			1
31	6587575	ADAPTER			1
32	6592107	SPRING			2
33	6592105	BALL			4
34	6531270	SLEEVE			1
35	6592098	WASHER			1
36	799119	RETAINER			1
37	6589226	BONNET	.625' flange		1
38	6660644	CAP			1
39	6587633	BONNET			1
40	30G-416	SCREW			1
41	6592109	ADAPTER			1
42	6665846	SEAL			4
43	6588781	END CAP			2
44	58K-124	O-RING			2

* HYDRAULIC CONTROL VALVE

Ref.N°	Part N°	Description	Remarks	Serial N°	Qty.
45	6806007	SPRING			2
46	6595951	SLEEVE			2
47	6592720	PLUG	W/Ref. * HYDRAULIC CONTROL VALVE(16)-* HYDRAULIC CONTROL VALVE(18)		1
48	58K-127	O-RING			2
49	6805102	BUSHING			2
50	90KV-8	PLUG	W/Ref. * HYDRAULIC CONTROL VALVE(51) - socket head		1
51	95K-12	O-RING			1
52	54K-20002	O-RING			1
53	6662848	CAP			1
54	6596332	SPRING			2
55	55K-212	O-RING	See Page BICS CONTROL VALVE(1)		4
56	6677383	SOLENOID	spool lock - 5' (127 mm) wire		2
57	55K-204	O-RING	See Page BICS CONTROL VALVE(1)		1
58	6806941	SEAL KIT	two spool - Ref. * HYDRAULIC CONTROL VALVE(2), * HYDRAULIC CONTROL VALVE(4), * HYDRAULIC CONTROL VALVE(42), * HYDRAULIC CONTROL		x
58	6632279	SEAL KIT	main relief - Ref. * HYDRAULIC CONTROL VALVE(21)-* HYDRAULIC CONTROL VALVE(24)		x
58	6809425	SEAL KIT	Ref. * HYDRAULIC CONTROL VALVE(13) & * HYDRAULIC CONTROL VALVE(16)-* HYDRAULIC CONTROL VALVE(18)		x
58	6809448	SEAL KIT	complete - Ref. * HYDRAULIC CONTROL VALVE(4), * HYDRAULIC CONTROL VALVE(13), * HYDRAULIC CONTROL VALVE(16)-* HYDRAULIC CONTROL V		x

HYDRAULIC CONTROL VALVE
(Advanced Hand Controls)

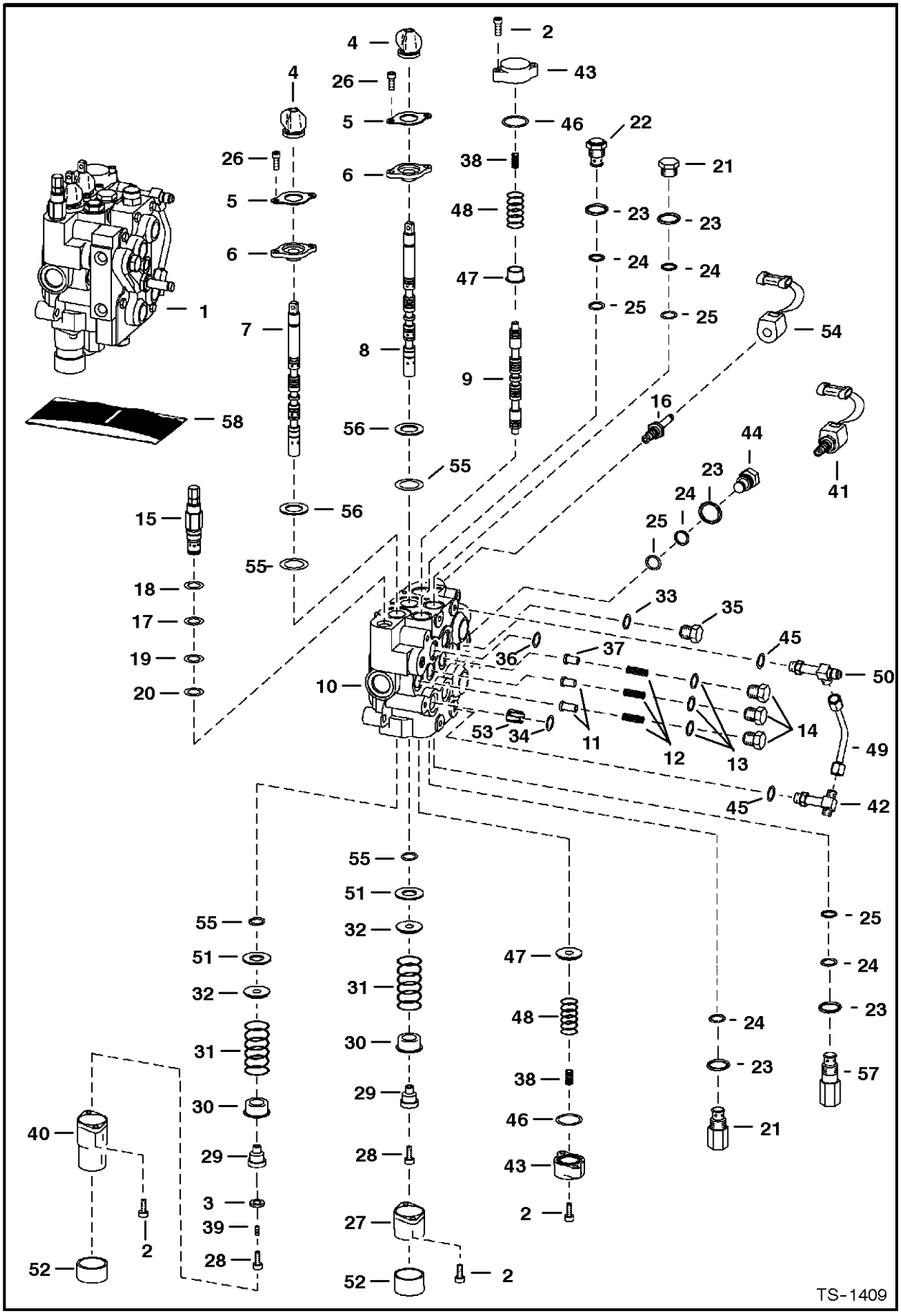

HYDRAULIC CONTROL VALVE

Ref.N°	Part N°	Description	Remarks	Serial N°	Qty.
1	NAP	VALVE	W/Fittings - Ref. HYDRAULIC CONTROL VALVE(2)-HYDRAULIC CONTROL VALVE(38), HYDRAULIC CONTROL VALVE(40)-HYDRAULIC CONTROL VALVE(53		1
1	6628571	VALVE	BICS control - See Page BICS CONTROL VALVE(1)		1
2	29G-416	SCREW			8
3	54K-20002	O-RING			1
4	6587763	BOOT			2
5	6589564	RETAINER			2
6	6589565	RETAINER	seal		2
7	6674297	SPOOL	lift - # 1 or Red		1
7	6674298	SPOOL	lift - # 2 or Green		1
7	6674299	SPOOL	lift - # 3 or Black		1
8	6674300	SPOOL	tilt - # 1 or Red		1
8	6674301	SPOOL	tilt - # 2 or Green		1
8	6674302	SPOOL	tilt - # 3 or Black		1
9	6588074	SPOOL	auxiliary		3
10	NSS	BODY			1
11	6592115	SEAT	load check		2
12	6592117	SPRING			3
13	79K-8	O-RING			3
14	6592116	NUT	load check		3
15	6676197	VALVE	main relief - W/Ref. HYDRAULIC CONTROL VALVE(17)-HYDRAULIC CONTROL VALVE(20) - Was 6661113 [A]		1
16	6666616	STEM			2
17	58K-17	O-RING			1
18	6665569	WASHER	back-up		1
19	25K-20016	O-RING			1
20	6665570	RING	glide		1
21	6678574	VALVE	port relief - 3400-3600 PSI - W/Ref. HYDRAULIC CONTROL VALVE(23)-HYDRAULIC CONTROL VALVE(25) - Was 6673184 [A]		2
22	6667549	VALVE	anti-cavity check -W/Ref. HYDRAULIC CONTROL VALVE(23)-HYDRAULIC CONTROL VALVE(25)		1
23	79K-10	O-RING			2
24	80K-14	WASHER	back-up		5
25	58K-14	O-RING	back-up washer required		5
25	6677106	O-RING	back-up washer not required		5
26	29G-412	SCREW			4
27	6587633	BONNET			1
28	30G-416	SCREW			2
29	6592109	ADAPTER			1
30	6592100	COLLAR			2
31	6587580	SPRING			2
32	6587523	WASHER			2
33	95K-12	O-RING	tapered boss face - socket head - Was 99K-12 [B]		x
34	55K-212	O-RING			4
35	90KV-8	PLUG	W/Ref. HYDRAULIC CONTROL VALVE(33) - tapered boss face - socket head		1
36	55K-204	O-RING			1
37	6596569	SEAT			1
38	6589045	SPRING	white		2

HYDRAULIC CONTROL VALVE

Ref.N°	Part N°	Description	Remarks	Serial N°	Qty.
39	6801167	PLUG	plastic		1
40	6803092	BONNET	.625' flange		1
41	6665084	VALVE	solenoid - W/Ref. HYDRAULIC CONTROL VALVE(16) & HYDRAULIC CONTROL VALVE(54) - Was 6653395 [B,D]		2
41	6586459	SEAL KIT			x
42	6805241	CROSS	W/Ref. HYDRAULIC CONTROL VALVE(45)		1
42	97K-6	O-RING	flared end		1
43	6588781	END CAP			2
44	6592720	PLUG	W/Ref. HYDRAULIC CONTROL VALVE(23)-HYDRAULIC CONTROL VALVE(25)		1
45	79K-6	O-RING			x
46	58K-124	O-RING			2
47	6595951	SLEEVE			2
48	6596332	SPRING			2
49	6577690	TUBE			1
50	6805243	TEE	W/Ref. HYDRAULIC CONTROL VALVE(45) - flat boss face - W/ flared end O-ring		1
50	97K-6	O-RING	flared end		1
51	6595663	BUSHING			2
52	6662848	CAP			1
53	6534630	RESTRICTOR	.134/.141		1
54	6717706	COIL	10 volt - W/Nut		2
55	6665846	SEAL			4
56	58K-127	O-RING			2
57	6671632	VALVE	port relief - 3400-3600 PSI - W/Ref. HYDRAULIC CONTROL VALVE(23)-HYDRAULIC CONTROL VALVE(25)		1
58	6803605	SEAL KIT	one spool - Ref. HYDRAULIC CONTROL VALVE(4), HYDRAULIC CONTROL VALVE(26) & HYDRAULIC CONTROL VALVE(55)		x
58	6632279	SEAL KIT	main relief - Ref. HYDRAULIC CONTROL VALVE(17)-HYDRAULIC CONTROL VALVE(20) - main relief		x
58	6809425	SEAL KIT	Ref. HYDRAULIC CONTROL VALVE(13) & HYDRAULIC CONTROL VALVE(23)-HYDRAULIC CONTROL VALVE(25) - Was 6586461 [A]		x
58	6809448	SEAL KIT	complete - Ref. HYDRAULIC CONTROL VALVE(4), HYDRAULIC CONTROL VALVE(13), HYDRAULIC CONTROL VALVE(17)-HYDRAULIC CONTROL VALVE(20)		x

HYDRAULIC CONTROL VALVE
(Advanced Control System)

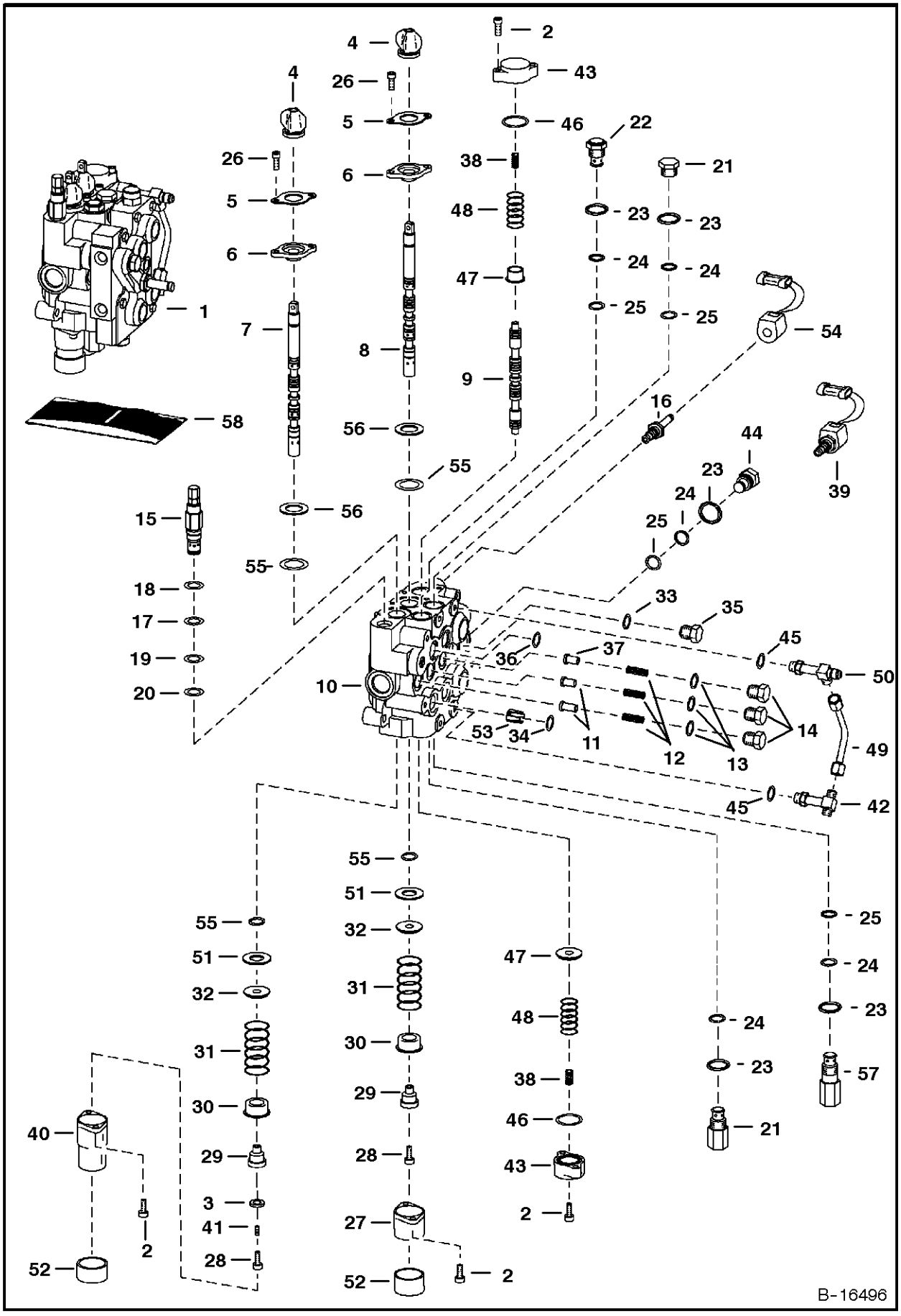

HYDRAULIC CONTROL VALVE

Ref.N°	Part N°	Description	Remarks	Serial N°	Qty.
1	NAP	VALVE	W/Fittings - Ref. HYDRAULIC CONTROL VALVE(2)-HYDRAULIC CONTROL VALVE(38), HYDRAULIC CONTROL VALVE(40)-HYDRAULIC CONTROL VALVE(53		1
1	6628571	VALVE	BICS control - See Page BICS CONTROL VALVE(1)		1
2	29G-416	SCREW			8
3	54K-20002	O-RING			1
4	6587763	BOOT			2
5	6589564	RETAINER			2
6	6589565	RETAINER	seal		2
7	6677660	SPOOL	lift - # 1 or Red		1
7	6677661	SPOOL	lift - # 2 or Green		1
8	6677662	SPOOL	tilt - # 1 or Red		1
8	6677663	SPOOL	tilt - # 2 or Green		1
9	6588074	SPOOL	auxiliary		3
10	NSS	BODY			1
11	6592115	SEAT	load check		2
12	6592117	SPRING			3
13	79K-8	O-RING			3
14	6592116	NUT	load check		3
15	6676197	VALVE	main relief - W/Ref. HYDRAULIC CONTROL VALVE(17)-HYDRAULIC CONTROL VALVE(20)		1
16	6666616	STEM			2
17	58K-17	O-RING			1
18	6665569	WASHER	back-up		1
19	25K-20016	O-RING			1
20	6665570	RING	glide		1
21	6678574	VALVE	port relief - 3400-3600 PSI - W/Ref. HYDRAULIC CONTROL VALVE(23)-HYDRAULIC CONTROL VALVE(25) - Was 6673184 [A]		2
22	6667549	VALVE	anti-cavity check - W/Ref. HYDRAULIC CONTROL VALVE(23)-HYDRAULIC CONTROL VALVE(25)		1
23	79K-10	O-RING			2
24	80K-14	WASHER	back-up		5
25	58K-14	O-RING	back-up washer required		5
25	6677106	O-RING	back-up washer not required		5
26	29G-412	SCREW			4
27	6587633	BONNET			1
28	30G-416	SCREW			2
29	6592109	ADAPTER			1
30	6592100	COLLAR			2
31	6587580	SPRING			2
32	6587523	WASHER			2
33	95K-12	O-RING	tapered boss face - socket head - Was 99K-12 [B]		x
34	55K-212	O-RING			4
35	90KV-8	PLUG	W/Ref. HYDRAULIC CONTROL VALVE(33) - tapered boss face - socket head		1
36	55K-204	O-RING			1
37	6596569	SEAT			1
38	6589045	SPRING	white		2
39	6665084	VALVE	solenoid - W/Ref. HYDRAULIC CONTROL VALVE(16) & HYDRAULIC CONTROL VALVE(54)		2
39	6586459	SEAL KIT			x

HYDRAULIC CONTROL VALVE

Ref.N°	Part N°	Description	Remarks	Serial N°	Qty.
40	6803092	BONNET	.625' flange		1
41	6801167	PLUG	plastic		1
42	6805241	CROSS	W/Ref. HYDRAULIC CONTROL VALVE(45)		1
42	97K-6	O-RING	flared end		1
43	6588781	END CAP			2
44	6592720	PLUG	W/Ref. HYDRAULIC CONTROL VALVE(23)-HYDRAULIC CONTROL VALVE(25)		1
45	79K-6	O-RING			x
46	58K-124	O-RING			2
47	6595951	SLEEVE			2
48	6596332	SPRING			2
49	6577690	TUBE			1
50	6805243	TEE	W/Ref. HYDRAULIC CONTROL VALVE(45) - flat boss face - W/ flared end O-ring		1
50	97K-6	O-RING	flared end		1
51	6595663	BUSHING			2
52	6662848	CAP			1
53	6534630	RESTRICTOR	.134/.141		1
54	6717706	COIL	10 volt - W/Nut		2
55	6665846	SEAL			4
56	58K-127	O-RING			2
57	6671632	VALVE	port relief - 3400-3600 PSI - W/Ref. HYDRAULIC CONTROL VALVE(23)-HYDRAULIC CONTROL VALVE(25)		1
58	6803605	SEAL KIT	one spool - Ref. HYDRAULIC CONTROL VALVE(4), HYDRAULIC CONTROL VALVE(26) & HYDRAULIC CONTROL VALVE(55)		x
58	6632279	SEAL KIT	main relief - Ref. HYDRAULIC CONTROL VALVE(17)-HYDRAULIC CONTROL VALVE(20) - main relief		x
58	6809425	SEAL KIT	Ref. HYDRAULIC CONTROL VALVE(13) & HYDRAULIC CONTROL VALVE(23)-HYDRAULIC CONTROL VALVE(25) - Was 6586461 [A]		x
58	6809448	SEAL KIT	complete - Ref. HYDRAULIC CONTROL VALVE(4), HYDRAULIC CONTROL VALVE(13), HYDRAULIC CONTROL VALVE(17)-HYDRAULIC CONTROL VALVE(20)		x

HYDRAULIC CONTROL VALVE
(Advanced Control System)

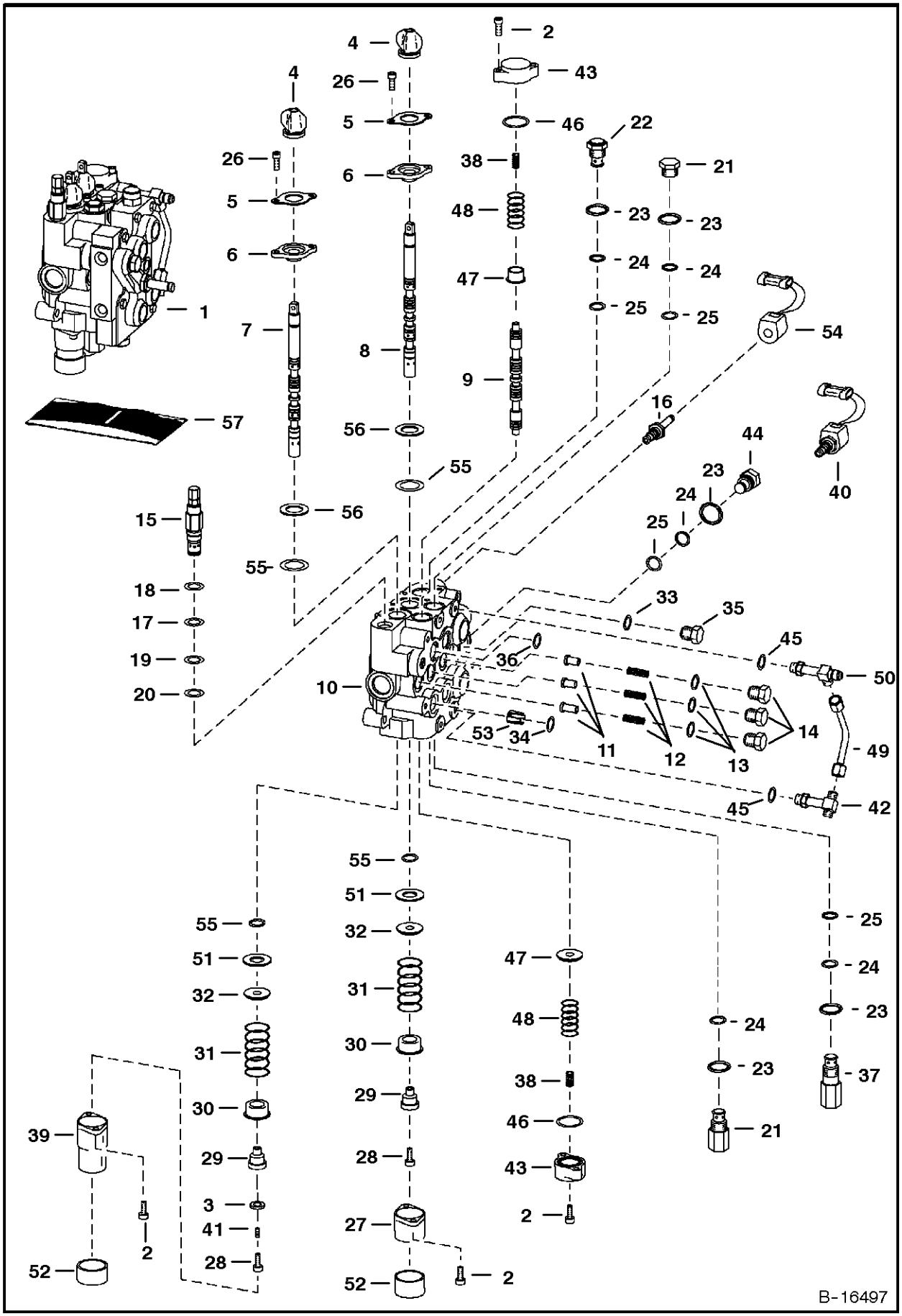

HYDRAULIC CONTROL VALVE

Ref.N°	Part N°	Description	Remarks	Serial N°	Qty.
1	NAP	VALVE	W/Fittings - Ref. HYDRAULIC CONTROL VALVE(2)-HYDRAULIC CONTROL VALVE(38), HYDRAULIC CONTROL VALVE(39)-HYDRAULIC CONTROL VALVE(53		1
1	6628571	VALVE	BICS control - See Page BICS CONTROL VALVE(1)		1
2	29G-416	SCREW			8
3	54K-20002	O-RING			1
4	6587763	BOOT			2
5	6589564	RETAINER			2
6	6589565	RETAINER	seal		2
7	6677660	SPOOL	lift - # 1 or Red		1
7	6677661	SPOOL	lift - # 2 or Green		1
8	6677662	SPOOL	tilt - # 1 or Red		1
8	6677663	SPOOL	tilt - # 2 or Green		1
9	6588074	SPOOL	auxiliary		3
10	NSS	BODY			1
11	6592115	SEAT	load check		3
12	6592117	SPRING			3
13	79K-8	O-RING			3
14	6592116	NUT	load check		3
15	6676197	VALVE	main relief - W/Ref. HYDRAULIC CONTROL VALVE(17)-HYDRAULIC CONTROL VALVE(20)		1
16	6666616	STEM			2
17	58K-17	O-RING			1
18	6665569	WASHER	back-up		1
19	25K-20016	O-RING			1
20	6665570	RING	glide		1
21	6673184	VALVE	port relief - 3400-3600 PSI - W/Ref. HYDRAULIC CONTROL VALVE(23)-HYDRAULIC CONTROL VALVE(25)		2
22	6667549	VALVE	anti-cavity check - W/Ref. HYDRAULIC CONTROL VALVE(23)-HYDRAULIC CONTROL VALVE(25)		1
23	79K-10	O-RING			2
24	80K-14	WASHER	back-up		5
25	58K-14	O-RING	back-up washer required		5
25	6677106	O-RING	back-up washer not required		5
26	29G-412	SCREW			4
27	6587633	BONNET			1
28	30G-416	SCREW			2
29	6592109	ADAPTER			1
30	6592100	COLLAR			2
31	6587580	SPRING			2
32	6587523	WASHER			2
33	95K-12	O-RING	'tapered boss face - socket head - Was 99K-12 [B]		x
34	55K-212	O-RING			4
35	90KV-8	PLUG	W/Ref. HYDRAULIC CONTROL VALVE(33) - tapered boss face - socket head		1
36	55K-204	O-RING			1
37	6671632	VALVE	port relief & anti-cavitation - 3400-3600 PSI - W/Ref. HYDRAULIC CONTROL VALVE(23)-HYDRAULIC CONTROL VALVE(25)		1
38	6589045	SPRING	white		2
39	6803092	BONNET	.625' flange		1

HYDRAULIC CONTROL VALVE

Ref.N°	Part N°	Description	Remarks	Serial N°	Qty.
40	6665084	VALVE	solenoid - W/Ref. HYDRAULIC CONTROL VALVE(16) & HYDRAULIC CONTROL VALVE(54)		2
40	6586459	SEAL KIT			x
41	6801167	PLUG	plastic		1
42	6805241	CROSS	W/Ref. HYDRAULIC CONTROL VALVE(45)		1
42	97K-6	O-RING	flared end		1
43	6588781	END CAP			2
44	6592720	PLUG	W/Ref. HYDRAULIC CONTROL VALVE(23)-HYDRAULIC CONTROL VALVE(25)		1
45	79K-6	O-RING			x
46	58K-124	O-RING			2
47	6595951	SLEEVE			2
48	6596332	SPRING			2
49	6577690	TUBE			1
50	6805243	TEE	W/Ref. HYDRAULIC CONTROL VALVE(45) - flat boss face - W/ flared end O-ring		1
50	97K-6	O-RING	flared end		1
51	6595663	BUSHING			2
52	6662848	CAP			1
53	6534630	RESTRICTOR	.134/.141		1
54	6717706	COIL	10 volt - W/Nut		2
55	6665846	SEAL			4
56	58K-127	O-RING			2
57	6803605	SEAL KIT	one spool - Ref. HYDRAULIC CONTROL VALVE(4), HYDRAULIC CONTROL VALVE(26) & HYDRAULIC CONTROL VALVE(55)		x
57	6632279	SEAL KIT	main relief - Ref. HYDRAULIC CONTROL VALVE(17)-HYDRAULIC CONTROL VALVE(20) - main relief		x
57	6809425	SEAL KIT	Ref. HYDRAULIC CONTROL VALVE(13) & HYDRAULIC CONTROL VALVE(23)-HYDRAULIC CONTROL VALVE(25) - Was 6586461 [A]		x
57	6809448	SEAL KIT	complete - Ref. HYDRAULIC CONTROL VALVE(4), HYDRAULIC CONTROL VALVE(13), HYDRAULIC CONTROL VALVE(17)-HYDRAULIC CONTROL VALVE(20)		x

* HYDRAULIC CONTROL VALVE
(Advanced Control System)

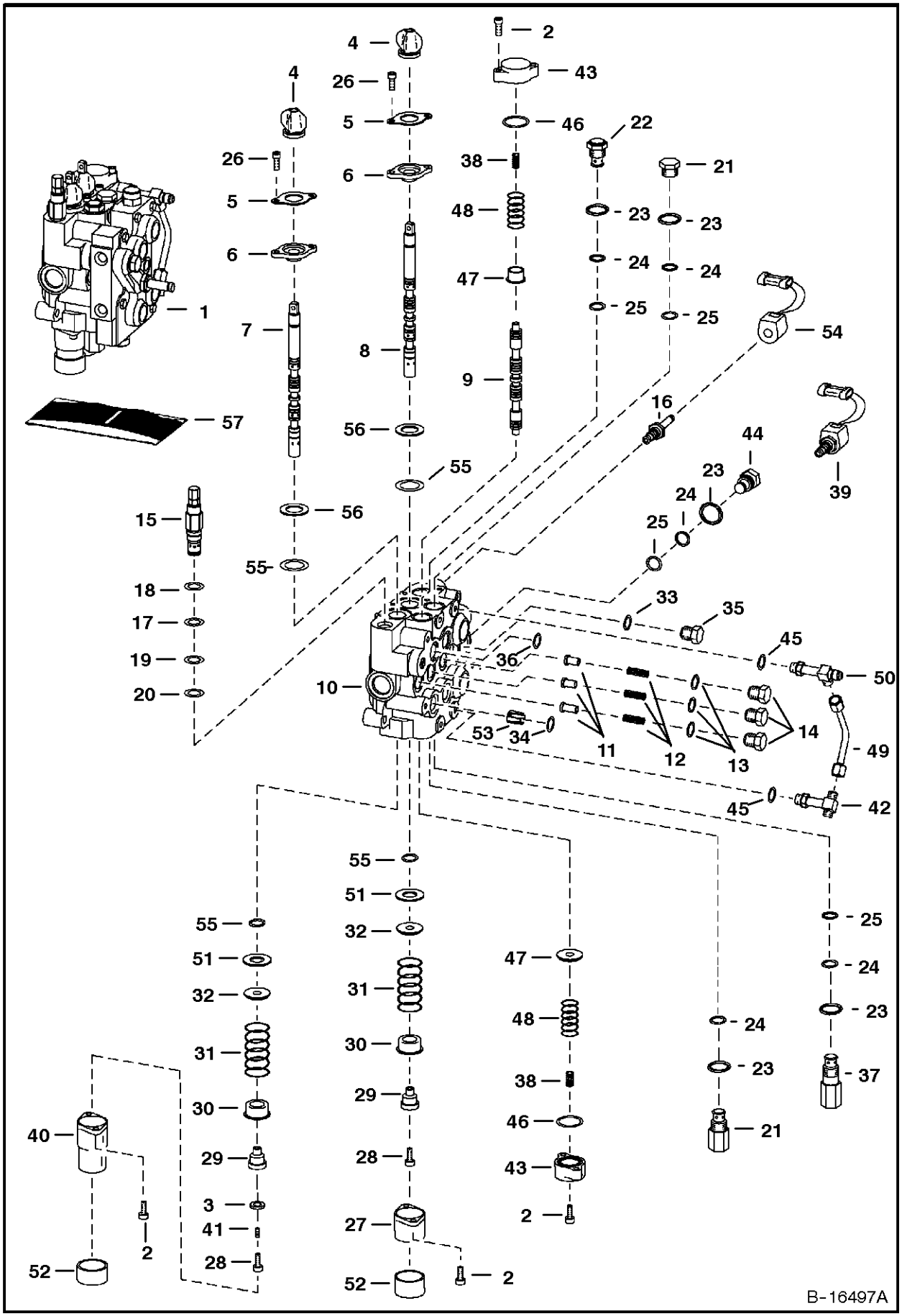

* HYDRAULIC CONTROL VALVE

Ref.N°	Part N°	Description	Remarks	Serial N°	Qty.
1	6812668	VALVE	W/Fittings - Ref. * HYDRAULIC CONTROL VALVE(2)-* HYDRAULIC CONTROL VALVE(38), * HYDRAULIC CONTROL VALVE(40)-* HYDRAULIC CONTROL		1
1	6628571	VALVE	BICS control - See Page BICS CONTROL VALVE(1)		1
2	29G-416	SCREW			8
3	54K-20002	O-RING			1
4	6587763	BOOT			2
5	6589564	RETAINER			2
6	6589565	RETAINER	seal		2
7	6677660	SPOOL	lift - # 1 or Red		1
7	6677661	SPOOL	lift - # 2 or Green		1
8	6677662	SPOOL	tilt - # 1 or Red		1
8	6677663	SPOOL	tilt - # 2 or Green		1
9	6588074	SPOOL	auxiliary		3
10	NSS	BODY			1
11	6592115	SEAT	load check		3
12	6592117	SPRING			3
13	79K-8	O-RING			3
14	6592116	NUT	load check		3
15	6676197	VALVE	main relief - W/Ref. * HYDRAULIC CONTROL VALVE(17)-* HYDRAULIC CONTROL VALVE(20)		1
16	6678892	STEM	W/screen		2
17	58K-17	O-RING			1
18	6665569	WASHER	back-up		1
19	25K-20016	O-RING			1
20	6665570	RING	glide		1
21	6678574	VALVE	port relief - 3400-3600 PSI - W/Ref. * HYDRAULIC CONTROL VALVE(23)-* HYDRAULIC CONTROL VALVE(25)		2
22	6667549	VALVE	anti-cavity check - W/Ref. * HYDRAULIC CONTROL VALVE(23)-* HYDRAULIC CONTROL VALVE(25)		1
23	79K-10	O-RING			2
24	80K-14	WASHER	back-up		5
25	58K-14	O-RING	back-up washer required		5
25	6677106	O-RING	back-up washer not required		5
26	29G-412	SCREW			4
27	6587633	BONNET			1
28	30G-416	SCREW			2
29	6592109	ADAPTER			1
30	6592100	COLLAR			2
31	6587580	SPRING			2
32	6587523	WASHER			2
33	95K-12	O-RING	'tapered boss face - socket head		x
34	55K-212	O-RING			4
35	90KV-8	PLUG	W/Ref. * HYDRAULIC CONTROL VALVE(33) - tapered boss face - socket head		1
36	55K-204	O-RING			1
37	6671632	VALVE	port relief & anti-cavitation - 3400-3600 PSI - W/Ref. * HYDRAULIC CONTROL VALVE(23)-* HYDRAULIC CONTROL VALVE(25)		1
38	6589045	SPRING	white		2
39	6678893	SOLENOID	solenoid - W/Ref. * HYDRAULIC CONTROL VALVE(16) & * HYDRAULIC CONTROL VALVE(54)		2

* HYDRAULIC CONTROL VALVE

Ref.N°	Part N°	Description	Remarks	Serial N°	Qty.
39	6586459	SEAL KIT			x
40	6803092	BONNET	.625' flange		1
41	6801167	PLUG	plastic		1
42	6805241	CROSS	W/Ref. * HYDRAULIC CONTROL VALVE(45)		1
42	97K-6	O-RING	flared end		1
43	6588781	END CAP			2
44	6592720	PLUG	W/Ref. HYDRAULIC CONTROL VALVE(23)-HYDRAULIC CONTROL VALVE(25)		1
45	79K-6	O-RING			x
46	58K-124	O-RING			2
47	6595951	SLEEVE			2
48	6596332	SPRING			2
49	6577690	TUBE			1
50	6805243	TEE	W/Ref. * HYDRAULIC CONTROL VALVE(45) - flat boss face - W/ flared end O-ring		1
50	97K-6	O-RING	flared end		1
51	6595663	BUSHING			2
52	6662848	CAP			1
53	6534630	RESTRICTOR	.134/.141		1
54	6678891	COIL	10 volt - W/Nut		2
55	6665846	SEAL			4
56	58K-127	O-RING			2
57	6803605	SEAL KIT	one spool - Ref. * HYDRAULIC CONTROL VALVE(4), * HYDRAULIC CONTROL VALVE(26) & * HYDRAULIC CONTROL VALVE(55)		x
57	6632279	SEAL KIT	main relief - Ref. * HYDRAULIC CONTROL VALVE(17)-* HYDRAULIC CONTROL VALVE(20) - main relief		x
57	6809425	SEAL KIT	Ref. * HYDRAULIC CONTROL VALVE(13) & * HYDRAULIC CONTROL VALVE(23)-* HYDRAULIC CONTROL VALVE(25)		x
57	6809448	SEAL KIT	complete - Ref. * HYDRAULIC CONTROL VALVE(4), * HYDRAULIC CONTROL VALVE(13), * HYDRAULIC CONTROL VALVE(17)-* HYDRAULIC CONTROL V		x

HYDRAULIC CONTROL VALVE
(Service Valve) (ACS)

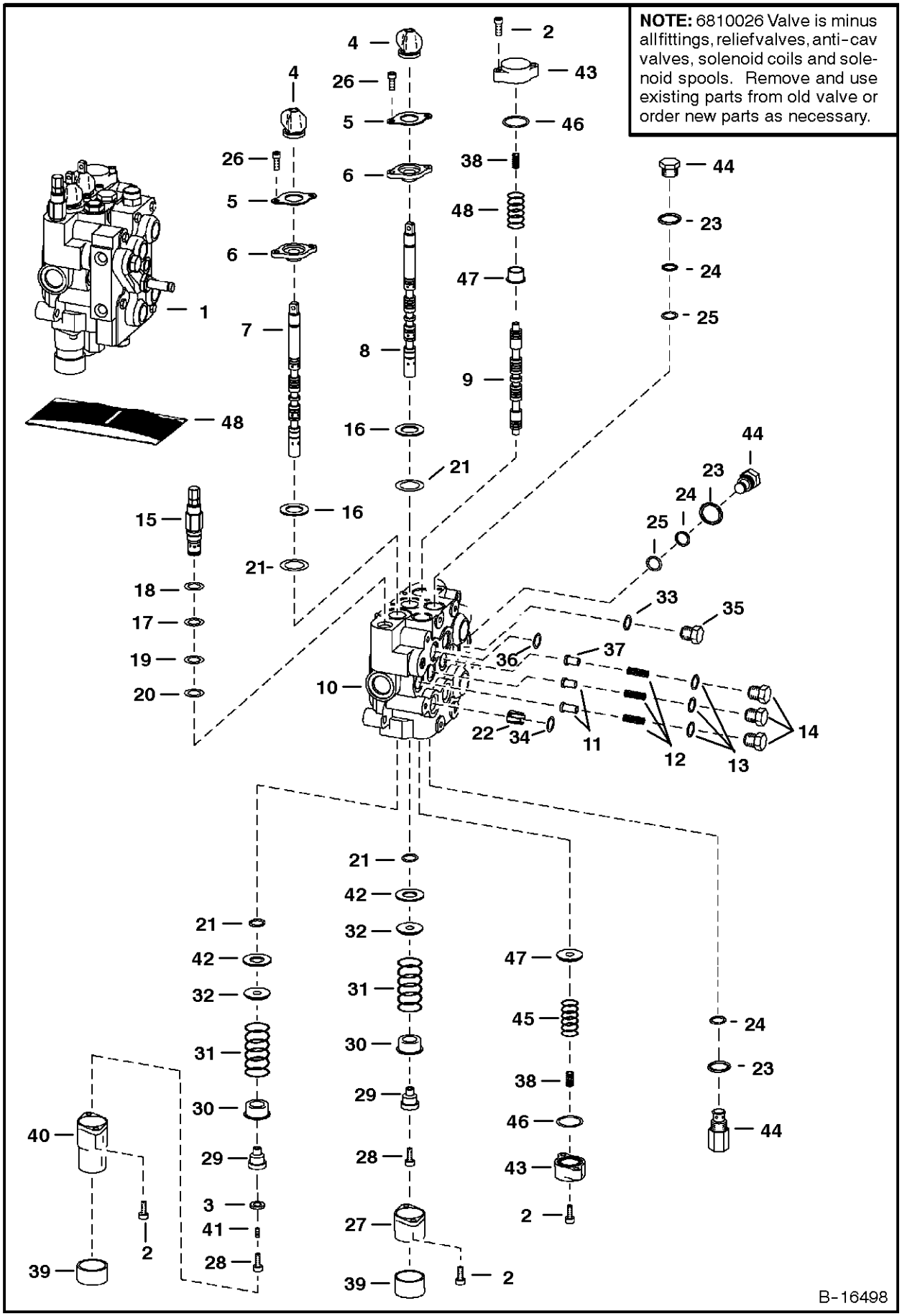

HYDRAULIC CONTROL VALVE

Ref.N°	Part N°	Description	Remarks	Serial N°	Qty.
1	6810026	VALVE	SEE NOTE		1
1	6628571	VALVE	BICS control - See Page BICS CONTROL VALVE(1)		1
2	29G-416	SCREW			8
3	54K-20002	O-RING			1
4	6587763	BOOT			2
5	6589564	RETAINER			2
6	6589565	RETAINER	seal		2
7	6677660	SPOOL	lift - # 1 or Red		1
7	6677661	SPOOL	lift - # 2 or Green		1
8	6677662	SPOOL	tilt - # 1 or Red		1
8	6677663	SPOOL	tilt - # 2 or Green		1
9	6588074	SPOOL	auxiliary		3
10	NSS	BODY			1
11	6592115	SEAT	load check		2
12	6592117	SPRING			3
13	79K-8	O-RING			3
14	6592116	NUT	load check		3
15	6676196	VALVE	main relief - W/Ref. HYDRAULIC CONTROL VALVE(17)-HYDRAULIC CONTROL VALVE(20)		1
16	58K-127	O-RING			2
17	58K-17	O-RING			1
18	6665569	WASHER	back-up		1
19	25K-20016	O-RING			1
20	6665570	RING	glide		1
21	6665846	SEAL			4
22	6534630	RESTRICTOR	.134/.141		1
23	79K-10	O-RING			2
24	80K-14	WASHER	back-up		5
25	58K-14	O-RING	back-up washer required		5
25	6677106	O-RING	back-up washer not required		5
26	29G-412	SCREW			4
27	6587633	BONNET			1
28	30G-416	SCREW			2
29	6592109	ADAPTER			1
30	6592100	COLLAR			2
31	6587580	SPRING			2
32	6587523	WASHER			2
33	95K-12	O-RING	tapered boss face - socket head		x
34	55K-212	O-RING			4
35	90KV-8	PLUG	W/Ref. HYDRAULIC CONTROL VALVE(33) - tapered boss face - socket head		1
36	55K-204	O-RING			1
37	6596569	SEAT			1
38	6589045	SPRING	white		2
39	6662848	CAP			1
40	6803092	BONNET	.625' flange		1
41	6801167	PLUG	plastic		1
42	6595663	BUSHING			2
43	6588781	END CAP			2
44	6592720	PLUG	W/Ref. HYDRAULIC CONTROL VALVE(23)-HYDRAULIC CONTROL VALVE(25)		5

HYDRAULIC CONTROL VALVE

Ref.N°	Part N°	Description	Remarks	Serial N°	Qty.
45	6596332	SPRING			2
46	58K-124	O-RING			2
47	6595951	SLEEVE			2
48	6803605	SEAL KIT	one spool - Ref. HYDRAULIC CONTROL VALVE(4), HYDRAULIC CONTROL VALVE(21) & HYDRAULIC CONTROL VALVE(26)		x
48	6632279	SEAL KIT	main relief - Ref. HYDRAULIC CONTROL VALVE(17)-HYDRAULIC CONTROL VALVE(20) - main relief		x
48	6809425	SEAL KIT	Ref. HYDRAULIC CONTROL VALVE(13) & HYDRAULIC CONTROL VALVE(23)-HYDRAULIC CONTROL VALVE(25)		x
48	6809448	SEAL KIT	complete - Ref. HYDRAULIC CONTROL VALVE(4), HYDRAULIC CONTROL VALVE(13), HYDRAULIC CONTROL VALVE(17)-HYDRAULIC CONTROL VALVE(20)		x

BICS CONTROL VALVE

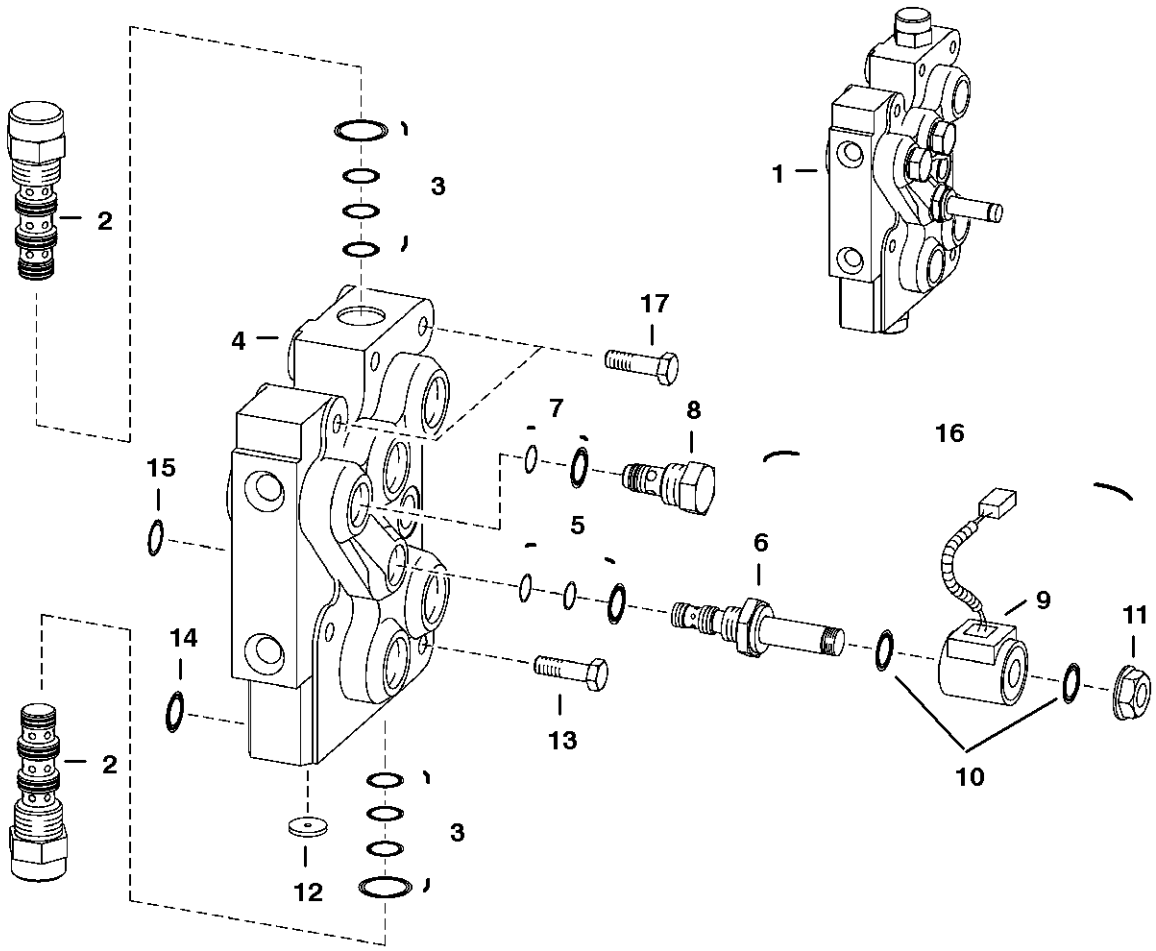

BICS CONTROL VALVE

Ref.N°	Part N°	Description	Remarks	Serial N°	Qty.
1	6628571	VALVE	Ref. BICS CONTROL VALVE(2) - BICS CONTROL VALVE(8)		1
2	6668765	VALVE	pilot operated		2
3	6669734	SEAL KIT			x
4	NSS	BODY			1
5	6669732	SEAL KIT			x
6	6667687	STEM			1
7	6669733	SEAL KIT			x
8	6669057	CHECK VALVE	filter		1
9	6671025	COIL	W/ diode		1
10	54K-20028	O-RING			2
11	6668820	NUT			1
12	6668791	ORIFICE			1
13	43C-532	BOLT			4
14	55K-212	O-RING			4
15	55K-204	O-RING			1
16	6672471	SOLENOID	solenoid - W/diode - W/Ref. BICS CONTROL VALVE(6) & BICS CONTROL VALVE(9)-BICS CONTROL VALVE(11)		1
17	43C-524	BOLT			2

MANUAL LIFT RELEASE VALVE

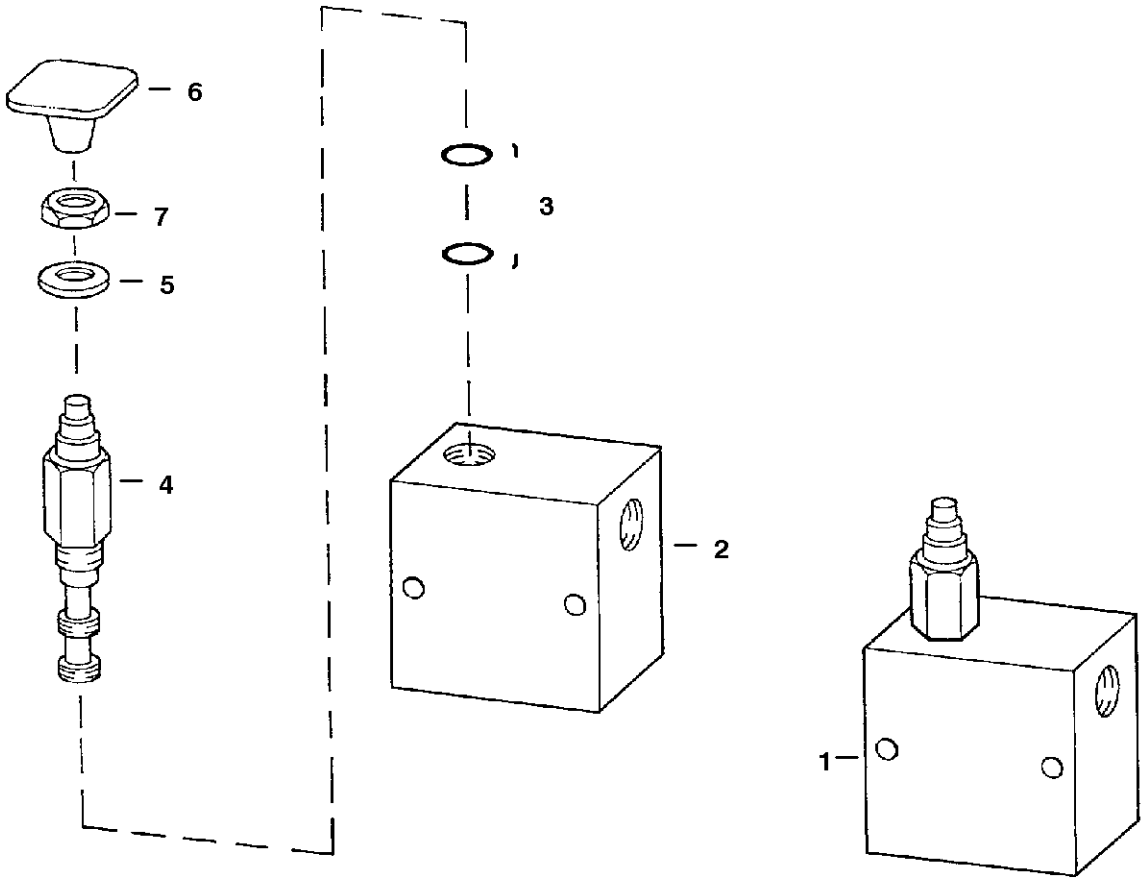

MANUAL LIFT RELEASE VALVE

Ref.N°	Part N°	Description	Remarks	Serial N°	Qty.
1	6667844	VALVE	Ref. MANUAL LIFT RELEASE VALVE(2) - MANUAL LIFT RELEASE VALVE(4)		1
2	NSS	BLOCK			1
3	6669087	SEAL KIT			1
4	6669085	VALVE			1
5	6707101	WASHER	neoprene		1
6	6668913	KNOB	red square		1
7	7D-4	NUT			1

PRESSURE RELEASE VALVE
(Front Auxiliary)

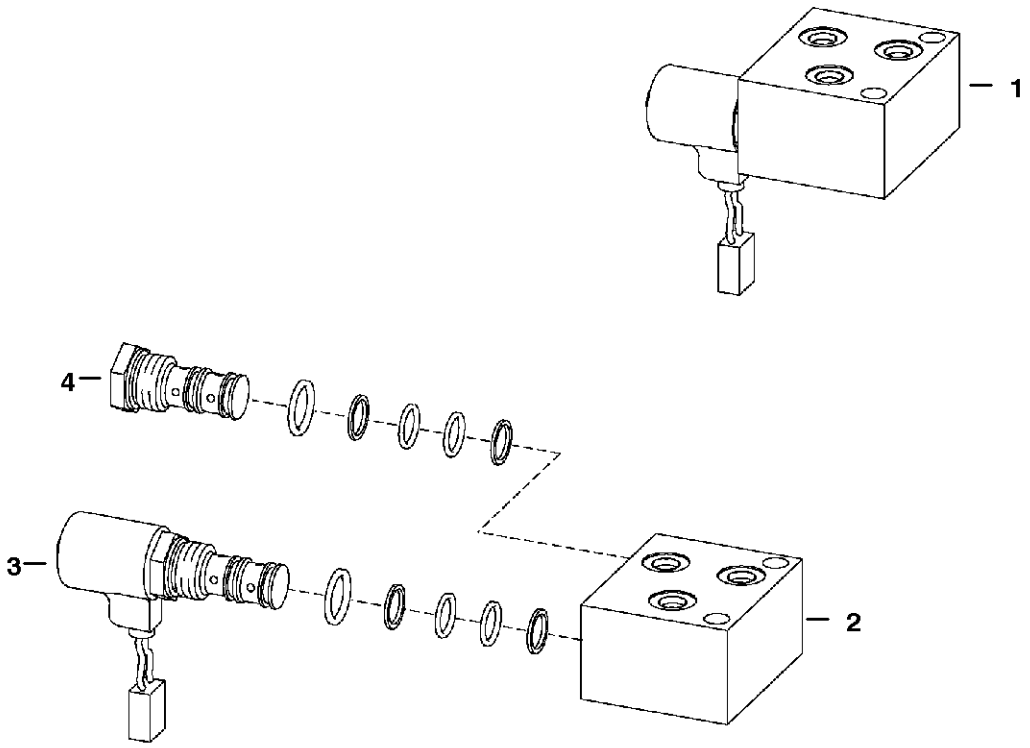

PE-1017

PRESSURE RELEASE VALVE

Ref.N°	Part N°	Description	Remarks	Serial N°	Qty.
1	NAP	VALVE	W/.4375' threaded ports - Order 6678150 Valve & (3) of 15KV-5inD1}p Adapter - Was 6674372 [A]		1
1	6678150	VALVE	W/.5625' threaded ports		1
2	NSS	BLOCK			1
3	NSS	VALVE	solenoid		1
3	6675285	STEM			1
3	6676564	SEAL KIT			1
3	6672962	COIL			1
3	6676566	NUT			1
4	6675284	SHUTTLE VALVE			1
4	6657409	SEAL KIT			1

BUCKET POSITIONING VALVE

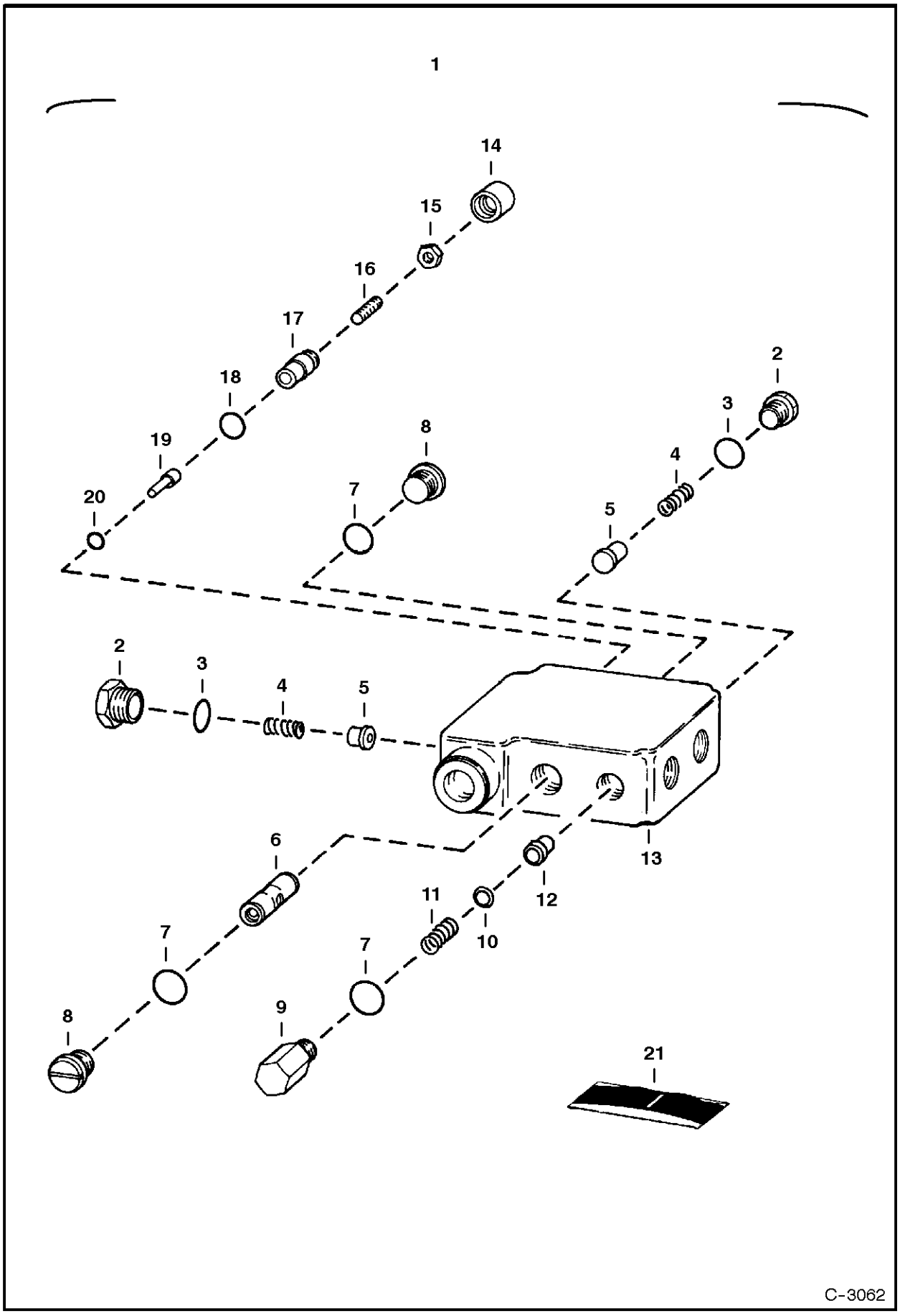

BUCKET POSITIONING VALVE

Ref.N°	Part N°	Description	Remarks	Serial N°	Qty.
1	6666341	VALVE	Ref. BUCKET POSITIONING VALVE(2)-BUCKET POSITIONING VALVE(20)		1
2	6647784	PLUG	W/Ref. BUCKET POSITIONING VALVE(3)		2
3	79K-8	O-RING			2
4	6647785	SPRING			2
5	6647783	LOAD CHECK			2
6	NSS	SPOOL			1
7	58K-116	O-RING	Was 80K-116 [A]		3
8	6647780	PLUG	W/Ref. BUCKET POSITIONING VALVE(7)		2
9	6667176	PLUG	W/Ref. BUCKET POSITIONING VALVE(7)		1
10	6667680	SNAP RING			1
11	6648294	SPRING			1
12	NSS	SPOOL			1
13	NSS	BODY			1
14	6667676	COVER			1
15	6631561	NUT			1
16	6648293	SCREW			1
17	6647778	CAP			1
18	79K-6	O-RING	Was 6634874 [B]		1
19	6647777	PIN			1
20	6667677	O-RING			1
21	6647786	SEAL KIT	Ref. BUCKET POSITIONING VALVE(3), BUCKET POSITIONING VALVE(7), BUCKET POSITIONING VALVE(14), BUCKET POSITIONING VALVE(18) & BUCK		1

HIGH FLOW HYDRAULICS

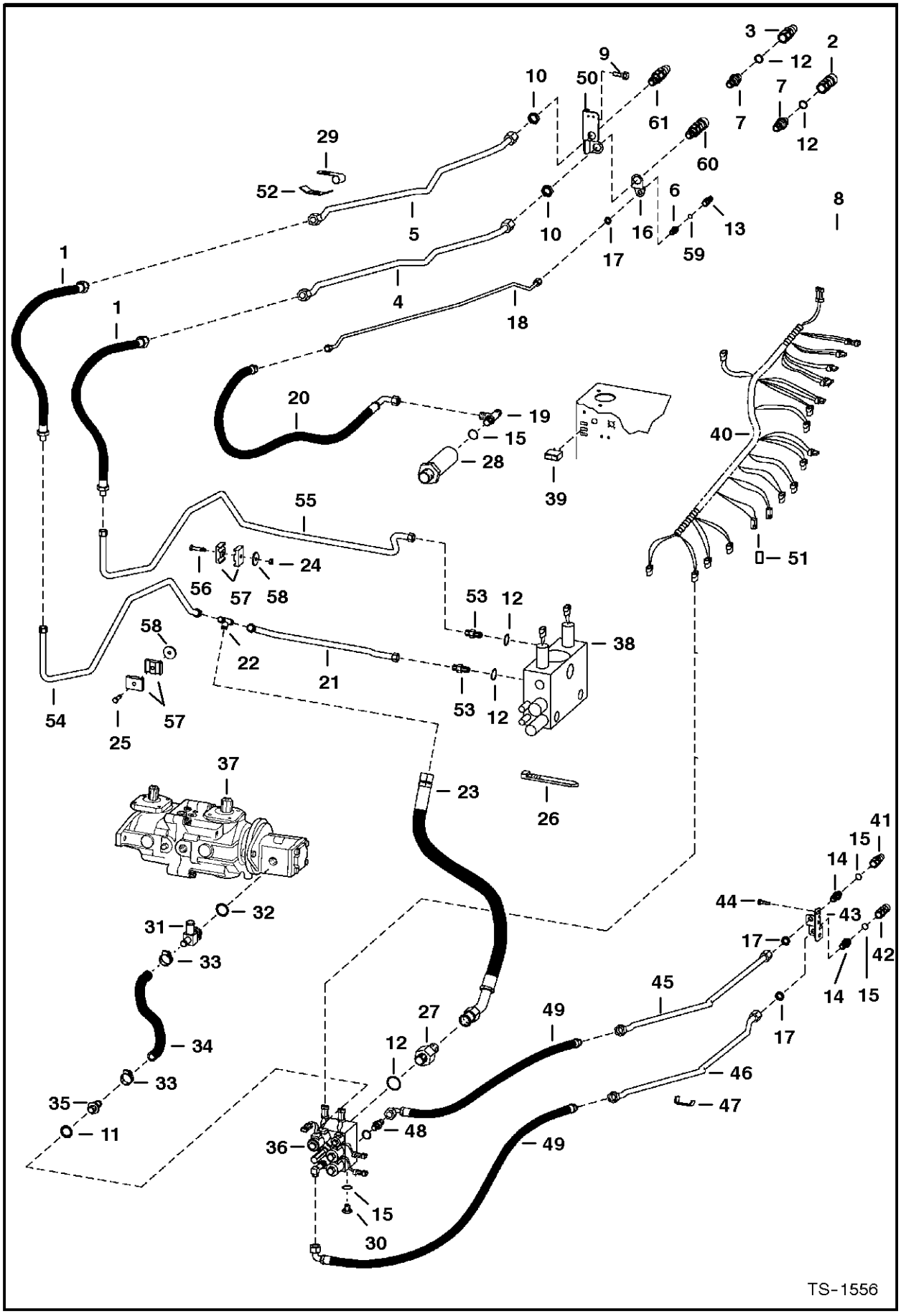

HIGH FLOW HYDRAULICS

Ref.N°	Part N°	Description	Remarks	Serial N°	Qty.
1	6713125	HOSE	W/ cover		2
2	NAP	QUICK COUPLER	female - Order Ref. HIGH FLOW HYDRAULICS(60) - Was 6667807 [B]		1
3	NAP	QUICK COUPLER	male - Order Ref. HIGH FLOW HYDRAULICS(61) - Was 6667808 [B]		1
3	6672026	O-RING			1
4	6711740	TUBE			1
5	6711739	TUBE			1
6	6711628	ADAPTER	W/Ref. HIGH FLOW HYDRAULICS(59) - flat boss face		1
6	6726479	ADAPTER	W/Ref. HIGH FLOW HYDRAULICS(59) - tapered boss face		1
6	97K-6	O-RING	flared end		1
7	6716090	ADAPTER	W/Ref. HIGH FLOW HYDRAULICS(12)		2
7	97K-12	O-RING	flared end		2
8	6718645	HARNESS			1
9	84G-3712	BOLT			2
10	86F-8	NUT			2
11	79K-10	O-RING			x
12	99K-12	O-RING			x
13	6667806	QUICK COUPLER	male		1
13	6669659	O-RING			1
14	6716089	CONNECTOR	W/O-rings		2
15	99K-6	O-RING			x
16	6711913	BRACKET			1
17	86F-5	NUT			3
18	6727802	TUBE	Was 6711746		1
19	21KV-5	TEE	W/Ref. HIGH FLOW HYDRAULICS(15)		1
19	97K-6	O-RING	flared end		1
20	6719108	HOSE			1
21	6712876	TUBE			1
22	10K-8	TEE	W/Ref. HIGH FLOW HYDRAULICS(12)		1
23	6729146	HOSE	Was 6712856 [A]		1
24	83D-5	NUT			1
25	84G-3732	BOLT			1
26	6624289	STA-STRAP			1
27	6659459	VALVE	in-line - W/Ref. HIGH FLOW HYDRAULICS(12)		1
28		FILTER	inAline - See Page HYDROSTATIC OIL FILTER(1)		1
29	30H-23	CLAMP			2
30	24KN-5	PLUG	W/Ref. HIGH FLOW HYDRAULICS(15)		1
31	6714904	TEE	W/Ref. HIGH FLOW HYDRAULICS(32)		1
32	79K-16	O-RING			x
33	6666865	CLAMP	worm gear		2
33	5HM-27	CLAMP	constant tension		2
34	6714423	HOSE			1
35	1316263	ADAPTER	W/Ref. HIGH FLOW HYDRAULICS(11)		1
36	6669203	VALVE	control - See Page HIGH FLOW HYDRAULICS(1)		1
37		PUMP	See Page HIGH FLOW HYDRAULICS(1) & HYDROS TATIC PUMP(1)		1
38		VALVE	hyd. control - See Page HYDRAULIC CONTROL VALVE(1) & HYDRAULIC CONTROL VALVE(1)		1
39	6668813	SWITCH	to activate HHH		1

HIGH FLOW HYDRAULICS

Ref.N°	Part N°	Description	Remarks	Serial N°	Qty.
40	6718177	HARNESS	W/Ref. HIGH FLOW HYDRAULICS(51)		1
41	6667804	QUICK COUPLER	male		1
41	6669657	O-RING			1
42	6667803	QUICK COUPLER	female		1
43	6711674	BRACKET			1
44	84G-3112	BOLT			2
45	6713027	TUBE			1
46	6713028	TUBE			1
47	6703615	CLAMP			2
48	15KV-5	ADAPTER	W/Ref. HIGH FLOW HYDRAULICS(15)		2
48	97K-6	O-RING	flared end		2
49	6706093	HOSE			2
50	6713850	MOUNT			1
51	6704122	DIODE			2
52	6502203	CLAMP			2
53	15K-8	ADAPTER			2
54	6712877	TUBE			1
55	6713902	TUBE			1
56	35C-540	BOLT			1
57	6592506	CLAMP			4
58	872229	WASHER			2
59	79K-8	O-RING	flat boss face		1
59	99K-8	O-RING	tapered boss face		1
60	6676447	COUPLER	female		1
61	6676445	COUPLER	male		1

HIGH FLOW HYDRAULICS

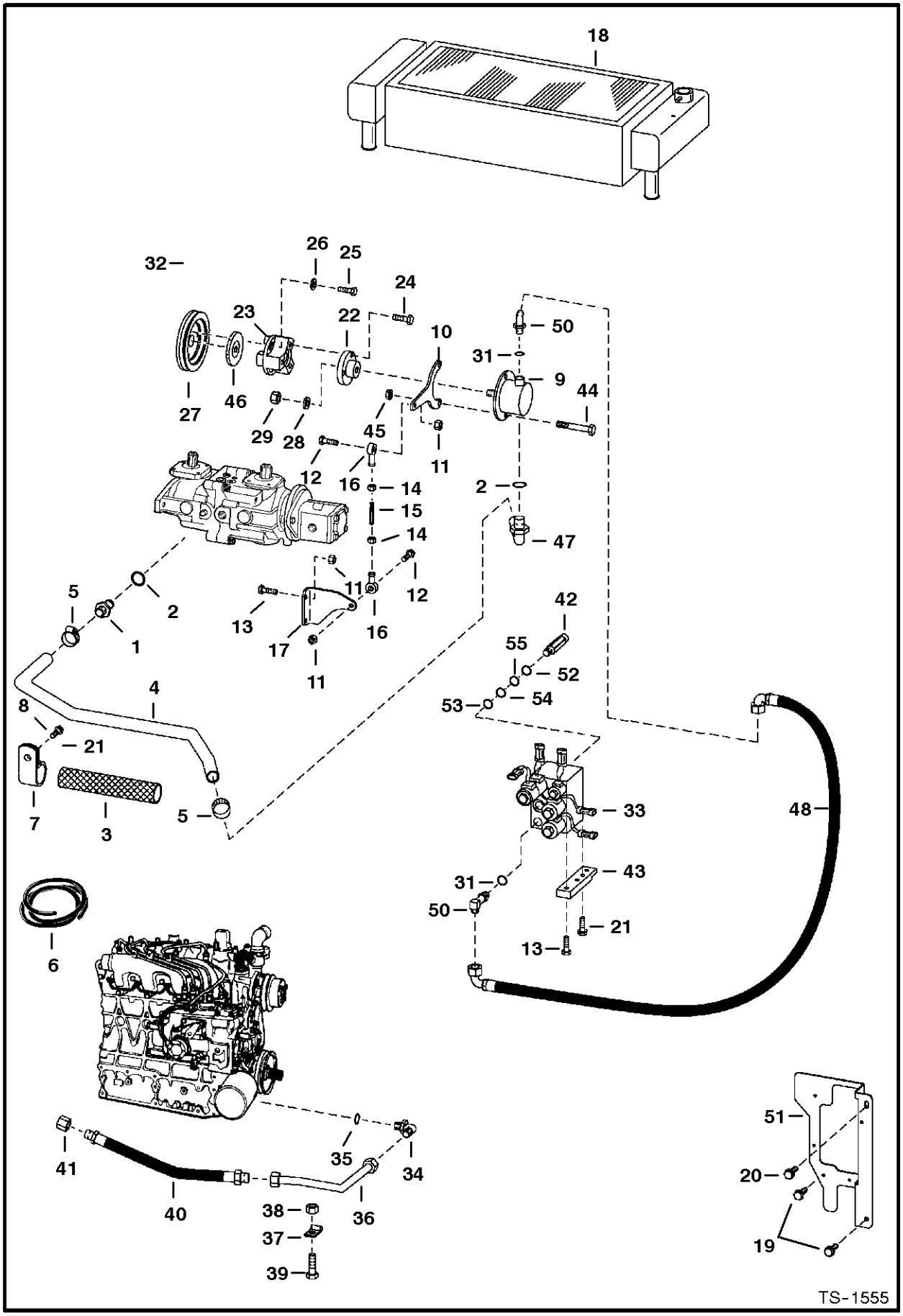

HIGH FLOW HYDRAULICS

Ref.N°	Part N°	Description	Remarks	Serial N°	Qty.
1	6713124	ADAPTER	W/Ref. HIGH FLOW HYDRAULICS(2)		1
2	79K-16	O-RING			x
3	NAP	SHIELD	hose - 10'(25,4 mm) long - Order Ref. HIGH FLOW HYDRAULICS(6)		1
4	6712854	HOSE			1
5	6666865	CLAMP	worm gear		2
5	5HM-42	CLAMP	constant tension		2
6	6705749	COVER	hose - bulk - Sold Per Foot		x
7	6669672	CLAMP			1
8	6CM-1220	BOLT			1
9	6667382	PUMP	gear - See Page HIGH FLOW HYDRAULICS(1)		1
10	6703722	ARM	torgue		1
11	85D-6	NUT			6
12	17C-620	BOLT			2
13	17C-616	BOLT			4
14	62D-6	NUT			2
15	6703719	ROD			1
16	6512954	ROD END			2
17	6704016	MOUNT			1
18		RADIATOR	See Page COOLING SYSTEM(1)		1
19	84G-3712	BOLT			2
20	84G-3716	BOLT			2
21	35C-610	BOLT			2
22	6705129	COUPLER			1
23	6705112	COUPLER			1
24	17C-720	BOLT			3
25	17C-524	BOLT			3
26	25E-15	WASHER			3
27	6705780	PULLEY			1
28	25E-21	WASHER			1
29	62D-8	NUT			1
30	17KV-7	ELBOW	W/Ref. HIGH FLOW HYDRAULICS(31)		1
30	97K-10	O-RING	flared end		1
31	99K-10	O-RING			x
32	6704720	BELT	See Page ENGINE & ATTACHING PARTS(1)		1
33		VALVE	control-W/Ref. HIGH FLOW HYDRAULICS(42)-See Page HIGH FLOW HYDRAULICS(1)		1
34	763818	ELBOW	W/Ref. HIGH FLOW HYDRAULICS(35)		1
35	79K-12	O-RING			1
36	6705436	TUBE			1
37	30H-40	CLAMP			1
38	85D-8	NUT			1
39	17C-816	BOLT			1
40	6705442	HOSE			1
41	36K-7	CAP			1
42	6676155	RELIEF VALVE	relief - Was 6665626 [A]		1
43	6705471	MOUNT			1
44	17C-724	BOLT			2
45	83D-7	NUT			2
46	6710480	RETAINER	nut		1

HIGH FLOW HYDRAULICS

Ref.N°	Part N°	Description	Remarks	Serial N°	Qty.
47	1629414	ELBOW	W/Ref. HIGH FLOW HYDRAULICS(2)		1
48	6714352	HOSE			1
49	25E-14	WASHER	used between Ref. HIGH FLOW HYDRAULICS(51) & timer module		1
50	6714134	ELBOW			1
51	6731060	SHIELD	Was 6717812 [A]		1
52	6665569	WASHER	backup		1
53	6665570	RING	glide		1
54	25K-20016	O-RING			1
55	58K-17	O-RING			1

HIGH FLOW HYDRAULICS
(Select Valve)

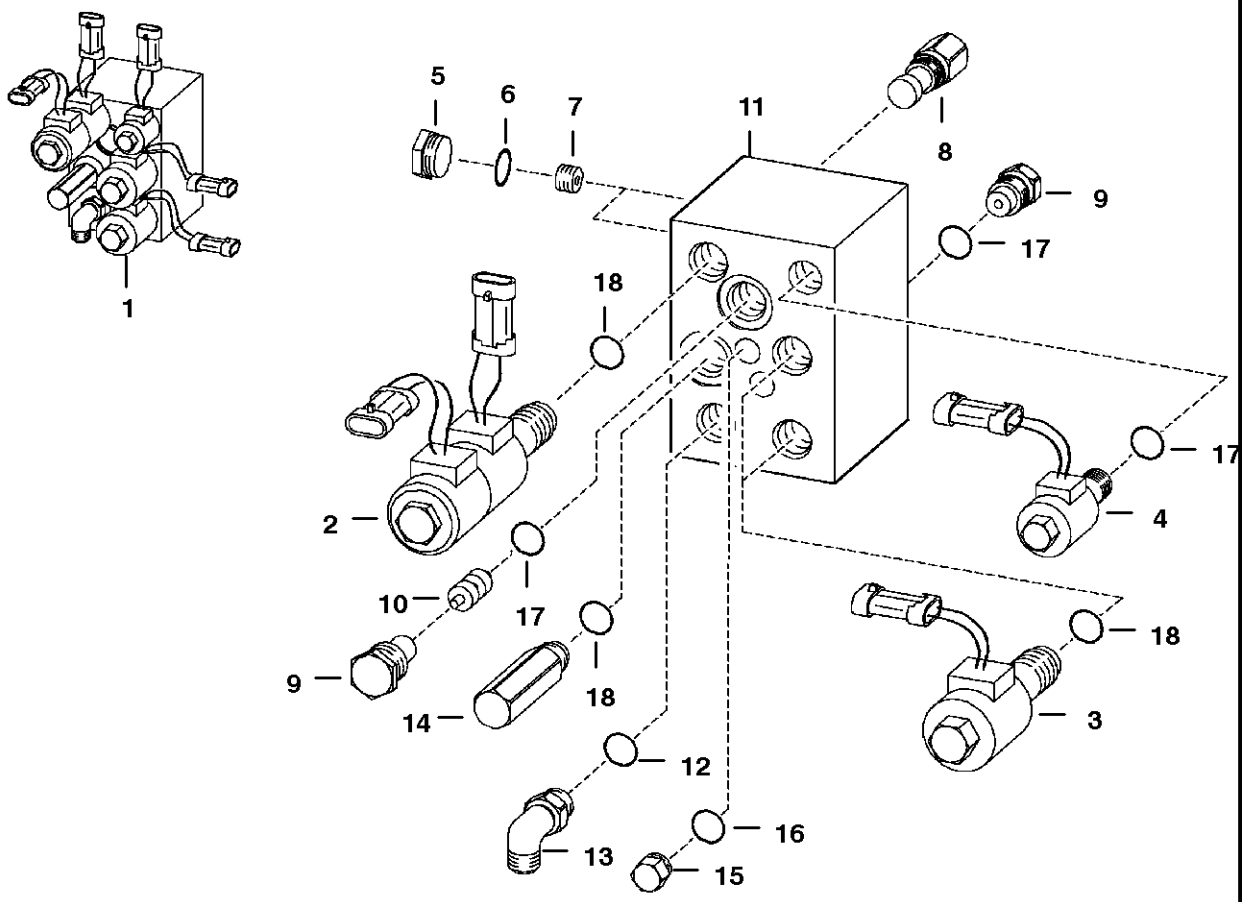

TS-1434

HIGH FLOW HYDRAULICS

Ref.N°	Part N°	Description	Remarks	Serial N°	Qty.
1	6669203	VALVE	Ref. HIGH FLOW HYDRAULICS(2) - HIGH FLOW HYDRAULICS(16)		1
2	6672450	VALVE ASSY.	solenoid		1
2	6664025	STEM			1
2	6671026	COIL	W/Connector		2
2	6671628	NUT			1
2	6679068	SPACER			1
2	6661448	SEAL KIT			1
3	6672449	VALVE ASSY.	solenoid		1
3	6664024	STEM			2
3	6671026	COIL	W/Connector		2
3	6671629	NUT			2
3	6664032	SEAL KIT			2
4	6672448	VALVE ASSY.	solenoid		1
4	6665702	STEM			1
4	6671025	COIL	W/Connector		2
4	6671628	NUT			2
4	6672515	SEAL KIT	Was 6664033 [A]		2
5	6665719	PLUG			10
6	95K-4	O-RING			x
7	6669615	ORIFICE	.020		2
8	6669729	SHUTTLE VALVE			1
8	6669736	SEAL KIT			1
9	6669728	CHECK VALVE			2
10	6673990	PISTON	Was 6664028 [A]		1
11	17KV-7	ELBOW	W/Ref. HIGH FLOW HYDRAULICS(14)		1
11	97K-10	O-RING	flared end		1
12	NAP	RELIEF VALVE	2850 PSI - Was 6672451 [A]		1
12	6676155	RELIEF VALVE	3300 PSI		1
12	6669737	SEAL KIT			1
13	NSS	BLOCK	Order Ref. HIGH FLOW HYDRAULICS(1)		1
14	99K-10	O-RING			x
15	6665719	PLUG			11
16	99K-5	O-RING			x
17	79K-8	O-RING			x
18	79K-10	O-RING			x

HIGH FLOW HYDRAULICS
(Gear Pump - Remotely Mounted to Main Frame)

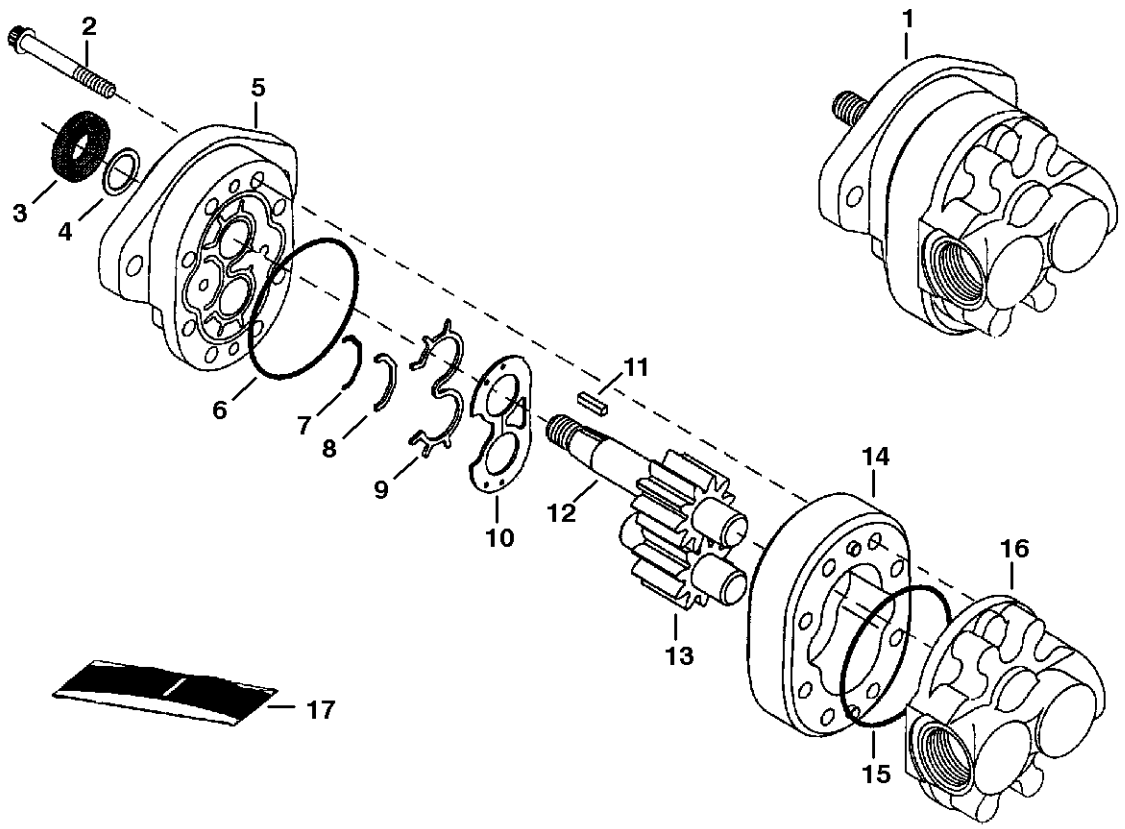

B-13927

HIGH FLOW HYDRAULICS

Ref.N°	Part N°	Description	Remarks	Serial N°	Qty.
1	6667382	PUMP			1
2	NSS	BOLT			8
3	NSS	SEAL			1
4	945412	WASHER			1
5	NSS	COVER			1
6	NSS	O-RING			2
7	NSS	O-RING	moulded		1
8	NSS	SEAL	bearing		1
9	NSS	SEAL			1
10	NSS	PLATE	wear		1
11	6661020	KEY			1
12	NSS	GEAR			1
13	NSS	GEAR			1
14	NSS	BODY			1
15	NSS	O-RING			1
16	NSS	COVER			1
17	6668013	SEAL KIT	Ref. HIGH FLOW HYDRAULICS(3), HIGH FLOW HYDRAULICS(4) & HIGH FLOW HYDRAULICS(6)-HIGH FLOW HYDRAULICS(10)		1

HIGH FLOW HYDRAULICS
(1600 lb. Rear Door Counterweight)

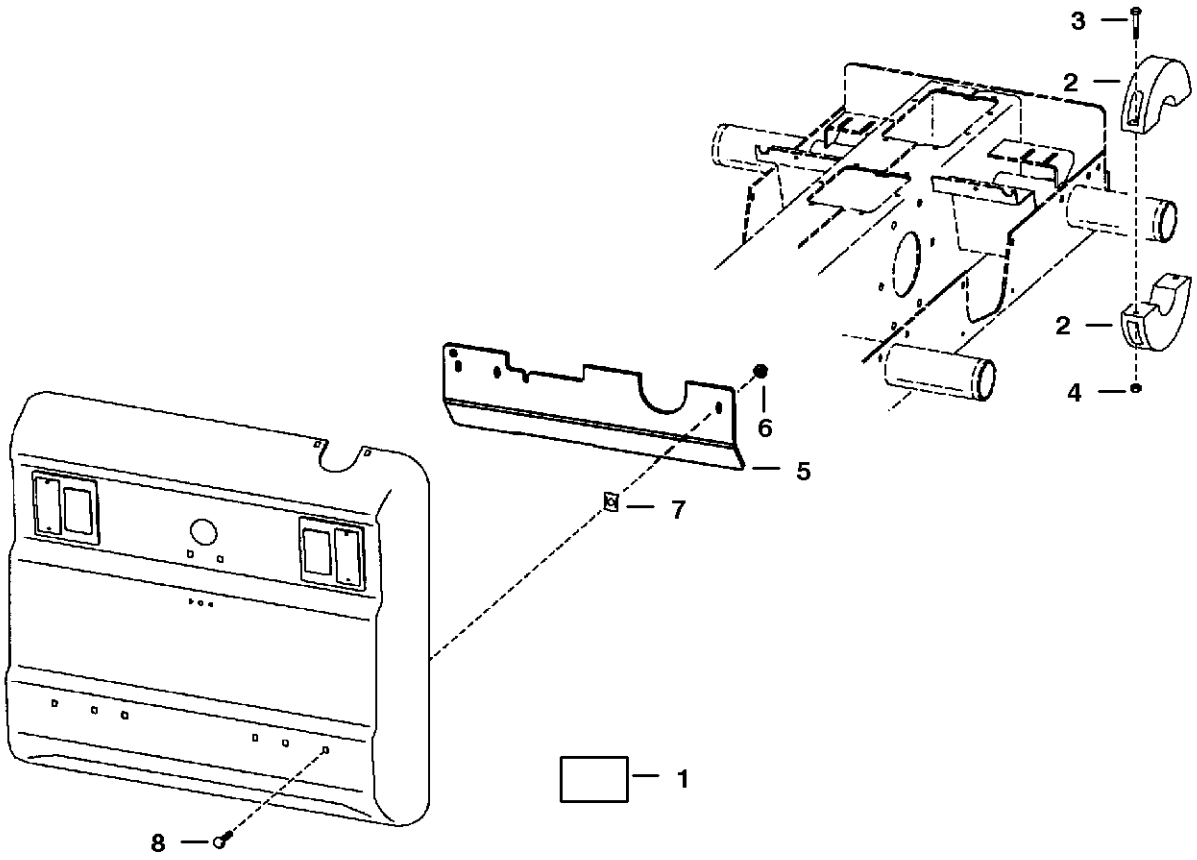

TS-1522

HIGH FLOW HYDRAULICS

Ref.N°	Part N°	Description	Remarks	Serial N°	Qty.
1	6703586	DECAL	1400 lb. - Not in Kit		1
1	6707481	DECAL	1600 lb. - Not in Kit		1
1	6705102	DECAL	1800 lb. - Not in Kit		1
2	6714361	WEIGHT	front axle - 38.7 lbs (17,6 kg) - 4.5'(114,3 mm) wide		4
3	17C-640	BOLT			4
4	61D-6	NUT			4
5	6725256	WEIGHT			3
6	57D-6	NUT			3
7	1612281	NUT	spring		3
8	37C-628	BOLT			3

HYDROSTATIC CIRCUITRY

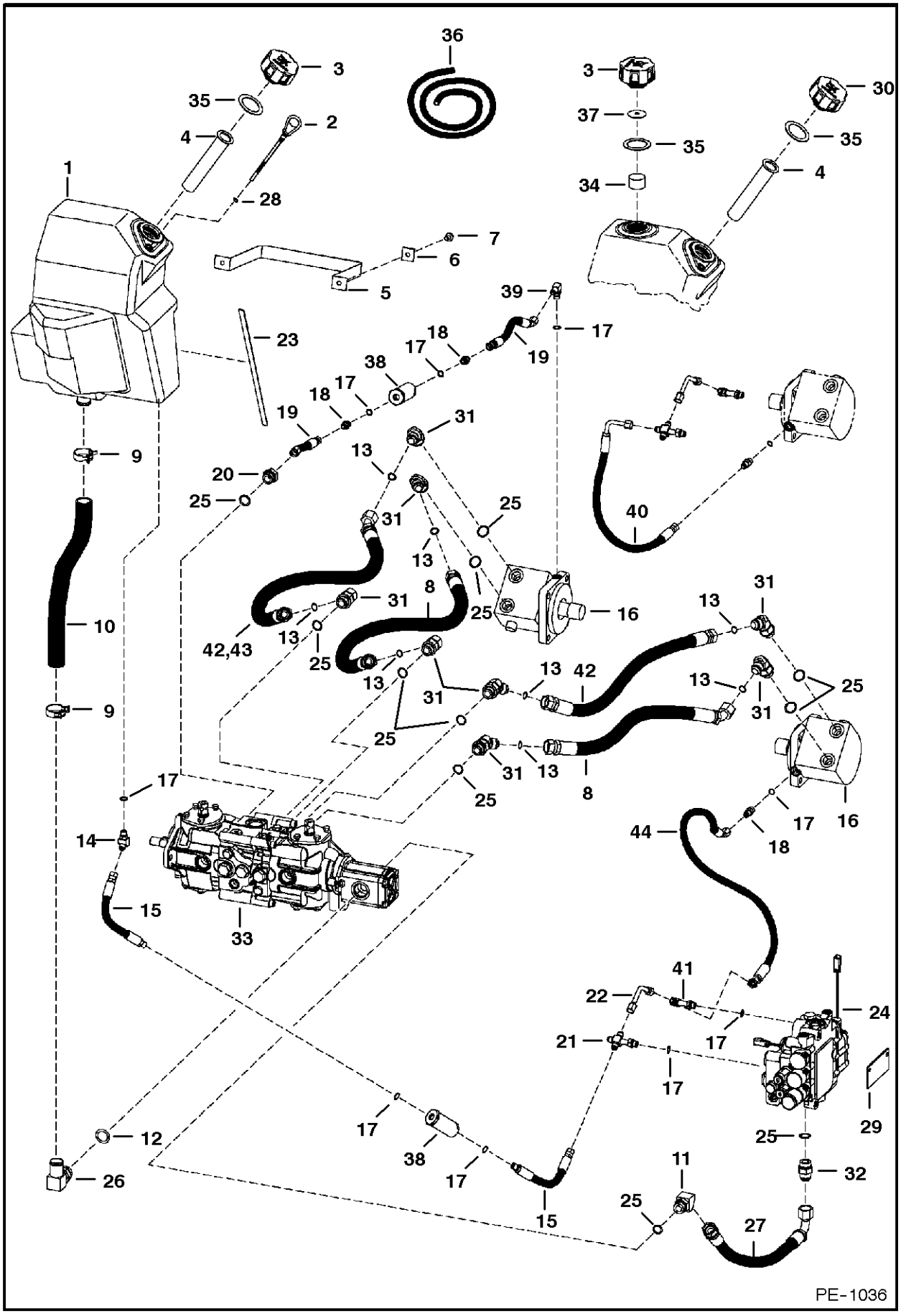

HYDROSTATIC CIRCUITRY

Ref.N°	Part N°	Description	Remarks	Serial N°	Qty.
1	NAP	TANK	W/vented breather cap & non- vented fill cap - Order 6718317inD1}U Tank & Ref. HYDROSTATIC CIRCUITRY(3) - Was 6718317 [A]	& Bel	1
1	6718317	TANK	W/vented fill cap	& Abv	1
2	6577459	DIPSTICK	W/Ref. HYDROSTATIC CIRCUITRY(28)		1
3	6727475	CAP	breather - Also Order Ref. HYDROSTATIC CIRCUITRY(35) & HYDROSTATIC CIRCUITRY(37) - Was 6577785 [A]	& Bel	1
3	6727475	CAP	breather - Also Order Ref. HYDROSTATIC CIRCUITRY(35)	& Abv	1
4	6569219	SCREEN			1
5	6718519	BAND			1
6	6559447	WASHER			2
7	84G-3712	BOLT			2
8	6658105	HOSE	face seal - Use W/Ref. HYDROSTATIC CIRCUITRY(31) (6714902 Elbow)		2
8	6675144	HOSE	mega seal - Use W/Ref. HYDROSTATIC CIRCUITRY(31) (6718181 Elbow)		2
9	5HM-42	CLAMP	constant tension		2
9	6672281	CLAMP	constant torque		2
10	6718353	HOSE	1.25' (31,8 mm) I.D.		1
11	18KV-8	ELBOW	W/Ref. HYDROSTATIC CIRCUITRY(25) (99K-12 O-ring)		1
11	97K-12	O-RING	flared end		1
12	99K-16	O-RING			x
13	58K-18	O-RING	Use W/Ref. HYDROSTATIC CIRCUITRY(31) (6714902 Elbow)		8
14	18KV-5	ELBOW			1
15	6725192	HOSE	Was 6719654 [A]		2
16		MOTOR	See Page HYDROSTATIC MOTOR(1)		2
17	99K-6	O-RING			x
18	15KV-5	ADAPTER	W/Ref. HYDROSTATIC CIRCUITRY(17)		3
18	21KV-5	TEE	W/Ref. HYDROSTATIC CIRCUITRY(17) - for Rear Aux. Option - See Page REAR AUXILIARY KIT(1)		2
18	97K-6	O-RING	flared end		4
19	NAP	HOSE	13.5'(342,9 mm) long - Order 6730769 Hose - Was 6712414 [A]		2
19	6730769	HOSE	14.5'(368,3 mm) long		2
20	6715186	ADAPTER	W/Ref. HYDROSTATIC CIRCUITRY(25) (99K-12inD1} O-ring)		1
20	97K-6	O-RING	flared end		1
21	6805241	CROSS	W/Ref. HYDROSTATIC CIRCUITRY(17)		1
21	97K-6	O-RING	flared end		1
22	6577690	TUBE			1
23	NAP	FOAM STRIP	16.12'' (409,5 mm) long - Order Ref. HYDROSTATIC CIRCUITRY(36)		1
24		VALVE	W/Ref. HYDROSTATIC CIRCUITRY(21), HYDROSTATIC CIRCUITRY(22), HYDROSTATIC CIRCUITRY(32) & HYDROSTATIC CIRCUITRY(41)- See Page HYD		1
25	79K-12	O-RING			8
25	99K-12	O-RING			8
26	6715191	ELBOW	W/Ref. HYDROSTATIC CIRCUITRY(12)		1
27	6729145	HOSE	Was 6712848 [A]		2
28	25K-20010	O-RING			1
29		COVER	side of main frame - See Page MAIN FRAME(1)		1

HYDROSTATIC CIRCUITRY

Ref.N°	Part N°	Description	Remarks	Serial N°	Qty.
30	6728149	CAP	fill - Also Order Ref. HYDROSTATIC CIRCUITRY(35) - Was 6532508 [A]		1
31	6714902	ELBOW	W/Ref. HYDROSTATIC CIRCUITRY(25) (79K-12inD1} O-ring) - face seal		8
31	6718181	ELBOW	W/Ref. HYDROSTATIC CIRCUITRY(25) (99K-12inD1} O-ring) - mega seal		8
32	15KN-8	ADAPTER	W/Ref. HYDROSTATIC CIRCUITRY(25) (99K-12 O-ring)	& Bel	1
32	97K-12	O-RING	flared end		1
32	6812646	ADAPTER	W/Ref. HYDROSTATIC CIRCUITRY(25) (79K-12 O-ring)	& Abv	1
33		PUMP	See Page HYDROSTATIC PUMP(1)		1
34	6701552	BAFFLE		& Bel	1
35	6700631	GASKET		& Bel	2
35	6700631	GASKET		& Abv	1
36	6511855	FOAM STRIP	bulk - Sold Per Foot - self adhesive		x
37	6703427	FOAM FILTER			1
38	6661022	FILTER	in-line - See Page HYDROSTATIC OIL FILTER(1)		2
39	17KV-5	ELBOW	W/Ref. HYDROSTATIC CIRCUITRY(17)		1
39	97K-6	O-RING	flared end		1
40	6617736	HOSE		& Bel	1
41	6558510	ELBOW	W/Ref. HYDROSTATIC CIRCUITRY(17)		1
42	6671714	HOSE	face seal - Use W/Ref. HYDROSTATIC CIRCUITRY(31) (6714902inD1} Elbow)		2
42	6675143	HOSE	mega seal - Use W/Ref. HYDROSTATIC CIRCUITRY(31) (6718181inD1} Elbow)		2
43	6671713	HOSE	face seal - Use W/Ref. HYDROSTATIC CIRCUITRY(31) (6714902inD1} Elbow)		1
43	6726377	HOSE	mega seal - Use W/Ref. HYDROSTATIC CIRCUITRY(31) (6718181inD1} Elbow)		1
44	6715251	HOSE		& Abv	1

HYDROSTATIC CIRCUITRY

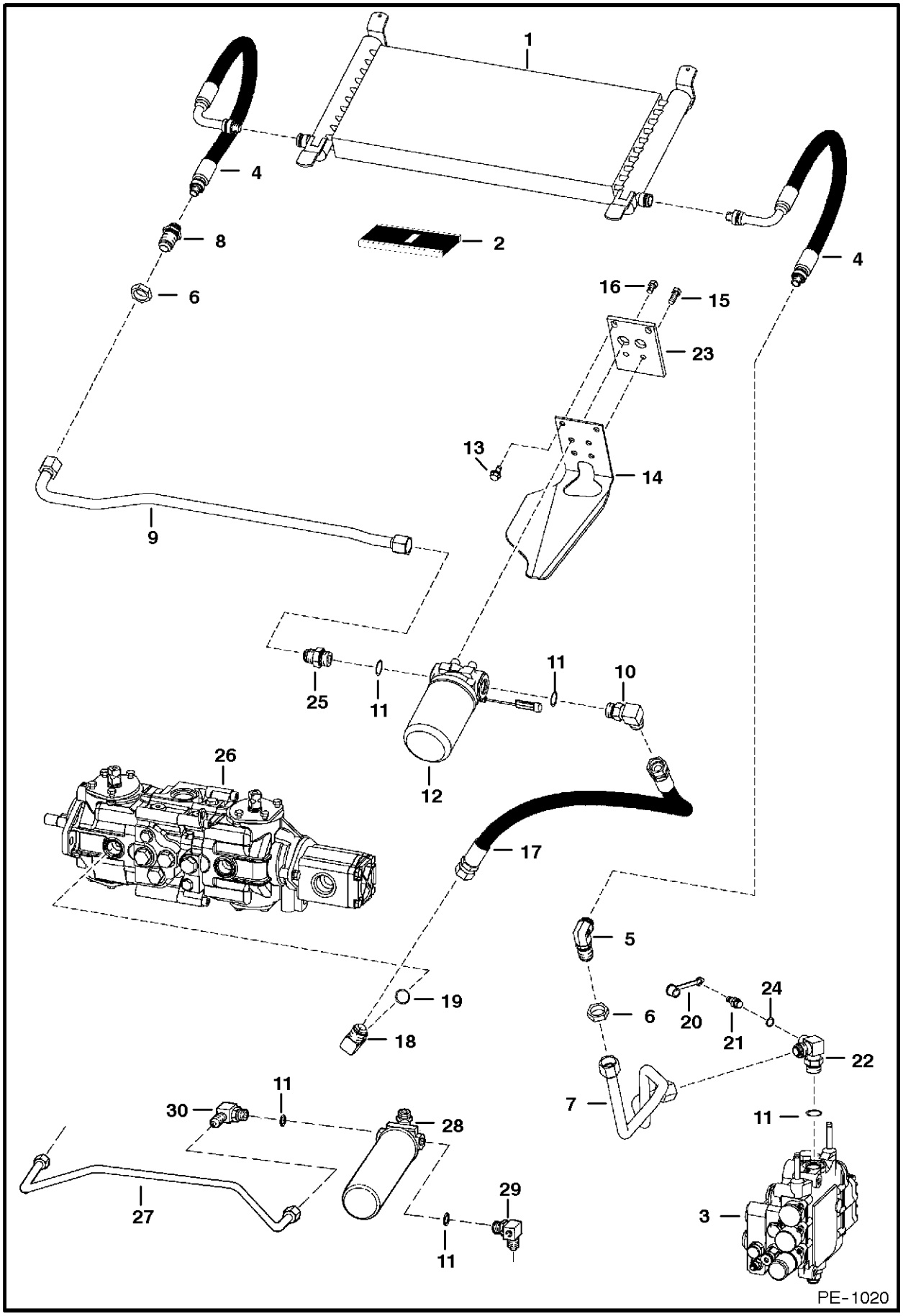

HYDROSTATIC CIRCUITRY

Ref.N°	Part N°	Description	Remarks	Serial N°	Qty.
1	6674150	OIL COOLER	STC - SEE NOTE		1
2	6674798	REPAIR KIT	For Ref. HYDROSTATIC CIRCUITRY(1), HYDROSTATIC CIRCUITRY(5) & HYDROSTATIC CIRCUITRY(8)		x
3		VALVE	See Page HYDRAULIC CONTROL VALVE(1) & HYDRAULIC CONTROL VALVE(1)		1
4	6673828	HOSE	STC - SEE NOTE		2
5	6670831	ELBOW	STC - SEE NOTE		1
5	97K-12	O-RING	flared end		1
6	86F-8	NUT			2
7	6708748	TUBE			1
8	6670830	ADAPTER	STC - SEE NOTE		1
8	97K-12	O-RING	flared end		1
9	6727347	TUBE		& Abv	1
10	17KV-8	ELBOW	W/Ref. HYDROSTATIC CIRCUITRY(11)	& Abv	1
11	99K-12	O-RING			x
12	6676969	FILTER ASSY	See Page HYDROSTATIC OIL FILTER(1)	& Abv	1
12	6661248	ELEMENT			1
13	84G-3712	BOLT			2
14	6727345	MOUNT	filter drain - Was 6704342 [A]	& Abv	1
15	17C-616	BOLT			2
16	17C-610	BOLT			2
17	6704159	HOSE			1
18	6714901	ELBOW	W/Ref. HYDROSTATIC CIRCUITRY(19)		1
19	79K-10	O-RING			x
20	6630367	DUST CAP			1
21	6630168	COUPLER	diagnostic - W/Ref. HYDROSTATIC CIRCUITRY(24)		1
22	6715653	TEE	W/Ref. HYDROSTATIC CIRCUITRY(11)		1
22	97K-12	O-RING	flared end		1
23	6704341	MOUNT			1
24	99K-6	O-RING			x
25	15KV-8	ADAPTER	W/Ref. HYDROSTATIC CIRCUITRY(11)	& Abv	1
26		PUMP	See Page HYDROSTATIC PUMP(1)		1
27	6704155	TUBE		& Bel	1
28	6661247	FILTER ASSY.	See Page HYDROSTATIC OIL FILTER(1)	& Bel	1
28	6661248	ELEMENT			1
29	6718661	ELBOW	W/Ref. HYDROSTATIC CIRCUITRY(11) - Was 6715655 [B,D]	& Bel	1
29	97K-12	O-RING	flared end		1
30	6700599	ELBOW	W/Ref. HYDROSTATIC CIRCUITRY(11) - Was 6715714 [B,D]	& Bel	1
30	97K-12	O-RING	flared end		1

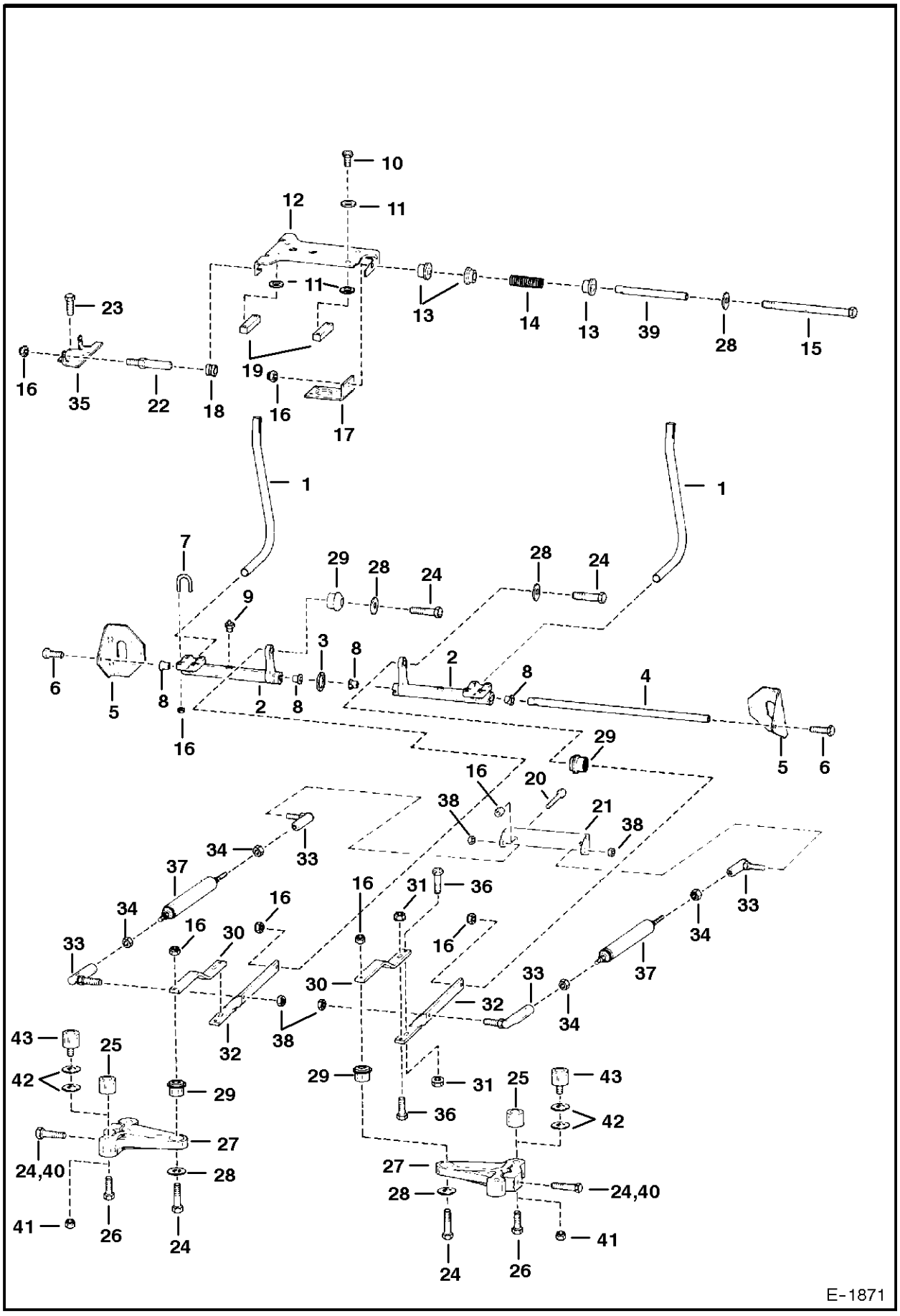
10
12
11
11
23
13
14
13
39
28
15
16
35
22
18
19
16
17
1
1
7
29
28
24
28
24
9
3
8
2
8
6
5
8
2
8
4
16
5
6
29
16
20
38
21
38
34
33
37
16
31
36
34
16
33
16
30
16
33
37
34
33
30
32
33
34
38
32
43
25
42
29
29
31
25
43
36
42
27
24,40
28
27
28
24,40
41
26
24
24
26
41

E-1871

HAND CONTROLS

Ref.N°	Part N°	Description	Remarks	Serial N°	Qty.
1	6702543	LEVER			2
2	NAP	BELLCRANK	W/notch for bushing tab - Order 6729957inD1}& Bellcrank, Ref. HAND CONTROLS(28) (619021 Washer) & Ref. HAND CONTROLS(29) (667806		2
2	6729957	BELLCRANK	W/ notch for bushing tab		2
2	6716977	BELLCRANK	W/O notch for bushing tab - AHC		2
3	6599741	WASHER	wave		1
4	6716545	ROD			1
5	6577230	MOUNT			2
6	45C-624	BOLT	Was 45C-620 [B]		2
7	6700768	U-BOLT			4
8	6703879	BUSHING			4
9	6518200	GREASE ZERK			2
10	8C-616	BOLT			4
11	6557831	WASHER			8
12	6706095	MOUNT			1
13	6715163	BUSHING			3
14	6701535	SPRING			1
15	17C-680	BOLT			1
16	95D-6	NUT			15
17	6576196	BRACKET			1
18	6706098	GUIDE			2
19	6702716	BLOCK			2
20	17C-612	BOLT			2
21	6706106	MOUNT			1
22	6577058	PIN			2
23	1CM-820	BOLT			8
24	17C-626	BOLT			6
24	17C-626	BOLT	See Ref. HAND CONTROLS(40)		4
25	6711643	CAM			4
26	35C-612	BOLT			4
27	NAP	LEVER	.8725'(22,2mm) I.D. hole for Ref. HAND CONTROLS(29) (6665701 Bushing)-Order 6729956inD1o Lever, Ref. HAND CONTROLS(28) (619021i		2
27	6729956	LEVER	1.0475'(26,6 mm) I.D. hole for Ref. HAND CONTROLS(29)		2
28	6563914	WASHER	1.00'(25,4 mm) O.D.		4
28	619021	WASHER	1.25'(31,8 mm) O.D.		4
29	6665701	BUSHING	neoprene - .885'(22,5 mm) O.D.		4
29	6678067	BUSHING	torsion - 1.060'(26,9 mm) O.D.		4
30	6702372	LINK			2
31	83D-6	NUT			4
32	6576195	LINK			2
33	6599744	BALL JOINT			4
34	8D-6	NUT			4
35	6706096	MOUNT			1
36	17C-620	BOLT			4
37	6649551	DAMPENER			2
38	62D-6	NUT			4
39	6715164	SLEEVE			1
40	35C-624	BOLT			2

HAND CONTROLS

Ref.N°	Part N°	Description	Remarks	Serial N°	Qty.
41	98D-6	NUT	AHC - See Page CONTROLS ELECTRICAL(1)		4
42	25E-17	WASHER	AHC - See Page CONTROLS ELECTRICAL(1)		8
43	6673789	BEARING	roller - AHC - See Page CONTROLS ELECTRICAL(1)		4

HYDROSTATIC MOTOR

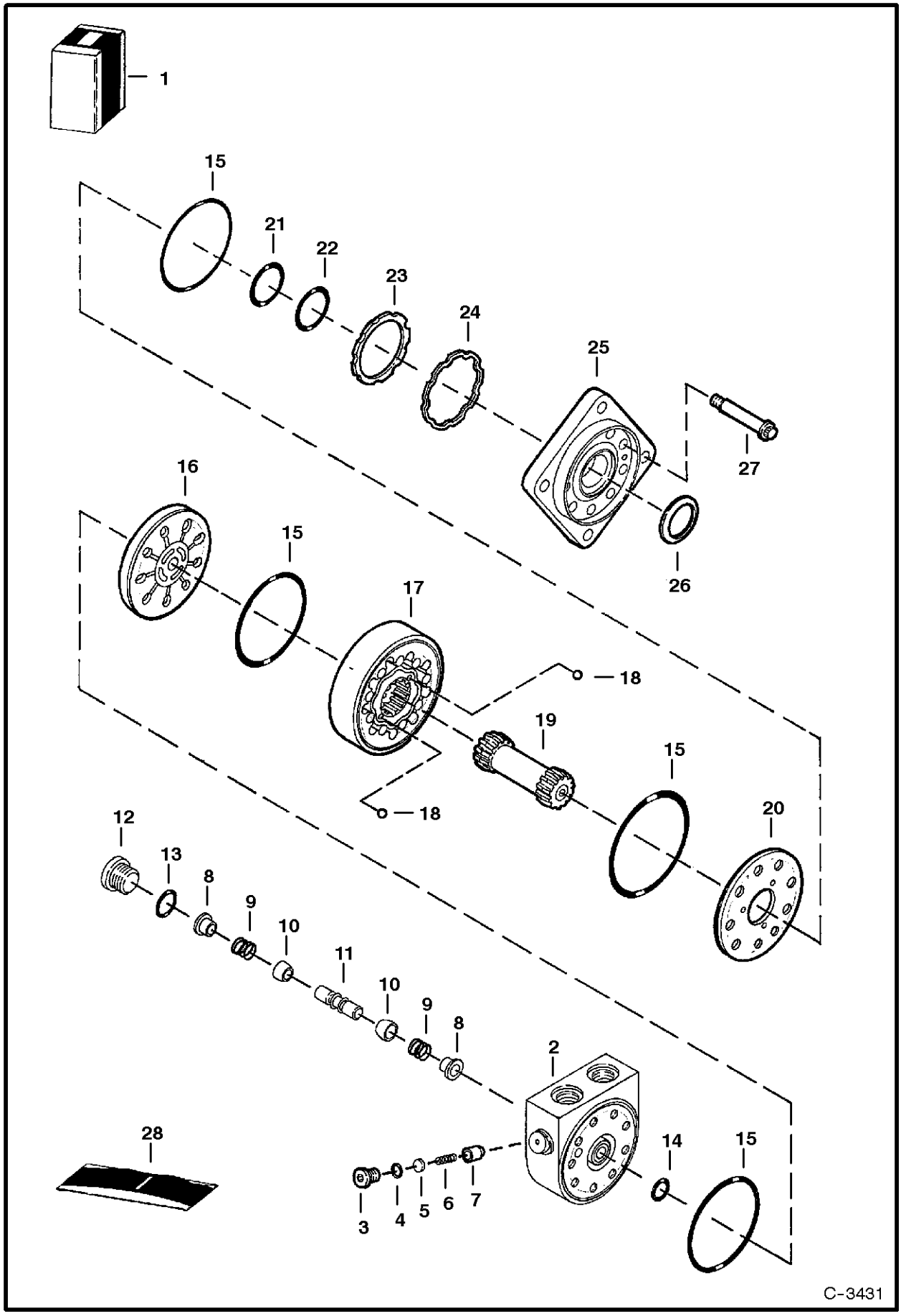

HYDROSTATIC MOTOR

Ref.N°	Part N°	Description	Remarks	Serial N°	Qty.
1	6671617	MOTOR	Ref. HYDROSTATIC MOTOR(2) - HYDROSTATIC MOTOR(27)		1
2	6669442	HOUSING	W/Ref. HYDROSTATIC MOTOR(3)-HYDROSTATIC MOTOR(7)		1
3	6668079	PLUG	W/Ref. HYDROSTATIC MOTOR(4)		1
4	79K-5	O-RING			1
5	6668080	SHIM			x
6	6669444	SPRING			1
7	6668082	POPPET			1
8	6561218	SHUTTLE			2
9	6513533	SPRING			2
10	6513532	POPPET			2
11	6668088	PISTON	shuttle		1
12	6668089	PLUG	W/Ref. HYDROSTATIC MOTOR(13)		1
13	79K-6	O-RING			1
14	6669452	O-RING			1
15	6669446	O-RING			4
16	6669447	PLATE	valve		1
17	6672126	GEROLER			1
18	6651542	BALL			2
19	6669469	SHAFT			1
20	6669448	PLATE	balance		1
21	6669450	RING	backup		1
22	6669449	O-RING			1
23	6669453	SEAL			1
24	6669454	RING	backup		1
25	6669451	FLANGE	mounting		1
26	6664815	SEAL			1
27	6669470	BOLT			9
28	6669455	SEAL KIT	W/Ref. HYDROSTATIC MOTOR(4), HYDROSTATIC MOTOR(13), HYDROSTATIC MOTOR(14), HYDROSTATIC MOTOR(21)-HYDROSTATIC MOTOR(24) & HYDROST		1

HYDROSTATIC PUMP

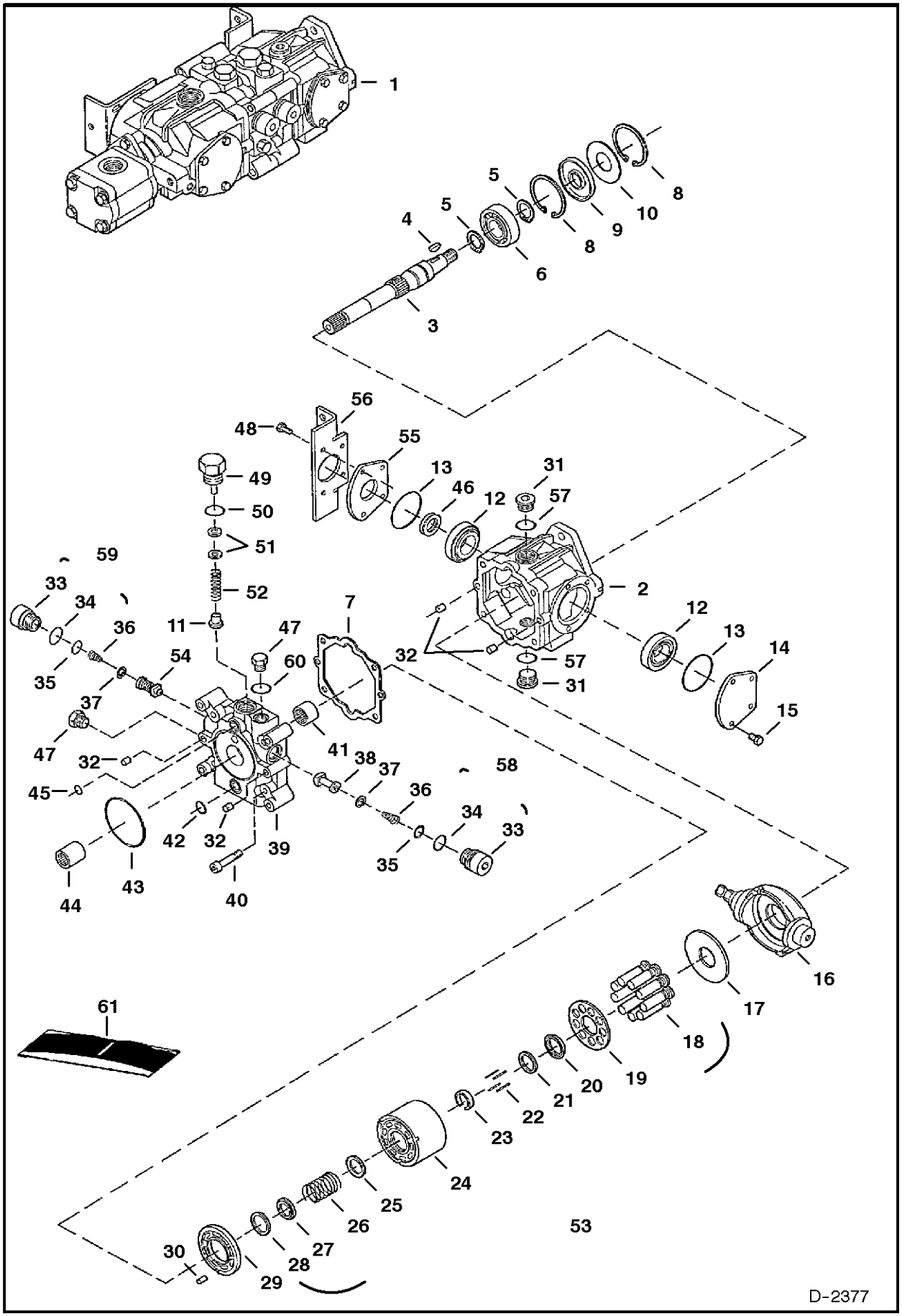

HYDROSTATIC PUMP

Ref.N°	Part N°	Description	Remarks	Serial N°	Qty.
1	6672051	PUMP			1
2	6669402	HOUSING			1
3	6669408	SHAFT			1
4	6J-807	KEY			1
5	658128	SNAP RING			2
6	654299	BEARING			1
7	6650634	GASKET			1
8	669863	SNAP RING			2
9	6645090	SEAL			1
10	6669409	WASHER			1
11	6650652	RELIEF	charge		1
12	6669411	BEARING	W/cup		2
13	6660814	O-RING			2
14	6657068	COVER			2
15	6650668	BOLT			4
16	6671513	SWASH PLATE			1
17	6650627	PLATE			1
18	NAP	PISTON ASSY.	Order Ref. HYDROSTATIC PUMP(53)		1
19	NAP	RETAINER	Order Ref. HYDROSTATIC PUMP(53)		1
20	NAP	RETAINER	guide - Order Ref. HYDROSTATIC PUMP(53)		1
21	6666338	WASHER			1
22	6650629	PIN			4
23	6650630	RETAINER			1
24	NAP	BLOCK	Order Ref. HYDROSTATIC PUMP(53)		1
25	NAP	WASHER	Order Ref. HYDROSTATIC PUMP(53)		1
26	NAP	SPRING	Order Ref. HYDROSTATIC PUMP(53)		1
27	NAP	WASHER	Order Ref. HYDROSTATIC PUMP(53)		1
28	NAP	WASHER	Order Ref. HYDROSTATIC PUMP(53)		1
29	6671515	VALVE PLATE			1
30	6650636	PIN			1
31	47K-8	PLUG	W/Ref. HYDROSTATIC PUMP(57)		2
32	6518460	PIN			4
33	NAP	PLUG	Order Ref. HYDROSTATIC PUMP(58) or HYDROSTATIC PUMP(59)		2
34	6657028	O-RING			2
35	79K-8	O-RING			2
36	NAP	SPRING	Order Ref. HYDROSTATIC PUMP(58) or HYDROSTATIC PUMP(59)		2
37	NAP	RETAINER	Order Ref. HYDROSTATIC PUMP(58) or HYDROSTATIC PUMP(59)		2
38	NAP	CHECK VALVE	poppet - Order Ref. HYDROSTATIC PUMP(58)		1
39	6669406	END PLATE			1
40	6650637	BOLT			4
41	6650635	BEARING			1
42	6650647	O-RING			1
43	6645081	O-RING			1
44	6650675	COUPLER			1
45	6650646	O-RING			1
46	6673881	SEAL			1
47	6645086	PLUG	W/Ref. HYDROSTATIC PUMP(60)		2
48	6671518	BOLT			1

HYDROSTATIC PUMP

Ref.N°	Part N°	Description	Remarks	Serial N°	Qty.
49	6650648	PLUG	charge relief		1
50	79K-10	O-RING			1
51	6669410	SHIM KIT	charge relief		1
52	6658301	SPRING			1
53	6671512	BLOCK ASSY			1
54	NAP	RELIEF VALVE	5000 PSI (345 bar) for Pump - Order Ref. HYDROSTATIC PUMP(59)		1
55	6657067	COVER			1
56	6706096	MOUNT			1
57	79K-12	O-RING			2
58	6670684	CHECK VALVE			1
59	6671510	RELIEF VALVE			1
60	6661481	O-RING			2
61	6671516	SEAL KIT	Ref. HYDROSTATIC PUMP(7), HYDROSTATIC PUMP(9), HYDROSTATIC PUMP(13), HYDROSTATIC PUMP(34), HYDROSTATIC PUMP(35), HYDROSTATIC PUM		1

HYDROSTATIC PUMP

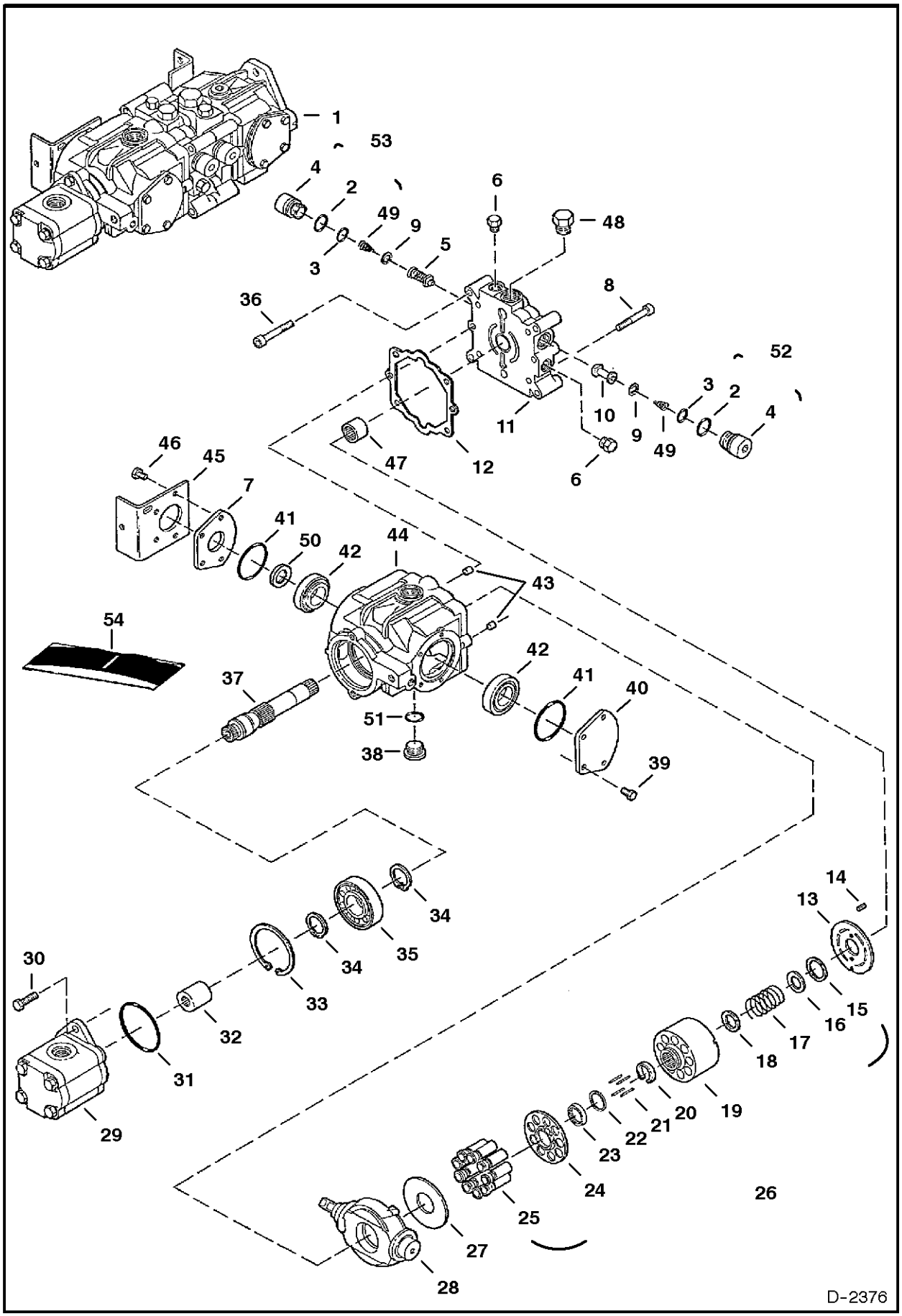

HYDROSTATIC PUMP

Ref.N°	Part N°	Description	Remarks	Serial N°	Qty.
1	6672051	PUMP			1
2	6657028	O-RING			2
3	79K-8	O-RING			2
4	NAP	PLUG	Order Ref. HYDROSTATIC PUMP(52) or HYDROSTATIC PUMP(53)		2
5	NAP	RELIEF VALVE	5000 PSI (345 bar) for Pump - Order Ref. HYDROSTATIC PUMP(53)		1
6	6645086	PLUG			4
7	6657067	COVER			1
8	6650637	BOLT			2
9	NAP	RETAINER	Order Ref. HYDROSTATIC PUMP(52) or HYDROSTATIC PUMP(53)		4
10	NAP	CHECK VALVE	poppet - Order Ref. HYDROSTATIC PUMP(52)		1
11	6669405	END CAP			1
12	6650634	GASKET			1
13	6671514	VALVE PLATE			1
14	6650636	PIN			2
15	NAP	RETAINER	Order Ref. HYDROSTATIC PUMP(26)		1
16	NAP	WASHER	Order Ref. HYDROSTATIC PUMP(26)		1
17	NAP	SPRING	Order Ref. HYDROSTATIC PUMP(26)		1
18	NAP	WASHER	Order Ref. HYDROSTATIC PUMP(26)		1
19	NAP	BLOCK	Order Ref. HYDROSTATIC PUMP(26)		1
20	6650630	RETAINER			1
21	6650629	PIN			4
22	6666338	WASHER			1
23	NAP	RETAINER	Order Ref. HYDROSTATIC PUMP(26)		1
24	NAP	RETAINER	Order Ref. HYDROSTATIC PUMP(26)		1
25	NAP	PISTON ASSY.	Order Ref. HYDROSTATIC PUMP(26)		1
26	6671512	BLOCK ASSY			1
27	6650627	PLATE			1
28	6671513	SWASH PLATE			1
29		GEAR PUMP			1
30	6666339	BOLT			2
31	6645080	O-RING			1
32	6671509	COUPLER			1
33	669863	SNAP RING			1
34	658128	SNAP RING			2
35	654299	BEARING			1
36	6652018	BOLT			4
37	6669407	SHAFT			1
38	47K-8	PLUG	W/Ref. HYDROSTATIC PUMP(51)		1
39	6650668	BOLT			4
40	6657068	COVER			1
41	6660814	O-RING			2
42	6669411	BEARING	W/cup		2
43	6518460	PIN			2
44	6669403	HOUSING			1
45	6576196	BRACKET			1
46	6650668	BOLT			1
47	6650635	BEARING			1
48	6645086	PLUG			1

HYDROSTATIC PUMP

Ref.N°	Part N°	Description	Remarks	Serial N°	Qty.
49	NAP	SPRING	Order Ref. HYDROSTATIC PUMP(52) or HYDROSTATIC PUMP(53)		2
50	6673881	SEAL			1
51	79K-12	O-RING			1
52	6670684	CHECK VALVE			1
53	6671510	RELIEF VALVE			1
54	6671516	SEAL KIT	Ref. HYDROSTATIC PUMP(2), HYDROSTATIC PUMP(3), HYDROSTATIC PUMP(12), HYDROSTATIC PUMP(31), HYDROSTATIC PUMP(41) & HYDROSTATIC PU		1

GEAR PUMP

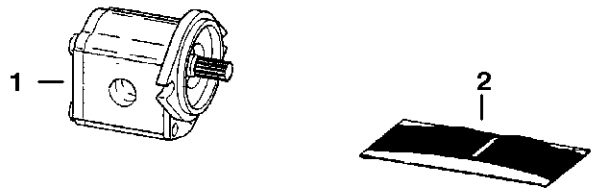

TS-1022

GEAR PUMP

Ref.N°	Part N°	Description	Remarks	Serial N°	Qty.
1	6672513	PUMP	Model B5501-36836		1
2	6671042	SEAL KIT			1

HYDROSTATIC OIL FILTER
(In-Line)

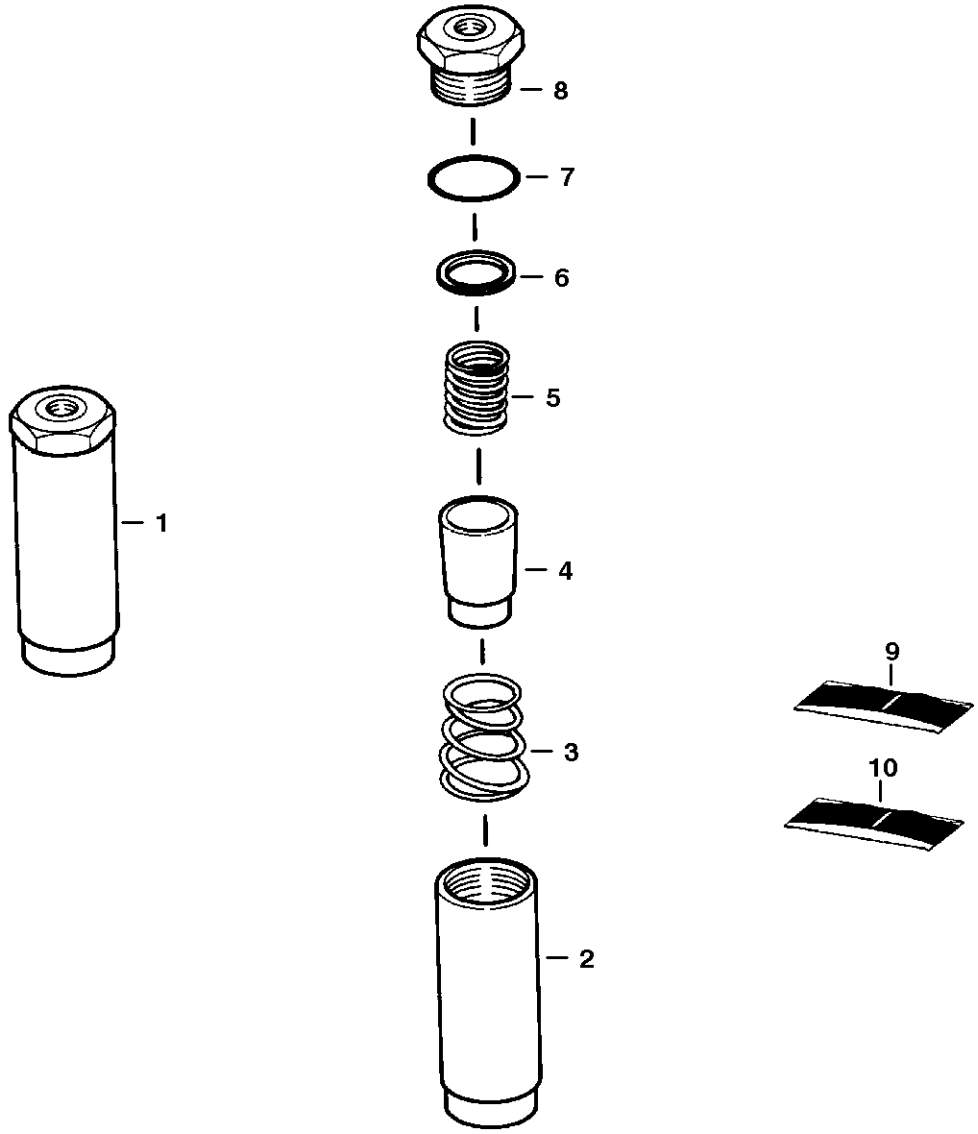

B-13527

HYDROSTATIC OIL FILTER

Ref.N°	Part N°	Description	Remarks	Serial N°	Qty.
1	6661022	FILTER	Ref. HYDROSTATIC OIL FILTER(2) - HYDROSTATIC OIL FILTER(8)		1
2	NSS	HOUSING			1
3	NSS	SPRING			1
4	NSS	ELEMENT			1
5	NSS	SPRING			1
6	NSS	GASKET			1
7	NSS	O-RING			1
8	NSS	PLUG			1
9	6661807	KIT	element - Ref. HYDROSTATIC OIL FILTER(4), HYDROSTATIC OIL FILTER(6) & HYDROSTATIC OIL FILTER(7)		1
10	6661808	KIT	spring - Ref. HYDROSTATIC OIL FILTER(3) & HYDROSTATIC OIL FILTER(5)		1

HYDROSTATIC OIL FILTER

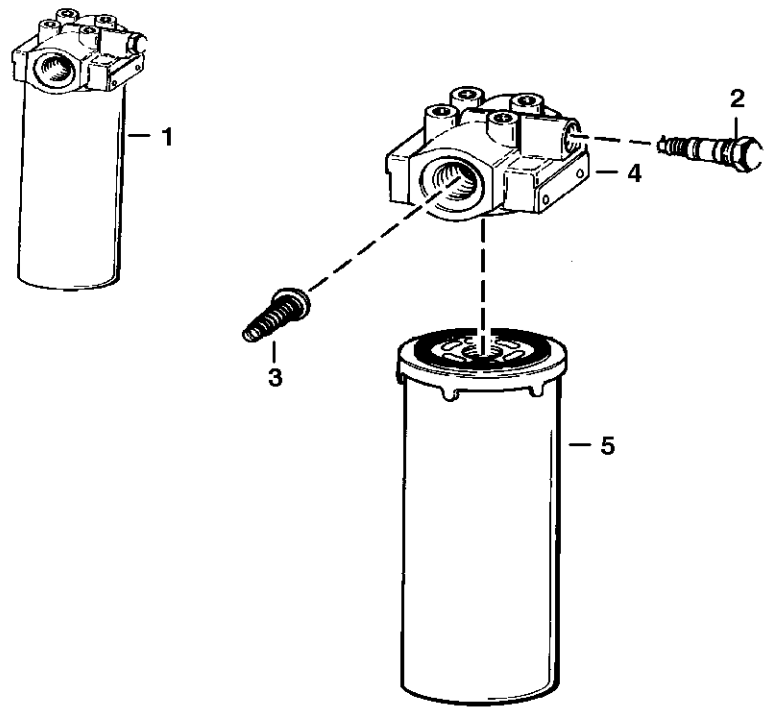

C-2818

HYDROSTATIC OIL FILTER

Ref.N°	Part N°	Description	Remarks	Serial N°	Qty.
1	6661247	FILTER ASSY.	W/Ref. HYDROSTATIC OIL FILTER(2) - HYDROSTATIC OIL FILTER(5) (50 PSI by-pass & switch) - Was 6661334 [B,D]		1
2	6660260	SWITCH	pressure - normally open - Was 6632053 [B,D]		1
2	6599365	KIT	Nut, washer & O-rings for switch		1
3	NAP	VALVE	by-pass (50 PSI - Order Ref. HYDROSTATIC OIL FILTER(1))		1
4	NSS	HEAD	Order Ref. HYDROSTATIC OIL FILTER(1)		1
5	6661248	ELEMENT			1

HYDROSTATIC OIL FILTER

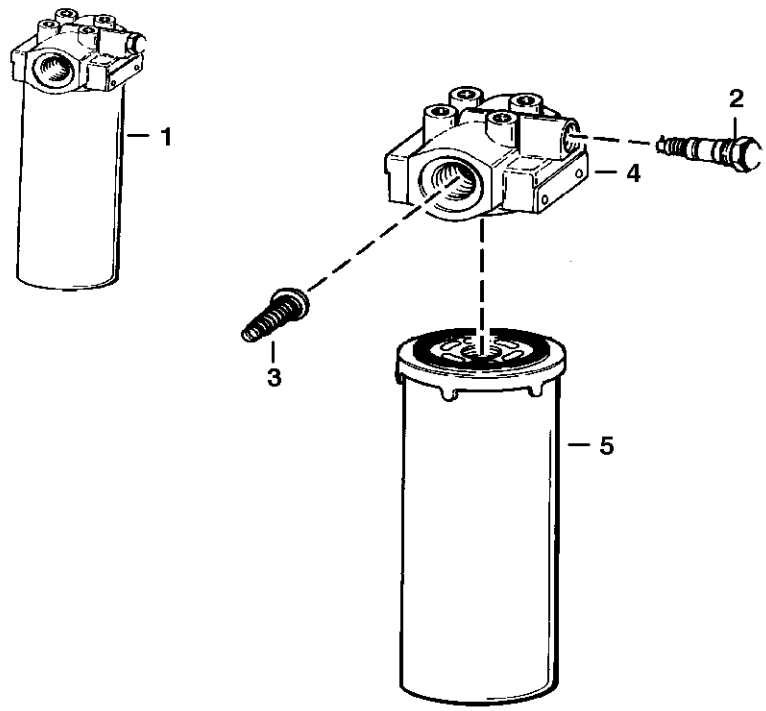

B-16487

HYDROSTATIC OIL FILTER

Ref.N°	Part N°	Description	Remarks	Serial N°	Qty.
1	6676969	FILTER ASSY	W/Ref. HYDROSTATIC OIL FILTER(2) - HYDROSTATIC OIL FILTER(5) (50 PSI by-pass & switch)		1
2	6660260	SWITCH	pressure - normally open		1
2	6599365	KIT	Nut, washer & O-rings for switch		1
3	NAP	VALVE	by-pass (50 PSI - Order Ref. HYDROSTATIC OIL FILTER(1))		1
4	NSS	HEAD	Order Ref. HYDROSTATIC OIL FILTER(1)		1
5	6661248	ELEMENT			1

CAB ELECTRICAL CIRCUITRY

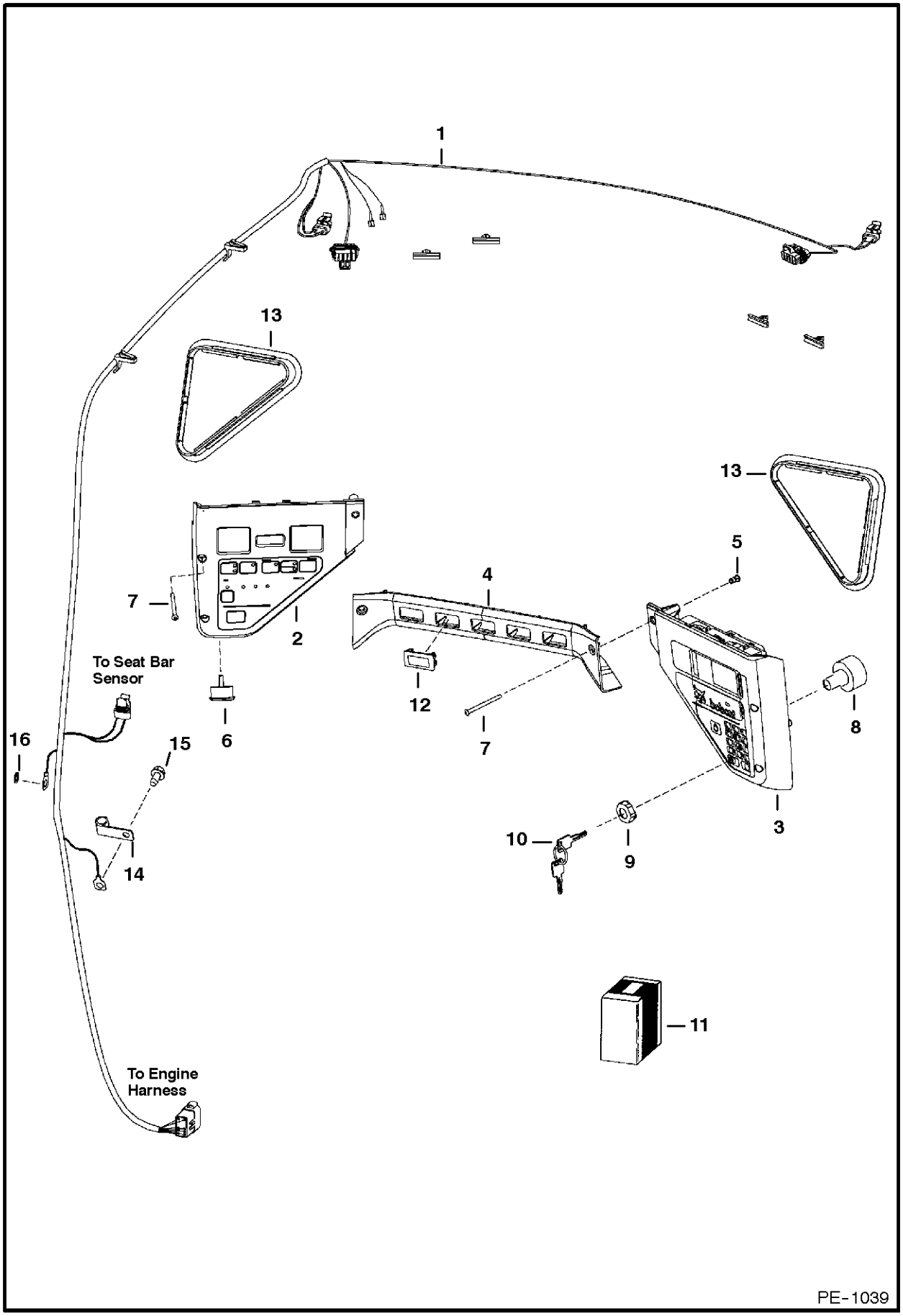

CAB ELECTRICAL CIRCUITRY

Ref.N°	Part N°	Description	Remarks	Serial N°	Qty.
1	6718870	HARNESS			1
2	6678680	PANEL	%L.H. - W/Ref. CAB ELECTRICAL CIRCUITRY(6) - Was 6672346 [A]		1
2	6675982	PLUG	backlighting service hole		1
2	6679855	BULB	Was 6675337 [A]		2
3	6678681	PANEL	R.H. - keyed - W/Ref. CAB ELECTRICAL CIRCUITRY(8) & CAB ELECTRICAL CIRCUITRY(9) - Was 6677175 [A]		1
3	6678682	PANEL	R.H. - deluxe - keyless - Was 6672348 [A]		1
3	NAP	INSTRUCTIONS	for deluxe panel - See Service Manual - Was 6900860 [A]		1
4	NAP	CROSSMEMBER	Order 6679845 Crossmember - See Page CAB ELECTRICAL CIRCUITRY(1) - Was 6674317 [A]		1
5	6675033	INSERT	threaded		6
6	6679856	ALARM	W/nut - Was 6675390 [A]		1
7	6719084	BOLT			6
8	6679842	SWITCH	ignition - W/Ref. CAB ELECTRICAL CIRCUITRY(9) - Was 6675470 [A]		1
9	6674202	NUT			2
10	6709527	KEY	ignition		1
11	NAP	KIT	keyless ign. - Order 6672348inD1S Panel - See Service Manual		1
12	6719038	PLUG			x
13	6674403	COVER			2
14	6675171	CLAMP			1
15	84G-3712	BOLT			1
16	6E-5	WASHER			1

CAB ELECTRICAL CIRCUITRY

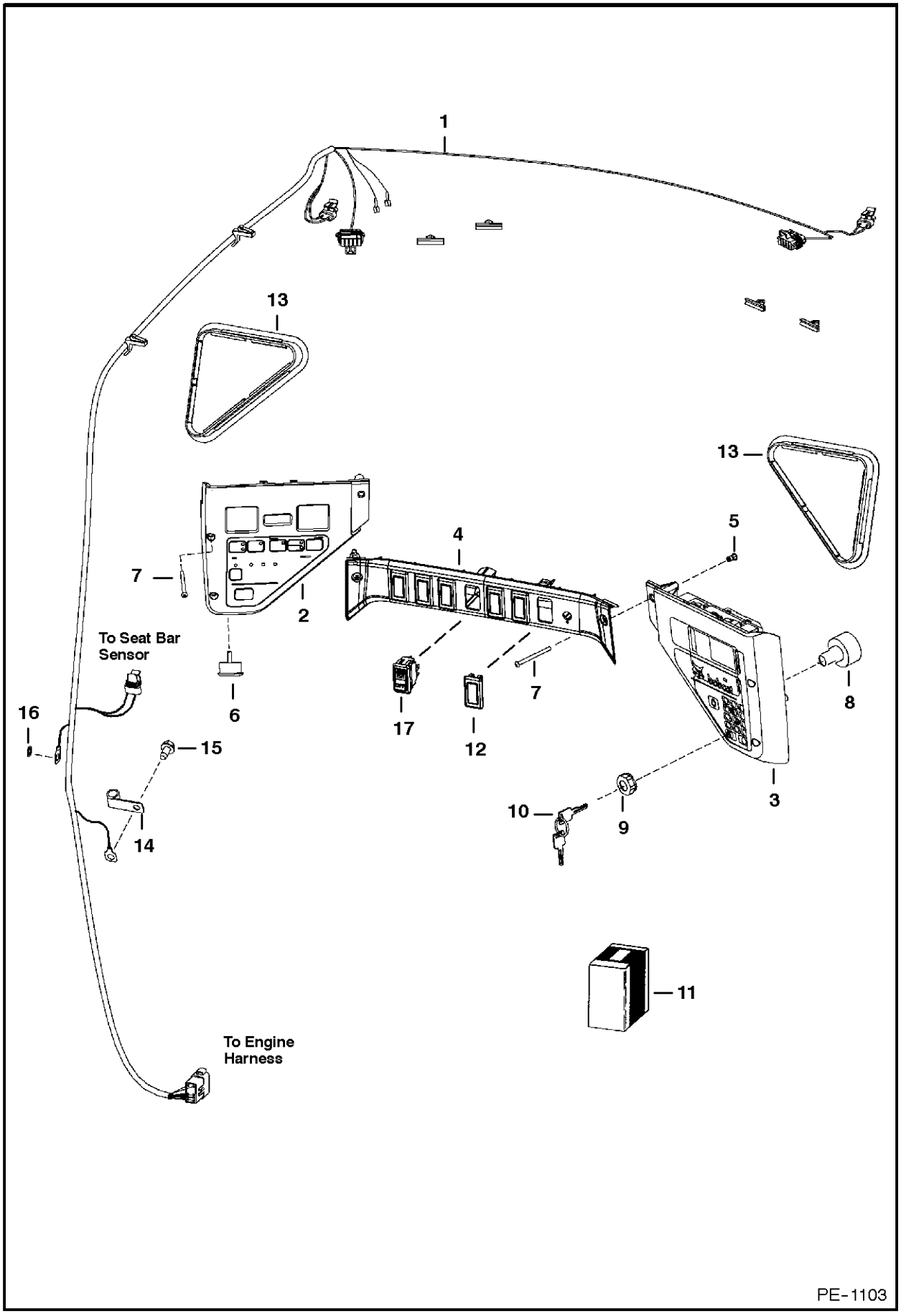

CAB ELECTRICAL CIRCUITRY

Ref.N°	Part N°	Description	Remarks	Serial N°	Qty.
1	6727178	HARNESS			1
2	6678680	PANEL	%L.H. - W/Ref. CAB ELECTRICAL CIRCUITRY(6) - Was 6672346 [A]		1
2	6675982	PLUG	backlighting service hole		1
2	6679855	BULB	Was 6675337 [A]		2
3	6678681	PANEL	R.H. - keyed - W/Ref. CAB ELECTRICAL CIRCUITRY(8) & CAB ELECTRICAL CIRCUITRY(9) - Was 6677175 [A]		1
3	6678682	PANEL	R.H. - deluxe - keyless - Was 6672348 [A]		1
3	NAP	INSTRUCTIONS	for deluxe panel - See Service Manual - Was 6900860 [A]		1
4	NAP	CROSSMEMBER	Order 6679845 Crossmember - See Page CAB ELECTRICAL CIRCUITRY(1) - Was 6674317 [A]		1
5	6675033	INSERT	threaded		6
6	6679856	ALARM	W/nut - Was 6675390 [A]		1
7	6719084	BOLT			6
8	6679842	SWITCH	ignition - W/Ref. CAB ELECTRICAL CIRCUITRY(9) - Was 6675470 [A]		1
9	6674202	NUT			2
10	6709527	KEY	ignition		1
11	NAP	KIT	keyless ign. - Order 6672348inD1S Panel - See Service Manual		1
12	6719038	PLUG	Was 6807730 [A]		x
13	6674403	COVER			2
14	6675171	CLAMP			1
15	84G-3712	BOLT			1
16	6E-5	WASHER			1
17	6676536	SWITCH	park brake		1

ENGINE ELECTRICAL CIRCUITRY

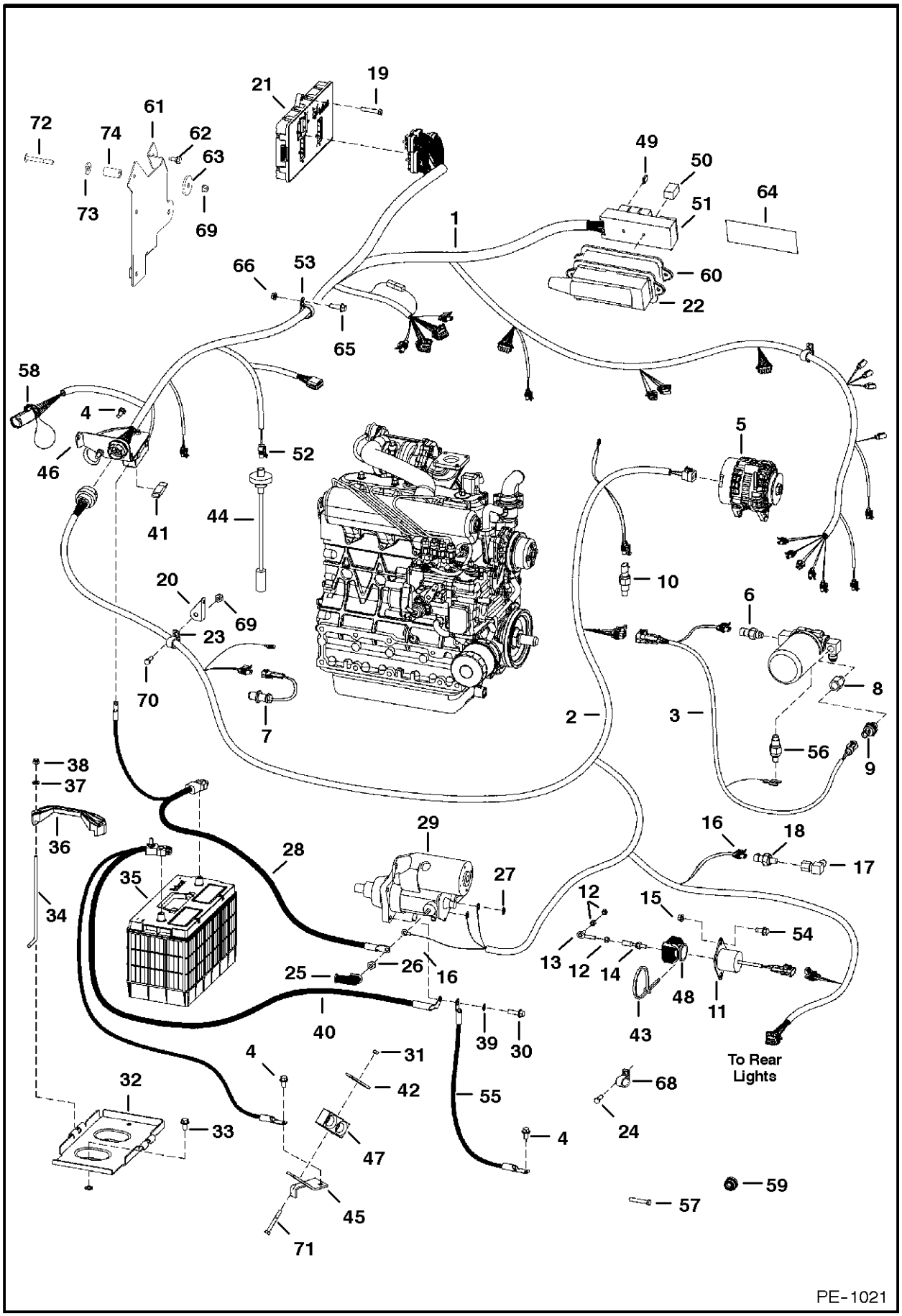

ENGINE ELECTRICAL CIRCUITRY

Ref.N°	Part N°	Description	Remarks	Serial N°	Qty.
1	6719802	HARNESS	W/Ref. ENGINE ELECTRICAL CIRCUITRY(49) - ENGINE ELECTRICAL CIRCUITRY(51) & ENGINE ELECTRICAL CIRCUITRY(53) - Was 6719720 [A]		1
1	6719803	HARNESS	W/Ref. ENGINE ELECTRICAL CIRCUITRY(49) - ENGINE ELECTRICAL CIRCUITRY(51) & ENGINE ELECTRICAL CIRCUITRY(53) - AHC - Was 6718913 [		1
1	6717569	DIODE	6 amp		1
2	6718871	HARNESS	engine - W/Ref. ENGINE ELECTRICAL CIRCUITRY(20), ENGINE ELECTRICAL CIRCUITRY(69) & ENGINE ELECTRICAL CIRCUITRY(70)		1
3	6715975	HARNESS	filter		1
4	84G-3712	BOLT			3
5		ALTERNATOR	See Page ALTERNATOR(1)		1
6	6727869	SENDER	hyd. temp. - Was 6718417 [B]		1
7	6658260	SENSOR	rpm		1
8	6718948	ADAPTER	W/filter		1
8	6675278	FILTER			1
9	6674316	SWITCH	%hyd. chg. press. - 3-pin molded connector		1
10	6718415	SWITCH	eng. temp.		1
11	6667993	SOLENOID	fuel shut off		1
12	62D-4	NUT			3
13	6578363	ROD END	swivel		1
14	6578366	BALL JOINT			1
15	61D-4	NUT			2
16	6672750	CONNECTOR			1
17	6707040	ELBOW			1
18	6674315	SWITCH	eng. oil press.		1
19	43C-616	BOLT	Was 35C-616 [B]		3
20	6714979	BRACKET			1
21	6678674	CONTROLLER	Bobcat - Was 6678068 [A]		1
21		CONTROLLER	Bobcat - AHC, ACS option - See Page CONTROLS ELECTRICAL(1)		1
22	6718659	HOUSING	fuse - boot		1
23	6675171	CLAMP			1
24	1CM-1220	BOLT			1
25	6560172	COVER			1
26	4DM-10	NUT			1
27	4DM-5	NUT			1
28	6719060	CABLE	pos.		1
29		STARTER	See Page STARTER(1)		1
30	35C-620	BOLT			3
31	91D-5	NUT			1
32	6718260	BATTERY PAN			1
33	84G-3716	BOLT			2
34	6576280	BOLT			2
35	6674687	BATTERY			1
35		BATTERY CAP			2
36	6569203	CLAMP			1
37	25E-15	WASHER			2
38	59D-5	NUT			2
39	6E-6	WASHER			1
40	6719059	CABLE	ground		1

ENGINE ELECTRICAL CIRCUITRY

Ref.N°	Part N°	Description	Remarks	Serial N°	Qty.
41	6675155	FUSE	100 amp		1
41	6675154	HOLDER	high amp fuse		1
42	6715132	RETAINER			1
43	6610510	NYLON TIE			3
44	6674209	SENSOR	fuel		1
44	6717579	GASKET			1
45	6719230	BRACKET			1
46	6726503	BRACKET	Was 6718970 [A]		1
47	6715197	CLAMP			1
48	6664286	BOOT	Also Order Ref. ENGINE ELECTRICAL CIRCUITRY(43)		1
49	6654806	FUSE	15 amp		2
49	6702444	FUSE	25 amp		6
49	6718034	FUSE	30 amp		2
50	6679820	SWITCH	relay - Was 6674376 [A]		7
51	6673200	FUSE BLOCK			1
52	6646383	CONNECTOR	fuel sender		1
52	6648330	TERMINAL	female - Was 6632946 [B]		2
53	6674673	CLAMP			1
54	17C-410	BOLT			2
55	6713821	CABLE			1
56	6660260	SWITCH	filter - See Page HYDROSTATIC OIL FILTER(1)		1
57	6716744	BOLT	thumb - 1.5'(38,1 mm) long		1
58	6667533	COVER			1
59	6675096	GROMMET			1
60	6725302	GASKET	See Page PANELS(1)		1
61	6719562	MOUNT			1
62	84G-3112	BOLT			3
63	872229	WASHER			1
64		DECAL	2.10' x 9.4'(53,3 mm x 238,8 mm) - fuse/relay - See Page PANELS(1)		1
65	35C-616	BOLT			1
66	91D-6	NUT			2
67	59D-6	NUT			1
68	30H-48	CLAMP			1
69	85D-5	NUT	Was 85D-8 [B]		2
70	17C-512	BOLT			2
71	17C-540	BOLT			1
72	37C-540	BOLT			1
73	25E-6				1
74	6714428	SPACER			1

ENGINE ELECTRICAL CIRCUITRY

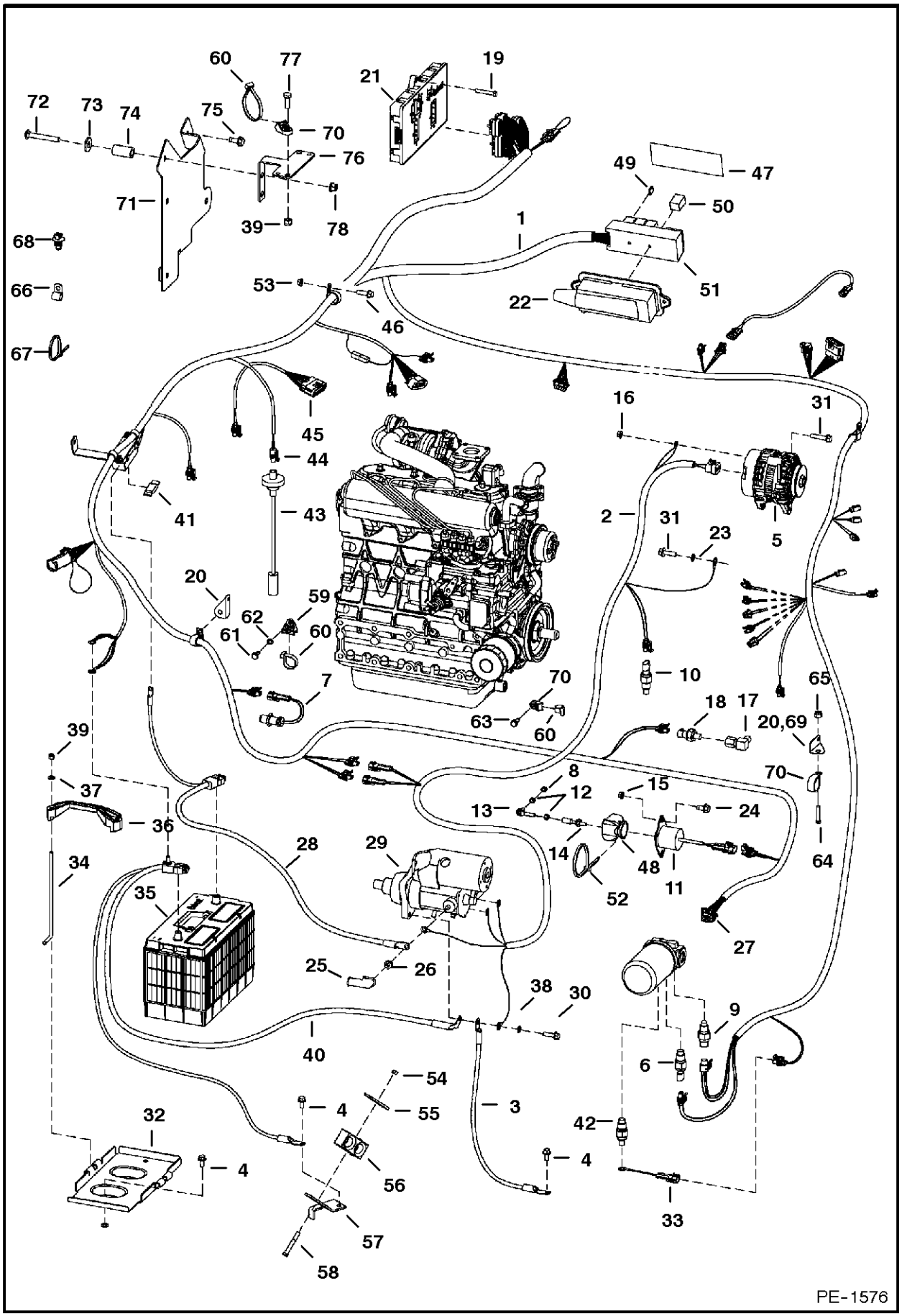

ENGINE ELECTRICAL CIRCUITRY

Ref.N°	Part N°	Description	Remarks	Serial N°	Qty.
1	6729055	HARNESS	main frame	5122 58000-	1
1				5124 51000-	1
1	6729962	HARNESS	main frame	5122 -	1
1				5124 -	1
1	6732801	HARNESS	main frame - Was 6731977 [B,D]	5122 & Abv	1
1				5124 & Abv	1
2	6726601	HARNESS	engine - W/Ref. ENGINE ELECTRICAL CIRCUITRY(20)	5122 & Bel	1
2				5124 & Bel	1
2	6729973	HARNESS	engine - Was 6739973 [D]	5122 & Abv	1
2				5124 & Abv	1
3	6565170	CABLE	neg.		1
4	84G-3712	BOLT			4
5		ALTERNATOR	See Page ALTERNATOR(1) & ALTERNATOR(1)		1
6	6727869	SENDER	hyd. temp.		1
7	6658260	SENSOR	rpm		1
8	66D-4	NUT			1
9	6674316	SWITCH	%hyd. chg. press. - 3-pin molded connector		1
10	6718415	SWITCH	eng. temp.		1
11	6667993	SOLENOID	fuel shut off		1
12	62D-4	NUT			2
13	6578363	ROD END	swivel		1
14	6578366	BALL JOINT			1
15	61D-4	NUT			2
16	43DM-8	NUT			1
17	6707040	ELBOW			1
18	6674315	SWITCH	eng. oil press.		1
19	43C-616	BOLT			3
20	6714979	BRACKET	Use W/Ref. ENGINE ELECTRICAL CIRCUITRY(1) (6729055 Harness)	5122 58000-	2
20				5124 51000-	1
21	6678674	CONTROLLER	Bobcat - Was 6676553 [A]		1
21		CONTROLLER	Bobcat - AHC, ACS option - See Page CONTROLS ELECTRICAL(1) - Was 6678068 [A]		1
22	6718659	HOUSING	fuse - boot		1
23	6E-5	WASHER			1
24	17C-410	BOLT			2
25	6560172	COVER			1
26	4DM-10	NUT			1
27	6676400	CONNECTOR			x
28	6727528	CABLE	pos. - Use W/starter on Page STARTER(1)		1
28	6731256	CABLE	pos. - Use W/starter on Page * (1)		1
29	6667587	STARTER	See Page STARTER(1)		1
30	35C-620	BOLT			3
31	29CM-820	BOLT			2
32	6718260	BATTERY PAN			1
33	6728626	HARNESS			1
34	6576280	BOLT			2
35	6674687	BATTERY			1
36	6569203	CLAMP			1
37	25E-15	WASHER			2

ENGINE ELECTRICAL CIRCUITRY

Ref.N°	Part N°	Description	Remarks	Serial N°	Qty.
38	6E-6	WASHER			1
39	59D-5	NUT		5122 & Bel	4
39				5124 & Bel	4
39	59D-5	NUT		5122 & Abv	6
39				5124 & Abv	6
40	6729008	CABLE	ground		1
41	6675155	FUSE	100 amp		1
41	6675154	HOLDER	high amp fuse		1
42		SWITCH	See Page HYDROSTATIC OIL FILTER(1)		1
43	7000004	SENSOR	fuel - W/gasket		1
43	6717579	GASKET			1
44	6646383	CONNECTOR	fuel sender		1
44	6648330	TERMINAL	female		2
45	6677216	CONNECTOR			x
46	35C-616	BOLT			1
47	6718774	DECAL	2' x 7' (50,8 mm x 177,8 mm) - fuse/relay - See Page PANELS(1)		1
48	6664286	BOOT	Also Order Ref. ENGINE ELECTRICAL CIRCUITRY(52)		1
49	6654806	FUSE	15 amp		2
49	6702444	FUSE	25 amp		6
49	6718034	FUSE	30 amp		2
50	6679820	SWITCH	relay - Was 6674376 [A]		7
51	6673200	FUSE BLOCK			1
52	6610510	NYLON TIE			3
53	91D-6	NUT			2
54	91D-5	NUT			1
55	6715132	RETAINER			1
56	6715197	CLAMP			1
57	6719230	BRACKET			1
58	17C-540	BOLT			1
59	6678818	MOUNT	Use W/Ref. ENGINE ELECTRICAL CIRCUITRY(1) (6729962 Harness)		1
60	6624289	STA-STRAP	Use W/Ref. ENGINE ELECTRICAL CIRCUITRY(1) (6729962 Harness)		10
61	1CM-825	BOLT	Use W/Ref. ENGINE ELECTRICAL CIRCUITRY(1) (6729962 Harness)		1
62	25E-14	WASHER	Use W/Ref. ENGINE ELECTRICAL CIRCUITRY(1) (6729962 Harness)		1
63	1CM-870	BOLT	Use W/Ref. ENGINE ELECTRICAL CIRCUITRY(1) (6729962 Harness)		2
64	17C-516	BOLT	Use W/Ref. ENGINE ELECTRICAL CIRCUITRY(1) (6729962 Harness)		1
65	85D-5	NUT	Use W/Ref. ENGINE ELECTRICAL CIRCUITRY(1) (6729962 Harness)		1
66	30H-60	CLIP	Use W/Ref. ENGINE ELECTRICAL CIRCUITRY(1) (6729962 Harness)		2
67	6678668	STRAP	Use W/Ref. ENGINE ELECTRICAL CIRCUITRY(1) (6729962 Harness)		1
68	6678666	MOUNT	Use W/Ref. ENGINE ELECTRICAL CIRCUITRY(1) (6729962 Harness)		1
69	6714979	BRACKET	Use W/Ref. ENGINE ELECTRICAL CIRCUITRY(1) (6729962 Harness)		1

ENGINE ELECTRICAL CIRCUITRY

Ref.N°	Part N°	Description	Remarks	Serial N°	Qty.
70	6678667	MOUNT	Use W/Ref. ENGINE ELECTRICAL CIRCUITRY(1) (6729962 Harness)		4
71	6719562	MOUNT			1
72	37C-540	BOLT			1
73	25E-6				1
74	6714428	SPACER			1
75	84G-3112	BOLT			1
76	6728621	BRACKET	Use W/Ref. ENGINE ELECTRICAL CIRCUITRY(1) (6729962 Harness)		1
77	17C-514	BOLT	Use W/Ref. ENGINE ELECTRICAL CIRCUITRY(1) (6729962 Harness)		2
78	83D-5	NUT	Use W/Ref. ENGINE ELECTRICAL CIRCUITRY(1) (6729962 Harness)		1

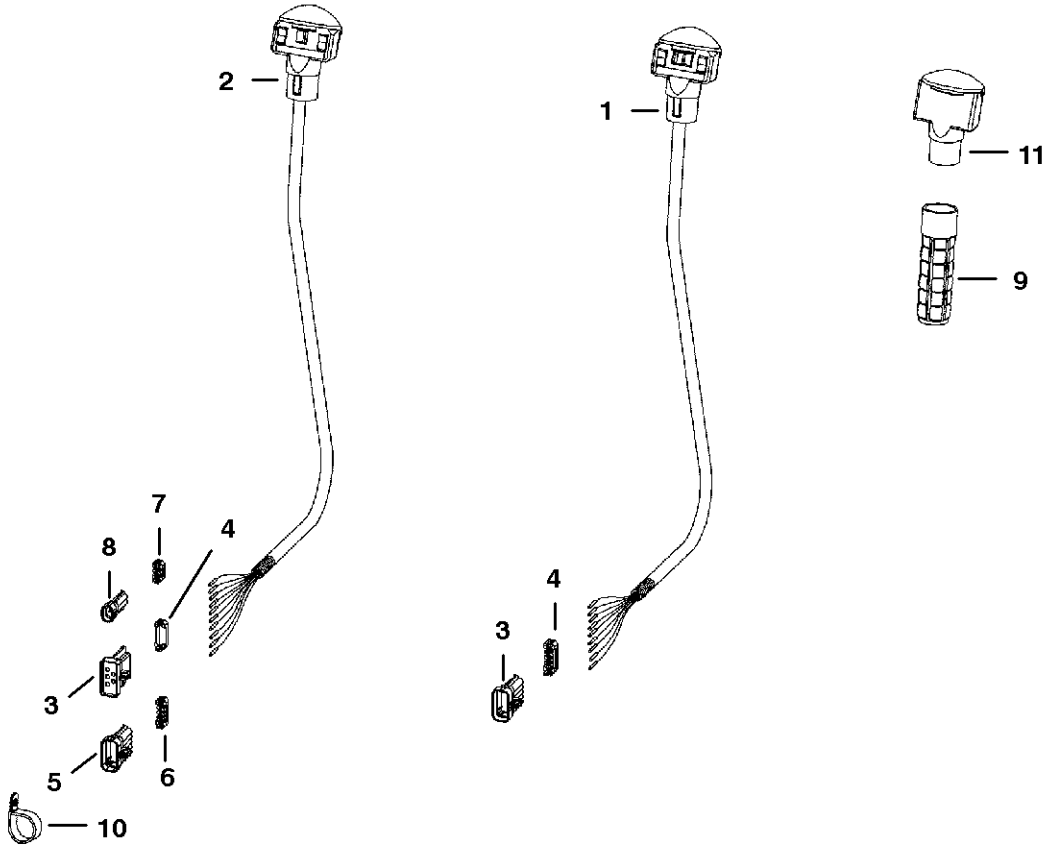

PE-1041

CONTROLS ELECTRICAL

Ref.N°	Part N°	Description	Remarks	Serial N°	Qty.
1	6675468	HANDLE ASSY	R.H. - %Also Order Ref. CONTROLS ELECTRICAL(3) & CONTROLS ELECTRICAL(4) - Was 6674449 [A]%		1
1	6640690	PIN			9
1	6641176	SEAL			9
2	6674450	HANDLE ASSY.	L.H. - Also Order Ref. CONTROLS ELECTRICAL(3) - CONTROLS ELECTRICAL(8)		1
2	6640690	PIN			10
2	6641176	SEAL			10
2	6677370	DECAL			1
3	6640692	CONNECTOR	10-pin		1
4	6640694	LOCK	10-pin		1
5	6667144	CONNECTOR	5 - way		1
6	6667145	LOCK	5 - way		1
7	6641180	LOCK	2 - pin		1
8	6641179	CONNECTOR	2 - pin		2
9	6702621	GRIP			2
10	6674000	CLAMP			2
11	6705920	HANDLE	L.H. - blank		1
11	6706565	KIT	blank handle		1
11	6722759	INSTRUCTIONS			1

CONTROLS ELECTRICAL
(AHC Option) (W/O Push Button Float)

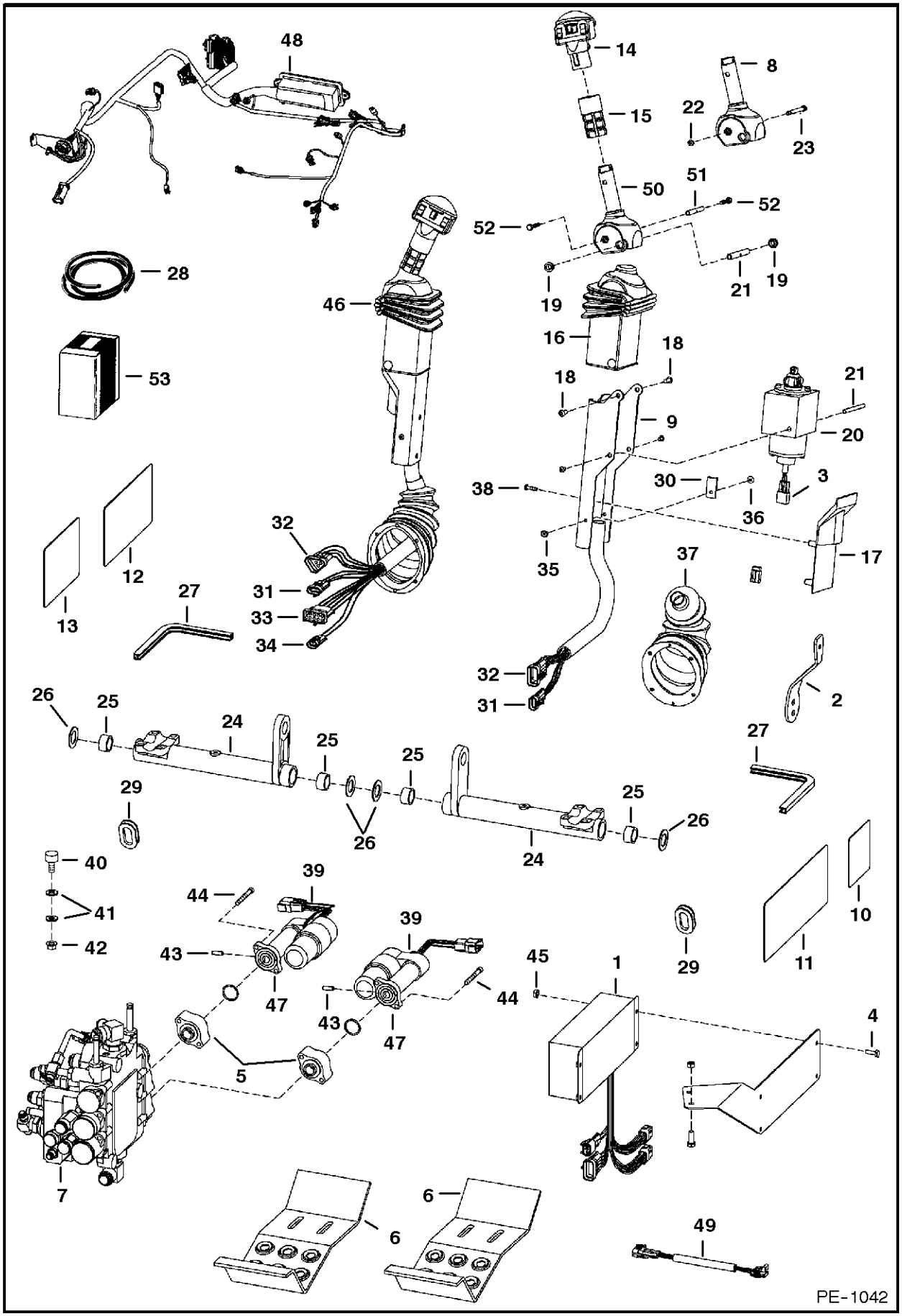

CONTROLS ELECTRICAL

Ref.N°	Part N°	Description	Remarks	Serial N°	Qty.
1	6674804	CONTROLLER			1
2	6717393	LEVER	throttle		1
3	6670707	CONNECTOR	3-pin		2
3	6670710	LOCK	3-pin		2
3	6670715	SOCKET			6
4	17C-412	BOLT			4
5	6725128	ADAPTER	actuator - Was 6718801 [A]		2
6	6712365	STEP			2
7		VALVE	AHC - See Page HYDRAULIC CONTROL VALVE(1)		1
8	NAP	HANDLE	R.H. - tilt - Order Ref. HAND CONTROL KIT(38) - HAND CONTROL KIT(40) - Was 6597774 [A]	& Abv	1
8	NAP	HANDLE	L.H. - lift - Order Ref. HAND CONTROL KIT(38) - HAND CONTROL KIT(40) - Was 6717163 [A]	& Abv	1
9	NAP	LEVER	R.H. - tilt - L shaped - Order 6597775inD1}v Lever - Was 6717055 [A]		1
9	6597775	LEVER	R.H. tilt - S shaped - Was 6597777 [D]		1
9	NAP	LEVER	L.H. - lift - L shaped - Order 6597776inD1}z Lever - Was 6717056 [A]		1
9	6597776	LEVER	L.H. lift - S shaped		1
10	6718706	DECAL	warning		1
11	6718699	DECAL			1
12	6718702	DECAL	operation		1
13	6718704	DECAL	opeation		1
14	NAP	HANDLE	R.H. - tilt - SEE BTI 335inD1} - Was 6675469 [A]		1
14	6640690	PIN			11
14	6670715	SOCKET			3
14	6641176	SEAL			11
14	6675250	HANDLE ASSY	L.H. - lift		1
14	6640690	PIN			13
14	6670715	SOCKET			3
14	6641176	SEAL			13
14	6677370	DECAL			1
15	6713349	GRIP			2
16	6713898	COVER			2
17	6715957	COVER			2
18	25GT-410	BOLT			8
19	6702990	BUSHING			4
20	NAP	SENSOR	%R.H. - tilt - Order 6727298 AHC Kit %- See Page HAND CONTROL KIT(1) - Was 6712398 [A]		4
20	NAP	SENSOR	L.H. - lift % - Order 6727298 AHC Kit %- See Page HAND CONTROL KIT(1) - Was 6712397 [A]		1
21	6713043	SPACER			4
22	12D-10	NUT		& Bel	2
23	6716826	BOLT		& Bel	2
24	6716977	BELLCRANK			2
25	6673710	BEARING	needle		4
26	6716916	WASHER	plastic		4
27	NAP	MOULDING	10.5'(266mm)long-Order Ref. CONTROLS ELECTRIC AL(28)		2
28	6654139	MOULDING	bulk - Sold Per Foot		x
29	6714726	PLUG			2
30	6665000	CLIP			2

CONTROLS ELECTRICAL

Ref.N°	Part N°	Description	Remarks	Serial N°	Qty.
31	6640699	CONNECTOR			1
31	6640700	LOCK			1
32	6640692	CONNECTOR			2
32	6640694	LOCK			2
33	6667144	CONNECTOR			1
33	6667145	LOCK			1
34	6641179	CONNECTOR			1
34	6641180	LOCK			1
35	6665322	RIVET	female		2
36	6665321	RIVET	male		2
37	6532127	BOOT			2
38	6669224	BOLT			4
39	6678775	ACTUATOR	Was 6674838 [A]		2
40	6673789	BEARING			4
41	25E-17	WASHER			8
42	98D-6	NUT			4
43	6718506	PIN			2
44	69G-436	BOLT			4
45	61D-4	NUT			5
46	NAP	LEVER ASSY	R.H. - tilt - L shaped - Order Ref. CONTROLS ELECT RICAL(53) - Was 6718195 [A]		1
46	NAP	LEVER ASSY	R.H. - lift - S shaped - Order Ref. CONTROLS ELECT RICAL(53) - Was 6718201 [A]		1
46	NAP	LEVER ASSY	L.H. - lift - L shaped - Order Ref. CONTROLS ELECT RICAL(53) - Was 6718194 [A]		1
46	NAP	LEVER ASSY	L.H. - lift - S shaped - Order Ref. CONTROLS ELECT RICAL(53) - Was 6718202 [A]		1
47	NAP	FLANGE			4
48	6719803	HARNESS	AHC - Was 6718913 [B,D]		1
48	6717569	DIODE	6 amp		1
49	6728742	HARNESS	jumper - to enhance boom lift		1
50	6729594	HANDLE	R.H.	& Abv	1
50	6729595	HANDLE	L.H.	& Abv	1
51	6729600	SPACER		& Abv	1
52	6727065	BOLT		& Abv	2
53	6727298	KIT	AHC - See Page HAND CONTROL KIT(1)		1

CONTROLS ELECTRICAL
(AHC Option) (W/ Push Button Float)

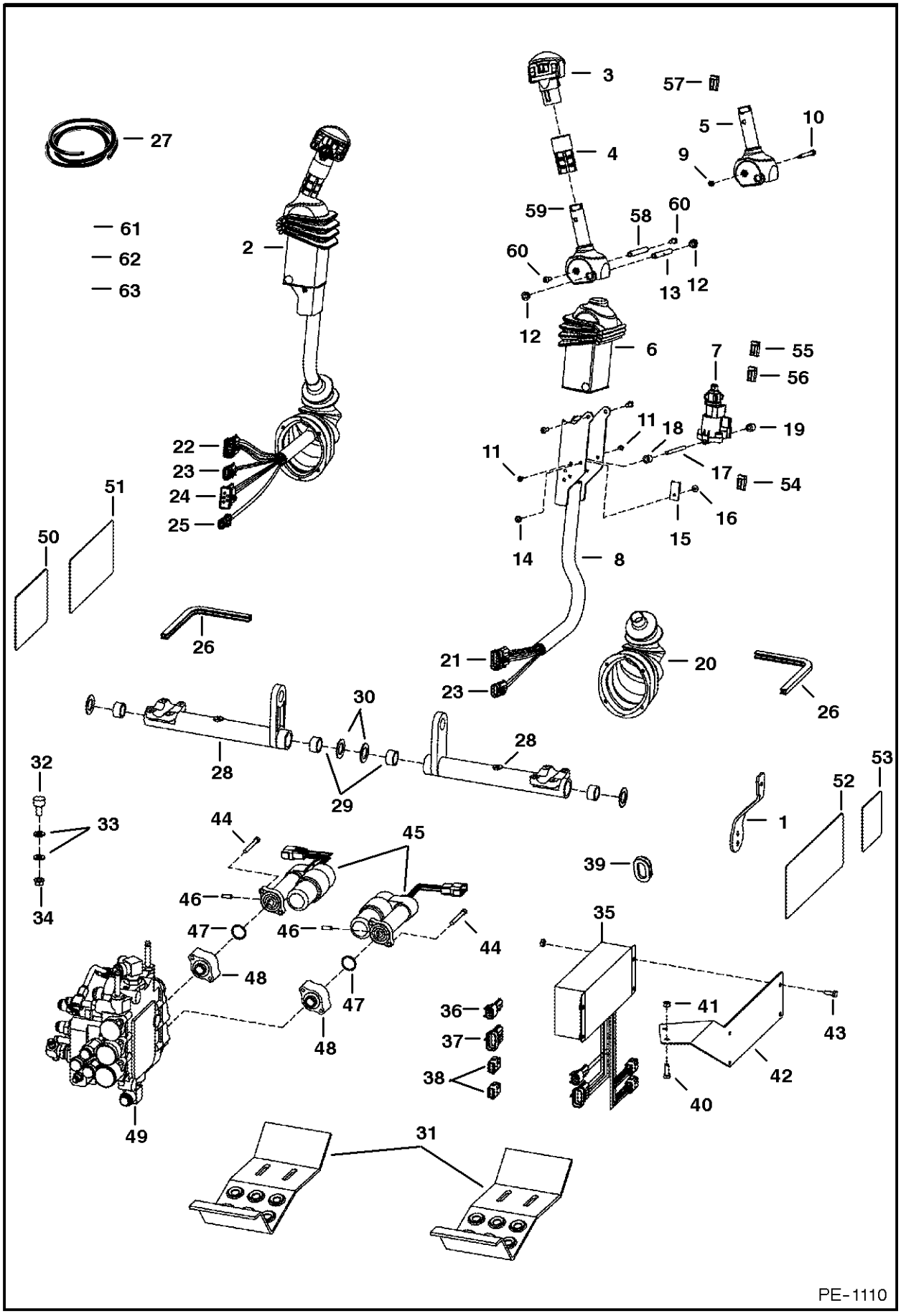

CONTROLS ELECTRICAL

Ref.N°	Part N°	Description	Remarks	Serial N°	Qty.
1	6717393	LEVER	throttle		1
2	6675742	LEVER	tilt - R.H.		1
2	6675750	LEVER	lift - L.H.		1
3	NAP	HANDLE	R.H. - tilt - SEE BTI 335inD1} - Was 6675469 [A]		1
3	6675749	HANDLE	lift - L.H.		1
4	6713349	GRIP			2
5	NAP	HANDLE	R.H. - tilt - Order Ref. CONTROLS ELECTRICAL(58) - CONTROLS ELECTRICAL(60) - Was 6597774 [A]	& Bel	1
5	NAP	HANDLE	L.H. - lift - Order Ref. CONTROLS ELECTRICAL(58) - CONTROLS ELECTRICAL(60) - Was 6717163 [A]	& Bel	1
6	6713898	COVER			2
7	6675741	SENSOR			2
7	6670706	CONNECTOR			1
7	6670715	SOCKET			3
7	6670710	LOCK			1
8	6719712	CHANNEL	R.H.		1
8	6719711	CHANNEL	L.H.		1
9	12D-10	NUT		& Bel	2
10	6716826	BOLT		& Bel	2
11	25GT-410	BOLT			8
12	6702990	BUSHING			4
13	6713043	SPACER			4
14	6665321	RIVET	male		2
15	6665000	CLIP			2
16	6665322	RIVET	female		2
17	6719834	SPACER	threaded		2
18	6727065	BOLT			4
19	6719835	SLEEVE			4
20	6532127	BOOT			2
21	6640692	CONNECTOR	10-pin		1
21	6640690	PIN			8
21	6640694	LOCK			1
21	6641176	SEAL			8
21	6646582	PLUG	cavity		1
22	6640692	CONNECTOR	10-pin		1
22	6640690	PIN			6
22	6640694	LOCK			1
22	6641176	SEAL			6
22	6646582	PLUG	cavity		4
23	6640699	CONNECTOR	3-pin		2
23	6640690	PIN			3
23	6641176	SEAL			3
23	6640700	LOCK			3
24	6667144	CONNECTOR	5-pin		2
24	6640690	PIN			3
24	6641176	SEAL			3
24	6646582	PLUG	cavity		1
24	6667145	LOCK			1
25	6641179	CONNECTOR	2-pin		1
25	6640690	PIN			2

CONTROLS ELECTRICAL

Ref.N°	Part N°	Description	Remarks	Serial N°	Qty.
25	6641176	SEAL			2
25	6641180	LOCK			1
26	NAP	MOULDING	%10.5'(266,7 mm)long-Order Ref. HAND CONTROL KIT(27)		1
27	6654139	MOULDING	bulk - Sold Per Foot		x
28	6716977	BELLCRANK			2
29	6673710	BEARING			4
30	6716916	WASHER	plastic		4
31	6712365	STEP			2
32	6673789	BEARING			4
33	25E-17	WASHER			8
34	98D-6	NUT			4
35	6676153	CONTROLLER	metal	5122 58000-58758	1
35				5124 51000-51044	1
35	6676337	CONTROLLER	gray plastic	5122 58759 & Abv	1
35				5124 51045 & Abv	1
36	6640692	CONNECTOR	10-pin		1
36	6640690	PIN			9
36	6640694	LOCK			1
36	6641176	SEAL			9
36	6646582	PLUG	cavity		1
37	6648307	CONNECTOR	2-pin		1
38	6670709	CONNECTOR	8-pin		2
39	6714726	PLUG			1
40	17C-612	BOLT			2
41	61D-6	NUT			2
42	6725165	MOUNT			1
43	17C-412	BOLT			4
44	69G-436	BOLT			4
45	6678775	ACTUATOR	Was 6674838 [A]		2
46	6718506	PIN			2
47	58K-120	O-RING			2
48	6725128	ADAPTER			2
49		VALVE	See Page HYDRAULIC CONTROL VALVE(1)		1
50	6718704	DECAL			1
51	6727155	DECAL		5122 57999 & Bel	1
51				5124 50999 & Bel	1
51	6728328	DECAL		5122 58000 & Abv	1
51				5124 51000 & Abv	1
52	6718699	DECAL			1
53	6718706	DECAL			1
54	6670707	CONNECTOR	3-pin		2
54	6670715	SOCKET			6
54	6670711	LOCK			2
55	6677364	CONNECTOR	3-pin		1
55	6676640	SEAL			3
56	6676870	CONNECTOR	3-pin		1
56	6676640	SEAL			1
56	6670715	SOCKET			1
56	6670711	LOCK			1

CONTROLS ELECTRICAL

Ref.N°	Part N°	Description	Remarks	Serial N°	Qty.
57	6676537	SWITCH	ACS		1
58	6729600	SPACER		& Abv	1
59	6729594	HANDLE	R.H.	& Abv	1
59	6729595	HANDLE	L.H.	& Abv	1
60	6727065	BOLT		& Abv	2
61	6728742	HARNESS	jumper - to enhance boom lift		1
62	6727129	HARNESS	Was 6727130 [B]	5122 57999 & Bel	1
62				5124 50999 & Bel	1
62	6726925	HARNESS		5122 58000 & Abv	1
62				5124 51000 & Abv	1
63	6729054	HARNESS	%Use W/Ref. ACS CONVERSION KIT(1) (6676153 Controller)	5122 58000-58758	1
63				5124 51000-51044	1

CONTROLS ELECTRICAL
(AHC) (ACS)

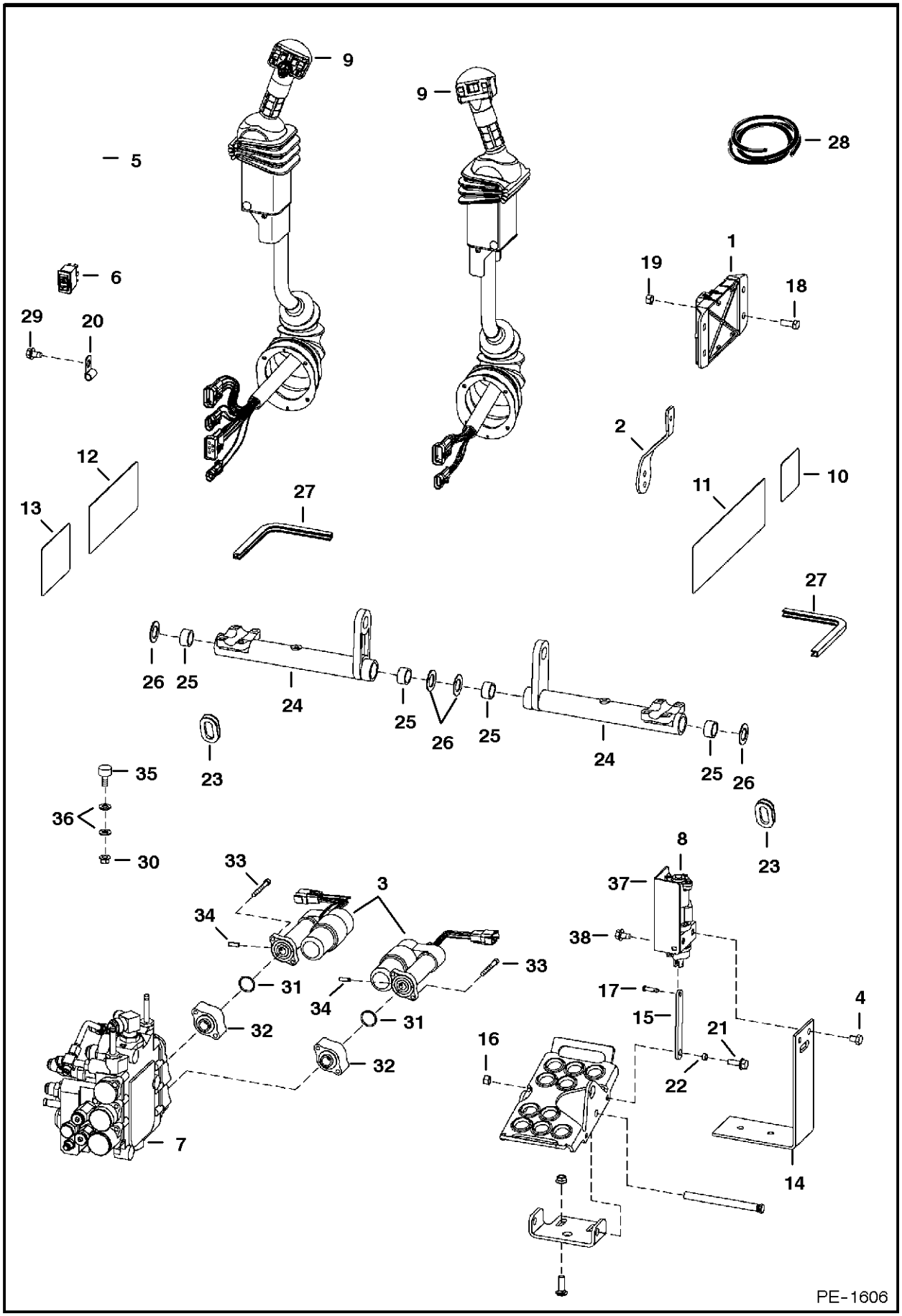

CONTROLS ELECTRICAL

Ref.N°	Part N°	Description	Remarks	Serial N°	Qty.
1	6676337	CONTROLLER	metal		1
2	6717393	LEVER	throttle		1
3	6678775	ACTUATOR			2
4	17C-608	BOLT			4
5	6729023	HARNESS			1
6	6676537	SWITCH	ACS - hand/foot		2
7		VALVE	See Page HYDRAULIC CONTROL VALVE(1)		1
8	6676493	SENSOR	foot pedal - R.H.		1
8	6676029	SOLENOID			1
8	6678492	ROTOR GROUP	foot pedal - L.H.		1
8	6676029	SOLENOID			1
9	6676333	LEVER	tilt - R.H. - See Page CONTROLS ELECTRICAL(1)		1
9	6676497	LEVER	lift - L.H. - See Page CONTROLS ELECTRICAL(1)		1
10	6718706	DECAL			1
11	6728539	DECAL			1
12	6727926	DECAL			1
13	6727941	DECAL			1
14	6726573	BRACKET			1
15	6726681	LINK			2
16	95D-5	NUT			2
17	6727496	PIN			2
18	17C-616	BOLT			2
19	95D-6	NUT			6
20	30H-62	CLIP			2
21	17C-514	BOLT			2
22	6729467	SPACER			2
23	6714726	PLUG			2
24	6716977	BELLCRANK			2
25	6673710	BEARING			4
26	6716916	WASHER	plastic		4
27	NAP	MOULDING	%10.5'(266,7 mm)long-Order Ref. HAND CONTROL KIT(27)		1
28	6654139	MOULDING	bulk - Sold Per Foot		x
29	84G-3710	BOLT			2
30	98D-6	NUT			4
31	58K-120	O-RING			2
32	6725128	ADAPTER			2
33	69G-436	BOLT			4
34	6718506	PIN			2
35	6673789	BEARING			4
36	25E-17	WASHER			8
37	6727231	SHIELD	R.H.		1
37	6727284	SHIELD	L.H.		1
38	43C-408	BOLT			4
39	17C-612	BOLT			2
40	6727580	MOUNT	controller		1

CONTROLS ELECTRICAL
(AHC) (ACS) (Handle Assembly)

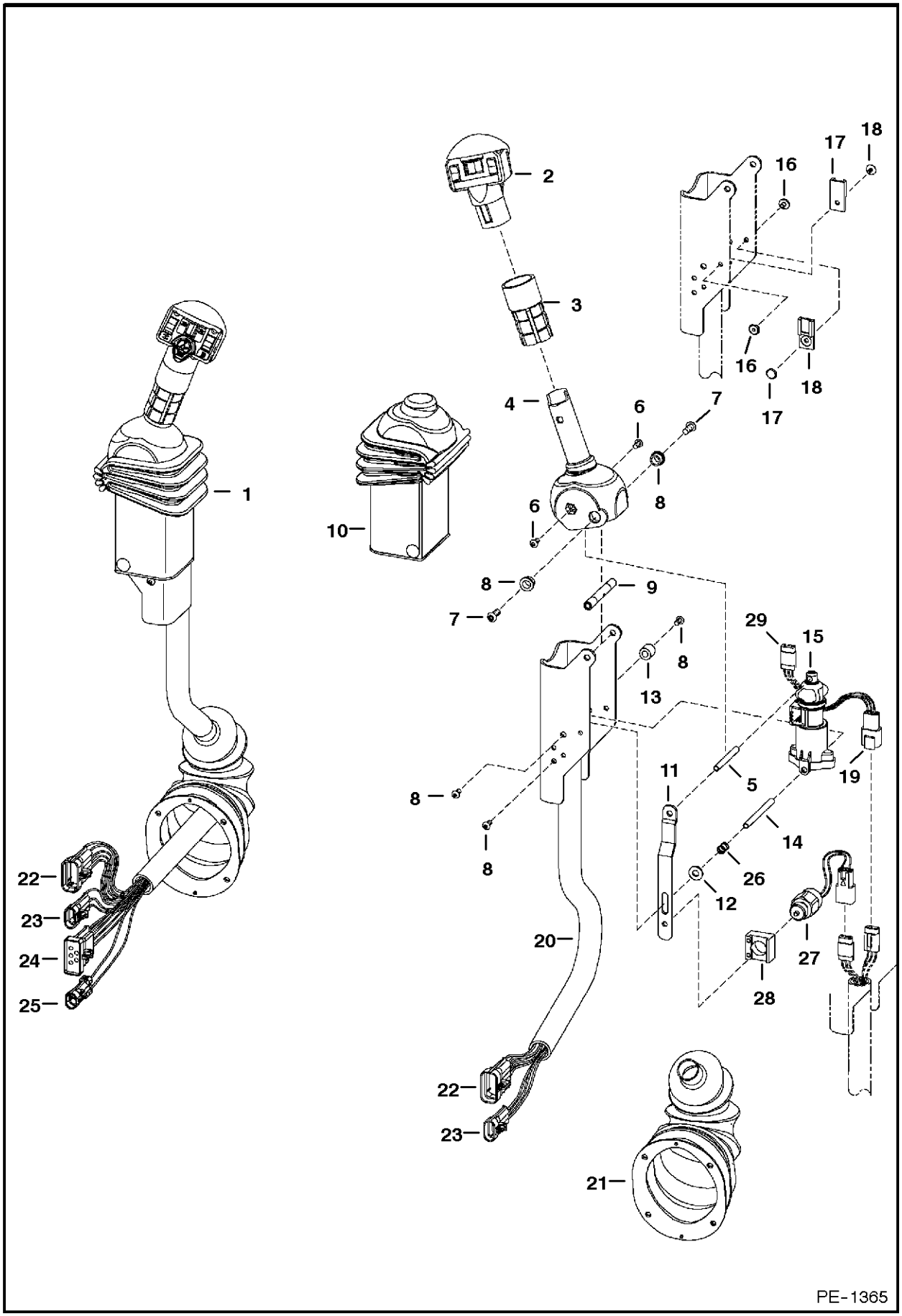

CONTROLS ELECTRICAL

Ref.N°	Part N°	Description	Remarks	Serial N°	Qty.
1	6676333	LEVER	tilt - R.H.		1
1	6676497	LEVER	lift - L.H.		1
2	6677536	HANDLE	lift - R.H.		1
2	6675749	HANDLE	lift - L.H.		1
3	6713349	GRIP			2
4	6729594	HANDLE			2
4	6729595	HANDLE	L.H.		1
5	6729600	SPACER	threaded		1
6	6727065	BOLT			6
7	25GT-410	BOLT			8
8	6702990	BUSHING			4
9	6713043	SPACER			4
10	6713898	COVER			2
11	6719715	STRAP	stop		1
12	25E-13	WASHER			1
13	6719835	SLEEVE			4
14	6719834	SPACER	threaded		2
15	6675741	SENSOR			2
15	6670706	CONNECTOR			1
15	6670715	SOCKET			3
15	6670710	LOCK			1
16	6665322	RIVET	female		2
17	6665321	RIVET	male		2
18	6665000	CLIP			2
19	6670707	CONNECTOR			1
19	6670715	SOCKET			3
19	6670711	LOCK			1
20	6719712	CHANNEL	R.H.		1
20	6719711	CHANNEL	L.H.		1
21	6532127	BOOT			2
22	6640692	CONNECTOR	10-pin		1
22	6640690	PIN			8
22	6640694	LOCK			1
22	6641176	SEAL			8
22	6646582	PLUG	cavity		1
23	6640699	CONNECTOR	3-pin		2
23	6640690	PIN			3
23	6641176	SEAL			3
23	6640700	LOCK			3
24	6667144	CONNECTOR	5-pin		2
24	6640690	PIN			3
24	6641176	SEAL			3
24	6646582	PLUG	cavity		1
24	6641180	LOCK			1
25	6641179	CONNECTOR	2-pin		1
25	6640690	PIN			2
25	6641176	SEAL			2
25	6641180	LOCK			1
26	6675745	SPRING			1
27	6676029	SOLENOID			1

CONTROLS ELECTRICAL

Ref.N°	Part N°	Description	Remarks	Serial N°	Qty.
28	6719716	MOUNT			1
29	6676870	CONNECTOR	3-pin		1
29	6670711	LOCK			1
29	6670715	SOCKET			1
29	6676640	SEAL			5

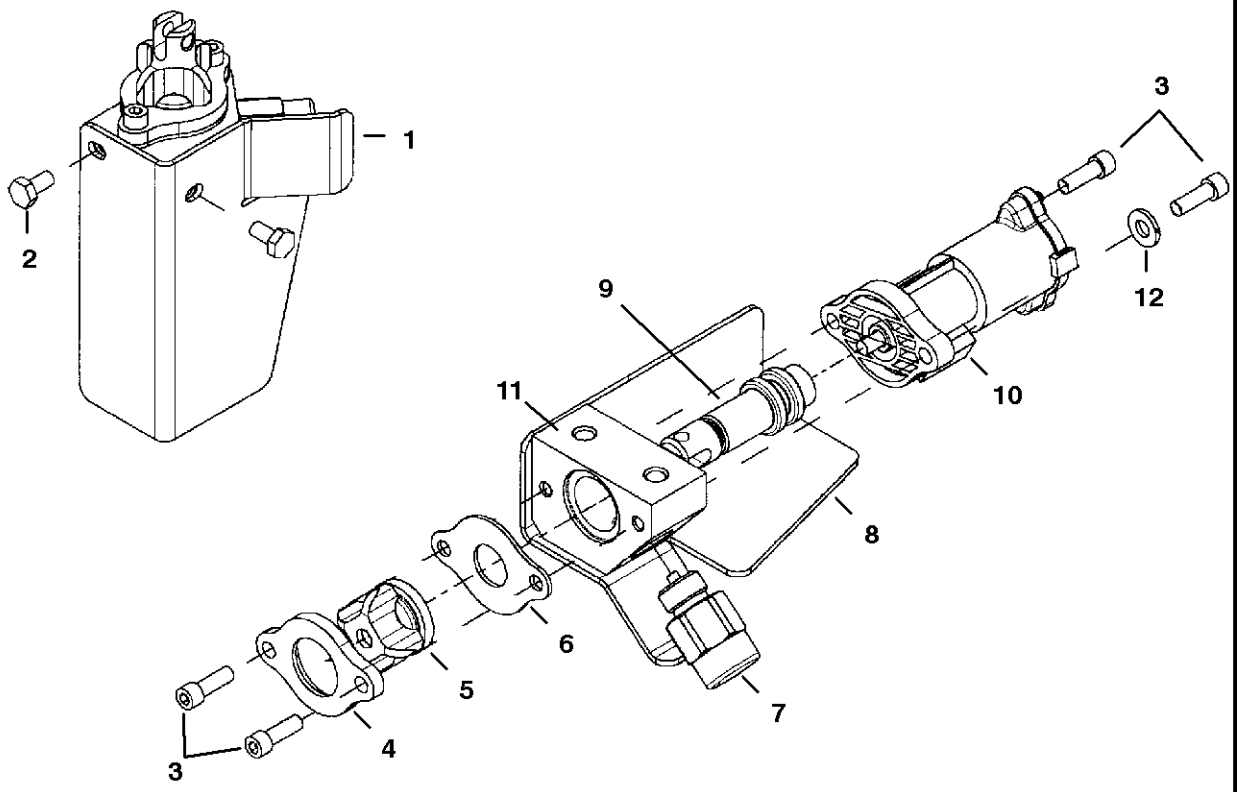

PE-1553

CONTROLS ELECTRICAL

Ref.N°	Part N°	Description	Remarks	Serial N°	Qty.
1	6676493	SENSOR	foot pedal - R.H.		1
1	6676492	SENSOR	foot pedal - L.H.		1
2	43C-408	BOLT			2
3	98G-412	BOLT			4
4	6726574	RETAINER	boot		1
5	6587763	BOOT			1
6	6726695	STOP PLATE			1
7	6676029	SOLENOID			1
8	6727231	SHIELD	R.H.		1
8	6727284	SHIELD	L.H.		1
9	NSS	SPOOL			1
10	NSS	SENSOR			1
11	NSS	BLOCK			1
12	25E-13	WASHER			2

ALTERNATOR
(Bobcat)

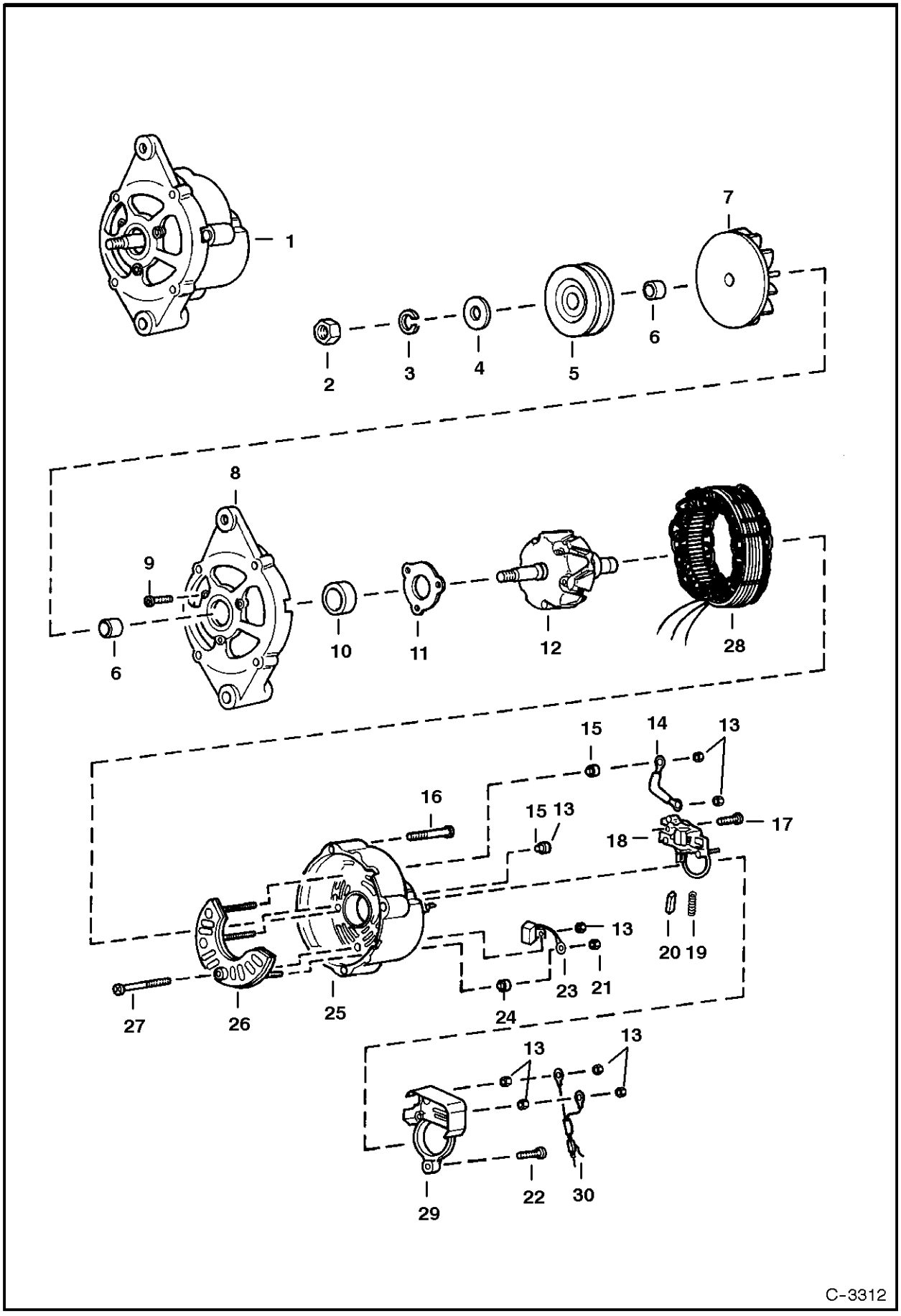

ALTERNATOR

Ref.N°	Part N°	Description	Remarks	Serial N°	Qty.
1	6661611	ALTERNATOR	Less Fan & Pulley		1
2	6659371	NUT			1
3	6659372	WASHER			1
4	6632323	WASHER			1
5	6571536	PULLEY			1
6	6659374	SPACER			2
7	6659375	FAN			1
8	6659376	BRACKET	W/Ref. ALTERNATOR(9) - ALTERNATOR(11)		1
9	6659378	BOLT			3
10	6659379	BEARING			1
11	6632228	RETAINER			1
12	6659380	ROTOR			1
13	6659387	NUT			7
14	6659397	TERMINAL			1
15	6659386	HOLDER			2
16	6659392	BOLT			3
17	6659396	SCREW			2
18	6659393	REGULATOR	W.Ref. ALTERNATOR(19) & ALTERNATOR(20)		1
19	6659395	SPRING			2
20	6659394	BRUSH			2
21	6659391	NUT			1
22	6659399	SCREW			1
23	6659388	CONDENSER			1
24	6659390	HOLDER			1
25	6659382	BRACKET	rear - W/Ref. ALTERNATOR(13), ALTERNATOR(15), ALTERNATOR(21) & ALTERNATOR(23) - ALTERNATOR(27)		1
26	6659384	RECTIFIER			1
27	6659385	SCREW			1
28	6659381	STATOR			1
29	6659398	COVER			1
30	6659400	CONNECTOR	assy.		1

ALTERNATOR

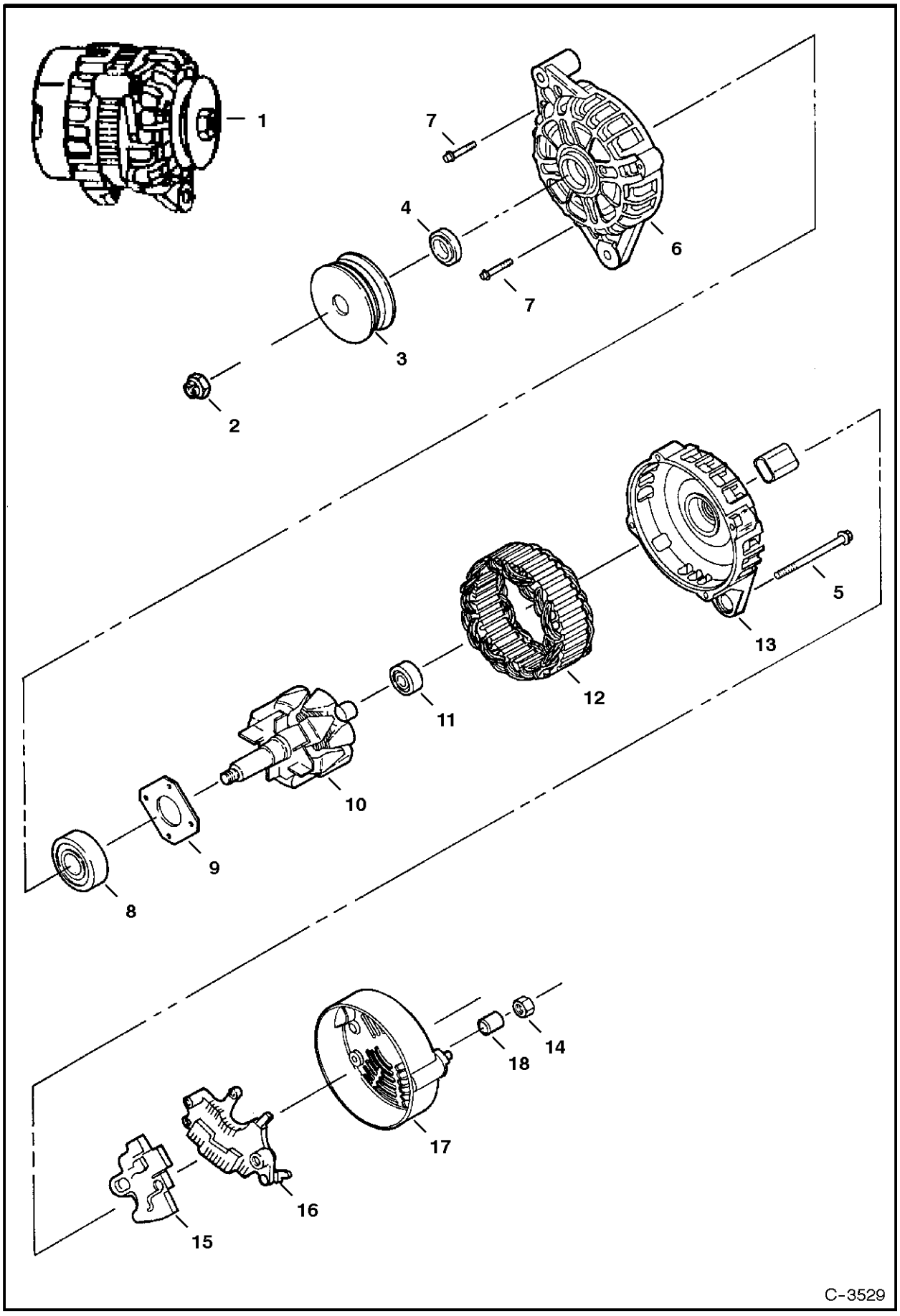

ALTERNATOR

Ref.N°	Part N°	Description	Remarks	Serial N°	Qty.
1	6678205	ALTERNATOR	90 amp - Was 6675292 [A]		1
2	6677497	NUT			1
3	6677496	PULLEY			1
4	6677495	SPACER			1
5	6677494	BOLT			4
6	6677491	BRACKET	front		1
7	6677817	BOLT			4
8	6677818	BEARING			1
9	6677819	RETAINER			1
10	6677492	ROTOR ASSY			1
11	6677820	BEARING			1
12	6677493	STATOR ASSY			1
13	6677490	BRACKET			1
14	6677486	NUT			1
15	NAP	(REGULATOR ASSY	Order Ref. ALTERNATOR(1) - Was 6677489 [A]		1
16	6677488	RECTIFIER ASSY			1
17	6677487	COVER			1
18	6677485	SPACER			1

STARTER
(Nippondenso)

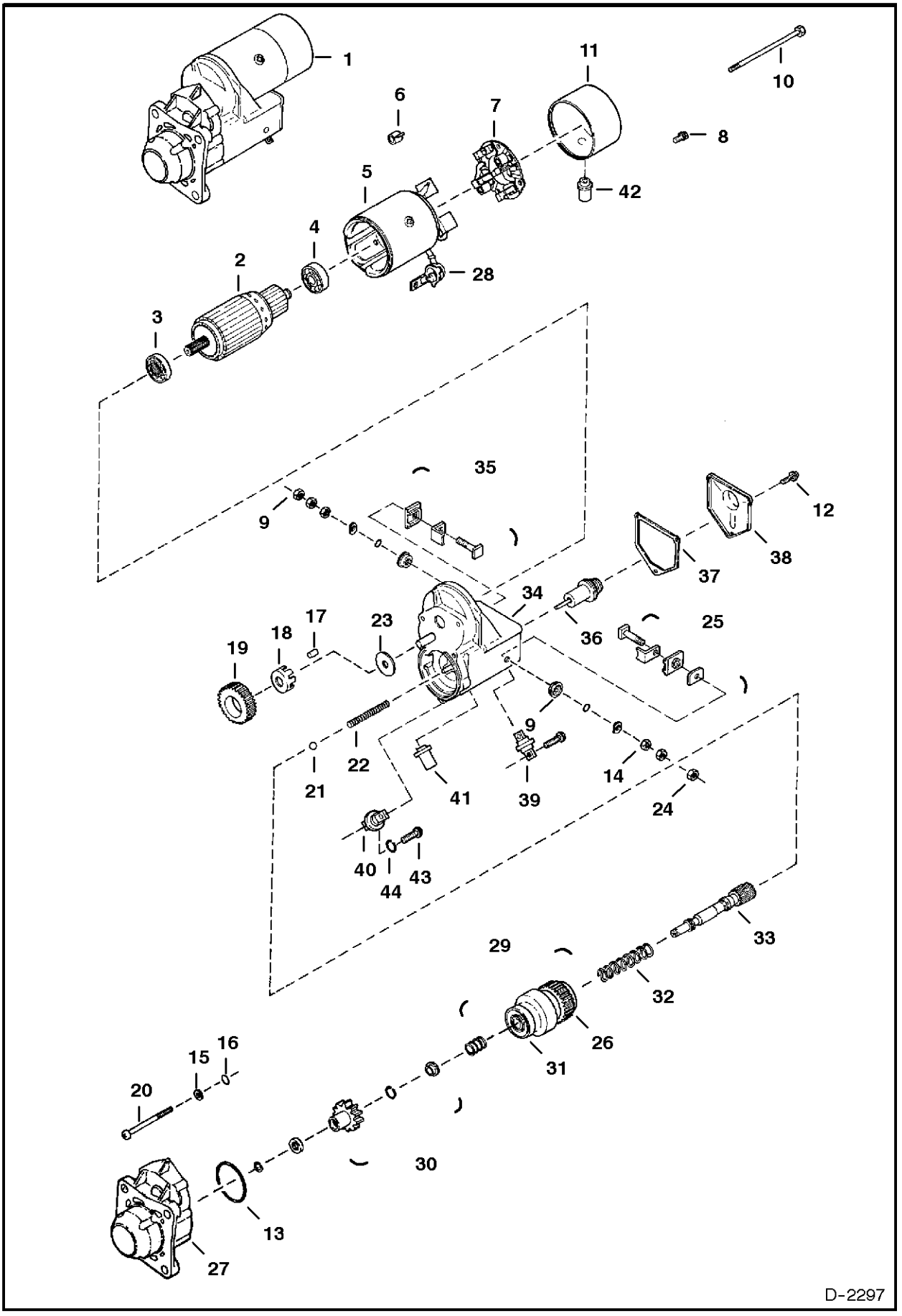

STARTER

Ref.N°	Part N°	Description	Remarks	Serial N°	Qty.
1	6667587	STARTER			1
2	6666621	ARMATURE	W/Ref. STARTER(3) & STARTER(4)		1
3	6632417	BEARING			1
4	6632418	BEARING			1
4	6671128	BEARING			1
4	6671129	BEARING			1
5	6632419	HOUSING ASSY.			1
6	6632421	SPRING			4
7	6632420	BRUSH HOLDER	W/Ref. STARTER(6)		1
8	6666634	BOLT	5mm x 9,4 mm		2
9	6666637	NUT			1
10	6666636	BOLT	6mm x 181mm		2
11	6671121	COVER			1
12	6666635	BOLT	5mm x 8mm		1
13	6666632	O-RING			1
14	6666630	WASHER	10mm		1
15	6666629	WASHER			3
16	6666631	O-RING			3
17	6632430	ROLLER			5
18	6632429	RETAINER			1
19	6632428	PINION			1
20	6666633	BOLT	6mm x 50mm		3
21	6671122	BALL			3
22	6632436	SPRING			1
23	6662437	WASHER			1
24	6666628	NUT	10mm		1
25	6671117	TERMINALS			1
26	6666622	DRIVE			1
27	6671124	HOUSING			1
28	6669365	BOOT			1
29	6671119	CLUTCH ASSY.	Ref. STARTER(26) & STARTER(30) - STARTER(33)		1
30	6671118	PINION			1
31	6671127	BEARING			1
32	6632441	SPRING			1
33	6669354	SHAFT			1
34	6671123	HOUSING			1
35	6671116	TERMINALS			1
36	6632432	PLUNGER			1
37	6632433	GASKET			1
38	6632434	COVER			1
39	6669359	TERMINAL			1
40	6671120	TERMINAL			1
41	6669360	BUSHING			1
42	6669372	COVER			1
43	6671126	SCREW			1
44	6671125	WASHER			1

*STARTER
(Valeo)

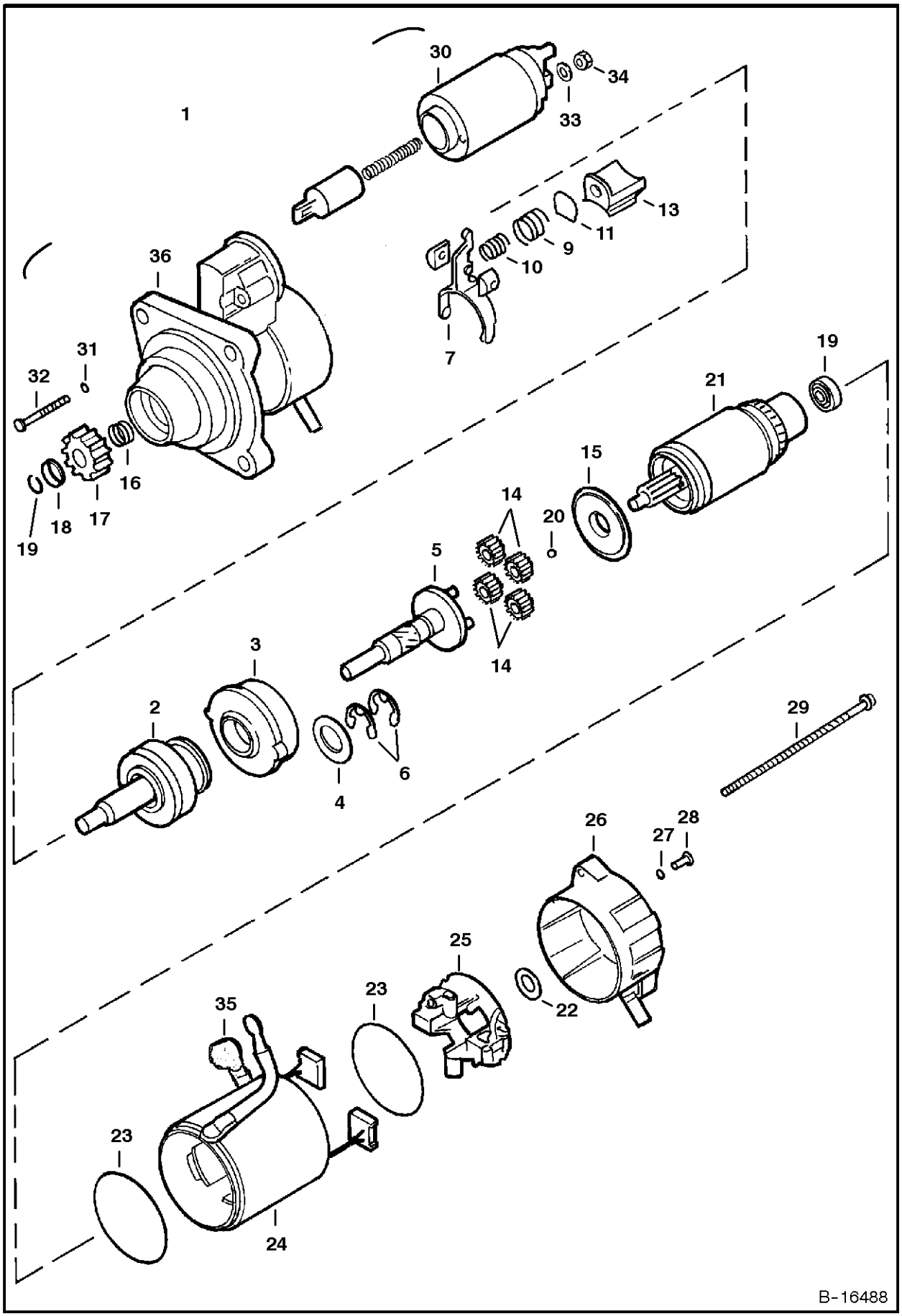

*

Ref.N°	Part N°	Description	Remarks	Serial N°	Qty.
1	6676958	STARTER			1
2	6680375	SHAFT	O.R.C. assy.		1
3	6680367	GEAR			1
4	6680378	WASHER			1
5	6680365	SHAFT			1
6	6680368	STOP RING			2
7	6680364	LEVER			1
8	6680357	HOLDER			2
9	6680381	SPRING			1
10	6680382	SPRING			1
11	6680370	PLATE			1
12	6680369	SEAL			1
13	6680371	LEVER			1
14	6680366	GEAR			4
15	6680372	BRACKET			1
16	6680361	SPRING			1
17	6680387	GEAR			1
18	6680360	STOP			1
19	6680359	STOP RING			1
20	6680362	BALL			1
21	6680374	ARMATURE			1
22	6680363	WASHER			1
23	6680380	SEAL			2
24	6680373	YOKE			1
25	6680377	HOLDER			1
26	6680386	BRACKET			1
27	6680358	RING	rubber		2
28	6680384	BOLT			2
29	6680356	BOLT			2
30	6680376	SWITCH			1
31	6680379	SEAL			2
32	6680383	BOLT			2
33	6EM-80	WASHER			1
34	4DM-8	NUT			1
35	6680355	BOOT			1
36	6680385	BRACKET			1

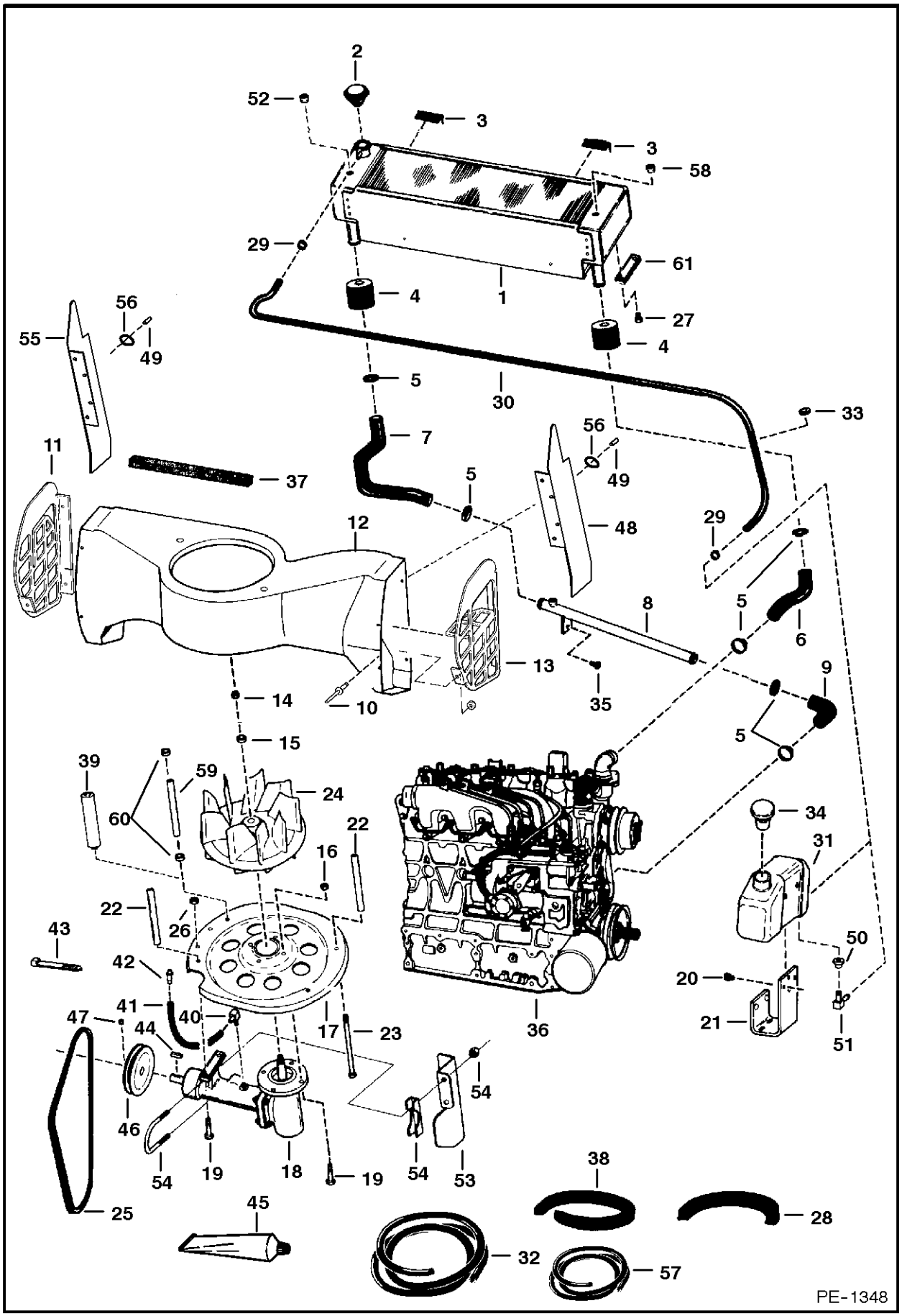
2
52
3
3
58
29
61
1
4
27
4
56
55
49
5
30
33
7
56
11
37
5
49
48
29
12
8
5
6
13
35
9
14
10
5
15
39
59
24
60
22
16
34
31
22
26
43
42
50
20
41
40
17
23
36
47
44
21
51
54
46
19
18
19
54
53
38
45
25
28
32
57
PE-1348

COOLING SYSTEM

Ref.N°	Part N°	Description	Remarks	Serial N°	Qty.
1	6666384	RADIATOR			1
2	6646678	CAP	14 PSI		1
3	NAP	MOULDING	3" (76,2 mm) long -Order Ref. COOLING SYSTEM(28)		2
4	6726433	SPACER	Was 6704829 [A]		2
5	6518820	CLAMP	worm gear		6
5	5HM-42	CLAMP	constant tension		6
6	6578280	HOSE			1
7	6578279	HOSE			1
8	6730999	TUBE ASSY	Was 6576029 [A]		1
9	6576028	HOSE			1
10	6706517	SCREW			8
11	6716571	LOUVER	L.H. - plastic		1
12	6700329	HOUSING			1
13	6716572	LOUVER	R.H. - plastic		1
14	96D-8	NUT	Was 86D-8 [B]		1
15	6701097	WASHER	Was 6803867 [A]		1
16	7D-6	NUT			4
17	6717478	INLET			1
18	6702138	HOUSING ASSY.	See Page COOLING FAN DRIVE ASSY.(1)		1
19	17C-616	BOLT			6
20	84G-3708	BOLT			2
21	6709415	MOUNT			1
22	6577382	SPACER			2
23	17C-6116	BOLT			4
24	6715142	FAN			1
25	6732416	BELT	fan - 41'(1041,4 mm) long - Use $W/Ref. COOLING SYSTEM(46) (6703483 Pulley) Europe		1
25	6715478	BELT	fan - 40'(1016 mm) long - Use W/Ref. COOLING SYSTEM(46) (6715924 Pulley)		1
26	61D-6	NUT			6
27	35C-508	BOLT			2
28	6649402	MOULDING	bulk - Sold Per Foot		x
29	6515575	CLAMP			2
30	NAP	HOSE	62" (1574,8 mm) long - Order Ref. COOLING SYSTE M(57)		1
31	6576660	TANK			1
32	6577822	HOSE	bulk - Sold Per Foot		x
33	1303932	GROMMET			1
34	6702797	CAP			1
35	17C-612	BOLT			1
36	6704441	ENGINE	See Page ENGINE & GASKET KITS(1)		1
37	NAP	MOULDING	42" (1066,8 mm) long - Order Ref . COOLING SYSTE M(38)		1
38	6511855	FOAM STRIP	bulk - Sold Per Foot - adhesive		x
39	NAP	SPACER	Was 6704907 [A]		2
40	6657376	ELBOW			1
41	NAP	HOSE	$19.5"(495,3 mm)long-Order Ref. COOLING SYSTEM (32)		1
42	6670627	BREATHER			1
43	6610510	NYLON TIE			1
44	7J-2108	KEY			1

COOLING SYSTEM

Ref.N°	Part N°	Description	Remarks	Serial N°	Qty.
45	6650407	ADHESIVE	1oz. tube		x
46	6715924	PULLEY	4.5'(114,3 mm) O.D. - Use W/Ref. COOLING SYSTEM (25) (6715478 Belt)		1
46	6703483	PULLEY	5.25'(133,35 mm) O.D. - Use W/Ref. COOLING SYSTEM(25) (6732416 Belt)		1
47	6715143	SET SCREW			2
48	6707385	SHIELD			1
49	6630207	RIVET			8
50	6553411	BUSHING	alternate design		1
51	6553412	ELBOW	alternate design		1
52	6704753	PLUG	brass		1
53	6719851	SHIELD	belt		1
54	6626631	CLAMP			1
55	6707380	SHIELD			1
56	25E-10	WASHER			8
57	6667189	HOSE	bulk - Sold Per Foot		x
58	6704753	PLUG	brass		1
59	6732318	SPACER			2
60	6732457	WASHER	step		4
61	6679991	SEAL	washer		1

ENGINE & ATTACHING PARTS
(Air Cleaner, Muffler & Grill)

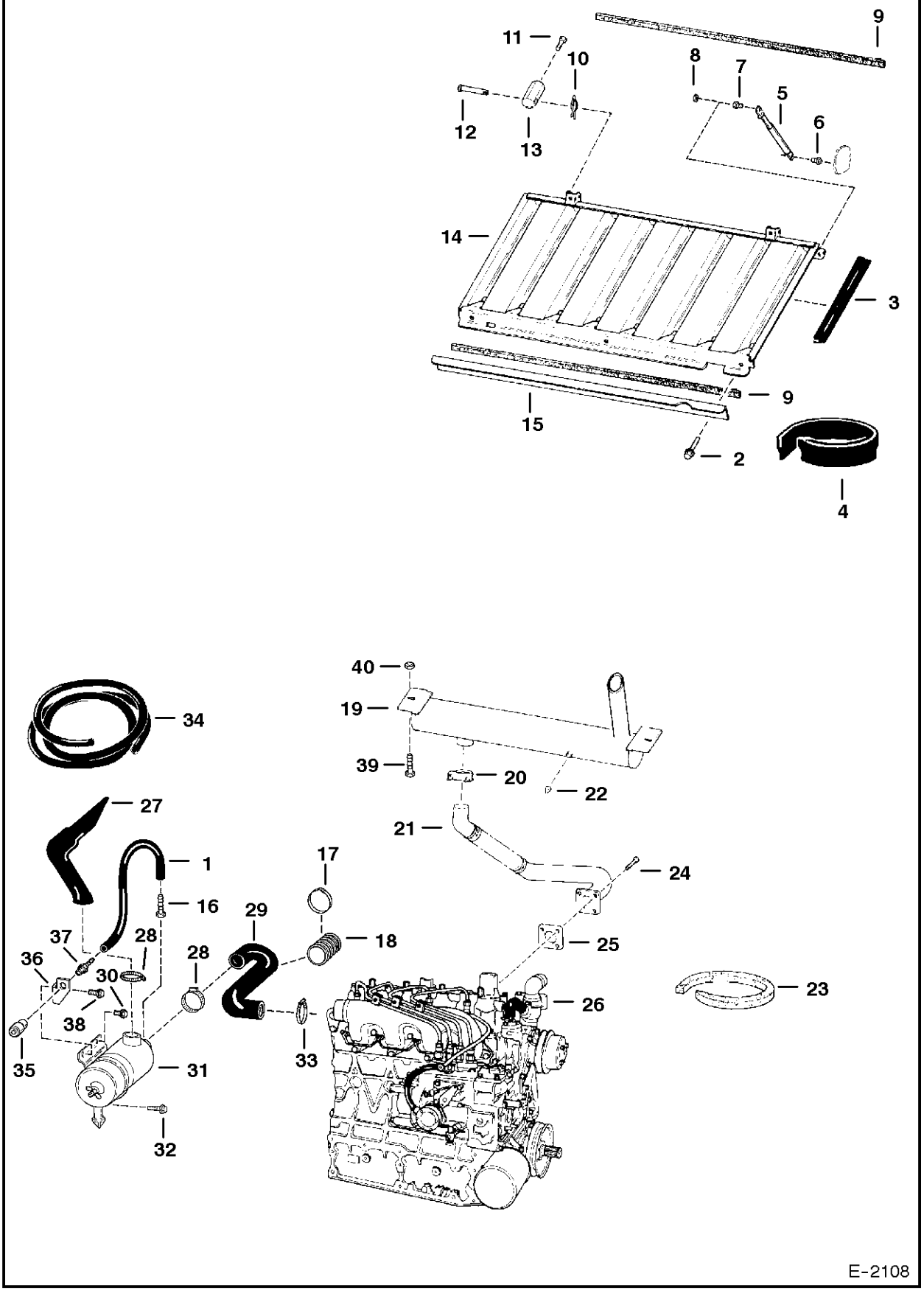

ENGINE & ATTACHING PARTS

Ref.N°	Part N°	Description	Remarks	Serial N°	Qty.
1	NAP	HOSE	12' (304,8 mm) long - Order Ref. ENGINE & ATTACHING PARTS(34)		1
2	84G-3112	BOLT			3
3	NAP	MOULDING	14.65" (372,1 mm) long - Order Ref. ENGINE & ATTACHING PARTS(4)		2
4	6646705	MOULDING	bulk - Sold Per Foot		x
5	6674285	GAS SPRING			1
6	6705052	BALL STUD	weld on		1
7	6649244	BALL STUD			1
8	61D-5	NUT			1
9	NAP	FOAM STRIP	34.5" (876,3 mm) long - Order Ref. ENGINE & ATTACHING PARTS(23)		2
10	6631418	PIN	ring		2
11	17C-608	BOLT			2
12	6567743	PIN			2
13	6579326	MOUNT			2
14	6718291	GRILL			1
15	6708981	BRACKET			1
16	6563452	ADAPTER	barbed		1
17	6664004	CLAMP			1
18	6706393	SHIELD	5' (127 mm) long		1
19	6671667	MUFFLER			1
20	6677363	CLAMP	Was 657904 [A]		1
21	6701151	PIPE			1
22	6661062	PLUG	brass 3/8" (9,5 mm)		1
23	6511855	FOAM STRIP	bulk - Sold Per Foot - self adhesive		x
24	6701123	BOLT			4
25	6727752	GASKET	Was 6575580 [A]		1
26		ENGINE	See Page ENGINE & GASKET KITS(1)		1
27	6718237	HOSE			1
28	6598799	CLAMP			2
28	42H-52	CLAMP			2
29	6714889%	HOSE	W/Ref. ENGINE & ATTACHING PARTS(17) & ENGINE & ATTACHING PARTS(18)		1
30	84G-3708	BOLT			2
31		AIR CLEANER	See Page AIR CLEANER(1)		1
32	84G-3712	BOLT			1
33	42H-32	CLAMP			1
34	6557720	HOSE	bulk - Sold Per Foot		x
35	6515007	INDICATOR	dust		1
36	6704823	BRACKET			1
37	6505813	ADAPTER	barbed		1
38	84G-3710	BOLT			1
39	35C-612	BOLT			2
40	61D-6	NUT			2

ENGINE & ATTACHING PARTS
(Engine Mounts)

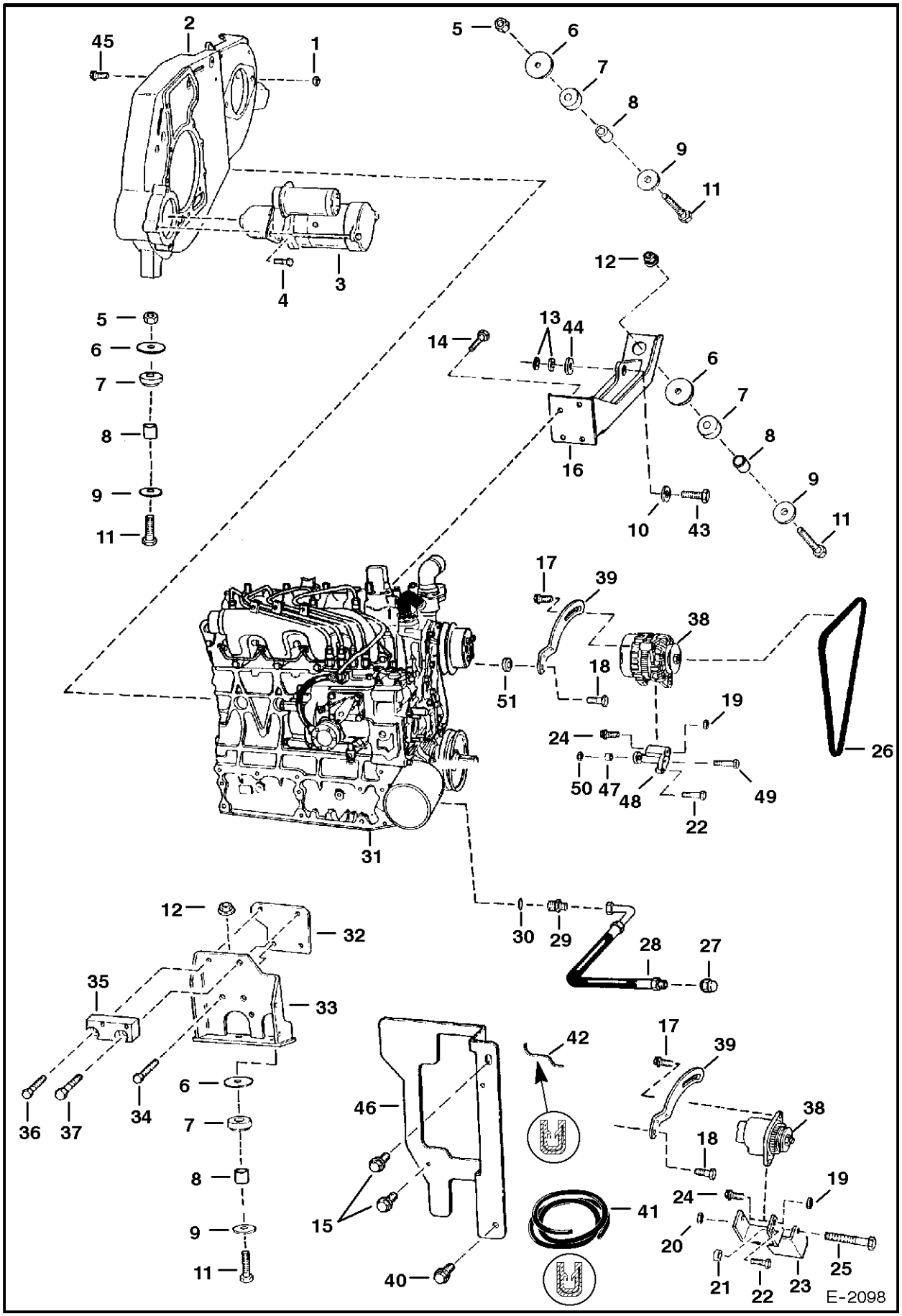

ENGINE & ATTACHING PARTS

Ref.N°	Part N°	Description	Remarks	Serial N°	Qty.
1	85D-8	NUT			2
2		MOUNT	See Page ENGINE & ATTACHING PARTS(1)		1
3		STARTER	See Page STARTER(1)		1
4	35C-620	BOLT			3
5	6652918	NUT			2
6	6705106	WASHER			4
7	6661785	MOUNT			4
8	6706043	BUSHING			4
9	6661787	WASHER			4
10	742640	WASHER	.25' thick - Use W/Ref. ENGINE & ATTACHING PARTS(43) (17C-830 Bolt)		1
10	6716408	WASHER	.40' thick - Use W/Ref. ENGINE & ATTACHING PARTS(43) (47C-832 Bolt)		1
10	6728337	SPACER	.58' thick - Use W/Ref. ENGINE & ATTACHING PARTS(43) (6675221 Bolt)		1
11	43C-848	BOLT	Was 17C-848 [B]		4
12	83D-8	NUT			2
13	25E-21	WASHER	use 2 max.		x
14	6719827	BOLT	Was 6CM-1225 [B]		4
15	84G-3712	BOLT			2
16	6712161	MOUNT	engine & hyd. pump		1
17	35C-516	BOLT			1
18	1CM-870	BOLT			1
18	29CM-820	BOLT	90 amp. alt.		1
19	57D-5	NUT			1
20	85D-6	NUT			1
21	6568877	WASHER			1
22	1CM-890	BOLT			1
23	6562257	MOUNT			1
24	17C-556	BOLT			1
25	17C-648	BOLT			1
26	6704720	BELT	alternator	5122 50001-57999	1
26				5124 50001-50999	1
26	6675837	BELT	alternator - 90 amp.	5122 58000 & Abv	1
26				5124 51000 & Abv	1
27	36K-6	CAP			1
28	6704012	HOSE	See Page HIGH FLOW HYDRAULICS(1) For High Horsepower Hydraulics		1
29	15K-6	CONNECTOR	W/Ref. ENGINE & ATTACHING PARTS(30) - flat boss face - See Page HIGH FLOW HYDRAULICS(1) For High Horsepower Hydraulics		1
29	15KN-6	ADAPTER	W/Ref. ENGINE & ATTACHING PARTS(30) - tapered boss face		1
29	97K-8	O-RING	flared end -See Page HIGH FLOW HYDRAULICS(1) For HHH		1
30	79K-8	O-RING	flat boss face		x
30	99K-8	O-RING	tapered boss face		x
31		ENGINE	See Page ENGINE & GASKET KITS(1)		1
32	6700535	SPACER			1
33	6703981	MOUNT			1
34	6719828	BOLT	Was 6CM-1230 [B]		2
35	6704322	MOUNT	fuel filter		1

ENGINE & ATTACHING PARTS

Ref.N°	Part N°	Description	Remarks	Serial N°	Qty.
36	6719826	BOLT	Was 5CM-1035 [B]		1
37	6719829	BOLT	Was 6CM-1235 [B]		1
38		ALTERNATOR	See Page ALTERNATOR(1) & ALTERNATOR(1)		1
39	6705711	BRACKET	alt.		1
39	6727084	BRACKET	alt. - 90 amp.		1
40	84G-3716	BOLT			2
41	6654139	MOULDING	bulk - Sold Per Foot		x
42	NAP	MOULDING	5.5'(139,7mm)long-Order Ref. ENGINE & ATTACHIN G PARTS(41)		1
43	17C-830	BOLT	hyd. pump bolt - 1.875'(47,6 mm) long		1
43	47C-832	BOLT	hyd. pump bolt - 2'(50,8 mm) long		1
43	6675221	BOLT	hyd. pump bolt - 2.25'(57,2 mm) long		1
44	6703140	WASHER			1
45	17C-828	BOLT			2
46	6731060	SHIELD	Was 6717812 [A]		1
47	6675838	BUSHING	90 amp. alt.		1
48	6725427	BRACKET	90 amp. alt.		1
49	1CM-8100	BOLT			2
50	53DM-8	NUT			2
51	6E-5	WASHER	90 amp. alt.		1

ENGINE & ATTACHING PARTS
(Belt Drive System)

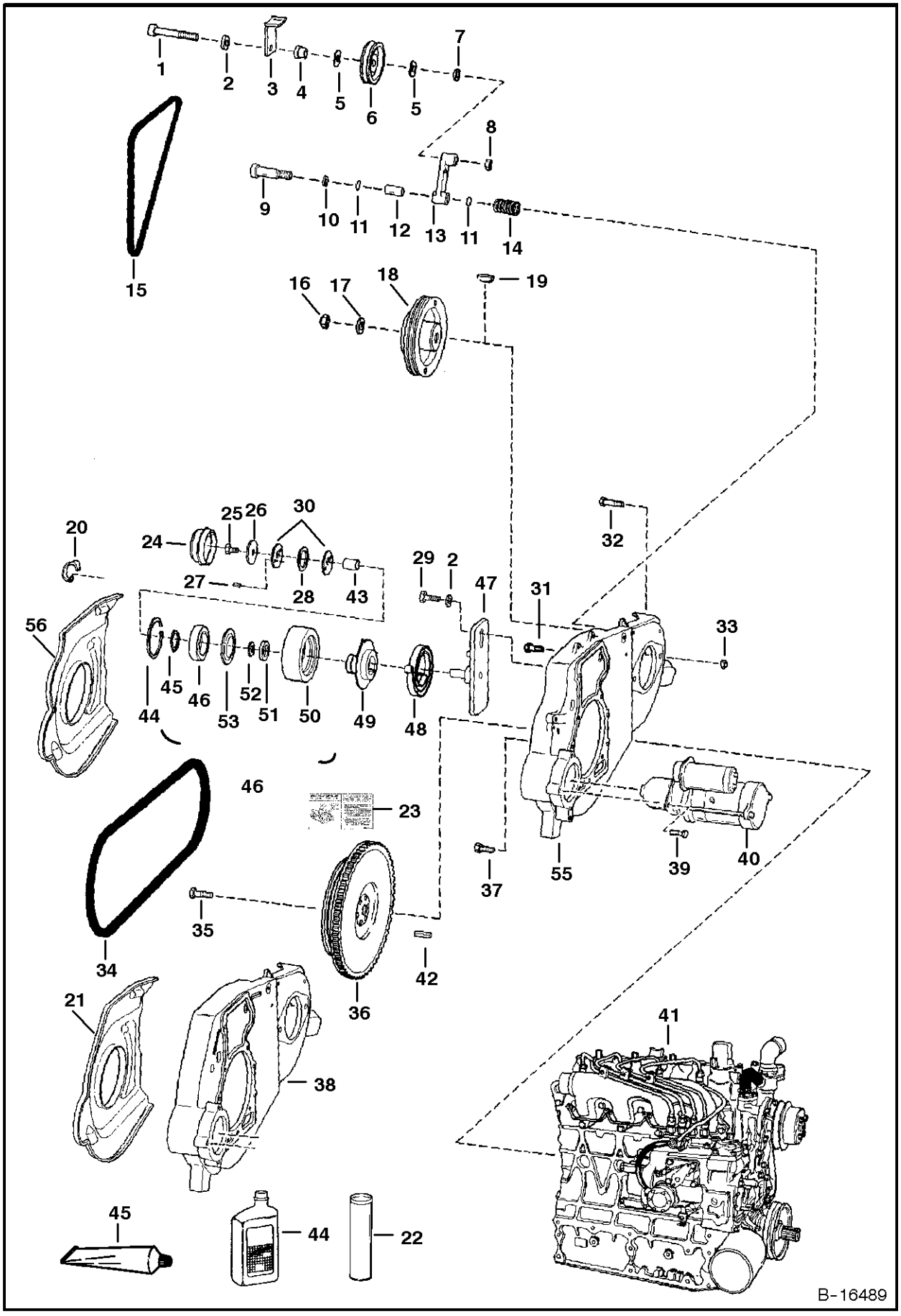

ENGINE & ATTACHING PARTS

Ref.N°	Part N°	Description	Remarks	Serial N°	Qty.
1	73G-656	BOLT			1
2	6704484	WASHER	thrust		3
3	6702474	RETAINER	fan drive idler belt		1
4	6704443	BUSHING	spacer		1
5	6660995	RING	grease		2
6	6662997	PULLEY	fan drive idler		1
7	6704444	WASHER			1
8	61D-6	NUT			1
9	38C-820	BOLT	shoulder		1
10	6655781	BEARING			1
11	6704820	O-RING			2
12	6670682	BEARING	nylon		1
13	6725212	IDLER ARM	W/Ref. ENGINE & ATTACHING PARTS(12) - Was 6703507 [A]		1
14	6700115	SPRING			1
15		BELT	fan drive - See Page COOLING SYSTEM(1) Ref. COOLING SYSTEM(25)		1
16	92D-12	NUT			1
17	6576033	WASHER			1
18	6704424	PULLEY	7.40' (188 mm) dia. - to hyd. pump - 3 groove	5122 56853 & Bel	1
18				5124 50430 & Bel	1
18	6726539	PULLEY	7.95' (202 mm) dia. - to hyd. pump - 3 groove	5122 56854 & Abv	1
18				5124 50431 & Abv	1
19	6J-807	KEY			1
20	6703022	CLIP			3
21	6704450	SHIELD	Use W/Ref. ENGINE & ATTACHING PARTS(18) (6704424 Pulley)	5122 56853 & Bel	1
21				5124 50430 & Bel	1
21	6726938	SHIELD	Use W/Ref. ENGINE & ATTACHING PARTS(18) (6726539 Pulley)	5122 56854 & Abv	1
21				5124 50431 & Abv	1
22	6599719	GREASE	Use W/Ref. ENGINE & ATTACHING PARTS(46)		x
23	6709030	DECAL	belt tension - spring loaded idler		1
24	6708770	CAP	dust		1
25	17C-610	BOLT			1
26	6705232'	WASHER			1
27	6713370	PIN			2
28	6710585	WASHER	wave spring		1
29	17C-620	BOLT			1
30	6705231	WASHER			2
31	6719828	BOLT	Was 6CM-1230 [B]		2
32	17C-828	BOLT	hyd. pump mount		2
33	85D-8	NUT			2
34	6672021	BELT	pump drive - 3 groove - Use W/Ref. ENGINE & ATTACHING PARTS(18) (6704424 Pulley)	5122 56853 & Bel	1
34				5124 50430 & Bel	1
34	6726898	BELT	pump drive - 3 groove - Use W/Ref. ENGINE & ATTACHING PARTS(18) (6726539 Pulley)	5122 56854 & Abv	1
34				5124 50431 & Abv	1
35	6652487	BOLT			6
36	6715165	FLYWHEEL	W/Ring Gear & Ref. ENGINE & ATTACHING PARTS(42)- 3 groove	5122 56853 & Bel	1

ENGINE & ATTACHING PARTS

Ref.N°	Part N°	Description	Remarks	Serial N°	Qty.
36				5124 50430 & Bel	1
36	6510470	RING GEAR			1
36	6726933	FLYWHEEL	W/Ring Gear & Ref. ENGINE & ATTACHING PARTS(42)- 3 groove	5122 56854 & Abv	1
36				5124 50431 & Abv	1
36	6510470	RING GEAR			1
37	6719825	BOLT	Was 5CM-1025 [B]		7
38	NAP	MOUNT	Use W/Ref. ENGINE & ATTACHING PARTS(18) (6704424 Pulley) - Order Ref. ENGINE & ATTACHING PARTS(55) & ENGINE & ATTACHING PARTS(56	5122 56853 & Bel	1
38				5124 50430 & Bel	1
38	6728062	MOUNT	Use W/Ref. ENGINE & ATTACHING PARTS(18) (6726539 Pulley) - Was 6726613 [A]		1
39	35C-620	BOLT			3
40		STARTER	See Page STARTER(1)		1
41		ENGINE	See Page ENGINE & GASKET KITS(1)		1
42	6713370	PIN			1
43	6704393	BEARING	bronze sleeve		1
44	6658847	SNAP RING			1
45	6658536	SNAP RING			1
46	6711698	IDLER ASSY.	spring loaded - Ref. ENGINE & ATTACHING PARTS(24) - ENGINE & ATTACHING PARTS(28), ENGINE & ATTACHING PARTS(30), ENGINE & ATTACHI		1
46	6714212	PULLEY ASSY.	Ref. ENGINE & ATTACHING PARTS(49) - ENGINE & ATTACHING PARTS(43)		1
47	6708767	BRACKET			1
48	6705491	SPRING	torsion		1
49	6711699	HUB ASSY.	Order Ref. ENGINE & ATTACHING PARTS(46)		1
50	6704391	PULLEY	idler		1
51	6661112	SEAL			1
52	6703168	BEARING	thrust		1
53	6664209	SEAL			1
54	6668114	BEARING	ball		1
55	6728062	MOUNT	Was 6726613 [A]	5122 56854 & Abv	1
55				5124 50431 & Abv	1
56	6726938	SHIELD		5122 56854 & Abv	1
56				5124 50431 & Abv	1

THROTTLE

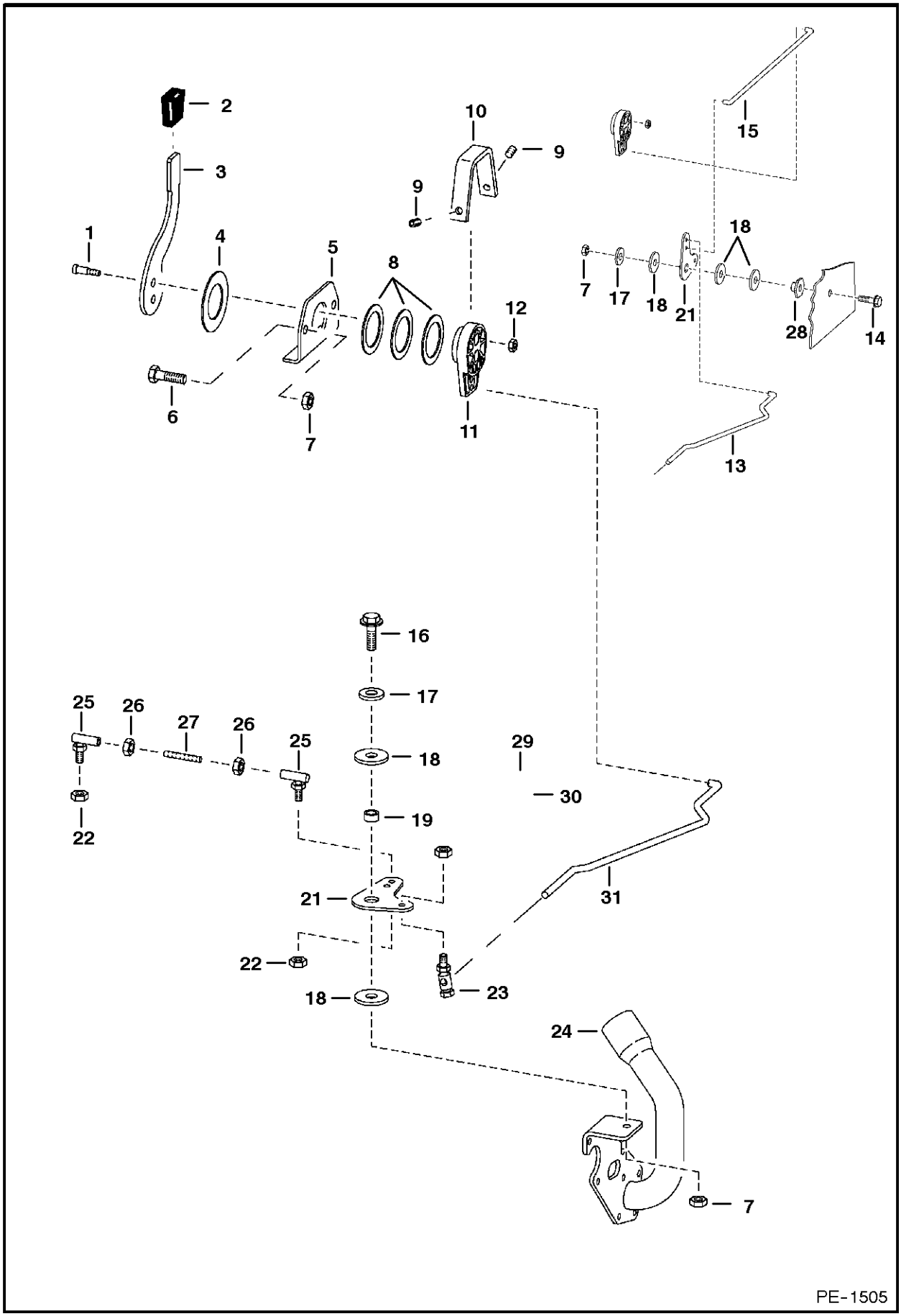
1
2
3
4
5
6
7
8
9
10
11
12
13
14
15
16
17
18
19
21
22
23
24
25
26
27
28
29
30
31
PE-1505

THROTTLE

Ref.N°	Part N°	Description	Remarks	Serial N°	Qty.
1	6705452	LEVER			1
2	6564452	GRIP			1
3	38C-610	BOLT	shoulder		2
4	6567962	WASHER			1
5	6576262	MOUNT			1
6	17C-626	BOLT			2
7	95D-6	NUT		& Bel	4
7	95D-6	NUT		& Abv	3
8	6630945	WASHER			3
9	6706572	SET SCREW			2
10	6576261	COVER			1
11	6709022	LEVER			1
12	85D-5	NUT			2
13	6703465	ROD		& Bel	1
14	84G-3724	BOLT		& Bel	1
15	6703466	ROD		& Bel	1
16	84G-3716	BOLT			1
17	25E-18	WASHER		& Bel	2
17	25E-18	WASHER		& Abv	1
18	6700170	WASHER	plastic	& Bel	5
18	6700170	WASHER	plastic	& Abv	2
19	6564343	BUSHING			1
20	59D-4	NUT	Was 85D-4 [B]		1
21	6578268	BELLCRANK		& Bel	2
21	6578268	BELLCRANK		& Abv	1
22	66D-4	NUT	Was 86D-4 [B]		2
23	6557291	BALL JOINT			1
24	6719048	MOUNT	fuel shutoff solenoid & oil fill		1
25	6554858	BALL JOINT			2
26	62D-4	NUT			2
27	6576252	ROD			1
28	6559479	NUT		& Bel	1
29	84G-3712	BOLT		& Abv	1
30	31H-38	CLAMP		& Abv	1
31	6717566	ROD		& Abv	1

COOLING FAN DRIVE ASSY.

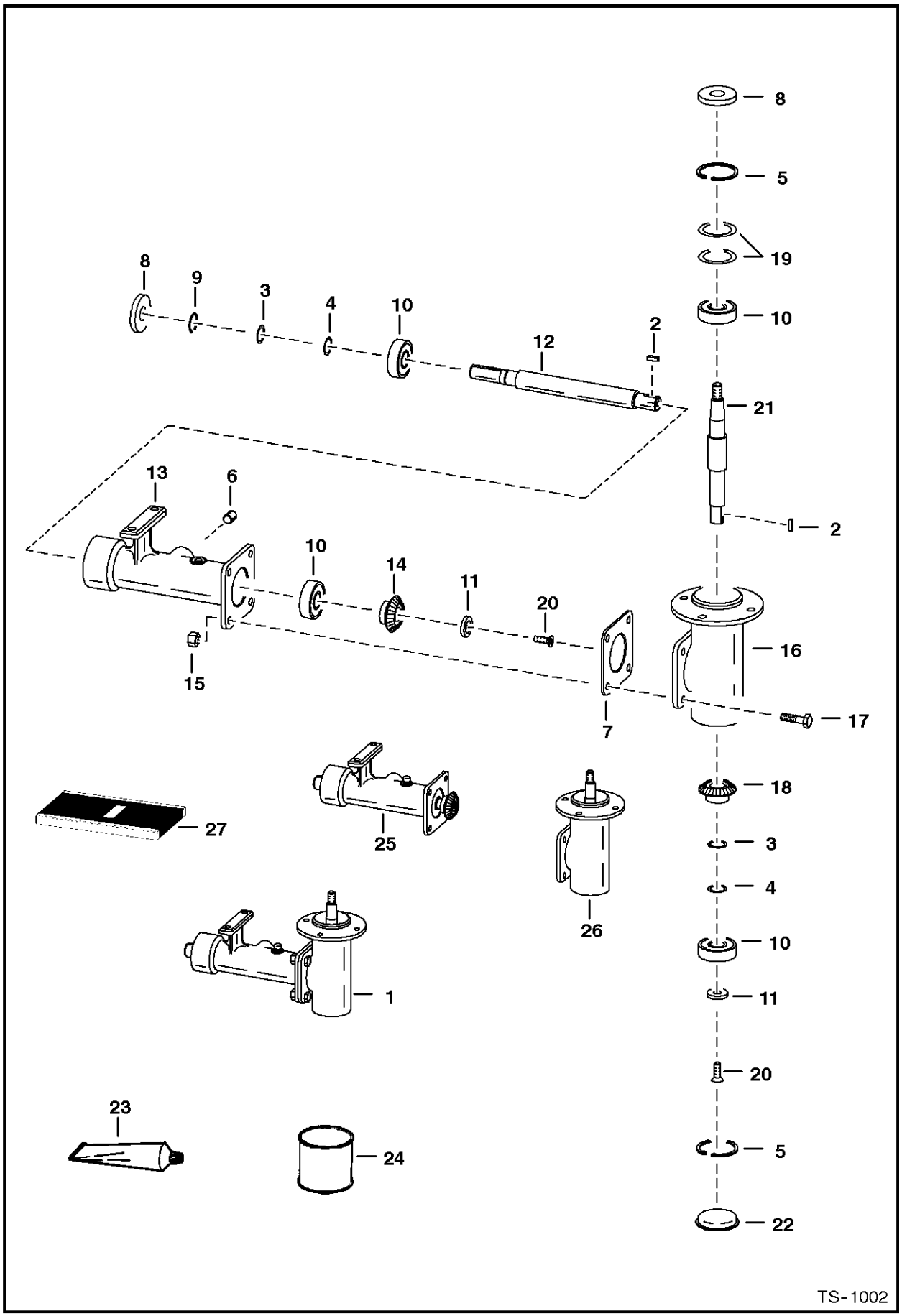

COOLING FAN DRIVE ASSY.

Ref.N°	Part N°	Description	Remarks	Serial N°	Qty.
1	6702138	HOUSING ASSY.	Ref. COOLING FAN DRIVE ASSY.(2) - COOLING FAN DRIVE ASSY.(22)		1
2	7J-2010	KEY			2
3	6702165	SHIM	.002'(0,05 mm) thickness - 1'(25,4 mm) O.D.		x
4	6701159	SHIM	.005'(0,13 mm) thickness - 1'(25,4 mm) O.D.		x
5	6653758	SNAP RING			2
6	16F-8	PLUG			1
7	6578284	SHIM	.003" (0,08 mm) thickness		x
8	6653702	SEAL			2
9	6653757	SNAP RING			1
10	6646627'	BEARING			4
11	6702140	WASHER	countersink		2
12	6702137	SHAFT	keyed		1
13	6579641	HOUSING			1
14	6702103	GEAR	keyed		1
15	95D-6	NUT			4
16	NSS	HOUSING	$Order 6702138inD1}y Housing or Ref. COOLING FAN DRIVE ASSY.(26)		1
17	17C-620	BOLT			4
18	6702102	GEAR	keyed		1
19	6702166	SHIM	.002" (0,05 mm) thickness - 2'(50,8 mm) O.D.		x
19	6702144	SHIM	.005" (0,13 mm) thickness - 2'(50,8 mm) O.D.		x
20	9G-512	SCREW			2
21	6702135	SHAFT	keyed		1
22	6700782	CAP	grease		1
23	6672486	SEALANT	polyurethane - Use W/Ref. COOLING FAN DRIVE ASSY.(7) & COOLING FAN DRIVE ASSY.(22)		x
24	6634393	LUBRICANT	gear - 1 pint		x
25	6707078	HOUSING ASSY.	half		1
26	6707077	HOUSING ASSY.	half		1
27	6669384	SPEEDY SLEEVE	repair kit		1

ENGINE & GASKET KITS
(Kubota - V2203)

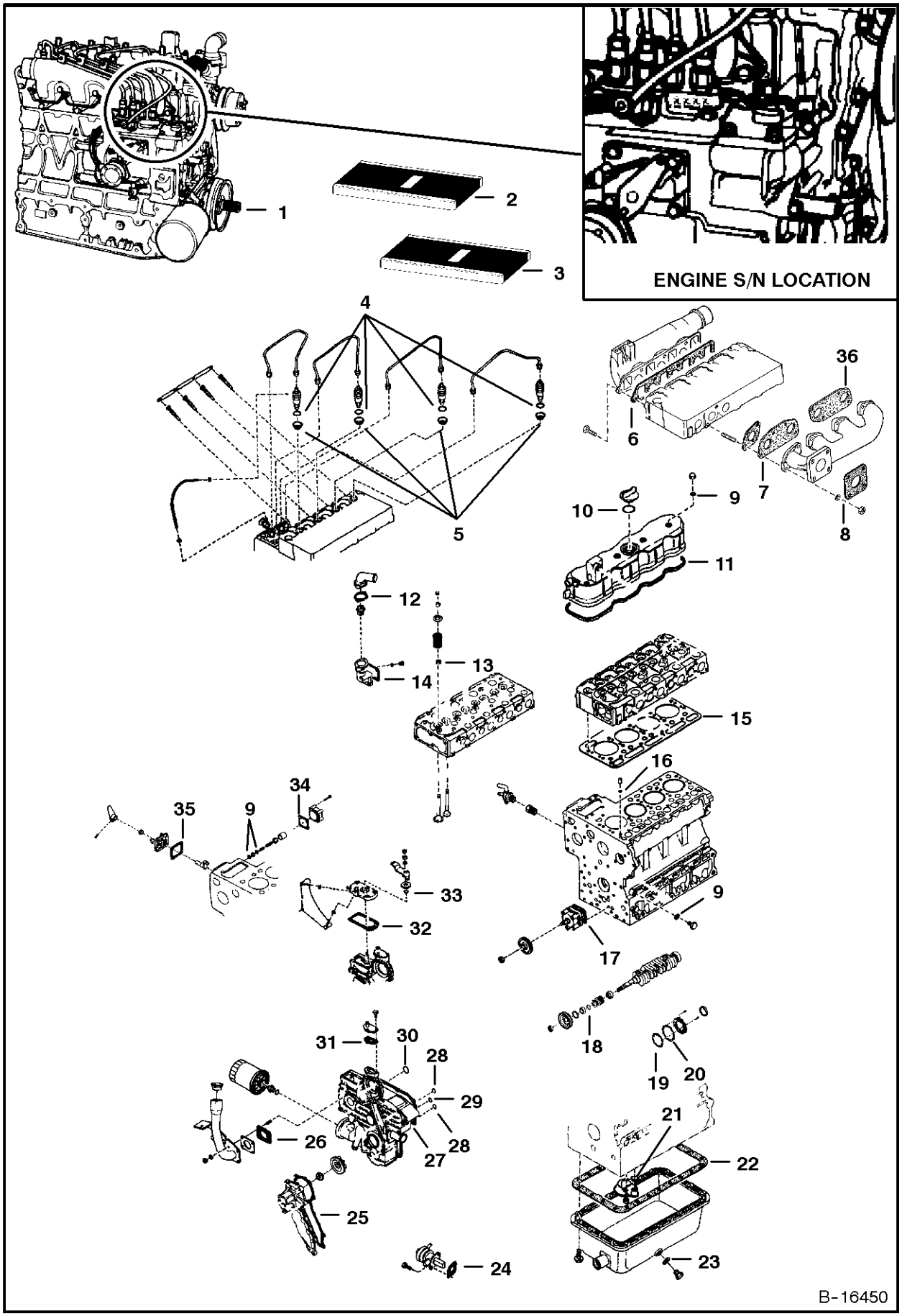

ENGINE & GASKET KITS

Ref.N°	Part N°	Description	Remarks	Serial N°	Qty.
1	6704441	ENGINE	Does not include starter, alternator, flywheel, & flywheel housing		1
1	NAP	SHORT BLOCK			1
2	6657401	GASKET KIT	Upper - Ref. ENGINE & GASKET KITS(6)-ENGINE & GASKET KITS(16) & ENGINE & GASKET KITS(36)		1
3	6657402	GASKET KIT	Lower - Does not include rear oil seal - Ref. ENGINE & GASKET KITS(17)-ENGINE & GASKET KITS(35)		1
4	6655218	GASKET	See Page INJECTOR NOZZLES(1)		4
5	6655872	SHIELD	See Page INJECTOR NOZZLES(1)		4
6	6666811	GASKET	See Page MANIFOLDS(1)		1
7	6666781	GASKET	See Page MANIFOLDS(1)		4
8	6575580	GASKET	muffler - See Page MANIFOLDS(1)		1
9	3974095	GASKET	See Page CRANKCASE(1) , ROCKER ARM COVER(1) & ENGINE STOP LEVER(1)		7
10	3966602	O-RING	See Page ROCKER ARM COVER(1)		1
11	6598136	GASKET	See Page ROCKER ARM COVER(1)		1
12	6732199	GASKET	thermostat cover - See Page WATER FLANGE & THERMOSTAT(1) - Was 6666790 [A]		1
13	6653830	SEAL	valve stem - See Page VALVE ROCKER ARM(1)		8
14	6666802	GASKET	water flange - See Page WATER FLANGE & THERMOSTAT(1)		1
15	6655159	GASKET	cylinder head - See Page CYLINDER HEAD(1)		1
16	3974038	O-RING	See Page CRANKCASE(1)		1
17	3974456	GASKET	See Page CRANKCASE(1)		1
18	3974577	O-RING	See Page PISTON & CRANKSHAFT(1)		1
19	6655165	GASKET	See Page PISTON & CRANKSHAFT(1)		1
20	6655167	GASKET	See Page PISTON & CRANKSHAFT(1)		1
21	3966516	O-RING	See Page OIL PAN(1)		1
22	3975449	GASKET	oil pan - See Page OIL PAN(1)		1
23	3974403	GASKET	See Page OIL PAN(1)		1
24	3974502	GASKET	fuel pump - See Page INJECTION PUMP(1)		1
25	3974995	GASKET	See Page WATER PUMP(1)		1
26	6714543	GASKET	See Page GEARCASE(1)		1
27	6653806	GASKET	gearcase - See Page GEARCASE(1)		1
28	3966515	O-RING	See Page GEARCASE(1)		2
29	6655162	O-RING	See Page GEARCASE(1)		1
30	3966530	O-RING	See Page GEARCASE(1)		1
31	3974895	GASKET	water return flange - See Page GEARCASE(1)		1
32	6635392	GASKET	See Page SPEED CONTROL PLATE(1)		1
33	3966512	O-RING	See Page SPEED CONTROL PLATE(1)		1
34	3974630	GASKET	See Page FUEL CAMSHAFT(1)		1
35	3974601	GASKET	pump cover - See Page ENGINE STOP LEVER(1)		1
36	6666791	GASKET	See Page MANIFOLDS(1)		1

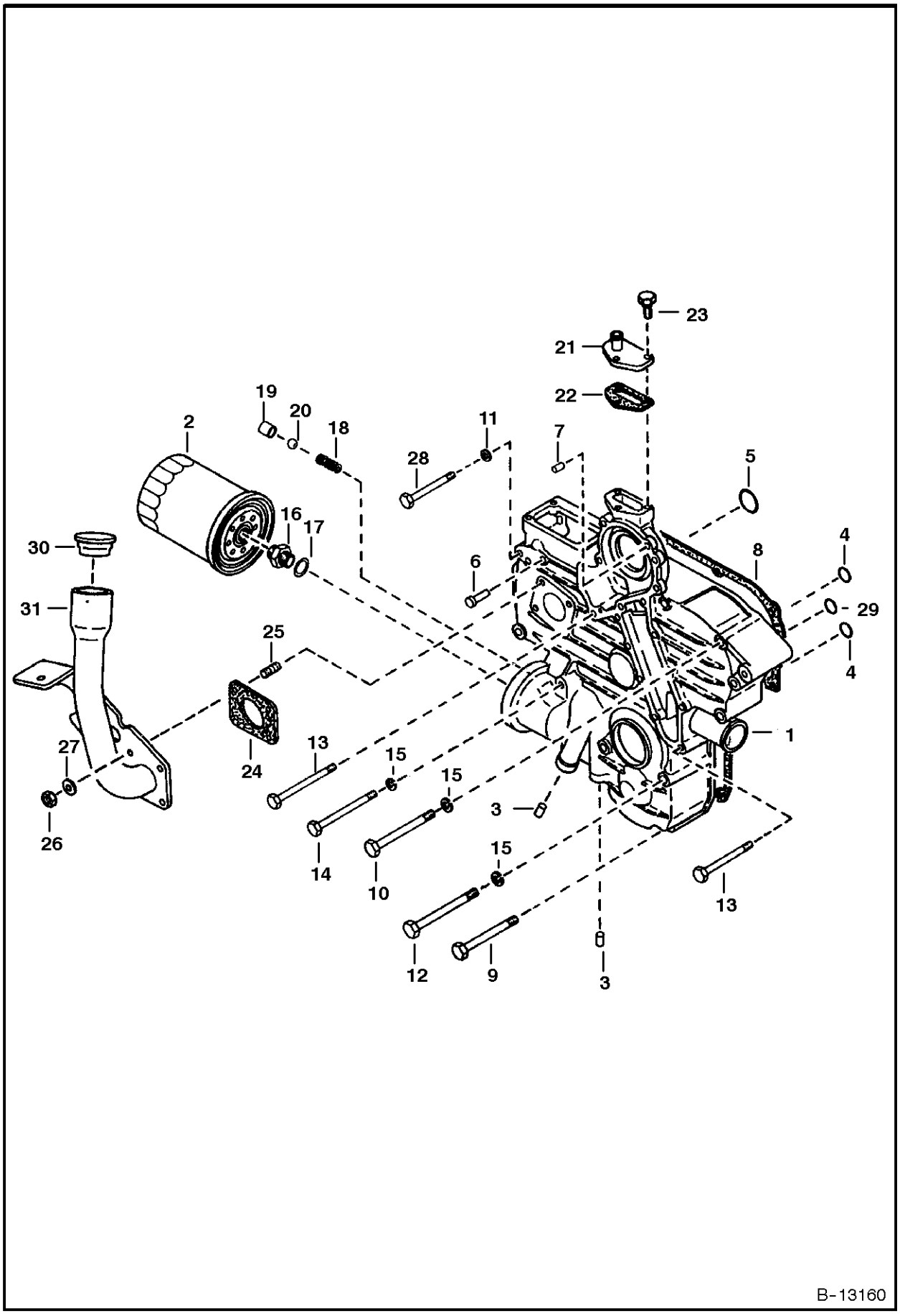
23
21
22
19
20
18
2
11
28
7
5
16
17
30
6
8
4
31
29
25
4
1
27
24
13
15
15
3
26
14
10
15
13
12
9
3
B-13160

GEARCASE

Ref.N°	Part N°	Description	Remarks	Serial N°	Qty.
1	6674164	CASE ASSY.			1
2	6675517	FILTER	oil filter - 6 Pack - Was 3974896 [A]		1
3	6667425	PLUG	pin		2
4	3966515	O-RING			2
5	3966530	O-RING			1
6	6652592	PIN	start spring		1
7	3974395	PIN	straight		2
8	6653806	GASKET	gearcase		1
9	3974888	BOLT			2
10	1CM-870	BOLT			5
11	2EM-8	WASHER			1
12	1CM-880	BOLT			2
13	6653808	BOLT			3
14	1CM-895	BOLT			2
15	6EM-80	WASHER			9
16	6653809	ADAPTER			1
17	15EM-180	WASHER			1
18	6652652	SPRING			1
19	3974893	SEAT	valve		1
20	10J-13	BALL			1
21	3974894	FLANGE	water return		1
22	3974895	GASKET	water return flange		1
23	4CM-620	BOLT			3
24	6714543	GASKET			1
25	6652764	STUD			4
26	1DM-6	NUT			4
27	6EM-60	WASHER	spring		4
28	6653807	BOLT			1
29	6655162	O-RING			1
30	6703736	CAP			1
31	6719048	MOUNT			1

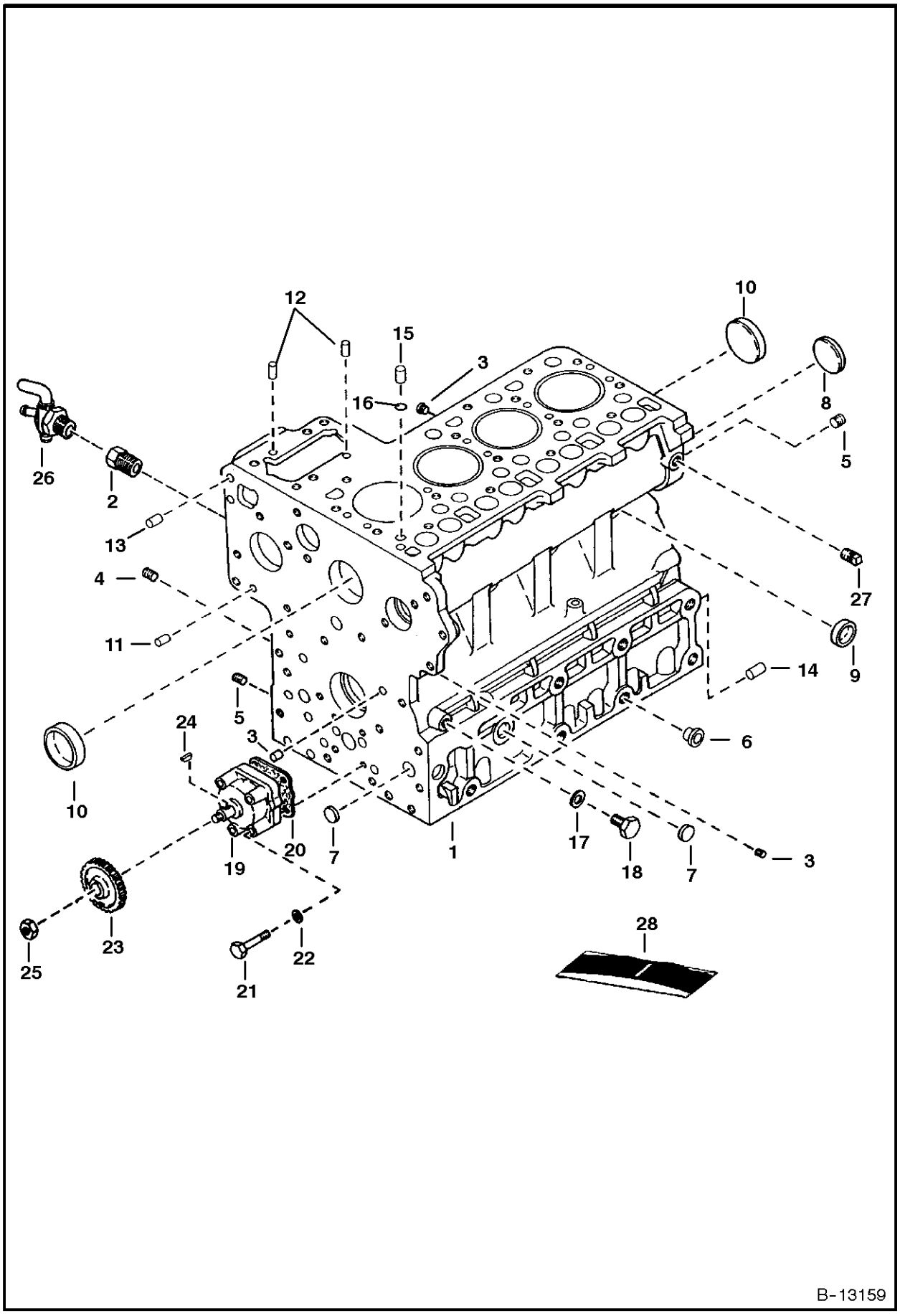
12
15
3
16
10
8
5
26
2
13
4
11
27
9
14
6
24
5
3
10
20
7
1
17
18
7
3
19
23
25
22
21
28
B-13159

CRANKCASE

Ref.N°	Part N°	Description	Remarks	Serial N°	Qty.
1	6655149	CRANKCASE	assy. - W/Ref. CRANKCASE(2)-CRANKCASE(15)		1
2	3974871	ADAPTER			1
3	6652574	PLUG			6
4	6655869	PLUG			12
5	6652575	PLUG			2
6	6598187	PLUG			21
7	4FM-18	PLUG	expansion		3
8	4FM-45	PLUG	expansion		1
9	3974389	CAP	sealing		6
10	3974390	CAP	sealing		2
11	3974393	PIN	straight		2
12	3974394	PIN	straight		2
13	3974395	PIN	straight		2
14	3974868	PIN	straight		1
15	3974037	PIN	pipe		1
16	3974038	O-RING			1
17	3974095	GASKET			1
18	6655884	PLUG			1
19	3975426	OIL PUMP			1
20	6666782	GASKET			1
21	6655195	BOLT			4
22	6EM-60	WASHER			4
23	3975441	GEAR			1
24	15JM-410	KEY			1
25	3DM-12	NUT			1
26	6672190	GEAR			1
27	16F-2	PLUG			1
28	6657402	GASKET KIT	Lower - Does not include rear oil seal		1

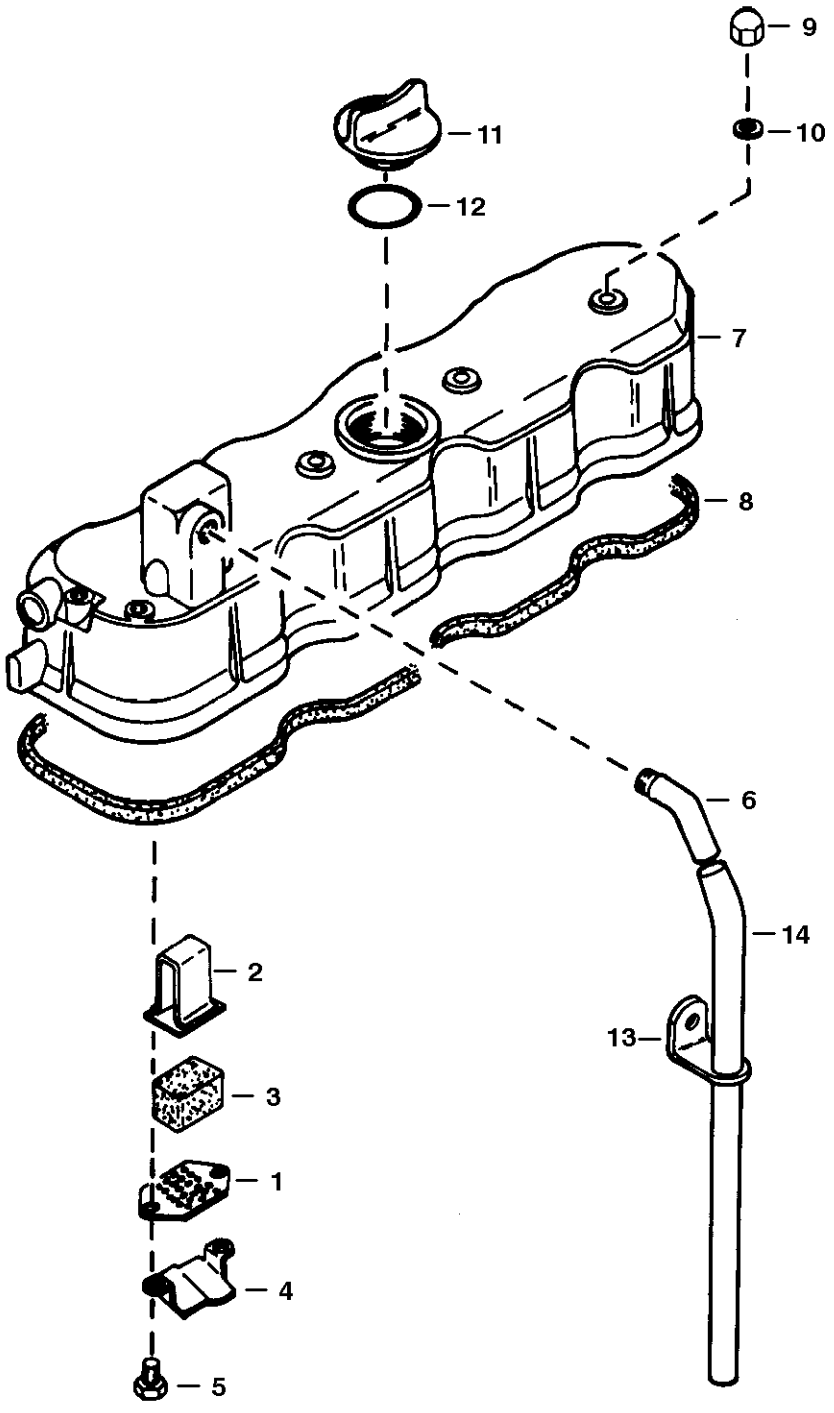
9
10
11
12
7
8
6
14
13
2
3
1
4
5
B-13158

ROCKER ARM COVER

Ref.N°	Part N°	Description	Remarks	Serial N°	Qty.
1	3974924	PLATE	element		1
2	3974925	PLATE	element		1
3	3974926	ELEMENT	breather		1
4	3974927	SHIELD	breather		1
5	3975436	SCREW	W/Washer		2
6	6652624	JOINT	breather pipe		1
7	6655175	COVER	valve		1
8	6598136	GASKET			1
9	3974923	NUT	cap		4
10	3974095	GASKET			4
11	6652653	PLUG	oil filter		1
12	3966602	O-RING			1
13	3974931	CLAMP	pipe		1
14	3974930	PIPE	breather		1

VALVE ROCKER ARM

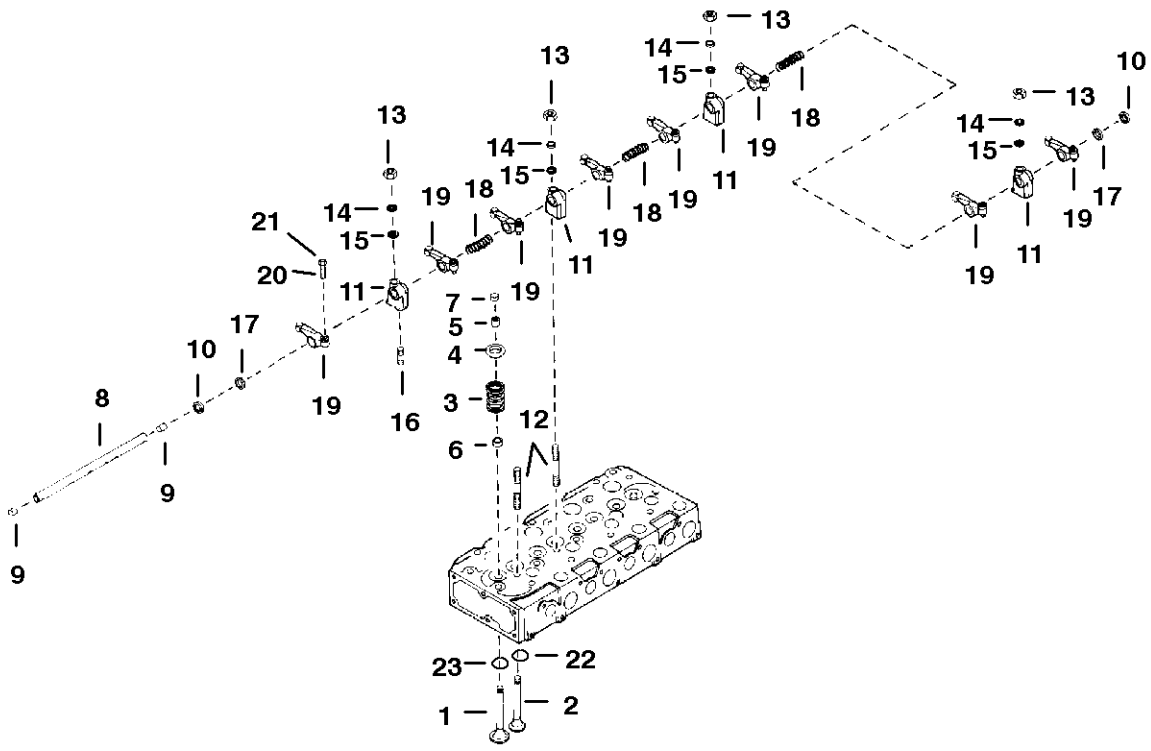

C-2547

VALVE ROCKER ARM

Ref.N°	Part N°	Description	Remarks	Serial N°	Qty.
1	6655173	VALVE	inlet		4
2	6655174	VALVE	exhaust		4
3	3974514	SPRING	valve		8
4	3974515	RETAINER	valve spring		8
5	3974516	COLLET	valve spring - complete		1
6	6653830	SEAL	valve stem		8
7	3974518	CAP	valve		8
8	3974519	SHAFT	rocker arm - W/Ref. VALVE ROCKER ARM(9)		1
9	25GM-8010	SET SCREW			2
10	5JM-14	CIR-CLIP	external		2
11	3974521	BRACKET	rocker arm		4
12	6653832	STUD			4
13	6652792	NUT			4
14	6EM-80	WASHER	spring		4
15	2EM-8	WASHER	plain		4
16	3974523	ORIFICE			1
17	3974524	WASHER	Was 6653833 [D]		2
18	6653833	SPRING	rocker arm - Was 3974525 [A]		3
19	6655870	ARM	rocker - W/Ref. VALVE ROCKER ARM(20) & VALVE ROCKER ARM(21)		8
20	3974920	SCREW	adjusting		8
21	2DM-8	NUT			8
22	6655156	SEAT	valve exhaust		4
23	6655155	SEAT	valve inlet		4

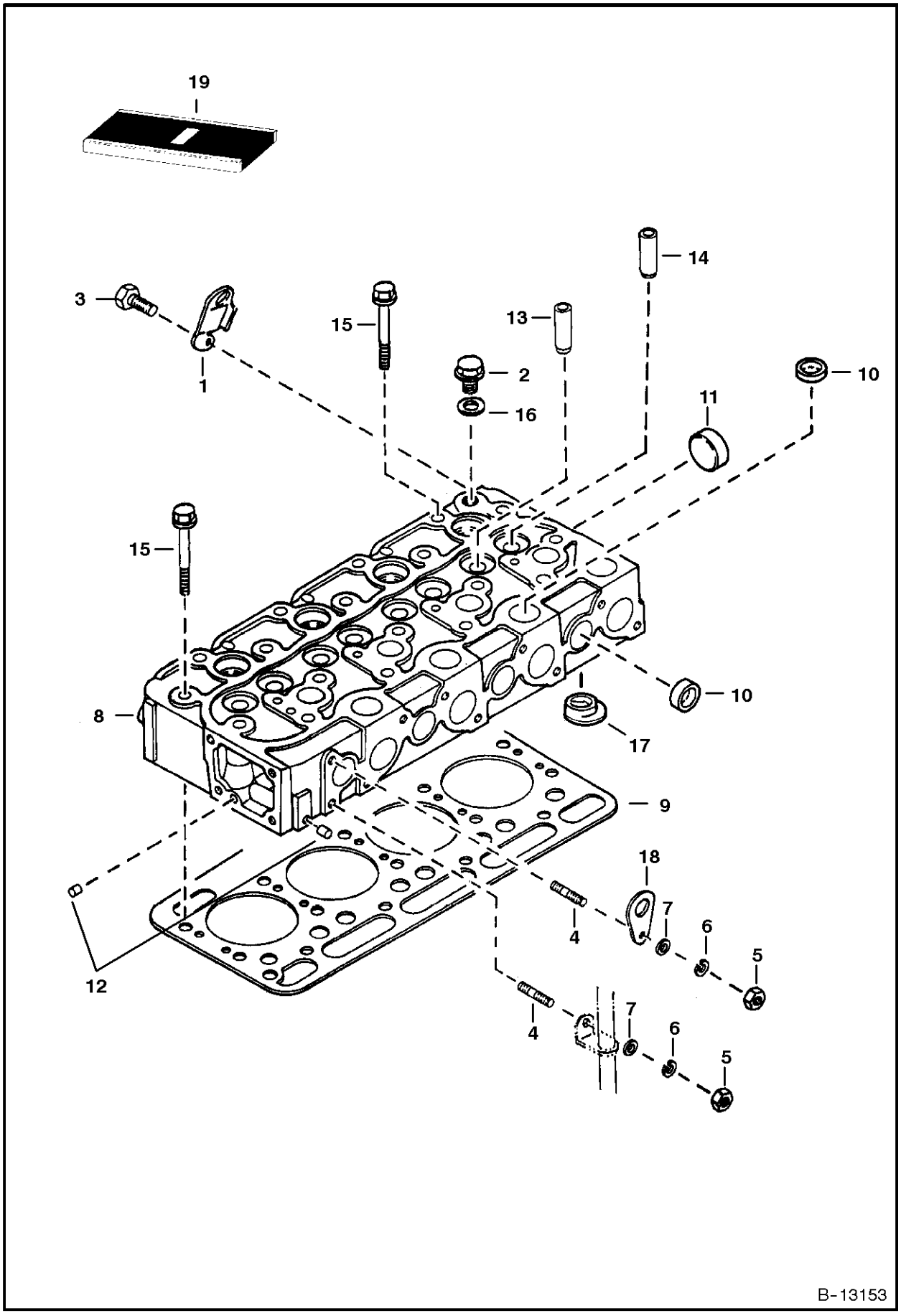
19
14
3
15
13
1
2
16
10
11
15
8
10
17
9
18
4
7
6
5
12
4
7
6
5
B-13153

CYLINDER HEAD

Ref.N°	Part N°	Description	Remarks	Serial N°	Qty.
1	6655152	HOOK	engine		1
2	6655160	PLUG			1
3	4CM-816	BOLT			1
4	6652670	STUD			2
5	6652792	NUT			2
6	6EM-80	WASHER	spring		2
7	2EM-8	WASHER	plain		2
8	6655153	HEAD	cylinder - W/Ref. CYLINDER HEAD(10)-CYLINDER HEAD(14)		1
9	6655159	GASKET	cylinder head		1
10	3974432	CAP	sealing		12
11	3974433	CAP	sealing		1
12	6598116	PLUG	Was 6652797 [A]		2
13	6655154	GUIDE	intake valve		4
14	6653803	GUIDE	exhaust valve		4
15	6655158	BOLT			18
16	6655161	WASHER			1
17	6667480	CHAMBER	combustion		4
18	3974882	HOOK			1
19	6657401	GASKET KIT	upper		1

OIL PAN

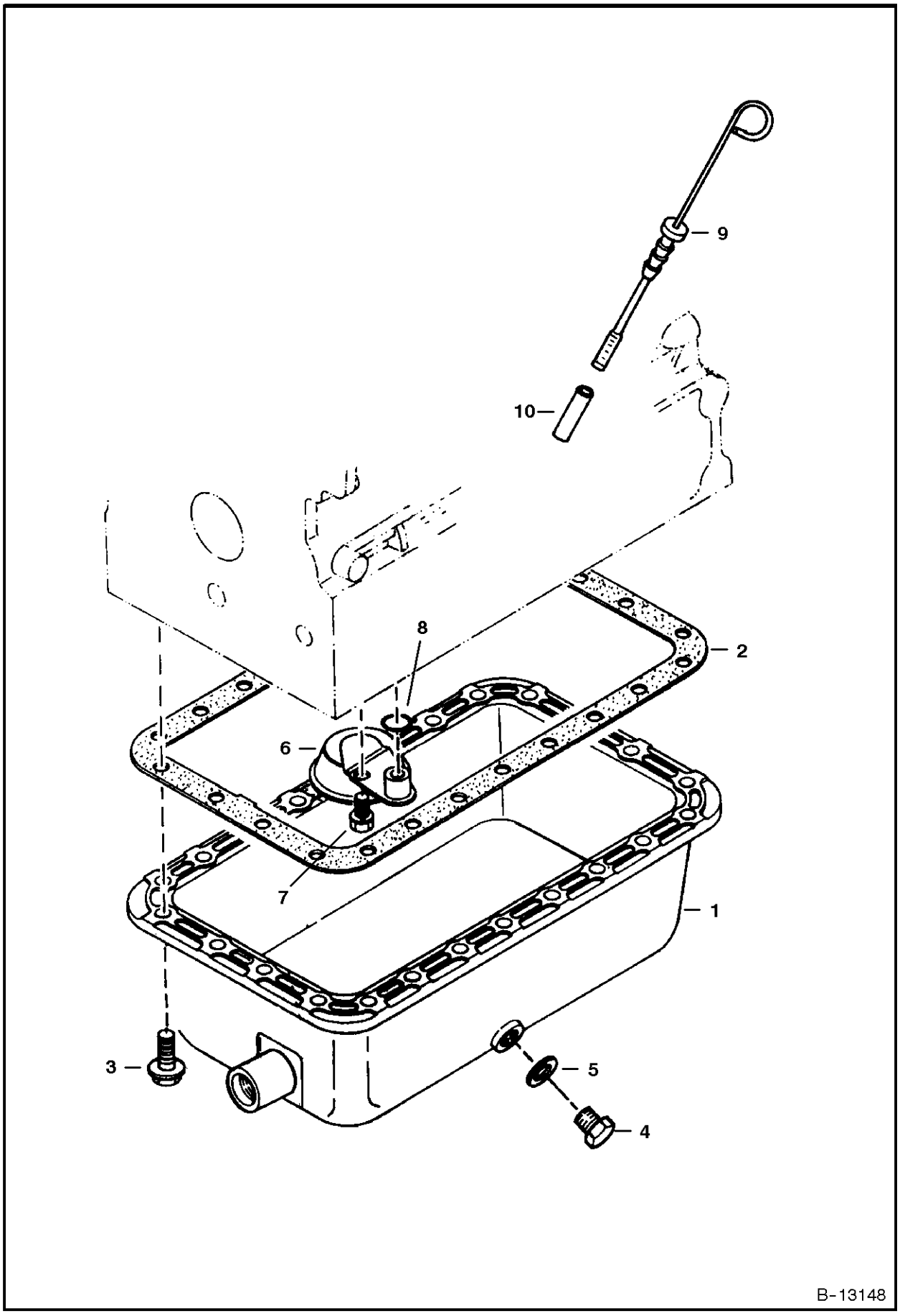

OIL PAN

Ref.N°	Part N°	Description	Remarks	Serial N°	Qty.
1	6655151	OIL PAN			1
2	3975449	GASKET	oil pan		1
3	6653798	BOLT			24
4	3974402	PLUG	drain		1
5	3974403	GASKET			1
6	6655194	OIL FILTER			1
7	4CM-816	BOLT			1
8	3966516	O-RING			1
9	NAP	DIPSTICK	oil - Order 6677202 Dipstick & Ref. OIL PAN(10) - Was 6658245 [A]		1
9	6677202	DIPSTICK	oil - long		1
10	6677203	TUBE	for long dipstick		1

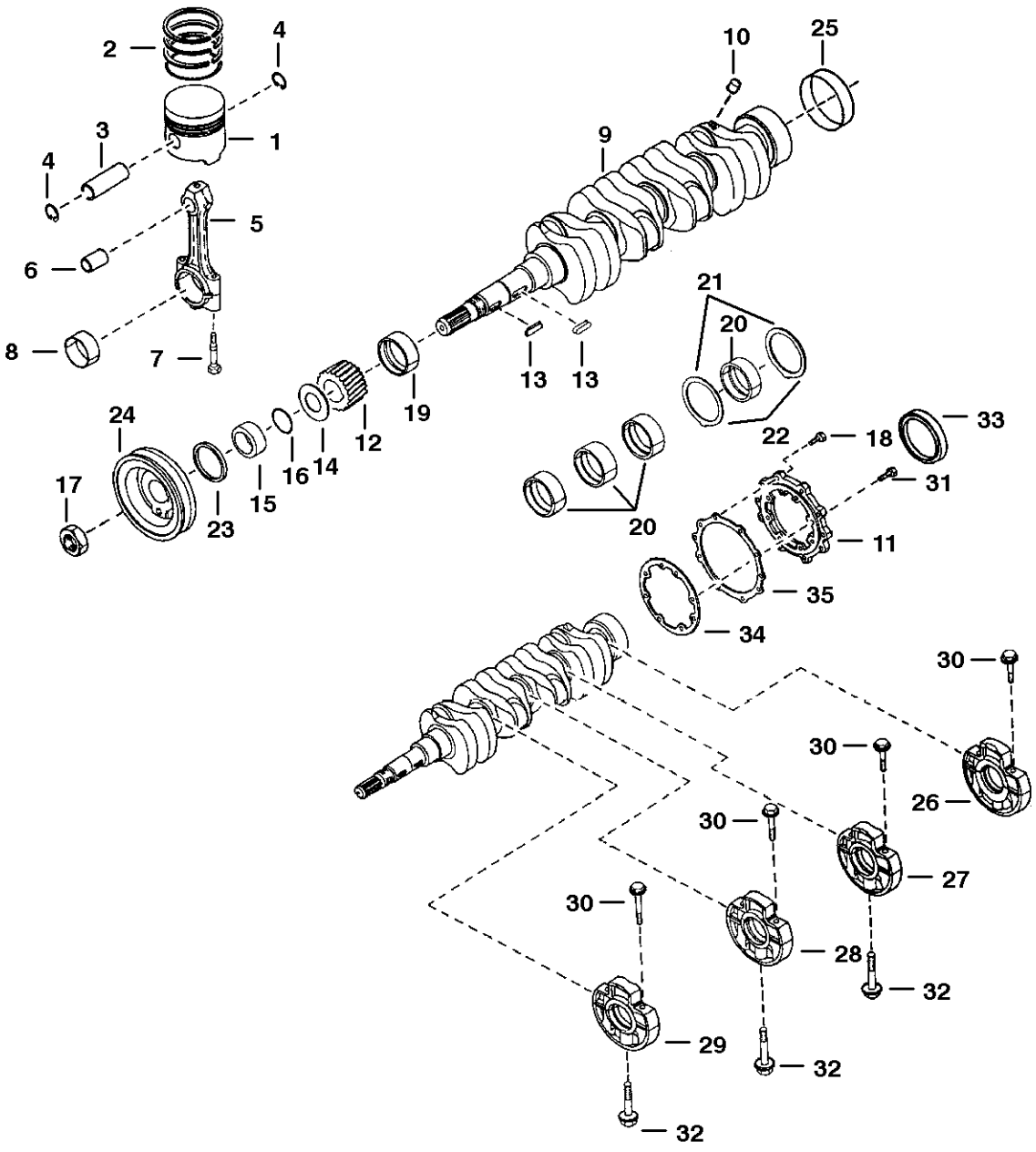
2
4
3
1
4
5
6
8
7
10
25
9
21
20
13
13
19
12
14
16
15
24
17
23
22
18
33
31
11
20
35
34
30
30
26
30
27
30
28
32
29
32
32
B-13145

PISTON & CRANKSHAFT

Ref.N°	Part N°	Description	Remarks	Serial N°	Qty.
1	6655177	PISTON	Std.		4
1	6657695	PISTON	(0,5 mm - .0197)		4
2	6678075	RINGS	piston - Std. - Was 6655178 [A]		4
2	6657696	RINGS	piston - (0,5 mm - .0197)		4
3	6655179	PIN			4
4	6655180	CIR-CLIP			8
5	6655181	ROD	connecting - W/Ref. PISTON & CRANKSHAFT(6), PISTON & CRANKSHAFT(7) & PISTON & CRANKSHAFT(8)		4
6	6655243	BUSHING			4
7	6655498	BOLT			8
8	6655183	BEARING	rod - Std.		4
8	6655236	BEARING	rod (0,2 mm-.0079)		4
8	6655237	BEARING	rod (0,4 mm-.0157)		4
9	6655184	CRANKSHAFT	Ref. PISTON & CRANKSHAFT(10) & PISTON & CRANKSHAFT(25) - Ref. PISTON & CRANKSHAFT(10) must be installed before using		1
10	6652633	PLUG	Must be installed before using Ref. PISTON & CRANKSHAFT(9) crankshaft - See S/L dated 3 Jan 85		4
11	6655166	COVER			1
12	6598142	GEAR			1
13	3974546	KEY			1
14	6653861	SLINGER	oil		1
15	3975337	COLLAR			1
16	3974577	O-RING			1
17	3974671	NUT			1
18	4CM-825	BOLT			8
19	6655185	BEARING	main - Std.		1
19	6655238	BEARING	main (0,2 mm-.0079)		1
19	6655239	BEARING	main (0,4 mm-.0157)		1
20	6655186	BEARING	main - Std.		4
20	6655240	BEARING	main (0,2 mm-.0079)		4
20	6655241	BEARING	main (0,4 mm-.0157)		4
21	3974945	WASHER	thrust - Std.		2
21	3975021	WASHER	thrust (0,2 mm-.0079)		2
21	3975022	WASHER	thrust (0,4 mm-.0157)		2
22	6653865	WASHER	thrust - Std.		2
22	6654002	WASHER	thrust (0,2 mm-.0079)		2
22	6654003	WASHER	thrust (0,4 mm-.0157)		2
23	6631664	SEAL	oil		1
24	6655235	PULLEY			1
25	6653859	SLEEVE			1
26	6655163	CASE	main bearing - W/Ref. PISTON & CRANKSHAFT(30)		1
27	6655170	CASE	main bearing - W/Ref. PISTON & CRANKSHAFT(30)		1
28	6655169	CASE	main bearing - W/Ref. PISTON & CRANKSHAFT(30)		1
29	6655168	CASE	main bearing - W/Ref. PISTON & CRANKSHAFT(30)		1
30	6655164	BOLT			8
31	4CM-828	BOLT			8
32	6653821	BOLT			3
33	6649300	SEAL	oil		1
34	6655165	GASKET			1

PISTON & CRANKSHAFT

Ref.N°	Part N°	Description	Remarks	Serial N°	Qty.
35	6666814	GASKET			1

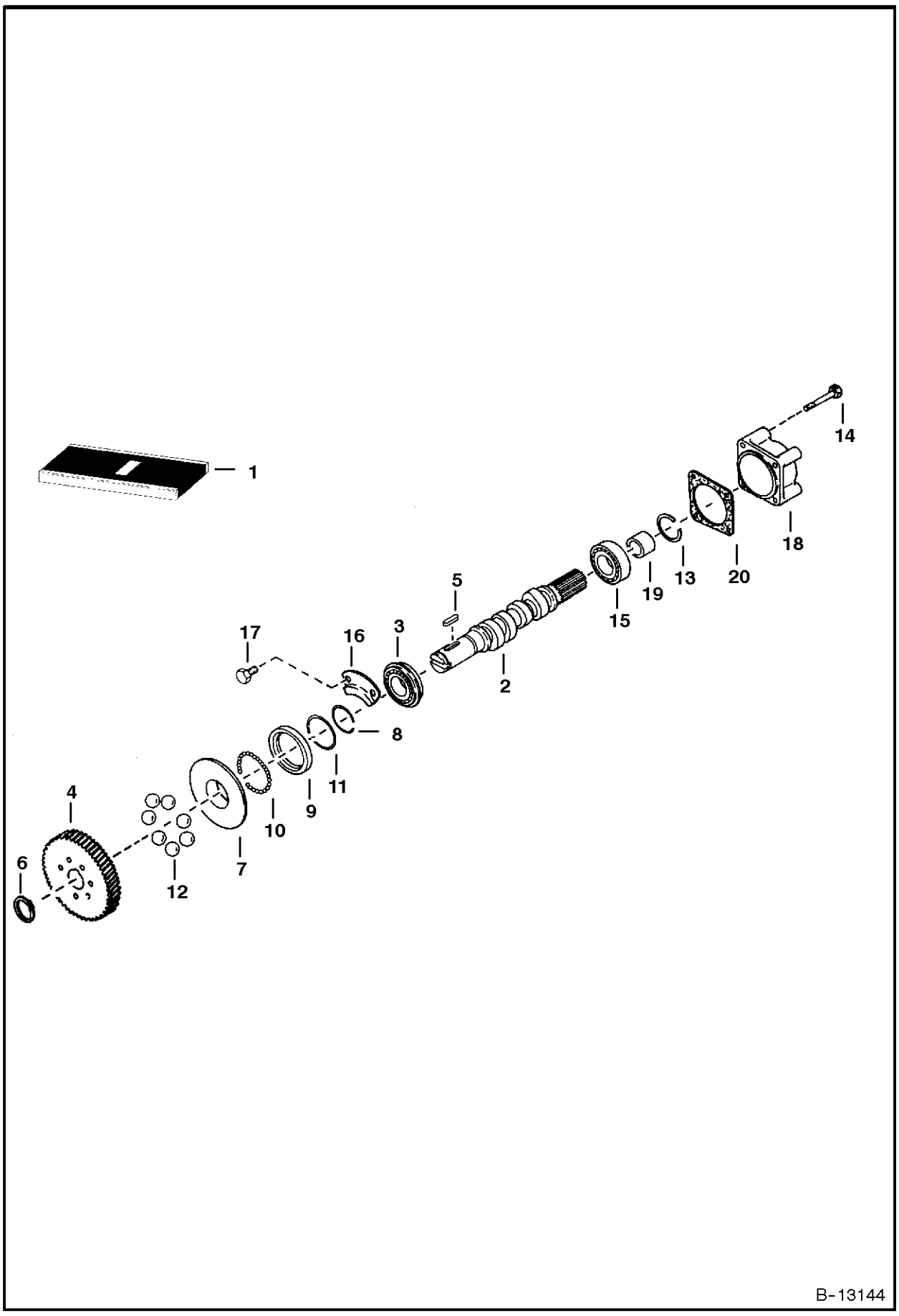
1
2
3
4
5
6
7
8
9
10
11
12
13
14
15
16
17
18
19
20
B-13144

FUEL CAMSHAFT

Ref.N°	Part N°	Description	Remarks	Serial N°	Qty.
1	6655211	CAMSHAFT	assy. - Ref. FUEL CAMSHAFT(2)-FUEL CAMSHAFT(14)		1
2	6655875	CAMSHAFT	fuel		1
3	851242	BEARING			1
4	6655212	GEAR	injection pump		1
5	6598099	KEY			1
6	5JM-24	CIR-CLIP	external		1
7	6655213	SLEEVE	governor		1
8	3974618	CIR-CLIP	sleeve		1
9	6655214	CASE	governor ball		1
10	10J-5	BALL			39
11	3974620	CIR-CLIP	ball case		1
12	6655215	BALL			7
13	6598158	CIR-CLIP	governor ball - Was 3975432 [A]		1
14	6651934	RIVET			7
15	6598101	BALL BEARING			1
16	3974624	STOPPER			1
17	4CM-814	BOLT			2
18	3974996	COVER	fuel camshaft		1
19	6655523	COLLAR			1
20	3974630	GASKET			1

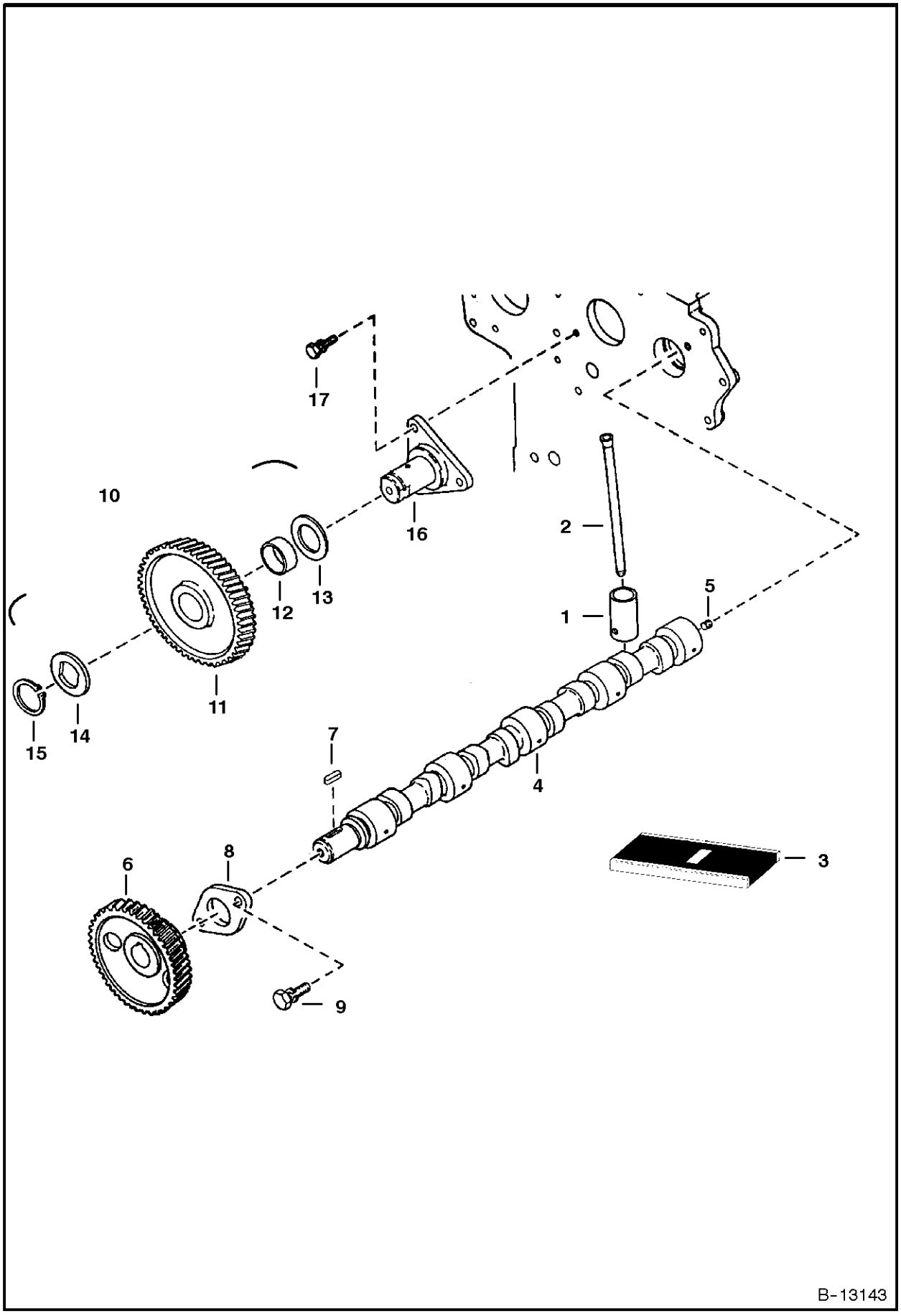
17
10
16
2
12
13
1
5
11
14
15
7
4
6
8
3
9
B-13143

CAMSHAFT

Ref.N°	Part N°	Description	Remarks	Serial N°	Qty.
1	6667428	TAPPET			8
2	6655176	PUSH ROD			8
3	6655427	CAMSHAFT	assy. - Ref. CAMSHAFT(4)-CAMSHAFT(8)		1
4	6655384	CAMSHAFT			1
5	6653839	PLUG	seat		1
6	6653840	GEAR	camshaft		1
7	3974546	KEY			1
8	6653843	STOPPER	camshaft		1
9	4CM-818	BOLT			2
10	6655187	GEAR ASSY.	idle - W/Ref. CAMSHAFT(11) & CAMSHAFT(12)		1
11	NSS	GEAR	idle - Order Ref. CAMSHAFT(10)		2
12	6655242	BUSHING	idle gear		1
13	6655190	COLLAR			1
14	6655191	COLLAR			1
15	6655192	CIR-CLIP	external		1
16	6655193	SHAFT	idle gear		1
17	4CM-816	BOLT			3

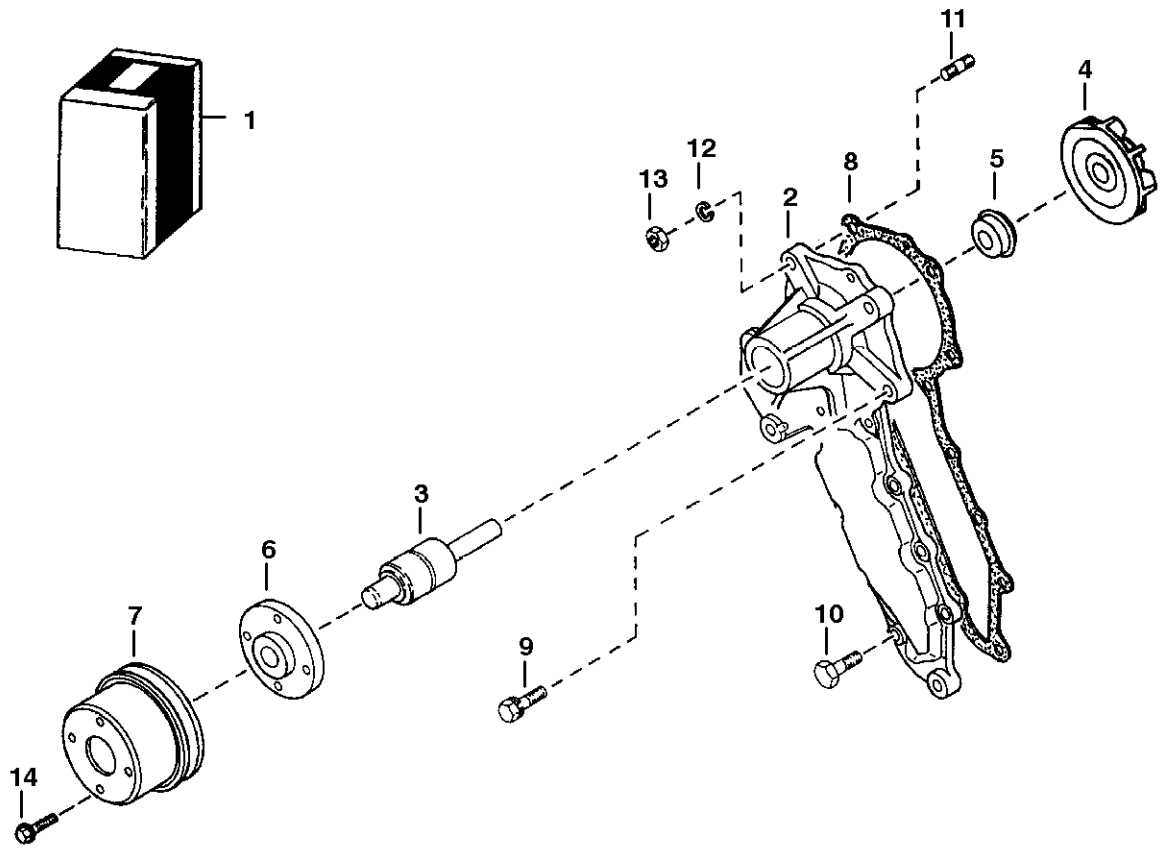

B-13142

WATER PUMP

Ref.N°	Part N°	Description	Remarks	Serial N°	Qty.
1	6653941	WATER PUMP	Ref. WATER PUMP(2)-WATER PUMP(6)		1
2	NAP	BODY			1
3	3974991	BEARING			1
4	6653944	IMPELLER			1
4	6667460	IMPELLER	for one piece seal Ref. WATER PUMP(5)		1
5	6653945	SET SEAL			1
5	6667465	SEAL	one piece		1
6	3974992	FLANGE			1
7	6598155	PULLEY	fan		1
8	3974995	GASKET			1
9	4CM-828	BOLT			2
10	6652580	BOLT			6
11	6653946	STUD			2
12	6EM-80	WASHER	spring		2
13	6652792	NUT			2
14	6652762	BOLT			4

WATER FLANGE & THERMOSTAT

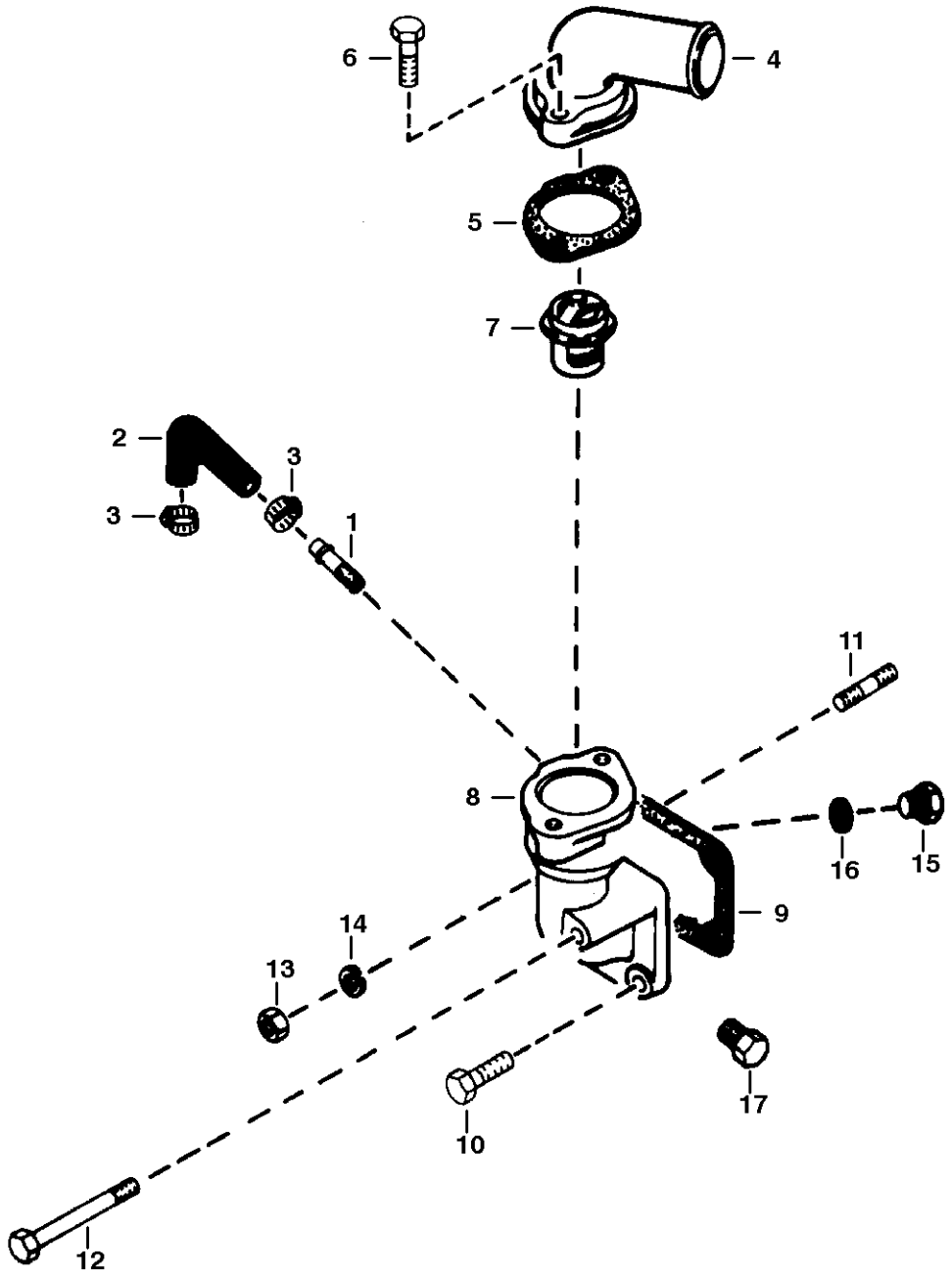

WATER FLANGE & THERMOSTAT

Ref.N°	Part N°	Description	Remarks	Serial N°	Qty.
1	6655880	PIPE	water return		1
2	3974988	PIPE	water return		1
3	3974679	BAND	pipe		2
4	6651489	COVER	thermostat		1
5	6732199	GASKET	$thermo. cover - Was 6666790 [A]$		1
6	1CM-835	BOLT			2
7	6653948	THERMOSTAT			1
7	6630184	THERMOSTAT	$203(_$ F -Used W/cab heater		1
8	6674167	FLANGE	W/Ref. WATER FLANGE & THERMOSTAT(1)		1
9	6666802	GASKET	water flange		1
10	4CM-822	BOLT			2
11	3974627	STUD			1
12	1CM-865	BOLT			1
13	6652792	NUT			1
14	6EM-80	WASHER			1
15	6649536	PLUG			1
16	6653562	GASKET			1
17	40K-2	PLUG			1

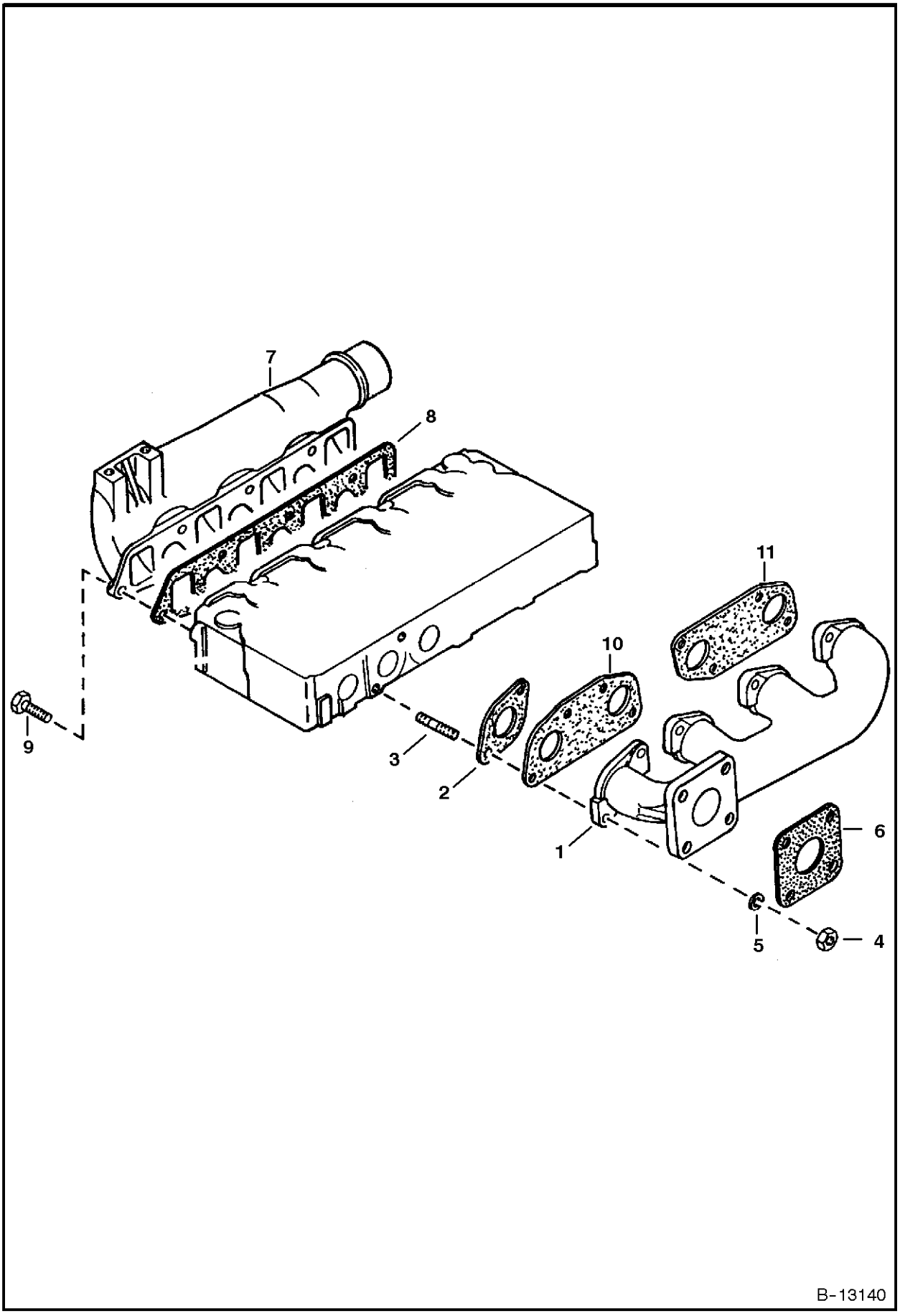
7
8
11
10
9
3
2
1
6
5
4
B-13140

MANIFOLDS

Ref.N°	Part N°	Description	Remarks	Serial N°	Qty.
1	6651482	MANIFOLD	exhaust		1
2	NAP	GASKET	Order Ref. MANIFOLDS(10) & MANIFOLDS(11)		4
3	6652670	STUD			8
4	6652792	NUT			8
5	6EM-80	WASHER	spring		12
6	6727752	GASKET	muffler - Was 6575580 [A]		1
7	6655171	MANIFOLD	intake		1
8	6666811	GASKET			1
9	4CM-822	BOLT			7
10	6666781	GASKET			1
11	6666791	GASKET			1

ENGINE STOP LEVER

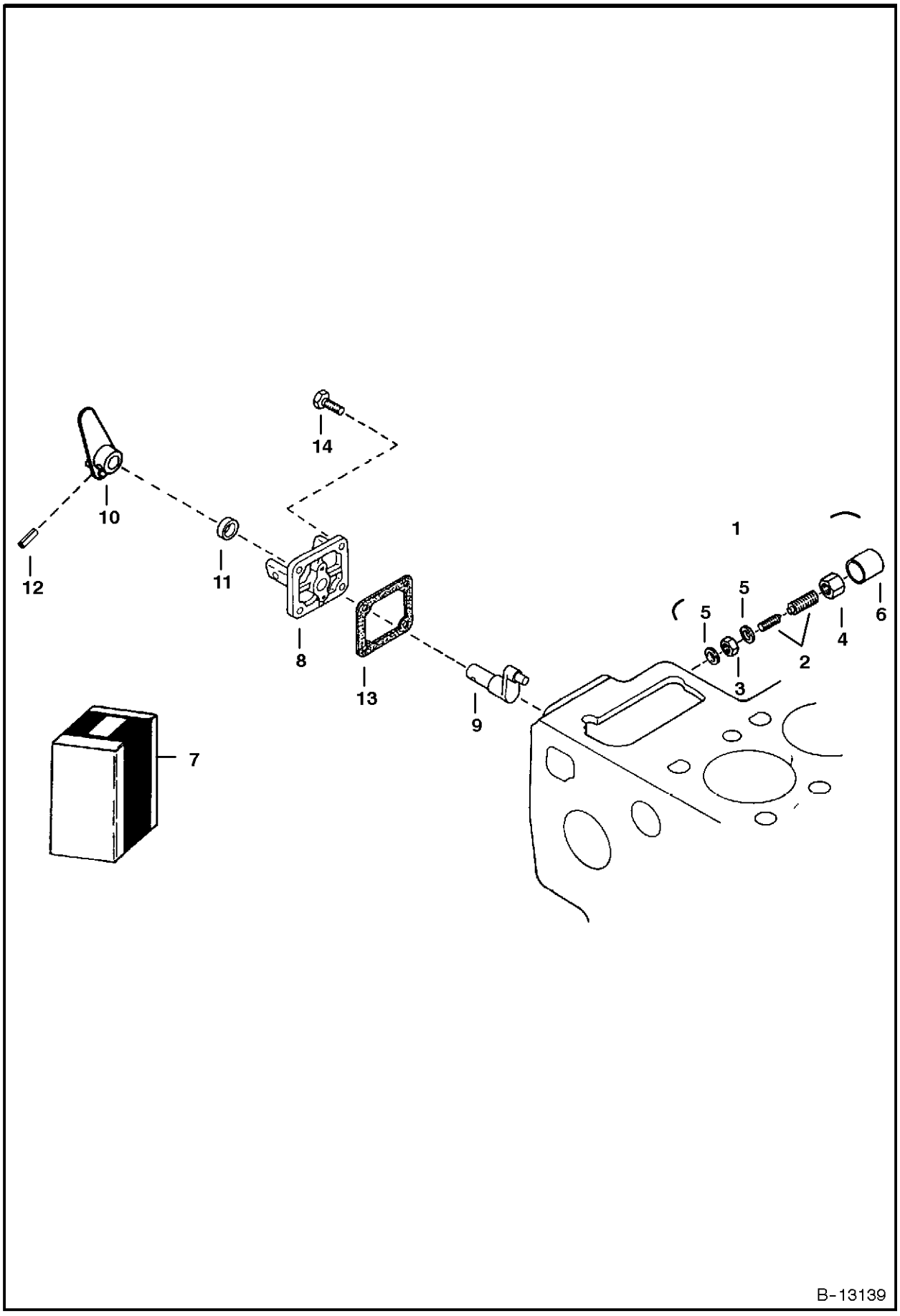

ENGINE STOP LEVER

Ref.N°	Part N°	Description	Remarks	Serial N°	Qty.
1	3974975	APPARATUS	assy., idle - Ref. ENGINE STOP LEVER(2)-ENGINE STOP LEVER(6)		1
2	6653906	BOLT ASSY.	adjusting		1
3	2DM-8	NUT	adjusting		1
4	3974978	NUT			1
5	3974095	GASKET			2
6	3974979	CAP			1
7	6676060	LEVER ASSY.	eng. stop - Ref. ENGINE STOP LEVER(8)-ENGINE STOP LEVER(12) - Was 6655879 [A]		1
8	6655230	COVER	injection pump		1
9	6655231	SHAFT	lever		1
10	6655232	LEVER	engine stop		1
11	6598703	SEAL	oil		1
12	6598098	PIN	spring		1
13	3974601	GASKET	pump cover		1
14	6652580	BOLT			3

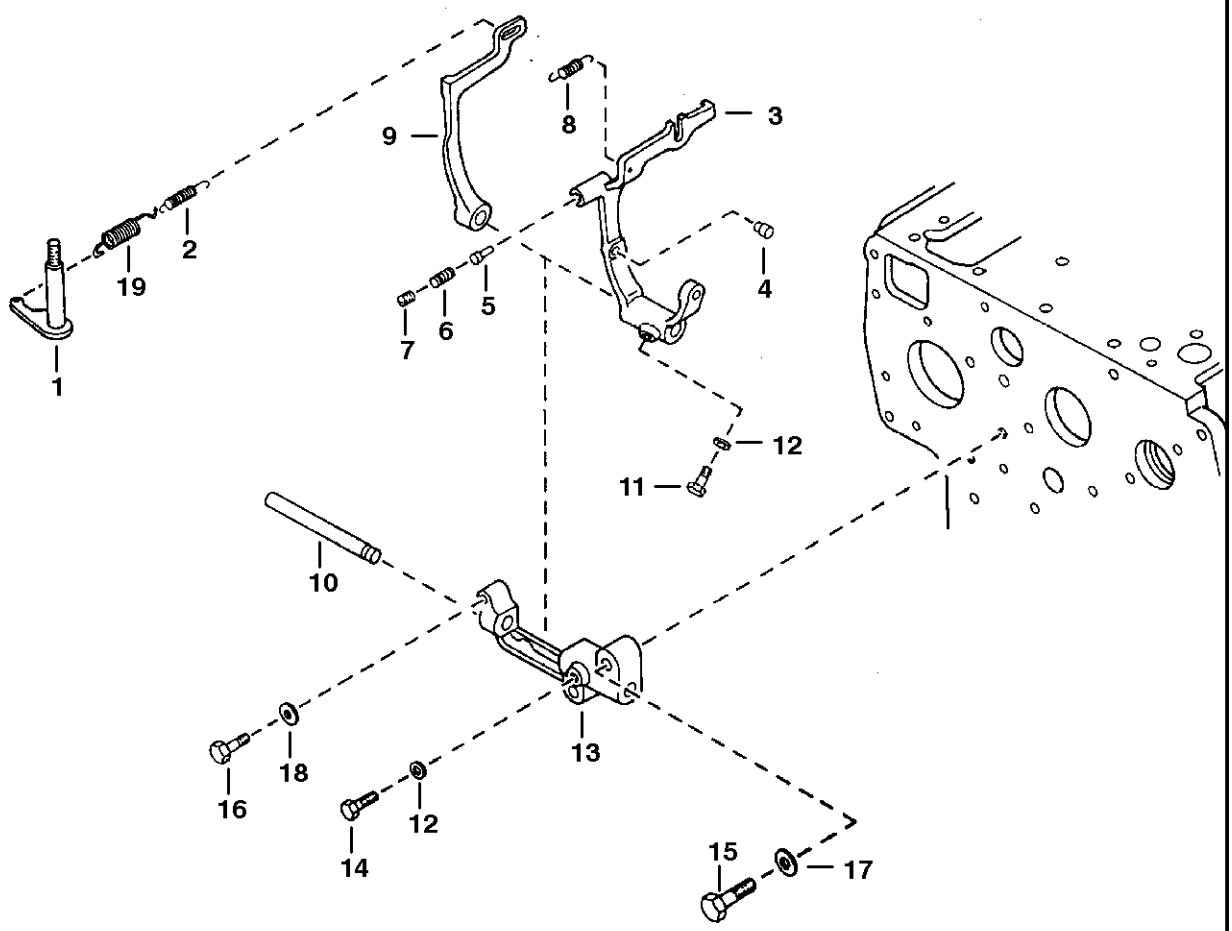

B-13138

GOVERNOR

Ref.N°	Part N°	Description	Remarks	Serial N°	Qty.
1	6598174	LEVER	governor		1
2	6655227	SPRING			1
3	6655876	LEVER	fork - W/Ref. GOVERNOR(4)-GOVERNOR(7)		1
4	NSS	PIN			2
5	NSS	PIN			1
6	NSS	SPRING			1
7	NSS	SCREW			1
8	6655225	SPRING			1
9	6655877	LEVER			1
10	3974658	SHAFT			1
11	3974659	BOLT			1
12	6EM-60	WASHER			2
13	3974661	HOLDER			1
14	3974192	BOLT			1
15	6598355	BOLT			2
16	4CM-628	BOLT			1
17	2EM-8	WASHER			2
18	1EM-60	WASHER			1
19	6655878	SPRING	governor		1

SPEED CONTROL PLATE

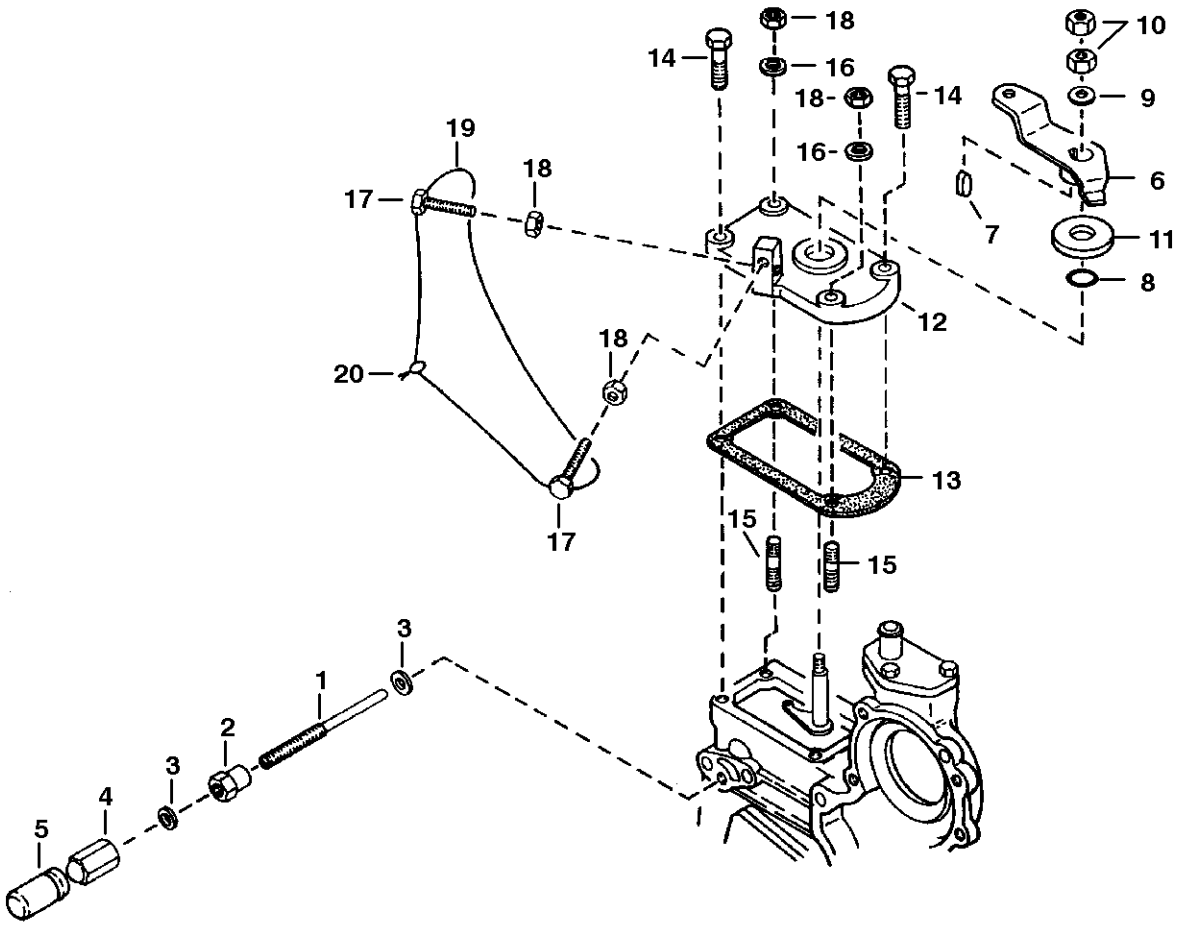

SPEED CONTROL PLATE

Ref.N°	Part N°	Description	Remarks	Serial N°	Qty.
1	3974970	BOLT	adjusting		1
2	3974971	NUT			1
3	3974972	GASKET			2
4	6655223	NUT	cap		1
5	6653905	CAP			1
6	6598176	LEVER	speed control		1
7	15JM-48	KEY	feather		1
8	3966512	O-RING			1
9	1EM-80	WASHER	plain		1
10	1DM-8	NUT			2
11	3974644	PLATE	friction		1
12	6641231	PLATE	speed control		1
13	6635392	GASKET			1
14	4CM-620	BOLT			2
15	6652764	STUD			2
16	6EM-60	WASHER	spring		2
17	6655228	BOLT			2
18	1DM-6	NUT			4
19	NAP	WIRE			1
20	NAP	LEAD	sealing		1

INJECTION PUMP

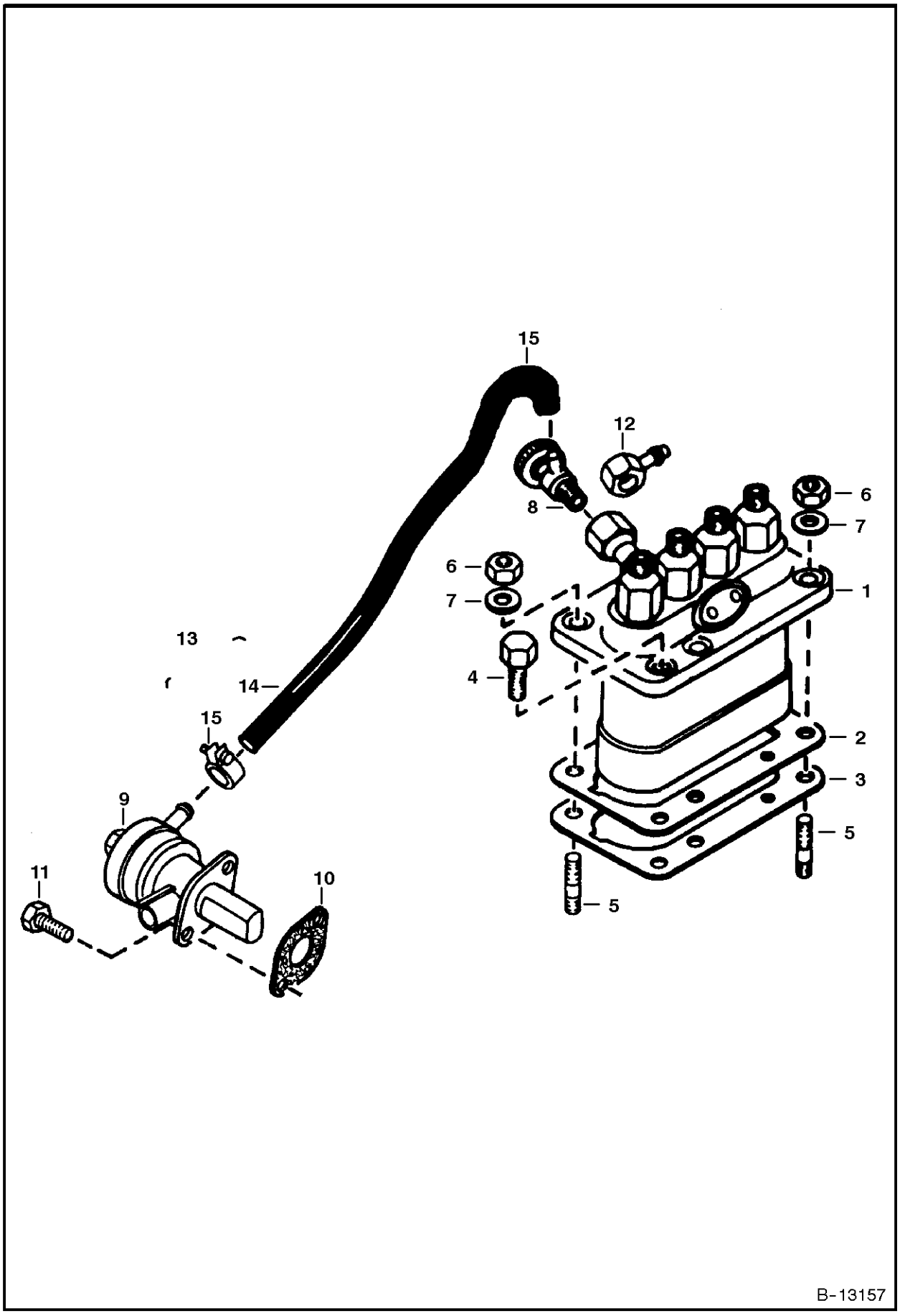

INJECTION PUMP

Ref.N°	Part N°	Description	Remarks	Serial N°	Qty.
1	6674676	PUMP	See Page INJECTION PUMP(1)		1
2	3974626	SHIM	0.15 mm		2
3	6655210	SHIM	0.45 mm		1
4	4CM-822	BOLT			4
5	6652670	STUD			2
6	6652792	NUT			2
7	6EM-80	WASHER	spring		2
8	6598102	COCK	jet start		1
9	6655216	FUEL PUMP			1
10	3974502	GASKET	fuel pump		1
11	4CM-616	BOLT			2
12	6655515	JOINT	eye - connects to Ref. FUEL SYSTEM(25) on Page FUEL SYSTEM(1)		1
13	6655197	PIPE ASSY.	fuel		1
14	NSS	PIPE	fuel		1
15	6655874	CLIP	pipe		2

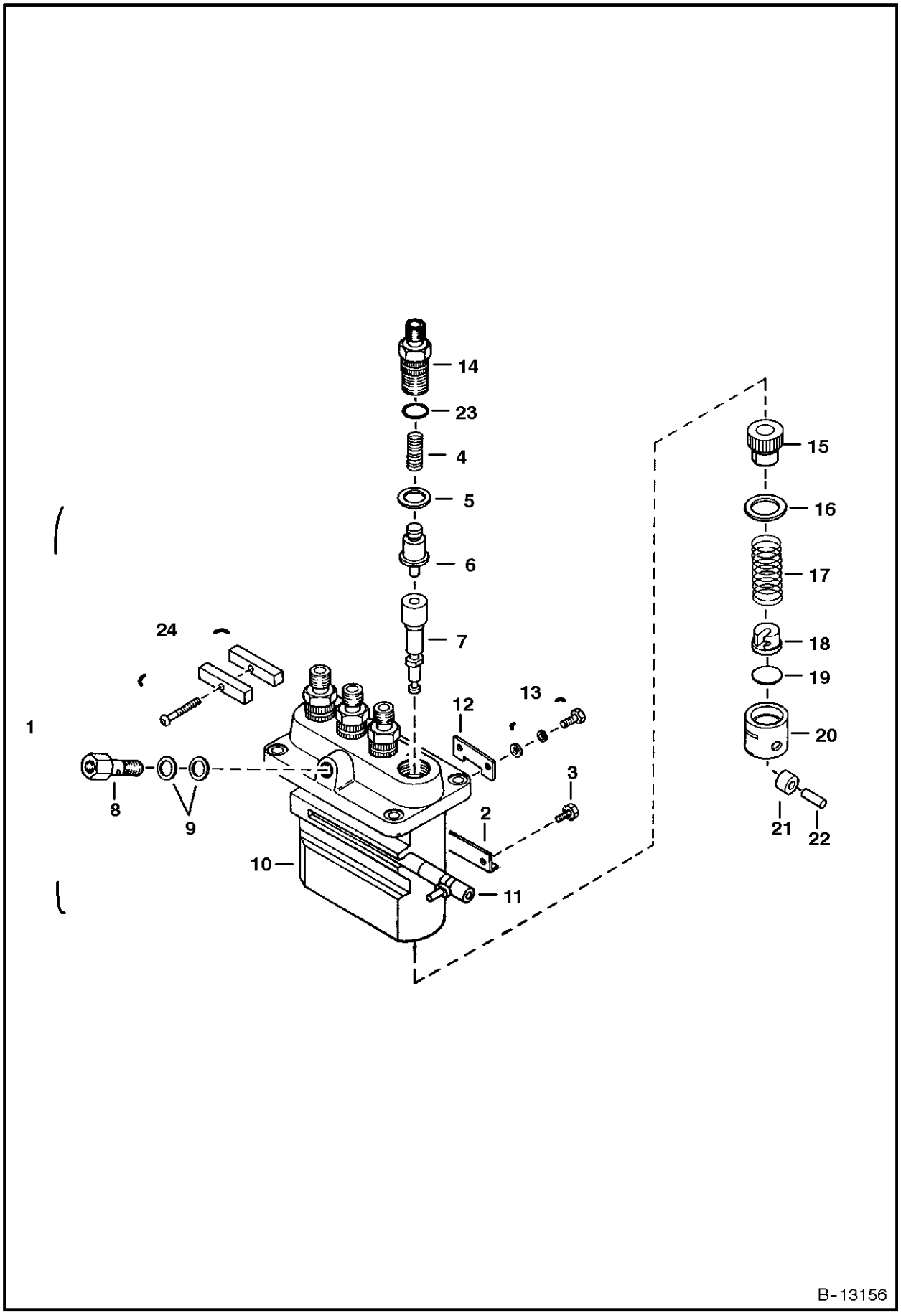
14
23
4
5
6
7
24
1
12
13
8
9
3
2
10
11
15
16
17
18
19
20
21
22
B-13156

INJECTION PUMP

Ref.N°	Part N°	Description	Remarks	Serial N°	Qty.
1	6674676	PUMP			1
2	6655207	PLATE	adjust		3
3	6655206	BOLT			3
4	6655203	SPRING	delivery valve		4
5	3974368	GASKET	delivery valve		4
6	6655202	VALVE	delivery		4
7	6655201	ELEMENT	pump		4
8	3975428	SCREW			1
9	3975389	GASKET			2
10	NSS	HOUSING	pump		1
11	3974787	RACK	control		1
12	6655209	PLATE	adjusting		3
13	3974366	BOLT			3
14	6655204	HOLDER	delivery valve		4
15	6653894	SLEEVE	control		4
16	3974381	SEAT	spring - Upper		4
17	3974382	SPRING	plunger		4
18	3974383	SEAT	spring - Under		4
19	3974384	SHIM			4
20	3974385	TAPPET	W/Ref. INJECTION PUMP(21) & INJECTION PUMP(22)		4
21	NSS	ROLLER			4
22	NSS	PIN			4
23	6655518	O-RING			4
24	6655205	PLATE ASSY.			2

INJECTOR NOZZLES

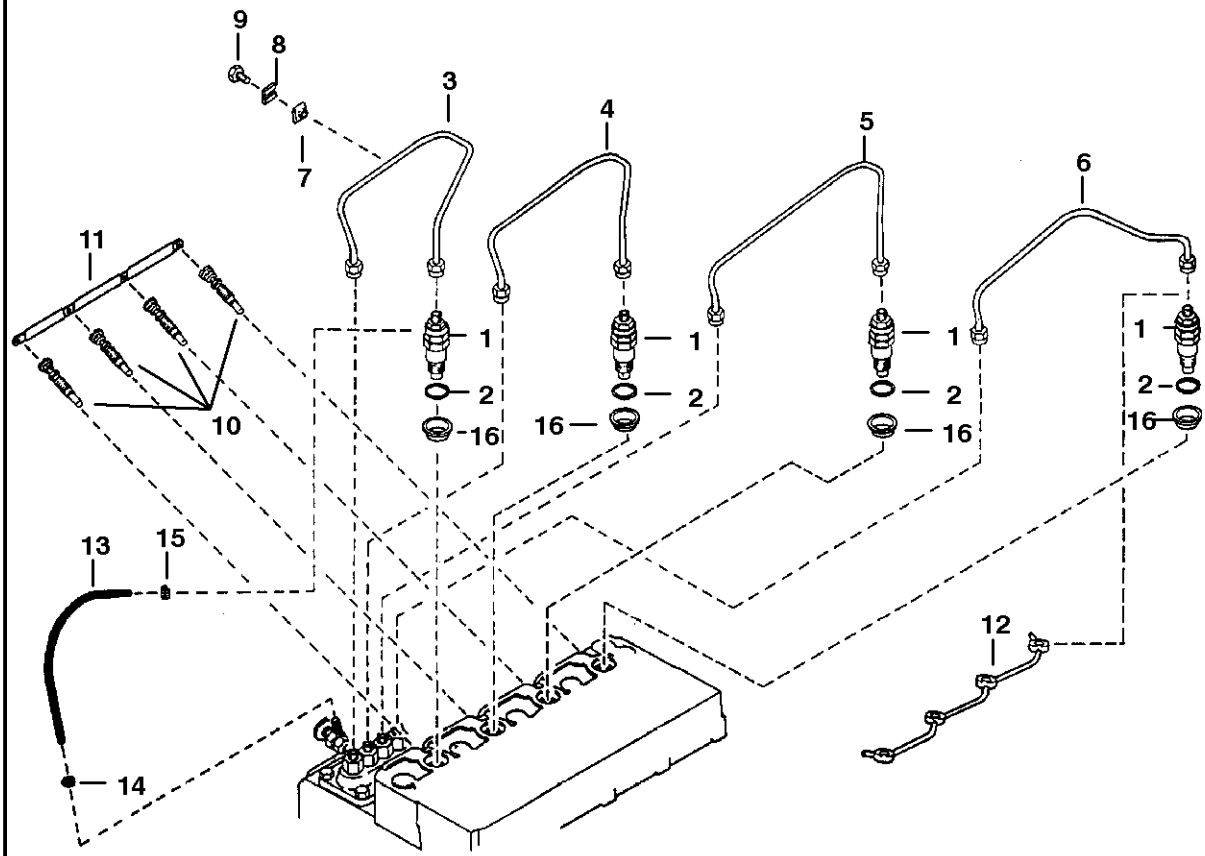

INJECTOR NOZZLES

Ref.N°	Part N°	Description	Remarks	Serial N°	Qty.
1	6722147	HOLDER KIT	nozzle - W/Ref. INJECTOR NOZZLES(2) & INJECTOR NOZZLES(16) - See Page INJECTOR HOLDER(1)		4
2	6655218	GASKET			4
3	6655219	PIPE	injection (1)		1
4	6655220	PIPE	injection (2)		1
5	6655221	PIPE	injection (3)		1
6	6655222	PIPE	injection (4)		1
7	6652688	CLAMP	pipe (1)		3
8	6652689	CLAMP	pipe (2)		3
9	3974260	SCREW	with washer		3
10	6655233	GLOW PLUG			4
11	6655234	CORD	glow plug		1
12	6655198	PIPE	fuel over flow		1
13	6598146	PIPE	fuel over flow (2)		1
14	6599136	CLAMP	pipe		1
15	6654718	CLIP	pipe		1
16	6655872	SHIELD			4

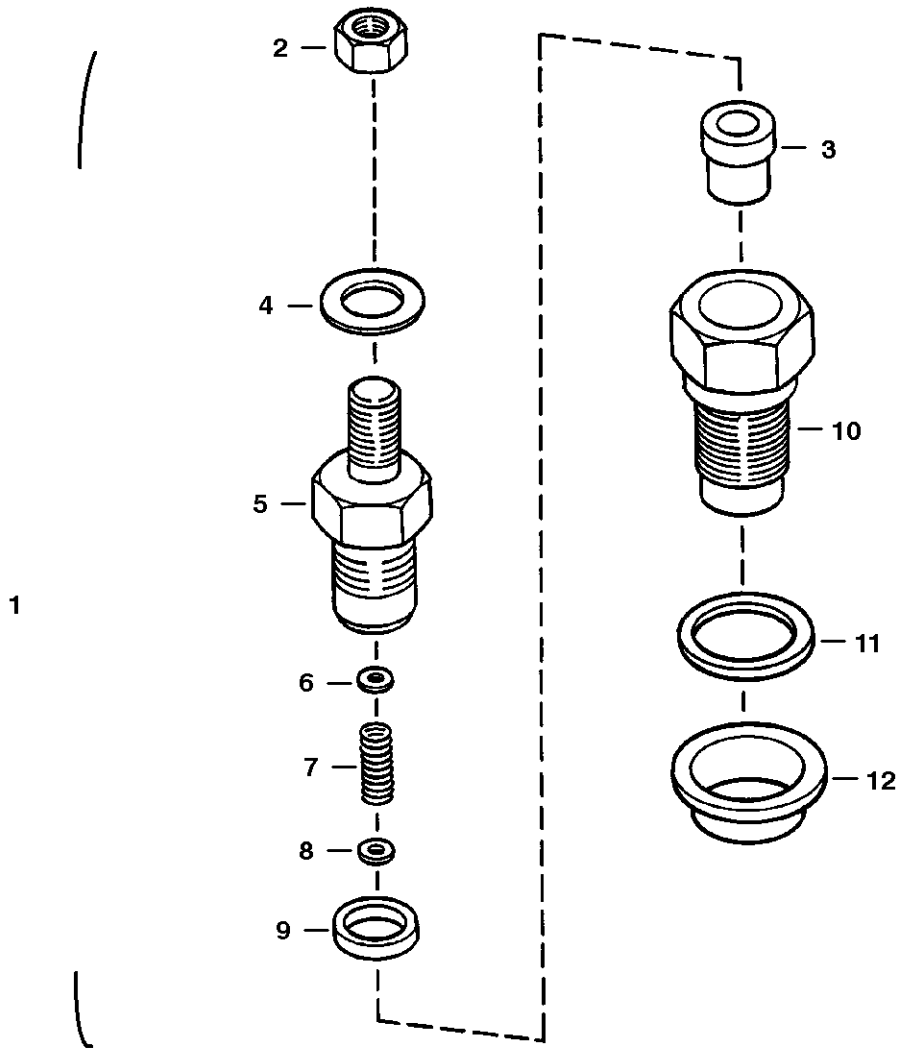
1
2
3
4
5
6
7
8
9
10
11
12
B-13154

INJECTOR HOLDER

Ref.N°	Part N°	Description	Remarks	Serial N°	Qty.
1	6722147	HOLDER KIT	nozzle - Ref. INJECTOR HOLDER(2)-INJECTOR HOLDER(12)		4
2	6657460	NUT			1
3	6655873	PIECE	nozzle		1
4	6657463	WASHER	plain		1
5	NSS	BODY	nozzle holder		1
6	6657742	WASHER ASSY	washer - (.900mm thru 1.950mm)		x
6	6656126	WASHER	adj. (1.00 mm)		x
6	6656127	WASHER	adj. (1.05 mm)		x
6	6656128	WASHER	adj. (1.10 mm)		x
6	6656129	WASHER	adj. (1.15 mm)		x
6	6656130	WASHER	adj. (1.20 mm)		x
6	6656131	WASHER	adj. (1.25 mm)		x
6	6656132	WASHER	adj. (1.30 mm)		x
7	NSS	SPRING	nozzle		1
8	NSS	PIECE	distance		1
9	NSS	PUSH ROD			1
10	NSS	NUT	nozzle		1
11	6655218	GASKET			1
12	6655872	SHIELD			1

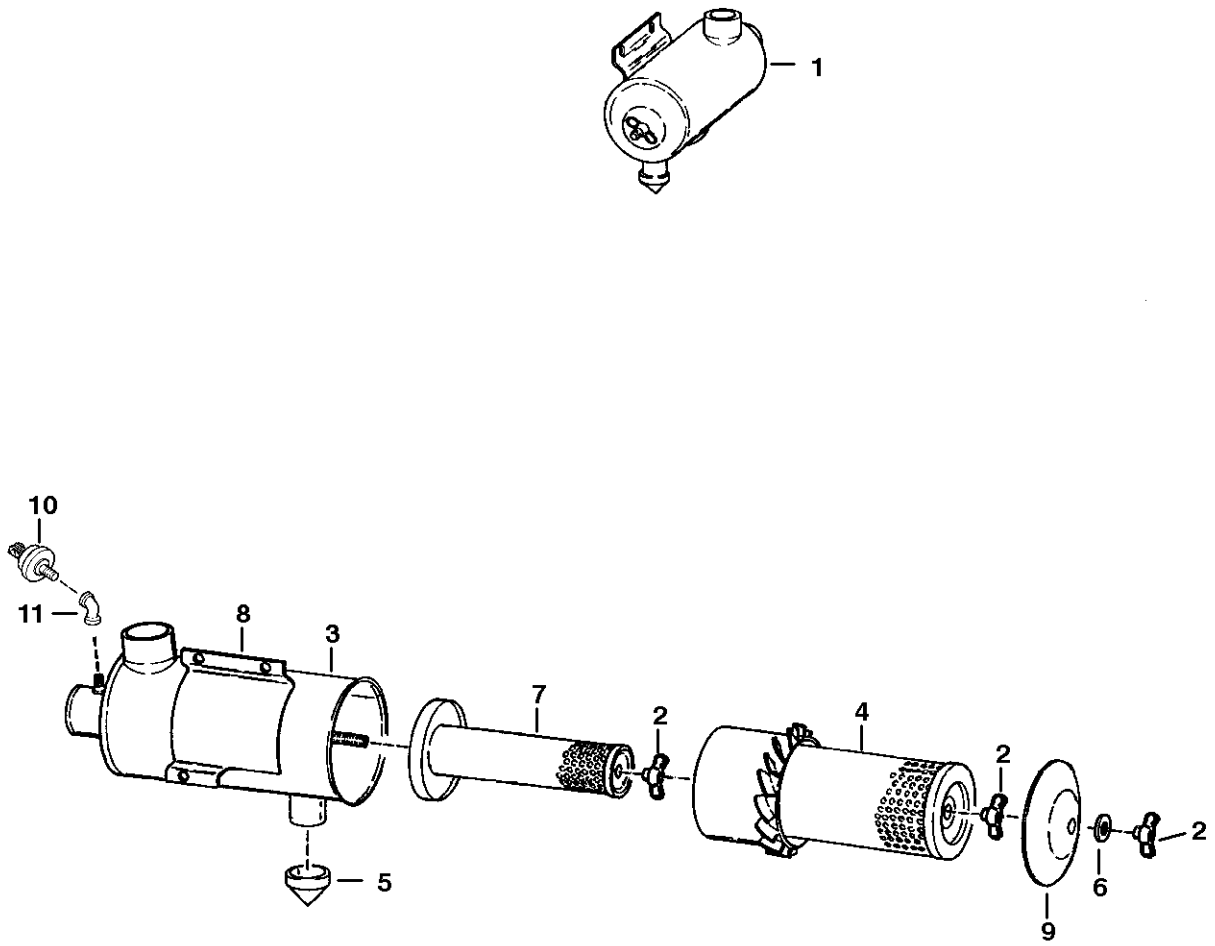
1
10
11
8
3
7
2
4
2
2
6
9
5
B-16478

AIR CLEANER

Ref.N°	Part N°	Description	Remarks	Serial N°	Qty.
1	6700711	AIR CLEANER	Ref. AIR CLEANER(2) - AIR CLEANER(9) & AIR CLEANER(7) - AIR CLEANER(5)		1
2	6661243	WING NUT			3
3	NAP	TANK			1
4	6598492	CARTRIDGE	outer		1
5	6655938	VALVE			1
6	6661244	WASHER			1
7	6598362	CARTRIDGE	inner		1
8	866028	CLAMP			1
9	6661242	COVER			1
10	6665371	SWITCH			1
11	6725502	ELBOW	Was 23F-1 [A]		1

ACS CONVERSION KIT

NOTE: Loader must be equipped W/Advanced Hand Control Option for this kit to function.

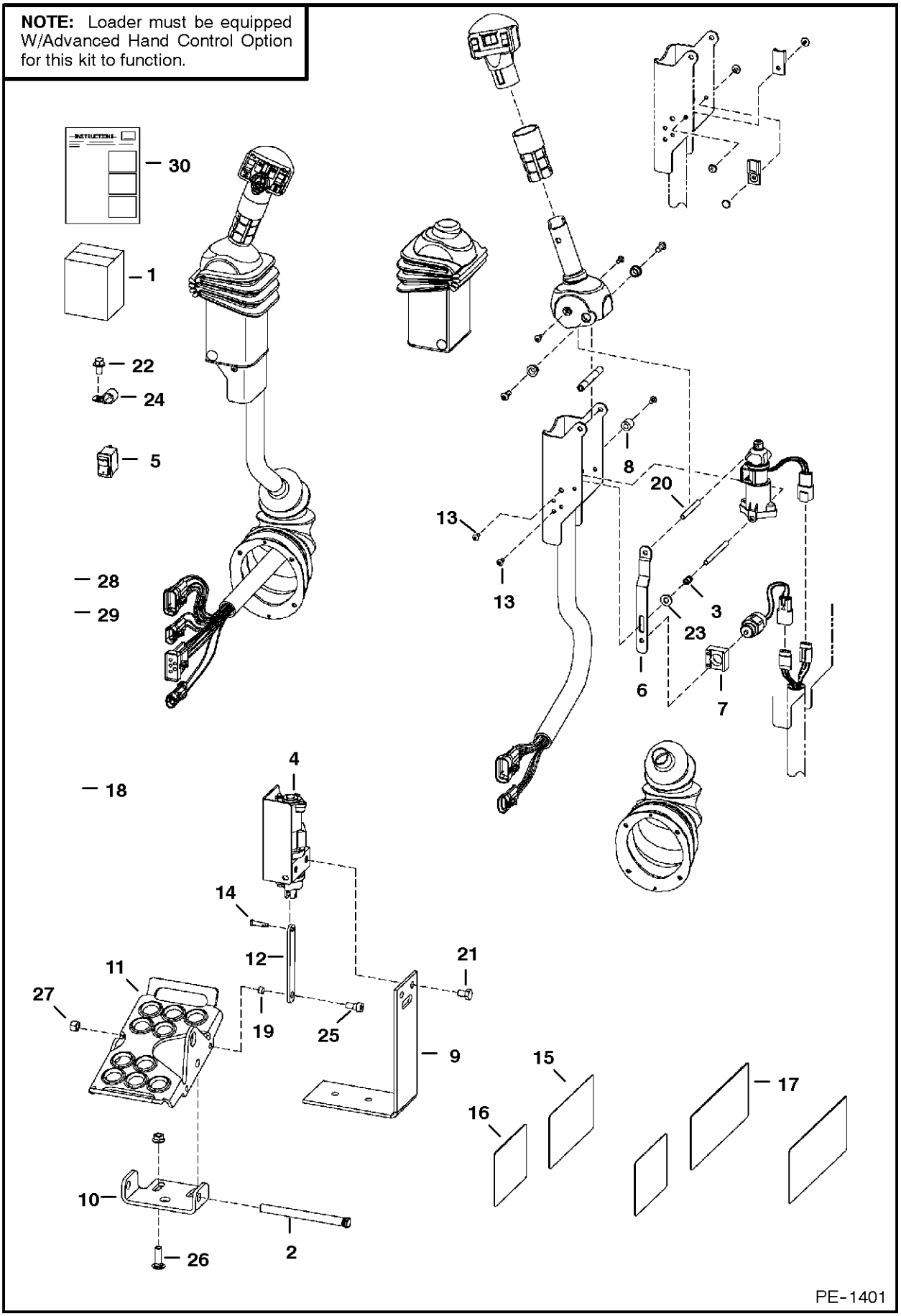

ACS CONVERSION KIT

Ref.N°	Part N°	Description	Remarks	Serial N°	Qty.
1	6731150	KIT	foot control - SEE NOTE		1
2	6564657	PIN			2
3	6675745	SPRING			2
4	6676493	SENSOR	foot pedal - R.H.		1
4	6676029	SOLENOID			1
4	6676492	SENSOR	foot pedal - L.H.		1
4	6676029	SOLENOID			1
5	6676537	SWITCH			2
6	6719715	STRAP			2
7	6719716	MOUNT	solenoid		2
8	6719834	SPACER	threaded		2
9	6726573	BRACKET			2
10	6726679	BRACKET	pedal		2
11	6726680	PEDAL			2
12	6726681	LINK			2
13	6727065	BOLT			12
14	6727496	PIN			2
15	6727926	DECAL			1
16	6727941	DECAL			1
17	6728539	DECAL			1
18	6729023	HARNESS			1
19	6729467	SPACER			2
20	6729600	SPACER	threaded		2
21	17C-608	BOLT			4
22	17C-612	BOLT			4
23	25E-13	WASHER			2
24	30H-38	CLAMP			4
25	17C-514	BOLT			2
26	37C-620	BOLT			4
27	57D-6	NUT			4
28	95D-5	NUT			2
29	95D-6	NUT			4
30	6901492	INSTRUCTIONS			1

ACCESS COVER
(Cleanout - Lower Front of Chaincase)

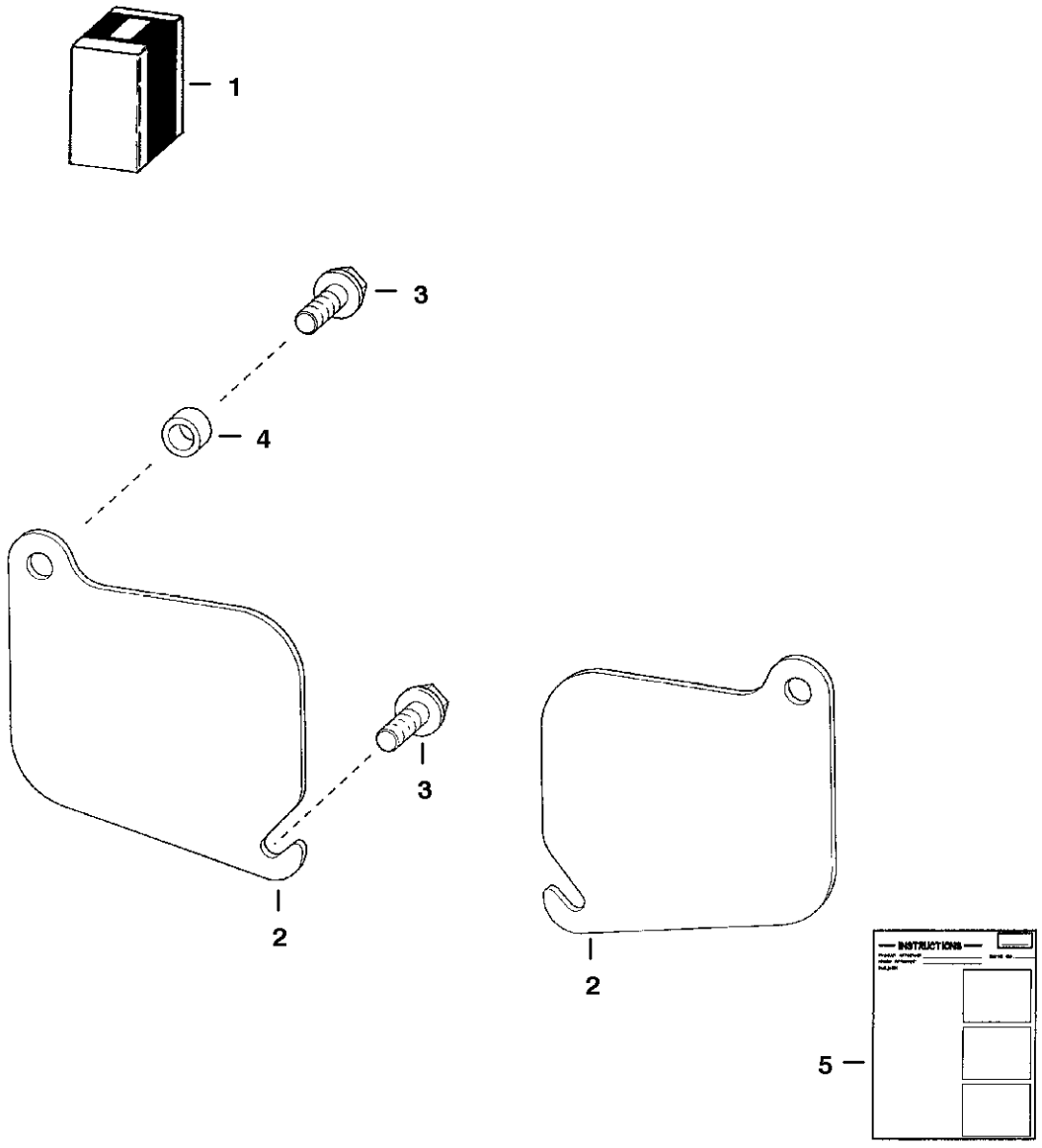

TS-1049

ACCESS COVER

Ref.N°	Part N°	Description	Remarks	Serial N°	Qty.
1	6577880	KIT	Ref. 2-5		1
2	6577812	COVER			2
3	84G-3720	BOLT			4
4	6562619	BUSHING			2
5	6570931	INSTRUCTIONS			1

ACCESSORIES HARNESS
(Standard - Non Deluxe Cab)

NOTE: If loader is not equipped with Deluxe Cab Option, this harness must be used to run Flasher Lights, Turn Indicators, Hazard LIghts, Rotating Beacon and/or Strobe Lights.

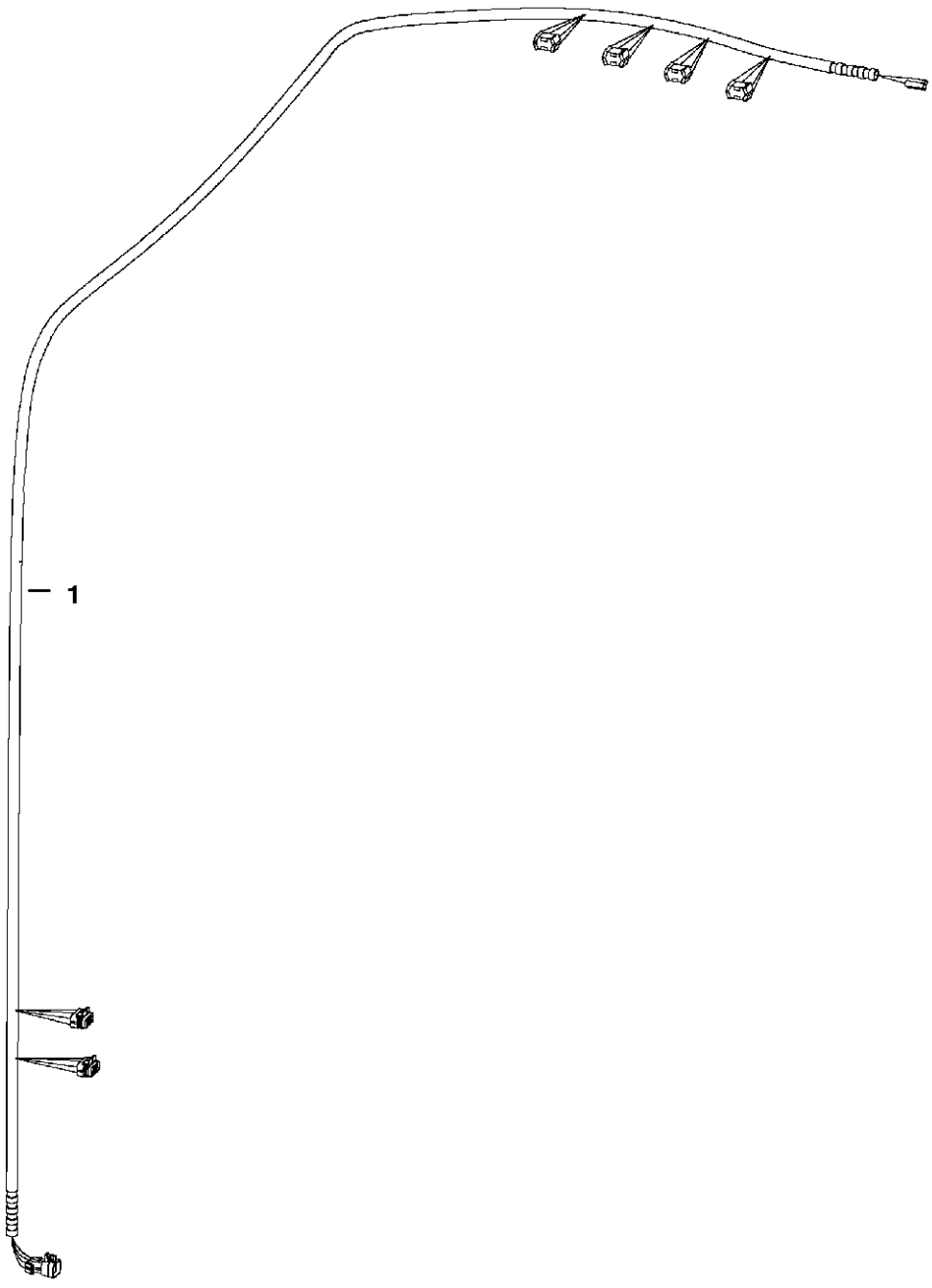

PE-1557

ACCESSORIES HARNESS

Ref.N°	Part N°	Description	Remarks	Serial N°	Qty.
1	6727468	HARNESS	SEE NOTE		1

AIR DEFLECTOR KIT

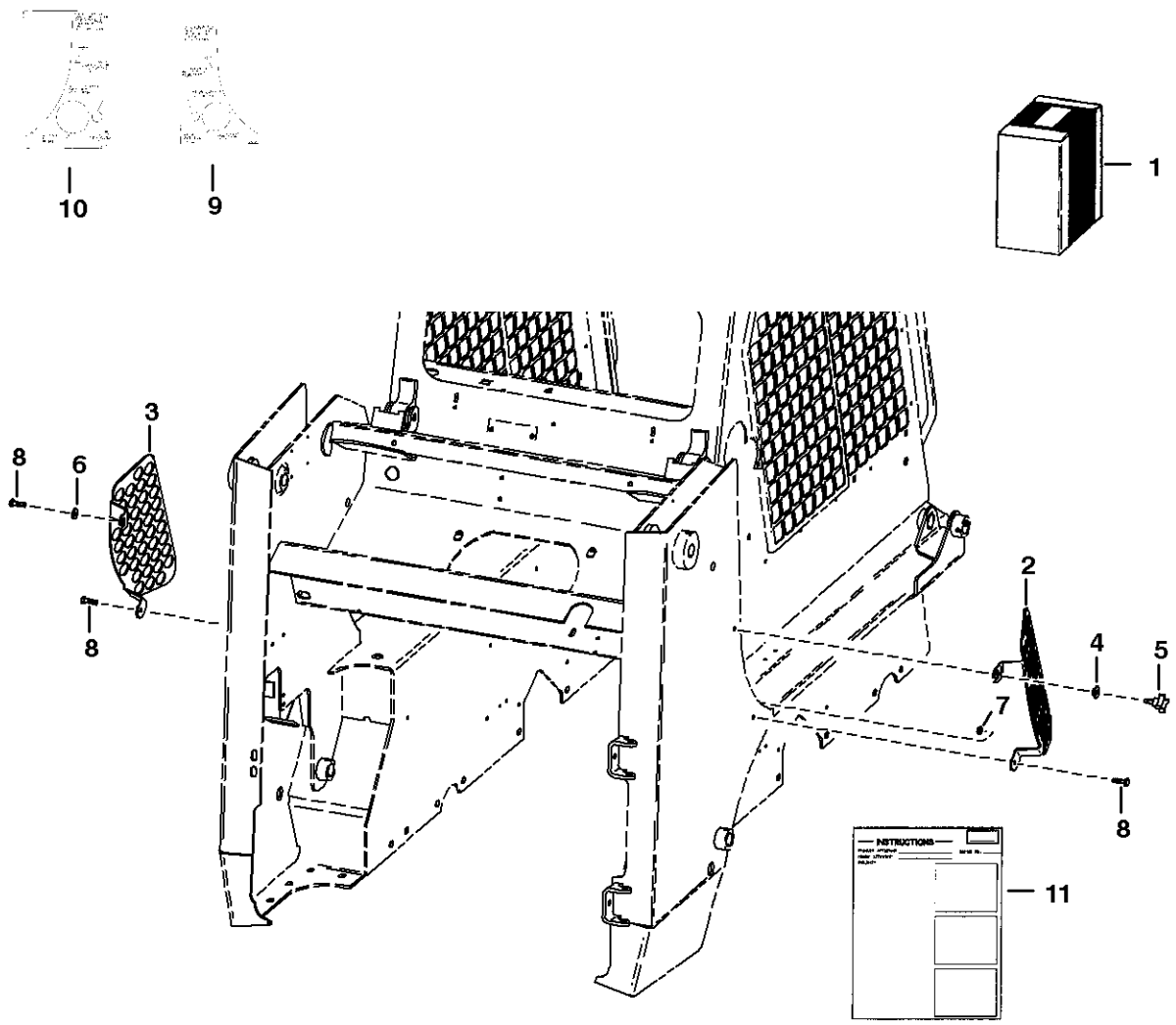

TS-1116

AIR DEFLECTOR KIT

Ref.N°	Part N°	Description	Remarks	Serial N°	Qty.
1	6702351	KIT	air deflector		1
2	6702346	SCREEN	R.H.		1
3	6702347	SCREEN	L.H.		1
4	6702986	NUT	spacer		1
5	6703090	HANDLE			1
6	27E-6	WASHER			1
7	61D-6	NUT			1
8	84G-3716	BOLT			3
9	NAP	TEMPLATE	R.H.-Order Ref. AIR DEFLECTOR KIT(11)		1
10	NAP	TEMPLATE	L.H.-Order Ref. AIR DEFLECTOR KIT(11)		1
11	6720621	INSTRUCTIONS			1

AXLE SEAL KIT

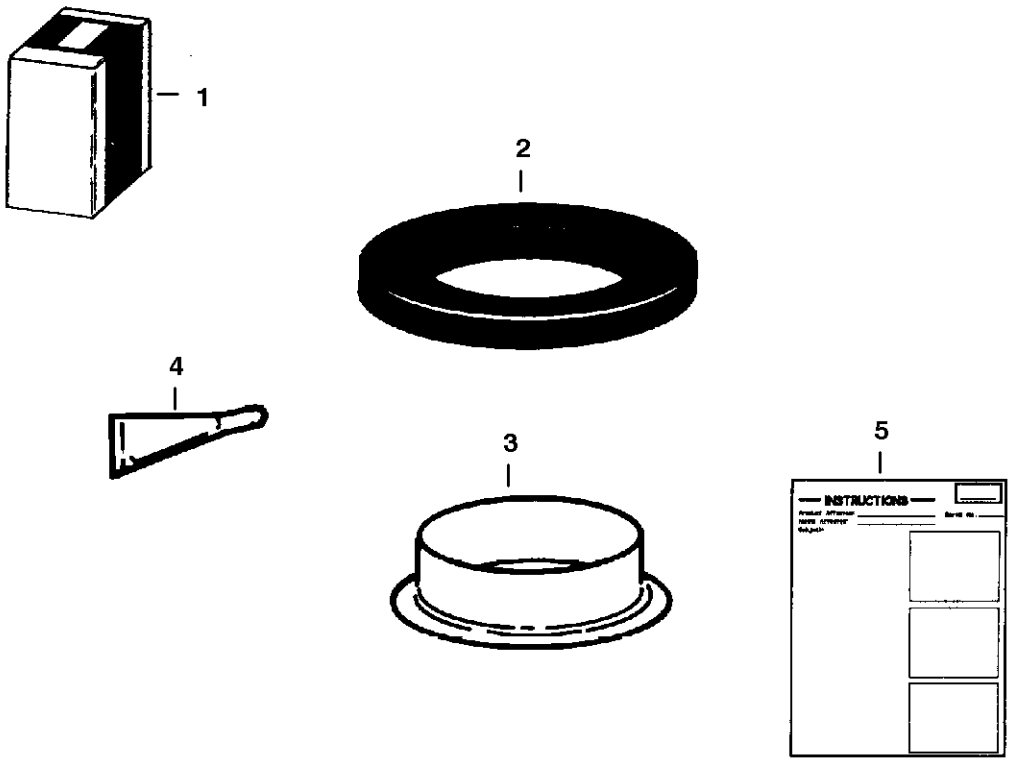

B-4041

AXLE SEAL KIT

Ref.N°	Part N°	Description	Remarks	Serial N°	Qty.
1	6722907	KIT	Ref. AXLE SEAL KIT(2) - AXLE SEAL KIT(5)		1
2	6658228	SEAL			1
3	6662306	RING			1
4	6598485	SEALANT			1
5	6722908	INSTRUCTIONS			1

BACK-UP ALARM

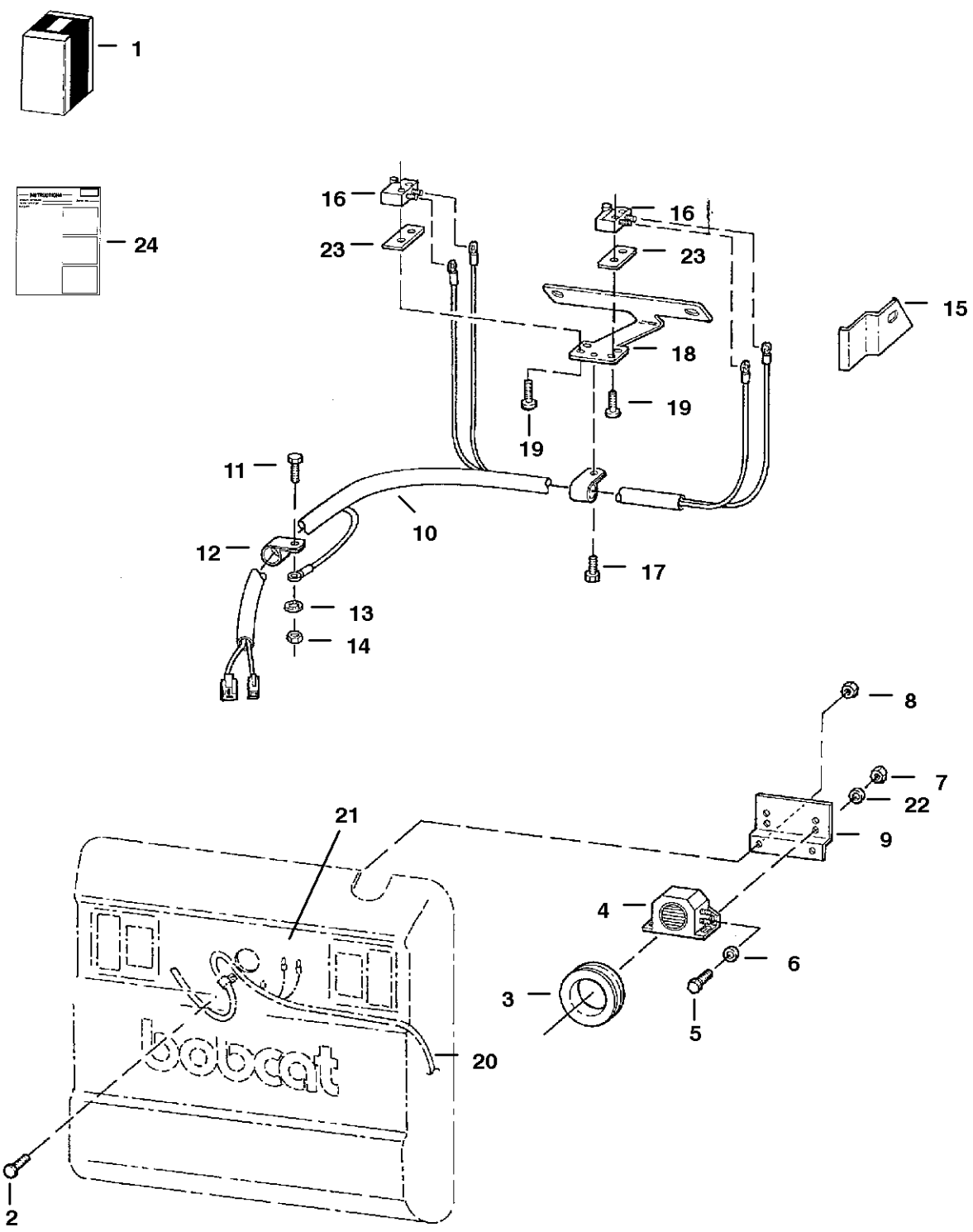

BACK-UP ALARM

Ref.N°	Part N°	Description	Remarks	Serial N°	Qty.
1	6718822	KIT	backup alarm - Ref. BACK-UP ALARM(2) - BACK-UP ALARM(24)		1
2	37C-512	BOLT			2
3	6577545	GROMMET			1
4	6599931	ALARM	backup		1
4	6668879	DECAL			1
5	17C-410	BOLT			2
6	25E-13	WASHER			2
7	61D-5	NUT			2
8	83D-4	NUT			2
9	6707726	MOUNT			1
10	6718820	HARNESS			1
11	17C-412	BOLT			1
12	30H-19	CLAMP	insulated		2
13	6E-4	WASHER			1
14	61D-4	NUT			1
15	6713793	BRACKET	switch		2
16	6646781	SWITCH	alarm		2
17	84G-3112	BOLT			1
18	6713792	MOUNT	switch		1
19	59G-616	BOLT			4
20	6715659	HARNESS	Used on loaders W/O rear lights - comes W/Ref. BACK-UP ALARM(21)		1
21	6672492	RETAINER			1
22	774220	NUT			2
23	6702593	SPACER			2
24	6900857	INSTRUCTIONS			1

BEACON

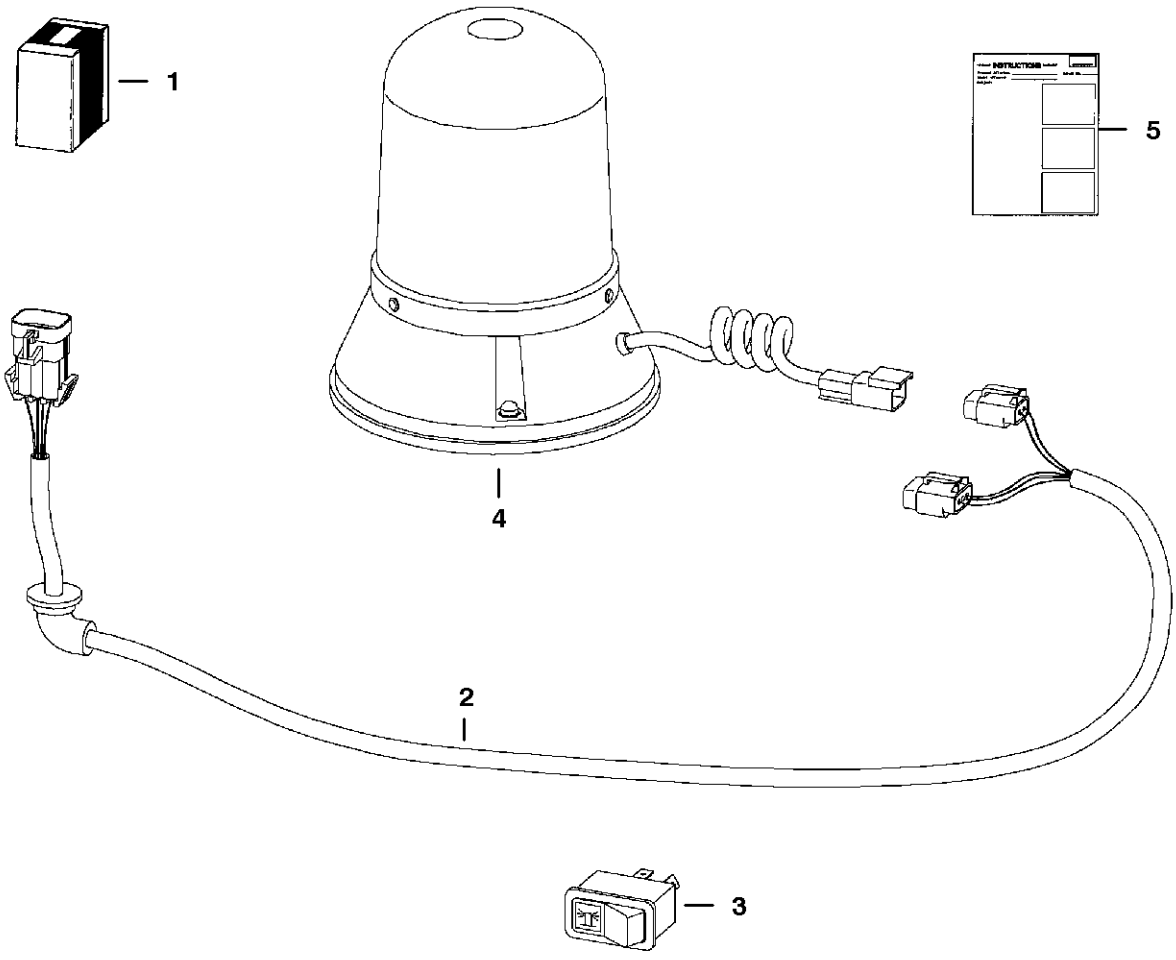

TS-1978

BEACON

Ref.N°	Part N°	Description	Remarks	Serial N°	Qty.
1	6719854	KIT	rotating beacon - If loader is not equipped W/Deluxe Cab Option also order 6727468 Harness - See Page ACCESSORIES HARNESS(1)		1
2	6718872	HARNESS			1
3	6665317	SWITCH	horizontal		1
3	6668816	SWITCH	vertical		1
4	6675523	BEACON			1
4	6666571	BULB			1
5	6900991	INSTRUCTIONS			1

BLOCK HEATER
(Engine)

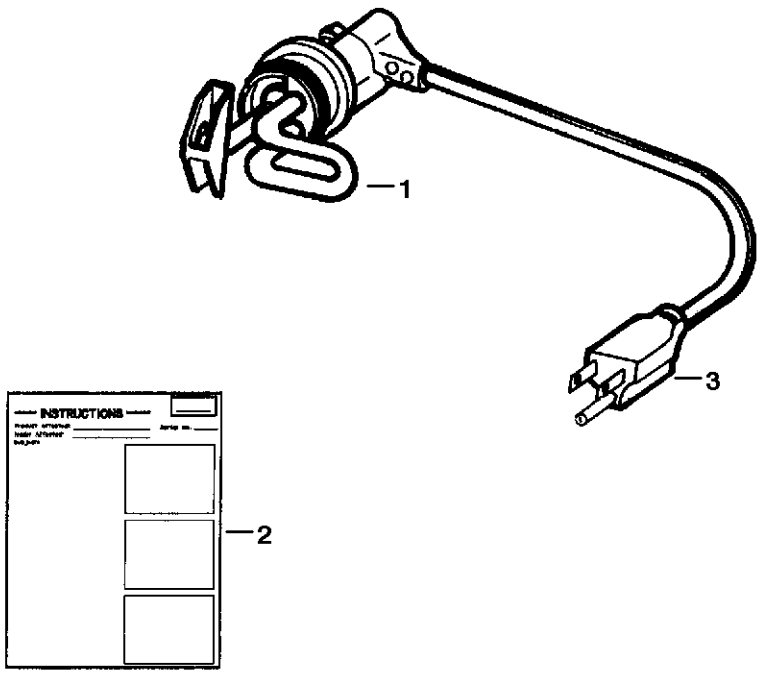

B-12299

BLOCK HEATER

Ref.N°	Part N°	Description	Remarks	Serial N°	Qty.
1	6720736	HEATER	W/Ref. BLOCK HEATER(2)		1
2	6720038	INSTRUCTIONS			1
3	6668881	CORD			1

BOB-TACH LEVERS
(For Use W/Industrial Grapple Fork)

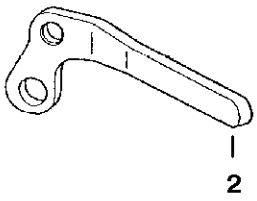

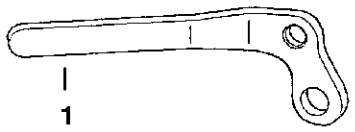

TS-1019

BOB-TACH LEVERS

Ref.N°	Part N°	Description	Remarks	Serial N°	Qty.
1	6578139	LEVER	R.H.		1
2	6578140	LEVER	L.H.		1

BUCKET POSITIONING VALVE KIT

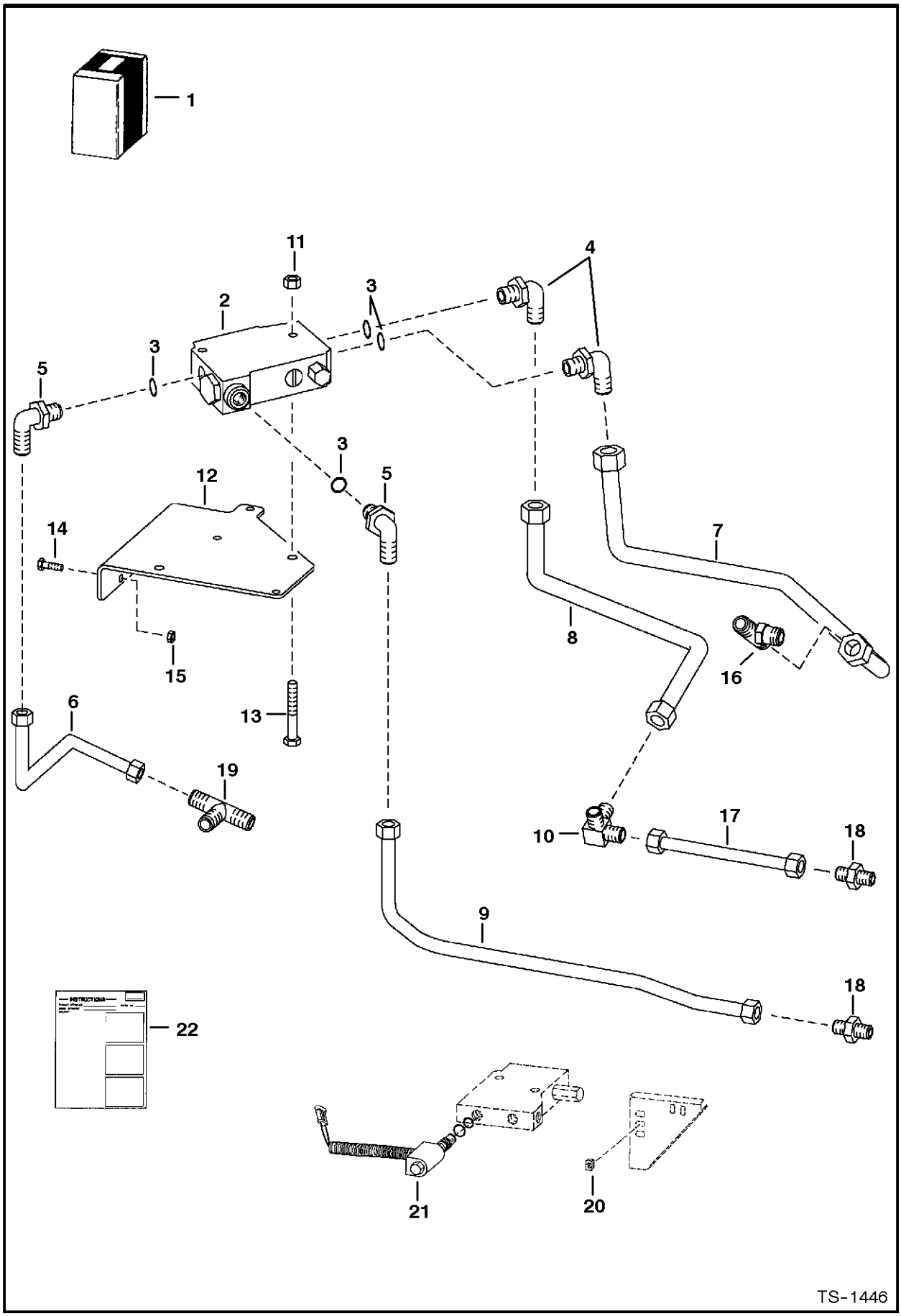

BUCKET POSITIONING VALVE KIT

Ref.N°	Part N°	Description	Remarks	Serial N°	Qty.
1	6712050	KIT	Ref. BUCKET POSITIONING VALVE KIT(2) - BUCKET POSITIONING VALVE KIT(15) & BUCKET POSITIONING VALVE KIT(20) - BUCKET POSITIONING		1
2	6666341	VALVE	bucket pos. - See Page BUCKET POSITIONING VALVE(1)		1
3	99K-10	O-RING			x
4	17KV-7	ELBOW	W/Ref. BUCKET POSITIONING VALVE KIT(3)		2
4	97K-10	O-RING	flared end		2
5	6715716	ELBOW	W/Ref. BUCKET POSITIONING VALVE KIT(3)		2
5	97K-8	O-RING	flared end		2
6	6705068	TUBE			1
7	6710583	TUBE			1
8	6704839	TUBE			1
9	6710584	TUBE			1
10	6705070	TEE			1
11	57D-5	NUT			2
12	6704833	BRACKET			1
13	35C-536	BOLT			2
14	35C-412	BOLT			2
15	55D-4	NUT			2
16		TEE	Not in Kit - See Page HYDRAULIC CIRCUITRY(1)		1
17		TUBE	Not in Kit - See Page HYDRAULIC CIRCUITRY(1)		1
18		ADAPTER	Not in Kit - See Page HYDRAULIC CIRCUITRY(1)		2
19		ADAPTER	Not in Kit - See Page HYDRAULIC CIRCUITRY(1)		1
20	6668814	SWITCH			1
21	6672863	SOLENOID			1
21	6670634	SEAL KIT			1
21	6671527	NUT			1
22	6724522	INSTRUCTIONS			1

* BUCKET POSITIONING VALVE KIT

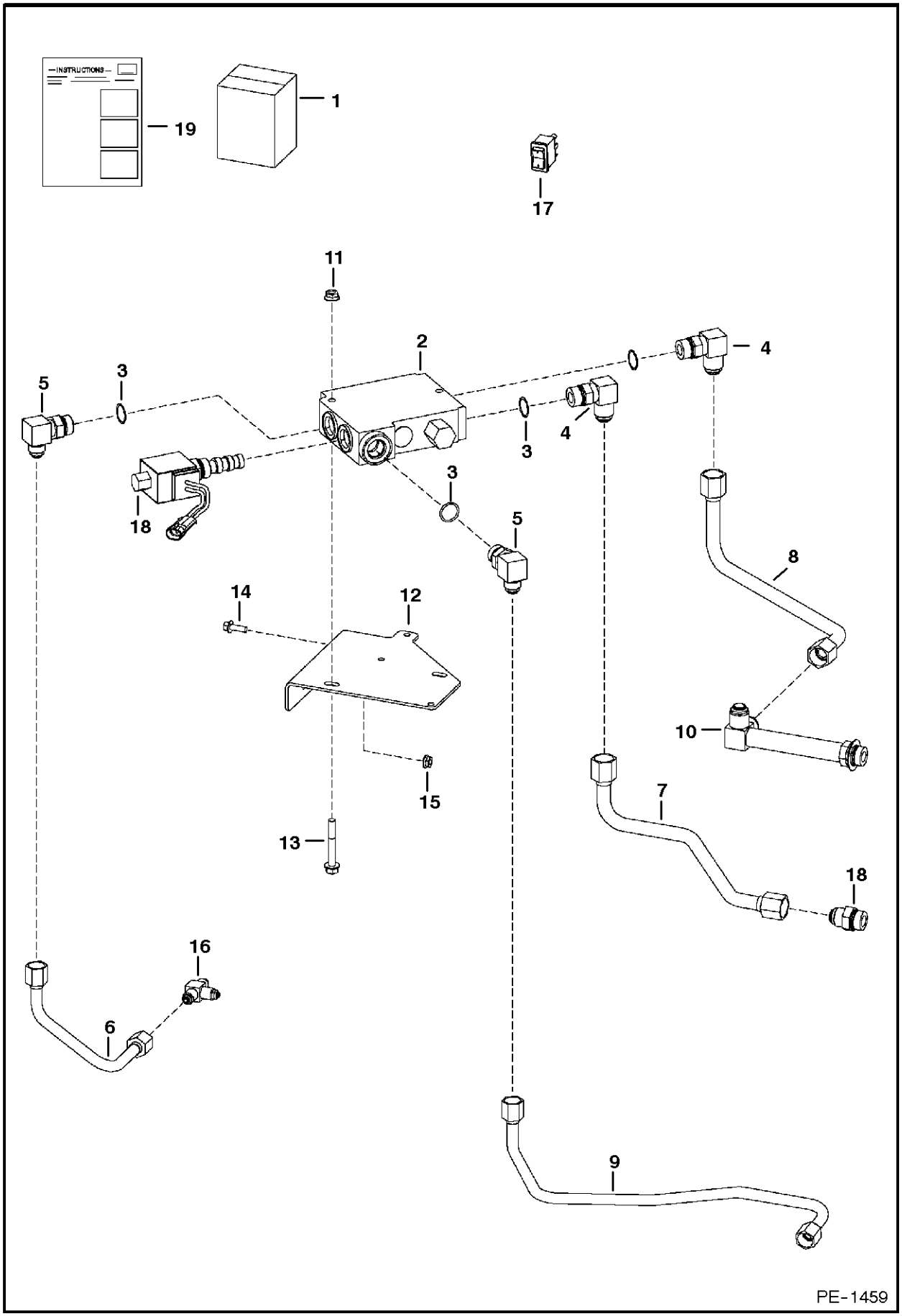

* BUCKET POSITIONING VALVE KIT

Ref.N°	Part N°	Description	Remarks	Serial N°	Qty.
1	6727619	KIT	Ref. * BUCKET POSITIONING VALVE KIT(2) - * BUCKET POSITIONING VALVE KIT(19)		1
2	6666341	VALVE	bucket pos. - See Page BUCKET POSITIONING VALVE(1)		1
3	99K-10	O-RING			x
4	17KV-7	ELBOW	W/Ref. * BUCKET POSITIONING VALVE KIT(3)		2
4	97K-10	O-RING	flared end		2
5	6715716	ELBOW	W/Ref. * BUCKET POSITIONING VALVE KIT(3)		2
5	97K-8	O-RING	flared end		2
6	6727627	TUBE			1
7	6727629	TUBE			1
8	6727626	TUBE			1
9	6727628	TUBE			1
10	6730142	TEE	Not in Kit		1
11	57D-5	NUT			2
12	6704833	BRACKET			1
13	35C-536	BOLT			2
14	35C-412	BOLT			2
15	55D-4	NUT			2
16		TEE	Not in Kit - See Page * (1)		1
17	6668814	SWITCH			1
18	6672863	SOLENOID			1
18	6670634	SEAL KIT			1
18	6671527	NUT			1
19	6724522	INSTRUCTIONS			1

CAB DOOR

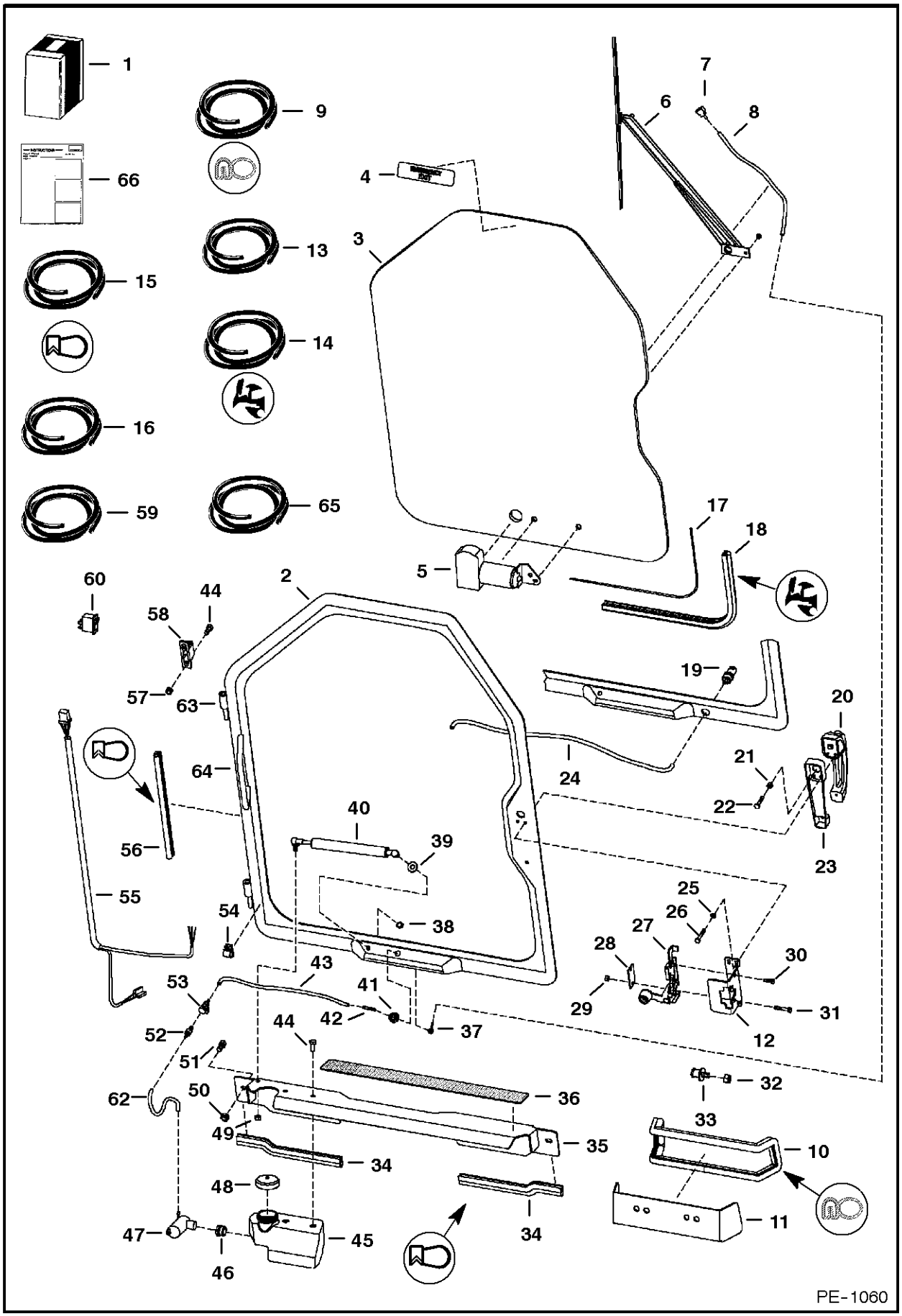
1
9
66
13
15
14
16
59
65
7
6
8
4
3
17
18
5
60
44
58
2
19
20
57
63
64
24
21
22
23
56
40
39
55
54
38
25
26
27
28
30
29
31
43
53
41
42
37
12
52
44
51
32
62
50
36
33
49
35
10
34
48
34
47
45
11
46
PE-1060

CAB DOOR

Ref.N°	Part N°	Description	Remarks	Serial N°	Qty.
1	6718808	KIT	door - Was 6718807 [B,D]		1
2	NAP	DOOR	.5' longer than 6726435inD1}. Door - Was 6717590 [A]		1
2	6726435	DOOR	'.5' shorter than NAP/6717590 Door		1
3	6717360	WINDOW	.25' thick - glass - See Page CAB DOOR(1)		1
4	6707852	DECAL	exit		1
5		MOTOR	See Page CAB DOOR(1)		1
6		ARM	wiper - See Page CAB DOOR(1)		1
7		NOZZLE	'wiper arm mounted -See Page CAB DOOR(1)		1
8		HOSE	See Page CAB DOOR(1)		1
9	6555351	SEAL	bulk - Sold Per Foot		x
10	NAP	SEAL	'40'(1016 mm) long - Order Ref. CAB DOOR(9)		1
11	6725200	PLATE			1
12	6717369	BRACKET	latch		1
13	6676918	HOSE	'50' (15,240 mm) long roll - .125' I.D. - black		x
14	6665568	SEAL	bulk - Sold Per Foot		x
15	6675558	SEAL	bulk - Sold Per Foot - Was 6669390 [A]		x
16	6554149	CORD	bulk - Sold Per Foot		x
17	NAP	CORD	window - 113.3' (2877,8mm) - Order Ref. CAB DOOR(16)		1
18	NAP	SEAL	window - 113.3' (2877,8mm) - Order Ref. CAB DOOR(14)		1
19	6664555	NOZZLE	washer		1
20	6674667	HANDLE			1
20	6709527	KEY	ign. & rear door		1
21	61D-4	NUT			1
22	17C-420	BOLT			1
23	6717146	SPACER	handle		1
24	NAP	HOSE	25.25' (641,4 mm) long - Order Ref. CAB DOOR(59)		1
25	6EM-60	WASHER			3
26	1CM-640	BOLT			3
27	6674666	LATCH			1
28	6718520	COVER	latch		1
29	4DM-6	NUT			2
30	1CM-620	BOLT			2
31	4CM-635	BOLT	Was 1CM-635 [B]		2
32	91D-7	NUT			1
33	6654170	STRIKER BOLT			1
34	NAP	SEAL	threshold - 11' (279,4mm) - Order Ref. CAB DOOR(15)		2
35	6725042	SHIELD			1
36	6542731	SAFETY TREAD			1
37	6676500	ELBOW			1
38	46D-5	NUT	acorn		1
39	25E-16	WASHER			1
40	6674938	GAS SPRING			1
40	6678548	SOCKET			2
40	6649244	BALL STUD			2
40	6649245	CLIP	spring		2
41	6676499	GROMMET	wiper		1
42	6676917	ELBOW			1
43	NAP	HOSE	18.25' (463,6 mm) long - Order Ref. CAB DOOR(59)		1

CAB DOOR

Ref.N°	Part N°	Description	Remarks	Serial N°	Qty.
44	17C-512	BOLT			6
45	6730830	TANK	washer - Was 6718627 [A]		1
46	6666766	GROMMET			1
47	6664554	PUMP	washer bottle		1
48	6674993	CAP	vented		1
49	61D-5	NUT			5
50	61D-6	NUT	Was 61D-8 [B]		2
51	17C-612	BOLT	Was 17C-812 [B]		2
52	6675299	COUPLER	insert		1
53	6675298	COUPLER	body		1
54	6675378	CLIP	Use W/door mounted nozzle		2
54	6675378	CLIP	Use W/wiper arm mounted nozzle		1
55	6718295	HARNESS	wiper - W/18'(457,2 mm) long 3-pin connector extension - Use W/NAP/6668137 Motor		1
55	6729739	HARNESS	wiper - Use W/6677835inD1}M Motor		1
56	NAP	SEAL	127.3'(3233,4mm) -Order Ref. CAB DOOR(15)		1
57	59D-5	NUT			4
58	6717593	HINGE	base		2
59	6676003	HOSE	bulk - Sold Per Foot - .109' I.D. - black - Was 6708310 [A]		x
60	6665707	SWITCH	front wiper		1
61	6664097	COVER	wiper		1
62	NAP	HOSE	washer - 4.25' (108 mm) long - Order Ref. CAB DOOR(65)		1
63	6718376	HINGE	door		2
64	6718521	HANDLE	grab		1
65	6708310	HOSE	bulk - Sold Per Foot - .149' I.D. - clear		x
66	6901013	INSTRUCTIONS	Was 6900854 [A]		1

CAB DOOR
(Window & Wiper)

NOTE: It is necessary to identify the correct style of wiper motor before ordering wiper replacement parts.
Components for wipers W/threaded shaft ends & built in fuse are shown on the upper half ot this page.
Components for wipers W/knurled shaft ends are shown on the lower half of this page.

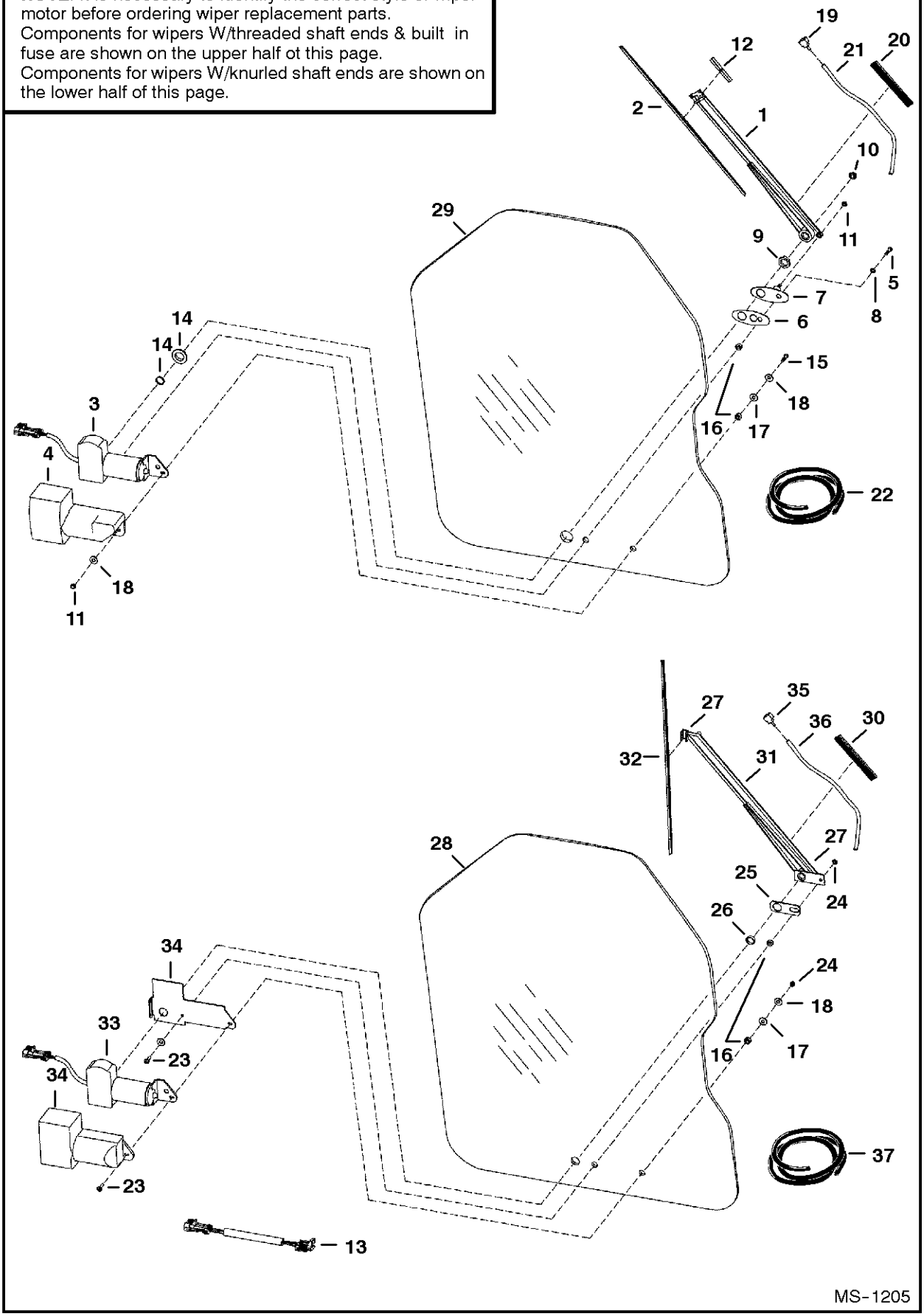

MS-1205

CAB DOOR

Ref.N°	Part N°	Description	Remarks	Serial N°	Qty.
1	6677833	ARM ASSY	W/Ref. CAB DOOR(19) - CAB DOOR(21)		1
2	6677834	BLADE	Also Order Ref. CAB DOOR(12)		1
3	6679476	MOTOR	'W/threaded shaft & built in fuse - SEE NOTE - Was 6677835 [A]		1
4	6677836	MOTOR			1
5	6677837	BOLT			1
6	6677839	GASKET			1
7	6677840	SWIVEL ASSY			1
8	6677841	WASHER	tooth lock		1
9	6677842	NUT			1
10	6677843	NUT			1
11	6677844	NUT			2
12	6677845	ADAPTER	arm		1
13	6730123	HARNESS	7'(177,8 mm) long wiper jumper - W/fuse - Use W/Ref. CAB DOOR(33)		1
14	6677848	SLEEVE	rubber - Use W/Ref. CAB DOOR(3) & Ref. CAB DOOR(28)		1
14	6677847	GROMMET	rubber - Use W/Ref. CAB DOOR(3) & Ref. CAB DOOR(29)		1
15	6678198	BOLT			1
16	6664085	BUSHING	nylon		2
17	6801059	WASHER	neoprene		1
18	6678739	WASHER	steel - Was 6664065 [A]		2
19	6678920	NOZZLE	For Ref. CAB DOOR(1)		1
20	6678921	GUIDE	hose		1
21	NAP	HOSE	18'(457,2mm)long -Order Ref. CAB DOOR(22)		x
22	6676003	HOSE	bulk - Sold Per Foot - .109' I.D. - black		x
23	6664566	SCREW			2
24	6664103	NUT	acorn		2
25	6664178	GASKET			1
26	6667201	SPACER	nylon - Use W/Ref. CAB DOOR(28) & Ref. CAB DOOR(33)		1
27	6670288	END	plastic		2
28	NAP	WINDOW	.25' thick glass W/.77' dia. wiper motor shaft hole - Order Ref. CAB DOOR(14) (6677847 Grommet) & Ref. CAB DOOR(29) - Was 6717		1
29	6729776	WINDOW	.25' thick glass W/1.00' dia. wiper motor shaft hole		1
30	6676501	CLIP			1
31	6664095	ARM	W/Ref. CAB DOOR(27) & CAB DOOR(30)		1
32	6664096	BLADE			1
33	6668137	MOTOR	wiper - W/knurled shaft end - Use W/Ref. CAB DOOR(13) - SEE NOTE - SEE BTlinD1}p 337		1
33	6631928	SHAFT			1
33	6631927	GEAR			1
33	6670164	LINK			1
33	961528	HARDWARE			1
34	6664097	COVER			1
35	6676498	NOZZLE	For Ref. CAB DOOR(31)		1
36	NAP	HOSE	10.25'(260,4 mm) long - Order Ref. CAB DOOR(37)		1
37	6676918	HOSE	50' (15,240 mm) long roll - .125' I.D. - black		x

CAB DOOR
(Special Applications)

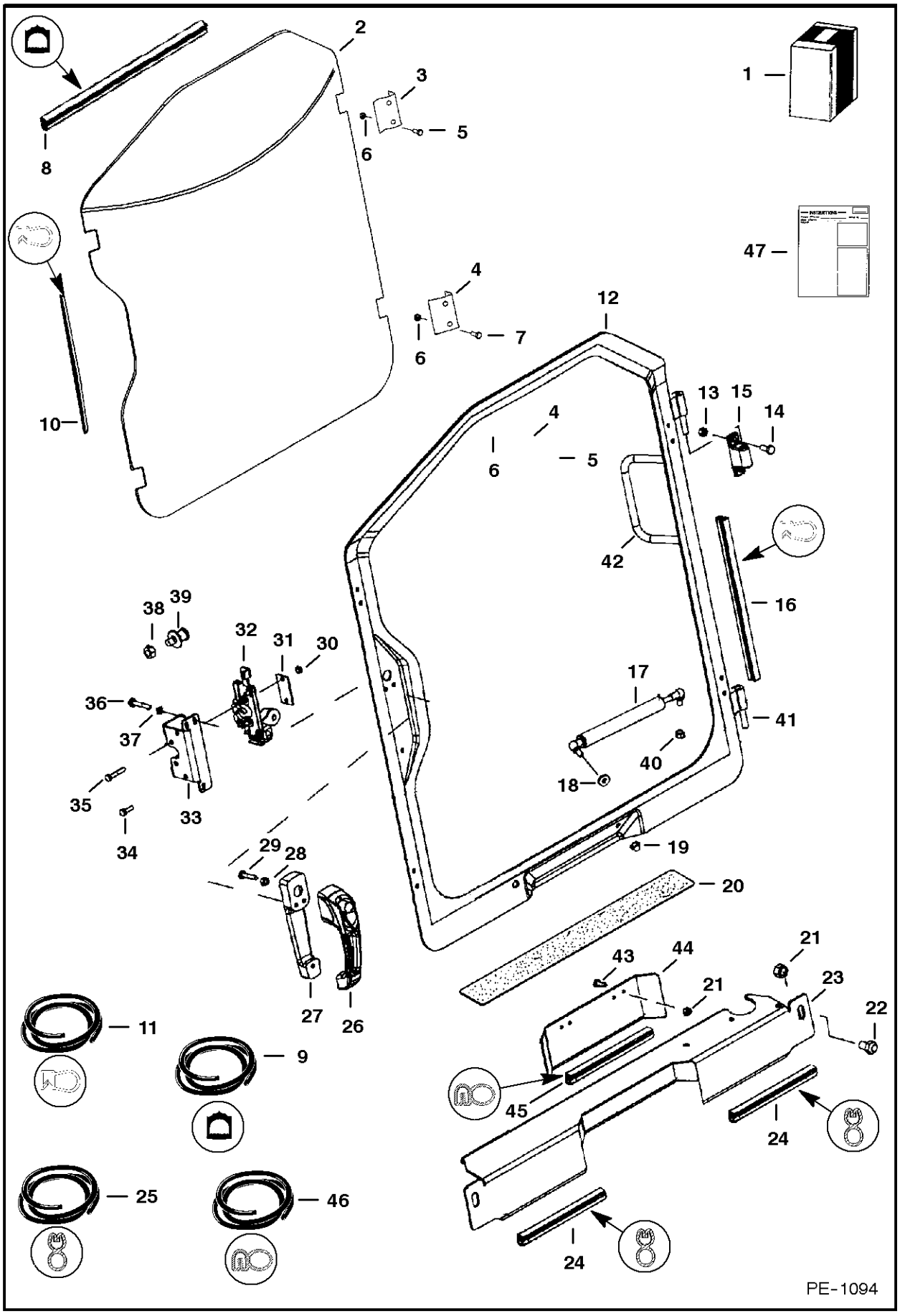

CAB DOOR

Ref.N°	Part N°	Description	Remarks	Serial N°	Qty.
1	6725941	KIT	door		1
2	NAP	WINDOW	.5' thick polycarbonate -W/O top notch - Order 672593 5 Window, Ref. CAB DOOR(4) & (2) each of Ref. CAB DOOR(5) & CAB DOOR(6) -		1
2	6732351	WINDOW	.5' thick polycarbonate - Was 6725935 [A] W/top notch		1
3	6725938	CLAMP			2
4	6725937	CLAMP			3
5	17C-628	BOLT			6
6	95D-6	NUT			10
7	17C-624	BOLT			4
8	NAP	SEAL	'12'(304,8 mm) long - Order Ref. CAB DOOR(9) - Used W/Ref. CAB DOOR(2) W/O top notch		1
9	6670759	SEAL	bulk - Sold Per Foot		x
10	NAP	SEAL	'115'(2921 mm) long -Order Ref. CAB DOOR(11)		1
11	6675558	SEAL	bulk - Sold Per Foot		x
12	6726932	DOOR	W/Ref. CAB DOOR(41) & CAB DOOR(42)		1
13	59D-5	NUT			4
14	17C-512	BOLT			6
15	6717593	HINGE	base		2
16	NAP	SEAL	127.3'(3233,4 mm) long - Order Ref. CAB DOOR(11)		1
17	6674938	GAS SPRING			1
17	6678548	SOCKET			2
17	6649244	BALL STUD			2
17	6649245	CLIP	spring		2
18	25E-16	WASHER			1
19	46D-5	NUT	acorn		1
20	6542731	SAFETY TREAD			1
21	55D-6	NUT			4
22	17C-612	BOLT			2
23	6725042	SHIELD			1
24	NAP	SEAL	'11'(279,4 mm) long -Order Ref. CAB DOOR(25)		2
25	6513152	SEAL	bulk - Sold Per Foot		x
26	6674667	HANDLE			1
26	6709527	KEY	ign. & rear door		1
27	6717146	SPACER	handle		1
28	61D-4	NUT			1
29	17C-420	BOLT			1
30	4DM-6	NUT			2
31	6718520	COVER	latch		1
32	6674666	LATCH			1
33	6717369	BRACKET	latch		1
34	1CM-620	BOLT			2
35	1CM-635	BOLT			2
36	1CM-640	BOLT			3
37	6EM-60	WASHER			3
38	91D-7	NUT			1
39	6654170	STRIKER BOLT			1
40	61D-5	NUT			5
41	6718376	HINGE	door		2
42	6718521	HANDLE	grab		1
43	35C-620	BOLT			2

CAB DOOR

Ref.N°	Part N°	Description	Remarks	Serial N°	Qty.
44	6725200	PLATE			1
45	NAP	SEAL	'40'(1016 mm) long - Order Ref. CAB DOOR(46)		1
46	6555351	SEAL	bulk - Sold Per Foot		x
47	6901013	INSTRUCTIONS			1

CAB DOOR
(Lexan Window)

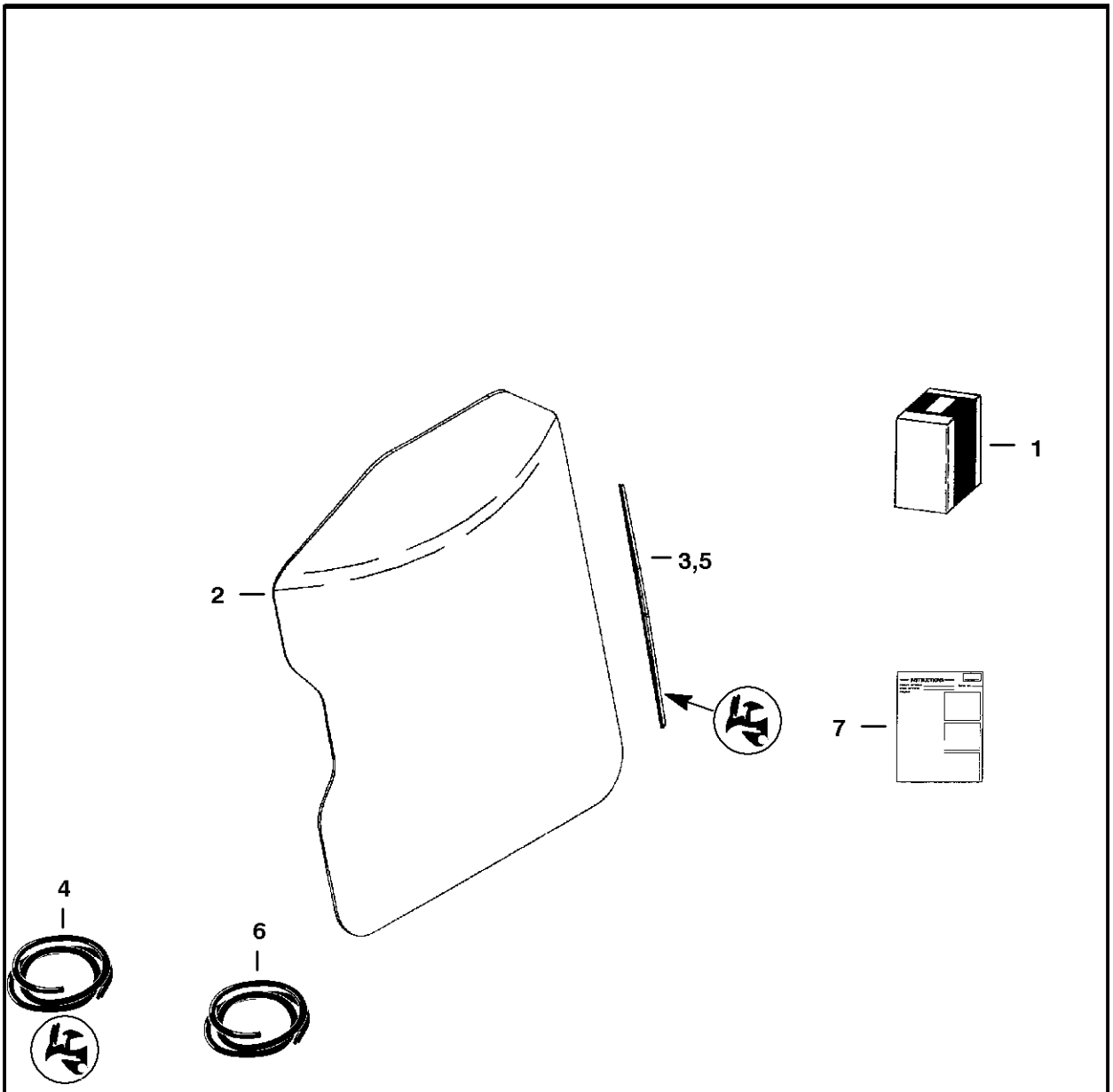

NOTE: This Lexan window in NOT approved as a Special Applications Kit. This window does not provide additional protection from materials entering cab openings.

PE-1558

CAB DOOR

Ref.N°	Part N°	Description	Remarks	Serial N°	Qty.
1	6726427	KIT	Ref.		1
2	6732350	WINDOW	lexan - Was 6675215 [A]		1
3	NAP	SEAL	113.3'(2877,8 mm) long - Order Ref. CAB DOOR(4)		1
4	6665568	SEAL	bulk - Sold Per Foot		x
5	NAP	CORD	113.3'(2877,8 mm) long - Order Ref. CAB DOOR(6)		1
6	6554149	CORD	bulk - Sold Per Foot		x
7	6901036	INSTRUCTIONS			1

CAB ENCLOSURE

NOTE: Order Cab Enclosure Kit from Gwinner SALES #6719667.
Order Special Applications Kit from Gwinner SALES # 6719390.

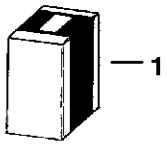

B-16410

CAB ENCLOSURE

Ref.N°	Part N°	Description	Remarks	Serial N°	Qty.
1	SALES	KIT	cab enclosure - SEE NOTE - includes items on Pages CAB DOOR(1) & CAB WINDOWS(1)		1
1	SALES	KIT	special cab enclosure - SEE NOTE - includes items on Page CAB DOOR(1) & CAB WINDOWS(1)		1

CAB ENCLOSURE
(Envelope)

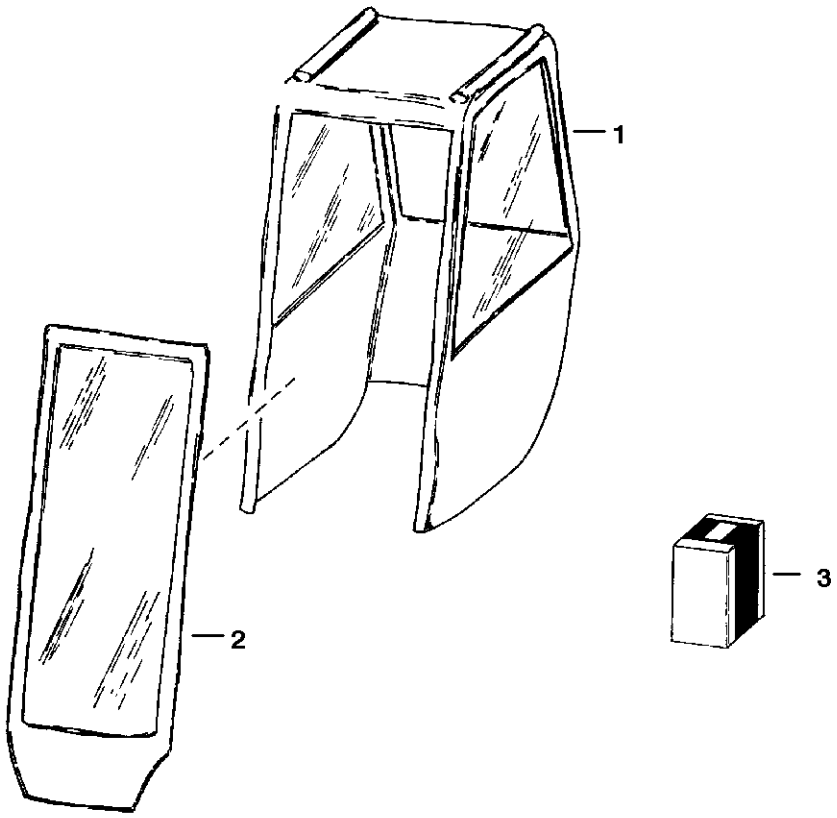

B-1413

CAB ENCLOSURE

Ref.N°	Part N°	Description	Remarks	Serial N°	Qty.
1	6675544	VINYLCAB	fits over cab - W/Ref. CAB ENCLOSURE(2) - CAB ENCLOSURE(3)		1
2	6675590	DOOR	vinyl		1
3	6675591	HINGE KIT			1

CAB WINDOWS

NOTE: Order Top & Rear Window Kit from Gwinner Sales # 6718805.
Order Side Window Kit from Gwinner Sales # 6718806.

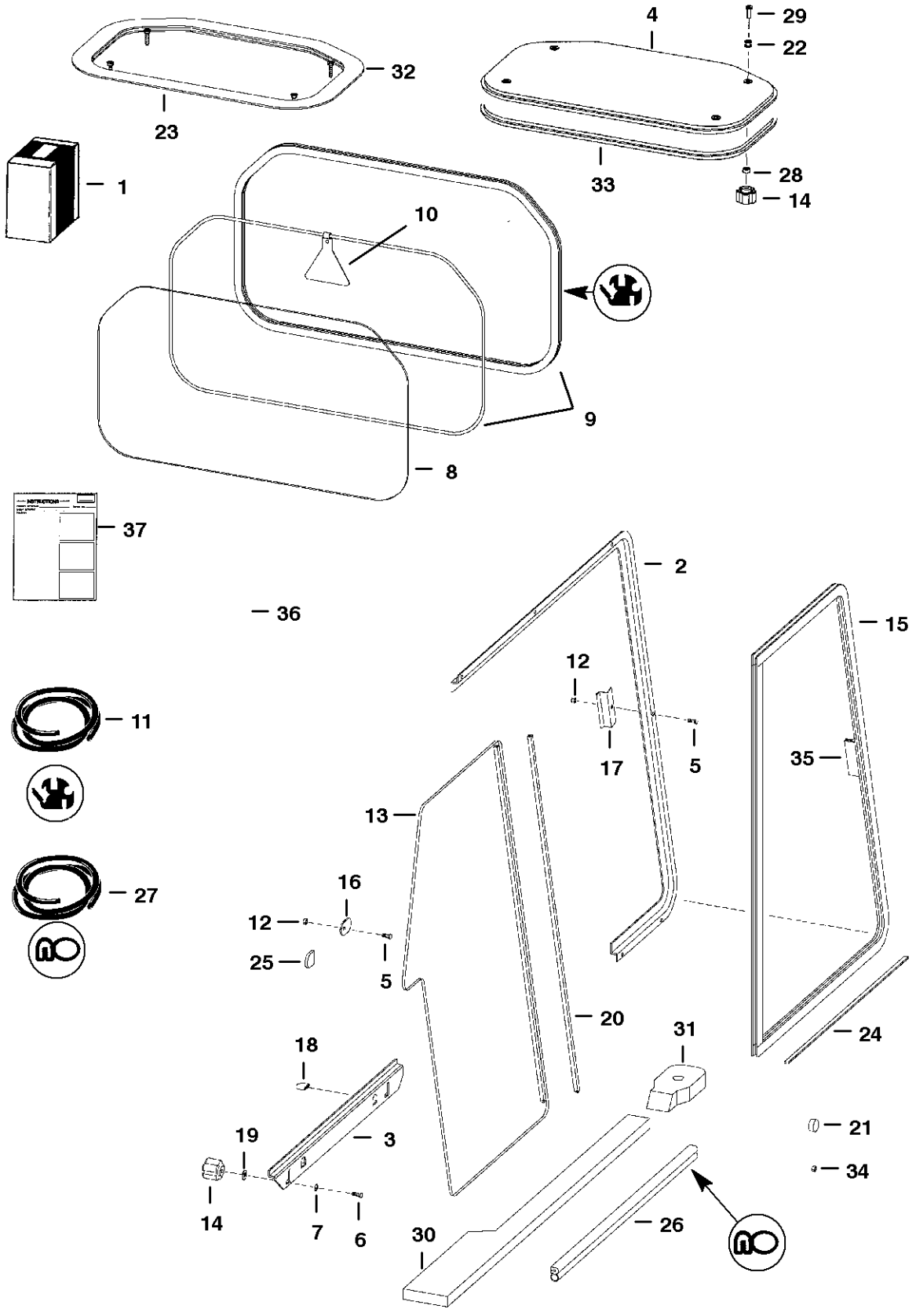

CAB WINDOWS

Ref.N°	Part N°	Description	Remarks	Serial N°	Qty.
1	SALES	KIT	Top & Rear Window - SEE NOTE		1
1	SALES	KIT	Side Window - SEE NOTE		1
2	6717870	TRACK	L.H. side		1
2	6717872	TRACK	R.H. side		1
3	6717871	TRACK	L.H. bottom		1
3	6717873	TRACK	R.H. bottom		1
4	6728629	WINDOW	assy. - lexan - W/Ref. CAB WINDOWS(22) & CAB WINDOWS(33)		1
5	10C-410	BOLT	carriage		18
6	10C-416	BOLT	carriage		4
7	25E-14	WASHER			4
8	6717874	WINDOW	rear		1
8	6719413	WINDOW	rear - lexan		1
9	NAP	EXTRUSION	75.75'(1924 mm) long - Order Ref. CAB WINDOWS(11)		x
9	NAP	CORD	75.75'(1924 mm) long - Order Ref. CAB WINDOWS(11)		x
10	6731478	EXIT TAG	Was 6559515 [A]		1
11	6675387	SEA;	bulk - Sold Per Foot - Was 6674524 [A]		x
11	6554149	CORD	bulk - Sold Per Foot		x
12	59D-4	NUT			18
13	6674520	WINDOW	L.H. rear - W/Ref. CAB WINDOWS(24)		1
13	6674522	WINDOW	R.H. rear - W/Ref. CAB WINDOWS(24)		1
14	6674741	KNOB			8
15	6674519	WINDOW	L.H. front		1
15	6674521	WINDOW	R.H. front		1
16	6719063	STOP			2
17	6719037	STRIKER			2
18	6719065	COVER	tab		4
19	6675212	RETAINER	bolt		4
20	6675833	SEAL	rear window dual wiper W/tape		2
21	6657719	PLUG	for .75' dia. hole		2
22	6675545	GROMMET			4
23	NAP	SEAL	bulk - Sold Per Foot - Order Ref. CAB WINDOWS(4) - Was 6675546 [A]		x
24	6676927	FELT STRIP	20.38' (517,7 mm) long		2
25	6677198	CAP	tab		2
26	NAP	SEAL	24'(609,6 mm) long - Order Ref. CAB WINDOWS(27)		1
27	6555351	SEAL	bulk - Sold Per Foot		x
28	6664085	BUSHING	nylon		4
29	91G-416	BOLT			4
30	6729010	SEAL	L.H. - cab to main frame - foam		1
30	6729009	SEAL	R.H. - cab to main frame - foam		1
31	6729011	SEAL	cab mount		2
32	NAP	WINDOW	top - Order Ref. CAB WINDOWS(4) - Was 6725360 [A]		1
33	NAP	SEAL	Order Ref. CAB WINDOWS(4)		1
34	6677973	PLUG	for .22' dia. hole		2
35	6678283	HANDLE	side window - W/tape & instructions		2
36	NAP	ADHESIVE	top window - Was 6675694 [B]		1
37	6901013	INSTRUCTIONS	Was 6900854 [A]		1

CAB WINDOWS

Ref.N°	Part N°	Description	Remarks	Serial N°	Qty.
37	6900853	INSTRUCTIONS	Side Windows		1

CAB WINDOWS
(Rear Window Removal Kit)

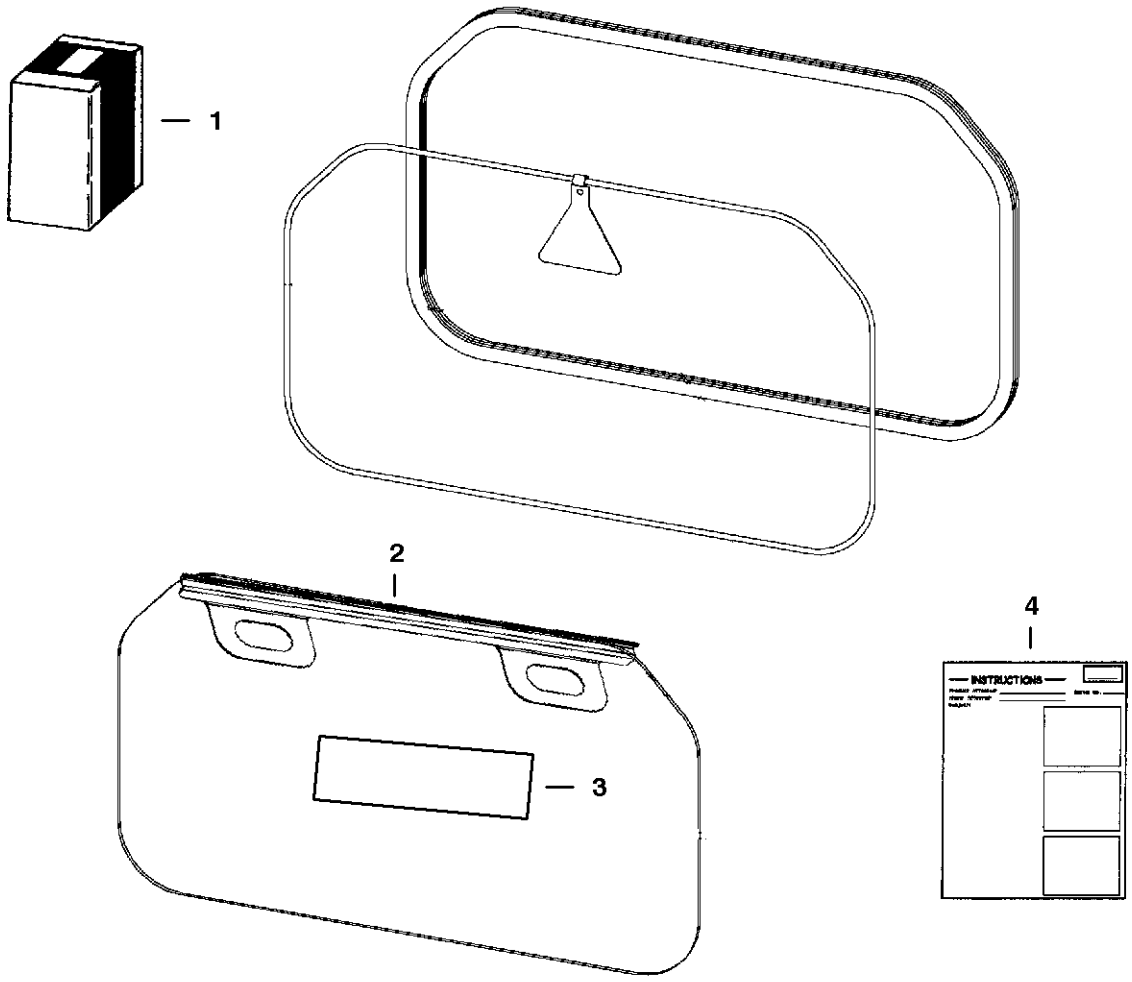

TS-2006

CAB WINDOWS

Ref.N°	Part N°	Description	Remarks	Serial N°	Qty.
1	6725946	KIT	Ref. CAB WINDOWS(2) - CAB WINDOWS(4)		1
2	6725421	HANDLE			1
3	6726303	DECAL			1
4	6901029	INSTRUCTIONS			1

COUNTERWEIGHT KIT
(Front Axle)

NOTE: Order Counterweight Kit from Gwinner Sales # 6704284.

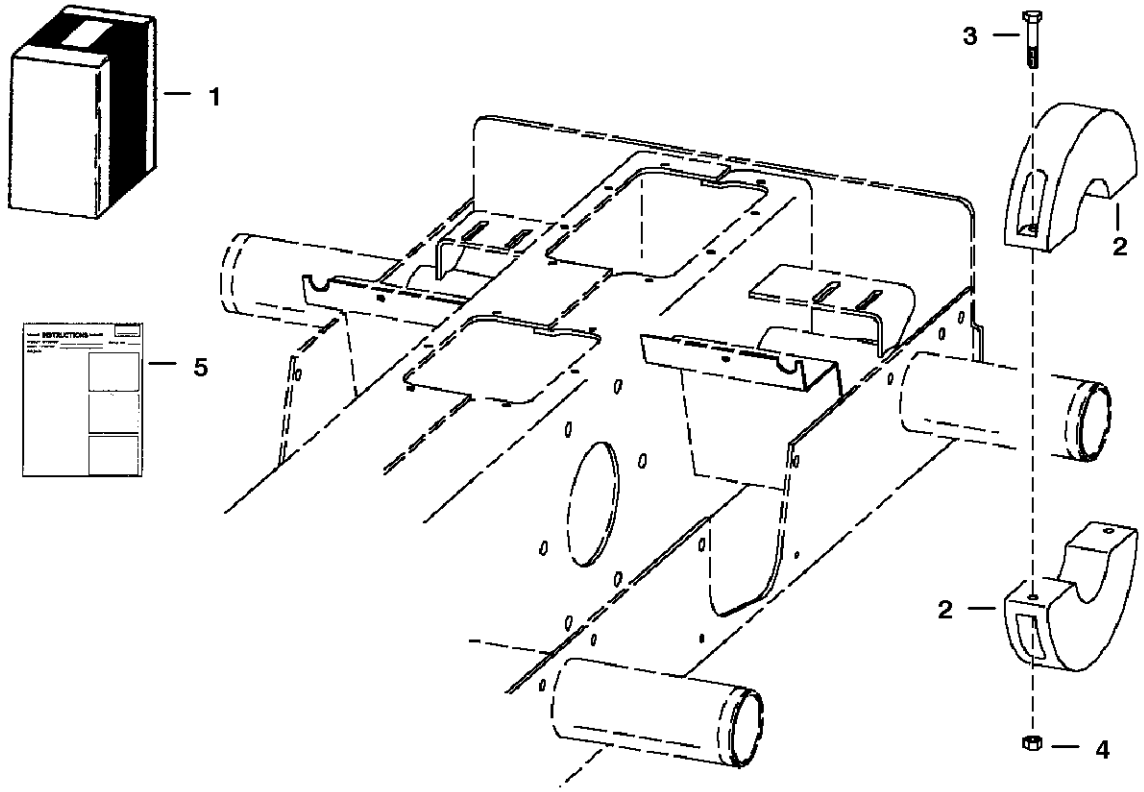

TS-1020

COUNTERWEIGHT KIT

Ref.N°	Part N°	Description	Remarks	Serial N°	Qty.
1	SALES	KIT	counterweight		1
2	6714361	WEIGHT	38.7 lbs. (17,6 kg) - 4.5'(114,3 mm) wide		4
3	17C-640	BOLT			8
4	61D-6	NUT			8
5	6900366	INSTRUCTIONS			1

COUNTERWEIGHT KIT
(1600 lb.)

NOTE: Order Counterweight Kit from Gwinner Sales # 6714932.

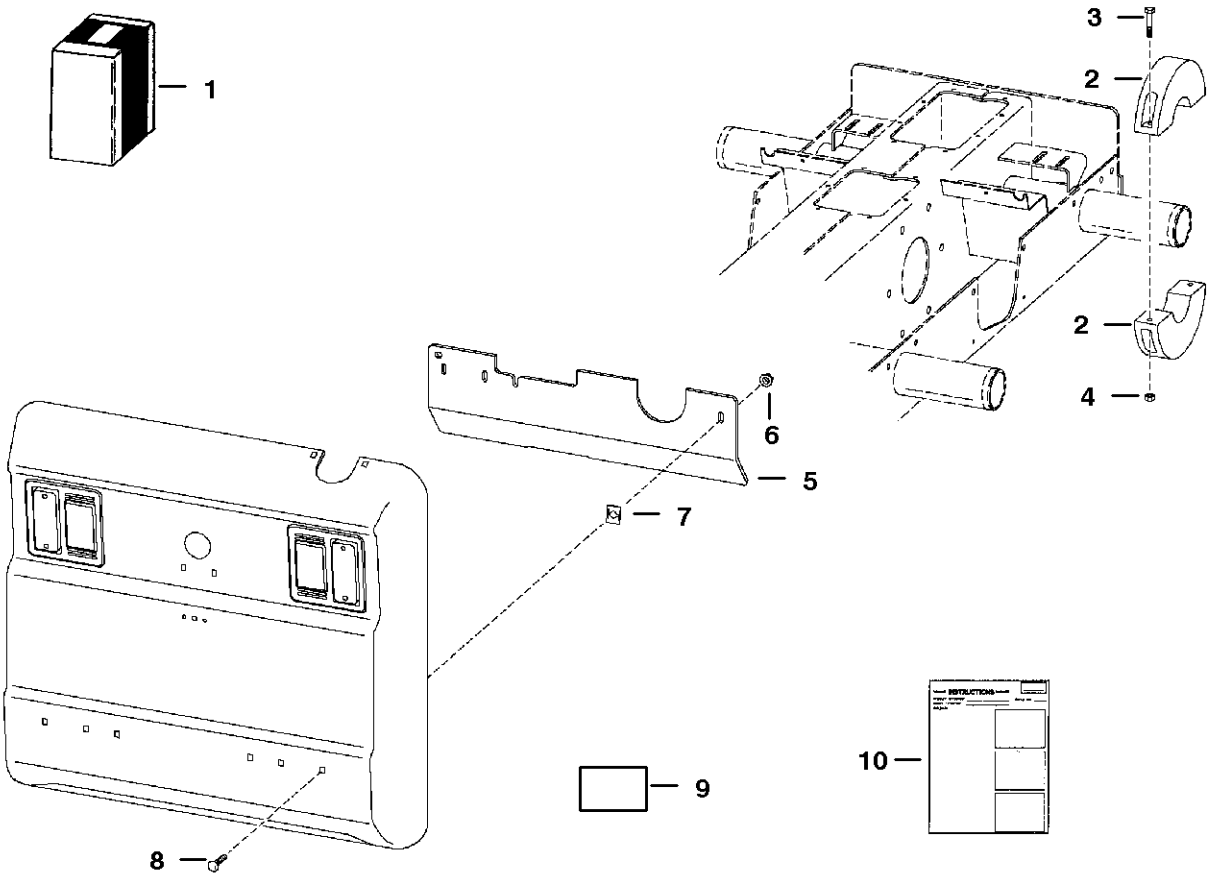

B-17013

COUNTERWEIGHT KIT

Ref.N°	Part N°	Description	Remarks	Serial N°	Qty.
1	SALES	KIT	counterweight		1
2	6714361	WEIGHT	front axle - 38.7 lbs (17,6 kg) - 4.5'(114,3 mm) wide		4
3	17C-640	BOLT			4
4	61D-6	NUT			4
5	6725256	WEIGHT			2
6	57D-6	NUT			3
7	1612281	NUT	spring		3
8	37C-632	BOLT			3
9	6707481	DECAL	1600 lb. - Not in Kit		1
10	6900410	INSTRUCTIONS			1

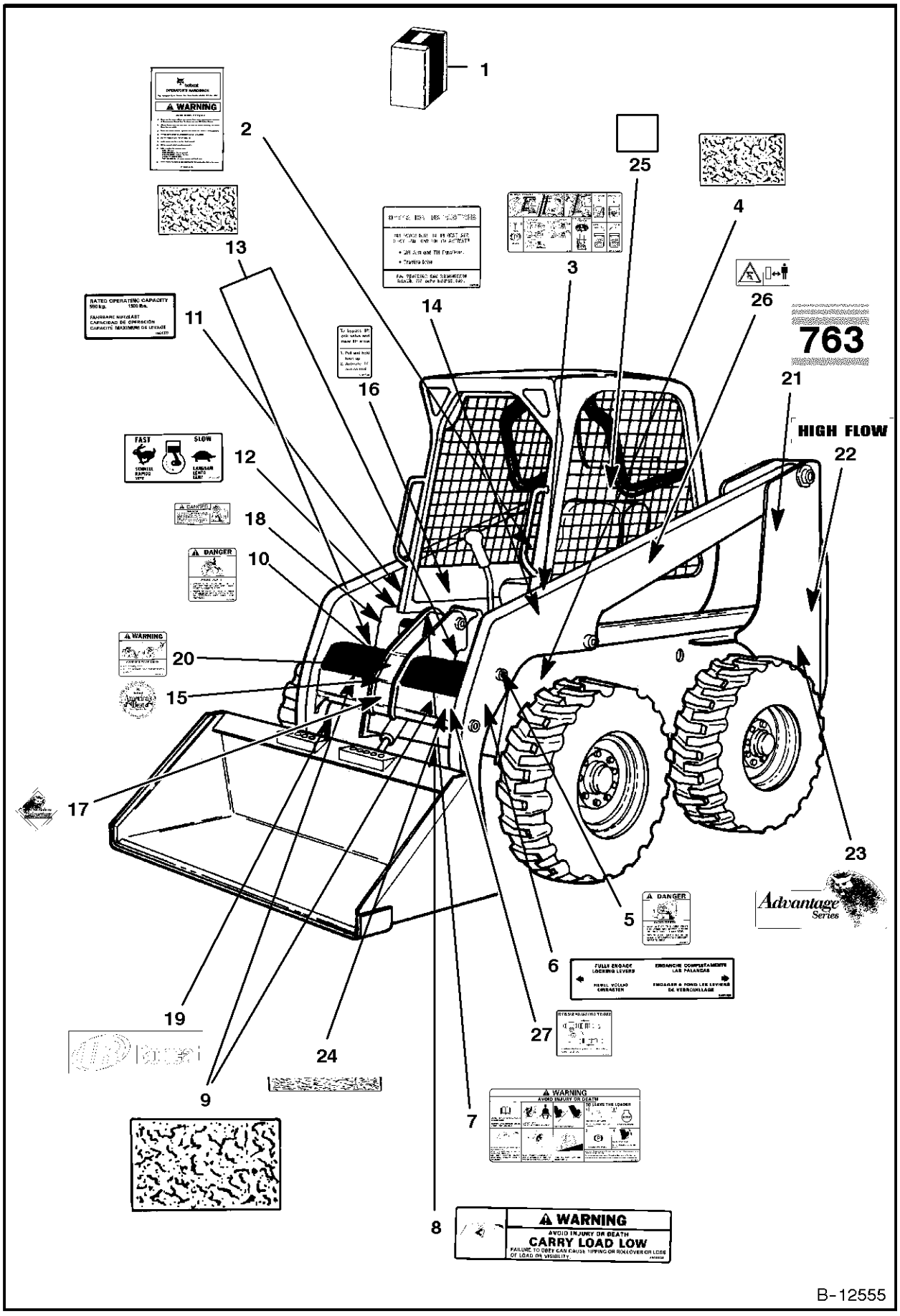
1
2
3
4
25
26
763
HIGH FLOW
21
22
23
13
11
14
16
12
18
10
20
15
17
19
24
9
7
8
5
6
27
WARNING
AVOID INJURY OR DEATH
CARRY LOAD LOW
FAILURE TO OBEY CAN CAUSE TIPPING OR ROLLOVER OR LOSS OF LOAD OR VISIBILITY
DANGER
FAST
SLOW
Advantage Series
B-12555

DECALS

Ref.N°	Part N°	Description	Remarks	Serial N°	Qty.
1	6901067	KIT	decal		1
1	6725366AR	KIT	decal		1
1	6725366BR	KIT	decal		1
1	6725366JP	KIT	decal		1
1	6725367AR	KIT	translation		1
1	6725367BR	KIT	translation		1
2	6719563	KIT	handbook - W/Wire Rope		1
2	6558309	WIRE ROPE	33' (838,2 mm) long - Bulk - Sold Per Foot - Also Order (2) of 6558310		x
2	6558310	SLEEVE	wire rope		2
2	17C-512	BOLT			1
2	61D-5	NUT			1
3	6728327	DECAL	operating - Was 6718701 [A]		1
4	6554100	SAFETY TREAD	6' x 6' (152,4 mm x 152,4 mm)		4
5	6579639	DECAL	danger		1
6	6561383	DECAL	Bob-tach		1
7	6718698	DECAL	warning - Was 6579510 [B]		1
8	6579528	DECAL	carry load low		1
9	6577947	SAFETY TREAD	7.5' x 15' (190,5 mm x 381,0 mm)		2
10	6579509	DECAL	danger		1
11	6725528	DECAL	capacity - 763 - Was 6707184 [A]		1
12	6557565	DECAL	throttle		1
13	6707523	SAFETY TREAD	L.H. - 6.8' x 8.75' - (172,7 mm x 222,3 mm)		1
13	6707524	SAFETY TREAD	R.H. - 6.8' x 8.75' - (172,7 mm x 222,3 mm)		1
14	6718703	DECAL	operations		1
15	6705088	DECAL	America's Best		1
16	6711840	DECAL	lift lock		1
17	6718275	DECAL	advantage logo		1
18	6717343	DECAL	danger		2
19	6727310	DECAL	Ingersoll Rand -Was 6711329 [A]		1
20	6710358	DECAL	warning		1
21	6714533	DECAL	model		2
22	6727913	DECAL	high flow - Not in Kit - Was 6714534 [A]		2
23	6718271	DECAL	advantage series - L.H. - 14'(355,6 mm) wide		1
24	6710746	SAFETY TREAD	1.25'x15'(31,8 mm x 381 mm)		2
24	6727917	SAFETY TREAD	1.25'x10.5'(31,8 mm x 266,7 mm)		2
25	6804790	DECAL	capacity		1
26	6713507	DECAL	stay clear -European -Not in Kit		2
27	6731757	DECAL	front aux. coupler block - Not in Kit		1

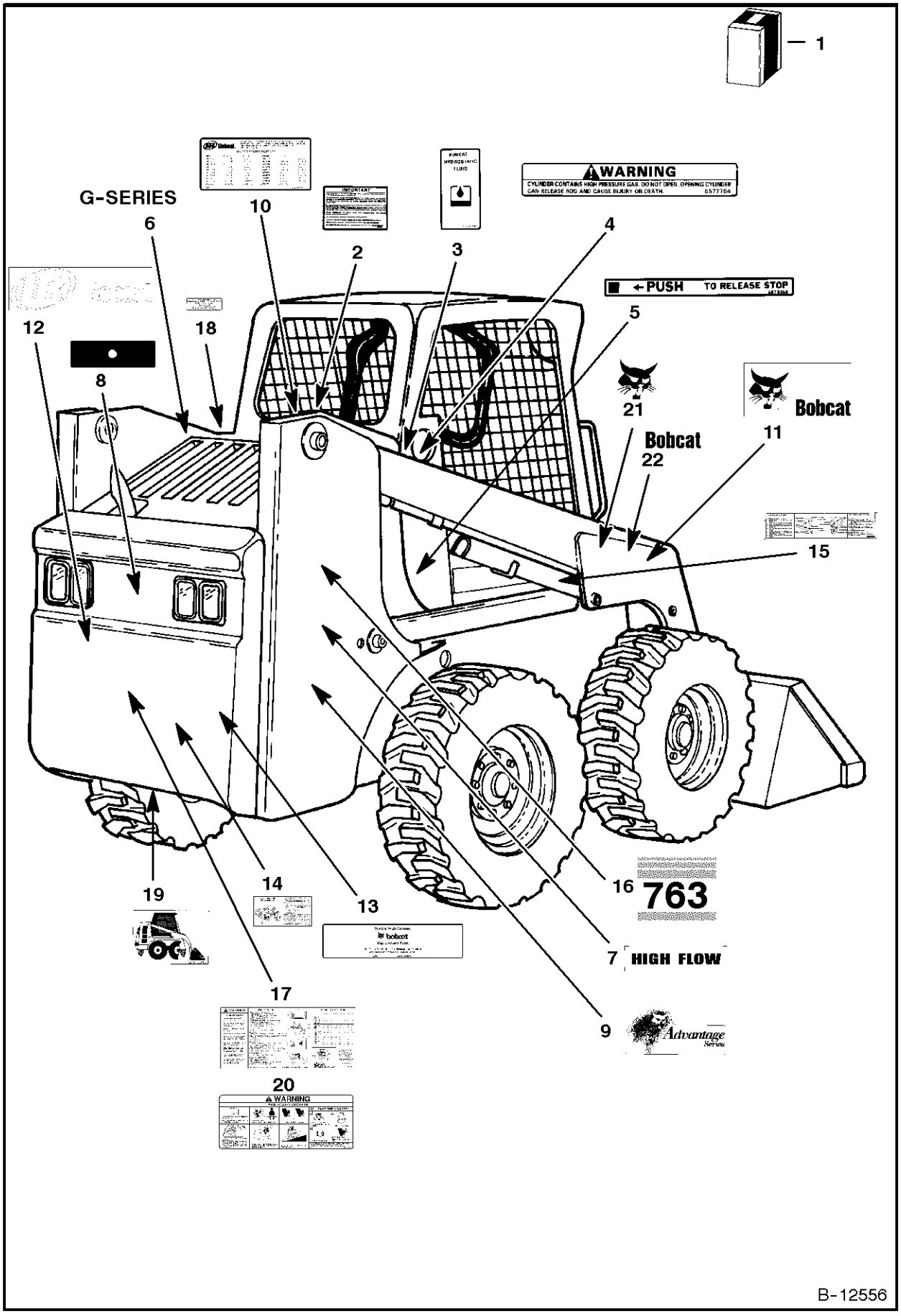
1
G-SERIES
6
10
2
3
4
WARNING
CYLINDER CONTAINS HIGH PRESSURE GAS. DO NOT OPEN. OPENING CYLINDER CAN RELEASE ROD AND CAUSE INJURY OR DEATH.
6577754
PUSH TO RELEASE STOP
5
12
18
8
21
Bobcat
11
Bobcat
22
15
16
763
19
14
13
7
HIGH FLOW
17
9
Advantage
20
WARNING
B-12556

DECALS

Ref.N°	Part N°	Description	Remarks	Serial N°	Qty.
1	6901067	KIT	decal		1
1	6725366AR	KIT	decal		1
1	6725366BR	KIT	decal		1
1	6725366JP	KIT	decal		1
1	6725367AR	KIT	translation		1
1	6725367BR	KIT	translation		1
2	6560573	DECAL	spark arrestor		1
3	6565990	DECAL	hydraulic fluid		1
4	6577754	DECAL	gas spring warning		2
5	6578368	DECAL	push		1
6	6717907	DECAL	'G' Series		1
7	6727913	DECAL	high flow* - Not in Kit - Was 6714534 [A]		2
8	6714242	DECAL			1
9	6718272	DECAL	advantage series - R.H. - 14'(355,6 mm) wide		1
10	6557224	DECAL	patent		1
11	6727309	DECAL	R.H. - Was 6702826 [A]		1
11	6727308	DECAL	L.H. - Was 6702827 [A]		1
12	6727311	DECAL	Bobcat Logo - Was 6714139 [A]		1
13	6565200	DECAL	engine oil filter		1
14	6709030	DECAL	belt tension idler		1
15	6706558	DECAL	boom stop		1
16	6714533	DECAL	model		2
17	6718398	DECAL	warning/service schedule/ service parts - Was 6715563 [A]		1
18	6708929	DECAL	propylene gylcol antifreeze		1
19	6707867	DECAL	tow hook		1
20	6718698	DECAL	warning - European - Not in Kit		1
21	6731508	DECAL	R.H.		1
21	6731507	DECAL	L.H.		1
22	6731509	DECAL	Bobcat		2

DELUXE CAB

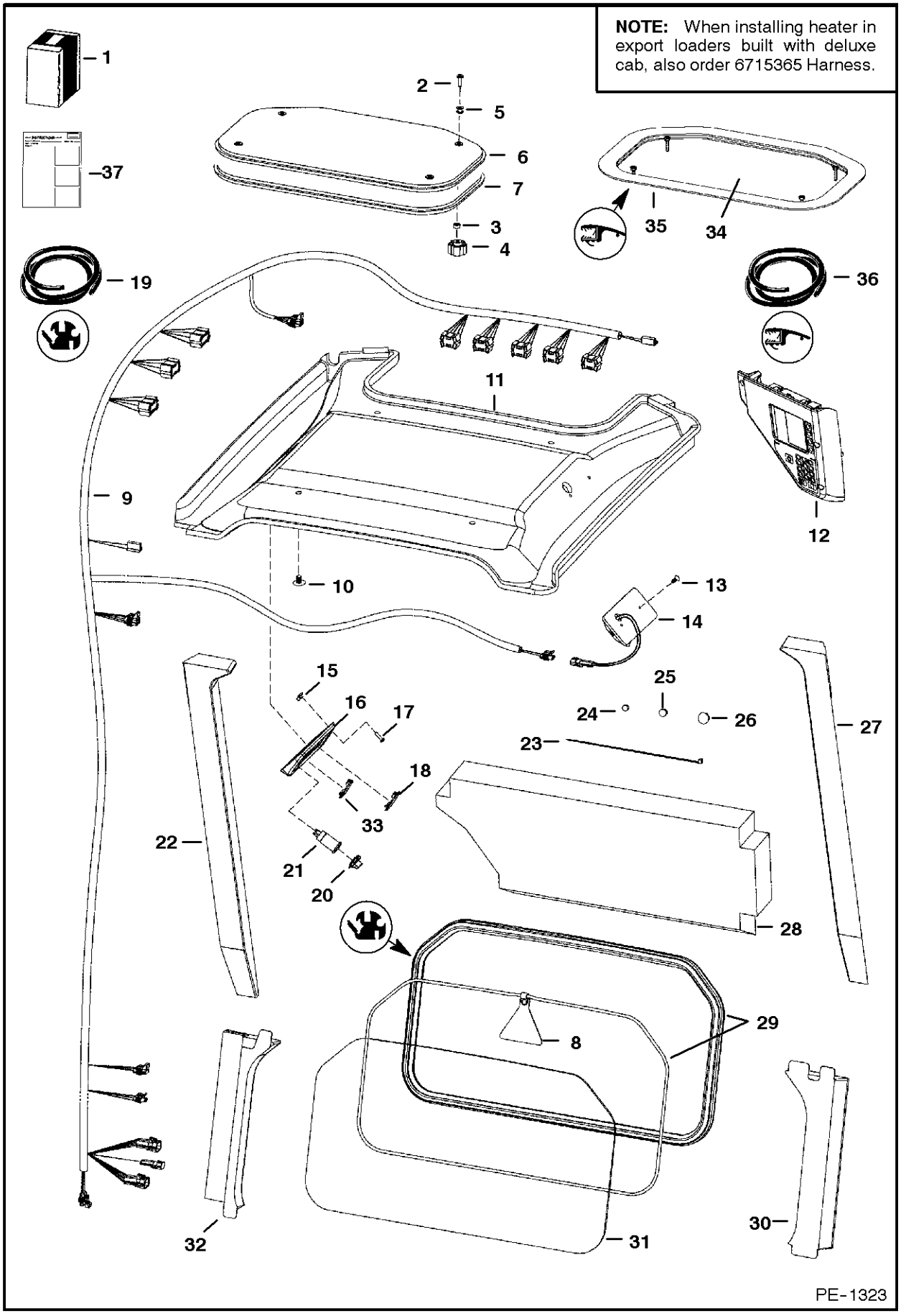
NOTE: When installing heater in export loaders built with deluxe cab, also order 6715365 Harness.
1
2
5
6
7
3
4
37
35
34
19
36
11
12
9
10
13
14
15
16
17
18
33
22
21
20
25
24
26
23
27
28
29
8
32
31
30
PE-1323

DELUXE CAB

Ref.N°	Part N°	Description	Remarks	Serial N°	Qty.
1	6718804	KIT	deluxe cab - Ref. DELUXE CAB(8) - DELUXE CAB(37)	5122 57999 & Bel	1
1				5124 50999 & Bel	1
1	6729233	KIT	deluxe cab - SEE NOTE	5122 58000 & Abv	1
1				5124 51000 & Abv	1
2	91G-416	BOLT	Was 88G-1216 [B,D]		4
3	6664085	BUSHING	nylon		4
4	6674741	KNOB			4
5	6675545	GROMMET			4
6	6728629	WINDOW	assy. - W/Ref. DELUXE CAB(5) & DELUXE CAB(7)		1
7	NAP	SEAL	Order Ref. DELUXE CAB(6)		x
8	6731478	EXIT TAG	Was 6559515 [A]		1
9	NAP	HARNESS	'Order 6725273inD19 Harness & 6725275inD17 Harness - Was 6715366 [A]	5122 -	1
9				5124 -	1
9	6725273	HARNESS		5122 - 57999	1
9				5124 - 50999	1
9	6727190	HARNESS	deluxe accessories	5122 58000 & Abv	1
9				5124 51000 & Abv	1
10	6674895	RETAINER	snap in		4
11	6717515	INSULATION	headliner		1
12	6678682	PANEL	R.H. - deluxe - keyless - Was 6672348 [A]		1
12	NAP	INSTRUCTIONS	See Loader Service Manual - Was 6900860 [A]		1
13	6664221	RETAINER	snap in		2
14	6664368	DOME LIGHT	dome		1
14	6665367	BULB			1
15	6669091	CLIP			4
16	6718580	PANEL			1
17	6669224	BOLT			4
18	6719038	PLUG			5
19	6675387	SEA;	bulk - Sold Per Foot - Was 6674524 [A]		x
19	6554149	CORD	bulk - Sold Per Foot		x
20	6664224	CAP			1
21	6664223	OUTLET			1
22	6717519	INSULATION			1
23	6610510	NYLON TIE			6
24	5289686	PLUG	black - for .375' dia. hole		5
25	6649949	PLUG	for .50' dia. hole		2
26	6657719	PLUG	for .75' dia. hole		1
27	6717520	INSULATION			1
28	6727299	INSULATION	cab back - Was 6719425 [A]		1
29	NAP	EXTRUSION	75.75'(1924 mm) long - Order Ref. DELUXE CAB(19)		x
29	NAP	CORD	75.75'(1924 mm) long - Order Ref. DELUXE CAB(19)		x
30	6717518	INSULATION			1
31	6717874	WINDOW	rear		1
32	6717517	INSULATION			1
33	6668742	SWITCH	travel control - export		1
34	NAP	WINDOW	Order Ref. DELUXE CAB(6) - Was 6725360 [A]		1
35	NAP	SEAL	Order Ref. DELUXE CAB(6)		x
36	NAP	SEAL	bulk - Sold Per Foot - Order Ref. DELUXE CAB(6) - Was 6675546 [A]		x

DELUXE CAB

Ref.N°	Part N°	Description	Remarks	Serial N°	Qty.
37	6900851	INSTRUCTIONS			1

ELECTRICAL CONNECTOR KIT
(7-Pin)

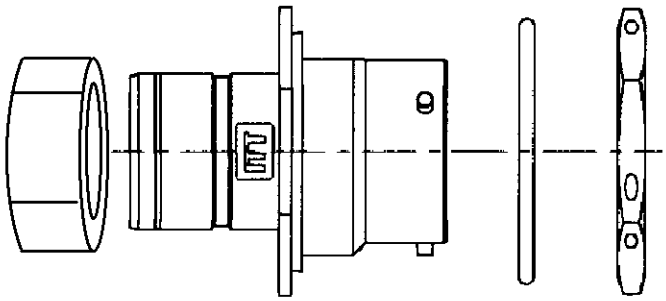

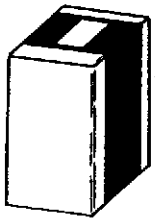

2

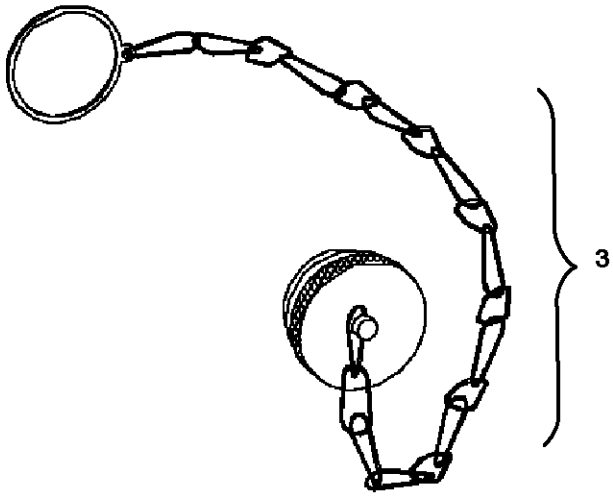

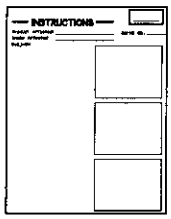

P-16385

ELECTRICAL CONNECTOR KIT

Ref.N°	Part N°	Description	Remarks	Serial N°	Qty.
1	6727176	KIT			1
2	6674802	CONNECTOR	7-pin		1
2	6669549	SOCKET	small		4
2	6677136	SOCKET	12 ga		3
3	6675026	CAP			1
4	6901076	INSTRUCTIONS			1

ELECTRICAL CONTROLS KIT
(To Run "G" Series Attachments & Old Attachments) (W/Toggle Switch)

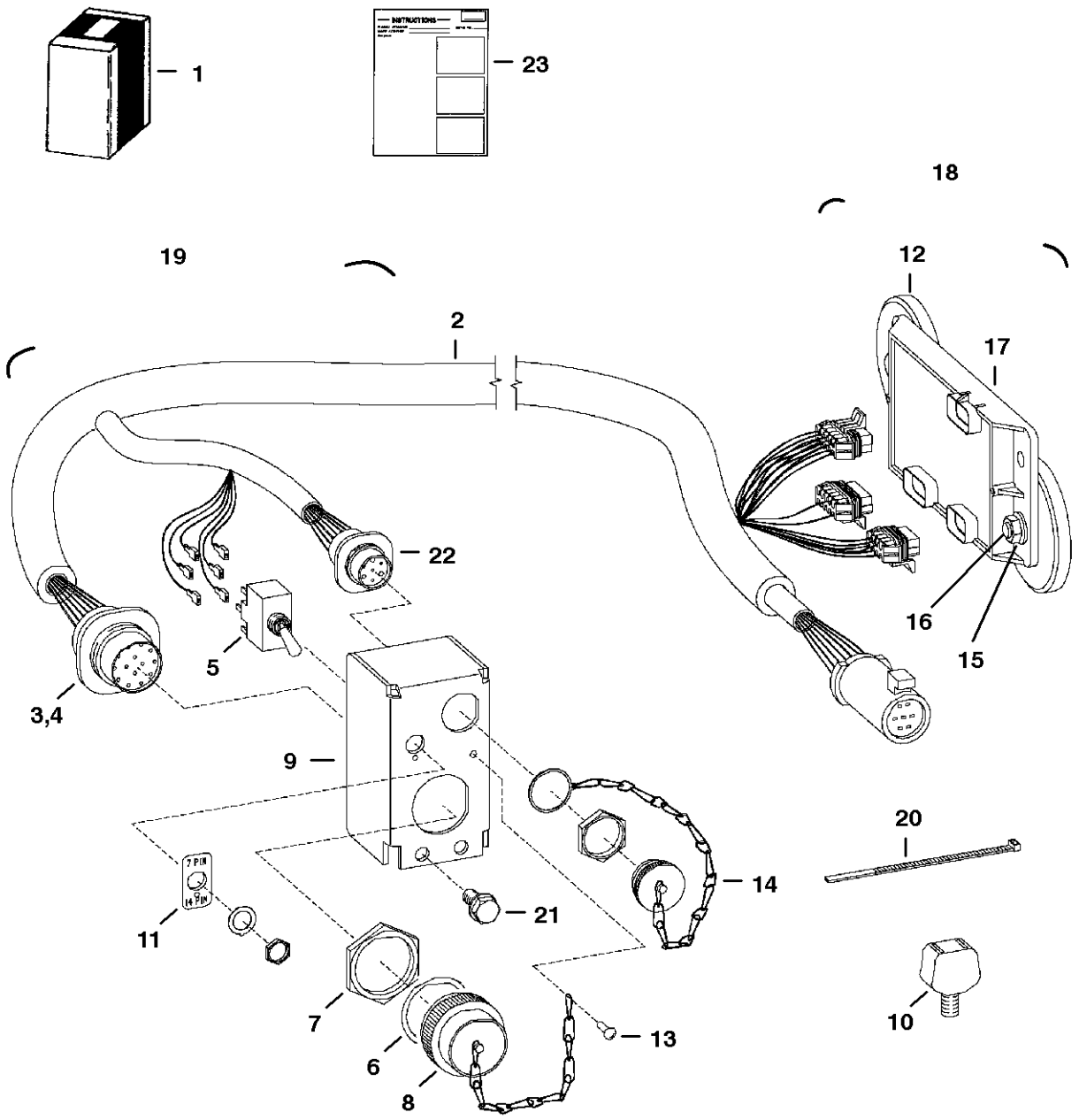

TS-1955

ELECTRICAL CONTROLS KIT

Ref.N°	Part N°	Description	Remarks	Serial N°	Qty.
1	NAP	KIT	Order 6727739inD1}h Kit -See Page ELECTRICAL CONTROLS KIT(1) Was 6719431 [A]		1
2	6719434	HARNESS	W/Ref. ELECTRICAL CONTROLS KIT(3), ELECTRIC AL CONTROLS KIT(4), ELECTRICAL CONTROLS KIT(6) - ELECTRICAL CONTROLS KIT(8) & ELECTRI		1
3	6667569	CONNECTOR	Also Order (14) of Ref. ELECTRICAL CONTROLS KIT(4)		1
4	6664040	PIN	male		x
5	6675389	SWITCH			1
6	6664037	WASHER			2
7	6664036	NUT			2
8	6664035	CAP			1
9	6719442	MOUNT			1
10	6675281	MOUNT	773G only		1
11	6719441	DECAL			1
12	6719448	MAGNET	100 lb. force		4
13	6704892	RIVET	Was 84G-1908 [B]		1
14	6675026	CAP			2
15	83D-6	NUT			2
16	25G-612	BOLT			2
17	6678675	CONTROLLER	Was 6676514 [A]		1
18	NAP	CONTROLLER	assy - Ref. ELECTRICAL CONTROLS KIT(12) & ELECTRICAL CONTROLS KIT(15) - ELECTRICAL CONTROLS KIT(17) - Order 'Ref. ELECTRICAL CO		1
19	NAP	CONTROL	assy - Order Ref. ELECTRICAL CONTROLS KIT(2), ELECTRICAL CONTROLS KIT(5) - ELECTRICAL CONTROLS KIT(9), ELECTRICAL CONTROLS KIT(1		1
20	6624289	STA-STRAP	Was 6610510 [B]		8
21	84G-3112	BOLT			2
22	6674802	CONNECTOR	7-pin - See Page ELECTRICAL CONNECTOR KIT(1)		1
22	6669549	SOCKET	small		4
22	6677136	SOCKET	12 ga		3
23	6900921	INSTRUCTIONS			1

ELECTRICAL CONTROLS KIT
(To Run "G" Series Attachments & Old Attachments) (W/O Toggle Switch)

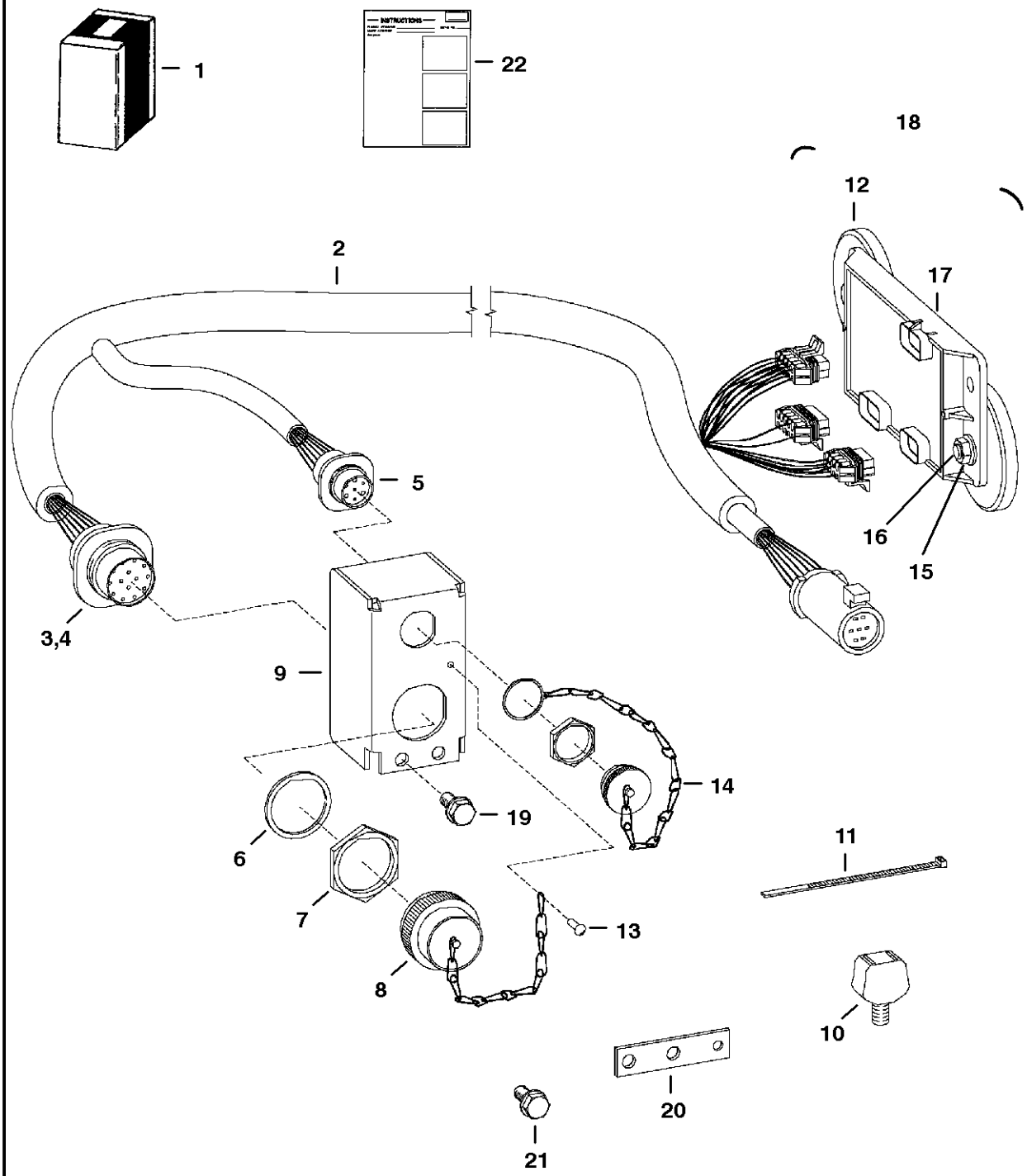

ELECTRICAL CONTROLS KIT

Ref.N°	Part N°	Description	Remarks	Serial N°	Qty.
1	6727739	KIT			1
2	6729380	HARNESS	W/Ref. ELECTRICAL CONTROLS KIT(3) - ELECTRIC AL CONTROLS KIT(8) & ELECTRICAL CONTROLS KIT(14) - Was 6727177 [A]		1
3	6667569	CONNECTOR	Also Order (14) of Ref. ELECTRICAL CONTROLS KIT(4)		1
4	6664040	PIN	male		x
5	6674802	CONNECTOR	7-pin - See Page ELECTRICAL CONNECTOR KIT(1)		1
5	6669549	SOCKET	small		4
5	6677136	SOCKET	large - 12 ga.		3
6	6664037	WASHER			2
7	6664036	NUT			2
8	6664035	CAP			1
9	6726945	MOUNT			1
10	6675281	MOUNT	773G only		1
11	6624289	STA-STRAP			8
12	6719448	MAGNET	100 lb. force		4
13	6704892	RIVET			1
14	6675026	CAP			2
15	83D-6	NUT			2
16	25G-612	BOLT			2
17	6678675	CONTROLLER	Was 6676514 [A]		1
18	NAP	CONTROLLER	assy - Ref. ELECTRICAL CONTROLS KIT(12) & ELECTRICAL CONTROLS KIT(15) - ELECTRICAL CONTROLS KIT(17) - Order 'Ref. ELECTRICAL CO		1
19	84G-3112	BOLT			2
20	6730291	BRACKET	873G-883 only		1
21	35C-512	BOLT	Use W/aux. hyd. coupler block - See Page * AUXILIAR Y HYDRAULICS(1)		2
22	6901116	INSTRUCTIONS			1

ELECTRICAL CONTROLS KIT
(Electronic Attachments)

NOTE: This kit will be used for chipper and mixer attachments.

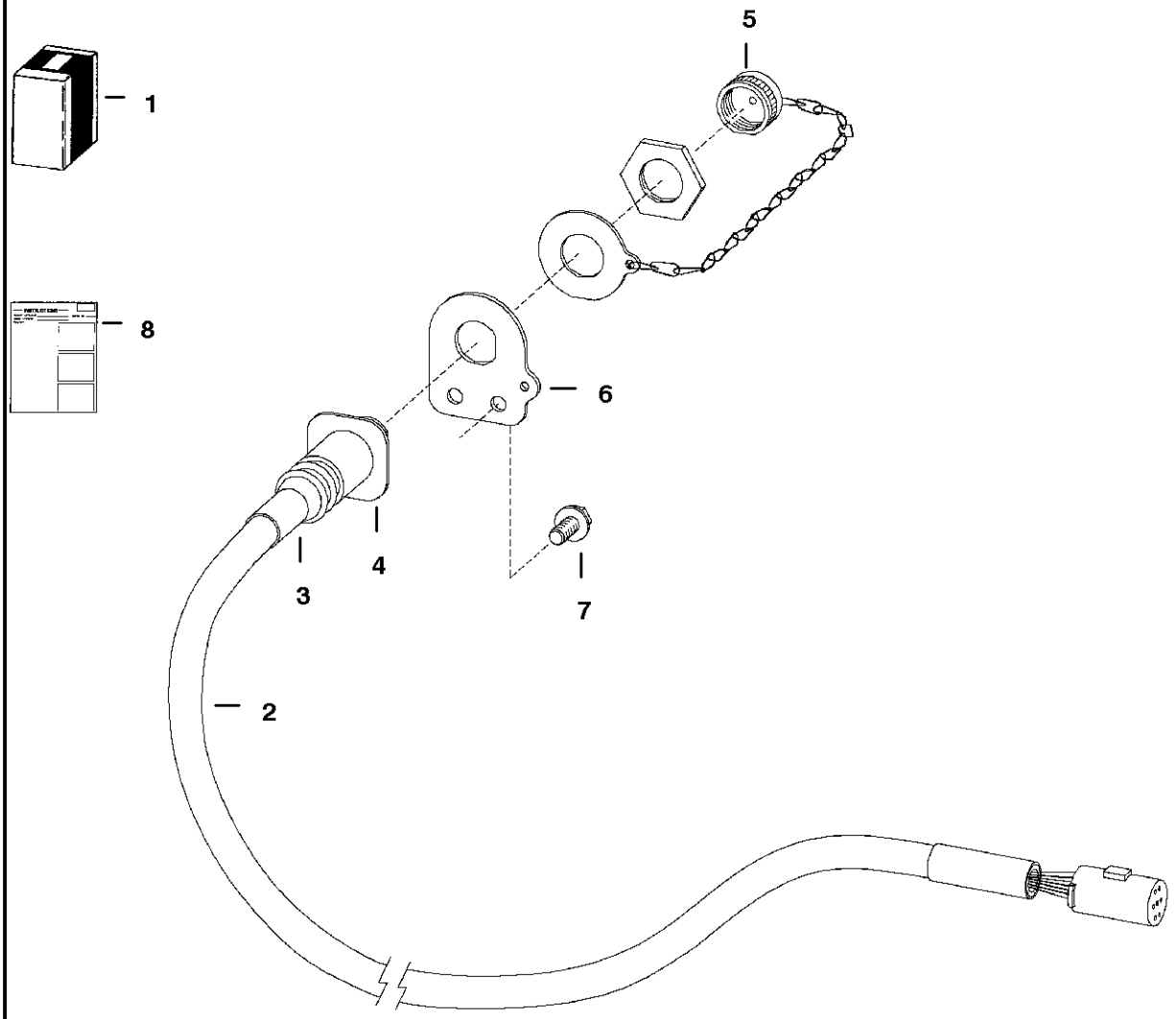

TS-1935

ELECTRICAL CONTROLS KIT

Ref.N°	Part N°	Description	Remarks	Serial N°	Qty.
1	6718812	KIT	Ref. ELECTRICAL CONTROLS KIT(2) - ELECTRICAL CONTROLS KIT(8)		1
2	6718426	HARNESS			1
3	6674799	ADAPTER	heat shrink		1
4	6674802	CONNECTOR	7-pin - See Page ELECTRICAL CONNECTOR KIT(1)		1
4	6669549	SOCKET	small		4
4	6677136	SOCKET	12 ga		3
5	6675026	CAP			1
6	6718750	MOUNT			1
7	84G-3112	BOLT			2
8	6900855	INSTRUCTIONS			1

ENGINE MOUNT KIT
(For Rough Application)

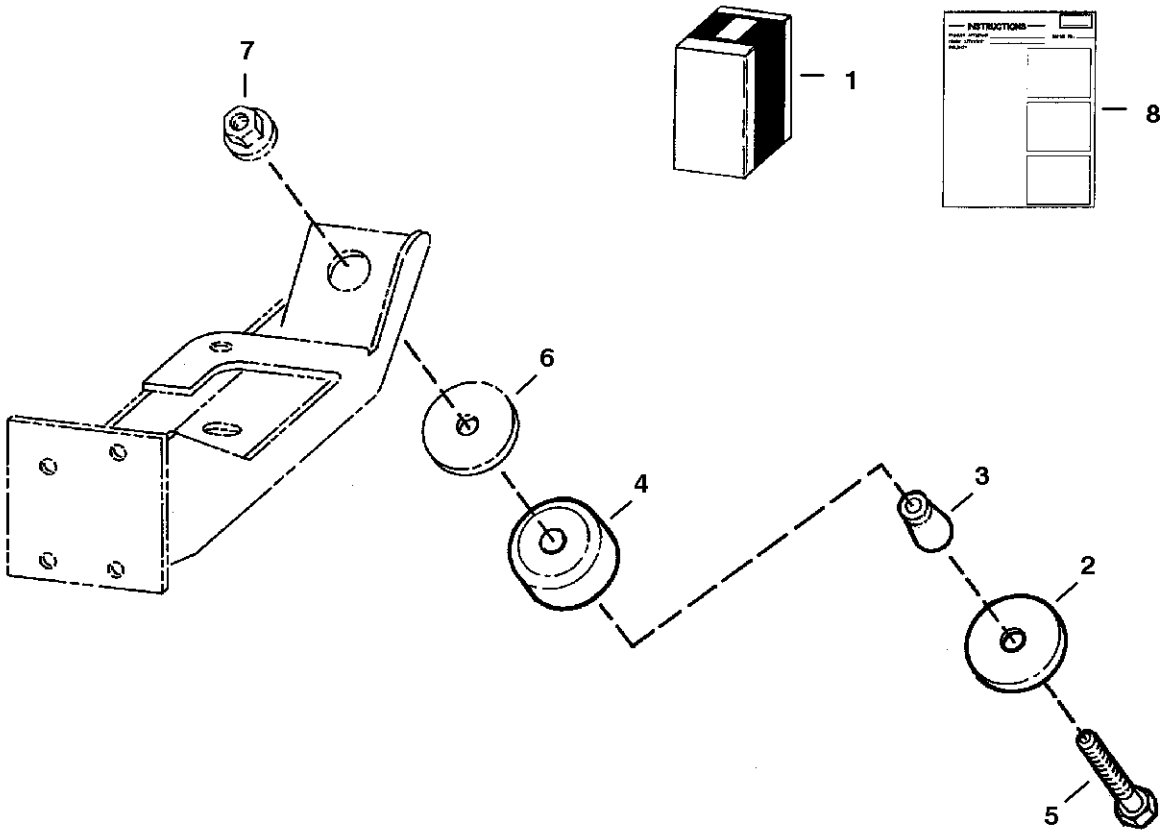

B-14623

ENGINE MOUNT KIT

Ref.N°	Part N°	Description	Remarks	Serial N°	Qty.
1	6711632	MOUNTING KIT	Ref. ENGINE MOUNT KIT(2) - ENGINE MOUNT KIT(8)		1
2	6661787	WASHER			4
3	6715287	SPACER			4
4	6668104	MOUNT			4
5	43C-852	BOLT			4
6	6705106	WASHER			4
7	6652918	NUT			4
8	6724482	INSTRUCTION			1

EUROPEAN ACCESSORIES
(Caliper Brake Kit)

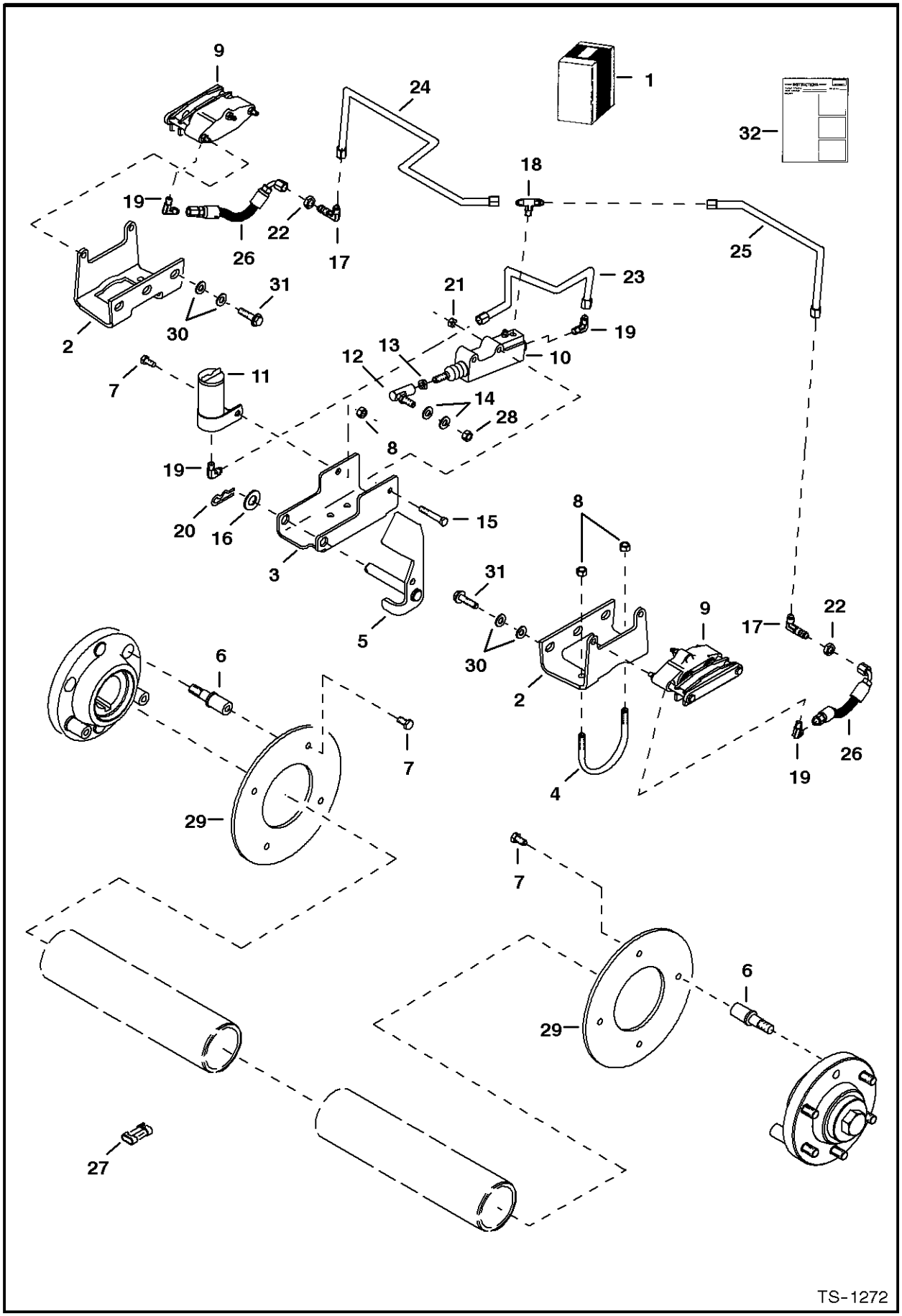

EUROPEAN ACCESSORIES

Ref.N°	Part N°	Description	Remarks	Serial N°	Qty.
1	NAP	KIT	Ref. EUROPEAN ACCESSORIES(2) - EUROPEAN ACCESSORIES(32)		1
2	6710469	MOUNT ASSY.	caliper		2
3	6709236	PEDAL MOUNT	pedal		1
4	6709237	CLAMP			2
5	6709239	PEDAL ASSY	brake		1
6	6709229	BOLT	wheel		8
7	17C-612	BOLT			9
8	91D-6	NUT			5
9	6666932	BRAKE ASSY	See Page EUROPEAN ACCESSORIES(1)		2
10	6666933	CYLINDER	See Page EUROPEAN ACCESSORIES(1)		1
11	6661117	TANK			1
12	6599744	BALL JOINT			1
13	8D-6	NUT			1
14	25E-17	WASHER			2
15	17C-532	BOLT			2
16	25E-25	WASHER			1
17	88F-3	ELBOW	W/O O-rings		2
17	88FN-3	ELBOW	W/ O-rings		2
17	97K-4	O-RING	flared end		4
18	98F-3	TEE			1
19	83F-3	ELBOW			4
20	1318565	PIN			1
21	91D-5	NUT			2
22	86F-3	NUT			2
23	6709400	TUBE			1
24	6709409	TUBE			1
25	6709410	TUBE			1
26	6709545	HOSE			2
27	6667139	CAP			1
28	62D-6	NUT			1
29	6709234	DISC	brake		2
30	27E-8	WASHER			8
31	31C-824	BOLT			4
32	6724380	INSTRUCTIONS			1

EUROPEAN ACCESSORIES
(Caliper Brake)

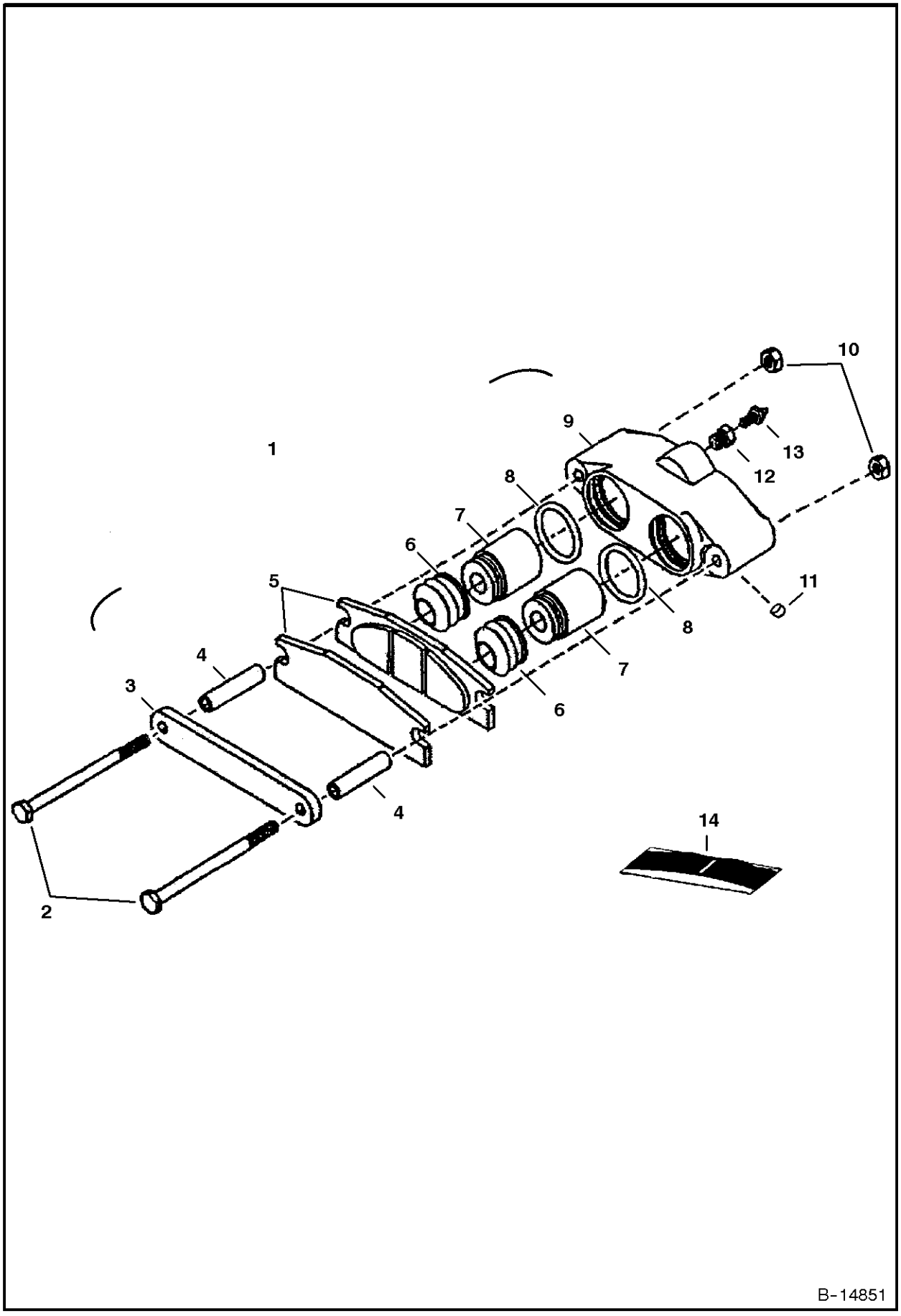

EUROPEAN ACCESSORIES

Ref.N°	Part N°	Description	Remarks	Serial N°	Qty.
1	6666932	BRAKE ASSY	assy. - W/Ref. EUROPEAN ACCESSORIES(2) - EUROPEAN ACCESSORIES(13)		1
2	6669154	BOLT			2
3	6669155	PLATE			1
4	6669156	SPACER			2
5	6669184	STATOR ASSY			1
6	NSS	BOOT	Order Ref. EUROPEAN ACCESSORIES(14)		2
7	6669159	PISTON			2
8	NSS	O-RING	Order Ref. EUROPEAN ACCESSORIES(14)		2
9	NSS	HOUSING	Order Ref. EUROPEAN ACCESSORIES(1)		1
10	6669162	NUT			2
11	6669163	PLUG			1
12	6669164	ADAPTER			1
13	6669165	SCREW	bleeder		1
14	6669185	SEAL KIT	W/Ref. EUROPEAN ACCESSORIES(6) & EUROPEAN ACCESSORIES(8)		1

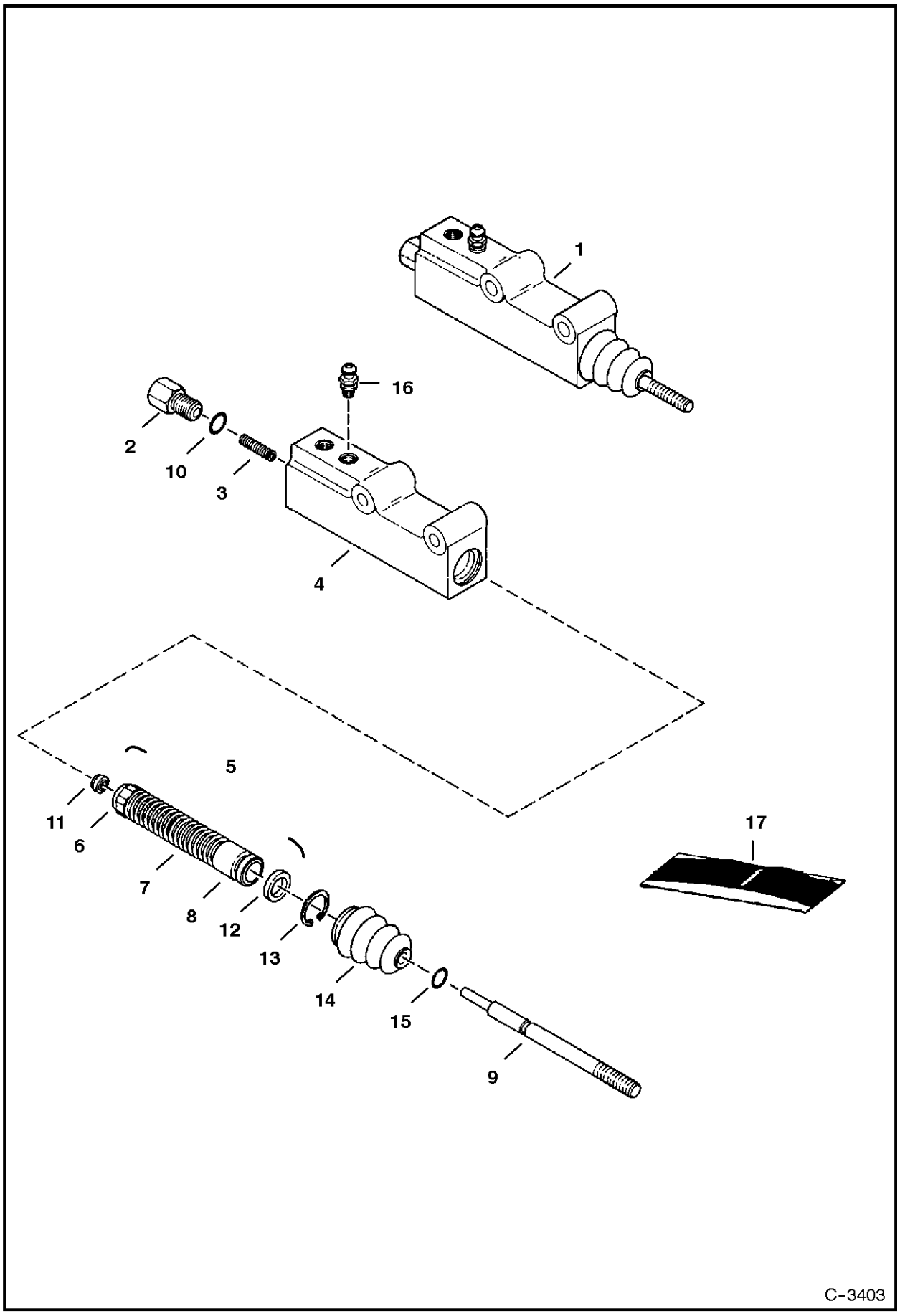
1
16
2
10
3
4
5
11
6
7
8
12
13
14
15
9
17
C-3403

EUROPEAN ACCESSORIES

Ref.N°	Part N°	Description	Remarks	Serial N°	Qty.
1	6666933	CYLINDER	master brake - Ref. EUROPEAN ACCESSORIES(2) - EUROPEAN ACCESSORIES(16)		1
2	NSS	ADAPTER			1
3	NSS	SPRING			1
4	NSS	BODY			1
5	NSS	SPRING ASSY.	Ref. EUROPEAN ACCESSORIES(6) - EUROPEAN ACCESSORIES(8) & EUROPEAN ACCESSORIES(11)		1
6	NSS	RETAINER			1
7	NSS	SPRING			1
8	NSS	PISTON			1
9	NSS	PUSH ROD			1
10	NSS	O-RING			1
11	NSS	SEAT			1
12	NSS	CUP			1
13	NSS	SNAP RING			1
14	NSS	BOOT			1
15	NSS	O-RING			1
16	6668097	SCREW	bleeder		1
17	6661608	SEAL KIT	Ref. EUROPEAN ACCESSORIES(10) - EUROPEAN ACCESSORIES(15)		1

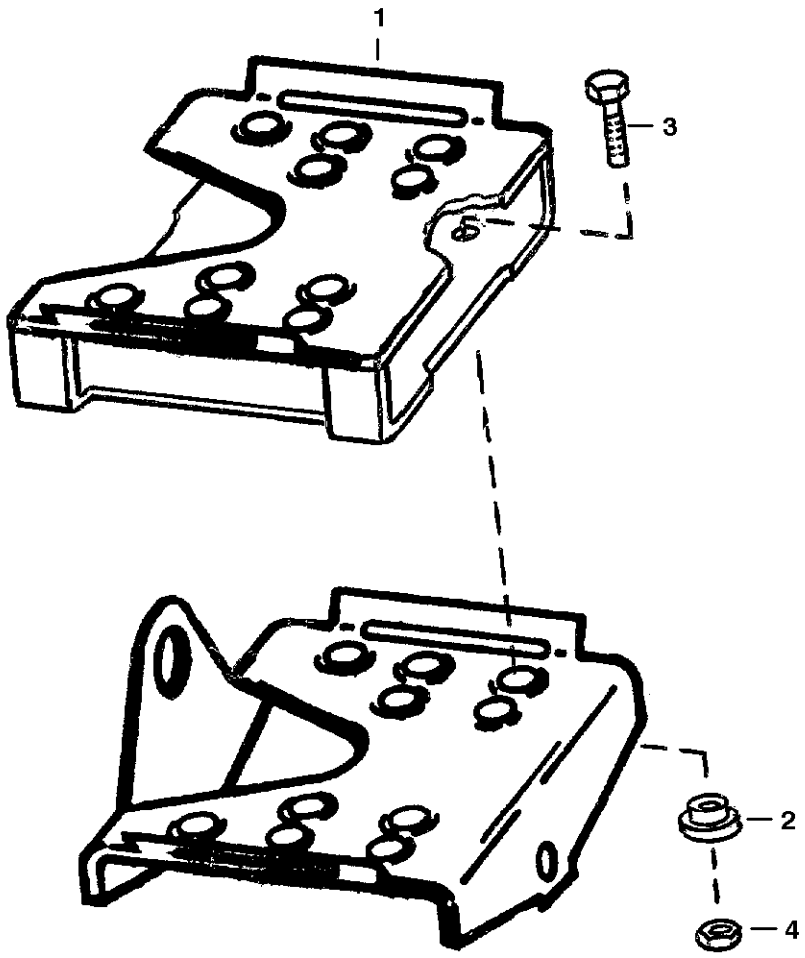

B-14856

EUROPEAN ACCESSORIES

Ref.N°	Part N°	Description	Remarks	Serial N°	Qty.
1	6713115	PEDAL	extender		2
2	6713116	BUSHING			8
3	17C-516	BOLT			8
4	85D-5	NUT			8

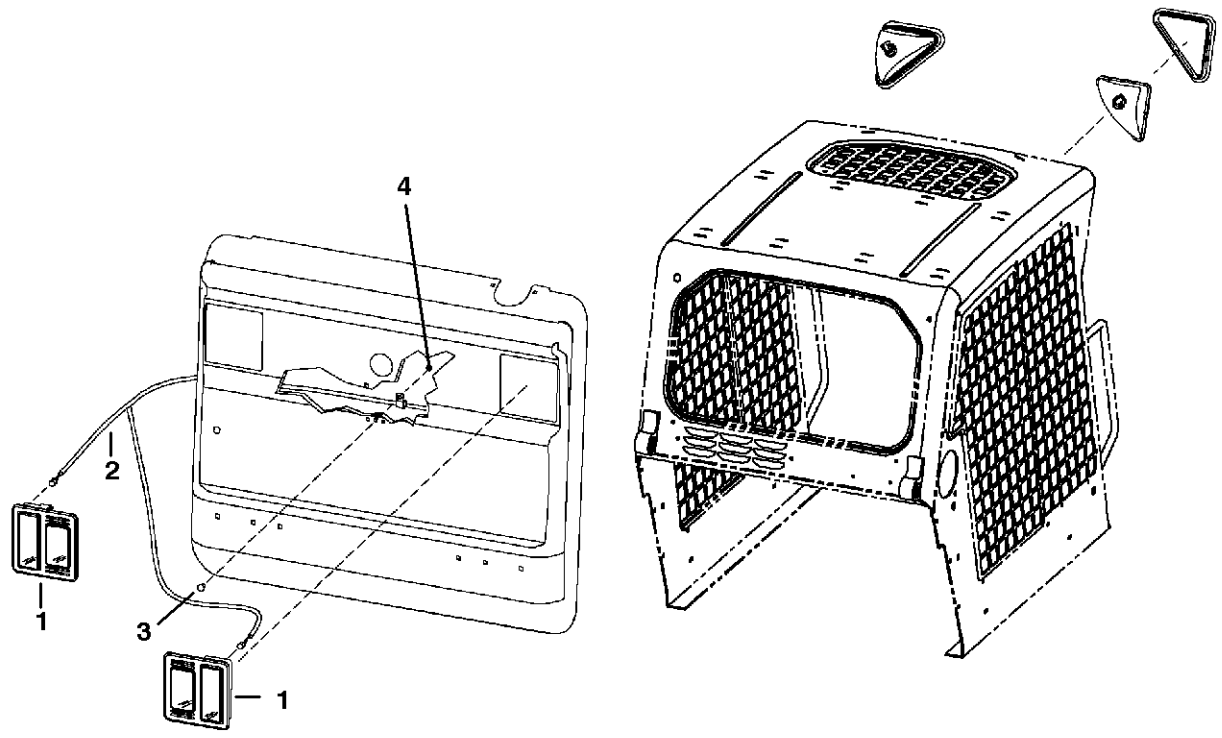

PE-1602

EUROPEAN ACCESSORIES

Ref.N°	Part N°	Description	Remarks	Serial N°	Qty.
1	6707789	LIGHT ASSY	rear		2
1	6666568	BULB	21W		2
1	6667887	BULB	21/5W		2
1	6668007	SCREW			2
1	6668010	LENS			2
1	6671027	LIGHT			2
2	NAP	HARNESS	Order 6718198inD1} Harness - Was 6714546 [A]		1
2	6718198	HARNESS	deluxe		1
3	37C-512	BOLT			1
4	4DM-5	NUT			1

EUROPEAN ACCESSORIES
(Sound Option)

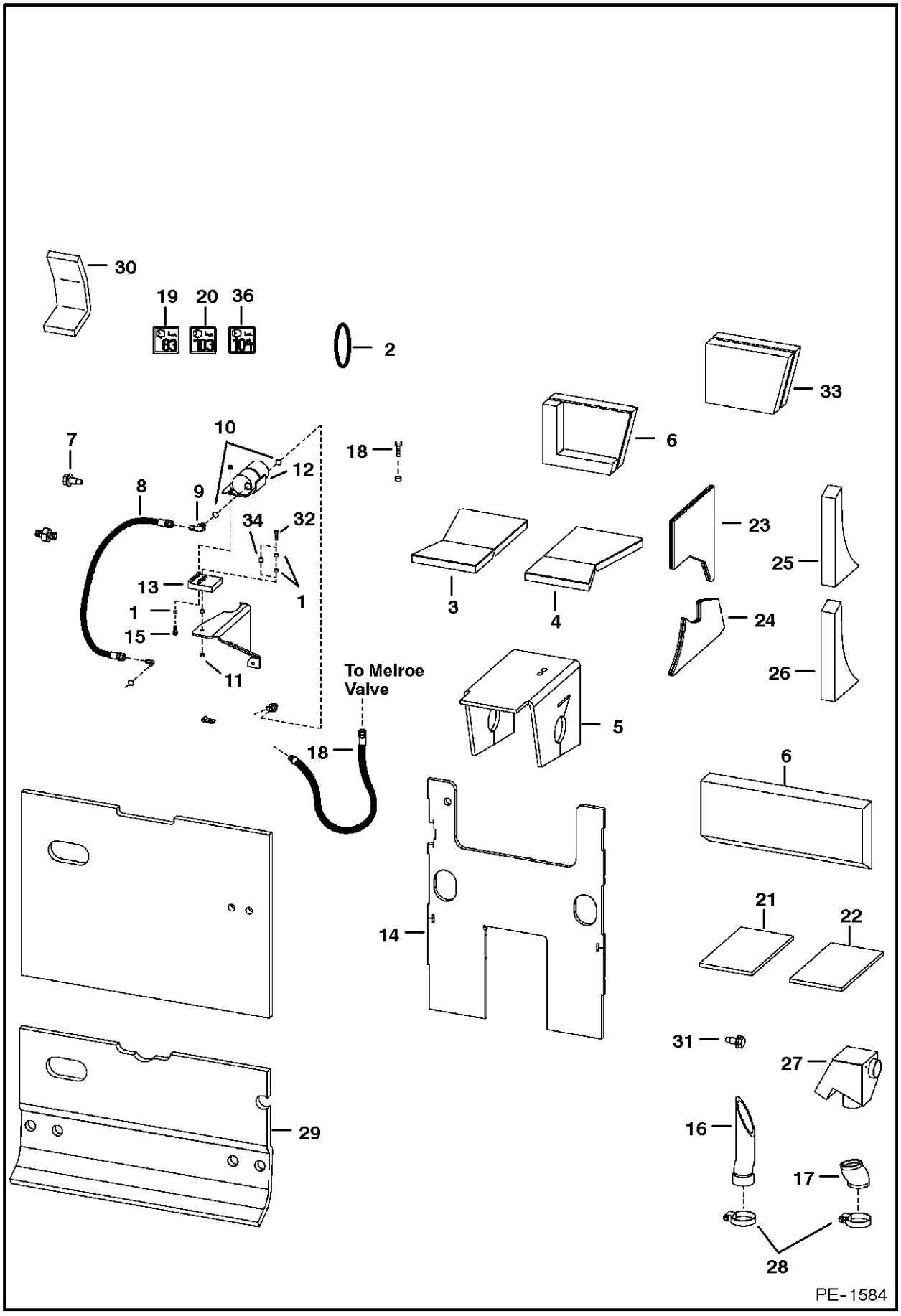

EUROPEAN ACCESSORIES

Ref.N°	Part N°	Description	Remarks	Serial N°	Qty.
1	6562619	BUSHING			2
2	6712970	PULLEY	4.75'(120,7 mm) O.D.		1
2	6712971	PULLEY	5.00'(127 mm) O.D.		1
2	6703483	PULLEY	5.25'(133,35 mm) O.D.		1
3	6704721	INSULATION	cross member - L.H.		1
4	6704722	INSULATION	cross member - R.H.		1
5	6715372	INSULATION	pedal		1
6	6725316	INSULATION	transmission		1
7	84G-3716	BOLT			2
8	6729144	HOSE	pump to hyd. muffler - Was 6707231 [A]		1
9	17KV-8	ELBOW	W/Ref. EUROPEAN ACCESSORIES(10)		1
9	97K-12	O-RING	flared end		1
10	99K-12	O-RING	tapered boss face		x
11	85D-6	NUT			2
12	6659982	MUFFLER	hydraulic		1
13	6705333	MOUNT	rubber		1
14	6719372	INSULATION	steering panel		1
15	35C-616	BOLT			2
16	6715239	HOSE	intake		1
17	6715240	HOSE	air cleaner		1
18	6729155	HOSE	muffler to control valve - Was 6714594 [A]		1
19	6579399	DECAL	noise warning - 83 decibel		1
20	6579403	DECAL	noise warning - 103 decibel		1
21	6705849	INSULATION	brace		1
22	6705850	INSULATION	brace		1
23	6719332	INSULATION	blower housing		1
24	6704769	INSULATION	blower housing		1
25	6707923	INSULATION	upright		1
26	6707924	INSULATION	upright		1
27	6719649	MUFFLER	intake		1
28	42H-52	CLAMP			2
29	6715106	INSULATION	rear door		1
30	6703331	INSULATION	air inlet		1
31	84G-3112	BOLT			1
32	84G-3724	BOLT			1
33	6705848	INSULATION	transmission		2
34	6715744	BUSHING			1
35	6715371	INSULATION	transmission		1
36	6731994	DECAL	noise warning - 104 decibel		1

FIRE EXTINGUISHER

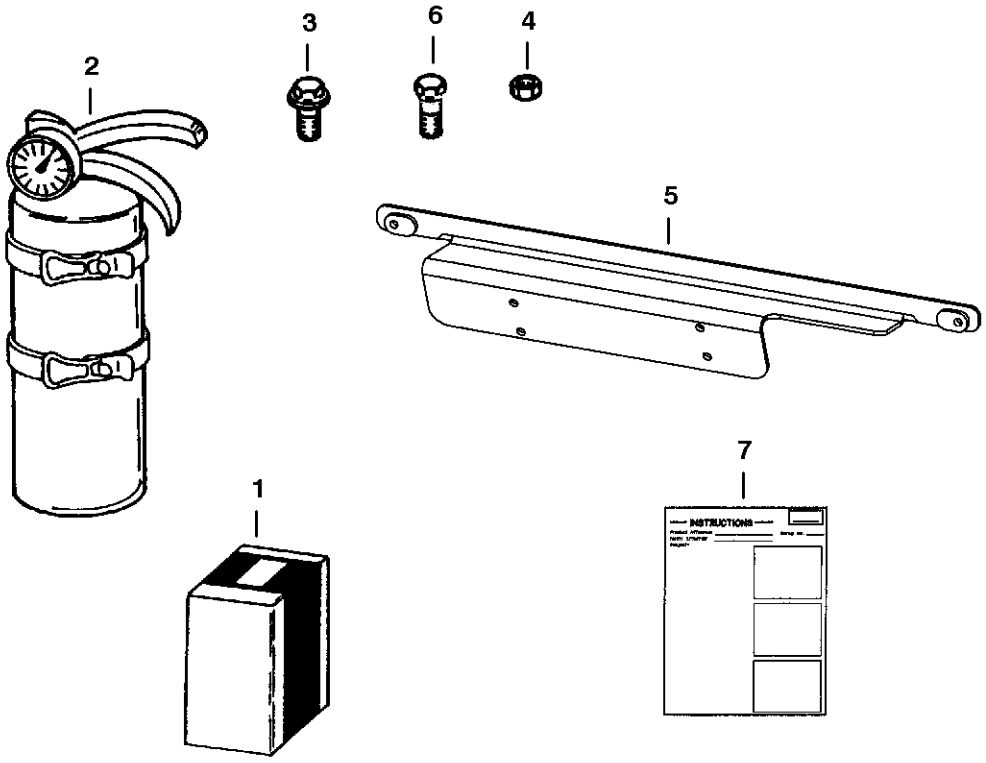

A-2386

FIRE EXTINGUISHER

Ref.N°	Part N°	Description	Remarks	Serial N°	Qty.
1	6725898	KIT	fire extinguisher - Ref. FIRE EXTINGUISHER(2) - FIRE EXTINGUISHER(7)		1
2	6675581	EXTINGUISHER			1
3	45G-1006	BOLT			4
4	12D-10	NUT			4
5	6725906	BRACKET			1
6	31C-410	BOLT			2
7	6901025	INSTRUCTIONS			1

F.O.P.S. KIT

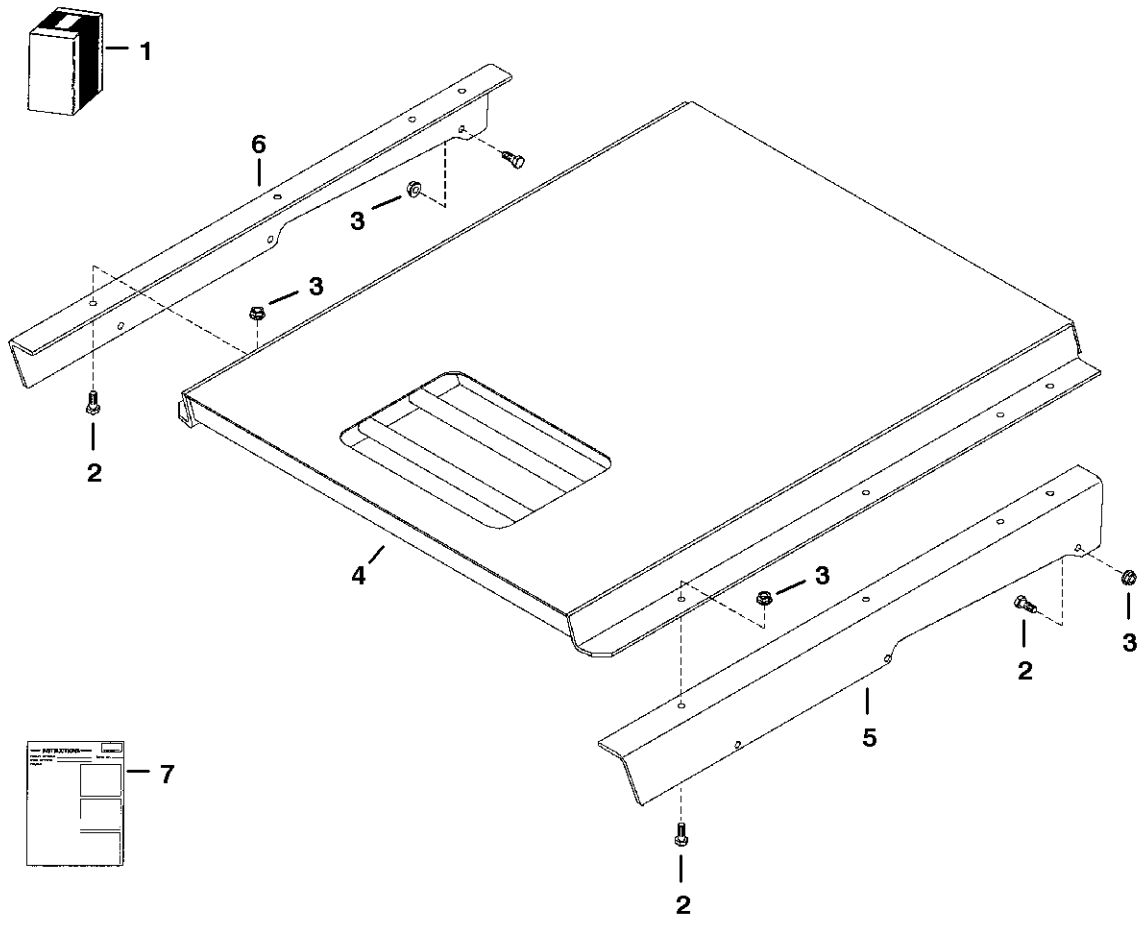

TS-2052

F.O.P.S. KIT

Ref.N°	Part N°	Description	Remarks	Serial N°	Qty.
1	6718924	KIT	Ref. F.O.P.S. KIT(2) - F.O.P.S. KIT(7)		1
2	17C-616	BOLT	Was 17C-612 [B]		14
3	83D-6	NUT			14
4	6702402	SHIELD			1
5	6718833	BRACKET	L.H.		1
6	6718834	BRACKET	R.H.		1
7	6720592	INSTRUCTIONS			1

FLASHER LIGHTS
(4-Way/Turn Indicators)

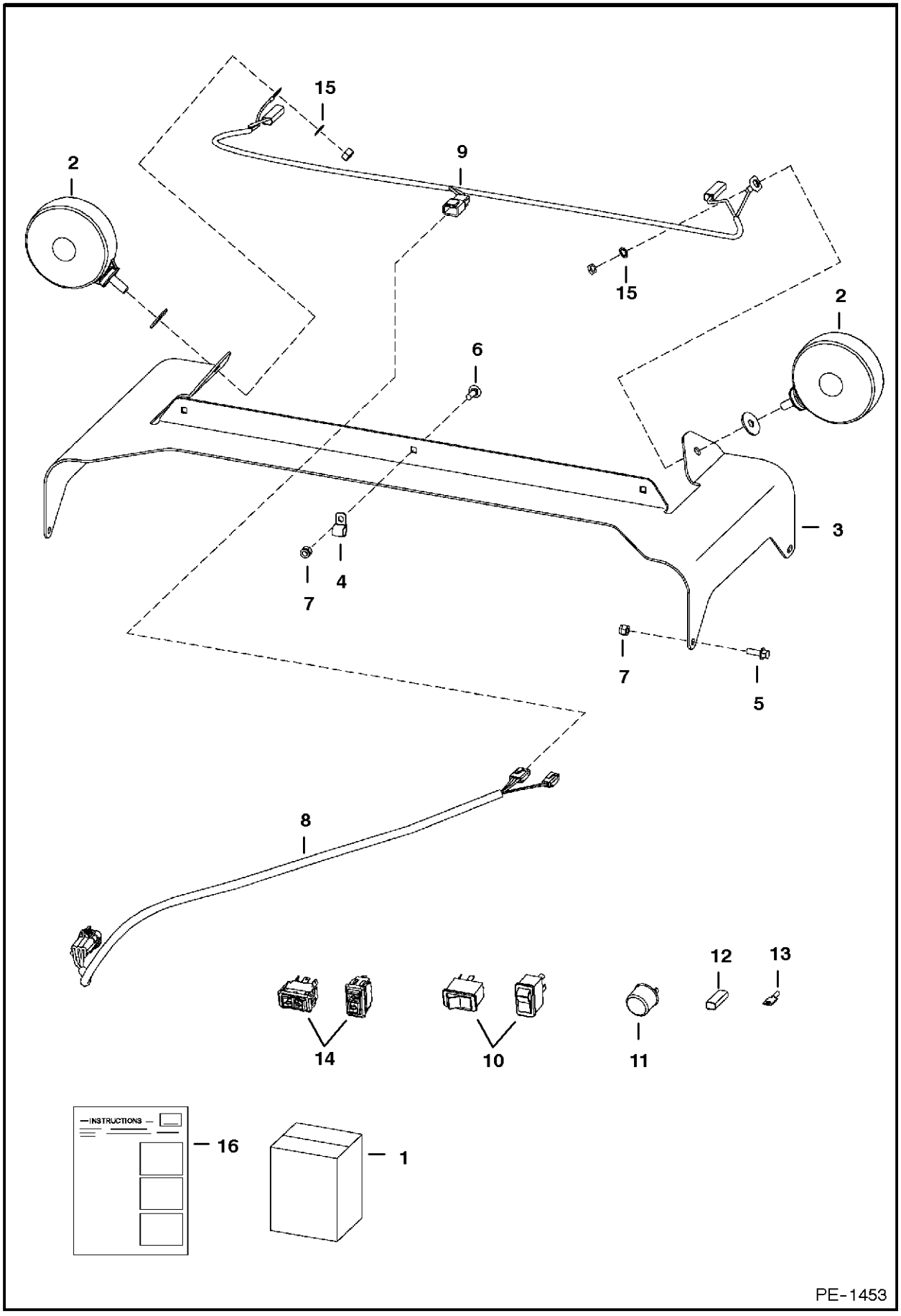

FLASHER LIGHTS

Ref.N°	Part N°	Description	Remarks	Serial N°	Qty.
1	6718411	KIT	Ref. FLASHER LIGHTS (2), FLASHER LIGHTS (3) & FLASHER LIGHTS (5) - FLASHER LIGHTS (16) - If loader is equipped W/Deluxe Cab Opti		1
2	6517516	LIGHT			2
3	6718326	MOUNT			1
4	30H-21	CLAMP	Not in Kit		3
5	35C-412	BOLT			4
6	37C-412	BOLT			3
7	59D-4	NUT			7
8	6718872	HARNESS	ext. cab		1
9	6718873	HARNESS	4-way flasher		1
10	6665316	SWITCH	horizontal		1
10	6668815	SWITCH	vertical		1
11	6557904	FLASHER			1
12	614142	SLEEVE			1
13	6515131	TERMINAL			1
14	6675835	TURN SIGNAL	horizontal		1
14	6676872	TURN SIGNAL	vertical		1
15	6E-5	WASHER			2
16	6900848	INSTRUCTIONS			1

HAND CONTROL KIT
(W/Push Button Float)

NOTE: Also order 6900969 O/M with revised date of 6/00 or newer.

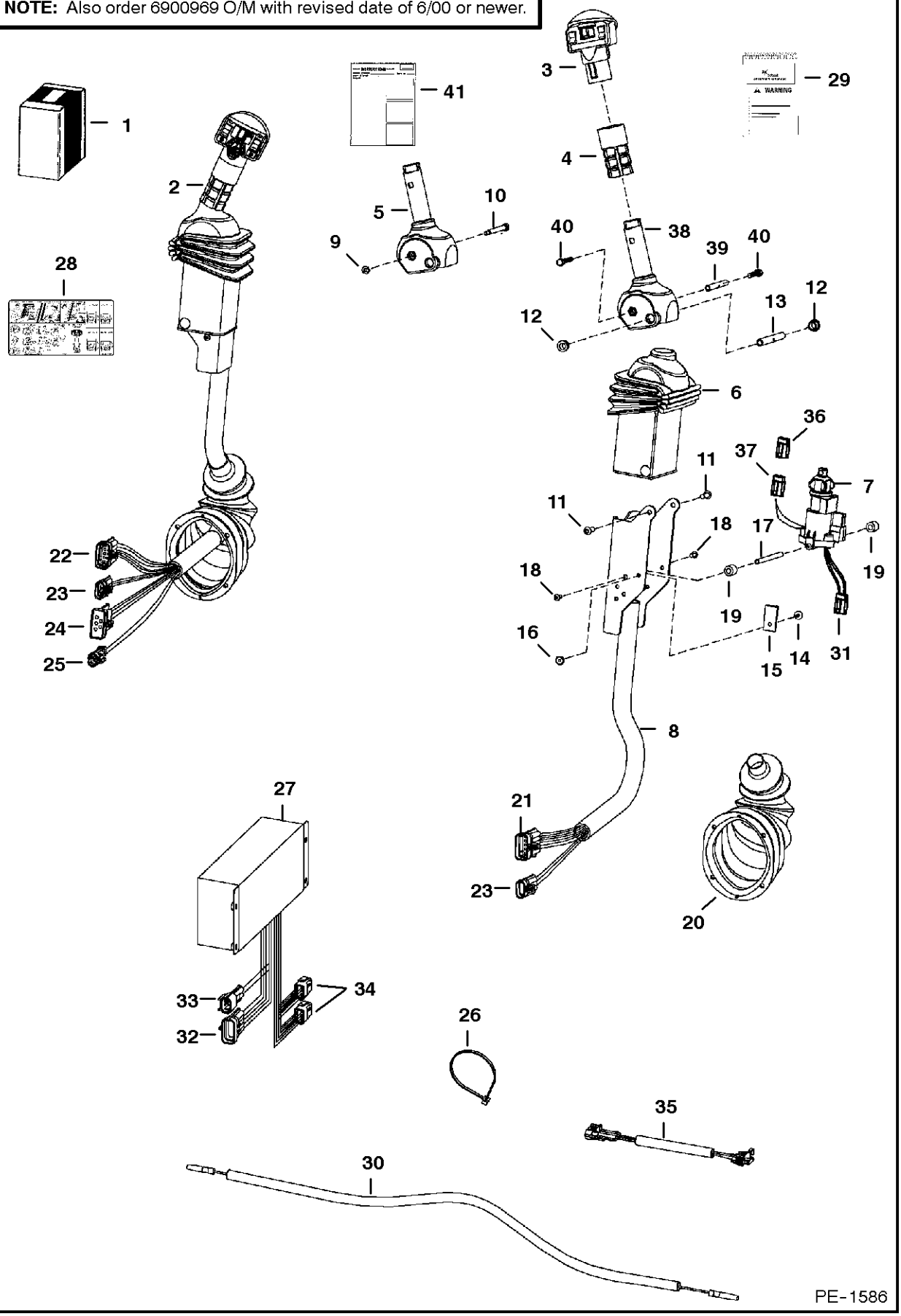

HAND CONTROL KIT

Ref.N°	Part N°	Description	Remarks	Serial N°	Qty.
1	6727298	KIT	SEE NOTE		1
2	6675742	LEVER	tilt - R.H.		1
2	6675750	LEVER	lift - L.H.		1
3	NAP	HANDLE	lift - R.H. - SEE BTIinD1}{ 335 - Was 6675469 [A]		1
3	6675749	HANDLE	lift - L.H.		1
4	6713349	GRIP			2
5	NAP	HANDLE	R.H. - Order Ref. HAND CONTROL KIT(38) - HAND CONTROL KIT(40) - Was 6597774 [A]	& Bel	1
5	NAP	HANDLE	L.H. - Order Ref. HAND CONTROL KIT(38) - HAND CONTROL KIT(40) - Was 6717163 [A]	& Bel	1
6	6713898	COVER			2
7	6675741	SENSOR			2
7	6670706	CONNECTOR	3pin		1
7	6670714	PIN			3
7	6670710	LOCK			1
8	6719712	CHANNEL	R.H.		1
8	6719711	CHANNEL	L.H.		1
9	12D-10	NUT		& Bel	2
10	6716826	BOLT		& Bel	2
11	25GT-410	BOLT			8
12	6702990	BUSHING			4
13	6713043	SPACER			4
14	6665321	RIVET	male		2
15	6665000	CLIP			2
16	6665322	RIVET	female		2
17	6719834	SPACER	threaded		2
18	6727065	BOLT			4
19	6719835	SLEEVE			4
20	6532127	BOOT			2
21	6640692	CONNECTOR	10pin		1
21	6640690	PIN			8
21	6640694	LOCK			1
21	6641176	SEAL			8
21	6646582	PLUG	cavity		2
22	6640692	CONNECTOR	10pin		1
22	6640690	PIN			6
22	6640694	LOCK			1
22	6641176	SEAL			6
22	6646582	PLUG	cavity		4
23	6640699	CONNECTOR	3pin		2
23	6640690	PIN			3
23	6641176	SEAL			3
23	6640700	LOCK			3
24	6667144	CONNECTOR	5pin		1
24	6640690	PIN			3
24	6641176	SEAL			3
24	6646582	PLUG	cavity		1
24	6667145	LOCK			1
25	6641179	CONNECTOR	2pin		1
25	6640690	PIN			2

HAND CONTROL KIT

Ref.N°	Part N°	Description	Remarks	Serial N°	Qty.
25	6641176	SEAL			2
25	6641180	LOCK			1
26	6610510	NYLON TIE			11
27	6676153	CONTROLLER			1
28	6727155	DECAL			1
29	6719563	KIT	handbook		1
30	6727328	HARNESS			1
31	6670707	CONNECTOR	3pin		1
31	6670715	SOCKET			3
31	6670711	LOCK			1
32	6640692	CONNECTOR	10pin		1
32	6640690	PIN			9
32	6640694	LOCK			1
32	6641176	SEAL			9
32	6646582	PLUG	cavity		1
33	6648307	CONNECTOR	2pin		1
34	6670709	CONNECTOR	8pin		2
35	6728742	HARNESS	W/capacitor		1
36	6677364	CONNECTOR	3-pin		1
36	6676640	SEAL			3
37	6676870	CONNECTOR	3-pin		1
37	6676640	SEAL			3
37	6670715	SOCKET			1
37	6670711	LOCK			1
38	6729594	HANDLE	R.H.	& Abv	1
38	6729595	HANDLE	L.H.	& Abv	1
39	6729600	SPACER		& Abv	1
40	6727065	BOLT		& Abv	2
41	6901100	INSTRUCTIONS			1

HEATER KIT

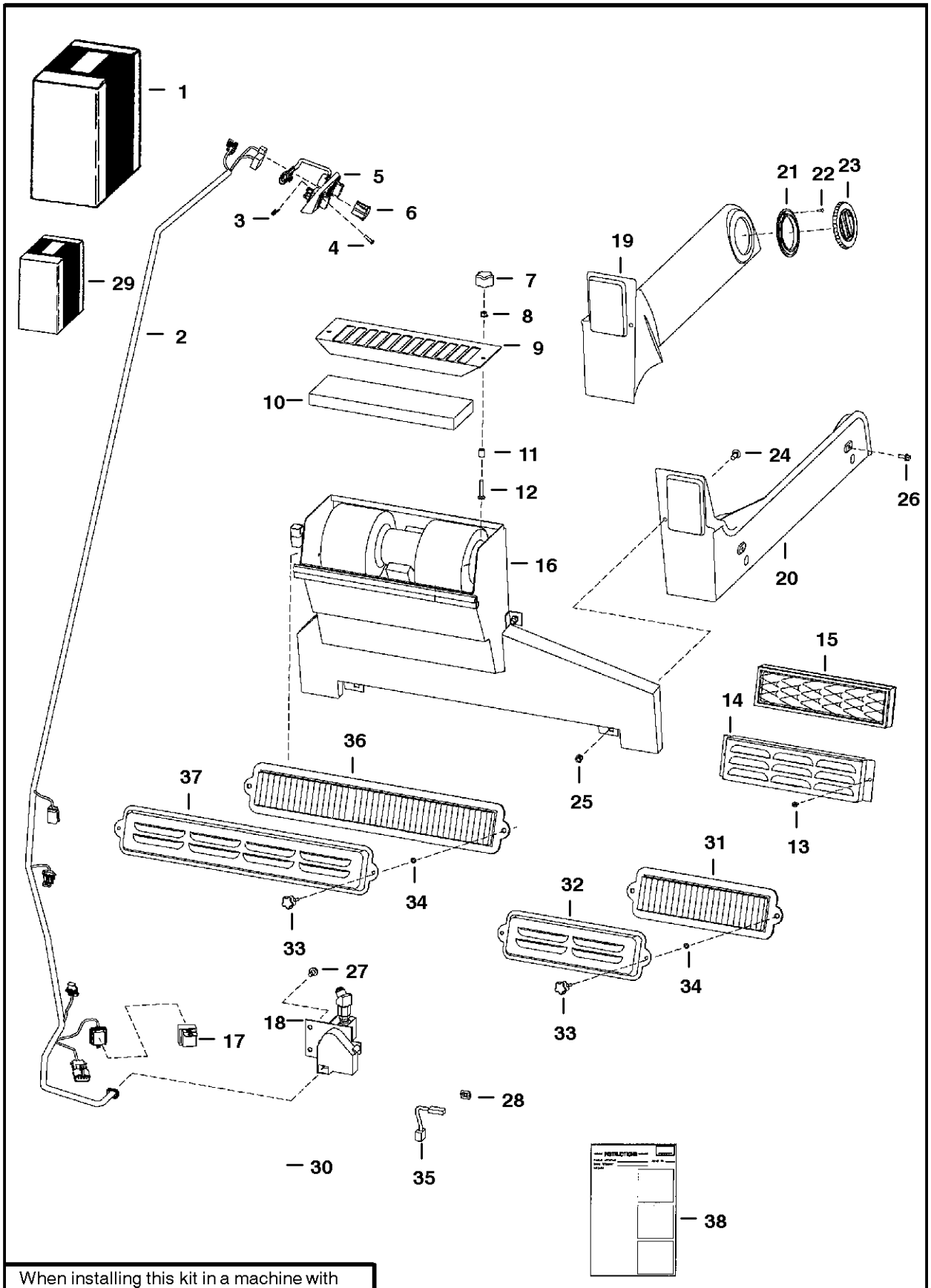

When installing this kit in a machine with the Michigan suspension seat the back angle adjusting knob may have to be replaced with 6674263.

PE-1587

HEATER KIT

Ref.N°	Part N°	Description	Remarks	Serial N°	Qty.
1	6718803	HEATER KIT	Ref. HEATER KIT(2)-HEATER KIT(12), HEATER KIT(16)-HEATER KIT(28), HEATER KIT(30), HEATER KIT(33), HEATER KIT(34) & HEATER KIT(36		1
2	6725933	HARNESS	hvac - W/Ref. HEATER KIT(17) - Was 6717877 [A]		1
2	6725273	HARNESS	AHC		1
3	6669091	CLIP	retainer		3
4	6669224	BOLT			3
5	6674228	PANEL	control		1
5	6640699	CONNECTOR			1
5	6718579	DECAL			1
5	6718887	PANEL	A/C		1
5	6675176	SWITCH	blower		1
5	6675177	KNOB			1
5	6675846	POTENTIOMETER	Was 6675178 [A]		1
6	6675181	PLUG	switch hole		1
7	6674741	KNOB			2
8	83D-4	NUT			2
9	6718175	SCREEN	filter		1
10	6678207	FILTER	recirculation - Was 6674229 [A]		1
11	6718837	SPACER			2
12	37C-424	BOLT			2
13	87G-1008	SCREW			2
14	NAP	COVER	filter - Order Ref. HEATER KIT(31), HEATER KIT(32) & (2) ea. of Ref. HEATER KIT(33) & HEATER KIT(34) - Was 6674236 [A]		1
15	NAP	FILTER	Order Ref. HEATER KIT(31), HEATER KIT(32) & (2) each of Ref. HEATER KIT(33) & HEATER KIT(34) - Was 6674230 [A]		1
16	6674933	HEATER	See Page HEATER(1)		1
17	6670312	SOLENOID	relay		1
18	6675684	VALVE	Was 6674227 [A]		1
18	6640699	CONNECTOR			1
18	6675175	BRACKET			1
18	6675172	BRACKET			1
18	6675173	ACTUATOR	pig tail		1
18	6680054	ACTUATOR	square plug		1
18	6675174	BODY			1
19	6717644	DUCT	L.H.		1
20	6717643	DUCT	R.H.		1
21	6675179	FLANGE			4
22	57G-608	SCREW			16
23	6674231	VENT	round		4
23	6675180	VENT			4
24	37C-512	BOLT			4
25	59D-5	NUT			4
26	35C-410	BOLT			4
27	84G-3110	BOLT			2
28	774220	NUT	spring		2
29	6725513	DECAL PACKAGE			1
30	6725390	HARNESS	jumper - 72'(1828,8 mm) long		1
31	6727140	FILTER			1
32	6726608	COVER			1

HEATER KIT

Ref.N°	Part N°	Description	Remarks	Serial N°	Qty.
33	6726386	KNOB			2
34	6676516	NUT	push		2
35	6725934	HARNESS	jumper - 4' (101,6 mm) long - 'connects Ref. HEATER KIT(2) (6725933inD1} Harness) & Ref. HEATER KIT(18) (NAP/6674227inD1}M Val		1
35	6725936	HARNESS	jumper - 8' (203,2 mm) long - 'connects Ref. HEATER KIT(2) (6725933inD1} Harness) & Ref. HEATER KIT(18) (6675684inD1}w Valve)		1
36	6677983	FILTER			1
37	6727847	COVER			1
38	6900850	INSTRUCTIONS			1

HEATER

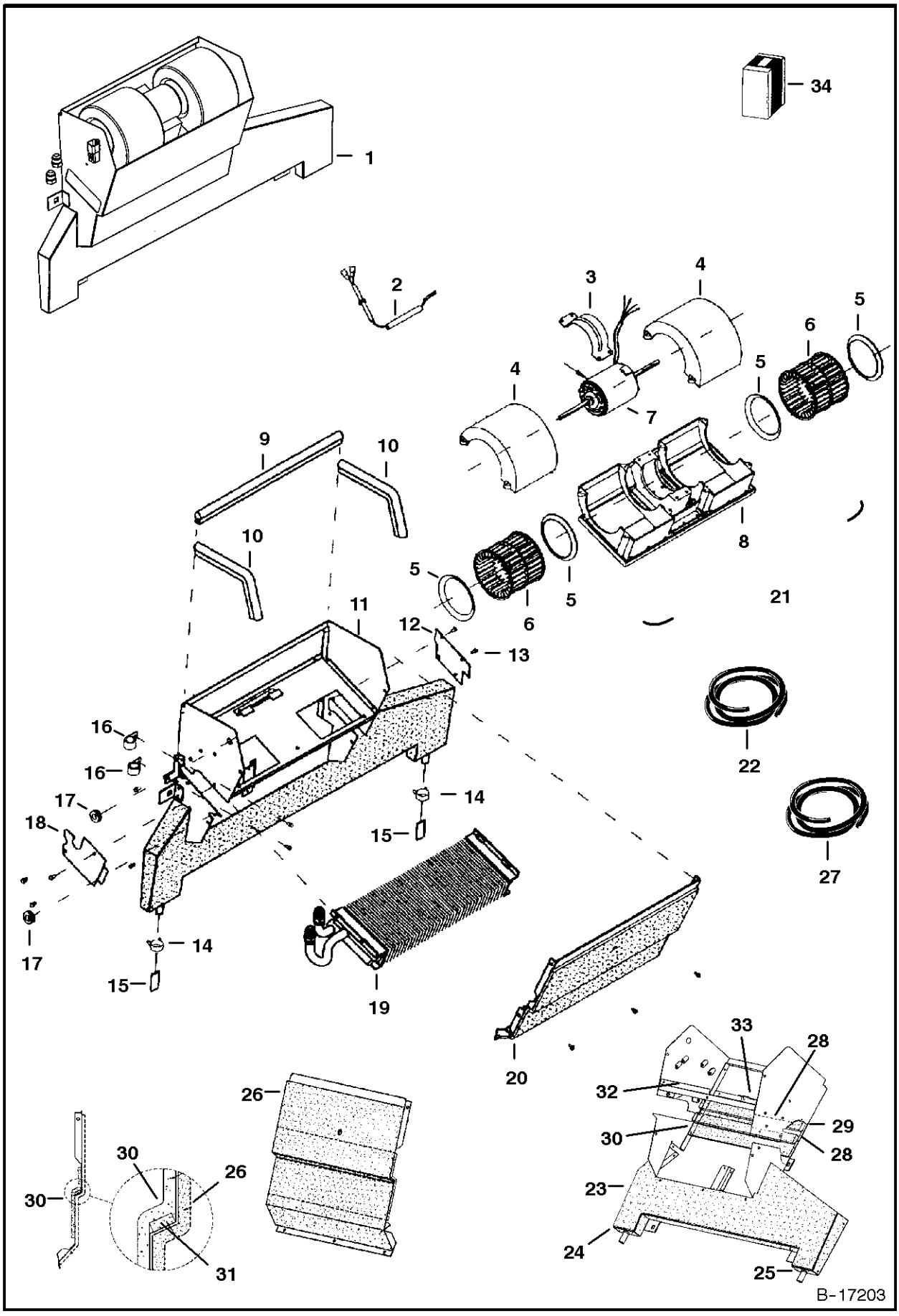
1
2
3
4
5
6
7
8
9
10
11
12
13
14
15
16
17
18
19
20
21
22
27
33
28
32
29
30
23
24
25
26
31
34
B-17203

HEATER

Ref.N°	Part N°	Description	Remarks	Serial N°	Qty.
1	6674933	HEATER	Ref. HEATER(2) - HEATER(22)		1
2	6675508	HARNESS			1
3	6675506	MOUNT			1
4	6675507	COVER			2
5	6675504	RING			4
6	6675505	BLOWER WHEEL			2
6	6676618	CLIP			2
7	6675509	MOTOR			1
8	6675503	HOUSING			1
9	NAP	SEAL	'14.75'(375 mm)long- Order Ref. HEATER(22)		1
10	NAP	SEAL	8.5'(215 mm)long - Order Ref. HEATER(22)		2
11	6675499	HOUSING	W/Ref. HEATER(23) - HEATER(25) & HEATER(27) - HEATER(30)		1
12	6675502	PLATE	cover		1
13		BOLT			x
14	6675510	CLAMP			2
15	6675511	DRAIN VALVE			2
16	6675512	CLAMP			2
17	6675513	GROMMET			2
18	6675501	PLATE	cover		1
19	NAP	COIL	See Page HEATER(1) - Was 6675498 [A]		1
20	6675500	COVER	W/Ref. HEATER(26), HEATER(27) & HEATER(30)		1
21	6675497	BLOWER	Ref. HEATER(2) - HEATER(8)		1
22	6675514	SEAL	bulk - Sold Per Foot		x
23	6675607	INSULATION			1
24	6675608	INSULATION			1
25	6675609	INSULATION			1
26	6675610	INSULATION			1
27	6675611	SEAL	bulk - Sold Per Foot		x
28	6675612	INSULATION			2
29	6675613	INSULATION			1
30	6675614	INSULATION			2
31	NAP	SEAL	15'(381 mm) long -Order Ref. HEATER(27)		1
32	NAP	SEAL	5.5'(140 mm) long -Order Ref. HEATER(27)		1
33	NAP	SEAL	4'(101,6 mm) long -Order Ref. HEATER(27)		1
34	6728567	KIT	See Page HEATER(1)		1

HEATER

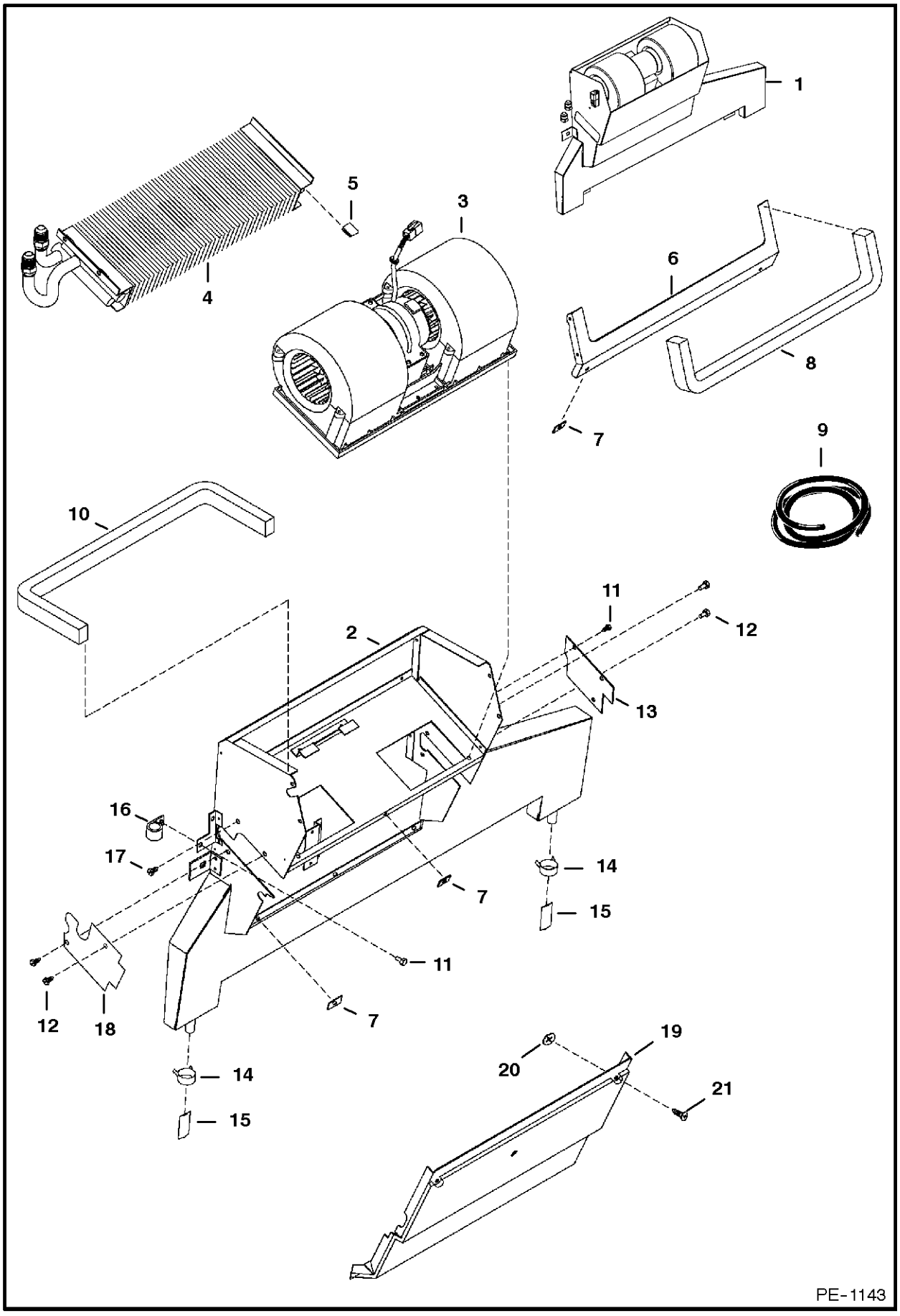

HEATER

Ref.N°	Part N°	Description	Remarks	Serial N°	Qty.
1	6676562	HEATER	assy - Ref. HEATER(2)-HEATER(11)		1
2	6677108	HOUSING			1
3	6675497	BLOWER	assy - See Page HEATER(1)		1
4	NAP	COIL	heater - See Page HEATER(1) - Was 6676603 [A]		1
5	6676539	CLIP			3
6	NAP	SEAL	Order Ref. HEATER(19) (6678151inD1} Cover) & 6678152inD1} Seal - Was 6677114 [A]		1
6	6678152	SEAL			1
7	6677115	RECEPTACLE			6
8	NAP	SEAL	'22.6'(575mm) long - Order Ref. HEATER(9)		1
9	6677111	SEAL	bulk - Sold Per Foot		x
10	NAP	SEAL	25'(635mm) long - Order Ref. HEATER(9)		1
11	6677119	SCREW	sheetmetal		7
12	6677118	SCREW	w/washer		4
13	6677120	COVER			1
14	6675510	CLAMP	drain hose		2
15	6675511	DRAIN VALVE			2
16	6675512	CLAMP	hose		2
17	6675513	GROMMET			1
18	6676604	COVER			1
19	NAP	COVER	Order Ref. HEATER(6) (6678152inD1} Seal) & 66781 51inD1} Cover -Was 6677109 [A]		1
19	6678151	COVER			1
20	6677116	RETAINER			6
21	6677117	SCREW	captive		6

HEATER
(Blower Seal Kit)

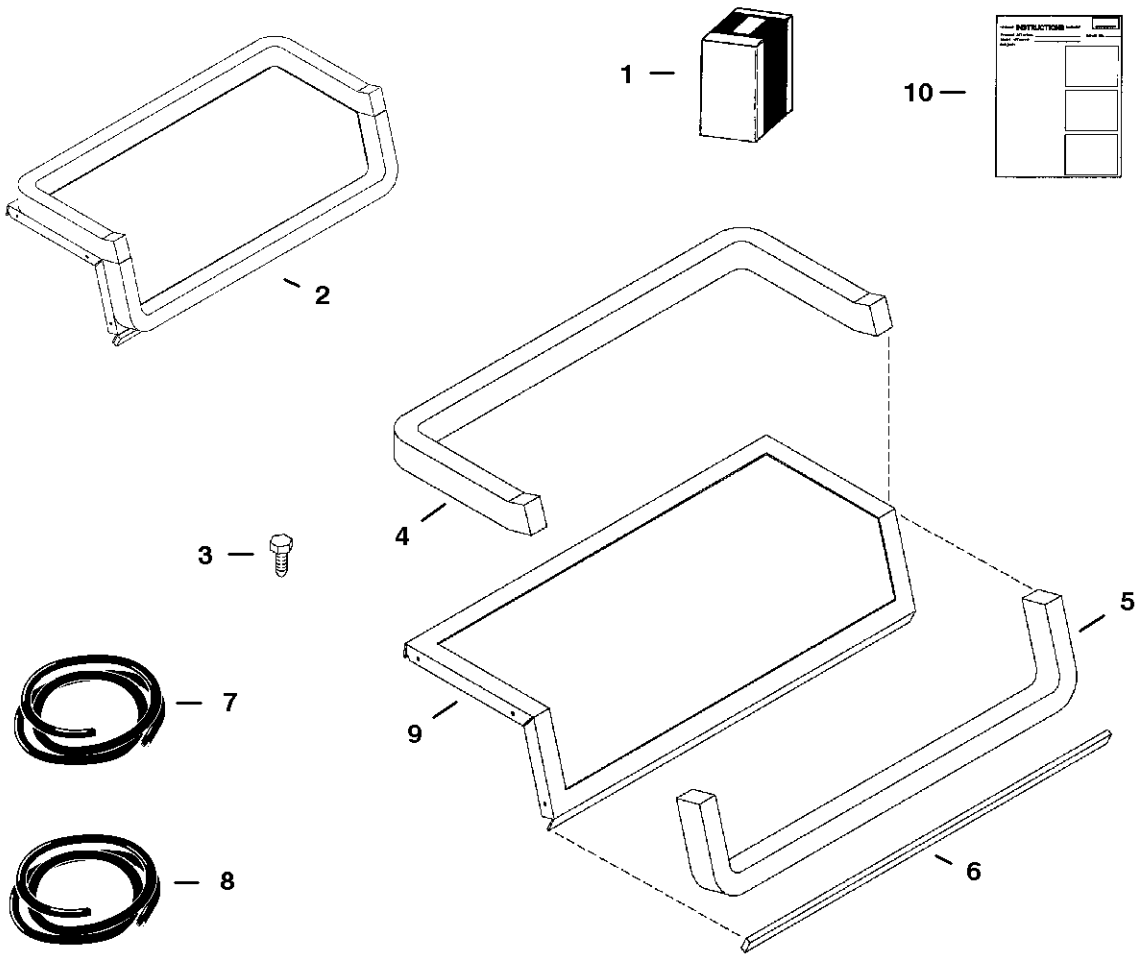

PE-1151

HEATER

Ref.N°	Part N°	Description	Remarks	Serial N°	Qty.
1	6728567	KIT	blower seal - W/Ref. HEATER(2), HEATER(3) & HEATER(10)		1
2	NSS	FLANGE SEAL	assy - Ref. HEATER(4), HEATER(5), HEATER(6) & HEATER(9) - Order Ref. HEATER(1)		1
3	6726621	SCREW			7
4	NAP	SEAL	27'(686mm) long - Order Ref. HEATER(8)		1
5	NAP	SEAL	21'(534mm) long - Order Ref. HEATER(8)		1
6	NAP	SEAL	15'(384mm) long - Order Ref. HEATER(7)		1
7	6675611	SEAL	bulk - Sold Per Foot		x
8	6677111	SEAL	bulk - Sold Per Foot		x
9	NSS	FLANGE	Order Ref. HEATER(1)		1
10	6901213	INSTRUCTIONS			1

HEATER
(Heater Coil Kit)

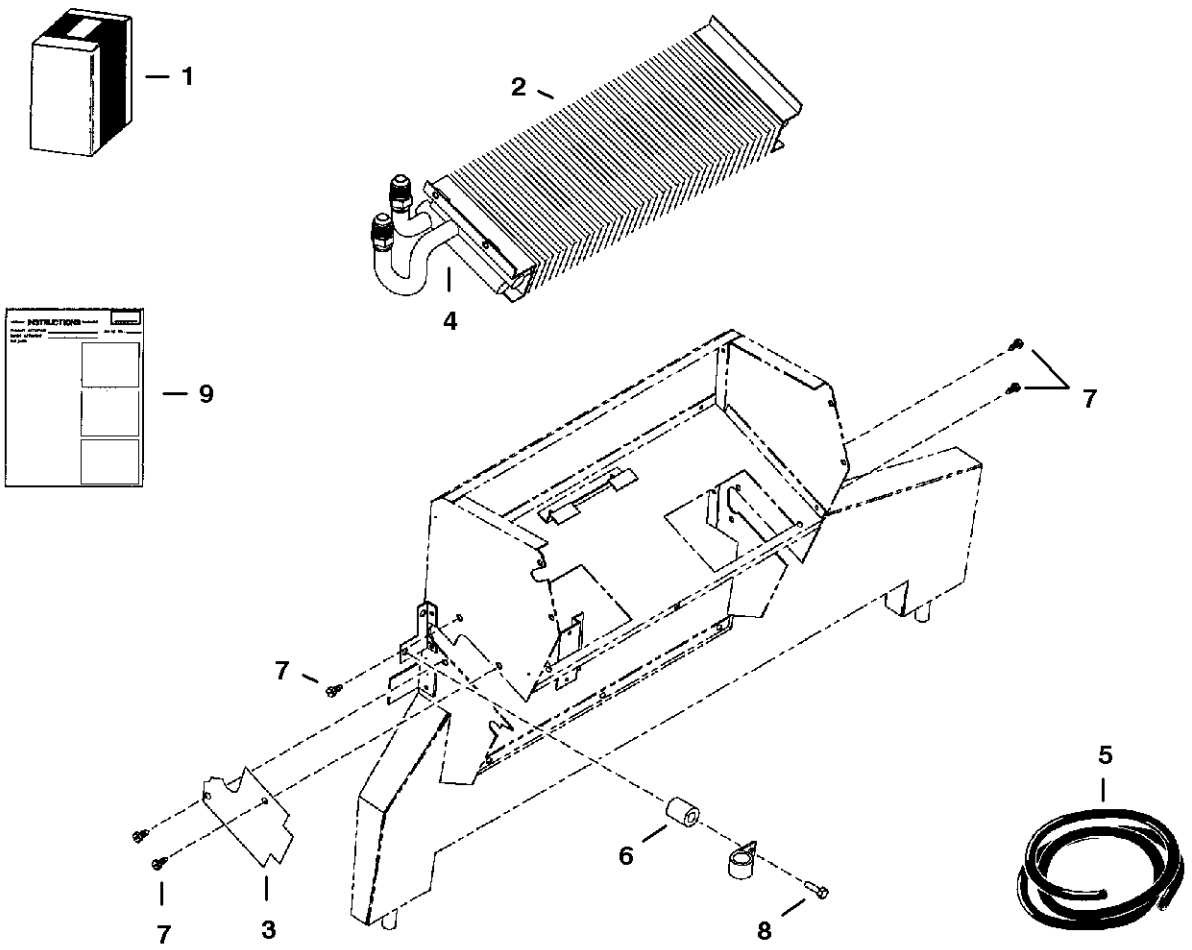

PE-1228

HEATER

Ref.N°	Part N°	Description	Remarks	Serial N°	Qty.
1	6727786	KIT	heater coil - W/Ref. HEATER(2)-HEATER(9) - Was 6728990 [A]		1
2	NAP	HEATER COIL	Order Ref. HEATER(1)		1
3	6677504	COVER	.279'(7,1mm) thickness		1
4	NAP	INSULATION	6(152.4mm) long - Order Ref. HEATER(5)		1
5	6676538	INSULATION	bulk - Sold Per Foot		x
6	6676606	SPACER			1
7	6726621	SCREW			4
8	6676653	SCREW			1
9	6901120	INSTRUCTIONS			1

HEATER PLUMBING KIT

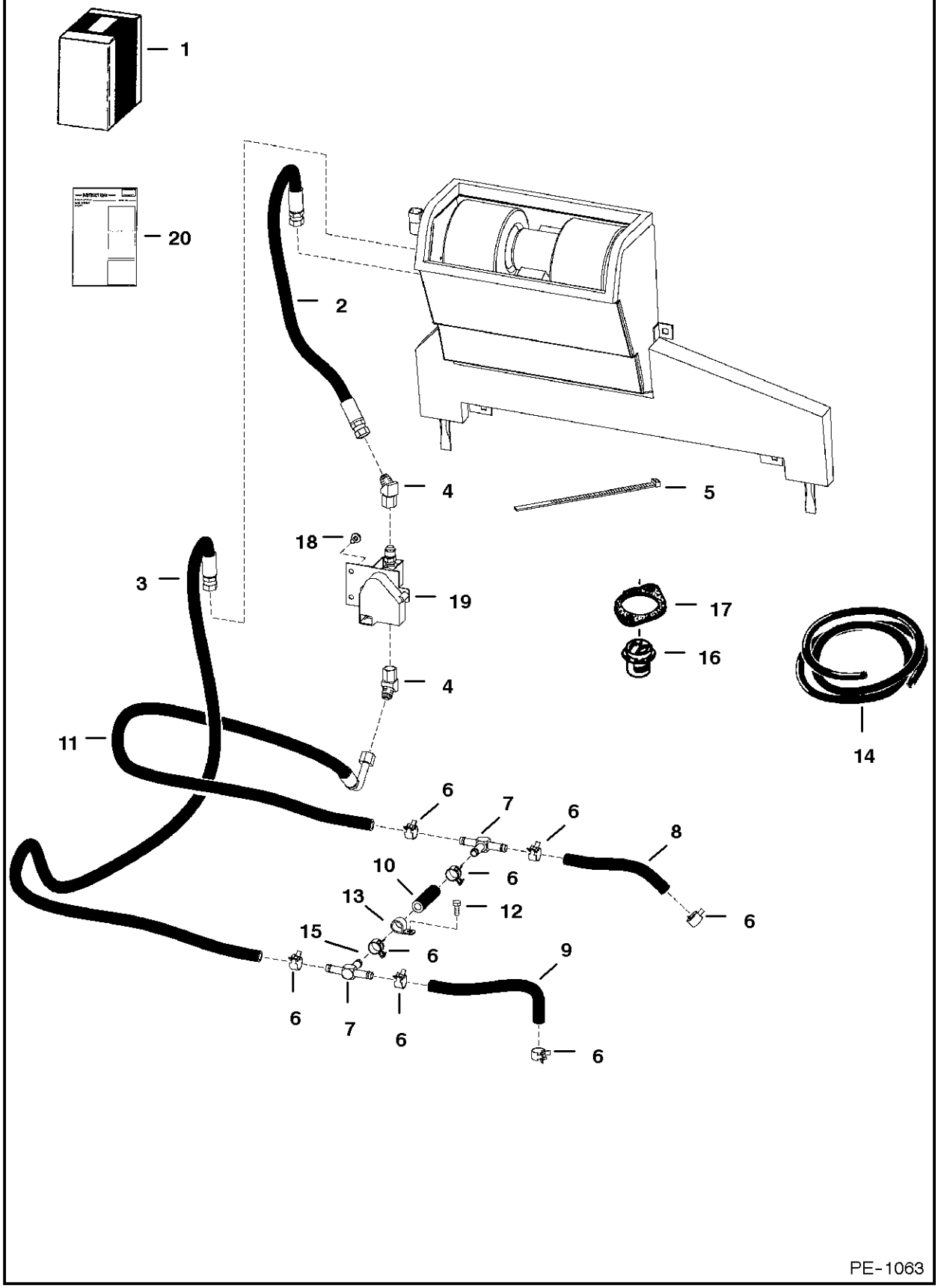

HEATER PLUMBING KIT

Ref.N°	Part N°	Description	Remarks	Serial N°	Qty.
1	NAP	KIT	Ref. HEATER PLUMBING KIT(2) - HEATER PLUMBING KIT(17) - Order 6731158inD1}W Kit (See Page HEATER PLUMBING KIT(1)) & 6730999 Tube		1
2	6719144		34'(863,6 mm) long - W/spring guard		1
3	6719080	HOSE	W/spring guard		1
4	12KN-6	ELBOW			2
5	6624289	STA-STRAP			4
6	5HM-20	CLAMP	hose		8
7	6718578	TEE			2
8	NAP	HOSE	8.3'(210,8 mm) long - Order Ref. HEATER PLUMBING KIT(14)		x
9	NAP	HOSE	10.5'(266,7 mm) long -Order Ref. HEATER PLUMBING KIT(14)		1
10	NAP	HOSE	3'(76,2 mm) long - Order Ref. HEATER PLUMBING KIT(14)		1
11	6717987	HOSE			1
12	1CM-820	BOLT			1
13	30H-64	CLAMP	insulated		1
14	6674905	HOSE	bulk - Sold Per Foot		x
15	6592852	ORIFICE			1
16	6630184	THERMOSTAT			1
17	6732199	GASKET	thermostat - Was 6666790 [A]		1
18	17C-512	BOLT	Not in Kit		2
18	95D-5	NUT	Not in Kit		2
19		VALVE	Not in Kit - See Page HEATER KIT(1)		1
20	6900850	INSTRUCTIONS	Not in Kit - See Page HEATER KIT(1)		1

HEATER PLUMBING KIT

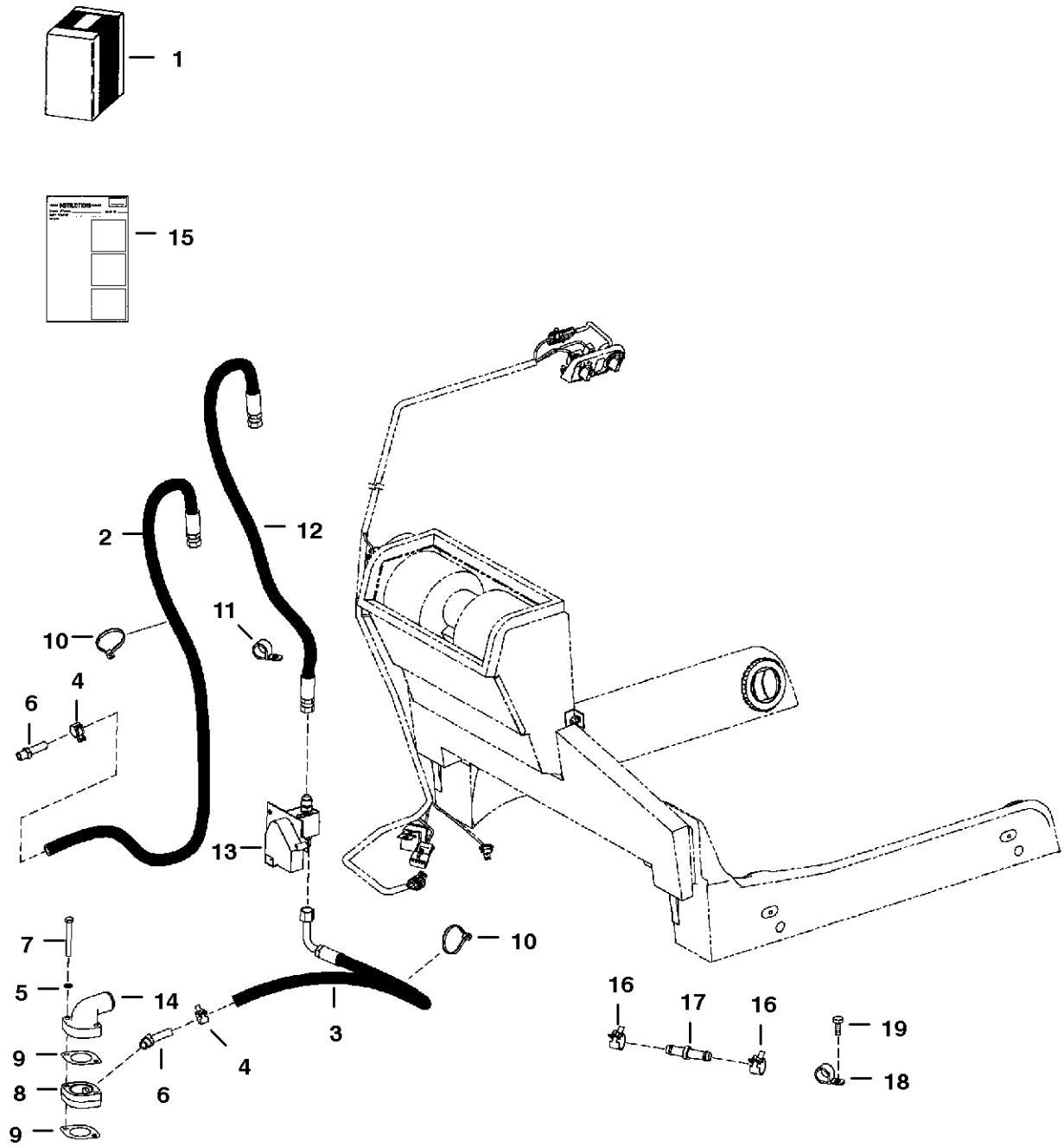

HEATER PLUMBING KIT

Ref.N°	Part N°	Description	Remarks	Serial N°	Qty.
1	6731158	KIT	Ref. HEATER PLUMBING KIT(2) - HEATER PLUMBING KIT(11) & HEATER PLUMBING KIT(15) - For Heater Kit See Page HEATER KIT(1)		1
2	6730996	HOSE	W/10' spring guard		1
3	6730998	HOSE			1
4	5HM-20	CLAMP	hose		2
5	6EM-80	WASHER			2
6	6731085	ELBOW			2
7	1CM-870	BOLT			2
8	6731049	ADAPTER			1
9	6666790	GASKET	thermostat		2
10	6624289	STA-STRAP			3
11	30H-45	CLAMP	insulated		1
12	6719144		34'(863,6 mm) long - W/spring guard		1
13		VALVE	Not in Kit - See Page HEATER KIT(1)		1
14		HOUSING	thermostat - Not in Kit - See Page WATER FLANGE & THERMOSTAT(1)		1
15	6900850	INSTRUCTIONS	Was 6901497 [A]		1
16	30H-50	CLAMP	'Not in Kit - Used in factory option only		1
17	6732023	CONNECTOR	Not in Kit - Used in factory option only		1
18	5HM-20	CLAMP	Not in Kit - Used in factory option only		2
19	84G-3712	BOLT	Not in Kit - Used in factory option only		1

HORN KIT

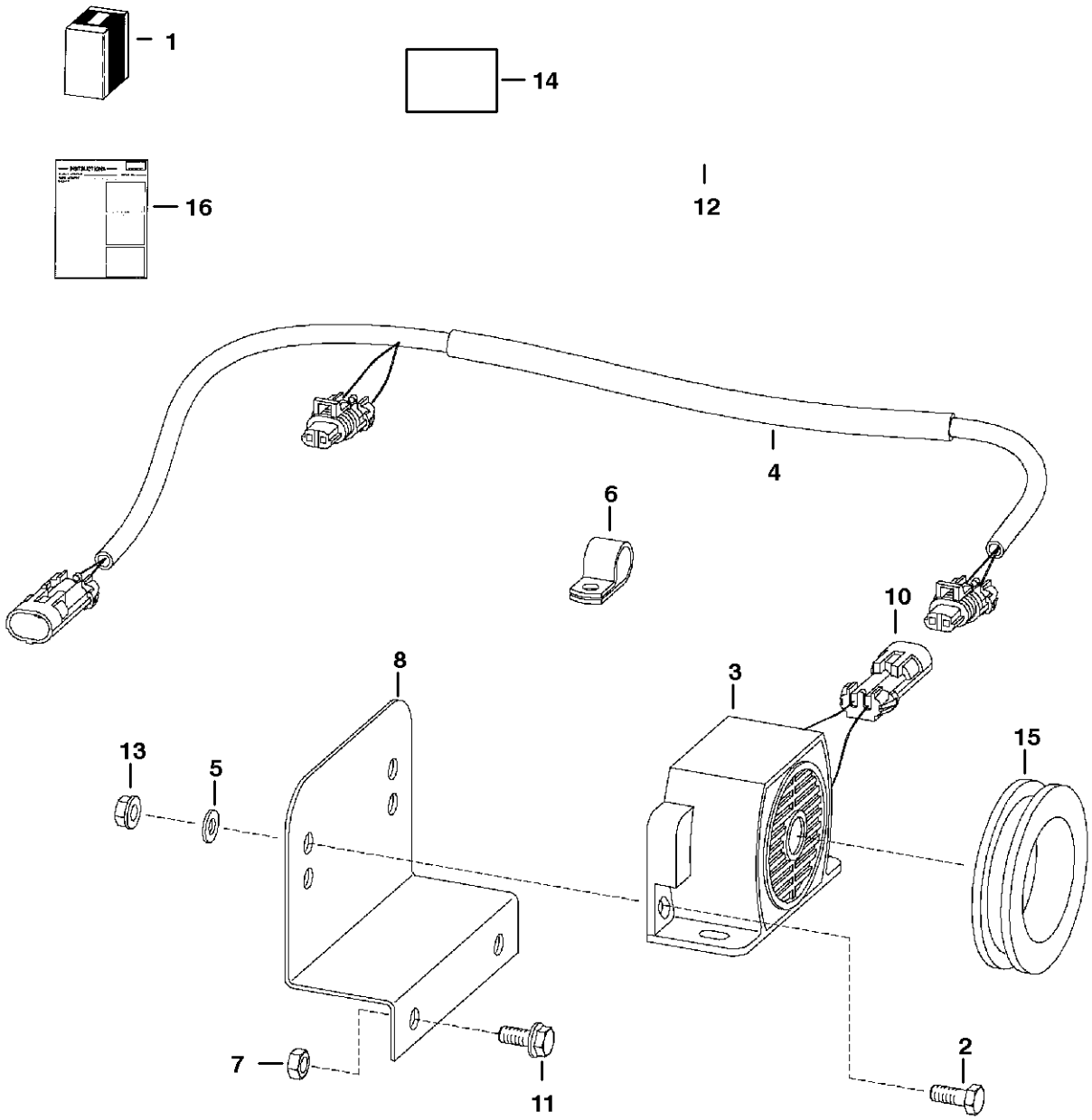

HORN KIT

Ref.N°	Part N°	Description	Remarks	Serial N°	Qty.
1	6719043	HORN KIT	Ref. HORN KIT(2) - HORN KIT(16)		1
2	17C-410	BOLT			2
3	6675099	HORN			1
4	6719151	HARNESS	56.5'(1435 mm) long		1
5	25E-13	WASHER			1
6	30H-23	CLAMP			1
7	83D-5	NUT	Was 61D-5 [B]		2
8	6707726	MOUNT			1
9	6641180	LOCK	2 - pin		2
9	6640700	LOCK	3 - pin		2
10	6641179	CONNECTOR	2 - pin		2
10	6640699	CONNECTOR	3 - pin		2
11	35C-512	BOLT			2
12	6705921	HANDLE ASSY.			1
12	6640690	PIN			5
12	6641176	SEAL			5
13	83D-4	NUT			2
14	6703727	DECAL			1
15	6577545	GROMMET			1
16	6900913	INSTRUCTIONS			1

LIFT KIT
(Four Point)

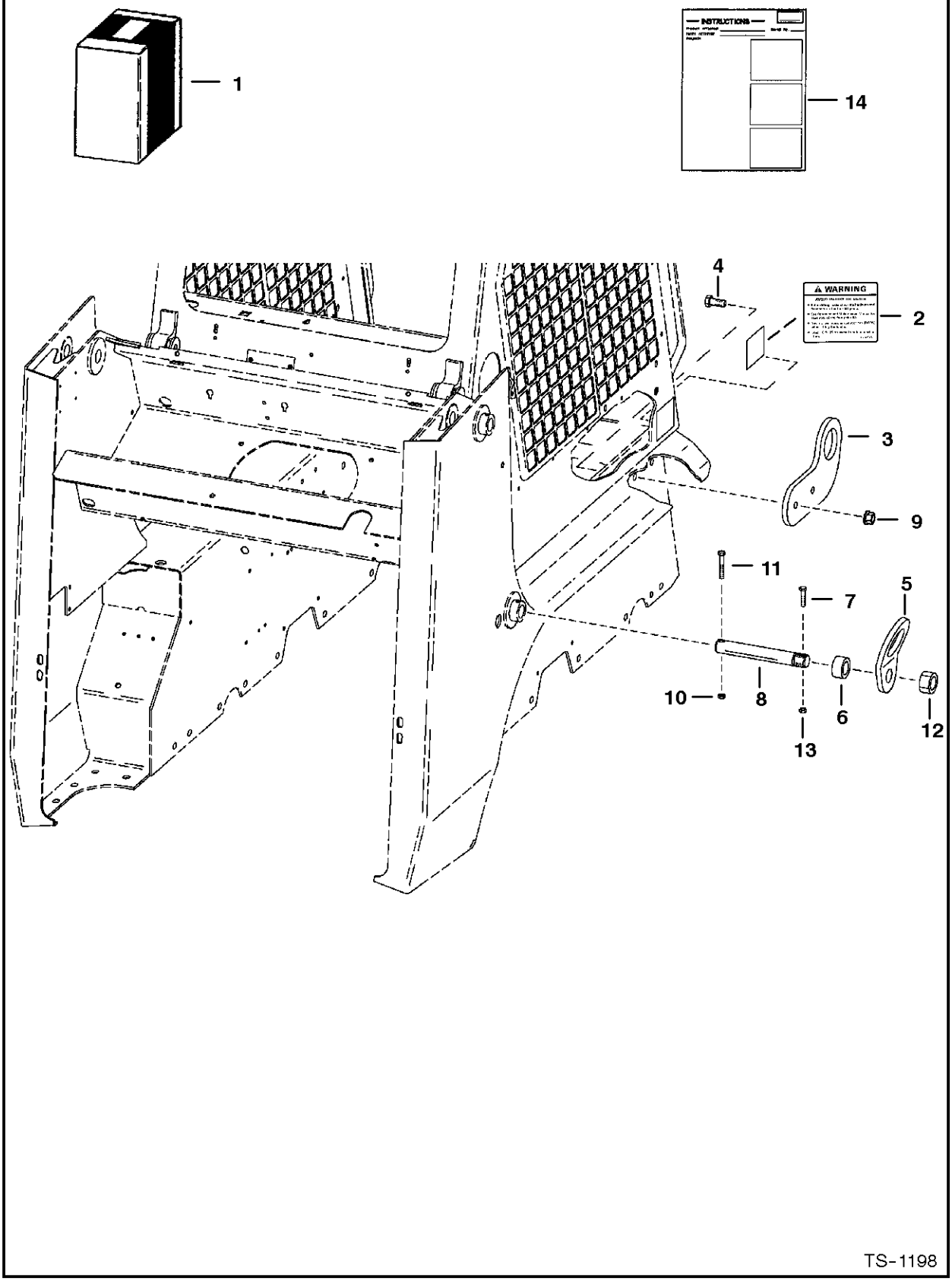

LIFT KIT

Ref.N°	Part N°	Description	Remarks	Serial N°	Qty.
1	6725224	KIT	Ref. LIFT KIT(2) - LIFT KIT(14)		1
2	6726423	DECAL	Was 6702916 [A]		2
3	6719490	LIFT EYE	front		2
4	17C-1028	BOLT			4
5	6706825	LIFT EYE	rear		2
6	6702921	SPACER	1.00' thick - 751 & 753		2
6	6719906	SPACER	.70' thick - 763		2
7	17C-540	BOLT			2
8	6706807	PIN			2
9	83D-10	NUT			4
10	85D-6	NUT	Not in Kit		2
11	17C-640	BOLT	Not in Kit		2
12	4D-20	NUT			2
13	87D-5	NUT			2
14	6722872	INSTRUCTIONS			1

LIFT KIT
(Single Point)

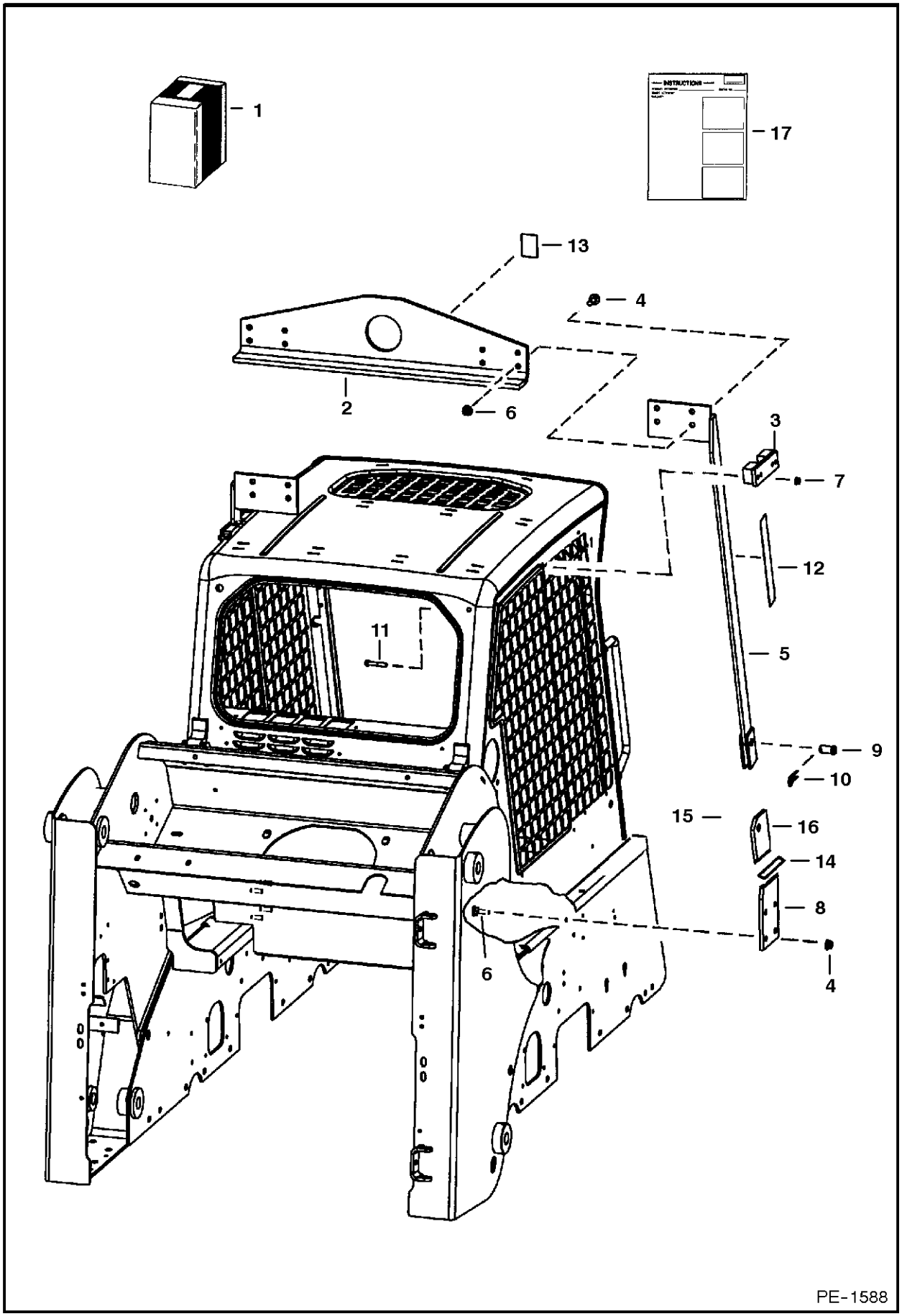

LIFT KIT

Ref.N°	Part N°	Description	Remarks	Serial N°	Qty.
1	6719323	KIT	Ref. LIFT KIT(2) - LIFT KIT(17)		1
2	6567827	ANGLE			1
3	6719184	BRACKET	L.H.		1
3	6719185	BRACKET	R.H.		1
4	31C-824	BOLT		& Bel	12
4	31C-824	BOLT		& Abv	16
5	NAP	BRACKET	R.H. - Was 6704146 [A]	& Bel	1
5	6725299	BRACKET	R.H.	& Abv	1
5	NAP	BRACKET	L.H. - Was 6704147 [A]	& Bel	1
5	6725300	BRACKET	L.H.	& Abv	1
6	57D-8	NUT			12
7	57D-6	NUT			8
8	6704149	BRACKET			2
9	6567838	PIN			2
10	1320075	COTTER PIN			2
11	17C-632	BOLT			8
12	6704786	DECAL	warning		2
13	6533898	DECAL	hook		1
14	NAP	SPACER	Was 6719324 [A]	& Bel	2
15	31C-844	BOLT	Was 31C-841 [B]	& Bel	4
16	NAP	BRACKET	Was 6704151 [A]	& Bel	2
16	6725297	BRACKET		& Abv	2
17	6900888	INSTRUCTIONS			1

LIGHT KIT

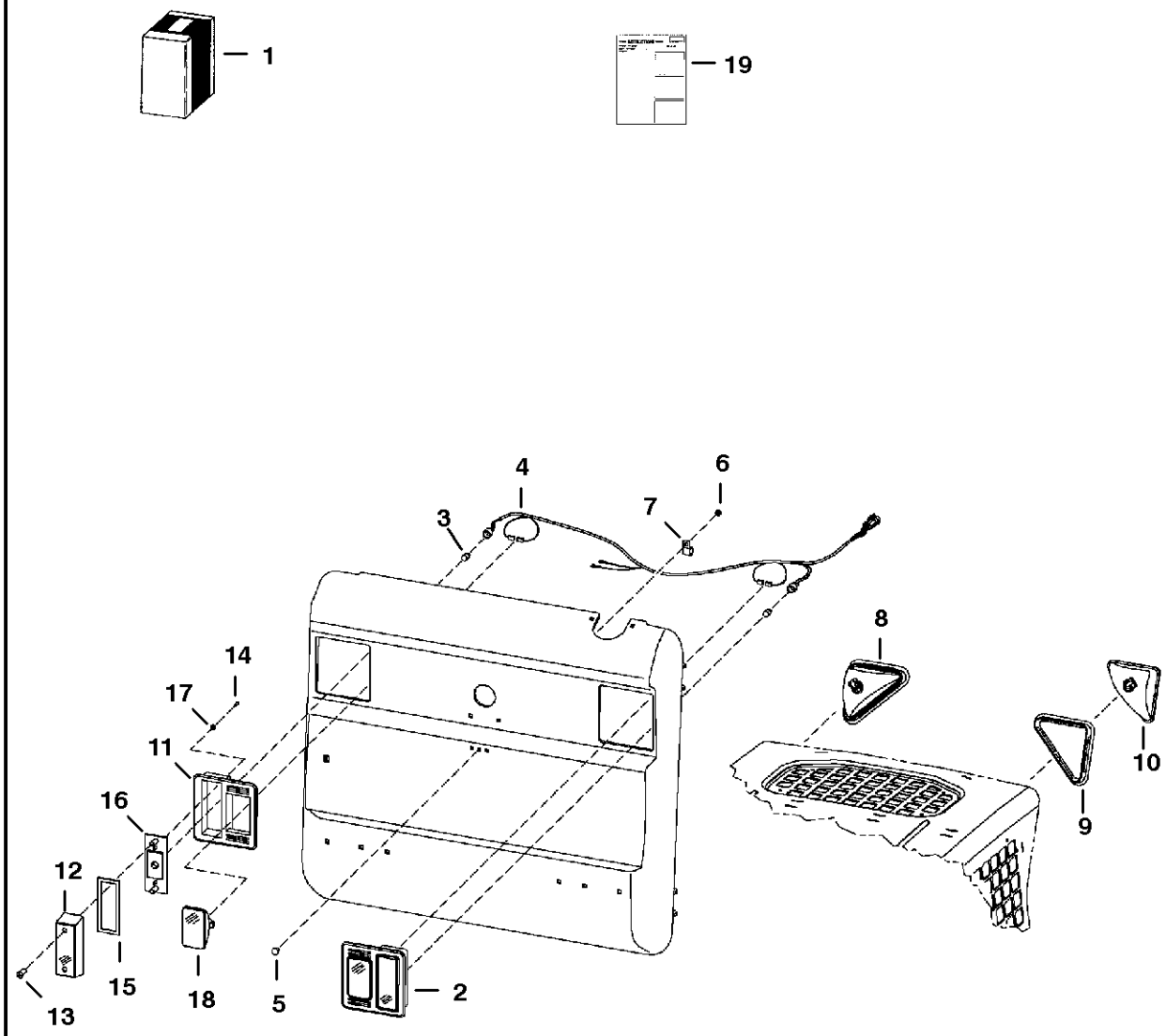

LIGHT KIT

Ref.N°	Part N°	Description	Remarks	Serial N°	Qty.
1	NAP	KIT			1
2	6670284	LIGHT	rear		2
3	6649481	BULB			2
4	6716419	HARNESS			1
5	37C-512	BOLT			1
6	85D-5	NUT			1
7	30H-42	CLAMP			1
8	NAP	LIGHT ASSY	R.H. - Ref. LIGHT KIT(9) & LIGHT KIT(10)		1
8	NAP	LIGHT ASSY	L.H. - Ref. LIGHT KIT(9) & LIGHT KIT(10)		1
9	6674401	HOUSING	R.H.		1
9	6675336	BULB	55 watt		1
9	6674400	HOUSING	L.H.		1
9	6675336	BULB	55 watt		1
10	6674402	MOUNT			1
11	6672279	MOUNT	rubber		2
12	6672276	LENS	red		2
13	6672274	SCREW			4
14	6672273	SCREW			2
15	6672275	GASKET			2
16	6672277	BRACKET			2
17	6672272	WASHER			4
18	6661353	LIGHT ASSY	W/bulb - white		2
18	898731	LIGHT BULB			2
19		INSTRUCTIONS			1

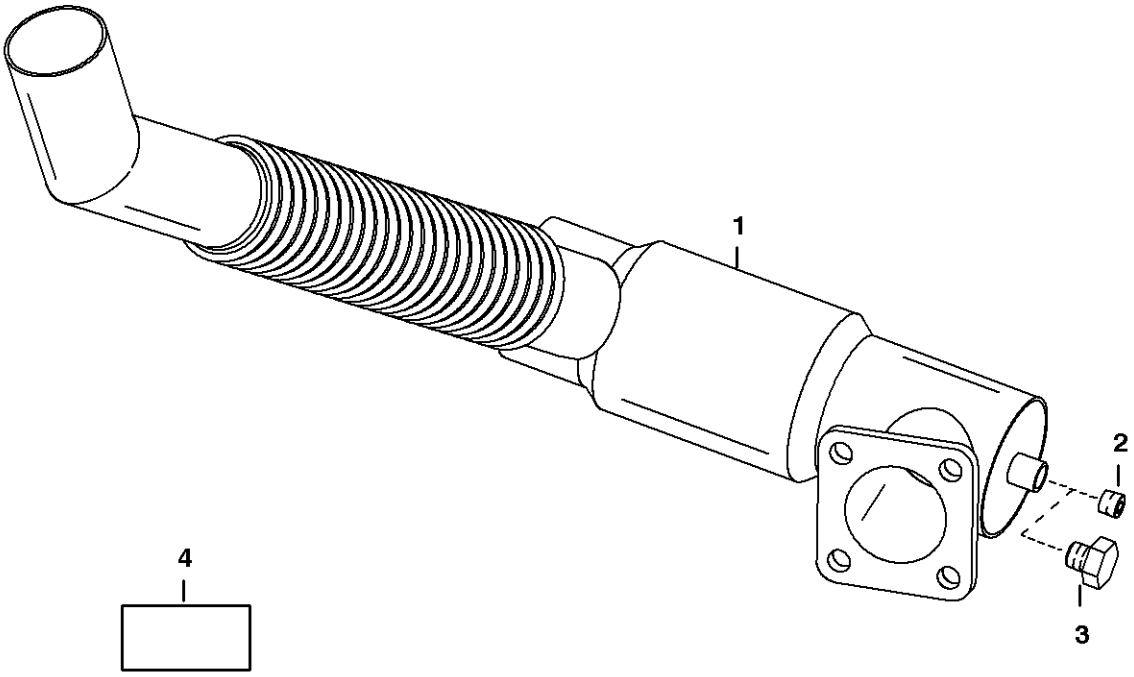

TS-1130

MUFFLER/PURIFIER KIT

Ref.N°	Part N°	Description	Remarks	Serial N°	Qty.
1	6661616	MUFFLER	W/Ref. MUFFLER/PURIFIER KIT(2)		1
2	NAP	PLUG	1/8' brass Allen Head - Order Ref. MUFFLER/PURIFIER KIT(3)		1
3	6659543	PLUG	1/8' brass - hex head		1
4	6667573	DECAL			1

RADIATOR SCREEN KIT

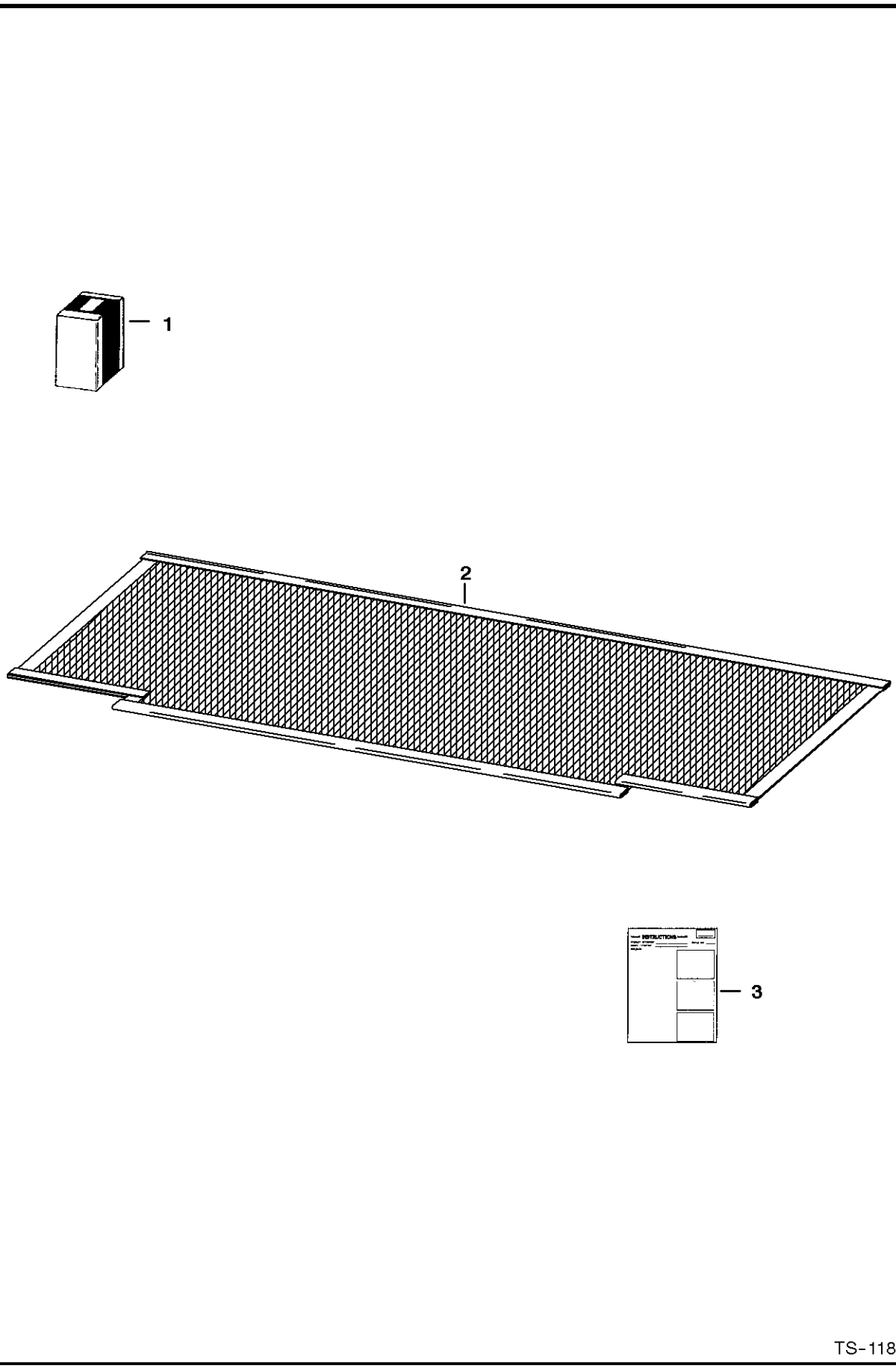

RADIATOR SCREEN KIT

Ref.N°	Part N°	Description	Remarks	Serial N°	Qty.
1	6706939	KIT	Ref. RADIATOR SCREEN KIT(2) & RADIATOR SCREEN KIT(3)		1
2	6706285	SCREEN			1
3	6722861	INSTRUCTIONS			1

REAR AUXILIARY KIT

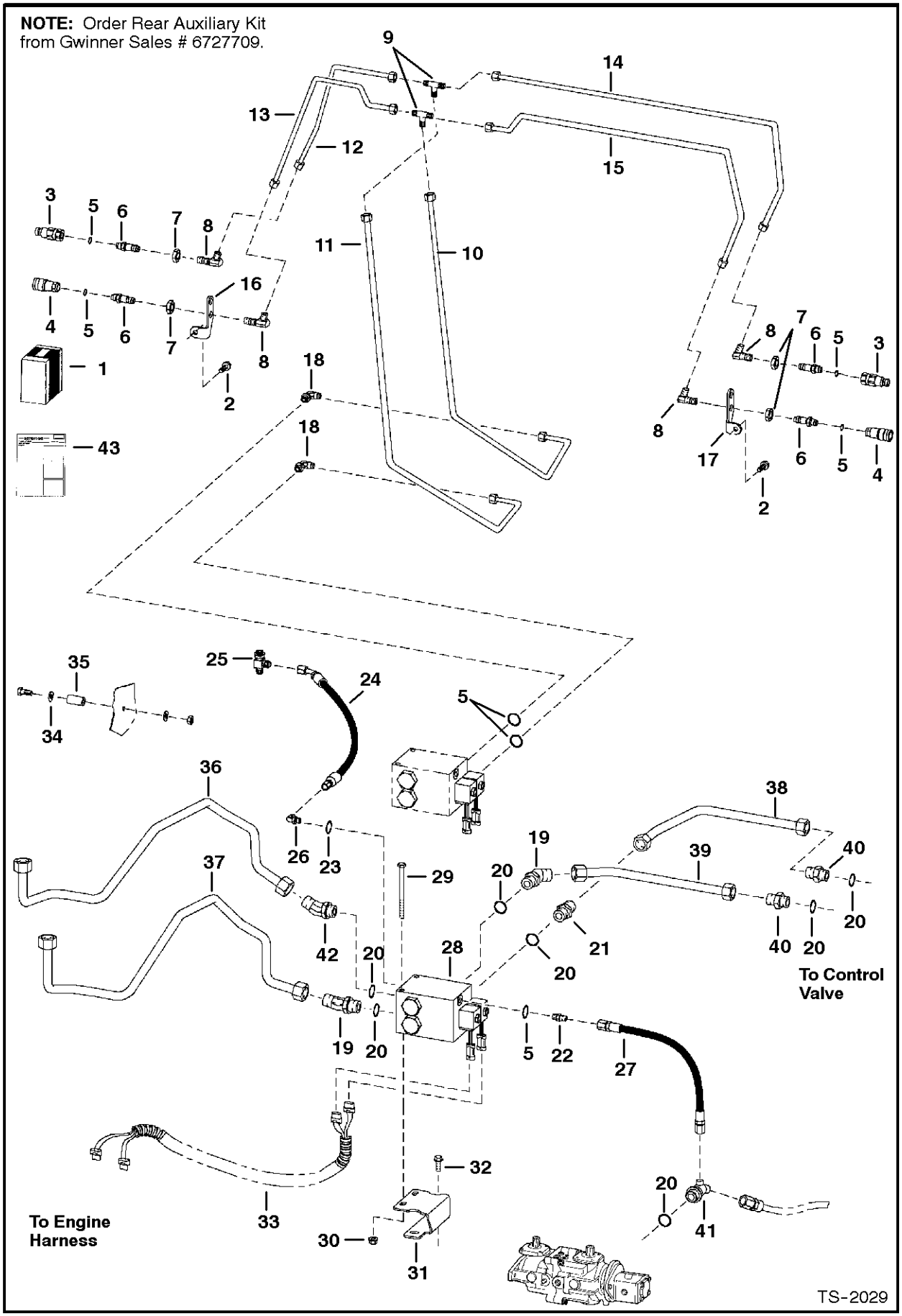

REAR AUXILIARY KIT

Ref.N°	Part N°	Description	Remarks	Serial N°	Qty.
1	SALES	KIT	Ref. REAR AUXILIARY KIT(2)-REAR AUXILIARY KIT(39), REAR AUXILIARY KIT(42) & REAR AUXILIARY KIT(43) - SEE NOTE		1
2	84G-3712	BOLT			2
3	6667804	QUICK COUPLER	male		2
3	6669657	O-RING			x
4	6667803	QUICK COUPLER	female		2
5	99K-6	O-RING	tapered boss face		x
6	6706633	CONNECTOR	W/Ref. REAR AUXILIARY KIT(5)		4
7	86F-5	NUT			4
8	88FN-5	ELBOW	W/Ref. REAR AUXILIARY KIT(5)		4
9	10KN-5	TEE	W/ O-rings		2
9	97K-6	O-RING	flared end		2
10	6719950	TUBE			1
11	6719949	TUBE			1
12	6707870	TUBE			1
13	6707869	TUBE			1
14	6707872	TUBE			1
15	6707871	TUBE			1
16	6707822	MOUNT			1
17	6707823	MOUNT			1
18	17KV-5	ELBOW	W/Ref. REAR AUXILIARY KIT(5) - tapered boss face		2
18	97K-6	O-RING	flared end		2
19	18KV-8	ELBOW	W/Ref. REAR AUXILIARY KIT(20) - tapered boss face		2
19	97K-12	O-RING	flared end		2
20	99K-12	O-RING	tapered boss face		x
21	15KV-8	ADAPTER	W/Ref. REAR AUXILIARY KIT(20)		1
22	15KV-5	ADAPTER	W/Ref. REAR AUXILIARY KIT(5) - tapered boss face		1
22	97K-6	O-RING	flared end		1
23	79K-4	O-RING			x
24	6725365	HOSE			1
25	21KV-5	TEE	existing - See Page HYDROSTATIC CIRCUITRY(1)		1
26	17KV-3	ELBOW	W/Ref. REAR AUXILIARY KIT(23) - tapered boss face		1
26	97K-4	O-RING	flared end		1
27	6713060	HOSE			1
27	6715330	HOSE	Export		1
28		VALVE	See Page REAR AUXILIARY VALVE(1)		1
29	17C-680	BOLT			2
30	83D-6	NUT			2
31	6725081	MOUNT			1
32	84G-3716	BOLT			4
33	6710870	HARNESS			1
34	27E-6	WASHER			1
35	6714428	SPACER			1
36	6719945	TUBE			1
37	6719946	TUBE			1
38	6719947	TUBE			1
39	6719948	TUBE			1
40		ADAPTER	existing - W/Ref. REAR AUXILIARY KIT(20)		2
41	6706144	CONNECTOR	cross		1

REAR AUXILIARY KIT

Ref.N°	Part N°	Description	Remarks	Serial N°	Qty.
41	6700599	ELBOW	Export		1
42	17KV-8	ELBOW	W/Ref. REAR AUXILIARY KIT(20) - tapered boss face		2
42	97K-12	O-RING	flared end		2
43	6901222	INSTRUCTIONS	Was 6901004 [A]		1

REAR AUXILIARY KIT
(High Flow Hydraulics) (W/ FF Couplers)

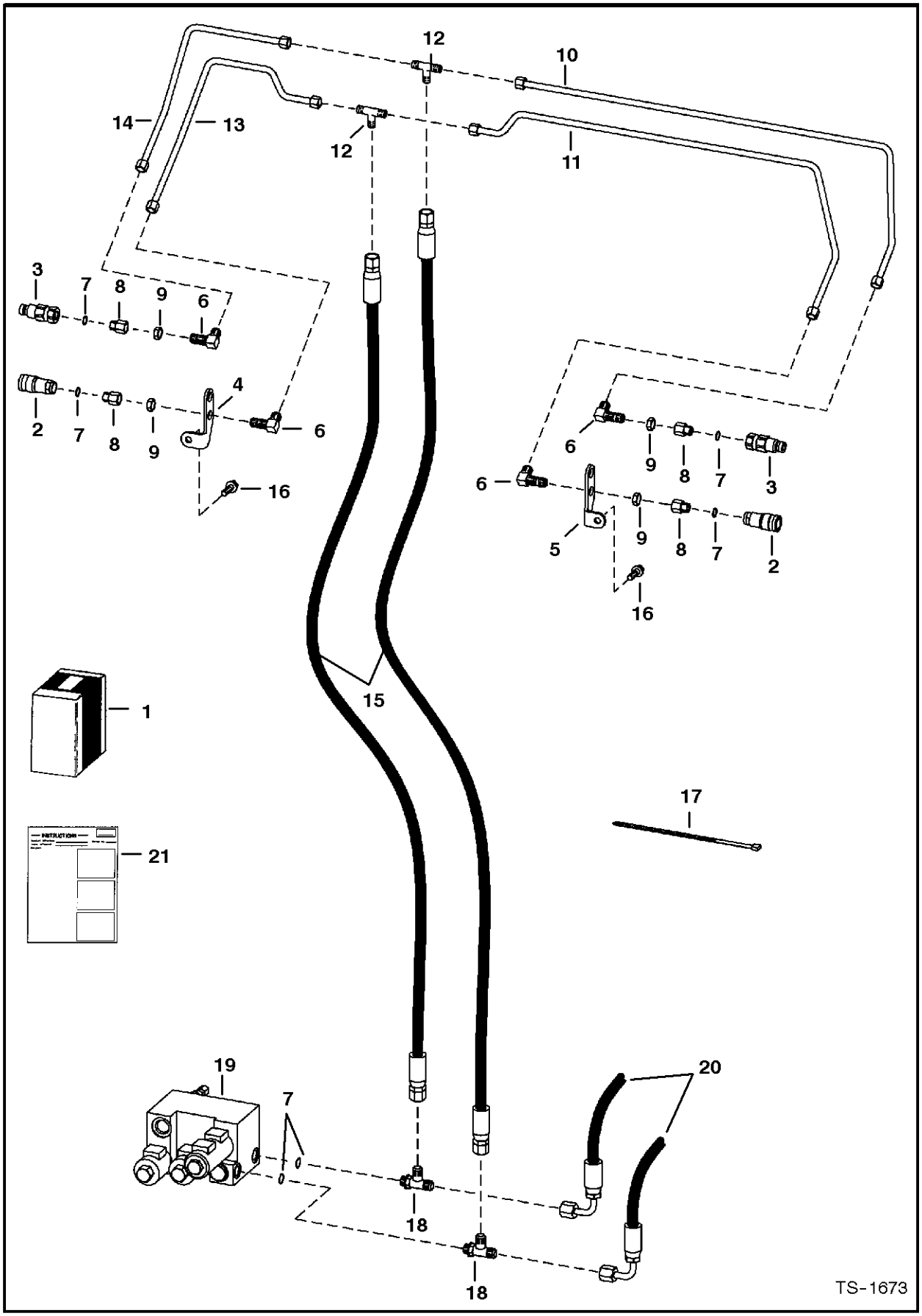

REAR AUXILIARY KIT

Ref.N°	Part N°	Description	Remarks	Serial N°	Qty.
1	SALES	KIT	'Ref. REAR AUXILIARY KIT(2)-REAR AUXILIARY KIT(20) & REAR AUXILIARY KIT(21)		1
2	6667803	QUICK COUPLER	female		2
3	6667804	QUICK COUPLER	male		2
3	6669657	O-RING			x
4	6707822	MOUNT			1
5	6707823	MOUNT			1
6	88F-5	ELBOW			4
7	79K-6	O-RING			x
8	6706633	CONNECTOR	W/Ref. REAR AUXILIARY KIT(7)		4
9	86F-5	NUT			4
10	6707872	TUBE			1
11	6707871	TUBE			1
12	10KN-5	TEE			2
13	6707869	TUBE			1
14	6707870	TUBE			1
15	6719809	HOSE			2
16	84G-3712	BOLT			2
17	6624289	STA-STRAP			2
18	21KV-5	TEE	W/Ref. REAR AUXILIARY KIT(7) - tapered boss face		2
18	97K-6	O-RING	flared end		2
19		VALVE	Not in Kit - See Page REAR AUXILIARY VALVE(1)		1
20		HOSE	existing hoses		1
21	6724385	INSTRUCTIONS			1

REAR AUXILIARY VALVE
(For Use W/FF Couplers)

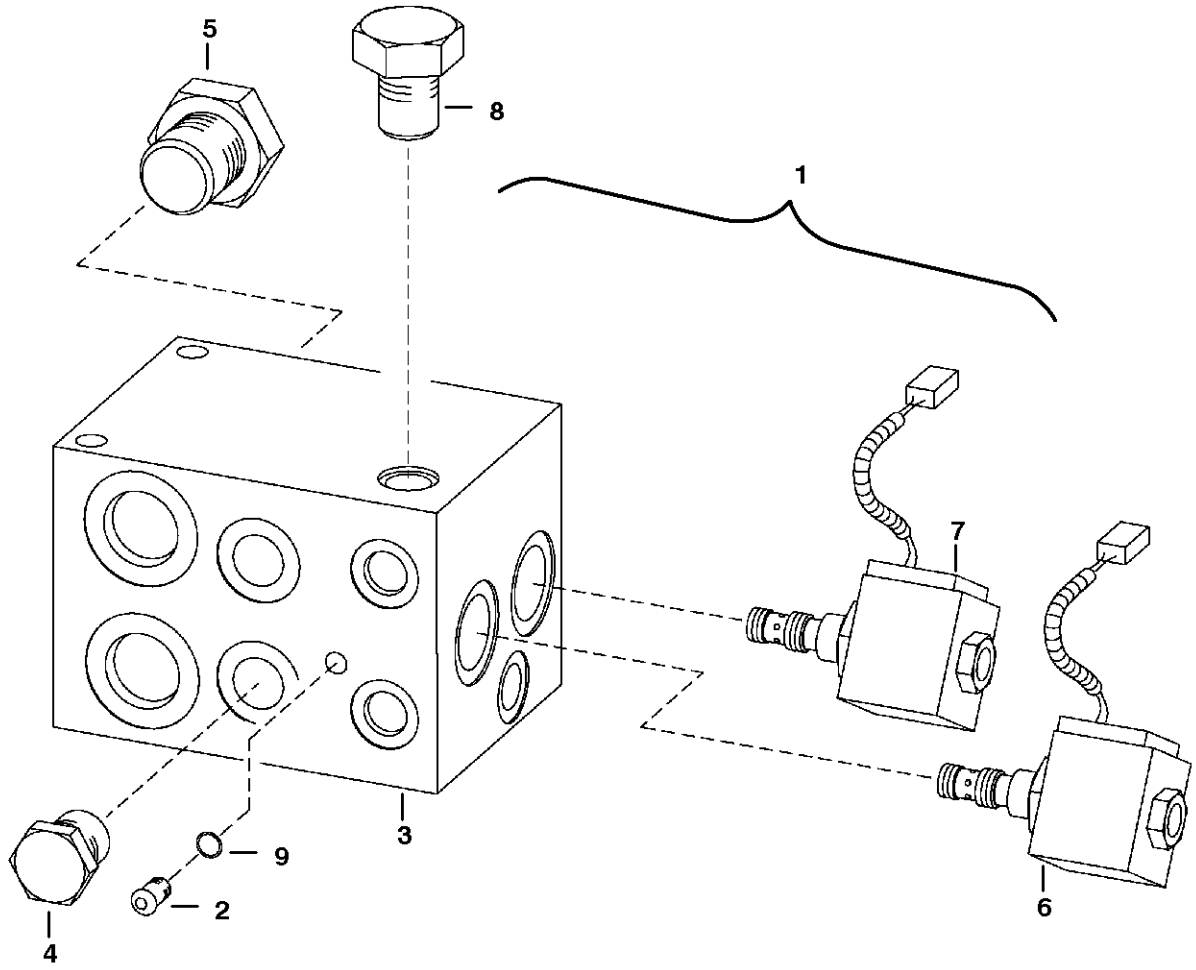

TS-1362

REAR AUXILIARY VALVE

Ref.N°	Part N°	Description	Remarks	Serial N°	Qty.
1	NAP	VALVE	diverter - silver - rear pressure 'release function -Was 6665572 [A]		1
1	6675073	VALVE	diverter - gold - front & rear pressure release function		1
2	6653490	PLUG	W/Ref. REAR AUXILIARY VALVE(9) - For Ref. REAR AUXILIARY VALVE(1) (NAP/ 6665572inD1}- Valve)		18
2	6676152	PLUG	W/Ref. REAR AUXILIARY VALVE(9) - For Ref. REAR AUXILIARY VALVE(1) (6675073inD1}1 Valve)		27
3	NSS	BODY			1
4	6664212	CHECK VALVE			2
4	6653487	SEAL KIT			2
5	6653484	VALVE			2
5	6653485	SEAL KIT			2
6	6669218	VALVE	solenoid - W/Connector		1
6	6669190	COIL	For Ref. REAR AUXILIARY VALVE(1) (NAP/6665572inD1}- Valve)		1
6	6676151	COIL	For Ref. REAR AUXILIARY VALVE(1) (6675073inD1} 1 Valve)		1
6	6669188	STEM			1
6	6669217	SEAL KIT			1
7	6669219	VALVE	solenoid - W/Connector		1
7	6669190	COIL			1
7	6669189	STEM			1
7	6669216	SEAL KIT			1
8	6669187	VALVE			1
8	6653487	SEAL KIT			1
9	79K-2	O-RING			x

REAR DOOR LOCK

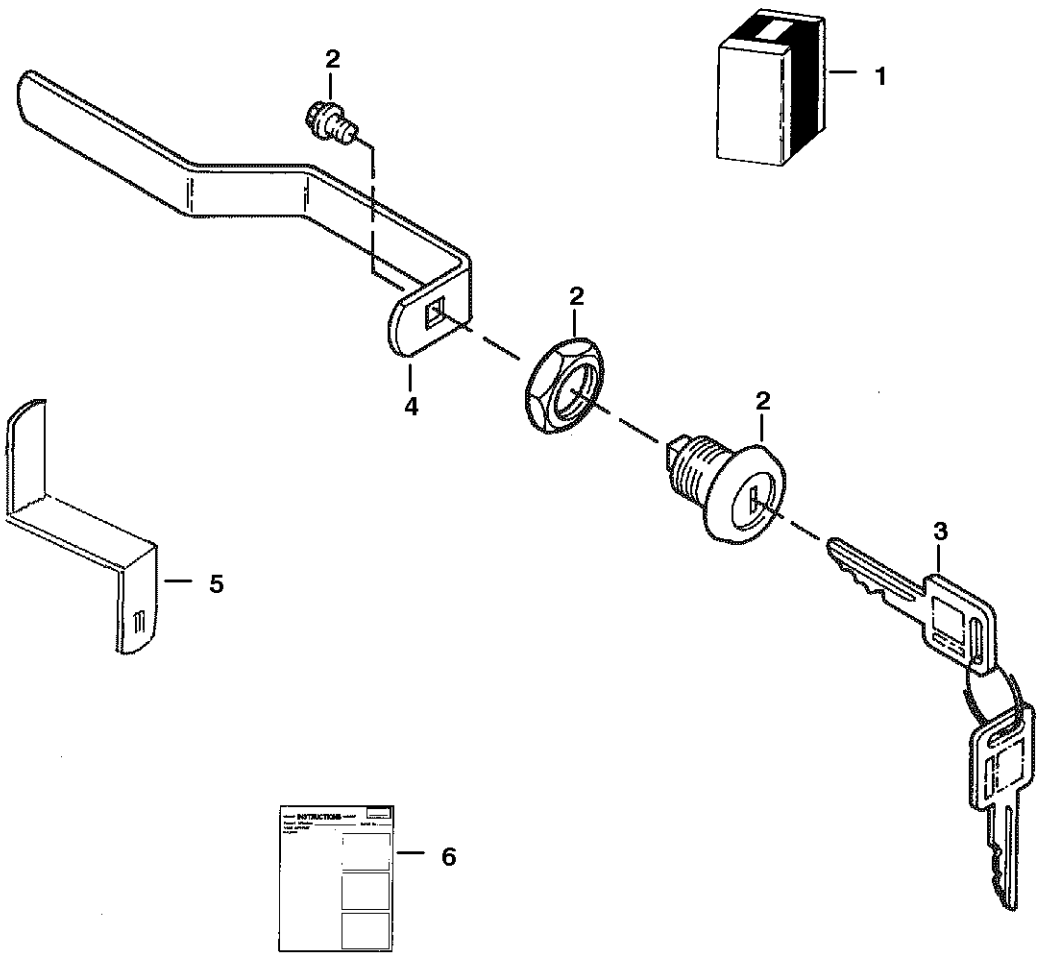

REAR DOOR LOCK

Ref.N°	Part N°	Description	Remarks	Serial N°	Qty.
1	6732001	KIT	lock - Ref. REAR DOOR LOCK(2)-REAR DOOR LOCK(6) - Was 6714973 [A]		1
2	6670726	LOCK			1
3	6709527	KEY	ignition		1
4	6714037+	LATCH	Use W/6711524inD1} Rear Door		1
5	6729688	LATCH	Use W/6729991inD1}~ Rear Door		1
6	6901656	INSTRUCTIONS	Was 6570762 [A]		1

SEAT
(Suspension - Sears)

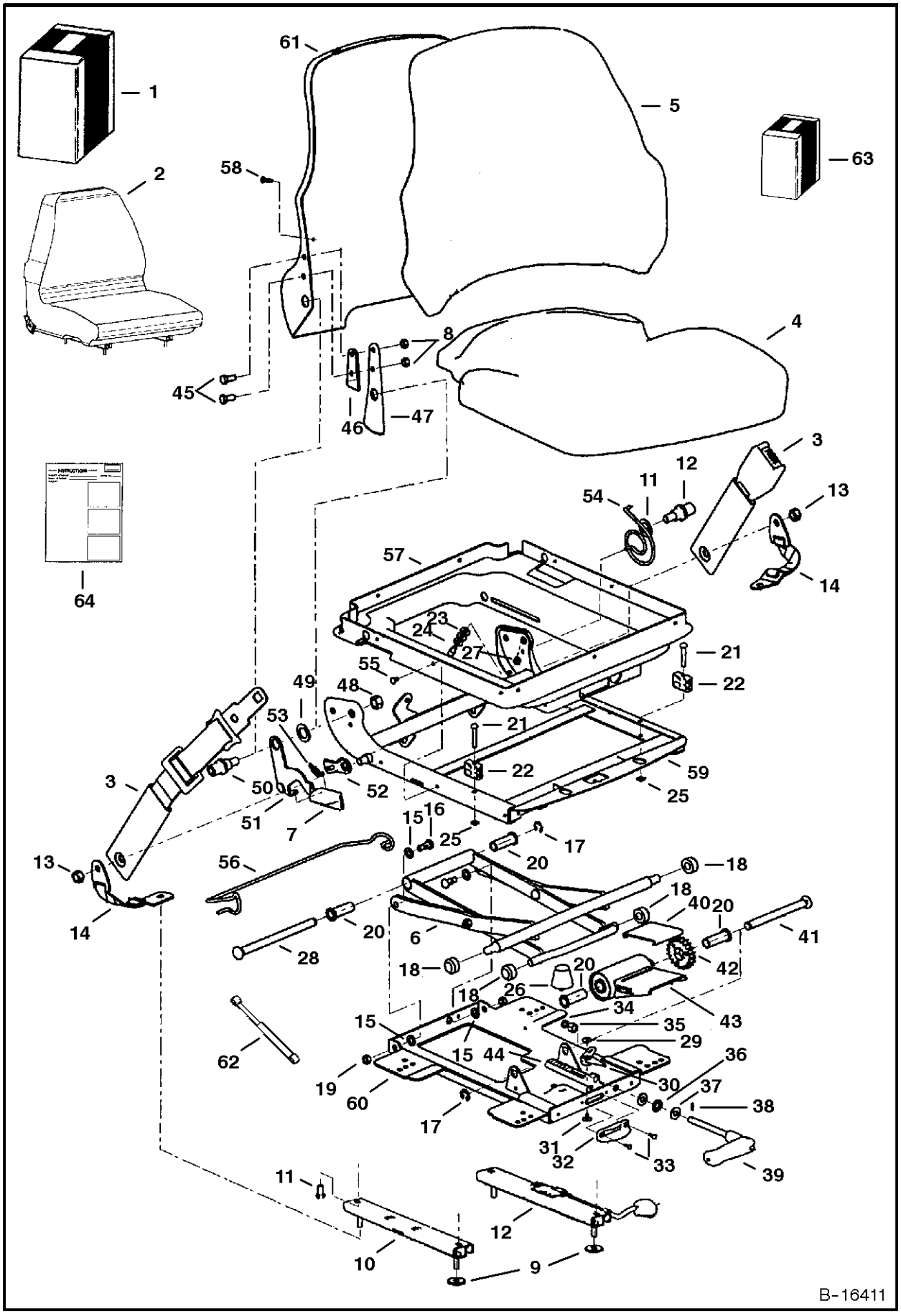

SEAT

Ref.N°	Part N°	Description	Remarks	Serial N°	Qty.
1	NAP	KIT	vinyl seat - Order Ref. SEAT(2), SEAT(3) & SEAT(64) - Was 6718868 [A]		1
1	NAP	KIT	fabric seat - Order Ref. SEAT(2), SEAT(3) & SEAT(64) - Was 6718869 [A]		1
2	NAP	SEAT	vinyl - W/Ref. SEAT(4) - SEAT(61) - W/R.H. recliner lever - Order 6675595inD1}v Seat - Was 6674896 [A]		1
2	6675595	SEAT	vinyl - W/Ref. SEAT(4) - SEAT(61) - W/L.H. recliner lever		1
2	NAP	SEAT	fabric - W/Ref. SEAT(4) - SEAT(61) - W/R.H. recliner lever - Order 6675596inD1}t Seat - Was 6674404 [A]		1
2	6675596	SEAT	fabric - W/Ref. SEAT(4) - SEAT(61) - W/L.H. recliner lever		1
3	6675170	SEAT BELT	lap		1
4	6675320	SEAT	seat - fabric		1
4	6675322	SEAT	seat - vinyl		1
5	6675319	SEAT	backrest - fabric - W/Ref. SEAT(58)		1
5	6675321	SEAT	backrest - vinyl - W/Ref. SEAT(58)		1
6	6675317	SCISSORS			1
7	6675323	KNOB	recliner		1
8	NSS	NUT			6
9	619021	WASHER			2
10	NSS	SLIDE	slave		1
11	NSS	BOLT			4
12	NSS	SLIDE	locking		1
13	NSS	NUT			2
14	NSS	BELT	tether		2
15	NSS	WASHER	cross pivot		4
16	NSS	BOLT	pivot		2
17	NSS	RING	retaining		2
18	NSS	ROLLER			4
19	NSS	NUT			2
20	NSS	BUSHING	weight adjustment		4
21	NSS	RIVET			2
22	NSS	BLOCK	up stop		2
23	NSS	WASHER			3
24	NSS	STOP	armrest		1
25	NSS	PUSHNUT			2
26	NSS	BUMPER			1
27	NSS	NUT			1
28	NSS	SHAFT	bearing		1
29	NSS	RIVET	female snap		1
30	NSS	INDICATOR	weight		1
31	NSS	RIVET	male snap		1
32	NSS	DIAL	weight indicator		1
33	NSS	POP RIVET			2
34	NSS	SPACER			1
35	NSS	NUT			1
36	NSS	BEARING	thrust		1
37	NSS	RACE	thrust		2
38	NSS	SHEAR PIN			1
39	NSS	HANDLE	weight adjustment		1
40	NSS	PLATE	wear		1

SEAT

Ref.N°	Part N°	Description	Remarks	Serial N°	Qty.
41	NSS	SHAFT	torsion		1
42	NSS	DRIVE GEAR			1
43	NSS	BUSHING	torsion		1
44	NSS	RACK	weight adjustment		1
45	NSS	BOLT			2
46	NSS	SPACER	recliner		1
47	NSS	BRACKET	back tilt		1
48	NSS	NUT			2
49	NSS	WASHER	plastic		2
50	NSS	BOSS	back pan pivot		2
51	NSS	HANDLE	recliner		1
52	NSS	LATCH	recliner		1
53	NSS	SPRING	extension		1
54	NSS	SPRING	tilt latch		1
55	NSS	CLIP			6
56	NSS	WIRE	boot support		1
57	NSS	SUSPENSION	boot		1
58	NSS	SCREW			2
59	NSS	HOUSING	upper		1
60	NSS	HOUSING	lower		1
61	NSS	BACK PAN			1
62	6676338	GAS SPRING			1
63	6675309	KIT	slides - Ref. SEAT(8) - SEAT(12)		1
63	6675310	KIT	tether belt - Ref. SEAT(9), SEAT(13) & SEAT(14)		1
63	6675311	KIT	suspension rollers & bearings - Ref. SEAT(15) - SEAT(20)		1
63	6675312	KIT	suspension bumpers & stops - Ref. SEAT(21) - SEAT(27)		1
63	6675313	KIT	rear tube - Ref. SEAT(17), SEAT(20) & SEAT(28)		1
63	6675314	KIT	weight adj. indicator - Ref. SEAT(29) - SEAT(33)		1
63	6675315	KIT	weight adj. handle - Ref. SEAT(34) - SEAT(39)		1
63	6675316	KIT	weight adj. - Ref. SEAT(17), SEAT(20) & SEAT(40) - SEAT(44)		1
63	NAP	KIT	R.H. recliner - Ref. SEAT(7), SEAT(8) & SEAT(45) - SEAT(54) - Order 6676034inD1}Q Kit - Was 6675318 [A]		1
63	6676034	KIT	L.H. recliner - Ref. SEAT(7), SEAT(8) & SEAT(45) - SEAT(54)		1
63	6675308	KIT	suspension boot - W/Ref. SEAT(55) - SEAT(57)		1
64	6900861	INSTRUCTIONS			1

SEAT BELT
(Three Point Retractable)

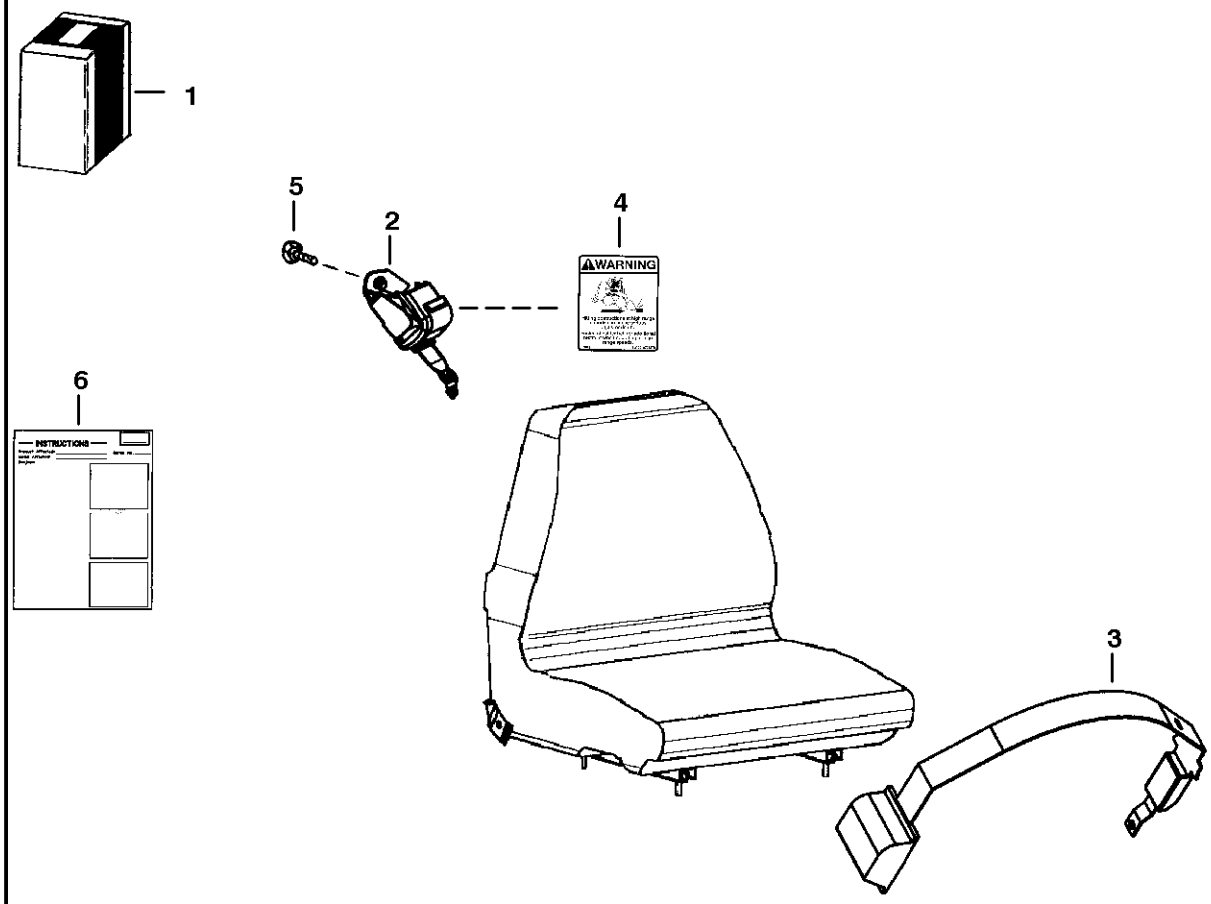

PE-1507

SEAT BELT

Ref.N°	Part N°	Description	Remarks	Serial N°	Qty.
1	6732219	KIT	three point retractable seat belt - - Use W/Sears brand suspension seat W/L.H. reliner lever - See Page SEAT(1) - Was 6725168 [A		1
2	6674407	SHOULDER BELT			1
3	6679308	SEAT BELT	Was 6674408 [A]		1
4	6725370	DECAL			1
5	35C-612	BOLT			1
6	6901010	INSTRUCTIONS			1

SEAT BELT
(3" Wide Retractable)

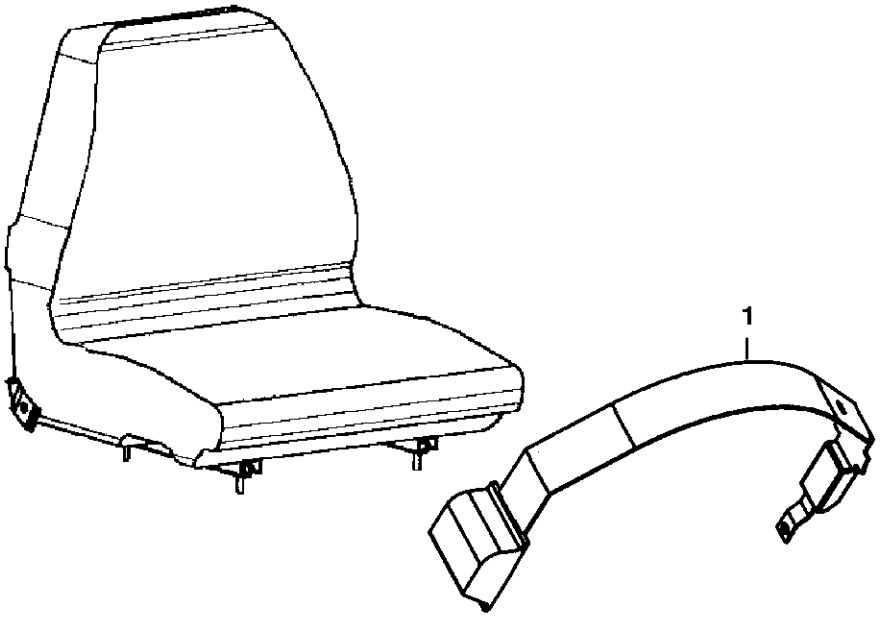

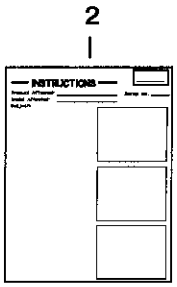

PE-1508

SEAT BELT

Ref.N°	Part N°	Description	Remarks	Serial N°	Qty.
1	6675562	SEAT BELT	3' wide retractable- Use W/Sears brand suspension seat W/L.H. reliner lever - See Page SEAT(1)		1
2	6901011	INSTRUCTIONS			1

SEAT BELT
(3" Wide)

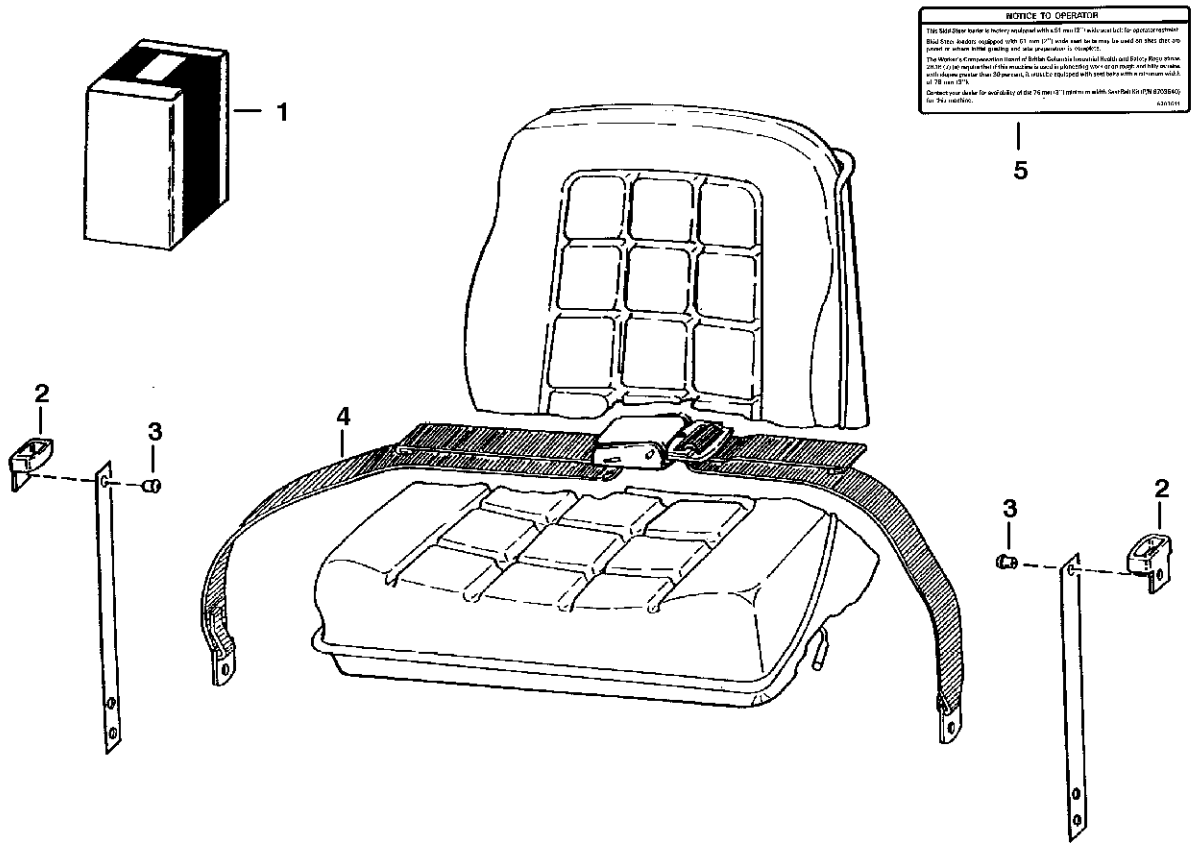

NOTE: Complies with British Columbia Industrial Health and Safety Regulations 26.16 (7) (a).

B-13601

SEAT BELT

Ref.N°	Part N°	Description	Remarks	Serial N°	Qty.
1	6703640	KIT	W/Ref. 2-5		1
2	6703703	GUIDE			2
3	6512797	RIVET			4
4	6659999	BELT			1
5	6703641	DECAL			1

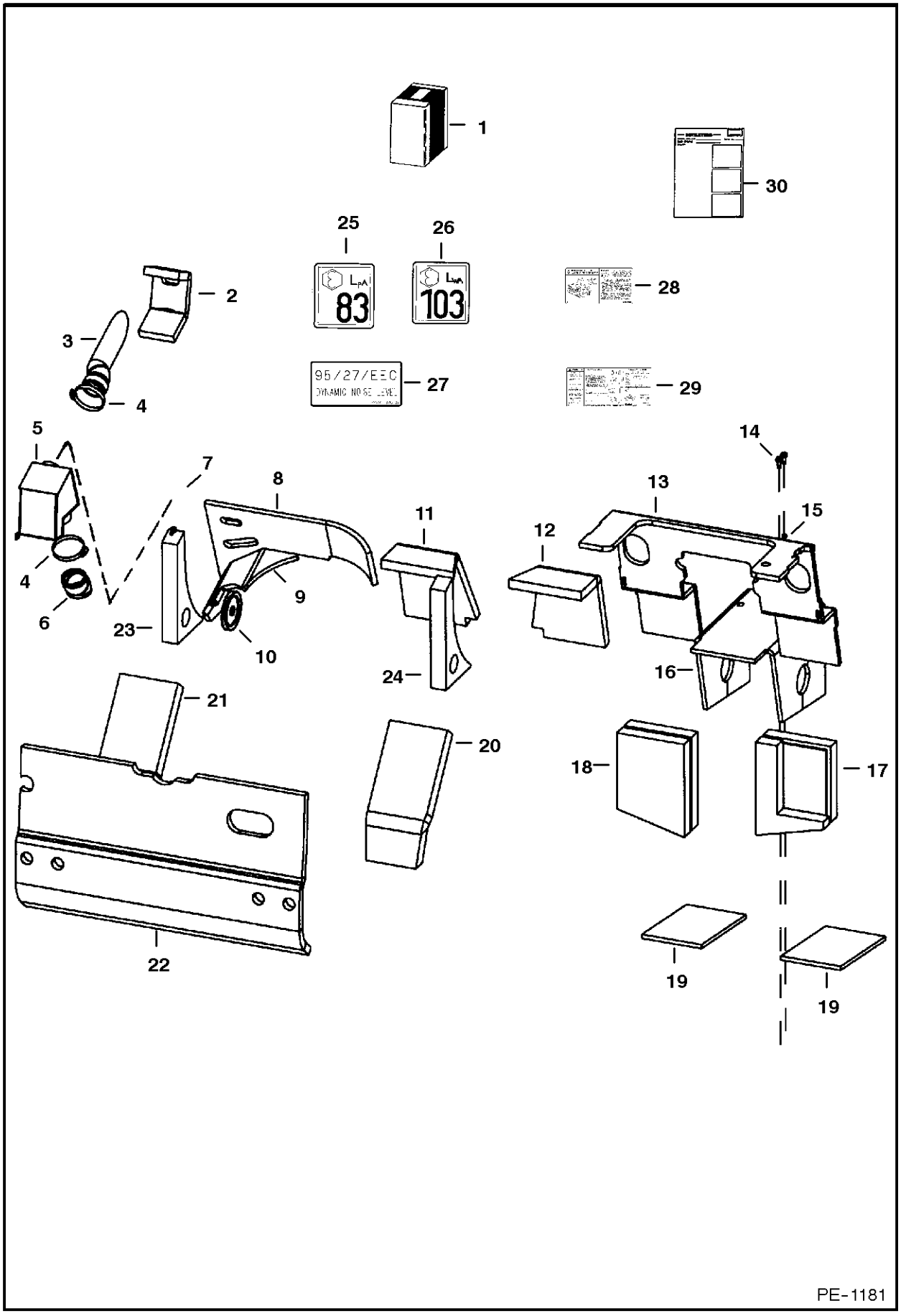
1
30
25
26
2
83
103
28
3
95/27/EEC
27
29
4
5
7
8
11
14
13
15
12
4
6
9
23
10
24
16
21
20
18
17
22
19
19
PE-1181

SOUND KIT

Ref.N°	Part N°	Description	Remarks	Serial N°	Qty.
1	6725364	KIT			1
2	6703331	INSULATION	air inlet		1
3	6715239	HOSE	intake		1
4	42H-52	CLAMP			2
5	6719649	MUFFLER	intake - Was 6715250 [B,D]		1
6	6715240	HOSE	air cleaner		1
7	84G-3112	BOLT			1
8	6719332	INSULATION	blower housing		1
9	6704769	INSULATION	blower housing		1
10	6712970	PULLEY	4.75'(120,7 mm) O.D.		1
10	6712971	PULLEY	5.00'(127 mm) O.D.		1
11	6704721	INSULATION	cross member - L.H.		1
12	6704722	INSULATION	cross member - R.H.		1
13	6719372	INSULATION	steering panel		1
14	84G-3716	BOLT			2
15	6562619	BUSHING			2
16	6715372	INSULATION	pedal		1
17	6725316	INSULATION	transmission		1
18	6705848	INSULATION	transmission		1
19	6715371	INSULATION	transmission		2
20	6705850	INSULATION	brace		1
21	6705849	INSULATION	brace		1
22	6715106	INSULATION	rear door		1
23	6707924	INSULATION	upright		1
24	6707923	INSULATION	upright		1
25	6579399	DECAL	noise level - 83 decibal		1
26	6579403	DECAL	noise level - 103 decibal		1
27	6715428	DECAL	dynamic level		1
28	6709030	DECAL	belt tension idler		1
29	6718398	DECAL	warning/service schedule/parts		1
30	6901003	INSTRUCTIONS			1

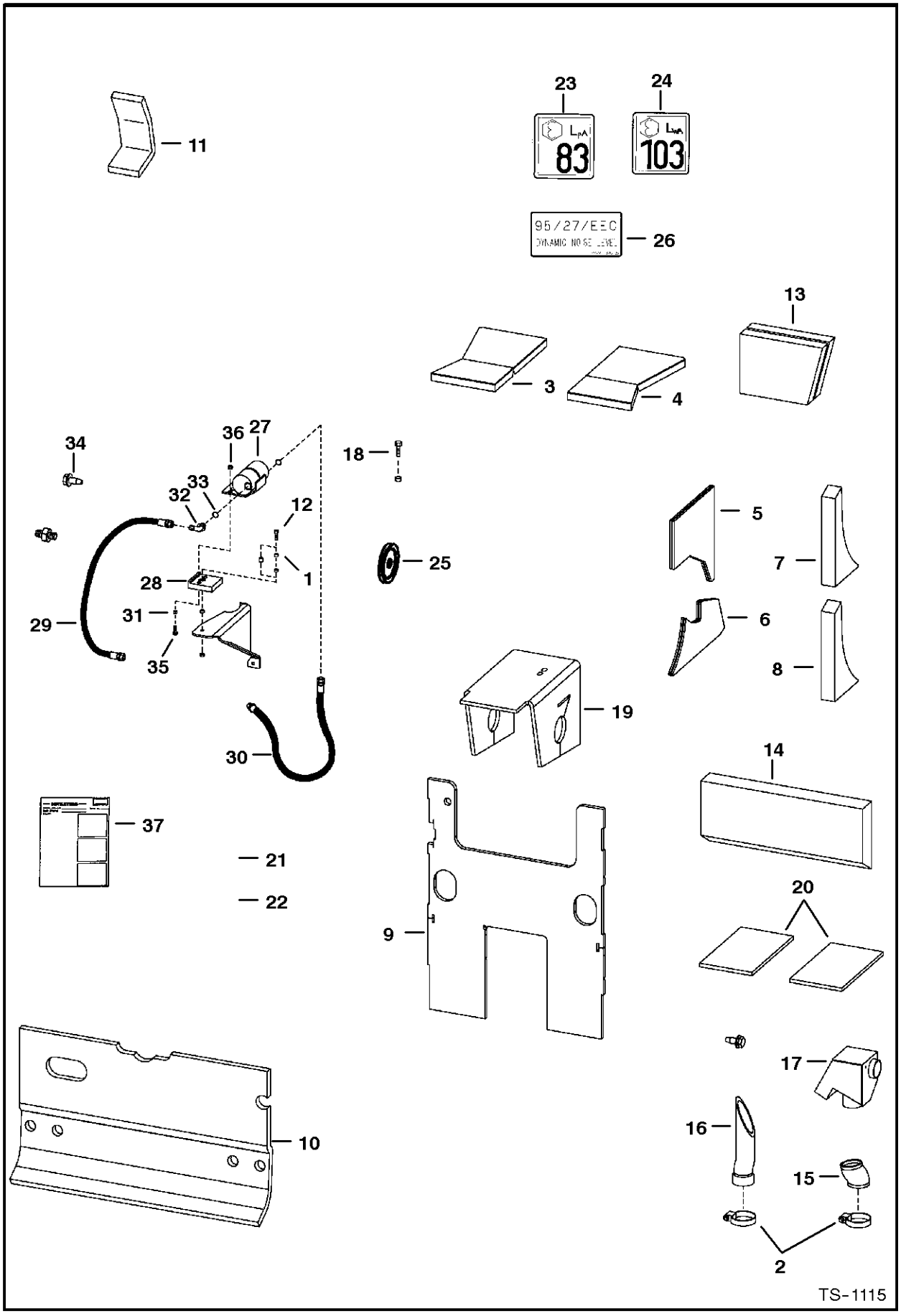
11
23
24
83
103
95/27/EEC
26
13
3
4
34
36
27
18
33
32
12
5
7
25
28
1
29
31
6
8
35
19
30
14
37
21
22
9
20
17
16
15
2
10
TS-1115

SOUND OPTION

Ref.N°	Part N°	Description	Remarks	Serial N°	Qty.
1	6562619	BUSHING			2
2	42H-52	CLAMP			2
3	6704721	INSULATION	cross member - L.H.		1
4	6704722	INSULATION	cross member - R.H.		1
5	6719332	INSULATION	blower housing		1
6	6704769	INSULATION	blower housing		1
7	6707923	INSULATION	upright		1
8	6707924	INSULATION	upright		1
9	6725316	INSULATION	transmission		1
10	6715106	INSULATION	rear door		1
11	6703331	INSULATION	air inlet		1
12	84G-3112	BOLT			1
13	6705848	INSULATION	transmission		2
14	6719372	INSULATION	steering panel		1
15	6715240	HOSE	air cleaner		1
16	6715239	HOSE	intake		1
17	6719649	MUFFLER	intake		1
18	84G-3716	BOLT			2
19	6715371	INSULATION	transmission		1
20	6715372	INSULATION	pedal		1
21	6705849	INSULATION	brace		1
22	6705850	INSULATION	brace		1
23	6579399	DECAL	noise level - 83 decibal		1
24	6579403	DECAL	noise level - 103 decibal		1
25	6712970	PULLEY	4.75'(120,7 mm) O.D.		1
25	6712971	PULLEY	5.00'(127 mm) O.D.		1
26	6715428	DECAL			1
27	6659982	MUFFLER	hyd.		1
28	6705333	MOUNT	rubber		1
29	6729144	HOSE	Was 6707231 [A]		1
30	6729155	HOSE	Was 6714594 [A]		1
31	6715744	BUSHING			1
32	17KV-8	ELBOW	W/Ref.		2
32	97K-12	O-RING	flared end		2
33	99K-12	O-RING			2
34	35C-616	BOLT			2
35	84G-3724	BOLT			1
36	85D-6	NUT			2
37	6901003	INSTRUCTIONS			1

SOUND REDUCTION HARDHAT

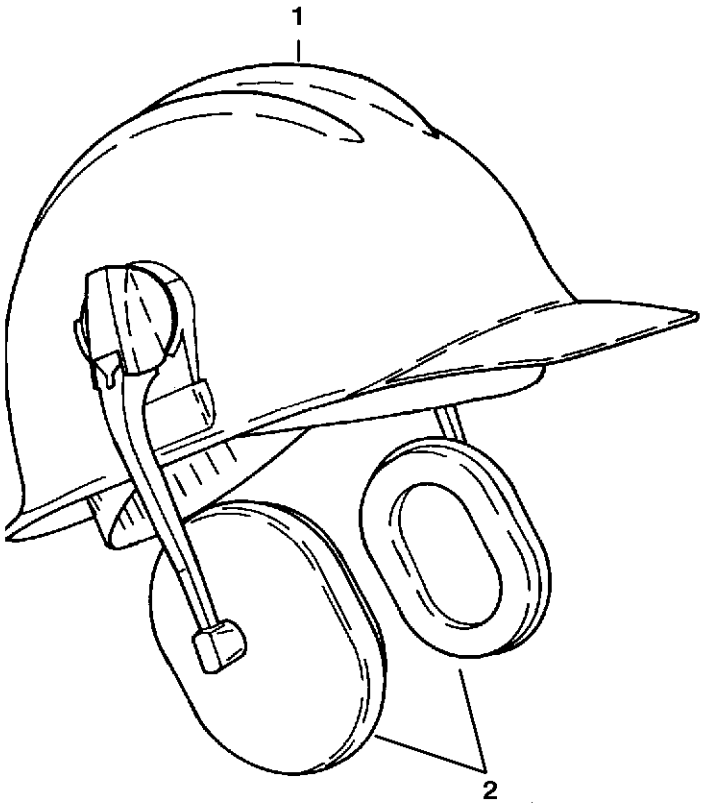

B-3111

SOUND REDUCTION HARDHAT

Ref.N°	Part N°	Description	Remarks	Serial N°	Qty.
1	6559552	HARDHAT			1
2	6559775	EARMUFFS			1

STROBE LIGHT

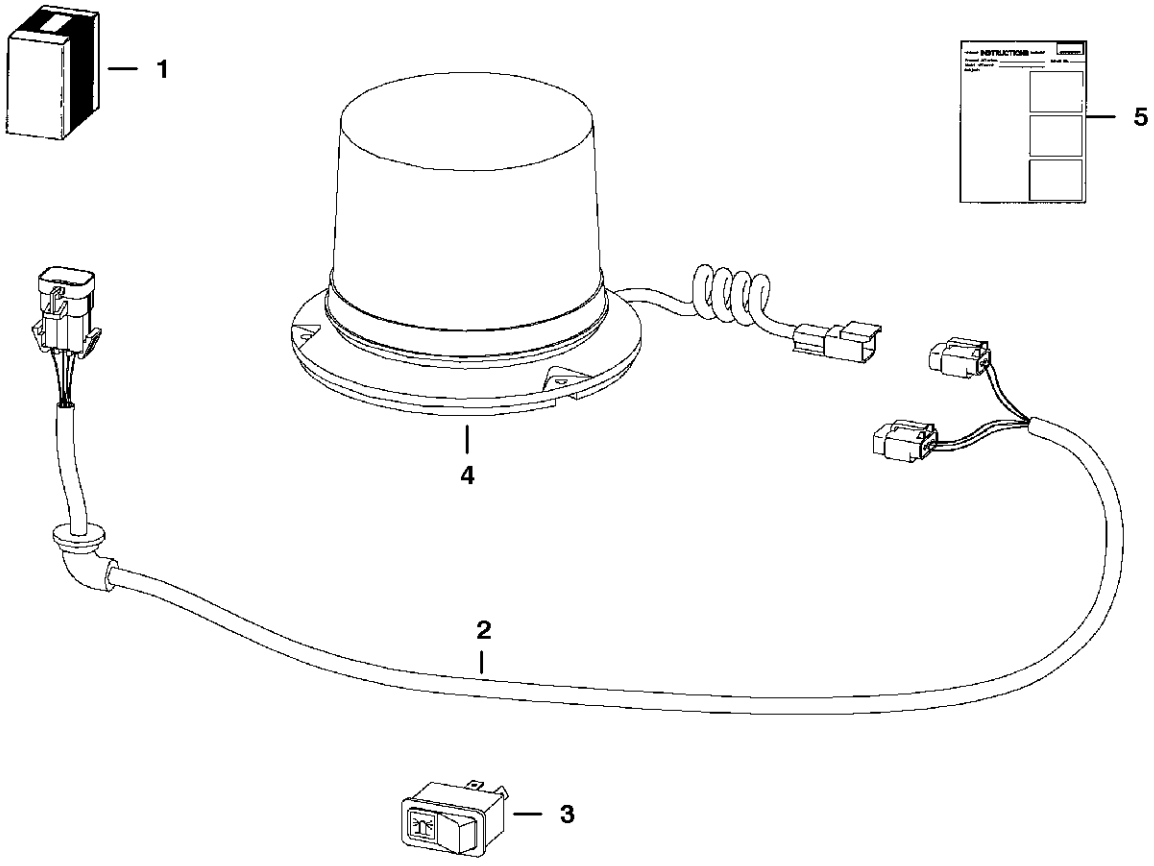

TS-1977

STROBE LIGHT

Ref.N°	Part N°	Description	Remarks	Serial N°	Qty.
1	6719857	KIT	strobe light- If loader is equipped W/Deluxe Cab Option also order 6727468 Harness - See Page ACCESSORIES HARNESS(1) - Was 67188		1
2	6718872	HARNESS			1
3	6665317	SWITCH	horizontal		1
3	6668816	SWITCH	vertical		1
4	6675522	STROBE			1
4	6675858	FLASH TUBE			1
5	6900992	INSTRUCTIONS			1

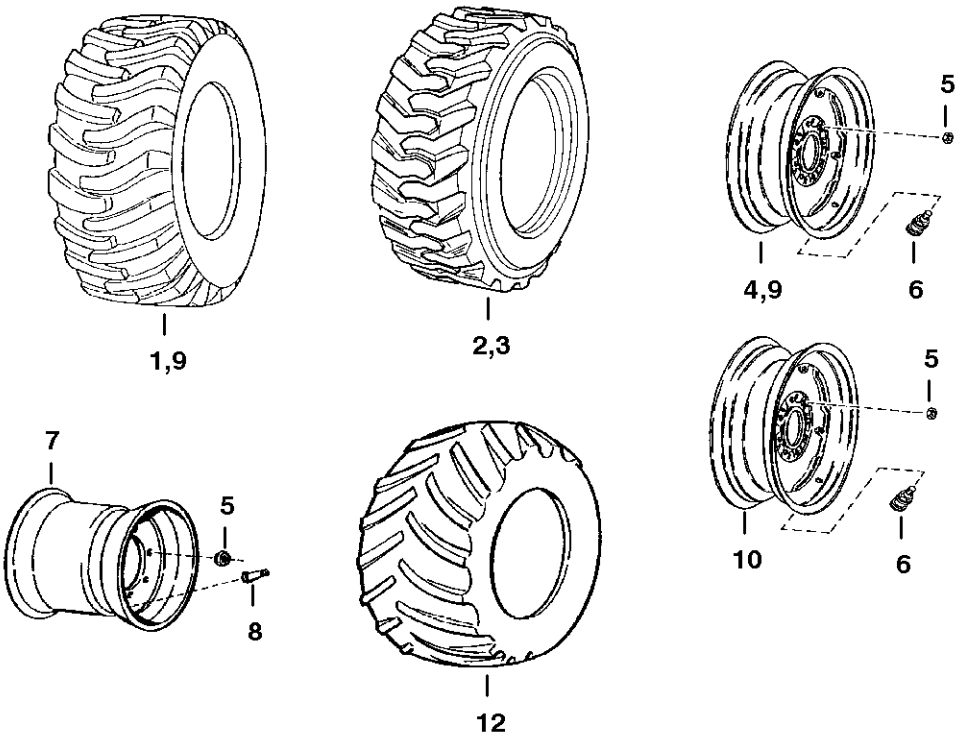

B-16463

TIRES & RIMS

Ref.N°	Part N°	Description	Remarks	Serial N°	Qty.
1	NAP	TIRE	10.00-16.5, 6 Ply - Firestone - Order Ref. TIRES & RIMS(3) (6729896 Tire) - Was 6646601 [A]		4
1	NAP	TIRE	'10.00-16.5, 8 ply -Dico Heavy Duty - Order Ref. TIRES & RIMS(3) (6729896 Tire) '- Was 6667889 [A]		4
2	6730106	TIRE	10.00 - 16.5 - 10 ply - Bobcat brand - severe duty		4
3	NAP	TIRE	10.00-16.5, 8 ply - Bobcat Brand - Heavy Duty - Order 6729896inD1} or 6729900inD1} Tire-Was 6661287 [A]		4
3	6729896	TIRE	10.00 - 16.5 - 8 ply - std. duty		4
3	6729900	TIRE	10.00 - 16.5 - 8 ply - heavy duty		4
4	6730771	RIM	Used W/Ref. TIRES & RIMS(1) & TIRES & RIMS(3) - Was 6565239 [A]		4
4	6730772	RIM	'Used W/Ref. TIRES & RIMS(11) - Was 6565240 [A]		4
5	6564669	NUT	wheel		32
6	1614765	VALVE	tubeless tire		4
7	6658846	RIM	Use W/Ref. TIRES & RIMS(12)		4
8	6591447	STEM	valve - Use W/Ref. TIRES & RIMS(7)		4
9	NAP	TIRE	10 x 16.5 Bar Lug Flotation (Dico)		4
10	6730775	RIM	inverted - Use W/Ref. TIRES & RIMS(3) - For 60' width - Was 6705109 [A]		4
11	NAP	TIRE	Galaxy - 31.5 - 13 x 16.5, 10 ply - Order 6730107inD1} h Tire - Was 6729035 [A]		4
11	6730107	TIRE	13 x 16.5 - 10 ply Bobcat Brand - Super Float		4
12	NAP	TIRE	31-15, 8 Ply Rating - Terra Grip - 'Goodyear - Was 6513971 [A]		4
12	NAP	TIRE	'31-15.5, 8 Ply Rating - Ultra Tread* - Goodyear - Was 6666668 [A]		4

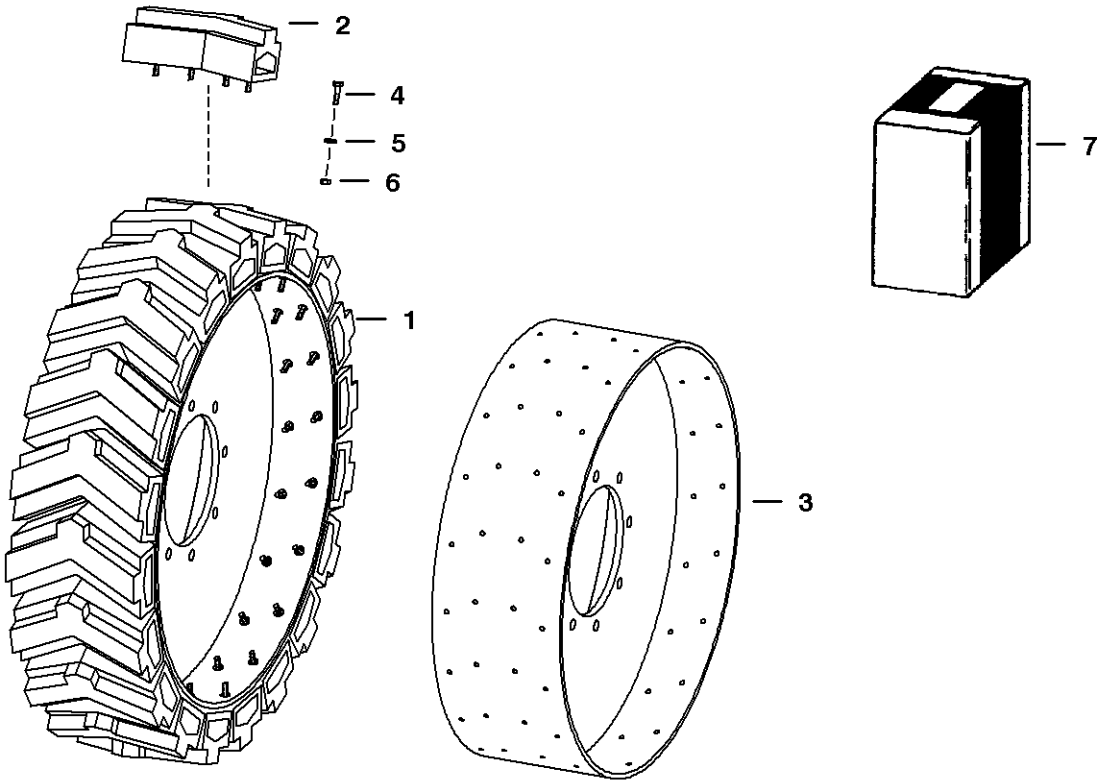

TS-1082

TIRES & RIMS

Ref.N°	Part N°	Description	Remarks	Serial N°	Qty.
1	6664993	TIRE & RIM	Assy. - R.H. - 7.5 x 15		2
1	6664994	TIRE & RIM	Assy. - L.H. - 7.5 x 15		2
1	6674003	TIRE & RIM	Assy. - R.H. - 10 x 16.5		2
1	6674004	TIRE & RIM	Assy. - L.H. - 10 x 16.5		2
2	6664995	KIT	Box of (9) segments - 7.5 x 15 W/Ref. TIRES & RIMS(4) - TIRES & RIMS(6) (18) segments/tire		x
2	6674007	KIT	Box of (10) segments - 10 x 16.5 W/Ref. TIRES & RIMS(4) - TIRES & RIMS(6) (20) segments/tire		x
3	NAP	RIM	R.H. - 7.5 x 15 - Order Ref. TIRES & RIMS(1)		2
3	NAP	RIM	L.H. - 7.5 x 15 - Order Ref. TIRES & RIMS(1)		2
3	NAP	RIM	R.H. - 10 x 16.5 - Order Ref. TIRES & RIMS(1)		2
3	NAP	RIM	L.H. - 10 x 16.5 - Order Ref. TIRES & RIMS(1)		2
4	1CM-830	BOLT			x
5	25E-15	WASHER			x
6	40DM-8	NUT			x
7	6707172	KIT	wheel - Set of (4) 7.5 x 15 Tire & Rim Assys. - Ref. TIRES & RIMS(1) - (2) R.H. & (2) L.H.		1
7	6718298	KIT	wheel - Set of (4) 10 x 16.5 Tire & Rim Assys. - Ref. TIRES & RIMS(1) - (2) R.H. & (2) L.H.		1

BULK ITEMS
(SEE NOTE)

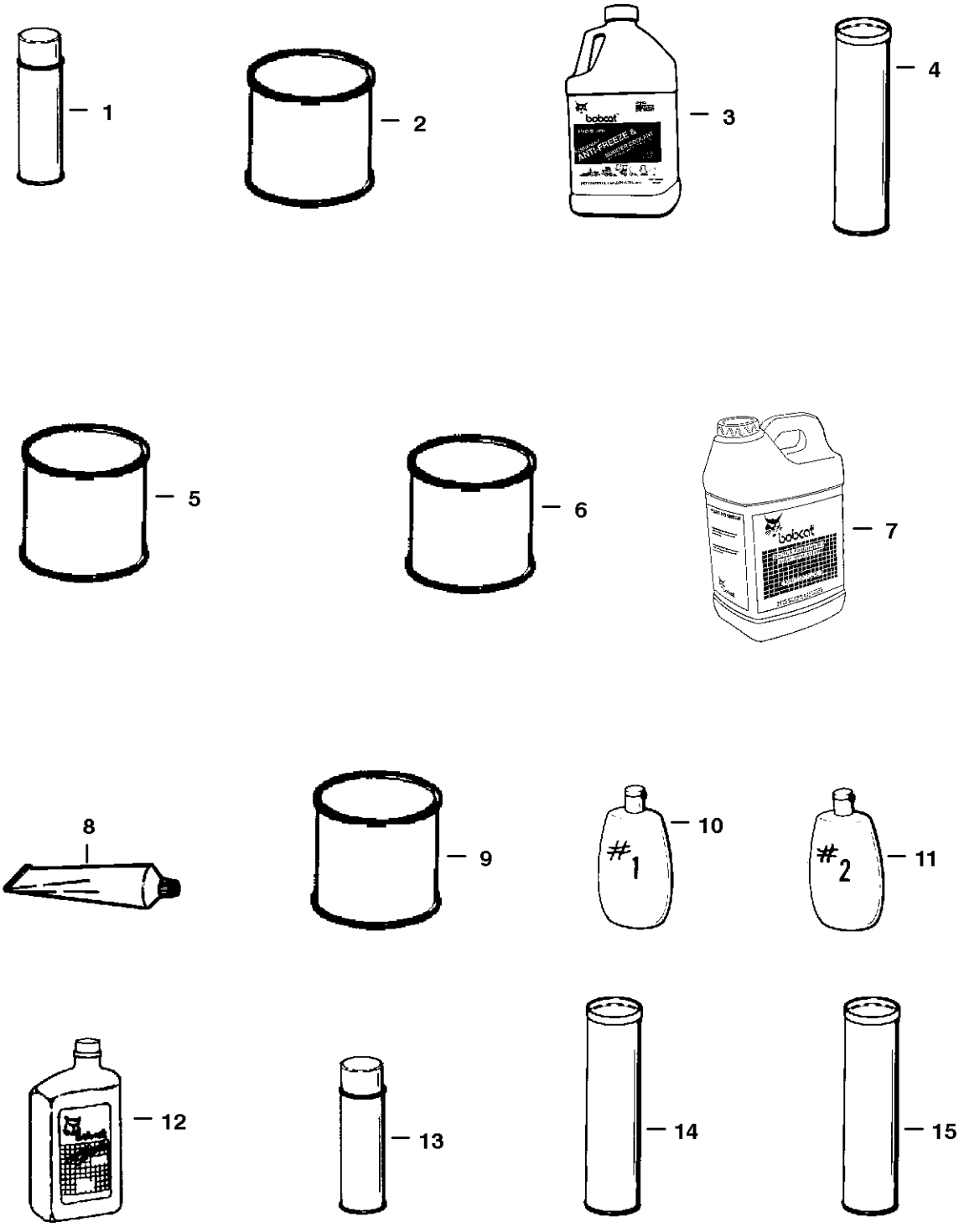

NOTE: Some of these bulk items may not be used on this particular model Bobcat.

NOTE: See Merchandising catalog for more products & information.

NOTE: Paint spray cans are packaged 6 per box.
Motor oil quarts are packaged 12 per box.
Motor oil 5 qt. jugs are packaged 4 per box.
Motor oil 2.5 gal. jugs are packaged 2 per box.

B-16462

BULK ITEMS

Ref.N°	Part N°	Description	Remarks	Serial N°	Qty.
1	6722783	PAINT	orange - Spray Can - SEE NOTE		x
1	6722786	PAINT	charcoal -Spray Can -SEE NOTE		x
1	6722789	PAINT	white - Spray Can - SEE NOTE		x
2	6722781	PAINT	orange - Gal. - Also Order Ref. BULK ITEMS(5)		x
2	6722782	PAINT	orange - Qt. - Also Order Ref. BULK ITEMS(5)		x
2	6722784	PAINT	charcoal - Gal-Also Order Ref. BULK ITEMS(5)		x
2	6722785	PAINT	'charcoal - Qt. - Also Order Ref. BULK ITEMS(5)		x
2	6722787	PAINT	'white - Gallon - Also Order Ref. BULK ITEMS(5)		x
2	6722788	PAINT	white - Qt. Also Order Ref. BULK ITEMS(5)		x
3	6724094	ANTI-FREEEZE	gallon - PG - premixed		x
3	6724354	ANTI-FREEZE	gallon - PG - concentrate		x
4	6633583	SEALANT	chaincase covers		x
5	6653517	REDUCER	gallon		x
6	6653518	PRIMER	gallon		x
6	6653519	PRIMER	Qt.		x
7	6563328	BLACK GOLD	Hydraulic/Hydrostatic Transmission Fluid - 5 Gallons - 2-2 1/2 Gallon Containers		x
7	6722344	BLACK GOLD	Hydraulic/Hydrostatic Transmission Fluid - 5 Gallons Container		x
7	NAP	FLUID	30 Gallon Drum		x
7	6563330	BLACK GOLD	55 Gallon Drum		x
8	6599360	SEALANT	electrical - 3 oz. tube		x
9	6634393	LUBRICANT	90 wt. gear - pint - For use in cooling fan drive assy.		x
10	6630188	POLISH	window-1 (8 oz.)		x
10	NAP	POLISH	'window-1 (64 oz.) -Order 6630188inD1} Polish - Was 6630190 [A]		x
11	6630189	POLISH	window-2 (8 oz.) - scratch remover		x
11	NAP	POLISH	window-2 (64 oz.) - scratch remover - Order 6630189inD1} Polish - - Was 6630191 [A]		x
12	6657303	MOTOR OIL	30 CE/SG - 1 Qt. - SEE NOTE		x
12	6724559	MOTOR OIL	SAE 30 - 1 Gal.		x
12	6674206	MOTOR OIL	30 CE/SG - 2.5 Gal. - SEE NOTE		x
12	6657301	MOTOR OIL	10W30 CE/SG - 1 Qt. -SEE NOTE		x
12	6724557	MOTOR OIL	SAE 10W30 - 1 Gal. - SEE NOTE		x
12	6674205	MOTOR OIL	10W30 CE/SG-'2.5 Gal.-SEE NOTE		x
12	6657299	MOTOR OIL	15W40 CE/SG - 1 Qt. -SEE NOTE		x
12	6724558	MOTOR OIL	SAE 15W40 - 1 Gal. - SEE NOTE		x
12	6674204	MOTOR OIL	15W40 CE/SG-'2.5 Gal.-SEE NOTE		x
13	6652818	ADHESIVE	insulation - spray can		x
14	6658266	GREASE	general purpose		x
15	6599719	GREASE	14.5 oz. cartridge - For fan idler bearing & spring loaded drive idler		x
16	6650407	ADHESIVE	1 oz. tube		x
17	6650388	SEALANT	flange		x

Part No.	Description	Was	Code	Page
225855	SEAL			28
614142	SLEEVE			350
619021	WASHER			14, 30, 76, 142, 394
654299	BEARING			148, 152
658128	SNAP RING			148, 152
669863	SNAP RING			148, 152
742640	WASHER			210
743332	GREASE ZERK			28, 30
763818	ELBOW			126
774220	NUT			276, 356
799119	SNAP RING			78, 82, 86, 90
851242	BALL BEARING			238
866028	CLAMP			262
872229	WASHER			46, 50, 52, 56, 64, 68, 124, 170
898731	BULB			378
945412	WASHER			132
961528	HARDWARE			292
1303932	GROMMET			204
1306637	PIN			76
1316263	ADAPTER			122
1318565	PIN			334
1320075	COTTER PIN			376
1530265	SEAL			70
1612281	NUT			134, 314
1614765	VALVE			412
1629414	ELBOW			126
3966512	O-RING			222, 252
3966515	O-RING			222, 224
3966516	O-RING			222, 234
3966530	O-RING			222, 224
3966602	O-RING			222, 228
3974037	PIN			226
3974038	O-RING			222, 226
3974095	GASKET			222, 226, 228, 248
3974192	BOLT			250
3974260	SCREW			258
3974366	BOLT			256
3974368	GASKET			256
3974381	SEAT			256
3974382	SPRING			256
3974383	SEAT			256
3974384	SHIM			256
3974385	TAPPET			256
3974389	CAP			226
3974390	CAP			226
3974393	PIN			226
3974394	PIN			226
3974395	PIN			224, 226
3974402	PLUG			234
3974403	GASKET			222, 234
3974432	CAP			232

Code for disposition of old part number

A — Use up

B — Use on other application (See PNI)

C — File PDR Report with Bobcat Parts Sales

D — Part Number Error

Part No.	Description	Was	Code	Page
3974433	CAP			232
3974456	GASKET			222
3974502	GASKET			222, 254
3974514	SPRING			230
3974515	RETAINER			230
3974516	COLLET			230
3974518	CAP			230
3974519	SHAFT			230
3974521	BRACKET			230
3974523	ORIFICE			230
3974525	SPRING			230
3974546	KEY			236, 240
3974577	O-RING			222, 236
3974601	GASKET			222, 248
3974618	CIR-CLIP			238
3974620	CIR-CLIP			238
3974624	STOPPER			238
3974626	SHIM			254
3974627	STUD			244
3974630	GASKET			222, 238
3974644	PLATE			252
3974658	SHAFT			250
3974659	BOLT			250
3974661	WASHER			250
3974671	NUT			236
3974679	BAND			244
3974787	RACK			256
3974868	PIN			226
3974871	ADAPTER			226
3974882	HOOK			232
3974888	BOLT			224
3974893	SEAT			224
3974894	FLANGE			224
3974895	GASKET			222, 224
3974920	SCREW			230
3974923	NUT			228
3974924	PLATE			228
3974925	PLATE			228
3974926	ELEMENT			228
3974927	SHIELD			228
3974930	PIPE			228
3974931	CLAMP			228
3974945	WASHER			236
3974970	BOLT			252
3974971	NUT			252
3974972	GASKET			252
3974975	APPARATUS			248
3974978	NUT			248
3974979	CAP			248
3974988	PIPE			244
3974991	BEARING			242

Code for disposition of old part number

A — Use up

B — Use on other application (See PNI)

C — File PDR Report with Bobcat Parts Sales

D — Part Number Error

Part No.	Description	Was	Code	Page
3974992	FLANGE			242
3974995	GASKET			222, 242
3974996	COVER			238
3975021	WASHER			236
3975022	WASHER			236
3975337	COLLAR			236
3975389	GASKET			256
3975426	OIL PUMP			226
3975428	SCREW			256
3975436	SCREW			228
3975441	GEAR			226
3975449	GASKET			222, 234
5289686	PLUG			320
6502203	CLAMP			46, 50, 52, 56, 64, 124
6505813	ADAPTER			208
6510171	LINK			36
6510470	RING GEAR			214
6511855	FOAM STRIP			138, 204, 208
6512026	BUSHING			76
6512797	RIVET			402
6512954	ROD END			126
6513152	SEAL			296
6513495	COTTER PIN			76
6513532	POPPET			146
6513533	SPRING			146
6515007	INDICATOR			208
6515131	TERMINAL			350
6515575	CLAMP			204
6515817	WASHER			14
6517516	LIGHT			350
6518200	GREASE ZERK			142
6518460	PIN			152
6518820	CLAMP			204
6519178	BUMPER			18, 28
6519328	RING			72, 74
6519925	BEARING	6669050	A	44
6531270	SLEEVE			78, 82, 86, 90
6532127	BOOT			22, 180, 182, 190, 352
6533898	DECAL			376
6534630	RESTRICTOR			96, 100, 104, 108, 110
6535451	HOSE			54, 60
6539236	HEAD			72, 74
6539645	SPACER			72, 74
6539932	PISTON			70
6539934	HEAD			70
6542731	SAFETY TREAD			288, 296
6544654	BUSHING			40, 42, 76
6547593	PIN			28
6552871	WASHER			44
6553411	BUSHING			12, 32, 40, 42, 206
6553412	ELBOW			206

Code for disposition of old part number

A — Use up

B — Use on other application (See PNI)

C — File PDR Report with Bobcat Parts Sales

D — Part Number Error

Part No.	Description	Was	Code	Page
6553709	WASHER			14
6554100	SAFETY TREAD			316
6554149	CORD			288, 300, 306, 320
6554858	BALL JOINT			218
6555351	SEAL			288, 298, 306
6555987	BUSHING			28
6557224	DECAL			318
6557291	BALL JOINT			218
6557565	DECAL			316
6557720	HOSE			208
6557831	WASHER			142
6557904	FLASHER			350
6558309	WIRE ROPE			316
6558310	SLEEVE			316
6558510	ELBOW			138
6559447	WASHER			136
6559479	NUT			40, 218
6559552	HARDHAT			408
6559775	EARMUFFS			408
6560172	COVER			168, 172
6560573	DECAL			318
6560633	DAMPENER			14
6561218	SHUTTLE			146
6561383	DECAL			316
6562018	SPRING			30
6562257	MOUNT			210
6562266	CLAMP			70
6562602	BUSHING			14
6562619	BUSHING			268, 344, 404, 406
6563328	FLUID			1, 416
6563330	FLUID			1, 416
6563452	ADAPTER			208
6563606	WASHER			44
6563914	WASHER			76, 142
6564343	BUSHING			218
6564452	GRIP			26, 218
6564654	PIN			76
6564657	PIN			76, 266
6564669	NUT			44, 412
6565170	CABLE			172
6565200	DECAL			318
6565355	GUIDE			16
6565990	DECAL			318
6567743	PIN			14, 208
6567827	ANGLE			376
6567838	PIN			376
6567962	WASHER			218
6568877	WASHER			210
6569203	CLAMP			168, 172
6569219	SCREEN			32, 136
6570931	INSTRUCTIONS			268

Code for disposition of old part number

A — Use up

B — Use on other application (See PNI)

C — File PDR Report with Bobcat Parts Sales

D — Part Number Error

Part No.	Description	Was	Code	Page
6571536	PULLEY			196
6571851	SNAP RING			38
6571852	SNAP RING			38
6575580	GASKET			222
6576028	HOSE			204
6576033	WASHER			28, 214
6576195	LINK			142
6576196	BRACKET			142, 152
6576252	ROD			218
6576261	COVER			218
6576262	MOUNT			218
6576280	BOLT			168, 172
6576302	BAR			76
6576660	TANK			204
6577058	PIN			142
6577204	SPROCKET			36, 44
6577230	MOUNT			142
6577382	SPACER			204
6577459	DIPSTICK			136
6577545	GROMMET			276, 372
6577671	HOSE			46, 52
6577690	TUBE			80, 84, 88, 96, 100, 104, 108, 136
6577754	DECAL			318
6577812	COVER			268
6577821	HOSE			32
6577822	HOSE			32, 204
6577880	KIT			268
6577947	SAFETY TREAD			316
6577961	GROMMET			22, 76
6578139	LEVER			282
6578140	LEVER			282
6578169	HOSE			34
6578172	HOSE			32
6578268	BELLCRANK			218
6578278	PAD			32
6578279	HOSE			204
6578280	HOSE			204
6578284	SHIM			220
6578363	ROD END			168, 172
6578366	BALL JOINT			168, 172
6578368	DECAL			318
6578505	COVER			12, 40
6578689	HUB			44
6578804	HOSE			54, 60
6579072	SPRING			28
6579104	SHIM			30
6579106	SHIM			30
6579127	CHAIN			36
6579326	MOUNT			208
6579399	DECAL			344, 404, 406
6579403	DECAL			344, 404, 406

Code for disposition of old part number

A — Use up

B — Use on other application (See PNI)

C — File PDR Report with Bobcat Parts Sales

D — Part Number Error

Part No.	Description	Was	Code	Page
6579509	DECAL			316
6579528	DECAL			316
6579613	STOP			14
6579639	DECAL			316
6579641	HOUSING			220
6584978	CONDUIT			40, 42
6585860	SPRING			40
6586459	SEAL KIT			80, 84, 96, 98, 104, 106
6586586	TUBE			70
6586918	SCREW			78, 82, 86, 90
6587458	KEY			32
6587523	WASHER			78, 82, 86, 90, 94, 98, 102, 106, 110
6587575	ADAPTER			78, 82, 86, 90
6587580	SPRING			78, 82, 86, 90, 94, 98, 102, 106, 110
6587633	BONNET			78, 82, 86, 90, 94, 98, 102, 106, 110
6587763	BOOT			78, 82, 86, 90, 94, 98, 102, 106, 110, 194
6588074	SPOOL			78, 82, 86, 90, 94, 98, 102, 106, 110
6588781	END CAP			80, 84, 86, 90, 96, 100, 104, 108, 110
6589045	SPRING			94, 98, 102, 106, 110
6589226	BONNET			78, 82, 86, 90
6589257	ROD			72
6589258	CASE			72
6589308	TUBE			72
6589564	RETAINER			78, 82, 86, 90, 94, 98, 102, 106, 110
6589565	RETAINER			94, 98, 102, 106, 110
6591447	STEM			412
6592098	WASHER			78, 82, 86, 90
6592100	COLLAR			78, 82, 86, 90, 94, 98, 102, 106, 110
6592105	BALL			78, 82, 86, 90
6592107	SPRING			78, 82, 86, 90
6592109	ADAPTER			78, 82, 86, 90, 94, 98, 102, 106, 110
6592115	SEAT			78, 82, 86, 90, 94, 98, 102, 106, 110
6592116	NUT			78, 82, 86, 90, 94, 98, 102, 106, 110
6592117	SPRING			78, 82, 86, 90, 94, 98, 102, 106, 110
6592506	CLAMP			64, 68, 124
6592720	PLUG			80, 84, 88, 92, 96, 100, 104, 108, 110
6592852	ORIFICE			368
6595663	BUSHING			78, 82, 86, 90, 96, 100, 104, 108, 110
6595951	SLEEVE			80, 84, 88, 90, 96, 100, 104, 108, 112
6596332	SPRING			80, 84, 88, 92, 96, 100, 104, 108, 110
6596569	SEAT			78, 94, 98, 110
6596807	PLUG			78, 82, 86, 90
6597775	LEVER			178
6597775	LEVER	6597777	D	178
6597776	LEVER			178
6598098	PIN			248
6598099	KEY			238
6598100	KEY			236
6598101	BALL BEARING			238
6598102	COCK			254

Code for disposition of old part number

A — Use up

B — Use on other application (See PNI)

C — File PDR Report with Bobcat Parts Sales

D — Part Number Error

Part No.	Description	Was	Code	Page
6598116	PLUG	6652797	A	232
6598136	GASKET			222, 228
6598142	GEAR			236
6598146	PIPE			258
6598155	PULLEY			242
6598158	CIR-CLIP	3975432	A	238
6598174	LEVER			250
6598176	LEVER			252
6598187	PLUG			226
6598355	BOLT			250
6598362	CARTRIDGE			1, 262
6598485	SEALANT			274
6598492	CARTRIDGE			1, 262
6598703	SEAL			248
6598799	CLAMP			208
6598908	ELBOW			32
6599136	CLIP			258
6599360	SEALANT			416
6599365	KIT			160, 162
6599645	PLUG			12, 34
6599719	GREASE			214, 416
6599741	WASHER			142
6599744	BALL JOINT			142, 334
6599931	ALARM			276
6610510	TIE			46, 52, 170, 174, 204, 320, 354
6617736	HOSE			138
6624289	TIE			68, 122, 328, 368, 370, 388
6624289	TIE	6610510	B	326
6626631	CLAMP			206
6628571	VALVE			60, 62, 78, 82, 86, 94, 98, 102, 106, 110, 114
6630168	COUPLER			140
6630184	THERMOSTAT			244, 368
6630188	POLISH			416
6630189	POLISH			416
6630207	RIVET			16, 22, 206
6630367	DUST CAP			140
6630945	WASHER			218
6631418	PIN			14, 18, 208
6631561	NUT			120
6631664	SEAL			236
6631927	GEAR			292
6631928	SHAFT			292
6632218	BEARING			38
6632228	RETAINER			196
6632279	SEAL KIT			80, 84, 88, 92, 96, 100, 104, 108, 112
6632323	WASHER			196
6632417	BEARING			200
6632418	BEARING			200
6632419	HOUSING ASSY			200
6632420	BRUSH HOLDER			200

Code for disposition of old part number

A — Use up

B — Use on other application (See PNI)

C — File PDR Report with Bobcat Parts Sales

D — Part Number Error

Part No.	Description	Was	Code	Page
6632421	SPRING			200
6632428	PINION			200
6632429	RETAINER			200
6632430	ROLLER			200
6632432	PLUNGER			200
6632433	GASKET			200
6632434	COVER			200
6632436	SPRING			200
6632441	SPRING			200
6632541	RACE			38
6633583	SEALANT			416
6634393	LUBRICANT			220, 416
6634609	RACE			44
6635392	GASKET			222, 252
6640690	PIN			176, 178, 182, 184, 190, 352, 354, 372
6640692	CONNECTOR			176, 180, 182, 184, 190, 352, 354
6640694	LOCK			176, 180, 182, 184, 190, 352, 354
6640699	CONNECTOR			180, 182, 190, 352, 356, 372
6640700	LOCK			180, 182, 190, 352, 372
6641176	SEAL			176, 178, 182, 184, 190, 352, 354, 372
6641179	CONNECTOR			176, 180, 182, 190, 352, 372
6641180	LOCK			176, 180, 184, 190, 354, 372
6641231	PLATE			252
6643249	COVER			46, 50, 56
6645080	O-RING			152
6645081	O-RING			148
6645086	PLUG			148, 152
6645090	SEAL			148
6646383	CONNECTOR			170, 174
6646582	PLUG			182, 184, 190, 352, 354
6646627	BEARING			220
6646678	CAP			1, 204
6646705	MOULDING			208
6646781	SWITCH			276
6647777	PIN			120
6647778	CAP			120
6647780	PLUG			120
6647783	LOAD CHECK			120
6647784	PLUG			120
6647785	SPRING			120
6647786	SEAL KIT			120
6648293	SCREW			120
6648294	SPRING			120
6648307	CONNECTOR			184, 354
6648330	TERMINAL			174
6648330	TERMINAL	6632946	B	170
6649244	BALL STUD			208, 288, 296
6649245	RETAINER			290, 296
6649300	SEAL			236
6649402	MOULDING			204
6649481	BULB			378

Code for disposition of old part number

A — Use up

B — Use on other application (See PNI)

C — File PDR Report with Bobcat Parts Sales

D — Part Number Error

Part No.	Description	Was	Code	Page
6649536	PLUG			244
6649551	SHOCK			144
6649949	PLUG			320
6650239	SCREEN			32
6650388	SEALANT			416
6650407	ADHESIVE			204, 416
6650627	PLATE			148, 152
6650629	PIN			148, 152
6650630	RETAINER			148, 152
6650634	GASKET			148, 152
6650635	BEARING			148, 152
6650636	PIN			148, 152
6650637	BOLT			148, 152
6650646	O-RING			148
6650647	O-RING			148
6650648	PLUG			148
6650652	RELIEF			148
6650668	BOLT			148, 152
6650675	COUPLER			148
6651482	MANIFOLD			246
6651489	COVER			244
6651542	BALL			146
6651709	SEAL			28
6651934	RIVET			238
6652018	BOLT			152
6652487	BOLT			214
6652574	PLUG			226
6652575	PLUG			226
6652580	BOLT			242, 248
6652592	PIN			224
6652624	JOINT			228
6652633	PLUG			236
6652652	SPRING			224
6652653	CAP			228
6652670	STUD			232, 246, 254
6652688	CLAMP			258
6652689	CLAMP			258
6652762	BOLT			242
6652764	STUD			224, 252
6652792	NUT			230, 232, 242, 244, 246, 254
6652818	ADHESIVE			416
6652918	NUT			210, 332
6653484	VALVE			390
6653485	SEAL KIT			390
6653487	SEAL KIT			390
6653490	PLUG			390
6653517	REDUCER			416
6653518	PRIMER			416
6653519	PRIMER			416
6653562	GASKET			244
6653702	SEAL			220

Code for disposition of old part number

A — Use up

B — Use on other application (See PNI)

C — File PDR Report with Bobcat Parts Sales

D — Part Number Error

Part No.	Description	Was	Code	Page
6653757	SNAP RING			220
6653758	SNAP RING			220
6653798	BOLT			234
6653803	GUIDE			232
6653806	GASKET			222, 224
6653807	BOLT			224
6653808	BOLT			224
6653809	ADAPTER			224
6653821	BOLT			236
6653830	SEAL			222, 230
6653832	STUD			230
6653833	WASHER			230
6653839	SCREW			240
6653840	GEAR			240
6653843	STOPPER			240
6653859	SLEEVE			236
6653861	SLINGER			236
6653865	WASHER			236
6653894	SLEEVE			256
6653905	CAP			252
6653906	BOLT ASSY			248
6653941	WATER PUMP			242
6653944	IMPELLER			242
6653945	SET SEAL			242
6653946	STUD			242
6653948	THERMOSTAT			244
6654002	WASHER			236
6654003	WASHER			236
6654139	MOULDING			180, 184, 188, 212, 354
6654170	STRIKER BOLT			288, 296
6654374	KEY			32
6654718	CLIP			258
6654806	FUSE			170, 174
6655149	CRANKCASE			226
6655151	OIL PAN			234
6655152	HOOK			232
6655153	HEAD			232
6655154	GUIDE			232
6655158	BOLT			232
6655159	GASKET			222, 232
6655160	PLUG			232
6655161	WASHER			232
6655162	O-RING			222, 224
6655163	CASE			236
6655164	BOLT			236
6655165	GASKET			222, 236
6655166	COVER			236
6655167	GASKET			222
6655168	CASE			236
6655169	CASE			236
6655170	CASE			236

Code for disposition of old part number

A — Use up

B — Use on other application (See PNI)

C — File PDR Report with Bobcat Parts Sales

D — Part Number Error

Part No.	Description	Was	Code	Page
6655171	MANIFOLD			246
6655173	VALVE			230
6655174	VALVE			230
6655175	COVER			228
6655176	PUSH ROD			240
6655177	PISTON			236
6655179	PIN			236
6655180	CIR-CLIP			236
6655181	ROD			236
6655183	BEARING			236
6655184	CRANKSHAFT			236
6655185	BEARING			236
6655186	BEARING			236
6655187	GEAR ASSY			240
6655190	COLLAR			240
6655191	COLLAR			240
6655192	CIR-CLIP			240
6655193	SHAFT			240
6655194	OIL FILTER			234
6655195	BOLT			226
6655197	PIPE ASSY			254
6655198	PIPE			258
6655201	ELEMENT			256
6655202	VALVE			256
6655203	SPRING			256
6655204	HOLDER			256
6655205	PLATE ASSY			256
6655206	BOLT			256
6655207	PLATE			256
6655209	PLATE			256
6655210	SHIM			254
6655211	CAMSHAFT			238
6655212	GEAR			238
6655213	SLEEVE			238
6655214	CASE			238
6655215	BALL			238
6655216	FUEL PUMP			32, 254
6655218	GASKET			222, 258, 260
6655219	PIPE			258
6655220	PIPE			258
6655221	PIPE			258
6655222	PIPE			258
6655223	NUT			252
6655227	SPRING			250
6655228	STOPPER			252
6655230	COVER			248
6655231	SHAFT			248
6655232	LEVER			248
6655233	GLOW PLUG			258
6655234	CORD			258
6655235	PULLEY			236

Code for disposition of old part number

A — Use up

B — Use on other application (See PNI)

C — File PDR Report with Bobcat Parts Sales

D — Part Number Error

Part No.	Description	Was	Code	Page
6655236	BEARING			236
6655237	BEARING			236
6655238	BEARING			236
6655239	BEARING			236
6655240	BEARING			236
6655241	BEARING			236
6655242	BUSHING			240
6655243	BUSHING			236
6655255	SPRING			250
6655384	CAMSHAFT			240
6655399	BUMPER			26
6655399	BUMPER	6714454	B,D	24
6655427	CAMSHAFT			240
6655498	BOLT			236
6655515	JOINT			254
6655518	O-RING			256
6655523	COLLAR			238
6655781	BEARING			214
6655869	PLUG			226
6655870	ARM			230
6655872	HEAT SEAL			222, 258, 260
6655873	PIECE			260
6655874	CLIP			254
6655875	CAMSHAFT			238
6655876	LEVER			250
6655877	LEVER			250
6655878	SPRING			250
6655880	PIPE			244
6655884	PLUG			226
6655938	VALVE			262
6656126	WASHER			260
6656127	WASHER			260
6656128	WASHER			260
6656129	WASHER			260
6656130	WASHER			260
6656131	WASHER			260
6656132	WASHER			260
6656155	COVER			46, 50, 52, 56
6657028	O-RING			148, 152
6657067	COVER			150, 152
6657068	COVER			148, 152
6657299	OIL			1, 416
6657301	OIL			1, 416
6657303	OIL			1, 416
6657376	ELBOW			204
6657401	GASKET KIT			222, 232
6657402	GASKET KIT			222, 226
6657409	SEAL KIT			118
6657460	NUT			260
6657463	WASHER			260
6657695	PISTON			236

Code for disposition of old part number

A — Use up

B — Use on other application (See PNI)

C — File PDR Report with Bobcat Parts Sales

D — Part Number Error

Part No.	Description	Was	Code	Page
6657696	RINGS			236
6657719	PLUG			306, 320
6657734	PUMP			32
6657742	KIT			260
6658105	HOSE			136
6658180	PLUG			34
6658228	SEAL			44, 274
6658260	SENSOR			168, 172
6658266	GREASE			416
6658301	SPRING			150
6658460	PIN			148
6658536	SNAP RING			216
6658672	SNAP RING			40, 42
6658846	RIM			412
6658847	SNAP RING			216
6659371	NUT			196
6659372	WASHER			196
6659374	SPACER			196
6659375	FAN			196
6659376	BRACKET			196
6659378	BOLT			196
6659379	BEARING			196
6659380	ROTOR			196
6659381	STATOR			196
6659382	BRACKET			196
6659384	RECTIFIER			196
6659385	SCREW			196
6659386	HOLDER			196
6659387	NUT			196
6659388	CONDENSER			196
6659390	HOLDER			196
6659391	NUT			196
6659392	BOLT			196
6659393	REGULATOR			196
6659394	BRUSH			196
6659395	SPRING			196
6659396	SCREW			196
6659397	TERMINAL			196
6659398	COVER			196
6659399	SCREW			196
6659400	CONNECTOR			196
6659459	CHECK VALVE			122
6659543	PLUG			380
6659982	MUFFLER			344, 406
6659999	BELT			402
6660260	SWITCH			162, 170
6660260	SWITCH	6632053	B,D	160
6660644	CAP			78, 82, 86, 90
6660814	O-RING			148, 152
6660995	RING			214
6661020	KEY			132

Code for disposition of old part number

A — Use up

B — Use on other application (See PNI)

C — File PDR Report with Bobcat Parts Sales

D — Part Number Error

Part No.	Description	Was	Code	Page
6661022	FILTER			138, 158
6661062	PLUG			208
6661112	SEAL			216
6661114	CAP			32
6661117	TANK			334
6661213	CLAMP			32
6661242	COVER			262
6661243	WING NUT			262
6661244	WASHER			262
6661247	FILTER			140
6661247	FILTER	6661334	B,D	160
6661248	ELEMENT			1, 140, 160, 162
6661353	LIGHT ASSY			378
6661382	ELBOW			32
6661448	SEAL KIT			130
6661481	O-RING			150
6661608	SEAL KIT			338
6661611	ALTERNATOR			196
6661616	MUFFLER			380
6661696	CAP			32
6661785	MOUNT			210
6661787	WASHER			210, 332
6661807	KIT			158
6661808	KIT			158
6661820	PISTON			72
6662306	RING			44, 274
6662437	WASHER			200
6662848	CAP			80, 84, 88, 92, 96, 100, 104, 108, 110
6662997	PULLEY			214
6664004	CLAMP			208
6664024	STEM			130
6664025	STEM			130
6664032	SEAL KIT			130
6664035	CAP			326, 328
6664036	NUT			326, 328
6664037	WASHER			326, 328
6664040	PIN			326, 328
6664085	SPACER			292, 306, 320
6664095	ARM			292
6664096	BLADE			292
6664097	COVER			290, 292
6664103	NUT			292
6664178	GASKET			292
6664209	SEAL			216
6664212	CHECK VALVE			390
6664221	RETAINER			320
6664223	OUTLET			320
6664224	CAP			320
6664286	BOOT			170, 174
6664368	LIGHT			320
6664554	PUMP			290

Code for disposition of old part number

A — Use up

B — Use on other application (See PNI)

C — File PDR Report with Bobcat Parts Sales

D — Part Number Error

Part No.	Description	Was	Code	Page
6664555	NOZZLE			288
6664566	SCREW			292
6664815	SEAL			36, 146
6664882	BUSHING			18
6664993	TIRE & RIM			414
6664994	TIRE & RIM			414
6664995	KIT			414
6665000	CLIP			180, 182, 190, 352
6665084	VALVE			98, 104
6665084	VALVE	6653395	B,D	80, 84, 96
6665086	SEAL			70, 72, 74
6665316	SWITCH			350
6665317	SWITCH			278, 410
6665321	RIVET			180, 182, 190, 352
6665322	RIVET			180, 182, 190, 352
6665367	BULB			320
6665371	SWITCH			262
6665568	SEAL			288, 300
6665569	WASHER			78, 82, 86, 90, 94, 98, 102, 106, 110, 128
6665570	RING			78, 82, 86, 90, 94, 98, 102, 106, 110, 128
6665572	VALVE			390
6665701	BUSHING			76, 142
6665702	STEM			130
6665707	SWITCH			290
6665719	PLUG			130
6665839	BOLT			76
6665846	SEAL			80, 84, 86, 90, 96, 100, 104, 108, 110
6666338	WASHER			148, 152
6666339	BOLT			152
6666341	VALVE			54, 56, 120, 284, 286
6666384	RADIATOR			204
6666568	BULB			342
6666571	BULB			278
6666616	STEM			80, 84, 94, 98, 102
6666621	ARMATURE			200
6666622	DRIVE			200
6666628	NUT			200
6666629	WASHER			200
6666630	WASHER			200
6666631	O-RING			200
6666632	O-RING			200
6666633	BOLT			200
6666634	BOLT			200
6666635	BOLT			200
6666636	BOLT			200
6666637	NUT			200
6666766	GROMMET			290
6666781	GASKET			222, 246
6666782	GASKET			226

Code for disposition of old part number

A — Use up

B — Use on other application (See PNI)

C — File PDR Report with Bobcat Parts Sales

D — Part Number Error

Part No.	Description	Was	Code	Page
6666790	GASKET			370
6666791	GASKET			222, 246
6666802	GASKET			222, 244
6666811	GASKET			222, 246
6666814	GASKET			236
6666865	CLAMP			122, 126
6666932	BRAKE			334, 336
6666933	CYLINDER			334, 338
6667139	CAP			334
6667144	CONNECTOR			176, 180, 182, 190, 352
6667145	LOCK			176, 180, 182, 352
6667176	PLUG			120
6667189	HOSE			206
6667201	SPACER			292
6667326	SEAL			70, 72, 74
6667352	ELEMENT			1, 32
6667353	FILTER ASSY			32
6667382	PUMP			126, 132
6667425	PLUG			224
6667428	TAPPET			240
6667460	IMPELLER			242
6667465	SEAL			242
6667480	CHAMBER			232
6667533	COVER			170
6667549	VALVE			94, 98, 102, 106
6667569	CONNECTOR			326, 328
6667573	DECAL			380
6667587	STARTER			172, 200
6667676	COVER			120
6667677	O-RING			120
6667680	SNAP RING			120
6667687	STEM			114
6667803	QUICK COUPLER			124, 384, 388
6667804	QUICK COUPLER			122, 384, 388
6667806	QUICK COUPLER			122
6667844	VALVE			60, 62, 116
6667887	BULB			342
6667889	TIRE			412
6667992	SOLENOID			40, 42
6667993	SOLENOID			168, 172
6668007	SCREW			342
6668010	LENS			342
6668013	SEAL KIT			132
6668079	PLUG			146
6668080	SHIM			146
6668082	POPPET			146
6668088	PISTON			146
6668089	PLUG			146
6668097	SCREW			338
6668104	MOUNT			332
6668114	BEARING			216

Code for disposition of old part number

A — Use up

B — Use on other application (See PNI)

C — File PDR Report with Bobcat Parts Sales

D — Part Number Error

Part No.	Description	Was	Code	Page
6668137	MOTOR			292
6668742	SWITCH			320
6668765	VALVE			114
6668791	ORIFICE			114
6668813	SWITCH			122
6668814	SWITCH			284, 286
6668815	SWITCH			350
6668816	SWITCH			278, 410
6668820	NUT			114
6668879	DECAL			276
6668881	CORD			280
6668913	KNOB			60, 62, 116
6668953	BRACKET			20
6669057	CHECK VALVE			114
6669085	VALVE			116
6669087	SEAL KIT			116
6669089	TRACK			20
6669091	CLIP			320, 356
6669135	SEAT			16, 18, 20
6669154	BOLT			336
6669155	PLATE			336
6669156	SPACER			336
6669159	PISTON			336
6669162	NUT			336
6669163	PLUG			336
6669164	ADAPTER			336
6669165	SCREW			336
6669184	STATOR ASSY			336
6669185	SEAL KIT			336
6669187	VALVE			390
6669188	SEAL KIT			390
6669189	STEM			390
6669190	COIL			390
6669203	VALVE			122, 130
6669216	SEAL KIT			390
6669217	SEAL KIT			390
6669218	VALVE			390
6669219	VALVE			390
6669224	BOLT			180, 320, 356
6669354	SHAFT			200
6669359	TERMINAL			200
6669360	BUSHING			200
6669365	BOOT			200
6669372	COVER			200
6669384	SPEEDY SLEEVE			220
6669402	HOUSING			148
6669403	HOUSING			152
6669405	END CAP			152
6669406	END PLATE			148
6669407	SHAFT			152
6669408	SHAFT			148

Code for disposition of old part number

A — Use up

B — Use on other application (See PNI)

C — File PDR Report with Bobcat Parts Sales

D — Part Number Error

Part No.	Description	Was	Code	Page
6669409	WASHER			148
6669410	SHIM KIT			148
6669411	BEARING			148, 152
6669442	HOUSING			146
6669444	SPRING			146
6669446	O-RING			146
6669447	PLATE			146
6669448	PLATE			146
6669449	O-RING			146
6669450	RING			146
6669451	FLANGE			146
6669452	O-RING			146
6669453	SEAL			146
6669454	RING			146
6669455	SEAL KIT			146
6669469	SHAFT			146
6669470	BOLT			146
6669549	SOCKET			324, 326, 328, 330
6669615	ORIFICE			130
6669657	O-RING			122, 384, 388
6669659	O-RING			122
6669672	CLAMP			126
6669728	CHECK VALVE			130
6669729	SHUTTLE VALVE			130
6669732	SEAL KIT			114
6669733	SEAL KIT			114
6669734	SEAL KIT			114
6669736	SEAL KIT			130
6669737	SEAL KIT			130
6670160	CUSHION			20
6670164	LINK			292
6670284	LIGHT			378
6670287	COVER			24, 26
6670288	END			292
6670312	SOLENOID			356
6670627	BREATHER			12, 40, 42, 204
6670634	SEAL KIT			284, 286
6670682	BEARING			214
6670684	CHECK VALVE			150, 154
6670706	CONNECTOR			182, 190, 352
6670707	CONNECTOR			178, 184, 190, 354
6670709	CONNECTOR			184, 354
6670710	LOCK			178, 182, 190, 352
6670711	LOCK			184, 190, 192, 354
6670714	PIN			352
6670715	PIN			178, 182, 184, 190, 192, 354
6670726	LOCK			392
6670759	SEAL			296
6670830	ADAPTER			140
6670831	ELBOW			140
6670867	LATCH			24

Code for disposition of old part number

A — Use up

B — Use on other application (See PNI)

C — File PDR Report with Bobcat Parts Sales

D — Part Number Error

Part No.	Description	Was	Code	Page
6671025	COIL			114, 130
6671026	COIL			130
6671027	LIGHT			342
6671042	SEAL KIT			156
6671116	TERMINALS			200
6671117	TERMINALS			200
6671118	PINION			200
6671119	CLUTCH ASSY			200
6671120	TERMINAL			200
6671121	COVER			200
6671122	BALL			200
6671123	HOUSING			200
6671124	HOUSING			200
6671125	WASHER			200
6671126	SCREW			200
6671127	BEARING			200
6671128	BEARING			200
6671129	BEARING			200
6671509	COUPLER			152
6671510	RELIEF VALVE			150, 154
6671512	BLOCK ASSY			150, 152
6671513	SWASH PLATE			148, 152
6671514	VALVE PLATE			152
6671515	VALVE PLATE			148
6671516	SEAL KIT			150, 154
6671518	BOLT			148
6671527	NUT			284, 286
6671617	MOTOR			146
6671628	NUT			130
6671629	NUT			130
6671632	VALVE			78, 82, 86, 96, 100, 102, 106
6671667	MUFFLER			208
6671713	HOSE			138
6671714	HOSE			138
6672021	BELT			214
6672026	O-RING			64, 122
6672051	PUMP			148, 152
6672126	GEROLER			146
6672190	DRAINCOCK			226
6672272	WASHER			378
6672273	SCREW			378
6672274	SCREW			378
6672275	GASKET			378
6672276	LENS			378
6672277	BRACKET			378
6672279	MOUNT			378
6672281	CLAMP			136
6672348	PANEL			164, 166
6672448	VALVE ASSY			130
6672449	VALVE ASSY			130
6672450	VALVE ASSY			130

Code for disposition of old part number

A — Use up

B — Use on other application (See PNI)

C — File PDR Report with Bobcat Parts Sales

D — Part Number Error

	Part No.	Description	Was	Code	Page
	6672471	VALVE			114
	6672486	SEALANT			220
	6672492	RETAINER			276
	6672513	PUMP			156
*	6672515	SEAL KIT	6664033	A	130
	6672715	SPACER	7000010	A	20
	6672750	CONNECTOR			168
	6672863	SOLENOID			284, 286
	6672962	COIL			118
	6673184	VALVE			102
	6673200	FUSE BLOCK			170, 174
	6673710	BEARING			178, 184, 188
*	6673789	BEARING			144
	6673789	BEARING			180, 184, 188
	6673828	HOSE			140
	6673881	SEAL			148, 152
	6673990	PISTON	6664028	A	130
	6674000	CLAMP			176
	6674003	TIRE & RIM			414
	6674004	TIRE & RIM			414
	6674007	KIT			414
	6674013	TRACK			20
	6674150	OIL COOLER			140
	6674164	CASE ASSY			224
	6674167	FLANGE			244
	6674202	NUT			164, 166
	6674204	OIL			1, 416
	6674205	OIL			1, 416
	6674206	OIL			1, 416
	6674209	SENDER			32, 170
	6674227	VALVE			358
	6674228	PANEL			356
	6674231	VENT			356
	6674285	GAS SPRING			208
	6674297	SPOOL			94
	6674298	SPOOL			94
	6674299	SPOOL			94
	6674300	SPOOL			94
	6674301	SPOOL			94
	6674302	SPOOL			94
	6674315	SWITCH			168, 172
	6674316	SWITCH			168, 172
	6674400	HOUSING			378
	6674401	HOUSING			378
	6674402	MOUNT			378
	6674403	COVER			16, 164, 166
	6674405	BUSHING			18
	6674406	SENSOR			18
	6674407	SHOULDER BELT			398
	6674450	HANDLE ASSY			176
	6674519	WINDOW			306

Code for disposition of old part number

A — Use up

B — Use on other application (See PNI)

C — File PDR Report with Bobcat Parts Sales

D — Part Number Error

Part No.	Description	Was	Code	Page
6674520	WINDOW			306
6674521	WINDOW			306
6674522	WINDOW			306
6674666	LATCH			288, 296
6674667	HANDLE			288, 296
6674673	CLAMP			170
6674676	PUMP			254, 256
6674687	BATTERY			1, 168, 172
6674741	KNOB			306, 320, 356
6674798	REPAIR KIT			140
6674799	ADAPTER			330
6674802	CONNECTOR			324, 326, 328, 330
6674804	CONTROLLER			178
6674808	SPOOL			78, 82, 86, 90
6674809	SPOOL			78, 82, 86, 90
6674810	SPOOL			78, 82, 86, 90
6674814	SPOOL			78, 82, 86, 90
6674815	SPOOL			78, 82, 86, 90
6674816	SPOOL			78, 82, 86, 90
6674894	NUT			18
6674895	REATAINER			320
6674905	HOSE			368
6674933	HEATER			356, 360
6674938	GAS SPRING			288, 296
6674993	CAP			290
6675026	CAP			324, 326, 328, 330
6675033	INSERT			14, 16, 164, 166
6675073	VALVE			390
6675074	SEAT BELT			16
6675096	GROMMET			170
6675099	HORN			372
6675134	GAS SPRING			14
6675135	GAS SPRING			14
6675136	GAS SPRING			14
6675140	SNAP RING			14
6675143	HOSE			138
6675144	HOSE			136
6675154	HOLDER			168, 174
6675155	FUSE			168, 174
6675170	SEAT BELT			394
6675171	CLAMP			164, 166, 168
6675172	BRACKET			356
6675173	ACTUATOR			356
6675174	BODY			356
6675175	BRACKET			356
6675176	SWITCH			356
6675177	KNOB			356
6675179	FLANGE			356
6675180	VENT			356
6675181	PLUG			356
6675212	RETAINER			306

Code for disposition of old part number

A — Use up

B — Use on other application (See PNI)

C — File PDR Report with Bobcat Parts Sales

D — Part Number Error

Part No.	Description	Was	Code	Page
6675221	BOLT			212
6675250	HANDLE			178
6675257	ROD END			14
6675273	WASHER			24, 26
6675278	FILTER			168
6675281	MOUNT			326, 328
6675284	SHUTTLE VALVE			118
6675285	STEM			118
6675298	COUPLER			290
6675299	COUPLER			290
6675308	KIT			396
6675309	KIT			396
6675310	KIT			396
6675311	KIT			396
6675312	KIT			396
6675313	KIT			396
6675314	KIT			396
6675315	KIT			396
6675316	KIT			396
6675317	SCISSORS			394
6675319	CUSHION			394
6675320	CUSHION			394
6675321	CUSHION			394
6675322	CUSHION			394
6675323	KNOB			394
6675332	LINK			36
6675336	BULB			378
6675378	CLIP			290
6675387	EXTRUSION	6674524	A	306, 320
6675389	SWITCH			326
6675468	HANDLE ASSY	6674449	A	176
6675497	BLOWER			360, 362
6675499	HOUSING			360
6675500	COVER			360
6675501	PLATE			360
6675502	PLATE			360
6675503	HOUSING			360
6675504	RING			360
6675505	BLOWER WHEEL			360
6675506	MOUNT			360
6675507	COVER			360
6675508	HARNESS			360
6675509	MOTOR			360
6675510	CLAMP			360, 362
6675511	DRAIN VALVE			360, 362
6675512	CLAMP			360, 362
6675513	GROMMET			360, 362
6675514	SEAL			360
6675517	FILTER			1
6675517	FILTER	3974896	A	224
6675522	STROBE			410

Code for disposition of old part number

A — Use up

B — Use on other application (See PNI)

C — File PDR Report with Bobcat Parts Sales

D — Part Number Error

Part No.	Description	Was	Code	Page
6675523	BEACON			278
6675524	CLIP			16
6675544	CANVAS CAB			304
6675545	GROMMET			306, 320
6675558	SEAL			296
6675558	SEAL	6669390	A	288
6675562	SEAT BELT			400
6675581	EXTINGUISHER			346
6675590	DOOR			304
6675591	HINGE KIT			304
6675595	SEAT			394
6675596	SEAT			394
6675607	INSULATION			360
6675608	INSULATION			360
6675609	INSULATION			360
6675610	INSULATION			360
6675611	SEAL			360, 364
6675612	INSULATION			360
6675613	INSULATION			360
6675614	INSULATION			360
6675684	VALVE			358
6675684	VALVE	6674227	A	356
6675741	SENSOR			182, 190, 352
6675742	LEVER			182, 352
6675745	SPRING			190, 266
6675749	HANDLE			182, 190, 352
6675750	LEVER			182, 352
6675833	SEAL			306
6675835	TURN SIGNAL			350
6675837	BELT			210
6675838	BUSHING			212
6675846	POTENTIOMETER	6675178	A	356
6675858	FLASH TUBE			410
6675982	PLUG			164, 166
6676003	HOSE			292
6676003	HOSE	6708310	A	290
6676029	SOLENOID			188, 190, 194, 266
6676034	KIT			396
6676060	LEVER ASSY	6655879	A	248
6676151	COIL			390
6676152	PLUG			390
6676153	CONTROLLER			184
6676155	RELIEF VALVE			130
6676155	RELIEF VALVE	6665626	A	126
6676197	VALVE			86, 98, 102, 106
6676197	VALVE	6661113	A	78, 82, 94
6676333	LEVER			188, 190
6676337	CONTROLLER			184, 188
6676338	GAS SPRING			396
6676400	CONNECTOR			172
6676445	QUICK COUPLER			124

Code for disposition of old part number

A — Use up

B — Use on other application (See PNI)

C — File PDR Report with Bobcat Parts Sales

D — Part Number Error

Part No.	Description	Was	Code	Page
6676447	QUICK COUPLER			124
6676492	SENSOR			194, 266
6676493	SENSOR			188, 194, 266
6676497	LEVER			188, 190
6676498	NOZZLE			292
6676499	GROMMET			290
6676500	ELBOW			288
6676501	CLIP			292
6676516	NUT			358
6676536	SWITCH			166
6676537	SWITCH			188, 266
6676538	INSULATION			366
6676539	CLIP			362
6676562	HEATER ASSEMBLY			362
6676564	SEAL KIT			118
6676566	NUT			118
6676604	COVER			362
6676606	SPACER			366
6676618	CLIP			360
6676640	SEAL			192, 354
6676653	SCREW			366
6676870	CONNECTOR			192, 354
6676872	TURN SIGNAL			350
6676917	ELBOW			290
6676918	HOSE			288, 294
6676927	FELT STRIP			306
6676969	FILTER			140, 162
6677108	HOUSING			362
6677111	SEAL			362, 364
6677115	RECEPTACLE			362
6677116	RETAINER			362
6677117	SCREW			362
6677118	SCREW			362
6677119	SCREW			362
6677120	COVER			362
6677136	SOCKET			324, 326, 328, 330
6677198	CAP			306
6677202	DIPSTICK			234
6677203	TUBE			234
6677216	CONNECTOR			174
6677363	CLAMP	657904	A	208
6677364	CONNECTOR			354
6677370	DECAL			176, 178
6677383	SOLENOID			92
6677485	SPACER			198
6677486	NUT			198
6677487	COVER			198
6677488	RECTIFER			198
6677490	BRACKET			198
6677491	BRACKET			198
6677492	ROTOR			198

Code for disposition of old part number

A — Use up

B — Use on other application (See PNI)

C — File PDR Report with Bobcat Parts Sales

D — Part Number Error

	Part No.	Description	Was	Code	Page
	6677493	STATOR			198
	6677494	BOLT			198
	6677495	SPACER			198
	6677496	PULLEY			198
	6677497	NUT			198
	6677504	COVER			366
	6677536	HANDLE			190
	6677817	BOLT			198
	6677818	BEARING			198
	6677819	RETAINER			198
	6677820	BEARING			198
	6677833	ARM ASSY			292
	6677834	BLADE			292
	6677835	MOTOR			290
	6677836	COVER			292
	6677837	BOLT			292
	6677839	GASKET			292
	6677840	SWIVEL ASSY			292
	6677841	WASHER			292
	6677842	NUT			292
	6677843	NUT			292
	6677844	NUT			292
	6677845	ADAPTER			292
	6677847	GROMMET			292
	6677848	SLEEVE			292
	6677973	PLUG			306
	6677983	FILTER			358
	6678067	BUSHING			142
	6678075	RINGS	6655178	A	236
	6678150	VALVE			64, 66
	6678151	COVER			362
	6678152	SEAL			362
	6678198	BOLT			292
	6678205	ALTERNATOR	6675292	A	198
*	6678207	FILTER	6674229	A	356
	6678283	HANDLE			306
	6678492	SENSOR			188
	6678548	SOCKET			288, 296
*	6678574	VALVE			106
*	6678574	VALVE	6673184	A	80, 84, 94
	6678574	VALVE			88
*	6678674	CONTROLLER	6678068	A	168, 172
*	6678675	CONTROLLER	6676514	A	326, 328
*	6678680	PANEL	6672346	A	164, 166
*	6678681	PANEL	6677175	A	164, 166
*	6678682	PANEL	6672348	A	164, 166, 320
	6678739	WASHER	6664065	A	292
	6678775	ACTUATOR	6674838	A	180, 184
*	6678891	COIL			88
*	6678892	STEM			88
*	6678893	VALVE			88

Code for disposition of old part number

A — Use up

B — Use on other application (See PNI)

C — File PDR Report with Bobcat Parts Sales

D — Part Number Error

	Part No.	Description	Was	Code	Page
	6678920	NOZZLE			292
	6678921	GUIDE			292
*	6678951	BLOCK ASSY			68
	6679068	SPACER			130
*	6679247	BOLT			44
*	6679308	SEAT BELT	6674408	A	398
*	6679476	MOTOR	6677835	A	292
*	6679820	SWITCH	6674376	A	170, 174
*	6679835	KIT			68
*	6679837	KIT			68
*	6679838	KIT			68
*	6679839	KIT			68
*	6679840	SEAL KIT			68
*	6679841	SEAL KIT			68
*	6679842	SWITCH	6675470	A	164, 166
*	6679855	BULB	6675337	A	164, 166
*	6679856	ALARM	6675390	A	164, 166
*	6679991	SEAL			206
*	6680018	KIT			68
*	6680020	SEAL KIT			68
*	6680054	ACTUATOR			356
	6700115	SPRING			214
	6700170	WASHER			40, 218
	6700182	COVER			12
	6700329	HOUSING			204
	6700330	COVER			12, 40, 42
	6700463	CUP			28
	6700533	SPACER			28
	6700535	SPACER			210
	6700599	TEE			384
	6700599	TEE	6715714	B,D	140
	6700631	GASKET			138
	6700711	AIR CLEANER			262
	6700768	U-BOLT			142
	6700782	CAP			220
	6701097	WASHER			12
	6701097	WASHER	6803867	A	204
	6701123	BOLT			208
	6701151	PIPE			208
	6701159	SHIM			220
	6701174	WASHER			14
	6701449	FILLER TUBE			32
	6701535	SPRING			18, 142
	6701552	BAFFLE			138
	6701892	CLAMP			46, 52
	6701893	CLAMP			46, 50, 52, 56
	6702102	GEAR			220
	6702103	GEAR			220
	6702135	SHAFT			220
	6702137	SHAFT			220
	6702138	HOUSING ASSY			204, 220

Code for disposition of old part number

A — Use up

B — Use on other application (See PNI)

C — File PDR Report with Bobcat Parts Sales

D — Part Number Error

	Part No.	Description	Was	Code	Page
	6702140	WASHER			220
	6702144	SHIM			220
	6702165	SHIM			220
	6702166	SHIM			220
	6702346	SCREEN			272
	6702347	SCREEN			272
	6702351	KIT			272
	6702372	LINK			142
	6702402	SHIELD			348
	6702409	BUSHING			12
	6702444	FUSE			170, 174
	6702474	RETAINER			214
	6702543	LEVER			142
	6702593	SPACER			276
	6702621	GRIP			176
	6702716	BLOCK			142
	6702797	CAP			204
	6702903	LEVER			30
	6702904	LEVER			30
	6702921	SPACER			374
	6702935	PIN			28
	6702958	BUSHING			30
	6702959	BUSHING			12
	6702971	BOLT			14
	6702986	NUT			272
	6702990	BUSHING			178, 182, 190, 352
	6703022	CLIP			214
	6703090	HANDLE			272
	6703097	GASKET			40, 42
	6703140	WASHER			212
	6703168	BEARING			216
	6703331	INSULATION			344, 404, 406
	6703363	BUSHING			28
	6703427	FOAM FILTER			138
	6703448	BUSHING			28
	6703465	ROD			218
*	6703483	PULLEY			206, 344
	6703572	PIN			28
	6703586	DECAL			134
	6703615	CLAMP			124
	6703616	BUSHING			28
	6703640	KIT			402
	6703641	DECAL			402
	6703703	GUIDE			402
	6703719	ROD			126
	6703722	ARM			126
	6703727	DECAL			372
	6703736	CAP			224
	6703879	BUSHING			142
	6703915	CHAIN			36
	6703981	MOUNT			210

Code for disposition of old part number

A — Use up

B — Use on other application (See PNI)

C — File PDR Report with Bobcat Parts Sales

D — Part Number Error

Part No.	Description	Was	Code	Page
6704012	HOSE			210
6704016	MOUNT			126
6704122	DIODE			124
6704149	BRACKET			376
6704155	TUBE			140
6704159	HOSE			140
6704240	PIVOT ASSY			30
6704242	WEDGE ASSY			30
6704248	PIVOT			30
6704287	BUSHING			28
6704288	PIN			28
6704322	MOUNT			210
6704335	HOSE			46, 50, 52, 56
6704336	HOSE			46, 50, 52, 56
6704341	MOUNT			140
6704391	PULLEY			216
6704393	BEARING			216
6704403	STOP			28
6704424	PULLEY			214
6704436	PAD			28
6704441	ENGINE			204, 222
6704443	BUSHING			214
6704444	WASHER			214
6704450	SHIELD			214
6704484	WASHER			214
6704492	HOUSING			38
6704600	STOP			30
6704601	STOP			30
6704680	COVER			12
6704695	COVER			12
6704720	BELT			126, 210
6704721	INSULATION			344, 404, 406
6704722	INSULATION			344, 404, 406
6704753	PLUG			206
6704769	INSULATION			344, 404, 406
6704786	DECAL			376
6704820	O-RING			214
6704823	BRACKET			208
6704833	BRACKET			54, 58, 284, 286
6704839	TUBE			54, 284
6704878	GASKET			36
6704892	RIVET			328
6704892	RIVET	84G-1908	B	326
6705047	BUSHING			12
6705052	BALL STUD			208
6705068	TUBE			54, 284
6705070	TEE			52, 284
6705088	DECAL			316
6705091	TAB			28
6705102	DECAL			134
6705106	WASHER			210, 332

Code for disposition of old part number

A — Use up

B — Use on other application (See PNI)

C — File PDR Report with Bobcat Parts Sales

D — Part Number Error

	Part No.	Description	Was	Code	Page
	6705112	COUPLER			126
	6705129	COUPLER			126
	6705231	WASHER			214
	6705232	WASHER			214
	6705333	MOUNT			344, 406
	6705436	TUBE			126
	6705442	HOSE			126
	6705452	LEVER			218
	6705471	MOUNT			126
	6705491	SPRING			216
	6705700	MOUNT			28
	6705711	BRACKET			212
	6705749	COVER			52, 126
	6705780	PULLEY			126
	6705847	SEAL			38
	6705848	INSULATION			344, 404, 406
	6705849	INSULATION			344, 404, 406
	6705850	INSULATION			344, 404, 406
	6705920	HANDLE			176
	6705921	HANDLE ASSY			372
	6706042	COVER			12, 40, 42
	6706043	BUSHING			210
	6706093	HOSE			124
	6706095	MOUNT			142
	6706096	MOUNT			142, 150
	6706098	GUIDE			142
	6706104	RETAINING NUT			76
	6706105	YOKE			76
	6706106	MOUNT			142
	6706144	CONNECTOR			384
	6706285	SCREEN			382
	6706349	MOUNT			14
	6706393	SHIELD			208
*	6706427	AXLE			44
	6706485	HOOK			12
	6706517	SCREW			32, 204
	6706558	DECAL			318
	6706565	KIT			176
	6706572	SET SCREW			218
	6706633	ADAPTER			384, 388
	6706718	MOUNT			40, 42
	6706737	GASKET			40, 42
	6706807	PIN			374
	6706825	LIFT EYE			374
	6706939	KIT			382
	6706968	GASKET			40, 42
	6707040	ELBOW			168, 172
	6707077	HOUSING ASSY			220
	6707078	HOUSING ASSY			220
	6707101	SEAL			60, 62, 116
	6707172	KIT			414

Code for disposition of old part number

A — Use up

B — Use on other application (See PNI)

C — File PDR Report with Bobcat Parts Sales

D — Part Number Error

Part No.	Description	Was	Code	Page
6707180	PIN			28
6707313	PEDAL MOUNT			40
6707314	PEDAL			40
6707315	ANGLE			40
6707337	SWITCH			40
6707380	SHIELD			206
6707385	SHIELD			206
6707481	DECAL			134, 314
6707514	SHIM			30
6707515	BRACE			12
6707523	SAFETY TREAD			316
6707524	SAFETY TREAD			316
6707647	BRACE			36
6707726	MOUNT			276, 372
6707789	LIGHT ASSY			342
6707822	MOUNT			384, 388
6707823	MOUNT			384, 388
6707852	DECAL			288
6707867	DECAL			318
6707869	TUBE			384, 388
6707870	TUBE			384, 388
6707871	TUBE			384, 388
6707872	TUBE			384, 388
6707923	INSULATION			344, 404, 406
6707924	INSULATION			344, 404, 406
6708009	LINK			76
6708016	GASKET			40, 42
6708018	SPRING			40, 42
6708043	BUSHING			76
6708189	TUBE			14
6708267	BOLT			40, 42
6708310	HOSE			290
6708748	TUBE			140
6708752	LIFT ARM			28
6708767	BRACKET			216
6708770	CAP			214
6708929	DECAL			318
6708981	BRACKET			208
6708987	BRACKET			12
6709022	LEVER			218
6709030	DECAL			214, 318, 404
6709170	STUD			44
6709215	BOB-TACH	SALES	D	30
6709229	BOLT			334
6709234	DISC			334
6709236	MOUNT			334
6709237	CLAMP			334
6709239	PEDAL ASSY			334
6709400	TUBE			334
6709409	TUBE			334
6709410	TUBE			334

Code for disposition of old part number

A — Use up

B — Use on other application (See PNI)

C — File PDR Report with Bobcat Parts Sales

D — Part Number Error

	Part No.	Description	Was	Code	Page
	6709415	MOUNT			204
	6709527	KEY			164, 166, 288, 296, 392
	6709545	HOSE			334
	6710166	LIFT ARM STOP			28
	6710358	DECAL			316
	6710469	MOUNT ASSY			334
	6710480	RETAINER			126
	6710573	TUBE			46, 54
	6710583	TUBE			54, 284
	6710584	TUBE			54, 284
	6710585	WASHER			214
	6710653	HOSE			32
	6710659	BUSHING			18
	6710746	SAFETY TREAD			316
	6710870	HARNESS			384
	6711280	MOUNT			54, 60
	6711524	REAR DOOR			24, 392
	6711526	HINGE			24, 26
	6711527	LATCH PLATE			24, 26
	6711628	ADAPTER			122
	6711632	MOUNTING KIT			332
	6711643	CAM			142
	6711664	GUIDE			24
	6711674	BRACKET			124
	6711698	IDLER ASSY			216
	6711699	HUB ASSY			216
	6711737	TUBE			64
	6711739	TUBE			122
	6711740	TUBE			122
	6711840	DECAL			316
	6711908	SPRING PLATE			16
	6711913	BRACKET			122
	6712050	KIT			284
	6712161	MOUNT			210
	6712365	STEP			178, 184
	6712402	MOUNT ASSY			38
*	6712703	TUBE			50, 56
	6712703	TUBE			46, 52
	6712704	TUBE			46, 52
	6712705	TUBE			46, 52
	6712706	TUBE			46, 52
	6712826	CHAINCASE			12, 36
	6712854	HOSE			126
	6712876	TUBE			122
	6712877	TUBE			124
	6712970	PULLEY			344, 404, 406
*	6712971	PULLEY			344, 404, 406
	6712980	TUBE			46, 50, 52, 56
	6712981	TUBE			46, 50, 52, 56
	6713027	TUBE			124
	6713028	TUBE			124

Code for disposition of old part number

A — Use up

B — Use on other application (See PNI)

C — File PDR Report with Bobcat Parts Sales

D — Part Number Error

Part No.	Description	Was	Code	Page
6713040	SPRING			30
6713043	SPACER			178, 182, 190, 352
6713060	HOSE			384
6713115	PEDAL			340
6713116	BUSHING			340
6713124	ADAPTER			126
6713125	HOSE			122
6713338	HOSE			46, 50, 52, 56
6713349	GRIP			178, 182, 190, 352
6713370	PIN			214, 216
6713456	SHAFT			38, 40, 42
6713507	DECAL			316
6713589	CLEVIS			18
6713792	MOUNT			276
6713793	BRACKET			276
6713821	WIRING KIT			170
6713850	MOUNT			124
6713887	BOLT			18
6713898	COVER			178, 182, 190, 352
6713902	TUBE			124
6714037	LATCH			392
6714126	DOOR STOP			24, 26
6714134	ELBOW			128
6714210	SPRING			24
6714212	PULLEY ASSY			216
6714242	DECAL			318
6714278	GUIDE			40, 42
6714352	HOSE			126
6714361	WEIGHT			134, 312, 314
6714423	HOSE			122
6714428	SPACER			170, 384
6714533	DECAL			316, 318
6714543	GASKET			222, 224
6714591	MAIN FRAME			12
6714726	PLUG			180, 184, 188
6714810	PIN			28
6714889	HOSE			208
6714901	ELBOW			140
6714902	ELBOW			138
6714904	TEE			122
6714979	BRACKET			168, 172
6715106	INSULATION			344, 404, 406
6715132	RETAINER			170, 174
6715142	FAN			204
6715143	SET SCREW			206
6715163	BUSHING			142
6715164	SLEEVE			144
6715165	FLYWHEEL			214
6715183	ELBOW			32
6715184	ADAPTER			48, 54
6715185	ADAPTER			64

Code for disposition of old part number

A — Use up

B — Use on other application (See PNI)

C — File PDR Report with Bobcat Parts Sales

D — Part Number Error

	Part No.	Description	Was	Code	Page
	6715186	ADAPTER			136
	6715191	ELBOW			136
	6715197	CLAMP			170, 174
	6715239	HOSE			344, 404, 406
	6715240	HOSE			344, 404, 406
*	6715251	HOSE			138
	6715287	SPACER			332
	6715318	TOOL HOLDER			24
	6715330	HOSE			384
	6715365	HARNESS			319, 321
	6715371	INSULATION			344, 404, 406
	6715372	INSULATION			344, 404, 406
	6715428	DECAL			404, 406
	6715478	BELT			204
	6715653	TEE			140
	6715656	TEE			46, 52
	6715659	HARNESS			276
*	6715716	ELBOW			50, 56
	6715716	ELBOW			54, 58, 284, 286
	6715744	BUSHING			344, 406
	6715860	SEAT BAR			18
	6715863	BRACKET			18
	6715864	BUSHING			18
	6715865	BUSHING			18
	6715866	BUSHING			18
	6715924	PULLEY			206
	6715957	COVER			178
	6715975	HARNESS			168
	6716089	ADAPTER			122
	6716090	ADAPTER			122
	6716228	BRAKE			40, 42
	6716408	WASHER			210
	6716419	HARNESS			378
	6716545	ROD			142
	6716571	LOUVER			204
	6716572	LOUVER			204
	6716601	PIN			28
	6716621	COVER			22
	6716627	TUBE			46, 52
	6716628	TUBE			46, 52
	6716744	SCREW			170
	6716826	BOLT			178, 182, 352
	6716843	WASHER			44
	6716916	WASHER			178, 184, 188
*	6716977	BELLCRANK			142
	6716977	BELLCRANK			178, 184, 188
	6717146	SPACER			288, 296
	6717208	SHIELD			22
	6717343	DECAL			316
	6717360	WINDOW			288
	6717369	BRACKET			288, 296

Code for disposition of old part number

A — Use up

B — Use on other application (See PNI)

C — File PDR Report with Bobcat Parts Sales

D — Part Number Error

	Part No.	Description	Was	Code	Page
	6717393	LEVER			178, 182, 188
	6717401	PLUG			34
	6717402	BUSHING			34
	6717478	INLET			204
	6717515	INSULATION			320
	6717517	INSULATION			320
	6717518	INSULATION			320
	6717519	INSULATION			320
	6717520	INSULATION			320
*	6717566	ROD			218
	6717569	DIODE			168, 180
	6717572	TANK			32
	6717579	GASKET			32, 170, 174
	6717593	HINGE			290, 296
	6717643	DUCT			356
	6717644	DUCT			356
	6717666	BUSHING			28
	6717706	COIL			96, 100, 104
	6717706	COIL	6665759	A	80, 84
	6717820	BAR			76
	6717870	TRACK			306
	6717871	TRACK			306
	6717872	TRACK			306
	6717873	TRACK			306
	6717874	WINDOW			306, 320
	6717907	DECAL			318
	6717911	TUBE			64
	6717987	HOSE			368
	6718034	FUSE			170, 174
	6718099	TUBE			48
	6718101	COVER			16
	6718175	SCREEN			356
	6718177	HARNESS			122
	6718181	ELBOW			138
	6718198	HARNESS			342
	6718200	DECAL			16
	6718237	HOSE			208
	6718260	BATTERY PAN			168, 172
	6718271	DECAL			316
	6718272	DECAL			318
	6718275	DECAL			316
	6718291	GRILL			208
	6718295	HARNESS			290
	6718298	KIT			414
	6718317	TANK			136
	6718326	MOUNT			350
	6718353	HOSE			136
	6718376	HINGE			290, 298
	6718398	DECAL			404
	6718398	DECAL	6715563	A	318
	6718411	KIT			350

Code for disposition of old part number

A — Use up

B — Use on other application (See PNI)

C — File PDR Report with Bobcat Parts Sales

D — Part Number Error

Part No.	Description	Was	Code	Page
6718415	SWITCH			168, 172
6718426	HARNESS			330
6718489	INSULATION			16
6718506	PIN			180, 184, 188
6718519	BAND			136
6718520	COVER			288, 296
6718521	HANDLE			290, 298
6718578	TEE			368
6718579	DECAL			356
6718580	PANEL			320
6718645	HARNESS			122
6718659	HOUSING			168, 172
6718661	ELBOW	6715655	B,D	140
6718698	DECAL			318
6718698	DECAL	6579510	B	316
6718699	DECAL			178, 184
6718702	DECAL			178
6718703	DECAL			316
6718704	DECAL			178, 184
6718706	DECAL			178, 184, 188
6718723	WASHER			28
6718750	MOUNT			330
6718760	COVER			22
6718774	DECAL			22, 174
6718784	COVER			14
6718796	PLUG			12, 24, 26
6718803	KIT			356
6718804	KIT			320
6718808	KIT	6718807	B,D	288
6718812	KIT			330
6718820	HARNESS			276
6718822	KIT			276
6718833	BRACKET			348
6718834	BRACKET			348
6718837	SPACER			356
6718870	HARNESS			164
6718871	HARNESS			168
6718872	HARNESS			278, 350, 410
6718873	HARNESS			350
6718887	PANEL			356
6718924	KIT			348
6718948	ADAPTER			168
6718954	HOSE	6578808	A	46, 52
6719037	STRIKER			306
6719038	PLUG			164, 320
6719038	PLUG	6807730	A	166
6719043	HORN KIT			372
6719048	MOUNT			218, 224
6719056	BLOCK			42
6719056	BLOCK	6705898	B,D	40

Code for disposition of old part number

A — Use up

B — Use on other application (See PNI)

C — File PDR Report with Bobcat Parts Sales

D — Part Number Error

	Part No.	Description	Was	Code	Page
	6719057	BLOCK			42
	6719057	BLOCK	6705897	B,D	40
	6719059	CABLE			168
	6719060	CABLE			168
	6719063	STOP			306
	6719064	MOUNT	6719005	A	14
	6719065	COVER			306
	6719080	HOSE			368
	6719084	BOLT			164, 166
	6719108	HOSE			122
*	6719144	HOSE			370
	6719144	HOSE			368
	6719151	HARNESS			372
	6719155	HOSE	6714594	A	406
	6719184	BRACKET			376
	6719185	BRACKET			376
	6719230	BRACKET			170, 174
	6719323	KIT			376
	6719324	SPACER			376
	6719332	INSULATION			344, 404, 406
	6719372	INSULATION			344, 404, 406
	6719413	WINDOW			306
	6719434	HARNESS			326
	6719441	DECAL			326
	6719442	MOUNT			326
	6719448	MAGNET			326, 328
	6719490	LIFT EYE			374
	6719503	CONTAINER			16
	6719504	INSULATION			16
	6719524	STRIKER			24
	6719525	BAR			24, 26
	6719550	TUBE			24
	6719562	MOUNT			170
	6719563	KIT			316, 354
	6719649	MUFFLER			344, 406
	6719649	MUFFLER	6715250	B,D	404
	6719653	HOSE			62
	6719653	HOSE	6711656	B,D	60
	6719672	OPERATOR CAB			14, 16
	6719711	CHANNEL			182, 190, 352
	6719712	CHANNEL			182, 190, 352
	6719715	STRAP			190, 266
	6719716	MOUNT			190, 266
	6719766	STOP			24, 26
	6719802	HARNESS	6719720	A	168
	6719803	HARNESS	6718913	B	168
	6719803	HARNESS	6718913	B,D	180
	6719809	HOSE			388
	6719825	BOLT	5CM-1025	B	216
	6719826	BOLT	5CM-1035	B	210
	6719827	BOLT	6CM-1225	B	210

Code for disposition of old part number

A — Use up

B — Use on other application (See PNI)

C — File PDR Report with Bobcat Parts Sales

D — Part Number Error

Part No.	Description	Was	Code	Page
6719828	BOLT	6CM-1230	B	210, 214
6719829	BOLT	6CM-1235	B	212
6719834	SPACER			182, 190, 266, 352
6719835	SLEEVE			182, 190, 352
6719851	SHIELD			206
6719854	KIT			278
6719857	KIT	6718872	A	410
6719906	SPACER			374
6719945	TUBE			384
6719946	TUBE			384
6719947	TUBE			384
6719948	TUBE			384
6719949	TUBE			384
6719950	TUBE			384
6720038	INSTRUCTIONS			280
6720592	INSTRUCTIONS			348
6720621	INSTRUCTIONS			272
6720736	HEATER			280
6722147	HOLDER			258, 260
6722344	FLUID			1, 416
6722759	INSTRUCTIONS			176
6722781	PAINT			416
6722782	PAINT			416
6722783	PAINT			416
6722784	PAINT			416
6722785	PAINT			416
6722786	PAINT			416
6722787	PAINT			416
6722788	PAINT			416
6722789	PAINT			416
6722861	INSTRUCTIONS			382
6722872	INSTRUCTIONS			374
6722907	KIT			44, 274
6722908	INSTRUCTIONS			274
6724094	ANTI-FREEZE			416
6724354	ANTI-FREEZE			416
6724380	INSTRUCTIONS			334
6724385	INSTRUCTIONS			388
6724482	INSTRUCTION			332
6724522	INSTRUCTIONS			284, 286
6724557	OIL			1, 416
6724558	OIL			1, 416
6724559	OIL			1, 416
6724775	LEVER KIT			30
6724776	LEVER KIT			30
6725042	SHIELD			288, 296
6725081	MOUNT			384
6725128	ADAPTER			184, 188
6725128	ADAPTER	6718801	A	178
6725165	MOUNT			184
6725192	HOSE	6719654	A	136

Code for disposition of old part number

A — Use up

B — Use on other application (See PNI)

C — File PDR Report with Bobcat Parts Sales

D — Part Number Error

	Part No.	Description	Was	Code	Page
	6725200	PLATE			288, 298
	6725210	BUSHING			12
	6725212	IDLER ARM	6703507	A	214
	6725224	KIT			374
	6725256	WEIGHT			134, 314
	6725273	HARNESS			320, 356
	6725275	HARNESS			320
	6725297	BRACKET			376
	6725299	BRACKET			376
	6725300	BRACKET			376
	6725301	COVER			16
	6725302	GASKET			22, 170
	6725303	FRAME			16
	6725316	INSULATION			344, 404, 406
	6725364	KIT			404
	6725365	HOSE			384
	6725366AR	KIT			316, 318
	6725366BR	KIT			316, 318
	6725366JP	KIT			316, 318
	6725367AR	KIT			316, 318
	6725367BR	KIT			316, 318
	6725370	DECAL			398
	6725373	SPRING PLATE			16
	6725390	HARNESS			356
	6725421	HANDLE			310
	6725427	BRACKET			212
	6725502	ELBOW	23F-1	A	262
	6725513	DECAL PACKAGE			356
	6725528	DECAL	6707184	A	316
	6725898	KIT			346
	6725906	BRACKET			346
	6725933	HARNESS			358
	6725933	HARNESS	6717877	A	356
	6725934	HARNESS			358
	6725936	HARNESS			358
	6725937	CLAMP			296
	6725938	CLAMP			296
	6725941	KIT			296
	6725946	KIT			310
*	6726277	CLAMP			50, 56
	6726303	DECAL			310
	6726377	HOSE			138
	6726386	KNOB			358
	6726423	DECAL	6702916	A	374
	6726427	KIT			300
	6726433	SPACER	6704829	A	204
	6726435	DOOR			288
	6726479	ADAPTER			122
	6726503	BRACKET	6718970	A	170
	6726539	PULLEY			214
	6726573	BRACKET			266

Code for disposition of old part number

A — Use up

B — Use on other application (See PNI)

C — File PDR Report with Bobcat Parts Sales

D — Part Number Error

	Part No.	Description	Was	Code	Page
	6726574	RETAINER			194
	6726601	HARNESS			172
	6726608	COVER			358
	6726621	SCREW			364, 366
	6726679	MOUNT			266
	6726679	MOUNT	6564658	A	76
	6726680	PEDAL			266
	6726680	PEDAL	6564656	A	76
	6726681	LINK			188, 266
	6726695	STOP PLATE			194
	6726898	BELT			214
	6726925	HARNESS			186
	6726932	DOOR			296
	6726933	FLYWHEEL			214
	6726938	SHIELD			214, 216
	6726945	MOUNT			328
	6727065	BOLT			180, 182, 186, 190, 266, 352, 354
	6727084	BRACKET			212
	6727129	HARNESS	6727130	B	186
	6727140	FILTER			356
	6727155	DECAL			184, 354
	6727176	KIT			324
	6727178	HARNESS			166
	6727190	HARNESS			320
	6727231	SHIELD			188, 194
	6727284	SHIELD			188, 194
	6727298	KIT			180, 352
	6727299	INSULATION	6719425	A	320
	6727308	DECAL	6702827	A	318
	6727309	DECAL	6702826	A	318
	6727310	DECAL	6711329	A	316
	6727311	DECAL	6714139	A	318
	6727328	HARNESS			354
	6727345	MOUNT	6704342	A	140
	6727347	TUBE			140
	6727468	HARNESS			270
	6727475	CAP	6577785	A	136
	6727496	PIN			188, 266
	6727528	CABLE			172
	6727544	PLATE			28
	6727545	PLATE			28
	6727580	MOUNT			188
*	6727619	KIT			286
*	6727626	TUBE			58, 286
*	6727627	TUBE			56, 286
*	6727628	TUBE			56, 286
*	6727629	TUBE			58, 286
*	6727630	TUBE			50
	6727639	ELBOW			46, 50, 52, 56
*	6727659	TEE			50, 56
*	6727686	HOSE			50, 56

Code for disposition of old part number

A — Use up

B — Use on other application (See PNI)

C — File PDR Report with Bobcat Parts Sales

D — Part Number Error

	Part No.	Description	Was	Code	Page
*	6727687	HOSE			50, 56
*	6727702	TUBE			62
	6727709	KIT			383, 385
	6727739	KIT			326, 328
	6727752	GASKET	6575580	A	208, 246
*	6727786	KIT	6728990	A	366
	6727801	TUBE	6711738	A	64
	6727802	TUBE	6711746	A	122
*	6727837	COVER			50, 58
	6727837	COVER			12
	6727847	COVER			358
	6727869	SENDER			172
	6727869	SENDER	6718417	B	168
	6727913	DECAL	6714534	A	316, 318
	6727917	SAFETY TREAD			316
	6727926	DECAL			188, 266
	6727941	DECAL			188, 266
	6728062	MOUNT	6726613	A	216
	6728149	CAP	6532508	A	136
	6728327	DECAL	6718701	A	316
	6728328	DECAL			184
	6728337	SPACER			210
	6728473	BOLT	38C-1036	B	30
	6728539	DECAL			188, 266
	6728567	KIT			360, 364
	6728626	HARNESS			172
	6728629	WINDOW			306, 320
	6728742	HARNESS			180, 186, 354
	6729008	CABLE			174
	6729009	SEAL			306
	6729010	SEAL			306
	6729011	SEAL			306
	6729012	INSULATION			14
	6729013	INSULATION			14
	6729023	HARNESS			188, 266
	6729054	HARNESS			186
	6729055	HARNESS			172
	6729144	HOSE	6707231	A	344, 406
	6729145	HOSE			62
	6729145	HOSE	6712848	A	60, 136
	6729146	HOSE	6712856	A	122
*	6729155	HOSE			68
	6729155	HOSE	6714594	A	344
	6729173	COVER			42
	6729233	KIT			320
	6729380	HARNESS	6727177	A	328
	6729467	SPACER			188, 266
	6729594	HANDLE			180, 186, 190, 354
	6729595	HANDLE			180, 186, 354
	6729600	SPACER			180, 184, 190, 266, 354
	6729688	LATCH			392

Code for disposition of old part number

A — Use up

B — Use on other application (See PNI)

C — File PDR Report with Bobcat Parts Sales

D — Part Number Error

	Part No.	Description	Was	Code	Page
	6729739	HARNESS			290
	6729776	WINDOW			292
*	6729853	HOSE			32
	6729853	HOSE			32
	6729896	TIRE			412
	6729900	TIRE			412
*	6729908	MOUNT			62
*	6729909	TUBE			62
*	6729910	TUBE			50, 56
*	6729911	TUBE			50, 56
*	6729912	TUBE			64
*	6729913	TUBE			50, 56
	6729939	LATCH PLATE			26
	6729956	LEVER			142
	6729957	BELLCRANK			142
	6729991	REAR DOOR			26, 392
	6730107	TIRE			412
	6730123	HARNESS			292
*	6730142	TEE			50, 56, 286
	6730291	BRACKET			328
	6730769	HOSE			136
	6730771	RIM	6565239	A	412
	6730772	RIM	6565240	A	412
	6730775	RIM	6705109	A	412
	6730830	TANK	6718627	A	290
*	6730915	HOSE			50, 56
*	6730916	TUBE			50, 56
*	6730917	TUBE			50, 56
	6730996	HOSE			370
	6730997	BUSHING	711273	A	30
	6730998	HOSE			370
	6730999	TUBE ASSY	6576029	A	204
	6731049	ADAPTER			370
*	6731060	SHIELD	6717812	A	212
	6731060	SHIELD	6717812	A	12, 128
	6731085	ELBOW			370
	6731121	PLUG	11F-12	A	12
	6731150	KIT			266
	6731158	KIT			368, 370
	6731217	CHAIN			36
*	6731478	EXIT TAG	6559515	A	306, 320
*	6731507	DECAL			318
*	6731508	DECAL			318
*	6731509	DECAL			318
*	6731732	CLAMP			68
*	6731757	DECAL			68, 316
*	6731994	DECAL			344
*	6732001	KIT	6714973	A	392
*	6732023	CONNECTOR			370
*	6732127	TUBE			68
*	6732128	TUBE			68

Code for disposition of old part number

A — Use up

B — Use on other application (See PNI)

C — File PDR Report with Bobcat Parts Sales

D — Part Number Error

	Part No.	Description	Was	Code	Page
*	6732129	TUBE			68
*	6732130	TUBE			68
*	6732134	TUBE			68
*	6732199	GASKET	6666790	A	222, 244, 368
*	6732219	KIT	6725168	A	398
*	6732220	HOSE			68
*	6732318	SPACER			206
*	6732350	WINDOW	6675215	A	300
*	6732351	WINDOW	6725935	A	296
*	6732416	BELT			204
*	6732457	WASHER			206
*	6732715	LATCH	6729685	A	26
	6801059	WASHER			292
	6801167	PLUG			94, 100, 104, 106, 110
	6803092	BONNET			96, 100, 102, 106, 110
	6803325	SEAL KIT			72
	6803605	SEAL KIT			96, 100, 104, 108, 112
	6804592	NUT			70
	6804606	SEAL KIT			70
	6804630	CYLINDER			70
	6804631	ROD			70
	6804632	PISTON			70
	6804790	DECAL			16, 316
	6805102	BUSHING			80, 84, 88, 92
	6805150	BUSHING			70
	6805241	CONNECTOR			80, 84, 88, 96, 100, 104, 108, 136
	6805243	TEE			96, 100, 104, 108
	6805696	TEE			80, 84, 88
	6806007	SPRING			80, 84, 88, 90
	6806075	SEAL KIT			74
	6806941	SEAL KIT			80, 84, 88, 92
	6809425	SEAL KIT			88, 108, 112
	6809425	SEAL KIT	6586461	A	80, 84, 96, 100, 104
	6809448	SEAL KIT			88, 108, 112
	6809448	SEAL KIT	6628835	A	80, 84, 96, 100, 104
	6809726	ROLLER			26
	6809727	CHANNEL			26
	6809734	BUSHING			26
	6810132	SPRING			26
	6810141	SPRING			26
	6811910	LATCH			26
*	6811994	CYLINDER			74
*	6812031	BLOCK			86
*	6812031	BLOCK	6805657	A	78, 82
*	6812504	CYLINDER			72
*	6812646	ADAPTER			62, 64, 138
*	6812666	VALVE			86
	6900366	INSTRUCTIONS			312
	6900410	INSTRUCTIONS			314
	6900848	INSTRUCTIONS			350
*	6900850	INSTRUCTIONS	6901497	A	370

Code for disposition of old part number

A — Use up

B — Use on other application (See PNI)

C — File PDR Report with Bobcat Parts Sales

D — Part Number Error

	Part No.	Description	Was	Code	Page
	6900850	INSTRUCTIONS			358
	6900851	INSTRUCTIONS			322
	6900853	INSTRUCTIONS			308
	6900855	INSTRUCTIONS			330
	6900857	INSTRUCTIONS			276
	6900861	INSTRUCTIONS			396
	6900888	INSTRUCTIONS			376
	6900913	INSTRUCTIONS			372
	6900921	INSTRUCTIONS			326
	6900991	INSTRUCTIONS			278
	6900992	INSTRUCTIONS			410
	6901003	INSTRUCTIONS			404, 406
	6901010	INSTRUCTIONS			398
	6901011	INSTRUCTIONS			400
	6901013	INSTRUCTIONS			298
	6901013	INSTRUCTIONS	6900854	A	290, 308
	6901025	INSTRUCTIONS			346
	6901029	INSTRUCTIONS			310
	6901036	INSTRUCTIONS			300
	6901067	KIT			316, 318
	6901076	INSTRUCTIONS			324
	6901100	INSTRUCTIONS			354
	6901116	INSTRUCTIONS			328
	6901120	INSTRUCTIONS			366
	6901213	INSTRUCTIONS			364
	6901222	INSTRUCTIONS	6901004	A	386
	6901492	INSTRUCTIONS			266
*	6901656	INSTRUCTIONS	6570762	A	392
	7000004	SENSOR			174
	1CM-620	BOLT			288, 296
	1CM-635	BOLT			296
	1CM-640	BOLT			288, 296
	1CM-820	BOLT			142, 368
	1CM-830	BOLT			414
	1CM-835	BOLT			244
	1CM-865	BOLT			244
	1CM-870	BOLT			210, 224, 370
	1CM-880	BOLT			224
	1CM-890	BOLT			210
	1CM-895	BOLT			224
	1CM-1220	BOLT			168
	1CM-8100	BOLT			212
	1DM-6	NUT			224, 252
	1DM-8	NUT			252
	1EM-60	WASHER			250
	1EM-80	WASHER			252
	2DM-8	NUT			230, 248
	2EM-8	WASHER			224, 230, 232, 250
	3DM-12	NUT			226
	4CM-616	BOLT			254
	4CM-620	BOLT			224, 252

Code for disposition of old part number

A — Use up

B — Use on other application (See PNI)

C — File PDR Report with Bobcat Parts Sales

D — Part Number Error

Part No.	Description	Was	Code	Page
4CM-628	BOLT			250
4CM-635	BOLT	1CM-635	B	288
4CM-814	BOLT			238
4CM-816	BOLT			232, 234, 240
4CM-818	BOLT			240
4CM-822	BOLT			244, 246, 254
4CM-825	BOLT			236
4CM-828	BOLT			236, 242
4D-20	NUT			374
4DM-5	NUT			168
4DM-6	NUT			288, 296
4DM-10	NUT			168, 172
4F-6106	PIN			18
4FM-18	PLUG			226
4FM-45	PLUG			226
5HM-13	CLAMP			34
5HM-14	CLAMP			34
5HM-20	CLAMP			368, 370
5HM-24	CLAMP			32
5HM-27	CLAMP			122
5HM-42	CLAMP			126, 136, 204
5HM-58	CLAMP			32
5JM-14	CIR-CLIP			230
5JM-24	CIR-CLIP			238
6CM-1220	BOLT			126
6E-4	WASHER			276
6E-5	WASHER			164, 166, 172, 212, 350
6E-6	WASHER			168, 172
6EM-60	WASHER			224, 226, 250, 252, 254, 288, 296
6EM-80	WASHER			224, 230, 232, 242, 244, 246, 370
6J-807	KEY			148, 214
6J-1664	WOODRUFF KEY			44
7D-4	NUT			60, 62
7D-6	NUT			204
7J-2010	KEY			220
7J-2108	KEY			204
8C-616	BOLT			142
8D-6	NUT			142, 334
9G-512	SCREW			220
9G-620	BOLT			30
10C-410	BOLT			306
10C-416	BOLT			306
10C-616	BOLT			18
10H-25	GREASE ZERK			28, 46, 50, 52, 56
10H-35	GREASE ZERK			28, 30
10J-13	BALL			224
10J-5	BALL			238
10K-8	TEE			122
10KN-5	TEE			384, 388
10KN-6	TEE			46, 54
11H-15	GREASE ZERK			28, 46, 50, 52, 56

Code for disposition of old part number

A — Use up

B — Use on other application (See PNI)

C — File PDR Report with Bobcat Parts Sales

D — Part Number Error

Part No.	Description	Was	Code	Page
12D-8	NUT			40
12D-10	NUT			178, 182, 346, 352
12H-15	GREASE ZERK			28, 46, 50, 52, 56
12KN-6	ELBOW			368
14J-5032	PIN			30
15EM-180	WASHER			224
15JM-48	KEY			252
15JM-410	KEY			226
15K-6	ADAPTER			210
15K-8	ADAPTER			124
15KN-6	ADAPTER			210
15KN-8	ADAPTER			60, 64, 138
15KV-5	ADAPTER			60, 62, 64, 66, 68, 124, 136, 384
15KV-7	ADAPTER			46, 52
15KV-8	ADAPTER			140, 384
16F-2	PLUG			226
16F-8	PLUG			220
17C-410	BOLT			170, 172, 276, 372
17C-412	BOLT			40, 42, 178, 184, 276
17C-420	BOLT			288, 296
17C-428	BOLT			54, 60, 62
17C-512	BOLT			32, 170, 290, 296, 316, 368
17C-514	BOLT			188, 266
17C-516	BOLT			32, 340
17C-524	BOLT			126
17C-532	BOLT			46, 52, 334
17C-540	BOLT			46, 52, 170, 174, 374
17C-556	BOLT			210
17C-608	BOLT			188, 208, 266
17C-610	BOLT			40, 140, 214
17C-612	BOLT			16, 32, 142, 184, 188, 204, 266, 296, 334
17C-612	BOLT	17C-812	B	290
17C-616	BOLT			126, 140, 188, 204
17C-616	BOLT	17C-612	B	348
17C-620	BOLT			28, 40, 50, 56, 76, 126, 142, 214, 220
17C-620	BOLT	6717378	A	12
17C-624	BOLT			76, 296
17C-626	BOLT			142, 218
17C-628	BOLT			296
17C-632	BOLT			376
17C-640	BOLT			18, 28, 134, 312, 314, 374
17C-648	BOLT			210
17C-656	BOLT			28
17C-660	BOLT			30
17C-664	BOLT			28
17C-680	BOLT			142, 384
17C-716	BOLT			16
17C-720	BOLT			126
17C-724	BOLT			126
17C-816	BOLT			126

Code for disposition of old part number

A — Use up

B — Use on other application (See PNI)

C — File PDR Report with Bobcat Parts Sales

D — Part Number Error

Part No.	Description	Was	Code	Page
17C-820	BOLT			24, 26, 40, 42
17C-828	BOLT			212, 214
17C-830	BOLT			212
17C-1028	BOLT			374
17C-1056	BOLT			14
17C-6116	BOLT			204
17KV-3	ELBOW			384
17KV-5	ELBOW			54, 60, 62, 138, 384
17KV-7	ELBOW			54, 58, 126, 130, 284, 286
17KV-8	ELBOW			140, 344, 384, 406
18C-1224	BOLT			44
18C-1636	BOLT			44
18KV-5	ELBOW			136
18KV-8	ELBOW			60, 62, 136, 384
19KN-7	TEE			46, 52
21KN-7	ELBOW			50, 56
21KV-5	TEE			60, 62, 122, 136, 384, 388
23G-812	SCREW			40
24KN-5	PLUG			122
25E-6	WASHER			170
25E-8	WASHER			40
25E-10	WASHER			206
25E-11	WASHER			342
25E-13	WASHER			40, 42, 190, 194, 266, 276, 372
25E-14	WASHER			128, 306
25E-15	WASHER			126, 168, 172, 414
25E-16	WASHER			288, 296
25E-17	WASHER			144, 180, 184, 188, 334
25E-18	WASHER			218
25E-21	WASHER			126, 210
25E-25	WASHER			334
25G-512	BOLT			20
25G-512	BOLT	25G-501	B	14
25G-520	BOLT			20
25G-612	BOLT			326, 328
25GM-8010	SET SCREW			230
25GT-410	BOLT			178, 182, 190, 352
25K-20010	O-RING			136
25K-20016	O-RING			78, 82, 86, 90, 94, 98, 102, 106, 110, 128
25K-30508	O-RING			36
27E-6	WASHER			272, 384
27E-8	WASHER			334
29CM-820	BOLT			172, 210
29G-412	BOLT			94, 98, 102, 106, 110
29G-416	BOLT			78, 82, 86, 90, 94, 98, 102, 106, 110
29G-444	BOLT			78, 82, 86, 90
30G-416	BOLT			78, 82, 86, 90, 94, 98, 102, 106, 110
30H-19	CLAMP			276
30H-21	CLAMP			350
30H-23	CLAMP			40, 122, 372

Code for disposition of old part number

A — Use up

B — Use on other application (See PNI)

C — File PDR Report with Bobcat Parts Sales

D — Part Number Error

Part No.	Description	Was	Code	Page
30H-35	CLAMP	30H-36	B	32
30H-40	CLAMP			126
30H-42	CLAMP			378
30H-45	CLAMP			370
30H-48	CLAMP			170
30H-50	CLAMP			370
30H-62	CLAMP			188
30H-38	CLAMP			266
30H-64	CLAMP			368
31C-410	BOLT			346
31C-420	BOLT			24
31C-820	BOLT			12
31C-824	BOLT			334, 376
31C-844	BOLT	31C-841	B	376
31C-1272	BOLT			28
31H-38	CLAMP			218
35C-410	BOLT			356
35C-412	BOLT			18, 54, 58, 284, 286, 350
35C-416	BOLT			62
35C-416	BOLT	84G-3716	B,D	60
35C-508	BOLT			204
35C-512	BOLT			328, 372
35C-516	BOLT			210
35C-536	BOLT			284, 286
35C-540	BOLT			124
35C-610	BOLT			126
35C-612	BOLT			76, 142, 208, 398
35C-616	BOLT			170, 174, 344, 406
35C-620	BOLT			168, 172, 210, 216, 298
35C-624	BOLT			144
35C-1032	BOLT			36
36K-6	CAP			210
36K-7	CAP			48, 50, 126
37C-412	BOLT			350
37C-424	BOLT			356
37C-512	BOLT			276, 342, 356, 378
37C-540	BOLT			170
37C-612	BOLT			24
37C-620	BOLT			76, 266
37C-628	BOLT			134
37C-632	BOLT			314
37C-644	BOLT			24
37C-820	BOLT			24
38C-610	BOLT			218
38C-820	BOLT			214
38C-824	BOLT			26
38C-840	BOLT			26
38C-856	BOLT			24, 26
40DM-8	NUT			414
40K-2	PLUG			244
42H-32	CLAMP			208

Code for disposition of old part number

A — Use up

B — Use on other application (See PNI)

C — File PDR Report with Bobcat Parts Sales

D — Part Number Error

Part No.	Description	Was	Code	Page
42H-52	CLAMP			208, 344, 404, 406
42HS-4	CLAMP	6515575	B	32
43C-408	BOLT			188, 194
43C-524	BOLT			114
43C-532	BOLT			60, 62, 114
43C-616	BOLT			172
43C-616	BOLT	35C-616	B	168
43C-848	BOLT	17C-848	B	210
43C-852	BOLT			332
43DM-8	NUT			172
45C-624	BOLT	45C-620	B	142
45G-1006	BOLT			346
46D-5	NUT			288, 296
47C-820	BOLT			40, 42
47C-832	BOLT			212
47K-8	PLUG			148, 152
53D-6	NUT			14, 18
53D-10	NUT			14
53DM-8	NUT			212
54K-20002	O-RING			80, 84, 88, 92, 94, 98, 102, 106, 110
54K-20028	O-RING			114
54K-30126	O-RING			72, 74
54K-30300	O-RING			70
54K-60128	O-RING			72, 74
54K-60304	O-RING			70
55D-4	NUT			284, 286
55D-6	NUT			24, 296
55K-204	O-RING			80, 84, 88, 92, 94, 98, 102, 106, 110, 114
55K-212	O-RING			80, 84, 88, 92, 94, 98, 102, 106, 110, 114
57D-4	NUT			54, 58
57D-5	NUT			54, 56, 210, 284, 286
57D-6	NUT			76, 134, 266, 314, 376
57D-8	NUT			24, 376
57G-608	SCREW			356
58K-14	O-RING			78, 82, 86, 90, 94, 98, 102, 106, 110
58K-17	O-RING			78, 82, 86, 90, 94, 98, 102, 106, 110, 128
58K-18	O-RING			136
58K-116	O-RING	80K-116	A	120
58K-120	O-RING			184, 188
58K-124	O-RING			80, 84, 86, 90, 96, 100, 104, 108, 110
58K-127	O-RING			80, 84, 88, 92, 96, 100, 104, 108, 110
58K-140	O-RING			72, 74
58K-238	O-RING			70
59D-4	NUT			306, 350
59D-4	NUT	85D-4	B	218
59D-5	NUT			14, 168, 174, 290, 296, 356
59D-6	NUT			24, 26, 170
59D-8	NUT			14

Code for disposition of old part number

A — Use up

B — Use on other application (See PNI)

C — File PDR Report with Bobcat Parts Sales

D — Part Number Error

Part No.	Description	Was	Code	Page
59G-616	BOLT			276
61D-4	NUT			168, 172, 180, 276, 288, 296
61D-5	NUT			24, 26, 208, 276, 290, 298, 316
61D-6	NUT			24, 28, 32, 134, 184, 204, 208, 214, 272, 312, 314
61D-6	NUT	61D-8	B	290
62D-4	NUT			168, 172, 218
62D-6	NUT			126, 144, 334
62D-8	NUT			126
66D-4	NUT			172
66D-4	NUT	86D-4	B	218
69G-436	BOLT			180, 184, 188
72F-1	DRAIN COCK			32
73G-656	BOLT			214
73K-328	WASHER			72, 74
73K-338	WASHER			70
77FN-7	ELBOW			48
79K-2	O-RING			390
79K-4	O-RING			66, 384
79K-5	O-RING			146
79K-6	O-RING			96, 100, 104, 108, 146, 388
79K-6	O-RING	6634874	B	120
79K-7	O-RING			80
79K-8	O-RING			78, 82, 86, 90, 94, 98, 102, 106, 110, 120, 124, 130, 148, 152, 210
79K-10	O-RING			78, 82, 84, 86, 88, 90, 94, 98, 102, 106, 110, 122, 130, 140, 148
79K-12	O-RING			64, 68, 126, 136, 138, 150, 154
79K-16	O-RING			122, 126
80K-14	WASHER			78, 82, 86, 90, 94, 98, 102, 106, 110
83D-4	NUT			18, 54, 60, 62, 276, 356, 372
83D-5	NUT			122
83D-5	NUT	61D-5	B	372
83D-6	NUT			76, 142, 326, 328, 348, 384
83D-7	NUT			126
83D-8	NUT			12, 14, 210
83D-10	NUT			374
83F-3	ELBOW			334
84G-3110	BOLT			12, 356
84G-3112	BOLT			12, 14, 22, 28, 32, 64, 124, 170, 208, 276, 326, 328, 330, 344, 404, 406
84G-3116	BOLT			34
84G-3708	BOLT			204, 208
84G-3710	BOLT			12, 50, 56, 188, 208
84G-3712	BOLT			12, 22, 40, 42, 54, 122, 126, 136, 140, 164, 166, 168, 172, 208, 210, 218, 370, 384, 388
84G-3716	BOLT			40, 42, 54, 126, 168, 212, 218, 272, 344, 384, 404, 406
84G-3720	BOLT			40, 42, 268
84G-3724	BOLT			218, 344, 406

Code for disposition of old part number

A — Use up

B — Use on other application (See PNI)

C — File PDR Report with Bobcat Parts Sales

D — Part Number Error

Part No.	Description	Was	Code	Page
84G-3728	BOLT			46, 50, 52, 56
84G-3732	BOLT			66, 68, 122
84G-3740	BOLT			68
85D-5	NUT			46, 52, 218, 340, 378
85D-5	NUT	85D-8	B	170
85D-6	NUT			16, 26, 28, 30, 126, 210, 344, 374, 406
85D-7	NUT			16
85D-8	NUT			14, 126, 210, 214
86F-3	NUT			334
86F-5	NUT			122, 384, 388
86F-7	NUT			64
86F-8	NUT			122, 140
87D-5	NUT			374
87G-1008	SCREW			356
88F-3	ADAPTER			334
88F-5	ELBOW			388
88FN-3	ELBOW			334
88FN-5	ELBOW	88F-5	B	384
90KV-5	PLUG			70, 72, 74
90KV-8	PLUG			80, 84, 88, 92, 94, 98, 102, 106, 110
91D-5	NUT			168, 174, 334
91D-6	NUT			68, 170, 174, 334
91D-7	NUT			288, 296
91G-416	BOLT			306
91G-416	BOLT	88G-1216	B,D	320
92D-12	NUT			214
92D-16	NUT			72, 74
93G-824	BOLT	73G-824	B	36
95D-5	NUT			14, 188, 266, 368
95D-6	NUT			40, 46, 50, 52, 56, 70, 142, 188, 218, 220, 266, 296
95D-6	NUT	59D-6	B	64
95D-6	NUT	91D-6	A	76
95K-4	O-RING			130
95K-6	O-RING			70, 72, 74
95K-12	O-RING			88, 92, 106, 110
95K-12	O-RING	99K-12	B	80, 84, 94, 98, 102
96D-8	NUT	86D-8	B	204
97K-4	O-RING			334, 384
97K-6	O-RING			54, 60, 62, 66, 68, 80, 84, 88, 96, 100, 104, 108, 122, 124, 136, 138, 384, 388
97K-8	O-RING			46, 48, 50, 54, 56, 58, 210, 284, 286
97K-10	O-RING			46, 48, 50, 52, 54, 56, 58, 64, 126, 130, 284, 286
97K-12	O-RING			60, 62, 64, 122, 136, 138, 140, 344, 384, 406
98D-6	NUT			144, 180, 184, 188
98F-3	TEE			334
98G-412	BOLT			194
99K-4	O-RING			66
99K-5	O-RING			32, 130

Code for disposition of old part number

A — Use up

B — Use on other application (See PNI)

C — File PDR Report with Bobcat Parts Sales

D — Part Number Error

	Part No.	Description	Was	Code	Page
	99K-6	O-RING			54, 60, 62, 68, 80, 84, 88, 122, 136, 140, 384
	99K-8	O-RING			124, 210
	99K-10	O-RING			46, 50, 52, 56, 126, 130, 284, 286
	99K-12	O-RING			60, 62, 64, 68, 122, 136, 138, 140, 344, 384, 406
	99K-16	O-RING			136
*	NAP	BUSHING	6731155	A	30
*	NAP	CROSSMEMBER	6674317	A	164, 166
*	NAP	CYLINDER	6589259	A	72
*	NAP	HOSE	6729853	A	32
*	NAP	SENSOR	6712397	A	178
*	NAP	SENSOR	6712398	A	178
*	NAP	SPACER	6704907	A	204
*	NAP	TIRE	6646601	A	412
*	NAP	VALVE	6673184	A	98
*	NAP	VALVE	6806739	A	78
	NAP	BELLCRANK	6703880	A	142
	NAP	BRACKET	6704146	A	376
	NAP	BRACKET	6704151	A	376
	NAP	BUSHING	6707494	A	12
	NAP	CASE	6804633	A	70
	NAP	COIL	6675498	A	360
	NAP	CONTROL	6725269	A	326
	NAP	CONTROLLER	6675495	A	326
	NAP	CONTROLLER	6676515	A	328
	NAP	COVER	6674236	A	356
	NAP	COVER	6677109	A	362
	NAP	DIPSTICK	6658245	A	234
	NAP	DOOR	6717590	A	288
	NAP	FILTER	6674230	A	356
	NAP	GAS SPRING	6719072	A	14
	NAP	GUIDE	6711907	A	16
	NAP	HANDLE	6597774	A	352
	NAP	HANDLE	6675469	A	352
	NAP	HANDLE	6717163	A	352
	NAP	HANDLE	6597774	A	178, 182
	NAP	HANDLE	6675469	A	178, 182
	NAP	HANDLE	6717163	A	178, 182
	NAP	HARNESS	6714546	A	342
	NAP	HARNESS	6715366	A	320
	NAP	HEATER COIL	6676603	A	362
	NAP	HOSE	6576386	A	32
	NAP	HOSE	6712414	A	136
	NAP	INSTRUCTIONS	6900860	A	164, 166, 320
	NAP	INSULATION	6719360	A	14
	NAP	KIT	6675318	A	396
	NAP	KIT	6718809	A	368
	NAP	KIT	6719431	A	326
	NAP	LEVER	6711644	A	142
	NAP	LEVER	6717055	A	178

Code for disposition of old part number

A — Use up

B — Use on other application (See PNI)

C — File PDR Report with Bobcat Parts Sales

D — Part Number Error

Part No.	Description	Was	Code	Page
NAP	LEVER	6717056	A	178
NAP	LEVER ASSY	6718194	A	180
NAP	LEVER ASSY	6718195	A	180
NAP	LEVER ASSY	6718201	A	180
NAP	LEVER ASSY	6718202	A	180
NAP	MOUNT	6700541	A	216
NAP	POLISH	6630190	A	416
NAP	POLISH	6630191	A	416
NAP	QUICK COUPLER	6667807	B	122
NAP	QUICK COUPLER	6667808	B	64, 122
NAP	QUICK COUPLER	6672960	B	64
NAP	REGULATOR ASSY	6677489	A	198
NAP	RELIEF VALVE	6672451	A	130
NAP	SEAL	6675546	A	306, 322
NAP	SEAL	6677114	A	362
NAP	SEAT	6674404	A	394
NAP	SEAT	6674896	A	394
NAP	SEAT BELT	6667875	A	16
NAP	SEAT BELT	6725403	A	16
NAP	STRIKER ASSY	6715157	A	24
NAP	TANK	6718317	A	136
NAP	TIRE	6513971	A	412
NAP	TIRE	6661287	A	412
NAP	TIRE	6666668	A	412
NAP	TIRE	6729035	A	412
NAP	VALVE	6665572	A	390
NAP	VALVE	6674372	A	64, 118
NAP	VALVE	6805935	A	94
NAP	WINDOW	6725360	A	306, 322
NAP	WINDOW	6725935	A	296

Code for disposition of old part number

A — Use up

B — Use on other application (See PNI)

C — File PDR Report with Bobcat Parts Sales

D — Part Number Error