1A2

INTRODUCTION AND CUSTOMER INFORMATION

JANEIRO 2005

T204231A -UN-13DEC04

RUTHZIL TRATOR COMERCIAL DE PEÇAS LTDA 11 97083-6812 ROLANDO



RIGHT SIDE VIEW OF JOHN DEERE 770D/772D MOTOR GRADER
(MANUFACTURED 2005-)

TO THE CUSTOMER

THE PART NUMBERS IN THIS PARTS CATALOG WERE CORRECT AT THE TIME THIS CATALOG WAS PUBLISHED. IT IS OUR POLICY TO CONSTANTLY IMPROVE OUR MACHINES AND THEREFORE, PART NUMBERS MAY CHANGE. WHEN ORDERING PARTS, VERIFY PART NUMBERS THROUGH YOUR DEALER.

(SPECIFICATIONS AND DESIGN SUBJECT TO CHANGE WITHOUT NOTICE.)

COPYRIGHT © 2005 DEERE & COMPANY Moline, Illinois All rights reserved

SERIAL NUMBER LOCATION

EACH 770D AND 772D MOTOR GRADER MAY HAVE EIGHT SERIAL NUMBER PLATES: ONE FOR THE PRODUCT IDENTIFICATION NUMBER, ONE FOR THE ENGINE, ONE FOR THE TRANSMISSION, ONE FOR THE HYDRAULIC PUMP, ONE FOR THE FRONT WHEEL DRIVE, ONE FOR THE DIFFERENTIAL AND ONE EACH FOR THE FRONT WHEEL DRIVE MOTORS.

THE PRODUCT IDENTIFICATION NUMBER PLATE IS LOCATED BELOW THE OPERATOR'S PLATFORM ON THE LEFT-HAND SIDE OF THE MAIN FRAME. THIS IS THE SERIAL NUMBER USED IN THIS CATALOG UNLESS OTHERWISE NOTED IN THE SERIAL NUMBER COLUMN.

THE ENGINE SERIAL NUMBER PLATE IS LOCATED ON THE LEFT-HAND SIDE OF THE CYLINDER BLOCK ABOVE THE STARTING MOTOR.

THE TRANSMISSION SERIAL NUMBER PLATE IS LOCATED ON THE FRONT OF THE TRANSMISSION HOUSING ABOVE THE OUTPUT SHAFT.

THE HYDRAULIC PUMP SERIAL NUMBER PLATE IS LOCATED ON THE BOTTOM OF THE PUMP.

THE FRONT WHEEL DRIVE HYDRAULIC PUMP IS LOCATED ON THE LEFT REAR OF THE TRANSMISSION AND THE SERIAL NUMBER PLATE IS LOCATED ON THE BOTTOM OF THE PUMP.

THE HYDRAULIC FRONT WHEEL DRIVE (HFWD) MOTOR SERIAL NUMBER PLATE IS LOCATED ON THE INSIDE REAR OF EACH RIGHT AND LEFT HFWD MOTOR HOUSINGS.

THE DIFFERENTIAL SERIAL NUMBER PLATE IS LOCATED ON THE COVER, RIGHT LOWER, BELOW THE DRIVESHAFT INPUT.

NOTE: IN THE TRANSMISSION SECTION, TRANSMISSION SERIAL NUMBER INFORMATION IS PROVIDED AS FOLLOWS: (1) WHEN ASTERISKS (******) ARE LISTED IN PLACE OF A SERIAL NUMBER, A SERIAL NUMBER NUMBER CHANGE WAS MADE AND "IT" CAN BE FOUND IN THE REMARKS COLUMN IN THE PUBLICATION. (2) WHEN X'S (XXXXXX) ARE LISTED IN PLACE OF A SERIAL NUMBER, A SERIAL NUMBER CHANGE WAS NOT AVAILABLE AT TIME OF PUBLICATION.

LEFT SIDE AND RIGHT SIDE, FRONT AND REAR OF THE MOTOR GRADER ARE VIEWED BY FACING IN THE DIRECTION OF MOTOR GRADER FORWARD TRAVEL.

WHENEVER SERIAL NUMBERS ARE REQUIRED ON ALL WARRANTY CLAIMS OR CORRESPONDENCE PERTAINING TO THIS PRODUCT, IT IS EXTREMELY IMPORTANT THAT ALL CHARACTERS BE FURNISHED. THIS POINT CANNOT BE OVEREMPHASIZED.

PRODUCT IDENTIFICATION NUMBER

TP16004 -UN-01JAN94

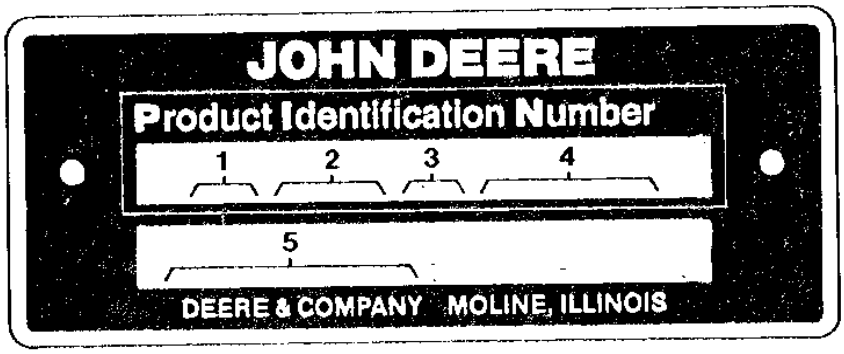

TP16004

1. DESIGNATES GRADER MANUFACTURER	DW - JOHN DEERE DAVENPORT WORKS
2. DESIGNATES GRADER MODEL	770D, 772D,
3. DESIGNATES GRADER CONFIGURATION	X
4. DESIGNATES GRADER SERIAL NUMBER	123456
5. DESIGNATES UNIT TYPE	MOTOR GRADER

ENGINE SERIAL NUMBER PLATE

RGP3513 -UN-01JAN94

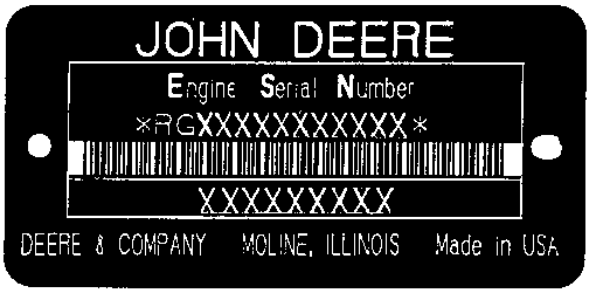

RGP3513

FIRST LINE	DEFINES
RG - JOHN DEERE WATERLOO ENGINE WORKS	DESIGNATES ENGINE MANUFACTURER
6	DESIGNATES NUMBER OF CYLINDERS
081 (8.1 LITERS)	DESIGNATES LITER DISPLACEMENT
H (AIR-TO-AIR)	DESIGNATES TYPE OF AIR INTAKE SYSTEM
DW - JOHN DEERE DAVENPORT WORKS	DESIGNATES USER FACTORY
XXXXXX	DESIGNATES ENGINE SERIAL NUMBER

SECOND LINE	APPLICATION
6081HDW13	770D/772D MOTOR GRADER

SERIAL NUMBER LISTING INFORMATION

SERIAL NUMBER INFORMATION IS LISTED TO SHOW ON WHICH MACHINES EACH PART CAN BE USED; FOR EXAMPLE:

- THE PART CAN BE USED ON ALL MACHINES.
000000- THE PART CAN BE USED ON ALL MACHINES BEGINNING WITH THE SERIAL NUMBER LISTED.
-000000 THE PART CAN BE USED ON ALL MACHINES UP TO AND INCLUDING THE SERIAL NUMBER LISTED.
000000-000000 THE PART CAN BE USED ON ALL MACHINES BETWEEN AND INCLUDING THE SERIAL NUMBERS LISTED.

WHEN XXXXXX'S ARE LISTED IN PLACE OF A SERIAL NUMBER, A SERIAL NUMBER CHANGE WAS MADE BUT THE EXACT SERIAL NUMBER WAS NOT AVAILABLE WHEN THE CATALOG WAS PRODUCED.

DIRECTION ARROW

ARROWS ARE USED WITH ILLUSTRATIONS TO INDICATE THE FRONT OF THE UNIT. "RIGHT-HAND" AND "LEFT-HAND" SIDES ARE DETERMINED BY FACING IN THE DIRECTION OF MACHINE FORWARD TRAVEL.

BOX-ENCLOSED ILLUSTRATIONS

A KEY NUMBER, SHOWN IN THE PARTS LIST, IS ASSIGNED TO A BOX ENCLOSING ALL PARTS SOLD AS A SERVICE ASSEMBLY.

COMPLETE GOODS LISTINGS

COMPLETE GOODS ARE LISTED IN BOLD FACE TYPE. ORDER SEPARATELY. DO NOT INCLUDE ON REPLACEMENT PARTS ORDER.

SI UNITS OF MEASURE

METRIC DIMENSIONS ARE GIVEN, WHERE APPLICABLE, THROUGHOUT THIS PARTS CATALOG.

CHANGE INDICATOR LINE

CHANGES AFFECTING THE ORDERING OF PARTS ARE IDENTIFIED BY VERTICAL LINES MARKED IN THE LEFT-HAND MARGIN OF REVISED PARTS LISTING IMAGES. A LINE IS ALSO AT THE LEFT-HAND EDGE OF THE SAME PART NUMBER IN THE NUMERICAL INDEX TO SHOW THE LOCATION OF REVISED INFORMATION.

ALPHABETICAL INDEX

GRID		PAGE
	A	
2K13	A/C AND HEAT TEMPERATURE CONTROL SWITCH	1830 - 18
2K13	A/C AND HEATER CONTROL CABLE	1830 - 18
2K13	A/C AND HEATER CONTROL KNOB	1830 - 18
2K13	A/C AND HEATER FAN SPEED SWITCH	1830 - 18
2K13	A/C AND HEATER ON AND OFF SWITCH	1830 - 18
2K13	A/C AND HEATER WIRING HARNESS	1830 - 18
2K9	A/C COMPRESSOR	1830 - 14
2I21	A/C CONTROL CONSOLE (CAB)	1810 - 30
2K13	A/C CONTROL SWITCH	1830 - 18
2K9	A/C MANIFOLD	1830 - 14
2K13	A/C PRESSURE SWITCH	1830 - 18
2K9	A/C PULLEY KIT	1830 - 14
2K9	A/C SERVICE KIT	1830 - 14
2K11	ACCUMULATOR, AIR CONDITIONING	1830 - 16
3E21	ACCUMULATOR, BLADE IMPACT	3460 - 18
2D18	ACCUMULATOR, BRAKE	1060 - 4
2C17	ACCUMULATOR, SECONDARY STEERING	0930 - 2
1H10	ACCUMULATOR, TRANSMISSION	0363 - 2
1J5	ADAPTER, ENGINE OIL COOLER	0419 - 1
1I13	ADAPTER, ENGINE OIL COOLER BYPASS	0407 - 10
1I18	ADAPTER, EXHAUST ELBOW	0410 - 2
1I24	ADAPTER, TURBO OIL DRAIN LINE	0416 - 2
2G5	AGRESSIVENESS SWITCH, HFWD	1674 - 18
2B23	AIR CLEANER FILTER RESTRICTION SENSOR	0520 - 2
2B23	AIR CLEANER PRE-CLEANER SUCTION HOSE TO MUFFLER	0520 - 2
2B23	AIR CLEANER WITH PRE-CLEANER	0520 - 2
2K5	AIR CONDITIONER AND HEATER COVER	1830 - 10
2K9	AIR CONDITIONER COMPRESSOR	1830 - 14
2K11	AIR CONDITIONING ACCUMULATOR	1830 - 16
2K11	AIR CONDITIONING COMPRESSOR BRACKET	1830 - 16
2K11	AIR CONDITIONING CONDENSER	1830 - 16
2K11	AIR CONDITIONING LINES, CONDENSER, AND RECEIVER-DRYER	1830 - 16
2K11	AIR CONDITIONING RECEIVER-DRYER	1830 - 16
2K5	AIR FILTER, CAB FRESH	1830 - 10
1I23	AIR HEATER CONTROLLER, ENGINE	0414 - 1
2B3	AIR HEATER, ENGINE	0505 - 2
2B23	AIR PRE-CLEANER	0520 - 2
2L12	ALARM, BACK-UP	2004 - 4
2E23	ALTERNATOR	1672 - 2
1J10	ALTERNATOR BRACKET	0423 - 2
2E23	ALTERNATOR MOUNTING BRACKET	1672 - 2
2L2	AM/FM RADIO	2001 - 2
2C14	AMBIENT AIR TEMPERATURE SENSOR, ENGINE	0578 - 4
2L2	ANTENNA, RADIO	2001 - 2
2J13	ARM REST (AIR)	1821 - 2
2J17	ARM REST (MECHANICAL)	1821 - 6
1H18	ARMS, ENGINE ROCKER	0402 - 2
2J9	ARTICULATION CONTROL LEVER	1810 - 42
2C23	ARTICULATION CYLINDER	0960 - 6
2D5	ARTICULATION CYLINDER HOSES	0960 - 12
2G20	ARTICULATION CYLINDER PIN	1740 - 2
2G20	ARTICULATION PIN	1740 - 2
2G7	ARTICULATION SENSOR	1674 - 20
2G7	ARTICULATION SENSOR LINKAGE	1674 - 20
3B14	ARTICULATION VALVE SECTION	2160 - 18
2J11	AUXILIARY CONTROL LEVER, RIGHT	1810 - 44
3C3	AUXILIARY VALVE SECTION (WITH FLOAT)	2160 - 32
3C5	AUXILIARY VALVE SECTION (WITHOUT FLOAT)	2160 - 34
3B4	AUXILLARY DRIVE, MAIN HYDRAULIC PUMP	2160 - 2
1D14	AXLE AND DRIVE CHAIN	0250 - 6
1D14	AXLE BEARING	0250 - 6
1C8	AXLE DRIVE SHAFT	0201 - 4
1D14	AXLE DRIVE SPROCKET	0250 - 6
1C20	AXLE DRIVESHAFT	0225 - 2
1D14	AXLE HOUSING	0250 - 6
1D14	AXLE HOUSING OIL SEAL	0250 - 6
1C22	AXLE, FRONT (770D)	0230 - 2
1D4	AXLE, FRONT (772D)	0240 - 2
1D1	AXLE, FRONT, TIE ROD (770D)	0230 - 6
	B	
2L12	BACK-UP ALARM	2004 - 4
2J13	BACKREST CUSHION (AIR)	1821 - 2
2J17	BACKREST CUSHION (MECHANICAL)	1821 - 6
1I11	BASE, ENGINE OIL FILTER	0407 - 8
2E21	BATTERY	1671 - 2
2E21	BATTERY CABLE	1671 - 2
2E21	BATTERY CLAMP	1671 - 2
2K16	BATTERY COVERS	1910 - 2
2F7	BEACON BRACKET KIT	1673 - 8
2F7	BEACON LIGHT BRACKET	1673 - 8
1H24	BEARING CAPS, MAIN AND THRUST	0404 - 2
1D14	BEARING, AXLE	0250 - 6
1H23	BEARING, CONNECTING ROD	0403 - 1
1H16	BEARING, ENGINE MAIN AND THRUST	0401 - 2
1E1	BEARING, HFWD MOTOR	0260 - 10
1E5	BEARING, HFWD PUMP	0260 - 14
1J10	BELT TENSIONER	0423 - 2
2B17	BELT TENSIONER, FAN	0512 - 2
2E23	BELT, ENGINE ACCESSORY DRIVE	1672 - 2
2B17	BELT, FAN	0512 - 2
2E23	BELT, SERPENTINE	1672 - 2
2K13	BINARY PRESSURE SWITCH, A/C	1830 - 18
3E21	BLADE IMPACT ACCUMULATOR	3460 - 18
3E21	BLADE IMPACT SYSTEM	3460 - 18
3E21	BLADE IMPACT SYSTEM KIT	3460 - 18
3E23	BLADE IMPACT VALVE	3460 - 20
3E21	BLADE IMPACT VALVE MOUNTING BRACKET	3460 - 18
3E23	BLADE IMPACT VALVE SEAL KIT	3460 - 20
3E21	BLADE IMPACT VALVE WIRING HARNESS	3460 - 18
2J11	BLADE LIFT CONTROL LEVER	1810 - 44
3E11	BLADE LIFT CYLINDER	3460 - 8
3E17	BLADE LIFT CYLINDER FITTINGS	3460 - 14
3E17	BLADE LIFT CYLINDER HYDRAULIC HOSES	3460 - 14
3E11	BLADE LIFT CYLINDER SEAL KIT	3460 - 8
3B20	BLADE LIFT VALVE RELIEF VALVE	2160 - 24
3B20	BLADE LIFT VALVE SECTION	2160 - 24
2J11	BLADE SIDE SHIFT CONTROL LEVER	1810 - 44
3B18	BLADE SIDE SHIFT VALVE SECTION	2160 - 22
3D9	BLADE SIDESHIFT CYL ROD END MOUNTING	3401 - 2
3E13	BLADE SLIDE CYLINDER	3460 - 10
3F1	BLADE SLIDE CYLINDER HYDRAULIC HOSES	3460 - 22
3E13	BLADE SLIDE CYLINDER SEAL KIT	3460 - 10
3F1	BLADE TILT AND SLIDE CYLINDER HYRDRAULIC HOSES	3460 - 22
3E15	BLADE TILT CYLINDER	3460 - 12
3F1	BLADE TILT CYLINDER HYDRAULIC HOSES	3460 - 22
3E15	BLADE TILT CYLINDER SEAL KIT	3460 - 12
3D19	BLADE TILT FRAME	3440 - 4
3D19	BLADE TILT FRAME WEAR INSERTS	3440 - 4
3B14	BLADE TILT VALVE SECTION	2160 - 18
2B17	BLADE, FAN	0512 - 2
2H17	BLADE, FRONT WINDSHIELD WIPER	1810 - 4
2H21	BLADE, LOWER FRONT WINDSHIELD WIPER	1810 - 8
2H19	BLADE, REAR WINDOW WIPER	1810 - 6
1I1	BLOCK ASSEMBLY, ENGINE SHORT	0404 - 4
1E5	BLOCK, CYLINDER, HFWD PUMP	0260 - 14
2H7	BLOCK, PUSH	1747 - 2

ALPHABETICAL INDEX - CONTINUED

GRID		PAGE
2J9	BOOT, LEFT CONTROL LEVERS	1810 - 42
2J11	BOOT, RIGHT CONTROL LEVERS	1810 - 44
2H1	BOTTOM GUARD (W/O RIPPER)	1746 - 2
2H1	BOTTOM GUARD KIT (W/O RIPPER)	1746 - 2
2H3	BOTTOM GUARD SIDE SHIELD (W/O RIPPER)	1746 - 4
2H3	BOTTOM GUARD SIDE SHIELD KIT (W/O RIPPER)	1746 - 4
2H5	BOTTOM GUARD SIDE SHIELDS (WITH RIPPER)	1746 - 6
2H5	BOTTOM GUARDS AND SIDE SHIELDS (WITH RIPPER)	1746 - 6
2H5	BOTTOM GUARDS AND SIDE SHIELDS KIT (WITH RIPPER)	1746 - 6
2K11	BRACKET, AIR CONDITIONING COMPRESSOR	1830 - 16
1J10	BRACKET, ALTERNATOR	0423 - 2
2E23	BRACKET, ALTERNATOR MOUNTING	1672 - 2
2L12	BRACKET, BACK-UP ALARM MOUNTING	2004 - 4
2F7	BRACKET, BEACON LIGHT	1673 - 8
3E21	BRACKET, BLADE IMPACT VALVE MOUNTING	3460 - 18
2H1	BRACKET, BOTTOM GUARD	1746 - 2
2D16	BRACKET, BRAKE VALVE/PEDAL MOUNTING	1060 - 2
2J21	BRACKET, CAB STEP	1822 - 2
2I21	BRACKET, CONVERTER MOUNTING (CAB)	1810 - 30
2I19	BRACKET, CONVERTER MOUNTING (CANOPY)	1810 - 28
2L6	BRACKET, EXTERIOR MIRROR	2002 - 4
2I21	BRACKET, FLC MOUNTING (CAB)	1810 - 30
2I19	BRACKET, FLC MOUNTING (CANOPY)	1810 - 28
3F8	BRACKET, FRONT MOUNTED SCARIFIER	4240 - 2
1J6	BRACKET, FUEL FILTER	0420 - 2
1F3	BRACKET, HFWD ENGAGEMENT MANIFOLD MOUNTING	0260 - 36
3B6	BRACKET, MAIN MANIFOLD VALVE MOUNTING	2160 - 4
2L2	BRACKET, RADIO	2001 - 2
1F10	BRACKET, TRANSMISSION CONTROL UNIT MOUNTING	0315 - 2
3C15	BRACKETS, MAIN CONTROL VALVE MOUNTING	2160 - 44
2J13	BRACKETS, SEAT (AIR)	1821 - 2
2J17	BRACKETS, SEAT (MECHANICAL)	1821 - 6
2F1	BRACKETS, SNOW LIGHTS	1673 - 2
2D18	BRAKE ACCUMULATOR	1060 - 4
2D18	BRAKE ACCUMULATOR HOSES	1060 - 4
2D14	BRAKE DISK	1011 - 2
1D12	BRAKE DISK, SECOND STAGE PINION, HFWD MOTOR	0250 - 4
2D16	BRAKE LIGHT SWITCH	1060 - 2
2D16	BRAKE PEDAL	1060 - 2
1D12	BRAKE PISTON HOUSING, HFWD MOTOR	0250 - 4
2D14	BRAKE SEPARATOR PLATE	1011 - 2
2D16	BRAKE VALVE	1060 - 2
2D18	BRAKE VALVE HOSES	1060 - 4
2D16	BRAKE VALVE/PEDAL MOUNTING BRACKET	1060 - 2
1G21	BRAKE, PARK	0350 - 28
1G21	BRAKE, TRANSMISSION	0350 - 28
2D14	BRAKES, SERVICE	1011 - 2
1F1	BREATHER, DIFFERENTIAL LOCK	0260 - 34
2F9	BULB, CAB ROOF LIGHT	1673 - 10
2F9	BULB, CAB WORK LIGHT	1673 - 10
2F11	BULB, FRONT DRIVE LIGHT	1673 - 12
2F3	BULB, FRONT SIGNAL LIGHT	1673 - 4
2F13	BULB, MID-FRAME WORK LIGHT	1673 - 14
2F13	BULB, REAR WORK LIGHT	1673 - 14
2F13	BULB, UNDER CAB WORK LIGHT	1673 - 14
2K16	BUMPER, DOOR, SERVICE	1910 - 2
1H17	BUSHING, CAMSHAFT	0402 - 1
1I24	BUSHING, TURBO OIL DRAIN LINE	0416 - 2

C

GRID		PAGE
2H15	CAB (COMPLETE)	1810 - 2
2H15	CAB AND CANOPY (COMPLETE)	1810 - 2
2K3	CAB B-POST HEATER AND AIR CONDITIONER DUCT	1830 - 8
2K3	CAB B-POST HEATER AND AIR CONDITIONER DUCT LOUVER	1830 - 8
2J7	CAB CONTROL LEVER CONSOLE	1810 - 40
2J7	CAB CONTROL LEVER CONSOLE COVER	1810 - 40
2J9	CAB CONTROL LEVERS (LEFT)	1810 - 42
2J11	CAB CONTROL LEVERS (RIGHT)	1810 - 44
2J1	CAB DOOR HOLD OPEN LATCH (LEFT)	1810 - 34
2I23	CAB DOOR HOLD OPEN LATCH (RIGHT)	1810 - 32
2J1	CAB DOOR, LEFT	1810 - 34
2I23	CAB DOOR, RIGHT	1810 - 32
2I17	CAB FLOORMAT	1810 - 26
2K5	CAB FRESH AIR FILTER	1830 - 10
2K5	CAB FRESH AIR FILTER HOUSING	1830 - 10
2J23	CAB HEATER HOSES	1830 - 2
2I9	CAB INTERIOR PANELS	1810 - 18
2F21	CAB INTERIOR WIRING HARNESS	1674 - 8
2H23	CAB ISOLATORS	1810 - 10
2H15	CAB KREMNUTS	1810 - 2
2F21	CAB MONITOR	1674 - 8
2J3	CAB MONITOR CONSOLE	1810 - 36
2G13	CAB MONITOR UNIT WIRING HARNESS	1674 - 26
2H23	CAB MOUNT ISOLATORS	1810 - 10
2F21	CAB POWER WIRING HARNESS	1674 - 8
2I13	CAB REAR INTERIOR PANELS	1810 - 22
2I13	CAB REAR WALL PANELS	1810 - 22
2I15	CAB ROOF	1810 - 24
2I15	CAB ROOF COVER	1810 - 24
2F9	CAB ROOF LIGHTS	1673 - 10
2F23	CAB ROOF WIRING HARNESS	1674 - 10
2I21	CAB SIDE CONSOLE	1810 - 30
2J3	CAB STATIONARY FRONT CONSOLE	1810 - 36
2J3	CAB STATIONARY FRONT CONSOLE COVER	1810 - 36
2J21	CAB STEP BRACKET	1822 - 2
2J21	CAB STEPS	1822 - 2
2J7	CAB TILT CONSOLE	1810 - 40
2J7	CAB TILT CONSOLE GAS SHOCK	1810 - 40
2G13	CAB TILT CONSOLE WIRING HARNESS	1674 - 26
2G13	CAB TILT CONSOLE WIRING HARNESS AND SWITCHES	1674 - 26
2K5	CAB TRAY	1830 - 10
2F9	CAB WORK AND DRIVE LIGHTS	1673 - 10
2F9	CAB WORK LIGHTS	1673 - 10
2K13	CABLE, A/C AND HEATER CONTROL	1830 - 18
2E21	CABLE, BATTERY	1671 - 2
2L2	CABLE, RADIO ANTENNA	2001 - 2
2K7	CABLE, TEMPERATURE CONTROL	1830 - 12
1H17	CAMSHAFT	0402 - 1
1H18	CAMSHAFT FOLLOWER	0402 - 2
2H15	CANOPY (COMPLETE)	1810 - 2
2I11	CANOPY INTERIOR PANELS	1810 - 20
2I19	CANOPY SIDE CONSOLE	1810 - 28
2C7	CAP, FUEL TANK	0560 - 2
3D5	CAP, HYDRAULIC RESERVOIR	2164 - 4
1H24	CAP, MAIN AND THRUST BEARING	0404 - 2
1H20	CARRIER, ENGINE ROCKER ARM COVER	0402 - 4
1D10	CARRIER, FIRST PLANET PINION, HFWD MOTOR	0250 - 2
1D16	CARRIER, PLANET PINION	0250 - 8
1C14	CASE, DIFFERENTIAL	0210 - 6
1G1	CASE, REAR TRANSMISSION	0350 - 6
2L2	CD PLAYER	2001 - 2
2E13	CENTRAL LUBRICATION, FRAME HINGE	1370 - 2

ALPHABETICAL INDEX - CONTINUED

GRID		PAGE
1D14	CHAIN, TANDEM DRIVE	0250 - 6
2B11	CHARGE AIR COOLER	0510 - 4
2B13	CHARGE AIR COOLER	0510 - 6
1E19	CHARGE HOSES, HFWD	0260 - 28
1E17	CHARGE PUMP, HFWD	0260 - 26
3E1	CIRCLE DRIVE GEARBOX	3450 - 2
3E1	CIRCLE DRIVE GEARBOX MOUNTING SCREWS	3450 - 2
3E3	CIRCLE DRIVE GEARBOX, WITH SLIP CLUTCH	3450 - 4
3E7	CIRCLE DRIVE MOTOR	3460 - 4
3E7	CIRCLE DRIVE MOTOR HOUSING	3460 - 4
3E7	CIRCLE DRIVE MOTOR SEAL KIT	3460 - 4
3D23	CIRCLE FRAME	3440 - 8
2J9	CIRCLE ROTATE CONTROL LEVER	1810 - 42
3E7	CIRCLE ROTATE MOTOR	3460 - 4
3F3	CIRCLE ROTATE MOTOR HYDRAULIC HOSES	3460 - 24
3B16	CIRCLE ROTATE VALVE SECTION	2160 - 20
2J11	CIRCLE SIDE SHIFT CONTROL LEVER	1810 - 44
3B14	CIRCLE SIDE SHIFT VALVE SECTION	2160 - 18
3E9	CIRCLE SIDESHIFT CYLINDER	3460 - 6
3F5	CIRCLE SIDESHIFT CYLINDER HYDRAULIC HOSES	3460 - 26
3E9	CIRCLE SIDESHIFT CYLINDER SEAL KIT	3460 - 6
2E21	CLAMP, BATTERY	1671 - 2
2C3	CLAMP, MUFFLER	0530 - 2
2B23	CLEANER, AIR, WITH PRE-CLEANER	0520 - 2
1G9	CLUTCH PLATE, TRANSMISSION	0350 - 16
1G11	CLUTCH PLATE, TRANSMISSION	0350 - 18
1G13	CLUTCH PLATE, TRANSMISSION	0350 - 20
1G15	CLUTCH PLATE, TRANSMISSION	0350 - 22
1C18	CLUTCH PLATES, DIFFERENTIAL	0210 - 10
3E3	CLUTCH, SLIP, CIRCLE DRIVE GEARBOX AND	3450 - 4
1J8	CLUTCH, STARTING MOTOR	0422 - 2
2F21	CMU	1674 - 8
2G13	CMU WIRING HARNESS	1674 - 26
3C11	COLD START DISCONNECT HOSES AND FITTINGS	2160 - 40
3C13	COLD START DISCONNECT SOLENOID VALVE	2160 - 42
2B5	COLD WEATHER STARTING AID	0505 - 4
2J5	COLUMN, STEERING	1810 - 38
2K9	COMPRESSOR, AIR CONDITIONER	1830 - 14
2K9	COMPRESSOR,A/C	1830 - 14
2K11	CONDENSER, AIR CONDITIONING	1830 - 16
2E8	CONDITIONER, COOLANT	1369 - 1
1H23	CONNECTING ROD, ENGINE	0403 - 1
2I21	CONSOLE, A/C CONTROL (CAB)	1810 - 30
2J7	CONSOLE, CAB CONTROL LEVER	1810 - 40
2J3	CONSOLE, CAB FRONT (STATIONARY)	1810 - 36
2I21	CONSOLE, CAB SIDE	1810 - 30
2J7	CONSOLE, CAB TILT	1810 - 40
2I19	CONSOLE, CANOPY SIDE	1810 - 28
2I21	CONSOLE, GEAR SHIFT LEVER (CAB)	1810 - 30
2I19	CONSOLE, GEARSHIFT LEVER (CANOPY)	1810 - 28
3C9	CONTROL LEVER, ONE HAND BLADE LIFT	2160 - 38
2J9	CONTROL LEVERS (LEFT)	1810 - 42
2J11	CONTROL LEVERS (RIGHT)	1810 - 44
2C9	CONTROL UNIT,ENGINE	0575 - 2
3C7	CONTROL VALVE KIT, FIFTH FUNCTION	2160 - 36
3C7	CONTROL VALVE KIT, FOURTH FUNCTION	2160 - 36
3C7	CONTROL VALVE KIT, SIXTH FUNCTION	2160 - 36
1H1	CONTROL VALVE MOUNTING, TRANSMISSION	0350 - 32
3B10	CONTROL VALVE, MAIN HYDRAULIC	2160 - 10
1H3	CONTROL VALVE, TRANSMISSION	0350 - 34
1E7	CONTROL, HFWD PUMP EP	0260 - 16
3B4	CONTROL, MAIN HYDRAULIC PUMP	2160 - 2
1I19	CONTROLLER, ENGINE	0413 - 2
1I23	CONTROLLER, ENGINE AIR HEATER	0414 - 1
2G5	CONTROLLER, HFWD	1674 - 18
1F10	CONTROLLER, TRANSMISSION	0315 - 2

GRID		PAGE
2G15	CONVERTER, POWER (24 VOLT TO 12 VOLT)	1674 - 28
2E8	COOLANT CONDITIONER	1369 - 1
1H24	COOLANT DRAIN VALVE, ENGINE	0404 - 2
2B7	COOLANT HEATER	0505 - 8
2B7	COOLANT HEATER HOSES	0505 - 8
2C13	COOLANT TEMPERATURE SENSOR, ENGINE	0578 - 3
1E21	COOLER HOSE, DIFFERENTIAL LOCK	0260 - 30
2B11	COOLER, CHARGE AIR	0510 - 4
2B13	COOLER, CHARGE AIR	0510 - 6
1J5	COOLER, ENGINE OIL	0419 - 1
2B15	COOLER, FUEL	0510 - 10
2B11	COOLER, HYDRAULIC OIL	0510 - 4
2B13	COOLER, HYDRAULIC OIL	0510 - 6
2K7	CORE, EVAPORATOR/HEATER	1830 - 12
1E23	COUPLING, DIFF LOCK PUMP TO TRANS	0260 - 32
1J6	COUPLING, FUEL DIAGNOSTIC	0420 - 2
2K5	COVER, AIR CONDITIONER AND HEATER	1830 - 10
2J7	COVER, CAB CONTROL LEVER CONSOLE	1810 - 40
2I13	COVER, CAB REAR	1810 - 22
2I15	COVER, CAB ROOF	1810 - 24
2J3	COVER, CAB STATIONARY FRONT CONSOLE	1810 - 36
3E1	COVER, CIRCLE DRIVE GEARBOX	3450 - 2
3E3	COVER, CIRCLE DRIVE GEARBOX, WITH SLIP CLUTCH	3450 - 4
1C12	COVER, DIFFERENTIAL CASE	0210 - 4
1J3	COVER, ENGINE COOLANT THERMOSTAT HOUSING	0418 - 2
1H20	COVER, ENGINE ROCKER ARM	0402 - 4
1H20	COVER, ENGINE VALVE	0402 - 4
2I9	COVER, FRONT WIPER (CAB)	1810 - 18
2I11	COVER, FRONT WIPER (CANOPY)_	1810 - 20
1J10	COVER, FUEL INJECTION PUMP ACCESS	0423 - 2
2K5	COVER, HEATER AND AIR CONDITIONER	1830 - 10
1E9	COVER, HFWD PUMP END	0260 - 18
3D5	COVER, HYDRAULIC RESERVOIR CLEAN OUT	2164 - 4
1F14	COVER, INCHING PEDAL	0315 - 6
1H22	COVER, INJECTION PUMP ACCESS	0402 - 6
2K20	COVER, MAIN FRAME SIDE	1913 - 2
1D10	COVER, PLANET PINION, HFWD MOTOR	0250 - 2
2I9	COVER, REAR WIPER (CAB)	1810 - 18
2I11	COVER, REAR WIPER (CANOPY)	1810 - 20
1E7	COVER, SERVO PISTON, HFWD PUMP	0260 - 16
2J5	COVER, STEERING WHEEL	1810 - 38
1H22	COVER, TIMING GEAR	0402 - 6
1F12	COVER, TRANS GEAR SELECTOR	0315 - 4
1J1	COVER, WATER PUMP	0417 - 2
2K16	COVERS, BATTERY	1910 - 2
2G24	COVERS, MAIN FRAME	1740 - 6
1C6	COVERS, TANDEM HOUSING	0201 - 2
2G24	COWL COVER, MAIN FRAME	1740 - 6
1H15	CRANKSHAFT	0401 - 1
2K5	CUPHOLDER	1830 - 10
2J13	CUSHION, BACKREST (AIR)	1821 - 2
2J17	CUSHION, BACKREST (MECHANICAL)	1821 - 6
2J13	CUSHION, SEAT (AIR)	1821 - 2
2J17	CUSHION, SEAT (MECHANICAL)	1821 - 6
3D9	CUTTING EDGES AND MOLDBOARDS	3401 - 2
1H24	CYLINDER BLOCK FITTINGS, ENGINE	0404 - 2
1J17	CYLINDER HEAD GASKET KIT, ENGINE	0452 - 2
1I14	CYLINDER HEAD, ENGINE	0409 - 2
2D5	CYLINDER HOSES, ARTICULATION	0960 - 12
2D3	CYLINDER HOSES, FRONT STEERING	0960 - 10
2D9	CYLINDER HOSES, WHEEL LEAN (770D)	0960 - 16
2D7	CYLINDER HOSES, WHEEL LEAN (772D)	0960 - 14
1H23	CYLINDER LINER, ENGINE	0403 - 1
2C23	CYLINDER, ARTICULATION	0960 - 6
3E11	CYLINDER, BLADE LIFT	3460 - 8
3E13	CYLINDER, BLADE SLIDE	3460 - 10

ALPHABETICAL INDEX - CONTINUED

GRID		PAGE
3E15	CYLINDER, BLADE TILT	3460 - 12
3E9	CYLINDER, CIRCLE SIDESHIFT	3460 - 6
2D1	CYLINDER, FRONT STEERING	0960 - 8
3F14	CYLINDER, RIPPER/REAR SCARIFIER	4240 - 8
3F10	CYLINDER, SCARIFIER	4240 - 4
2C19	CYLINDER, WHEEL LEAN (770D)	0960 - 2
2C21	CYLINDER, WHEEL LEAN (772D)	0960 - 4

D

1F16	DAMPENER, TORSIONAL	0325 - 2
1J12	DAMPENER, TORSIONAL	0429 - 1
2E2	DECALS, ENGLISH	1320 - 2
2E6	DECALS, FRENCH	1320 - 6
2E4	DECALS, SPANISH	1320 - 4
2B21	DECELERATOR PEDAL	0515 - 4
1J6	DIAGNOSTIC COUPLING, FUEL	0420 - 2
1C16	DIAGNOSTIC FITTING, DIFFERENTIAL LOCK	0210 - 8
1F3	DIAGNOSTIC FITTING, HFWD ENGAGEMENT MANIFOLD	0260 - 36
1H6	DIAGNOSTIC FITTING, TRANSMISSION CONTROL VALVE	0360 - 2
2G5	DIAL, HFWD AGRESSIVENESS	1674 - 18
1E23	DIFF LOCK PUMP	0260 - 32
1E23	DIFF LOCK PUMP MOUNTING	0260 - 32
1C18	DIFFERENTIAL	0210 - 10
1C14	DIFFERENTIAL CASE	0210 - 6
1C12	DIFFERENTIAL CASE COVER	0210 - 4
1C17	DIFFERENTIAL CASE OIL LINE	0210 - 9
1C18	DIFFERENTIAL CLUTCH PLATES	0210 - 10
1E21	DIFFERENTIAL LOCK COOLER HOSES	0260 - 30
1C16	DIFFERENTIAL LOCK DIAGNOSTIC FITTING	0210 - 8
1F1	DIFFERENTIAL LOCK FILTER	0260 - 34
1F1	DIFFERENTIAL LOCK HOSES AND FILTER	0260 - 34
1F1	DIFFERENTIAL LOCK HYDRAULIC HOSES	0260 - 34
1E21	DIFFERENTIAL LOCK OIL LINE	0260 - 30
1E23	DIFFERENTIAL LOCK PUMP	0260 - 32
1F1	DIFFERENTIAL LOCK PUMP HOSES	0260 - 34
2G13	DIFFERENTIAL LOCK SWITCH	1674 - 26
1C16	DIFFERENTIAL LOCK VALVE	0210 - 8
1C16	DIFFERENTIAL LOCK VALVE SOLENOID	0210 - 8
1I5	DIPSTICK, ENGINE OIL	0407 - 1
1F18	DIPSTICK, TRANSMISSION OIL	0341 - 2
3C13	DISCONNECT VALVE, COLD START	2160 - 42
3C11	DISCONNECT, MAIN HYD PUMP COLD START	2160 - 40
2D14	DISK, BRAKE	1011 - 2
1D12	DISK, BRAKE, SECOND STAGE PINION, HFWD MOTOR	0250 - 4
2K3	DISTRIBUTION DUCT, HEATER AND AIR CONDITIONER	1830 - 8
2I9	DOMELIGHT (CAB)	1810 - 18
2I11	DOMELIGHT (CANOPY)	1810 - 20
2K16	DOOR BUMPER, SERVICE	1910 - 2
2K16	DOOR HINGE, SERVICE	1910 - 2
2J1	DOOR LATCH, CAB (LEFT)	1810 - 34
2I23	DOOR LATCH, CAB (RIGHT)	1810 - 32
2J1	DOOR, CAB LEFT	1810 - 34
2I23	DOOR, CAB RIGHT	1810 - 32
2K16	DOORS, ENGINE	1910 - 2
2K16	DOORS, SERVICE	1910 - 2
3D17	DRAFT FRAME	3440 - 2
1H24	DRAIN VALVE, ENGINE COOLANT	0404 - 2
1I6	DRAIN VALVE, ENGINE OIL PAN	0407 - 2
1J1	DRAIN VALVE, WATER PUMP	0417 - 2
1D14	DRIVE CHAIN, TANDEM	0250 - 6
2F11	DRIVE LIGHTS, FRONT	1673 - 12
1C8	DRIVE SHAFT, FINAL DRIVE AND TANDEM PIVOT	0201 - 4
1C8	DRIVE SPROCKET	0201 - 4
3B4	DRIVE, AUXILLARY, MAIN HYDRAULIC PUMP	2160 - 2
1D16	DRIVE, TANDEM	0250 - 8
1D22	DRIVE, WHEEL, HFWD	0260 - 6
1C20	DRIVESHAFT	0225 - 2
2B17	DRIVESHAFT, FAN	0512 - 2
1E7	DRIVESHAFT, HFWD PUMP	0260 - 16
2G13	DRIVING LIGHT HIGH/LOW BEAM SWITCH	1674 - 26
2K3	DUCT, CAB B-POST HEATER AND AIR CONDITIONER	1830 - 8
2K3	DUCT, DISTRIBUTION, HEATER AND AIR CONDITIONER	1830 - 8
2K5	DUCTS, HEATER AND AIR CONDITIONER	1830 - 10

E

2C9	ECU	0575 - 2
1I23	ECU, ENGINE AIR HEATER	0414 - 1
1H20	ELBOW FITTING, ENGINE VENTILATING SYSTEM	0402 - 4
1I18	ELBOW, EXHAUST	0410 - 2
2G9	ELECTRICAL CENTER, VEHICLE	1674 - 22
1I19	ELECTRONIC ENGINE CONTROLLER	0413 - 2
1I19	ELECTRONIC UNIT INJECTOR	0413 - 2
2B23	ELEMENT, FILTER, AIR CLEANER	0520 - 2
1D24	END CAP, HFWD MOTOR	0260 - 8
1E9	END COVER, HFWD PUMP	0260 - 18
1D1	END, TIE ROD, FRONT AXLE (770D)	0230 - 6
1D6	END, TIE ROD, FRONT AXLE (772D)	0240 - 4
1F5	ENGAGEMENT MANIFOLD, HFWD	0260 - 38
1F5	ENGAGEMENT SOLENOID, HFWD	0260 - 38
2E23	ENGINE ACCESSORY DRIVE BELT	1672 - 2
2B3	ENGINE AIR HEATER	0505 - 2
2B3	ENGINE AIR HEATER RELAY	0505 - 2
2B3	ENGINE AIR HEATER WIRING HARNESS	0505 - 2
2C9	ENGINE CONTROL UNIT	0575 - 2
1I19	ENGINE CONTROLLER	0413 - 2
1J3	ENGINE COOLANT THERMOSTAT AND HOUSING	0418 - 2
1J17	ENGINE CYLINDER HEAD GASKET KIT	0452 - 2
2K16	ENGINE DOORS	1910 - 2
2G22	ENGINE FRAME	1740 - 4
2C5	ENGINE MOUNTING SUPPORTS	0540 - 2
2C5	ENGINE MOUNTS	0540 - 2
2E9	ENGINE OIL DRAIN HOSE	1369 - 2
1I3	ENGINE OVERHAUL KIT	0404 - 6
1J17	ENGINE REBUILD GASKET KIT	0452 - 2
1I1	ENGINE SHORT BLOCK ASSEMBLY	0404 - 4
2B19	ENGINE SPEED CONTROL ON/OFF SWITCH	0515 - 2
2B19	ENGINE SPEED CONTROL PEDAL AND SWITCHES	0515 - 2
2B19	ENGINE SPEED CONTROL SET SWITCH	0515 - 2
2I21	ENGINE SPEED CONTROL SWITCH LABEL (CAB)	1810 - 30
2I19	ENGINE SPEED CONTROL SWITCH LABEL (CANOPY)	1810 - 28
2I21	ENGINE SPEED CONTROL SWITCH PANEL (CAB)	1810 - 30
2I19	ENGINE SPEED CONTROL SWITCH PANEL (CANOPY)	1810 - 28
2B21	ENGINE SPEED DECELERATOR PEDAL	0515 - 4
1H20	ENGINE VENTILATING SYSTEM	0402 - 4
2F19	ENGINE WIRING HARNESS	1674 - 6
2E2	ENGLISH LABELS AND TRADEMARKS	1320 - 2
2E2	ENGLISH TRADEMARKS AND LABELS	1320 - 2
1E7	EP CONTROL GASKET	0260 - 16
1E7	EP CONTROL, HFWD PUMP	0260 - 16

ALPHABETICAL INDEX - CONTINUED

GRID		PAGE
1I19	EUI	0413 - 2
2K7	EVAPORATOR/HEATER CORE	1830 - 12
1I18	EXHAUST ELBOW	0410 - 2
1I17	EXHAUST MANIFOLD	0410 - 1
1I14	EXHAUST VALVES, ENGINE	0409 - 2
2K7	EXPANSION VALVE,HEATER AND A/C	1830 - 12
3D13	EXTENSION KIT, MOLDBOARD (24" MOLDBOARD)	3401 - 6
3D15	EXTENSION KIT, MOLDBOARD (27" MOLDBOARD)	3401 - 8
3D13	EXTENSION, MOLDBOARD (24" MOLDBOARD)	3401 - 6
3D15	EXTENSION, MOLDBOARD (27" MOLDBOARD)	3401 - 8
2F1	EXTENSIONS, SNOW LIGHT	1673 - 2
2L6	EXTERIOR MIRROR	2002 - 4
2L8	EXTINGUISHER, FIRE	2003 - 2

F

2B17	FAN	0512 - 2
2B17	FAN AND FAN TOWER	0512 - 2
2B17	FAN BELT	0512 - 2
2B17	FAN BELT IDLER PULLEY	0512 - 2
2B17	FAN BELT TENSIONER	0512 - 2
2B17	FAN BLADE	0512 - 2
1J13	FAN DRIVE PULLEY, FIXED	0429 - 2
1J13	FAN DRIVE, FIXED PULLEY	0429 - 2
2B17	FAN DRIVESHAFT	0512 - 2
2B11	FAN GUARD	0510 - 4
2B9	FAN GUARD (WITHOUT AIR CONDITIONING)	0510 - 2
2B17	FAN HUB	0512 - 2
2B17	FAN PULLEY	0512 - 2
2B11	FAN SHROUD	0510 - 4
2B13	FAN SHROUD	0510 - 6
2B17	FAN TOWER	0512 - 2
3C7	FIFTH FUNCTION CONTROL VALVE KIT	2160 - 36
1G15	FIFTH STAGE ASSEMBLY, TRANSMISSION	0350 - 22
1G15	FIFTH STAGE INPUT SHAFT	0350 - 22
1J6	FILTER AND LINES, FUEL	0420 - 2
1F1	FILTER HEAD, DIFFERENTIAL LOCK FILTER	0260 - 34
1H6	FILTER HEAD, TRANSMISSION	0360 - 2
3D3	FILTER RESTRICTION SWITCH, MAIN HYDRAULIC FILTER	2164 - 2
1H6	FILTER RESTRICTION SWITCH, TRANSMISSION	0360 - 2
2B23	FILTER, AIR CLEANER	0520 - 2
2K5	FILTER, CAB FRESH AIR	1830 - 10
1F1	FILTER, DIFFERENTIAL LOCK	0260 - 34
1I11	FILTER, ENGINE OIL	0407 - 8
3D3	FILTER, MAIN HYDRAULIC	2164 - 2
1H6	FILTER, TRANSMISSION	0360 - 2
1C8	FINAL DRIVE HOUSING	0201 - 4
2L8	FIRE EXTINGUISHER	2003 - 2
1D10	FIRST PLANET PINION, HFWD MOTOR	0250 - 2
1G17	FIRST SIXTH ASSEMBLY	0350 - 24
1G7	FIRST STAGE ASSEMBLY	0350 - 14
1G7	FIRST STAGE INPUT SHAFT	0350 - 14
1D10	FIRST STAGE PINION, HFWD MOTOR	0250 - 2
1F3	FITTING, DIAGNOSTIC, HFWD ENGAGEMENT MANIFOLD	0260 - 36
3E21	FITTINGS, BLADE IMPACT VALVE	3460 - 18
3E17	FITTINGS, BLADE LIFT CYLINDER	3460 - 14
3F1	FITTINGS, BLADE SLIDE CYLINDER	3460 - 22
3F1	FITTINGS, BLADE TILT CYLINDER	3460 - 22
3F3	FITTINGS, CIRCLE ROTATE MOTOR	3460 - 24
3F5	FITTINGS, CIRCLE SIDESHIFT CYLINDER	3460 - 26
1C14	FITTINGS, DIFFERENTIAL CASE	0210 - 6
1H24	FITTINGS, ENGINE CYLINDER BLOCK	0404 - 2
2E11	FITTINGS, FLUID SAMPLING	1369 - 4
1J6	FITTINGS, FUEL FILTER AND LINES	0420 - 2
1F3	FITTINGS, HFWD ENGAGEMENT MANIFOLD	0260 - 36
3C23	FITTINGS, MAIN HYDRAULIC PUMP(770D)	2163 - 6
3D1	FITTINGS, MAIN HYDRAULIC PUMP(772D)	2163 - 8
2D23	FITTINGS, PARK BRAKE VALVE	1111 - 4
3F22	FITTINGS, RIPPER CYLINDER	4260 - 10
3E19	FITTINGS, SADDLE LOCK PIN	3460 - 16
3F20	FITTINGS, SCARIFIER CYLINDER (FRONT)	4260 - 8
3F22	FITTINGS, SCARIFIER CYLINDER (REAR)	4260 - 10
2D16	FITTINGS, SERVICE BRAKE VALVE	1060 - 2
2D3	FITTINGS, STEERING CYLINDER	0960 - 10
2D11	FITTINGS, STEERING VALVE	0960 - 18
3B10	FIVE FUNCTION HYDRAULIC CONTROL VALVE	2160 - 10
2G17	FLC	1675 - 2
2I19	FLC MOUNTING BRACKET (CANOPY)	1810 - 28
2I21	FLC MOUNTING BRACKET(CAB)	1810 - 30
2G17	FLEX LOAD CENTER (FLC)	1675 - 2
2I17	FLOORMAT, CAB	1810 - 26
2E11	FLUID SAMPLING FITTINGS	1369 - 4
2B5	FLUID, STARTING	0505 - 4
1E9	FLUSHING PUMP, HFWD MOTOR	0260 - 18
1J14	FLYWHEEL	0433 - 1
1J15	FLYWHEEL HOUSING	0433 - 2
1H17	FOLLOWER, CAMSHAFT	0402 - 1
1H18	FOLLOWER, CAMSHAFT	0402 - 2
3B10	FOUR FUNCTION HYDRAULIC CONTROL VALVE	2160 - 10
1G13	FOURTH STAGE ASSEMBLY, TRANSMISSION	0350 - 20
1G13	FOURTH STAGE INPUT SHAFT	0350 - 20
3D17	FRAME, DRAFT	3440 - 2
2G22	FRAME, ENGINE	1740 - 4
2G20	FRAME, MAIN	1740 - 2
3F12	FRAME, REAR RIPPER/SCARIFIER	4240 - 6
3D19	FRAME, TILT, BLADE	3440 - 4
2E6	FRENCH LABELS AND TRADEMARKS	1320 - 6
2E6	FRENCH TRADEMARKS AND LABELS	1320 - 6
2K5	FRESH AIR FILTER, CAB	1830 - 10
2F13	FRONT AND REAR WORK LIGHTS	1673 - 14
1C22	FRONT AXLE (770D)	0230 - 2
1D4	FRONT AXLE (772D)	0240 - 2
1D4	FRONT AXLE GUARD (772D)	0240 - 2
1C22	FRONT AXLE PIVOT PIN (770D)	0230 - 2
1D4	FRONT AXLE PIVOT PIN (772D)	0240 - 2
1D1	FRONT AXLE TIE ROD (770D)	0230 - 6
1D6	FRONT AXLE TIE ROD (772D)	0240 - 4
2F11	FRONT DRIVE LIGHTS	1673 - 12
3F18	FRONT EQUIPMENT HOSES	4260 - 6
2G3	FRONT HFWD WIRING HARNESS	1674 - 16
2H21	FRONT LOWER WINDSHIELD WIPER	1810 - 8
3F18	FRONT MOUNTED EQUIPMENT HYDRAULIC HOSES	4260 - 6
3F8	FRONT MOUNTED SCARIFIER	4240 - 2
3F8	FRONT MOUNTED SCARIFIER KIT	4240 - 2
3F8	FRONT MOUNTED SCARIFIER MOUNTING BRACKET	4240 - 2
2H9	FRONT MOUNTED WEIGHT	1749 - 2
1H22	FRONT OIL SEAL	0402 - 6
2F15	FRONT PLATFORM WIRING HARNESS	1674 - 2
3F20	FRONT SCARIFIER HOSE KIT	4260 - 8
3F20	FRONT SCARIFIER HYDRAULIC HOSES	4260 - 8
2F3	FRONT SIGNAL LIGHTS	1673 - 4
2F3	FRONT SIGNAL LIGHTS, LED	1673 - 4
2D1	FRONT STEERING CYLINDER	0960 - 8
2D3	FRONT STEERING CYLINDER HOSES	0960 - 10
1F21	FRONT TRANSMISSION HOUSING (770D)	0350 - 2
1F23	FRONT TRANSMISSION HOUSING (772D)	0350 - 4
2F15	FRONT TURN/DRIVING LIGHT WIRING HARNESS	1674 - 2
1B12	FRONT WHEEL (10" X 24" SPLIT RIM)	0110 - 12
1B14	FRONT WHEEL (12" X 25")	0110 - 14
1B10	FRONT WHEEL (14" X 25" SPLIT RIM)	0110 - 10

ALPHABETICAL INDEX - CONTINUED

GRID		PAGE
1B16	FRONT WHEEL (16" X 24")	0110 - 16
1B18	FRONT WHEEL (17"X 25" SPLIT RIM)	0110 - 20
1C24	FRONT WHEEL BEARING (770D)	0230 - 4
1D3	FRONT WHEEL BEARING (770D)	0230 - 4
1C24	FRONT WHEEL HUB (770D)	0230 - 4
1D3	FRONT WHEEL HUB (770D)	0230 - 4
2L18	FRONT WINDOW SUNVISOR	2007 - 4
2I5	FRONT WINDOWS, LOWER (OPENABLE)	1810 - 14
2I1	FRONT WINDOWS, LOWER (STATIONARY)	1810 - 12
2H17	FRONT WINDSHIELD WASHER PUMP	1810 - 4
2H17	FRONT WINDSHIELD WIPER	1810 - 4
2I9	FRONT WIPER COVER (CAB)	1810 - 18
2I11	FRONT WIPER COVER (CANOPY)	1810 - 20
2F15	FRONT WIRING HARNESS, MAIN	1674 - 2
2F13	FRONT WORK LIGHTS	1673 - 14
2B15	FUEL COOLER	0510 - 10
2B15	FUEL COOLER HOSES	0510 - 10
1J6	FUEL FILTER AND LINES	0420 - 2
1I19	FUEL INJECTION LINES	0413 - 2
1I19	FUEL INJECTION NOZZLE	0413 - 2
1I19	FUEL INJECTION PUMP	0413 - 2
1H20	FUEL INJECTION WIRING HARNESS	0402 - 4
2C7	FUEL TANK	0560 - 2
2C7	FUEL TANK CAP	0560 - 2
2C7	FUEL TANK SENDING UNIT	0560 - 2
2C7	FUEL TANK SUPPORT	0560 - 2
2B5	FUSE, STARTING AID	0505 - 4

G

1I19	G SENSOR (FUEL INJECTION PUMP)	0413 - 2
2J7	GAS SHOCK, CAB CONTROL LEVER CONSOLE	1810 - 40
1J17	GASKET KIT, ENGINE CYLINDER HEAD	0452 - 2
1J17	GASKET KIT, ENGINE REBUILD	0452 - 2
1I14	GASKET, ENGINE CYLINDER HEAD	0409 - 2
1H20	GASKET, ENGINE ROCKER ARM COVER	0402 - 4
1H20	GASKET, ENGINE ROCKER ARM COVER CARRIER	0402 - 4
1E7	GASKET, HFWD PUMP EP CONTROL	0260 - 16
3D5	GASKET, HYDRAULIC RESERVOIR CLEAN OUT	2164 - 4
1H1	GASKET, TRANS CONTROL VALVE	0350 - 32
1F12	GEAR SELECTOR, TRANSMISSION	0315 - 4
1H17	GEAR, CAMSHAFT	0402 - 1
1H15	GEAR, CRANKSHAFT	0401 - 1
1I8	GEAR, ENGINE OIL PUMP	0407 - 4
1J14	GEAR, FLYWHEEL RING	0433 - 1
1I19	GEAR, FUEL INJECTION PUMP	0413 - 2
3E1	GEARBOX	3450 - 2
3E1	GEARBOX COVER, CIRCLE DRIVE	3450 - 2
3E3	GEARBOX COVER, CIRCLE DRIVE, WITH SLIP CLUTCH	3450 - 4
3E1	GEARBOX, CIRCLE DRIVE	3450 - 2
3E1	GEARBOX, CIRCLE DRIVE MOUNTING SCREWS	3450 - 2
3E3	GEARBOX, CIRCLE DRIVE, WITH SLIP CLUTCH	3450 - 4
3E3	GEARBOX, WITH SLIP CLUTCH	3450 - 4
1F21	GEARS, PUMP DRIVE (770D)	0350 - 2
1F23	GEARS, PUMP DRIVE (772D)	0350 - 4
2I21	GEARSHIFT LEVER CONSOLE (CAB)	1810 - 30
2I19	GEARSHIFT LEVER CONSOLE (CANOPY)	1810 - 28
2E13	GREASE FITTINGS, FRAME HINGE CENTRAL LUBRICATION	1370 - 2
2K22	GRILLE	1921 - 2
2K22	GRILLE HOUSING	1921 - 2
2K22	GRILLE HOUSING, REAR	1921 - 2
2K22	GRILLE, REAR	1921 - 2
2I9	GRILLE, SPEAKER (CAB)	1810 - 18
2I11	GRILLE, SPEAKER (CANOPY)	1810 - 20
2E21	GROUNDING STRAPS	1671 - 2
2H1	GUARD, BOTTOM (W/O RIPPER)	1746 - 2
2B11	GUARD, FAN	0510 - 4
2B9	GUARD, FAN (WITHOUT AIR CONDITIONING)	0510 - 2
1D4	GUARD, FRONT AXLE (772D)	0240 - 2
1E11	GUARD, HFWD HOSE	0260 - 20
1D22	GUARD, HFWD MOTOR HOSE	0260 - 6
1H8	GUARD, VALVE, TRANSMISSION	0360 - 4
2H5	GUARDS, BOTTOM (WITH RIPPER)	1746 - 6

H

2K13	HARNESS, A/C AND HEATER WIRING	1830 - 18
3E21	HARNESS, BLADE IMPACT VALVE WIRING	3460 - 18
2F21	HARNESS, CAB INTERIOR WIRING	1674 - 8
2F21	HARNESS, CAB POWER WIRING	1674 - 8
2F23	HARNESS, CAB ROOF WIRING	1674 - 10
2F19	HARNESS, ENGINE WIRING	1674 - 6
1H20	HARNESS, FUEL INJECTION WIRING	0402 - 4
2G3	HARNESS, HFWD WIRING	1674 - 16
2F15	HARNESS, MAIN WIRING (FRONT)	1674 - 2
2F17	HARNESS, MAIN WIRING (REAR)	1674 - 4
2F1	HARNESS, SNOW LIGHT WIRING	1673 - 2
2F5	HARNESS, TAIL LIGHT WIRING	1673 - 6
2G1	HARNESS, TRANSMISSION WIRING	1674 - 14
2B5	HARNESS, WIRING, COLD WEATHER STARTING AID	0505 - 4
2G13	HAZARD WARNING LIGHT SWITCH	1674 - 26
1I14	HEAD, ENGINE CYLINDER	0409 - 2
2I9	HEADLINER (CAB)	1810 - 18
2I11	HEADLINER (CANOPY)	1810 - 20
2J13	HEADREST (AIR)	1821 - 2
2J17	HEADREST (MECHANICAL)	1821 - 6
2L6	HEATED EXTERIOR MIRROR	2002 - 4
2K7	HEATER AND A/C BLOWER MOTOR	1830 - 12
2K7	HEATER AND A/C BLOWER MOTOR IMPELLER	1830 - 12
2K7	HEATER AND A/C EXPANSION VALVE	1830 - 12
2K7	HEATER AND A/C HOUSING	1830 - 12
2K7	HEATER AND A/C RESISTOR	1830 - 12
2K7	HEATER AND A/C THERMOSTAT	1830 - 12
2K5	HEATER AND AIR CONDITIONER COVER	1830 - 10
2K3	HEATER AND AIR CONDITIONER DUCTS	1830 - 8
2K5	HEATER AND AIR CONDITIONER DUCTS	1830 - 10
2K5	HEATER AND AIR CONDITIONER FILTER, FILTER HOUSING, AND COVER	1830 - 10
2K13	HEATER AND AIR CONDITIONER LINES AND CONTROLS	1830 - 18
2J23	HEATER HOSES, CAB	1830 - 2
2B7	HEATER, COOLANT	0505 - 8
2G5	HFWD AGRESSIVENESS SWITCH	1674 - 18
2G5	HFWD CAB COMPONENTS	1674 - 18
1E19	HFWD CHARGE HOSES	0260 - 28
1E17	HFWD CHARGE PUMP	0260 - 26
1E19	HFWD CHARGE PUMP HOSES	0260 - 28
1E17	HFWD CHARGE PUMP SEAL KIT	0260 - 26
2G5	HFWD CONTROLLER	1674 - 18
1F5	HFWD ENGAGEMENT MANIFOLD	0260 - 38
1F3	HFWD ENGAGEMENT MANIFOLD FITTINGS AND TEMPERATURE SENSOR	0260 - 36
1F3	HFWD ENGAGEMENT MANIFOLD MOUNTING BRACKET	0260 - 36
1F5	HFWD ENGAGEMENT MANIFOLD SEAL KIT	0260 - 38
1F5	HFWD ENGAGEMENT SOLENOID	0260 - 38
1F5	HFWD ENGAGEMENT SOLENOID VALVE	0260 - 38
1F5	HFWD FLUSHING VALVE	0260 - 38
1D18	HFWD FRONT HUB AND MOTOR (COMPLETE)	0260 - 2

ALPHABETICAL INDEX - CONTINUED

GRID		PAGE
1E11	HFWD HOSE GUARD	0260 - 20
1E13	HFWD HOSES (BULKHEAD TO HFWD ENGAGMENT VALVE)	0260 - 22
1E11	HFWD HOSES (HFWD ENGAGEMENT VALVE TO HFWD MOTORS)	0260 - 20
1E15	HFWD HOSES (HFWD PUMP TO BULKHEAD)	0260 - 24
1D18	HFWD HUB (COMPLETE)	0260 - 2
1D22	HFWD HUB AND YOKE	0260 - 6
2G5	HFWD INCHING MODE SWITCH	1674 - 18
1D18	HFWD MOTOR (COMPLETE)	0260 - 2
1E1	HFWD MOTOR BEARING	0260 - 10
1D20	HFWD MOTOR BRAKE LINE	0260 - 4
1E13	HFWD MOTOR CASE DRAIN HOSE (BULKHEAD TO HFWD ENGAGEMENT VALVE)	0260 - 22
1E11	HFWD MOTOR CASE DRAIN HOSE (HFWD ENGAGEMENT VALVE TO HFWD MOTOR)	0260 - 20
1E15	HFWD MOTOR CASE DRAIN HOSE (HFWD PUMP TO BULKHEAD)	0260 - 24
1D24	HFWD MOTOR END CAP	0260 - 8
1E13	HFWD MOTOR FLUSHING HOSE (BULKHEAD TO HFWD ENGAGEMENT VALVE)	0260 - 22
1E13	HFWD MOTOR FLUSHING HOSE (BULKHEAD TO HFWD ENGAGEMENT VALVE)	0260 - 22
1E11	HFWD MOTOR FLUSHING HOSE (HFWD ENGAGEMENT VALVE TO HFWD MOTOR)	0260 - 20
1E11	HFWD MOTOR FLUSHING HOSE (HFWD ENGAGEMENT VALVE TO HFWD MOTORS)	0260 - 20
1E15	HFWD MOTOR FLUSHING HOSE (HFWD PUMP TO BULKHEAD)	0260 - 24
1E15	HFWD MOTOR FLUSHING HOSE (HFWD PUMP TO BULKHEAD)	0260 - 24
1E9	HFWD MOTOR FLUSHING PUMP	0260 - 18
1E13	HFWD MOTOR FORWARD HOSE (BULKHEAD TO HFWD ENGAGEMENT VALVE)	0260 - 22
1E11	HFWD MOTOR FORWARD HOSE (HFWD ENGAGEMENT VALVE TO HFWD MOTOR)	0260 - 20
1E15	HFWD MOTOR FORWARD HOSE (HFWD PUMP TO BULKHEAD)	0260 - 24
1D20	HFWD MOTOR HYDRAULIC LINES	0260 - 4
1E1	HFWD MOTOR PISTON RINGS	0260 - 10
1D20	HFWD MOTOR PRESSURE LINE	0260 - 4
1E13	HFWD MOTOR REVERSE HOSE (BULKHEAD TO HFWD ENGAGEMENT VALVE)	0260 - 22
1E11	HFWD MOTOR REVERSE HOSE (HFWD ENGAGEMENT VALVE TO HFWD MOTOR)	0260 - 20
1E15	HFWD MOTOR REVERSE HOSE (HFWD PUMP TO BULKHEAD)	0260 - 24
1D20	HFWD MOTOR RIGHT DRAIN LINE	0260 - 4
1E1	HFWD MOTOR ROTATING COMPONENTS	0260 - 10
1D24	HFWD MOTOR SEAL KIT	0260 - 8
1E1	HFWD MOTOR SEAL KIT	0260 - 10
1D24	HFWD MOTOR SERVO PISTON	0260 - 8
1D24	HFWD MOTOR SOLENOID AND SERVO PISTON	0260 - 8
1E1	HFWD MOTOR SPEED SENSOR	0260 - 10
1E1	HFWD MOTOR SWASH PLATE	0260 - 10
2G5	HFWD ON/OFF SWITCH	1674 - 18
1F5	HFWD OPERATING CHARGE PRESSURE REGULATING VALVE	0260 - 38
1E5	HFWD PUMP BEARING	0260 - 14
1E5	HFWD PUMP CYLINDER BLOCK, SWASH PLATE, AND PISTONS	0260 - 14
1E7	HFWD PUMP DRIVESHAFT	0260 - 16
1E9	HFWD PUMP END COVER AND HFWD MOTOR FLUSHING PUMP	0260 - 18
1E7	HFWD PUMP EP CONTROL	0260 - 16
1E7	HFWD PUMP EP CONTROL GASKET	0260 - 16
1E7	HFWD PUMP EP CONTROL SEAL KIT	0260 - 16
1E7	HFWD PUMP EP CONTROL SOLENOID	0260 - 16
1E7	HFWD PUMP HOUSING AND EP CONTROL	0260 - 16
1E7	HFWD PUMP MAIN HOUSING	0260 - 16
1E3	HFWD PUMP MOUNTING (672CH2)	0260 - 12
1E9	HFWD PUMP OVERHAUL SEAL KIT	0260 - 18
1E5	HFWD PUMP PISTONS	0260 - 14
1E9	HFWD PUMP PRESSURE OVERRIDE VALVE	0260 - 18
1F3	HFWD PUMP PRESSURE SENSOR	0260 - 36
1E7	HFWD PUMP SEAL KIT	0260 - 16
1E15	HFWD PUMP SUCTION HOSE	0260 - 24
1E13	HFWD TANK RETURN HOSE (BULKHEAD TO HFWD ENGAGEMENT VALVE)	0260 - 22
1E15	HFWD TANK RETURN HOSE (HFWD PUMP TO BULKHEAD)	0260 - 24
2G3	HFWD WHEEL SPEED SENSOR WIRING HARNESS	1674 - 16
2G3	HFWD WIRING HARNESS	1674 - 16
2G13	HIGH/LOW BEAM LIGHT SWITCH	1674 - 26
1D24	HIGH/LOW SPEED SOLENOID, HFWD MOTOR	0260 - 8
2K16	HINGE, DOOR, SERVICE	1910 - 2
2K18	HOOD	1910 - 4
2K18	HOOD SUPPORT	1910 - 4
2L10	HORN	2004 - 2
2G13	HORN SWITCH	1674 - 26
1D22	HOSE GUARD, HFWD MOTOR	0260 - 6
2B23	HOSE, AIR CLEANER PRE-CLEANER TO MUFFLER	0520 - 2
3E21	HOSE, BLADE IMPACT ACCUMULATOR	3460 - 18
3E21	HOSE, BLADE IMPACT VALVE	3460 - 18
3E17	HOSE, BLADE LIFT CYLINDER	3460 - 14
3F1	HOSE, BLADE SLIDE CYLINDER	3460 - 22
3F1	HOSE, BLADE TILT CYLINDER	3460 - 22
1E19	HOSE, CHARGE, HFWD	0260 - 28
3F3	HOSE, CIRCLE ROTATE MOTOR	3460 - 24
3F5	HOSE, CIRCLE SIDESHIFT CYLINDER	3460 - 26
1E21	HOSE, DIFFERENTIAL LOCK COOLER	0260 - 30
1E21	HOSE, DIFFERENTIAL LOCK COOLER TO DIFFERENTIAL LOCK VALVE	0260 - 30
1F1	HOSE, DIFFERENTIAL LOCK FILTER TO DIFFERENTIAL LOCK VALVE	0260 - 34
1F1	HOSE, DIFFERENTIAL LOCK PUMP TO DIFFERENTIAL LOCK VALVE	0260 - 34
1H20	HOSE, ENGINE VENTILATING SYSTEM	0402 - 4
1E19	HOSE, HFWD CHARGE PUMP	0260 - 28
1E19	HOSE, HFWD CHARGE PUMP SUCTION	0260 - 28
1E13	HOSE, HFWD MOTOR CASE DRAIN (BULKHEAD TO HFWD ENGAGEMENT VALVE)	0260 - 22
1E11	HOSE, HFWD MOTOR CASE DRAIN (HFWD ENGAGEMENT VALVE TO HFWD MOTOR)	0260 - 20
1E15	HOSE, HFWD MOTOR CASE DRAIN (HFWD PUMP TO BULKHEAD)	0260 - 24
1E13	HOSE, HFWD MOTOR FLUSHING (BULKHEAD TO HFWD ENGAGEMENT VALVE)	0260 - 22
1E11	HOSE, HFWD MOTOR FLUSHING (HFWD ENGAGEMENT VALVE TO HFWD MOTOR)	0260 - 20
1E15	HOSE, HFWD MOTOR FLUSHING (HFWD PUMP TO BULKHEAD)	0260 - 24
1E15	HOSE, HFWD PUMP SUCTION	0260 - 24
1E13	HOSE, HFWD TANK RETURN (BULKHEAD TO HFWD ENGAGEMENT VALVE)	0260 - 22
1E15	HOSE, HFWD TANK RETURN (HFWD PUMP TO BULKHEAD)	0260 - 24
3C23	HOSE, HYDRAULIC ACCUMULATOR (770D)	2163 - 6
3D1	HOSE, HYDRAULIC ACCUMULATOR (772D)	2163 - 8
3C17	HOSE, HYDRAULIC LOAD SENSE	2163 - 2
3C23	HOSE, HYDRAULIC PUMP (770D)	2163 - 6
3D1	HOSE, HYDRAULIC PUMP (772D)	2163 - 8

ALPHABETICAL INDEX - CONTINUED

GRID		PAGE
3C11	HOSE, HYDRAULIC, MAIN HYD COLD START DISCONNECT	2160 - 40
1E11	HOSE, LEFT HFWD MOTOR BRAKE (HFWD ENGAGEMENT VALVE TO HFWD MOTOR)	0260 - 20
1E13	HOSE, LEFT HFWD MOTOR FORWARD (BULKHEAD TO HFWD ENGAGEMENT VALVE)	0260 - 22
1E11	HOSE, LEFT HFWD MOTOR FORWARD (HFWD ENGAGEMENT VALVE TO HFWD MOTOR)	0260 - 20
1E15	HOSE, LEFT HFWD MOTOR FORWARD (HFWD PUMP TO BULKHEAD)	0260 - 24
1E13	HOSE, LEFT HFWD MOTOR REVERSE (BULKHEAD TO HFWD ENGAGEMENT VALVE)	0260 - 22
1E11	HOSE, LEFT HFWD MOTOR REVERSE (HFWD ENGAGEMENT VALVE TO HFWD MOTOR)	0260 - 20
1E15	HOSE, LEFT HFWD MTOR REVERSE (HFWD PUMP TO BULKHEAD)	0260 - 24
2D9	HOSE, MAIN CONTROL VALVE TO WHEEL LEAN CYLINDER (770D)	0960 - 16
2D5	HOSE, MAIN HYDRAULIC CONTROL VALVE TO ARTICULATION CYLINDER	0960 - 12
2D7	HOSE, MAIN HYDRAULIC CONTROL VALVE TO WHEEL LEAN CYLINDER (772D)	0960 - 14
3C23	HOSE, MAIN HYDRAULIC MANIFOLD VALVE TO HYDRAULIC ACCUMULATOR (770D)	2163 - 6
3D1	HOSE, MAIN HYDRAULIC MANIFOLD VALVE TO HYDRAULIC ACCUMULATOR (772D)	2163 - 8
3C23	HOSE, MAIN HYDRAULIC MANIFOLD VALVE TO HYDRAULIC FILTER (770D)	2163 - 6
3C23	HOSE, MAIN HYDRAULIC MANIFOLD VALVE TO MAIN HYDRAULIC CONTROL VALVE (770D)	2163 - 6
3D1	HOSE, MAIN HYDRAULIC MANIFOLD VALVE TO MAIN HYDRAULIC CONTROL VALVE (772D)	2163 - 8
3C23	HOSE, MAIN HYDRAULIC PUMP (770D)	2163 - 6
3D1	HOSE, MAIN HYDRAULIC PUMP (772D)	2163 - 8
3C17	HOSE, MAIN HYDRAULIC PUMP LOAD SENSE	2163 - 2
2D23	HOSE, PARK BRAKE VALVE TO TRANSMISSION	1111 - 4
3F22	HOSE, REAR SCARIFIER	4260 - 10
1E11	HOSE, RIGHT HFWD MOTOR BRAKE (HFWD ENGAGEMENT VALVE TO HFWD MOTOR)	0260 - 20
1E13	HOSE, RIGHT HFWD MOTOR FORWARD (BULKHEAD TO HFWD ENGAGEMENT VALVE)	0260 - 22
1E11	HOSE, RIGHT HFWD MOTOR FORWARD (HFWD ENGAGEMENT VALVE TO HFWD MOTOR)	0260 - 20
1E15	HOSE, RIGHT HFWD MOTOR FORWARD (HFWD PUMP TO BULKHEAD)	0260 - 24
1E13	HOSE, RIGHT HFWD MOTOR REVERSE (BULKHEAD TO HFWD ENGAGEMENT VALVE)	0260 - 22
1E11	HOSE, RIGHT HFWD MOTOR REVERSE (HFWD ENGAGEMENT VALVE TO HFWD MOTOR)	0260 - 20
1E15	HOSE, RIGHT HFWD MOTOR REVERSE (HFWD PUMP TO BULKHEAD)	0260 - 24
3F22	HOSE, RIPPER	4260 - 10
3E19	HOSE, SADDLE LOCK PIN	3460 - 16
2C17	HOSE, SECONDARY STEERING	0930 - 2
3C23	HOSE, SUCTION, MAIN HYDRAULIC PUMP (770D)	2163 - 6
3D1	HOSE, SUCTION, MAIN HYDRAULIC PUMP (772D)	2163 - 8
2B23	HOSE, SUCTION, MUFFLER TO AIR CLEANER PRE-CLEANER	0520 - 2
1H10	HOSE, TRANSMISSION ACUMULATOR	0363 - 2
1I24	HOSE, TURBOCHARGER BOOST CONTROL	0416 - 2
1I24	HOSE, WASTEGATE TURBOCHARGER	0416 - 2
2D5	HOSES, ARTICULATION CYLINDER	0960 - 12
2D18	HOSES, BRAKE ACCUMULATOR	1060 - 4
2D18	HOSES, BRAKE VALVE	1060 - 4
2J23	HOSES, CAB HEATER	1830 - 2
2B7	HOSES, COOLANT HEATER	0505 - 8
1F1	HOSES, DIFFERENTIAL LOCK PUMP	0260 - 34
2E9	HOSES, ENGINE OIL DRAIN	1369 - 2
3F18	HOSES, FRONT MOUNTED EQUIPMENT	4260 - 6
3F20	HOSES, FRONT SCARIFIER	4260 - 8
2D3	HOSES, FRONT STEERING CYLINDER	0960 - 10
2B15	HOSES, FUEL COOLER	0510 - 10
3C21	HOSES, HYDRAULIC OIL COOLER (770D) (SN 599561-)	2163 - 5A
3C19	HOSES, HYDRAULIC OIL COOLER (772D)	2163 - 4
2D23	HOSES, PARK BRAKE	1111 - 4
3F20	HOSES, SCARIFIER (FRONT)	4260 - 8
2D18	HOSES, SERVICE BRAKE	1060 - 4
2D11	HOSES, STEERING VALVE	0960 - 18
1H6	HOSES, TRANSMISSION FILTER	0360 - 2
1H10	HOSES, TRANSMISSION OIL COOLER	0363 - 2
2D9	HOSES, WHEEL LEAN CYLINDER (770D)	0960 - 16
2D7	HOSES, WHEEL LEAN CYLINDER (772D)	0960 - 14
1D14	HOUSING, AXLE	0250 - 6
2K5	HOUSING, CAB FRESH AIR FILTER	1830 - 10
3E7	HOUSING, CIRCLE DRIVE MOTOR	3460 - 4
1J3	HOUSING, ENGINE COOLANT THERMOSTAT	0418 - 2
1I11	HOUSING, ENGINE OIL FILTER	0407 - 8
1C8	HOUSING, FINAL DRIVE	0201 - 4
1D10	HOUSING, FIRST PLANET PINION, HFWD MOTOR	0250 - 2
1J15	HOUSING, FLYWHEEL	0433 - 2
2K22	HOUSING, GRILLE	1921 - 2
2K7	HOUSING, HEATER AND A/C	1830 - 12
1D22	HOUSING, HFWD MOTOR	0260 - 6
1E7	HOUSING, MAIN, HFWD PUMP	0260 - 16
1D12	HOUSING, PISTON BRAKE, HFWD MOTOR	0250 - 4
1C8	HOUSING, PIVOT	0201 - 4
2I9	HOUSING, RADIO (CAB)	1810 - 18
2I11	HOUSING, RADIO (CANOPY)	1810 - 20
2K22	HOUSING, REAR GRILLE	1921 - 2
1J15	HOUSING, REAR OIL SEAL	0433 - 2
1G1	HOUSING, REAR TRANSMISSION	0350 - 6
1C6	HOUSING, TANDEM	0201 - 2
1G5	HOUSING, TRANSMISSION	0350 - 12
1H3	HOUSING, TRANSMISSION CONTROL VALVE	0350 - 34
1F12	HOUSING, TRANSMISSION GEAR SHIFT	0315 - 4
2B17	HUB, FAN	0512 - 2
1C24	HUB, FRONT WHEEL (770D)	0230 - 4
1D3	HUB, FRONT WHEEL (770D)	0230 - 4
1D22	HUB, HFWD	0260 - 6
1D18	HUB, HFWD (COMPLETE)	0260 - 2
1D12	HUB, SECOND STAGE PINION, HFWD MOTOR	0250 - 4
2K1	HVAC POWERED PRECLEANER	1830 - 4
3C23	HYDRAULIC ACCUMULATOR HOSES (770D)	2163 - 6
3D1	HYDRAULIC ACCUMULATOR HOSES (772D)	2163 - 8
2J7	HYDRAULIC CONTROL LEVER PIVOT ROD	1810 - 40
2J9	HYDRAULIC CONTROL LEVERS (LEFT)	1810 - 42
2J11	HYDRAULIC CONTROL LEVERS (RIGHT)	1810 - 44
2C23	HYDRAULIC CYLINDER, ARTICULATION	0960 - 6
3E11	HYDRAULIC CYLINDER, BLADE LIFT	3460 - 8
3E13	HYDRAULIC CYLINDER, BLADE SLIDE	3460 - 10
3E15	HYDRAULIC CYLINDER, BLADE TILT	3460 - 12
3E9	HYDRAULIC CYLINDER, CIRCLE SIDESHIFT	3460 - 6
2D1	HYDRAULIC CYLINDER, FRONT STEERING	0960 - 8
3F14	HYDRAULIC CYLINDER, RIPPER/REAR SCARIFIER	4240 - 8
3F10	HYDRAULIC CYLINDER, SCARIFIER	4240 - 4
2C19	HYDRAULIC CYLINDER, WHEEL LEAN (770D)	0960 - 2
2C21	HYDRAULIC CYLINDER, WHEEL LEAN (772D)	0960 - 4
3C17	HYDRAULIC LOAD SENSE HOSES	2163 - 2
3B8	HYDRAULIC MANIFOLD VALVE, MAIN	2160 - 6
2B11	HYDRAULIC OIL COOLER	0510 - 4

ALPHABETICAL INDEX - CONTINUED

GRID		PAGE
2B13	HYDRAULIC OIL COOLER	0510 - 6
3C21	HYDRAULIC OIL COOLER HOSES (770D) (SN 599561-)	2163 - 5A
3C19	HYDRAULIC OIL COOLER HOSES (772D)	2163 - 4
3B4	HYDRAULIC PUMP, MAIN	2160 - 2
3D5	HYDRAULIC RESERVOIR	2164 - 4
3D5	HYDRAULIC RESERVOIR CAP	2164 - 4
3D5	HYDRAULIC RESERVOIR CLEAN OUT COVER	2164 - 4
	I	
2B17	IDLER PULLEY, FAN BELT	0512 - 2
2F21	IGNITION RELAY	1674 - 8
2G13	IGNITION SWITCH	1674 - 26
2I21	IGNITION SWITCH LABEL (CAB)	1810 - 30
2I19	IGNITION SWITCH LABEL (CANOPY)	1810 - 28
3E23	IMPACT VALVE, BLADE	3460 - 20
2K7	IMPELLER, HEATER AND A/C BLOWER MOTOR	1830 - 12
1F14	INCHING PEDAL	0315 - 6
1F14	INCHING PEDAL COVER	0315 - 6
3E19	INDICATOR SWITCH, SADDLE LOCKING PIN	3460 - 16
1I19	INJECTION PUMP, FUEL	0413 - 2
1I19	INJECTOR, ELECTRONIC UNIT	0413 - 2
3B24	INLET SECTION, LEFT MAIN HYDRAULIC CONTROL VALVE	2160 - 28
3B22	INLET SECTION, RIGHT MAIN HYDRAULIC CONTROL VALVE	2160 - 26
1C12	INPUT QUILL	0210 - 4
1C10	INPUT YOKE	0210 - 2
1I14	INSERT, ENGINE VALVE SEAT	0409 - 2
3D19	INSERTS, BLADE TILT FRAME WEAR	3440 - 4
1I23	INTAKE MANIFOLD	0414 - 1
1I14	INTAKE VALVE, ENGINE	0409 - 2
1I10	INTAKE, ENGINE OIL PUMP	0407 - 6
2I9	INTERIOR PANELS, CAB	1810 - 18
2I11	INTERIOR PANELS, CANOPY	1810 - 20
2L4	INTERIOR REARVIEW MIRROR	2002 - 2
1F16	ISOLATOR, TORSIONAL	0325 - 2
2H23	ISOLATORS, CAB	1810 - 10
	J	
1H24	JET, PISTON COOLING	0404 - 2
1C20	JOINT, DRIVESHAFT	0225 - 2
	K	
2C23	KIT, ARTICULATION CYLINDER SEAL	0960 - 6
2F7	KIT, BEACON BRACKET	1673 - 8
3E21	KIT, BLADE IMPACT SYSTEM	3460 - 18
3E23	KIT, BLADE IMPACT VALVE SEAL	3460 - 20
3E11	KIT, BLADE LIFT CYLINDER SEAL	3460 - 8
3E13	KIT, BLADE SLIDE CYLINDER SEAL	3460 - 10
3E15	KIT, BLADE TILT CYLINDER SEAL	3460 - 12
2H1	KIT, BOTTOM GUARD (W/O RIPPER)	1746 - 2
2H3	KIT, BOTTOM GUARD SIDE SHIELD KIT (W/O RIPPER)	1746 - 4
2H5	KIT, BOTTOM GUARDS AND SIDE SHIELDS (WITH RIPPER)	1746 - 6
3E7	KIT, CIRCLE DRIVE MOTOR SEAL	3460 - 4
3E9	KIT, CIRCLE SIDESHIFT CYLINDER SEAL	3460 - 6
3B4	KIT, CYL BLOCK, MAIN HYDRAULIC PUMP	2160 - 2
1H23	KIT, CYLINDER LINER O-RING	0403 - 1
1I23	KIT, ENGINE AIR HEATER MANIFOLD	0414 - 1
3C7	KIT, FIFTH FUNCTION CONTROL VALVE KIT	2160 - 36
3F8	KIT, FRONT MOUNTED SCARIFIER	4240 - 2
2D1	KIT, FRONT STEERING CYLINDER SEAL	0960 - 8
1E17	KIT, HFWD CHARGE PUMP SEAL	0260 - 26
1D24	KIT, HFWD MOTOR SEAL	0260 - 8
1E1	KIT, HFWD MOTOR SEAL	0260 - 10
1E9	KIT, HFWD PUMP OVERHAUL SEAL	0260 - 18
1E7	KIT, HFWD PUMP SEAL	0260 - 16
2E2	KIT, LABEL AND TRADEMARK REPLACEMENT, ENGLISH	1320 - 2
3B8	KIT, MAIN MANIFOLD VALVE SEAL	2160 - 6
3D13	KIT, MOLDBOARD EXTENSION (24" MOLDBOARD)	3401 - 6
3D15	KIT, MOLDBOARD EXTENSION (27" MOLDBOARD)	3401 - 8
3C9	KIT, ONE HAND BLADE LIFT CONTROL	2160 - 38
1H23	KIT, PISTON AND CYLINDER LINER	0403 - 1
1H23	KIT, PISTON RING	0403 - 1
3F12	KIT, REAR RIPPER/SCARIFIER	4240 - 6
2E2	KIT, REPAINT, ENGLISH LABELS	1320 - 2
3F22	KIT, RIPPER/REAR SCARIFIER HYDRAULIC HOSES	4260 - 10
3F14	KIT, RIPPER/REAR SCARIFIER SEAL KIT	4240 - 8
2C1	KIT, ROTARY EJECTOR PRECLEANER	0520 - 4
3E5	KIT, ROTARY MANIFOLD SEAL	3460 - 2
3F10	KIT, SCARIFIER CYLINDER SEAL	4240 - 4
3F20	KIT, SCARIFIER HYDRAULIC HOSE (FRONT)	4260 - 8
1E7	KIT, SEAL, HFWD PUMP EP CONTROL	0260 - 16
3B4	KIT, SEAL, MAIN HYDRAULIC PUMP	2160 - 2
2C17	KIT, SECONDARY STEERING	0930 - 2
2D16	KIT, SERVICE BRAKE VALVE SEAL	1060 - 2
3C7	KIT, SEVENTH FUNCTION CONTROL VALVE KIT	2160 - 36
3C7	KIT, SIXTH FUNCTION CONTROL VALVE KIT	2160 - 36
1J8	KIT, STARTING MOTOR SOLENOID	0422 - 2
2D11	KIT, STEERING VALVE SEAL	0960 - 18
1J1	KIT, WATER PUMP SEAL	0417 - 2
2C19	KIT, WHEEL LEAN CYLINDER SEAL (770D)	0960 - 2
2C21	KIT, WHEEL LEAN CYLINDER SEAL (772D)	0960 - 4
2I3	KIT, WINDSHIELD REPAIR	1810 - 13A
2K9	KIT,A/C PULLEY	1830 - 14
2K9	KIT,A/C SERVICE	1830 - 14
2K9	KIT,A/C SHAFT SEAL	1830 - 14
3C9	KNOB, ONE HAND BLADE LIFT CONTROL LEVER	2160 - 38
2H15	KREMNUTS, CAB	1810 - 2
	L	
2I21	LABEL, ENGINE SPEED CONTROL SWITCH (CAB)	1810 - 30
2I19	LABEL, ENGINE SPEED CONTROL SWITCH (CANOPY)	1810 - 28
2I21	LABEL, IGNITION SWITCH (CAB)	1810 - 30
2I19	LABEL, IGNITION SWITCH (CANOPY)	1810 - 28
2E2	LABELS AND TRADEMARKS, ENGLISH	1320 - 2
2E6	LABELS AND TRADEMARKS, FRENCH	1320 - 6
2E4	LABELS AND TRADEMARKS, SPANISH	1320 - 4
2E2	LABELS, ENGLISH	1320 - 2
2E6	LABELS, FRENCH	1320 - 6
2E4	LABELS, SPANISH	1320 - 4
2F5	LAMP, LED STOP	1673 - 6
2F5	LAMP, LED TAIL	1673 - 6
2F5	LAMP, LED TURN	1673 - 6
2J1	LATCH, CAB DOOR (LEFT)	1810 - 34
2I23	LATCH, CAB DOOR (RIGHT)	1810 - 32
2J1	LATCH, CAB DOOR HOLD OPEN (LEFT)	1810 - 34
2I23	LATCH, CAB DOOR HOLD OPEN (RIGHT)	1810 - 32
2K16	LATCH, ENGINE DOOR	1910 - 2
2I5	LATCH, OPENABLE LOWER FRONT WINDOWS	1810 - 14

ALPHABETICAL INDEX - CONTINUED

GRID		PAGE
2I7	LATCH, OPENABLE SIDE WINDOWS	1810 - 16
2K16	LATCH, SERVICE DOORS	1910 - 2
2L14	LATCH, TOOLBOX SPRING HOOK	2005 - 2
1D8	LEAN BAR LINK (772D)	0240 - 6
2C19	LEAN CYLINDER, WHEEL (770D)	0960 - 2
2C21	LEAN CYLINDER, WHEEL (772D)	0960 - 4
2F3	LED FRONT SIGNAL LIGHT	1673 - 4
2F5	LED STOP LAMP	1673 - 6
2F5	LED STOP LIGHT	1673 - 6
2F5	LED TAIL LIGHT	1673 - 6
2F5	LED TURN LAMP	1673 - 6
2F5	LED TURN LIGHT	1673 - 6
3B20	LEFT BLADE LIFT VALVE SECTION	2160 - 24
2J9	LEFT CONTROL LEVER BOOT	1810 - 42
2J9	LEFT HYDRAULIC CONTROL LEVERS	1810 - 42
3B10	LEFT MAIN HYDRAULIC CONTROL VALVE	2160 - 10
3B24	LEFT MAIN HYDRAULIC CONTROL VALVE INLET AND OUTLET SECTIONS	2160 - 28
2J1	LEFT SIDE CAB DOOR	1810 - 34
3B24	LEFT VALVE INLET SECTION	2160 - 28
3B24	LEFT VALVE OUTLET SECTION	2160 - 28
2J9	LEVER, ARTICULATION CONTROL	1810 - 42
2J11	LEVER, BLADE LIFT CONTROL	1810 - 44
2J11	LEVER, BLADE SIDE SHIFT CONTROL	1810 - 44
2J9	LEVER, CIRCLE ROTATE CONTROL	1810 - 42
2J11	LEVER, CIRCLE SIDE SHIFT CONTROL	1810 - 44
2J11	LEVER, LEFT BLADE LIFT CONTROL	1810 - 44
3C9	LEVER, ONE HAND BLADE LIFT CONTROL	2160 - 38
2J9	LEVER, RIGHT AUXILIARY CONTROL	1810 - 42
2J9	LEVER, RIGHT BLADE LIFT CONTROL	1810 - 42
2J11	LEVER, RIPPER CONTROL	1810 - 44
2J9	LEVER, SCARIFIER CONTROL	1810 - 42
2J9	LEVER, WHEEL LEAN CONTROL	1810 - 42
2J9	LEVERS, CAB CONTROL (LEFT)	1810 - 42
2J11	LEVERS, CAB CONTROL (RIGHT)	1810 - 44
3E17	LIFT CYLINDER HOSES	3460 - 14
3E11	LIFT CYLINDER, BLADE	3460 - 8
1I16	LIFT STRAP, ENGINE	0409 - 4
2F7	LIGHT BRACKET, BEACON	1673 - 8
2K22	LIGHT PANEL, REAR	1921 - 2
2F5	LIGHT, LED STOP	1673 - 6
2F5	LIGHT, LED TURN	1673 - 6
2F9	LIGHTS, CAB ROOF	1673 - 10
2F11	LIGHTS, FRONT DRIVE	1673 - 12
2F3	LIGHTS, FRONT SIGNAL	1673 - 4
2F13	LIGHTS, FRONT WORK	1673 - 14
2F13	LIGHTS, REAR WORK	1673 - 14
2B23	LINE, AIR CLEANER PRE-CLEANER TO MUFFLER	0520 - 2
1C17	LINE, DIFFERENTIAL CASE OIL	0210 - 9
1I19	LINE, FUEL INJECTION PUMP LUBE	0413 - 2
1D20	LINE, HFWD MOTOR BRAKE	0260 - 4
1D20	LINE, HFWD MOTOR PRESSURE	0260 - 4
1D20	LINE, HFWD MOTOR RIGHT DRAIN	0260 - 4
2B23	LINE, SUCTION, MUFFLER TO AIR CLEANER PRE-CLEANER	0520 - 2
1I24	LINE, TURBOCHARGER OIL	0416 - 2
1H23	LINER, ENGINE CYLINDER	0403 - 1
1J6	LINES AND FILTER, FUEL	0420 - 2
2E13	LINES AND FITTINGS, FRAME HINGE CENTRAL LUBRICATION	1370 - 2
2K11	LINES, AIR CONDITIONING	1830 - 16
1I19	LINES, FUEL INJECTION	0413 - 2
1D20	LINES, HFWD MOTOR	0260 - 4
1D8	LINK, LEAN BAR (772D)	0240 - 6
1C22	LINK, WHEEL LEAN (770D)	0230 - 2
1D8	LINK, WHEEL LEAN BAR (772D)	0240 - 6
2G7	LINKAGE, ARTICULATION SENSOR	1674 - 20
2G17	LOAD CENTER	1675 - 2
3C17	LOAD SENSE HOSE, MAIN HYDRAULIC PUMP	2163 - 2
3C17	LOAD SENSE HOSES, HYDRAULIC	2163 - 2
3E19	LOCK PIN, SADDLE	3460 - 16
2K16	LOCK, SERVICE DOORS	1910 - 2
3B14	LOCKOUT VALVE, ARTICULATION VALVE SECTION	2160 - 18
3C3	LOCKOUT VALVE, AUXILIARY VALVE SECTION (WITH FLOAT)	2160 - 32
3C5	LOCKOUT VALVE, AUXILIARY VALVE SECTION (WITHOUT FLOAT)	2160 - 34
3B20	LOCKOUT VALVE, BLADE LIFT VALVE SECTION	2160 - 24
3B18	LOCKOUT VALVE, BLADE SIDE SHIFT VALVE SECTION	2160 - 22
3B14	LOCKOUT VALVE, BLADE TILT VALVE SECTION	2160 - 18
3B14	LOCKOUT VALVE, CIRCLE SIDE SHIFT VALVE SECTION	2160 - 18
3C1	LOCKOUT VALVE, RIPPER VALVE SECTION	2160 - 30
3C3	LOCKOUT VALVE, SCARIFIER VALVE SECTION	2160 - 32
3B14	LOCKOUT VALVE, WHEEL LEAN VALVE SECTION	2160 - 18
2K3	LOUVER, CAB B-POST HEATER AND AIR CONDITIONER DUCT	1830 - 8
2H21	LOWER FRONT WINDSHIELD WIPER	1810 - 8
2H21	LOWER FRONT WINDSHIELD WIPER BLADE	1810 - 8
1B14	LUBGOLT, FRONT WHEEL (12" X 25")	0110 - 14
2E13	LUBRICATION LINES, FRAME HINGE	1370 - 2
2E13	LUBRICATION, CENTRAL, FRAME HINGE	1370 - 2
1B10	LUGBOLT, FRONT WHEEL (14" X 25")	0110 - 10
1B16	LUGBOLT, FRONT WHEEL (16" X 24")	0110 - 16
1B2	LUGBOLT, REAR WHEEL (10" X 24") (SPLIT RIM)	0110 - 2
1B2	LUGBOLT, WHEEL (10" X 24") (SPLIT RIM)	0110 - 2
1B4	LUGBOLT, WHEEL (14" X 25") (770D) (772D)	0110 - 4
1B4	LUGBOLT, WHEEL (17" X 25") (770D) (772D)	0110 - 4

M

2C11	MAGNETIC PICK-UP, ENGINE	0578 - 1
1H16	MAIN BEARING, ENGINE	0401 - 2
3C15	MAIN CONTROL VALVE MOUNTING BRACKETS	2160 - 44
1C8	MAIN DRIVE AXLE HOUSING	0201 - 4
2G20	MAIN FRAME	1740 - 2
2G24	MAIN FRAME COVERS	1740 - 6
2G24	MAIN FRAME COWL COVER	1740 - 6
2K20	MAIN FRAME FRONT SIDE COVERS	1913 - 2
2G24	MAIN FRAME TOP COVER	1740 - 6
2F15	MAIN FRAME WIRING HARNESS	1674 - 2
3D3	MAIN HYD FILTER MOUNTING	2164 - 2
3B10	MAIN HYDRAULIC CONTROL VALVE	2160 - 10
3B24	MAIN HYDRAULIC CONTROL VALVE INLET SECTION (LEFT)	2160 - 28
3B22	MAIN HYDRAULIC CONTROL VALVE INLET SECTION (RIGHT)	2160 - 26
3B24	MAIN HYDRAULIC CONTROL VALVE OUTLET SECTION (LEFT)	2160 - 28
3B22	MAIN HYDRAULIC CONTROL VALVE OUTLET SECTION (RIGHT)	2160 - 26
3B12	MAIN HYDRAULIC CONTROL VALVE TIE RODS	2160 - 12
3D3	MAIN HYDRAULIC FILTER	2164 - 2
3B8	MAIN HYDRAULIC MANIFOLD VALVE	2160 - 6
3C23	MAIN HYDRAULIC MANIFOLD VALVE HOSES (770D)	2163 - 6

ALPHABETICAL INDEX - CONTINUED

GRID		PAGE
3D1	MAIN HYDRAULIC MANIFOLD VALVE HOSES (772D)	2163 - 8
3C23	MAIN HYDRAULIC PLUMBING (770D)	2163 - 6
3D1	MAIN HYDRAULIC PLUMBING (772D)	2163 - 8
3B4	MAIN HYDRAULIC PUMP	2160 - 2
3C23	MAIN HYDRAULIC PUMP FITTINGS (770D)	2163 - 6
3D1	MAIN HYDRAULIC PUMP FITTINGS (772D)	2163 - 8
3C17	MAIN HYDRAULIC PUMP LOAD SENSE HOSE	2163 - 2
3B4	MAIN HYDRAULIC PUMP SEAL KIT	2160 - 2
3C23	MAIN HYDRAULIC PUMP SUCTION HOSE (770D)	2163 - 6
3D1	MAIN HYDRAULIC PUMP SUCTION HOSE (772D)	2163 - 8
3B8	MAIN MANIFOLD VALVE	2160 - 6
3B6	MAIN MANIFOLD VALVE MOUNTING BRACKET	2160 - 4
3B8	MAIN MANIFOLD VALVE SEAL KIT	2160 - 6
2F15	MAIN WIRING HARNESS (FRONT)	1674 - 2
2F17	MAIN WIRING HARNESS (REAR)	1674 - 4
3B8	MANIFOLD VALVE, MAIN	2160 - 6
1I17	MANIFOLD, EXHAUST	0410 - 1
1I19	MANIFOLD, FUEL INJECTION	0413 - 2
1F5	MANIFOLD, HFWD ENGAGEMENT	0260 - 38
1I23	MANIFOLD, INTAKE	0414 - 1
3E5	MANIFOLD, ROTARY	3460 - 2
2K9	MANIFOLD,A/C	1830 - 14
2F13	MID-FRAME WORK LIGHTS	1673 - 14
2L6	MIRROR BRACKET, EXTERIOR	2002 - 4
2L6	MIRROR, EXTERIOR	2002 - 4
2L6	MIRROR, EXTERIOR HEATED	2002 - 4
2L4	MIRROR, INTERIOR REARVIEW	2002 - 2
1F12	MODULE, TRANSMISSION SWITCH BOX	0315 - 4
1J6	MOISTURE SENSOR, FUEL	0420 - 2
2C12	MOISTURE SENSOR, FUEL	0578 - 2
3D13	MOLDBOARD EXTENSION (24" MOLDBOARD)	3401 - 6
3D15	MOLDBOARD EXTENSION (27" MOLDBOARD)	3401 - 8
3D13	MOLDBOARD EXTENSION KIT (24" MOLDBOARD)	3401 - 6
3D15	MOLDBOARD EXTENSION KIT (27" MOLDBOARD)	3401 - 8
3D11	MOLDBOARD OVERLAYS	3401 - 4
3D9	MOLDBOARDS AND CUTTING EDGES	3401 - 2
2F21	MONITOR	1674 - 8
2J3	MONITOR CONSOLE, CAB	1810 - 36
1D22	MOTOR HOUSING, HFWD	0260 - 6
3E7	MOTOR, CIRCLE DRIVE	3460 - 4
2H17	MOTOR, FRONT WINDSHIELD WIPER	1810 - 4
2K7	MOTOR, HEATER AND A/C BLOWER	1830 - 12
1D18	MOTOR, HFWD (COMPLETE)	0260 - 2
1J8	MOTOR, STARTING	0422 - 2
3B6	MOUNTING BRACKET, MAIN MANIFOLD VALVE	2160 - 4
3C15	MOUNTING BRACKETS, MAIN CONTROL VALVE	2160 - 44
3D9	MOUNTING PIN,BLADE SIDESHIFT CYL ROD END	3401 - 2
1E23	MOUNTING, DIFF LOCK PUMP	0260 - 32
2C5	MOUNTING, ENGINE	0540 - 2
1E3	MOUNTING, HFWD PUMP (672CH2)	0260 - 12
3D3	MOUNTING, MAIN HYD FILTER	2164 - 2
1H1	MOUNTING, TRANSMISSION CONTROL VALVE	0350 - 32
2C5	MOUNTS, ENGINE	0540 - 2
2C3	MUFFLER	0530 - 2
2B23	MUFFLER SUCTION HOSE TO AIR CLEANER PRE-CLEANER	0520 - 2

N

1E19	NEUTRAL CHARGE PRESSURE REGULATING VALVE	0260 - 28
2B5	NOZZLE, COLD WEATHER STARTING AID	0505 - 4
1I19	NOZZLE, FUEL INJECTION	0413 - 2

O

1J1	O-RING, WATER PUMP	0417 - 2
1H3	OIL COOLER BYPASS RELIEF VALVE	0350 - 34
1I13	OIL COOLER BYPASS TUBES AND ADAPTER, ENGINE	0407 - 10
3C21	OIL COOLER HOSES, HYDRAULIC (770D) (SN 599561-)	2163 - 5A
3C19	OIL COOLER HOSES, HYDRAULIC (772D)	2163 - 4
1H10	OIL COOLER HOSES, TRANSMISSION	0363 - 2
1J5	OIL COOLER, ENGINE	0419 - 1
2B11	OIL COOLER, HYDRAULIC	0510 - 4
2B13	OIL COOLER, HYDRAULIC	0510 - 6
1I5	OIL DIPSTICK, ENGINE	0407 - 1
1F1	OIL FILTER, DIFFERENTIAL LOCK	0260 - 34
1I11	OIL FILTER, ENGINE	0407 - 8
1H6	OIL FILTER, TRANSMISSION	0360 - 2
1C17	OIL LINE, DIFFERENTIAL CASE	0210 - 9
1E21	OIL LINE, DIFFERENTIAL LOCK	0260 - 30
1I24	OIL LINE, TURBOCHARGER	0416 - 2
1I6	OIL PAN, ENGINE	0407 - 2
1D12	OIL PLUG, HFWD	0250 - 4
2C15	OIL PRESSURE SENSOR, ENGINE	0578 - 5
1I10	OIL PUMP INTAKE, ENGINE	0407 - 6
1I8	OIL PUMP, ENGINE	0407 - 4
1D14	OIL SEAL, AXLE HOUSING	0250 - 6
1H22	OIL SEAL, FRONT	0402 - 6
1J15	OIL SEAL, REAR	0433 - 2
1F21	OIL TROUGH, TRANS CASE (770D)	0350 - 2
1F23	OIL TROUGH, TRANS CASE (772D)	0350 - 4
3C9	ONE HAND BLADE LIFT CONTROL	2160 - 38
2I7	OPENABLE SIDE WINDOWS	1810 - 16
2I5	OPENABLE WINDOWS (LOWER FRONT)	1810 - 14
2I7	OPENABLE WINDOWS (SIDE)	1810 - 16
1F5	OPERATING CHARGE PRESSURE REGULATING VALVE, HFWD	0260 - 38
1H24	ORIFICE, PISTON COOLING JET	0404 - 2
3B24	OUTLET SECTION, LEFT MAIN HYDRAULIC CONTROL VALVE	2160 - 28
3B22	OUTLET SECTION, RIGHT MAIN HYDRAULIC CONTROL VALVE	2160 - 26
1G19	OUTPUT, TRANSMISSION	0350 - 26
1I3	OVERHAUL KIT, ENGINE	0404 - 6
3D11	OVERLAYS, MOLDBOARD	3401 - 4

P

1I6	PAN, ENGINE OIL	0407 - 2
2I21	PANEL, ENGINE SPEED CONTROL SWITCH (CAB)	1810 - 30
2I19	PANEL, ENGINE SPEED CONTROL SWITCH (CANOPY)	1810 - 28
2K22	PANEL, REAR LIGHT	1921 - 2
2I9	PANELS, CAB INTERIOR	1810 - 18
2I13	PANELS, CAB REAR INTERIOR	1810 - 22
2I11	PANELS, CANOPY INTERIOR	1810 - 20
1G21	PARK BRAKE	0350 - 28
2D23	PARK BRAKE HOSES	1111 - 4
2D21	PARK BRAKE PRESSURE SWITCH	1111 - 2
2D21	PARK BRAKE SOLENOID VALVE	1111 - 2
2D21	PARK BRAKE VALVE	1111 - 2
2D23	PARK BRAKE VALVE FITTINGS	1111 - 4
2D23	PARK BRAKE VALVE HOSES	1111 - 4
2D16	PEDAL, BRAKE	1060 - 2
2B21	PEDAL, DECELERATOR	0515 - 4
2B19	PEDAL, ENGINE SPEED CONTROL	0515 - 2

ALPHABETICAL INDEX - CONTINUED

GRID		PAGE
1F14	PEDAL, INCHING	0315 - 6
2D16	PEDAL, SERVICE BRAKE	1060 - 2
2C11	PICK-UP, ENGINE MAGNETIC	0578 - 1
2G20	PIN, ARTICULATION CYLINDER	1740 - 2
1C22	PIN, FRONT AXLE PIVOT (770D)	0230 - 2
1D4	PIN, FRONT AXLE PIVOT (772D)	0240 - 2
1C8	PIN, PIVOT	0201 - 4
2G20	PIN, PIVOT, MAIN FRAME	1740 - 2
1C22	PIN, STEERING CYLINDER (770D)	0230 - 2
1C22	PIN, WHEEL LEAN (770D)	0230 - 2
1D8	PIN, WHEEL LEAN BAR LINK (772D)	0240 - 6
1C22	PIN, WHEEL LEAN LINK (770D)	0230 - 2
3D9	PIN,BLADE SIDESHIFT CYL ROD END MOUNTING	3401 - 2
1D10	PINION, FIRST PLANET, HFWD MOTOR	0250 - 2
1D10	PINION, FIRST STAGE, HFWD MOTOR	0250 - 2
1D12	PINION, SECOND STAGE, HFWD MOTOR	0250 - 4
2C23	PINS, ARTICULATION CYLINDER	0960 - 6
2D1	PINS, STEERING CYLINDER	0960 - 8
2C19	PINS, WHEEL LEAN CYLINDER (770D)	0960 - 2
2C21	PINS, WHEEL LEAN CYLINDER (772D)	0960 - 4
1H24	PISTON COOLING JET	0404 - 2
1H23	PISTON RING, ENGINE	0403 - 1
1E1	PISTON RINGS, HFWD MOTOR	0260 - 10
1H23	PISTON, ENGINE	0403 - 1
1D24	PISTON, HFWD MOTOR SERVO	0260 - 8
1E5	PISTON, HFWD PUMP	0260 - 14
1E7	PISTON, SERVO, HFWD PUMP	0260 - 16
1E5	PISTONS, HFWD PUMP	0260 - 14
1C8	PIVOT HOUSING	0201 - 4
1C8	PIVOT PIN	0201 - 4
2G20	PIVOT PIN, MAIN FRAME	1740 - 2
1C8	PIVOT, TANDEM	0201 - 4
1D16	PLANET PINION CARRIER	0250 - 8
1D10	PLANET PINION CARRIER, FIRST, HFWD MOTOR	0250 - 2
1D16	PLANETARY, TANDEM DRIVE	0250 - 8
2H9	PLATE, FRONT MOUNTED WEIGHT	1749 - 2
2D14	PLATE, SEPARATOR, BRAKE	1011 - 2
1C18	PLATES, DIFFERENTIAL CLUTCH	0210 - 10
1D12	PLUG, HFWD OIL	0250 - 4
2G15	POWER CONVERTER (24 VOLT TO 12 VOLT)	1674 - 28
2K1	POWERED PRECLEANER, HVAC	1830 - 4
2B23	PRE-CLEANER, AIR	0520 - 2
2C1	PRECLEANER	0520 - 4
2C1	PRECLEANER WITH SEPARATOR	0520 - 4
2K1	PRECLEANER, HVAC POWERED	1830 - 4
2C1	PRECLEANER, ROTARY EJECTOR	0520 - 4
1E9	PRESSURE OVERRIDE VALVE, HFWD CHARGE PUMP	0260 - 18
3B8	PRESSURE REDUCING VALVE, SADDLE LOCK PIN	2160 - 6
1E19	PRESSURE REGULATING VALVE, NEUTRAL CHARGE	0260 - 28
3C21	PRESSURE RELIEF VALVE, HYD OIL COOLER HOSE (770D) (SN 599561-)	2163 - 5A
3C19	PRESSURE RELIEF VALVE, HYD OIL COOLER HOSES (772D)	2163 - 4
2C15	PRESSURE SENSOR, ENGINE OIL	0578 - 5
1F3	PRESSURE SENSOR, HFWD PUMP	0260 - 36
3D3	PRESSURE SWITCH, MAIN HYDRAULIC	2164 - 2
2D21	PRESSURE SWITCH, PARK BRAKE	1111 - 2
1J12	PULLEY, CRANKSHAFT	0429 - 1
2B17	PULLEY, FAN	0512 - 2
2B17	PULLEY, FAN BELT IDLER	0512 - 2
1J13	PULLEY, FIXED FAN DRIVE	0429 - 2
1F21	PUMP DRIVE GEARS (770D)	0350 - 2
1F23	PUMP DRIVE GEARS (772D)	0350 - 4
1E3	PUMP MOUNTING, HFWD (672CH2)	0260 - 12
1E23	PUMP, DIFF LOCK	0260 - 32
1E23	PUMP, DIFFERENTIAL LOCK	0260 - 32
1I8	PUMP, ENGINE OIL	0407 - 4
2H17	PUMP, FRONT WINDSHIELD WASHER	1810 - 4
1I19	PUMP, FUEL INJECTION	0413 - 2
1I19	PUMP, FUEL INJECTION HAND PRIMER	0413 - 2
1E17	PUMP, HFWD CHARGE	0260 - 26
1E9	PUMP, HFWD MOTOR FLUSHING	0260 - 18
1E7	PUMP, HFWD, MAIN HOUSING	0260 - 16
3B4	PUMP, MAIN HYDRAULIC	2160 - 2
2H19	PUMP, REAR WINDSHIELD WASHER	1810 - 6
1J1	PUMP, WATER	0417 - 2
2H7	PUSH BLOCK	1747 - 2
1H18	PUSH RODS, ENGINE	0402 - 2

Q

1C12	QUILL, INPUT	0210 - 4

R

2B11	RADIATOR, CHARGE AIR COOLER AND HYDRAULIC OIL COOLER	0510 - 4
2B13	RADIATOR, CHARGE AIR COOLER AND HYDRAULIC OIL COOLER	0510 - 6
2L2	RADIO	2001 - 2
2L2	RADIO ANTENNA	2001 - 2
2L2	RADIO ANTENNA CABLE	2001 - 2
2L2	RADIO BRACKET	2001 - 2
2I9	RADIO HOUSING (CAB)	1810 - 18
2I11	RADIO HOUSING (CANOPY)	1810 - 20
2F21	RADIO SPEAKER WIRING HARNESS	1674 - 8
2L2	RADIO SPEAKERS	2001 - 2
1I19	RAIL, FUEL INJECTION	0413 - 2
2K22	REAR GRILLE	1921 - 2
2K22	REAR GRILLE HOUSING	1921 - 2
2G3	REAR HFWD WIRING HARNESS	1674 - 16
2E16	REAR HITCH	1511 - 2
2K22	REAR LIGHT PANEL	1921 - 2
2F17	REAR MAIN WIRING HARNESS	1674 - 4
1J15	REAR OIL SEAL	0433 - 2
1J15	REAR OIL SEAL HOUSING	0433 - 2
2F17	REAR PLATFORM WIRING HARNESS	1674 - 4
3F12	REAR RIPPER SHANK	4240 - 6
3F12	REAR RIPPER/SCARIFIER	4240 - 6
3F12	REAR RIPPER/SCARIFIER KIT	4240 - 6
3F16	REAR SCARIFIER SHANK	4240 - 10
3F16	REAR SCARIFIER TEETH	4240 - 10
1G1	REAR TRANSMISSION CASE	0350 - 6
1G1	REAR TRANSMISSION HOUSING	0350 - 6
1B2	REAR WHEEL (10" X 24") (SPLIT RIM)	0110 - 2
1B4	REAR WHEEL (14" X 25") (772D)	0110 - 4
1B4	REAR WHEEL (17" X 25") (772D)	0110 - 4
2I1	REAR WINDOW	1810 - 12
2L16	REAR WINDOW SUNVISOR	2007 - 2
2H19	REAR WINDSHIELD WASHER PUMP	1810 - 6
2H19	REAR WINDSHIELD WIPER	1810 - 6
2I9	REAR WIPER COVER (CAB)	1810 - 18
2I11	REAR WIPER COVER (CANOPY)	1810 - 20
2F13	REAR WORK LIGHTS	1673 - 14
2F13	REAR, MID-FRAME, AND UNDER CAB WORK LIGHTS	1673 - 14
2L4	REARVIEW MIRROR, INTERIOR	2002 - 2
1J17	REBUILD GASKET KIT, ENGINE	0452 - 2
2K11	RECEIVER-DRYER, AIR CONDITIONING	1830 - 16
2B3	RELAY, ENGINE AIR HEATER	0505 - 2

ALPHABETICAL INDEX - CONTINUED

GRID		PAGE
2F21	RELAY, IGNITION	1674 - 8
3B20	RELIEF VALVE, BLADE LIFT VALVE SECTION	2160 - 24
1H3	RELIEF VALVE, OIL COOLER BYPASS	0350 - 34
3D5	RESERVOIR, HYDRAULIC	2164 - 4
2H17	RESERVOIR, WINDSHIELD WASHER	1810 - 4
2K7	RESISTOR, HEATER AND A/C	1830 - 12
1I19	RESTRICTOR, FUEL INJECTION RAIL	0413 - 2
1E13	RETURN HOSE, HFWD TANK (BULKHEAD TO HFWD ENGAGEMENT VALVE)	0260 - 22
1E15	RETURN HOSE, HFWD TANK (HFWD PUMP TO BULKHEAD)	0260 - 24
2J11	RIGHT AUXILIARY CONTROL LEVER	1810 - 44
2J9	RIGHT AUXLIARY CONTROL LEVER	1810 - 42
2J11	RIGHT BLADE LIFT CONTROL	1810 - 44
2J9	RIGHT BLADE LIFT CONTROL LEVER	1810 - 42
3B20	RIGHT BLADE LIFT VALVE SECTION	2160 - 24
2J11	RIGHT CONTROL LEVER BOOT	1810 - 44
2J11	RIGHT HYDRAULIC CONTROL LEVERS	1810 - 44
3B10	RIGHT MAIN HYDRAULIC CONTROL VALVE	2160 - 10
3B22	RIGHT MAIN HYDRAULIC CONTROL VALVE INLET AND OUTLET SECTIONS	2160 - 26
2I23	RIGHT SIDE CAB DOOR	1810 - 32
3B22	RIGHT VALVE INLET SECTION	2160 - 26
3B22	RIGHT VALVE OUTLET SECTION	2160 - 26
1B2	RIM WHEEL (10" X 24")	0110 - 2
1B12	RIM, FRONT WHEEL (10" X 24" SPLIT RIM)	0110 - 12
1B14	RIM, FRONT WHEEL (12" X 25" TIRE)	0110 - 14
1B10	RIM, FRONT WHEEL (14" X 25")	0110 - 10
1B16	RIM, FRONT WHEEL (16" X 24")	0110 - 16
1B2	RIM, REAR WHEEL (10" X 24")	0110 - 2
1B8	RIM, REAR WHEEL (13" X 25")	0110 - 8
1B4	RIM, REAR WHEEL (14" X 25") (772D)	0110 - 4
1B4	RIM, REAR WHEEL (17" X 25") (772D)	0110 - 4
1B6	RIM, REAR WHEEL (9" X 24")	0110 - 6
1B6	RIM, WHEEL	0110 - 6
1B8	RIM, WHEEL	0110 - 8
1B2	RIM, WHEEL (10" X 24")	0110 - 2
1B4	RIM, WHEEL (14" X 25") (770D) (772D)	0110 - 4
1B4	RIM, WHEEL (17" X 25") (770D) (772D)	0110 - 4
1J14	RING GEAR, FLYWHEEL	0433 - 1
1H23	RING, ENGINE PISTON	0403 - 1
1J1	RING, WATER PUMP RETAINING	0417 - 2
2J11	RIPPER CONTROL LEVER	1810 - 44
3F22	RIPPER HYDRAULIC HOSES	4260 - 10
3F12	RIPPER TEETH	4240 - 6
3C1	RIPPER VALVE SECTION	2160 - 30
3F14	RIPPER/REAR SCARIFIER CYLINDER	4240 - 8
3F14	RIPPER/REAR SCARIFIER CYLINDER SEAL KIT	4240 - 8
3F22	RIPPER/REAR SCARIFIER HYDRAULIC HOSES	4260 - 10
3F22	RIPPER/REAR SCARIFIER HYDRAULIC HOSE KIT	4260 - 10
3F12	RIPPER, REAR	4240 - 6
1H20	ROCKER ARM COVER CARRIER, ENGINE	0402 - 4
1H20	ROCKER ARM COVER, ENGINE	0402 - 4
1H18	ROCKER ARMS, ENGINE	0402 - 2
2J7	ROD, CAB CONTROL LEVER PIVOT	1810 - 40
1H23	ROD, ENGINE CONNECTING	0403 - 1
2J7	ROD, HYDRAULIC CONTROL LEVER PIVOT	1810 - 40
1D6	ROD, TIE, FRONT AXLE (772D)	0240 - 4
1F12	ROD, TRANSMISSION SHIFTER GEAR	0315 - 4
1H18	RODS, ENGINE PUSH	0402 - 2
3B12	RODS, MAIN HYDRAULIC CONTROL VALVE TIE	2160 - 12
2I15	ROOF, CAB	1810 - 24
3B14	ROTARY ACTUATOR, ARTICULATION VALVE SECTION	2160 - 18
3C3	ROTARY ACTUATOR, AUXLIARY VALVE SECTION (WITH FLOAT)	2160 - 32
3C5	ROTARY ACTUATOR, AUXLIARY VALVE SECTION (WITHOUT FLOAT)	2160 - 34
3B20	ROTARY ACTUATOR, BLADE LIFT VALVE SECTION	2160 - 24
3B18	ROTARY ACTUATOR, BLADE SIDE SHIFT VALVE SECTION	2160 - 22
3B14	ROTARY ACTUATOR, BLADE TILT VALVE SECTION	2160 - 18
3B16	ROTARY ACTUATOR, CIRCLE ROTATE VALVE SECTION	2160 - 20
3B14	ROTARY ACTUATOR, CIRCLE SIDE SHIFT VALVE SECTION	2160 - 18
3C1	ROTARY ACTUATOR, RIPPER VALVE SECTION	2160 - 30
3C3	ROTARY ACTUATOR, SCARIFIERVALVE SECTION	2160 - 32
3B14	ROTARY ACTUATOR, WHEEL LEAN VALVE SECTION	2160 - 18
2C1	ROTARY EJECTOR PRECLEANER	0520 - 4
2C1	ROTARY EJECTOR PRECLEANER KIT	0520 - 4
3E5	ROTARY MANIFOLD	3460 - 2
3E5	ROTARY MANIFOLD SEAL KIT	3460 - 2

S

3D21	SADDLE FRAME	3440 - 6
3E19	SADDLE LOCK PIN AND HYDRAULIC HOSES	3460 - 16
3B8	SADDLE LOCK PIN PRESSURE REDUCING VALVE	2160 - 6
3B8	SADDLE LOCK PIN SOLENOID	2160 - 6
3E19	SADDLE LOCKING PIN INDICATOR SWITCH	3460 - 16
3C3	SCARIFIER AND AUXILIARY VALVE SECTION (WITH FLOAT)	2160 - 32
2J9	SCARIFIER CONTROL LEVER	1810 - 42
3F10	SCARIFIER CYLINDER	4240 - 4
3F10	SCARIFIER CYLINDER SEAL KIT	4240 - 4
3F20	SCARIFIER HOSES, FRONT	4260 - 8
3F20	SCARIFIER HYDRAULIC HOSE KIT (FRONT)	4260 - 8
3F22	SCARIFIER HYDRAULIC HOSES (REAR)	4260 - 10
3F16	SCARIFIER TEETH, REAR	4240 - 10
3C3	SCARIFIER VALVE SECTION	2160 - 32
3F8	SCARIFIER, FRONT MOUNTED	4240 - 2
3F12	SCARIFIER, REAR	4240 - 6
1G5	SCREEN, TRANSMISSION	0350 - 12
2C23	SEAL KIT, ARTICULATION CYLINDER	0960 - 6
3E23	SEAL KIT, BLADE IMPACT VALVE	3460 - 20
3E11	SEAL KIT, BLADE LIFT CYLINDER	3460 - 8
3E13	SEAL KIT, BLADE SLIDE CYLINDER	3460 - 10
3E15	SEAL KIT, BLADE TILT CYLINDER	3460 - 12
3E7	SEAL KIT, CIRCLE DRIVE MOTOR	3460 - 4
3E9	SEAL KIT, CIRCLE SIDESHIFT CYLINDER	3460 - 6
2D1	SEAL KIT, FRONT STEERING CYLINDER	0960 - 8
1E17	SEAL KIT, HFWD CHARGE PUMP	0260 - 26
1F5	SEAL KIT, HFWD ENGAGEMENT MANIFOLD	0260 - 38
1D24	SEAL KIT, HFWD MOTOR	0260 - 8
1E1	SEAL KIT, HFWD MOTOR	0260 - 10
1E7	SEAL KIT, HFWD PUMP	0260 - 16
1E7	SEAL KIT, HFWD PUMP EP CONTROL	0260 - 16
1E9	SEAL KIT, HFWD PUMP OVERHAUL	0260 - 18
3B4	SEAL KIT, MAIN HYDRAULIC PUMP	2160 - 2
3B8	SEAL KIT, MAIN MANIFOLD VALVE	2160 - 6
3F14	SEAL KIT, RIPPER/REAR SCARIFIER SEAL KIT	4240 - 8
3E5	SEAL KIT, ROTARY MANIFOLD	3460 - 2
3F10	SEAL KIT, SCARIFIER CYLINDER	4240 - 4
2D16	SEAL KIT, SERVICE BRAKE VALVE	1060 - 2

ALPHABETICAL INDEX - CONTINUED

GRID		PAGE
2D11	SEAL KIT, STEERING VALVE	0960 - 18
2C19	SEAL KIT, WHEEL LEAN CYLINDER (770D)	0960 - 2
2C21	SEAL KIT, WHEEL LEAN CYLINDER (772D)	0960 - 4
1D14	SEAL, AXLE HOUSING OIL	0250 - 6
1H22	SEAL, FRONT OIL	0402 - 6
1J15	SEAL, REAR OIL	0433 - 2
1J1	SEAL, WATER PUMP	0417 - 2
2G11	SEALED SWITCH MODULE (SSM)	1674 - 24
1C10	SEALS, INPUT YOKE	0210 - 2
2J13	SEAT BRACKETS (AIR)	1821 - 2
2J17	SEAT BRACKETS (MECHANICAL)	1821 - 6
2J13	SEAT CUSHION (AIR)	1821 - 2
2J17	SEAT CUSHION (MECHANICAL)	1821 - 6
2J13	SEAT SUSPENSION (AIR)	1821 - 2
2J15	SEAT SUSPENSION (AIR)	1821 - 4
2J17	SEAT SUSPENSION (MECHANICAL)	1821 - 6
2J19	SEAT SUSPENSION (MECHANICAL)	1821 - 8
2J15	SEAT SUSPENSION BOOT KIT (AIR)	1821 - 4
2J19	SEAT SUSPENSION BOOT KIT (MECHANICAL)	1821 - 8
2J15	SEAT SUSPENSION SHOCK KIT (AIR)	1821 - 4
2J19	SEAT SUSPENSION SHOCK KIT (MECHANICAL)	1821 - 8
2J15	SEAT, SUSPENSION (AIR)	1821 - 4
2J19	SEAT, SUSPENSION (MECHANICAL)	1821 - 8
1G9	SECOND STAGE ASSEMBLY	0350 - 16
1G9	SECOND STAGE INPUT SHAFT	0350 - 16
1D12	SECOND STAGE PINION, HFWD MOTOR	0250 - 4
2C17	SECONDARY STEERING	0930 - 2
2C17	SECONDARY STEERING ACCUMULATOR	0930 - 2
2C17	SECONDARY STEERING HOSE	0930 - 2
2C17	SECONDARY STEERING KIT	0930 - 2
2C7	SENDER, FUEL TANK	0560 - 2
2B23	SENSOR, AIR FILTER RESTRICTION	0520 - 2
2G7	SENSOR, ARTICULATION	1674 - 20
2C14	SENSOR, ENGINE AMBIENT AIR TEMPERATURE	0578 - 4
2C13	SENSOR, ENGINE COOLANT TEMPERATURE	0578 - 3
2C15	SENSOR, ENGINE OIL PRESSURE	0578 - 5
2C11	SENSOR, ENGINE SPEED	0578 - 1
1I19	SENSOR, FUEL INJECTION PUMP POSITION	0413 - 2
2C12	SENSOR, FUEL MOISTURE	0578 - 2
1I19	SENSOR, FUEL RAIL PRESSURE	0413 - 2
1I19	SENSOR, G (FUEL INJECTION PUMP)	0413 - 2
1E1	SENSOR, HFWD MOTOR SPEED	0260 - 10
1F3	SENSOR, HFWD PUMP PRESSURE	0260 - 36
1G3	SENSOR, SPEED, TRANS	0350 - 8
1G3	SENSOR, TRANS OUTPUT SHAFT SPEED	0350 - 8
1H3	SENSOR, TRANS TEMPERATURE	0350 - 34
1J6	SENSORS, FUEL TEMPERATURE AND MOISTURE	0420 - 2
2C1	SEPARATOR	0520 - 4
2D14	SEPARATOR PLATE, BRAKE	1011 - 2
2E23	SERPENTINE BELT	1672 - 2
2D18	SERVICE BRAKE ACCUMULATOR AND HOSES	1060 - 4
2D18	SERVICE BRAKE HOSES	1060 - 4
2D16	SERVICE BRAKE PEDAL	1060 - 2
2D16	SERVICE BRAKE VALVE	1060 - 2
2D16	SERVICE BRAKE VALVE SEAL KIT	1060 - 2
2D14	SERVICE BRAKES	1011 - 2
2K16	SERVICE DOOR LATCH	1910 - 2
2K16	SERVICE DOORS	1910 - 2
1E7	SERVO PISTON COVER, HFWD PUMP	0260 - 16
1D24	SERVO PISTON, HFWD MOTOR	0260 - 8
1E7	SERVO PISTON, HFWD PUMP	0260 - 16
3B10	SEVEN FUNCTION HYDRAULIC CONTROL VALVE	2160 - 10
3C7	SEVENTH FUNCTION CONTROL VALVE KIT	2160 - 36
1C11	SHAFT AND SPIRAL BEVEL GEAR	0210 - 3
1C8	SHAFT, AXLE DRIVE	0201 - 4
1C8	SHAFT, DRAIVE, FINAL DRIVE AND TANDEM PIVOT	0201 - 4
1H18	SHAFT, ENGINE ROCKER ARM	0402 - 2
1G15	SHAFT, INPUT, FIFTH STAGE	0350 - 22
1G7	SHAFT, INPUT, FIRST STAGE	0350 - 14
1G13	SHAFT, INPUT, FOURTH STAGE	0350 - 20
1G9	SHAFT, INPUT, SECOND STAGE	0350 - 16
1G17	SHAFT, INPUT, SIXTH STAGE	0350 - 24
1G11	SHAFT, INPUT, THIRD STAGE	0350 - 18
1G19	SHAFT, OUTPUT, TRANSMISSION	0350 - 26
3F8	SHANK, FRONT MOUNTED SCARIFIER	4240 - 2
3F12	SHANK, REAR RIPPER	4240 - 6
3F16	SHANK, REAR SCARIFIER	4240 - 10
2H3	SHIELD, SIDE, BOTTOM GUARD (W/O RIPPER)	1746 - 4
1H3	SHIFT SOLENOID, TRANSMISSION	0350 - 34
1F12	SHIFTER, TRANSMISSION	0315 - 4
1H23	SHIM, ENGINE CYLINDER LINER	0403 - 1
2J7	SHOCK, CAB CONTROL LEVER CONSOLE GAS	1810 - 40
1I1	SHORT BLOCK ASSEMBLY, ENGINE	0404 - 4
2B11	SHROUD, FAN	0510 - 4
2B13	SHROUD, FAN	0510 - 6
2K20	SIDE COVERS, MAIN FRAME	1913 - 2
2H3	SIDE SHIELD, BOTTOM GUARD (W/O RIPPER)	1746 - 4
2H5	SIDE SHIELDS, BOTTOM GUARD (WITH RIPPER)	1746 - 6
2I7	SIDE WINDOWS (OPENABLE)	1810 - 16
3E9	SIDESHIFT CYLINDER, CIRCLE	3460 - 6
2F3	SIGNAL LIGHTS, FRONT	1673 - 4
2F3	SIGNAL LIGHTS, LED FRONT	1673 - 4
3B10	SIX FUNCTION HYDRAULIC CONTROL VALVE	2160 - 10
3C7	SIXTH FUNCTION CONTROL VALVE KIT	2160 - 36
1G17	SIXTH STAGE INPUT SHAFT	0350 - 24
3F1	SLIDE CYLINDER HOSES	3460 - 22
3E13	SLIDE CYLINDER, BLADE	3460 - 10
3E3	SLIP CLUTCH, CIRCLE DRIVE GEARBOX AND	3450 - 4
2L20	SMV SIGN	2008 - 2
2F1	SNOW LIGHT BRACKET WIRING HARNESS	1673 - 2
2F1	SNOW LIGHT BRACKETS	1673 - 2
2F1	SNOW LIGHT EXTENSION BRACKETS	1673 - 2
1J8	SOLENOID KIT, STARTING MOTOR	0422 - 2
3C13	SOLENOID VALVE, COLD START DISCONNECT VALVE SECTION	2160 - 42
2D21	SOLENOID VALVE, PARK BRAKE	1111 - 2
3E23	SOLENOID, BLADE IMPACT VALVE	3460 - 20
3C13	SOLENOID, COLD START DISCONNECT	2160 - 42
2B5	SOLENOID, COLD WEATHER STARTING	0505 - 4
1C16	SOLENOID, DIFFERENTIAL LOCK VALVE	0210 - 8
1F5	SOLENOID, HFWD ENGAGEMENT	0260 - 38
1D24	SOLENOID, HFWD MOTOR	0260 - 8
1E7	SOLENOID, HFWD PUMP EP CONTROL	0260 - 16
3B8	SOLENOID, SADDLE LOCK PIN	2160 - 6
1H3	SOLENOID, TRANS SHIFT	0350 - 34
2E4	SPANISH LABELS AND TRADEMARKS	1320 - 4
2E4	SPANISH TRADEMARKS AND LABELS	1320 - 4
2I9	SPEAKER GRILLE (CAB)	1810 - 18
2I11	SPEAKER GRILLE (CANOPY)	1810 - 20
2L2	SPEAKERS	2001 - 2
2B19	SPEED CONTROL PEDAL, ENGINE	0515 - 2
1E1	SPEED SENSOR, HFWD MOTOR	0260 - 10
1G3	SPEED SENSOR, TRANS	0350 - 8
1C24	SPINDLE, STEERING (770D)	0230 - 4
1D3	SPINDLE, STEERING (770D)	0230 - 4
1C11	SPIRAL BEVEL GEAR AND SHAFT	0210 - 3
1I14	SPRING, ENGINE VALVE	0409 - 2
1D14	SPROCKET, AXLE DRIVE	0250 - 6
1C8	SPROCKET, DRIVE	0201 - 4
2B5	START AID SWITCH, TEMPERATURE	0505 - 4
2B5	STARTING AID, COLD WEATHER	0505 - 4
2B5	STARTING FLUID	0505 - 4
1J8	STARTING MOTOR	0422 - 2

ALPHABETICAL INDEX - CONTINUED

GRID		PAGE
2J3	STATIONARY CONSOLE, CAB FRONT	1810 - 36
2I1	STATIONARY LOWER FRONT WINDOWS	1810 - 12
2I1	STATIONARY SIDE WINDOWS	1810 - 12
2I1	STATIONARY WINDOWS	1810 - 12
2J5	STEERING COLUMN	1810 - 38
2D3	STEERING CYLINDER HOSES, FRONT	0960 - 10
1C22	STEERING CYLINDER PIN (770D)	0230 - 2
2D1	STEERING CYLINDER, FRONT	0960 - 8
1C24	STEERING SPINDLE (770D)	0230 - 4
1D3	STEERING SPINDLE (770D)	0230 - 4
2D11	STEERING VALVE	0960 - 18
2D11	STEERING VALVE HOSES	0960 - 18
2D11	STEERING VALVE SEAL KIT	0960 - 18
2J5	STEERING WHEEL	1810 - 38
2J5	STEERING WHEEL COVER	1810 - 38
1B2	STEM, VALVE WHEEL (10" X 24")	0110 - 2
1B12	STEM, VALVE, FRONT WHEEL (10" X 24" SPLIT RIM)	0110 - 12
1B14	STEM, VALVE, FRONT WHEEL (12" X 25" TIRE)	0110 - 14
1B10	STEM, VALVE, FRONT WHEEL (14" X 25")	0110 - 10
1B16	STEM, VALVE, FRONT WHEEL (16" X 24")	0110 - 16
1B2	STEM, VALVE, REAR WHEEL (10" X 24")	0110 - 2
1B8	STEM, VALVE, REAR WHEEL (13" X 25")	0110 - 8
1B4	STEM, VALVE, REAR WHEEL (14" X 25") (772D)	0110 - 4
1B4	STEM, VALVE, REAR WHEEL (17" X 25") (772D)	0110 - 4
1B6	STEM, VALVE, REAR WHEEL (9" X 24")	0110 - 6
1B6	STEM, VALVE, WHEEL	0110 - 6
1B2	STEM, VALVE, WHEEL (10" X 24")	0110 - 2
1B8	STEM, VALVE, WHEEL (13" X 25")	0110 - 8
1B4	STEM, VALVE, WHEEL (14" X 25") (770D) (772D)	0110 - 4
1B4	STEM, VALVE, WHEEL (17" X 25") (770D) (772D)	0110 - 4
1C6	STEP, TANDEM HOUSING	0201 - 2
2J21	STEPS, CAB	1822 - 2
1I16	STRAP, ENGINE LIFT	0409 - 4
2E21	STRAPS, GROUNDING	1671 - 2
1E19	SUCTION HOSE, HFWD CHARGE PUMP	0260 - 28
1E15	SUCTION HOSE, HFWD PUMP	0260 - 24
3C23	SUCTION HOSE, MAIN HYDRAULIC PUMP (770D)	2163 - 6
3D1	SUCTION HOSE, MAIN HYDRAULIC PUMP (772D)	2163 - 8
1G3	SUCTION SCREEN, TRANSMISSION	0350 - 8
1G3	SUCTION TUBE, TRANSMISSION	0350 - 8
2L16	SUNSHADE, REAR WINDOW	2007 - 2
2L18	SUNSHADE, REAR WINDOW	2007 - 4
2L16	SUNVISOR, REAR WINDOW	2007 - 2
2L18	SUNVISOR, REAR WINDOW	2007 - 4
2B11	SUPPORT, COOLING PACKAGE	0510 - 4
2B13	SUPPORT, COOLING PACKAGE	0510 - 6
2C7	SUPPORT, FUEL TANK	0560 - 2
2K18	SUPPORT, HOOD	1910 - 4
2B11	SUPPORT, RADIATOR	0510 - 4
2B13	SUPPORT, RADIATOR	0510 - 6
2C5	SUPPORTS, ENGINE MOUNTING	0540 - 2
2J15	SUSPENSION SEAT (AIR)	1821 - 4
2J19	SUSPENSION SEAT (MECHANICAL)	1821 - 8
2J13	SUSPENSION, SEAT (AIR)	1821 - 2
2J17	SUSPENSION, SEAT (MECHANICAL)	1821 - 6
1E1	SWASH PLATE, HFWD MOTOR	0260 - 10
1E5	SWASH PLATE, HFWD PUMP	0260 - 14
3B4	SWASHPLATE, MAIN HYDRAULIC PUMP	2160 - 2
2I21	SWITCH PANEL, ENGINE SPEED CONTROL (CAB)	1810 - 30
2I19	SWITCH PANEL, ENGINE SPEED CONTROL (CANOPY)	1810 - 28
2K13	SWITCH, A/C AND HEAT TEMPERATURE CONTROL	1830 - 18
2K13	SWITCH, A/C AND HEATER FAN SPEED	1830 - 18
2K13	SWITCH, A/C AND HEATER ON/OFF	1830 - 18
2K13	SWITCH, A/C PRESSURE	1830 - 18
2D16	SWITCH, BRAKE LIGHT	1060 - 2
2G13	SWITCH, DIFFERENTIAL LOCK	1674 - 26
2G13	SWITCH, DRIVING LIGHT HIGH/LOW BEAM SWITCH	1674 - 26
2B19	SWITCH, ENGINE SPEED CONTROL ON/OFF	0515 - 2
2B19	SWITCH, ENGINE SPEED CONTROL SET	0515 - 2
3D3	SWITCH, FILTER RESTRICTION, MAIN HYDRAULIC FILTER	2164 - 2
2G13	SWITCH, HAZARD WARNING LIGHT	1674 - 26
2G5	SWITCH, HFWD AGRESSIVENESS	1674 - 18
2G5	SWITCH, HFWD INCHING MODE	1674 - 18
2G5	SWITCH, HFWD ON/OFF	1674 - 18
2G13	SWITCH, HORN	1674 - 26
2G13	SWITCH, IGNITION	1674 - 26
3D3	SWITCH, MAIN HYD FILTER PRESSURE	2164 - 2
2D21	SWITCH, PARK BRAKE PRESSURE	1111 - 2
3E19	SWITCH, SADDLE LOCKING PIN INDICATOR	3460 - 16
2B5	SWITCH, TEMPERATURE, COLD WEATHER START AID	0505 - 4
1H6	SWITCH, TRANSMISSION OIL FILTER RESTRICTION	0360 - 2
2G13	SWITCH, TURN SIGNAL	1674 - 26
3B8	SYSTEM RELIEF VALVE, MAIN MANIFOLD	2160 - 6

T

2F5	TAIL LIGHT WIRING HARNESS	1673 - 6
2F5	TAIL LIGHTS	1673 - 6
1D16	TANDEM DRIVE	0250 - 8
1D14	TANDEM DRIVE CHAIN	0250 - 6
1D16	TANDEM DRIVE PLANETARY	0250 - 8
1C6	TANDEM HOUSING	0201 - 2
1C6	TANDEM HOUSING COVERS	0201 - 2
1C8	TANDEM PIVOT	0201 - 4
2C7	TANK, FUEL	0560 - 2
1F10	TCU	0315 - 2
3F8	TEETH, FRONT MOUNTED SCARIFIER	4240 - 2
3F16	TEETH, REAR SCARIFIER	4240 - 10
3F12	TEETH, RIPPER	4240 - 6
2K7	TEMPERATURE CONTROL CABLE	1830 - 12
2C14	TEMPERATURE SENSOR, ENGINE AMBIENT AIR	0578 - 4
2C13	TEMPERATURE SENSOR, ENGINE COOLANT	0578 - 3
1J6	TEMPERATURE SENSOR, FUEL	0420 - 2
1F3	TEMPERATURE SENSOR, HFWD ENGAGEMENT MANIFOLD	0260 - 36
2B5	TEMPERATURE SWITCH,COLD WEATHER STARTING AID	0505 - 4
1J10	TENSIONER, BELT	0423 - 2
2B17	TENSIONER, FAN BELT	0512 - 2
1J3	THERMOSTAT, ENGINE COOLANT	0418 - 2
2K7	THERMOSTAT, HEATER AND A/C	1830 - 12
1G11	THIRD STAGE ASSEMBLY, TRANSMISSION	0350 - 18
1G11	THIRD STAGE INPUT SHAFT	0350 - 18
1H16	THRUST BEARING, ENGINE	0401 - 2
1H16	THRUST WASHER, ENGINE	0401 - 2
1D1	TIE ROD END, FRONT AXLE (770D)	0230 - 6
1D6	TIE ROD END, FRONT AXLE (772D)	0240 - 4
1D1	TIE ROD, FRONT AXLE (770D)	0230 - 6
1D6	TIE ROD, FRONT AXLE (772D)	0240 - 4
3B12	TIE RODS, MAIN HYDRAULIC CONTROL VALVE	2160 - 12

ALPHABETICAL INDEX - CONTINUED

GRID		PAGE
1J10	TIGHTENER, BELT	0423 - 2
2J7	TILT CONSOLE, CAB	1810 - 40
3F1	TILT CYLINDER HOSES	3460 - 22
3E15	TILT CYLINDER, BLADE	3460 - 12
1H22	TIMING GEAR COVER	0402 - 6
2L14	TOOLBOX	2005 - 2
2L14	TOOLBOX TRAY	2005 - 2
2G24	TOP COVER, MAIN FRAME	1740 - 6
1F16	TORSIONAL DAMPENER	0325 - 2
1J12	TORSIONAL DAMPENER	0429 - 1
1F16	TORSIONAL ISOLATOR	0325 - 2
2B17	TOWER, FAN	0512 - 2
2E2	TRADEMARKS AND LABELS, ENGLISH	1320 - 2
2E6	TRADEMARKS AND LABELS, FRENCH	1320 - 6
2E4	TRADEMARKS AND LABELS, SPANISH	1320 - 4
1F21	TRANS CASE OIL TROUGH (770D)	0350 - 2
1F23	TRANS CASE OIL TROUGH (772D)	0350 - 4
1H1	TRANS CONTROL VALVE GASKET	0350 - 32
1F12	TRANS GEAR SELECTOR COVER	0315 - 4
1G3	TRANS OUTPUT SHAFT SPEED SENSOR	0350 - 8
1F20	TRANSMISSION (COMPLETE)	0350 - 1
1H10	TRANSMISSION ACCUMULATOR	0363 - 2
1G21	TRANSMISSION BRAKE	0350 - 28
1G3	TRANSMISSION CASE BOLTS	0350 - 8
1G3	TRANSMISSION CASE HARDWARE	0350 - 8
1G1	TRANSMISSION CASE, REAR	0350 - 6
1G9	TRANSMISSION CLUTCH PLATE	0350 - 16
1G11	TRANSMISSION CLUTCH PLATE	0350 - 18
1G13	TRANSMISSION CLUTCH PLATE	0350 - 20
1G15	TRANSMISSION CLUTCH PLATE	0350 - 22
1F10	TRANSMISSION CONTROL UNIT	0315 - 2
1F10	TRANSMISSION CONTROL UNIT MOUNTING BRACKET	0315 - 2
1H3	TRANSMISSION CONTROL VALVE	0350 - 34
1H6	TRANSMISSION CONTROL VALVE DIAGNOSTIC FITTING	0360 - 2
1H1	TRANSMISSION CONTROL VALVE MOUNTING	0350 - 32
1F10	TRANSMISSION CONTROLLER	0315 - 2
1F18	TRANSMISSION DIPSTICK TUBE	0341 - 2
1G15	TRANSMISSION FIFTH STAGE ASSEMBLY	0350 - 22
1H6	TRANSMISSION FILTER	0360 - 2
1H6	TRANSMISSION FILTER HEAD	0360 - 2
1H6	TRANSMISSION FILTER HOSES	0360 - 2
1G7	TRANSMISSION FIRST STAGE ASSEMBLY	0350 - 14
1G13	TRANSMISSION FOURTH STAGE ASSEMBLY	0350 - 20
1F12	TRANSMISSION GEAR SELECTOR	0315 - 4
1F12	TRANSMISSION GEAR SHIFT ROD	0315 - 4
1F12	TRANSMISSION GEAR SHIFT SELECTOR	0315 - 4
1G5	TRANSMISSION HOUSING	0350 - 12
1G1	TRANSMISSION HOUSING, REAR	0350 - 6
1H10	TRANSMISSION OIL COOLER HOSES	0363 - 2
1H10	TRANSMISSION OIL COOLER HOSES AND ACCUMULATOR	0363 - 2
1F18	TRANSMISSION OIL DIPSTICK AND FLYWHEEL HOUSING DRAIN	0341 - 2
1H6	TRANSMISSION OIL FILTER RESTRICTION SWITCH	0360 - 2
1G19	TRANSMISSION OUTPUT	0350 - 26
1G19	TRANSMISSION OUTPUT SHAFT	0350 - 26
1G5	TRANSMISSION SCREEN	0350 - 12
1G9	TRANSMISSION SECOND STAGE ASSEMBLY	0350 - 16
1H3	TRANSMISSION SHIFT SOLENOID	0350 - 34
1F12	TRANSMISSION SHIFTER	0315 - 4
1G17	TRANSMISSION SIXTH STAGE ASSEMBLY	0350 - 24
1G3	TRANSMISSION SUCTION SCREEN	0350 - 8
1G3	TRANSMISSION SUCTION TUBE	0350 - 8
1F12	TRANSMISSION SWITCH BOX MODULE	0315 - 4
1H3	TRANSMISSION TEMPERATURE SENSOR	0350 - 34
1G11	TRANSMISSION THIRD STAGE ASSEMBLY	0350 - 18
1G9	TRANSMISSION UNIVERSAL DRIVESHAFT	0350 - 16
1G11	TRANSMISSION UNIVERSAL DRIVESHAFT	0350 - 18
1G13	TRANSMISSION UNIVERSAL DRIVESHAFT	0350 - 20
1G15	TRANSMISSION UNIVERSAL DRIVESHAFT	0350 - 22
1H8	TRANSMISSION VALVE GUARD	0360 - 4
1G21	TRANSMISSION WET BRAKE	0350 - 28
2G1	TRANSMISSION WIRING HARNESS	1674 - 14
1G23	TRANSMISSION YOKE	0350 - 30
2K5	TRAY, CAB	1830 - 10
2L14	TRAY, TOOLBOX	2005 - 2
1F21	TROUGH, TRANS CASE OIL (770D)	0350 - 2
1F23	TROUGH, TRANS CASE OIL (772D)	0350 - 4
1J3	TUBE, ENGINE COOLANT THERMOSTAT HOUSING	0418 - 2
1J5	TUBE, ENGINE OIL COOLER	0419 - 1
1I13	TUBE, ENGINE OIL COOLER BYPASS	0407 - 10
1I5	TUBE, ENGINE OIL DIPSTICK	0407 - 1
1I11	TUBE, ENGINE OIL FILTER HOUSING	0407 - 8
1F18	TUBE, TRANSMISSION OIL DIPSTICK	0341 - 2
1I24	TURBOCHARGER AND OIL LINES	0416 - 2
2G13	TURN SIGNAL SWITCH	1674 - 26

U

2F13	UNDER CAB WORK LIGHTS	1673 - 14
1G9	UNIVERSAL DRIVESHAFT, TRANSMISSION	0350 - 16
1G11	UNIVERSAL DRIVESHAFT, TRANSMISSION	0350 - 18
1G13	UNIVERSAL DRIVESHAFT, TRANSMISSION	0350 - 20
1G15	UNIVERSAL DRIVESHAFT, TRANSMISSION	0350 - 22
1C20	UNIVERSAL JOINT, DRIVESHAFT	0225 - 2

V

1H20	VALVE COVER, ENGINE	0402 - 4
1H8	VALVE GUARD, TRANSMISSION	0360 - 4
3C15	VALVE MOUNTING BRACKETS, MAIN CONTROL	2160 - 44
3B14	VALVE SECTION, ARTICULATION	2160 - 18
3C3	VALVE SECTION, AUXILIARY (WITH FLOAT)	2160 - 32
3C5	VALVE SECTION, AUXILIARY (WITHOUT FLOAT)	2160 - 34
3B20	VALVE SECTION, BLADE LIFT	2160 - 24
3B18	VALVE SECTION, BLADE SIDE SHIFT	2160 - 22
3B16	VALVE SECTION, CIRCLE ROTATE	2160 - 20
3B14	VALVE SECTION, CIRCLE SIDE SHIFT	2160 - 18
3B24	VALVE SECTION, INLET (LEFT)	2160 - 28
3B22	VALVE SECTION, INLET (RIGHT)	2160 - 26
3B24	VALVE SECTION, OUTLET (LEFT)	2160 - 28
3B22	VALVE SECTION, OUTLET (RIGHT)	2160 - 26
3C1	VALVE SECTION, RIPPER	2160 - 30
3C3	VALVE SECTION, SCARIFIER	2160 - 32
3B14	VALVE SECTION, WHEEL LEAN	2160 - 18
1B12	VALVE STEM, FRONT WHEEL (10" X 24" SPLIT RIM)	0110 - 12
1B14	VALVE STEM, FRONT WHEEL (12" X 25" TIRE)	0110 - 14
1B10	VALVE STEM, FRONT WHEEL (14" X 25")	0110 - 10
1B16	VALVE STEM, FRONT WHEEL (16" X 24")	0110 - 16
1B2	VALVE STEM, REAR WHEEL (10" X 24")	0110 - 2
1B8	VALVE STEM, REAR WHEEL (13" X 25")	0110 - 8
1B4	VALVE STEM, REAR WHEEL (14" X 25") (772D)	0110 - 4
1B4	VALVE STEM, REAR WHEEL (17" X 25") (772D)	0110 - 4
1B6	VALVE STEM, REAR WHEEL (9" X 24")	0110 - 6
1B6	VALVE STEM, WHEEL	0110 - 6

ALPHABETICAL INDEX - CONTINUED

GRID		PAGE
1B2	VALVE STEM, WHEEL (10" X 24")	0110 - 2
1B8	VALVE STEM, WHEEL (13" X 25")	0110 - 8
1B4	VALVE STEM, WHEEL (14" X 25") (770D) (772D)	0110 - 4
1B4	VALVE STEM, WHEEL (17" X 25") (770D) (772D)	0110 - 4
3B14	VALVE, ARTICULATION	2160 - 18
3C3	VALVE, AUXILIARY (WITH FLOAT)	2160 - 32
3C5	VALVE, AUXILIARY (WITHOUT FLOAT)	2160 - 34
3E23	VALVE, BLADE IMPACT	3460 - 20
3B20	VALVE, BLADE LIFT	2160 - 24
3B18	VALVE, BLADE SIDE SHIFT	2160 - 22
3B14	VALVE, BLADE TILT	2160 - 18
2D16	VALVE, BRAKE	1060 - 2
3B16	VALVE, CIRCLE ROTATE	2160 - 20
3B14	VALVE, CIRCLE SIDE SHIFT	2160 - 18
3C13	VALVE, COLD START SOLENOID	2160 - 42
1C16	VALVE, DIFFERENTIAL LOCK	0210 - 8
3C13	VALVE, DISCONNECT	2160 - 42
1H24	VALVE, ENGINE COOLANT DRAIN	0404 - 2
1I14	VALVE, ENGINE INTAKE AND EXHAUST	0409 - 2
1J5	VALVE, ENGINE OIL COOLER BY-PASS	0419 - 1
1I11	VALVE, ENGINE OIL FILTER BYPASS	0407 - 8
1I6	VALVE, ENGINE OIL PAN DRAIN	0407 - 2
1I11	VALVE, ENGINE OIL PRESSURE REGULATING	0407 - 8
1I19	VALVE, FUEL INJECTION PUMP CHECK	0413 - 2
1I19	VALVE, FUEL INJECTION PUMP OVERFLOW	0413 - 2
1I19	VALVE, FUEL RAIL PRESSURE RELIEF	0413 - 2
1F5	VALVE, HFWD ENGAGEMENT SOLENOID	0260 - 38
1F5	VALVE, HFWD FLUSHING	0260 - 38
1F5	VALVE, HFWD OPERATING CHARGE PRESSURE REGULATING	0260 - 38
1E9	VALVE, HFWD PUMP PRESSURE OVERRIDE	0260 - 18
3B14	VALVE, LOCKOUT, ARTICULATION VALVE SECTION	2160 - 18
3C3	VALVE, LOCKOUT, AUXILIARY VALVE SECTION (WITH FLOAT)	2160 - 32
3C5	VALVE, LOCKOUT, AUXILIARY VALVE SECTION (WITHOUT FLOAT)	2160 - 34
3B20	VALVE, LOCKOUT, BLADE LIFT VALVE SECTION	2160 - 24
3B18	VALVE, LOCKOUT, BLADE SIDE SHIFT VALVE SECTION	2160 - 22
3B14	VALVE, LOCKOUT, BLADE TILT VALVE SECTION	2160 - 18
3B14	VALVE, LOCKOUT, CIRCLE SIDE SHIFT VALVE SECTION	2160 - 18
3C1	VALVE, LOCKOUT, RIPPER VALVE SECTION	2160 - 30
3C3	VALVE, LOCKOUT, SCARIFIER VALVE SECTION	2160 - 32
3B14	VALVE, LOCKOUT, WHEEL LEAN VALVE SECTION	2160 - 18
3B10	VALVE, MAIN HYDRAULIC CONTROL	2160 - 10
3B8	VALVE, MAIN HYDRAULIC MANIFOLD	2160 - 6
3B8	VALVE, MAIN MANIFOLD	2160 - 6
1E19	VALVE, NEUTRAL CHARGE PRESSURE REGULATING	0260 - 28
1H3	VALVE, OIL COOLER BYPASS RELIEF	0350 - 34
2D21	VALVE, PARK BRAKE	1111 - 2
3B8	VALVE, PRESSURE REDUCING, SADDLE LOCK PIN	2160 - 6
3B20	VALVE, RELIEF, BLADE LIFT VALVE SECTION	2160 - 24
3C1	VALVE, RIPPER	2160 - 30
3C3	VALVE, SCARIFIER	2160 - 32
2D16	VALVE, SERVICE BRAKE	1060 - 2
2D21	VALVE, SOLENOID, PARK BRAKE	1111 - 2
2D11	VALVE, STEERING	0960 - 18
3B8	VALVE, SYSTEM RELIEF, MAIN MANIFOLD	2160 - 6
2K7	VALVE, WATER	1830 - 12
1J1	VALVE, WATER PUMP DRAIN	0417 - 2
3B14	VALVE, WHEEL LEAN	2160 - 18
2G9	VEHICLE ELECTRICAL CENTER	1674 - 22
1H20	VENTILATING SYSTEM, ENGINE	0402 - 4

W

1H16	WASHER, ENGINE THRUST	0401 - 2
1J1	WATER PUMP	0417 - 2
2K7	WATER VALVE	1830 - 12
3D19	WEAR INSERTS, BLADE TILT FRAME	3440 - 4
2H9	WEIGHT, FRONT MOUNTED	1749 - 2
1G21	WET BRAKE, TRANSMISSION	0350 - 28
1B2	WHEEL (10" X 24") (SPLIT RIM)	0110 - 2
1B8	WHEEL (13" X 25" ONE-PIECE)	0110 - 8
1B4	WHEEL (14" X 25") (770D) (772D)	0110 - 4
1B4	WHEEL (17" X 25") (770D) (772D)	0110 - 4
1B6	WHEEL (9" X 24" ONE-PIECE)	0110 - 6
1B6	WHEEL (9" X 24")	0110 - 6
1C24	WHEEL BEARING, FRONT (770D)	0230 - 4
1D3	WHEEL BEARING, FRONT (770D)	0230 - 4
1D22	WHEEL DRIVE, HFWD	0260 - 6
1C24	WHEEL HUB, FRONT (770D)	0230 - 4
1D3	WHEEL HUB, FRONT (770D)	0230 - 4
1D8	WHEEL LEAN BAR LINK (772D)	0240 - 6
2J9	WHEEL LEAN CONTROL LEVER	1810 - 42
2C19	WHEEL LEAN CYLINDER (770D)	0960 - 2
2C21	WHEEL LEAN CYLINDER (772D)	0960 - 4
2D9	WHEEL LEAN CYLINDER HOSES (770D)	0960 - 16
2D7	WHEEL LEAN CYLINDER HOSES (772D)	0960 - 14
1C22	WHEEL LEAN LINK (770D)	0230 - 2
1C22	WHEEL LEAN LINK PIN (770D)	0230 - 2
1C22	WHEEL LEAN PIN (770D)	0230 - 2
3B14	WHEEL LEAN VALVE SECTION	2160 - 18
2G3	WHEEL SPEED SENSOR WIRING HARNESS, HFWD	1674 - 16
1B4	WHEEL(14" X 25" AND 17" X 25" SPLIT RIM)	0110 - 4
1B12	WHEEL, FRONT (10" X 24" SPLIT RIM)	0110 - 12
1B14	WHEEL, FRONT (12" X 25")	0110 - 14
1B10	WHEEL, FRONT (14" X 25")	0110 - 10
1B16	WHEEL, FRONT (16" X 24") (772D)	0110 - 16
1B18	WHEEL, FRONT(17"X 25" SPLIT RIM)	0110 - 20
1B2	WHEEL, REAR (10" X 24") (SPLIT RIM)	0110 - 2
1B8	WHEEL, REAR (13" X 25")	0110 - 8
1B4	WHEEL, REAR (14" X 25") (772D)	0110 - 4
1B4	WHEEL, REAR (17" X 25") (772D)	0110 - 4
1B6	WHEEL, REAR (9" X 24")	0110 - 6
2J5	WHEEL, STEERING	1810 - 38
2L16	WINDOW SHADE, REAR	2007 - 2
2J1	WINDOW, CAB DOOR (LEFT)	1810 - 34
2I23	WINDOW, CAB DOOR (RIGHT)	1810 - 32
2I1	WINDOW, REAR	1810 - 12
2I5	WINDOWS, FRONT OPENABLE	1810 - 14
2I5	WINDOWS, LOWER FRONT OPENABLE	1810 - 14
2I1	WINDOWS, LOWER FRONT STATIONARY	1810 - 12
2I7	WINDOWS, OPENABLE SIDE	1810 - 16
2I7	WINDOWS, SIDE OPENABLE	1810 - 16
2I1	WINDOWS, STATIONARY	1810 - 12
2I1	WINDOWS, STATIONARY SIDE	1810 - 12
2I1	WINDSHIELD	1810 - 12
2I3	WINDSHIELD REPAIR KIT	1810 - 13A
2H17	WINDSHIELD WASHER RESERVOIR	1810 - 4
2H17	WINDSHIELD WIPER MOTOR, FRONT	1810 - 4
2H19	WINDSHIELD WIPER MOTOR, REAR	1810 - 6
2H17	WINDSHIELD WIPER, FRONT	1810 - 4
2H19	WINDSHIELD WIPER, REAR	1810 - 6

ALPHABETICAL INDEX - CONTINUED

GRID		PAGE
2H17	WIPER BLADE, FRONT WINDSHIELD	1810 - 4
2H21	WIPER BLADE, LOWER FRONT WINDSHIELD	1810 - 8
2H19	WIPER BLADE, REAR WINDOW	1810 - 6
2H21	WIPER, WINDSHIELD LOWER FRONT	1810 - 8
2K13	WIRING HARNESS, A/C AND HEATER	1830 - 18
3E21	WIRING HARNESS, BLADE IMPACT VALVE	3460 - 18
2F21	WIRING HARNESS, CAB INTERIOR	1674 - 8
2G13	WIRING HARNESS, CAB MONITOR UNIT	1674 - 26
2F21	WIRING HARNESS, CAB POWER	1674 - 8
2F23	WIRING HARNESS, CAB ROOF	1674 - 10
2G13	WIRING HARNESS, CAB TILT CONSOLE	1674 - 26
2G13	WIRING HARNESS, CMU	1674 - 26
2F19	WIRING HARNESS, ENGINE	1674 - 6
2B3	WIRING HARNESS, ENGINE AIR HEATER	0505 - 2
2G3	WIRING HARNESS, FRONT HFWD	1674 - 16
2F15	WIRING HARNESS, FRONT PLATFORM	1674 - 2
2F15	WIRING HARNESS, FRONT TURN/DRIVING LIGHT	1674 - 2
1H20	WIRING HARNESS, FUEL INJECTION	0402 - 4
2G3	WIRING HARNESS, HFWD	1674 - 16
2F15	WIRING HARNESS, MAIN (FRONT)	1674 - 2
2F17	WIRING HARNESS, MAIN (REAR)	1674 - 4
2F21	WIRING HARNESS, RADIO SPEAKER	1674 - 8
2G3	WIRING HARNESS, REAR HFWD	1674 - 16
2F17	WIRING HARNESS, REAR PLATFORM	1674 - 4
2F1	WIRING HARNESS, SNOW LIGHT	1673 - 2
2F5	WIRING HARNESS, TAIL LIGHT	1673 - 6
2G1	WIRING HARNESS, TRANSMISSION	1674 - 14
2B5	WIRING HARNESS,COLD WEATHER STARTING AID	0505 - 4

Y

1C20	YOKE, DRIVESHAFT	0225 - 2
1D22	YOKE, HFWD	0260 - 6
1C10	YOKE, INPUT	0210 - 2
1G23	YOKE, TRANSMISSION	0350 - 30

WHEEL (10" X 24" SPLIT RIM)

T200473 -UN-01JUN04

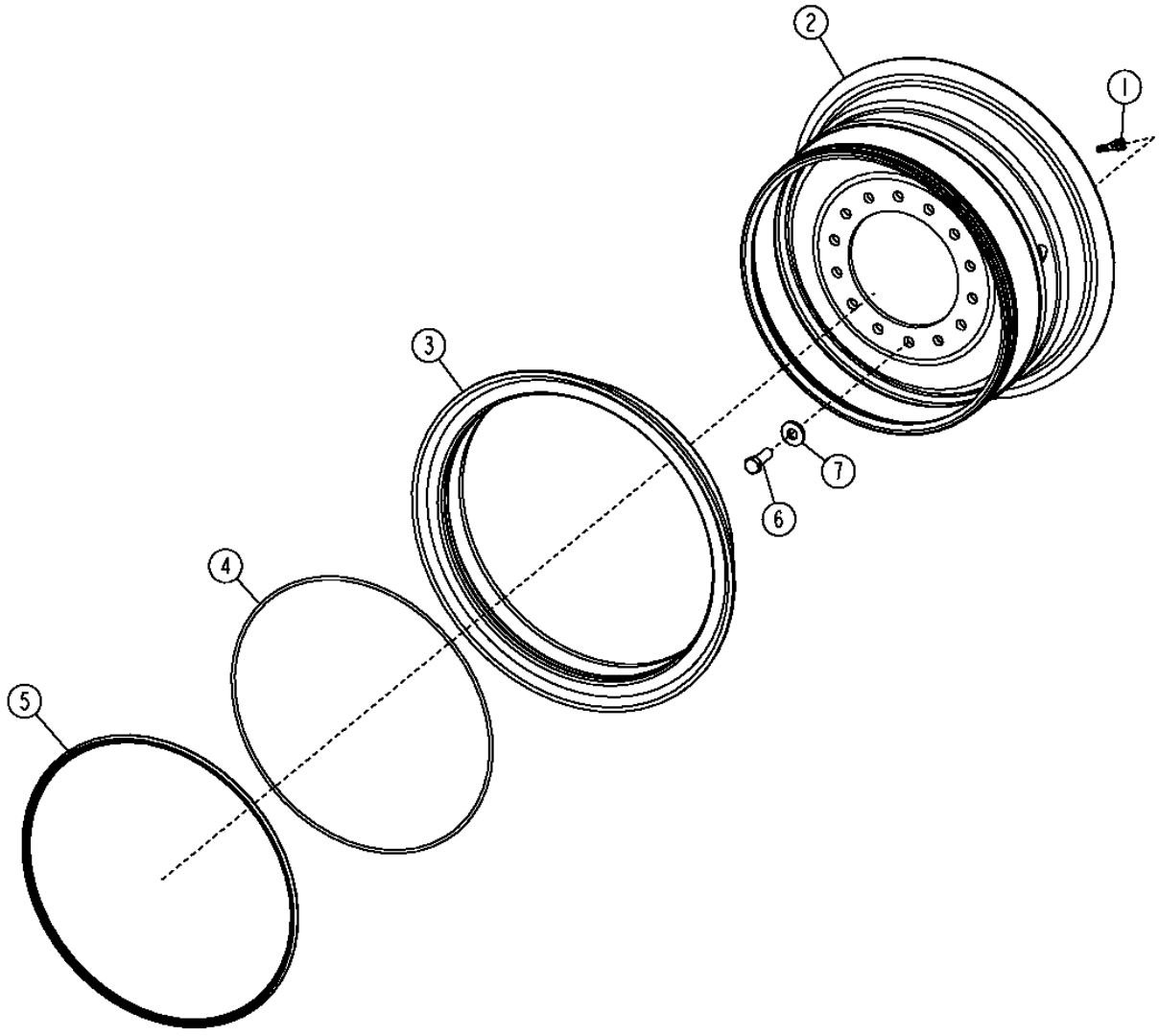

T200473

WHEEL (10" X 24" SPLIT RIM)

KEY	PART NO.	PART NAME	QTY	SERIAL NO.	770D	772D	REMARKS
1	AT25226	TIRE VALVE STEM	1		X	X	
2	AT43231	WHEEL	1		X		254MM X 610MM (10" X 24") (13-14 X 24 TIRE) (QUANTITY OF 6 PER MACHINE)
	AT43231	WHEEL	1			X	254 MM X 610 MM (10" X 24") (13-14 X 24 TIRE) (QUANTITY OF 4 PER MACHINE) (USE AS REAR WHEEL ONLY ON 772D)
3	T27183	WHEEL RING	1		X	X	WITH 254 MM X 610 MM (10" X 24") WHEEL
4	T59932	O-RING	1		X	X	254 MM X 610 MM (10" X 24") WHEEL
5	T27184	WHEEL RING	1		X	X	WITH 254 MM X 610 MM (10" X 24") WHEEL
6	19H3158	CAP SCREW	14		X	X	3/4" X 2"
7	T151797	WASHER	14		X	X	0.812" X 1-7/8" X 0.245"

WHEEL (14" X 25" AND 17" X 25" SPLIT RIM)

T200475 -UN-01JUN04

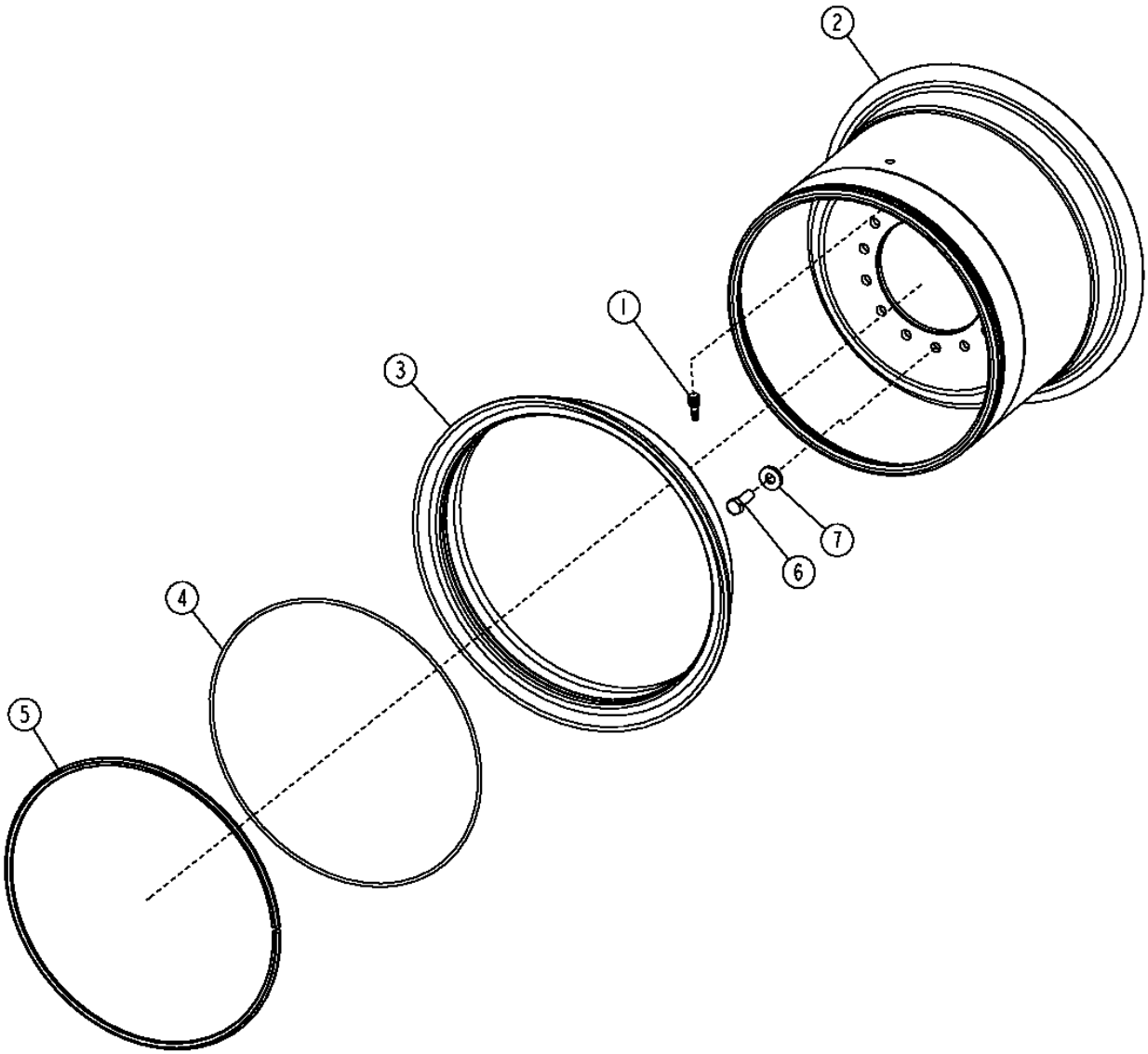

T200475

WHEEL (SPLIT RIM)

KEY	PART NO.	PART NAME	QTY	SERIAL NO.	770D	772D	REMARKS
1	AT25226	TIRE VALVE STEM	1		X	X	
2	AT68940	WHEEL	1		X	X	356 MM X 635 MM (14" X 25") (17.5-25 TIRE) (QUANTITY OF 6 PER MACHINE)
	AT68940	WHEEL	1				356 MM X 635 MM (14" X 25") (17.5-25 TIRE) (QUANTITY OF 4 PER MACHINE) (USE AS REAR WHEEL ONLY ON 772D)
	AT182580	RIM	1		X	X	432 MM X 635 MM (17" X 25") (20.5-25 TIRE) (QUANTITY OF 6 PER MACHINE)
	AT182580	RIM	1				432 MM X 635 MM (17" X 25") (20.5-25 TIRE) (QUANTITY OF 4 PER MACHINE) (USE AS REAR WHEEL ONLY ON 772D)
3	T27193	WHEEL RING	1		X	X	WITH 356 MM X 635 MM (14" X 25") OR 432 MM X 635 MM (17" X 25") WHEEL
4	T59933	O-RING	1		X	X	WITH 356 MM X 635 MM (14"X 25") OR 432 MM X 635 MM (17" X 25") WHEEL
5	T27194	WHEEL RING	1		X	X	WITH 356 MM X 635 MM (14" X 25") OR 432 MM X 635 MM (17" X 25") WHEEL
6	19H3158	CAP SCREW	14		X	X	3/4" X 2"
7	T151797	WASHER	14		X	X	0.812" X 1-7/8" X 0.245"

WHEEL (9" X 24" ONE-PIECE)

T200485 -UN-02JUN04

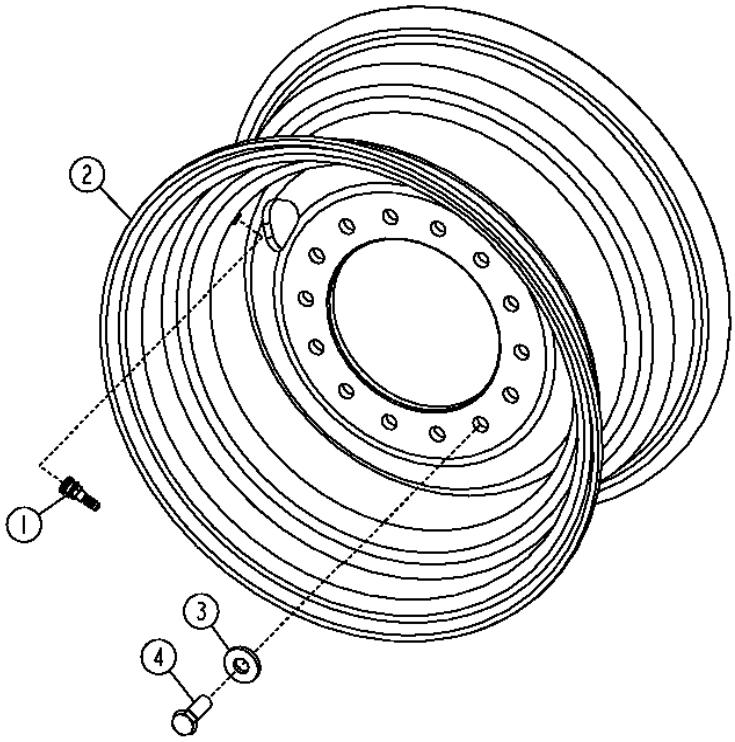

1B7

WHEEL (9" X 24" ONE-PIECE)

KEY	PART NO.	PART NAME	QTY	SERIAL NO.	770D	772D	REMARKS
1	AT25226	TIRE VALVE STEM	1		X	X	
2	AT103567	WHEEL	1		X		229 MM X 610 MM (9" X 24") (13-14 X 24 TIRE) (QUANTITY OF 6 PER MACHINE)
	AT103567	WHEEL	1			X	229 MM X 610 MM (9" X 24") (13 X 24 TIRE) (QUANTITY OF 4 PER MACHINE) (FOR USE AS REAR WHEEL ONLY ON 772D)
3	T151797	WASHER	14		X	X	0.812" X 1-7/8" X 0.245"
4	19H3158	CAP SCREW	14		X	X	3/4" X 2"

WHEEL (13" X 25" ONE-PIECE)

T200485 -UN-02JUN04

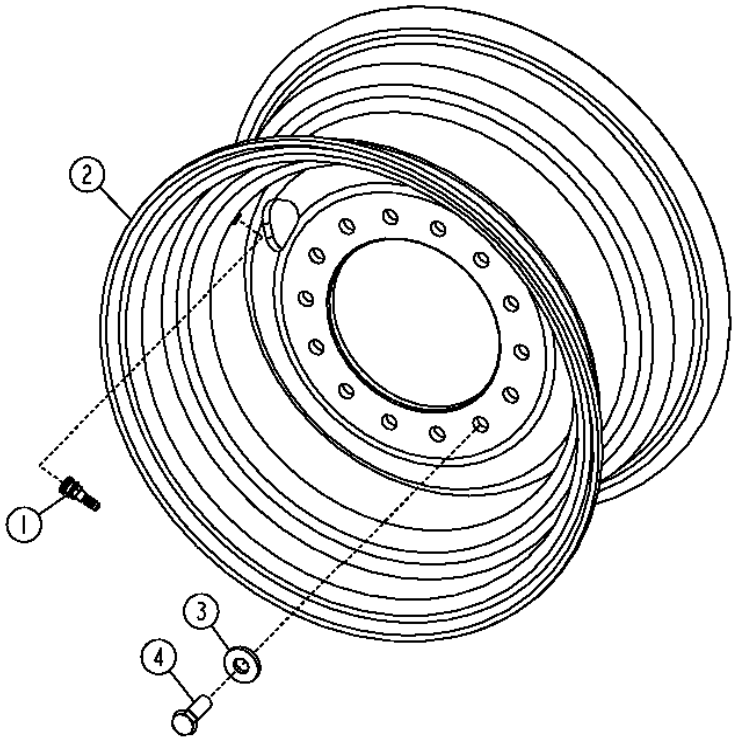

WHEEL (13" X 25" ONE-PIECE)

KEY	PART NO.	PART NAME	QTY	SERIAL NO.	770D	772D	REMARKS
1	AT25226	TIRE VALVE STEM	1		X	X	
2	AT105608	WHEEL	1		X		330 MM X 635 MM (13" X 25") (15.5-17.5 X 25 TIRE) (QUANTITY OF 6 PER MACHINE)
	AT105608	WHEEL	1			X	330 MM X 635 MM (13" X 25") (17.5-25 TIRE) (QUANTITY OF 4 PER MACHINE) (USE AS REAR WHEEL ONLY ON 772D)
	AT179099	WHEEL	1		X		406 MM X 610 MM (16" X 24") (18.4-24 TIRE) (QUANTITY OF 6 PER MACHINE)
	AT179099	WHEEL	1			X	406 MM X 610 MM (16" X 24") (18.4-24 TIRE) (QUANTITY OF 4 PER MACHINE) (USE AS REAR WHEEL ONLY ON 772D)
3	T151797	WASHER	14		X	X	0.812" X 1-7/8" X 0.245"
4	19H3158	CAP SCREW	14		X	X	3/4" X 2"

FRONT WHEEL (14" X 25" SPLIT RIM)

T200486 -UN-01JUN04

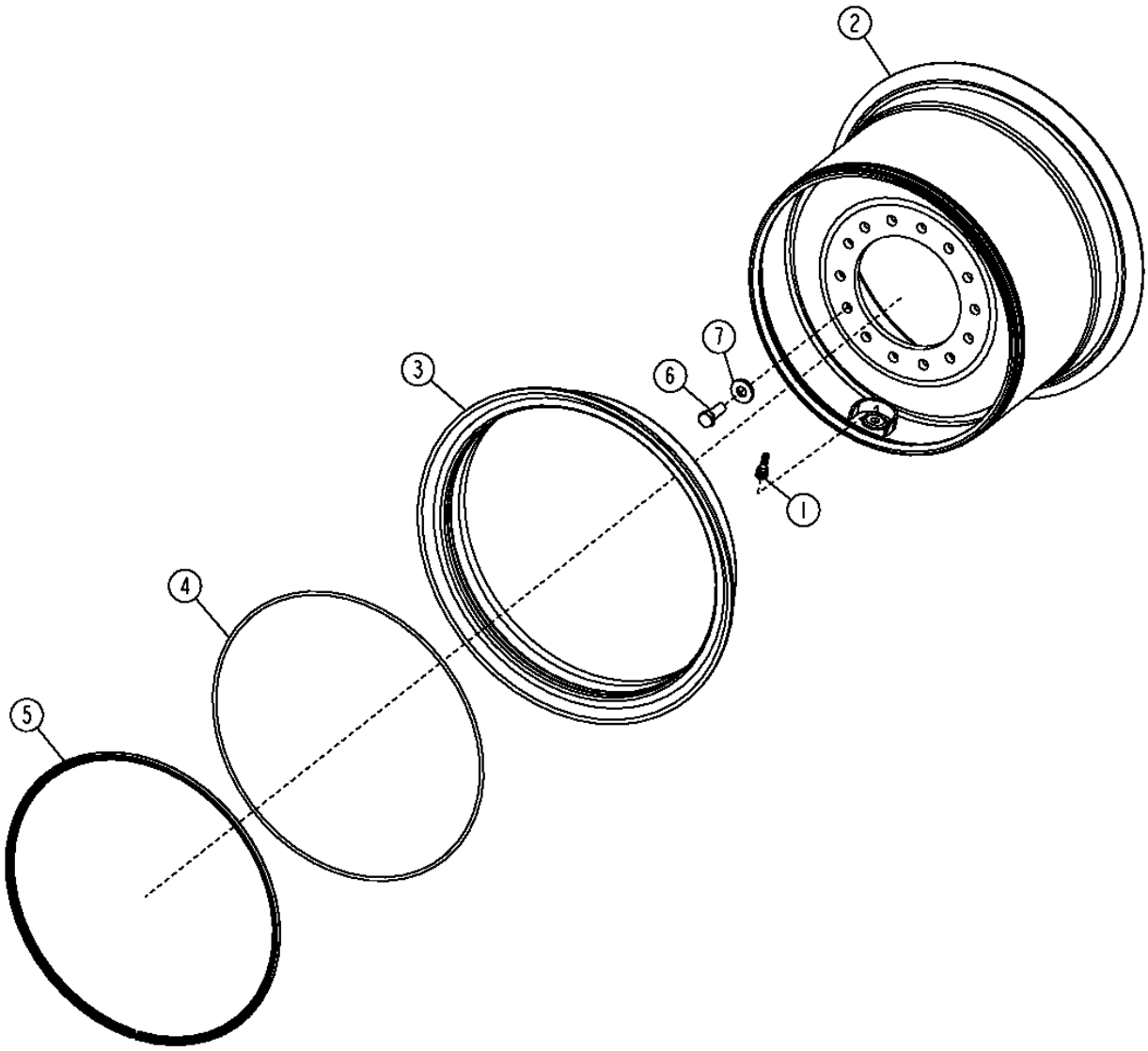

T200486

FRONT WHEEL (14" X 25" SPLIT RIM)

KEY	PART NO.	PART NAME	QTY	SERIAL NO.	770D	772D	REMARKS
1	AT25226	TIRE VALVE STEM	1		X		
2	AT190417	WHEEL	1		X		356 MM X 635 MM (14" X 25") (17.5-25 TIRE)
3	T27193	WHEEL RING	1		X		
4	T59933	O-RING	1		X		
5	T27194	WHEEL RING	1		X		
6	19H3158	CAP SCREW	14		X		3/4" X 2"
7	T151797	WASHER	14		X		0.812" X 1-7/8" X 0.245"

FRONT WHEEL (10" X 24" SPLIT RIM)

T148646 -UN-03DEC01

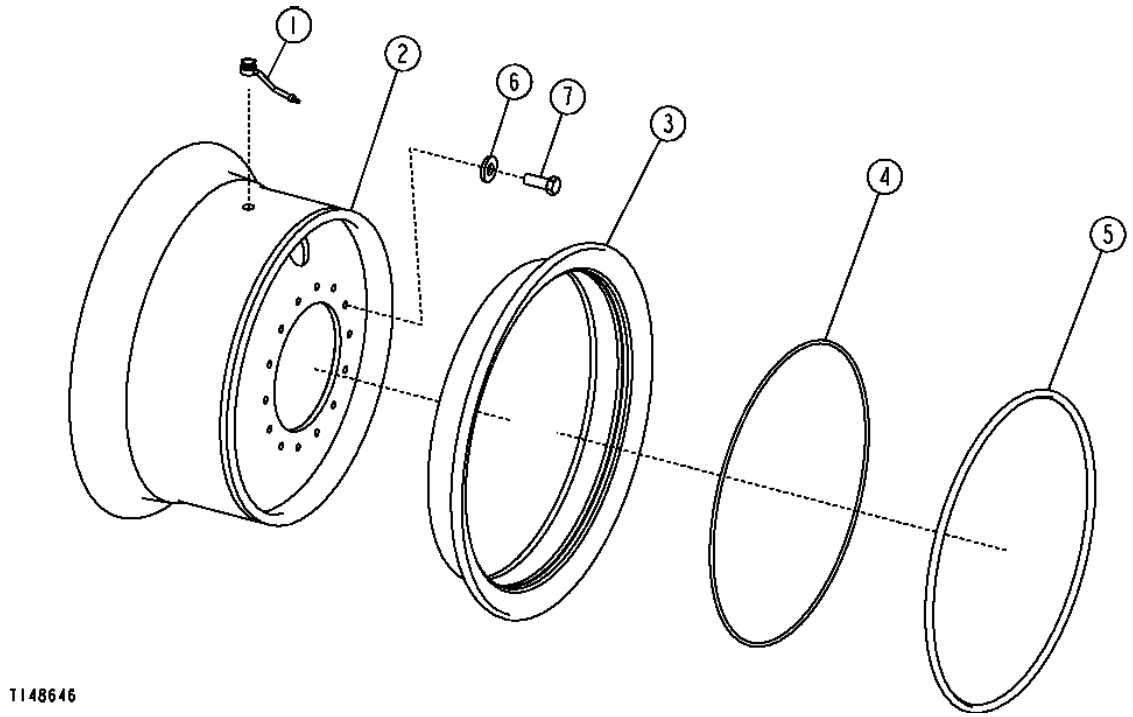

1B13

FRONT WHEEL (10" X 24" SPLIT RIM)

KEY	PART NO.	PART NAME	QTY	SERIAL NO.	770D	772D	REMARKS
1	AT197613	TIRE VALVE STEM	1		X		
2	AT193866	WHEEL	1		X		254 MM X 610 MM (10" X 24") (13-14 X 24 TIRE)
3	T27183	WHEEL RING	1		X		
4	T59932	O-RING	1		X		
5	T27184	WHEEL RING	1		X		
6	T151797	WASHER	14		X		
7	19H3158	CAP SCREW	14		X		3/4" X 2"

FRONT WHEEL (10" X 24" SPLIT RIM)

T151782 -UN-22FEB02

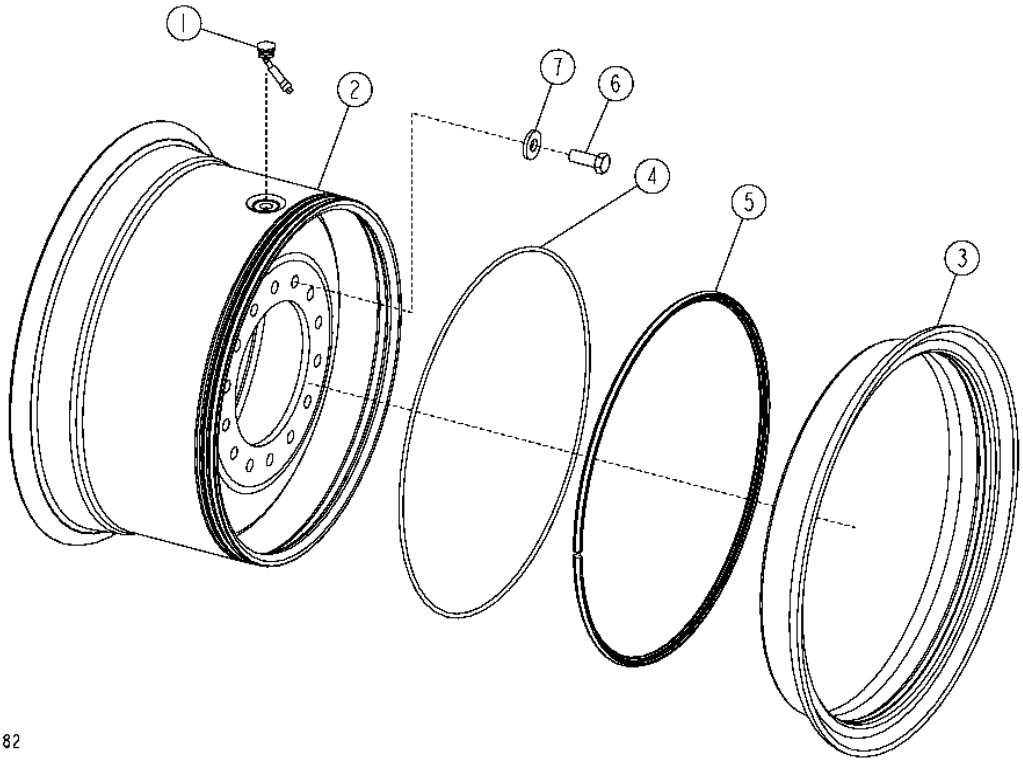

1B15

FRONT WHEEL (10" X 24" SPLIT RIM)

KEY	PART NO.	PART NAME	QTY	SERIAL NO.	770D	772D	REMARKS
1	AT197844	TIRE VALVE STEM	1		X		WITH 305 MM X 635 MM (12" X 25") WHEEL
2	AT194842	WHEEL	1		X		305 MM X 635 MM (12" X 25") (15.5-25 TIRE)
3	T27193	WHEEL RING	1		X		WITH 305 MM X 635 MM (12 X 25") WHEEL
4	T59933	O-RING	1		X		WITH 305 MM X 635 MM (12" X 25") WHEEL
5	T27194	WHEEL RING	1		X		WITH 305 MM X 635 MM (12" X 25") WHEEL
6	19H3158	CAP SCREW	14		X		
7	T151797	WASHER	14		X		

FRONT WHEEL

T200583 -UN-03JUN04

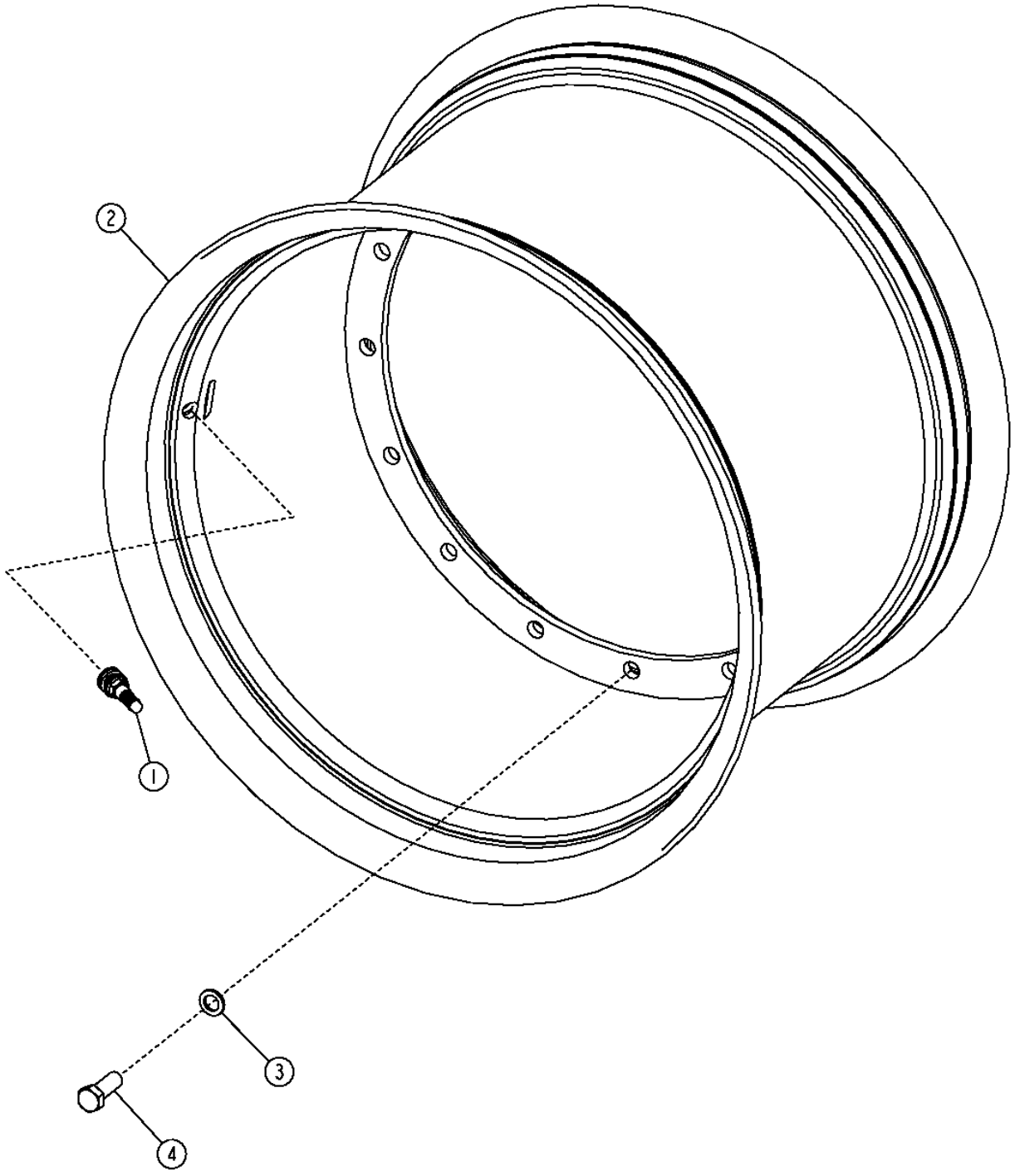

1B17

FRONT WHEEL

KEY	PART NO.	PART NAME	QTY	SERIAL NO.	770D	772D	REMARKS
1	AT25226	TIRE VALVE STEM	1		X		
2	AT179249	WHEEL	1		X		406 MM X 610 MM (16" X 24") (18.4-24 TIRE)
3	24M7427	WASHER	16		X		15 X 24 X 2.500 MM (0.591" X 0.945" X 0.098")
4	19H1670	CAP SCREW	16		X		14.275 X 38.100 MM (9/16" X 1-1/2")

FRONT WHEEL (17"X 25" SPLIT RIM)

T203377 -UN-15DEC04

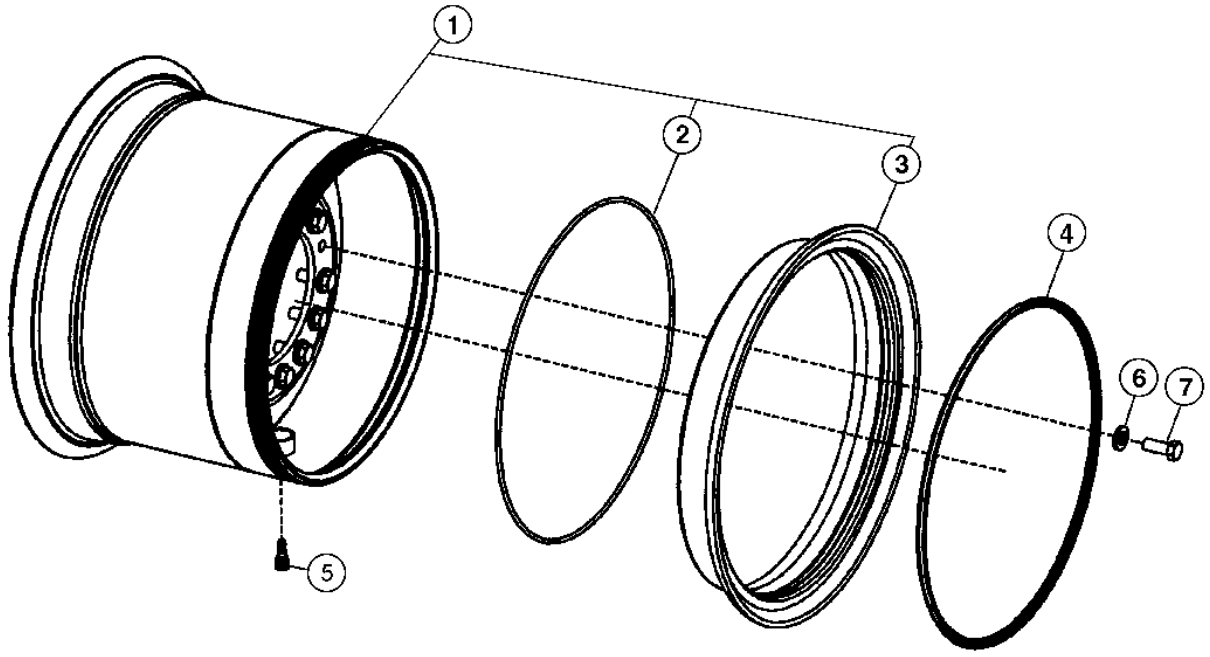

T203377

1B19

FRONT WHEEL (17"X 25" SPLIT RIM)

KEY	PART NO.	PART NAME	QTY	SERIAL NO.	770D	772D	REMARKS
1	AT310377	RIM	1		X		(635 MM X 602 MM) (25" X 17") RIM
2	T59933	O-RING	1		X		
3	T212453	WHEEL RING	1		X		
4	T212452	WHEEL RING	1		X		
5	AT25226	TIRE VALVE STEM	1		X		
6	R54124	WASHER	14		X		
7	19H3158	CAP SCREW	14		X		3/4" X 2"

TANDEM HOUSING

T203244 -UN-17SEP04

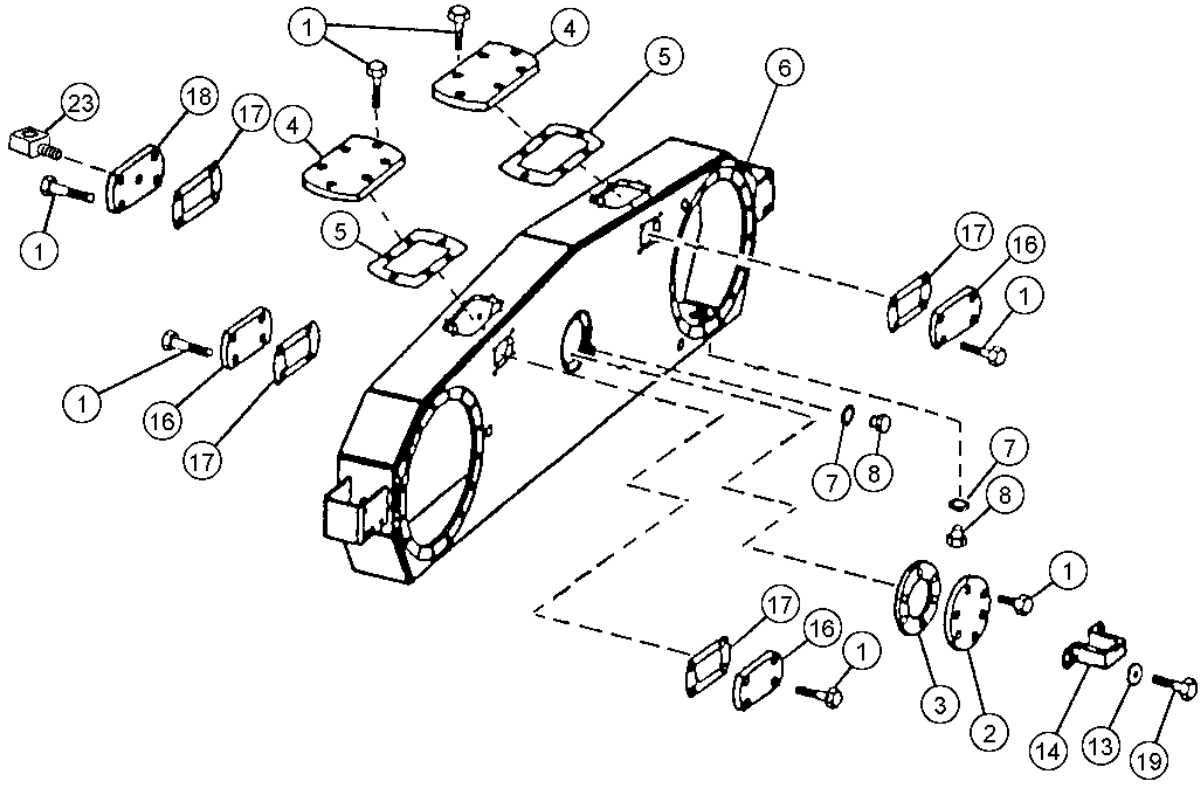

T203244

TANDEM HOUSING

KEY	PART NO.	PART NAME	QTY	SERIAL NO.	770D	772D	REMARKS
1	H150941	CAP SCREW	32		X	X	
2	T158338	COVER	1		X	X	
3	T158340	GASKET	1		X	X	
4	T158514	PLATE	2		X	X	TOP
5	T158513	GASKET	2		X	X	TOP
6	AT305639	HOUSING	1		X	X	
7	U17409	O-RING	2		X	X	
8	T78662	DRAIN PLUG	4		X	X	(OIL DRAIN AND OIL LEVEL)
13	24M7239	WASHER	2		X	X	
14	T160368	STEP	1		X	X	
16	T158509	COVER	3		X	X	
17	T158511	GASKET	4		X	X	
18	T158510	COVER	1		X	X	
19	19M7402	CAP SCREW	2		X	X	M10 X 25
23	JD7838	ADAPTER	1		X	X	

FINAL DRIVE AND TANDEM PIVOT

T150727 -UN-04FEB02

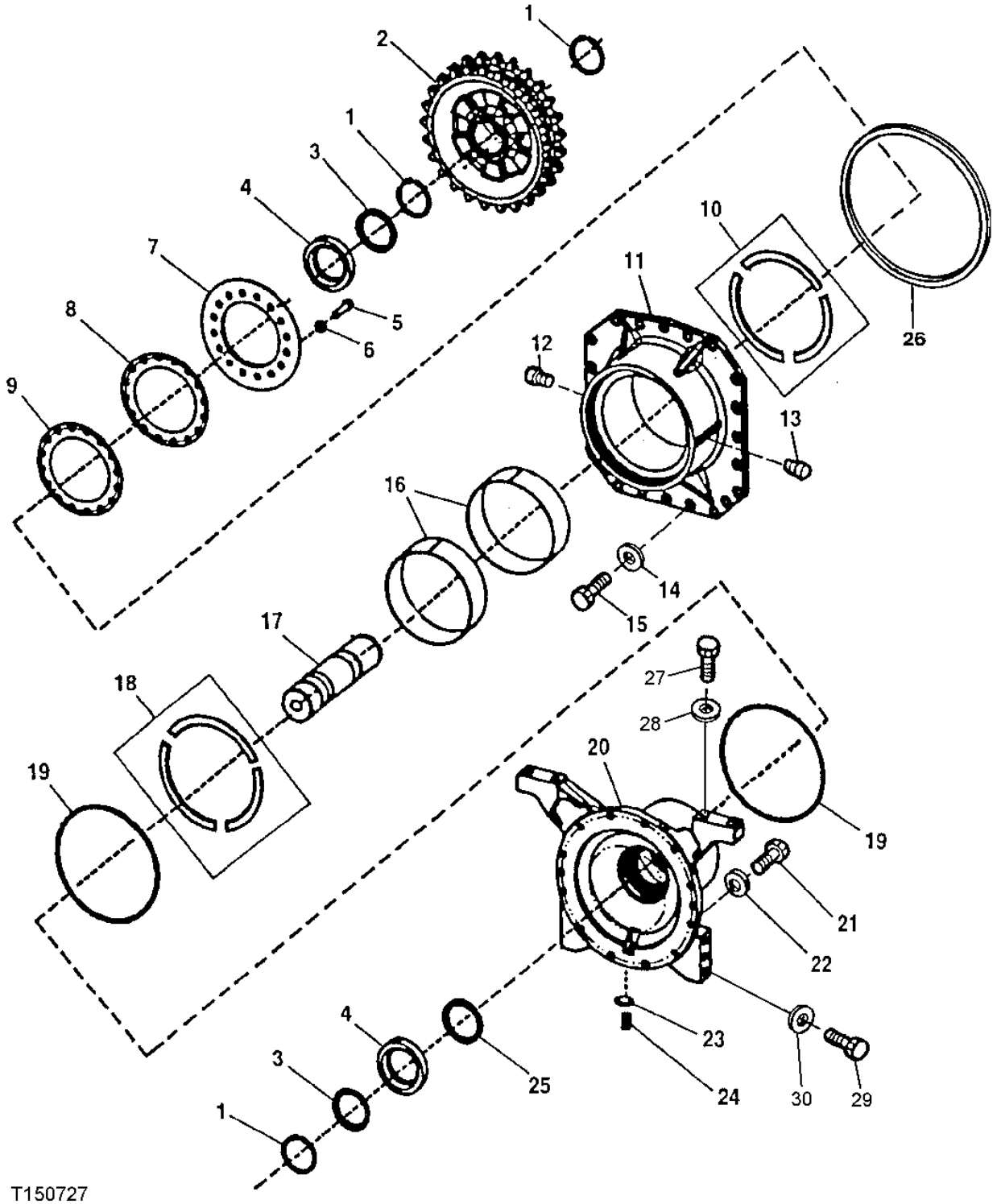

FINAL DRIVE AND TANDEM PIVOT

KEY	PART NO.	PART NAME	QTY	SERIAL NO.	770D	772D	REMARKS
1	T157952	SNAP RING	3		X	X	
2	T157945	DRIVE SPROCKET	1		X	X	
3	JD8989	BEARING CONE	2		X	X	
4	JD8272	BEARING CUP	2		X	X	
5	19M7417	CAP SCREW	16		X	X	M16 X 65
6	24M7338	WASHER	16		X	X	
7	T157944	RETAINER	1		X	X	
8	T158335	SHIM	AR		X	X	.07 MM
9	T158334	SHIM	AR		X	X	.2 MM
10	T158492	THRUST WASHER	3		X	X	
11	T157943	PIVOT	1		X	X	(TANDEM)
12	T71306	ORIFICE	1		X	X	
13	JD7781	LUBRICATION FITTING	1		X	X	
14	R135543	WASHER	22		X	X	
15	19M7488	CAP SCREW	22		X	X	M16 X 40
16	T158332	BUSHING	2		X	X	
17	T157942	DRIVE SHAFT	1		X	X	(TANDEM)
18	T158492	THRUST WASHER	3		X	X	
19	T206434	O-RING	2		X	X	
20	T157941	HOUSING	1		X	X	(FINAL DRIVE AXLE)
21	19M8190	CAP SCREW	12		X	X	M16 X 180
22	R135543	WASHER	12		X	X	
23	U17409	O-RING	1		X	X	
24	T78662	DRAIN PLUG	1		X	X	
25	AR75527	SEAL	1		X	X	
26	T41677	O-RING	1		X	X	
27	19M7889	CAP SCREW	4		X	X	M24 X 80
28	24M7294	WASHER	4		X	X	
29	19M7892	CAP SCREW	3		X	X	M20 X 80
30	24M7242	WASHER	3		X	X	

INPUT YOKE

RXP021502 -UN-12MAR97

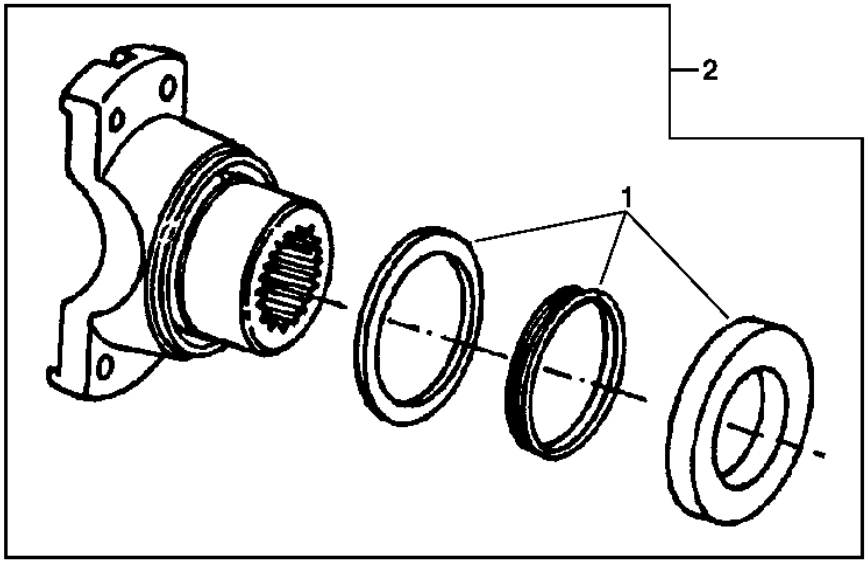

RXP021502

KEY	PART NO.	PART NAME	QTY	AXLE SERIAL NO.	770D	772D	REMARKS
1	RE45315	SEAL KIT	1		X	X	
	R100500	SEAL	1		X	X	
2	RE45317	KIT	1		X	X	

SPIRAL BEVEL INPUT PINION AND RING GEAR SET

RXP6492 -UN-01JAN94

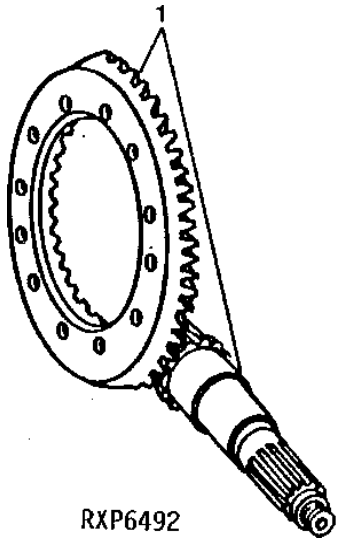

KEY	PART NO.	PART NAME	QTY	AXLE SERIAL NO.	770D	772D	REMARKS
1	YZ120662	RING GEAR AND PINION	1		X	X	(MARKED YZ120661 AND YZ120589) (ALSO ORDER RE50114) (SUB YZ120595) R.H. ASSEMBLY
	YZ120167	WASHER	1		X	X	

INPUT QUILL ASSEMBLY

RXP9482 -UN-01JAN94

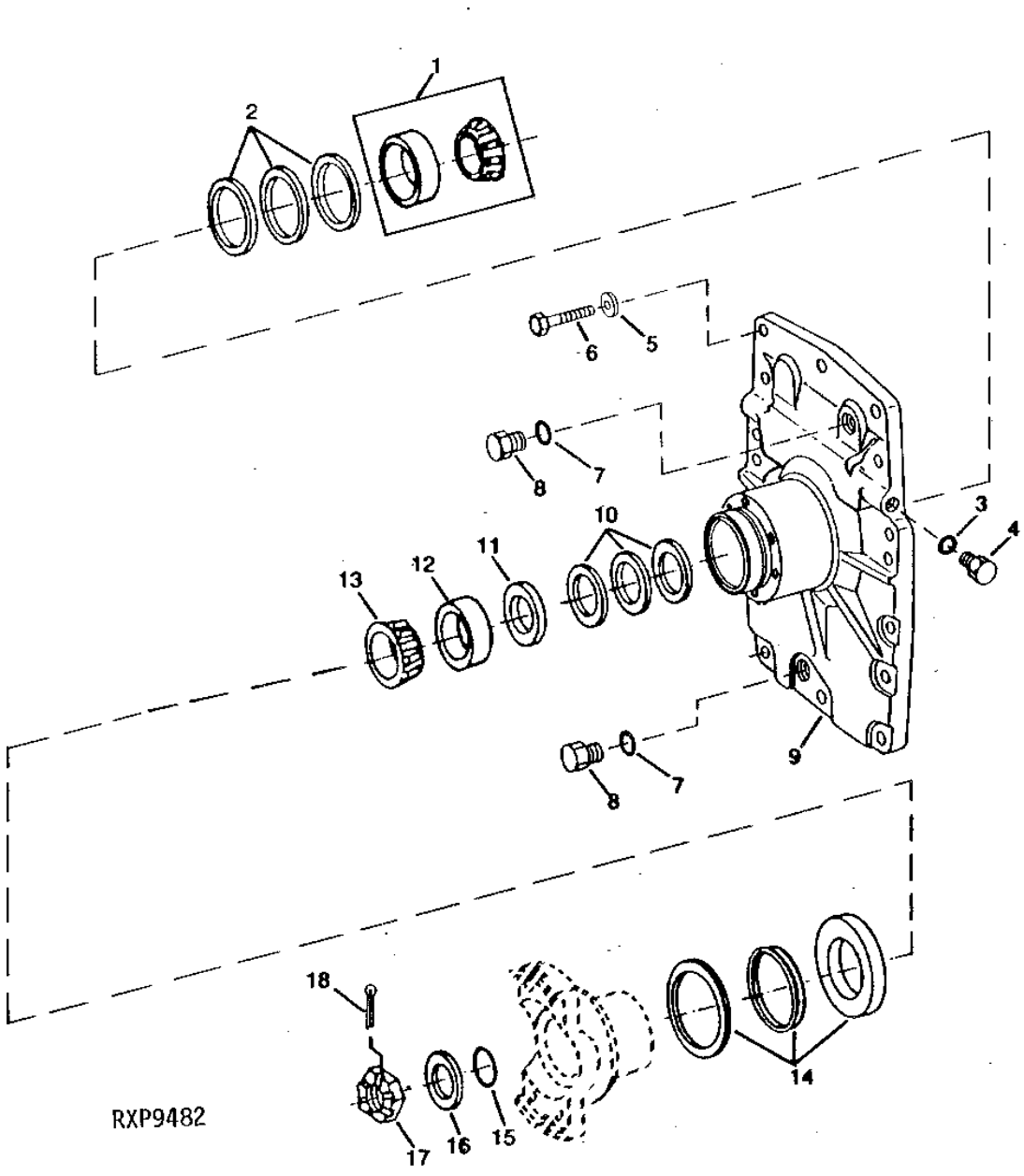

INPUT QUILL ASSEMBLY

KEY	PART NO.	PART NAME	QTY	AXLE SERIAL NO.	770D	772D	REMARKS
1	RE49486	TAPERED ROLLER BEARING	1		X	X	
2	R35365	SHIM	AR		X	X	
	R35366	SHIM	AR		X	X	
	R35367	SHIM	AR		X	X	
3	R26448	O-RING	2		X	X	
4	R27218	FITTING PLUG	2		X	X	
5	R135543	WASHER	15		X	X	
6	19M7409	CAP SCREW	15		X	X	
7	F3171R	O-RING	2		X	X	
8	R27175	DRAIN PLUG	2		X	X	
9	R116261	COVER	1		X	X	(SUB R126117)
10	R51196	SHIM	AR		X	X	
	R51197	SHIM	AR		X	X	
	R51198	SHIM	AR		X	X	
	R51199	SHIM	AR		X	X	
11	R56308	WASHER	1		X	X	
12	JD8255	BEARING CUP	1		X	X	
13	JD9078	BEARING CONE	1		X	X	
14	RE45315	SEAL KIT	1		X	X	
	R100500	SEAL	1		X	X	
15	A4540R	O-RING	1		X	X	
16	R48733	WASHER	AR		X	X	
	R48734	WASHER	AR		X	X	
	R48735	WASHER	AR		X	X	
17	R48776	NUT	1		X	X	
18	11M7032	COTTER PIN	1		X	X	5 X 50 MM
..	UN7189	SEALANT	1		X	X	(SUB TY16021)

DIFFERENTIAL CASE

RXP021560 -UN-30MAY96

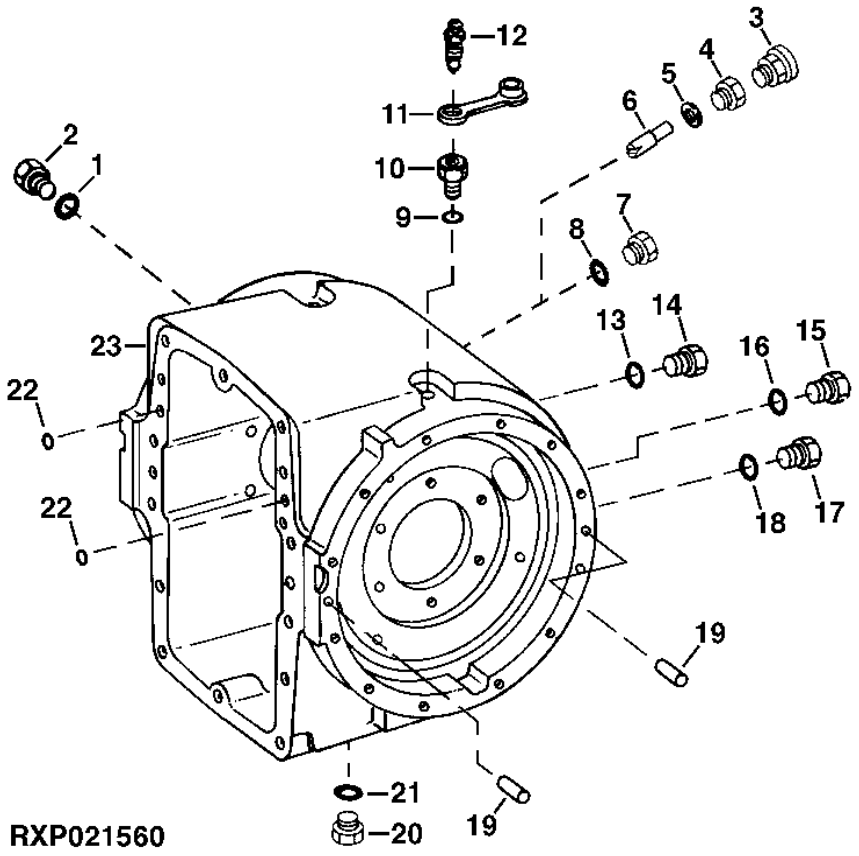

DIFFERENTIAL CASE

KEY	PART NO.	PART NAME	QTY	SERIAL NO.	770D	772D	REMARKS
1	R26375	O-RING	1		X	X	
2	R39112	FITTING	1		X	X	
3	RE62981	PRESSURE RELIEF VALVE	1		X	X	
4	R112210	ADAPTER	1		X	X	
5	U17409	O-RING	1		X	X	
6	R132574	STRUCTURAL TUBING	1		X	X	
7	15H666	PIPE PLUG	1		X	X	
8	U17409	O-RING	1		X	X	
9	R26448	O-RING	2		X	X	
10	R106789	BUSHING	2		X	X	
11	YZ120455	PLUG	2		X	X	
12	R21612	BLEED VALVE	2		X	X	
13	F3171R	O-RING	1		X	X	
14	R116801	PIPE PLUG	1		X	X	
15	R27175	DRAIN PLUG	1		X	X	
16	F3171R	O-RING	1		X	X	
17	R116801	PIPE PLUG	1		X	X	
18	F3171R	O-RING	1		X	X	
19	R27315	DOWEL PIN	4		X	X	
20	R84262	FITTING PLUG	1		X	X	
21	F3171R	O-RING	1		X	X	
22	R375R	O-RING	2		X	X	
23	YZ120522	CASE	1		X	X	LOW PRESSURE WITH VALVE

DIFFERENTIAL LOCK WITH VALVE

T212903 -UN-20JUL05

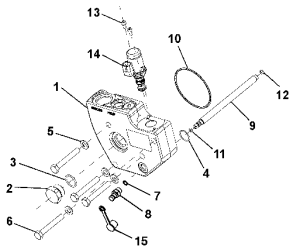

T212903

KEY	PART NO.	PART NAME	QTY	SERIAL NO.	770D	772D	REMARKS
1	YZ120442	HOUSING	1		X	X	
2	R27175	DRAIN PLUG	1		X	X	
3	F3171R	O-RING	1		X	X	
4	F37010020	O-RING	1		X	X	
5	24M7028	WASHER	4		X	X	
6	19M7328	CAP SCREW	4		X	X	
7	R28782	O-RING	1		X	X	
8	AH125760	HYD. QUICK-CONNECT COUPLER	1		X	X	
9	YZ120826	OIL LINE	1		X	X	
10	F37020153	O-RING	1		X	X	
11	F37010010	O-RING	1		X	X	
12	R26287	O-RING	1		X	X	
13	19M7887	SCREW	2		X	X	
14	AT303799	VALVE	1		X	X	
	AT224873	SEAL KIT	1		X	X	
15	R77175	COVER	1		X	X	

DIFFERENTIAL CASE OIL LINE

RXP021510 -UN-13MAR97

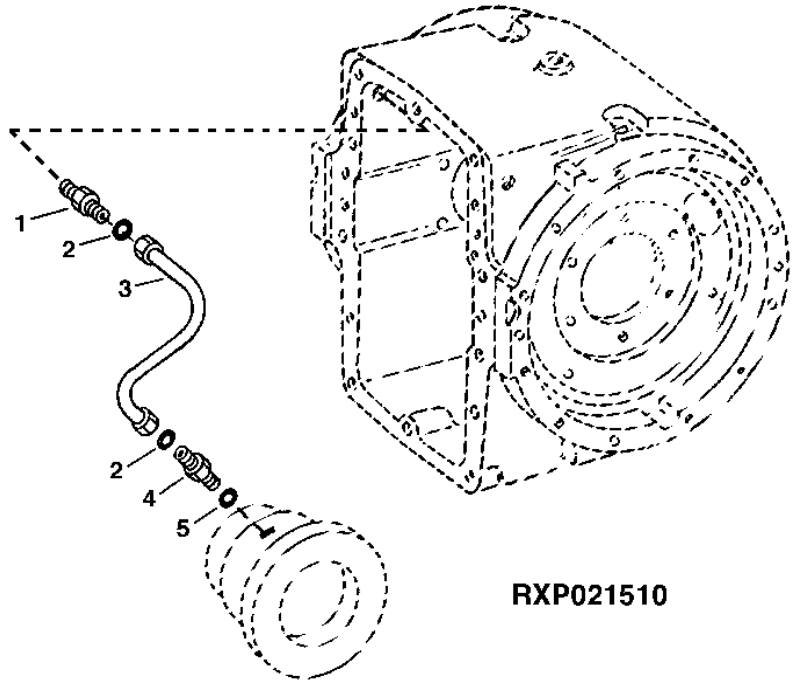

KEY	PART NO.	PART NAME	QTY	AXLE SERIAL NO.	772 772 DD	REMARKS
1	T80938	ADAPTER	1		X X	
2	T77814	O-RING	2		X X	
3	YZ120508	OIL LINE	1		X X	LOW PRESSURE
4	R115176	ADAPTER	1		X X	
5	R26287	O-RING	1		X X	

DIFFERENTIAL

YZ120447D -UN-22NOV04

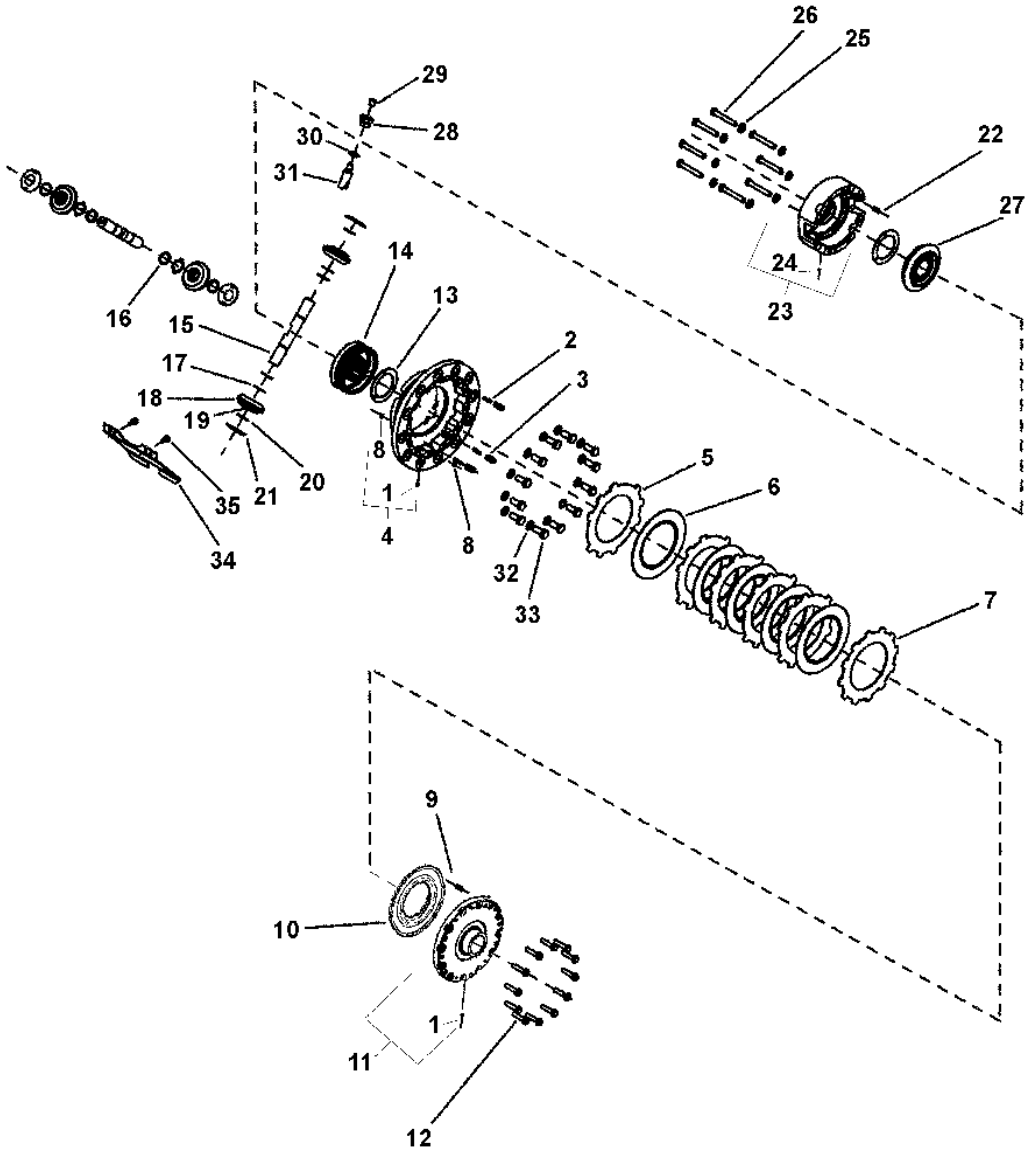

YZ120447D

DIFFERENTIAL

KEY	PART NO.	PART NAME	QTY	SERIAL NO.	770D	772D	REMARKS
1	400R	BALL	2		X	X	
2	34H328	SPRING PIN	3		X	X	
3	YZ120398	SPRING	3		X	X	
4	YZ120913	HOUSING	1		X	X	(ALSO ORDER 34M7224) (MARKED YZ120859)
5	R34858	CLUTCH PLATE	5		X	X	
6	RE53823	DISK	5		X	X	
7	R34857	CLUTCH PLATE	1		X	X	
8	R60038	PACKING	2		X	X	
9	34M7224	SPRING PIN	1		X	X	USE WITH COVER MARKED YZ120858 AND HOUSING MARKED YZ120859- ONLY
10	R95116	PISTON	1		X	X	
11	YZ120912	COVER	1		X	X	(MARKED YZ120859)
12	R116214	SCREW	12		X	X	
13	R93623	THRUST WASHER	2		X	X	
14	YZ120386	BEVEL GEAR	1		X	X	
15	R70111	PINION SHAFT	2		X	X	
16	YZ120471	RING	4		X	X	
17	R70113	THRUST WASHER	4		X	X	
18	R134726	PINION	1		X	X	
19	R70115	NEEDLE ROLLER	26		X	X	
20	R70112	THRUST WASHER	4		X	X	
21	R59460	THRUST WASHER	4		X	X	
22	YZ120909	SPRING PIN	1		X	X	(SUB FOR 34H171)
23	YZ120690	HOUSING	1		X	X	(MARKED YZ120503)
24	H871R	BALL	2		X	X	(ALSO ORDER YZ120909) (SUB FOR H871)
25	24H1111	WASHER	8		X	X	
26	19H2668	CAP SCREW	8		X	X	
27	R59289	BEVEL GEAR	1		X	X	
28	R112210	ADAPTER	1		X	X	
29	.....	PLUG	1		X	X	R116373 NO LONGER AVAILABLE (FURNISH 15H563)
30	U17409	O-RING	1		X	X	
31	R132574	STRUCTURAL TUBING	1		X	X	
32	R85226	WASHER	12		X	X	
33	19H3718	CAP SCREW	12		X	X	
34	R130036	DEFLECTOR	1		X	X	
35	T106596	SCREW	2		X	X	

DRIVESHAFT

T200588 -UN-02JUN04

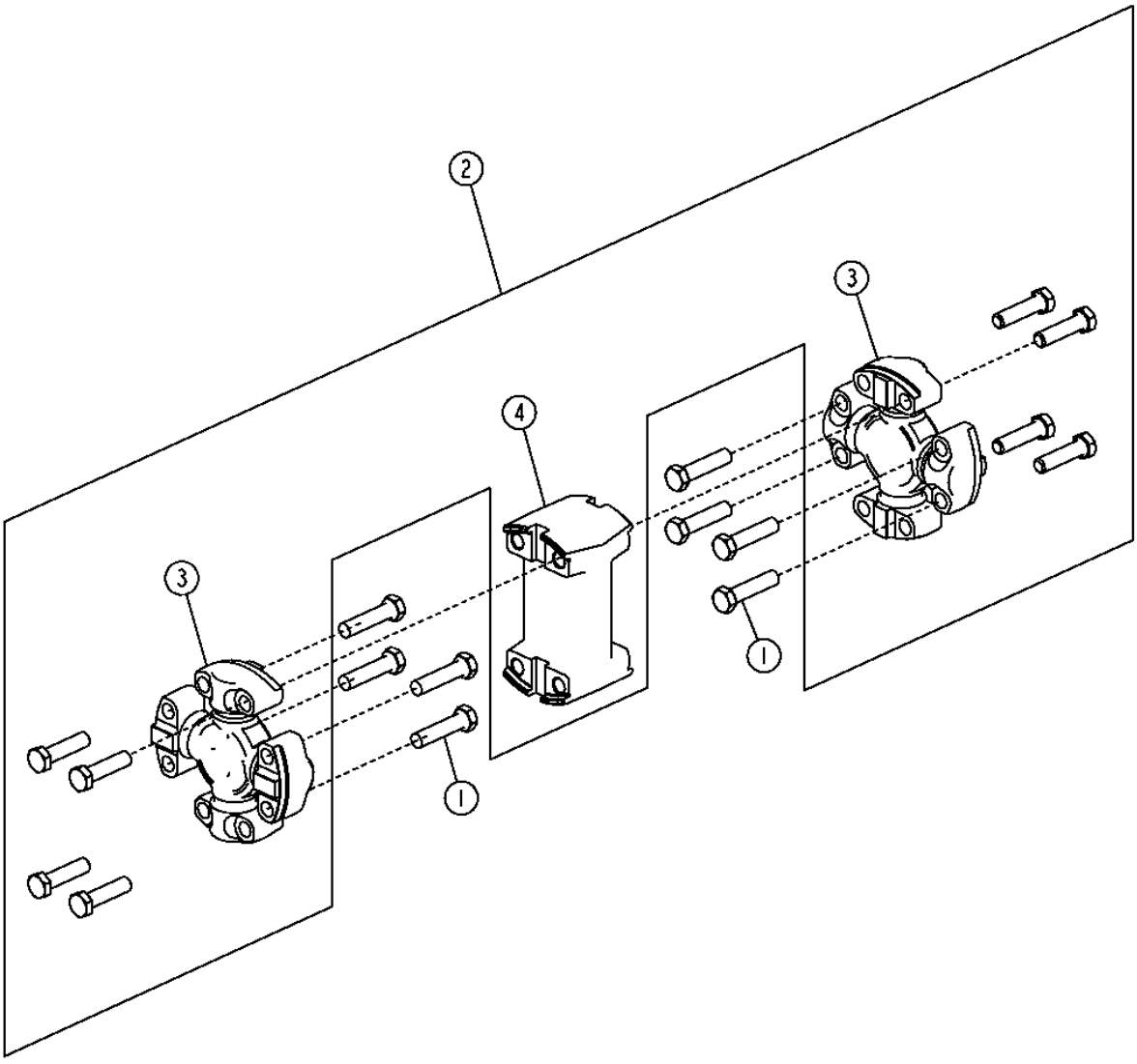

T200588

DRIVESHAFT

KEY	PART NO.	PART NAME	QTY	SERIAL NO.	770D	772D	REMARKS
1	19H3752	CAP SCREW	8		X	X	1/2" X 2-1/8"
2	AT199661	DRIVE SHAFT	1		X	X	
3	AT199084	CROSS AND BEARING ASSEMBLY	2		X	X	
4	T191021	YOKE	1		X	X	

FRONT AXLE AND WHEEL LEAN LINK (770D)

T193519 -UN-07AUG03

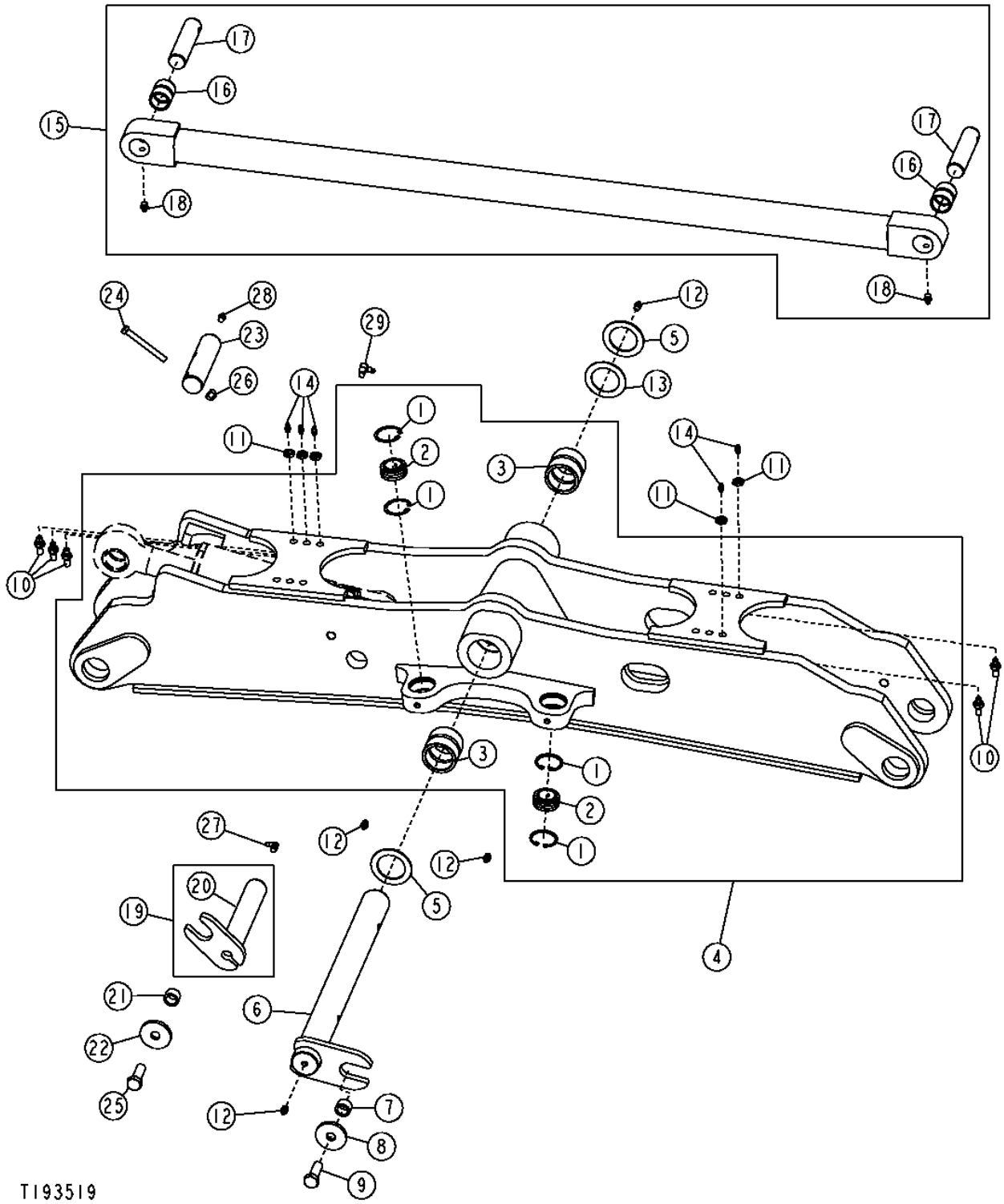

FRONT AXLE AND WHEEL LEAN LINK (770D)

KEY	PART NO.	PART NAME	QTY	SERIAL NO.	770D	772D	REMARKS
1	40M1863	SNAP RING	4		X		
2	AT101224	BUSHING	2		X		
3	T33933	BUSHING	2		X		
4	AT313342	FRONT AXLE SUPPORT	1		X		
5	24H1595	WASHER	2		X		
6	AT313362	PIN	1		X		
7	28H3401	SPACER	1		X		
8	T146246	WASHER	1		X		
9	19M7489	CAP SCREW	1		X		M16 X 45
10	T75644	ADAPTER	5		X		
11	E12379	NUT	5		X		
12	JD7759	LUBRICATION FITTING	4		X		
13	24H1595	WASHER	2		X		
14	JD7797	LUBRICATION FITTING	5		X		
15	AT193885	LINK	1		X		
16	T41961	BUSHING	2		X		
17	T152859	PIN	2		X		
18	JD7798	LUBRICATION FITTING	2		X		
19	AT314624	PIN	1		X		
20	T209581	SHIM	3		X		
21	28H3401	SPACER	1		X		
22	T146246	WASHER	1		X		
23	T152862	PIN	1		X		
24	19H1912	CAP SCREW	1		X		3/8" X 3-1/2"
25	19M7489	CAP SCREW	1		X		M16 X 45
26	T11234	LOCK NUT	1		X		
27	JD7781	LUBRICATION FITTING	1		X		
28	JD7759	LUBRICATION FITTING	1		X		
29	H80936	ELBOW FITTING	1		X		

FRONT WHEEL HUBS (770D)

T204046 -UN-12DEC04

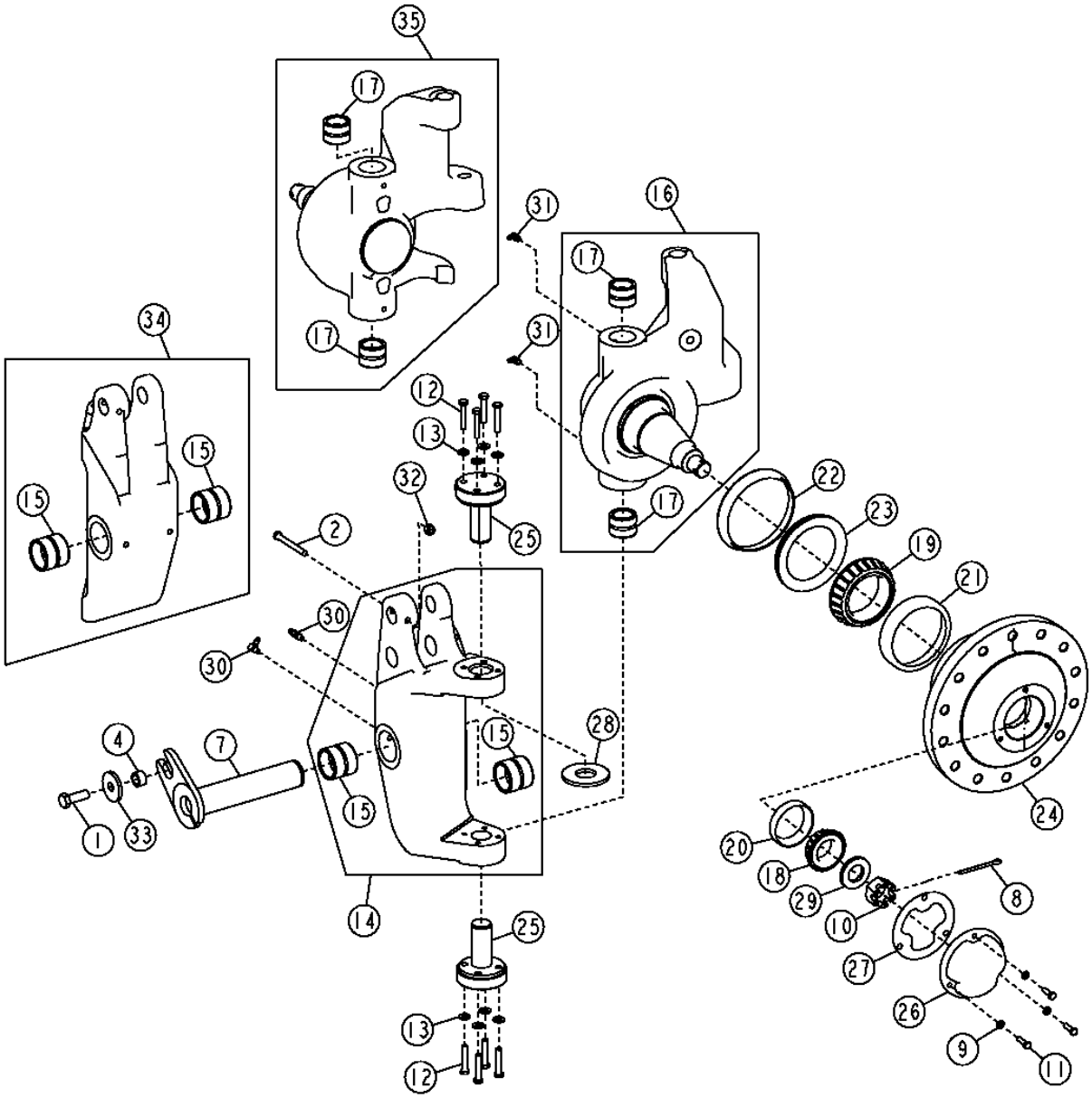

T204046

FRONT WHEEL HUBS (770D)

KEY	PART NO.	PART NAME	QTY	SERIAL NO.	770D	772D	REMARKS
1	19M7489	CAP SCREW	1		X		
2	19H1912	CAP SCREW	1		X		
3	19M7489	CAP SCREW	1		X		M16 X 45
4	28H3401	SPACER	1		X		
7	AT198517	PIN FASTENER	1		X		
8	11H251	COTTER PIN	1		X		
9	12M7065	LOCK WASHER	1		X		8 MM
10	14H927	NUT	1		X		1-1/4"
11	19H1905	CAP SCREW	3		X		
12	19H3065	CAP SCREW	8		X		
13	24M7239	WASHER	8		X		
14	AT169875	PIVOT	1		X		
15	T41953	BUSHING	2		X		
16	AT317542	SPINDLE	1		X		(SUB FOR AT303854)
17	T41963	BUSHING	2		X		
18	JD9048	BEARING CONE	1		X		
19	JD9082	BEARING CONE	1		X		
20	JD9113	BEARING CUP	1		X		
21	JD9141	BEARING CUP	1		X		
22	R59074	OIL CUP	1		X		
23	RE31702	SEAL	1		X		
24	T162428	HUB	1		X		
25	T184404	SPINDLE	1		X		
26	T41982	CAP	1		X		
27	T41983	GASKET	1		X		
28	T41984	WASHER	1		X		
29	U42462	WASHER	1		X		
30	H80936	ELBOW FITTING	2		X		
31	JD7781	LUBRICATION FITTING	2		X		
32	T11234	LOCK NUT	1		X		
33	T146246	WASHER	1		X		(SUB FOR 11M7017)
34	AT169874	PIVOT	1		X		
35	AT317543	SPINDLE	1		X		(SUB FOR AT303855)

FRONT AXLE TIE ROD (770D)

T200608 -UN-02JUN04

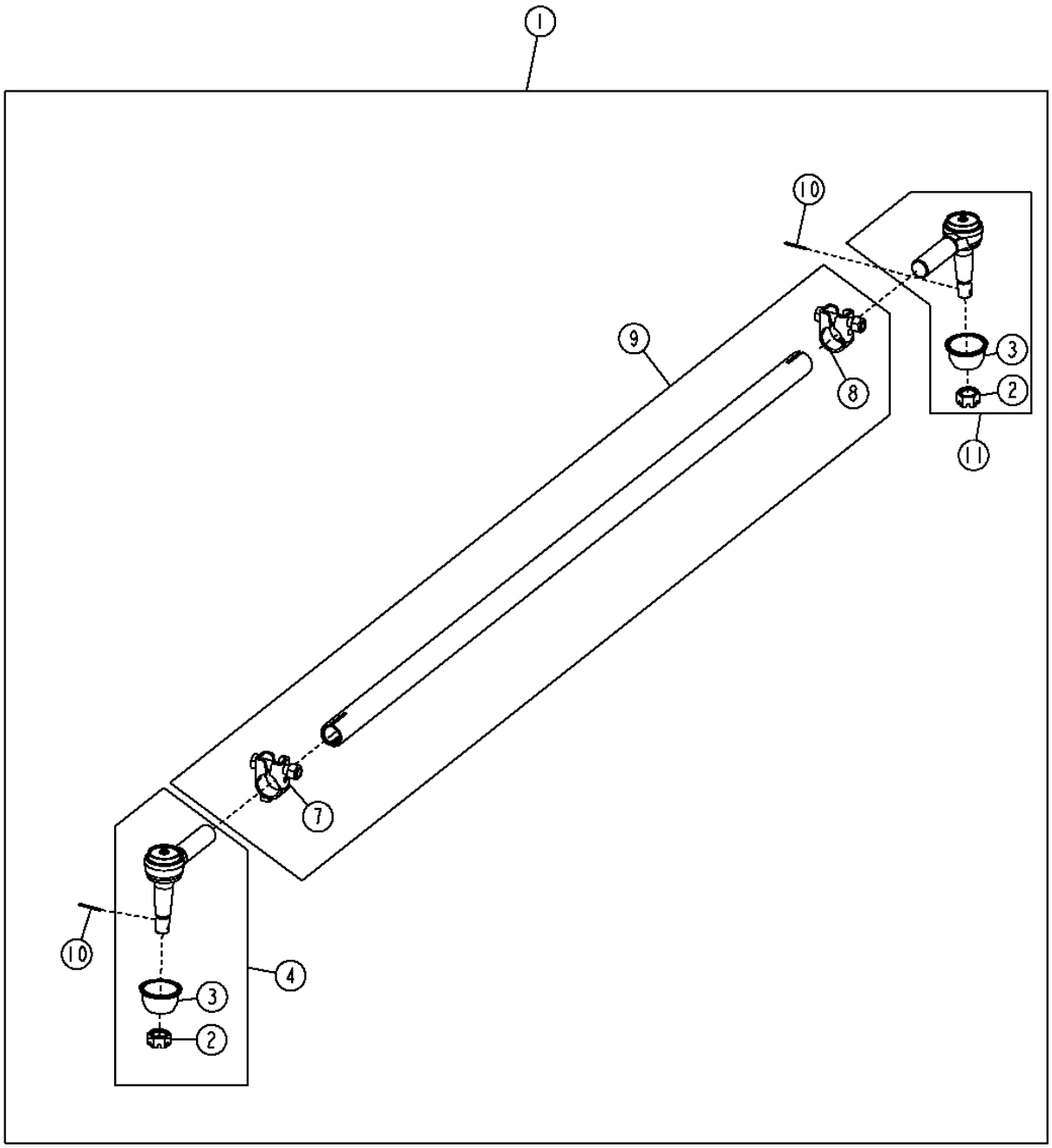

T200608

FRONT AXLE TIE ROD (770D)

KEY	PART NO.	PART NAME	QTY	SERIAL NO.	770D	772D	REMARKS
1	AT304615	TIE ROD	1		X		
2	14H875	NUT	1		X		7/8"
3	T159656	BOOT	1		X		
4	AT191260	TIE ROD END	1		X		(RH THREAD)
7	AT191739	CLAMP	1		X		
8	AT191299	CLAMP	1		X		
9	AT199999	TIE ROD	1		X		
10	11M7023	COTTER PIN	2		X		4 X 32 MM
11	AT191261	TIE ROD END	1		X		(LH THREAD)

FRONT WHEEL HUBS (770D)

T204046 -UN-12DEC04

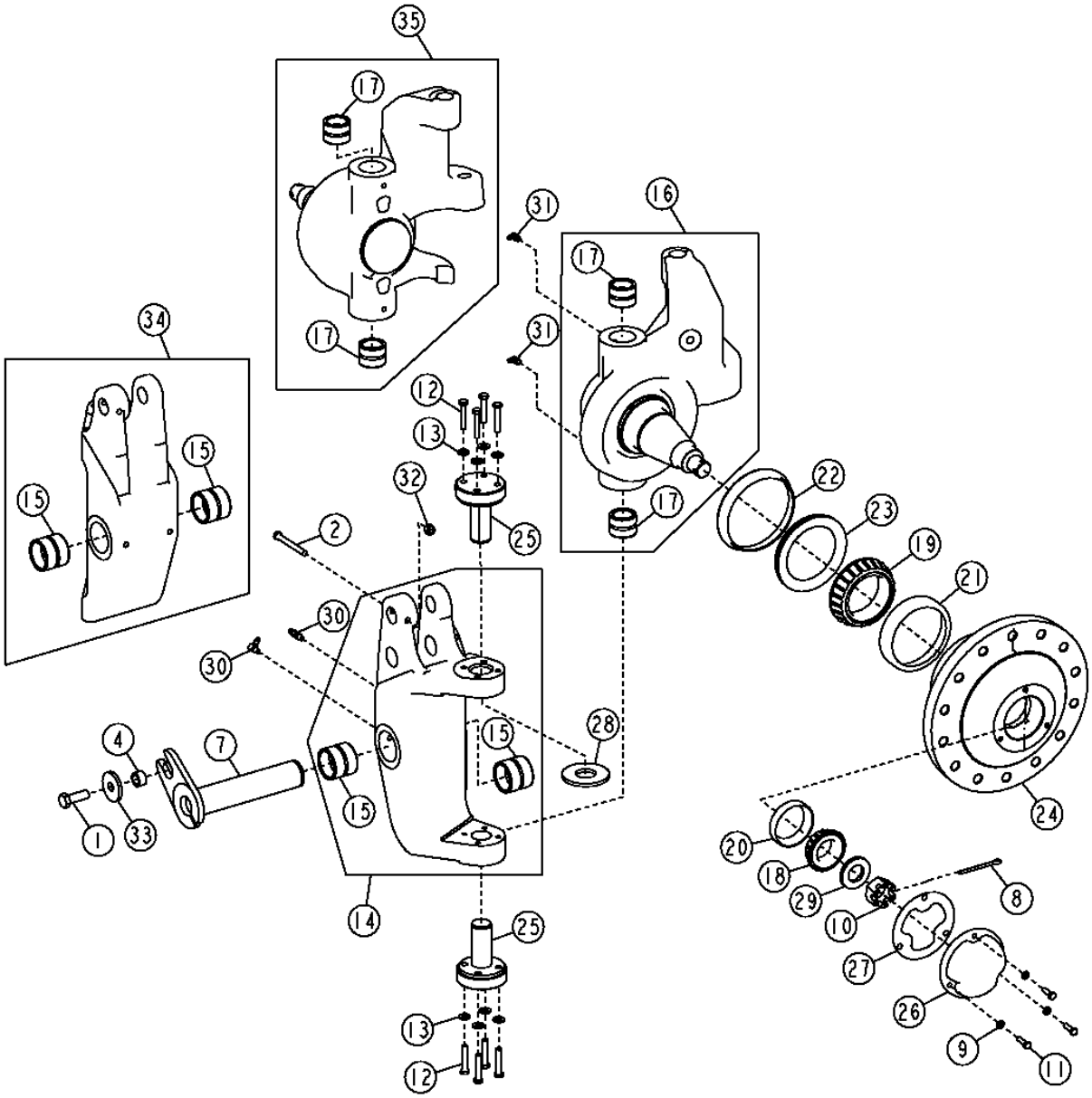

T204046

MEMORANDA

FRONT AXLE AND MOUNTING PIN (772D)

T201043 -UN-16AUG04

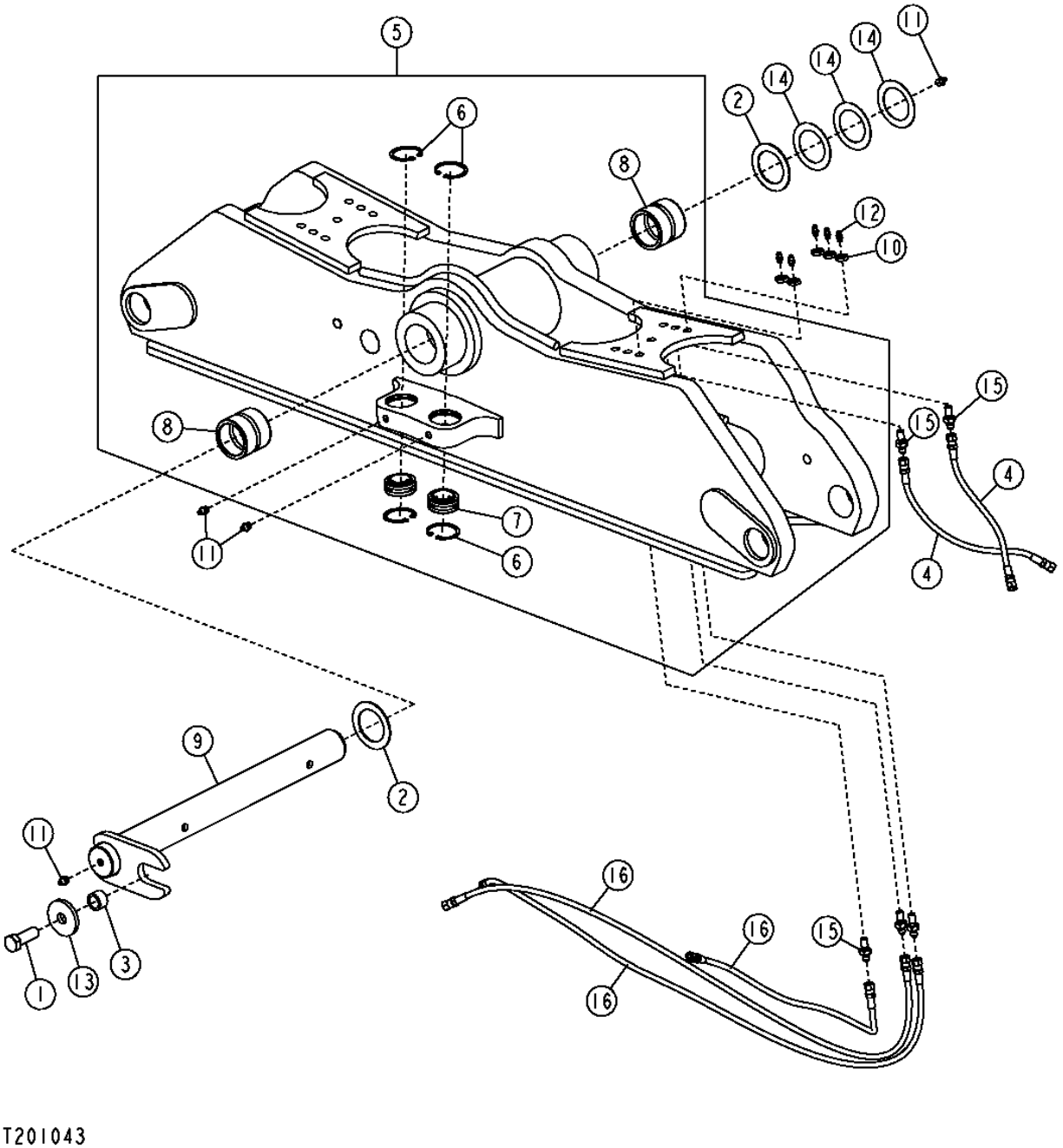

THIS PARTS LISTING IS CONTINUED

FRONT AXLE AND MOUNTING PIN (772D)

KEY	PART NO.	PART NAME	QTY	SERIAL NO.	770D	772D	REMARKS
1	19M7489	CAP SCREW	1		X		M16 X 45
2	24H1595	WASHER	2		X		1/4"
3	28H3401	SPACER	1		X		
4	AT194405	HYDRAULIC HOSE	2		X		
5	AT313340	AXLE	1		X		
6	40M1863	SNAP RING	4		X		
7	AT101224	BUSHING	2		X		
8	T33933	BUSHING	2		X		
9	AT313362	PIN	1		X		
10	E12379	NUT	5		X		
11	JD7759	LUBRICATION FITTING	4		X		
12	JD7797	LUBRICATION FITTING	5		X		
13	T146246	WASHER	1		X		
14	T209581	SHIM	3		X		
15	T75644	ADAPTER	5		X		
16	AT57326	HYDRAULIC HOSE	3		X		

FRONT AXLE TIE ROD (772D)

T200624 -UN-07JUN04

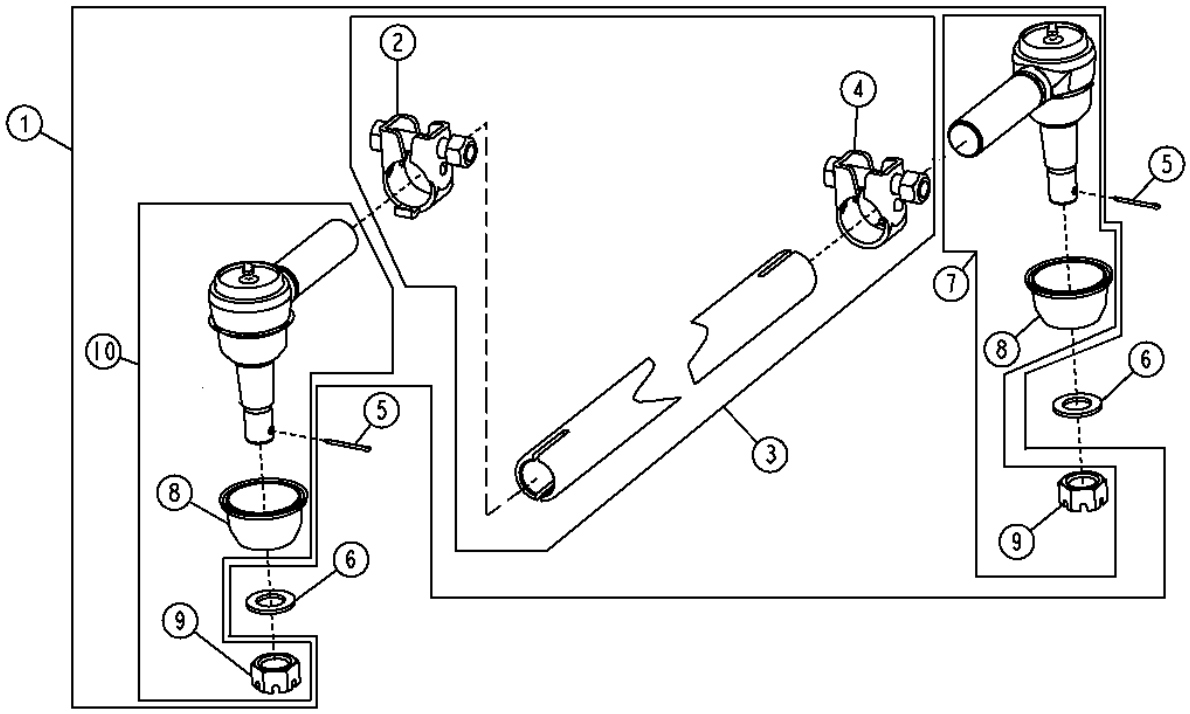

T200624

FRONT AXLE TIE ROD (772D)

KEY	PART NO.	PART NAME	QTY	SERIAL NO.	770D	772D	REMARKS
1	AT193805	TIE ROD	1		X		
2	AT191739	CLAMP	1		X		
3	AT280508	LINE	1		X		
4	AT191299	CLAMP	1		X		
5	11M7023	COTTER PIN	2		X		4 X 32 MM
6	24M7359	WASHER	2		X		
7	AT191261	TIE ROD END	1		X		(LH THREAD)
8	T159656	BOOT	1		X		
9	14H875	NUT	1		X		22.225 MM
10	AT191260	TIE ROD END	1		X		(RH THREAD)

WHEEL LEAN BAR (772D)

T145721 -UN-23OCT01

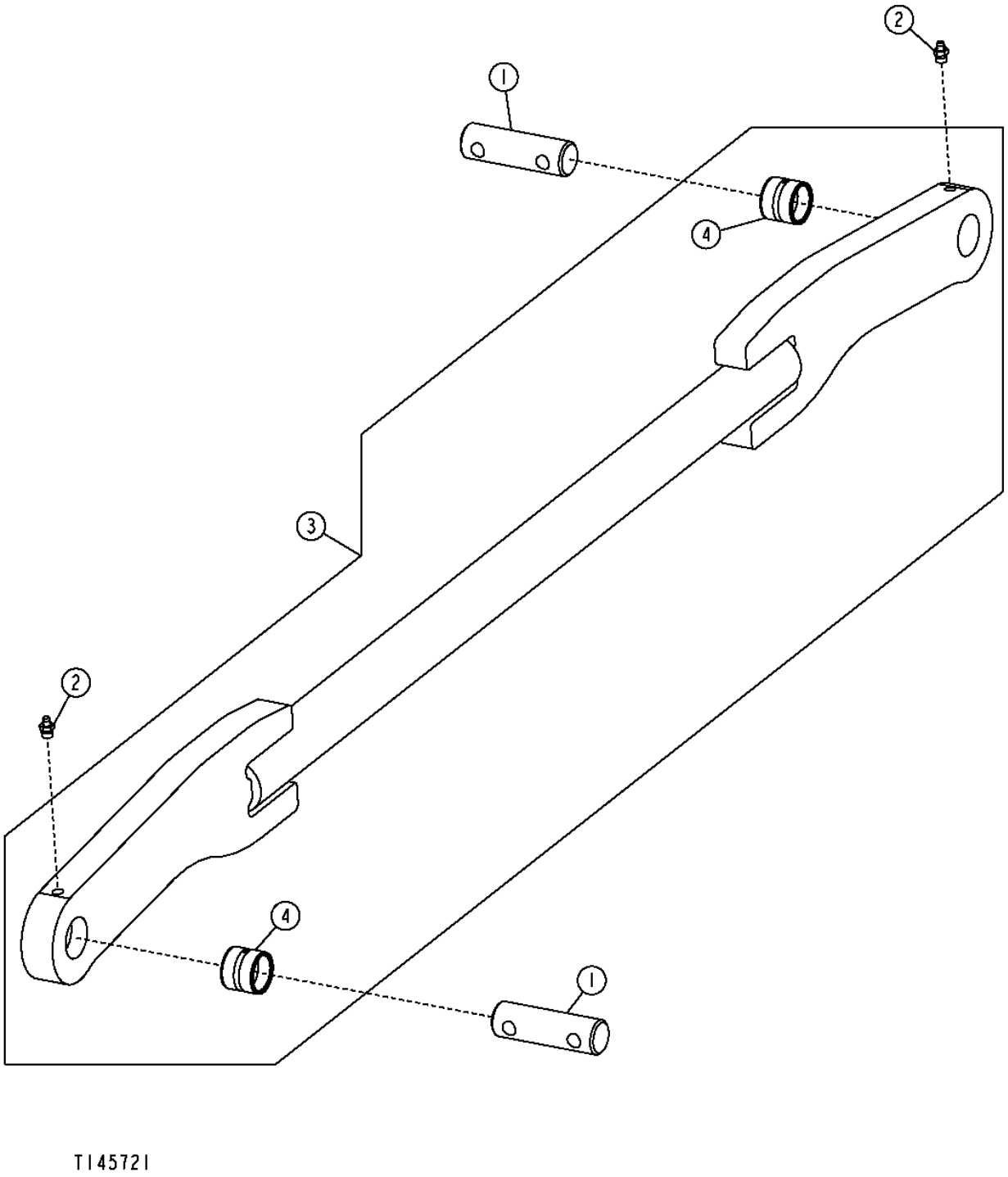

WHEEL LEAN BAR (772D)

KEY	PART NO.	PART NAME	QTY	SERIAL NO.	770D	772D	REMARKS
1	T187561	PIN	2			X	
2	JD7759	LUBRICATION FITTING	2			X	
3	AT195880	LINK	1			X	LEAN BAR
4	T187566	BUSHING	2			X	

HFWD FIRST STAGE PINION, CARRIER AND HOUSING (RIGHT SIDE ILLUSTRATED)

T146114 -UN-07NOV01

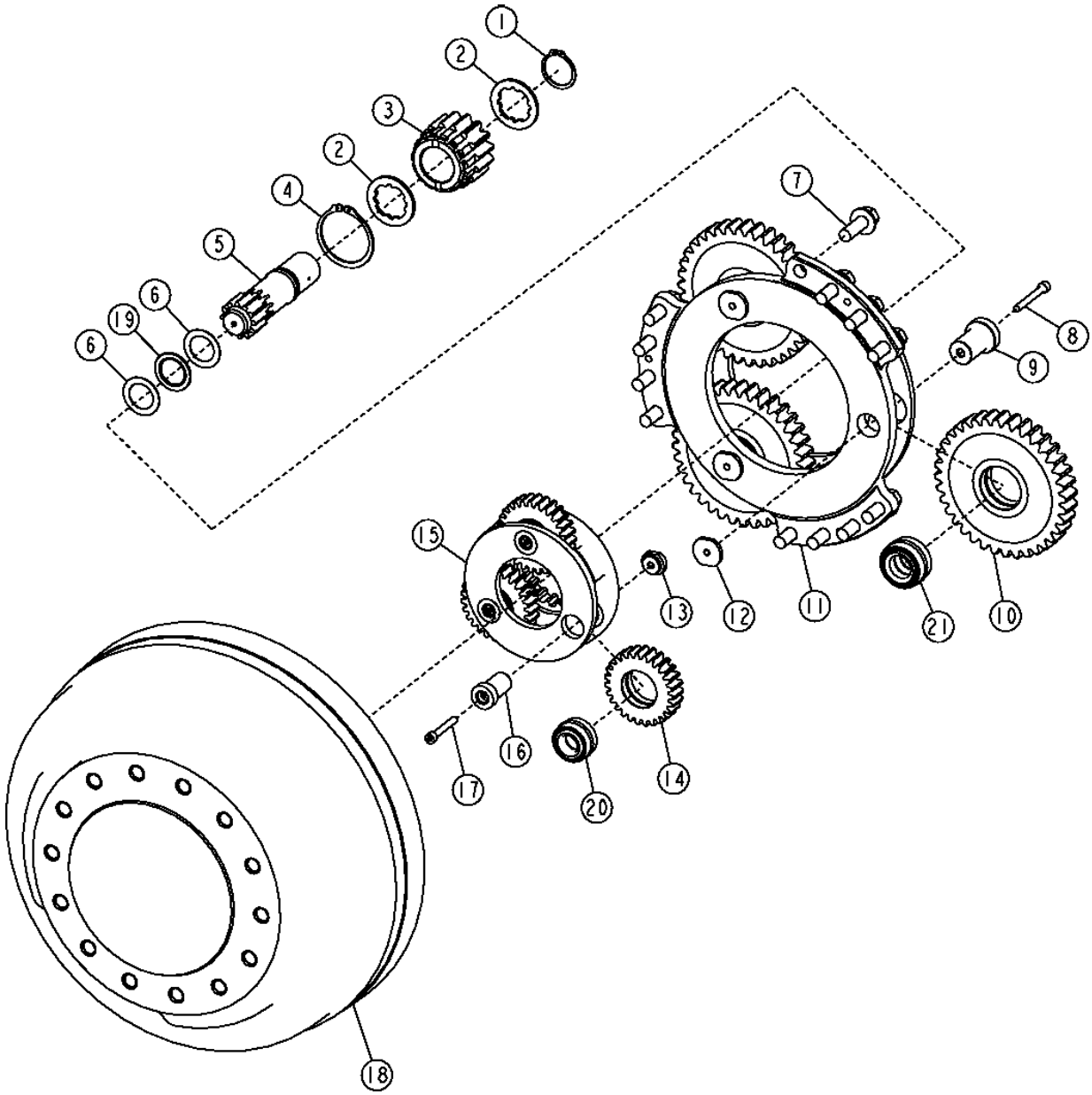

T146114

HFWD FIRST STAGE PINION, CARRIER AND HOUSING (RIGHT SIDE ILLUSTRATED)

KEY	PART NO.	PART NAME	QTY	MOTOR SERIAL NO.	770D	772D	REMARKS
1	40M1837	SNAP RING	1		X		
2	T166928	THRUST WASHER	2		X		
3	T166927	PLANET PINION	1		X		
4	40M7187	SNAP RING	1		X		
5	T166922	PLANET PINION	1		X		
6	T166934	BEARING RACE	2		X		
7	19M7844	SCREW	12		X		
8	19M8554	SCREW	3		X		
9	T166930	SHAFT	3		X		
10	T166929	PLANET PINION	3		X		
11	T166932	PLANET PINION CARRIER	1		X		SECOND STAGE
12	T166931	RETAINER	3		X		
13	T166925	RETAINER	3		X		
14	T166923	PLANET PINION	3		X		
15	T166926	PLANET PINION CARRIER	1		X		
16	T166924	SHAFT	3		X		
17	19M8335	SCREW	3		X		M8 X 55
18	AT193864	HOUSING	1		X		(INCLUDES THREE R26650 DOWEL PINS)
	R26650	DOWEL PIN	3		X		(NOT ILLUSTRATED)
19	AT187119	THRUST BEARING RACE	1		X		
20	AT187117	TAPERED ROLLER BEARING	3		X		
21	DE18970	BEARING	3		X		

HFWD HUB, BRAKE PISTON HOUSING AND SECOND STAGE PINION (RIGHT SIDE ILLUSTRATED)

T155072 -UN-22MAY02

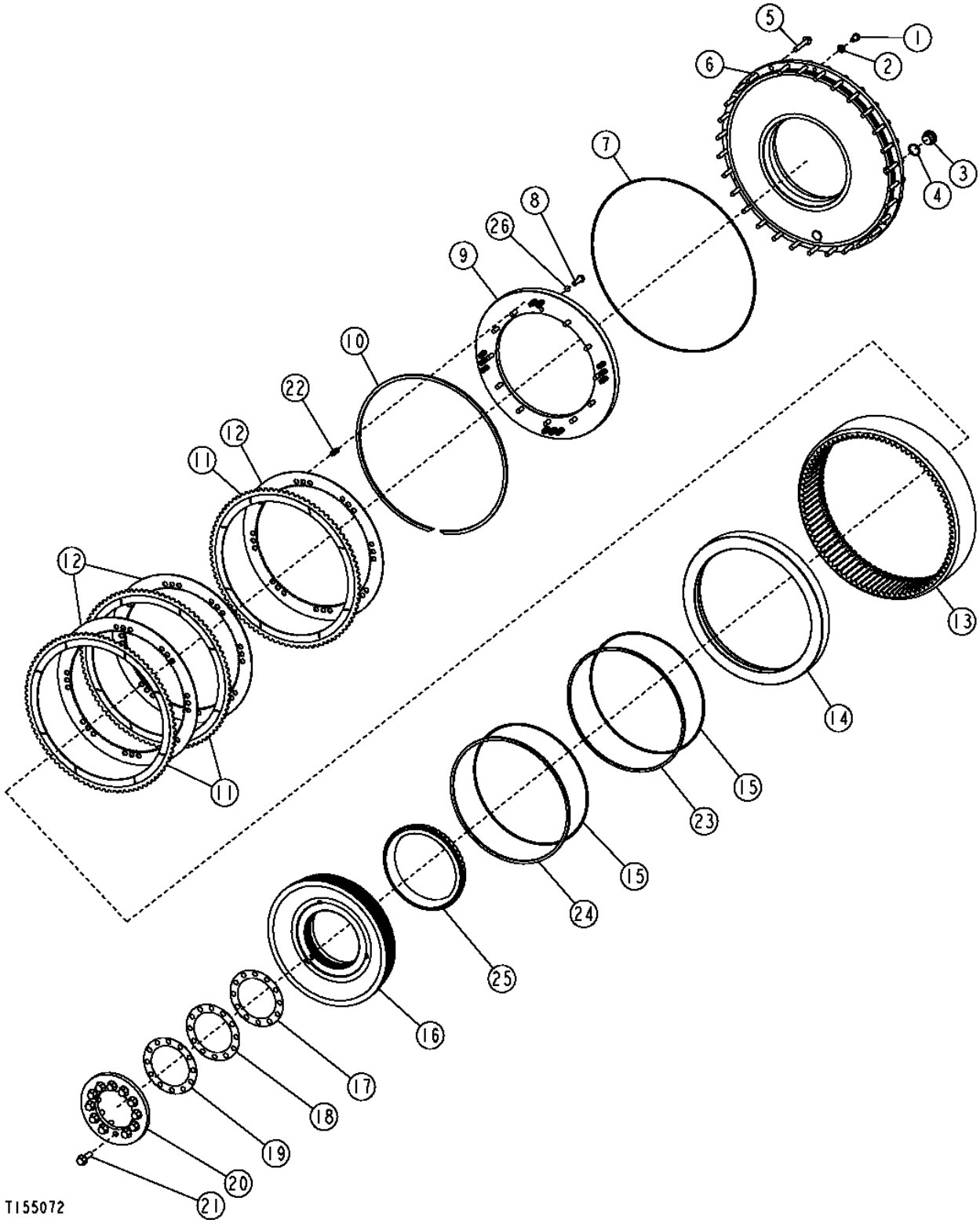

HFWD HUB, BRAKE PISTON HOUSING AND SECOND STAGE PINION (RIGHT SIDE ILLUSTRATED)

KEY	PART NO.	PART NAME	QTY	MOTOR SERIAL NO.	770D	772D	REMARKS
1	19M8451	CAP SCREW	3		X		M10 X 14
2	24M7028	WASHER	3		X		
3	T78662	DRAIN PLUG	2		X		
4	U17409	O-RING	2		X		
5	19M7807	SCREW	30		X		M10 X 60
6	T186956	COVER	1		X		
7	T166933	PACKING	1		X		
8	T188745	CAP SCREW	24		X		
9	T186989	PLATE	1		X		
10	T166921	SNAP RING	1		X		
11	AT187115	BRAKE DISK	3		X		
12	T166916	PLATE	3		X		
13	T166920	RING GEAR	1		X		
14	T186988	PISTON	1		X		
15	T186655	PACKING	2		X		
16	T186656	PLANET PINION CARRIER	1		X		
17	T183810	SHIM	3		X		(.1)
18	T183811	SHIM	2		X		(.15)
19	T183812	SHIM	1		X		(.5)
20	T166919	PLATE	1		X		
21	19M7791	BOLT	12		X		M12 X 40
22	T166917	SPRING	12		X		
23	T188352	RING	1		X		
24	JD10423	BEARING CUP	1		X		
25	AT187114	BEARING CONE	1		X		
26	24M7346	WASHER	24		X		11 X 20 X 2 MM

AXLE AND DRIVE CHAIN

T203245 -UN-17SEP04

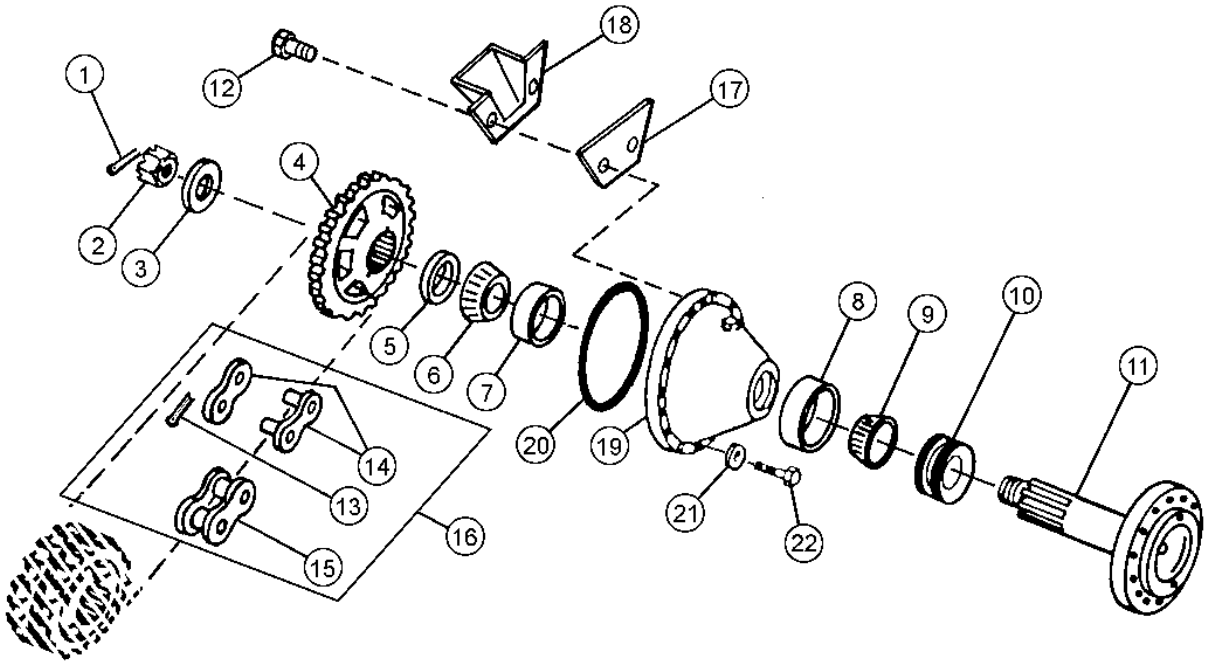

T203245

AXLE AND DRIVE CHAIN

KEY	PART NO.	PART NAME	QTY	SERIAL NO.	770D	772D	REMARKS
1	11M7085	COTTER PIN	1		X	X	
2	T158600	NUT	1		X	X	
3	T158599	WASHER	1		X	X	
4	T158248	CHAIN SPROCKET	1		X	X	
5	R48437	SHIM	1		X	X	.202 MM (.008")
6	JD9080	BEARING CONE	1		X	X	
7	JD9138	BEARING CUP	1		X	X	
8	JD9120	BEARING CUP	1		X	X	
9	JD8962	BEARING CONE	1		X	X	
10	AT72157	SEAL	1		X	X	
11	T158250	HALF AXLE	1		X	X	
12	19M7300	CAP SCREW	1		X	X	M6 X 10
13	11M7021	COTTER PIN	2		X	X	4 X 25 MM
14	AT44582	LINK	4		X	X	CONNECTING
15	AT44583	CHAIN LINK	AR		X	X	ROLLER
16	AT40729	ROLLER CHAIN	1		X	X	
17	T159985	PLATE	1		X	X	(USE ON FRONT AXLE ONLY)
18	T159984	OIL CUP	1		X	X	(USE ON REAR AXLE ONLY)
19	T158249	HOUSING	1		X	X	
20	T158339	O-RING	1		X	X	
21	R135543	WASHER	16		X	X	
22	19M7489	CAP SCREW	16		X	X	

TANDEM DRIVE AND PLANETARY

T204201 -UN-16OCT04

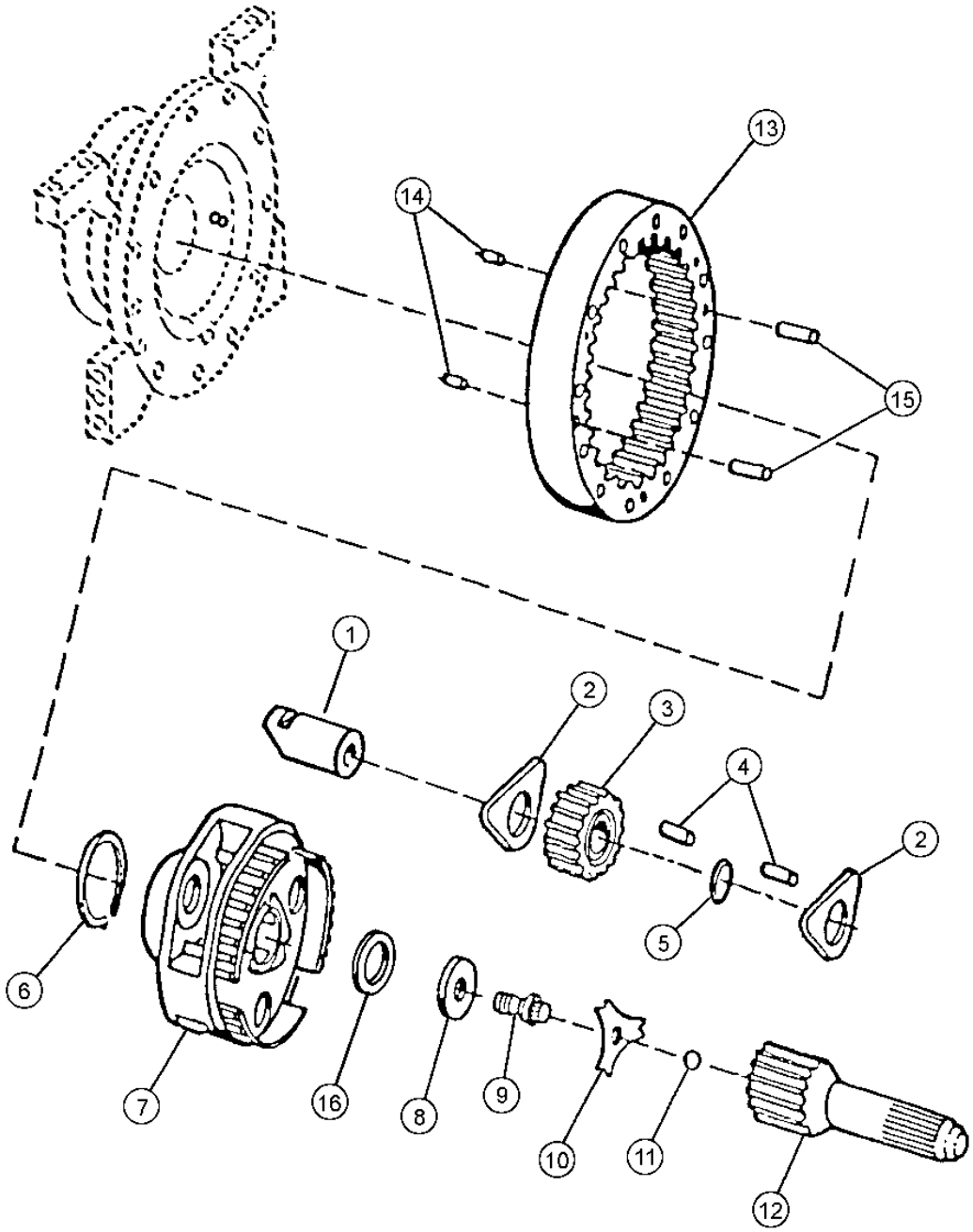

T204201

TANDEM DRIVE AND PLANETARY

KEY	PART NO.	PART NAME	QTY	SERIAL NO.	770D	772D	REMARKS
1	R77664	SHAFT	3		X	X	
2	R112079	THRUST WASHER	6		X	X	
3	R108997	PLANET PINION	3		X	X	
4	R63575	NEEDLE ROLLER	144		X	X	
5	R71929	WASHER	3		X	X	
6	R72430	SNAP RING	1		X	X	
7	R131113	PLANET PINION CARRIER	1		X	X	
8	R94546	SPACER	1		X	X	
9	R81162	BOLT	1		X	X	
10	R94545	LOCK PLATE	1		X	X	
11	F3171R	O-RING	3		X	X	
12	R131114	PINION SHAFT	1		X	X	
13	R93937	GEAR	1		X	X	
14	R54380	DOWEL PIN	2		X	X	
15	R27315	DOWEL PIN	2		X	X	
16	R52389	SHIM	1		X	X	

HFWD FRONT HUB AND MOTOR (COMPLETE)

T205141 -UN-03DEC04

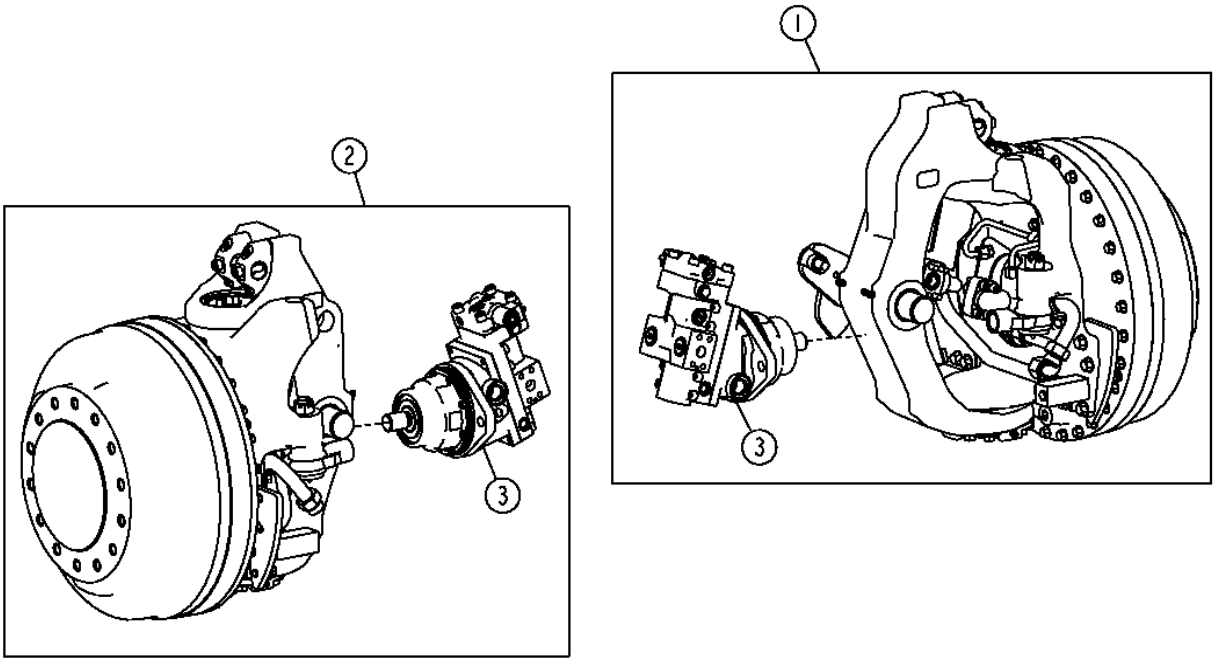

T205141

THIS PARTS LISTING IS CONTINUED

HFWD FRONT HUB AND MOTOR (COMPLETE)

KEY	PART NO.	PART NAME	QTY	SERIAL NO.	770D	772D	REMARKS
1	AT188625	WHEEL	1		X		(CONVENIENCE ASSEMBLY)(RH HFWD HUB AND MOTOR) (COMPONENTS LISTED ON SEPARATE PAGES)
2	AT188624	WHEEL	1		X		(CONVENIENCE ASSEMBLY)(LH HFWD HUB AND MOTOR) (COMPONENTS LISTED ON SEPARATE PAGES)
3	AT194472	HYDRAULIC MOTOR	1		X		(HFWD MOTOR)(COMPLETE) (COMPONENTS LISTED ON SEPARATE PAGES)

HFWD MOTOR HYDRAULIC LINES

T205102 -UN-29DEC04

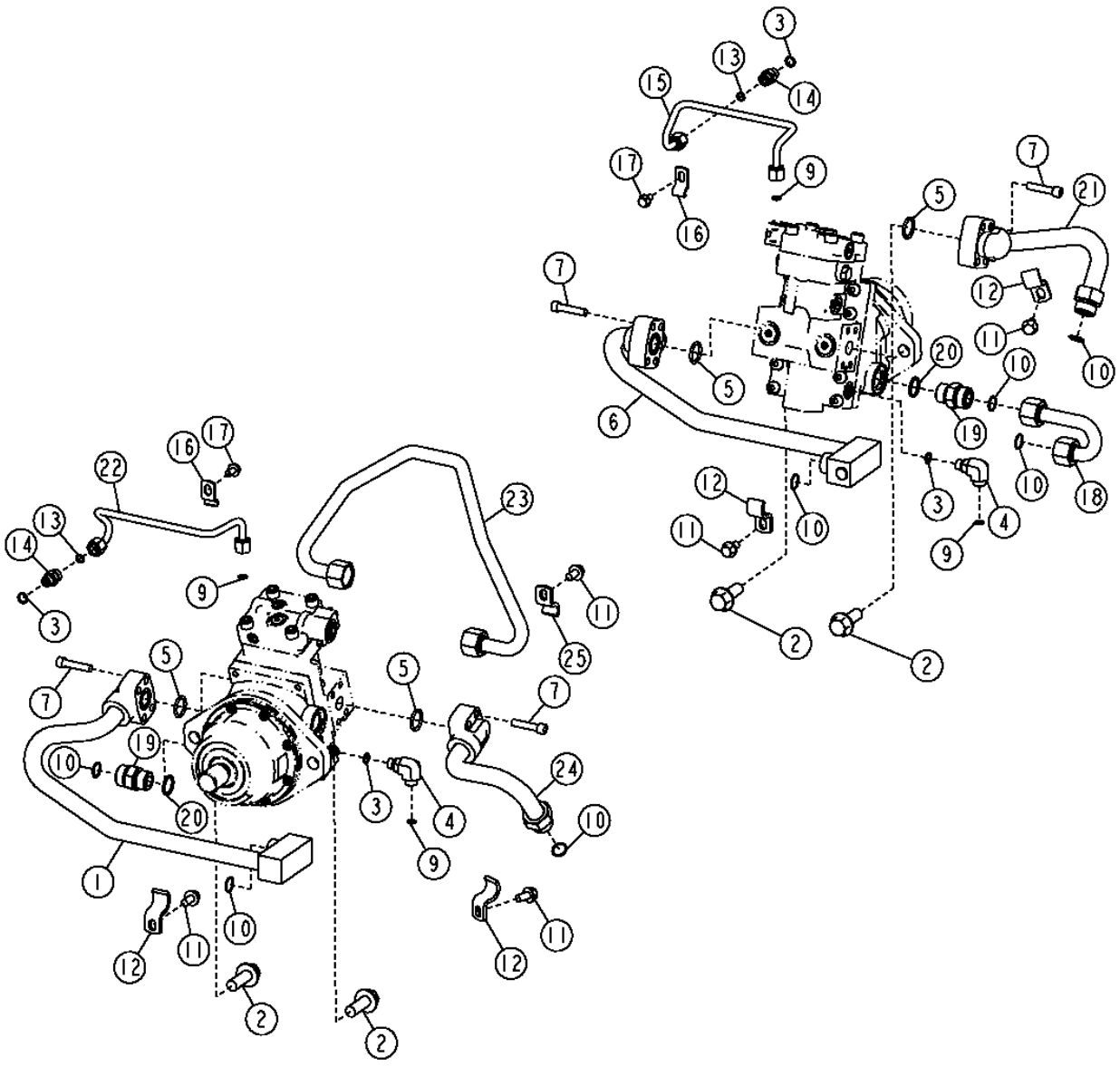

HFWD MOTOR HYDRAULIC LINES

KEY	PART NO.	PART NAME	QTY	SERIAL NO.	770D	772D	REMARKS
1	AT191729	LINE	1		X		(LEFT FRONT PRESSURE)
2	19M7844	SCREW	4		X		M16 X 45
3	R26448	O-RING	4		X		
4	38H1004	ELBOW FITTING	2		X		
5	T59014	O-RING	4		X		
6	AT191725	LINE	1		X		(RIGHT FRONT PRESSURE)
7	19H3750	SCREW	16		X		3/8" X 1-3/4"
9	T77613	O-RING	4		X		
10	T77858	O-RING	6		X		
11	19M7784	SCREW	6		X		M10 X 20
12	T185959	CLAMP	4		X		
13	R28782	O-RING	2		X		
14	38H1160	ADAPTER	2		X		
15	AT191506	LINE	1		X		(RIGHT BRAKE)
16	T185960	CLAMP	2		X		
17	19M7865	SCREW	2		X		M8 X 16
18	AT192114	LINE	1		X		(RIGHT DRAIN)
19	38H1163	ADAPTER	2		X		
20	U12547	O-RING	2		X		
21	AT191724	LINE	1		X		(RIGHT REAR PRESSURE)
22	AT191505	LINE	1		X		(LEFT BRAKE)
23	AT191730	LINE	1		X		(LEFT DRAIN)
24	AT191728	LINE	1		X		(LEFT REAR PRESSURE)

HFWD HUB AND YOKE

T205081 -UN-21DEC04

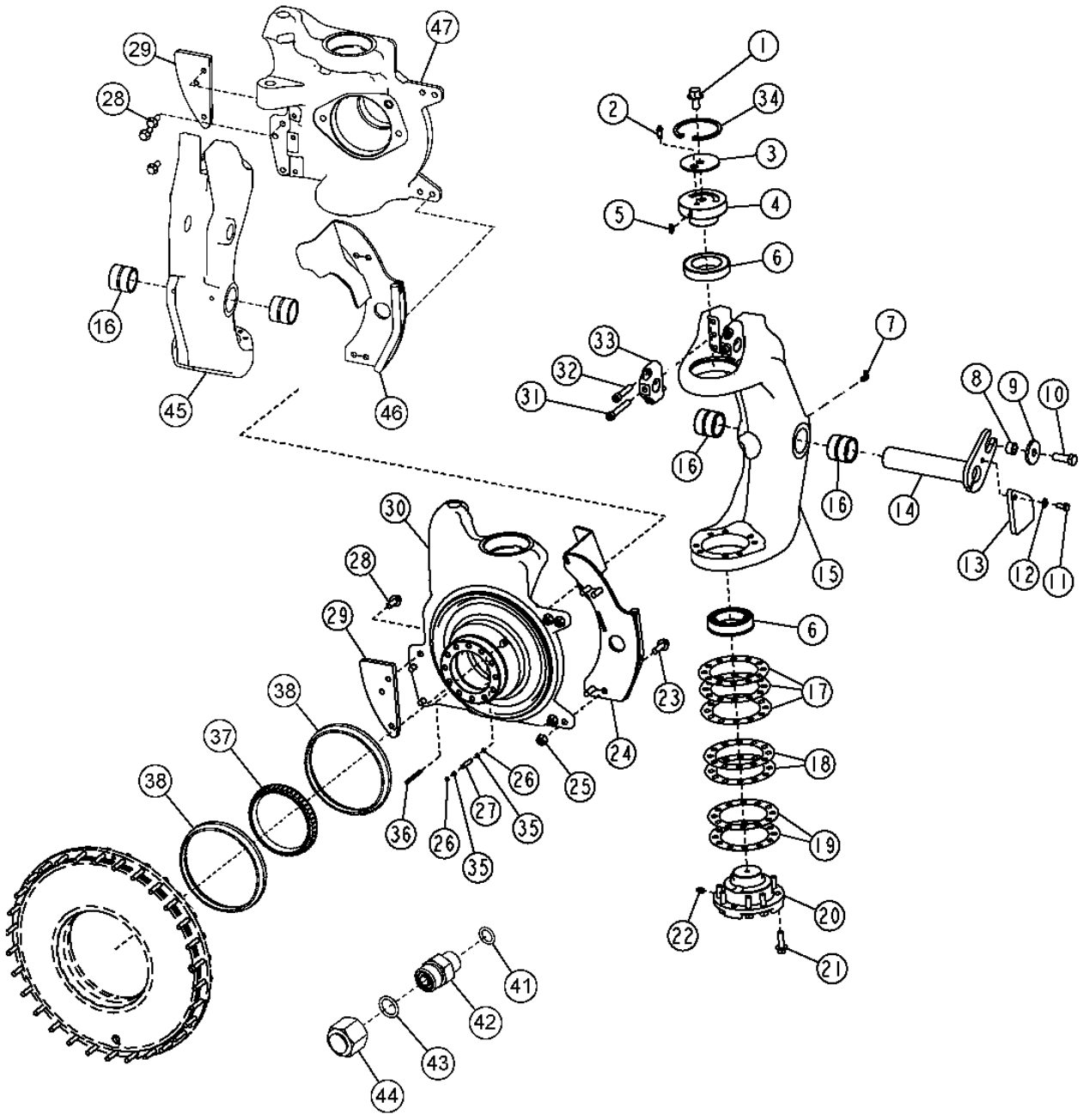

HFWD HUB AND YOKE

KEY	PART NO.	PART NAME	QTY	SERIAL NO.	770D	772D	REMARKS
1	19M7792	SCREW	1		X		M16 X 30
2	JD7771	LUBRICATION FITTING	1		X		
3	T184460	PLATE	1		X		
4	T183816	KINGPIN	1		X		
5	CE17368	SHAFT KEY	1		X		
6	AT188662	TAPERED ROLLER BEARING	2		X		
7	T75447	ELBOW FITTING	2		X		
8	28H3401	SPACER	1		X		
9	T146246	WASHER	1		X		
10	19M7489	CAP SCREW	1		X		M16 X 45
11	19M7938	CAP SCREW	1		X		M10 X 20
12	24M7296	WASHER	1		X		
13	T188984	STRAP	1		X		(BUMPER)
14	AT198516	PIN FASTENER	1		X		(SUB FOR AT196745)
15	T183821	YOKE	1		X		(RIGHT)
16	T41953	BUSHING	2		X		
17	T183818	SHIM	3		X		(.1)
18	T183819	SHIM	2		X		(.15)
19	T183820	SHIM	2		X		(.5)
20	T183817	KINGPIN	1		X		
21	19M7791	BOLT	8		X		M12 X 40
22	JD7798	LUBRICATION FITTING	1		X		
23	19M7791	BOLT	4		X		M12 X 40
24	AT326599	ISOLATOR	1		X		(SUB FOR AT198028)
25	14M7299	FLANGE NUT	4		X		M12
26	T186658	O-RING	2		X		
27	T186657	STRUCTURAL TUBING	1		X		(CONNECTOR)
28	19M7789	SCREW	3		X		M12 X 30
29	T185370	GUARD	1		X		
30	T166907	HOUSING	1		X		
31	T188856	SCREW	2		X		
32	T188857	SCREW	4		X		
33	T187196	RETAINER	2		X		
34	T183822	WEAR RING	1		X		
35	T186659	SEALING TRIM	2		X		
36	34M5564	SPRING PIN	1		X		
37	DE19507	WHEEL SEAL O-RING	1		X		(CONTAINS SET OF TWO SEAL HALVES - BOTH HALVES REQUIRED FOR ONE WHEEL DRIVE)
38	AT187114	BEARING CONE	2		X		
41	R26448	O-RING	1		X		
42	38H1160	ADAPTER	1		X		
43	R28782	O-RING	1		X		
44	38H1415	FITTING	1		X		
45	T183823	YOKE	1		X		(LEFT)
46	AT326600	ISOLATOR	1		X		(SUB FOR AT198029)
47	T183824	HOUSING	1		X		

HFWD MOTOR SOLENOID AND SERVO PISTON

T204743 -UN-30NOV04

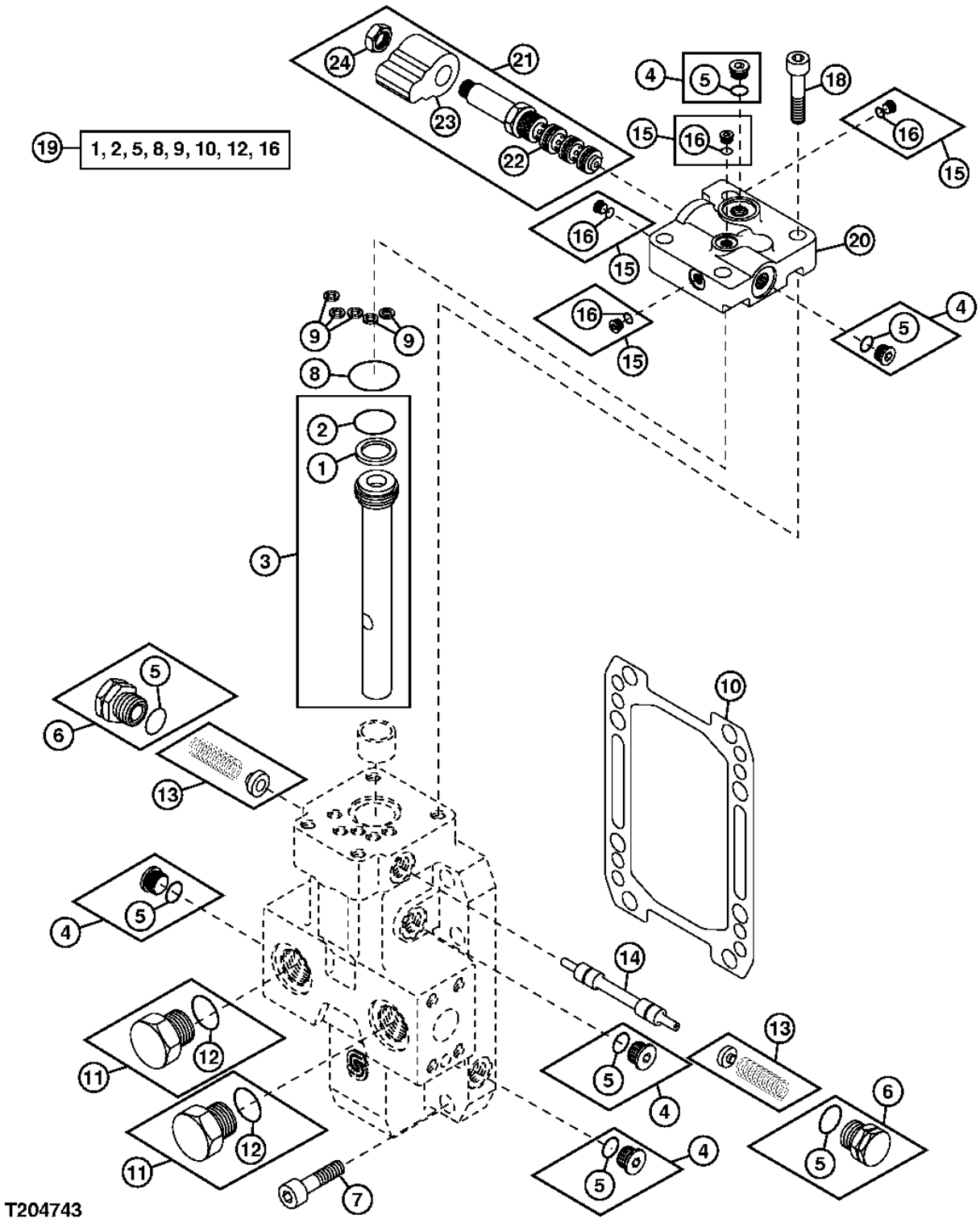

HFWD MOTOR SOLENOID AND SERVO PISTON

KEY	PART NO.	PART NAME	QTY	SERIAL NO.	770D	772D	REMARKS
1	T162854	RING	1		X		
2	T155757	O-RING	1		X		
3	AN208022	PISTON	1		X		
4	AT184868	FITTING PLUG	4		X		
5	M74600	O-RING	6		X		
6	AT180814	PLUG	2		X		
7	T214109	SCREW	2		X		
8	T158241	O-RING	1		X		
9	T155988	O-RING	5		X		
10	N306882	GASKET	1		X		
11	M74877	PLUG	2		X		
12	M45387	O-RING	2		X		
13	AT196462	PLATE	1		X		
14	T176405	SPOOL	1		X		
15	AT184869	PLUG	4		X		
16	T165535	O-RING	4		X		
18	T214110	SCREW	4		X		
19	AT319117	SEAL KIT	1		X		
20	T214145	HYDRAULIC CYLINDER CAP	1		X		
21	AT195921	SOLENOID VALVE	1		X		
22	AT195922	HYD ACTUATED CONTROL VALVE	1		X		
23	AT192055	SOLENOID VALVE COIL	1		X		
24	T181306	NUT	1		X		

HFWD MOTOR SWASH PLATE, BEARINGS, AND SPEED SENSOR

T204742 -UN-22NOV04

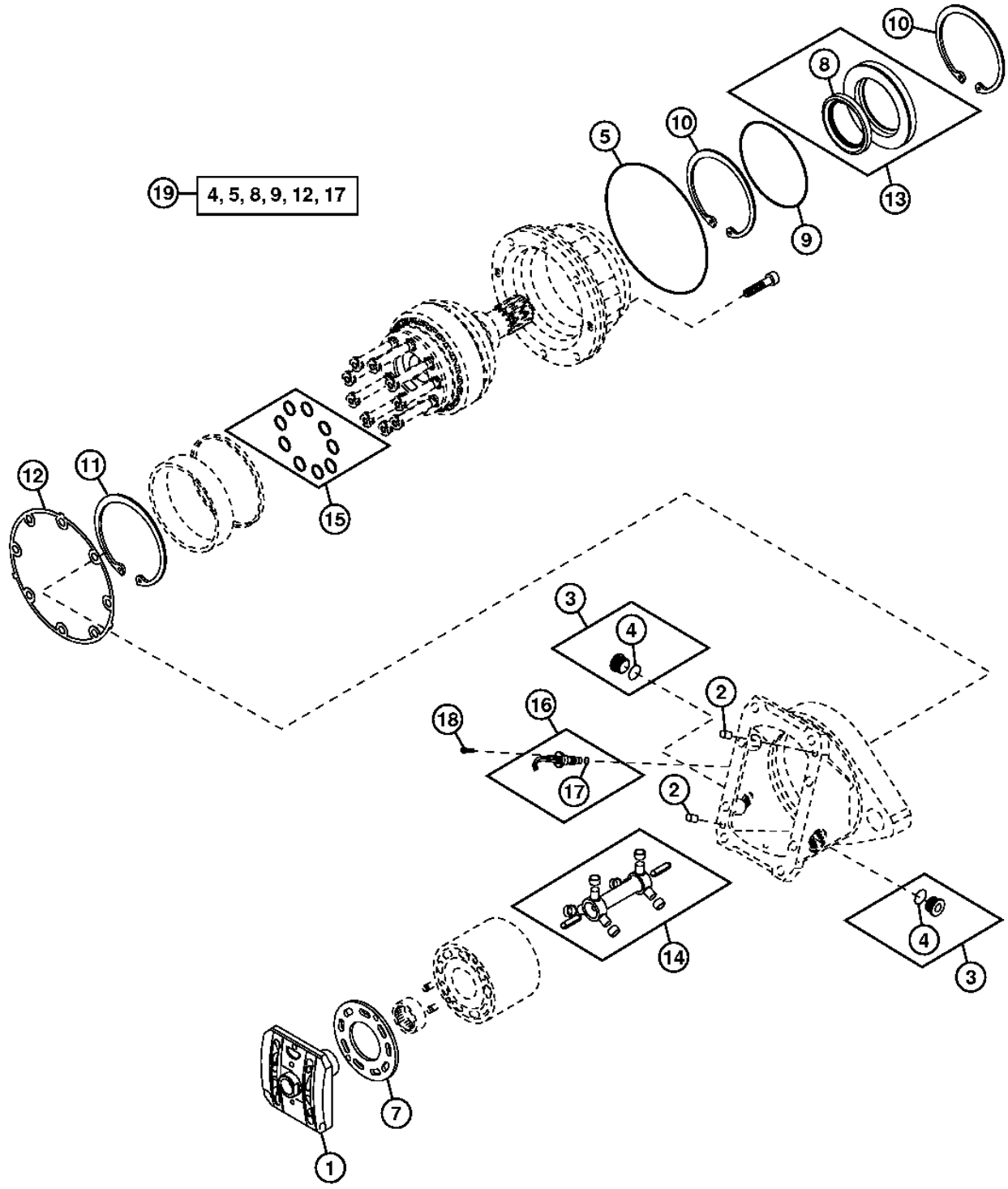

T204742

HFWD MOTOR SWASH PLATE, BEARINGS, AND SPEED SENSOR

KEY	PART NO.	PART NAME	QTY	SERIAL NO.	770D	772D	REMARKS
1	N306880	VALVE	1		X		
2	R726R	DOWEL PIN	2		X		
3	AT214801	PLUG	2		X		
4	T59014	O-RING	2		X		
5	F37030250	O-RING	1		X		
7	N306881	PLATE	1		X		
8	AT173174	SEAL	1		X		
9	T187896	O-RING	1		X		
10	N306885	SNAP RING	2		X		
11	N306886	SNAP RING	1		X		
12	N306887	GASKET	1		X		
13	AT195723	SEAL	1		X		
14	AN208024	SHAFT	1		X		(SUB FOR AT196745)
15	AT319115	PISTON RING KIT	1		X		
16	AT194596	GROUND SPEED SENSOR	1		X		
17	M74600	O-RING	1		X		
18	T214111	SCREW	1		X		
19	AT319117	SEAL KIT	1		X		
22	AT195922	HYD ACTUATED CONTROL VALVE	1		X		
23	AT192055	SOLENOID VALVE COIL	1		X		
24	T181306	NUT	1		X		

HFWD PUMP

T203978 -UN-23NOV04

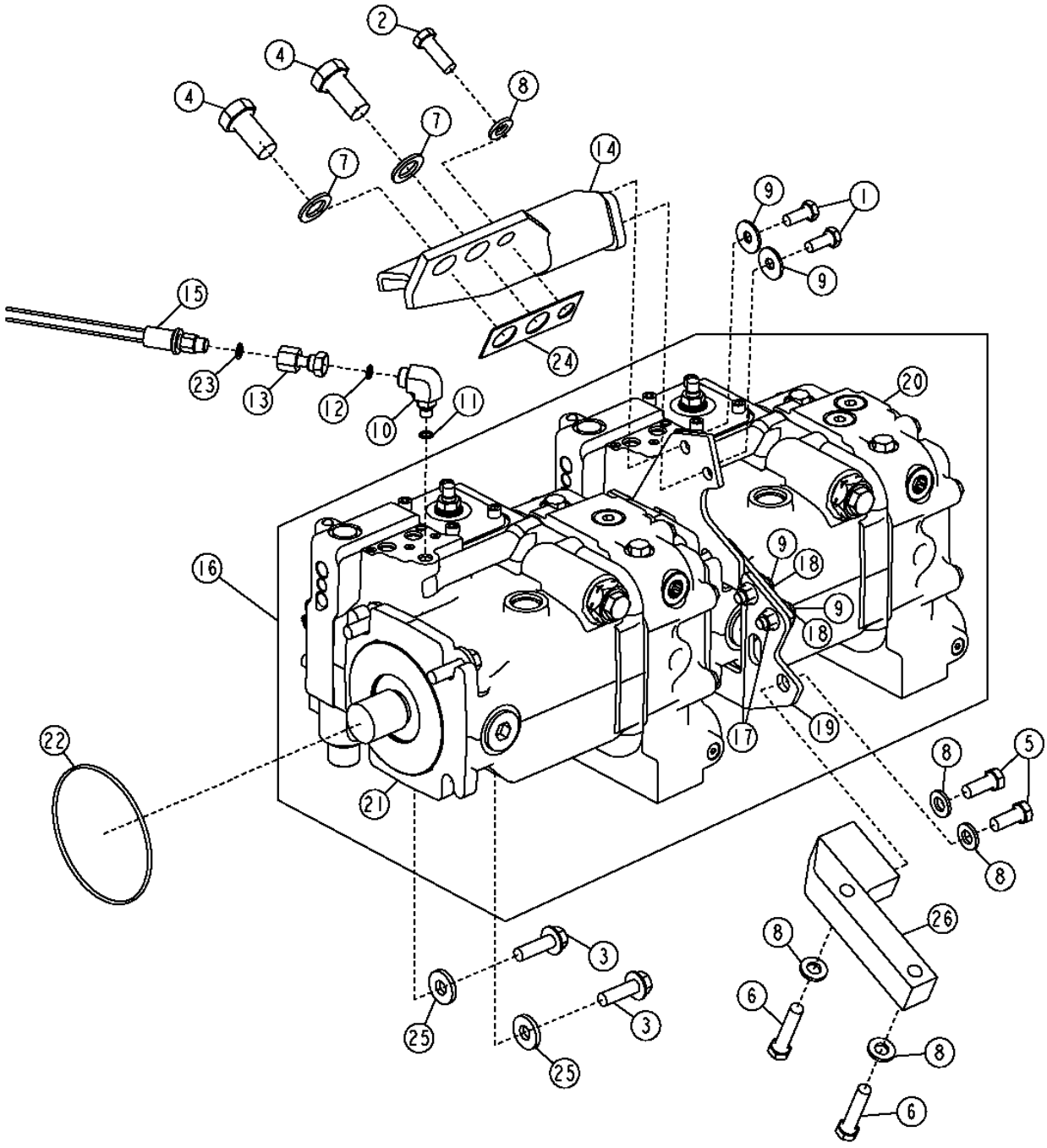

HFWD PUMP

KEY	PART NO.	PART NAME	QTY	SERIAL NO.	770D	772D	REMARKS
1	19M7402	CAP SCREW	2		X		M10 X 25
2	19M7403	CAP SCREW	1		X		M12 X 35
3	19M7791	BOLT	4		X		M12 X 40
4	19M7946	CAP SCREW	2		X		M20 X 40
5	19M8011	CAP SCREW	2		X		M12 X 30
6	19M8313	CAP SCREW	2		X		M12 X 55
7	24M7099	WASHER	2		X		
8	24M7240	WASHER	5		X		
9	24M7296	WASHER	4		X		
10	38H1435	ELBOW FITTING	1		X		
11	R28782	O-RING	1		X		
12	T77613	O-RING	1		X		
13	AT191214	ADAPTER	1		X		
14	AT194555	SUPPORT	1		X		
15	AT194815	PRESSURE SWITCH	1		X		(BRAKE RIGHT)
16	AT307760	HYDRAULIC PUMP	1		X		(FRONT AND REAR HFWD PUMP) (COMPONENTS ON SEPARATE PAGES)
17	14M7296	FLANGE NUT	2		X		M10
18	19M7662	CAP SCREW	2		X		M10 X 30
19	AT307775	BRACKET	1		X		
20	AT317887	PUMP	1		X		(REAR HFWD PUMP)
21	AT317891	PUMP	1		X		(FRONT HFWD PUMP)
22	F37020159	O-RING	1		X		
23	R26286	O-RING	1		X		
24	T187206	SHIM	1		X		
25	T29342	WASHER	4		X		
26	T206048	BRACKET	1		X		

HFWD PUMP CYLINDER BLOCK, SWASH PLATE, AND PISTONS

T148543 -UN-29NOV01

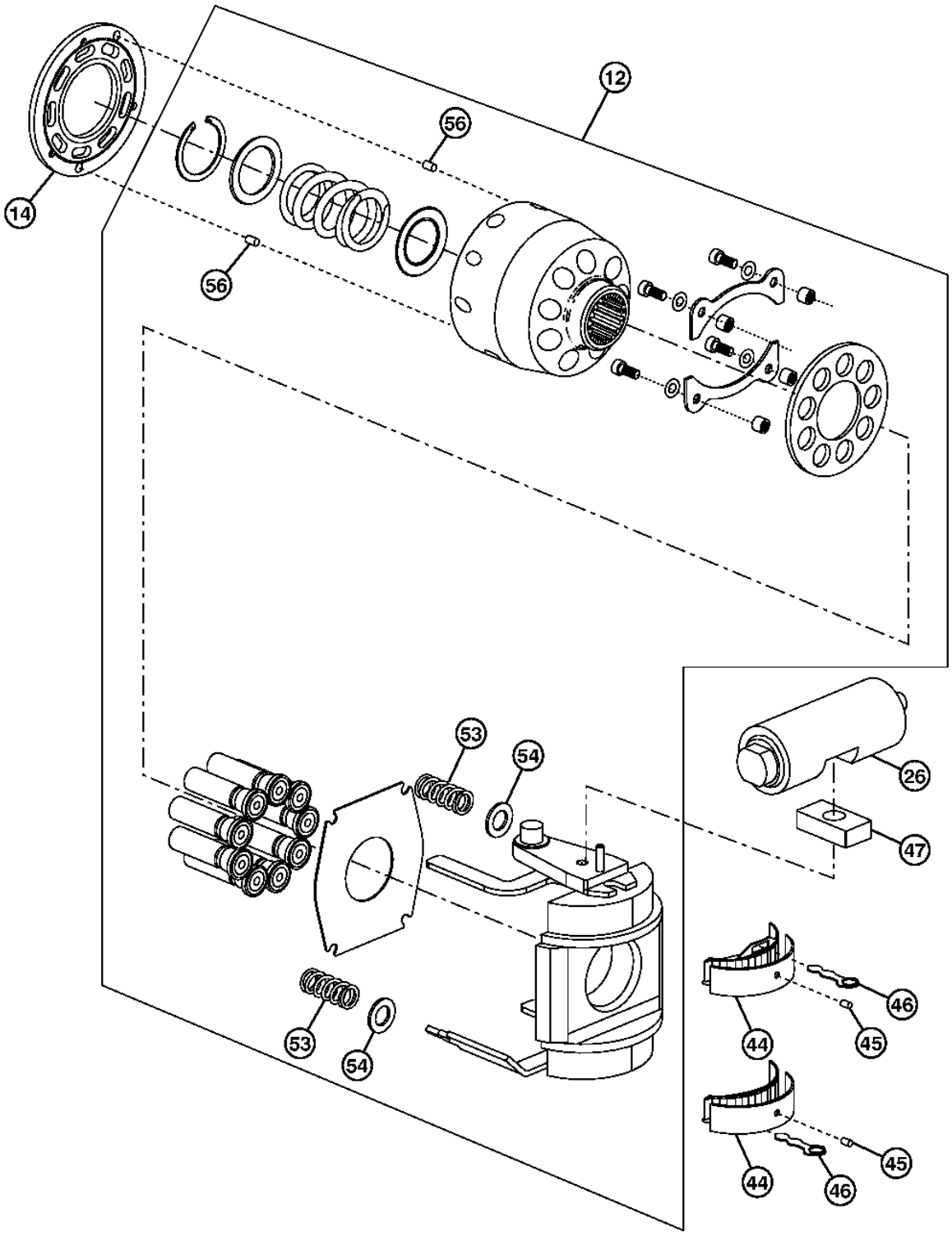

T148543

HFWD PUMP CYLINDER BLOCK, SWASH PLATE, AND PISTONS

KEY	PART NO.	PART NAME	QTY	SERIAL NO.	770D	772D	REMARKS
12	AT195063	HYDRAULIC PUMP REPAIR KIT	1		X		SWASH / ROTATING GROUP
14	T187714	PLATE	1		X		
26	AT195062	PISTON	1		X		SERVO
44	AT195057	BEARING	2		X		
45	T162211	PIN	2		X		
46	T187726	LINK	2		X		
47	T187721	LINK	1		X		SLIDE BLOCK
53	T162212	SPRING	2		X		
54	T162213	WASHER	2		X		
56	T162215	DOWEL PIN	3		X		

HFWD PUMP HOUSING AND EP CONTROL

T205107 -UN-05JAN05

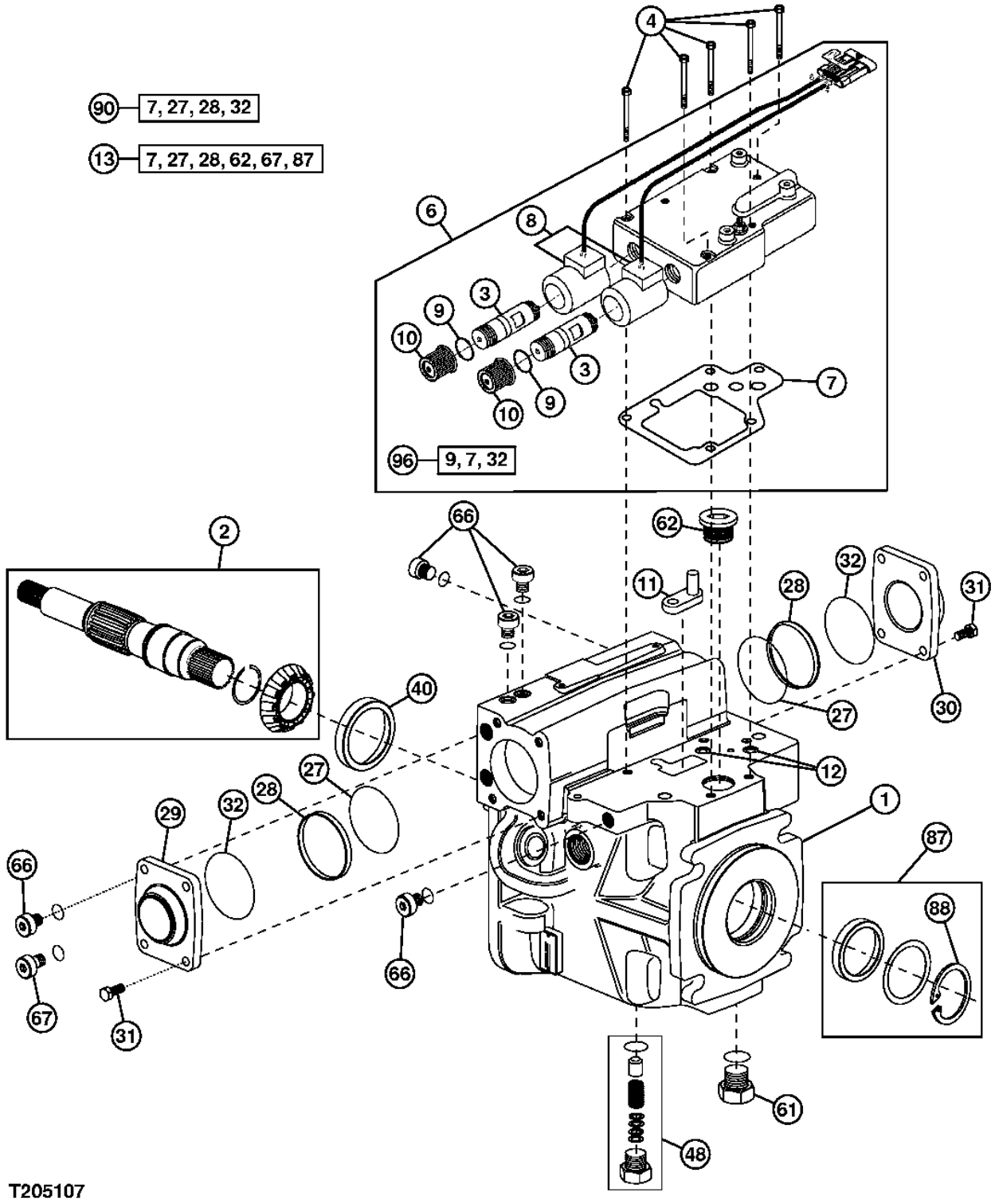

HFWD PUMP HOUSING AND EP CONTROL

KEY	PART NO.	PART NAME	QTY	SERIAL NO.	770D	772D	REMARKS
1	T187734	HOUSING	1		X		(REAR PUMP)
	T190814	HOUSING	1		X		(FRONT PUMP)
2	T187719	DRIVE SHAFT	1		X		(FRONT PUMP)
	T187736	DRIVE SHAFT	1		X		(REAR PUMP)
3	T187733	TUBE	1		X		
4	T187741	CAP SCREW	1		X		
6	AT195066	CONTROL	1		X		(EP CONTROL-24 VOLT)
7	T187729	GASKET	1		X		
8	AT198322	SOLENOID VALVE COIL	1		X		
9	T187745	O-RING	1		X		
10	T187744	NUT	1		X		
11	T187731	LINK	1		X		
12	T187711	ORIFICE	1		X		
13	AT317889	KIT	1		X		(PUMP OVERHAUL SEAL KIT)
27	T187772	O-RING	2		X		
28	T187722	RING	2		X		
29	T187720	COVER	1		X		
30	T187728	COVER	1		X		
31	T187769	BOLT	8		X		
32	T187774	O-RING	AR		X		
40	T187713	BEARING CUP	1		X		
48	AT195065	PRESSURE RELIEF VALVE	1		X		
61	AT195068	PLUG	1		X		
62	T162216	PLUG	1		X		
66	AT180965	PLUG	3		X		
67	AT180966	PLUG	1		X		
87	T187723	SEAL	1		X		
88	T187712	SNAP RING	1		X		USED ON FRONT PUMP ONLY.
96	AT195125	KIT	1		X		(EP SEAL KIT)

HFWD PUMP END COVER AND HFWD MOTOR FLUSHING PUMP

T205108 -UN-15DEC04

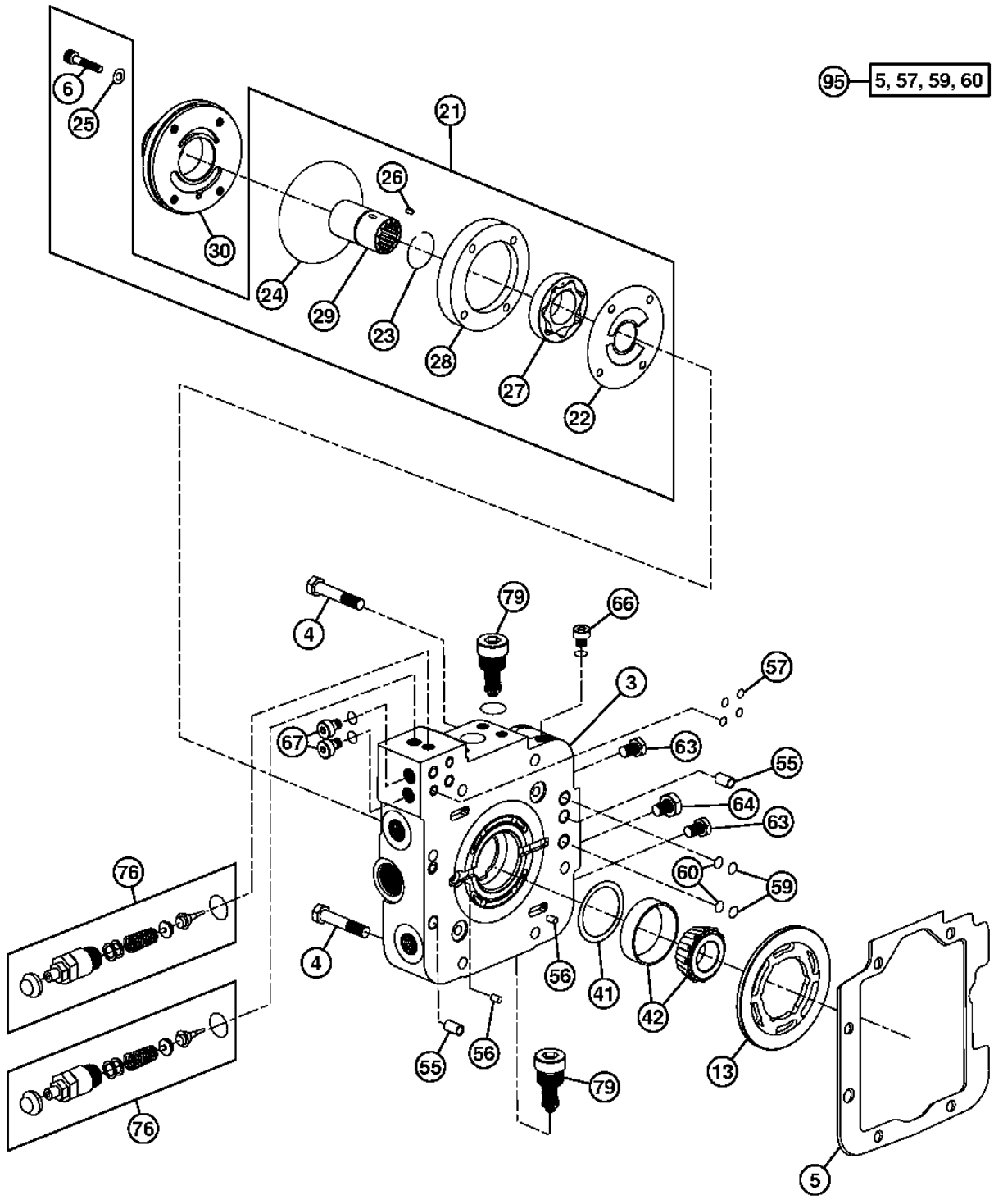

T205108

HFWD PUMP END COVER AND HFWD MOTOR FLUSHING PUMP

KEY	PART NO.	PART NAME	QTY	SERIAL NO.	770D	772D	REMARKS
3	T187738	COVER	1		X		(FRONT PUMP)
	T187737	COVER	1		X		(REAR PUMP)
4	T187767	BOLT	8		X		
5	T187724	GASKET	1		X		
6	AT195073	KIT	1		X		(HFWD CHARGE PUMP HARDWARE KIT) (INCLUDES 4 SOCKET HEAD CAP SCREWS)
13	T187735	PLATE	1		X		
21	AT195074	KIT	1		X		(HFWD MOTOR FLUSHING PUMP REPAIR KIT)
22	T162157	PLATE	1		X		
23	T162155	SNAP RING	1		X		(RETAINING RING)
24	T162152	O-RING	1		X		
25	AT180935	SEAL KIT	1		X		(INCLUDES 4 SEALS)
26	N126638	PIN	1		X		
27	T187716	ROTATOR	1		X		
28	T187717	RING	1		X		(FRONT PUMP)
	T187716	ROTATOR	1		X		(REAR PUMP)
29	T187727	SHAFT	1		X		
30	AT180936	COVER	1		X		
41	AT195075	KIT	1		X		(HFWD PUMP DRIVESHAFT SHIM KIT)
42	AT195060	BEARING	1		X		
55	T187715	PIN	2		X		
56	T162215	DOWEL PIN	3		X		
57	T187730	SEAL	4		X		
59	T187740	RING	2		X		
60	T187725	RING	1		X		
63	AT180964	FITTING	2		X		
64	AT195069	PLUG	1		X		(FRONT PUMP)
66	AT180965	PLUG	2		X		
67	AT180966	PLUG	2		X		
76	AT317886	PRESSURE RELIEF VALVE	2		X		(PRESSURE OVERRIDE VALVE)
79	AT195064	PRESSURE RELIEF FITTING	2		X		
95	AT317889	KIT	1		X		(PUMP OVERHAUL SEAL KIT-FRONT PUMP)
	AT195124	KIT	1		X		(COVER SEAL KIT-REAR PUMP)

HFWD HOSES (HFWD ENGAGEMENT VALVE TO HFWD MOTORS)

T203261 -UN-09NOV04

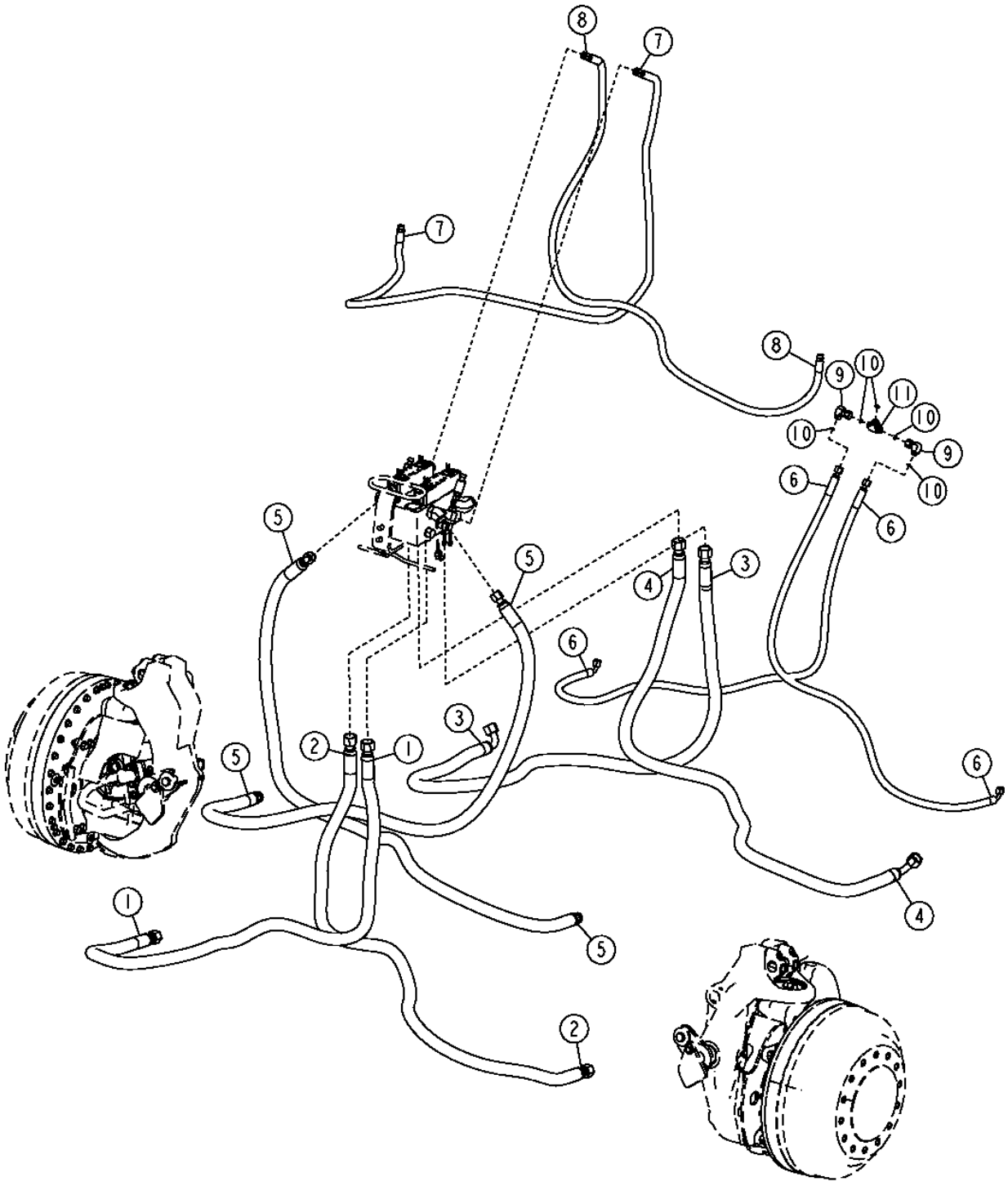

HFWD HOSES (HFWD ENGAGEMENT VALVE TO HFWD MOTORS)

KEY	PART NO.	PART NAME	QTY	SERIAL NO.	770D	772D	REMARKS
1	AT196253	HYDRAULIC HOSE - FABRICATE	1		X		(RIGHT HFWD MOTOR FORWARD)
2	AT196249	HYDRAULIC HOSE - FABRICATE	1		X		(LEFT HFWD MOTOR FORWARD)
3	AT196254	HYDRAULIC HOSE - FABRICATE	1		X		(RIGHT HFWD MOTOR REVERSE)
4	AR21839	CLAMP	1		X		(LEFT HFWD MOTOR REVERSE) (SUB FOR AT196250, THIS APPLICATION)
5	AT197098	HYDRAULIC HOSE - FABRICATE	2		X		(HFWD MOTOR CASE DRAIN)
6	AT308073	HYDRAULIC HOSE - FABRICATE	2		X		(RIGHT AND LEFT HFWD MOTOR FLUSHING HOSE)
7	AT196256	HYDRAULIC HOSE - FABRICATE	1		X		(RIGHT HFWD BRAKE HOSE)
8	AT196252	HYDRAULIC HOSE - FABRICATE	1		X		(LEFT HFWD BRAKE HOSE)
9	38H1094	ELBOW FITTING	2		X		
10	T77613	O-RING	9		X		
11	38H1205	TEE FITTING	1		X		
12	T188182	HOSE GUARD	2		X		(PROTECTIVE SLEEVE FOR HFWD HOSES) (NOT ILLUSTRATED)

HFWD HOSES (BULKHEAD TO HFWD ENGAGEMENT VALVE)

T203262 -UN-09NOV04

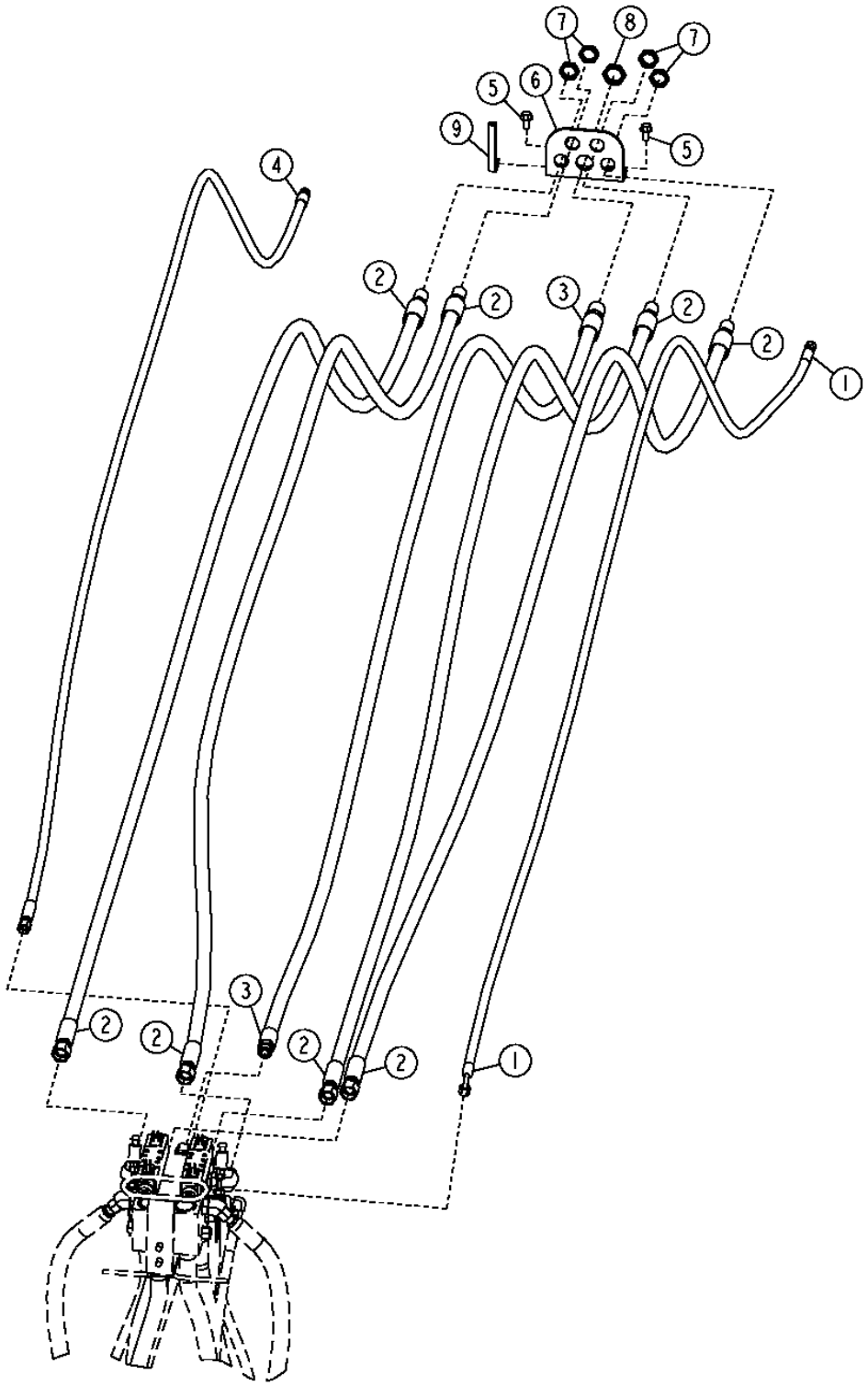

THIS PARTS LISTING IS CONTINUED

HFWD HOSES (BULKHEAD TO HFWD ENGAGEMENT VALVE)

KEY	PART NO.	PART NAME	QTY	SERIAL NO.	770D	772D	REMARKS
1	AT305512	HYDRAULIC HOSE - FABRICATE	1		X		(HFWD MOTOR FLUSHING)
2	AT305505	HYDRAULIC HOSE	4		X		(HFWD MOTOR FORWARD/REVERSE)
3	AT305510	HYDRAULIC HOSE	1		X		(HFWD MOTOR TANK)
4	AT305509	HYDRAULIC HOSE - FABRICATE	1		X		(HFWD MOTOR CASE DRAIN)
5	19M7788	SCREW	2		X		
6	T210043	BRACKET	1		X		
7	T78707	NUT	4		X		
8	T78715	NUT	1		X		
9	.....	PAD	1		X		(MAKE FROM T61861) (CUT TO LENGTH)

HFWD HOSES (HFWD PUMP TO BULKHEAD)

T204637 -UN-09DEC04

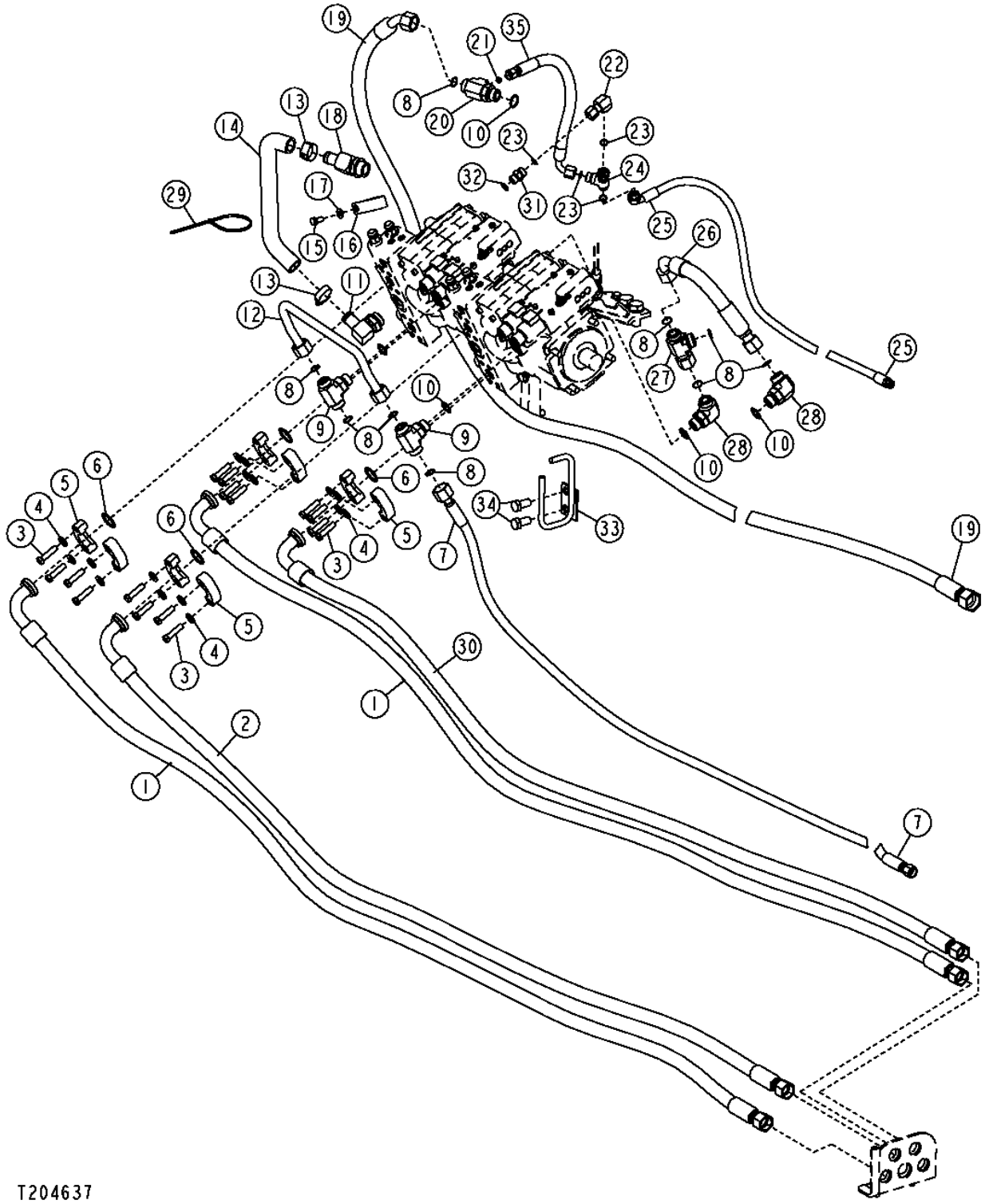

THIS PARTS LISTING IS CONTINUED

HFWD HOSES (HFWD PUMP TO BULKHEAD)

KEY	PART NO.	PART NAME	QTY	SERIAL NO.	770D	772D	REMARKS
1	AT309957	HYDRAULIC HOSE - FABRICATE	2		X		(LEFT FORWARD AND REVERSE)
2	AT305507	HYDRAULIC HOSE - FABRICATE	1		X		(RIGHT FORWARD)
3	19H2563	CAP SCREW	16		X		7/16" X 1-3/4"
4	24M7240	WASHER	16		X		
5	H122182	FLANGE FITTING	8		X		
6	T78313	O-RING	4		X		
7	AT309959	HYDRAULIC HOSE - FABRICATE	1		X		(HFWD MOTOR CASE DRAIN HOSE)
8	T77858	O-RING	9		X		
9	38H1019	TEE FITTING	2		X		
10	U12547	O-RING	5		X		
11	AH75162	FITTING	1		X		
12	AT302098	TUBE	1		X		
13	AT145650	HOSE CLAMP	2		X		
14	AT310272	HOSE	1		X		
15	19M7938	CAP SCREW	1		X		M10 X 20
16	T149597	CLAMP	1		X		
17	24M7239	WASHER	1		X		
18	AT223584	FITTING	1		X		
19	AT305508	HYDRAULIC HOSE - FABRICATE	1		X		(HFWD MOTOR TANK HOSE)
20	38H1598	TEE FITTING	1		X		
21	T77613	O-RING	1		X		
22	38H1095	ELBOW FITTING	1		X		
23	T77857	O-RING	4		X		
24	AT197488	CHECK VALVE	1		X		
25	AT305513	HYDRAULIC HOSE - FABRICATE	1		X		(HFWD MOTOR FLUSHING HOSE)
26	AT193948	HYDRAULIC HOSE - FABRICATE	1		X		
27	38H1033	TEE FITTING	1		X		
28	38H1007	ELBOW FITTING	2		X		
29	H77698	TIE BAND	1		X		
30	AT305506	HYDRAULIC HOSE - FABRICATE	1		X		(RIGHT REVERSE)
31	38H1161	ADAPTER	1		X		
32	R26375	O-RING	1		X		
33	AT312998	HOSE SUPPORT	1		X		
34	19M8029	CAP SCREW	2		X		M16 X 30
35	AT317166	HYDRAULIC HOSE - FABRICATE	1		X		

HFWD CHARGE PUMP

T209458 -UN-22MAR05

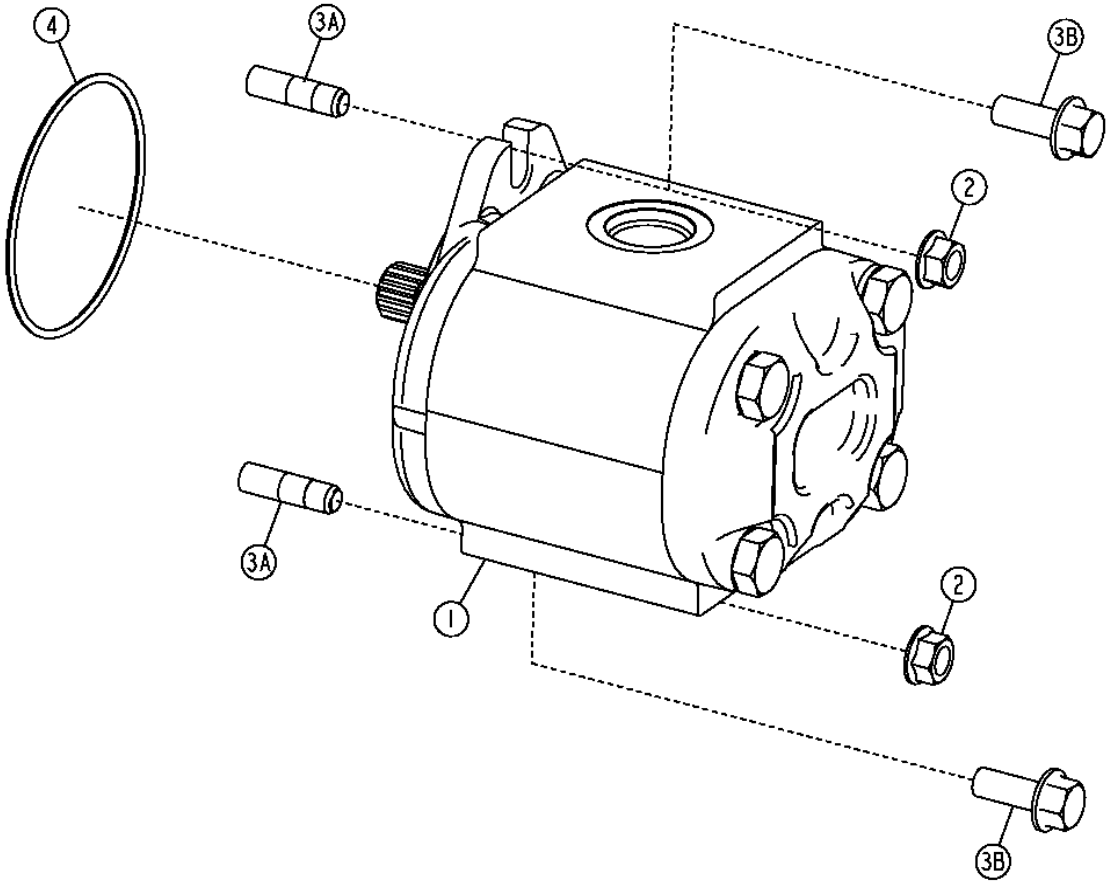

T209458

HFWD CHARGE PUMP

KEY	PART NO.	PART NAME	QTY	SERIAL NO.	770D	772D	REMARKS
1	AT317637	HYDRAULIC PUMP	1		X		(HFWD CHARGE PUMP)
	AT317595	SEAL KIT	1		X		(HFWD CHARGE PUMP SEAL KIT)
2	E55662	FLANGE NUT	2	-597330	X		3/8"
3A	T20052	STUD	2	-597330	X		
3B	19H3771	SCREW	2	597331-	X		
4	U42702	O-RING	1		X		

HFWD CHARGE PUMP HOSES

T203846 -UN-09NOV04

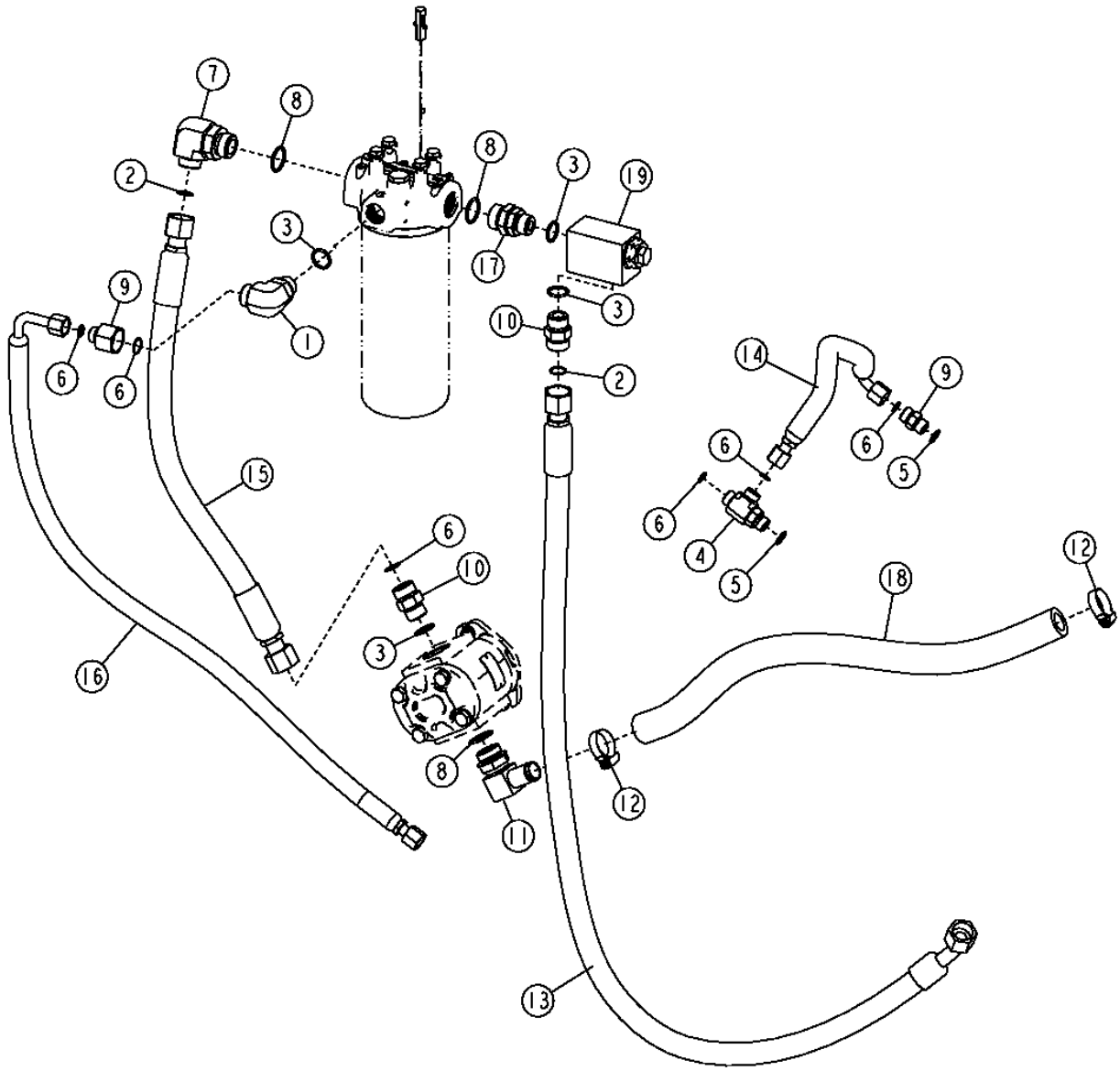

HFWD CHARGE PUMP HOSES

KEY	PART NO.	PART NAME	QTY	SERIAL NO.	770D	772D	REMARKS
1	38H1007	ELBOW FITTING	1		X		
2	T77858	O-RING	4		X		
3	U12547	O-RING	4		X		
4	38H1024	TEE FITTING	1		X		
5	R26375	O-RING	2		X		
6	T77857	O-RING	3		X		
7	38H1052	ELBOW FITTING	1		X		
8	R29936	O-RING	3		X		
9	38H1161	ADAPTER	1		X		
10	38H1163	ADAPTER	2		X		
11	AH75162	FITTING	1		X		
12	AR21839	CLAMP	2		X		(SUB FOR AT145650, THIS APPLICATION)
13	AT188217	HYDRAULIC HOSE - FABRICATE	1		X		
14	AT191879	HYDRAULIC HOSE - FABRICATE	1		X		
15	AT312910	HYDRAULIC HOSE - FABRICATE	1		X		
16	AT312912	HYDRAULIC HOSE - FABRICATE	1		X		
17	AT83306	ADAPTER	1		X		
18	T186987	SUCTION HOSE	1		X		
19	AT194980	PRESSURE RELIEF VALVE	1		X		(NEUTRAL CHARGE PRESSURE REGULATING VALVE)
	AT194982	HYD ACTUATED CONTROL VALVE	1		X		(NOT ILLUSTRATED)
	AT194983	SHIM	1		X		(NOT ILLUSTRATED)
	AZ42092	GANG	1		X		(NOT ILLUSTRATED)
	T187664	HOUSING	1		X		(NOT ILLUSTRATED)

DIFFERENTIAL LOCK COOLER HOSES

T211055 -UN-16MAY05

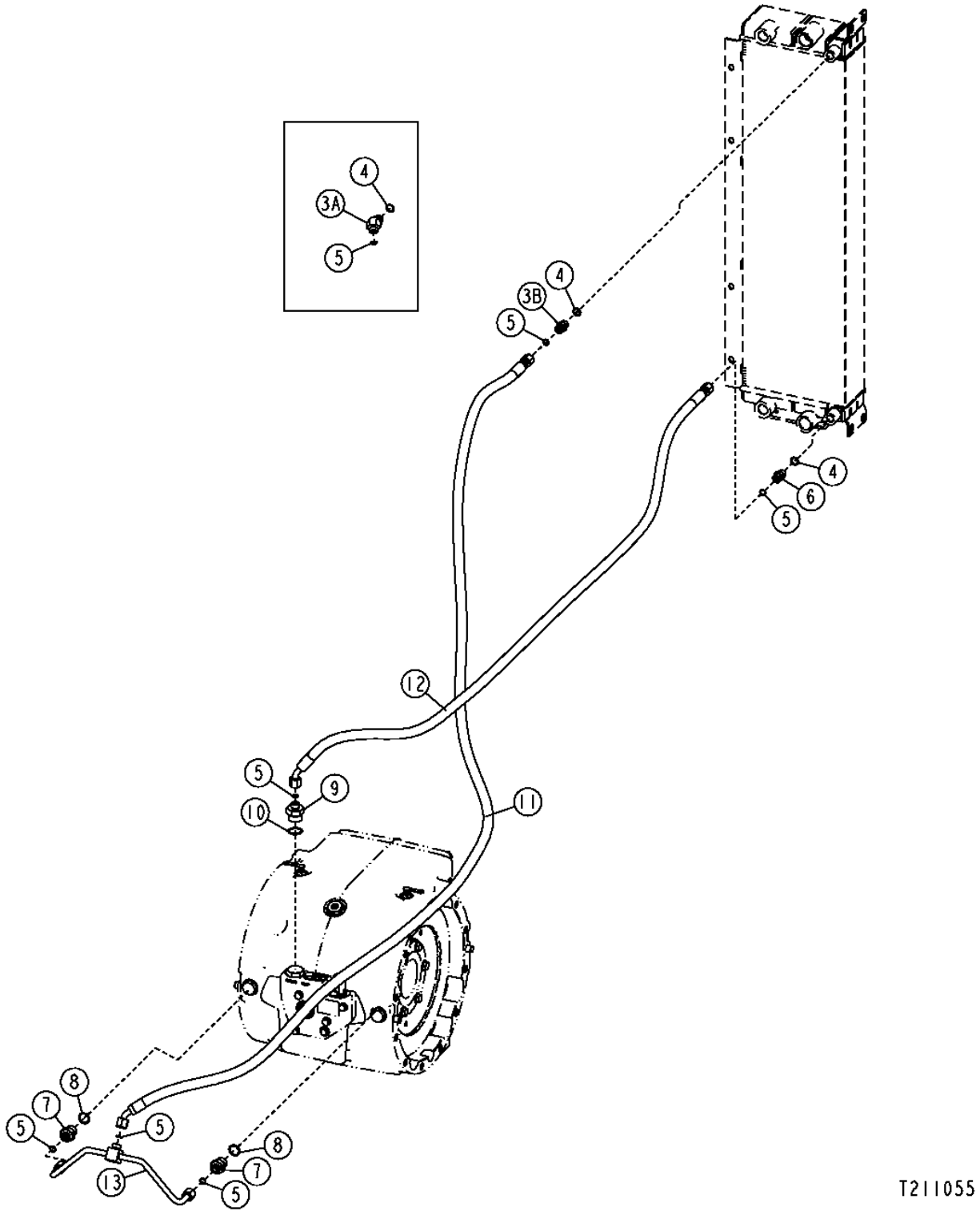

DIFFERENTIAL LOCK COOLER HOSES

KEY	PART NO.	PART NAME	QTY	SERIAL NO.	770D	772D	REMARKS
1	14M7274	NUT	1	-598033	X	X	M10
2	19M7938	CAP SCREW	2	-598033	X	X	M10 X 20
	24M7239	WASHER	2	-598033	X	X	
3A	38H1046	ELBOW FITTING	1	-598033	X	X	
3B	38H1161	ADAPTER	1	598034-	X	X	
4	R26375	O-RING	2		X	X	
5	T77857	O-RING	7		X	X	
6	38H1161	ADAPTER	1		X	X	
7	38H1175	ADAPTER	2		X	X	
8	U12547	O-RING	2		X	X	
9	38H1176	ADAPTER	1		X	X	
10	R29936	O-RING	1		X	X	
11	AT303539	HYDRAULIC HOSE - FABRICATE	1		X	X	
12	AT305832	HYDRAULIC HOSE - FABRICATE	1		X	X	
13	AT305833	OIL LINE	1		X	X	
14	T38377	CLAMP	2	-598033	X	X	

DIFFERENTIAL LOCK PUMP, HYDRAULIC FITTINGS AND MOUNTING

T200634 -UN-07JUN04

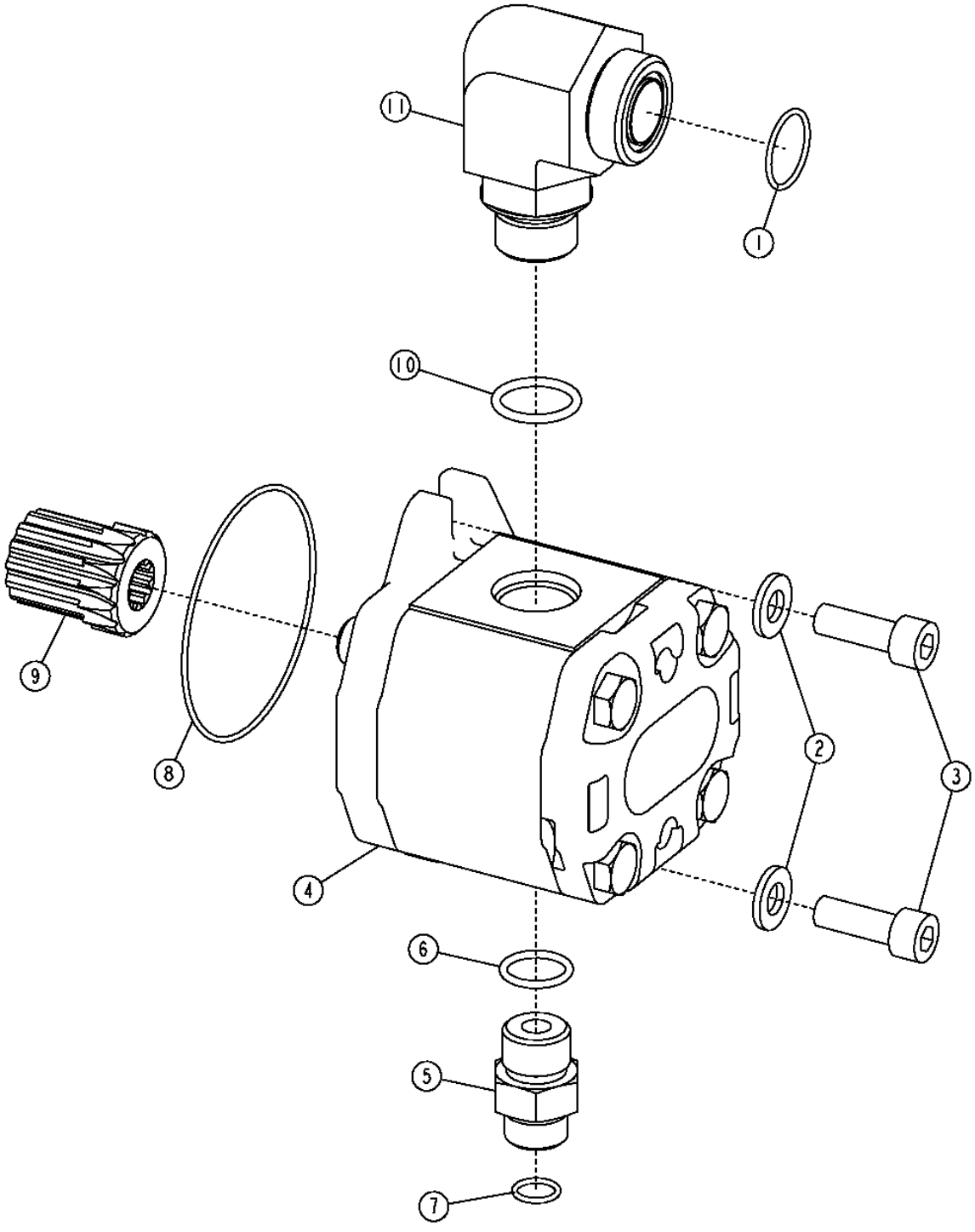

DIFFERENTIAL LOCK PUMP, HYDRAULIC FITTINGS AND MOUNTING

KEY	PART NO.	PART NAME	QTY	SERIAL NO.	770D	772D	REMARKS
1	T76938	O-RING	1		X	X	
2	24M7239	WASHER	2		X	X	
3	19M7576	SCREW	2		X	X	M10 X 30
4	AT191095	PUMP	1		X	X	(DIFFERENTIAL LOCK)
5	38H1174	ADAPTER	1		X	X	
6	R26906	O-RING	1		X	X	
7	T77857	O-RING	1		X	X	
8	T160541	O-RING	1		X	X	
9	YZ103042	SLEEVE	1		X	X	(DIFF LOCK PUMP TO TRANSMISSION)
10	U12547	O-RING	1		X	X	
11	38H1305	ELBOW FITTING	1		X	X	

DIFFERENTIAL LOCK HYDRAULIC HOSES AND FILTER

T202051 -UN-12DEC04

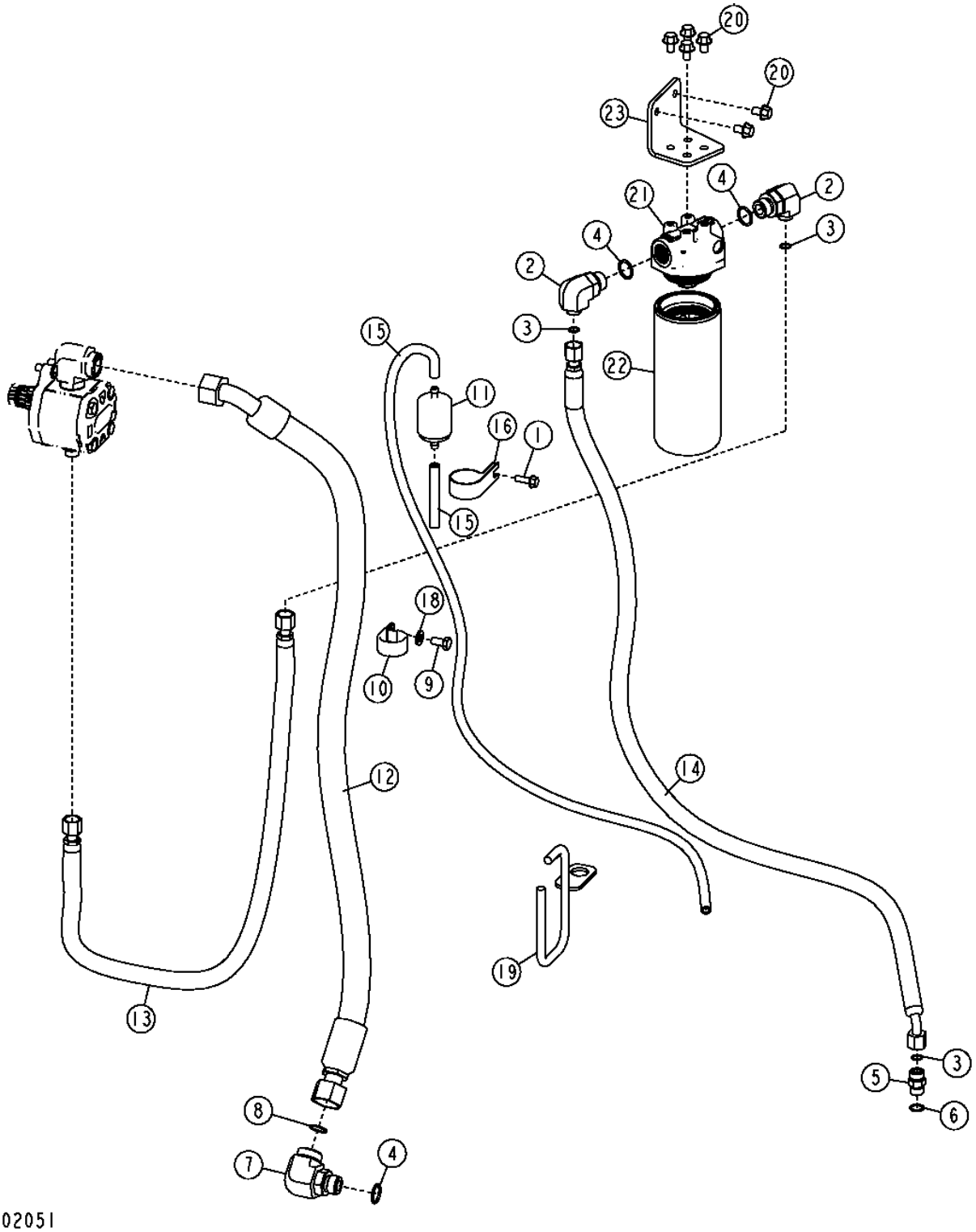

THIS PARTS LISTING IS CONTINUED

DIFFERENTIAL LOCK HYDRAULIC HOSES AND FILTER

KEY	PART NO.	PART NAME	QTY	SERIAL NO.	770D	772D	REMARKS
1	19M7867	SCREW	1		X	X	M8 X 25
2	38H1013	ELBOW FITTING	2		X	X	
3	T77857	O-RING	3		X	X	
4	U12547	O-RING	3		X	X	
5	38H1161	ADAPTER	1		X	X	
6	R26375	O-RING	1		X	X	
7	38H1305	ELBOW FITTING	1		X	X	
8	T76938	O-RING	1		X	X	
9	19M7938	CAP SCREW	1		X	X	
10	AH77714	CLIP	1		X	X	
11	AT101565	AIR FILTER	1		X	X	
12	AT191160	HYDRAULIC HOSE - FABRICATE	1		X	X	
13	AT305831	HYDRAULIC HOSE - FABRICATE	1		X	X	
14	AT305834	HYDRAULIC HOSE - FABRICATE	1		X	X	
15	.....	BULK HOSE	2		X	X	(MAKE FROM M87571) (CUT TO LENGTH)
16	E69975	CLAMP	1		X	X	
17	H77698	TIE BAND	2		X	X	(NOT ILLUSTRATED)
18	24M7239	WASHER	1		X	X	
19	AT309711	HOSE SUPPORT	1		X	X	
20	19M7783	SCREW	6		X	X	M10 X 16
21	AT305053	FILTER HEAD	1		X	X	
22	AT306605	HYDRAULIC FILTER	1		X	X	(DIFFERENTIAL LOCK FILTER)
23	T205883	BRACKET	1		X	X	

HFWD ENGAGEMENT MANIFOLD FITTINGS AND TEMPERATURE SENSOR

T206131 -UN-18DEC04

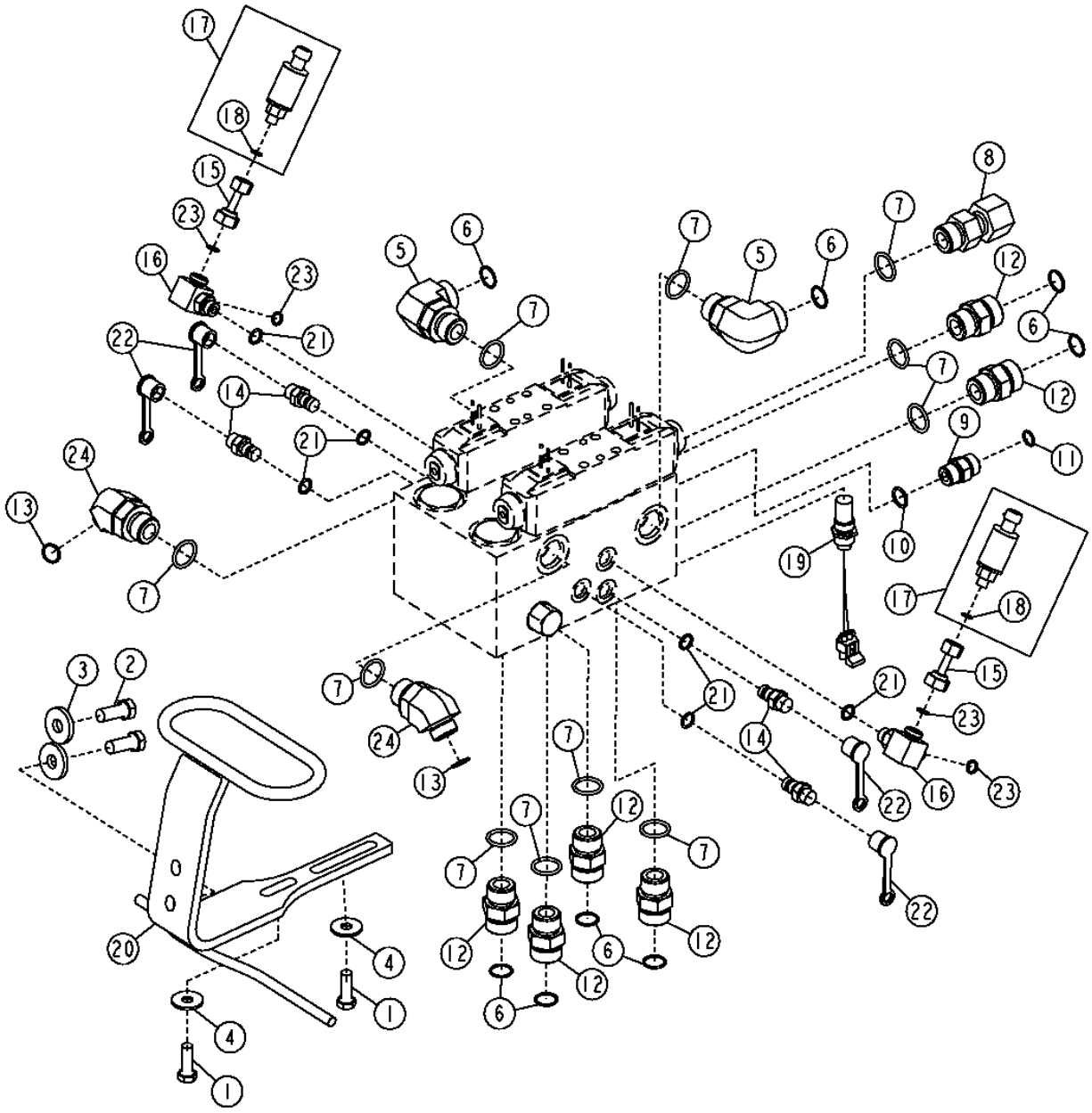

THIS PARTS LISTING IS CONTINUED

HFWD ENGAGEMENT MANIFOLD FITTINGS AND TEMPERATURE SENSOR

KEY	PART NO.	PART NAME	QTY	SERIAL NO.	770D	772D	REMARKS
1	19M7662	CAP SCREW	2		X	X	M10 X 30
2	19M8011	CAP SCREW	2		X	X	M12 X 30
3	24M7226	WASHER	2		X	X	
4	24M7266	WASHER	2		X	X	
5	38H1007	ELBOW FITTING	2		X	X	
6	T77858	O-RING	8		X	X	
7	U12547	O-RING	10		X	X	
8	38H1070	FITTING	1		X	X	
9	38H1161	ADAPTER	1		X	X	
10	R26375	O-RING	1		X	X	
11	T77857	O-RING	1		X	X	
12	38H1163	ADAPTER	6		X	X	
13	T77932	O-RING	2		X	X	
14	AH125760	HYD. QUICK-CONNECT COUPLER	4		X	X	
15	AT191639	ELBOW FITTING	2		X	X	
16	AT195285	TEE FITTING	2		X	X	
17	AT302927	TRANSDUCER	2		X	X	(HFWD PUMP PRESSURE SENSOR)
18	R26287	O-RING	1		X	X	
19	AT307707	SWITCH	1		X	X	(HFWD TEMPERATURE SWITCH) (INCLUDES O-RING)
20	AT310959	BRACKET	1		X	X	
21	R26448	O-RING	6		X	X	
22	R77175	COVER	4		X	X	
23	T77613	O-RING	4		X	X	
24	38H1577	ELBOW FITTING	2		X	X	

HFWD ENGAGEMENT MANIFOLD

T206902 -UN-12JAN05

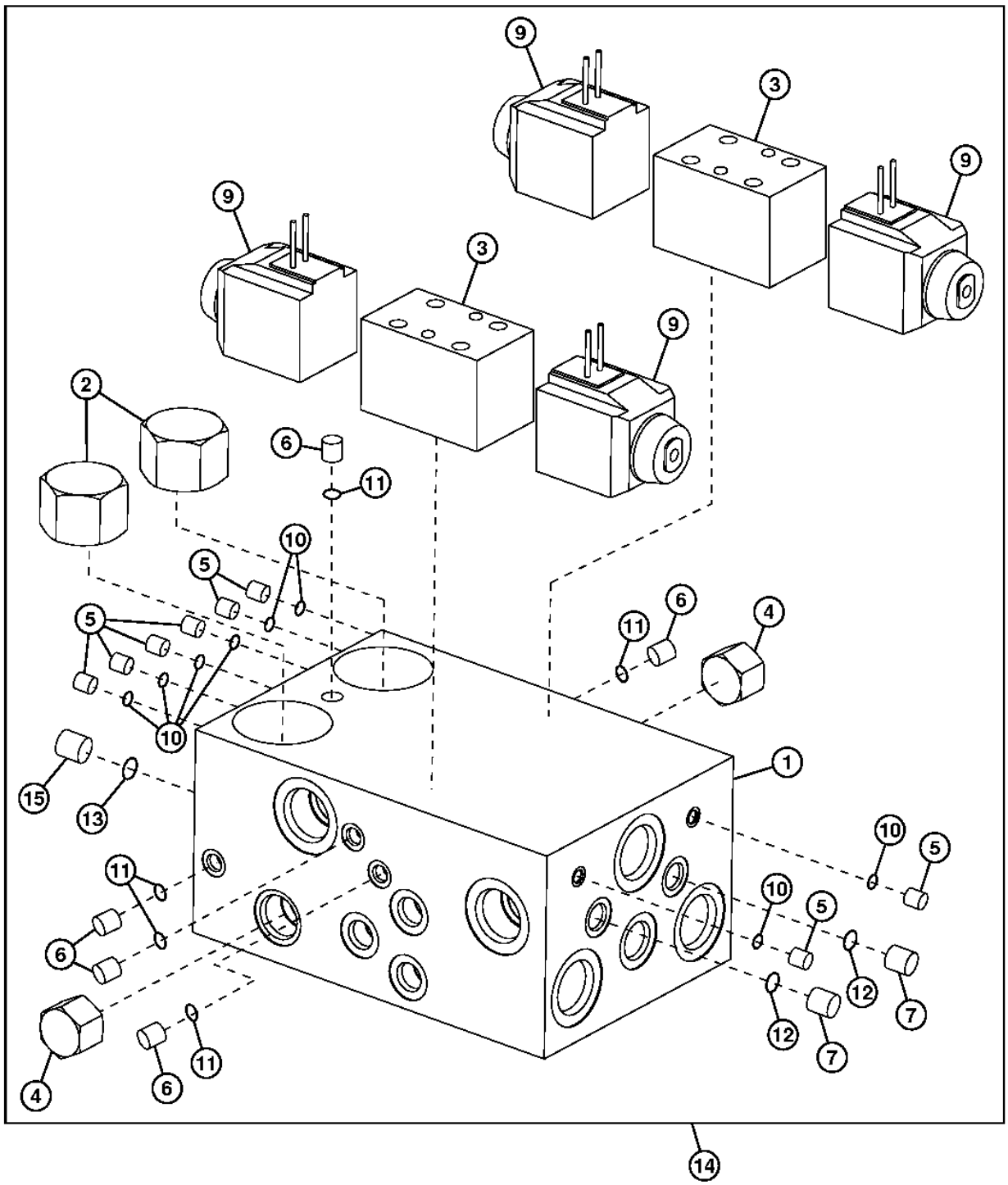

T206902

HFWD ENGAGEMENT MANIFOLD

KEY	PART NO.	PART NAME	QTY	SERIAL NO.	770D	772D	REMARKS
1	AT194986	CYLINDER BLOCK	1		X		
2	AT194988	PRESSURE RELIEF VALVE	2		X		
3	AT194990	HYD ACTUATED CONTROL VALVE	2		X		
4	AT194991	HYD ACTUATED CONTROL VALVE	2		X		
5	AT320199	PLUG	8		X		
6	AT320198	PLUG	5		X		
7	AT320179	PLUG	2		X		
8	AT194983	SHIM	2		X		(NOT ILLUSTRATED)
9	AT194989	STEEL	4		X		
10	R30903	O-RING	8		X		
11	R26286	O-RING	5		X		
12	U12547	O-RING	2		X		
13	R26375	O-RING	1		X		
14	AT199626	FLOW CONTROL HYD. VALVE	1		X		(HFWD ENGAGEMENT MANIFOLD)
	AZ42092	GANG	1		X		(SEAL KIT)
15	AT320176	FITTING PLUG	1		X		

TRANSMISSION CONTROL UNIT

T201735 -UN-30JUL04

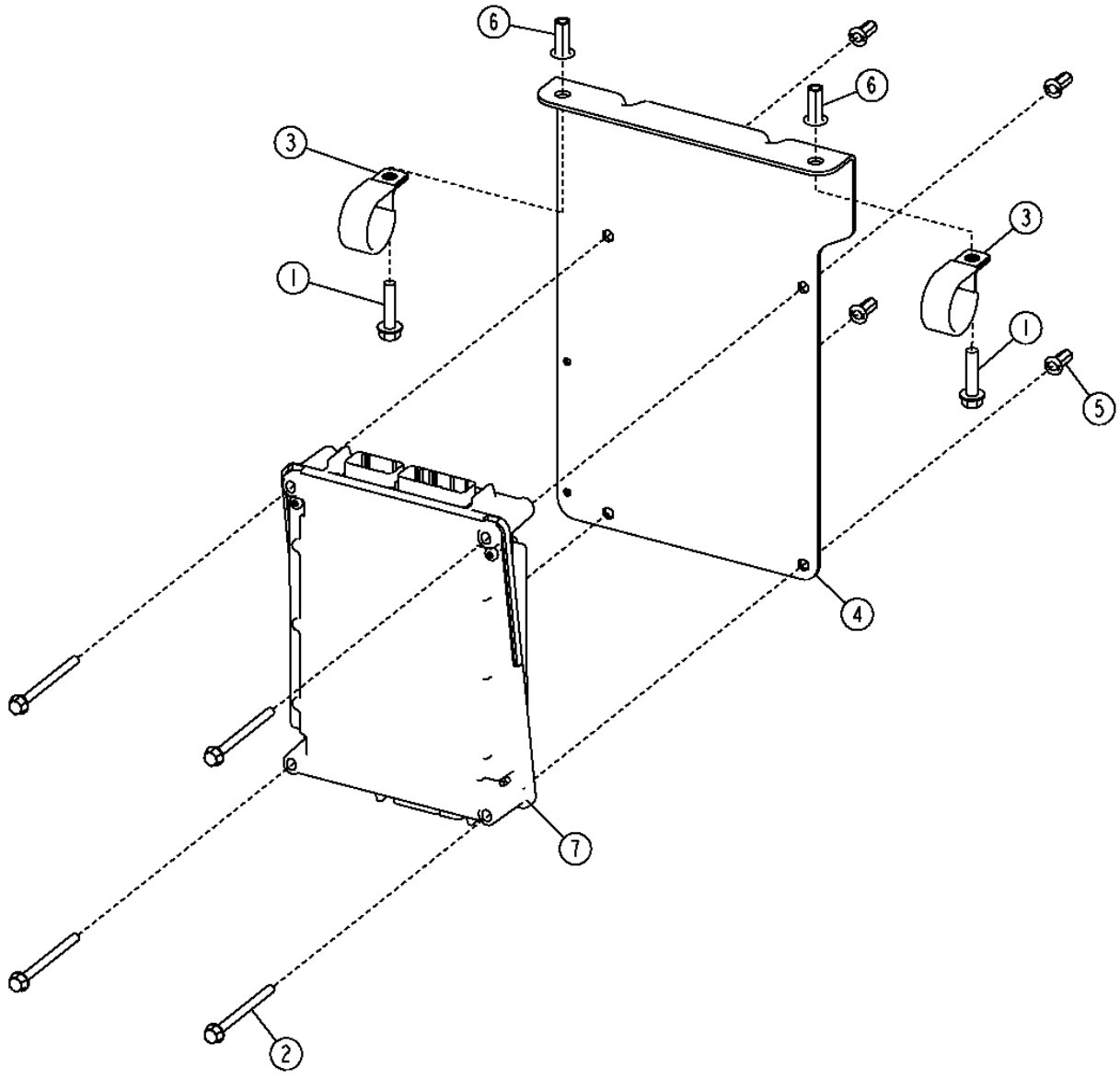

T201735

TRANSMISSION CONTROL UNIT

KEY	PART NO.	PART NAME	QTY	SERIAL NO.	770D	772D	REMARKS
1	19M7897	SCREW	2		X	X	M8 X 35
2	19M8145	SCREW	4		X	X	M6 X 80
3	AH77714	CLIP	2		X	X	
4	AT312607	BRACKET	1		X	X	
5	T196077	NUT	4		X	X	M6
6	T196079	NUT	2		X	X	
7	YZ105856	TRANSMISSION CONTROLLER	1		X	X	(TCU) (PREPROGRAMMED)

TRANSMISSION GEAR SELECTOR

T201740 -UN-08NOV04

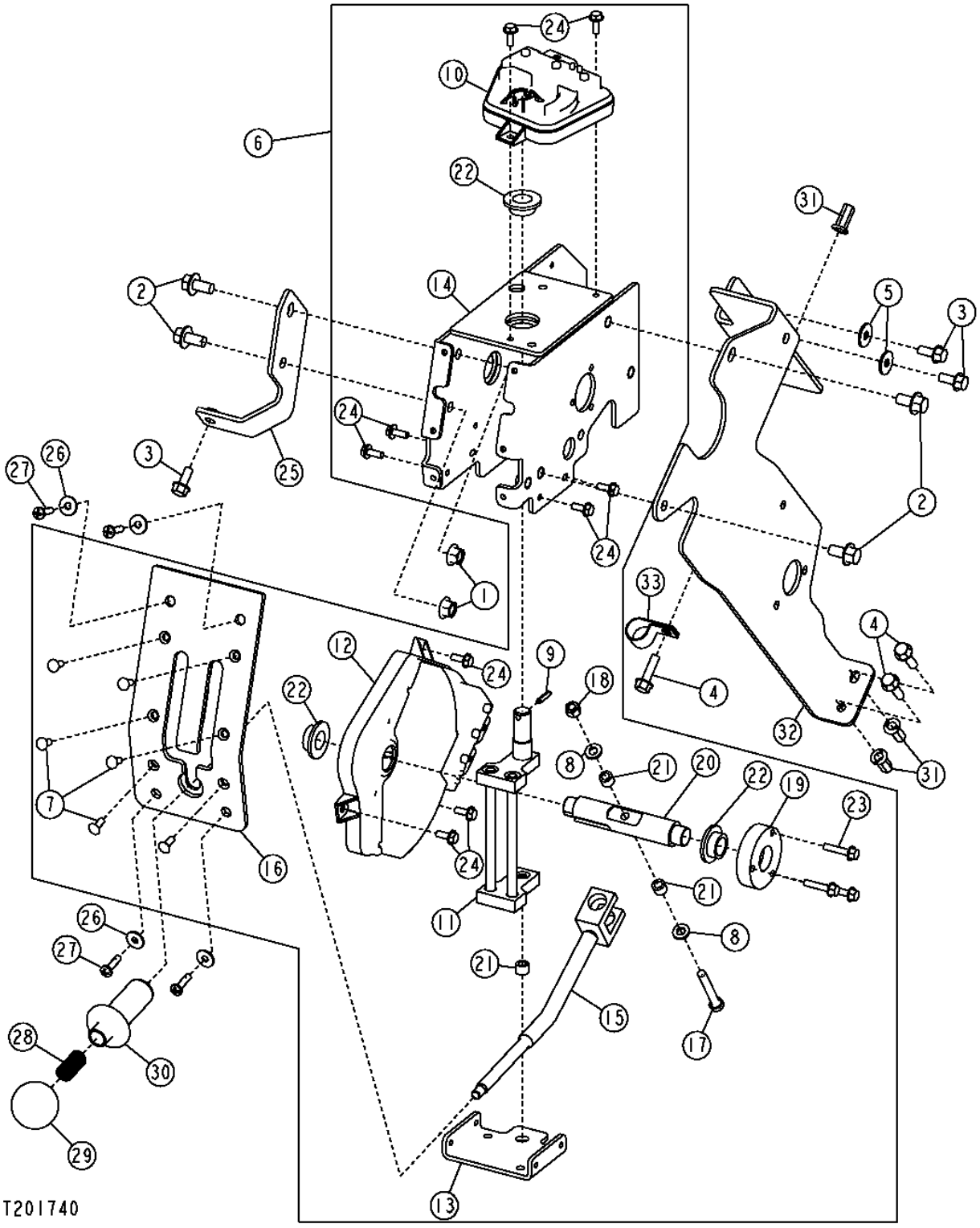

THIS PARTS LISTING IS CONTINUED

TRANSMISSION GEAR SELECTOR

KEY	PART NO.	PART NAME	QTY	SERIAL NO.	770D	772D	REMARKS
1	14M7296	FLANGE NUT	2		X	X	M10
2	19M7784	SCREW	4		X	X	M10 X 20
3	19M7866	BOLT	3		X	X	M8 X 20
4	19M7868	SCREW	2		X	X	M8 X 30
5	24M7298	WASHER	2		X	X	
6	AT302388	SHIFTER	1		X	X	
7	21M7399	SCREW	6		X	X	M6 X 16
8	24M7238	WASHER	2		X	X	
9	34H280	SPRING PIN	1		X	X	
10	AT174935	MODULE	1		X	X	
11	AT180923	CRADLE	1		X	X	
12	AT184684	TRANSMISSION CONTROLLER	1		X	X	
13	AT302104	BRACKET	1		X	X	
14	AT302105	FRAME	1		X	X	
15	AT304327	LEVER	1		X	X	
16	AT305398	PLATE	1		X	X	
17	T163333	CAP SCREW	1		X	X	
18	T16464	LOCK NUT	1		X	X	
19	T201461	BUSHING	1		X	X	
20	T201462	SHAFT	1		X	X	
21	T201481	BUSHING	3		X	X	
22	T201482	BUSHING	3		X	X	
23	19M7796	SCREW	3		X	X	M6 X 30
24	19M7775	SCREW	9		X	X	M6 X 16
25	AT305433	BRACKET	1		X	X	
26	24H1821	WASHER	4		X	X	
27	21M7310	SCREW	4		X	X	M6 X 25
28	T140922	COMPRESSION SPRING	1		X	X	
29	T162876	KNOB	1		X	X	
30	T164264	LOCKING COLLAR	1		X	X	
31	T196079	NUT	3		X	X	
32	T202792	BRACKET	1		X	X	(ALSO ORDER (3) T196077 AND (2) T196079)
33	T120536	CLAMP	1		X	X	(SUB FOR T78787, THIS APPLICATION)

INCHING PEDAL

T207178 -UN-28JAN05

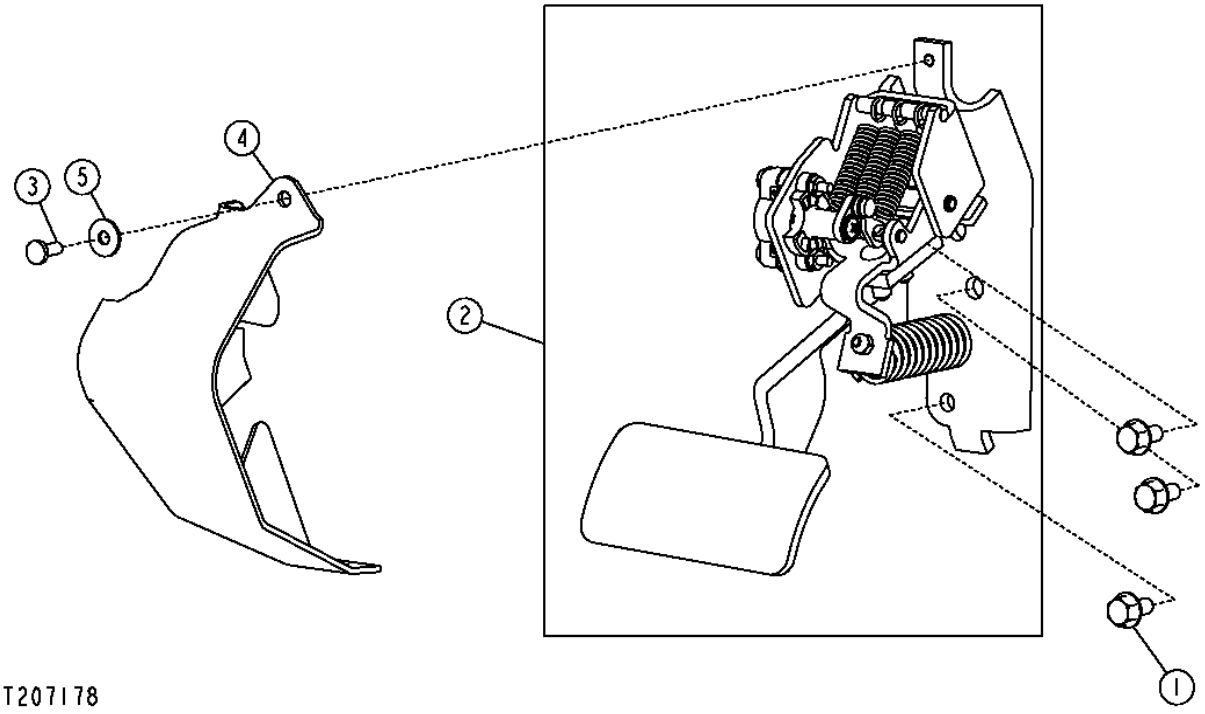

INCHING PEDAL

KEY	PART NO.	PART NAME	QTY	SERIAL NO.	770D	772D	REMARKS
1	19M7865	SCREW	3		X	X	M8 X 16
2	AT307200	PEDAL	1		X	X	
3	21M7292	SCREW	1		X	X	M6 X 16
4	T209947	COVER	1		X	X	
5	24H1821	WASHER	1		X	X	

TORSIONAL ISOLATOR

T155122 -UN-23MAY02

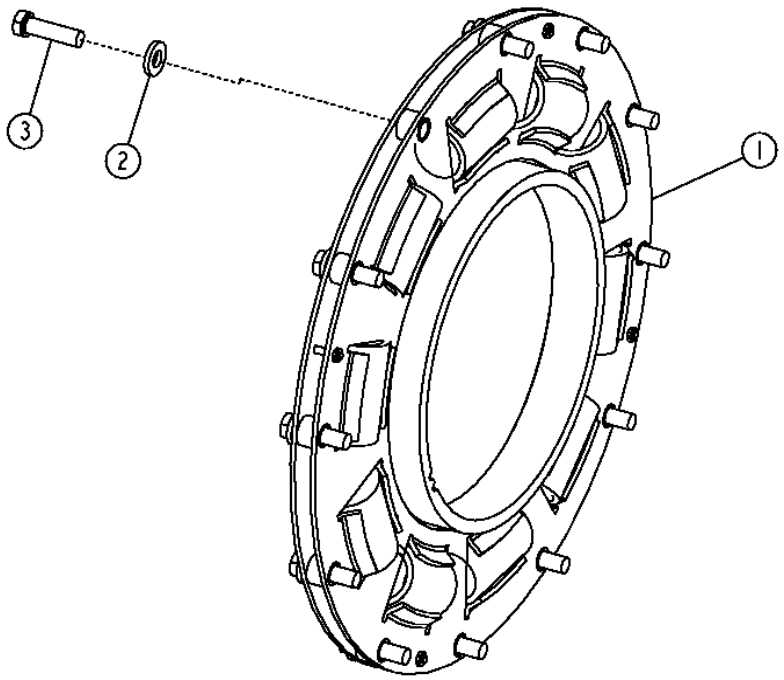

T155122

TORSIONAL ISOLATOR

KEY	PART NO.	PART NAME	QTY	SERIAL NO.	770D	772D	REMARKS
1	AT199018	ABSORBER	1		X	X	
2	T185424	WASHER	12		X	X	
3	19H3219	CAP SCREW	12		X	X	3/8" X 1-3/8"

TRANSMISSION OIL DIPSTICK AND FLYWHEEL HOUSING DRAIN

T212758 -UN-19JUL05

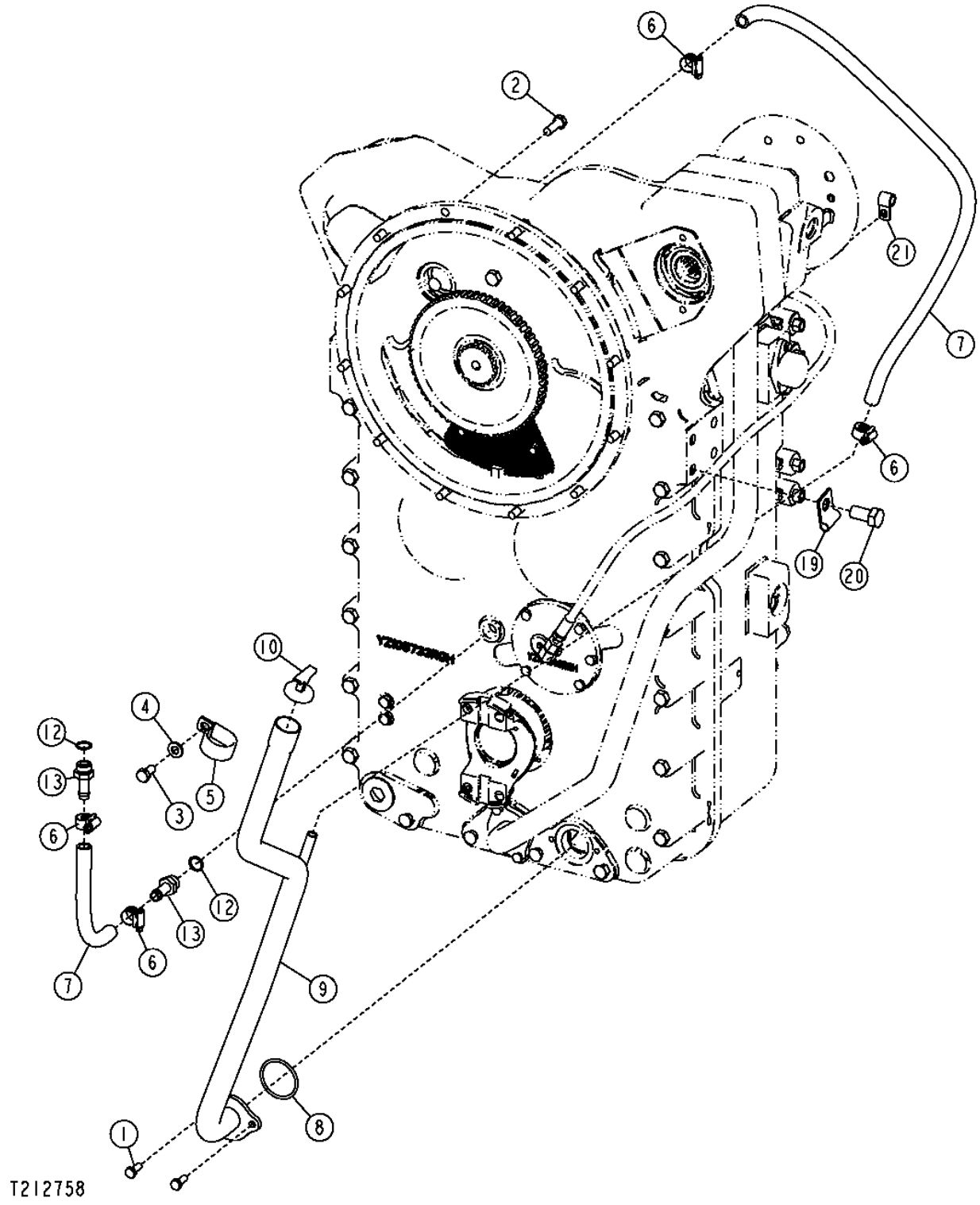

TRANSMISSION OIL DIPSTICK AND FLYWHEEL HOUSING DRAIN

KEY	PART NO.	PART NAME	QTY	SERIAL NO.	770D	772D	REMARKS
1	19M7139	CAP SCREW	2		X	X	M8 X 20
2	19H3239	CAP SCREW	12		X	X	3/8" X 1-1/4"
3	19M7938	CAP SCREW	1		X	X	M10 X 20
4	24M7239	WASHER	1		X	X	
5	AH77714	CLIP	1		X	X	
6	AR21836	CLAMP	2		X	X	
7	.....	BULK HOSE	2		X	X	(MAKE FROM T168383) (CUT TO LENGTH)
8	P50631	O-RING	1		X	X	50.394 X 3.531 MM
9	YZ104048	DIPSTICK TUBE	1		X	X	
10	YZ105042	DIPSTICK	1		X	X	
11	YZ105419	CLAMP	1		X	X	
12	R26375	O-RING	2		X	X	
13	T38282	HOSE FITTING	2		X	X	
19	AA31281	CLAMP	1		X	X	
20	19M8029	CAP SCREW	1		X	X	M16 X 30
21	YZ105419	CLAMP	1		X	X	

MEMORANDA

TRANSMISSION (COMPLETE)

T206634 -UN-05JAN05

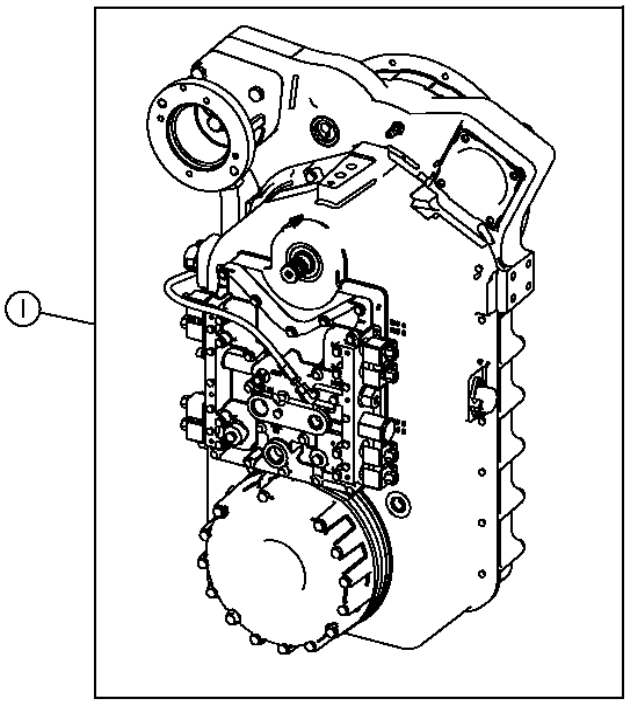

T206634

KEY	PART NO.	PART NAME	QTY	SERIAL NO.	770D	772D	REMARKS
1	AT317808	TRANSMISSION	1		X		REMANUFACTURED (COMPONENT EXCHANGE) (NON-HFWD)(YZ19068 ORIGINAL TRANSMISSION)
	AT317809	TRANSMISSION	1			X	REMANUFACTURED (COMPONENT EXCHANGE)(HFWD) (YZ19067 ORIGINAL TRANSMISSION)

FRONT TRANSMISSION CASE (770D)

YZ105133PCD01 -UN-23AUG04

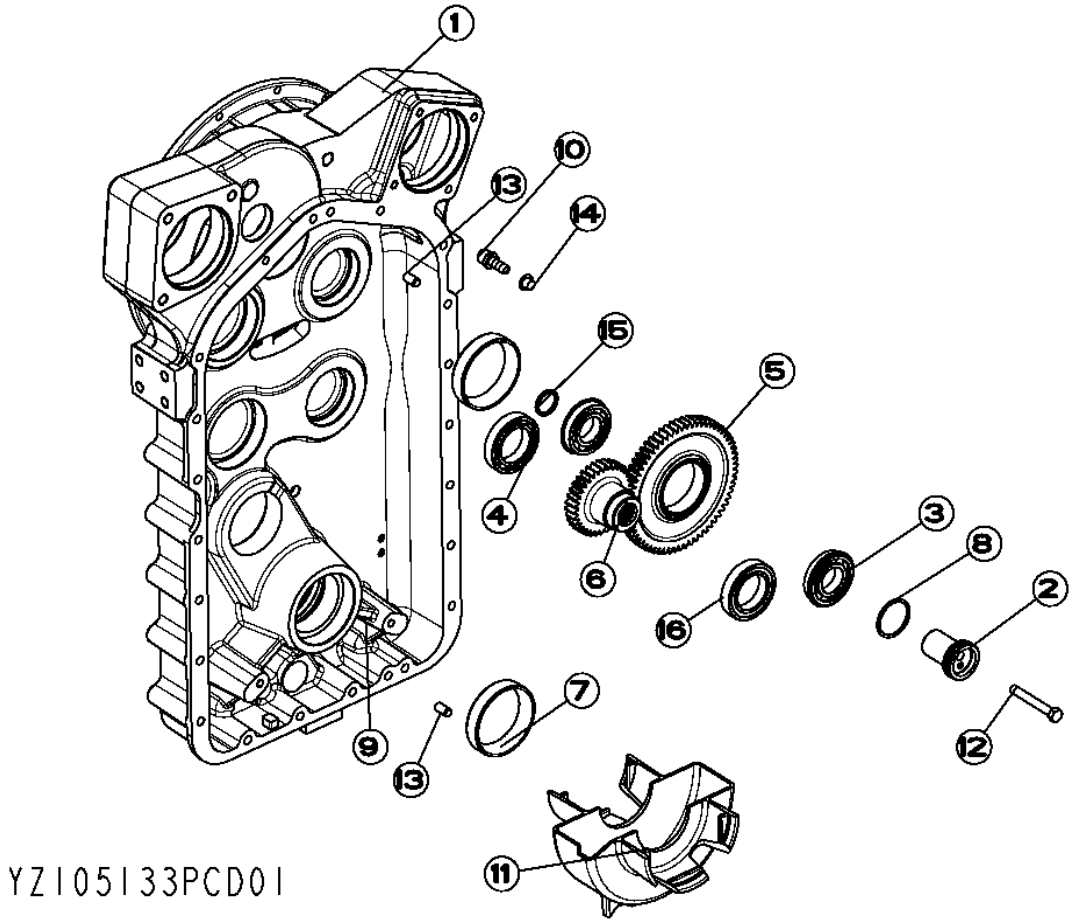

FRONT TRANSMISSION CASE (770D)

KEY	PART NO.	PART NAME	QTY	SERIAL NO.	770D	772D	REMARKS
1	YZ105385	HOUSING	1		X		FRONT HOUSING, (INCLUDES (2) F2710616, (2) F85004 AND (2) R28782)
2	YZ101474	SHAFT	2		X		
3	YZ103148	BALL BEARING	2		X		
4	F40111	BALL BEARING	1		X		
5	YZ105096	GEAR	1		X		
6	YZ105097	GEAR	1		X		
7	YZ103146	BEARING CUP	2		X		
8	B3690R	O-RING	2		X		(SUB FOR F37030226)
9	F85120	FITTING PLUG	1		X		
10	.....	HOSE FITTING	1		X		(F3310305 NO LONGER AVAILABLE)
11	YZ105375	TROUGH	1		X		(SUB FOR YZ103405)
12	.....	CAP SCREW	2		X		(19M2900 NO LONGER AVAILABLE)
13	F2710616	DOWEL PIN	2		X		
14	F2310018	PLUG	1		X		
15	F37030219	O-RING	1		X		
16	YZ100100	BALL BEARING	1		X		

FRONT TRANSMISSION CASE (772D)

YZ105123PCD01 -UN-24AUG04

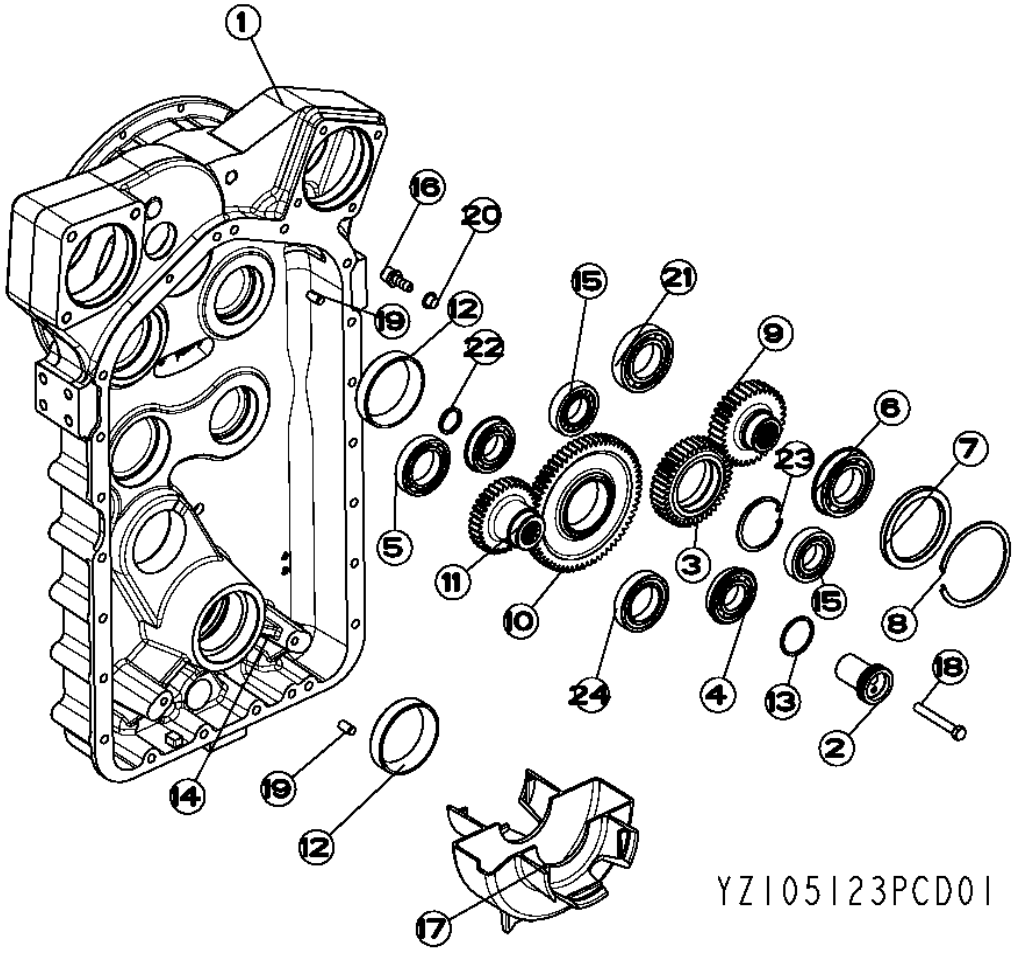

FRONT TRANSMISSION CASE (772D)

KEY	PART NO.	PART NAME	QTY	SERIAL NO.	770D	772D	REMARKS
1	YZ105385	HOUSING	1			X	(INCLUDES (2) F2710616, (2) U44115, (2) R28782, F85108, YZ105538, (2) 24M1604, (2) 19M3115, YZ105539) FRONT HOUSING KIT
2	YZ101474	SHAFT	2			X	
3	YZ105094	GEAR	1			X	
4	YZ103148	BALL BEARING	2			X	
5	F40111	BALL BEARING	1			X	
6	F40211R	BALL BEARING	1			X	
7	YZ105320	SPACER	1			X	
8	N131806	SNAP RING	1			X	
9	YZ105319	GEAR	1			X	
10	YZ105096	GEAR	1			X	
11	YZ105097	GEAR	1			X	
12	YZ103146	BEARING CUP	2			X	
13	P50631	O-RING	2			X	(SUB FOR F37030226)
14	F85120	FITTING PLUG	1			X	
15	YZ105122	CYLINDRICAL ROLLER BEARING	2			X	
16	.....		1			X	HOSE FITTING, (F3310305 NO LONGER AVAILABLE)
17	YZ105375	TROUGH	1			X	(SUB FOR YZ103405)
18	.....		2			X	CAPSCREW, (19M2900 NO LONGER AVAILABLE)
19	F2710616	DOWEL PIN	2			X	
20	F2310018	PLUG	1			X	
21	YZ103455	BEARING	1			X	
22	F37030219	O-RING	1			X	
23	F39000315	SNAP RING	1			X	
24	YZ100100	BALL BEARING	1			X	

REAR TRANSMISSION HOUSING

YZ105125PCD02 -UN-26JUL05

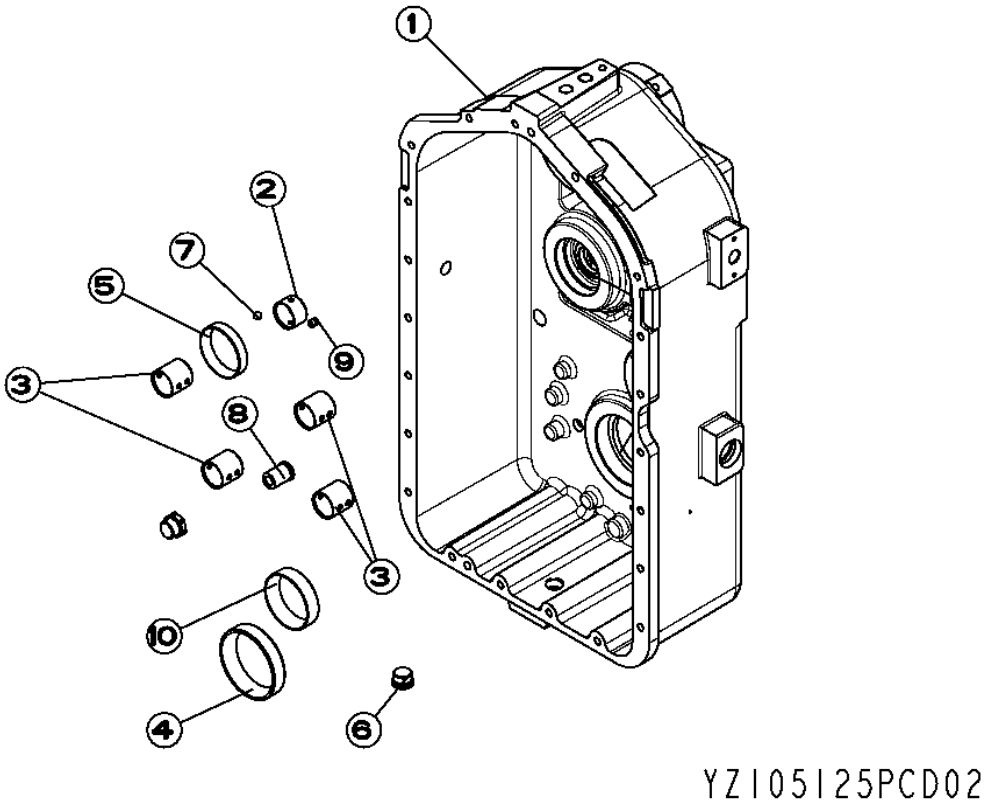

REAR TRANSMISSION HOUSING

KEY	PART NO.	PART NAME	QTY	SERIAL NO.	770D	772D	REMARKS
1	YZ105533	HOUSING	1		X	X	REAR
2	4008024	SLEEVE	1		X	X	
3	4008023	SLEEVE	4		X	X	
4	YZ103146	BEARING CUP	1		X	X	
5	YZ104280	BEARING CUP	1		X	X	
6	F85112	DRAIN PLUG	1		X	X	
	F37060912	O-RING	1		X	X	
7	F7400014D	BALL	1		X	X	
8	YZ250262	PRESSURE RELIEF VALVE	1		X	X	(SUB FOR YZ102752)
9	YZ101353	PLUG	1		X	X	(SUB FOR YZ105851)
10	YZ104087	BEARING CUP	1		X	X	

TRANSMISSION CASE HARDWARE

YZ105131 -UN-27JUL05

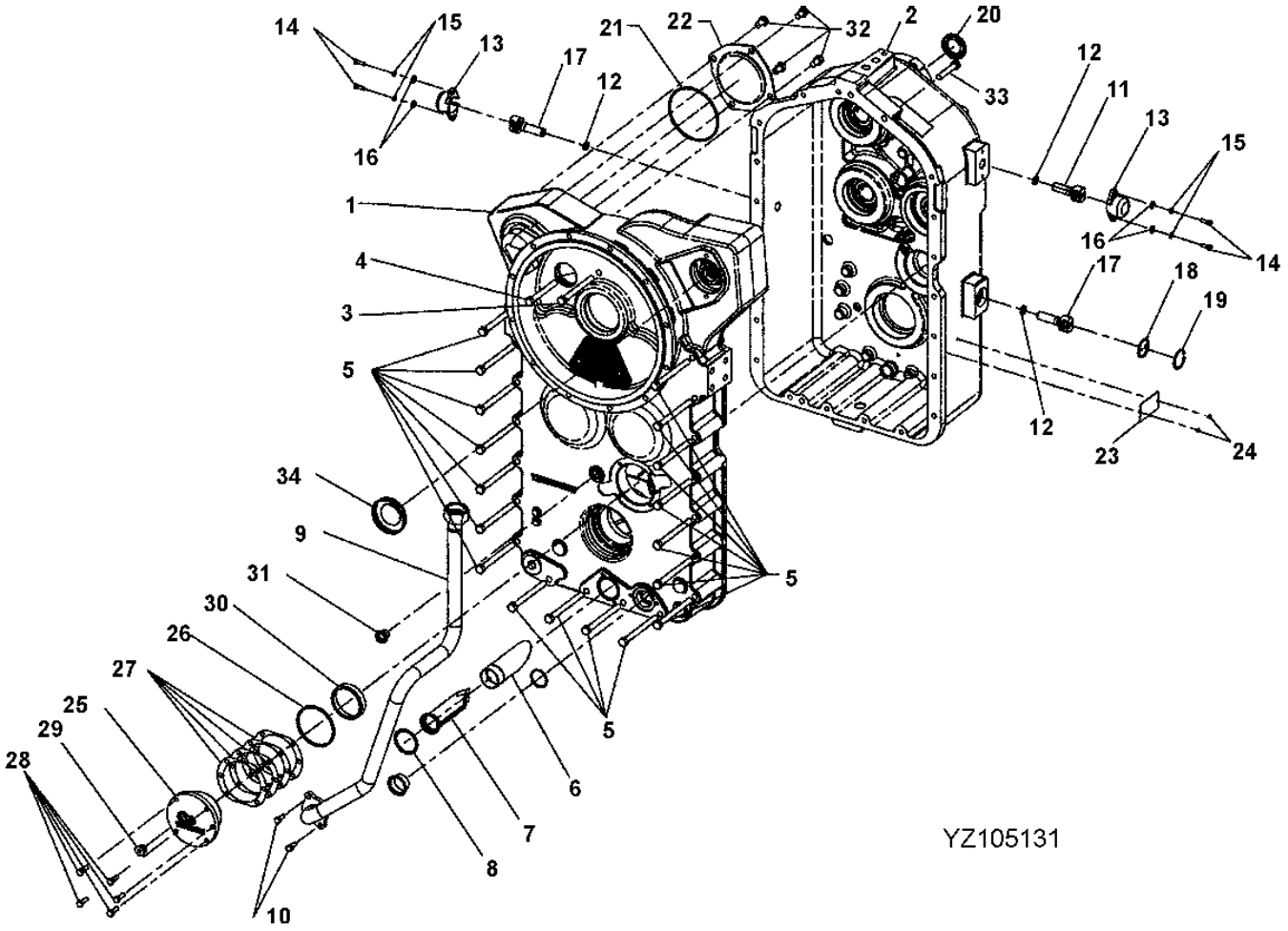

TRANSMISSION CASE HARDWARE

KEY	PART NO.	PART NAME	QTY	SERIAL NO.	770D	772D	REMARKS
1	.....	HOUSING	1		X	X	FRONT HOUSING
2	.....	HOUSING	1		X	X	REAR HOUSING
3	19M2905	CAP SCREW	2		X	X	M12 X 120
4	19M7289	CAP SCREW	1		X	X	M12 X 110, (SUB FOR 19M2903)
5	19M7758	CAP SCREW	18		X	X	M12 X 130, (SUB FOR 19M2906)
6	YZ102234	DEFLECTOR	1		X	X	BAFFLE
7	YZ104125	SCREEN	1		X	X	
8	P50631	O-RING	1		X	X	(SUB FOR F37030226)
9	YZ105259	OIL LINE	1		X	X	
10	19M3129	CAP SCREW	2		X	X	M8 X 20, (SUB FOR 19M9064)
11	RE12119	WHEEL SPEED SENSOR	1		X	X	
12	F37020114	O-RING	3		X	X	
13	R67230	COVER	2		X	X	
14	19M3118	CAP SCREW	4		X	X	M6 X 20
15	12H302	LOCK WASHER	4		X	X	1/4"
16	24H1287	WASHER	4		X	X	9/32" X 5/8" X 0.065"
17	YZ104746	SENSOR	2		X	X	
18	YZ104678	LOCK WASHER	1		X	X	(SUB FOR YZ104114)
19	F39000175	SNAP RING	1		X	X	(SUB FOR YZ104121)
20	YZ105354	SEAL	1		X	X	
21	YZ105724	PLATE	1		X	X	
22	F37020159	O-RING	1		X	X	
23	YZ250086	SERIAL NUMBER PLATE	1		X	X	
24	F310063	SCREW	2		X	X	
25	YZ104140	RETAINER	1		X	X	
26	F37030239	O-RING	1		X	X	
27	YZ104170	SHIM	1		X	X	
28	19M3131	CAP SCREW	5		X	X	M8 X 25
29	F85108	FITTING PLUG	1		X	X	
30	YZ104280	BEARING CUP	1		X	X	
31	.....	PLUG	1		X	X	(R66405 NO LONGER AVAILABLE)
32	19M3160	CAP SCREW	4		X	X	
33	19M6458	CAP SCREW	1		X	X	
34	F23303	PLUG	1		X	X	

TRANSMISSION SCREEN

YZ105123A -UN-25AUG04

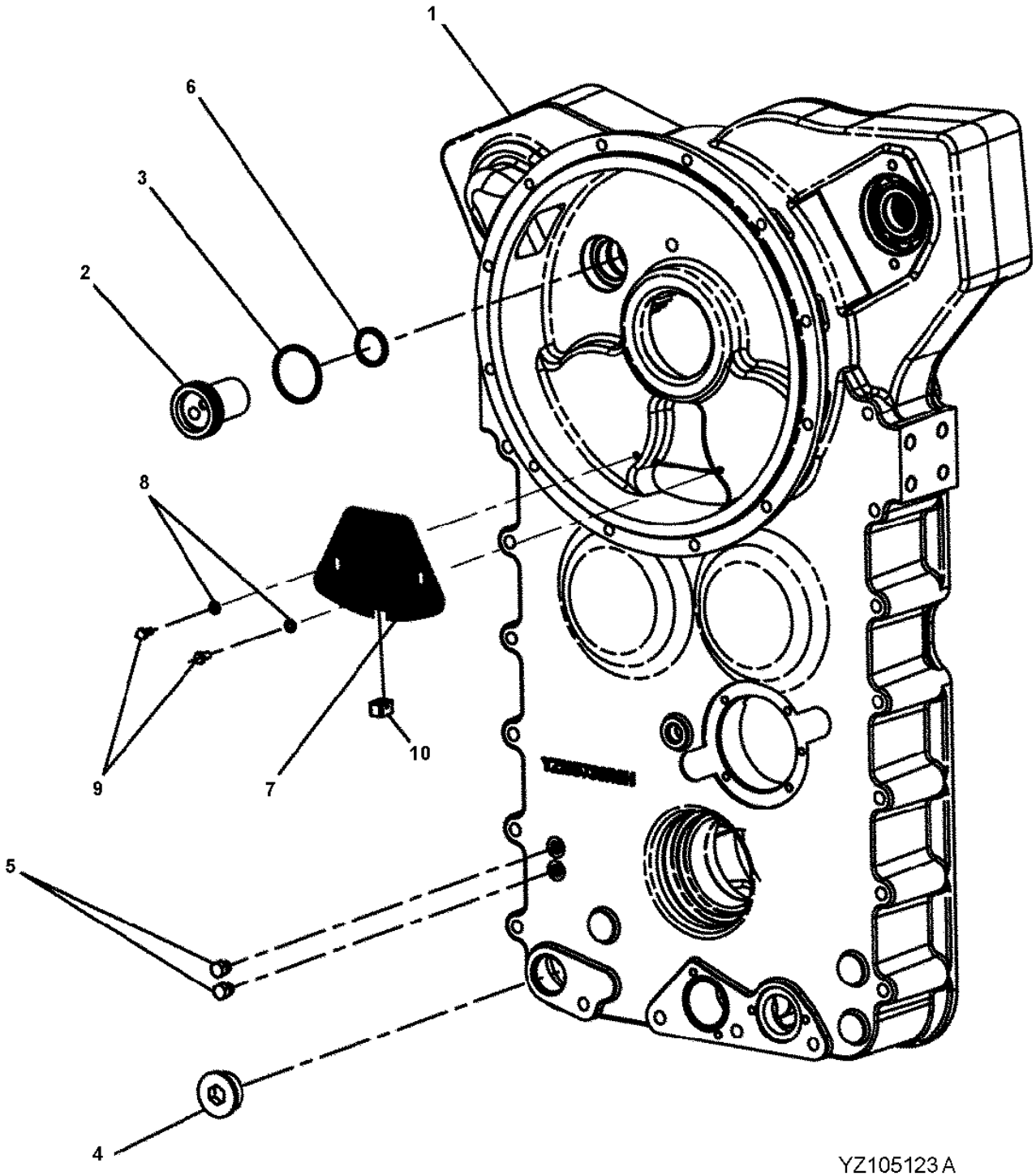

TRANSMISSION SCREEN

KEY	PART NO.	PART NAME	QTY	SERIAL NO.	770D	772D	REMARKS
1	YZ106205	HOUSING	1		X	X	(SUB FOR YZ105575) FRONT
2	YZ101474	SHAFT	1		X	X	
3	P50631	O-RING	1		X	X	(SUB FOR F37030226)
4	F85120	FITTING PLUG	1		X	X	
	F37060920	O-RING	1		X	X	(USE WITH F85120) (NOT ILLUSTRATED)
5	U44115	FITTING PLUG	2		X	X	
	R28782	O-RING	2		X	X	(USE WITH U44115) (NOT ILLUSTRATED)
6	F37030219	O-RING	1		X	X	
7	YZ105538	SCREEN	1		X	X	
8	24M7088	WASHER	1		X	X	
9	19M3115	CAP SCREW	2		X	X	M6 X 12
10	YZ105539	MAGNET	1		X	X	

TRANSMISSION FIRST STAGE ASSEMBLY

YZ103673PCD01 -UN-14DEC04

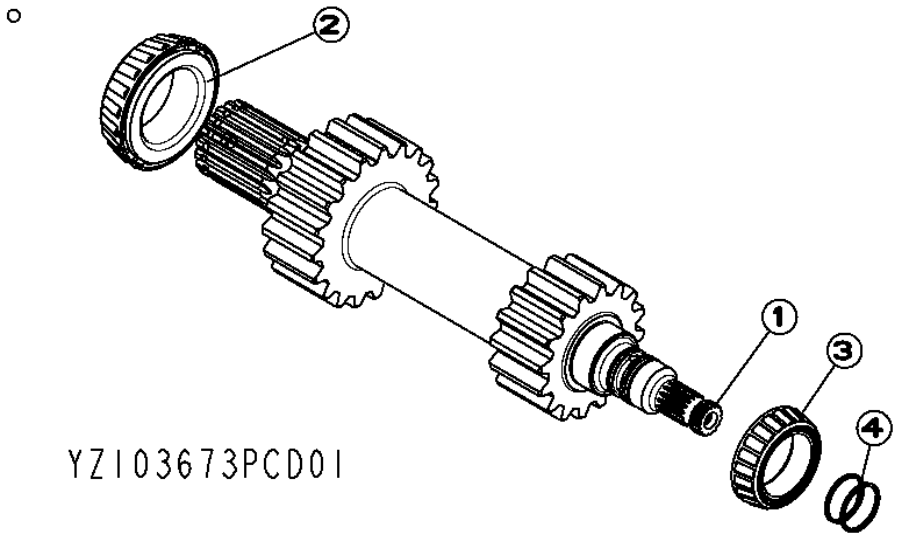

TRANSMISSION FIRST STAGE ASSEMBLY

KEY	PART NO.	PART NAME	QTY	SERIAL NO.	770D	772D	REMARKS
1	YZ106202	SHAFT	1		X	X	INPUT, (SUB FOR YZ103847)
2	YZ103188	BEARING CONE	1		X	X	
3	YZ104281	BEARING CUP	1		X	X	
4	YZ250161	SEAL	2		X	X	(SUB FOR 40B1113)

TRANSMISSION SECOND STAGE ASSEMBLY
(YZ105413)

T148929A -UN-27AUG04

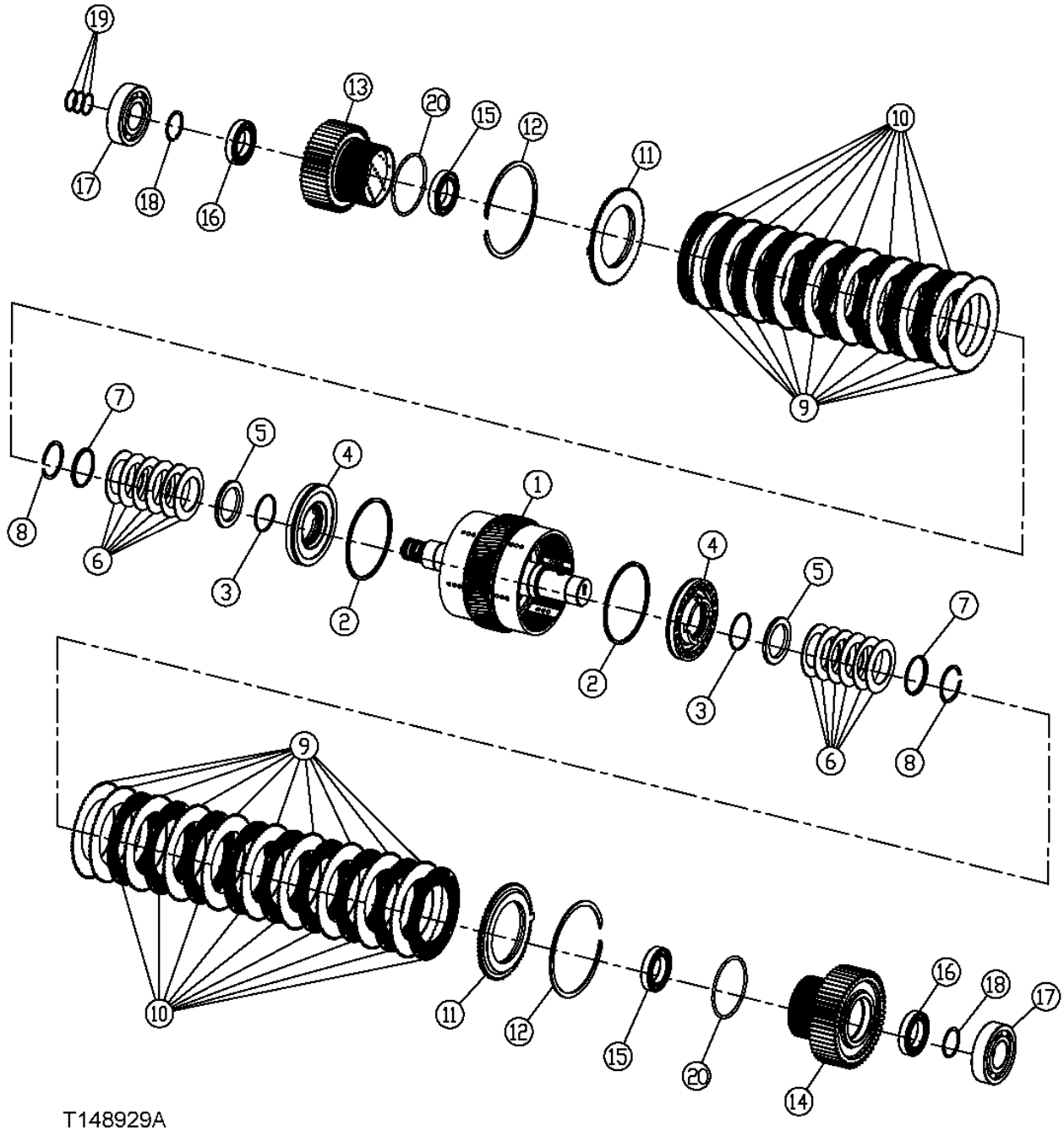

TRANSMISSION SECOND STAGE ASSEMBLY

KEY	PART NO.	PART NAME	QTY	SERIAL NO.	770D	772D	REMARKS
1	YZ105508	UNIVERSAL DRIVESHAFT	1		X	X	SECOND STAGE
2	YZ150119	SEAL	2		X	X	
3	F37020144	O-RING	2		X	X	
4	YZ105689	PISTON	2		X	X	(SUB FOR 4008520)
5	4008521	WASHER	2		X	X	
6	4003725	DISK SPRING	12		X	X	
7	4009711	RETAINER	2		X	X	
8	F81743	SNAP RING	2		X	X	
9	YZ106211	SEPARATOR	20		X	X	(SUB YZ104908)
10	YZ105493	CLUTCH PLATE	18		X	X	(SUB FOR YZ105892)
11	YZ105454	RETAINER	2		X	X	
12	YZ105465	SNAP RING	2		X	X	
13	YZ105059	GEAR	1		X	X	59 T
14	YZ103113	GEAR	1		X	X	51 T
15	YZ105415	BALL BEARING	2		X	X	
16	YZ106078	BALL BEARING	2		X	X	(SUB FOR F40110)
17	YZ106184	BALL BEARING	2		X	X	(SUB FOR YZ150041)
18	YZ105485	SNAP RING	2		X	X	(SUB FOR F81696)
19	YZ250161	SEAL	3		X	X	
20	F37030244G	O-RING	2		X	X	

TRANSMISSION THIRD STAGE ASSEMBLY

T148930A -UN-30AUG04

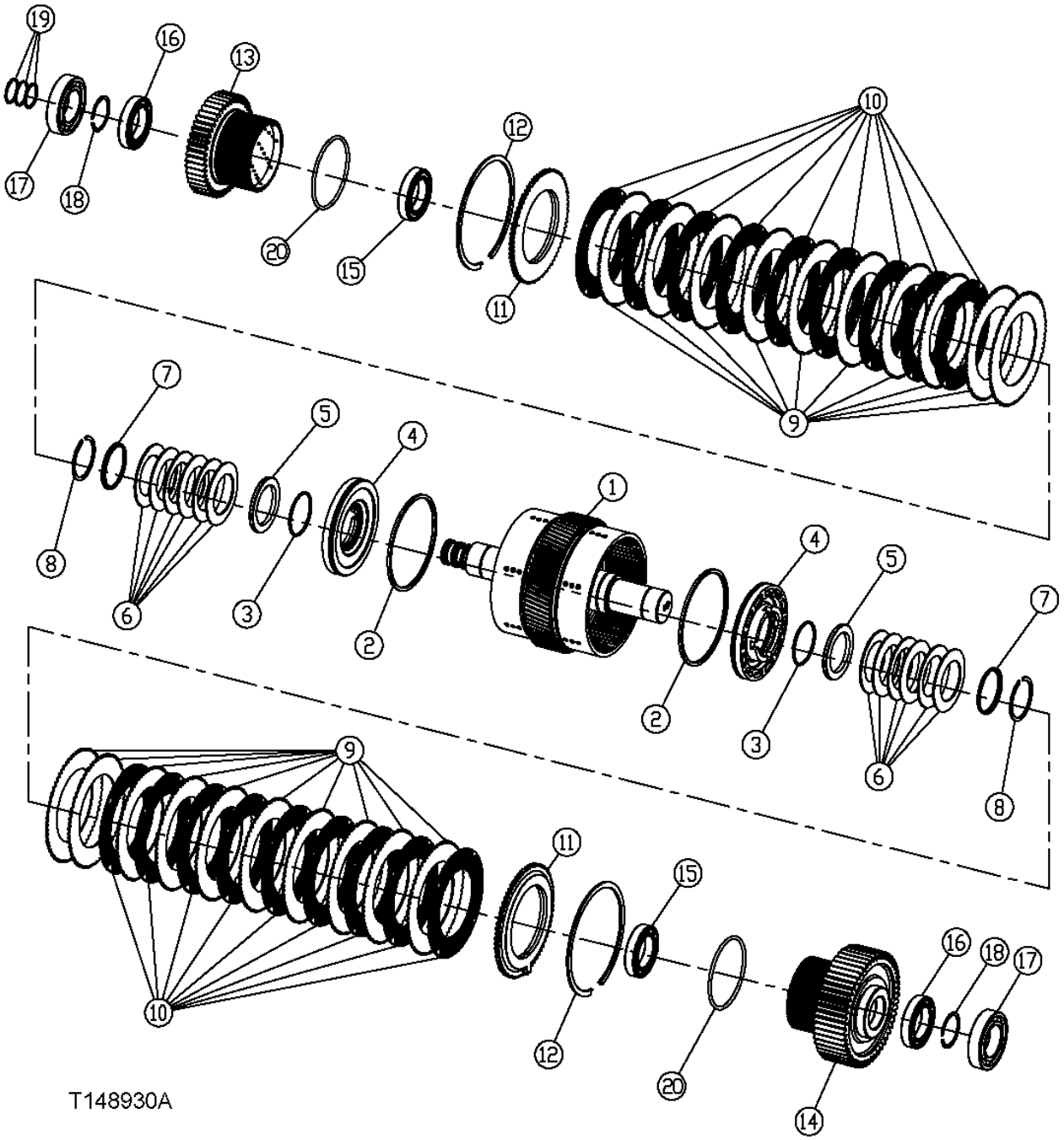

TRANSMISSION THIRD STAGE ASSEMBLY

KEY	PART NO.	PART NAME	QTY	SERIAL NO.	770D	772D	REMARKS
1	YZ105509	UNIVERSAL DRIVESHAFT	1		X	X	THIRD STAGE, (SUB FOR YZ102996)
2	YZ150119	SEAL	2		X	X	
3	F37020144	O-RING	2		X	X	
4	YZ105689	PISTON	2		X	X	(SUB FOR 4008520)
5	4008521	WASHER	2		X	X	
6	4003725	DISK SPRING	12		X	X	
7	4009711	RETAINER	2		X	X	
8	F81743	SNAP RING	2		X	X	
9	YZ106211	SEPARATOR	20		X	X	(SUB YZ104908)
10	YZ105493	CLUTCH PLATE	18		X	X	(SUB FOR YZ105892)
11	YZ105454	RETAINER	2		X	X	
12	YZ105465	SNAP RING	2		X	X	
13	YZ103111	GEAR	1		X	X	59 T
14	YZ103112	GEAR	1		X	X	51 T
15	YZ105415	BALL BEARING	2		X	X	
16	YZ106078	BALL BEARING	2		X	X	(SUB FOR F40110)
17	YZ106185	BALL BEARING	2		X	X	(SUB FOR YZ103129)
18	YZ105485	SNAP RING	2		X	X	(SUB FOR F81696)
19	YZ250161	SEAL	3		X	X	
20	F37030244G	O-RING	2		X	X	

TRANSMISSION FOURTH STAGE ASSEMBLY

T148933 -UN-10DEC01

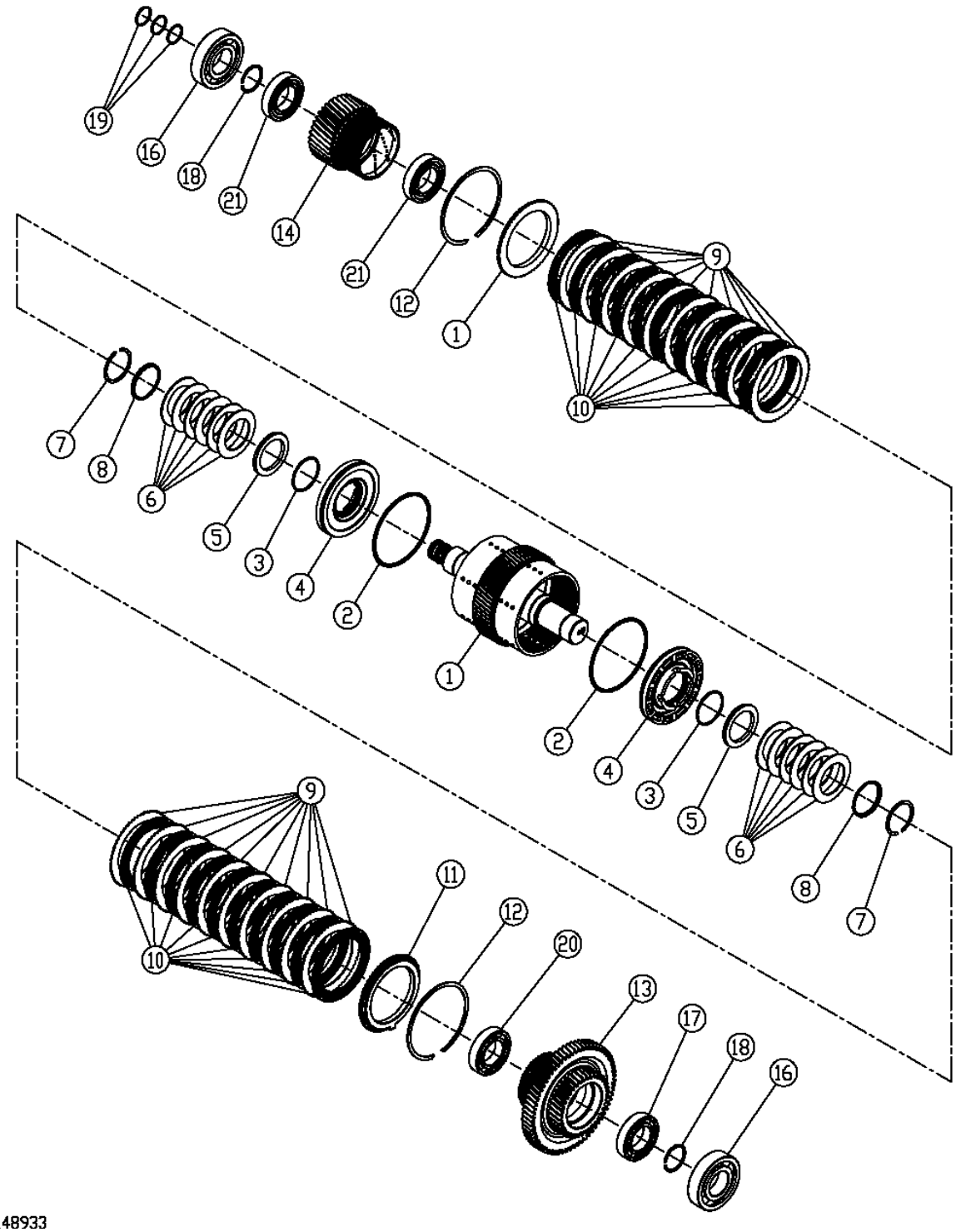

T148933

TRANSMISSION FOURTH STAGE ASSEMBLY

KEY	PART NO.	PART NAME	QTY	SERIAL NO.	770D	772D	REMARKS
1	YZ105464	UNIVERSAL DRIVESHAFT	1		X	X	FOURTH STAGE, (SUB FOR YZ105464)
2	YZ150119	SEAL	2		X	X	
3	F37020144	O-RING	2		X	X	
4	YZ105689	PISTON	2		X	X	(SUB FOR 4008520)
5	4008521	WASHER	2		X	X	
6	4003725	DISK SPRING	12		X	X	
7	F81743	SNAP RING	2		X	X	
8	4009711	RETAINER	2		X	X	
9	YZ106212	SEPARATOR	20		X	X	(SUB YZ150185)
10	YZ105891	CLUTCH PLATE	20		X	X	(SUB FOR YZ105494)
11	YZ150217	RETAINER	2		X	X	(SUB FOR YZ100356)
12	YZ105982	SNAP RING	2		X	X	(SUB FOR YZ103040)
13	YZ105443	GEAR	1		X	X	38/39 T
14	YZ103100	GEAR	1		X	X	38 T
16	YZ106163	BALL BEARING	2		X	X	(SUB FOR YZ103876)
17	YZ103875	BALL BEARING	1		X	X	
18	YZ105485	SNAP RING	2		X	X	(SUB FOR F81696)
19	YZ250161	SEAL	3		X	X	
20	YZ103144	BALL BEARING	1		X	X	
21	YZ104733	BEARING	2		X	X	

TRANSMISSION FIFTH STAGE ASSEMBLY

T148939 -UN-10DEC01

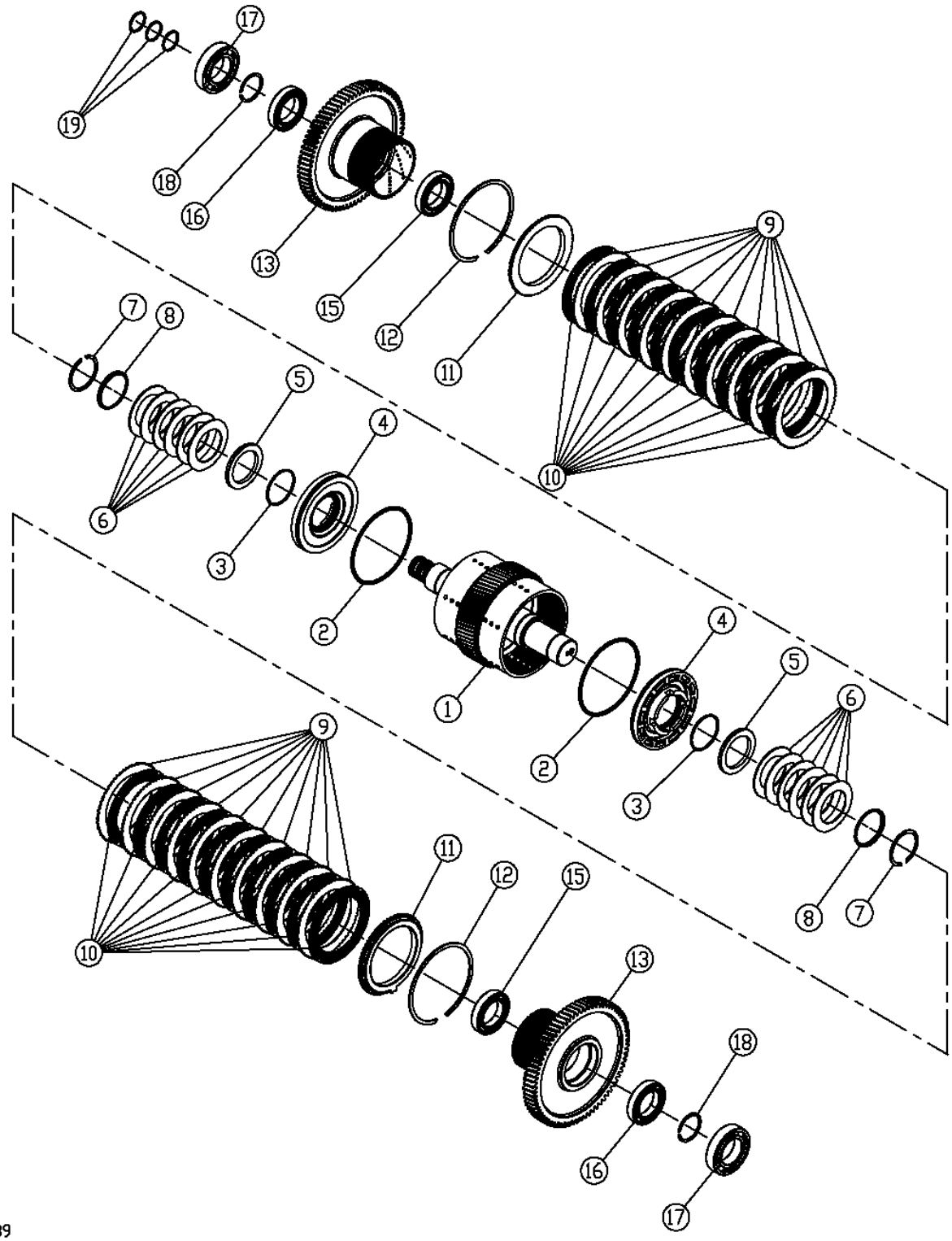

THIS PARTS LISTING IS CONTINUED

TRANSMISSION FIFTH STAGE ASSEMBLY

KEY	PART NO.	PART NAME	QTY	SERIAL NO.	770D	772D	REMARKS
1	YZ105463	UNIVERSAL DRIVESHAFT	1		X	X	FIFTH STAGE, (SUB FOR YZ103130)
2	YZ150119	SEAL	2		X	X	
3	F37020144	O-RING	2		X	X	
4	YZ105689	PISTON	2		X	X	(SUB FOR 4008520)
5	4008521	WASHER	2		X	X	
6	4003725	DISK SPRING	12		X	X	
7	F81743	SNAP RING	2		X	X	
8	4009711	RETAINER	2		X	X	
9	YZ106212	SEPARATOR	20		X	X	(SUB YZ150185)
10	YZ105891	CLUTCH PLATE	20		X	X	(SUB FOR YZ105494)
11	YZ150217	RETAINER	2		X	X	(SUB FOR YZ100356)
12	YZ105982	SNAP RING	2		X	X	(SUB FOR YZ103040)
13	YZ103102	GEAR	2		X	X	75 T
15	YZ105415	BALL BEARING	2		X	X	
16	YZ106078	BALL BEARING	2		X	X	(SUB FOR F40110)
17	YZ106185	BALL BEARING	2		X	X	(SUB FOR YZ103129)
18	YZ105485	SNAP RING	2		X	X	(SUB FOR F81696)
19	YZ250161	SEAL	3		X	X	

TRANSMISSION SIXTH STAGE ASSEMBLY

T148940 -UN-10DEC01

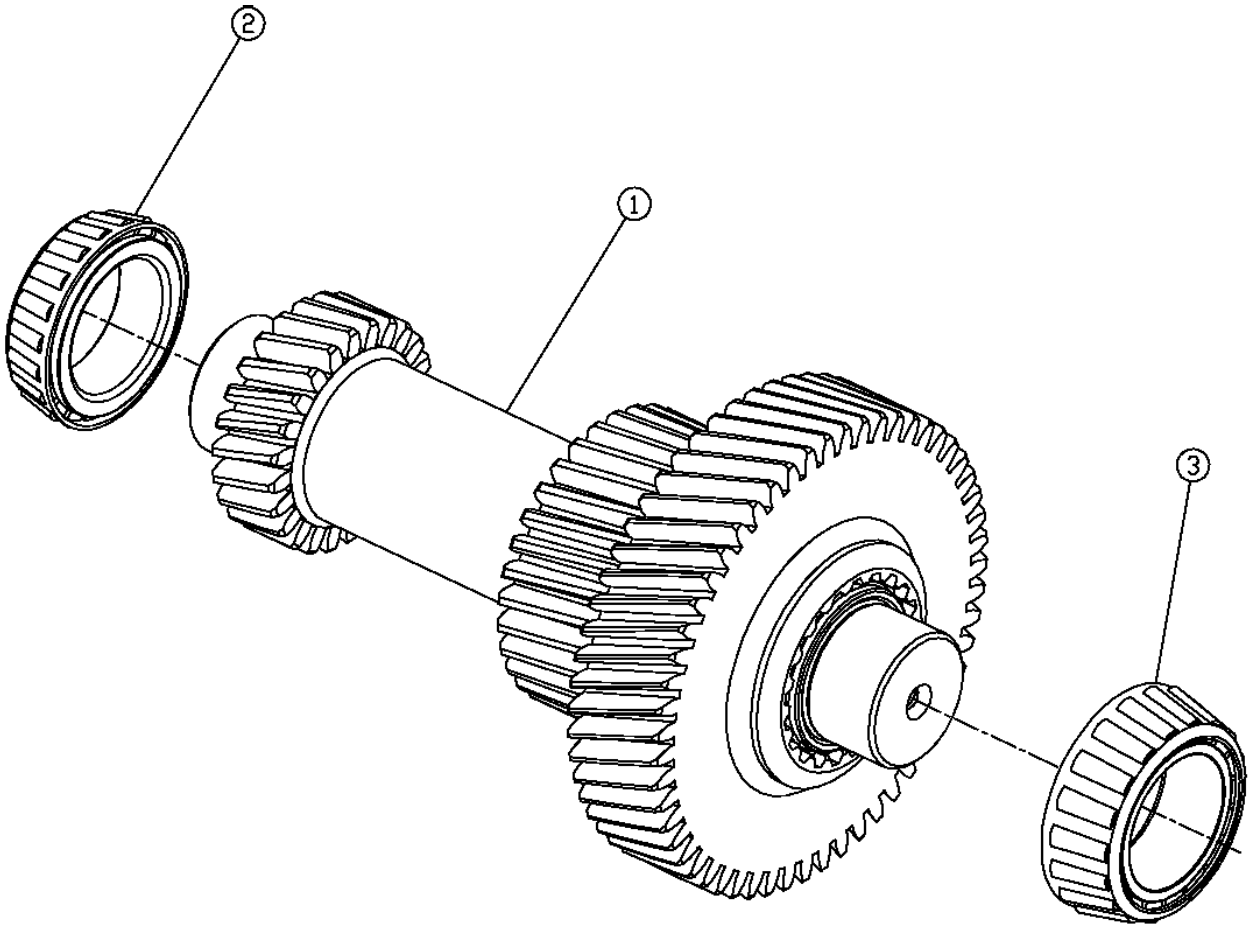

T148940

TRANSMISSION SIXTH STAGE ASSEMBLY

KEY	PART NO.	PART NAME	QTY	SERIAL NO.	770D	772D	REMARKS
1	YZ104653	SHAFT	1		X	X	
2	YZ104281	BEARING CUP	1		X	X	
3	YZ104088	BEARING CONE	1		X	X	

TRANSMISSION OUTPUT

TP48791 -UN-09MAY96

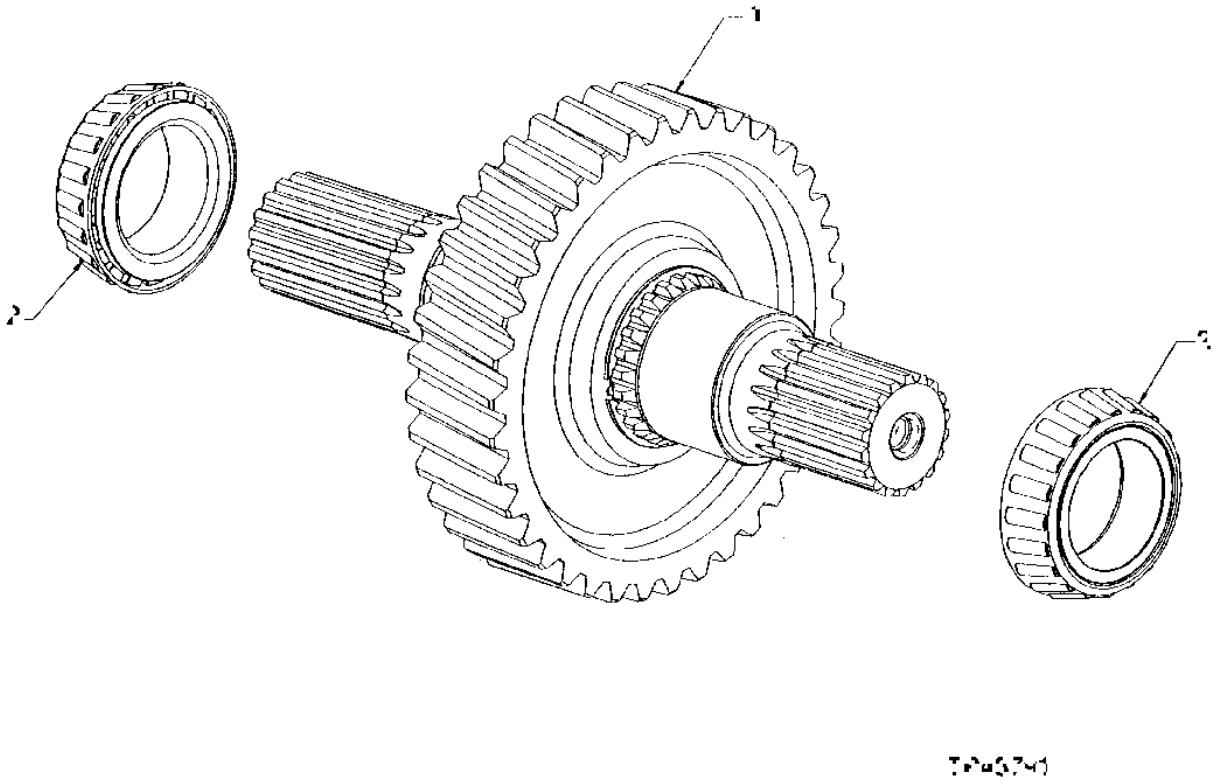

TRANSMISSION OUTPUT

KEY	PART NO.	PART NAME	QTY	SERIAL NO.	770D	772D	REMARKS
1	YZ104154	SHAFT	1		X	X	
2	YZ103188	BEARING CONE	2		X	X	

PARK BRAKE

T148941C -UN-30AUG04

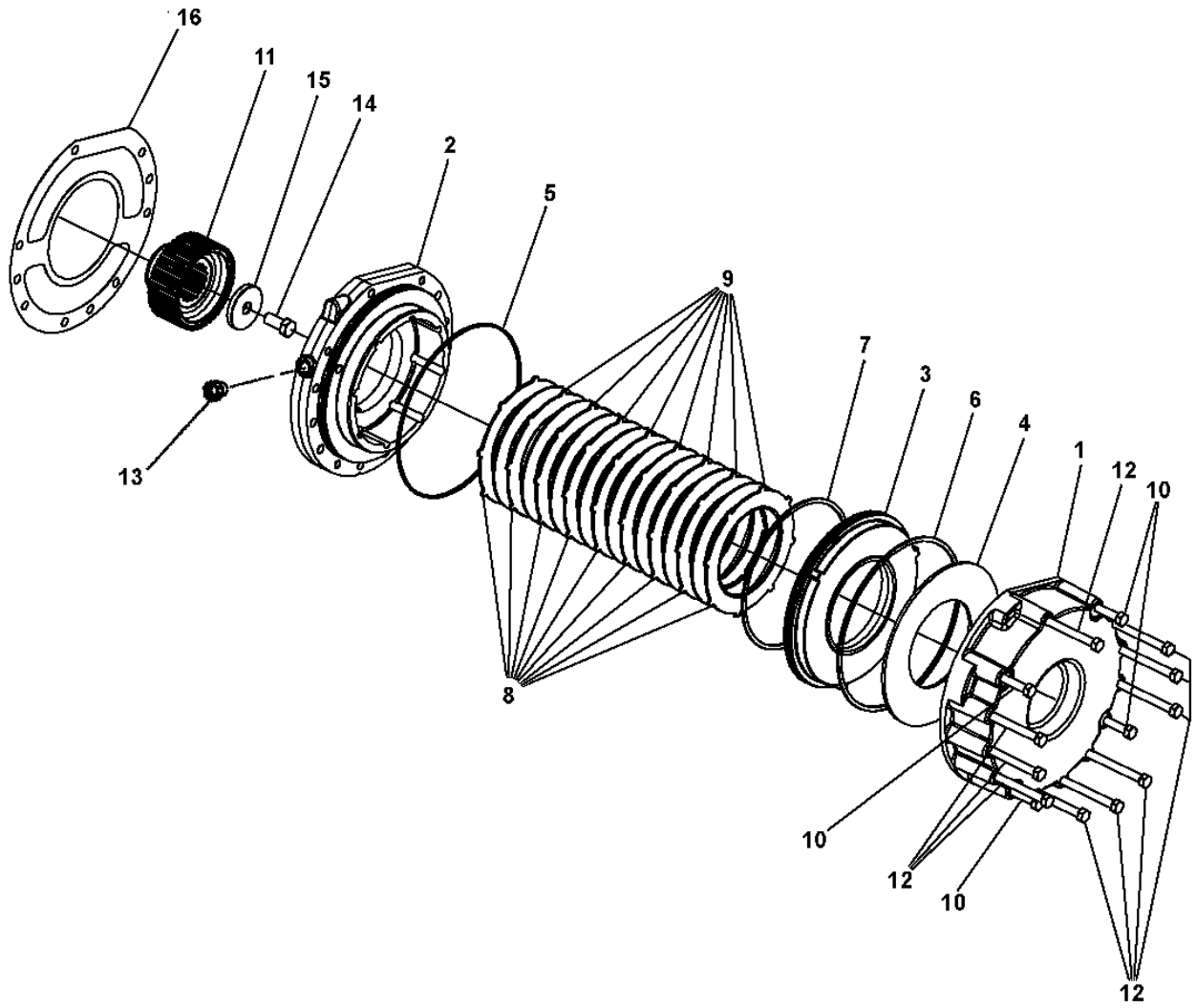

T148941C

PARK BRAKE

KEY	PART NO.	PART NAME	QTY	SERIAL NO.	770D	772D	REMARKS
1	YZ104052	COVER	1		X	X	
2	YZ103067	HOUSING	1		X	X	
3	YZ103185	PISTON	1		X	X	
4	YZ103115	DISK SPRING	1		X	X	PISTON RETURN
5	F37030275	O-RING	1		X	X	
6	YZ101349	SEAL	1		X	X	OUTER PISTON
7	YZ101350	SEAL	1		X	X	INNER PISTON
8	YZ100952	CLUTCH PLATE	9		X	X	SEPARATOR
9	RE234261	BRAKE DISK	8		X	X	(SUB FOR AR94517)
10	19M7289	CAP SCREW	4		X	X	M12 X 110, (SUB FOR 19M2903)
11	YZ105386	HUB	1		X	X	
12	19M7716	CAP SCREW	10		X	X	
13	.....	PLUG	1		X	X	(R66405 NO LONGER AVAILABLE)
14	19M3187	CAP SCREW	1		X	X	
15	4005234	WASHER	1		X	X	
16	YZ104871	GASKET	1		X	X	

TRANSMISSION YOKE

YZ105897PCD01 -UN-20AUG04

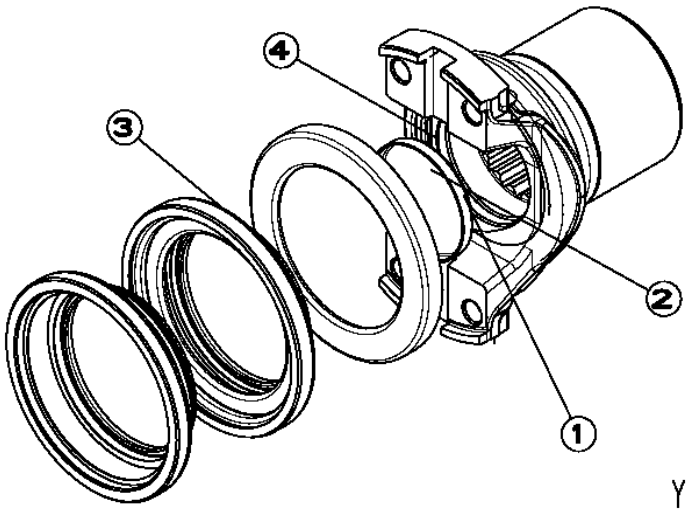

TRANSMISSION YOKE

KEY	PART NO.	PART NAME	QTY	SERIAL NO.	770D	772D	REMARKS
1	YZ105685	YOKE	1			X	
	YZ105685	YOKE	1		X		
2	YZ105914	SEAL	1		X	X	(SUB YZ104237)
3	YZ101905	CAP	1		X	X	EXPANSION
4	YZ105893	SEAL	1		X	X	

TRANSMISSION CONTROL VALVE MOUNTING

YZ104586PCD01 -UN-30AUG04

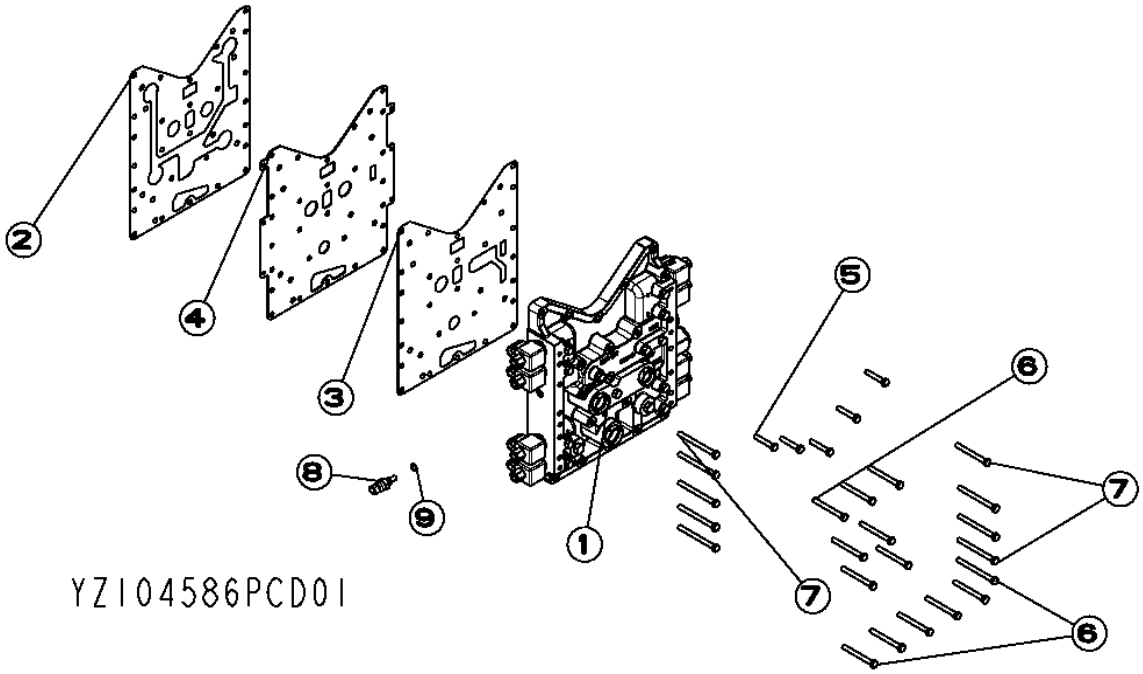

TRANSMISSION CONTROL VALVE MOUNTING

KEY	PART NO.	PART NAME	QTY	SERIAL NO.	770D	772D	REMARKS
1	YZ104198	HOUSING	1		X	X	
2	YZ104179	GASKET	1		X	X	(TRANS HOUSING TO PLATE)
3	YZ104180	GASKET	1		X	X	(VALVE HOUSING TO PLATE)
4	YZ104959	PLATE	1		X	X	
5	19M2972	CAP SCREW	5		X	X	M8 X 45
6	19M9050	CAP SCREW	13		X	X	M8 X 75
7	19M9066	CAP SCREW	9		X	X	M8 X 90
8	RE38310	SENSOR	1		X	X	
9	R26286	O-RING	1		X	X	

TRANSMISSION CONTROL VALVE

YZ07026 -UN-26JUL05

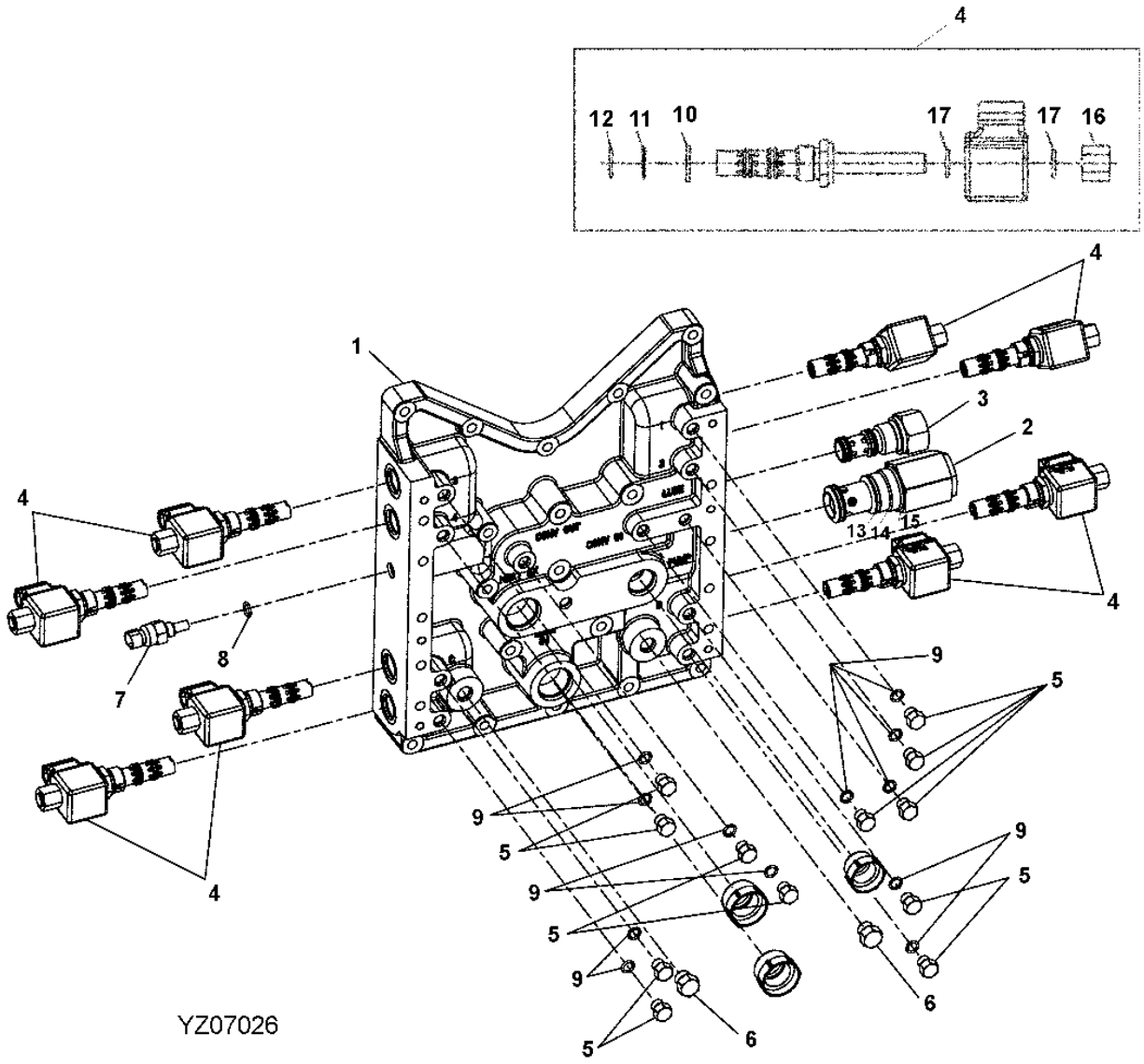

TRANSMISSION CONTROL VALVE

KEY	PART NO.	PART NAME	QTY	SERIAL NO.	770D	772D	REMARKS
1	YZ104198	HOUSING	1		X	X	(SUB FOR YZ103114)
2	YZ250249	REGULATOR	1		X	X	TRANSMISSION PRESSURE, (SUB FOR YZ501639)
3	YZ106316	PRESSURE RELIEF VALVE	1		X	X	OIL COOLER BYPASS, (SUB YZ105065)
	YZ105486	SEAL KIT	1		X	X	
4	YZ501931	VALVE	8		X	X	(SUB FOR YZ150141)
5	U44115	FITTING PLUG	12		X	X	TEST PORT
6	F85006	FITTING PLUG	2		X	X	TEST PORT
	F37060906	O-RING	2		X	X	
7	RE38310	SENSOR	1		X	X	TRANS TEMPERATURE
8	R26286	O-RING	1		X	X	
9	R28782	O-RING	12		X	X	
10	F37060910	O-RING	1		X	X	(ONE USED ON EACH SOLENOID VALVE)
11	F37010016	O-RING	1		X	X	(ONE USED ON EACH SOLENOID VALVE)
12	YZ101612	O-RING	1		X	X	(ONE USED ON EACH SOLENOID VALVE)
13	F37020122	O-RING	1		X	X	(ONE USED ON EACH SOLENOID VALVE)
14	F37020123	O-RING	1		X	X	(ONE USED ON EACH SOLENOID VALVE)
15	F37020124	O-RING	1		X	X	(ONE USED ON EACH SOLENOID VALVE)
16	YZ502169	NUT	1		X	X	(SUB FOR YZ150204)
17	W37636	O-RING	2		X	X	

TRANSMISSION CHARGE PUMP
(YZ105130)

YZ105129PCD02 -UN-26JUL05

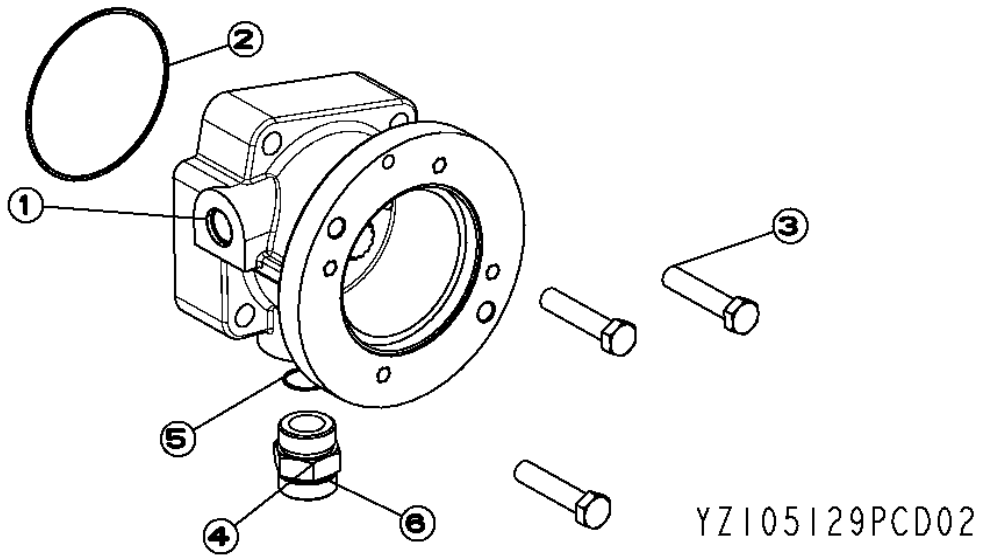

KEY	PART NO.	PART NAME	QTY	SERIAL NO.	770D	772D	REMARKS
1	YZ105258	OIL PUMP	1		X	X	50CC
2	F37020159	O-RING	1		X	X	
3	19M6754	CAP SCREW	3		X	X	
4	38H1165	ADAPTER	1		X	X	FITTING, FLAT FACE
5	U13639	O-RING	1		X	X	
6	T78612	O-RING	1		X	X	

MEMORANDA

TRANSMISSION FILTER AND HOSES

T202000 -UN-29NOV04

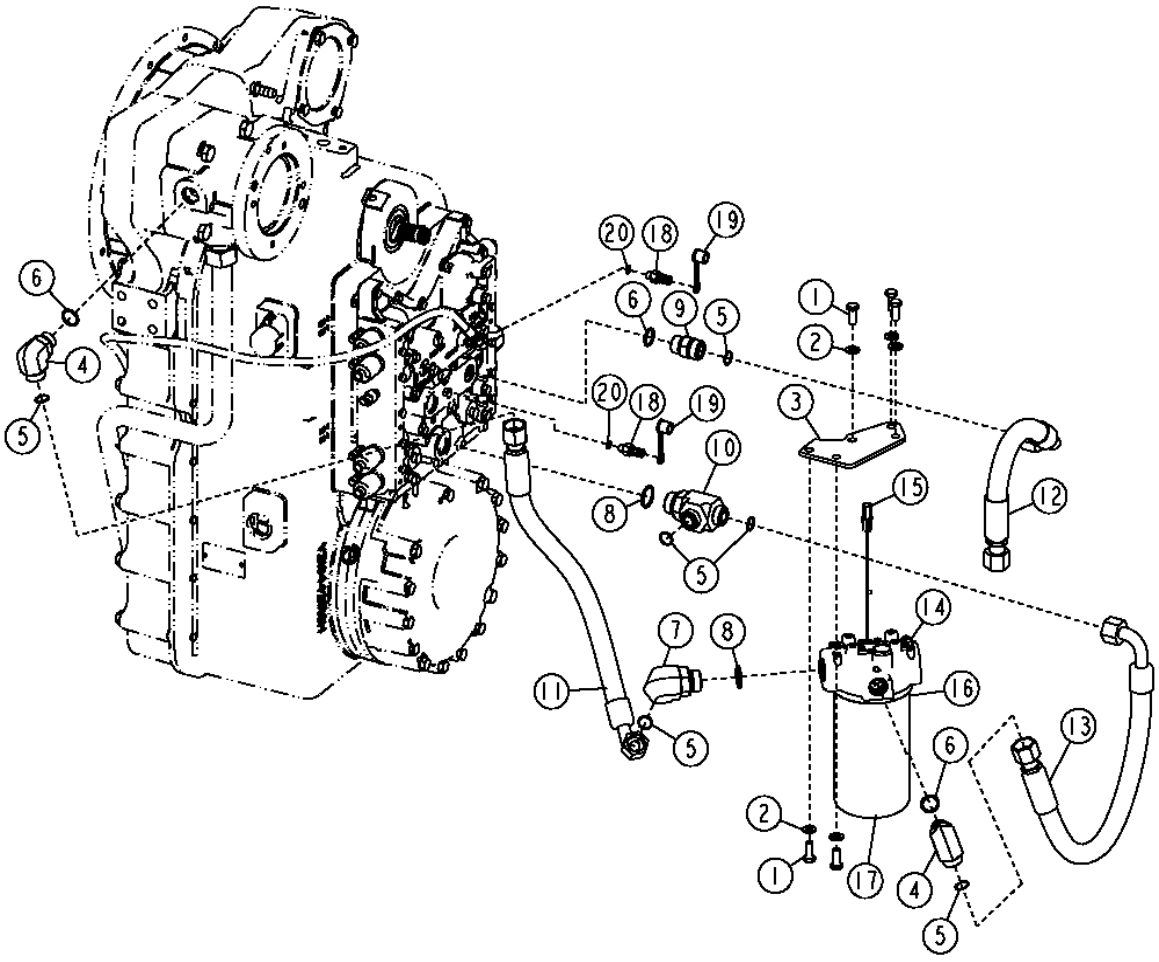

T202000

TRANSMISSION FILTER AND HOSES

KEY	PART NO.	PART NAME	QTY	TRANSMISSION SERIAL NO.	770D	772D	REMARKS
1	19M7402	CAP SCREW	5		X	X	M10 X 25
2	24M7239	WASHER	5		X	X	
3	T204678	PLATE	1		X	X	
4	38H1007	ELBOW FITTING	2		X	X	
5	T77858	O-RING	6		X	X	
6	U12547	O-RING	3		X	X	
7	38H1052	ELBOW FITTING	1		X	X	
8	R29936	O-RING	2		X	X	
9	38H1163	ADAPTER	1		X	X	
10	38H1438	TEE FITTING	1		X	X	
11	AT307581	HYDRAULIC HOSE - FABRICATE	1		X	X	
12	AT307582	HYDRAULIC HOSE - FABRICATE	1		X	X	
13	AT307588	HYDRAULIC HOSE - FABRICATE	1		X	X	
14	AT305048	FILTER HEAD	1		X	X	
15	AT307045	PRESSURE SWITCH	1		X	X	
16	P46051	O-RING	1		X	X	
17	AT305049	HYDRAULIC FILTER	1		X	X	(TRANSMISSION FILTER)
18	AT180119	FITTING	2		X	X	
19	R77175	COVER	2		X	X	
20	R28782	O-RING	2		X	X	

TRANSMISSION VALVE GUARDS

T202316 -UN-02SEP04

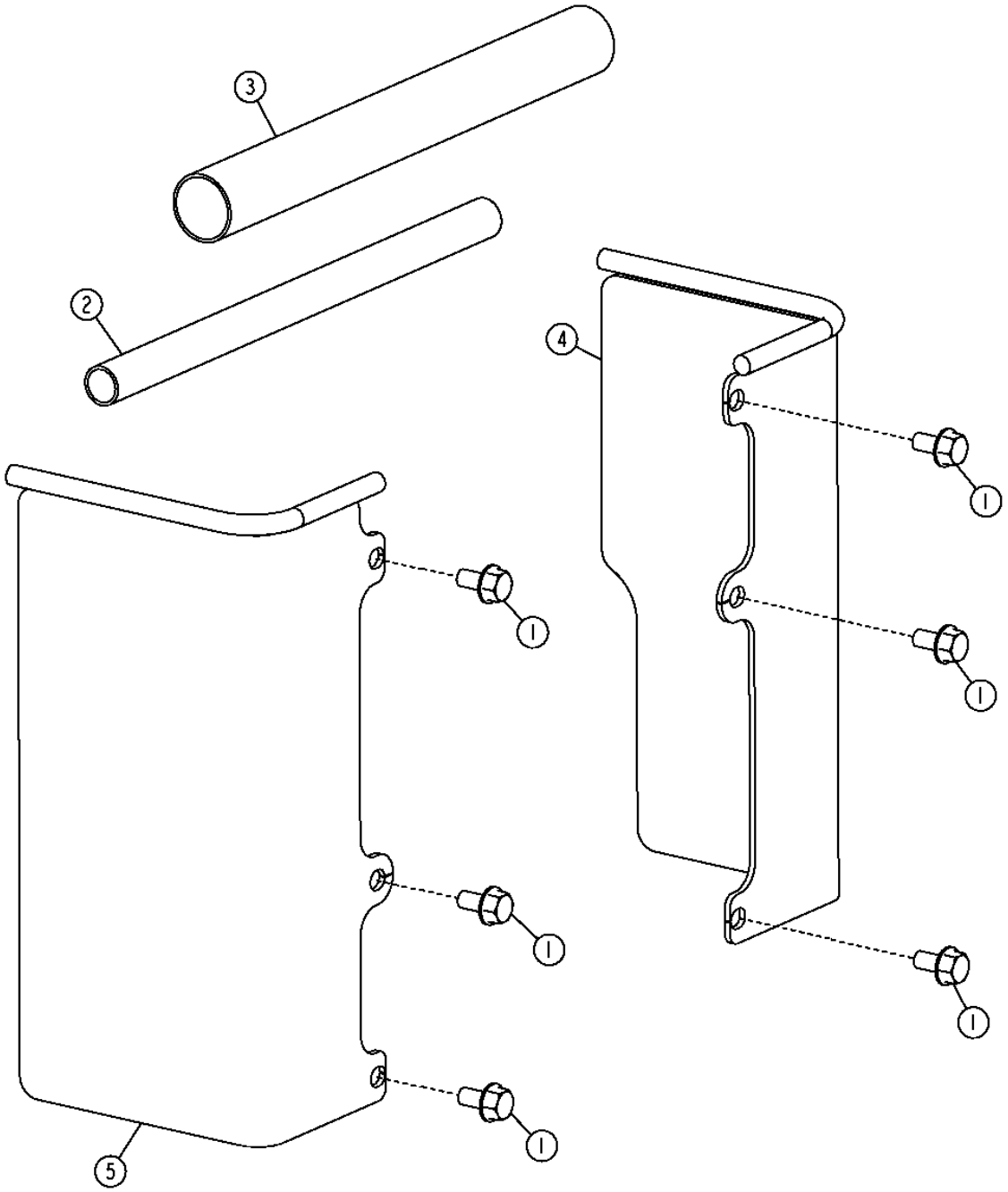

T202316

TRANSMISSION VALVE GUARDS

KEY	PART NO.	PART NAME	QTY	SERIAL NO.	770D	772D	REMARKS
1	19M7865	SCREW	6		X	X	M8 X 16
2	AT226446	DUST SHIELD	3		X	X	.75" HEAT SHRINK, HIGH RATIO
3	AT226447	DUST SHIELD	1		X	X	1.3" HEAT SHRINK, HIGH RATIO
4	AT312106	SHIELD	1		X	X	TRANSMISSION VALVE GUARD, LEFT
5	AT312107	SHIELD	1		X	X	TRANSMISSION VALVE GUARD, RIGHT

TRANSMISSION OIL COOLER HOSES AND ACCUMULATOR

T208489 -UN-18FEB05

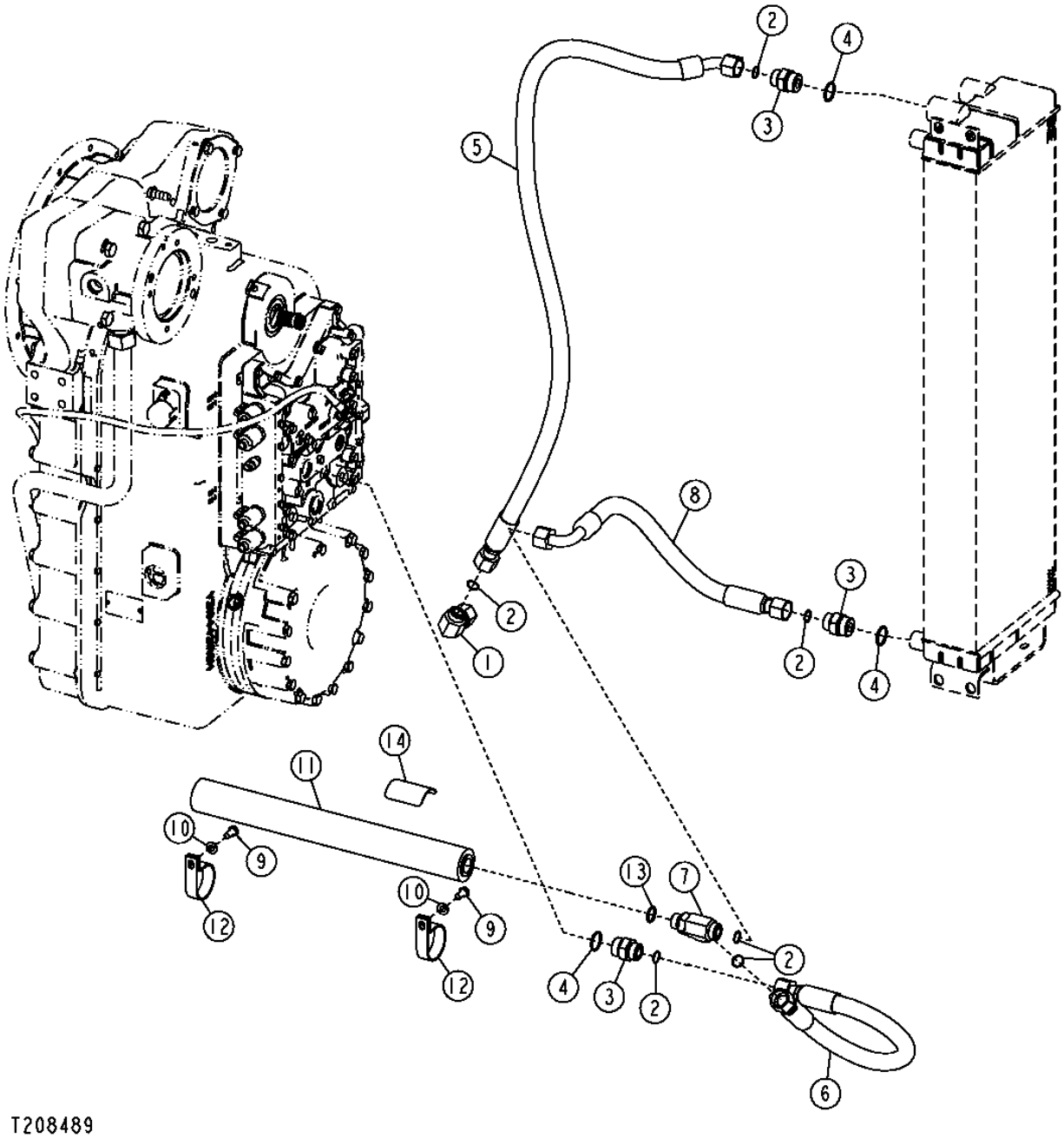

TRANSMISSION OIL COOLER HOSES AND ACCUMULATOR

KEY	PART NO.	PART NAME	QTY	SERIAL NO.	770D	772D	REMARKS
1	38H1097	ELBOW FITTING	1		X	X	
2	T77858	O-RING	4		X	X	
3	38H1194	ADAPTER	3		X	X	
4	R29936	O-RING	3		X	X	
5	AT307165	HYDRAULIC HOSE - FABRICATE	1		X	X	
6	AT320242	HYDRAULIC HOSE - FABRICATE	1		X	X	
7	38H1026	TEE FITTING	1		X	X	
8	AT320243	HYDRAULIC HOSE - FABRICATE	1		X	X	
9	19M7938	CAP SCREW	2		X	X	M10 X 20
10	24M7239	WASHER	2		X	X	
11	AT313425	HYDRAULIC ACCUMULATOR	1		X	X	
12	T126204	CLAMP	2		X	X	
13	U12547	O-RING	2		X	X	
14	T155572	SAFETY SIGN	1		X	X	

MEMORANDA

1H15

CRANKSHAFT

RGP8789 -UN-13MAY02

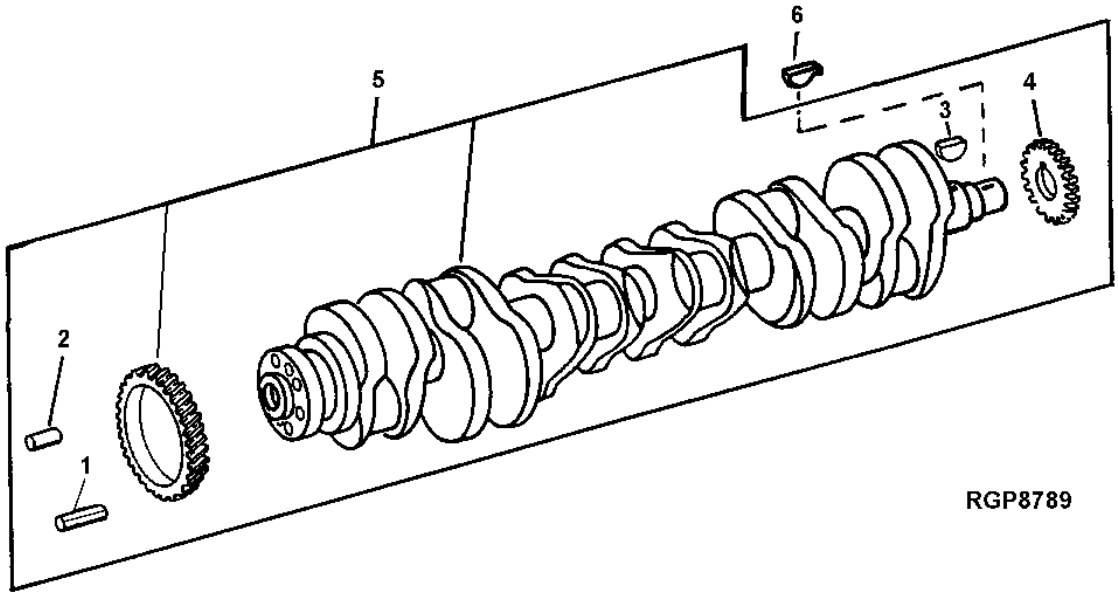

KEY	PART NO.	PART NAME	QTY	ENGINE SERIAL NO.	770D	772D	REMARKS
1	34M7089	DOWEL PIN	1		X	X	4 X 12 MM
2	R41934	DOWEL PIN	1		X	X	
3	R120752	KEY	1		X	X	1/8" X 0.625"
4	R104587	GEAR	1		X	X	
5	RE505124	CRANKSHAFT	1		X	X	(MARKED R120030 AND RE505124)
6	R116311	KEY	1		X	X	

MAIN BEARINGS

RGP1272 -UN-01JAN94

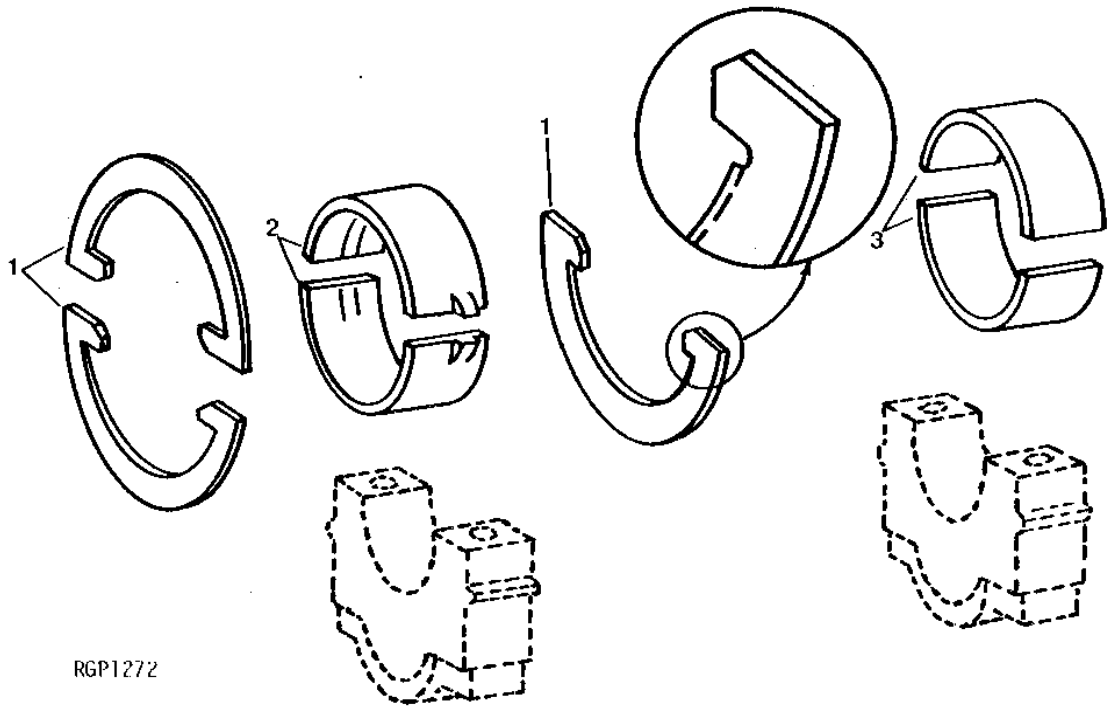

KEY	PART NO.	PART NAME	QTY	ENGINE SERIAL NO.	770D	772D	REMARKS
1	RE61253	THRUST WASHER	1		X	X	STD, (INCLUDES (3) R124381)
	RE61851	THRUST WASHER	1		X	X	0.18 MM (.007") OS, (INCLUDES (3) R124842)
2	RE504198	THRUST BEARING	1		X	X	STD, (INCLUDES R502127 AND R502128)
	RE504199	THRUST BEARING	1		X	X	0.292 MM (.011") US, (INCLUDES R502315 AND R502319)
	RE504200	THRUST BEARING	1		X	X	0.552 MM (.022") US, (INCLUDES R502316 AND R502320)
3	RE504195	BEARING	6		X	X	STD, (INCLUDES R502125 AND R502126)
	RE504196	BEARING	6		X	X	0.292 MM (.011") US, (INCLUDES R502317 AND R502321)
	RE504197	BEARING	6		X	X	0.552 MM (.022") US, (INCLUDES R502318 AND R502322)

1H17

CAMSHAFT AND GEARS

RGP3752 -UN-01JAN94

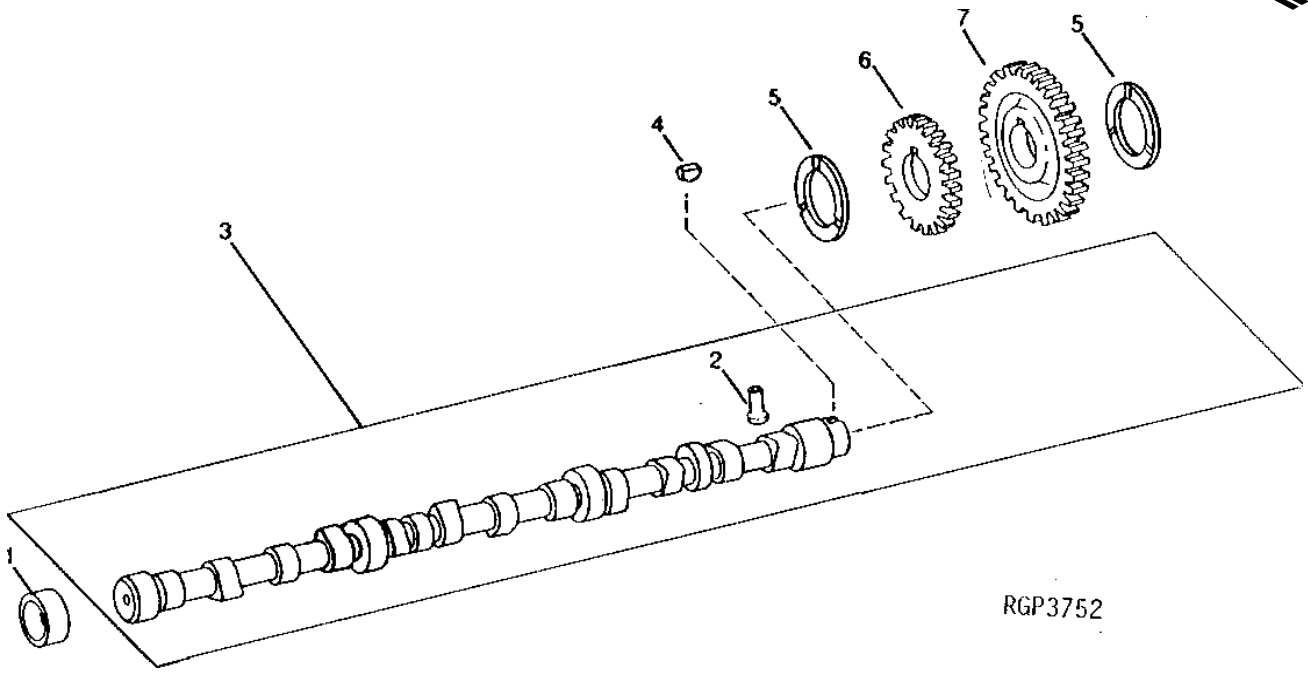

KEY	PART NO.	PART NAME	QTY	ENGINE SERIAL NO.	7 7 7 7 0 2 D D	REMARKS
1	R87561	BUSHING	4		X X	
2	R110126	FOLLOWER	12		X X	
3	RE57054	CAMSHAFT	1		X X	(MARKED R120872)
4	26H91	SHAFT KEY	1		X X	3/16" X 1-1/4"
5	R504811	WASHER	2		X X	
6	R104589	GEAR	1		X X	FUEL INJECTION DRIVE
7	R518212	GEAR	1		X X	CAMSHAFT

ROCKER ARMS, SHAFT AND PUSH RODS

RGP8223 -UN-26SEP01

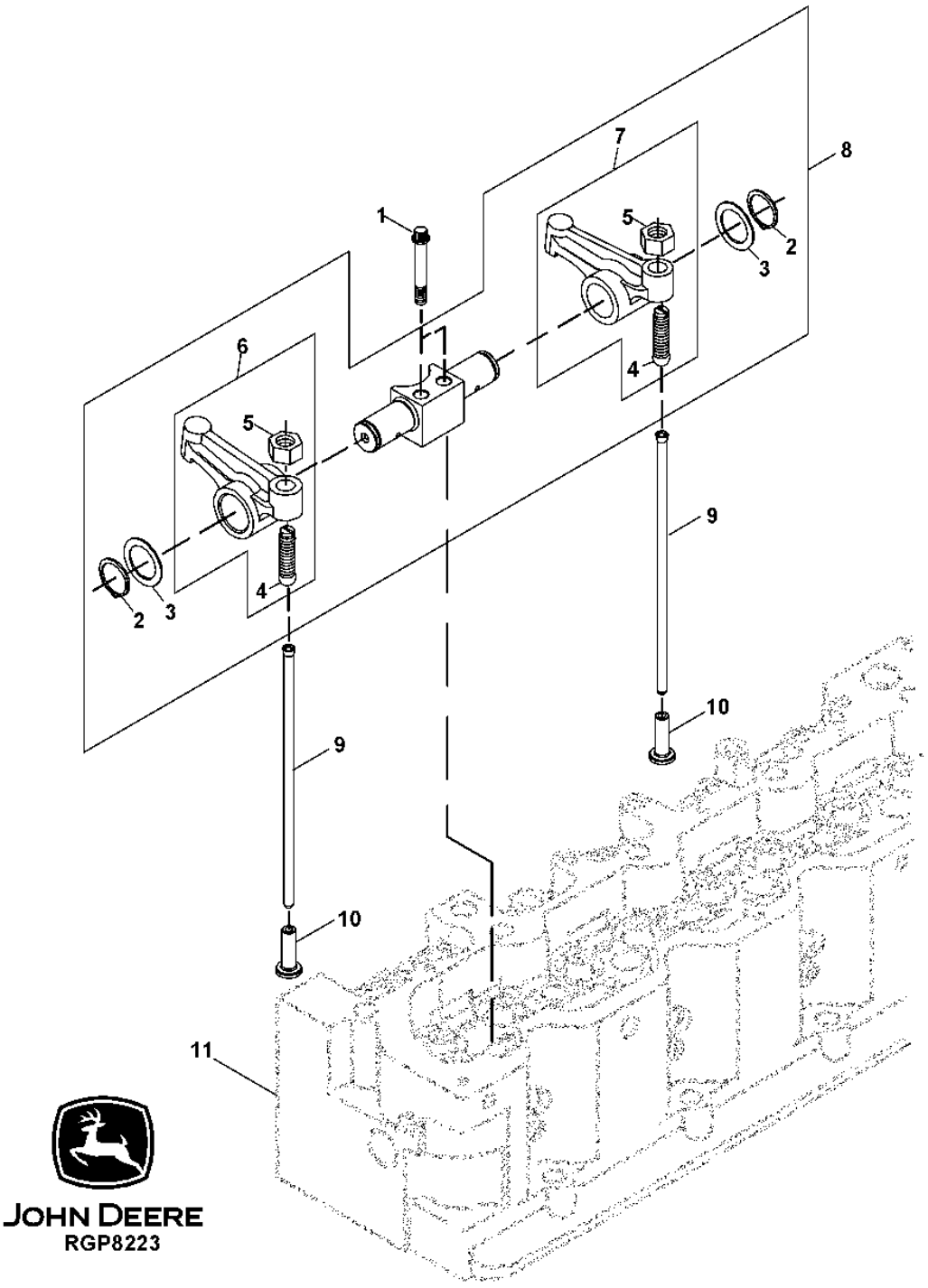

ROCKER ARMS, SHAFT AND PUSH RODS

KEY	PART NO.	PART NAME	QTY	ENGINE SERIAL NO.	770D	772D	REMARKS
1	19H3833	SCREW	12		X	X	5/16" X 1-3/4"
2	U17408	RING	2		X	X	
3	24H1384	WASHER	2		X	X	49/64" X 1-1/16" X 0.036"
4	R27443	SET SCREW	2		X	X	
5	14H1080	NUT	2		X	X	3/8"
6	RE24046	ROCKER ARM	1		X	X	(A) (1I, 2E, 3I, 4E, 5I, 6E) (LH)
7	RE24045	ROCKER ARM	1		X	X	(A) (1E, 2I, 3E, 4I, 5E, 6I) (RH)
8	RE521278	KIT	6		X	X	
9	R85027	PUSH ROD	12		X	X	
10	R110126	FOLLOWER	12		X	X	
11	.....	CYLINDER HEAD	1		X	X	

(A) - E (EXHAUST VALVE) - I (INTAKE VALVE)

ROCKER ARM COVER AND VENTILATING SYSTEM

RGP10897 -UN-14DEC04

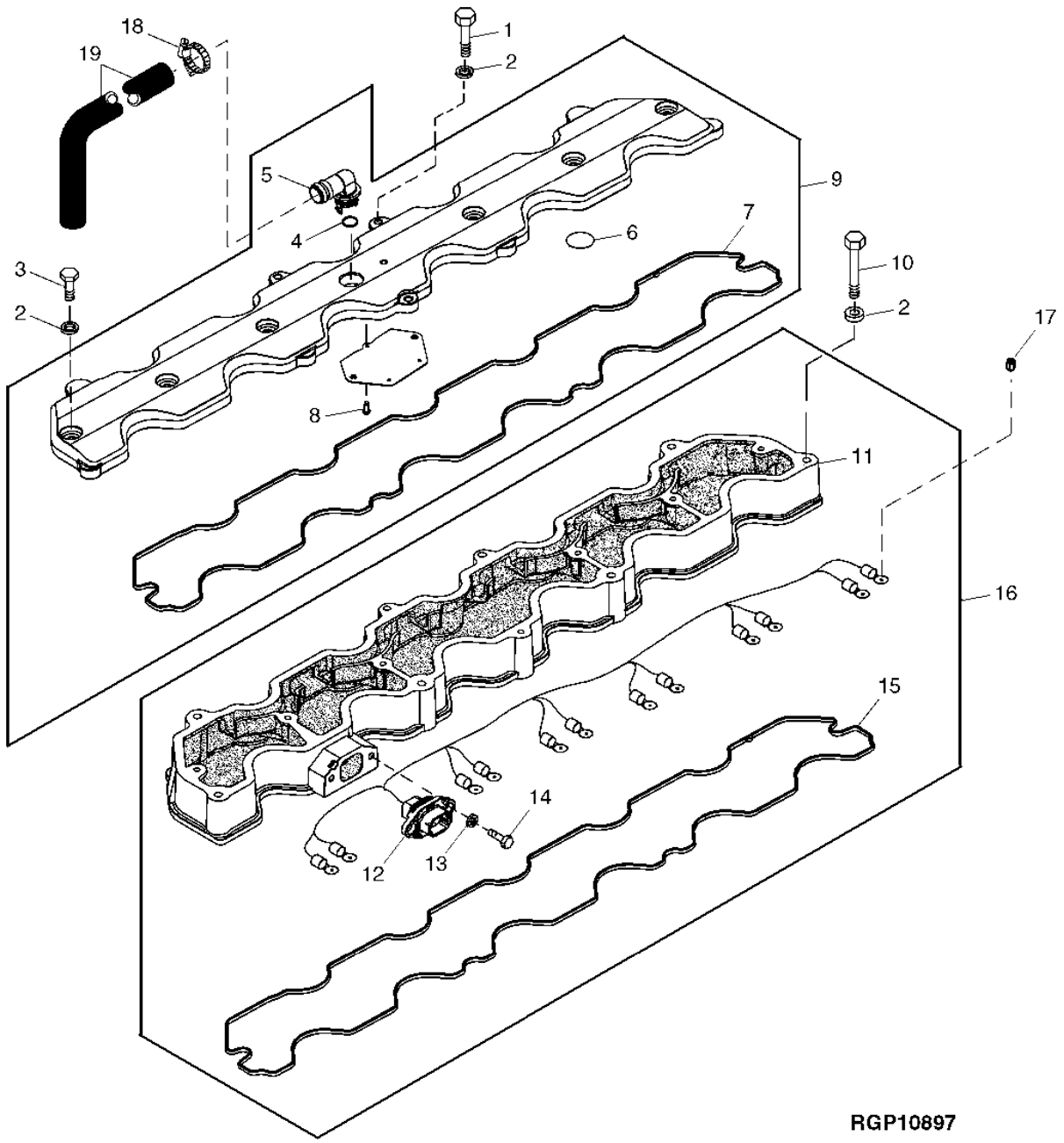

ROCKER ARM COVER AND VENTILATING SYSTEM

KEY	PART NO.	PART NAME	QTY	ENGINE SERIAL NO.	770D	772D	REMARKS
1	19H2151	CAP SCREW	2		X	X	1/4" X 3"
2	24H1286	WASHER	15		X	X	9/32" X 1/2" X 1/16"
3	19H1914	CAP SCREW	7		X	X	1/4" X 1"
4	R72328	O-RING	1		X	X	0.737" X 0.103"
5	R120467	ELBOW FITTING	1		X	X	
6	R504093	SEAL	4		X	X	
7	R502598	SEAL	1		X	X	
8	37H26	SCREW	5		X	X	0.116" X 1/4"
9	RE505094	VALVE COVER	1		X	X	
10	19H2334	CAP SCREW	6		X	X	1/4" X 2-1/2"
11	R502695	HOUSING	1		X	X	
12	RE509048	WIRING HARNESS	1		X	X	(INCLUDES R520373)
	R520373	SEAL	1		X	X	
13	24H1287	WASHER	2		X	X	9/32" X 5/8" X 0.065"
14	19H2036	CAP SCREW	2		X	X	1/4" X 7/8"
15	R502719	SEAL	1		X	X	
16	RE509265	HOUSING	1		X	X	
17	R134920	NUT	12		X	X	M7
18	TY22467	CLAMP	1		X	X	
19	.....	BULK HOSE	1		X	X	(MAKE FROM TY22450) (CUT TO LENGTH)

TIMING GEAR COVER AND FRONT OIL SEAL

RGP10908 -UN-17DEC04

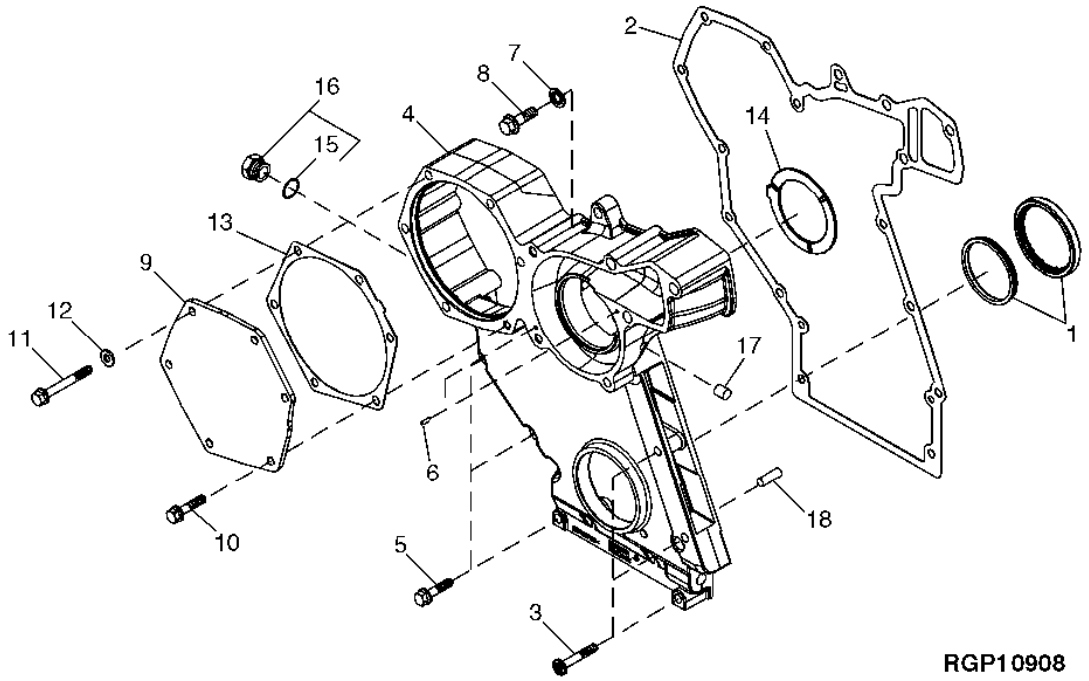

KEY	PART NO.	PART NAME	QTY	ENGINE SERIAL NO.	7 7 7 7 0 2 D D	REMARKS
1	AR49025	SEAL	1		X X	(INCLUDES R32617)
2	R119384	GASKET	1		X X	
3	R115129	CAP SCREW	3		X X	
4	R502083	COVER	1		X X	W/O AUX DRIVE
5	R104859	SCREW	3		X X	
6	R11086	DOWEL PIN	2		X X	
7	RE517059	WASHER	2		X X	
8	19H3693	SCREW	1		X X	3/8" X 1-1/4"
9	R131890	COVER	1		X X	INJECTION PUMP ACCESS
10	R112268	SCREW	1		X X	
11	19H3300	CAP SCREW	5		X X	5/16" X 3-3/4"
12	24H1136	WASHER	5		X X	11/32" X 11/16" X 0.065"
13	R502011	GASKET	1		X X	
14	R504811	WASHER	1		X X	
15	51M7044	O-RING	1		X X	17.300 X 2.200 MM
16	RE517370	FITTING PLUG	1		X X	M20X1.5
17	R98527	FILTER	1		X X	
18	F1743R	DOWEL PIN	2		X X	
..	R32617	RETAINER	1		X X	WEAR

PISTONS, CONNECTING RODS AND CYLINDER LINERS

RGP9618 -UN-06JUN03

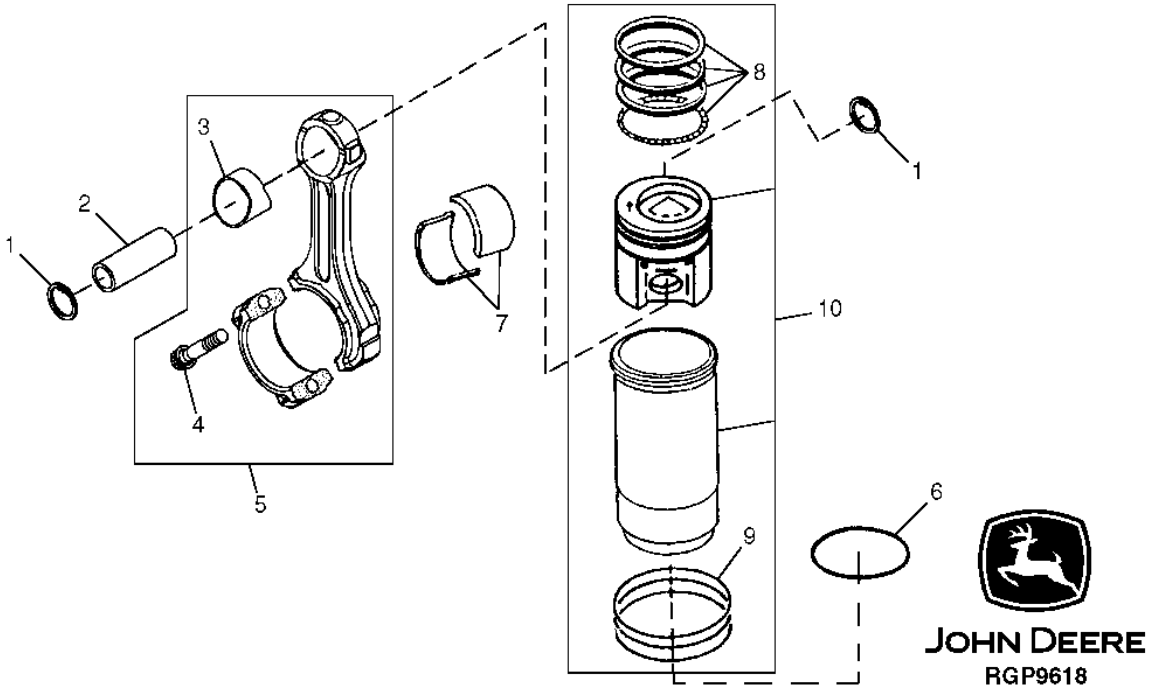

KEY	PART NO.	PART NAME	QTY	ENGINE SERIAL NO.	770D	772D	REMARKS
1	E1343FN	SNAP RING	12		X	X	
2	R57771	PISTON PIN	6		X	X	
3	R74008	BUSHING	6		X	X	
4	R501035	CAP SCREW	12		X	X	
5	RE501513	CONNECTING ROD	6		X	X	(MARKED R501034)
6	R93948	SHIM	AR		X	X	0.05MM (.002") (2 MAXIMUM)
7	R116081	BEARING	12		X	X	STD
	RE57167	BEARING	12		X	X	0.292MM (.011") US, (INCLUDES (2) R121338)
8	RE503528	PISTON RING	6		X	X	
9	AR98850	O-RING KIT	6		X	X	
10	RE64509	PISTON-LINER KIT	6		X	X	(PISTON MARKED RE70688)

MEMORANDA

MEMORANDA

CYLINDER BLOCK FITTINGS AND BEARING CAPS

RGP4339 -UN-01JAN94

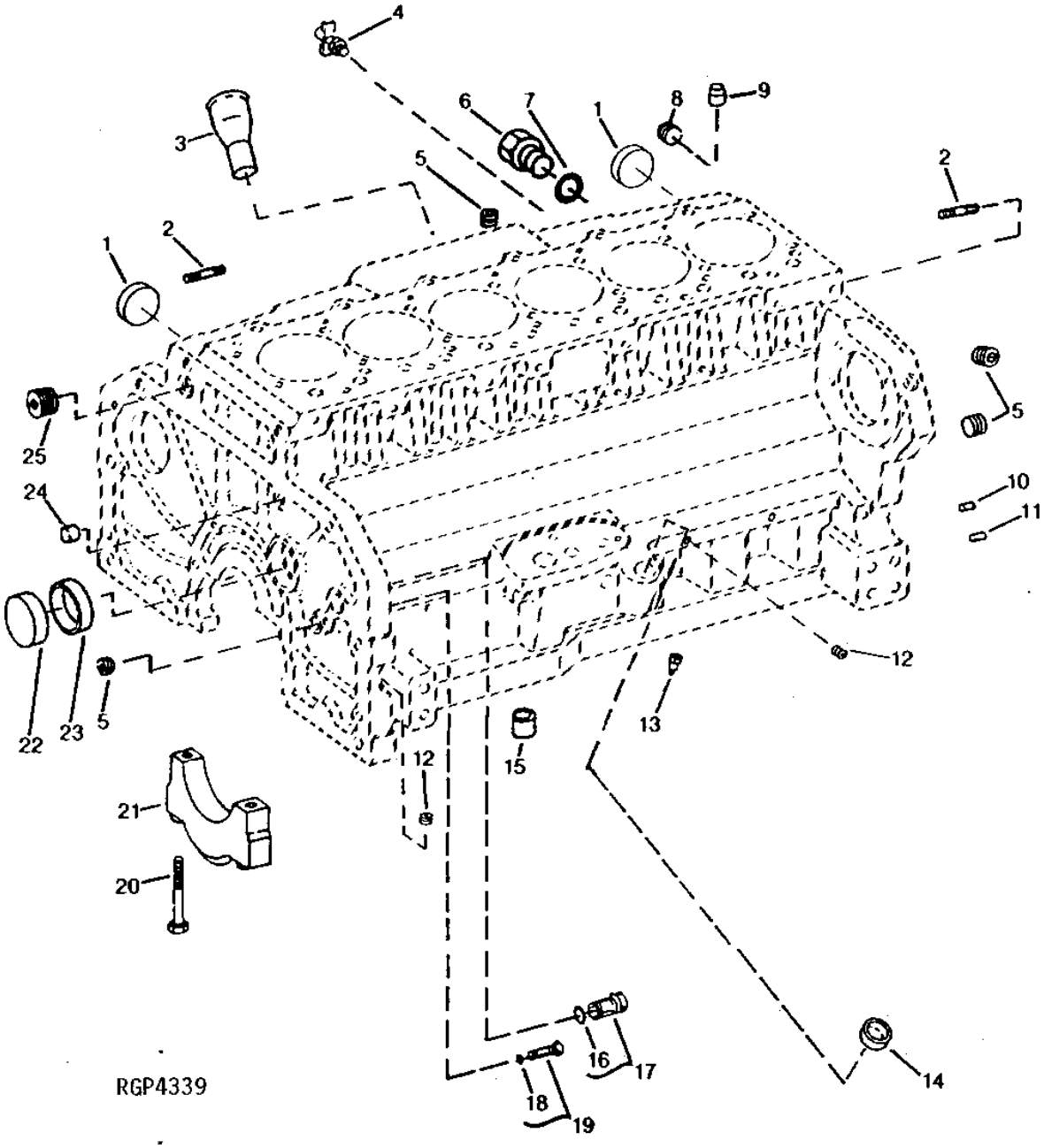

CYLINDER BLOCK FITTINGS AND BEARING CAPS

KEY	PART NO.	PART NAME	QTY	ENGINE SERIAL NO.	770D	772D	REMARKS
1	R43409	PLUG	2		X	X	
2	R515224	STUD	4		X	X	3/8" X 1.929"
3	R121765	DIPSTICK TUBE	1		X	X	141.5 MM
4	AT13740	DRAIN VALVE	1		X	X	1/4"-18NPT
5	RE57836	PIPE PLUG	4		X	X	1/2"-14NPT
6	R39741	DRAIN PLUG	1		X	X	NO ENGINE HEATER
7	U13639	O-RING	1		X	X	1.475" X 0.118"
8	15H690	PIPE PLUG	2		X	X	3/4"-14NPT
9	R42340	BUSHING	2		X	X	
10	R1612R	DOWEL PIN	2		X	X	
11	F1743R	DOWEL PIN	2		X	X	
12	RE71255	PIPE PLUG	6		X	X	1/8"-27NPT
13	R43621	ORIFICE	6		X	X	PISTON COOLING JET
14	T35390	PLUG	1		X	X	OIL FILL HOLE
15	R500642	BUSHING	2		X	X	
16	R27149	O-RING	1		X	X	0.921" X 0.139"
17	AR61533	PLUG	1		X	X	
18	A4365R	O-RING	1		X	X	0.239" X 0.070"
19	AR61589	PLUG	1		X	X	
20	R519287	CAP SCREW	14		X	X	
21	R120953	BEARING CAP	6		X	X	MAIN
	R120954	BEARING CAP	1		X	X	THRUST
22	R82007	PLUG	1		X	X	
23	R87561	BUSHING	4		X	X	CAMSHAFT
24	R61288	DOWEL PIN	1		X	X	5/8" X 0.472"
25	15H686	PIPE PLUG	1		X	X	1"
..	37H44	SCREW	2		X	X	NO. 7 X 3/8" TYPE U, ENG. SERIAL NO. PLATE (NOT SHOWN)
..	R501255	PLUG	1		X	X	AUXILARY DRIVE IDLER GEAR HOLE (NOT SHOWN)

SHORT BLOCK ASSEMBLY

RGP4577 -UN-02NOV95

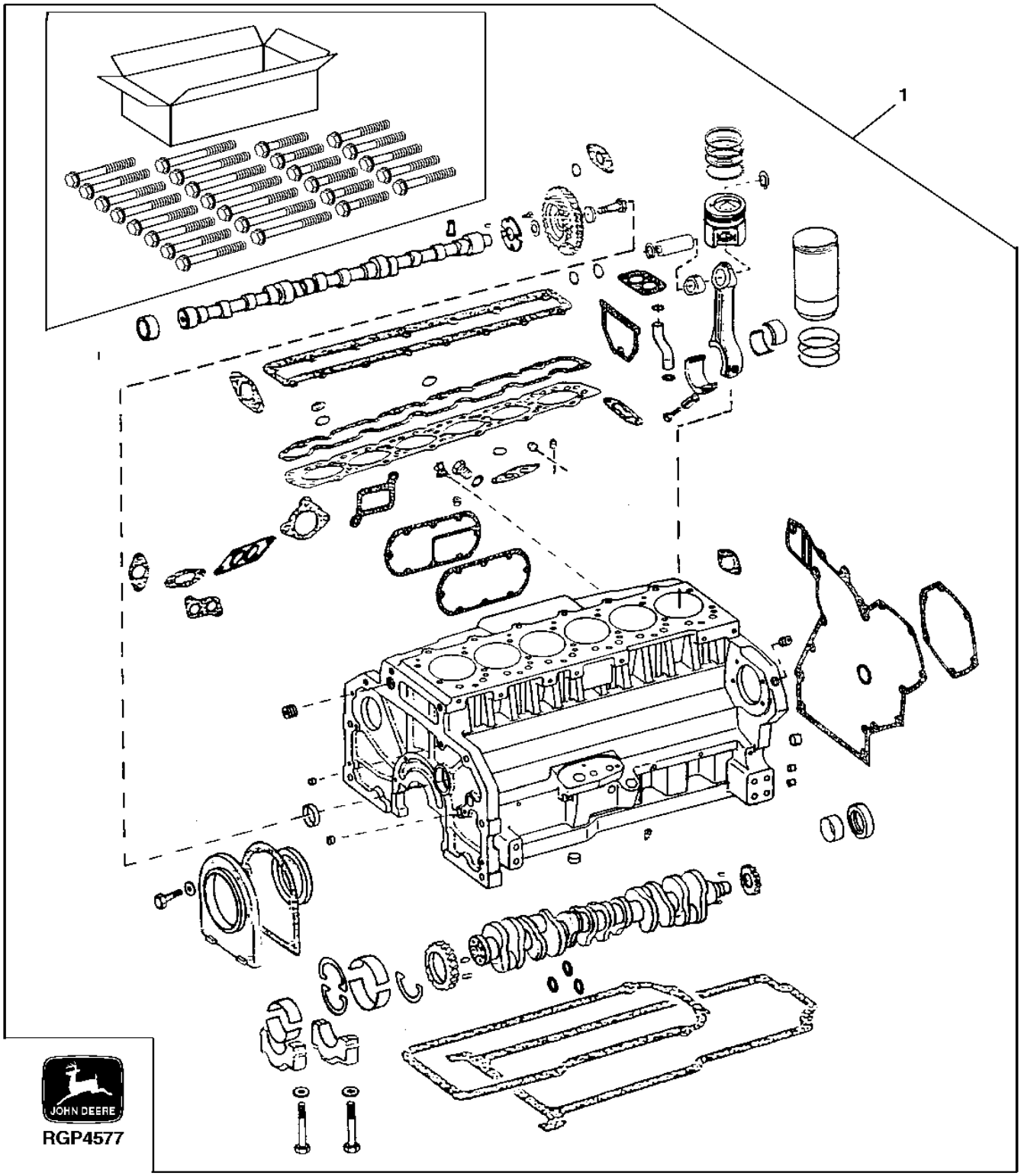

SHORT BLOCK ASSEMBLY

KEY	PART NO.	PART NAME	QTY	ENGINE SERIAL NO.	770D	772D	REMARKS
1	RE506660	SHORT BLOCK ASSEMBLY	1		X	X	(PISTON MARKED RE70688) (ALSO ORDER R121765)

OVERHAUL KIT

RGP10202 -UN-08SEP03

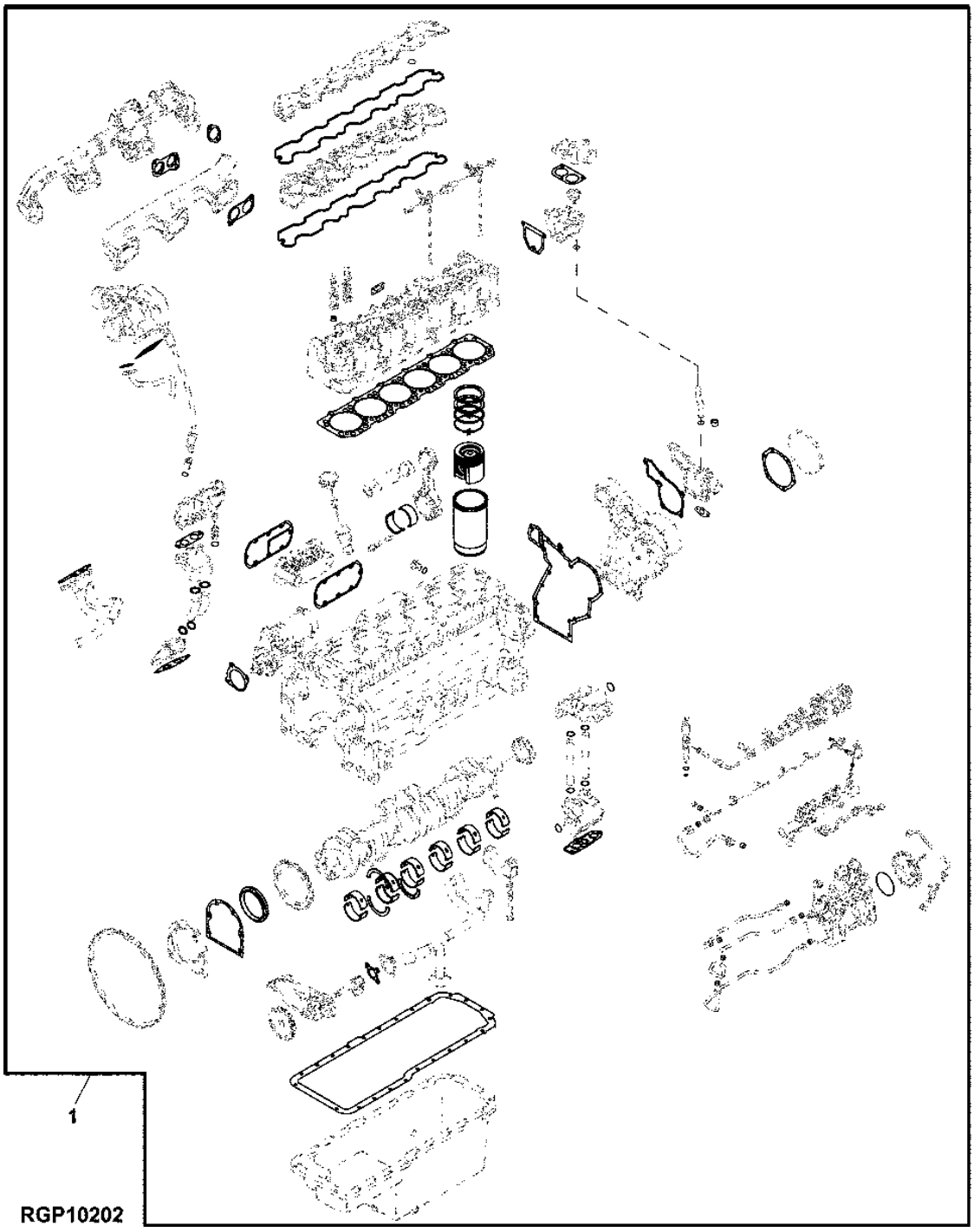

OVERHAUL KIT

KEY	PART NO.	PART NAME	QTY	ENGINE SERIAL NO.	770D	772D	REMARKS
1	RE521154	ENGINE OVERHAUL KIT	1		X	X	(CONTAINS (6) RE64509 PISTON/LINERS, RE521058 GASKET KIT, STD BEARINGS, FRONT/REAR SEALS, AND SNAP RINGS) (ALSO ORDER (6) R57771 PISTON PINS, (6) RE501513 CONNECTING RODS MARKED R501034, AND R520583 OIL PAN GASKET) (PISTON MARKED RE70688)

MEMORANDA

OIL DIPSTICK AND TUBE

RGP4446 -UN-03MAR95

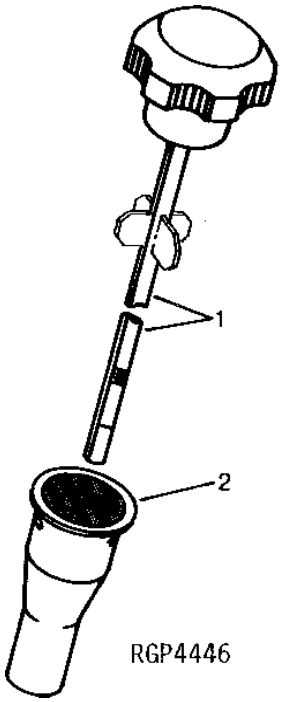

KEY	PART NO.	PART NAME	QTY	ENGINE SERIAL NO.	770D	772D	REMARKS
1	RE500216	DIPSTICK	1		X	X	
2	R121765	DIPSTICK TUBE	1		X	X	141.5MM

OIL PAN AND DRAIN VALVE

RGP10895 -UN-05JAN05

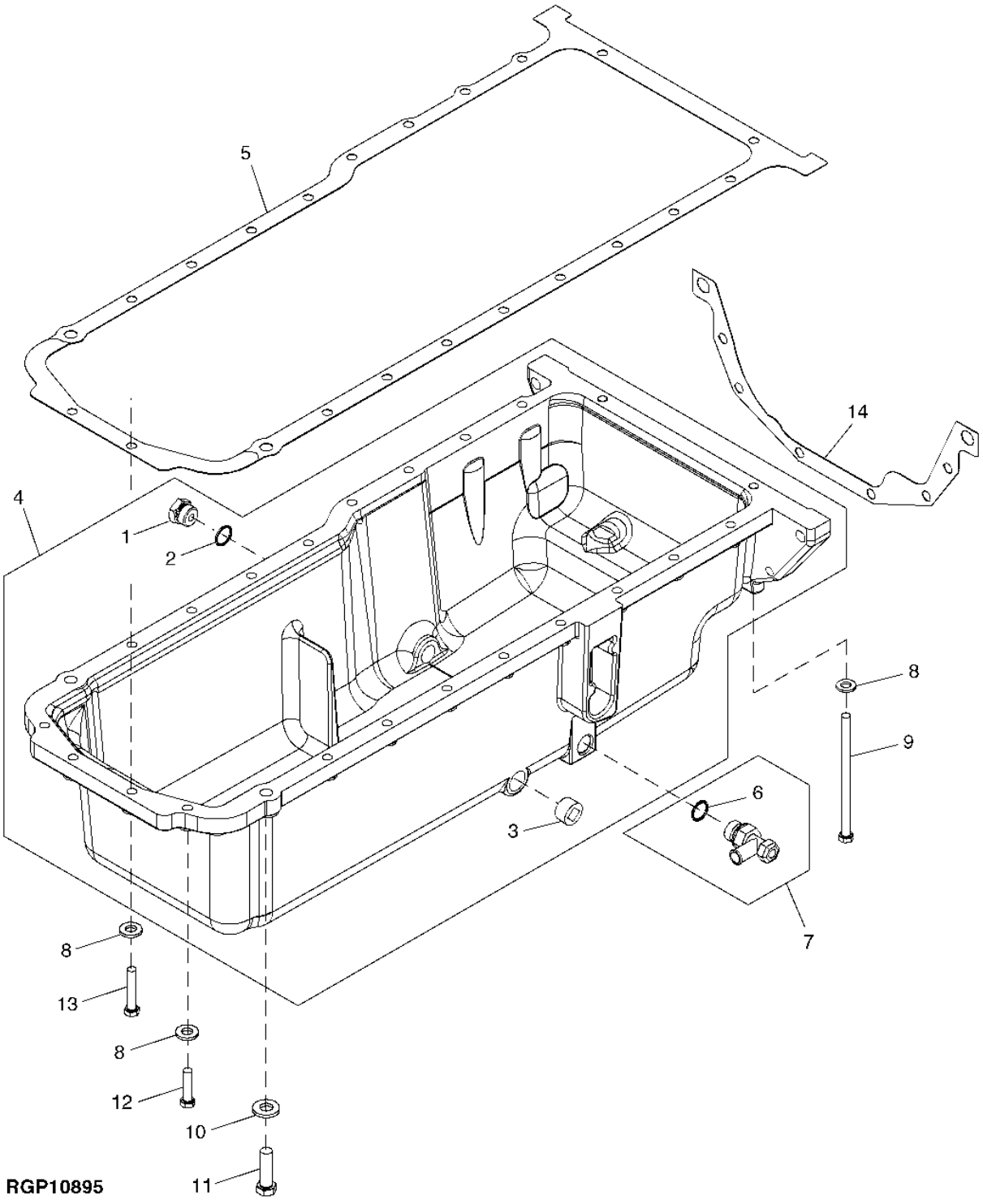

OIL PAN AND DRAIN VALVE

KEY	PART NO.	PART NAME	QTY	ENGINE SERIAL NO.	770D	772D	REMARKS
1	R27474	DRAIN PLUG	1		X	X	7/8"-14UNF
2	R47151	O-RING	1		X	X	0.755" X 0.097"
3	15H690	PIPE PLUG	1		X	X	3/4"-14NPTF
4	RE522649	OIL PAN	1		X	X	
5	R520583	GASKET	1		X	X	
6	R26906	O-RING	1		X	X	0.755" X 0.097"
7	AT152180	DRAIN VALVE	1		X	X	7/8"-14UNF
8	24M7239	WASHER	22		X	X	10.700 X 21 X 2.500 MM
9	19H3565	CAP SCREW	2		X	X	3/8" X 6-1/8"
10	R135895	WASHER	2		X	X	13.500 X 27 X 3.400 MM
11	19H2473	CAP SCREW	2		X	X	1/2" X 1-3/4"
12	19H2633	CAP SCREW	16		X	X	3/8" X 1-1/2"
13	19H3485	CAP SCREW	4		X	X	3/8" X 2"
14	R89441	GASKET	1		X	X	REAR

OIL PUMP

RGP4450 -UN-03MAR95

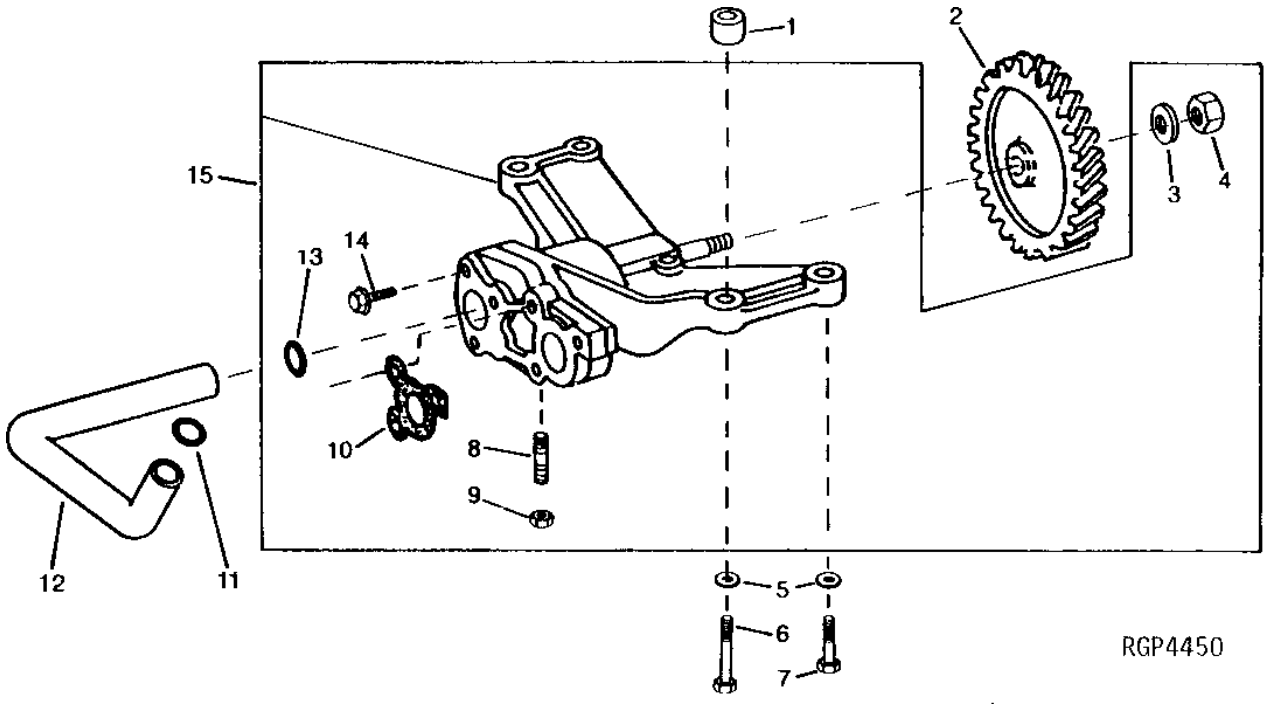

OIL PUMP

KEY	PART NO.	PART NAME	QTY	ENGINE SERIAL NO.	770D	772D	REMARKS
1	R500642	BUSHING	2		X	X	
2	R502773	GEAR	1		X	X	Z= 48
3	T21242	WASHER	1		X	X	
4	14H826	NUT	1		X	X	1/2"
5	R57696	WASHER	4		X	X	
6	19H3759	CAP SCREW	2		X	X	3/8" X 1-7/8"
7	19H3219	CAP SCREW	2		X	X	3/8" X 1-3/8"
8	22H1040	SET SCREW	1		X	X	5/16" X 1-1/4"
9	14H785	NUT	1		X	X	5/16"
10	R100569	GASKET	1		X	X	
11	R71732	O-RING	1		X	X	
12	R116718	OIL TUBE	1		X	X	
13	R71732	O-RING	1		X	X	
14	R104628	SCREW	5		X	X	
15	SE500877	OIL PUMP	1		X	X	(REMANUFACTURED) (MARKED R504028)

OIL PUMP INTAKE

RGP3629 -UN-01JAN94

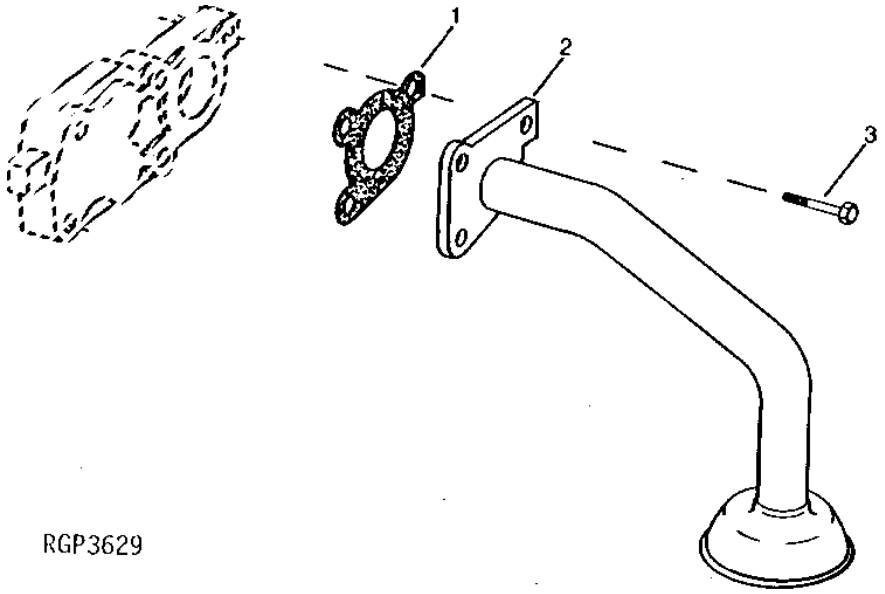

KEY	PART NO.	PART NAME	QTY	ENGINE SERIAL NO.	770D	772D	REMARKS
1	R100569	GASKET	1		X	X	
2	RE520585	OIL PUMP INTAKE	1		X	X	
3	R104628	SCREW	3		X	X	

MEMORANDA

OIL FILTER AND HOUSING

RGP10903 -UN-16DEC04

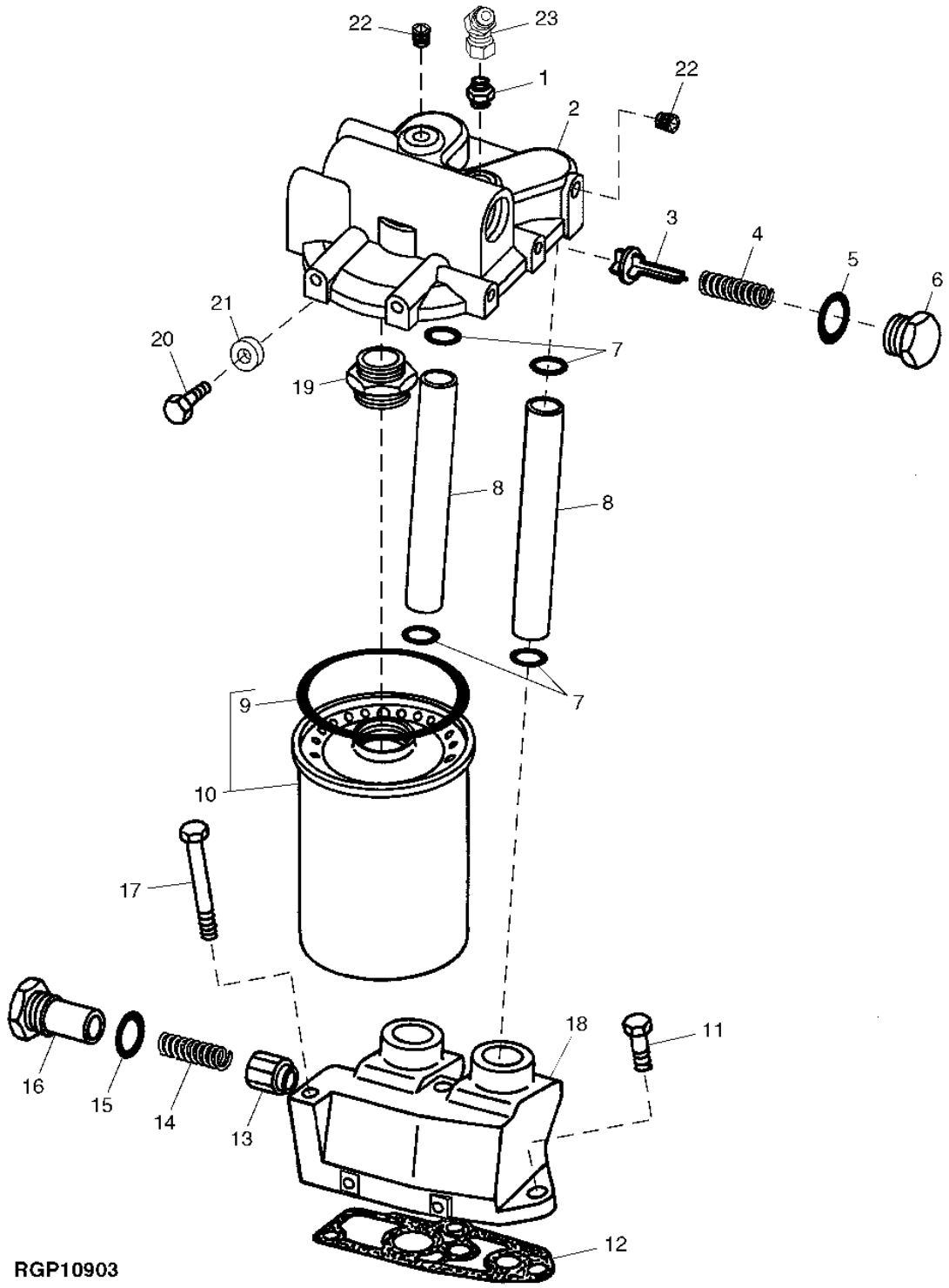

OIL FILTER AND HOUSING

KEY	PART NO.	PART NAME	QTY	ENGINE SERIAL NO.	770D	772D	REMARKS
1	RE57561	ADAPTER	1		X	X	
2	R128694	BASE	1		X	X	
3	R500055	VALVE	1		X	X	
4	R98064	SPRING	1		X	X	
5	U17409	O-RING	1		X	X	
6	R117073	FITTING PLUG	1		X	X	
7	R47153	O-RING	4		X	X	
8	R86063	TUBE	2		X	X	
9	R43660	PACKING	1		X	X	
10	RE521420	OIL FILTER	1		X	X	(MARKED RE520628)
11	19H3239	CAP SCREW	1		X	X	3/8" X 1-1/4"
12	R119847	GASKET	1		X	X	
13	R124186	PRESSURE RELIEF VALVE	1		X	X	
14	R500330	SPRING	1		X	X	
15	U17409	O-RING	1		X	X	
16	R129821	FITTING PLUG	1		X	X	
17	19H3445	CAP SCREW	2		X	X	3/8" X 3-3/4"
18	R129820	HOUSING	1		X	X	
19	R518382	ADAPTER	1		X	X	
20	19H3104	CAP SCREW	1		X	X	7/16" X 1-1/4"
	19H3205	CAP SCREW	1		X	X	7/16" X 1-1/2"
21	24H1886	WASHER	1		X	X	15/32" X 1-1/8" X 0.180", (USE WITH 19H3205)
22	RE71255	PIPE PLUG	2		X	X	1/8"-27NPT
23	RE504581	ELBOW FITTING	1		X	X	45°

OIL COOLER BYPASS TUBES AND ADAPTER

RGP10904 -UN-16DEC04

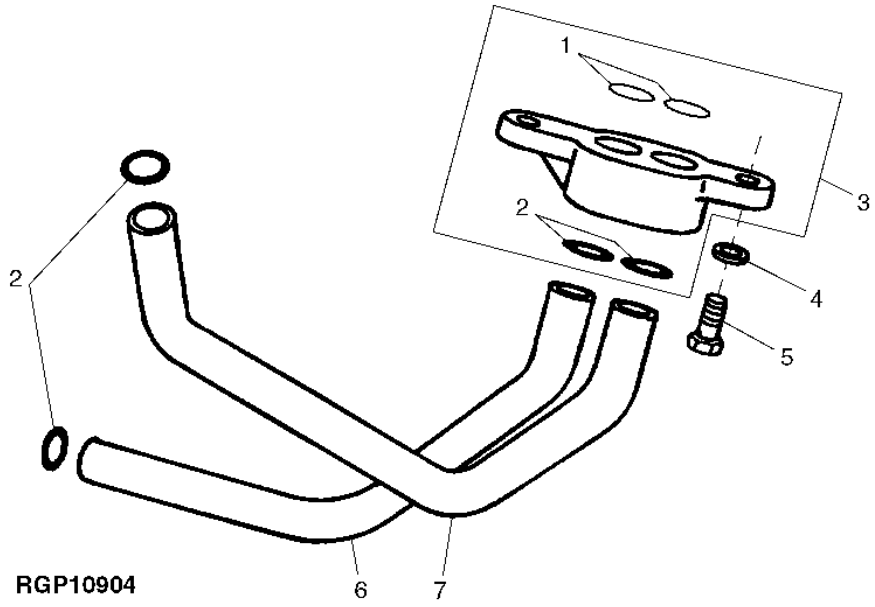

KEY	PART NO.	PART NAME	QTY	ENGINE SERIAL NO.	770D	772D	REMARKS
1	R504669	SEAL	2		X	X	
2	R71732	O-RING	4		X	X	
3	RE524007	ADAPTER	1		X	X	
4	24M7346	WASHER	2		X	X	11 X 20 X 2 MM
5	R40236	CAP SCREW	2		X	X	
6	R116718	OIL TUBE	1		X	X	
7	R518376	OIL TUBE	1		X	X	

MEMORANDA

CYLINDER HEAD

RGP11115 -UN-28FEB05

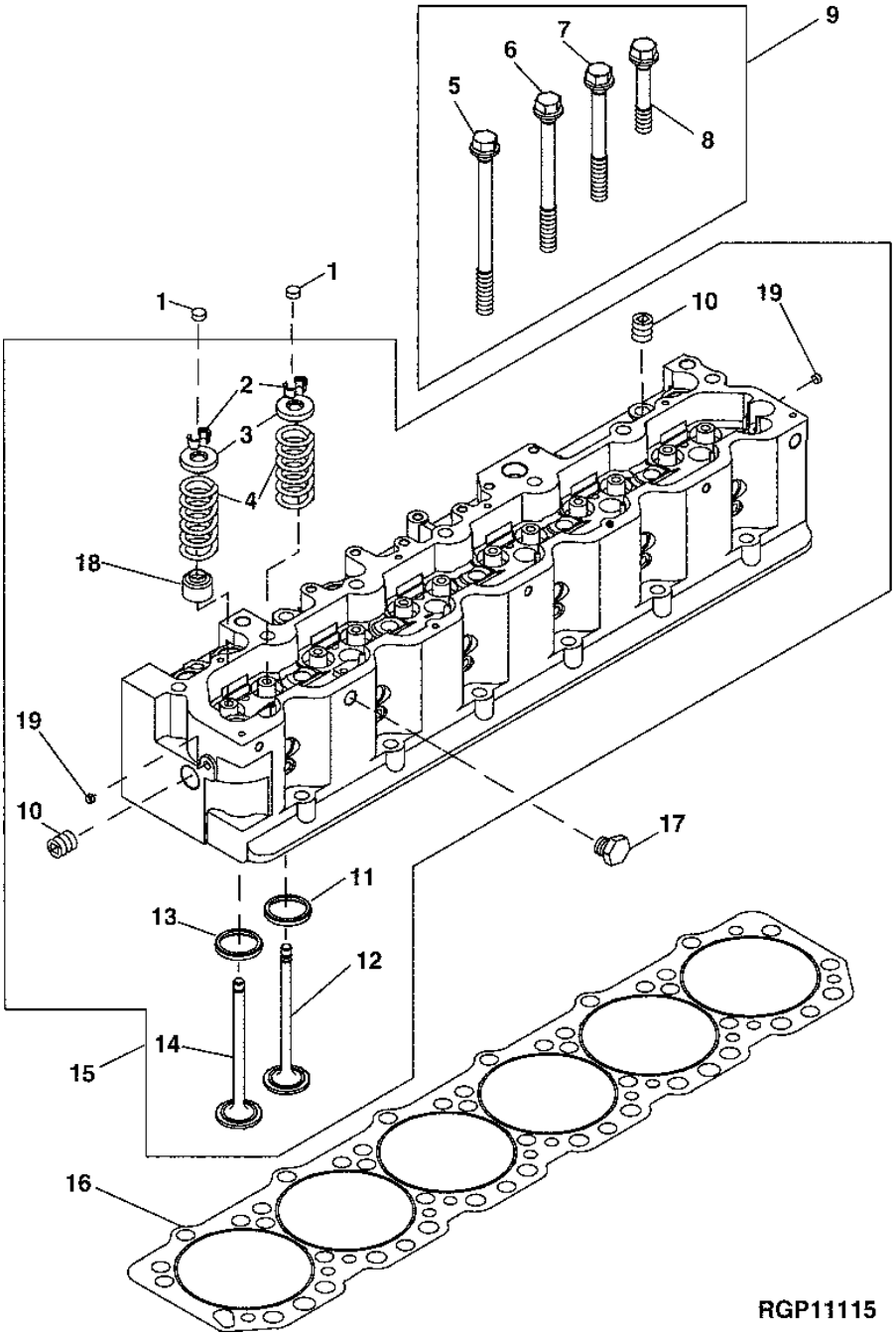

CYLINDER HEAD

KEY	PART NO.	PART NAME	QTY	ENGINE SERIAL NO.	770D	772D	REMARKS
1	T20129	CAP	12		X	X	
2	T20077	RETAINER	24		X	X	
3	R500098	CAP	12		X	X	
4	R502187	SPRING	12		X	X	
5	R121491	CAP SCREW	7		X	X	(A) (9/16" X 8.0")
6	R121490	CAP SCREW	8		X	X	(A) (9/16" X 6.9")
7	R502911	CAP SCREW	6		X	X	(A) (9/16" X 5.3")
8	R502912	CAP SCREW	5		X	X	(A) (9/16" X 5.9")
9	RE506501	KIT	1		X	X	(A)
10	15H690	PIPE PLUG	11		X	X	3/4"-14NPT
11	R121193	VALVE SEAT INSERT	6		X	X	(B) I STD
	R93350	VALVE SEAT INSERT	6		X	X	(B) I 0.25MM (.010") OS
12	R84618	INTAKE VALVE	6		X	X	STD
	R93308	INTAKE VALVE	6		X	X	0.08MM (.003") OS
	R93312	INTAKE VALVE	6		X	X	0.38MM (.015") OS
	R93314	INTAKE VALVE	6		X	X	0.76MM (.030") OS
13	R119132	VALVE SEAT INSERT	6		X	X	(B) E STD
	R93349	VALVE SEAT INSERT	6		X	X	(B) E 0.25MM (.010") OS
14	R84619	EXHAUST VALVE	6		X	X	STD
	R93311	EXHAUST VALVE	6		X	X	0.08MM (.003") OS
	R93313	EXHAUST VALVE	6		X	X	0.38MM (.015) OS
	R93315	EXHAUST VALVE	6		X	X	0.76MM (.030") OS
15	RE519894	CYLINDER HEAD	1		X	X	(MARKED R517486)
16	RE55475	ENGINE CYLINDER HEAD GASKET	1		X	X	
17	19H2367	CAP SCREW	1		X	X	5/8" X 3/4"
18	R501640	SHIELD	6		X	X	
19	R515575	PLUG	2		X	X	
..	R504327	DOWEL PIN	1		X	X	9.525MM X 8MM, (NOT SHOWN)

(A) SPECIAL HEAD BOLTS

(B) E - (EXHAUST VALVE) I - (INTAKE VALVE)

LIFT STRAPS

RGP3009 -UN-01JAN94

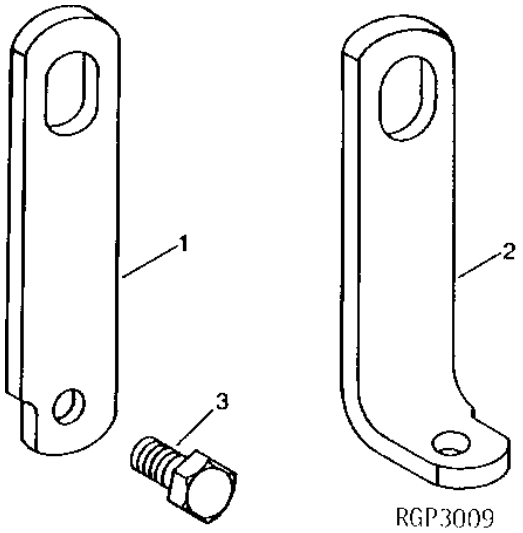

KEY	PART NO.	PART NAME	QTY	ENGINE SERIAL NO.	7 7 7 7 0 2 D D	REMARKS
1	R61497	STRAP	1		X X	
2	R86571	ANGLE	1		X X	
3	19H1756	CAP SCREW	2		X X	5/8" X 1-1/2"

EXHAUST MANIFOLD

RGP4065 -UN-01JAN94

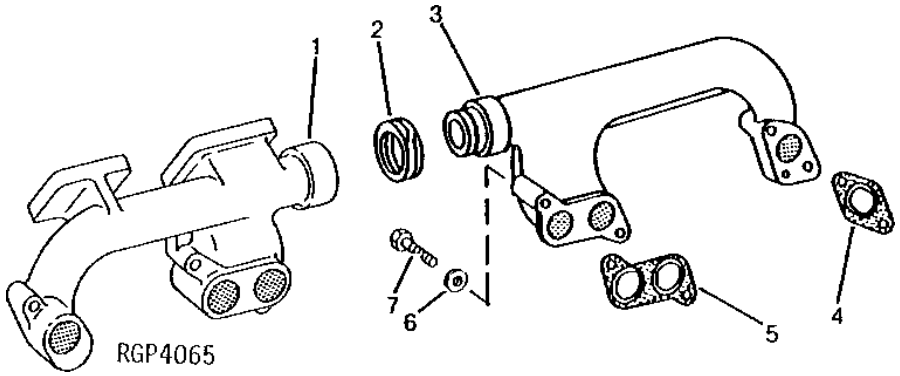

KEY	PART NO.	PART NAME	QTY	ENGINE SERIAL NO.	770D	772D	REMARKS
1	R127425	EXHAUST MANIFOLD	1		X	X	REAR
2	R122595	RING	2		X	X	
3	R127426	EXHAUST MANIFOLD	1		X	X	FRONT
4	R521438	GASKET	2		X	X	OUTER
5	R521437	GASKET	2		X	X	INNER
6	R63845	WASHER	8		X	X	
7	19H3031	CAP SCREW	4		X	X	3/8" X 2-1/2", UPPER
	19H3267	CAP SCREW	4		X	X	3/8" X 1-5/8", LOWER

EXHAUST ELBOW

RGP5900 -UN-23FEB00

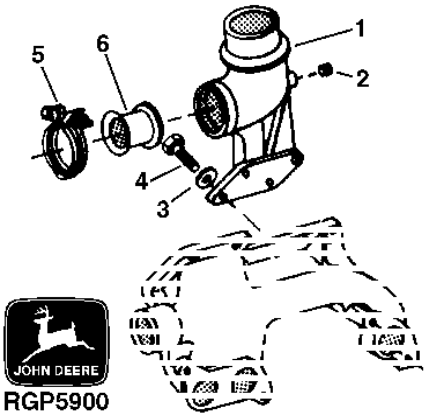

KEY	PART NO.	PART NAME	QTY	ENGINE SERIAL NO.	770D	772D	REMARKS
1	R127563	ELBOW FITTING	1		X	X	
2	15H604	PIPE PLUG	1		X	X	1/4"
3	24H1305	WASHER	4		X	X	13/32" X 13/16" X 0.065"
4	R54500	SCREW	4		X	X	
5	RE40048	CLAMP	1		X	X	
6	R133307	ADAPTER	1		X	X	

MEMORANDA

FUEL INJECTION SYSTEM

RGP10893 -UN-14DEC04

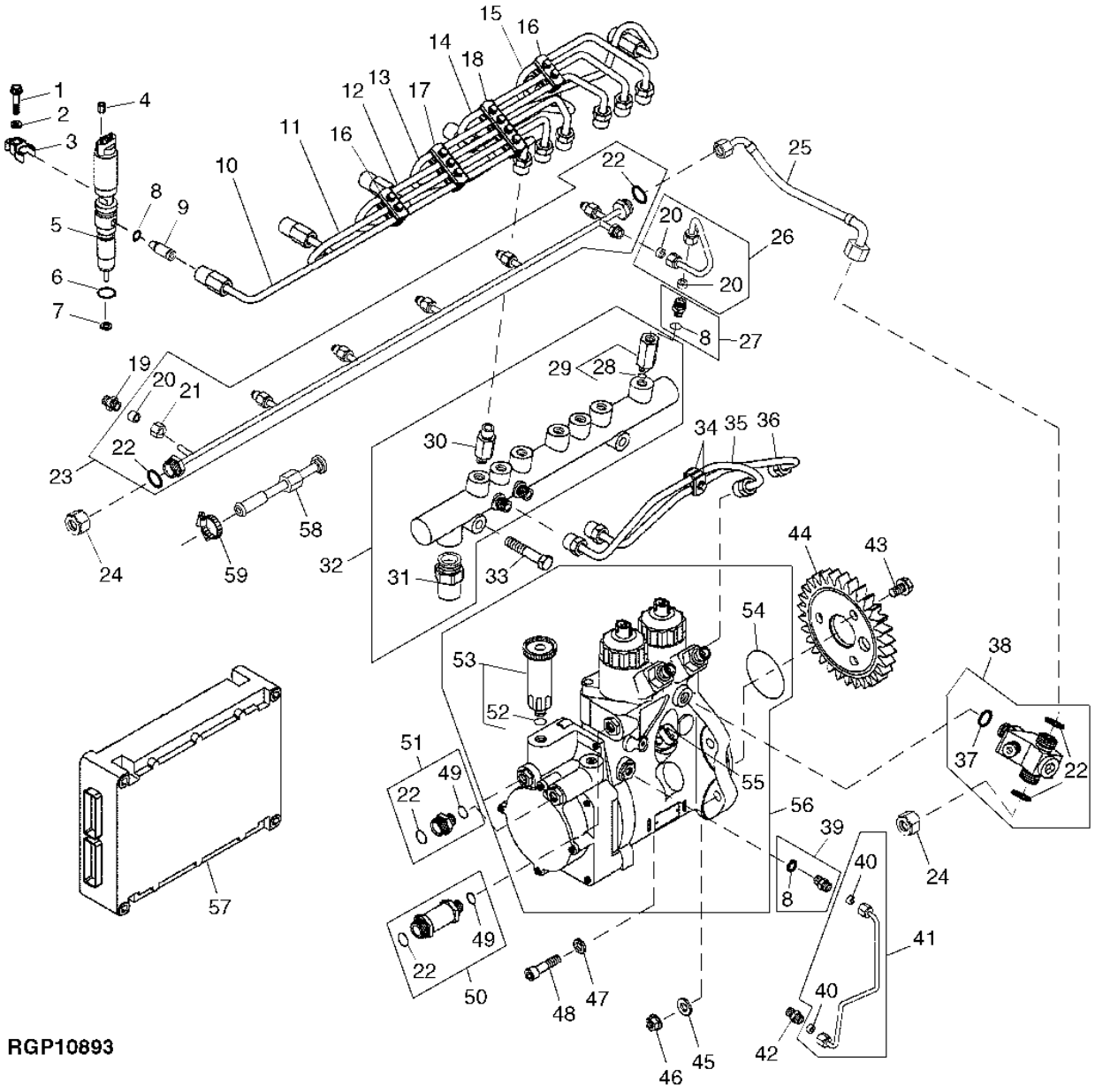

FUEL INJECTION SYSTEM

KEY	PART NO.	PART NAME	QTY	ENGINE SERIAL NO.	772D	772D	REMARKS
1	19H3218	CAP SCREW	6		X	X	3/8" X 1-3/4"
2	R63845	WASHER	6		X	X	
3	R502602	CLAMP	6		X	X	
4	R134920	NUT	12		X	X	
5	RE518726	INJECTION NOZZLE	6		X	X	(HPCR G2 1800) (BLUE DOT)
6	R503578	PACKING	6		X	X	
7	R131051	WASHER	6		X	X	
8	R505570	O-RING	8		X	X	0.339" X 0.094"
9	RE509416	FITTING	6		X	X	
10	RE515524	FUEL LINE	1		X	X	(NO.6)
11	RE504017	FUEL LINE	1		X	X	(NO.5)
12	RE504016	FUEL LINE	1		X	X	(NO.4)
13	RE504015	FUEL LINE	1		X	X	(NO.3)
14	RE504014	FUEL LINE	1		X	X	(NO.2)
15	RE504013	FUEL LINE	1		X	X	(NO.1)
16	RE502655	CLAMP	2		X	X	(INCLUDES (2) 19M7502 AND (2) 24M7027)
17	RE509012	CLAMP	1		X	X	(INCLUDES (3) 19M7502 AND (3) 24M7027)
18	RE509013	CLAMP	1		X	X	(INCLUDES (4) 19M7502 AND (4) 24M7027)
19	RE502650	FITTING	6		X	X	1/2"-24UNS X 1/8"-27NPT
20	R51936	SEALING WASHER	8		X	X	
21	R51937	TUBE NUT	6		X	X	
22	R63548	O-RING	AR		X	X	0.364" X 0.070"
23	RE521476	MANIFOLD	1		X	X	
24	38H1415	FITTING	AR		X	X	11/16"-16UN
25	RE521477	FUEL LINE	1		X	X	LEAK-OFF
26	RE507003	LINE	1		X	X	
27	RE506624	ADAPTER	1		X	X	M10X1.0 X 1/2"-24UNS
28	R515454	SHIM	1		X	X	
29	RE516335	PRESSURE RELIEF VALVE	1		X	X	M10X1.0 X M18X1.5, (MARKED 0161)
30	RE515636	RESTRICTOR	6		X	X	M14X1.5 X M18X1.5, (MARKED 0220)
31	RE520930	SENSOR	1		X	X	M22X1.5, (MARKED 6140)
32	RE521433	RAIL	1		X	X	(MARKED 0273)
33	19H2699	CAP SCREW	2		X	X	7/16" X 2-1/4"
34	RE502654	CLAMP	1		X	X	(INCLUDES 19M7502 AND 24M7027)
35	RE505155	FUEL LINE	1		X	X	
36	RE505154	FUEL LINE	1		X	X	
37	R519759	O-RING	1		X	X	
38	RE522834	VALVE	1		X	X	M14X1.5 X (2) 11/16"-16ORFS, (INCLUDES R77175)
39	RE503059	ADAPTER	1		X	X	M10X1.0 X 7/16"-24UNS

THIS PARTS LISTING IS CONTINUED

FUEL INJECTION SYSTEM

RGP10893 -UN-14DEC04

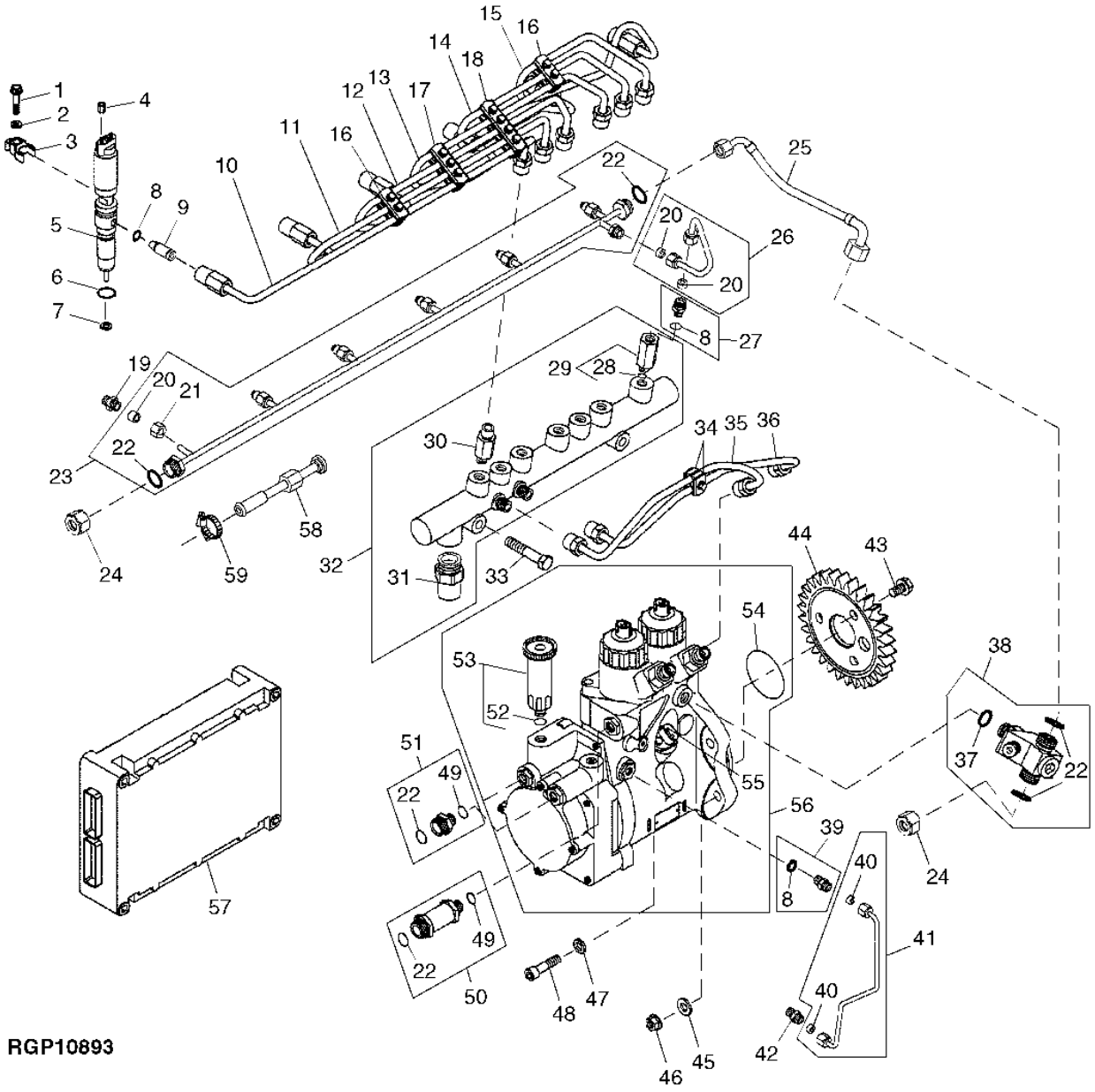

FUEL INJECTION SYSTEM

KEY	PART NO.	PART NAME	QTY	ENGINE SERIAL NO.	770D	772D	REMARKS
40	R67264	PACKING	2		X	X	
41	RE504156	OIL LINE	1		X	X	
42	R76822	FITTING	1		X	X	7/16"-24UNS X 1/8"-27NPT
43	19M7783	SCREW	3		X	X	M10 X 16
44	R504089	BEVEL GEAR DRIVE	1		X	X	Z= 30
45	24M7239	WASHER	3		X	X	10.700 X 21 X 2.500 MM
46	14H1090	NUT	3		X	X	3/8"
47	24H1652	WASHER	1		X	X	13/32" X 11/16" X 7/64"
48	19H3124	SCREW	1		X	X	3/8" X 1-1/2"
49	51M7095	O-RING	3		X	X	0.445" X 0.087"
50	RE520978	CHECK VALVE	1		X	X	M14X1.5 X 11/16"-16UN
51	RE522616	FITTING	2		X	X	M14X1.5 X 11/16"-16UN
52	R515456	WASHER	1		X	X	
53	RE515638	KIT	1		X	X	
54	R515457	O-RING	1		X	X	99 X 3 MM
55	RE524660	KIT	1		X	X	(G SENSOR)
56	RE521423	FUEL INJECTION PUMP	1		X	X	(DENSO HPCR HPO 24V)
57	RE522515	ENGINE CONTROLLER	1		X	X	(ORDER WITH ESN) (12/24V)
58	RE523825	ADAPTER	1		X	X	11/16"-16ORFS X 1/2", FUEL LINE
59	AR77962	HOSE CLAMP	1		X	X	

MEMORANDA

INTAKE MANIFOLD

RGP10894 -UN-17DEC04

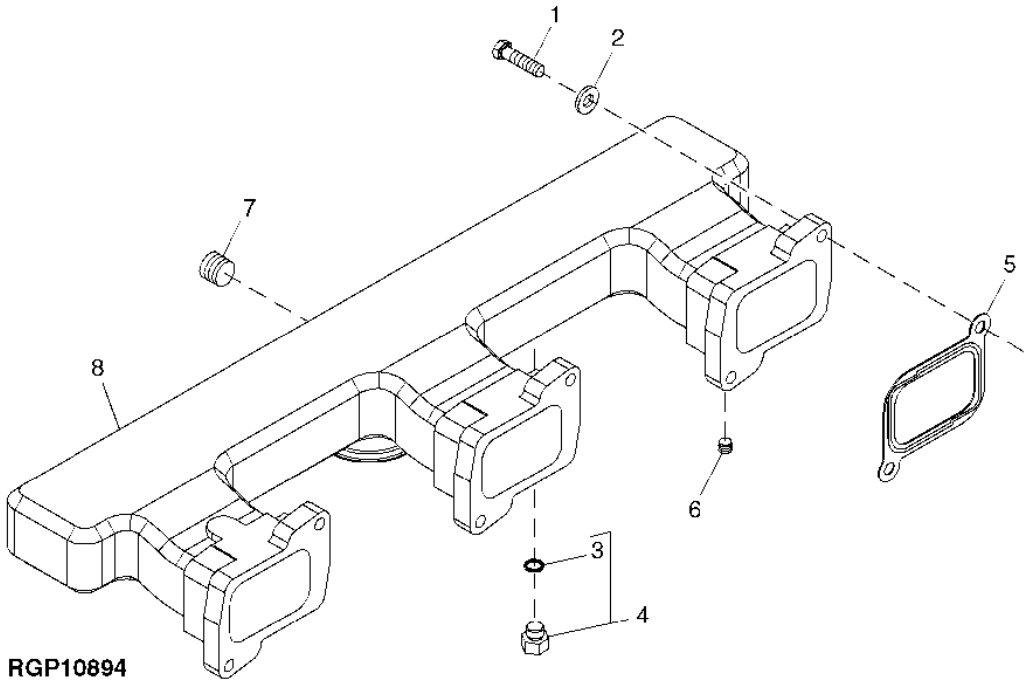

KEY	PART NO.	PART NAME	QTY	ENGINE SERIAL NO.	7 7 7 7 0 2 D D	REMARKS
1	19H2633	CAP SCREW	6		X X	3/8" X 1-1/2"
2	24H1682	WASHER	6		X X	13/32" X 7/8" X 0.120"
3	51M7041	O-RING	1		X X	11.300 X 2.200 MM
4	RE46684	PLUG	1		X X	M14X1.5, (W/O AIR HEATER)
5	R130573	GASKET	3		X X	
6	RE71255	PIPE PLUG	1		X X	1/8"-27NPT
7	15H623	PIPE PLUG	1		X X	3/8"-18NPT
8	R504823	INTAKE MANIFOLD	1		X X	(W/O AIR HEATER) (MARKED R504823)
	RE515331	INTAKE MANIFOLD	1		X X	(WITH AIR HEATER) (MARKED R515064) (INCLUDES (2) RE66693)
..	RE66693	CABLE	2		X X	(WITH AIR HEATER) (NOT SHOWN)
..	RE500882	AIR HEATER CONTROLLER	1		X X	24V, (NOT SHOWN)

MEMORANDA

MEMORANDA

TURBOCHARGER AND OIL LINES

RGP4675 -UN-21JAN97

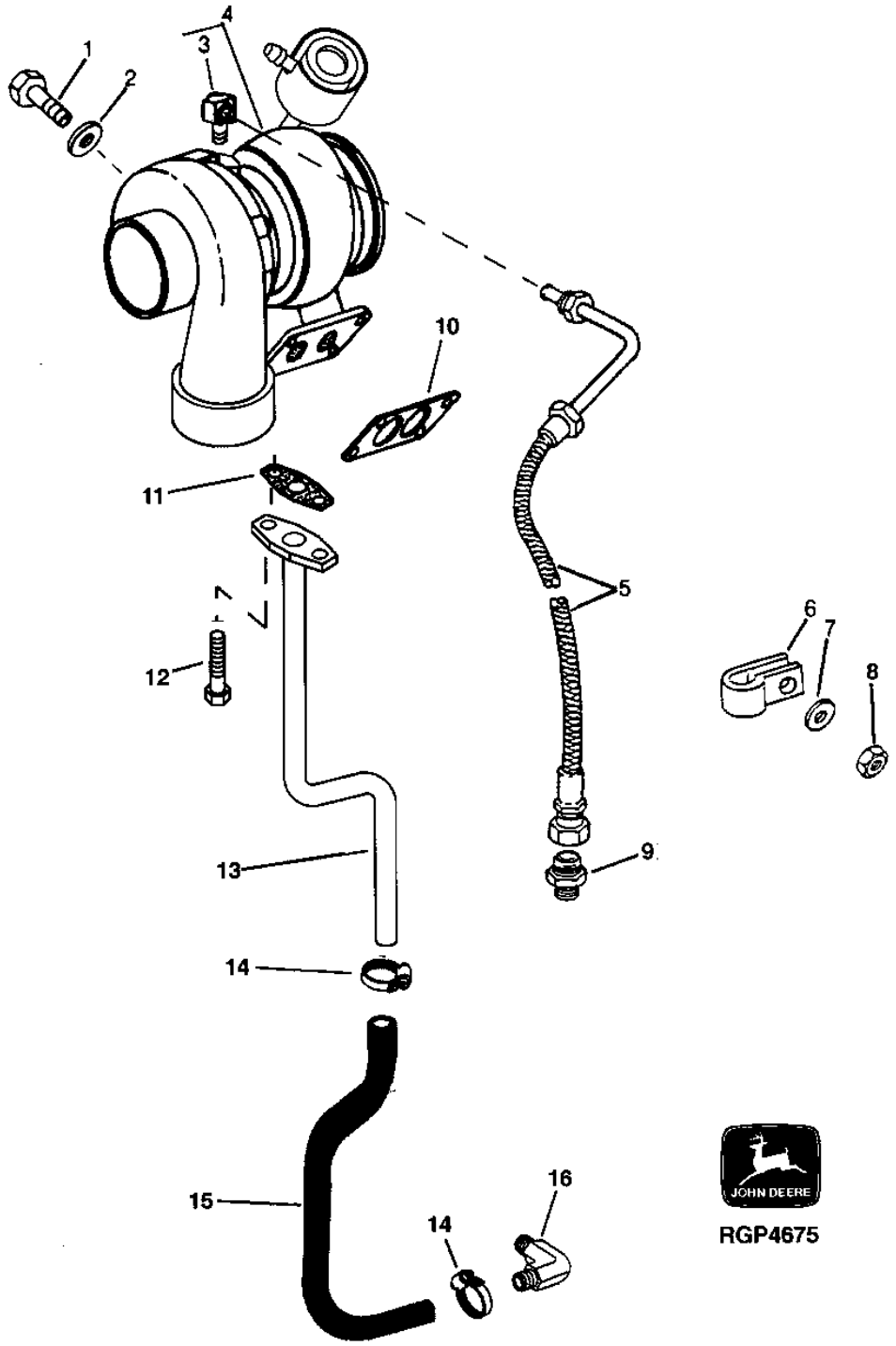

TURBOCHARGER AND OIL LINES

KEY	PART NO.	PART NAME	QTY	ENGINE SERIAL NO.	770D	772D	REMARKS
1	R54500	SCREW	4		X	X	3/8" X 1"
2	24H1305	WASHER	4		X	X	13/32" X 13/16" X 0.065"
3	T11180	ELBOW FITTING	1		X	X	
4	RE501669	TURBOCHARGER	1		X	X	(REMANUFACTURED) (SCHWITZER) (MARKED RE520910)
	R134028	HOSE	1		X	X	BOOST CONTROL (WASTEGATE)
5	RE20230	OIL LINE	1		X	X	
6	AH89486	CLIP	1		X	X	
7	.....	WASHER	NA		X	X	
8	.....	NUT	NA		X	X	
9	RE504581	ELBOW FITTING	1		X	X	45°, (NOT SHOWN)
	RE57561	ADAPTER	1		X	X	
10	R89879	GASKET	1		X	X	
11	R105346	GASKET	1		X	X	
12	R122618	SCREW	2		X	X	
13	RE69328	OIL LINE	1		X	X	
14	TY22467	CLAMP	2		X	X	
15	R500723	HOSE	1		X	X	
16	R126812	ELBOW FITTING	1		X	X	1/2"-14NPT, 90°
	RE524764	THREADED NIPPLE	1	256768-	X	X	(TURBO OIL DRAIN LINE ADAPTER)

MEMORANDA

MEMORANDA

WATER PUMP AND COVER

RGP10902 -UN-15DEC04

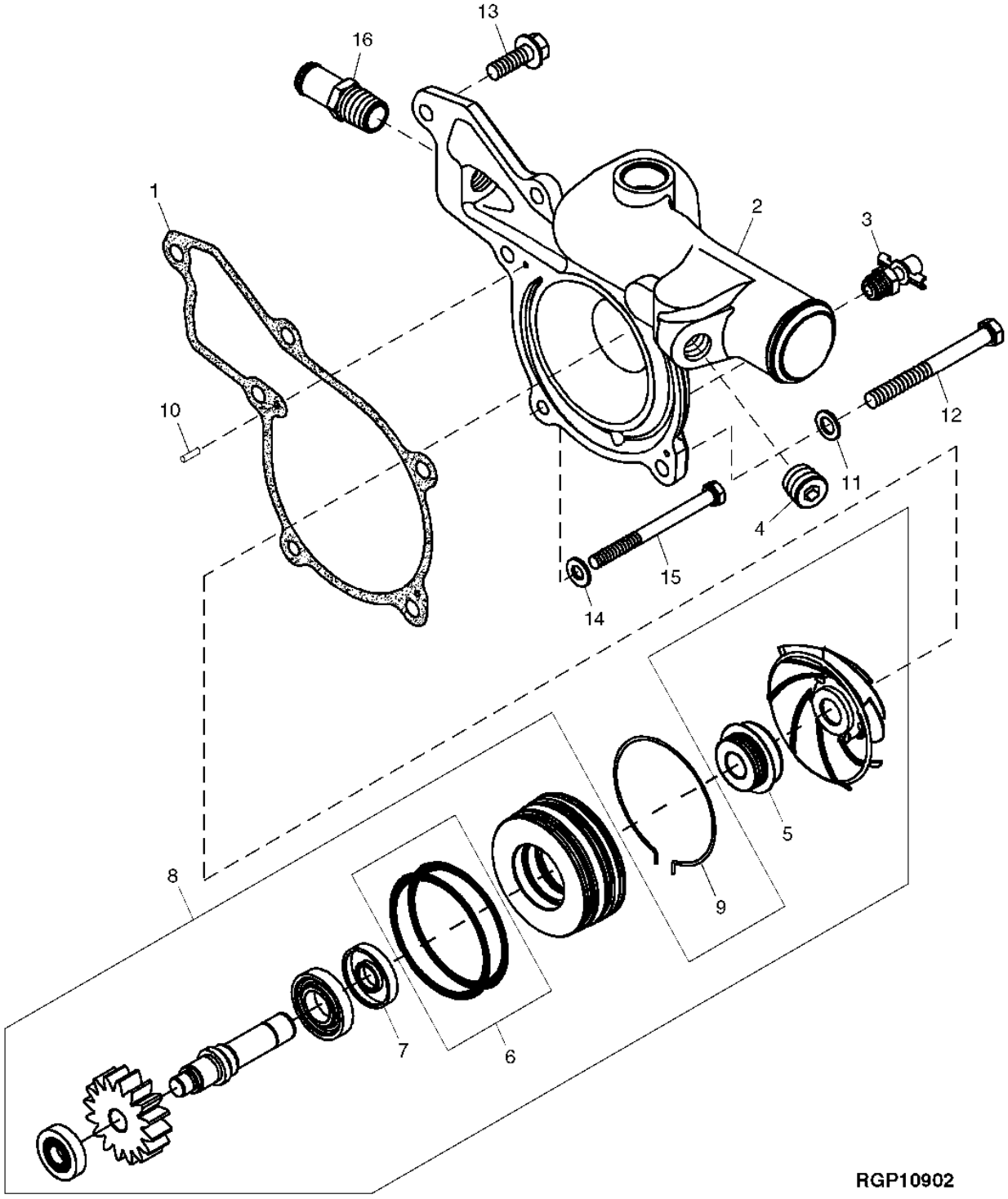

WATER PUMP AND COVER

KEY	PART NO.	PART NAME	QTY	ENGINE SERIAL NO.	770D	772D	REMARKS
1	R119383	GASKET	1		X	X	
2	R503427	COVER	1		X	X	
3	AT13740	DRAIN VALVE	1		X	X	1/4"-18NPT
4	RE57836	PIPE PLUG	1		X	X	1/2"-14NPT
5	RE521496	SEAL KIT	1		X	X	
6	RE509463	KIT	1		X	X	SEAL
7	RE39134	SEAL	1		X	X	
8	RE521502	WATER PUMP	1		X	X	(LOW FLOW W/ 16 TOOTH GEAR) (MARKED R503501)
9	R121316	RING	1		X	X	
10	R11086	DOWEL PIN	2		X	X	0.127" X 0.380"
11	24M7096	WASHER	3		X	X	10.500 X 18 X 1.600 MM
12	19H3445	CAP SCREW	3		X	X	3/8" X 3-3/4"
13	19H3411	SCREW	2		X	X	3/8" X 1-1/8"
14	24H1136	WASHER	1		X	X	11/32" X 11/16" X 0.065"
15	19H1897	CAP SCREW	1		X	X	5/16" X 3-3/4"
16	R39503	FITTING	1		X	X	1/2"-14NPT

MEMORANDA

MEMORANDA

THERMOSTAT HOUSING AND COVER

RGP10899 -UN-05JAN05

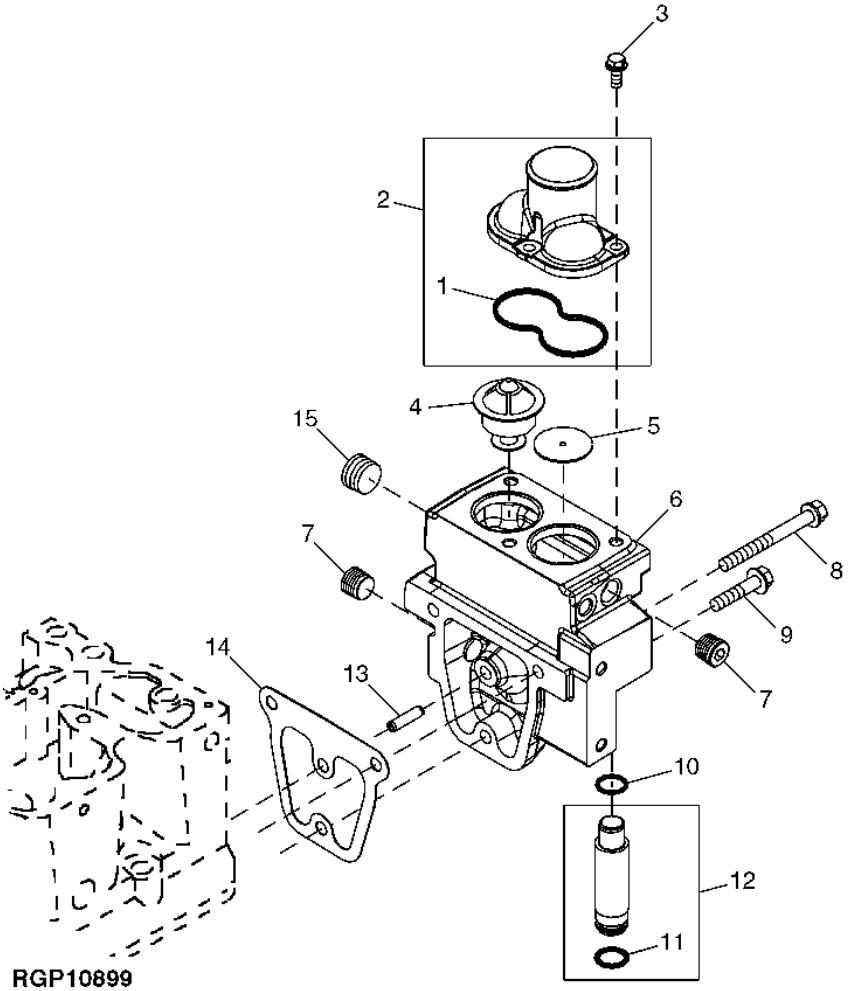

RGP10899

THERMOSTAT HOUSING AND COVER

KEY	PART NO.	PART NAME	QTY	ENGINE SERIAL NO.	770D	772D	REMARKS
1	R136151	SEAL	1		X	X	
2	RE502570	COVER	1		X	X	
3	T53268	SCREW	3		X	X	3/8" X 0.870"
4	AR48675	THERMOSTAT	1		X	X	82°C (180°F)
5	R100671	PLUG	1		X	X	
6	R519578	MANIFOLD	1		X	X	
7	RE57836	PIPE PLUG	2		X	X	1/2"-14NPT
8	R133998	SCREW	2		X	X	3/8" X 3.635"
9	19H3772	SCREW	1		X	X	3/8" X 1-3/4"
10	R72328	O-RING	1		X	X	0.737" X 0.103"
11	R504810	O-RING	1		X	X	47/64" X 0.139"
12	RE509095	TUBE	1		X	X	
13	34H329	SPRING PIN	1		X	X	5/16" X 1-1/4"
14	R86062	GASKET	1		X	X	
15	15H690	PIPE PLUG	1		X	X	3/4"-14NPT

MEMORANDA

OIL COOLER

RGP10522 -UN-07APR04

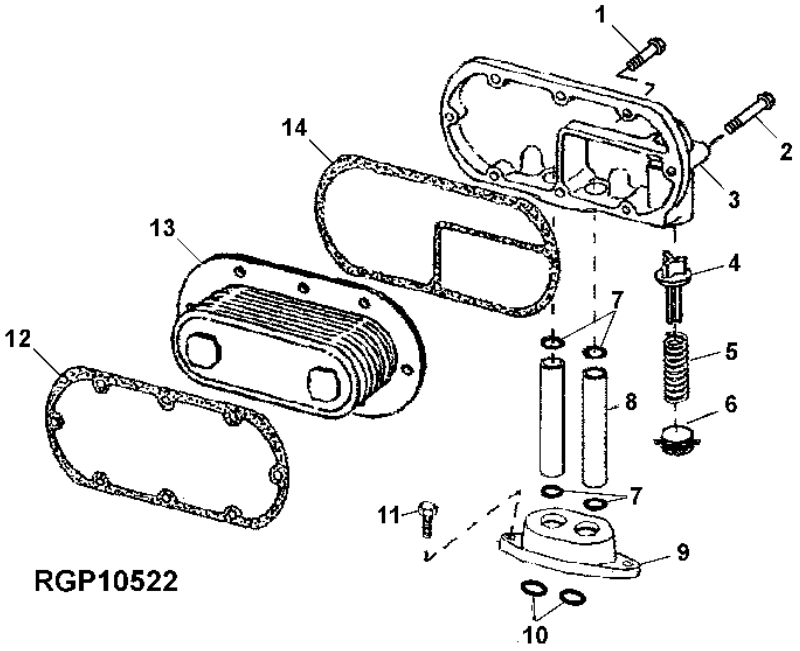

KEY	PART NO.	PART NAME	QTY	ENGINE SERIAL NO.	770D	772D	REMARKS
1	19H3768	SCREW	7		X	X	5/16" X 1-3/8"
2	19H3769	SCREW	1		X	X	5/16" X 2-1/2"
3	R504289	COVER	1		X	X	
4	R500055	VALVE	1		X	X	
5	R98064	SPRING	1		X	X	
6	R504670	RETAINER	1		X	X	
7	R518804	PACKING	4		X	X	
8	RE515781	OIL TUBE	2		X	X	
9	R504667	ADAPTER	1		X	X	
10	R504669	SEAL	2		X	X	
11	19H3771	SCREW	2		X	X	3/8" X 1"
12	RE524105	GASKET	1		X	X	
13	AR55394	OIL COOLER	1		X	X	
14	R504668	SEAL	1		X	X	

MEMORANDA

MEMORANDA

FUEL FILTER AND LINES

RGP10900 -UN-01MAR05

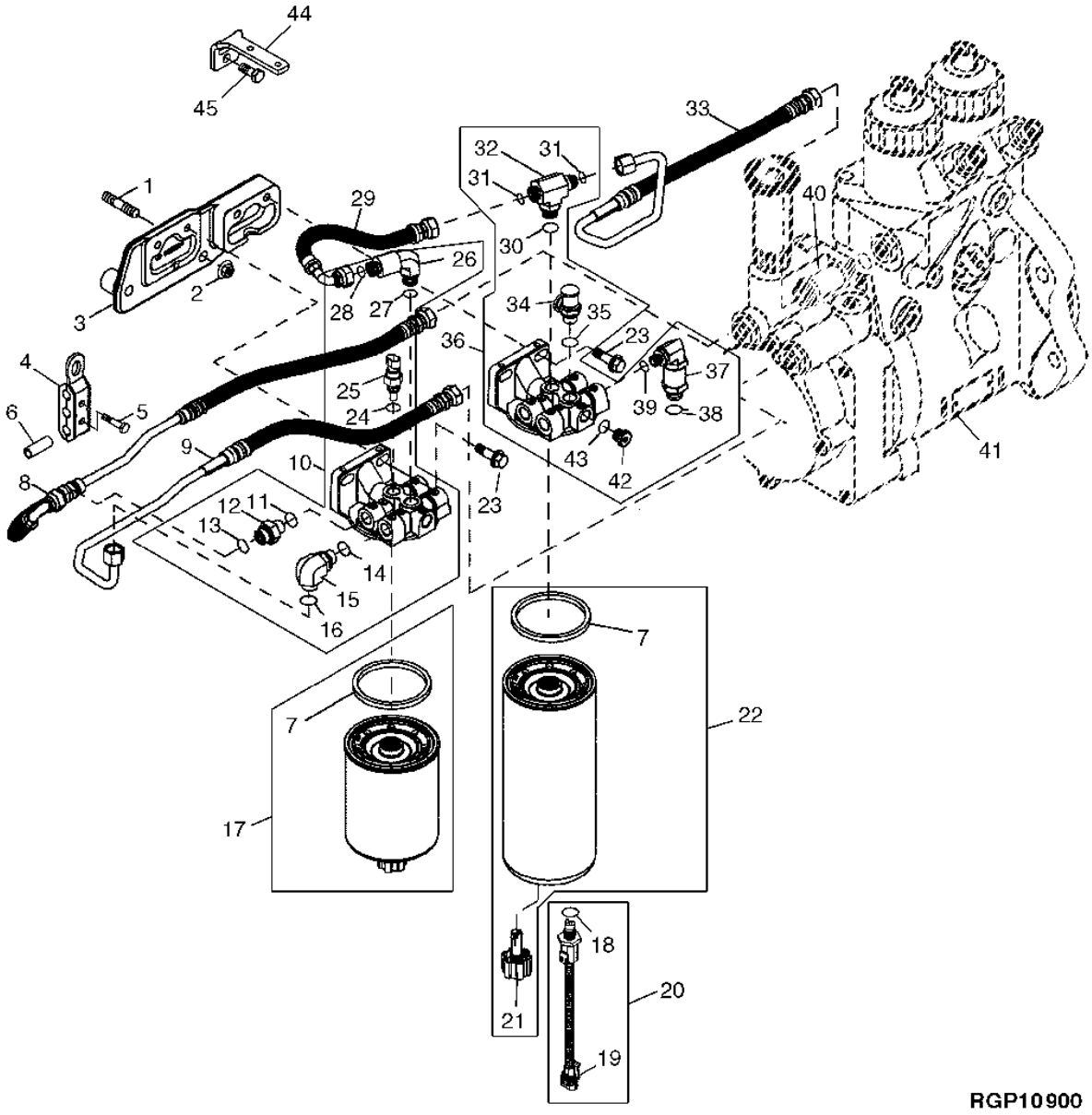

FUEL FILTER AND LINES

KEY	PART NO.	PART NAME	QTY	ENGINE SERIAL NO.	770D	772D	REMARKS
1	R504516	STUD	2		X	X	7/16" X 2.638"
2	14H1059	NUT	2		X	X	7/16"
3	R518524	BRACKET	1		X	X	
4	RE509668	CLAMP	1		X	X	
5	19H1791	CAP SCREW	2		X	X	1/4" X 1-1/4"
6	R518563	HOSE GUARD	3		X	X	
7	R519483	PACKING	2		X	X	
8	RE520975	FUEL LINE	1		X	X	(INCLUDES R518563)
9	RE520981	FUEL LINE	1		X	X	(INCLUDES R518563)
10	RE520969	FILTER HEAD	1		X	X	FINAL FILTER
11	51M7096	O-RING	1		X	X	13.300 X 2.200 MM
12	RE522518	FITTING	1		X	X	(INCLUDES 51M7096 AND R63548)
13	R63548	O-RING	1		X	X	0.364" X 0.070"
14	51M7096	O-RING	1		X	X	13.300 X 2.200 MM
15	RE522145	ADAPTER	1		X	X	(INCLUDES 51M7096 AND R63548)
16	R63548	O-RING	1		X	X	0.364" X 0.070"
17	RE522688	FUEL FILTER	1		X	X	(2 MICRON) FINAL
18	51M7095	O-RING	1		X	X	11.300 X 2.200 MM
19	57M7254	ELECTRICAL CONNECTOR ASSY	1		X	X	(ALSO ORDER 57M7258, 57M7289 AND (2) R104846)
20	RE522685	MOISTURE SENSOR	1		X	X	
21	RE522686	DRAIN VALVE	1		X	X	
22	RE522687	FUEL FILTER	1		X	X	(10 MICRON) PRE-FILTER
23	19H3693	SCREW	4		X	X	3/8" X 1-1/4"
24	51M7041	O-RING	1		X	X	11.300 X 2.200 MM
25	RE48419	FUEL TEMPERATURE SENSOR	1		X	X	(INCLUDES 51M7041)
26	RE520971	CONTROL VALVE	1		X	X	(INCLUDES 51M7096 AND R63548)
27	51M7096	O-RING	1		X	X	13.300 X 2.200 MM
28	R63548	O-RING	1		X	X	0.364" X 0.070"
29	RE521473	FUEL LINE	1		X	X	
30	51M7096	O-RING	1		X	X	13.300 X 2.200 MM
31	R63548	O-RING	2		X	X	0.364" X 0.070"
32	RE522143	ADAPTER	1		X	X	(INCLUDES 51M7096 AND (2) R63548)
33	RE520972	FUEL LINE	1		X	X	(INCLUDES R518563)
34	RE523578	DIAGNOSTIC COUPLING	1		X	X	(INCLUDES 51M7096)
35	51M7096	O-RING	1		X	X	13.300 X 2.200 MM
36	RE520967	FILTER HEAD	1		X	X	PRE-FILTER
37	RE520968	CHECK VALVE	1		X	X	(INCLUDES 51M7096 AND R63548)
38	R63548	O-RING	1		X	X	0.364" X 0.070"
39	51M7096	O-RING	1		X	X	13.300 X 2.200 MM
40	.....	CHECK VALVE	1		X	X	
41	.....	FUEL INJECTION PUMP	1		X	X	
42	RE522144	DRAIN PLUG	1		X	X	(INCLUDES 51M7095)
43	51M7095	O-RING	1		X	X	11.300 X 2.200 MM
44	R505515	BRACKET	3		X	X	
45	19H2284	CAP SCREW	3		X	X	3/8" X 7/8"

MEMORANDA

MEMORANDA

STARTING MOTOR (24-VOLT DENSO)

RGP10898 -UN-14DEC04

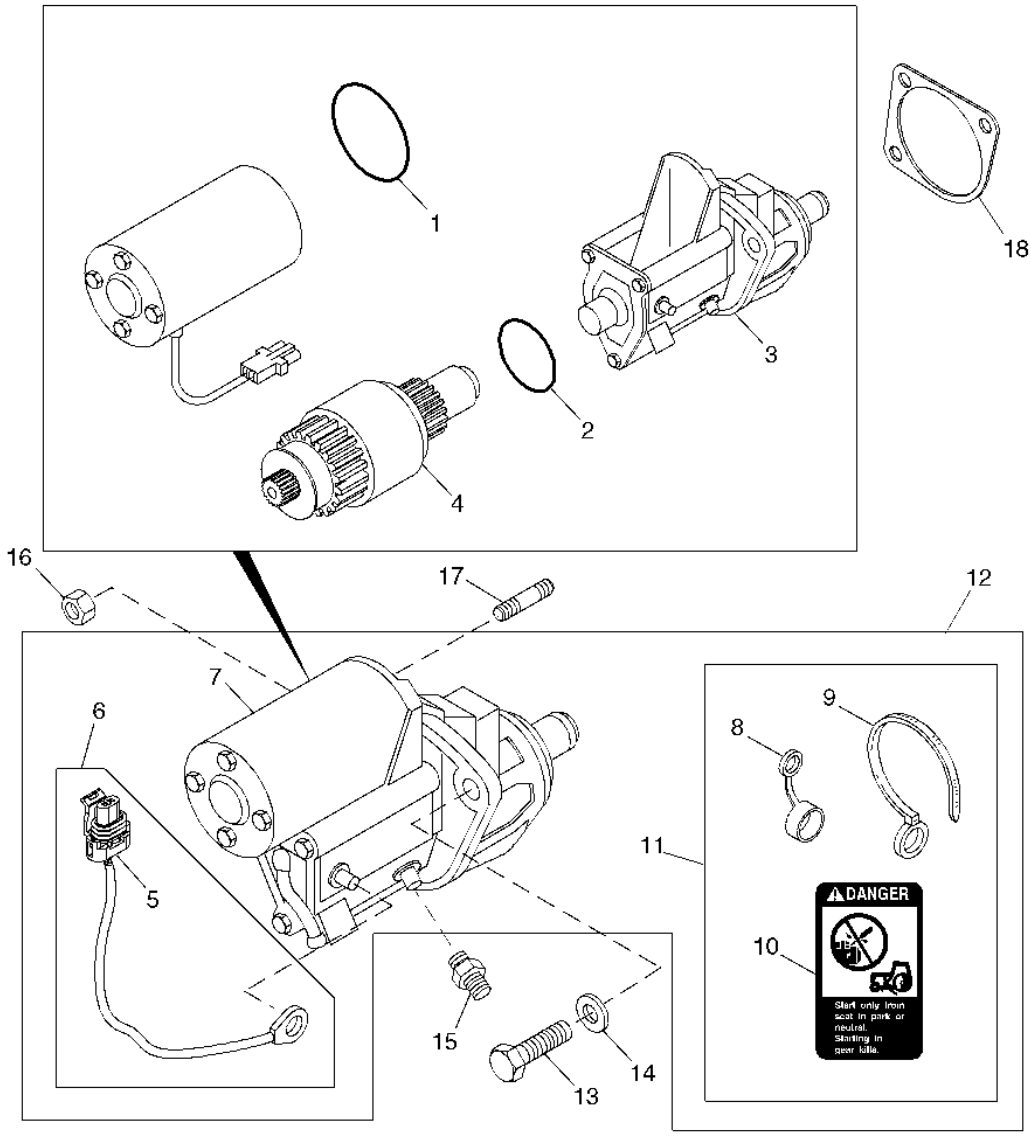

RGP10898

STARTING MOTOR (24-VOLT DENSO)

KEY	PART NO.	PART NAME	QTY	ENGINE SERIAL NO.	770D	772D	REMARKS
1	R135509	SEAL	1		X	X	
2	R135510	O-RING	1		X	X	47.200 X 2.400 MM (1.858" X 0.094")
3	RE70678	SOLENOID	1		X	X	
4	RE70682	CLUTCH	1		X	X	
5	RE12362	ELECTRICAL CONNECTOR ASSY	1		X	X	
	57M7271	ELEC. CONNECTOR TERMINAL	1		X	X	
6	RE505399	WIRING LEAD	1		X	X	TERMINAL M
7	.....	STARTER MOTOR	1		X	X	24V
8	.....	COVER	1		X	X	TERMINAL 50
9	R96703	TIE BAND	1		X	X	
10	T146102	LABEL	1		X	X	BYPASS START (ENGLISH)
11	RE70756	KIT	1		X	X	SOLENOID COVER
12	RE506103	STARTER MOTOR KIT	1		X	X	24V, (MARKED RE504245)
13	19H3219	CAP SCREW	2		X	X	3/8" X 1-3/8"
14	24M7096	WASHER	1		X	X	10.500 X 18 X 1.600 MM
15	R516315	STUD	1		X	X	(USE WITH RE506103)
16	E55662	FLANGE NUT	1		X	X	
17	R515224	STUD	1		X	X	
18	R53108	GASKET	1		X	X	
..	RE71256	SCREW WITH WASHER	1		X	X	M5X0.8, TERMINAL 50 (NOT SHOWN)
..	R136052	STUD	1		X	X	M12X1.75, TERMINAL G (NOT SHOWN)

MEMORANDA

MEMORANDA

ALTERNATOR MOUNTING BRACKET AND BELT TENSIONER

RGP4957 -UN-22AUG97

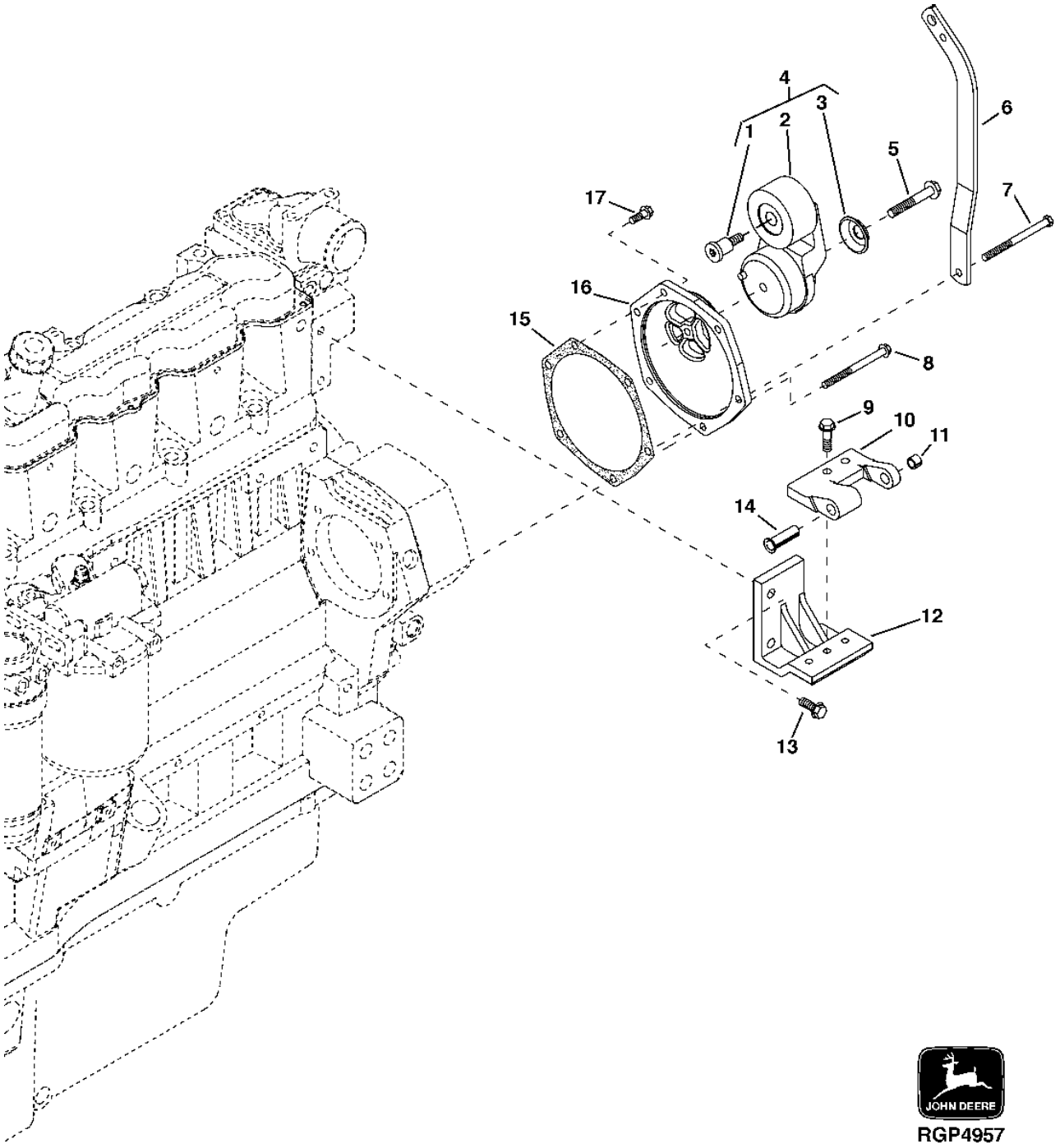

ALTERNATOR MOUNTING BRACKET AND BELT TENSIONER

KEY	PART NO.	PART NAME	QTY	ENGINE SERIAL NO.	772D	772D	REMARKS
1	R98250	BOLT	1		X	X	
2	RE505264	IDLER	1		X	X	
3	R114837	DUST SHIELD	1		X	X	
4	RE68715	TIGHTENER	1		X	X	
5	19M7810	SCREW	1		X	X	M10 X 80
6	.....	STRAP	NA		X	X	
7	.....	CAP SCREW	NA		X	X	
8	19H3300	CAP SCREW	5		X	X	5/16" X 3-3/4"
	24H1136	WASHER	5		X	X	11/32" X 11/16" X 0.065"
9	.....	SCREW	NA		X	X	
10	.....	BRACKET	NA		X	X	
11	.....	BUSHING	NA		X	X	
12	R131002	SUPPORT	1		X	X	
13	19H3771	SCREW	2		X	X	3/8" X 1"
14	.....	BUSHING	NA		X	X	
15	R502011	GASKET	1		X	X	
16	R131890	COVER	1		X	X	
17	R112268	SCREW	1		X	X	

MEMORANDA

CRANKSHAFT PULLEY AND DAMPENER

RGP4708 -UN-12JUL96

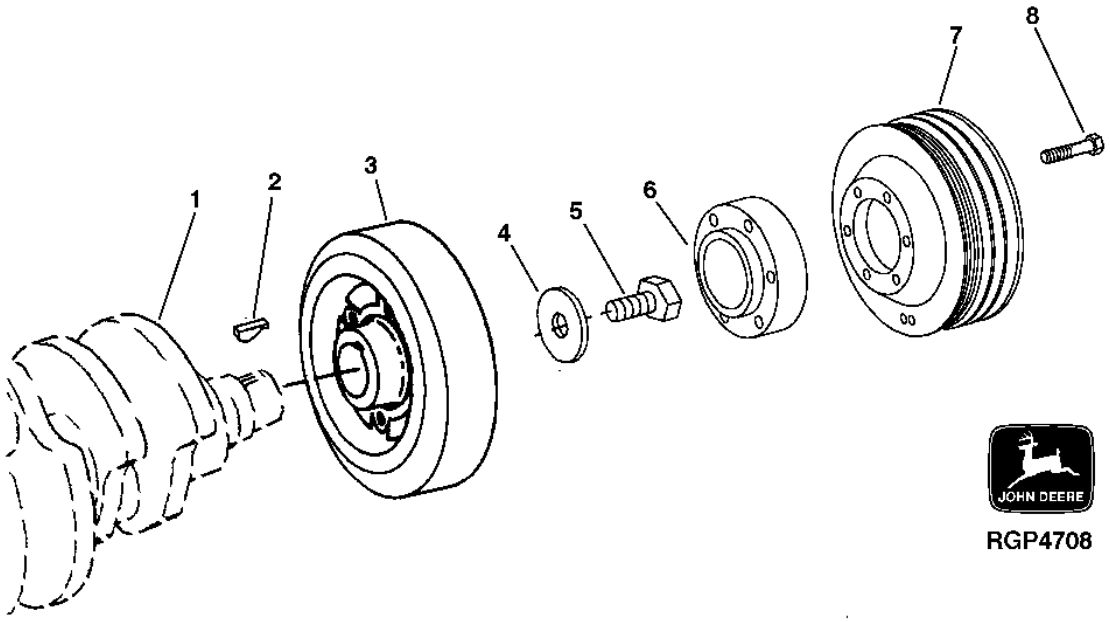

KEY	PART NO.	PART NAME	QTY	ENGINE SERIAL NO.	770D	772D	REMARKS
1	.....	CRANKSHAFT	1		X	X	
2	R116311	KEY	1		X	X	
3	RE57603	TORSIONAL DAMPER	1		X	X	
4	R26333	WASHER	1		X	X	
5	R79846	CAP SCREW	1		X	X	
6	.....	SPACER	NA		X	X	
7	R106998	PULLEY	1		X	X	OD 206.5MM
8	19H3219	CAP SCREW	6		X	X	3/8" X 1-3/8"

FIXED FAN DRIVE PULLEY

RGP10896 -UN-14DEC04

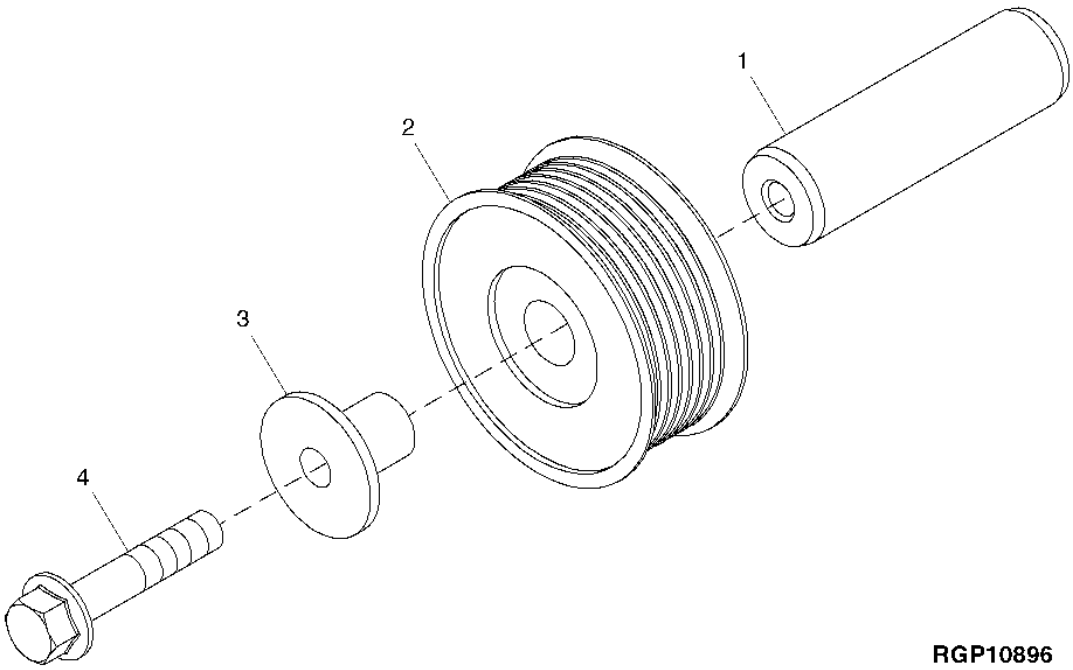

KEY	PART NO.	PART NAME	QTY	SERIAL NO.	770D	772D	REMARKS
1	R131001	SHAFT	1		X	X	
2	AT211041	IDLER	1		X	X	
3	R502079	SLEEVE	1		X	X	
4	19M8292	SCREW	1		X	X	M10 X 50

FLYWHEEL

RGP198 -UN-01JAN94

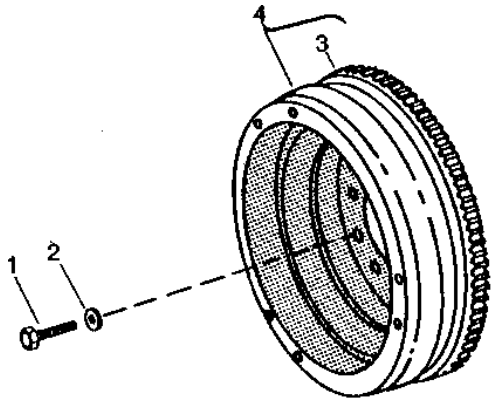

RGP198

KEY	PART NO.	PART NAME	QTY	ENGINE SERIAL NO.	7 7 7 7 0 2 D D	REMARKS
1	R112883	CAP SCREW	6		X X	1/2" X 1-3/4"
2	T23891	WASHER	6		X X	
3	R28811	RING GEAR	1		X X	
4	AR68167	FLYWHEEL	1		X X	(MARKED R56962)

FLYWHEEL HOUSING AND CRANKSHAFT OIL SEAL HOUSING

RGP10891 -UN-24NOV04

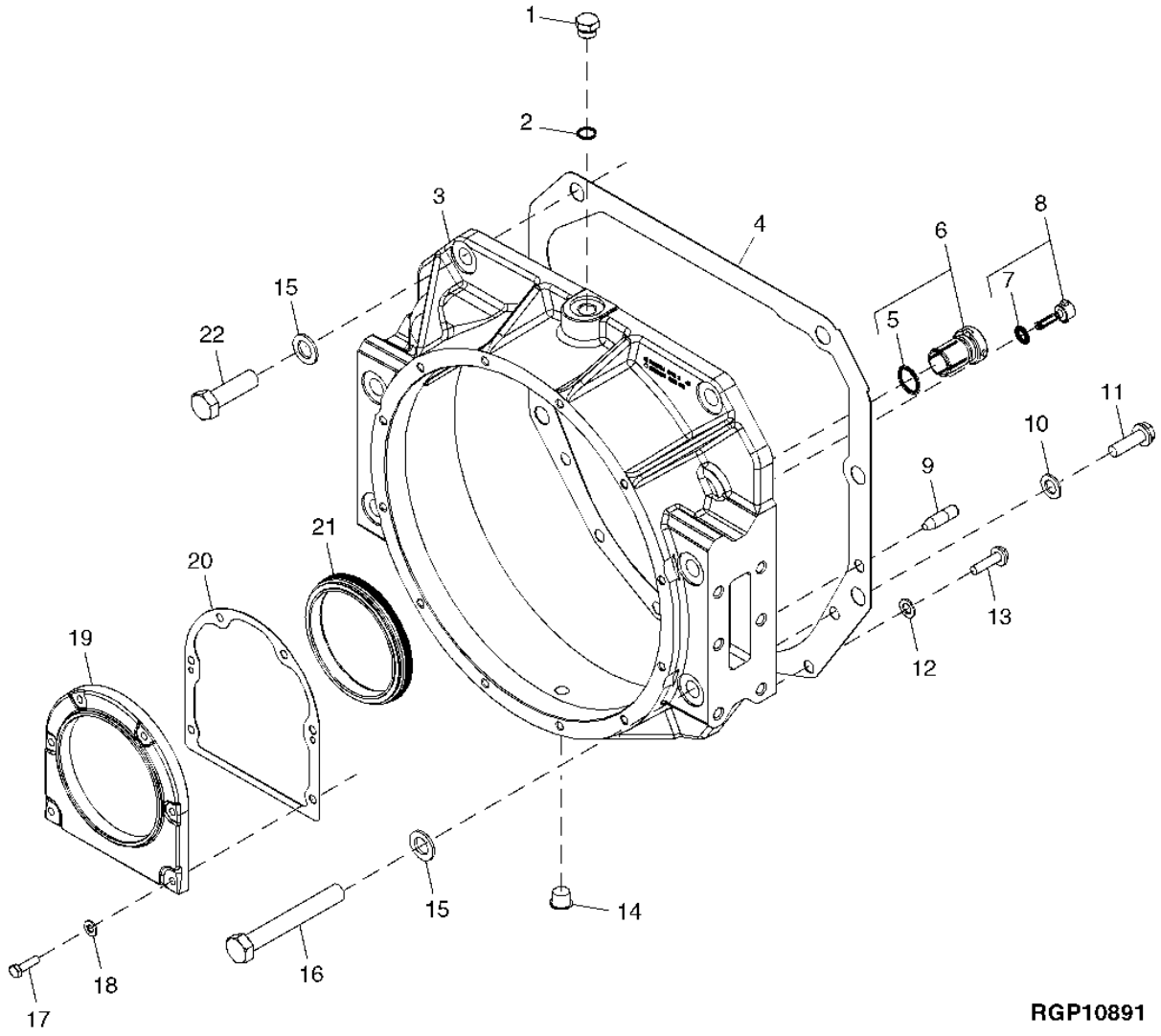

FLYWHEEL HOUSING AND CRANKSHAFT OIL SEAL HOUSING

KEY	PART NO.	PART NAME	QTY	ENGINE SERIAL NO.	770D	772D	REMARKS
1	R39112	FITTING	1		X	X	3/4"-16UNF
2	R47150	O-RING	1		X	X	0.644" X 0.087"
3	R121694	HOUSING	1		X	X	
4	R518995	GASKET	1		X	X	
	R89441	GASKET	1		X	X	OIL PAN REMOVAL (LOWER PORTION ONLY) (NOT SHOWN)
5	R27149	O-RING	1		X	X	0.921" X 0.139"
6	AR61533	PLUG	1		X	X	
7	A4365R	O-RING	1		X	X	0.239" X 0.070"
8	AR61589	PLUG	1		X	X	
9	H79910	DOWEL PIN	2		X	X	0.502" X 1.752"
10	24M7240	WASHER	2		X	X	13 X 25 X 3 MM
11	19H2473	CAP SCREW	2		X	X	1/2" X 1-3/4"
12	24M7239	WASHER	4		X	X	10.700 X 21 X 2.500 MM
13	19H2633	CAP SCREW	4		X	X	3/8" X 1-1/2"
14	RE57836	PIPE PLUG	1		X	X	1/2"-14NPT
15	24M7353	WASHER	6		X	X	20 X 34 X 3 MM
16	19H2001	CAP SCREW	4		X	X	3/4" X 5-1/2"
17	19H2117	CAP SCREW	6		X	X	5/16" X 1-1/8"
18	T27860	WASHER	6		X	X	0.344" X 0.689" X 0.066"
19	R125027	HOUSING	1		X	X	
20	R520504	GASKET	1		X	X	
21	RE520036	SEAL	1		X	X	
22	19H1862	CAP SCREW	2		X	X	3/4" X 2-1/2"

MEMORANDA

MEMORANDA

GASKET KITS

RGP10184 -UN-11MAR04

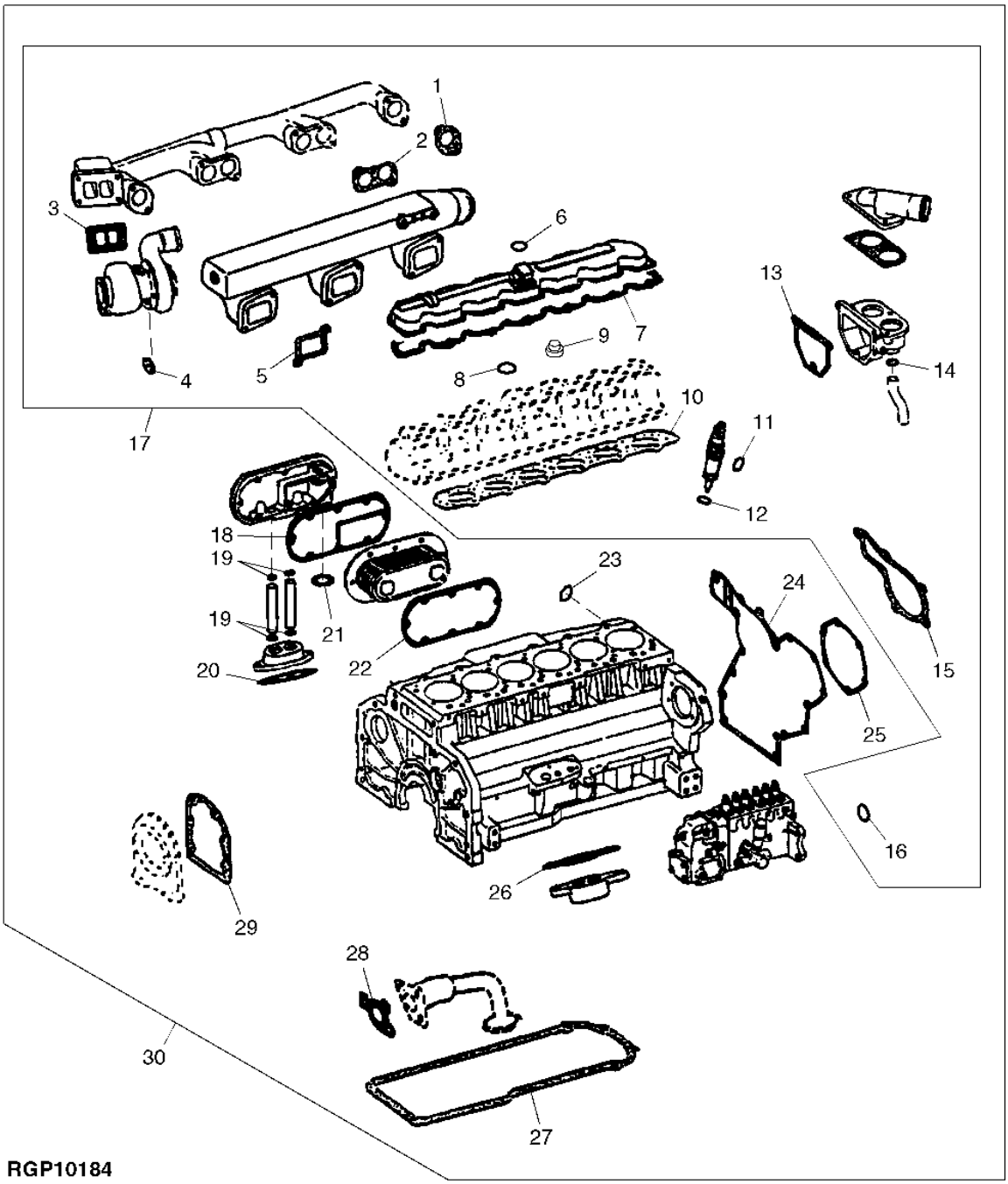

RGP10184

GASKET KITS

KEY	PART NO.	PART NAME	QTY	ENGINE SERIAL NO.	770D	772D	REMARKS
1	R83021	GASKET	2		X	X	OUTER
2	R83020	GASKET	2		X	X	INNER
3	R92097	GASKET	1		X	X	
	R89879	GASKET	1		X	X	
4	R105346	GASKET	1		X	X	
5	R130573	GASKET	3		X	X	
6	R72328	O-RING	1		X	X	
7	R502598	SEAL	1		X	X	COVER
	R502719	SEAL	1		X	X	CARRIER
8	R504093	SEAL	4		X	X	
9	R501640	SHIELD	6		X	X	
10	RE55475	ENGINE CYLINDER HEAD GASKET	1		X	X	
11	R505570	O-RING	6		X	X	
12	R131051	WASHER	6		X	X	
	R503578	PACKING	6		X	X	
13	R136063	SEAL	1		X	X	
14	R504810	O-RING	1		X	X	
15	R119383	GASKET	1		X	X	
16	R515457	O-RING	1		X	X	
17	RE521059	GASKET KIT	1		X	X	CYLINDER HEAD, (INCLUDES (8) R51936, RE516171 AND (8) R63551) (DOES NOT INCLUDE (4) R504093)
18	R132396	GASKET	1		X	X	
19	R47153	O-RING	4		X	X	
20	R50424	GASKET	1		X	X	
21	U17409	O-RING	1		X	X	
22	AR58952	GASKET	1		X	X	
23	U13639	O-RING	1		X	X	
24	R119384	GASKET	1		X	X	
25	R502011	GASKET	1		X	X	
26	R109625	GASKET	1		X	X	
27	RE504822	GASKET	1		X	X	
28	R100569	GASKET	1		X	X	
29	R26058	GASKET	1		X	X	
30	RE521058	GASKET KIT	1		X	X	ENGINE REBUILD
..	R51936	SEALING WASHER	8		X	X	
..	R63551	SEALING WASHER	8		X	X	

ENGINE AIR HEATER

T201622 -UN-12JUL04

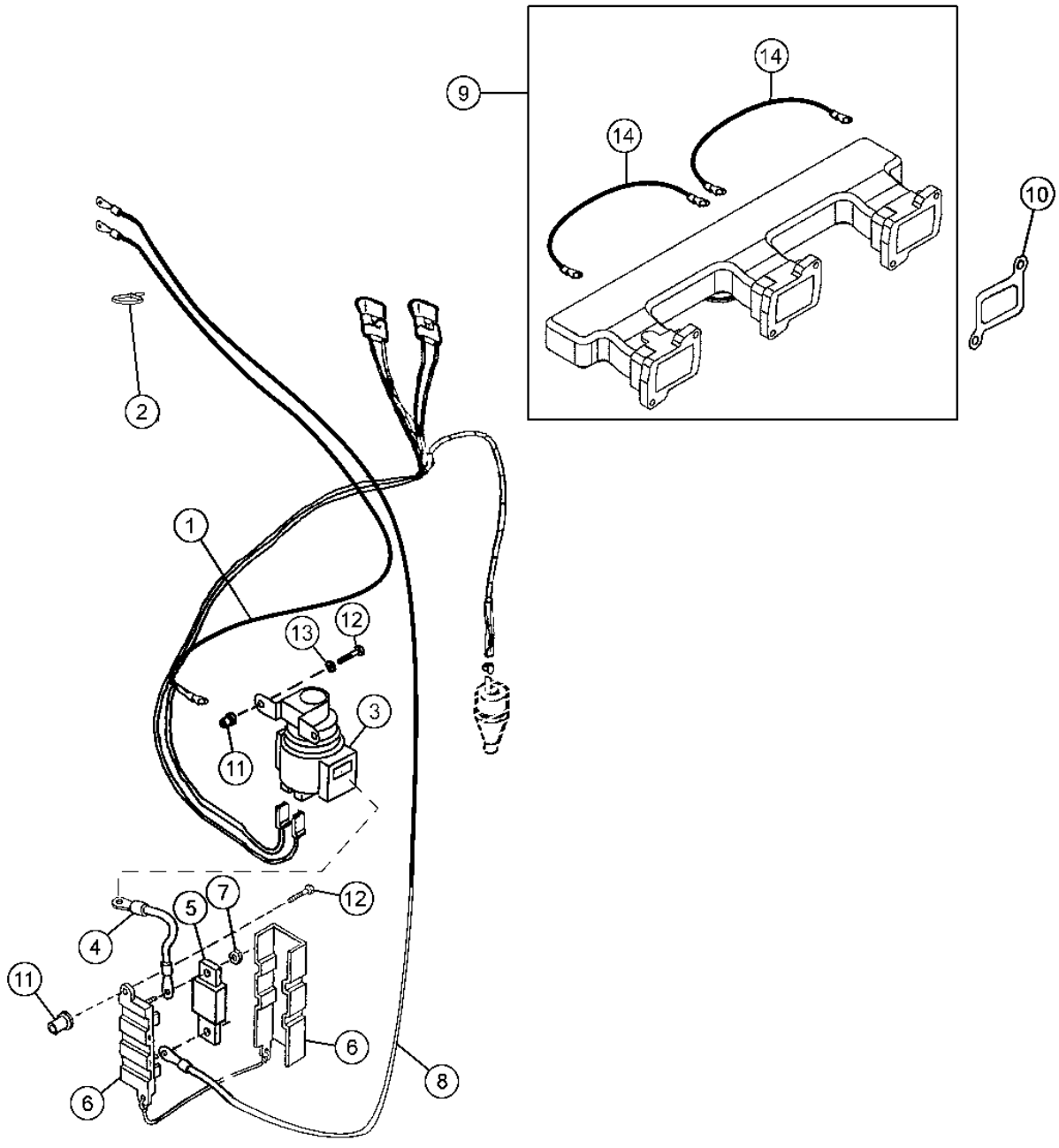

T201622

ENGINE AIR HEATER

KEY	PART NO.	PART NAME	QTY	SERIAL NO.	770D	772D	REMARKS
1	AT196516	WIRING HARNESS	1		X	X	(ENGINE AIR HEATER)
2	H77698	TIE BAND	AR		X	X	
3	AT145341	RELAY	1		X	X	(AIR HEATER) (24 VOLT)
4	AT184618	WIRE	1		X	X	(AIR HEATER) (FUSE TO RELAY)
5	AT203566	FUSE	1		X	X	(125 AMP) (AIR HEATER)
6	AT206818	FUSE HOLDER	1		X	X	
7	14M7303	FLANGE NUT	2		X	X	M6
8	AT191008	WIRE	1		X	X	(ENGINE AIR HEATER GROUND TERMINAL TO STARTER GROUND STUD)
9	RE515331	INTAKE MANIFOLD	1		X	X	(AIR INTAKE)
10	R130573	GASKET	3		X	X	
11	T160333	NUT	4		X	X	
12	19M7862	SCREW	4		X	X	M6 X 20
13	24M7139	WASHER	2		X	X	
14	RE66693	CABLE	2		X	X	

COLD WEATHER STARTING AID

T201627 -UN-10DEC04

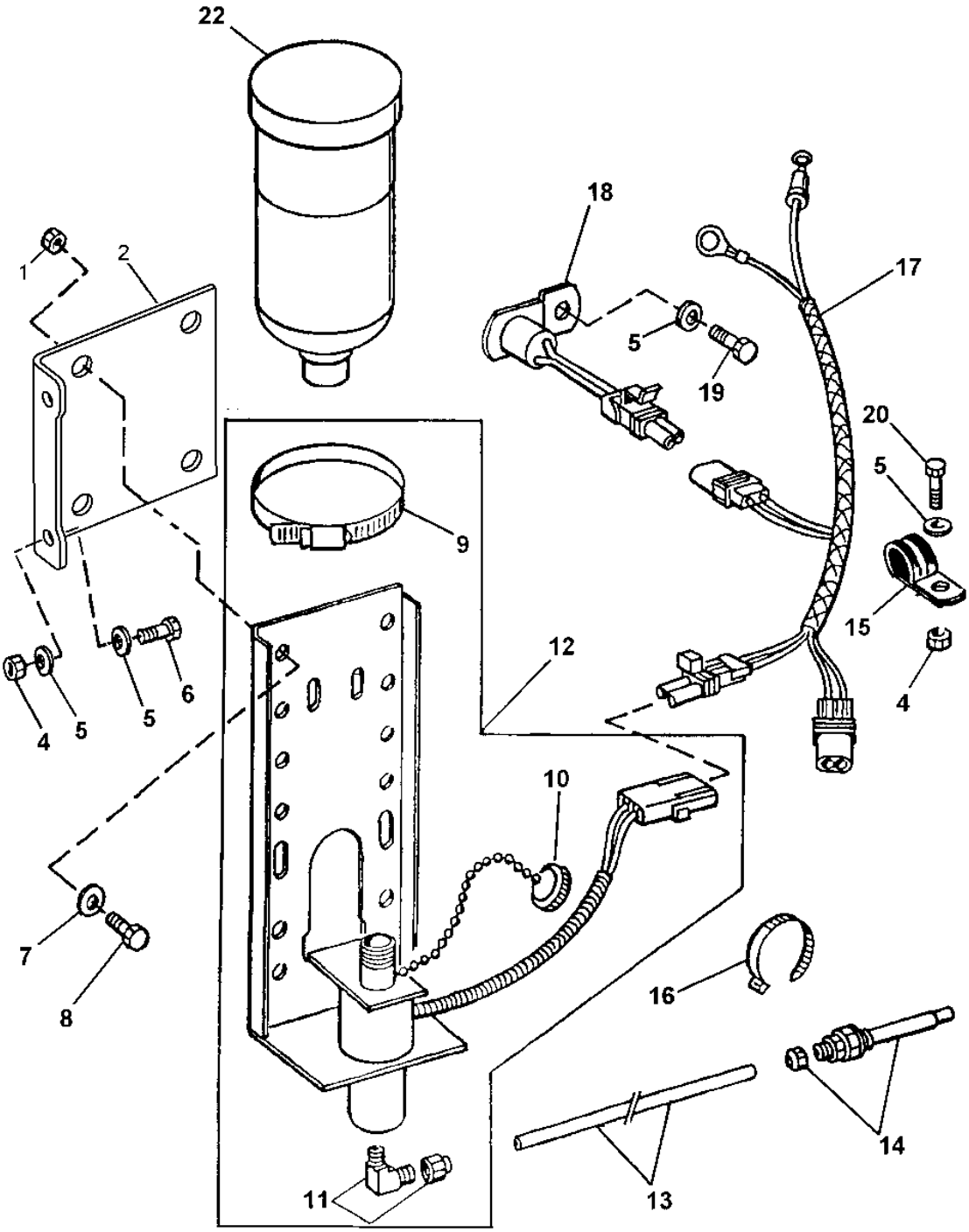

T201627

COLD WEATHER STARTING AID

KEY	PART NO.	PART NAME	QTY	SERIAL NO.	770D	772D	REMARKS
1	T160334	NUT	4		X	X	
2	T206515	ANGLE	1		X	X	
4	14M7274	NUT	3		X	X	M10
5	24M7239	WASHER	6		X	X	
6	19M7402	CAP SCREW	2		X	X	M10 X 25
7	24M7238	WASHER	4		X	X	
8	19M7407	CAP SCREW	4		X	X	M8 X 25
9	AR21842	CLAMP	1		X	X	
10	AT171539	CAP (HAT)	1		X	X	
11	AT181582	ELBOW FITTING	1		X	X	
12	AT183422	SOLENOID	1		X	X	
13	.....	TUBE	1		X	X	(MAKE FROM T78593 BULK MATERIAL, CUT TO LENGTH)
14	AT183417	NOZZLE	1		X	X	
15	15H511	PIPE BUSHING	1		X	X	1/8"
16	R44302	TIE BAND	AR		X	X	
17	AT190836	WIRING HARNESS	1		X	X	(INCLUDES (1) 57M7121 FUSE)
	57M7121	FUSE	1		X	X	
18	AT183485	TEMPERATURE SWITCH	1		X	X	
19	19H1648	CAP SCREW	1		X	X	3/8" X 3/4"
20	T76252	CLAMP	1		X	X	
22	AT183423	STARTING FLUID	1		X	X	

COOLANT HEATER

T203938 -UN-10NOV04

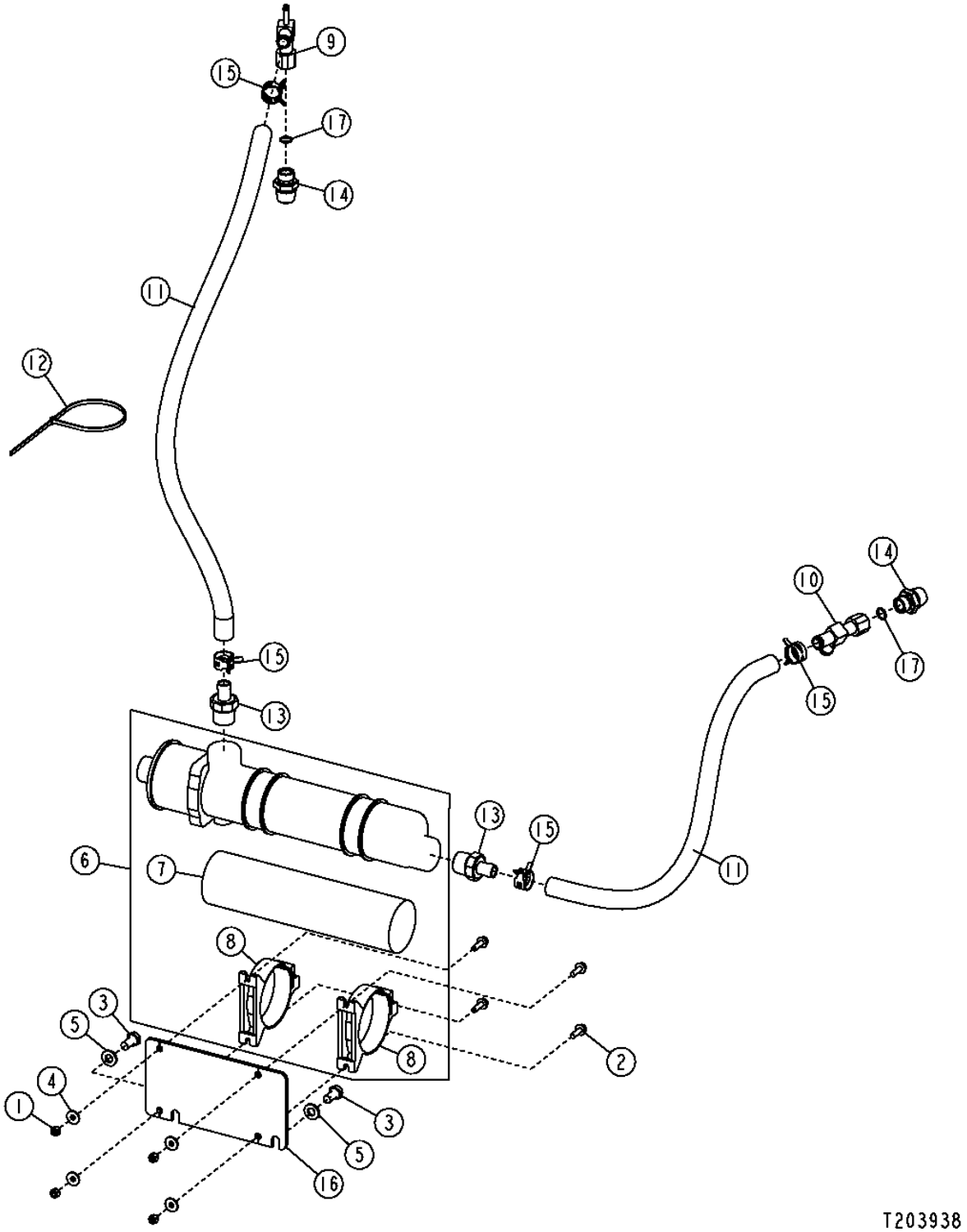

THIS PARTS LISTING IS CONTINUED

COOLANT HEATER

KEY	PART NO.	PART NAME	QTY	SERIAL NO.	770D	772D	REMARKS
1	14M7528	LOCK NUT	4		X	X	M6
2	19M7862	SCREW	4		X	X	M6 X 20
3	19M7938	CAP SCREW	2		X	X	M10 X 20
4	24M7139	WASHER	4		X	X	
5	24M7239	WASHER	2		X	X	
6	AT306681	COOLANT HEATER	1		X	X	
7	AT306682	COOLANT HEATER	1		X	X	
8	T205065	BLOCK CLAMP	2		X	X	
9	AT307054	TEE FITTING	1		X	X	
10	AT307279	TEE FITTING	1		X	X	
11	.....	BULK HOSE	1		X	X	(MAKE FROM T60811) (CUT TO LENGTH)
12	H77698	TIE BAND	1		X	X	
13	L100913	FITTING	2		X	X	
14	M87683	ADAPTER	2		X	X	
15	R117721	CLAMP	4		X	X	
16	T205452	BRACKET	1		X	X	
17	T77857	O-RING	2		X	X	

FAN GUARD (WITHOUT AIR CONDITIONING)

T203916 -UN-05NOV04

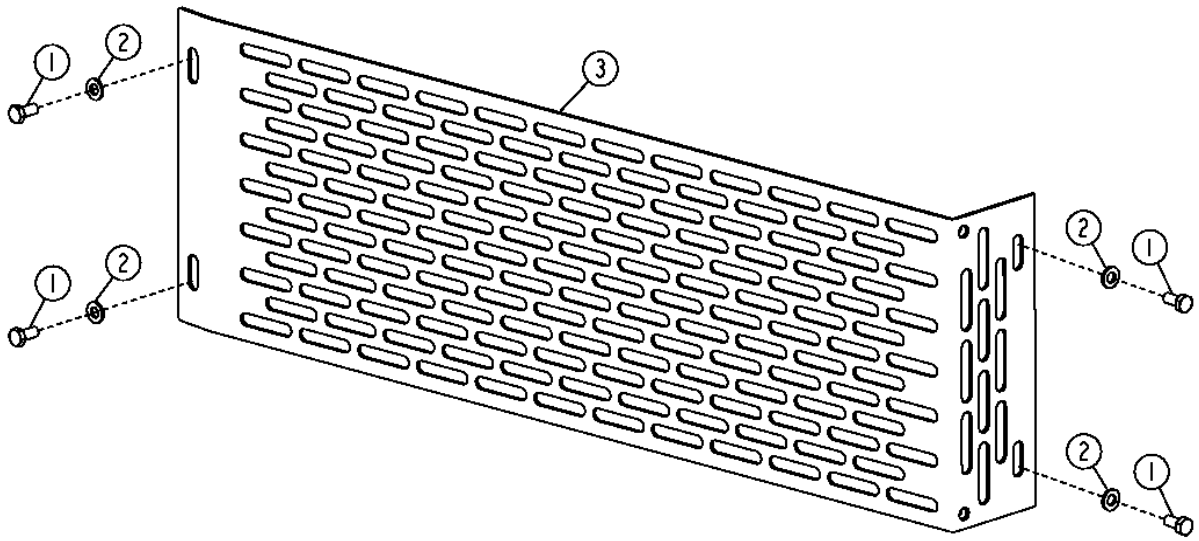

T203916

FAN GUARD (WITHOUT AIR CONDITIONING)

KEY	PART NO.	PART NAME	QTY	SERIAL NO.	770D	772D	REMARKS
1	19M7938	CAP SCREW	4		X	X	
2	24M7239	WASHER	4		X	X	
3	AT312995	GUARD	1		X	X	

RADIATOR, CHARGE AIR COOLER AND HYDRAULIC OIL COOLER

T204313 -UN-18DEC04

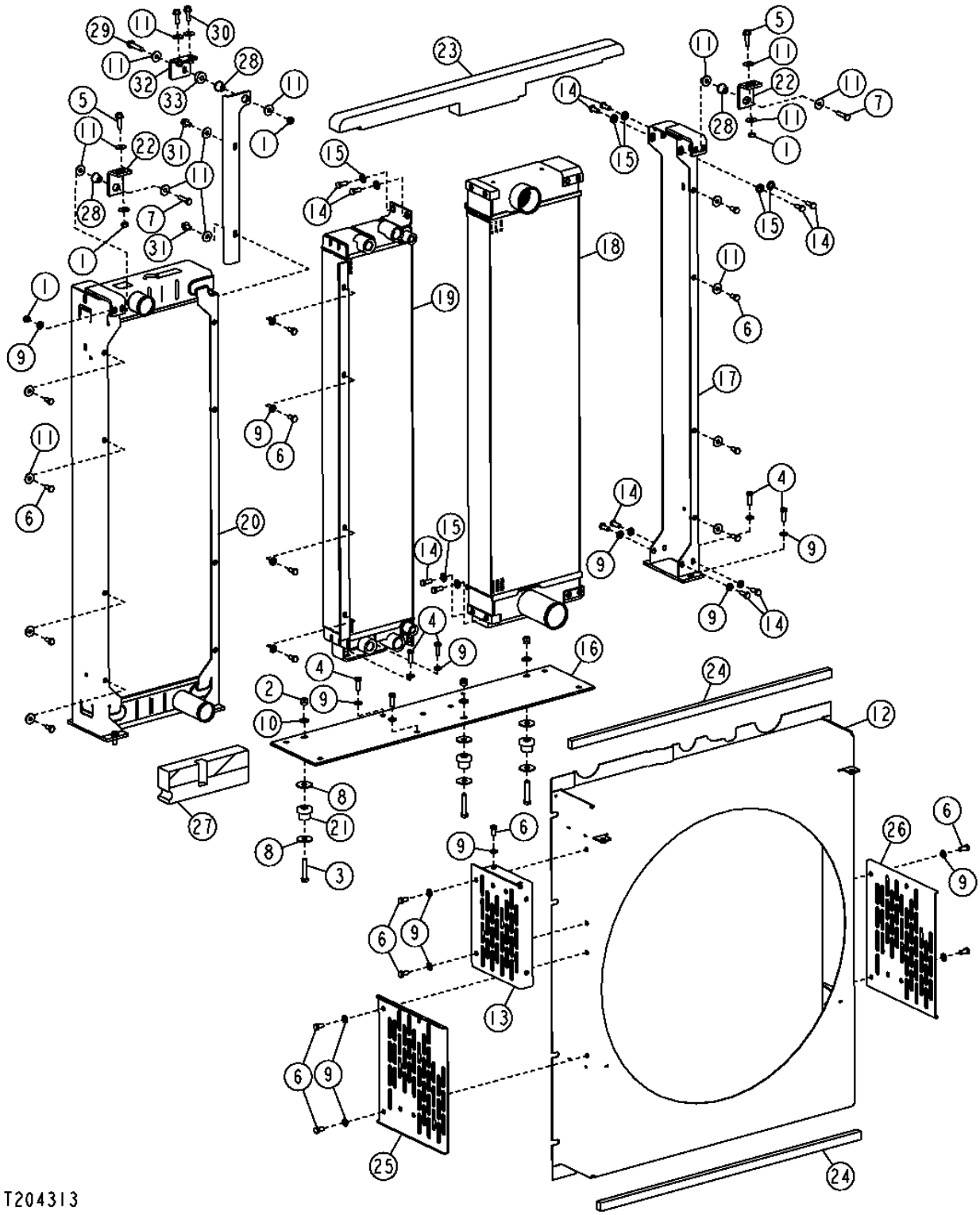

RADIATOR, CHARGE AIR COOLER AND HYDRAULIC OIL COOLER

KEY	PART NO.	PART NAME	QTY	SERIAL NO.	770D	772D	REMARKS
1	14M7274	NUT	5		X	X	M10
2	14M7313	LOCK NUT	2		X	X	M12
3	19M7363	CAP SCREW	3		X	X	M12 X 60
4	19M7662	CAP SCREW	8		X	X	M10 X 30
5	19M7835	SCREW	2		X	X	M10 X 35
6	19M7938	CAP SCREW	19		X	X	M10 X 20
7	19M8637	CAP SCREW	2		X	X	M10 X 40
8	24H1346	WASHER	6		X	X	
9	24M7239	WASHER	25		X	X	
10	24M7240	WASHER	3		X	X	
11	24M7296	WASHER	22		X	X	
12	AT307031	SHROUD	1		X	X	
13	AT307061	BRACKET	1		X	X	
14	19M7402	CAP SCREW	12		X	X	M10 X 25
15	24M7345	WASHER	8		X	X	
16	AT306034	PLATE	1		X	X	
17	AT306035	CHANNEL	1		X	X	
18	AT306967	AFTERCOOLER	1		X	X	(CHARGE AIR COOLER)
19	AT306968	OIL COOLER	1		X	X	(HYDRAULIC OIL COOLER)
20	AT311872	RADIATOR	1		X	X	
21	AT318649	ISOLATOR	3		X	X	
22	T205474	ANGLE	2		X	X	
23	T205711	SEAL	1		X	X	
24	T206558	ISOLATOR	2		X	X	
25	T212467	GUARD	1		X	X	
26	T212468	GUARD	1		X	X	
27	T213647	ISOLATOR	1		X	X	
28	U42208	ISOLATOR	3		X	X	
29	19M7807	SCREW	1		X	X	
30	19M7786	SCREW	2		X	X	
31	19M7784	SCREW	2		X	X	
32	AT320484	BRACKET	1		X	X	
33	T214426	BUSHING	1		X	X	

RADIATOR AND CHARGE AIR COOLER HOSES AND TUBES

T209452 -UN-18MAR05

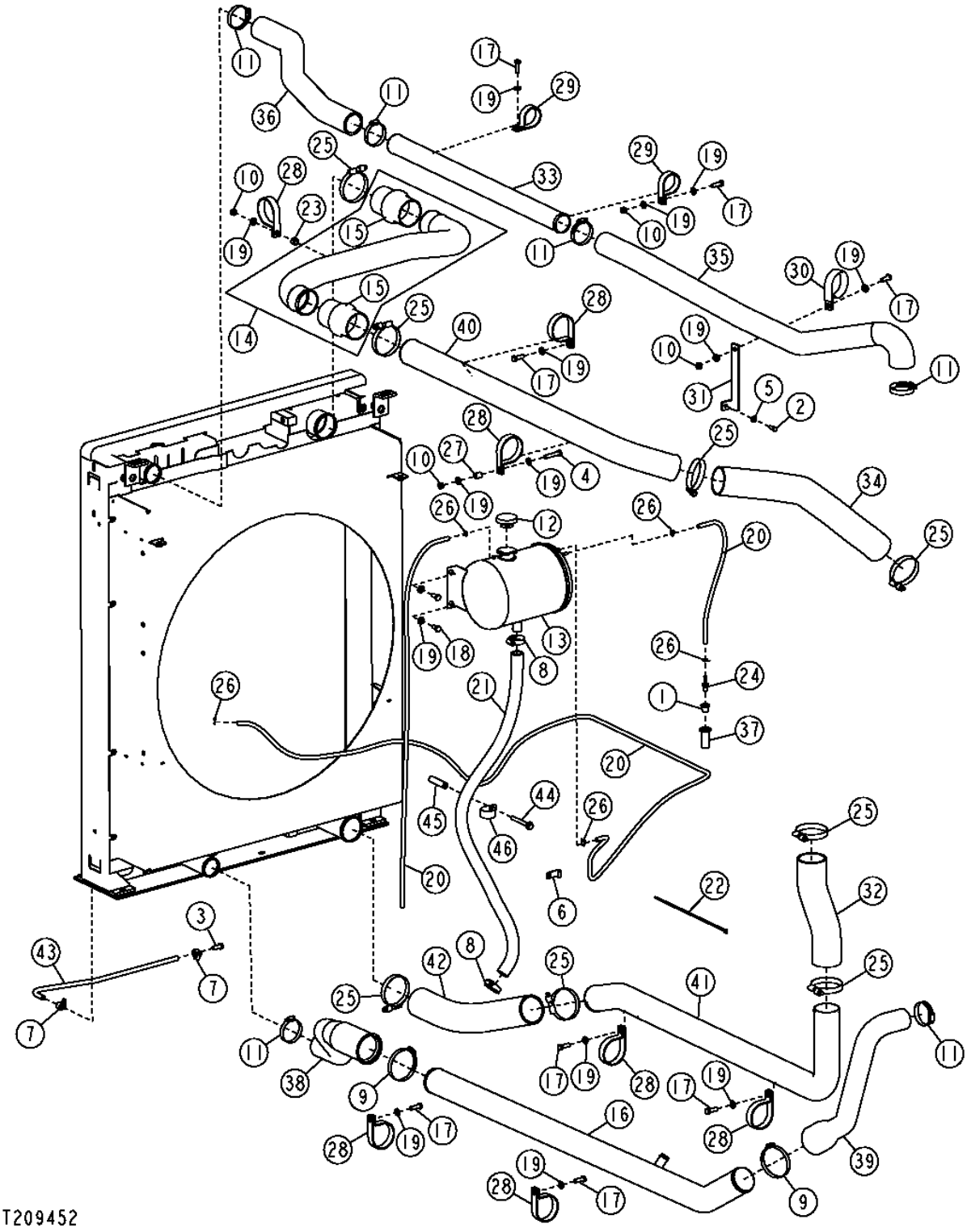

RADIATOR AND CHARGE AIR COOLER HOSES AND TUBES

KEY	PART NO.	PART NAME	QTY	SERIAL NO.	770D	772D	REMARKS
1	15H625	PIPE BUSHING	1		X	X	
2	19H1900	CAP SCREW	1		X	X	
3	19M7402	CAP SCREW	1		X	X	M10 X 25
4	19M8600	CAP SCREW	1		X	X	M10 X 50
5	24M7238	WASHER	1		X	X	
6	AH89557	CLIP	1		X	X	
7	AR21836	CLAMP	2		X	X	
8	AR21839	CLAMP	2		X	X	
9	AR21841	CLAMP	2		X	X	
10	14M7274	NUT	4		X	X	M10
11	AR40418	HOSE CLAMP	6		X	X	
12	AT173610	FILLER CAP	3		X	X	
13	AT181162	TANK	1		X	X	
	T107141	O-RING	1		X	X	(NOT ILLUSTRATED)
	T162965	SIGHT PLUG	1		X	X	(NOT ILLUSTRATED)
14	AT307083	AIR FLOW TUBE	1		X	X	
15	R164193	HOSE	2		X	X	
16	AT307343	TUBE	1		X	X	
17	19M7662	CAP SCREW	8		X	X	M10 X 30
18	19M7938	CAP SCREW	4		X	X	M10 X 20
19	24M7239	WASHER	17		X	X	
20	.....	BULK HOSE	17		X	X	(MAKE FROM T79477) (CUT TO LENGTH)
21	.....	BULK HOSE	4		X	X	(MAKE FROM T139131) (CUT TO LENGTH)
22	H77698	TIE BAND	1		X	X	(MAKE FROM T79477) (CUT TO LENGTH)
23	M40509	SPACER	1		X	X	(MAKE FROM T139131) (CUT TO LENGTH)
24	R43583	FITTING	1		X	X	
25	RE52702	CLAMP	8		X	X	
26	T13254	CLAMP	5		X	X	
27	T158436	SPACER	1		X	X	
28	T160608	CLAMP	7		X	X	
29	T160609	CLAMP	2		X	X	
30	T162575	CLAMP	1		X	X	
31	T164031	BRACKET	1		X	X	
32	T185030	HOSE	1		X	X	
33	T202242	TUBE	1		X	X	
34	T202634	HOSE	1		X	X	
35	T202768	RADIATOR HOSE	1		X	X	
36	T205480	RADIATOR HOSE	1		X	X	
37	T205652	FITTING	1		X	X	
38	T205818	RADIATOR HOSE	1		X	X	
39	T206005	RADIATOR HOSE	1		X	X	
40	T206594	TUBE	1		X	X	
41	T210550	TUBE	1		X	X	
42	T217194	HOSE	1		X	X	(SUB FOR T210564)
43	T72856	HOSE	1		X	X	
44	19M8977	SCREW	1		X	X	M10 X 85
45	28H3399	SPACER	1		X	X	
46	AH77714	CLIP	1		X	X	

FUEL COOLER

T204388 -UN-13NOV04

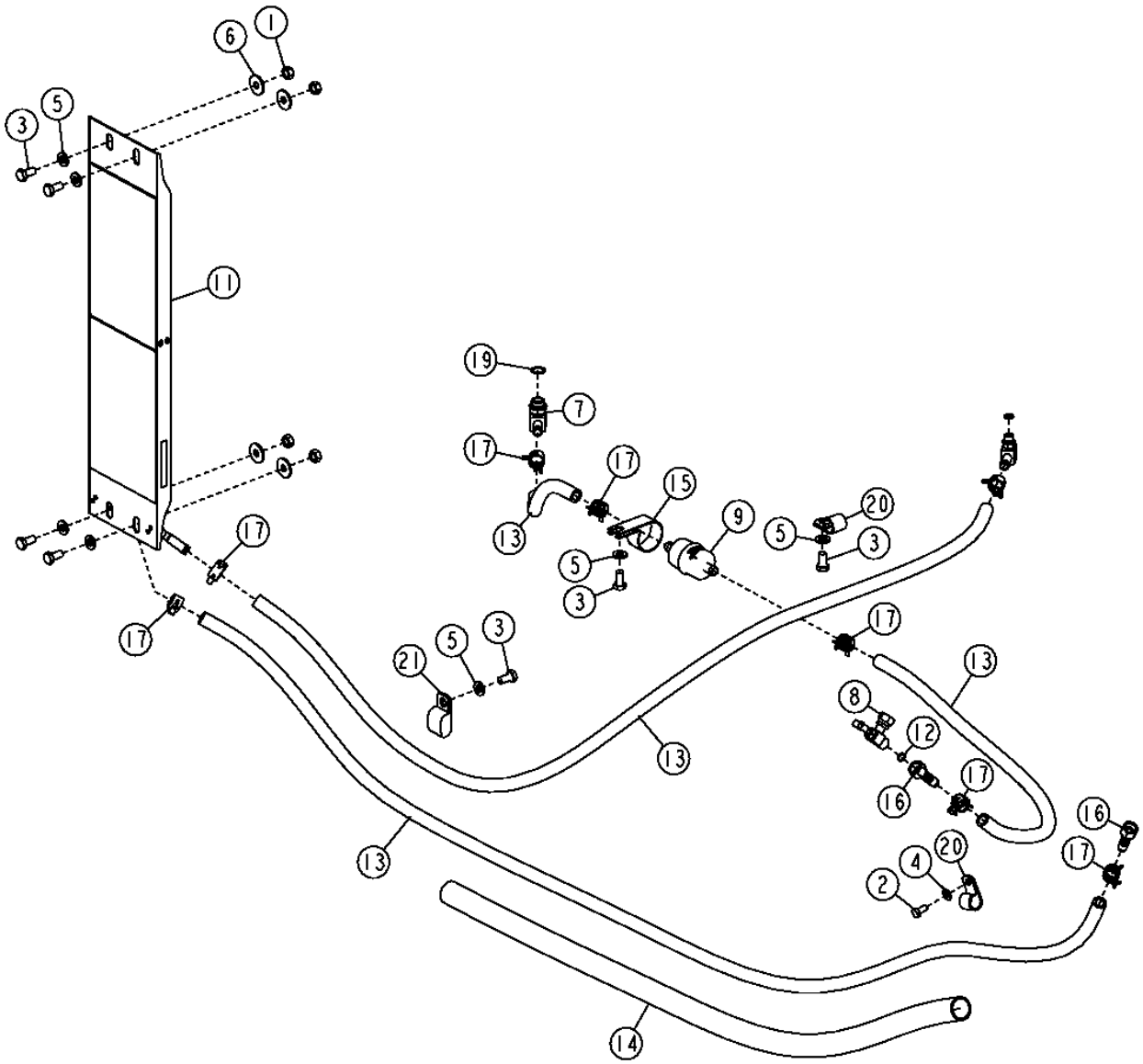

2B16

FUEL COOLER

KEY	PART NO.	PART NAME	QTY	SERIAL NO.	770D	772D	REMARKS
1	14M7274	NUT	4		X	X	M10
2	19H1813	CAP SCREW	1		X	X	5/16" X 5/8"
3	19M7938	CAP SCREW	7		X	X	M10 X 20
4	24M7238	WASHER	1		X	X	
5	24M7239	WASHER	7		X	X	
6	24M7296	WASHER	4		X	X	
7	AT124317	ELBOW FITTING	1		X	X	
8	AT176011	HAND OPERATED VALVE	1		X	X	
9	AT223493	FUEL FILTER	1		X	X	
10	AT307668	FITTING	1		X	X	
11	AT309911	FUEL COOLER	1		X	X	
12	T77613	O-RING	1		X	X	
13	.....	BULK HOSE	1		X	X	(MAKE FROM T168383) (CUT TO LENGTH)
14	.....	CONDUIT	1		X	X	(MAKE FROM T107029) (CUT TO LENGTH)
15	E69975	CLAMP	1		X	X	
16	RE523825	ADAPTER	2		X	X	
17	R184863	HOSE CLAMP	8		X	X	
18	R26286	O-RING	1		X	X	
19	R26375	O-RING	1		X	X	
20	T74416	CLAMP	2		X	X	
21	T32854	CLAMP	1		X	X	

FAN AND FAN TOWER

T204675 -UN-22NOV04

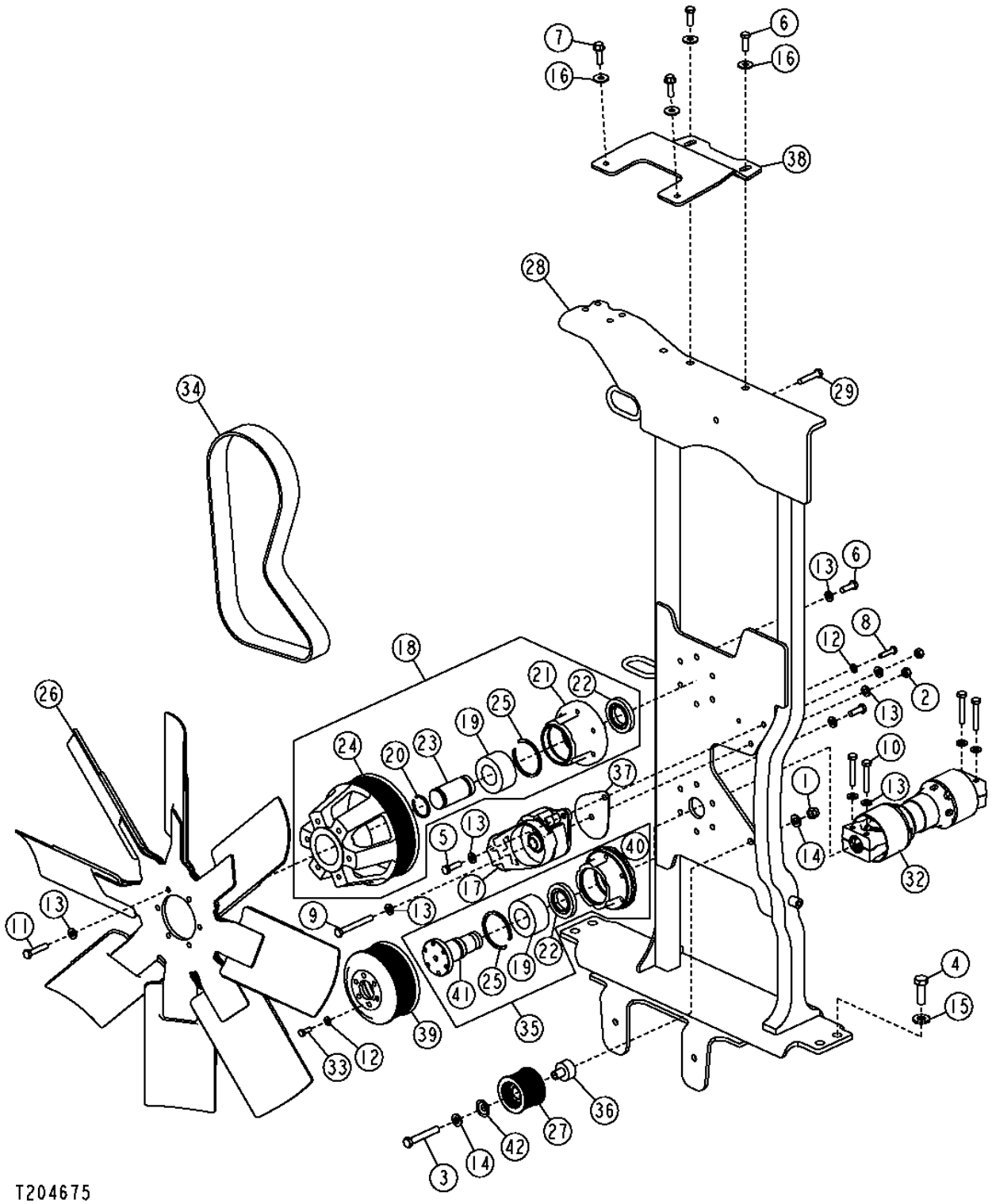

FAN AND FAN TOWER

KEY	PART NO.	PART NAME	QTY	SERIAL NO.	770D	772D	REMARKS
1	14M7313	LOCK NUT	1		X	X	M12
2	14M7520	LOCK NUT	2		X	X	M10
3	19M7364	CAP SCREW	1		X	X	M12 X 80
4	19M7489	CAP SCREW	4		X	X	M16 X 45
5	19M7550	CAP SCREW	1		X	X	M10 X 35
6	19M7662	CAP SCREW	14		X	X	M10 X 30
7	19M7835	SCREW	2		X	X	M10 X 35
8	19M8008	CAP SCREW	1		X	X	M8 X 35
9	19M8183	CAP SCREW	1		X	X	M10 X 90
10	19M7658	CAP SCREW	4		X	X	M10 X 50
11	19M8600	CAP SCREW	6		X	X	M10 X 50
12	24M7238	WASHER	13		X	X	
13	24M7239	WASHER	26		X	X	
14	24M7240	WASHER	2		X	X	
15	24M7241	WASHER	4		X	X	
16	24M7296	WASHER	4		X	X	
17	AT194587	TIGHTENER	1		X	X	
18	AT194588	HUB	1		X	X	
19	AE53905	TAPERED ROLLER BEARING	2		X	X	
20	R31291	SNAP RING	1		X	X	
21	T158400	HUB	1		X	X	
22	T159052	ADJUSTER	2		X	X	
23	T159883	SHAFT	1		X	X	
24	T187386	PULLEY	1		X	X	
25	T24513	RING	2		X	X	
26	AT194773	FAN BLADE	1		X	X	
27	AT194965	IDLER	1		X	X	
28	AT305057	SUPPORT	1		X	X	
29	19M2870	CAP SCREW	1		X	X	
32	AT308399	UNIVERSAL DRIVESHAFT	1		X	X	
33	19M7881	SCREW	12		X	X	M8 X 20
34	T213775	FLAT BELT	1		X	X	
35	AT309043	HUB	1		X	X	
36	T187416	BUSHING	1		X	X	
37	T187818	PLATE	1		X	X	
38	AT313691	SUPPORT	1		X	X	
39	T187387	PULLEY	1		X	X	
40	T159884	HUB	1		X	X	
41	T207072	SHAFT	1		X	X	
42	T187477	COVER	1		X	X	

ENGINE SPEED CONTROL PEDAL AND SWITCHES

T202482 -UN-03SEP04

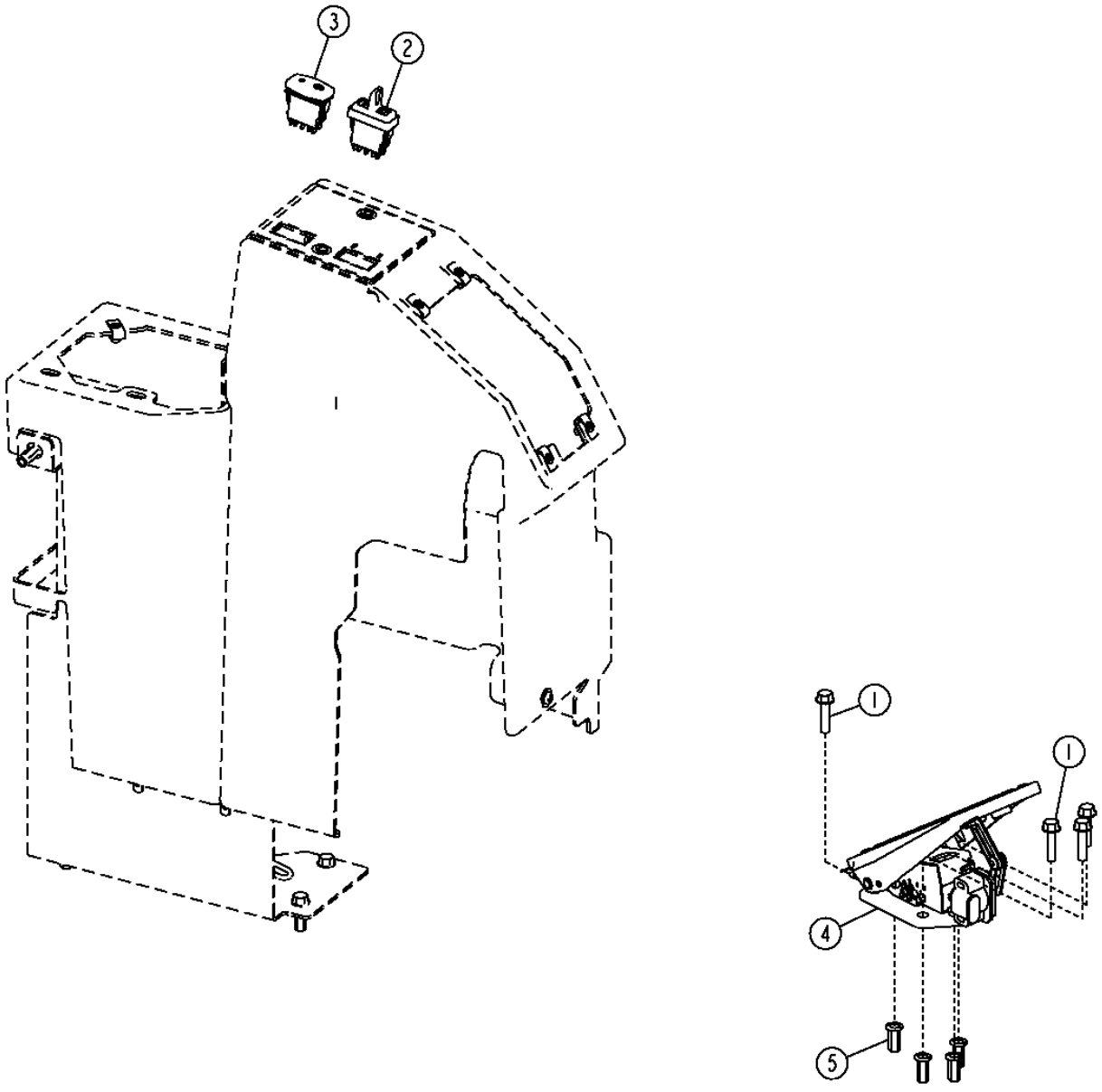

T202482

ENGINE SPEED CONTROL PEDAL AND SWITCHES

KEY	PART NO.	PART NAME	QTY	SERIAL NO.	770D	772D	REMARKS
1	19M7897	SCREW	4		X	X	M8 X 35
2	AT302731	SWITCH	1		X	X	(ENGINE SPEED CONTROL SET SWITCH)
3	AT302732	TOGGLE/ROCKER SWITCH	1		X	X	(ENGINE SPEED CONTROL ON/OFF SWITCH)
4	RE519877	ACCELERATOR	1		X	X	
5	T196079	NUT	4		X	X	M8

ENGINE SPEED DECELERATOR PEDAL

T203067 -UN-28OCT04

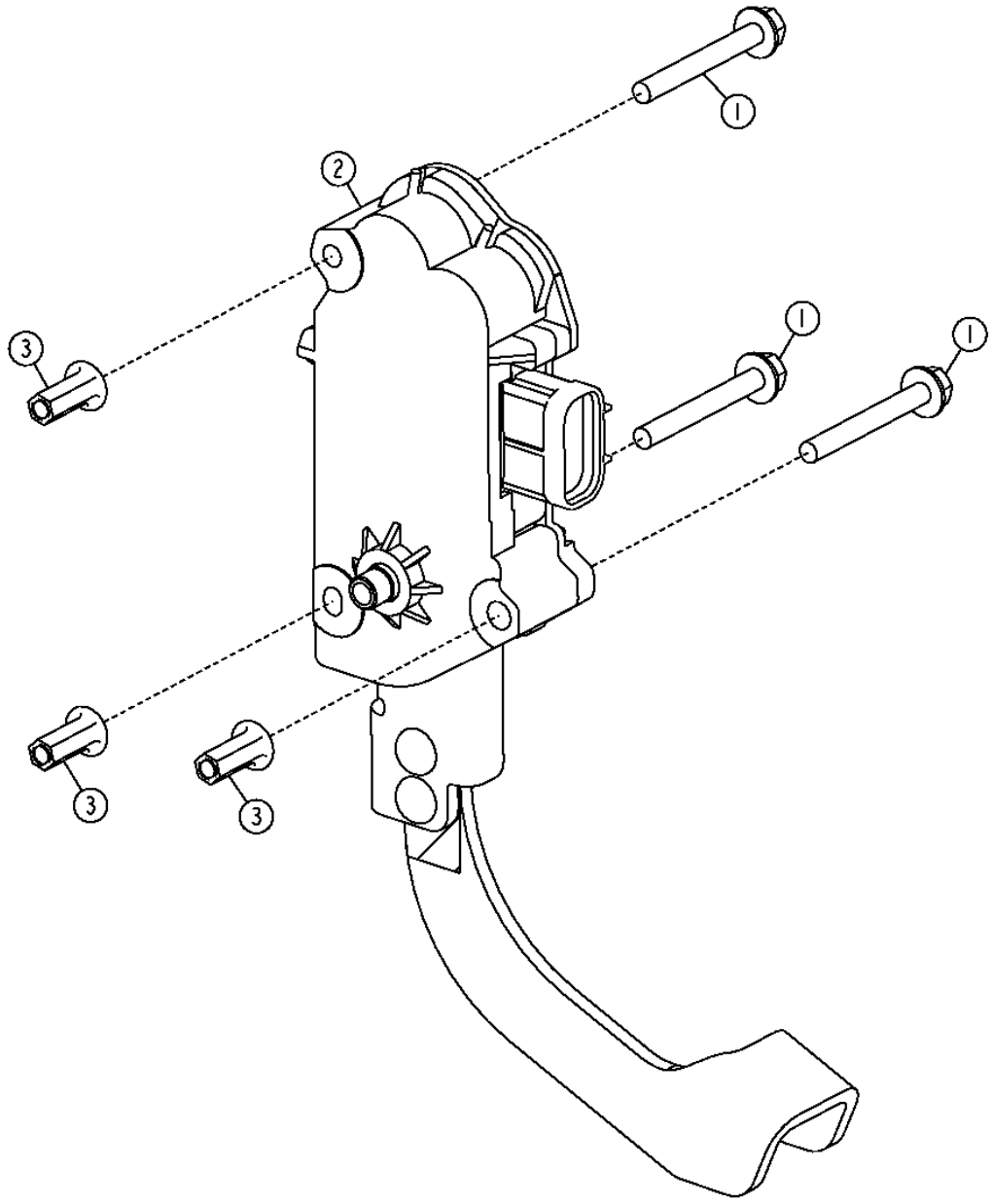

T203067

ENGINE SPEED DECELERATOR PEDAL

KEY	PART NO.	PART NAME	QTY	SERIAL NO.	770D	772D	REMARKS
1	19M8092	SCREW	3		X	X	M6 X 50
2	AT314814	KIT	1		X	X	
3	T196077	NUT	1		X	X	

AIR CLEANER WITH PRE-CLEANER

T153236 -UN-09APR02

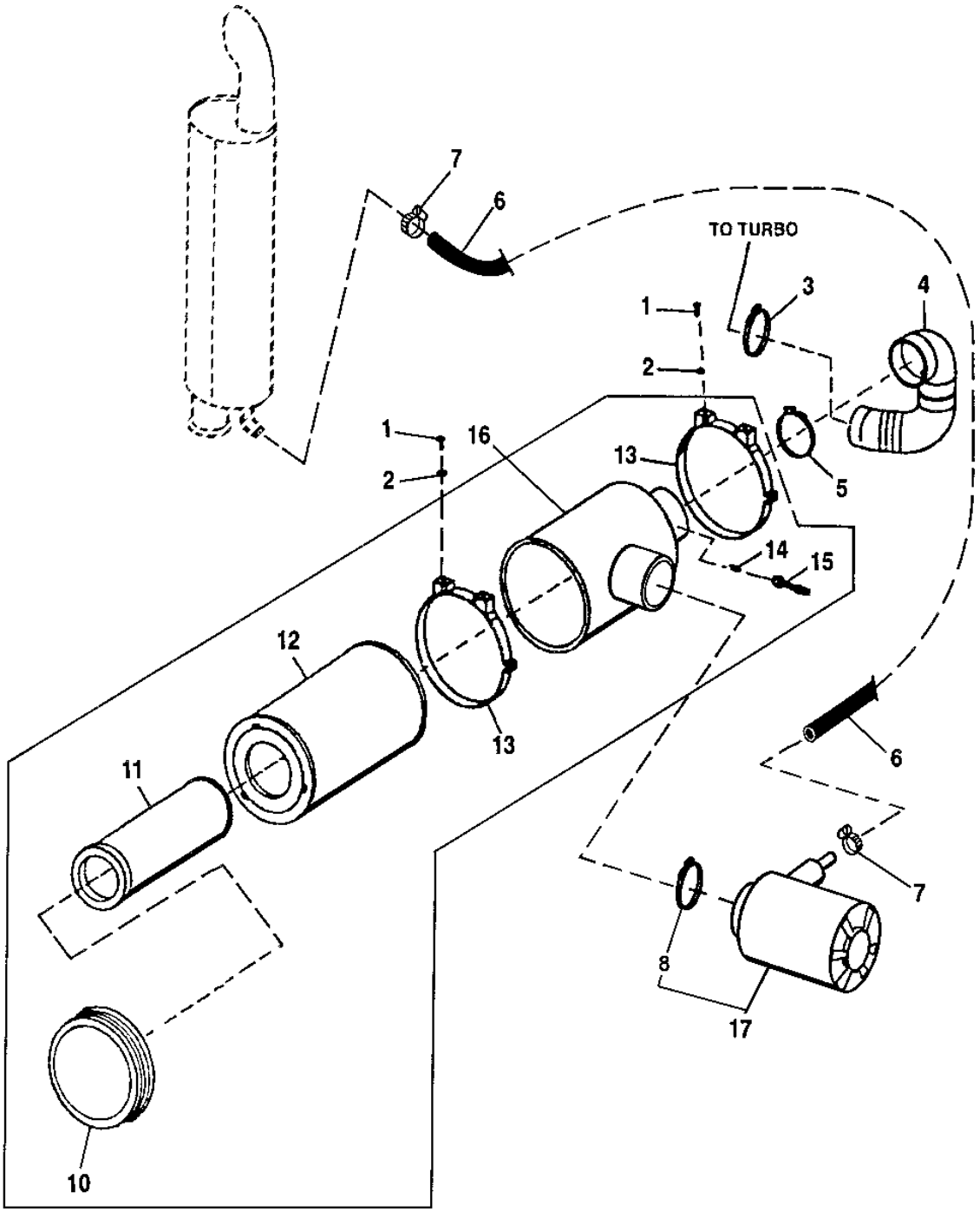

T153236

AIR CLEANER WITH PRE-CLEANER

KEY	PART NO.	PART NAME	QTY	SERIAL NO.	870D	872D	REMARKS
1	19M7785	SCREW	4		X	X	M10 X 25, (SUB FOR 19M7402, THIS APPLICATION)
2	24M7296	WASHER	4		X	X	10.500 X 30 X 2.500 MM (0.413" X 1.181" X 0.098")
3	RE19429	CLAMP	1		X	X	
4	T164303	SUCTION HOSE	1		X	X	
5	TT208828	CLAMP	1		X	X	(SUB FOR AT53440)
6	T76691	HOSE	1		X	X	
7	AR21839	CLAMP	2		X	X	
8	AT189052	CLAMP	1		X	X	(NO LONGER REQUIRED)
10	AT183636	COVER	1		X	X	
11	RE51630	FILTER ELEMENT	1		X	X	SECONDARY
12	RE51629	FILTER ELEMENT	1		X	X	PRIMARY
13	AT211206	BAND	2		X	X	(SUB FOR AT202864)
14	AR44361	FITTING	1		X	X	
15	AT178542	AIR RESTRICTION SENSOR	1		X	X	
16	AT183375	AIR CLEANER	1		X	X	
17	AT183377	PRECLEANER	1		X	X	

ROTARY EJECTOR PRECLEANER

T204404 -UN-03DEC04

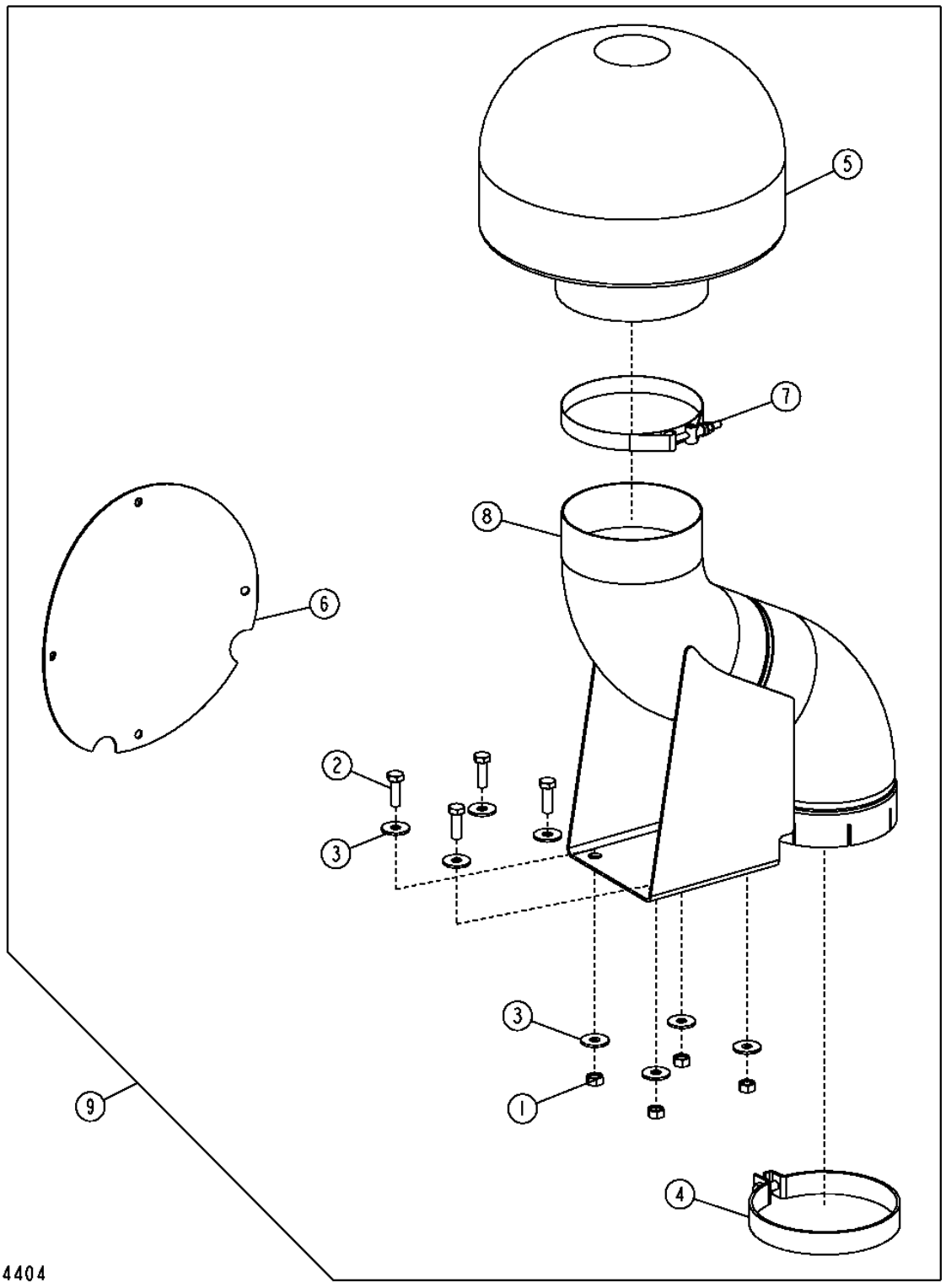

ROTARY EJECTOR PRECLEANER

KEY	PART NO.	PART NAME	QTY	SERIAL NO.	770D	772D	REMARKS
1	14M7274	NUT	4		X	X	
2	19M7662	CAP SCREW	4		X	X	M10 X 30
3	24M7296	WASHER	8		X	X	
4	AT189052	CLAMP	1		X	X	
5	AT184015	PRECLEANER	1		X	X	
	AT184016	SEPARATOR	1		X	X	
6	T208503	CAP	1		X	X	
7	AT53440	CLAMP	1		X	X	
8	AT317539	KIT	1		X	X	
9	**AT310939**	**KIT**	**1**		**X**	**X**	**(WHOLEGOODS)(ROTARY EJECTOR PRECLEANER KIT)**

MUFFLER

T155667 -UN-06JUN02

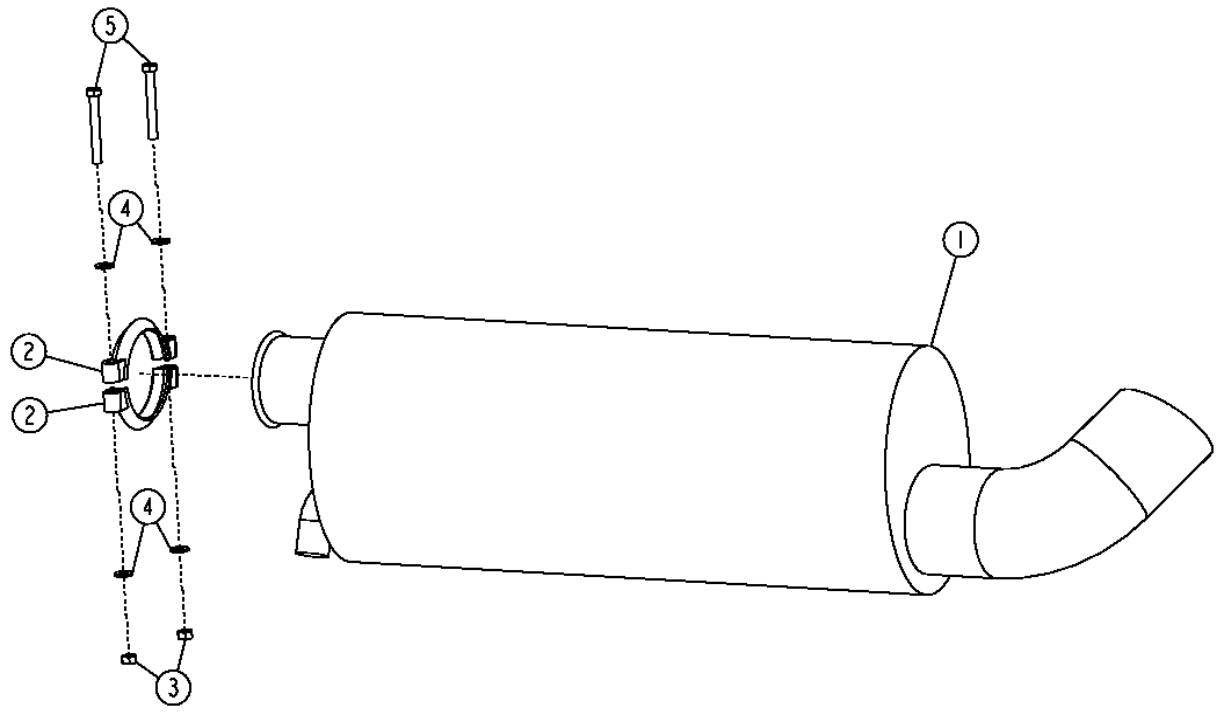

T155667

MUFFLER

KEY	PART NO.	PART NAME	QTY	SERIAL NO.	770D	772D	REMARKS
1	AT182063	MUFFLER	1		X	X	
2	AR43705	CLAMP	2		X	X	
3	M142955	LOCK NUT	2		X	X	
4	24M7213	WASHER	4		X	X	10.500 X 25 X 4 MM, (SUB FOR 24M7239)
5	19M7328	CAP SCREW	2		X	X	M10 X 70, (SUB FOR 19M8081, 19M7875, THIS APPLICATION)

ENGINE AND TRANSMISSION MOUNTING

T201666 -UN-29JUL04

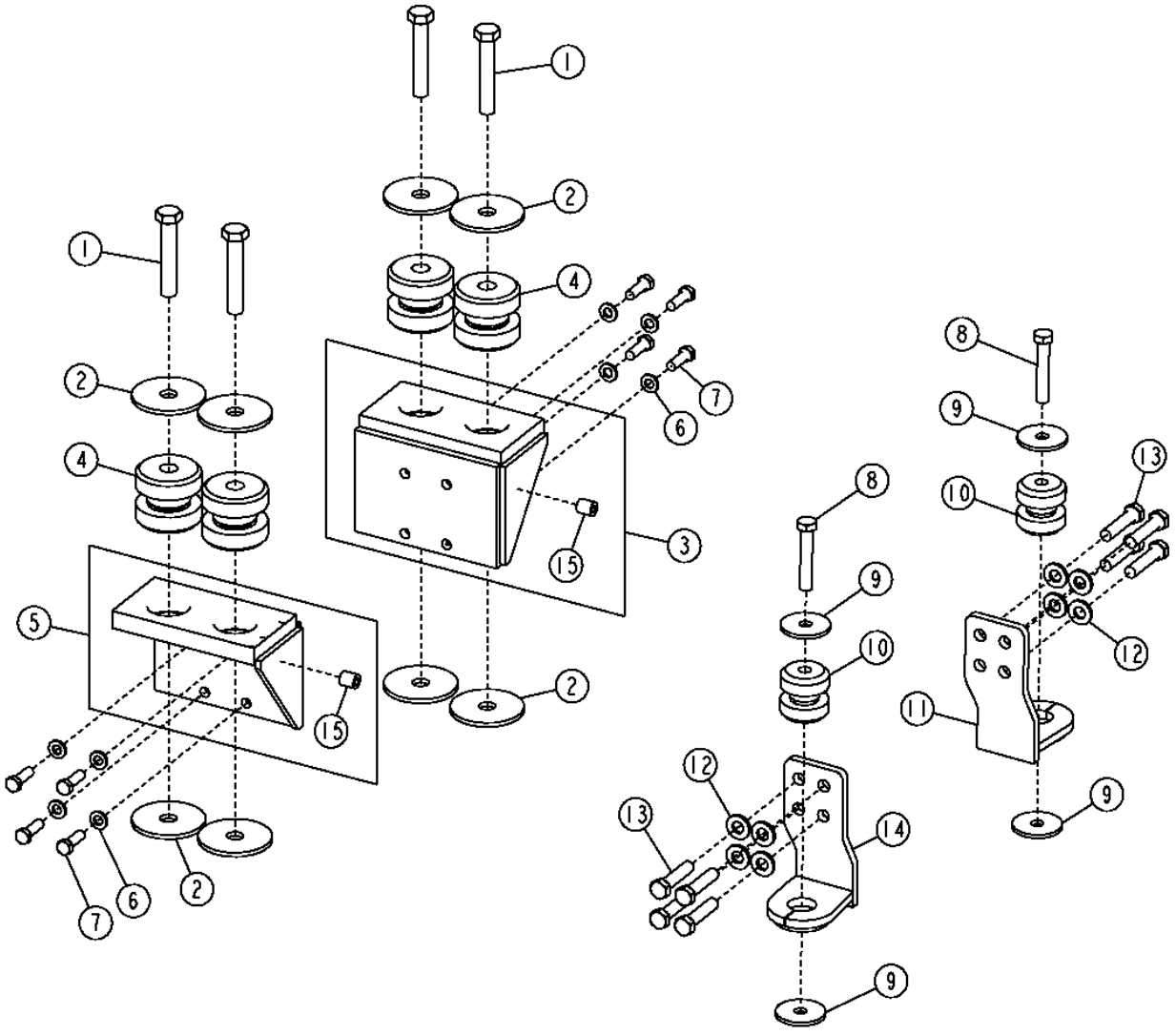

ENGINE AND TRANSMISSION MOUNTING

KEY	PART NO.	PART NAME	QTY	SERIAL NO.	770D	772D	REMARKS
1	19M7969	CAP SCREW	4		X	X	M20 X 110
2	T158949	WASHER	8		X	X	
3	AT178586	BRACKET	1		X	X	REAR LEFT
4	AT107738	ISOLATOR	4		X	X	
5	AT161176	BRACKET	1		X	X	REAR RIGHT
6	24M7240	WASHER	8		X	X	
7	19H2993	CAP SCREW	8		X	X	1/2" X 1-1/2"
8	19M8485	CAP SCREW	2		X	X	M16 X 90
9	T179952	WASHER	4		X	X	(SUB FOR T160825)
10	AT170854	ISOLATOR	2		X	X	
11	AT302821	SUPPORT	1		X	X	FRONT LEFT
12	24M7241	WASHER	6		X	X	
13	19H3107	CAP SCREW	8		X	X	5/8" X 2-3/4", (WITHOUT AIR CONDITIONING)
	19H3208	CAP SCREW	2		X	X	(WITH AIR CONDITIONING)
	19H3107	CAP SCREW	6		X	X	(WITH AIR CONDITIONING)
14	AT302818	SUPPORT	1		X	X	FRONT RIGHT
15	T72414	BUSHING	2		X	X	

FUEL TANK AND FUEL TANK HOSES

T209453 -UN-21MAR05

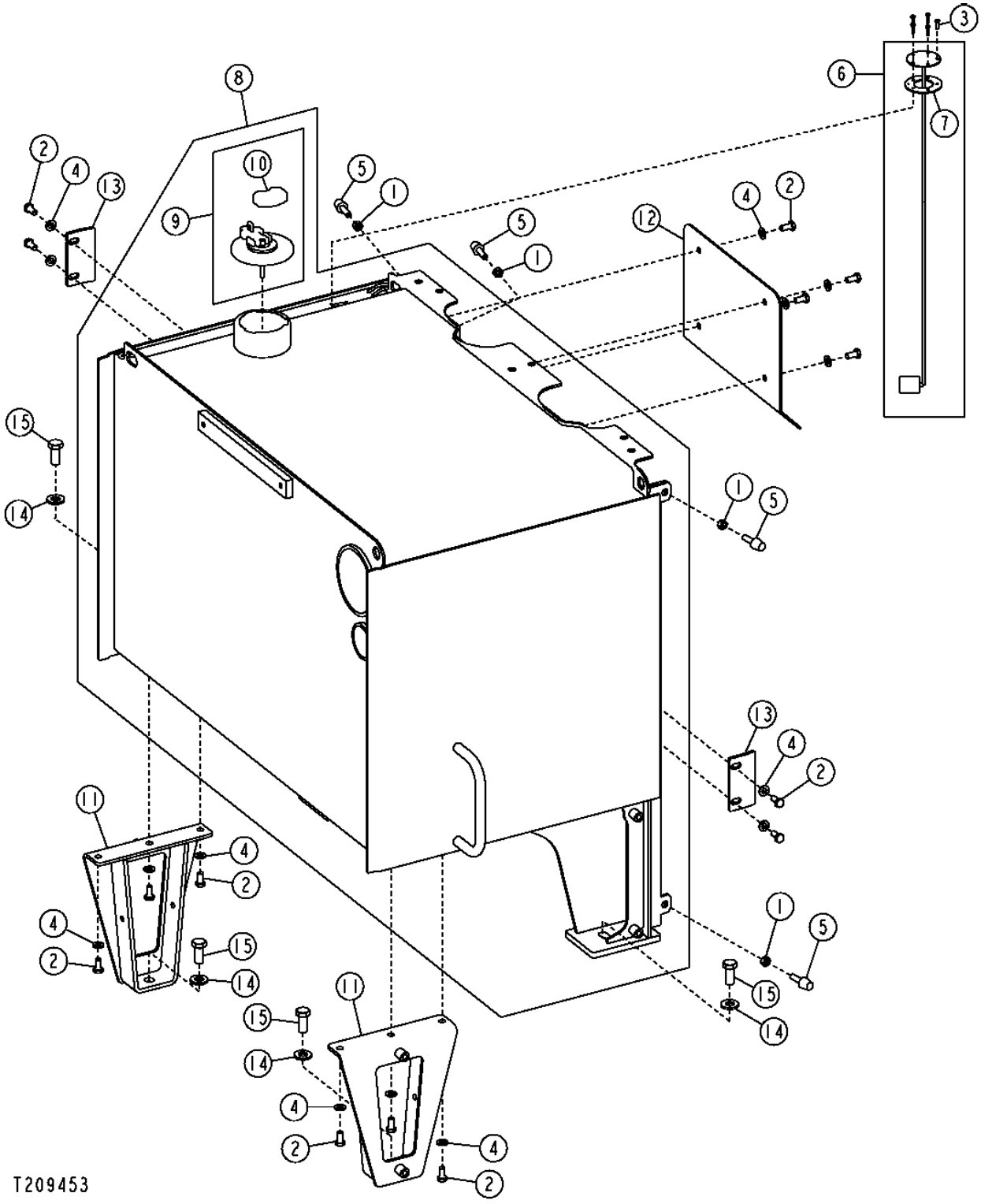

FUEL TANK AND FUEL TANK HOSES

KEY	PART NO.	PART NAME	QTY	SERIAL NO.	770D	772D	REMARKS
1	14M7274	NUT	4		X	X	M10
2	19M7938	CAP SCREW	14		X	X	M10 X 20
3	19M8078	CAP SCREW	5		X	X	M4 X 16
4	24M7239	WASHER	14		X	X	
5	AT219974	BUMPER	4		X	X	
6	AT301133	FUEL SENDER	1		X	X	
7	R81596	GASKET	1		X	X	
8	AT307361	FUEL TANK	1		X	X	
9	AT185695	CAP	1		X	X	
10	T165992	BREATHER	1		X	X	
11	AT318171	SUPPORT	2		X	X	
12	T162343	PLATE	1		X	X	
13	T201999	PLATE	1		X	X	
14	24M7241	WASHER	1		X	X	
15	19M8035	CAP SCREW	4		X	X	

ENGINE CONTROL UNIT

T202532 -UN-03SEP04

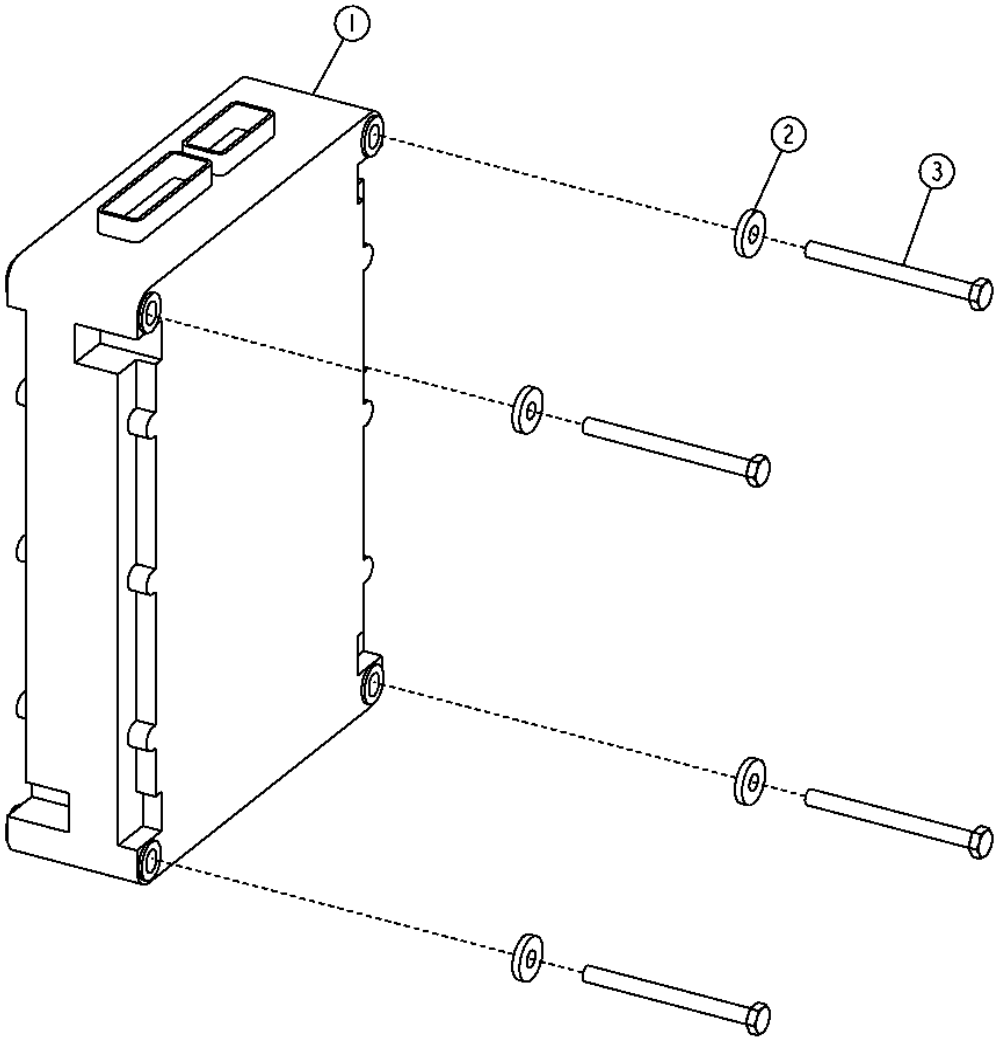

T202532

ENGINE CONTROL UNIT

KEY	PART NO.	PART NAME	QTY	SERIAL NO.	770D	772D	REMARKS
1	19M8786	SCREW	4		X	X	M6 X 70
2	24M7250	WASHER	4		X	X	
3	RE522516	ENGINE CONTROLLER	1		X	X	

MEMORANDA

MAGNETIC PICK-UP

RGP8972 -UN-19JUL02

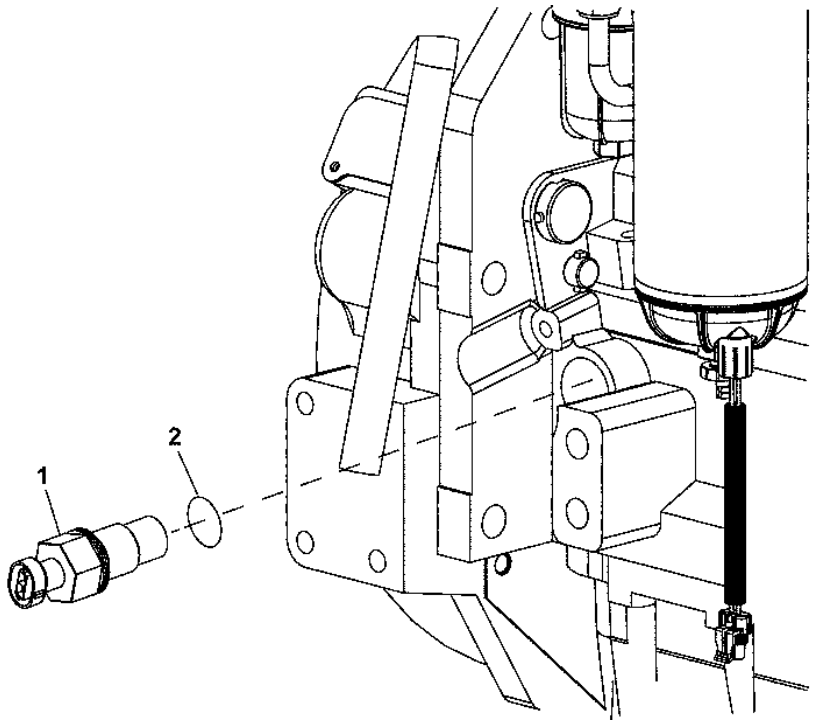

RGP8972

KEY	PART NO.	PART NAME	QTY	ENGINE SERIAL NO.	7 7 0 D	7 7 2 D	REMARKS
1	RE519144	SENSOR	1		X	X	M20X1.5
2	51M7044	O-RING	1		X	X	17.300 X 2.200 MM

WATER IN FUEL SENSOR

RGP10901 -UN-27JAN05

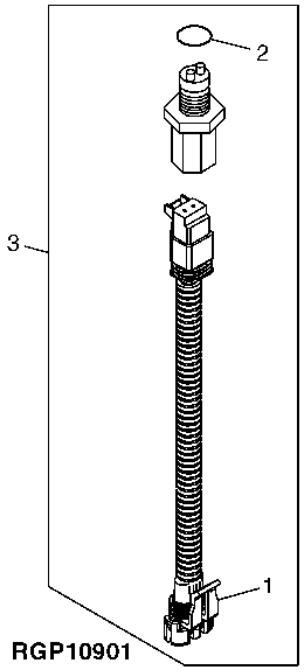

KEY	PART NO.	PART NAME	QTY	ENGINE SERIAL NO.	7 7 7 7 0 2 D D	REMARKS
1	57M7254	ELECTRICAL CONNECTOR ASSY	1		X X	(ALSO ORDER 57M7258, 57M7289 AND (2) R104846)
2	51M7095	O-RING	1		X X	11.300 X 2.200 MM
3	RE522685	MOISTURE SENSOR	1		X X	WATER IN FUEL

COOLANT TEMPERATURE SENSOR

RGP10905 -UN-17DEC04

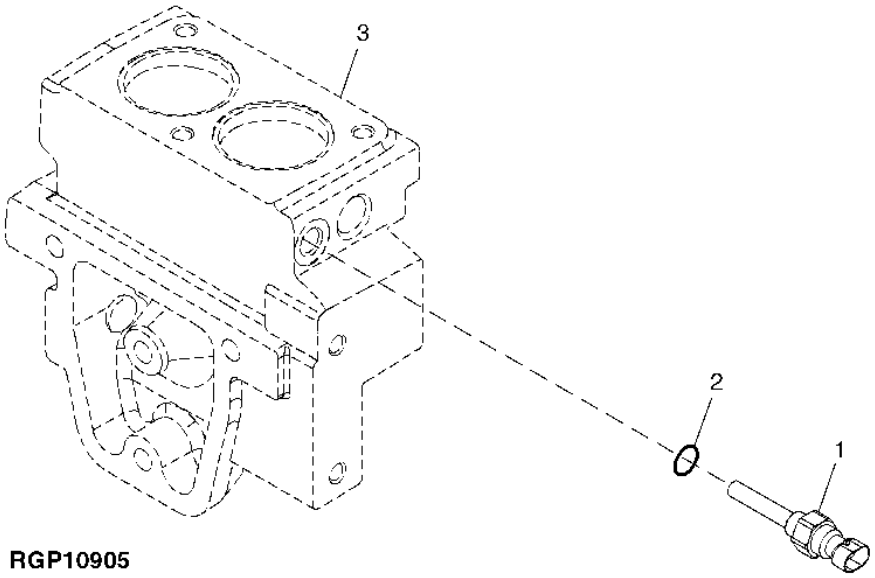

RGP10905

KEY	PART NO.	PART NAME	QTY	ENGINE SERIAL NO.	770D	772D	REMARKS
1	RE151433	COOLANT TEMPERATURE SENSOR	1		X	X	
2	R77673	O-RING	1		X	X	0.414" X 0.072"
3	.....	MANIFOLD	1		X	X	THERMOSTAT HOUSING

AMBIENT TEMPERATURE SENSOR (WITH AIR HEATER)

RGP10906 -UN-17DEC04

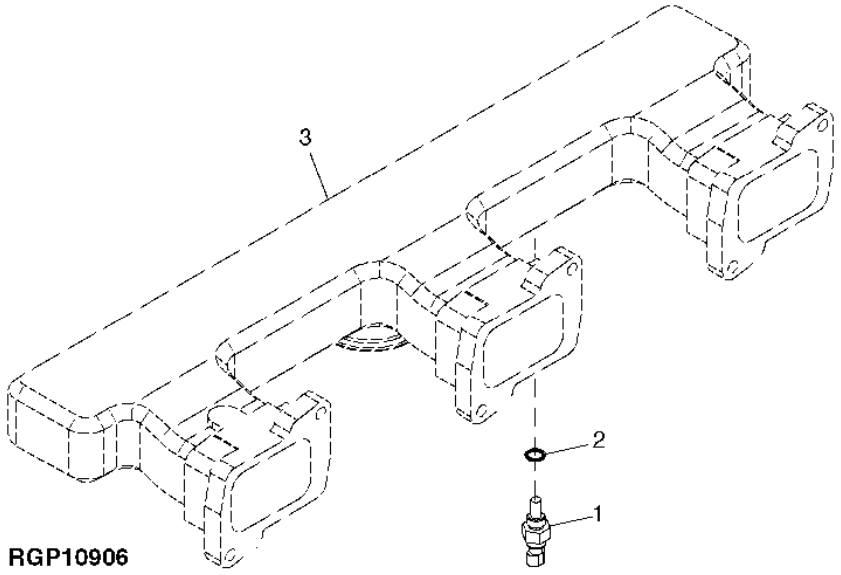

KEY	PART NO.	PART NAME	QTY	ENGINE SERIAL NO.	7 7 7 7 0 2 D D	REMARKS
1	RE61812	SENSOR	1		X X	M14X1.5
2	51M7041	O-RING	1		X X	11.300 X 2.200 MM
3	.....	MANIFOLD	1		X X	INTAKE

OIL PRESSURE SENSOR

RGP10907 -UN-17DEC04

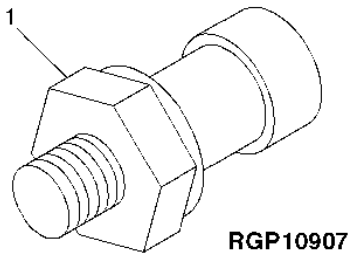

KEY	PART NO.	PART NAME	QTY	ENGINE SERIAL NO.	770D	772D	REMARKS
1	RE167207	PRESSURE SENSOR	1		X	X	

SECONDARY STEERING

T202623 -UN-20OCT04

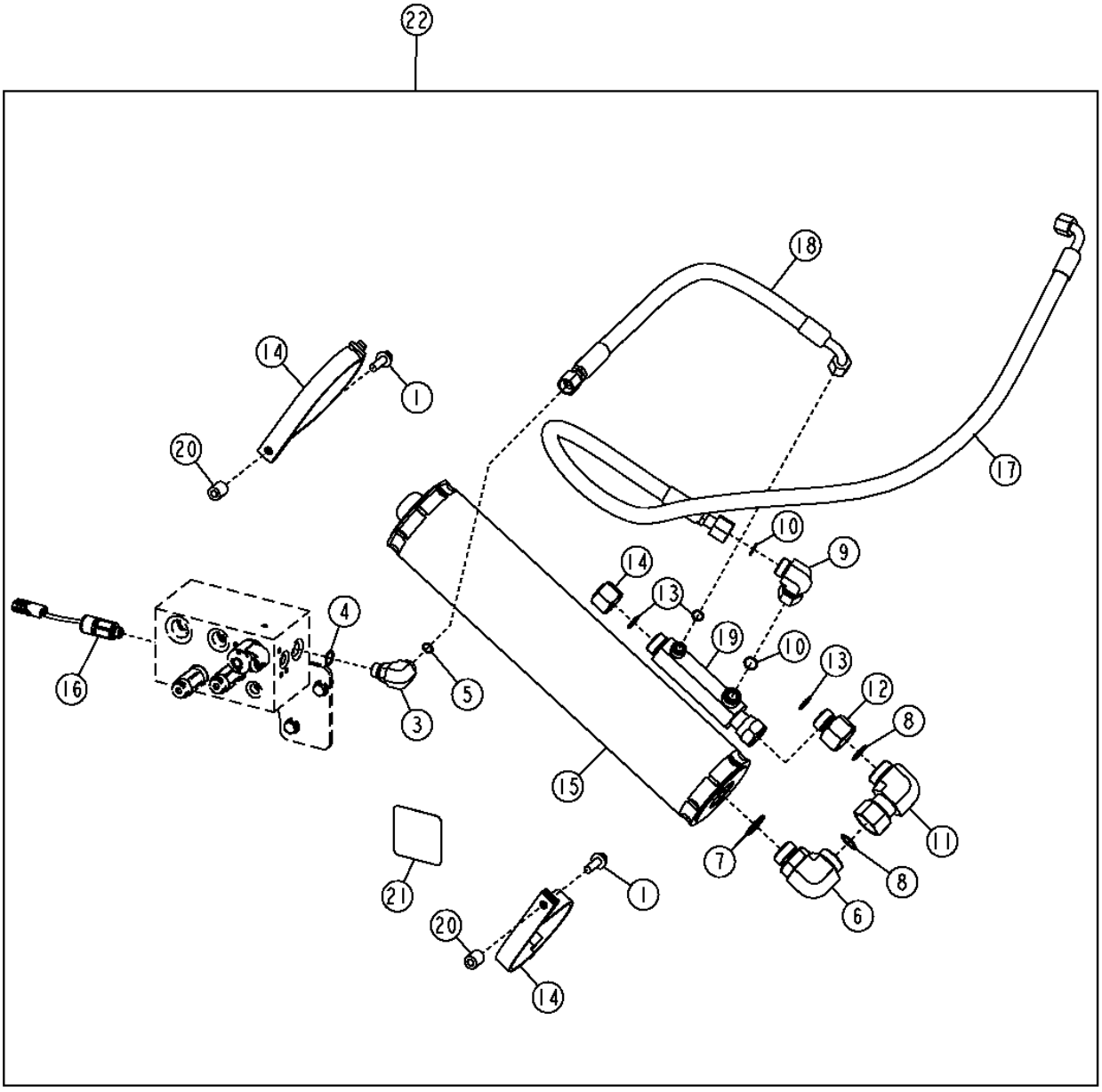

T202623

SECONDARY STEERING

KEY	PART NO.	PART NAME	QTY	SERIAL NO.	770D	772D	REMARKS
1	19M7786	SCREW	2		X	X	M10 X 30
2	38H1418	FITTING	1		X	X	
3	38H1005	ELBOW FITTING	1		X	X	
4	R26375	O-RING	1		X	X	
5	T77857	O-RING	2		X	X	
6	38H1037	ELBOW FITTING	1		X	X	
7	R29936	O-RING	1		X	X	
8	T76938	O-RING	2		X	X	
9	38H1096	ELBOW FITTING	1		X	X	
10	T77932	O-RING	2		X	X	
11	38H1098	ELBOW FITTING	1		X	X	
12	38H1483	REDUCER	1		X	X	
13	T77858	O-RING	2		X	X	
14	AT186653	CLAMP	2		X	X	
15	AT227717	HYDRAULIC ACCUMULATOR	1		X	X	
16	AT313352	PRESSURE SWITCH	1		X	X	
17	AT313541	HYDRAULIC HOSE - FABRICATE	1		X	X	
18	AT313542	HYDRAULIC HOSE - FABRICATE	1		X	X	
19	RE211000	CHECK VALVE	1		X	X	
20	T72414	BUSHING	2		X	X	
21	T164124	LABEL	1		X	X	
22	**AT313338**	**KIT**	**1**		**X**	**X**	**(WHOLEGOODS) (SECONDARY STEERING)**

WHEEL LEAN CYLINDER (770D)

T201465 -UN-08DEC04

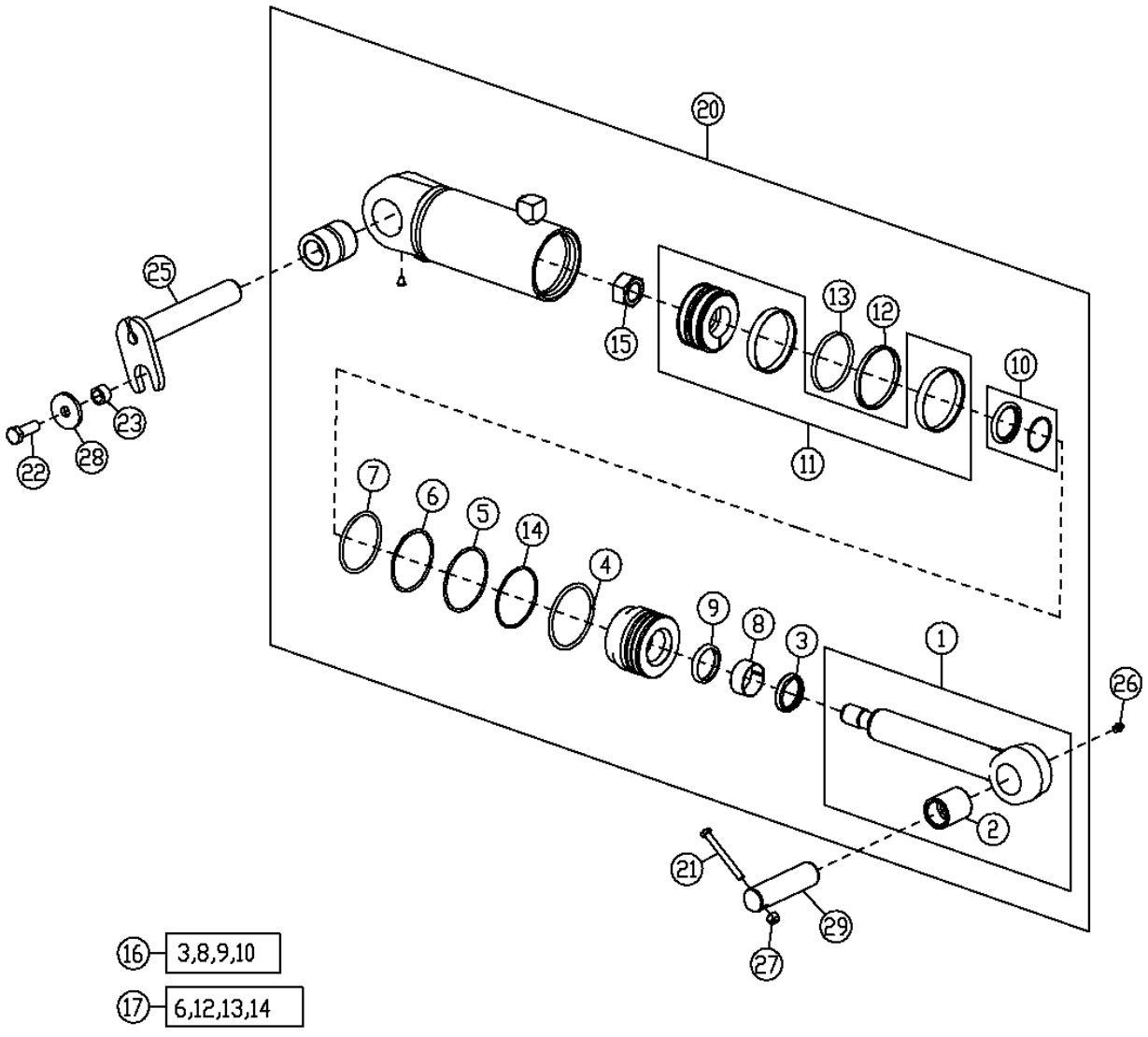

T201465

WHEEL LEAN CYLINDER (770D)

KEY	PART NO.	PART NAME	QTY	SERIAL NO.	770D	772D	REMARKS
1	AH139128	HYDRAULIC CYLINDER ROD	1		X		
2	H145104	BUSHING	1		X		
3	AH146557	SEAL	1		X		
4	H180080	SNAP RING	1		X		
5	H180094	SNAP RING	1		X		
6	R81862	BACK-UP RING	1		X		
7	F950R	O-RING	1		X		
8	H208987	WEAR RING	1		X		
9	H152203	SEAL	1		X		
10	AH146561	SEAL	1		X		
11	AH205062	PISTON	1		X		
12	H168248	WASHER	1		X		
13	H168249	WASHER	1		X		
14	.....	O-RING	1		X		(ORDER AH212101)
15	H170539	NUT	1		X		
16	AH210484	HYDRAULIC CYLINDER KIT	1		X		(ROD SEAL KIT)
17	AH212102	HYDRAULIC CYLINDER KIT	1		X		(BORE SEAL KIT)
20	AH212494	HYDRAULIC CYLINDER	1		X		(WHEEL LEAN)
21	19H1912	CAP SCREW	1		X		3/8" X 3-1/2"
22	19M7489	CAP SCREW	1		X		M16 X 45
23	28H3401	SPACER	1		X		
25	AT314624	PIN	1		X		
26	JD7759	LUBRICATION FITTING	1		X		
27	T11234	LOCK NUT	1		X		
28	T146246	WASHER	1		X		
29	T152862	PIN	1		X		

WHEEL LEAN CYLINDER (772D)

T201466 -UN-19JUL04

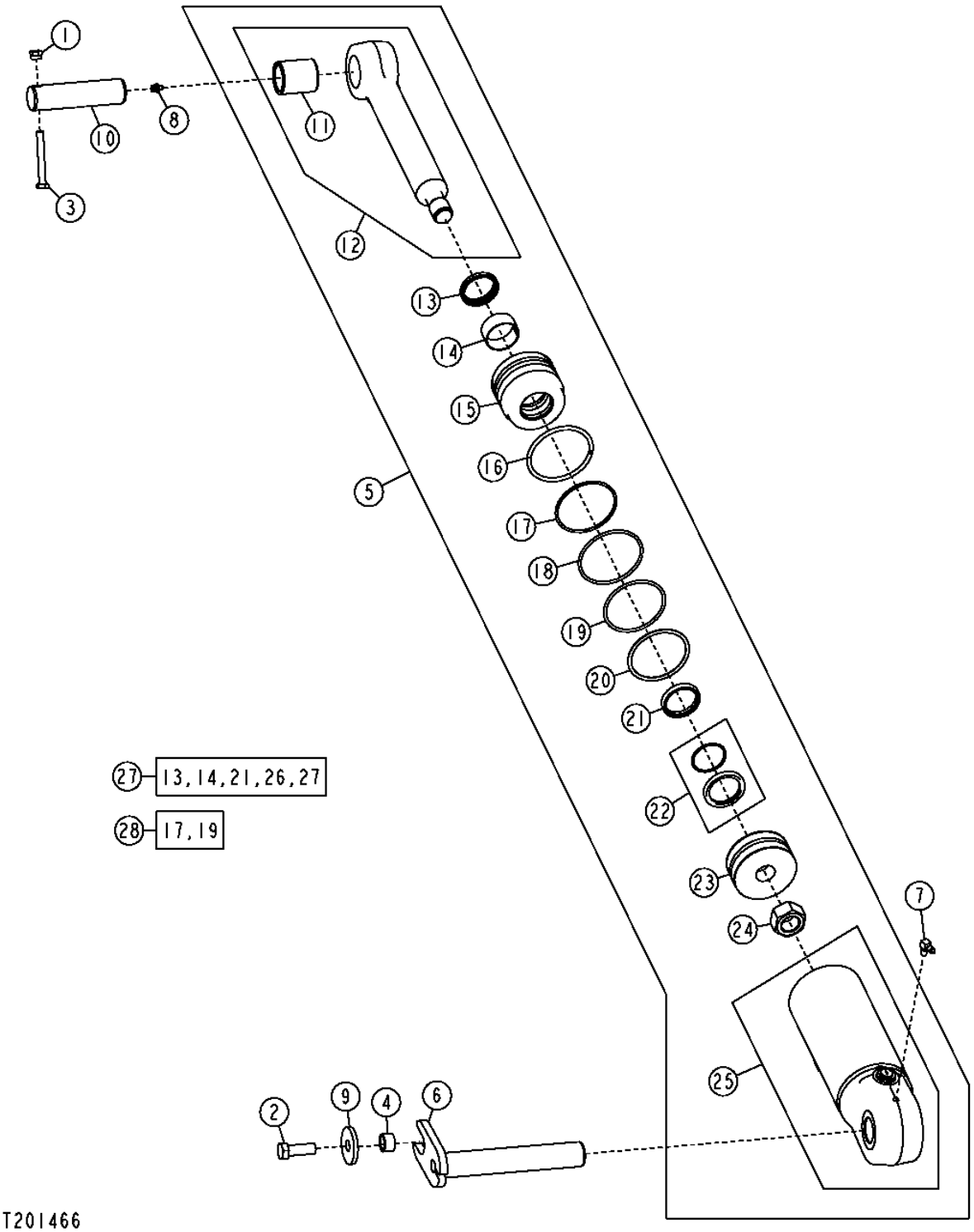

WHEEL LEAN CYLINDER (772D)

KEY	PART NO.	PART NAME	QTY	SERIAL NO.	770D	772D	REMARKS
1	14M7517	LOCK NUT	1		X		M10
2	19M7489	CAP SCREW	1		X		M16 X 45
3	19M8081	CAP SCREW	1		X		M10 X 80
4	28H3401	SPACER	1		X		
5	AH208859	HYDRAULIC CYLINDER	1		X		(WHEEL LEAN) (HFWD)
6	AT314624	PIN	1		X		
7	H80936	ELBOW FITTING	1		X		
8	JD7798	LUBRICATION FITTING	1		X		
9	T146256	LABEL	1		X		
10	T185047	PIN FASTENER	1		X		
11	H145104	BUSHING	1		X		
12	AH168200	ROD	1		X		
13	AH146557	SEAL	1		X		
14	H208987	WEAR RING	1		X		
15	.....	HYDR. CYLINDER ROD GUIDE	1		X		(SUB AH212102)
16	H180080	SNAP RING	1		X		
17	.....	O-RING	1		X		(SUB AH212102)
18	H180094	SNAP RING	1		X		
19	R81862	BACK-UP RING	1		X		
20	F950R	O-RING	1		X		
21	H152203	SEAL	1		X		
22	AH146561	SEAL	1		X		
23	AH205062	PISTON	1		X		
24	H170539	NUT	1		X		
25	AH212500	HYDRAULIC CYLINDER BARREL	1		X		
26	H154856	WEAR RING	1		X		(NOT ILLUSTRATED)(WIPER INSTALLATION TOOLS)
27	AH210484	HYDRAULIC CYLINDER KIT	1		X		(ROD SEAL KIT)
28	AH212102	HYDRAULIC CYLINDER KIT	1		X		(BORE SEAL KIT)

ARTICULATION CYLINDER

T201468 -UN-27JUL04

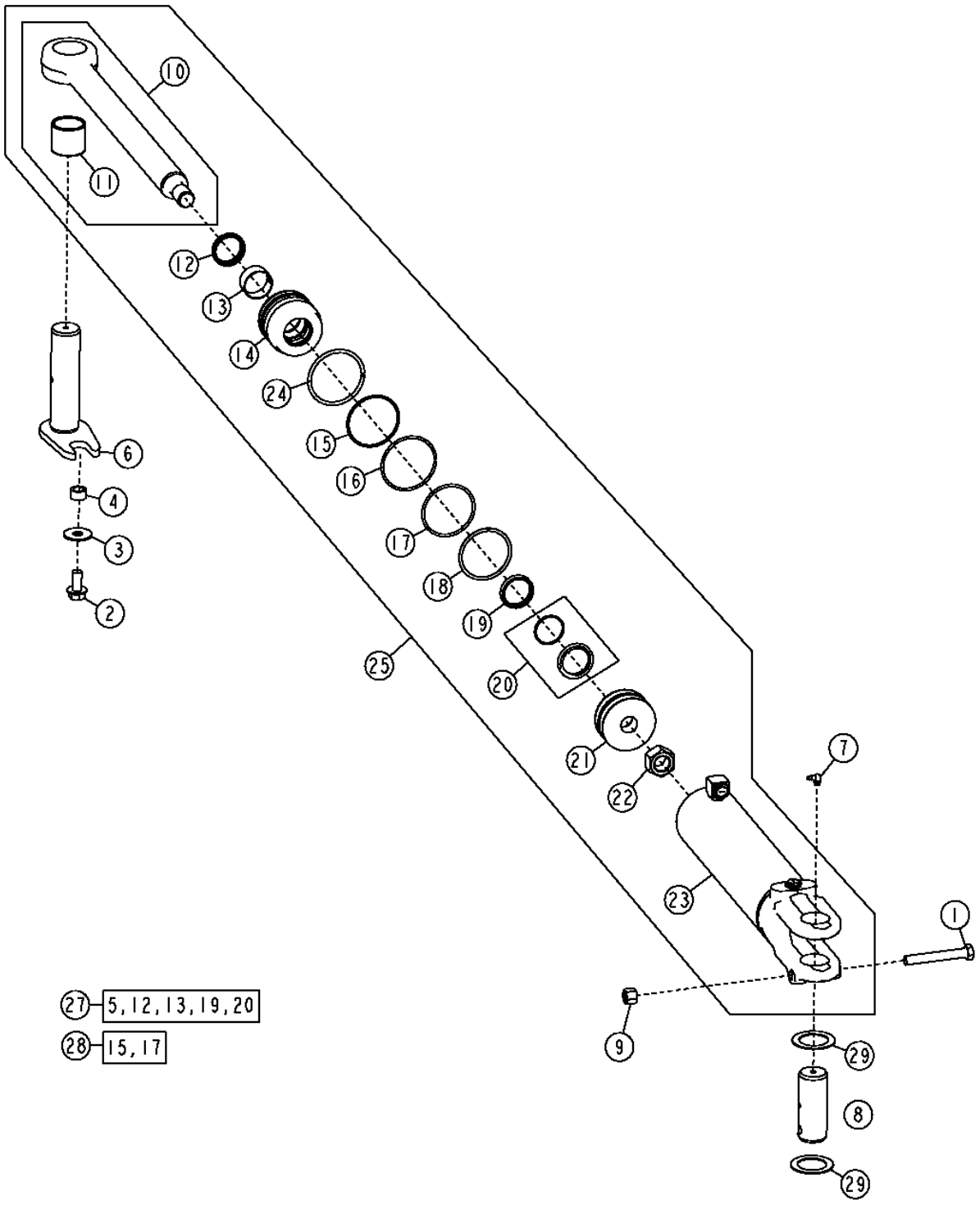

ARTICULATION CYLINDER

KEY	PART NO.	PART NAME	QTY	SERIAL NO.	770D	772D	REMARKS
1	19H2133	CAP SCREW	1		X	X	5/8" X 4-1/2"
2	19M7843	SCREW	1		X	X	M16 X 35
3	24M7315	WASHER	1		X	X	
4	28H3401	SPACER	1		X	X	
5	H154856	WEAR RING	1		X	X	
6	AT175953	PIN	1		X	X	
7	JD7799	LUBRICATION FITTING	1		X	X	
8	T42217	PIN FASTENER	1		X	X	
9	U44915	LOCK NUT	1		X	X	
10	RE37693	HYDRAULIC CYLINDER ROD	1		X	X	
11	R98953	BUSHING	1		X	X	
12	AH146557	SEAL	1		X	X	
13	H208987	WEAR RING	1		X	X	
14	H208995	HYDR. CYLINDER ROD GUIDE	1		X	X	
15	.....	O-RING	1		X	X	(SUB AH212102)
16	H180094	SNAP RING	1		X	X	
17	R81862	BACK-UP RING	1		X	X	
18	F950R	O-RING	1		X	X	
19	H152203	SEAL	1		X	X	
20	AH146561	SEAL	1		X	X	
21	AH205062	PISTON	1		X	X	
22	H170539	NUT	1		X	X	M30
23	AH212545	HYDRAULIC CYLINDER BARREL	1		X	X	
24	H180080	SNAP RING	1		X	X	
25	AH212473	HYDRAULIC CYLINDER	1		X	X	(ARICULATION CYLINDER)
27	AH210484	HYDRAULIC CYLINDER KIT	1		X	X	(ROD SEAL KIT)
28	AH212102	HYDRAULIC CYLINDER KIT	1		X	X	(BORE SEAL KIT)
29	24H1595	WASHER	2		X	X	

FRONT STEERING CYLINDER

T201469 -UN-29NOV04

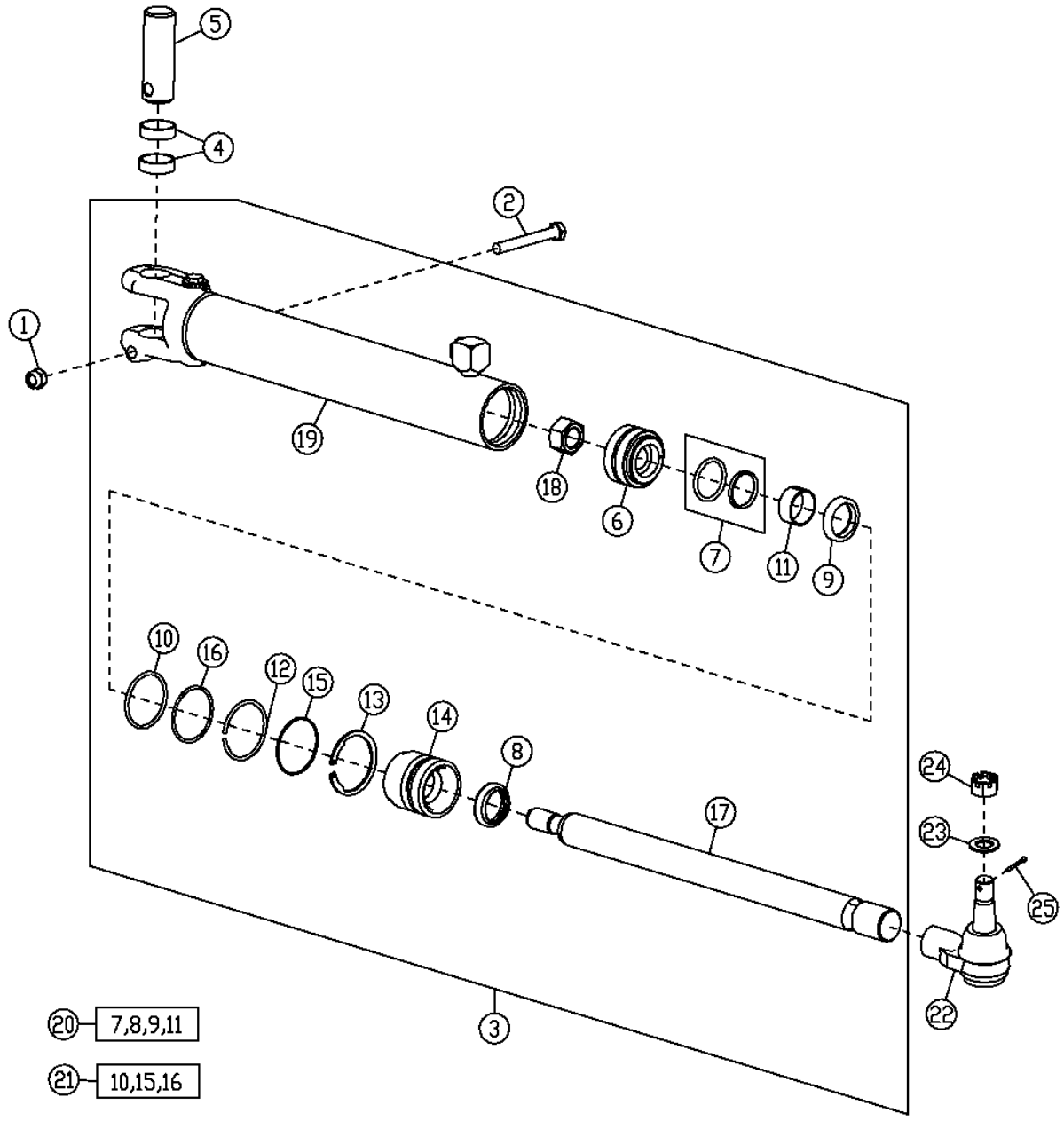

T201469

FRONT STEERING CYLINDER

KEY	PART NO.	PART NAME	QTY	SERIAL NO.	770D	772D	REMARKS
1	14M7517	LOCK NUT	1		X	X	M10
2	19M8081	CAP SCREW	1		X	X	M10 X 80
3	AH215390	HYDRAULIC CYLINDER	1		X	X	(FRONT STEERING)
4	T184629	SPACER	1		X	X	
5	T204711	PIN FASTENER	1		X	X	
6	AH140072	PISTON	1		X	X	
7	AH147976	SEAL	1		X	X	
8	AH150452	SEAL	1		X	X	
9	H154514	SEAL	1		X	X	
10	H155964	O-RING	1		X	X	
11	H156058	WEAR RING	1		X	X	
12	H164204	SNAP RING	1		X	X	
13	H164205	SNAP RING	1		X	X	
14	H171332	HYDR. CYLINDER ROD GUIDE	1		X	X	
15	M44162	O-RING	1		X	X	
16	R78393	BACK-UP RING	1		X	X	
17	H150956	HYDRAULIC CYLINDER ROD	1		X	X	
18	H170535	NUT	1		X	X	
19	AH215391	HYDRAULIC CYLINDER BARREL	1		X	X	
20	AH161589	HYDRAULIC CYLINDER KIT	1		X	X	(ROD SEAL KIT)
21	AH164325	HYDRAULIC CYLINDER KIT	1		X	X	(BORE SEAL KIT)
22	AT169864	TIE ROD END	1		X	X	
23	24M7359	WASHER	1		X	X	
24	14H875	NUT	1		X	X	
25	11M7023	COTTER PIN	1		X	X	

FRONT STEERING CYLINDER HYDRAULIC HOSES

T208052 -UN-12FEB05

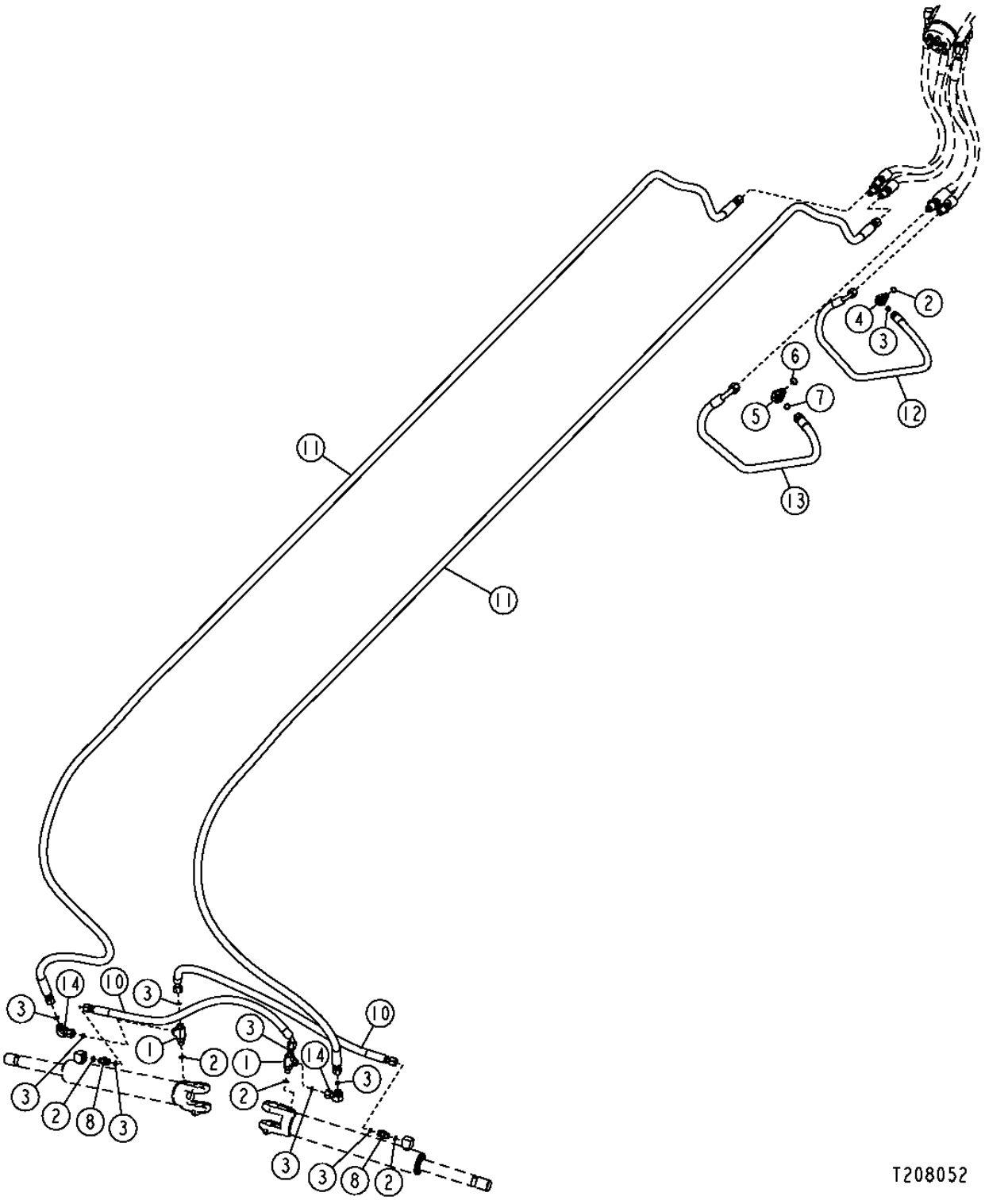

FRONT STEERING CYLINDER HOSES

KEY	PART NO.	PART NAME	QTY	SERIAL NO.	770D	772D	REMARKS
1	38H1023	TEE FITTING	2		X	X	
2	R26448	O-RING	3		X	X	
3	T77613	O-RING	9		X	X	
4	38H1045	ELBOW FITTING	1		X	X	
5	38H1046	ELBOW FITTING	1		X	X	
6	R26375	O-RING	1		X	X	
7	T77857	O-RING	1		X	X	
8	38H1160	ADAPTER	2		X	X	
10	AT180301	HYDRAULIC HOSE - FABRICATE	2		X		
	AT192380	HYDRAULIC HOSE - FABRICATE	2			X	
11	AT304794	HYDRAULIC HOSE - FABRICATE	2		X	X	
12	AT305768	HYDRAULIC HOSE - FABRICATE	1		X	X	
13	AT309952	HYDRAULIC HOSE - FABRICATE	1		X	X	
14	38H1094	ELBOW FITTING	2		X	X	

ARTICULATION CYLINDER HOSES

T202582 -UN-08SEP04

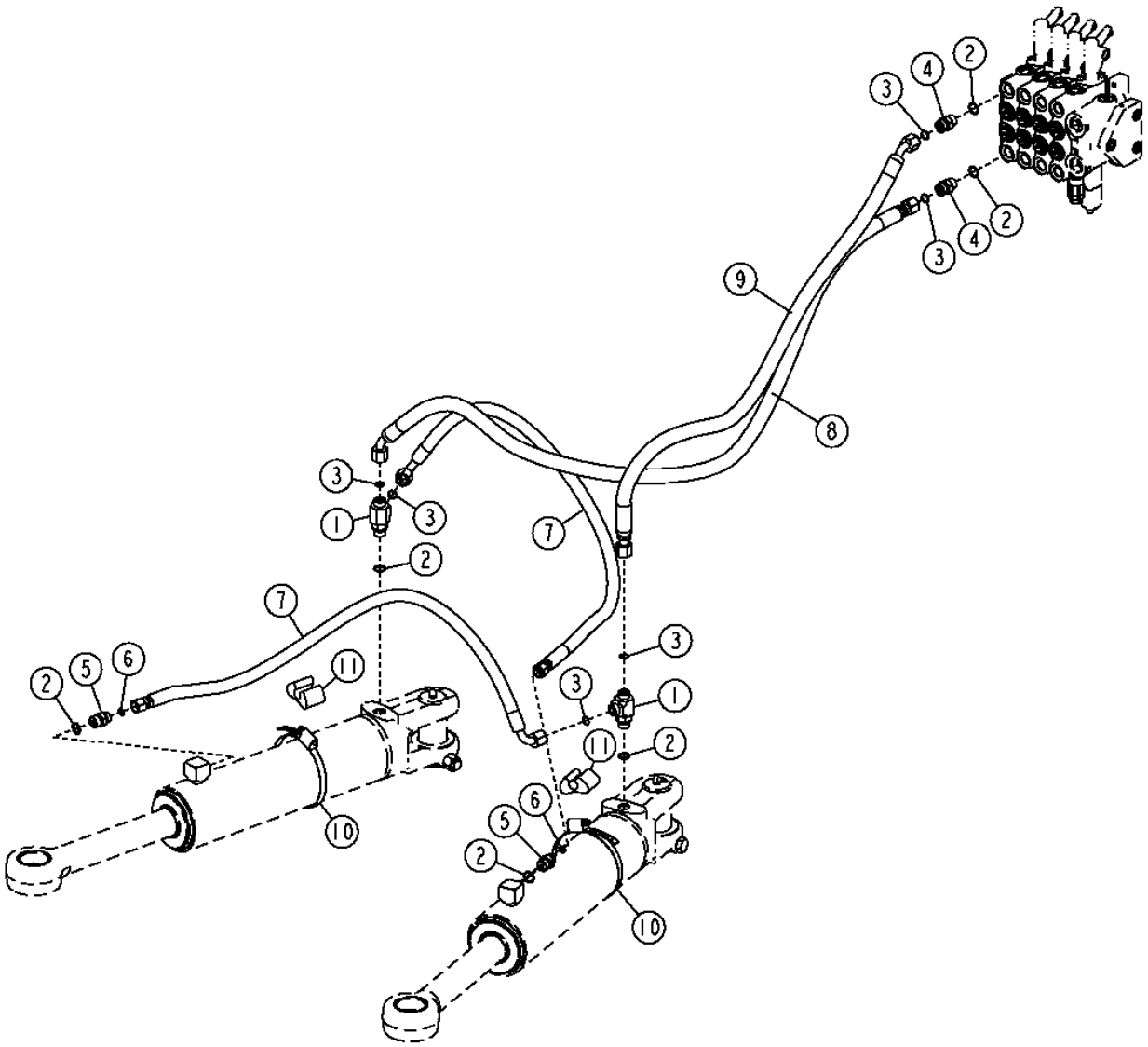

ARTICULATION CYLINDER HOSES

KEY	PART NO.	PART NAME	QTY	SERIAL NO.	770D	772D	REMARKS
1	38H1024	TEE FITTING	2		X	X	
2	R26375	O-RING	6		X	X	
3	T77857	O-RING	6		X	X	
4	38H1161	ADAPTER	2		X	X	
5	38H1171	ADAPTER	2		X	X	
6	T77613	O-RING	2		X	X	
7	AT306154	HYDRAULIC HOSE - FABRICATE	2		X	X	
8	AT306155	HYDRAULIC HOSE - FABRICATE	1		X	X	
9	AT306156	HYDRAULIC HOSE - FABRICATE	1		X	X	
10	C16054	CLAMP	2		X	X	
11	T105773	GUIDE	2		X	X	
12	H77698	TIE BAND	AR		X	X	(NOT ILLUSTRATED)

WHEEL LEAN CYLINDER HOSES (772D)

T202583 -UN-19OCT04

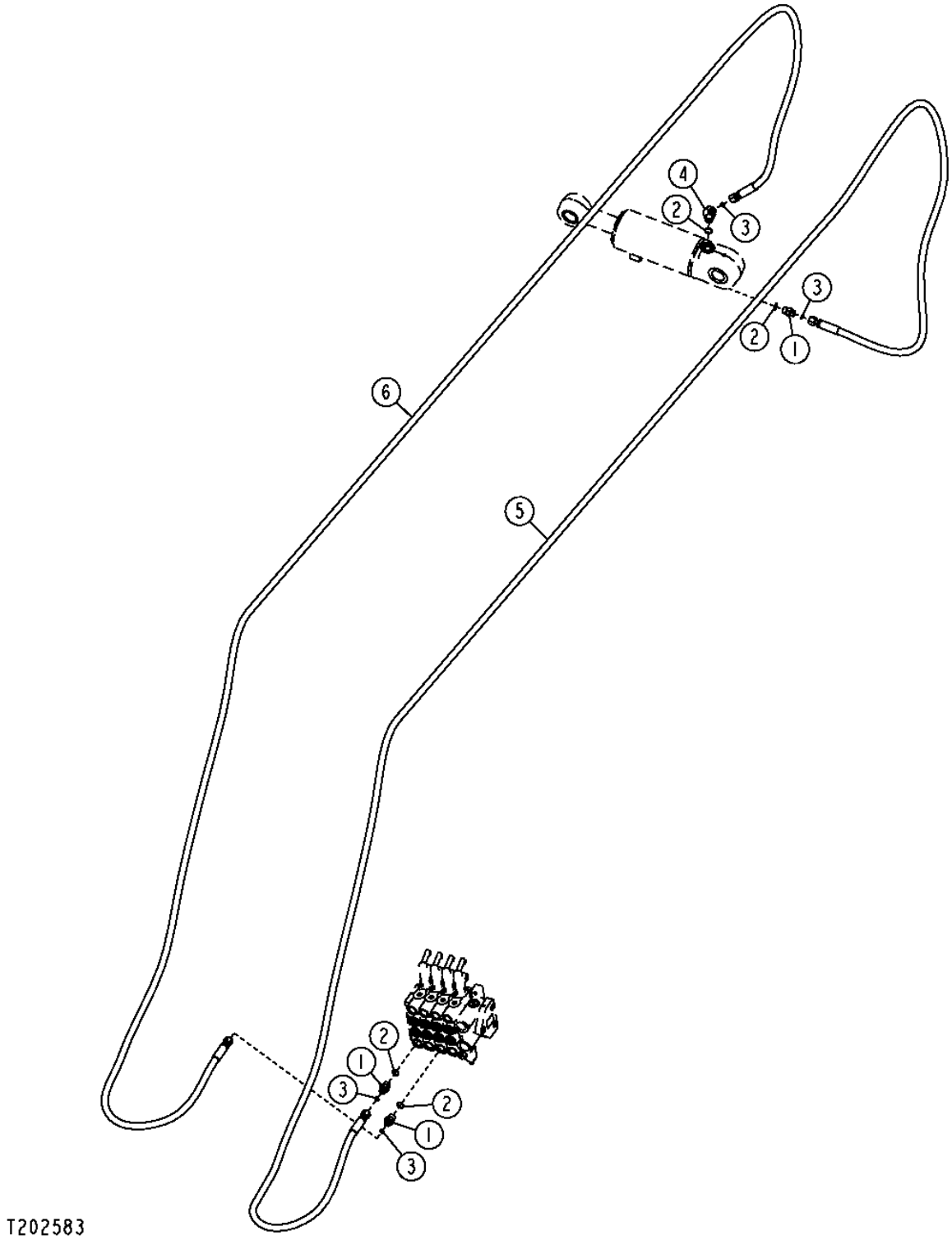

WHEEL LEAN CYLINDER HOSES (772D)

KEY	PART NO.	PART NAME	QTY	SERIAL NO.	770D	772D	REMARKS
1	38H1171	ADAPTER	3			X	
2	R26375	O-RING	4			X	
3	T77613	O-RING	4			X	
4	38H1522	ELBOW FITTING	1			X	
5	AT305624	HYDRAULIC HOSE - FABRICATE	1			X	
6	AT305625	HYDRAULIC HOSE - FABRICATE	1			X	

WHEEL LEAN CYLINDER HYDRAULIC HOSES (770D)

T202584 -UN-19OCT04

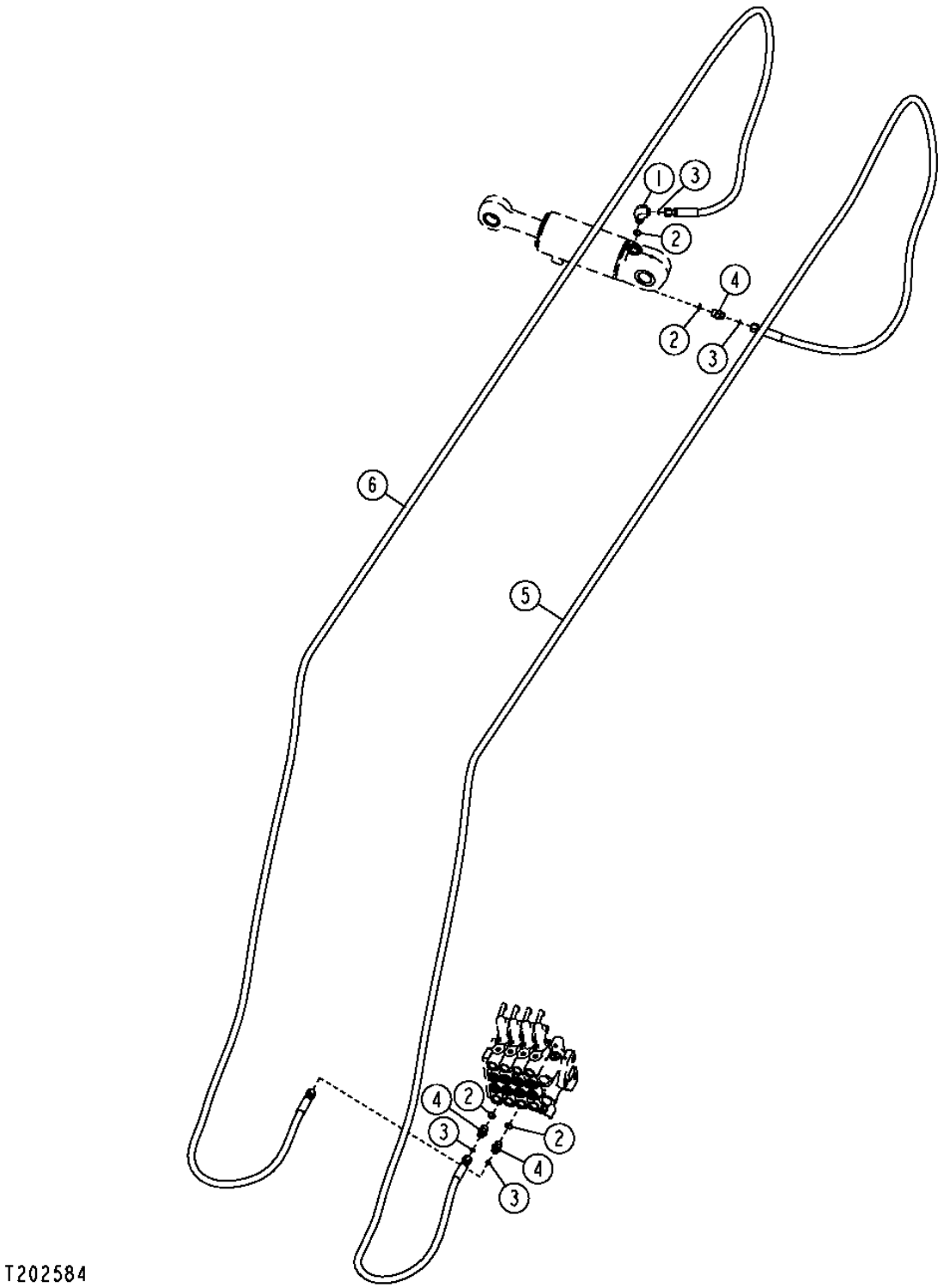

WHEEL LEAN CYLINDER HYDRAULIC HOSES (770D)

KEY	PART NO.	PART NAME	QTY	SERIAL NO.	770D	772D	REMARKS
1	38H1010	ELBOW FITTING	1		X	X	
2	R26375	O-RING	4		X	X	
3	T77613	O-RING	4		X	X	
4	38H1171	ADAPTER	1		X	X	
5	AT305991	HYDRAULIC HOSE - FABRICATE	1		X	X	
6	AT305992	HYDRAULIC HOSE - FABRICATE	1		X	X	

STEERING VALVE AND STEERING VALVE HOSES

T203906 -UN-08DEC04

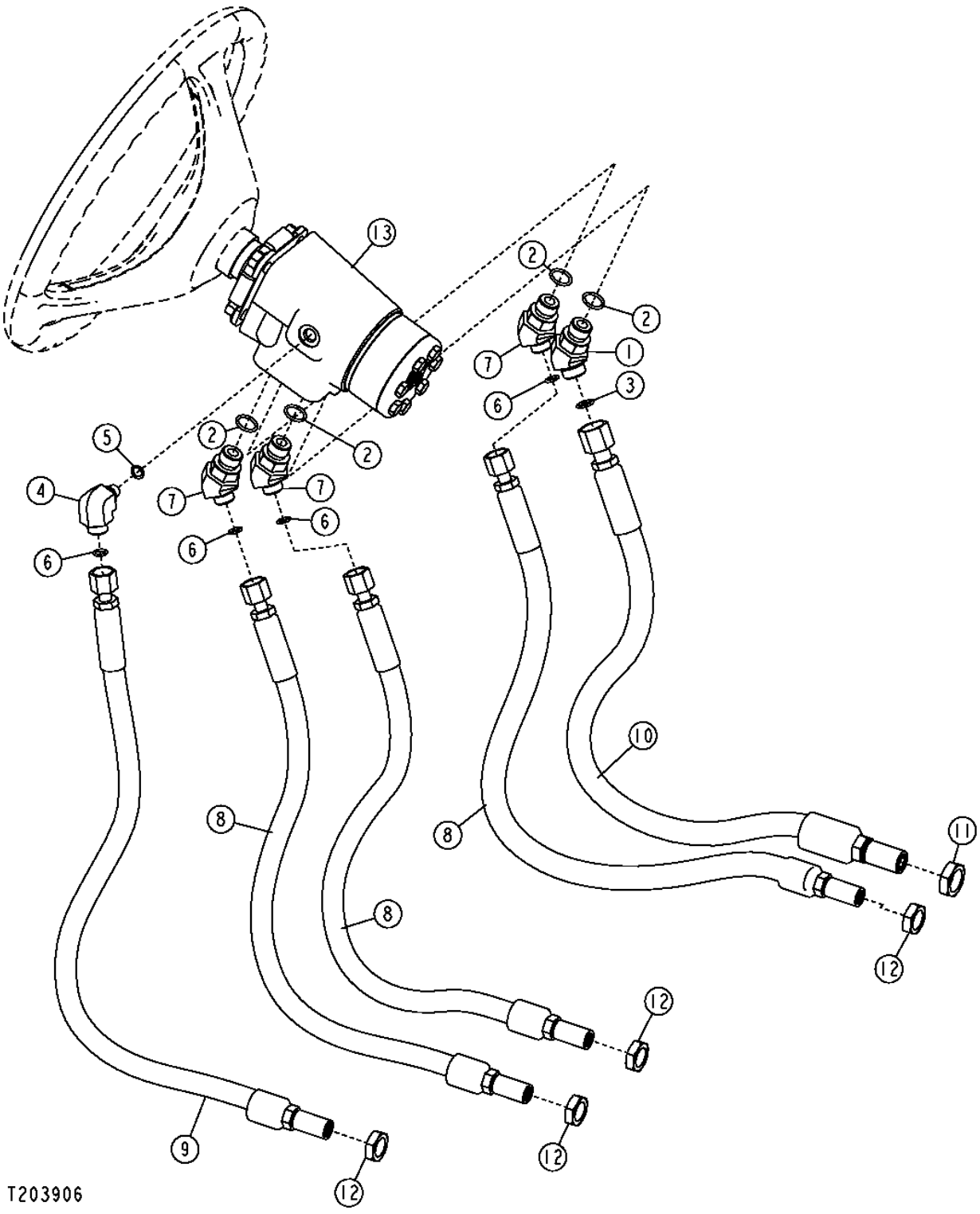

STEERING VALVE AND STEERING VALVE HOSES

KEY	PART NO.	PART NAME	QTY	SERIAL NO.	770D	772D	REMARKS
1	38H1046	ELBOW FITTING	1		X	X	
2	R26375	O-RING	4		X	X	
3	T77857	O-RING	1		X	X	
4	38H1435	ELBOW FITTING	1		X	X	
5	R28782	O-RING	1		X	X	
6	T77613	O-RING	4		X	X	
7	38H1522	ELBOW FITTING	3		X	X	
8	AT302166	HYDRAULIC HOSE - FABRICATE	3		X	X	
9	AT302175	HYDRAULIC HOSE - FABRICATE	1		X	X	
10	AT309953	HYDRAULIC HOSE - FABRICATE	1		X	X	
11	T78716	NUT	1		X	X	
12	T81029	NUT	4		X	X	
13	AT303489	CONTROL VALVE	1		X	X	(STEERING VALVE)
	AT316249	SEAL KIT	1		X	X	(STEERING VALVE SEAL KIT)

SERVICE BRAKES

TP57409 -UN-13MAR98

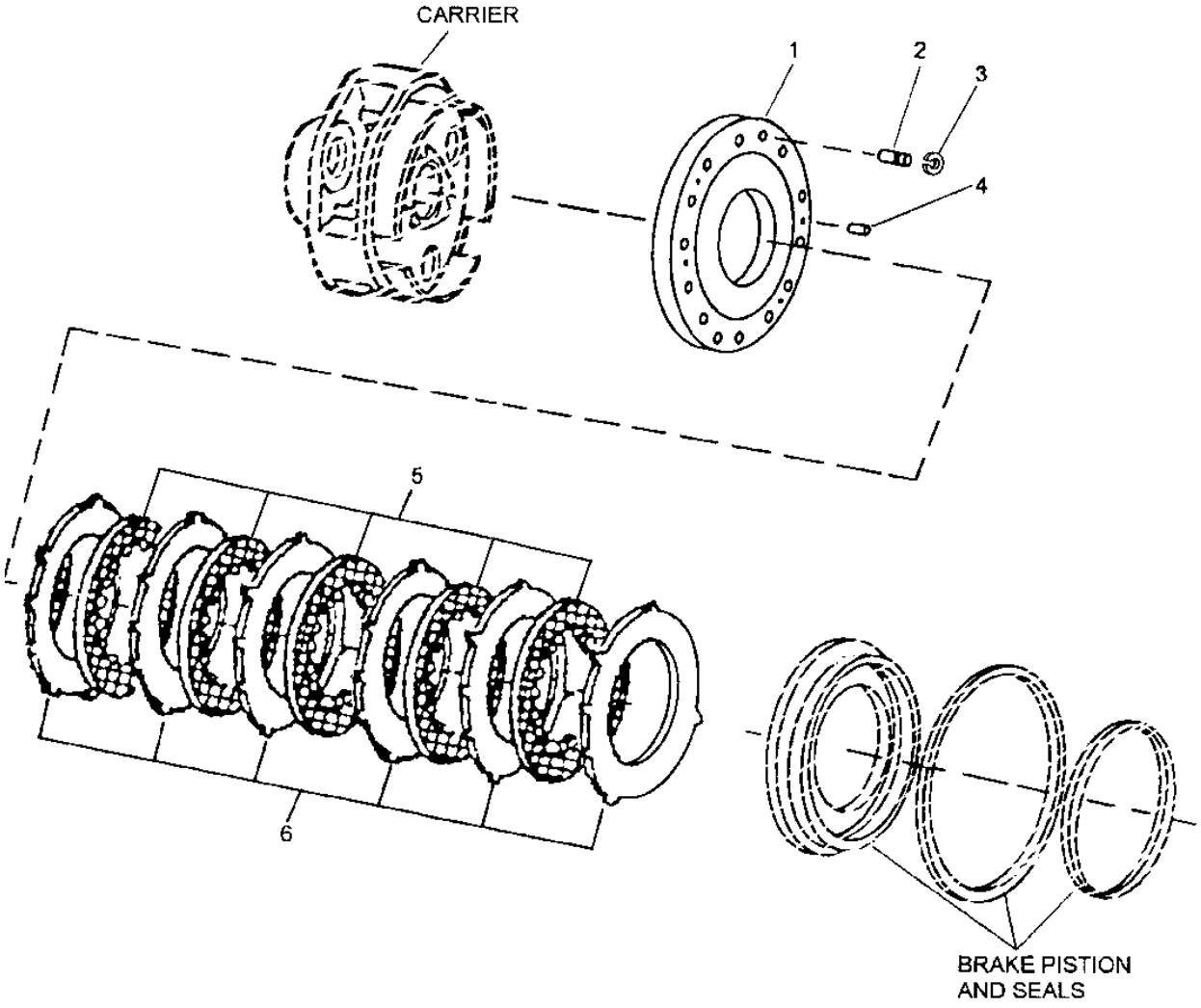

TP57409

SERVICE BRAKES

KEY	PART NO.	PART NAME	QTY	SERIAL NO.	770D	772D	REMARKS
1	R131225	PLATE	1		X	X	
2	R129628	DOWEL PIN	2		X	X	
3	40M7042	SNAP RING	2		X	X	
4	R27315	DOWEL PIN	2		X	X	15.875 X 28.575 MM (5/8" X 1-1/8")
5	RE65008	BRAKE DISK	5		X	X	
6	R150895	PLATE	6		X	X	SEPARATOR

SERVICE BRAKE PEDAL AND VALVE

T201823 -UN-02SEP04

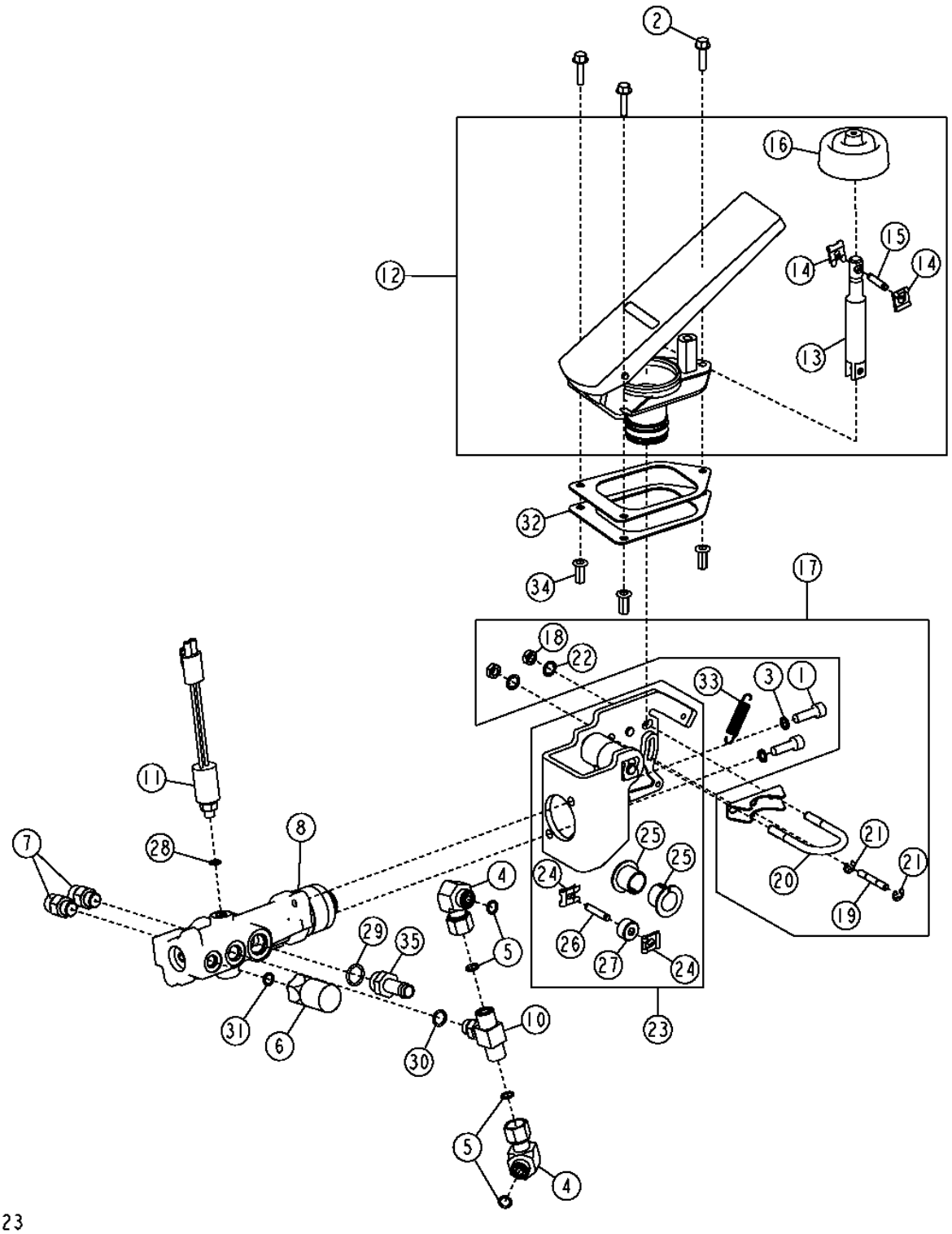

SERVICE BRAKE PEDAL AND VALVE

KEY	PART NO.	PART NAME	QTY	SERIAL NO.	770D	772D	REMARKS
1	19M7657	SCREW	2		X	X	
2	19M7863	SCREW	3		X	X	
3	24M7313	WASHER	2		X	X	
4	38H1094	ELBOW FITTING	2		X	X	
5	T77613	O-RING	4		X	X	
6	AT150024	SWITCH	1		X	X	
7	AT181313	CHECK VALVE	2		X	X	
8	AT187021	MANUAL HYDRAULIC VALVE	1		X	X	(SERVICE BRAKE VALVE)
	AT150112	SEAL KIT	1		X	X	(SERVICE BRAKE VALVE SEAL KIT)
10	AT207529	CHECK VALVE	1		X	X	
11	AT314827	SWITCH	1		X	X	(BRAKE LIGHT SWITCH)
12	AT317654	PEDAL	1		X	X	
13	AT317655	PUSH ROD	1		X	X	
14	T157212	CLIP	2		X	X	
15	T157258	PIN	1		X	X	
16	T174634	BOOT	1		X	X	
17	AT304479	PACKAGE OF PARTS	1		X	X	
18	R53317	LOCK NUT	2		X	X	
19	T157211	PIN	1		X	X	
20	T157220	CLAMP	1		X	X	
21	T170180	SNAP RING	2		X	X	
22	T170181	LOCK WASHER	2		X	X	
23	AT304480	KIT	1		X	X	
24	T157212	CLIP	2		X	X	
25	T157223	BEARING	2		X	X	
26	T157257	PIN	1		X	X	
27	T175236	ROLLER	1		X	X	
28	R26287	O-RING	1		X	X	
29	R26375	O-RING	1		X	X	
30	R26448	O-RING	1		X	X	
31	R28782	O-RING	1		X	X	
32	T172927	GASKET	2		X	X	
33	T176108	SPRING	1		X	X	
34	T196077	NUT	3		X	X	
35	T38282	HOSE FITTING	1		X	X	

SERVICE BRAKE ACUMULATOR AND HOSES

T202006 -UN-03AUG04

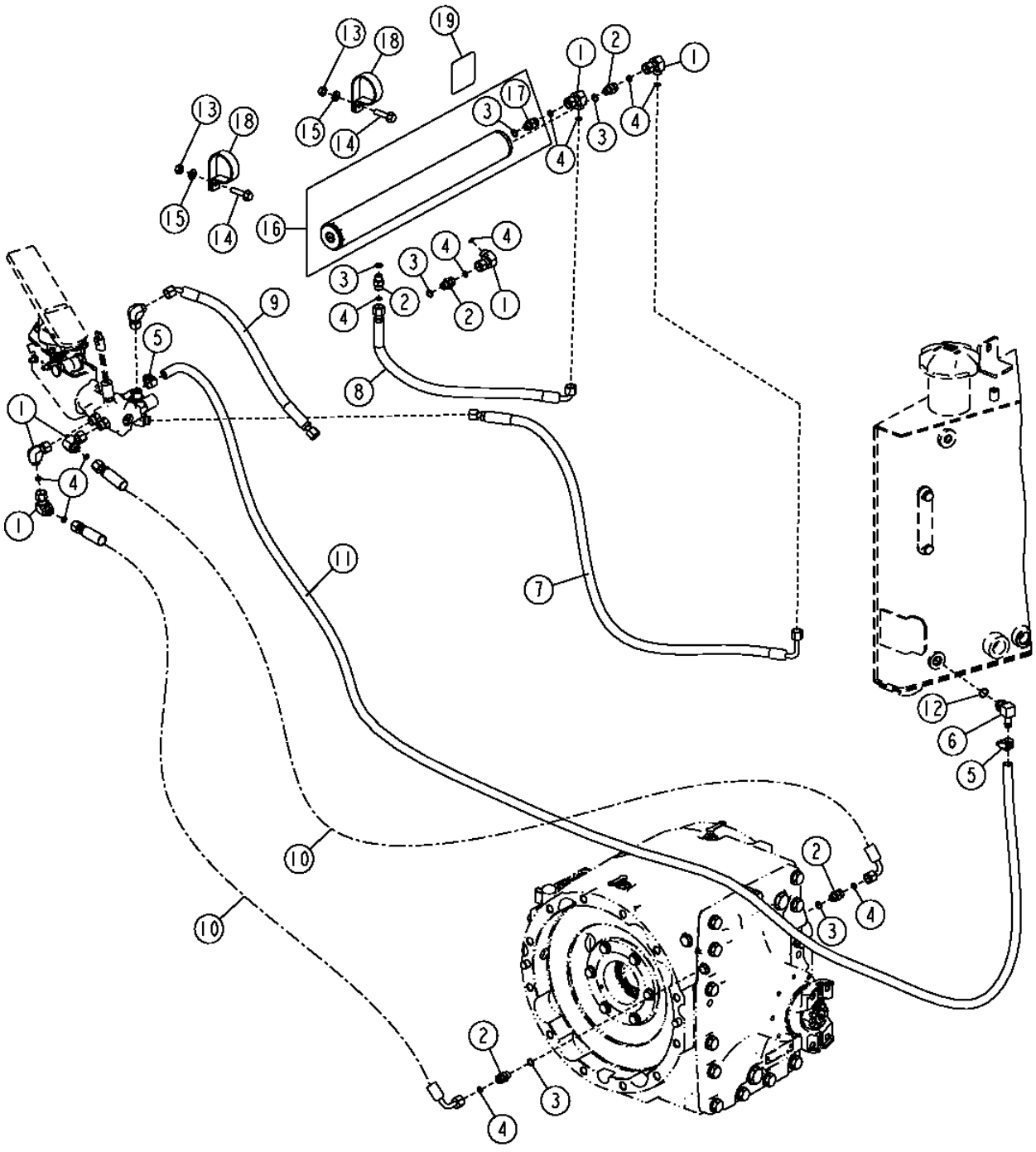

SERVICE BRAKE ACUMULATOR AND HOSES

KEY	PART NO.	PART NAME	QTY	SERIAL NO.	770D	772D	REMARKS
1	38H1094	ELBOW FITTING	6		X	X	
2	38H1160	ADAPTER	5		X	X	
3	R26448	O-RING	5		X	X	
4	T77613	O-RING	11		X	X	
5	AR21836	CLAMP	2		X	X	
6	AT124317	ELBOW FITTING	1		X	X	
7	AT305627	HYDRAULIC HOSE - FABRICATE	1		X	X	
8	AT305739	HYDRAULIC HOSE - FABRICATE	1		X	X	
9	AT305740	HYDRAULIC HOSE - FABRICATE	2		X	X	
10	AT305741	HYDRAULIC HOSE - FABRICATE	2		X	X	
11	.....	BULK HOSE	1		X	X	(MAKE FROM T168383) (CUT TO LENGTH)
12	R26375	O-RING	1		X	X	
13	14M7274	NUT	2		X	X	M10
14	19M8162	SCREW	2		X	X	M10 X 40
15	24M7239	WASHER	2		X	X	
16	AT306749	HYDRAULIC ACCUMULATOR	1		X	X	
17	AT225573	CHECK VALVE	1		X	X	
18	T126204	CLAMP	1		X	X	
19	T164124	LABEL	1		X	X	

PARK BRAKE VALVE

T201054 -UN-22JUN04

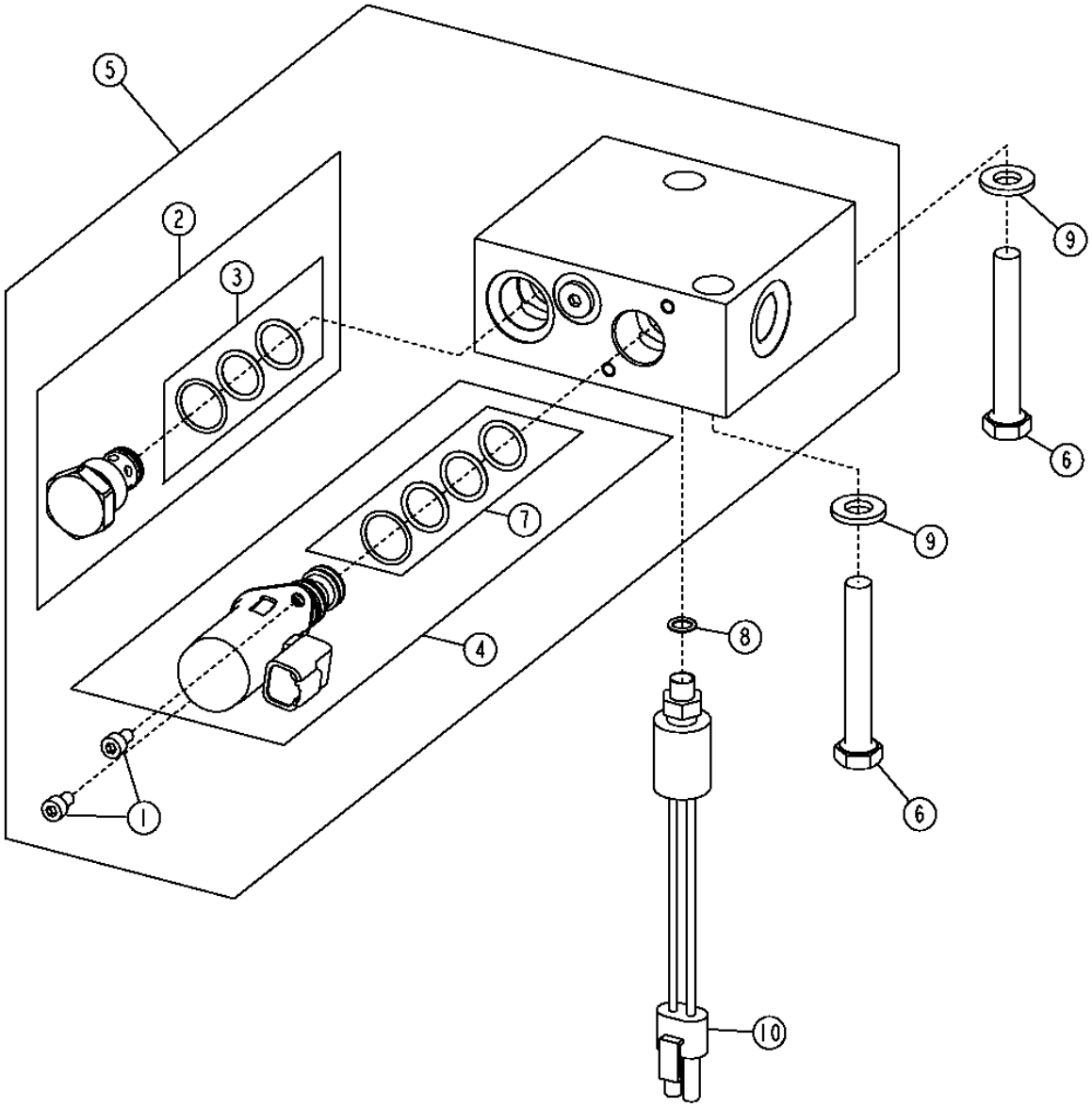

T201054

PARK BRAKE VALVE

KEY	PART NO.	PART NAME	QTY	SERIAL NO.	770D	772D	REMARKS
1	19M9150	SCREW	2		X	X	
2	AT224863	CHECK VALVE	1		X	X	
3	AT224864	SEAL KIT	1		X	X	
4	AT224576	SOLENOID VALVE	1		X	X	
5	AT224497	FLOW CONTROL HYD. VALVE	1		X	X	(PARK BRAKE VALVE)
6	19M7875	CAP SCREW	2		X	X	
7	AT224873	SEAL KIT	1		X	X	
8	R26287	O-RING	1		X	X	
9	24M7239	WASHER	2		X	X	
10	AT223537	PRESSURE SWITCH	1		X	X	(PARK BRAKE PRESSURE SWITCH)

PARK BRAKE HYDRAULIC HOSES

T203307 -UN-02NOV04

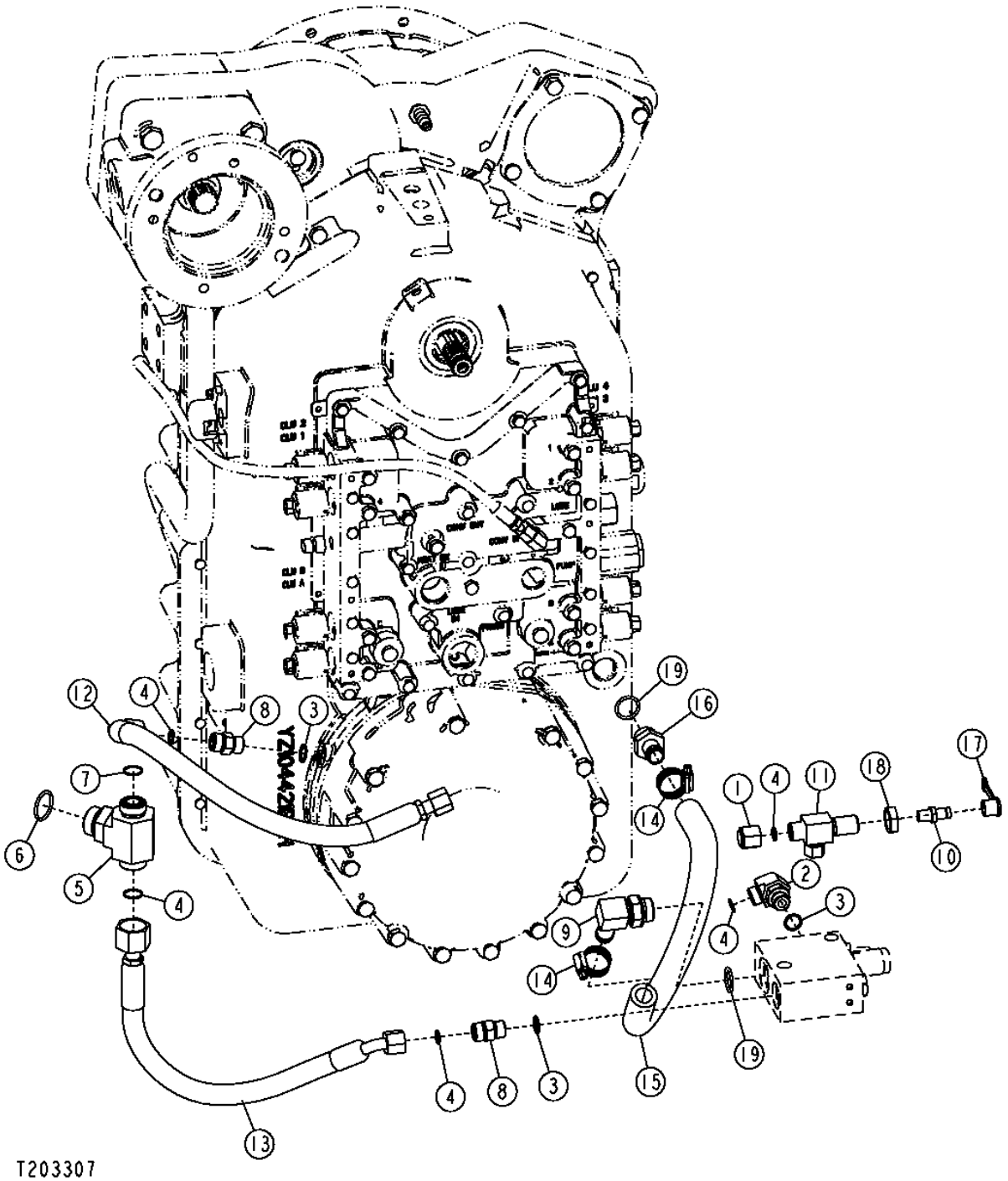

PARK BRAKE HYDRAULIC HOSES

KEY	PART NO.	PART NAME	QTY	SERIAL NO.	770D	772D	REMARKS
1	38H1416	FITTING	1		X	X	
2	38H1005	ELBOW FITTING	1		X	X	
3	R26375	O-RING	3		X	X	
4	T77857	O-RING	4		X	X	
5	38H1055	TEE FITTING	1		X	X	
6	R29936	O-RING	1		X	X	
7	T77858	O-RING	2		X	X	
8	38H1161	ADAPTER	2		X	X	
9	AH61472	HOSE FITTING	1		X	X	
10	AT177142	FITTING	1		X	X	
11	AT183612	PRESSURE RELIEF VALVE	1		X	X	
12	AT304974	HYDRAULIC HOSE - FABRICATE	1		X	X	
13	AT304996	HYDRAULIC HOSE - FABRICATE	1		X	X	
14	AT79195	CLAMP	2		X	X	
15	.....	BULK HOSE	1		X	X	(MAKE FROM T78497) (CUT TO LENGTH)
16	R53540	HOSE FITTING	1		X	X	
17	R77175	COVER	1		X	X	
18	T78716	NUT	1		X	X	
19	U12547	O-RING	2		X	X	

TRADEMARKS AND LABELS (ENGLISH)

T204405 -UN-15DEC04

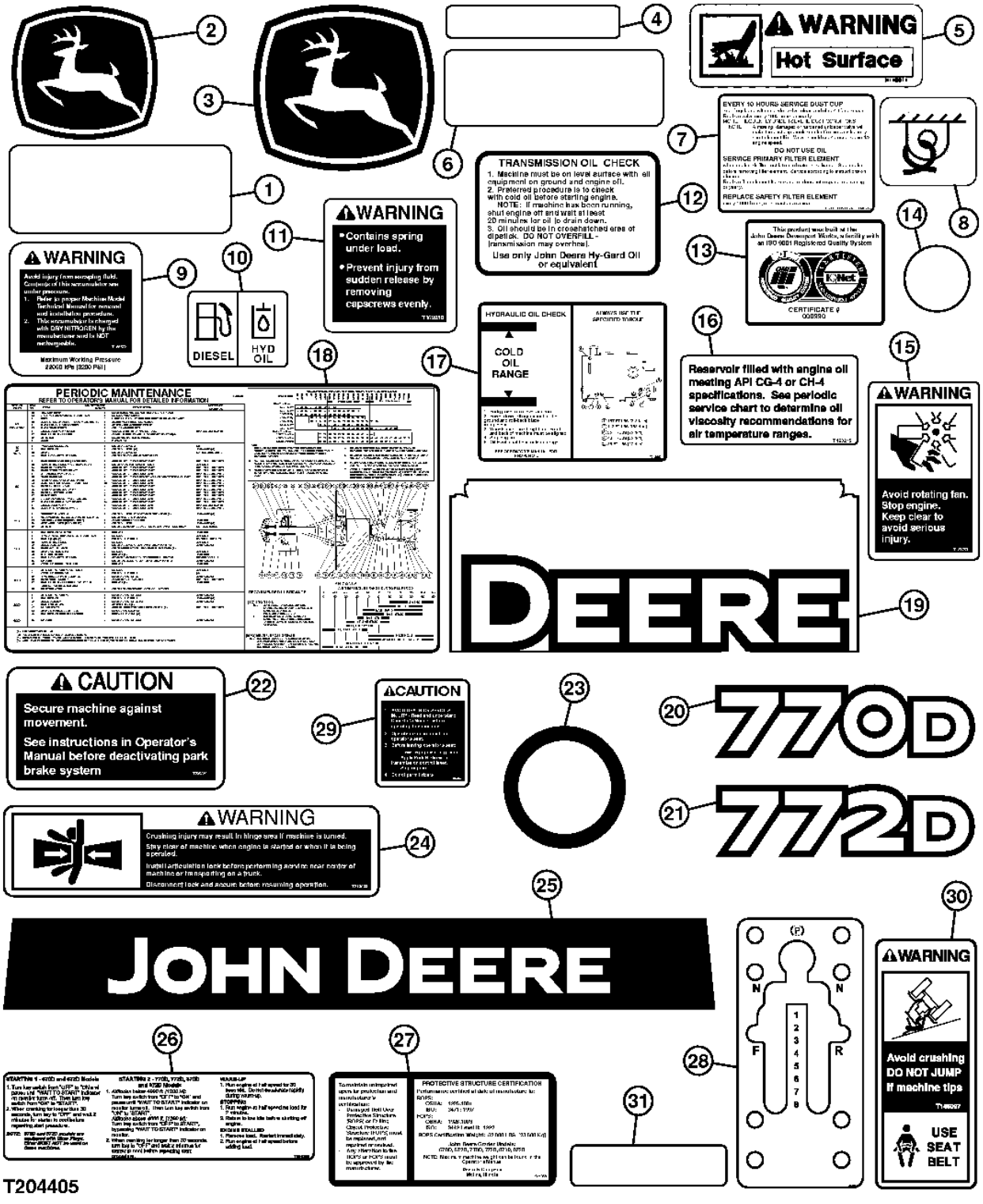

THIS PARTS LISTING IS CONTINUED

TRADEMARKS AND LABELS (ENGLISH)

KEY	PART NO.	PART NAME	QTY	SERIAL NO.	770D	772D	REMARKS
1	H21259	MAT	4		X	X	(15.5" X 6" ANTI-SKID)
2	JD5756	LABEL	1		X	X	(LEAPING DEERE FOR MAIN FRAME COWL COVER)
3	JD5822	LABEL	2		X	X	(LEAPING DEERE FOR REAR GRILLE)
4	JD5921	REFLECTOR	8		X	X	(YELLOW REFLECTIVE LABEL)
5	M118611	LABEL	1		X	X	(HOT SURFACE)
6	T103395	MAT	4		X	X	(8" X 6" ANTI-SKID)
7	T146605	LABEL	1		X	X	(AIR CLEANER SERVICE)
8	T153680	LABEL	6		X	X	(TIE DOWN LOCATION)
9	T155572	SAFETY SIGN	1		X	X	(ACCUMULATOR SAFETY)
10	T161674	LABEL	1		X	X	(HYDRAULIC RESERVOIR/FUEL TANK CAPS)
11	T162050	LABEL	1		X	X	(BRAKE COVER REMOVAL WARNING)
12	T163658	LABEL	1		X	X	(TRANSMISSION OIL LEVEL CHECK)
13	T175744	LABEL	1		X	X	(ISO 9001 REGISTERED)
14	T186793	LABEL	2		X	X	(GRAY CIRCULAR COVER)
15	T187757	LABEL	2		X	X	(WARNING-FAN)
16	T190212	LABEL	1		X	X	(OIL DESCRIPTION)
17	T215268	LABEL	1		X	X	BRAKE COVER
18	T206088	LABEL	1		X	X	(PERIODIC MAINTENANCE)
19	T206091	LABEL	2		X	X	
20	T206095	LABEL	2		X		
21	T206096	LABEL	2			X	
22	T206289	SAFETY SIGN	2		X	X	(CAUTION-PARK BRAKE)
23	T210871	SAFETY SIGN	1		X	X	(ARTICULATION LOCK)
24	T210933	SAFETY SIGN	2		X	X	(WARNING-ARTICULATION)
25	T182184	LABEL	1		X	X	(SUNSCREEN)
26	T206295	LABEL	1		X	X	(START/STOP PROCEDURE)
27	T205368	LABEL	1		X	X	(ROPS/FOPS CERTIFICATION)
28	T205367	LABEL	1		X	X	(SHIFT PATTERN)
29	T160152	LABEL	1		X	X	(CAUTION-SHUTDOWN)
30	T146097	LABEL	1		X	X	(MULTIPLE HAZARDS)
31	JD5938	REFLECTOR	2		X	X	(RED REFLECTOR)

TRADEMARKS AND LABELS (SPANISH)

T205367 -UN-30NOV04

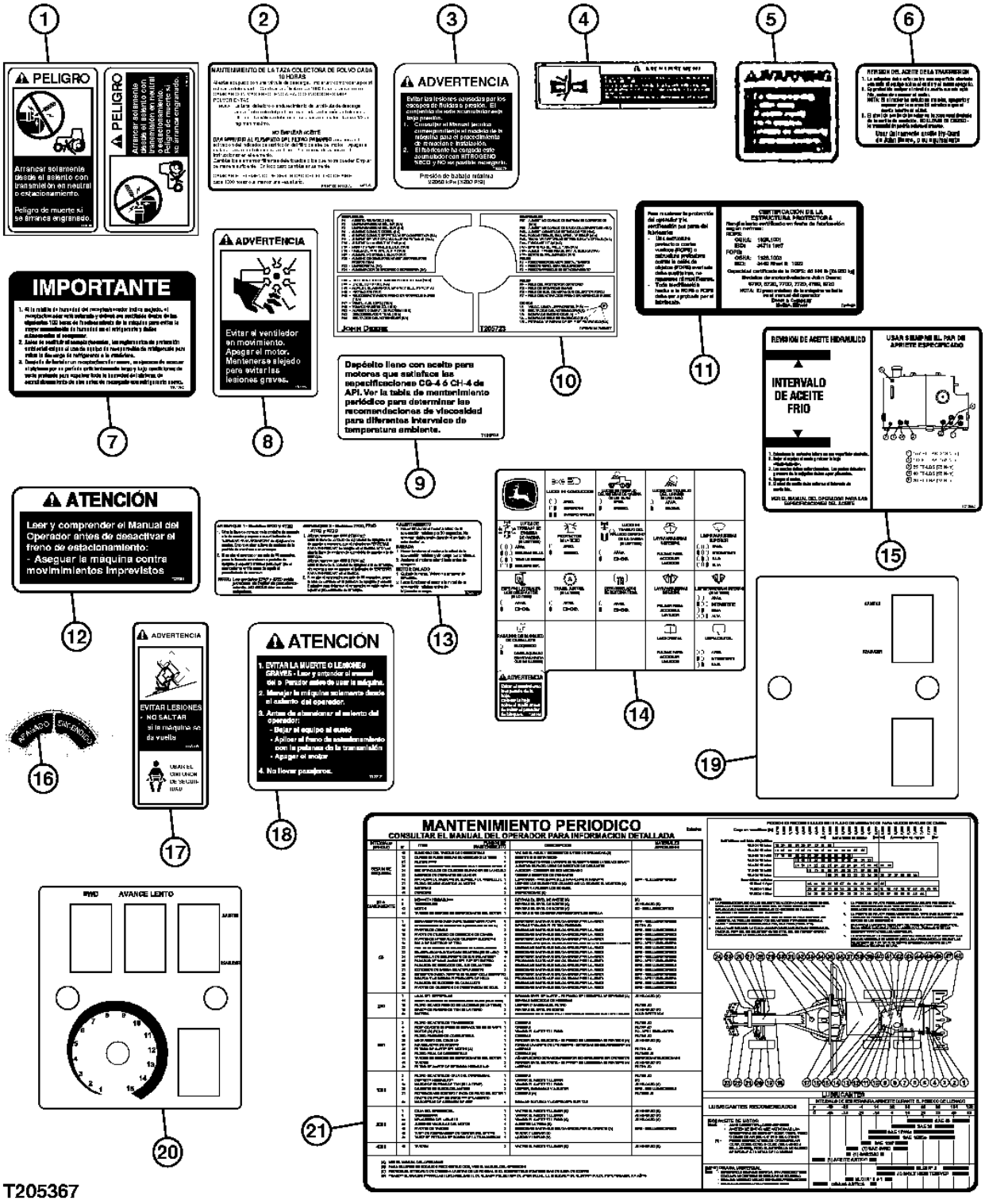

TRADEMARKS AND LABELS (SPANISH)

KEY	PART NO.	PART NAME	QTY	SERIAL NO.	770D	772D	REMARKS
1	T146106	SAFETY SIGN	1		X	X	
2	T146606	LABEL	1		X	X	
3	T155579	SAFETY SIGN	1		X	X	
4	T214972	SAFETY SIGN	2		X	X	
5	T162052	LABEL	1		X	X	
6	T163660	LABEL	1		X	X	
7	T164692	LABEL	1		X	X	
8	T187759	LABEL	4		X	X	
9	T190533	LABEL	1		X	X	
10	T205723	LABEL	1		X	X	
11	T205920	LABEL	1		X	X	
12	T206291	SAFETY SIGN	1		X	X	
13	T206297	LABEL	1		X	X	
14	T206346	LABEL	1		X	X	
15	T215270	LABEL	1		X	X	
16	T63225	LABEL	1		X	X	
17	T146098	SAFETY SIGN	1		X	X	
18	T160154	LABEL	1		X	X	
19	T213215	LABEL	1		X		
20	T213209	LABEL	1			X	
21	T206090	LABEL	1		X	X	

TRADEMARKS AND LABELS (FRENCH)

T205375 -UN-30NOV04

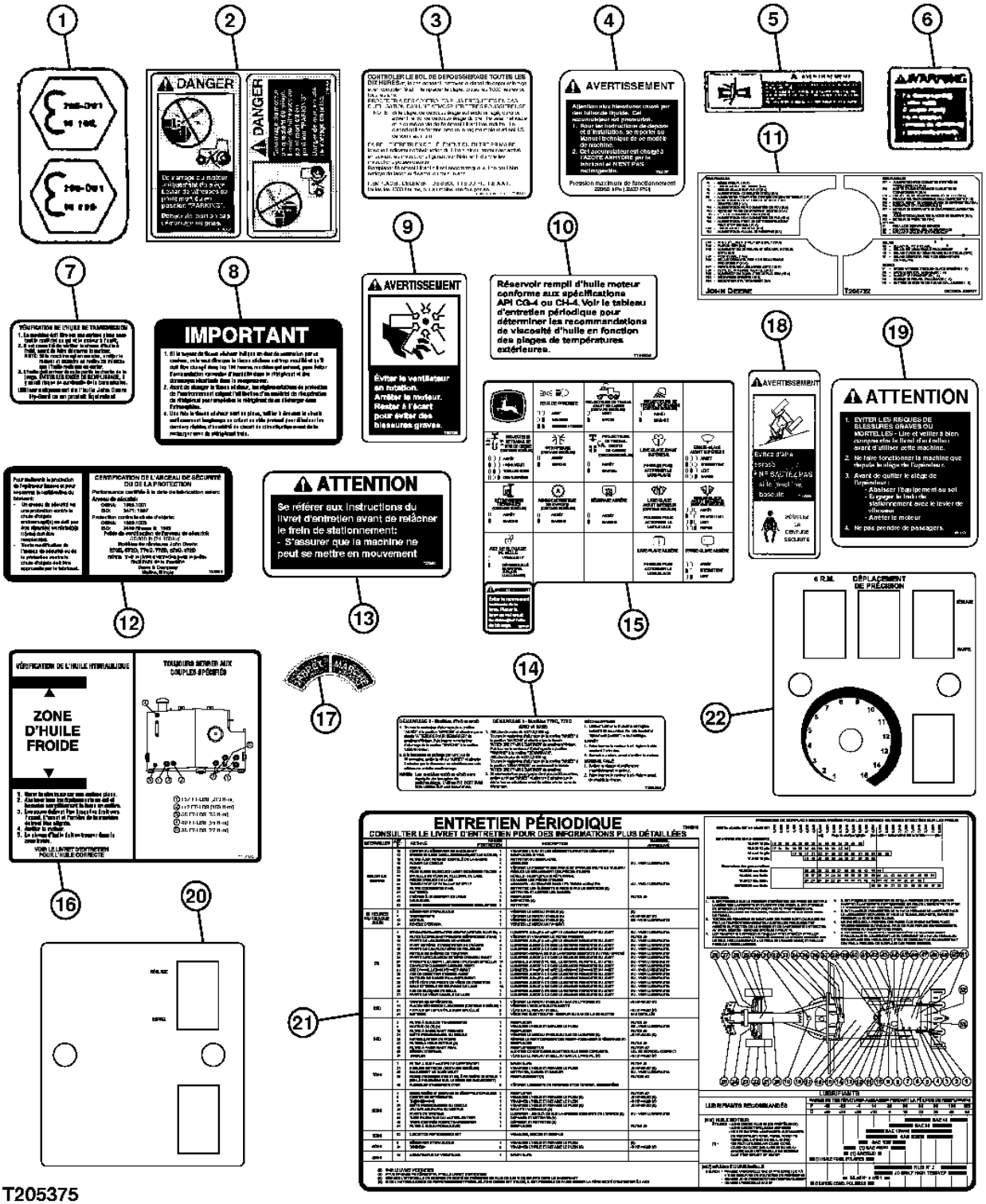

T205375

TRADEMARKS AND LABELS (FRENCH)

KEY	PART NO.	PART NAME	QTY	SERIAL NO.	770D	772D	REMARKS
1	T145453	LABEL	1		X	X	
2	T146104	SAFETY SIGN	1		X	X	
3	T146607	LABEL	1		X	X	
4	T155581	SAFETY SIGN	1		X	X	
5	T214971	SAFETY SIGN	2		X	X	
6	T162051	LABEL	1		X	X	
7	T163659	LABEL	1		X	X	
8	T164691	LABEL	1		X	X	
9	T187758	LABEL	4		X	X	
10	T190534	LABEL	1		X	X	
11	T205722	LABEL	1		X	X	
12	T205919	LABEL	1		X	X	
13	T206290	LABEL	1		X	X	
14	T206296	LABEL	1		X	X	
15	T206345	LABEL	1		X	X	
16	T215269	LABEL	1		X	X	
17	T63224	LABEL	1		X	X	
18	T146099	SAFETY SIGN	1		X	X	
19	T160153	LABEL	1		X		
20	T213210	LABEL	1			X	
21	T206089	LABEL	1		X	X	
22	T213207	LABEL	1		X	X	

MEMORANDA

ENGINE COOLANT CONDITIONER

RGP9624 -UN-26JUN03



KEY	PART NO.	PART NAME	QTY	ENGINE SERIAL NO.	770D	772D	REMARKS
1	TY16004	ENGINE COOLANT CONDITIONER	1		X	X	16 OZ (473 ML)
2	TY16005	ENGINE COOLANT CONDITIONER	1		X	X	1/2 GAL (1.89 L)

ENGINE OIL DRAIN

T202063 -UN-03DEC04

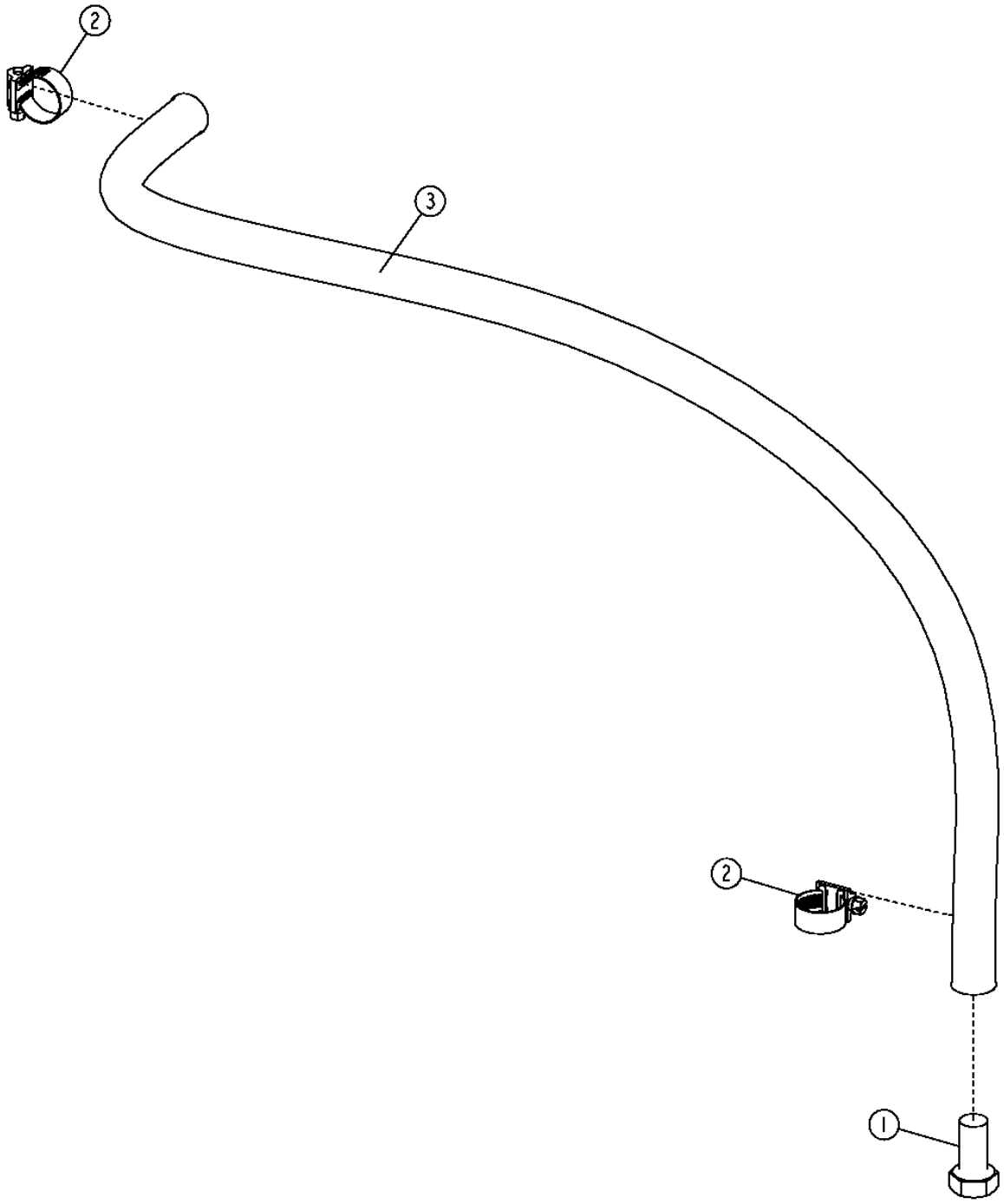

T202063

ENGINE OIL DRAIN

KEY	PART NO.	PART NAME	QTY	SERIAL NO.	770D	772D	REMARKS
1	19H1833	CAP SCREW	1		X	X	5/8" X 1-1/4"
2	AR21837	CLAMP	2		X	X	
3	.....	BULK HOSE	1		X	X	(MAKE FROM T60811) (CUT TO 2FT LENGTH)

FLUID SAMPLING FITTINGS

T205807 -UN-12DEC04

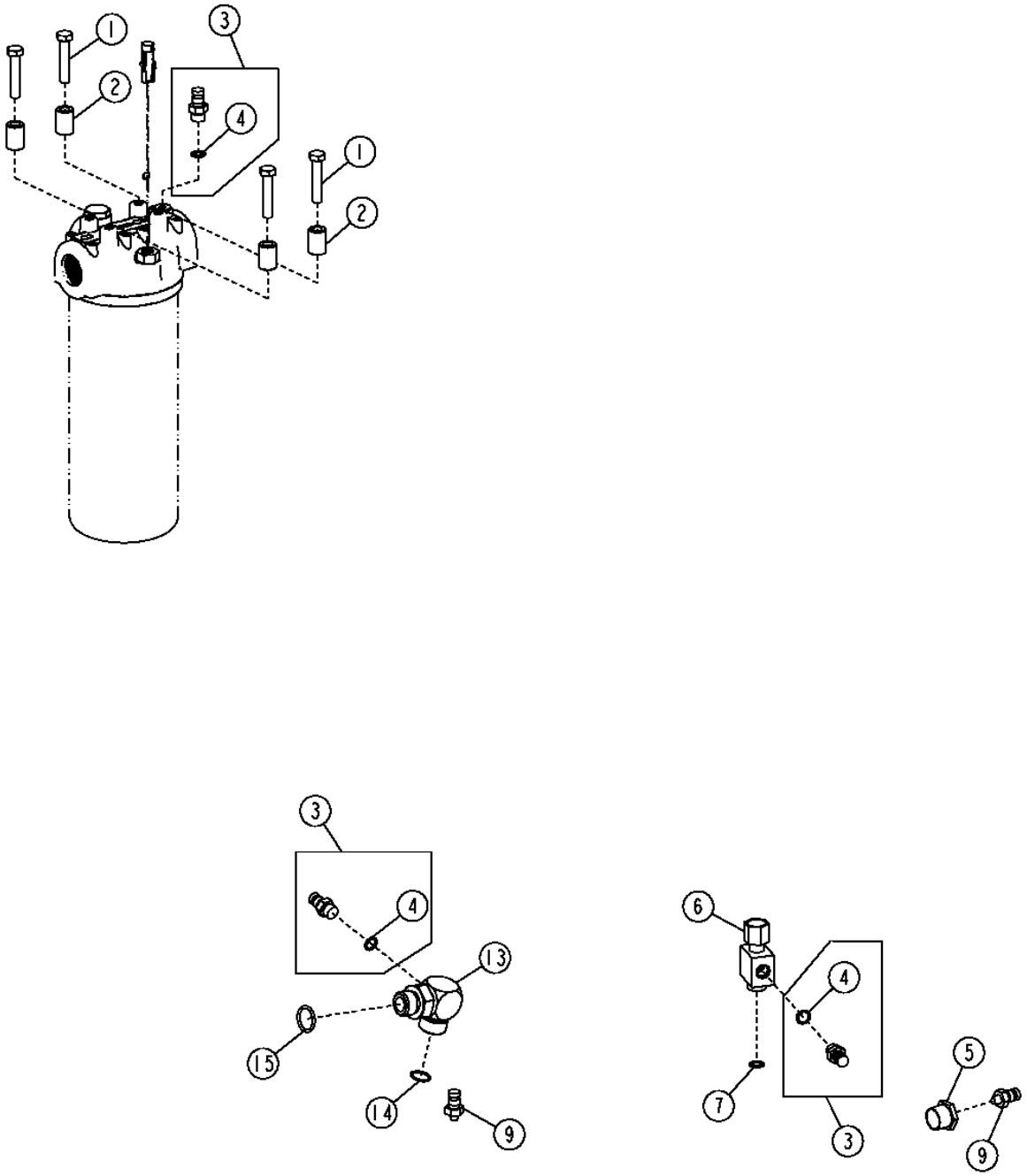

T205807

FLUID SAMPLING FITTINGS

KEY	PART NO.	PART NAME	QTY	SERIAL NO.	770D	772D	REMARKS
1	19M8600	CAP SCREW	4		X	X	M10 X 50
2	T147891	BUSHING	4		X	X	
3	AT306111	FITTING	3		X	X	(HYDRAULIC OIL, TRANSMISSION OIL, AND DIFFERENTIAL OIL)
4	R26448	O-RING	3		X	X	
5	15H518	PIPE BUSHING	1		X	X	
6	T213462	TEE FITTING	1		X	X	
7	T77857	O-RING	1		X	X	
9	AT306133	FITTING	2		X	X	(COOLANT AND ENGINE OIL)
13	T210739	TEE FITTING	1		X	X	
14	T77858	O-RING	1		X	X	
15	U12547	O-RING	1		X	X	
16	R63016	ADAPTER	1		X	X	

FRAME HINGE CENTRAL LUBRICATION LINES AND FITTINGS

T201046 -UN-18JUN04

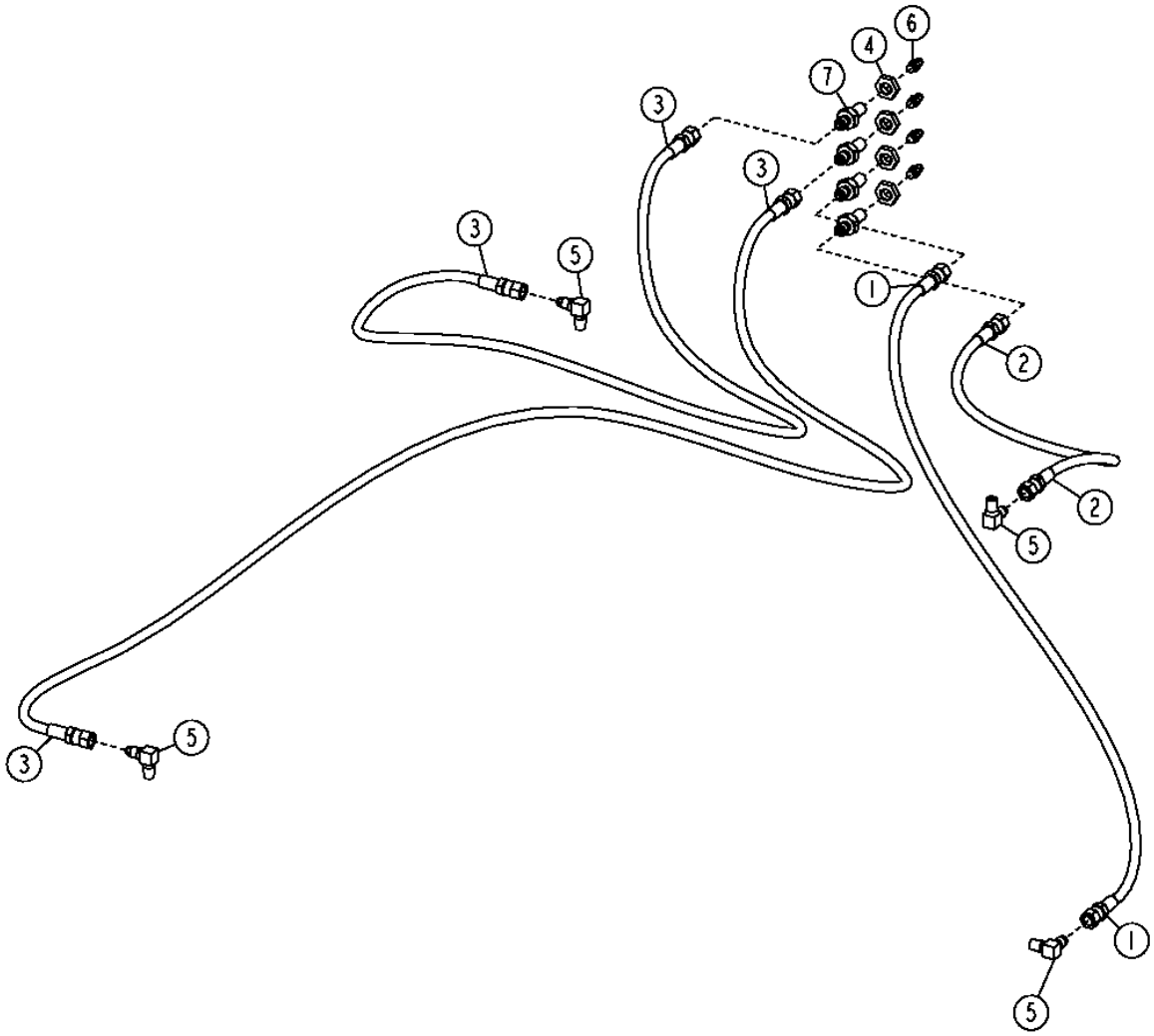

T201046

FRAME HINGE CENTRAL LUBRICATION LINES AND FITTINGS

KEY	PART NO.	PART NAME	QTY	SERIAL NO.	770D	772D	REMARKS
1	AT112769	HYDRAULIC HOSE	1		X	X	(TO BOTTOM FRAME HINGE PIN)
2	AT62699	HYDRAULIC HOSE	1		X	X	(TO TOP FRAME HINGE PIN)
3	AT62703	HYDRAULIC HOSE	2		X	X	(TO ARTICULATION CYLINDER PINS)
4	E12379	NUT	4		X	X	
5	H80936	ELBOW FITTING	4		X	X	
6	JD7797	LUBRICATION FITTING	4		X	X	
7	T75644	ADAPTER	4		X	X	

REAR HITCH

T202478 -UN-03SEP04

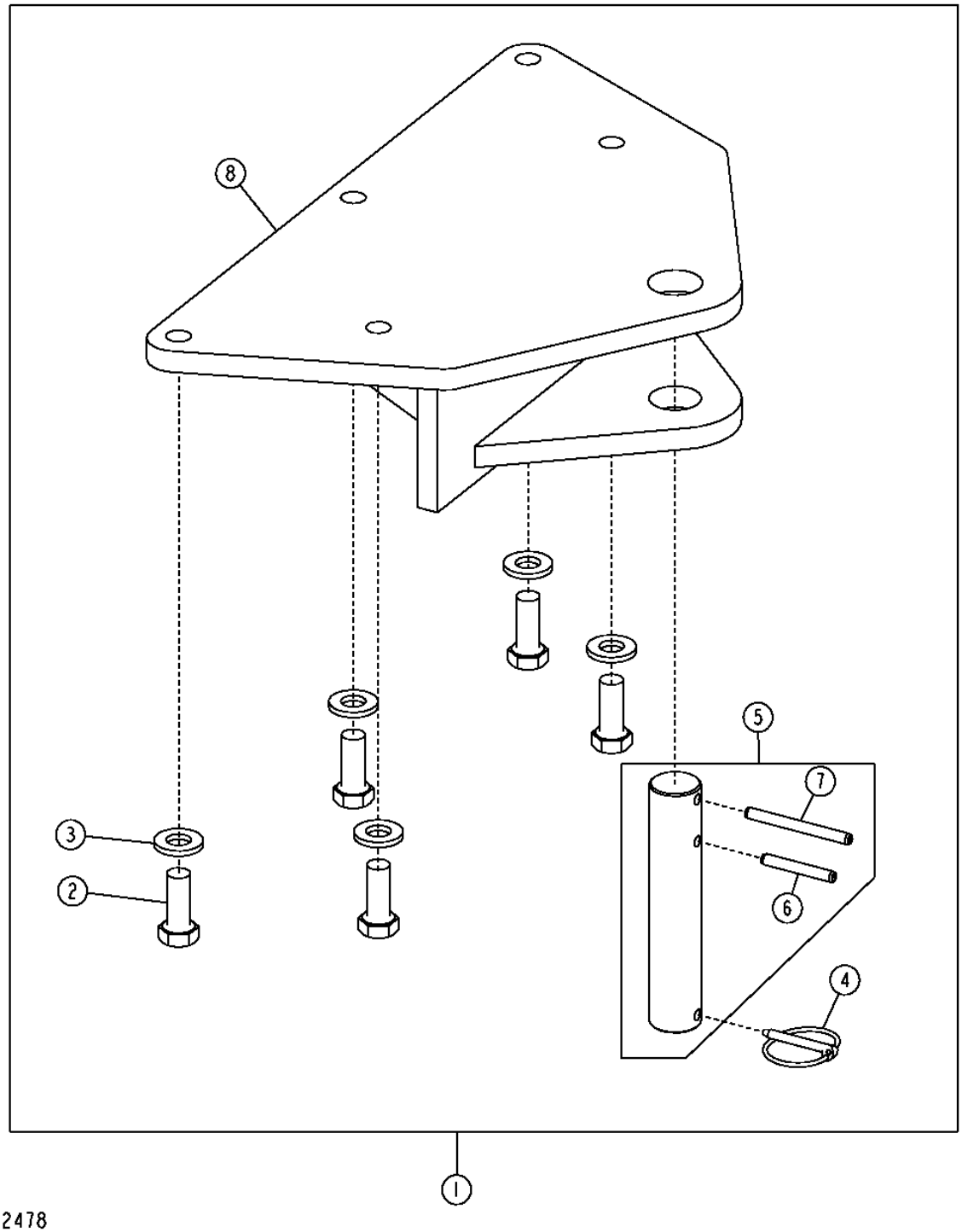

REAR HITCH

KEY	PART NO.	PART NAME	QTY	SERIAL NO.	770D	772D	REMARKS
1	**AT316746**	**KIT**	**1**		**X**	**X**	**(WHOLEGOODS) (REAR HITCH KIT)**
2	19M7597	CAP SCREW	5		X	X	M20 X 50
3	24M7242	WASHER	5		X	X	
4	AR83396	QUICK LOCK PIN	1		X	X	
5	AT186723	PIN FASTENER	1		X	X	
6	34H358	SPRING PIN	1		X	X	
7	34H363	SPRING PIN	1		X	X	
8	AT187234	HITCH	1		X	X	

BATTERIES, CABLES, CLAMPS AND GROUNDING STRAPS

T213473 -UN-24AUG05

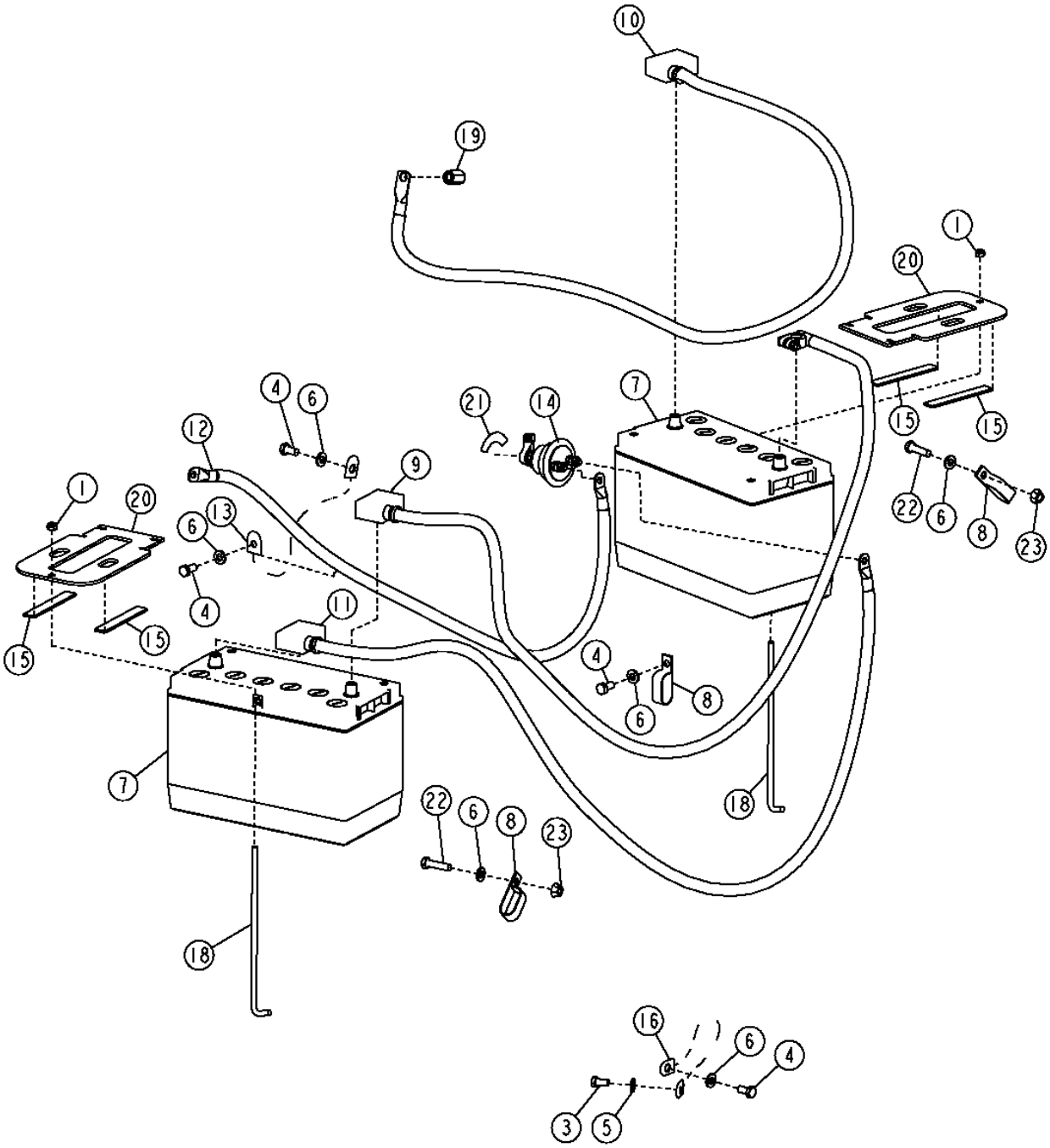

BATTERIES, CABLES, CLAMPS AND GROUNDING STRAPS

KEY	PART NO.	PART NAME	QTY	SERIAL NO.	770D	772D	REMARKS
1	14M7166	LOCK NUT	2		X	X	M8
3	19H1648	CAP SCREW	3		X	X	3/8" X 3/4"
4	19M7938	CAP SCREW	3		X	X	M10 X 20
5	24H1305	WASHER	3		X	X	
6	24M7239	WASHER	6		X	X	
7	TY25803	DRY CHARGED BATTERY	2		X	X	750 COLD CRANKING AMPS AT 0°F (-18°C), 265-MINUTE RESERVE CAPACITY AT 25 AMPS
	TY23020	DRY CHARGED BATTERY	2		X	X	1400 COLD CRANKING AMPS AT 0°F (-18°C), 440-MINUTE RESERVE CAPACITY AT 25 AMPS
8	AH77869	CLIP	3		X	X	
9	AT175548	BATTERY CABLE	1		X	X	2 749.550 MM (108-1/4")
10	AT175549	BATTERY CABLE	1		X	X	1 974.850 MM (77-3/4")
11	AT175550	BATTERY CABLE	1		X	X	2 274.875 MM (89-9/16")
12	AT191007	BATTERY CABLE	1		X	X	1 150 MM (45.276")
13	AT38449	GROUND CABLE	1		X	X	609.600 MM (24")
14	AT41188	SWITCH	1		X	X	
15	.....	BARRIER	1		X	X	(MAKE FROM T66419) (CUT TO LENGTH)
16	R36545	GROUND CABLE	2		X	X	406.400 MM (16")
18	T161376	HOOK BOLT	2		X	X	
19	T174530	NUT	1		X	X	M12
20	T208242	PLATE	2		X	X	
21	T42199	LABEL	1		X	X	
22	19M7938	CAP SCREW	2	-XXXXXX	X	X	M10 X 20
	19M8637	CAP SCREW	2	XXXXXX-	X	X	M10 X 40
23	14M7296	FLANGE NUT	2	XXXXXX-	X	X	M10

ALTERNATOR AND ALTERNATOR BRACKETS

T212837 -UN-20JUL05

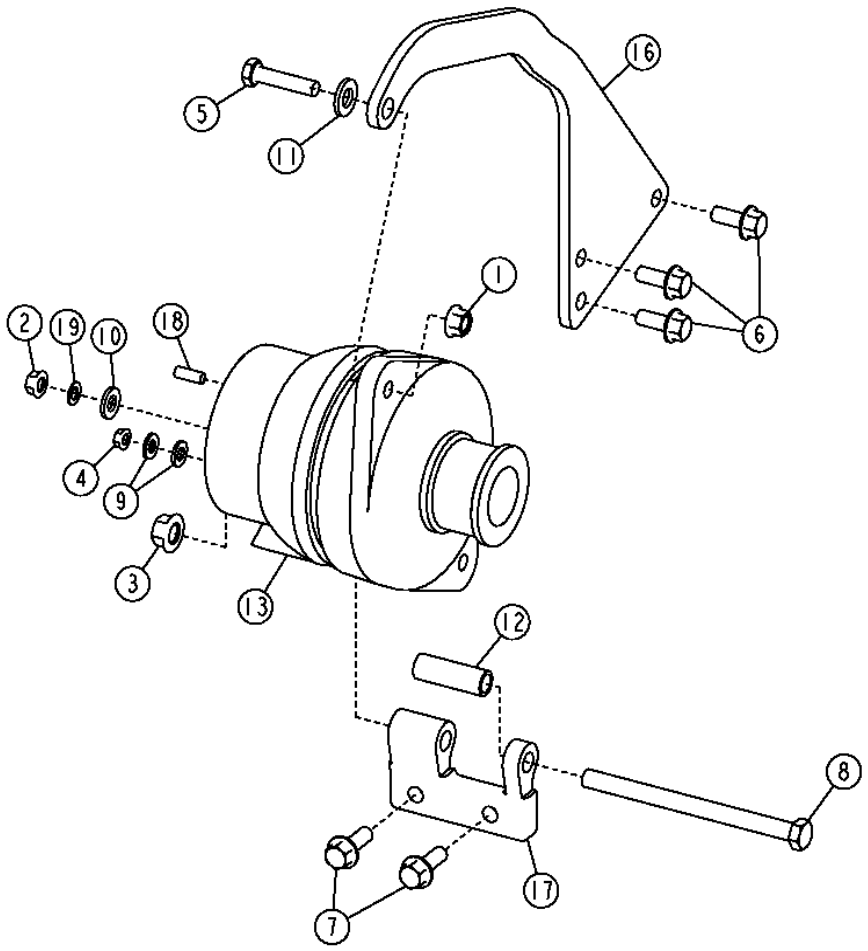

T212837

ALTERNATOR AND ALTERNATOR BRACKETS

KEY	PART NO.	PART NAME	QTY	SERIAL NO.	770D	772D	REMARKS
1	14M7296	FLANGE NUT	1		X	X	M10
2	14M7298	FLANGE NUT	1		X	X	M8
3	14M7299	FLANGE NUT	2		X	X	M12
4	14M7303	FLANGE NUT	1		X	X	M6
5	19H2676	CAP SCREW	1		X	X	3/8" X 1"
6	19H3772	SCREW	2		X	X	3/8" X 1-3/4"
7	19M7180	CAP SCREW	1		X	X	M10 X 45
8	19M7791	BOLT	1		X	X	M12 X 40
9	24M7238	WASHER	2		X	X	
10	24M7239	WASHER	1		X	X	
11	24M7240	WASHER	1		X	X	
12	19M7818	SCREW	1		X	X	
13	AT300167	ALTERNATOR	1		X	X	(100 AMP)
14	AT300684	WIRING HARNESS	1		X	X	(NOT ILLUSTRATED) (ALTERNATOR WIRING HARNESS)
15	R123459	V-BELT	1		X	X	(WITHOUT A/C)
	R135608	V-BELT	1		X	X	(WITH A/C)
16	R132968	STRAP	1		X	X	
17	T201537	CAP	1		X	X	
18	T205161	STRAP	1		X	X	
19	T205235	BRACKET	1		X	X	
20	T201538	PULLEY	1		X	X	

SNOW LIGHT BRACKETS

T208054 -UN-12FEB05

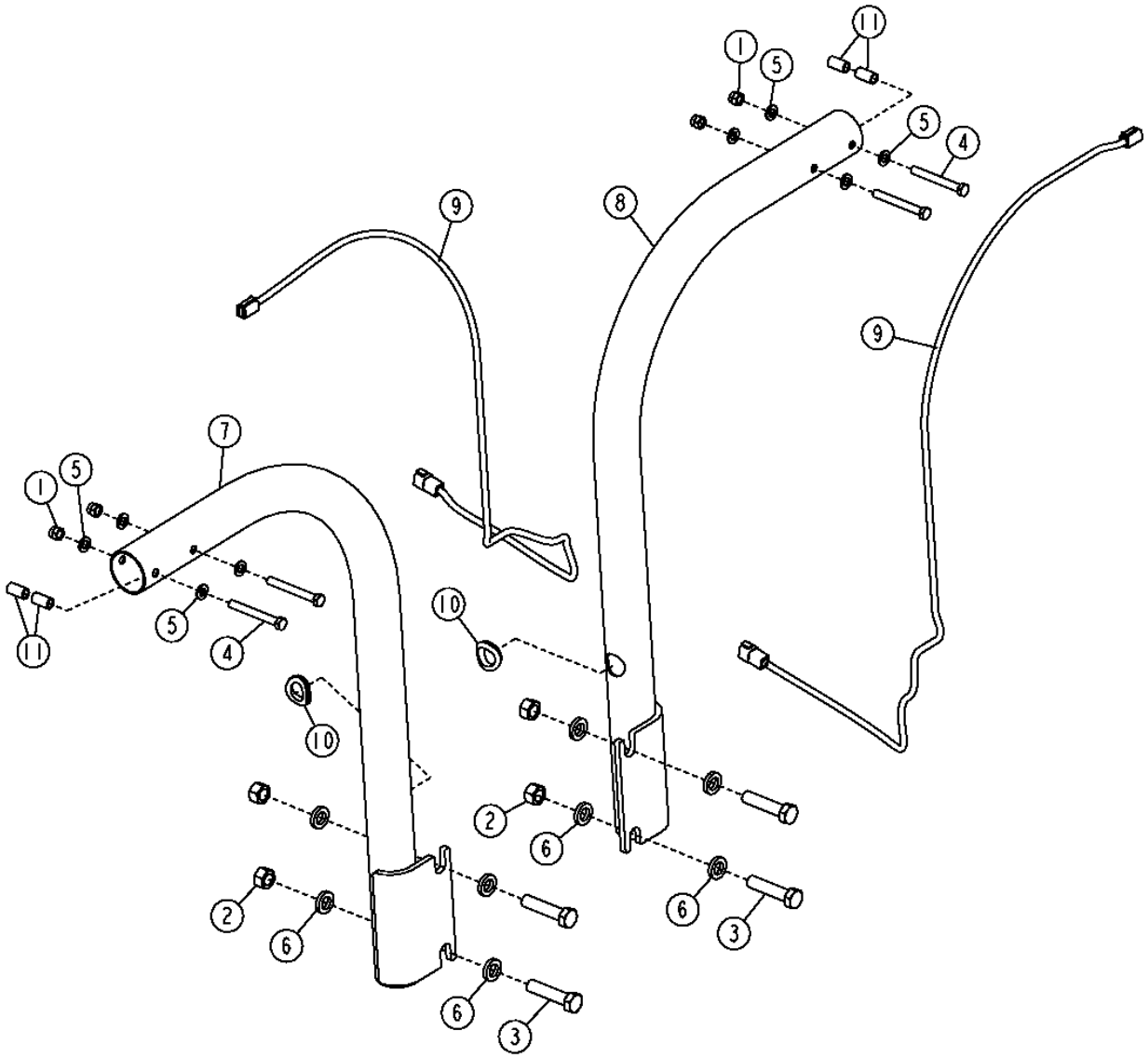

SNOW LIGHT BRACKETS

KEY	PART NO.	PART NAME	QTY	SERIAL NO.	770D	772D	REMARKS
1	14M7313	LOCK NUT	4		X	X	M12
2	14H1058	NUT	4		X	X	3/4"
3	19M3167	CAP SCREW	4		X	X	M12 X 60
4	19M7949	CAP SCREW	4		X	X	M12 X 100
5	24M7047	WASHER	8		X	X	
6	T83426	WASHER	8		X	X	
7	AT306612	BRACKET	1		X	X	(RH)
8	AT306632	BRACKET	1		X	X	(LH)
9	AT307780	WIRING HARNESS	2		X	X	(FRONT WORKLIGHT EXTENSION)
10	M86690	GROMMET	2		X	X	
11	28H3387	BUSHING	4		X	X	

FRONT SIGNAL LIGHTS

T202181 -UN-14SEP04

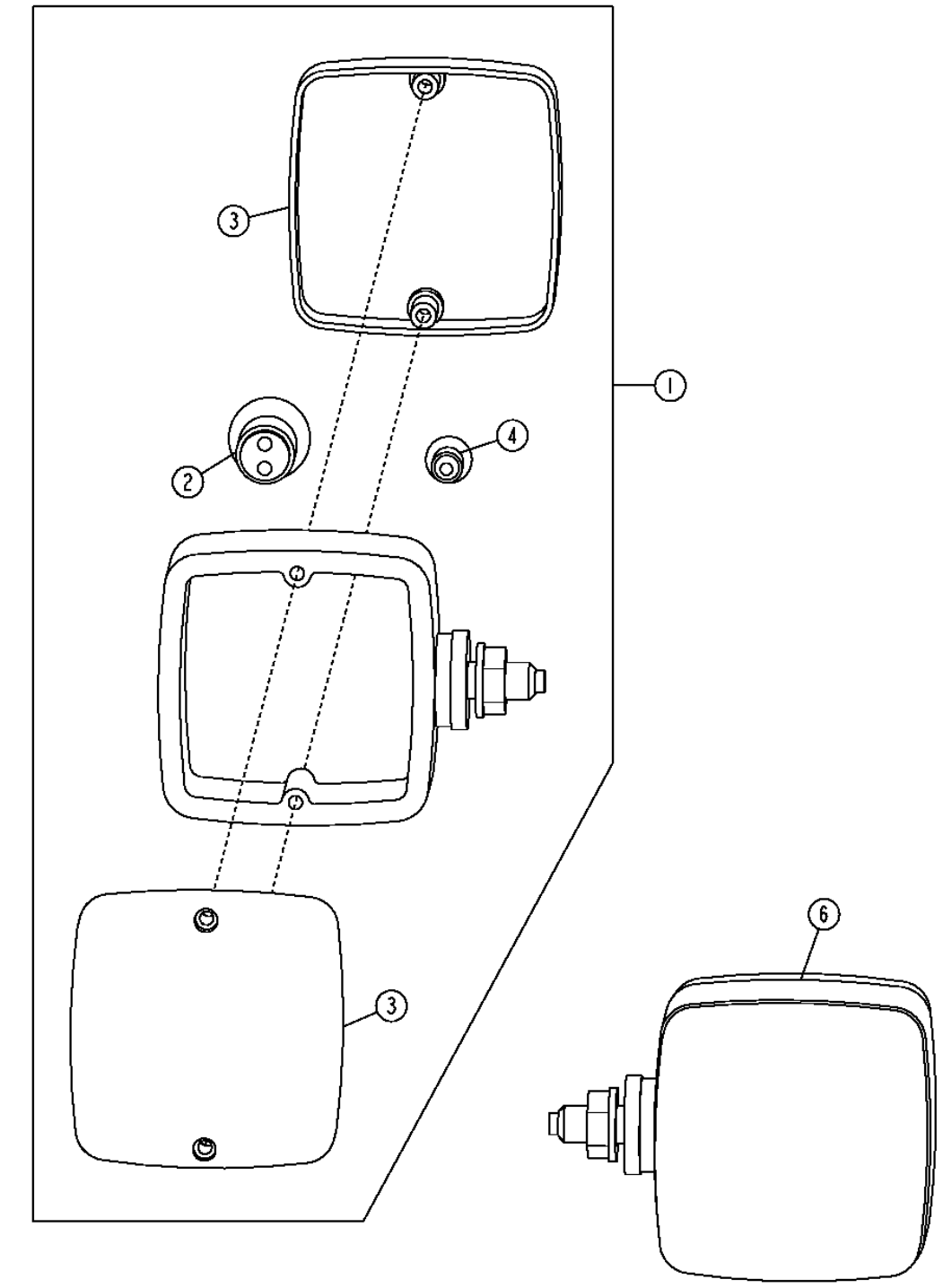

FRONT SIGNAL LIGHTS

KEY	PART NO.	PART NAME	QTY	SERIAL NO.	770D	772D	REMARKS
1	AT206878	LAMP	2		X	X	(STANDARD)
2	AT210333	BULB	2		X	X	
3	T176372	LENS	4		X	X	
4	U44537	BULB	4		X	X	
6	AT307090	LAMP	2		X	X	(LED)

TAIL LIGHTS

T202186 -UN-12DEC04

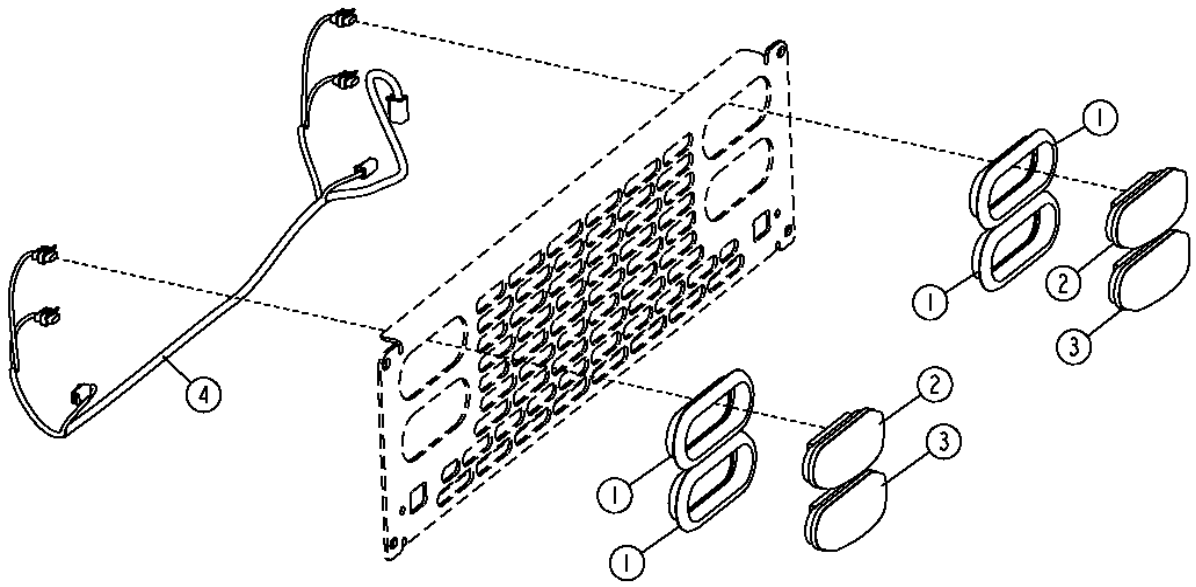

T202186

TAIL LIGHTS

KEY	PART NO.	PART NAME	QTY	SERIAL NO.	770D	772D	REMARKS
1	T178948	RETAINER	4		X	X	
2	T180074	TURN SIGNAL LAMP	2		X	X	(AMBER LED)
	T178947	TURN SIGNAL LAMP	2		X	X	(AMBER STANDARD)
3	T180075	TAIL LAMP	2		X	X	(RED LED)
	T178946	TAIL LAMP	2		X	X	(RED STANDARD)
4	AT305935	WIRING HARNESS	1		X	X	(USE WITH LED LIGHTS)
	AT305934	WIRING HARNESS	1		X	X	(USE WITH STANDARD LIGHTS)

BEACON LIGHT BRACKET

T210192 -UN-14APR05

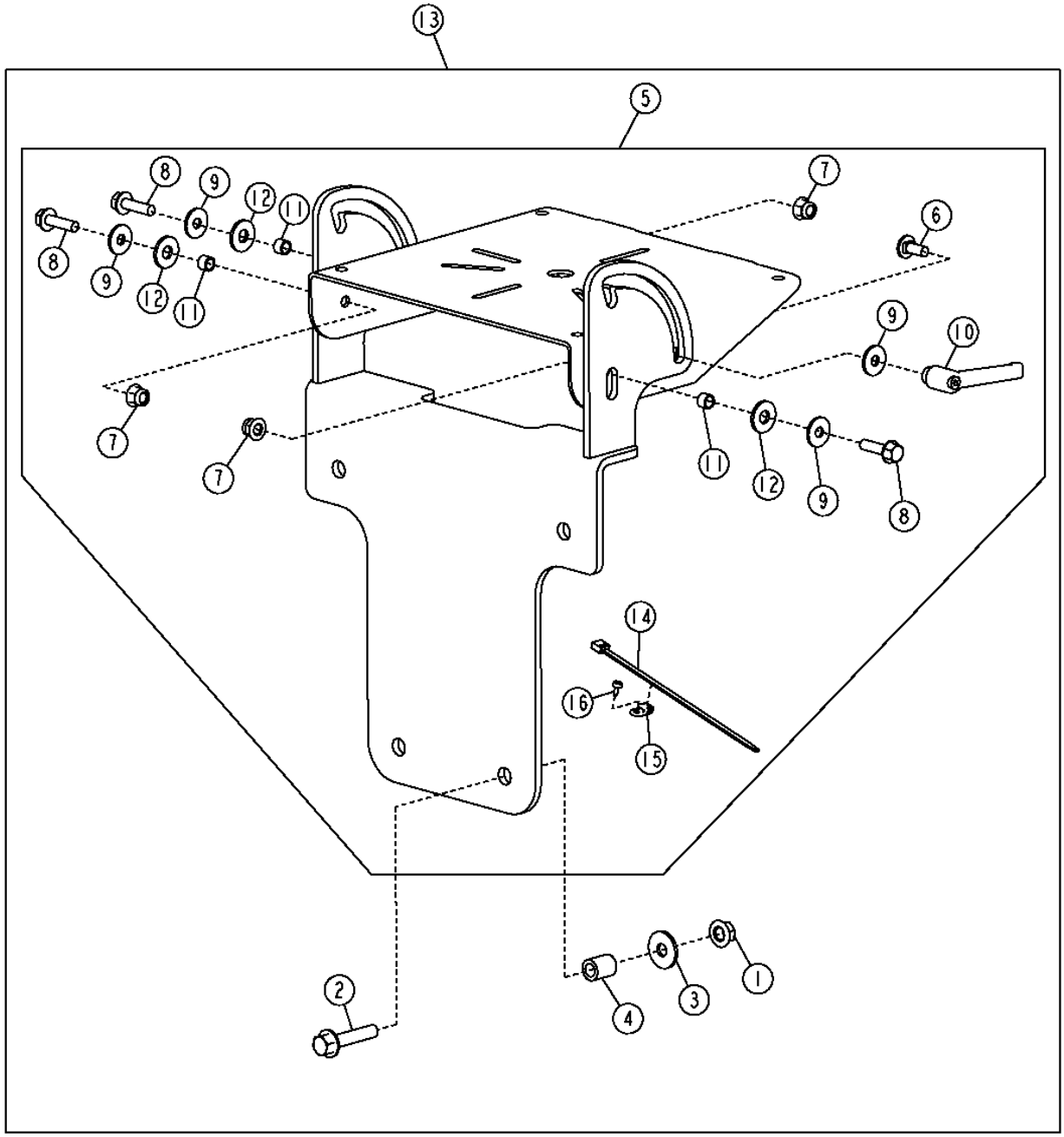

T210192

BEACON LIGHT BRACKET

KEY	PART NO.	PART NAME	QTY	SERIAL NO.	770D	772D	REMARKS
1	14M7296	FLANGE NUT	3		X	X	M10
2	19M7806	SCREW	3		X	X	M10 X 50
3	24M7296	WASHER	3		X	X	
4	H140461	BUSHING	4		X	X	
5	AT304295	BRACKET	1		X	X	
6	03M7184	BOLT	1		X	X	M8 X 20
7	14M7396	LOCK NUT	3		X	X	M8
8	19M7868	SCREW	3		X	X	M8 X 30
9	24M7298	WASHER	4		X	X	
10	AT227063	LEVER	1		X	X	
11	T131169	WASHER	3		X	X	
12	R52921	WASHER	3		X	X	
13	**AT318620**	**KIT**	**1**		**X**	**X**	**(WHOLEGOODS) (BEACON BRACKET KIT)**
14	R44302	TIE BAND	3		X	X	
15	T187394	ANCHOR	3		X	X	
16	T185769	SCREW	3		X	X	

CAB WORK AND DRIVE LIGHTS

T209115 -UN-04MAR05

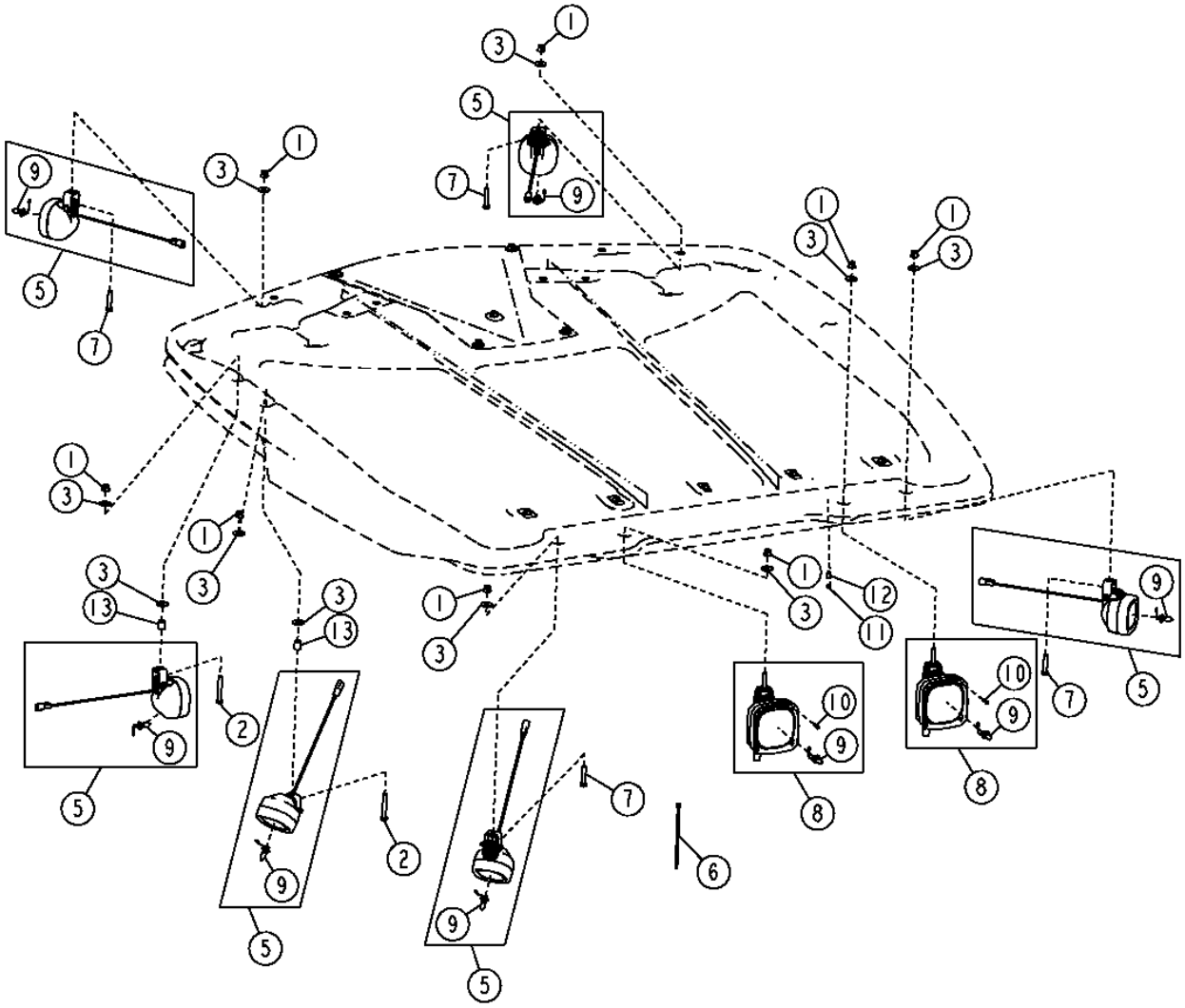

T209115

CAB WORK AND DRIVE LIGHTS

KEY	PART NO.	PART NAME	QTY	SERIAL NO.	770D	772D	REMARKS
1	14M7400	LOCK NUT	8		X	X	M10
2	19M7875	CAP SCREW	2		X	X	M10 X 70
3	24M7296	WASHER	10		X	X	
5	AT305931	FLOODLAMP	6		X	X	
6	R44302	TIE BAND	16		X	X	
7	19M8637	CAP SCREW	4		X	X	M10 X 40
8	AT306335	FLOODLAMP	2		X	X	
9	AT135758	BULB	1		X	X	
10	T80394	SCREW	4		X	X	
11	T185769	SCREW	10		X	X	
12	T187394	ANCHOR	10		X	X	
13	H140461	BUSHING	2				

FRONT DRIVING LIGHTS

T203343 -UN-28OCT04

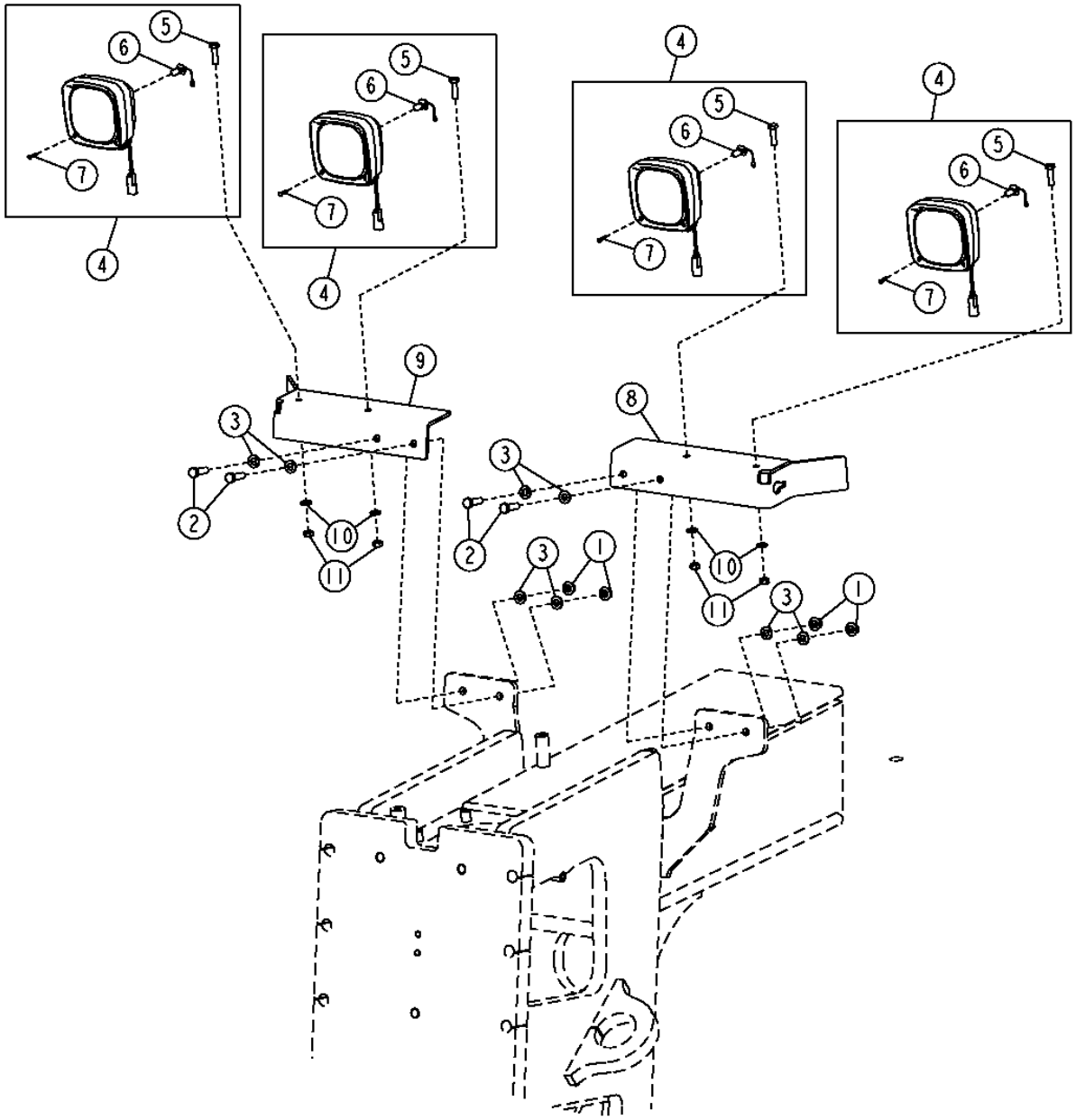

FRONT DRIVING LIGHTS

KEY	PART NO.	PART NAME	QTY	SERIAL NO.	770D	772D	REMARKS
1	14M7275	NUT	4		X	X	M12
2	19M7403	CAP SCREW	4		X	X	M12 X 35
3	24M7240	WASHER	8		X	X	
4	AT305932	FLOODLAMP	4		X	X	
5	19M7550	CAP SCREW	1		X	X	M10 X 35
6	AT135758	BULB	1		X	X	
7	T80394	SCREW	4		X	X	
8	AT315249	BRACKET	1		X	X	
9	AT315250	BRACKET	1		X	X	
10	24M7239	WASHER	4		X	X	
11	14M7274	NUT	4		X	X	M10

REAR, MID-FRAME, AND UNDER CAB WORK LIGHTS

T203344 -UN-20OCT04

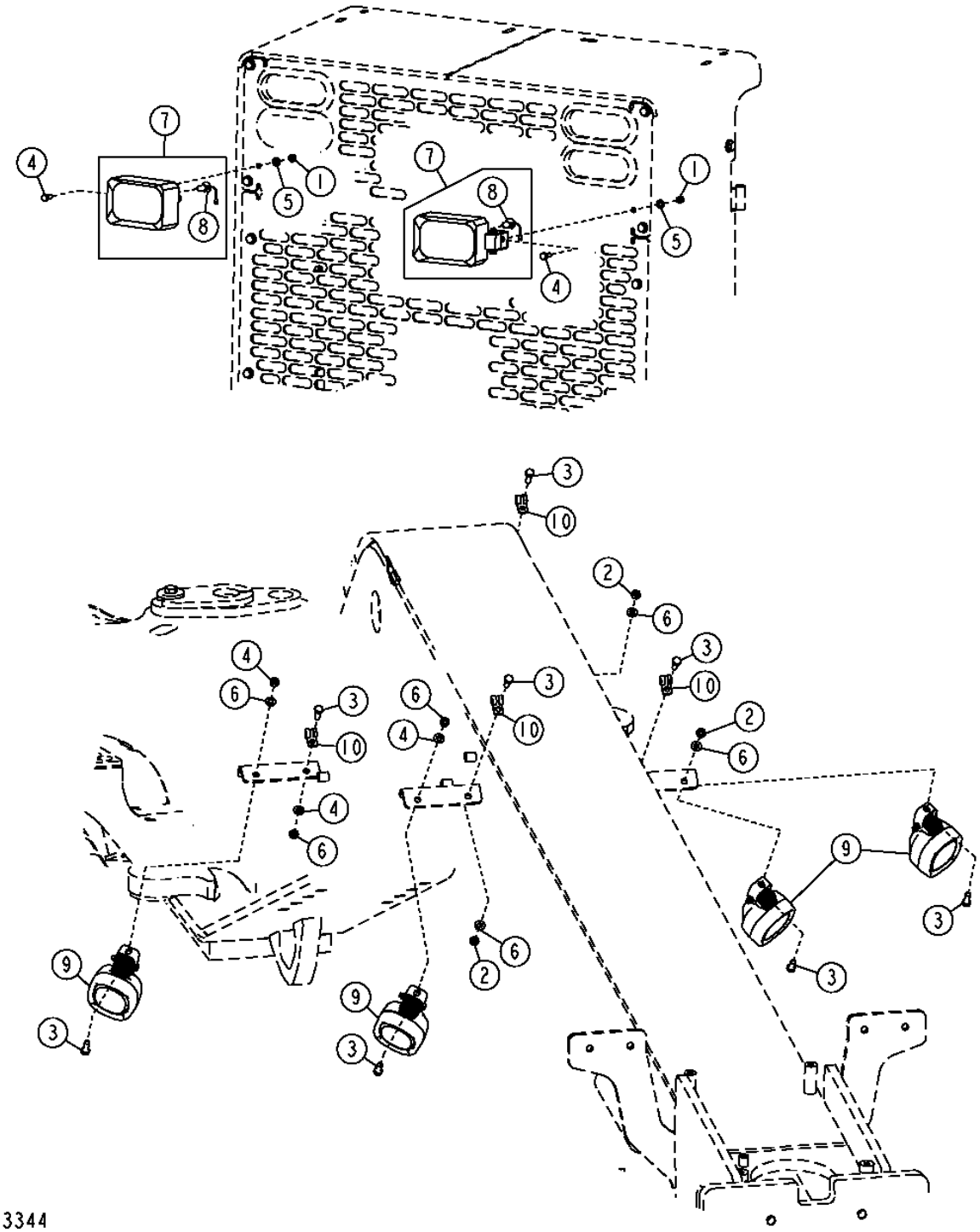

REAR, MID-FRAME, AND UNDER CAB WORK LIGHTS

KEY	PART NO.	PART NAME	QTY	SERIAL NO.	770D	772D	REMARKS
1	14M7166	LOCK NUT	2		X	X	M8
2	14M7274	NUT	8		X	X	M10
3	19M7402	CAP SCREW	8		X	X	M10 X 25
4	19M7881	SCREW	2		X	X	M8 X 20
5	24M7238	WASHER	2		X	X	
6	24M7239	WASHER	8		X	X	
7	AT305926	FLOODLAMP	2		X	X	
8	AT135758	BULB	1		X	X	(USE FOR FRONT AND REAR WORK LIGHT)
9	AT305931	FLOODLAMP	4		X	X	
10	T75276	CLAMP	4		X	X	

MAIN WIRING HARNESS (FRONT)

T208809 -UN-25FEB05

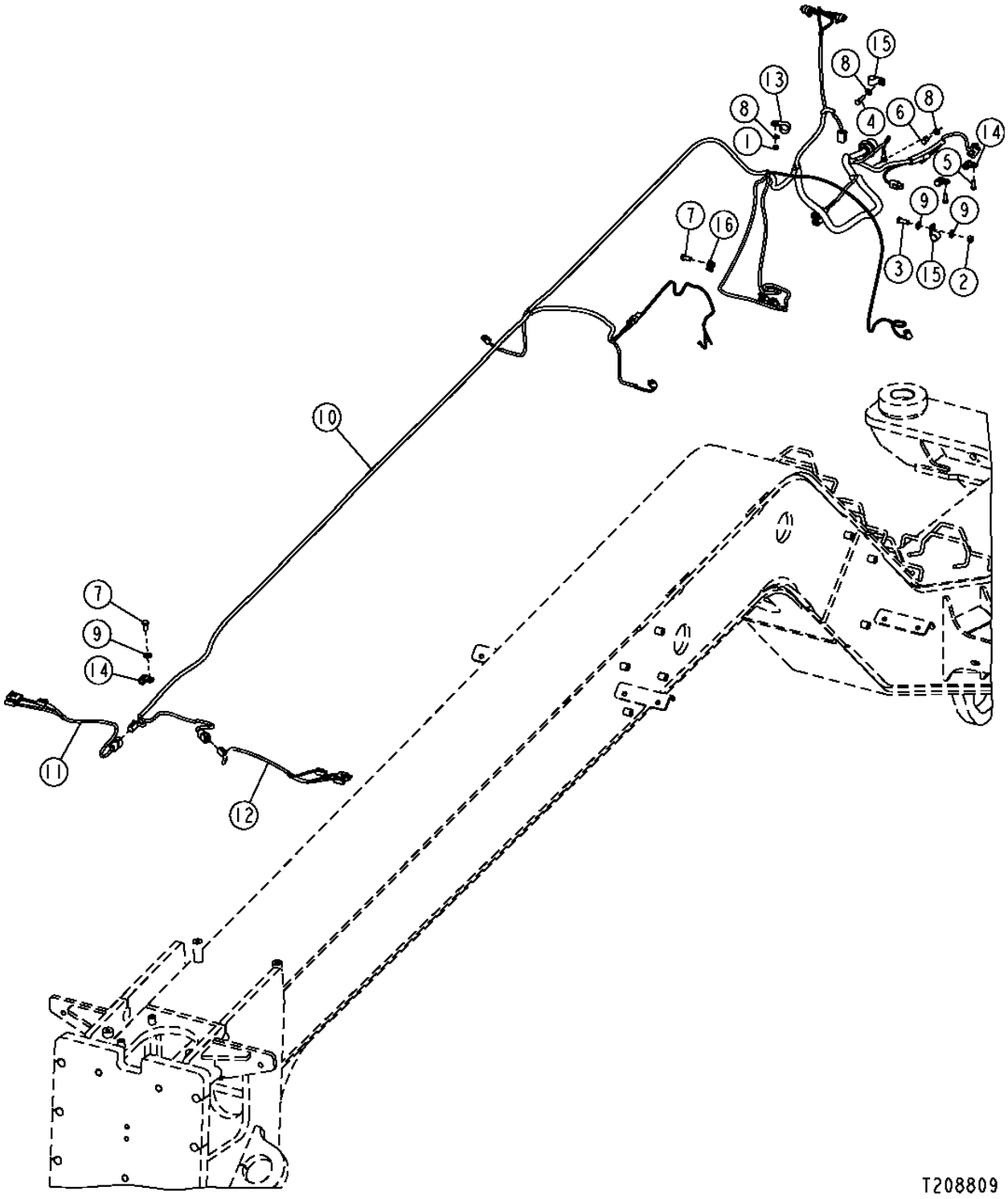

MAIN WIRING HARNESS (FRONT)

KEY	PART NO.	PART NAME	QTY	SERIAL NO.	770D	772D	REMARKS
1	14M7298	FLANGE NUT	1		X	X	M8
2	14M7274	NUT	1		X	X	M10
3	19M7402	CAP SCREW	1		X	X	M10 X 25
4	19M7513	CAP SCREW	1		X	X	M8 X 30
5	19M7513	CAP SCREW	1		X	X	M8 X 30
6	19M7932	CAP SCREW	1		X	X	M8 X 16
7	19M7938	CAP SCREW	2		X	X	M10 X 20
8	24M7238	WASHER	3		X	X	
9	24M7239	WASHER	3		X	X	
10	AT305927	WIRING HARNESS	1		X	X	(FRONT PLATFORM)
11	AT307807	WIRING HARNESS	1		X	X	(RIGHT FRONT DRIVE/TURN)
12	AT307807	WIRING HARNESS	1		X	X	(LEFT FRONT DRIVE/TURN)
13	T102934	CLAMP	1		X	X	
14	T74412	CLAMP	3		X	X	
15	T74416	CLAMP	1		X	X	
	T78787	CLAMP	1	597629-	X	X	
16	T75276	CLAMP	1		X	X	

MAIN WIRING HARNESS (REAR)

T208810 -UN-25FEB05

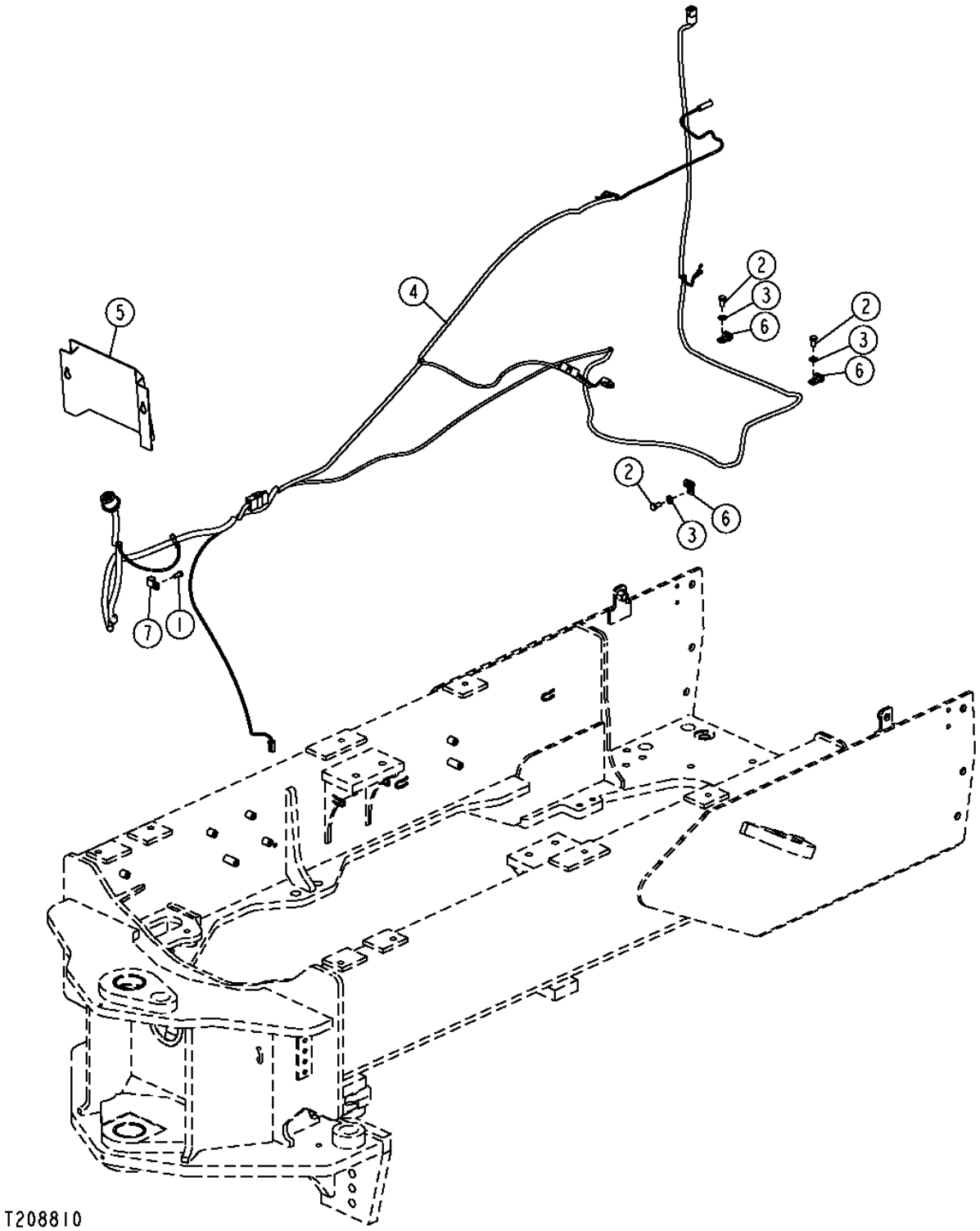

MAIN WIRING HARNESS (REAR)

KEY	PART NO.	PART NAME	QTY	SERIAL NO.	770D	772D	REMARKS
1	19M7881	SCREW	1		X	X	M8 X 20
2	19M7938	CAP SCREW	3		X	X	M10 X 20
3	24M7239	WASHER	3		X	X	
4	AT305936	WIRING HARNESS	1		X	X	(REAR PLATFORM HARNESS)
5	T209889	COVER	3		X	X	
6	T74412	CLAMP	3		X	X	
7	T74416	CLAMP	3		X	X	

ENGINE WIRING HARNESS

T203941 -UN-29DEC04

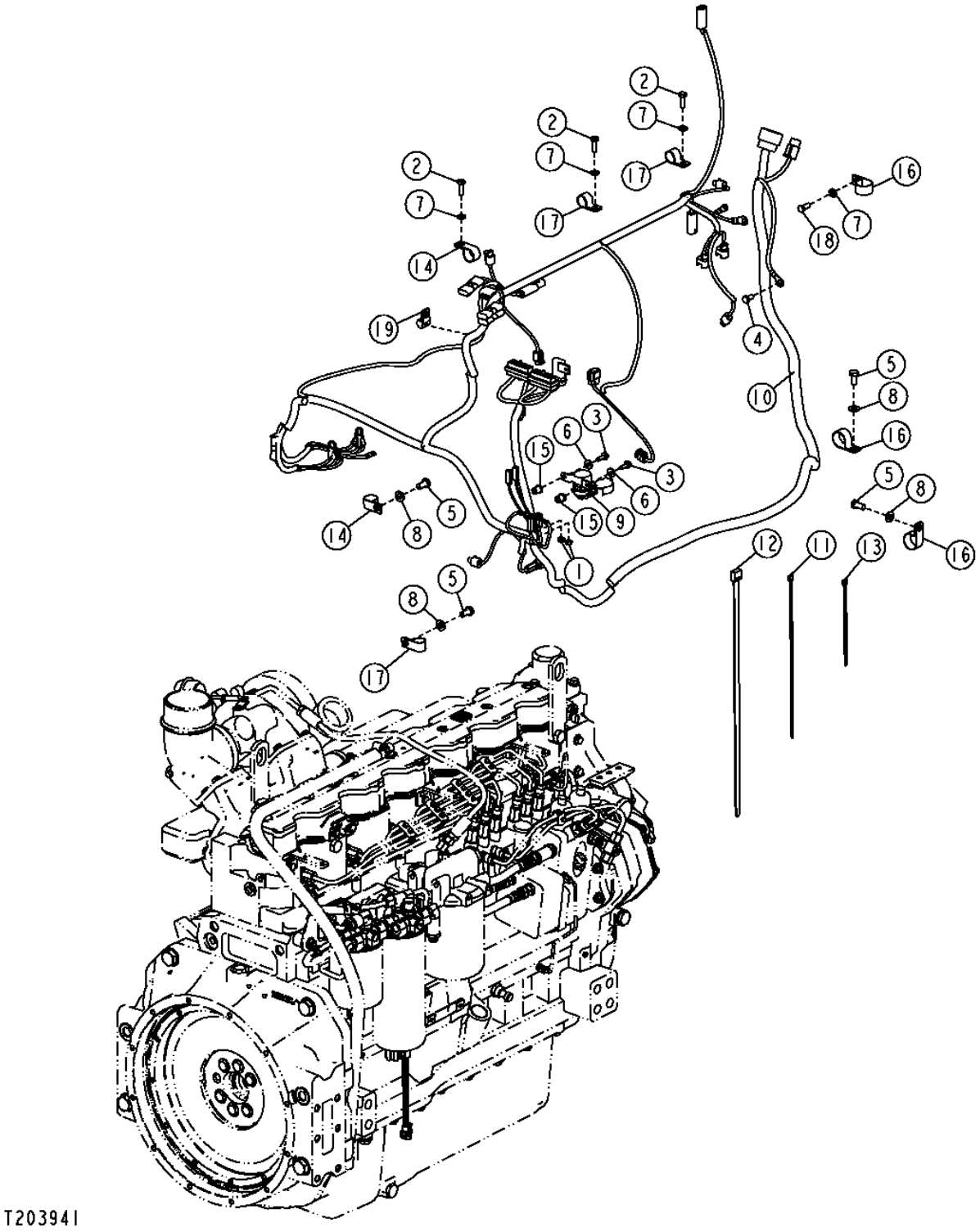

ENGINE WIRING HARNESS

KEY	PART NO.	PART NAME	QTY	SERIAL NO.	770D	772D	REMARKS
1	14M7303	FLANGE NUT	2		X	X	M6
2	19M7407	CAP SCREW	3		X	X	M8 X 25
3	19M7862	SCREW	2		X	X	M6 X 20
4	19M7932	CAP SCREW	1		X	X	M8 X 16
5	19M7938	CAP SCREW	4		X	X	M10 X 20
6	24M7139	WASHER	2		X	X	
7	24M7238	WASHER	4		X	X	
8	24M7239	WASHER	4		X	X	
9	AT145341	RELAY	1		X	X	
10	AT306366	WIRING HARNESS	1		X	X	(ENGINE WIRING HARNESS)
11	H77698	TIE BAND	4		X	X	
12	N189220	TIE BAND	4		X	X	(NOT ILLUSTRATED)
13	R44302	TIE BAND	5		X	X	(NOT ILLUSTRATED)
14	T102934	CLAMP	2		X	X	
15	T160333	NUT	2		X	X	
16	T162675	CLAMP	3		X	X	
17	T78787	CLAMP	3		X	X	
18	19M7513	CAP SCREW	1		X	X	M8 X 30
19	T74410	CLAMP	1		X	X	

CAB INTERIOR WIRING HARNESS

T213494 -UN-25AUG05

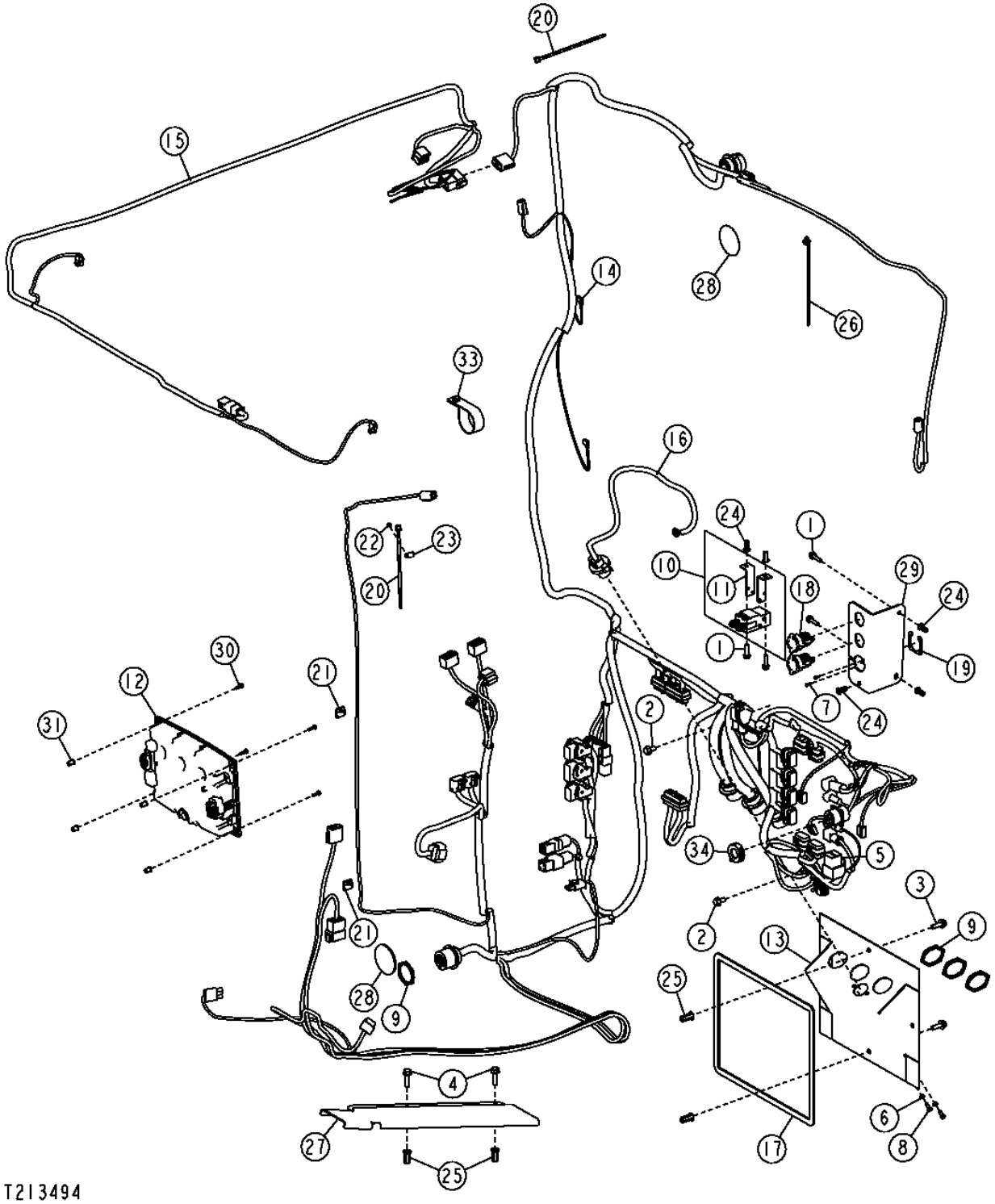

CAB INTERIOR WIRING HARNESS

KEY	PART NO.	PART NAME	QTY	SERIAL NO.	770D	772D	REMARKS
1	19M7863	SCREW	4		X	X	M6 X 25
2	19M7865	SCREW	2		X	X	M8 X 16
3	19M7867	SCREW	4		X	X	M8 X 25
4	19M7868	SCREW	2		X	X	M8 X 30
5	19M9224	CAP SCREW	1		X	X	M4 X 14, (SUB FOR 21M7250)
6	24M7087	WASHER	7		X	X	
7	37M7095	SCREW	2		X	X	
8	37M7218	SCREW	2		X	X	
9	57M8035	NUT	4		X	X	
10	AT317063	RELAY	1		X	X	(IGNITION-100 AMP)
11	T200363	BRACKET	2		X	X	
12	AT302638	MONITOR	1		X	X	(CMU)
13	AT304953	BRACKET	1		X	X	
14	AT305385	CAB WIRING HARNESS	1		X		(INTERIOR HARNESS)
	AT305386	CAB WIRING HARNESS	1			X	(INTERIOR HARNESS HFWD)
15	AT306180	RADIO SPEAKER WRG HARNESS	1		X	X	
16	AT307810	CAB WIRING HARNESS	1		X	X	(CAB POWER HARNESS)
17	.....	ISOLATOR	1		X	X	(MAKE FROM T63019 BULK MATERIAL, CUT TO LENGTH)
18	GY20126	SOCKET OUTLET	2		X	X	(12 VOLT)
19	L155075	PLATE	1		X	X	
20	R44302	TIE BAND	10		X	X	
	H77698	TIE BAND	7		X	X	
21	T182909	CLIP	2		X	X	
22	T185769	SCREW	1		X	X	
23	T187394	ANCHOR	1		X	X	
24	T196077	NUT	5		X	X	
25	T196079	NUT	6		X	X	
26	T205819	TIE BAND	5		X	X	
27	T205829	COVER	1		X	X	
28	T206106	LABEL	3		X	X	
29	T210672	BRACKET	1		X	X	
30	T82791	SCREW	4		X	X	
31	T82792	NUT	4		X	X	
32	T186793	LABEL	1				(T186973 NOT ILLISTRATED)
33	N198631	CLAMP	1			X	(6-WD HARNESS)
34	57M7477	ELECTRICAL CONNECTOR ASSY	1		X	X	(COVER FOR SERVICE EXPERT CONNECTOR)

CAB ROOF WIRING HARNESS

T201539 -UN-30JUL04

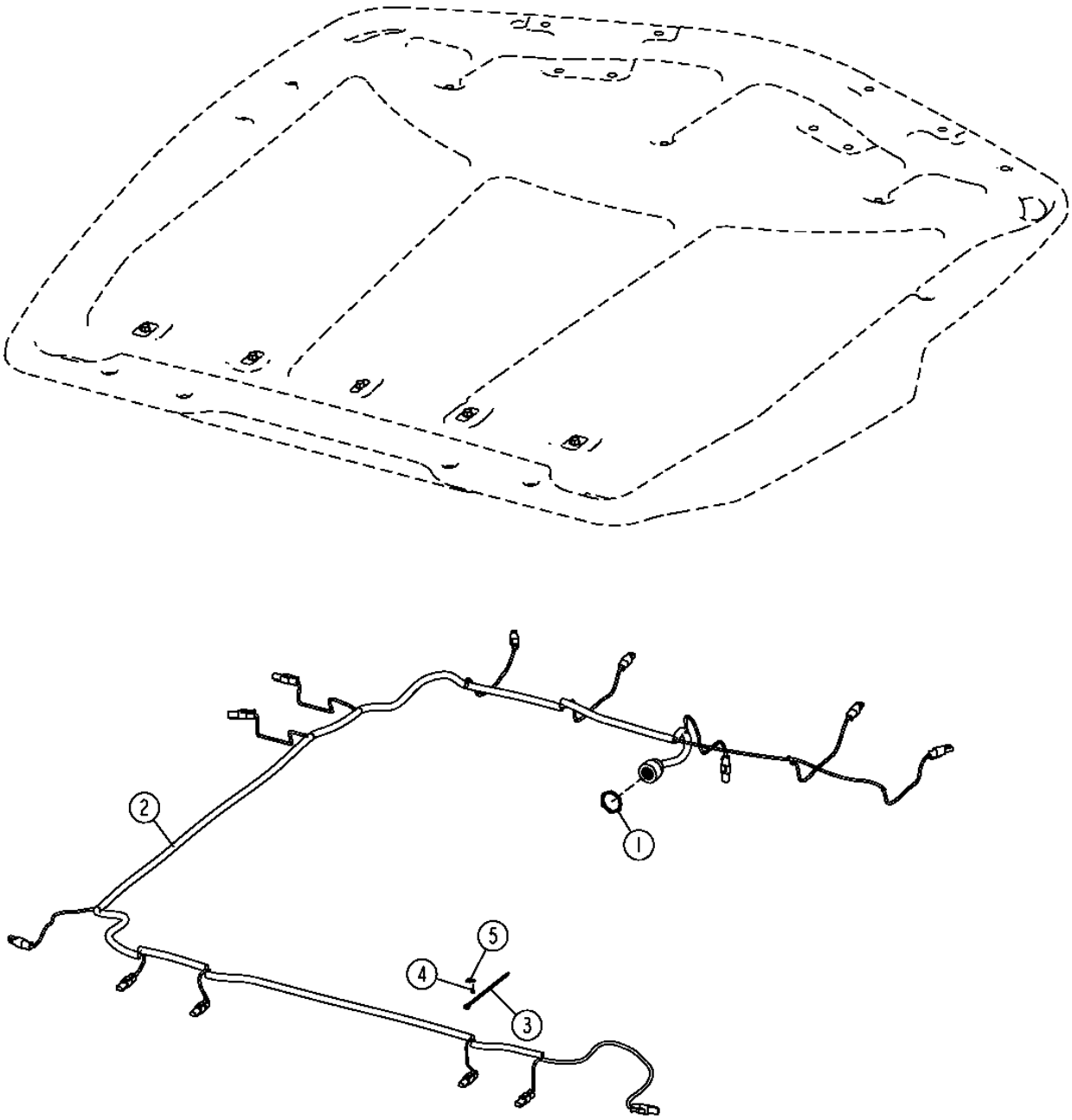

T201539

CAB ROOF WIRING HARNESS

KEY	PART NO.	PART NAME	QTY	SERIAL NO.	770D	772D	REMARKS
1	57M8035	NUT	1		X	X	
2	AT305387	CAB WIRING HARNESS	1		X	X	(CAB ROOF HARNESS)
3	R44302	TIE BAND	22		X	X	
4	T185769	SCREW	22		X	X	
5	T187394	ANCHOR	22		X	X	

TRANSMISSION WIRING HARNESS

T210302 -UN-15APR05

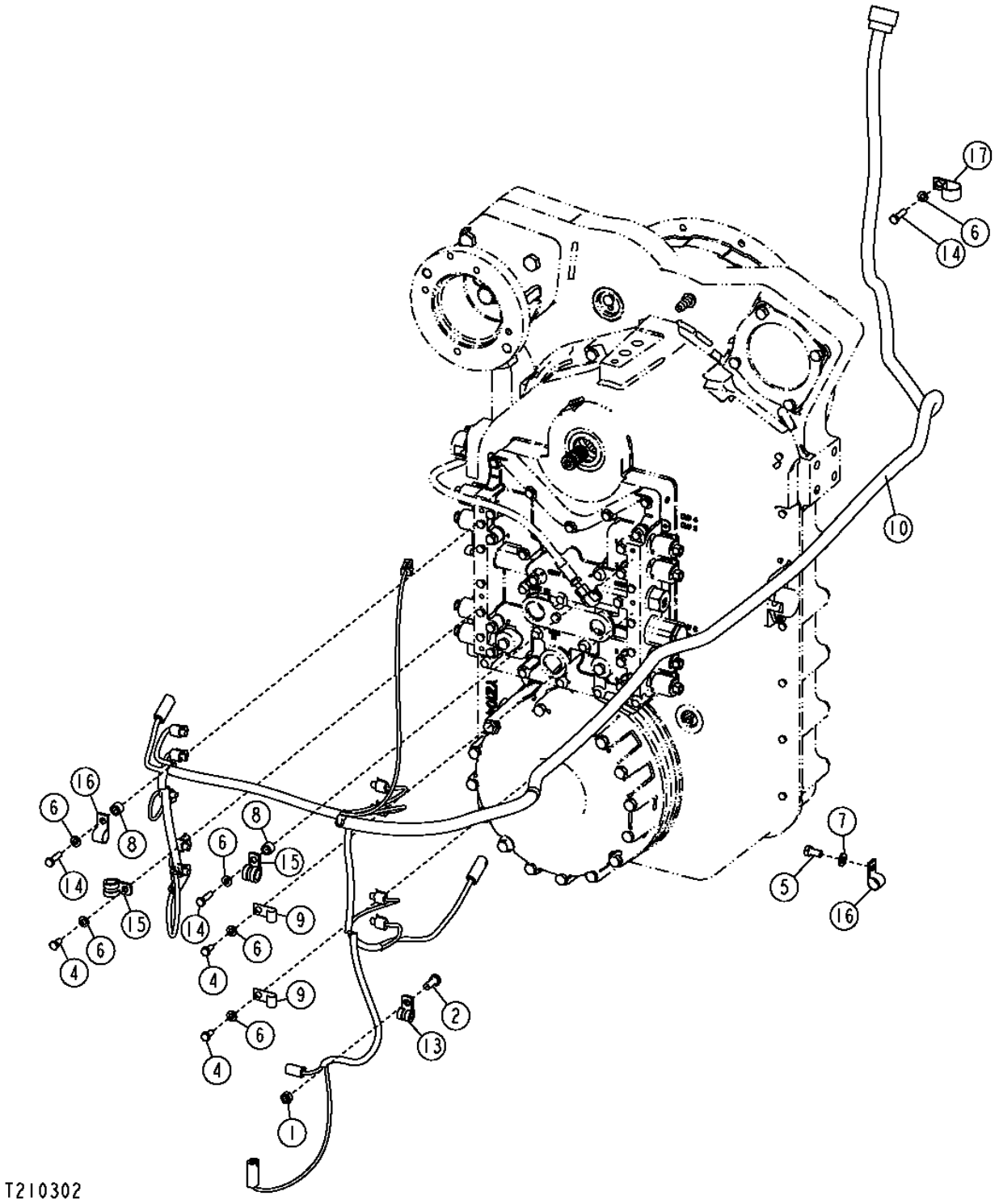

TRANSMISSION WIRING HARNESS

KEY	PART NO.	PART NAME	QTY	SERIAL NO.	770D	772D	REMARKS
1	14M7274	NUT	1		X	X	M10
2	19M7402	CAP SCREW	1		X	X	M10 X 25
3	19M7513	CAP SCREW	3		X	X	M8 X 30
4	19M7932	CAP SCREW	3		X	X	M8 X 16
5	19M7938	CAP SCREW	1		X	X	M10 X 20
6	24M7238	WASHER	6		X	X	
7	24M7239	WASHER	1		X	X	
8	28H3385	BUSHING	2		X	X	
9	AH89557	CLIP	2		X	X	
10	AT305928	WIRING HARNESS	1		X	X	(TRANSMISSION WIRING HARNESS)
11	H77698	TIE BAND	10		X	X	(NOT ILLUSTRATED)
12	T102934	CLAMP	2		X	X	
13	T74412	CLAMP	1		X	X	
14	19M7513	CAP SCREW	1		X	X	M8 X 30
15	T76252	CLAMP	2		X	X	
16	T74416	CLAMP	2		X	X	
17	T120536	CLAMP	1		X	X	

HFWD WIRING HARNESS

T201551 -UN-10NOV04

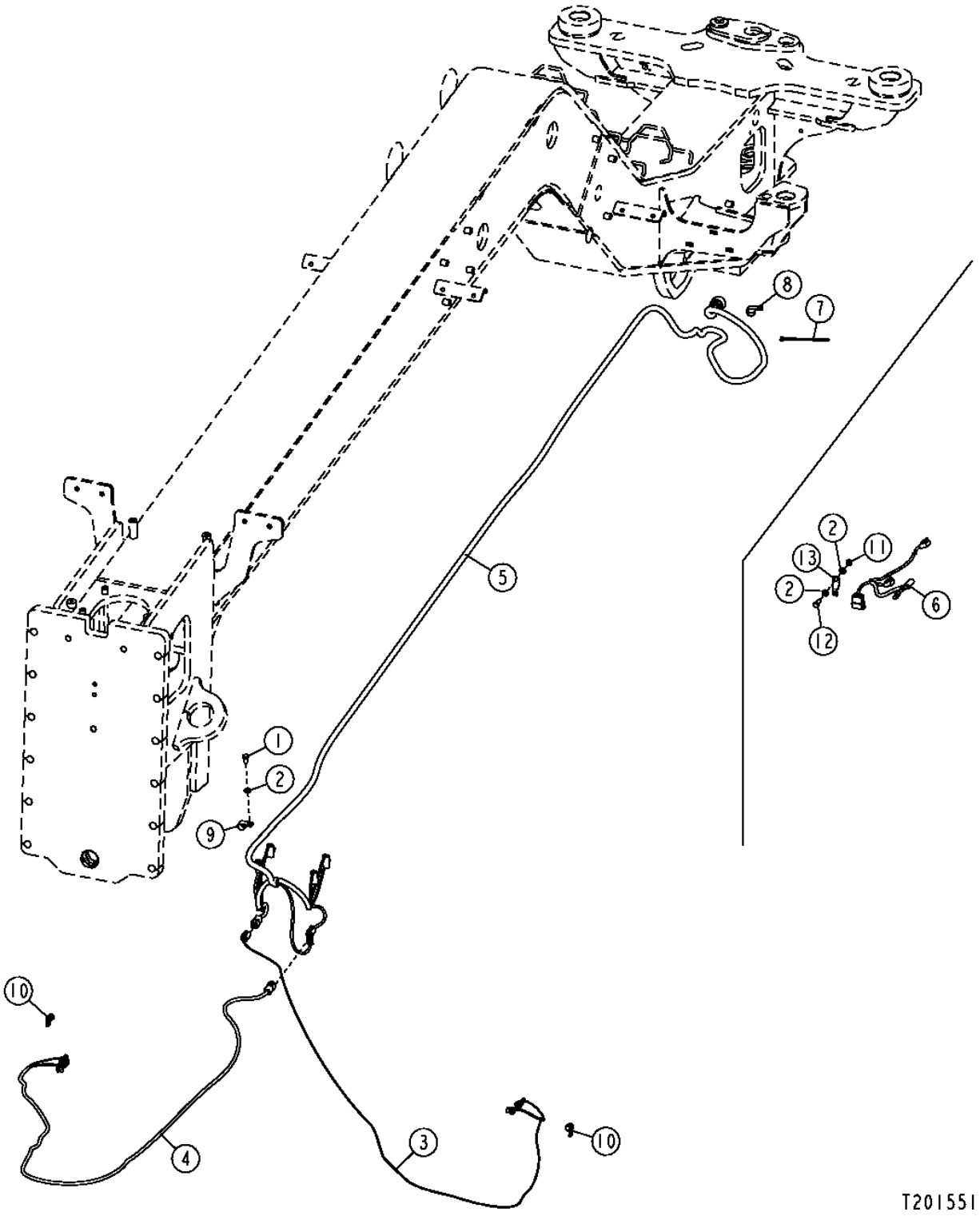

HFWD WIRING HARNESS

KEY	PART NO.	PART NAME	QTY	SERIAL NO.	770D	772D	REMARKS
1	19M7938	CAP SCREW	1		X		M10 X 20
2	24M7239	WASHER	3		X		
3	AT280296	WIRING HARNESS	1		X		(LEFT WHEEL SPEED SENSOR)
4	AT280297	WIRING HARNESS	1		X		(RIGHT WHEEL SPEED SENSOR)
5	AT305929	WIRING HARNESS	1		X		(HFWD FRONT)
6	AT305930	WIRING HARNESS	1		X		(HFWD REAR)
7	R44302	TIE BAND	16		X		(NOT ILLUSTRATED)
8	T102934	CLAMP	1		X		
9	T78787	CLAMP	1		X		
10	T75276	CLAMP	2		X		
11	14M7274	NUT	1		X		M10
12	19M7402	CAP SCREW	1		X		M10 X 25
13	57M8736	ELEC. CONNECTOR ACCESSORY	1		X		

HFWD CONTROL UNIT AND SWITCHES

T201552 -UN-28JUL04

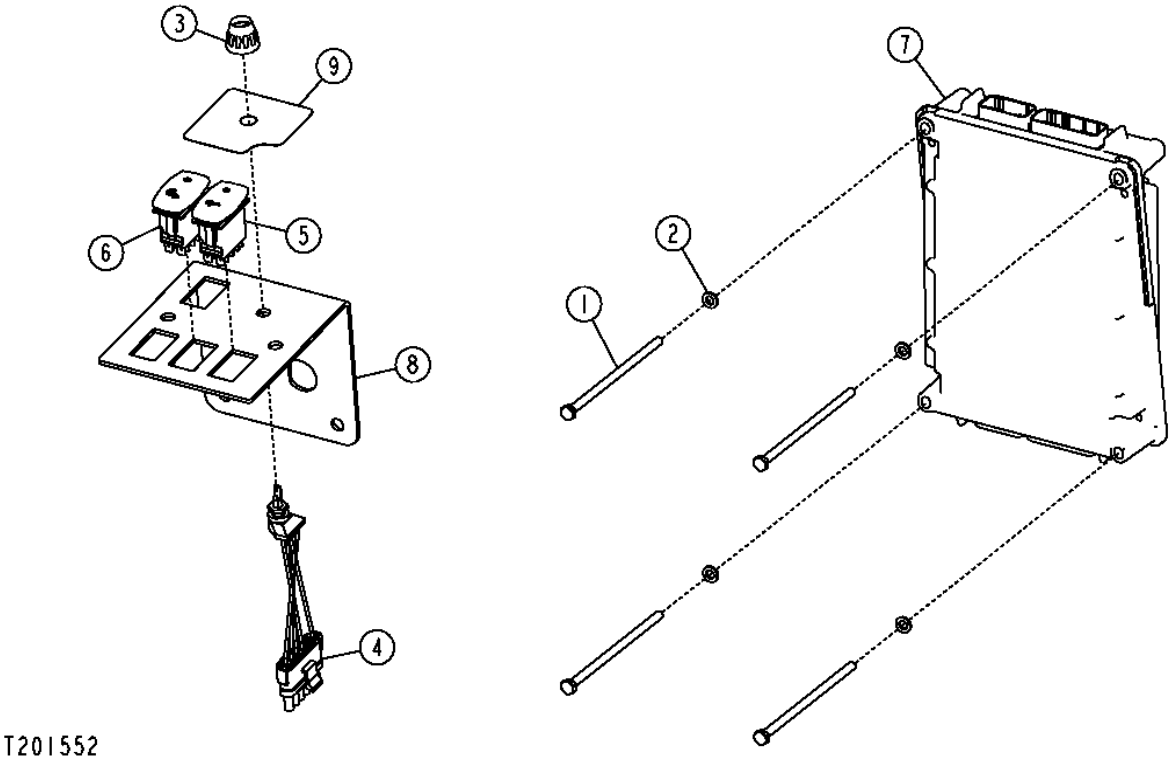

HFWD CONTROL UNIT AND SWITCHES

KEY	PART NO.	PART NAME	QTY	SERIAL NO.	770D	772D	REMARKS
1	19M8827	SCREW	4		X		M6 X 130
2	24M7347	WASHER	4		X		
3	AL58295	KNOB	1		X		
4	AT303859	ROTARY SWITCH	1		X		(HFWD AGRESSIVENESS)
5	AT304023	SWITCH	1		X		(HFWD ON/OFF)
6	AT304024	SWITCH	1		X		(HFWD INCHING MODE)
7	AT314667	ELECTRONIC CONTROL UNIT	1		X		(HFWD CONTROLLER)
8	T203912	INSTRUMENT PANEL	1		X		(HFWD CONTROLS)
9	T203987	LABEL	1		X		(HFWD AGRESSIVENESS DIAL)

ARTICULATION SENSOR AND LINKAGE

T206900 -UN-28JAN05

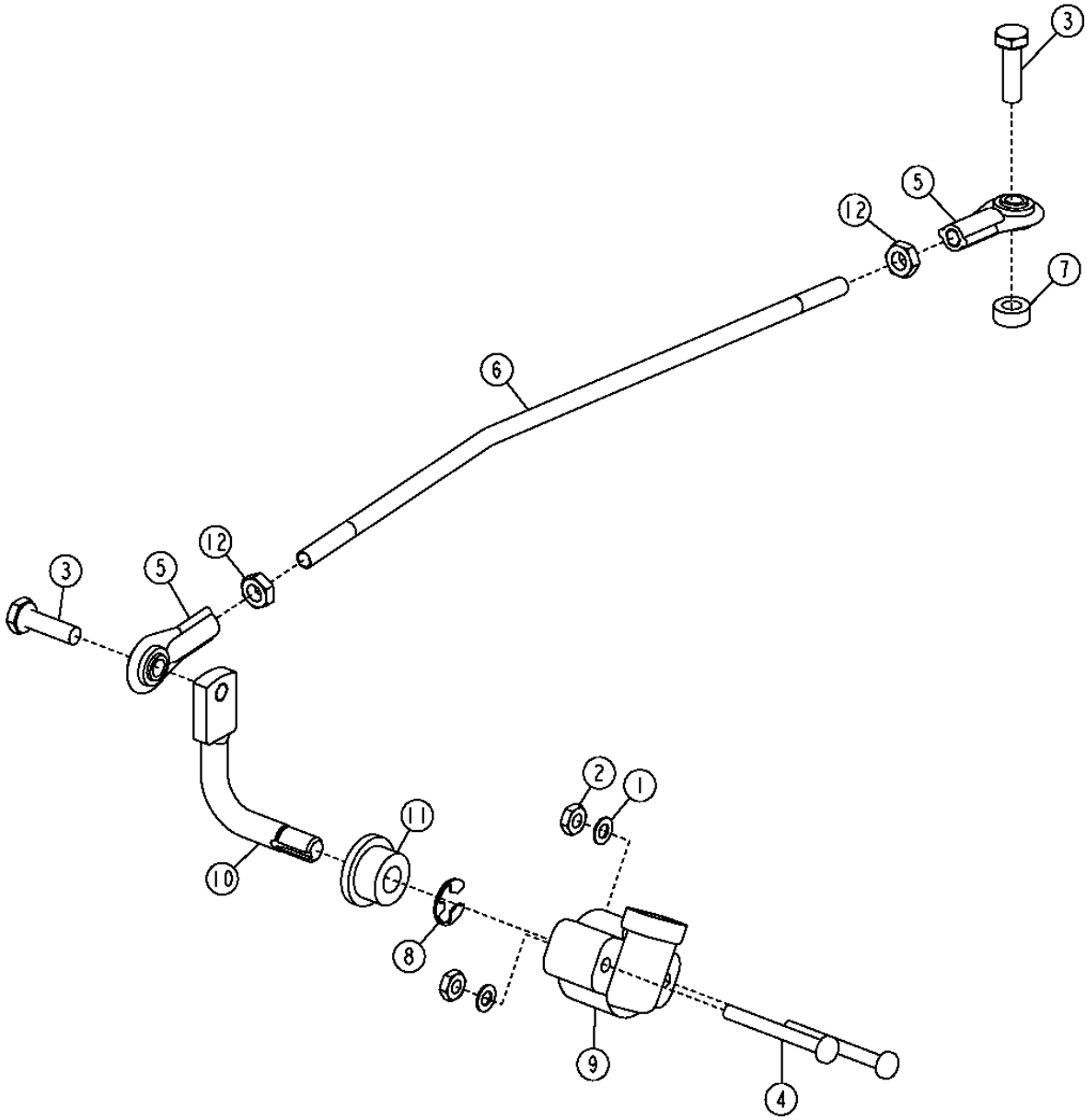

T206900

ARTICULATION SENSOR AND LINKAGE

KEY	PART NO.	PART NAME	QTY	SERIAL NO.	770D	772D	REMARKS
1	12M7060	WASHER	2		X		
2	14H778	NUT	2		X		
3	19H2036	CAP SCREW	2		X		
4	21H1401	SCREW	2		X		
5	RE56489	LINK END	2		X		(SUB FOR RE39224)
6	T203646	LEVER	1		X		
7	M82772	WASHER	1		X		
8	R72655	SNAP RING	1		X		
9	RE56165	POTENTIOMETER	1		X		
10	T215784	ARM	1		X		
11	T82861	BUSHING	1		X		
12	14H649	NUT	2		X		6.350 MM

VEHICLE ELECTRICAL CENTER (VEC)

T201875 -UN-30JUL04

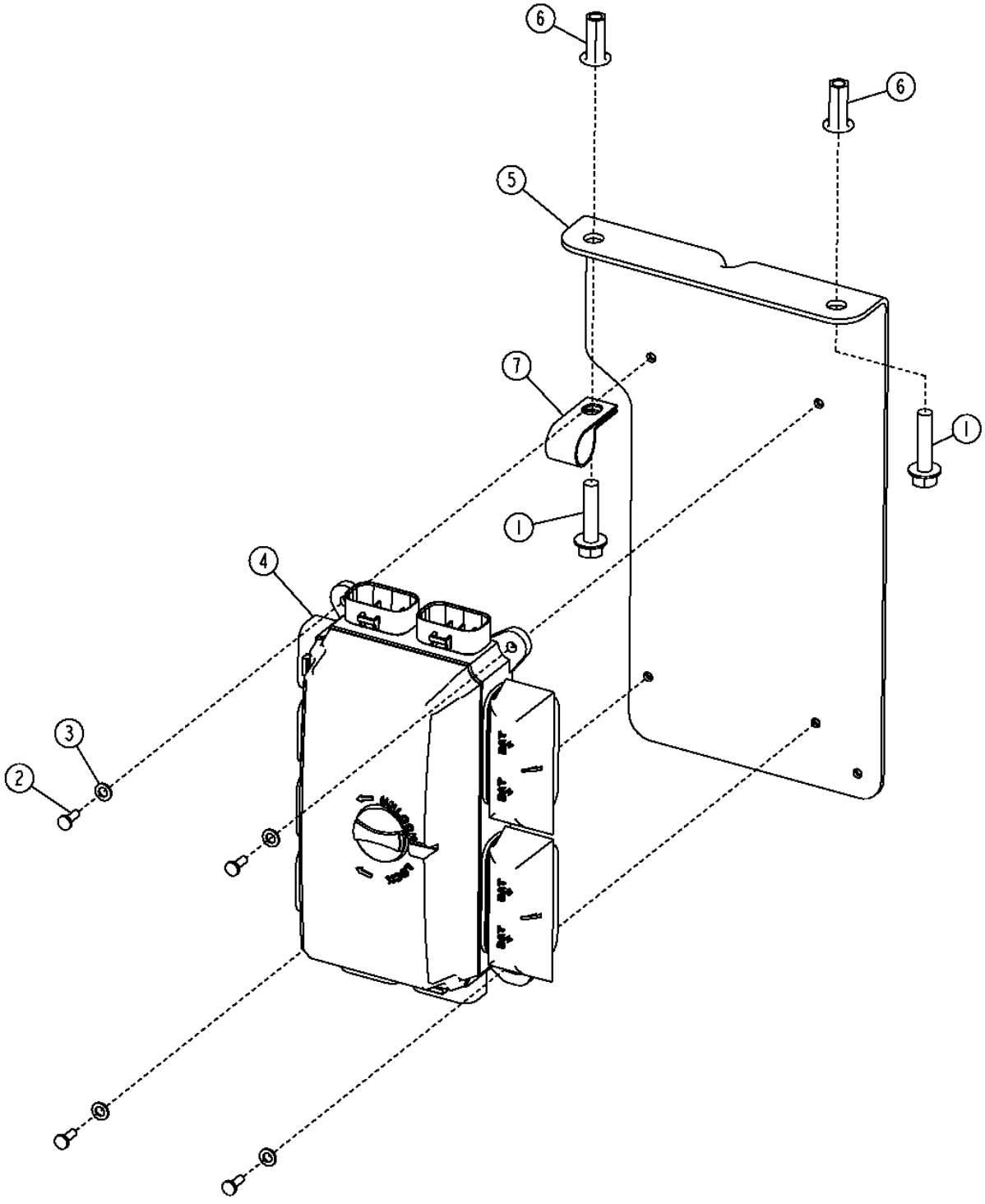

VEHICLE ELECTRICAL CENTER (VEC)

KEY	PART NO.	PART NAME	QTY	SERIAL NO.	770D	772D	REMARKS
1	19M7897	SCREW	2		X	X	M8 X 35
2	19M9224	CAP SCREW	4		X	X	M4 X 14, (SUB FOR 21M7250)
3	24M7087	WASHER	4		X	X	
4	AT304788	VEHICLE CONTROLLER	1		X	X	(VEC)(INCLUDES ALL FUSES, DIODES, AND RELAYS)
5	AT308628	BRACKET	1		X	X	(VEC MOUNTING)
6	T196079	NUT	2		X	X	
7	T120536	CLAMP	1		X	X	
8	57M7688	FUSE	10		X	X	5 AMP, (NOT ILLUSTRATED)
9	57M7690	FUSE	3		X	X	15 AMP, (NOT ILLUSTRATED)
10	AT305389	RELAY	5		X	X	(NOT ILLUSTRATED)
11	57M7691	FUSE	1		X	X	20 AMP, (NOT ILLUSTRATED)
12	57M7689	FUSE	15		X	X	10 AMP, (NOT ILLUSTRATED)
13	57M8623	FUSE	1		X	X	25 AMP, (NOT ILLUSTRATED)
14	57M8641	DIODE	5		X	X	(NOT ILLUSTRATED)

SEALED SWITCH MODULE (SSM)

T202038 -UN-13AUG04

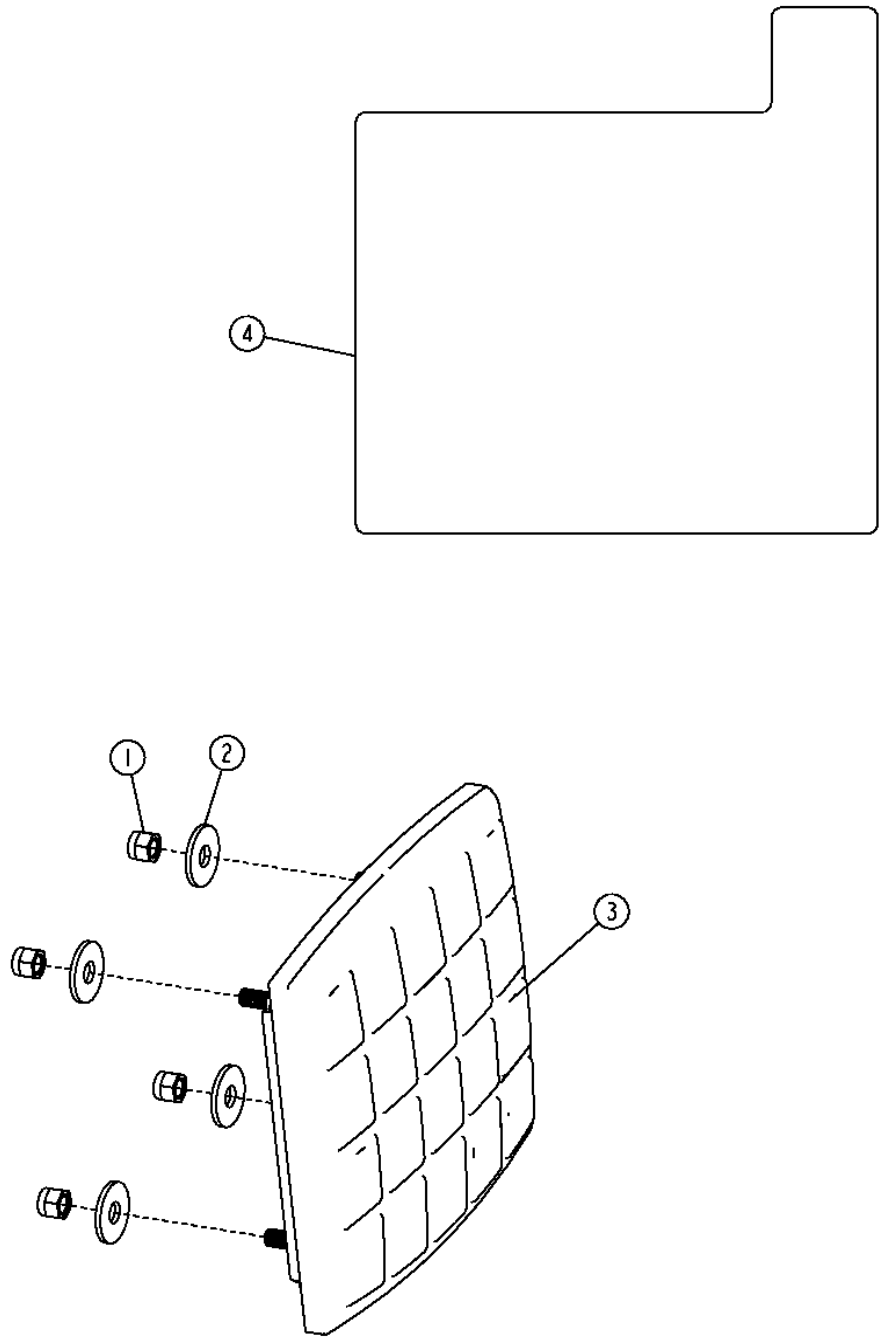

SEALED SWITCH MODULE (SSM)

KEY	PART NO.	PART NAME	QTY	SERIAL NO.	770D	772D	REMARKS
1	14M7360	LOCK NUT	4		X	X	M5
2	24M7139	WASHER	4		X	X	
3	AT303896	PUSH SWITCH	1		X	X	(SSM)
4	T206344	LABEL	1		X	X	

CAB TILT CONSOLE WIRING HARNESS AND SWITCHES

T202039 -UN-28JAN05

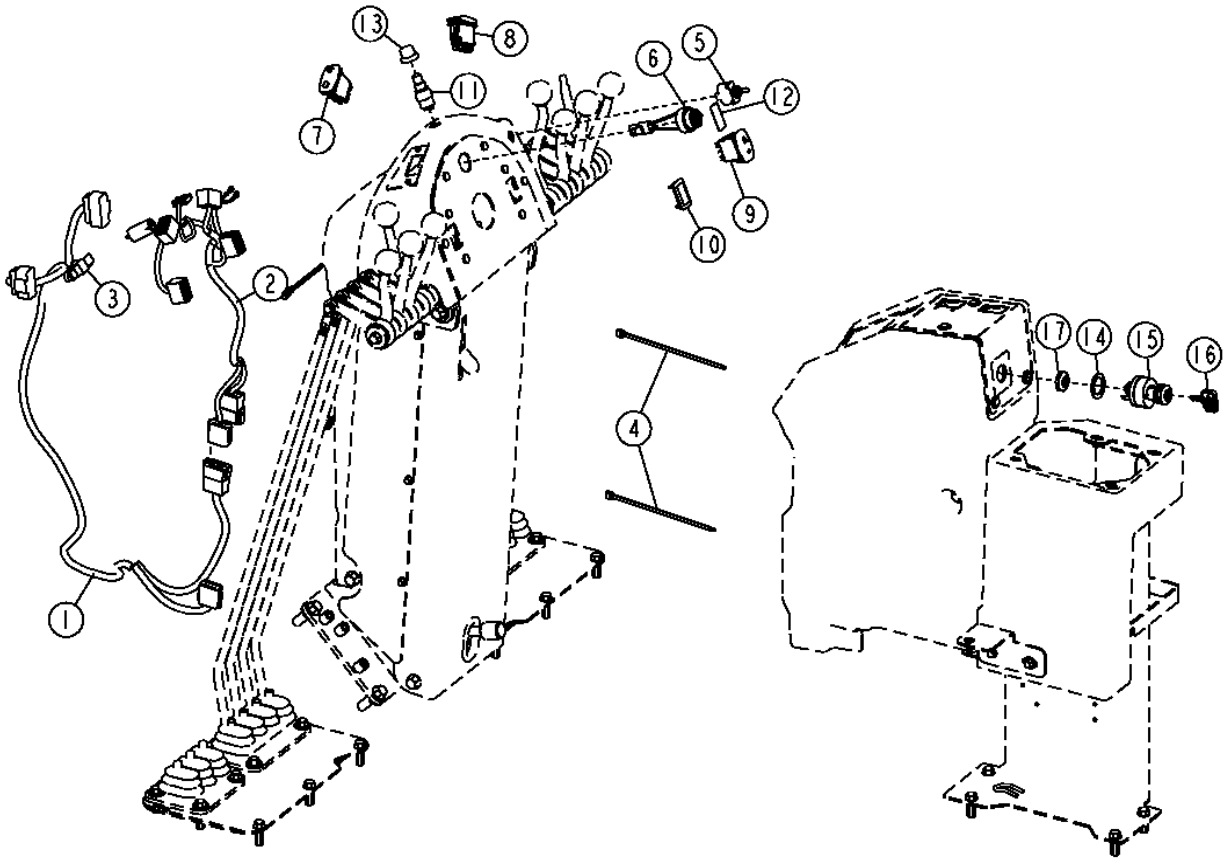

T202039

CAB TILT CONSOLE WIRING HARNESS AND SWITCHES

KEY	PART NO.	PART NAME	QTY	SERIAL NO.	770D	772D	REMARKS
1	AT305384	INSTRUMENT PNL WRG HARNESS	1		X	X	(CMU WIRING HARNESS)
2	AT307628	MONITOR WIRING HARNESS	1		X	X	(CAB TILT CONSOLE WIRING HARNESS)
3	57M8131	ELEC. CONNECTOR TERMINAL	1		X	X	
4	R44302	TIE BAND	2		X	X	
5	AT106154	TOGGLE/ROCKER SWITCH	1		X	X	(DIFFERENTIAL LOCK SWITCH)
6	AT160480	ALARM SYSTEM	1		X	X	
7	AT302730	TOGGLE/ROCKER SWITCH	1		X	X	(TURN SIGNAL SWITCH)
8	AT302769	SWITCH	1		X	X	(DRIVING LIGHT HIGH/LOW BEAM SWITCH)
9	AT304026	SWITCH	1		X	X	(HAZARD WARNING LIGHT SWITCH)
10	M115279	PLUG	1		X	X	
11	R39554	SWITCH	1		X	X	(HORN)
12	T205821	LABEL	1		X	X	
13	T55501	CAP	1		X	X	
14	24H1441	WASHER	1		X	X	
15	AT195301	SWITCH	1		X	X	(IGNITION SWITCH)
16	AT195302	KEY	1		X	X	
17	R44302	TIE BAND	1		X	X	

POWER CONVERTER (24 VOLT TO 12 VOLT)

T202054 -UN-05AUG04

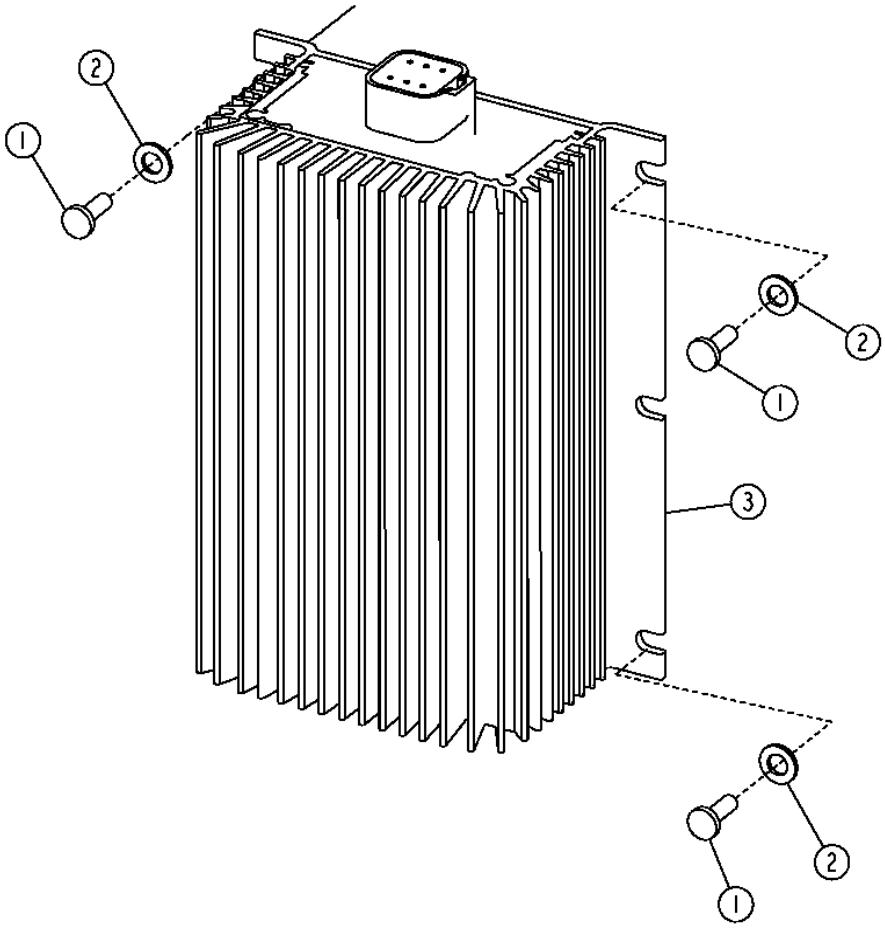

T202054

POWER CONVERTER (24 VOLT TO 12 VOLT)

KEY	PART NO.	PART NAME	QTY	SERIAL NO.	770D	772D	REMARKS
1	19M9224	CAP SCREW	3		X	X	M4 X 14, (SUB FOR 21M7250)
2	24M7087	WASHER	3		X	X	
3	AT224894	CONVERTER	1		X	X	(10 AMP)
	AT302797	CONVERTER	1		X	X	(25 AMP)

FLEX LOAD CENTER (FLC)

T201879 -UN-29JUL04

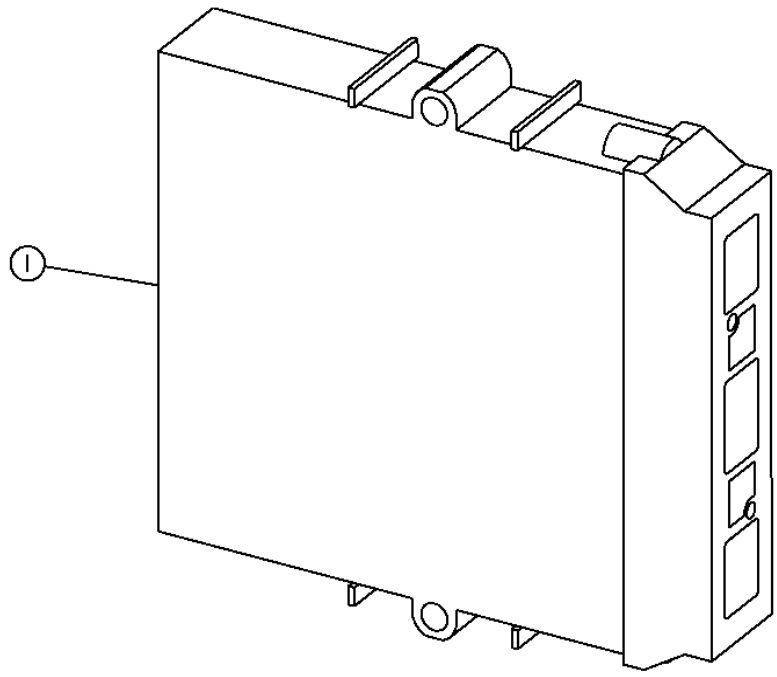

T201879

FLEX LOAD CENTER (FLC)

KEY	PART NO.	PART NAME	QTY	SERIAL NO.	770D	772D	REMARKS
1	AT305854	VEHICLE CONTROLLER	1		X	X	(FLEX LOAD CENTER) (FLC) (SOFTWARE MUST BE DOWNLOADED FROM SDS SERVER BY VEHICLE SERIAL NO.)

MAIN FRAME

T201886 -UN-29JUL04

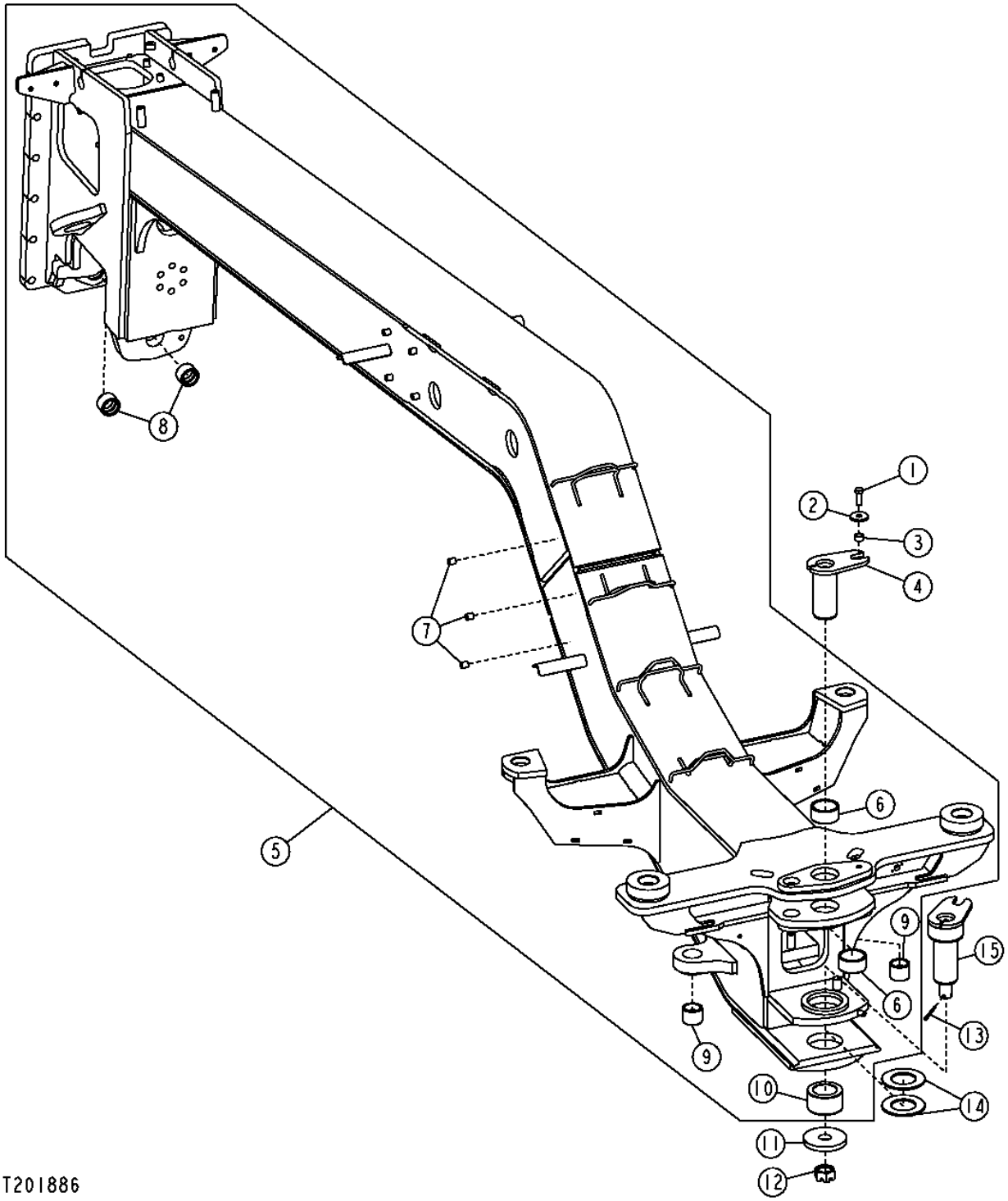

MAIN FRAME

KEY	PART NO.	PART NAME	QTY	SERIAL NO.	770D	772D	REMARKS
1	19M7489	CAP SCREW	1		X	X	M16 X 45
2	T146246	WASHER	1		X	X	
3	28H3401	SPACER	1		X	X	
4	AT320496	PIN	1		X	X	
5	**AT302401**	**MAIN FRAME**	**1**		**X**	**X**	**(CONVENIENCE ASSEMBLY)**
6	T158102	BUSHING	2		X	X	
7	T72414	BUSHING	1		X	X	
8	T82886	BUSHING	4		X	X	
9	T158229	BUSHING	2		X	X	
10	T157829	BUSHING	1		X	X	
11	T157828	BUSHING	1		X	X	
12	14H991	NUT	1		X	X	1-1/2"
13	11H251	COTTER PIN	1		X	X	1/4" X 3"
14	T157827	WASHER	2		X	X	
15	AT173971	PIN FASTENER	1		X	X	
17	.....	ISOLATOR	AR		X	X	(CUT TO LENGTH FROM T176644 BULK MATERIAL) (NOT ILLUSTRATED)

ENGINE FRAME

T203055 -UN-22OCT04

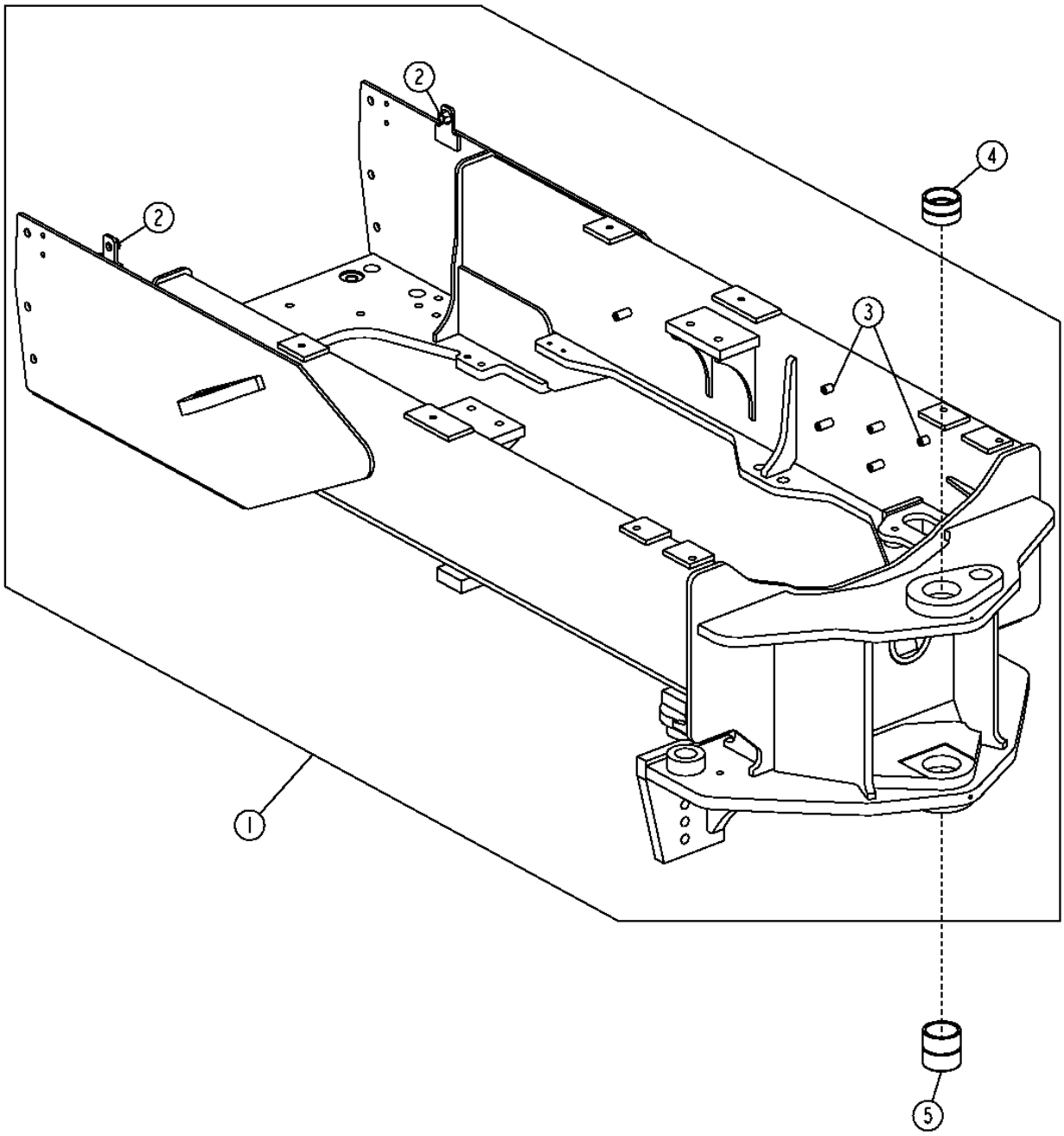

T203055

ENGINE FRAME

KEY	PART NO.	PART NAME	QTY	SERIAL NO.	770D	772D	REMARKS
1	**AT303670**	**FRAME**	**1**		**X**	**X**	**(CONVENIENCE ASSEMBLY)**
2	14M7291	FLANGE NUT	1		X	X	M16
3	T72414	BUSHING	10		X	X	
4	T42843	BUSHING	1		X	X	
5	T42844	BUSHING	1		X	X	

MAIN FRAME COVERS

T210079 -UN-11APR05

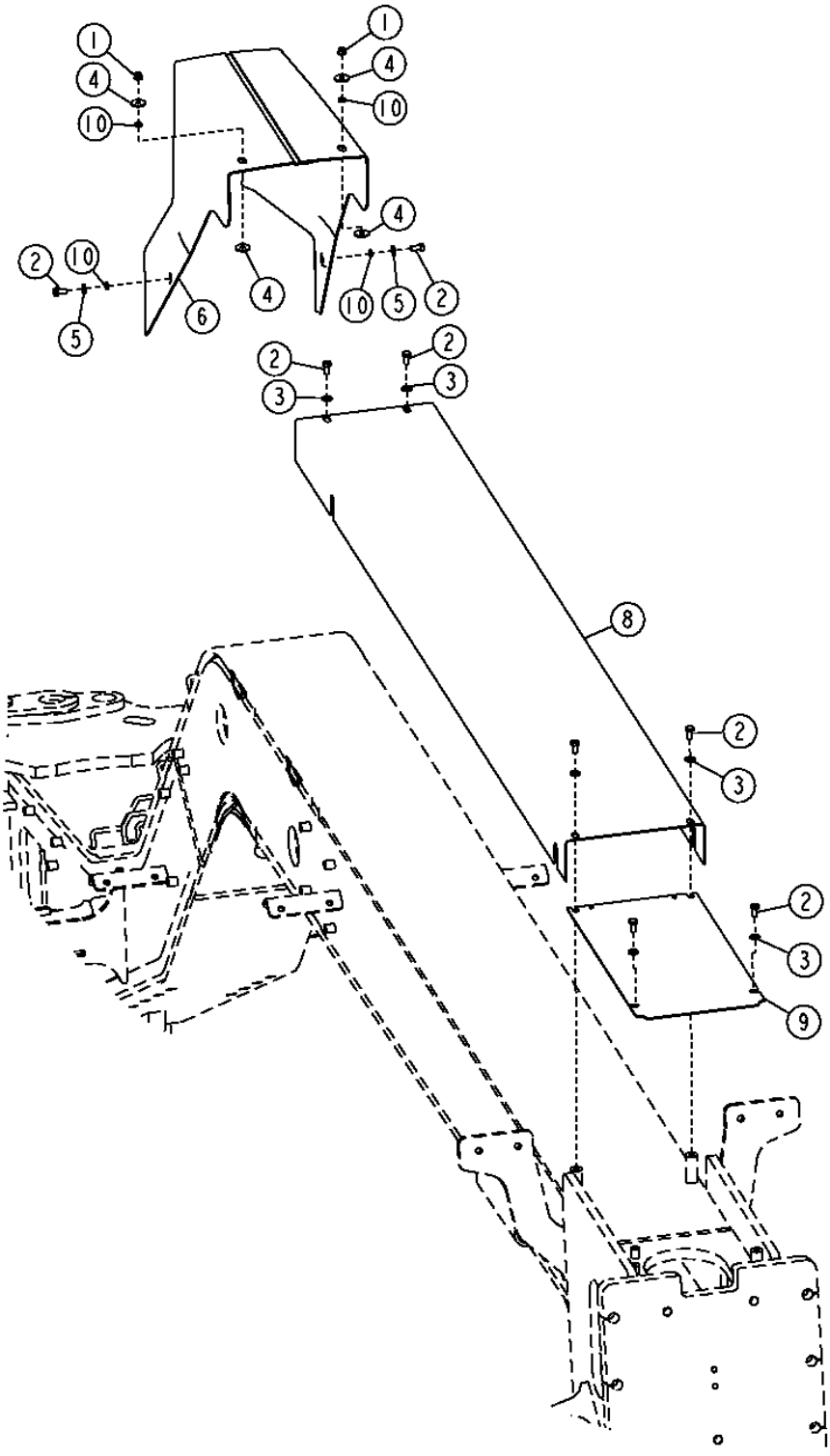

MAIN FRAME COVERS

KEY	PART NO.	PART NAME	QTY	SERIAL NO.	770D	772D	REMARKS
1	14M7396	LOCK NUT	2		X	X	M8
2	19M7938	CAP SCREW	8		X	X	M10 X 20
3	24H1308	WASHER	6		X	X	
4	24H1657	WASHER	4		X	X	
5	24M7028	WASHER	2		X	X	
6	AT307275	COVER	1		X	X	
8	T204556	COVER	1		X	X	
9	T206293	COVER	1		X	X	
10	T77706	WASHER	4		X	X	

BOTTOM GUARD (WITHOUT RIPPER)

T201048 -UN-16AUG04

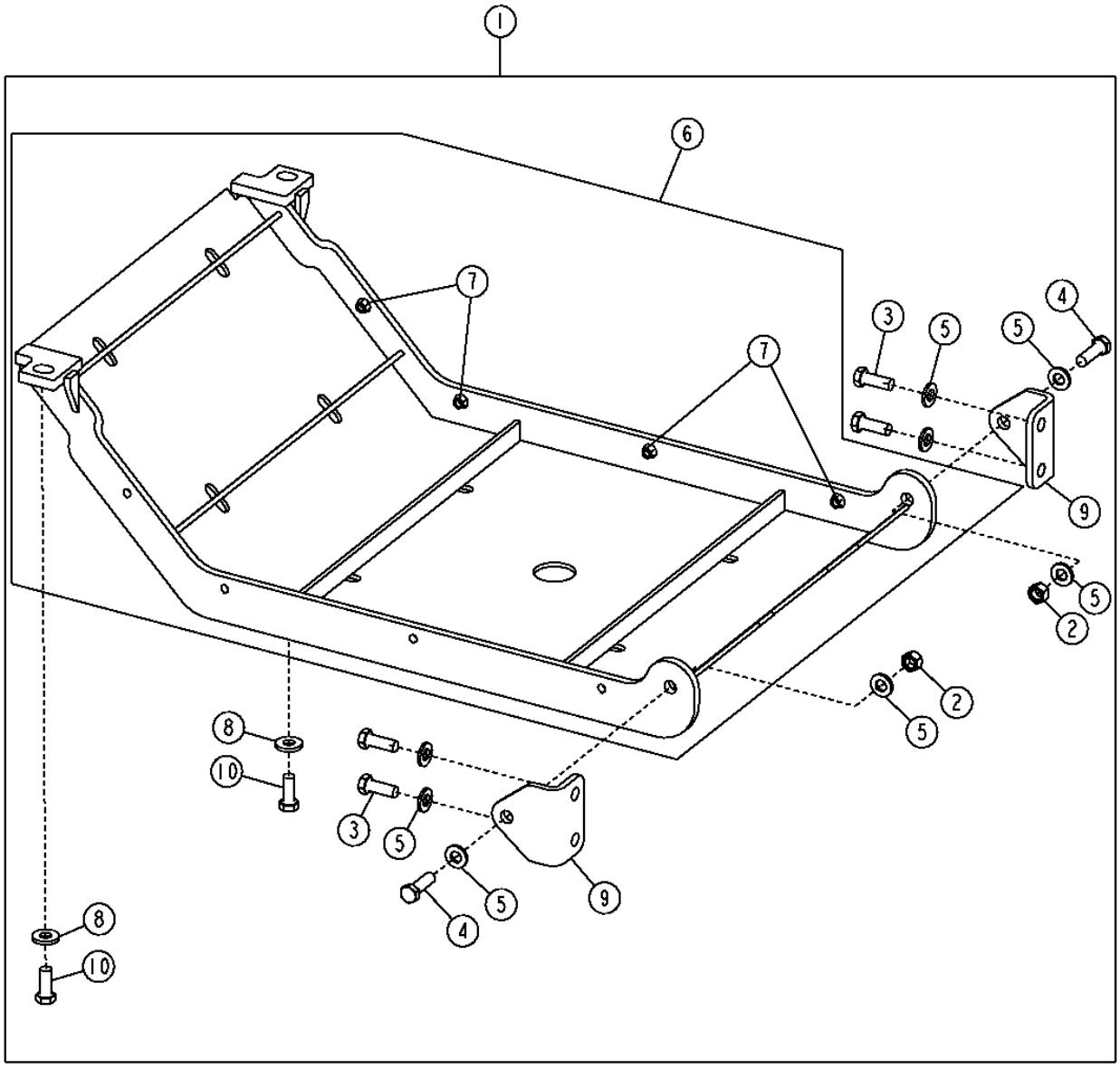

T201048

BOTTOM GUARD (WITHOUT RIPPER)

KEY	PART NO.	PART NAME	QTY	SERIAL NO.	770D	772D	REMARKS
1	**AT306846**	**KIT**	**1**		**X**	**X**	**(WHOLEGOODS)(BOTTOM GUARD WITHOUT RIPPER)**
2	14M7277	NUT	2		X	X	M20
3	19M8002	CAP SCREW	6		X	X	M20 X 55
4	19M8638	CAP SCREW	2		X	X	M20 X 65
5	24M7242	WASHER	8		X	X	
6	AT306816	GUARD	1		X	X	
7	14M7443	FLANGE NUT	8		X	X	M12
8	T151797	WASHER	2		X	X	
9	T160698	BRACKET	2		X	X	
10	19M7597	CAP SCREW	2		X	X	M20 X 50

BOTTOM GUARD SIDE SHIELDS (WITHOUT RIPPER)

T208599 -UN-18FEB05

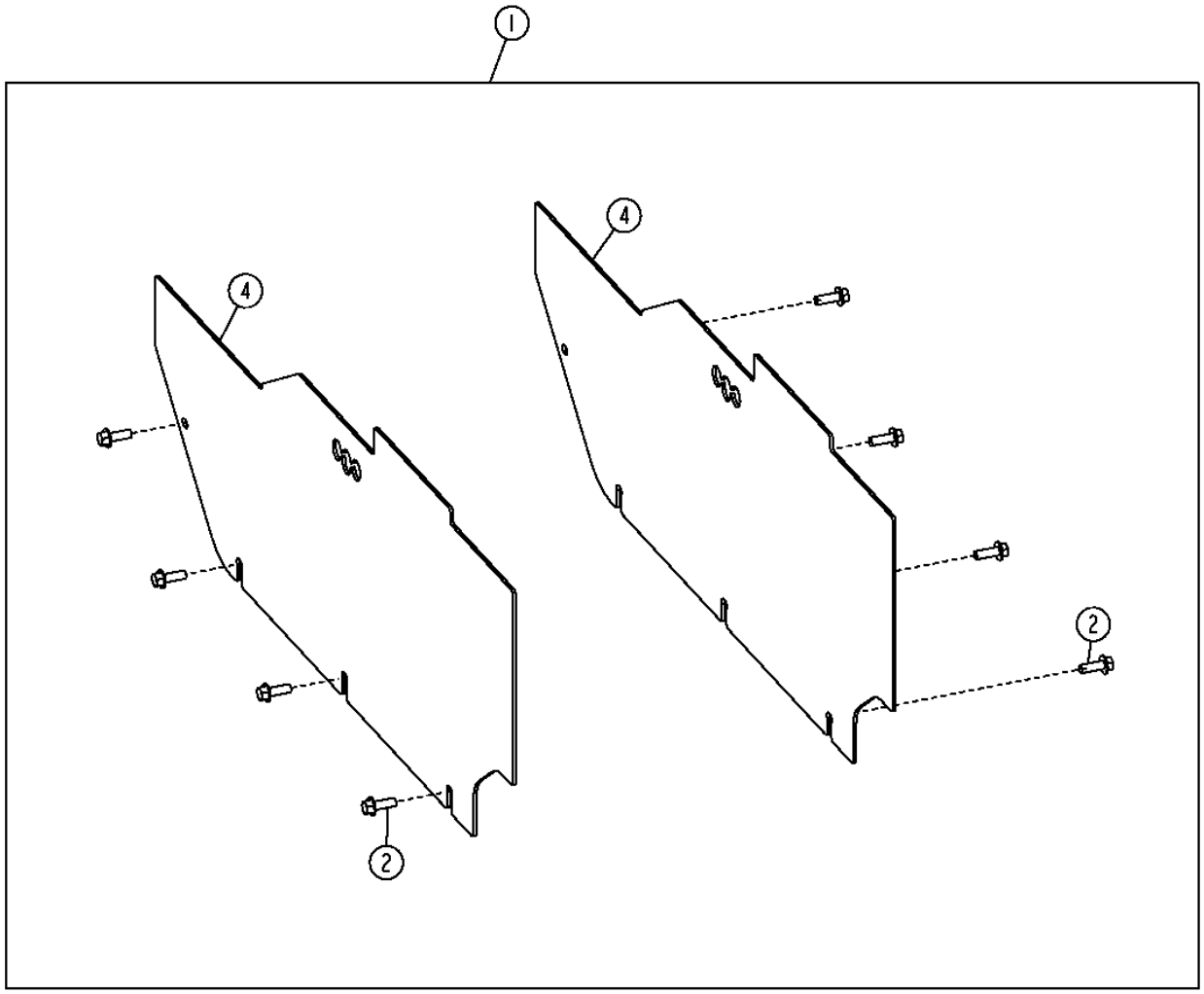

T208599

BOTTOM GUARD SIDE SHIELDS (WITHOUT RIPPER)

KEY	PART NO.	PART NAME	QTY	SERIAL NO.	770D	772D	REMARKS
1	**AT306847**	**KIT**	**2**		**X**	**X**	**(WHOLEGOODS)(BOTTOM GUARD SIDE SHIELDS WITHOUT RIPPER)**
2	19M7790	SCREW	8		X	X	M12 X 35
4	T205202	PLATE	2		X	X	

BOTTOM GUARDS AND SIDE SHIELDS (WITH RIPPER)

T208600 -UN-18FEB05

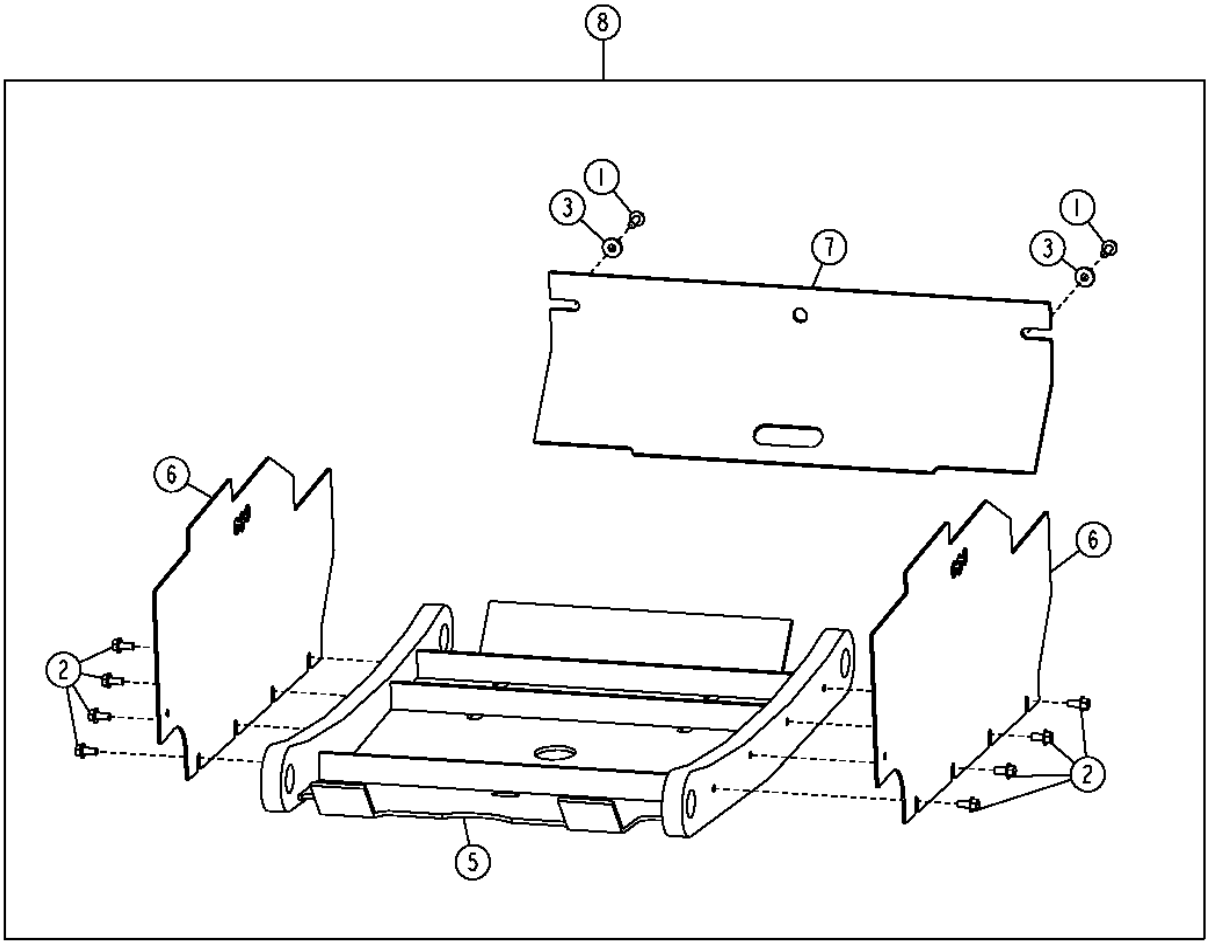

T208600

BOTTOM GUARDS AND SIDE SHIELDS (WITH RIPPER)

KEY	PART NO.	PART NAME	QTY	SERIAL NO.	770D	772D	REMARKS
1	19M7790	SCREW	2		X	X	M12 X 35
2	19M7788	SCREW	8		X	X	M12 X 25
5	AT312431	KIT	1		X	X	
6	T205317	PLATE	2		X	X	
7	T205547	PLATE	1		X	X	
8	**AT306944**	**KIT**	**1**		**X**	**X**	**(WHOLEGOODS) (RIPPER GUARD KIT)**

PUSH BLOCK

T200685 -UN-12DEC04

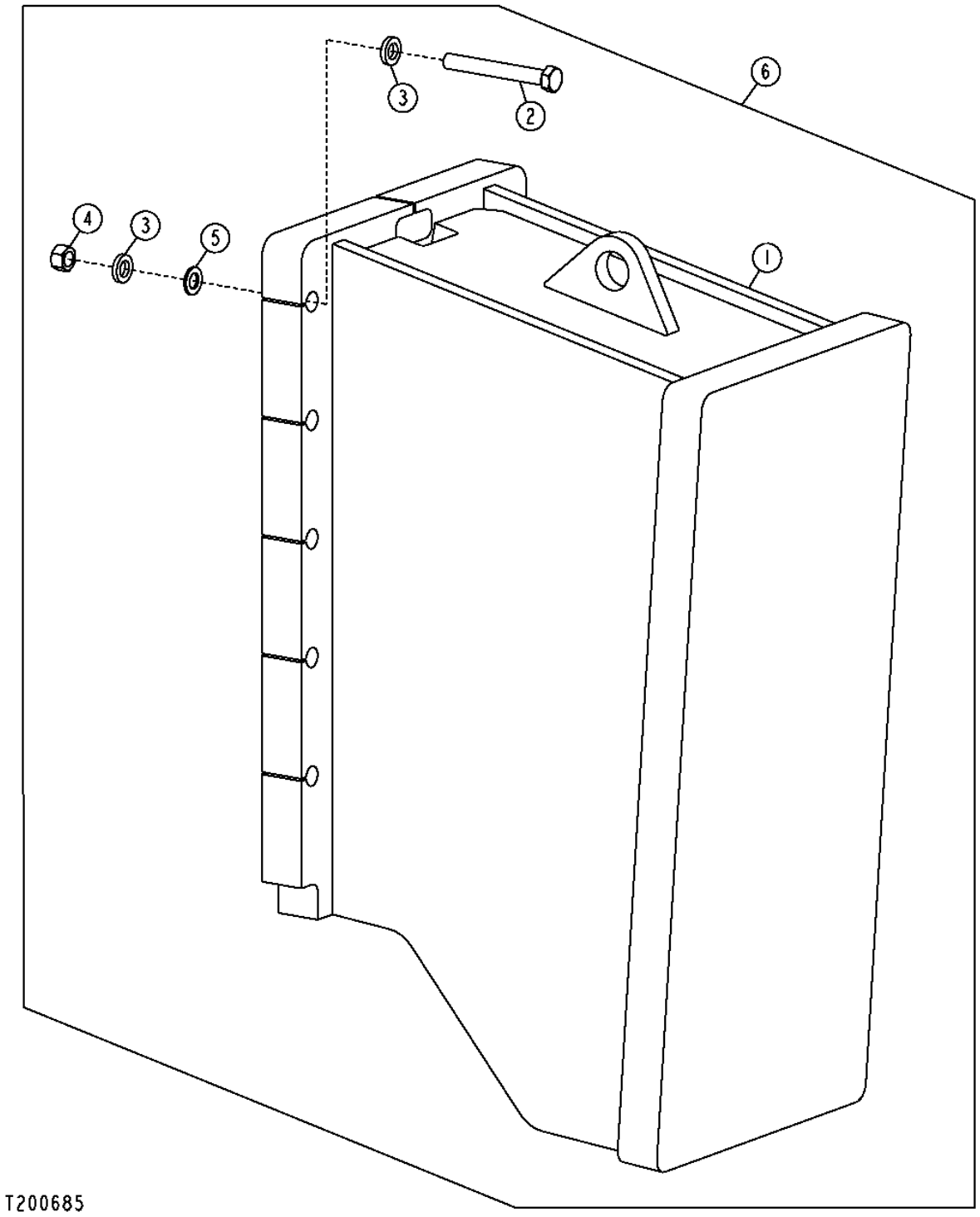

PUSH BLOCK

KEY	PART NO.	PART NAME	QTY	SERIAL NO.	770D	772D	REMARKS
1	AT164240	FRAME	1		X	X	(PUSH BLOCK)
2	19H3307	CAP SCREW	10		X	X	3/4" X 6"
3	T83426	WASHER	20		X	X	
4	14H1058	NUT	10		X	X	
5	T10510	WASHER	10		X	X	
6	**AT158292**	**KIT**	**1**		**X**	**X**	**(WHOLEGOODS) (FRONT PUSH BLOCK KIT)**

THIS PARTS LISTING IS CONTINUED

FRONT MOUNTED WEIGHT

T200684 -UN-07JUN04

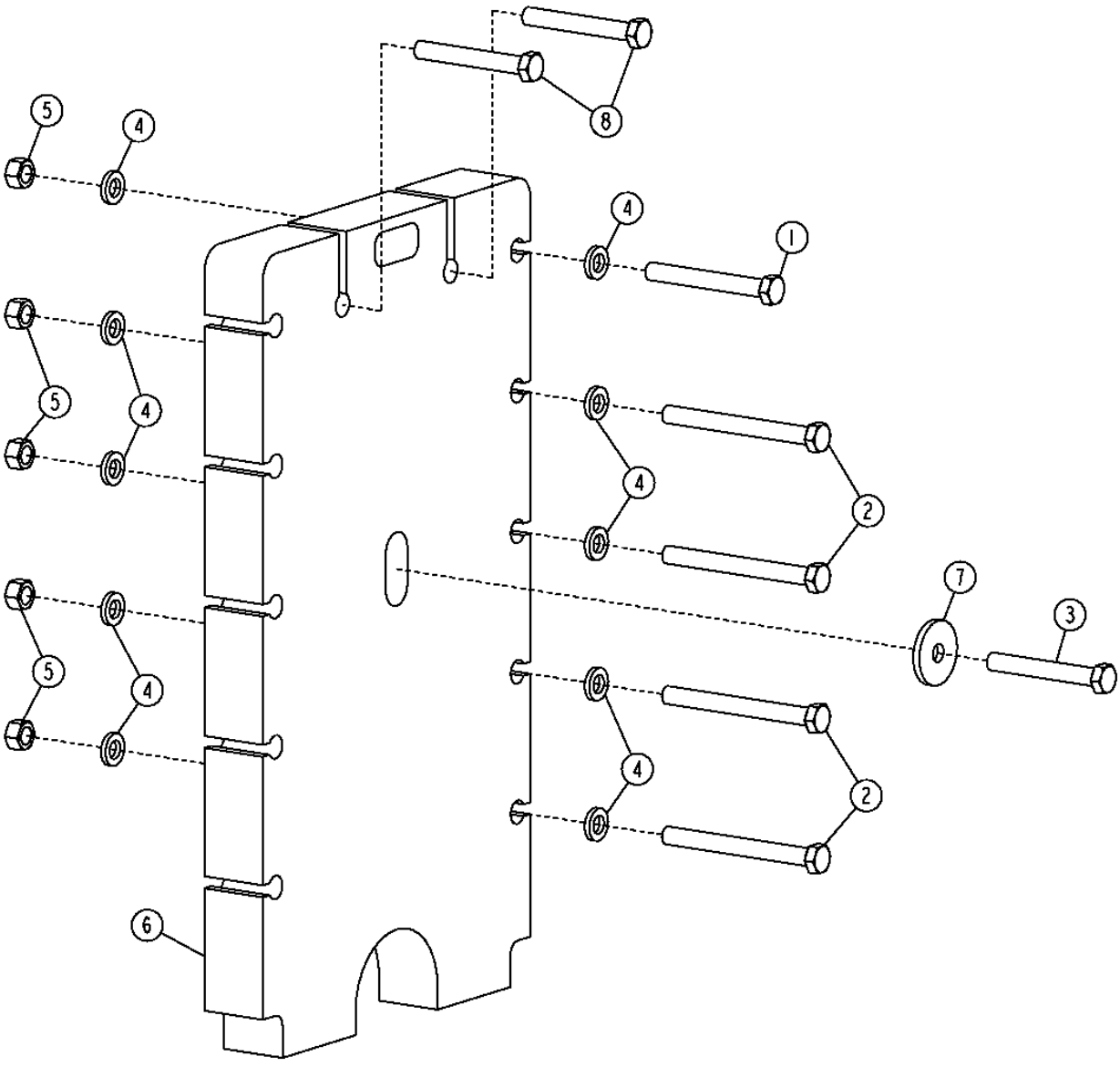

FRONT MOUNTED WEIGHT

KEY	PART NO.	PART NAME	QTY	SERIAL NO.	770D	772D	REMARKS
1	19H3307	CAP SCREW	2		X	X	3/4" X 6", (SUB FOR 19H1988, THIS APPLICATION) (WITH 550 POUND FRONT WEIGHT WITH FRONT EQUIPMENT)
	19H3307	CAP SCREW	10		X	X	3/4" X 6", (SUB FOR 19H1988, THIS APPLICATION) (WITH 550 POUND FRONT WEIGHT)
2	19H3740	CAP SCREW	4		X	X	3/4" X 7-1/2", (WITHOUT FRONT MOUNTED EQUIPMENT)
	19H3740	CAP SCREW	10		X	X	3/4" X 7-1/2", (WITH 550 POUND FRONT WEIGHT WITH FRONT EQUIPMENT)
	19H3234	CAP SCREW	10		X	X	3/4" X 8-1/2", (WITH 500 POUND FRONT WEIGHT WITH PUSH BLOCK)
3	19H3415	CAP SCREW	3		X	X	3/4" X 5-1/2", (WITH 550 POUND FRONT WEIGHT WITH FRONT EQUIPMENT)
	19H2826	CAP SCREW	1		X	X	3/4" X 4-1/2", (SUB FOR 19H3105, THIS APPLICATION) (WITH FRONT MOUNTED EQUIPMENT)
4	T83426	WASHER	8		X	X	(SUB FOR T17776) (WITHOUT FRONT MOUNTED EQUIPMENT)
	T83426	WASHER	20		X	X	(SUB FOR T17776) (WITH 550 POUND FRONT WEIGHT)
	T83426	WASHER	4		X	X	(SUB FOR T17776) (WITH 550 POUND FRONT WEIGHT WITH FRONT EQUIPMENT)
5	14H1058	NUT	4		X	X	3/4", (WITHOUT FRONT MOUNTED EQUIPMENT)
	14H1058	NUT	2		X	X	3/4", (WITH 550 POUND FRONT WEIGHT WITH FRONT EQUIPMENT)
	14H1058	NUT	10		X	X	3/4", (WITH 550 POUND FRONT WEIGHT)
6	T103590	PLATE	1		X	X	
7	R64283	LOCK WASHER	1		X	X	(WITH 550 POUND FRONT WEIGHT WITH FRONT EQUIPMENT)
8	19H3415	CAP SCREW	3		X	X	3/4" X 5-1/2", (WITH 550 POUND FRONT WEIGHT WITH FRONT EQUIPMENT)

THIS PARTS LISTING IS CONTINUED

CAB AND CANOPY FRAME

T203066 -UN-17SEP04

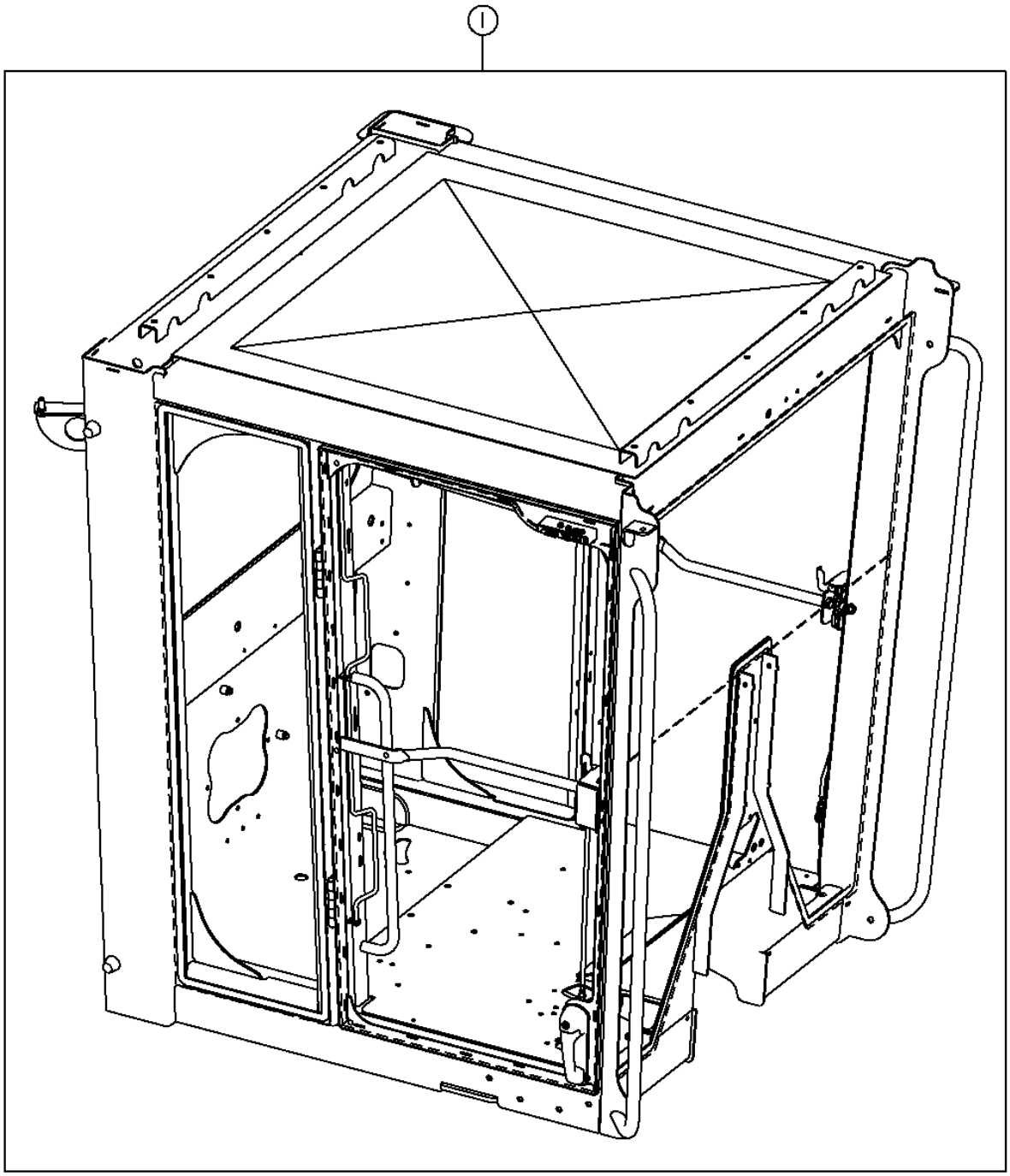

T203066

2H16

CAB AND CANOPY FRAME

KEY	PART NO.	PART NAME	QTY	SERIAL NO.	770D	772D	REMARKS
1	AT308196	CAB	1		X	X	(LOW PROFILE)(INCLUDES DOORS AND WINDOWS)
	AT308197	CAB	1		X	X	(FULL HEIGHT)(INCLUDES DOORS AND WINDOWS)
	AT310373	CAB	1		X	X	(LOW PROFILE W/OPENABLE WINDOWS)(INCLUDES DOORS AND WINDOWS)
	AT310374	CAB	1		X	X	(FULL HEIGHT WITH OPENABLE WINDOWS)(INCLUDES DOORS AND WINDOWS)
	AT310375	CANOPY	1		X	X	(LOW PROFILE CANOPY-NOT ILLUSTRATED) (INCLUDES REAR WINDOW)
2	T196077	NUT	24		X	X	M6, (CAB OR CANOPY)(KREMNUT-NOT ILLUSTRATED) (M6 FOR 2.5 TO 5.0 MM THICKNESS)
	T196079	NUT	65		X	X	M8, (CAB)(KREMNUT-NOT ILLUSTRATED) (M8 FOR 2.5 TO 5.0 MM THICKNESS)
	T196079	NUT	48		X	X	M8, (CANOPY)(KREMNUT-NOT ILLUSTRATED) (M8 FOR 2.5 TO 5.0 MM THICKNESS)
	T196080	NUT	8		X	X	M8, (CAB OR CANOPY)(KREMNUT-NOT ILLUSTRATED) (M8 FOR 5.0 TO 7.0 MM THICKNESS)
	H173411	NUT	22		X	X	M10, (CAB)(KREMNUT-NOT ILLUSTRATED) (M10 FOR 3.0 TO 4.5 MM THICKNESS)
	H173411	NUT	19		X	X	M10, (CANOPY)(KREMNUT-NOT ILLUSTRATED) (M10 FOR 3.0 TO 4.5 MM THICKNESS)
	T148409	NUT	8		X	X	(CAB OR CANOPY)(KREMNUT-NOT ILLUSTRATED) (M10 FOR 5.0 TO 7.0 MM THICKNESS)

FRONT WINDSHIELD WIPER

T208500 -UN-18FEB05

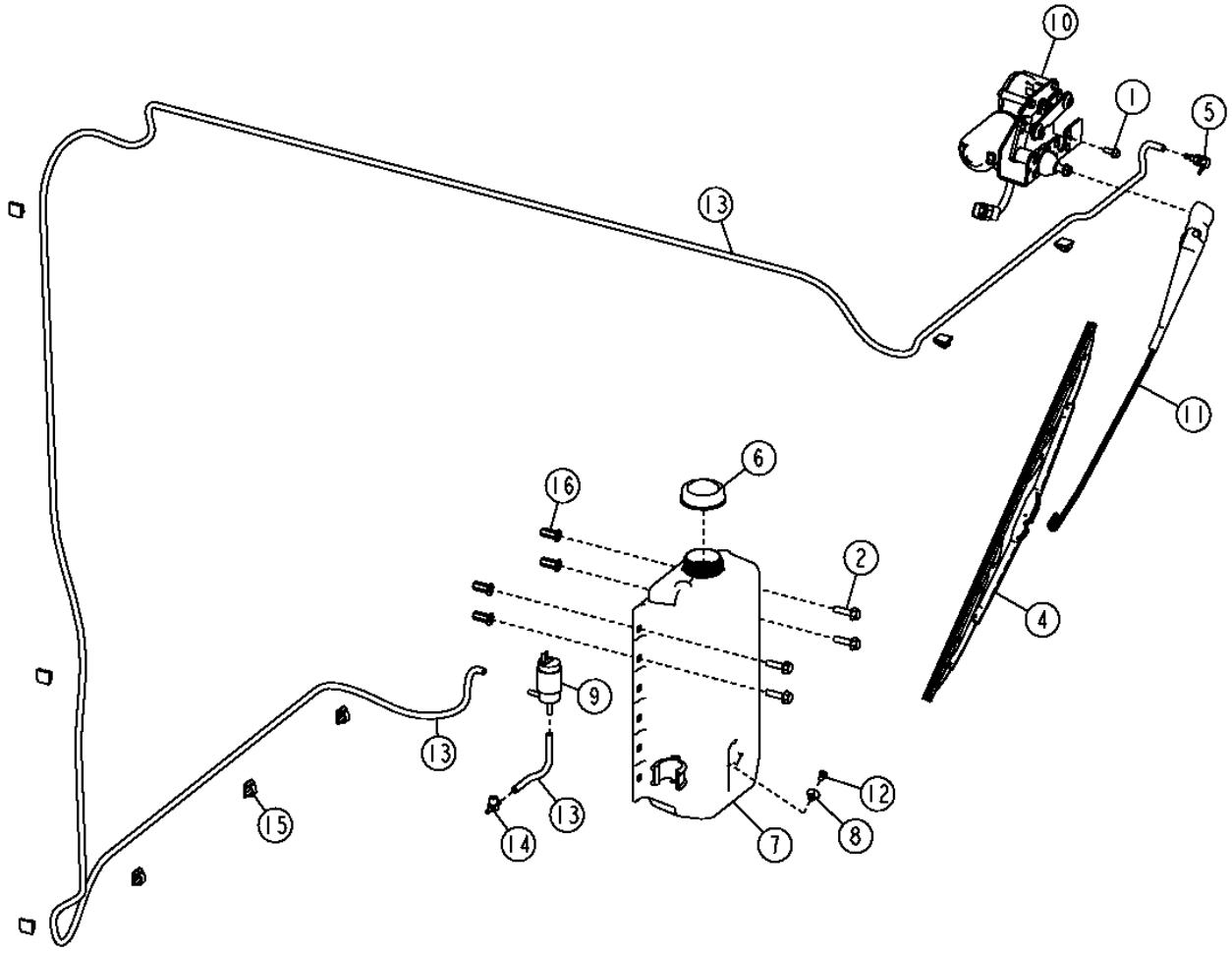

T208500

2H18

FRONT WINDSHIELD WIPER

KEY	PART NO.	PART NAME	QTY	SERIAL NO.	770D	772D	REMARKS
1	19M7775	SCREW	1		X	X	M6 X 16
2	19M7868	SCREW	4		X	X	M8 X 30
4	AL153661	WIPER BLADE	1		X	X	(USE WITH FULL HEIGHT CAB)
	AL153660	WIPER BLADE	1		X	X	(USE WITH LOW PROFILE CAB)
5	AT116970	ELBOW FITTING	1		X	X	
6	AT106413	CAP	1		X	X	
7	T125860	TANK	1		X	X	
8	T127280	GROMMET	1		X	X	
9	AT173192	PUMP	1		X	X	
10	AT304630	WIPER MOTOR	1		X	X	(USE WITH FULL HEIGHT CAB)
	AT304635	WIPER MOTOR	1		X	X	(USE WITH LOW PROFILE CAB)
11	AT304633	WIPER ARM	1		X	X	(USE WITH FULL HEIGHT CAB)
	AT304634	WIPER ARM	1		X	X	(USE WITH LOW PROFILE CAB)
12	B2976R	PLUG	1		X	X	
13	.....	BULK HOSE	1		X	X	(MAKE FROM R120653) (CUT TO LENGTH)
14	T126400	HOSE FITTING	1		X	X	
15	T182909	CLIP	8		X	X	
16	T196079	NUT	4		X	X	

REAR WINDSHIELD WIPER

T208501 -UN-18FEB05

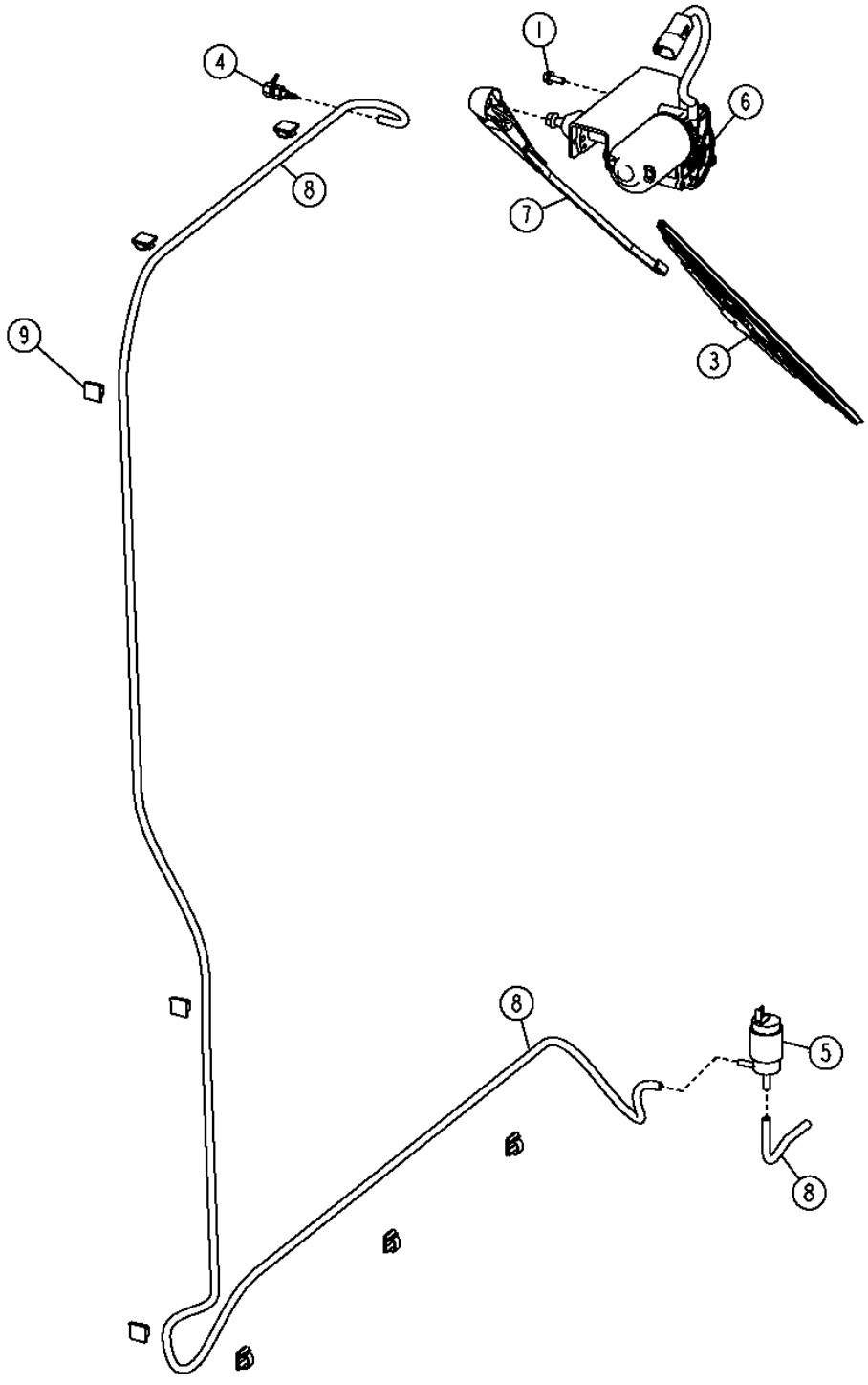

REAR WINDSHIELD WIPER

KEY	PART NO.	PART NAME	QTY	SERIAL NO.	770D	772D	REMARKS
1	19M7775	SCREW	1		X	X	M6 X 16
3	AL153661	WIPER BLADE	1		X	X	(USE WITH FULL HEIGHT CAB)
	AL153660	WIPER BLADE	1		X	X	(USE WITH LOW PROFILE CAB)
4	AT116970	ELBOW FITTING	1		X	X	(USE WITH FULL HEIGHT CAB)
5	AT173192	PUMP	1		X	X	
6	AT304630	WIPER MOTOR	1		X	X	(USE WITH FULL HEIGHT CAB)
	AT304635	WIPER MOTOR	1		X	X	(USE WITH LOW PROFILE CAB)
7	AT304633	WIPER ARM	1		X	X	(USE WITH FULL HEIGHT CAB)
	AT304634	WIPER ARM	1		X	X	(USE WITH LOW PROFILE CAB)
8	.....	BULK HOSE	1		X	X	(CUT TO LENGTH) (MAKE FROM R120653)
9	T182909	CLIP	1		X	X	

LOWER FRONT WINDSHIELD WIPER

T207943 -UN-12FEB05

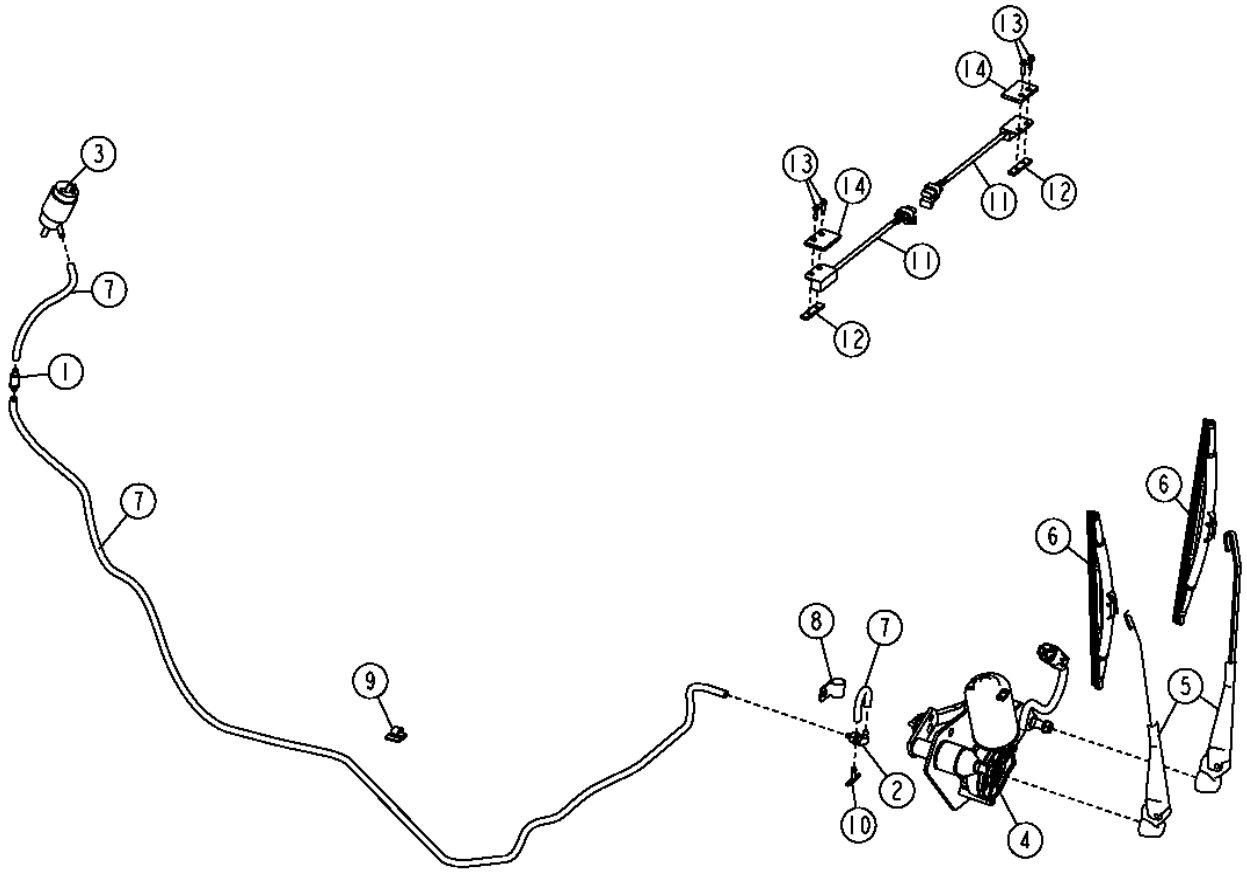

T207943

LOWER FRONT WINDSHIELD WIPER

KEY	PART NO.	PART NAME	QTY	SERIAL NO.	772D	772D	REMARKS
1	AL114275	CHECK VALVE	1		X	X	
2	AT188681	KIT	1		X	X	
3	AT173192	PUMP	1		X	X	
4	AT303926	WIPER MOTOR	1		X	X	
5	AT305663	WIPER ARM	2		X	X	
6	AT305698	WIPER BLADE	2		X	X	
7	.....	BULK HOSE	1		X	X	(MAKE FROM R120653) (CUT TO LENGTH)
8	M47566	CLIP	1		X	X	
9	T182909	CLIP	1		X	X	
10	T58542	FITTING	1		X	X	
11	AT307779	SENSOR	2		X	X	
12	T208283	PLATE	2		X	X	
13	37M7314	SCREW	4		X	X	M4 X 16
14	T215218	PLATE	2		X	X	

CAB ISOLATORS

T202057 -UN-02SEP04

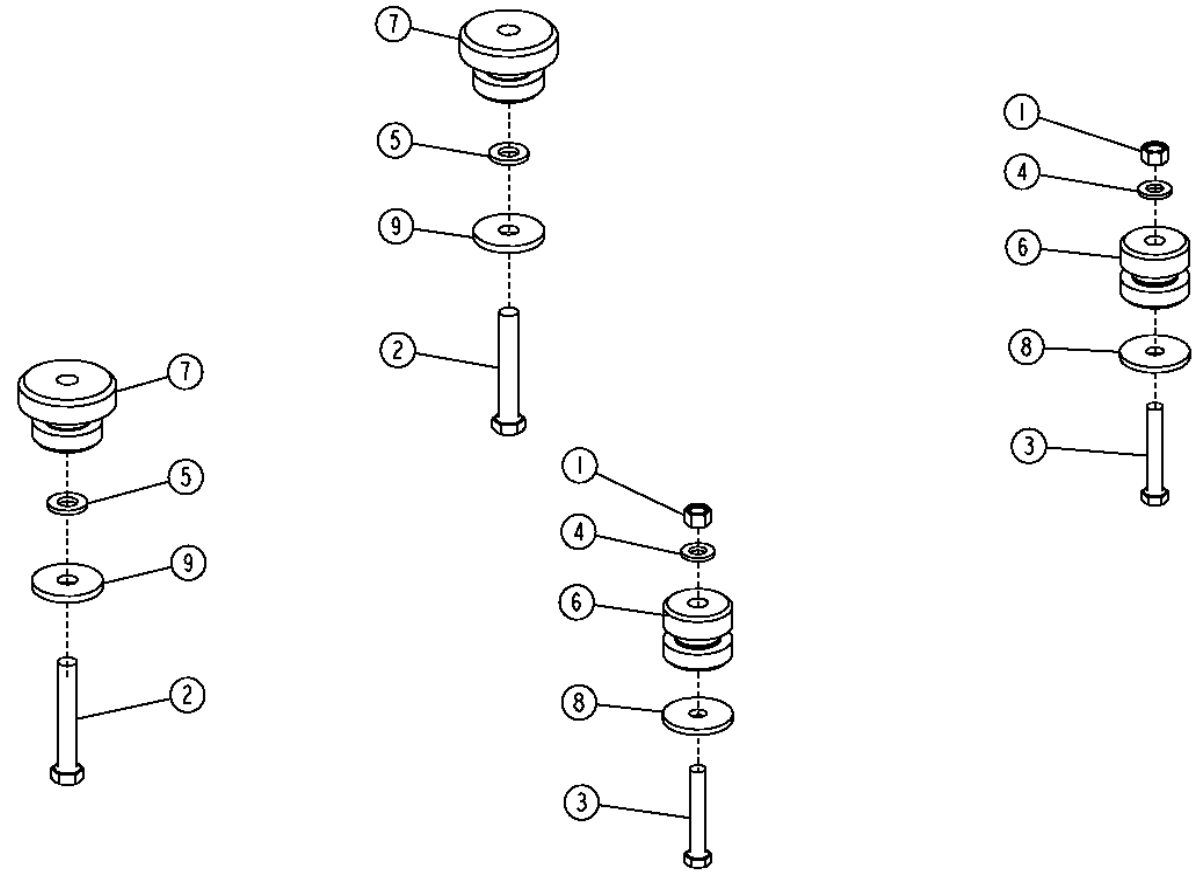

T202057

2H24

CAB ISOLATORS

KEY	PART NO.	PART NAME	QTY	SERIAL NO.	770D	772D	REMARKS
1	14M7277	NUT	2		X	X	M20
2	19M7781	CAP SCREW	2		X	X	M24 X 150
3	19M7883	SCREW	2		X	X	M20 X 120
4	24M7242	WASHER	2		X	X	
5	24M7243	WASHER	2		X	X	
6	AT165288	ISOLATOR	2		X	X	
7	AT170005	ISOLATOR	2		X	X	
8	T101807	WASHER	2		X	X	
9	T153535	WASHER	2		X	X	

STATIONARY WINDOWS

T202649 -UN-08DEC04

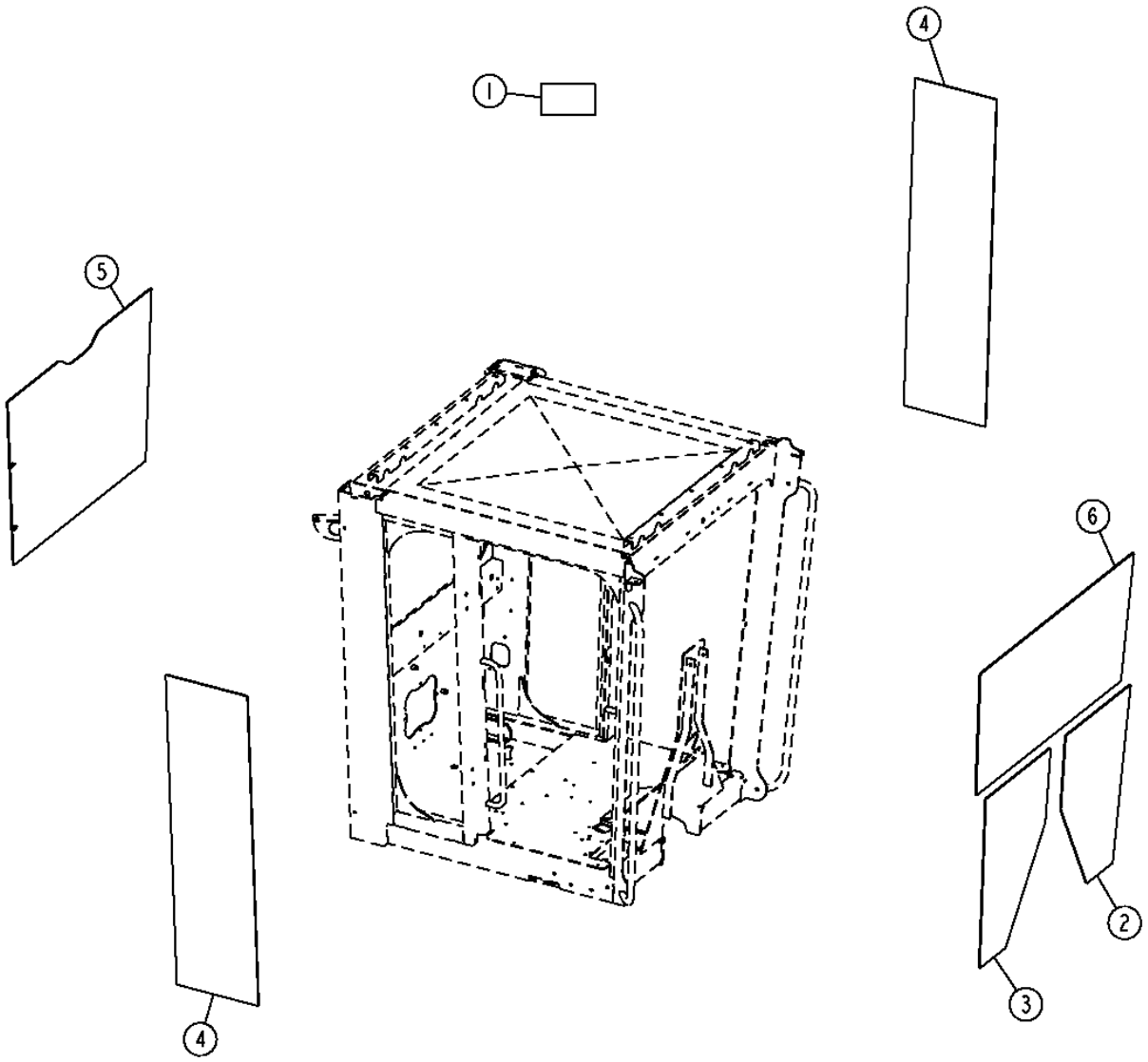

T202649

STATIONARY WINDOWS

KEY	PART NO.	PART NAME	QTY	SERIAL NO.	770D	772D	REMARKS
1	T135675	STAND-OFF	AR		X	X	(USED BETWEEN WINDOW AND CAB)
2	T202076	WINDOWPANE	1		X	X	LH FRONT LOWER
3	T202077	WINDOWPANE	1		X	X	RH FRONT LOWER
4	T202074	WINDOWPANE	2		X	X	SIDE-LOW PROFILE CAB,64"(1629MM)TALL
	T202131	WINDOWPANE	2		X	X	SIDE-FULL HEIGHT CAB,72.5"(1854MM)TALL
5	T202075	WINDOWPANE	1		X	X	REAR-LOW PROFILE CANOPY AND CAB,34"(858MM) TALL
	T202132	WINDOWPANE	1		X	X	REAR-FULL HEIGHT CAB,42.5"(1083MM)TALL
6	.....	WINDSHIELD	1		X	X	LOW PROFILE CAB,26"(652 MM)TALL, (SUB AT325943) (T202078 NO LONGER AVAILABLE)
	.....	WINDSHIELD	1		X	X	FULL HEIGHT CAB,34.5"(878MM)TALL, (SUB AT325944) (T202133 NO LONGER AVAILABLE)
7	T214023	ISOLATOR	1		X	X	(FRONT WINDOW EDGE PROTECTOR 17' LONG)

WINDSHIELD REPAIR KIT

T213677 -UN-25AUG05

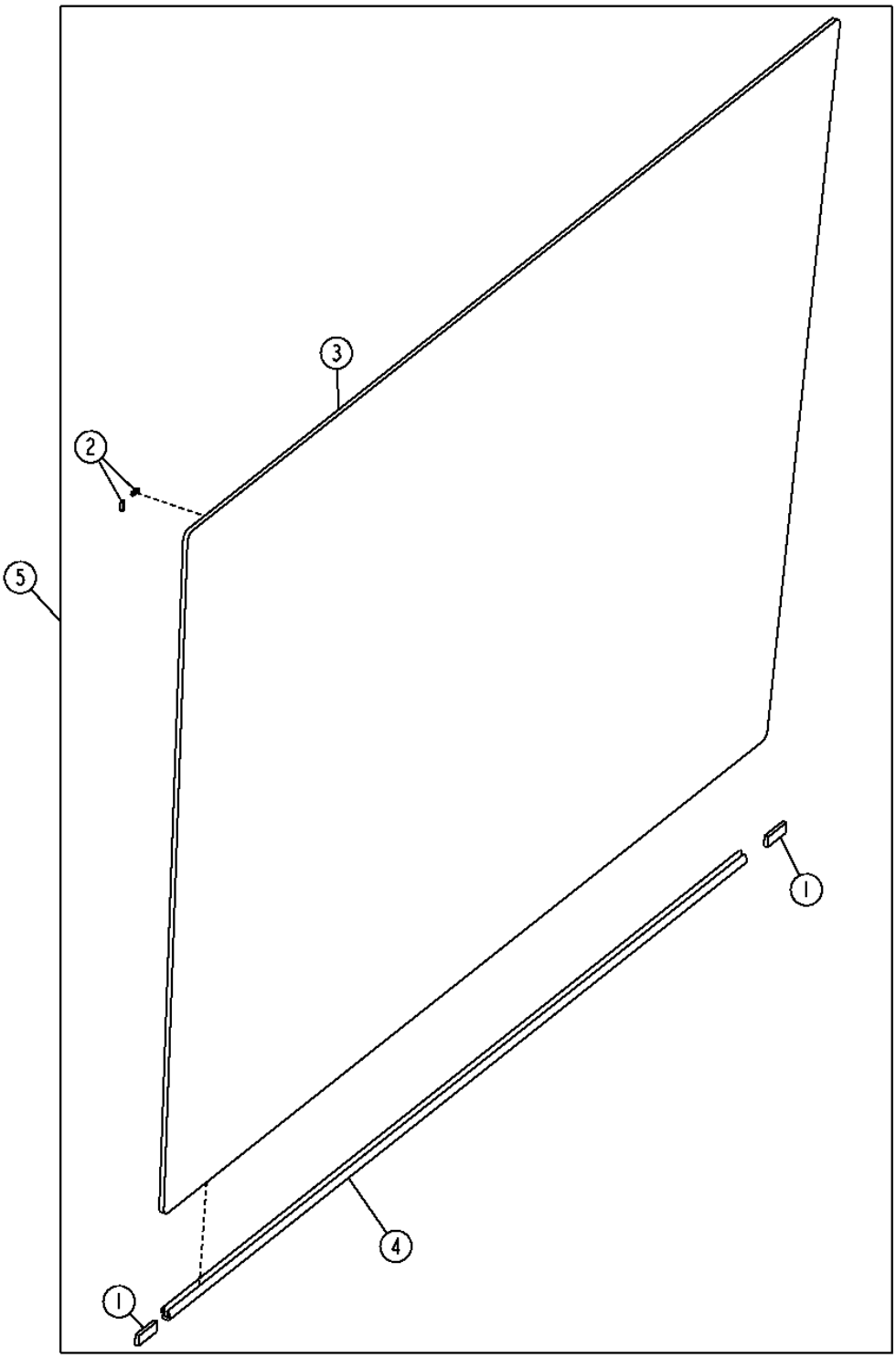

WINDSHIELD REPAIR KIT

KEY	PART NO.	PART NAME	QTY	SERIAL NO.	770D	772D	REMARKS
1	R83066	ISOLATOR	1		X	X	CUT INTO TWO 40 MM (1.5 IN) STRIPS
2	T135675	STAND-OFF	10		X	X	
3	.....	WINDSHIELD	1		X	X	(SUB AT325943) FULL HEIGHT CAB
	.....	WINDSHIELD	1		X	X	(SUB AT325944) LOW PROFILE HEIGHT CAB
4	T214023	ISOLATOR	1		X	X	
5	AT325943	WINDSHIELD KIT	1		X	X	(FULL HEIGHT CAB)
	AT325944	WINDSHIELD KIT	1		X	X	(LOW PROFILE HEIGHT CAB)

OPENABLE WINDOWS (LOWER FRONT)

T208146 -UN-12FEB05

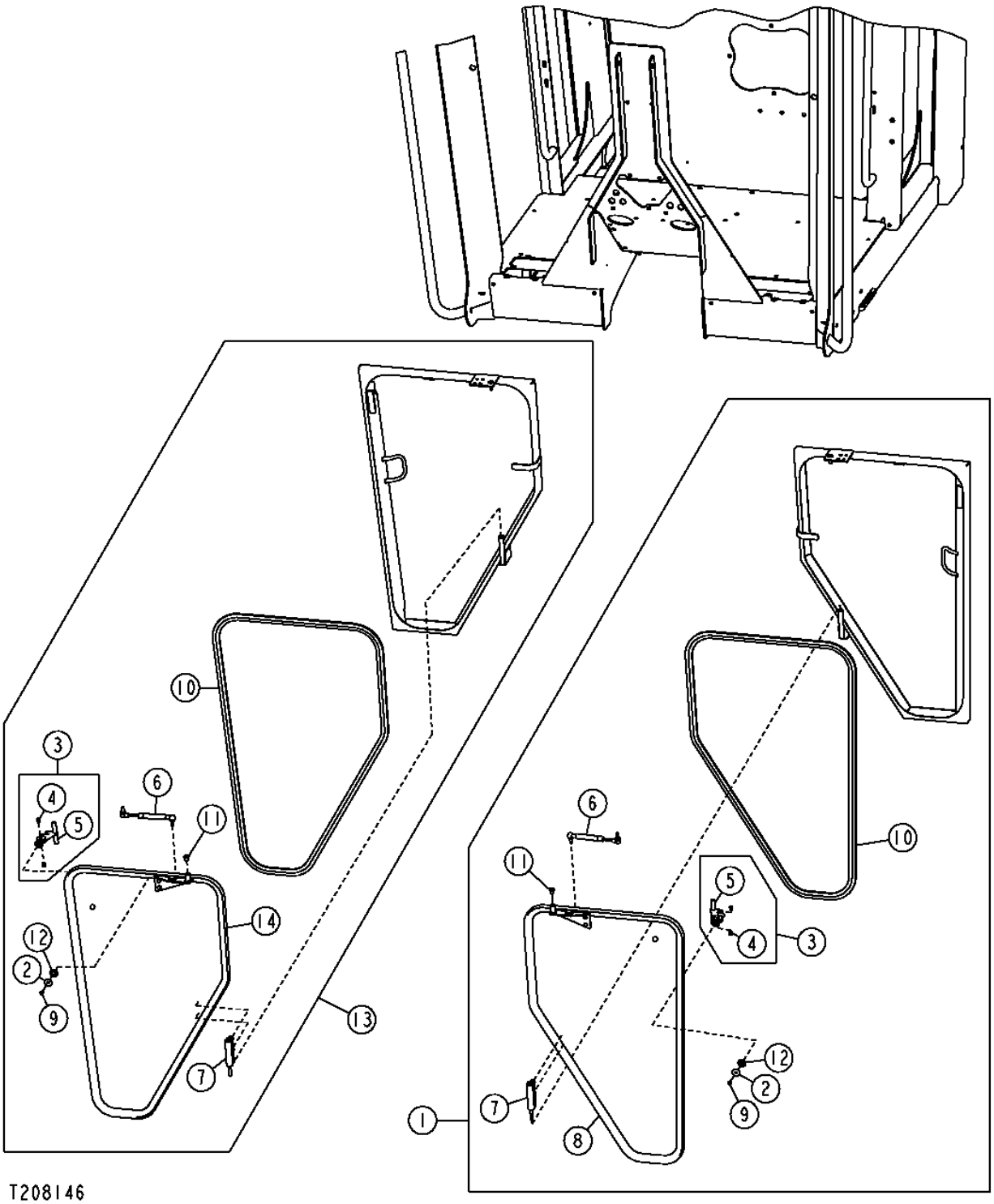

OPENABLE WINDOWS (LOWER FRONT)

KEY	PART NO.	PART NAME	QTY	SERIAL NO.	770D	772D	REMARKS
1	AT304098	WINDOW	1		X	X	LH LOWER OPENABLE-COMPLETE
2	24H1288	WASHER	1		X	X	
3	AT196522	LATCH	1		X	X	
4	A48970	DUAL LOCK FASTENER	2		X	X	
5	T119153	LATCH	1		X	X	
6	AT315903	GAS OPERATED CYLINDER	1		X	X	
7	AT315906	HINGE	1		X	X	
8	AT315909	WINDOW	1		X	X	
9	T188806	SCREW	1		X	X	
10	T211943	ISOLATOR	1		X	X	
11	T213917	BUSHING	1		X	X	
12	T76833	WASHER	1		X	X	
13	AT304099	WINDOW	1		X	X	RH LOWER OPENABLE-COMPLETE
14	AT315910	WINDOW	1		X	X	

OPENABLE WINDOWS (SIDE)

T202929 -UN-20OCT04

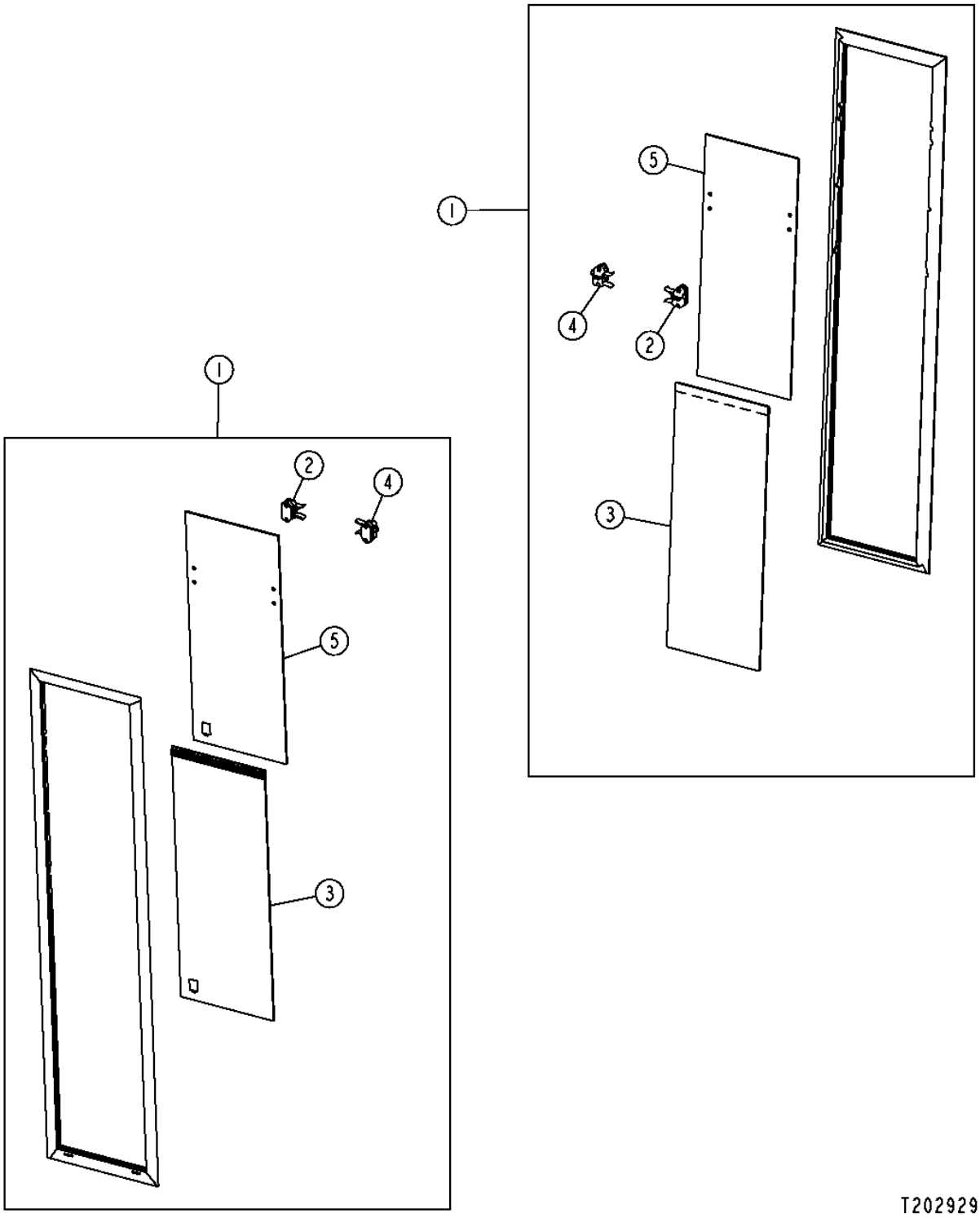

OPENABLE WINDOWS (SIDE)

KEY	PART NO.	PART NAME	QTY	SERIAL NO.	770D	772D	REMARKS
1	AT305416	WINDOW	2		X	X	(FULL HEIGHT)
	AT305414	WINDOW	2		X	X	(LOW PROFILE)
2	AT315844	LATCH	1		X	X	
3	AT315896	WINDOWPANE	1		X	X	(FULL HEIGHT AND LOW PROFILE)
4	AT316267	LATCH	2		X	X	
5	T211868	WINDOWPANE	1		X	X	(FULL HEIGHT)
	T211864	WINDOWPANE	1		X	X	(LOW PROFILE)

CAB INTERIOR PANELS

T211691 -UN-03JUN05

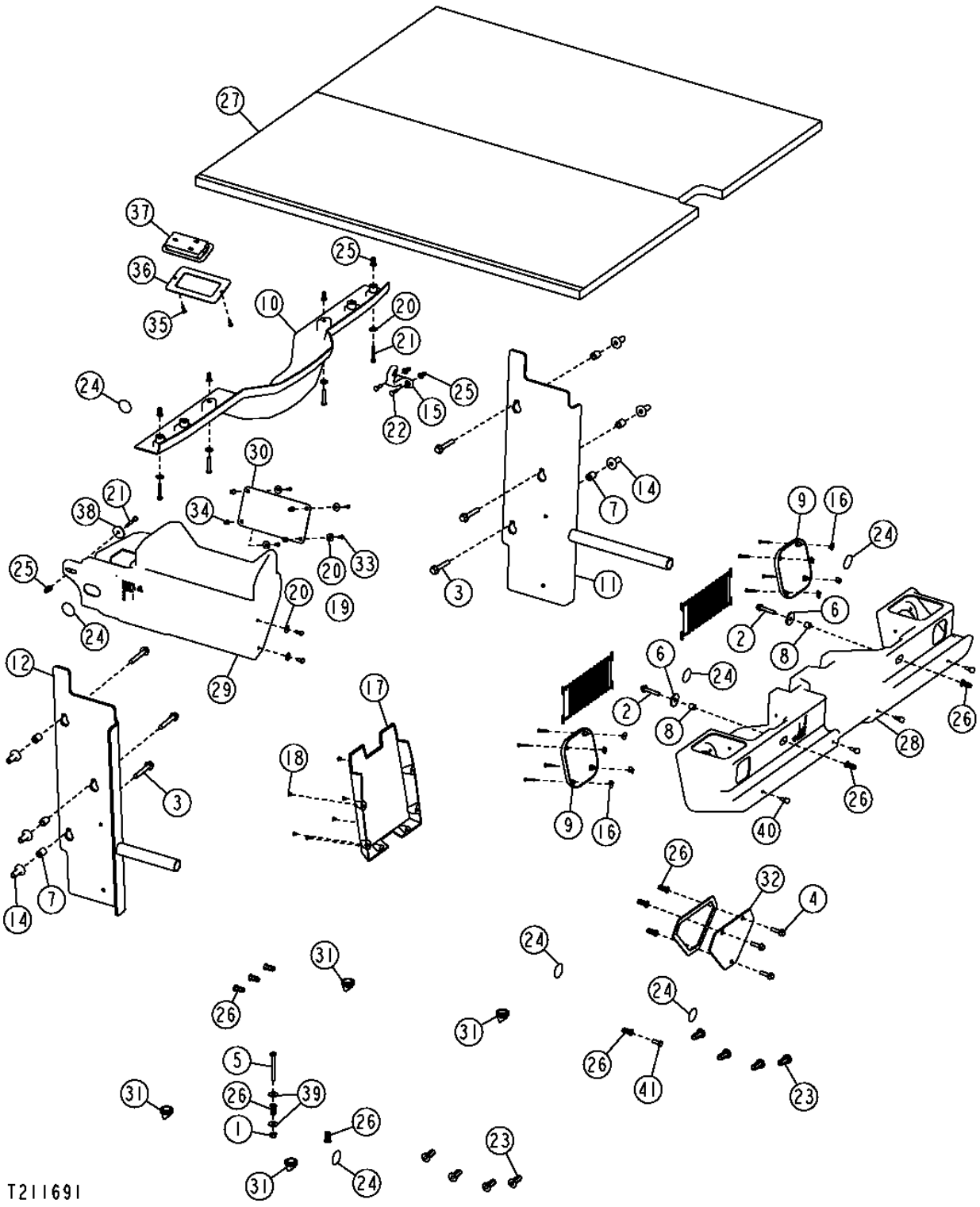

CAB INTERIOR PANELS

KEY	PART NO.	PART NAME	QTY	SERIAL NO.	770D	772D	REMARKS
1	14M7298	FLANGE NUT	1		X	X	M8
2	19M7799	SCREW	2		X	X	M8 X 45
3	19M7808	SCREW	6		X	X	M10 X 65
4	19M7868	SCREW	3		X	X	M8 X 30
5	19M8403	CAP SCREW	1		X	X	M8 X 75
6	24H1296	WASHER	2		X	X	
7	H140461	BUSHING	6		X	X	(SUB FOR 28H3436)
8	28H3450	SPACER	2		X	X	
9	AT305406	GRILLE	2		X	X	(SPEAKER GRILLE)
10	AT307650	COVER	1		X	X	(REAR WIPER COVER)
11	AT314363	BRACKET	1		X	X	(ALSO ORDER (2) T196077)
12	AT314364	BRACKET	1		X	X	(ALSO ORDER (2) T196077)
13	.....	ISOLATOR	1		X	X	(MAKE FROM T63019) (CUT TO LENGTH)
14	H173411	NUT	6		X	X	
15	L102023	HOOK	1		X	X	
16	R53528	NUT	8		X	X	
17	R77915	HOLDER	1		X	X	(OPERATOR'S MANUAL HOLDER)
18	R79033	RIVET	6		X	X	
19	21M7292	SCREW	2		X	X	M6 X 16
20	24H1821	WASHER	10		X	X	9/32" X 47/64" X 1/16"
21	21M7403	SCREW	5		X	X	M6 X 40
22	21M7310	SCREW	2		X	X	M6 X 25
23	T148409	NUT	8		X	X	
24	T186793	LABEL	7		X	X	
25	T196077	NUT	7		X	X	
26	T196079	NUT	11		X	X	
27	T202687	HEADLINER	1		X	X	(LOW PROFILE CAB)
	T205243	HEADLINER	1		X	X	(FULL HEIGHT CAB)
28	T202799	HOUSING	1		X	X	(FRONT WIPER COVER)
29	T202921	HOUSING	1		X	X	(RADIO HOUSING)
30	T203390	BRACKET	1		X	X	
31	T203950	PLUG	4		X	X	
32	T204645	COVER	1		X	X	
33	T82791	SCREW	4		X	X	
34	T82792	NUT	4		X	X	
35	37M7218	SCREW	2		X	X	
36	T212073	PLATE	1		X	X	
37	TT206940	LAMP	1		X	X	(DOMELIGHT)
38	24H1695	WASHER	1		X	X	
39	24M7298	WASHER	2		X	X	8.400 X 25 X 2 MM
40	U43012	STRIKER	4		X	X	
41	19M7881	SCREW	1		X	X	(USED TO PLUG HOLE IN CAB)

CANOPY INTERIOR PANELS

T211693 -UN-03JUN05

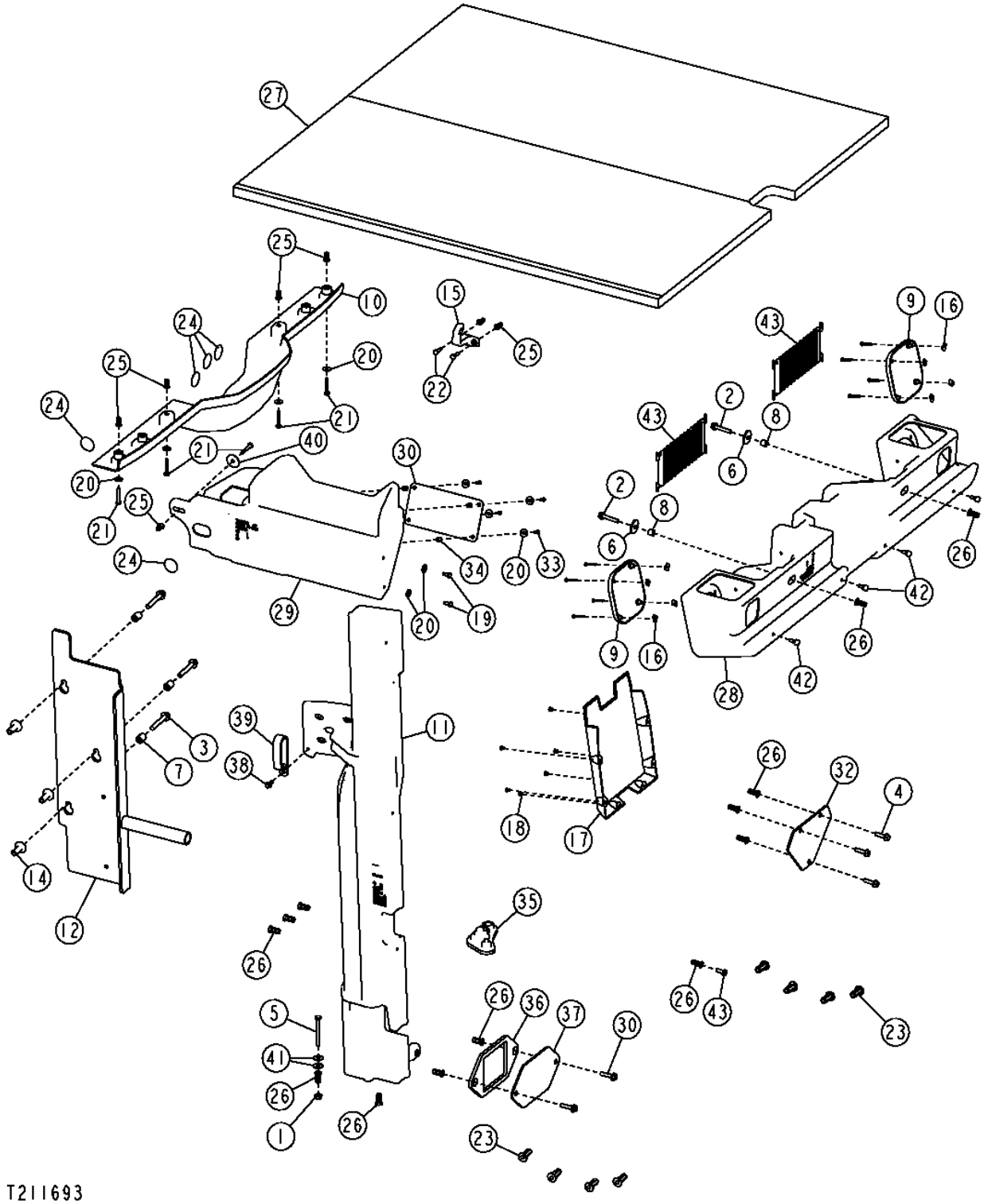

CANOPY INTERIOR PANELS

KEY	PART NO.	PART NAME	QTY	SERIAL NO.	770D	772D	REMARKS
1	14M7298	FLANGE NUT	1		X	X	M8
2	19M7799	SCREW	2		X	X	M8 X 45
3	19M7808	SCREW	3		X	X	M10 X 65
4	19M7868	SCREW	3		X	X	M8 X 30
5	19M8403	CAP SCREW	1		X	X	M8 X 75
6	24H1296	WASHER	2		X	X	
7	H140461	BUSHING	3		X	X	(SUB FOR 28H3436)
8	28H3450	SPACER	2		X	X	
9	AT305406	GRILLE	2		X	X	
10	AT307650	COVER	1		X	X	
11	AT308941	SUPPORT	1		X	X	
12	AT314364	KIT	1		X	X	
14	H173411	NUT	3		X	X	
15	L102023	HOOK	1		X	X	
16	R53528	NUT	8		X	X	
17	R77915	HOLDER	1		X	X	
18	R79033	RIVET	6		X	X	
19	21M7292	SCREW	2		X	X	M6 X 16
20	24H1821	WASHER	11		X	X	9/32" X 47/64" X 1/16"
21	21M7403	SCREW	5		X	X	M6 X 40
22	21M7310	SCREW	3		X	X	
23	T148409	NUT	8		X	X	
24	T186793	LABEL	4		X	X	
25	T196077	NUT	7		X	X	
26	T196079	NUT	13		X	X	
27	T202687	HEADLINER	1		X	X	(LOW PROFILE CAB)
28	T202799	HOUSING	1		X	X	
29	T202921	HOUSING	1		X	X	
30	19M7897	SCREW	2		X	X	
32	T204645	COVER	1		X	X	
33	T82791	SCREW	4		X	X	
34	T82792	NUT	4		X	X	
35	T166297	GROMMET	1		X	X	
36	T206985	SEAL	1		X	X	
37	T207637	BRACKET	1		X	X	
38	19M7775	SCREW	1		X	X	
39	T215319	CLAMP	1		X	X	
40	24H1695	WASHER	1		X	X	
41	24M7298	WASHER	2		X	X	
42	U43021	BUMPER	4		X	X	
43	19M7881	SCREW	1		X	X	(USED TO PLUG HOLE IN CAB)

CAB REAR INTERIOR PANELS

T203161 -UN-01NOV04

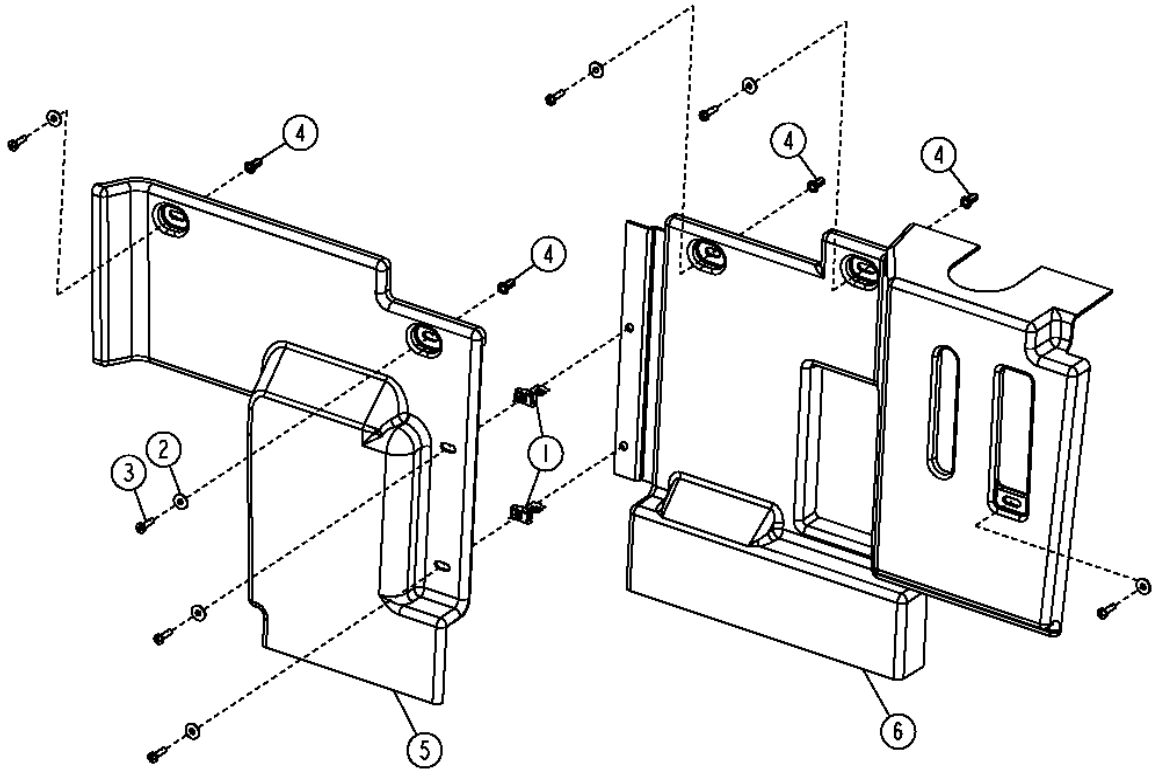

T203161

CAB REAR INTERIOR PANELS

KEY	PART NO.	PART NAME	QTY	SERIAL NO.	770D	772D	REMARKS
1	R134098	NUT	2		X	X	
2	24H1821	WASHER	7		X	X	
3	21M7310	SCREW	7		X	X	M6 X 25
4	T196077	NUT	4		X	X	
5	T202793	COVER	1		X	X	
6	T205354	COVER	1		X	X	

CAB ROOF

T209064 -UN-04MAR05

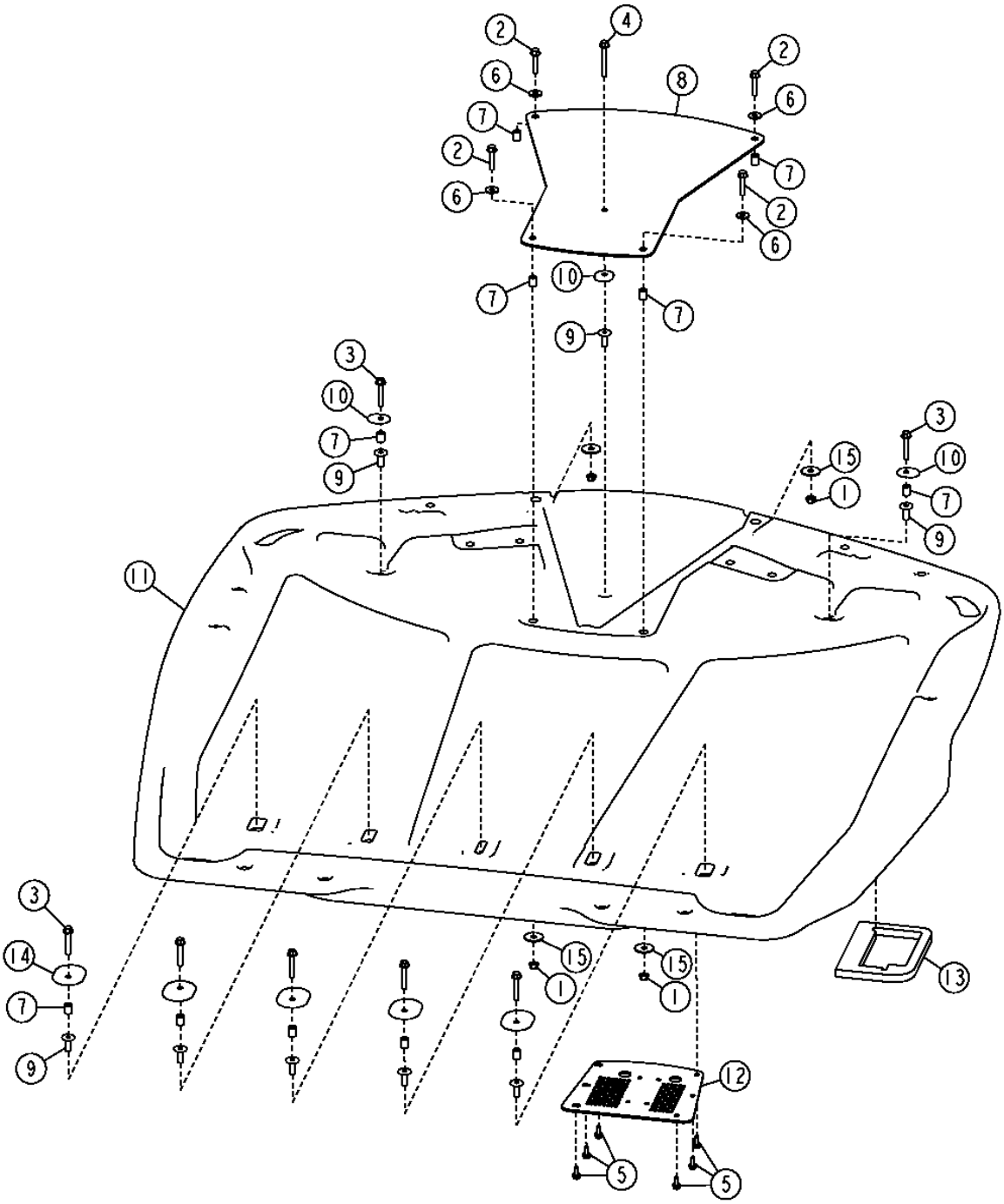

T209064

CAB ROOF

KEY	PART NO.	PART NAME	QTY	SERIAL NO.	770D	772D	REMARKS
1	14M7296	FLANGE NUT	4		X	X	M10
2	19M7805	SCREW	4		X	X	M10 X 45
3	19M7807	SCREW	7		X	X	M10 X 60, (SUB FOR 19M7808)
4	19M7810	SCREW	1		X	X	M10 X 80
5	19M7866	BOLT	6		X	X	M8 X 20
6	24M7296	WASHER	4		X	X	
7	H140461	BUSHING	11		X	X	(SUB FOR 28H3436)
8	AT317562	PLATE	1		X	X	
9	H173411	NUT	8		X	X	
10	T185664	SEALING WASHER	3		X	X	
11	T203896	ROOF	1		X	X	
12	T204319	PLATE	1		X	X	
13	T205066	ISOLATOR	1		X	X	
14	T205068	SEALING WASHER	5		X	X	
15	24H1334	WASHER	4				

CAB FLOORMAT

T201842 -UN-29JUL04

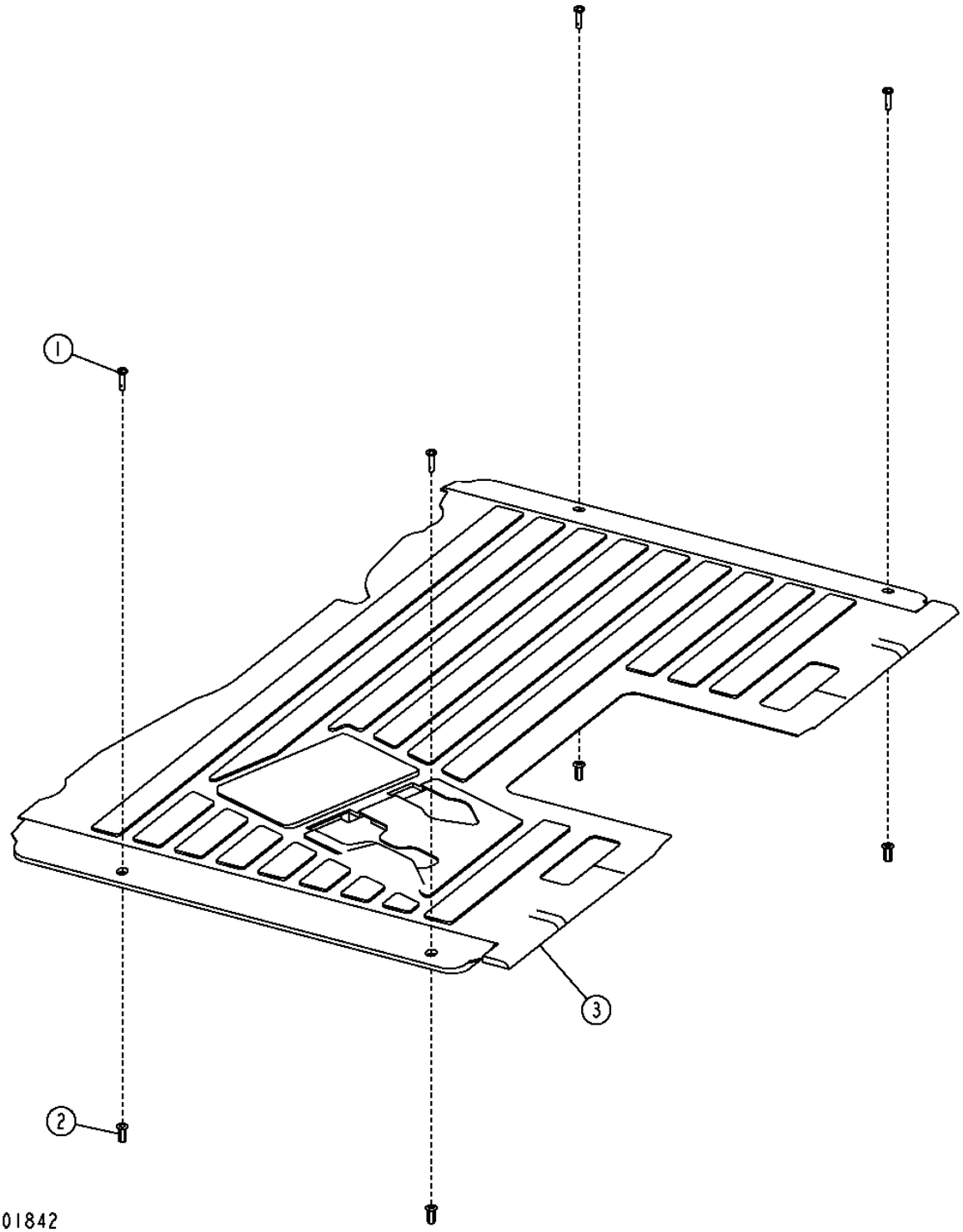

2I18

CAB FLOORMAT

KEY	PART NO.	PART NAME	QTY	SERIAL NO.	770D	772D	REMARKS
1	21M7310	SCREW	4		X	X	M6 X 25
2	T196077	NUT	1		X	X	
3	T202357	MAT	1		X	X	

CANOPY SIDE CONSOLE

T203909 -UN-19NOV04

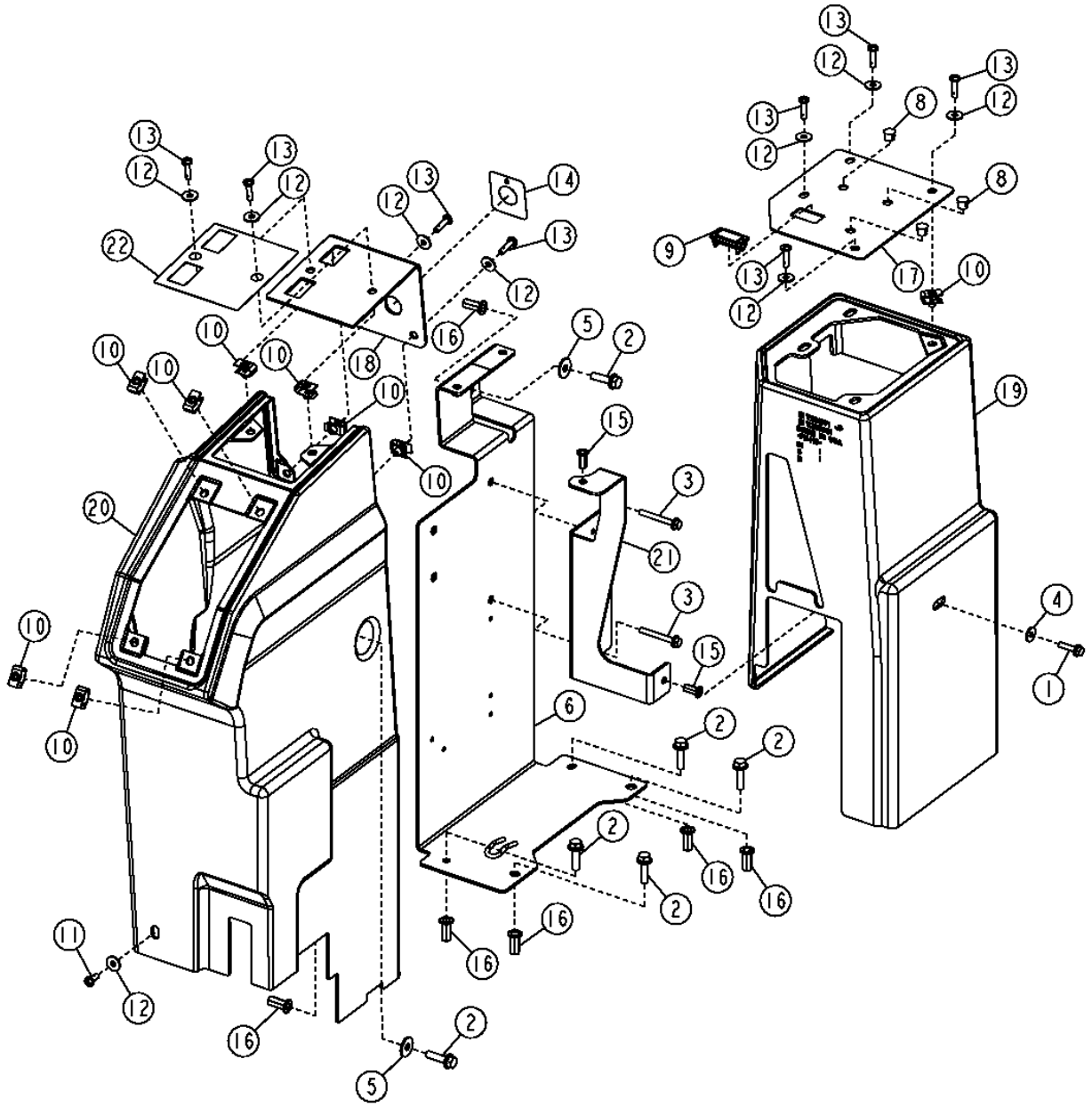

T203909

CANOPY SIDE CONSOLE

KEY	PART NO.	PART NAME	QTY	SERIAL NO.	770D	772D	REMARKS
1	19M7863	SCREW	1		X	X	M6 X 25
2	19M7868	SCREW	6		X	X	M8 X 30
3	19M8092	SCREW	2		X	X	M6 X 50
4	24M7139	WASHER	1		X	X	
5	24M7298	WASHER	2		X	X	
6	AT306848	BRACKET	1		X	X	(FLC AND POWER CONVERTER MOUNTING BRACKET)
8	H113924	PLUG	3		X	X	
9	M115279	PLUG	1		X	X	
10	R134098	NUT	9		X	X	
11	21M7292	SCREW	1		X	X	M6 X 16
12	24H1646	WASHER	9		X	X	(SUB FOR T134530)
13	21M7310	SCREW	8		X	X	M6 X 25
14	T157172	LABEL	1		X	X	
15	T196077	NUT	2		X	X	
16	T196079	NUT	6		X	X	
17	T202800	INSTRUMENT PANEL	1		X	X	
18	T203961	INSTRUMENT PANEL	1		X	X	
19	T205661	HOUSING	1		X	X	
20	T205662	HOUSING	1		X	X	
21	T205671	BRACKET	1		X	X	(ALSO ORDER (2) T196077)
22	T213199	LABEL	1		X	X	

CAB SIDE CONSOLE

T203914 -UN-18DEC04

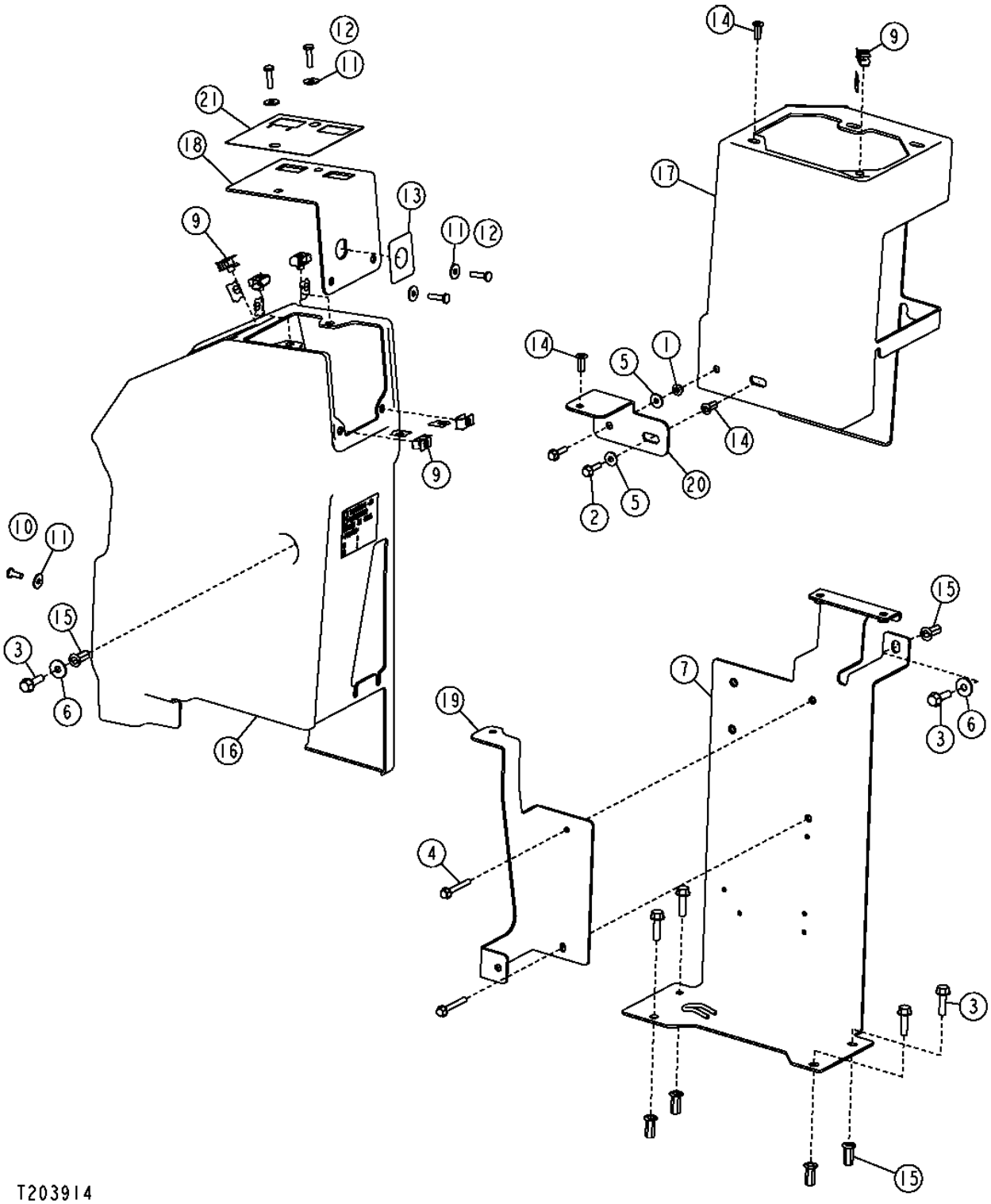

CAB SIDE CONSOLE

KEY	PART NO.	PART NAME	QTY	SERIAL NO.	770D	772D	REMARKS
1	14M7303	FLANGE NUT	1		X	X	M6
2	19M7863	SCREW	2		X	X	M6 X 25
3	19M7868	SCREW	6		X	X	M8 X 30
4	19M8092	SCREW	2		X	X	M6 X 50
5	24M7139	WASHER	2		X	X	
6	24M7298	WASHER	2		X	X	
7	AT306848	BRACKET	1		X	X	(FLC AND POWER CONVERTER MOUNTING BRACKET)
10	21M7292	SCREW	1		X	X	M6 X 16
11	24H1821	WASHER	5		X	X	
12	21M7310	SCREW	4		X	X	M6 X 25
13	T157172	LABEL	1		X	X	
14	T196077	NUT	3		X	X	
15	T196079	NUT	6		X	X	
16	T201564	CONTROL CONSOLE	1		X	X	(GEARSHIFT LEVER CONSOLE)
17	T201571	CONSOLE	1		X	X	(A/C CONSOLE)
18	T203961	INSTRUMENT PANEL	1		X	X	
19	T205671	BRACKET	1		X	X	(ALSO ORDER (2) T196077)
20	T213140	BRACKET	1		X	X	(ALSO ORDER T196077)
21	T213199	LABEL	1		X	X	

RIGHT SIDE CAB DOOR

T204838 -UN-11NOV04

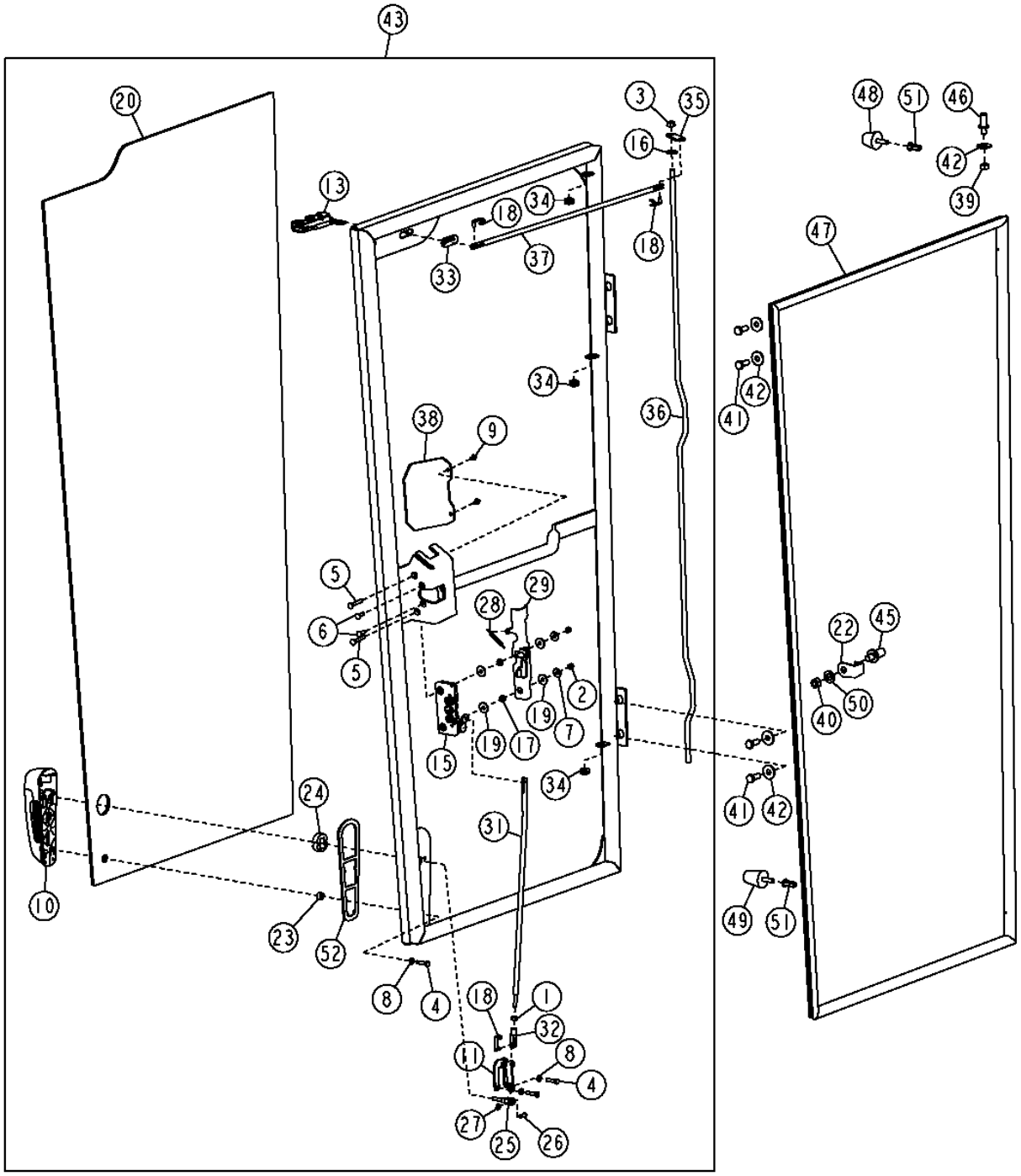

RIGHT SIDE CAB DOOR

KEY	PART NO.	PART NAME	QTY	SERIAL NO.	770D	772D	REMARKS
1	14H786	NUT	2		X	X	
2	14M7165	LOCK NUT	4		X	X	M6
3	14M7298	FLANGE NUT	2		X	X	M8
4	19M7933	CAP SCREW	12		X	X	M6 X 25
5	21M7289	SCREW	4		X	X	M6 X 40
6	21M7326	SCREW	4		X	X	M6 X 20
7	24H1646	WASHER	4		X	X	
8	24M7293	WASHER	12		X	X	
9	37M7059	SCREW	4		X	X	M5 X 12
10	AT306181	HANDLE	2		X	X	
11	AT317981	BELLCRANK	2		X	X	
13	AT317983	LATCH	1		X	X	
15	AT317985	LATCH	1		X	X	
16	H110232	WASHER	2		X	X	
17	T160017	SPACER	4		X	X	
18	T160020	PIN	8		X	X	
19	T175675	WASHER	8		X	X	
20	T202653	WINDOWPANE	1		X	X	(RH LOW PROFILE)
	T202655	WINDOWPANE	1		X	X	(RH FULL HEIGHT)
22	T204599	GASKET	2		X	X	
23	T205901	WASHER	2		X	X	
24	T205902	SPACER	2		X	X	
25	T210101	YOKE	2		X	X	
26	T210102	PIN FASTENER	2		X	X	
27	T210103	RING	2		X	X	
28	T210106	SPRING	2		X	X	
29	T213167	LEVER	1		X	X	
31	T213443	ROD	2		X	X	
32	T213444	CLEVIS	2		X	X	
33	T213445	GROMMET	2		X	X	
34	L152397	GROMMET	6		X	X	(SUB FOR T213447)
35	T213448	STRAP	2		X	X	
36	T213450	ROD	2		X	X	(LOW PROFILE)
	T213449	ROD	2		X	X	(FULL HEIGHT)
37	T213451	ROD	2		X	X	
38	T213452	COVER	2		X	X	
39	14M7274	NUT	2		X	X	M10
40	14M7275	NUT	2		X	X	M12
41	19M7402	CAP SCREW	8		X	X	M10 X 25
42	24M7296	WASHER	10		X	X	
43	AT303744	DOOR	1		X	X	(RH LOW PROFILE)
	AT303748	DOOR	1		X	X	(RH FULL HEIGHT)
45	AT307096	STRIKER	2		X	X	
46	T201880	STUD	2		X	X	
47	AT322428	ISOLATOR	2		X	X	
48	AT317979	BUMPER	2		X	X	
49	AT317980	BUMPER	2		X	X	
50	R70663	WASHER	2		X	X	
51	T196079	NUT	4		X	X	
52	T205499	GUARD	2		X	X	

LEFT SIDE CAB DOOR

T204307 -UN-18DEC04

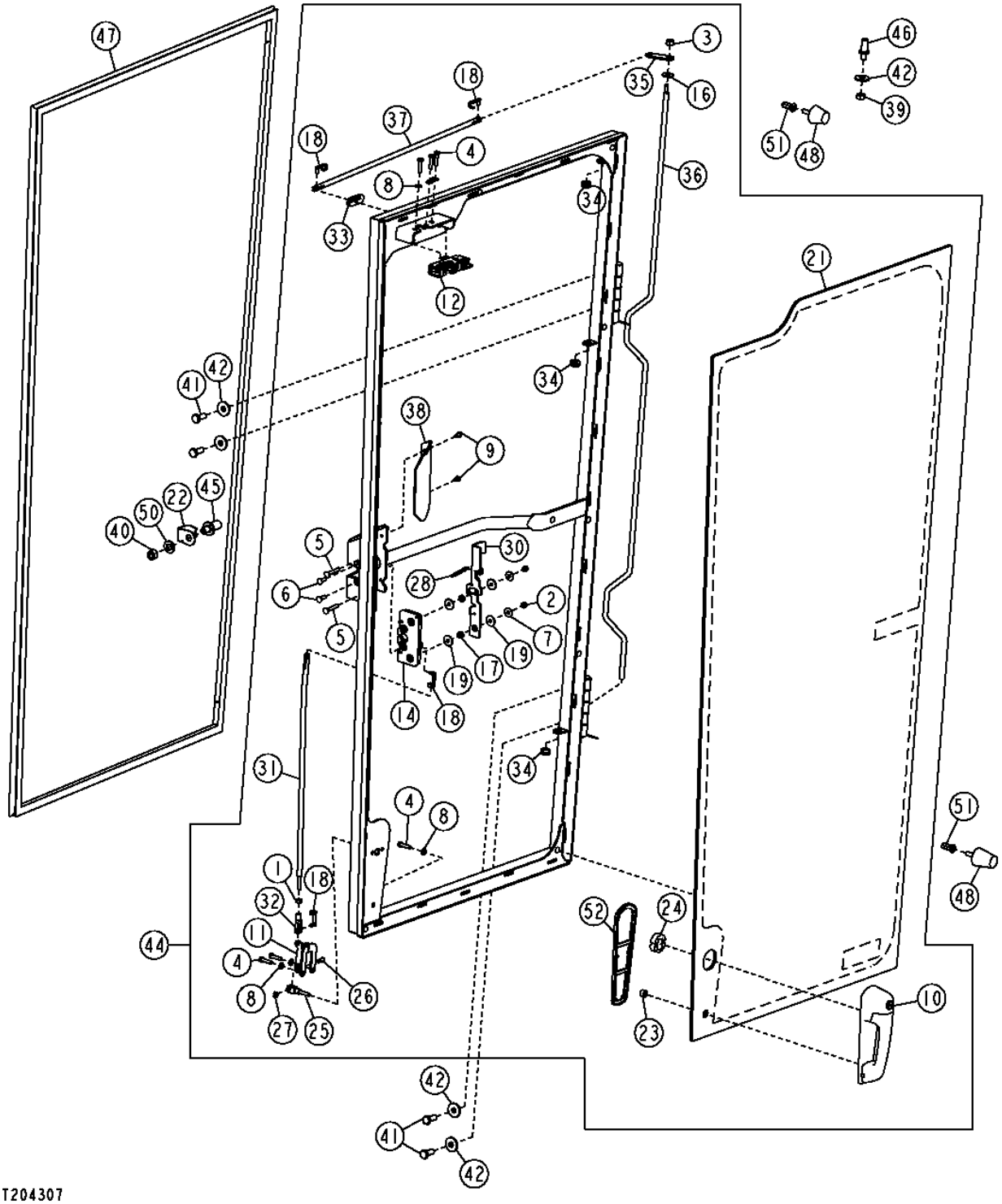

LEFT SIDE CAB DOOR

KEY	PART NO.	PART NAME	QTY	SERIAL NO.	770D	772D	REMARKS
1	14H786	NUT	2		X	X	
2	14M7165	LOCK NUT	4		X	X	M6
3	14M7298	FLANGE NUT	2		X	X	M8
4	19M7933	CAP SCREW	12		X	X	M6 X 25
5	21M7289	SCREW	4		X	X	M6 X 40
6	21M7326	SCREW	4		X	X	M6 X 20
7	24H1646	WASHER	4		X	X	
8	24M7293	WASHER	12		X	X	
9	37M7059	SCREW	4		X	X	M5 X 12
10	AT306181	HANDLE	2		X	X	
11	AT317981	BELLCRANK	2		X	X	
12	AT317982	LATCH	1		X	X	
14	AT317984	LATCH	1		X	X	
16	H110232	WASHER	2		X	X	
17	T160017	SPACER	4		X	X	
18	T160020	PIN	8		X	X	
19	T175675	WASHER	8		X	X	
21	T202654	WINDOWPANE	1		X	X	(LH LOW PROFILE)
	T202656	WINDOWPANE	1		X	X	(LH FULL HEIGHT)
22	T204599	GASKET	2		X	X	
23	T205901	WASHER	2		X	X	
24	T205902	SPACER	2		X	X	
25	T210101	YOKE	2		X	X	
26	T210102	PIN FASTENER	2		X	X	
27	T210103	RING	2		X	X	
28	T210106	SPRING	2		X	X	
30	T213167	LEVER	1		X	X	
31	T213443	ROD	2		X	X	
32	T213444	CLEVIS	2		X	X	
33	T213445	GROMMET	2		X	X	
34	T213447	GROMMET	6		X	X	
35	T213448	STRAP	2		X	X	
36	T213450	ROD	2		X	X	(LOW PROFILE)
	T213449	ROD	2		X	X	(FULL HEIGHT)
37	T213451	ROD	2		X	X	
38	T213452	COVER	2		X	X	
39	14M7274	NUT	2		X	X	M10
40	14M7275	NUT	2		X	X	M12
41	19M7402	CAP SCREW	8		X	X	M10 X 25
42	24M7296	WASHER	10		X	X	
44	AT303745	DOOR	1		X	X	(LH LOW PROFILE)
	AT303749	DOOR	1		X	X	(LH FULL HEIGHT)
45	AT307096	STRIKER	2		X	X	
46	T201880	STUD	2		X	X	
47	AT322428	ISOLATOR	2		X	X	
48	AT317979	BUMPER	2		X	X	
50	R70663	WASHER	2		X	X	
51	T196079	NUT	4		X	X	
52	T205499	GUARD	2		X	X	

CAB STATIONARY FRONT CONSOLE

T204497 -UN-12NOV04

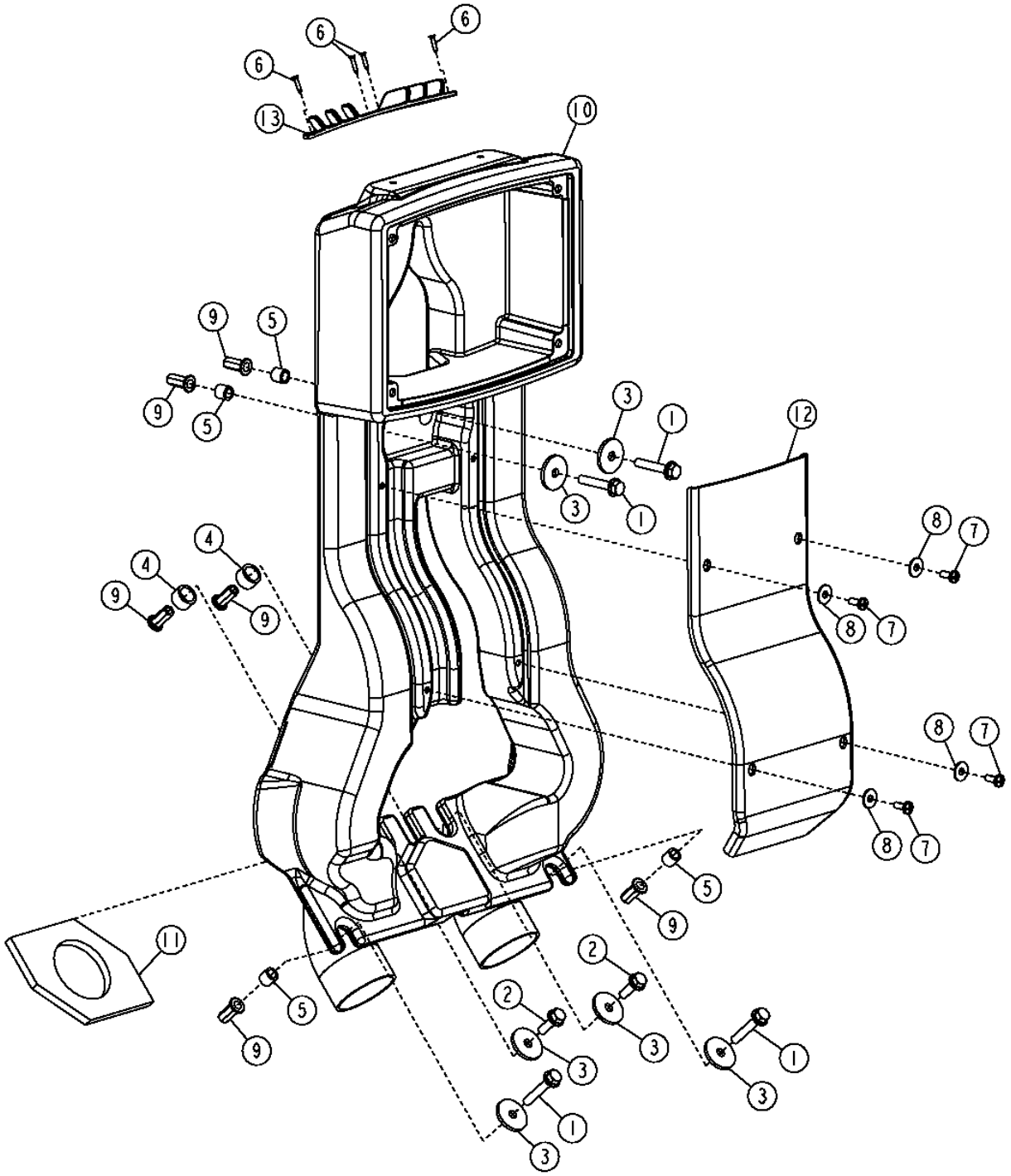

CAB STATIONARY FRONT CONSOLE

KEY	PART NO.	PART NAME	QTY	SERIAL NO.	770D	772D	REMARKS
1	19M7799	SCREW	4		X	X	M8 X 45
2	19M7867	SCREW	2		X	X	M8 X 25
3	24H1296	WASHER	6		X	X	
4	28H3393	BUSHING	2		X	X	
5	28H3450	SPACER	4		X	X	
6	37M7333	SCREW	4		X	X	
7	21M7292	SCREW	4		X	X	M6 X 16
8	24H1646	WASHER	4		X	X	(SUB FOR T134530)
9	T196079	NUT	6		X	X	
10	T201565	AIR DUCT	1		X	X	
11	T202746	SEAL	2		X	X	
12	T202797	COVER	1		X	X	
13	T212947	LOUVER	1		X	X	

STEERING WHEEL

T205167 -UN-29NOV04

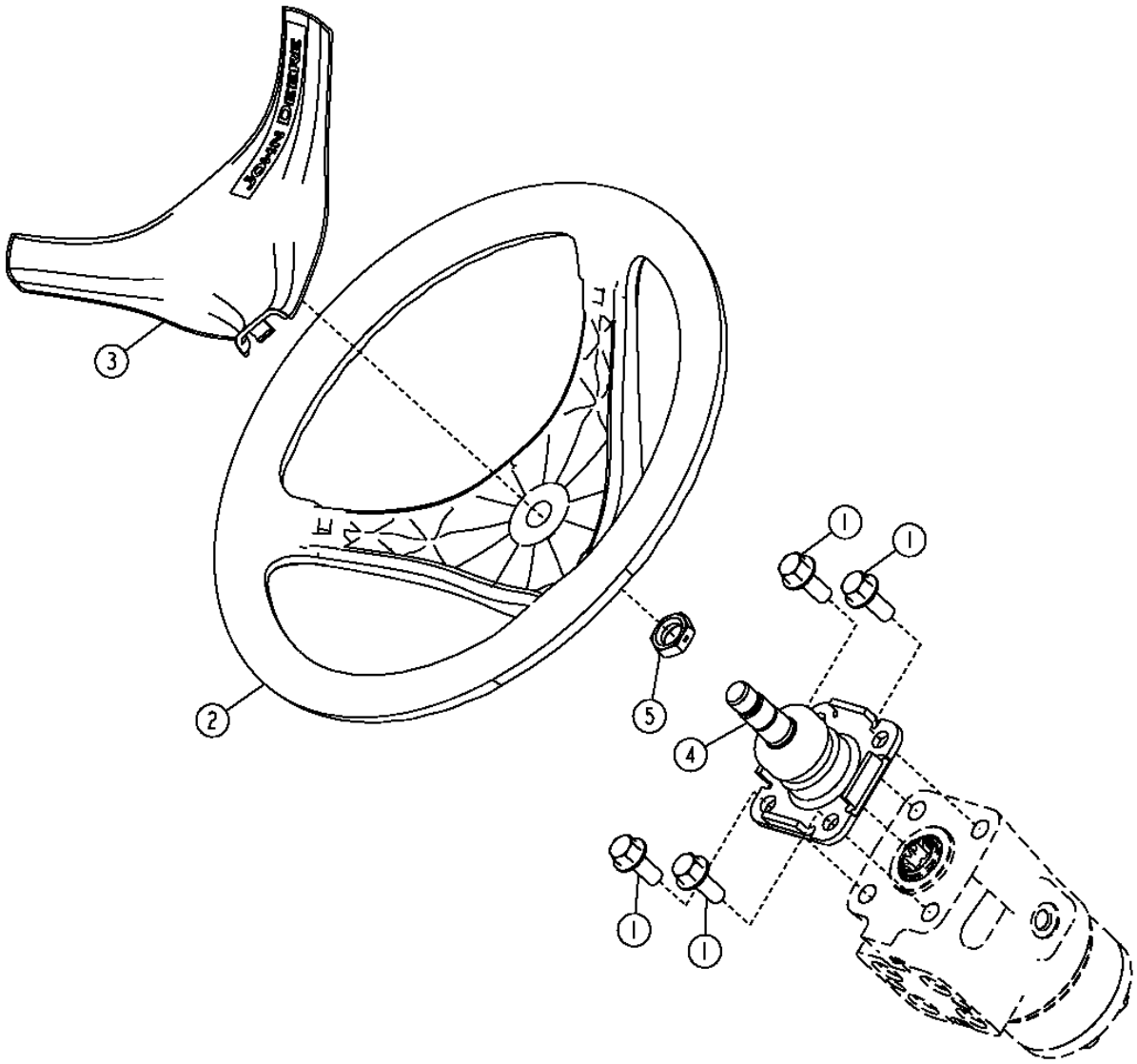

T205167

STEERING WHEEL

KEY	PART NO.	PART NAME	QTY	SERIAL NO.	770D	772D	REMARKS
1	19M7785	SCREW	4		X	X	M10 X 25
2	M142218	STEERING WHEEL	1		X	X	
3	M142219	COVER	1		X	X	
4	AT322881	STEERING COLUMN	2		X	X	
5	T213896	NUT	1		X	X	

CAB CONTROL LEVER CONSOLE

T212873 -UN-21JUL05

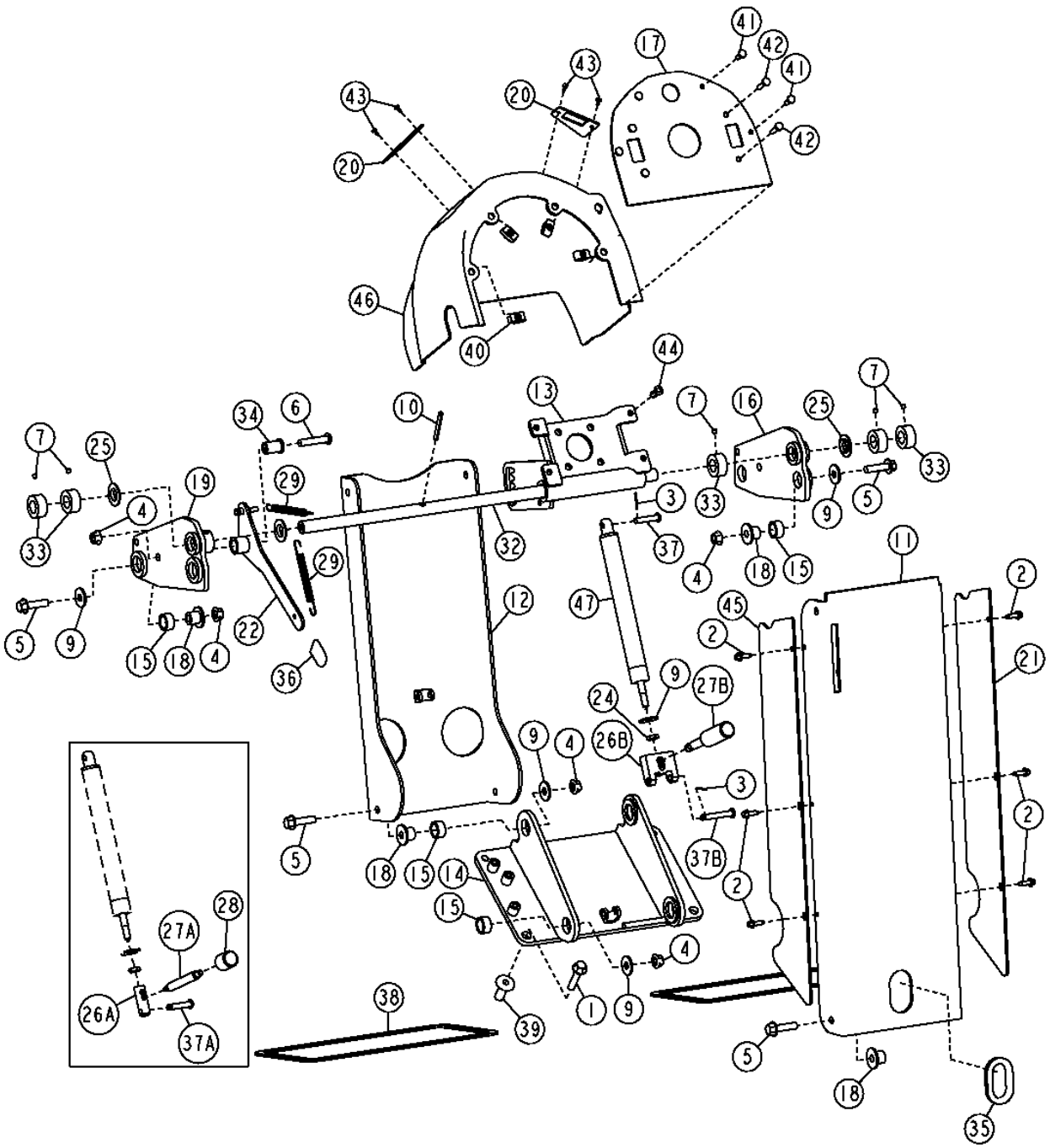

CAB CONTROL LEVER CONSOLE

KEY	PART NO.	PART NAME	QTY	SERIAL NO.	770D	772D	REMARKS
1	19M7805	SCREW	4		X	X	M10 X 45
2	37M7131	SCREW	6		X	X	
3	11M7078	COTTER PIN	2		X	X	
4	14M7296	FLANGE NUT	9		X	X	M10
5	19M7804	SCREW	8		X	X	M10 X 40
6	21M7497	SCREW	1		X	X	M10 X 50
7	22M7111	SET SCREW	5		X	X	M6 X 6
9	24M7296	WASHER	9		X	X	
10	34M7044	SPRING PIN	1		X	X	
11	AT305051	CONTROL SUPPORT	1		X	X	
12	AT305052	CONTROL SUPPORT	1		X	X	
13	AT305070	BRACKET	1		X	X	(ALSO ORDER (4) T196078)
14	AT305018	CONTROL SUPPORT	1		X	X	
15	T203544	BUSHING	8		X	X	
16	AT305297	BRACKET	1		X	X	
17	T204643	PLATE	1		X	X	
18	T203545	BUSHING	8		X	X	
19	AT305310	BRACKET	1		X	X	
20	T205401	PLATE	2		X	X	
21	T206080	COVER	1		X	X	
22	AT305397	LEVER	1		X	X	
24	14M7500	NUT	1		X	X	M10
25	T104220	WASHER	4		X	X	
26A	.....	ADAPTER	1		X	X	(SUB T217649, T217650, R69166) (T210698 NO LONGER AVAILABLE)
26B	T217649	ADAPTER	1		X	X	
27A	.....	LEVER	1		X	X	(SUB T217649, T217650, R69166) (T210699 NO LONGER AVAILABLE)
27B	T217650	LEVER	1		X	X	
28	.....	PIN FASTENER	1		X	X	(SUB T217649, T217650, R69166) (T210700 NO LONGER AVAILABLE)
29	M145875	EXTENSION SPRING	2		X	X	
32	T203569	SHAFT	1		X	X	
33	T203576	SPACER	5		X	X	
34	T203871	SPACER	1		X	X	
35	T210711	GROMMET	1		X	X	
36	T81012	CAP	1		X	X	
37	Z21059	PIN FASTENER	1		X	X	
37A	Z21059	PIN FASTENER	1		X	X	
37B	R69166	PIN	1		X	X	
38	.....	ISOLATOR	1		X	X	(MAKE FROM T59938) (CUT TO LENGTH)
39	H173411	NUT	4		X	X	
40	M84972	NUT	4		X	X	
41	T133674	SELF-LOCKING SCREW	4		X	X	
42	T134895	SELF-LOCKING SCREW	4		X	X	
43	T185769	SCREW	4		X	X	
44	T196078	NUT	4		X	X	
45	T203589	COVER	1		X	X	
46	T204301	COVER	1		X	X	
47	AT305734	WIRING HARNESS	1		X	X	

CAB CONTROL LEVERS (LEFT)

T210167 -UN-14APR05

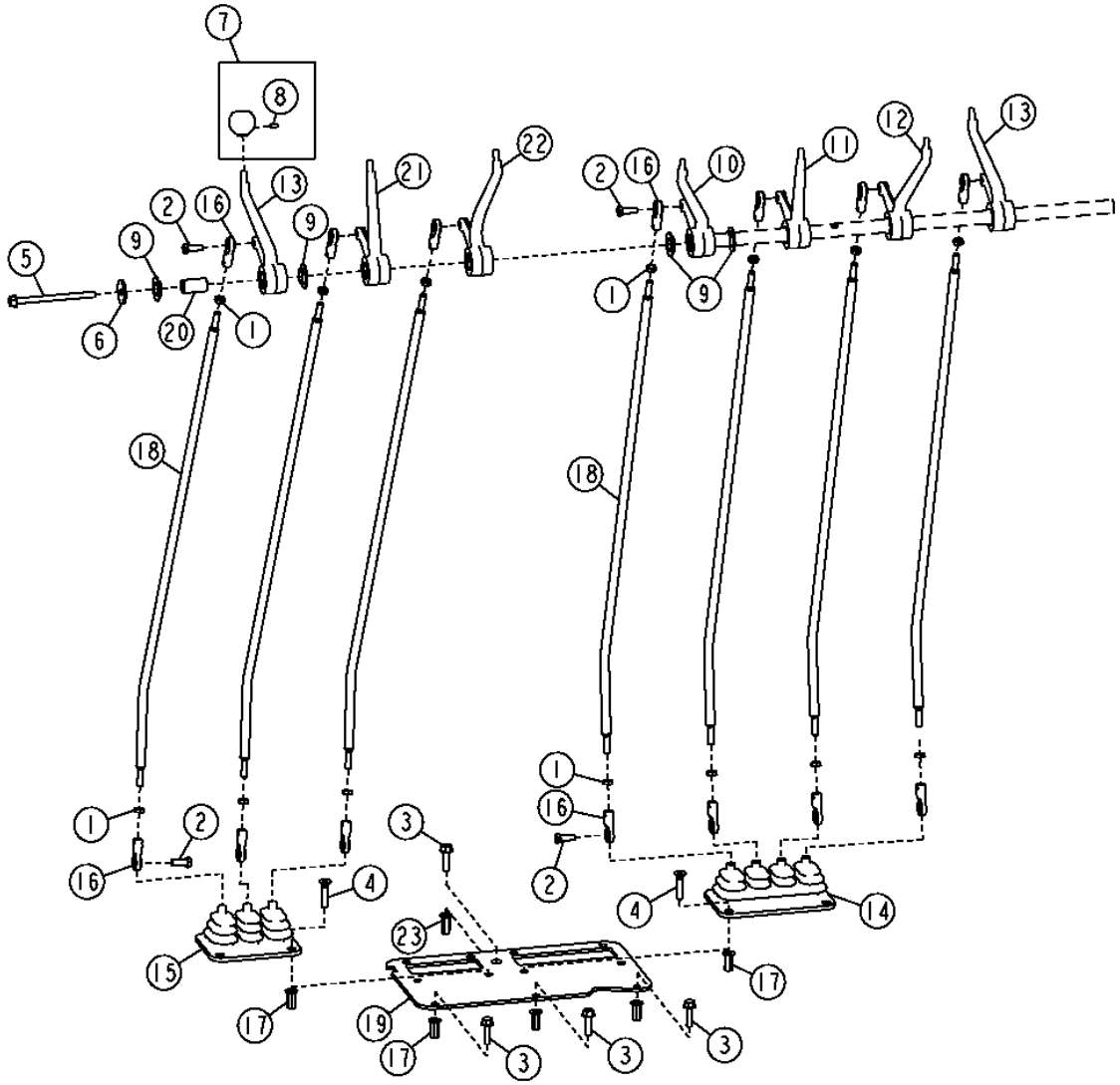

CAB CONTROL LEVERS (LEFT)

KEY	PART NO.	PART NAME	QTY	SERIAL NO.	770D	772D	REMARKS
1	14H882	NUT	14		X	X	
2	19H2127	CAP SCREW	14		X	X	
3	19M7868	SCREW	4		X	X	M8 X 30
4	N278790	SCREW	16		X	X	
5	19M7865	SCREW	2		X	X	M8 X 16, (USE WITH FOUR LEVERS)
	19M7800	SCREW	1		X	X	M8 X 50, (USE WITH FIVE LEVERS)
	19M7913	SCREW	1		X	X	M8 X 90, (USE WITH SIX LEVERS)
	19M8006	SCREW	1		X	X	M8 X 120, (USE WITH SEVEN LEVERS)
6	24H1296	WASHER	1		X	X	
7	AT317737	KNOB	1		X	X	(CIRCLE ROTATE)
	AT317739	KNOB	1		X	X	(ARTICULATION)
	AT317740	KNOB	1		X	X	(WHEEL LEAN)
	AT317741	KNOB	1		X	X	(RIGHT BLADE LIFT)
	AT317744	KNOB	1		X	X	(AUXILIARY)
	AT317742	KNOB	1		X	X	(SCARIFIER)
8	T213242	SET SCREW	1		X	X	
9	T104220	WASHER	32		X	X	
10	T202160	CONTROL LEVER	1		X	X	
11	T202161	CONTROL LEVER	1		X	X	
12	T202162	CONTROL LEVER	1		X	X	
13	T202163	CONTROL LEVER	1		X	X	
14	AT305667	BOOT	1		X	X	
15	AT305939	BOOT	1		X	X	
16	AT317778	LINK END	14		X	X	
17	T196079	NUT	11		X	X	
18	T202586	LEVER	7		X	X	
19	T204044	PLATE	2		X	X	
20	T204457	SPACER	1		X	X	
21	T202164	CONTROL LEVER	1		X	X	
22	T202159	CONTROL LEVER	2		X	X	
23	T196080	NUT	2		X	X	

CAB CONTROL LEVERS (RIGHT)

T210168 -UN-14APR05

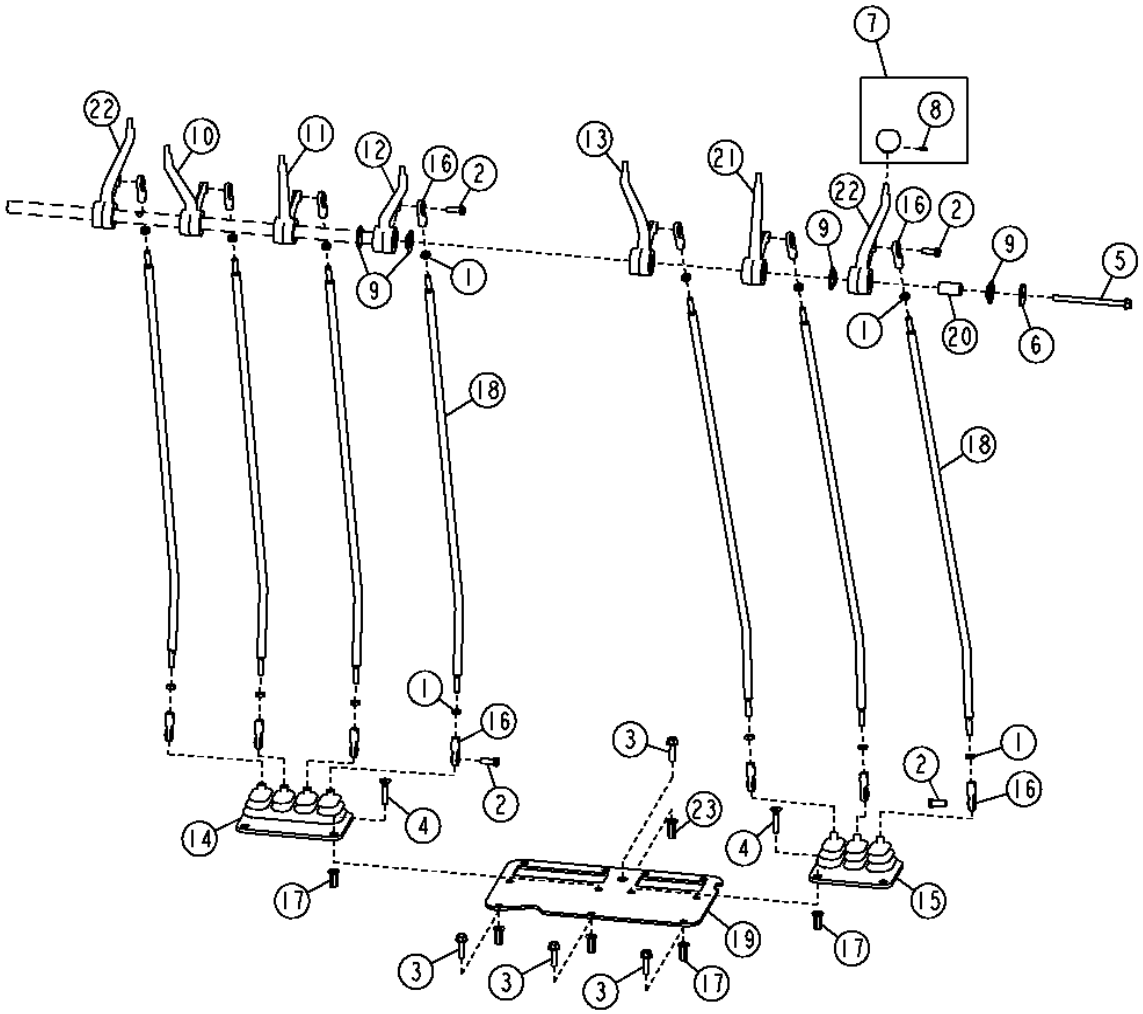

2J12

CAB CONTROL LEVERS (RIGHT)

KEY	PART NO.	PART NAME	QTY	SERIAL NO.	770D	772D	REMARKS
1	14H882	NUT	14		X	X	
2	19H2127	CAP SCREW	14		X	X	
3	19M7868	SCREW	4		X	X	M8 X 30
4	N278790	SCREW	16		X	X	
5	19M7865	SCREW	2		X	X	M8 X 16, (USE WITH FOUR LEVERS)
	19M7800	SCREW	1		X	X	M8 X 50, (USE WITH FIVE LEVERS)
	19M7913	SCREW	1		X	X	M8 X 90, (USE WITH SIX LEVERS)
	19M8006	SCREW	1		X	X	M8 X 120, (USE WITH SEVEN LEVERS)
6	24H1296	WASHER	1		X	X	
7	AT317734	KNOB	1		X	X	(LEFT BLADE LIFT)
	AT317735	KNOB	1		X	X	(BLADE SIDE SHIFT)
	AT317736	KNOB	1		X	X	(BLADE TILT)
	AT317738	KNOB	1		X	X	(CIRCLE SIDE SHIFT)
	AT317743	KNOB	1		X	X	(RIPPER)
	AT317744	KNOB	1		X	X	(AUXILIARY)
8	T213242	SET SCREW	1		X	X	
9	T104220	WASHER	32		X	X	
10	T202160	CONTROL LEVER	1		X	X	
11	T202161	CONTROL LEVER	1		X	X	
12	T202162	CONTROL LEVER	1		X	X	
13	T202163	CONTROL LEVER	1		X	X	
14	AT305667	BOOT	1		X	X	
15	AT305939	BOOT	1		X	X	
16	AT317778	LINK END	14		X	X	
17	T196079	NUT	11		X	X	
18	T202586	LEVER	7		X	X	
19	T204044	PLATE	2		X	X	
20	T204457	SPACER	1		X	X	
21	T202164	CONTROL LEVER	1		X	X	
22	T202159	CONTROL LEVER	2		X	X	
23	T196080	NUT	2		X	X	

AIR SUSPENSION SEAT

T204097 -UN-10NOV04

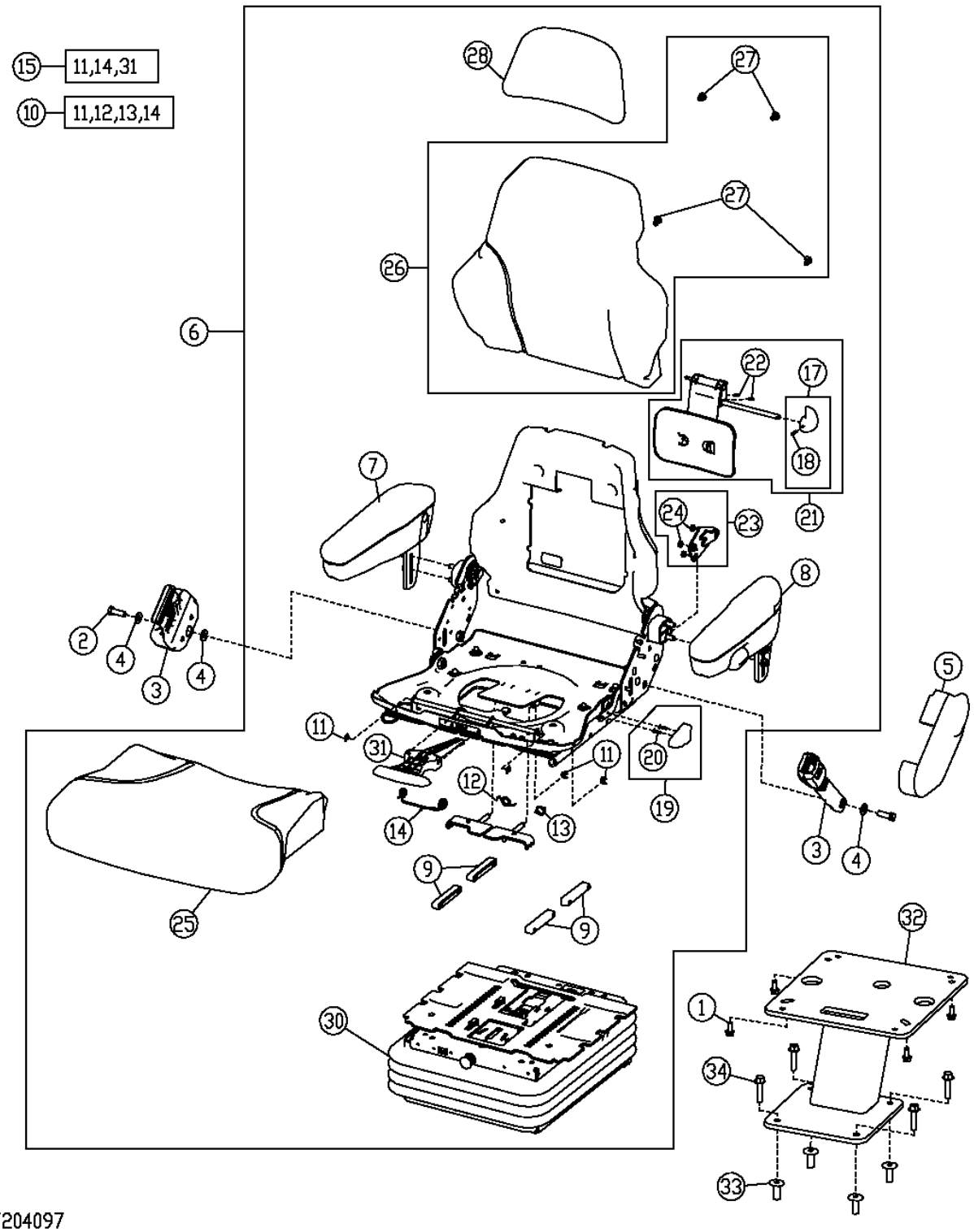

AIR SUSPENSION SEAT

KEY	PART NO.	PART NAME	QTY	SERIAL NO.	770D	772D	REMARKS
1	19M7866	BOLT	4		X	X	
2	19H3569	CAP SCREW	2		X	X	
3	AT308199	SEAT BELT	1		X	X	
4	T105740	WASHER	4		X	X	
5	T163962	COVER	1		X	X	
6	AT224248	SEAT	1		X	X	GRAY CLOTH
7	AT195441	ARMREST KIT	1		X	X	(R.H.)
	AT315715	PAD	1		X	X	
8	AT195442	ARMREST KIT	1		X	X	(L.H.)
	AT315761	PAD	1		X	X	
9	AT209020	KIT	1		X	X	SLIDE PUCK KIT
10	AT209021	KIT	1		X	X	SLIDE SPRING KIT
11	R72655	SNAP RING	4		X	X	
12	T163334	SPRING	1		X	X	
13	T163335	SPRING	1		X	X	
14	T163336	TORSION SPRING	1		X	X	
15	AT209022	KIT	1		X	X	SLIDE CONTROL KIT
17	AT209024	KIT	1		X	X	LUMBAR KNOB KIT
18	34H262	SPRING PIN	1		X	X	
19	AT209025	KIT	1		X	X	RECLINER KNOB KIT
20	37H121	SCREW	1		X	X	
21	AT209026	KIT	1		X	X	LUMBAR SERVICE KIT
22	34H387	SPRING PIN	2		X	X	
23	AT209225	KIT	1		X	X	RECLINER SERVICE KIT (INCLUDES RECLINER KNOB KIT AND TORSION SPRING)
24	M453T	LOCK NUT	3		X	X	
25	AT308795	CUSHION	1		X	X	(SUB FOR AT221019) GRAY CLOTH
26	AT308796	CUSHION	1		X	X	(SUB FOR AT221020) GRAY CLOTH
27	T171686	CLIP	4		X	X	
28	AT308797	CUSHION	1		X	X	(SUB FOR AT221021) GRAY CLOTH
29	N119177	GROMMET	1		X	X	(NOT ILLUSTRATED)
30	AT208531	SEAT SUSPENSION	1		X	X	(AIR)(COMPONENTS ON SEPARATE PAGE)
31	.....	CONTROL	1		X	X	
32	AT305437	PEDESTAL	1		X	X	
33	H173411	NUT	4		X	X	
34	19M7805	SCREW	4		X	X	M10 X 45

AIR SEAT SUSPENSION COMPONENTS

T195125 -UN-25SEP03

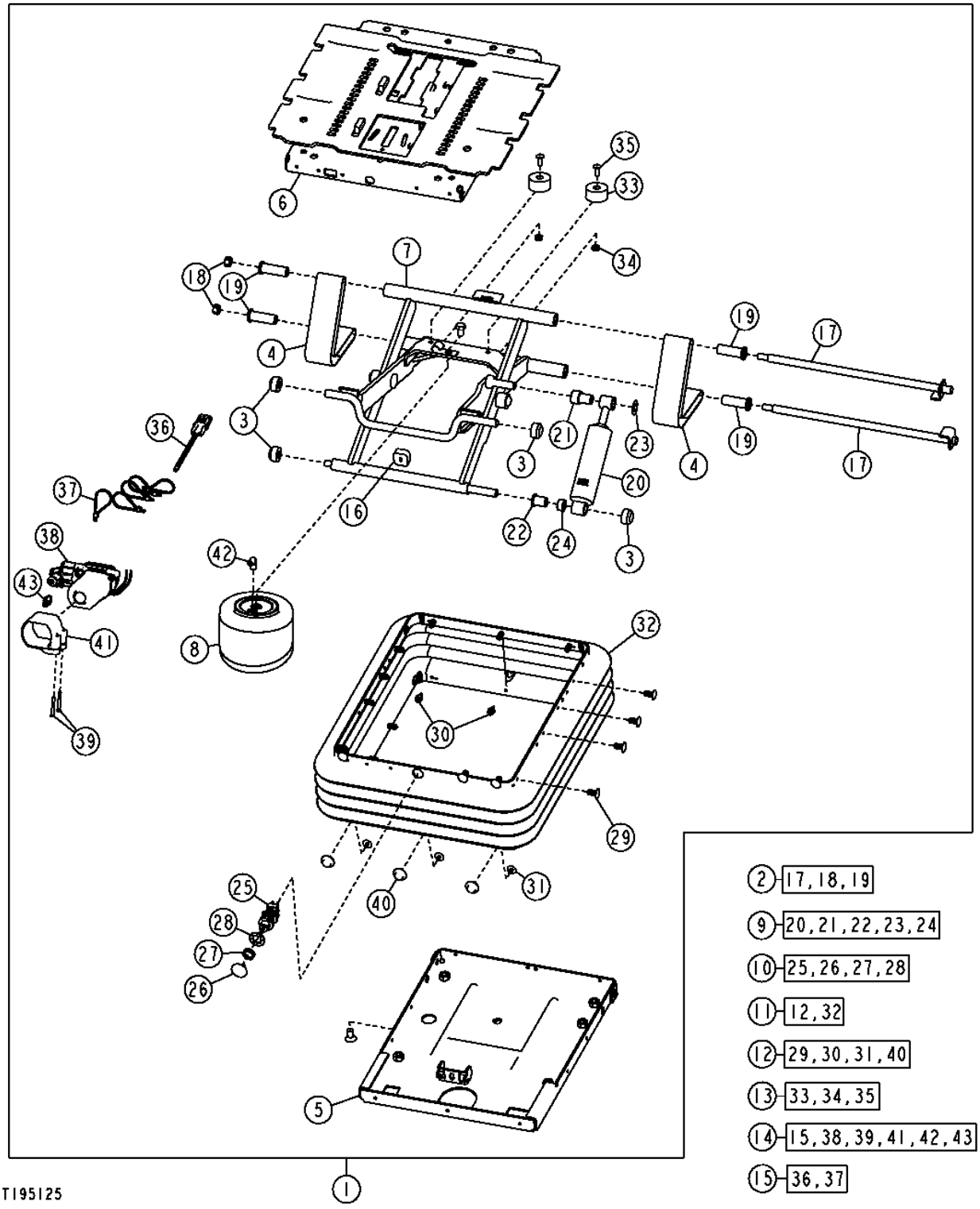

AIR SEAT SUSPENSION COMPONENTS

KEY	PART NO.	PART NAME	QTY	SERIAL NO.	770D	772D	REMARKS
1	AT208531	SEAT SUSPENSION	1		X	X	
2	AT173313	SHAFT	1		X	X	
3	AT173314	SEAT BEARING ROLLER KIT	1		X	X	
4	AT173315	KIT	1		X	X	TETHER BELT SERVICE KIT
5	AT208483	HOUSING	1		X	X	
6	AT208484	HOUSING	1		X	X	
7	AT208485	ARM	1		X	X	
8	AT208486	SPRING	1		X	X	(AIR BLADDER SPRING)
9	AT208487	KIT	1		X	X	SUSPENSION SHOCK SERVICE KIT
10	AT208490	SELECTIVE CONTROL VALVE	1		X	X	
11	AT208491	KIT	1		X	X	BOOT SERVICE KIT (INCLUDES AT173321)
12	AT173321	SEAT SUSPENSION BOOT KIT	1		X	X	
13	AT209469	KIT	1		X	X	BUMPER SERVICE KIT
14	AT226676	COMPRESSOR	1		X	X	
15	AT208488	WIRING HARNESS	1		X	X	
16	T55224	BUMPER	1		X	X	
17	.....	SHAFT	2		X	X	(SUB AT173313)
18	.....	LOCK NUT	2		X	X	(SUB AT173313)
19	.....	BUSHING	4		X	X	(SUB AT173313)
20	.....	SHOCK ABSORBER	1		X	X	(SUB AT208487)
21	.....	BEARING	1		X	X	(SUB AT208487)
22	.....	ECCENTRIC LOCKING COLLAR	1		X	X	(SUB AT208487)
23	.....	PUSH NUT	1		X	X	(SUB AT208487)
24	.....	SPACER	1		X	X	(SUB AT208487)
25	.....	HYD ACTUATED CONTROL VALVE	1		X	X	(SUB AT208490)
26	.....	KNOB	1		X	X	(SUB AT208490)
27	.....	NUT	1		X	X	(SUB AT208490)
28	.....	LOCK WASHER	1		X	X	(SUB AT208490)
29	.....	CLIP	23		X	X	(SUB AT173321)
30	.....	RIVET	3		X	X	(SUB AT173321)
31	.....	RIVET	3		X	X	(SUB AT173321)
32	.....	BOOT	1		X	X	(SUB AT208491)
33	.....	BUMPER	2		X	X	(SUB AT209469)
34	.....	LOCK NUT	2		X	X	(SUB AT209469)
35	.....	SCREW	2		X	X	(SUB AT209469)
36	.....	WIRING HARNESS	1		X	X	(SUB AT208488)
37	.....	TIE BAND	4		X	X	(SUB AT208488)
38	.....	COMPRESSOR	1		X	X	(SUB AT226676)
39	.....	SPRING PIN	2		X	X	(SUB AT226676)
40	.....	RIVET	6		X	X	(SUB AT173321)
41	.....	CLAMP	1		X	X	(SUB AT226676)
42	.....	PIPE ELBOW	1		X	X	(SUB AT226676)
43	.....	TAB CONNECTOR BODY	1		X	X	(SUB AT226676)
44	AT208493	FITTING KIT	1		X	X	(AIRLINE HOSE AND FITTING KIT) (NOT ILLUSTRATED)

2J17

MECHANICAL SUSPENSION SEAT

T204659 -UN-21DEC04

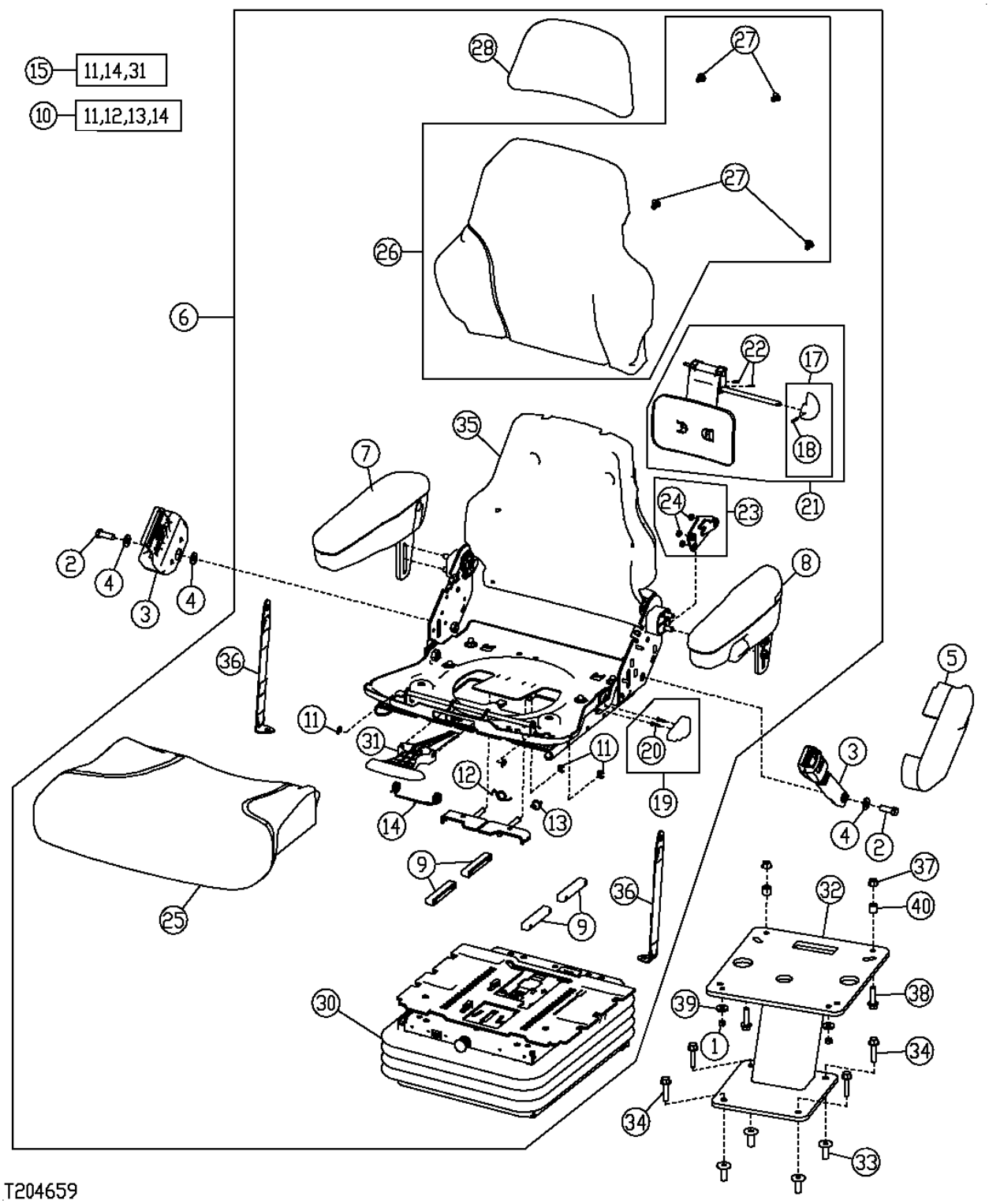

MECHANICAL SUSPENSION SEAT

KEY	PART NO.	PART NAME	QTY	SERIAL NO.	770D	772D	REMARKS
1	14H785	NUT	4		X	X	5/16"
2	19H3569	CAP SCREW	2		X	X	
3	AT308199	SEAT BELT	1		X	X	
4	T105740	WASHER	4		X	X	
5	T163962	COVER	1		X	X	
6	AT195440	SEAT	1		X	X	GRAY CLOTH
7	AT195441	ARMREST KIT	1		X	X	(R.H.)
	AT315715	PAD	1		X	X	
8	AT195442	ARMREST KIT	1		X	X	(L.H.)
	AT315761	PAD	1		X	X	
9	AT209020	KIT	1		X	X	SLIDE PUCK KIT
10	AT209021	KIT	1		X	X	SLIDE SPRING KIT
11	R72655	SNAP RING	4		X	X	
12	T163334	SPRING	1		X	X	
13	T163335	SPRING	1		X	X	
14	T163336	TORSION SPRING	1		X	X	
15	AT209022	KIT	1		X	X	SLIDE CONTROL KIT
17	AT209024	KIT	1		X	X	LUMBAR KNOB KIT
18	34H262	SPRING PIN	1		X	X	
19	AT209025	KIT	1		X	X	RECLINER KNOB KIT
20	37H121	SCREW	1		X	X	
21	AT209026	KIT	1		X	X	LUMBAR SERVICE KIT
22	34H387	SPRING PIN	2		X	X	
23	AT209225	KIT	1		X	X	RECLINER SERVICE KIT (INCLUDES RECLINER KNOB KIT AND TORSION SPRING)
24	M453T	LOCK NUT	3		X	X	
25	AT308795	CUSHION	1		X	X	(SUB FOR AT221019) GRAY CLOTH
26	AT308796	CUSHION	1		X	X	(SUB FOR AT221020) GRAY CLOTH
27	T171686	CLIP	4		X	X	
28	AT308797	CUSHION	1		X	X	(SUB FOR AT221021) GRAY CLOTH
29	N119177	GROMMET	1		X	X	(NOT ILLUSTRATED)
30	AT180126	SEAT SUSPENSION	1		X	X	(MECHANICAL)(COMPONENTS ON SEPARATE PAGE)
31	.....	CONTROL	1		X	X	
32	AT303518	PEDESTAL	1		X	X	
33	H173411	NUT	4		X	X	
34	19M7805	SCREW	4		X	X	M10 X 45
35	AT280583	PAN	1		X	X	
36	AT181392	KIT	2		X	X	
37	14M7296	FLANGE NUT	2		X	X	M10
38	19M7804	SCREW	2		X	X	M10 X 40
39	24H1887	WASHER	4		X	X	
40	28H3425	SPACER	2		X	X	

MECHANICAL SEAT SUSPENSION COMPONENTS

T206425 -UN-29DEC04

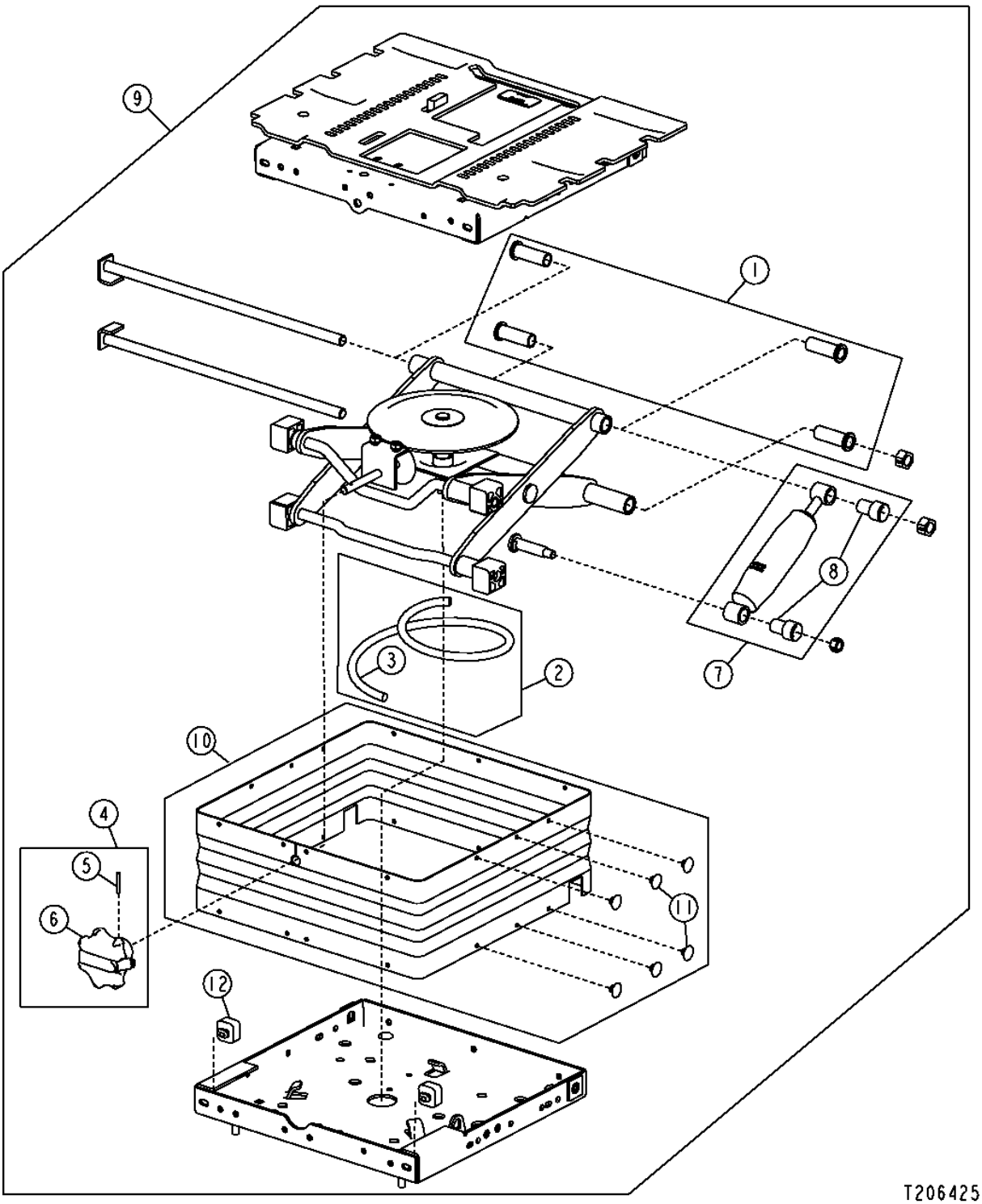

MECHANICAL SEAT SUSPENSION COMPONENTS

KEY	PART NO.	PART NAME	QTY	SERIAL NO.	770D	772D	REMARKS
1	AT106397	BEARING KIT	1		X	X	
2	AT125801	SPRING	1		X	X	
3	T55210	SPRING	1		X	X	
4	AT125805	KIT	1		X	X	(ADJUSTING KNOB KIT)
5	34H266	SPRING PIN	1		X	X	
6	AT125829	KNOB	1		X	X	
7	AT175436	KIT	1		X	X	(SHOCK ABSORBER KIT)
8	T55222	BUSHING	2		X	X	
9	AT180126	SEAT SUSPENSION	1		X	X	(MECHANICAL SEAT SUSPENSION)
10	AT180135	SEAT SUSPENSION	1		X	X	(BOOT AND CLIP KIT)
11	T63798	PLUG	25		X	X	
12	T55224	BUMPER	2		X	X	

CAB STEPS

T202320 -UN-02SEP04

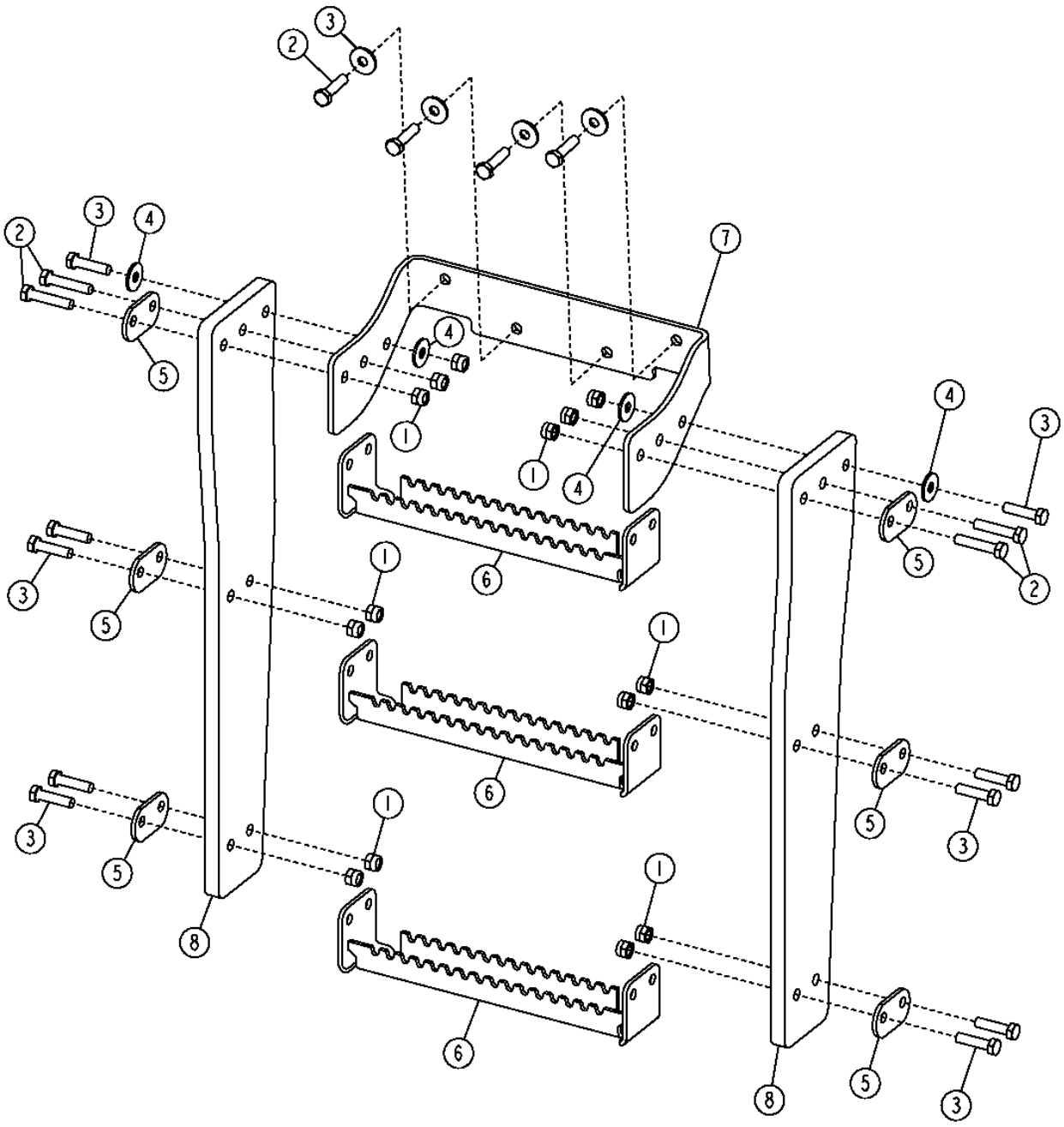

T202320

CAB STEPS

KEY	PART NO.	PART NAME	QTY	SERIAL NO.	770D	772D	REMARKS
1	14M7517	LOCK NUT	28		X	X	M10
2	19M8600	CAP SCREW	8		X	X	M10 X 50
3	19M8637	CAP SCREW	28		X	X	M10 X 40
4	24M7296	WASHER	16		X	X	
5	T173779	STRAP	12		X	X	
6	T176870	STEP	6		X	X	
7	T201673	BRACKET	2		X	X	
8	T202374	STRAP	4		X	X	

CAB HEATER HOSES

T204121 -UN-12NOV04

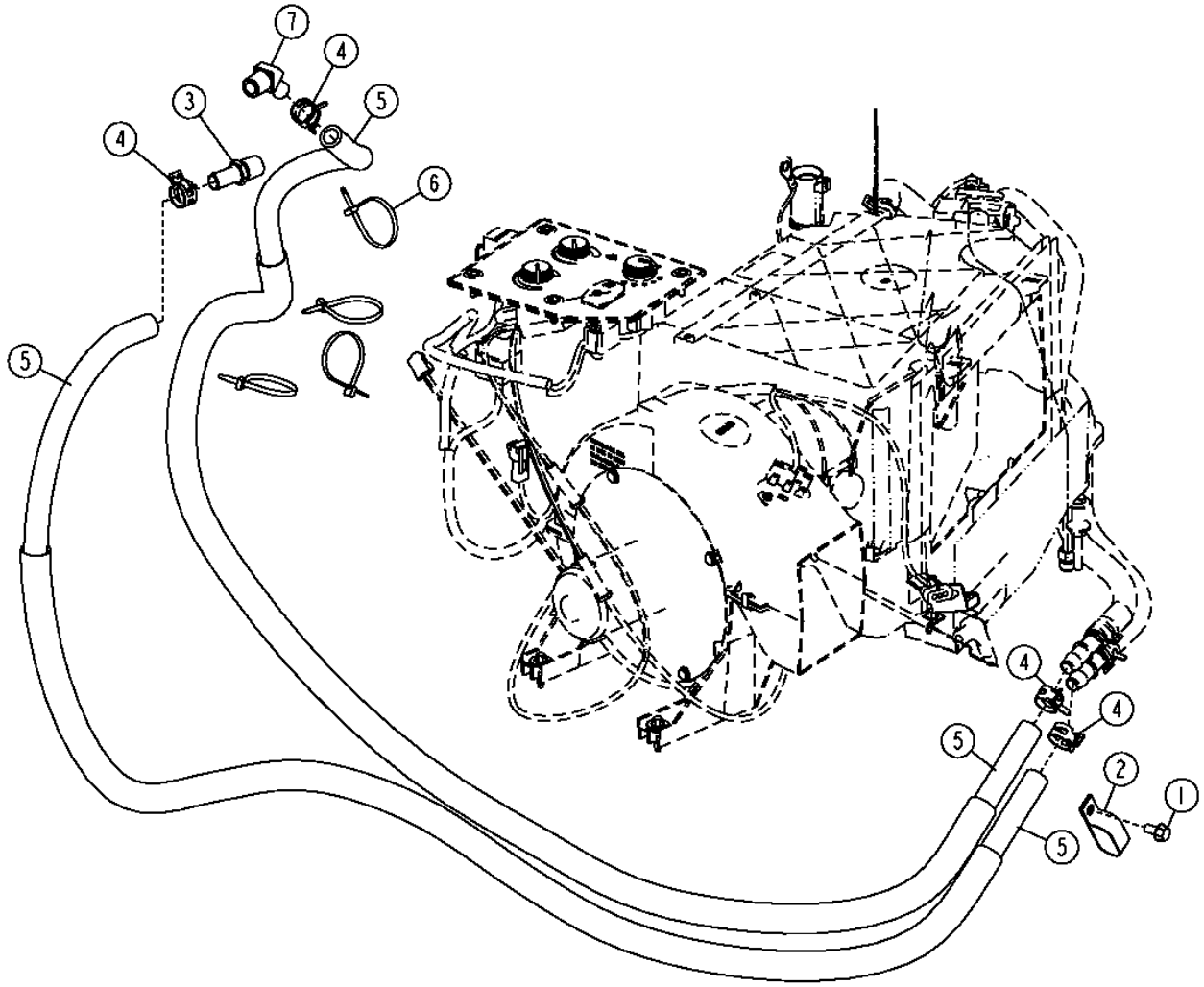

T204121

CAB HEATER HOSES

KEY	PART NO.	PART NAME	QTY	SERIAL NO.	770D	772D	REMARKS
1	19M7865	SCREW	1		X	X	M8 X 16
2	AH77869	CLIP	1		X	X	
3	R41985	FITTING	1		X	X	
4	R117721	CLAMP	4		X	X	
5	.....	BULK HOSE	1		X	X	(MAKE FROM T60811) (CUT TO LENGTH)
6	R44302	TIE BAND	4		X	X	
7	T27077	HOSE FITTING	1		X	X	

HVAC POWERED PRECLEANER

T202492 -UN-28OCT04

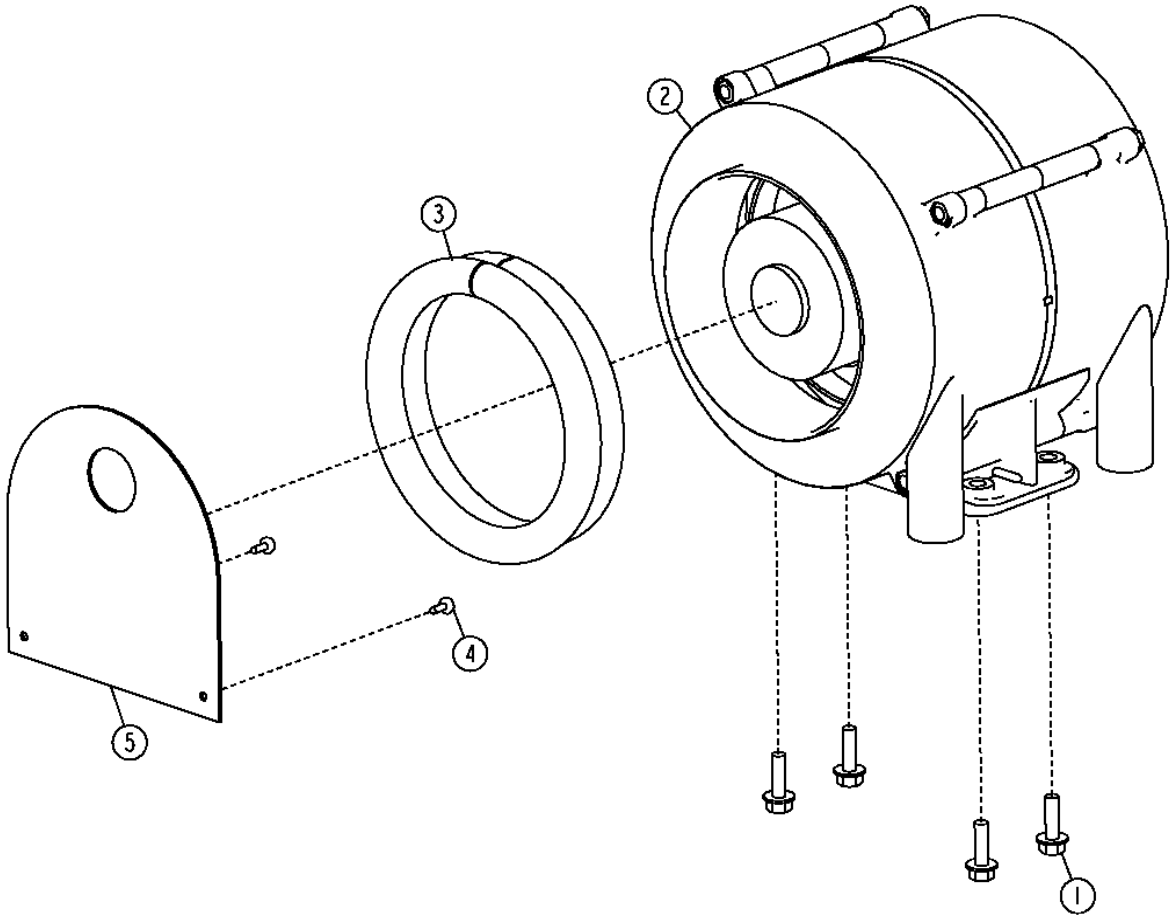

T202492

HVAC POWERED PRECLEANER

KEY	PART NO.	PART NAME	QTY	SERIAL NO.	770D	772D	REMARKS
1	19M7862	SCREW	4		X	X	M6 X 20
2	AT302794	PRECLEANER	1		X	X	
3	T185326	ISOLATOR	1		X	X	
4	T185769	SCREW	2		X	X	
5	T213349	PLATE	1		X	X	

HEATER AND AIR CONDITIONER DUCTS

T212742 -UN-15JUL05

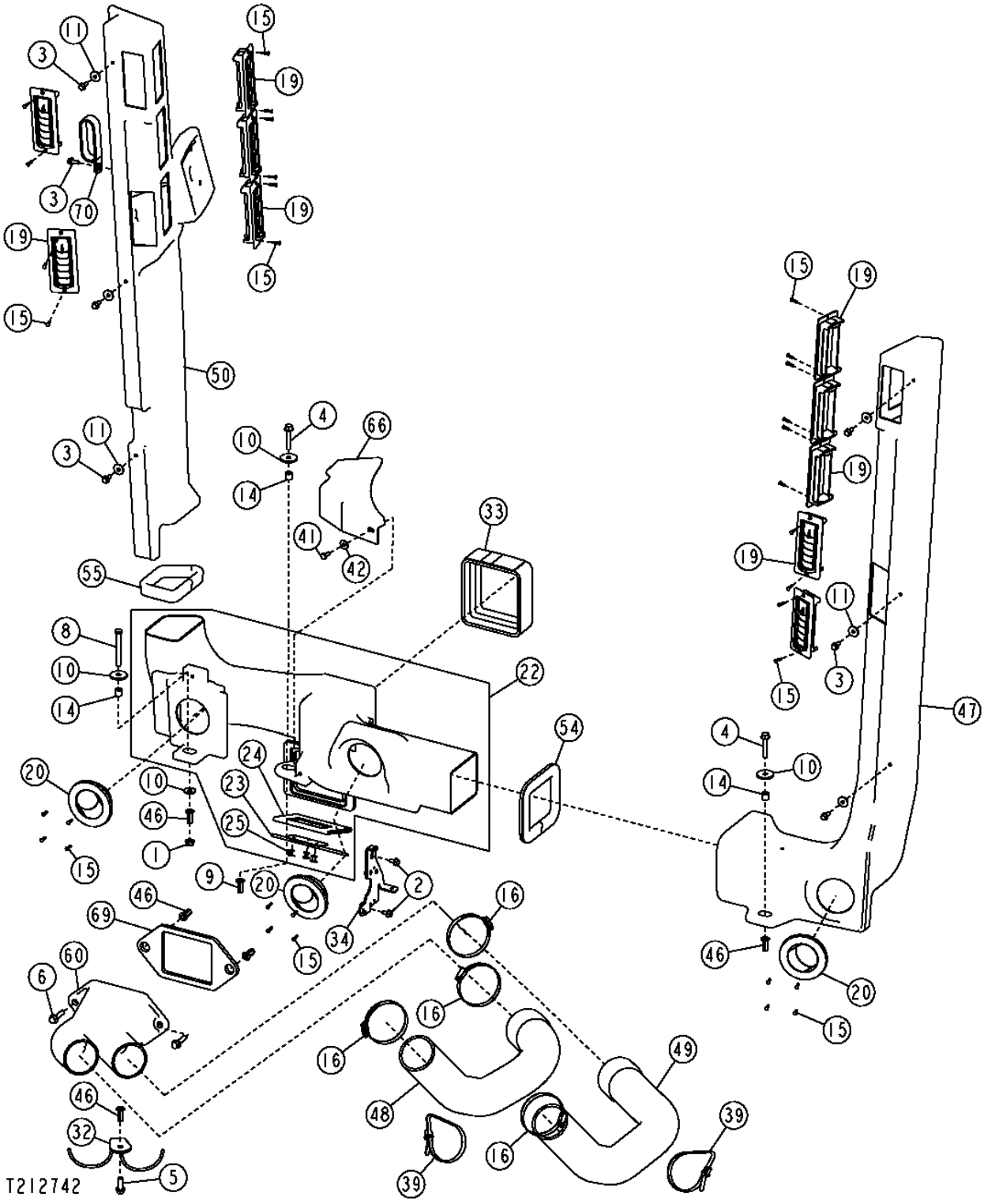

HEATER AND AIR CONDITIONER DUCTS

KEY	PART NO.	PART NAME	QTY	SERIAL NO.	770D	772D	REMARKS
1	14M7298	FLANGE NUT	1		X	X	M8
2	19M7774	SCREW	2		X	X	M6 X 12
3	19M7775	SCREW	4		X	X	M6 X 16
4	19M7799	SCREW	1		X	X	M8 X 45
5	19M7867	SCREW	1		X	X	M8 X 25
6	19M7897	SCREW	2		X	X	M8 X 35
8	19M8403	CAP SCREW	1		X	X	M8 X 75
9	T196079	NUT	1		X	X	
10	24H1296	WASHER	2		X	X	
11	24M7100	WASHER	3		X	X	
14	28H3450	SPACER	2		X	X	
15	37M7333	SCREW	32		X	X	
16	AR62936	CLAMP	4		X	X	
19	AT227668	LOUVER	10		X	X	
20	AT227669	LOUVER	3		X	X	
22	AT308017	AIR DUCT	1		X	X	
23	AT305524	GATE	1		X	X	
24	AT305869	DOOR	1		X	X	
25	T184345	RIVET	3		X	X	
32	AT308314	HOSE SUPPORT	1		X	X	
33	AT308935	ISOLATOR	1		X	X	
34	AT309837	BRACKET	1		X	X	
39	N189220	TIE BAND	2		X	X	
41	21M7292	SCREW	1		X	X	M6 X 16
42	24H1646	WASHER	3		X	X	(SUB FOR T134530)
46	T196079	NUT	9		X	X	
47	T201561	AIR DUCT	1		X	X	
48	T201562	AIR DUCT	1		X	X	
49	T201566	AIR DUCT	1		X	X	
50	T201568	AIR DUCT	1		X	X	
54	T202743	ISOLATOR	1		X	X	
55	T202744	ISOLATOR	1		X	X	
60	T203560	AIR DUCT	1		X	X	
66	T206718	PLATE	1		X	X	
69	T206985	SEAL	1		X	X	
70	T215319	CLAMP	1		X	X	

HEATER AND AIR CONDITIONER FILTER, FILTER HOUSING, AND COVER

T207941 -UN-12FEB05

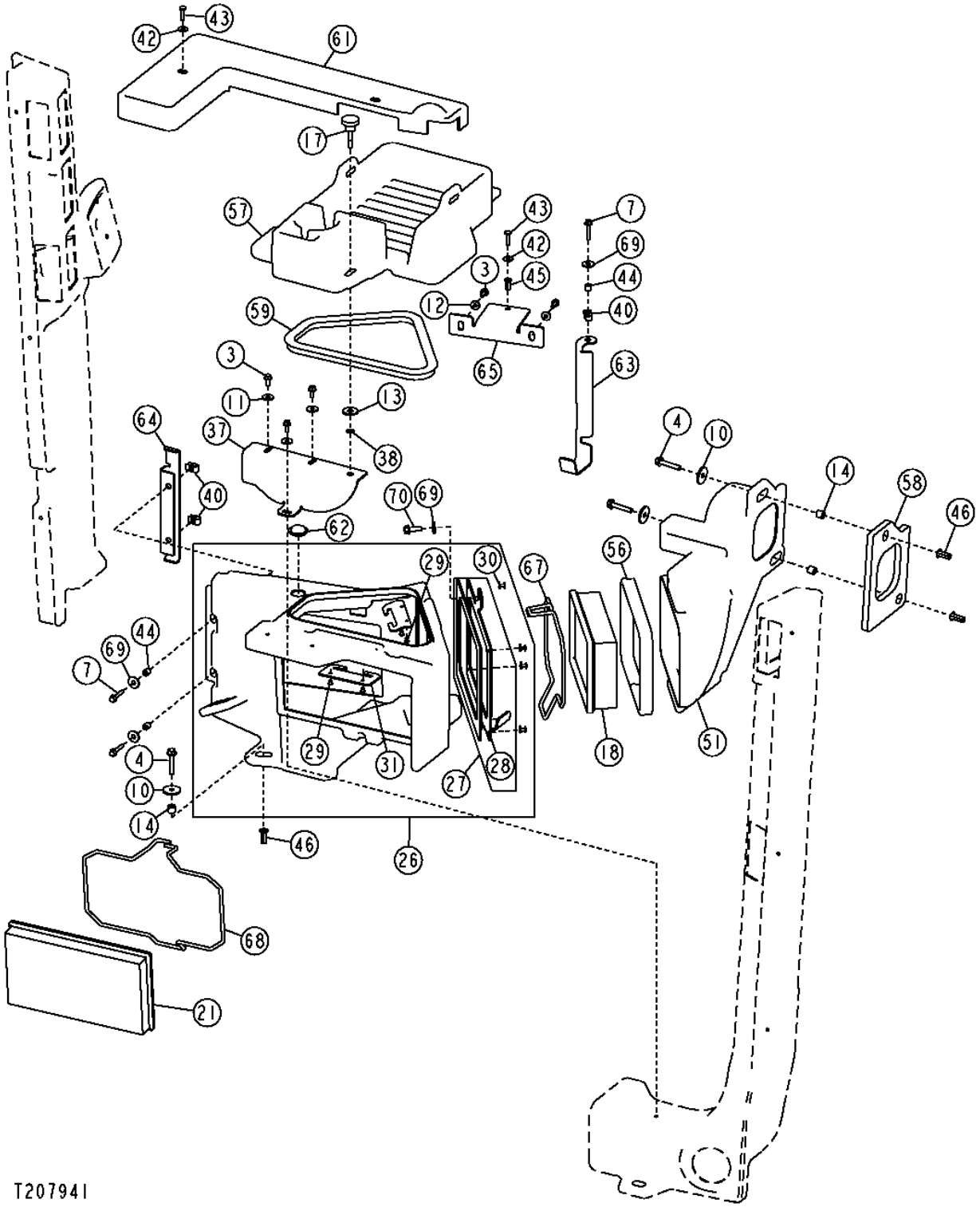

HEATER AND AIR CONDITIONER FILTER, FILTER HOUSING, AND COVER

KEY	PART NO.	PART NAME	QTY	SERIAL NO.	770D	772D	REMARKS
3	19M7775	SCREW	11		X	X	M6 X 16
4	19M7799	SCREW	5		X	X	M8 X 45
7	19M8290	SCREW	3		X	X	M6 X 35
10	24H1296	WASHER	6		X	X	11/32" X 1-3/8" X 0.134"
11	24M7100	WASHER	10		X	X	6.600 X 22 X 2 MM
12	24M7139	WASHER	2		X	X	6.400 X 18 X 1.600 MM
13	24M7296	WASHER	1		X	X	10.500 X 30 X 2.500 MM
14	28H3450	SPACER	6		X	X	0.364" X 0.540" X 1/2"
17	AR83434	KNOB	1		X	X	
18	AT191102	AIR FILTER	1		X	X	
21	AT307501	AIR FILTER	1		X	X	
26	AT308283	HOUSING	1		X	X	
27	.....	SUPPORT	1		X	X	(AT309672 NO LONGER AVAILABLE)
28	T206616	PLATE	1		X	X	
29	R79033	RIVET	5		X	X	
30	T184345	RIVET	4		X	X	
31	T206813	BRACKET	1		X	X	
37	AT315465	KIT	1		X	X	
38	H131531	PUSH NUT	1		X	X	
40	R134098	NUT	3		X	X	
42	24H1646	WASHER	3		X	X	17/64" X 3/4" X 0.060", (SUB FOR T134530)
43	21M7310	SCREW	3		X	X	M6 X 25
44	T164945	SPACER	3		X	X	
45	T196077	NUT	1		X	X	
46	T196079	NUT	9		X	X	
51	T201570	AIR DUCT	1		X	X	
56	T202745	ISOLATOR	1		X	X	
57	T203143	COVER	1		X	X	
58	T203494	SEAL	1		X	X	
59	T203495	ISOLATOR	1		X	X	
61	T204278	COVER	1		X	X	
62	T206624	PLUG	1		X	X	
63	T206625	BRACKET	1		X	X	
64	T206626	BRACKET	1		X	X	
65	T206627	STRAP	1		X	X	(ALSO ORDER (2) T196077)
67	T206809	RETAINER	1		X	X	
68	T206812	RETAINER	1		X	X	
69	24M7298	WASHER	4		X	X	8.400 X 25 X 2 MM
70	19M7867	SCREW	2		X	X	M8 X 25

HEATER/AIR CONDITIONING MODULE ASSEMBLY

T212380 -UN-28JUN05

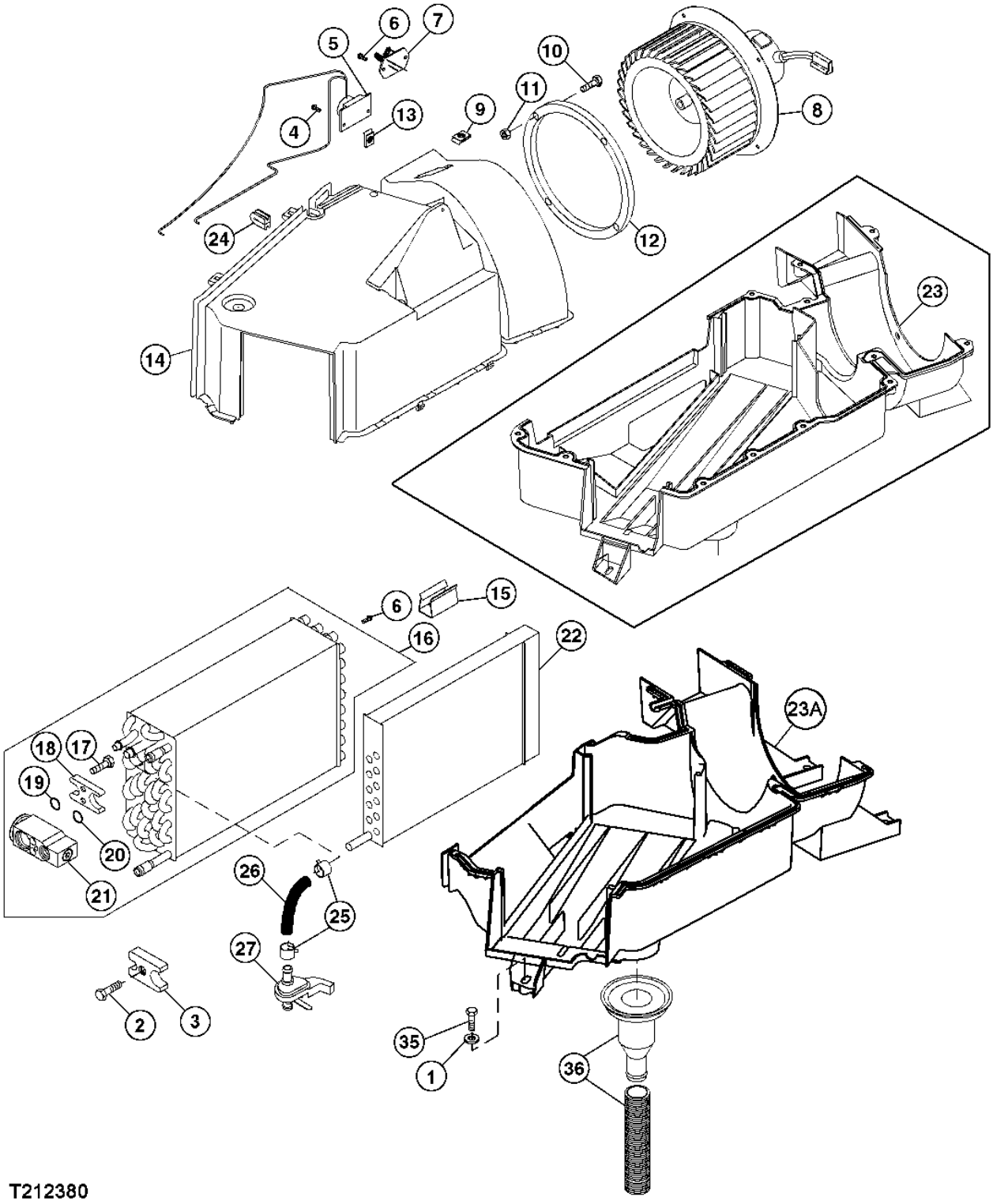

HEATER/AIR CONDITIONING MODULE ASSEMBLY

KEY	PART NO.	PART NAME	QTY	SERIAL NO.	770D	772D	REMARKS
1	24M7100	WASHER	2		X	X	
2	19M8553	SCREW	2		X	X	M6 X 16
3	R125223	PLATE	1		X	X	
4	H85092	SCREW	2		X	X	
5	RE198074	TEMPERATURE SWITCH	1		X	X	
6	37M7073	SCREW	6		X	X	
7	AT318987	RESISTOR	1		X	X	
8	AT302953	BLOWER MOTOR	1		X	X	
9	M74782	NUT	4		X	X	
10	19M7775	SCREW	4		X	X	M6 X 16
11	M84972	NUT	4		X	X	
12	R162769	SEAL	1		X	X	
13	R50279	NUT	2		X	X	
14	R190722	HOUSING	1		X	X	
15	R96248	CLIP	11		X	X	
16	RE187311	EVAPORATOR	1		X	X	
17	PT11778	BOLT	2		X	X	
18	L77943	PLATE	1		X	X	
19	R113050	O-RING	1		X	X	
20	R33259	O-RING	1		X	X	
21	RE174764	VALVE	1		X	X	
22	RE177967	HEATER	1		X	X	
23	R190723	HOUSING	1	-XXXXXX	X	X	
23A	R244664	HOUSING	1	XXXXXX-	X	X	
24	R163985	GROMMET	2		X	X	
25	T184924	HOSE CLAMP	1		X	X	
26	R125454	RADIATOR HOSE	1		X	X	
27	AT193500	HAND OPERATED VALVE	1		X	X	
35	37M7104	SCREW	3		X	X	
36	AT191178	LINE	1		X	X	

AIR CONDITIONING COMPRESSOR,PULLEY AND SERVICE KITS

T204668 -UN-19NOV04

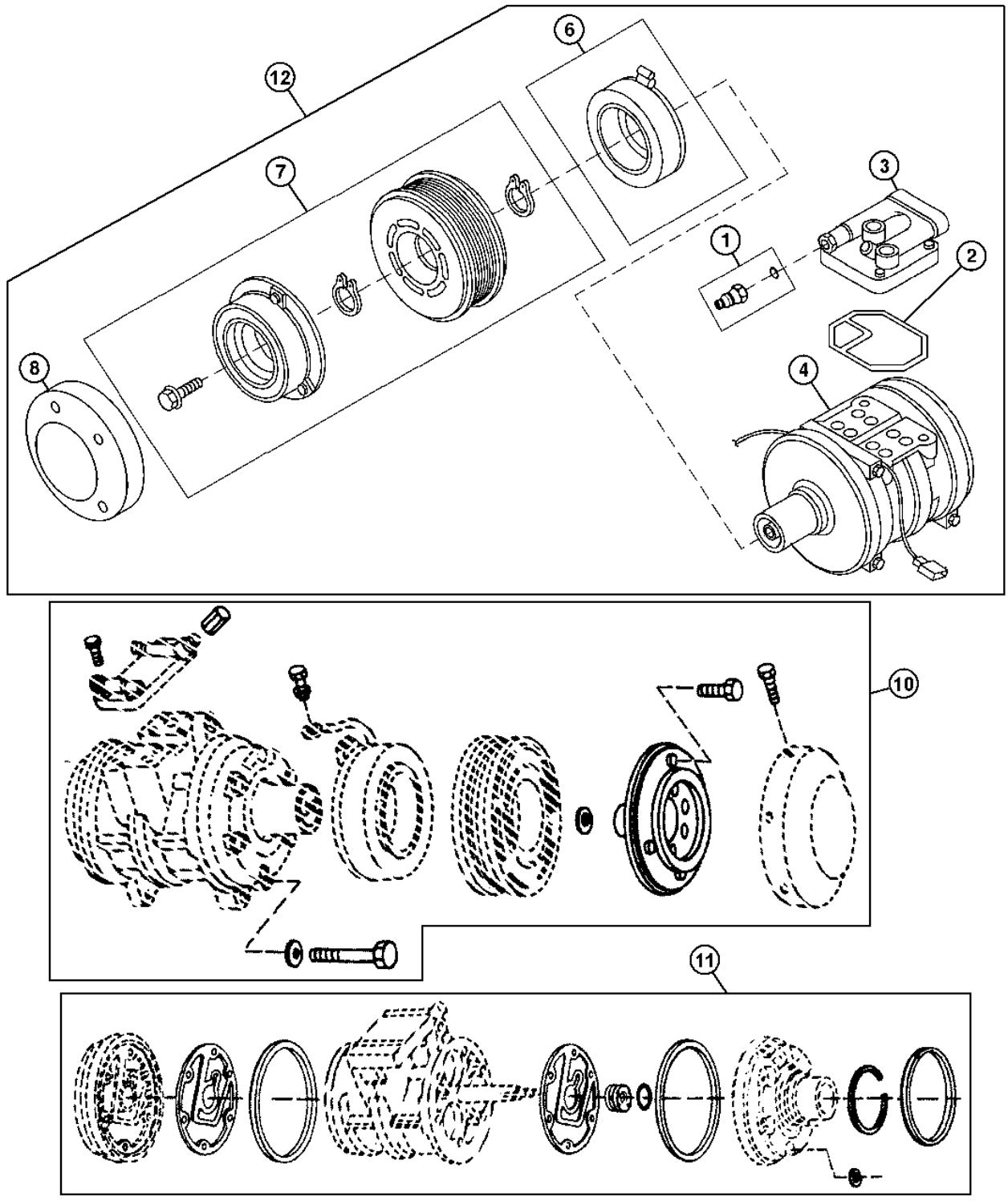

T204668

AIR CONDITIONING COMPRESSOR,PULLEY AND SERVICE KITS

KEY	PART NO.	PART NAME	QTY	ENGINE SERIAL NO.	772D	772D	REMARKS
1	RE52506	FLOW CONTROL HYD. VALVE	1		X	X	
2	R115742	SEAL	1		X	X	
3	RE55423	MANIFOLD	1		X	X	
4	RE52454	COMPRESSOR	1		X	X	WITHOUT CLUTCH
6	AT163872	KIT	1		X	X	STATOR
7	RE52508	KIT	1		X	X	8 RIBBED PULLEY
8	R115743	COVER	1		X	X	
9	RE12363	ELECTRICAL CONNECTOR ASSY	1		X	X	(NOT ILLUSTRATED)
	R78057	ELEC. CONNECTOR TERMINAL	2		X	X	(NOT ILLUSTRATED)
	R78059	ELECTRICAL CONNECTOR ASSY	2		X	X	(NOT ILLUSTRATED)
	14M7273	NUT	1		X	X	M8
10	RE52507	KIT	1		X	X	HARDWARE
11	RE52509	SEAL KIT	1		X	X	SHAFT SEAL
12	AT168543	COMPRESSOR	1		X	X	

AIR CONDITIONING LINES, CONDENSER, AND RECEIVER-DRYER

T210170 -UN-14APR05

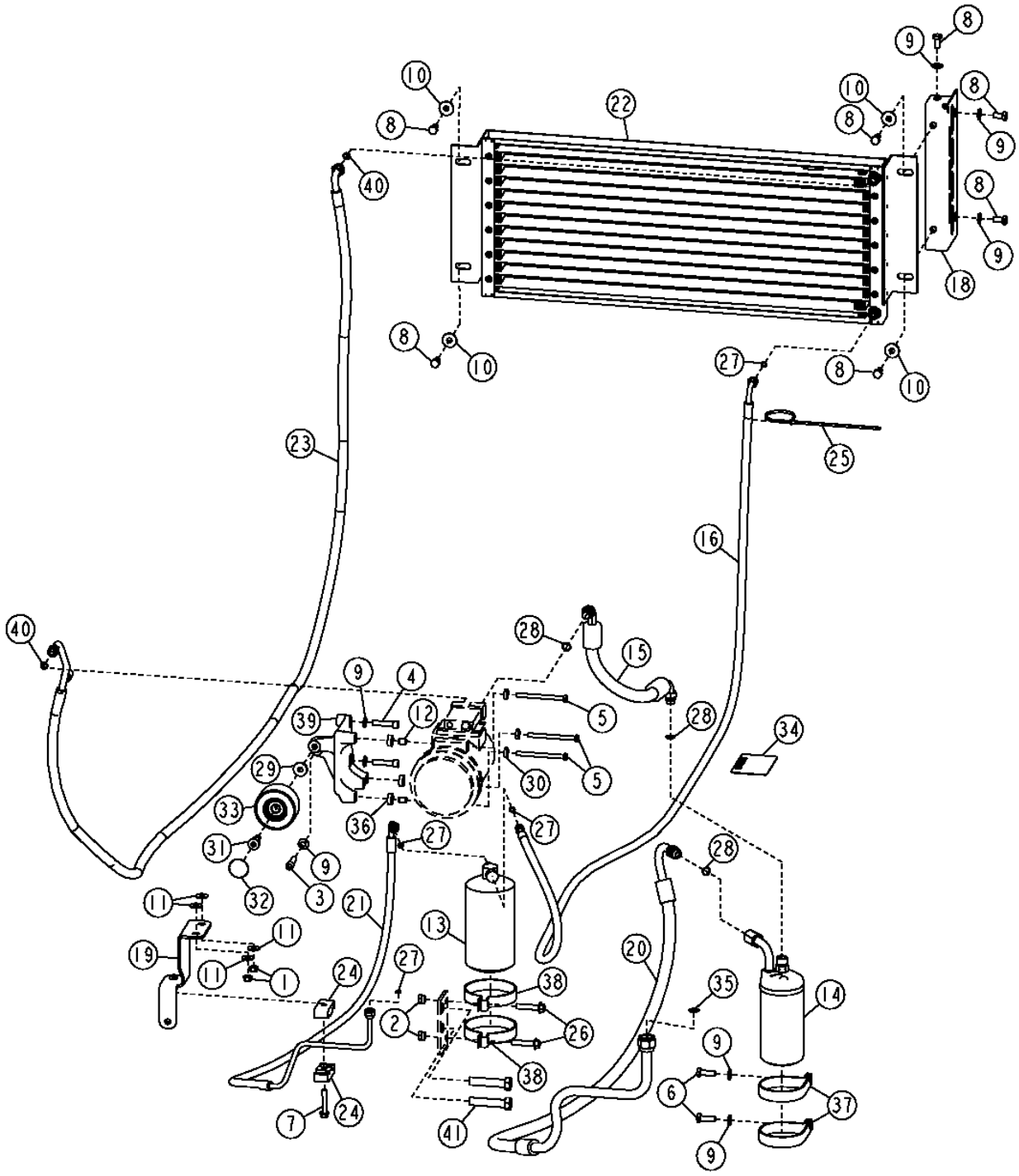

AIR CONDITIONING LINES, CONDENSOR, AND RECEIVER-DRYER

KEY	PART NO.	PART NAME	QTY	ENGINE SERIAL NO.	770D	772D	REMARKS
1	14M7298	FLANGE NUT	2		X	X	M8
2	14M7517	LOCK NUT	2		X	X	M10
3	19H3124	SCREW	1		X	X	3/8" X 1-1/2"
4	19H3750	SCREW	2		X	X	3/8" X 1-3/4"
5	19M7296	CAP SCREW	3		X	X	M8 X 100
6	19M7662	CAP SCREW	2		X	X	M10 X 30
7	19M7800	SCREW	1		X	X	M8 X 50
8	19M7938	CAP SCREW	7		X	X	M10 X 20
9	24M7239	WASHER	8		X	X	
10	24M7296	WASHER	4		X	X	
11	24M7298	WASHER	4		X	X	
12	34M7247	SPRING PIN	2		X	X	
13	AT162848	RECEIVER-DRYER	1		X	X	
14	AT190809	PNEUMATIC ACCUMULATOR	1		X	X	
15	AT191741	REFRIGERANT HOSE	1		X	X	
16	AT280631	REFRIGERANT HOSE	1		X	X	
18	AT307062	BRACKET	1		X	X	
19	AT307847	BRACKET	1		X	X	
20	AT307888	REFRIGERANT HOSE	1		X	X	
21	AT307889	REFRIGERANT HOSE	1		X	X	
22	AT312058	VAPOR CONDENSER	1		X	X	
23	AT318798	REFRIGERANT HOSE	1		X	X	
24	H114865	CLAMP	2		X	X	
25	H77698	TIE BAND	1		X	X	
26	N275650	SCREW	2		X	X	
27	R10093	O-RING	4		X	X	
28	R33259	O-RING	3		X	X	
29	R53436	WASHER	1		X	X	
30	R56397	WASHER	3		X	X	
31	R98250	BOLT	1		X	X	
32	R99590	COVER	1		X	X	
33	RE505265	IDLER	1		X	X	
34	T138914	LABEL	1		X	X	
35	T143169	O-RING	1		X	X	
36	T162477	WASHER	3		X	X	
37	T164030	CLAMP	2		X	X	
38	T190513	CLAMP	2		X	X	
39	T204493	SUPPORT	1		X	X	
40	R113050	O-RING	2		X	X	
41	19H3208	CAP SCREW	2		X	X	5/8" X 3"

HEATER AND AIR CONDITIONER LINES AND CONTROLS

T212743 -UN-15JUL05

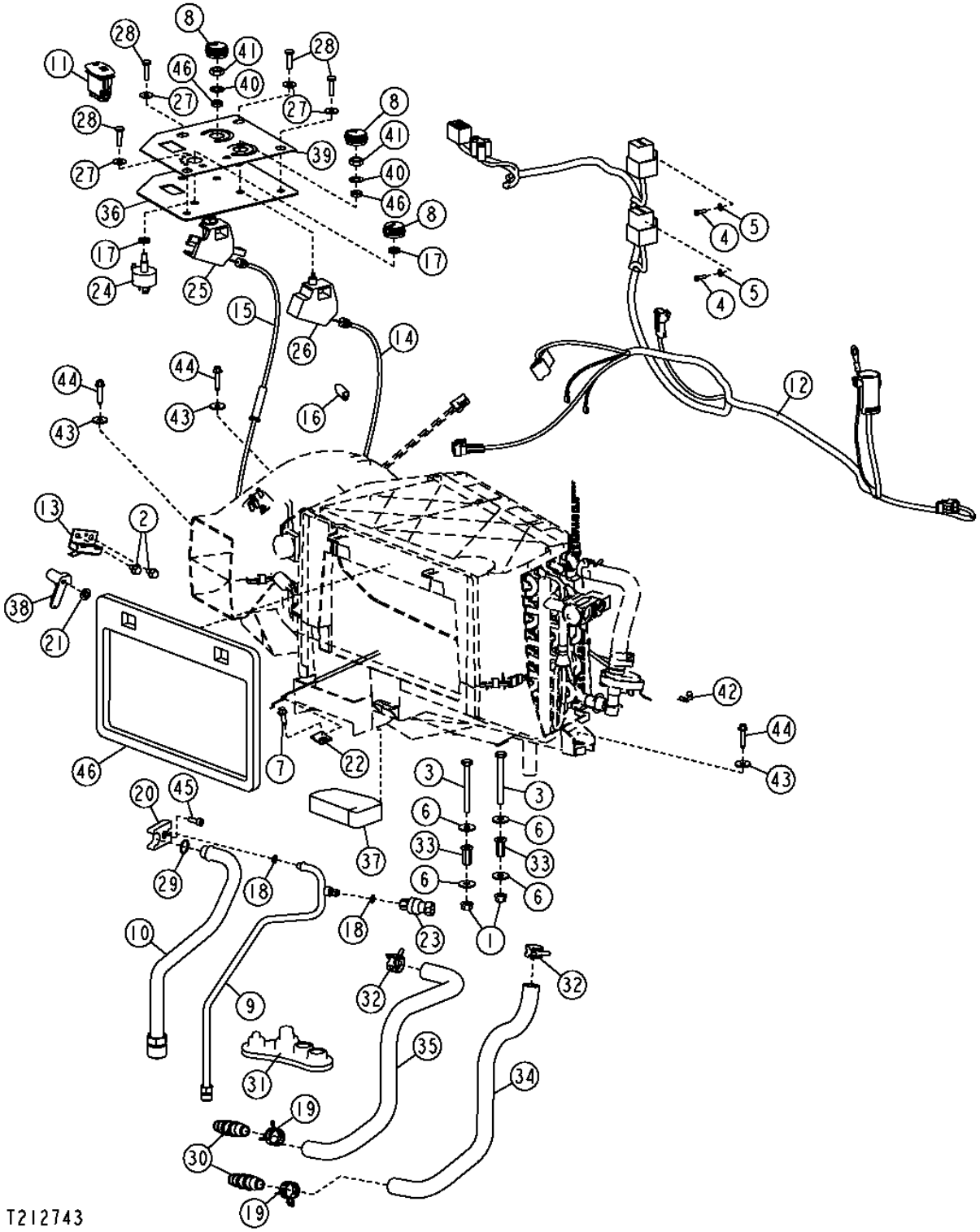

HEATER AND AIR CONDITIONER LINES AND CONTROLS

KEY	PART NO.	PART NAME	QTY	SERIAL NO.	770D	772D	REMARKS
1	14M7298	FLANGE NUT	1		X	X	M8
2	19M7774	SCREW	2		X	X	M6 X 12
3	19M8403	CAP SCREW	2		X	X	M8 X 75
4	19M9224	CAP SCREW	2		X	X	M4 X 14, (SUB FOR 21M7250)
5	24M7087	WASHER	2		X	X	5.500 X 10 X 1 MM
6	24M7298	WASHER	4		X	X	8.400 X 25 X 2 MM
7	37M7131	SCREW	1		X	X	M6 X 20
8	AL76568	KNOB	3		X	X	
9	AT303467	LINE	1		X	X	
10	AT303469	LINE	1		X	X	
11	AT303865	TOGGLE/ROCKER SWITCH	1		X	X	(A/C AND HEATER ON/OFF)
12	AT305547	AC COMPRESSOR WRG HARNESS	1		X	X	
13	AT306056	SWITCH	1		X	X	
14	AT310795	PUSH PULL CABLE	1		X	X	
15	AT310810	PUSH PULL CABLE	1		X	X	
16	.....	WEATHERSTRIP	4		X	X	(MAKE FROM T58056) (CUT TO LENGTH)
17	E46066	NUT	2		X	X	
18	R10093	O-RING	2		X	X	
19	R117721	CLAMP	2		X	X	
20	R125223	PLATE	1		X	X	
21	R192109	PUSH NUT	1		X	X	
22	R31654	CLAMP	1		X	X	
23	RE157329	SWITCH	1		X	X	
24	RE43497	ROTARY SWITCH	1		X	X	
25	RE46742	TEMPERATURE SWITCH	1		X	X	(A/C AND HEAT TEMPERATURE)
	12H292	LOCK WASHER	1		X	X	1/2"
	14H934	NUT	1		X	X	7/16"
26	RE46743	CONTROL	1		X	X	(FAN SPEED)
27	24H1646	WASHER	4		X	X	17/64" X 3/4" X 0.060", (SUB FOR T134530)
28	21M7310	SCREW	4		X	X	M6 X 25
29	T143169	O-RING	1		X	X	
30	T160492	ELEC. CONNECTOR ACCESSORY	2		X	X	
31	T166297	GROMMET	1		X	X	
32	T184924	HOSE CLAMP	2		X	X	
33	T196079	NUT	2		X	X	
34	T202034	HOSE	1		X	X	
35	T202035	HOSE	1		X	X	
36	T202800	INSTRUMENT PANEL	1		X	X	
37	T204124	PAD	1		X	X	
38	T204274	ARM	1		X	X	
39	T205370	LABEL	1		X	X	
40	12H325	LOCK WASHER	2		X	X	(NO LONGER REQUIRED)
41	14H934	NUT	2		X	X	(NO LONGER REQUIRED)
42	L57881	CLIP	1		X	X	
43	24M7100	WASHER	3		X	X	6.600 X 22 X 2 MM
44	37M7104	SCREW	3		X	X	M6 X 30
45	19M8553	SCREW	1		X	X	M6 X 16
46	R203687	NUT	2		X	X	
47	T202742	SEAL	1		X	X	

SERVICE DOORS

T210142 -UN-06APR05

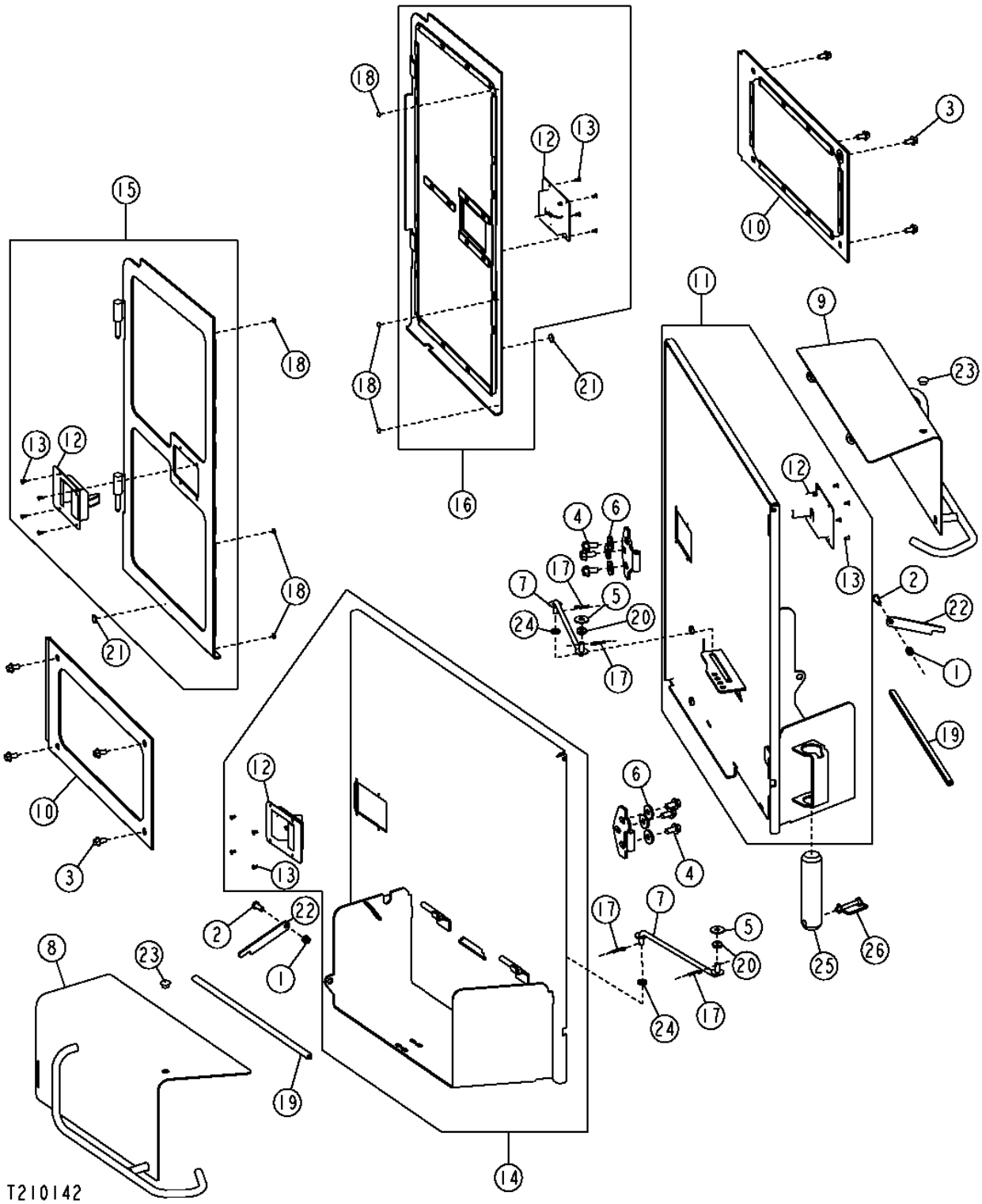

SERVICE DOORS

KEY	PART NO.	PART NAME	QTY	SERIAL NO.	770D	772D	REMARKS
1	14M7517	LOCK NUT	2		X	X	M10
2	19M7167	CAP SCREW	2		X	X	M10 X 25
3	19M7784	SCREW	8		X	X	M10 X 20
4	19M7788	SCREW	6		X	X	M12 X 25
5	24H1330	WASHER	2		X	X	
6	24M7226	WASHER	6		X	X	
7	AT312053	ROD	2		X	X	
8	AT311438	KIT	1		X	X	(RIGHT BATTERY BOX COVER)
9	AT311431	KIT	1		X	X	(LEFT BATTERY BOX COVER)
10	AT228826	SHIELD	2		X	X	
11	AT311915	KIT	1		X	X	(LEFT ENGINE DOOR)
12	AT221696	LATCH	4		X	X	
13	H85233	RIVET	16		X	X	
14	AT311916	KIT	1		X	X	(RIGHT ENGINE DOOR)
15	AT306771	DOOR	1		X	X	(RIGHT RADIATOR COMPARTMENT DOOR)
16	AT306772	DOOR	1		X	X	(LEFT RADIATOR COMPARTMENT DOOR)
17	J16931	PIN	4		X	X	
18	R96753	SPACER	6		X	X	
19	T161531	MOLDING	2		X	X	
20	T162238	GROMMET	2		X	X	
21	T173591	BUMPER	2		X	X	
22	T188651	LATCH	2		X	X	
23	T21387	BUMPER	2		X	X	
24	T27260	WASHER	1		X	X	
25	T204009	SHEAR PIN	1		X	X	
26	N279068	COTTER PIN	1		X	X	

HOOD

T203940 -UN-18DEC04

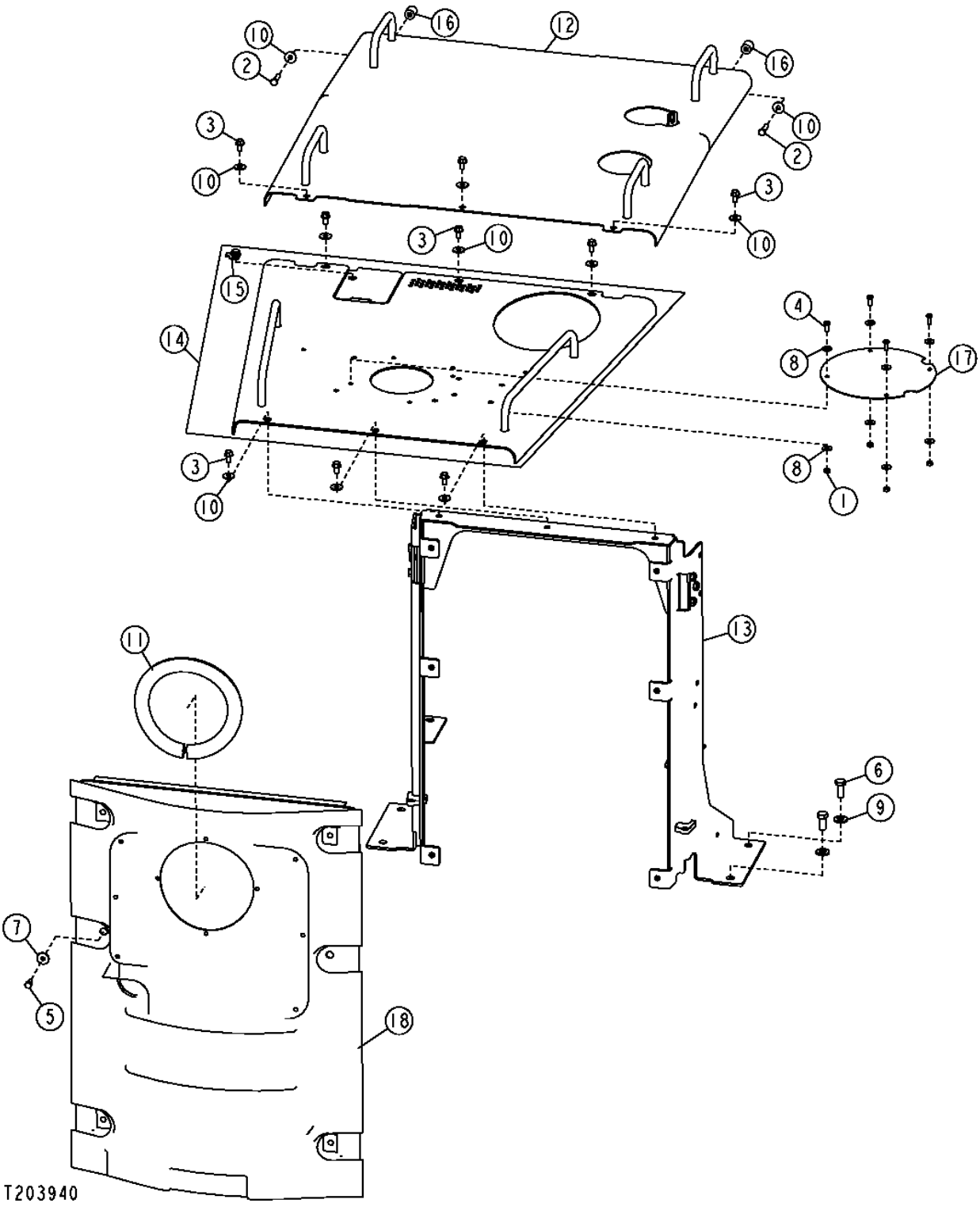

2K19

SERVICE DOORS

KEY	PART NO.	PART NAME	QTY	SERIAL NO.	770D	772D	REMARKS
1	14M7273	NUT	4		X	X	M8
2	19M7572	CAP SCREW	2		X	X	M10 X 45
3	19M7784	SCREW	9		X	X	M10 X 20
6	19M7881	SCREW	4		X	X	M8 X 20
7	19M7938	CAP SCREW	6		X	X	M10 X 20
8	19M8035	CAP SCREW	4		X	X	M16 X 35
9	24H1653	WASHER	6		X	X	
10	24M7207	WASHER	8		X	X	
11	AT191541	ISOLATOR	1		X	X	
12	AT306539	HOOD	1		X	X	
13	AT316715	SUPPORT	1		X	X	
14	AT317581	HOOD	1		X	X	
15	AT38176	LOCK	1		X	X	
16	R117879	BUSHING	2		X	X	(SUB FOR (2) AT320236)
	14M7296	FLANGE NUT	2		X	X	M10, (SUB FOR (2) AT320236)
17	T187863	COVER	1		X	X	
18	T208184	COVER	1		X	X	

MAIN FRAME FRONT SIDE COVERS

T203248 -UN-28OCT04

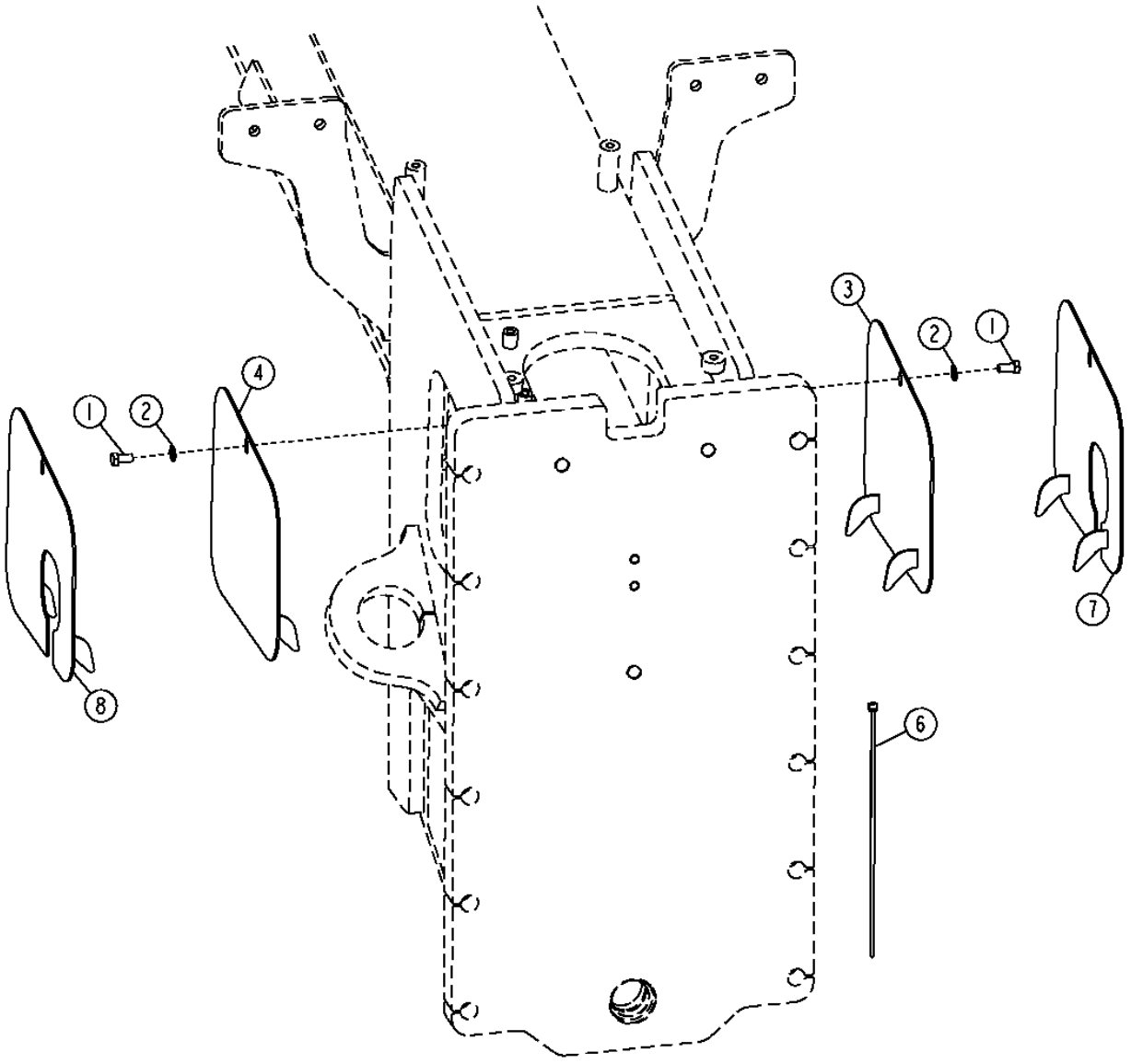

T203248

MAIN FRAME FRONT SIDE COVERS

KEY	PART NO.	PART NAME	QTY	SERIAL NO.	770D	772D	REMARKS
1	19M7938	CAP SCREW	2		X	X	M10 X 20
2	24H1308	WASHER	2		X	X	13/32" X 1" X 0.134", (SUB FOR 24M7028, THIS APPLICATION)
3	AT316321	COVER	1		X		
4	AT316322	COVER	1		X		
5	.....	CONDUIT	1		X	X	(MAKE FROM T157991) (CUT TO LENGTH)(NOT ILLUSTRATED)
6	H77698	TIE BAND	3		X	X	
7	AT316323	COVER	1			X	
8	AT316324	COVER	1			X	

GRILLE AND GRILLE HOUSING

T201156 -UN-05AUG04

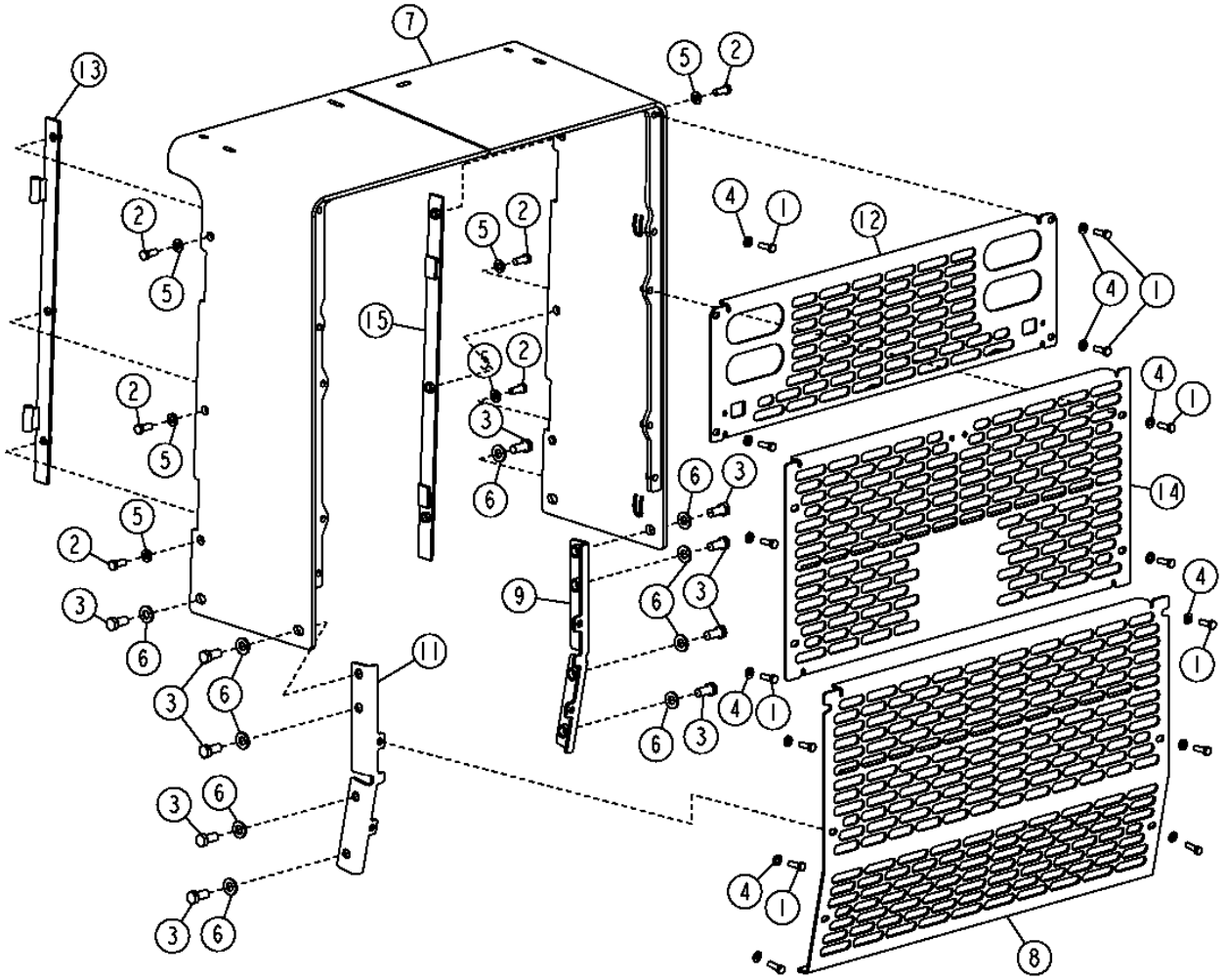

T201156

GRILLE AND GRILLE HOUSING

KEY	PART NO.	PART NAME	QTY	SERIAL NO.	770D	772D	REMARKS
1	19M7662	CAP SCREW	14		X	X	M10 X 30
2	19M8011	CAP SCREW	6		X	X	M12 X 30
3	19M8035	CAP SCREW	10		X	X	M16 X 35
4	24M7239	WASHER	14		X	X	
5	24M7240	WASHER	6		X	X	
6	24M7241	WASHER	10		X	X	
7	AT306536	FRAME	1		X	X	(GRILLE HOUSING)
8	AT306953	GRILLE	1		X	X	(LOWER)
9	AT306973	ANGLE	1		X	X	
11	AT306974	ANGLE	1		X	X	
12	AT307723	GRILLE	1		X	X	(UPPER)
13	AT309380	HINGE	1		X	X	(LEFT RADIATOR COMPARTMENT DOOR)
14	AT308110	GRILLE	1		X	X	(MIDDLE)
15	AT309379	HINGE	1		X	X	(RIGHT RADIATOR COMPARTMENT DOOR)

RADIO AND SPEAKERS

T201726 -UN-30JUL04

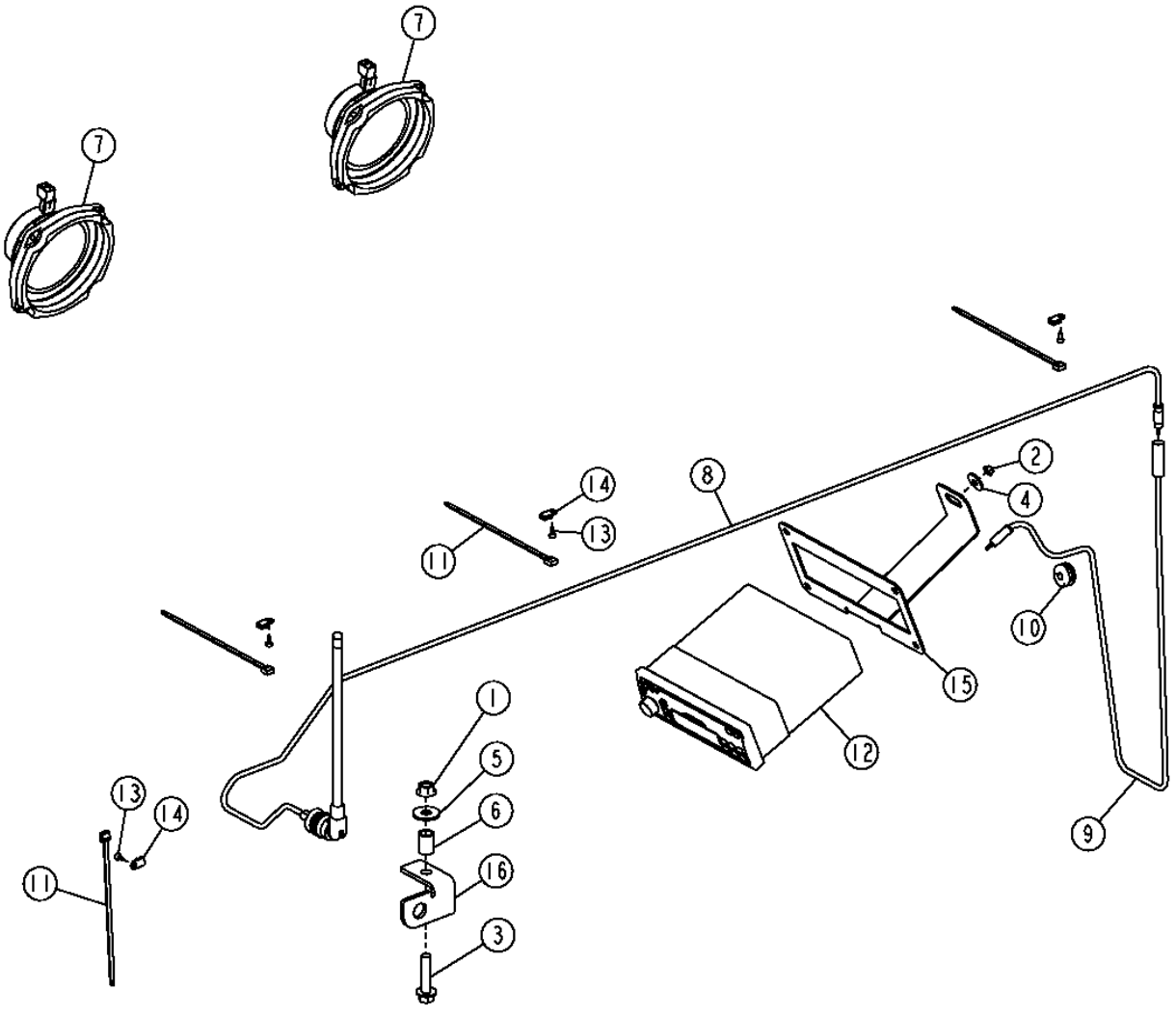

T201726

RADIO AND SPEAKERS

KEY	PART NO.	PART NAME	QTY	SERIAL NO.	770D	772D	REMARKS
1	14M7296	FLANGE NUT	1		X	X	M10
2	14M7375	FLANGE NUT	1		X	X	M5
3	19M7805	SCREW	1		X	X	M10 X 45
4	24M7100	WASHER	1		X	X	
5	24M7296	WASHER	1		X	X	
6	H140461	BUSHING	1		X	X	
7	AT188759	SPEAKER	2		X	X	(5 1/4")
8	AT199388	ANTENNA	1		X	X	
9	AT302520	ANTENNA CABLE	1		X	X	
10	R28193	GROMMET	1		X	X	
11	R44302	TIE BAND	3		X	X	
12	RE227953	RADIO	1		X	X	(AM/FM WITH CD)
	RE190139	RADIO	1		X	X	(AM/FM WITH WEATHERBAND)
	RE190140	RADIO	1		X	X	(AM/FM WITH WEATHERBAND AND CASSETTE)
13	T185769	SCREW	4		X	X	
14	T187394	ANCHOR	4		X	X	
15	T203389	BRACKET	1		X	X	
16	T204635	BRACKET	1		X	X	

INTERIOR REARVIEW MIRROR

T203162 -UN-01NOV04

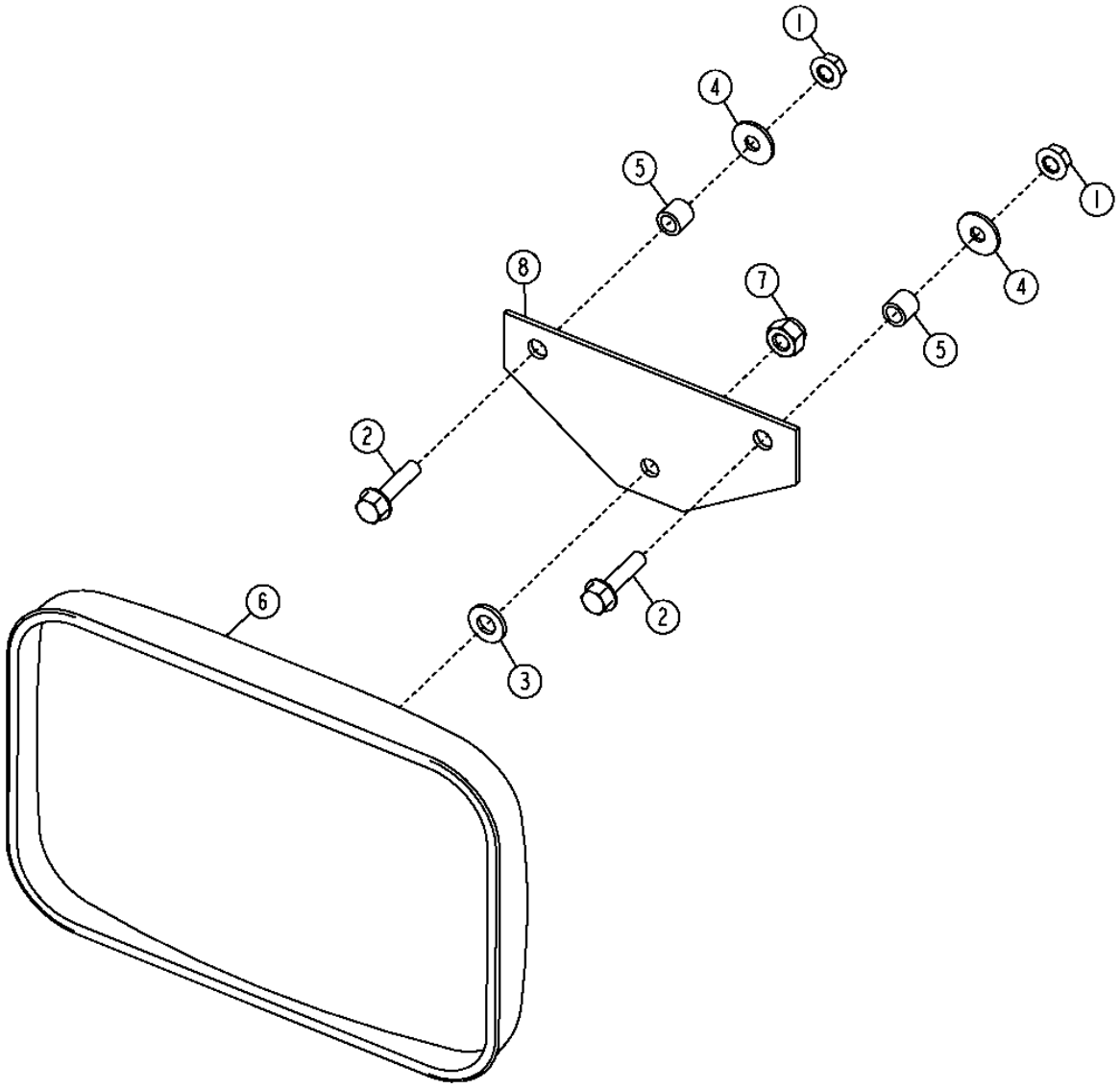

T203162

INTERIOR REARVIEW MIRROR

KEY	PART NO.	PART NAME	QTY	SERIAL NO.	770D	772D	REMARKS
1	14M7298	FLANGE NUT	2		X	X	M8
2	19M7897	SCREW	2		X	X	M8 X 35
3	24M7239	WASHER	1		X	X	
4	24M7298	WASHER	2		X	X	
5	28H3450	SPACER	2		X	X	
6	AT157226	REAR VIEW MIRROR	1		X	X	
7	T11234	LOCK NUT	2		X	X	
8	T145360	PLATE	1		X	X	

EXTERIOR MIRROR

T208065 -UN-12FEB05

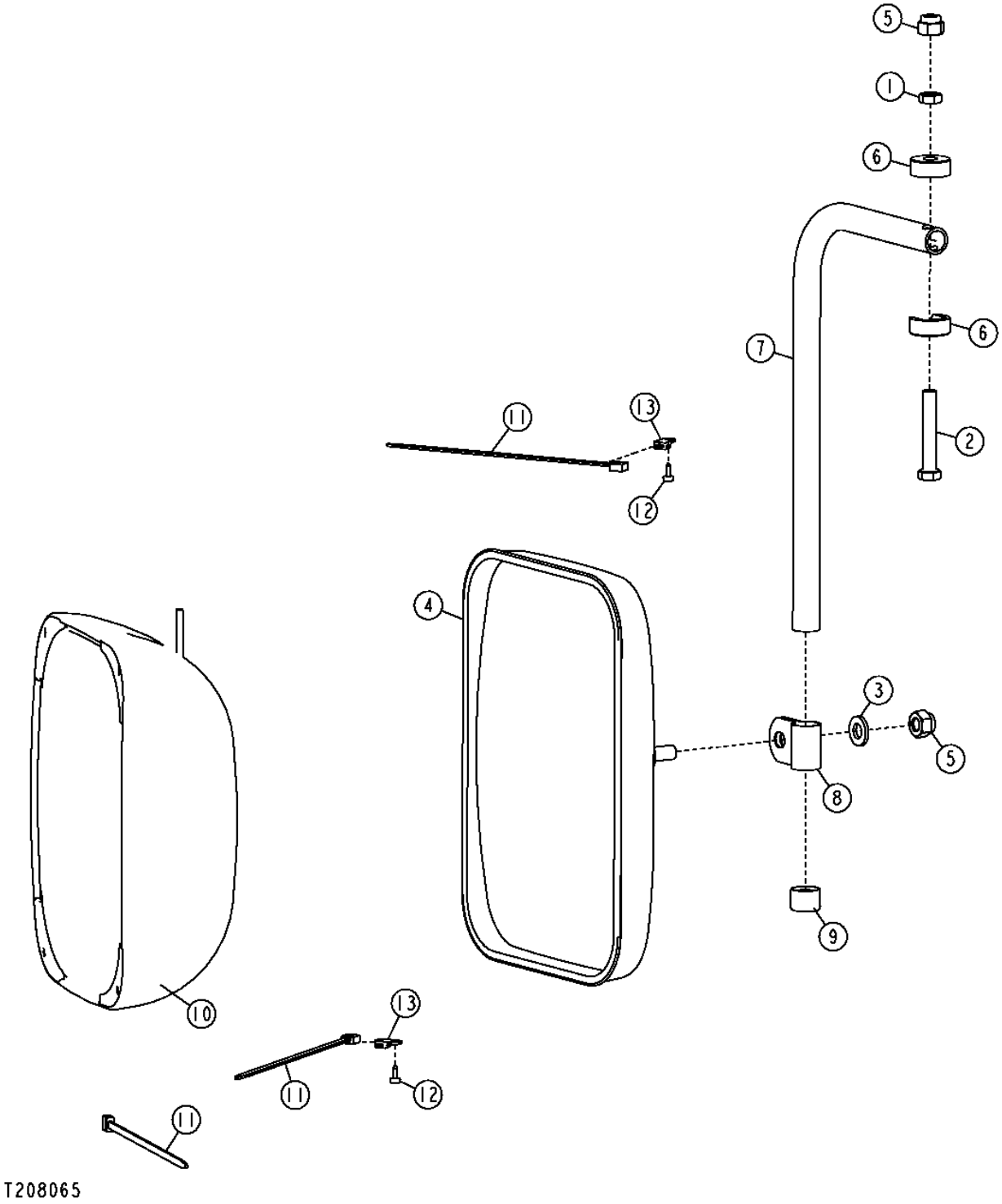

EXTERIOR MIRROR

KEY	PART NO.	PART NAME	QTY	SERIAL NO.	770D	772D	REMARKS
1	14H732	NUT	1		X	X	
2	19H1726	CAP SCREW	1		X	X	3/8" X 2-1/4"
3	24M7239	WASHER	1		X	X	
4	AT157226	REAR VIEW MIRROR	1		X	X	
5	T11234	LOCK NUT	2		X	X	3/8"
6	T115030	HALF CLAMP	2		X	X	
7	T115031	RIB	1		X	X	
8	T119564	CLAMP	1		X	X	
9	T128437	CAP	1		X	X	
10	AT304638	REAR VIEW MIRROR	1		X	X	
11	R44302	TIE BAND	AR		X	X	
12	T185769	SCREW	2		X	X	
13	T187394	ANCHOR	2		X	X	

FIRE EXTINGUISHER

T202720 -UN-03SEP04

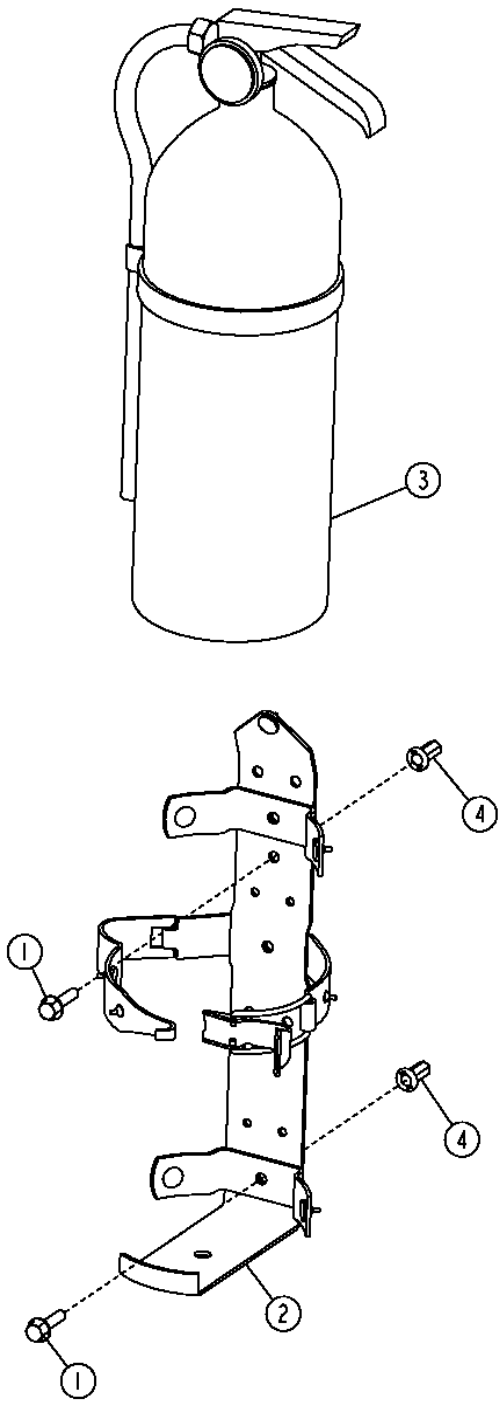

T202720

FIRE EXTINGUISHER

KEY	PART NO.	PART NAME	QTY	SERIAL NO.	770D	772D	REMARKS
1	19M7863	SCREW	2		X	X	M6 X 25
2	AT189390	BRACKET	1		X	X	
3	AT189487	FIRE EXTINGUISHER	1		X	X	
4	T196078	NUT	2		X	X	

HORN

TP15206 -UN-01JAN94

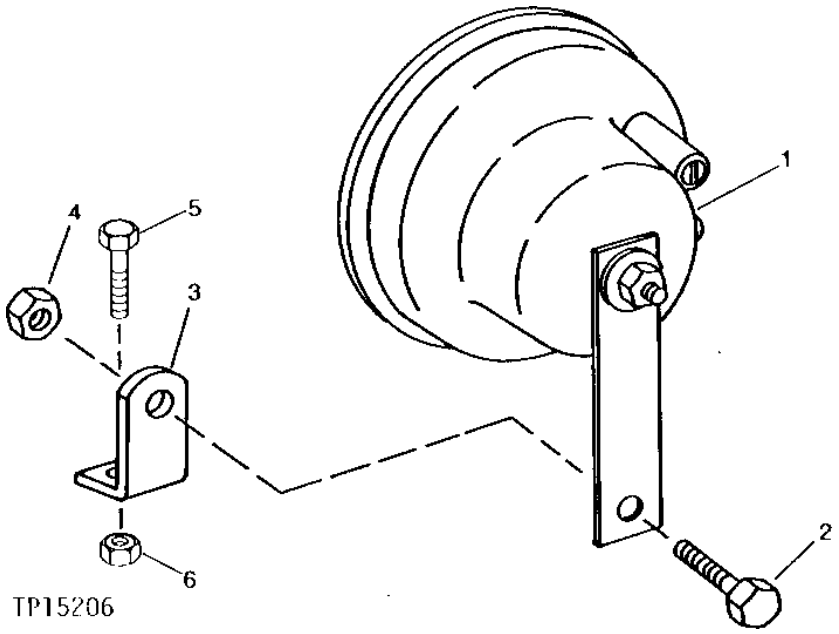

HORN

KEY	PART NO.	PART NAME	QTY	SERIAL NO.	770D	772D	REMARKS
1	AT226282	HORN	1		X	X	
2	19H2664	CAP SCREW	1		X	X	5/16" X 3/4"
3	R46791	BRACKET	1		X	X	
4	14H785	NUT	1		X	X	5/16"
5	19H2676	CAP SCREW	1		X	X	3/8" X 1"
6	14H812	NUT	1		X	X	3/8"

BACK-UP ALARM

T202061 -UN-05AUG04

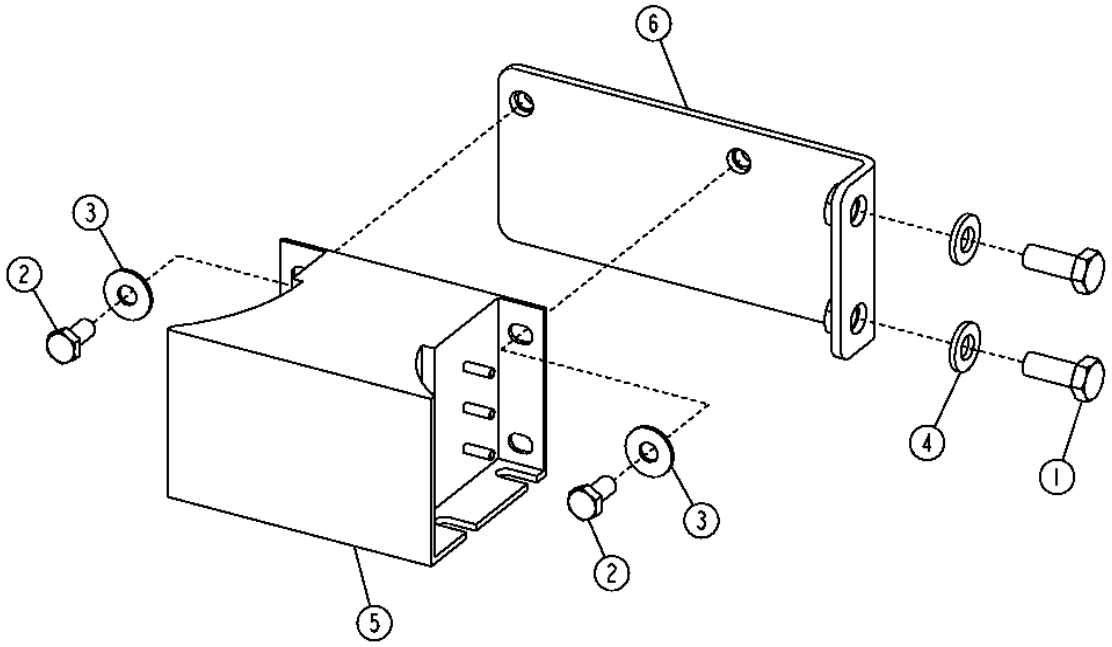

T202061

BACK-UP ALARM

KEY	PART NO.	PART NAME	QTY	SERIAL NO.	772D	772D	REMARKS
1	19M7402	CAP SCREW	2		X	X	M10 X 25
2	19M7932	CAP SCREW	2		X	X	M8 X 16
3	24H1822	WASHER	2		X	X	
4	24M7239	WASHER	2		X	X	
5	AT120461	TRAVEL WARNING ALARM	1		X	X	
6	AT307351	BRACKET	1		X	X	

TOOLBOX

T200761 -UN-09JUN04

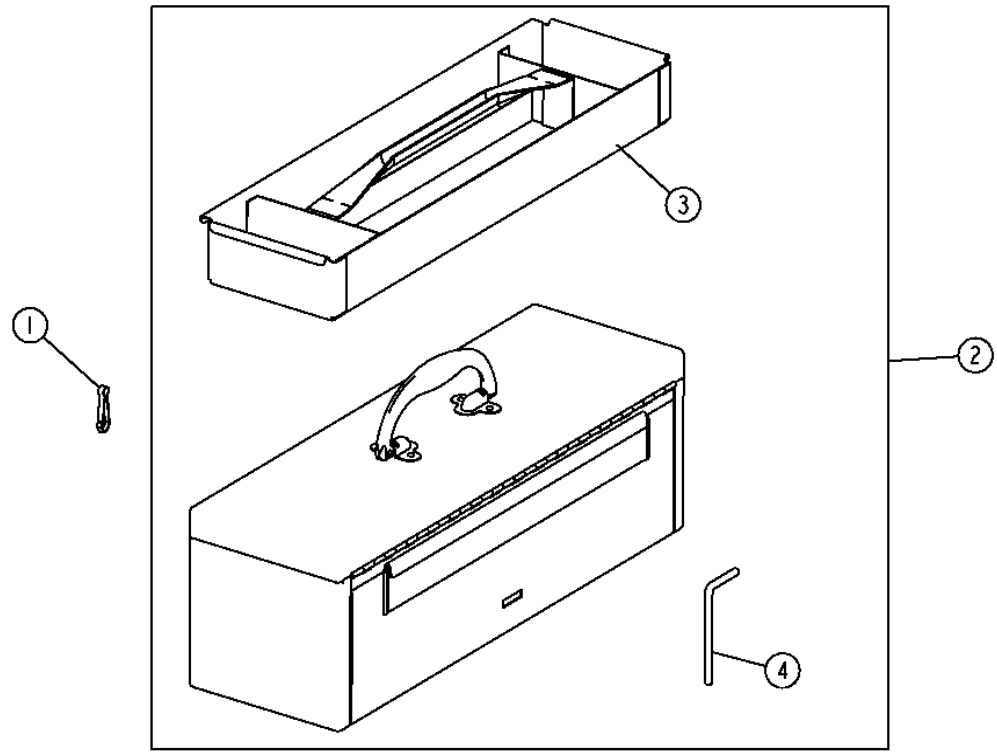

TOOLBOX

KEY	PART NO.	PART NAME	QTY	SERIAL NO.	770D	772D	REMARKS
1	99M7039	HOOK	1		X	X	
2	AT22070	TOOLBOX	1		X	X	
3	AT22073	HOLDER	1		X	X	
4	T23027	PIN	1		X	X	

REAR WINDOW SUNVISOR

T203172 -UN-01NOV04

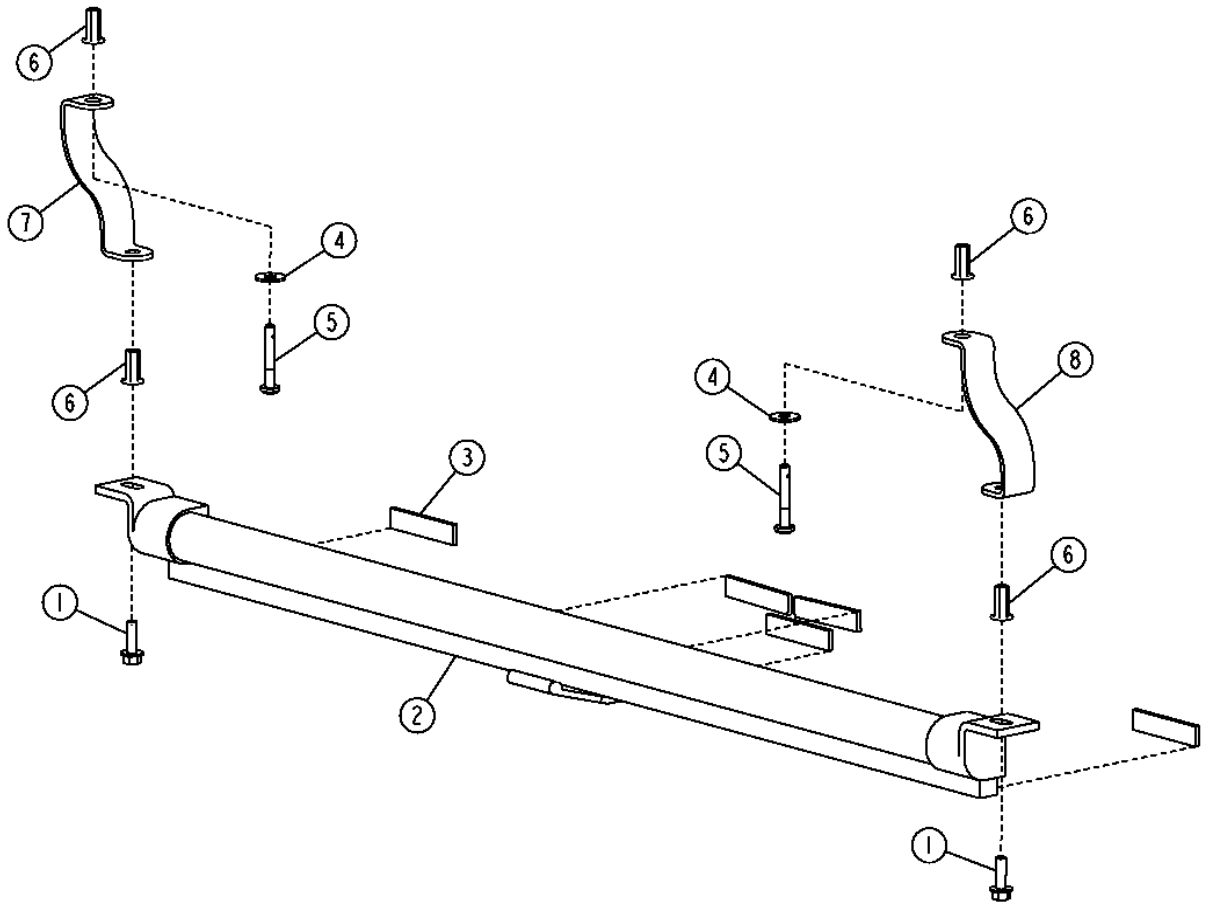

T203172

REAR WINDOW SUNVISOR

KEY	PART NO.	PART NAME	QTY	SERIAL NO.	770D	772D	REMARKS
1	19M7862	SCREW	2		X	X	M6 X 20
2	AT305193	SHADE CURTAIN	1		X	X	
3	.....	WEATHERSTRIP	1		X	X	(MAKE FROM T63019) (CUT TO LENGTH)
4	24H1821	WASHER	2		X	X	
5	21M7403	SCREW	2		X	X	M6 X 40
6	T196077	NUT	4		X	X	
7	T204938	BRACKET	1		X	X	(ALSO ORDER (2) T196077)
8	T205088	BRACKET	1		X	X	(ALSO ORDER (2) T196077)

FRONT WINDOW SUNVISOR

T205801 -UN-12DEC04

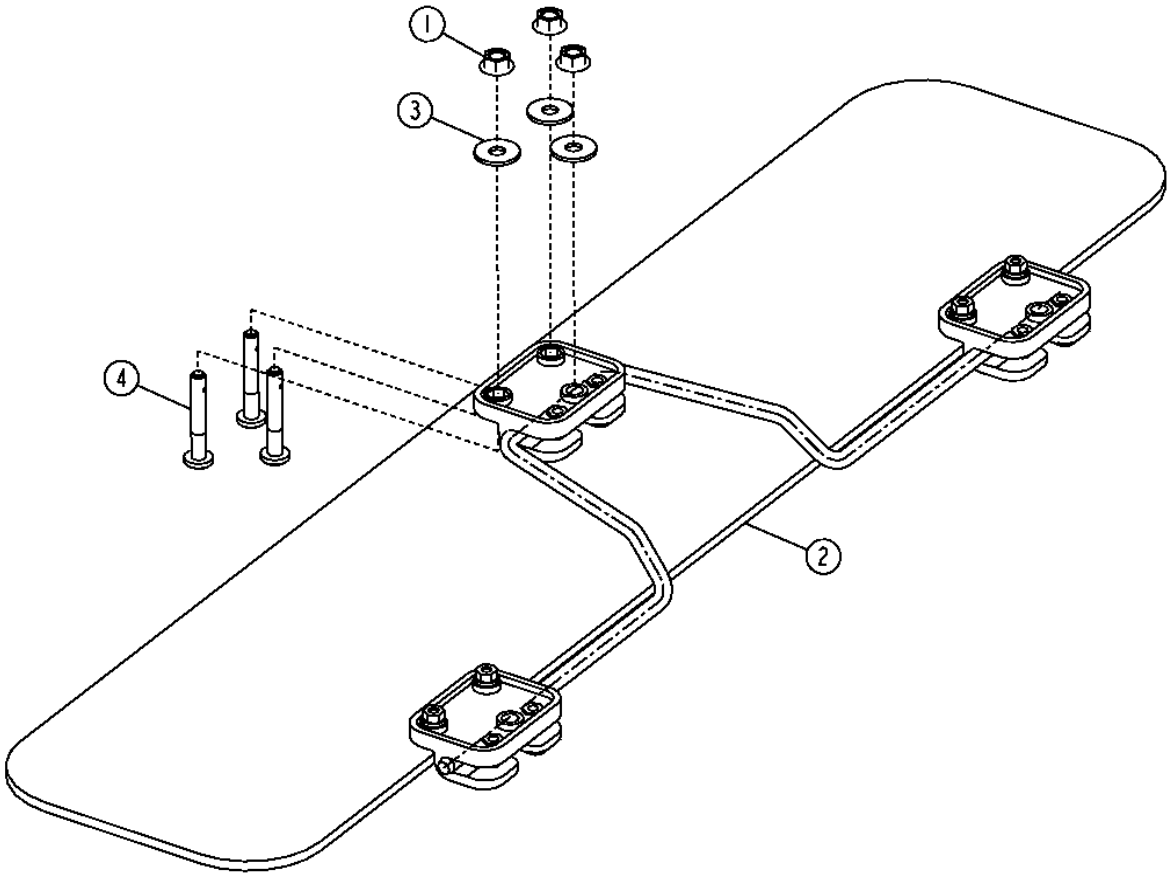

T205801

FRONT WINDOW SUNVISOR

KEY	PART NO.	PART NAME	QTY	SERIAL NO.	770D	772D	REMARKS
1	14M7303	FLANGE NUT	3		X	X	M6
2	AT306350	SUN VISOR	1		X	X	
3	24H1821	WASHER	3		X	X	
4	21M7403	SCREW	3		X	X	M6 X 40

SMV SIGN

T202479 -UN-18DEC04

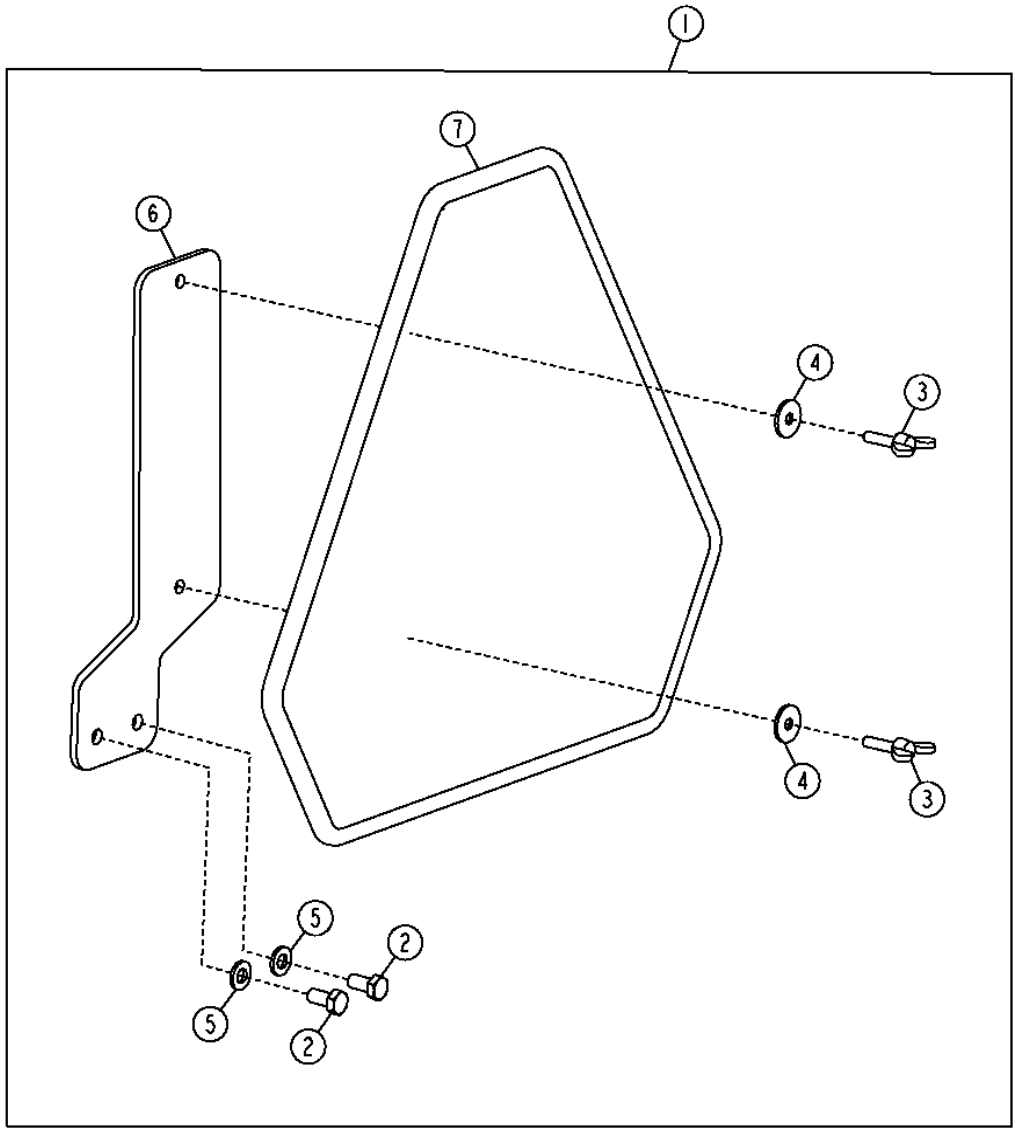

T202479

SMV SIGN

KEY	PART NO.	PART NAME	QTY	SERIAL NO.	770D	772D	REMARKS
1	**AT315341**	**KIT**	**1**		**X**	**X**	**(WHOLEGOODS) (SMV SIGN KIT)**
2	19M7932	CAP SCREW	2		X	X	M8 X 16
3	21M7344	SCREW	2		X	X	M6 X 25
4	24M7100	WASHER	2		X	X	
5	24M7238	WASHER	2		X	X	
6	AT315334	BRACKET	1		X	X	
9	JD5929	SMV EMBLEM	1		X	X	

MAIN HYDRAULIC PUMP

T201567 -UN-10DEC04

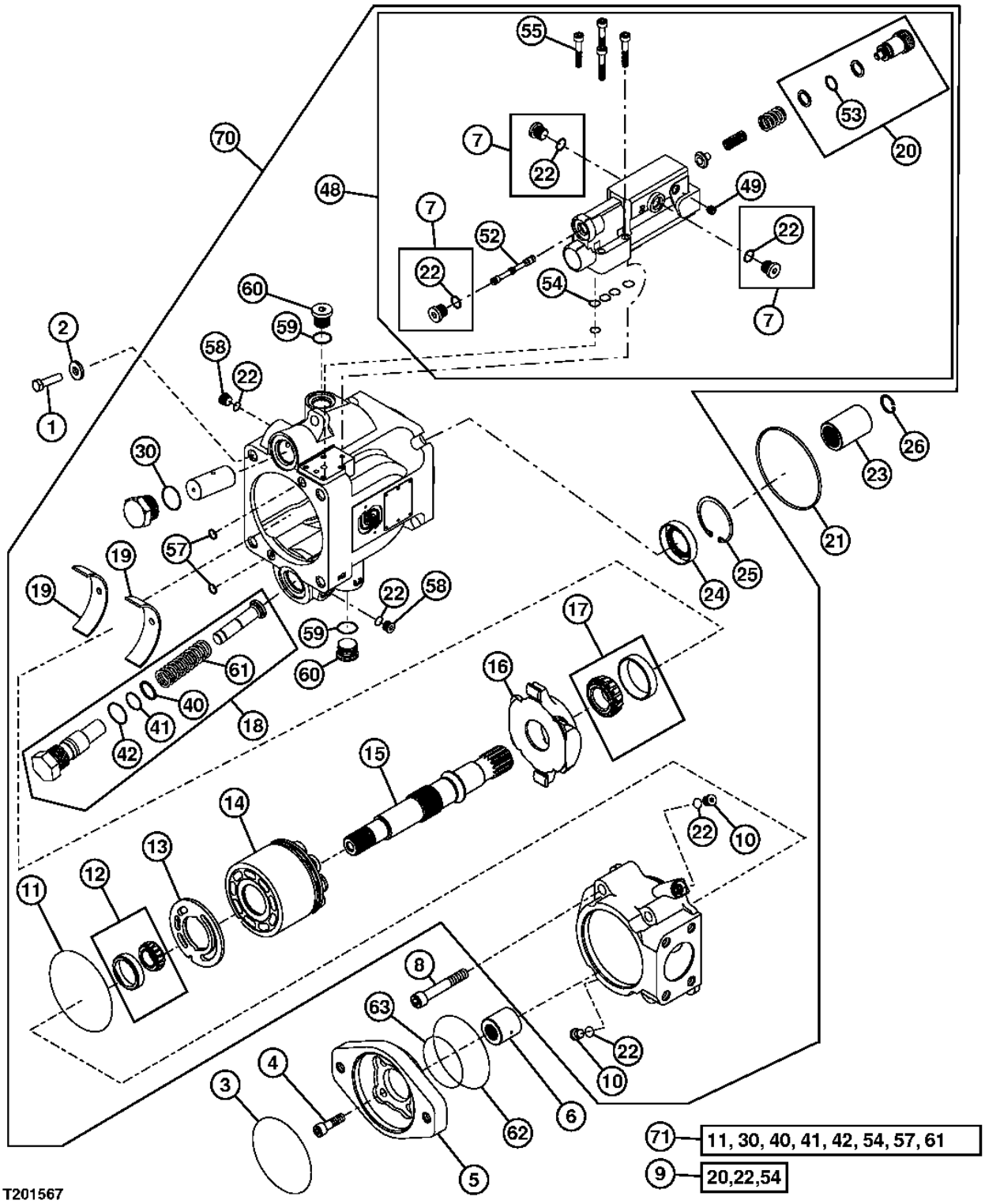

MAIN HYDRAULIC PUMP

KEY	PART NO.	PART NAME	QTY	SERIAL NO.	770D	772D	REMARKS
1	19M7496	CAP SCREW	4		X	X	M12 X 45
2	T29342	WASHER	4		X	X	
3	.....	O-RING	1			X	(USED WITH AUXILIARY DRIVE)
4	19M8440	SCREW	4			X	M10 X 25, (USED WITH AUXILIARY DRIVE)
5	.....	PLATE	1			X	ADAPTER (USED WITH AUXILIARY DRIVE)
6	T188690	HYDR.QUICK COUPLER SOCKET	1			X	(USED WITH AUXILIARY DRIVE)
7	T176425	PLUG	3		X	X	
8	.....	SCREW	4			X	(USED WITH AUXILIARY DRIVE)
9	AT305110	SEAL KIT	1		X	X	
10	T54904	FITTING PLUG	2		X	X	
11	N203952	O-RING	1		X	X	
12	AT191366	BEARING KIT	1		X	X	
13	T188686	PLATE	1		X	X	
14	AT196346	KIT	1		X	X	(CONTAINS PUMP PISTONS AND HOUSING)
15	T185138	DRIVE SHAFT	1			X	(USED WITH AUXILIARY DRIVE)
	T188698	SHAFT	1		X		(USED WITHOUT AUXILIARY DRIVE)
16	AT280244	MOUNTING PARTS	1		X	X	SWASHPLATE ASSEMBLY, (SUB FOR AT197420)
17	AT191367	BEARING KIT	1		X	X	
18	AT191369	PISTON REPLACEMENT KIT	1		X	X	
19	AT191368	BEARING	2		X	X	SWASHPLATE
20	.....	PLUG	1		X	X	(SUB AT305110)
21	F37020159	O-RING	1		X	X	
22	R28782	O-RING	6		X	X	
23	4001456	SLEEVE	1		X	X	
24	T185183	SEAL	1		X	X	
25	T185254	SNAP RING	1		X	X	
26	F39000106	SNAP RING	1		X	X	
30	T24212	O-RING	1		X	X	
40	T185185	BACK-UP RING	1		X	X	
41	T76938	O-RING	1		X	X	
42	T24212	O-RING	1		X	X	
48	AT199076	KIT	1		X	X	CONTROL
49	T188687	SCREW	1		X	X	
52	T190243	SPOOL	1		X	X	CONTROL
53	.....	O-RING	1		X	X	
54	T185181	RING	4		X	X	
55	T185186	SCREW	4		X	X	
57	T185184	RING	2		X	X	
58	T54904	FITTING PLUG	2		X	X	
59	M45387	O-RING	2		X	X	
60	M74877	PLUG	2		X	X	
61	T185135	SPRING	1		X	X	
62	T42302	O-RING	1			X	(WITH AUXILIARY DRIVE)
63	E65288	O-RING	1			X	(WITH AUXILIARY DRIVE)
70	AT302661	HYDRAULIC PUMP	1			X	(MAIN HYDRAULIC PUMP) (WITH AUXILIARY DRIVE)
	AT302662	HYDRAULIC PUMP	1		X		(MAIN HYDRAULIC PUMP) (WITHOUT AUXILIARY DRIVE)
71	AT191371	SEAL KIT	1		X	X	PUMP OVERHAUL

MAIN MANIFOLD VALVE MOUNTING BRACKET

T202314 -UN-02SEP04

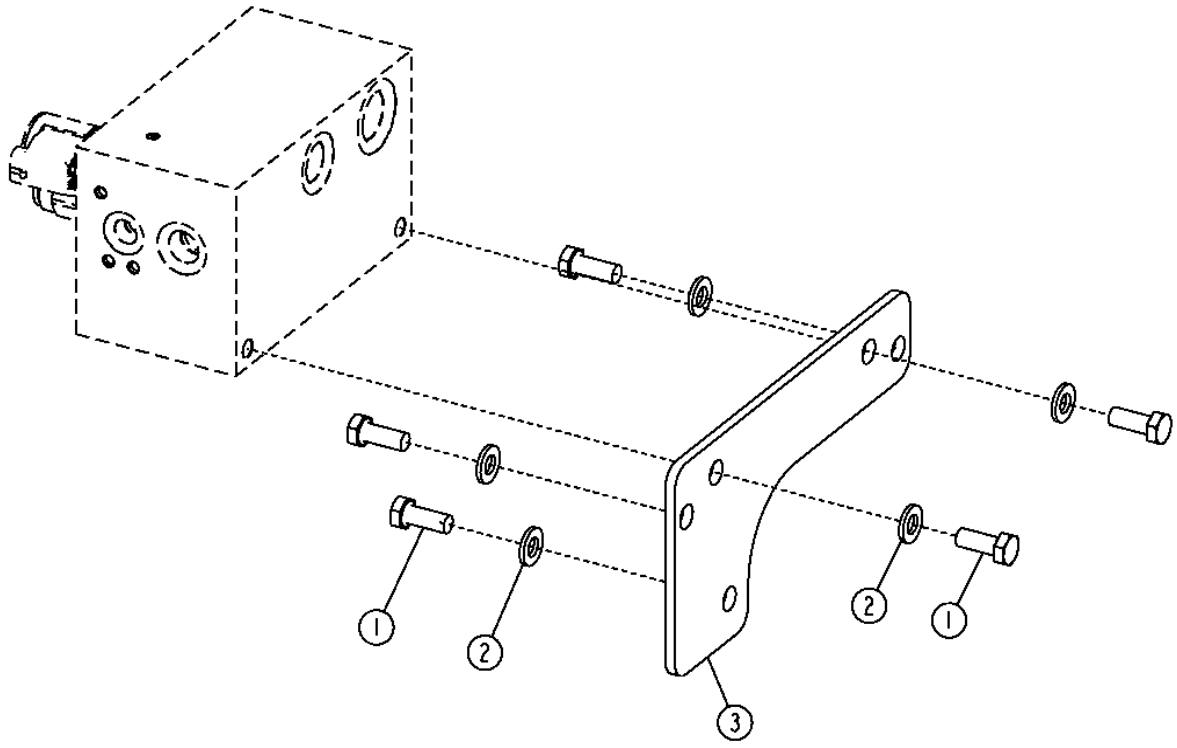

T202314

MAIN MANIFOLD VALVE MOUNTING BRACKET

KEY	PART NO.	PART NAME	QTY	SERIAL NO.	770D	772D	REMARKS
1	19M7402	CAP SCREW	5		X	X	M10 X 25
2	24M7239	WASHER	5		X	X	
3	T205720	PLATE	1		X	X	

MAIN HYDRAULIC MANIFOLD VALVE

T202315 -UN-01SEP04

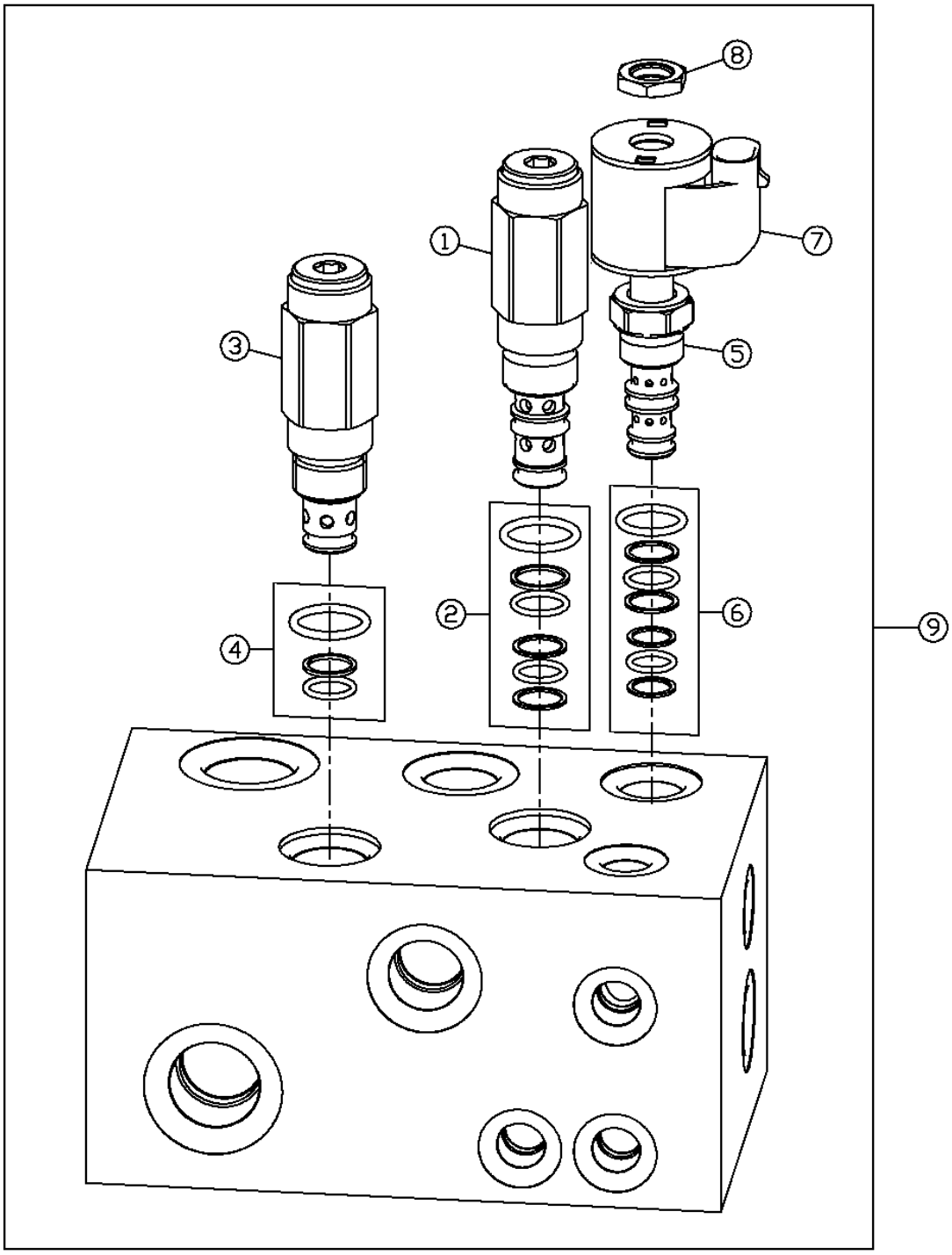

T202315

MAIN HYDRAULIC MANIFOLD VALVE

KEY	PART NO.	PART NAME	QTY	SERIAL NO.	770D	772D	REMARKS
1	AT307811	VALVE	1		X	X	(SADDLE LOCK PIN PRESSURE REDUCING VALVE)
2	AT196943	SEAL KIT	1		X	X	
3	AT302907	PRESSURE RELIEF VALVE	1		X	X	(SYSTEM RELIEF VALVE)
4	AT224864	SEAL KIT	1		X	X	
5	AT302908	SOLENOID VALVE	1		X	X	
6	AH209121	SEAL KIT	1		X	X	
7	AT224574	SOLENOID VALVE COIL	1		X	X	(SADDLE LOCK PIN SOLENOID)
8	N223292	NUT	1		X	X	
9	AT302150	MANIFOLD	1		X	X	(MAIN MANIFOLD VALVE)

MAIN HYDRAULIC CONTROL VALVE (RIGHT AND LEFT COMPLETE)

T204802 -UN-09NOV04

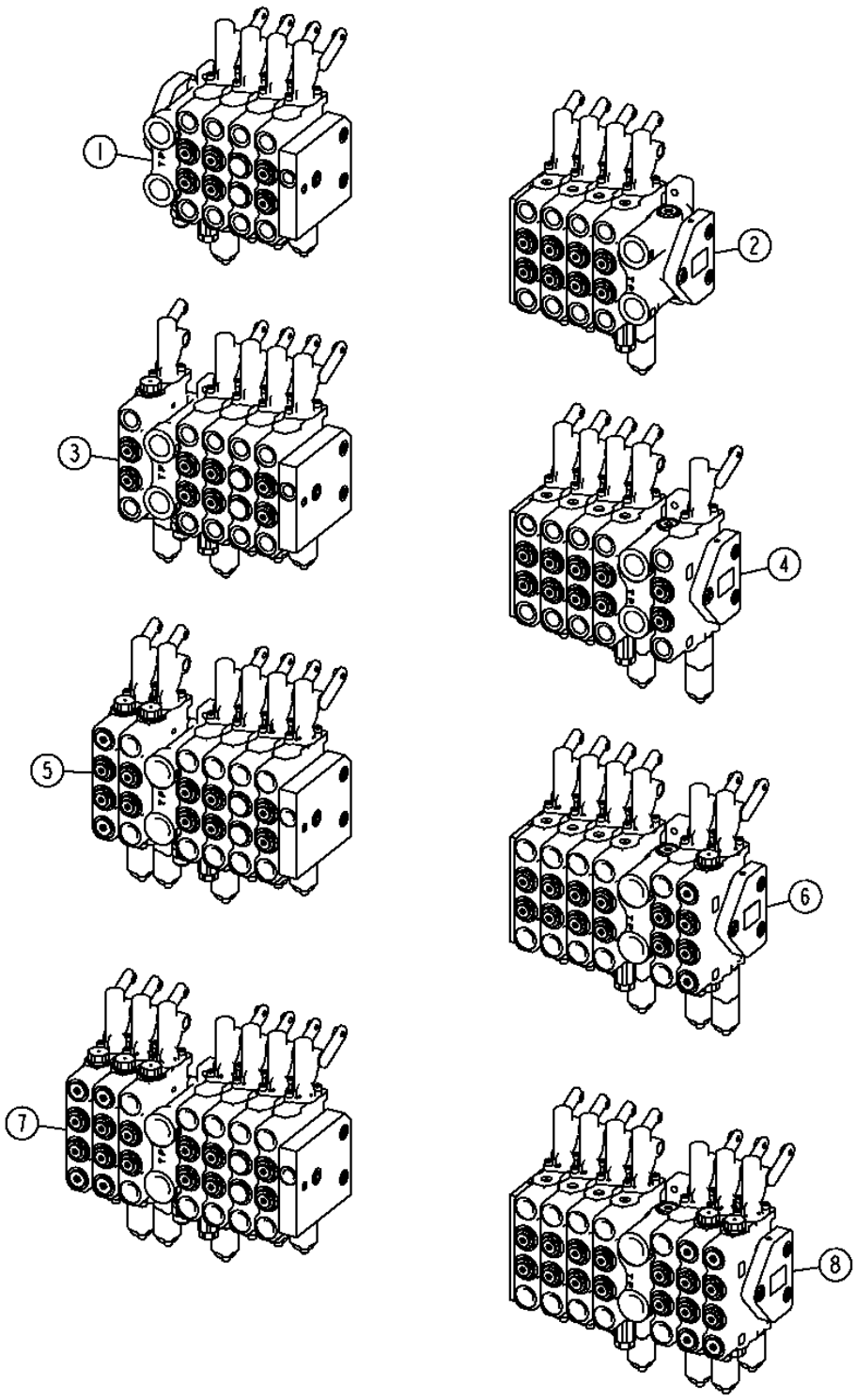

MAIN HYDRAULIC CONTROL VALVE (RIGHT AND LEFT COMPLETE)

KEY	PART NO.	PART NAME	QTY	SERIAL NO.	770D	772D	REMARKS
1	AT302284	CONTROL VALVE	1		X	X	(LEFT 4 FUNCTION)(COMPONENTS ON SEPARATE PAGES)
2	AT302283	CONTROL VALVE	1		X	X	(RIGHT 4 FUNCTION)(COMPONENTS ON SEPARATE PAGES)
3	AT302286	CONTROL VALVE	1		X	X	(LEFT 5 FUNCTION)(COMPONENTS ON SEPARATE PAGES)
4	AT302285	CONTROL VALVE	1		X	X	(RIGHT 5 FUNCTION)(COMPONENTS ON SEPARATE PAGES)
5	AT309235	CONTROL VALVE	1		X	X	(LEFT 6 FUNCTION)(COMPONENTS ON SEPARATE PAGES)
6	AT309234	CONTROL VALVE	1		X	X	(RIGHT 6 FUNCTION)(COMPONENTS ON SEPARATE PAGES)
7	AT302288	CONTROL VALVE	1		X	X	(LEFT 7 FUNCTION)(COMPONENTS ON SEPARATE PAGES)
8	AT302287	CONTROL VALVE	1		X	X	(RIGHT 7 FUNCTION)(COMPONENTS ON SEPARATE PAGES)

MAIN HYDRAULIC CONTROL VALVE TIE RODS

T204807 -UN-16NOV04

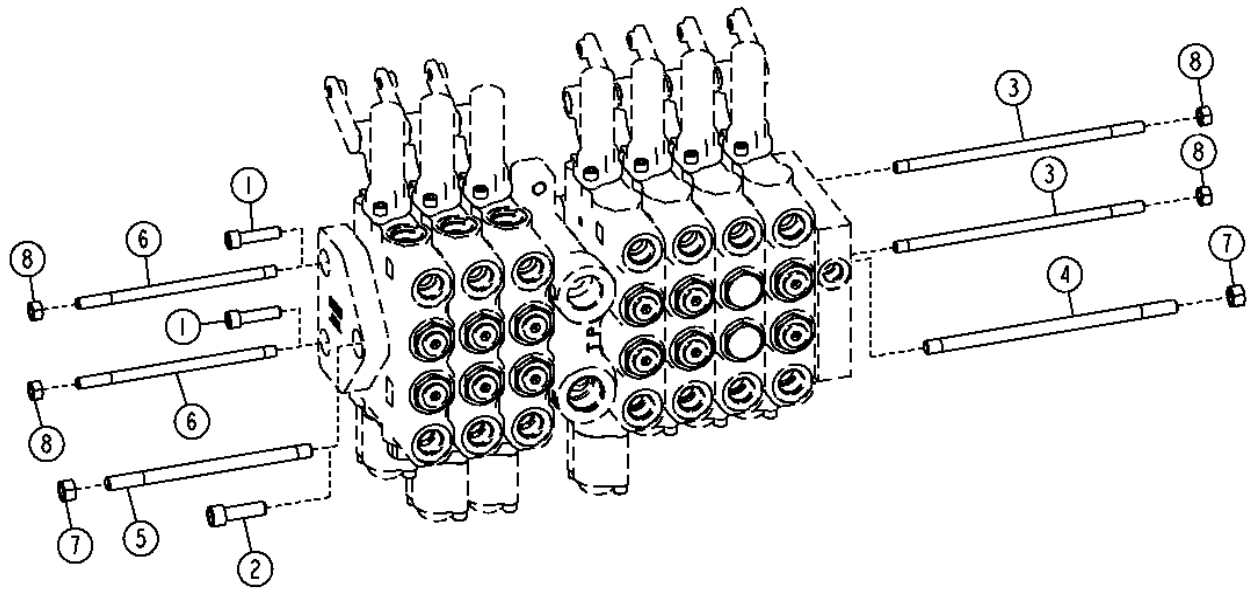

T204807

MAIN HYDRAULIC CONTROL VALVE TIE RODS

KEY	PART NO.	PART NAME	QTY	SERIAL NO.	770D	772D	REMARKS
1	19H3920	SCREW	2		X	X	5/16" X 1-1/4", (4 FUNCTION)
2	19H3921	SCREW	1		X	X	3/8" X 1-1/4", (4 FUNCTION)
3	T213026	STUD	2		X	X	
4	T213029	STUD	1		X	X	
5	T213030	STUD	1		X	X	(5 FUNCTION)
	T76128	STUD	1		X	X	(6 FUNCTION)
	T213031	STUD	1		X	X	(7 FUNCTION)
6	T213027	STUD	2		X	X	(5 FUNCTION)
	T76127	STUD	2		X	X	(6 FUNCTION)
	T213028	STUD	2		X	X	(7 FUNCTION)
7	14H1080	NUT	1		X	X	3/8", (4 FUNCTION)
	14H1080	NUT	2		X	X	3/8", (5,6,7 FUNCTION)
8	14H1042	NUT	2		X	X	5/16", (4 FUNCTION)
	14H1042	NUT	4		X	X	5/16", (5,6,7 FUNCTION)

BLADE TILT, ARTICULATION, CIRCLE SIDE SHIFT AND WHEEL LEAN VALVE SECTIONS

T203404 -UN-09NOV04

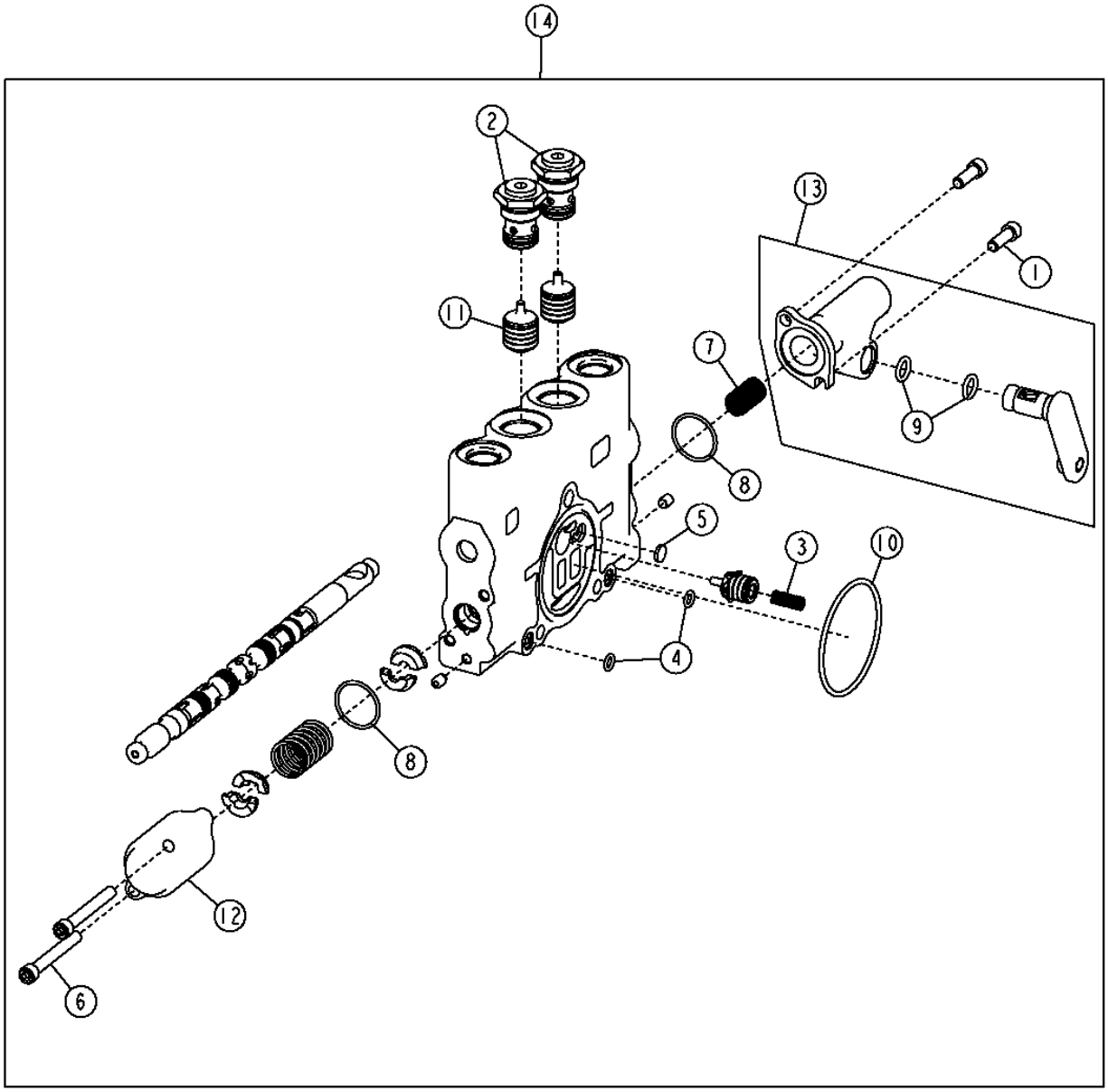

T203404

BLADE TILT, ARTICULATION, CIRCLE SIDE SHIFT AND WHEEL LEAN VALVE SECTIONS

KEY	PART NO.	PART NAME	QTY	SERIAL NO.	770D	772D	REMARKS
1	19H2924	SCREW	2		X	X	1/4" X 3/4"
2	AT317328	CHECK VALVE	2		X	X	
3	R111238	SPRING	1		X	X	
4	R76578	O-RING	3		X	X	
5	R95493	DISK	1		X	X	
6	T118712	SCREW	2		X	X	
7	T190767	SPRING	1		X	X	
8	T213022	O-RING	2		X	X	
9	T213023	O-RING	2		X	X	
10	T213025	O-RING	1		X	X	
11	T213031	STUD	2		X	X	
12	T213033	HOUSING	1		X	X	
13	AT317305	ACTUATOR	1		X	X	(USE WITH BLADE TILT VALVE SECTION)
	AT317304	ACTUATOR	1		X	X	(USE WITH ARTICULATION, CIRCLE SIDE SHIFT, AND WHEEL LEAN VALVE SECTIONS)
14	AT317315	CONTROL VALVE	1		X	X	(BLADE TILT VALVE SECTION)
	AT317316	CONTROL VALVE	1		X	X	(ARTICULATION VALVE SECTION)
	AT317317	CONTROL VALVE	1		X	X	(CIRCLE SIDE SHIFT VALVE SECTION)
	AT317318	CONTROL VALVE	1		X	X	(WHEEL LEAN VALVE SECTION)

CIRCLE ROTATE VALVE SECTION

T203405 -UN-09NOV04

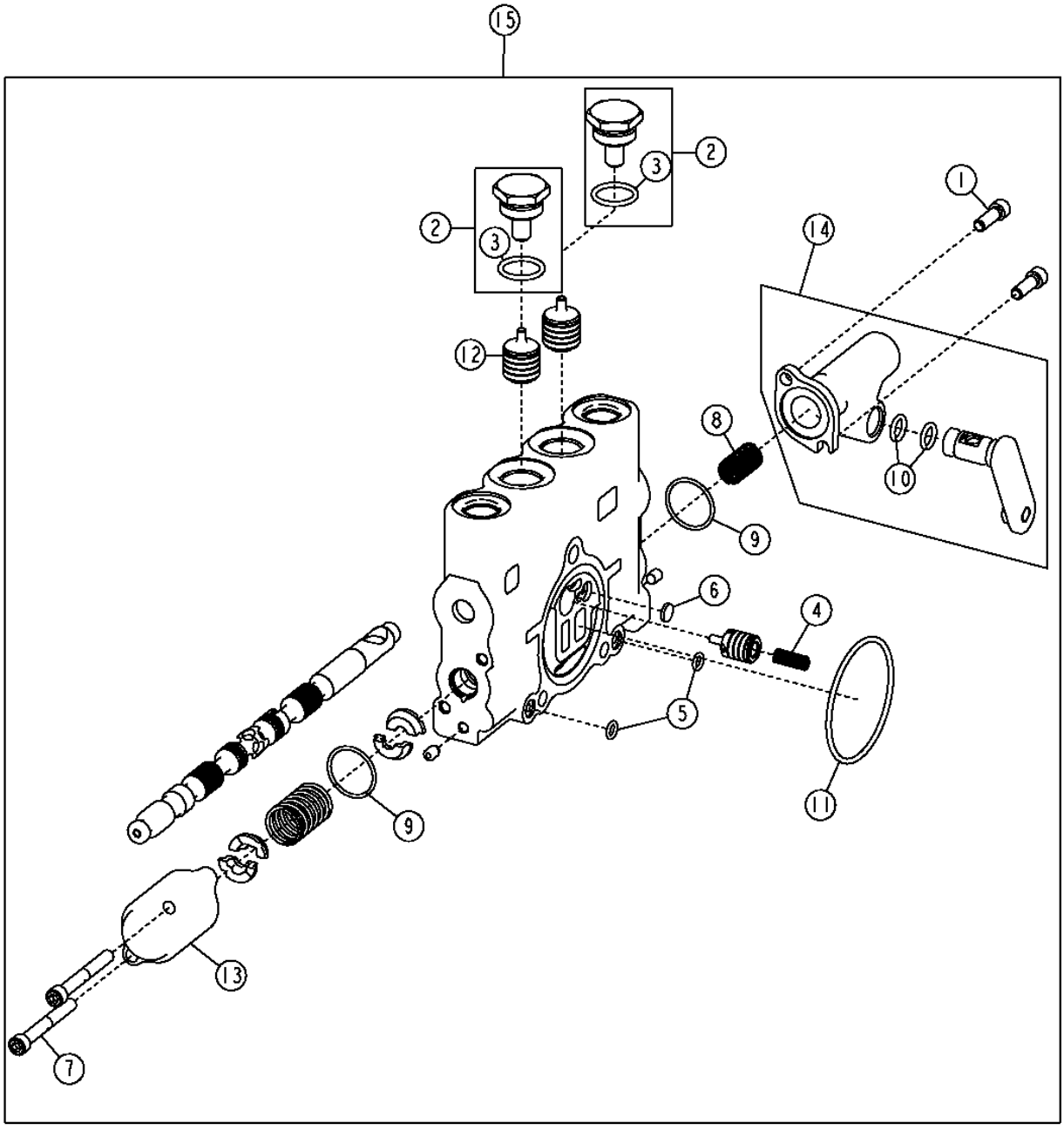

T203405

CIRCLE ROTATE VALVE SECTION

KEY	PART NO.	PART NAME	QTY	SERIAL NO.	770D	772D	REMARKS
1	19H2924	SCREW	2		X	X	1/4" X 3/4"
2	AT317820	FITTING	2		X	X	
3	R26906	O-RING	1		X	X	
4	R111238	SPRING	1		X	X	
5	R76578	O-RING	3		X	X	
6	R95493	DISK	1		X	X	
7	T118712	SCREW	2		X	X	
8	T190767	SPRING	1		X	X	
9	T213022	O-RING	2		X	X	
10	T213023	O-RING	2		X	X	
11	T213025	O-RING	1		X	X	
12	T213031	STUD	2		X	X	
13	T213033	HOUSING	1		X	X	
14	AT317305	ACTUATOR	1		X	X	
15	AT317314	CONTROL VALVE	1		X	X	(CIRCLE ROTATE VALVE SECTION)

BLADE SIDE SHIFT VALVE SECTION

T203406 -UN-09NOV04

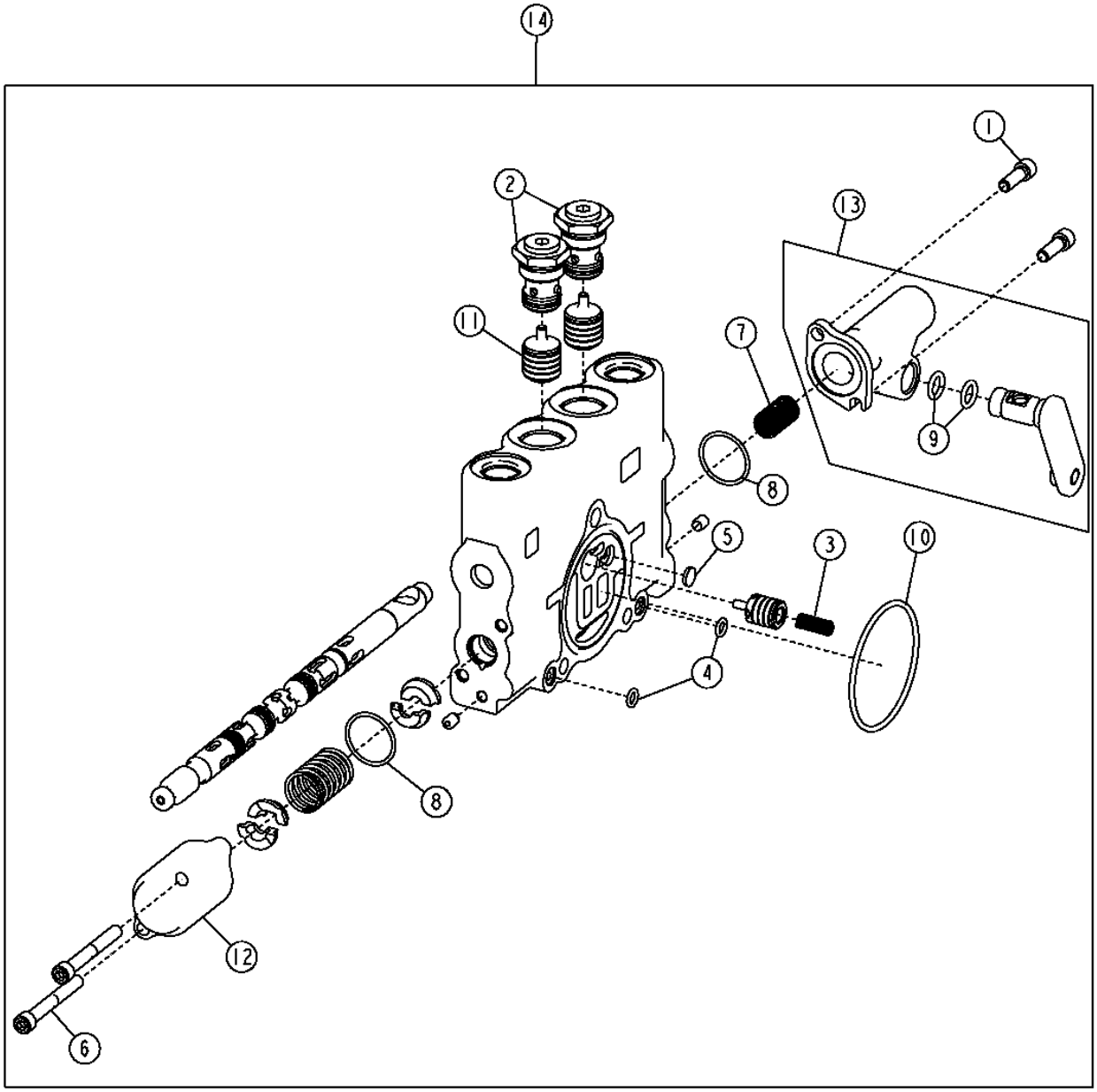

T203406

BLADE SIDE SHIFT VALVE SECTION

KEY	PART NO.	PART NAME	QTY	SERIAL NO.	770D	772D	REMARKS
1	19H2924	SCREW	2		X	X	1/4" X 3/4"
2	AT317328	CHECK VALVE	2		X	X	
3	R111238	SPRING	1		X	X	
4	R76578	O-RING	3		X	X	
5	R95493	DISK	1		X	X	
6	T118712	SCREW	2		X	X	
7	T190767	SPRING	1		X	X	
8	T213022	O-RING	2		X	X	
9	T213023	O-RING	2		X	X	
10	T213025	O-RING	1		X	X	
11	T213031	STUD	2		X	X	
12	T213033	HOUSING	2		X	X	
13	AT317305	ACTUATOR	1		X	X	
14	AT317313	CONTROL VALVE	1		X	X	(BLADE SIDE SHIFT VALVE SECTION)

BLADE LIFT VALVE SECTION

T203541 -UN-09NOV04

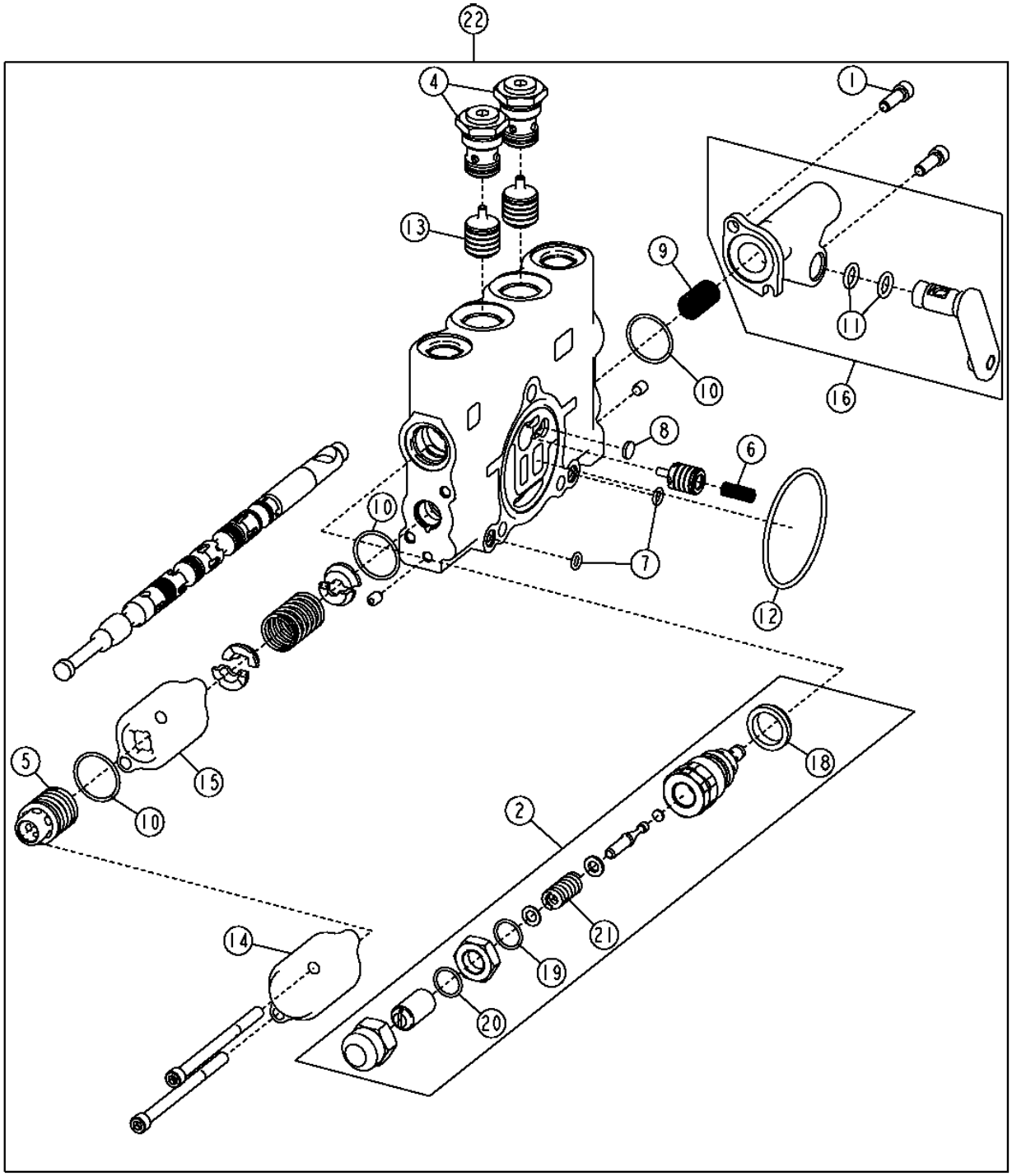

3 — 18, 19, 20, 21

T203541

BLADE LIFT VALVE SECTION

KEY	PART NO.	PART NAME	QTY	SERIAL NO.	770D	772D	REMARKS
1	19H2924	SCREW	2		X	X	1/4" X 3/4"
2	AT301226	PRESSURE RELIEF VALVE	1		X	X	
3	AT301227	SEAL KIT	1		X	X	
4	AT317328	CHECK VALVE	2		X	X	
5	AT317822	DETENT	1		X	X	
6	R111238	SPRING	1		X	X	
7	R76578	O-RING	3		X	X	
8	R95493	DISK	1		X	X	
9	T190767	SPRING	1		X	X	
10	T213022	O-RING	3		X	X	
11	T213023	O-RING	2		X	X	
12	T213025	O-RING	1		X	X	
13	T213031	STUD	2		X	X	
14	T213033	HOUSING	1		X	X	
15	T213318	HOUSING	1		X	X	
16	AT317305	ACTUATOR	1		X	X	(LEFT)
	AT317304	ACTUATOR	1		X	X	(RIGHT)
17	R47150	O-RING	1		X	X	
18	T183756	SEAL	1		X	X	
19	R63548	O-RING	1		X	X	
20	.....	O-RING	1		X	X	
21	.....	SPRING	1		X	X	
22	AT317308	CONTROL VALVE	1		X	X	(LEFT BLADE LIFT VALVE SECTION)
	AT317309	CONTROL VALVE	1		X	X	(RIGHT BLADE LIFT VALVE SECTION)

RIGHT MAIN HYDRAULIC CONTROL VALVE INLET AND OUTLET SECTIONS

T203556 -UN-16NOV04

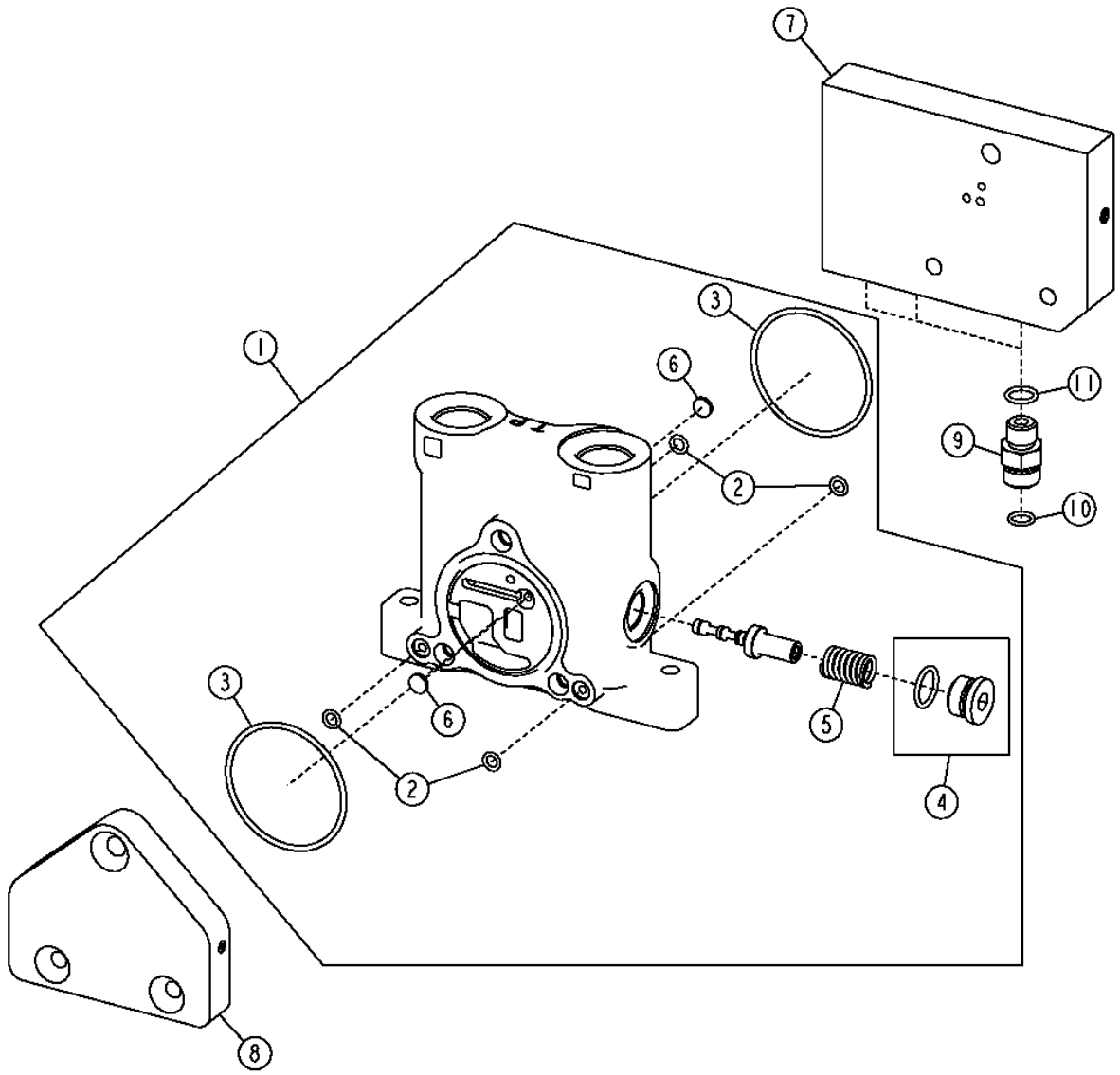

T203556

RIGHT MAIN HYDRAULIC CONTROL VALVE INLET AND OUTLET SECTIONS

KEY	PART NO.	PART NAME	QTY	SERIAL NO.	770D	772D	REMARKS
1	AT317306	HOUSING	1		X	X	
2	R76578	O-RING	4		X	X	
3	T213025	O-RING	2		X	X	
4	RE49624	PLUG	4		X	X	
5	T213032	COMPRESSION SPRING	1		X	X	
6	R95493	DISK	2		X	X	
7	AT317329	HOUSING	1		X	X	
8	AT317331	HOUSING	1		X	X	
9	38H1160	ADAPTER	3		X	X	
10	T77613	O-RING	3		X	X	
11	R26448	O-RING	3		X	X	

LEFT MAIN HYDRAULIC CONTROL VALVE INLET AND OUTLET SECTIONS

T203544 -UN-08DEC04

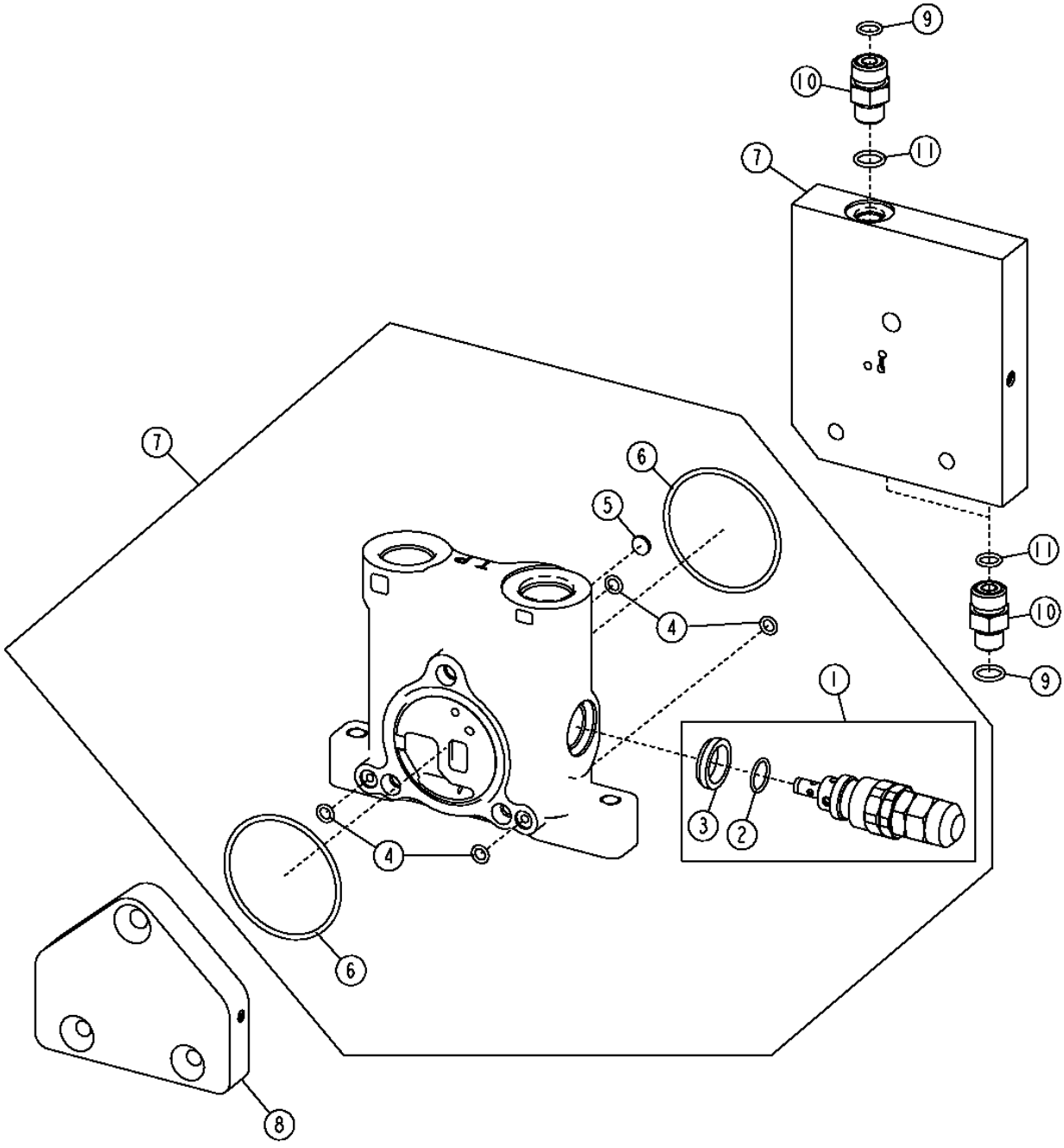

T203544

LEFT MAIN HYDRAULIC CONTROL VALVE INLET AND OUTLET SECTIONS

KEY	PART NO.	PART NAME	QTY	SERIAL NO.	770D	772D	REMARKS
1	AT317323	PRESSURE RELIEF VALVE	1		X	X	
2	T150961	O-RING	2		X	X	
3	T183756	SEAL	1		X	X	
4	R76578	O-RING	4		X	X	
5	R95493	DISK	2		X	X	
6	T213025	O-RING	1		X	X	
7	AT317330	HOUSING	1		X	X	
8	AT317331	HOUSING	1		X	X	
9	T77613	O-RING	3		X	X	
10	38H1160	ADAPTER	3		X	X	
11	R26448	O-RING	3		X	X	

RIPPER VALVE SECTION

T210408 -UN-15APR05

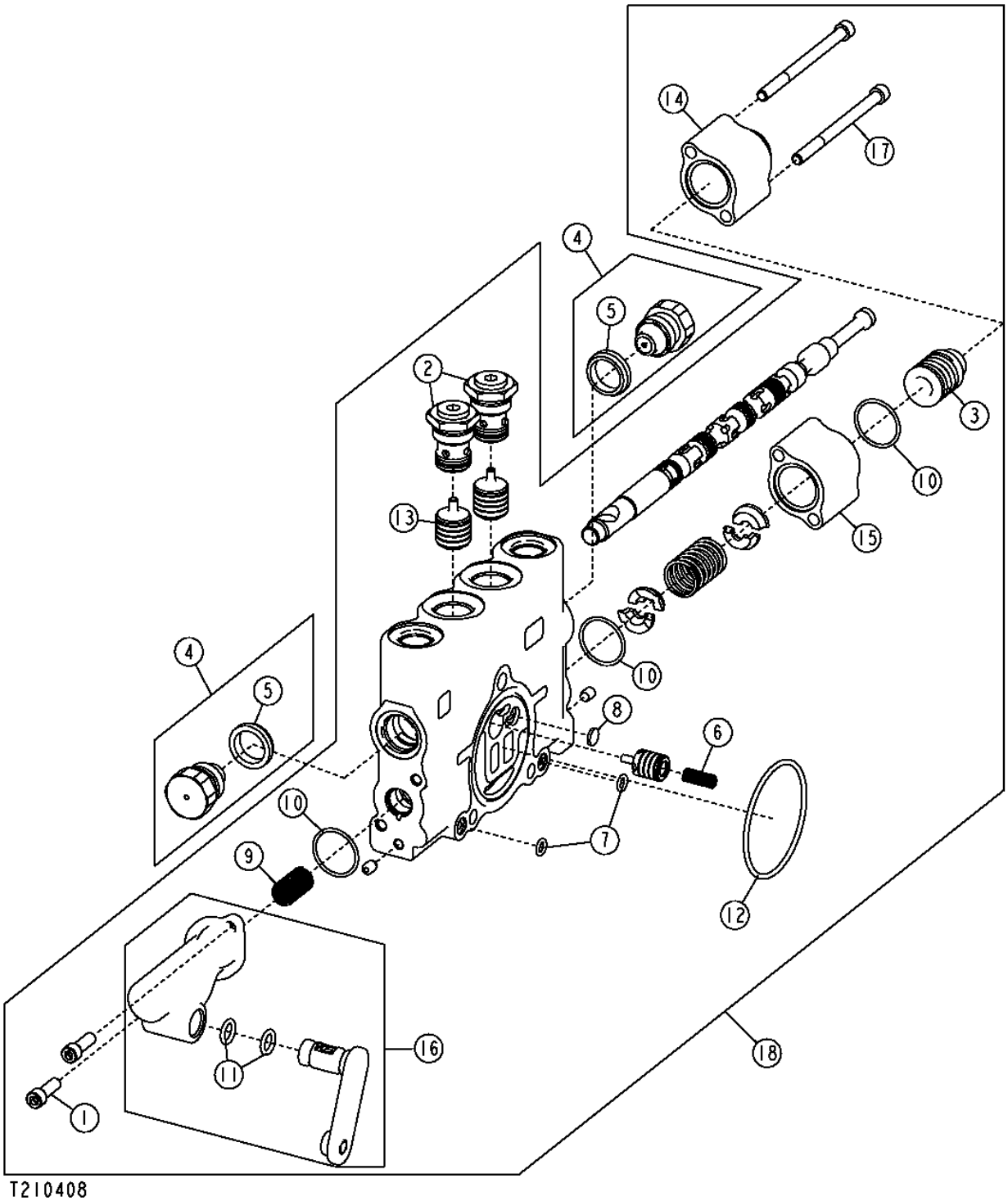

RIPPER VALVE SECTION

KEY	PART NO.	PART NAME	QTY	SERIAL NO.	770D	772D	REMARKS
1	19H2924	SCREW	2		X	X	1/4" X 3/4"
2	AT317328	CHECK VALVE	2		X	X	
3	AT317822	DETENT	1		X	X	
4	AT78527	PLUG	2		X	X	
5	T183756	SEAL	1		X	X	
6	R111238	SPRING	1		X	X	
7	R76578	O-RING	3		X	X	
8	R95493	DISK	1		X	X	
9	T190767	SPRING	1		X	X	
10	T213022	O-RING	3		X	X	
11	T213023	O-RING	2		X	X	
12	T213025	O-RING	1		X	X	
13	T213031	STUD	2		X	X	
14	T213033	HOUSING	1		X	X	
15	T213318	HOUSING	1		X	X	
16	AT317304	ACTUATOR	1		X	X	
17	T118712	SCREW	2		X	X	
18	AT317321	CONTROL VALVE	1		X	X	(RIPPER VALVE SECTION)

SCARIFIER AND AUXILIARY VALVE SECTION (WITH FLOAT)

T210407 -UN-15APR05

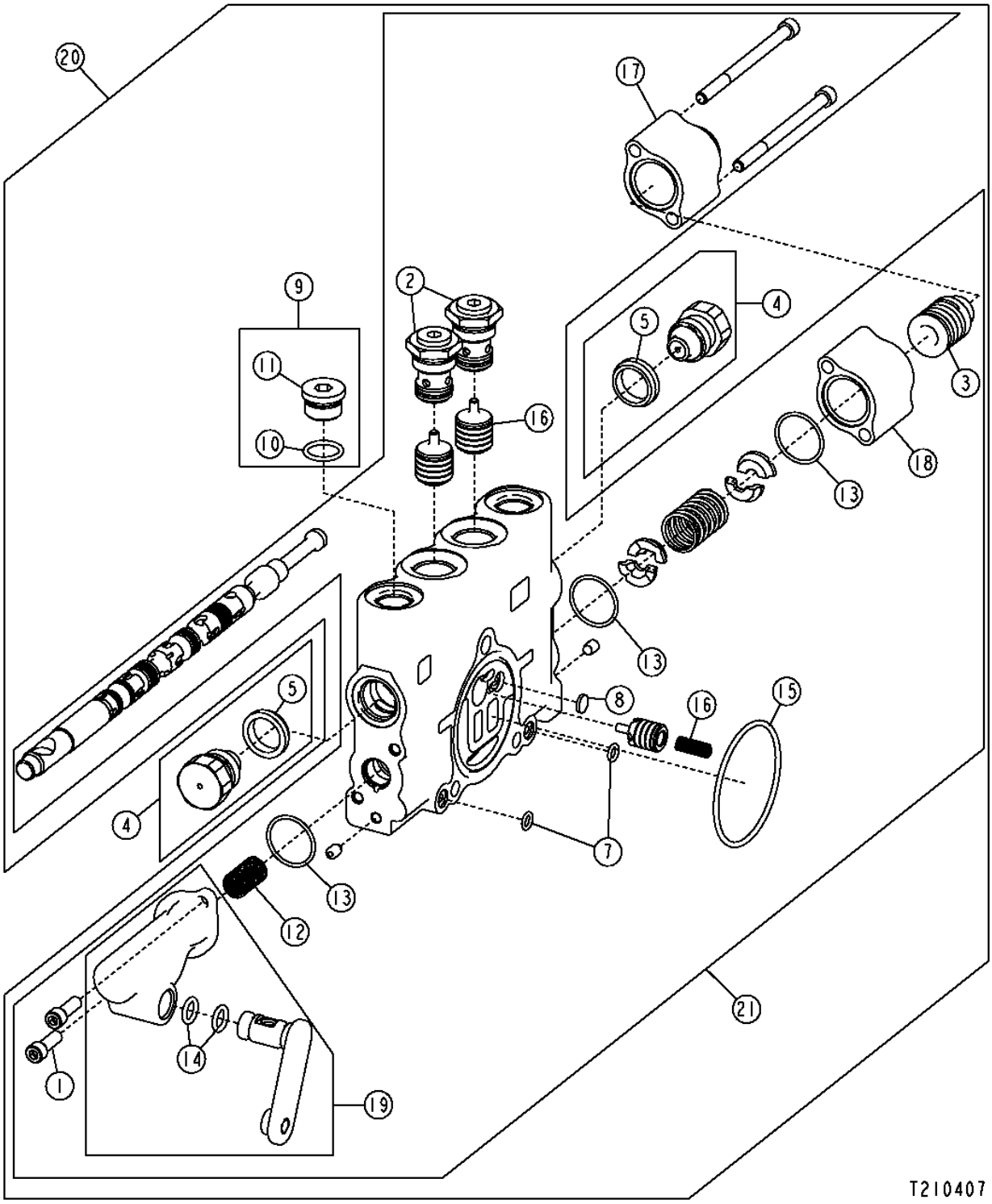

SCARIFIER AND AUXILIARY VALVE SECTION (WITH FLOAT)

KEY	PART NO.	PART NAME	QTY	SERIAL NO.	770D	772D	REMARKS
1	19H2924	SCREW	2		X	X	1/4" X 3/4"
2	AT317328	CHECK VALVE	2		X	X	
3	AT317822	DETENT	1		X	X	
4	AT78527	PLUG	2		X	X	
5	T183756	SEAL	1		X	X	
6	R111238	SPRING	1		X	X	
7	R76578	O-RING	3		X	X	
8	R95493	DISK	1		X	X	
9	RE49624	PLUG	2		X	X	
10	R26375	O-RING	1		X	X	
11	R39112	FITTING	2		X	X	
12	T190767	SPRING	1		X	X	
13	T213022	O-RING	3		X	X	
14	T213023	O-RING	1		X	X	
15	T213025	O-RING	1		X	X	
16	T213031	STUD	1		X	X	
17	T213033	HOUSING	1		X	X	
18	T213318	HOUSING	1		X	X	
19	AT317304	KIT	1		X	X	(USE WITH LEFT AUXILIARY VALVE SECTION)
	AT317305	KIT	1		X	X	(USE WITH SCARIFIER AND RIGHT AUX. SECTION)
20	AT317322	CONTROL VALVE	1		X	X	(LEFT AUXILIARY VALVE SECTION WITH FLOAT)
	AT317319	CONTROL VALVE	1		X	X	(SCARIFIER VALVE SECTION)
21	AT319023	CONTROL VALVE	1		X	X	(RIGHT AUXILIARY SECTION WITH FLOAT)

AUXILIARY VALVE SECTION (WITHOUT FLOAT)

T210409 -UN-15APR05

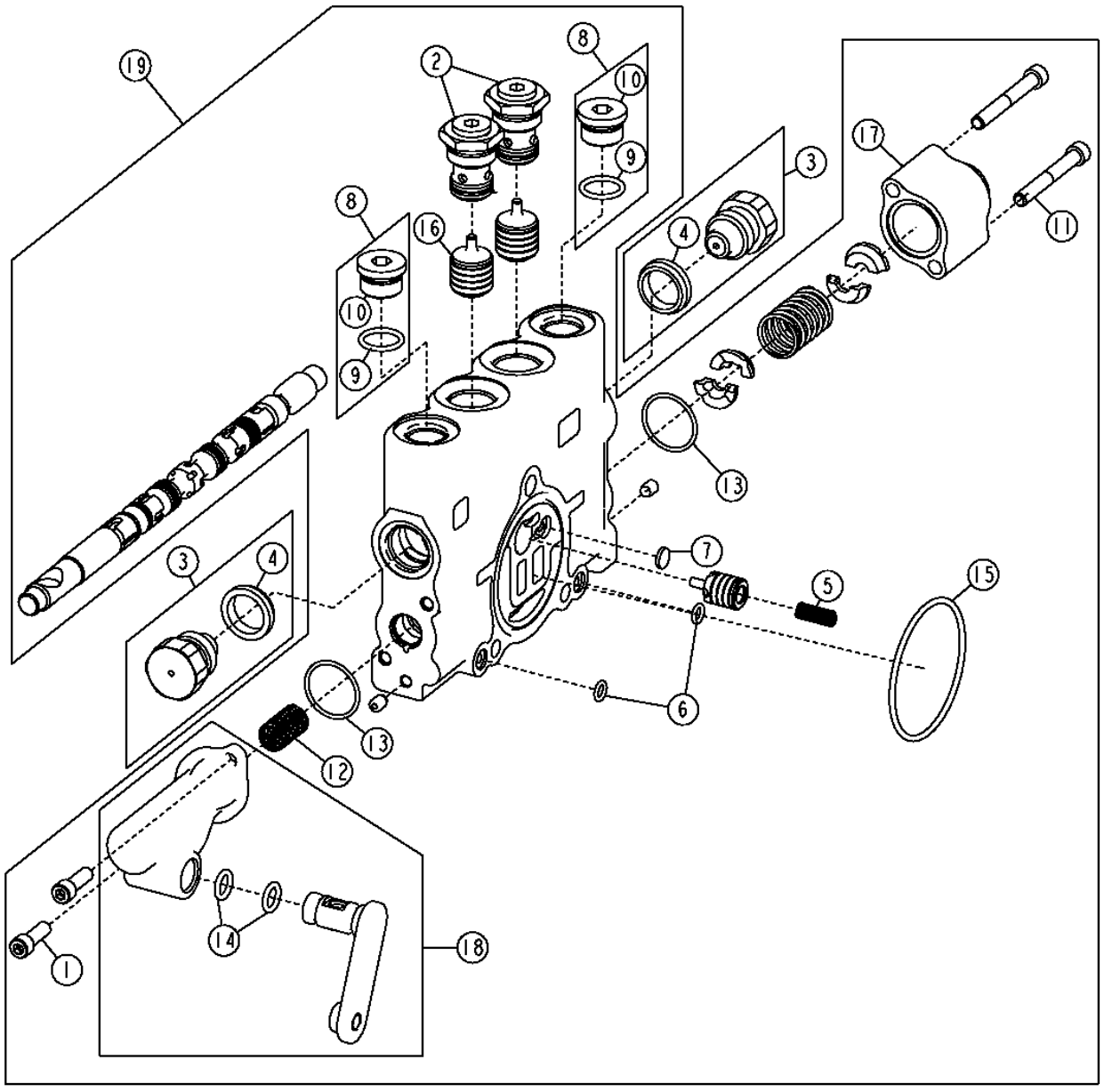

T210409

AUXILIARY VALVE SECTION (WITHOUT FLOAT)

KEY	PART NO.	PART NAME	QTY	SERIAL NO.	770D	772D	REMARKS
1	19H2924	SCREW	2		X	X	1/4" X 3/4"
2	AT317328	CHECK VALVE	2		X	X	
3	AT78527	PLUG	2		X	X	
4	T183756	SEAL	1		X	X	
5	R111238	SPRING	1		X	X	
6	R76578	O-RING	3		X	X	
7	R95493	DISK	1		X	X	
8	RE49624	PLUG	2		X	X	
9	R26375	O-RING	1		X	X	
10	R39112	FITTING	1		X	X	
11	T118712	SCREW	2		X	X	
12	T190767	SPRING	1		X	X	
13	T213022	O-RING	3		X	X	
14	T213023	O-RING	1		X	X	
15	T213025	O-RING	1		X	X	
16	T213031	STUD	1		X	X	
17	T213033	HOUSING	1		X	X	
18	AT317304	ACTUATOR	1		X	X	
19	AT317310	CONTROL VALVE	1		X	X	(LEFT AUXILIARY VALVE SECTION WITHOUT FLOAT)
	AT317312	CONTROL VALVE	1		X	X	(RIGHT AUXILIARY VALVE SECTION WITHOUT FLOAT)

ADDITIONAL HYDRAULIC CONTROL VALVE KIT

T204997 -UN-18NOV04

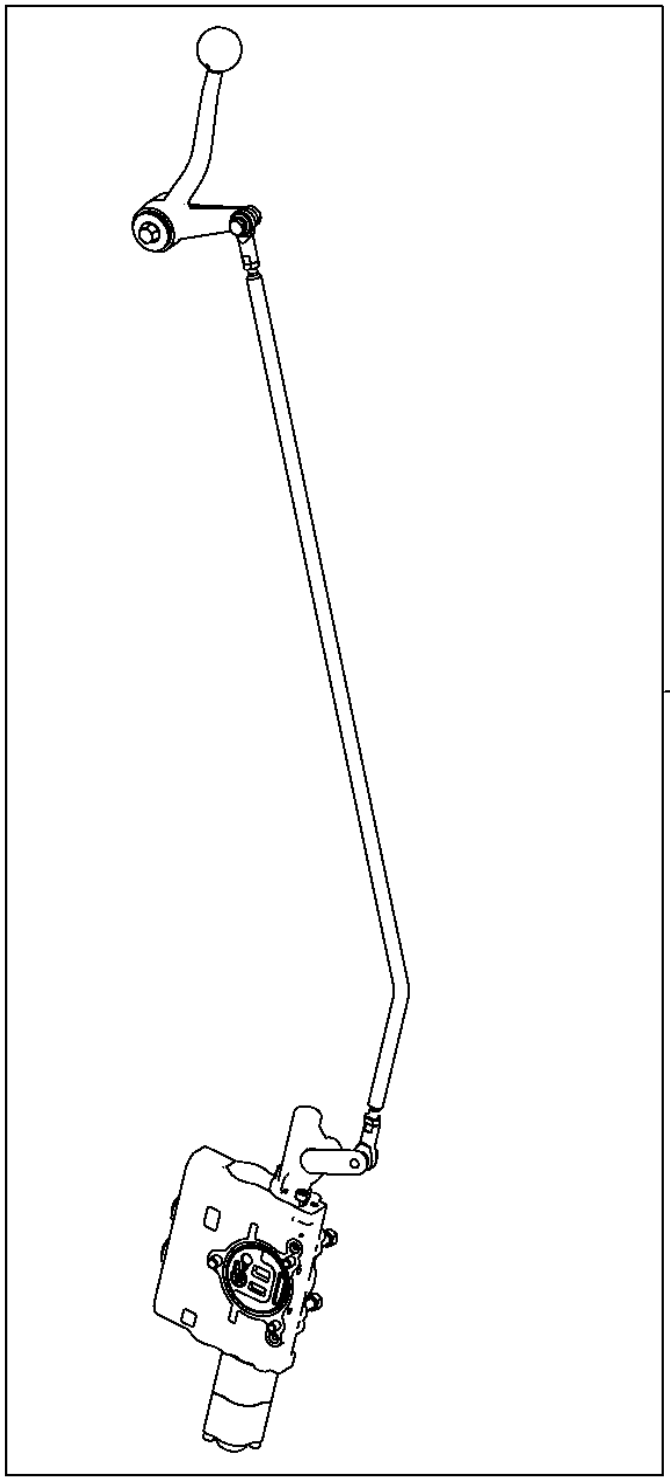

T204997

ADDITIONAL HYDRAULIC CONTROL VALVE KIT

KEY	PART NO.	PART NAME	QTY	SERIAL NO.	770D	772D	REMARKS
1	**AT317287**	**KIT**	**1**		**X**	**X**	**(RIGHT 5TH FUNCTION CONTROL VALVE KIT)**
	AT317288	**KIT**	**1**		**X**	**X**	**(LEFT 5TH FUNCTION CONTROL VALVE KIT)**
	AT317289	**KIT**	**1**		**X**	**X**	**(RIGHT 6TH FUNCTION CONTROL VALVE KIT)**
	AT317290	**KIT**	**1**		**X**	**X**	**(LEFT 6TH FUNCTION CONTROL VALVE KIT)**
	AT317291	**KIT**	**1**		**X**	**X**	**(RIGHT 7TH FUNCTION CONTROL VALVE KIT)**
	AT317293	**KIT**	**1**		**X**	**X**	**(LEFT 7TH FUNCTION CONTROL VALVE KIT)**

ONE HAND BLADE LIFT CONTROL

T211056 -UN-16MAY05

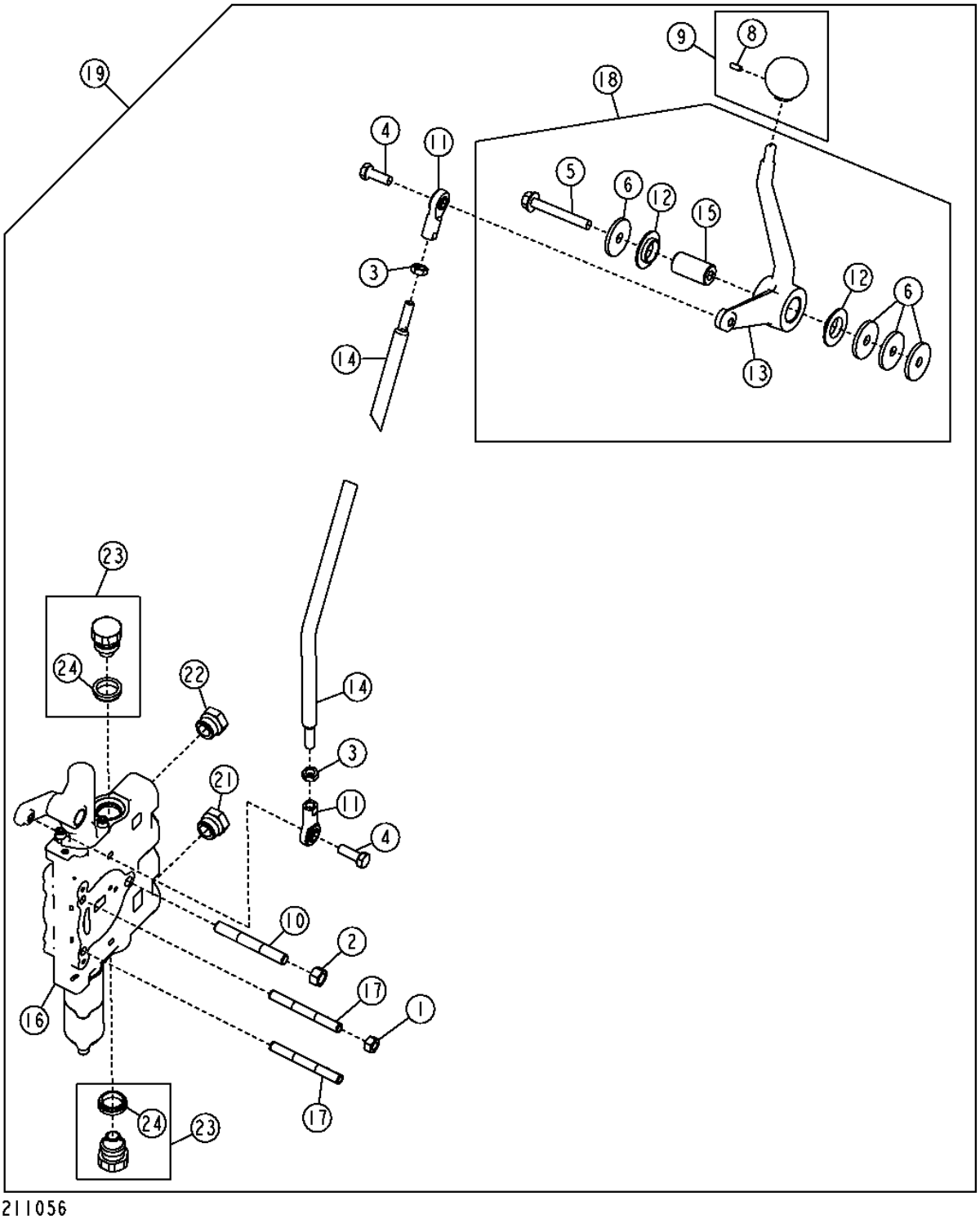

ONE HAND BLADE LIFT CONTROL

KEY	PART NO.	PART NAME	QTY	SERIAL NO.	770D	772D	REMARKS
1	14H1042	NUT	2		X	X	
2	14H1080	NUT	1		X	X	
3	14H882	NUT	2		X	X	
4	19H2127	CAP SCREW	2		X	X	
5	19M7801	SCREW	1		X	X	M8 X 60
6	24H1296	WASHER	4		X	X	
8	T213242	SET SCREW	1		X	X	
9	AT317742	KNOB	1		X	X	
10	T213030	STUD	1		X	X	
11	AT317778	LINK END	2		X	X	
12	T104220	WASHER	2		X	X	
13	T202162	CONTROL LEVER	1		X	X	
14	T202586	LEVER	1		X	X	
15	T204457	SPACER	1		X	X	
16	AT319023	CONTROL VALVE	1		X	X	
17	T213027	STUD	2		X	X	
18	**AT302544**	**KIT**	**1**		**X**	**X**	**(WHOLEGOODS) (ONE HAND BLADE LIFT CONTROL LEVER KIT)**
19	**AT317339**	**KIT**	**1**		**X**	**X**	**(WHOLEGOODS) (ONE HAND BLADE LIFT CONTROL LEVER AND VALVE KIT)**
20	AT322617	HYDRAULIC HOSE - FABRICATE	4		X	X	(NOT ILLUSTRATED)
21	R26375	O-RING	2		X	X	
22	R39112	FITTING	2		X	X	
23	AT78527	PLUG	2		X	X	
24	T183756	SEAL	2		X	X	

COLD START DISCONNECT HOSES AND FITTINGS

T205433 -UN-29NOV04

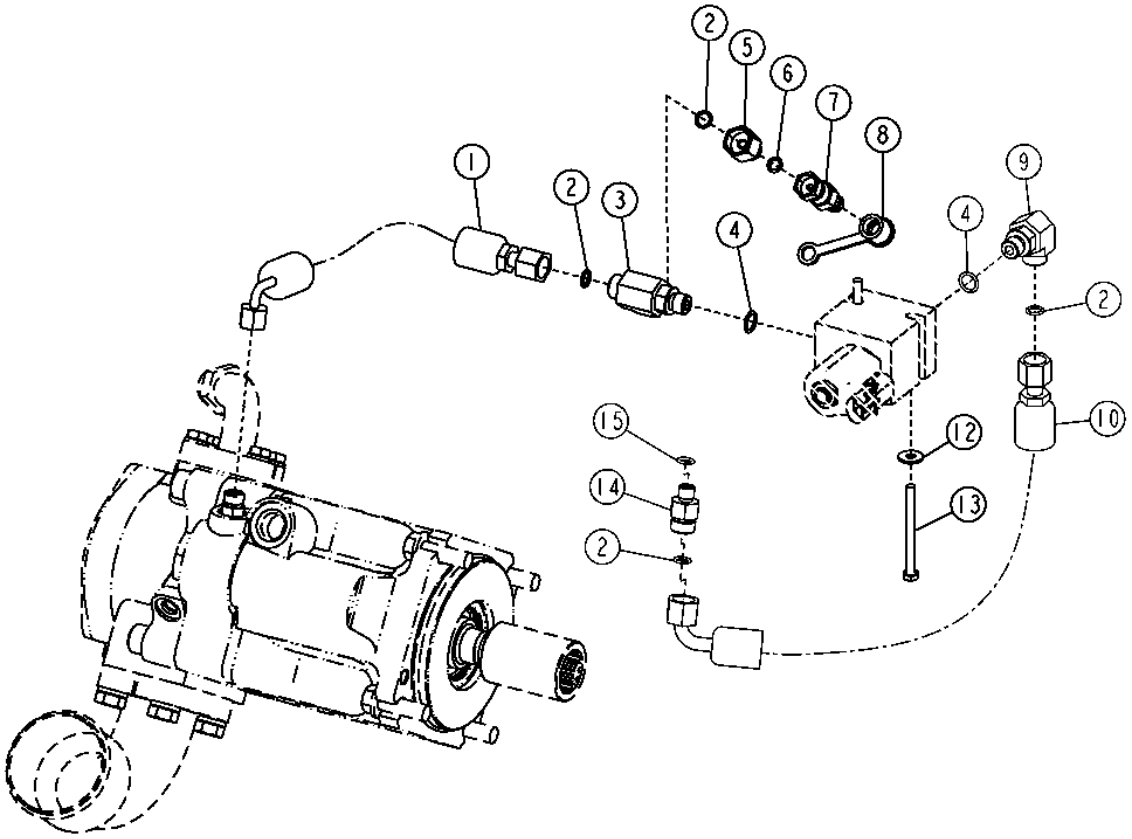

T205433

COLD START DISCONNECT HOSES AND FITTINGS

KEY	PART NO.	PART NAME	QTY	SERIAL NO.	770D	772D	REMARKS
1	AT195917	HYDRAULIC HOSE - FABRICATE	1		X	X	
2	T77613	O-RING	4		X	X	
3	38H1023	TEE FITTING	1		X	X	
4	R26448	O-RING	2		X	X	
5	38H1480	REDUCER	1		X	X	
6	T77814	O-RING	1		X	X	
7	RE60700	DIAGNOSTIC COUPLING	1		X	X	DIAGNOSTIC
8	R77175	COVER	1		X	X	
9	38H1004	ELBOW FITTING	1		X	X	
10	AT195918	HYDRAULIC HOSE - FABRICATE	1		X	X	
12	24M7139	WASHER	2		X	X	
13	19M8786	SCREW	2		X	X	M6 X 70
14	38H1309	ADAPTER	1		X	X	
15	R28782	O-RING	1		X	X	

COLD START DISCONNECT SOLENOID VALVE

T205434 -UN-29NOV04

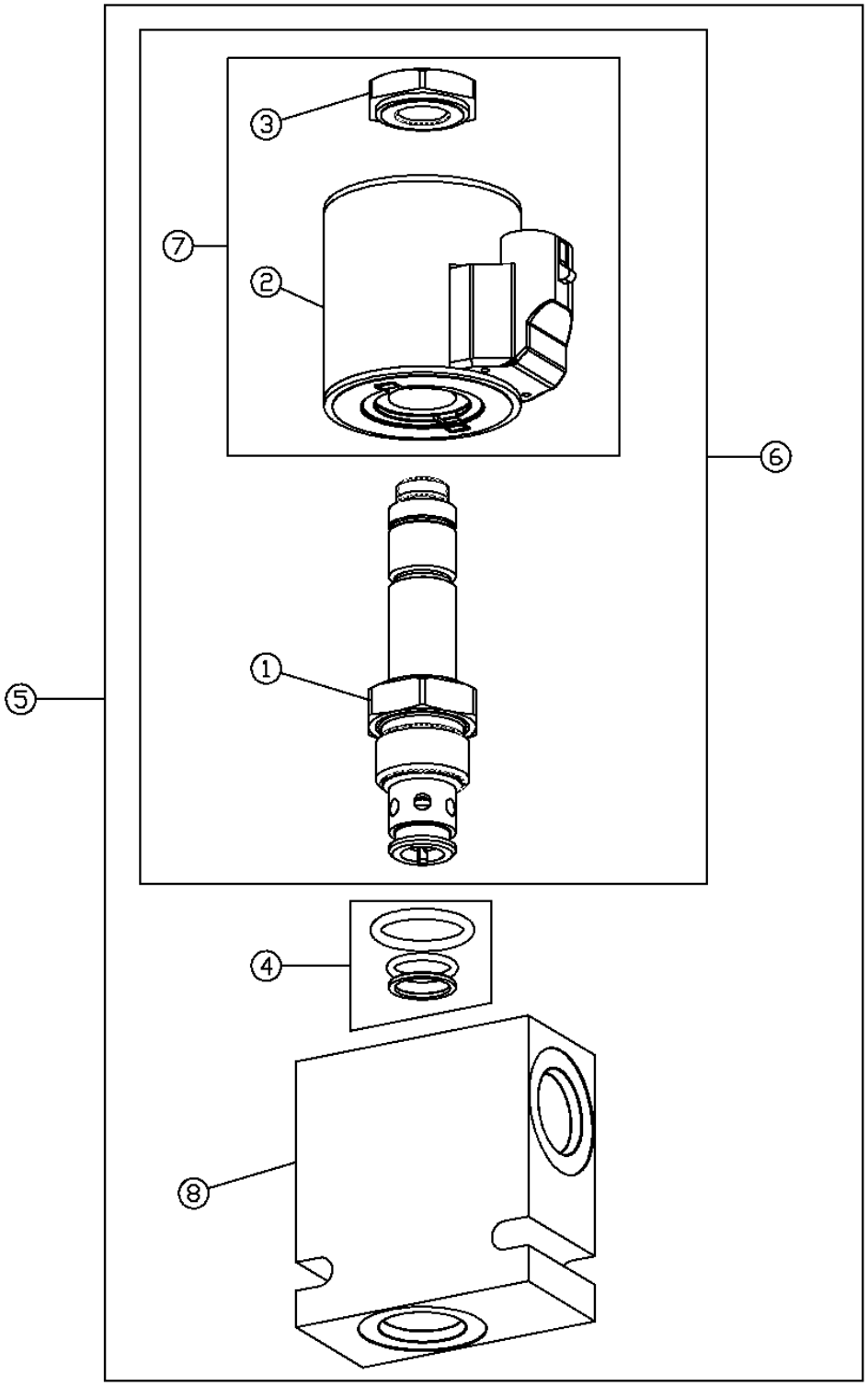

COLD START DISCONNECT SOLENOID VALVE

KEY	PART NO.	PART NAME	QTY	SERIAL NO.	770D	772D	REMARKS
1	AT195900	SOLENOID VALVE	1		X	X	
2	AT147011	SOLENOID	1		X	X	
3	R109691	NUT	1		X	X	
4	AT216348	SEAL KIT	1		X	X	
5	AT195860	ELEC.PROPORTIONAL VALVE	1		X	X	(COLD START DISCONNECT SOLENOID VALVE)
6	AT195898	MOUNTING PARTS	1		X	X	
7	AT139434	KIT	1		X	X	
8	T188288	HOUSING	1		X	X	

MAIN CONTROL VALVE MOUNTING BRACKETS

T203168 -UN-01NOV04

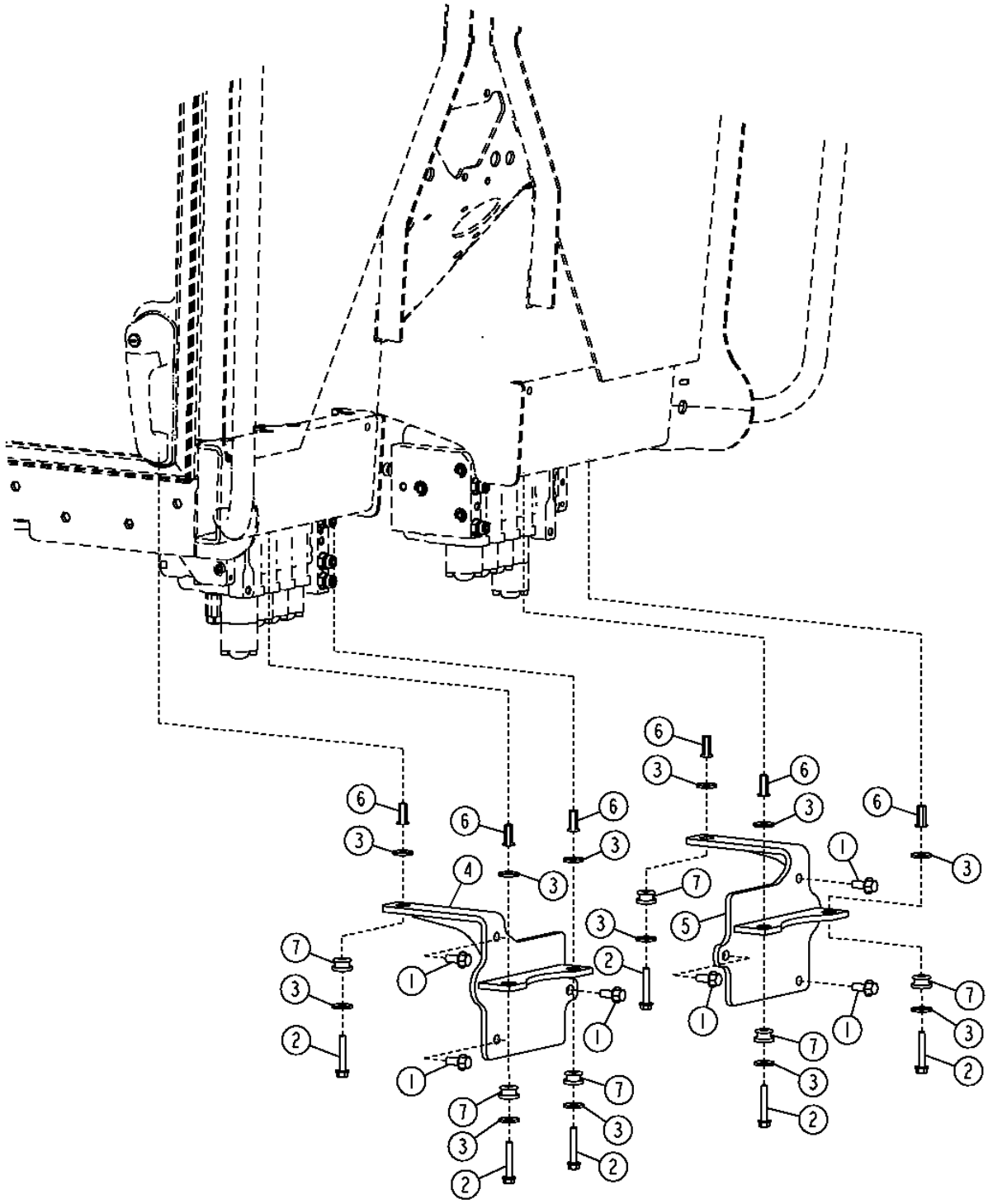

T203168

MAIN CONTROL VALVE MOUNTING BRACKETS

KEY	PART NO.	PART NAME	QTY	SERIAL NO.	770D	772D	REMARKS
1	19M7785	SCREW	6		X	X	M10 X 25
2	19M7800	SCREW	6		X	X	M8 X 50
3	24M7024	WASHER	12		X	X	
4	AT303129	BRACKET	1		X	X	
5	AT303678	BRACKET	1		X	X	
6	T196080	NUT	6		X	X	
7	U42208	ISOLATOR	6		X	X	

HYDRAULIC LOAD SENSE HOSES

T208053 -UN-12FEB05

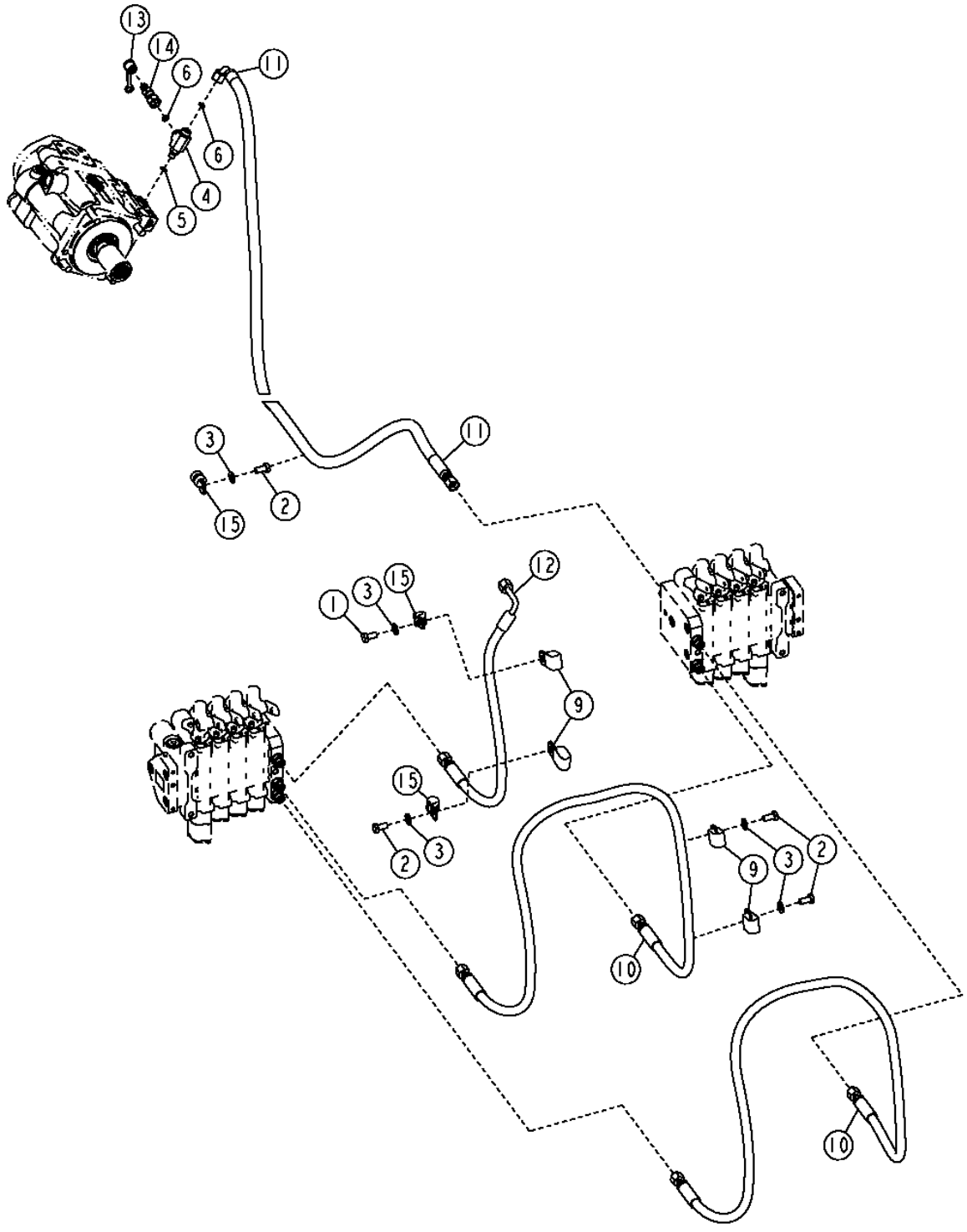

HYDRAULIC LOAD SENSE HOSES

KEY	PART NO.	PART NAME	QTY	SERIAL NO.	770D	772D	REMARKS
1	19M7932	CAP SCREW	1		X	X	M8 X 16
2	19M7938	CAP SCREW	4		X	X	M10 X 20
3	24M7239	WASHER	5		X	X	
4	38H1434	TEE FITTING	1		X	X	
5	R28782	O-RING	1		X	X	
6	T77613	O-RING	2		X	X	
9	AH97280	CLIP	4		X	X	
10	AT305628	HYDRAULIC HOSE - FABRICATE	2		X	X	
11	AT305630	HYDRAULIC HOSE - FABRICATE	1		X	X	
12	AT305738	HYDRAULIC HOSE - FABRICATE	1		X	X	
13	R77175	COVER	1		X	X	
14	RE60701	DIAGNOSTIC COUPLING	1		X	X	
15	T76719	CLAMP	3		X	X	

HYDRAULIC OIL COOLER HOSES (772D)

T213394 -UN-25AUG05

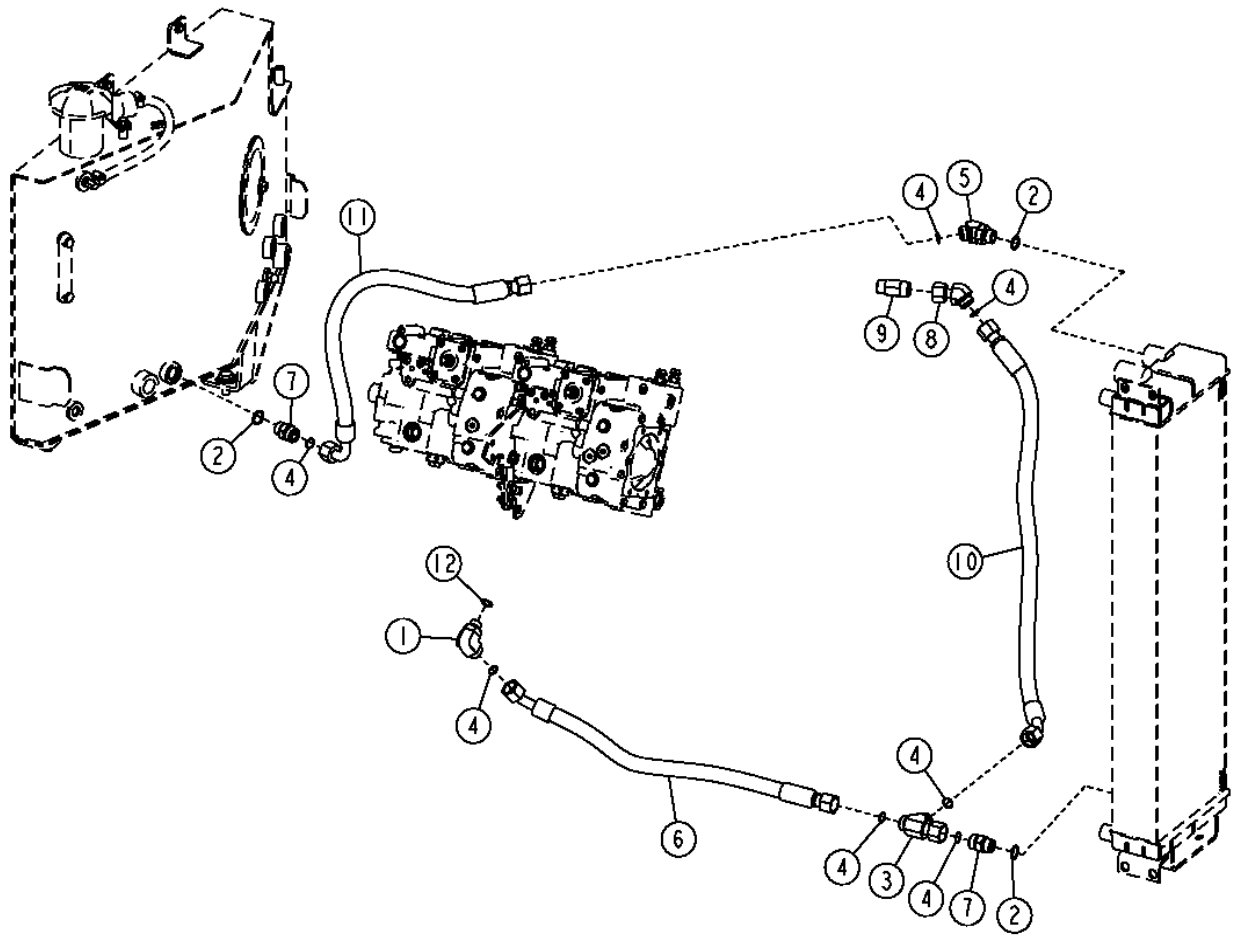

T213394

HYDRAULIC OIL COOLER HOSES (772D)

KEY	PART NO.	PART NAME	QTY	SERIAL NO.	770D	772D	REMARKS
2	U12547	O-RING	3			X	
	U12547	O-RING	5			X	
3	38H1033	TEE FITTING	1			X	
4	T77858	O-RING	6			X	
5	38H1048	ELBOW FITTING	1			X	
6	AT307263	HYDRAULIC HOSE - FABRICATE	2			X	
7	38H1163	ADAPTER	2			X	
8	38H1609	ADAPTER	1			X	
9	AT175957	PRESSURE RELIEF VALVE	1			X	
10	AT307220	HYDRAULIC HOSE - FABRICATE	1			X	
11	AT307231	HYDRAULIC HOSE - FABRICATE	1			X	

HYDRAULIC OIL COOLER HOSES (770D) (SN 599561-)

T213388 -UN-25AUG05

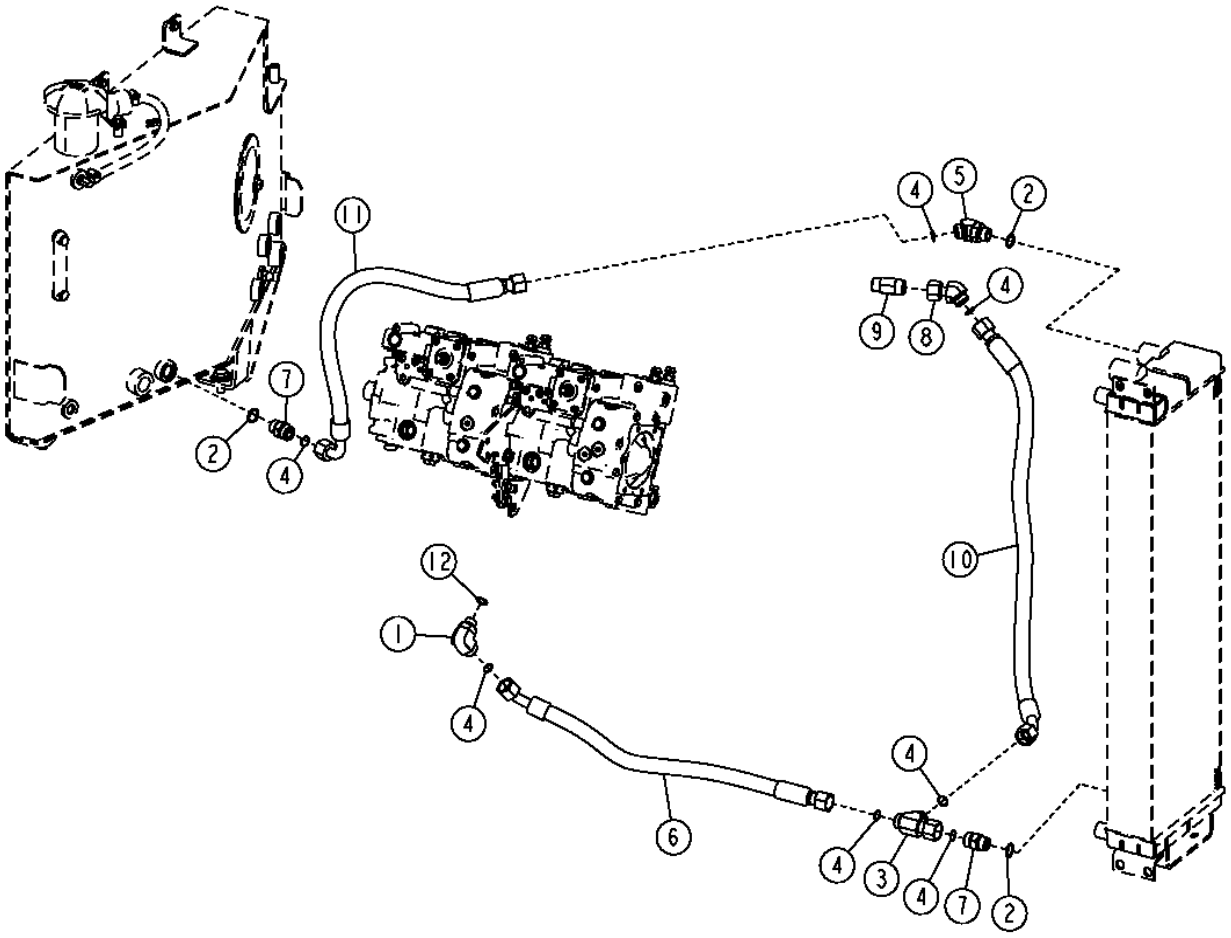

T213388

HYDRAULIC OIL COOLER HOSES (770D) (SN 599561-)

KEY	PART NO.	PART NAME	QTY	SERIAL NO.	770D	772D	REMARKS
1	38H1014	ELBOW FITTING	1		X		
2	U12547	O-RING	4		X		
3	38H1033	TEE FITTING	1		X		
4	T77858	O-RING	7		X		
5	38H1048	ELBOW FITTING	1		X		
6	AT326525	HYDRAULIC HOSE - FABRICATE	1		X		
7	38H1163	ADAPTER	2		X		
8	38H1609	ADAPTER	1		X		
9	AT175957	PRESSURE RELIEF VALVE	1		X		
10	AT307220	HYDRAULIC HOSE - FABRICATE	1		X		
11	AT307231	HYDRAULIC HOSE - FABRICATE	1		X		

MAIN HYDRAULIC PLUMBING (770D)

T213419 -UN-24AUG05

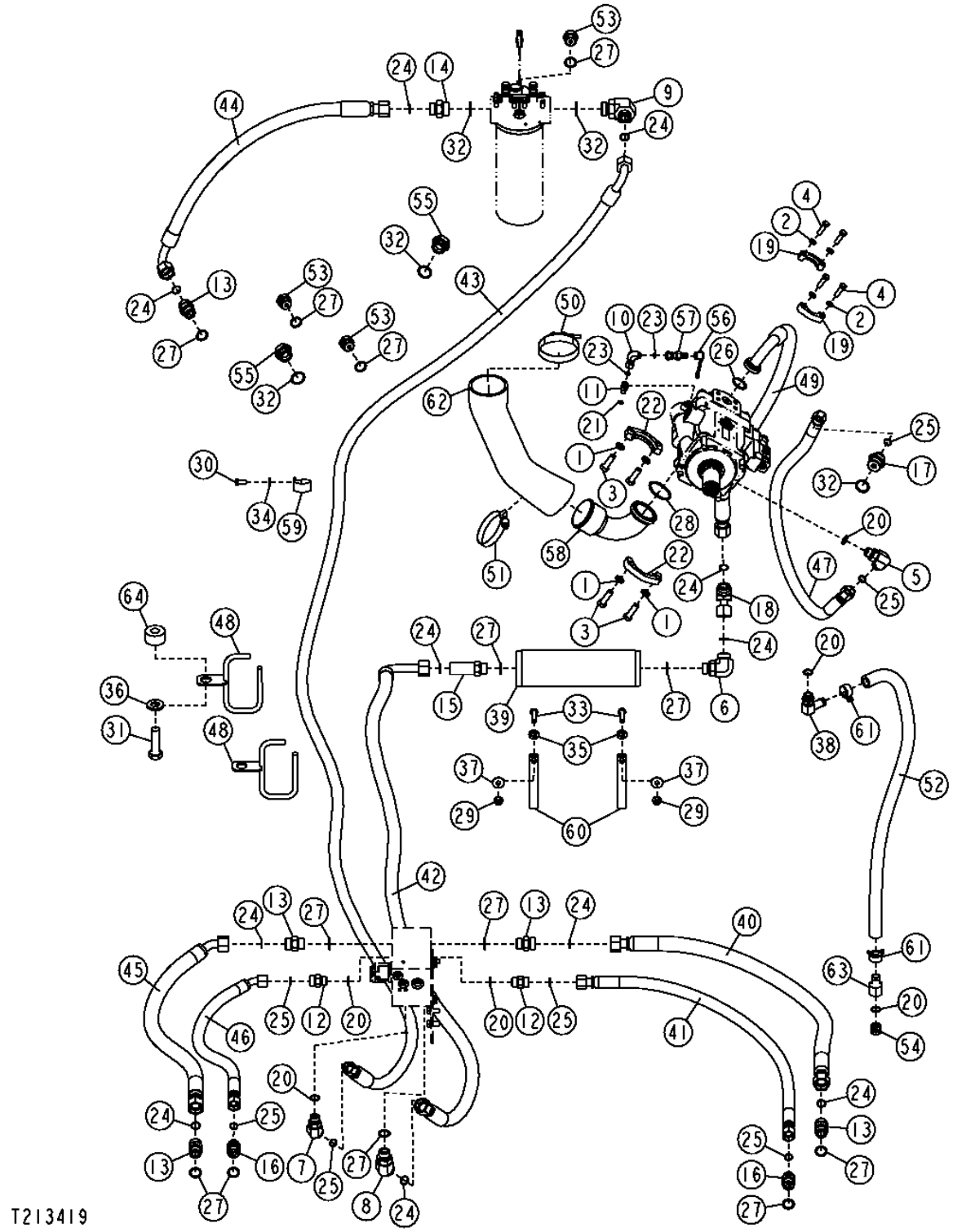

MAIN HYDRAULIC PLUMBING (770D)

KEY	PART NO.	PART NAME	QTY	SERIAL NO.	670D	672D	REMARKS
1	12H301	LOCK WASHER	4		X		
2	12H304	LOCK WASHER	4		X		9.525 MM
3	19H2993	CAP SCREW	4		X		
4	19H3239	CAP SCREW	4		X		
5	38H1006	ELBOW FITTING	1	-599560	X		
6	38H1007	ELBOW FITTING	1		X		
7	38H1047	ELBOW FITTING	1		X		
8	38H1048	ELBOW FITTING	1		X		
9	38H1052	ELBOW FITTING	1		X		
10	38H1093	ELBOW FITTING	1		X		
11	38H1159	ADAPTER	1		X		
12	38H1162	ADAPTER	2		X		
13	38H1163	ADAPTER	5		X		
14	38H1194	ADAPTER	1		X		
15	38H1215	ADAPTER	1		X		
16	38H1329	ADAPTER	2		X		
17	38H1447	ADAPTER	1	-599560	X		
18	38H1609	ADAPTER	1		X		
19	H61354	FLANGE FITTING	2		X		
20	R26906	O-RING	6		X		
21	R28782	O-RING	1		X		
22	R37023	FLANGE FITTING	2		X		
23	T77814	O-RING	2		X		
24	T77858	O-RING	11		X		
25	T77932	O-RING	7		X		
26	T78313	O-RING	1		X		
27	U12547	O-RING	13		X		
28	U46457	O-RING	1		X		
29	14M7296	FLANGE NUT	2		X		M10
30	19M7938	CAP SCREW	1		X		M10 X 20
31	19M8002	CAP SCREW	1		X		M20 X 55
32	R29936	O-RING	4	-599560	X		
	R29936	O-RING	5	599561-			
33	19M8637	CAP SCREW	2		X		M10 X 40
34	24M7239	WASHER	1		X		
35	24M7240	WASHER	2		X		
36	24M7242	WASHER	1		X		
37	24M7296	WASHER	2		X		
38	AH64349	HOSE FITTING	1		X		
39	AT300859	ATTENUATOR	1		X		
40	AT304144	HYDRAULIC HOSE - FABRICATE	1		X		
41	AT304147	HYDRAULIC HOSE - FABRICATE	1		X		
42	AT304888	HYDRAULIC HOSE - FABRICATE	1		X		
43	AT305277	HYDRAULIC HOSE - FABRICATE	1		X		
44	AT305916	HYDRAULIC HOSE - FABRICATE	1		X		
45	AT307299	HYDRAULIC HOSE - FABRICATE	1		X		
46	AT307300	HYDRAULIC HOSE - FABRICATE	1		X		
47	AT308909	HYDRAULIC HOSE - FABRICATE	1	-599560	X		
48	AT309711	HOSE SUPPORT	2		X		
49	AT311425	HYDRAULIC HOSE	1		X		
50	AT37477	HOSE CLAMP	1		X		
51	RE52702	CLAMP	1		X		
52	.....	BULK HOSE	1		X		(MAKE FROM T78497) (CUT TO LENGTH)
53	R27175	DRAIN PLUG	3		X		
54	R27474	DRAIN PLUG	1		X		
55	R36636	FITTING PLUG	1	-599560	X		
	R36636	FITTING PLUG	2	599561-	X		
56	R77175	COVER	1		X		
57	RE60700	DIAGNOSTIC COUPLING	1		X		
58	T158298	LINE	1		X		
59	AH77714	CLIP	1		X		
60	T164030	CLAMP	2		X		
61	T185826	CLAMP	2		X		
62	T187526	SUCTION HOSE	1		X		
63	T190892	HOSE FITTING	1		X		
64	H134114	SPACER	1		X		

MAIN HYDRAULIC PLUMBING (772D)

T203903 -UN-03DEC04

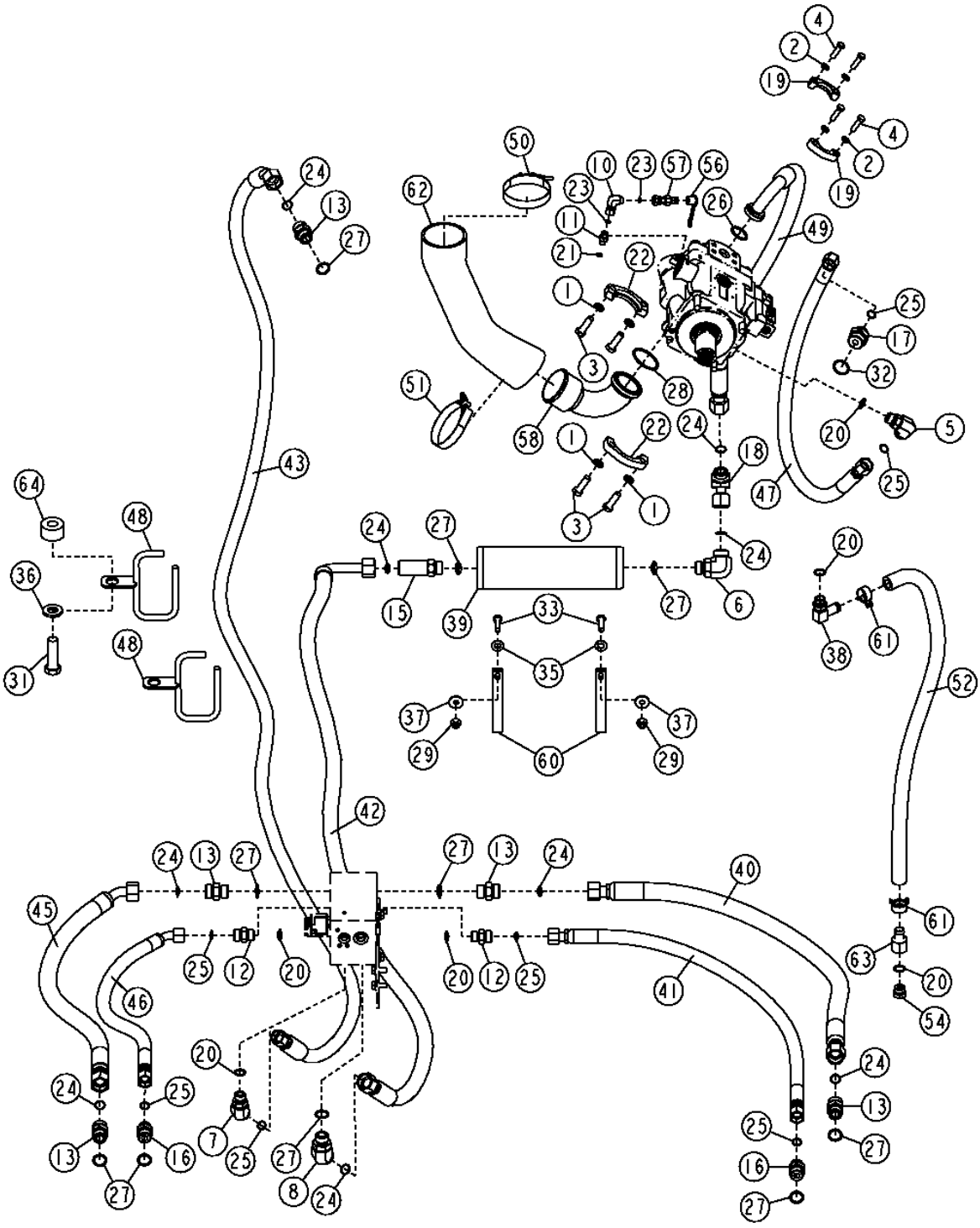

MAIN HYDRAULIC PLUMBING (772D)

KEY	PART NO.	PART NAME	QTY	SERIAL NO.	770D	772D	REMARKS
1	12H301	LOCK WASHER	4			X	
2	12H304	LOCK WASHER	4			X	
3	19H2993	CAP SCREW	4			X	
4	19H3239	CAP SCREW	4			X	
5	38H1006	ELBOW FITTING	1			X	
6	38H1007	ELBOW FITTING	1			X	
7	38H1047	ELBOW FITTING	1			X	
8	38H1048	ELBOW FITTING	1			X	
10	38H1093	ELBOW FITTING	1			X	
11	38H1159	ADAPTER	1			X	
12	38H1162	ADAPTER	2			X	
13	38H1163	ADAPTER	5			X	
15	38H1215	ADAPTER	1			X	
16	38H1329	ADAPTER	2			X	
17	38H1447	ADAPTER	1			X	
18	38H1609	ADAPTER	1			X	
19	H61354	FLANGE FITTING	2			X	
20	R26906	O-RING	6			X	
21	R28782	O-RING	1			X	
22	R37023	FLANGE FITTING	2			X	
23	T77814	O-RING	2			X	
24	T77858	O-RING	9			X	
25	T77932	O-RING	7			X	
26	T78313	O-RING	1			X	
27	U12547	O-RING	11			X	
28	U46457	O-RING	1			X	
29	14M7296	FLANGE NUT	2			X	M10
31	19M8002	CAP SCREW	1			X	M20 X 55
32	R29936	O-RING	1			X	
33	19M8637	CAP SCREW	2			X	M10 X 40
35	24M7240	WASHER	2			X	13 X 25 X 3 MM
36	24M7242	WASHER	1			X	21.400 X 42 X 5 MM
37	24M7296	WASHER	2			X	10.500 X 30 X 2.500 MM
38	AH64349	HOSE FITTING	1			X	
39	AT300859	ATTENUATOR	1			X	
40	AT304144	HYDRAULIC HOSE - FABRICATE	1			X	
41	AT304147	HYDRAULIC HOSE - FABRICATE	1			X	
42	AT304888	HYDRAULIC HOSE - FABRICATE	1			X	
43	AT304967	HYDRAULIC HOSE - FABRICATE	1			X	
45	AT307299	HYDRAULIC HOSE - FABRICATE	1			X	
46	AT307300	HYDRAULIC HOSE - FABRICATE	1			X	
47	AT308909	HYDRAULIC HOSE - FABRICATE	1			X	
48	AT309711	HOSE SUPPORT	2			X	
49	AT311425	HYDRAULIC HOSE	1			X	
50	AT37477	HOSE CLAMP	1			X	
51	AT56659	HOSE CLAMP	1			X	
52	.....	BULK HOSE	1			X	(MAKE FROM T78497) (CUT TO LENGTH)
54	R27474	DRAIN PLUG	1			X	
56	R77175	COVER	1			X	
57	RE60700	DIAGNOSTIC COUPLING	1			X	
58	T158298	LINE	1			X	
60	T164030	CLAMP	2			X	
61	T185826	CLAMP	2			X	
62	T187526	SUCTION HOSE	1			X	
63	T190892	HOSE FITTING	1			X	

MAIN HYDRAULIC FILTER

T212747 -UN-15JUL05

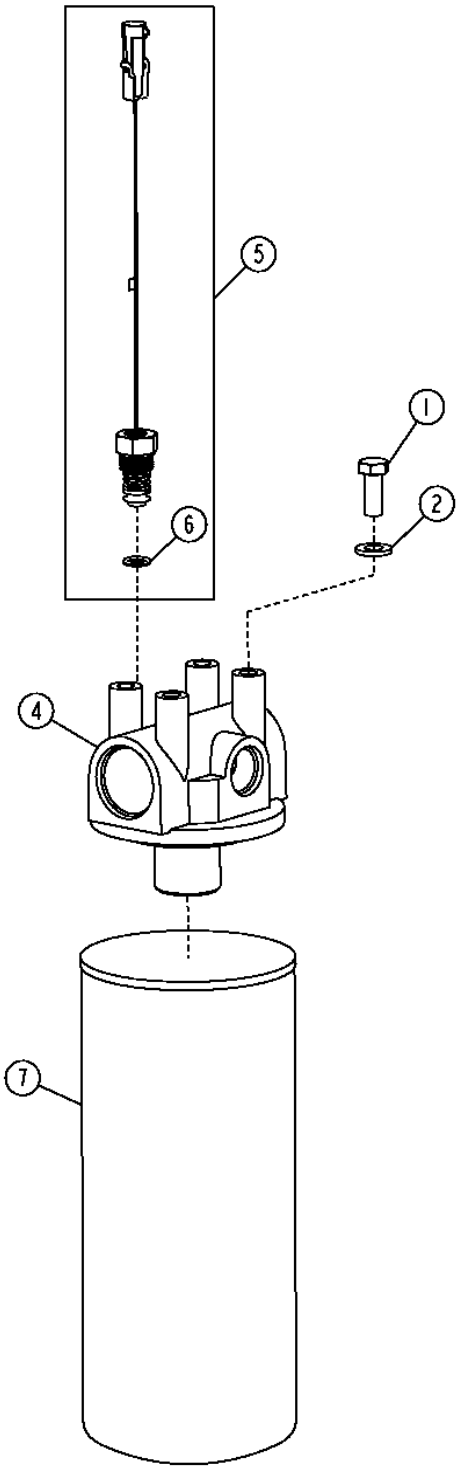

MAIN HYDRAULIC FILTER

KEY	PART NO.	PART NAME	QTY	SERIAL NO.	770D	772D	REMARKS
1	19M7402	CAP SCREW	4		X	X	M10 X 25
2	24M7239	WASHER	1		X	X	
4	AT302906	FILTER HEAD	1		X	X	
5	AT307045	PRESSURE SWITCH	1		X	X	(MAIN HYDRAULIC FILTER RESTRICTION)
6	P46051	O-RING	1		X	X	
7	AT308274	OIL FILTER	1		X	X	(MAIN HYDRAULIC FILTER)

HYDRAULIC RESERVOIR

T209696 -UN-21MAR05

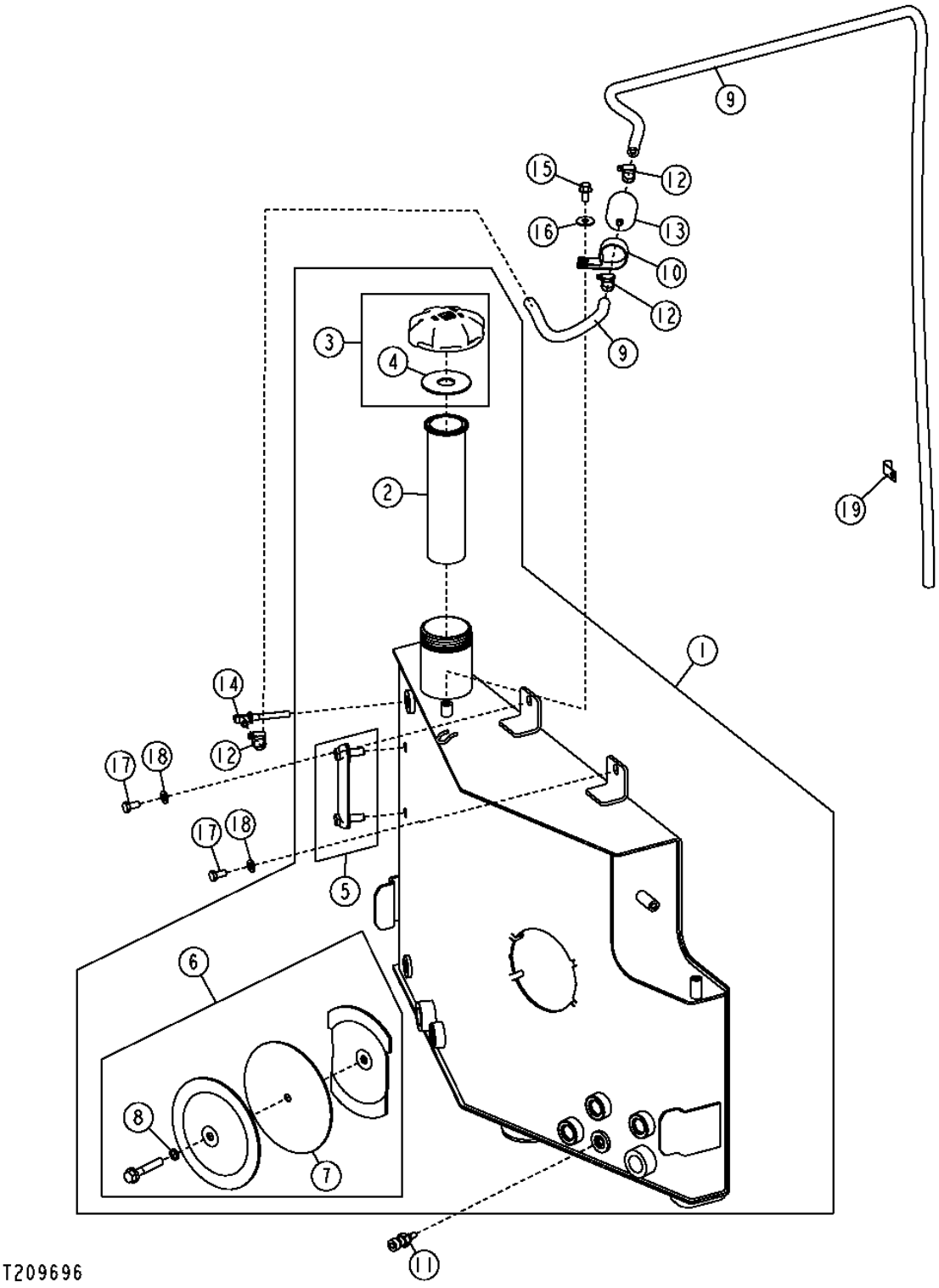

HYDRAULIC RESERVOIR

KEY	PART NO.	PART NAME	QTY	SERIAL NO.	770D	772D	REMARKS
1	AT305981	HYDRAULIC RESERVOIR	1		X	X	
2	AT161638	STRAINER	1		X	X	
3	AT177950	FILLER CAP	1		X	X	
4	H148166	WASHER	1		X	X	
5	AT227279	LEVEL GAUGE	1		X	X	
6	AT227441	COVER	1		X	X	
7	AT307292	GASKET KIT	1		X	X	
8	T195587	O-RING	1		X	X	
9	.....	HOSE	1		X	X	(MAKE FROM M87571) (CUT TO LENGTH)
10	E69975	CLAMP	1		X	X	
11	RE38310	SENSOR	1	-599560	X	X	
	AH156145	SENSOR	1	599561-	X	X	
12	T13254	CLAMP	3		X	X	
13	AT101565	AIR FILTER	1		X	X	
14	AT176384	ELBOW FITTING	1		X	X	
15	19M7784	SCREW	1		X	X	M10 X 20
16	24M7296	WASHER	1		X	X	
17	19M7938	CAP SCREW	2		X	X	
18	24M7239	WASHER	2		X	X	
19	AH89557	CLIP	1		X	X	

MOLDBOARDS AND CUTTING EDGES (FIVE HOLE END BIT)

T201129 -UN-25JUN04

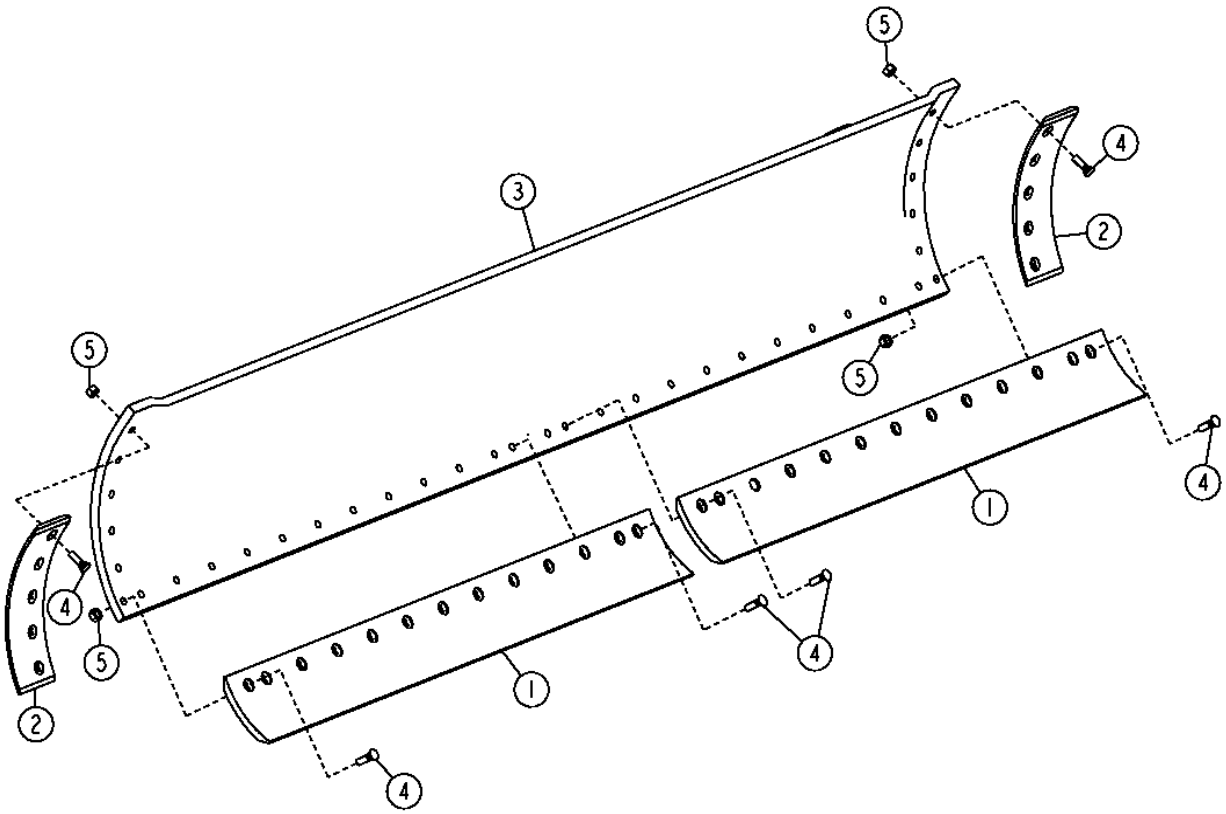

T201129

MOLDBOARDS AND CUTTING EDGES (FIVE HOLE END BIT)

KEY	PART NO.	PART NAME	QTY	SERIAL NO.	770D	772D	REMARKS
1	T66702	DURA-MAX TM CUTTING EDGE	AR		X	X	DURA-MAX THROUGH HARDENED DOUBLE BEVEL EDGE, 16 MM X 152 MM X 1 829 MM (5/8" X 6" X 6')
	T66707	DURA-MAX TM CUTTING EDGE	AR		X	X	DURA-MAX THROUGH HARDENED DOUBLE BEVEL EDGE, 16 MM X 152 MM X 2 134 MM (5/8" X 6" X 7')
	T66703	DURA-MAX TM CUTTING EDGE	AR		X	X	DURA-MAX THROUGH HARDENED DOUBLE BEVEL EDGE, 19 MM X 203 MM X 1 829 MM (3/4" X 8" X 6')
	T66704	DURA-MAX TM CUTTING EDGE	AR		X	X	DURA-MAX THROUGH HARDENED DOUBLE BEVEL EDGE, 19 MM X 203 MM X 2 134 MM (3/4" X 8" X 7')
2	T202876	CUTTING EDGE	2		X	X	(RECOMMENDED WITH 16 MM (5/8") CUTTING EDGE)
3	AT303240	MOLDBOARD	1		X	X	22 MM X 3648 MM (7/8" X 12' X 24")
	AT303282	MOLDBOARD	1		X	X	22 MM X 4 268 MM (7/8" X 14' X 24")
	AT303296	MOLDBOARD	1		X	X	22 MM X 3 963 MM (7/8" X 13' X 27")
	AT310278	MOLDBOARD	1		X	X	25 MM X 3648 MM (1" X 12' X 27")
	AT303301	MOLDBOARD	1		X	X	25MM X4268MM (1" X 14' X 27")
4	09H1759	BOLT	40		X	X	5/8" X 2-1/4", (WITH 14' MOLDBOARD)
	09H1759	BOLT	38		X	X	5/8" X 2-1/4", (WITH 13' MOLDBOARD)
	09H1759	BOLT	36		X	X	5/8" X 2-1/4", (WITH 12' MOLDBOARD)
5	14H800	NUT	40		X	X	5/8", (WITH 14" MOLDBOARD)
	14H800	NUT	38		X	X	5/8", (WITH 13' MOLDBOARD)
	14H800	NUT	36		X	X	5/8", (WITH 12' MOLDBOARD)

MOLDBOARD OVERLAYS

T201130 -UN-24JUN04

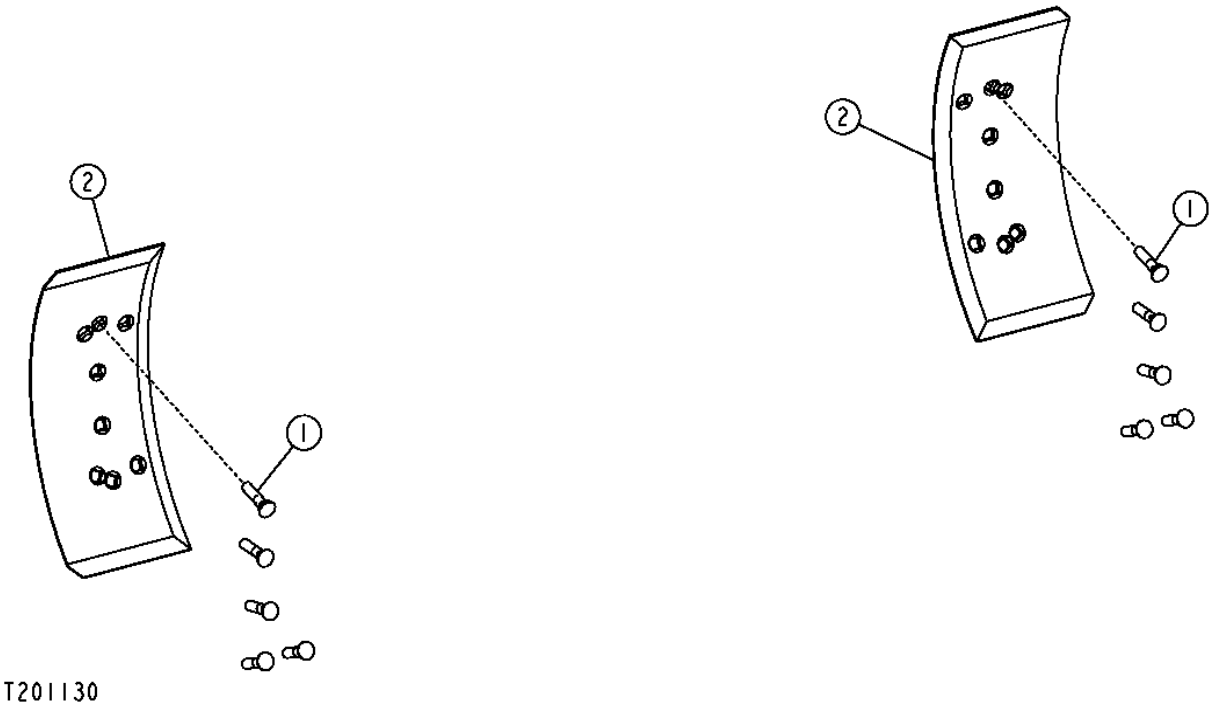

MOLDBOARD OVERLAYS

KEY	PART NO.	PART NAME	QTY	SERIAL NO.	770D	772D	REMARKS
1	09H1773	BOLT	10		X	X	DURA-MAX THROUGH HARDENED DOUBLE BEVEL EDGE, 16 MM X 152 MM X 1 829 MM (5/8" X 6" X 6')
2	T202940	OVERLAY END BIT	2		X	X	(8" CUTTING EDGE)
	T202938	OVERLAY END BIT	2		X	X	(6" CUTTING EDGE)

MOLDBOARD EXTENSION (24" MOLDBOARD)

T201131 -UN-05JAN05

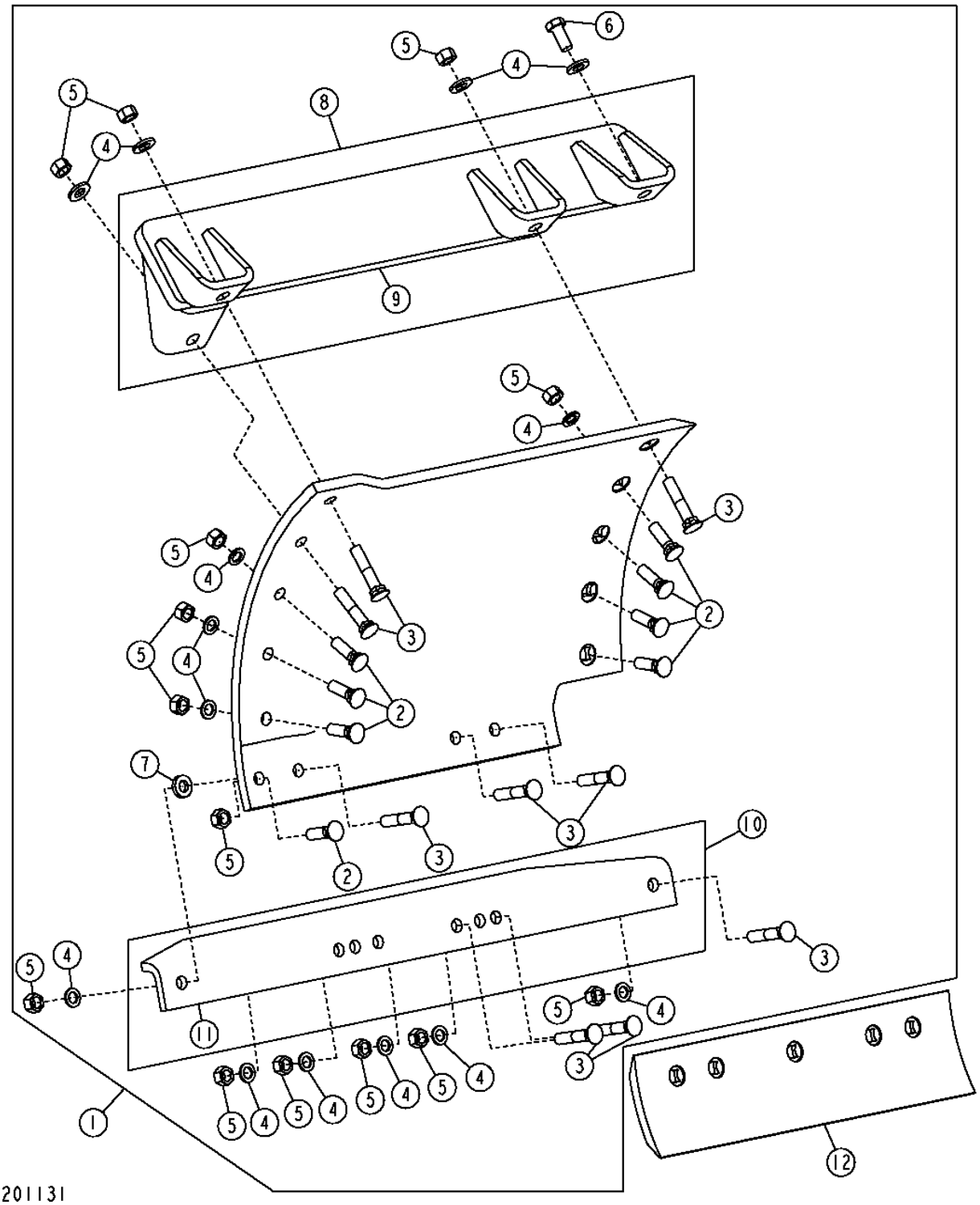

MOLDBOARD EXTENSION (24" MOLDBOARD)

KEY	PART NO.	PART NAME	QTY	SERIAL NO.	770D	772D	REMARKS
1	**AT307731**	**KIT**	**1**		**X**	**X**	**(WHOLEGOODS) RH EXTENSION FOR 24" MOLDBOARD**
	AT307730	**KIT**	**1**		**X**	**X**	**(WHOLEGOODS) LH EXTENSION FOR 24" MOLDBOARD**
2	09H1759	BOLT	8		X	X	5/8" X 2-1/4"
3	09H1773	BOLT	9		X	X	5/8" X 3-1/4"
4	R73290	WASHER	14		X	X	0.641" X 1.063" X 0.105"
5	14H760	NUT	17		X	X	5/8"
6	19M8035	CAP SCREW	1		X	X	M16 X 35
7	24H1367	WASHER	3		X	X	21/32" X 1-1/4" X 1/4"
8	AT306162	SUPPORT	1		X	X	RH (UPPER MOLDBOARD STIFFENER)
	AT306163	SUPPORT	1		X	X	LH (UPPER MOLDBOARD STIFFENER)
9	T204543	BRACKET	2		X	X	
10	AT47241	REINFORCEMENT	1		X	X	(LOWER MOLDBOARD STIFFENER)
11	T43726	SUPPORT	1		X	X	
12	T66709	DURA-MAX TM CUTTING EDGE	1		X	X	(5/8 X 6 X 2 FT)
	T66708	DURA-MAX TM CUTTING EDGE	1		X	X	(3/4 X 8 X 2 FT)

MOLDBOARD EXTENSION (27" MOLDBOARD)

T211356 -UN-02JUN05

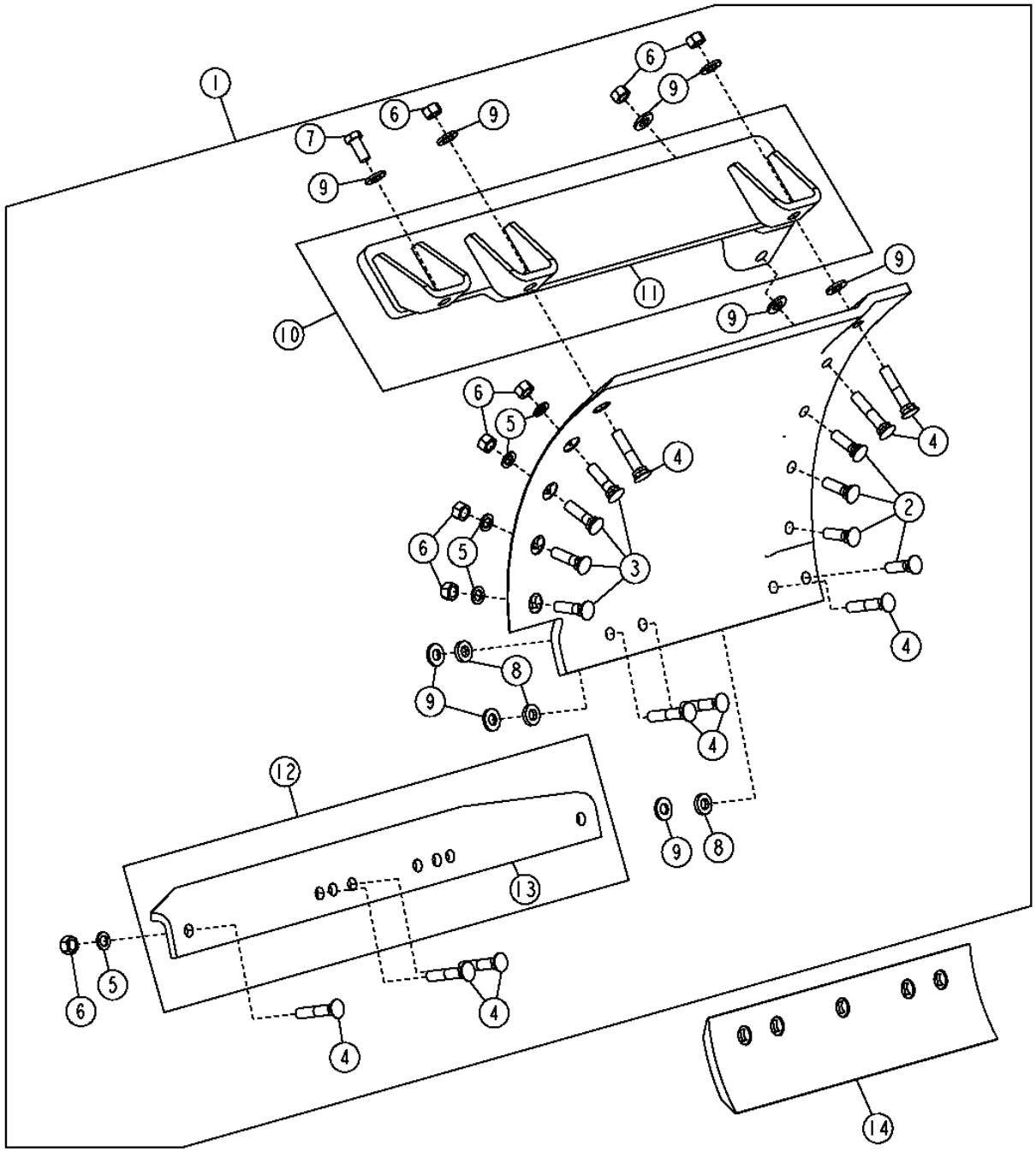

T211356

MOLDBOARD EXTENSION (27" MOLDBOARD)

KEY	PART NO.	PART NAME	QTY	SERIAL NO.	770D	772D	REMARKS
1	**AT307732**	**KIT**	**1**		**X**	**X**	**(WHOLEGOODS) LH EXTENSION FOR 27" MOLDBOARD**
	AT307733	**KIT**	**1**		**X**	**X**	**(WHOLEGOODS) RH EXTENSION FOR 27" MOLDBOARD**
2	09H1759	BOLT	4		X	X	5/8" X 2-1/4"
3	09H1764	BOLT	4		X	X	5/8" X 2-1/2"
4	09H1773	BOLT	9		X	X	5/8" X 3-1/4"
5	R73290	WASHER	14		X	X	0.641" X 1.063" X 0.105"
6	14H760	NUT	17		X	X	5/8"
7	19M8035	CAP SCREW	1		X	X	M16 X 35
8	24H1367	WASHER	3		X	X	21/32" X 1-1/4" X 1/4"
9	24M7241	WASHER	9		X	X	17 X 34 X 4 MM, (SUB FOR (4) 24H1378, THIS APPLICATION)
10	AT306163	SUPPORT	1		X	X	LH (UPPER MOLDBOARD STIFFENER)
	AT306162	SUPPORT	1		X	X	RH (UPPER MOLDBOARD STIFFENER)
11	T204543	BRACKET	2		X	X	
12	AT47241	REINFORCEMENT	1		X	X	(LOWER MOLDBOARD STIFFENER)
13	T43726	SUPPORT	1		X	X	
14	T66709	DURA-MAX TM CUTTING EDGE	1		X	X	(5/8 X 6 X 2 FT)
	T66708	DURA-MAX TM CUTTING EDGE	1		X	X	(3/4 X 8 X 2 FT)

DRAFT FRAME

T201050 -UN-22JUN04

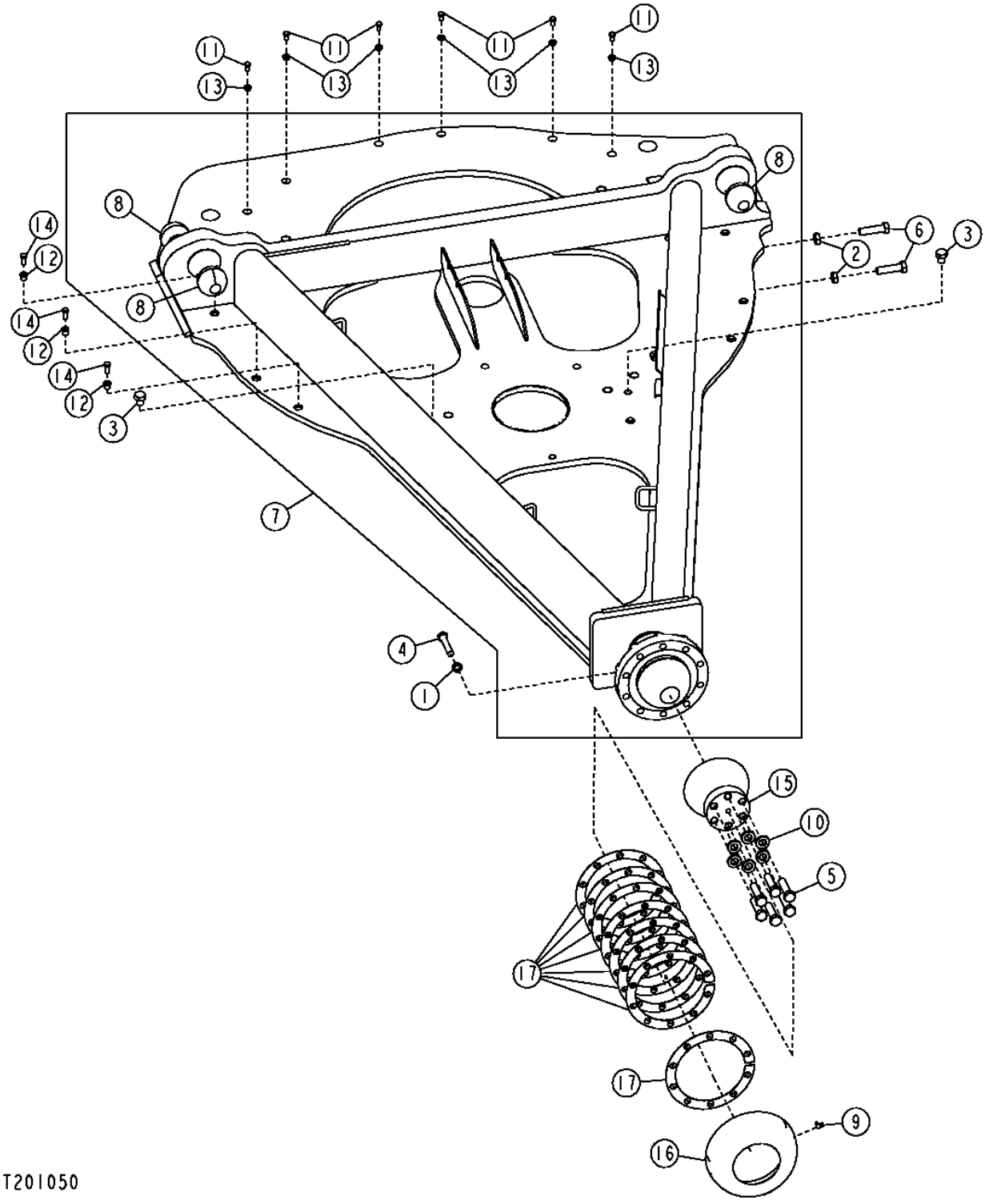

3D18

DRAFT FRAME

KEY	PART NO.	PART NAME	QTY	SERIAL NO.	770D	772D	REMARKS
1	12H294	LOCK WASHER	10		X	X	5/8"
2	14H793	NUT	12		X	X	3/4"
3	19H2368	CAP SCREW	2		X	X	3/4" X 3/4"
4	19H2641	CAP SCREW	10		X	X	5/8" X 3-1/4"
5	19M8639	CAP SCREW	6		X	X	M20 X 70
6	19H2913	CAP SCREW	12		X	X	3/4" X 2-3/4"
7	**AT305363**	**FRAME**	**1**		**X**	**X**	**(CONVENIENCE ASSEMBLY) (DRAFT FRAME)**
8	T59974	BALL	3		X	X	.914 MM (.036")
9	JD7781	LUBRICATION FITTING	1		X	X	
10	N231749	WASHER	6		X	X	
11	R69629	CAP SCREW	6		X	X	90°, 1/8"
12	T188075	BUSHING	12		X	X	
13	T188076	WASHER	6		X	X	3/8" X 1"
14	T33372	BOLT	12		X	X	
15	T213516	RETAINER	1		X	X	
16	T213579	RETAINER	1		X	X	
17	T42243	WASHER	8		X	X	

BLADE TILT FRAME

T201052 -UN-05JAN05

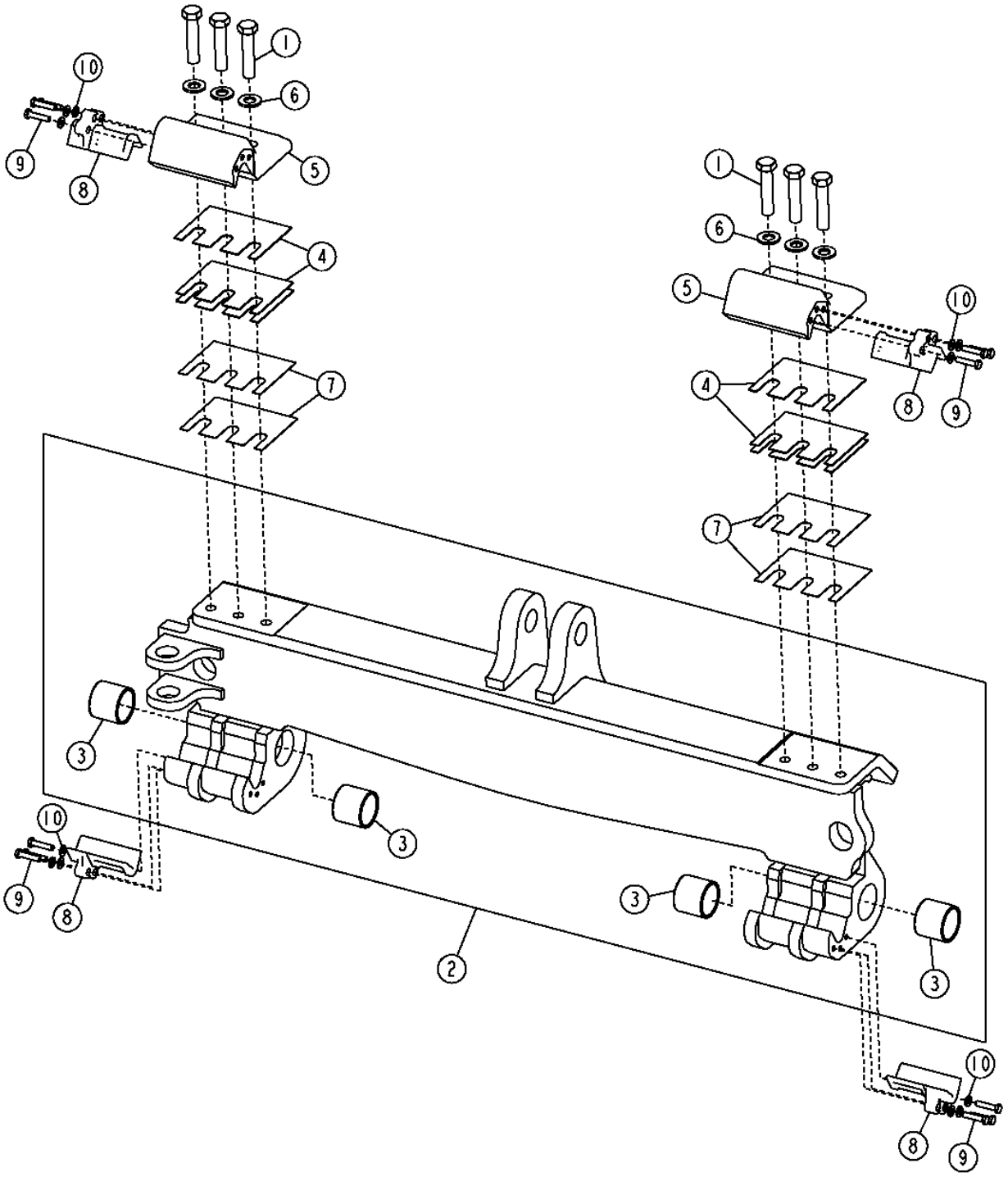

BLADE TILT FRAME

KEY	PART NO.	PART NAME	QTY	SERIAL NO.	770D	772D	REMARKS
1	19H3255	CAP SCREW	6		X	X	7/8" X 4"
2	AT226520	FRAME	1		X	X	(BLADE TILT FRAME)
3	T143929	BUSHING	4		X	X	
4	T124382	STRAP	6		X	X	
5	T212793	KIT	2		X	X	
6	T19572	WASHER	6		X	X	
7	T158027	STRAP	2		X	X	
8	T183474	INSERT	8		X	X	(EXTENDED LIFE INSERTS)(IF REPLACING T185579 STD. INSERTS, ALSO ORDER 24 19M7572)
	T185579	INSERT	8		X	X	(STANDARD INSERTS)
9	19M7572	CAP SCREW	24		X	X	M10 X 45, (USE WITH EXTENDED LIFE INSERTS)
	19M7662	CAP SCREW	24		X	X	M10 X 30, (USE WITH STANDARD INSERTS)
10	24M7239	WASHER	24		X	X	

SADDLE FRAME

T203298 -UN-08DEC04

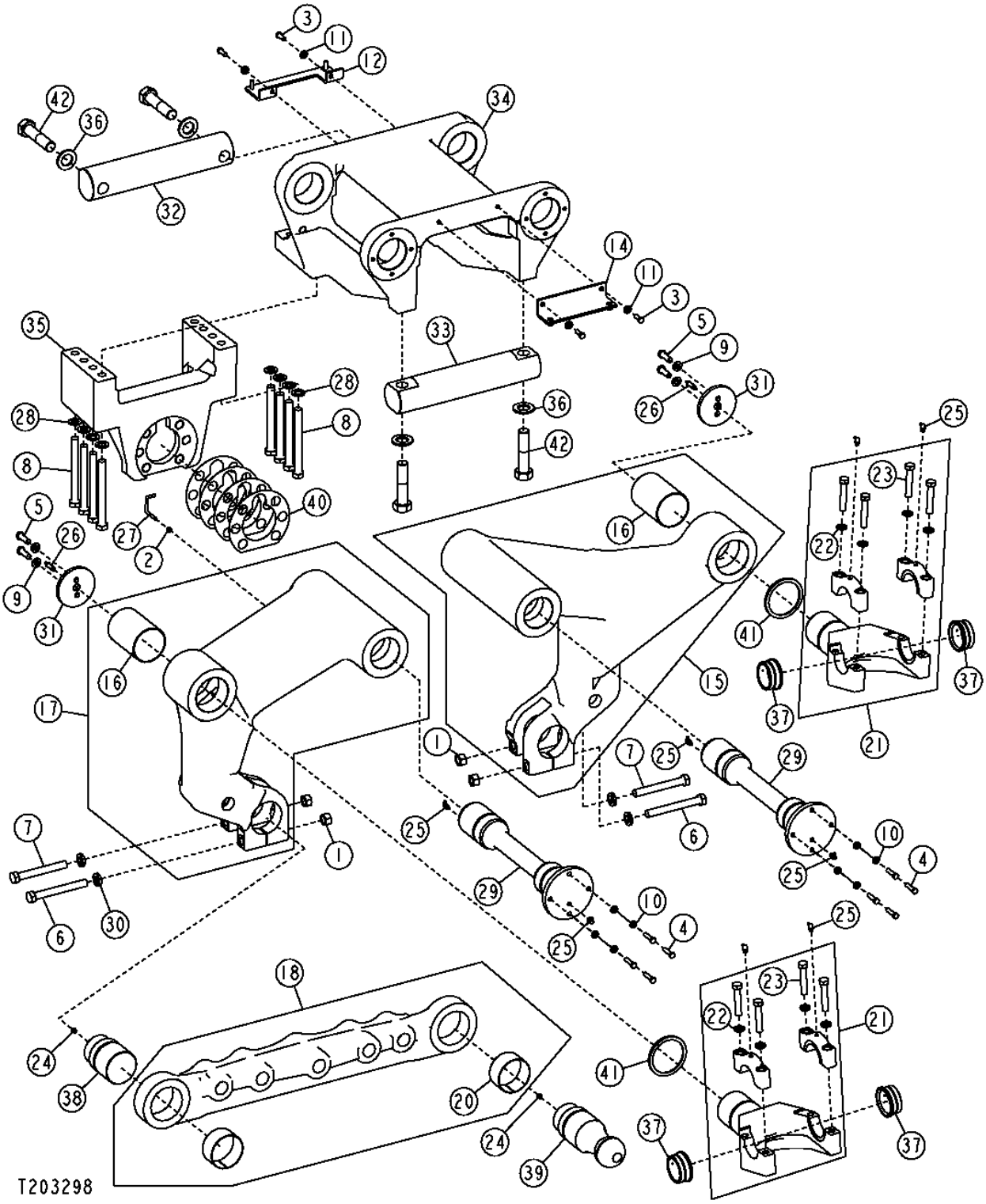

SADDLE FRAME

KEY	PART NO.	PART NAME	QTY	SERIAL NO.	770D	772D	REMARKS
1	14H1058	NUT	4		X	X	3/4"
2	14H786	NUT	1		X	X	1/4"
3	19H1731	CAP SCREW	4		X	X	3/8" X 1"
4	19H1800	CAP SCREW	8		X	X	3/8" X 1-1/2"
5	19H2993	CAP SCREW	4		X	X	1/2" X 1-1/2"
6	19H3225	CAP SCREW	2		X	X	3/4" X 6-1/2"
7	19H3307	CAP SCREW	2		X	X	3/4" X 6"
8	19H3740	CAP SCREW	8		X	X	3/4" X 7-1/2"
9	24H1625	WASHER	4		X	X	
10	24H1864	WASHER	8		X	X	
11	24M7239	WASHER	4		X	X	
12	AT307326	BRACKET	1		X	X	
14	AT315712	ANGLE	1		X	X	
15	AT317482	ARM	1		X	X	
16	T186350	BUSHING	1		X	X	
17	AT317483	ARM	1		X	X	
18	AT317484	KIT	1		X	X	
20	T42589	BUSHING	2		X	X	
21	AT317485	YOKE	2		X	X	
22	12H294	LOCK WASHER	4		X	X	
23	19H2641	CAP SCREW	4		X	X	
24	JD7759	LUBRICATION FITTING	2		X	X	
25	JD7781	LUBRICATION FITTING	8		X	X	
26	JD7782	LUBRICATION FITTING	2		X	X	
27	T103453	POINTER	1		X	X	
28	T10510	WASHER	8		X	X	
29	T152169	PIN	2		X	X	
30	T83426	WASHER	4		X	X	
31	T207483	RETAINER	2		X	X	
32	T208102	PIN FASTENER	1		X	X	
33	T208103	PIN FASTENER	1		X	X	
34	T213096	FRAME	1		X	X	
35	T213102	BRACKET	1		X	X	
36	T24510	WASHER	4		X	X	
37	T42574	BUSHING	4		X	X	
38	T42582	PIN FASTENER	1		X	X	
39	T42583	BALL	1		X	X	
40	T60260	SHIM	4		X	X	
41	T81674	THRUST WASHER	2		X	X	
42	T82855	CAP SCREW	4		X	X	

CIRCLE FRAME

T204655 -UN-03DEC04

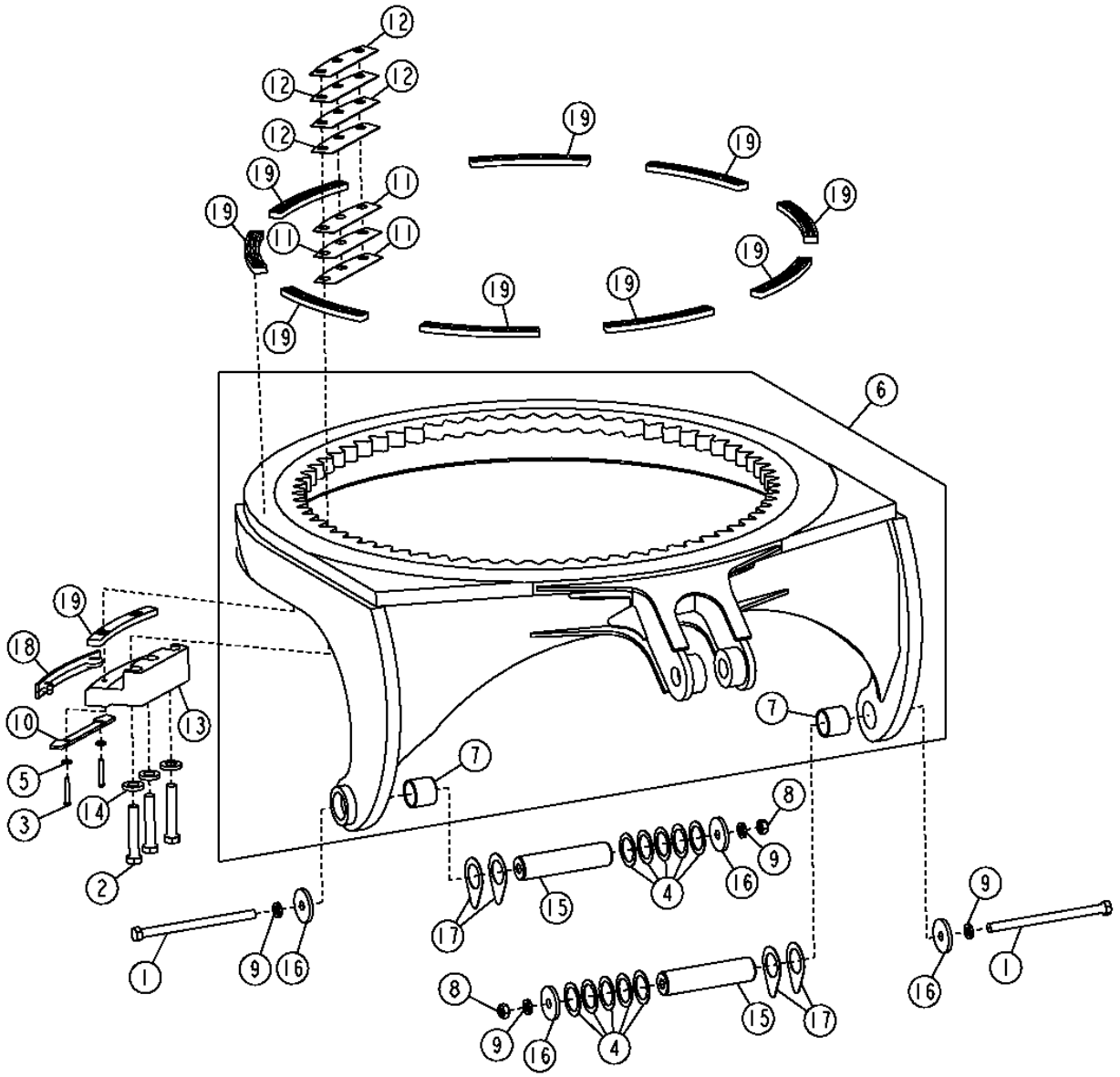

T204655

CIRCLE FRAME

KEY	PART NO.	PART NAME	QTY	SERIAL NO.	770D	772D	REMARKS
1	08H4845	CAP SCREW	2		X	X	7/8" X 13-1/2"
2	19H2329	CAP SCREW	18		X	X	1" X 5-1/2"
3	19H2553	CAP SCREW	12		X	X	3/8" X 2-5/8"
4	24H1671	WASHER	10		X	X	
5	24M7213	WASHER	12		X	X	
6	AT301673	CIRCLE	1		X	X	
7	T143929	BUSHING	1		X	X	
8	K40017	LOCK NUT	2		X	X	7/8"
9	N237603	WASHER	4		X	X	
10	T128502	PLATE	6		X	X	
11	T129981	SHIM	18		X	X	
12	T129982	SHIM	24		X	X	
13	T150614	SUPPORT	6		X	X	
14	T152721	WASHER	18		X	X	
15	T203381	BUSHING	2		X	X	
16	T203388	BUSHING	4		X	X	
17	T208792	SHIM	4		X	X	
18	T141732	INSERT	6		X	X	(STANDARD WITH OR WITHOUT SLIP CLUTCH)
	T163748	INSERT	6		X	X	(EXTENDED LIFE WITH OR WITHOUT SLIP CLUTCH)
19	T141733	INSERT	15		X	X	(STANDARD WITHOUT SLIP CLUTCH)
	T184082	INSERT	15		X	X	(EXTENDED LIFE WITHOUT SLIP CLUTCH, STANDARD WITH SLIP CLUTCH)

CIRCLE DRIVE GEARBOX

T201069 -UN-24JUN04

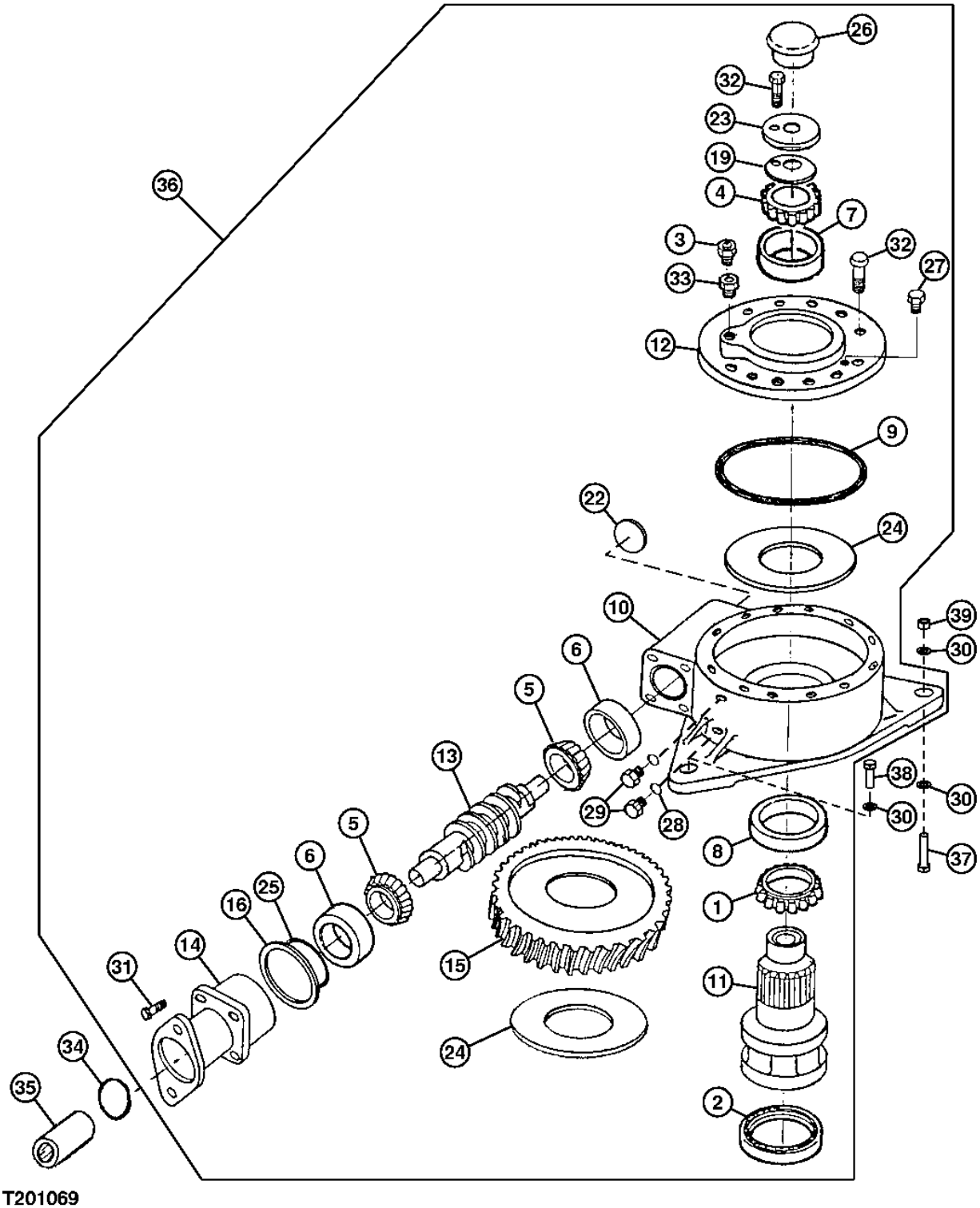

T201069

CIRCLE DRIVE GEARBOX

KEY	PART NO.	PART NAME	QTY	SERIAL NO.	770D	772D	REMARKS
1	AT169451	BEARING CONE	1		X	X	
2	AT169452	SEAL	1		X	X	
3	E14814	PRESSURE RELIEF FITTING	1		X	X	
4	JD10024	BEARING CONE	1		X	X	
5	JD10144	BEARING CONE	2		X	X	
6	JD8240	BEARING CUP	2		X	X	
7	JD9021	BEARING CUP	1		X	X	
8	JD9134	BEARING CUP	1		X	X	
9	R37287	O-RING	1		X	X	
10	T151485	HOUSING	1		X	X	
11	T152876	PINION SHAFT	1		X	X	
12	T152877	COVER	1		X	X	
13	T167010	SHAFT	1		X	X	(USE WITH T167011)
14	T152879	FLANGE	1		X	X	
15	T167011	WORM GEAR	1		X	X	(USE WITH T167010)
16	T152881	SHIM	AR		X	X	(.1 MM)
	T152882	SHIM	AR		X	X	(.2 MM)
	T152883	SHIM	AR		X	X	(.5 MM)
19	T152990	SHIM	AR		X	X	(.1 MM)
	T152991	SHIM	AR		X	X	(.2 MM)
	T152992	SHIM	AR		X	X	(.5 MM)
22	T152993	PLUG	1		X	X	
23	T152994	WASHER	1		X	X	HS, SAE 8, 1/2" X 2"
24	T152995	THRUST WASHER	2		X	X	
25	T42302	O-RING	1		X	X	
26	Z40239	CAP	1		X	X	
27	R39112	FITTING	1		X	X	
28	R26448	O-RING	2		X	X	
29	R27218	FITTING PLUG	1		X	X	
30	T10510	WASHER	5		X	X	
31	19M7790	SCREW	4		X	X	M12 X 35
32	19M7835	SCREW	15		X	X	M10 X 35
33	CE17879	ADAPTER	1		X	X	
34	U42702	O-RING	1		X	X	
35	T150942	SPLINED COUPLING	1		X	X	
36	AT190539	GEAR CASE	1		X	X	
37	19H3026	CAP SCREW	2		X	X	3/4" X 3-1/2"
38	19H2991	CAP SCREW	1		X	X	3/4" X 2-1/4", (FRONT MOUNTING SCREW)
39	14H1046	NUT	2		X	X	3/4"

CIRCLE DRIVE GEARBOX (WITH SLIP CLUTCH)

T201073 -UN-04DEC04

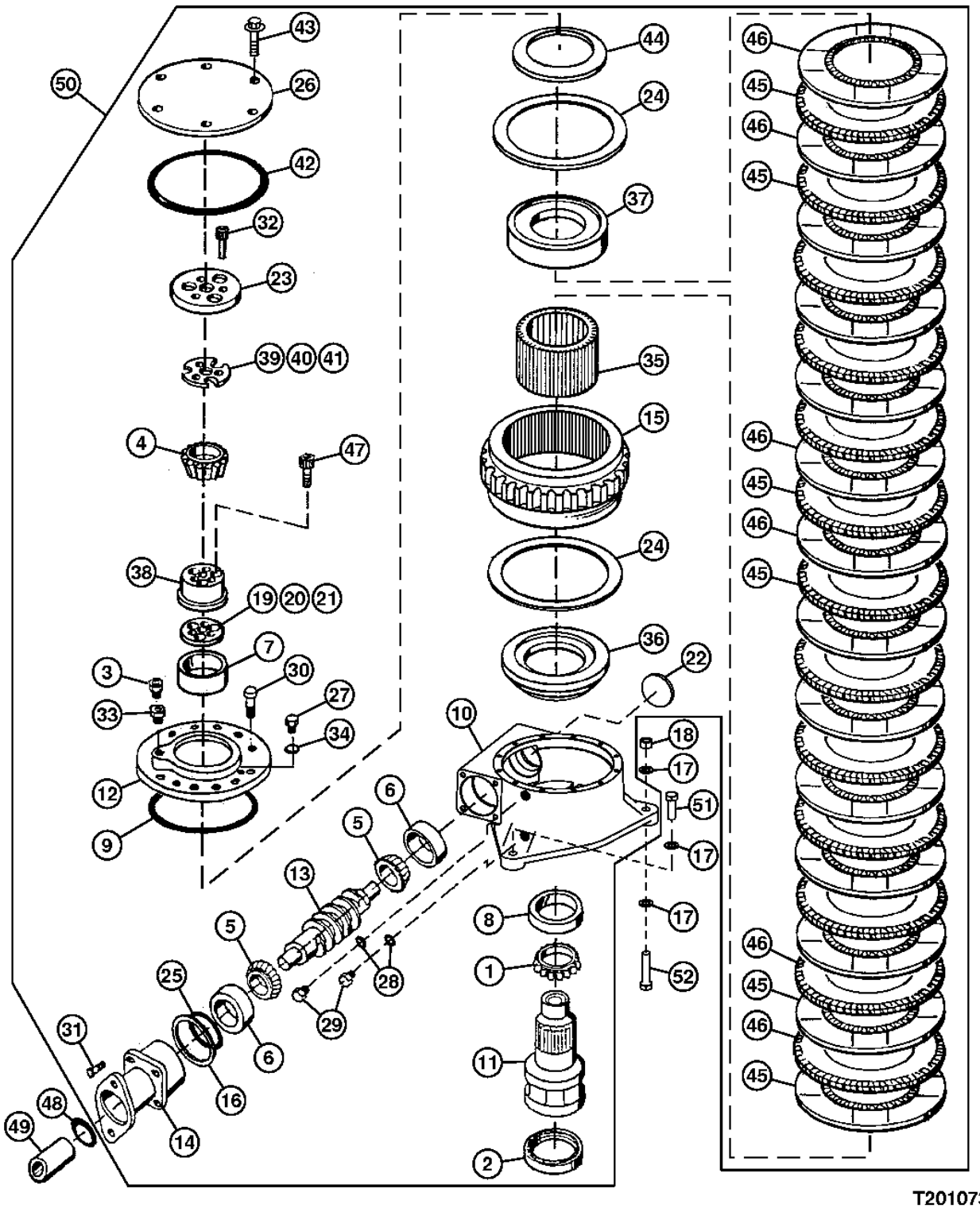

THIS PARTS LISTING IS CONTINUED

CIRCLE DRIVE GEARBOX (WITH SLIP CLUTCH)

KEY	PART NO.	PART NAME	QTY	SERIAL NO.	770D	772D	REMARKS
1	AT169451	BEARING CONE	1		X	X	
2	AT169452	SEAL	1		X	X	
3	E14814	PRESSURE RELIEF FITTING	1		X	X	
4	JD9082	BEARING CONE	1		X	X	
5	JD10144	BEARING CONE	2		X	X	
6	JD8240	BEARING CUP	2		X	X	
7	JD9141	BEARING CUP	1		X	X	
8	JD9134	BEARING CUP	1		X	X	
9	R37287	O-RING	1		X	X	
10	T165055	HOUSING	1		X	X	
11	T165061	PINION SHAFT	1		X	X	
12	T165056	CAP	1		X	X	
13	T167010	SHAFT	1		X	X	
14	T152879	FLANGE	1		X	X	
15	T184228	WORM GEAR	1		X	X	
16	T152881	SHIM	AR		X	X	0.1 MM
	T152882	SHIM	AR		X	X	0.15 MM
	T152883	SHIM	AR		X	X	0.5 MM
17	T10510	WASHER	5		X	X	0.15 MM
18	14H1046	NUT	2		X	X	3/4", 0.5 MM
19	T165072	SHIM	AR		X	X	0.1 MM
	T165073	SHIM	AR		X	X	0.15 MM
	T165074	SHIM	AR		X	X	0.5 MM
20	T165073	SHIM	1		X	X	0.15 MM
21	T165074	SHIM	6		X	X	0.5 MM
22	T152993	PLUG	1		X	X	
23	T165062	WASHER	1		X	X	HS, SAE 8, 1/2" X 2"
24	T165063	THRUST WASHER	2		X	X	
25	T42302	O-RING	1		X	X	
26	T165077	COVER	1		X	X	
27	R39112	FITTING	1		X	X	
28	R26448	O-RING	2		X	X	
29	R27218	FITTING PLUG	2		X	X	
30	19M7835	SCREW	12		X	X	M10 X 35
31	19M7790	SCREW	4		X	X	M12 X 35
32	T165075	SCREW	3		X	X	
33	CE17879	ADAPTER	1		X	X	
34	R26375	O-RING	1		X	X	
35	T165064	HUB	1		X	X	
36	T165065	PLATE	1		X	X	
37	T165066	PLATE	1		X	X	
38	T165067	SLEEVE	1		X	X	
39	T165068	SHIM	5		X	X	0.1 MM
	T165069	SHIM	AR		X	X	0.15 MM
	T165069	SHIM	AR		X	X	0.5 MM
40	T165069	SHIM	1		X	X	0.15 MM
41	T165070	SHIM	3		X	X	0.5 MM
42	T80123	O-RING	1		X	X	
43	19M7866	BOLT	6		X	X	
44	T165791	DISK SPRING	1		X	X	
45	T164986	PLATE	13		X	X	
46	AT184409	CLUTCH DISK	14		X	X	
47	T165071	SCREW	3		X	X	
48	U42702	O-RING	1		X	X	
49	T150942	SPLINED COUPLING	1		X	X	(T150942 IS NOT INCLUDED IN AT184413)
50	**AT184413**	**GEAR CASE**	**1**		**X**	**X**	**(CONVENIENCE ASSEMBLY)**
51	19H2991	CAP SCREW	1		X	X	3/4" X 2-1/4", (SUB FOR 19H1388, THIS APPLICATION) (FRONT MOUNTING SCREW)
52	19H3026	CAP SCREW	2		X	X	3/4" X 3-1/2"

ROTARY MANIFOLD

T201027 -UN-18JUN04

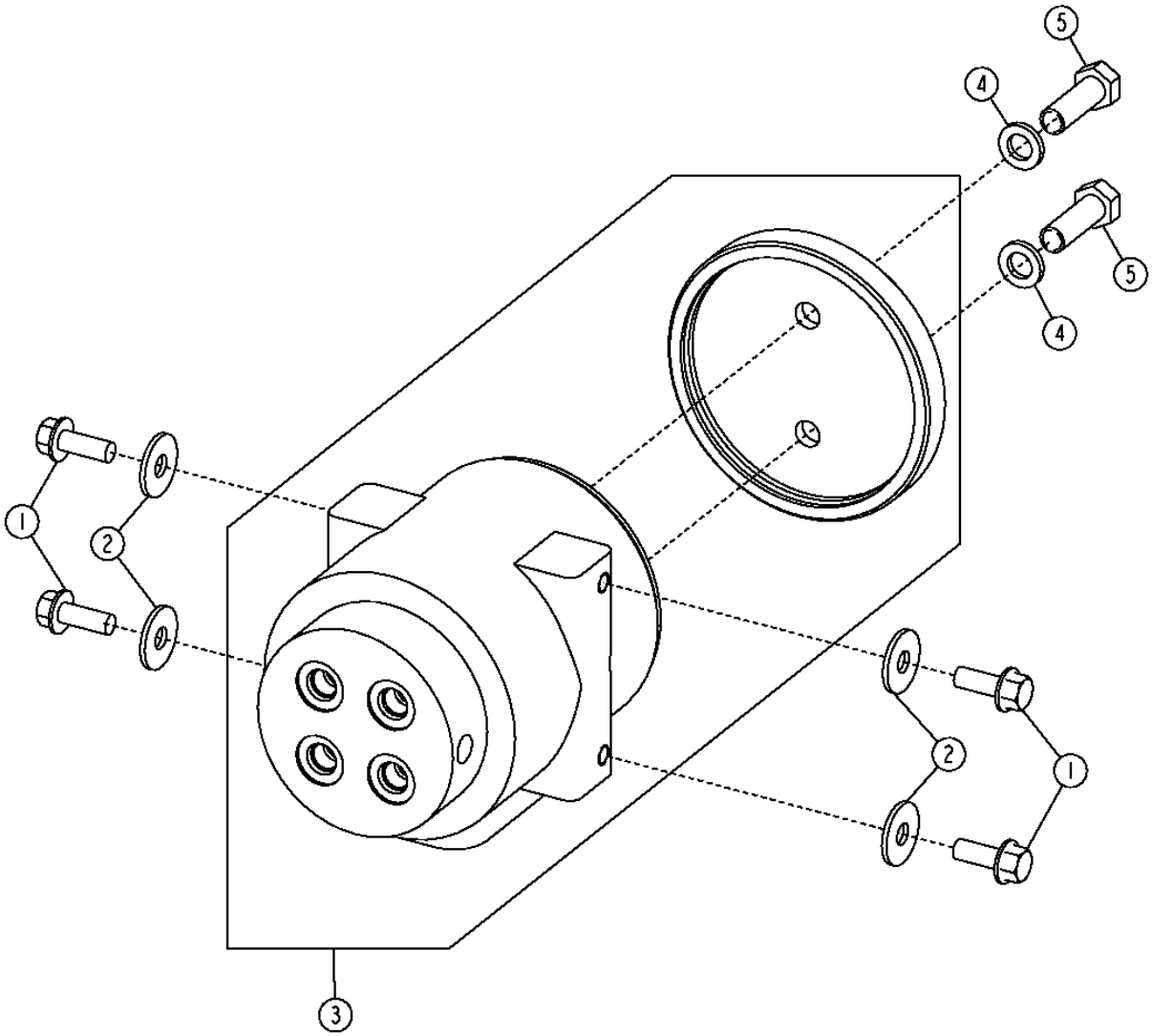

T201027

ROTARY MANIFOLD

KEY	PART NO.	PART NAME	QTY	SERIAL NO.	770D	772D	REMARKS
1	19H3771	SCREW	4		X	X	3/8" X 1"
2	24M7296	WASHER	4		X	X	
3	AT169948	MANIFOLD	1		X	X	(ROTARY)
	AT169949	SEAL KIT	1		X	X	
4	12H301	LOCK WASHER	2		X	X	1/2"
5	19H2676	CAP SCREW	2		X	X	3/8" X 1"

CIRCLE DRIVE MOTOR

T201064 -UN-04DEC04

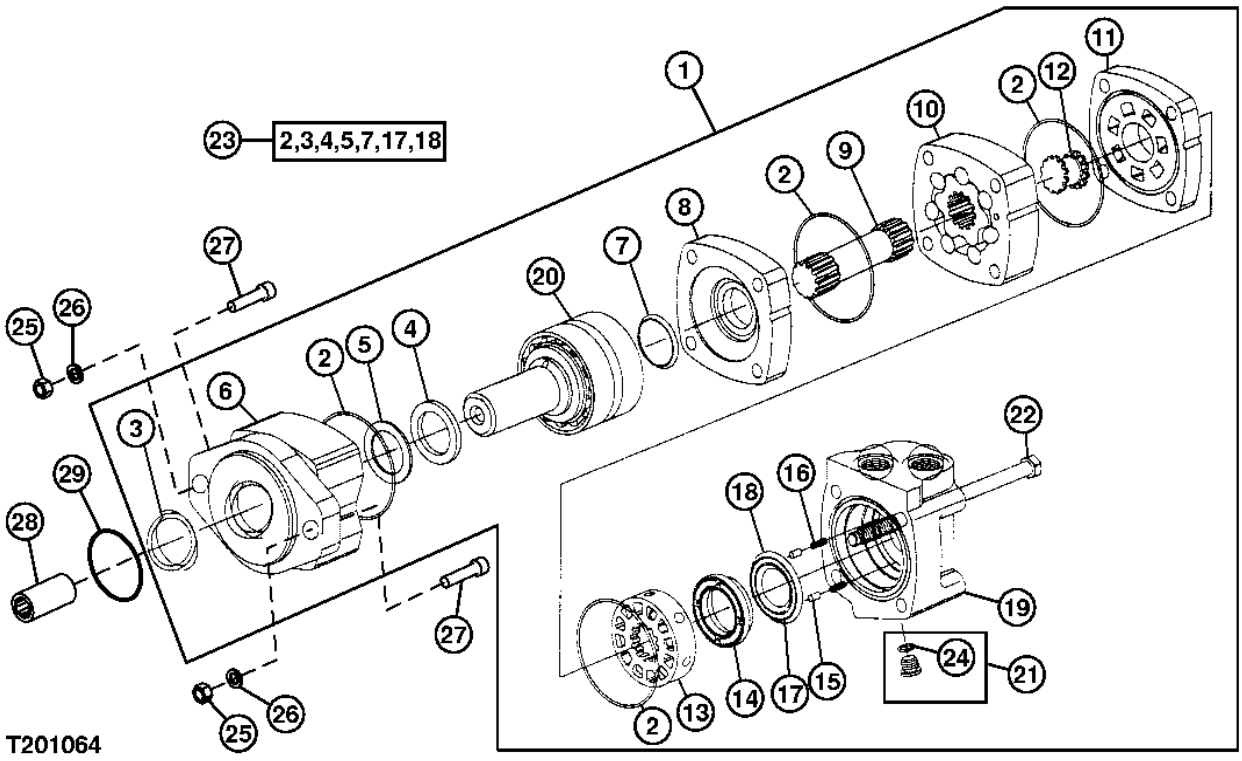

CIRCLE DRIVE MOTOR

KEY	PART NO.	PART NAME	QTY	SERIAL NO.	770D	772D	REMARKS
1	AT197057	MOTOR	1		X	X	(CIRCLE DRIVE)
2	T190610	SEAL	4		X	X	
3	T190611	SEAL	1		X	X	
4	T190612	SEAL	1		X	X	
5	T190613	BACK-UP RING	1		X	X	
6	T190614	BEARING HOUSING W/ BEARING	1		X	X	
7	T190615	SEAL	1		X	X	
8	T190616	WEAR PLATE	1		X	X	
9	T190617	DRIVE	1		X	X	
10	AT197907	MOUNTING PARTS	1		X	X	
11	T190639	PLATE	1		X	X	
12	T190640	FLOW CONTROL HYD. VALVE	1		X	X	
13	T190641	FLOW CONTROL HYD. VALVE	1		X	X	
14	T190642	PLATE	1		X	X	
15	T190643	PIN	2		X	X	
16	T190644	SPRING	2		X	X	
17	T190645	SEAL	1		X	X	
18	T190646	SEAL	1		X	X	
19	T190647	HOUSING	1		X	X	
20	AT197906	SHAFT	1		X	X	
21	AT197908	MOUNTING PARTS	1		X	X	
22	T190648	CAP SCREW	1		X	X	
23	AT197924	SEAL KIT	1		X	X	
24	R28782	O-RING	1		X	X	
25	12H301	LOCK WASHER	2		X	X	1/2"
26	14H809	NUT	2		X	X	1/2"
27	19H3033	SCREW	2		X	X	1/2" X 2"
28	T150942	SPLINED COUPLING	1		X	X	
29	U42702	O-RING	1		X	X	

CIRCLE SIDESHIFT CYLINDER

T201164 -UN-02OCT04

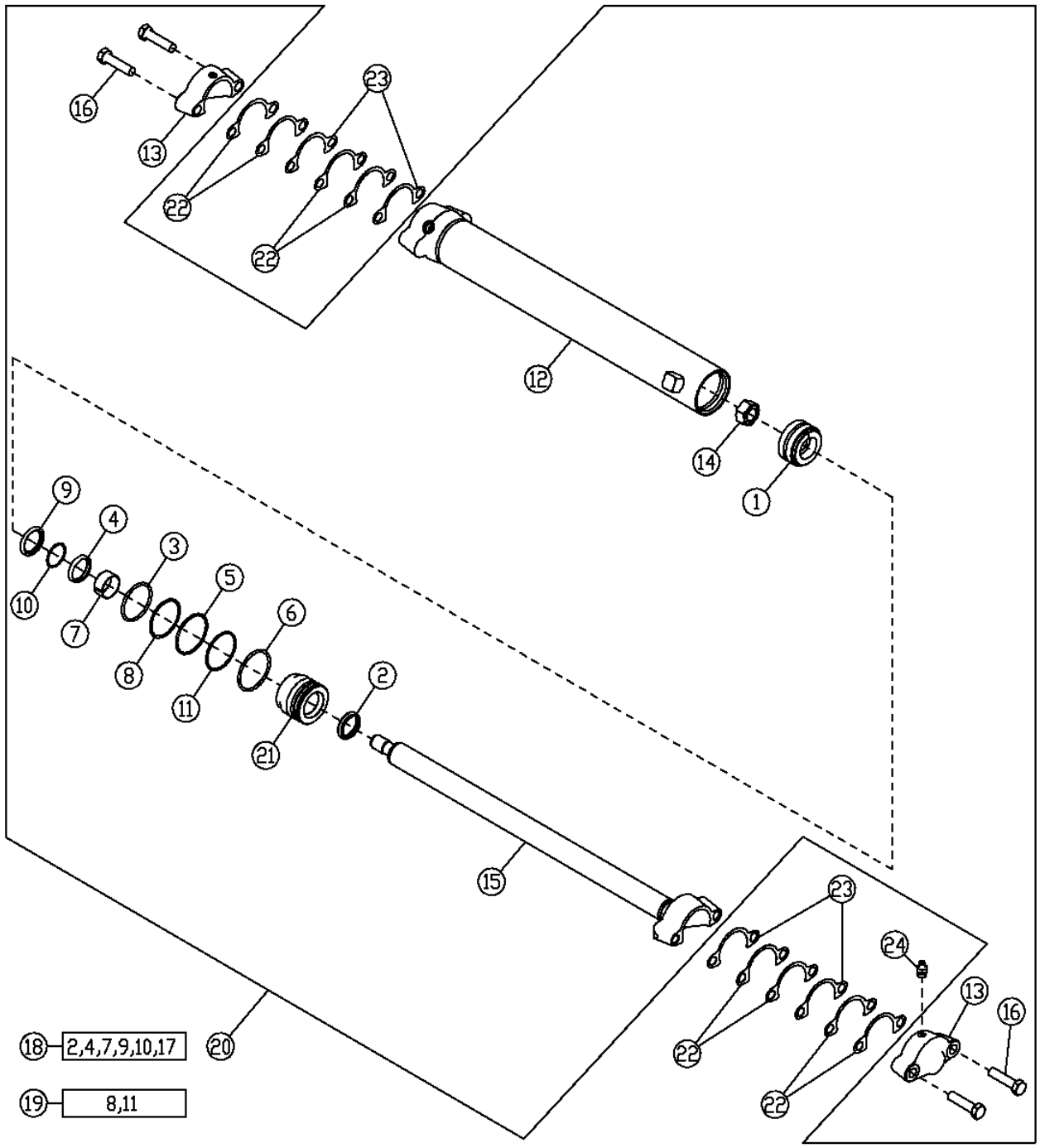

CIRCLE SIDESHIFT CYLINDER

KEY	PART NO.	PART NAME	QTY	SERIAL NO.	770D	772D	REMARKS
1	AH141183	PISTON	1		X	X	
2	AH146557	SEAL	1		X	X	
3	F1430R	O-RING	1		X	X	
4	H152203	SEAL	1		X	X	
5	H180103	SNAP RING	1		X	X	
6	H206859	SNAP RING	1		X	X	
7	H208987	WEAR RING	1		X	X	
8	R79101	BACK-UP RING	1		X	X	
9	.....	SEAL	1		X	X	(SUB AH210184)
10	.....	RING	1		X	X	(SUB AH210184)
11	.....	O-RING	1		X	X	(SUB AH212097)
12	AH212503	HYDRAULIC CYLINDER BARREL	1		X	X	
13	H142036	END	2		X	X	
14	H170539	NUT	1		X	X	
15	RE37331	HYDRAULIC CYLINDER ROD	1		X	X	
16	19H1440	CAP SCREW	4		X	X	3/4" X 3"
17	H154856	WEAR RING	1		X	X	(WIPER INSTALLATION TOOL) (NOT ILLUSTRATED)
18	AH210484	HYDRAULIC CYLINDER KIT	1		X	X	(ROD SEAL KIT)
19	AH212097	HYDRAULIC CYLINDER KIT	1		X	X	(BORE SEAL KIT)
20	AH208873	HYDRAULIC CYLINDER	1		X	X	(CIRCLE SIDESHIFT CYLINDER)
21	H208631	HYDR. CYLINDER ROD GUIDE	1		X	X	
22	T147623	SHIM	3		X	X	
23	T148164	SHIM	4		X	X	
24	JD7844	LUBRICATION FITTING	2		X	X	

BLADE LIFT CYLINDER

T201280 -UN-09DEC04

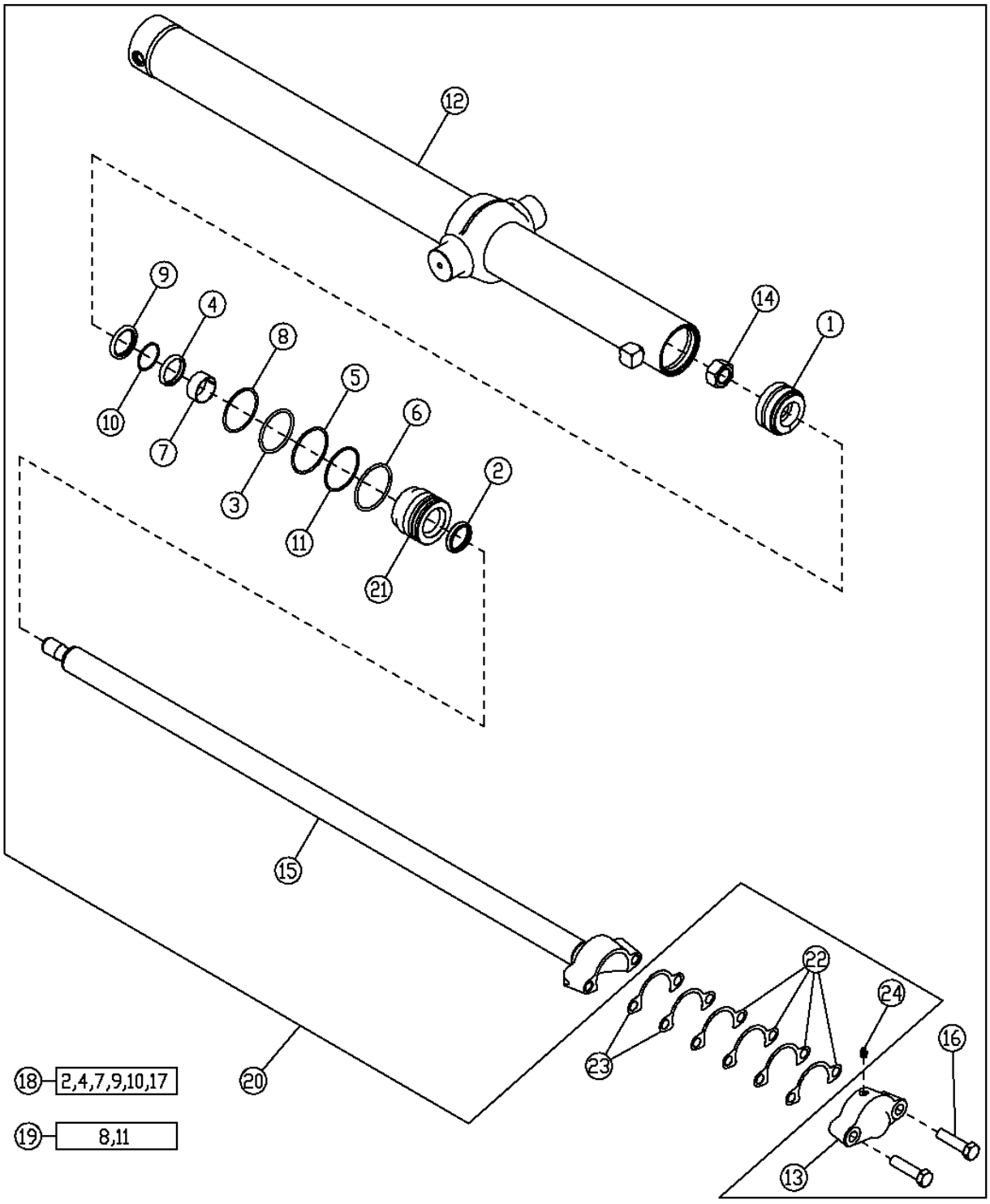

BLADE LIFT CYLINDER

KEY	PART NO.	PART NAME	QTY	SERIAL NO.	770D	772D	REMARKS
1	AH141183	PISTON	1		X	X	
2	AH146557	SEAL	1		X	X	
3	F1430R	O-RING	1		X	X	
4	H152203	SEAL	1		X	X	
5	H180103	SNAP RING	1		X	X	
6	H206859	SNAP RING	1		X	X	
7	H208987	WEAR RING	1		X	X	
8	R79101	BACK-UP RING	1		X	X	
9	.....	SEAL	1		X	X	(SUB AH210184)
10	.....	RING	1		X	X	(SUB AH210184)
11	.....	O-RING	1		X	X	(SUB AH212097)
12	AH212502	HYDRAULIC CYLINDER BARREL	1		X	X	
13	H142036	END	1		X	X	
14	H170539	NUT	1		X	X	
15	RE37382	HYDRAULIC CYLINDER ROD	1		X	X	
16	19H1440	CAP SCREW	2		X	X	3/4" X 3"
17	H154856	WEAR RING	1		X	X	(WIPER INSTALLATION TOOL) (NOT ILLUSTRATED)
18	AH210484	HYDRAULIC CYLINDER KIT	1		X	X	(ROD SEAL KIT)
19	AH212097	HYDRAULIC CYLINDER KIT	1		X	X	(BORE SEAL KIT)
20	AH208875	HYDRAULIC CYLINDER	1		X	X	(BLADE LIFT CYLINDER)
21	H208631	HYDR. CYLINDER ROD GUIDE	1		X	X	
22	T147623	SHIM	8		X	X	
23	T148164	SHIM	4		X	X	
24	JD7798	LUBRICATION FITTING	2		X	X	

BLADE SLIDE CYLINDER

T201378 -UN-30JUN04

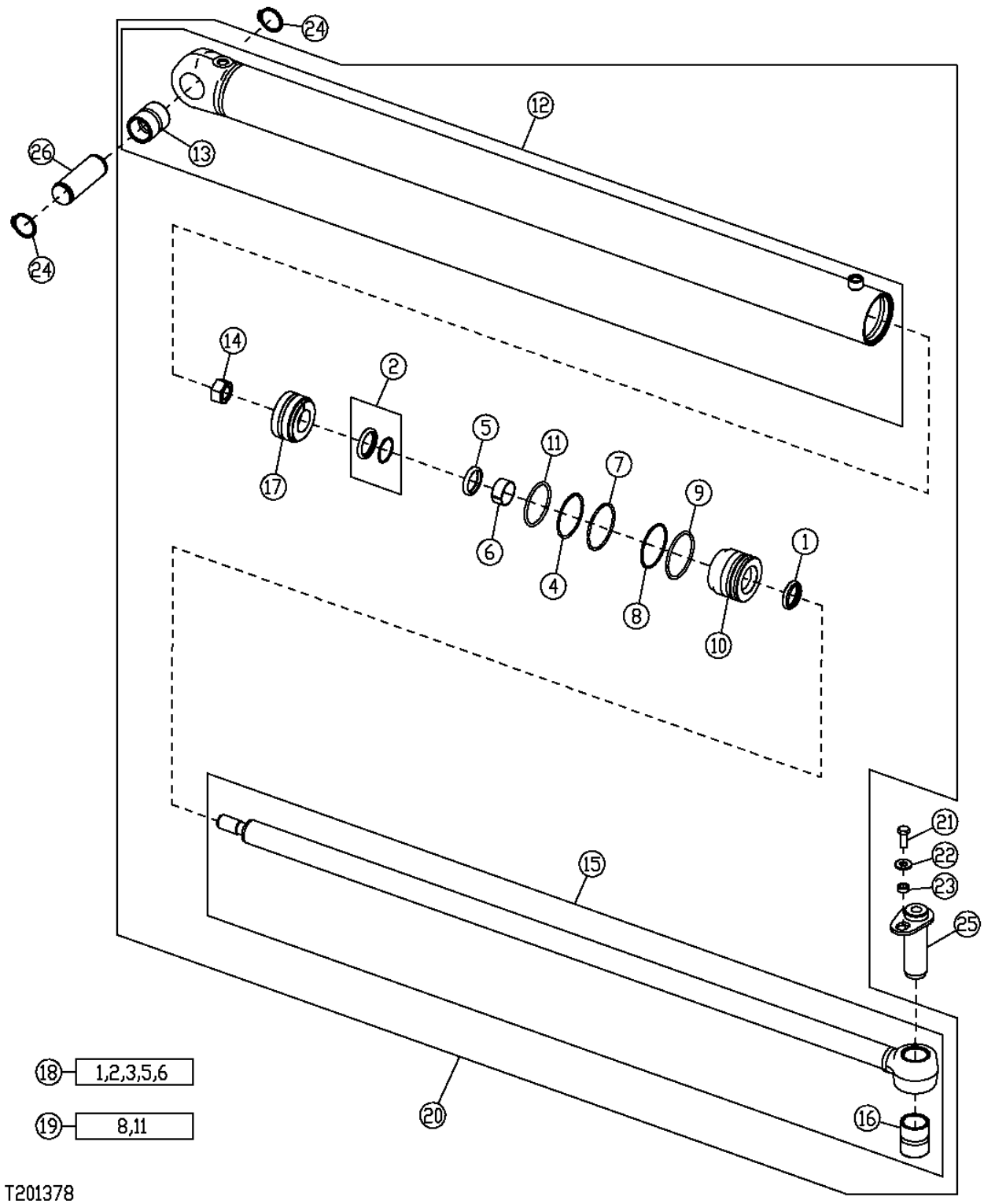

BLADE SLIDE CYLINDER

KEY	PART NO.	PART NAME	QTY	SERIAL NO.	770D	772D	REMARKS
1	AH146556	SEAL	1		X	X	
2	AH146560	SEAL	1		X	X	
3	H155629	SEAL	1		X	X	(WIPER INSTALLATION TOOL) (NOT ILLUSTRATED)
4	F1430R	O-RING	1		X	X	
5	H152202	SEAL	1		X	X	
6	H157898	WEAR RING	1		X	X	
7	H180103	SNAP RING	1		X	X	
8	.....	O-RING	1		X	X	(SUB AH212097)
9	H206859	SNAP RING	1		X	X	
10	H208999	HYDR. CYLINDER ROD GUIDE	1		X	X	
11	R79101	BACK-UP RING	1		X	X	
12	AH212901	HYDRAULIC CYLINDER BARREL	1		X	X	
13	R89940	BUSHING	1		X	X	
14	H170538	NUT	1		X	X	M27
15	RE36349	HYDRAULIC CYLINDER ROD	1		X	X	
16	R89940	BUSHING	1		X	X	
17	AH136453	PISTON	1		X	X	
18	AH149813	HYDRAULIC CYLINDER KIT	1		X	X	(ROD SEAL KIT)
19	AH212097	HYDRAULIC CYLINDER KIT	1		X	X	(BORE SEAL KIT)
20	AH212900	HYDRAULIC CYLINDER	1		X	X	(BLADE SLIDE CYLINDER)
21	19H2898	CAP SCREW	1		X	X	1/2" X 1-1/4"
22	24H1349	WASHER	1		X	X	
23	28H3418	WASHER	1		X	X	
24	40M7180	SNAP RING	2		X	X	
25	AT41245	PIN	1		X	X	
26	T124495	PIN FASTENER	1		X	X	

BLADE TILT CYLINDER

T201392 -UN-02JUL04

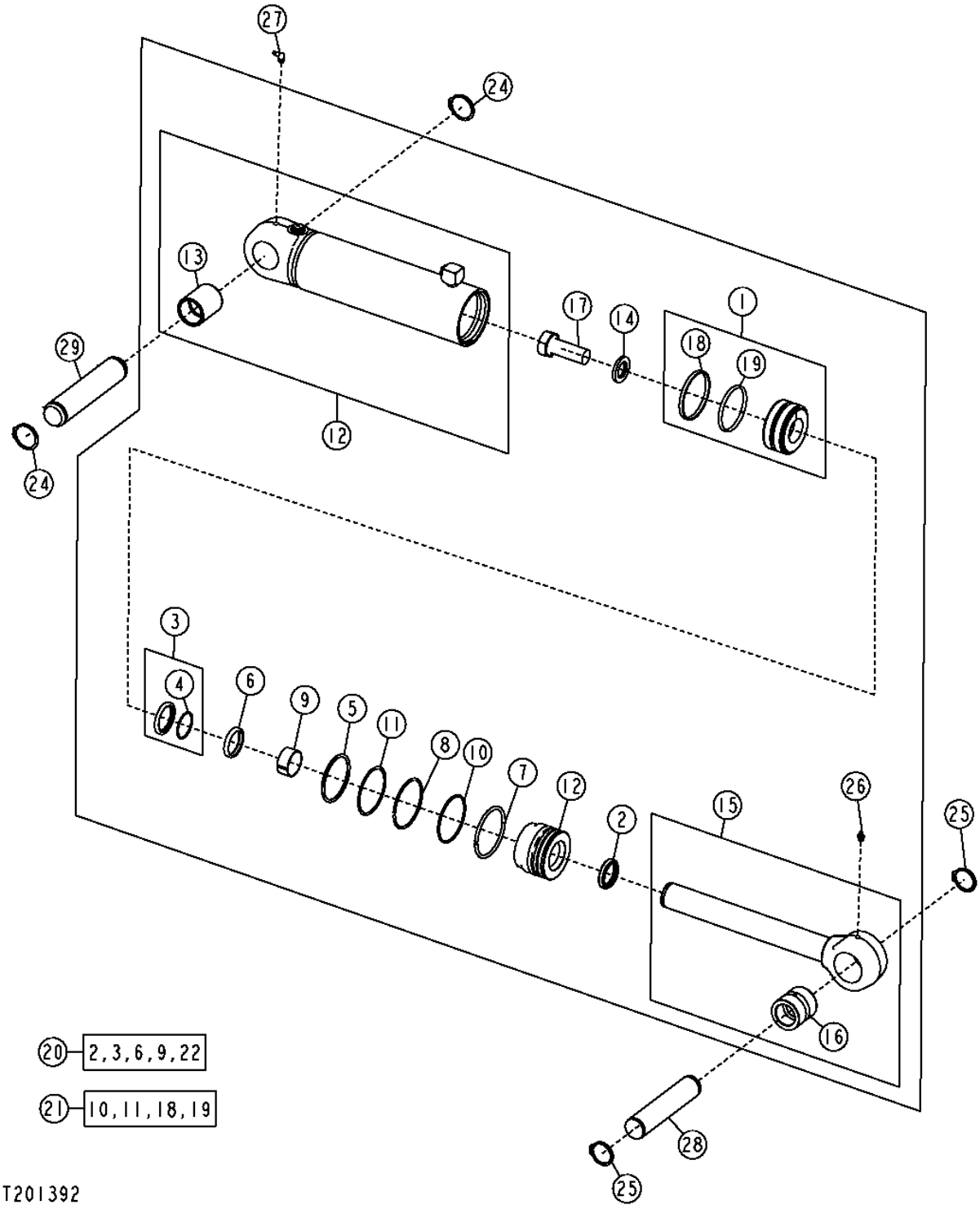

BLADE TILT CYLINDER

KEY	PART NO.	PART NAME	QTY	SERIAL NO.	770D	772D	REMARKS
1	AH205062	PISTON	1		X	X	
2	AH146557	SEAL	1		X	X	
3	AH146561	SEAL	1		X	X	
4	H208995	HYDR. CYLINDER ROD GUIDE	1		X	X	
5	F950R	O-RING	1		X	X	
6	H152203	SEAL	1		X	X	
7	H180080	SNAP RING	1		X	X	
8	H180094	SNAP RING	1		X	X	
9	H208987	WEAR RING	1		X	X	
10	.....	O-RING	1		X	X	(SUB AH212102)
11	R81862	BACK-UP RING	1		X	X	
12	AH212812	HYDRAULIC CYLINDER BARREL	1		X	X	
13	R81968	BUSHING	1		X	X	
14	H145175	WASHER	1		X	X	
15	RE28364	HYDRAULIC CYLINDER ROD	1		X	X	
16	R82960	BUSHING	1		X	X	
17	19M8353	CAP SCREW	1		X	X	M30 X 80
18	H168248	WASHER	1		X	X	
19	H168249	WASHER	1		X	X	
20	AH210484	HYDRAULIC CYLINDER KIT	1		X	X	(ROD SEAL KIT)
21	AH212102	HYDRAULIC CYLINDER KIT	1		X	X	(BORE SEAL KIT)
22	H154856	WEAR RING	1		X	X	(WIPER INSTALLATION TOOL) (NOT ILLUSTRATED)
23	AH212811	HYDRAULIC CYLINDER	1		X	X	(BLADE TILT)
24	40M7166	SNAP RING	2		X	X	
25	40M7180	SNAP RING	2		X	X	
26	JD7798	LUBRICATION FITTING	1		X	X	
27	JD7799	LUBRICATION FITTING	1		X	X	
28	T151953	PIN	1		X	X	
29	T77067	PIN FASTENER	1		X	X	

BLADE LIFT CYLINDER HYDRAULIC HOSES

T201521 -UN-29JUL04

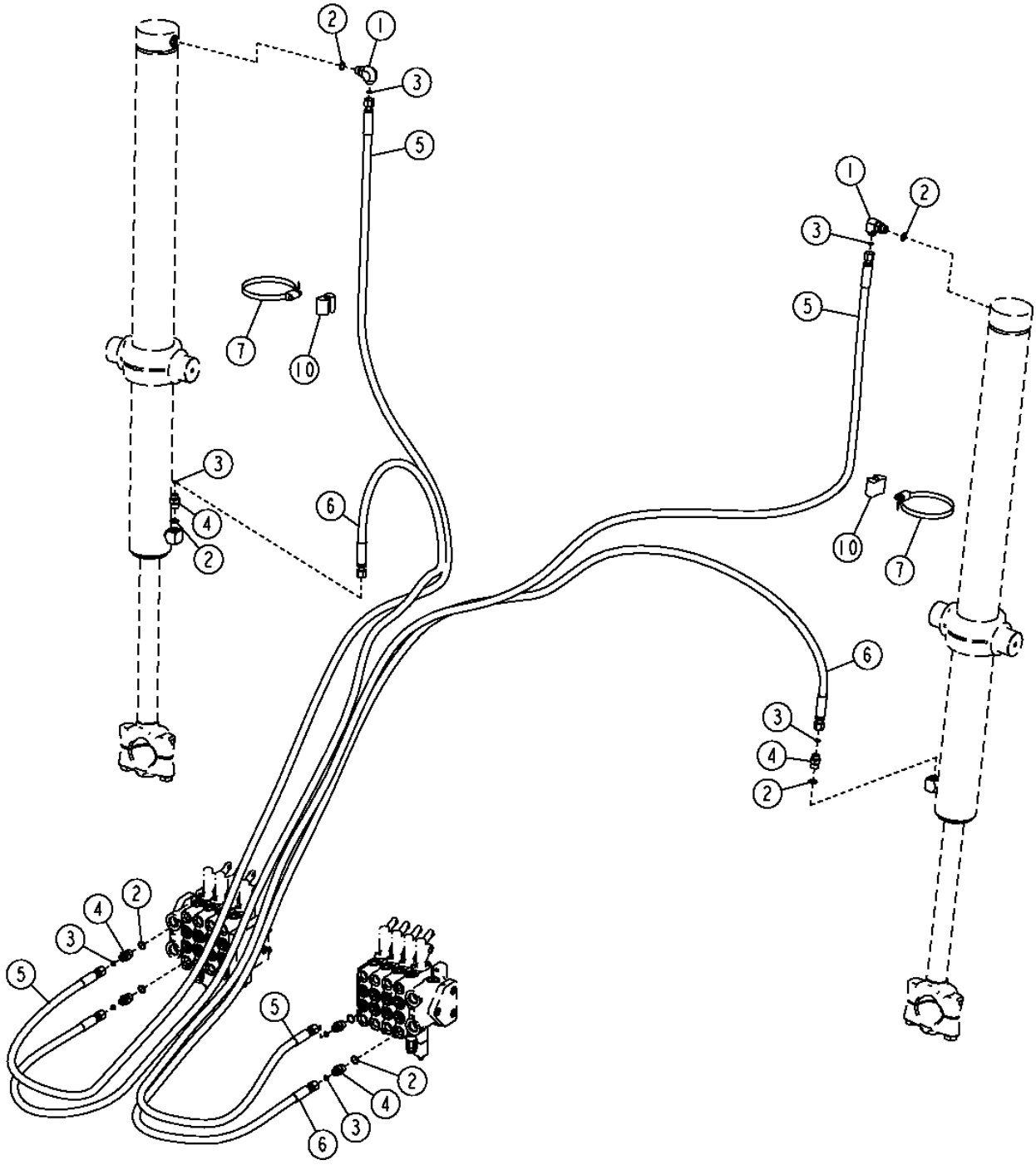

BLADE LIFT CYLINDER HYDRAULIC HOSES

KEY	PART NO.	PART NAME	QTY	SERIAL NO.	770D	772D	REMARKS
1	38H1010	ELBOW FITTING	2		X	X	
2	R26375	O-RING	8		X	X	
3	T77613	O-RING	8		X	X	
4	38H1171	ADAPTER	6		X	X	
5	AT304148	HYDRAULIC HOSE - FABRICATE	2		X	X	(HEAD END)
6	AT304149	HYDRAULIC HOSE - FABRICATE	2		X	X	(ROD END)
7	C16054	CLAMP	2		X	X	
10	T105773	GUIDE	2		X	X	

SADDLE LOCK PIN AND HYDRAULIC HOSES

T201523 -UN-28OCT04

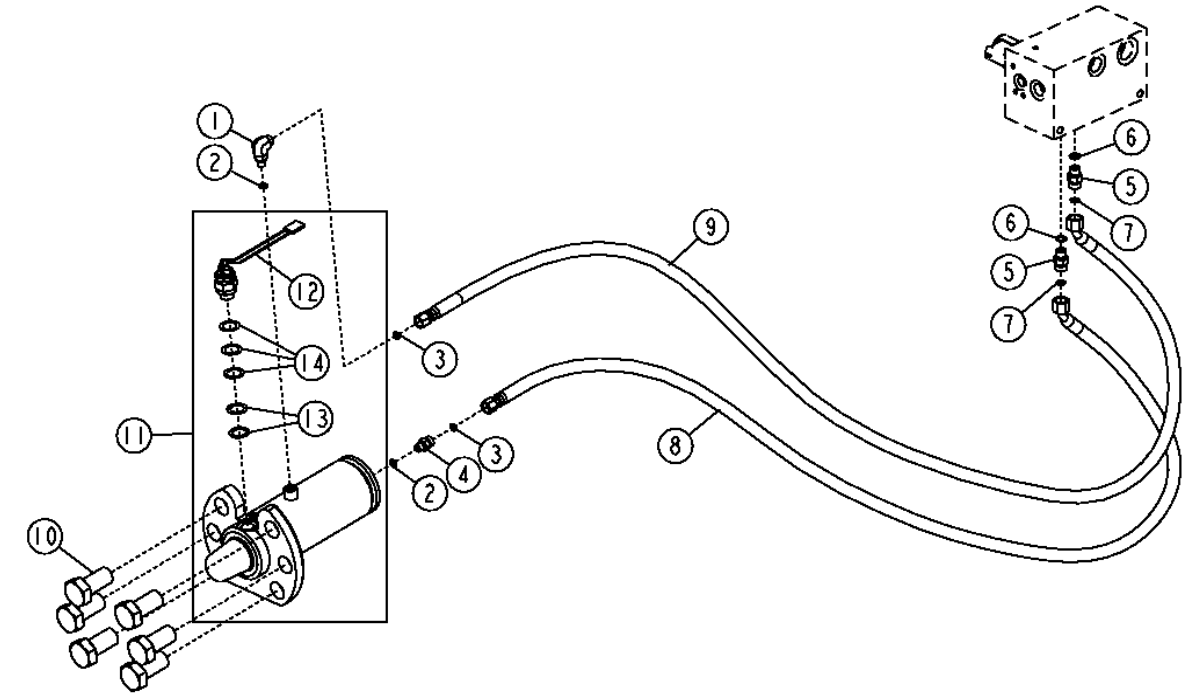

T201523

SADDLE LOCK PIN AND HYDRAULIC HOSES

KEY	PART NO.	PART NAME	QTY	SERIAL NO.	770D	772D	REMARKS
1	38H1003	ELBOW FITTING	1		X	X	
2	R28782	O-RING	2		X	X	
3	T77814	O-RING	2		X	X	
4	38H1159	ADAPTER	1		X	X	
5	38H1160	ADAPTER	2		X	X	
6	R26448	O-RING	2		X	X	
7	T77613	O-RING	2		X	X	
8	AT304150	HYDRAULIC HOSE - FABRICATE	1		X	X	
9	AT304151	HYDRAULIC HOSE - FABRICATE	1		X	X	
10	19H3700	CAP SCREW	6		X	X	1" X 2"
11	AT303325	SPRING LOCKING PIN	1		X	X	
	AT303536	SEAL KIT	1		X	X	
12	AT303600	SWITCH	1		X	X	
13	T42598	SHIM	2		X	X	
14	T70438	SHIM	3		X	X	

BLADE IMPACT SYSTEM

T204683 -UN-19NOV04

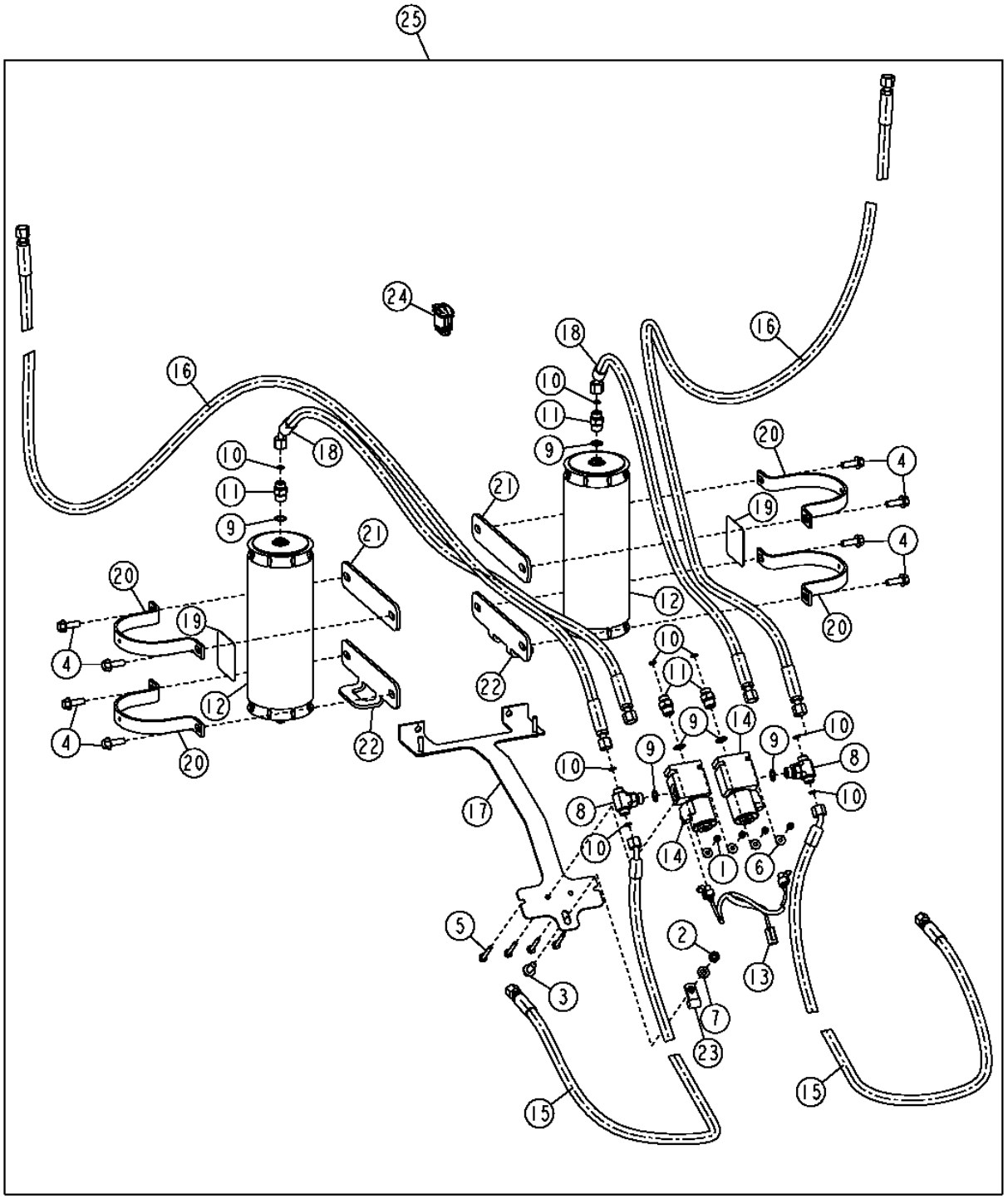

T204683

BLADE IMPACT SYSTEM

KEY	PART NO.	PART NAME	QTY	SERIAL NO.	770D	772D	REMARKS
1	14M7272	NUT	4		X	X	M6
2	14M7274	NUT	2		X	X	M10
3	19M7785	SCREW	1		X	X	M10 X 25
4	19M7786	SCREW	8		X	X	M10 X 30
5	19M8321	SCREW	4		X	X	M6 X 45
6	24M7139	WASHER	4		X	X	
7	24M7239	WASHER	1		X	X	
8	38H1054	TEE FITTING	2		X	X	
9	R26375	O-RING	6		X	X	
10	T77613	O-RING	6		X	X	
11	38H1171	ADAPTER	4		X	X	
12	AT196351	HYDRAULIC ACCUMULATOR	2		X	X	
	AT196760	KIT	2		X	X	(ACCUMULATOR GAS VALVE-NOT ILLUSTRATED)
13	AT305055	WIRING HARNESS	1		X	X	(BLADE IMPACT VALVE WIRING HARNESS)
14	AT302918	SOLENOID VALVE	2		X	X	(COMPONENTS LISTED ON SEPARATE PAGE)
15	AT306340	HYDRAULIC HOSE - FABRICATE	2		X	X	
16	AT306341	HYDRAULIC HOSE - FABRICATE	2		X	X	
17	AT312997	BRACKET	1		X	X	
18	AT315980	HYDRAULIC HOSE - FABRICATE	2		X	X	
19	T164124	LABEL	2		X	X	(ENGLISH)
	T164128	LABEL	2		X	X	(FRENCH)
	T164129	LABEL	2		X	X	(SPANISH)
20	T166761	CLAMP	4		X	X	
21	T203984	PLATE	2		X	X	
22	T211465	PLATE	2		X	X	
23	T28862	CLAMP	1		X	X	
24	AT305054	TOGGLE/ROCKER SWITCH	1		X	X	
25	**AT315881**	**KIT**	**1**		**X**	**X**	**(WHOLEGOODS)(BLADE IMPACT SYSTEM)**

BLADE IMPACT VALVE

T202312 -UN-01SEP04

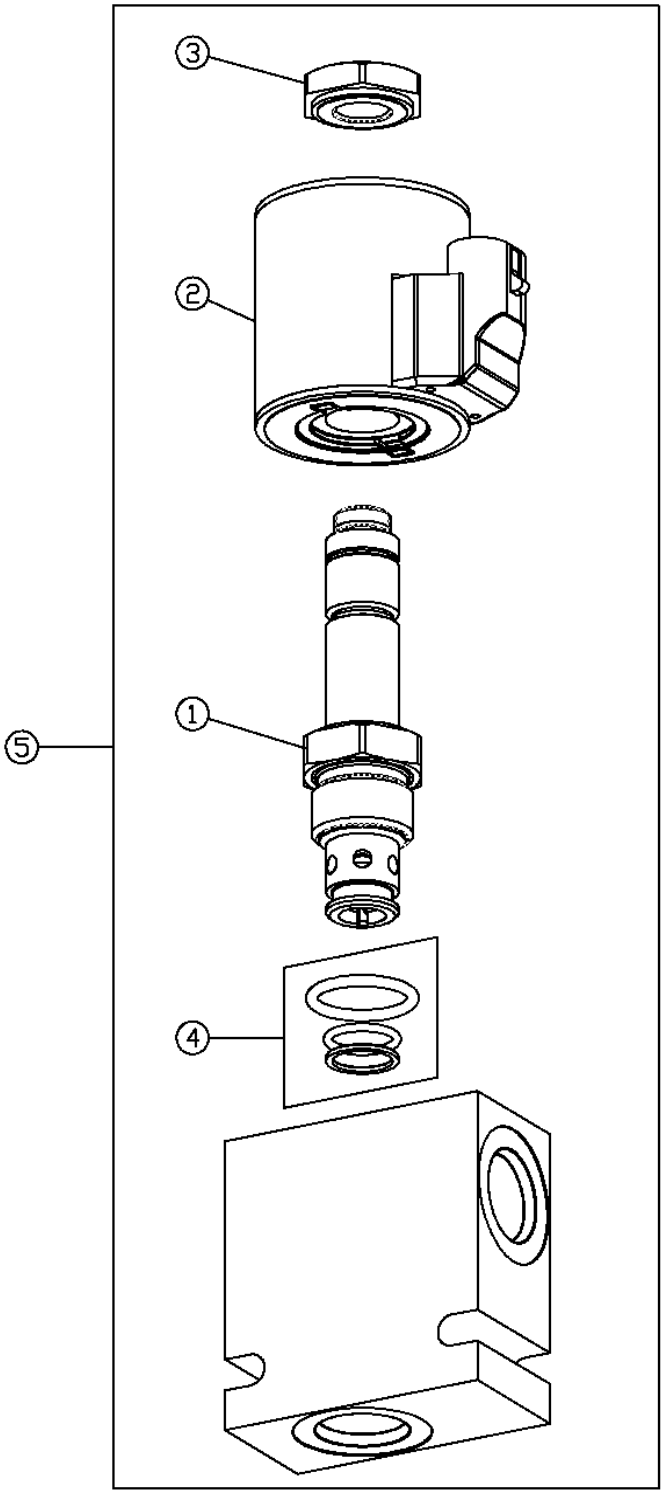

BLADE IMPACT VALVE

KEY	PART NO.	PART NAME	QTY	SERIAL NO.	770D	772D	REMARKS
1	AT302919	SOLENOID VALVE	1		X	X	
2	AT224703	SOLENOID VALVE COIL	1		X	X	
3	T181306	NUT	1		X	X	
4	AT224864	SEAL KIT	1		X	X	
5	AT302918	SOLENOID VALVE	2		X	X	(BLADE IMPACT VALVE)

BLADE TILT AND SLIDE CYLINDER HYDRAULIC HOSES

T202729 -UN-19OCT04

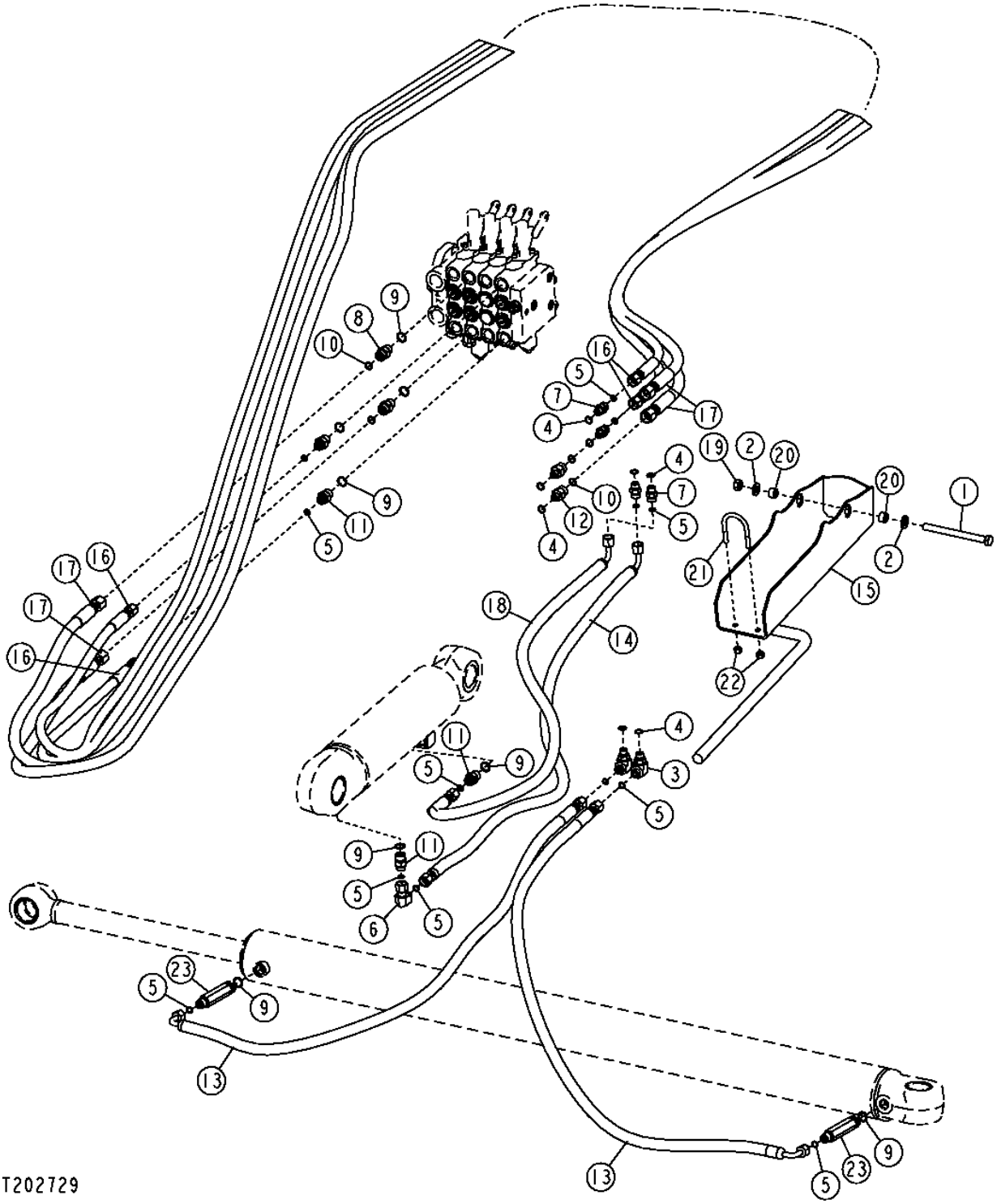

BLADE TILT AND SLIDE CYLINDER HYDRAULIC HOSES

KEY	PART NO.	PART NAME	QTY	SERIAL NO.	770D	772D	REMARKS
1	19H3136	CAP SCREW	1		X	X	1/2" X 5-3/4"
2	24M7240	WASHER	2		X	X	
3	38H1004	ELBOW FITTING	2		X	X	
4	R26448	O-RING	8		X	X	
5	T77613	O-RING	13		X	X	
6	38H1094	ELBOW FITTING	1		X	X	
7	38H1160	ADAPTER	4		X	X	
8	38H1161	ADAPTER	2		X	X	
9	R26375	O-RING	8		X	X	
10	T77857	O-RING	4		X	X	
11	38H1171	ADAPTER	4		X	X	
12	38H1173	ADAPTER	2		X	X	
13	AT166150	HYDRAULIC HOSE - FABRICATE	2		X	X	
14	AT179875	HYDRAULIC HOSE - FABRICATE	1		X	X	
15	AT304373	GUARD	1		X	X	
16	AT306446	HYDRAULIC HOSE - FABRICATE	2		X	X	
17	AT307845	HYDRAULIC HOSE - FABRICATE	2		X	X	
18	AT309961	HYDRAULIC HOSE - FABRICATE	1		X	X	
19	K40014	LOCK NUT	1		X	X	
20	M40509	SPACER	2		X	X	
21	T151806	U-BOLT	1		X	X	
22	T16464	LOCK NUT	2		X	X	
23	T82612	ADAPTER	2		X	X	

CIRCLE ROTATE MOTOR HYDRAULIC HOSES

T202731 -UN-08SEP04

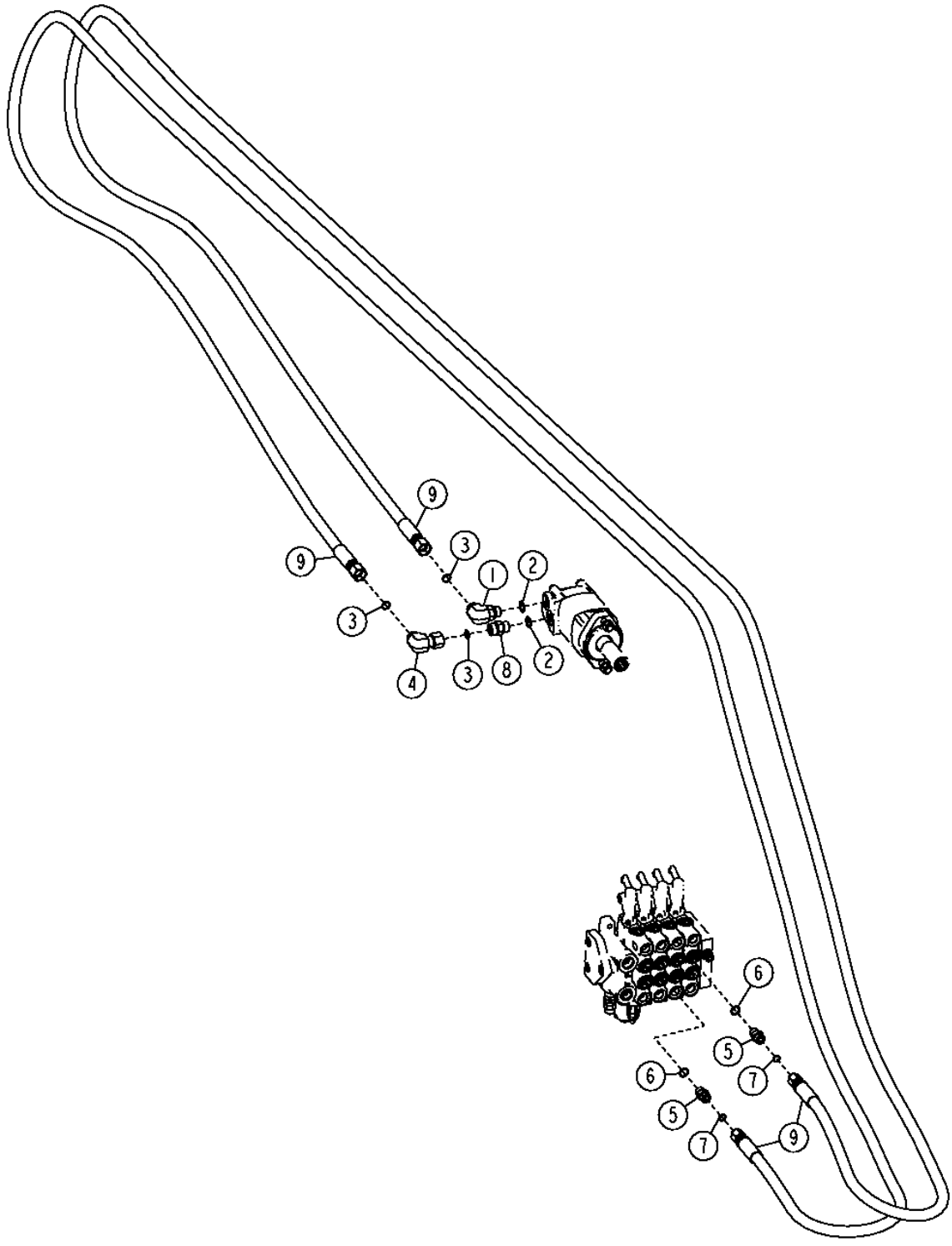

CIRCLE ROTATE MOTOR HYDRAULIC HOSES

KEY	PART NO.	PART NAME	QTY	SERIAL NO.	770D	772D	REMARKS
1	38H1006	ELBOW FITTING	1		X	X	
2	R26906	O-RING	2		X	X	
3	T77932	O-RING	3		X	X	
4	38H1096	ELBOW FITTING	1		X	X	
5	38H1161	ADAPTER	2		X	X	
6	R26375	O-RING	2		X	X	
7	T77857	O-RING	2		X	X	
8	38H1162	ADAPTER	1		X	X	
9	AT304862	HYDRAULIC HOSE - FABRICATE	2		X	X	

CIRCLE SIDESHIFT CYLINDER HYDRAULIC HOSES

T202733 -UN-07SEP04

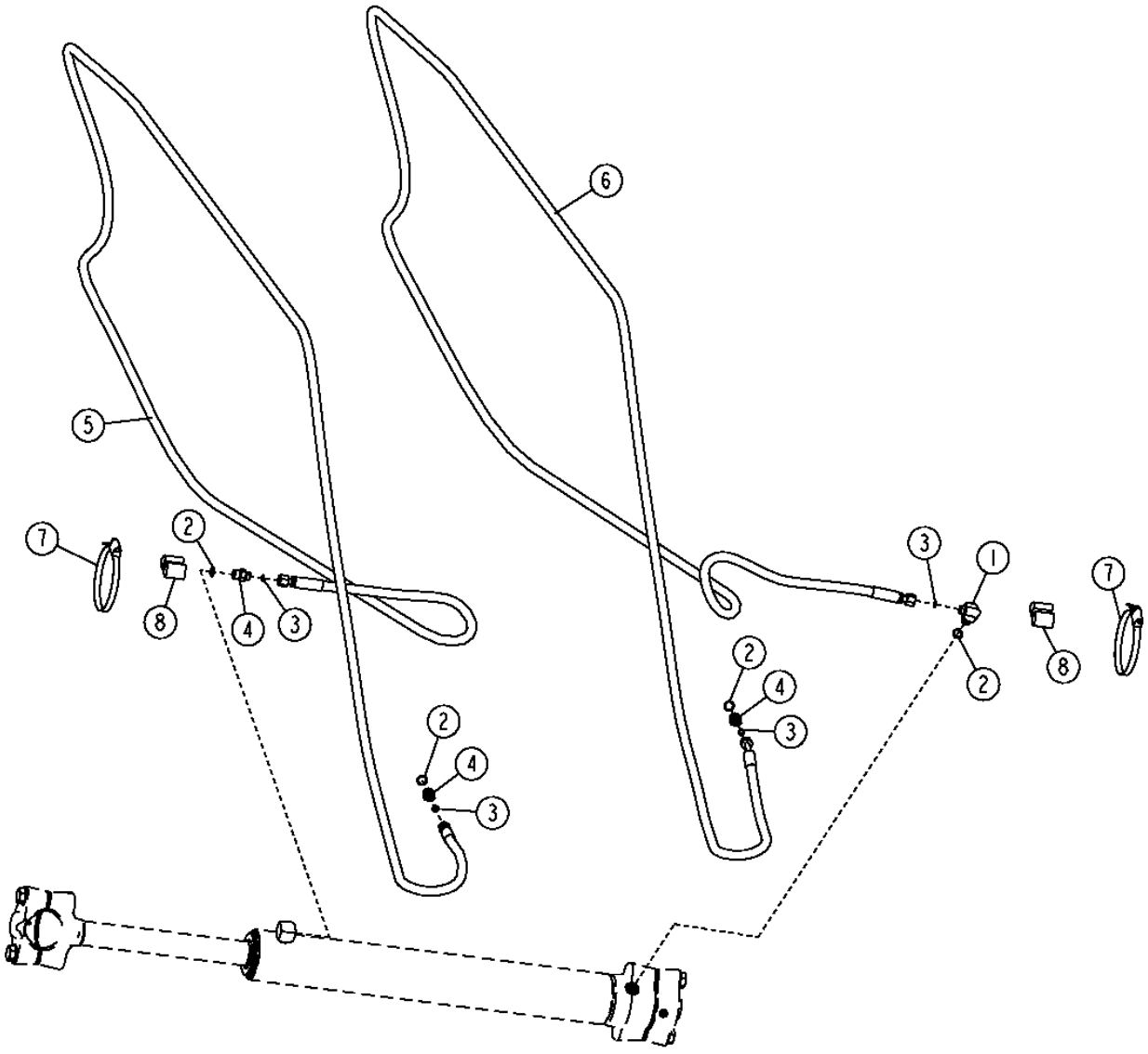

T202733

CIRCLE SIDESHIFT CYLINDER HYDRAULIC HOSES

KEY	PART NO.	PART NAME	QTY	SERIAL NO.	772D	772D	REMARKS
1	38H1010	ELBOW FITTING	1		X	X	
2	R26375	O-RING	4		X	X	
3	T77613	O-RING	4		X	X	
4	38H1171	ADAPTER	3		X	X	
5	AT305548	HYDRAULIC HOSE - FABRICATE	1		X	X	
6	AT305769	HYDRAULIC HOSE - FABRICATE	1		X	X	
7	C16054	CLAMP	2		X	X	
8	T105773	GUIDE	3		X	X	

FRONT MOUNTED SCARIFIER

T204191 -UN-19NOV04

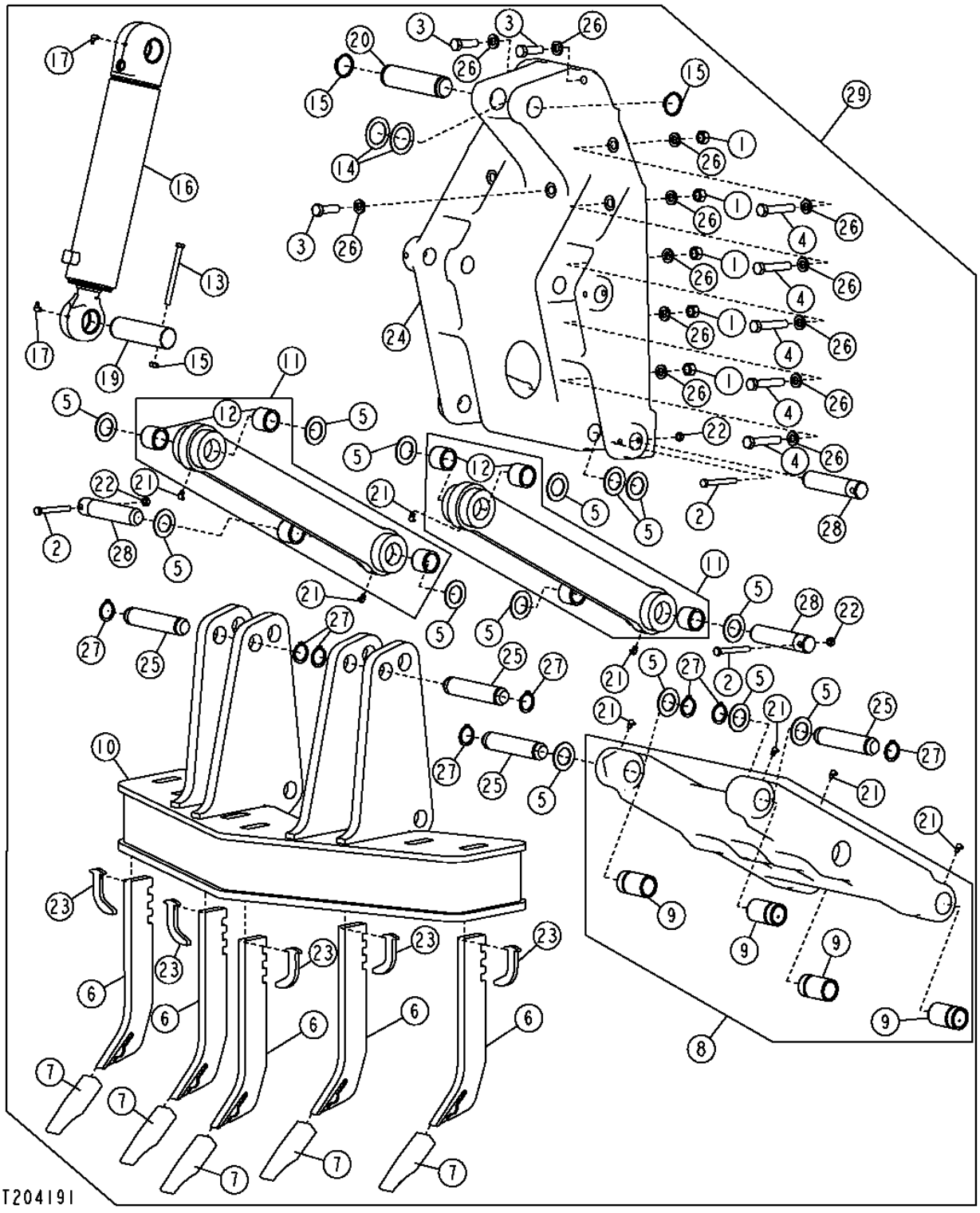

THIS PARTS LISTING IS CONTINUED

FRONT MOUNTED SCARIFIER

KEY	PART NO.	PART NAME	QTY	SERIAL NO.	770D	772D	REMARKS
1	14H1058	NUT	10		X	X	3/4"
2	19H3586	CAP SCREW	4		X	X	1/2" X 4-1/4", (WHOLEGOODS)
3	19H2411	CAP SCREW	3		X	X	3/4" X 2-1/2"
4	19H3196	CAP SCREW	10		X	X	3/4" X 4"
5	24H1571	WASHER	16		X	X	
6	T114792	SHANK	1		X	X	
7	T6Y5230	TOOTH	1		X	X	
8	AT162731	SCARIFIER BOOM	1		X	X	
9	T59506	BUSHING	4		X	X	
10	AT168327	SCARIFIER ATTACHMENT	1		X	X	
11	AT302889	LINK	2		X	X	
12	T25875	BUSHING	4		X	X	
13	19H3535	CAP SCREW	1		X	X	1/2" X 6"
14	24H1679	WASHER	2		X	X	
15	40M7066	SNAP RING	2		X	X	
16	AH212650	HYDRAULIC CYLINDER	1		X	X	(COMPONENTS ON SEPARATE PAGE)
17	JD7799	LUBRICATION FITTING	2		X	X	
19	T125945	PIN FASTENER	1		X	X	
20	T142485	PIN	1		X	X	
21	JD7781	LUBRICATION FITTING	8		X	X	
22	K40014	LOCK NUT	4		X	X	
23	T104223	RETAINER	5		X	X	
24	T147700	BRACKET	1		X	X	
25	T152047	PIN	4		X	X	
26	T17776	WASHER	23		X	X	
27	U12167	SNAP RING	8		X	X	
28	U41528	PIN FASTENER	1		X	X	
29	**AT317749**	**KIT**	**1**		**X**	**X**	**(WHOLEGOODS) (FRONT MOUNTED SCARIFIER KIT)**

SCARIFIER CYLINDER

T204186 -UN-10NOV04

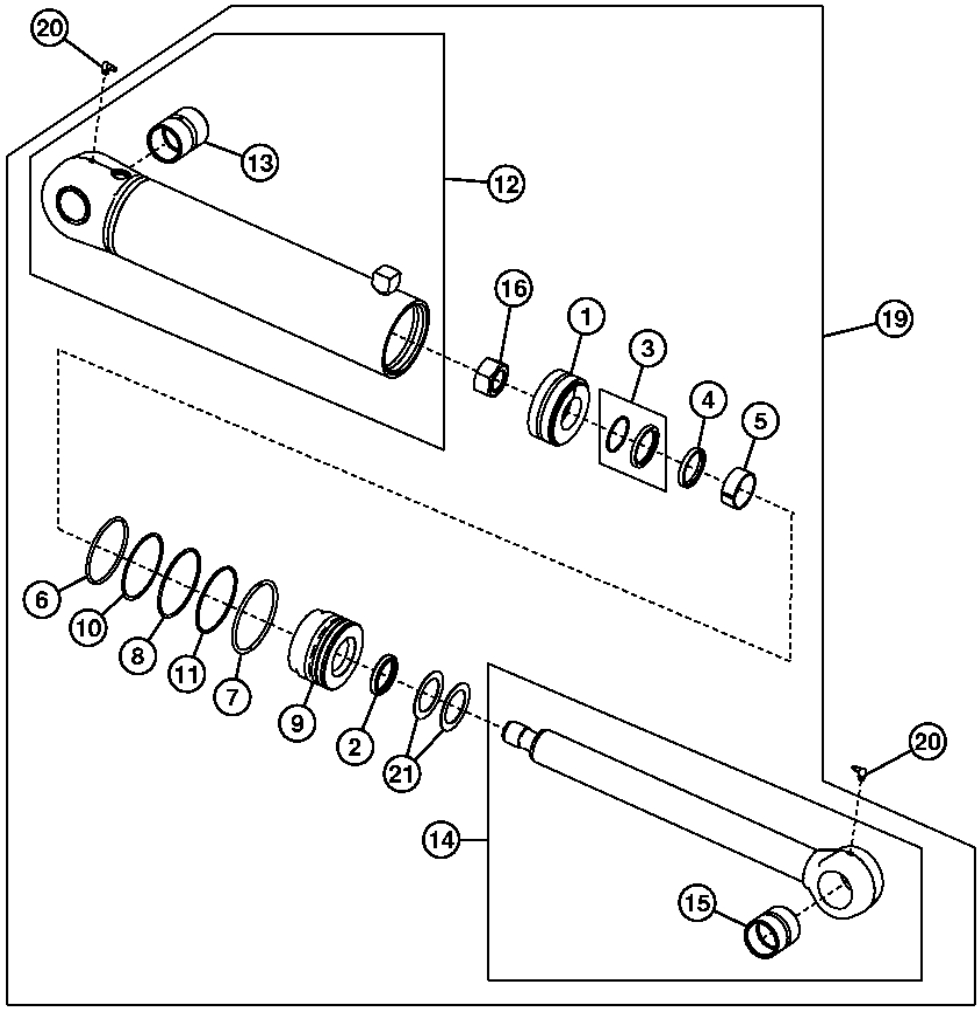

18 2,3,4,5,17

T204186

SCARIFIER CYLINDER

KEY	PART NO.	PART NAME	QTY	SERIAL NO.	770D	772D	REMARKS
1	AH168884	PISTON	1		X	X	
2	AH146558	SEAL	1		X	X	
3	AH146562	SEAL	1		X	X	
4	H152204	SEAL	1		X	X	
5	H152795	WEAR RING	1		X	X	
6	R83578	O-RING	1		X	X	
7	H179659	SNAP RING	1		X	X	
8	H180100	SNAP RING	1		X	X	
9	H210841	HYDR. CYLINDER ROD GUIDE	1		X	X	
10	R79001	BACK-UP RING	1		X	X	
11	U10746	O-RING	1		X	X	
12	AH212657	HYDRAULIC CYLINDER BARREL	1		X	X	
13	R82075	BUSHING	1		X	X	
14	.....	ROD	1		X	X	(SUB AH212650)
15	R82076	BUSHING	1		X	X	
16	H170541	LOCK NUT	1		X	X	
17	H155630	SEAL	1		X	X	(WIPER INSTALLATION TOOL)(NOT ILLUSTRATED)
18	AH149814	HYDRAULIC CYLINDER KIT	1		X	X	(ROD SEAL KIT)
19	AH212650	HYDRAULIC CYLINDER	1		X	X	(SCARIFIER CYLINDER)
20	JD7799	LUBRICATION FITTING	2		X	X	
21	24H1697	WASHER	2		X	X	

REAR RIPPER/SCARIFIER AND RIPPER TEETH

T204198 -UN-03DEC04

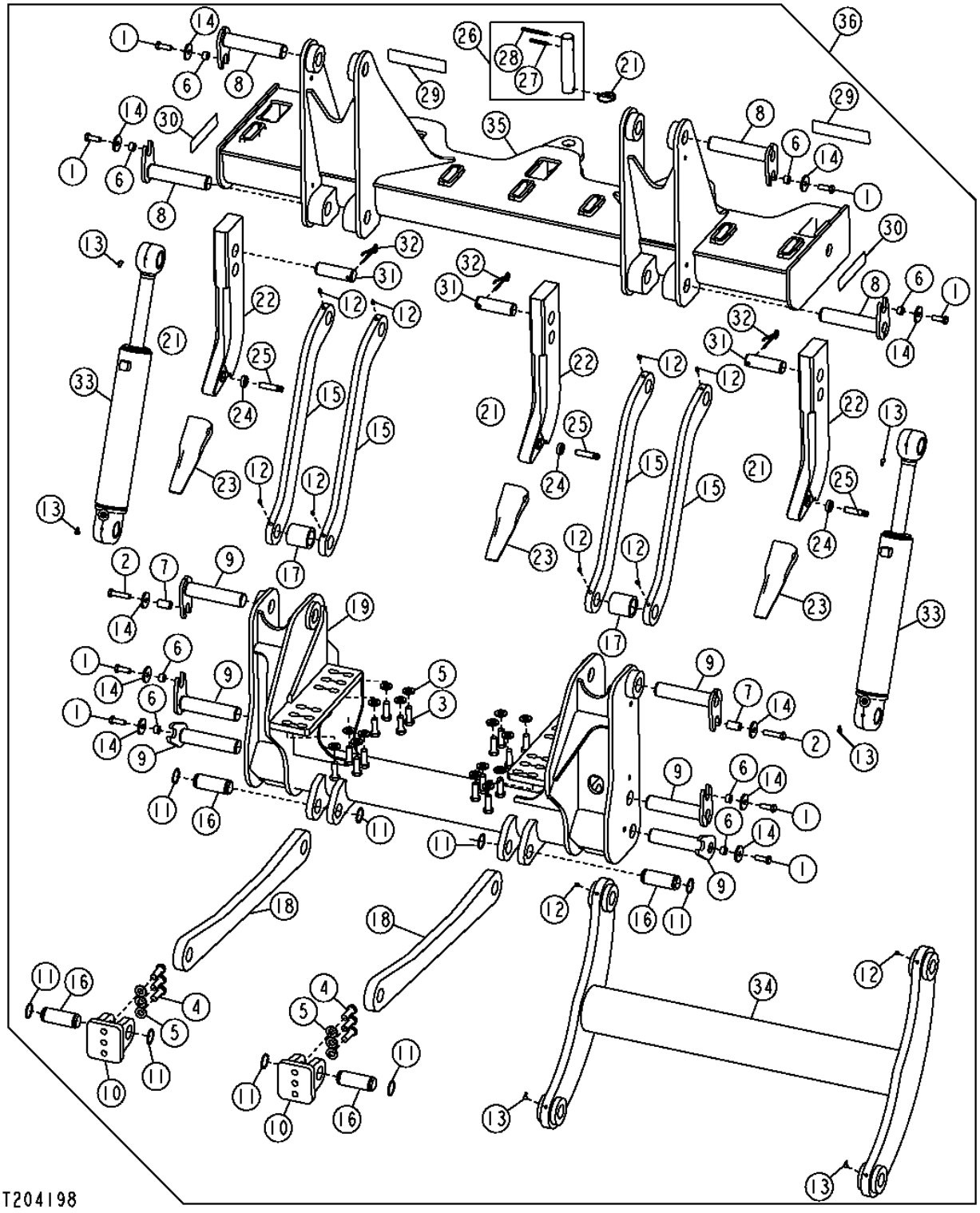

REAR RIPPER/SCARIFIER AND RIPPER TEETH

KEY	PART NO.	PART NAME	QTY	SERIAL NO.	770D	772D	REMARKS
1	19M7489	CAP SCREW	8		X	X	M16 X 45
2	19M7719	CAP SCREW	2		X	X	M16 X 70
3	19M8002	CAP SCREW	16		X	X	M20 X 55
4	19M8224	CAP SCREW	6		X	X	M20 X 60
5	24M7242	WASHER	22		X	X	
6	28H3401	SPACER	8		X	X	
7	28H3415	BUSHING	2		X	X	
8	AT166094	PIN	4		X	X	
9	AT166095	PIN	6		X	X	
10	AT175786	BRACKET	2		X	X	
11	E52817	SNAP RING	8		X	X	
12	JD7798	LUBRICATION FITTING	10		X	X	
13	JD7799	LUBRICATION FITTING	6		X	X	
14	T146246	WASHER	10		X	X	(SUB AH212650)
15	T149818	PLATE	4		X	X	
16	T149822	PIN	4		X	X	
17	T153019	SPACER	2		X	X	(WIPER INSTALLATION TOOL)(NOT ILLUSTRATED)
18	T204905	PLATE	2		X	X	(ROD SEAL KIT)
19	AT306509	FRAME	1		X	X	(SCARIFIER CYLINDER)
21	AR83396	QUICK LOCK PIN	1		X	X	
22	T211749	SHANK	3		X	X	
23	T6Y0309	TOOTH	3		X	X	
24	T8E6359	RETAINER	3		X	X	
25	T9W2668	PIN	3		X	X	
26	AT186723	PIN FASTENER	1		X	X	
27	34H358	SPRING PIN	1		X	X	
28	34H363	SPRING PIN	1		X	X	
29	JD5920	REFLECTOR	2		X	X	
30	JD5921	REFLECTOR	2		X	X	
31	T108521	PIN	3		X	X	
32	T108524	PIN	3		X	X	
33	AH212649	HYDRAULIC CYLINDER	2		X	X	
34	AT306503	SIDEBOOM	1		X	X	
35	**AT160581**	**KIT**	**1**		**X**	**X**	
36	**AT306505**	**KIT**	**1**		**X**	**X**	

REAR RIPPER/SCARIFIER HYDRAULIC CYLINDER

T201463 -UN-06JUL04

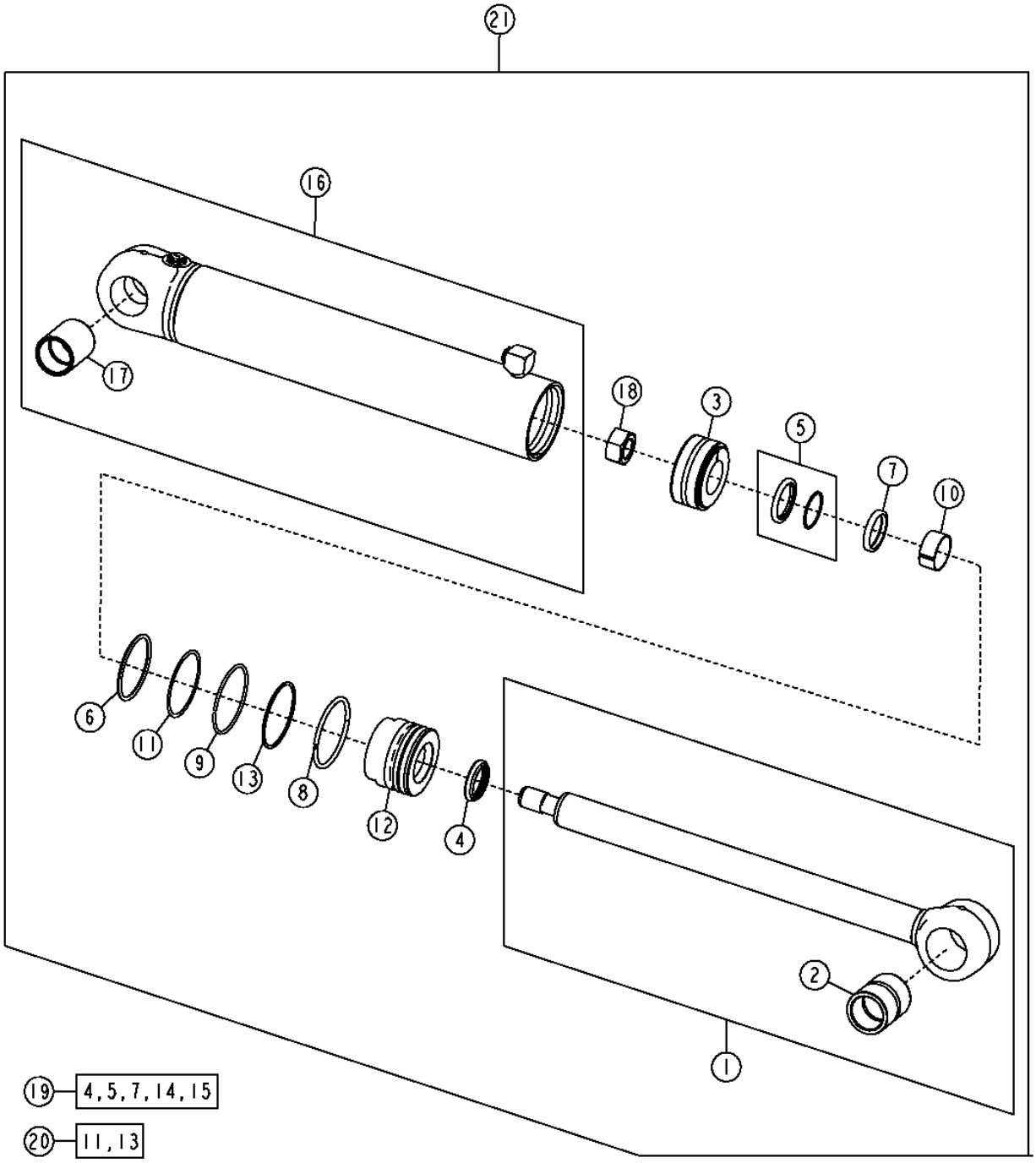

REAR RIPPER/SCARIFIER HYDRAULIC CYLINDER

KEY	PART NO.	PART NAME	QTY	SERIAL NO.	770D	772D	REMARKS
1	AH144879	HYDRAULIC CYLINDER ROD	1		X	X	
2	R81971	BUSHING	1		X	X	
3	AH205062	PISTON	1		X	X	
4	AH146557	SEAL	1		X	X	
5	AH146561	SEAL	1		X	X	
6	F950R	O-RING	1		X	X	
7	H152203	SEAL	1		X	X	
8	H180080	SNAP RING	1		X	X	
9	H180094	SNAP RING	1		X	X	
10	H208987	WEAR RING	1		X	X	
11	R81862	BACK-UP RING	1		X	X	
12	H208995	HYDR. CYLINDER ROD GUIDE	1		X	X	
13	.....	O-RING	1		X	X	(SUB AH212102)
14	H154856	WEAR RING	1		X	X	(NOT ILLUSTRATED)
15	H208987	WEAR RING	1		X	X	
16	AH212656	HYDRAULIC CYLINDER BARREL	1		X	X	
17	R81968	BUSHING	1		X	X	
18	H170539	NUT	1		X	X	
19	AH210484	HYDRAULIC CYLINDER KIT	1		X	X	(ROD SEAL KIT)
20	AH212102	HYDRAULIC CYLINDER KIT	1		X	X	(BORE SEAL KIT)
21	AH212649	HYDRAULIC CYLINDER	1		X	X	(RIPPER CYLINDER)

REAR SCARIFIER TEETH

T204200 -UN-28OCT04

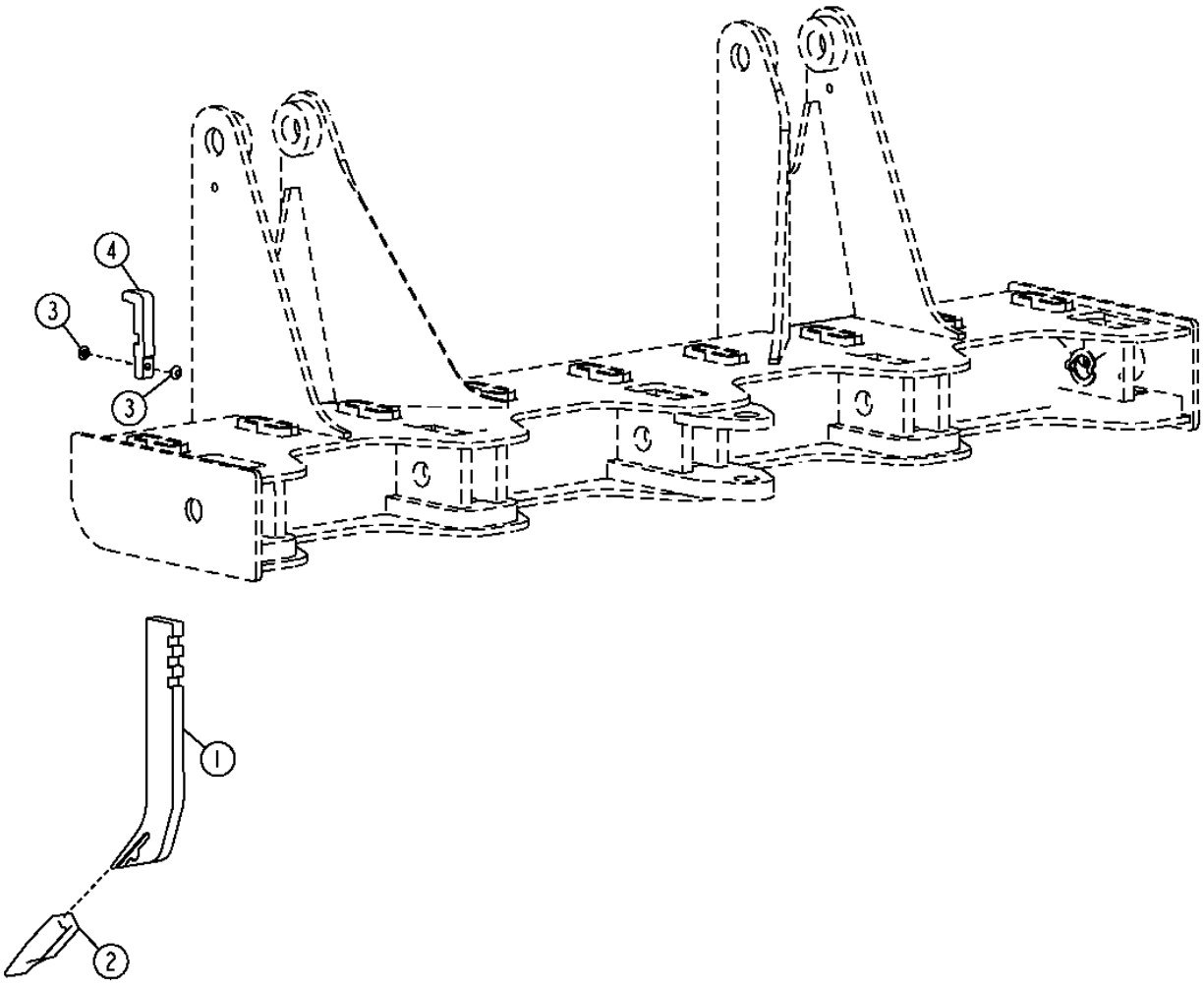

T204200

3F17

REAR SCARIFIER TEETH

KEY	PART NO.	PART NAME	QTY	SERIAL NO.	770D	772D	REMARKS
1	T114792	SHANK	9		X	X	
2	T6Y5230	TOOTH	9		X	X	
3	T150347	PLUG	18		X	X	
4	T204018	RETAINER	6		X	X	

FRONT MOUNTED EQUIPMENT HYDRAULIC HOSES

T202723 -UN-07SEP04

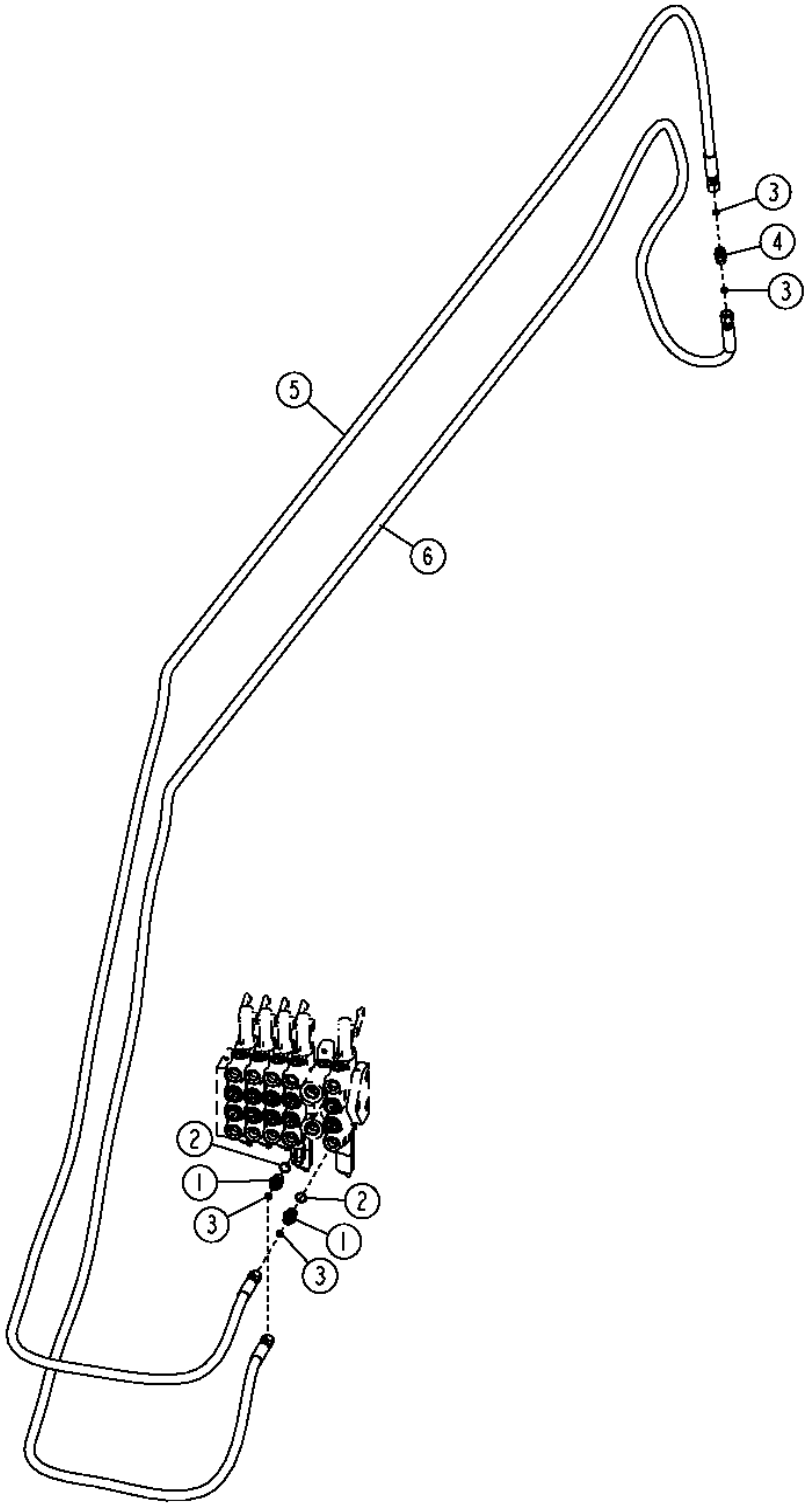

T202723

FRONT MOUNTED EQUIPMENT HYDRAULIC HOSES

KEY	PART NO.	PART NAME	QTY	SERIAL NO.	770D	772D	REMARKS
1	38H1171	ADAPTER	2		X	X	
2	R26375	O-RING	2		X	X	
3	T77613	O-RING	4		X	X	
4	38H1278	UNION FITTING	1		X	X	
5	AT305770	HYDRAULIC HOSE - FABRICATE	1		X	X	
6	AT305771	HYDRAULIC HOSE - FABRICATE	1		X	X	

FRONT SCARIFIER HYDRAULIC HOSES

T203169 -UN-19NOV04

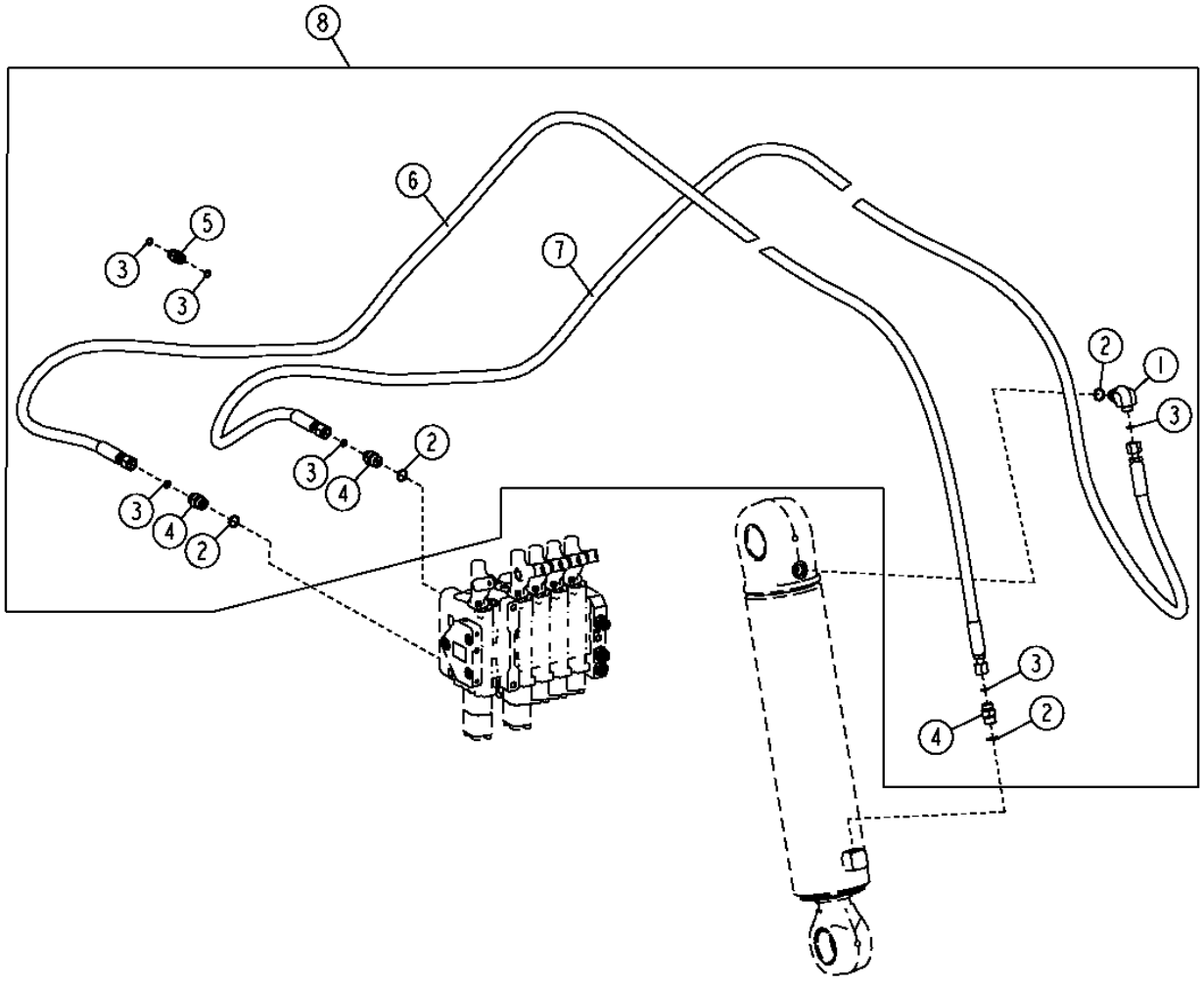

T203169

FRONT SCARIFIER HYDRAULIC HOSES

KEY	PART NO.	PART NAME	QTY	SERIAL NO.	770D	772D	REMARKS
1	38H1010	ELBOW FITTING	1		X	X	
2	R26375	O-RING	2		X	X	
3	T77613	O-RING	3		X	X	
4	38H1171	ADAPTER	3		X	X	
5	38H1278	UNION FITTING	1		X	X	
6	AT305770	HYDRAULIC HOSE - FABRICATE	1		X	X	
7	AT305771	HYDRAULIC HOSE - FABRICATE	1		X	X	
8	**AT318528**	**KIT**	**1**		**X**	**X**	**(WHOLEGOODS) (FRONT SCARIFIER HYDRAULIC HOSE KIT)**

REAR RIPPER/REAR SCARIFIER HYDRAULIC HOSES

T204377 -UN-22NOV04

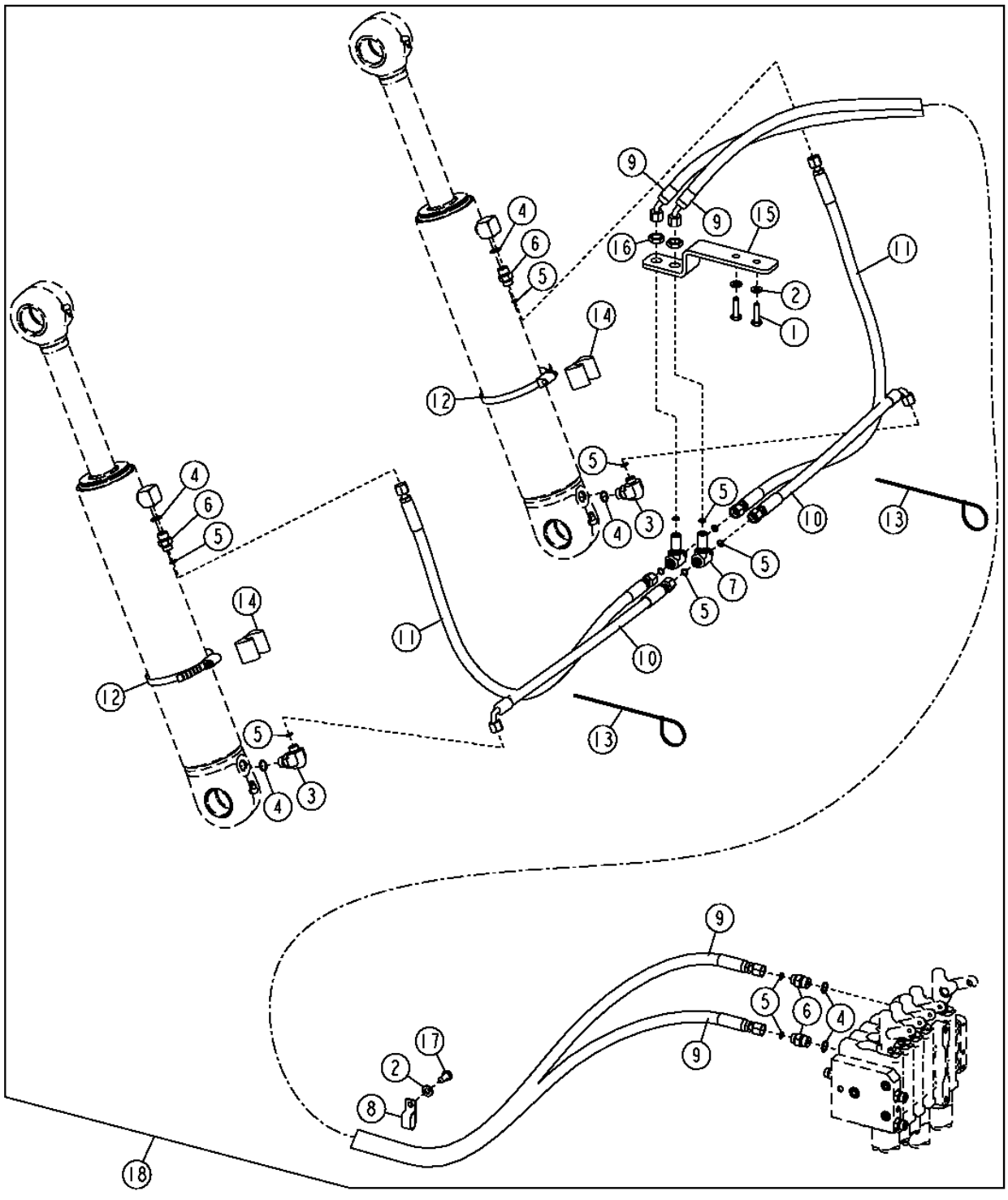

REAR RIPPER/REAR SCARIFIER HYDRAULIC HOSES

KEY	PART NO.	PART NAME	QTY	SERIAL NO.	770D	772D	REMARKS
1	19M7550	CAP SCREW	2		X	X	M10 X 35
2	24M7239	WASHER	2		X	X	
3	38H1010	ELBOW FITTING	2		X	X	
4	R26375	O-RING	6		X	X	
5	T77613	O-RING	12		X	X	
6	38H1171	ADAPTER	4		X	X	
7	38H1291	TEE FITTING	2		X	X	
8	AH97280	CLIP	1		X	X	
9	AT306388	HYDRAULIC HOSE - FABRICATE	2		X	X	
10	AT307458	HYDRAULIC HOSE - FABRICATE	2		X	X	
11	AT307459	HYDRAULIC HOSE - FABRICATE	2		X	X	
12	C16054	CLAMP	2		X	X	
13	H77698	TIE BAND	2		X	X	
14	T105773	GUIDE	2		X	X	
15	T205713	BRACKET	1		X	X	
16	T81029	NUT	2		X	X	
17	19M7938	CAP SCREW	1		X	X	M10 X 20
18	**AT318529**	**KIT**	**1**		**X**	**X**	**(WHOLEGOODS)(RIPPER/REAR SCARIFIER PLUMBING)**

MEMORANDA

NUMERICAL INDEX

PART NO.	GRID	KEY	PAGE
AA31281	1F19	19	0341 - 3
AE53905	2B18	19	0512 - 3
AH125760	1C16	8	0210 - 8
AH125760	1F4	14	0260 - 37
AH136453	3E14	17	3460 - 11
AH139128	2C20	1	0960 - 3
AH140072	2D2	6	0960 - 9
AH141183	3E10	1	3460 - 7
AH141183	3E12	1	3460 - 9
AH144879	3F15	1	4240 - 9
AH146556	3E14	1	3460 - 11
AH146557	2C20	3	0960 - 3
AH146557	2C22	13	0960 - 5
AH146557	2C24	12	0960 - 7
AH146557	3E10	2	3460 - 7
AH146557	3E12	2	3460 - 9
AH146557	3E16	2	3460 - 13
AH146557	3F15	4	4240 - 9
AH146558	3F11	2	4240 - 5
AH146560	3E14	2	3460 - 11
AH146561	2C20	10	0960 - 3
AH146561	2C22	22	0960 - 5
AH146561	2C24	20	0960 - 7
AH146561	3E16	3	3460 - 13
AH146561	3F15	5	4240 - 9
AH146562	3F11	3	4240 - 5
AH147976	2D2	7	0960 - 9
AH149813	3E14	18	3460 - 11
AH149814	3F11	18	4240 - 5
AH150452	2D2	8	0960 - 9
AH156145	3D6	11	2164 - 5
AH161589	2D2	20	0960 - 9
AH164325	2D2	21	0960 - 9
AH168200	2C22	12	0960 - 5
AH168884	3F11	1	4240 - 5
AH205062	2C20	11	0960 - 3
AH205062	2C22	23	0960 - 5
AH205062	2C24	21	0960 - 7
AH205062	3E16	1	3460 - 13
AH205062	3F15	3	4240 - 9
AH208859	2C22	5	0960 - 5
AH208873	3E10	20	3460 - 7
AH208875	3E12	20	3460 - 9
AH209121	3B9	6	2160 - 7
AH210184	3E10	9	3460 - 7
AH210184	3E10	10	3460 - 7
AH210184	3E12	9	3460 - 9
AH210184	3E12	10	3460 - 9
AH210484	2C20	16	0960 - 3
AH210484	2C22	27	0960 - 5
AH210484	2C24	27	0960 - 7
AH210484	3E10	18	3460 - 7
AH210484	3E12	18	3460 - 9
AH210484	3E16	20	3460 - 13
AH210484	3F15	19	4240 - 9
AH212097	3E10	11	3460 - 7
AH212097	3E10	19	3460 - 7
AH212097	3E12	11	3460 - 9
AH212097	3E12	19	3460 - 9
AH212097	3E14	8	3460 - 11
AH212097	3E14	19	3460 - 11
AH212101	2C20	14	0960 - 3
AH212102	2C20	17	0960 - 3
AH212102	2C22	15	0960 - 5
AH212102	2C22	17	0960 - 5
AH212102	2C22	28	0960 - 5
AH212102	2C24	15	0960 - 7
AH212102	2C24	28	0960 - 7
AH212102	3E16	10	3460 - 13
AH212102	3E16	21	3460 - 13
AH212102	3F15	13	4240 - 9
AH212102	3F15	20	4240 - 9
AH212473	2C24	25	0960 - 7
AH212494	2C20	20	0960 - 3
AH212500	2C22	25	0960 - 5
AH212502	3E12	12	3460 - 9
AH212503	3E10	12	3460 - 7
AH212545	2C24	23	0960 - 7
AH212649	3F13	33	4240 - 7
AH212649	3F15	21	4240 - 9
AH212650	3F9	16	4240 - 3
AH212650	3F11	14	4240 - 5
AH212650	3F11	19	4240 - 5
AH212650	3F13	14	4240 - 7
AH212656	3F15	16	4240 - 9
AH212657	3F11	12	4240 - 5
AH212811	3E16	23	3460 - 13
AH212812	3E16	12	3460 - 13
AH212900	3E14	20	3460 - 11
AH212901	3E14	12	3460 - 11
AH215390	2D2	3	0960 - 9
AH215391	2D2	19	0960 - 9
AH61472	2D24	9	1111 - 5
AH64349	3C24	38	2163 - 7
AH64349	3D2	38	2163 - 9
AH75162	1E16	11	0260 - 25
AH75162	1E20	11	0260 - 29
AH77714	1F2	10	0260 - 35
AH77714	1F11	3	0315 - 3
AH77714	1F19	5	0341 - 3
AH77714	2B14	46	0510 - 7
AH77714	3C24	59	2163 - 7
AH77869	2E22	8	1671 - 3
AH77869	2J24	2	1830 - 3
AH89486	1I25	6	0416 - 3
AH89557	2B14	6	0510 - 7
AH89557	2G2	9	1674 - 15
AH89557	3D6	19	2164 - 5
AH97280	3C18	9	2163 - 3
AH97280	3F23	8	4260 - 11
AL114275	2H22	1	1810 - 9
AL153660	2H18	4	1810 - 5
AL153660	2H20	3	1810 - 7
AL153661	2H18	4	1810 - 5
AL153661	2H20	3	1810 - 7
AL58295	2G6	3	1674 - 19
AL76568	2K14	8	1830 - 19
AN208022	1D25	3	0260 - 9
AN208024	1E2	14	0260 - 11
AR21836	1F19	6	0341 - 3
AR21836	2B14	7	0510 - 7
AR21836	2D19	5	1060 - 5
AR21837	2E10	2	1369 - 3
AR21839	1E12	4	0260 - 21
AR21839	1E20	12	0260 - 29
AR21839	2B14	8	0510 - 7
AR21839	2B24	7	0520 - 3
AR21841	2B14	9	0510 - 7
AR21842	2B6	9	0505 - 5
AR40418	2B14	11	0510 - 7
AR43705	2C4	2	0530 - 3
AR44361	2B24	14	0520 - 3
AR48675	1J4	4	0418 - 3
AR49025	1H22	1	0402 - 6
AR55394	1J5	13	0419 - 1
AR58952	1J18	22	0452 - 3
AR61533	1H25	17	0404 - 3
AR61533	1J16	6	0433 - 3
AR61589	1H25	19	0404 - 3
AR61589	1J16	8	0433 - 3
AR62936	2K4	16	1830 - 9
AR68167	1J14	4	0433 - 1
AR75527	1C9	25	0201 - 5
AR77962	1I22	59	0413 - 5
AR83396	2E17	4	1511 - 3
AR83396	3F13	21	4240 - 7
AR83434	2K6	17	1830 - 11
AR94517	1G22	9	0350 - 29
AR98850	1H23	9	0403 - 1
AT101224	1C23	2	0230 - 3
AT101224	1D5	7	0240 - 3
AT101565	1F2	11	0260 - 35
AT101565	3D6	13	2164 - 5
AT103567	1B7	2	0110 - 7
AT105608	1B9	2	0110 - 9
AT106154	2G14	5	1674 - 27
AT106397	2J20	1	1821 - 9
AT106413	2H18	6	1810 - 5
AT107738	2C6	4	0540 - 3
AT112769	2E14	1	1370 - 3
AT116970	2H18	5	1810 - 5
AT116970	2H20	4	1810 - 7
AT120461	2L13	5	2004 - 5
AT124317	2B16	7	0510 - 11
AT124317	2D19	6	1060 - 5
AT125801	2J20	2	1821 - 9
AT125805	2J20	4	1821 - 9
AT125829	2J20	6	1821 - 9
AT135758	2F10	9	1673 - 11
AT135758	2F12	6	1673 - 13
AT135758	2F14	8	1673 - 15
AT13740	1H25	4	0404 - 3
AT13740	1J2	3	0417 - 3
AT139434	3C14	7	2160 - 43
AT145341	2B4	3	0505 - 3
AT145341	2F20	9	1674 - 7
AT145650	1E16	13	0260 - 25
AT145650	1E20	12	0260 - 29
AT147011	3C14	2	2160 - 43
AT150024	2D17	6	1060 - 3
AT150112	2D17	8	1060 - 3
AT152180	1I7	7	0407 - 3
AT157226	2L5	6	2002 - 3
AT157226	2L7	4	2002 - 5
AT158292	2H8	6	1747 - 3
AT160480	2G14	6	1674 - 27
AT160581	3F13	35	4240 - 7
AT161176	2C6	5	0540 - 3
AT161638	3D6	2	2164 - 5
AT162731	3F9	8	4240 - 3
AT162848	2K12	13	1830 - 17
AT163872	2K10	6	1830 - 15
AT164240	2H8	1	1747 - 3
AT165288	2H24	6	1810 - 11
AT166094	3F13	8	4240 - 7
AT166095	3F13	9	4240 - 7
AT166150	3F2	13	3460 - 23
AT168327	3F9	10	4240 - 3
AT168543	2K10	12	1830 - 15
AT169451	3E2	1	3450 - 3
AT169451	3E4	1	3450 - 5

NUMERICAL INDEX - CONTINUED

PART NO.	GRID	KEY	PAGE
AT169452	3E2	2	3450 - 3
AT169452	3E4	2	3450 - 5
AT169864	2D2	22	0960 - 9
AT169874	1C25	34	0230 - 5
AT169875	1C25	14	0230 - 5
AT169948	3E6	3	3460 - 3
AT169949	3E6	3	3460 - 3
AT170005	2H24	7	1810 - 11
AT170854	2C6	10	0540 - 3
AT171539	2B6	10	0505 - 5
AT173174	1E2	8	0260 - 11
AT173192	2H18	9	1810 - 5
AT173192	2H20	5	1810 - 7
AT173192	2H22	3	1810 - 9
AT173313	2J16	2	1821 - 5
AT173313	2J16	17	1821 - 5
AT173313	2J16	18	1821 - 5
AT173313	2J16	19	1821 - 5
AT173314	2J16	3	1821 - 5
AT173315	2J16	4	1821 - 5
AT173321	2J16	11	1821 - 5
AT173321	2J16	12	1821 - 5
AT173321	2J16	29	1821 - 5
AT173321	2J16	30	1821 - 5
AT173321	2J16	31	1821 - 5
AT173321	2J16	40	1821 - 5
AT173610	2B14	12	0510 - 7
AT173971	2G21	15	1740 - 3
AT174935	1F13	10	0315 - 5
AT175436	2J20	7	1821 - 9
AT175548	2E22	9	1671 - 3
AT175549	2E22	10	1671 - 3
AT175550	2E22	11	1671 - 3
AT175786	3F13	10	4240 - 7
AT175953	2C24	6	0960 - 7
AT175957	3C20	9	2163 - 5
AT175957	3C22	9	2163 - 5B
AT176011	2B16	8	0510 - 11
AT176384	3D6	14	2164 - 5
AT177142	2D24	10	1111 - 5
AT177950	3D6	3	2164 - 5
AT178542	2B24	15	0520 - 3
AT178586	2C6	3	0540 - 3
AT179099	1B9	2	0110 - 9
AT179249	1B17	2	0110 - 17
AT179875	3F2	14	3460 - 23
AT180119	1H7	18	0360 - 3
AT180126	2J18	30	1821 - 7
AT180126	2J20	9	1821 - 9
AT180135	2J20	10	1821 - 9
AT180301	2D4	10	0960 - 11
AT180814	1D25	6	0260 - 9
AT180923	1F13	11	0315 - 5
AT180935	1E10	25	0260 - 19
AT180936	1E10	30	0260 - 19
AT180964	1E10	63	0260 - 19
AT180965	1E8	66	0260 - 17
AT180965	1E10	66	0260 - 19
AT180966	1E8	67	0260 - 17
AT180966	1E10	67	0260 - 19
AT181162	2B14	13	0510 - 7
AT181313	2D17	7	1060 - 3
AT181392	2J18	36	1821 - 7
AT181582	2B6	11	0505 - 5
AT182063	2C4	1	0530 - 3
AT182580	1B5	2	0110 - 5
AT183375	2B24	16	0520 - 3
AT183377	2B24	17	0520 - 3
AT183417	2B6	14	0505 - 5
AT183422	2B6	12	0505 - 5
AT183423	2B6	22	0505 - 5
AT183485	2B6	18	0505 - 5
AT183612	2D24	11	1111 - 5
AT183636	2B24	10	0520 - 3
AT184015	2C2	5	0520 - 5
AT184016	2C2	5	0520 - 5
AT184409	3E4	46	3450 - 5
AT184413	3E4	49	3450 - 5
AT184413	3E4	50	3450 - 5
AT184618	2B4	4	0505 - 3
AT184684	1F13	12	0315 - 5
AT184868	1D25	4	0260 - 9
AT184869	1D25	15	0260 - 9
AT185695	2C8	9	0560 - 3
AT186653	2C18	14	0930 - 3
AT186723	2E17	5	1511 - 3
AT186723	3F13	26	4240 - 7
AT187021	2D17	8	1060 - 3
AT187114	1D13	25	0250 - 5
AT187114	1D23	38	0260 - 7
AT187115	1D13	11	0250 - 5
AT187117	1D11	20	0250 - 3
AT187119	1D11	19	0250 - 3
AT187234	2E17	8	1511 - 3
AT188217	1E20	13	0260 - 29
AT188624	1D19	2	0260 - 3
AT188625	1D19	1	0260 - 3
AT188662	1D23	6	0260 - 7
AT188681	2H22	2	1810 - 9
AT188759	2L3	7	2001 - 3
AT189052	2B24	8	0520 - 3
AT189052	2C2	4	0520 - 5
AT189390	2L9	2	2003 - 3
AT189487	2L9	3	2003 - 3
AT190417	1B11	2	0110 - 11
AT190539	3E2	36	3450 - 3
AT190809	2K12	14	1830 - 17
AT190836	2B6	17	0505 - 5
AT191007	2E22	12	1671 - 3
AT191008	2B4	8	0505 - 3
AT191095	1E24	4	0260 - 33
AT191102	2K6	18	1830 - 11
AT191160	1F2	12	0260 - 35
AT191178	2K8	36	1830 - 13
AT191214	1E4	13	0260 - 13
AT191260	1D2	4	0230 - 7
AT191260	1D7	10	0240 - 5
AT191261	1D2	11	0230 - 7
AT191261	1D7	7	0240 - 5
AT191299	1D2	8	0230 - 7
AT191299	1D7	4	0240 - 5
AT191366	3B5	12	2160 - 3
AT191367	3B5	17	2160 - 3
AT191368	3B5	19	2160 - 3
AT191369	3B5	18	2160 - 3
AT191371	3B5	71	2160 - 3
AT191505	1D21	22	0260 - 5
AT191506	1D21	15	0260 - 5
AT191541	2K19	11	1910 - 5
AT191639	1F4	15	0260 - 37
AT191724	1D21	21	0260 - 5
AT191725	1D21	6	0260 - 5
AT191728	1D21	24	0260 - 5
AT191729	1D21	1	0260 - 5
AT191730	1D21	23	0260 - 5
AT191739	1D2	7	0230 - 7
AT191739	1D7	2	0240 - 5
AT191741	2K12	15	1830 - 17
AT191879	1E20	14	0260 - 29
AT192055	1D25	23	0260 - 9
AT192055	1E2	23	0260 - 11
AT192114	1D21	18	0260 - 5
AT192380	2D4	10	0960 - 11
AT193500	2K8	27	1830 - 13
AT193805	1D7	1	0240 - 5
AT193864	1D11	18	0250 - 3
AT193866	1B13	2	0110 - 13
AT193885	1C23	15	0230 - 3
AT193948	1E16	26	0260 - 25
AT194405	1D5	4	0240 - 3
AT194472	1D19	3	0260 - 3
AT194555	1E4	14	0260 - 13
AT194587	2B18	17	0512 - 3
AT194588	2B18	18	0512 - 3
AT194596	1E2	16	0260 - 11
AT194773	2B18	26	0512 - 3
AT194815	1E4	15	0260 - 13
AT194842	1B15	2	0110 - 15
AT194965	2B18	27	0512 - 3
AT194980	1E20	19	0260 - 29
AT194982	1E20	19	0260 - 29
AT194983	1E20	19	0260 - 29
AT194983	1F6	8	0260 - 39
AT194986	1F6	1	0260 - 39
AT194988	1F6	2	0260 - 39
AT194989	1F6	9	0260 - 39
AT194990	1F6	3	0260 - 39
AT194991	1F6	4	0260 - 39
AT195057	1E6	44	0260 - 15
AT195060	1E10	42	0260 - 19
AT195062	1E6	26	0260 - 15
AT195063	1E6	12	0260 - 15
AT195064	1E10	79	0260 - 19
AT195065	1E8	48	0260 - 17
AT195066	1E8	6	0260 - 17
AT195068	1E8	61	0260 - 17
AT195069	1E10	64	0260 - 19
AT195073	1E10	6	0260 - 19
AT195074	1E10	21	0260 - 19
AT195075	1E10	41	0260 - 19
AT195124	1E10	95	0260 - 19
AT195125	1E8	96	0260 - 17
AT195285	1F4	16	0260 - 37
AT195301	2G14	15	1674 - 27
AT195302	2G14	16	1674 - 27
AT195440	2J18	6	1821 - 7
AT195441	2J14	7	1821 - 3
AT195441	2J18	7	1821 - 7
AT195442	2J14	8	1821 - 3
AT195442	2J18	8	1821 - 7
AT195723	1E2	13	0260 - 11
AT195860	3C14	5	2160 - 43
AT195880	1D9	3	0240 - 7
AT195898	3C14	6	2160 - 43
AT195900	3C14	1	2160 - 43
AT195917	3C12	1	2160 - 41
AT195918	3C12	10	2160 - 41
AT195921	1D25	21	0260 - 9
AT195922	1D25	22	0260 - 9
AT195922	1E2	22	0260 - 11
AT196249	1E12	2	0260 - 21

NUMERICAL INDEX - CONTINUED

PART NO.	GRID	KEY	PAGE
AT196250	1E12	4	0260 - 21
AT196252	1E12	8	0260 - 21
AT196253	1E12	1	0260 - 21
AT196254	1E12	3	0260 - 21
AT196256	1E12	7	0260 - 21
AT196346	3B5	14	2160 - 3
AT196351	3E22	12	3460 - 19
AT196462	1D25	13	0260 - 9
AT196516	2B4	1	0505 - 3
AT196522	2I6	3	1810 - 15
AT196745	1D23	14	0260 - 7
AT196745	1E2	14	0260 - 11
AT196760	3E22	12	3460 - 19
AT196943	3B9	2	2160 - 7
AT197057	3E8	1	3460 - 5
AT197098	1E12	5	0260 - 21
AT197420	3B5	16	2160 - 3
AT197488	1E16	24	0260 - 25
AT197613	1B13	1	0110 - 13
AT197844	1B15	1	0110 - 15
AT197906	3E8	20	3460 - 5
AT197907	3E8	10	3460 - 5
AT197908	3E8	21	3460 - 5
AT197924	3E8	23	3460 - 5
AT198028	1D23	24	0260 - 7
AT198029	1D23	46	0260 - 7
AT198322	1E8	8	0260 - 17
AT198516	1D23	14	0260 - 7
AT198517	1C25	7	0230 - 5
AT199018	1F17	1	0325 - 3
AT199076	3B5	48	2160 - 3
AT199084	1C21	3	0225 - 3
AT199388	2L3	8	2001 - 3
AT199626	1F6	14	0260 - 39
AT199661	1C21	2	0225 - 3
AT199999	1D2	9	0230 - 7
AT202864	2B24	13	0520 - 3
AT203566	2B4	5	0505 - 3
AT206818	2B4	6	0505 - 3
AT206878	2F4	1	1673 - 5
AT207529	2D17	10	1060 - 3
AT208483	2J16	5	1821 - 5
AT208484	2J16	6	1821 - 5
AT208485	2J16	7	1821 - 5
AT208486	2J16	8	1821 - 5
AT208487	2J16	9	1821 - 5
AT208487	2J16	20	1821 - 5
AT208487	2J16	21	1821 - 5
AT208487	2J16	22	1821 - 5
AT208487	2J16	23	1821 - 5
AT208487	2J16	24	1821 - 5
AT208488	2J16	15	1821 - 5
AT208488	2J16	36	1821 - 5
AT208488	2J16	37	1821 - 5
AT208490	2J16	10	1821 - 5
AT208490	2J16	25	1821 - 5
AT208490	2J16	26	1821 - 5
AT208490	2J16	27	1821 - 5
AT208490	2J16	28	1821 - 5
AT208491	2J16	11	1821 - 5
AT208491	2J16	32	1821 - 5
AT208493	2J16	44	1821 - 5
AT208531	2J14	30	1821 - 3
AT208531	2J16	1	1821 - 5
AT209020	2J14	9	1821 - 3
AT209020	2J18	9	1821 - 7
AT209021	2J14	10	1821 - 3
AT209021	2J18	10	1821 - 7
AT209022	2J14	15	1821 - 3
AT209022	2J18	15	1821 - 7
AT209024	2J14	17	1821 - 3
AT209024	2J18	17	1821 - 7
AT209025	2J14	19	1821 - 3
AT209025	2J18	19	1821 - 7
AT209026	2J14	21	1821 - 3
AT209026	2J18	21	1821 - 7
AT209225	2J14	23	1821 - 3
AT209225	2J18	23	1821 - 7
AT209469	2J16	13	1821 - 5
AT209469	2J16	33	1821 - 5
AT209469	2J16	34	1821 - 5
AT209469	2J16	35	1821 - 5
AT210333	2F4	2	1673 - 5
AT211041	1J13	2	0429 - 2
AT211206	2B24	13	0520 - 3
AT214801	1E2	3	0260 - 11
AT216348	3C14	4	2160 - 43
AT219974	2C8	5	0560 - 3
AT22070	2L15	2	2005 - 3
AT22073	2L15	3	2005 - 3
AT221019	2J14	25	1821 - 3
AT221019	2J18	25	1821 - 7
AT221020	2J14	26	1821 - 3
AT221020	2J18	26	1821 - 7
AT221021	2J14	28	1821 - 3
AT221021	2J18	28	1821 - 7
AT221696	2K17	12	1910 - 3
AT223493	2B16	9	0510 - 11
AT223537	2D22	10	1111 - 3
AT223584	1E16	18	0260 - 25
AT224248	2J14	6	1821 - 3
AT224497	2D22	5	1111 - 3
AT224574	3B9	7	2160 - 7
AT224576	2D22	4	1111 - 3
AT224703	3E24	2	3460 - 21
AT224863	2D22	2	1111 - 3
AT224864	2D22	3	1111 - 3
AT224864	3B9	4	2160 - 7
AT224864	3E24	4	3460 - 21
AT224873	1C16	14	0210 - 8
AT224873	2D22	7	1111 - 3
AT224894	2G16	3	1674 - 29
AT225573	2D19	17	1060 - 5
AT226282	2L11	1	2004 - 3
AT226446	1H9	2	0360 - 5
AT226447	1H9	3	0360 - 5
AT226520	3D20	2	3440 - 5
AT226676	2J16	14	1821 - 5
AT226676	2J16	38	1821 - 5
AT226676	2J16	39	1821 - 5
AT226676	2J16	41	1821 - 5
AT226676	2J16	42	1821 - 5
AT226676	2J16	43	1821 - 5
AT227063	2F8	10	1673 - 9
AT227279	3D6	5	2164 - 5
AT227441	3D6	6	2164 - 5
AT227668	2K4	19	1830 - 9
AT227669	2K4	20	1830 - 9
AT227717	2C18	15	0930 - 3
AT228826	2K17	10	1910 - 3
AT25226	1B3	1	0110 - 3
AT25226	1B5	1	0110 - 5
AT25226	1B7	1	0110 - 7
AT25226	1B9	1	0110 - 9
AT25226	1B11	1	0110 - 11
AT25226	1B17	1	0110 - 17
AT25226	1B19	5	0110 - 21
AT280244	3B5	16	2160 - 3
AT280296	2G4	3	1674 - 17
AT280297	2G4	4	1674 - 17
AT280508	1D7	3	0240 - 5
AT280583	2J18	35	1821 - 7
AT280631	2K12	16	1830 - 17
AT300167	2E24	13	1672 - 3
AT300684	2E24	14	1672 - 3
AT300859	3C24	39	2163 - 7
AT300859	3D2	39	2163 - 9
AT301133	2C8	6	0560 - 3
AT301226	3B21	2	2160 - 25
AT301227	3B21	3	2160 - 25
AT301673	3D24	6	3440 - 9
AT302098	1E16	12	0260 - 25
AT302104	1F13	13	0315 - 5
AT302105	1F13	14	0315 - 5
AT302150	3B9	9	2160 - 7
AT302166	2D12	8	0960 - 19
AT302175	2D12	9	0960 - 19
AT302283	3B11	2	2160 - 11
AT302284	3B11	1	2160 - 11
AT302285	3B11	4	2160 - 11
AT302286	3B11	3	2160 - 11
AT302287	3B11	8	2160 - 11
AT302288	3B11	7	2160 - 11
AT302388	1F13	6	0315 - 5
AT302401	2G21	5	1740 - 3
AT302520	2L3	9	2001 - 3
AT302544	3C10	18	2160 - 39
AT302638	2F22	12	1674 - 9
AT302661	3B5	70	2160 - 3
AT302662	3B5	70	2160 - 3
AT302730	2G14	7	1674 - 27
AT302731	2B20	2	0515 - 3
AT302732	2B20	3	0515 - 3
AT302769	2G14	8	1674 - 27
AT302794	2K2	2	1830 - 5
AT302797	2G16	3	1674 - 29
AT302818	2C6	14	0540 - 3
AT302821	2C6	11	0540 - 3
AT302889	3F9	11	4240 - 3
AT302906	3D4	4	2164 - 3
AT302907	3B9	3	2160 - 7
AT302908	3B9	5	2160 - 7
AT302918	3E22	14	3460 - 19
AT302918	3E24	5	3460 - 21
AT302919	3E24	1	3460 - 21
AT302927	1F4	17	0260 - 37
AT302953	2K8	8	1830 - 13
AT303129	3C16	4	2160 - 45
AT303240	3D10	3	3401 - 3
AT303282	3D10	3	3401 - 3
AT303296	3D10	3	3401 - 3
AT303301	3D10	3	3401 - 3
AT303325	3E20	11	3460 - 17
AT303467	2K14	9	1830 - 19
AT303469	2K14	10	1830 - 19
AT303489	2D12	13	0960 - 19
AT303518	2J18	32	1821 - 7
AT303536	3E20	11	3460 - 17
AT303539	1E22	11	0260 - 31
AT303600	3E20	12	3460 - 17
AT303670	2G23	1	1740 - 5

NUMERICAL INDEX - CONTINUED

PART NO.	GRID	KEY	PAGE
AT303678	3C16	5	2160 - 45
AT303744	2I24	43	1810 - 33
AT303745	2J2	44	1810 - 35
AT303748	2I24	43	1810 - 33
AT303749	2J2	44	1810 - 35
AT303799	1C16	14	0210 - 8
AT303854	1C25	16	0230 - 5
AT303855	1C25	35	0230 - 5
AT303859	2G6	4	1674 - 19
AT303865	2K14	11	1830 - 19
AT303896	2G12	3	1674 - 25
AT303926	2H22	4	1810 - 9
AT304023	2G6	5	1674 - 19
AT304024	2G6	6	1674 - 19
AT304026	2G14	9	1674 - 27
AT304098	2I6	1	1810 - 15
AT304099	2I6	13	1810 - 15
AT304144	3C24	40	2163 - 7
AT304144	3D2	40	2163 - 9
AT304147	3C24	41	2163 - 7
AT304147	3D2	41	2163 - 9
AT304148	3E18	5	3460 - 15
AT304149	3E18	6	3460 - 15
AT304150	3E20	8	3460 - 17
AT304151	3E20	9	3460 - 17
AT304295	2F8	5	1673 - 9
AT304327	1F13	15	0315 - 5
AT304373	3F2	15	3460 - 23
AT304479	2D17	17	1060 - 3
AT304480	2D17	23	1060 - 3
AT304615	1D2	1	0230 - 7
AT304630	2H18	10	1810 - 5
AT304630	2H20	6	1810 - 7
AT304633	2H18	11	1810 - 5
AT304633	2H20	7	1810 - 7
AT304634	2H18	11	1810 - 5
AT304634	2H20	7	1810 - 7
AT304635	2H18	10	1810 - 5
AT304635	2H20	6	1810 - 7
AT304638	2L7	10	2002 - 5
AT304788	2G10	4	1674 - 23
AT304794	2D4	11	0960 - 11
AT304862	3F4	9	3460 - 25
AT304888	3C24	42	2163 - 7
AT304888	3D2	42	2163 - 9
AT304953	2F22	13	1674 - 9
AT304967	3D2	43	2163 - 9
AT304974	2D24	12	1111 - 5
AT304996	2D24	13	1111 - 5
AT305018	2J8	14	1810 - 41
AT305048	1H7	14	0360 - 3
AT305049	1H7	17	0360 - 3
AT305051	2J8	11	1810 - 41
AT305052	2J8	12	1810 - 41
AT305053	1F2	21	0260 - 35
AT305054	3E22	24	3460 - 19
AT305055	3E22	13	3460 - 19
AT305057	2B18	28	0512 - 3
AT305070	2J8	13	1810 - 41
AT305110	3B5	9	2160 - 3
AT305110	3B5	20	2160 - 3
AT305193	2L17	2	2007 - 3
AT305277	3C24	43	2163 - 7
AT305297	2J8	16	1810 - 41
AT305310	2J8	19	1810 - 41
AT305363	3D18	7	3440 - 3
AT305384	2G14	1	1674 - 27
AT305385	2F22	14	1674 - 9
AT305386	2F22	14	1674 - 9
AT305387	2F24	2	1674 - 11
AT305389	2G10	10	1674 - 23
AT305397	2J8	22	1810 - 41
AT305398	1F13	16	0315 - 5
AT305406	2I10	9	1810 - 19
AT305406	2I12	9	1810 - 21
AT305414	2I8	1	1810 - 17
AT305416	2I8	1	1810 - 17
AT305433	1F13	25	0315 - 5
AT305437	2J14	32	1821 - 3
AT305505	1E14	2	0260 - 23
AT305506	1E16	30	0260 - 25
AT305507	1E16	2	0260 - 25
AT305508	1E16	19	0260 - 25
AT305509	1E14	4	0260 - 23
AT305510	1E14	3	0260 - 23
AT305512	1E14	1	0260 - 23
AT305513	1E16	25	0260 - 25
AT305524	2K4	23	1830 - 9
AT305547	2K14	12	1830 - 19
AT305548	3F6	5	3460 - 27
AT305624	2D8	5	0960 - 15
AT305625	2D8	6	0960 - 15
AT305627	2D19	7	1060 - 5
AT305628	3C18	10	2163 - 3
AT305630	3C18	11	2163 - 3
AT305639	1C7	6	0201 - 3
AT305663	2H22	5	1810 - 9
AT305667	2J10	14	1810 - 43
AT305667	2J12	14	1810 - 45
AT305698	2H22	6	1810 - 9
AT305734	2J8	47	1810 - 41
AT305738	3C18	12	2163 - 3
AT305739	2D19	8	1060 - 5
AT305740	2D19	9	1060 - 5
AT305741	2D19	10	1060 - 5
AT305768	2D4	12	0960 - 11
AT305769	3F6	6	3460 - 27
AT305770	3F19	5	4260 - 7
AT305770	3F21	6	4260 - 9
AT305771	3F19	6	4260 - 7
AT305771	3F21	7	4260 - 9
AT305831	1F2	13	0260 - 35
AT305832	1E22	12	0260 - 31
AT305833	1E22	13	0260 - 31
AT305834	1F2	14	0260 - 35
AT305854	2G18	1	1675 - 3
AT305869	2K4	24	1830 - 9
AT305916	3C24	44	2163 - 7
AT305926	2F14	7	1673 - 15
AT305927	2F16	10	1674 - 3
AT305928	2G2	10	1674 - 15
AT305929	2G4	5	1674 - 17
AT305930	2G4	6	1674 - 17
AT305931	2F10	5	1673 - 11
AT305931	2F14	9	1673 - 15
AT305932	2F12	4	1673 - 13
AT305934	2F6	4	1673 - 7
AT305935	2F6	4	1673 - 7
AT305936	2F18	4	1674 - 5
AT305939	2J10	15	1810 - 43
AT305939	2J12	15	1810 - 45
AT305981	3D6	1	2164 - 5
AT305991	2D10	5	0960 - 17
AT305992	2D10	6	0960 - 17
AT306034	2B12	16	0510 - 5
AT306035	2B12	17	0510 - 5
AT306056	2K14	13	1830 - 19
AT306111	2E12	3	1369 - 5
AT306133	2E12	9	1369 - 5
AT306154	2D6	7	0960 - 13
AT306155	2D6	8	0960 - 13
AT306156	2D6	9	0960 - 13
AT306162	3D14	8	3401 - 7
AT306162	3D16	10	3401 - 9
AT306163	3D14	8	3401 - 7
AT306163	3D16	10	3401 - 9
AT306180	2F22	15	1674 - 9
AT306181	2I24	10	1810 - 33
AT306181	2J2	10	1810 - 35
AT306335	2F10	8	1673 - 11
AT306340	3E22	15	3460 - 19
AT306341	3E22	16	3460 - 19
AT306350	2L19	2	2007 - 5
AT306366	2F20	10	1674 - 7
AT306388	3F23	9	4260 - 11
AT306446	3F2	16	3460 - 23
AT306503	3F13	34	4240 - 7
AT306505	3F13	36	4240 - 7
AT306509	3F13	19	4240 - 7
AT306536	2K23	7	1921 - 3
AT306539	2K19	12	1910 - 5
AT306605	1F2	22	0260 - 35
AT306612	2F2	7	1673 - 3
AT306632	2F2	8	1673 - 3
AT306681	2B8	6	0505 - 9
AT306682	2B8	7	0505 - 9
AT306749	2D19	16	1060 - 5
AT306771	2K17	15	1910 - 3
AT306772	2K17	16	1910 - 3
AT306816	2H2	6	1746 - 3
AT306846	2H2	1	1746 - 3
AT306847	2H4	1	1746 - 5
AT306848	2I20	6	1810 - 29
AT306848	2I22	7	1810 - 31
AT306944	2H6	8	1746 - 7
AT306953	2K23	8	1921 - 3
AT306967	2B12	18	0510 - 5
AT306968	2B12	19	0510 - 5
AT306973	2K23	9	1921 - 3
AT306974	2K23	11	1921 - 3
AT307031	2B12	12	0510 - 5
AT307045	1H7	15	0360 - 3
AT307045	3D4	5	2164 - 3
AT307054	2B8	9	0505 - 9
AT307061	2B12	13	0510 - 5
AT307062	2K12	18	1830 - 17
AT307083	2B14	14	0510 - 7
AT307090	2F4	6	1673 - 5
AT307096	2I24	45	1810 - 33
AT307096	2J2	45	1810 - 35
AT307165	1H11	5	0363 - 3
AT307200	1F15	2	0315 - 7
AT307220	3C20	10	2163 - 5
AT307220	3C22	10	2163 - 5B
AT307231	3C20	11	2163 - 5
AT307231	3C22	11	2163 - 5B
AT307263	3C20	6	2163 - 5
AT307275	2G25	6	1740 - 7
AT307279	2B8	10	0505 - 9
AT307292	3D6	7	2164 - 5
AT307299	3C24	45	2163 - 7

NUMERICAL INDEX - CONTINUED

PART NO.	GRID	KEY	PAGE
AT307299	3D2	45	2163 - 9
AT307300	3C24	46	2163 - 7
AT307300	3D2	46	2163 - 9
AT307326	3D22	12	3440 - 7
AT307343	2B14	16	0510 - 7
AT307351	2L13	6	2004 - 5
AT307361	2C8	8	0560 - 3
AT307458	3F23	10	4260 - 11
AT307459	3F23	11	4260 - 11
AT307501	2K6	21	1830 - 11
AT307581	1H7	11	0360 - 3
AT307582	1H7	12	0360 - 3
AT307588	1H7	13	0360 - 3
AT307628	2G14	2	1674 - 27
AT307650	2I10	10	1810 - 19
AT307650	2I12	10	1810 - 21
AT307668	2B16	10	0510 - 11
AT307707	1F4	19	0260 - 37
AT307723	2K23	12	1921 - 3
AT307730	3D14	1	3401 - 7
AT307731	3D14	1	3401 - 7
AT307732	3D16	1	3401 - 9
AT307733	3D16	1	3401 - 9
AT307760	1E4	16	0260 - 13
AT307775	1E4	19	0260 - 13
AT307779	2H22	11	1810 - 9
AT307780	2F2	9	1673 - 3
AT307807	2F16	11	1674 - 3
AT307807	2F16	12	1674 - 3
AT307810	2F22	16	1674 - 9
AT307811	3B9	1	2160 - 7
AT307845	3F2	17	3460 - 23
AT307847	2K12	19	1830 - 17
AT307888	2K12	20	1830 - 17
AT307889	2K12	21	1830 - 17
AT308017	2K4	22	1830 - 9
AT308073	1E12	6	0260 - 21
AT308110	2K23	14	1921 - 3
AT308196	2H16	1	1810 - 3
AT308197	2H16	1	1810 - 3
AT308199	2J14	3	1821 - 3
AT308199	2J18	3	1821 - 7
AT308274	3D4	7	2164 - 3
AT308283	2K6	26	1830 - 11
AT308314	2K4	32	1830 - 9
AT308399	2B18	32	0512 - 3
AT308628	2G10	5	1674 - 23
AT308795	2J14	25	1821 - 3
AT308795	2J18	25	1821 - 7
AT308796	2J14	26	1821 - 3
AT308796	2J18	26	1821 - 7
AT308797	2J14	28	1821 - 3
AT308797	2J18	28	1821 - 7
AT308909	3C24	47	2163 - 7
AT308909	3D2	47	2163 - 9
AT308935	2K4	33	1830 - 9
AT308941	2I12	11	1810 - 21
AT309043	2B18	35	0512 - 3
AT309234	3B11	6	2160 - 11
AT309235	3B11	5	2160 - 11
AT309379	2K23	15	1921 - 3
AT309380	2K23	13	1921 - 3
AT309672	2K6	27	1830 - 11
AT309711	1F2	19	0260 - 35
AT309711	3C24	48	2163 - 7
AT309711	3D2	48	2163 - 9
AT309837	2K4	34	1830 - 9
AT309911	2B16	11	0510 - 11
AT309952	2D4	13	0960 - 11
AT309953	2D12	10	0960 - 19
AT309957	1E16	1	0260 - 25
AT309959	1E16	7	0260 - 25
AT309961	3F2	18	3460 - 23
AT310272	1E16	14	0260 - 25
AT310278	3D10	3	3401 - 3
AT310373	2H16	1	1810 - 3
AT310374	2H16	1	1810 - 3
AT310375	2H16	1	1810 - 3
AT310377	1B19	1	0110 - 21
AT310795	2K14	14	1830 - 19
AT310810	2K14	15	1830 - 19
AT310939	2C2	9	0520 - 5
AT310959	1F4	20	0260 - 37
AT311425	3C24	49	2163 - 7
AT311425	3D2	49	2163 - 9
AT311431	2K17	9	1910 - 3
AT311438	2K17	8	1910 - 3
AT311872	2B12	20	0510 - 5
AT311915	2K17	11	1910 - 3
AT311916	2K17	14	1910 - 3
AT312053	2K17	7	1910 - 3
AT312058	2K12	22	1830 - 17
AT312106	1H9	4	0360 - 5
AT312107	1H9	5	0360 - 5
AT312431	2H6	5	1746 - 7
AT312607	1F11	4	0315 - 3
AT312910	1E20	15	0260 - 29
AT312912	1E20	16	0260 - 29
AT312995	2B10	3	0510 - 3
AT312997	3E22	17	3460 - 19
AT312998	1E16	33	0260 - 25
AT313338	2C18	22	0930 - 3
AT313340	1D5	5	0240 - 3
AT313342	1C23	4	0230 - 3
AT313352	2C18	16	0930 - 3
AT313362	1C23	6	0230 - 3
AT313362	1D5	9	0240 - 3
AT313425	1H11	11	0363 - 3
AT313541	2C18	17	0930 - 3
AT313542	2C18	18	0930 - 3
AT313691	2B18	38	0512 - 3
AT314363	2I10	11	1810 - 19
AT314364	2I10	12	1810 - 19
AT314364	2I12	12	1810 - 21
AT314624	1C23	19	0230 - 3
AT314624	2C20	25	0960 - 3
AT314624	2C22	6	0960 - 5
AT314667	2G6	7	1674 - 19
AT314814	2B22	2	0515 - 5
AT314827	2D17	11	1060 - 3
AT315249	2F12	8	1673 - 13
AT315250	2F12	9	1673 - 13
AT315334	2L21	6	2008 - 3
AT315341	2L21	1	2008 - 3
AT315465	2K6	37	1830 - 11
AT315712	3D22	14	3440 - 7
AT315715	2J14	7	1821 - 3
AT315715	2J18	7	1821 - 7
AT315761	2J14	8	1821 - 3
AT315761	2J18	8	1821 - 7
AT315844	2I8	2	1810 - 17
AT315881	3E22	25	3460 - 19
AT315896	2I8	3	1810 - 17
AT315903	2I6	6	1810 - 15
AT315906	2I6	7	1810 - 15
AT315909	2I6	8	1810 - 15
AT315910	2I6	14	1810 - 15
AT315980	3E22	18	3460 - 19
AT316249	2D12	13	0960 - 19
AT316267	2I8	4	1810 - 17
AT316321	2K21	3	1913 - 3
AT316322	2K21	4	1913 - 3
AT316323	2K21	7	1913 - 3
AT316324	2K21	8	1913 - 3
AT316715	2K19	13	1910 - 5
AT316746	2E17	1	1511 - 3
AT317063	2F22	10	1674 - 9
AT317166	1E16	35	0260 - 25
AT317287	3C8	1	2160 - 37
AT317288	3C8	1	2160 - 37
AT317289	3C8	1	2160 - 37
AT317290	3C8	1	2160 - 37
AT317291	3C8	1	2160 - 37
AT317293	3C8	1	2160 - 37
AT317304	3B15	13	2160 - 19
AT317304	3B21	16	2160 - 25
AT317304	3C2	16	2160 - 31
AT317304	3C4	19	2160 - 33
AT317304	3C6	18	2160 - 35
AT317305	3B15	13	2160 - 19
AT317305	3B17	14	2160 - 21
AT317305	3B19	13	2160 - 23
AT317305	3B21	16	2160 - 25
AT317305	3C4	19	2160 - 33
AT317306	3B23	1	2160 - 27
AT317308	3B21	22	2160 - 25
AT317309	3B21	22	2160 - 25
AT317310	3C6	19	2160 - 35
AT317312	3C6	19	2160 - 35
AT317313	3B19	14	2160 - 23
AT317314	3B17	15	2160 - 21
AT317315	3B15	14	2160 - 19
AT317316	3B15	14	2160 - 19
AT317317	3B15	14	2160 - 19
AT317318	3B15	14	2160 - 19
AT317319	3C4	20	2160 - 33
AT317321	3C2	18	2160 - 31
AT317322	3C4	20	2160 - 33
AT317323	3B25	1	2160 - 29
AT317328	3B15	2	2160 - 19
AT317328	3B19	2	2160 - 23
AT317328	3B21	4	2160 - 25
AT317328	3C2	2	2160 - 31
AT317328	3C4	2	2160 - 33
AT317328	3C6	2	2160 - 35
AT317329	3B23	7	2160 - 27
AT317330	3B25	7	2160 - 29
AT317331	3B23	8	2160 - 27
AT317331	3B25	8	2160 - 29
AT317339	3C10	19	2160 - 39
AT317482	3D22	15	3440 - 7
AT317483	3D22	17	3440 - 7
AT317484	3D22	18	3440 - 7
AT317485	3D22	21	3440 - 7
AT317539	2C2	8	0520 - 5
AT317542	1C25	16	0230 - 5
AT317543	1C25	35	0230 - 5
AT317562	2I16	8	1810 - 25
AT317581	2K19	14	1910 - 5
AT317595	1E18	1	0260 - 27
AT317637	1E18	1	0260 - 27

NUMERICAL INDEX - CONTINUED

PART NO.	GRID	KEY	PAGE
AT317654	2D17	12	1060 - 3
AT317655	2D17	13	1060 - 3
AT317734	2J12	7	1810 - 45
AT317735	2J12	7	1810 - 45
AT317736	2J12	7	1810 - 45
AT317737	2J10	7	1810 - 43
AT317738	2J12	7	1810 - 45
AT317739	2J10	7	1810 - 43
AT317740	2J10	7	1810 - 43
AT317741	2J10	7	1810 - 43
AT317742	2J10	7	1810 - 43
AT317742	3C10	9	2160 - 39
AT317743	2J12	7	1810 - 45
AT317744	2J10	7	1810 - 43
AT317744	2J12	7	1810 - 45
AT317749	3F9	29	4240 - 3
AT317778	2J10	16	1810 - 43
AT317778	2J12	16	1810 - 45
AT317778	3C10	11	2160 - 39
AT317808	1F20	1	0350 - 1
AT317809	1F20	1	0350 - 1
AT317820	3B17	2	2160 - 21
AT317822	3B21	5	2160 - 25
AT317822	3C2	3	2160 - 31
AT317822	3C4	3	2160 - 33
AT317886	1E10	76	0260 - 19
AT317887	1E4	20	0260 - 13
AT317889	1E8	13	0260 - 17
AT317889	1E10	95	0260 - 19
AT317891	1E4	21	0260 - 13
AT317979	2I24	48	1810 - 33
AT317979	2J2	48	1810 - 35
AT317980	2I24	49	1810 - 33
AT317981	2I24	11	1810 - 33
AT317981	2J2	11	1810 - 35
AT317982	2J2	12	1810 - 35
AT317983	2I24	13	1810 - 33
AT317984	2J2	14	1810 - 35
AT317985	2I24	15	1810 - 33
AT318171	2C8	11	0560 - 3
AT318528	3F21	8	4260 - 9
AT318529	3F23	18	4260 - 11
AT318620	2F8	13	1673 - 9
AT318649	2B12	21	0510 - 5
AT318798	2K12	23	1830 - 17
AT318987	2K8	7	1830 - 13
AT319023	3C4	21	2160 - 33
AT319023	3C10	16	2160 - 39
AT319115	1E2	15	0260 - 11
AT319117	1D25	19	0260 - 9
AT319117	1E2	19	0260 - 11
AT320176	1F6	15	0260 - 39
AT320179	1F6	7	0260 - 39
AT320198	1F6	6	0260 - 39
AT320199	1F6	5	0260 - 39
AT320236	2K19	16	1910 - 5
AT320242	1H11	6	0363 - 3
AT320243	1H11	8	0363 - 3
AT320484	2B12	32	0510 - 5
AT320496	2G21	4	1740 - 3
AT322428	2I24	47	1810 - 33
AT322428	2J2	47	1810 - 35
AT322617	3C10	20	2160 - 39
AT322881	2J6	4	1810 - 39
AT325943	2I2	6	1810 - 13
AT325943	2I4	3	1810 - 13B
AT325943	2I4	5	1810 - 13B
AT325944	2I2	6	1810 - 13
AT325944	2I4	3	1810 - 13B
AT325944	2I4	5	1810 - 13B
AT326525	3C22	6	2163 - 5B
AT326599	1D23	24	0260 - 7
AT326600	1D23	46	0260 - 7
AT37477	3C24	50	2163 - 7
AT37477	3D2	50	2163 - 9
AT38176	2K19	15	1910 - 5
AT38449	2E22	13	1671 - 3
AT40729	1D15	16	0250 - 7
AT41188	2E22	14	1671 - 3
AT41245	3E14	25	3460 - 11
AT43231	1B3	2	0110 - 3
AT44582	1D15	14	0250 - 7
AT44583	1D15	15	0250 - 7
AT47241	3D14	10	3401 - 7
AT47241	3D16	12	3401 - 9
AT53440	2B24	5	0520 - 3
AT53440	2C2	7	0520 - 5
AT56659	3D2	51	2163 - 9
AT57326	1D5	16	0240 - 3
AT62699	2E14	2	1370 - 3
AT62703	2E14	3	1370 - 3
AT68940	1B5	2	0110 - 5
AT72157	1D15	10	0250 - 7
AT78527	3C2	4	2160 - 31
AT78527	3C4	4	2160 - 33
AT78527	3C6	3	2160 - 35
AT78527	3C10	23	2160 - 39
AT79195	2D24	14	1111 - 5
AT83306	1E20	17	0260 - 29
AZ42092	1E20	19	0260 - 29
AZ42092	1F6	14	0260 - 39
A4365R	1H25	18	0404 - 3
A4365R	1J16	7	0433 - 3
A4540R	1C13	15	0210 - 5
A48970	2I6	4	1810 - 15
B2976R	2H18	12	1810 - 5
B3690R	1F22	8	0350 - 3
CE17368	1D23	5	0260 - 7
CE17879	3E2	33	3450 - 3
CE17879	3E4	33	3450 - 5
C16054	2D6	10	0960 - 13
C16054	3E18	7	3460 - 15
C16054	3F6	7	3460 - 27
C16054	3F23	12	4260 - 11
DE18970	1D11	21	0250 - 3
DE19507	1D23	37	0260 - 7
E12379	1C23	11	0230 - 3
E12379	1D5	10	0240 - 3
E12379	2E14	4	1370 - 3
E1343FN	1H23	1	0403 - 1
E14814	3E2	3	3450 - 3
E14814	3E4	3	3450 - 5
E46066	2K14	17	1830 - 19
E52817	3F13	11	4240 - 7
E55662	1E18	2	0260 - 27
E55662	1J9	16	0422 - 3
E65288	3B5	63	2160 - 3
E69975	1F2	16	0260 - 35
E69975	2B16	15	0510 - 11
E69975	3D6	10	2164 - 5
F1430R	3E10	3	3460 - 7
F1430R	3E12	3	3460 - 9
F1430R	3E14	4	3460 - 11
F1743R	1H22	18	0402 - 6
F1743R	1H25	11	0404 - 3
F2310018	1F22	14	0350 - 3
F2310018	1F24	20	0350 - 5
F23303	1G4	34	0350 - 9
F2710616	1F22	1	0350 - 3
F2710616	1F22	13	0350 - 3
F2710616	1F24	1	0350 - 5
F2710616	1F24	19	0350 - 5
F310063	1G4	24	0350 - 9
F3171R	1C13	7	0210 - 5
F3171R	1C15	13	0210 - 7
F3171R	1C15	16	0210 - 7
F3171R	1C15	18	0210 - 7
F3171R	1C15	21	0210 - 7
F3171R	1C16	3	0210 - 8
F3171R	1D17	11	0250 - 9
F37010010	1C16	11	0210 - 8
F37010016	1H4	11	0350 - 35
F37010020	1C16	4	0210 - 8
F37020114	1G4	12	0350 - 9
F37020122	1H4	13	0350 - 35
F37020123	1H4	14	0350 - 35
F37020124	1H4	15	0350 - 35
F37020144	1G10	3	0350 - 17
F37020144	1G12	3	0350 - 19
F37020144	1G14	3	0350 - 21
F37020144	1G16	3	0350 - 23
F37020153	1C16	10	0210 - 8
F37020159	1E4	22	0260 - 13
F37020159	1G4	22	0350 - 9
F37020159	1H5	2	0350 - 36
F37020159	3B5	21	2160 - 3
F37030219	1F22	15	0350 - 3
F37030219	1F24	22	0350 - 5
F37030219	1G6	6	0350 - 13
F37030226	1F22	8	0350 - 3
F37030226	1F24	13	0350 - 5
F37030226	1G4	8	0350 - 9
F37030226	1G6	3	0350 - 13
F37030239	1G4	26	0350 - 9
F37030244G	1G10	20	0350 - 17
F37030244G	1G12	20	0350 - 19
F37030250	1E2	5	0260 - 11
F37030275	1G22	5	0350 - 29
F37060906	1H4	6	0350 - 35
F37060910	1H4	10	0350 - 35
F37060912	1G2	6	0350 - 7
F37060920	1G6	4	0350 - 13
F39000106	3B5	26	2160 - 3
F39000175	1G4	19	0350 - 9
F39000315	1F24	23	0350 - 5
F40110	1G10	16	0350 - 17
F40110	1G12	16	0350 - 19
F40110	1G16	16	0350 - 23
F40111	1F22	4	0350 - 3
F40111	1F24	5	0350 - 5
F40211R	1F24	6	0350 - 5
F7400014D	1G2	7	0350 - 7
F81696	1G10	18	0350 - 17
F81696	1G12	18	0350 - 19
F81696	1G14	18	0350 - 21
F81696	1G16	18	0350 - 23
F81743	1G10	8	0350 - 17
F81743	1G12	8	0350 - 19
F81743	1G14	7	0350 - 21
F81743	1G16	7	0350 - 23
F85004	1F22	1	0350 - 3

NUMERICAL INDEX - CONTINUED

PART NO.	GRID	KEY	PAGE
F85006	1H4	6	0350 - 35
F85108	1F24	1	0350 - 5
F85108	1G4	29	0350 - 9
F85112	1G2	6	0350 - 7
F85120	1F22	9	0350 - 3
F85120	1F24	14	0350 - 5
F85120	1G6	4	0350 - 13
F950R	2C20	7	0960 - 3
F950R	2C22	20	0960 - 5
F950R	2C24	18	0960 - 7
F950R	3E16	5	3460 - 13
F950R	3F15	6	4240 - 9
GY20126	2F22	18	1674 - 9
H110232	2I24	16	1810 - 33
H110232	2J2	16	1810 - 35
H113924	2I20	8	1810 - 29
H114865	2K12	24	1830 - 17
H122182	1E16	5	0260 - 25
H131531	2K6	38	1830 - 11
H134114	3C24	64	2163 - 7
H140461	2F8	4	1673 - 9
H140461	2F10	13	1673 - 11
H140461	2I10	7	1810 - 19
H140461	2I12	7	1810 - 21
H140461	2I16	7	1810 - 25
H140461	2L3	6	2001 - 3
H142036	3E10	13	3460 - 7
H142036	3E12	13	3460 - 9
H145104	2C20	2	0960 - 3
H145104	2C22	11	0960 - 5
H145175	3E16	14	3460 - 13
H148166	3D6	4	2164 - 5
H150941	1C7	1	0201 - 3
H150956	2D2	17	0960 - 9
H152202	3E14	5	3460 - 11
H152203	2C20	9	0960 - 3
H152203	2C22	21	0960 - 5
H152203	2C24	19	0960 - 7
H152203	3E10	4	3460 - 7
H152203	3E12	4	3460 - 9
H152203	3E16	6	3460 - 13
H152203	3F15	7	4240 - 9
H152204	3F11	4	4240 - 5
H152795	3F11	5	4240 - 5
H154514	2D2	9	0960 - 9
H154856	2C22	26	0960 - 5
H154856	2C24	5	0960 - 7
H154856	3E10	17	3460 - 7
H154856	3E12	17	3460 - 9
H154856	3E16	22	3460 - 13
H154856	3F15	14	4240 - 9
H155629	3E14	3	3460 - 11
H155630	3F11	17	4240 - 5
H155964	2D2	10	0960 - 9
H156058	2D2	11	0960 - 9
H157898	3E14	6	3460 - 11
H164204	2D2	12	0960 - 9
H164205	2D2	13	0960 - 9
H168248	2C20	12	0960 - 3
H168248	3E16	18	3460 - 13
H168249	2C20	13	0960 - 3
H168249	3E16	19	3460 - 13
H170535	2D2	18	0960 - 9
H170538	3E14	14	3460 - 11
H170539	2C20	15	0960 - 3
H170539	2C22	24	0960 - 5
H170539	2C24	22	0960 - 7
H170539	3E10	14	3460 - 7
H170539	3E12	14	3460 - 9
H170539	3F15	18	4240 - 9
H170541	3F11	16	4240 - 5
H171332	2D2	14	0960 - 9
H173411	2H16	2	1810 - 3
H173411	2I10	14	1810 - 19
H173411	2I12	14	1810 - 21
H173411	2I16	9	1810 - 25
H173411	2J8	39	1810 - 41
H173411	2J14	33	1821 - 3
H173411	2J18	33	1821 - 7
H179659	3F11	7	4240 - 5
H180080	2C20	4	0960 - 3
H180080	2C22	16	0960 - 5
H180080	2C24	24	0960 - 7
H180080	3E16	7	3460 - 13
H180080	3F15	8	4240 - 9
H180094	2C20	5	0960 - 3
H180094	2C22	18	0960 - 5
H180094	2C24	16	0960 - 7
H180094	3E16	8	3460 - 13
H180094	3F15	9	4240 - 9
H180100	3F11	8	4240 - 5
H180103	3E10	5	3460 - 7
H180103	3E12	5	3460 - 9
H180103	3E14	7	3460 - 11
H206859	3E10	6	3460 - 7
H206859	3E12	6	3460 - 9
H206859	3E14	9	3460 - 11
H208631	3E10	21	3460 - 7
H208631	3E12	21	3460 - 9
H208987	2C20	8	0960 - 3
H208987	2C22	14	0960 - 5
H208987	2C24	13	0960 - 7
H208987	3E10	7	3460 - 7
H208987	3E12	7	3460 - 9
H208987	3E16	9	3460 - 13
H208987	3F15	10	4240 - 9
H208987	3F15	15	4240 - 9
H208995	2C24	14	0960 - 7
H208995	3E16	4	3460 - 13
H208995	3F15	12	4240 - 9
H208999	3E14	10	3460 - 11
H210841	3F11	9	4240 - 5
H21259	2E3	1	1320 - 3
H61354	3C24	19	2163 - 7
H61354	3D2	19	2163 - 9
H77698	1E16	29	0260 - 25
H77698	1F2	17	0260 - 35
H77698	2B4	2	0505 - 3
H77698	2B8	12	0505 - 9
H77698	2B14	22	0510 - 7
H77698	2D6	12	0960 - 13
H77698	2F20	11	1674 - 7
H77698	2F22	20	1674 - 9
H77698	2G2	11	1674 - 15
H77698	2K12	25	1830 - 17
H77698	2K21	6	1913 - 3
H77698	3F23	13	4260 - 11
H79910	1J16	9	0433 - 3
H80936	1C23	29	0230 - 3
H80936	1C25	30	0230 - 5
H80936	2C22	7	0960 - 5
H80936	2E14	5	1370 - 3
H85092	2K8	4	1830 - 13
H85233	2K17	13	1910 - 3
H871	1C19	24	0210 - 11
H871R	1C19	24	0210 - 11
JD10024	3E2	4	3450 - 3
JD10144	3E2	5	3450 - 3
JD10144	3E4	5	3450 - 5
JD10423	1D13	24	0250 - 5
JD5756	2E3	2	1320 - 3
JD5822	2E3	3	1320 - 3
JD5920	3F13	29	4240 - 7
JD5921	2E3	4	1320 - 3
JD5921	3F13	30	4240 - 7
JD5929	2L21	9	2008 - 3
JD5938	2E3	31	1320 - 3
JD7759	1C23	12	0230 - 3
JD7759	1C23	28	0230 - 3
JD7759	1D5	11	0240 - 3
JD7759	1D9	2	0240 - 7
JD7759	2C20	26	0960 - 3
JD7759	3D22	24	3440 - 7
JD7771	1D23	2	0260 - 7
JD7781	1C9	13	0201 - 5
JD7781	1C23	27	0230 - 3
JD7781	1C25	31	0230 - 5
JD7781	3D18	9	3440 - 3
JD7781	3D22	25	3440 - 7
JD7781	3F9	21	4240 - 3
JD7782	3D22	26	3440 - 7
JD7797	1C23	14	0230 - 3
JD7797	1D5	12	0240 - 3
JD7797	2E14	6	1370 - 3
JD7798	1C23	18	0230 - 3
JD7798	1D23	22	0260 - 7
JD7798	2C22	8	0960 - 5
JD7798	3E12	24	3460 - 9
JD7798	3E16	26	3460 - 13
JD7798	3F13	12	4240 - 7
JD7799	2C24	7	0960 - 7
JD7799	3E16	27	3460 - 13
JD7799	3F9	17	4240 - 3
JD7799	3F11	20	4240 - 5
JD7799	3F13	13	4240 - 7
JD7838	1C7	23	0201 - 3
JD7844	3E10	24	3460 - 7
JD8240	3E2	6	3450 - 3
JD8240	3E4	6	3450 - 5
JD8255	1C13	12	0210 - 5
JD8272	1C9	4	0201 - 5
JD8962	1D15	9	0250 - 7
JD8989	1C9	3	0201 - 5
JD9021	3E2	7	3450 - 3
JD9048	1C25	18	0230 - 5
JD9078	1C13	13	0210 - 5
JD9080	1D15	6	0250 - 7
JD9082	1C25	19	0230 - 5
JD9082	3E4	4	3450 - 5
JD9113	1C25	20	0230 - 5
JD9120	1D15	8	0250 - 7
JD9134	3E2	8	3450 - 3
JD9134	3E4	8	3450 - 5
JD9138	1D15	7	0250 - 7
JD9141	1C25	21	0230 - 5
JD9141	3E4	7	3450 - 5
J16931	2K17	17	1910 - 3
K40014	3F2	19	3460 - 23
K40014	3F9	22	4240 - 3
K40017	3D24	8	3440 - 9
L100913	2B8	13	0505 - 9

NUMERICAL INDEX - CONTINUED

PART NO.	GRID	KEY	PAGE
L102023	2I10	15	1810 - 19
L102023	2I12	15	1810 - 21
L152397	2I24	34	1810 - 33
L155075	2F22	19	1674 - 9
L57881	2K14	42	1830 - 19
L77943	2K8	18	1830 - 13
M115279	2G14	10	1674 - 27
M115279	2I20	9	1810 - 29
M118611	2E3	5	1320 - 3
M142218	2J6	2	1810 - 39
M142219	2J6	3	1810 - 39
M142955	2C4	3	0530 - 3
M145875	2J8	29	1810 - 41
M40509	2B14	23	0510 - 7
M40509	3F2	20	3460 - 23
M44162	2D2	15	0960 - 9
M453T	2J14	24	1821 - 3
M453T	2J18	24	1821 - 7
M45387	1D25	12	0260 - 9
M45387	3B5	59	2160 - 3
M47566	2H22	8	1810 - 9
M74600	1D25	5	0260 - 9
M74600	1E2	17	0260 - 11
M74782	2K8	9	1830 - 13
M74877	1D25	11	0260 - 9
M74877	3B5	60	2160 - 3
M82772	2G8	7	1674 - 21
M84972	2J8	40	1810 - 41
M84972	2K8	11	1830 - 13
M86690	2F2	10	1673 - 3
M87571	1F2	15	0260 - 35
M87571	3D6	9	2164 - 5
M87683	2B8	14	0505 - 9
N119177	2J14	29	1821 - 3
N119177	2J18	29	1821 - 7
N126638	1E10	26	0260 - 19
N131806	1F24	8	0350 - 5
N189220	2F20	12	1674 - 7
N189220	2K4	39	1830 - 9
N198631	2F22	33	1674 - 9
N203952	3B5	11	2160 - 3
N223292	3B9	8	2160 - 7
N231749	3D18	10	3440 - 3
N237603	3D24	9	3440 - 9
N275650	2K12	26	1830 - 17
N278790	2J10	4	1810 - 43
N278790	2J12	4	1810 - 45
N279068	2K17	26	1910 - 3
N306880	1E2	1	0260 - 11
N306881	1E2	7	0260 - 11
N306882	1D25	10	0260 - 9
N306885	1E2	10	0260 - 11
N306886	1E2	11	0260 - 11
N306887	1E2	12	0260 - 11
PT11778	2K8	17	1830 - 13
P46051	1H7	16	0360 - 3
P46051	3D4	6	2164 - 3
P50631	1F19	8	0341 - 3
P50631	1F24	13	0350 - 5
P50631	1G4	8	0350 - 9
P50631	1G6	3	0350 - 13
RE12119	1G4	11	0350 - 9
RE12362	1J9	5	0422 - 3
RE12363	2K10	9	1830 - 15
RE151433	2C13	1	0578 - 3
RE157329	2K14	23	1830 - 19
RE167207	2C15	1	0578 - 5
RE174764	2K8	21	1830 - 13
RE177967	2K8	22	1830 - 13
RE187311	2K8	16	1830 - 13
RE190139	2L3	12	2001 - 3
RE190140	2L3	12	2001 - 3
RE19429	2B24	3	0520 - 3
RE198074	2K8	5	1830 - 13
RE20230	1I25	5	0416 - 3
RE211000	2C18	19	0930 - 3
RE227953	2L3	12	2001 - 3
RE234261	1G22	9	0350 - 29
RE24045	1H19	7	0402 - 3
RE24046	1H19	6	0402 - 3
RE28364	3E16	15	3460 - 13
RE31702	1C25	23	0230 - 5
RE36349	3E14	15	3460 - 11
RE37331	3E10	15	3460 - 7
RE37382	3E12	15	3460 - 9
RE37693	2C24	10	0960 - 7
RE38310	1H2	8	0350 - 33
RE38310	1H4	7	0350 - 35
RE38310	3D6	11	2164 - 5
RE39134	1J2	7	0417 - 3
RE39224	2G8	5	1674 - 21
RE40048	1I18	5	0410 - 2
RE43497	2K14	24	1830 - 19
RE45315	1C10	1	0210 - 2
RE45315	1C13	14	0210 - 5
RE45317	1C10	2	0210 - 2
RE46684	1I23	4	0414 - 1
RE46742	2K14	25	1830 - 19
RE46743	2K14	26	1830 - 19
RE48419	1J7	25	0420 - 3
RE49486	1C13	1	0210 - 5
RE49624	3B23	4	2160 - 27
RE49624	3C4	9	2160 - 33
RE49624	3C6	8	2160 - 35
RE500216	1I5	1	0407 - 1
RE500882	1I23	..	0414 - 1
RE50114	1C11	1	0210 - 3
RE501513	1H23	5	0403 - 1
RE501513	1I4	1	0404 - 7
RE501669	1I25	4	0416 - 3
RE502570	1J4	2	0418 - 3
RE502650	1I20	19	0413 - 3
RE502654	1I20	34	0413 - 3
RE502655	1I20	16	0413 - 3
RE503059	1I20	39	0413 - 3
RE503528	1H23	8	0403 - 1
RE504013	1I20	15	0413 - 3
RE504014	1I20	14	0413 - 3
RE504015	1I20	13	0413 - 3
RE504016	1I20	12	0413 - 3
RE504017	1I20	11	0413 - 3
RE504156	1I22	41	0413 - 5
RE504195	1H16	3	0401 - 2
RE504196	1H16	3	0401 - 2
RE504197	1H16	3	0401 - 2
RE504198	1H16	2	0401 - 2
RE504199	1H16	2	0401 - 2
RE504200	1H16	2	0401 - 2
RE504245	1J9	12	0422 - 3
RE504581	1I12	23	0407 - 9
RE504581	1I25	9	0416 - 3
RE504822	1J18	27	0452 - 3
RE505094	1H21	9	0402 - 5
RE505124	1H15	5	0401 - 1
RE505154	1I20	36	0413 - 3
RE505155	1I20	35	0413 - 3
RE505264	1J11	2	0423 - 3
RE505265	2K12	33	1830 - 17
RE505399	1J9	6	0422 - 3
RE506103	1J9	12	0422 - 3
RE506103	1J9	15	0422 - 3
RE506501	1I15	9	0409 - 3
RE506624	1I20	27	0413 - 3
RE506660	1I2	1	0404 - 5
RE507003	1I20	26	0413 - 3
RE509012	1I20	17	0413 - 3
RE509013	1I20	18	0413 - 3
RE509048	1H21	12	0402 - 5
RE509095	1J4	12	0418 - 3
RE509265	1H21	16	0402 - 5
RE509416	1I20	9	0413 - 3
RE509463	1J2	6	0417 - 3
RE509668	1J7	4	0420 - 3
RE515331	1I23	8	0414 - 1
RE515331	2B4	9	0505 - 3
RE515524	1I20	10	0413 - 3
RE515636	1I20	30	0413 - 3
RE515638	1I22	53	0413 - 5
RE515781	1J5	8	0419 - 1
RE516171	1J18	17	0452 - 3
RE51629	2B24	12	0520 - 3
RE51630	2B24	11	0520 - 3
RE516335	1I20	29	0413 - 3
RE517059	1H22	7	0402 - 6
RE517370	1H22	16	0402 - 6
RE518726	1I20	5	0413 - 3
RE519144	2C11	1	0578 - 1
RE519877	2B20	4	0515 - 3
RE519894	1I15	15	0409 - 3
RE520036	1J16	21	0433 - 3
RE520585	1I10	2	0407 - 6
RE520628	1I12	10	0407 - 9
RE520910	1I25	4	0416 - 3
RE520930	1I20	31	0413 - 3
RE520967	1J7	36	0420 - 3
RE520968	1J7	37	0420 - 3
RE520969	1J7	10	0420 - 3
RE520971	1J7	26	0420 - 3
RE520972	1J7	33	0420 - 3
RE520975	1J7	8	0420 - 3
RE520978	1I22	50	0413 - 5
RE520981	1J7	9	0420 - 3
RE521058	1I4	1	0404 - 7
RE521058	1J18	30	0452 - 3
RE521059	1J18	17	0452 - 3
RE521154	1I4	1	0404 - 7
RE521278	1H19	8	0402 - 3
RE521420	1I12	10	0407 - 9
RE521423	1I22	56	0413 - 5
RE521433	1I20	32	0413 - 3
RE521473	1J7	29	0420 - 3
RE521476	1I20	23	0413 - 3
RE521477	1I20	25	0413 - 3
RE521496	1J2	5	0417 - 3
RE521502	1J2	8	0417 - 3
RE522143	1J7	32	0420 - 3
RE522144	1J7	42	0420 - 3
RE522145	1J7	15	0420 - 3
RE522515	1I22	57	0413 - 5
RE522516	2C10	3	0575 - 3
RE522518	1J7	12	0420 - 3

NUMERICAL INDEX - CONTINUED

PART NO.	GRID	KEY	PAGE
RE522616	1I22	51	0413 - 5
RE522649	1I7	4	0407 - 3
RE522685	1J7	20	0420 - 3
RE522685	2C12	3	0578 - 2
RE522686	1J7	21	0420 - 3
RE522687	1J7	22	0420 - 3
RE522688	1J7	17	0420 - 3
RE522834	1I20	38	0413 - 3
RE523578	1J7	34	0420 - 3
RE523825	1I22	58	0413 - 5
RE523825	2B16	16	0510 - 11
RE524007	1I13	3	0407 - 10
RE524105	1J5	12	0419 - 1
RE52454	2K10	4	1830 - 15
RE524660	1I22	55	0413 - 5
RE524764	1I25	16	0416 - 3
RE52506	2K10	1	1830 - 15
RE52507	2K10	10	1830 - 15
RE52508	2K10	7	1830 - 15
RE52509	2K10	11	1830 - 15
RE52702	2B14	25	0510 - 7
RE52702	3C24	51	2163 - 7
RE53823	1C19	6	0210 - 11
RE55423	2K10	3	1830 - 15
RE55475	1I15	16	0409 - 3
RE55475	1J18	10	0452 - 3
RE56165	2G8	9	1674 - 21
RE56489	2G8	5	1674 - 21
RE57054	1H17	3	0402 - 1
RE57167	1H23	7	0403 - 1
RE57561	1I12	1	0407 - 9
RE57561	1I25	9	0416 - 3
RE57603	1J12	3	0429 - 1
RE57836	1H25	5	0404 - 3
RE57836	1J2	4	0417 - 3
RE57836	1J4	7	0418 - 3
RE57836	1J16	14	0433 - 3
RE60700	3C12	7	2160 - 41
RE60700	3C24	57	2163 - 7
RE60700	3D2	57	2163 - 9
RE60701	3C18	14	2163 - 3
RE61253	1H16	1	0401 - 2
RE61812	2C14	1	0578 - 4
RE61851	1H16	1	0401 - 2
RE62981	1C15	3	0210 - 7
RE64509	1H23	10	0403 - 1
RE64509	1I4	1	0404 - 7
RE65008	2D15	5	1011 - 3
RE66693	1I23	8	0414 - 1
RE66693	1I23	..	0414 - 1
RE66693	2B4	14	0505 - 3
RE68715	1J11	4	0423 - 3
RE69328	1I25	13	0416 - 3
RE70678	1J9	3	0422 - 3
RE70682	1J9	4	0422 - 3
RE70688	1H23	10	0403 - 1
RE70688	1I2	1	0404 - 5
RE70688	1I4	1	0404 - 7
RE70756	1J9	11	0422 - 3
RE71255	1H25	12	0404 - 3
RE71255	1I12	22	0407 - 9
RE71255	1I23	6	0414 - 1
RE71256	1J9	..	0422 - 3
R100500	1C10	1	0210 - 2
R100500	1C13	14	0210 - 5
R100569	1I9	10	0407 - 5
R100569	1I10	1	0407 - 6
R100569	1J18	28	0452 - 3
R100671	1J4	5	0418 - 3
R10093	2K12	27	1830 - 17
R10093	2K14	18	1830 - 19
R104587	1H15	4	0401 - 1
R104589	1H17	6	0402 - 1
R104628	1I9	14	0407 - 5
R104628	1I10	3	0407 - 6
R104846	1J7	19	0420 - 3
R104846	2C12	1	0578 - 2
R104859	1H22	5	0402 - 6
R105346	1I25	11	0416 - 3
R105346	1J18	4	0452 - 3
R106789	1C15	10	0210 - 7
R106998	1J12	7	0429 - 1
R108997	1D17	3	0250 - 9
R109625	1J18	26	0452 - 3
R109691	3C14	3	2160 - 43
R110126	1H17	2	0402 - 1
R110126	1H19	10	0402 - 3
R11086	1H22	6	0402 - 6
R11086	1J2	10	0417 - 3
R111238	3B15	3	2160 - 19
R111238	3B17	4	2160 - 21
R111238	3B19	3	2160 - 23
R111238	3B21	6	2160 - 25
R111238	3C2	6	2160 - 31
R111238	3C4	6	2160 - 33
R111238	3C6	5	2160 - 35
R112079	1D17	2	0250 - 9
R112210	1C15	4	0210 - 7
R112210	1C19	28	0210 - 11
R112268	1H22	10	0402 - 6
R112268	1J11	17	0423 - 3
R112883	1J14	1	0433 - 1
R113050	2K8	19	1830 - 13
R113050	2K12	40	1830 - 17
R114837	1J11	3	0423 - 3
R115129	1H22	3	0402 - 6
R115176	1C17	4	0210 - 9
R115742	2K10	2	1830 - 15
R115743	2K10	8	1830 - 15
R116081	1H23	7	0403 - 1
R116214	1C19	12	0210 - 11
R116261	1C13	9	0210 - 5
R116311	1H15	6	0401 - 1
R116311	1J12	2	0429 - 1
R116718	1I9	12	0407 - 5
R116718	1I13	6	0407 - 10
R116801	1C15	14	0210 - 7
R116801	1C15	17	0210 - 7
R117073	1I12	6	0407 - 9
R117721	2B8	15	0505 - 9
R117721	2J24	4	1830 - 3
R117721	2K14	19	1830 - 19
R117879	2K19	16	1910 - 5
R119132	1I15	13	0409 - 3
R119383	1J2	1	0417 - 3
R119383	1J18	15	0452 - 3
R119384	1H22	2	0402 - 6
R119384	1J18	24	0452 - 3
R119847	1I12	12	0407 - 9
R120030	1H15	5	0401 - 1
R120467	1H21	5	0402 - 5
R120653	2H18	13	1810 - 5
R120653	2H20	8	1810 - 7
R120653	2H22	7	1810 - 9
R120752	1H15	3	0401 - 1
R120872	1H17	3	0402 - 1
R120953	1H25	21	0404 - 3
R120954	1H25	21	0404 - 3
R121193	1I15	11	0409 - 3
R121316	1J2	9	0417 - 3
R121338	1H23	7	0403 - 1
R121490	1I15	6	0409 - 3
R121491	1I15	5	0409 - 3
R121694	1J16	3	0433 - 3
R121765	1H25	3	0404 - 3
R121765	1I2	1	0404 - 5
R121765	1I5	2	0407 - 1
R122595	1I17	2	0410 - 1
R122618	1I25	12	0416 - 3
R123459	2E24	15	1672 - 3
R124186	1I12	13	0407 - 9
R124381	1H16	1	0401 - 2
R124842	1H16	1	0401 - 2
R125027	1J16	19	0433 - 3
R125223	2K8	3	1830 - 13
R125223	2K14	20	1830 - 19
R125454	2K8	26	1830 - 13
R126117	1C13	9	0210 - 5
R126812	1I25	16	0416 - 3
R127425	1I17	1	0410 - 1
R127426	1I17	3	0410 - 1
R127563	1I18	1	0410 - 2
R128694	1I12	2	0407 - 9
R129628	2D15	2	1011 - 3
R129820	1I12	18	0407 - 9
R129821	1I12	16	0407 - 9
R130036	1C19	34	0210 - 11
R130573	1I23	5	0414 - 1
R130573	1J18	5	0452 - 3
R130573	2B4	10	0505 - 3
R131001	1J13	1	0429 - 2
R131002	1J11	12	0423 - 3
R131051	1I20	7	0413 - 3
R131051	1J18	12	0452 - 3
R131113	1D17	7	0250 - 9
R131114	1D17	12	0250 - 9
R131225	2D15	1	1011 - 3
R131890	1H22	9	0402 - 6
R131890	1J11	16	0423 - 3
R132396	1J18	18	0452 - 3
R132574	1C15	6	0210 - 7
R132574	1C19	31	0210 - 11
R132968	2E24	16	1672 - 3
R133307	1I18	6	0410 - 2
R133998	1J4	8	0418 - 3
R134028	1I25	4	0416 - 3
R134098	2I14	1	1810 - 23
R134098	2I20	10	1810 - 29
R134098	2K6	40	1830 - 11
R134726	1C19	18	0210 - 11
R134920	1H21	17	0402 - 5
R134920	1I20	4	0413 - 3
R135509	1J9	1	0422 - 3
R135510	1J9	2	0422 - 3
R135543	1C9	14	0201 - 5
R135543	1C9	22	0201 - 5
R135543	1C13	5	0210 - 5
R135543	1D15	21	0250 - 7
R135608	2E24	15	1672 - 3
R135895	1I7	10	0407 - 3
R136052	1J9	..	0422 - 3

NUMERICAL INDEX - CONTINUED

PART NO.	GRID	KEY	PAGE
R136063	1J18	13	0452 - 3
R136151	1J4	1	0418 - 3
R150895	2D15	6	1011 - 3
R1612R	1H25	10	0404 - 3
R162769	2K8	12	1830 - 13
R163985	2K8	24	1830 - 13
R164193	2B14	15	0510 - 7
R184863	2B16	17	0510 - 11
R190722	2K8	14	1830 - 13
R190723	2K8	23	1830 - 13
R192109	2K14	21	1830 - 19
R203687	2K14	46	1830 - 19
R21612	1C15	12	0210 - 7
R244664	2K8	23A	1830 - 13
R26058	1J18	29	0452 - 3
R26286	1E4	23	0260 - 13
R26286	1F6	11	0260 - 39
R26286	1H2	9	0350 - 33
R26286	1H4	8	0350 - 35
R26286	2B16	18	0510 - 11
R26287	1C16	12	0210 - 8
R26287	1C17	5	0210 - 9
R26287	1F4	18	0260 - 37
R26287	2D17	28	1060 - 3
R26287	2D22	8	1111 - 3
R26333	1J12	4	0429 - 1
R26375	1C15	1	0210 - 7
R26375	1E16	32	0260 - 25
R26375	1E20	5	0260 - 29
R26375	1E22	4	0260 - 31
R26375	1F2	6	0260 - 35
R26375	1F4	10	0260 - 37
R26375	1F6	13	0260 - 39
R26375	1F19	12	0341 - 3
R26375	2B16	19	0510 - 11
R26375	2C18	4	0930 - 3
R26375	2D4	6	0960 - 11
R26375	2D6	2	0960 - 13
R26375	2D8	2	0960 - 15
R26375	2D10	2	0960 - 17
R26375	2D12	2	0960 - 19
R26375	2D17	29	1060 - 3
R26375	2D19	12	1060 - 5
R26375	2D24	3	1111 - 5
R26375	3C4	10	2160 - 33
R26375	3C6	9	2160 - 35
R26375	3C10	21	2160 - 39
R26375	3E4	34	3450 - 5
R26375	3E18	2	3460 - 15
R26375	3E22	9	3460 - 19
R26375	3F2	9	3460 - 23
R26375	3F4	6	3460 - 25
R26375	3F6	2	3460 - 27
R26375	3F19	2	4260 - 7
R26375	3F21	2	4260 - 9
R26375	3F23	4	4260 - 11
R26448	1C13	3	0210 - 5
R26448	1C15	9	0210 - 7
R26448	1D21	3	0260 - 5
R26448	1D23	41	0260 - 7
R26448	1F4	21	0260 - 37
R26448	2D4	2	0960 - 11
R26448	2D17	30	1060 - 3
R26448	2D19	3	1060 - 5
R26448	2E12	4	1369 - 5
R26448	3B23	11	2160 - 27
R26448	3B25	11	2160 - 29
R26448	3C12	4	2160 - 41
R26448	3E2	28	3450 - 3
R26448	3E4	28	3450 - 5
R26448	3E20	6	3460 - 17
R26448	3F2	4	3460 - 23
R26650	1D11	18	0250 - 3
R26906	1E24	6	0260 - 33
R26906	1I7	6	0407 - 3
R26906	3B17	3	2160 - 21
R26906	3C24	20	2163 - 7
R26906	3D2	20	2163 - 9
R26906	3F4	2	3460 - 25
R27149	1H25	16	0404 - 3
R27149	1J16	5	0433 - 3
R27175	1C13	8	0210 - 5
R27175	1C15	15	0210 - 7
R27175	1C16	2	0210 - 8
R27175	3C24	53	2163 - 7
R27218	1C13	4	0210 - 5
R27218	3E2	29	3450 - 3
R27218	3E4	29	3450 - 5
R27315	1C15	19	0210 - 7
R27315	1D17	15	0250 - 9
R27315	2D15	4	1011 - 3
R27443	1H19	4	0402 - 3
R27474	1I7	1	0407 - 3
R27474	3C24	54	2163 - 7
R27474	3D2	54	2163 - 9
R28193	2L3	10	2001 - 3
R28782	1C16	7	0210 - 8
R28782	1D21	13	0260 - 5
R28782	1D23	43	0260 - 7
R28782	1E4	11	0260 - 13
R28782	1F22	1	0350 - 3
R28782	1F24	1	0350 - 5
R28782	1G6	5	0350 - 13
R28782	1H4	9	0350 - 35
R28782	1H7	20	0360 - 3
R28782	2D12	5	0960 - 19
R28782	2D17	31	1060 - 3
R28782	3B5	22	2160 - 3
R28782	3C12	15	2160 - 41
R28782	3C18	5	2163 - 3
R28782	3C24	21	2163 - 7
R28782	3D2	21	2163 - 9
R28782	3E8	24	3460 - 5
R28782	3E20	2	3460 - 17
R28811	1J14	3	0433 - 1
R29936	1E20	8	0260 - 29
R29936	1E22	10	0260 - 31
R29936	1H7	8	0360 - 3
R29936	1H11	4	0363 - 3
R29936	2C18	7	0930 - 3
R29936	2D24	6	1111 - 5
R29936	3C24	32	2163 - 7
R29936	3D2	32	2163 - 9
R30903	1F6	10	0260 - 39
R31291	2B18	20	0512 - 3
R31654	2K14	22	1830 - 19
R32617	1H22	1	0402 - 6
R32617	1H22	..	0402 - 6
R33259	2K8	20	1830 - 13
R33259	2K12	28	1830 - 17
R34857	1C19	7	0210 - 11
R34858	1C19	5	0210 - 11
R35365	1C13	2	0210 - 5
R35366	1C13	2	0210 - 5
R35367	1C13	2	0210 - 5
R36545	2E22	16	1671 - 3
R36636	3C24	55	2163 - 7
R37023	3C24	22	2163 - 7
R37023	3D2	22	2163 - 9
R37287	3E2	9	3450 - 3
R37287	3E4	9	3450 - 5
R375R	1C15	22	0210 - 7
R39112	1C15	2	0210 - 7
R39112	1J16	1	0433 - 3
R39112	3C4	11	2160 - 33
R39112	3C6	10	2160 - 35
R39112	3C10	22	2160 - 39
R39112	3E2	27	3450 - 3
R39112	3E4	27	3450 - 5
R39503	1J2	16	0417 - 3
R39554	2G14	11	1674 - 27
R39741	1H25	6	0404 - 3
R40236	1I13	5	0407 - 10
R41934	1H15	2	0401 - 1
R41985	2J24	3	1830 - 3
R42340	1H25	9	0404 - 3
R43409	1H25	1	0404 - 3
R43583	2B14	24	0510 - 7
R43621	1H25	13	0404 - 3
R43660	1I12	9	0407 - 9
R44302	2B6	16	0505 - 5
R44302	2F8	14	1673 - 9
R44302	2F10	6	1673 - 11
R44302	2F20	13	1674 - 7
R44302	2F22	20	1674 - 9
R44302	2F24	3	1674 - 11
R44302	2G4	7	1674 - 17
R44302	2G14	4	1674 - 27
R44302	2G14	17	1674 - 27
R44302	2J24	6	1830 - 3
R44302	2L3	11	2001 - 3
R44302	2L7	11	2002 - 5
R46791	2L11	3	2004 - 3
R47150	1J16	2	0433 - 3
R47150	3B21	17	2160 - 25
R47151	1I7	2	0407 - 3
R47153	1I12	7	0407 - 9
R47153	1J18	19	0452 - 3
R48437	1D15	5	0250 - 7
R48733	1C13	16	0210 - 5
R48734	1C13	16	0210 - 5
R48735	1C13	16	0210 - 5
R48776	1C13	17	0210 - 5
R500055	1I12	3	0407 - 9
R500055	1J5	4	0419 - 1
R500098	1I15	3	0409 - 3
R500330	1I12	14	0407 - 9
R500642	1H25	15	0404 - 3
R500642	1I9	1	0407 - 5
R500723	1I25	15	0416 - 3
R501034	1H23	5	0403 - 1
R501034	1I4	1	0404 - 7
R501035	1H23	4	0403 - 1
R501255	1H25	..	0404 - 3
R501640	1I15	18	0409 - 3
R501640	1J18	9	0452 - 3
R502011	1H22	13	0402 - 6
R502011	1J11	15	0423 - 3
R502011	1J18	25	0452 - 3
R502079	1J13	3	0429 - 2
R502083	1H22	4	0402 - 6

NUMERICAL INDEX - CONTINUED

PART NO.	GRID	KEY	PAGE
R502125	1H16	3	0401 - 2
R502126	1H16	3	0401 - 2
R502127	1H16	2	0401 - 2
R502128	1H16	2	0401 - 2
R502187	1I15	4	0409 - 3
R502315	1H16	2	0401 - 2
R502316	1H16	2	0401 - 2
R502317	1H16	3	0401 - 2
R502318	1H16	3	0401 - 2
R502319	1H16	2	0401 - 2
R502320	1H16	2	0401 - 2
R502321	1H16	3	0401 - 2
R502322	1H16	3	0401 - 2
R502598	1H21	7	0402 - 5
R502598	1J18	7	0452 - 3
R502602	1I20	3	0413 - 3
R502695	1H21	11	0402 - 5
R502719	1H21	15	0402 - 5
R502719	1J18	7	0452 - 3
R502773	1I9	2	0407 - 5
R50279	2K8	13	1830 - 13
R502911	1I15	7	0409 - 3
R502912	1I15	8	0409 - 3
R503427	1J2	2	0417 - 3
R503501	1J2	8	0417 - 3
R503578	1I20	6	0413 - 3
R503578	1J18	12	0452 - 3
R504028	1I9	15	0407 - 5
R504089	1I22	44	0413 - 5
R504093	1H21	6	0402 - 5
R504093	1J18	8	0452 - 3
R504093	1J18	17	0452 - 3
R50424	1J18	20	0452 - 3
R504289	1J5	3	0419 - 1
R504327	1I15	..	0409 - 3
R504516	1J7	1	0420 - 3
R504667	1J5	9	0419 - 1
R504668	1J5	14	0419 - 1
R504669	1I13	1	0407 - 10
R504669	1J5	10	0419 - 1
R504670	1J5	6	0419 - 1
R504810	1J4	11	0418 - 3
R504810	1J18	14	0452 - 3
R504811	1H17	5	0402 - 1
R504811	1H22	14	0402 - 6
R504823	1I23	8	0414 - 1
R505515	1J7	44	0420 - 3
R505570	1I20	8	0413 - 3
R505570	1J18	11	0452 - 3
R51196	1C13	10	0210 - 5
R51197	1C13	10	0210 - 5
R51198	1C13	10	0210 - 5
R51199	1C13	10	0210 - 5
R515064	1I23	8	0414 - 1
R515224	1H25	2	0404 - 3
R515224	1J9	17	0422 - 3
R515454	1I20	28	0413 - 3
R515456	1I22	52	0413 - 5
R515457	1I22	54	0413 - 5
R515457	1J18	16	0452 - 3
R515575	1I15	19	0409 - 3
R516315	1J9	15	0422 - 3
R517486	1I15	15	0409 - 3
R518212	1H17	7	0402 - 1
R518376	1I13	7	0407 - 10
R518382	1I12	19	0407 - 9
R518524	1J7	3	0420 - 3
R518563	1J7	6	0420 - 3
R518563	1J7	8	0420 - 3
R518563	1J7	9	0420 - 3
R518563	1J7	33	0420 - 3
R518804	1J5	7	0419 - 1
R518995	1J16	4	0433 - 3
R519287	1H25	20	0404 - 3
R51936	1I20	20	0413 - 3
R51936	1J18	17	0452 - 3
R51936	1J18	..	0452 - 3
R51937	1I20	21	0413 - 3
R519483	1J7	7	0420 - 3
R519578	1J4	6	0418 - 3
R519759	1I20	37	0413 - 3
R520373	1H21	12	0402 - 5
R520504	1J16	20	0433 - 3
R520583	1I7	5	0407 - 3
R521437	1I17	5	0410 - 1
R521438	1I17	4	0410 - 1
R52389	1D17	16	0250 - 9
R52921	2F8	12	1673 - 9
R53108	1J9	18	0422 - 3
R53317	2D17	18	1060 - 3
R53436	2K12	29	1830 - 17
R53528	2I10	16	1810 - 19
R53528	2I12	16	1810 - 21
R53540	2D24	16	1111 - 5
R54124	1B19	6	0110 - 21
R54380	1D17	14	0250 - 9
R54500	1I18	4	0410 - 2
R54500	1I25	1	0416 - 3
R56308	1C13	11	0210 - 5
R56397	2K12	30	1830 - 17
R56962	1J14	4	0433 - 1
R57696	1I9	5	0407 - 5
R57771	1H23	2	0403 - 1
R57771	1I4	1	0404 - 7
R59074	1C25	22	0230 - 5
R59289	1C19	27	0210 - 11
R59460	1C19	21	0210 - 11
R60038	1C19	8	0210 - 11
R61288	1H25	24	0404 - 3
R61497	1I16	1	0409 - 4
R63016	2E12	16	1369 - 5
R63548	1I20	22	0413 - 3
R63548	1J7	12	0420 - 3
R63548	1J7	13	0420 - 3
R63548	1J7	15	0420 - 3
R63548	1J7	16	0420 - 3
R63548	1J7	26	0420 - 3
R63548	1J7	28	0420 - 3
R63548	1J7	31	0420 - 3
R63548	1J7	32	0420 - 3
R63548	1J7	37	0420 - 3
R63548	1J7	38	0420 - 3
R63548	3B21	19	2160 - 25
R63551	1J18	17	0452 - 3
R63551	1J18	..	0452 - 3
R63575	1D17	4	0250 - 9
R63845	1I17	6	0410 - 1
R63845	1I20	2	0413 - 3
R64283	2H10	7	1749 - 3
R66405	1G4	31	0350 - 9
R66405	1G22	13	0350 - 29
R67230	1G4	13	0350 - 9
R67264	1I22	40	0413 - 5
R69166	2J8	26A	1810 - 41
R69166	2J8	27A	1810 - 41
R69166	2J8	28	1810 - 41
R69166	2J8	37B	1810 - 41
R69629	3D18	11	3440 - 3
R70111	1C19	15	0210 - 11
R70112	1C19	20	0210 - 11
R70113	1C19	17	0210 - 11
R70115	1C19	19	0210 - 11
R70663	2I24	50	1810 - 33
R70663	2J2	50	1810 - 35
R71732	1I9	11	0407 - 5
R71732	1I9	13	0407 - 5
R71732	1I13	2	0407 - 10
R71929	1D17	5	0250 - 9
R72328	1H21	4	0402 - 5
R72328	1J4	10	0418 - 3
R72328	1J18	6	0452 - 3
R72430	1D17	6	0250 - 9
R726R	1E2	2	0260 - 11
R72655	2G8	8	1674 - 21
R72655	2J14	11	1821 - 3
R72655	2J18	11	1821 - 7
R73290	3D14	4	3401 - 7
R73290	3D16	5	3401 - 9
R74008	1H23	3	0403 - 1
R76578	3B15	4	2160 - 19
R76578	3B17	5	2160 - 21
R76578	3B19	4	2160 - 23
R76578	3B21	7	2160 - 25
R76578	3B23	2	2160 - 27
R76578	3B25	4	2160 - 29
R76578	3C2	7	2160 - 31
R76578	3C4	7	2160 - 33
R76578	3C6	6	2160 - 35
R76822	1I22	42	0413 - 5
R77175	1C16	15	0210 - 8
R77175	1F4	22	0260 - 37
R77175	1H7	19	0360 - 3
R77175	1I20	38	0413 - 3
R77175	2D24	17	1111 - 5
R77175	3C12	8	2160 - 41
R77175	3C18	13	2163 - 3
R77175	3C24	56	2163 - 7
R77175	3D2	56	2163 - 9
R77664	1D17	1	0250 - 9
R77673	2C13	2	0578 - 3
R77915	2I10	17	1810 - 19
R77915	2I12	17	1810 - 21
R78057	2K10	9	1830 - 15
R78059	2K10	9	1830 - 15
R78393	2D2	16	0960 - 9
R79001	3F11	10	4240 - 5
R79033	2I10	18	1810 - 19
R79033	2I12	18	1810 - 21
R79033	2K6	29	1830 - 11
R79101	3E10	8	3460 - 7
R79101	3E12	8	3460 - 9
R79101	3E14	11	3460 - 11
R79846	1J12	5	0429 - 1
R81162	1D17	9	0250 - 9
R81596	2C8	7	0560 - 3
R81862	2C20	6	0960 - 3
R81862	2C22	19	0960 - 5
R81862	2C24	17	0960 - 7
R81862	3E16	11	3460 - 13
R81862	3F15	11	4240 - 9
R81968	3E16	13	3460 - 13

NUMERICAL INDEX - CONTINUED

PART NO.	GRID	KEY	PAGE
R81968	3F15	17	4240 - 9
R81971	3F15	2	4240 - 9
R82007	1H25	22	0404 - 3
R82075	3F11	13	4240 - 5
R82076	3F11	15	4240 - 5
R82960	3E16	16	3460 - 13
R83020	1J18	2	0452 - 3
R83021	1J18	1	0452 - 3
R83066	2I4	1	1810 - 13B
R83578	3F11	6	4240 - 5
R84262	1C15	20	0210 - 7
R84618	1I15	12	0409 - 3
R84619	1I15	14	0409 - 3
R85027	1H19	9	0402 - 3
R85226	1C19	32	0210 - 11
R86062	1J4	14	0418 - 3
R86063	1I12	8	0407 - 9
R86571	1I16	2	0409 - 4
R87561	1H17	1	0402 - 1
R87561	1H25	23	0404 - 3
R89441	1I7	14	0407 - 3
R89441	1J16	4	0433 - 3
R89879	1I25	10	0416 - 3
R89879	1J18	3	0452 - 3
R89940	3E14	13	3460 - 11
R89940	3E14	16	3460 - 11
R92097	1J18	3	0452 - 3
R93308	1I15	12	0409 - 3
R93311	1I15	14	0409 - 3
R93312	1I15	12	0409 - 3
R93313	1I15	14	0409 - 3
R93314	1I15	12	0409 - 3
R93315	1I15	14	0409 - 3
R93349	1I15	13	0409 - 3
R93350	1I15	11	0409 - 3
R93623	1C19	13	0210 - 11
R93937	1D17	13	0250 - 9
R93948	1H23	6	0403 - 1
R94545	1D17	10	0250 - 9
R94546	1D17	8	0250 - 9
R95116	1C19	10	0210 - 11
R95493	3B15	5	2160 - 19
R95493	3B17	6	2160 - 21
R95493	3B19	5	2160 - 23
R95493	3B21	8	2160 - 25
R95493	3B23	6	2160 - 27
R95493	3B25	5	2160 - 29
R95493	3C2	8	2160 - 31
R95493	3C4	8	2160 - 33
R95493	3C6	7	2160 - 35
R96248	2K8	15	1830 - 13
R96703	1J9	9	0422 - 3
R96753	2K17	18	1910 - 3
R98064	1I12	4	0407 - 9
R98064	1J5	5	0419 - 1
R98250	1J11	1	0423 - 3
R98250	2K12	31	1830 - 17
R98527	1H22	17	0402 - 6
R98953	2C24	11	0960 - 7
R99590	2K12	32	1830 - 17
SE500877	1I9	15	0407 - 5
TT206940	2I10	37	1810 - 19
TT208828	2B24	5	0520 - 3
TY16004	2E8	1	1369 - 1
TY16005	2E8	2	1369 - 1
TY16021	1C13	..	0210 - 5
TY22450	1H21	19	0402 - 5
TY22467	1H21	18	0402 - 5
TY22467	1I25	14	0416 - 3
TY23020	2E22	7	1671 - 3
TY25803	2E22	7	1671 - 3
T101807	2H24	8	1810 - 11
T102934	2F16	13	1674 - 3
T102934	2F20	14	1674 - 7
T102934	2G2	12	1674 - 15
T102934	2G4	8	1674 - 17
T103395	2E3	6	1320 - 3
T103453	3D22	27	3440 - 7
T103590	2H10	6	1749 - 3
T104220	2J8	25	1810 - 41
T104220	2J10	9	1810 - 43
T104220	2J12	9	1810 - 45
T104220	3C10	12	2160 - 39
T104223	3F9	23	4240 - 3
T10510	2H8	5	1747 - 3
T10510	3D22	28	3440 - 7
T10510	3E2	30	3450 - 3
T10510	3E4	17	3450 - 5
T105740	2J14	4	1821 - 3
T105740	2J18	4	1821 - 7
T105773	2D6	11	0960 - 13
T105773	3E18	10	3460 - 15
T105773	3F6	8	3460 - 27
T105773	3F23	14	4260 - 11
T106596	1C19	35	0210 - 11
T107029	2B16	14	0510 - 11
T107141	2B14	13	0510 - 7
T108521	3F13	31	4240 - 7
T108524	3F13	32	4240 - 7
T11180	1I25	3	0416 - 3
T11234	1C23	26	0230 - 3
T11234	1C25	32	0230 - 5
T11234	2C20	27	0960 - 3
T11234	2L5	7	2002 - 3
T11234	2L7	5	2002 - 5
T114792	3F9	6	4240 - 3
T114792	3F17	1	4240 - 11
T115030	2L7	6	2002 - 5
T115031	2L7	7	2002 - 5
T118712	3B15	6	2160 - 19
T118712	3B17	7	2160 - 21
T118712	3B19	6	2160 - 23
T118712	3C2	17	2160 - 31
T118712	3C6	11	2160 - 35
T119153	2I6	5	1810 - 15
T119564	2L7	8	2002 - 5
T120536	1F13	33	0315 - 5
T120536	2G2	17	1674 - 15
T120536	2G10	7	1674 - 23
T124382	3D20	4	3440 - 5
T124495	3E14	26	3460 - 11
T125860	2H18	7	1810 - 5
T125945	3F9	19	4240 - 3
T126204	1H11	12	0363 - 3
T126204	2D19	18	1060 - 5
T126400	2H18	14	1810 - 5
T127280	2H18	8	1810 - 5
T128437	2L7	9	2002 - 5
T128502	3D24	10	3440 - 9
T129981	3D24	11	3440 - 9
T129982	3D24	12	3440 - 9
T131169	2F8	11	1673 - 9
T13254	2B14	26	0510 - 7
T13254	3D6	12	2164 - 5
T133674	2J8	41	1810 - 41
T134530	2I20	12	1810 - 29
T134530	2J4	8	1810 - 37
T134530	2K4	42	1830 - 9
T134530	2K6	42	1830 - 11
T134530	2K14	27	1830 - 19
T134895	2J8	42	1810 - 41
T135675	2I2	1	1810 - 13
T135675	2I4	2	1810 - 13B
T138914	2K12	34	1830 - 17
T139131	2B14	21	0510 - 7
T139131	2B14	23	0510 - 7
T140922	1F13	28	0315 - 5
T141732	3D24	18	3440 - 9
T141733	3D24	19	3440 - 9
T142485	3F9	20	4240 - 3
T143169	2K12	35	1830 - 17
T143169	2K14	29	1830 - 19
T143929	3D20	3	3440 - 5
T143929	3D24	7	3440 - 9
T145360	2L5	8	2002 - 3
T145453	2E7	1	1320 - 7
T146097	2E3	30	1320 - 3
T146098	2E5	17	1320 - 5
T146099	2E7	18	1320 - 7
T146102	1J9	10	0422 - 3
T146104	2E7	2	1320 - 7
T146106	2E5	1	1320 - 5
T146246	1C23	8	0230 - 3
T146246	1C23	22	0230 - 3
T146246	1C25	33	0230 - 5
T146246	1D5	13	0240 - 3
T146246	1D23	9	0260 - 7
T146246	2C20	28	0960 - 3
T146246	2G21	2	1740 - 3
T146246	3F13	14	4240 - 7
T146256	2C22	9	0960 - 5
T146605	2E3	7	1320 - 3
T146606	2E5	2	1320 - 5
T146607	2E7	3	1320 - 7
T147623	3E10	22	3460 - 7
T147623	3E12	22	3460 - 9
T147700	3F9	24	4240 - 3
T147891	2E12	2	1369 - 5
T148164	3E10	23	3460 - 7
T148164	3E12	23	3460 - 9
T148409	2H16	2	1810 - 3
T148409	2I10	23	1810 - 19
T148409	2I12	23	1810 - 21
T149597	1E16	16	0260 - 25
T149818	3F13	15	4240 - 7
T149822	3F13	16	4240 - 7
T150347	3F17	3	4240 - 11
T150614	3D24	13	3440 - 9
T150942	3E2	35	3450 - 3
T150942	3E4	49	3450 - 5
T150942	3E8	28	3460 - 5
T150961	3B25	2	2160 - 29
T151485	3E2	10	3450 - 3
T151797	1B3	7	0110 - 3
T151797	1B5	7	0110 - 5
T151797	1B7	3	0110 - 7
T151797	1B9	3	0110 - 9
T151797	1B11	7	0110 - 11
T151797	1B13	6	0110 - 13
T151797	1B15	7	0110 - 15
T151797	2H2	8	1746 - 3

NUMERICAL INDEX - CONTINUED

PART NO.	GRID	KEY	PAGE
T151806	3F2	21	3460 - 23
T151953	3E16	28	3460 - 13
T152047	3F9	25	4240 - 3
T152169	3D22	29	3440 - 7
T152721	3D24	14	3440 - 9
T152859	1C23	17	0230 - 3
T152862	1C23	23	0230 - 3
T152862	2C20	29	0960 - 3
T152876	3E2	11	3450 - 3
T152877	3E2	12	3450 - 3
T152879	3E2	14	3450 - 3
T152879	3E4	14	3450 - 5
T152881	3E2	16	3450 - 3
T152881	3E4	16	3450 - 5
T152882	3E2	16	3450 - 3
T152882	3E4	16	3450 - 5
T152883	3E2	16	3450 - 3
T152883	3E4	16	3450 - 5
T152990	3E2	19	3450 - 3
T152991	3E2	19	3450 - 3
T152992	3E2	19	3450 - 3
T152993	3E2	22	3450 - 3
T152993	3E4	22	3450 - 5
T152994	3E2	23	3450 - 3
T152995	3E2	24	3450 - 3
T153019	3F13	17	4240 - 7
T153535	2H24	9	1810 - 11
T153680	2E3	8	1320 - 3
T155572	1H11	14	0363 - 3
T155572	2E3	9	1320 - 3
T155579	2E5	3	1320 - 5
T155581	2E7	4	1320 - 7
T155757	1D25	2	0260 - 9
T155988	1D25	9	0260 - 9
T157172	2I20	14	1810 - 29
T157172	2I22	13	1810 - 31
T157211	2D17	19	1060 - 3
T157212	2D17	14	1060 - 3
T157212	2D17	24	1060 - 3
T157220	2D17	20	1060 - 3
T157223	2D17	25	1060 - 3
T157257	2D17	26	1060 - 3
T157258	2D17	15	1060 - 3
T157827	2G21	14	1740 - 3
T157828	2G21	11	1740 - 3
T157829	2G21	10	1740 - 3
T157941	1C9	20	0201 - 5
T157942	1C9	17	0201 - 5
T157943	1C9	11	0201 - 5
T157944	1C9	7	0201 - 5
T157945	1C9	2	0201 - 5
T157952	1C9	1	0201 - 5
T157991	2K21	5	1913 - 3
T158027	3D20	7	3440 - 5
T158102	2G21	6	1740 - 3
T158229	2G21	9	1740 - 3
T158241	1D25	8	0260 - 9
T158248	1D15	4	0250 - 7
T158249	1D15	19	0250 - 7
T158250	1D15	11	0250 - 7
T158298	3C24	58	2163 - 7
T158298	3D2	58	2163 - 9
T158332	1C9	16	0201 - 5
T158334	1C9	9	0201 - 5
T158335	1C9	8	0201 - 5
T158338	1C7	2	0201 - 3
T158339	1D15	20	0250 - 7
T158340	1C7	3	0201 - 3
T158400	2B18	21	0512 - 3
T158436	2B14	27	0510 - 7
T158492	1C9	10	0201 - 5
T158492	1C9	18	0201 - 5
T158509	1C7	16	0201 - 3
T158510	1C7	18	0201 - 3
T158511	1C7	17	0201 - 3
T158513	1C7	5	0201 - 3
T158514	1C7	4	0201 - 3
T158599	1D15	3	0250 - 7
T158600	1D15	2	0250 - 7
T158949	2C6	2	0540 - 3
T159052	2B18	22	0512 - 3
T159656	1D2	3	0230 - 7
T159656	1D7	8	0240 - 5
T159883	2B18	23	0512 - 3
T159884	2B18	40	0512 - 3
T159984	1D15	18	0250 - 7
T159985	1D15	17	0250 - 7
T160017	2I24	17	1810 - 33
T160017	2J2	17	1810 - 35
T160020	2I24	18	1810 - 33
T160020	2J2	18	1810 - 35
T160152	2E3	29	1320 - 3
T160153	2E7	19	1320 - 7
T160154	2E5	18	1320 - 5
T160333	2B4	11	0505 - 3
T160333	2F20	15	1674 - 7
T160334	2B6	1	0505 - 5
T160368	1C7	14	0201 - 3
T160492	2K14	30	1830 - 19
T160541	1E24	8	0260 - 33
T160608	2B14	28	0510 - 7
T160609	2B14	29	0510 - 7
T160698	2H2	9	1746 - 3
T160825	2C6	9	0540 - 3
T161376	2E22	18	1671 - 3
T161531	2K17	19	1910 - 3
T161674	2E3	10	1320 - 3
T162050	2E3	11	1320 - 3
T162051	2E7	6	1320 - 7
T162052	2E5	5	1320 - 5
T162152	1E10	24	0260 - 19
T162155	1E10	23	0260 - 19
T162157	1E10	22	0260 - 19
T162211	1E6	45	0260 - 15
T162212	1E6	53	0260 - 15
T162213	1E6	54	0260 - 15
T162215	1E6	56	0260 - 15
T162215	1E10	56	0260 - 19
T162216	1E8	62	0260 - 17
T162238	2K17	20	1910 - 3
T162343	2C8	12	0560 - 3
T162428	1C25	24	0230 - 5
T162477	2K12	36	1830 - 17
T162575	2B14	30	0510 - 7
T162675	2F20	16	1674 - 7
T162854	1D25	1	0260 - 9
T162876	1F13	29	0315 - 5
T162965	2B14	13	0510 - 7
T163333	1F13	17	0315 - 5
T163334	2J14	12	1821 - 3
T163334	2J18	12	1821 - 7
T163335	2J14	13	1821 - 3
T163335	2J18	13	1821 - 7
T163336	2J14	14	1821 - 3
T163336	2J18	14	1821 - 7
T163658	2E3	12	1320 - 3
T163659	2E7	7	1320 - 7
T163660	2E5	6	1320 - 5
T163748	3D24	18	3440 - 9
T163962	2J14	5	1821 - 3
T163962	2J18	5	1821 - 7
T164030	2K12	37	1830 - 17
T164030	3C24	60	2163 - 7
T164030	3D2	60	2163 - 9
T164031	2B14	31	0510 - 7
T164124	2C18	21	0930 - 3
T164124	2D19	19	1060 - 5
T164124	3E22	19	3460 - 19
T164128	3E22	19	3460 - 19
T164129	3E22	19	3460 - 19
T164264	1F13	30	0315 - 5
T164303	2B24	4	0520 - 3
T16464	1F13	18	0315 - 5
T16464	3F2	22	3460 - 23
T164691	2E7	8	1320 - 7
T164692	2E5	7	1320 - 5
T164945	2K6	44	1830 - 11
T164986	3E4	45	3450 - 5
T165055	3E4	10	3450 - 5
T165056	3E4	12	3450 - 5
T165061	3E4	11	3450 - 5
T165062	3E4	23	3450 - 5
T165063	3E4	24	3450 - 5
T165064	3E4	35	3450 - 5
T165065	3E4	36	3450 - 5
T165066	3E4	37	3450 - 5
T165067	3E4	38	3450 - 5
T165068	3E4	39	3450 - 5
T165069	3E4	39	3450 - 5
T165069	3E4	40	3450 - 5
T165070	3E4	41	3450 - 5
T165071	3E4	47	3450 - 5
T165072	3E4	19	3450 - 5
T165073	3E4	19	3450 - 5
T165073	3E4	20	3450 - 5
T165074	3E4	19	3450 - 5
T165074	3E4	21	3450 - 5
T165075	3E4	32	3450 - 5
T165077	3E4	26	3450 - 5
T165535	1D25	16	0260 - 9
T165791	3E4	44	3450 - 5
T165992	2C8	10	0560 - 3
T166297	2I12	35	1810 - 21
T166297	2K14	31	1830 - 19
T166761	3E22	20	3460 - 19
T166907	1D23	30	0260 - 7
T166916	1D13	12	0250 - 5
T166917	1D13	22	0250 - 5
T166919	1D13	20	0250 - 5
T166920	1D13	13	0250 - 5
T166921	1D13	10	0250 - 5
T166922	1D11	5	0250 - 3
T166923	1D11	14	0250 - 3
T166924	1D11	16	0250 - 3
T166925	1D11	13	0250 - 3
T166926	1D11	15	0250 - 3
T166927	1D11	3	0250 - 3
T166928	1D11	2	0250 - 3
T166929	1D11	10	0250 - 3
T166930	1D11	9	0250 - 3
T166931	1D11	12	0250 - 3

NUMERICAL INDEX - CONTINUED

PART NO.	GRID	KEY	PAGE
T166932	1D11	11	0250 - 3
T166933	1D13	7	0250 - 5
T166934	1D11	6	0250 - 3
T167010	3E2	13	3450 - 3
T167010	3E2	15	3450 - 3
T167010	3E4	13	3450 - 5
T167011	3E2	13	3450 - 3
T167011	3E2	15	3450 - 3
T168383	1F19	7	0341 - 3
T168383	2B16	13	0510 - 11
T168383	2D19	11	1060 - 5
T170180	2D17	21	1060 - 3
T170181	2D17	22	1060 - 3
T171686	2J14	27	1821 - 3
T171686	2J18	27	1821 - 7
T172927	2D17	32	1060 - 3
T173591	2K17	21	1910 - 3
T173779	2J22	5	1822 - 3
T174530	2E22	19	1671 - 3
T174634	2D17	16	1060 - 3
T175236	2D17	27	1060 - 3
T175675	2I24	19	1810 - 33
T175675	2J2	19	1810 - 35
T175744	2E3	13	1320 - 3
T176108	2D17	33	1060 - 3
T176372	2F4	3	1673 - 5
T176405	1D25	14	0260 - 9
T176425	3B5	7	2160 - 3
T176644	2G21	17	1740 - 3
T176870	2J22	6	1822 - 3
T17776	2H10	4	1749 - 3
T17776	3F9	26	4240 - 3
T178946	2F6	3	1673 - 7
T178947	2F6	2	1673 - 7
T178948	2F6	1	1673 - 7
T179952	2C6	9	0540 - 3
T180074	2F6	2	1673 - 7
T180075	2F6	3	1673 - 7
T181306	1D25	24	0260 - 9
T181306	1E2	24	0260 - 11
T181306	3E24	3	3460 - 21
T182184	2E3	25	1320 - 3
T182909	2F22	21	1674 - 9
T182909	2H18	15	1810 - 5
T182909	2H20	9	1810 - 7
T182909	2H22	9	1810 - 9
T183474	3D20	8	3440 - 5
T183756	3B21	18	2160 - 25
T183756	3B25	3	2160 - 29
T183756	3C2	5	2160 - 31
T183756	3C4	5	2160 - 33
T183756	3C6	4	2160 - 35
T183756	3C10	24	2160 - 39
T183810	1D13	17	0250 - 5
T183811	1D13	18	0250 - 5
T183812	1D13	19	0250 - 5
T183816	1D23	4	0260 - 7
T183817	1D23	20	0260 - 7
T183818	1D23	17	0260 - 7
T183819	1D23	18	0260 - 7
T183820	1D23	19	0260 - 7
T183821	1D23	15	0260 - 7
T183822	1D23	34	0260 - 7
T183823	1D23	45	0260 - 7
T183824	1D23	47	0260 - 7
T184082	3D24	19	3440 - 9
T184228	3E4	15	3450 - 5
T184345	2K4	25	1830 - 9
T184345	2K6	30	1830 - 11
T184404	1C25	25	0230 - 5
T184460	1D23	3	0260 - 7
T184629	2D2	4	0960 - 9
T184924	2K8	25	1830 - 13
T184924	2K14	32	1830 - 19
T185030	2B14	32	0510 - 7
T185047	2C22	10	0960 - 5
T185135	3B5	61	2160 - 3
T185138	3B5	15	2160 - 3
T185181	3B5	54	2160 - 3
T185183	3B5	24	2160 - 3
T185184	3B5	57	2160 - 3
T185185	3B5	40	2160 - 3
T185186	3B5	55	2160 - 3
T185254	3B5	25	2160 - 3
T185326	2K2	3	1830 - 5
T185370	1D23	29	0260 - 7
T185424	1F17	2	0325 - 3
T185579	3D20	8	3440 - 5
T185664	2I16	10	1810 - 25
T185769	2F8	16	1673 - 9
T185769	2F10	11	1673 - 11
T185769	2F22	22	1674 - 9
T185769	2F24	4	1674 - 11
T185769	2J8	43	1810 - 41
T185769	2K2	4	1830 - 5
T185769	2L3	13	2001 - 3
T185769	2L7	12	2002 - 5
T185826	3C24	61	2163 - 7
T185826	3D2	61	2163 - 9
T185959	1D21	12	0260 - 5
T185960	1D21	16	0260 - 5
T186350	3D22	16	3440 - 7
T186655	1D13	15	0250 - 5
T186656	1D13	16	0250 - 5
T186657	1D23	27	0260 - 7
T186658	1D23	26	0260 - 7
T186659	1D23	35	0260 - 7
T186793	2E3	14	1320 - 3
T186793	2F22	32	1674 - 9
T186793	2I10	24	1810 - 19
T186793	2I12	24	1810 - 21
T186956	1D13	6	0250 - 5
T186973	2F22	32	1674 - 9
T186987	1E20	18	0260 - 29
T186988	1D13	14	0250 - 5
T186989	1D13	9	0250 - 5
T187196	1D23	33	0260 - 7
T187206	1E4	24	0260 - 13
T187386	2B18	24	0512 - 3
T187387	2B18	39	0512 - 3
T187394	2F8	15	1673 - 9
T187394	2F10	12	1673 - 11
T187394	2F22	23	1674 - 9
T187394	2F24	5	1674 - 11
T187394	2L3	14	2001 - 3
T187394	2L7	13	2002 - 5
T187416	2B18	36	0512 - 3
T187477	2B18	42	0512 - 3
T187526	3C24	62	2163 - 7
T187526	3D2	62	2163 - 9
T187561	1D9	1	0240 - 7
T187566	1D9	4	0240 - 7
T187664	1E20	19	0260 - 29
T187711	1E8	12	0260 - 17
T187712	1E8	88	0260 - 17
T187713	1E8	40	0260 - 17
T187714	1E6	14	0260 - 15
T187715	1E10	55	0260 - 19
T187716	1E10	27	0260 - 19
T187716	1E10	28	0260 - 19
T187717	1E10	28	0260 - 19
T187719	1E8	2	0260 - 17
T187720	1E8	29	0260 - 17
T187721	1E6	47	0260 - 15
T187722	1E8	28	0260 - 17
T187723	1E8	87	0260 - 17
T187724	1E10	5	0260 - 19
T187725	1E10	60	0260 - 19
T187726	1E6	46	0260 - 15
T187727	1E10	29	0260 - 19
T187728	1E8	30	0260 - 17
T187729	1E8	7	0260 - 17
T187730	1E10	57	0260 - 19
T187731	1E8	11	0260 - 17
T187733	1E8	3	0260 - 17
T187734	1E8	1	0260 - 17
T187735	1E10	13	0260 - 19
T187736	1E8	2	0260 - 17
T187737	1E10	3	0260 - 19
T187738	1E10	3	0260 - 19
T187740	1E10	59	0260 - 19
T187741	1E8	4	0260 - 17
T187744	1E8	10	0260 - 17
T187745	1E8	9	0260 - 17
T187757	2E3	15	1320 - 3
T187758	2E7	9	1320 - 7
T187759	2E5	8	1320 - 5
T187767	1E10	4	0260 - 19
T187769	1E8	31	0260 - 17
T187772	1E8	27	0260 - 17
T187774	1E8	32	0260 - 17
T187818	2B18	37	0512 - 3
T187863	2K19	17	1910 - 5
T187896	1E2	9	0260 - 11
T188075	3D18	12	3440 - 3
T188076	3D18	13	3440 - 3
T188182	1E12	12	0260 - 21
T188288	3C14	8	2160 - 43
T188352	1D13	23	0250 - 5
T188651	2K17	22	1910 - 3
T188686	3B5	13	2160 - 3
T188687	3B5	49	2160 - 3
T188690	3B5	6	2160 - 3
T188698	3B5	15	2160 - 3
T188745	1D13	8	0250 - 5
T188806	2I6	9	1810 - 15
T188856	1D23	31	0260 - 7
T188857	1D23	32	0260 - 7
T188984	1D23	13	0260 - 7
T190212	2E3	16	1320 - 3
T190243	3B5	52	2160 - 3
T190513	2K12	38	1830 - 17
T190533	2E5	9	1320 - 5
T190534	2E7	10	1320 - 7
T190610	3E8	2	3460 - 5
T190611	3E8	3	3460 - 5
T190612	3E8	4	3460 - 5
T190613	3E8	5	3460 - 5
T190614	3E8	6	3460 - 5
T190615	3E8	7	3460 - 5
T190616	3E8	8	3460 - 5

NUMERICAL INDEX - CONTINUED

PART NO.	GRID	KEY	PAGE
T190617	3E8	9	3460 - 5
T190639	3E8	11	3460 - 5
T190640	3E8	12	3460 - 5
T190641	3E8	13	3460 - 5
T190642	3E8	14	3460 - 5
T190643	3E8	15	3460 - 5
T190644	3E8	16	3460 - 5
T190645	3E8	17	3460 - 5
T190646	3E8	18	3460 - 5
T190647	3E8	19	3460 - 5
T190648	3E8	22	3460 - 5
T190767	3B15	7	2160 - 19
T190767	3B17	8	2160 - 21
T190767	3B19	7	2160 - 23
T190767	3B21	9	2160 - 25
T190767	3C2	9	2160 - 31
T190767	3C4	12	2160 - 33
T190767	3C6	12	2160 - 35
T190814	1E8	1	0260 - 17
T190892	3C24	63	2163 - 7
T190892	3D2	63	2163 - 9
T191021	1C21	4	0225 - 3
T195587	3D6	8	2164 - 5
T19572	3D20	6	3440 - 5
T196077	1F11	5	0315 - 3
T196077	1F13	32	0315 - 5
T196077	2B22	3	0515 - 5
T196077	2D17	34	1060 - 3
T196077	2F22	24	1674 - 9
T196077	2H16	2	1810 - 3
T196077	2I10	11	1810 - 19
T196077	2I10	12	1810 - 19
T196077	2I10	25	1810 - 19
T196077	2I12	25	1810 - 21
T196077	2I14	4	1810 - 23
T196077	2I18	2	1810 - 27
T196077	2I20	15	1810 - 29
T196077	2I20	21	1810 - 29
T196077	2I22	14	1810 - 31
T196077	2I22	19	1810 - 31
T196077	2I22	20	1810 - 31
T196077	2K6	45	1830 - 11
T196077	2K6	65	1830 - 11
T196077	2L17	6	2007 - 3
T196077	2L17	7	2007 - 3
T196077	2L17	8	2007 - 3
T196078	2J8	13	1810 - 41
T196078	2J8	44	1810 - 41
T196078	2L9	4	2003 - 3
T196079	1F11	6	0315 - 3
T196079	1F13	31	0315 - 5
T196079	1F13	32	0315 - 5
T196079	2B20	5	0515 - 3
T196079	2F22	25	1674 - 9
T196079	2G10	6	1674 - 23
T196079	2H16	2	1810 - 3
T196079	2H18	16	1810 - 5
T196079	2I10	26	1810 - 19
T196079	2I12	26	1810 - 21
T196079	2I20	16	1810 - 29
T196079	2I22	15	1810 - 31
T196079	2I24	51	1810 - 33
T196079	2J2	51	1810 - 35
T196079	2J4	9	1810 - 37
T196079	2J10	17	1810 - 43
T196079	2J12	17	1810 - 45
T196079	2K4	9	1830 - 9
T196079	2K4	46	1830 - 9
T196079	2K6	46	1830 - 11
T196079	2K14	33	1830 - 19
T196080	2H16	2	1810 - 3
T196080	2J10	23	1810 - 43
T196080	2J12	23	1810 - 45
T196080	3C16	6	2160 - 45
T200363	2F22	11	1674 - 9
T20052	1E18	3A	0260 - 27
T20077	1I15	2	0409 - 3
T20129	1I15	1	0409 - 3
T201461	1F13	19	0315 - 5
T201462	1F13	20	0315 - 5
T201481	1F13	21	0315 - 5
T201482	1F13	22	0315 - 5
T201537	2E24	17	1672 - 3
T201538	2E24	20	1672 - 3
T201561	2K4	47	1830 - 9
T201562	2K4	48	1830 - 9
T201564	2I22	16	1810 - 31
T201565	2J4	10	1810 - 37
T201566	2K4	49	1830 - 9
T201568	2K4	50	1830 - 9
T201570	2K6	51	1830 - 11
T201571	2I22	17	1810 - 31
T201673	2J22	7	1822 - 3
T201880	2I24	46	1810 - 33
T201880	2J2	46	1810 - 35
T201999	2C8	13	0560 - 3
T202034	2K14	34	1830 - 19
T202035	2K14	35	1830 - 19
T202074	2I2	4	1810 - 13
T202075	2I2	5	1810 - 13
T202076	2I2	2	1810 - 13
T202077	2I2	3	1810 - 13
T202078	2I2	6	1810 - 13
T202131	2I2	4	1810 - 13
T202132	2I2	5	1810 - 13
T202133	2I2	6	1810 - 13
T202159	2J10	22	1810 - 43
T202159	2J12	22	1810 - 45
T202160	2J10	10	1810 - 43
T202160	2J12	10	1810 - 45
T202161	2J10	11	1810 - 43
T202161	2J12	11	1810 - 45
T202162	2J10	12	1810 - 43
T202162	2J12	12	1810 - 45
T202162	3C10	13	2160 - 39
T202163	2J10	13	1810 - 43
T202163	2J12	13	1810 - 45
T202164	2J10	21	1810 - 43
T202164	2J12	21	1810 - 45
T202242	2B14	33	0510 - 7
T202357	2I18	3	1810 - 27
T202374	2J22	8	1822 - 3
T202586	2J10	18	1810 - 43
T202586	2J12	18	1810 - 45
T202586	3C10	14	2160 - 39
T202634	2B14	34	0510 - 7
T202653	2I24	20	1810 - 33
T202654	2J2	21	1810 - 35
T202655	2I24	20	1810 - 33
T202656	2J2	21	1810 - 35
T202687	2I10	27	1810 - 19
T202687	2I12	27	1810 - 21
T202742	2K14	47	1830 - 19
T202743	2K4	54	1830 - 9
T202744	2K4	55	1830 - 9
T202745	2K6	56	1830 - 11
T202746	2J4	11	1810 - 37
T202768	2B14	35	0510 - 7
T202792	1F13	32	0315 - 5
T202793	2I14	5	1810 - 23
T202797	2J4	12	1810 - 37
T202799	2I10	28	1810 - 19
T202799	2I12	28	1810 - 21
T202800	2I20	17	1810 - 29
T202800	2K14	36	1830 - 19
T202876	3D10	2	3401 - 3
T202921	2I10	29	1810 - 19
T202921	2I12	29	1810 - 21
T202938	3D12	2	3401 - 5
T202940	3D12	2	3401 - 5
T203143	2K6	57	1830 - 11
T203381	3D24	15	3440 - 9
T203388	3D24	16	3440 - 9
T203389	2L3	15	2001 - 3
T203390	2I10	30	1810 - 19
T203494	2K6	58	1830 - 11
T203495	2K6	59	1830 - 11
T203544	2J8	15	1810 - 41
T203545	2J8	18	1810 - 41
T203560	2K4	60	1830 - 9
T203569	2J8	32	1810 - 41
T203576	2J8	33	1810 - 41
T203589	2J8	45	1810 - 41
T203646	2G8	6	1674 - 21
T203871	2J8	34	1810 - 41
T203896	2I16	11	1810 - 25
T203912	2G6	8	1674 - 19
T203950	2I10	31	1810 - 19
T203961	2I20	18	1810 - 29
T203961	2I22	18	1810 - 31
T203984	3E22	21	3460 - 19
T203987	2G6	9	1674 - 19
T204009	2K17	25	1910 - 3
T204018	3F17	4	4240 - 11
T204044	2J10	19	1810 - 43
T204044	2J12	19	1810 - 45
T204124	2K14	37	1830 - 19
T204274	2K14	38	1830 - 19
T204278	2K6	61	1830 - 11
T204301	2J8	46	1810 - 41
T204319	2I16	12	1810 - 25
T204457	2J10	20	1810 - 43
T204457	2J12	20	1810 - 45
T204457	3C10	15	2160 - 39
T204493	2K12	39	1830 - 17
T204543	3D14	9	3401 - 7
T204543	3D16	11	3401 - 9
T204556	2G25	8	1740 - 7
T204599	2I24	22	1810 - 33
T204599	2J2	22	1810 - 35
T204635	2L3	16	2001 - 3
T204643	2J8	17	1810 - 41
T204645	2I10	32	1810 - 19
T204645	2I12	32	1810 - 21
T204678	1H7	3	0360 - 3
T204711	2D2	5	0960 - 9
T204905	3F13	18	4240 - 7
T204938	2L17	7	2007 - 3
T205065	2B8	8	0505 - 9
T205066	2I16	13	1810 - 25
T205068	2I16	14	1810 - 25

NUMERICAL INDEX - CONTINUED

PART NO.	GRID	KEY	PAGE
T205088	2L17	8	2007 - 3
T205161	2E24	18	1672 - 3
T205202	2H4	4	1746 - 5
T205235	2E24	19	1672 - 3
T205243	2I10	27	1810 - 19
T205317	2H6	6	1746 - 7
T205354	2I14	6	1810 - 23
T205367	2E3	28	1320 - 3
T205368	2E3	27	1320 - 3
T205370	2K14	39	1830 - 19
T205401	2J8	20	1810 - 41
T205452	2B8	16	0505 - 9
T205474	2B12	22	0510 - 5
T205480	2B14	36	0510 - 7
T205499	2I24	52	1810 - 33
T205499	2J2	52	1810 - 35
T205547	2H6	7	1746 - 7
T205652	2B14	37	0510 - 7
T205661	2I20	19	1810 - 29
T205662	2I20	20	1810 - 29
T205671	2I20	21	1810 - 29
T205671	2I22	19	1810 - 31
T205711	2B12	23	0510 - 5
T205713	3F23	15	4260 - 11
T205720	3B7	3	2160 - 5
T205722	2E7	11	1320 - 7
T205723	2E5	10	1320 - 5
T205818	2B14	38	0510 - 7
T205819	2F22	26	1674 - 9
T205821	2G14	12	1674 - 27
T205829	2F22	27	1674 - 9
T205883	1F2	23	0260 - 35
T205901	2I24	23	1810 - 33
T205901	2J2	23	1810 - 35
T205902	2I24	24	1810 - 33
T205902	2J2	24	1810 - 35
T205919	2E7	12	1320 - 7
T205920	2E5	11	1320 - 5
T206005	2B14	39	0510 - 7
T206048	1E4	26	0260 - 13
T206080	2J8	21	1810 - 41
T206088	2E3	18	1320 - 3
T206089	2E7	21	1320 - 7
T206090	2E5	21	1320 - 5
T206091	2E3	19	1320 - 3
T206095	2E3	20	1320 - 3
T206096	2E3	21	1320 - 3
T206106	2F22	28	1674 - 9
T206289	2E3	22	1320 - 3
T206290	2E7	13	1320 - 7
T206291	2E5	12	1320 - 5
T206293	2G25	9	1740 - 7
T206295	2E3	26	1320 - 3
T206296	2E7	14	1320 - 7
T206297	2E5	13	1320 - 5
T206344	2G12	4	1674 - 25
T206345	2E7	15	1320 - 7
T206346	2E5	14	1320 - 5
T206434	1C9	19	0201 - 5
T206515	2B6	2	0505 - 5
T206558	2B12	24	0510 - 5
T206594	2B14	40	0510 - 7
T206616	2K6	28	1830 - 11
T206624	2K6	62	1830 - 11
T206625	2K6	63	1830 - 11
T206626	2K6	64	1830 - 11
T206627	2K6	65	1830 - 11
T206718	2K4	66	1830 - 9
T206809	2K6	67	1830 - 11
T206812	2K6	68	1830 - 11
T206813	2K6	31	1830 - 11
T206985	2I12	36	1810 - 21
T206985	2K4	69	1830 - 9
T207072	2B18	41	0512 - 3
T207483	3D22	31	3440 - 7
T207637	2I12	37	1810 - 21
T208102	3D22	32	3440 - 7
T208103	3D22	33	3440 - 7
T208184	2K19	18	1910 - 5
T208242	2E22	20	1671 - 3
T208283	2H22	12	1810 - 9
T208503	2C2	6	0520 - 5
T208792	3D24	17	3440 - 9
T209581	1C23	20	0230 - 3
T209581	1D5	14	0240 - 3
T209889	2F18	5	1674 - 5
T209947	1F15	4	0315 - 7
T210043	1E14	6	0260 - 23
T210101	2I24	25	1810 - 33
T210101	2J2	25	1810 - 35
T210102	2I24	26	1810 - 33
T210102	2J2	26	1810 - 35
T210103	2I24	27	1810 - 33
T210103	2J2	27	1810 - 35
T210106	2I24	28	1810 - 33
T210106	2J2	28	1810 - 35
T210550	2B14	41	0510 - 7
T210564	2B14	42	0510 - 7
T210672	2F22	29	1674 - 9
T210698	2J8	26A	1810 - 41
T210699	2J8	27A	1810 - 41
T210700	2J8	28	1810 - 41
T210711	2J8	35	1810 - 41
T210739	2E12	13	1369 - 5
T210871	2E3	23	1320 - 3
T210933	2E3	24	1320 - 3
T211465	3E22	22	3460 - 19
T211749	3F13	22	4240 - 7
T211864	2I8	5	1810 - 17
T211868	2I8	5	1810 - 17
T211943	2I6	10	1810 - 15
T212073	2I10	36	1810 - 19
T21242	1I9	3	0407 - 5
T212452	1B19	4	0110 - 21
T212453	1B19	3	0110 - 21
T212467	2B12	25	0510 - 5
T212468	2B12	26	0510 - 5
T212793	3D20	5	3440 - 5
T212947	2J4	13	1810 - 37
T213022	3B15	8	2160 - 19
T213022	3B17	9	2160 - 21
T213022	3B19	8	2160 - 23
T213022	3B21	10	2160 - 25
T213022	3C2	10	2160 - 31
T213022	3C4	13	2160 - 33
T213022	3C6	13	2160 - 35
T213023	3B15	9	2160 - 19
T213023	3B17	10	2160 - 21
T213023	3B19	9	2160 - 23
T213023	3B21	11	2160 - 25
T213023	3C2	11	2160 - 31
T213023	3C4	14	2160 - 33
T213023	3C6	14	2160 - 35
T213025	3B15	10	2160 - 19
T213025	3B17	11	2160 - 21
T213025	3B19	10	2160 - 23
T213025	3B21	12	2160 - 25
T213025	3B23	3	2160 - 27
T213025	3B25	6	2160 - 29
T213025	3C2	12	2160 - 31
T213025	3C4	15	2160 - 33
T213025	3C6	15	2160 - 35
T213026	3B13	3	2160 - 13
T213027	3B13	6	2160 - 13
T213027	3C10	17	2160 - 39
T213028	3B13	6	2160 - 13
T213029	3B13	4	2160 - 13
T213030	3B13	5	2160 - 13
T213030	3C10	10	2160 - 39
T213031	3B13	5	2160 - 13
T213031	3B15	11	2160 - 19
T213031	3B17	12	2160 - 21
T213031	3B19	11	2160 - 23
T213031	3B21	13	2160 - 25
T213031	3C2	13	2160 - 31
T213031	3C4	16	2160 - 33
T213031	3C6	16	2160 - 35
T213032	3B23	5	2160 - 27
T213033	3B15	12	2160 - 19
T213033	3B17	13	2160 - 21
T213033	3B19	12	2160 - 23
T213033	3B21	14	2160 - 25
T213033	3C2	14	2160 - 31
T213033	3C4	17	2160 - 33
T213033	3C6	17	2160 - 35
T213096	3D22	34	3440 - 7
T213102	3D22	35	3440 - 7
T213140	2I22	20	1810 - 31
T213167	2I24	29	1810 - 33
T213167	2J2	30	1810 - 35
T213199	2I20	22	1810 - 29
T213199	2I22	21	1810 - 31
T213207	2E7	22	1320 - 7
T213209	2E5	20	1320 - 5
T213210	2E7	20	1320 - 7
T213215	2E5	19	1320 - 5
T213242	2J10	8	1810 - 43
T213242	2J12	8	1810 - 45
T213242	3C10	8	2160 - 39
T213318	3B21	15	2160 - 25
T213318	3C2	15	2160 - 31
T213318	3C4	18	2160 - 33
T213349	2K2	5	1830 - 5
T213443	2I24	31	1810 - 33
T213443	2J2	31	1810 - 35
T213444	2I24	32	1810 - 33
T213444	2J2	32	1810 - 35
T213445	2I24	33	1810 - 33
T213445	2J2	33	1810 - 35
T213447	2I24	34	1810 - 33
T213447	2J2	34	1810 - 35
T213448	2I24	35	1810 - 33
T213448	2J2	35	1810 - 35
T213449	2I24	36	1810 - 33
T213449	2J2	36	1810 - 35
T213450	2I24	36	1810 - 33
T213450	2J2	36	1810 - 35
T213451	2I24	37	1810 - 33
T213451	2J2	37	1810 - 35
T213452	2I24	38	1810 - 33
T213452	2J2	38	1810 - 35

NUMERICAL INDEX - CONTINUED

PART NO.	GRID	KEY	PAGE
T213462	2E12	6	1369 - 5
T213516	3D18	15	3440 - 3
T213579	3D18	16	3440 - 3
T213647	2B12	27	0510 - 5
T213775	2B18	34	0512 - 3
T21387	2K17	23	1910 - 3
T213896	2J6	5	1810 - 39
T213917	2I6	11	1810 - 15
T214023	2I2	7	1810 - 13
T214023	2I4	4	1810 - 13B
T214109	1D25	7	0260 - 9
T214110	1D25	18	0260 - 9
T214111	1E2	18	0260 - 11
T214145	1D25	20	0260 - 9
T214426	2B12	33	0510 - 5
T214971	2E7	5	1320 - 7
T214972	2E5	4	1320 - 5
T215218	2H22	14	1810 - 9
T215268	2E3	17	1320 - 3
T215269	2E7	16	1320 - 7
T215270	2E5	15	1320 - 5
T215319	2I12	39	1810 - 21
T215319	2K4	70	1830 - 9
T215784	2G8	10	1674 - 21
T217194	2B14	42	0510 - 7
T217649	2J8	26A	1810 - 41
T217649	2J8	26B	1810 - 41
T217649	2J8	27A	1810 - 41
T217649	2J8	28	1810 - 41
T217650	2J8	26A	1810 - 41
T217650	2J8	27A	1810 - 41
T217650	2J8	27B	1810 - 41
T217650	2J8	28	1810 - 41
T23027	2L15	4	2005 - 3
T23891	1J14	2	0433 - 1
T24212	3B5	30	2160 - 3
T24212	3B5	42	2160 - 3
T24510	3D22	36	3440 - 7
T24513	2B18	25	0512 - 3
T25875	3F9	12	4240 - 3
T27077	2J24	7	1830 - 3
T27183	1B3	3	0110 - 3
T27183	1B13	3	0110 - 13
T27184	1B3	5	0110 - 3
T27184	1B13	5	0110 - 13
T27193	1B5	3	0110 - 5
T27193	1B11	3	0110 - 11
T27193	1B15	3	0110 - 15
T27194	1B5	5	0110 - 5
T27194	1B11	5	0110 - 11
T27194	1B15	5	0110 - 15
T27260	2K17	24	1910 - 3
T27860	1J16	18	0433 - 3
T28862	3E22	23	3460 - 19
T29342	1E4	25	0260 - 13
T29342	3B5	2	2160 - 3
T32854	2B16	21	0510 - 11
T33372	3D18	14	3440 - 3
T33933	1C23	3	0230 - 3
T33933	1D5	8	0240 - 3
T35390	1H25	14	0404 - 3
T38282	1F19	13	0341 - 3
T38282	2D17	35	1060 - 3
T38377	1E22	14	0260 - 31
T41677	1C9	26	0201 - 5
T41953	1C25	15	0230 - 5
T41953	1D23	16	0260 - 7
T41961	1C23	16	0230 - 3
T41963	1C25	17	0230 - 5
T41982	1C25	26	0230 - 5
T41983	1C25	27	0230 - 5
T41984	1C25	28	0230 - 5
T42199	2E22	21	1671 - 3
T42217	2C24	8	0960 - 7
T42243	3D18	17	3440 - 3
T42302	3B5	62	2160 - 3
T42302	3E2	25	3450 - 3
T42302	3E4	25	3450 - 5
T42574	3D22	37	3440 - 7
T42582	3D22	38	3440 - 7
T42583	3D22	39	3440 - 7
T42589	3D22	20	3440 - 7
T42598	3E20	13	3460 - 17
T42843	2G23	4	1740 - 5
T42844	2G23	5	1740 - 5
T43726	3D14	11	3401 - 7
T43726	3D16	13	3401 - 9
T53268	1J4	3	0418 - 3
T54904	3B5	10	2160 - 3
T54904	3B5	58	2160 - 3
T55210	2J20	3	1821 - 9
T55222	2J20	8	1821 - 9
T55224	2J16	16	1821 - 5
T55224	2J20	12	1821 - 9
T55501	2G14	13	1674 - 27
T58056	2K14	16	1830 - 19
T58542	2H22	10	1810 - 9
T59014	1D21	5	0260 - 5
T59014	1E2	4	0260 - 11
T59506	3F9	9	4240 - 3
T59932	1B3	4	0110 - 3
T59932	1B13	4	0110 - 13
T59933	1B5	4	0110 - 5
T59933	1B11	4	0110 - 11
T59933	1B15	4	0110 - 15
T59933	1B19	2	0110 - 21
T59938	2J8	38	1810 - 41
T59974	3D18	8	3440 - 3
T6Y0309	3F13	23	4240 - 7
T6Y5230	3F9	7	4240 - 3
T6Y5230	3F17	2	4240 - 11
T60260	3D22	40	3440 - 7
T60811	2B8	11	0505 - 9
T60811	2E10	3	1369 - 3
T60811	2J24	5	1830 - 3
T61861	1E14	9	0260 - 23
T63019	2F22	17	1674 - 9
T63019	2I10	13	1810 - 19
T63019	2L17	3	2007 - 3
T63224	2E7	17	1320 - 7
T63225	2E5	16	1320 - 5
T63798	2J20	11	1821 - 9
T66419	2E22	15	1671 - 3
T66702	3D10	1	3401 - 3
T66703	3D10	1	3401 - 3
T66704	3D10	1	3401 - 3
T66707	3D10	1	3401 - 3
T66708	3D14	12	3401 - 7
T66708	3D16	14	3401 - 9
T66709	3D14	12	3401 - 7
T66709	3D16	14	3401 - 9
T70438	3E20	14	3460 - 17
T71306	1C9	12	0201 - 5
T72414	2C6	15	0540 - 3
T72414	2C18	20	0930 - 3
T72414	2G21	7	1740 - 3
T72414	2G23	3	1740 - 5
T72856	2B14	43	0510 - 7
T74410	2F20	19	1674 - 7
T74412	2F16	14	1674 - 3
T74412	2F18	6	1674 - 5
T74412	2G2	13	1674 - 15
T74416	2B16	20	0510 - 11
T74416	2F16	15	1674 - 3
T74416	2F18	7	1674 - 5
T74416	2G2	16	1674 - 15
T75276	2F14	10	1673 - 15
T75276	2F16	16	1674 - 3
T75276	2G4	10	1674 - 17
T75447	1D23	7	0260 - 7
T75644	1C23	10	0230 - 3
T75644	1D5	15	0240 - 3
T75644	2E14	7	1370 - 3
T76127	3B13	6	2160 - 13
T76128	3B13	5	2160 - 13
T76252	2B6	20	0505 - 5
T76252	2G2	15	1674 - 15
T76691	2B24	6	0520 - 3
T76719	3C18	15	2163 - 3
T76833	2I6	12	1810 - 15
T76938	1E24	1	0260 - 33
T76938	1F2	8	0260 - 35
T76938	2C18	8	0930 - 3
T76938	3B5	41	2160 - 3
T77067	3E16	29	3460 - 13
T77613	1D21	9	0260 - 5
T77613	1E4	12	0260 - 13
T77613	1E12	10	0260 - 21
T77613	1E16	21	0260 - 25
T77613	1F4	23	0260 - 37
T77613	2B16	12	0510 - 11
T77613	2D4	3	0960 - 11
T77613	2D6	6	0960 - 13
T77613	2D8	3	0960 - 15
T77613	2D10	3	0960 - 17
T77613	2D12	6	0960 - 19
T77613	2D17	5	1060 - 3
T77613	2D19	4	1060 - 5
T77613	3B23	10	2160 - 27
T77613	3B25	9	2160 - 29
T77613	3C12	2	2160 - 41
T77613	3C18	6	2163 - 3
T77613	3E18	3	3460 - 15
T77613	3E20	7	3460 - 17
T77613	3E22	10	3460 - 19
T77613	3F2	5	3460 - 23
T77613	3F6	3	3460 - 27
T77613	3F19	3	4260 - 7
T77613	3F21	3	4260 - 9
T77613	3F23	5	4260 - 11
T77706	2G25	10	1740 - 7
T77814	1C17	2	0210 - 9
T77814	3C12	6	2160 - 41
T77814	3C24	23	2163 - 7
T77814	3D2	23	2163 - 9
T77814	3E20	3	3460 - 17
T77857	1E16	23	0260 - 25
T77857	1E20	6	0260 - 29
T77857	1E22	5	0260 - 31
T77857	1E24	7	0260 - 33
T77857	1F2	3	0260 - 35

NUMERICAL INDEX - CONTINUED

PART NO.	GRID	KEY	PAGE
T77857	1F4	11	0260 - 37
T77857	2B8	17	0505 - 9
T77857	2C18	5	0930 - 3
T77857	2D4	7	0960 - 11
T77857	2D6	3	0960 - 13
T77857	2D12	3	0960 - 19
T77857	2D24	4	1111 - 5
T77857	2E12	7	1369 - 5
T77857	3F2	10	3460 - 23
T77857	3F4	7	3460 - 25
T77858	1D21	10	0260 - 5
T77858	1E16	8	0260 - 25
T77858	1E20	2	0260 - 29
T77858	1F4	6	0260 - 37
T77858	1H7	5	0360 - 3
T77858	1H11	2	0363 - 3
T77858	2C18	13	0930 - 3
T77858	2D24	7	1111 - 5
T77858	2E12	14	1369 - 5
T77858	3C20	4	2163 - 5
T77858	3C22	4	2163 - 5B
T77858	3C24	24	2163 - 7
T77858	3D2	24	2163 - 9
T77932	1F4	13	0260 - 37
T77932	2C18	10	0930 - 3
T77932	3C24	25	2163 - 7
T77932	3D2	25	2163 - 9
T77932	3F4	3	3460 - 25
T78313	1E16	6	0260 - 25
T78313	3C24	26	2163 - 7
T78313	3D2	26	2163 - 9
T78497	2D24	15	1111 - 5
T78497	3C24	52	2163 - 7
T78497	3D2	52	2163 - 9
T78593	2B6	13	0505 - 5
T78612	1H5	6	0350 - 36
T78662	1C7	8	0201 - 3
T78662	1C9	24	0201 - 5
T78662	1D13	3	0250 - 5
T78707	1E14	7	0260 - 23
T78715	1E14	8	0260 - 23
T78716	2D12	11	0960 - 19
T78716	2D24	18	1111 - 5
T78787	1F13	33	0315 - 5
T78787	2F16	15	1674 - 3
T78787	2F20	17	1674 - 7
T78787	2G4	9	1674 - 17
T79477	2B14	20	0510 - 7
T79477	2B14	22	0510 - 7
T8E6359	3F13	24	4240 - 7
T80123	3E4	42	3450 - 5
T80394	2F10	10	1673 - 11
T80394	2F12	7	1673 - 13
T80938	1C17	1	0210 - 9
T81012	2J8	36	1810 - 41
T81029	2D12	12	0960 - 19
T81029	3F23	16	4260 - 11
T81674	3D22	41	3440 - 7
T82612	3F2	23	3460 - 23
T82791	2F22	30	1674 - 9
T82791	2I10	33	1810 - 19
T82791	2I12	33	1810 - 21
T82792	2F22	31	1674 - 9
T82792	2I10	34	1810 - 19
T82792	2I12	34	1810 - 21
T82855	3D22	42	3440 - 7
T82861	2G8	11	1674 - 21
T82886	2G21	8	1740 - 3
T83426	2F2	6	1673 - 3
T83426	2H8	3	1747 - 3
T83426	2H10	4	1749 - 3
T83426	3D22	30	3440 - 7
T9W2668	3F13	25	4240 - 7
UN7189	1C13	..	0210 - 5
U10746	3F11	11	4240 - 5
U12167	3F9	27	4240 - 3
U12547	1D21	20	0260 - 5
U12547	1E16	10	0260 - 25
U12547	1E20	3	0260 - 29
U12547	1E22	8	0260 - 31
U12547	1E24	10	0260 - 33
U12547	1F2	4	0260 - 35
U12547	1F4	7	0260 - 37
U12547	1F6	12	0260 - 39
U12547	1H7	6	0360 - 3
U12547	1H11	13	0363 - 3
U12547	2D24	19	1111 - 5
U12547	2E12	15	1369 - 5
U12547	3C20	2	2163 - 5
U12547	3C22	2	2163 - 5B
U12547	3C24	27	2163 - 7
U12547	3D2	27	2163 - 9
U13639	1H5	5	0350 - 36
U13639	1H25	7	0404 - 3
U13639	1J18	23	0452 - 3
U17408	1H19	2	0402 - 3
U17409	1C7	7	0201 - 3
U17409	1C9	23	0201 - 5
U17409	1C15	5	0210 - 7
U17409	1C15	8	0210 - 7
U17409	1C19	30	0210 - 11
U17409	1D13	4	0250 - 5
U17409	1I12	5	0407 - 9
U17409	1I12	15	0407 - 9
U17409	1J18	21	0452 - 3
U41528	3F9	28	4240 - 3
U42208	2B12	28	0510 - 5
U42208	3C16	7	2160 - 45
U42462	1C25	29	0230 - 5
U42702	1E18	4	0260 - 27
U42702	3E2	34	3450 - 3
U42702	3E4	48	3450 - 5
U42702	3E8	29	3460 - 5
U43012	2I10	40	1810 - 19
U43021	2I12	42	1810 - 21
U44115	1F24	1	0350 - 5
U44115	1G6	5	0350 - 13
U44115	1H4	5	0350 - 35
U44537	2F4	4	1673 - 5
U44915	2C24	9	0960 - 7
U46457	3C24	28	2163 - 7
U46457	3D2	28	2163 - 9
W37636	1H4	17	0350 - 35
YZ100100	1F22	16	0350 - 3
YZ100100	1F24	24	0350 - 5
YZ100356	1G14	11	0350 - 21
YZ100356	1G16	11	0350 - 23
YZ100952	1G22	8	0350 - 29
YZ101349	1G22	6	0350 - 29
YZ101350	1G22	7	0350 - 29
YZ101353	1G2	9	0350 - 7
YZ101474	1F22	2	0350 - 3
YZ101474	1F24	2	0350 - 5
YZ101474	1G6	2	0350 - 13
YZ101612	1H4	12	0350 - 35
YZ101905	1G24	3	0350 - 31
YZ102234	1G4	6	0350 - 9
YZ102752	1G2	8	0350 - 7
YZ102996	1G12	1	0350 - 19
YZ103040	1G14	12	0350 - 21
YZ103040	1G16	12	0350 - 23
YZ103042	1E24	9	0260 - 33
YZ103067	1G22	2	0350 - 29
YZ103100	1G14	14	0350 - 21
YZ103102	1G16	13	0350 - 23
YZ103111	1G12	13	0350 - 19
YZ103112	1G12	14	0350 - 19
YZ103113	1G10	14	0350 - 17
YZ103114	1H4	1	0350 - 35
YZ103115	1G22	4	0350 - 29
YZ103129	1G12	17	0350 - 19
YZ103129	1G16	17	0350 - 23
YZ103130	1G16	1	0350 - 23
YZ103144	1G14	20	0350 - 21
YZ103146	1F22	7	0350 - 3
YZ103146	1F24	12	0350 - 5
YZ103146	1G2	4	0350 - 7
YZ103148	1F22	3	0350 - 3
YZ103148	1F24	4	0350 - 5
YZ103185	1G22	3	0350 - 29
YZ103188	1G8	2	0350 - 15
YZ103188	1G20	2	0350 - 27
YZ103405	1F22	11	0350 - 3
YZ103405	1F24	17	0350 - 5
YZ103455	1F24	21	0350 - 5
YZ103847	1G8	1	0350 - 15
YZ103875	1G14	17	0350 - 21
YZ103876	1G14	16	0350 - 21
YZ104048	1F19	9	0341 - 3
YZ104052	1G22	1	0350 - 29
YZ104087	1G2	10	0350 - 7
YZ104088	1G18	3	0350 - 25
YZ104114	1G4	18	0350 - 9
YZ104121	1G4	19	0350 - 9
YZ104125	1G4	7	0350 - 9
YZ104140	1G4	25	0350 - 9
YZ104154	1G20	1	0350 - 27
YZ104170	1G4	27	0350 - 9
YZ104179	1H2	2	0350 - 33
YZ104180	1H2	3	0350 - 33
YZ104198	1H2	1	0350 - 33
YZ104198	1H4	1	0350 - 35
YZ104237	1G24	2	0350 - 31
YZ104280	1G2	5	0350 - 7
YZ104280	1G4	30	0350 - 9
YZ104281	1G8	3	0350 - 15
YZ104281	1G18	2	0350 - 25
YZ104653	1G18	1	0350 - 25
YZ104678	1G4	18	0350 - 9
YZ104733	1G14	21	0350 - 21
YZ104746	1G4	17	0350 - 9
YZ104871	1G22	16	0350 - 29
YZ104908	1G10	9	0350 - 17
YZ104908	1G12	9	0350 - 19
YZ104959	1H2	4	0350 - 33
YZ105042	1F19	10	0341 - 3
YZ105059	1G10	13	0350 - 17
YZ105065	1H4	3	0350 - 35
YZ105094	1F24	3	0350 - 5
YZ105096	1F22	5	0350 - 3
YZ105096	1F24	10	0350 - 5

NUMERICAL INDEX - CONTINUED

PART NO.	GRID	KEY	PAGE
YZ105097	1F22	6	0350 - 3
YZ105097	1F24	11	0350 - 5
YZ105122	1F24	15	0350 - 5
YZ105258	1H5	1	0350 - 36
YZ105259	1G4	9	0350 - 9
YZ105319	1F24	9	0350 - 5
YZ105320	1F24	7	0350 - 5
YZ105354	1G4	20	0350 - 9
YZ105375	1F22	11	0350 - 3
YZ105375	1F24	17	0350 - 5
YZ105385	1F22	1	0350 - 3
YZ105385	1F24	1	0350 - 5
YZ105386	1G22	11	0350 - 29
YZ105415	1G10	15	0350 - 17
YZ105415	1G12	15	0350 - 19
YZ105415	1G16	15	0350 - 23
YZ105419	1F19	11	0341 - 3
YZ105419	1F19	21	0341 - 3
YZ105443	1G14	13	0350 - 21
YZ105454	1G10	11	0350 - 17
YZ105454	1G12	11	0350 - 19
YZ105463	1G16	1	0350 - 23
YZ105464	1G14	1	0350 - 21
YZ105465	1G10	12	0350 - 17
YZ105465	1G12	12	0350 - 19
YZ105485	1G10	18	0350 - 17
YZ105485	1G12	18	0350 - 19
YZ105485	1G14	18	0350 - 21
YZ105485	1G16	18	0350 - 23
YZ105486	1H4	3	0350 - 35
YZ105493	1G10	10	0350 - 17
YZ105493	1G12	10	0350 - 19
YZ105494	1G14	10	0350 - 21
YZ105494	1G16	10	0350 - 23
YZ105508	1G10	1	0350 - 17
YZ105509	1G12	1	0350 - 19
YZ105533	1G2	1	0350 - 7
YZ105538	1F24	1	0350 - 5
YZ105538	1G6	7	0350 - 13
YZ105539	1F24	1	0350 - 5
YZ105539	1G6	10	0350 - 13
YZ105575	1G6	1	0350 - 13
YZ105685	1G24	1	0350 - 31
YZ105689	1G10	4	0350 - 17
YZ105689	1G12	4	0350 - 19
YZ105689	1G14	4	0350 - 21
YZ105689	1G16	4	0350 - 23
YZ105724	1G4	21	0350 - 9
YZ105851	1G2	9	0350 - 7
YZ105856	1F11	7	0315 - 3
YZ105891	1G14	10	0350 - 21
YZ105891	1G16	10	0350 - 23
YZ105892	1G10	10	0350 - 17
YZ105892	1G12	10	0350 - 19
YZ105893	1G24	4	0350 - 31
YZ105914	1G24	2	0350 - 31
YZ105982	1G14	12	0350 - 21
YZ105982	1G16	12	0350 - 23
YZ106078	1G10	16	0350 - 17
YZ106078	1G12	16	0350 - 19
YZ106078	1G16	16	0350 - 23
YZ106163	1G14	16	0350 - 21
YZ106184	1G10	17	0350 - 17
YZ106185	1G12	17	0350 - 19
YZ106185	1G16	17	0350 - 23
YZ106202	1G8	1	0350 - 15
YZ106205	1G6	1	0350 - 13
YZ106211	1G10	9	0350 - 17
YZ106211	1G12	9	0350 - 19
YZ106212	1G14	9	0350 - 21
YZ106212	1G16	9	0350 - 23
YZ106316	1H4	3	0350 - 35
YZ120167	1C11	1	0210 - 3
YZ120386	1C19	14	0210 - 11
YZ120398	1C19	3	0210 - 11
YZ120442	1C16	1	0210 - 8
YZ120455	1C15	11	0210 - 7
YZ120471	1C19	16	0210 - 11
YZ120503	1C19	23	0210 - 11
YZ120508	1C17	3	0210 - 9
YZ120522	1C15	23	0210 - 7
YZ120589	1C11	1	0210 - 3
YZ120595	1C11	1	0210 - 3
YZ120661	1C11	1	0210 - 3
YZ120662	1C11	1	0210 - 3
YZ120690	1C19	23	0210 - 11
YZ120826	1C16	9	0210 - 8
YZ120859	1C19	4	0210 - 11
YZ120859	1C19	11	0210 - 11
YZ120909	1C19	22	0210 - 11
YZ120909	1C19	24	0210 - 11
YZ120912	1C19	11	0210 - 11
YZ120913	1C19	4	0210 - 11
YZ150041	1G10	17	0350 - 17
YZ150119	1G10	2	0350 - 17
YZ150119	1G12	2	0350 - 19
YZ150119	1G14	2	0350 - 21
YZ150119	1G16	2	0350 - 23
YZ150141	1H4	4	0350 - 35
YZ150185	1G14	9	0350 - 21
YZ150185	1G16	9	0350 - 23
YZ150204	1H4	16	0350 - 35
YZ150217	1G14	11	0350 - 21
YZ150217	1G16	11	0350 - 23
YZ250086	1G4	23	0350 - 9
YZ250161	1G8	4	0350 - 15
YZ250161	1G10	19	0350 - 17
YZ250161	1G12	19	0350 - 19
YZ250161	1G14	19	0350 - 21
YZ250161	1G16	19	0350 - 23
YZ250249	1H4	2	0350 - 35
YZ250262	1G2	8	0350 - 7
YZ501639	1H4	2	0350 - 35
YZ501931	1H4	4	0350 - 35
YZ502169	1H4	16	0350 - 35
Z21059	2J8	37	1810 - 41
Z21059	2J8	37A	1810 - 41
Z40239	3E2	26	3450 - 3
40B1113	1G8	4	0350 - 15
400R	1C19	1	0210 - 11
4001456	3B5	23	2160 - 3
4003725	1G10	6	0350 - 17
4003725	1G12	6	0350 - 19
4003725	1G14	6	0350 - 21
4003725	1G16	6	0350 - 23
4005234	1G22	15	0350 - 29
4008023	1G2	3	0350 - 7
4008024	1G2	2	0350 - 7
4008520	1G10	4	0350 - 17
4008520	1G12	4	0350 - 19
4008520	1G14	4	0350 - 21
4008520	1G16	4	0350 - 23
4008521	1G10	5	0350 - 17
4008521	1G12	5	0350 - 19
4008521	1G14	5	0350 - 21
4008521	1G16	5	0350 - 23
4009711	1G10	7	0350 - 17
4009711	1G12	7	0350 - 19
4009711	1G14	8	0350 - 21
4009711	1G16	8	0350 - 23