CATERPILLAR®

SEBP4096-21
September 2008

RUTHZIL TRATOR COMERCIAL DE PEÇAS LTDA  11 97083-6812 ROLANDO

# Parts Manual

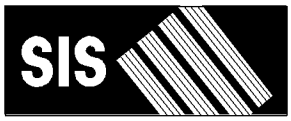


**See "General Information" for New Parts Manual Features.**

## 772 Off-Highway Truck

**RLB1-Up (Machine)**
**RHX1-Up (Engine)**
**NDG1-Up (Transmission)**
**T2C1-Up (Torque Converter)**

**Powered By C18 Engine**
**This Parts Manual is also available in .PDF format on Compact Disc (CD-ROM)-Caterpillar Form No. SERP4096**

# Product and Dealer Information

Note: For product identification plate locations, see the section “Product Identification Information” in the Operation and Maintenance Manual.

**Delivery Date:** _____

## Product Information

Model: _____

Product Identification Number: _____

Engine Serial Number: _____

Transmission Serial Number: _____

Generator Serial Number: _____

Attachment Serial Numbers: _____

Attachment Information: _____

Customer Equipment Number: _____

Dealer Equipment Number: _____

## Dealer Information

Name: _____ Branch: _____

Address: _____

_____

_____

| | Dealer Contact | Phone Number | Hours |
|---|---|---|---|
| Sales: | _____ | _____ | _____ |
| Parts: | _____ | _____ | _____ |
| Service: | _____ | _____ | _____ |

# MEMORANDA

# TABLE OF CONTENTS


| Name | Page |
|---|---|
| **GENERAL INFORMATION** | A5 |
| **REPAIR ALTERNATIVES** | A8 |
| **SUPPLEMENTAL COOLANT ADDITIVES** | A9 |
| **MAINTENANCE PARTS** | A10 |
| **INDEX** | A14 |
| **MACHINE ARRANGEMENT** | 1 |
| CERTIFICATION AR-MACHINE | 1 |
| CHASSIS AR | 1 |
| GENERAL AR | 1 |
| **ENGINE ARRANGEMENT** | 2 |
| ENGINE AR-COMPLETE | 2 |
| ENGINE AR-CORE | 14 |
| INSTALLATION AR-ENGINE | 19 |
| **BASIC ENGINE** | 21 |
| ACTUATOR GP-VALVE | 21 |
| ADAPTER GP-PUMP DRIVE | 23 |
| BASE GP-VALVE COVER & INJ HARN | 24 |
| CAMSHAFT GP | 28 |
| COVER GP-AIR COMPRESSOR | 29 |
| COVER GP-CYLINDER BLOCK | 30 |
| COVER GP-FLYWHEEL HOUSING | 34 |
| COVER GP-FRONT HOUSING | 35 |
| COVER GP-SOUND SUPPRESSION | 37 |
| COVER GP-VALVE MECHANISM | 39 |
| CRANKSHAFT GP | 42 |
| CYLINDER BLOCK AS | 43 |
| CYLINDER BLOCK GP | 49 |
| CYLINDER HEAD AS | 61 |
| CYLINDER HEAD GP | 69 |
| DAMPER GP | 77 |
| DRIVE GP-ACCESSORY | 78 |
| DRIVE GP-PUMP | 79 |
| ENGINE BRAKE GP | 80 |
| FASTENER GP-FRONT HOUSING | 81 |
| FASTENER GP-VALVE MECHANISM | 83 |
| FLYWHEEL GP | 84 |
| GEAR GP-CAMSHAFT | 85 |
| GEAR GP-FRONT | 86 |
| GEAR GP-REAR | 89 |
| GUARD GP-BELT | 91 |
| HOUSING GP-FLYWHEEL | 92 |
| HOUSING GP-FRONT | 96 |
| LIFTING GP-ENGINE | 98 |
| MECHANISM GP-FUEL PUMP & VALVE | 101 |
| MOUNTING GP-ALTERNATOR & COMPR | 106 |
| PAN GP-OIL | 107 |
| PISTON & ROD GP | 113 |
| PLUG GP-CYLINDER BLOCK | 117 |
| PLUG GP-CYLINDER HEAD | 119 |
| PULLEY GP-CRANKSHAFT | 120 |
| ROCKER ARM GP | 121 |
| SEAL GP-CRANKSHAFT | 127 |
| SUPPORT GP-ENGINE | 129 |
| **LUBRICATION SYSTEM** | 134 |
| BASE GP-OIL FILTER | 134 |
| FASTENER GP-OIL PUMP MOUNTING | 138 |
| FILLER GP-ENGINE OIL | 139 |
| FILTER GP-ENGINE OIL | 141 |
| FUMES DISPOSAL GP | 148 |
| GAUGE GP-OIL LEVEL (DIPSTICK) | 149 |
| LINES GP-ENGINE OIL | 151 |
| LINES GP-TURBOCHARGER OIL | 153 |
| MANIFOLD GP-CONTROL | 155 |
| OIL CHANGE GP-HIGH SPEED | 156 |
| PUMP & LINES GP | 157 |
| PUMP GP-ENGINE OIL | 163 |
| **COOLING SYSTEM** | 164 |
| COOLING AR | 164 |
| FAN GP-SUCTION | 165 |
| LINES GP-WATER | 166 |
| PUMP GP-WATER | 182 |
| RADIATOR GP | 185 |
| **AIR INLET AND EXHAUST SYSTEM** | 189 |
| AFTERCOOLER GP | 189 |
| AIR CLEANER GP | 190 |
| COVER GP-TURBOCHARGER | 192 |
| ELBOW GP-EXHAUST | 193 |
| EXHAUST AR-ENGINE | 194 |
| LINES GP-AIR | 195 |
| LINES GP-EXHAUST | 199 |
| MANIFOLD GP-EXHAUST | 201 |
| MUFFLER GP | 202 |
| PIPE GP-EXHAUST | 203 |
| TURBOCHARGER GP | 206 |
| **FUEL SYSTEM** | 211 |
| ADAPTER GP-FAST FILL FUEL | 211 |
| ADAPTER-FAST FILL FUEL | 215 |
| CONTROL GP-GOVERNOR | 216 |
| FILTER GP-WATER SEP & FUEL | 217 |
| HEATER GP-FUEL | 218 |
| INJECTOR GP-FUEL | 221 |
| LINES GP-FUEL | 222 |
| PUMP & MTG GP-FUEL TRANSFER | 229 |
| PUMP GP-FUEL INJECTION | 231 |
| PUMP GP-FUEL PRM & PRIM FILTER | 234 |
| PUMP GP-FUEL PRM & WATER SEP | 239 |
| SENDER GP-FUEL LEVEL | 240 |

# TABLE OF CONTENTS


| Name | Page |
|---|---|
| TANK GP-FUEL | 241 |
| VALVE GP-CHECK | 244 |
| **ELECTRICAL AND STARTING SYSTEM** | 248 |
| ALARM GP | 248 |
| ALTERNATOR GP-CHARGING | 249 |
| APPLICATION GP-MONITOR | 251 |
| BATTERY & WIRING GP | 252 |
| CAMERA AR | 255 |
| CIRCUIT BREAKER GP | 256 |
| CONNECTION GP-ELECTRICAL | 259 |
| CONTROL & MTG GP-ENGINE ELEK | 260 |
| CONTROL & MTG GP-MONITOR | 261 |
| CONTROL GP-MACHINE | 262 |
| ELECTRICAL AR | 263 |
| ELECTRONICS GP-COMMUNICATION | 263 |
| ELECTRONICS GP-MACHINE | 264 |
| ELECTRONICS GP-MONITOR | 264 |
| HEATER GP-JACKET WATER | 270 |
| INSTALLATION AR-COMMUNICATION | 272 |
| INSTALLATION AR-PAYLOAD | 272 |
| INSTALLATION GP-COMMUNICATION | 273 |
| LAMP GP-DOME | 278 |
| LAMP GP-FLOOD | 279 |
| LAMP GP-HEAD & SIGNAL | 282 |
| LAMP GP-MARKER | 284 |
| LAMP GP-PAYLOAD SIGNAL | 285 |
| LIGHTING GP-FLOOD | 287 |
| MOUNTING GP-PRESSURE SENSOR | 291 |
| MOUNTING GP-SENSOR | 292 |
| RADIO GP-COMMUNICATION | 293 |
| SENSOR & MTG GP-PAYLOAD | 294 |
| SENSOR GP-ENGINE | 296 |
| SENSOR GP-POSITION | 298 |
| SENSOR GP-PRESSURE | 301 |
| SENSOR GP-SPEED | 310 |
| SENSOR GP-TEMPERATURE | 318 |
| STARTING AID GP-ETHER | 324 |
| STARTING MOTOR GP-ELECTRIC | 325 |
| SWITCH GP-DISCONNECT | 329 |
| SWITCH GP-MAGNETIC | 331 |
| SWITCH GP-PRESSURE | 336 |
| SWITCH GP-ROCKER | 339 |
| SWITCH GP-TOGGLE | 341 |
| VALVE GP-ETHER STARTING | 342 |
| WIRING GP-CAB | 343 |
| WIRING GP-CAMERA | 347 |
| WIRING GP-CHASSIS | 348 |
| WIRING GP-COMMUNICATION | 368 |
| WIRING GP-ENGINE | 370 |
| WIRING GP-LIGHTING | 377 |
| WIRING GP-MIRROR | 381 |
| WIRING GP-RADIO | 382 |
| WIRING GP-TRACTION CONTROL | 383 |
| WIRING GP-UNIT INJECTOR | 385 |
| **POWER TRAIN** | 386 |
| ACTUATOR GP-ROTARY | 386 |
| AXLE & MOUNTING GP | 388 |
| CASE GP-TRANSMISSION | 389 |
| CONTROL AR-TRACTION | 391 |
| CONTROL GP-TRANSMISSION HYD | 392 |
| COVER GP-SHIPPING | 396 |
| DIFFERENTIAL & BEVEL GEAR GP | 398 |
| DIFFERENTIAL GP | 401 |
| DRAIN GP-ECOLOGY | 402 |
| FINAL DRIVE GP | 403 |
| FILTER GP-OIL | 406 |
| GEAR GP-TRANSFER | 408 |
| LINES GP-POWER TRAIN COOLER | 411 |
| LINES GP-POWER TRAIN OIL | 413 |
| MANIFOLD GP-CONTROL | 423 |
| MOUNTING GP-AXLE | 427 |
| MOUNTING GP-TORQUE CONVERTER | 428 |
| MOUNTING GP-TRANSMISSION | 429 |
| PLANETARY GP-TRANSMISSION | 430 |
| POWER TRAIN AR | 436 |
| PUMP GP-TRANSMISSION | 437 |
| RIM GP | 439 |
| RIM GP-DEMOUNTABLE | 440 |
| SHAFT AR-DRIVE | 440 |
| SHAFT GP-DRIVE | 441 |
| SLIP JOINT GP | 442 |
| SUPPORT GP-AXLE HOUSING | 443 |
| TORQUE CONVERTER GP | 444 |
| TRANSMISSION AR | 449 |
| UNIVERSAL JOINT GP | 450 |
| VALVE GP-LOCKUP CLUTCH & SOL | 453 |
| VALVE GP-PRESSURE CONTROL | 458 |
| VALVE GP-SELECTOR & PRESS CONT | 460 |
| VALVE GP-SOLENOID | 463 |
| VALVE GP-TRACTION CONTROL | 465 |
| VALVE GP-TRANSMISSION CONTROL | 467 |
| WHEEL AR | 468 |
| WHEEL GP-FINAL DRIVE & BRAKE | 469 |
| WHEEL GP-FRONT | 479 |
| **FRAME AND BODY** | 481 |
| BAFFLE GP-RADIATOR | 481 |
| COWLING GP | 482 |
| FENDER GP | 484 |
| FRAME GP | 488 |
| GUARD GP-BOTTOM | 490 |
| GUARD GP-CANOPY | 491 |
| GUARD GP-DRIVE SHAFT | 493 |
| GUARD GP-MUD | 494 |

# TABLE OF CONTENTS


| Name | Page |
|---|---|
| HANDRAIL GP | 502 |
| LINES GP-CENTRAL LUBRICATION | 504 |
| LINES GP-LUBRICATION | 514 |
| LINK GP-UPPER | 529 |
| MIRROR GP-REAR VIEW | 530 |
| MOUNTING AR-TRUCK BODY | 533 |
| MOUNTING GP-TRUCK BODY | 534 |
| SIDEBOARD AS-BODY | 536 |
| STEP GP | 539 |
| SUPPRESSION AR-SOUND | 541 |
| SUPPRESSION GP-SOUND | 542 |
| SUSPENSION GP-FRONT | 554 |
| SUSPENSION GP-REAR | 558 |
| VALVE GP-CHARGING | 561 |
| **BRAKING SYSTEM** | 563 |
| ACCUMULATOR GP-BRAKE | 563 |
| BRAKE GP-HYD CALIPER SERVICE | 564 |
| BRAKE GP-SERVICE | 565 |
| BRAKE GP-SERVICE & PARKING | 566 |
| CONTROL GP-BRAKE | 574 |
| COOLER GP-BRAKE OIL | 575 |
| LINES GP-ACCUMULATOR | 579 |
| LINES GP-BRAKE | 584 |
| LINES GP-SERVICE BRAKE | 594 |
| SLACK ADJUSTER GP | 600 |
| VALVE & MTG GP-BRAKE | 601 |
| VALVE GP-BRAKE | 604 |
| VALVE GP-DIVERTER | 610 |
| VALVE GP-SHUTTLE | 611 |
| **STEERING SYSTEM** | 612 |
| ACCUMULATOR GP-HYDRAULIC | 612 |
| CYLINDER & MTG GP-STEERING | 613 |
| CYLINDER GP-STEERING | 614 |
| FILTER GP-OIL | 615 |
| LINES GP-STEERING | 617 |
| LINK GP-STEERING | 625 |
| PUMP GP-METERING | 627 |
| STEERING COLUMN GP-ADJUSTABLE | 628 |
| TANK & FILTER GP-STEERING | 630 |
| VALVE GP-CHECK & RELIEF | 632 |
| VALVE GP-PRESSURE REDUCING | 634 |
| VALVE GP-RELIEF | 635 |
| VALVE GP-SOLENOID & MANIFOLD | 637 |
| **HYDRAULIC SYSTEM** | 638 |
| ACTUATOR GP-PILOT CONTROL | 638 |
| CONTROL AR-FAN | 640 |
| CYLINDER & MTG GP-HOIST | 641 |
| CYLINDER GP-HOIST | 643 |
| FILTER GP-OIL | 647 |
| HYDRAULIC AR | 649 |
| LINES GP-ATTACHMENT | 650 |
| LINES GP-HOIST | 653 |
| LINES GP-HYDRAULIC FAN | 665 |
| LINES GP-HYDRAULIC OIL COOLER | 685 |
| MOTOR GP-GEAR | 689 |
| PUMP & MOTOR GP-HYDRAULIC | 691 |
| PUMP GP-GEAR | 693 |
| PUMP GP-PISTON | 700 |
| ROTATING GP-PUMP | 704 |
| TANK & MTG GP-HYDRAULIC | 705 |
| TANK GP-HYDRAULIC | 706 |
| VALVE & MTG GP-CONTROL | 710 |
| VALVE GP-CONTROL | 711 |
| VALVE GP-PUMP CONTROL | 715 |
| VALVE GP-RELIEF | 717 |
| VALVE GP-SOLENOID | 719 |
| **OPERATOR STATION** | 721 |
| ADJUSTER GP-SEAT | 721 |
| AIR COMPRESSOR GP-SEAT | 722 |
| AIR CONDITIONER & MOUNTING GP | 723 |
| ARMREST GP | 725 |
| CAB AR | 728 |
| COIL GP-HEATER | 729 |
| COMPRESSOR GP-REFRIGERANT | 730 |
| CONDENSER & MTG GP-REFRIGERANT | 731 |
| CONTROL GP-FOOT BRAKE | 732 |
| CONTROL GP-SERVICE BRAKE | 736 |
| CONTROL GP-STEERING | 738 |
| CONTROL GP-TRANSMISSION | 741 |
| CONTROL GP-UNPRGMED MONITOR | 743 |
| CONTROL GP-TMSN & HOIST | 745 |
| COVER GP-SEAT BELT | 749 |
| DISPLAY GP-CAMERA | 750 |
| DOOR GP-CAB | 751 |
| HEATER & AIR CONDITIONER GP | 755 |
| INSTALLATION GP-RADIO | 758 |
| INSULATION GP-HEAT | 760 |
| KIT-FLOW CONTROL VALVE | 761 |
| LINER GP-CAB | 762 |
| LINES GP-AIR CONDITIONER | 764 |
| LINES GP-HEATER | 768 |
| LITERATURE GP | 770 |
| MOTOR GP-WINDOW WIPER | 771 |
| MOUNTING GP-CAB | 772 |
| PAN GP-BACKREST | 773 |
| PAN GP-DRAIN | 774 |
| PANEL GP-CAB | 775 |
| PANEL GP-INSTRUMENT | 777 |
| PANEL GP-SOUND SUPPRESSION | 781 |
| PEDAL GP-GOVERNOR | 783 |
| PLATFORM AR | 785 |
| PLATFORM GP | 786 |
| RECLINER GP-SEAT | 788 |
| ROPS GP | 789 |

# TABLE OF CONTENTS


| Name | Page | Name | Page |
|---|---|---|---|
| SEAT BELT GP | 791 | | |
| SEAT GP | 794 | | |
| SEAT GP-ADJUSTABLE | 798 | | |
| SEAT GP-COMPANION | 799 | | |
| SEAT GP | 801 | | |
| SUSPENSION GP-SEAT | 802 | | |
| TRIM GP-CAB | 804 | | |
| VALVE GP-WATER | 807 | | |
| VISOR GP-CAB | 808 | | |
| WASHER GP-WINDOW | 809 | | |
| WINDOW GP | 810 | | |
| WINDOW GP-CAB | 814 | | |
| WIPER & WASHER GP-WINDOW | 815 | | |
| **SERVICE EQUIPMENT AND SUPPLIES** | 816 | | |
| CHOCK GP-WHEEL | 816 | | |
| FILM GP | 817 | | |
| LINES & MTG GP-WATER TANK | 820 | | |
| MOUNTING GP-WATER TANK | 820 | | |
| PLATE & FILM GP | 821 | | |
| PLATE GP-ENGINE IDENTIFICATION | 860 | | |
| PROTECTION GP-VANDALISM | 862 | | |
| **PART NUMBER INDEX** | B1 | | |

# GENERAL INFORMATION

## 1. MACHINE IDENTIFICATION

Caterpillar machines are identified by Product Identification Numbers (PIN). Some components included in a machine may be identified by Serial Numbers (S/N). Typical components that will be serialized include engines, transmissions, bulldozers, and rippers. The machine and engine are further identified by arrangement numbers and in some cases modification numbers. These numbers are shown on the product identification plate(s) and on the master plate in the operator's compartment.

Caterpillar dealers need all of these numbers to determine accurate parts identification.

SIS *New Feature*

Effective First Quarter 2001 the Caterpillar Product Identification Number (PIN) changed from 8 to 17 characters. In an effort to provide uniform equipment identification, Caterpillar and other construction equipment manufacturers are moving to comply with the latest version of the product identification numbering standard. Non-road machine PINs are defined by ISO 10261. The new PIN format will apply to all Caterpillar machines and generator sets. The PIN plates and frame marking will display the 17 character PIN. The new format will look like the following:

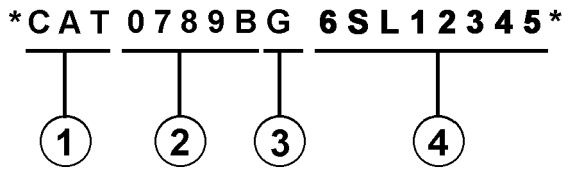


Where:

1. Caterpillar's World Manufacturing Code (characters 1-3)

2. Machine Descriptor (characters 4-8)

3. Check Character (character 9)

4. Machine Indicator Section (MIS) or Product Sequence Number (characters 10-17). These were previously referred to as the Serial Number.

Machines and generator sets produced before First Quarter 2001 will maintain their 8 character PIN format.

Components such as engines, transmissions, axles, etc. and work tools will continue to use an 8 character Serial Number (S/N).

## 2. ORDERING PARTS

**⚠ WARNING**

**When replacement parts are required for this product Caterpillar recommends using Caterpillar replacement parts or parts with equivalent specifications including, but not limited to, physical dimensions, type, strength and material.**

**Failure to heed this warning can lead to premature failures, product damage, personal injury or death.**

Quality Caterpillar replacement parts are available from Caterpillar dealers throughout the world. Their parts inventories are up to date and include all parts normally required to protect your investment in Caterpillar machines. Dealers may offer repair kits or remanufactured parts to allow selection of the most effective repair alternative for a particular situation. When ordering parts, your order should specify the quantity, part number, part name, and the serial number/product identification number of the machine for which the parts are needed.

## 3. PARTS MANUAL ORGANIZATION

Product information in this manual is presented as "information elements" that represent all of the components for the specific model. Engine Arrangement and Seat Group are examples of information elements. The information elements are organized alphabetically by part name and secondarily by part number within each major section of the manual.

## 4. TABLE OF CONTENTS

A table of contents (TOC) is found at the beginning of the manual. The TOC lists each section of the manual with a complete list of all information elements organized as they appear in the manual. Page numbers are provided for quick reference to detailed parts identification illustrations and serviceable consist lists.

## 5. MAINTENANCE PARTS INDEX

The Maintenance Parts Index, located near the beginning of the manual, references most frequently used maintenance part numbers, providing description, quantity, usage and page number. This information is organized alphabetically by part description.

**6. INDEX**

The index located near the front of the manual is an alphabetical listing of all information elements included in the manual. Page numbers are provided for quick reference to detailed parts identification illustrations and serviceable consist lists.

**7. PART NUMBER INDEX**

A numerical index listing all part numbers and the corresponding page number(s) appears at the back of the manual.

**8. CAPTIONS**

Captions located at the beginning of each information element identify the part number and part name along with additional descriptive information. PIN and S/N information found in each caption should be used to select correct information for a specific machine. Field replacement options, identification of optional attachment components, and where used ("part of") information is also provided.

The first line of a caption is shown in larger type font to indicate the beginning of an information element. Captions for additional pages that may be required to illustrate an information element will be shown in standard type font and will include the term *(contd.)* .

**9. NON-SERVICED PARTS**

In some instances it is necessary to display non-serviced parts that are a link to a lower level serviceable consist lists. These non-serviced part numbers are shown in *italic* type indicating that they are not available.

**10. PARTS LIST REFERENCE NUMBERS**

Numbers shown in the Ref No column correspond to numbers used in the associated graphic(s). An alphabetic suffix may be added to a reference number to identify lower level consist items. Numbers shown in the Graphic Ref column refer to the graphic number identifier displayed in the lower left corner of each illustration. The Graphic Ref number may be used in combination with the item Ref No to determine the correct part number. There may be intentional omission of a Ref No in a consist list as information is updated to reflect the latest serviceable part numbers.

**11. INDENTED PART NAMES**

When a part name is indented in a parts list, it is part of (included in) the group or assembly under which it is indented.

**12. ILLUSTRATION REFERENCE LETTERS**

When necessary, illustrations contain reference letters (A, B, C etc.) that are intended to track lines and harnesses from one point to another. They are also used to show where to reconnect illustrations that have been separated.

**13. ABBREVIATIONS AND SYMBOLS**

**O.D.** – Outside Diameter
**I.D.** – Inside Diameter
**A** – Not Part Of This Group
**B** – Use As Required
**C** – Change From Previous Type
**D** – Order By The Meter
**E** – Order By The Centimeter
**F** – Not Shown
**G** – Order By The Inch
**I** – Refer To Hydraulic Information System
**M** – Metric Part
**R** – Remfg Part May Be Available
**Y** – Separate Illustration
**Z** – Not Serviced Separately

SIS *New Feature*

**14. DESCRIPTION OF TYPE CHANGES**

Type - A type is defined as any configuration change that requires an additional Information Element for an Arrangement, Group, or Assembly. If serial number breaks for types are not available, a type # ( Type 1, Type 2, etc.) will be displayed in the caption. These "type" changes are identified with a "C" note (change from previous type) in the Parts List. Only the "types" that apply to this Parts Manual will be included. Additional types may exist causing "C" notes to appear on an Information Element when no other types are shown.

**15.<END>**

This symbol indicates the end of an information element.

**NOTE:**

**Continuing improvement and advancement of product design may cause changes to your machine which may not be included in this publication. Whenever a question arises regarding your caterpillar product or this publication, please consult your caterpillar dealer for the latest available information.**

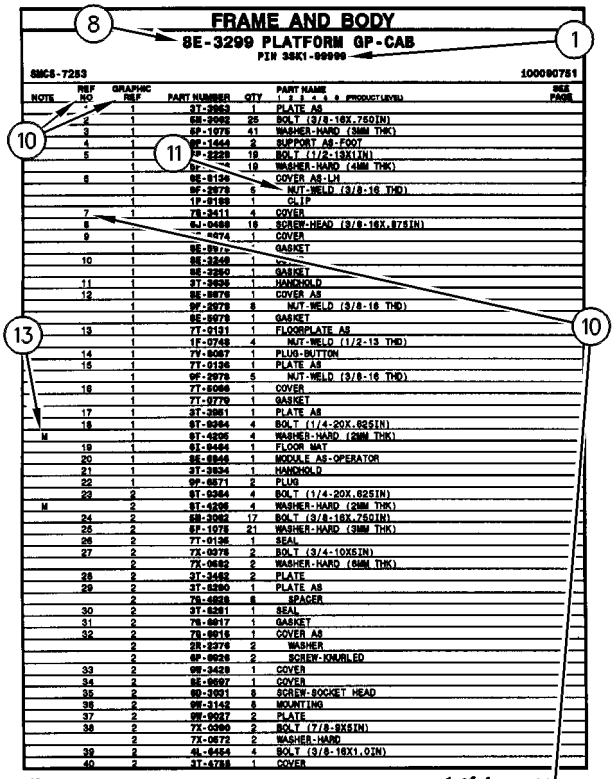
FRAME AND BODY
8E-3299 PLATFORM GP-CAB
PIN 3SK1-99999
SMCS-7253
100090751
NOTE | REF NO | GRAPHIC REF | PART NUMBER | QTY | PART NAME | SEE PAGE
1 | 3T-2953 | PLATE AS
2 | 5S-2992 | BOLT (3/8-16X.750IN)
3 | 9F-1075 | WASHER-HARD (38MM THK)
4 | 1 | 9F-1444 | 2 | SUPPORT AS-FOOT
5 | 1 | 7P-2229 | 18 | BOLT (1/2-13X1IN)
1 | 9F- | 18 | WASHER-HARD (41MM THK)
6 | 1 | 8E-6136 | COVER AS-LH
1 | 9F-2979 | 6 | NUT-WELD (3/8-16 THD)
1 | 1P-0188 | 1 | CLIP
7 | 1 | 7S-2411 | 4 | COVER
8 | 9J-0498 | 18 | SCREW-HEAD (3/8-16X.875IN)
9 | 1 | -4474 | 1 | COVER
1 | 8E-897 | GASKET
10 | 1 | 8E-3249 | 1
1 | 8E-3250 | 1 | GASKET
11 | 1 | 3T-3638 | 1 | HANDHOLD
12 | 1 | 8E-8978 | 1 | COVER AS
1 | 9F-2979 | 8 | NUT-WELD (3/8-16 THD)
1 | 8E-8979 | 1 | GASKET
13 | 1 | 7T-0131 | 1 | FLOORPLATE AS
1 | 1F-0748 | 4 | NUT-WELD (1/2-13 THD)
14 | 1 | 7V-8067 | 1 | PLUG-BUTTON
15 | 1 | 7T-0136 | 1 | PLATE AS
1 | 9F-2978 | 5 | NUT-WELD (3/8-16 THD)
16 | 1 | 7T-8066 | 1 | COVER
1 | 7T-8779 | 1 | GASKET
17 | 1 | 3T-3861 | 1 | PLATE AS
18 | 1 | 6T-8264 | 4 | BOLT (1/4-20X.625IN)
M | 1 | 9T-4205 | 4 | WASHER-HARD (26MM THK)
19 | 1 | 6L-8494 | 1 | FLOOR MAT
20 | 1 | 8E-8846 | 1 | MODULE AS-OPERATOR
21 | 1 | 3T-3834 | 1 | HANDHOLD
22 | 1 | 9P-8871 | 2 | PLUG
23 | 2 | 6T-8264 | 4 | BOLT (1/4-20X.625IN)
M | 2 | 9T-4205 | 4 | WASHER-HARD (26MM THK)
24 | 2 | 5S-3062 | 17 | BOLT (3/8-16X.750IN)
25 | 2 | 9F-1075 | 21 | WASHER-HARD (38MM THK)
26 | 2 | 7T-0135 | 1 | SEAL
27 | 2 | 7X-0975 | 2 | BOLT (3/4-10X5IN)
2 | 7X-0652 | 2 | WASHER-HARD (64MM THK)
28 | 2 | 3T-3452 | 2 | PLATE
29 | 2 | 3T-8290 | 1 | PLATE AS
2 | 7S-4828 | 8 | SPACER
30 | 2 | 3T-8281 | 1 | SEAL
31 | 2 | 7S-8817 | 1 | GASKET
32 | 2 | 7S-8816 | 1 | COVER AS
2 | 2R-2276 | 2 | WASHER
2 | 6P-8926 | 2 | SCREW-KNURLED
33 | 2 | 9W-3429 | 1 | COVER
34 | 2 | 8E-8897 | 1 | COVER
35 | 2 | 9D-3931 | 8 | SCREW-SOCKET HEAD
36 | 2 | 9W-3142 | 8 | MOUNTING
37 | 2 | 9W-8927 | 2 | PLATE
38 | 2 | 7X-0990 | 2 | BOLT (7/8-9X5IN)
2 | 7X-0672 | 2 | WASHER-HARD
39 | 2 | 4L-8454 | 4 | BOLT (3/8-16X1.0IN)
40 | 2 | 3T-4788 | 1 | COVER
12 FRAME AND BODY
1 of 4
SELP4570-01

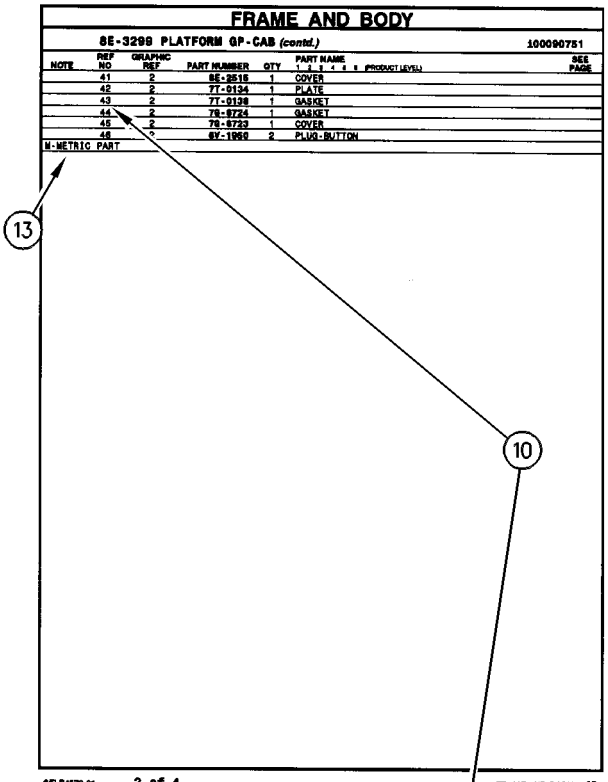
FRAME AND BODY
8E-3299 PLATFORM GP-CAB (contd.)
100090751
NOTE | REF NO | GRAPHIC REF | PART NUMBER | QTY | PART NAME | SEE PAGE
41 | 2 | 8E-2516 | 1 | COVER
42 | 2 | 7T-0134 | 1 | PLATE
43 | 2 | 7T-0138 | 1 | GASKET
44 | 2 | 7S-8724 | 1 | GASKET
45 | 2 | 7S-8723 | 1 | COVER
46 | 2 | 6V-1950 | 2 | PLUG-BUTTON
M-METRIC PART
SELP4570-01
2 of 4
FRAME AND BODY 13

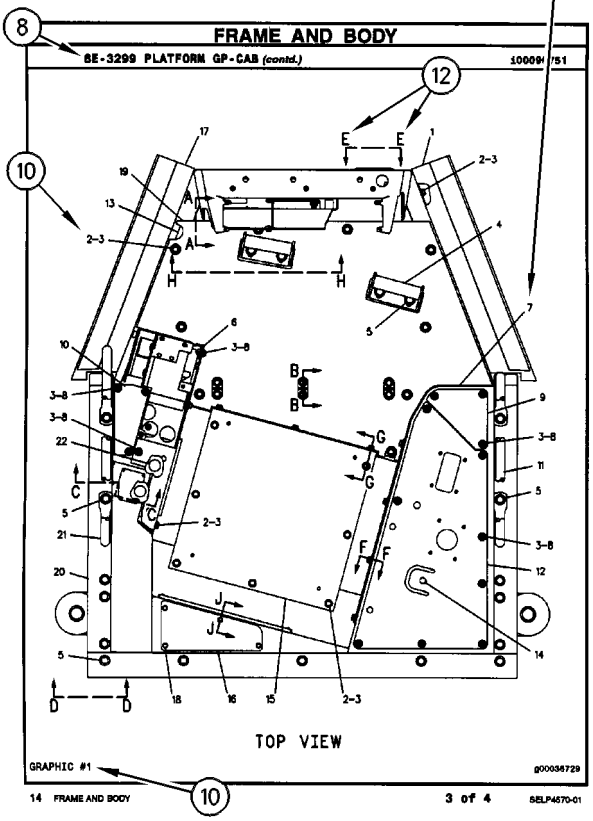
FRAME AND BODY
8E-3299 PLATFORM GP-CAB (contd.)
100090751
TOP VIEW
GRAPHIC #1
g00036729
14 FRAME AND BODY
3 of 4
SELP4570-01

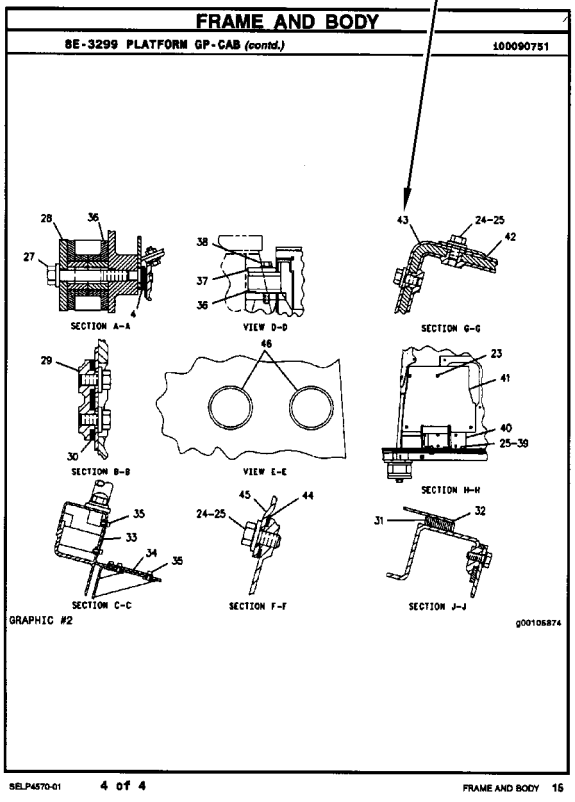
FRAME AND BODY
8E-3299 PLATFORM GP-CAB (contd.)
100090751
SECTION A-A
VIEW D-D
SECTION G-G
SECTION B-B
VIEW E-E
SECTION H-H
SECTION C-C
SECTION F-F
SECTION J-J
GRAPHIC #2
g00105874
SELP4570-01
4 of 4
FRAME AND BODY 15

# REPAIR ALTERNATIVES

**REMANUFACTURED COMPONENTS**

As an option when making repairs consider Caterpillar Remanufactured Components. Components that are available through the Caterpillar Remanufactured Program are identified three ways in the parts book:

- with the letter R in the note field of the parts list
- with an R* at the beginning of the first line of the caption
- with an *R at the end of the first line of the caption

Typical components included in the Remanufacturing Program include:

ALTERNATORS
CONNECTING RODS
CRANKSHAFTS - UNDERSIZE
CRANKSHAFTS - UPGRADE TO NEW
CYLINDER HEADS
ELECTRONIC CONTROL MODULES (ECM)
ELECTRONIC SENSORS
FUEL INJECTORS
FUEL NOZZLES
FUEL PUMPS
GOVERNORS
OIL PUMPS
PISTONS
SHORT BLOCKS
STARTERS
TURBOCHARGERS - COMPLETE
TURBOCHARGER CARTRIDGES
WATER PUMPS

Caterpillar Remanufactured engines for many engine arrangements are also available.

# SUPPLEMENTAL COOLANT ADDITIVES

**CUSTOMER BENEFITS:**

Protects against cavitation, foam, erosion, corrosion, and scale buildup in cooling systems.

- Provides measured coolant conditioner.

**DESCRIPTION:**

Additives deplete from the coolant with normal operation. For this reason, Supplemental Coolant Additives (SCA) must be added to all heavy duty coolants at regular intervals. In addition, when not using a fully formulated, pre-charged antifreeze, like Caterpillar's DEAC, an initial charge of SCA must be added to the cooling system. The amount of SCA added to the system is dependent on the capacity of the system.

The SCA for initial fill is provided as a liquid. SCA's for maintenance intervals are available in liquid form and as a spin-on element. (No Spin-on available for 3600 Family of Engines)

**NOTE:**

The amount of SCA added at initial fill is not the same as the amount added at maintenance intervals.

The coolant additive elements can be used with any ethylene or propylene glycol type antifreeze which meets ASTM D4985 or ASTM D5345 Specifications.

**NOTE:**

For use with standard heavy duty coolant only, not for use with Extended Life Coolant.

**PARTS NEEDED:**

| Cooling System Capacity | | Liquid SCA at Initial Fill | Liquid SCA at Maintenance* | Spin-on SCA Maintenance Element* |
|---|---|---|---|---|
| Liters | Gallons | | | |
| 22-30 | (6-8) | 3P-2044 (1) | 6V-3542 (1) | 111-2370 (1) |
| 30-38 | (8-10) | 3P-2044 (1)<br>6V-3542 (1) | 111-2372 (1) | 111-2369 (1) |
| 38-49 | (10-13) | 3P-2044 (1)<br>8T-1589 (1) | 111-2372 (1) | 111-2369 (1) |
| 49-64 | (13-17) | 3P-2044 (2) | 8T-1589 (1) | 9N-3368 (1) |
| 64-83 | (17-22) | 3P-2044 (2)<br>8T-1589 (1) | 111-2372 (1)<br>6V-3542 (1) | 111-2371 (1) |
| 83-114 | (22-30) | 3P-2044 (3)<br>8T-1589 (1) | 3P-2044 (1) | 9N-3718 (1) |
| 114-163 | (30-43) | 3P-2044 (5) | 3P-2044 (1)<br>6V-3542 (1) | 111-2371 (2) |
| 163-242 | (43-64) | 3P-2044 (8) | 3P-2044 (2) | 9N-3718 (2) |

** Normal maintenance period is 250 hrs. See your Operation and Maintenance Manual for complete coolant maintenance instructions.*

( ) Indicates quantity required.

# MAINTENANCE PARTS

| DESCRIPTION | PART NUMBER | QTY | WHERE USED | PAGE |
|---|---|---|---|---|
| **AIR INLET AND EXHAUST SYSTEM** | | | | |
| FILTER ELEMENT AS-AIR (PRIMARY) | 246-5009 | 1 | AIR CLEANER GP | 190 |
| FILTER ELEMENT AS-AIR (SECONDARY) | 246-5010 | 1 | AIR CLEANER GP | 190 |
| **BASIC ENGINE** | | | | |
| BELT-SERPENTINE (ALTERNATOR) | 273-4204 | 1 | DRIVE GP-ACCESSORY | 78 |
| PLUG-DRAIN (ENGINE OIL PAN) | 109-5839 | 1 | PAN GP-OIL | 107 |
| | | 1 | PAN GP-OIL | 111 |
| SEAL-VALVE COVER | 242-9537 | 1 | COVER GP-VALVE MECHANISM | 39 |
| | | 1 | COVER GP-VALVE MECHANISM | 40 |
| **COOLING SYSTEM** | | | | |
| CAP AS-RADIATOR | 294-3342 | 1 | RADIATOR GP | 185 |
| FILTER-WATER PUMP | 136-3742 | 1 | PUMP GP-WATER | 182 |
| REGULATOR-TEMPERATURE (92-DEG C) (COOLANT) | 248-5513 | 2 | LINES GP-WATER | 166 |

# MAINTENANCE PARTS

| DESCRIPTION | PART NUMBER | QTY | WHERE USED | PAGE |
|---|---|---|---|---|
| **ELECTRICAL AND STARTING SYSTEM** | | | | |
| BATTERY (12-VOLT, MAINTENANCE FREE) | 153-5710 | 2 | BATTERY & WIRING GP | 252 |
| CIRCUIT BREAKER AS (15-AMPERE) (AIR CONDITIONER) | 6T-3643 | 1 | CIRCUIT BREAKER GP | 256 |
| CIRCUIT BREAKER AS (15-AMPERE) (ENGINE ECM) | 6T-3643 | 1 | CIRCUIT BREAKER GP | 256 |
| CIRCUIT BREAKER AS (20-AMPERE) (LIGHTING) | 200-8577 | 1 | CIRCUIT BREAKER GP | 256 |
| CIRCUIT BREAKER AS (90-AMPERE) (ALTERNATOR) | 171-2211 | 1 | WIRING GP-CHASSIS | 349 |
| | | 1 | WIRING GP-CHASSIS | 355 |
| | | 1 | WIRING GP-CHASSIS | 362 |
| CIRCUIT BREAKER AS (90-AMPERE) (MAIN) | 171-2211 | 1 | WIRING GP-CHASSIS | 349 |
| | | 1 | WIRING GP-CHASSIS | 355 |
| | | 1 | WIRING GP-CHASSIS | 362 |
| ELEMENT AS-JACKET WATER HEATER (240-VOLT, 1500-WATT) | 207-6901 | 1 | HEATER GP-JACKET WATER | 270 |
| FLASHER AS (TURN SIGNAL) | 8D-6946 | 1 | WIRING GP-CAB | 344 |
| FUSE (10-AMPERE) | 9W-1442 | 14 | CIRCUIT BREAKER GP | 256 |
| FUSE (15-AMPERE) | 9W-1441 | 7 | CIRCUIT BREAKER GP | 256 |
| FUSE (20-AMPERE) | 9W-1446 | 3 | CIRCUIT BREAKER GP | 256 |
| KEY | 5P-8500 | 1 | BATTERY & WIRING GP | 253 |
| KEY (BATTERY DISCONNECT) | 8H-5306 | 1 | SWITCH GP-DISCONNECT | 329 |
| LAMP (24-VOLT) (DOME) | 7N-9943 | 1 | LAMP GP-DOME | 278 |
| LAMP (24-VOLT, 21-WATT) (AMBER) | 242-0588 | 1 | LAMP GP-HEAD & SIGNAL | 282 |
| | | 1 | LAMP GP-HEAD & SIGNAL | 283 |
| LAMP (24-VOLT, 5-WATT) (CLEAR) | 130-3515 | 1 | LAMP GP-HEAD & SIGNAL | 282 |
| | | 1 | LAMP GP-HEAD & SIGNAL | 283 |
| LAMP (24-VOLT, 75/70-WATT) (CLEAR) | 9X-3465 | 1 | LAMP GP-HEAD & SIGNAL | 282 |
| | | 1 | LAMP GP-HEAD & SIGNAL | 283 |
| LAMP GP-MARKER (AMBER, 24-VOLT) (SIDE MARKER, RH) | 246-9871 | 2 | WIRING GP-LIGHTING | 377 |
| LAMP GP-PAYLOAD SIGNAL (24-VOLT) (PAYLOAD MONITOR) | 246-9869 | 2 | LAMP GP-PAYLOAD SIGNAL | 285 |
| | 246-9870 | 2 | LAMP GP-PAYLOAD SIGNAL | 285 |
| LAMP-HALOGEN (24-VOLT, 65-WATT) | 9X-3463 | 1 | LAMP GP-FLOOD | 279 |
| | | 1 | LAMP GP-FLOOD | 280 |
| | | 1 | LAMP GP-FLOOD | 281 |
| **FUEL SYSTEM** | | | | |
| CAP AS-FILLER (FAST FILL FUEL) | 101-8909 | 1 | ADAPTER GP-FAST FILL FUEL | 211 |
| CAP AS-FILLER (FUEL TANK) | 7X-7700 | 1 | TANK GP-FUEL | 242 |
| FILTER AS-WATER SEP & FUEL (PRIMARY) | 326-1644 | 1 | FILTER GP-WATER SEP & FUEL | 217 |
| FILTER-FUEL (ADVANCED EFFICIENCY) | 1R-0762 | 1 | PUMP GP-FUEL PRM & PRIM FILTER | 236 |
| FILTER-FUEL (ADVANCED EFFICIENCY) (SECONDARY) | 1R-0762 | 1 | PUMP GP-FUEL PRM & PRIM FILTER | 234 |
| STRAINER-FUEL | 9P-7121 | 1 | TANK GP-FUEL | 242 |

# MAINTENANCE PARTS

| DESCRIPTION | PART NUMBER | QTY | WHERE USED | PAGE |
|---|---|---|---|---|
| **HYDRAULIC SYSTEM** | | | | |
| CAP-FILLER (HYDRAULIC TANK FILL) | 7H-1447 | 1 | TANK GP-HYDRAULIC | 708 |
| FILTER ELEMENT AS-OIL (STANDARD EFFICIENCY) | 134-0964 | 1 | FILTER GP-OIL | 647 |
| FILTER-OIL (ULTRA HIGH EFFICIENCY) | 126-1813 | 1 | FILTER GP-OIL | 648 |
| PLUG-DRAIN (HYDRAULIC TANK) | 9J-7031 | 1 | TANK GP-HYDRAULIC | 708 |
| SCREEN (HOIST CONTROL VALVE) | 6E-1297 | 1 | VALVE GP-CONTROL | 711 |
| SCREEN AS | 9T-9227 | 1 | TANK GP-HYDRAULIC | 708 |
| SCREEN AS (HYDRAULIC OIL) | 6E-6640 | 1 | LINES GP-HYDRAULIC OIL COOLER | 685 |
| SCREEN AS (HYDRAULIC TANK) | 239-8460 | 1 | TANK GP-HYDRAULIC | 708 |
| SCREEN AS (HYDRAULIC) | 130-4834 | 1 | VALVE GP-SOLENOID | 720 |
| STRAINER AS (HYDRAULIC TANK) | 5J-7438 | 1 | TANK GP-HYDRAULIC | 708 |
| **LUBRICATION SYSTEM** | | | | |
| CAP AS-FILLER (ENGINE OIL) | 113-5253 | 1 | FILLER GP-ENGINE OIL | 139 |
| | 6N-2985 | 1 | FILLER GP-ENGINE OIL | 139 |
| FILTER AS-ENGINE OIL (STANDARD EFFICIENCY) | 1R-0716 | 1 | FILTER GP-ENGINE OIL | 142 |
| | | 1 | FILTER GP-ENGINE OIL | 144 |
| FILTER-ENGINE OIL (ADVANCED EFFICIENCY) | 1R-1808 | 1 | FILTER GP-ENGINE OIL | 146 |
| | | 1 | FILTER GP-ENGINE OIL | 147 |
| **OPERATOR STATION** | | | | |
| BLADE AS-WIPER (700-MM) (FRONT WINDOW) | 6V-7419 | 1 | WIPER & WASHER GP-WINDOW | 815 |
| CAP-VENTED (WINDOW WASHER RESERVOIR) | 8E-8292 | 1 | WASHER GP-WINDOW | 809 |
| FILTER ELEMENT-AIR (CAB) | 259-3222 | 1 | HEATER & AIR CONDITIONER GP | 755 |
| FILTER ELEMENT-CAB AIR (CAB HEATER, AIR CONDITIONER) | 268-6704 | 1 | AIR CONDITIONER & MOUNTING GP | 723 |
| KEY (LITERATURE COMPARTMENT) | 5P-8500 | 2 | LITERATURE GP | 770 |
| LAMP AS-INDICATOR (WHITE, 24-VOLT) | 287-7198 | 2 | CONTROL GP-TMSN & HOIST | 745 |
| | | 2 | CONTROL GP-TMSN & HOIST | 747 |
| LAMP-LED (24-VOLT, WHITE) (DASH) | 163-6508 | 2 | PANEL GP-INSTRUMENT | 777 |
| RECEIVER-DRYER GP (REFRIGERANT) | 175-7162 | 1 | LINES GP-AIR CONDITIONER | 766 |
| SEAT BELT GP | 8Y-4030 | 1 | SEAT GP-COMPANION | 800 |
| SEAT BELT GP (RETRACTABLE) | 280-8111 | 1 | SEAT GP | 797 |

# MAINTENANCE PARTS

| DESCRIPTION | PART NUMBER | QTY | WHERE USED | PAGE |
|---|---|---|---|---|
| **POWER TRAIN** | | | | |
| BREATHER (REAR DIFFERENTIAL) | 9T-1119 | 1 | MOUNTING GP-AXLE | 427 |
| BREATHER AS (TORQUE CONVERTER, TRANSMISSION) | 9C-4937 | 1 | LINES GP-POWER TRAIN OIL | 413 |
| | | 1 | LINES GP-POWER TRAIN OIL | 418 |
| FILTER ELEMENT AS-OIL (STANDARD EFFICIENCY) | 1R-0719 | 1 | FILTER GP-OIL | 406 |
| FILTER ELEMENT AS-OIL (ULTRA HIGH EFFICIENCY) | 132-8875 | 1 | FILTER GP-OIL | 406 |
| | | 1 | FILTER GP-OIL | 407 |
| FILTER GP-OIL (POWER TRAIN) | 6P-4603 | 1 | LINES GP-POWER TRAIN OIL | 413 |
| PLUG (TRANSMISSION OIL DRAIN) | 138-1510 | 1 | DRAIN GP-ECOLOGY | 402 |
| PLUG-MAGNETIC (DIFFERENTIAL OIL) | 126-8921 | 1 | MOUNTING GP-AXLE | 427 |
| PLUG-MAGNETIC (FINAL DRIVE, OIL FILL) | 8M-3837 | 1 | FINAL DRIVE GP | 403 |
| PLUG-MAGNETIC (FRONT WHEEL, OIL FILL) | 8M-3837 | 1 | WHEEL GP-FRONT | 479 |
| PLUG-MAGNETIC (REAR AXLE) | 8M-5576 | 1 | DIFFERENTIAL & BEVEL GEAR GP | 399 |
| SCREEN (CONTROL MANIFOLD) | 6E-5066 | 1 | MANIFOLD GP-CONTROL | 423 |
| SCREEN AS (TRACTION CONTROL) | 6T-7532 | 1 | VALVE GP-TRACTION CONTROL | 465 |
| SCREEN GP-MAGNETIC (TRANSFER GEAR) | 4S-8603 | 1 | GEAR GP-TRANSFER | 408 |
| SCREEN-SUCTION (GEAR TRANSFER-INPUT) | 8P-3795 | 1 | GEAR GP-TRANSFER | 408 |
| SCREEN-SUCTION (TORQUE CONVERTER) | 3S-3875 | 1 | TORQUE CONVERTER GP | 444 |
| **STEERING SYSTEM** | | | | |
| CAP-FILLER (HYDRAULIC OIL,STEERING) | 7H-1447 | 1 | TANK & FILTER GP-STEERING | 630 |
| FILTER-OIL (ADVANCED EFFICIENCY) (HYDRAULIC CASE DRAIN) | 9T-8578 | 1 | FILTER GP-OIL | 615 |
| FILTER-OIL (ULTRA HIGH EFFICIENCY) (HYDRAULIC CASE DRAIN) | 144-0832 | 1 | FILTER GP-OIL | 615 |

# INDEX


| Name | Page |
|---|---|

## A

ACCUMULATOR GP-BRAKE–CHARGED . . . . . 563
ACCUMULATOR GP-HYDRAULIC–UNCHARGED . . . . . 612
ACCUMULATOR-REFRIGERANT . . . . . 766
ACTUATOR GP-PILOT CONTROL–PROPORTIONAL SOLENOID . . . . . 638
ACTUATOR GP-ROTARY . . . . . 386
ACTUATOR GP-VALVE . . . . . 21, 22
ADAPTER GP-FAST FILL FUEL . . . . . 211, 213
ADAPTER GP-PUMP DRIVE . . . . . 23
ADAPTER-FAST FILL FUEL . . . . . 211, 215
ADJUSTER GP-SEAT . . . . . 721
AFTERCOOLER GP . . . . . 189
AIR CLEANER GP . . . . . 190, 191
AIR COMPRESSOR GP-SEAT . . . . . 722
AIR CONDITIONER & MOUNTING GP . . . . . 723
ALARM GP (BACKUP) . . . . . 289
ALARM GP–ACTION . . . . . 248
ALTERNATOR GP-CHARGING . . . . . 249
APPLICATION GP-MONITOR–MESSENGER . . . . 251
APPLICATION GP-MONITOR–PAYLOAD MONITOR . . . . . 251
ARMREST GP . . . . . 725
ARMREST GP–LH . . . . . 726
ARMREST GP–RH . . . . . 727
AXLE & MOUNTING GP . . . . . 388

## B

BAFFLE GP-RADIATOR . . . . . 481
BASE GP-OIL FILTER . . . . . 136, 142
BASE GP-OIL FILTER–ENGINE . . . . . 134, 135, 137
BASE GP-VALVE COVER & INJ HARN . . . . . 24, 25, 26, 27
BATTERY & WIRING GP . . . . . 252
BATTERY (12-VOLT, MAINTENANCE FREE) . . . . 252
BELT-SERPENTINE (ALTERNATOR) . . . . . 78
BLADE AS-WIPER (700-MM) (FRONT WINDOW) . . . . . 815
BRAKE GP-HYD CALIPER SERVICE–FRONT . . . 564
BRAKE GP-SERVICE & PARKING–REAR . . . . . 566, 569, 572
BRAKE GP-SERVICE–FRONT . . . . . 565
BREATHER (REAR DIFFERENTIAL) . . . . . 427
BREATHER AS (TORQUE CONVERTER, TRANSMISSION) . . . 413, 418

## C

CAB AR . . . . . 728
CAMERA AR–WORK AREA VISUAL SYSTEM . . . 255
CAMERA GP (115-DEG, COLOR) . . . . . 347
CAMSHAFT GP . . . . . 28
CAP AS-FILLER (ENGINE OIL) . . . . . 139
CAP AS-FILLER (FAST FILL FUEL) . . . . . 211
CAP AS-FILLER (FUEL TANK) . . . . . 242
CAP AS-RADIATOR . . . . . 185
CAP-FILLER (HYDRAULIC OIL,STEERING) . . . . . 630
CAP-FILLER (HYDRAULIC TANK FILL) . . . . . 708
CAP-VENTED (WINDOW WASHER RESERVOIR) . . . . . 809
CASE GP-TRANSMISSION . . . . . 389
CERTIFICATION AR-MACHINE–EUROPEAN MARKET . . . . . 1
CHASSIS AR . . . . . 1
CHOCK GP-WHEEL . . . . . 816
CIRCUIT BREAKER AS (15-AMPERE) (AIR CONDITIONER) . . . . . 256
CIRCUIT BREAKER AS (15-AMPERE) (ENGINE ECM) . . . . . 256
CIRCUIT BREAKER AS (20-AMPERE) (LIGHTING) . . . . . 256
CIRCUIT BREAKER AS (90-AMPERE) (ALTERNATOR) . . . . . 349, 355, 362
CIRCUIT BREAKER AS (90-AMPERE) (MAIN) . . . 349, 355, 362
CIRCUIT BREAKER GP . . . . . 256
CLAMP GP . . . . . 750
COIL GP-HEATER . . . . . 729
COMPRESSOR GP-REFRIGERANT . . . . . 730
CONDENSER & MTG GP-REFRIGERANT . . . . . 731
CONNECTION GP-ELECTRICAL . . . . . 259
CONNECTOR GP-ELECTRONIC . . . . . 750
CONTROL & MTG GP-ENGINE ELEK . . . . . 260
CONTROL & MTG GP-MONITOR–PAYLOAD . . . . 261
CONTROL AR-FAN–HYDRAULIC . . . . . 640
CONTROL AR-TRACTION . . . . . 391
CONTROL GP-BRAKE . . . . . 574
CONTROL GP-FOOT BRAKE . . . . . 733, 735
CONTROL GP-FOOT BRAKE–SECONDARY . . . 734
CONTROL GP-FOOT BRAKE–SERVICE . . . . . 732
CONTROL GP-GOVERNOR–ACCELERATOR . . . 216
CONTROL GP-MACHINE . . . . . 262

# INDEX


| Name | Page |
|---|---|
| CONTROL GP-MONITOR (MESSENGER) | 744 |
| CONTROL GP-SERVICE BRAKE | 736 |
| CONTROL GP-STEERING | 738 |
| | 739 |
| CONTROL GP-TMSN & HOIST | 745 |
| | 747 |
| CONTROL GP-TRANSMISSION | 741 |
| | 742 |
| CONTROL GP-TRANSMISSION HYD | 392 |
| CONTROL GP-UNPRGMED MONITOR | 743 |
| CONTROL GP-UNPRGMED MONITOR–MESSENGER | 744 |
| CONTROL GP-UNPROGRAMMED | 260 |
| CONTROL GP-UNPROGRAMMED (CHASSIS) | 262 |
| CONVERTER GP-ELECTRICAL (24-VOLT TO 12-VOLT) | 761 |
| COOLER GP-BRAKE OIL | 575 |
| | 577 |
| COOLING AR | 164 |
| CORE AS-AFTERCOOLER | 189 |
| CORE AS-ENGINE OIL COOLER | 166 |
| CORE AS-OIL COOLER (BRAKE) | 575 |
| | 577 |
| CORE AS-RADIATOR | 187 |
| COVER GP-ACCESS | 174 |
| | 176 |
| | 179 |
| COVER GP-AIR COMPRESSOR | 29 |
| COVER GP-CYLINDER BLOCK | 30 |
| | 31 |
| | 32 |
| | 33 |
| COVER GP-FLYWHEEL HOUSING | 34 |
| COVER GP-FRONT HOUSING | 35 |
| | 36 |
| COVER GP-SEAT BELT | 749 |
| COVER GP-SHIPPING | 396 |
| COVER GP-SOUND SUPPRESSION | 38 |
| COVER GP-SOUND SUPPRESSION–FRONT HOUSING | 37 |
| COVER GP-TURBOCHARGER | 192 |
| COVER GP-VALVE MECHANISM | 39 |
| | 40 |
| | 41 |
| COWLING GP | 482 |
| CRANKSHAFT GP | 42 |
| CYLINDER & MTG GP-HOIST | 641 |
| CYLINDER & MTG GP-STEERING | 613 |
| CYLINDER BLOCK AS | 43 |
| | 44 |
| | 45 |
| | 46 |
| | 47 |
| | 48 |
| CYLINDER BLOCK GP | 49 |
| | 51 |
| | 53 |
| | 55 |
| | 57 |
| | 58 |
| | 59 |
| | 60 |
| CYLINDER GP-HOIST–TELESCOPING | 643 |
| | 645 |
| CYLINDER GP-HYDRAULIC (EXHAUST DIVERTER) | 674 |
| | 680 |
| CYLINDER GP-STEERING | 614 |
| CYLINDER HEAD AS | 61 |
| | 63 |
| | 64 |
| | 67 |
| CYLINDER HEAD GP | 69 |
| | 70 |
| | 71 |
| | 72 |
| | 73 |
| | 75 |


## D


| | |
|---|---|
| DAMPER GP | 77 |
| DIFFERENTIAL & BEVEL GEAR GP | 398 |
| | 399 |
| DIFFERENTIAL GP | 401 |
| DISPLAY GP-CAMERA | 750 |
| DOOR GP-CAB | 751 |
| | 753 |
| DRAIN GP-ECOLOGY–POWER TRAIN OIL | 402 |
| DRIVE GP-ACCESSORY | 78 |
| DRIVE GP-PUMP | 79 |


## E


| | |
|---|---|
| ELBOW GP-EXHAUST | 193 |
| ELECTRICAL AR | 263 |
| ELECTRONICS GP-COMMUNICATION–PRODUCT LINK 300 | 263 |
| ELECTRONICS GP-ENGINE RATINGS | 2 |
| | 3 |
| | 5 |
| | 7 |
| | 10 |
| | 11 |
| ELECTRONICS GP-MACHINE | 264 |
| ELECTRONICS GP-MONITOR–ARABIC, ENGLISH, TURKISH | 269 |
| ELECTRONICS GP-MONITOR–BURMESE, ENGLISH, INDONESIAN, VIETNAMESE | 267 |

# INDEX


| Name | Page |
|---|---|
| ELECTRONICS GP-MONITOR–CROATIAN, ENGLISH, MONGOLIAN, SERBIAN | 269 |
| ELECTRONICS GP-MONITOR–CZECH, ENGLISH, POLISH, RUSSIAN | 266 |
| ELECTRONICS GP-MONITOR–DANISH, DUTCH, ENGLISH, GERMAN | 265 |
| ELECTRONICS GP-MONITOR–ENGLISH, CHINESE | 268 |
| ELECTRONICS GP-MONITOR–ENGLISH, FINNISH, ICELANDIC, NORWEGIAN | 267 |
| ELECTRONICS GP-MONITOR–ENGLISH, FINNISH, NORWEGIAN, SWEDISH | 266 |
| ELECTRONICS GP-MONITOR–ENGLISH, FRENCH, GERMAN, ITALIAN | 265 |
| ELECTRONICS GP-MONITOR–ENGLISH, GERMAN, HUNGARIAN, RUSSIAN | 266 |
| ELECTRONICS GP-MONITOR–ENGLISH, GREEK, HEBREW, ITALIAN | 268 |
| ELECTRONICS GP-MONITOR–ENGLISH, HUNGARIAN, SLOVAKIAN | 269 |
| ELECTRONICS GP-MONITOR–ENGLISH, INDONESIAN, MALAYSIAN, THAI | 267 |
| ELECTRONICS GP-MONITOR–ENGLISH, JAPANESE | 268 |
| ELECTRONICS GP-MONITOR–ENGLISH, KOREAN | 265 |
| ELECTRONICS GP-MONITOR–ENGLISH, SPANISH, FRENCH, PORT | 264 |
| ELECTRONICS GP-MONITOR–PAYLOAD CONTROL | 264 |
| ELEMENT AS-JACKET WATER HEATER (240-VOLT, 1500-WATT) | 270 |
| ENGINE AR-COMPLETE | 2 |
| | 3 |
| | 4 |
| | 6 |
| | 8 |
| | 9 |
| | 11 |
| | 13 |
| ENGINE AR-CORE | 14 |
| | 15 |
| | 16 |
| | 17 |
| | 18 |
| ENGINE BRAKE GP | 80 |
| EXHAUST AR-ENGINE | 194 |

## F

| | |
|---|---|
| FAN GP-SUCTION | 165 |
| FASTENER GP-CYLINDER HEAD | 71 |
| | 72 |
| | 75 |
| FASTENER GP-FRONT HOUSING | 81 |
| | 82 |
| FASTENER GP-OIL PUMP MOUNTING–ENGINE | 138 |
| FASTENER GP-VALVE MECHANISM | 83 |
| FENDER GP–LH | 484 |
| | 485 |
| FENDER GP–RH | 486 |
| | 487 |
| FILLER GP-ENGINE OIL | 139 |
| FILM GP | 817 |
| FILM GP–DUAL SLOPE BODY | 819 |
| FILM GP–FLAT FLOOR BODY | 818 |
| FILM-IDENTIFICATION | 755 |
| FILM-IDENTIFICATION (FILL, DRAIN) | 156 |
| FILM-IDENTIFICATION (FUSE PANEL) | 256 |
| FILM-IDENTIFICATION (GREASE POINT) (FRONT STRUT, RH, LH) | 508 |
| | 510 |
| FILM-IDENTIFICATION (GREASE POINTS) (REAR CENTER) | 508 |
| | 510 |
| FILM-IDENTIFICATION (HYDRAULIC OIL) | 822 |
| | 827 |
| FILM-IDENTIFICATION (INSTRUMENT PANEL) (DASH) | 777 |
| FILM-IDENTIFICATION (RELAY PANEL) | 343 |
| FILM-IDENTIFICATION (RELAY) | 381 |
| FILM-INFORMATION (GREASE POINT, LEFT REAR) | 504 |
| | 514 |
| FILM-INFORMATION (GREASE POINT, LOWER LEFT SIDE) | 504 |
| | 514 |
| FILM-INFORMATION (GREASE POINT, LOWER RIGHT SIDE) | 504 |
| | 514 |
| FILM-INFORMATION (GREASE POINT, REAR PIVOT FRAME) | 504 |
| | 514 |
| FILM-INFORMATION (GREASE POINT, RIGHT REAR) | 504 |
| | 514 |
| FILM-INFORMATION (GREASE POINT, UPPER LEFT SIDE) | 504 |
| | 514 |
| FILM-INFORMATION (GREASE POINT, UPPER RIGHT SIDE) | 504 |
| | 514 |
| FILM-INFORMATION (PRODUCT LINK, READ OMM) | 273 |
| | 275 |
| | 832 |
| | 847 |
| FILM-INSTRUCTION (ENGINE SHUTDOWN) | 822 |
| | 827 |

# INDEX


| Name | Page |
|---|---|
| | 837 |
| | 842 |
| FILM-INSTRUCTION (HYDRAULIC ACCUMULATOR) (SERBIAN) | 859 |
| FILM-INSTRUCTION (SEAT ADJUSTMENT) | 802 |
| FILM-STRIPE (REFLECTIVE, WHITE) (3-CM) | 165 |
| FILM-WARNING (CRUSH HAZARD, READ MANUAL) | 554 |
| | 556 |
| | 558 |
| | 560 |
| FILM-WARNING (HIGH PRESSURE, READ MANUAL) | 554 |
| | 556 |
| | 558 |
| | 560 |
| FILM-WARNING (HIGH PRESSURE, READ OMM) | 563 |
| FILM-WARNING (HOT FLUID UND PRESS, READ OMM) | 837 |
| FILM-WARNING (NO WELD, NO DRILL, READ OMM) | 822 |
| | 827 |
| | 837 |
| | 842 |
| FILM-WARNING (PRODUCT LINK RADIO, INTL) | 273 |
| | 832 |
| FILM-WARNING (PRODUCT LINK RADIO, U.S.) | 275 |
| | 847 |
| FILM-WARNING (UNIVERSAL, READ OMM, U.S.) | 847 |
| FILTER AS-ENGINE OIL (STANDARD EFFICIENCY) | 142 |
| | 144 |
| FILTER AS-WATER SEP & FUEL (PRIMARY) | 217 |
| FILTER ELEMENT AS-AIR (PRIMARY) | 190 |
| FILTER ELEMENT AS-AIR (SECONDARY) | 190 |
| FILTER ELEMENT AS-OIL (STANDARD EFFICIENCY) | 406 |
| | 647 |
| FILTER ELEMENT AS-OIL (ULTRA HIGH EFFICIENCY) | 406 |
| | 407 |
| FILTER ELEMENT-AIR (CAB) | 755 |
| FILTER ELEMENT-CAB AIR (CAB HEATER, AIR CONDITIONER) | 723 |
| FILTER GP-ENGINE OIL | 141 |
| | 142 |
| | 144 |
| | 146 |
| | 147 |
| FILTER GP-OIL (POWER TRAIN) | 413 |
| FILTER GP-OIL–HYDRAULIC FAN | 647 |
| FILTER GP-OIL–POWER TRAIN | 406 |
| | 407 |
| FILTER GP-OIL– STEERING PUMP CASE DRAIN | 648 |
| FILTER GP-OIL–ULTRA HIGH EFFICIENCY– STEERING RETURN | 615 |
| FILTER GP-WATER SEP & FUEL | 217 |
| FILTER-ENGINE OIL (ADVANCED EFFICIENCY) | 146 |
| | 147 |
| FILTER-FUEL (ADVANCED EFFICIENCY) | 236 |
| FILTER-FUEL (ADVANCED EFFICIENCY) (SECONDARY) | 234 |
| FILTER-OIL (ADVANCED EFFICIENCY) (HYDRAULIC CASE DRAIN) | 615 |
| FILTER-OIL (ULTRA HIGH EFFICIENCY) | 648 |
| FILTER-OIL (ULTRA HIGH EFFICIENCY) (HYDRAULIC CASE DRAIN) | 615 |
| FILTER-WATER PUMP | 182 |
| FINAL DRIVE & WHEEL | 469 |
| | 470 |
| | 472 |
| | 474 |
| | 476 |
| | 478 |
| FINAL DRIVE GP | 403 |
| | 405 |
| FLASHER AS (TURN SIGNAL) | 344 |
| FLOOR MAT | 762 |
| FLYWHEEL GP | 84 |
| FRAME GP | 488 |
| | 489 |
| FUMES DISPOSAL GP | 148 |
| FUSE (10-AMPERE) | 256 |
| FUSE (15-AMPERE) | 256 |
| FUSE (20-AMPERE) | 256 |


## G


| | |
|---|---|
| GAUGE AS-OIL LEVEL (DIPSTICK) (ENGINE OIL) | 149 |
| GAUGE AS-OIL LEVEL (DIPSTICK) (TRANSMISSION) | 413 |
| | 418 |
| GAUGE GP-OIL LEVEL (DIPSTICK)–ENGINE | 149 |
| | 150 |
| GAUGE GP-SIGHT (SIGHT GLASS) (HYDRAULIC TANK OIL) | 630 |
| GAUGE-SIGHT (COOLANT LEVEL) | 185 |
| GAUGE-SIGHT (HYDRAULIC TANK) | 708 |
| GEAR GP-CAMSHAFT | 85 |
| GEAR GP-FRONT | 86 |
| GEAR GP-REAR | 89 |
| | 90 |

# INDEX


| Name | Page |
|---|---|
| GEAR GP-TRANSFER–INPUT | 408 |
| GENERAL AR | 1 |
| GUARD GP-BELT–ALTERNATOR | 91 |
| GUARD GP-BOTTOM | 490 |
| GUARD GP-CANOPY | 491, 492 |
| GUARD GP-DRIVE SHAFT | 493 |
| GUARD GP-MUD | 494, 496, 499, 501 |

## H

| | |
|---|---|
| HANDLE GP-MODULAR (HOIST) | 745, 747 |
| HANDLE GP-MODULAR (TRANSMISSION) | 745, 747 |
| HANDRAIL GP | 502 |
| HARNESS AS-CAB | 256, 343 |
| HARNESS AS-CHASSIS (BODY, BRAKE) | 348, 354, 361 |
| HARNESS AS-CHASSIS (SECONDARY STEERING) | 348, 354, 361 |
| HARNESS AS-CONSOLE | 343 |
| HARNESS AS-CONTROL | 273, 275 |
| HARNESS AS-DASH | 777 |
| HARNESS AS-ENGINE | 25, 370, 373, 375 |
| HARNESS AS-ENGINE (INJECTOR, VARIABLE VALVE) | 24 |
| HARNESS AS-ENGINE (UNIT INJECTOR) | 26, 27 |
| HARNESS AS-FRONT | 343 |
| HARNESS AS-HEATER & AIR COND | 761 |
| HARNESS AS-LIGHTING | 287, 289, 377 |
| HARNESS AS-MONITOR (FRONT, LH) | 285 |
| HARNESS AS-MONITOR (FRONT, RH) | 285 |
| HARNESS AS-MONITOR (REAR, LH) | 285 |
| HARNESS AS-MONITOR (REAR, RH) | 285 |
| HARNESS AS-MONITOR (WORK AREA VISUAL SYSTEM) | 750 |
| HARNESS AS-MOTOR | 755 |
| HARNESS AS-POWER (AIR CONDITIONER, HEATER CONT) | 761 |
| HARNESS AS-PUMP (FUEL PRIMING) | 234 |
| HARNESS AS-REAR | 348, 355, 362 |
| HARNESS AS-SENSOR | 383 |
| HARNESS AS-SENSOR (FUEL LEVEL) | 348, 354, 361 |
| HARNESS AS-SENSOR (SPEED) | 311 |
| HARNESS AS-SOLENOID | 383 |
| HARNESS AS-TRANSMISSION | 349, 355, 362, 392 |
| HARNESS AS-VALVE (SEAT AIR COMPRESSOR) | 802 |
| HARNESS AS-WIRING | 377 |
| HARNESS AS-WIRING (HEATED MIRROR) | 381 |
| HARNESS AS-WIRING (JUMPER) | 236 |
| HARNESS AS-WIRING (SPEED SENSOR) | 312 |
| HEATER & AIR CONDITIONER GP | 755 |
| HEATER GP-FUEL | 218 |
| HEATER GP-JACKET WATER | 270, 271 |
| HOUSING GP-FLYWHEEL | 92, 94 |
| HOUSING GP-FRONT | 96 |
| HYDRAULIC AR | 649 |

## I

| | |
|---|---|
| INDICATOR (BODY POSITION) | 745, 747 |
| INDICATOR (TRANSMISSION SPEED) | 745, 747 |
| INJECTOR GP-FUEL | 221, 231, 232 |
| INSTALLATION AR-COMMUNICATION–PRODUCT LINK 321SR | 272 |
| INSTALLATION AR-ENGINE | 19, 20 |
| INSTALLATION AR-PAYLOAD | 272 |
| INSTALLATION GP-COMMUNICATION | 273, 275, 277 |
| INSTALLATION GP-RADIO | 758, 759 |
| INSULATION GP-HEAT | 760 |

## K

| | |
|---|---|
| KEY | 253 |
| KEY (BATTERY DISCONNECT) | 329 |
| KEY (LITERATURE COMPARTMENT) | 770 |

# INDEX


| Name | Page |
|---|---|
| KIT-FLOW CONTROL VALVE–AIR CONDITIONER, HEATER | 761 |
| KIT-SLIDER BLOCK | 801 |

## L

| | |
|---|---|
| LAMP (24-VOLT) (DOME) | 278 |
| LAMP (24-VOLT, 21-WATT) (AMBER) | 282, 283 |
| LAMP (24-VOLT, 5-WATT) (CLEAR) | 282, 283 |
| LAMP (24-VOLT, 75/70-WATT) (CLEAR) | 282, 283 |
| LAMP AS-INDICATOR (WHITE, 24-VOLT) | 745, 747 |
| LAMP GP-DOME | 278 |
| LAMP GP-FLOOD | 279, 280, 281 |
| LAMP GP-HEAD & SIGNAL–LH | 283 |
| LAMP GP-HEAD & SIGNAL–RH | 282 |
| LAMP GP-MARKER | 284 |
| LAMP GP-MARKER (AMBER, 24-VOLT) (SIDE MARKER, RH) | 377 |
| LAMP GP-PAYLOAD SIGNAL | 285 |
| LAMP GP-PAYLOAD SIGNAL (24-VOLT) (PAYLOAD MONITOR) | 285 |
| LAMP GP-SIGNAL (24-VOLT) (STOP, TAIL, TURN, LH) | 289 |
| LAMP GP-SIGNAL (24-VOLT) (STOP, TURN, TAIL, RH) | 287 |
| LAMP-HALOGEN (24-VOLT, 65-WATT) | 279, 280, 281 |
| LAMP-LED (24-VOLT, WHITE) (DASH) | 777 |
| LIFTING GP-ENGINE | 98, 99, 100 |
| LIGHTING GP-FLOOD–REAR, LH | 289 |
| LIGHTING GP-FLOOD–REAR, RH | 287 |
| LINER GP-CAB–SOUND SUPPRESSION | 762 |
| LINES & MTG GP-WATER TANK | 820 |
| LINES GP-ACCUMULATOR–BRAKE | 579, 581 |
| LINES GP-AIR | 195, 197, 198 |
| LINES GP-AIR CONDITIONER | 764, 766 |
| LINES GP-ATTACHMENT–TRACTION CONTROL SYSTEM | 650 |
| LINES GP-BRAKE | 584, 589 |
| LINES GP-CENTRAL LUBRICATION | 508, 510, 512, 513 |
| LINES GP-CENTRAL LUBRICATION–BLADE CYLINDER | 504 |
| LINES GP-ENGINE OIL | 151, 152 |
| LINES GP-EXHAUST | 199, 200 |
| LINES GP-FUEL | 222, 225, 227 |
| LINES GP-HEATER | 768, 769 |
| LINES GP-HOIST | 653, 657, 661 |
| LINES GP-HYDRAULIC FAN | 665, 669, 673, 679, 684 |
| LINES GP-HYDRAULIC OIL COOLER | 685 |
| LINES GP-LUBRICATION | 514 |
| LINES GP-LUBRICATION–FRONT, LH | 523 |
| LINES GP-LUBRICATION–FRONT, RH | 521 |
| LINES GP-LUBRICATION–PRIMARY | 519 |
| LINES GP-LUBRICATION–REAR, LH | 525 |
| LINES GP-LUBRICATION–RH, REAR | 527 |
| LINES GP-POWER TRAIN COOLER | 411 |
| LINES GP-POWER TRAIN OIL | 413, 418 |
| LINES GP-SERVICE BRAKE | 594, 596, 599 |
| LINES GP-STEERING | 617, 619 |
| LINES GP-TURBOCHARGER OIL | 153, 154 |
| LINES GP-WATER | 166, 170, 172, 174, 176, 179 |
| LINK GP-STEERING | 625 |
| LINK GP-UPPER | 529 |
| LITERATURE GP | 770 |

## M

| | |
|---|---|
| MANIFOLD GP-CONTROL–BRAKE ACCUMULATOR CHARGE, HYDRAULIC FAN | 423 |
| MANIFOLD GP-CONTROL–EXHAUST DIVERTER, HYD FAN | 425 |

# INDEX


| Name | Page |
|---|---|
| | 426 |
| MANIFOLD GP-CONTROL–HYDRAULIC FAN | 155 |
| MANIFOLD GP-EXHAUST | 201 |
| MECHANISM GP-FUEL PUMP & VALVE | 101 |
| | 102 |
| | 103 |
| | 104 |
| | 105 |
| MIRROR GP-REAR VIEW–HEATED | 531 |
| | 532 |
| MIRROR GP-REAR VIEW–WIDE TRUCK BODY | 530 |
| MODULE GP-DISPLAY (ELECTRONIC) | 778 |
| MODULE GP-DISPLAY (WORK AREA VISUAL SYSTEM) | 750 |
| MOTOR GP-GEAR–HYDRAULIC FAN | 689 |
| | 690 |
| MOTOR GP-WINDOW WIPER | 771 |
| MOUNTING AR-TRUCK BODY–DUAL SLOPE | 533 |
| MOUNTING AR-TRUCK BODY–FLAT FLOOR | 533 |
| MOUNTING GP-ALTERNATOR & COMPR | 106 |
| MOUNTING GP-AXLE–REAR | 427 |
| MOUNTING GP-CAB | 772 |
| MOUNTING GP-PRESSURE SENSOR–ATMOSPHERIC, ENGINE OIL | 291 |
| MOUNTING GP-SENSOR–ATMOSPHERIC AIR, ENGINE OIL | 292 |
| MOUNTING GP-TORQUE CONVERTER | 428 |
| MOUNTING GP-TRANSMISSION | 429 |
| MOUNTING GP-TRUCK BODY | 534 |
| MOUNTING GP-TRUCK BODY–FLAT FLOOR | 536 |
| MOUNTING GP-WATER TANK | 820 |
| MUFFLER GP | 202 |

## O

| | |
|---|---|
| OIL CHANGE GP-HIGH SPEED–ENGINE | 156 |

## P

| | |
|---|---|
| PADLOCK GP | 253 |
| | 816 |
| PADLOCK GP (VANDALISM GUARD) | 862 |
| PAN GP-BACKREST–CLOTH | 773 |
| PAN GP-DRAIN–AIR CONDITIONER | 774 |
| PAN GP-OIL–ENGINE | 107 |
| | 109 |
| | 111 |
| PANEL GP-CAB | 775 |
| PANEL GP-INSTRUMENT | 777 |
| PANEL GP-SOUND SUPPRESSION | 781 |
| PANEL GP-SOUND SUPPRESSION–ENGINE FRONT HOUSING | 782 |
| PEDAL GP-GOVERNOR | 783 |
| | 784 |
| PIPE GP-EXHAUST | 203 |
| | 205 |
| PISTON & ROD GP | 113 |
| | 115 |
| PLANETARY GP-TRANSMISSION | 430 |
| PLATE & FILM GP | 821 |
| | 822 |
| | 827 |
| | 832 |
| | 837 |
| | 842 |
| | 847 |
| PLATE & FILM GP–ARABIC | 852 |
| | 856 |
| PLATE & FILM GP–CZECH | 858 |
| PLATE & FILM GP–DANISH | 852 |
| | 856 |
| PLATE & FILM GP–DUTCH | 852 |
| | 859 |
| PLATE & FILM GP–FINNISH | 852 |
| | 857 |
| PLATE & FILM GP–GERMAN | 853 |
| | 857 |
| PLATE & FILM GP–GREEK | 853 |
| | 857 |
| PLATE & FILM GP–HEBREW | 859 |
| PLATE & FILM GP–INDONESIAN | 853 |
| | 857 |
| PLATE & FILM GP–ITALIAN | 853 |
| | 857 |
| PLATE & FILM GP–JAPANESE | 854 |
| | 858 |
| PLATE & FILM GP–NORWEGIAN | 854 |
| | 858 |
| PLATE & FILM GP–PORTUGUESE | 854 |
| | 856 |
| PLATE & FILM GP–RUSSIAN | 854 |
| | 856 |
| PLATE & FILM GP–SERBIAN | 859 |
| PLATE & FILM GP–SLOVAKIAN | 855 |
| | 858 |
| PLATE & FILM GP–SPANISH | 855 |
| | 856 |
| PLATE & FILM GP–SWEDISH | 855 |
| | 858 |
| PLATE GP-ENGINE IDENTIFICATION | 860 |
| | 861 |
| PLATE-IDENTIFICATION (ALTERNATOR) | 348 |
| | 354 |
| | 361 |
| PLATE-INFORMATION (STRUTS, TEMPERATURE) | 558 |
| PLATE-INSTRUCTION (AIR CONDITIONER) | 821 |
| PLATE-INSTRUCTION (HYDRAULIC ACCUMULATOR) | 558 |

# INDEX


| Name | Page |
|---|---|
| PLATE-SERIAL NUMBER (TORQUE CONVERTER) | 444 |
| PLATE-SERIAL NUMBER (TRANSMISSION) | 430 |
| PLATFORM AR | 785 |
| PLATFORM GP–LH | 786 |
| PLATFORM GP–RH | 787 |
| PLUG (TRANSMISSION OIL DRAIN) | 402 |
| PLUG GP-CYLINDER BLOCK | 117, 118 |
| PLUG GP-CYLINDER HEAD | 119 |
| PLUG-DRAIN (ENGINE OIL PAN) | 107, 111 |
| PLUG-DRAIN (HYDRAULIC TANK) | 708 |
| PLUG-MAGNETIC (DIFFERENTIAL OIL) | 427 |
| PLUG-MAGNETIC (FINAL DRIVE, OIL FILL) | 403 |
| PLUG-MAGNETIC (FRONT WHEEL, OIL FILL) | 479 |
| PLUG-MAGNETIC (REAR AXLE) | 399 |
| PLUG-PIPE | 166 |
| POTENTIOMETER AS (TEMPERATURE CONTROL) | 777 |
| POWER TRAIN AR | 436 |
| PROTECTION GP-VANDALISM | 862 |
| PROTECTION GP-VANDALISM–HYDRAULIC TANK | 863 |
| PULLEY GP-CRANKSHAFT | 120 |
| PUMP & LINES GP | 157, 160 |
| PUMP & MOTOR GP-HYDRAULIC–SECONDARY STEERING, BRAKE RELEASE, HIGH SPEED OIL CHANGE | 691, 692 |
| PUMP & MTG GP-FUEL TRANSFER–REAR | 229, 230 |
| PUMP GP-ENGINE OIL | 163 |
| PUMP GP-FUEL INJECTION | 231, 232, 233 |
| PUMP GP-FUEL PRM & PRIM FILTER | 234, 236 |
| PUMP GP-FUEL PRM & WATER SEP | 239 |
| PUMP GP-FUEL TRANSFER | 229 |
| PUMP GP-GEAR–BRAKE, HOIST | 697, 699 |
| PUMP GP-GEAR–HIGH SPEED OIL CHANGE, PRELUBE | 695 |
| PUMP GP-GEAR–HOIST, BRAKE | 696 |
| PUMP GP-GEAR–SECONDARY STEERING, BRAKE RELEASE | 693 |
| PUMP GP-METERING–HMU | 627 |
| PUMP GP-PISTON–STEERING | 700, 703 |
| PUMP GP-TRANSMISSION | 437 |
| PUMP GP-WATER | 182, 184 |
| RADIATOR GP | 185, 187 |
| RADIO GP-COMMUNICATION–PRODUCT LINK 121SR | 293 |
| RECEIVER-DRYER GP (REFRIGERANT) | 766 |
| RECLINER GP-SEAT | 788 |
| REGULATOR AS-VOLTAGE (24-VOLT) (ALTERNATOR) | 249 |
| REGULATOR-TEMPERATURE (92-DEG C) (COOLANT) | 166 |
| RELAY AS (24-VDC, 20-AMPERE) (HEATED MIRROR TIMER) | 381 |
| RELAY AS (24-VOLT) | 343, 344 |
| RELAY AS (24-VOLT) (EXHAUST DIVERTER) | 343 |
| RIM GP | 439 |
| RIM GP-DEMOUNTABLE | 440 |
| ROCKER ARM GP | 121, 123, 124, 125, 126 |
| ROPS GP | 789 |
| ROTATING GP-PUMP | 704 |
| SCREEN (CONTROL MANIFOLD) | 423 |
| SCREEN (HOIST CONTROL VALVE) | 711 |
| SCREEN AS | 708 |
| SCREEN AS (HYDRAULIC OIL) | 685 |
| SCREEN AS (HYDRAULIC TANK) | 708 |
| SCREEN AS (HYDRAULIC) | 720 |
| SCREEN AS (TRACTION CONTROL) | 465 |
| SCREEN GP-MAGNETIC (TRANSFER GEAR) | 408 |
| SCREEN-SUCTION (GEAR TRANSFER-INPUT) | 408 |
| SCREEN-SUCTION (TORQUE CONVERTER) | 444 |
| SEAL GP-CRANKSHAFT | 127, 128 |
| SEAL GP-CRANKSHAFT (FRONT) | 128 |
| SEAL GP-DUO-CONE | 470 |
| SEAL-VALVE COVER | 39, 40 |
| SEAT BELT GP | 800 |
| SEAT BELT GP (RETRACTABLE) | 797 |
| SEAT BELT GP–RETRACTABLE | 791, 792, 793 |
| SEAT GP–CLOTH | 794, 796, 797 |
| SEAT GP–SUSPENSION-CLOTH, LUMBAR | 801 |


## R

## S

# INDEX


| Name | Page |
|---|---|
| SEAT GP-ADJUSTABLE | 798 |
| SEAT GP-COMPANION | 799 |
| | 800 |
| SENDER GP-FUEL LEVEL | 240 |
| SENSOR & MTG GP-PAYLOAD | 294 |
| SENSOR AS-TEMPERATURE | 323 |
| SENSOR GP-ENGINE | 2 |
| | 3 |
| | 5 |
| | 7 |
| | 10 |
| | 11 |
| | 296 |
| SENSOR GP-POSITION | 298 |
| | 299 |
| | 300 |
| SENSOR GP-POSITION (FOOT BRAKE CONTROL) | 735 |
| | 784 |
| SENSOR GP-POSITION (HOIST) | 745 |
| | 747 |
| SENSOR GP-POSITION (ROTARY) (FOOT BRAKE CONTROL) | 733 |
| | 783 |
| SENSOR GP-POSITION (TRANSMISSION SPEED) | 392 |
| SENSOR GP-POSITION (TRANSMISSION) | 745 |
| | 747 |
| SENSOR GP-PRESSURE | 301 |
| | 302 |
| | 303 |
| | 304 |
| | 305 |
| | 306 |
| | 307 |
| | 308 |
| | 309 |
| SENSOR GP-PRESSURE (ATMOSPHERIC) | 296 |
| SENSOR GP-PRESSURE (FAN DRIVE) | 423 |
| SENSOR GP-PRESSURE (FUEL) | 234 |
| | 236 |
| SENSOR GP-PRESSURE (INTAKE AIR MANIFOLD) | 296 |
| SENSOR GP-PRESSURE (OIL) | 296 |
| SENSOR GP-PRESSURE (PAYLOAD MONITOR) | 294 |
| SENSOR GP-PRESSURE (TURBOCHARGER INLET) | 377 |
| SENSOR GP-SPEED | 310 |
| | 311 |
| | 312 |
| | 313 |
| | 314 |
| | 315 |
| | 317 |
| SENSOR GP-SPEED (ENGINE SPEED) | 375 |
| SENSOR GP-SPEED (TCS, LEFT WHEEL) | 383 |
| SENSOR GP-SPEED (TCS, RIGHT WHEEL) | 383 |
| SENSOR GP-SPEED (TIMING, CAMSHAFT) | 296 |
| SENSOR GP-SPEED (TRANSMISSION) | 315 |
| SENSOR GP-TEMPERATURE | 234 |
| | 236 |
| | 318 |
| | 319 |
| | 320 |
| | 321 |
| | 322 |
| | 323 |
| SENSOR GP-TEMPERATURE (BRAKE OIL) | 348 |
| | 354 |
| | 361 |
| SENSOR GP-TEMPERATURE (COOLANT) | 296 |
| SENSOR GP-TEMPERATURE (INTAKE AIR MANIFOLD) | 296 |
| SENSOR GP-TEMPERATURE (TORQUE CONVERTER OIL) | 375 |
| SERVICE GP-MONITOR | 265 |
| | 266 |
| | 267 |
| | 268 |
| | 269 |
| SHAFT AR-DRIVE | 440 |
| SHAFT GP-DRIVE | 441 |
| SIDEBOARD AS-BODY | 536 |
| | 537 |
| | 538 |
| SLACK ADJUSTER GP–REAR BRAKES | 600 |
| SLIP JOINT GP | 442 |
| SOFTWARE GP-COMMUNICATION (PRODUCT LINK 300) | 263 |
| SOFTWARE GP-MONITOR | 265 |
| | 266 |
| | 267 |
| | 268 |
| | 269 |
| SOFTWARE GP-MONITOR (PAYLOAD CONTROL) | 264 |
| SOLENOID AS-STARTING MOTOR (24-VOLT) | 327 |
| STARTING AID GP-ETHER | 324 |
| STARTING MOTOR GP-ELECTRIC | 325 |
| STARTING MOTOR GP-ELECTRIC–HEAVY-DUTY, LH | 326 |
| STEERING COLUMN GP-ADJUSTABLE | 628 |
| STEP GP | 539 |
| | 540 |
| STRAINER AS (HYDRAULIC TANK) | 708 |
| STRAINER-FUEL | 242 |
| SUN VISOR | 808 |
| SUPPORT GP-AXLE HOUSING | 443 |
| SUPPORT GP-ENGINE | 129 |

# INDEX


| Name | Page |
|---|---|
| | 130 |
| | 131 |
| | 132 |
| SUPPORT GP-SEAT BELT (3-POINT) | 796 |
| | 797 |
| SUPPRESSION AR-SOUND–EUROPEAN MARKET | 541 |
| SUPPRESSION GP-SOUND | 542 |
| | 544 |
| | 546 |
| | 548 |
| | 553 |
| SUPPRESSION GP-SOUND (TORQUE CONVERTER, OUTER) | 544 |
| SUPPRESSION GP-SOUND–TORQUE CONVERTER | 552 |
| SUPPRESSION GP-SOUND–TRANSMISSION | 550 |
| | 551 |
| SUSPENSION GP-FRONT | 554 |
| | 556 |
| SUSPENSION GP-REAR | 558 |
| | 560 |
| SUSPENSION GP-SEAT–AIR | 802 |
| SWITCH AS (BRAKE RETARDER) | 343 |
| SWITCH AS-DIFF PRESSURE (FILTER BYPASS) | 647 |
| SWITCH AS-LIMIT (ACCESS PLATFORM UPPER TRAVEL) | 348 |
| | 354 |
| | 361 |
| SWITCH AS-MAGNETIC (START RELAY) | 333 |
| SWITCH AS-PRESSURE (AIR CONDITIONER, LOW SIDE) | 375 |
| SWITCH AS-PRESSURE (PARKING BRAKE) | 584 |
| | 589 |
| SWITCH AS-PRESSURE (REFRIGERANT) | 375 |
| SWITCH AS-PRESSURE (SECONDARY STEERING) | 617 |
| SWITCH AS-PRESSURE (SERVICE BRAKE, RETARDER) | 584 |
| | 589 |
| SWITCH AS-PRESSURE (STEERING PUMP OIL LOW PRESSURE) | 632 |
| SWITCH AS-PUSH (DOOR) | 343 |
| SWITCH AS-ROCKER | 340 |
| SWITCH AS-ROCKER (24-VOLT) (AIR CONDITIONER ON, OFF) | 777 |
| SWITCH AS-ROCKER (24-VOLT, SEALED, ILLUMINATED) (TRACTION CONTROL SELECT) | 339 |
| SWITCH AS-ROCKER (ARC ON, OFF) | 778 |
| SWITCH AS-ROCKER (BACKLIGHT) | 778 |
| SWITCH AS-ROCKER (FRONT BRAKE) | 777 |
| SWITCH AS-ROCKER (HAZARD) | 777 |
| SWITCH AS-ROCKER (HEADLIGHT) | 777 |
| SWITCH AS-ROCKER (HEATED MIRRORS) | 381 |
| SWITCH AS-ROCKER (SECONDARY STEERING) | 777 |
| SWITCH AS-ROCKER (THROTTLE LOCK) | 777 |
| SWITCH AS-ROTARY (FAN SPEED) | 777 |
| SWITCH AS-START (KEY) | 777 |
| SWITCH AS-TOGGLE (ENGINE LOCKOUT) | 377 |
| SWITCH AS-TOGGLE (ENGINE SHUTDOWN) | 377 |
| SWITCH AS-TOGGLE (MACHINE LOCKOUT) | 377 |
| SWITCH GP-DISCONNECT (BATTERY) | 330 |
| SWITCH GP-DISCONNECT–BATTERY | 329 |
| | 330 |
| SWITCH GP-MAGNETIC | 331 |
| | 332 |
| | 333 |
| | 334 |
| | 335 |
| SWITCH GP-MAGNETIC (24-VOLT) (STARTING AID RELAY) | 348 |
| | 354 |
| | 361 |
| SWITCH GP-MAGNETIC (SECONDARY STEERING) | 348 |
| | 354 |
| | 361 |
| SWITCH GP-MULTIFUNCTION (TURN SIGNAL, WIPER, WASHER) | 343 |
| SWITCH GP-PRESSURE | 336 |
| | 337 |
| SWITCH GP-PRESSURE (HYDRAULIC) | 348 |
| | 354 |
| | 361 |
| SWITCH GP-PRESSURE–FUEL FILTER | 338 |
| SWITCH GP-ROCKER | 340 |
| SWITCH GP-ROCKER–TRACTION CONTROL SELECT | 339 |
| SWITCH GP-TOGGLE | 341 |


## T


| | |
|---|---|
| TANK & FILTER GP-STEERING | 630 |
| TANK & MTG GP-HYDRAULIC | 705 |
| TANK AS-WINDOW WASHER | 809 |
| TANK GP-FUEL | 241 |
| | 242 |
| TANK GP-HYDRAULIC | 706 |
| | 708 |
| TORQUE CONVERTER GP | 444 |
| | 447 |
| TRANSMISSION AR | 449 |
| TRIM GP-CAB | 804 |
| TURBOCHARGER GP | 206 |
| | 207 |
| | 208 |

# INDEX


| Name | Page |
|---|---|
| | 209 |
| | 210 |
| **U** | |
| UNIVERSAL JOINT GP | 450 |
| | 451 |
| | 452 |
| **V** | |
| VALVE & MTG GP-BRAKE | 603 |
| VALVE & MTG GP-BRAKE–FRONT BRAKE, RETARDER CONTROL | 601 |
| VALVE & MTG GP-CONTROL | 710 |
| VALVE AS-WATER | 761 |
| VALVE GP-BRAKE (SERVICE) | 732 |
| VALVE GP-BRAKE–TOW RELEASE | 604 |
| | 607 |
| VALVE GP-CHARGING | 561 |
| | 562 |
| VALVE GP-CHECK | 584 |
| | 589 |
| | 637 |
| | 675 |
| | 680 |
| VALVE GP-CHECK & RELIEF | 632 |
| VALVE GP-CHECK (FAN SPEED) | 155 |
| VALVE GP-CHECK (PAYLOAD MONITOR) | 294 |
| VALVE GP-CHECK–FUEL | 244 |
| | 245 |
| | 246 |
| | 247 |
| VALVE GP-CONTROL–HOIST | 711 |
| VALVE GP-DIVERTER | 610 |
| | 637 |
| VALVE GP-ETHER STARTING | 342 |
| VALVE GP-LOCKUP CLUTCH & SOL–POWER TRAIN OIL | 453 |
| | 455 |
| VALVE GP-PRESSURE CONTROL | 458 |
| VALVE GP-PRESSURE REDUCING | 604 |
| | 634 |
| VALVE GP-PRESSURE REDUCING (HOIST PILOT OIL) | 604 |
| | 607 |
| VALVE GP-PUMP CONTROL | 715 |
| VALVE GP-PUMP CONTROL (PRESSURE COMPENSATION) | 693 |
| VALVE GP-RELIEF | 635 |
| | 636 |
| | 717 |
| | 718 |
| VALVE GP-RELIEF (TOWING) | 604 |
| | 607 |
| VALVE GP-SELECTOR & PRESS CONT–TRANSMISSION | 460 |
| VALVE GP-SHUTOFF (MANUAL) | 242 |
| VALVE GP-SHUTTLE | 611 |
| VALVE GP-SOLENOID | 463 |
| | 464 |
| | 719 |
| | 720 |
| VALVE GP-SOLENOID & MANIFOLD | 637 |
| VALVE GP-SOLENOID (24-VOLT) (EXHAUST DIVERTER) | 425 |
| | 426 |
| VALVE GP-SOLENOID (AUTOMATIC RETARDER CONTROL) | 601 |
| VALVE GP-SOLENOID (FAN DRIVE) | 423 |
| VALVE GP-SOLENOID (FAN SPEED) | 155 |
| | 425 |
| | 426 |
| VALVE GP-SOLENOID (FRONT BRAKE) | 601 |
| VALVE GP-SOLENOID (PARKING BRAKE) | 603 |
| VALVE GP-SOLENOID (TRACTION CONTROL SYSTEM) | 465 |
| VALVE GP-SOLENOID (TRANSMISSION) | 453 |
| VALVE GP-SOLENOID (UPSHIFT, DOWNSHIFT) | 455 |
| VALVE GP-SOLENOID (UPSHIFT, DOWNSHIFT, LCL) | 392 |
| VALVE GP-TRACTION CONTROL | 465 |
| VALVE GP-TRANSMISSION CONTROL | 467 |
| VALVE GP-WATER–HEATER | 807 |
| VALVE-RELIEF (BRAKE COOLING) | 711 |
| VISOR GP-CAB | 808 |
| **W** | |
| WASHER GP-WINDOW | 809 |
| WATER SEP & FUEL PRM PUMP GP | 239 |
| WHEEL AR | 468 |
| WHEEL GP-FINAL DRIVE & BRAKE | 469 |
| | 470 |
| | 472 |
| | 474 |
| | 476 |
| | 478 |
| WHEEL GP-FRONT | 479 |
| WINDOW GP | 810 |
| WINDOW GP–VENTILATION, LH | 813 |
| WINDOW GP-CAB | 814 |
| WIPER & WASHER GP-WINDOW | 815 |
| WIRING GP-CAB | 343 |
| WIRING GP-CAMERA | 347 |
| WIRING GP-CHASSIS | 348 |
| | 354 |
| | 361 |
| WIRING GP-COMMUNICATION | 368 |

# INDEX


| Name | Page | Name | Page |
|---|---|---|---|
| | 369 | | |
| WIRING GP-ENGINE | 370 | | |
| | 373 | | |
| | 375 | | |
| WIRING GP-LIGHTING | 377 | | |
| WIRING GP-MIRROR | 381 | | |
| WIRING GP-RADIO | 382 | | |
| WIRING GP-TRACTION CONTROL | 383 | | |
| WIRING GP-UNIT INJECTOR | 385 | | |

# MEMORANDA

# MACHINE ARRANGEMENT

## *299-6765* CERTIFICATION AR-MACHINE–EUROPEAN MARKET

**S/N: RLB1-UP**

**FOR USE WITH 299-5705–PAGE 820, 299-5707–PAGE 820. CANNOT BE USED WITH 262-6652–PAGE 541, 295-1788–PAGE 194, 272-3087–PAGE 6, 299-5701–PAGE 533, 299-5703–PAGE 533, 9D-9880–PAGE 211**

**AN ATTACHMENT**

**SMCS-7000** **i02669511**

| NOTE | PART NUMBER | QTY | PART NAME 1 2 3 4 5 6 (PRODUCT LEVEL) | SEE PAGE |
|---|---|---|---|---|
| Y | *270-5360* | 1 | SUPPRESSION GP-SOUND | 542 |
| Y-SEPARATE ILLUSTRATION | | | | |

**<END>**

## *268-7808* CHASSIS AR

**S/N: RLB1-UP**

**PART OF 268-7810 GENERAL AR**

**SMCS-7000** **i02612673**

| NOTE | PART NUMBER | QTY | PART NAME 1 2 3 4 5 6 (PRODUCT LEVEL) | SEE PAGE |
|---|---|---|---|---|
| Y | *270-5317* | 1 | LINK GP-STEERING | 625 |
| Y | *6V-1970* | 1 | LITERATURE GP | 770 |
| Y | *265-0730* | 1 | MOUNTING GP-CAB | 772 |
| Y | *108-3587* | 1 | MOUNTING GP-TRANSMISSION | 429 |
| Y | *299-7983* | 1 | SUSPENSION GP-FRONT | 554 |
| Y | *270-6889* | 1 | SUSPENSION GP-REAR | 560 |
| Y-SEPARATE ILLUSTRATION | | | | |

**<END>**

## *268-7810* GENERAL AR

**S/N: RLB1-UP**

**SMCS-7000** **i02820096**

| NOTE | PART NUMBER | QTY | PART NAME 1 2 3 4 5 6 (PRODUCT LEVEL) | SEE PAGE |
|---|---|---|---|---|
| Y | *269-8820* | 1 | CAB AR | 728 |
| Y | *268-7808* | 1 | CHASSIS AR | 1 |
| Y | *276-8860* | 1 | COOLING AR | 164 |
| Y | *270-1500* | 1 | ELECTRICAL AR | 263 |
| Y | *256-5347* | 1 | ELECTRONICS GP-MACHINE (CHASSIS) | 264 |
| Y | *270-7723* | 1 | FRAME GP | 489 |
| Y | *270-1748* | 1 | HYDRAULIC AR | 649 |
| Y | *270-4248* | 1 | INSTALLATION AR-ENGINE | 19 |
| | | | S/N: RLB1-318 | |
| Y | *308-5826* | 1 | INSTALLATION AR-ENGINE | 20 |
| | | | S/N: RLB319-UP | |
| Y | *269-8700* | 1 | PLATFORM AR | 785 |
| Y | *270-5370* | 1 | POWER TRAIN AR | 436 |
| Y | **227-1037** | 1 | TORQUE CONVERTER GP | 444 |
| Y | **294-5560** | 1 | TRANSMISSION AR | 449 |
| Y-SEPARATE ILLUSTRATION | | | | |

**<END>**

# ENGINE ARRANGEMENT

## *221-8124* ENGINE AR-COMPLETE

**S/N: RHX1-UP**

**436 BRAKE KW (585 BHP) AT 2000 RPM. WITH BRAKE AN ATTACHMENT**

**SMCS-1000** **i03267261**

| NOTE | PART NUMBER | QTY | PART NAME 1 2 3 4 5 6 (PRODUCT LEVEL) | SEE PAGE |
|---|---|---|---|---|
| Y | *126-7631* | 1 | CONNECTION GP-ELECTRICAL | 259 |
| Y | *241-7598* | 1 | CONTROL & MTG GP-ENGINE ELEK | 260 |
| Y | *223-4730* | 1 | COVER GP-AIR COMPRESSOR | 29 |
| Y | *247-0025* | 1 | COVER GP-CYLINDER BLOCK | 33 |
| Y | *216-5540* | 1 | COVER GP-FLYWHEEL HOUSING | 34 |
| Y | *120-9847* | 1 | COVER GP-FRONT HOUSING | 35 |
| Y | *159-6159* | 1 | COVER GP-FRONT HOUSING (CAM, IDLER GEAR) | 36 |
| Y | *230-0104* | 1 | COVER GP-SOUND SUPPRESSION | 37 |
| Y | *239-4113* | 1 | COVER GP-VALVE MECHANISM | 41 |
| Y | *227-3705* | 1 | DAMPER GP | 77 |
| Y | *6I-3638* | 1 | DRIVE GP-PUMP | 79 |
| Y | *241-5936* | 1 | ENGINE AR-CORE | 15 |
| Y | *4P-6846* | 1 | FASTENER GP-FRONT HOUSING | 81 |
| Y | *108-9382* | 1 | FASTENER GP-FRONT HOUSING | 82 |
| Y | *4N-2481* | 1 | FASTENER GP-OIL PUMP MOUNTING | 138 |
| Y | *244-6815* | 1 | FILTER GP-ENGINE OIL | 142 |
| Y | *219-4438* | 1 | FLYWHEEL GP | 84 |
| Y | *159-9362* | 1 | FUMES DISPOSAL GP | 148 |
| Y | *224-9695* | 1 | GEAR GP-REAR | 89 |
| Y | *223-4423* | 1 | HOUSING GP-FLYWHEEL | 92 |
| Y | *244-2509* | 1 | HOUSING GP-FRONT | 96 |
| Y | *111-2088* | 1 | LIFTING GP-ENGINE (REAR) | 98 |
| Y | *127-0564* | 1 | LIFTING GP-ENGINE | 100 |
| Y | *227-3917* | 1 | LINES GP-ENGINE OIL | 151 |
| Y | *246-1175* | 1 | LINES GP-FUEL | 222 |
| Y | *235-1054* | 1 | LINES GP-TURBOCHARGER OIL | 153 |
| Y | *219-4441* | 1 | LINES GP-WATER | 166 |
| Y | *220-6372* | 1 | MANIFOLD GP-EXHAUST | 201 |
| Y | *188-1754* | 1 | MOUNTING GP-ALTERNATOR & COMPR | 106 |
| Y | *197-7415* | 1 | MOUNTING GP-SENSOR (ATMOSPHERIC, ENGINE OIL) | 292 |
| Y | *175-3860* | 1 | PAN GP-OIL | 107 |
| Y | *174-3874* | 1 | PANEL GP-SOUND SUPPRESSION (ENGINE, LH) | 781 |
| Y | *227-9980* | 1 | PANEL GP-SOUND SUPPRESSION (FRONT HOUSING) | 782 |
| Y | *235-8397* | 1 | PLUG GP-CYLINDER BLOCK | 117 |
| Y | *229-6711* | 1 | PLUG GP-CYLINDER HEAD | 119 |
| Y | *150-4279* | 1 | PUMP & MTG GP-FUEL TRANSFER | 229 |
| YR | **161-4113** | 1 | PUMP GP-ENGINE OIL | 163 |
| Y | *246-1053* | 1 | PUMP GP-FUEL PRM & PRIM FILTER | 234 |
| Y | *174-5986* | 1 | PUMP GP-WATER | 184 |
| Y | *243-1563* | 1 | SENSOR GP-ENGINE | 296 |
| Y | *235-5021* | 1 | SUPPORT GP-ENGINE | 130 |
| Y | *262-1080* | 1 | TURBOCHARGER GP | 209 |
| Y | *243-1561* | 1 | WIRING GP-ENGINE | 370 |
| | *219-7186* | 1 | ELECTRONICS GP-ENGINE RATINGS | |
| | | | | |
| | | | PLEASE USE THE GASKET KIT LINK IN SIS OR CONTACT YOUR LOCAL DEALER FOR THE LATEST GASKET KIT INFORMATION | |

R-REMFG PART MAY BE AVAILABLE
Y-SEPARATE ILLUSTRATION

# ENGINE ARRANGEMENT

## *247-3315* ENGINE AR-COMPLETE

**S/N: RHX1-UP**
**436 BRAKE KW (585 BHP) AT 2000 RPM. NO BRAKE**
**AN ATTACHMENT**

**SMCS-1000** **i03267262**

| NOTE | PART NUMBER | QTY | PART NAME<br>1 2 3 4 5 6 (PRODUCT LEVEL) | SEE PAGE |
|---|---|---|---|---|
| Y | *126-7631* | 1 | CONNECTION GP-ELECTRICAL | 259 |
| Y | *241-7598* | 1 | CONTROL & MTG GP-ENGINE ELEK | 260 |
| Y | *223-4730* | 1 | COVER GP-AIR COMPRESSOR | 29 |
| Y | *247-0025* | 1 | COVER GP-CYLINDER BLOCK | 33 |
| Y | *216-5540* | 1 | COVER GP-FLYWHEEL HOUSING | 34 |
| Y | *120-9847* | 1 | COVER GP-FRONT HOUSING | 35 |
| Y | *159-6159* | 1 | COVER GP-FRONT HOUSING (CAM, IDLER GEAR) | 36 |
| Y | *230-0104* | 1 | COVER GP-SOUND SUPPRESSION | 37 |
| Y | *237-1964* | 1 | COVER GP-TURBOCHARGER | 192 |
| Y | *239-4113* | 1 | COVER GP-VALVE MECHANISM | 41 |
| Y | *227-3705* | 1 | DAMPER GP | 77 |
| Y | *6I-3638* | 1 | DRIVE GP-PUMP | 79 |
| Y | *241-5935* | 1 | ENGINE AR-CORE | 14 |
| Y | *4P-6846* | 1 | FASTENER GP-FRONT HOUSING | 81 |
| Y | *108-9382* | 1 | FASTENER GP-FRONT HOUSING | 82 |
| Y | *4N-2481* | 1 | FASTENER GP-OIL PUMP MOUNTING | 138 |
| Y | *244-6815* | 1 | FILTER GP-ENGINE OIL | 142 |
| Y | *219-4438* | 1 | FLYWHEEL GP | 84 |
| Y | *159-9362* | 1 | FUMES DISPOSAL GP | 148 |
| Y | *224-9695* | 1 | GEAR GP-REAR | 89 |
| Y | *223-4423* | 1 | HOUSING GP-FLYWHEEL | 92 |
| Y | *244-2509* | 1 | HOUSING GP-FRONT | 96 |
| Y | *111-2088* | 1 | LIFTING GP-ENGINE (REAR) | 98 |
| Y | *111-2355* | 1 | LIFTING GP-ENGINE (FRONT) | 99 |
| Y | *227-3917* | 1 | LINES GP-ENGINE OIL | 151 |
| Y | *246-1175* | 1 | LINES GP-FUEL | 222 |
| Y | *235-1054* | 1 | LINES GP-TURBOCHARGER OIL | 153 |
| Y | *219-4441* | 1 | LINES GP-WATER | 166 |
| Y | *220-6372* | 1 | MANIFOLD GP-EXHAUST | 201 |
| Y | *188-1754* | 1 | MOUNTING GP-ALTERNATOR & COMPR | 106 |
| Y | *197-7415* | 1 | MOUNTING GP-SENSOR (ATMOSPHERIC, ENGINE OIL) | 292 |
| Y | *175-3860* | 1 | PAN GP-OIL | 107 |
| Y | *174-3874* | 1 | PANEL GP-SOUND SUPPRESSION (ENGINE, LH) | 781 |
| Y | *227-9980* | 1 | PANEL GP-SOUND SUPPRESSION (FRONT HOUSING) | 782 |
| Y | *235-8397* | 1 | PLUG GP-CYLINDER BLOCK | 117 |
| Y | *229-6711* | 1 | PLUG GP-CYLINDER HEAD | 119 |
| Y | *150-4279* | 1 | PUMP & MTG GP-FUEL TRANSFER | 229 |
| YR | **161-4113** | 1 | PUMP GP-ENGINE OIL | 163 |
| Y | *246-1053* | 1 | PUMP GP-FUEL PRM & PRIM FILTER | 234 |
| Y | *174-5986* | 1 | PUMP GP-WATER | 184 |
| Y | *243-1563* | 1 | SENSOR GP-ENGINE | 296 |
| Y | *235-5021* | 1 | SUPPORT GP-ENGINE | 130 |
| Y | *245-8474* | 1 | TURBOCHARGER GP | 206 |
| Y | *243-1561* | 1 | WIRING GP-ENGINE | 370 |
| | *219-7186* | 1 | ELECTRONICS GP-ENGINE RATINGS | |
| | | | | |
| | | | PLEASE USE THE GASKET KIT LINK IN SIS OR CONTACT YOUR LOCAL DEALER FOR THE LATEST GASKET KIT INFORMATION | |

R-REMFG PART MAY BE AVAILABLE
Y-SEPARATE ILLUSTRATION

# ENGINE ARRANGEMENT

## *272-3086* ENGINE AR-COMPLETE

**S/N: RHX1-UP**
**446 BRAKE KW (598 BHP) AT 1800 RPM. WITH BRAKE**
**PART OF 280-2296 ENGINE AR-COMPLETE**
**AN ATTACHMENT**

**SMCS-1000** **i02714958**

| NOTE | PART NUMBER | QTY | PART NAME<br>1 2 3 4 5 6 (PRODUCT LEVEL) | SEE PAGE |
|---|---|---|---|---|
| Y | *126-7631* | 1 | CONNECTION GP-ELECTRICAL | 259 |
| Y | *241-7598* | 1 | CONTROL & MTG GP-ENGINE ELEK | 260 |
| Y | *223-4730* | 1 | COVER GP-AIR COMPRESSOR | 29 |
| Y | *107-6736* | 1 | COVER GP-CYLINDER BLOCK (TURBOCHARGER DRAIN COVER) | 30 |
| | | | S/N: RHX3791-UP | |
| Y | *107-6737* | 1 | COVER GP-CYLINDER BLOCK (OIL FILLER) | 31 |
| | | | S/N: RHX3791-UP | |
| Y | *228-7083* | 1 | COVER GP-CYLINDER BLOCK (CENTRAL STRUCTURE) | 32 |
| | | | S/N: RHX1-3790 | |
| Y | *250-2304* | 1 | MOUNTING GP-PRESSURE SENSOR (ATMOSPHERIC, ENGINE OIL) | 291 |
| | | | S/N: RHX3791-UP | |
| Y | *216-5540* | 1 | COVER GP-FLYWHEEL HOUSING | 34 |
| Y | *120-9847* | 1 | COVER GP-FRONT HOUSING | 35 |
| Y | *159-6159* | 1 | COVER GP-FRONT HOUSING (CAM, IDLER GEAR) | 36 |
| Y | *230-0104* | 1 | COVER GP-SOUND SUPPRESSION | 37 |
| Y | *239-4113* | 1 | COVER GP-VALVE MECHANISM | 41 |
| Y | *227-3705* | 1 | DAMPER GP | 77 |
| Y | *6I-3638* | 1 | DRIVE GP-PUMP | 79 |
| Y | *241-5936* | 1 | ENGINE AR-CORE | 15 |
| | | | S/N: RHX1-3790 | |
| Y | *294-7614* | 1 | ENGINE AR-CORE | 17 |
| | | | S/N: RHX3791-UP | |
| Y | *4P-6846* | 1 | FASTENER GP-FRONT HOUSING (WITH LIFTING EYE) | 81 |
| Y | *108-9382* | 1 | FASTENER GP-FRONT HOUSING | 82 |
| Y | *4N-2481* | 1 | FASTENER GP-OIL PUMP MOUNTING | 138 |
| Y | *244-6815* | 1 | FILTER GP-ENGINE OIL | 142 |
| Y | *219-4438* | 1 | FLYWHEEL GP | 84 |
| Y | *159-9362* | 1 | FUMES DISPOSAL GP | 148 |
| Y | *282-2409* | 1 | GAUGE GP-OIL LEVEL (DIPSTICK) (ENGINE) | 150 |
| Y | *224-9695* | 1 | GEAR GP-REAR | 89 |
| Y | *275-4185* | 1 | HOUSING GP-FLYWHEEL | 94 |
| Y | *244-2509* | 1 | HOUSING GP-FRONT | 96 |
| Y | *111-2088* | 1 | LIFTING GP-ENGINE (REAR) | 98 |
| Y | *127-0564* | 1 | LIFTING GP-ENGINE (FRONT) | 100 |
| Y | *246-1175* | 1 | LINES GP-FUEL | 222 |
| Y | *235-1054* | 1 | LINES GP-TURBOCHARGER OIL | 153 |
| Y | *219-4441* | 1 | LINES GP-WATER (OIL COOLER) | 166 |
| Y | *225-4127* | 1 | LINES GP-WATER (TURBOCHARGER) | 170 |
| Y | *220-6372* | 1 | MANIFOLD GP-EXHAUST | 201 |
| Y | *188-1754* | 1 | MOUNTING GP-ALTERNATOR & COMPR | 106 |
| Y | *277-8461* | 1 | PAN GP-OIL | 109 |
| Y | *174-3874* | 1 | PANEL GP-SOUND SUPPRESSION (ENGINE, LH) | 781 |
| Y | *227-9980* | 1 | PANEL GP-SOUND SUPPRESSION (FRONT HOUSING) | 782 |
| Y | *224-3979* | 1 | PLATE GP-ENGINE IDENTIFICATION (C18 ACERT) | 860 |
| Y | *235-8397* | 1 | PLUG GP-CYLINDER BLOCK | 117 |
| Y | *229-6711* | 1 | PLUG GP-CYLINDER HEAD | 119 |
| Y | *170-1757* | 1 | PULLEY GP-CRANKSHAFT | 120 |
| Y | *150-4279* | 1 | PUMP & MTG GP-FUEL TRANSFER | 229 |
| YR | **161-4113** | 1 | PUMP GP-ENGINE OIL | 163 |
| Y | *246-1053* | 1 | PUMP GP-FUEL PRM & PRIM FILTER | 234 |
| | | | S/N: RHX1-3790 | |

*272-3086* **ENGINE AR-COMPLETE** ***(contd.)*** **i02714958**

| NOTE | PART NUMBER | QTY | PART NAME<br>1 2 3 4 5 6 (PRODUCT LEVEL) | SEE PAGE |
|---|---|---|---|---|
| Y | *298-6412* | 1 | PUMP GP-FUEL PRM & PRIM FILTER | 236 |
| | | | S/N: RHX3791-UP | |
| Y | *174-5986* | 1 | PUMP GP-WATER | 184 |
| Y | *243-1563* | 1 | SENSOR GP-ENGINE | 296 |
| Y | *185-6278* | 1 | SUPPORT GP-ENGINE | 129 |
| Y | *262-1080* | 1 | TURBOCHARGER GP | 209 |
| Y | *243-1561* | 1 | WIRING GP-ENGINE | 370 |
| | | | | |
| | *219-7186* | 1 | ELECTRONICS GP-ENGINE RATINGS | |
| | | | | |
| | | | PLEASE USE THE GASKET KIT LINK IN SIS OR CONTACT YOUR LOCAL DEALER FOR THE LATEST GASKET KIT INFORMATION | |

R-REMFG PART MAY BE AVAILABLE
Y-SEPARATE ILLUSTRATION

# ENGINE ARRANGEMENT

## *272-3087* ENGINE AR-COMPLETE

**S/N: RHX1-UP**

**AN ATTACHMENT**

**SMCS-1000** **i02712912**

| NOTE | PART NUMBER | QTY | PART NAME<br>1 2 3 4 5 6 (PRODUCT LEVEL) | SEE PAGE |
|---|---|---|---|---|
| Y | *126-7631* | 1 | CONNECTION GP-ELECTRICAL | 259 |
| Y | *241-7598* | 1 | CONTROL & MTG GP-ENGINE ELEK | 260 |
| Y | *223-4730* | 1 | COVER GP-AIR COMPRESSOR | 29 |
| Y | *107-6736* | 1 | COVER GP-CYLINDER BLOCK (TURBOCHARGER DRAIN COVER) | 30 |
| | | | S/N: RHX3791-UP | |
| Y | *107-6737* | 1 | COVER GP-CYLINDER BLOCK (OIL FILLER) | 31 |
| | | | S/N: RHX3791-UP | |
| Y | *228-7083* | 1 | COVER GP-CYLINDER BLOCK | 32 |
| | | | S/N: RHX1-3790 | |
| Y | *250-2304* | 1 | MOUNTING GP-PRESSURE SENSOR (ATMOSPHERIC, ENGINE OIL) | 291 |
| | | | S/N: RHX3791-UP | |
| Y | *216-5540* | 1 | COVER GP-FLYWHEEL HOUSING | 34 |
| Y | *120-9847* | 1 | COVER GP-FRONT HOUSING | 35 |
| Y | *159-6159* | 1 | COVER GP-FRONT HOUSING (CAM, IDLER GEAR) | 36 |
| Y | *230-0104* | 1 | COVER GP-SOUND SUPPRESSION | 37 |
| Y | *239-4113* | 1 | COVER GP-VALVE MECHANISM | 41 |
| Y | *227-3705* | 1 | DAMPER GP | 77 |
| Y | *6I-3638* | 1 | DRIVE GP-PUMP | 79 |
| Y | *241-5935* | 1 | ENGINE AR-CORE | 14 |
| | | | S/N: RHX2218-3790 | |
| Y | *294-3050* | 1 | ENGINE AR-CORE | 16 |
| | | | S/N: RHX3791-4280 | |
| Y | *297-3206* | 1 | ENGINE AR-CORE | 18 |
| | | | S/N: RHX4281-UP | |
| Y | *4P-6846* | 1 | FASTENER GP-FRONT HOUSING | 81 |
| Y | *108-9382* | 1 | FASTENER GP-FRONT HOUSING | 82 |
| Y | *4N-2481* | 1 | FASTENER GP-OIL PUMP MOUNTING | 138 |
| Y | *244-6815* | 1 | FILTER GP-ENGINE OIL | 142 |
| Y | *246-1053* | 1 | PUMP GP-FUEL PRM & PRIM FILTER | 234 |
| | | | S/N: RHX1-3790 | |
| Y | *298-6412* | 1 | PUMP GP-FUEL PRM & PRIM FILTER | 236 |
| | | | S/N: RHX3791-UP | |
| Y | *219-4438* | 1 | FLYWHEEL GP | 84 |
| Y | *159-9362* | 1 | FUMES DISPOSAL GP | 148 |
| Y | *282-2409* | 1 | GAUGE GP-OIL LEVEL (DIPSTICK) (ENGINE) | 150 |
| Y | *224-9695* | 1 | GEAR GP-REAR | 89 |
| Y | *275-4185* | 1 | HOUSING GP-FLYWHEEL | 94 |
| Y | *244-2509* | 1 | HOUSING GP-FRONT | 96 |
| Y | *111-2088* | 1 | LIFTING GP-ENGINE (REAR) | 98 |
| Y | *127-0564* | 1 | LIFTING GP-ENGINE | 100 |
| Y | *246-1175* | 1 | LINES GP-FUEL | 222 |
| Y | *235-1054* | 1 | LINES GP-TURBOCHARGER OIL | 153 |
| Y | *219-4441* | 1 | LINES GP-WATER | 166 |
| Y | *225-4127* | 1 | LINES GP-WATER (TURBOCHARGER) | 170 |
| Y | *220-6372* | 1 | MANIFOLD GP-EXHAUST | 201 |
| Y | *188-1754* | 1 | MOUNTING GP-ALTERNATOR & COMPR | 106 |
| Y | *277-8461* | 1 | PAN GP-OIL | 109 |
| Y | *174-3874* | 1 | PANEL GP-SOUND SUPPRESSION (ENGINE, LH) | 781 |
| Y | *227-9980* | 1 | PANEL GP-SOUND SUPPRESSION (FRONT HOUSING) | 782 |
| Y | *224-3979* | 1 | PLATE GP-ENGINE IDENTIFICATION (C18 ACERT) | 860 |
| Y | *235-8397* | 1 | PLUG GP-CYLINDER BLOCK | 117 |
| Y | *229-6711* | 1 | PLUG GP-CYLINDER HEAD | 119 |
| Y | *170-1757* | 1 | PULLEY GP-CRANKSHAFT | 120 |
| Y | *150-4279* | 1 | PUMP & MTG GP-FUEL TRANSFER | 229 |

*272-3087* **ENGINE AR-COMPLETE** *(contd.)* **i02712912**

| NOTE | PART NUMBER | QTY | PART NAME<br>1 2 3 4 5 6 (PRODUCT LEVEL) | SEE PAGE |
|---|---|---|---|---|
| YR | **161-4113** | 1 | PUMP GP-ENGINE OIL | 163 |
| Y | *174-5986* | 1 | PUMP GP-WATER | 184 |
| Y | *243-1563* | 1 | SENSOR GP-ENGINE | 296 |
| Y | *185-6278* | 1 | SUPPORT GP-ENGINE | 129 |
| Y | *262-1080* | 1 | TURBOCHARGER GP | 209 |
| Y | *243-1561* | 1 | WIRING GP-ENGINE | 370 |
| | *219-7186* | 1 | ELECTRONICS GP-ENGINE RATINGS | |
| | | | | |
| | | | PLEASE USE THE GASKET KIT LINK IN SIS OR CONTACT YOUR LOCAL DEALER FOR THE LATEST GASKET KIT INFORMATION | |

R-REMFG PART MAY BE AVAILABLE
Y-SEPARATE ILLUSTRATION

# ENGINE ARRANGEMENT

## *280-2296* ENGINE AR-COMPLETE

**S/N: RLB1-UP**

**CANNOT BE USED WITH 272-3087—PAGE 6, 299-6756—PAGE 13, 262-6652—PAGE 541, 299-6765—PAGE 1, 292-2554—PAGE 11**

**AN ATTACHMENT**

**SMCS-1000** **i02747593**

| NOTE | PART NUMBER | QTY | PART NAME 1 2 3 4 5 6 (PRODUCT LEVEL) | SEE PAGE |
|---|---|---|---|---|
| Y | **272-3086** | 1 | ENGINE AR-COMPLETE | 4 |
| Y | *280-2181* | 1 | SWITCH GP-ROCKER | 340 |

Y-SEPARATE ILLUSTRATION

# ENGINE ARRANGEMENT

## 292-2553 ENGINE AR-COMPLETE

**S/N: RHX3837-UP**
**PART OF 299-6756 ENGINE AR-COMPLETE**
**FOR USE WITH 262-6652—PAGE 541, 299-6765—PAGE 1. CANNOT BE USED WITH 272-3087—PAGE 6**
**AN ATTACHMENT**

**SMCS-1000** **i03267263**

| NOTE | PART NUMBER | QTY | PART NAME 1 2 3 4 5 6 (PRODUCT LEVEL) | SEE PAGE |
|---|---|---|---|---|
| Y | *235-5805* | 1 | SUPPORT GP-ENGINE | 131 |
| | | | S/N: RHX3837-4126 | |
| Y | *126-7631* | 1 | CONNECTION GP-ELECTRICAL | 259 |
| Y | *241-7598* | 1 | CONTROL & MTG GP-ENGINE ELEK | 260 |
| Y | *223-4730* | 1 | COVER GP-AIR COMPRESSOR | 29 |
| Y | *107-6736* | 1 | COVER GP-CYLINDER BLOCK (TURBOCHARGER DRAIN COVER) | 30 |
| Y | *107-6737* | 1 | COVER GP-CYLINDER BLOCK | 31 |
| Y | *216-5540* | 1 | COVER GP-FLYWHEEL HOUSING | 34 |
| Y | *120-9847* | 1 | COVER GP-FRONT HOUSING | 35 |
| Y | *159-6159* | 1 | COVER GP-FRONT HOUSING (CAM, IDLER GEAR) | 36 |
| Y | *230-0104* | 1 | COVER GP-SOUND SUPPRESSION | 37 |
| Y | *239-4113* | 1 | COVER GP-VALVE MECHANISM | 41 |
| Y | *227-3705* | 1 | DAMPER GP | 77 |
| Y | *6I-3638* | 1 | DRIVE GP-PUMP | 79 |
| Y | *241-5936* | 1 | ENGINE AR-CORE | 15 |
| | | | S/N: RHX3837-4126 | |
| Y | *294-7614* | 1 | ENGINE AR-CORE | 17 |
| | | | S/N: RHX4127-UP | |
| Y | *4P-6846* | 1 | FASTENER GP-FRONT HOUSING | 81 |
| Y | *108-9382* | 1 | FASTENER GP-FRONT HOUSING | 82 |
| Y | *4N-2481* | 1 | FASTENER GP-OIL PUMP MOUNTING | 138 |
| Y | *244-6815* | 1 | FILTER GP-ENGINE OIL | 142 |
| Y | *219-4438* | 1 | FLYWHEEL GP | 84 |
| Y | *159-9362* | 1 | FUMES DISPOSAL GP | 148 |
| Y | *282-2409* | 1 | GAUGE GP-OIL LEVEL (DIPSTICK) (ENGINE) | 150 |
| Y | *293-0989* | 1 | GEAR GP-REAR | 90 |
| Y | *275-4185* | 1 | HOUSING GP-FLYWHEEL | 94 |
| Y | *244-2509* | 1 | HOUSING GP-FRONT | 96 |
| Y | *111-2088* | 1 | LIFTING GP-ENGINE (REAR) | 98 |
| Y | *127-0564* | 1 | LIFTING GP-ENGINE | 100 |
| Y | *246-1175* | 1 | LINES GP-FUEL | 222 |
| Y | *235-1054* | 1 | LINES GP-TURBOCHARGER OIL | 153 |
| Y | *219-4441* | 1 | LINES GP-WATER | 166 |
| Y | *225-4127* | 1 | LINES GP-WATER (TURBOCHARGER) | 170 |
| Y | *220-6372* | 1 | MANIFOLD GP-EXHAUST | 201 |
| Y | *188-1754* | 1 | MOUNTING GP-ALTERNATOR & COMPR | 106 |
| Y | *277-8461* | 1 | PAN GP-OIL | 109 |
| Y | *174-3874* | 1 | PANEL GP-SOUND SUPPRESSION (ENGINE, LH) | 781 |
| Y | *227-9980* | 1 | PANEL GP-SOUND SUPPRESSION (FRONT HOUSING) | 782 |
| Y | *224-3979* | 1 | PLATE GP-ENGINE IDENTIFICATION (C18 ACERT) | 860 |
| Y | *235-8397* | 1 | PLUG GP-CYLINDER BLOCK | 117 |
| Y | *229-6711* | 1 | PLUG GP-CYLINDER HEAD | 119 |
| Y | *170-1757* | 1 | PULLEY GP-CRANKSHAFT | 120 |
| Y | *150-4279* | 1 | PUMP & MTG GP-FUEL TRANSFER | 229 |
| YR | **161-4113** | 1 | PUMP GP-ENGINE OIL | 163 |
| Y | *246-1053* | 1 | PUMP GP-FUEL PRM & PRIM FILTER | 234 |
| | | | S/N: RHX3837-4126 | |
| Y | *298-6412* | 1 | PUMP GP-FUEL PRM & PRIM FILTER | 236 |
| | | | S/N: RHX4127-UP | |
| Y | *174-5986* | 1 | PUMP GP-WATER | 184 |
| Y | *250-2304* | 1 | MOUNTING GP-PRESSURE SENSOR (ATMOSPHERIC, ENGINE OIL) | 291 |

## 292-2553 ENGINE AR-COMPLETE *(contd. )* i03267263

| NOTE | PART NUMBER | QTY | PART NAME 1 2 3 4 5 6 (PRODUCT LEVEL) | SEE PAGE |
|---|---|---|---|---|
| Y | *243-1563* | 1 | SENSOR GP-ENGINE | 296 |
| Y | *185-6278* | 1 | SUPPORT GP-ENGINE | 129 |
| Y | *262-1080* | 1 | TURBOCHARGER GP | 209 |
| Y | *243-1561* | 1 | WIRING GP-ENGINE | 370 |
| | *219-7186* | 1 | ELECTRONICS GP-ENGINE RATINGS | |
| | | | | |
| | | | PLEASE USE THE GASKET KIT LINK IN SIS OR CONTACT YOUR LOCAL DEALER FOR THE LATEST GASKET KIT INFORMATION | |

R-REMFG PART MAY BE AVAILABLE
Y-SEPARATE ILLUSTRATION

# ENGINE ARRANGEMENT

## 292-2554 ENGINE AR-COMPLETE

**S/N: RHX3837-UP**
**446 BRAKE KW (598 BHP) AT 1800 RPM**
**AN ATTACHMENT**

**SMCS-1000** **i03267264**

| NOTE | PART NUMBER | QTY | PART NAME<br>1 2 3 4 5 6 (PRODUCT LEVEL) | SEE PAGE |
|---|---|---|---|---|
| Y | *126-7631* | 1 | CONNECTION GP-ELECTRICAL | 259 |
| Y | *241-7598* | 1 | CONTROL & MTG GP-ENGINE ELEK | 260 |
| Y | *223-4730* | 1 | COVER GP-AIR COMPRESSOR | 29 |
| Y | *107-6736* | 1 | COVER GP-CYLINDER BLOCK (TURBOCHARGER DRAIN COVER) | 30 |
| Y | *107-6737* | 1 | COVER GP-CYLINDER BLOCK | 31 |
| Y | *216-5540* | 1 | COVER GP-FLYWHEEL HOUSING | 34 |
| Y | *120-9847* | 1 | COVER GP-FRONT HOUSING | 35 |
| Y | *159-6159* | 1 | COVER GP-FRONT HOUSING (CAM, IDLER GEAR) | 36 |
| Y | *230-0104* | 1 | COVER GP-SOUND SUPPRESSION | 37 |
| Y | *283-7182* | 1 | COVER GP-SOUND SUPPRESSION (ENGINE OIL PAN) | 38 |
| | | | S/N: RHX4281-UP | |
| Y | *239-4113* | 1 | COVER GP-VALVE MECHANISM | 41 |
| Y | *227-3705* | 1 | DAMPER GP | 77 |
| Y | *6I-3638* | 1 | DRIVE GP-PUMP | 79 |
| Y | *294-3050* | 1 | ENGINE AR-CORE | 16 |
| | | | S/N: RHX3837-4280 | |
| Y | *297-3206* | 1 | ENGINE AR-CORE | 18 |
| | | | S/N: RHX4281-UP | |
| Y | *4P-6846* | 1 | FASTENER GP-FRONT HOUSING | 81 |
| Y | *108-9382* | 1 | FASTENER GP-FRONT HOUSING | 82 |
| Y | *4N-2481* | 1 | FASTENER GP-OIL PUMP MOUNTING | 138 |
| Y | *244-6815* | 1 | FILTER GP-ENGINE OIL | 142 |
| Y | *219-4438* | 1 | FLYWHEEL GP | 84 |
| Y | *159-9362* | 1 | FUMES DISPOSAL GP | 148 |
| Y | *282-2409* | 1 | GAUGE GP-OIL LEVEL (DIPSTICK) (ENGINE) | 150 |
| Y | *293-0989* | 1 | GEAR GP-REAR | 90 |
| Y | *275-4185* | 1 | HOUSING GP-FLYWHEEL | 94 |
| Y | *244-2509* | 1 | HOUSING GP-FRONT | 96 |
| Y | *111-2088* | 1 | LIFTING GP-ENGINE (REAR) | 98 |
| Y | *127-0564* | 1 | LIFTING GP-ENGINE | 100 |
| Y | *246-1175* | 1 | LINES GP-FUEL | 222 |
| Y | *235-1054* | 1 | LINES GP-TURBOCHARGER OIL | 153 |
| Y | *219-4441* | 1 | LINES GP-WATER | 166 |
| Y | *225-4127* | 1 | LINES GP-WATER (TURBOCHARGER) | 170 |
| Y | *220-6372* | 1 | MANIFOLD GP-EXHAUST | 201 |
| Y | *188-1754* | 1 | MOUNTING GP-ALTERNATOR & COMPR | 106 |
| Y | *277-8461* | 1 | PAN GP-OIL | 109 |
| Y | *174-3874* | 1 | PANEL GP-SOUND SUPPRESSION (ENGINE, LH) | 781 |
| Y | *227-9980* | 1 | PANEL GP-SOUND SUPPRESSION (FRONT HOUSING) | 782 |
| Y | *224-3979* | 1 | PLATE GP-ENGINE IDENTIFICATION (C18 ACERT) | 860 |
| Y | *235-8397* | 1 | PLUG GP-CYLINDER BLOCK | 117 |
| Y | *229-6711* | 1 | PLUG GP-CYLINDER HEAD | 119 |
| Y | *170-1757* | 1 | PULLEY GP-CRANKSHAFT | 120 |
| Y | *150-4279* | 1 | PUMP & MTG GP-FUEL TRANSFER | 229 |
| YR | **161-4113** | 1 | PUMP GP-ENGINE OIL | 163 |
| Y | *298-6412* | 1 | PUMP GP-FUEL PRM & PRIM FILTER | 236 |
| Y | *174-5986* | 1 | PUMP GP-WATER | 184 |
| Y | *250-2304* | 1 | MOUNTING GP-PRESSURE SENSOR (ATMOSPHERIC, ENGINE OIL) | 291 |
| Y | *243-1563* | 1 | SENSOR GP-ENGINE | 296 |
| Y | *185-6278* | 1 | SUPPORT GP-ENGINE | 129 |
| Y | *262-1080* | 1 | TURBOCHARGER GP | 209 |
| Y | *243-1561* | 1 | WIRING GP-ENGINE | 370 |
| | *219-7186* | 1 | ELECTRONICS GP-ENGINE RATINGS | |

# ENGINE ARRANGEMENT

## 292-2554 ENGINE AR-COMPLETE *(contd. )* i03267264

| NOTE | PART NUMBER | QTY | PART NAME 1 2 3 4 5 6 (PRODUCT LEVEL) | SEE PAGE |
|---|---|---|---|---|
| | | | | |
| | | | PLEASE USE THE GASKET KIT LINK IN SIS OR CONTACT YOUR LOCAL DEALER FOR THE LATEST GASKET KIT INFORMATION | |

R-REMFG PART MAY BE AVAILABLE
Y-SEPARATE ILLUSTRATION

# ENGINE ARRANGEMENT

## *299-6756* ENGINE AR-COMPLETE

**S/N: RLB1-UP**

**FOR USE WITH 262-6652—PAGE 541, 299-6765—PAGE 1. CANNOT BE USED WITH 272-3087—PAGE 6, 292-2554—PAGE 11, 280-2296—PAGE 8 AN ATTACHMENT**

**SMCS-1000** **i02747521**

| NOTE | PART NUMBER | QTY | PART NAME 1 2 3 4 5 6 (PRODUCT LEVEL) | SEE PAGE |
|---|---|---|---|---|
| Y | **292-2553** | 1 | ENGINE AR-COMPLETE | 9 |
| Y | *280-2181* | 1 | SWITCH GP-ROCKER | 340 |

Y-SEPARATE ILLUSTRATION

# ENGINE ARRANGEMENT

## *241-5935* ENGINE AR-CORE

**S/N: RHX1-2217**

**PART OF 247-3315, 272-3087 ENGINE AR-COMPLETE**

**AN ATTACHMENT**

**SMCS-1000** **i02459522**

| NOTE | PART NUMBER | QTY | PART NAME<br>1 2 3 4 5 6 (PRODUCT LEVEL) | SEE PAGE |
|---|---|---|---|---|
| Y | *234-5005* | 1 | BASE GP-VALVE COVER & INJ HARN | 24 |
| | | | S/N: RHX1-1883 | |
| Y | *278-5662* | 1 | BASE GP-VALVE COVER & INJ HARN | 26 |
| | | | S/N: RHX1884-2217 | |
| Y | *243-0551* | 1 | CAMSHAFT GP | 28 |
| Y | *223-9732* | 1 | CRANKSHAFT GP | 42 |
| Y | *223-9253* | 1 | CYLINDER BLOCK GP | 49 |
| | | | S/N: RHX1-667 | |
| Y | *261-0191* | 1 | CYLINDER BLOCK GP | 51 |
| | | | S/N: RHX668-2217 | |
| Y | *235-2974* | 1 | CYLINDER HEAD GP | 71 |
| Y | *109-1657* | 1 | FASTENER GP-VALVE MECHANISM | 83 |
| Y | *207-0449* | 1 | GEAR GP-FRONT | 86 |
| Y | *234-6136* | 6 | PISTON & ROD GP | 113 |
| Y | *235-1403* | 6 | PUMP GP-FUEL INJECTION | 231 |
| Y | *148-7482* | 1 | MECHANISM GP-FUEL PUMP & VALVE | 101 |

Y-SEPARATE ILLUSTRATION

# ENGINE ARRANGEMENT

## *241-5936* ENGINE AR-CORE

**S/N: RHX1-UP**

**PART OF 221-8124, 272-3086, 292-2553 ENGINE AR-COMPLETE**

**AN ATTACHMENT**

**SMCS-1000** **i02676801**

| NOTE | PART NUMBER | QTY | PART NAME<br>1 2 3 4 5 6 (PRODUCT LEVEL) | SEE PAGE |
|---|---|---|---|---|
| Y | *233-7245* | 1 | ACTUATOR GP-VALVE (EXHAUST) | 21 |
| Y | *234-5005* | 1 | BASE GP-VALVE COVER & INJ HARN | 24 |
| Y | *243-0551* | 1 | CAMSHAFT GP | 28 |
| Y | *223-9732* | 1 | CRANKSHAFT GP | 42 |
| Y | *223-9253* | 1 | CYLINDER BLOCK GP | 49 |
| | | | S/N: RHX1-667 | |
| Y | *261-0191* | 1 | CYLINDER BLOCK GP | 51 |
| | | | S/N: RHX668-UP | |
| Y | *235-2974* | 1 | CYLINDER HEAD GP | 71 |
| Y | *207-0449* | 1 | GEAR GP-FRONT | 86 |
| Y | *235-0382* | 1 | MECHANISM GP-FUEL PUMP & VALVE | 103 |
| | | | S/N: RHX1-678 | |
| Y | *266-3699* | 1 | MECHANISM GP-FUEL PUMP & VALVE | 104 |
| | | | S/N: RHX679-UP | |
| Y | *234-6136* | 6 | PISTON & ROD GP | 113 |
| Y | *235-1403* | 6 | PUMP GP-FUEL INJECTION | 231 |

Y-SEPARATE ILLUSTRATION

# ENGINE ARRANGEMENT

## *294-3050* ENGINE AR-CORE

**S/N: RHX3791-UP**

**PART OF 272-3087, 292-2554 ENGINE AR-COMPLETE**

**AN ATTACHMENT**

**SMCS-1000** **i02993211**

| NOTE | PART NUMBER | QTY | PART NAME<br>1 2 3 4 5 6 (PRODUCT LEVEL) | SEE PAGE |
|---|---|---|---|---|
| Y | *278-5662* | 1 | BASE GP-VALVE COVER & INJ HARN | 26 |
| Y | *243-0551* | 1 | CAMSHAFT GP | 28 |
| Y | *223-9732* | 1 | CRANKSHAFT GP | 42 |
| Y | *261-0191* | 1 | CYLINDER BLOCK GP | 51 |
| Y | *235-2974* | 1 | CYLINDER HEAD GP | 71 |
| | | | S/N: RHX3791-4126 | |
| Y | *274-1953* | 1 | CYLINDER HEAD GP | 75 |
| | | | S/N: RHX4127-UP | |
| Y | *109-1657* | 1 | FASTENER GP-VALVE MECHANISM | 83 |
| Y | *207-0449* | 1 | GEAR GP-FRONT | 86 |
| Y | *190-0009* | 1 | MECHANISM GP-FUEL PUMP & VALVE | 102 |
| Y | *234-6136* | 6 | PISTON & ROD GP | 113 |
| Y | *294-7615* | 6 | PUMP GP-FUEL INJECTION | 233 |

Y-SEPARATE ILLUSTRATION

# ENGINE ARRANGEMENT

## *294-7614* ENGINE AR-CORE

**S/N: RHX3791-UP**

**PART OF 272-3086, 292-2553 ENGINE AR-COMPLETE**

**AN ATTACHMENT**

**SMCS-1000** **i02686458**

| NOTE | PART NUMBER | QTY | PART NAME 1 2 3 4 5 6 (PRODUCT LEVEL) | SEE PAGE |
|---|---|---|---|---|
| Y | *233-7245* | 1 | ACTUATOR GP-VALVE (EXHAUST) | 21 |
| Y | *234-5005* | 1 | BASE GP-VALVE COVER & INJ HARN | 24 |
| Y | *243-0551* | 1 | CAMSHAFT GP | 28 |
| Y | *223-9732* | 1 | CRANKSHAFT GP | 42 |
| Y | *261-0191* | 1 | CYLINDER BLOCK GP | 51 |
| Y | *274-1953* | 1 | CYLINDER HEAD GP | 75 |
| Y | *207-0449* | 1 | GEAR GP-FRONT | 86 |
| Y | *266-3699* | 1 | MECHANISM GP-FUEL PUMP & VALVE | 104 |
| Y | *234-6136* | 6 | PISTON & ROD GP | 113 |
| Y | *294-7615* | 6 | PUMP GP-FUEL INJECTION | 233 |

Y-SEPARATE ILLUSTRATION

# ENGINE ARRANGEMENT

## *297-3206* ENGINE AR-CORE

**S/N: RHX4281-UP**

**PART OF 272-3087, 292-2554 ENGINE AR-COMPLETE**

**AN ATTACHMENT**

**SMCS-1000** **i02679570**

| NOTE | PART NUMBER | QTY | PART NAME 1 2 3 4 5 6 (PRODUCT LEVEL) | SEE PAGE |
|---|---|---|---|---|
| Y | *278-5662* | 1 | BASE GP-VALVE COVER & INJ HARN | 26 |
| Y | *243-0551* | 1 | CAMSHAFT GP | 28 |
| Y | *223-9732* | 1 | CRANKSHAFT GP | 42 |
| Y | *297-3207* | 1 | CYLINDER BLOCK GP | 57 |
| Y | *235-2974* | 1 | CYLINDER HEAD GP | 71 |
| Y | *109-1657* | 1 | FASTENER GP-VALVE MECHANISM | 83 |
| Y | *207-0449* | 1 | GEAR GP-FRONT | 86 |
| Y | *190-0009* | 1 | MECHANISM GP-FUEL PUMP & VALVE | 102 |
| Y | *234-6136* | 6 | PISTON & ROD GP | 113 |
| Y | *294-7615* | 6 | PUMP GP-FUEL INJECTION | 233 |

Y-SEPARATE ILLUSTRATION

# ENGINE ARRANGEMENT

## *270-4248* INSTALLATION AR-ENGINE

**S/N: RLB1-318**

**PART OF 268-7810 GENERAL AR**

**SMCS-1000** **i03266692**

| NOTE | PART NUMBER | QTY | PART NAME 1 2 3 4 5 6 (PRODUCT LEVEL) | SEE PAGE |
|---|---|---|---|---|
| Y | *270-4223* | 1 | AIR CLEANER GP | 191 |
| Y | *270-4225* | 1 | COOLER GP-BRAKE OIL | 575 |
| Y | *270-4282* | 1 | DRIVE GP-ACCESSORY | 78 |
| Y | *270-4221* | 1 | FILLER GP-ENGINE OIL | 139 |
| Y | *270-4252* | 1 | GAUGE GP-OIL LEVEL (DIPSTICK) (ENGINE) | 149 |
| Y | *270-4219* | 1 | LINES GP-AIR (EXHAUST) | 195 |
| Y | *270-4218* | 1 | LINES GP-WATER (COOLANT DRAIN) | 172 |
| Y | *270-4258* | 1 | MOUNTING GP-TORQUE CONVERTER | 428 |
| Y | *270-4251* | 1 | PUMP & LINES GP (PRELUBRICATION) | 157 |
| Y | *227-8842* | 1 | STARTING MOTOR GP-ELECTRIC | 325 |
| Y | *270-4249* | 1 | SUPPORT GP-ENGINE | 132 |

Y-SEPARATE ILLUSTRATION

# ENGINE ARRANGEMENT

## *308-5826* INSTALLATION AR-ENGINE

**S/N: RLB319-UP**

**PART OF 268-7810 GENERAL AR**

**SMCS-1000** **i03266704**

| NOTE | PART NUMBER | QTY | PART NAME 1 2 3 4 5 6 (PRODUCT LEVEL) | SEE PAGE |
|---|---|---|---|---|
| Y | *270-4223* | 1 | AIR CLEANER GP | 191 |
| Y | *270-4225* | 1 | COOLER GP-BRAKE OIL | 575 |
| Y | *270-4282* | 1 | DRIVE GP-ACCESSORY | 78 |
| Y | *270-4221* | 1 | FILLER GP-ENGINE OIL | 139 |
| Y | *270-4252* | 1 | GAUGE GP-OIL LEVEL (DIPSTICK) (ENGINE) | 149 |
| Y | *270-4219* | 1 | LINES GP-AIR | 195 |
| Y | *270-4218* | 1 | LINES GP-WATER | 172 |
| Y | *270-4258* | 1 | MOUNTING GP-TORQUE CONVERTER | 428 |
| Y | *308-5828* | 1 | PUMP & LINES GP | 160 |
| Y | *227-8842* | 1 | STARTING MOTOR GP-ELECTRIC | 325 |
| Y | *270-4249* | 1 | SUPPORT GP-ENGINE | 132 |

Y-SEPARATE ILLUSTRATION

# 233-7245 ACTUATOR GP-VALVE

**S/N: RHX1-4608**
**24-VOLT. EXHAUST**
**PART OF 241-5936, 294-7614 ENGINE AR-CORE**
**AN ATTACHMENT**

**SMCS-1130** **i02796707**

| NOTE | REF NO | GRAPHIC REF | PART NUMBER | QTY | PART NAME 1 2 3 4 5 6 (PRODUCT LEVEL) | SEE PAGE |
|---|---|---|---|---|---|---|
| YR | 1 | 1 | **239-9624** | 3 | ENGINE BRAKE GP | 80 |
| | 2 | 1 | **288-4109** | 9 | STUD-SPECIAL (COMPRESSION BRAKE) | |
| | 3 | 1 | **234-9505** | 3 | SUPPORT | |
| | 4 | 1 | **234-9508** | 3 | BOLT (1/2-13X5.65-IN) | |
| | 5 | 1 | **235-0658** | 6 | STUD | |
| | 7 | 1 | **235-1088** | 6 | NUT (3/8-16-THD) | |
| | 8 | 1 | **235-1089** | 12 | NUT-FLANGE (1/2-13-THD) | |
| | 9 | 1 | **8T-7062** | 3 | STUD-TAPERLOCK (1/2-13X55, 1/2-13X21-MM) | |

R-REMFG PART MAY BE AVAILABLE
Y-SEPARATE ILLUSTRATION

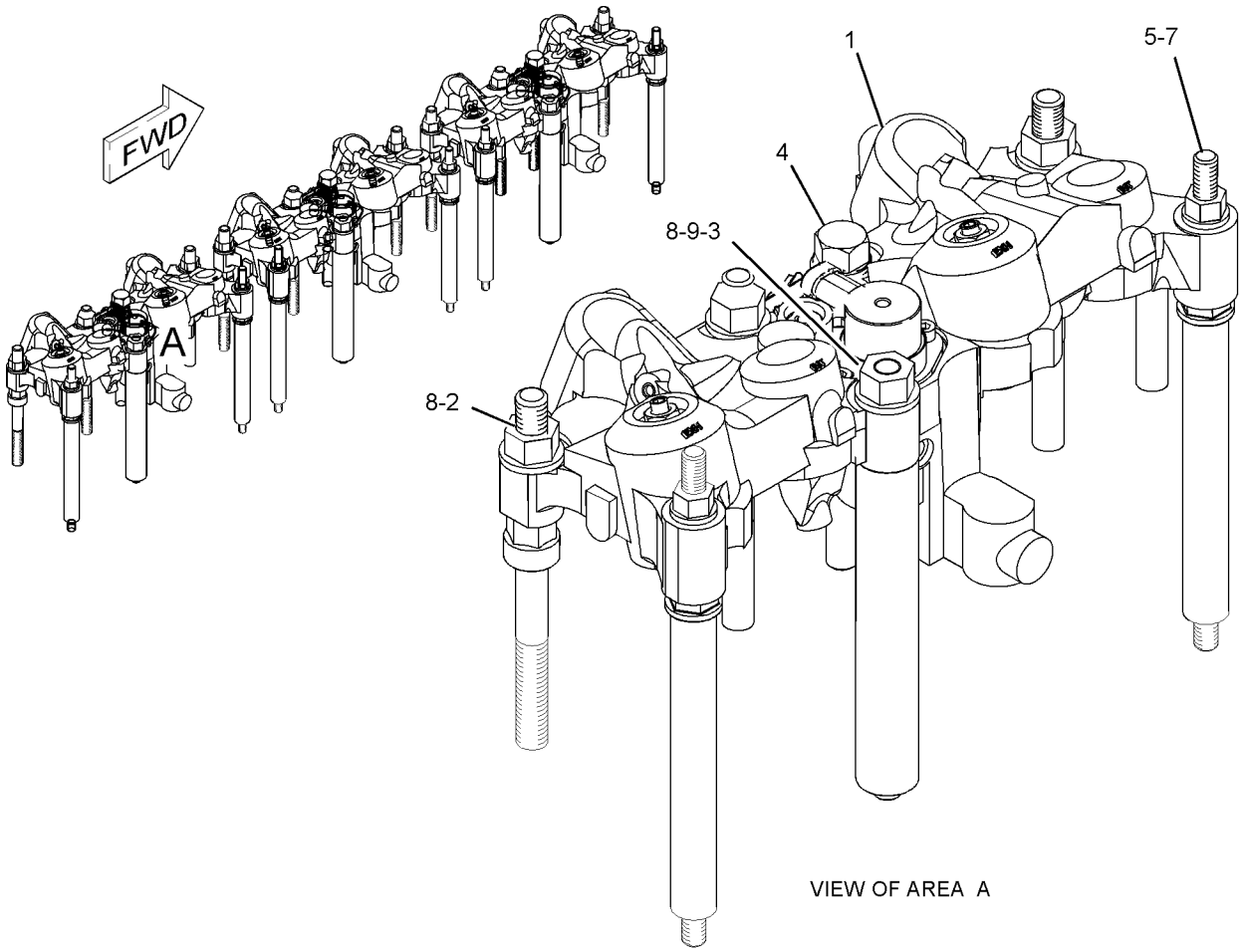


VIEW OF AREA A

GRAPHIC #1 **<END>** g01089483

# BASIC ENGINE

## *233-7245* ACTUATOR GP-VALVE

**S/N: RHX4609-UP**
**24-VOLT. EXHAUST**
**PART OF 241-5936, 294-7614 ENGINE AR-CORE**
**AN ATTACHMENT**

**SMCS-1130** **i02796666**

| NOTE | REF NO | GRAPHIC REF | PART NUMBER | QTY | PART NAME 1 2 3 4 5 6 (PRODUCT LEVEL) | SEE PAGE |
|---|---|---|---|---|---|---|
| YR | 1 | 1 | **239-9624** | 3 | ENGINE BRAKE GP | 80 |
| C | 2 | 1 | **304-9553** | 9 | STUD | |
| | 3 | 1 | **234-9505** | 3 | SUPPORT | |
| | 4 | 1 | **234-9508** | 3 | BOLT (1/2-13X5.65-IN) | |
| C | 5 | 1 | **282-3731** | 6 | SPACER AS | |
| | 7 | 1 | **235-1088** | 6 | NUT (3/8-16-THD) | |
| | 8 | 1 | **235-1089** | 12 | NUT-FLANGE (1/2-13-THD) | |
| | 9 | 1 | **8T-7062** | 3 | STUD-TAPERLOCK (1/2-13X55, 1/2-13X21-MM) | |

C-CHANGE FROM PREVIOUS TYPE
R-REMFG PART MAY BE AVAILABLE
Y-SEPARATE ILLUSTRATION

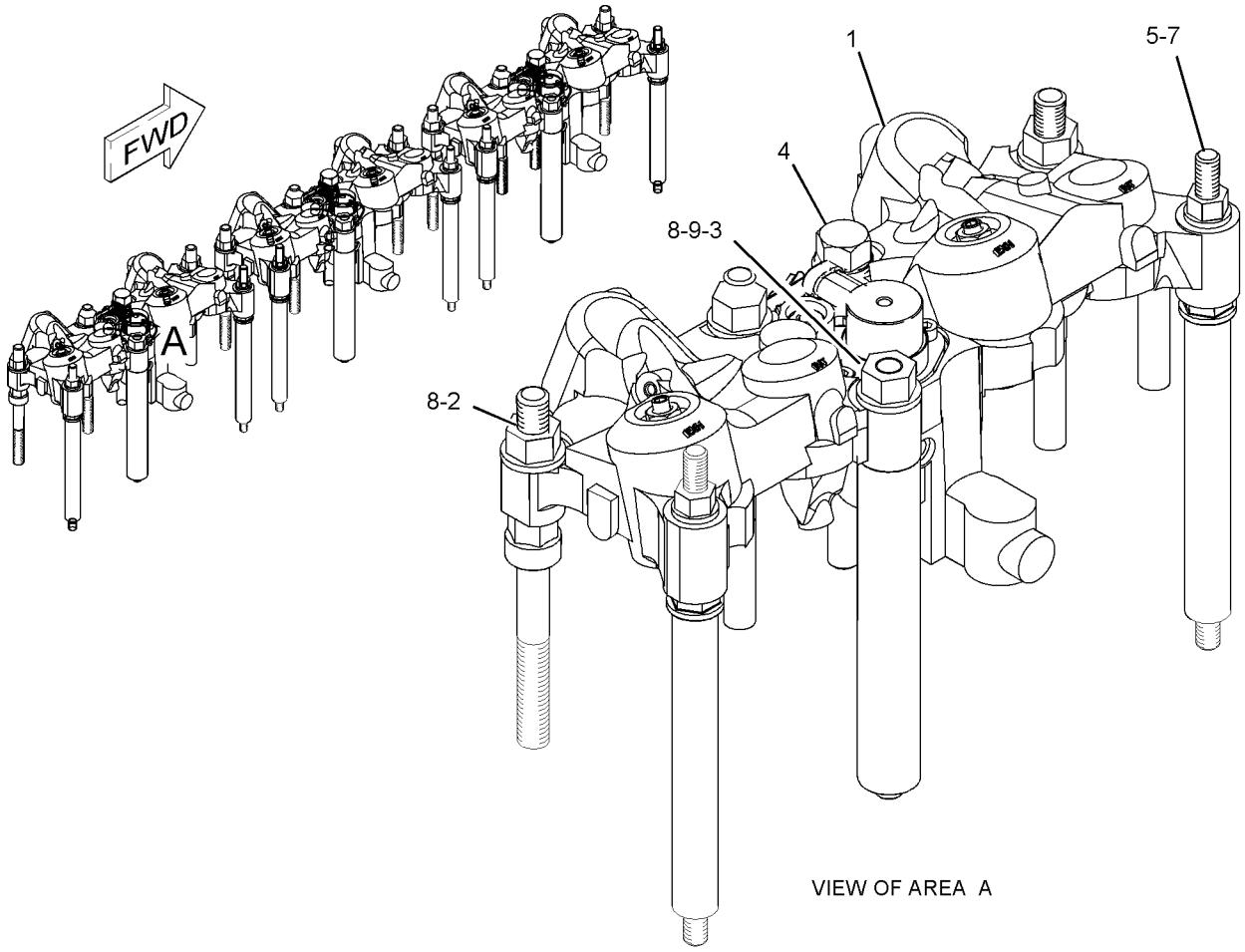


GRAPHIC #1 **<END>** g01089483

# 133-9907 ADAPTER GP-PUMP DRIVE

**S/N: RHX1-UP**
**PART OF 6I-3638 DRIVE GP-PUMP**
**AN ATTACHMENT**

**SMCS-3108** **i03260721**

| NOTE | REF NO | GRAPHIC REF | PART NUMBER | QTY | PART NAME 1 2 3 4 5 6 (PRODUCT LEVEL) | SEE PAGE |
|---|---|---|---|---|---|---|
| | 1 | 1 | **1B-3867** | 2 | BALL BEARING | |
| | 2 | 1 | **4F-7957** | 3 | BOLT (1/4-20X0.875-IN) | |
| | 3 | 1 | **6I-4575** | 1 | GEAR (34-TEETH) | |
| | 4 | 1 | **9X-2038** | 3 | WASHER (7X19X2-MM THK) | |
| | 5 | 1 | **133-9906** | 1 | ADAPTER | |
| | 6 | 1 | **1H-8647** | 1 | RING-SNAP | |

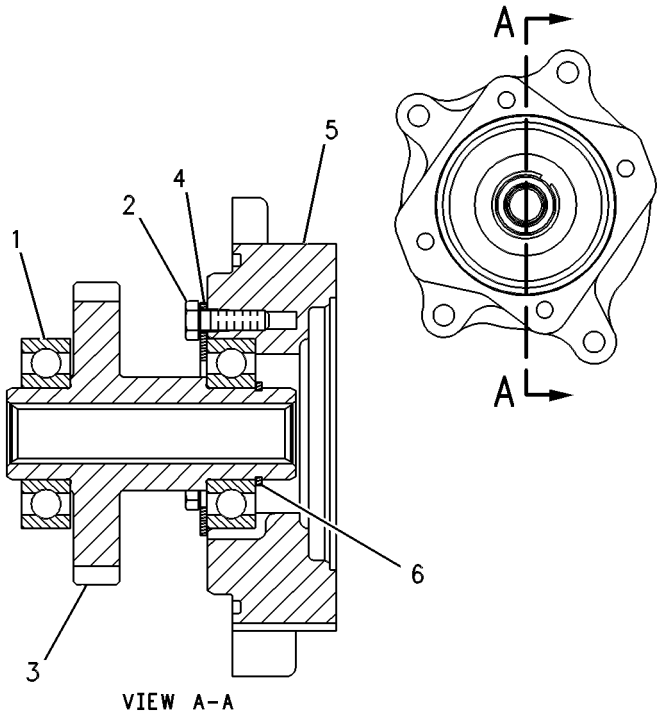

VIEW A-A

GRAPHIC #1 **<END>** g00263602

# BASIC ENGINE

## *234-5005* BASE GP-VALVE COVER & INJ HARN

**S/N: RHX1-5201**

**PART OF 241-5935, 241-5936, 294-7614 ENGINE AR-CORE**

**AN ATTACHMENT**

**SMCS-1120, 1408** **i03293162**

| NOTE | REF NO | GRAPHIC REF | PART NUMBER | QTY | PART NAME 1 2 3 4 5 6 (PRODUCT LEVEL) | SEE PAGE |
|---|---|---|---|---|---|---|
| | 1 | 1 | **123-3202** | 3 | STRAP-CABLE | |
| | 2 | 1 | **6V-0128** | 1 | SEAL-CONNECTOR | |
| | 3 | 1 | **7E-6508** | 6 | CAP AS | |
| | 4 | 1 | **9L-8925** | 14 | BOLT (5/16-18X1.25-IN) | |
| | 5 | 1 | **122-1472** | 1 | BOLT (5/16-18X2.36-IN) | |
| | 6 | 1 | **177-4152** | 1 | BASE-VALVE MECHANISM COVER | |
| | 7 | 1 | **234-5002** | 1 | HARNESS AS-ENGINE (INJECTOR, VARIABLE VALVE) | |
| | 8 | 1 | **100-5218** | 3 | CLIP | |
| | 9 | 1 | **100-5219** | 3 | CLIP | |
| | 10 | 1 | **4F-7957** | 2 | BOLT (1/4-20X0.875-IN) | |
| | 11 | 1 | **5P-0537** | 8 | WASHER-HARD (7.2X14.5X2-MM THK) | |
| | 12 | 1 | **8H-3127** | 6 | BOLT (1/4-20X0.75-IN) | |
| | 13 | 1 | **5P-5678** | 1 | SEAL | |

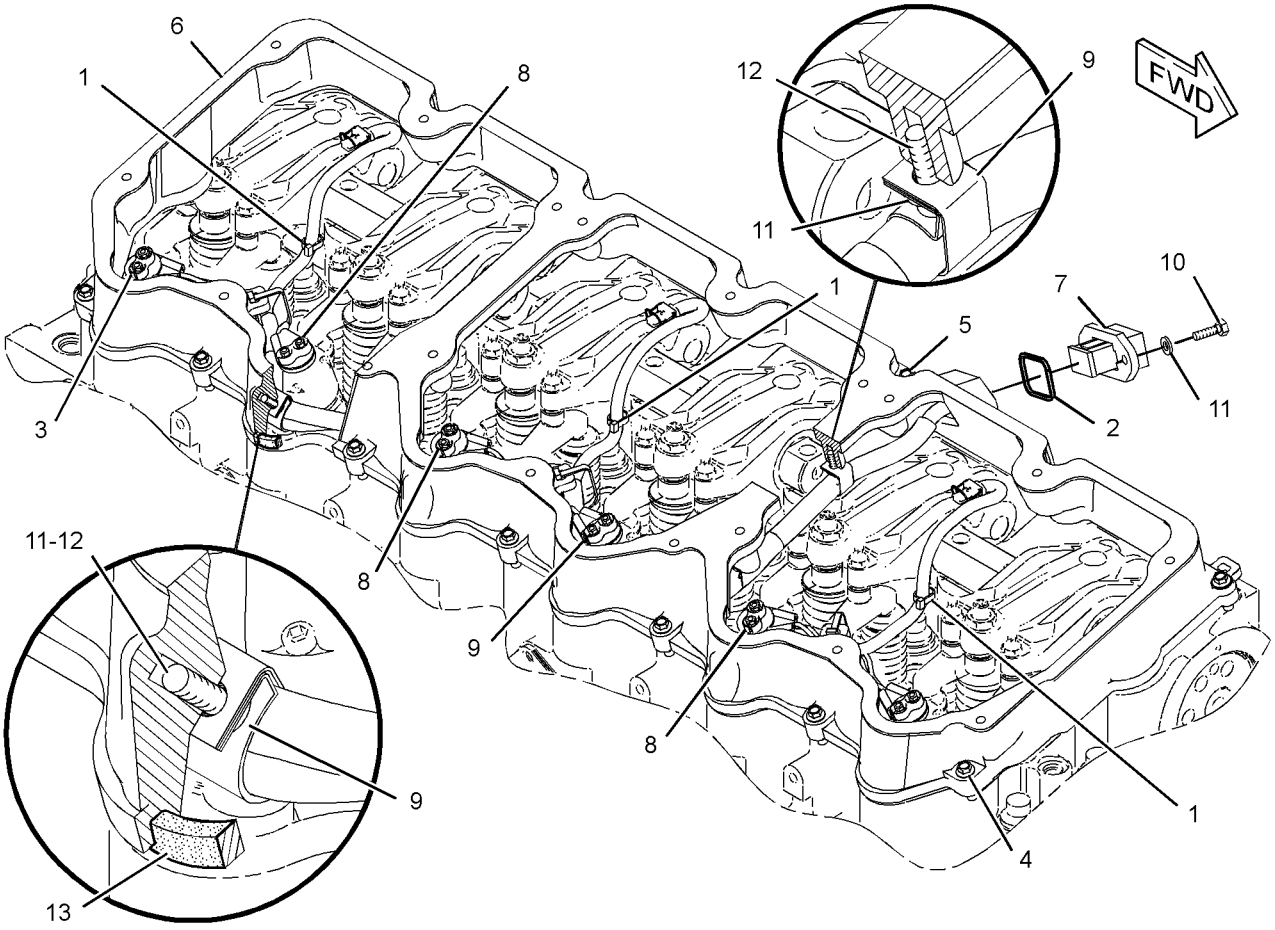


GRAPHIC #1 **<END>** g01677199

# *234-5005* BASE GP-VALVE COVER & INJ HARN

**S/N: RHX5202-UP**

**PART OF 241-5936, 294-7614 ENGINE AR-CORE**

**AN ATTACHMENT**

**SMCS-1120, 1408** **i03293012**

| NOTE | REF NO | GRAPHIC REF | PART NUMBER | QTY | PART NAME 1 2 3 4 5 6 (PRODUCT LEVEL) | SEE PAGE |
|---|---|---|---|---|---|---|
| C | 1 | 1 | **123-3202** | 6 | STRAP-CABLE | |
| | 2 | 1 | **6V-0128** | 1 | SEAL-CONNECTOR | |
| | 3 | 1 | **7E-6508** | 6 | CAP AS | |
| | 4 | 1 | **9L-8925** | 14 | BOLT (5/16-18X1.25-IN) | |
| | 5 | 1 | **122-1472** | 1 | BOLT (5/16-18X2.36-IN) | |
| C | 6 | 1 | **289-8215** | 1 | BASE-VALVE MECHANISM COVER | |
| | 7 | 1 | **307-1610** | 1 | HARNESS AS-ENGINE | |
| | 8 | 1 | **100-5218** | 3 | CLIP | |
| | 9 | 1 | **100-5219** | 3 | CLIP | |
| | 10 | 1 | **4F-7957** | 2 | BOLT (1/4-20X0.875-IN) | |
| | 11 | 1 | **5P-0537** | 8 | WASHER-HARD (7.2X14.5X2-MM THK) | |
| | 12 | 1 | **8H-3127** | 6 | BOLT (1/4-20X0.75-IN) | |
| C | 13 | 1 | **272-0390** | 1 | SEAL | |

C-CHANGE FROM PREVIOUS TYPE

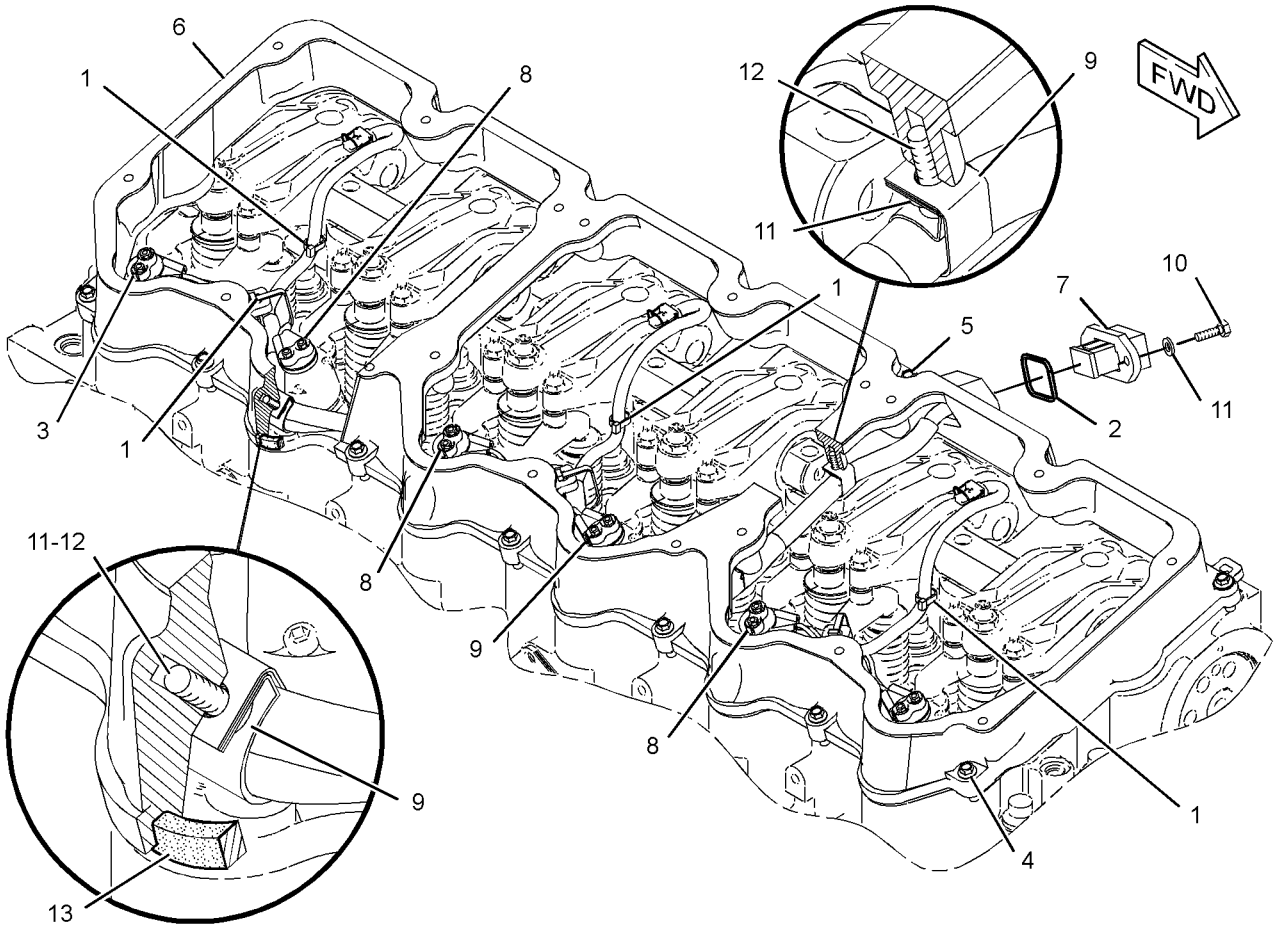


GRAPHIC #1 **<END>** g01418424

# 278-5662 BASE GP-VALVE COVER & INJ HARN

**S/N: RHX1884-5201**

**PART OF 241-5935, 294-3050, 297-3206 ENGINE AR-CORE**

**AN ATTACHMENT**

**SMCS-1120, 1408** **i02673384**

| NOTE | REF NO | GRAPHIC REF | PART NUMBER | QTY | PART NAME 1 2 3 4 5 6 (PRODUCT LEVEL) | SEE PAGE |
|---|---|---|---|---|---|---|
| | 1 | 1 | **123-3202** | 3 | STRAP-CABLE | |
| | 2 | 1 | **6V-0128** | 1 | SEAL-CONNECTOR | |
| | 3 | 1 | **7E-6508** | 6 | CAP AS | |
| | 4 | 1 | **9L-8925** | 14 | BOLT (5/16-18X1.25-IN) | |
| | 5 | 1 | **122-1472** | 1 | BOLT (5/16-18X2.36-IN) | |
| | 6 | 1 | **177-4152** | 1 | BASE-VALVE MECHANISM COVER | |
| | 7 | 1 | **278-5657** | 1 | HARNESS AS-ENGINE (UNIT INJECTOR) | |
| | | 1 | **103-8134** | 1 | KIT-RECEPTACLE (12-PIN) | |
| | | | | | (INCLUDES RECEPTACLE AS & WEDGE) | |
| | 8 | 1 | **100-5218** | 3 | CLIP | |
| | 9 | 1 | **100-5219** | 3 | CLIP | |
| | 10 | 1 | **4F-7957** | 2 | BOLT (1/4-20X0.875-IN) | |
| | 11 | 1 | **5P-0537** | 8 | WASHER-HARD (7.2X14.5X2-MM THK) | |
| | 12 | 1 | **8H-3127** | 6 | BOLT (1/4-20X0.75-IN) | |
| D | 13 | 1 | **5P-5678** | | SEAL (2.9-M) | |

D-ORDER BY THE METER

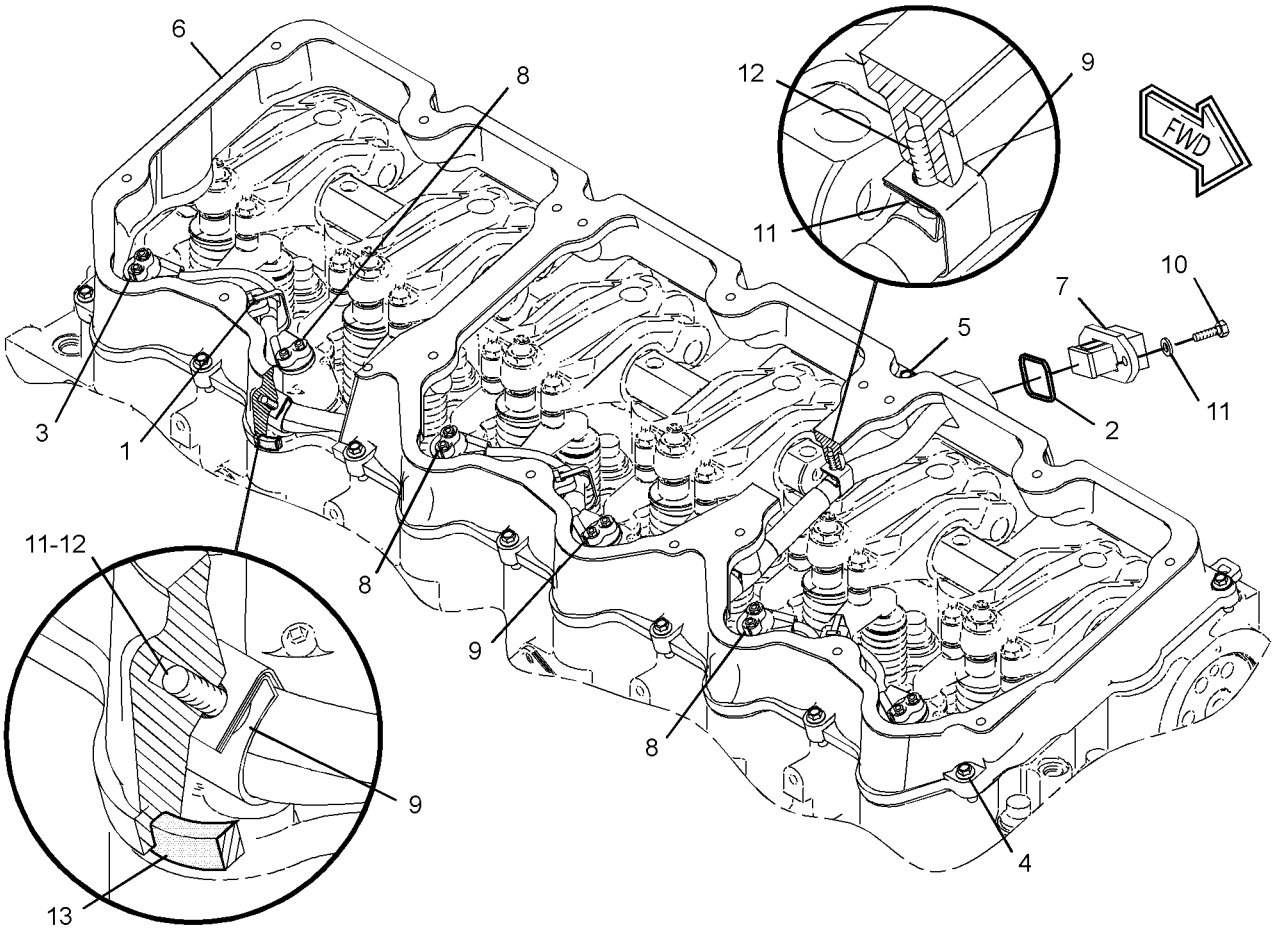


GRAPHIC #1 **<END>** g01213201

# 278-5662 BASE GP-VALVE COVER & INJ HARN

**S/N: RHX5202-UP**
**PART OF 297-3206 ENGINE AR-CORE**
**AN ATTACHMENT**

**SMCS-1120, 1408** **i02957485**

| NOTE | REF NO | GRAPHIC REF | PART NUMBER | QTY | PART NAME 1 2 3 4 5 6 (PRODUCT LEVEL) | SEE PAGE |
|---|---|---|---|---|---|---|
| | 1 | 1 | **123-3202** | 3 | STRAP-CABLE | |
| | 2 | 1 | **6V-0128** | 1 | SEAL-CONNECTOR | |
| | 3 | 1 | **7E-6508** | 6 | CAP AS | |
| | 4 | 1 | **9L-8925** | 14 | BOLT (5/16-18X1.25-IN) | |
| | 5 | 1 | **122-1472** | 1 | BOLT (5/16-18X2.36-IN) | |
| C | 6 | 1 | **289-8215** | 1 | BASE-VALVE MECHANISM COVER | |
| | 7 | 1 | **307-1611** | 1 | HARNESS AS-ENGINE (UNIT INJECTOR) | |
| | 8 | 1 | **100-5218** | 3 | CLIP | |
| | 9 | 1 | **100-5219** | 3 | CLIP | |
| | 10 | 1 | **4F-7957** | 2 | BOLT (1/4-20X0.875-IN) | |
| | 11 | 1 | **5P-0537** | 8 | WASHER-HARD (7.2X14.5X2-MM THK) | |
| | 12 | 1 | **8H-3127** | 6 | BOLT (1/4-20X0.75-IN) | |
| C | 13 | 1 | **272-0390** | 1 | SEAL | |

C-CHANGE FROM PREVIOUS TYPE

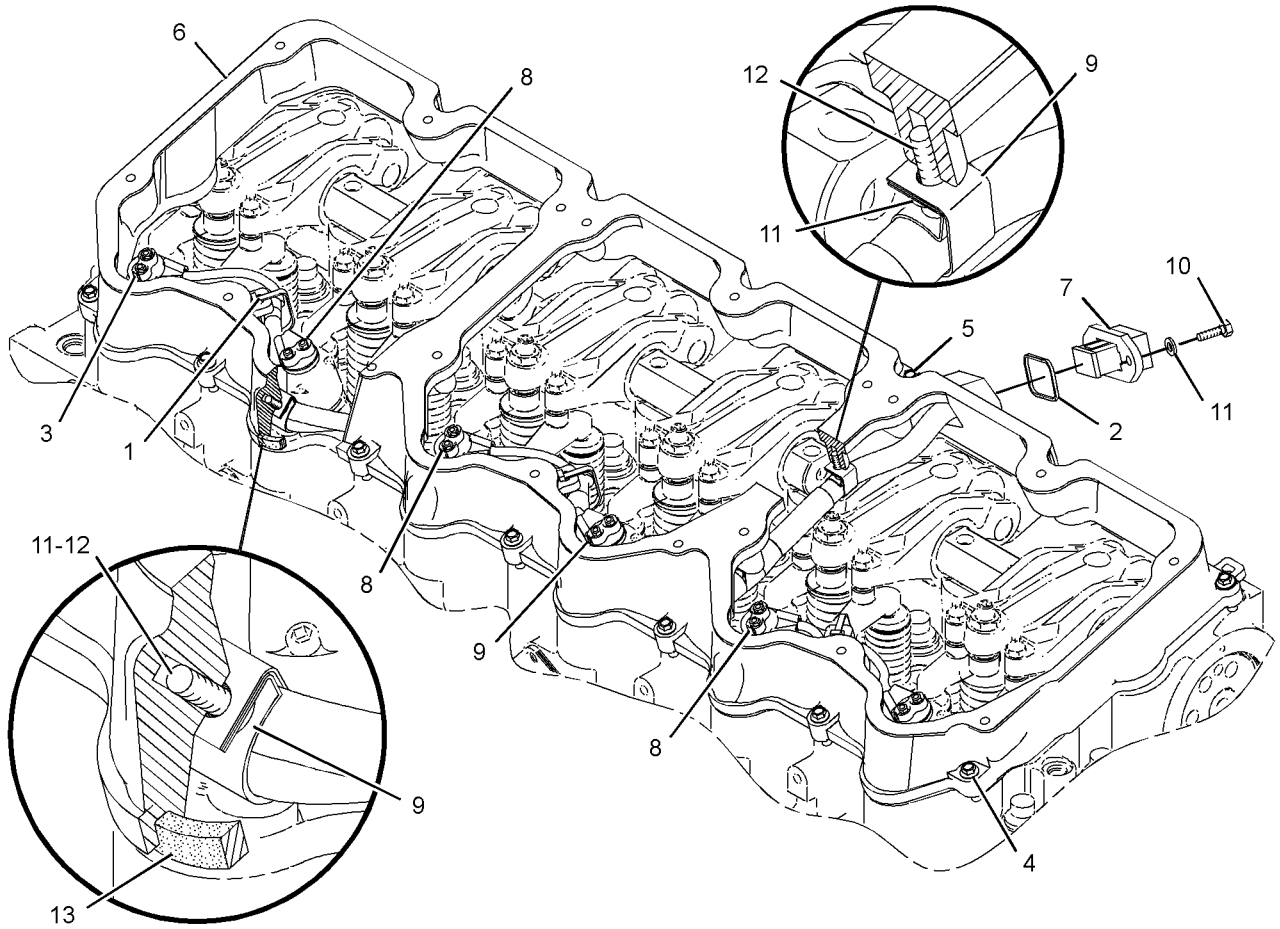


GRAPHIC #1 **<END>** g01436044

# 243-0551 CAMSHAFT GP

**S/N: RHX1-UP**

**PART OF 241-5935, 241-5936, 294-3050, 294-7614, 297-3206 ENGINE AR-CORE**

**AN ATTACHMENT**

**SMCS-1210** **i02245985**

| NOTE | REF NO | GRAPHIC REF | PART NUMBER | QTY | PART NAME 1 2 3 4 5 6 (PRODUCT LEVEL) | SEE PAGE |
|---|---|---|---|---|---|---|
| | 1 | 1 | **6V-1197** | 1 | SEAL-O-RING | |
| | 2 | 1 | **102-9089** | 1 | COVER | |
| | 3 | 1 | **119-0036** | 3 | SCREW-FLAT HEAD (5/16-18X0.87-IN) | |
| | 4 | 1 | **239-6139** | 1 | CAMSHAFT | |

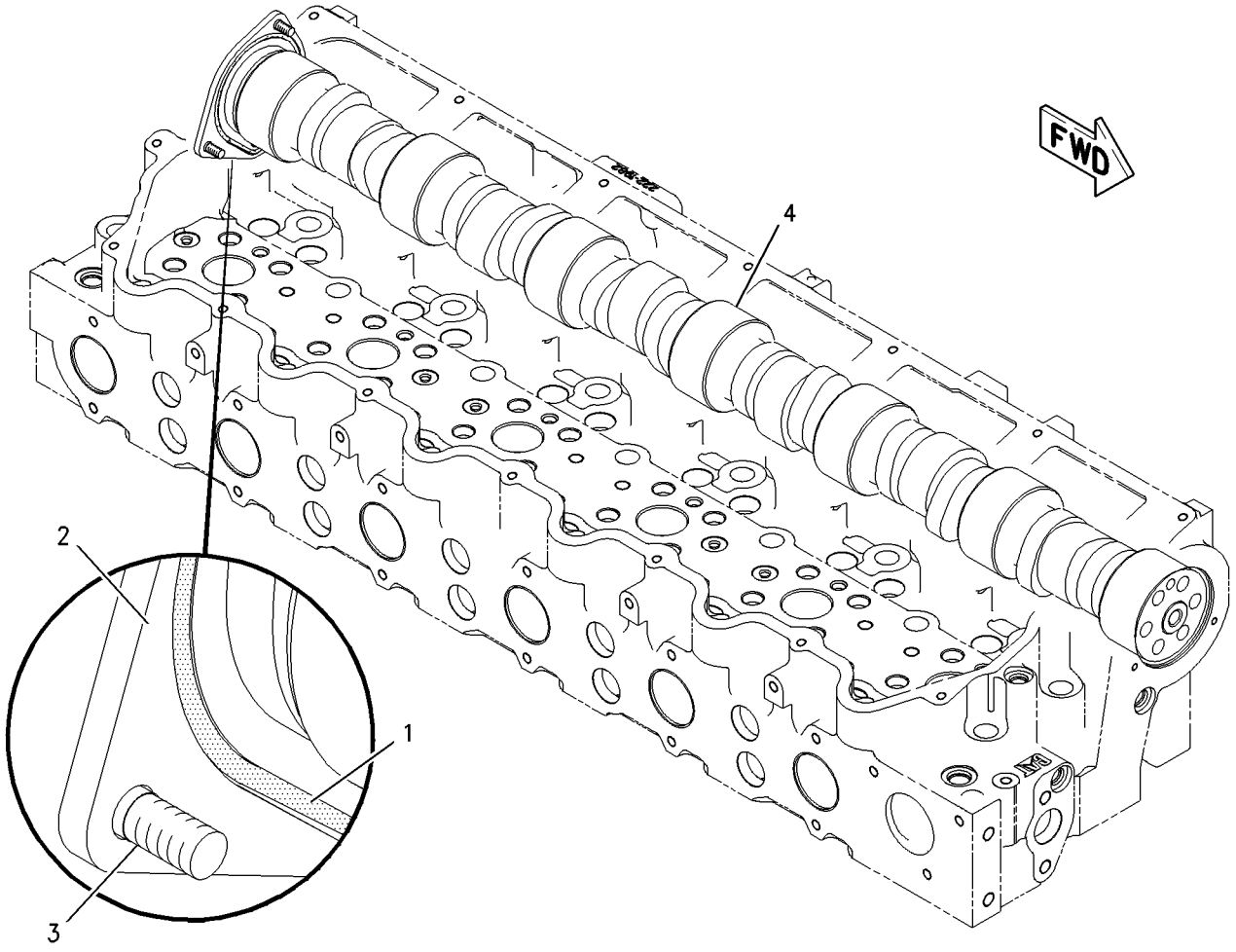


GRAPHIC #1 **<END>** g01002422

# *223-4730* COVER GP-AIR COMPRESSOR

**S/N: RHX1-UP**
**A COVER FOR THE AIR COMPRESSOR PILOT HOLE IN THE FRONT PLATE WHEN AN AIR COMPRESSOR IS NOT USED**
**PART OF 221-8124, 247-3315, 272-3086, 272-3087, 292-2553, 292-2554 ENGINE**
**AR-COMPLETE**
**AN ATTACHMENT**

**SMCS-1803** **i02586519**

| NOTE | REF NO | GRAPHIC REF | PART NUMBER | QTY | PART NAME 1 2 3 4 5 6 (PRODUCT LEVEL) | SEE PAGE |
|---|---|---|---|---|---|---|
| | 1 | 1 | **285-0823** | 1 | COVER | |
| | 2 | 1 | *183-3409* | 1 | PLUG AS | |
| | | 1 | **9S-8002** | 1 | PLUG-O-RING | |
| | 2A | 1 | **033-5853** | 1 | SEAL-O-RING | |
| | 3 | 1 | **1F-7958** | 3 | NUT-FULL (1/2-13-THD) | |
| | 4 | 1 | **5P-8245** | 3 | WASHER-HARD (13.5X25.5X3-MM THK) | |
| | 5 | 1 | **6V-6609** | 2 | SEAL-O-RING | |
| | 6 | 1 | **7J-6285** | 1 | SEAL-O-RING (123.32MM ID) | |
| | 7 | 1 | **8L-2786** | 1 | SEAL-O-RING | |
| | 8 | 1 | **9S-8005** | 3 | PLUG-O-RING | |

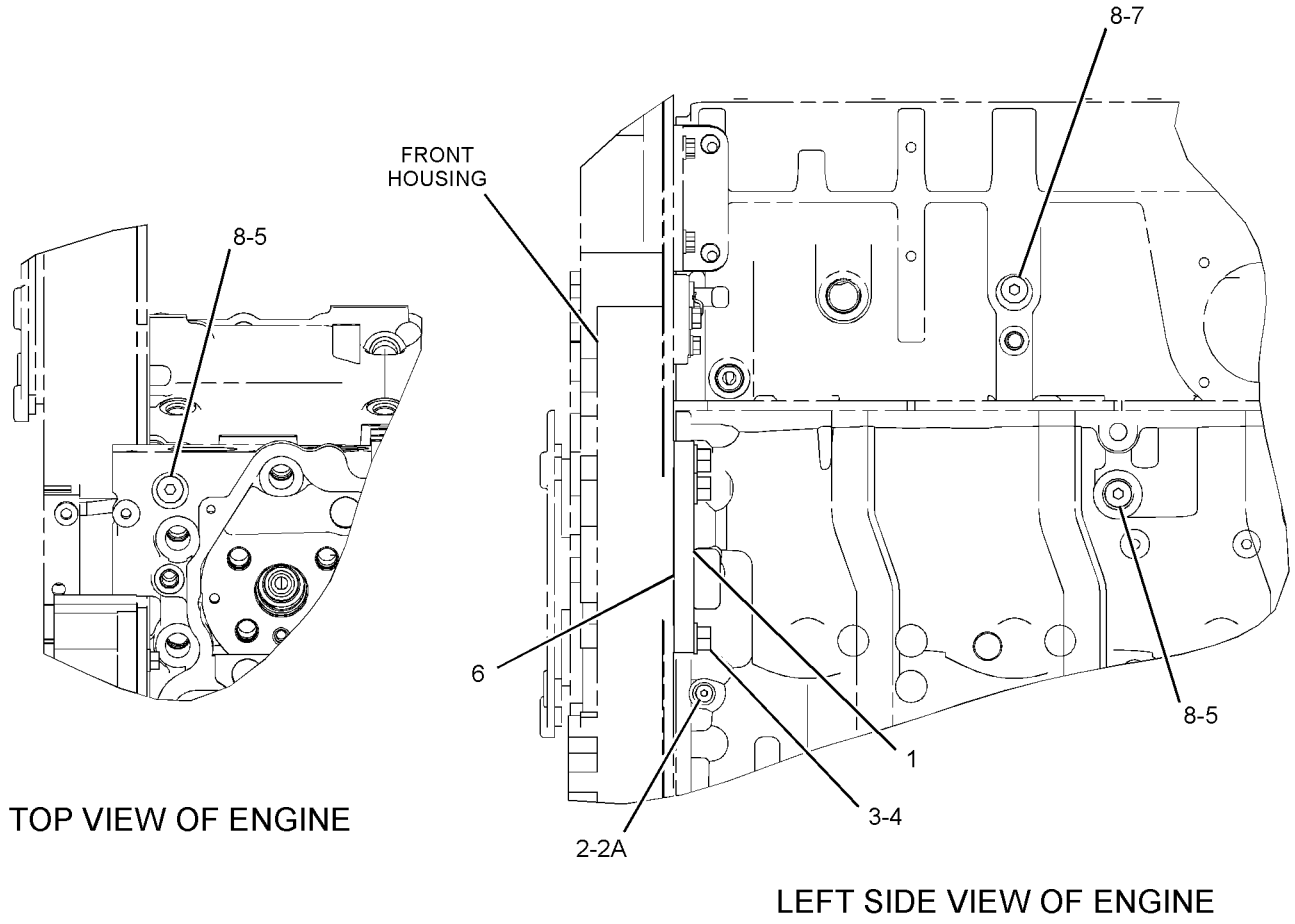


GRAPHIC #1 **<END>** g01302518

# *107-6736* COVER GP-CYLINDER BLOCK

**S/N: RHX3791-UP**
**PART OF 272-3086, 272-3087, 292-2553, 292-2554 ENGINE AR-COMPLETE**
**FOR USE WITH MID MOUNTED TURBO AND/OR RH OIL FILL**
**AN ATTACHMENT**

**SMCS-1201** **i02763877**

| NOTE | REF NO | GRAPHIC REF | PART NUMBER | QTY | PART NAME 1 2 3 4 5 6 (PRODUCT LEVEL) | SEE PAGE |
|---|---|---|---|---|---|---|
| | 1 | 1 | **0S-1594** | 2 | BOLT (3/8-16X1-IN) | |
| | 2 | 1 | **5M-2894** | 2 | WASHER-HARD (10.2X18.5X2.5-MM THK) | |
| | 3 | 1 | **4W-9890** | 1 | COVER | |
| | 4 | 1 | **4N-0699** | 1 | GASKET | |

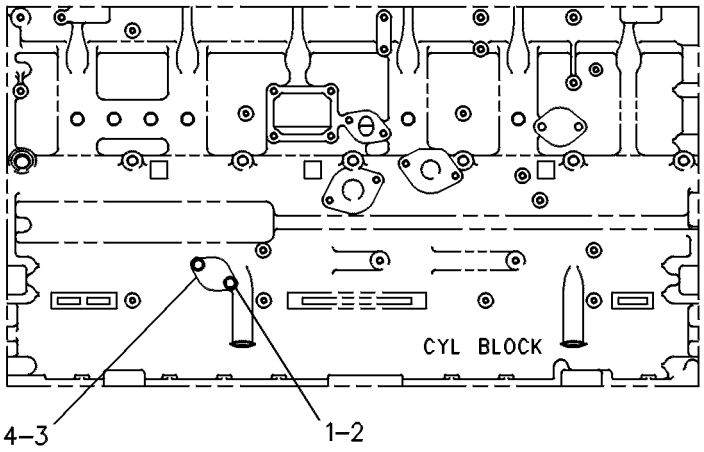


LEFT SIDE VIEW

GRAPHIC #1 **<END>** g00244599

# *107-6737* COVER GP-CYLINDER BLOCK

**S/N: RHX3791-UP**
**PART OF 272-3086, 272-3087, 292-2553, 292-2554 ENGINE AR-COMPLETE**
**CANNOT BE USED WITH RIGHT SIDE OIL FILLER**
**AN ATTACHMENT**

**SMCS-1201** **i01847626**

| NOTE | REF NO | GRAPHIC REF | PART NUMBER | QTY | PART NAME 1 2 3 4 5 6 (PRODUCT LEVEL) | SEE PAGE |
|---|---|---|---|---|---|---|
| | 1 | 1 | **0S-1594** | 2 | BOLT (3/8-16X1 IN) | |
| | 2 | 1 | **5M-2894** | 2 | WASHER-HARD (10.2X18.5X2.5MM THK) | |
| | 4 | 1 | **4N-0699** | 1 | GASKET | |
| | 5 | 1 | **4W-9890** | 1 | COVER | |

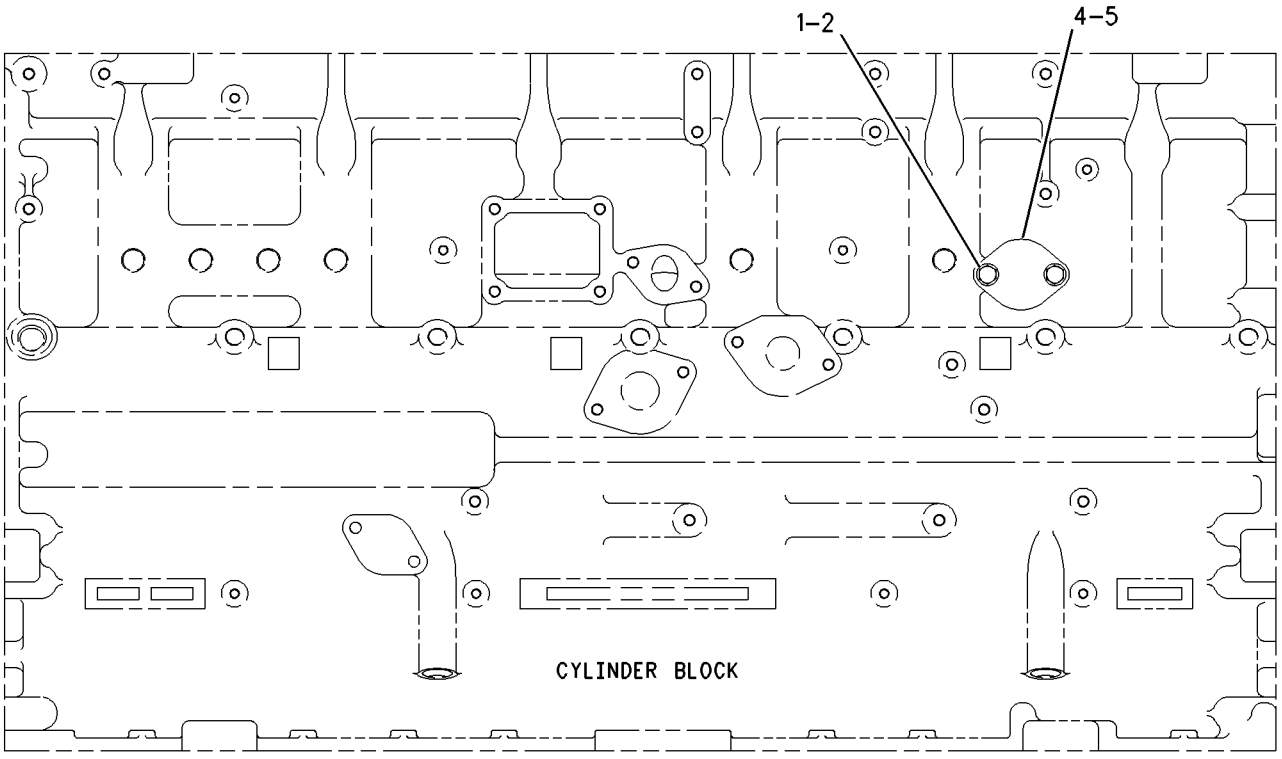


LEFT SIDE VIEW

GRAPHIC #1 **<END>** g00942208

# *228-7083* COVER GP-CYLINDER BLOCK

**S/N: RHX1-3790**
**PART OF 272-3086, 272-3087 ENGINE AR-COMPLETE**
**AN ATTACHMENT**

**SMCS-1201** **i03167200**

| NOTE | REF NO | GRAPHIC REF | PART NUMBER | QTY | PART NAME 1 2 3 4 5 6 (PRODUCT LEVEL) | SEE PAGE |
|---|---|---|---|---|---|---|
| J | 1 | 1 | **165-6170** | 3 | PLUG | |
| | 2 | 1 | **329-7062** | 1 | ADAPTER | |
| | 3 | 1 | **0S-1594** | 4 | BOLT (3/8-16X1-IN) | |
| | 4 | 1 | **1T-0720** | 2 | BOLT-12 POINT HEAD (3/8-16X1.25-IN) | |
| | 5 | 1 | **2S-3625** | 2 | COVER | |
| | 6 | 1 | **3H-1461** | 2 | SEAL-O-RING | |
| | 7 | 1 | **5M-2894** | 6 | WASHER-HARD (10.2X18.5X2.5-MM THK) | |
| | 8 | 1 | **6V-3683** | 1 | SEAL-O-RING | |
| | 9 | 1 | **8J-4351** | 1 | SEAL-O-RING | |

J-USE TO PLUG OPTIONAL DIPSTICK LOCATIONS

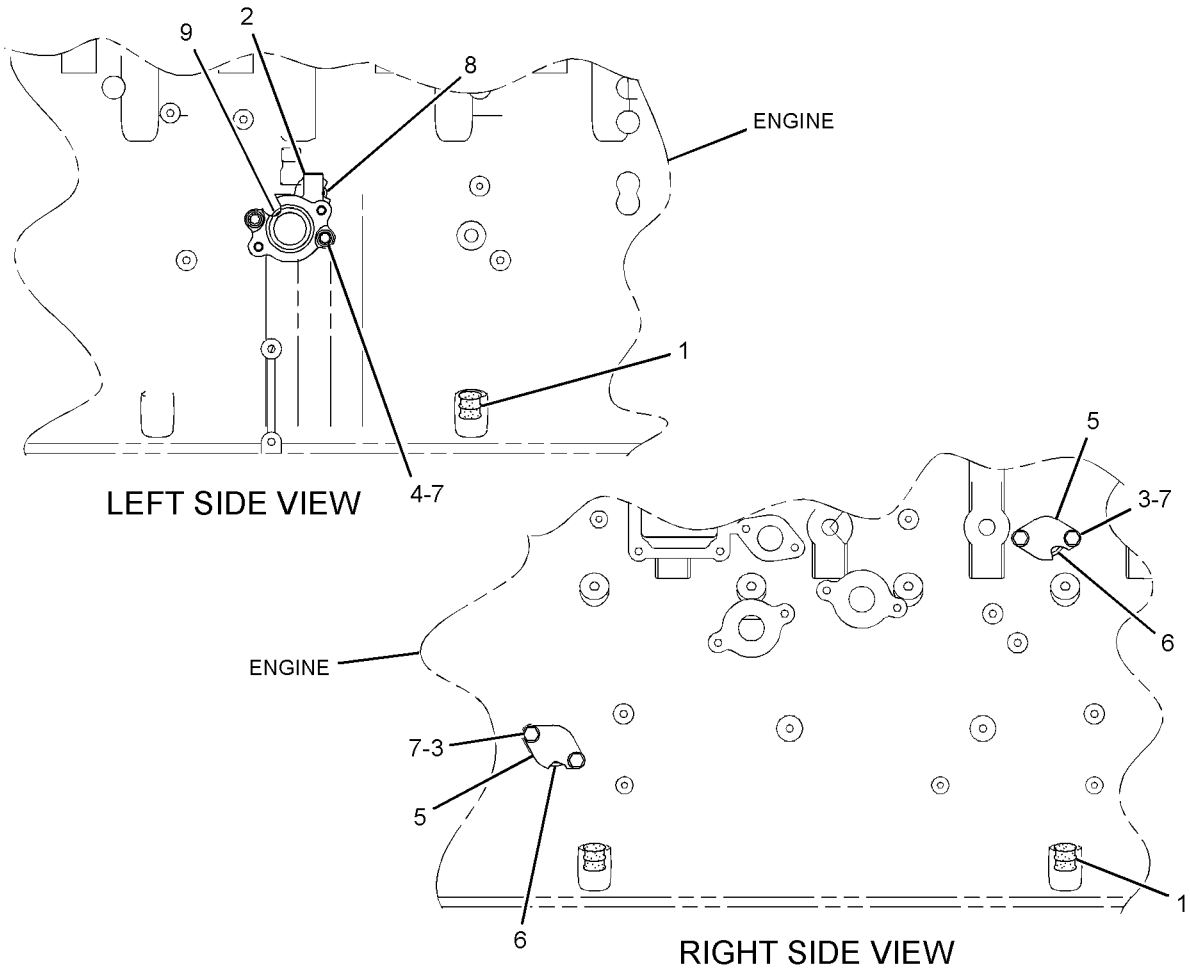


GRAPHIC #1 **<END>** g01644855

# *247-0025* COVER GP-CYLINDER BLOCK

**S/N: RHX1-UP**

**PART OF 221-8124, 247-3315 ENGINE AR-COMPLETE**

**AN ATTACHMENT**

**SMCS-1201** **i02040860**

| NOTE | REF NO | GRAPHIC REF | PART NUMBER | QTY | PART NAME 1 2 3 4 5 6 (PRODUCT LEVEL) | SEE PAGE |
|---|---|---|---|---|---|---|
| J | 1 | 1 | **165-6170** | 3 | PLUG | |
| | 2 | 1 | **0S-1594** | 2 | BOLT (3/8-16X25.4-IN) | |
| | 3 | 1 | **4N-0699** | 1 | GASKET | |
| | 4 | 1 | **4W-9890** | 1 | COVER | |
| | 5 | 1 | **5M-2894** | 2 | WASHER-HARD (10.2X18.5X2.5-MM THK) | |

J-USE TO PLUG OPTIONAL DIPSTICK LOCATIONS

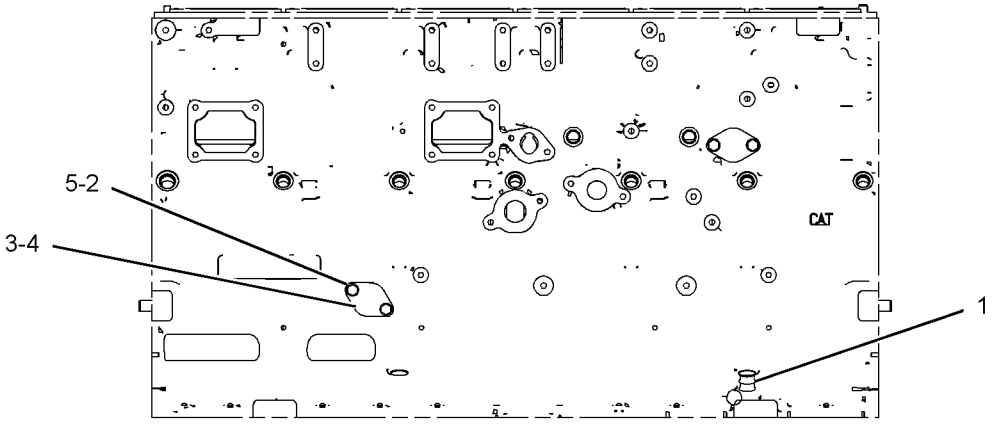


RIGHT SIDE VIEW

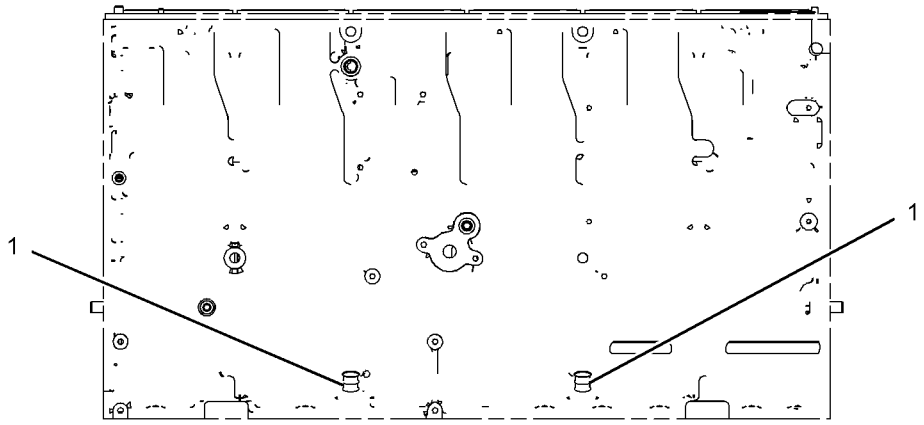


LEFT SIDE VIEW

GRAPHIC #1

**<END>**

g01052716

# *216-5540* COVER GP-FLYWHEEL HOUSING

**S/N: RHX1-UP**
**PART OF 221-8124, 247-3315, 272-3086, 272-3087, 292-2553, 292-2554 ENGINE**
**AR-COMPLETE**
**AN ATTACHMENT**

**SMCS-1157** **i01963594**

| NOTE | REF NO | GRAPHIC REF | PART NUMBER | QTY | PART NAME 1 2 3 4 5 6 (PRODUCT LEVEL) | SEE PAGE |
|---|---|---|---|---|---|---|
| | 1 | 1 | **217-5900** | 1 | COVER | |
| | 2 | 1 | **4M-6480** | 1 | GASKET | |
| M | 3 | 1 | **6V-4248** | 2 | BOLT (M10X1.5X25-MM) | |
| | 4 | 1 | **6V-5839** | 2 | WASHER (11X21X2.5-MM THK) | |

M-METRIC PART

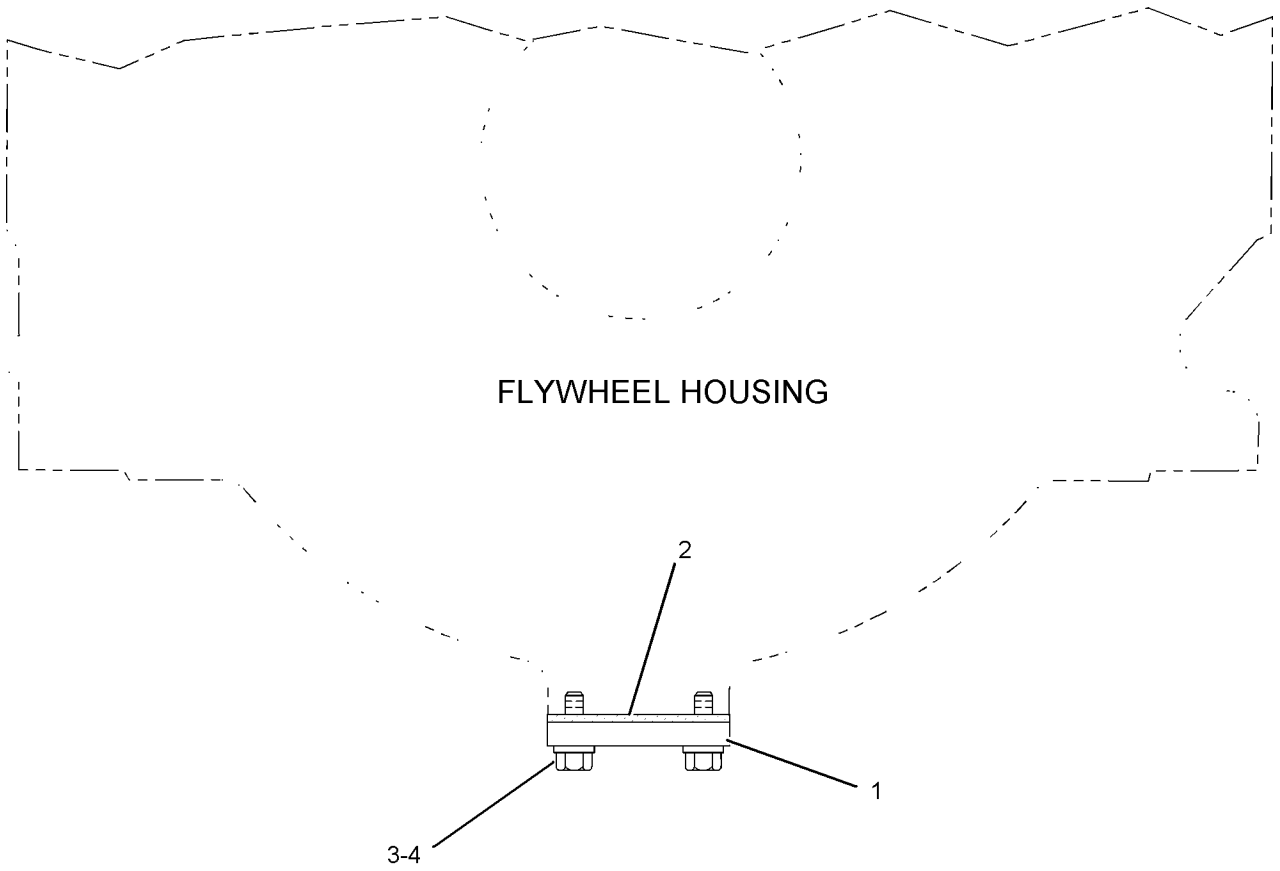


GRAPHIC #1 **<END>** g01020213

# *120-9847* COVER GP-FRONT HOUSING

**S/N: RHX1-UP**
**PROVIDES COVER FOR OIL FILLER OPENING ON FRONT HOUSING**
**PART OF 221-8124, 247-3315, 272-3086, 272-3087, 292-2553, 292-2554 ENGINE**
**AR-COMPLETE**
**AN ATTACHMENT**

**SMCS-1151, 1162, 1166** **i00670788**

| NOTE | REF NO | GRAPHIC REF | PART NUMBER | QTY | PART NAME 1 2 3 4 5 6 (PRODUCT LEVEL) | SEE PAGE |
|---|---|---|---|---|---|---|
| | 1 | 1 | **7C-1445** | 1 | COVER | |
| | 2 | 1 | **2B-2695** | 2 | BOLT (5/16-18X0.875-IN) | |
| | 3 | 1 | **9M-1974** | 2 | WASHER-HARD (8.8X16X2-MM THK) | |
| | 4 | 1 | **061-9455** | 1 | SEAL-O-RING | |

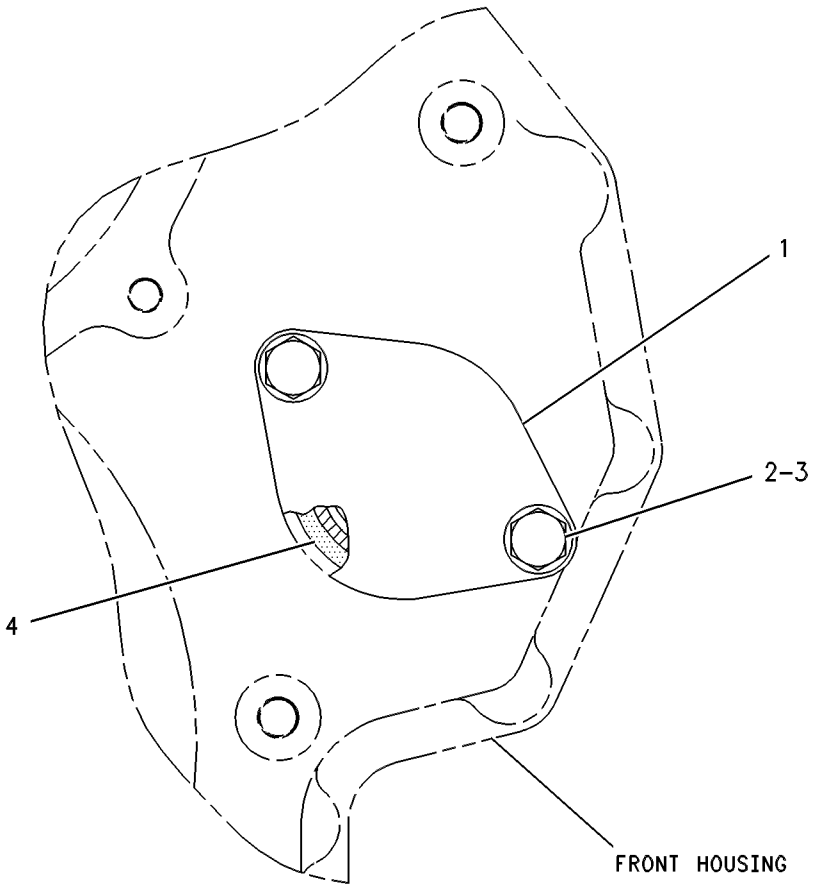


GRAPHIC #1 **<END>** g00252251

# *159-6159* COVER GP-FRONT HOUSING

**S/N: RHX1-UP**
**CAM AND IDLER GEAR ACCESS**
**PART OF 221-8124, 247-3315, 272-3086, 272-3087, 292-2553, 292-2554 ENGINE**
**AR-COMPLETE**
**AN ATTACHMENT**

**SMCS-1151, 1162, 1166** **i02763873**

| NOTE | REF NO | GRAPHIC REF | PART NUMBER | QTY | PART NAME 1 2 3 4 5 6 (PRODUCT LEVEL) | SEE PAGE |
|---|---|---|---|---|---|---|
| | 1 | 1 | **297-1813** | 12 | SCREW-HEAD (5/16-18X1-IN) | |
| | 2 | 1 | **175-1367** | 2 | SPACER (8.8X16X10-MM THK) (MARKED X) | |
| | 3 | 1 | **209-3569** | 1 | COVER GP-FRONT HOUSING | |
| | | 1 | **160-7271** | 1 | SEAL | |
| | 4 | 1 | **031-4155** | 2 | LOCKNUT (5/16-18-THD) (MARKED X) | |
| | 5 | 1 | **175-1366** | 2 | STUD (MARKED X) | |
| | 6 | 1 | **163-4565** | 2 | SEAL-O-RING (MARKED X) | |

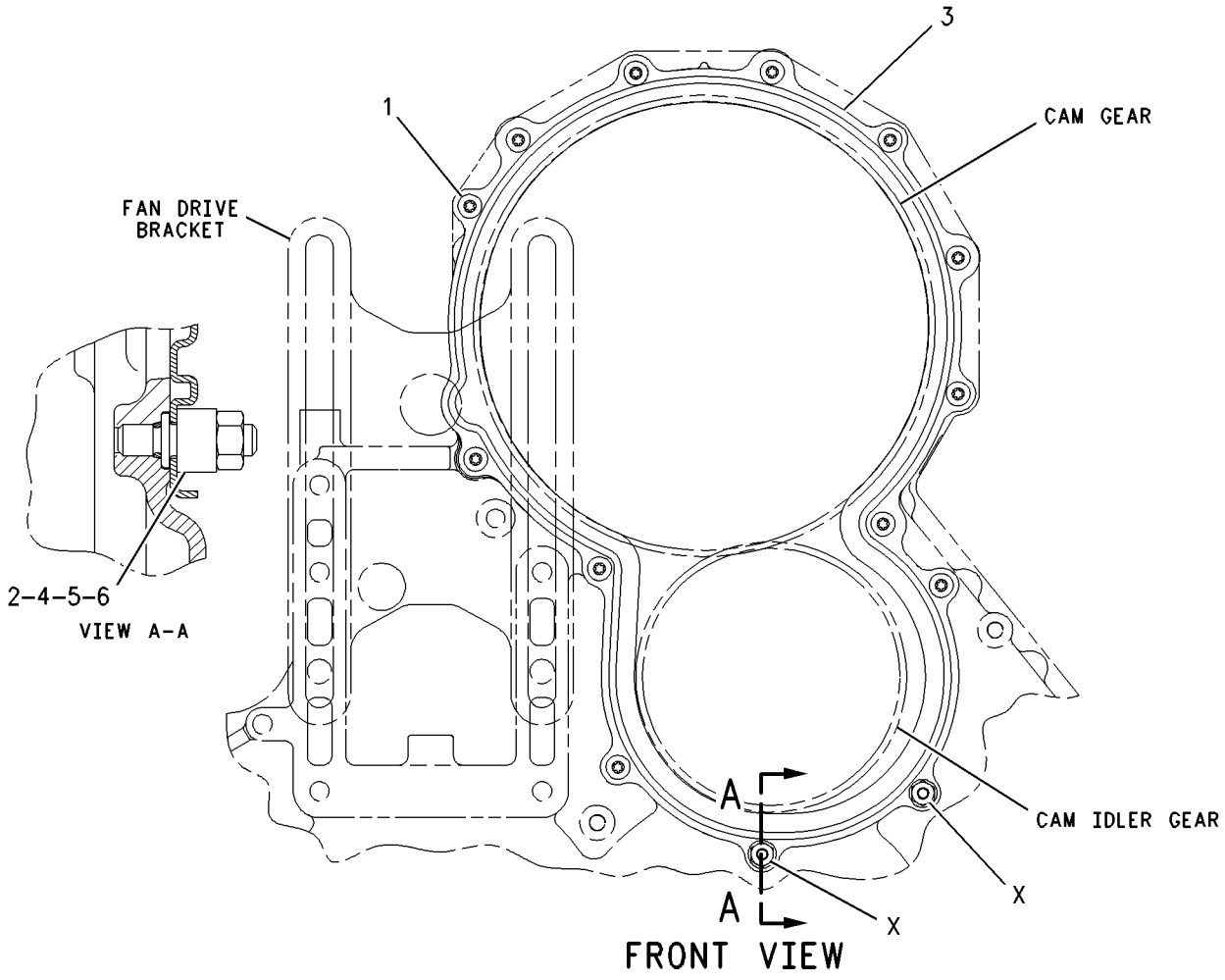


GRAPHIC #1 **<END>** g00631258

## *230-0104* COVER GP-SOUND SUPPRESSION–FRONT HOUSING

**S/N: RHX1-UP**
**FOR THE WATER PUMP AREA**
**PART OF 221-8124, 247-3315, 272-3086, 272-3087, 292-2553, 292-2554 ENGINE**
**AR-COMPLETE**
**FOR USE WITH FULL FRONT SOUND SUPPRESSION PANEL GROUP. CANNOT BE USED WITH ALTERNATOR MOUNTING GROUP AND ACCESSORY DRIVE GROUP**
**AN ATTACHMENT**

**SMCS-1107, 1801** **i01897574**

| NOTE | REF NO | GRAPHIC REF | PART NUMBER | QTY | PART NAME 1 2 3 4 5 6 (PRODUCT LEVEL) | SEE PAGE |
|---|---|---|---|---|---|---|
| | 1 | 1 | **100-3098** | 1 | COVER AS-PANEL | |
| | 2 | 1 | **0S-1588** | 1 | BOLT (3/8-16X1.25 IN) | |
| | 3 | 1 | **0T-0055** | 1 | BOLT (3/8-16X4.25 IN) | |
| | 4 | 1 | **1A-5183** | 2 | BOLT (3/8-16X4.75 IN) | |
| | 5 | 1 | **5M-2894** | 1 | WASHER-HARD (10.2X18.5X2.5MM THK) | |
| | 6 | 1 | **9X-6458** | 3 | WASHER-HARD (10.2X22.5X3MM THK) | |

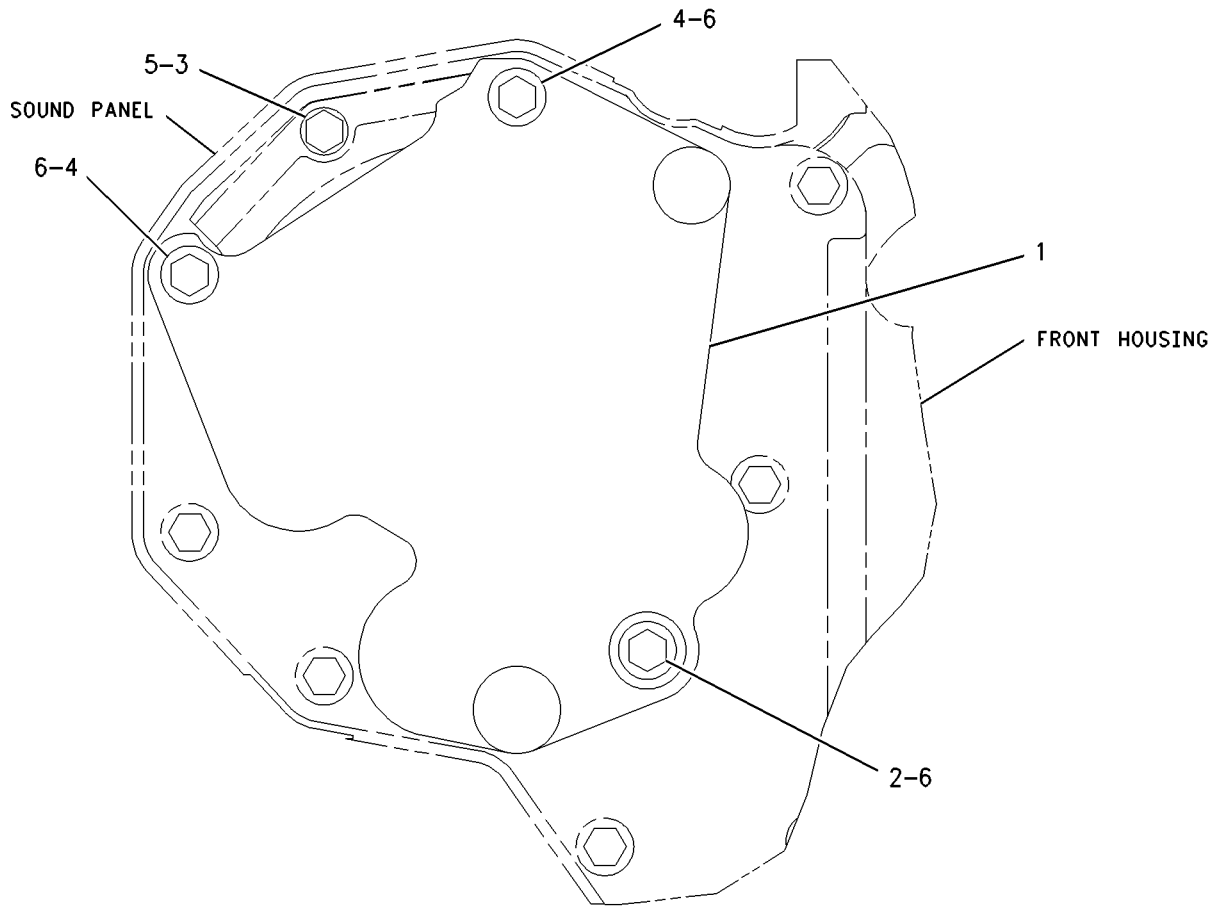


FRONT VIEW

GRAPHIC #1 **<END>** g00987886

# *283-7182* COVER GP-SOUND SUPPRESSION

**S/N: RHX4281-UP**
**PART OF 292-2554 ENGINE AR-COMPLETE**
**AN ATTACHMENT**

**SMCS-1107, 1801** **i02634479**

| NOTE | REF NO | GRAPHIC REF | PART NUMBER | QTY | PART NAME 1 2 3 4 5 6 (PRODUCT LEVEL) | SEE PAGE |
|---|---|---|---|---|---|---|
| | 1 | 1 | **283-7180** | 1 | PANEL AS | |
| | 1A | 1 | **9N-6108** | 8 | SPACER (30-MM LGX14-MM DIA) | |
| | 2 | 1 | **0S-1619** | 7 | BOLT (3/8-16X3-IN) | |
| | 3 | 1 | **170-0612** | 1 | STUD | |
| | 4 | 1 | **5M-2894** | 8 | WASHER-HARD (10.2X18.5X2.5-MM THK) | |

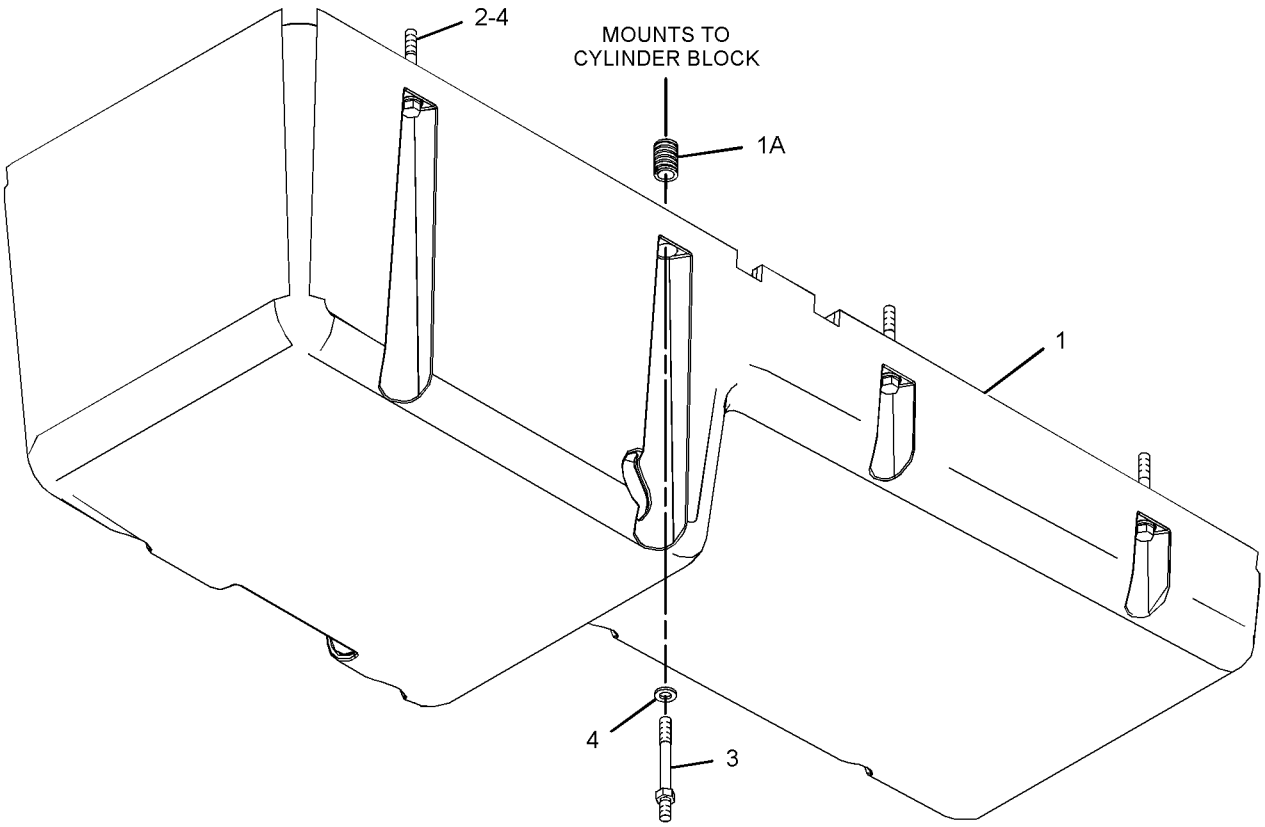


GRAPHIC #1 **<END>** g01324236

# *225-1148* COVER GP-VALVE MECHANISM

**S/N: RHX1-UP**

**PART OF 239-4113 COVER GP-VALVE MECHANISM**

**AN ATTACHMENT**

**SMCS-1107** **i02810054**

| NOTE | REF NO | GRAPHIC REF | PART NUMBER | QTY | PART NAME 1 2 3 4 5 6 (PRODUCT LEVEL) | SEE PAGE |
|---|---|---|---|---|---|---|
| | 1 | 1 | **242-9537** | 1 | SEAL-VALVE COVER | |
| | 2 | 1 | **243-1159** | 6 | FASTENER AS | |
| | | | | | (EACH INCLUDES) | |
| | | 1 | **149-7378** | 1 | GROMMET | |
| | 3 | 1 | **225-1144** | 1 | COVER-VALVE | |

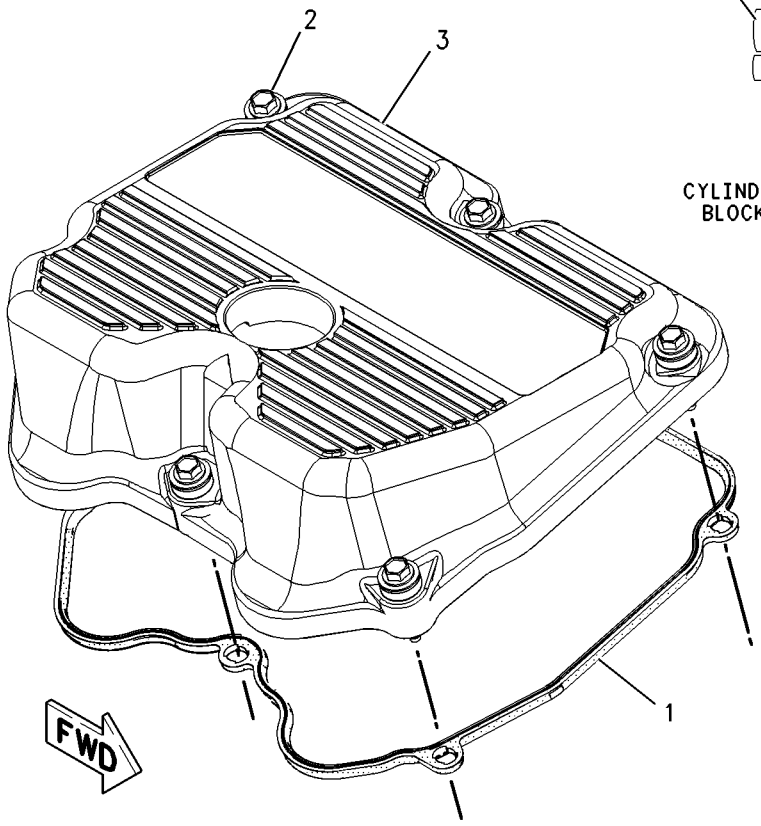


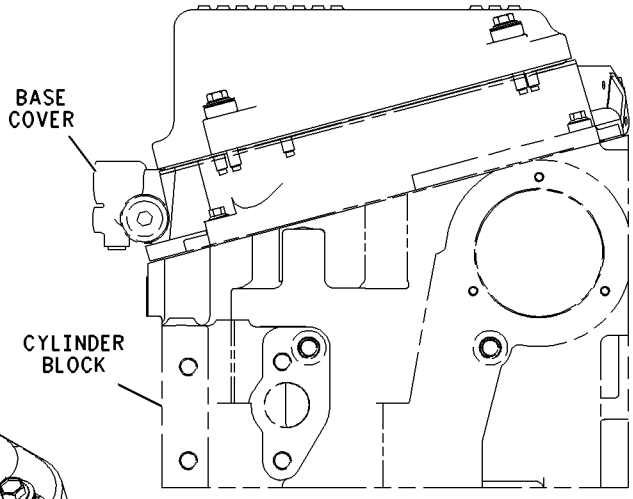


FRONT VIEW
(TYPICAL INSTALLATION)

GRAPHIC #1 **<END>** g00991113

# *239-4111* COVER GP-VALVE MECHANISM

**S/N: RHX1-UP**

**PART OF 239-4113 COVER GP-VALVE MECHANISM**

**AN ATTACHMENT**

**SMCS-1107** **i02305859**

| NOTE | REF NO | GRAPHIC REF | PART NUMBER | QTY | PART NAME 1 2 3 4 5 6 (PRODUCT LEVEL) | SEE PAGE |
|---|---|---|---|---|---|---|
| | 1 | 1 | **269-6348** | 1 | COVER AS-VALVE | |
| | 2 | 1 | **242-9537** | 1 | SEAL-VALVE COVER | |
| | 3 | 1 | **243-1159** | 6 | FASTENER AS | |
| | | | | | (EACH INCLUDES) | |
| | | 1 | **149-7378** | 1 | GROMMET | |

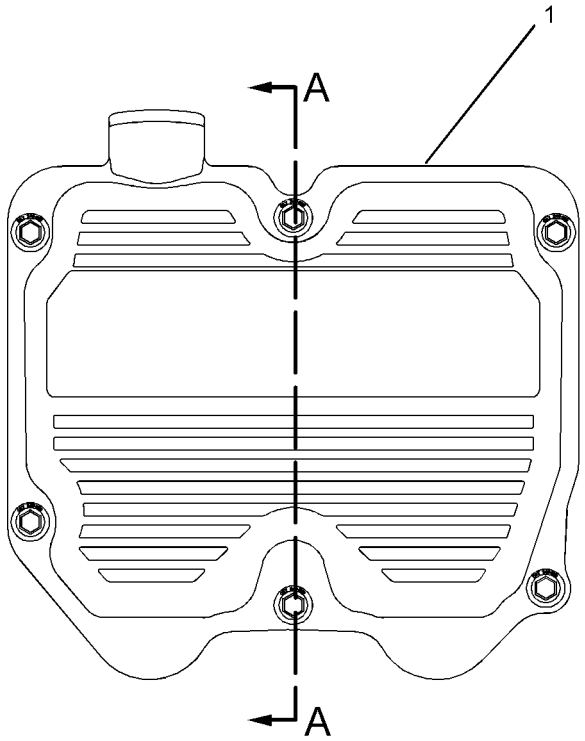


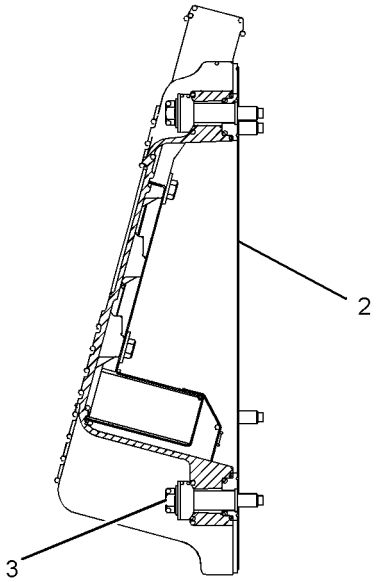


SECTION A-A

GRAPHIC #1 **<END>** g01052702

# *239-4113* COVER GP-VALVE MECHANISM

**S/N: RHX1-UP**

**PART OF 221-8124, 247-3315, 272-3086, 272-3087, 292-2553, 292-2554 ENGINE**

**AR-COMPLETE**

**AN ATTACHMENT**

**SMCS-1107** **i02039988**

| NOTE | REF NO | GRAPHIC REF | PART NUMBER | QTY | PART NAME 1 2 3 4 5 6 (PRODUCT LEVEL) | SEE PAGE |
|---|---|---|---|---|---|---|
| Y | 1 | 1 | *225-1148* | 2 | COVER GP-VALVE MECHANISM | 39 |
| Y | 2 | 1 | *239-4111* | 1 | COVER GP-VALVE MECHANISM | 40 |

Y-SEPARATE ILLUSTRATION

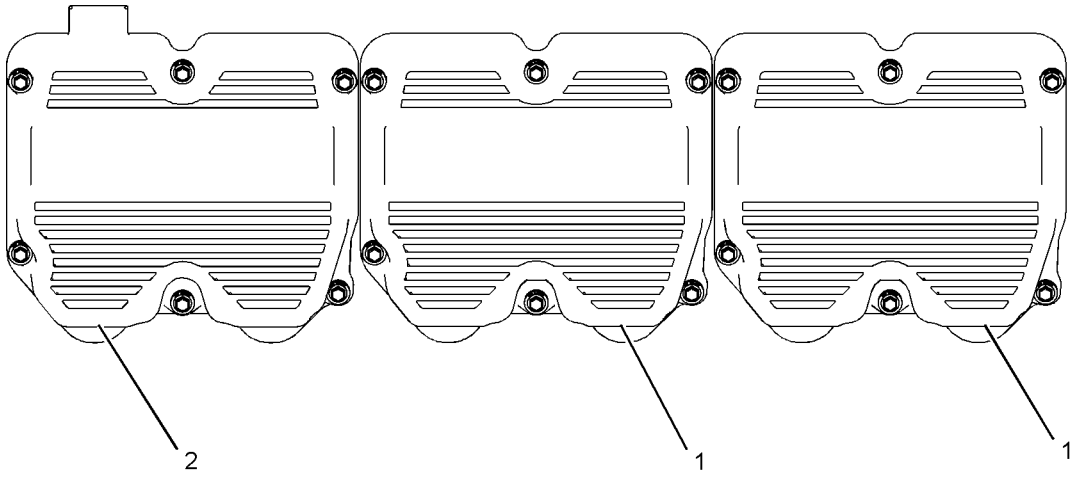


TOP VIEW

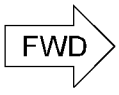


GRAPHIC #1 **<END>** g01052729

# *223-9732* CRANKSHAFT GP

**S/N: RHX1-UP**

**PART OF 241-5935, 241-5936, 294-3050, 294-7614, 297-3206 ENGINE AR-CORE**

**AN ATTACHMENT**

**SMCS-1202** **i03191019**

| NOTE | REF NO | GRAPHIC REF | PART NUMBER | QTY | PART NAME 1 2 3 4 5 6 (PRODUCT LEVEL) | SEE PAGE |
|---|---|---|---|---|---|---|
| | 1 | 1 | **253-1752** | 2 | PLATE-THRUST | |
| Y | 2 | 1 | *319-7401* | 1 | SEAL GP-CRANKSHAFT (FRONT) | 128 |
| R | 3 | 1 | **189-4918** | 1 | CRANKSHAFT AS | |
| | 3A | 1 | **4N-0684** | 1 | DOWEL | |
| | 3B | 1 | **7S-5005** | 1 | DOWEL | |
| | 3C | 1 | **187-8981** | 1 | GEAR-CRANKSHAFT (80-TEETH) | |
| | 4 | 1 | **317-8766** | 7 | BEARING-MAIN | |
| AB | | 1 | **4W-5698** | | BEARING-MAIN (0.63-MM US) | |
| AB | | 1 | **4W-5699** | | BEARING-MAIN (1.27-MM US) | |
| AB | | 1 | **4W-5700** | | BEARING-MAIN (0.63-MM OS) | |
| AB | | 1 | **4W-5701** | | BEARING-MAIN (0.63-MM US - 0.63-MM OS) | |

A-NOT PART OF THIS GROUP
B-USE AS REQUIRED
R-REMFG PART MAY BE AVAILABLE
Y-SEPARATE ILLUSTRATION

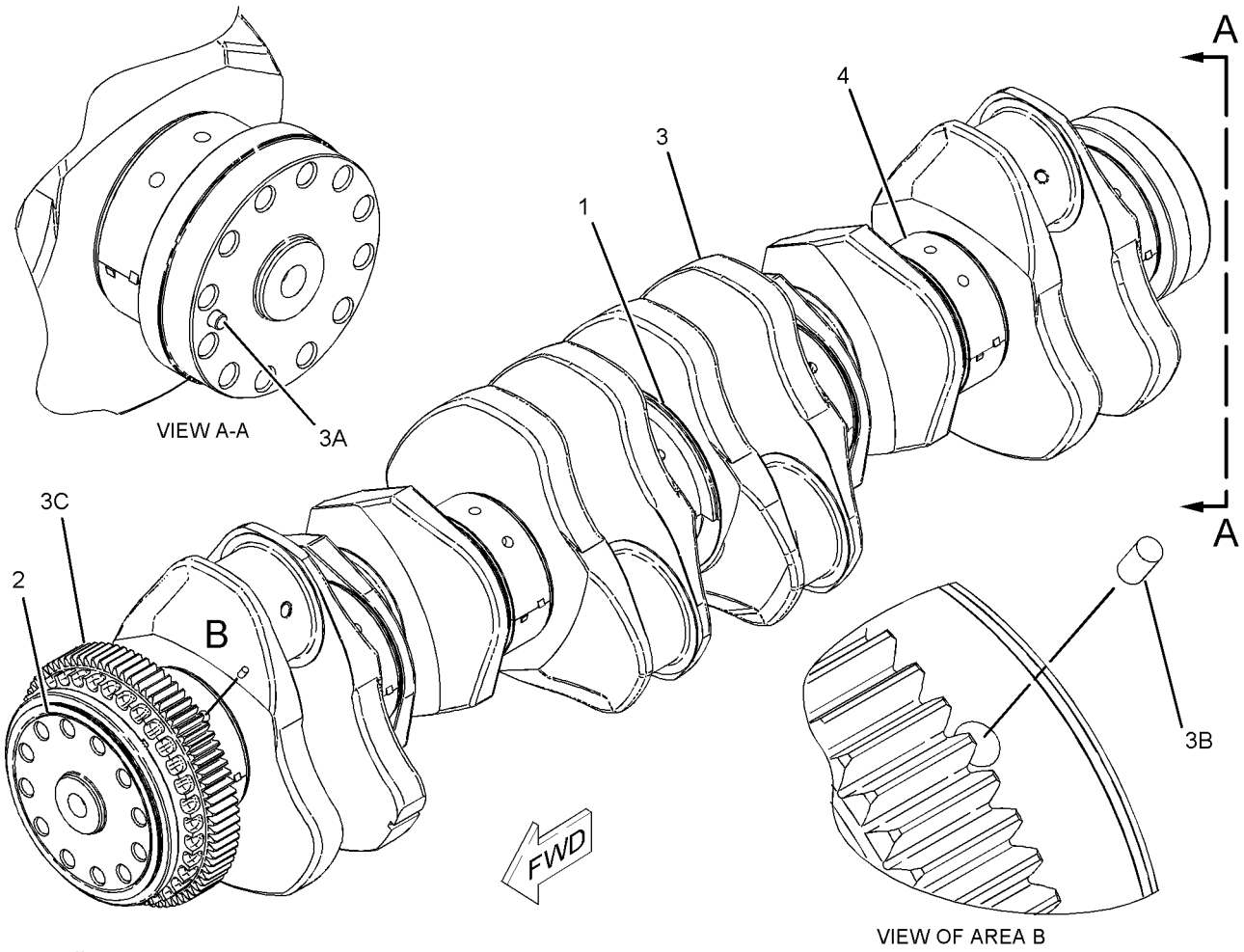


GRAPHIC #1 **<END>** g01070662

# 222-1975 CYLINDER BLOCK AS

**S/N: RHX1-667**
**PART OF 223-9253 CYLINDER BLOCK GP**
**AN ATTACHMENT**

**SMCS-1201** **i02926997**

| NOTE | REF NO | GRAPHIC REF | PART NUMBER | QTY | PART NAME 1 2 3 4 5 6 (PRODUCT LEVEL) | SEE PAGE |
|---|---|---|---|---|---|---|
| | 1 | 1 | **155-0809** | 6 | SEAL-LINER | |
| | 2 | 1 | **155-0810** | 6 | SEAL-LINER | |
| | 3 | 1 | **155-2793** | 6 | SEAL-LINER | |
| | 4 | 1 | **215-2985** | 6 | LINER-CYLINDER | |
| YR | 5 | 1 | **229-8568** | 1 | CYLINDER BLOCK AS | 44 |
| | 6 | 1 | **9L-5854** | 6 | BAND-FILLER (130.2-MM ID) | |

R-REMFG PART MAY BE AVAILABLE
Y-SEPARATE ILLUSTRATION

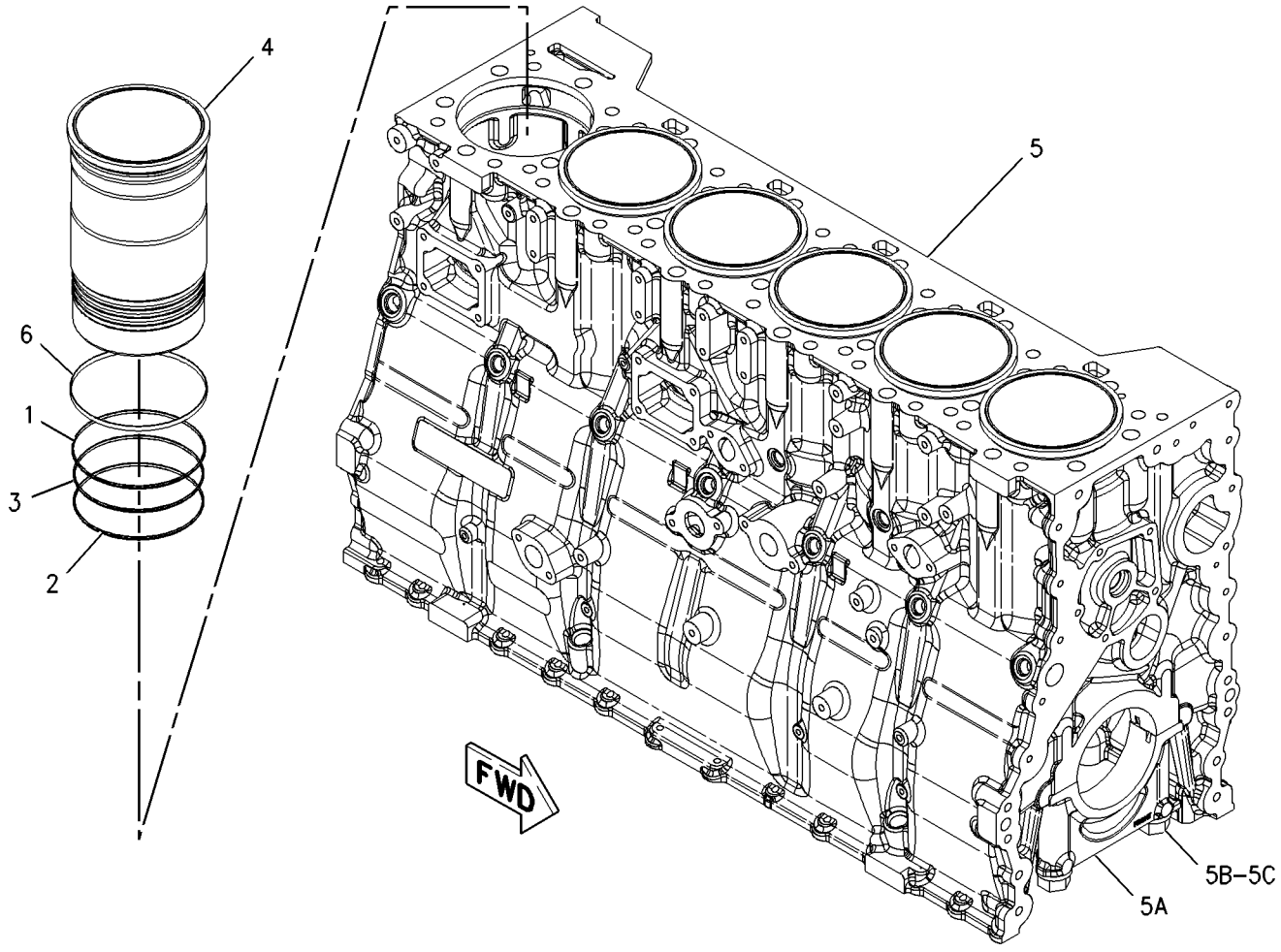


GRAPHIC #1 **<END>** g01007124

# BASIC ENGINE

## *229-8568* CYLINDER BLOCK AS

**S/N: RHX1-UP**

**PART OF 222-1975, 261-0052 CYLINDER BLOCK AS**

**AN ATTACHMENT**

**SMCS-1201** **i02228404**

| NOTE | REF NO | GRAPHIC REF | PART NUMBER | QTY | PART NAME 1 2 3 4 5 6 (PRODUCT LEVEL) | SEE PAGE |
|---|---|---|---|---|---|---|
| | 1 | 1 | **167-8081** | 7 | CAP-CRANKSHAFT BEARING | |
| | 2 | 1 | **167-8083** | 14 | BOLT (7/8-14X7.5-IN) | |
| | 3 | 1 | **9H-1031** | 14 | WASHER-HARD (24X41.5X6-MM THK) | |

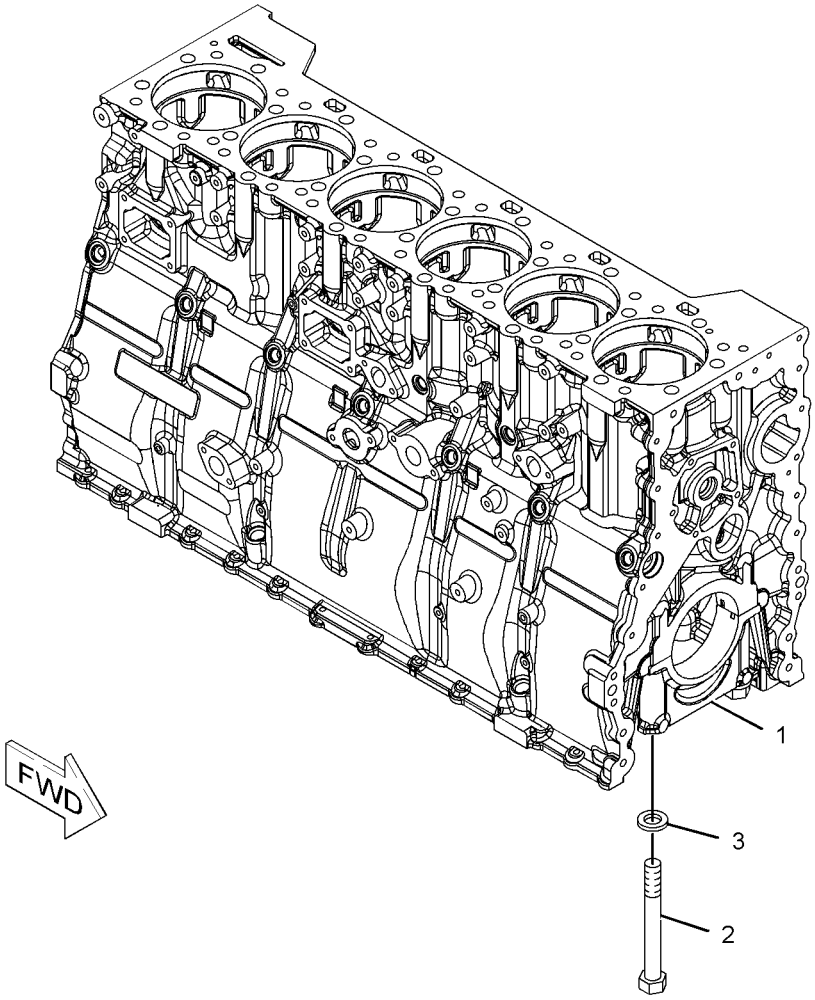


GRAPHIC #1 **<END>** g01122669

# 261-0052 CYLINDER BLOCK AS

**S/N: RHX668-UP**
**PART OF 261-0191 CYLINDER BLOCK GP**
**AN ATTACHMENT**

**SMCS-1201** **i02228386**

| NOTE | REF NO | GRAPHIC REF | PART NUMBER | QTY | PART NAME 1 2 3 4 5 6 (PRODUCT LEVEL) | SEE PAGE |
|---|---|---|---|---|---|---|
| | 1 | 1 | **155-0809** | 6 | SEAL-LINER | |
| | 2 | 1 | **155-0810** | 6 | SEAL-LINER | |
| | 3 | 1 | **155-2793** | 6 | SEAL-LINER | |
| | 4 | 1 | **253-8766** | 6 | LINER-CYLINDER | |
| Y | 5 | 1 | **229-8568** | 1 | CYLINDER BLOCK AS | 44 |
| | 6 | 1 | **9L-5854** | 6 | BAND-FILLER (130.2-MM ID) | |

Y-SEPARATE ILLUSTRATION

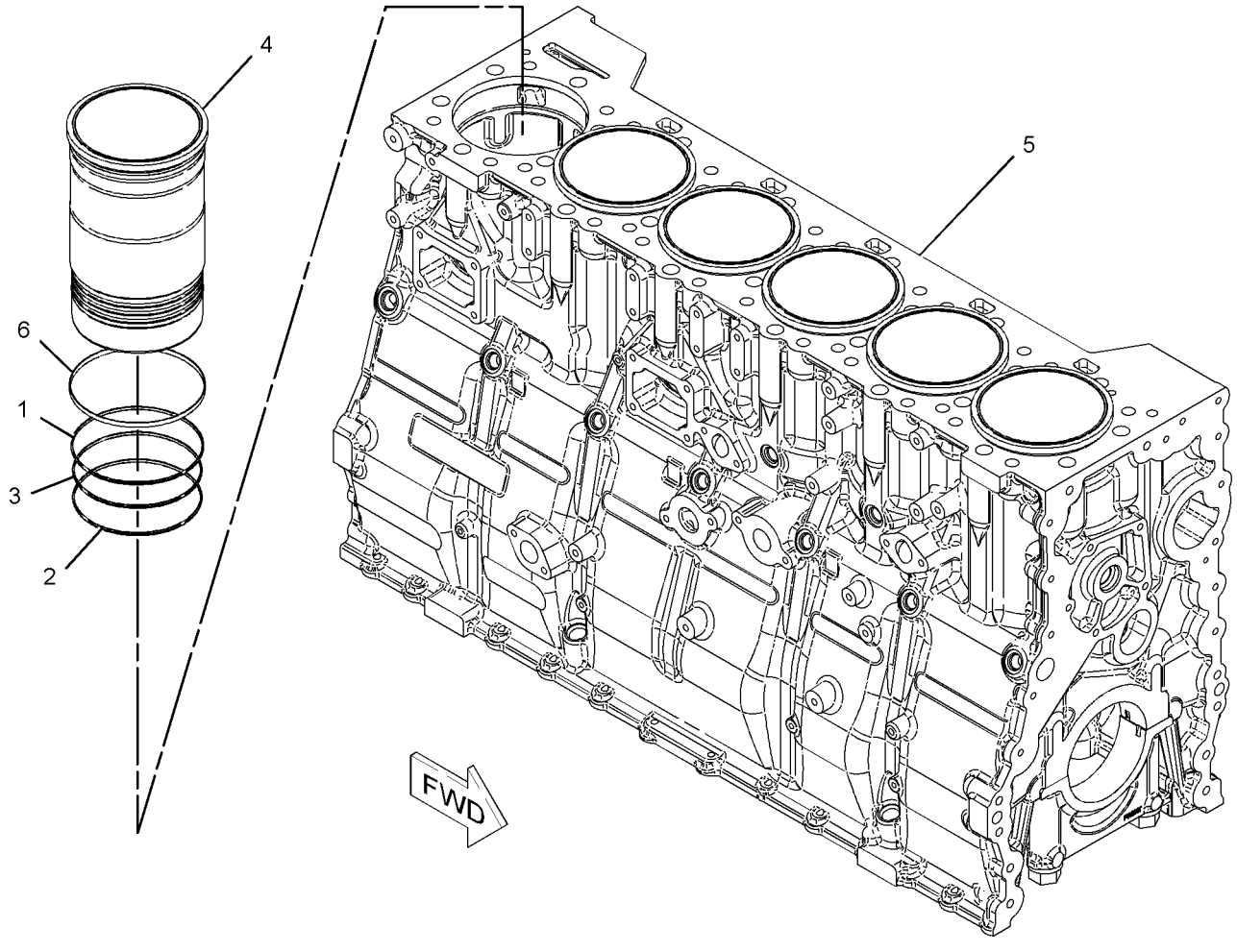


GRAPHIC #1 **<END>** g01122528

# BASIC ENGINE

## *267-4631* CYLINDER BLOCK AS

**S/N: RHX4281-UP**

**PART OF 301-3018, 323-8451 CYLINDER BLOCK AS, 297-4267 CYLINDER BLOCK GP**

**AN ATTACHMENT**

**SMCS-1201** **i02348817**

| NOTE | REF NO | GRAPHIC REF | PART NUMBER | QTY | PART NAME 1 2 3 4 5 6 (PRODUCT LEVEL) | SEE PAGE |
|---|---|---|---|---|---|---|
| | 1 | 1 | **167-8081** | 7 | CAP-CRANKSHAFT BEARING | |
| | 2 | 1 | **167-8083** | 14 | BOLT (7/8-14X7.5-IN) | |
| | 3 | 1 | **9H-1031** | 14 | WASHER-HARD (24X41.5X6-MM THK) | |

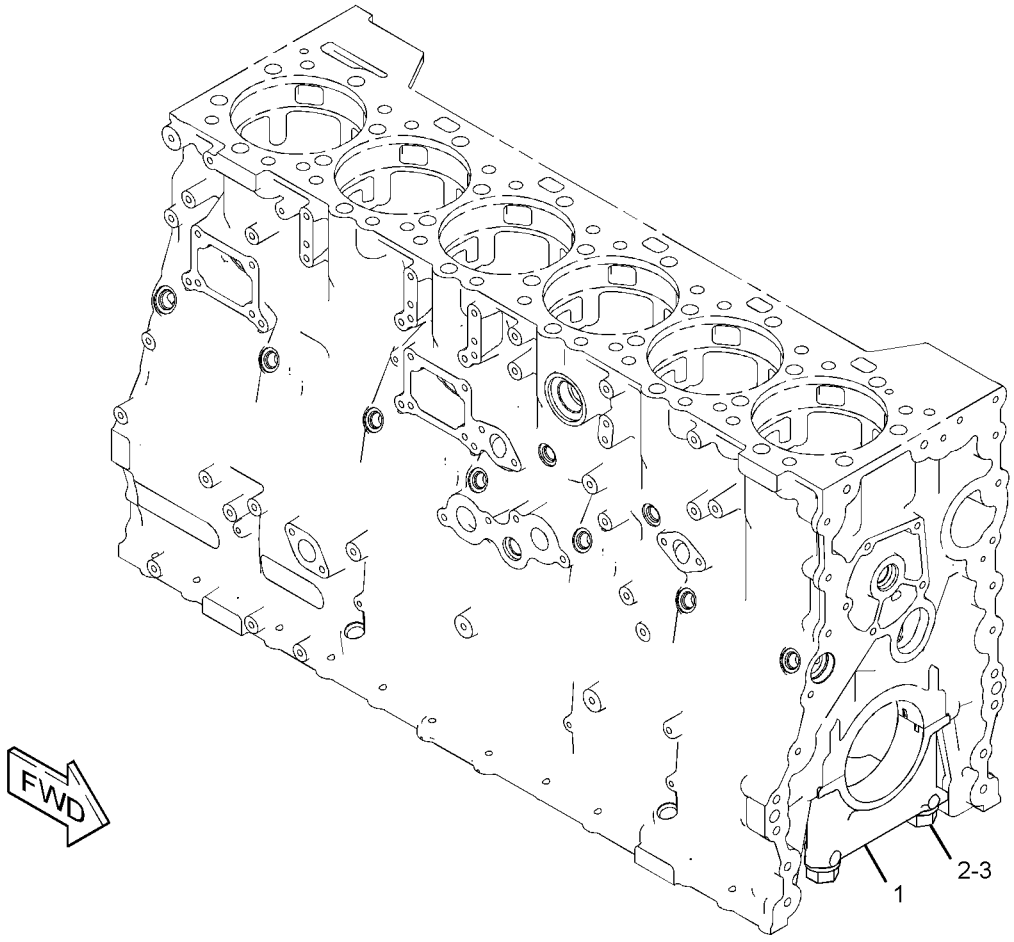


GRAPHIC #1 **<END>** g01177294

# 301-3018 CYLINDER BLOCK AS

**S/N: RHX4918-UP**
**PART OF 261-0191 CYLINDER BLOCK GP**
**FIELD REPLACEMENT ORDER 323-8451—PAGE 48**
**AN ATTACHMENT**

**SMCS-1201** **i02680503**

| NOTE | REF NO | GRAPHIC REF | PART NUMBER | QTY | PART NAME 1 2 3 4 5 6 (PRODUCT LEVEL) | SEE PAGE |
|---|---|---|---|---|---|---|
| | 1 | 1 | **155-0809** | 6 | SEAL-LINER | |
| | 2 | 1 | **155-0810** | 6 | SEAL-LINER | |
| | 3 | 1 | **155-2793** | 6 | SEAL-LINER | |
| | 4 | 1 | **253-8766** | 6 | LINER-CYLINDER | |
| Y | 5 | 1 | **267-4631** | 1 | CYLINDER BLOCK AS | 46 |
| | 6 | 1 | **9L-5854** | 6 | BAND-FILLER (130.2-MM ID) | |

Y-SEPARATE ILLUSTRATION

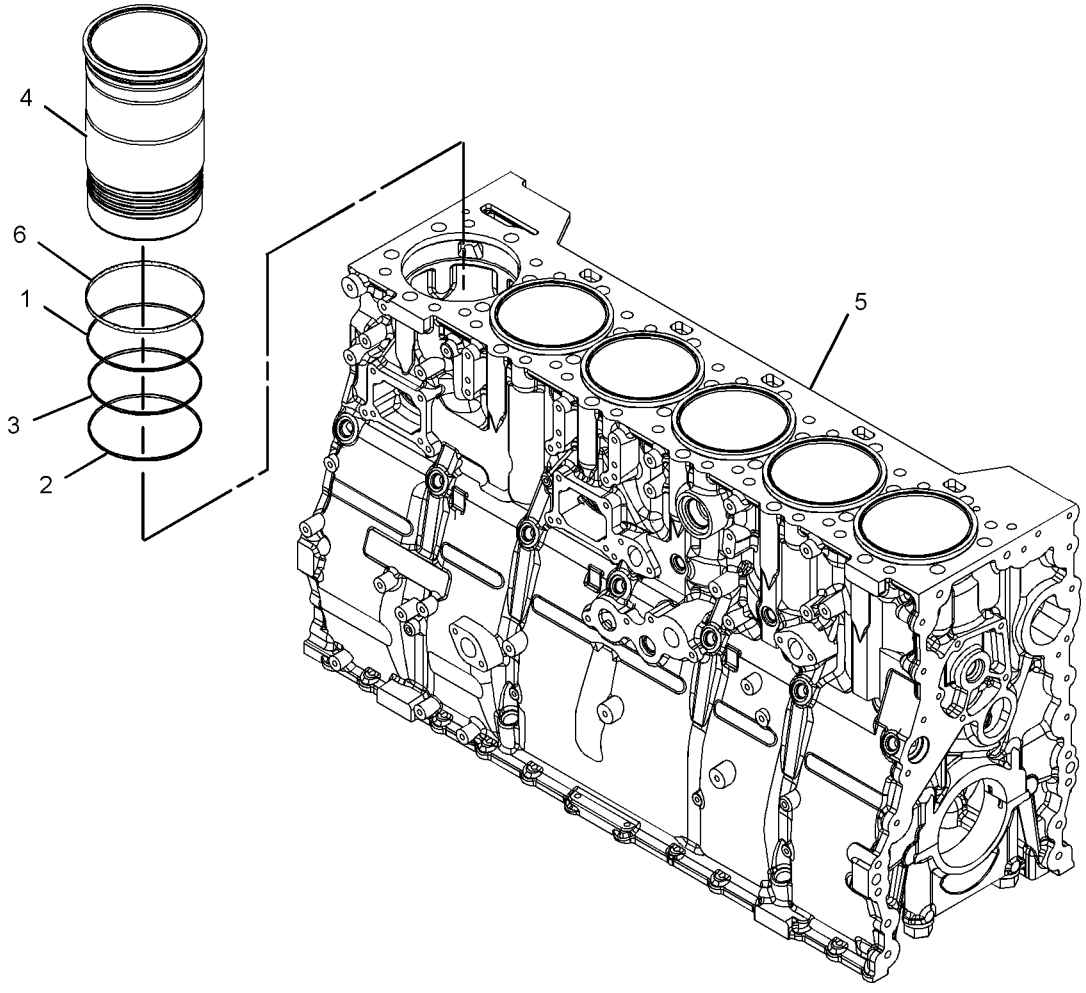


GRAPHIC #1 **<END>** g01347377

# *323-8451* CYLINDER BLOCK AS

**S/N: RHX4918-UP**
**PART OF 261-0191 CYLINDER BLOCK GP**
**FIELD REPLACEMENT FOR 301-3018—PAGE 47**
**AN ATTACHMENT**

**SMCS-1201** **i03148541**

| NOTE | REF NO | GRAPHIC REF | PART NUMBER | QTY | PART NAME 1 2 3 4 5 6 (PRODUCT LEVEL) | SEE PAGE |
|---|---|---|---|---|---|---|
| | 1 | 1 | **155-0809** | 6 | SEAL-LINER | |
| | 2 | 1 | **155-2793** | 12 | SEAL-LINER | |
| Y | 3 | 1 | **267-4631** | 1 | CYLINDER BLOCK AS | 46 |
| | 4 | 1 | **322-1126** | 6 | LINER-CYLINDER | |
| | 5 | 1 | **9L-5854** | 6 | BAND-FILLER (130.2-MM ID) | |

Y-SEPARATE ILLUSTRATION

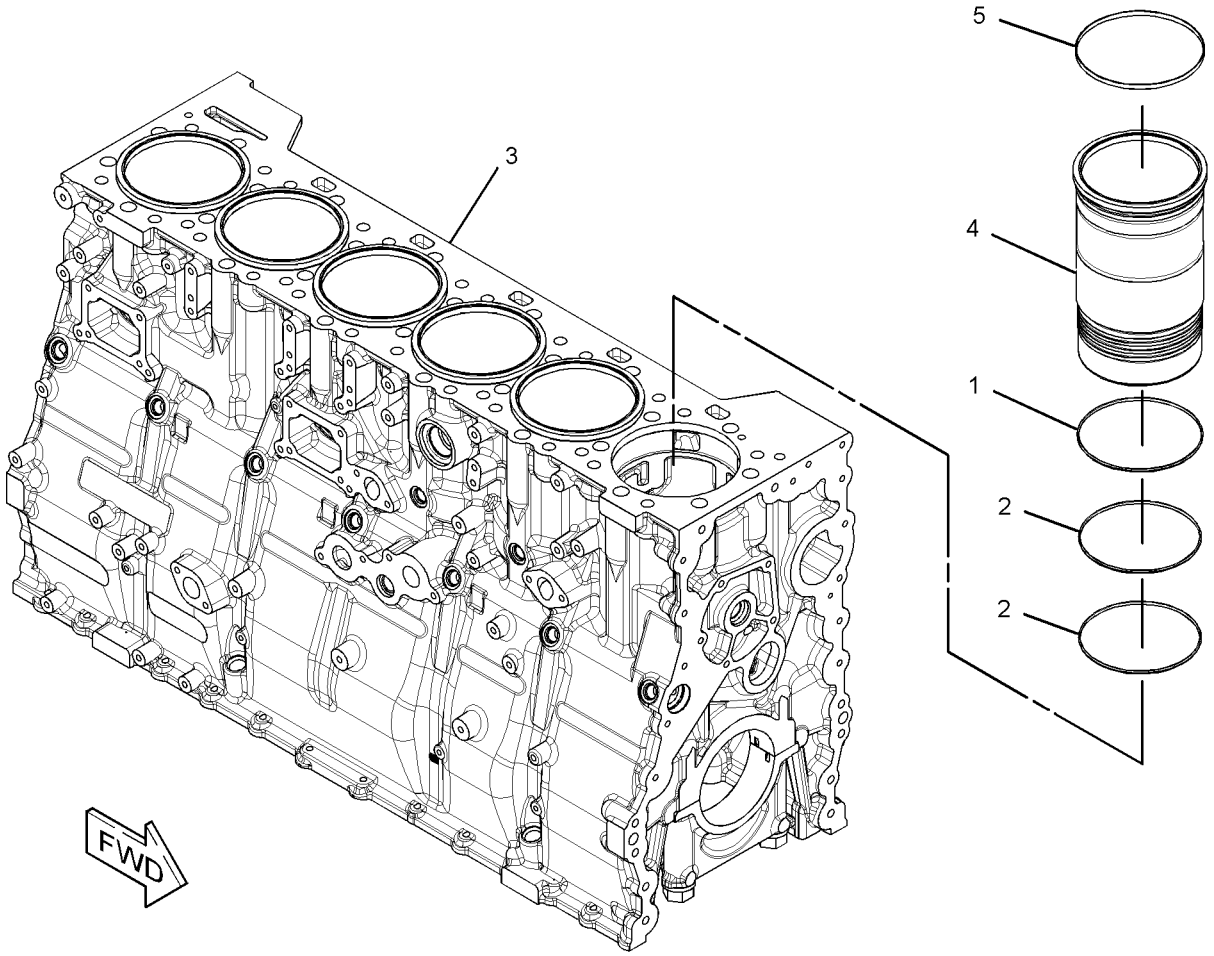


GRAPHIC #1 **<END>** g01620021

## *223-9253* CYLINDER BLOCK GP

**S/N: RHX1-667**

**PART OF 241-5935, 241-5936 ENGINE AR-CORE**

**AN ATTACHMENT**

**SMCS-1201** **i02090002**

| NOTE | REF NO | GRAPHIC REF | PART NUMBER | QTY | PART NAME 1 2 3 4 5 6 (PRODUCT LEVEL) | SEE PAGE |
|---|---|---|---|---|---|---|
| | 1 | 1 | **1S-9540** | 1 | DOWEL | |
| | 2 | 1 | **4N-1650** | 1 | DOWEL | |
| | 3 | 1 | **6I-1055** | 1 | DOWEL | |
| | 4 | 1 | **6I-4421** | 1 | PLATE-SPACER | |
| | 5 | 1 | **8S-9094** | 1 | PLUG-ORIFICE | |
| | 6 | 1 | **142-2329** | 1 | SEAL | |
| Y | 7 | 1 | **222-1975** | 1 | CYLINDER BLOCK AS | 43 |
| | 8 | 1 | **227-1204** | 1 | GASKET | |
| | 9 | 1 | **100-7399** | 2 | PLUG | |
| | 10 | 1 | **250-0466** | 2 | SEAL-O-RING | |
| | 11 | 1 | **4N-0683** | 4 | DOWEL | |
| | 12 | 1 | **5P-0840** | 1 | SEAL-O-RING | |

Y-SEPARATE ILLUSTRATION

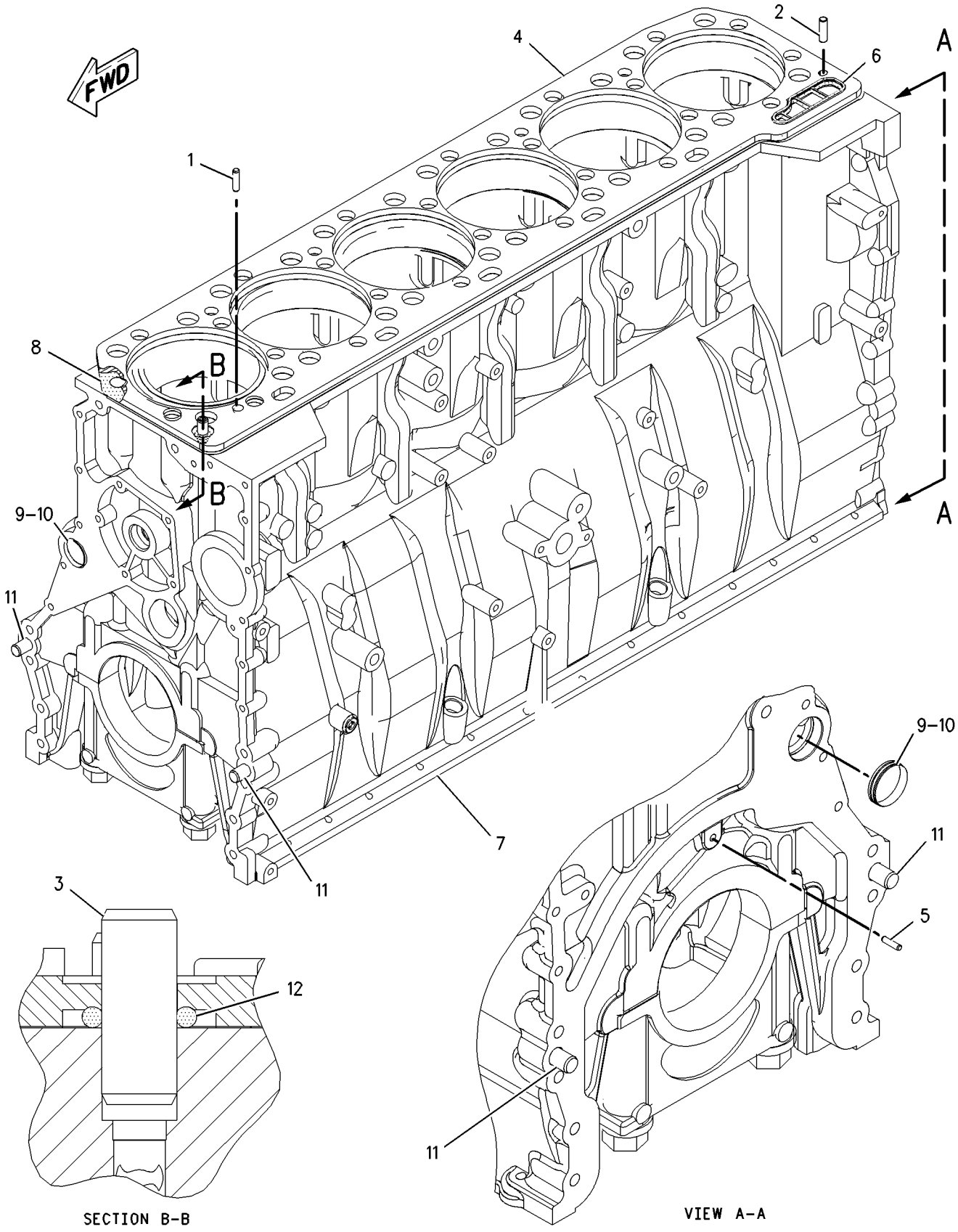


GRAPHIC #1 **<END>** g01006794

## *261-0191* CYLINDER BLOCK GP

**S/N: RHX668-4917**

**PART OF 241-5935, 241-5936, 294-3050, 294-7614 ENGINE AR-CORE**

**AN ATTACHMENT**

**SMCS-1201** **i02413200**

| NOTE | REF NO | GRAPHIC REF | PART NUMBER | QTY | PART NAME 1 2 3 4 5 6 (PRODUCT LEVEL) | SEE PAGE |
|---|---|---|---|---|---|---|
| | 1 | 1 | **1S-9540** | 1 | DOWEL | |
| | 2 | 1 | **4N-1650** | 1 | DOWEL | |
| | 3 | 1 | **6I-1055** | 1 | DOWEL | |
| | 4 | 1 | **6I-4421** | 1 | PLATE-SPACER | |
| | 5 | 1 | **8S-9094** | 1 | PLUG-ORIFICE | |
| | 6 | 1 | **142-2329** | 1 | SEAL | |
| | 7 | 1 | **227-1204** | 1 | GASKET | |
| | 8 | 1 | **250-0466** | 2 | SEAL-O-RING | |
| Y | 9 | 1 | **261-0052** | 1 | CYLINDER BLOCK AS | 45 |
| | 10 | 1 | **100-7399** | 2 | PLUG | |
| | 11 | 1 | **4N-0683** | 4 | DOWEL | |
| | 12 | 1 | **5P-0840** | 1 | SEAL-O-RING | |

Y-SEPARATE ILLUSTRATION

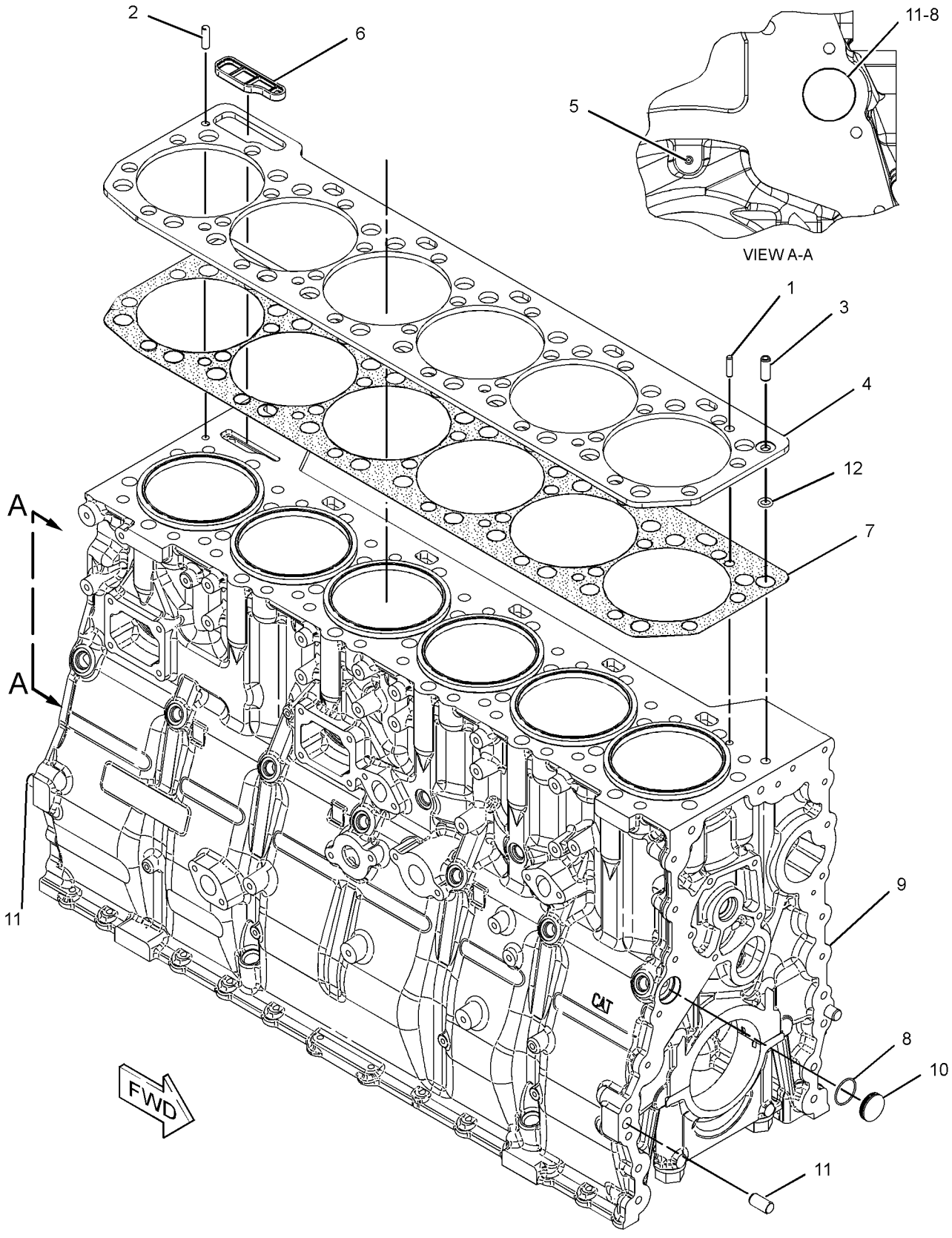


GRAPHIC #1 **<END>** g01215462

## *261-0191* CYLINDER BLOCK GP

**S/N: RHX4918-5238**
**PART OF 241-5936, 294-3050, 294-7614 ENGINE AR-CORE**
**AN ATTACHMENT**

**SMCS-1201** **i03292744**

| NOTE | REF NO | GRAPHIC REF | PART NUMBER | QTY | PART NAME 1 2 3 4 5 6 (PRODUCT LEVEL) | SEE PAGE |
|---|---|---|---|---|---|---|
| | 1 | 1 | **1S-9540** | 1 | DOWEL | |
| | 2 | 1 | **4N-1650** | 1 | DOWEL | |
| | 3 | 1 | **6I-1055** | 1 | DOWEL | |
| | 4 | 1 | **6I-4421** | 1 | PLATE-SPACER | |
| | 5 | 1 | **142-2329** | 1 | SEAL | |
| C | 6 | 1 | **201-4340** | 1 | PLUG AS | |
| | | 1 | **6V-4589** | 1 | SEAL-O-RING | |
| | | 1 | **9S-8006** | 1 | PLUG-O-RING | |
| | 7 | 1 | **227-1204** | 1 | GASKET | |
| | 8 | 1 | **250-0466** | 2 | SEAL-O-RING | |
| CY | 9 | 1 | *301-3018* | 1 | CYLINDER BLOCK AS | 47 |
| CY | 10 | 1 | *305-9196* | 1 | PLUG GP-CYLINDER BLOCK | 118 |
| | 11 | 1 | **100-7399** | 2 | PLUG | |
| | 12 | 1 | **4N-0683** | 4 | DOWEL | |
| | 13 | 1 | **5P-0840** | 1 | SEAL-O-RING | |

C-CHANGE FROM PREVIOUS TYPE
Y-SEPARATE ILLUSTRATION

*261-0191* **CYLINDER BLOCK GP** *(contd.)* **i03292744**

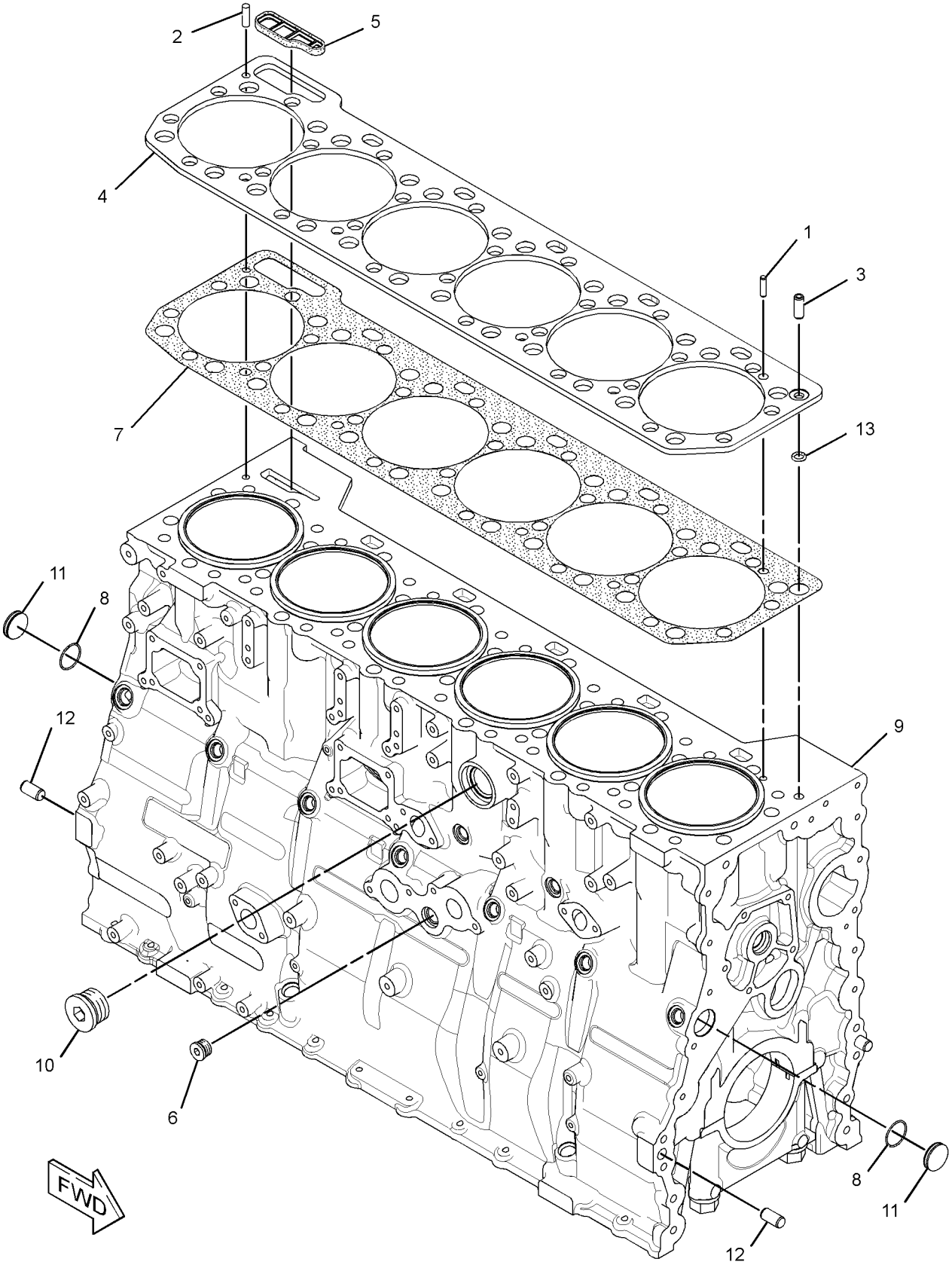


GRAPHIC #1 **<END>** g01347328

## *261-0191* CYLINDER BLOCK GP

**S/N: RHX5239-UP**
**PART OF 241-5936, 294-7614 ENGINE AR-CORE**
**AN ATTACHMENT**

**SMCS-1201** **i03292605**

| NOTE | REF NO | GRAPHIC REF | PART NUMBER | QTY | PART NAME 1 2 3 4 5 6 (PRODUCT LEVEL) | SEE PAGE |
|---|---|---|---|---|---|---|
| | 1 | 1 | **1S-9540** | 1 | DOWEL | |
| | 2 | 1 | **4N-1650** | 1 | DOWEL | |
| | 3 | 1 | **6I-1055** | 1 | DOWEL | |
| | 4 | 1 | **6I-4421** | 1 | PLATE-SPACER | |
| | 5 | 1 | **142-2329** | 1 | SEAL | |
| C | 6 | 1 | **201-4340** | 1 | PLUG AS | |
| | | 1 | **6V-4589** | 1 | SEAL-O-RING | |
| | | 1 | **9S-8006** | 1 | PLUG-O-RING | |
| | 7 | 1 | **227-1204** | 1 | GASKET | |
| | 8 | 1 | **250-0466** | 2 | SEAL-O-RING | |
| CY | 9 | 1 | *323-8451* | 1 | CYLINDER BLOCK AS | 48 |
| CY | 10 | 1 | *305-9196* | 1 | PLUG GP-CYLINDER BLOCK | 118 |
| | 11 | 1 | **100-7399** | 2 | PLUG | |
| | 12 | 1 | **4N-0683** | 4 | DOWEL | |
| | 13 | 1 | **5P-0840** | 1 | SEAL-O-RING | |

C-CHANGE FROM PREVIOUS TYPE
Y-SEPARATE ILLUSTRATION

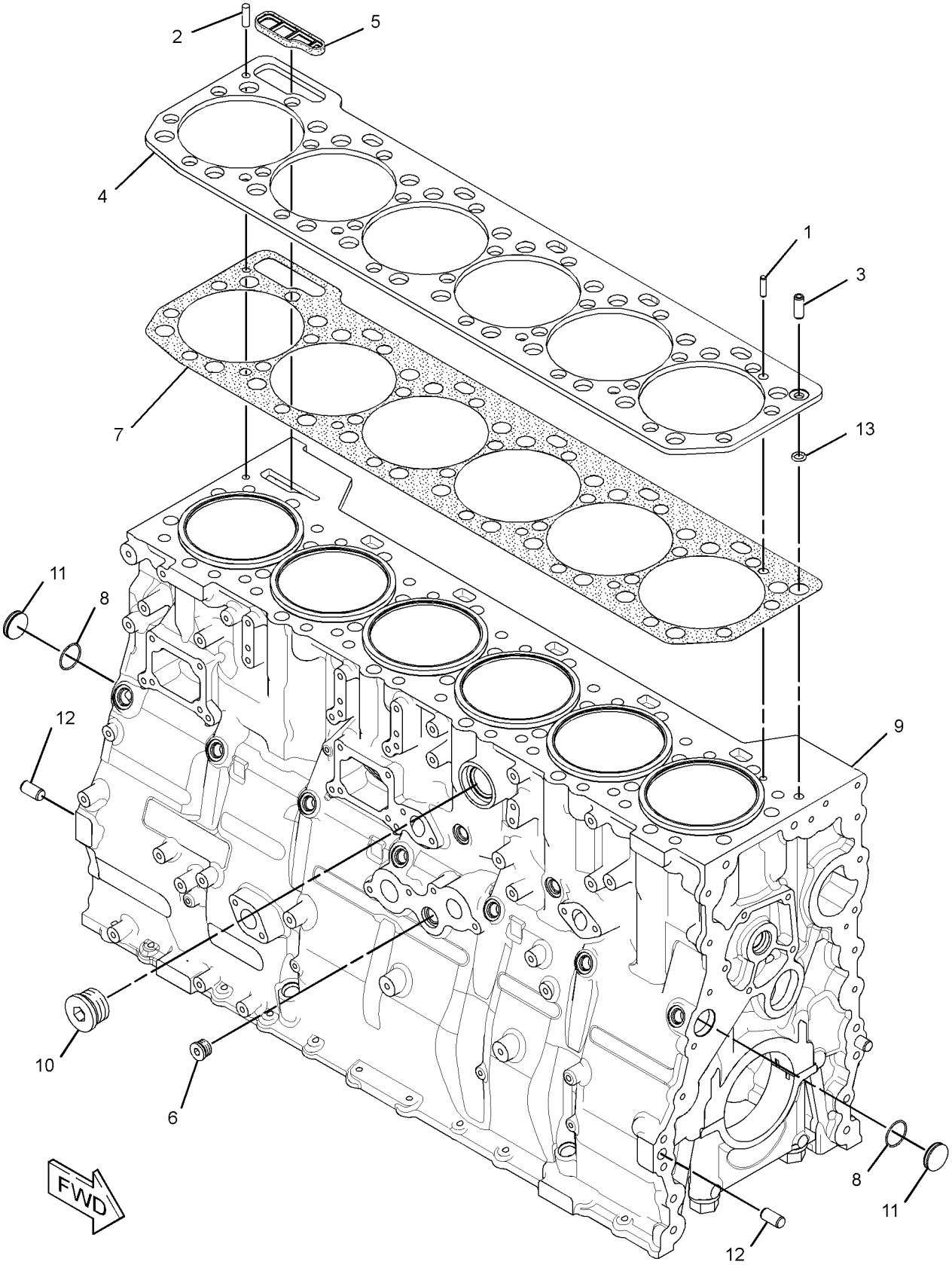


GRAPHIC #1 **<END>** g01347328

# 297-3207 CYLINDER BLOCK GP

**S/N: RHX4281-UP**
**PART OF 297-3206 ENGINE AR-CORE**
**AN ATTACHMENT**

**SMCS-1201** **i02679902**

| NOTE | REF NO | GRAPHIC REF | PART NUMBER | QTY | PART NAME 1 2 3 4 5 6 (PRODUCT LEVEL) | SEE PAGE |
|---|---|---|---|---|---|---|
| | 1 | 1 | **1S-9540** | 1 | DOWEL | |
| | 2 | 1 | **4N-1650** | 1 | DOWEL | |
| | 3 | 1 | **6I-1055** | 1 | DOWEL | |
| | 4 | 1 | **6I-4421** | 1 | PLATE-SPACER | |
| | 5 | 1 | **8S-9094** | 1 | PLUG-ORIFICE | |
| | 6 | 1 | **142-2329** | 1 | SEAL | |
| | 7 | 1 | **227-1204** | 1 | GASKET | |
| | 8 | 1 | **250-0466** | 2 | SEAL-O-RING | |
| Y | 9 | 1 | *297-4267* | 1 | CYLINDER BLOCK GP | 59 |
| | 10 | 1 | **100-7399** | 2 | PLUG | |
| | 11 | 1 | **4N-0683** | 4 | DOWEL | |
| | 12 | 1 | **5P-0840** | 1 | SEAL-O-RING | |

Y-SEPARATE ILLUSTRATION

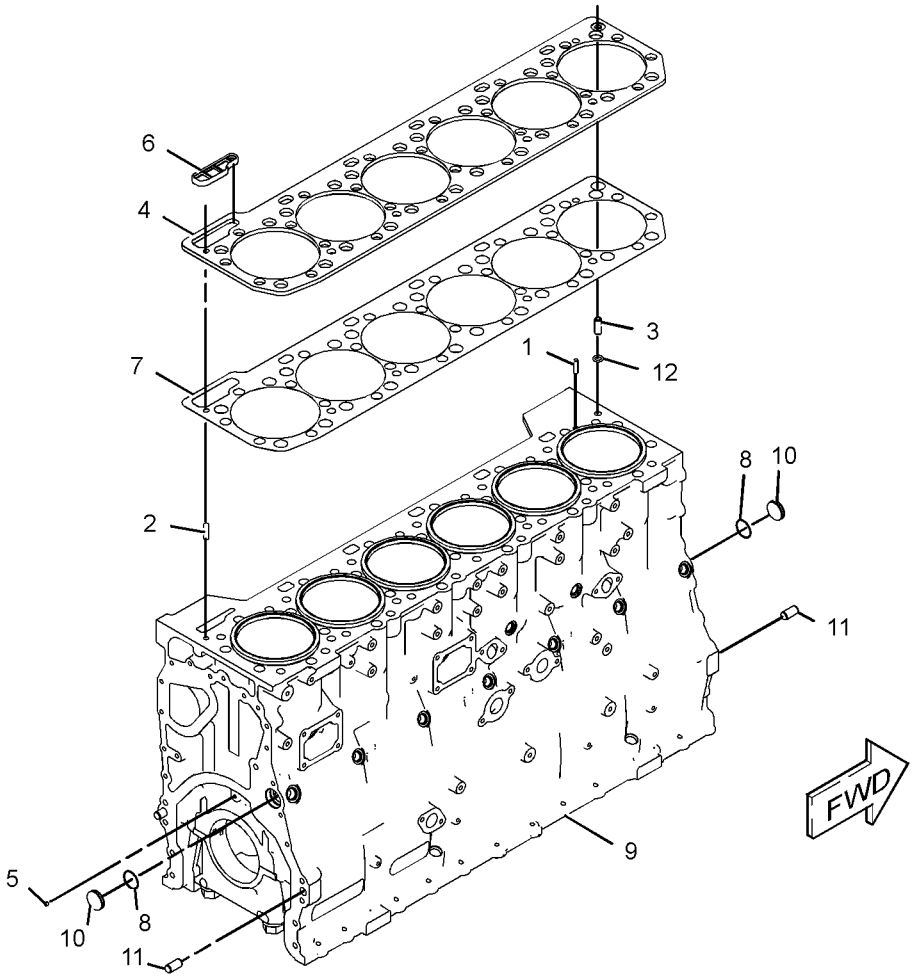


GRAPHIC #1 **<END>** g01351109

# *297-4266* CYLINDER BLOCK GP

**S/N: RHX4281-UP**
**PART OF 297-4267 CYLINDER BLOCK GP**
**AN ATTACHMENT**

**SMCS-1201** **i02696038**

| NOTE | REF NO | GRAPHIC REF | PART NUMBER | QTY | PART NAME 1 2 3 4 5 6 (PRODUCT LEVEL) | SEE PAGE |
|---|---|---|---|---|---|---|
| | 1 | 1 | **167-8081** | 7 | CAP-CRANKSHAFT BEARING | |
| | 2 | 1 | **167-8083** | 14 | BOLT (7/8-14X7.5-IN) | |
| | 3 | 1 | **9H-1031** | 14 | WASHER-HARD (24X41.5X6-MM THK) | |

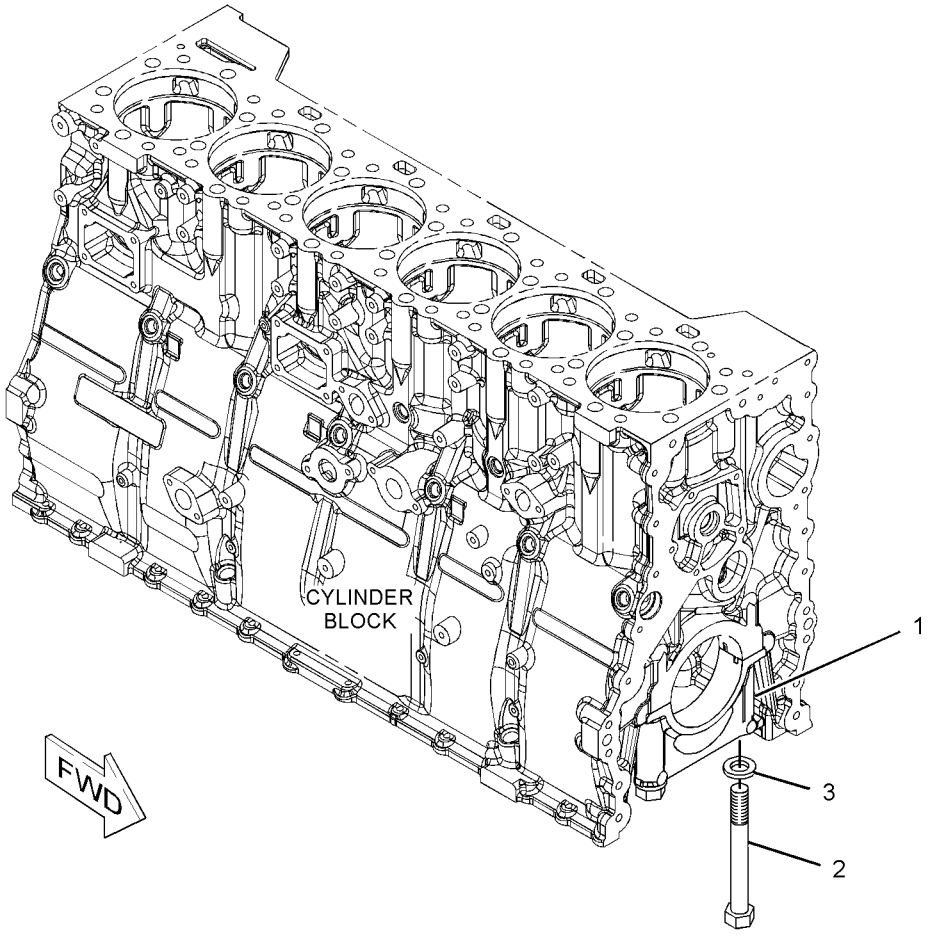


GRAPHIC #1 **<END>** g01352095

# *297-4267* CYLINDER BLOCK GP

**S/N: RHX4281-4891**
**PART OF 297-3207 CYLINDER BLOCK GP**
**AN ATTACHMENT**

**SMCS-1201** **i02687004**

| NOTE | REF NO | GRAPHIC REF | PART NUMBER | QTY | PART NAME 1 2 3 4 5 6 (PRODUCT LEVEL) | SEE PAGE |
|---|---|---|---|---|---|---|
| | 1 | 1 | **155-0809** | 6 | SEAL-LINER | |
| | 2 | 1 | **155-2793** | 12 | SEAL-LINER | |
| Y | 3 | 1 | *297-4266* | 1 | CYLINDER BLOCK GP | 58 |
| | 4 | 1 | **304-9856** | 6 | LINER-CYLINDER | |
| | 5 | 1 | **9L-5854** | 6 | BAND-FILLER (130.2-MM ID) | |

Y-SEPARATE ILLUSTRATION

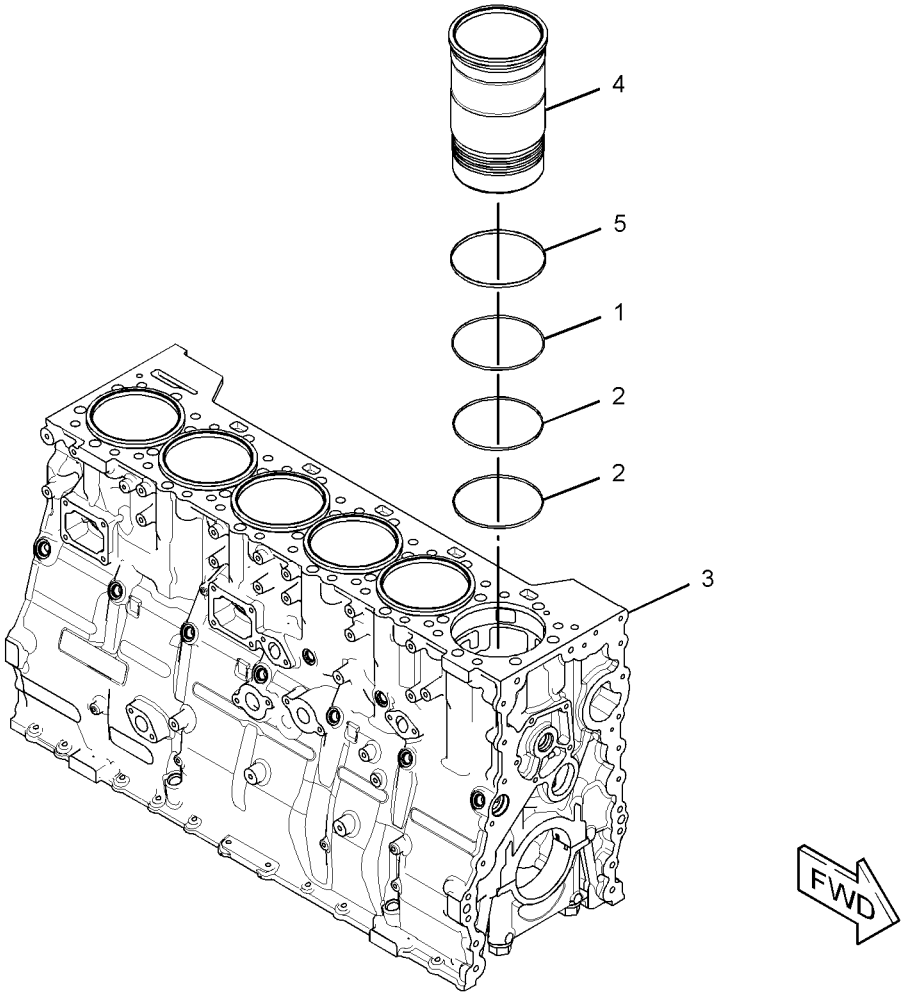


GRAPHIC #1 **<END>** g01351191

# *297-4267* CYLINDER BLOCK GP

**S/N: RHX4892-UP**
**PART OF 297-3207 CYLINDER BLOCK GP**
**AN ATTACHMENT**

**SMCS-1201** **i03157380**

| NOTE | REF NO | GRAPHIC REF | PART NUMBER | QTY | PART NAME 1 2 3 4 5 6 (PRODUCT LEVEL) | SEE PAGE |
|---|---|---|---|---|---|---|
| | 1 | 1 | **155-0809** | 6 | SEAL-LINER | |
| | 2 | 1 | **155-2793** | 12 | SEAL-LINER | |
| CY | 3 | 1 | **267-4631** | 1 | CYLINDER BLOCK AS | 46 |
| | 4 | 1 | **304-9856** | 6 | LINER-CYLINDER | |
| | 5 | 1 | **9L-5854** | 6 | BAND-FILLER (130.2-MM ID) | |

C-CHANGE FROM PREVIOUS TYPE
Y-SEPARATE ILLUSTRATION

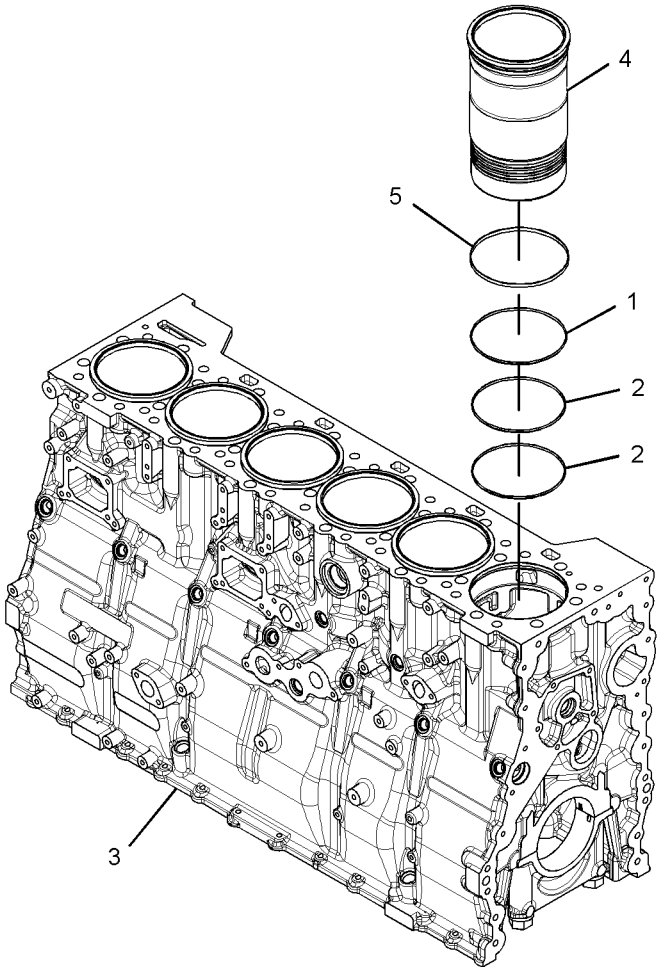


GRAPHIC #1 **<END>** g01662006

# BASIC ENGINE

## *223-7263* CYLINDER HEAD AS

**S/N: RHX1-UP**
**WITH PRE-FINISHED VALVE SEAT INSERTS**
**PART OF 243-6741 CYLINDER HEAD AS, 223-9250 CYLINDER HEAD GP**
**AN ATTACHMENT**

**SMCS-1100, 1101, 1103, 1104, 1105, 1106, 1108, 1109, 1115, 1117, 1121, 1124, 1125**

**i02844808**

| NOTE | REF NO | GRAPHIC REF | PART NUMBER | QTY | PART NAME 1 2 3 4 5 6 (PRODUCT LEVEL) | SEE PAGE |
|---|---|---|---|---|---|---|
| | 1 | 1 | **122-7375** | 24 | GUIDE-VALVE (STANDARD) | |
| AB | | 1 | **122-0447** | | GUIDE-VALVE (0.51-MM OS) | |
| AB | | 1 | **122-8612** | | GUIDE-VALVE (0.13-MM OS) | |
| | 2 | 1 | **216-5582** | 7 | BEARING-SLEEVE (STANDARD) | |
| AB | | 1 | **217-0751** | | BEARING-SLEEVE (0.254-MM OS) | |
| AB | | 1 | **217-0752** | | BEARING-SLEEVE (0.762-MM OS) | |
| AB | | 1 | **261-3429** | | BEARING-SLEEVE (1.778-MM OS) | |
| AB | | 1 | **261-3430** | | BEARING-SLEEVE (1.27-MM OS) | |
| | 3 | 1 | **224-3983** | 12 | INSERT-SEAT (INLET) (STANDARD) | |
| AB | | 1 | **314-3063** | | INSERT-VALVE SEAT (0.55 MM US THK) | |
| AB | | 1 | **314-3064** | | INSERT-VALVE SEAT (INLET 0.13 OS OD) | |
| AB | | 1 | **314-3065** | | INSERT-VALVE SEAT (0.13 MM OS OD, 0.55 MM US THK) | |
| AB | | 1 | **314-3066** | | INSERT-VALVE SEAT (INLET 0.26 OS OD) | |
| AB | | 1 | **314-3067** | | INSERT-VALVE SEAT (0.26 MM OS OD, 0.55 MM US THK) | |
| AB | | 1 | **314-3068** | | INSERT-VALVE SEAT (INLET 0.51 OS OD) | |
| AB | | 1 | **314-3069** | | INSERT-VALVE SEAT (0.51 MM OS OD, 0.55 MM US THK) | |
| | 4 | 1 | **226-5561** | 12 | INSERT-VALVE (EXHAUST) (STANDARD) | |
| AB | | 1 | **288-4883** | | INSERT-VALVE (EXHAUST 0.51 OS OD) | |
| AB | | 1 | **288-4884** | | INSERT-VALVE (EXHAUST 0.76 OS OD) | |
| | 5 | 1 | **263-4920** | 6 | SLEEVE-INJECTOR (INLET) | |
| | 8 | 1 | **166-2904** | 12 | SEAL-O-RING | |
| | 9 | 1 | **3B-0623** | 17 | PLUG-CUP | |
| | 10 | 1 | **3B-0645** | 20 | PLUG-CUP | |
| | 11 | 1 | **8T-6757** | 3 | PLUG-PIPE | |
| | 12 | 1 | **9X-7430** | 6 | SEAL-O-RING | |

A-NOT PART OF THIS GROUP
B-USE AS REQUIRED

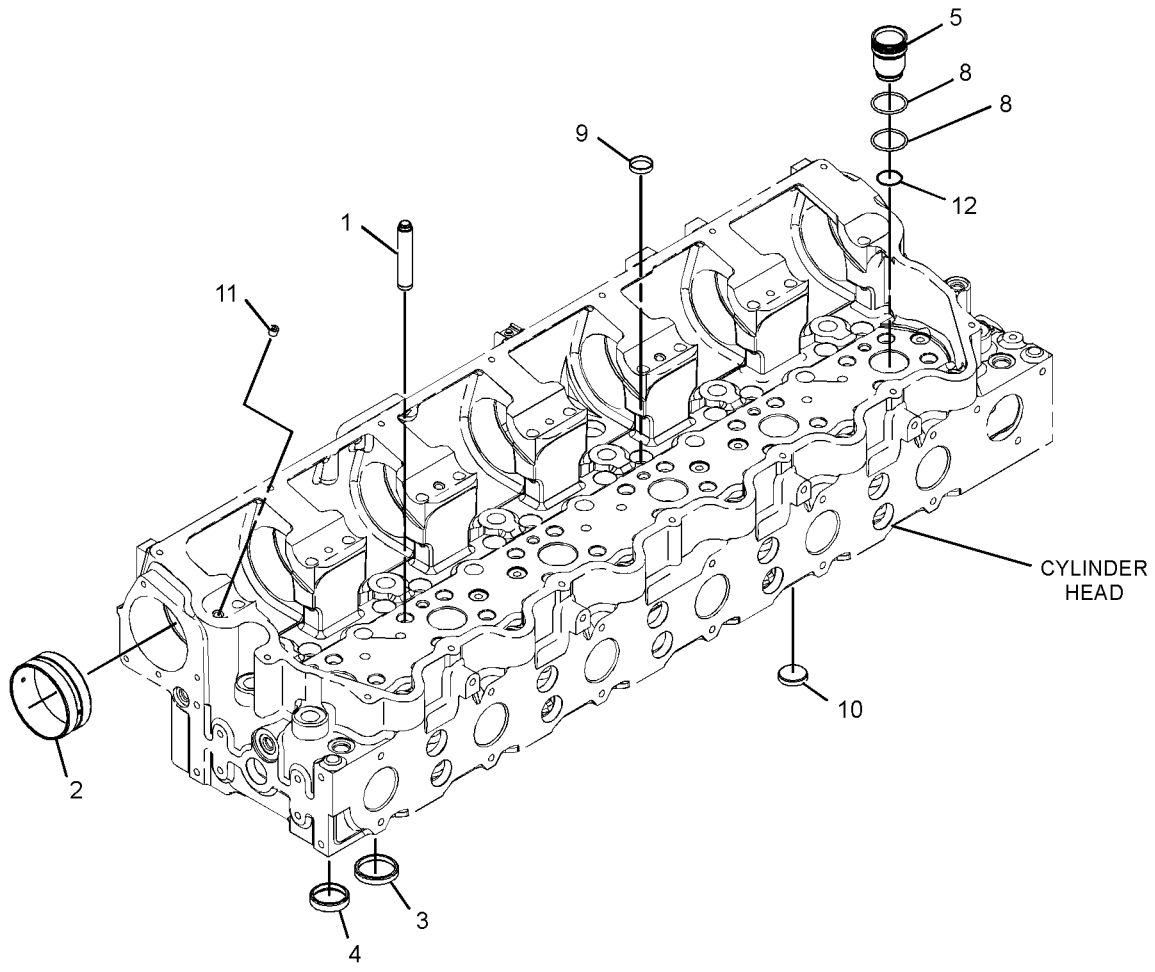


GRAPHIC #1 **<END>** g01370336

# 243-0943 CYLINDER HEAD AS

**S/N: RHX1-1594**

**PART OF 243-6741 CYLINDER HEAD AS**

**AN ATTACHMENT**

**SMCS-1100, 1101, 1103, 1104, 1105, 1106, 1108, 1109, 1115, 1117, 1121, 1124, 1125**

**i01983776**

| NOTE | REF NO | GRAPHIC REF | PART NUMBER | QTY | PART NAME 1 2 3 4 5 6 (PRODUCT LEVEL) | SEE PAGE |
|---|---|---|---|---|---|---|
| | 1 | 1 | **152-7582** | 12 | INSERT-VALVE SEAT (EXHAUST) (STANDARD) | |
| AB | | 1 | **167-0642** | | INSERT-VALVE SEAT (0.76 MM O.S.) | |
| AB | | 1 | **170-4737** | | INSERT-VALVE SEAT (0.51 MM O.S.) | |
| | 2 | 1 | **175-3617** | 12 | INSERT-VALVE SEAT (INLET) (STANDARD) | |
| AB | | 1 | **167-0643** | | INSERT-VALVE SEAT (0.76 MM O.S.) | |
| AB | | 1 | **170-4738** | | INSERT-VALVE SEAT (0.51 MM O.S.) | |

A-NOT PART OF THIS GROUP
B-USE AS REQUIRED

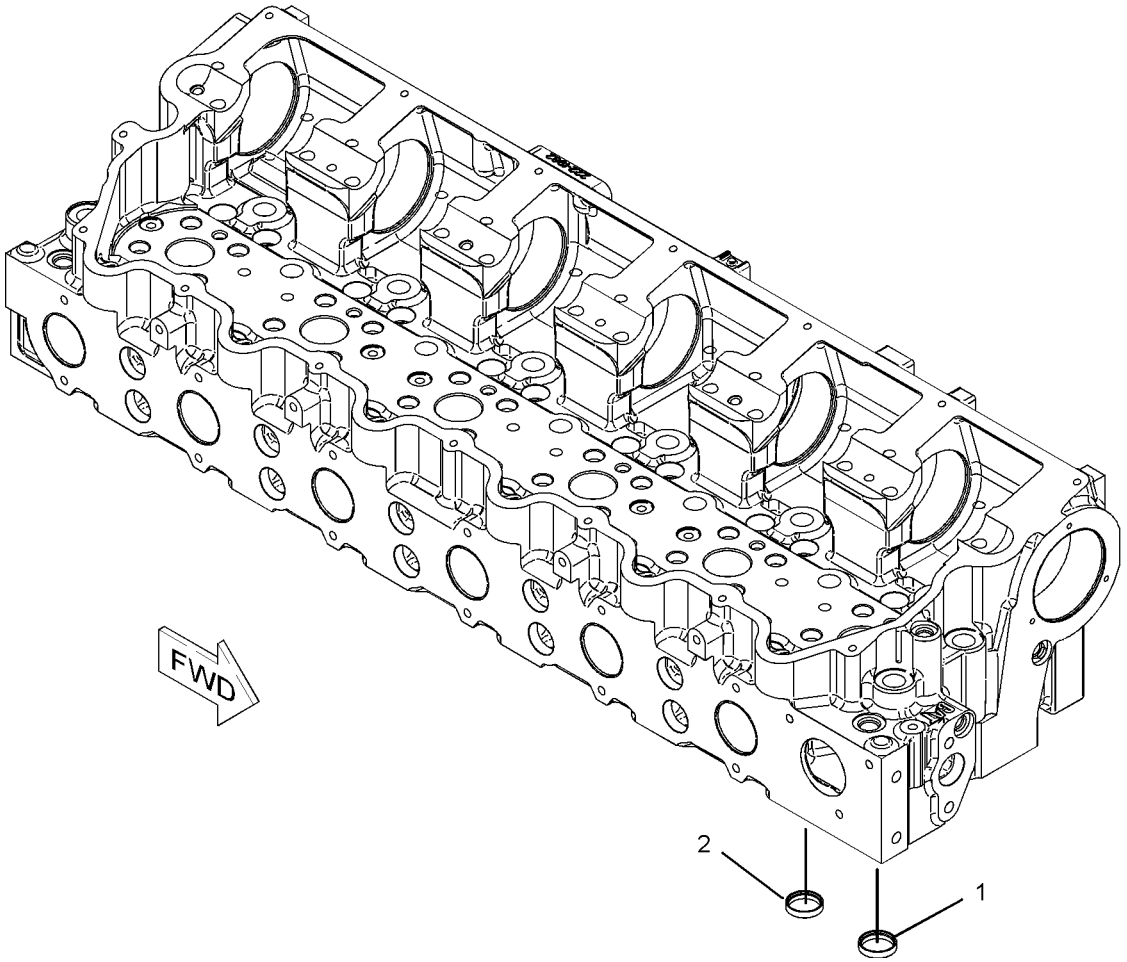


GRAPHIC #1 **<END>** g01028691

# *243-6741* CYLINDER HEAD AS

**S/N: RHX1-1594**
**WITH MACHINE IN PLACE VALVE SEAT INSERTS**
**PART OF 223-9250 CYLINDER HEAD GP**
**AN ATTACHMENT**

**SMCS-1100, 1101, 1103, 1104, 1105, 1106, 1108, 1109, 1115, 1117, 1121, 1124, 1125**

**i02763889**

| NOTE | REF NO | GRAPHIC REF | PART NUMBER | QTY | PART NAME 1 2 3 4 5 6 (PRODUCT LEVEL) | SEE PAGE |
|---|---|---|---|---|---|---|
| | 1 | 2 | **122-7375** | 24 | GUIDE-VALVE (STANDARD) | |
| AB | | 2 | **122-0447** | | GUIDE-VALVE (0.51-MM OS) | |
| AB | | 2 | **122-8612** | | GUIDE-VALVE (0.13-MM OS) | |
| | 2 | 1 | **216-5582** | 7 | BEARING-SLEEVE (STANDARD) | |
| AB | | 1 | **217-0751** | | BEARING-SLEEVE (0.254-MM OS) | |
| AB | | 1 | **217-0752** | | BEARING-SLEEVE (0.762-MM OS) | |
| AB | | 1 | **261-3429** | | BEARING-SLEEVE (1.778-MM OS) | |
| AB | | 1 | **261-3430** | | BEARING-SLEEVE (1.27-MM OS) | |
| | 3 | 2 | **227-4239** | 6 | SLEEVE-INJECTOR | |
| Y | 4 | 1 | **243-0943** | 1 | CYLINDER HEAD AS | 63 |
| | | | | | —OR— | |
| Y | | 1 | **223-7263** | 1 | CYLINDER HEAD AS | 61 |
| | 5 | 2 | **166-2903** | 6 | SEAL-O-RING | |
| | 6 | 2 | **166-2904** | 6 | SEAL-O-RING | |
| | 7 | 1 | **3B-0623** | 17 | PLUG-CUP | |
| | 8 | 1,2 | **3B-0645** | 20 | PLUG-CUP | |
| | 9 | 2 | **8T-6757** | 3 | PLUG-PIPE | |
| | 10 | 2 | **9X-7430** | 6 | SEAL-O-RING | |

A-NOT PART OF THIS GROUP
B-USE AS REQUIRED
Y-SEPARATE ILLUSTRATION

*243-6741* **CYLINDER HEAD AS** *(contd.)* **i02763889**

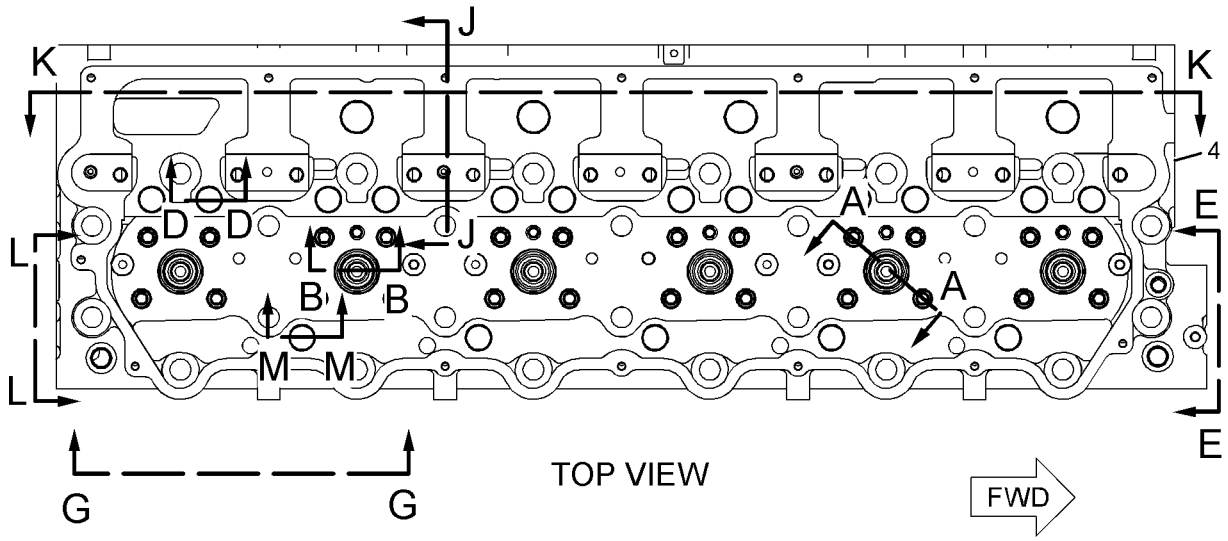


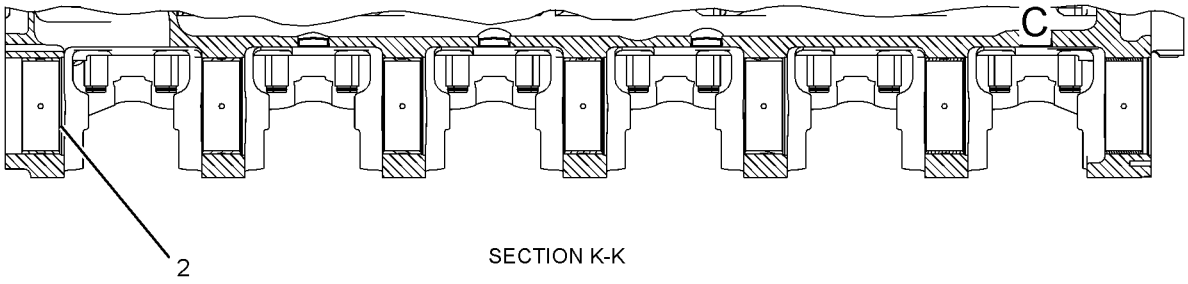


SECTION K-K

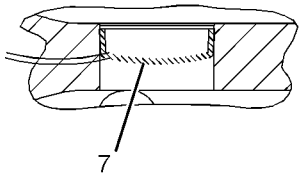


SECTION M-M

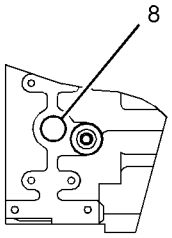


VIEW L-L

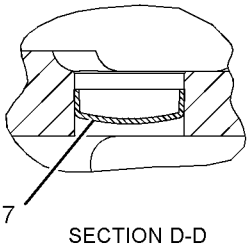


SECTION D-D

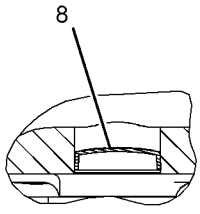


VIEW OF AREA C

REFER TO ALL ILLUSTRATIONS OF THIS GROUP FOR AUXILIARY VIEWS

GRAPHIC #1

g01221315

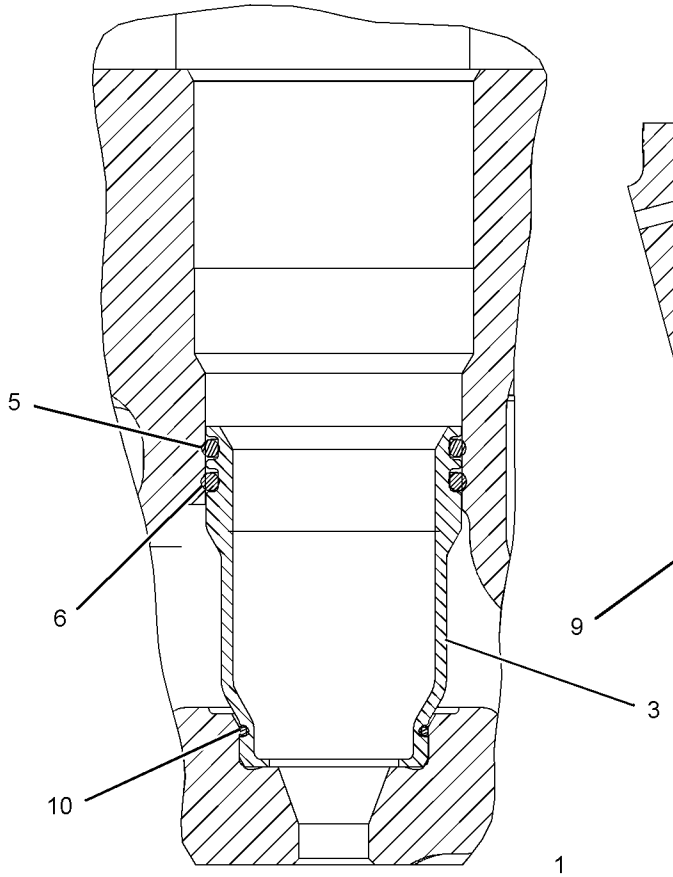


SECTION B-B

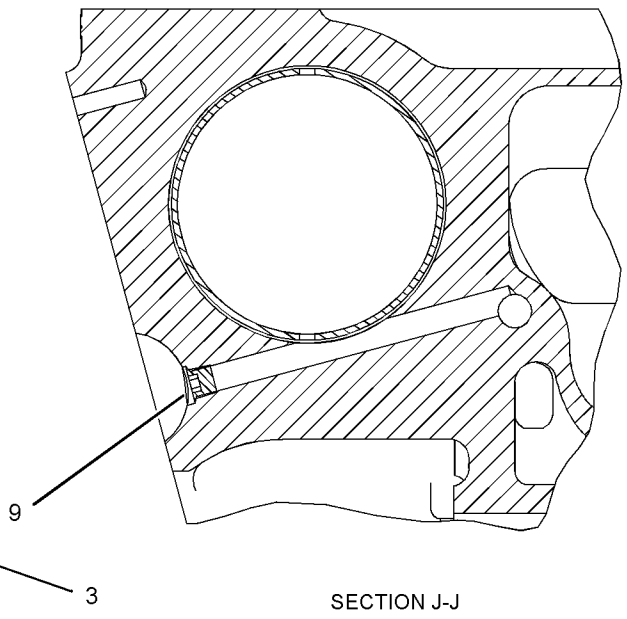


SECTION J-J

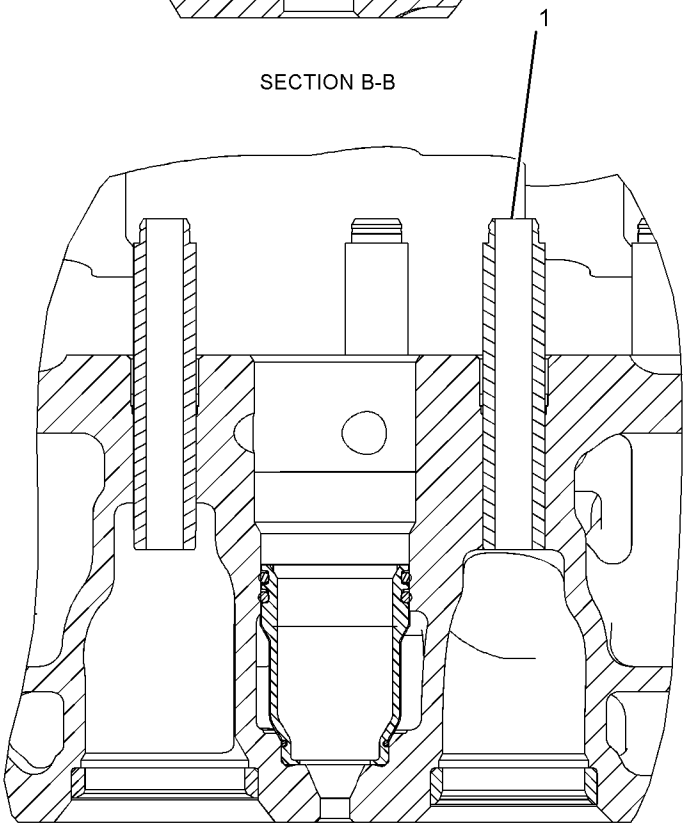


SECTION A-A

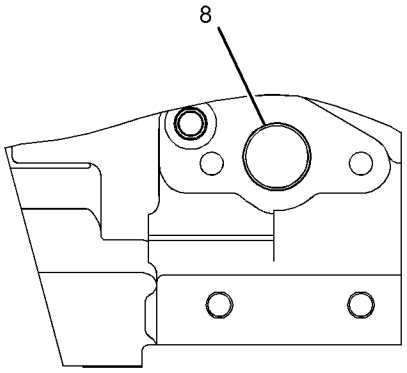


VIEW E-E

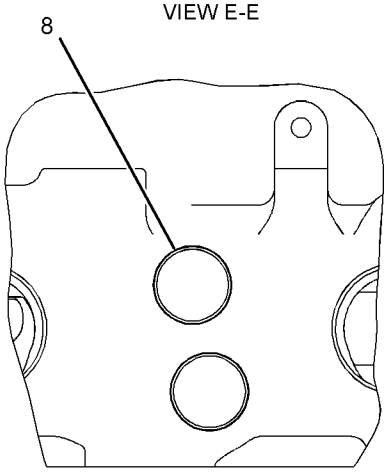


VIEW G-G

GRAPHIC #2 **<END>** g01029134

# *281-1640* CYLINDER HEAD AS

**S/N: RHX3191-UP**
**CONTAINS PRECISION PRE-MACHINED VALVE SEAT INSERTS**
**PART OF 263-5055 CYLINDER HEAD GP**
**AN ATTACHMENT**

**SMCS-1100, 1101, 1103, 1104, 1105, 1106, 1108, 1109, 1115, 1117, 1121, 1124, 1125**

**i02884458**

| NOTE | REF NO | GRAPHIC REF | PART NUMBER | QTY | PART NAME 1 2 3 4 5 6 (PRODUCT LEVEL) | SEE PAGE |
|---|---|---|---|---|---|---|
| | 1 | 1 | **122-7375** | 24 | GUIDE-VALVE (STANDARD) | |
| AB | | 1 | **122-0447** | | GUIDE-VALVE (0.51-MM OS) | |
| AB | | 1 | **122-8612** | | GUIDE-VALVE (0.13-MM OS) | |
| | 2 | 1 | **216-5582** | 7 | BEARING-SLEEVE (STANDARD) | |
| AB | | 1 | **217-0751** | | BEARING-SLEEVE (0.254-MM OS) | |
| AB | | 1 | **217-0752** | | BEARING-SLEEVE (0.762-MM OS) | |
| AB | | 1 | **261-3429** | | BEARING-SLEEVE (1.778-MM OS) | |
| AB | | 1 | **261-3430** | | BEARING-SLEEVE (1.27-MM OS) | |
| | 3 | 1 | **226-5561** | 12 | INSERT-VALVE (EXHAUST) (STANDARD) | |
| AB | | 1 | **288-4883** | | INSERT-VALVE (EXHAUST 0.51 OS OD) | |
| AB | | 1 | **288-4884** | | INSERT-VALVE (EXHAUST 0.76 OS OD) | |
| | 4 | 1 | **263-4920** | 6 | SLEEVE-INJECTOR (INLET) | |
| | 6 | 1 | **280-3979** | 12 | INSERT-VALVE (INLET) (STANDARD) | |
| AB | | 1 | **288-4881** | | INSERT-VALVE (INLET) (0.51-MM OS) | |
| AB | | 1 | **288-4882** | | INSERT-VALVE (INLET) (0.76-MM OS) | |
| | 7 | 1 | **166-2904** | 12 | SEAL-O-RING | |
| | 8 | 1 | **3B-0623** | 17 | PLUG-CUP | |
| | 9 | 1 | **3B-0645** | 20 | PLUG-CUP | |
| | 10 | 1 | **8T-6757** | 3 | PLUG-PIPE | |
| | 11 | 1 | **9X-7430** | 6 | SEAL-O-RING | |

A-NOT PART OF THIS GROUP
B-USE AS REQUIRED

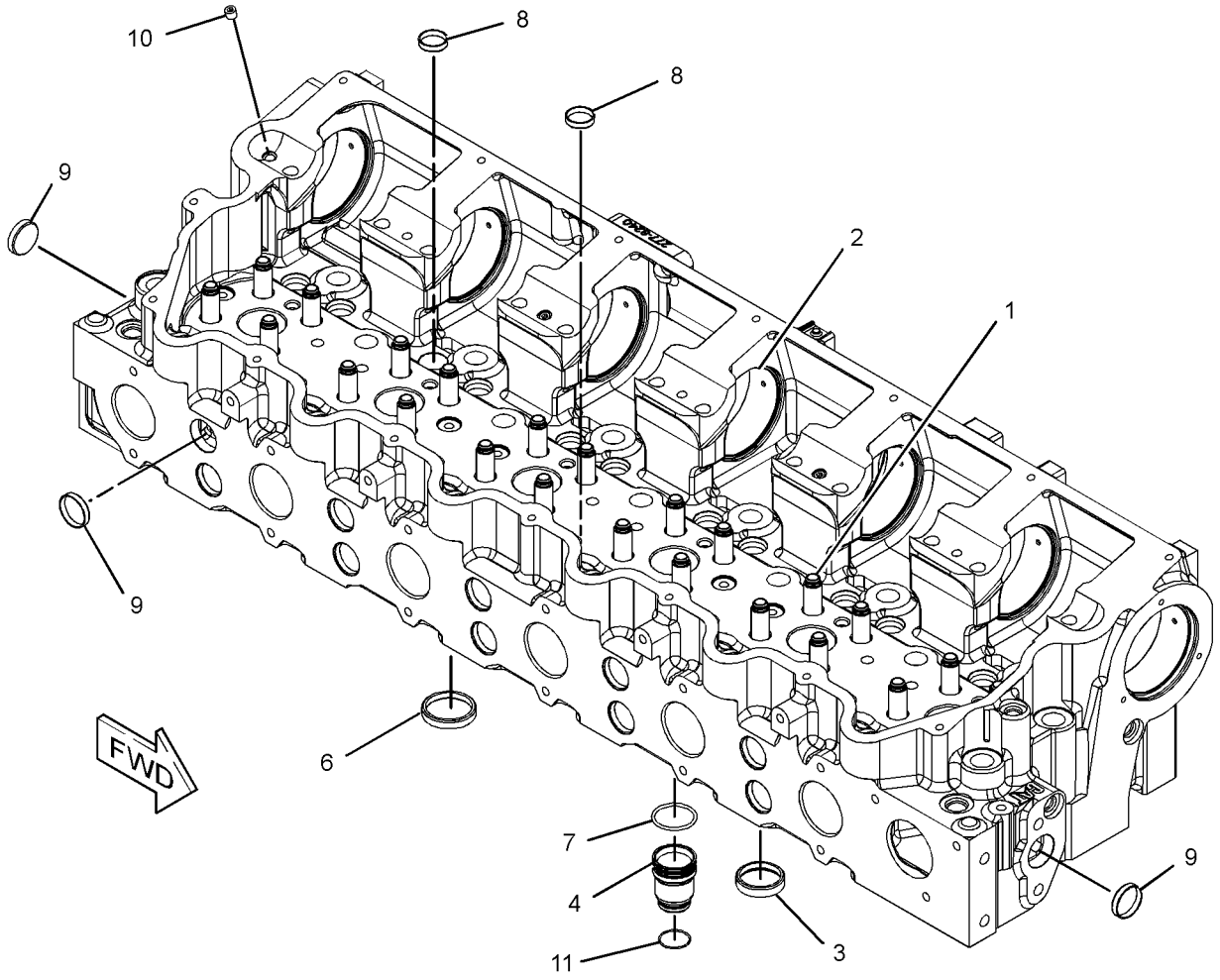


GRAPHIC #1 **<END>** g01207161

# 223-9250 CYLINDER HEAD GP*R

**S/N: RHX1-1594**
**PART OF 235-2974 CYLINDER HEAD GP**
**AN ATTACHMENT**

**SMCS-1100** **i02733172**

| NOTE | REF NO | GRAPHIC REF | PART NUMBER | QTY | PART NAME 1 2 3 4 5 6 (PRODUCT LEVEL) | SEE PAGE |
|---|---|---|---|---|---|---|
| | 1 | 1 | **2A-4429** | 48 | LOCK-RETAINER | |
| | 2 | 1 | **6I-0928** | 24 | WASHER | |
| | 3 | 1 | **153-7023** | 12 | VALVE-INLET | |
| | 4 | 1 | **153-7024** | 12 | VALVE-EXHAUST | |
| | 5 | 1 | **163-2478** | 24 | SEAL-VALVE STEM | |
| | 6 | 1 | **211-3123** | 24 | SPRING-VALVE (OUTER) | |
| CY | 7 | 1 | **243-6741** | 1 | CYLINDER HEAD AS | 64 |
| | 8 | 1 | **186-2001** | 24 | ROTOCOIL AS | |
| | 9 | 1 | **211-3122** | 24 | SPRING-VALVE (INNER) | |

C-CHANGE FROM PREVIOUS TYPE
Y-SEPARATE ILLUSTRATION

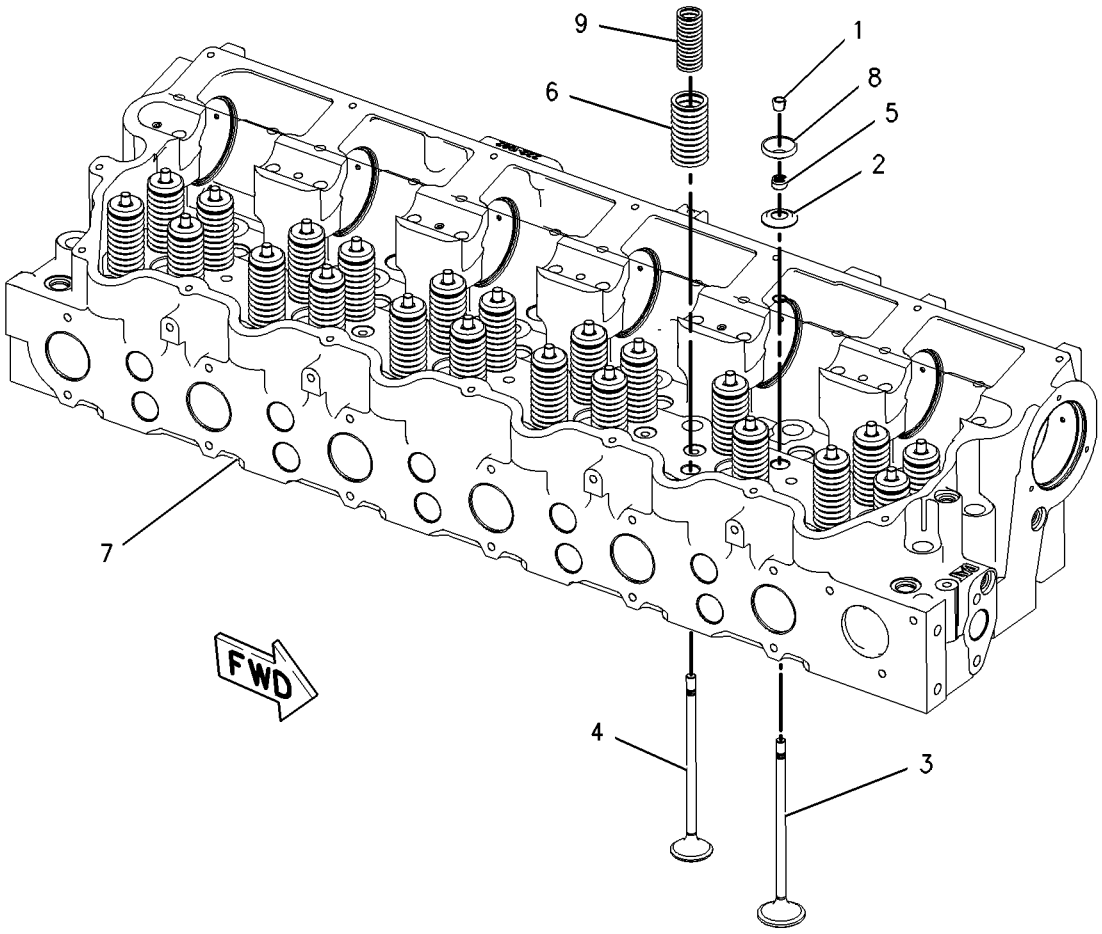


GRAPHIC #1 **<END>** g00955632

# BASIC ENGINE

## 223-9250 CYLINDER HEAD GP*R

**S/N: RHX1595-UP**

**PART OF 235-2974 CYLINDER HEAD GP**

**AN ATTACHMENT**

**SMCS-1100** **i02847394**

| NOTE | REF NO | GRAPHIC REF | PART NUMBER | QTY | PART NAME 1 2 3 4 5 6 (PRODUCT LEVEL) | SEE PAGE |
|---|---|---|---|---|---|---|
| | 1 | 1 | **2A-4429** | 48 | LOCK-RETAINER | |
| | 2 | 1 | **6I-0928** | 24 | WASHER | |
| | 3 | 1 | **153-7023** | 12 | VALVE-INLET | |
| | 4 | 1 | **153-7024** | 12 | VALVE-EXHAUST | |
| | 5 | 1 | **163-2478** | 24 | SEAL-VALVE STEM | |
| | 6 | 1 | **247-9908** | 24 | SPRING-VALVE (OUTER) | |
| CY | 7 | 1 | **223-7263** | 1 | CYLINDER HEAD AS | 61 |
| | 8 | 1 | **186-2001** | 24 | ROTOCOIL AS | |
| | 9 | 1 | **211-3122** | 24 | SPRING-VALVE (INNER) | |

C-CHANGE FROM PREVIOUS TYPE
Y-SEPARATE ILLUSTRATION

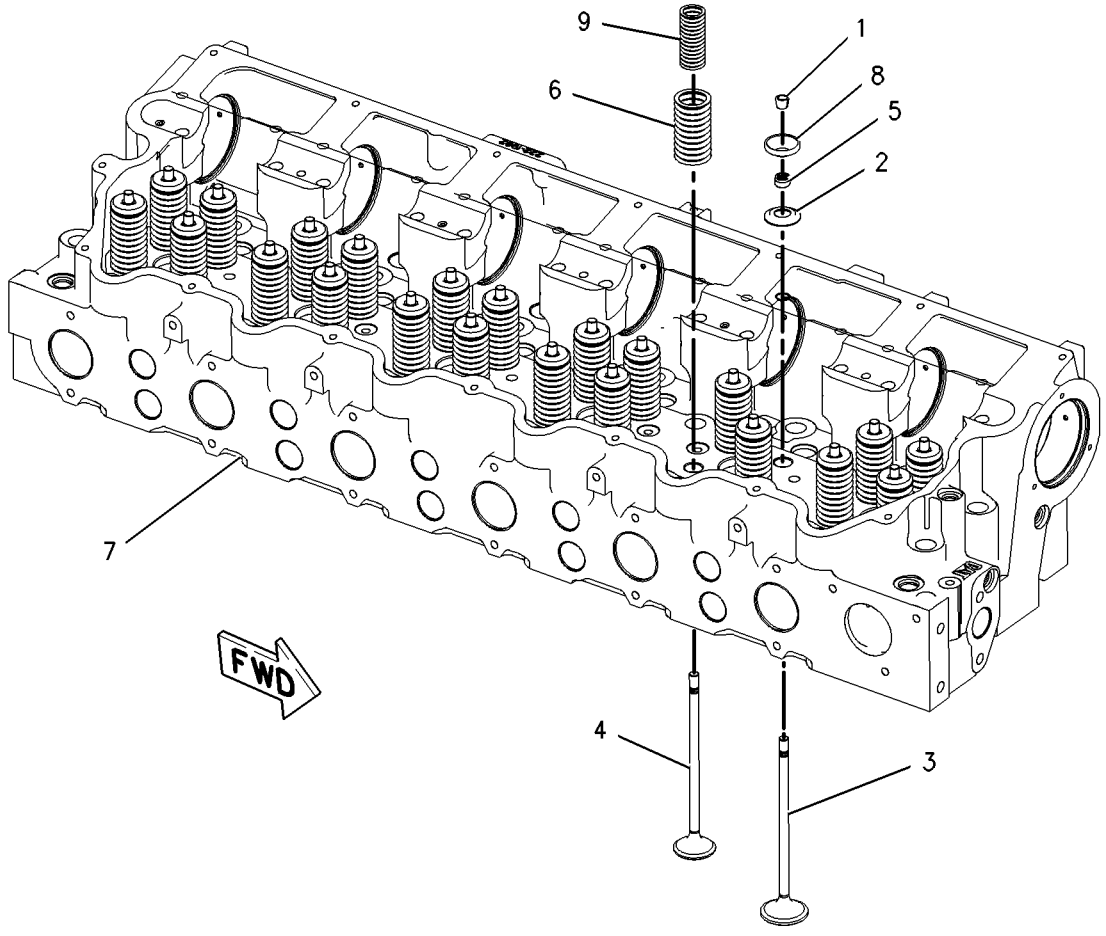


GRAPHIC #1 **<END>** g00955632

# BASIC ENGINE

## *235-2974* CYLINDER HEAD GP

**S/N: RHX1-4927**

**PART OF 241-5935, 241-5936, 294-3050, 297-3206 ENGINE AR-CORE**

**AN ATTACHMENT**

**SMCS-1100** **i03108465**

| NOTE | REF NO | GRAPHIC REF | PART NUMBER | QTY | PART NAME 1 2 3 4 5 6 (PRODUCT LEVEL) | SEE PAGE |
|---|---|---|---|---|---|---|
| | 1 | 1 | **3E-6772** | 24 | SEAL | |
| | 2 | 1 | *6I-4025* | 16 | FASTENER GP-CYLINDER HEAD | |
| | | | | | (EACH INCLUDES) | |
| | | 1 | **5H-1504** | 1 | WASHER-HARD (20X33.5X5-MM THK) | |
| | | 1 | **124-1855** | 1 | BOLT-12 POINT HEAD (3/4-16X7.638-IN) | |
| | 3 | 1 | *106-5673* | 10 | FASTENER GP-CYLINDER HEAD | |
| | | | | | (EACH INCLUDES) | |
| | | 1 | **5H-1504** | 1 | WASHER-HARD (20X33.5X5-MM THK) | |
| | | 1 | **124-1854** | 1 | BOLT-12 POINT HEAD (3/4-16X8.5-IN) | |
| | 4 | 1 | **281-8261** | 6 | SLEEVE AS-EXHAUST | |
| YR | 5 | 1 | **223-9250** | 1 | CYLINDER HEAD GP | 69 |
| | 6 | 1 | **224-5122** | 1 | GASKET (CYLINDER HEAD) | |
| | 7 | 1 | **5P-0840** | 1 | SEAL-O-RING | |
| | 8 | 1 | **6V-5049** | 3 | SEAL-O-RING | |
| | 9 | 1 | **9S-8004** | 3 | PLUG-O-RING | |

R-REMFG PART MAY BE AVAILABLE
Y-SEPARATE ILLUSTRATION

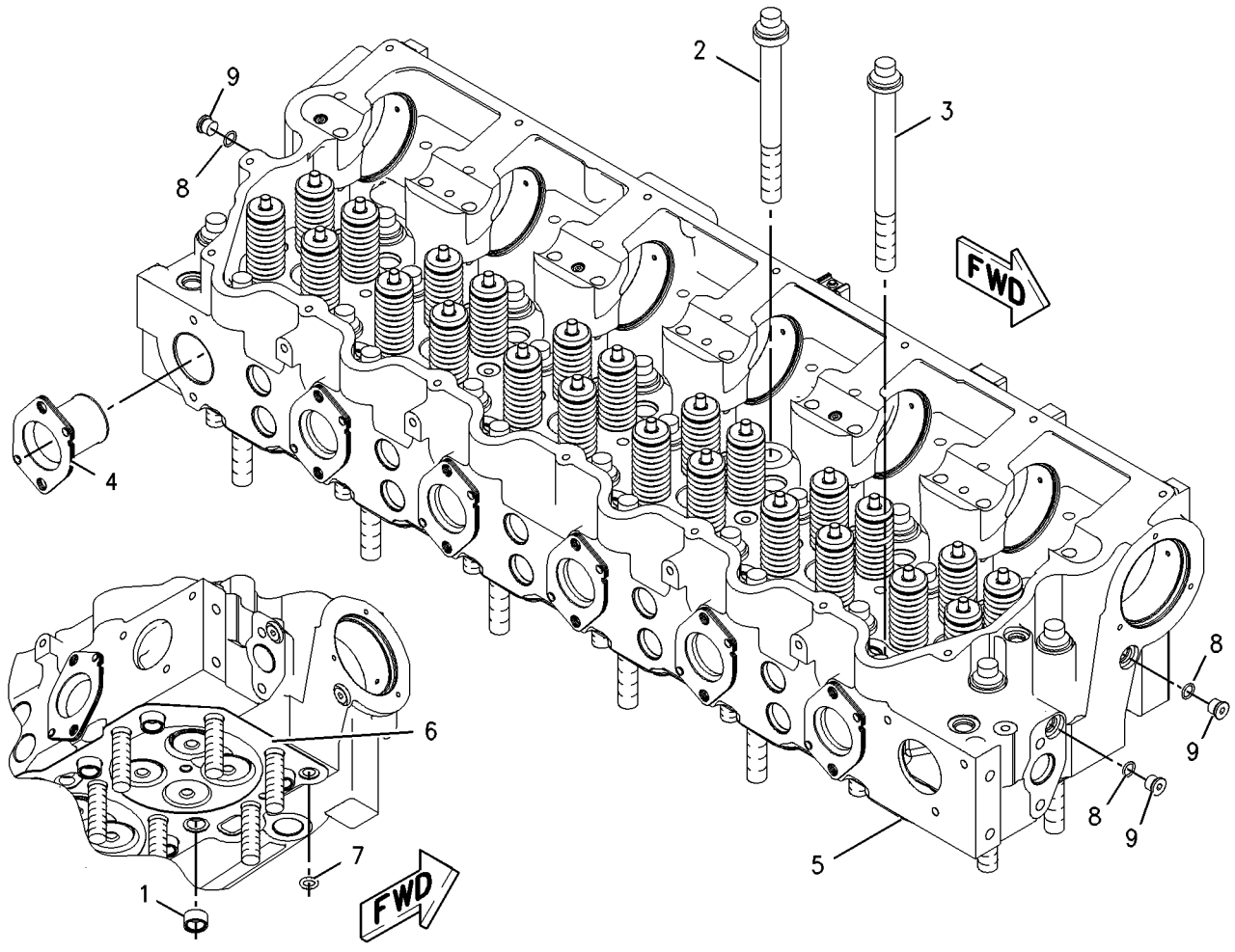


GRAPHIC #1 **<END>** g01002373

# BASIC ENGINE

## *235-2974* CYLINDER HEAD GP

**S/N: RHX4928-UP**
**PART OF 241-5936, 297-3206 ENGINE AR-CORE**
**AN ATTACHMENT**

**SMCS-1100** **i03151336**

| NOTE | REF NO | GRAPHIC REF | PART NUMBER | QTY | PART NAME 1 2 3 4 5 6 (PRODUCT LEVEL) | SEE PAGE |
|---|---|---|---|---|---|---|
| | 1 | 1 | **3E-6772** | 24 | SEAL | |
| | 2 | 1 | *6I-4025* | 16 | FASTENER GP-CYLINDER HEAD | |
| | | | | | (EACH INCLUDES) | |
| | | 1 | **5H-1504** | 1 | WASHER-HARD (20X33.5X5-MM THK) | |
| | | 1 | **124-1855** | 1 | BOLT-12 POINT HEAD (3/4-16X7.638-IN) | |
| | 3 | 1 | *106-5673* | 10 | FASTENER GP-CYLINDER HEAD | |
| | | | | | (EACH INCLUDES) | |
| | | 1 | **5H-1504** | 1 | WASHER-HARD (20X33.5X5-MM THK) | |
| | | 1 | **124-1854** | 1 | BOLT-12 POINT HEAD (3/4-16X8.5-IN) | |
| | 4 | 1 | **281-8261** | 6 | SLEEVE AS-EXHAUST | |
| CYR | 5 | 1 | **263-5055** | 1 | CYLINDER HEAD GP | 73 |
| | 6 | 1 | **224-5122** | 1 | GASKET (CYLINDER HEAD) | |
| | 7 | 1 | **5P-0840** | 1 | SEAL-O-RING | |
| C | 8 | 1 | *183-3408* | 3 | PLUG AS | |
| | | | | | (EACH INCLUDES) | |
| | 8A | 1 | **6V-5049** | 1 | SEAL-O-RING | |
| | 8B | 1 | **9S-8004** | 1 | PLUG-O-RING | |

C-CHANGE FROM PREVIOUS TYPE
R-REMFG PART MAY BE AVAILABLE
Y-SEPARATE ILLUSTRATION

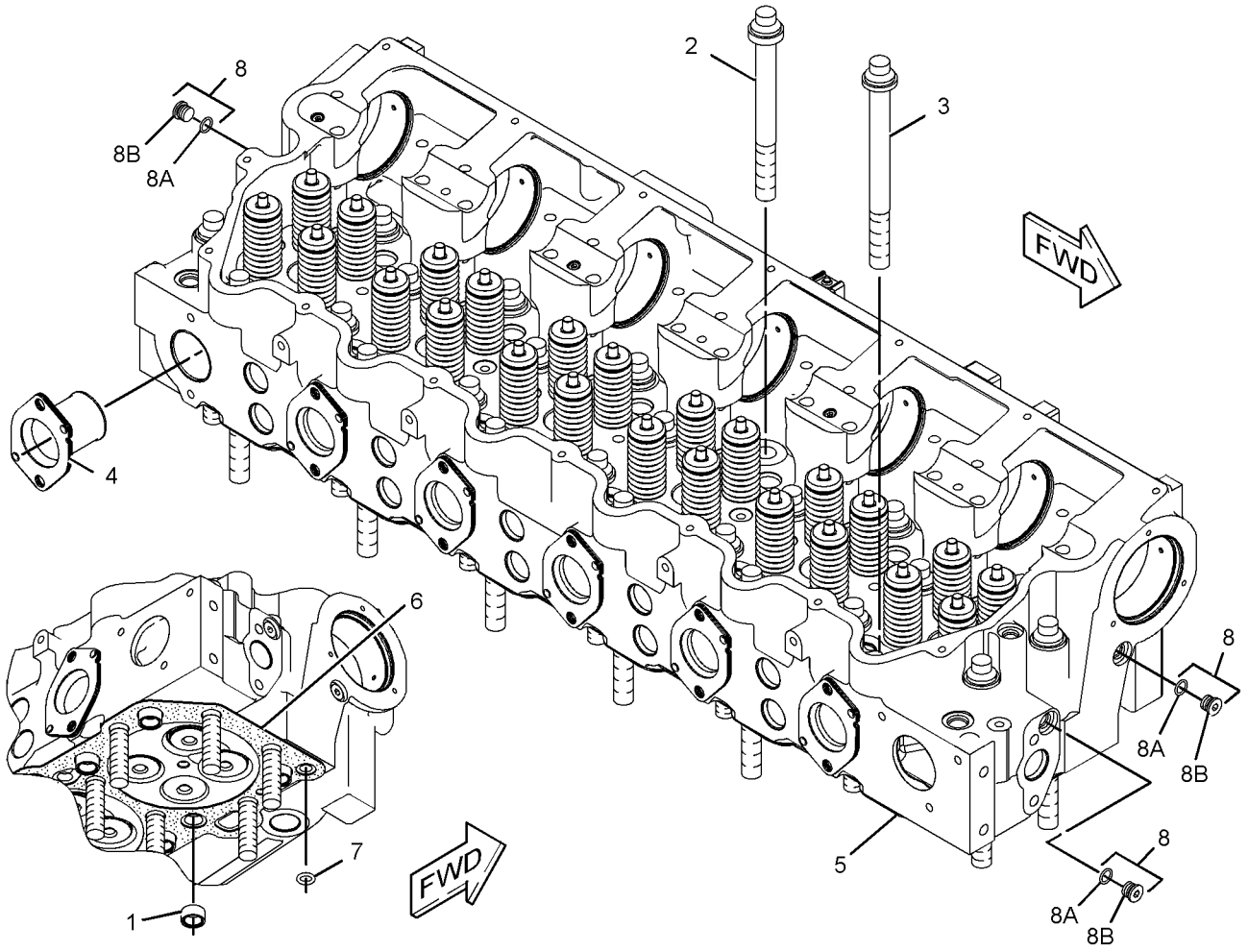


GRAPHIC #1 **<END>** g01415757

# 263-5055 CYLINDER HEAD GP*R

**S/N: RHX3191-UP**

**PART OF 235-2974, 274-1953 CYLINDER HEAD GP**

**AN ATTACHMENT**

**SMCS-1100** **i02857219**

| NOTE | REF NO | GRAPHIC REF | PART NUMBER | QTY | PART NAME 1 2 3 4 5 6 (PRODUCT LEVEL) | SEE PAGE |
|---|---|---|---|---|---|---|
| | 1 | 1 | **2A-4429** | 48 | LOCK-RETAINER | |
| | 2 | 1 | **6I-0928** | 24 | WASHER | |
| | 3 | 1 | **163-2478** | 24 | SEAL-VALVE STEM | |
| | 4 | 1 | **247-9908** | 24 | SPRING-VALVE (OUTER) | |
| CY | 5 | 1 | **281-1640** | 1 | CYLINDER HEAD AS | 67 |
| | 6 | 1 | **153-7024** | 12 | VALVE-EXHAUST | |
| C | 7 | 1 | **186-2001** | 24 | ROTOCOIL AS | |
| | 8 | 1 | **211-3122** | 24 | SPRING-VALVE (INNER) | |
| | 9 | 1 | **236-5605** | 12 | VALVE-INLET | |

C-CHANGE FROM PREVIOUS TYPE
Y-SEPARATE ILLUSTRATION

## 263-5055 CYLINDER HEAD GP *(contd. )* i02857219

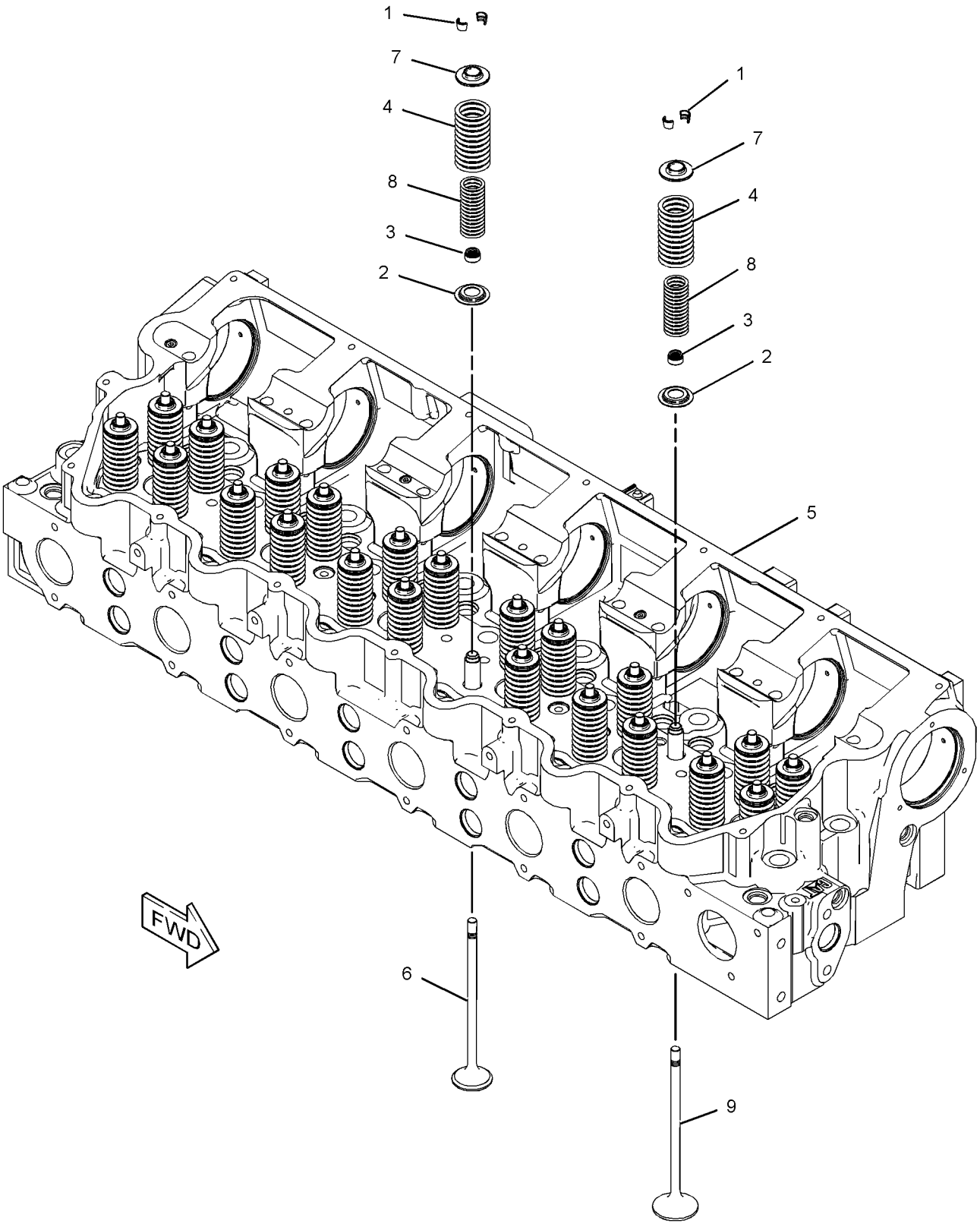


GRAPHIC #1 **<END>** g01207023

# *274-1953* CYLINDER HEAD GP

**S/N: RHX3191-UP**
**PART OF 294-3050, 294-7614 ENGINE AR-CORE**
**AN ATTACHMENT**

**SMCS-1100** **i03247358**

| NOTE | REF NO | GRAPHIC REF | PART NUMBER | QTY | PART NAME 1 2 3 4 5 6 (PRODUCT LEVEL) | SEE PAGE |
|---|---|---|---|---|---|---|
| | 1 | 1 | **3E-6772** | 24 | SEAL | |
| | 2 | 1 | *6I-4025* | 16 | FASTENER GP-CYLINDER HEAD | |
| | | | | | (EACH INCLUDES) | |
| | | 1 | **5H-1504** | 1 | WASHER-HARD (20X33.5X5-MM THK) | |
| | | 1 | **124-1855** | 1 | BOLT-12 POINT HEAD (3/4-16X7.638-IN) | |
| | 3 | 1 | *106-5673* | 10 | FASTENER GP-CYLINDER HEAD | |
| | | | | | (EACH INCLUDES) | |
| | | 1 | **5H-1504** | 1 | WASHER-HARD (20X33.5X5-MM THK) | |
| | | 1 | **124-1854** | 1 | BOLT-12 POINT HEAD (3/4-16X8.5-IN) | |
| YR | 4 | 1 | *263-5055* | 1 | CYLINDER HEAD GP | 73 |
| | 5 | 1 | **281-8261** | 6 | SLEEVE AS-EXHAUST | |
| | 6 | 1 | **224-5122** | 1 | GASKET (CYLINDER HEAD) | |
| | 7 | 1 | **5P-0840** | 1 | SEAL-O-RING | |
| | 8 | 1 | **183-3408** | 3 | PLUG AS | |

R-REMFG PART MAY BE AVAILABLE
Y-SEPARATE ILLUSTRATION

*274-1953* **CYLINDER HEAD GP** *(contd.)* **i03247358**

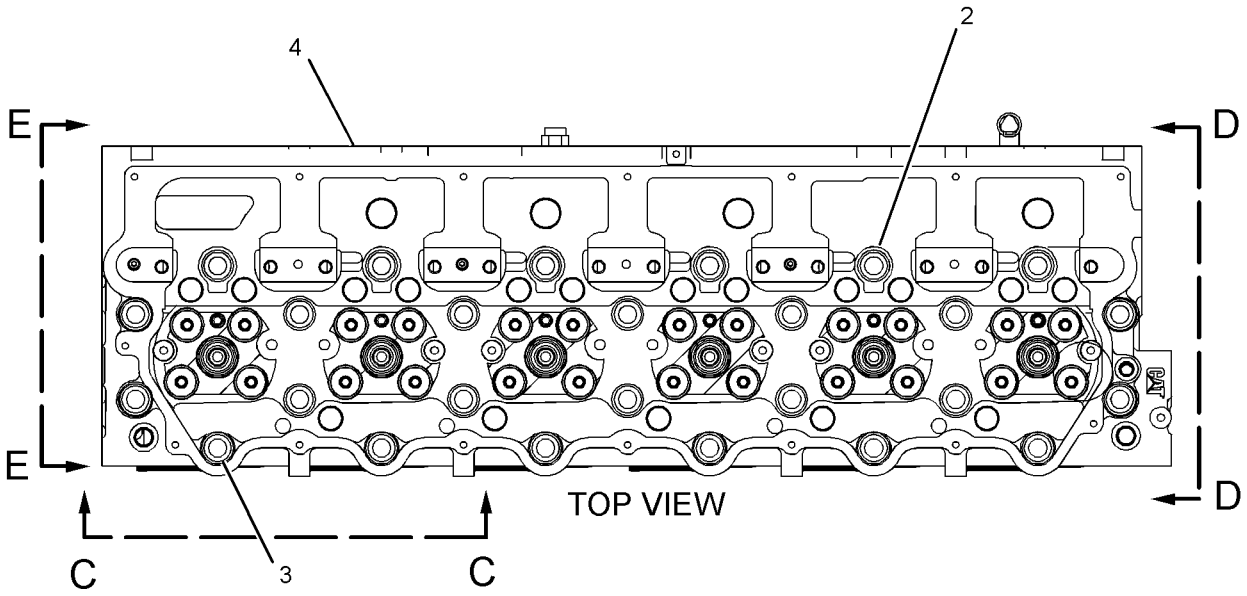


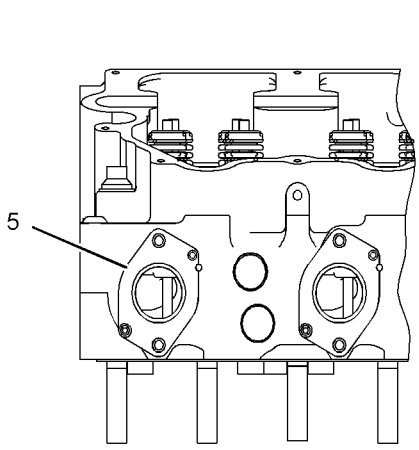


VIEW C-C

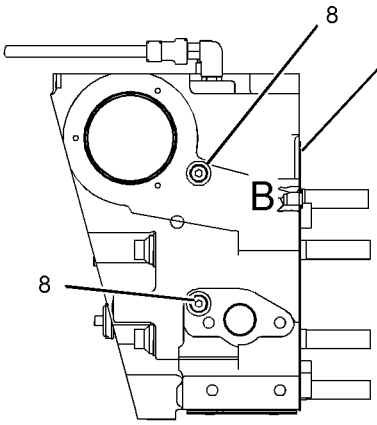


VIEW D-D

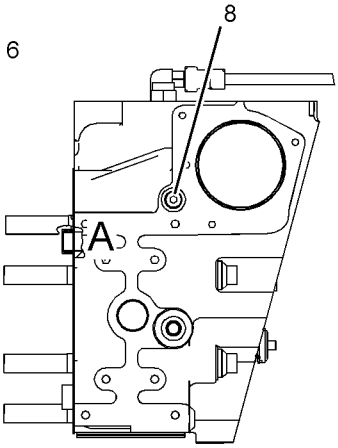


VIEW E-E

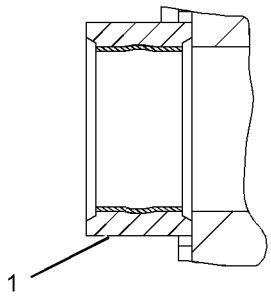


VIEW OF AREA A

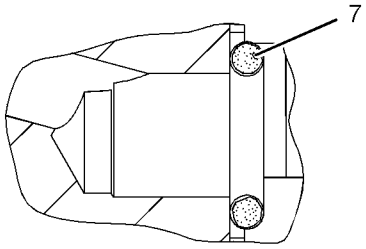


VIEW OF AREA B

GRAPHIC #1 **<END>** g01648636

# *227-3705* DAMPER GP

**S/N: RHX1-UP**

**PART OF 221-8124, 247-3315, 272-3086, 272-3087, 292-2553, 292-2554 ENGINE**

**AR-COMPLETE**

**AN ATTACHMENT**

**SMCS-1205** **i01925129**

| NOTE | REF NO | GRAPHIC REF | PART NUMBER | QTY | PART NAME 1 2 3 4 5 6 (PRODUCT LEVEL) | SEE PAGE |
|---|---|---|---|---|---|---|
| | 1 | 1 | **6N-7654** | 1 | SPACER (6.312X8.18X0.312-IN THK) | |
| R | 2 | 1 | **167-8130** | 1 | DAMPER AS | |
| | 3 | 1 | **0S-1585** | 12 | BOLT (1/2-13X1.5-IN) | |
| | 4 | 1 | **1A-3203** | 6 | BOLT (5/8-18X4.75-IN) | |
| | 5 | 1 | **227-3704** | 1 | ADAPTER-DAMPER | |

R-REMFG PART MAY BE AVAILABLE

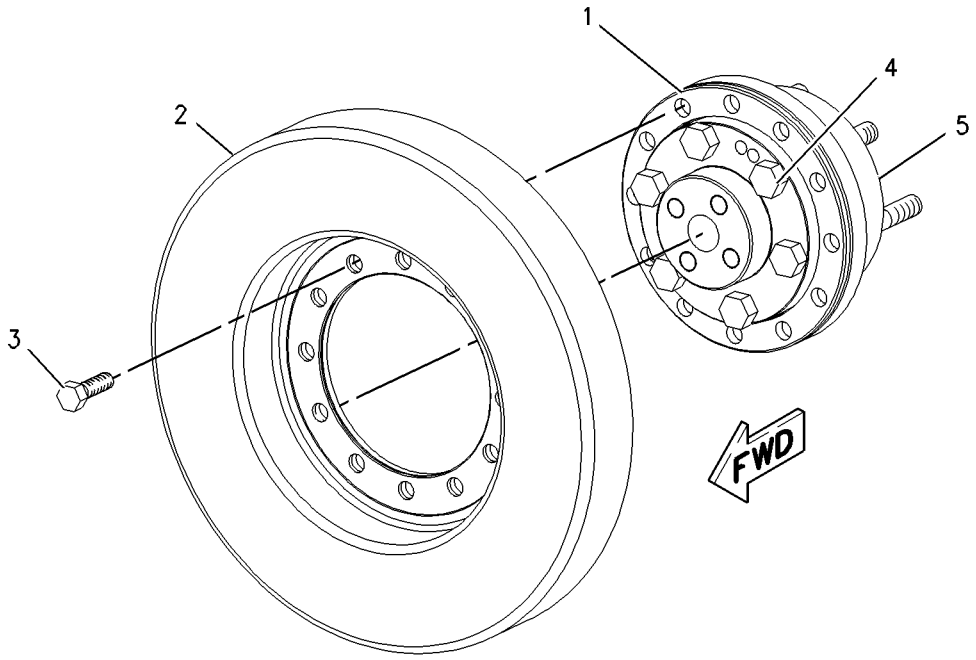


GRAPHIC #1 **<END>** g01003023

## *270-4282* DRIVE GP-ACCESSORY

**S/N: RLB1-UP**

**PART OF 270-4248, 308-5826 INSTALLATION AR-ENGINE**

**SMCS-1207** **i03266801**

| NOTE | REF NO | GRAPHIC REF | PART NUMBER | QTY | PART NAME 1 2 3 4 5 6 (PRODUCT LEVEL) | SEE PAGE |
|---|---|---|---|---|---|---|
| | 1 | 1 | **217-8938** | 1 | BELT TENSIONER | |
| Y | 2 | 1 | **218-0324** | 1 | COMPRESSOR GP-REFRIGERANT | 730 |
| | 3 | 1 | **273-3219** | 1 | PULLEY-ALTERNATOR | |
| | 4 | 1 | **273-4204** | 1 | BELT-SERPENTINE (ALTERNATOR) | |
| Y | 5 | 1 | *275-2192* | 1 | GUARD GP-BELT (ALTERNATOR) | 91 |
| YR | 6 | 1 | **197-8820** | 1 | ALTERNATOR GP-CHARGING (24-VOLT, 95-AMPERE) | 249 |
| | 7 | 1 | **8T-4121** | 3 | WASHER-HARD (11X21X2.5-MM THK) | |
| M | 8 | 1 | **8T-4172** | 1 | BOLT (M10X1.5X80-MM) | |
| | 9 | 1 | **8T-4223** | 3 | WASHER-HARD (13.5X25.5X3-MM THK) | |
| M | 10 | 1 | **8T-4244** | 1 | NUT (M12X1.75-THD) | |
| | 11 | 1 | **8T-4835** | 1 | BOLT (1/2-13X2-IN) | |
| M | 12 | 1 | **8T-5092** | 1 | BOLT (M12X1.75X150-MM) | |
| M | 13 | 1 | **8T-5436** | 2 | BOLT (M10X1.5X130-MM) | |

M-METRIC PART
R-REMFG PART MAY BE AVAILABLE
Y-SEPARATE ILLUSTRATION

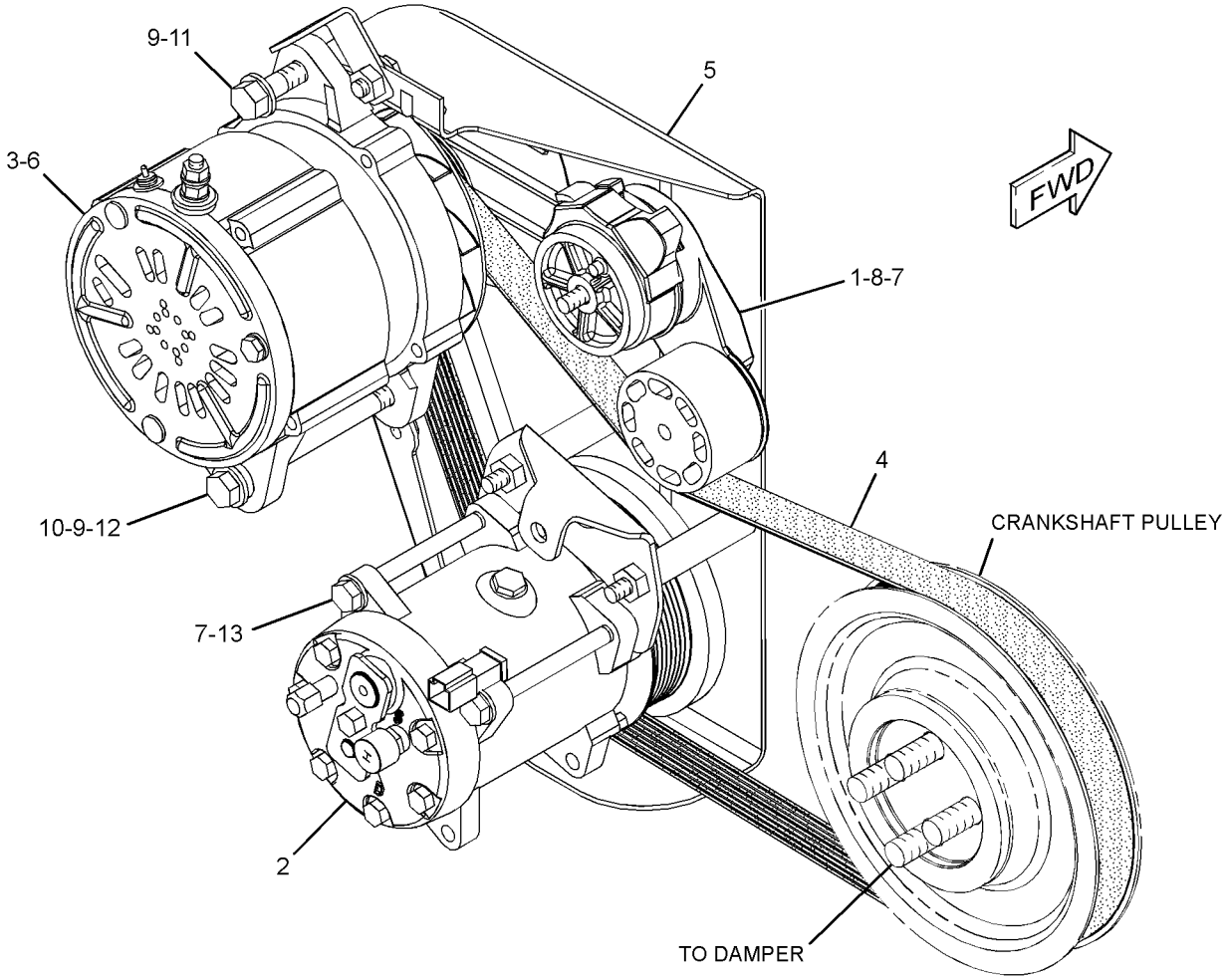


GRAPHIC #1 **<END>** g01335096

# *6I-3638* DRIVE GP-PUMP

**S/N: RHX1-UP**
**LEFT HAND REARWARD FACING SAE 2 BOLT FLANGE WITH SPLINE DRIVE**
**PART OF 221-8124, 247-3315, 272-3086, 272-3087, 292-2553, 292-2554 ENGINE**
**AR-COMPLETE**
**FOR USE WITH THE 2.5 BASE MODULE LARGE CAM GEAR TRAIN, CUSTOMER SUPPLIED SAE "A" PUMP WITH 11 TOOTH 16/32 DEPTH SPLINE**
**AN ATTACHMENT**

**SMCS-1017, 1207, 3108** **i01949792**

| NOTE | REF NO | GRAPHIC REF | PART NUMBER | QTY | PART NAME 1 2 3 4 5 6 (PRODUCT LEVEL) | SEE PAGE |
|---|---|---|---|---|---|---|
| | 1 | 1 | **0S-1590** | 3 | BOLT (3/8-16X2-IN) | |
| | 2 | 1 | **8T-9527** | 1 | SEAL-O-RING | |
| YC | 3 | 1 | *133-9907* | 1 | ADAPTER GP-PUMP DRIVE | 23 |
| | 4 | 1 | **5M-2894** | 4 | WASHER-HARD (10.2X18.5X2.5-MM THK) | |
| | 5 | 1 | **9S-8752** | 1 | NUT-FULL (3/8-16-THD) | |

C-CHANGE FROM PREVIOUS TYPE
Y-SEPARATE ILLUSTRATION

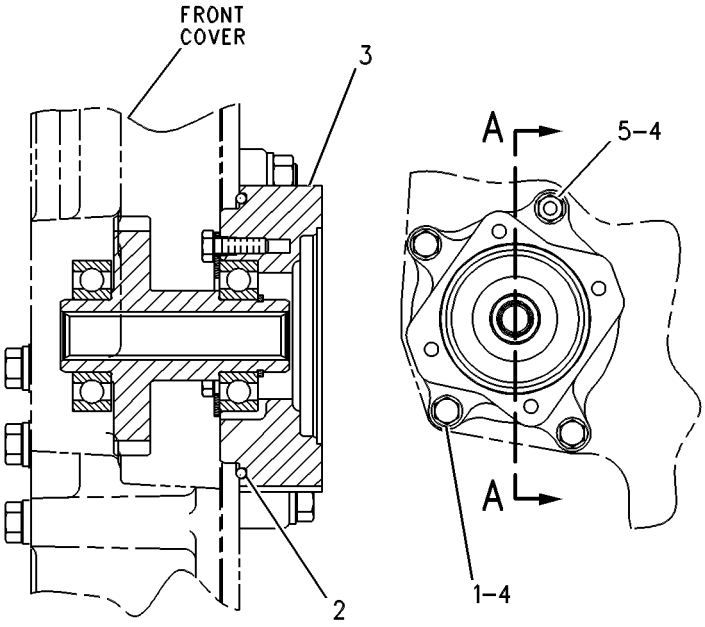


VIEW A-A

GRAPHIC #1 **<END>** g00263601

# *239-9624* ENGINE BRAKE GP*R

**S/N: RHX1-UP**
**PART OF 233-7245 ACTUATOR GP-VALVE**
**AN ATTACHMENT**

**SMCS-1119** **i02961086**

| NOTE | REF NO | GRAPHIC REF | PART NUMBER | QTY | PART NAME 1 2 3 4 5 6 (PRODUCT LEVEL) | SEE PAGE |
|---|---|---|---|---|---|---|
| | 1 | 1 | **230-9446** | 2 | SCREW-ADJUSTMENT | |
| | 2 | 1 | **250-9378** | 1 | VALVE AS-BRAKE | |
| | 3 | 1 | **230-9447** | 2 | NUT-JAM | |

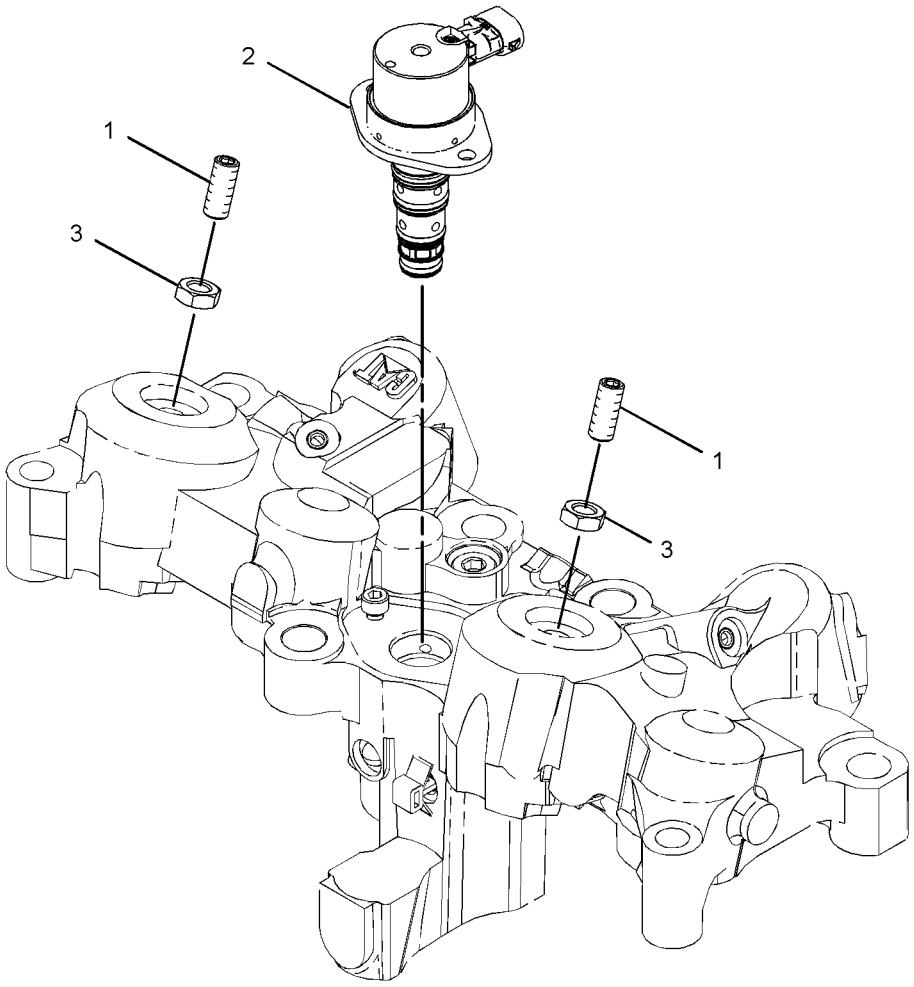


GRAPHIC #1 **<END>** g01271040

# *4P-6846* FASTENER GP-FRONT HOUSING

**S/N: RHX1-UP**
**PART OF 221-8124, 247-3315, 272-3086, 272-3087, 292-2553, 292-2554 ENGINE**
**AR-COMPLETE**
**AN ATTACHMENT**

**SMCS-1151** **i02544049**

| NOTE | REF NO | GRAPHIC REF | PART NUMBER | QTY | PART NAME 1 2 3 4 5 6 (PRODUCT LEVEL) | SEE PAGE |
|---|---|---|---|---|---|---|
| | 1 | 1 | **7N-0452** | 1 | PLATE | |
| | 2 | 1 | **0S-1594** | 2 | BOLT (3/8-16X1-IN) | |
| | 3 | 1 | **5M-2894** | 2 | WASHER-HARD (10.2X18.5X2.5-MM THK) | |

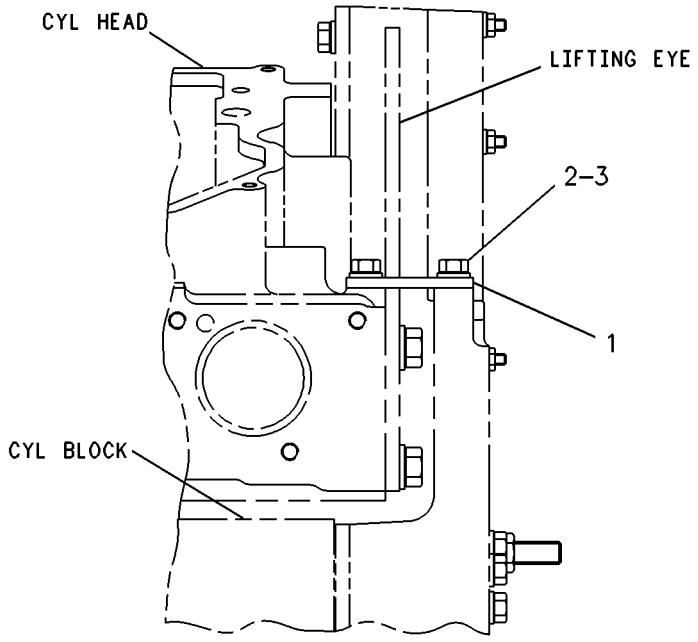


RIGHT SIDE VIEW

GRAPHIC #1 **<END>** g00231021

# *108-9382* FASTENER GP-FRONT HOUSING

**S/N: RHX1-UP**
**PART OF 221-8124, 247-3315, 272-3086, 272-3087, 292-2553, 292-2554 ENGINE**
**AR-COMPLETE**
**FOR USE WITH FRONT HOUSING WHEN FAN DRIVE IS NOT INSTALLED**
**AN ATTACHMENT**

**SMCS-1151** **i00670762**

| NOTE | REF NO | GRAPHIC REF | PART NUMBER | QTY | PART NAME 1 2 3 4 5 6 (PRODUCT LEVEL) | SEE PAGE |
|---|---|---|---|---|---|---|
| | 1 | 1 | **1F-7958** | 2 | NUT-FULL (1/2-13-THD) | |
| | 2 | 1 | **5P-8245** | 2 | WASHER-HARD (13.5X25.5X3-MM THK) | |
| | 3 | 1 | **149-5268** | 2 | STUD-TAPERLOCK | |

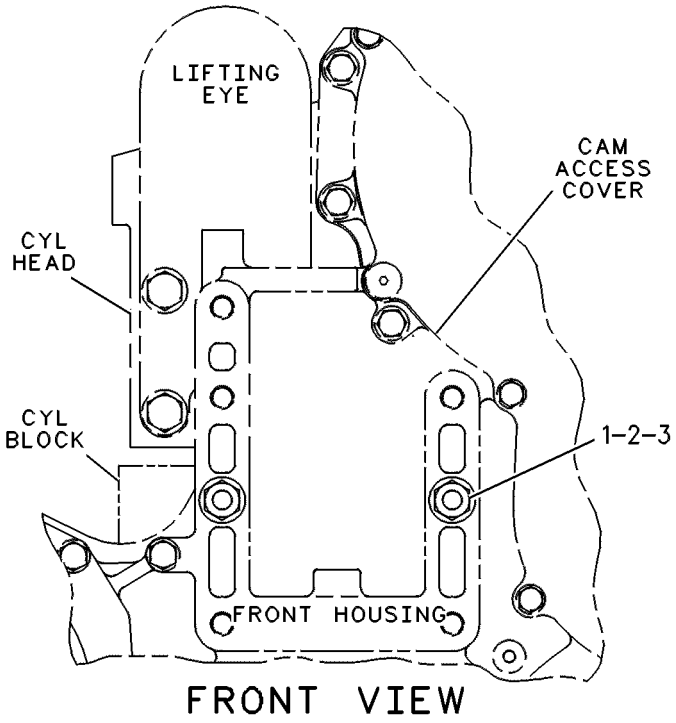


FRONT VIEW

GRAPHIC #1 **<END>** g00237936

# *109-1657* FASTENER GP-VALVE MECHANISM

**S/N: RHX1-UP**

**PART OF 241-5935, 294-3050, 297-3206 ENGINE AR-CORE**

**AN ATTACHMENT**

**SMCS-1102, 1107** **i01090405**

| NOTE | REF NO | GRAPHIC REF | PART NUMBER | QTY | PART NAME 1 2 3 4 5 6 (PRODUCT LEVEL) | SEE PAGE |
|---|---|---|---|---|---|---|
| | 1 | 1 | **5J-5794** | 12 | BOLT (1/2-13X3.5-IN) | |
| | 2 | 1 | **8L-8413** | 6 | STRAP-CABLE | |

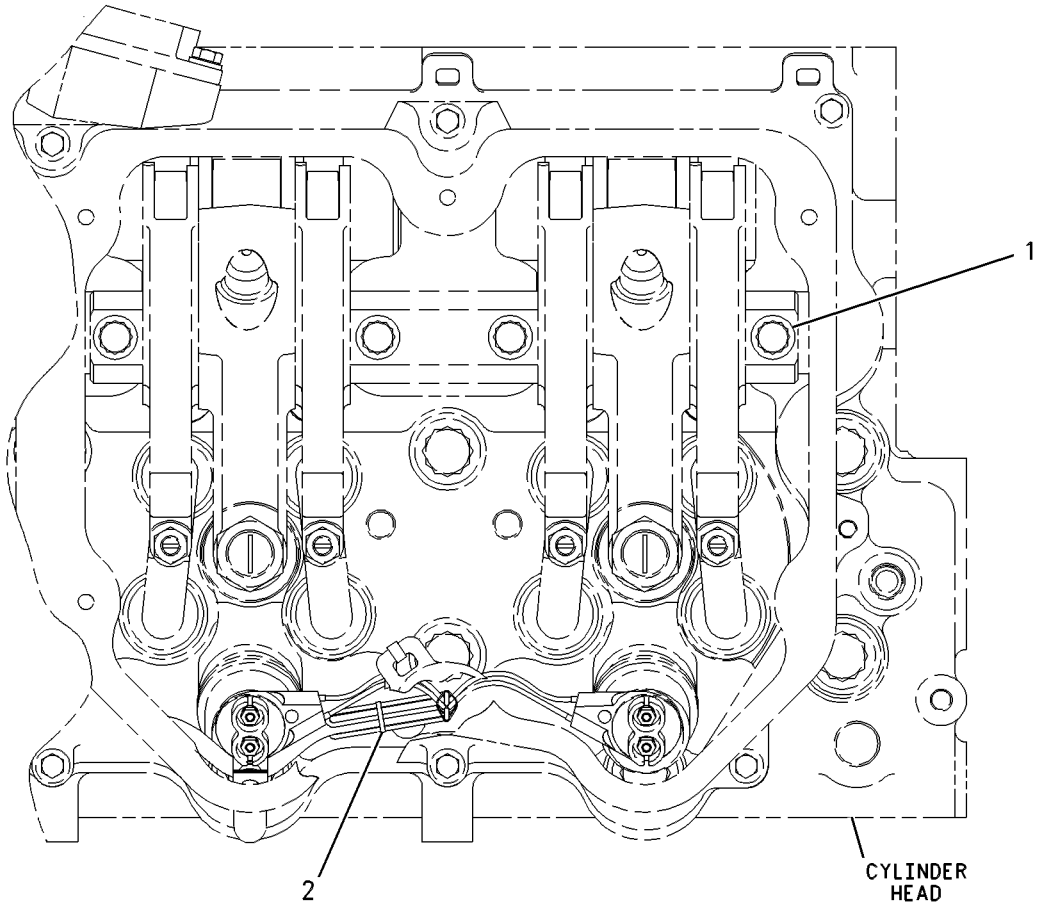


TOP VIEW

GRAPHIC #1 **<END>** g00571205

# BASIC ENGINE

## *219-4438* FLYWHEEL GP

**S/N: RHX1-UP**

**PART OF 221-8124, 247-3315, 272-3086, 272-3087, 292-2553, 292-2554 ENGINE**

**AR-COMPLETE**

**AN ATTACHMENT**

**SMCS-1156, 1158** **i02039952**

| NOTE | REF NO | GRAPHIC REF | PART NUMBER | QTY | PART NAME 1 2 3 4 5 6 (PRODUCT LEVEL) | SEE PAGE |
|---|---|---|---|---|---|---|
| | 1 | 1 | **236-4417** | 1 | FLYWHEEL AS | |
| | | 1 | **4N-2514** | 1 | GEAR (113-TEETH) | |
| | 2 | 1 | **0S-1602** | 12 | BOLT (5/8-18X3.5-IN) | |
| | 3 | 1 | **4D-3704** | 12 | WASHER-HARD (17X30X5-MM THK) | |

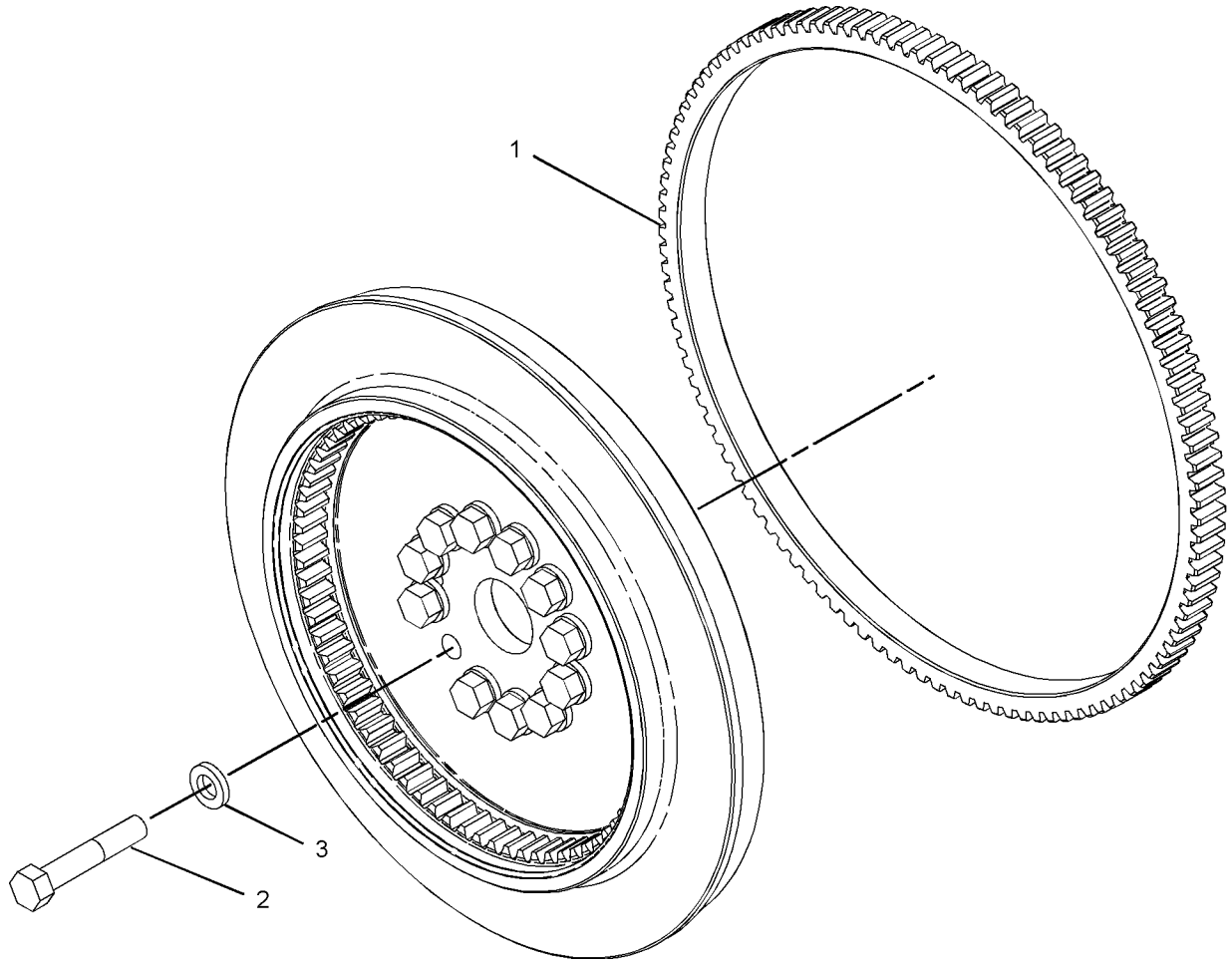


GRAPHIC #1 **<END>** g01052710

# 204-9316 GEAR GP-CAMSHAFT

**S/N: RHX1-UP**
**96-TEETH**
**PART OF 207-0449 GEAR GP-FRONT**
**AN ATTACHMENT**

**SMCS-1212** **i02758303**

| NOTE | REF NO | GRAPHIC REF | PART NUMBER | QTY | PART NAME 1 2 3 4 5 6 (PRODUCT LEVEL) | SEE PAGE |
|---|---|---|---|---|---|---|
| | 1 | 1 | **9X-8872** | 16 | BOLT-LOCKING (3/8-16X0.875-IN) | |
| | 2 | 1 | **103-0126** | 1 | DOWEL | |

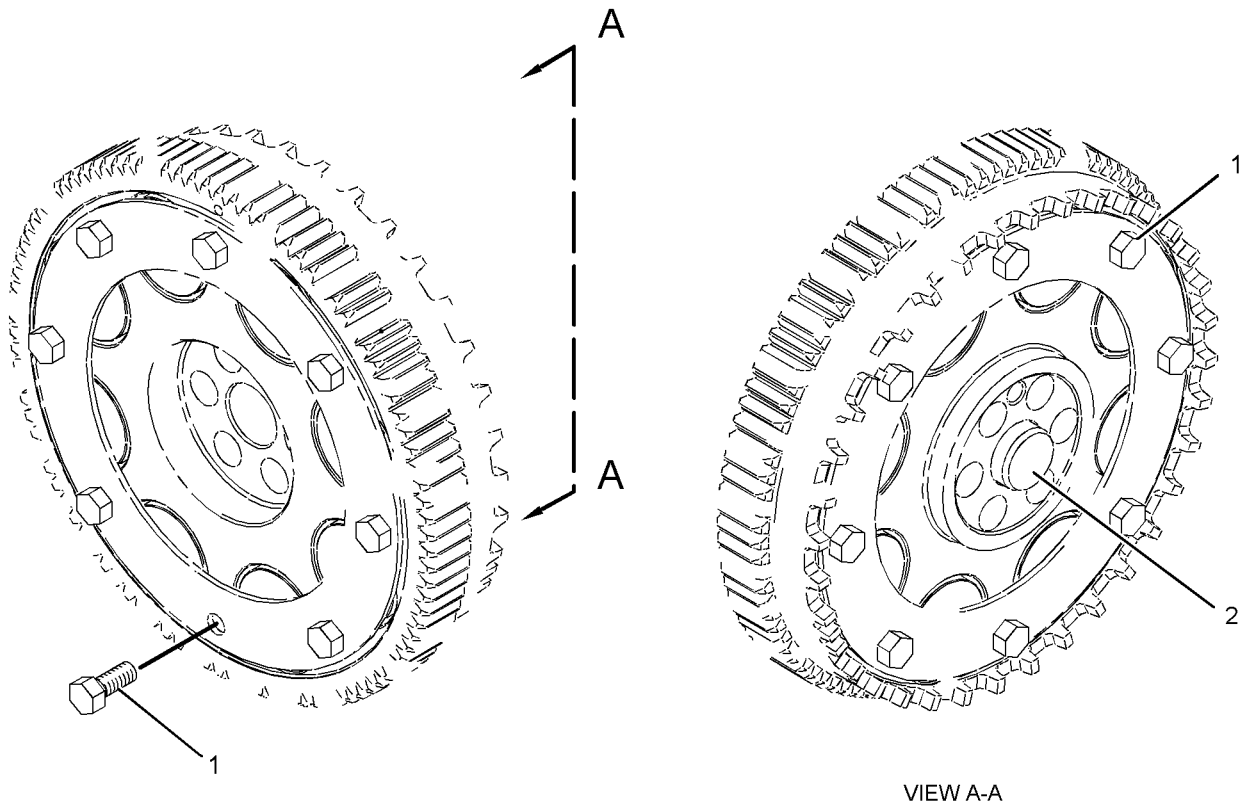


VIEW A-A

GRAPHIC #1 **<END>** g01381153

# BASIC ENGINE

## *207-0449* GEAR GP-FRONT

**S/N: RHX1-UP**

**SHOT-PEENED CLUSTER IDLER AND AN 8 BOLT CAM GEAR RETAINER**

**PART OF 241-5935, 241-5936, 294-3050, 294-7614, 297-3206 ENGINE AR-CORE AN ATTACHMENT**

**SMCS-1151, 1162, 1206** **i02868063**

| NOTE | REF NO | GRAPHIC REF | PART NUMBER | QTY | PART NAME 1 2 3 4 5 6 (PRODUCT LEVEL) | SEE PAGE |
|---|---|---|---|---|---|---|
| | 1 | 2 | **0S-1571** | 1 | BOLT (3/8-16X1.75-IN) | |
| | 2 | 2 | **2J-3118** | 5 | BOLT-LOCKING (3/8-16X1.25-IN) | |
| | 3 | 1 | **5P-4142** | 2 | BOLT-LOCKING (3/8-16X1.5-IN) | |
| | 4 | 2 | **1B-8705** | 1 | KEY-WOODRUFF | |
| | 5 | 2 | **1P-7346** | 1 | WASHER-HARD (10.2X35X6-MM THK) | |
| | 6 | 1 | **126-1756** | 10 | BOLT-LOCKING (5/16-18X0.875-IN) | |
| | 7 | 2 | **112-9217** | 1 | PLATE-THRUST | |
| | 8 | 2 | **130-4701** | 1 | GEAR AS (56-TEETH) | |
| | | 2 | **130-4698** | 1 | BEARING-SLEEVE | |
| | 9 | 2 | **151-5966** | 1 | SHAFT AS-STUB | |
| | | 2 | **6I-3623** | 1 | DOWEL | |
| | 10 | 1 | **6I-3624** | 2 | PLATE-THRUST | |
| | 11 | 2 | **6I-3625** | 1 | GEAR AS (71-TEETH) | |
| | | 2 | **101-8468** | 1 | BEARING-SLEEVE | |
| Y | 12 | 2 | **204-9316** | 1 | GEAR GP-CAMSHAFT (96-TEETH) | 85 |
| | 13 | 2 | **197-4971** | 1 | SHAFT-STUB | |
| | 14 | 2 | **158-3416** | 1 | SHAFT-STUB | |
| | 15 | 1 | **031-3185** | 6 | BOLT-12 POINT HEAD (5/8-11X3-IN) | |
| | 16 | 2 | **149-9110** | 1 | GEAR-OIL PUMP DRIVE (69-TEETH) | |
| | 17 | 1,2 | **9S-8752** | 10 | NUT-FULL (3/8-16-THD) | |
| | 18 | 1,2 | **9X-6458** | 12 | WASHER-HARD (10.2X22.5X3-MM THK) | |
| | 19 | 1 | **117-8801** | 1 | SEAL-O-RING | |
| | 20 | 1 | **5E-8771** | 1 | SEAL-O-RING | |
| | 21 | 2 | **159-1533** | 1 | PLATE-SEALING | |
| | 22 | 2 | **159-8524** | 1 | ADAPTER AS | |
| | | 2 | **6V-3677** | 1 | DOWEL | |
| | 23 | 2 | **102-5861** | 1 | PLATE-THRUST | |
| | 24 | 1 | **107-0583** | 3 | BOLT-LOCKING (1/4-20X0.87-IN) | |
| | 25 | 2 | **187-8979** | 1 | GEAR AS (105, 63-TEETH) | |
| | | 2 | **1B-8705** | 1 | KEY-WOODRUFF | |
| | | 2 | **6I-4582** | 1 | GEAR (63-TEETH) | |
| | | 2 | **131-7123** | 1 | BEARING-SLEEVE | |

Y-SEPARATE ILLUSTRATION

*207-0449* **GEAR GP-FRONT** *(contd.)* **i02868063**

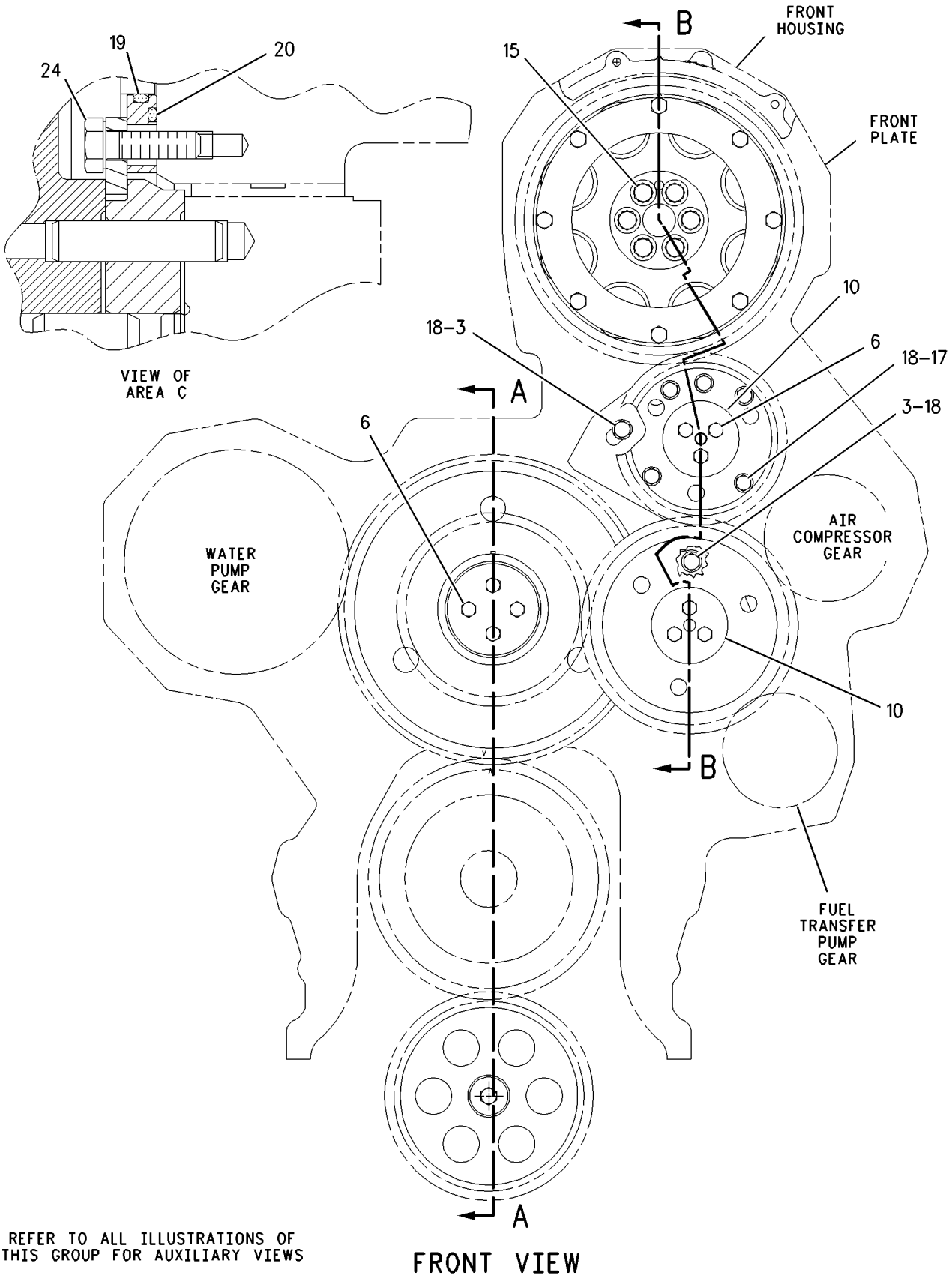


GRAPHIC #1 g00809001

*207-0449* **GEAR GP-FRONT** *(contd.)* **i02868063**

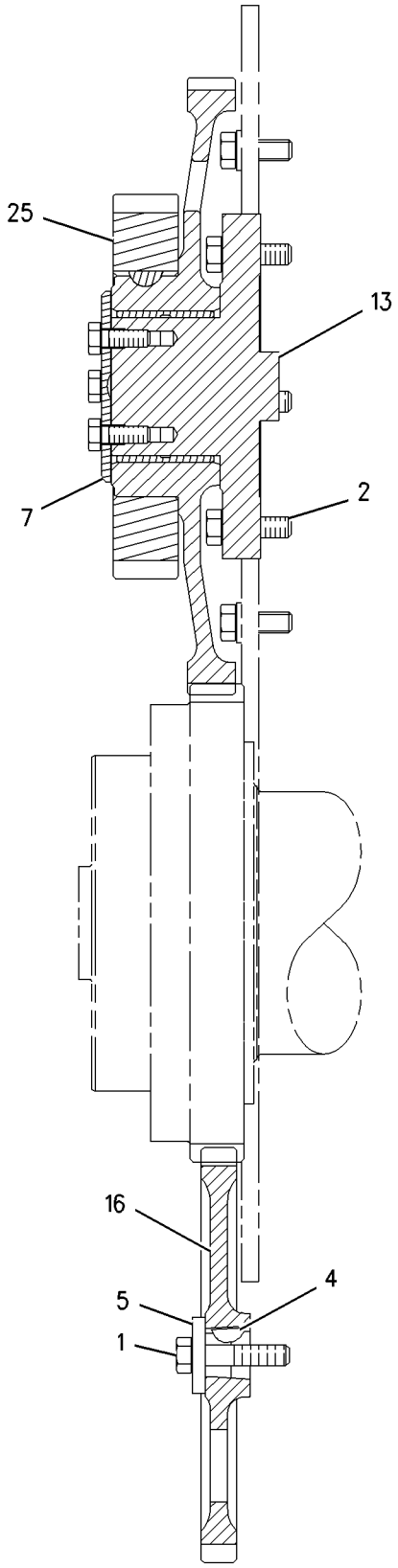


SECTION A-A

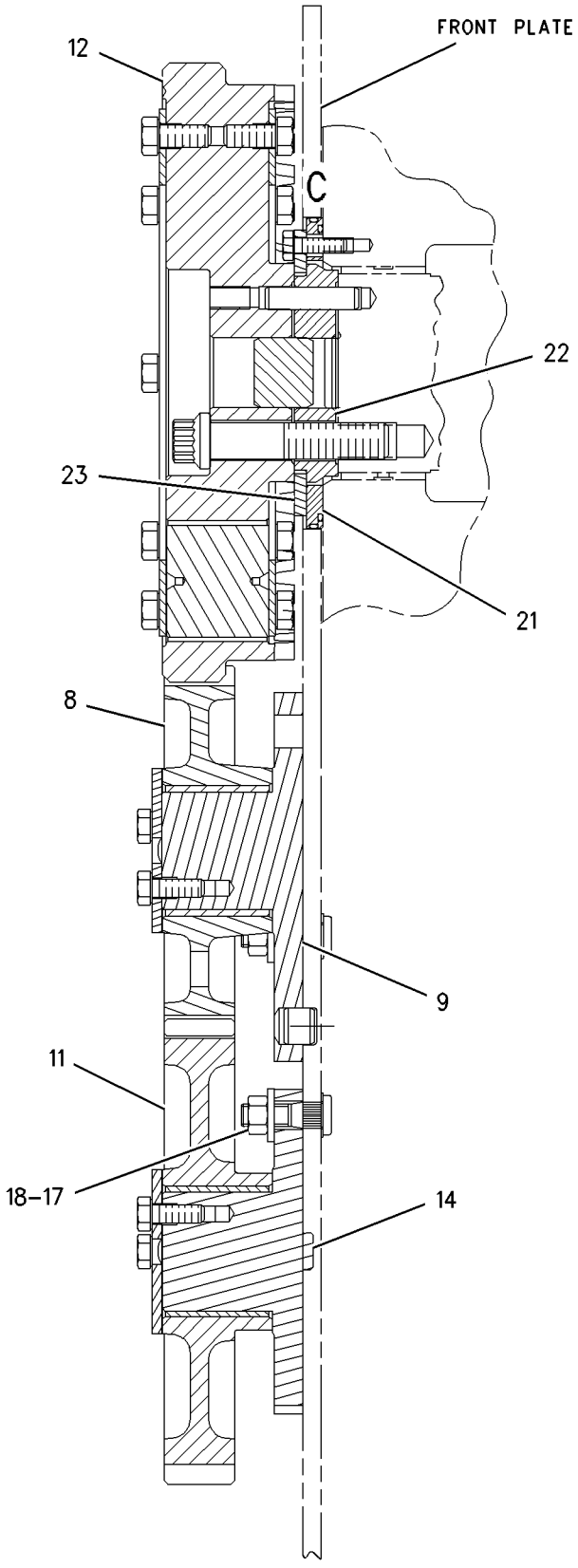


SECTION B-B

GRAPHIC #2 **<END>** g00809003

# 224-9695 GEAR GP-REAR

**S/N: RHX1-UP**

**PART OF 221-8124, 247-3315, 272-3086, 272-3087 ENGINE AR-COMPLETE**

**AN ATTACHMENT**

**SMCS-1204, 1206** **i02680043**

| NOTE | REF NO | GRAPHIC REF | PART NUMBER | QTY | PART NAME 1 2 3 4 5 6 (PRODUCT LEVEL) | SEE PAGE |
|---|---|---|---|---|---|---|
| | 1 | 1 | **281-3436** | 2 | ADAPTER AS-PUMP | |
| | | | | | (EACH INCLUDES) | |
| | | 1 | **209-8624** | 1 | BEARING-SLEEVE | |
| | 2 | 1 | **206-4198** | 1 | GEAR AS (51-TEETH) | |
| | | 1 | **4N-0684** | 1 | DOWEL | |
| | 3 | 1 | **207-8211** | 2 | GEAR AS-IDLER (53-TEETH) | |
| | | | | | (EACH INCLUDES) | |
| | | 1 | **209-8621** | 1 | BEARING | |
| | 4 | 1 | **209-9770** | 2 | RETAINER AS | |
| | | | | | (EACH INCLUDES) | |
| | | 1 | **5B-5821** | 1 | DOWEL | |
| | 5 | 1 | **229-1472** | 1 | GEAR AS (51-TEETH) | |
| | | 1 | **4F-6024** | 1 | PIN | |
| | 6 | 1 | **230-4069** | 1 | GEAR AS (51-TEETH) | |
| | | 1 | **4F-6024** | 1 | PIN | |
| M | 7 | 1 | **136-4183** | 12 | BOLT-12 POINT HEAD (M10X1.5X30-MM) | |
| | 8 | 1 | **2W-2072** | 2 | SEAL-O-RING | |
| | 9 | 1 | **189-6123** | 8 | BOLT-12 POINT HEAD (M12X1.75X60-MM) | |

M-METRIC PART

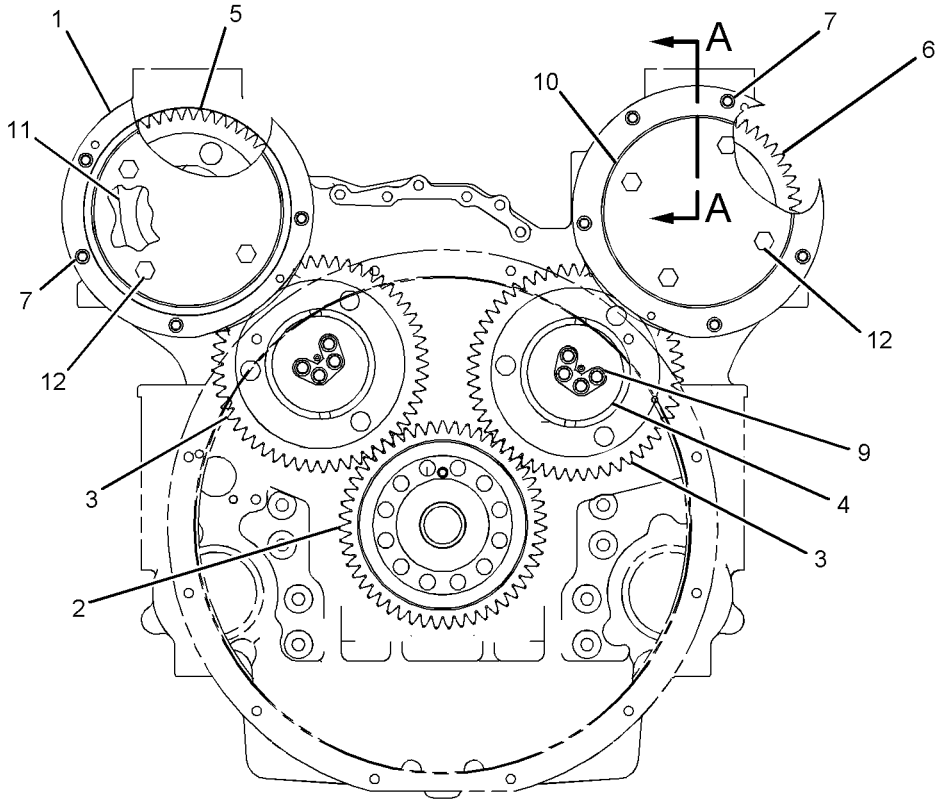


REAR VIEW

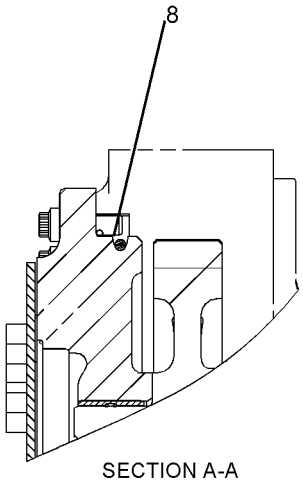


SECTION A-A

GRAPHIC #1 **<END>** g01052732

# BASIC ENGINE

## *293-0989* GEAR GP-REAR

**S/N: RHX3837-UP**
**PART OF 292-2553, 292-2554 ENGINE AR-COMPLETE**
**AN ATTACHMENT**

**SMCS-1204, 1206** **i02686263**

| NOTE | REF NO | GRAPHIC REF | PART NUMBER | QTY | PART NAME 1 2 3 4 5 6 (PRODUCT LEVEL) | SEE PAGE |
|---|---|---|---|---|---|---|
| | 1 | 1 | **209-9770** | 2 | RETAINER AS | |
| | | | | | (EACH INCLUDES) | |
| | | 1 | **5B-5821** | 1 | DOWEL | |
| | 2 | 1 | **281-3436** | 2 | ADAPTER AS-PUMP | |
| | | | | | (EACH INCLUDES) | |
| | | 1 | **209-8624** | 1 | BEARING-SLEEVE | |
| | 3 | 1 | **292-3504** | 1 | GEAR AS-CRANKSHAFT (51-TEETH) | |
| | | 1 | **4N-0684** | 1 | DOWEL | |
| | 4 | 1 | **292-3510** | 2 | GEAR AS-IDLER (53-TEETH) | |
| | | | | | (EACH INCLUDES) | |
| | | 1 | **209-8621** | 1 | BEARING | |
| | 5 | 1 | **292-3512** | 1 | GEAR AS (14-TEETH) | |
| | | 1 | **4F-6024** | 1 | PIN | |
| | 6 | 1 | **292-3514** | 1 | GEAR AS (14-TEETH) | |
| | | 1 | **4F-6024** | 1 | PIN | |
| M | 7 | 1 | **136-4183** | 12 | BOLT-12 POINT HEAD (M10X1.5X30-MM) | |
| | 8 | 1 | **189-6123** | 8 | BOLT-12 POINT HEAD (M12X1.75X60-MM) | |
| | 9 | 1 | **2W-2072** | 2 | SEAL-O-RING | |

M-METRIC PART

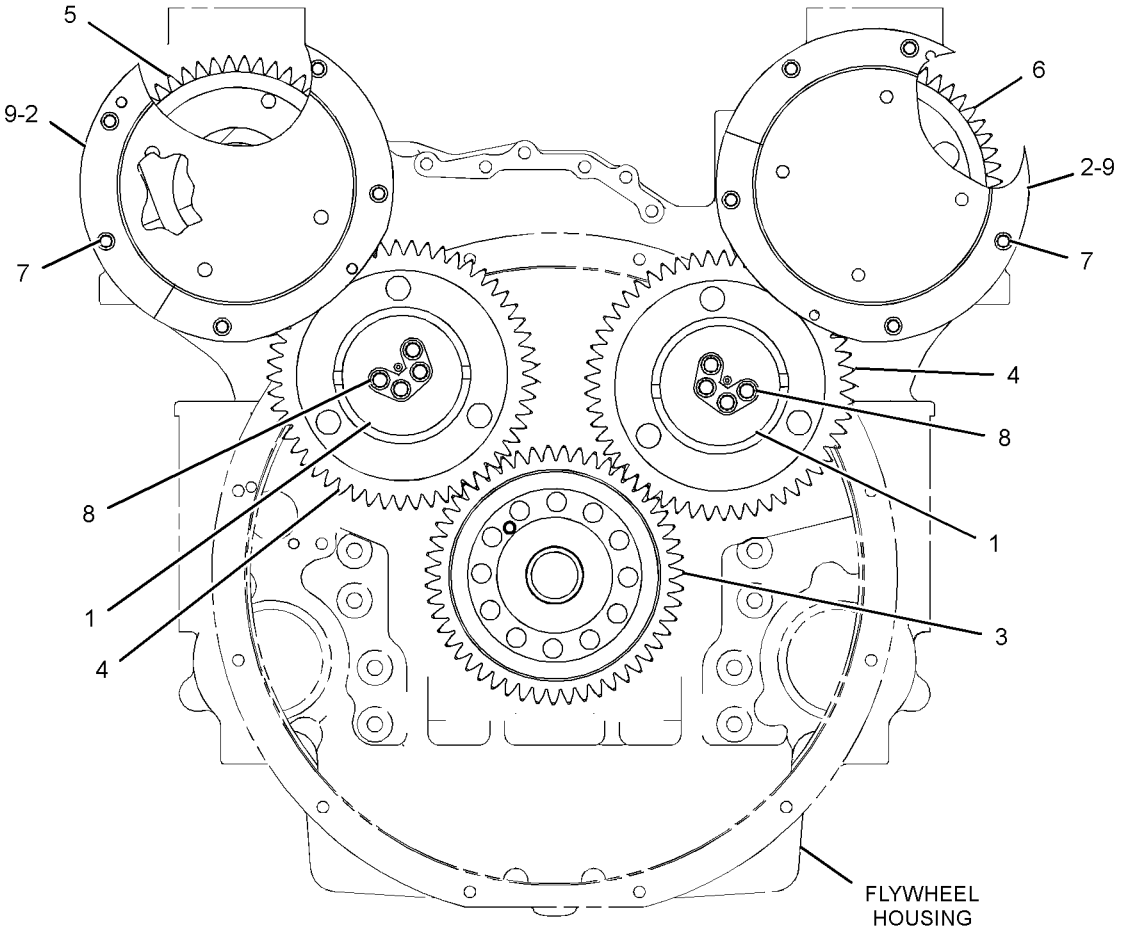


REAR VIEW OF ENGINE

GRAPHIC #1

**<END>**

g01350940

# 275-2192 GUARD GP-BELT–ALTERNATOR

**S/N: RLB1-UP**

**PART OF 270-4282 DRIVE GP-ACCESSORY**

**SMCS-7174** **i02704602**

| NOTE | REF NO | GRAPHIC REF | PART NUMBER | QTY | PART NAME 1 2 3 4 5 6 (PRODUCT LEVEL) | SEE PAGE |
|---|---|---|---|---|---|---|
| | 1 | 1 | **269-9423** | 1 | GUARD AS | |
| | 2 | 1 | **275-2152** | 1 | BRACKET AS | |
| | 3 | 1 | **298-6172** | 1 | BRACKET AS | |
| M | | 1 | **8T-3490** | 4 | NUT-WELD (M10X1.5-THD) | |
| | 4 | 1 | **300-8571** | 2 | SPACER (11X25X82.5-MM THK) | |
| | 5 | 1 | **5P-4116** | 1 | WASHER-HARD (8.8X20.5X2-MM THK) | |
| | 6 | 1 | **7X-7729** | 4 | WASHER (11X25X3-MM THK) | |
| M | 7 | 1 | **8T-4137** | 2 | BOLT (M10X1.5X20-MM) | |
| M | 8 | 1 | **8T-4908** | 1 | BOLT (M8X1.25X25-MM) | |
| M | 9 | 1 | **8T-6685** | 2 | BOLT (M10X1.5X110-MM) | |

M-METRIC PART

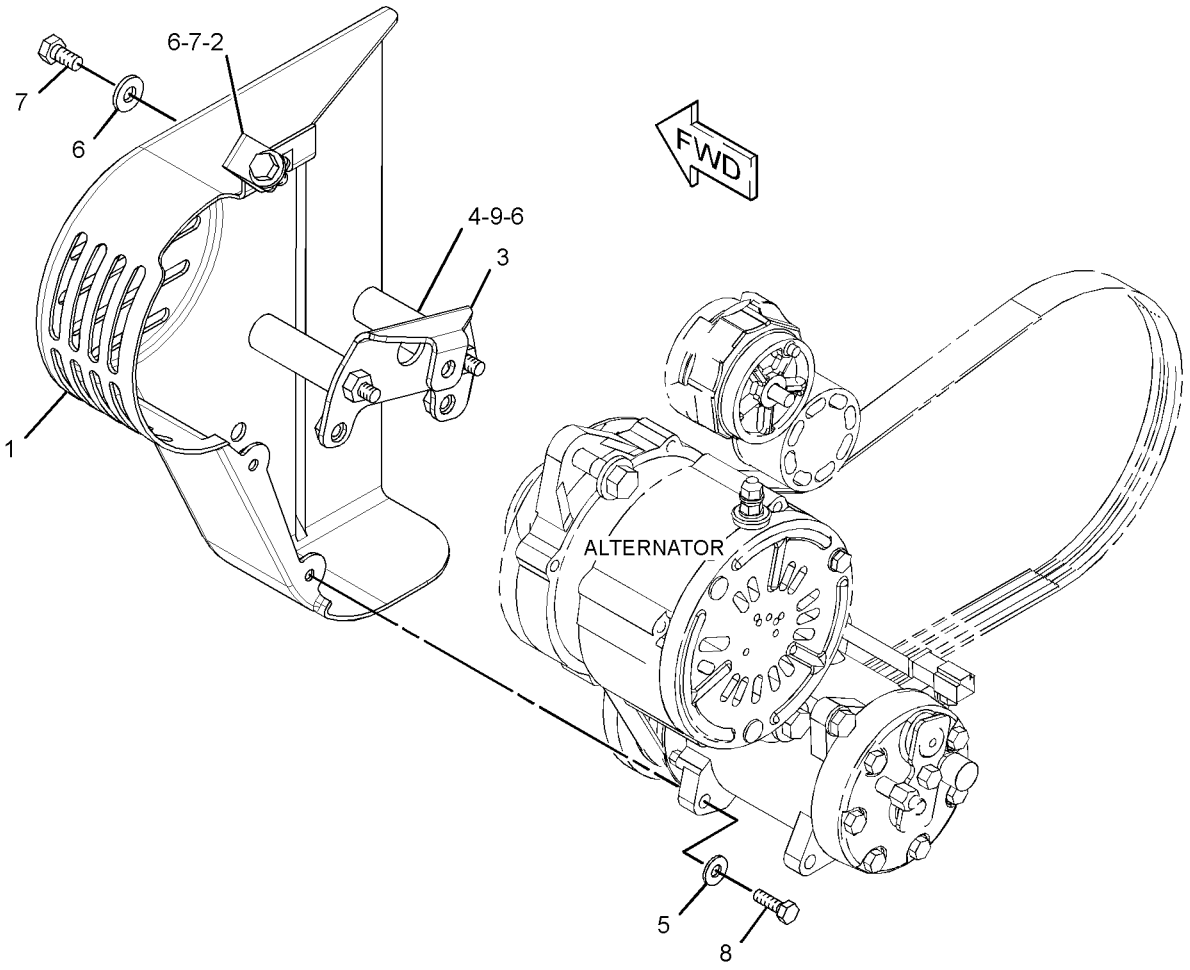


GRAPHIC #1 **<END>** g01365301

# BASIC ENGINE

## *223-4423* HOUSING GP-FLYWHEEL

**S/N: RHX1-UP**

**PART OF 221-8124, 247-3315 ENGINE AR-COMPLETE**

**AN ATTACHMENT**

**SMCS-1157** **i03303663**

| NOTE | REF NO | GRAPHIC REF | PART NUMBER | QTY | PART NAME 1 2 3 4 5 6 (PRODUCT LEVEL) | SEE PAGE |
|---|---|---|---|---|---|---|
| Y | 1 | 1 | *319-0785* | 1 | SEAL GP-CRANKSHAFT (REAR FLYWHEEL HOUSING) | 127 |
| | 2 | 1 | *148-8411* | 2 | PLUG AS | |
| | | | | | (EACH INCLUDES) | |
| | | 1 | **3K-0360** | 1 | SEAL-O-RING | |
| | | 1 | **9S-4185** | 1 | PLUG-O-RING | |
| | 3 | 1 | **155-5619** | 1 | GASKET | |
| | 4 | 1 | **175-3721** | 2 | COVER | |
| | 5 | 1 | **223-4422** | 1 | HOUSING AS | |
| | | 1 | **1W-3136** | 1 | BAFFLE | |
| | | 1 | **209-8622** | 2 | BEARING-SLEEVE | |
| | 6 | 1 | *148-8395* | 2 | PLUG AS | |
| | | | | | (EACH INCLUDES) | |
| | | 1 | **3K-0360** | 1 | SEAL-O-RING | |
| | | 1 | **9S-8005** | 1 | PLUG-O-RING | |
| | 7 | 1 | **155-3624** | 4 | PLUG AS (MARKED X) | |
| | | | | | (EACH INCLUDES) | |
| | | 1 | **3J-7354** | 1 | SEAL-O-RING | |
| | | 1 | **9S-4182** | 1 | PLUG-O-RING | |
| | 8 | 1 | **165-3930** | 7 | BOLT (3/8-16X1.625-IN) (MARKED Y) | |
| | 9 | 1 | **165-3932** | 1 | BOLT (3/8-16X2-IN) | |
| | 10 | 1 | **1J-9671** | 1 | SEAL-O-RING | |
| | 11 | 1 | **223-4903** | 6 | BOLT (MARKED W) | |
| | 12 | 1 | **2P-2772** | 1 | COVER | |
| | 13 | 1 | **4M-0189** | 2 | SEAL-O-RING | |
| | 14 | 1 | **4N-0933** | 1 | GASKET | |
| | 15 | 1 | **5J-5793** | 1 | BOLT-12 POINT HEAD (1/2-13X1.75-IN) | |
| | 16 | 1 | **5J-5794** | 8 | BOLT (1/2-13X3.5-IN) (MARKED Z) | |
| | 17 | 1 | **5P-8245** | 13 | WASHER-HARD (13.5X25.5X3-MM THK) | |
| M | 18 | 1 | **6A-5591** | 4 | BOLT (M12X1.75X25-MM) | |
| M | 19 | 1 | **6V-4248** | 1 | BOLT (M10X1.5X25-MM) | |
| | 20 | 1 | **6V-5839** | 2 | WASHER (11X21X2.5-MM THK) | |
| M | 21 | 1 | **8T-0643** | 1 | BOLT (M10X1.5X80-MM) | |
| | 22 | 1 | **9S-8003** | 1 | PLUG | |
| | 23 | 1 | **2A-1162** | 1 | GASKET | |
| | 24 | 1 | **5F-0304** | 1 | PLUG (FLYWHEEL HOUSING) | |

M-METRIC PART
Y-SEPARATE ILLUSTRATION

*223-4423* **HOUSING GP-FLYWHEEL** *(contd.)* **i03303663**

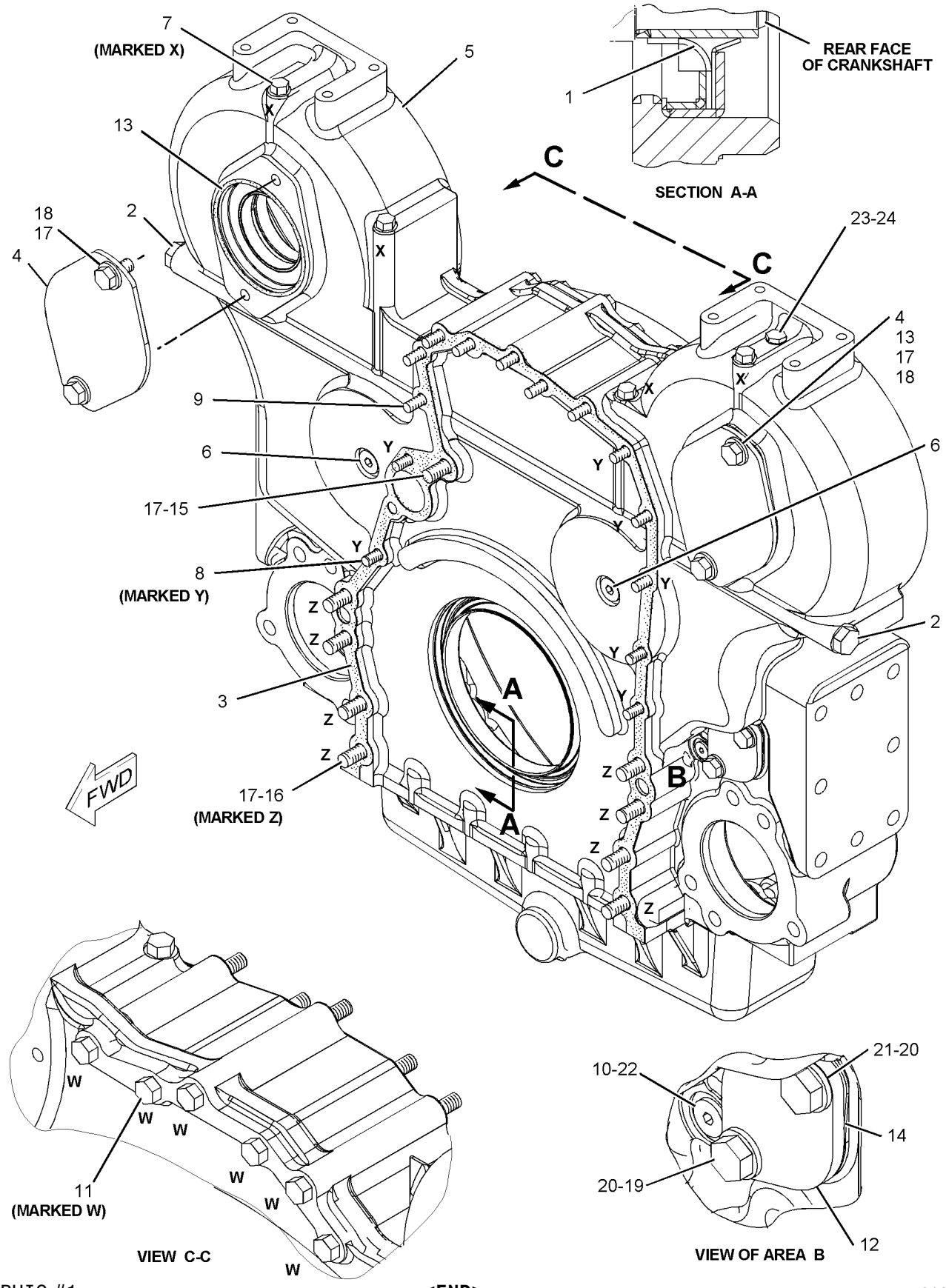


GRAPHIC #1 **<END>** g01084439

# *275-4185* HOUSING GP-FLYWHEEL

**S/N: RHX1-UP**
**SAE NO.1 FLYWHEEL HOUSING**
**PART OF 272-3086, 272-3087, 292-2553, 292-2554 ENGINE AR-COMPLETE**
**AN ATTACHMENT**

**SMCS-1157** **i02972492**

| NOTE | REF NO | GRAPHIC REF | PART NUMBER | QTY | PART NAME 1 2 3 4 5 6 (PRODUCT LEVEL) | SEE PAGE |
|---|---|---|---|---|---|---|
| Y | 1 | 1 | *319-0785* | 1 | SEAL GP-CRANKSHAFT (REAR) | 127 |
| | 2 | 1 | *148-8411* | 2 | PLUG AS | |
| | | | | | (EACH INCLUDES) | |
| | | 1 | **3K-0360** | 1 | SEAL-O-RING | |
| | | 1 | **9S-4185** | 1 | PLUG-O-RING | |
| | 3 | 1 | **155-5619** | 1 | GASKET | |
| | 4 | 1 | **175-3721** | 2 | COVER | |
| | 5 | 1 | **275-4162** | 1 | HOUSING AS-FLYWHEEL | |
| | | 1 | **1W-3136** | 1 | BAFFLE | |
| | | 1 | **209-8622** | 2 | BEARING-SLEEVE | |
| | 6 | 1 | *148-8395* | 2 | PLUG AS | |
| | | | | | (EACH INCLUDES) | |
| | | 1 | **3K-0360** | 1 | SEAL-O-RING | |
| | | 1 | **9S-8005** | 1 | PLUG-O-RING | |
| | 7 | 1 | *155-3624* | 4 | PLUG AS (MARKED X) | |
| | | | | | (EACH INCLUDES) | |
| | | 1 | **3J-7354** | 1 | SEAL-O-RING | |
| | | 1 | **9S-4182** | 1 | PLUG-O-RING | |
| | 8 | 1 | **165-3930** | 7 | BOLT (3/8-16X1.625-IN) (MARKED Y) | |
| | 9 | 1 | **165-3932** | 1 | BOLT (3/8-16X2-IN) | |
| | 10 | 1 | **1J-9671** | 1 | SEAL-O-RING | |
| | 11 | 1 | **223-4903** | 6 | BOLT (MARKED W) | |
| | 12 | 1 | **2P-2772** | 1 | COVER | |
| | 13 | 1 | **4M-0189** | 2 | SEAL-O-RING | |
| | 14 | 1 | **4N-0933** | 1 | GASKET | |
| | 15 | 1 | **5J-5793** | 1 | BOLT-12 POINT HEAD (1/2-13X1.75-IN) | |
| | 16 | 1 | **5J-5794** | 8 | BOLT (1/2-13X3.5-IN) (MARKED Z) | |
| | 17 | 1 | **5P-8245** | 13 | WASHER-HARD (13.5X25.5X3-MM THK) | |
| M | 18 | 1 | **6A-5591** | 4 | BOLT (M12X1.75X25-MM) | |
| M | 19 | 1 | **6V-4248** | 1 | BOLT (M10X1.5X25-MM) | |
| | 20 | 1 | **6V-5839** | 2 | WASHER (11X21X2.5-MM THK) | |
| M | 21 | 1 | **8T-0643** | 1 | BOLT (M10X1.5X80-MM) | |
| | 22 | 1 | **9S-8003** | 1 | PLUG | |
| | 23 | 1 | **2A-1162** | 1 | GASKET | |
| | 24 | 1 | **5F-0304** | 1 | PLUG | |

M-METRIC PART
Y-SEPARATE ILLUSTRATION

*275-4185* **HOUSING GP-FLYWHEEL** *(contd.)* **i02972492**

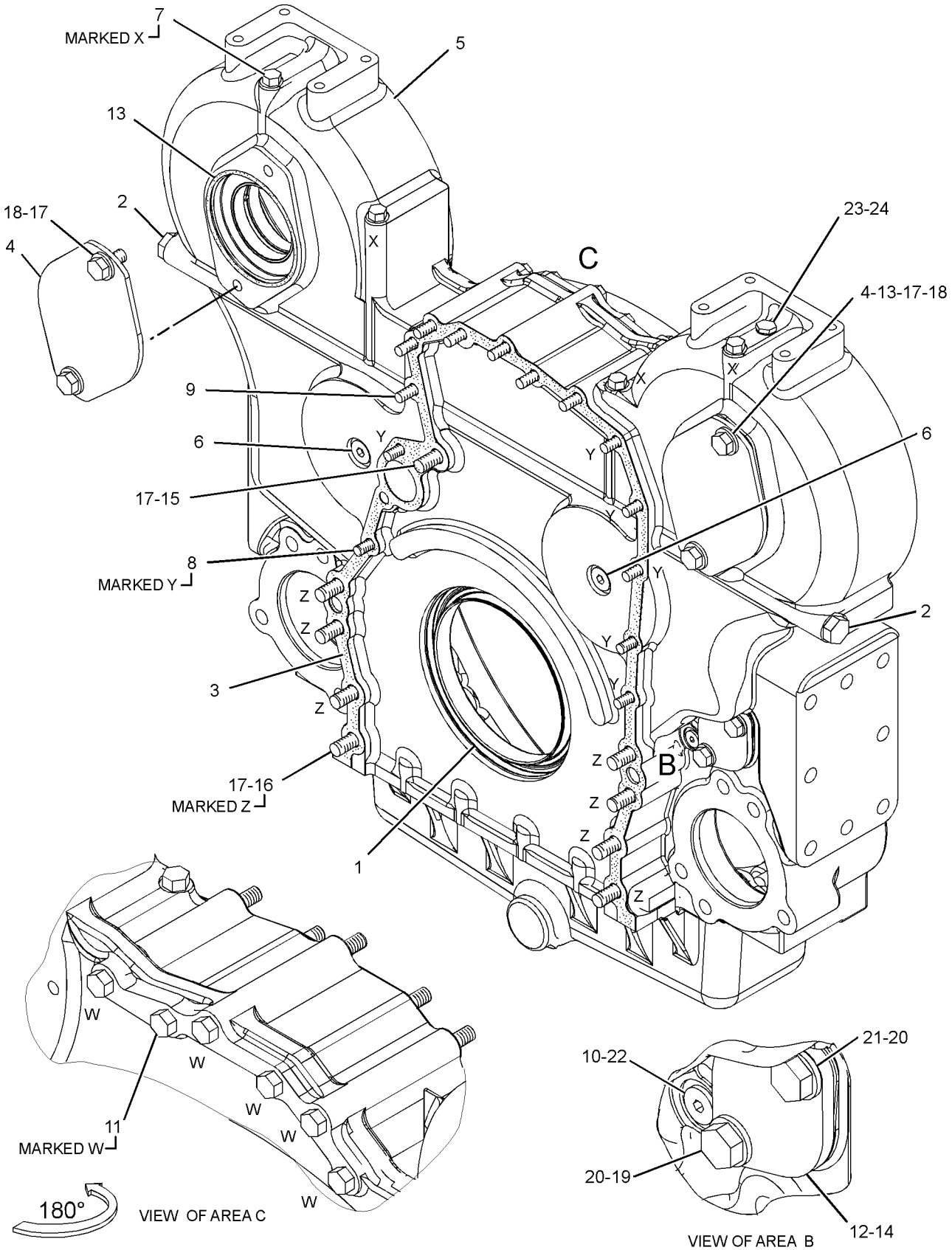


GRAPHIC #1 **<END>** g01502188

## *244-2509* HOUSING GP-FRONT

**S/N: RHX1-UP**

**PART OF 221-8124, 247-3315, 272-3086, 272-3087, 292-2553, 292-2554 ENGINE**

**AR-COMPLETE**

**AN ATTACHMENT**

**SMCS-1151, 1162, 1206** **i03267270**

| NOTE | REF NO | GRAPHIC REF | PART NUMBER | QTY | PART NAME 1 2 3 4 5 6 (PRODUCT LEVEL) | SEE PAGE |
|---|---|---|---|---|---|---|
| | 1 | 1 | **120-9243** | 2 | STUD (BRAKE) | |
| | 2 | 1 | **126-1757** | 9 | WASHER (10.85X19.3X1.27-MM THK) | |
| | 3 | 1 | **129-5427** | 2 | WASHER-SPECIAL (SEALING) | |
| | 4 | 1 | **129-5428** | 12 | STUD (BRAKE) | |
| | 5 | 1 | **155-9524** | 1 | SEAL-INTEGRAL | |
| | 6 | 1 | **166-9144** | 1 | GASKET | |
| | 7 | 1 | **223-0533** | 1 | PLATE | |
| | 8 | 1 | **241-0478** | 1 | HOUSING GP-FRONT | |
| | 8A | 1 | **3E-8044** | 1 | STUD (1/2-13X2.95-IN) | |
| | 9 | 1 | **0L-2070** | 1 | BOLT (3/8-16X2.25-IN) | |
| | 10 | 1 | **0S-1588** | 9 | BOLT (3/8-16X1.25-IN) | |
| | 11 | 1 | **0T-0055** | 1 | BOLT (3/8-16X4.25-IN) | |
| | 12 | 1 | **5M-2894** | 20 | WASHER-HARD (10.2X18.5X2.5-MM THK) | |
| | 13 | 1 | **5P-4255** | 8 | BOLT-LOCKING (3/8-16X1-IN) | |
| | 14 | 1 | **9S-8752** | 1 | NUT-FULL (3/8-16-THD) | |

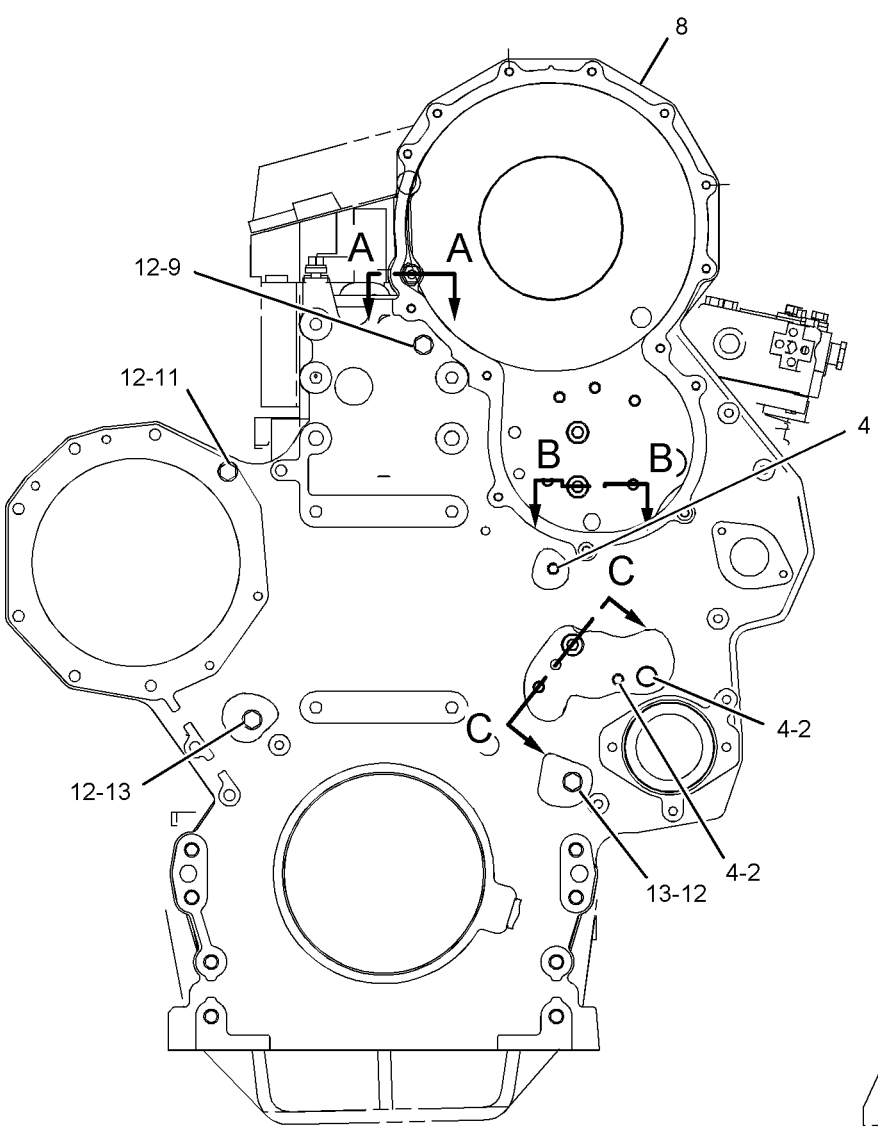


FRONT VIEW

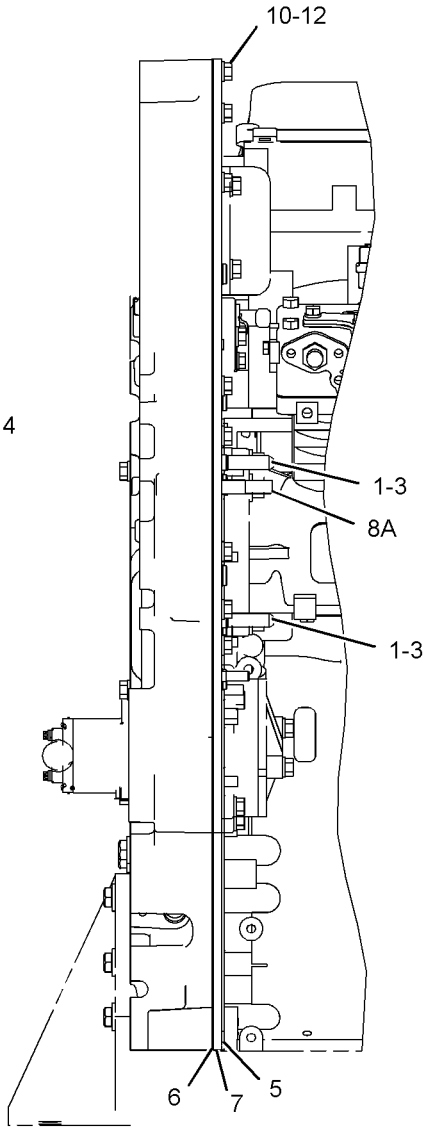


LEFT SIDE VIEW

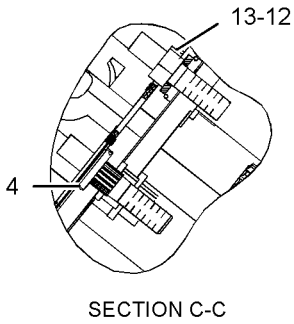


SECTION C-C

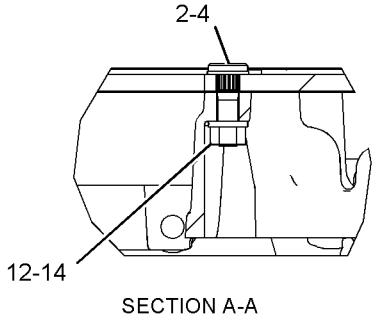


SECTION A-A

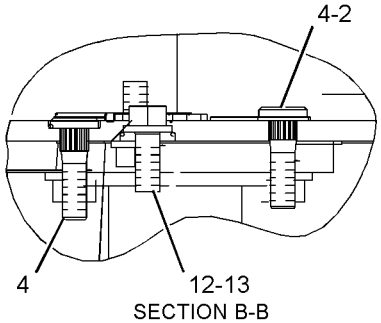


SECTION B-B

GRAPHIC #1

**<END>**

g01112832

# BASIC ENGINE

## *111-2088* LIFTING GP-ENGINE

**S/N: RHX1-UP**
**REAR, LOW PROFILE LIFTING EYE**
**PART OF 221-8124, 247-3315, 272-3086, 272-3087, 292-2553, 292-2554 ENGINE**
**AR-COMPLETE**
**AN ATTACHMENT**

**SMCS-1122** **i02332229**

| NOTE | REF NO | GRAPHIC REF | PART NUMBER | QTY | PART NAME 1 2 3 4 5 6 (PRODUCT LEVEL) | SEE PAGE |
|---|---|---|---|---|---|---|
| | 1 | 1 | **109-9985** | 1 | EYE-LIFTING | |
| | 2 | 1 | **0S-1594** | 8 | BOLT (3/8-16X1-IN) | |
| | 3 | 1 | **5M-2894** | 8 | WASHER-HARD (10.2X18.5X2.5-MM THK) | |

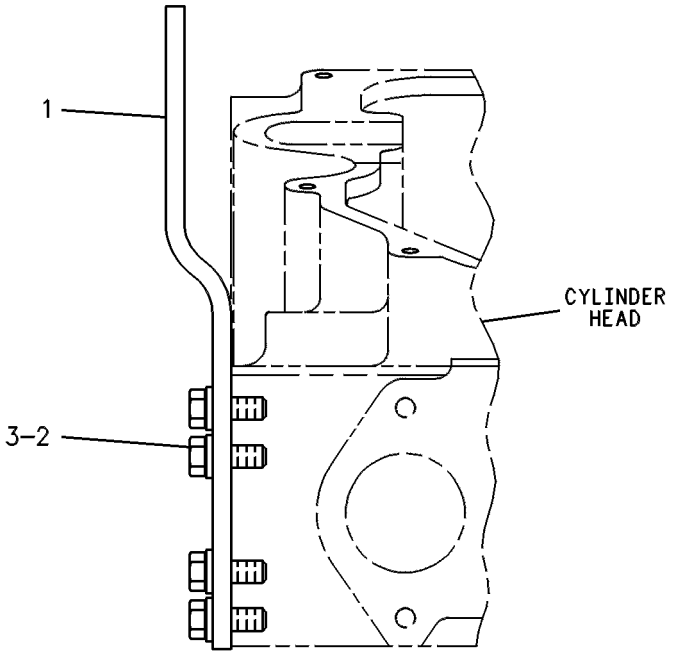


GRAPHIC #1 **<END>** g00238183

# *111-2355* LIFTING GP-ENGINE

**S/N: RHX1-UP**
**FRONT- OFFSET LIFTING EYE**
**PART OF 247-3315 ENGINE AR-COMPLETE**
**CANNOT BE USED WITH ALTERNATOR MOUNTING**
**AN ATTACHMENT**

**SMCS-1122** **i00833389**

| NOTE | REF NO | GRAPHIC REF | PART NUMBER | QTY | PART NAME 1 2 3 4 5 6 (PRODUCT LEVEL) | SEE PAGE |
|---|---|---|---|---|---|---|
| | 1 | 1 | **110-4344** | 1 | EYE-LIFTING | |
| | 2 | 1 | **0S-1595** | 4 | BOLT (1/2-13X1.25-IN) | |
| | 3 | 1 | **5P-8245** | 4 | WASHER-HARD (13.5X25.5X3-MM THK) | |

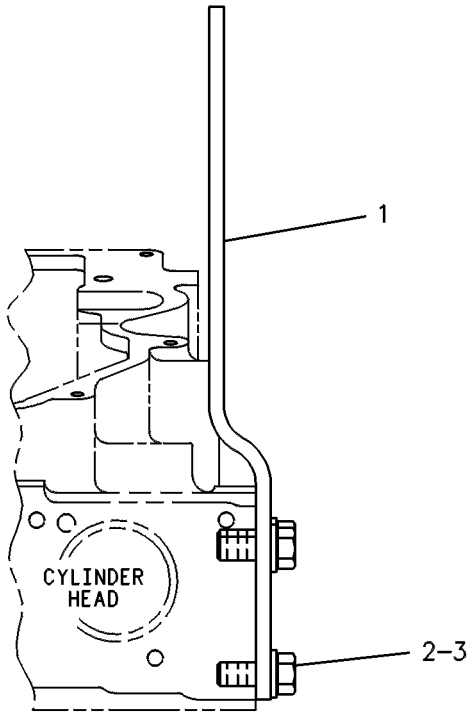


GRAPHIC #1 **<END>** g00238181

# *127-0564* LIFTING GP-ENGINE

**S/N: RHX1-UP**
**FRONT**
**PART OF 221-8124, 272-3086, 272-3087, 292-2553, 292-2554 ENGINE AR-COMPLETE**
**AN ATTACHMENT**

**SMCS-1122** **i00671604**

| NOTE | REF NO | GRAPHIC REF | PART NUMBER | QTY | PART NAME 1 2 3 4 5 6 (PRODUCT LEVEL) | SEE PAGE |
|---|---|---|---|---|---|---|
| | 1 | 1 | **127-0563** | 1 | EYE-LIFTING | |
| | 2 | 1 | **0S-1595** | 4 | BOLT (1/2-13X1.25-IN) | |
| | 3 | 1 | **5P-8245** | 4 | WASHER-HARD (13.5X25.5X3-MM THK) | |

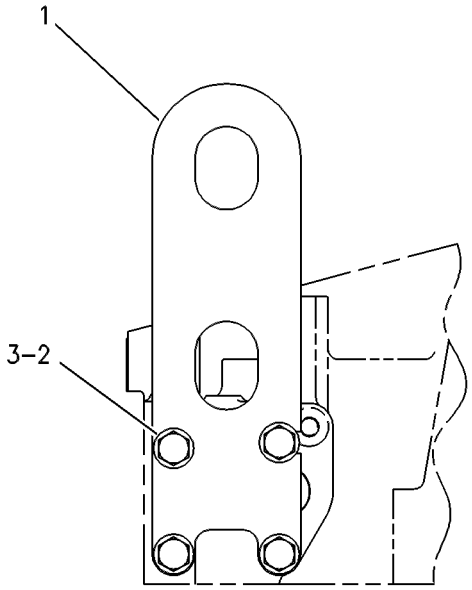


FRONT VIEW

GRAPHIC #1 **<END>** g00257294

# *148-7482* MECHANISM GP-FUEL PUMP & VALVE

**S/N: RHX1-2217**
**PART OF 241-5935 ENGINE AR-CORE**
**AN ATTACHMENT**

**SMCS-1102, 1123, 1292** **i01768605**

| NOTE | REF NO | GRAPHIC REF | PART NUMBER | QTY | PART NAME 1 2 3 4 5 6 (PRODUCT LEVEL) | SEE PAGE |
|---|---|---|---|---|---|---|
| CY | 1 | 1 | *198-9898* | 3 | ROCKER ARM GP | 121 |
| | 2 | 1 | **6I-1458** | 12 | BRIDGE-VALVE | |

C-CHANGE FROM PREVIOUS TYPE
Y-SEPARATE ILLUSTRATION

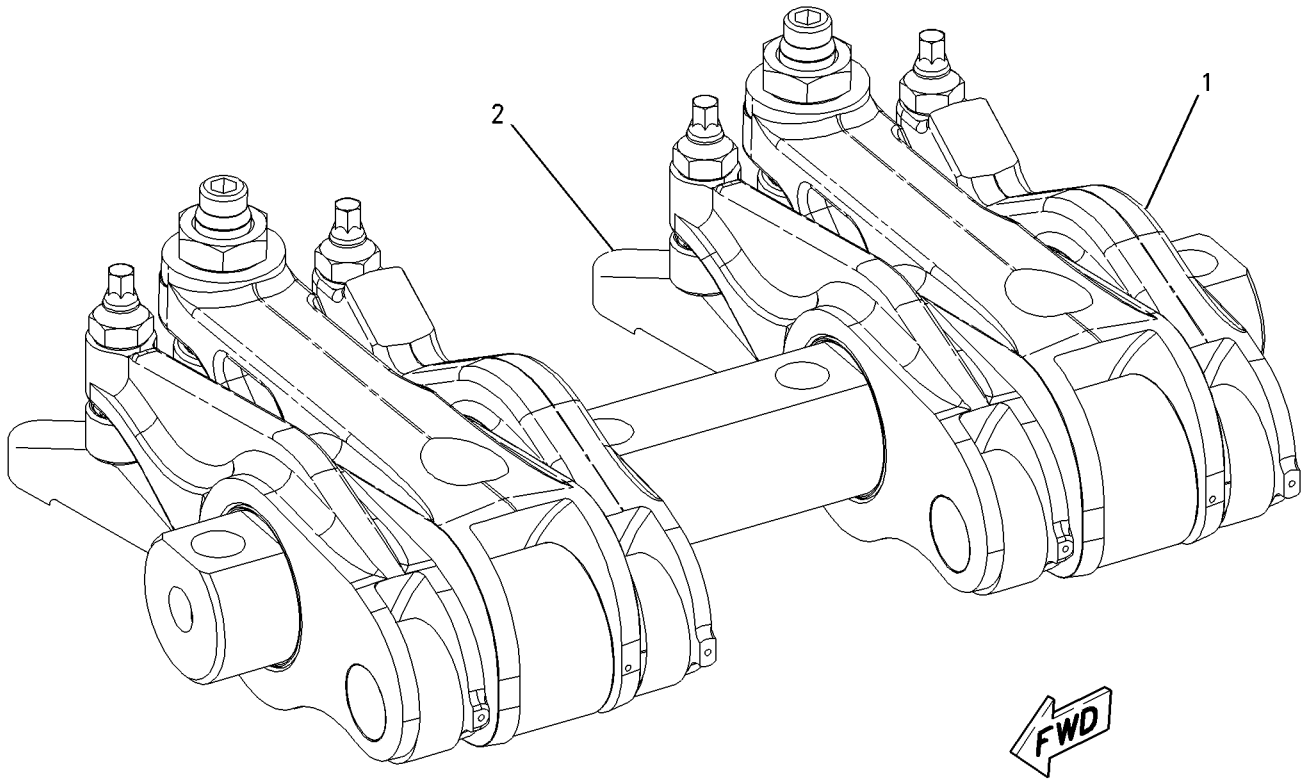


GRAPHIC #1 **<END>** g00905240

# *190-0009* MECHANISM GP-FUEL PUMP & VALVE

**S/N: RHX3837-UP**
**PART OF 294-3050, 297-3206 ENGINE AR-CORE**
**AN ATTACHMENT**

**SMCS-1102, 1123, 1292** **i02518515**

| NOTE | REF NO | GRAPHIC REF | PART NUMBER | QTY | PART NAME 1 2 3 4 5 6 (PRODUCT LEVEL) | SEE PAGE |
|---|---|---|---|---|---|---|
| CY | 1 | 1 | *278-1929* | 3 | ROCKER ARM GP | 125 |
| | 2 | 1 | **6I-1458** | 12 | BRIDGE-VALVE | |

C-CHANGE FROM PREVIOUS TYPE
Y-SEPARATE ILLUSTRATION

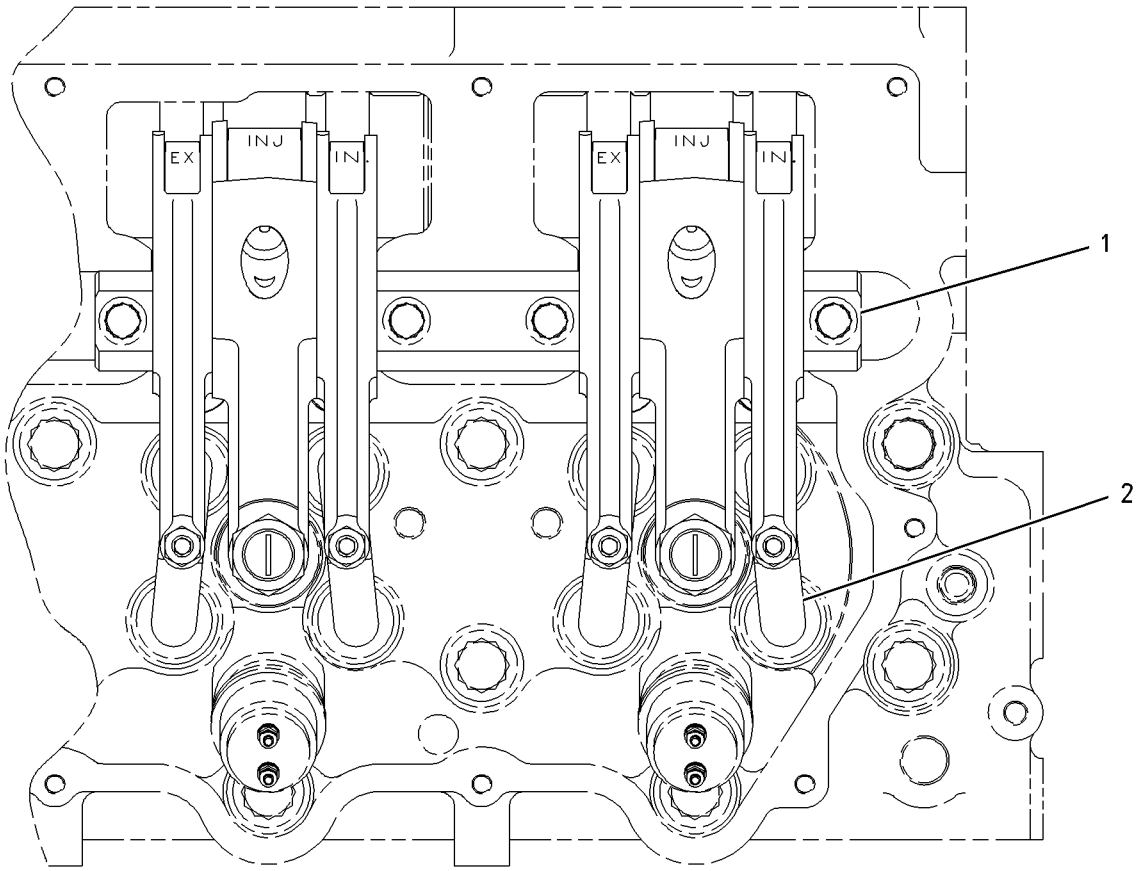


TOP VIEW

GRAPHIC #1 **<END>** g00814910

# *235-0382* MECHANISM GP-FUEL PUMP & VALVE

**S/N: RHX1-678**
**PART OF 241-5936 ENGINE AR-CORE**
**AN ATTACHMENT**

**SMCS-1102, 1123, 1292** **i02050528**

| NOTE | REF NO | GRAPHIC REF | PART NUMBER | QTY | PART NAME 1 2 3 4 5 6 (PRODUCT LEVEL) | SEE PAGE |
|---|---|---|---|---|---|---|
| | 1 | 1 | **6I-1458** | 12 | BRIDGE-VALVE | |
| Y | 2 | 1 | *243-2467* | 3 | ROCKER ARM GP | 123 |

Y-SEPARATE ILLUSTRATION

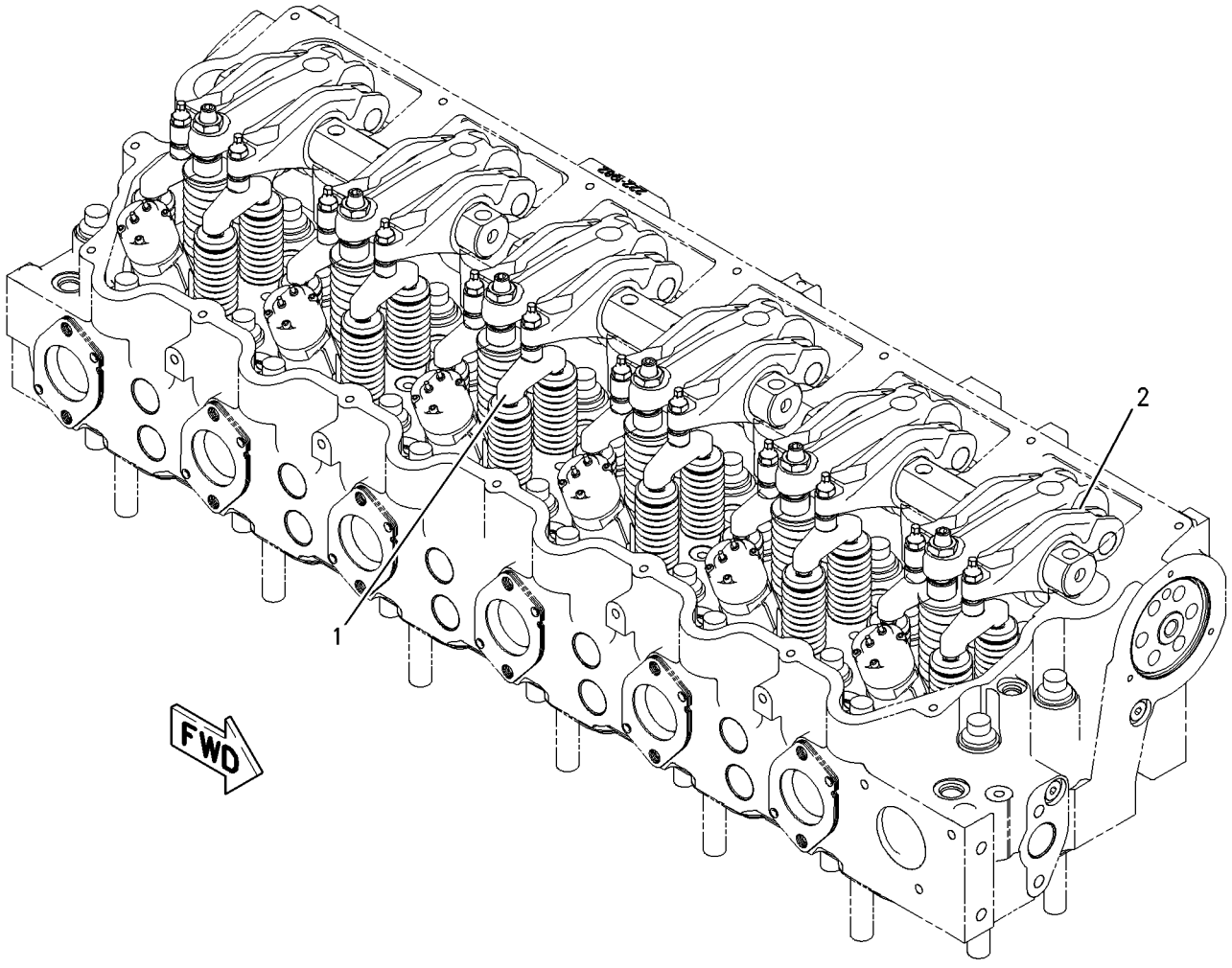


GRAPHIC #1 **<END>** g01002983

# 266-3699 MECHANISM GP-FUEL PUMP & VALVE

**S/N: RHX679-2176**
**PART OF 241-5936 ENGINE AR-CORE**
**AN ATTACHMENT**

**SMCS-1102, 1123, 1292** **i02237653**

| NOTE | REF NO | GRAPHIC REF | PART NUMBER | QTY | PART NAME 1 2 3 4 5 6 (PRODUCT LEVEL) | SEE PAGE |
|---|---|---|---|---|---|---|
| | 1 | 1 | **6I-1458** | 12 | BRIDGE-VALVE | |
| Y | 2 | 1 | *262-7100* | 3 | ROCKER ARM GP | 124 |

Y-SEPARATE ILLUSTRATION

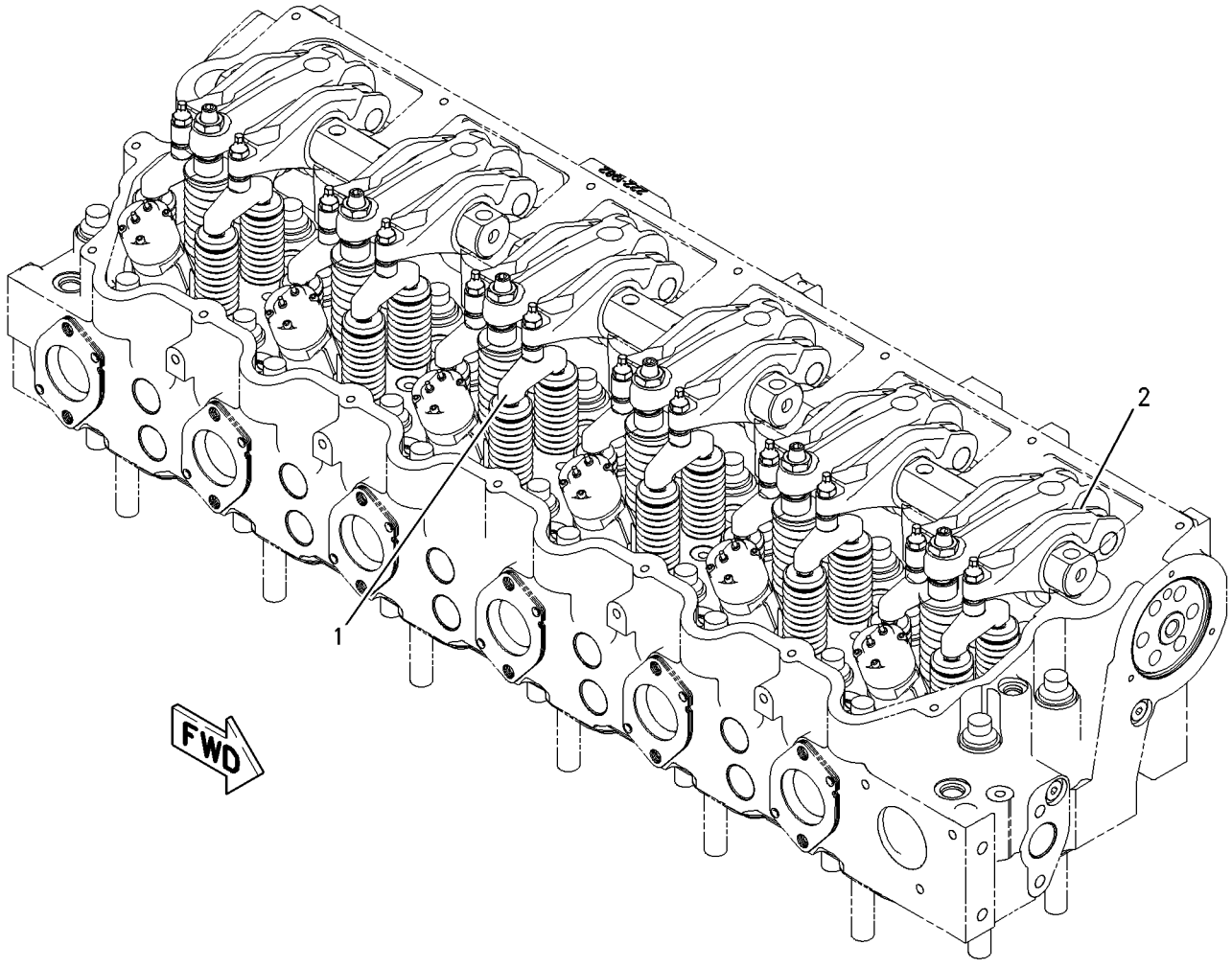


GRAPHIC #1 **<END>** g01002983

# *266-3699* MECHANISM GP-FUEL PUMP & VALVE

**S/N: RHX2177-UP**
**PART OF 241-5936, 294-7614 ENGINE AR-CORE**
**AN ATTACHMENT**

**SMCS-1102, 1123, 1292** **i03026784**

| NOTE | REF NO | GRAPHIC REF | PART NUMBER | QTY | PART NAME 1 2 3 4 5 6 (PRODUCT LEVEL) | SEE PAGE |
|---|---|---|---|---|---|---|
| | 1 | 1 | **6I-1458** | 12 | BRIDGE-VALVE | |
| CY | 2 | 1 | *278-1938* | 3 | ROCKER ARM GP | 126 |

C-CHANGE FROM PREVIOUS TYPE
Y-SEPARATE ILLUSTRATION

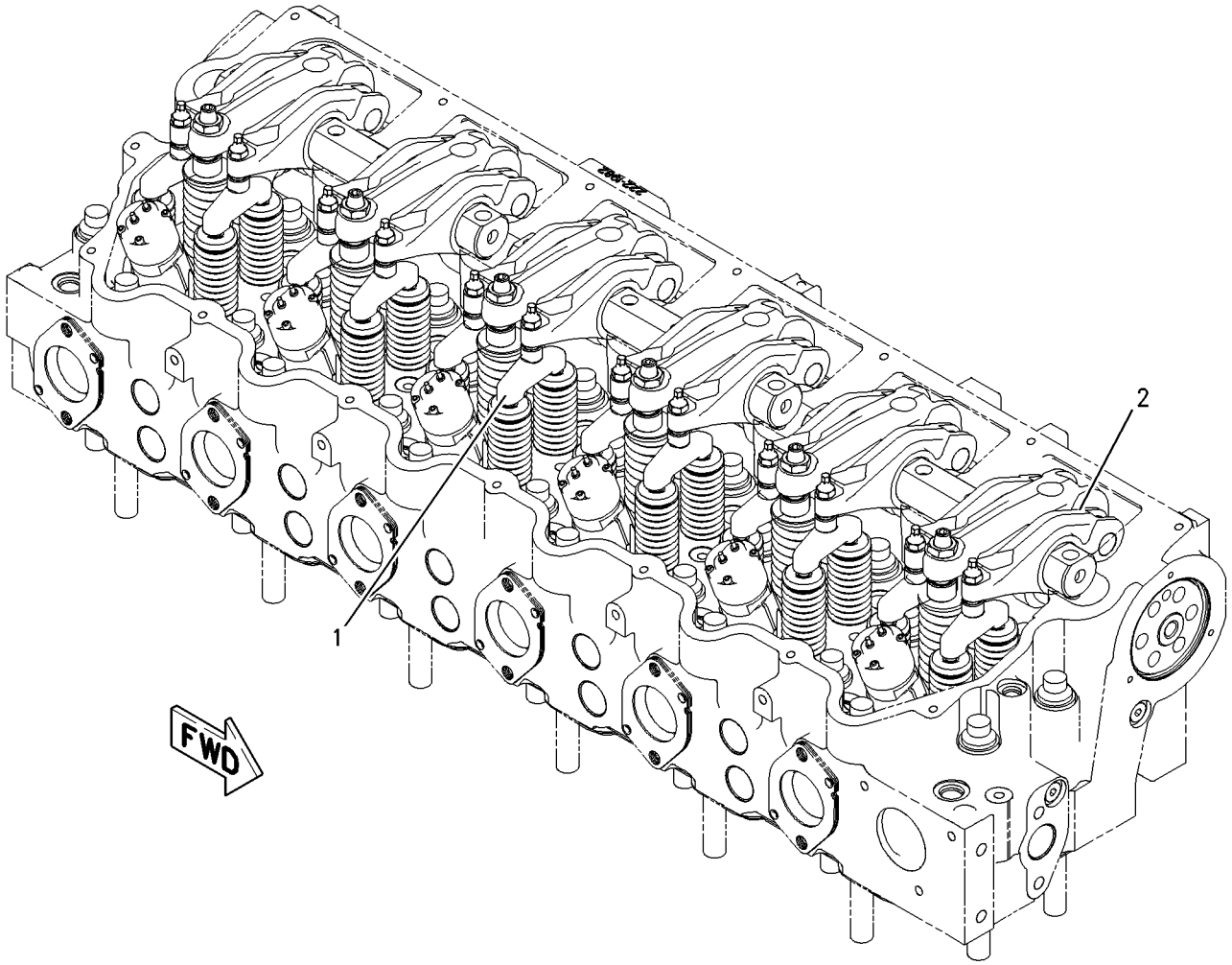


GRAPHIC #1 **<END>** g01002983

# *188-1754* MOUNTING GP-ALTERNATOR & COMPR

**S/N: RHX1-UP**
**PART OF 221-8124, 247-3315, 272-3086, 272-3087, 292-2553, 292-2554 ENGINE**
**AR-COMPLETE**
**AN ATTACHMENT**

**SMCS-1405, 1802** **i01444958**

| NOTE | REF NO | GRAPHIC REF | PART NUMBER | QTY | PART NAME 1 2 3 4 5 6 (PRODUCT LEVEL) | SEE PAGE |
|---|---|---|---|---|---|---|
| | 1 | 1 | **188-1755** | 1 | SUPPORT | |
| | 2 | 1 | **0S-1608** | 2 | BOLT (3/8-16X3.75-IN) | |
| | 3 | 1 | **0T-0573** | 2 | BOLT (3/8-16X2.75-IN) | |
| | 4 | 1 | **2P-1974** | 2 | STUD-TAPERLOCK (3/8-16X4.2-IN) | |
| | 5 | 1 | **5M-2894** | 6 | WASHER-HARD (10.2X18.5X2.5-MM THK) | |
| | 6 | 1 | **9S-8752** | 2 | NUT-FULL (3/8-16-THD) | |

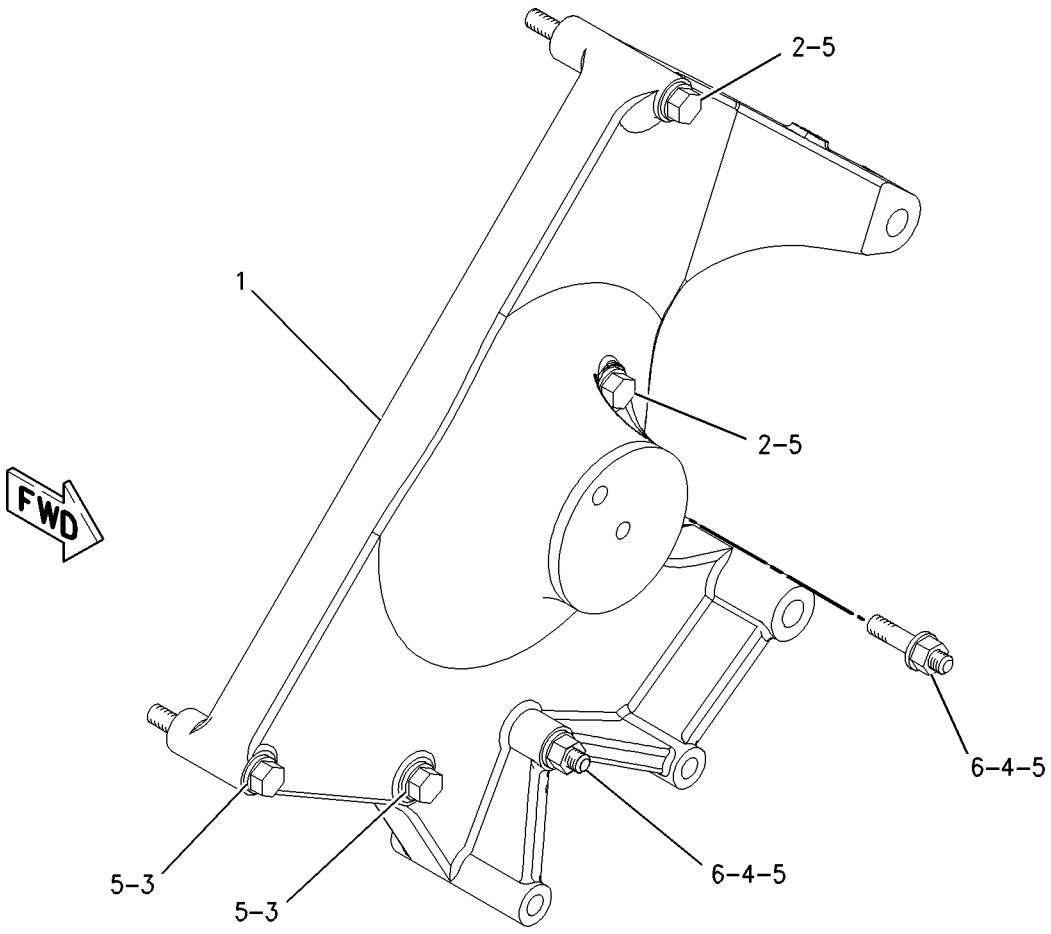


GRAPHIC #1 **<END>** g00759989

## *175-3860* PAN GP-OIL–ENGINE

**S/N: RHX1-UP**

**PART OF 221-8124, 247-3315 ENGINE AR-COMPLETE**

**AN ATTACHMENT**

**SMCS-1302** **i02939139**

| NOTE | REF NO | GRAPHIC REF | PART NUMBER | QTY | PART NAME 1 2 3 4 5 6 (PRODUCT LEVEL) | SEE PAGE |
|---|---|---|---|---|---|---|
| | 1 | 1 | **2P-3205** | 40 | BOLT-WASHER HEAD (3/8-16X1.75-IN) | |
| | 2 | 1 | **7E-4342** | 1 | GASKET | |
| | 3 | 1 | **9N-3167** | 1 | PLATE | |
| | 4 | 1 | **175-3868** | 1 | COVER | |
| | 5 | 1 | **179-3211** | 1 | PAN-OIL | |
| | 6 | 1 | **0S-1587** | 2 | BOLT (1/2-13X1.75-IN) | |
| | 7 | 1 | **0S-1588** | 8 | BOLT (3/8-16X1.25-IN) | |
| | 8 | 1 | **109-0076** | 1 | SEAL-O-RING | |
| | 9 | 1 | **3B-1915** | 2 | BOLT (3/8-16X1.375-IN) | |
| | 10 | 1 | **4N-1151** | 2 | GASKET | |
| | 11 | 1 | **4P-0519** | 1 | ADAPTER AS-DRAIN | |
| | 11A | 1 | **109-5839** | 1 | PLUG-DRAIN (ENGINE OIL PAN) | |
| | 12 | 1 | **5M-2894** | 13 | WASHER-HARD (10.2X18.5X2.5-MM THK) | |
| | 13 | 1 | **5P-7701** | 1 | SEAL-O-RING | |
| | 14 | 1 | **6V-3830** | 1 | SEAL-O-RING | |
| | 15 | 1 | **7E-4341** | 1 | PAN-OIL | |
| | 16 | 1 | **9S-9334** | 1 | PLUG-O-RING | |
| | 17 | 1 | **1A-2029** | 3 | BOLT (3/8-16X1.125-IN) | |

*175-3860* **PAN GP-OIL** *(contd.)* **i02939139**

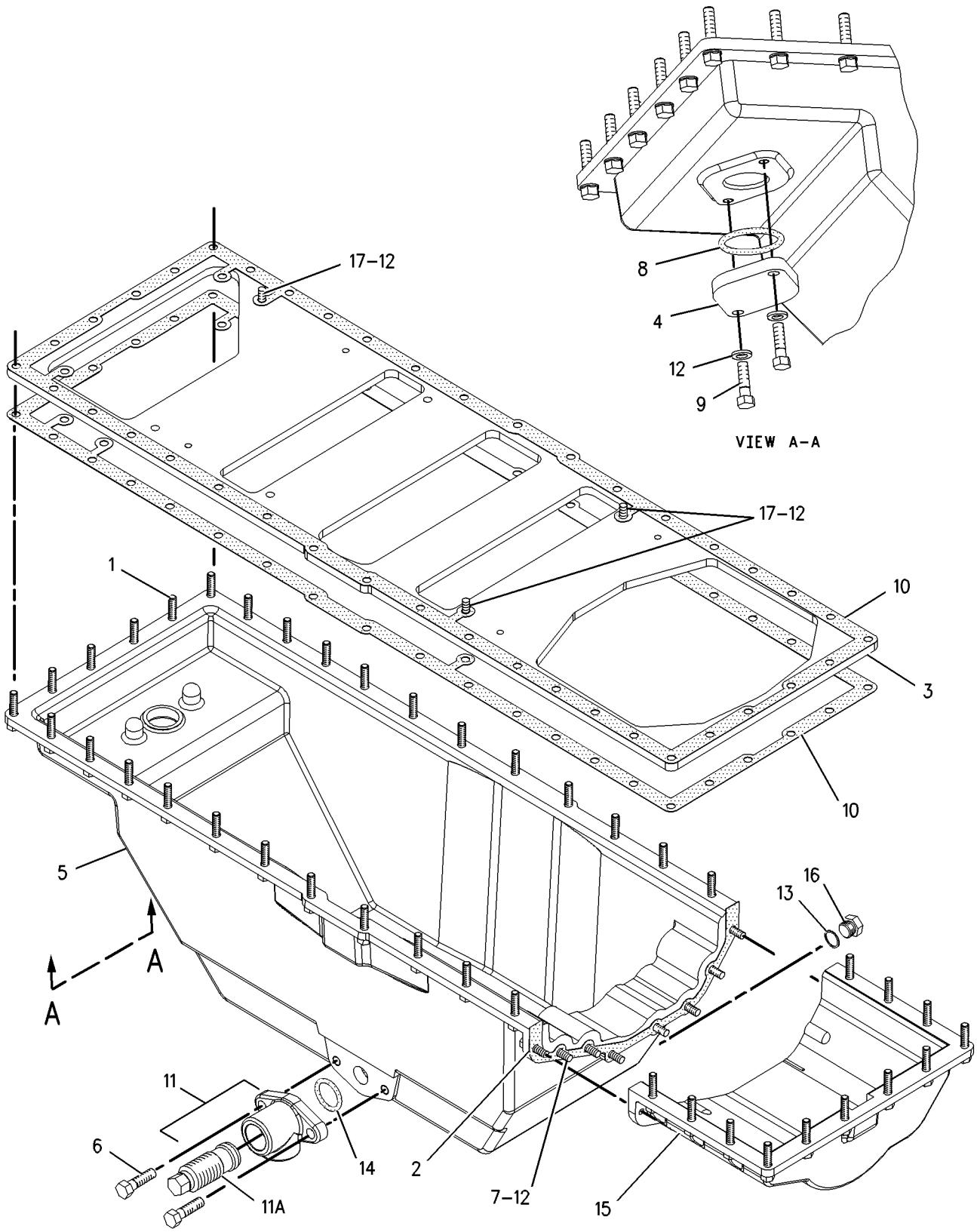


GRAPHIC #1 **<END>** g00735585

## *277-8461* PAN GP-OIL–ENGINE

**S/N: RHX1-3790**
**PART OF 272-3086, 272-3087 ENGINE AR-COMPLETE**
**AN ATTACHMENT**

**SMCS-1302** **i02644072**

| NOTE | REF NO | GRAPHIC REF | PART NUMBER | QTY | PART NAME 1 2 3 4 5 6 (PRODUCT LEVEL) | SEE PAGE |
|---|---|---|---|---|---|---|
| | 1 | 1 | **2P-3204** | 40 | BOLT-WASHER HEAD | |
| | 2 | 1 | **4P-7373** | 1 | TUBE AS | |
| | 3 | 1 | **9N-3167** | 1 | PLATE | |
| | 4 | 1 | **115-2365** | 1 | BRACKET-TUBE | |
| | 5 | 1 | **230-7201** | 1 | COVER | |
| | 6 | 1 | **275-4261** | 1 | PAN-OIL | |
| | 7 | 1 | **281-0570** | 1 | TUBE AS | |
| | 8 | 1 | **0L-1351** | 1 | BOLT (3/8-16X0.875-IN) | |
| | 9 | 1 | **0S-1585** | 2 | BOLT (1/2-13X1.5-IN) | |
| | 10 | 1 | **0S-1591** | 2 | BOLT (3/8-16X1.5-IN) | |
| | 11 | 1 | **109-0072** | 1 | SEAL-O-RING | |
| | 12 | 1 | **109-0078** | 1 | SEAL-O-RING | |
| | 13 | 1 | **1A-2029** | 3 | BOLT (3/8-16X1.125-IN) | |
| | 14 | 1 | **2K-4973** | 2 | LOCKNUT (3/8-16-THD) | |
| | 15 | 1 | **4N-1151** | 2 | GASKET | |
| | 16 | 1 | **5M-2894** | 3 | WASHER-HARD (10.2X18.5X2.5-MM THK) | |
| | 17 | 1 | **5P-7701** | 1 | SEAL-O-RING | |
| | 18 | 1 | **6V-3830** | 1 | SEAL-O-RING | |
| | 19 | 1 | **9S-9334** | 1 | PLUG-O-RING | |
| | 20 | 1 | **9X-6458** | 3 | WASHER-HARD (10.2X22.5X3-MM THK) | |

*277-8461* **PAN GP-OIL** *(contd.)* **i02644072**

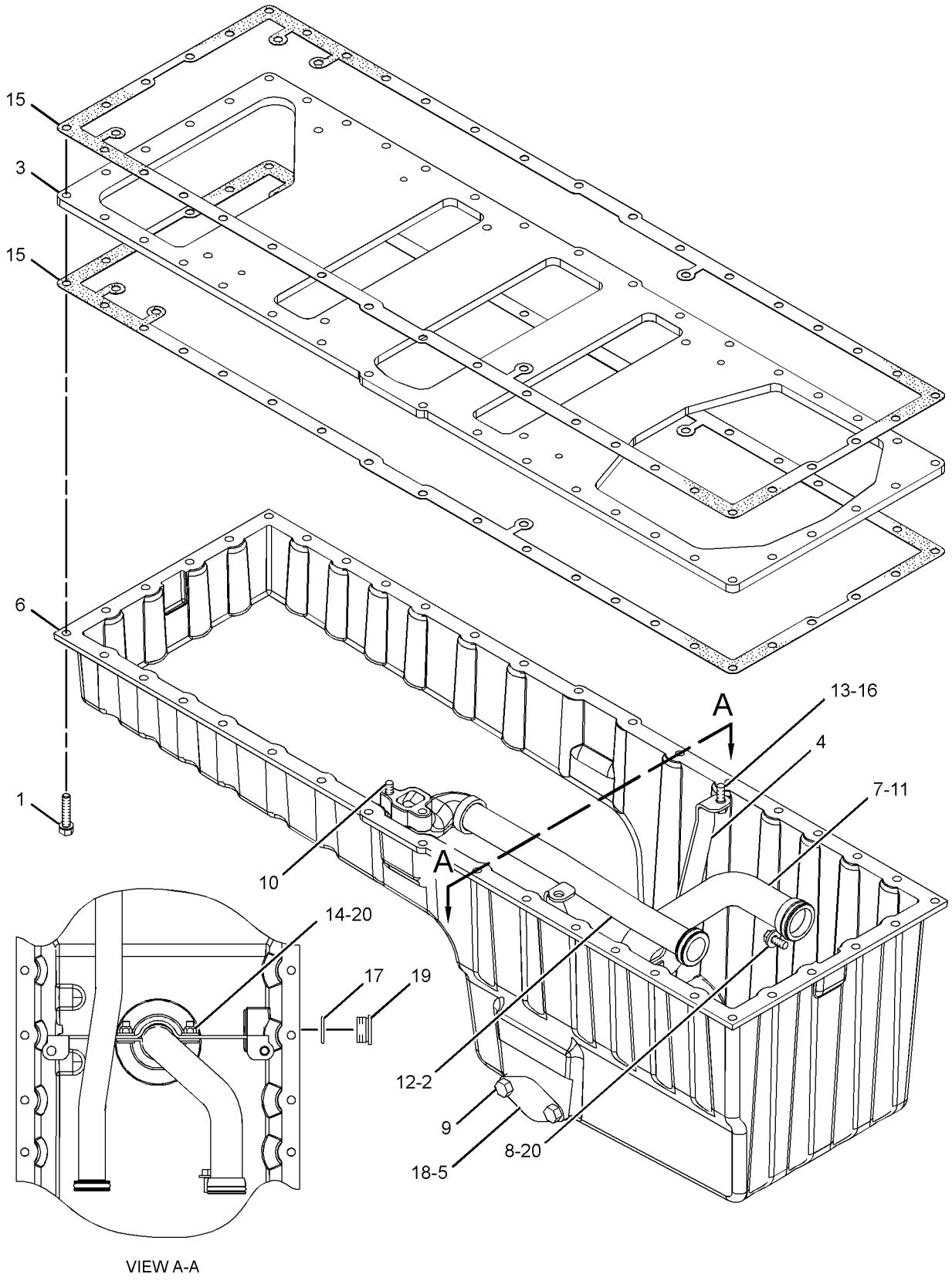


GRAPHIC #1 **<END>** g01272330

## *277-8461* PAN GP-OIL—ENGINE

**S/N: RHX3791-UP**

**PART OF 272-3086, 272-3087, 292-2553, 292-2554 ENGINE AR-COMPLETE AN ATTACHMENT**

**SMCS-1302** **i03267274**

| NOTE | REF NO | GRAPHIC REF | PART NUMBER | QTY | PART NAME 1 2 3 4 5 6 (PRODUCT LEVEL) | SEE PAGE |
|---|---|---|---|---|---|---|
| C | 1 | 1 | **2P-3205** | 40 | BOLT-WASHER HEAD (3/8-16X1.75-IN) | |
| | 2 | 1 | **4P-7373** | 1 | TUBE AS | |
| | 3 | 1 | **9N-3167** | 1 | PLATE | |
| | 4 | 1 | **115-2365** | 1 | BRACKET-TUBE | |
| | 5 | 1 | **6V-3830** | 1 | SEAL-O-RING | |
| | 6 | 1 | **275-4261** | 1 | PAN-OIL | |
| | 7 | 1 | **281-0570** | 1 | TUBE AS | |
| | 8 | 1 | **0L-1351** | 1 | BOLT (3/8-16X0.875-IN) | |
| C | 9 | 1 | **0S-1595** | 2 | BOLT (1/2-13X1.25-IN) | |
| | 10 | 1 | **0S-1591** | 2 | BOLT (3/8-16X1.5-IN) | |
| | 11 | 1 | **109-0072** | 1 | SEAL-O-RING | |
| | 12 | 1 | **109-0078** | 1 | SEAL-O-RING | |
| | 13 | 1 | **1A-2029** | 3 | BOLT (3/8-16X1.125-IN) | |
| | 14 | 1 | **2K-4973** | 2 | LOCKNUT (3/8-16-THD) | |
| | 15 | 1 | **188-0210** | 2 | GASKET | |
| | 16 | 1 | **5M-2894** | 3 | WASHER-HARD (10.2X18.5X2.5-MM THK) | |
| | 17 | 1 | **5P-7701** | 1 | SEAL-O-RING | |
| | 19 | 1 | **9S-9334** | 1 | PLUG-O-RING | |
| | 20 | 1 | **9X-6458** | 3 | WASHER-HARD (10.2X22.5X3-MM THK) | |
| | 21 | 1 | **4P-0519** | 1 | ADAPTER AS-DRAIN | |
| | | 1 | **109-5839** | 1 | PLUG-DRAIN (ENGINE OIL PAN) | |
| | | 1 | **109-5840** | 1 | ADAPTER-PLUG | |
| | 22 | 1 | **6B-9081** | 1 | BUSHING-REDUCING | |
| | 23 | 1 | **6D-3534** | 1 | CONNECTOR-HOSE | |

C-CHANGE FROM PREVIOUS TYPE

*277-8461* **PAN GP-OIL** *(contd.)* **i03267274**

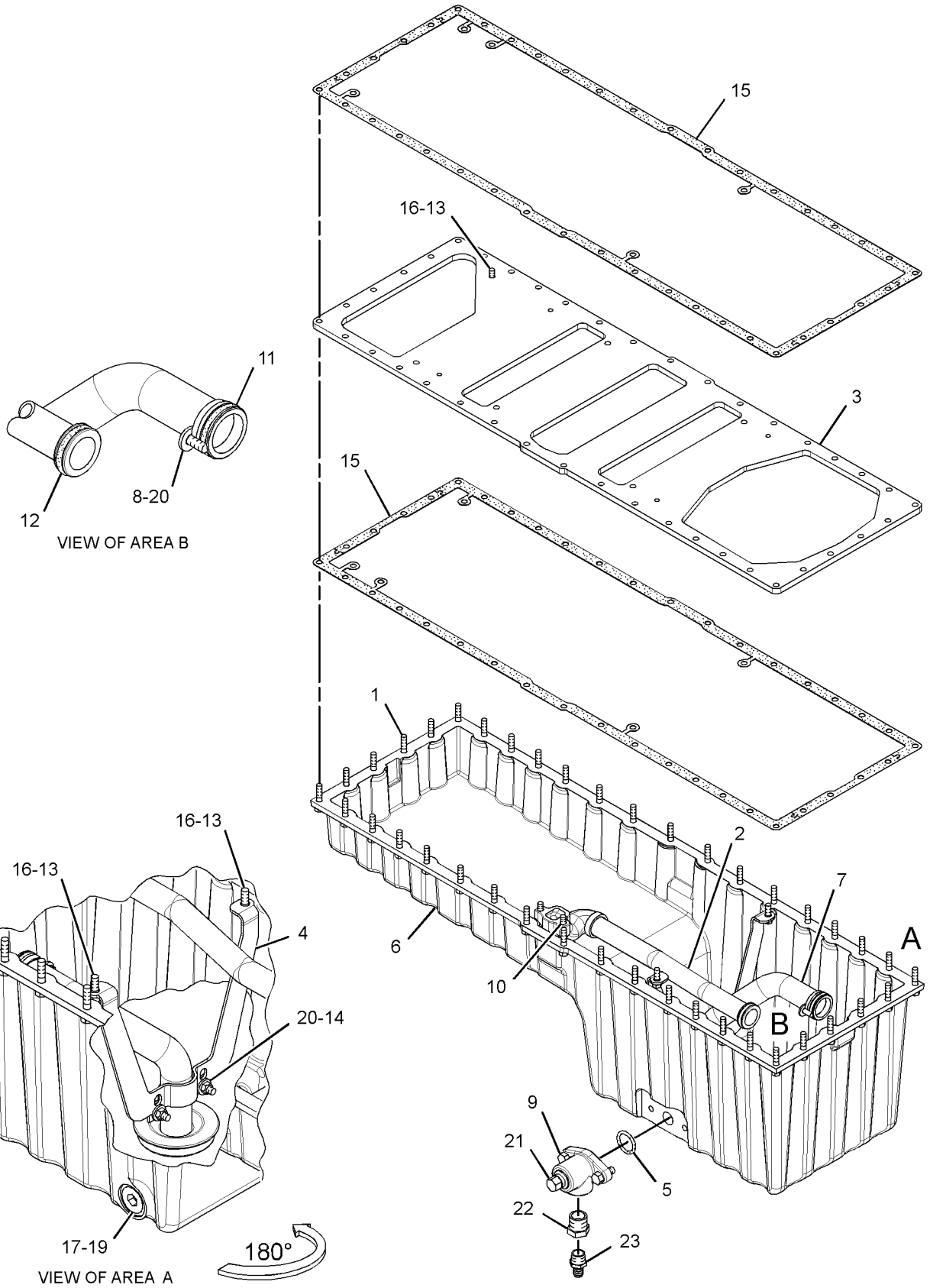


GRAPHIC #1

**<END>**

g01645357

# *234-6136* PISTON & ROD GP

**S/N: RHX1-625**
**16.3:1-COMBUSTION RATIO**
**PART OF 241-5935, 241-5936 ENGINE AR-CORE**
**AN ATTACHMENT**

**SMCS-1225** **i02332299**

| NOTE | REF NO | GRAPHIC REF | PART NUMBER | QTY | PART NAME 1 2 3 4 5 6 (PRODUCT LEVEL) | SEE PAGE |
|---|---|---|---|---|---|---|
| | 1 | 1 | **151-5925** | 1 | BOLT (7/16-14-2A THD) | |
| | 2 | 1 | **180-7350** | 1 | PIN-PISTON | |
| | 3 | 1 | **187-1503** | 1 | RING-PISTON (INTERMEDIATE) | |
| | 4 | 1 | **197-9296** | 1 | RING-PISTON (OIL CONTROL) | |
| | 5 | 1 | **197-9360** | 1 | TUBE AS | |
| | 6 | 1 | **223-9159** | 1 | RING-PISTON-TOP | |
| R | 7 | 1 | **224-3245** | 1 | ROD AS | |
| | | 1 | **7N-2043** | 2 | DOWEL | |
| | | 1 | **213-3217** | 4 | BOLT (MJ11X1.25X84-MM) | |
| | | 1 | **229-6259** | 1 | BEARING | |
| | 8 | 1 | **224-3246** | 1 | BEARING-CONNECTING ROD (STANDARD) | |
| AB | | 1 | **232-3235** | | BEARING-CONNECTING ROD (0.64-MM US) | |
| AB | | 1 | **232-3236** | | BEARING-CONNECTING ROD (1.27-MM US) | |
| | 9 | 1 | **230-2569** | 2 | RETAINER-PIN | |
| | 10 | 1 | **234-5858** | 1 | BODY AS-PISTON | |

A-NOT PART OF THIS GROUP
B-USE AS REQUIRED
R-REMFG PART MAY BE AVAILABLE

*234-6136* **PISTON & ROD GP** *(contd.)* **i02332299**

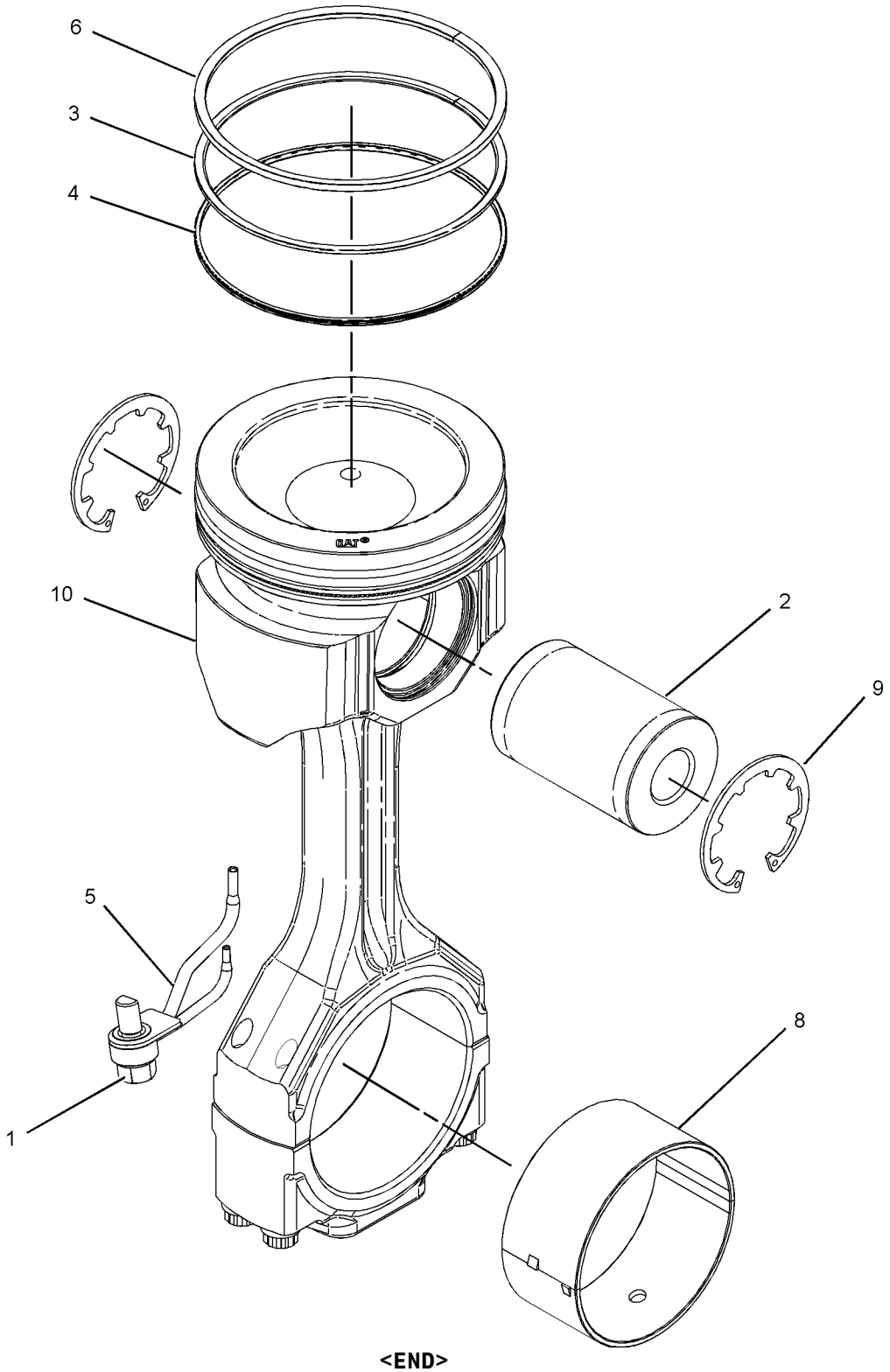


GRAPHIC #1 **<END>** g01052674

# *234-6136* PISTON & ROD GP

**S/N: RHX626-UP**
**16.3:1-COMBUSTION RATIO**
**PART OF 241-5935, 241-5936, 294-3050, 294-7614, 297-3206 ENGINE AR-CORE**
**AN ATTACHMENT**

**SMCS-1225** **i02520888**

| NOTE | REF NO | GRAPHIC REF | PART NUMBER | QTY | PART NAME 1 2 3 4 5 6 (PRODUCT LEVEL) | SEE PAGE |
|---|---|---|---|---|---|---|
| | 1 | 1 | **151-5925** | 1 | BOLT (7/16-14-THD) | |
| | 2 | 1 | **180-7350** | 1 | PIN-PISTON | |
| C | 3 | 1 | **238-2707** | 1 | RING-PISTON (INTERMEDIATE) | |
| C | 4 | 1 | **246-5659** | 1 | RING-PISTON (OIL CONTROL) | |
| | 5 | 1 | **274-8359** | 1 | TUBE AS | |
| | 6 | 1 | **223-9159** | 1 | RING-PISTON-TOP | |
| R | 7 | 1 | **224-3245** | 1 | ROD AS | |
| | | 1 | **219-4458** | 2 | PIN-DOWEL | |
| | | 1 | **213-3217** | 4 | BOLT (M11X1.25X84-MM) | |
| | | 1 | **229-6259** | 1 | BEARING | |
| | 8 | 1 | **224-3246** | 1 | BEARING-CONNECTING ROD (STANDARD) | |
| AB | | 1 | **232-3235** | | BEARING-CONNECTING ROD (0.64-MM US) | |
| AB | | 1 | **232-3236** | | BEARING-CONNECTING ROD (1.27-MM US) | |
| | 9 | 1 | **230-2569** | 2 | RETAINER-PIN | |
| C | 10 | 1 | **247-7745** | 1 | BODY AS | |

A-NOT PART OF THIS GROUP
B-USE AS REQUIRED
C-CHANGE FROM PREVIOUS TYPE
R-REMFG PART MAY BE AVAILABLE

*234-6136* **PISTON & ROD GP** *(contd.)* **i02520888**

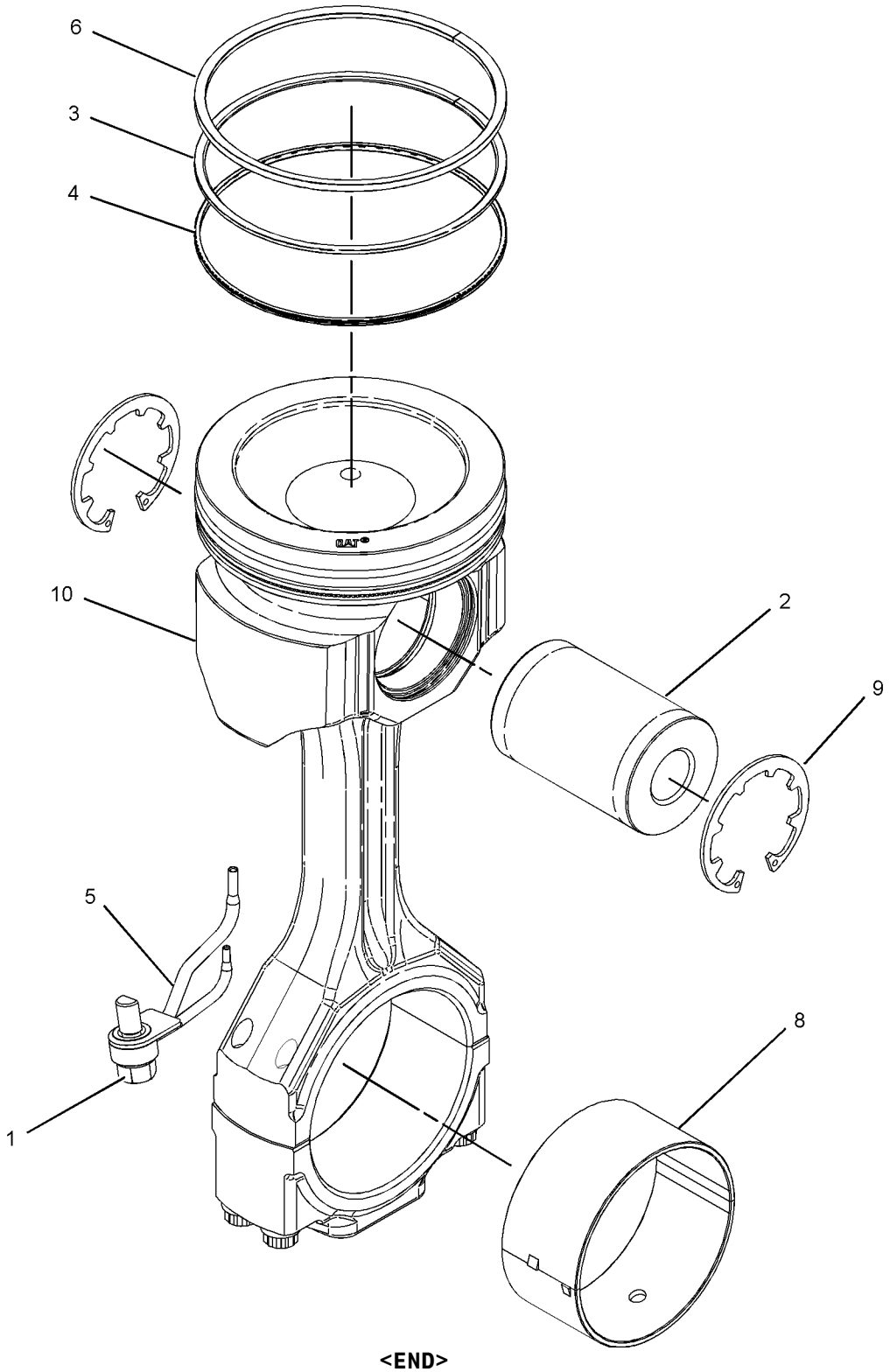


GRAPHIC #1 **<END>** g01052674

# 235-8397 PLUG GP-CYLINDER BLOCK

**S/N: RHX1-UP**
**PART OF 221-8124, 247-3315, 272-3086, 272-3087, 292-2553, 292-2554 ENGINE**
**AR-COMPLETE**
**AN ATTACHMENT**

**SMCS-1201** **i02014496**

| NOTE | REF NO | GRAPHIC REF | PART NUMBER | QTY | PART NAME 1 2 3 4 5 6 (PRODUCT LEVEL) | SEE PAGE |
|---|---|---|---|---|---|---|
| | 1 | 1 | **136-7227** | 1 | SEAL-O-RING | |
| | 3 | 1 | **9S-8002** | 1 | PLUG-O-RING | |
| | 3A | 1 | **033-5853** | 1 | SEAL-O-RING | |
| | 4 | 1 | **8L-2786** | 5 | SEAL-O-RING | |
| | 5 | 1 | **9S-8005** | 8 | PLUG-O-RING | |
| | 5A | 1 | **6V-6609** | 3 | SEAL-O-RING | |
| | 6 | 1 | **9S-8006** | 1 | PLUG-O-RING | |

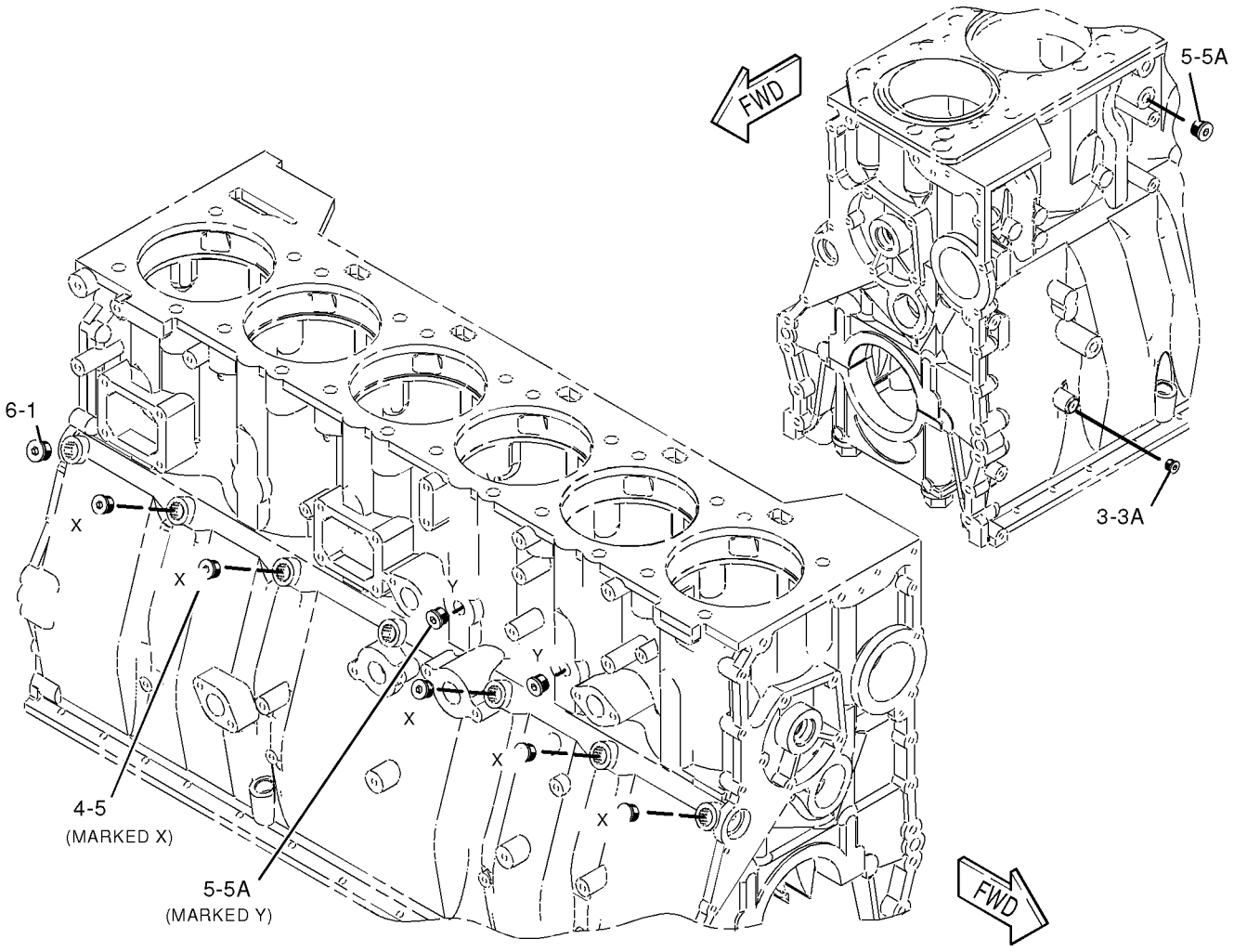


GRAPHIC #1 **<END>** g01045322

# *305-9196* PLUG GP-CYLINDER BLOCK

**S/N: RHX4918-UP**
**PART OF 261-0191 CYLINDER BLOCK GP**
**AN ATTACHMENT**

**SMCS-1201** **i02680401**

| NOTE | REF NO | GRAPHIC REF | PART NUMBER | QTY | PART NAME 1 2 3 4 5 6 (PRODUCT LEVEL) | SEE PAGE |
|---|---|---|---|---|---|---|
| | 1 | 1 | **6V-5065** | 1 | SEAL-O-RING | |
| | 2 | 1 | **9S-8010** | 1 | PLUG | |

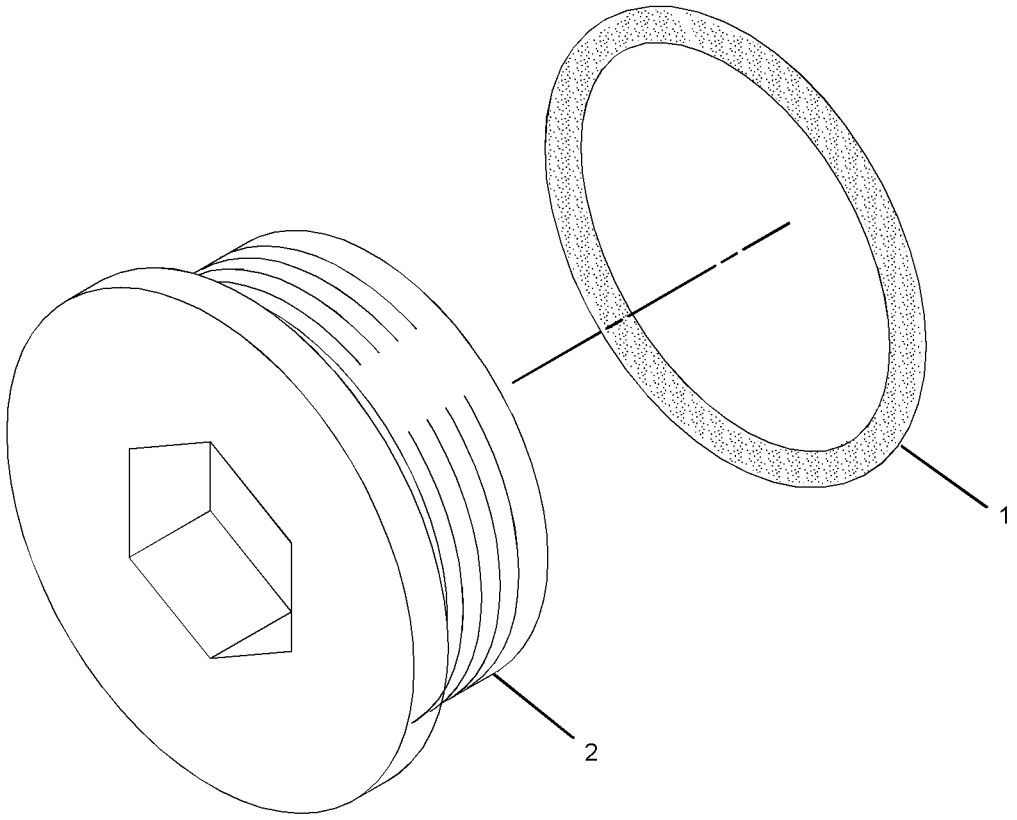


GRAPHIC #1 **<END>** g01347363

# *229-6711* PLUG GP-CYLINDER HEAD

**S/N: RHX1-UP**

**PART OF 221-8124, 247-3315, 272-3086, 272-3087, 292-2553, 292-2554 ENGINE**

**AR-COMPLETE**

**FOR USE WITH AIR COMPRESSOR COVER GROUP IF NO AIR COMPRESSOR**

**AN ATTACHMENT**

**SMCS-1100** **i03236061**

| NOTE | REF NO | GRAPHIC REF | PART NUMBER | QTY | PART NAME 1 2 3 4 5 6 (PRODUCT LEVEL) | SEE PAGE |
|---|---|---|---|---|---|---|
| | 1 | 1 | **6V-6609** | 1 | SEAL-O-RING | |
| | 2 | 1 | *183-3408* | 4 | PLUG AS (MARKED X) | |
| | | | | | (EACH INCLUDES) | |
| | 2A | 1 | **9S-8004** | 1 | PLUG-O-RING | |
| | 2B | 1 | **214-7568** | 1 | SEAL-O-RING | |
| | 3 | 1 | **6V-3251** | 1 | SEAL-O-RING | |
| | 4 | 1 | **9S-8006** | 1 | PLUG-O-RING | |
| | 5 | 1 | **9S-8005** | 1 | PLUG-O-RING | |

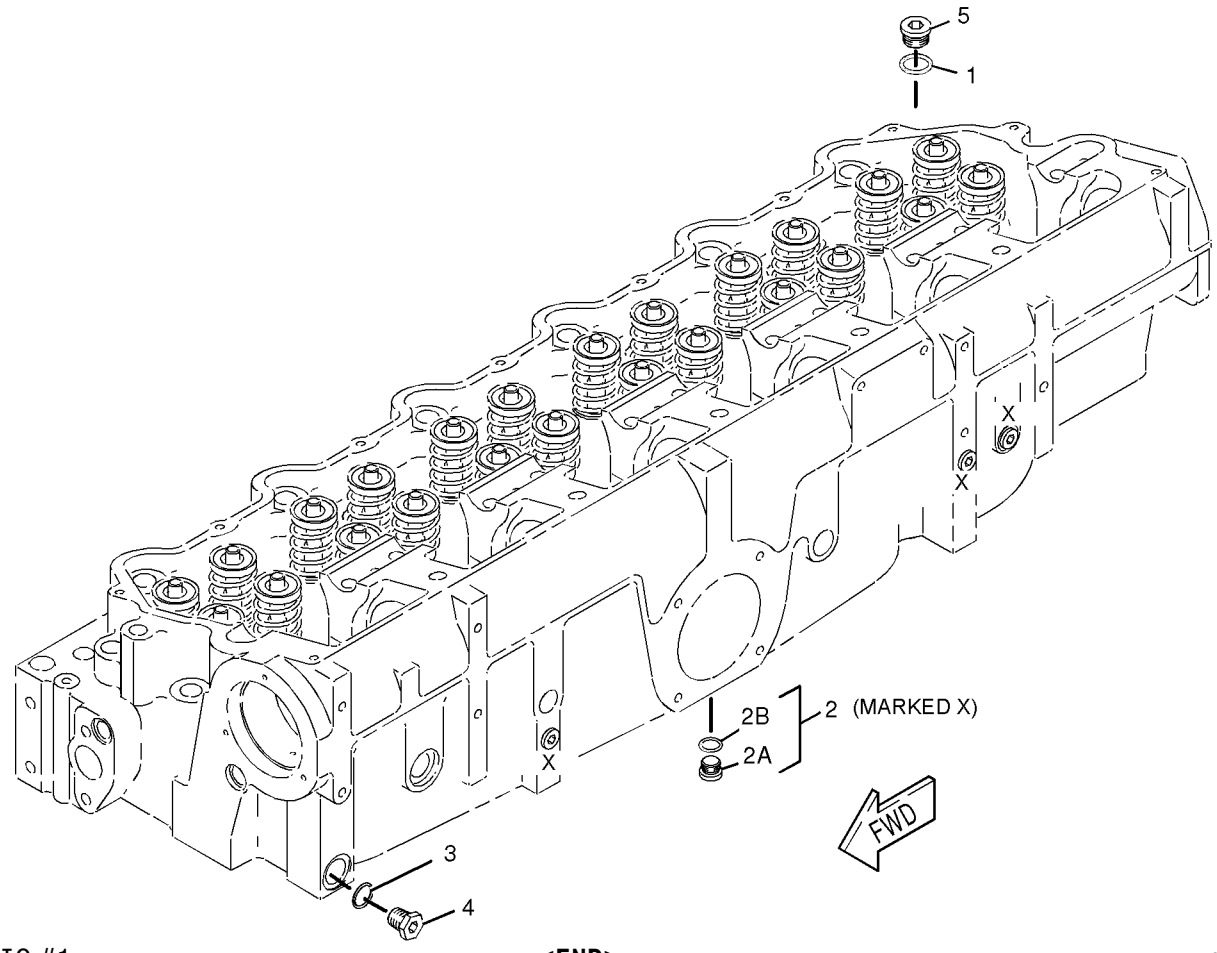


GRAPHIC #1 **<END>** g01037658

# BASIC ENGINE

## *170-1757* PULLEY GP-CRANKSHAFT

**S/N: RHX1-UP**

**PART OF 272-3086, 272-3087, 292-2553, 292-2554 ENGINE AR-COMPLETE**

**AN ATTACHMENT**

**SMCS-1205** **i01288019**

| NOTE | REF NO | GRAPHIC REF | PART NUMBER | QTY | PART NAME 1 2 3 4 5 6 (PRODUCT LEVEL) | SEE PAGE |
|---|---|---|---|---|---|---|
| | 1 | 1 | **172-4848** | 1 | PULLEY (8 GROOVE) | |
| | 2 | 1 | **7X-0345** | 4 | BOLT (5/8-11X1.75IN) | |

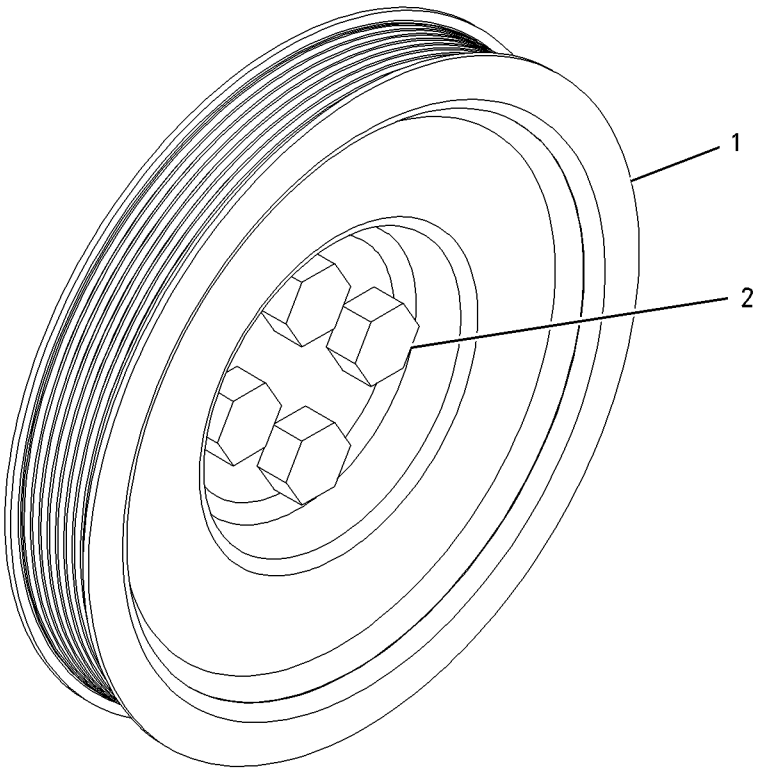


GRAPHIC #1 **<END>** g00684206

# *198-9898* ROCKER ARM GP

**S/N: RHX1-2217**

**PART OF 148-7482 MECHANISM GP-FUEL PUMP & VALVE**

**AN ATTACHMENT**

**SMCS-1102, 1123** **i02925746**

| NOTE | REF NO | GRAPHIC REF | PART NUMBER | QTY | PART NAME 1 2 3 4 5 6 (PRODUCT LEVEL) | SEE PAGE |
|---|---|---|---|---|---|---|
| | 1 | 1 | **6I-0901** | 1 | SHAFT AS-ROCKER ARM | |
| | | 1 | **4B-9782** | 2 | BALL | |
| | 2 | 1 | **276-5317** | 4 | NUT (3/8-24-THD) | |
| | 3 | 1 | **258-8721** | 4 | BUTTON | |
| W | 4 | 1 | **192-4151** | 2 | BUTTON (24-MM OD) | |
| | | | | | —OR— | |
| J | | 1 | **4P-7371** | 2 | INSERT (14.75-MM OD) | |
| W | 5 | 1 | **196-5069** | 2 | SCREW-ARM ADJUSTMENT (9/16-18 THD) | |
| | | | | | —OR— | |
| J | | 1 | **4P-4278** | 2 | SCREW-UNIT INJ ADJUSTMENT (7/8-18 THD) | |
| W | 6 | 1 | **196-5070** | 2 | NUT-JAM (9/16-18-THD) | |
| | | | | | —OR— | |
| J | | 1 | **4P-4279** | 2 | NUT-JAM (7/8-18 THD) | |
| | 7 | 1 | **232-0253** | 4 | SCREW-ARM ADJUSTMENT | |
| R | 8 | 1 | **203-8822** | 2 | ROCKER ARM AS (EXHAUST VALVE ROCKER) | |
| R | 9 | 1 | **203-8824** | 2 | ROCKER ARM AS (INLET VALVE ROCKER) | |
| WR | 10 | 1 | **207-5248** | 2 | ROCKER ARM AS (UNIT INJECTOR ROCKER) | |
| W | 11 | 1 | **061-8639** | 2 | SEAL-O-RING | |
| | | | | | —OR— | |
| J | | 1 | **032-9313** | 2 | SEAL-O-RING | |
| | 12 | 1 | **8L-2777** | 4 | SEAL-O-RING | |

J-PARTS MARKED J MUST BE USED TOGETHER ON OLDER ROCKER ARM ASSEMBLIES
R-REMFG PART MAY BE AVAILABLE
W-PARTS MARKED W MUST BE USED TOGETHER ON NEWER ROCKER ARM ASSEMBLIES

*198-9898* **ROCKER ARM GP** *(contd. )* **i02925746**

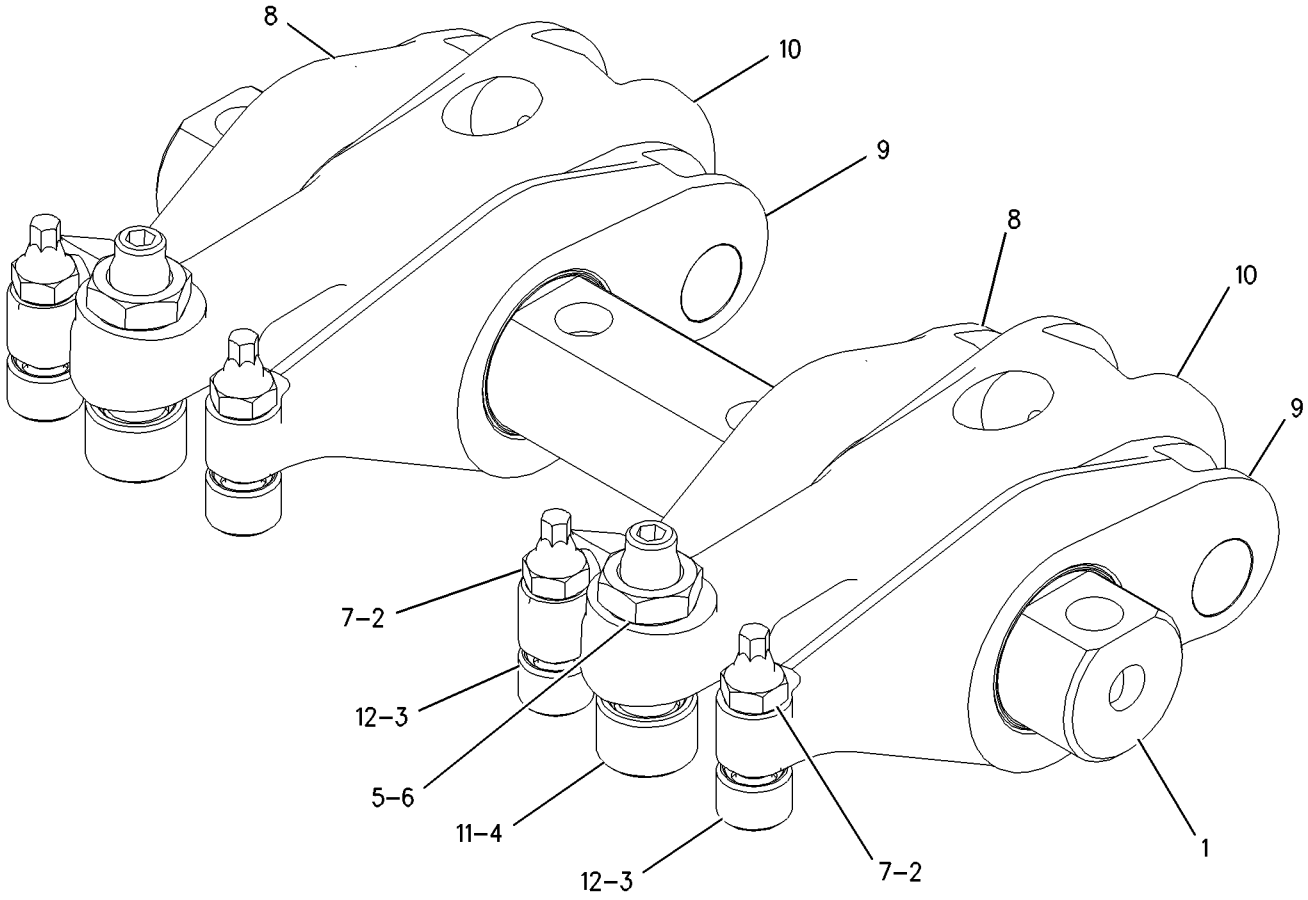


GRAPHIC #1 **<END>** g00905507

# 243-2467 ROCKER ARM GP

**S/N: RHX1-678**

**PART OF 235-0382 MECHANISM GP-FUEL PUMP & VALVE AN ATTACHMENT**

**SMCS-1102, 1123** **i02651880**

| NOTE | REF NO | GRAPHIC REF | PART NUMBER | QTY | PART NAME 1 2 3 4 5 6 (PRODUCT LEVEL) | SEE PAGE |
|---|---|---|---|---|---|---|
| | 1 | 1 | **6I-0901** | 1 | SHAFT AS-ROCKER ARM | |
| | | 1 | **4B-9782** | 2 | BALL | |
| | 2 | 1 | **276-5317** | 4 | NUT (3/8-24-THD) | |
| | 3 | 1 | **258-8721** | 4 | BUTTON | |
| | 4 | 1 | **192-4151** | 2 | BUTTON | |
| | 5 | 1 | **196-5069** | 2 | SCREW-ARM ADJUSTMENT | |
| | 6 | 1 | **196-5070** | 2 | NUT-JAM (9/16-18-THD) | |
| | 7 | 1 | **232-0253** | 4 | SCREW-ARM ADJUSTMENT | |
| R | 8 | 1 | **259-6122** | 4 | ROCKER ARM AS | |
| R | 9 | 1 | **243-2466** | 2 | ROCKER ARM AS (UNIT INJECTOR) | |
| | 10 | 1 | **061-8639** | 2 | SEAL-O-RING | |
| | 11 | 1 | **8L-2777** | 4 | SEAL-O-RING | |

R-REMFG PART MAY BE AVAILABLE

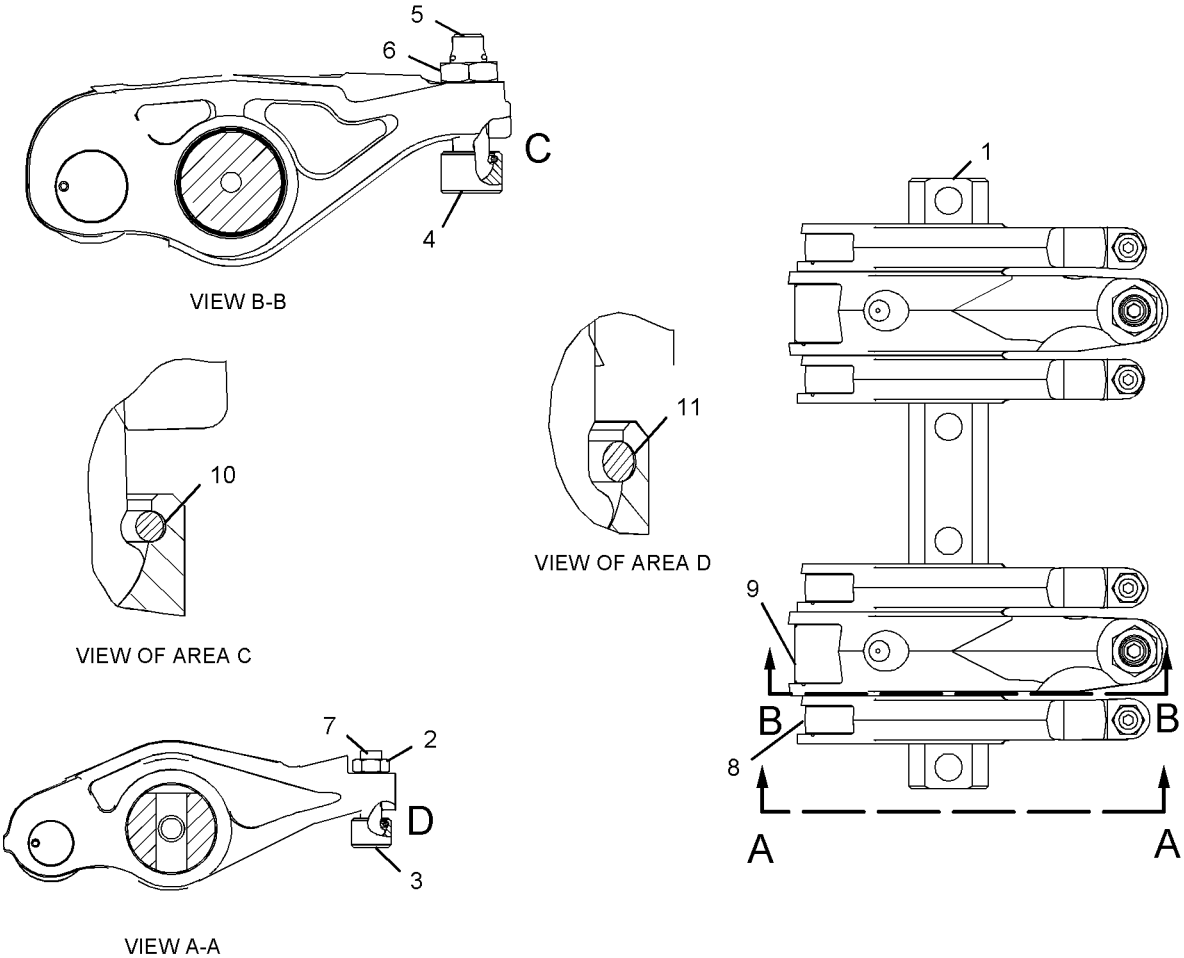


GRAPHIC #1 **<END>** g01053106

# *262-7100* ROCKER ARM GP

**S/N: RHX679-2176**

**PART OF 266-3699 MECHANISM GP-FUEL PUMP & VALVE**

**AN ATTACHMENT**

**SMCS-1102, 1123** **i02475503**

| NOTE | REF NO | GRAPHIC REF | PART NUMBER | QTY | PART NAME 1 2 3 4 5 6 (PRODUCT LEVEL) | SEE PAGE |
|---|---|---|---|---|---|---|
| | 1 | 1 | **6I-0901** | 1 | SHAFT AS-ROCKER ARM | |
| | | 1 | **4B-9782** | 2 | BALL | |
| | 2 | 1 | **276-5317** | 4 | NUT (3/8-24-THD) | |
| | 3 | 1 | **258-8721** | 1 | BUTTON | |
| | 4 | 1 | **192-4151** | 2 | BUTTON | |
| | 5 | 1 | **196-5069** | 2 | SCREW-ARM ADJUSTMENT | |
| | 6 | 1 | **196-5070** | 2 | NUT-JAM (9/16-18-THD) | |
| | 7 | 1 | **232-0253** | 4 | SCREW-ARM ADJUSTMENT | |
| | 8 | 1 | **262-6880** | 2 | ROCKER ARM AS | |
| | 9 | 1 | **269-4136** | 2 | ROCKER ARM AS (UNIT INJECTOR) | |
| | 10 | 1 | **061-8639** | 2 | SEAL-O-RING | |
| | 11 | 1 | **8L-2777** | 4 | SEAL-O-RING | |
| R | 12 | 1 | **203-8824** | 2 | ROCKER ARM AS | |

R-REMFG PART MAY BE AVAILABLE

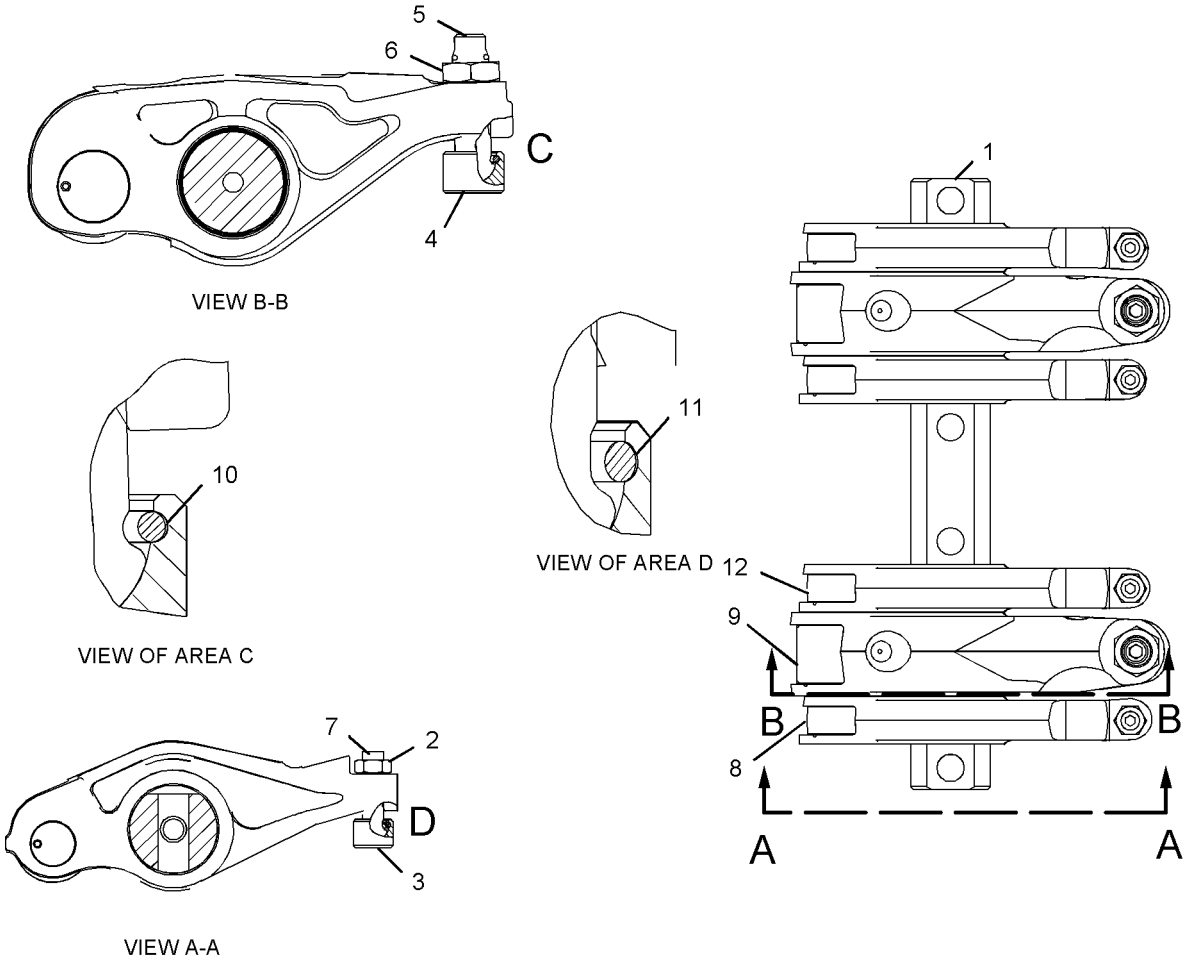


GRAPHIC #1 **<END>** g01128920

# *278-1929* ROCKER ARM GP

**S/N: RHX3837-UP**

**PART OF 190-0009 MECHANISM GP-FUEL PUMP & VALVE**

**AN ATTACHMENT**

**SMCS-1102, 1123** **i03253114**

| NOTE | REF NO | GRAPHIC REF | PART NUMBER | QTY | PART NAME 1 2 3 4 5 6 (PRODUCT LEVEL) | SEE PAGE |
|---|---|---|---|---|---|---|
| | 1 | 1 | **307-8322** | 1 | SHAFT AS-ROCKER ARM | |
| | | 1 | **4B-9782** | 2 | BALL | |
| | 2 | 1 | **276-5317** | 4 | NUT (3/8-24-THD) | |
| | 3 | 1 | **192-4151** | 2 | BUTTON | |
| | 4 | 1 | **196-5069** | 2 | SCREW-ARM ADJUSTMENT | |
| | 5 | 1 | **196-5070** | 2 | NUT-JAM (9/16-18-THD) | |
| R | 6 | 1 | **203-8824** | 4 | ROCKER ARM AS (INLET) | |
| | 7 | 1 | **274-4491** | 4 | SCREW-ARM ADJUSTMENT (3/8-24X1.20-IN) | |
| | 8 | 1 | **258-8721** | 4 | BUTTON | |
| R | 9 | 1 | **278-1365** | 2 | ROCKER ARM AS (EXHAUST) | |
| | 10 | 1 | **061-8639** | 2 | SEAL-O-RING | |
| | 11 | 1 | **8L-2777** | 4 | SEAL-O-RING | |

R-REMFG PART MAY BE AVAILABLE

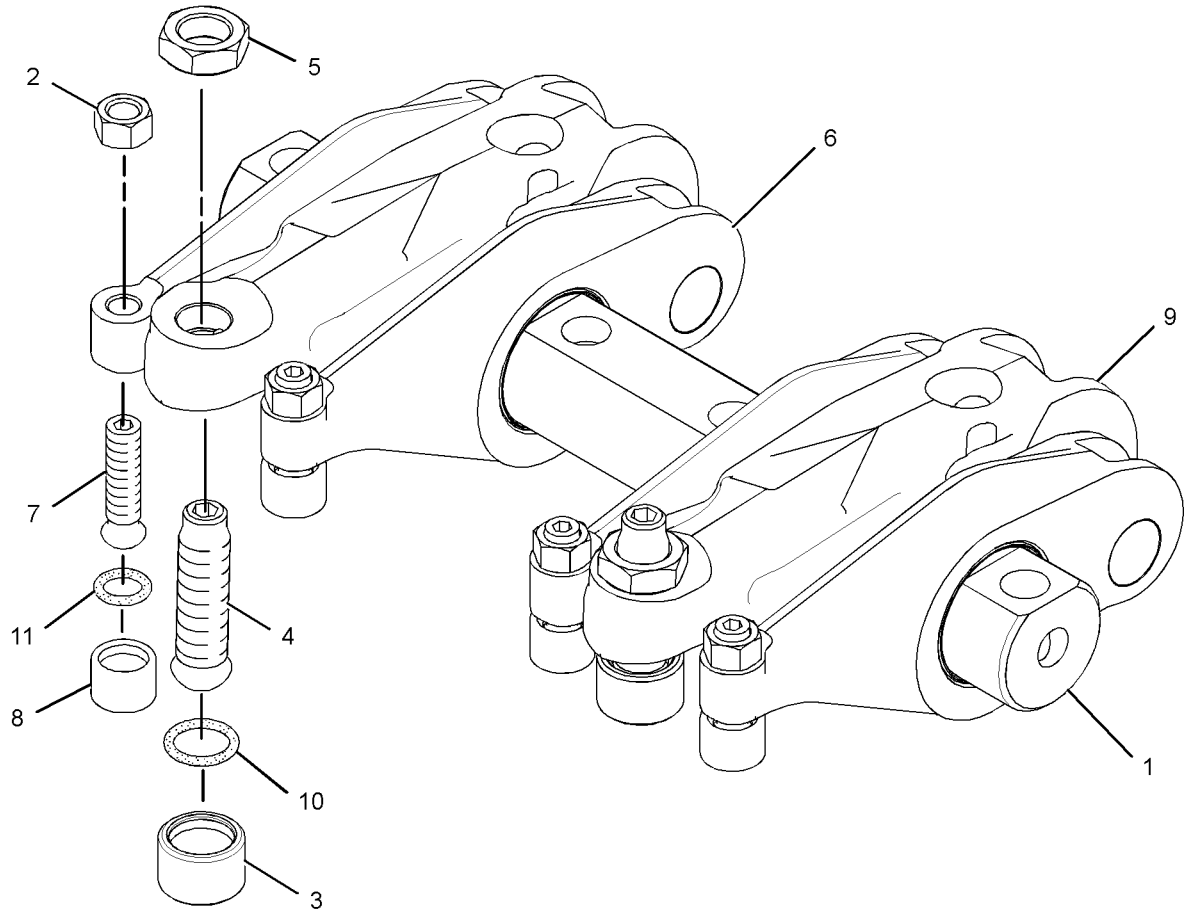


GRAPHIC #1 **<END>** g01653913

# *278-1938* ROCKER ARM GP

**S/N: RHX2177-UP**

**PART OF 266-3699 MECHANISM GP-FUEL PUMP & VALVE**

**AN ATTACHMENT**

**SMCS-1102, 1123** **i02723838**

| NOTE | REF NO | GRAPHIC REF | PART NUMBER | QTY | PART NAME 1 2 3 4 5 6 (PRODUCT LEVEL) | SEE PAGE |
|---|---|---|---|---|---|---|
| | 1 | 1 | **6I-0901** | 1 | SHAFT AS-ROCKER ARM | |
| | | 1 | **4B-9782** | 2 | BALL | |
| | 2 | 1 | **276-5317** | 4 | NUT (3/8-24-THD) | |
| | 3 | 1 | **192-4151** | 2 | BUTTON | |
| | 4 | 1 | **196-5069** | 2 | SCREW-ARM ADJUSTMENT | |
| | 5 | 1 | **196-5070** | 2 | NUT-JAM (9/16-18-THD) | |
| R | 6 | 1 | **203-8824** | 2 | ROCKER ARM AS | |
| | 7 | 1 | **274-4491** | 4 | SCREW-ARM ADJUSTMENT (3/8-24X1.20-IN) | |
| | 8 | 1 | **258-8721** | 4 | BUTTON | |
| R | 9 | 1 | **276-4132** | 2 | ROCKER ARM AS | |
| R | 10 | 1 | **278-1363** | 2 | ROCKER ARM AS | |
| | 11 | 1 | **061-8639** | 2 | SEAL-O-RING | |
| | 12 | 1 | **8L-2777** | 4 | SEAL-O-RING | |

R-REMFG PART MAY BE AVAILABLE

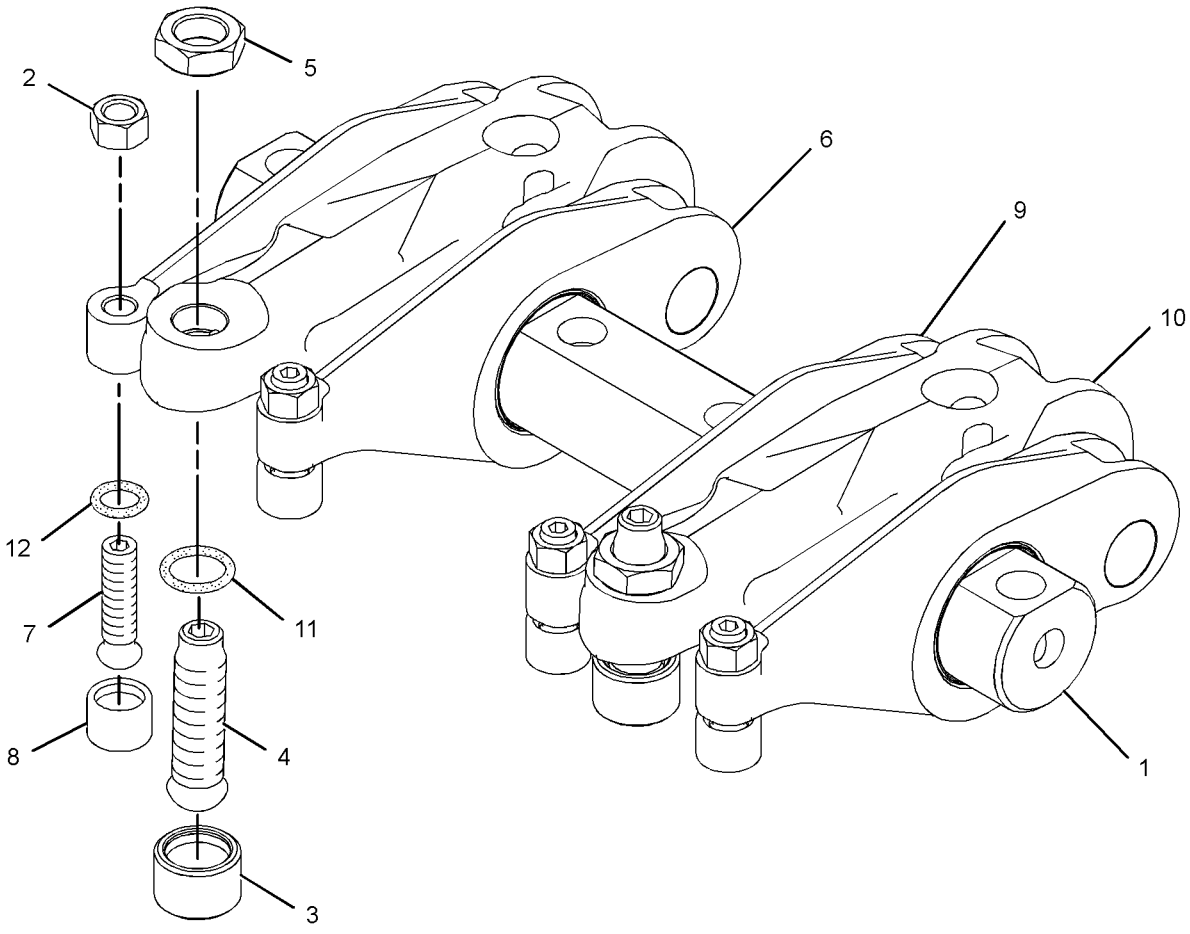


GRAPHIC #1 **<END>** g01306645

# *319-0785* SEAL GP-CRANKSHAFT

**S/N: RHX1-UP**
**PART OF 223-4423, 275-4185 HOUSING GP-FLYWHEEL**
**FOR USE WITH CCW ROTATION, REAR**
**AN ATTACHMENT**

**SMCS-1160, 1161** **i02958100**

| NOTE | REF NO | GRAPHIC REF | PART NUMBER | QTY | PART NAME 1 2 3 4 5 6 (PRODUCT LEVEL) | SEE PAGE |
|---|---|---|---|---|---|---|
| | 1 | 1 | **142-5868** | 1 | SEAL-CRANKSHAFT (REAR) | |

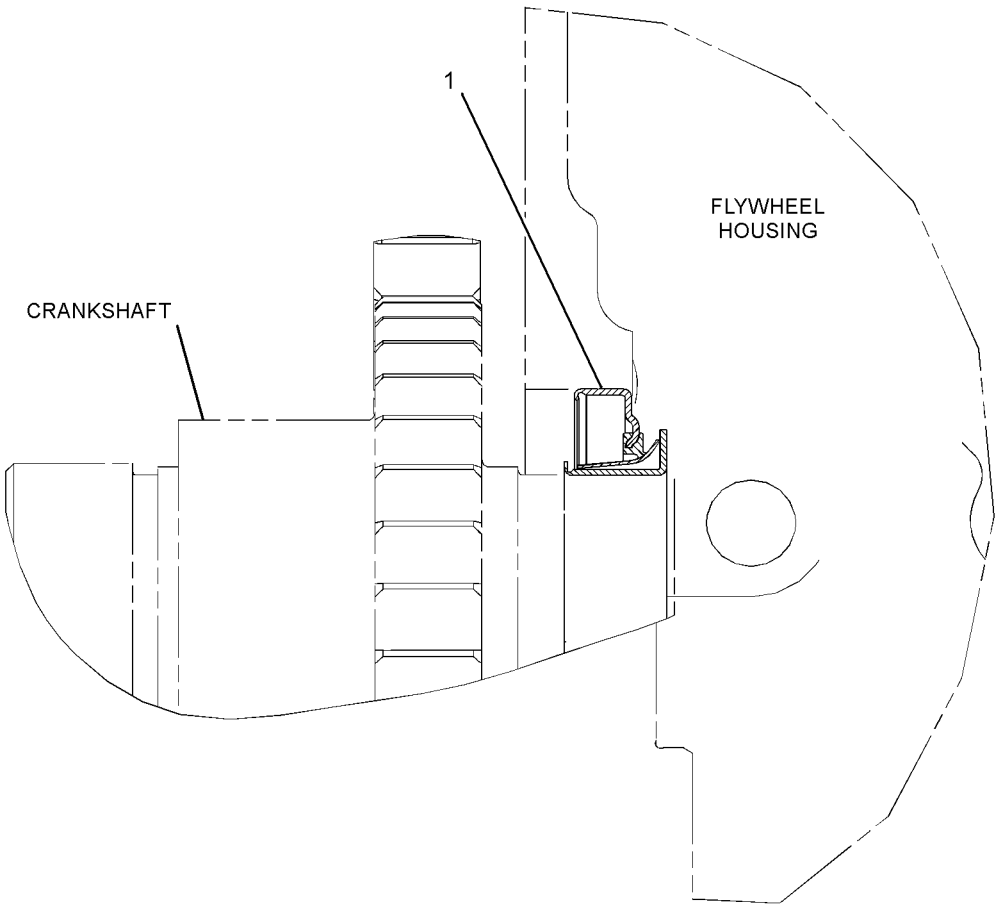


RIGHT SIDE VIEW OF ENGINE

GRAPHIC #1 **<END>** g01496733

# BASIC ENGINE

## *319-7401* SEAL GP-CRANKSHAFT

**S/N: RHX1-UP**
**PART OF 223-9732 CRANKSHAFT GP**
**AN ATTACHMENT**

**SMCS-1160, 1161** **i02957871**

| NOTE | REF NO | GRAPHIC REF | PART NUMBER | QTY | PART NAME 1 2 3 4 5 6 (PRODUCT LEVEL) | SEE PAGE |
|---|---|---|---|---|---|---|
| | 1 | 1 | **142-5867** | 1 | SEAL GP-CRANKSHAFT (FRONT) | |

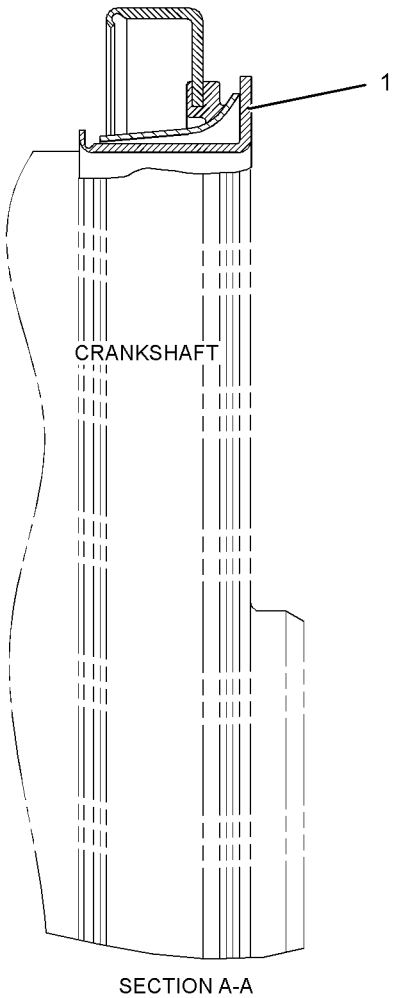


SECTION A-A

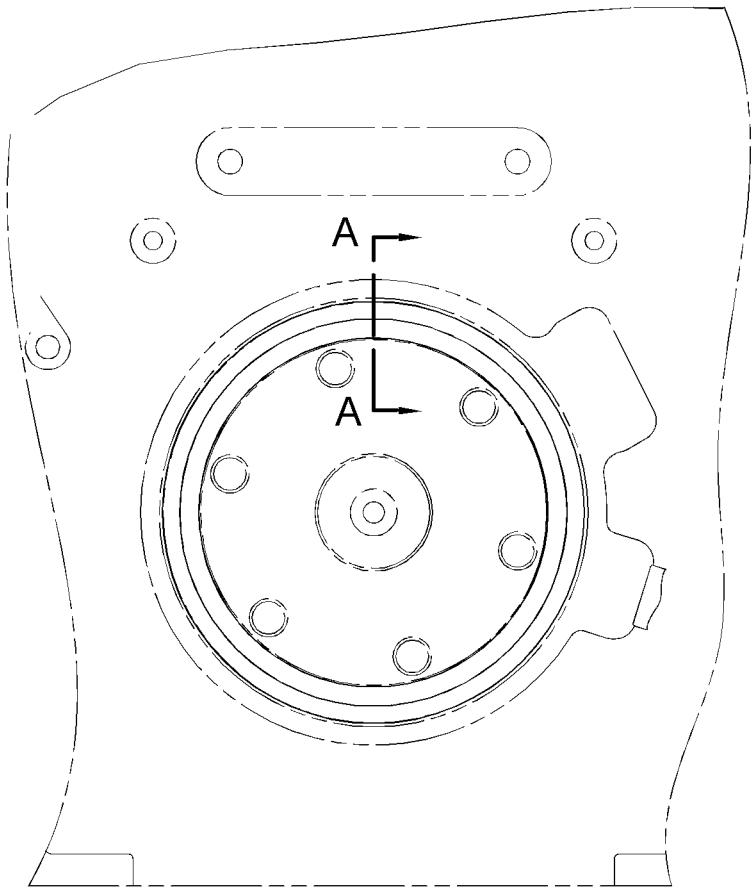


FRONT VIEW OF ENGINE

GRAPHIC #1

**<END>**

g01516169

## *185-6278* SUPPORT GP-ENGINE

**S/N: RHX1-UP**

**PART OF 272-3086, 272-3087, 292-2553, 292-2554 ENGINE AR-COMPLETE AN ATTACHMENT**

**SMCS-1152, 1153, 1154** **i02047053**

| NOTE | REF NO | GRAPHIC REF | PART NUMBER | QTY | PART NAME 1 2 3 4 5 6 (PRODUCT LEVEL) | SEE PAGE |
|---|---|---|---|---|---|---|
| | 1 | 1 | **227-3872** | 1 | SUPPORT-ENGINE | |
| | 2 | 1 | **5P-8245** | 8 | WASHER-HARD (13.5X25.5X3-MM THK) | |
| | 3 | 1 | **9X-8878** | 8 | BOLT (1/2-13X5.25-IN) | |

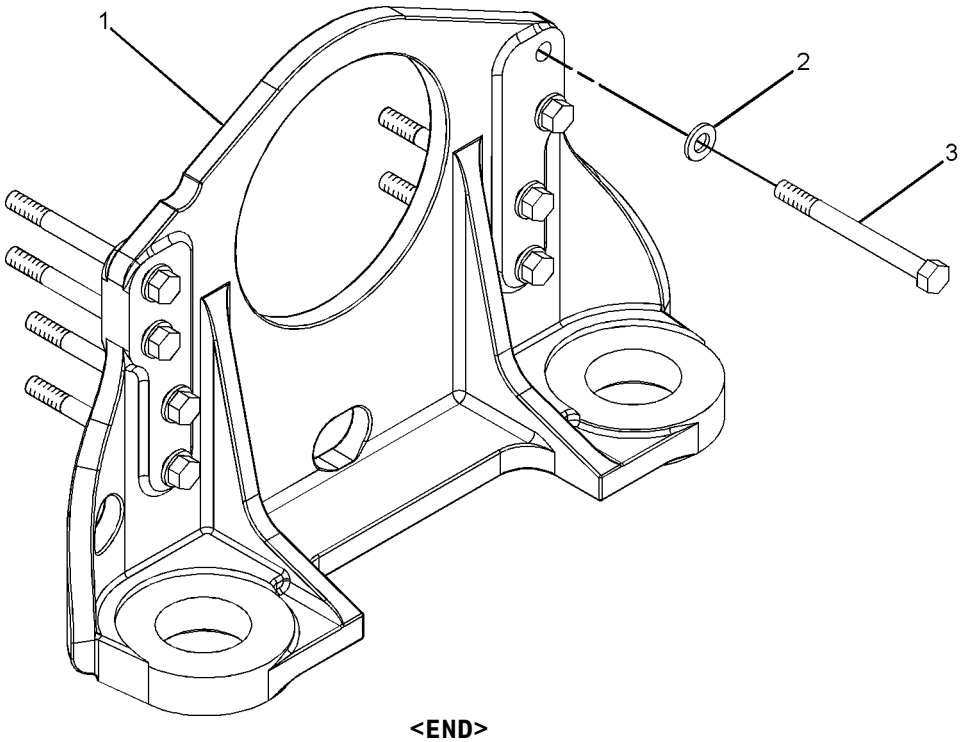


GRAPHIC #1 **<END>** g01054554

# BASIC ENGINE

## *235-5021* SUPPORT GP-ENGINE

**S/N: RHX1-UP**
**PART OF 221-8124, 247-3315 ENGINE AR-COMPLETE**
**AN ATTACHMENT**

**SMCS-1152, 1153, 1154** **i02490113**

| NOTE | REF NO | GRAPHIC REF | PART NUMBER | QTY | PART NAME 1 2 3 4 5 6 (PRODUCT LEVEL) | SEE PAGE |
|---|---|---|---|---|---|---|
| | 1 | 1 | **9Y-7770** | 1 | SUPPORT-ENGINE | |
| | 1A | 1 | **4N-0683** | 2 | DOWEL | |
| | 2 | 1 | **8F-8804** | 8 | BOLT (1/2-13X5.75-IN) | |
| | 3 | 1 | **5P-8245** | 8 | WASHER-HARD (13.5X25.5X3-MM THK) | |

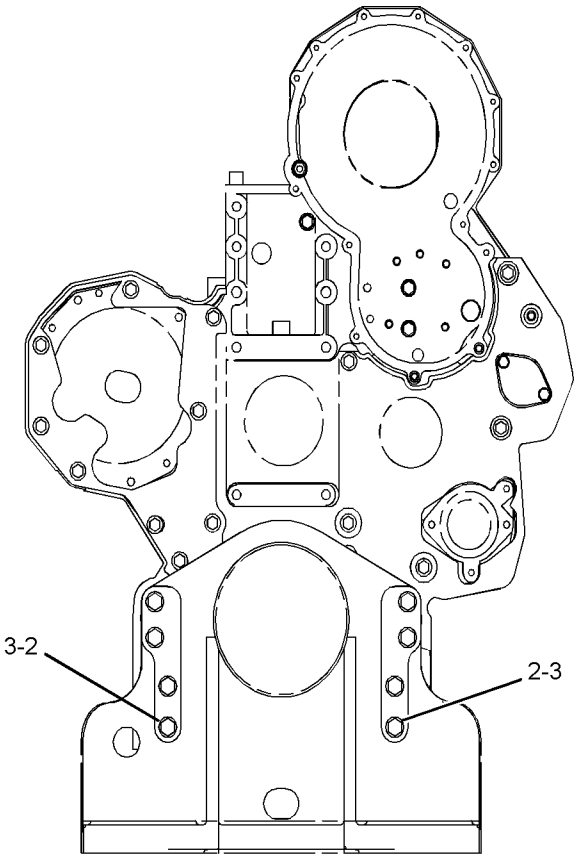


FRONT VIEW

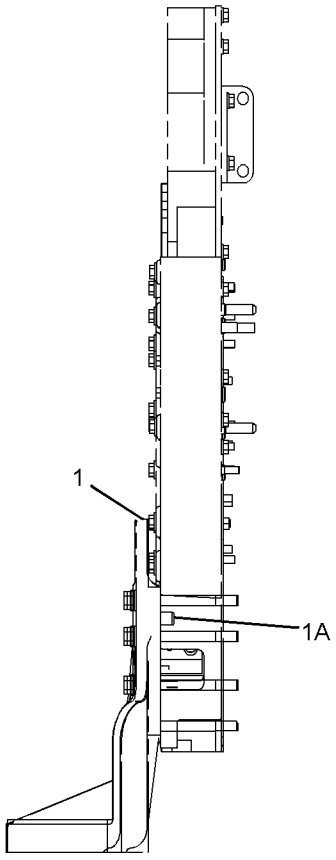


LEFT SIDE VIEW

GRAPHIC #1 **<END>** g01051817

# *235-5805* SUPPORT GP-ENGINE

**S/N: RHX3837-UP**
**PART OF 292-2553 ENGINE AR-COMPLETE**
**AN ATTACHMENT**

**SMCS-1152, 1153, 1154** **i02676633**

| NOTE | REF NO | GRAPHIC REF | PART NUMBER | QTY | PART NAME 1 2 3 4 5 6 (PRODUCT LEVEL) | SEE PAGE |
|---|---|---|---|---|---|---|
| | 1 | 1 | **6I-3968** | 1 | BRACKET-SUPPORT | |
| | 2 | 1 | **101-3120** | 2 | SPACER (10.5X25X20-MM THK) | |
| | 3 | 1 | **0S-1571** | 2 | BOLT (3/8-16X1.75-IN) | |
| | 4 | 1 | **0S-1591** | 2 | BOLT (3/8-16X1.5-IN) | |
| | 5 | 1 | **5M-2894** | 4 | WASHER-HARD (10.2X18.5X2.5-MM THK) | |

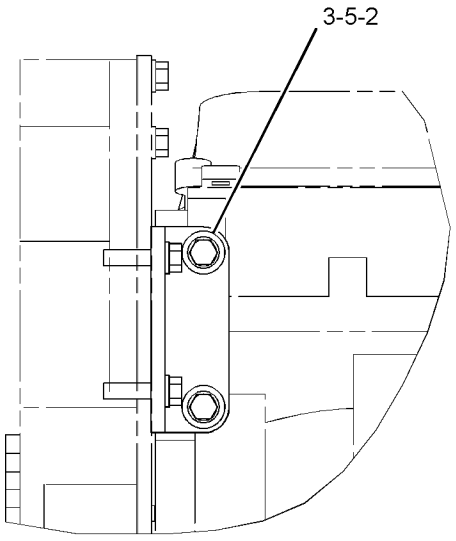


LEFT SIDE VIEW

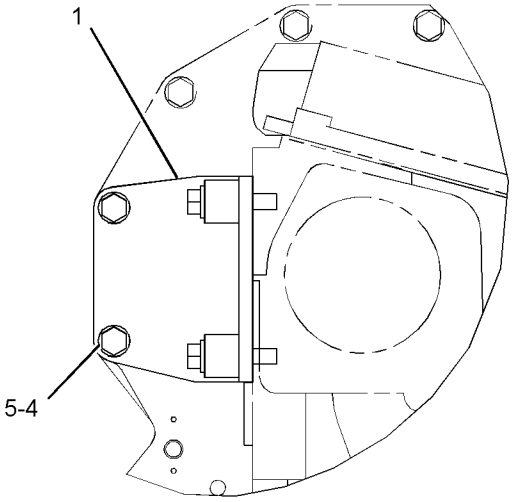


REAR VIEW

GRAPHIC #1 **<END>** g01071857

# BASIC ENGINE

## *270-4249* SUPPORT GP-ENGINE

**S/N: RLB1-UP**

**PART OF 270-4248, 308-5826 INSTALLATION AR-ENGINE**

**SMCS-1152, 1153, 1154** **i02706947**

| NOTE | REF NO | GRAPHIC REF | PART NUMBER | QTY | PART NAME 1 2 3 4 5 6 (PRODUCT LEVEL) | SEE PAGE |
|---|---|---|---|---|---|---|
| | 1 | 1 | **6Y-2065** | 2 | MOUNT AS | |
| | 2 | 1 | **7E-0658** | 2 | SUPPORT-ENGINE | |
| | 3 | 1 | **8W-6731** | 2 | WASHER (27X100X12-MM THK) | |
| | 4 | 1 | **9W-6582** | 4 | SLEEVE | |
| | 5 | 1 | **9W-9930** | 4 | MOUNT AS | |
| | 6 | 1 | **245-1363** | 2 | CAP | |
| | 7 | 1 | **273-9921** | 1 | SUPPORT AS | |
| M | 7A | 1 | **8T-3851** | 4 | BOSS-WELD (M10X1.5X17.5-MM) | |
| M | 7B | 1 | **8T-4935** | 1 | BOSS-WELD (M10X1.5X45-MM) | |
| M | 7C | 1 | **9R-2613** | 1 | BOSS-WELD (M10X1.5X25-MM) | |
| M | 9 | 1 | **7X-2568** | 2 | BOLT (M20X2.5X180-MM) | |
| M | 10 | 1 | **7X-2569** | 2 | BOLT (M20X2.5X200-MM) | |
| M | 11 | 1 | **7X-2532** | 4 | BOLT (M20X2.5X130-MM) | |
| | 12 | 1 | **8T-4123** | 14 | WASHER (22X35X3.5-MM THK) | |
| M | 13 | 1 | **8T-4131** | 8 | NUT (M20X2.5-THD) | |
| | 14 | 1 | **8T-5439** | 2 | WASHER-HARD (21.5X45X6-MM THK) | |
| M | 15 | 1 | **8T-7338** | 14 | BOLT (M16X2X45-MM) | |
| | 16 | 1 | **9W-6584** | 6 | WASHER (20.5X114X10-MM THK) | |
| | 17 | 1 | **9X-8257** | 14 | WASHER (17.5X30X3.5-MM THK) | |

M-METRIC PART

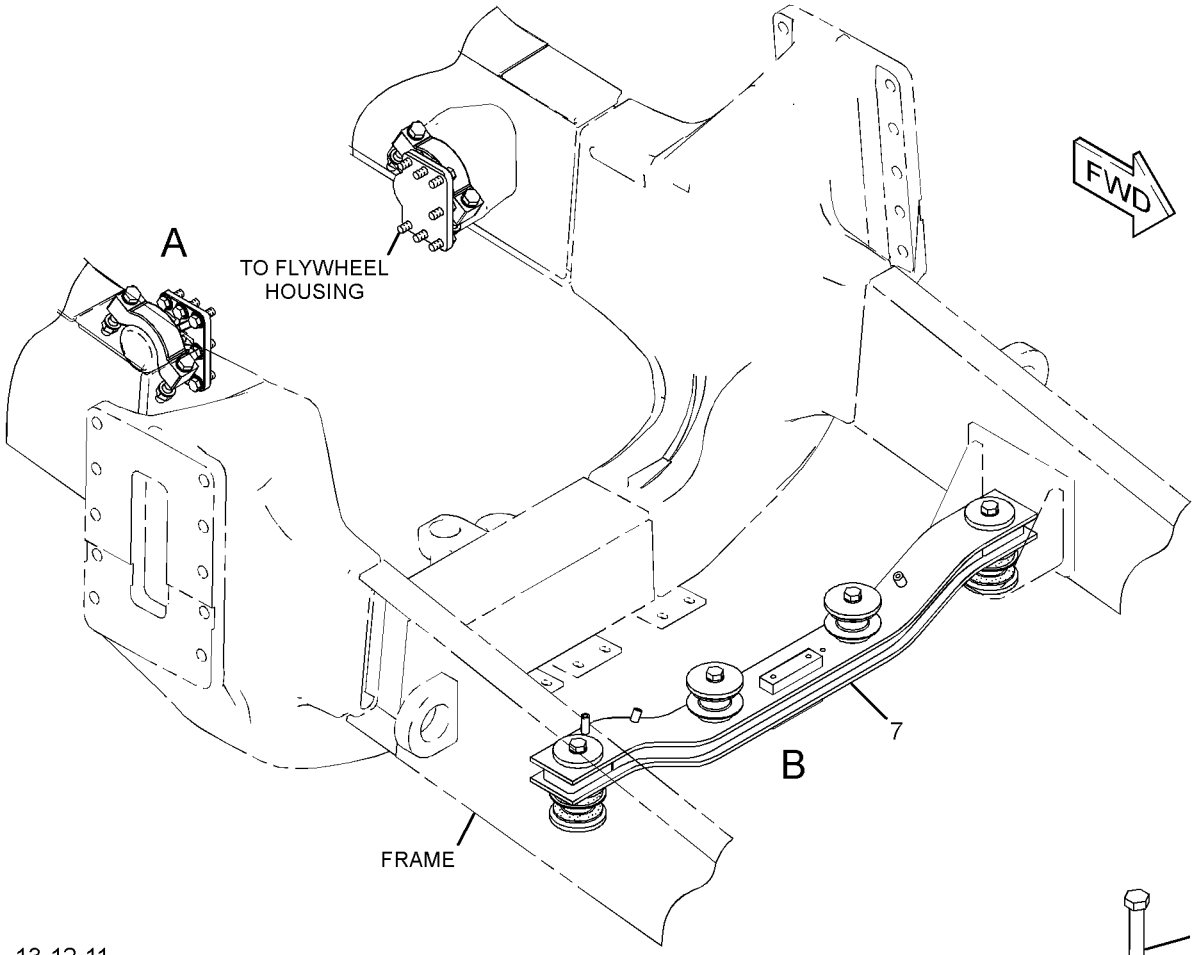


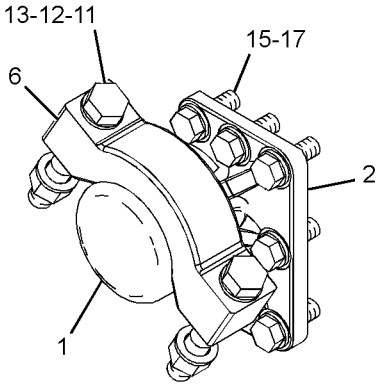


VIEW OF AREA A

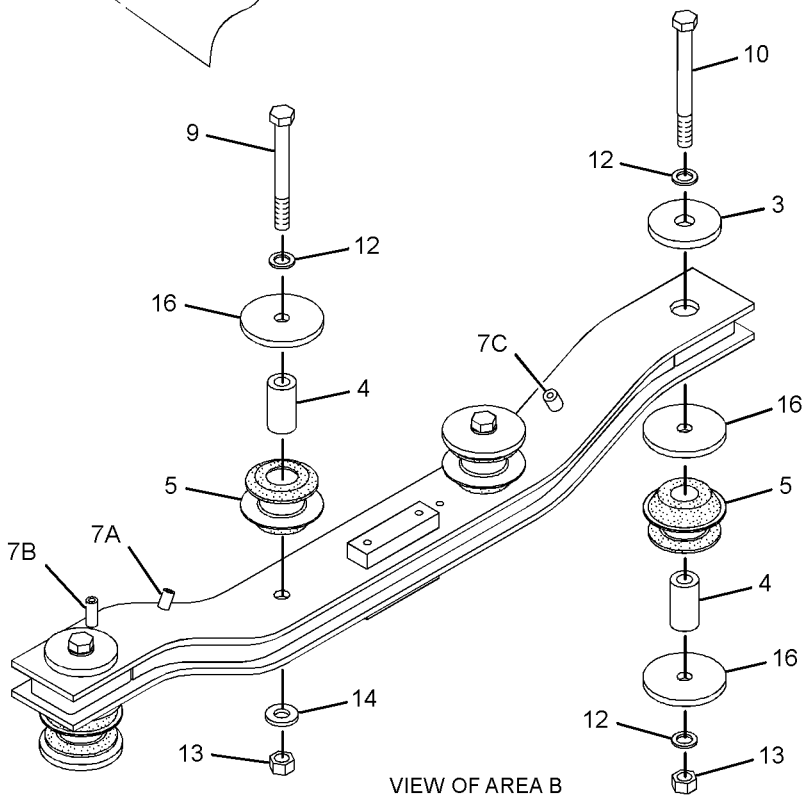


VIEW OF AREA B

GRAPHIC #1 **<END>** g01344441

# LUBRICATION SYSTEM

## 121-2471 BASE GP-OIL FILTER–ENGINE

**S/N: RHX1-2123**
**PART OF 155-4800 FILTER GP-ENGINE OIL**
**AN ATTACHMENT**

**SMCS-1306** **i02163505**

| NOTE | REF NO | GRAPHIC REF | PART NUMBER | QTY | PART NAME 1 2 3 4 5 6 (PRODUCT LEVEL) | SEE PAGE |
|---|---|---|---|---|---|---|
| C | 1 | 1 | **176-1363** | 1 | BASE GP-OIL FILTER (ENGINE) | |
| | | 1 | **9L-7657** | 2 | PLUG-CUP | |
| | | 1 | **2P-4304** | 1 | STUD-HOLLOW | |
| | 2 | 1 | **9S-4191** | 1 | PLUG-O-RING | |
| | 3 | 1 | **6V-5049** | 2 | SEAL-O-RING | |
| | 4 | 1 | **5P-3501** | 1 | ADAPTER | |
| | 5 | 1 | **8T-6765** | 1 | PLUG-PIPE | |
| | 6 | 1 | **9M-0853** | 2 | PLUNGER-VALVE | |
| | 7 | 1 | **4N-8150** | 2 | SPRING | |
| | 8 | 1 | **5P-7701** | 2 | SEAL-O-RING | |
| | 9 | 1 | **9S-9334** | 2 | PLUG-O-RING | |

C-CHANGE FROM PREVIOUS TYPE

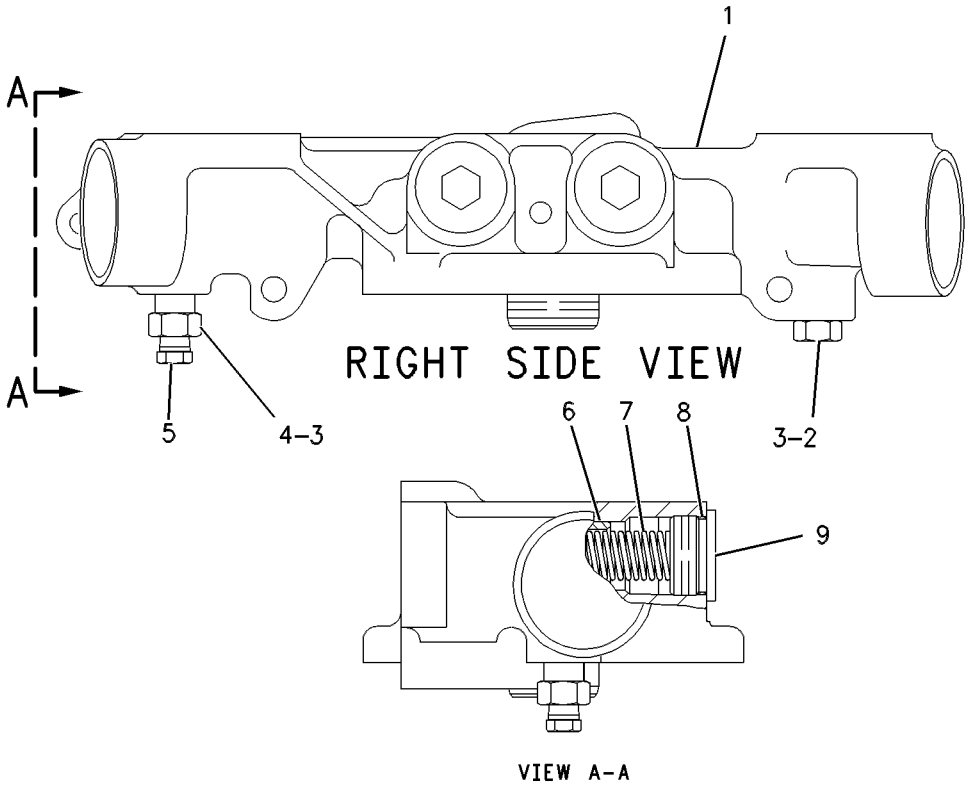


GRAPHIC #1 **<END>** g00598034

# 176-1363 BASE GP-OIL FILTER–ENGINE

**S/N: RHX2124-UP**
**PART OF 200-0655 BASE GP-OIL FILTER**
**AN ATTACHMENT**

**SMCS-1306** **i02459914**

| NOTE | REF NO | GRAPHIC REF | PART NUMBER | QTY | PART NAME 1 2 3 4 5 6 (PRODUCT LEVEL) | SEE PAGE |
|---|---|---|---|---|---|---|
| | 1 | 1 | **2P-4304** | 1 | STUD-HOLLOW | |
| | 2 | 1 | **9L-7657** | 2 | PLUG-CUP | |

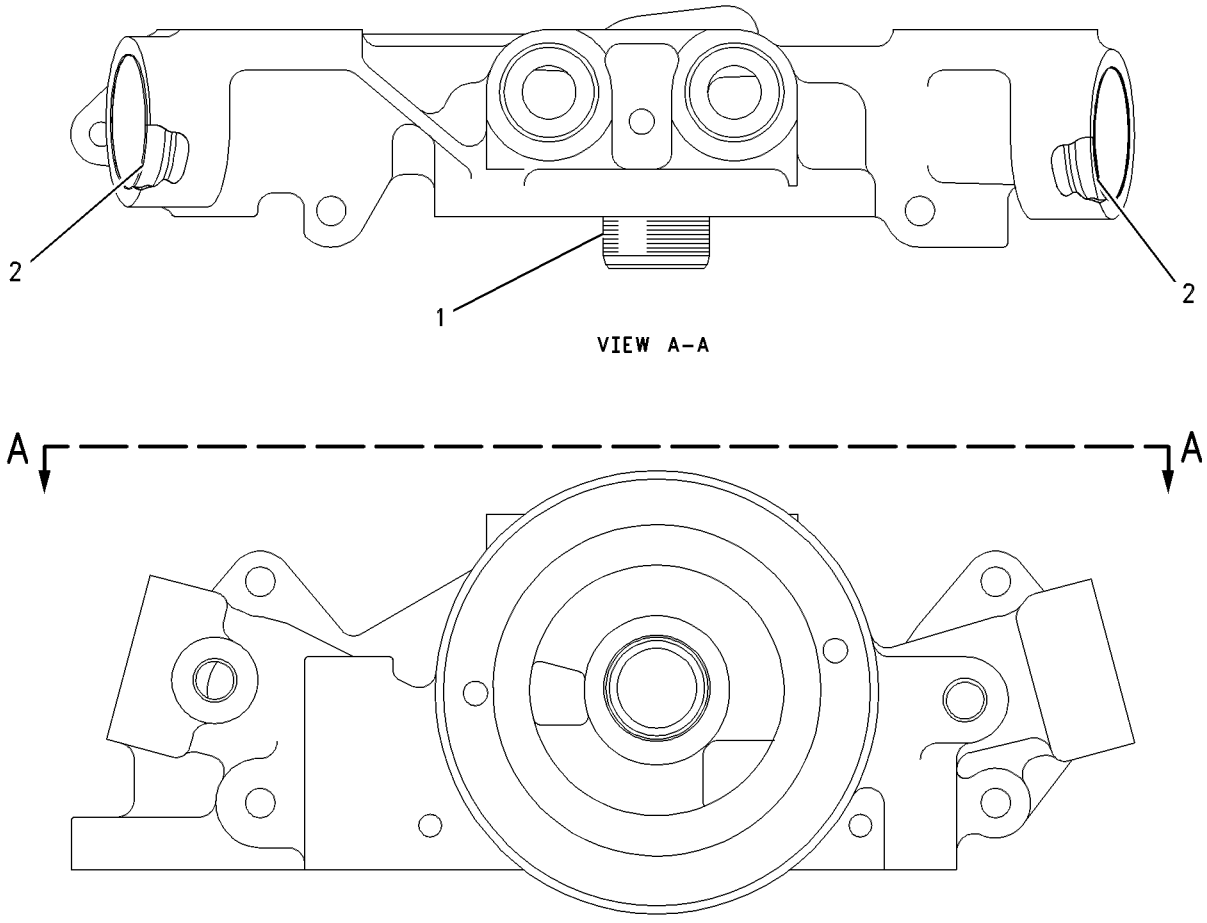


GRAPHIC #1 **<END>** g00638223

# LUBRICATION SYSTEM

## *200-0654* BASE GP-OIL FILTER

**S/N: RHX2124-UP**
**PART OF 244-6815 FILTER GP-ENGINE OIL**
**AN ATTACHMENT**

**SMCS-1306** **i01518303**

| NOTE | REF NO | GRAPHIC REF | PART NUMBER | QTY | PART NAME 1 2 3 4 5 6 (PRODUCT LEVEL) | SEE PAGE |
|---|---|---|---|---|---|---|
| Y | 1 | 1 | *200-0655* | 1 | BASE GP-OIL FILTER (ENGINE) | 137 |
| | 2 | 1 | **061-7540** | 2 | SEAL-O-RING | |
| | 3 | 1 | **153-6680** | 1 | ELBOW | |
| | 4 | 1 | **0S-1588** | 4 | BOLT (3/8-16X1.25-IN) | |
| | 5 | 1 | **5M-2894** | 4 | WASHER-HARD (10.2X18.5X2.5-MM THK) | |

Y-SEPARATE ILLUSTRATION

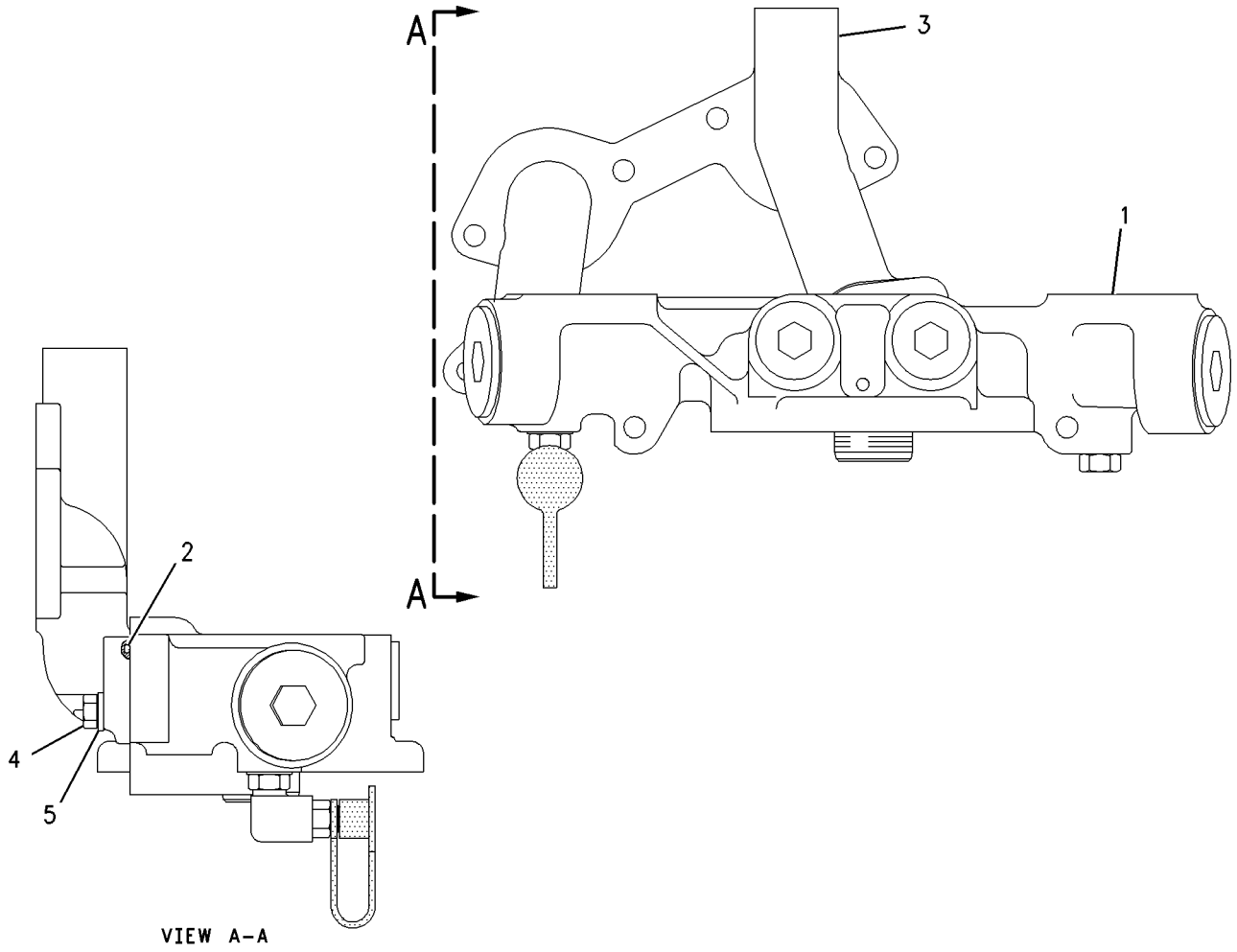


GRAPHIC #1 **<END>** g00788143

# *200-0655* BASE GP-OIL FILTER–ENGINE

**S/N: RHX2124-UP**
**PART OF 200-0654 BASE GP-OIL FILTER**
**AN ATTACHMENT**

**SMCS-1306** **i01522158**

| NOTE | REF NO | GRAPHIC REF | PART NUMBER | QTY | PART NAME 1 2 3 4 5 6 (PRODUCT LEVEL) | SEE PAGE |
|---|---|---|---|---|---|---|
| Y | 1 | 1 | **176-1363** | 1 | BASE GP-OIL FILTER | 135 |
| | 2 | 1 | **9S-4191** | 1 | PLUG-O-RING | |
| | 3 | 1 | **6V-5049** | 2 | SEAL-O-RING | |
| | 4 | 1 | **8C-6712** | 1 | ELBOW | |
| | 5 | 1 | **8C-3446** | 1 | VALVE-FLUID SAMPLING | |
| | 6 | 1 | **1P-1367** | 2 | PLUNGER | |
| | 7 | 1 | **4N-8150** | 2 | SPRING | |
| | 8 | 1 | **5P-7701** | 2 | SEAL-O-RING | |
| | 9 | 1 | **9S-9334** | 2 | PLUG-O-RING | |
| | 10 | 1 | **3J-7354** | 1 | SEAL-O-RING | |
| | 11 | 1 | **8C-3445** | 1 | CAP-DUST | |

Y-SEPARATE ILLUSTRATION

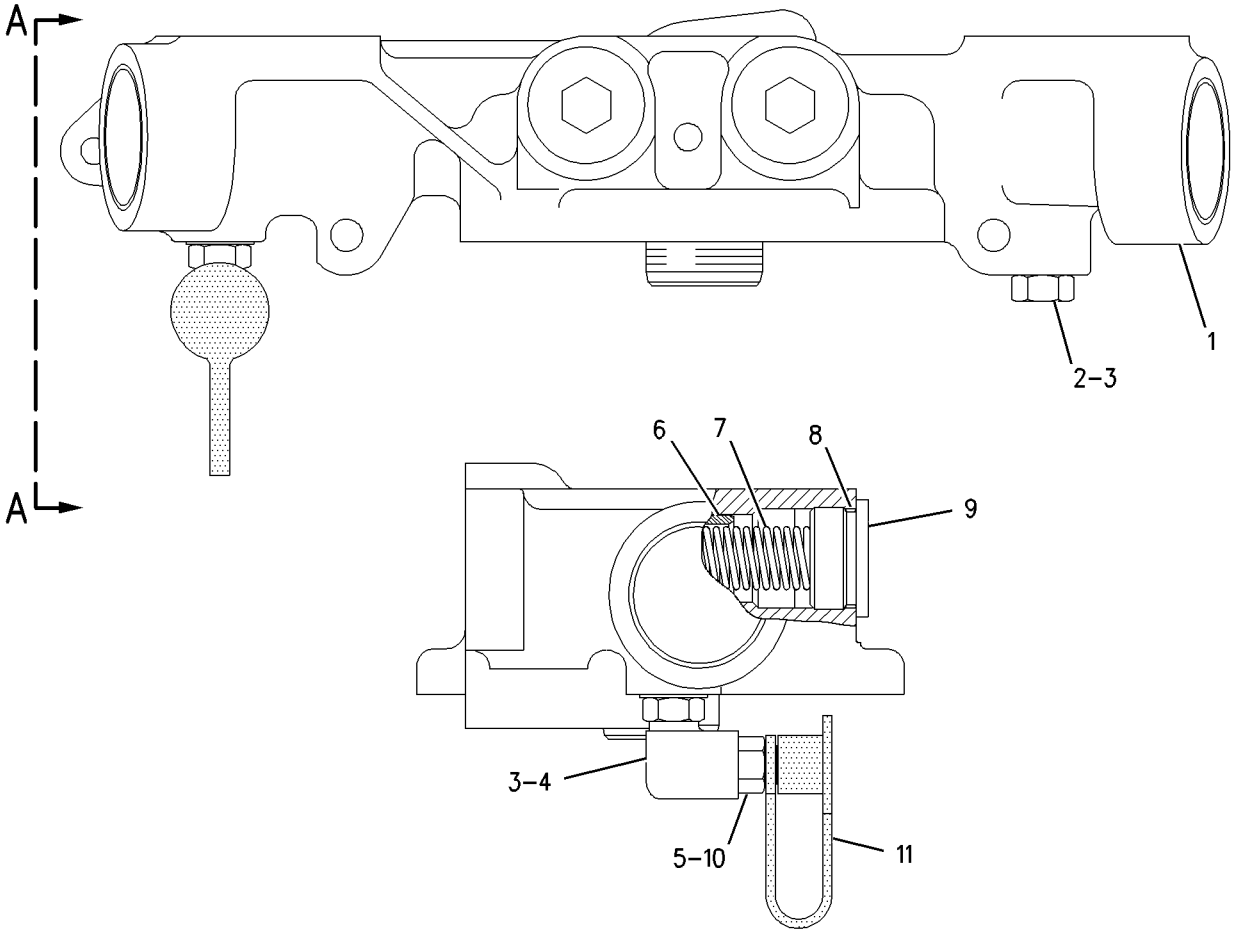


VIEW A-A

GRAPHIC #1 **<END>** g00788118

# *4N-2481* FASTENER GP-OIL PUMP MOUNTING–ENGINE

**S/N: RHX1-UP**

**PART OF 221-8124, 247-3315, 272-3086, 272-3087, 292-2553, 292-2554 ENGINE**

**AR-COMPLETE**

**AN ATTACHMENT**

**SMCS-1304** **i02728826**

| NOTE | REF NO | GRAPHIC REF | PART NUMBER | QTY | PART NAME 1 2 3 4 5 6 (PRODUCT LEVEL) | SEE PAGE |
|---|---|---|---|---|---|---|
| | 1 | 1 | **0L-1143** | 2 | BOLT (3/8-16X2.5-IN) | |
| | 2 | 1 | **0S-1590** | 1 | BOLT (3/8-16X2-IN) | |
| | 3 | 1 | **5M-2894** | 3 | WASHER-HARD (10.2X18.5X2.5-MM THK) | |

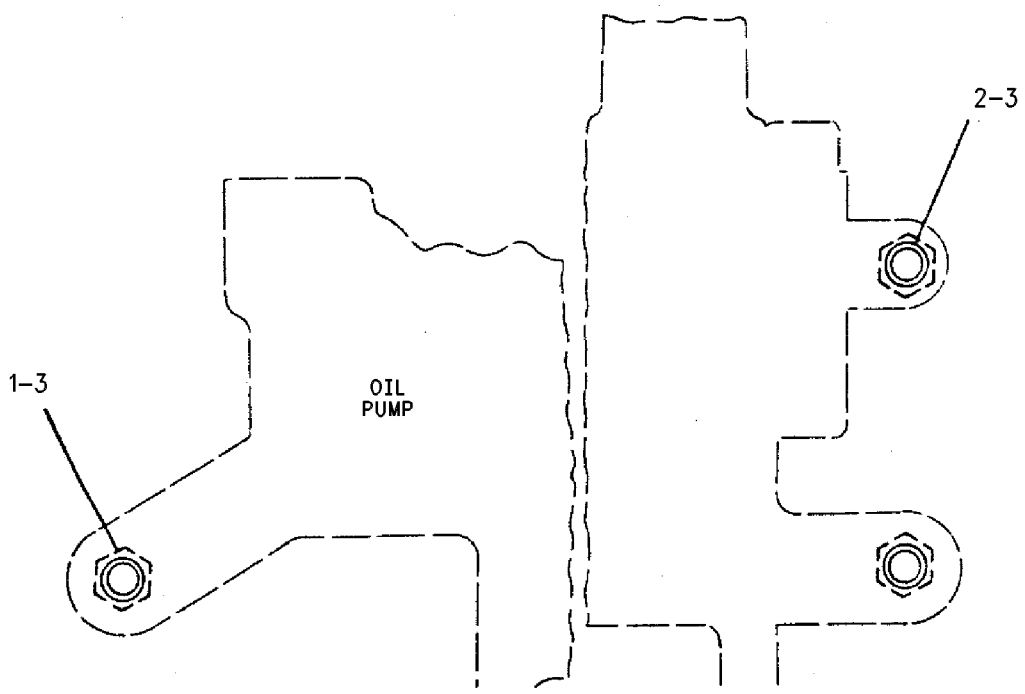


GRAPHIC #1 **<END>** g00604525

# *270-4221* FILLER GP-ENGINE OIL

**S/N: RLB1-UP**

**PART OF 270-4248, 308-5826 INSTALLATION AR-ENGINE**

**SMCS-1316, 7513** **i03015901**

| NOTE | REF NO | GRAPHIC REF | PART NUMBER | QTY | PART NAME 1 2 3 4 5 6 (PRODUCT LEVEL) | SEE PAGE |
|---|---|---|---|---|---|---|
| | 1 | 1 | **2P-2717** | 1 | HASP-OIL FILLER | |
| | 2 | 1 | **4B-4314** | 1 | RIVET | |
| | 3 | 1 | **6N-2985** | 1 | CAP AS-FILLER (ENGINE OIL) | |
| | | | | | —OR— | |
| F | | | **113-5253** | 1 | CAP AS-FILLER (ENGINE OIL) | |
| | 4 | 1 | **215-4011** | 2 | CLAMP | |
| | 5 | 1 | **254-4104** | 1 | TUBE AS | |
| | 6 | 1 | **277-8107** | 1 | BRACKET AS | |
| M | | 1 | **8T-3490** | 1 | NUT-WELD (M10X1.5-THD) | |
| | 7 | 1 | **277-8129** | 1 | TUBE AS | |
| | 8 | 1 | **278-4822** | 1 | BRACKET AS | |
| M | | 1 | **8T-3490** | 2 | NUT-WELD (M10X1.5-THD) | |
| | 9 | 1 | **104-3173** | 1 | CLIP | |
| | 10 | 1 | **139-1398** | 1 | CLIP | |
| | 11 | 1 | **5P-9299** | 1 | CLIP | |
| | 12 | 1 | **6V-8676** | 1 | SEAL-O-RING | |
| | 13 | 1 | **7X-4736** | 1 | GROMMET | |
| | 14 | 1 | **8T-2502** | 2 | BOLT (3/8-16X1.125-IN) | |
| | 15 | 1 | **8T-4121** | 8 | WASHER-HARD (11X21X2.5-MM THK) | |
| M | 16 | 1 | **8T-4136** | 1 | BOLT (M10X1.5X25-MM) | |
| M | 17 | 1 | **8T-4137** | 4 | BOLT (M10X1.5X20-MM) | |
| M | 18 | 1 | **8T-4195** | 1 | BOLT (M10X1.5X30-MM) | |
| E | 19 | 1 | **286-7253** | | HOSE (144-CM) | |

E-ORDER BY THE CENTIMETER
F-NOT SHOWN
M-METRIC PART

*270-4221* **FILLER GP-ENGINE OIL** *(contd.)* **i03015901**

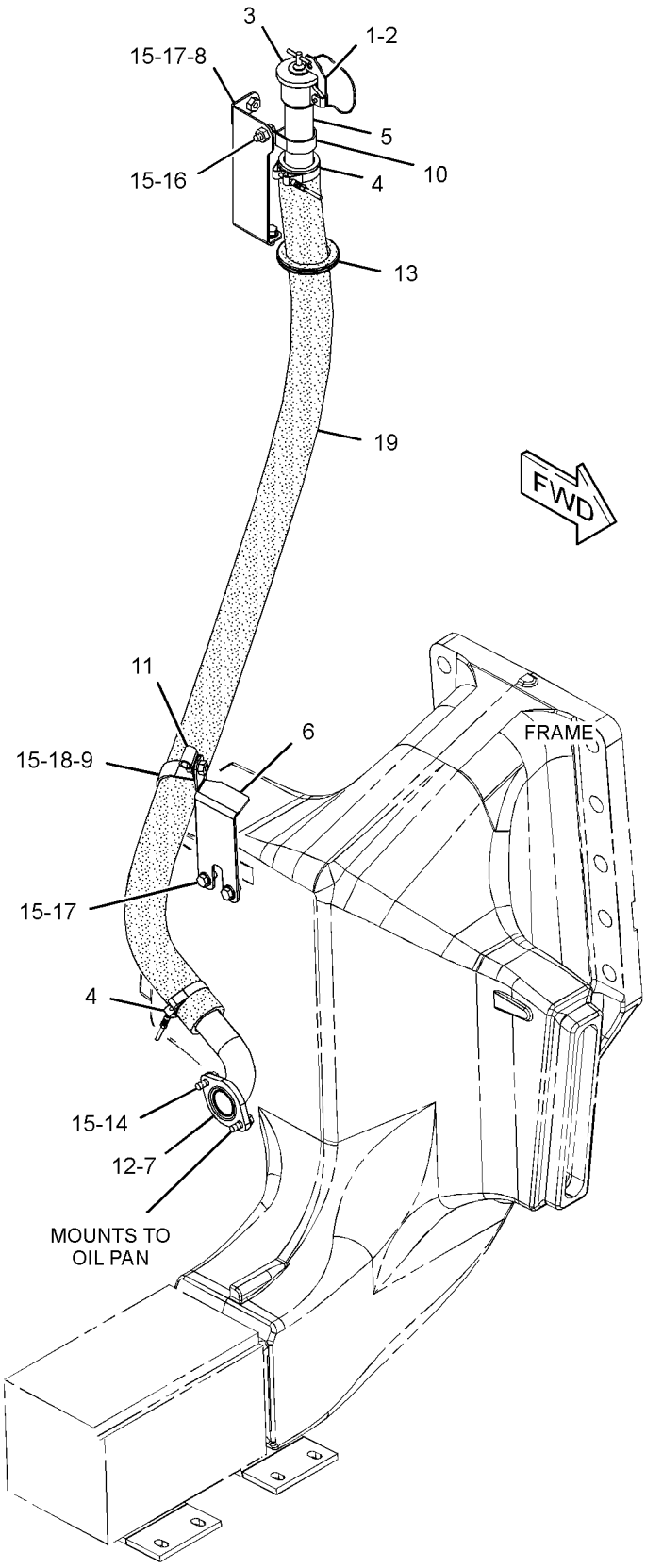


GRAPHIC #1 **<END>** g01363912

# *155-4800* FILTER GP-ENGINE OIL

**S/N: RHX1-2123**
**PART OF 244-6815 FILTER GP-ENGINE OIL**
**AN ATTACHMENT**

**SMCS-1308** **i02695873**

| NOTE | REF NO | GRAPHIC REF | PART NUMBER | QTY | PART NAME 1 2 3 4 5 6 (PRODUCT LEVEL) | SEE PAGE |
|---|---|---|---|---|---|---|
| Y | 1 | 1 | **121-2471** | 1 | BASE GP-OIL FILTER (ENGINE) | 134 |
| | 2 | 1 | **061-7540** | 2 | SEAL-O-RING | |
| | 3 | 1 | **153-6680** | 1 | ELBOW | |
| | 4 | 1 | **0S-1588** | 4 | BOLT (3/8-16X1.25-IN) | |
| | 5 | 1 | **5M-2894** | 4 | WASHER-HARD (10.2X18.5X2.5-MM THK) | |
| Y-SEPARATE ILLUSTRATION | | | | | | |

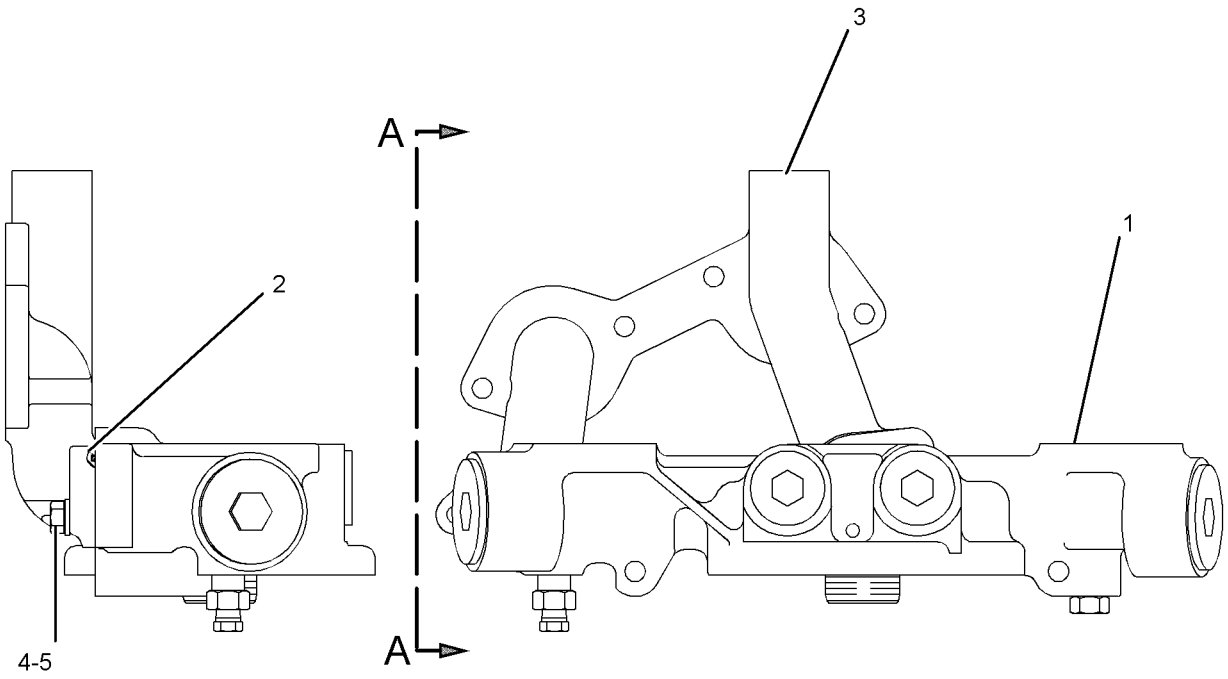


VIEW A-A

GRAPHIC #1 **<END>** g01351995

# LUBRICATION SYSTEM

## *244-6815* FILTER GP-ENGINE OIL

**S/N: RHX1-2123**
**REMOTE ENGINE MOUNTED FOR SERVICEABILITY**
**PART OF 221-8124, 247-3315, 272-3086, 272-3087 ENGINE AR-COMPLETE**
**AN ATTACHMENT**
**TYPE 1**

**SMCS-1308** **i02186047**

| NOTE | REF NO | GRAPHIC REF | PART NUMBER | QTY | PART NAME 1 2 3 4 5 6 (PRODUCT LEVEL) | SEE PAGE |
|---|---|---|---|---|---|---|
| | 1 | 1 | **1R-0716** | 1 | FILTER AS-ENGINE OIL (STANDARD EFFICIENCY) | |
| | 2 | 1 | **2P-3760** | 2 | GASKET | |
| | 3 | 1 | **7N-3451** | 1 | BASE AS-OIL FILTER | |
| | 4 | 1 | **8C-3445** | 1 | CAP-DUST | |
| | 5 | 1 | **8C-6515** | 1 | TEE | |
| | 6 | 1 | **102-5828** | 1 | COVER | |
| | 7 | 1 | **102-5829** | 1 | ADAPTER | |
| | 8 | 1 | **104-7995** | 1 | BASE GP-OIL FILTER | |
| | | 1 | **2P-4304** | 1 | STUD-HOLLOW | |
| | 9 | 1 | **183-7264** | 1 | VALVE AS-FLUID SAMPLING (ENGINE OIL) | |
| | 10 | 1 | **244-6816** | 1 | BRACKET AS | |
| I | 11 | 1 | **244-6817** | 1 | HOSE AS | |
| I | 12 | 1 | **244-6818** | 1 | HOSE AS | |
| | 13 | 1 | **0L-2070** | 1 | BOLT (3/8-16X2.25-IN) | |
| | 14 | 1 | **0S-1588** | 2 | BOLT (3/8-16X1.25-IN) | |
| | 15 | 1 | **0S-1590** | 2 | BOLT (3/8-16X2-IN) | |
| | 16 | 1 | **0S-1594** | 11 | BOLT (3/8-16X1-IN) | |
| | 17 | 1 | **0T-0065** | 2 | BOLT (3/8-16X3.5-IN) | |
| | 18 | 1 | **142-0038** | 1 | ELBOW | |
| | 19 | 1 | **148-8357** | 2 | ELBOW AS | |
| | | | | | (EACH INCLUDES) | |
| | | 1 | **5K-9090** | 1 | SEAL-O-RING | |
| | | 1 | **6V-9008** | 1 | ELBOW | |
| | | 1 | **7M-8485** | 1 | SEAL-O-RING | |
| | 20 | 1 | **2M-9780** | 1 | SEAL-O-RING | |
| | 21 | 1 | **2P-3761** | 2 | COVER | |
| | 22 | 1 | **3J-1907** | 1 | SEAL-O-RING | |
| | 23 | 1 | **3P-0650** | 2 | SEAL-O-RING | |
| | 24 | 1 | **5K-9090** | 3 | SEAL-O-RING | |
| | 25 | 1 | **5M-2894** | 8 | WASHER-HARD (10.2X18.5X2.5-MM THK) | |
| | 26 | 1 | **6V-3908** | 2 | SEAL-O-RING | |
| | 27 | 1 | **6V-5839** | 4 | WASHER (11X21X2.5-MM THK) | |
| | 28 | 1 | **7M-8485** | 2 | SEAL-O-RING | |
| | 29 | 1 | **8C-5230** | 2 | SEAL-O-RING | |
| M | 30 | 1 | **8T-4195** | 4 | BOLT (M10X1.5X30-MM) | |
| | 31 | 1 | **8T-6356** | 1 | TEE-O-RING PORT | |
| | 32 | 1 | **9S-8006** | 1 | PLUG-O-RING | |

I-REFER TO HYDRAULIC INFORMATION SYSTEM
M-METRIC PART

*244-6815* **FILTER GP-ENGINE OIL** *(contd.)* **i02186047**

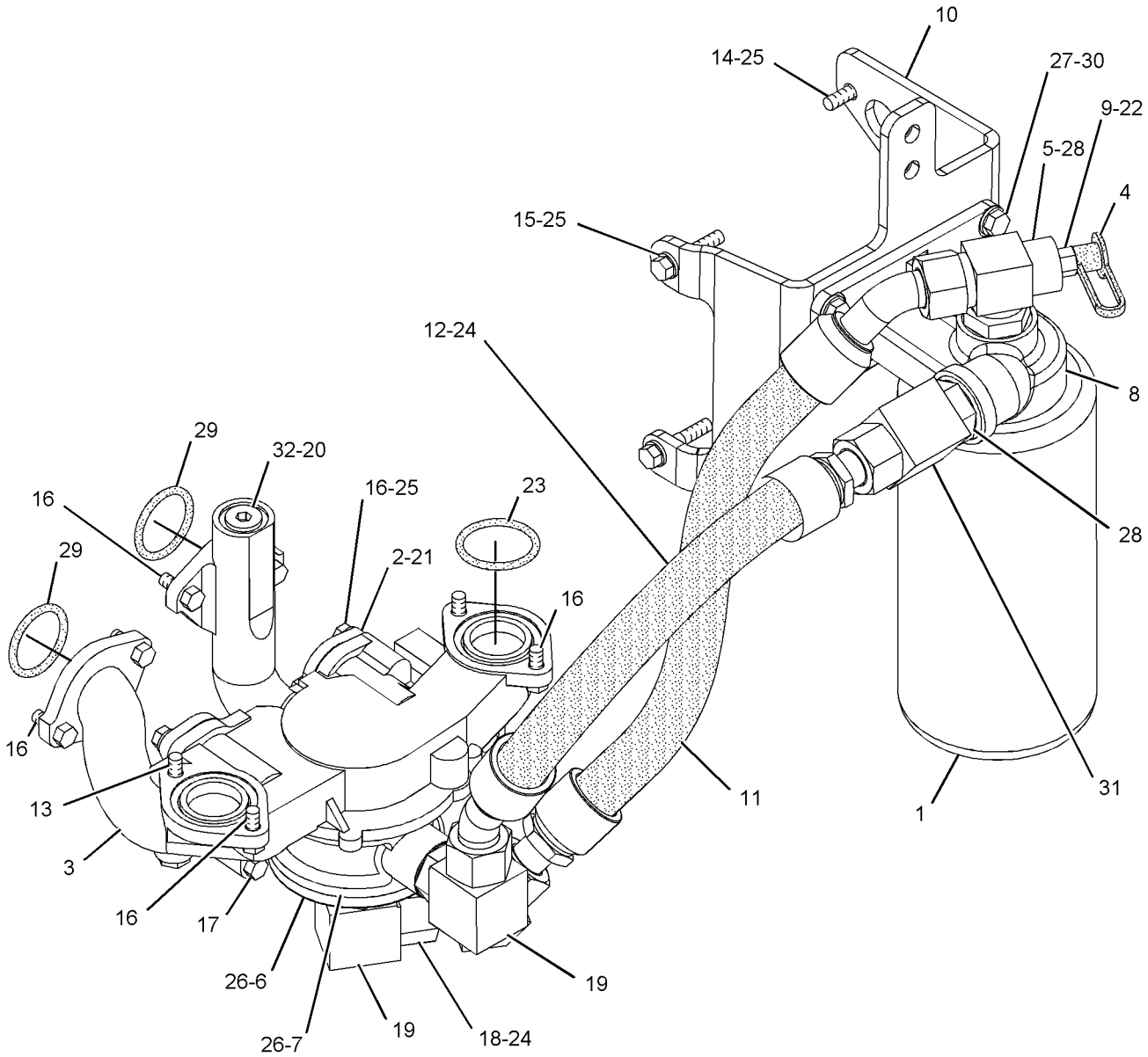


GRAPHIC #1 **<END>** g01120131

# LUBRICATION SYSTEM

## *244-6815* FILTER GP-ENGINE OIL

**S/N: RHX1-2123**
**REMOTE ENGINE MOUNTED FOR SERVICEABILITY**
**PART OF 247-3315, 272-3086, 272-3087 ENGINE AR-COMPLETE**
**AN ATTACHMENT**
**TYPE 2**

**SMCS-1308** **i02486297**

| NOTE | REF NO | GRAPHIC REF | PART NUMBER | QTY | PART NAME 1 2 3 4 5 6 (PRODUCT LEVEL) | SEE PAGE |
|---|---|---|---|---|---|---|
| | 1 | 1 | **1R-0716** | 1 | FILTER AS-ENGINE OIL (STANDARD EFFICIENCY) | |
| C | 2 | 1 | **5P-3501** | 1 | ADAPTER | |
| | 3 | 1 | **8C-3445** | 1 | CAP-DUST | |
| | 4 | 1 | **8C-6515** | 1 | TEE | |
| | 5 | 1 | **104-7995** | 1 | BASE GP-OIL FILTER | |
| | | 1 | **2P-4304** | 1 | STUD-HOLLOW | |
| CY | 6 | 1 | *155-4800* | 1 | FILTER GP-ENGINE OIL | 141 |
| | 7 | 1 | **183-7264** | 1 | VALVE AS-FLUID SAMPLING (ENGINE OIL) | |
| C | 8 | 1 | **200-4246** | 1 | ELBOW | |
| C | 9 | 1 | **208-5033** | 1 | COVER | |
| C | 10 | 1 | **208-5034** | 1 | ADAPTER | |
| | 11 | 1 | **244-6816** | 1 | BRACKET AS | |
| I | 12 | 1 | **244-6817** | 1 | HOSE AS | |
| I | 13 | 1 | **244-6818** | 1 | HOSE AS | |
| C | 14 | 1 | **0L-1351** | 2 | BOLT (3/8-16X0.875-IN) | |
| C | 15 | 1 | **0S-1588** | 4 | BOLT (3/8-16X1.25-IN) | |
| C | 16 | 1 | **0S-1590** | 1 | BOLT (3/8-16X2-IN) | |
| C | 17 | 1 | **0S-1608** | 2 | BOLT (3/8-16X3.75-IN) | |
| | 18 | 1 | **0S-1619** | 2 | BOLT (3/8-16X3-IN) | |
| C | 19 | 1 | **129-3172** | 2 | STUD-MOUNTING (3/8-16X1.564-IN) | |
| | 20 | 1 | **142-0038** | 1 | ELBOW | |
| C | 21 | 1 | *148-8335* | 1 | CONNECTOR AS | |
| | | 1 | **5K-9090** | 1 | SEAL-O-RING | |
| | | 1 | **6V-8635** | 1 | CONNECTOR | |
| | | 1 | **7M-8485** | 1 | SEAL-O-RING | |
| | 22 | 1 | **148-8357** | 2 | ELBOW AS | |
| | | | | | (EACH INCLUDES) | |
| | | 1 | **5K-9090** | 1 | SEAL-O-RING | |
| | | 1 | **6V-9008** | 1 | ELBOW | |
| | | 1 | **7M-8485** | 1 | SEAL-O-RING | |
| C | 23 | 1 | *148-8429* | 1 | TEE AS | |
| | | 1 | **5K-9090** | 2 | SEAL-O-RING | |
| | | 1 | **6V-9840** | 1 | TEE-SWIVEL | |
| C | 24 | 1 | **1A-2029** | 4 | BOLT (3/8-16X1.125-IN) | |
| C | 25 | 1 | **3J-1907** | 2 | SEAL-O-RING | |
| | 26 | 1 | **3P-0650** | 2 | SEAL-O-RING | |
| C | 27 | 1 | **5K-9090** | 2 | SEAL-O-RING | |
| C | 28 | 1 | **5M-2894** | 17 | WASHER-HARD (10.2X18.5X2.5-MM THK) | |
| CM | 29 | 1 | **6V-1820** | 4 | BOLT (M10X1.5X30-MM) | |
| | 30 | 1 | **6V-5839** | 4 | WASHER (11X21X2.5-MM THK) | |
| C | 31 | 1 | **6V-8076** | 1 | ELBOW | |
| C | 32 | 1 | **6V-9833** | 1 | CAP AS | |
| C | 33 | 1 | **7M-8485** | 1 | SEAL-O-RING | |
| | 34 | 1 | **8C-5230** | 2 | SEAL-O-RING | |
| C | 35 | 1 | **8T-6765** | 1 | PLUG-PIPE | |
| C | 36 | 1 | **9S-4191** | 1 | PLUG-O-RING | |
| C | 37 | 1 | **9S-9334** | 2 | PLUG-O-RING | |

C-CHANGE FROM PREVIOUS TYPE
I-REFER TO HYDRAULIC INFORMATION SYSTEM
M-METRIC PART
Y-SEPARATE ILLUSTRATION

*244-6815* **FILTER GP-ENGINE OIL** *(contd.)* **i02486297**

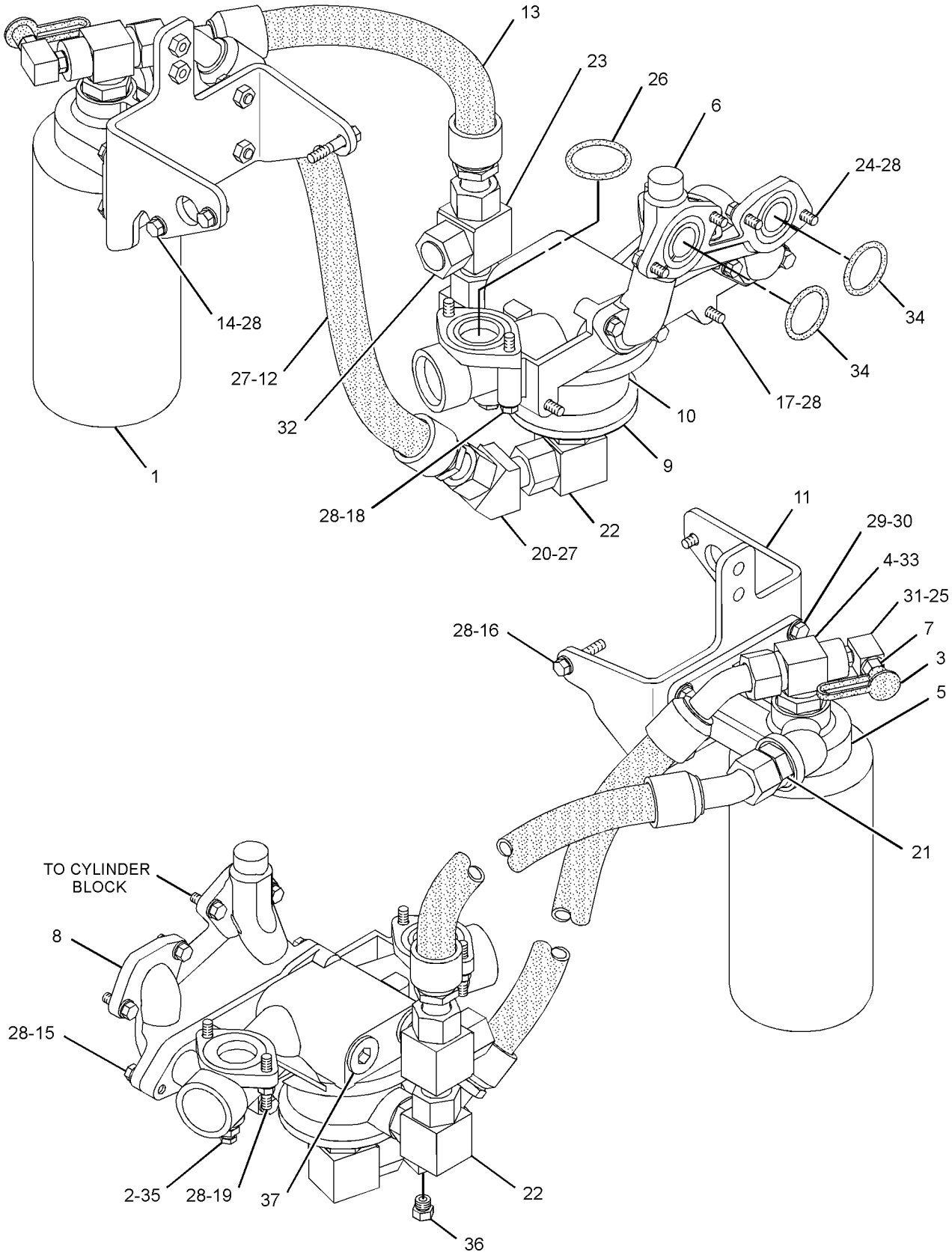


GRAPHIC #1 **<END>** g01279455

# LUBRICATION SYSTEM

## *244-6815* FILTER GP-ENGINE OIL

**S/N: RHX2124-2929**
**REMOTE ENGINE MOUNTED FOR SERVICEABILITY**
**PART OF 247-3315, 272-3086, 272-3087 ENGINE AR-COMPLETE**
**AN ATTACHMENT**

**SMCS-1308** **i02618906**

| NOTE | REF NO | GRAPHIC REF | PART NUMBER | QTY | PART NAME 1 2 3 4 5 6 (PRODUCT LEVEL) | SEE PAGE |
|---|---|---|---|---|---|---|
| C | 1 | 1 | **1R-1808** | 1 | FILTER-ENGINE OIL (ADVANCED EFFICIENCY) | |
| CY | 2 | 1 | *200-0654* | 1 | BASE GP-OIL FILTER | 136 |
| | 3 | 1 | **0S-1588** | 4 | BOLT (3/8-16X1.25-IN) | |
| | 4 | 1 | **0S-1608** | 2 | BOLT (3/8-16X3.75-IN) | |
| | 5 | 1 | **0S-1619** | 2 | BOLT (3/8-16X3-IN) | |
| | 6 | 1 | **129-3172** | 2 | STUD-MOUNTING (3/8-16X1.564-IN) | |
| | 7 | 1 | **1A-2029** | 4 | BOLT (3/8-16X1.125-IN) | |
| | 8 | 1 | **3P-0650** | 2 | SEAL-O-RING | |
| C | 9 | 1 | **5M-2894** | 14 | WASHER-HARD (10.2X18.5X2.5-MM THK) | |
| | 10 | 1 | **8C-5230** | 2 | SEAL-O-RING | |
| | 11 | 1 | **9S-9334** | 2 | PLUG-O-RING | |

C-CHANGE FROM PREVIOUS TYPE
Y-SEPARATE ILLUSTRATION

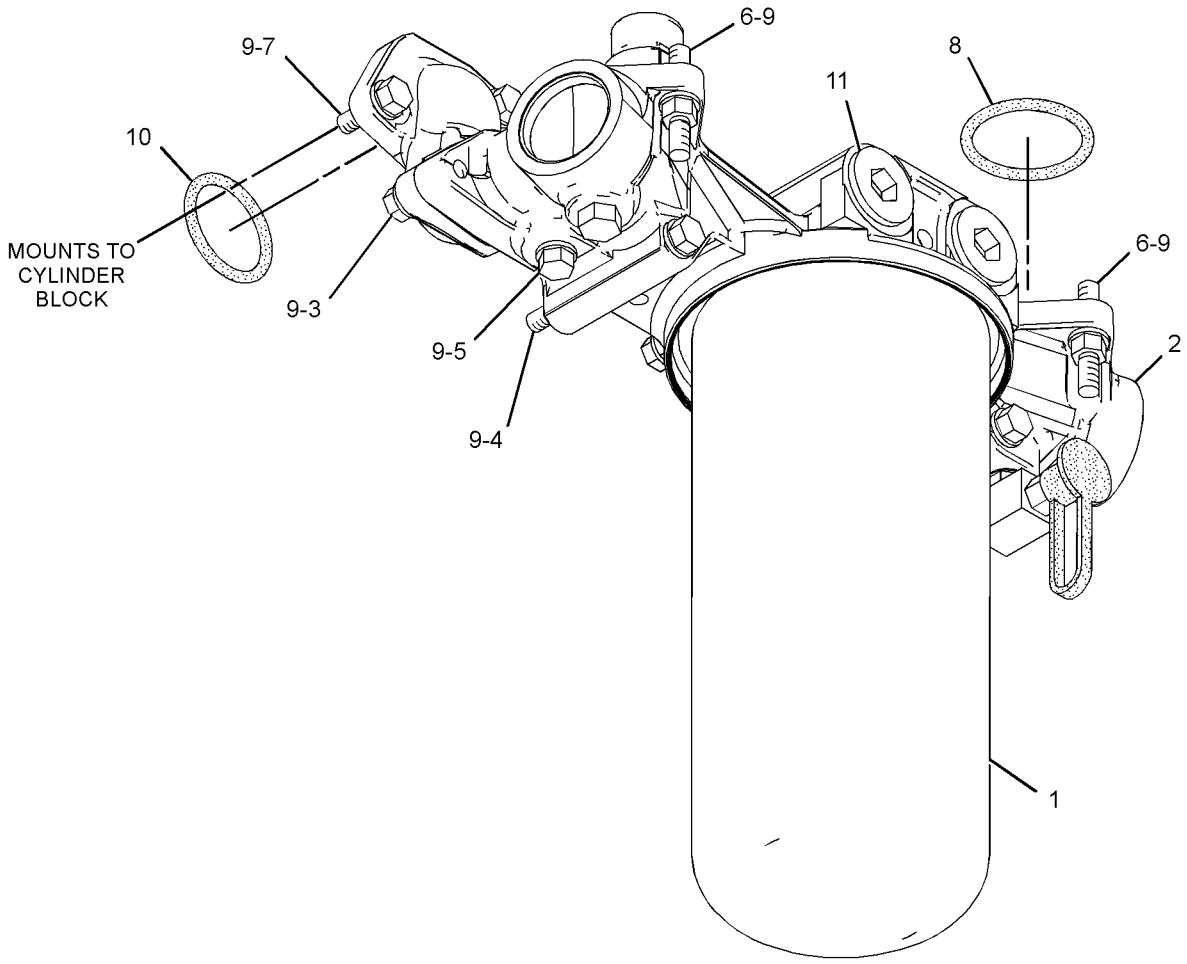


GRAPHIC #1 **<END>** g01309615

# *244-6815* FILTER GP-ENGINE OIL

**S/N: RHX2930-UP**
**REMOTE ENGINE MOUNTED FOR SERVICEABILITY**
**PART OF 272-3086, 272-3087, 292-2553, 292-2554 ENGINE AR-COMPLETE**
**AN ATTACHMENT**

**SMCS-1308** **i02866528**

| NOTE | REF NO | GRAPHIC REF | PART NUMBER | QTY | PART NAME 1 2 3 4 5 6 (PRODUCT LEVEL) | SEE PAGE |
|---|---|---|---|---|---|---|
| | 1 | 1 | **1R-1808** | 1 | FILTER-ENGINE OIL (ADVANCED EFFICIENCY) | |
| Y | 2 | 1 | *200-0654* | 1 | BASE GP-OIL FILTER | 136 |
| | 4 | 1 | **0S-1608** | 2 | BOLT (3/8-16X3.75-IN) | |
| | 5 | 1 | **0S-1619** | 2 | BOLT (3/8-16X3-IN) | |
| | 6 | 1 | **129-3172** | 2 | STUD-MOUNTING (3/8-16X1.564-IN) | |
| | 7 | 1 | **1A-2029** | 4 | BOLT (3/8-16X1.125-IN) | |
| | 8 | 1 | **3P-0650** | 2 | SEAL-O-RING | |
| | 9 | 1 | **5M-2894** | 10 | WASHER-HARD (10.2X18.5X2.5-MM THK) | |
| | 10 | 1 | **8C-5230** | 2 | SEAL-O-RING | |
| C | 12 | 1 | **2M-9780** | 1 | SEAL-O-RING | |
| C | 13 | 1 | **9S-8006** | 1 | PLUG-O-RING | |

C-CHANGE FROM PREVIOUS TYPE
Y-SEPARATE ILLUSTRATION

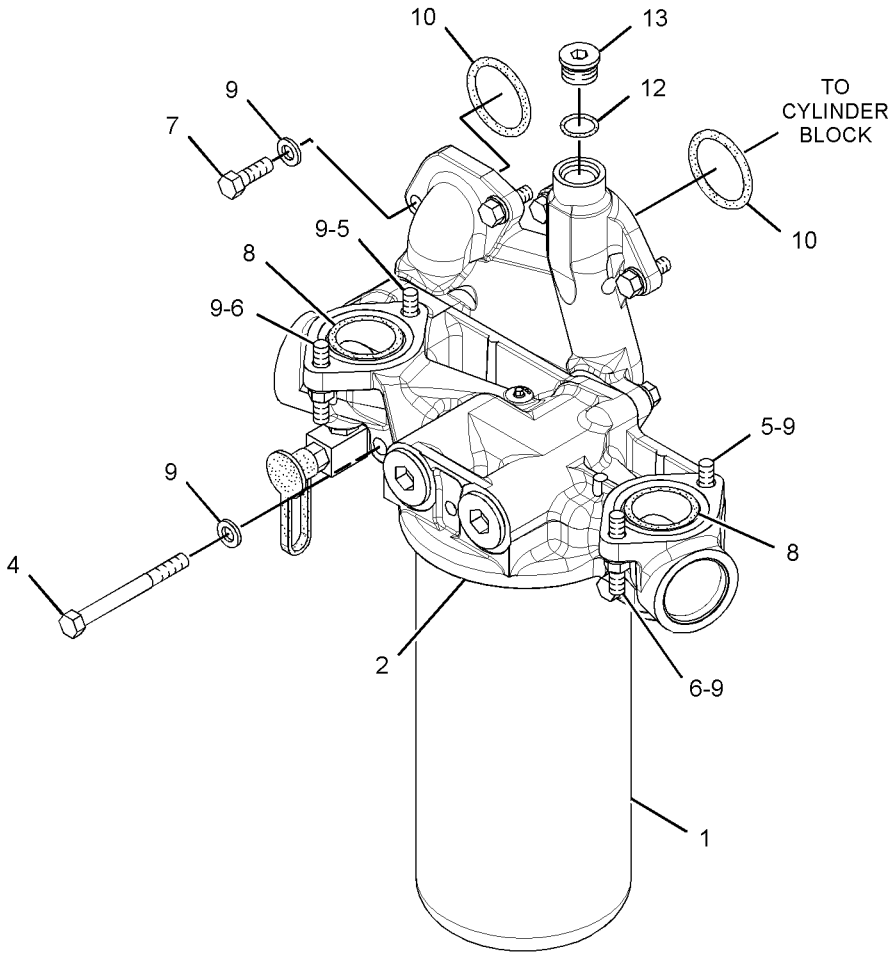


GRAPHIC #1 **<END>** g01502182

# *159-9362* FUMES DISPOSAL GP

**S/N: RHX1-UP**
**REAR VALVE COVER MOUNTED FUMES DISPOSAL**
**PART OF 221-8124, 247-3315, 272-3086, 272-3087, 292-2553, 292-2554 ENGINE**
**AR-COMPLETE**
**AN ATTACHMENT**

**SMCS-1317** **i02884340**

| NOTE | REF NO | GRAPHIC REF | PART NUMBER | QTY | PART NAME 1 2 3 4 5 6 (PRODUCT LEVEL) | SEE PAGE |
|---|---|---|---|---|---|---|
| | 1 | 1 | **161-6622** | 1 | CLIP | |
| | 2 | 1 | **207-8128** | 1 | HOSE AS (FUMES DISPOSAL) | |
| | 3 | 1 | **5P-2369** | 1 | CLIP | |
| | 4 | 1 | **9M-0164** | 1 | CLAMP-HOSE | |

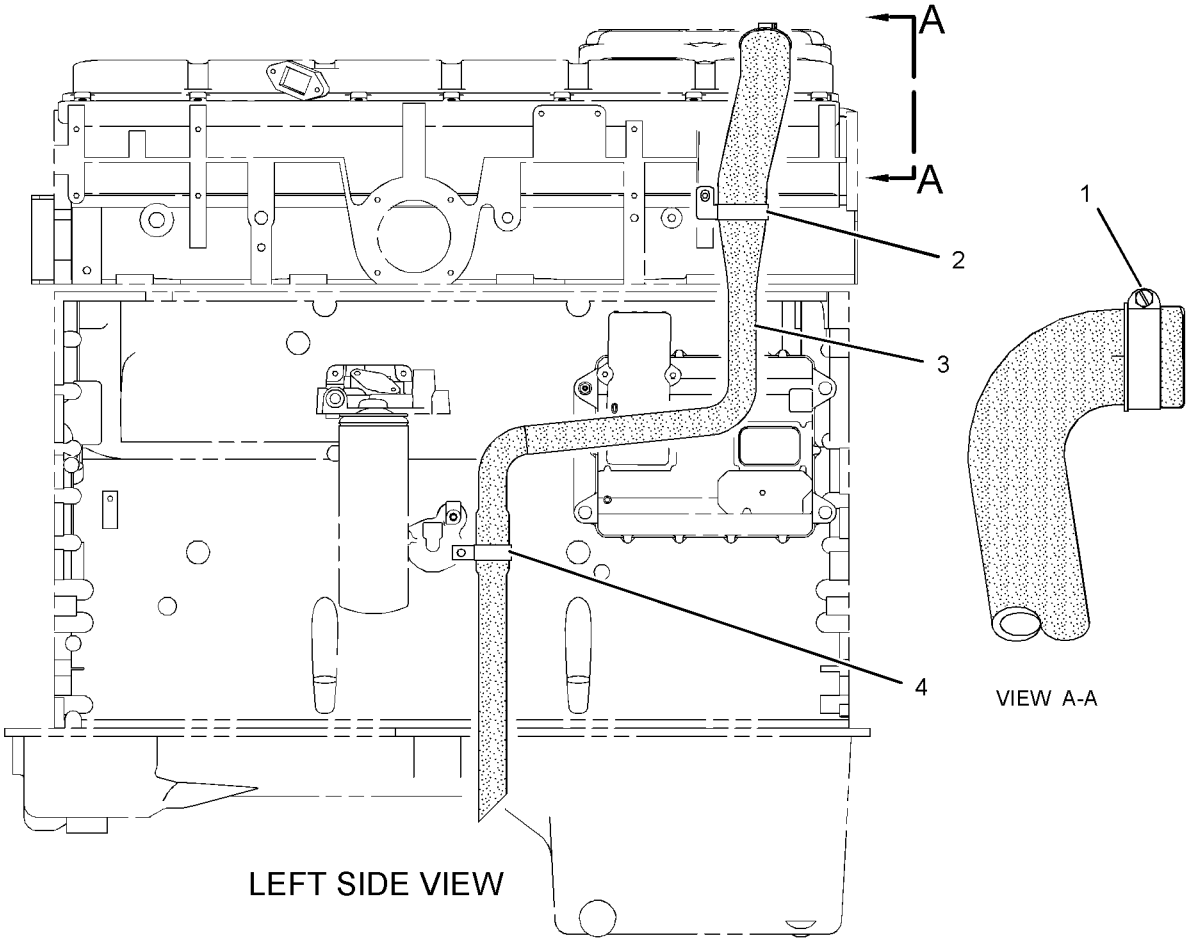


GRAPHIC #1 **<END>** g01436024

# *270-4252* GAUGE GP-OIL LEVEL (DIPSTICK)—ENGINE

**S/N: RLB1-UP**

**PART OF 270-4248, 308-5826 INSTALLATION AR-ENGINE**

**SMCS-1326** **i02616314**

| NOTE | REF NO | GRAPHIC REF | PART NUMBER | QTY | PART NAME 1 2 3 4 5 6 (PRODUCT LEVEL) | SEE PAGE |
|---|---|---|---|---|---|---|
| | 1 | 1 | **273-9919** | 1 | GAUGE AS-OIL LEVEL (DIPSTICK) (ENGINE OIL) | |
| | 2 | 1 | **162-9112** | 1 | GROMMET-SPLIT | |
| | 3 | 1 | **7C-4354** | 1 | CLIP | |
| | 4 | 1 | **8M-2770** | 1 | CLIP | |
| | 5 | 1 | **8T-4121** | 2 | WASHER-HARD (11X21X2.5-MM THK) | |
| M | 6 | 1 | **8T-4136** | 1 | BOLT (M10X1.5X25-MM) | |
| M | 7 | 1 | **8T-4191** | 1 | BOLT (M10X1.5X16-MM) | |

M-METRIC PART

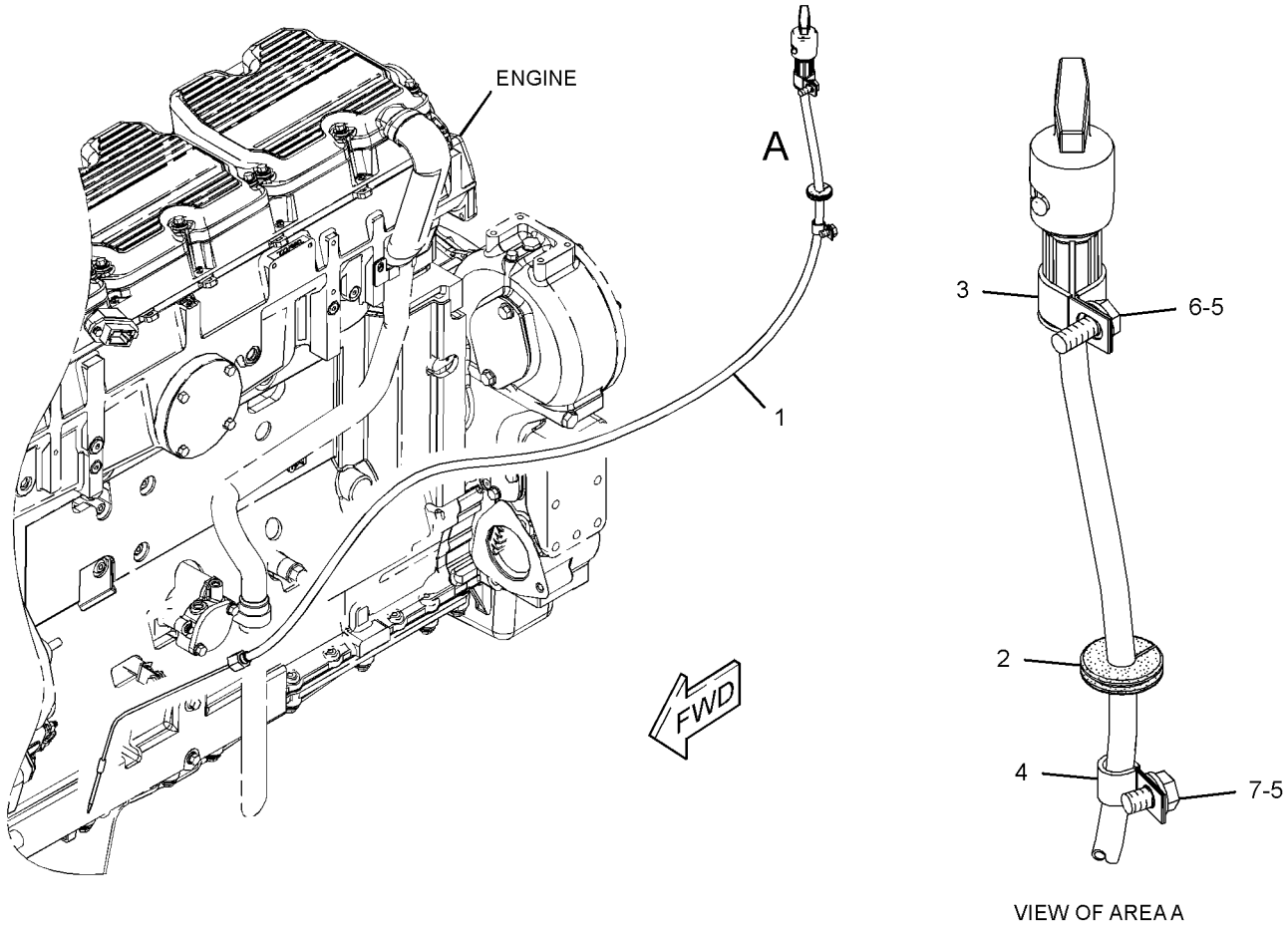


GRAPHIC #1 **<END>** g01328697

# *282-2409* GAUGE GP-OIL LEVEL (DIPSTICK)—ENGINE

**S/N: RHX1-UP**

**PART OF 272-3086, 272-3087, 292-2553, 292-2554 ENGINE AR-COMPLETE**

**AN ATTACHMENT**

**SMCS-1326** **i02441649**

| NOTE | REF NO | GRAPHIC REF | PART NUMBER | QTY | PART NAME 1 2 3 4 5 6 (PRODUCT LEVEL) | SEE PAGE |
|---|---|---|---|---|---|---|
| J | 1 | 1 | **165-6170** | 3 | PLUG | |
| | 2 | 1 | **282-2406** | 1 | TUBE AS | |
| | 3 | 1 | **033-6033** | 1 | SEAL-O-RING | |
| | 4 | 1 | **061-8639** | 1 | SEAL-O-RING | |
| | 5 | 1 | **6V-9830** | 1 | CAP AS | |

J-USE TO PLUG OPTIONAL DIPSTICK LOCATIONS

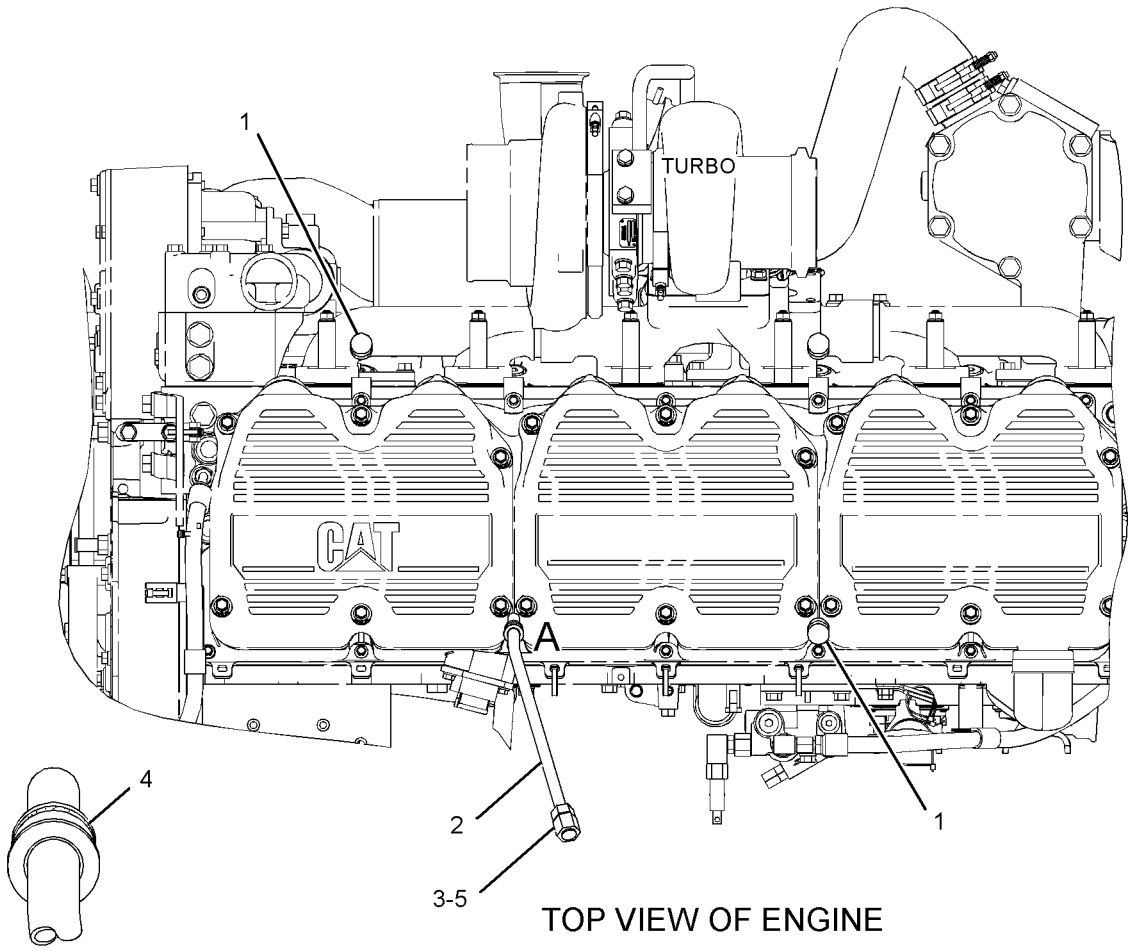


TOP VIEW OF ENGINE

VIEW OF AREA A

GRAPHIC #1 **<END>** g01284805

# *227-3917* LINES GP-ENGINE OIL

**S/N: RHX1-UP**

**PART OF 221-8124, 247-3315 ENGINE AR-COMPLETE**

**AN ATTACHMENT**

**SMCS-1307** **i02655546**

| NOTE | REF NO | GRAPHIC REF | PART NUMBER | QTY | PART NAME 1 2 3 4 5 6 (PRODUCT LEVEL) | SEE PAGE |
|---|---|---|---|---|---|---|
| | 1 | 1 | **4N-0913** | 1 | SCREEN AS-SUCTION (ENGINE OIL) | |
| | 2 | 1 | **4N-0914** | 1 | CLIP | |
| | 3 | 1 | **4P-7373** | 1 | TUBE AS | |
| | 4 | 1 | **4P-9131** | 1 | SUPPORT-BELL | |
| | 5 | 1 | **7E-4508** | 1 | TUBE AS | |
| | 6 | 1 | **8N-2104** | 1 | BELL AS-SUCTION | |
| | 7 | 1 | **0L-1351** | 3 | BOLT (3/8-16X0.875-IN) | |
| | 8 | 1 | **0S-1591** | 2 | BOLT (3/8-16X1.5-IN) | |
| | 9 | 1 | **109-0072** | 1 | SEAL-O-RING | |
| | 10 | 1 | **109-0078** | 1 | SEAL-O-RING | |
| | 11 | 1 | **1A-2029** | 2 | BOLT (3/8-16X1.125-IN) | |
| | 12 | 1 | **5M-2894** | 2 | WASHER-HARD (10.2X18.5X2.5-MM THK) | |
| | 13 | 1 | **9X-6458** | 3 | WASHER-HARD (10.2X22.5X3-MM THK) | |

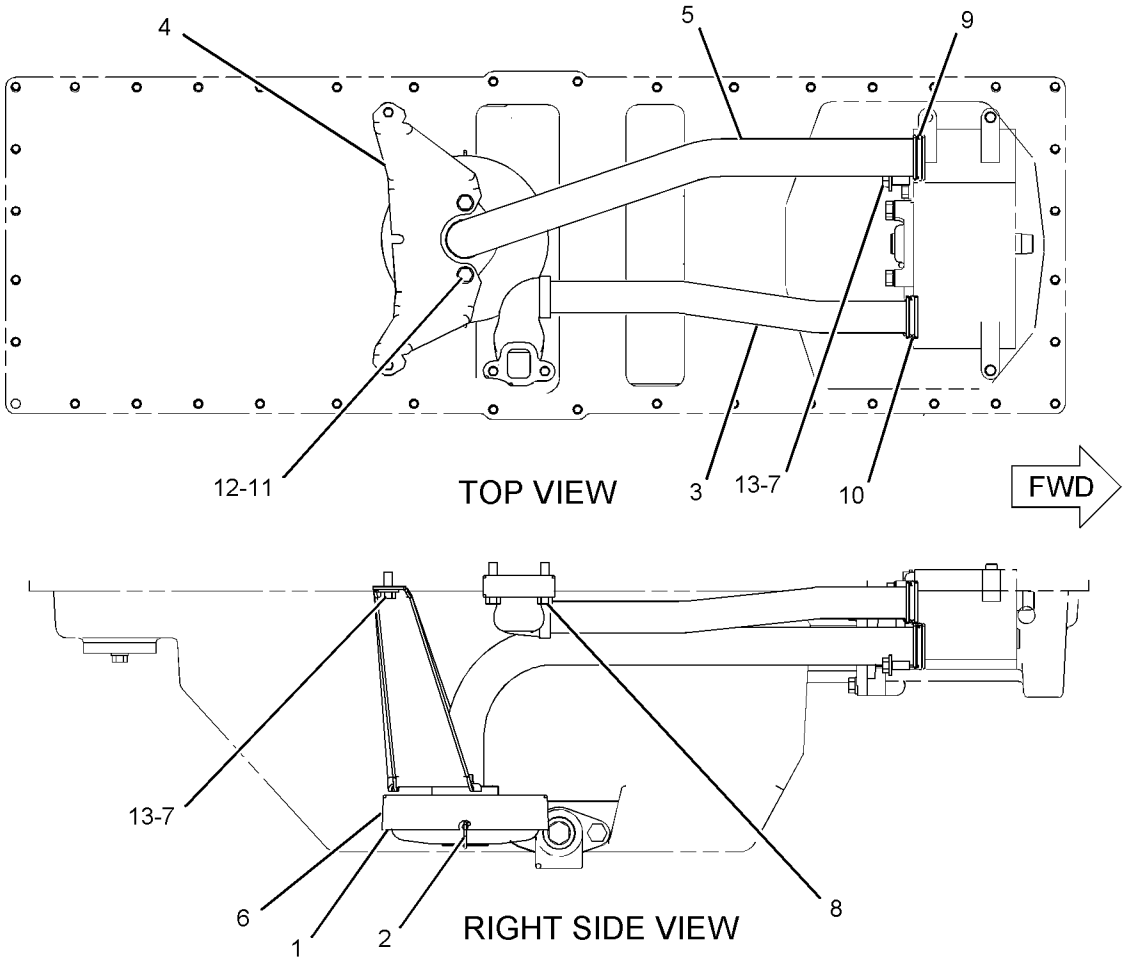


GRAPHIC #1

**<END>**

g01056064

# LUBRICATION SYSTEM

## *227-3917* LINES GP-ENGINE OIL

**S/N: RHX2481-2964**
**PART OF 247-3315 ENGINE AR-COMPLETE**
**AN ATTACHMENT**

**SMCS-1307** **i02810265**

| NOTE | REF NO | GRAPHIC REF | PART NUMBER | QTY | PART NAME 1 2 3 4 5 6 (PRODUCT LEVEL) | SEE PAGE |
|---|---|---|---|---|---|---|
| | 1 | 1 | **4N-0913** | 1 | SCREEN AS-SUCTION (ENGINE OIL) | |
| | 2 | 1 | **4N-0914** | 1 | CLIP | |
| | 3 | 1 | **4P-7373** | 1 | TUBE AS | |
| | 4 | 1 | **4P-9131** | 1 | SUPPORT-BELL | |
| | 5 | 1 | **7E-4508** | 1 | TUBE AS | |
| | 6 | 1 | **8N-2104** | 1 | BELL AS-SUCTION | |
| C | 7 | 1 | **0L-1351** | 1 | BOLT (3/8-16X0.875-IN) | |
| | 8 | 1 | **0S-1591** | 2 | BOLT (3/8-16X1.5-IN) | |
| | 9 | 1 | **109-0072** | 1 | SEAL-O-RING | |
| | 10 | 1 | **109-0078** | 1 | SEAL-O-RING | |
| | 11 | 1 | **1A-2029** | 2 | BOLT (3/8-16X1.125-IN) | |
| | 12 | 1 | **5M-2894** | 2 | WASHER-HARD (10.2X18.5X2.5-MM THK) | |
| | 13 | 1 | **9X-6458** | 3 | WASHER-HARD (10.2X22.5X3-MM THK) | |
| C | 14 | 1 | **0S-1588** | 2 | BOLT (3/8-16X1.25-IN) | |

C-CHANGE FROM PREVIOUS TYPE

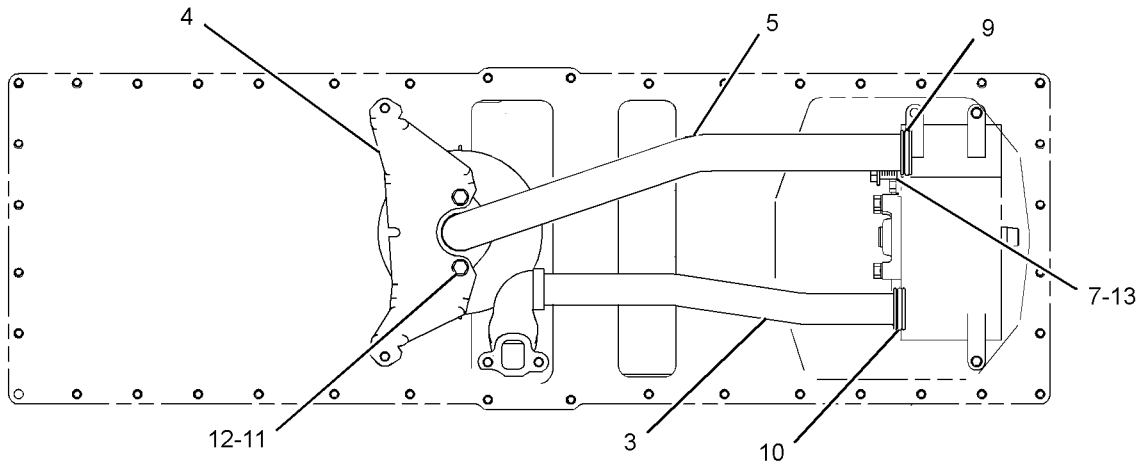


TOP VIEW OF ENGINE

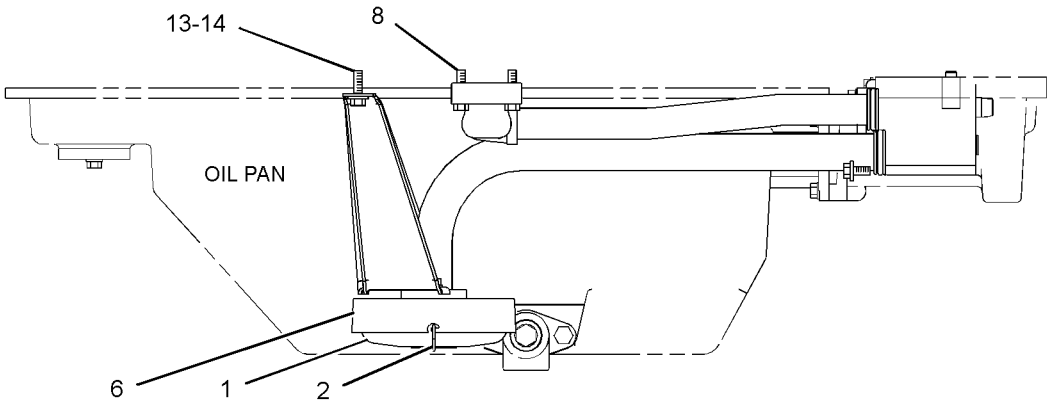


RIGHT SIDE VIEW OF ENGINE

GRAPHIC #1 **<END>** g01291169

# *235-1054* LINES GP-TURBOCHARGER OIL

**S/N: RHX1-1177**

**PART OF 221-8124, 247-3315, 272-3086, 272-3087 ENGINE AR-COMPLETE**

**AN ATTACHMENT**

**SMCS-1052, 1307** **i02047173**

| NOTE | REF NO | GRAPHIC REF | PART NUMBER | QTY | PART NAME 1 2 3 4 5 6 (PRODUCT LEVEL) | SEE PAGE |
|---|---|---|---|---|---|---|
| | 1 | 1 | **7N-7559** | 1 | GASKET | |
| | 2 | 1 | **210-9246** | 1 | SEAL-O-RING | |
| | 3 | 1 | **242-3375** | 1 | HOSE AS | |
| | 4 | 1 | **242-3376** | 1 | HOSE AS | |
| | 5 | 1 | **4L-9337** | 2 | BOLT (3/8-16X1.5-IN) | |
| | 6 | 1 | **4P-4460** | 1 | GASKET | |
| | 7 | 1 | **5M-2894** | 6 | WASHER-HARD (10.2X18.5X2.5-MM THK) | |
| | 8 | 1 | **5S-7383** | 4 | BOLT (3/8-16X1.75-IN) | |
| | 9 | 1 | **6V-8397** | 1 | SEAL-O-RING | |
| | 10 | 1 | **6V-8634** | 1 | CONNECTOR | |
| | 11 | 1 | **8L-2786** | 1 | SEAL-O-RING | |

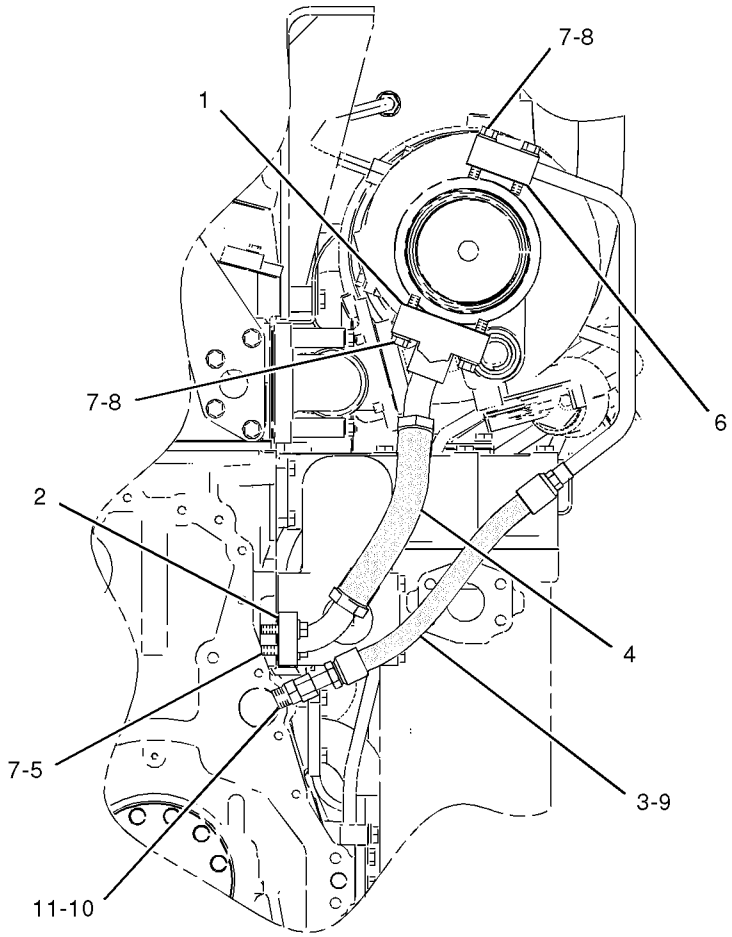


REAR VIEW

GRAPHIC #1 **<END>** g01056545

# LUBRICATION SYSTEM

## *235-1054* LINES GP-TURBOCHARGER OIL

**S/N: RHX1178-UP**

**PART OF 221-8124, 247-3315, 272-3086, 272-3087, 292-2553, 292-2554 ENGINE**

**AR-COMPLETE**

**AN ATTACHMENT**

**SMCS-1052, 1307** **i02459024**

| NOTE | REF NO | GRAPHIC REF | PART NUMBER | QTY | PART NAME 1 2 3 4 5 6 (PRODUCT LEVEL) | SEE PAGE |
|---|---|---|---|---|---|---|
| | 1 | 1 | **7N-7559** | 1 | GASKET | |
| | 2 | 1 | **210-9246** | 1 | SEAL-O-RING | |
| | 3 | 1 | **242-3375** | 1 | HOSE AS | |
| C | 4 | 1 | **254-7000** | 1 | TUBE AS-DRAIN | |
| | 5 | 1 | **4L-9337** | 2 | BOLT (3/8-16X1.5-IN) | |
| | 6 | 1 | **4P-4460** | 1 | GASKET | |
| | 7 | 1 | **5M-2894** | 6 | WASHER-HARD (10.2X18.5X2.5-MM THK) | |
| C | 8 | 1 | **5S-7383** | 2 | BOLT (3/8-16X1.75-IN) | |
| | 9 | 1 | **6V-8397** | 1 | SEAL-O-RING | |
| | 10 | 1 | **6V-8634** | 1 | CONNECTOR | |
| | 11 | 1 | **8L-2786** | 1 | SEAL-O-RING | |
| C | 12 | 1 | **0S-1571** | 2 | BOLT (3/8-16X1.75-IN) | |
| C | 13 | 1 | **284-3502** | 2 | CLAMP-BAND | |
| C | 14 | 1 | **254-6999** | 1 | TUBE AS-DRAIN | |
| C | 15 | 1 | **246-6036** | 1 | HOSE | |

C-CHANGE FROM PREVIOUS TYPE

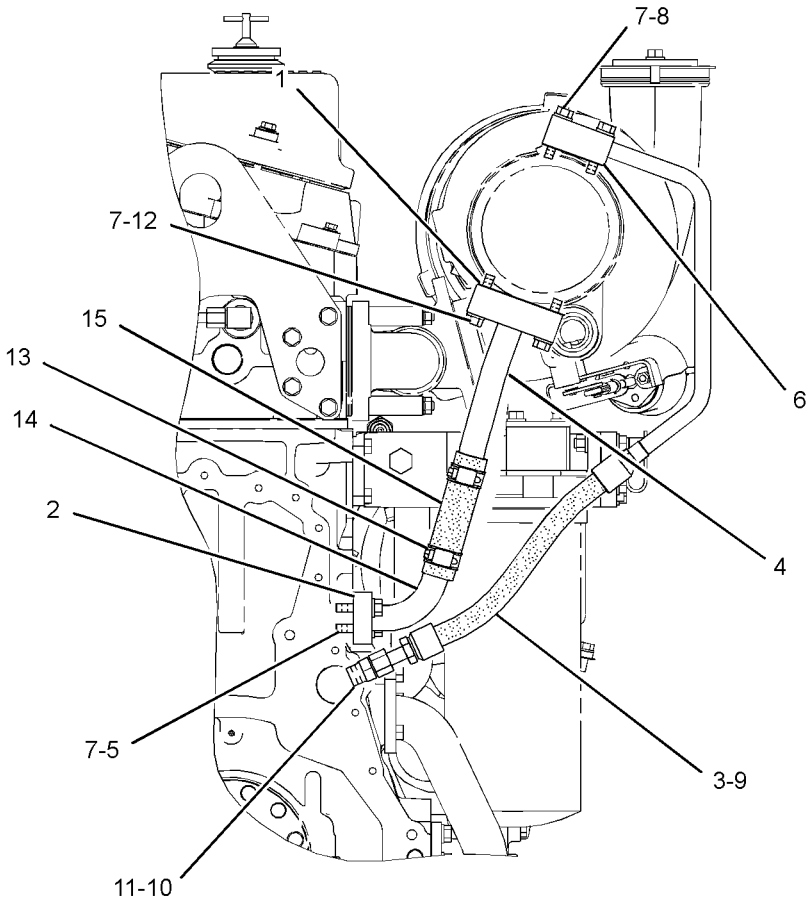


REAR VIEW

GRAPHIC #1

**<END>**

g01191460

# *270-0510* MANIFOLD GP-CONTROL–HYDRAULIC FAN

**S/N: RLB1-UP**

**PART OF 279-2244 LINES GP-HYDRAULIC FAN**

**AN ATTACHMENT**

**SMCS-1359, 5264, 5479** **i02719640**

| NOTE | REF NO | GRAPHIC REF | PART NUMBER | QTY | PART NAME 1 2 3 4 5 6 (PRODUCT LEVEL) | SEE PAGE |
|---|---|---|---|---|---|---|
| | 1 | 1 | **279-6530** | 1 | VALVE GP-SOLENOID (FAN SPEED) | |
| | | 1 | **261-6728** | 1 | COIL AS | |
| | 2 | 1 | **302-8161** | 1 | VALVE GP-CHECK (FAN SPEED) | |
| | | 1 | **8M-8161** | 1 | FLANGE-SHAFT | |
| | | 1 | **159-9038** | 1 | KIT-VALVE SEAL | |
| | | | | | (INCLUDES SEAL-O-RING & RING BACKUP) | |
| | | | | | | |
| | | | | | PARTS SHOWN IN GRAPHIC(S) WITHOUT A REFERENCE NUMBER ARE NOT SERVICED SEPARATELY | |

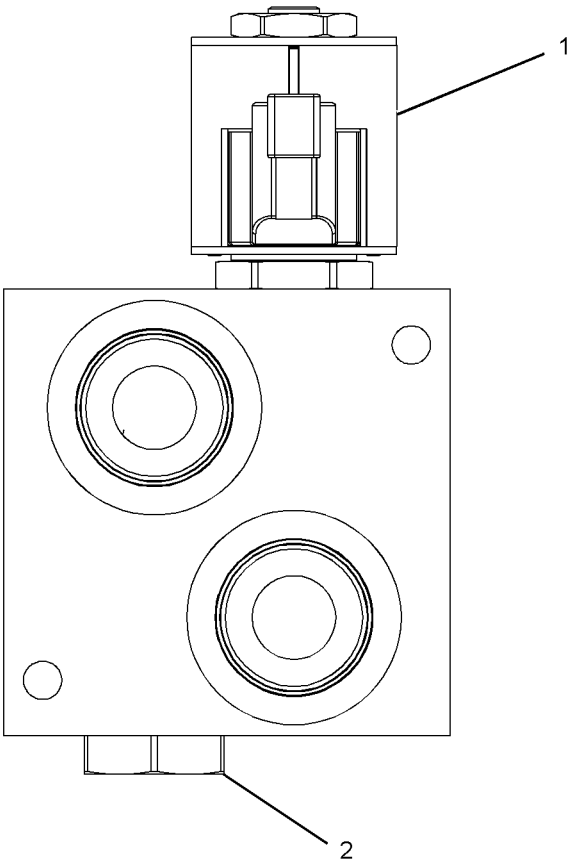


GRAPHIC #1 **<END>** g01379855

# *270-4232* OIL CHANGE GP-HIGH SPEED–ENGINE

**S/N: RLB1-UP**
**AN ATTACHMENT**

**SMCS-1325** **i02701989**

| NOTE | REF NO | GRAPHIC REF | PART NUMBER | QTY | PART NAME 1 2 3 4 5 6 (PRODUCT LEVEL) | SEE PAGE |
|---|---|---|---|---|---|---|
| | 1 | 1 | **110-8827** | 1 | FITTING (QUICK DISCONNECT, MALE) | |
| | | 1 | **110-8826** | 1 | CAP-DUST | |
| | 2 | 1 | **261-4377** | 1 | FILM-IDENTIFICATION (FILL, DRAIN) | |
| | 3 | 1 | **5P-7701** | 1 | SEAL-O-RING | |
| | 4 | 1 | **7X-3167** | 1 | ADAPTER-SWIVEL | |
| | 5 | 1 | **8C-3051** | 1 | ADAPTER | |
| | 6 | 1 | **7M-8485** | 1 | SEAL-O-RING | |

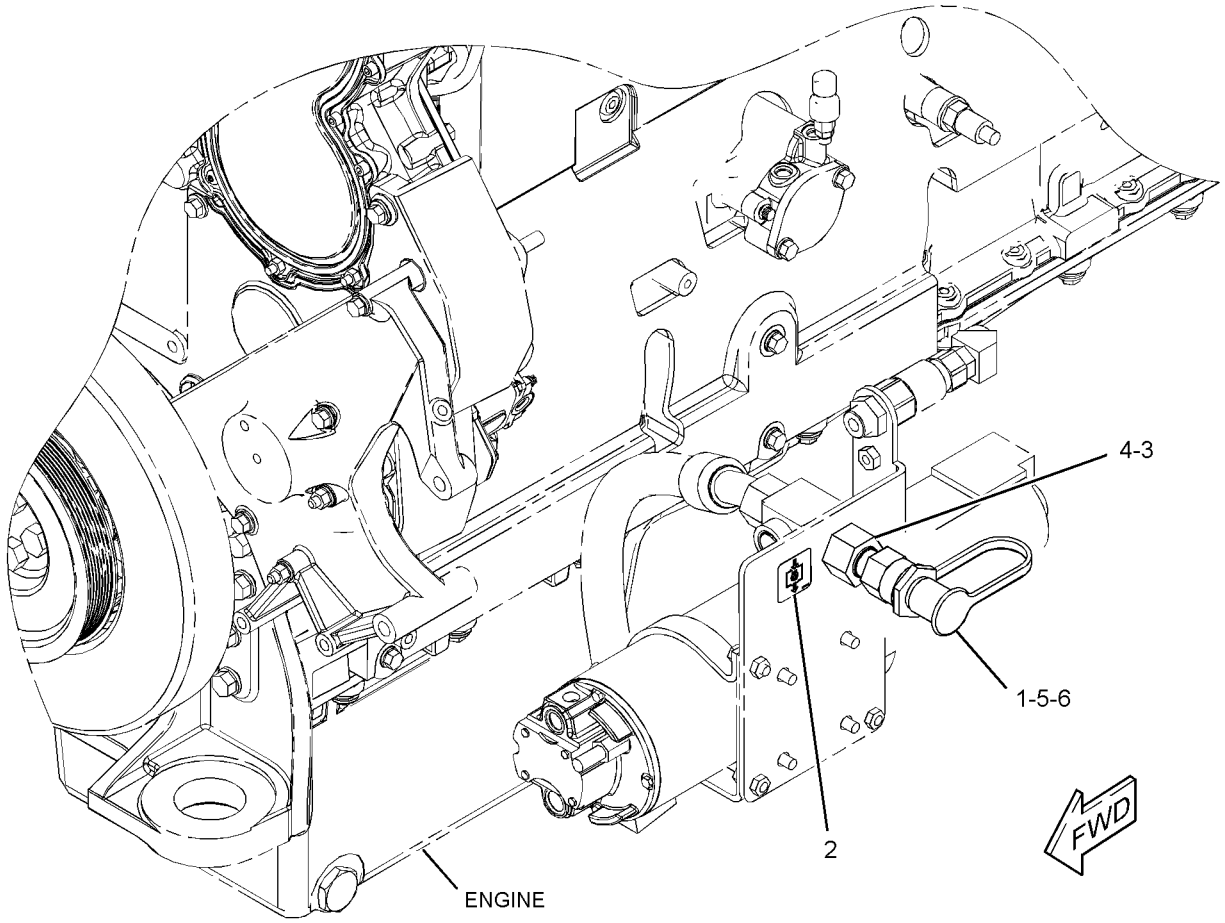


GRAPHIC #1 **<END>** g01356584

# LUBRICATION SYSTEM

## *270-4251* PUMP & LINES GP

**S/N: RLB1-318**

**PART OF 270-4248 INSTALLATION AR-ENGINE**

**SMCS-1304, 1307** **i03020888**

| NOTE | REF NO | GRAPHIC REF | PART NUMBER | QTY | PART NAME 1 2 3 4 5 6 (PRODUCT LEVEL) | SEE PAGE |
|---|---|---|---|---|---|---|
| | 1 | 1 | **5D-1026** | 1 | CLAMP-HOSE | |
| | 2 | 1 | **9T-1013** | 1 | VALVE AS-CHECK | |
| | | 1 | **3K-0360** | 1 | SEAL-O-RING | |
| | | 1 | **6V-8398** | 1 | SEAL-O-RING | |
| | 3 | 1 | **153-2995** | 1 | FITTING AS (QUICK DISCONNECT, MALE) | |
| | 4 | 1 | **193-8335** | 1 | FITTING AS (QUICK DISCONNECT, FEMALE) | |
| Y | 5 | 1 | *227-5525* | 1 | PUMP & MOTOR GP-HYDRAULIC (SEC STRG, BRK REL, HS OIL CHG) (ENGINE OIL) | 691 |
| | 6 | 1 | *241-6208* | 1 | ELBOW AS | |
| | | 1 | **119-6220** | 1 | ELBOW | |
| | | 1 | **2M-9780** | 1 | SEAL-O-RING | |
| | | 1 | **5K-9090** | 1 | SEAL-O-RING | |
| | 7 | 1 | **249-0073** | 1 | FITTING AS | |
| | | 1 | **6V-8635** | 1 | CONNECTOR | |
| | | 1 | **5K-9090** | 1 | SEAL-O-RING | |
| | | 1 | **7M-8485** | 1 | SEAL-O-RING | |
| | 8 | 1 | *250-1488* | 1 | TEE AS | |
| | | 1 | **154-7159** | 1 | TEE | |
| | | 1 | **5K-9090** | 3 | SEAL-O-RING | |
| | 9 | 1 | **276-7543** | 1 | TUBE AS | |
| I | 10 | 1 | **276-7544** | 1 | HOSE AS | |
| | 11 | 1 | **277-9406** | 1 | BRACKET AS | |
| | | 1 | **1F-0750** | 4 | NUT-WELD (3/8-16-THD) | |
| M | | 1 | **8T-3490** | 1 | NUT-WELD (M10X1.5-THD) | |
| | 12 | 1 | **279-6418** | 1 | TUBE AS | |
| I | 13 | 1 | **282-5346** | 1 | HOSE AS | |
| | 14 | 1 | **100-7870** | 1 | ADAPTER-O-RING | |
| | 15 | 1 | *148-8352* | 1 | ELBOW AS | |
| | | 1 | **6V-9854** | 1 | ELBOW | |
| | | 1 | **5K-9090** | 1 | SEAL-O-RING | |
| | 16 | 1 | *150-4048* | 1 | ELBOW AS | |
| | | 1 | **6V-8722** | 1 | ELBOW | |
| | | 1 | **3K-0360** | 1 | SEAL-O-RING | |
| | | 1 | **7J-9108** | 1 | SEAL-O-RING | |
| | 17 | 1 | *148-8390* | 1 | ELBOW AS | |
| | | 1 | **6V-8626** | 1 | ELBOW | |
| | | 1 | **2M-9780** | 1 | SEAL-O-RING | |
| | | 1 | **7J-9108** | 1 | SEAL-O-RING | |
| | 18 | 1 | **1S-0994** | 3 | CLIP | |
| | 19 | 1 | **5S-7379** | 2 | BOLT (3/8-16X0.875-IN) | |
| | 20 | 1 | **6V-8189** | 2 | NUT (5/16-18-THD) | |
| | 21 | 1 | **6V-8918** | 2 | BOLT (5/16-18X1.25-IN) | |
| | 22 | 1 | **6V-9170** | 1 | NUT-BULKHEAD (1-14-THD) | |
| | 23 | 1 | **6V-9172** | 1 | NUT (1-7/16-12-THD) | |
| | 24 | 1 | **6V-9833** | 1 | CAP AS | |
| | 25 | 1 | **8T-4121** | 3 | WASHER-HARD (11X21X2.5-MM THK) | |
| M | 26 | 1 | **8T-4137** | 5 | BOLT (M10X1.5X20-MM) | |
| | 27 | 1 | **8T-4224** | 4 | WASHER-HARD (8.8X16X2-MM THK) | |
| | 28 | 1 | **8T-4896** | 4 | WASHER-HARD (10.2X18.5X2.5-MM THK) | |
| | 29 | 1 | **9B-7237** | 2 | BOLT (3/8-16X1.25-IN) | |
| E | 30 | 1 | **5P-0767** | | HOSE (22-CM) | |
| | 31 | 1 | **3J-1907** | 1 | SEAL-O-RING | |
| | 32 | 1 | **7X-7729** | 4 | WASHER (11X25X3-MM THK) | |
| | 33 | 1 | **6V-1889** | 1 | CLIP | |
| M | 34 | 1 | **8T-4133** | 1 | NUT (M10X1.5-THD) | |
| M | 35 | 1 | **8T-4136** | 1 | BOLT (M10X1.5X25-MM) | |

E-ORDER BY THE CENTIMETER
I-REFER TO HYDRAULIC INFORMATION SYSTEM
M-METRIC PART
Y-SEPARATE ILLUSTRATION

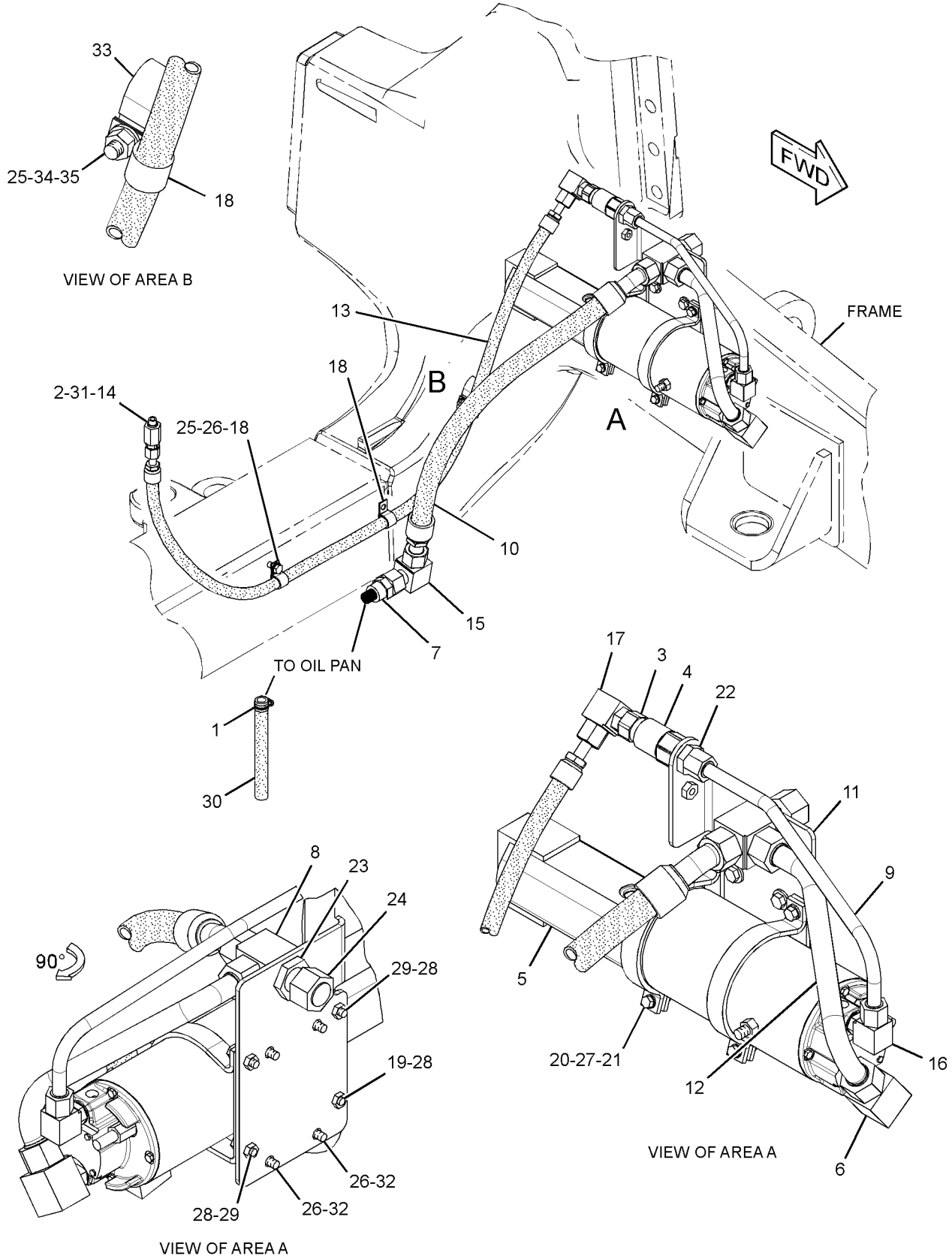


GRAPHIC #1 **<END>** g01560113

# LUBRICATION SYSTEM

## *308-5828* PUMP & LINES GP

**S/N: RLB319-UP**

**PART OF 308-5826 INSTALLATION AR-ENGINE**

**SMCS-1304, 1307** **i02820104**

| NOTE | REF NO | GRAPHIC REF | PART NUMBER | QTY | PART NAME 1 2 3 4 5 6 (PRODUCT LEVEL) | SEE PAGE |
|---|---|---|---|---|---|---|
| G | 1 | 1 | **9X-2379** | | HOSE (13.3-INCH) | |
| | 2 | 1 | **9M-2904** | 1 | CLAMP-HOSE | |
| | 3 | 1 | **9T-1013** | 1 | VALVE AS-CHECK | |
| | | 1 | **3K-0360** | 1 | SEAL-O-RING | |
| | | 1 | **6V-8398** | 1 | SEAL-O-RING | |
| | 4 | 1 | **153-2995** | 1 | FITTING AS (QUICK DISCONNECT, MALE) | |
| | 5 | 1 | **193-8335** | 1 | FITTING AS (QUICK DISCONNECT, FEMALE) | |
| Y | 6 | 1 | *227-5525* | 1 | PUMP & MOTOR GP-HYDRAULIC (SEC STRG, BRK REL, HS OIL CHG) | 691 |
| | 7 | 1 | *241-6208* | 1 | ELBOW AS | |
| | | 1 | **2M-9780** | 1 | SEAL-O-RING | |
| | | 1 | **5K-9090** | 1 | SEAL-O-RING | |
| | | 1 | **119-6220** | 1 | ELBOW | |
| | 8 | 1 | **249-0073** | 1 | FITTING AS | |
| | | 1 | **5K-9090** | 1 | SEAL-O-RING | |
| | | 1 | **7M-8485** | 1 | SEAL-O-RING | |
| | 9 | 1 | *250-1488* | 1 | TEE AS | |
| | | 1 | **5K-9090** | 3 | SEAL-O-RING | |
| | | 1 | **154-7159** | 1 | TEE | |
| | 10 | 1 | **276-7543** | 1 | TUBE AS | |
| I | 11 | 1 | **276-7544** | 1 | HOSE AS | |
| | 12 | 1 | **277-9406** | 1 | BRACKET AS | |
| | | 1 | **1F-0750** | 4 | NUT-WELD (3/8-16-THD) | |
| M | | 1 | **8T-3490** | 1 | NUT-WELD (M10X1.5-THD) | |
| | 13 | 1 | **279-6418** | 1 | TUBE AS | |
| I | 14 | 1 | **282-5346** | 1 | HOSE AS | |
| | 15 | 1 | **100-7870** | 1 | ADAPTER-O-RING | |
| | 16 | 1 | *148-8352* | 1 | ELBOW AS | |
| | | 1 | **5K-9090** | 1 | SEAL-O-RING | |
| | | 1 | **6V-9854** | 1 | ELBOW | |
| | 17 | 1 | *148-8390* | 1 | ELBOW AS | |
| | | 1 | **2M-9780** | 1 | SEAL-O-RING | |
| | | 1 | **6V-8626** | 1 | ELBOW | |
| | | 1 | **7J-9108** | 1 | SEAL-O-RING | |
| | 18 | 1 | *150-4048* | 1 | ELBOW AS | |
| | | 1 | **3K-0360** | 1 | SEAL-O-RING | |
| | | 1 | **6V-8722** | 1 | ELBOW | |
| | | 1 | **7J-9108** | 1 | SEAL-O-RING | |
| | 19 | 1 | **1F-3674** | 1 | ELBOW-STREET | |
| | 20 | 1 | **1S-0994** | 2 | CLIP | |
| | 21 | 1 | **3J-1907** | 1 | SEAL-O-RING | |
| | 22 | 1 | **5S-7379** | 2 | BOLT (3/8-16X0.875-IN) | |
| | 23 | 1 | **6V-8189** | 2 | NUT (5/16-18-THD) | |
| | 24 | 1 | **6V-8918** | 2 | BOLT (5/16-18X1.25-IN) | |
| | 25 | 1 | **6V-9170** | 1 | NUT-BULKHEAD (1-14-THD) | |
| | 26 | 1 | **6V-9172** | 1 | NUT (1-7/16-12-THD) | |
| | 27 | 1 | **6V-9833** | 1 | CAP AS | |
| | 28 | 1 | **7E-3076** | 1 | FITTING | |
| | 29 | 1 | **7X-7729** | 4 | WASHER (11X25X3-MM THK) | |
| | 30 | 1 | **8T-4121** | 1 | WASHER-HARD (11X21X2.5-MM THK) | |
| M | 31 | 1 | **8T-4137** | 5 | BOLT (M10X1.5X20-MM) | |
| | 32 | 1 | **8T-4224** | 4 | WASHER-HARD (8.8X16X2-MM THK) | |
| | 33 | 1 | **8T-4896** | 4 | WASHER-HARD (10.2X18.5X2.5-MM THK) | |
| | 34 | 1 | **9B-7237** | 2 | BOLT (3/8-16X1.25-IN) | |

G-ORDER BY THE INCH
I-REFER TO HYDRAULIC INFORMATION SYSTEM
M-METRIC PART
Y-SEPARATE ILLUSTRATION

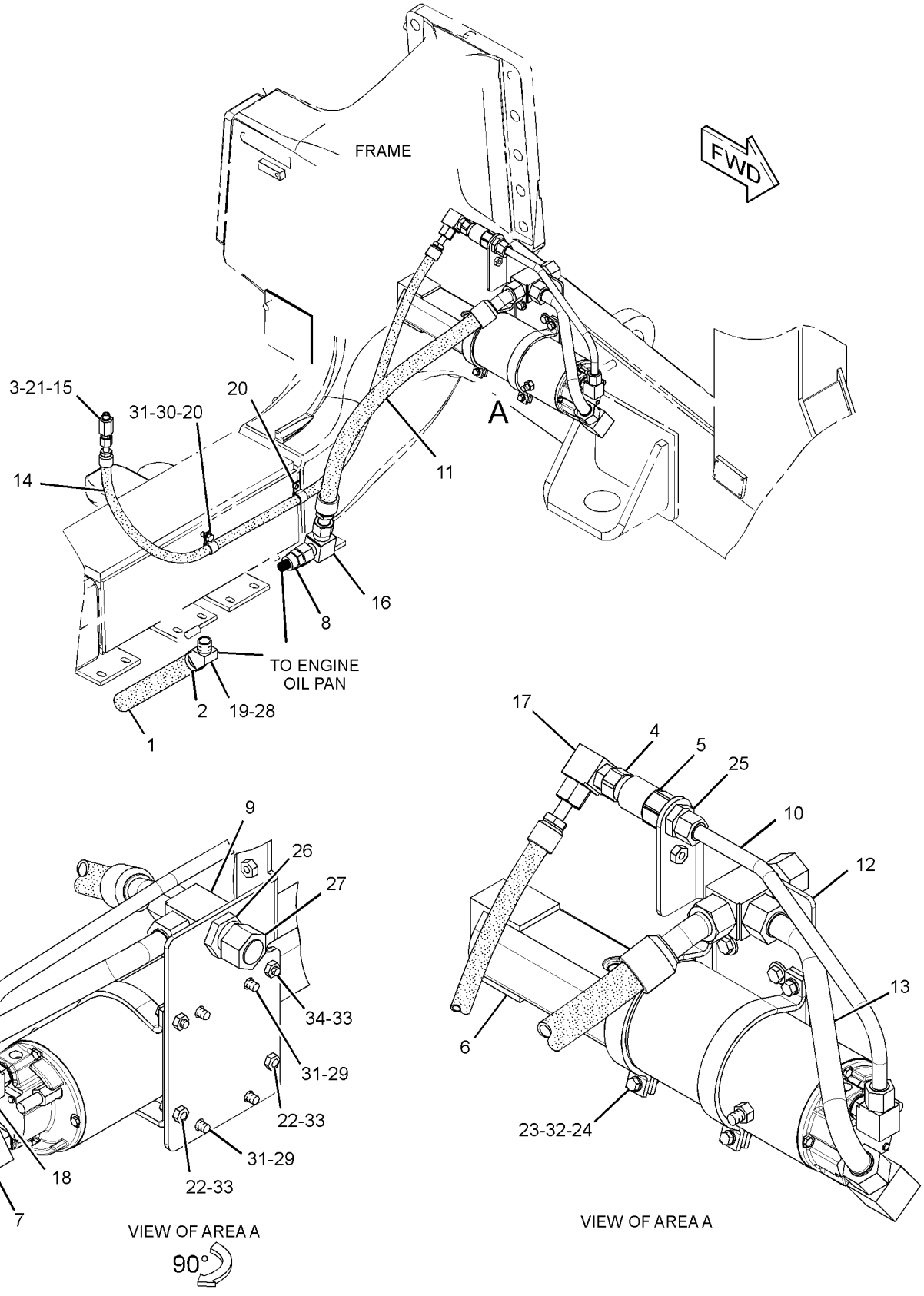


GRAPHIC #1 **<END>** g01420805

# *161-4113* PUMP GP-ENGINE OIL*R

**S/N: RHX1-UP**

**PART OF 221-8124, 247-3315, 272-3086, 272-3087, 292-2553, 292-2554 ENGINE**

**AR-COMPLETE**

**AN ATTACHMENT**

**SMCS-1304, 1315** **i02086285**

| NOTE | REF NO | GRAPHIC REF | PART NUMBER | QTY | PART NAME 1 2 3 4 5 6 (PRODUCT LEVEL) | SEE PAGE |
|---|---|---|---|---|---|---|
| | 1 | 1 | **1W-7238** | 1 | SHAFT AS-PUMP DRIVE | |
| | 2 | 1 | **1W-7239** | 1 | SHAFT AS-IDLER | |
| | 3 | 1 | **2P-3205** | 4 | BOLT-WASHER HEAD (3/8-16X1.75-IN) | |
| | 4 | 1 | **2S-2760** | 1 | SPRING | |
| | 5 | 1 | **6N-1931** | 1 | PLUNGER | |
| | 6 | 1 | **9Y-1792** | 1 | RETAINER | |
| | 7 | 1 | **235-1587** | 1 | BODY AS | |
| | | 1 | **7N-2156** | 2 | BEARING-SLEEVE | |
| | | 1 | **8M-8489** | 2 | DOWEL | |
| | 8 | 1 | **127-6356** | 1 | COVER AS-PUMP | |
| | | 1 | **8S-6511** | 2 | BEARING-SLEEVE | |
| | 9 | 1 | **1M-0644** | 2 | BOLT (3/8-16X2.25-IN) | |
| | 10 | 1 | **2S-7905** | 1 | PLUG-PIPE | |
| | 11 | 1 | **5M-2894** | 2 | WASHER-HARD (10.2X18.5X2.5-MM THK) | |

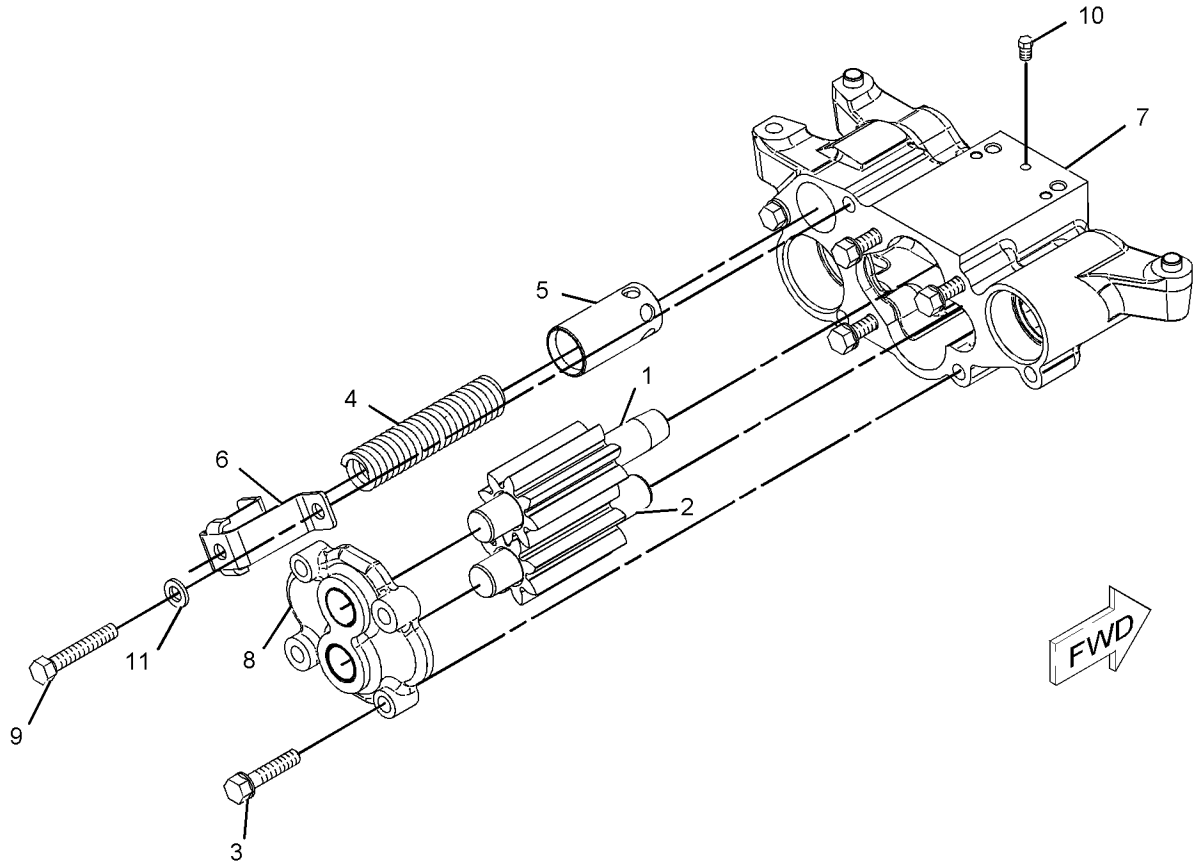


GRAPHIC #1 **<END>** g01066948

# COOLING SYSTEM

## *276-8860* COOLING AR

**S/N: RLB1-UP**

**PART OF 268-7810 GENERAL AR**

**SMCS-1350, 1353** **i02612708**

| NOTE | PART NUMBER | QTY | PART NAME 1 2 3 4 5 6 (PRODUCT LEVEL) | SEE PAGE |
|---|---|---|---|---|
| Y | *270-4240* | 1 | AFTERCOOLER GP | 189 |
| Y | *270-4242* | 1 | BAFFLE GP-RADIATOR | 481 |
| Y | *275-4256* | 1 | CONDENSER & MTG GP-REFRIGERANT | 731 |
| Y | *270-4241* | 1 | FAN GP-SUCTION | 165 |
| Y | *276-8911* | 1 | MOTOR GP-GEAR (HYDRAULIC FAN) | 690 |
| Y | *270-4239* | 1 | RADIATOR GP | 185 |
| Y | *277-3276* | 1 | WASHER GP-WINDOW | 809 |

Y-SEPARATE ILLUSTRATION

**<END>**

# COOLING SYSTEM

## *270-4241* FAN GP-SUCTION

**S/N: RLB1-UP**

**PART OF 276-8860 COOLING AR**

**SMCS-1356** **i02701960**

| NOTE | REF NO | GRAPHIC REF | PART NUMBER | QTY | PART NAME 1 2 3 4 5 6 (PRODUCT LEVEL) | SEE PAGE |
|---|---|---|---|---|---|---|
| | 1 | 1 | **244-5929** | 1 | SPIDER AS-FAN (8-BLADE) | |
| | 2 | 1 | **275-5840** | 1 | SUPPORT AS | |
| | 3 | 1 | **276-6039** | 4 | GUARD AS-FAN | |
| | | 1 | **6N-8599** | 6 | CLIP | |
| M | | 1 | **8T-3490** | 3 | NUT-WELD (M10X1.5-THD) | |
| | 4 | 1 | **278-3387** | 1 | ADAPTER-FAN | |
| | 5 | 1 | **8T-4121** | 12 | WASHER-HARD (11X21X2.5-MM THK) | |
| M | 6 | 1 | **8T-4136** | 12 | BOLT (M10X1.5X25-MM) | |
| M | 7 | 1 | **8T-4139** | 6 | BOLT (M12X1.75X30-MM) | |
| M | 8 | 1 | **8T-4195** | 8 | BOLT (M10X1.5X30-MM) | |
| | 9 | 1 | **8T-4223** | 6 | WASHER-HARD (13.5X25.5X3-MM THK) | |
| | 10 | 1 | **8T-4224** | 16 | WASHER-HARD (8.8X16X2-MM THK) | |
| M | 11 | 1 | **8T-7547** | 16 | BOLT (M8X1.25X30-MM) | |
| E | 12 | 1 | **233-7644** | | FILM-STRIPE (REFLECTIVE, WHITE) (3-CM) | |
| | 13 | 1 | **7X-7729** | 8 | WASHER (11X25X3-MM THK) | |

E-ORDER BY THE CENTIMETER
M-METRIC PART

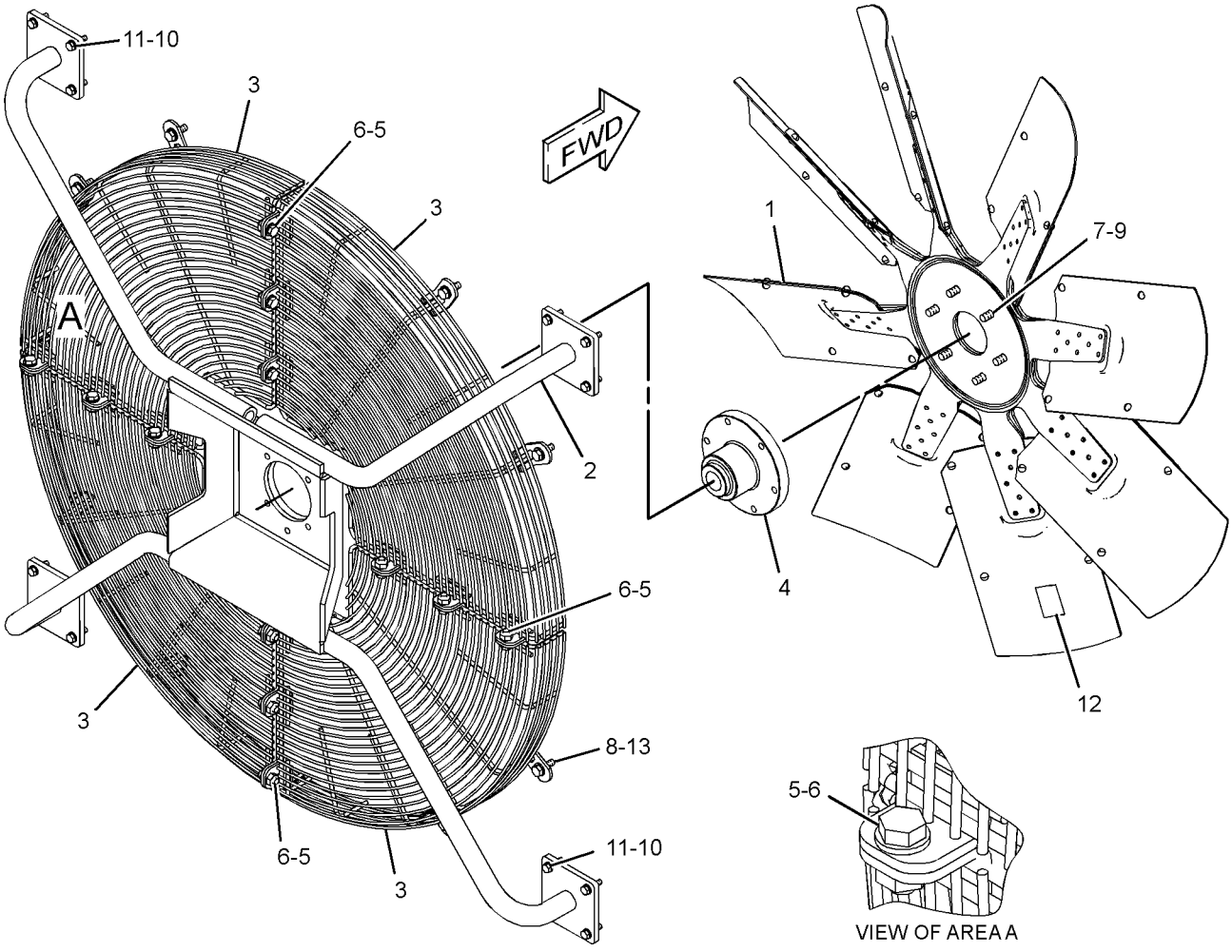


GRAPHIC #1 **<END>** g01356600

# COOLING SYSTEM

## *219-4441* LINES GP-WATER

**S/N: RHX1-UP**

**PART OF 221-8124, 247-3315, 272-3086, 272-3087, 292-2553, 292-2554 ENGINE**

**AR-COMPLETE**

**AN ATTACHMENT**

**SMCS-1380** **i03041717**

| NOTE | REF NO | GRAPHIC REF | PART NUMBER | QTY | PART NAME 1 2 3 4 5 6 (PRODUCT LEVEL) | SEE PAGE |
|---|---|---|---|---|---|---|
| | 1 | 1 | **2S-0795** | 2 | GASKET | |
| R | 2 | 1 | **7W-0205** | 1 | CORE GP-OIL COOLER | |
| | 3 | 2 | **9Y-6089** | 1 | GASKET | |
| | 4 | 1 | **125-0434** | 1 | SEAL-INTEGRAL | |
| | 5 | 2 | **126-4935** | 2 | SEAL-INTEGRAL | |
| R | 6 | 1 | **133-0125** | 1 | CORE AS-ENGINE OIL COOLER | |
| | 7 | 2 | **157-0670** | 1 | CAP-DUST | |
| | 8 | 1 | **166-3501** | 1 | PIPE | |
| | 9 | 1 | **220-0717** | 1 | BONNET-OUTLET | |
| | 10 | 1 | **220-0718** | 1 | BONNET | |
| | 11 | 1 | **248-2772** | 1 | BONNET-OIL COOLER | |
| | 12 | 1 | **227-8851** | 1 | MANIFOLD-HOUSING | |
| | 13 | 2 | **227-8852** | 1 | COVER-WATER PUMP | |
| | 14 | 1 | **236-1687** | 1 | HOUSING-REGULATOR | |
| | 15 | 1 | **237-2520** | 1 | BONNET | |
| | 16 | 1 | **237-2521** | 1 | BRACKET | |
| | 17 | 1 | **248-5513** | 2 | REGULATOR-TEMPERATURE (92-DEG C) (COOLANT) | |
| | 18 | 1 | **0L-1352** | 1 | BOLT (3/8-16X3.25-IN) | |
| | 19 | 2 | **0S-1591** | 4 | BOLT (3/8-16X1.5-IN) | |
| | 20 | 1 | **0S-1594** | 2 | BOLT (3/8-16X1-IN) | |
| | 21 | 1 | **0T-0065** | 1 | BOLT (3/8-16X3.5-IN) | |
| | 22 | 1 | **109-0077** | 3 | SEAL-O-RING | |
| | 23 | 1 | *148-8407* | 1 | PLUG AS | |
| | | 1 | **3J-1907** | 1 | SEAL-O-RING | |
| | | 1 | **9S-4191** | 1 | PLUG-O-RING | |
| | 24 | 1 | *148-8408* | 1 | PLUG AS | |
| | | 1 | **3D-2824** | 1 | SEAL-O-RING | |
| | | 1 | **9S-4183** | 1 | PLUG-O-RING | |
| | 25 | 2 | **154-9023** | 1 | VALVE-SAMPLING (ENGINE COOLANT) | |
| | 26 | 1 | **167-4407** | 1 | SEAL-O-RING | |
| | 27 | 1 | **171-4358** | 2 | SEAL-O-RING | |
| | 28 | 1,2 | **1A-2029** | 8 | BOLT (3/8-16X1.125-IN) | |
| | 29 | 2 | **3J-1907** | 2 | SEAL-O-RING | |
| | 30 | 2 | **3J-7354** | 1 | SEAL-O-RING | |
| | 31 | 2 | **3K-0360** | 1 | SEAL-O-RING | |
| | 32 | 1 | **3S-9643** | 2 | SEAL-LIP TYPE (WATER TEMPERATURE REGULATOR) | |
| | 33 | 1 | **4F-0411** | 3 | BOLT (3/8-16X6.5-IN) | |
| | 34 | 2 | **5P-2566** | 8 | BOLT (1/2-13X1.5-IN) | |
| | 35 | 2 | **5P-6944** | 1 | ADAPTER | |
| | 36 | 2 | **5P-9617** | 1 | ADAPTER | |
| | 37 | 2 | **6V-4432** | 2 | BOLT (1/2-13X4-IN) | |
| | 38 | 2 | **6V-5063** | 3 | SEAL-O-RING | |
| | 39 | 1 | **6V-6609** | 2 | SEAL-O-RING | |
| | 40 | 2 | **6V-8077** | 1 | ELBOW | |
| | 41 | 2 | **7X-0334** | 2 | BOLT (1/2-13X5-IN) | |
| | 42 | 2 | **8T-4223** | 12 | WASHER-HARD (13.5X25.5X3-MM THK) | |
| | 43 | 2 | **8T-6761** | 1 | PLUG-PIPE | |
| M | 44 | 2 | **8T-7338** | 3 | BOLT (M16X2X45-MM) | |
| | 45 | 2 | **9S-4183** | 2 | PLUG-O-RING | |
| | 46 | 1 | **9S-4185** | 2 | PLUG-O-RING | |
| | 47 | 2 | *162-0177* | 1 | PLUG AS | |
| | | 2 | **3J-1907** | 1 | SEAL-O-RING | |
| | | | **9S-8004** | 1 | PLUG-O-RING | |

## *219-4441* **LINES GP-WATER** *(contd.)* **i03041717**

| NOTE | REF NO | GRAPHIC REF | PART NUMBER | QTY | PART NAME 1 2 3 4 5 6 (PRODUCT LEVEL) | SEE PAGE |
|---|---|---|---|---|---|---|
| | 48 | 2 | *148-8395* | 2 | PLUG AS | |
| | | | | | (EACH INCLUDES) | |
| | | 2 | **3K-0360** | 1 | SEAL-O-RING | |
| | | 2 | **9S-8005** | 1 | PLUG-O-RING | |
| | 49 | 2 | **9S-8008** | 1 | PLUG-O-RING | |
| | 50 | 2 | **9X-8257** | 3 | WASHER (17.5X30X3.5-MM THK) | |

M-METRIC PART
R-REMFG PART MAY BE AVAILABLE

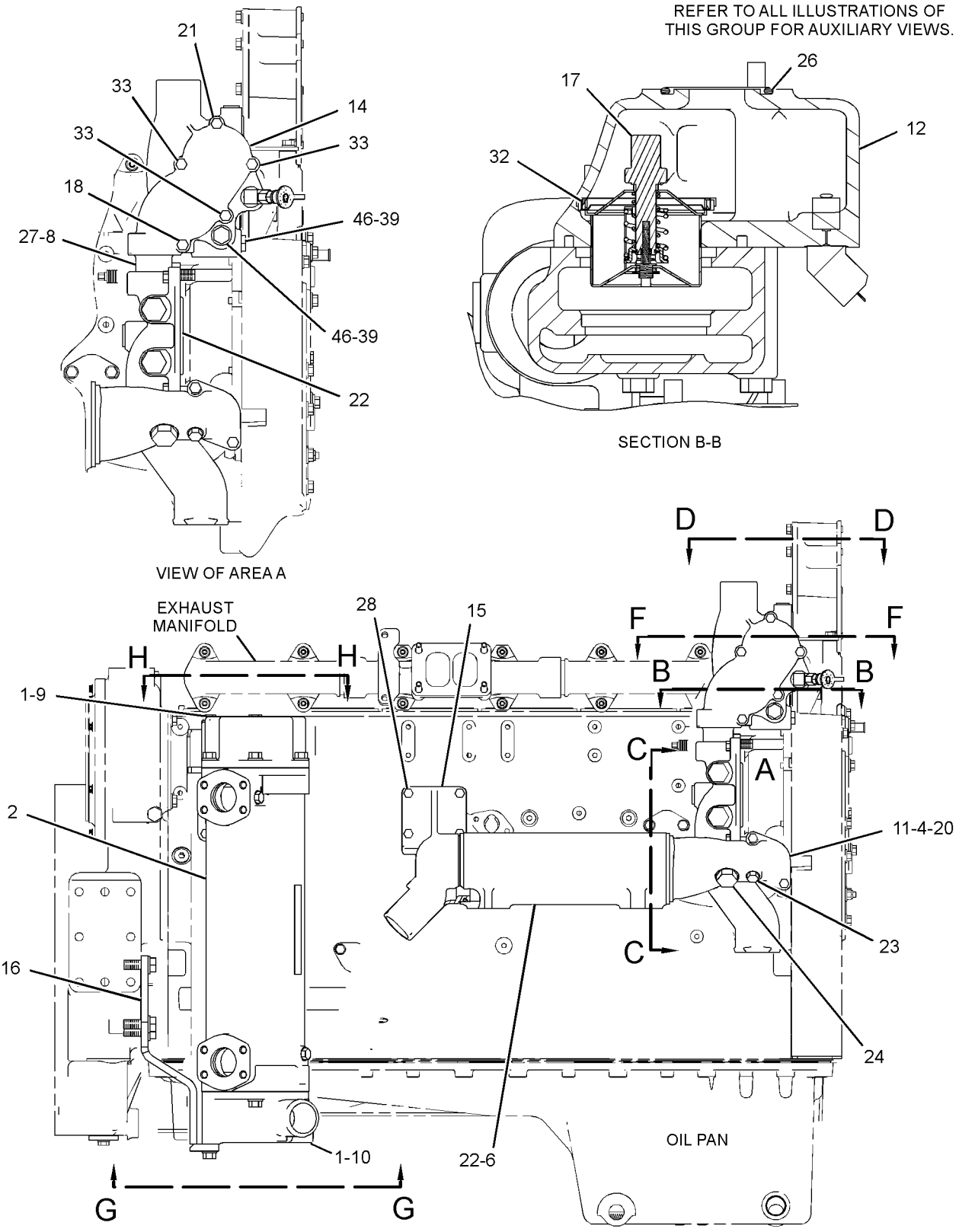


RIGHT SIDE VIEW OF ENGINE

GRAPHIC #1 g01311512

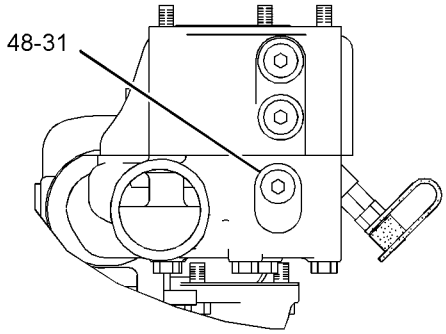


VIEW D-D

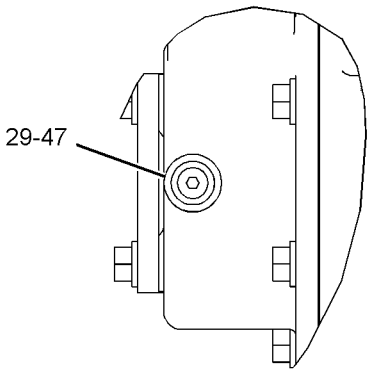


VIEW E-E

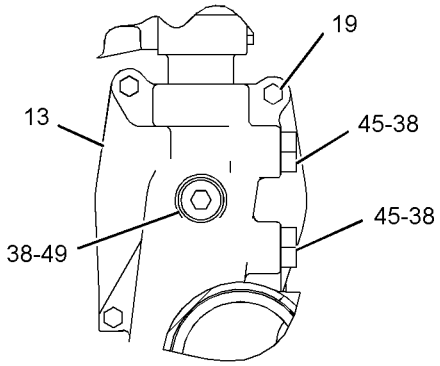


SECTION C-C

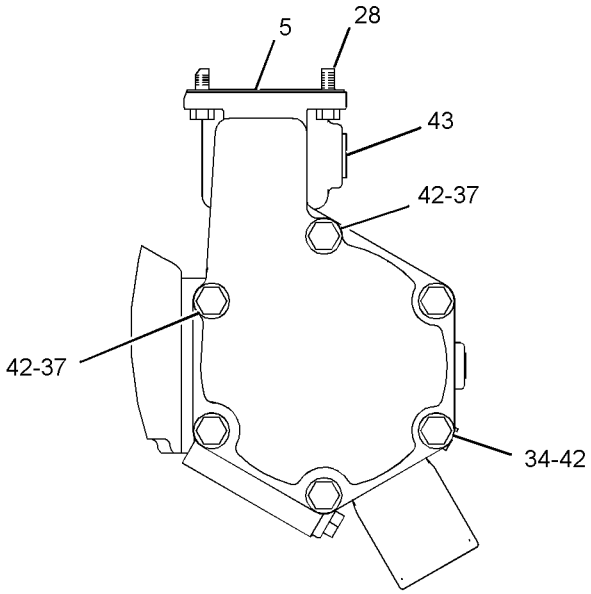


VIEW H-H

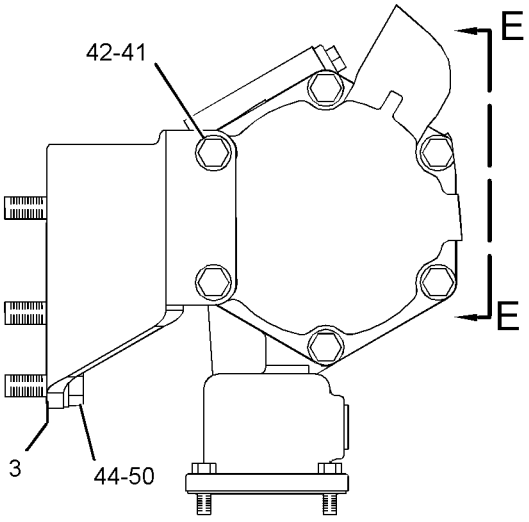


VIEW G-G

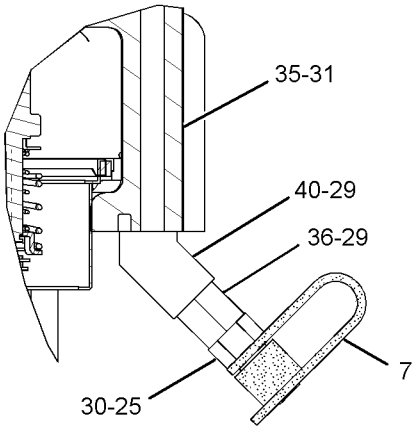


SECTION F-F

GRAPHIC #2 **<END>** g01311592

# COOLING SYSTEM

## *225-4127* LINES GP-WATER

**S/N: RHX1-UP**

**PART OF 272-3086, 272-3087, 292-2553, 292-2554 ENGINE AR-COMPLETE**

**FOR USE WITH TURBOCHARGER**

**AN ATTACHMENT**

**SMCS-1380** **i01963822**

| NOTE | REF NO | GRAPHIC REF | PART NUMBER | QTY | PART NAME 1 2 3 4 5 6 (PRODUCT LEVEL) | SEE PAGE |
|---|---|---|---|---|---|---|
| | 1 | 1 | **7N-7628** | 4 | GASKET | |
| | 2 | 1 | **7N-7878** | 2 | PLATE-COVER | |
| | 3 | 1 | **8M-4553** | 1 | BRACKET | |
| | 4 | 1 | **217-1546** | 1 | TUBE AS | |
| | 5 | 1 | **217-1547** | 1 | TUBE AS | |
| | 6 | 1 | **237-2789** | 1 | BRACKET AS | |
| | | 1 | **1F-0750** | 2 | NUT-WELD (3/8-16-THD) | |
| | 7 | 1 | **033-6033** | 2 | SEAL-O-RING | |
| | 8 | 1 | **0S-1588** | 2 | BOLT (3/8-16X1.25-IN) | |
| | 9 | 1 | **0S-1594** | 2 | BOLT (3/8-16X1-IN) | |
| | 10 | 1 | **1A-2029** | 7 | BOLT (3/8-16X1.125-IN) | |
| | 11 | 1 | **2Y-6448** | 1 | SPACER (10.5X25.4X11.8-MM THK) | |
| | 12 | 1 | **5M-2894** | 11 | WASHER-HARD (10.2X18.5X2.5-MM THK) | |
| | 13 | 1 | **5P-9299** | 2 | CLIP | |
| | 14 | 1 | **6V-8625** | 1 | ELBOW (FACE SEAL) | |
| | 16 | 1 | **8L-2786** | 1 | SEAL-O-RING | |

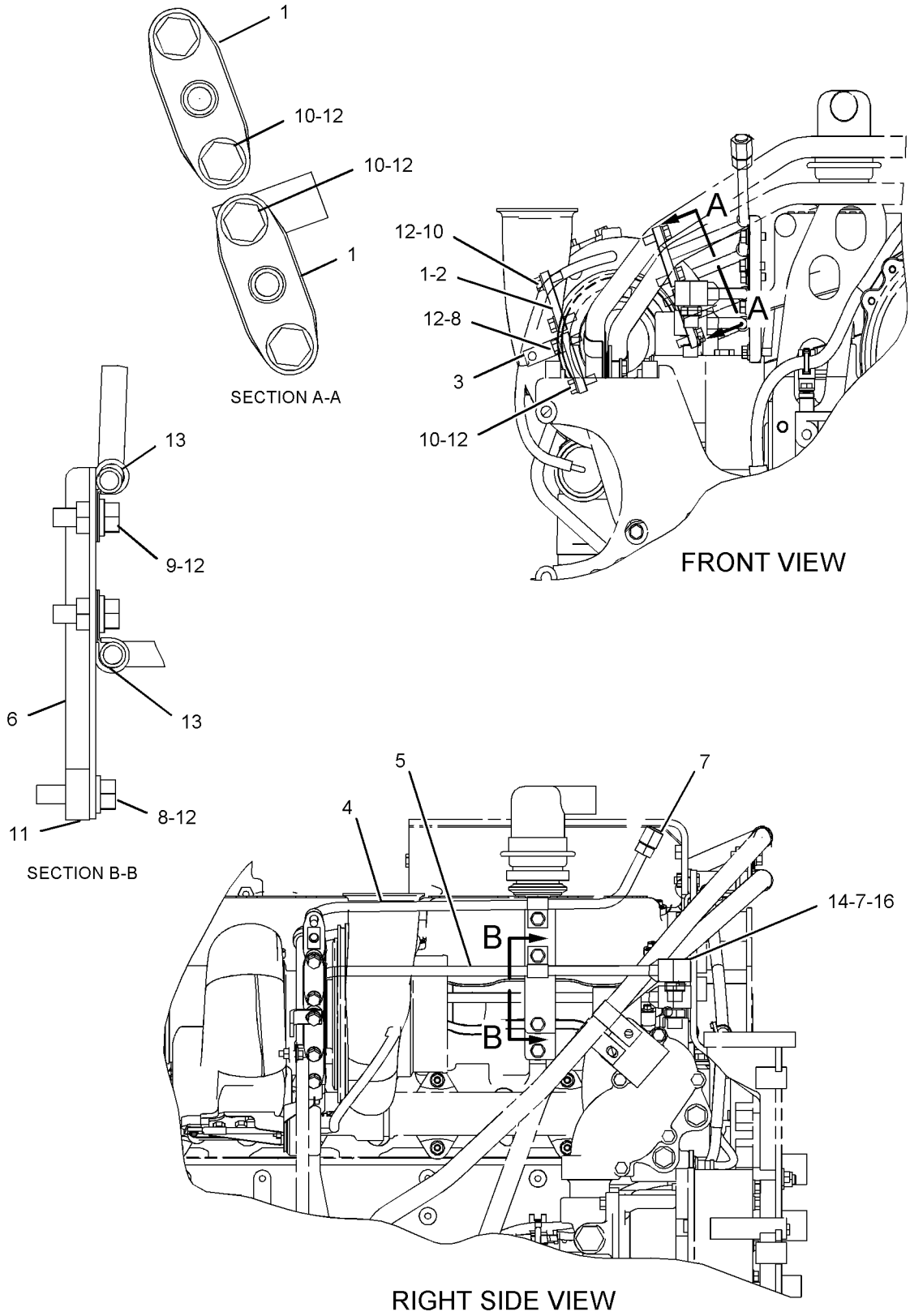


GRAPHIC #1

**<END>**

g01020966

# COOLING SYSTEM

## *270-4218* LINES GP-WATER

**S/N: RLB1-UP**

**PART OF 270-4248, 308-5826 INSTALLATION AR-ENGINE**

**SMCS-1380** **i03078824**

| NOTE | REF NO | GRAPHIC REF | PART NUMBER | QTY | PART NAME 1 2 3 4 5 6 (PRODUCT LEVEL) | SEE PAGE |
|---|---|---|---|---|---|---|
| | 1 | 1 | **2N-8037** | 1 | ELBOW | |
| | 2 | 1 | **3S-7712** | 1 | HOSE (7-IN) | |
| | 2A | 1 | **4S-6822** | 1 | HOSE (4.5-IN) | |
| | 4 | 1 | **5D-1026** | 1 | CLAMP-HOSE | |
| | 5 | 1 | **6K-5741** | 1 | VALVE-DRAIN (COOLANT) | |
| | 6 | 1 | **8F-8151** | 1 | VALVE-SHUTOFF (COOLANT DRAIN) | |
| | 7 | 1 | **002-5299** | 1 | TEE-PIPE | |
| | 8 | 1 | **209-4573** | 4 | CLAMP-V BAND | |
| | 9 | 1 | **276-7542** | 1 | HOSE AS | |
| I | 10 | 1 | **278-5638** | 1 | HOSE AS | |
| | 11 | 1 | **278-5640** | 1 | TUBE AS | |
| | 12 | 1 | **278-5663** | 1 | HOSE | |
| | 13 | 1 | **293-3035** | 1 | BRACKET AS | |
| M | | 1 | **8T-3490** | 2 | NUT-WELD (M10X1.5-THD) | |
| | 14 | 1 | **300-3798** | 1 | PLATE | |
| | 15 | 1 | **032-1267** | 1 | CONNECTOR | |
| | 16 | 1 | **120-5867** | 2 | CLIP | |
| | 17 | 1 | *148-8370* | 1 | ELBOW AS | |
| | | 1 | **6V-9851** | 1 | ELBOW | |
| | | 1 | **6V-8398** | 1 | SEAL-O-RING | |
| | 18 | 1 | *148-8378* | 1 | ELBOW AS | |
| | | 1 | **6V-8724** | 1 | ELBOW | |
| | | 1 | **3J-1907** | 1 | SEAL-O-RING | |
| | | 1 | **6V-8397** | 1 | SEAL-O-RING | |
| | 19 | 1 | **209-4579** | 2 | CLAMP | |
| | 20 | 1 | **3B-7722** | 1 | BUSHING-PIPE | |
| | 21 | 1 | **7X-7729** | 2 | WASHER (11X25X3-MM THK) | |
| | 22 | 1 | **4D-7735** | 2 | CLIP | |
| | 23 | 1 | **8T-4121** | 2 | WASHER-HARD (11X21X2.5-MM THK) | |
| M | 24 | 1 | **8T-4133** | 1 | NUT (M10X1.5-THD) | |
| M | 26 | 1 | **8T-4195** | 3 | BOLT (M10X1.5X30-MM) | |
| E | 27 | 1 | **5P-0743** | | HOSE (24-CM) | |

E-ORDER BY THE CENTIMETER
I-REFER TO HYDRAULIC INFORMATION SYSTEM
M-METRIC PART

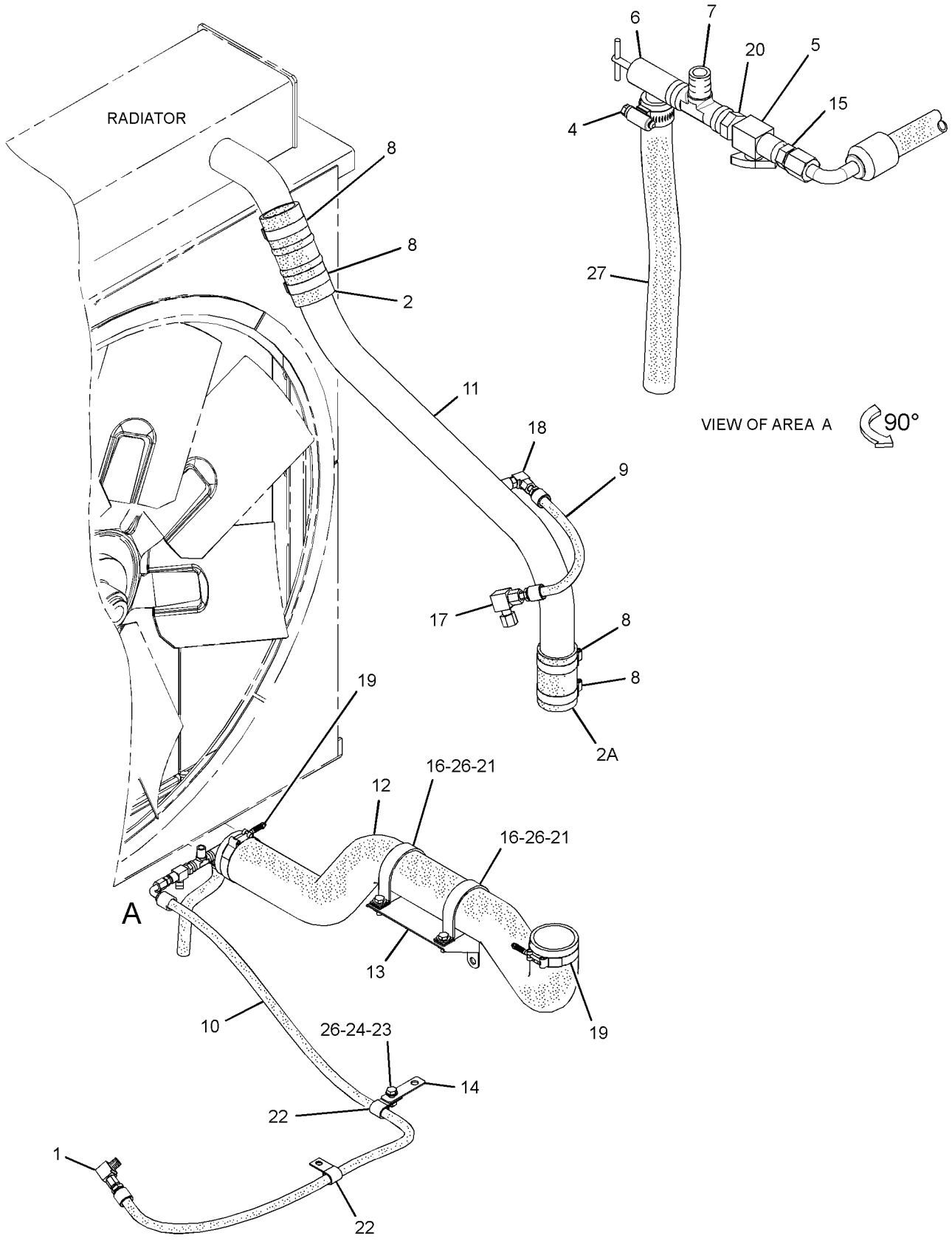


GRAPHIC #1 **<END>** g01578395

# COOLING SYSTEM

## *299-6272* LINES GP-WATER

**S/N: RLB1-402**

**PART OF 299-5707 LINES & MTG GP-WATER TANK**

**AN ATTACHMENT**

**SMCS-1380** **i02867286**

| NOTE | REF NO | GRAPHIC REF | PART NUMBER | QTY | PART NAME 1 2 3 4 5 6 (PRODUCT LEVEL) | SEE PAGE |
|---|---|---|---|---|---|---|
| E | 1 | 1 | **5P-1265** | | HOSE (17.8-CM) | |
| E | 2 | 1 | **5P-0763** | | HOSE (10.2-CM) | |
| | 3 | 1 | **9M-0164** | 4 | CLAMP-HOSE | |
| | 4 | 1 | **132-7370** | 1 | HOSE | |
| | 5 | 1 | **136-8424** | 1 | HOSE | |
| | 6 | 1 | **274-7881** | 1 | TUBE AS | |
| | 7 | 1 | **274-7882** | 1 | TUBE AS | |
| | 8 | 1 | **274-7883** | 1 | TUBE AS | |
| | 9 | 1 | **274-7884** | 1 | TUBE | |
| I | 10 | 1 | **275-0110** | 1 | HOSE AS | |
| I | 11 | 1 | **275-9237** | 1 | HOSE AS | |
| | 12 | 1 | *280-2486* | 1 | COVER GP-ACCESS | |
| | | 1 | **2J-2668** | 2 | COVER | |
| | | 1 | **4J-0524** | 2 | SEAL-O-RING | |
| | 13 | 1 | **288-4658** | 1 | TUBE AS | |
| | 14 | 1 | **302-1494** | 1 | TUBE AS | |
| | 15 | 1 | **304-0490** | 1 | PLATE | |
| | 16 | 1 | **308-6357** | 1 | TUBE AS | |
| | 17 | 1 | *148-8378* | 1 | ELBOW AS | |
| | | 1 | **3J-1907** | 1 | SEAL-O-RING | |
| | | 1 | **6V-8397** | 1 | SEAL-O-RING | |
| | | 1 | **6V-8724** | 1 | ELBOW | |
| | 18 | 1 | *148-8435* | 1 | TEE AS | |
| | | 1 | **3J-1907** | 1 | SEAL-O-RING | |
| | | 1 | **6V-8397** | 2 | SEAL-O-RING | |
| | | 1 | **6V-8781** | 1 | TEE-FACE SEAL | |
| | 19 | 1 | **1P-3705** | 2 | SEAL-RECTANGULAR | |
| | 20 | 1 | **1P-3706** | 1 | SEAL-RECTANGULAR | |
| | 21 | 1 | **1P-3707** | 2 | SEAL-RECTANGULAR | |
| | 22 | 1 | **1P-4579** | 2 | FLANGE-HALF | |
| | 23 | 1 | **209-4581** | 4 | CLAMP | |
| | 24 | 1 | **4J-0524** | 2 | SEAL-O-RING | |
| | 25 | 1 | **5P-2424** | 8 | BOLT (1/2-13X2.25-IN) | |
| | 26 | 1 | **6V-5039** | 1 | CLIP (SLOT) | |
| | 27 | 1 | **6V-5040** | 1 | CLIP (TAB) | |
| | 28 | 1 | **8C-5172** | 1 | SEAL-RECTANGULAR | |
| | 29 | 1 | **8T-4121** | 2 | WASHER-HARD (11X21X2.5-MM THK) | |
| M | 30 | 1 | **8T-4137** | 2 | BOLT (M10X1.5X20-MM) | |
| M | 31 | 1 | **8T-4193** | 4 | BOLT (M16X2X50-MM) | |
| | 32 | 1 | **8T-4223** | 26 | WASHER-HARD (13.5X25.5X3-MM THK) | |
| M | 33 | 1 | **8T-4244** | 1 | NUT (M12X1.75-THD) | |
| | 34 | 1 | **8T-4835** | 4 | BOLT (1/2-13X2-IN) | |
| M | 35 | 1 | **8T-4910** | 4 | BOLT (M12X1.75X60-MM) | |
| M | 36 | 1 | **8T-4956** | 1 | BOLT (M12X1.75X35-MM) | |
| M | 37 | 1 | **8T-6868** | 4 | BOLT (M12X1.75X80-MM) | |
| | 38 | 1 | **8T-8919** | 4 | BOLT (1/2-13X1.75-IN) | |
| | 39 | 1 | **9X-8257** | 4 | WASHER (17.5X30X3.5-MM THK) | |

E-ORDER BY THE CENTIMETER
I-REFER TO HYDRAULIC INFORMATION SYSTEM
M-METRIC PART

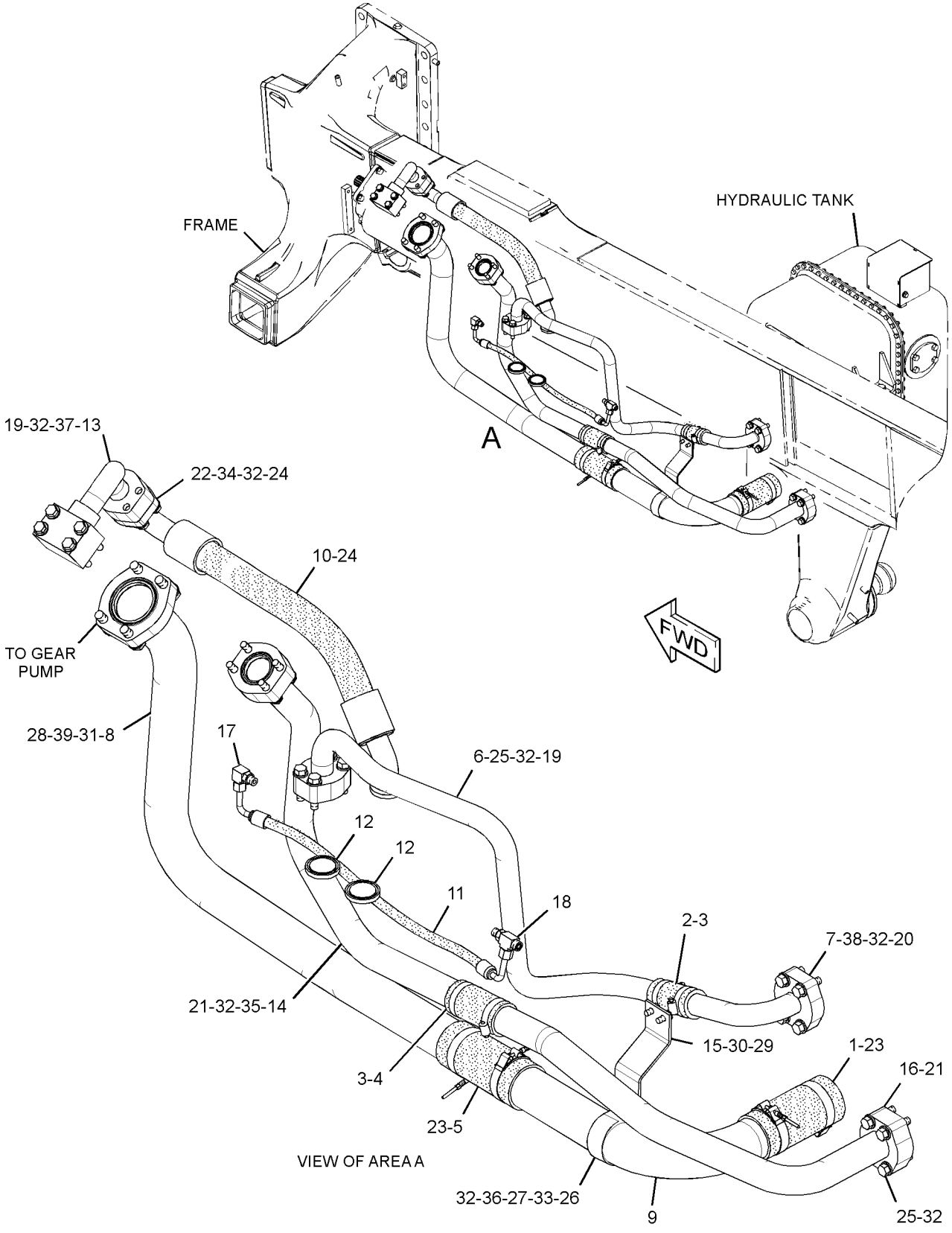


GRAPHIC #1 **<END>** g01502611

# COOLING SYSTEM

## *299-6272* LINES GP-WATER

**S/N: RLB403-446**

**PART OF 299-5707 LINES & MTG GP-WATER TANK**

**AN ATTACHMENT**

**SMCS-1380** **i03014354**

| NOTE | REF NO | GRAPHIC REF | PART NUMBER | QTY | PART NAME 1 2 3 4 5 6 (PRODUCT LEVEL) | SEE PAGE |
|---|---|---|---|---|---|---|
| E | 1 | 1 | **5P-1265** | | HOSE (17.8-CM) | |
| C | 2 | 1 | **2W-5564** | 1 | STRAP | |
| E | 3 | 1 | **5P-0763** | | HOSE (10.2-CM) | |
| | 4 | 1 | **9M-0164** | 4 | CLAMP-HOSE | |
| | 5 | 1 | **132-7370** | 1 | HOSE | |
| | 6 | 1 | **136-8424** | 1 | HOSE | |
| | 7 | 1 | **274-7881** | 1 | TUBE AS | |
| | 8 | 1 | **274-7882** | 1 | TUBE AS | |
| | 9 | 1 | **274-7883** | 1 | TUBE AS | |
| | 10 | 1 | **274-7884** | 1 | TUBE | |
| I | 11 | 1 | **275-0110** | 1 | HOSE AS | |
| I | 12 | 1 | **275-9237** | 1 | HOSE AS | |
| | 13 | 1 | *280-2486* | 1 | COVER GP-ACCESS | |
| | | 1 | **2J-2668** | 2 | COVER | |
| | | 1 | **4J-0524** | 2 | SEAL-O-RING | |
| | 14 | 1 | **302-1494** | 1 | TUBE AS | |
| | 15 | 1 | **304-0490** | 1 | PLATE | |
| C | 16 | 1 | **306-9216** | 1 | BLOCK | |
| CI | 17 | 1 | **306-9218** | 1 | HOSE AS | |
| C | 18 | 1 | **307-0722** | 1 | TUBE AS | |
| | 19 | 1 | **308-6357** | 1 | TUBE AS | |
| | 20 | 1 | *148-8378* | 1 | ELBOW AS | |
| | | 1 | **3J-1907** | 1 | SEAL-O-RING | |
| | | 1 | **6V-8397** | 1 | SEAL-O-RING | |
| | | 1 | **6V-8724** | 1 | ELBOW | |
| | 21 | 1 | *148-8435* | 1 | TEE AS | |
| | | 1 | **3J-1907** | 1 | SEAL-O-RING | |
| | | 1 | **6V-8397** | 2 | SEAL-O-RING | |
| | | 1 | **6V-8781** | 1 | TEE-FACE SEAL | |
| | 22 | 1 | **1P-3705** | 2 | SEAL-RECTANGULAR | |
| | 23 | 1 | **1P-3706** | 1 | SEAL-RECTANGULAR | |
| | 24 | 1 | **1P-3707** | 2 | SEAL-RECTANGULAR | |
| C | 25 | 1 | **1P-4579** | 10 | FLANGE-HALF | |
| | 26 | 1 | **209-4581** | 4 | CLAMP | |
| C | 27 | 1 | **2J-2668** | 1 | COVER | |
| C | 28 | 1 | **4J-0524** | 5 | SEAL-O-RING | |
| | 29 | 1 | **5P-2424** | 8 | BOLT (1/2-13X2.25-IN) | |
| C | 30 | 1 | **5P-7470** | 1 | CLIP (SLOT) | |
| C | 31 | 1 | **5P-7471** | 1 | CLIP (TAB) | |
| C | 32 | 1 | **5P-7703** | 1 | GROMMET | |
| | 33 | 1 | **6V-5039** | 1 | CLIP (SLOT) | |
| | 34 | 1 | **6V-5040** | 1 | CLIP (TAB) | |
| C | 35 | 1 | **7X-7729** | 5 | WASHER (11X25X3-MM THK) | |
| | 36 | 1 | **8C-5172** | 1 | SEAL-RECTANGULAR | |
| CM | 37 | 1 | **8T-0106** | 4 | BOLT (M12X1.75X100-MM) | |
| C | 38 | 1 | **8T-4121** | 4 | WASHER-HARD (11X21X2.5-MM THK) | |
| CM | 39 | 1 | **8T-4133** | 1 | NUT (M10X1.5-THD) | |
| CM | 40 | 1 | **8T-4136** | 1 | BOLT (M10X1.5X25-MM) | |
| M | 41 | 1 | **8T-4137** | 2 | BOLT (M10X1.5X20-MM) | |
| CM | 42 | 1 | **8T-4186** | 4 | BOLT (M10X1.5X40-MM) | |
| M | 43 | 1 | **8T-4193** | 4 | BOLT (M16X2X50-MM) | |
| CM | 44 | 1 | **8T-4195** | 1 | BOLT (M10X1.5X30-MM) | |
| C | 45 | 1 | **8T-4223** | 34 | WASHER-HARD (13.5X25.5X3-MM THK) | |
| CM | 46 | 1 | **8T-4244** | 5 | NUT (M12X1.75-THD) | |
| | 47 | 1 | **8T-4835** | 4 | BOLT (1/2-13X2-IN) | |

## *299-6272* **LINES GP-WATER** *(contd.)* **i03014354**

| NOTE | REF NO | GRAPHIC REF | PART NUMBER | QTY | PART NAME 1 2 3 4 5 6 (PRODUCT LEVEL) | SEE PAGE |
|---|---|---|---|---|---|---|
| CM | 48 | 1 | **8T-4910** | 8 | BOLT (M12X1.75X60-MM) | |
| M | 49 | 1 | **8T-4956** | 1 | BOLT (M12X1.75X35-MM) | |
| | 50 | 1 | **8T-8919** | 4 | BOLT (1/2-13X1.75-IN) | |
| | 51 | 1 | **9X-8257** | 4 | WASHER (17.5X30X3.5-MM THK) | |

C-CHANGE FROM PREVIOUS TYPE
E-ORDER BY THE CENTIMETER
I-REFER TO HYDRAULIC INFORMATION SYSTEM
M-METRIC PART

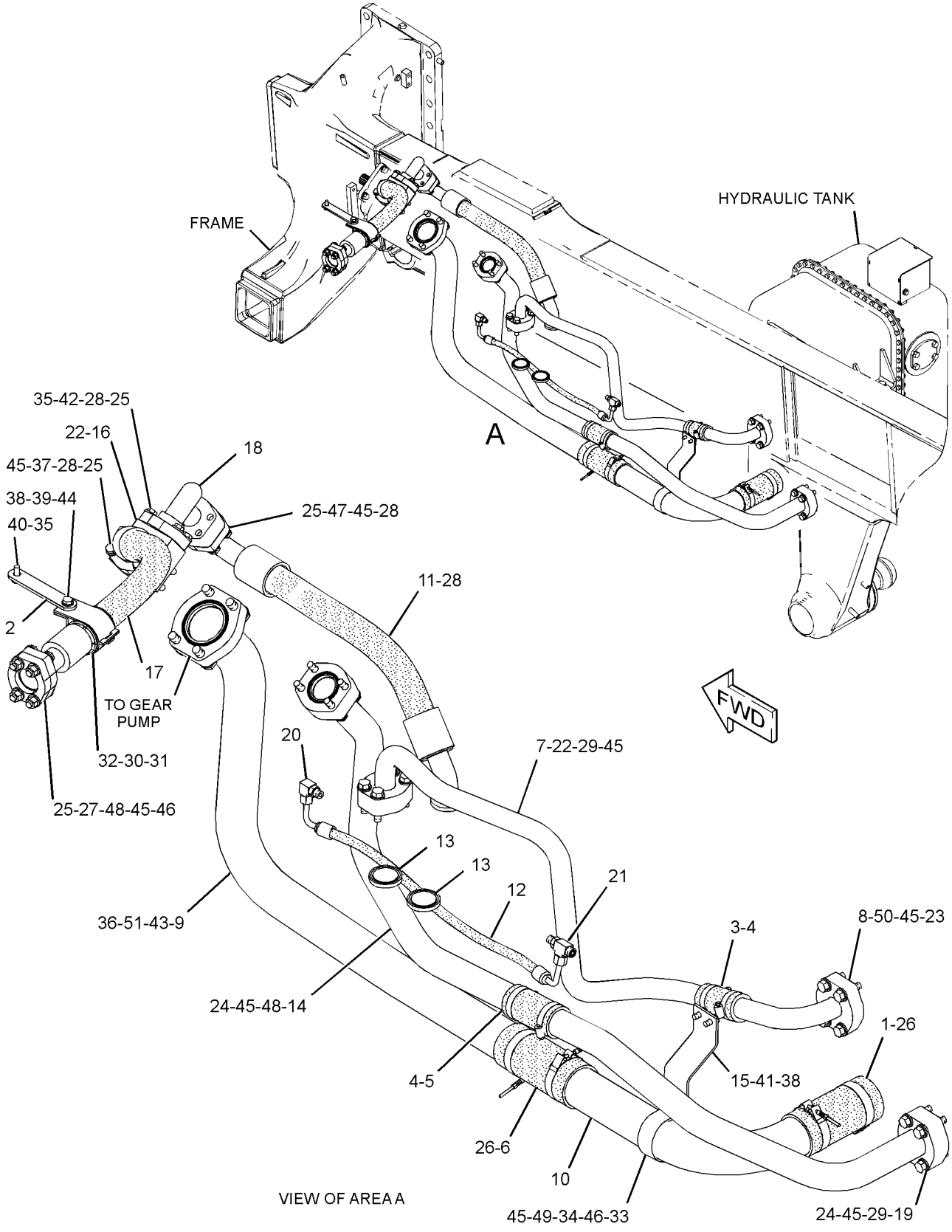


GRAPHIC #1 **<END>** g01526140

# COOLING SYSTEM

## *299-6272* LINES GP-WATER

**S/N: RLB447-UP**

**PART OF 299-5707 LINES & MTG GP-WATER TANK**

**AN ATTACHMENT**

**SMCS-1380** **i03133821**

| NOTE | REF NO | GRAPHIC REF | PART NUMBER | QTY | PART NAME 1 2 3 4 5 6 (PRODUCT LEVEL) | SEE PAGE |
|---|---|---|---|---|---|---|
| | 1 | 1 | **2W-5564** | 1 | STRAP | |
| | 2 | 1 | **274-7883** | 1 | TUBE AS | |
| | 3 | 1 | **274-7884** | 1 | TUBE | |
| I | 4 | 1 | **275-0110** | 1 | HOSE AS | |
| | 5 | 1 | *280-2486* | 1 | COVER GP-ACCESS | |
| | | 1 | **2J-2668** | 2 | COVER | |
| | | 1 | **4J-0524** | 2 | SEAL-O-RING | |
| | 6 | 1 | **302-1494** | 1 | TUBE AS | |
| | 7 | 1 | **304-0490** | 1 | PLATE | |
| | 8 | 1 | **308-6357** | 1 | TUBE AS | |
| C | 9 | 1 | **315-6728** | 1 | BLOCK | |
| CI | 10 | 1 | **315-6729** | 1 | HOSE AS | |
| C | 11 | 1 | **315-6732** | 1 | TUBE AS | |
| C | 12 | 1 | **317-1694** | 1 | TUBE AS | |
| C | 13 | 1 | **319-9026** | 1 | COVER | |
| C | 14 | 1 | **320-2783** | 1 | HOSE AS | |
| C | 15 | 1 | *148-8336* | 2 | CONNECTOR AS | |
| | | | | | (EACH INCLUDES) | |
| | | 1 | **6V-8636** | 1 | CONNECTOR | |
| | | 1 | **6V-8397** | 1 | SEAL-O-RING | |
| | | 1 | **3J-1907** | 1 | SEAL-O-RING | |
| C | 16 | 1 | *148-8367* | 1 | ELBOW AS | |
| | | 1 | **6V-9850** | 1 | ELBOW | |
| | | 1 | **6V-8397** | 1 | SEAL-O-RING | |
| C | 17 | 1 | *148-8433* | 1 | TEE AS | |
| | | 1 | **6V-9836** | 1 | TEE-SWIVEL | |
| | | 1 | **6V-8397** | 2 | SEAL-O-RING | |
| | 18 | 1 | **1P-3705** | 2 | SEAL-RECTANGULAR | |
| | 19 | 1 | **1P-3707** | 2 | SEAL-RECTANGULAR | |
| C | 20 | 1 | **1P-4579** | 8 | FLANGE-HALF | |
| C | 21 | 1 | **1P-4582** | 2 | FLANGE-HALF | |
| C | 22 | 1 | **317-2710** | 1 | TUBE AS | |
| | 23 | 1 | **4J-0524** | 5 | SEAL-O-RING | |
| C | 24 | 1 | **4J-0527** | 1 | SEAL-O-RING | |
| | 25 | 1 | **5P-2424** | 8 | BOLT (1/2-13X2.25-IN) | |
| C | 26 | 1 | **5P-2566** | 4 | BOLT (1/2-13X1.5-IN) | |
| C | 27 | 1 | **5P-4295** | 1 | CLIP | |
| | 28 | 1 | **5P-7470** | 1 | CLIP (SLOT) | |
| | 29 | 1 | **5P-7471** | 1 | CLIP (TAB) | |
| | 30 | 1 | **5P-7703** | 1 | GROMMET | |
| | 31 | 1 | **6V-5039** | 1 | CLIP (SLOT) | |
| | 32 | 1 | **6V-5040** | 1 | CLIP (TAB) | |
| | 33 | 1 | **7X-7729** | 5 | WASHER (11X25X3-MM THK) | |
| | 34 | 1 | **8C-5172** | 1 | SEAL-RECTANGULAR | |
| | 35 | 1 | **8T-4121** | 4 | WASHER-HARD (11X21X2.5-MM THK) | |
| M | 36 | 1 | **8T-4133** | 1 | NUT (M10X1.5-THD) | |
| M | 37 | 1 | **8T-4136** | 1 | BOLT (M10X1.5X25-MM) | |
| M | 38 | 1 | **8T-4137** | 2 | BOLT (M10X1.5X20-MM) | |
| CM | 39 | 1 | **8T-4140** | 4 | BOLT (M16X2X60-MM) | |
| M | 40 | 1 | **8T-4186** | 4 | BOLT (M10X1.5X40-MM) | |
| M | 41 | 1 | **8T-4195** | 1 | BOLT (M10X1.5X30-MM) | |
| | 42 | 1 | **8T-4223** | 34 | WASHER-HARD (13.5X25.5X3-MM THK) | |
| CM | 43 | 1 | **8T-4244** | 1 | NUT (M12X1.75-THD) | |
| CM | 44 | 1 | **8T-4648** | 4 | BOLT (M12X1.75X70-MM) | |
| | 45 | 1 | **8T-4835** | 4 | BOLT (1/2-13X2-IN) | |

## *299-6272* **LINES GP-WATER** *(contd.)* **i03133821**

| NOTE | REF NO | GRAPHIC REF | PART NUMBER | QTY | PART NAME 1 2 3 4 5 6 (PRODUCT LEVEL) | SEE PAGE |
|---|---|---|---|---|---|---|
| CM | 46 | 1 | **8T-4910** | 4 | BOLT (M12X1.75X60-MM) | |
| M | 47 | 1 | **8T-4956** | 1 | BOLT (M12X1.75X35-MM) | |
| C | 48 | 1 | **8T-4984** | 2 | CLAMP-HOSE | |
| C | 49 | 1 | **8T-4985** | 4 | CLAMP-HOSE | |
| CM | 50 | 1 | **8T-5001** | 4 | BOLT (M12X1.75X130-MM) | |
| C | 51 | 1 | **8T-6703** | 2 | CLAMP-HOSE | |
| CM | 52 | 1 | **8T-8549** | 4 | LOCKNUT (M12X1.75-THD) | |
| | 53 | 1 | **9X-8257** | 4 | WASHER (17.5X30X3.5-MM THK) | |
| CE | 54 | 1 | **5P-1291** | | HOSE (10.2-CM) | |
| CE | 55 | 1 | **5P-1293** | | HOSE (12-CM) | |
| CE | 56 | 1 | **7X-7893** | | HOSE (18-CM) | |
| CE | 56A | 1 | **7X-7893** | | HOSE (20-CM) | |

C-CHANGE FROM PREVIOUS TYPE
E-ORDER BY THE CENTIMETER
I-REFER TO HYDRAULIC INFORMATION SYSTEM
M-METRIC PART

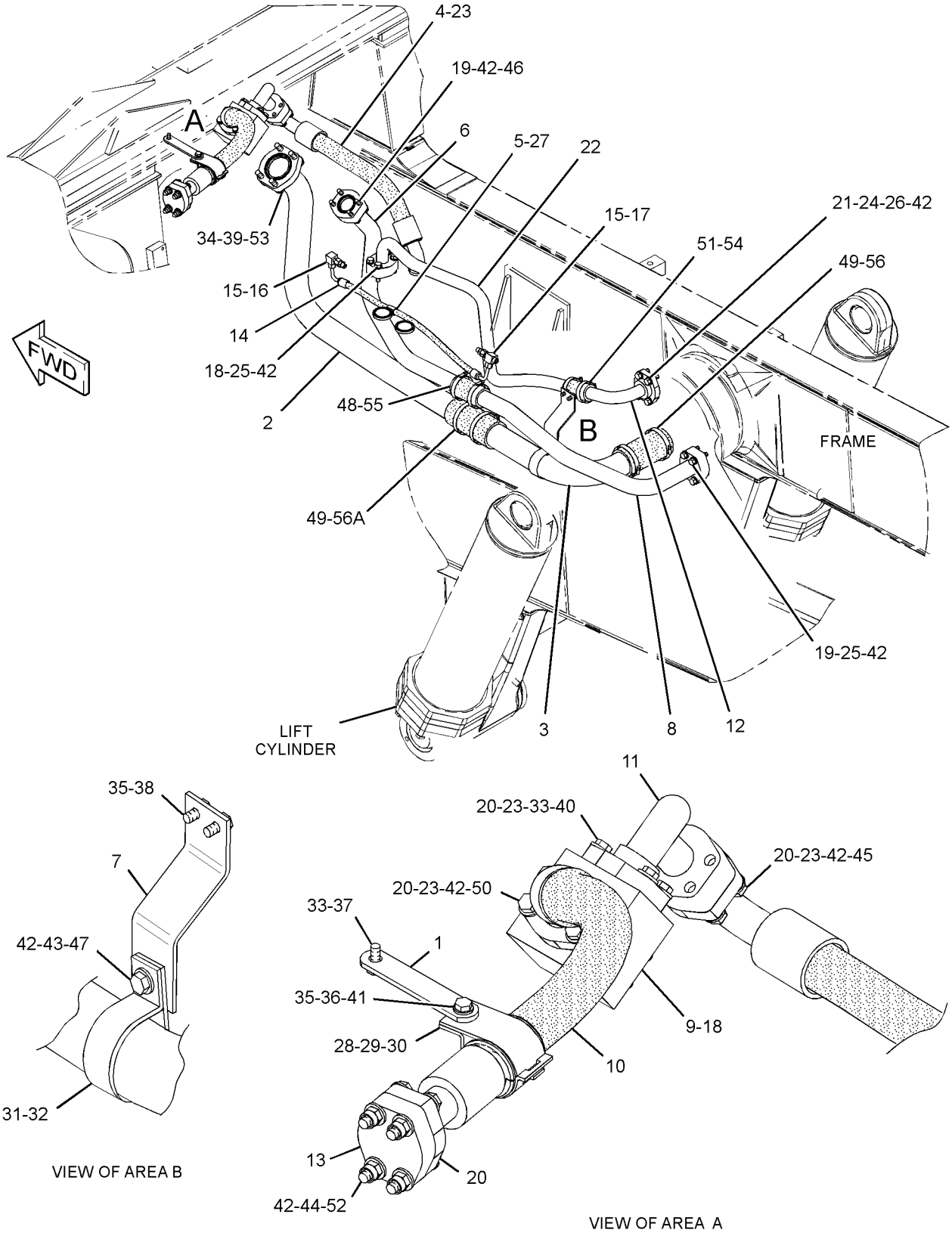


GRAPHIC #1 **<END>** g01622594

# COOLING SYSTEM

## 161-5719 PUMP GP-WATER*R

**S/N: RHX1-UP**
**PART OF 174-5986 PUMP GP-WATER**
**AN ATTACHMENT**

**SMCS-1361** **i02740969**

| NOTE | REF NO | GRAPHIC REF | PART NUMBER | QTY | PART NAME 1 2 3 4 5 6 (PRODUCT LEVEL) | SEE PAGE |
|---|---|---|---|---|---|---|
| | 1 | 1 | **161-5718** | 1 | HOUSING-WATER PUMP | |
| | 2 | 1 | **129-9907** | 1 | IMPELLER-PUMP | |
| W | 3 | 1 | **9M-6527** | 1 | WASHER-HARD (10.2X25.5X5-MM THK) | |
| | 4 | 1 | **0S-1591** | 1 | BOLT (3/8-16X1.5-IN) | |
| | 5 | 1 | **1A-1135** | 1 | BOLT (5/8-11X2-IN) | |
| W | 6 | 1 | **128-0317** | 1 | SEAL GP (WATER PUMP) | |
| | 7 | 1 | **153-9023** | 1 | GEAR (74-TEETH) | |
| W | 8 | 1 | **153-1256** | 1 | SEAL-LIP TYPE | |
| W | 9 | 1 | **135-4928** | 1 | SHAFT-WATER PUMP | |
| W | 10 | 1 | **5S-0581** | 1 | WASHER-HARD (17X38X8-MM THK) | |
| | 11 | 1 | **1B-7182** | 4 | BOLT (5/16-18X1.25-IN) | |
| W | 12 | 1 | **108-7930** | 1 | BEARING AS-ROLLER | |
| W | 13 | 1 | **136-1107** | 1 | RETAINER | |
| W | 14 | 1 | **136-3742** | 1 | FILTER-WATER PUMP | |
| | | | | | AVAILABLE REPAIR KIT(S): | |
| W | | | **138-6744** | 1 | KIT-PUMP REBUILD (WATER) | |
| | | | | | INCLUDES WASHER, SEALS, BEARING AS, FILTERS, SHAFT-WATER PUMP, AND RETAINER | |

W-KIT MARKED W INCLUDES PARTS MARKED W

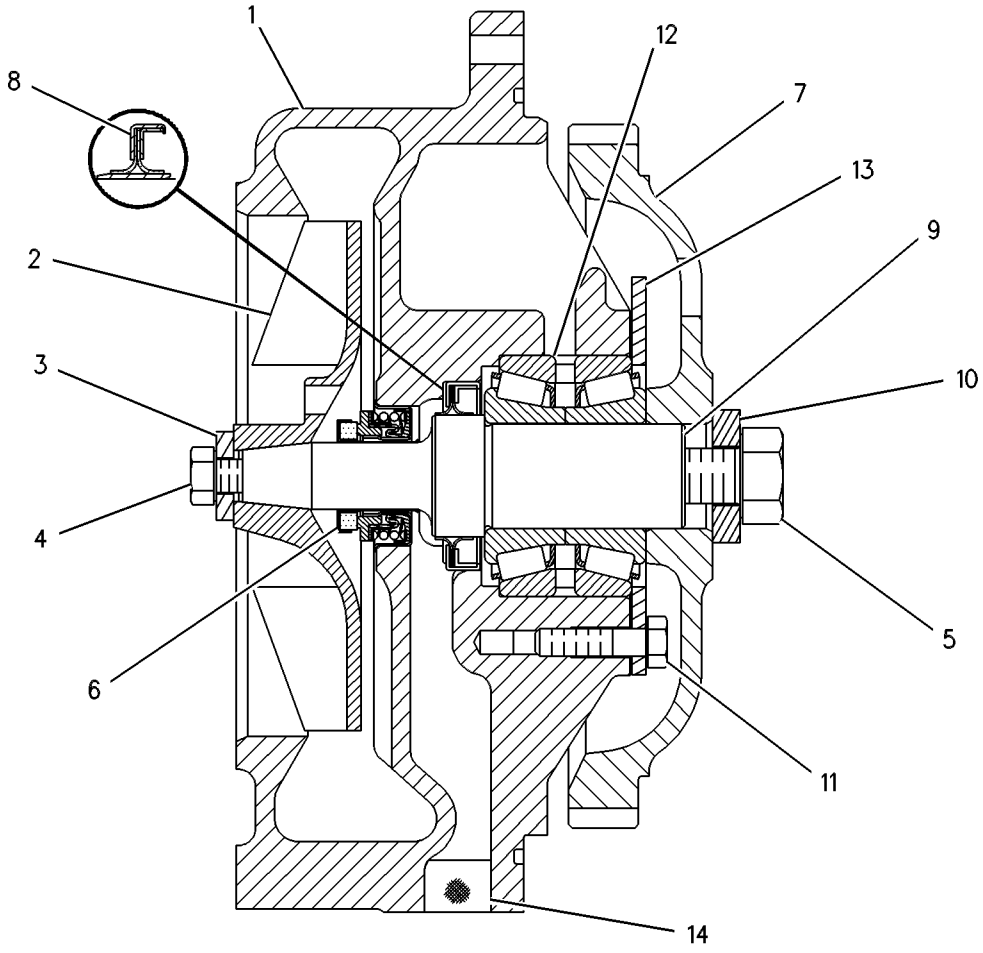


GRAPHIC #1 **<END>** g00263499

## *174-5986* PUMP GP-WATER

**S/N: RHX1-UP**
**HEAVY DUTY PUMP**
**PART OF 221-8124, 247-3315, 272-3086, 272-3087, 292-2553, 292-2554 ENGINE**
**AR-COMPLETE**
**AN ATTACHMENT**

**SMCS-1361** **i02610618**

| NOTE | REF NO | GRAPHIC REF | PART NUMBER | QTY | PART NAME 1 2 3 4 5 6 (PRODUCT LEVEL) | SEE PAGE |
|---|---|---|---|---|---|---|
| YR | 1 | 1 | **161-5719** | 1 | PUMP GP-WATER | 182 |
| | 2 | 1 | **4P-2383** | 1 | ADAPTER | |
| | 3 | 1 | **9M-3786** | 1 | SEAL-O-RING | |
| | 4 | 1 | **122-3772** | 1 | SEAL-O-RING | |
| | 5 | 1 | **109-0077** | 1 | SEAL-O-RING | |

R-REMFG PART MAY BE AVAILABLE
Y-SEPARATE ILLUSTRATION

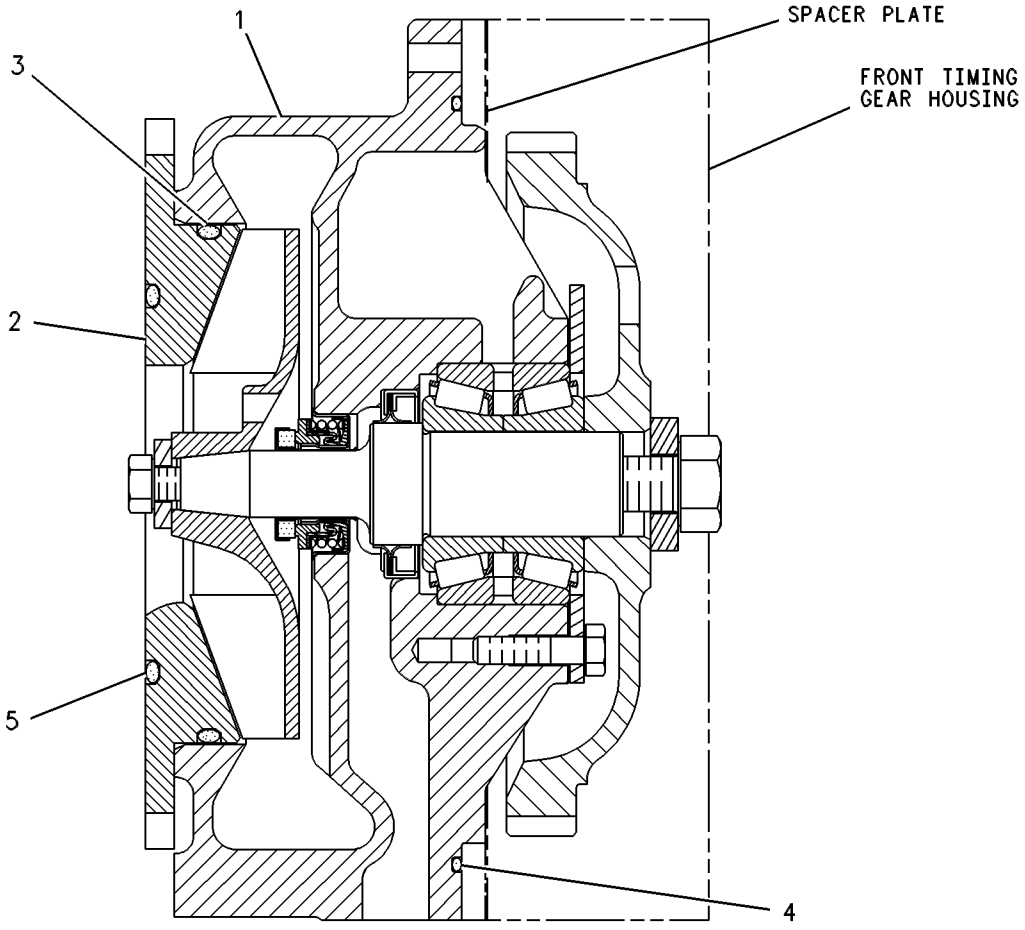


GRAPHIC #1 **<END>** g00263504

# COOLING SYSTEM

## *270-4239* RADIATOR GP

**S/N: RLB1-UP**

**PART OF 276-8860 COOLING AR**

**SMCS-1353** **i02612803**

| NOTE | REF NO | GRAPHIC REF | PART NUMBER | QTY | PART NAME 1 2 3 4 5 6 (PRODUCT LEVEL) | SEE PAGE |
|---|---|---|---|---|---|---|
| | 1 | 1 | **1K-4649** | 4 | SPACER (0.516X1X1-IN THK) | |
| | 2 | 1 | **2S-1212** | 2 | MOUNT AS | |
| | 3 | 1 | **7N-7988** | 2 | MOUNT AS | |
| | 4 | 1 | **9S-7325** | 2 | CLAMP AS | |
| | 5 | 1 | **9Y-9236** | 1 | GAUGE-SIGHT (COOLANT LEVEL) | |
| | 6 | 1 | **235-7071** | 2 | CHANNEL AS | |
| | 7 | 1 | **238-9811** | 2 | PLATE AS | |
| | | | | | (EACH INCLUDES) | |
| M | | 1 | **8T-3490** | 6 | NUT-WELD (M10X1.5-THD) | |
| | 8 | 1 | **238-9812** | 2 | PLATE AS | |
| | | | | | (EACH INCLUDES) | |
| M | | 1 | **8T-3490** | 6 | NUT-WELD (M10X1.5-THD) | |
| | 9 | 1 | **238-9837** | 4 | STRIP | |
| | 10 | 1 | **238-9838** | 4 | BAFFLE | |
| | 11 | 1 | **248-6827** | 2 | PLATE | |
| Y | 12 | 1 | *273-2444* | 1 | RADIATOR GP | 187 |
| | 13 | 1 | **294-3342** | 1 | CAP AS-RADIATOR | |
| | 14 | 1 | **305-7084** | 4 | CAP | |
| | 15 | 1 | **033-8248** | 1 | CLIP | |
| | 16 | 1 | **134-3987** | 1 | CLIP | |
| | 17 | 1 | **147-0385** | 1 | CLIP | |
| | 18 | 1 | **198-4780** | 8 | WASHER-HARD (17.5X32X8-MM THK) | |
| | 19 | 1 | **6V-4432** | 2 | BOLT (1/2-13X4-IN) | |
| | 20 | 1 | **6V-8188** | 2 | NUT (1/2-13-THD) | |
| | 21 | 1 | **7M-8485** | 1 | SEAL-O-RING | |
| | 22 | 1 | **7X-7729** | 24 | WASHER (11X25X3-MM THK) | |
| | 23 | 1 | **8T-4121** | 37 | WASHER-HARD (11X21X2.5-MM THK) | |
| M | 24 | 1 | **8T-4132** | 4 | NUT (M16X2-THD) | |
| M | 25 | 1 | **8T-4136** | 16 | BOLT (M10X1.5X25-MM) | |
| M | 26 | 1 | **8T-4137** | 39 | BOLT (M10X1.5X20-MM) | |
| M | 27 | 1 | **8T-4195** | 6 | BOLT (M10X1.5X30-MM) | |
| | 28 | 1 | **8T-4223** | 8 | WASHER-HARD (13.5X25.5X3-MM THK) | |
| | 29 | 1 | **8T-4896** | 2 | WASHER-HARD (10.2X18.5X2.5-MM THK) | |
| M | 30 | 1 | **8T-4910** | 4 | BOLT (M12X1.75X60-MM) | |
| M | 31 | 1 | **8T-6383** | 4 | BOLT (M16X2X200-MM) | |
| | 32 | 1 | **8T-9101** | 2 | BOLT (3/8-16X2.75-IN) | |
| E | 33 | 1 | **8C-3681** | | HOSE (187-CM) | |

E-ORDER BY THE CENTIMETER
M-METRIC PART
Y-SEPARATE ILLUSTRATION

*270-4239* **RADIATOR GP** *(contd.)* **i02612803**

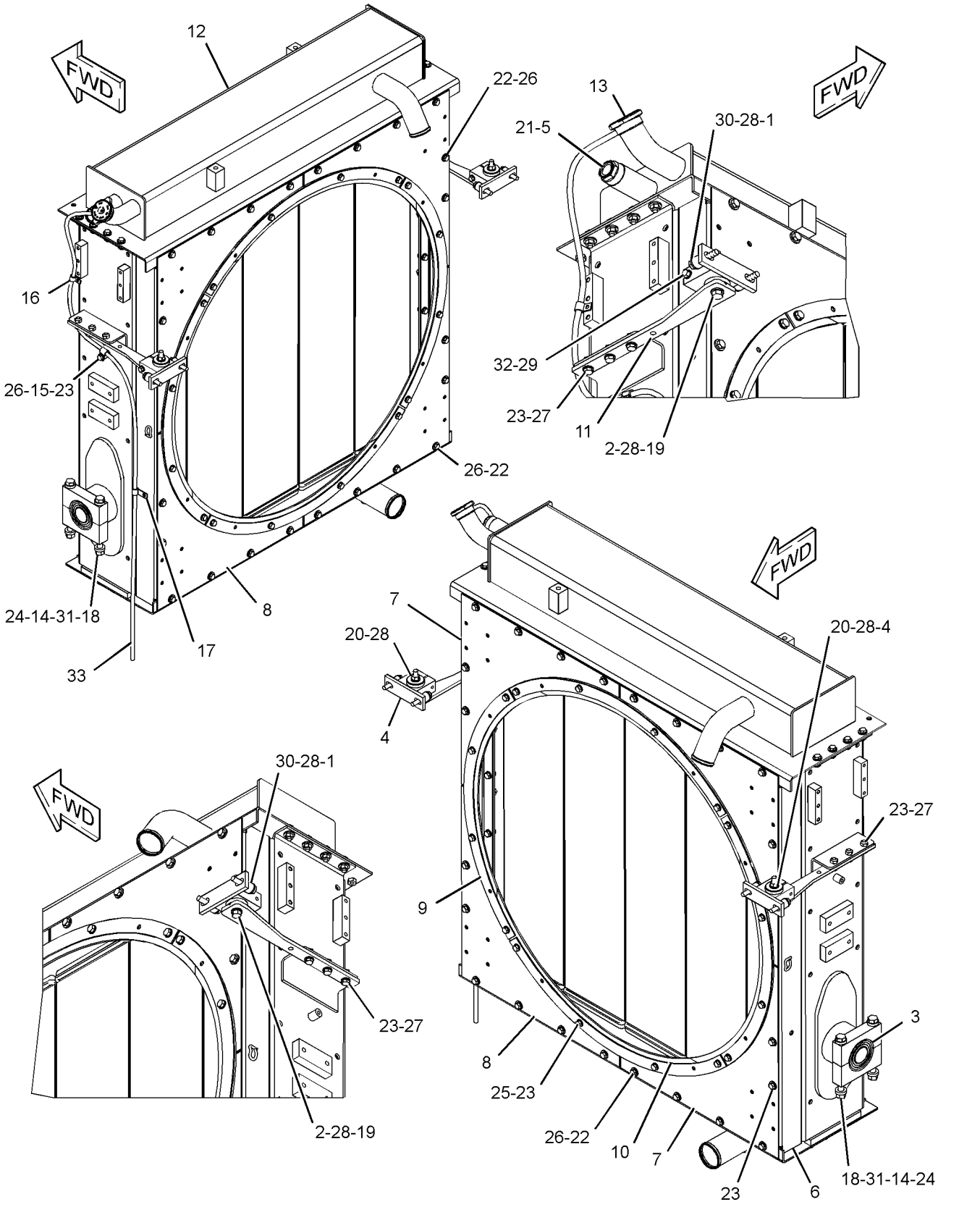


GRAPHIC #1 **<END>** g01344697

# *273-2444* RADIATOR GP

**S/N: RLB1-UP**

**PART OF 270-4239 RADIATOR GP**

**SMCS-1353** **i03077482**

| NOTE | REF NO | GRAPHIC REF | PART NUMBER | QTY | PART NAME 1 2 3 4 5 6 (PRODUCT LEVEL) | SEE PAGE |
|---|---|---|---|---|---|---|
| | 1 | 1 | **272-5438** | 10 | SEAL-RADIATOR (DUROMETER, WIDE) | |
| | 2 | 1 | **273-2417** | 1 | TANK AS-RADIATOR (TOP) | |
| | 3 | 1 | **326-2944** | 2 | CHANNEL AS | |
| | 4 | 1 | **277-3483** | 1 | TANK AS-RADIATOR (BOTTOM) | |
| | 5 | 1 | **223-5089** | 5 | CORE AS-RADIATOR | |
| | 6 | 1 | **7X-7729** | 56 | WASHER (11X25X3-MM THK) | |
| M | 8 | 1 | **8T-4133** | 8 | NUT (M10X1.5-THD) | |
| M | 9 | 1 | **8T-4136** | 40 | BOLT (M10X1.5X25-MM) | |
| M | 10 | 1 | **8T-4195** | 8 | BOLT (M10X1.5X30-MM) | |
| D | 11 | 1 | **5P-7211** | | SEAL (1.3-M EACH) | |

D-ORDER BY THE METER
M-METRIC PART

*273-2444* **RADIATOR GP** *(contd.)* **i03077482**

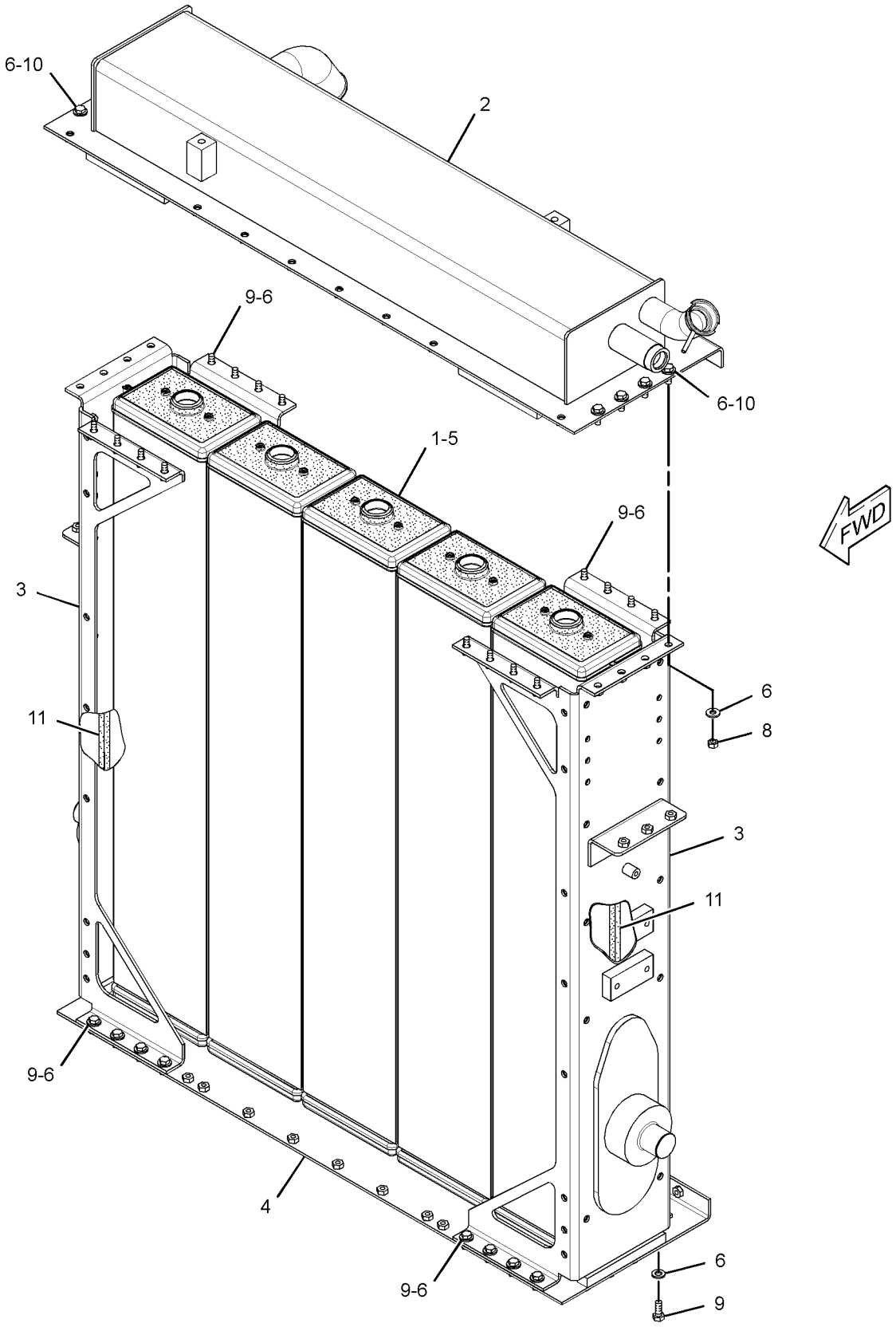


GRAPHIC #1 **<END>** g01561241

# AIR INLET AND EXHAUST SYSTEM

## *270-4240* AFTERCOOLER GP

**S/N: RLB1-UP**

**PART OF 276-8860 COOLING AR**

**SMCS-1063** **i02612824**

| NOTE | REF NO | GRAPHIC REF | PART NUMBER | QTY | PART NAME 1 2 3 4 5 6 (PRODUCT LEVEL) | SEE PAGE |
|---|---|---|---|---|---|---|
| | 1 | 1 | **8D-3786** | 6 | MOUNTING | |
| | 2 | 1 | **231-9394** | 1 | CORE AS-AFTERCOOLER | |
| | 3 | 1 | **294-5809** | 2 | BRACKET | |
| | 4 | 1 | **276-8859** | 2 | PLATE | |
| | 5 | 1 | **7X-0618** | 6 | WASHER-HARD (13.5X40X5-MM THK) | |
| | 6 | 1 | **7X-7729** | 4 | WASHER (11X25X3-MM THK) | |
| M | 7 | 1 | **8T-4195** | 4 | BOLT (M10X1.5X30-MM) | |
| | 8 | 1 | **8T-4223** | 8 | WASHER-HARD (13.5X25.5X3-MM THK) | |
| | 9 | 1 | **8T-8917** | 8 | BOLT (1/2-13X1.25-IN) | |
| | 10 | 1 | **8T-8919** | 6 | BOLT (1/2-13X1.75-IN) | |

M-METRIC PART

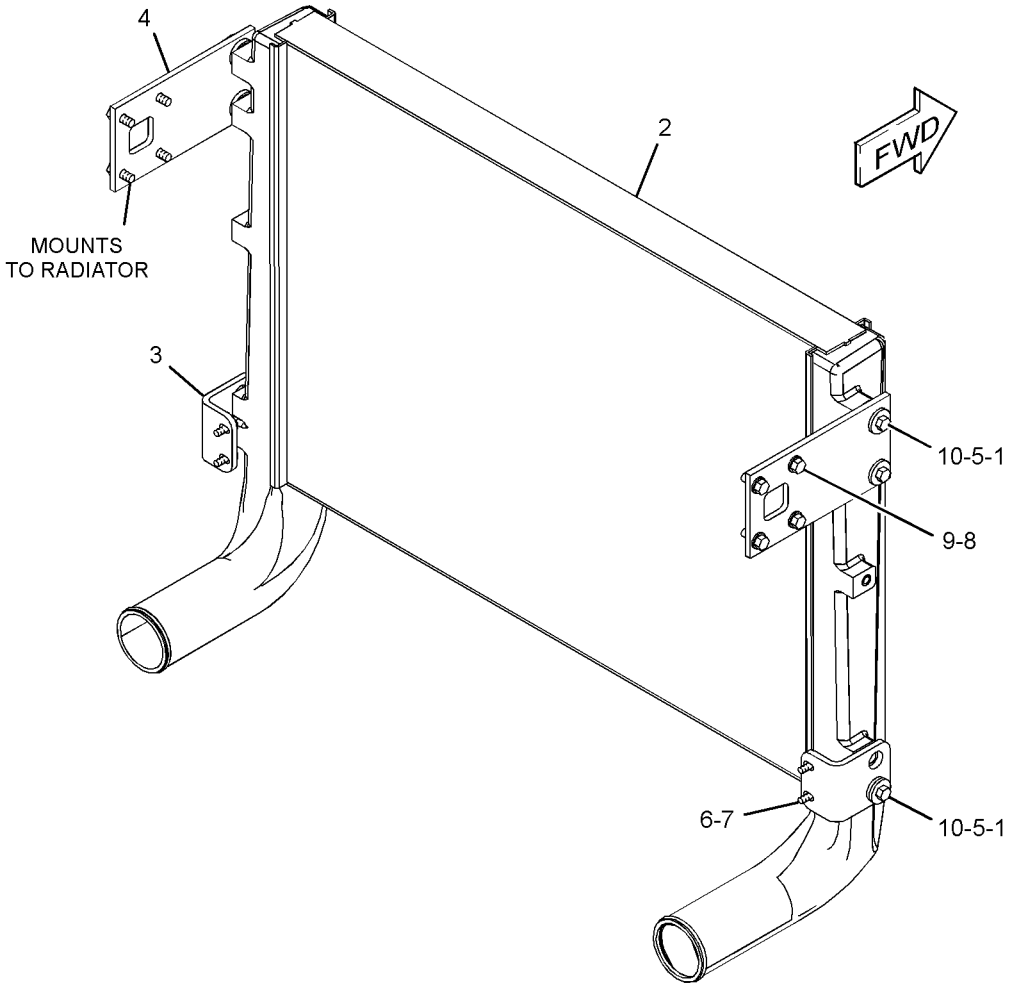


GRAPHIC #1 **<END>** g01320098

# AIR INLET AND EXHAUST SYSTEM

## 254-3566 AIR CLEANER GP

**S/N: RLB1-UP**

**PART OF 270-4223 AIR CLEANER GP**

**SMCS-1051, 1054** **i02507042**

| NOTE | REF NO | GRAPHIC REF | PART NUMBER | QTY | PART NAME 1 2 3 4 5 6 (PRODUCT LEVEL) | SEE PAGE |
|---|---|---|---|---|---|---|
| | 1 | 1 | **7R-6776** | 1 | VALVE | |
| | 2 | 1 | **246-5008** | 1 | COVER AS | |
| | 3 | 1 | **246-5009** | 1 | FILTER ELEMENT AS-AIR (PRIMARY) | |
| | 4 | 1 | **246-5010** | 1 | FILTER ELEMENT AS-AIR (SECONDARY) | |
| | 5 | 1 | **247-8640** | 2 | BRACKET AS | |

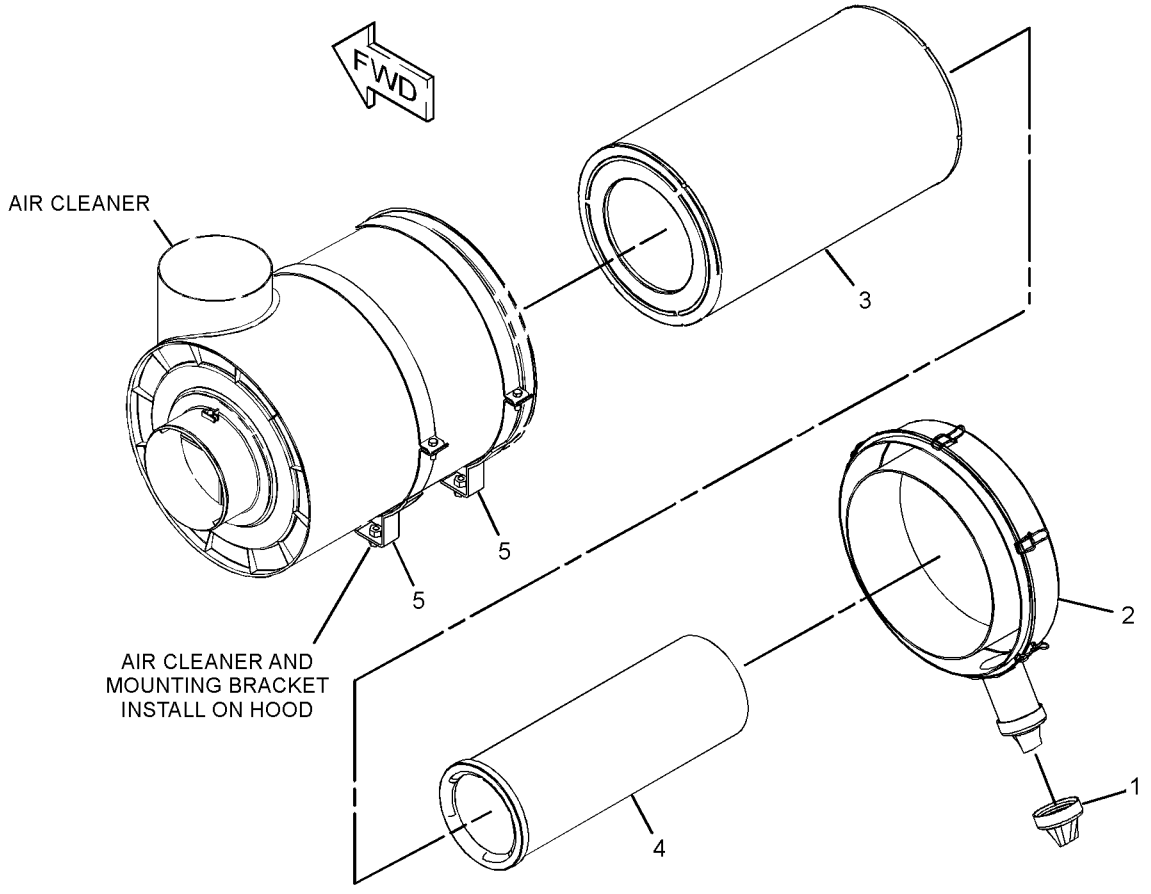


GRAPHIC #1 **<END>** g01263452

# AIR INLET AND EXHAUST SYSTEM

## *270-4223* AIR CLEANER GP

**S/N: RLB1-UP**

**PART OF 270-4248, 308-5826 INSTALLATION AR-ENGINE**

**SMCS-1051, 1054** **i02629823**

| NOTE | REF NO | GRAPHIC REF | PART NUMBER | QTY | PART NAME 1 2 3 4 5 6 (PRODUCT LEVEL) | SEE PAGE |
|---|---|---|---|---|---|---|
| | 1 | 1 | **9Y-6102** | 1 | ELBOW | |
| | 2 | 1 | **136-4190** | 1 | CLIP-2 PIECE | |
| | 3 | 1 | **136-4191** | 1 | CLIP-2 PIECE | |
| | 4 | 1 | **234-7960** | 1 | HOSE-REDUCER | |
| Y | 5 | 1 | **254-3566** | 1 | AIR CLEANER GP | 190 |
| | 6 | 1 | **254-4293** | 1 | CAP GP-AIR CLEANER | |
| | | 1 | **5P-0600** | 1 | CLAMP-HOSE | |
| | 7 | 1 | **276-4776** | 1 | TUBE AS | |
| | 8 | 1 | **233-8350** | 3 | CLAMP | |
| | 9 | 1 | **233-8484** | 1 | CLAMP (BOLT SPRING) | |
| | 10 | 1 | **8T-4121** | 1 | WASHER-HARD (11X21X2.5-MM THK) | |
| M | 11 | 1 | **8T-4136** | 1 | BOLT (M10X1.5X25-MM) | |
| M | 12 | 1 | **8T-4139** | 4 | BOLT (M12X1.75X30-MM) | |
| | 13 | 1 | **8T-4223** | 4 | WASHER-HARD (13.5X25.5X3-MM THK) | |

M-METRIC PART
Y-SEPARATE ILLUSTRATION

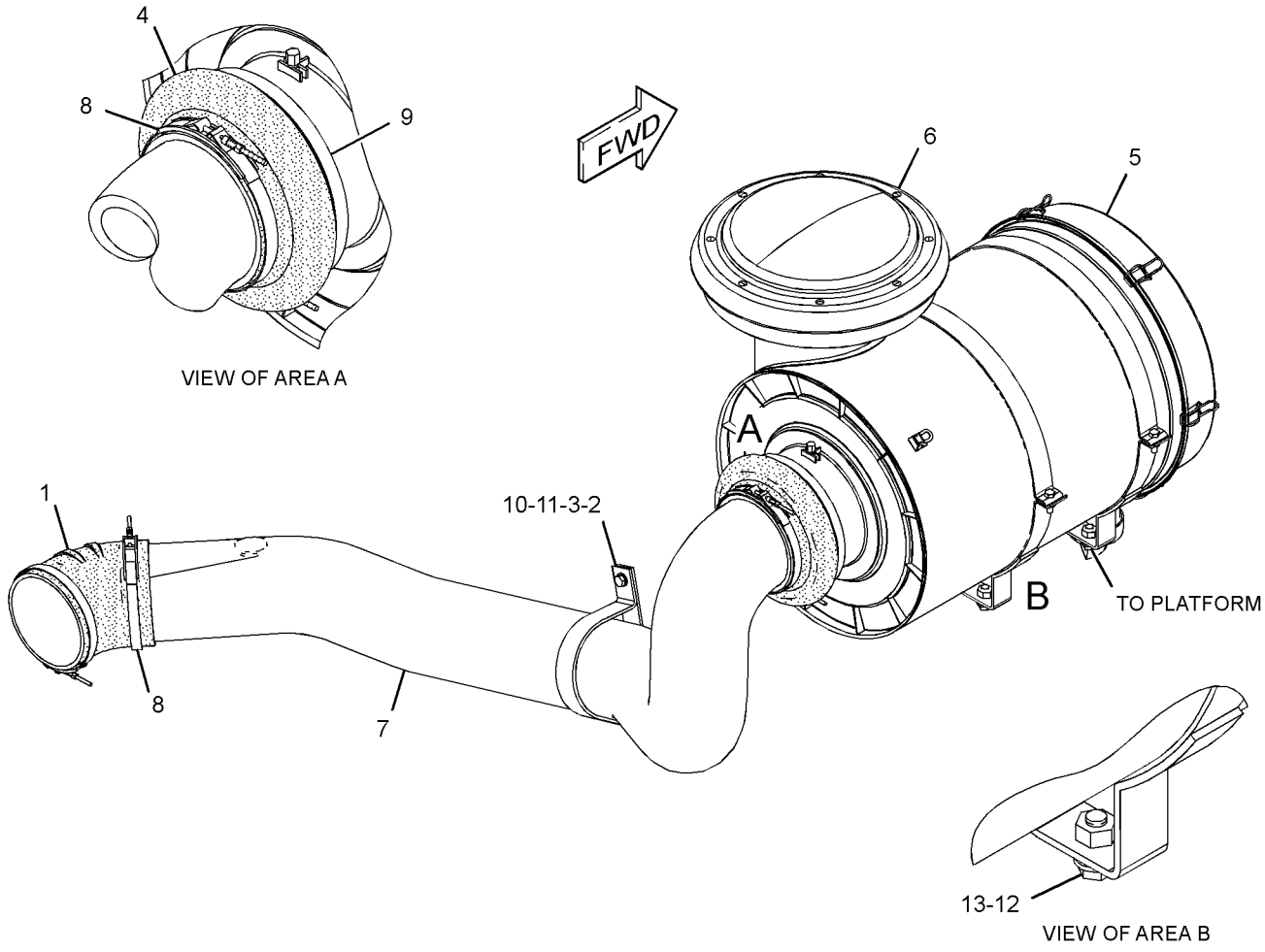


GRAPHIC #1 **<END>** g01343582

# AIR INLET AND EXHAUST SYSTEM

## *237-1964* COVER GP-TURBOCHARGER

**S/N: RHX1-UP**
**PART OF 247-3315 ENGINE AR-COMPLETE**
**AN ATTACHMENT**

**SMCS-1052, 1073** **i02224997**

| NOTE | REF NO | GRAPHIC REF | PART NUMBER | QTY | PART NAME 1 2 3 4 5 6 (PRODUCT LEVEL) | SEE PAGE |
|---|---|---|---|---|---|---|
| | 1 | 1 | **241-3283** | 2 | GASKET | |
| | 2 | 1 | **7N-7878** | 2 | PLATE-COVER | |
| | 3 | 1 | **0S-1594** | 4 | BOLT (3/8-16X1-IN) | |
| | 4 | 1 | **5M-2894** | 4 | WASHER-HARD (10.2X18.5X2.5-MM THK) | |

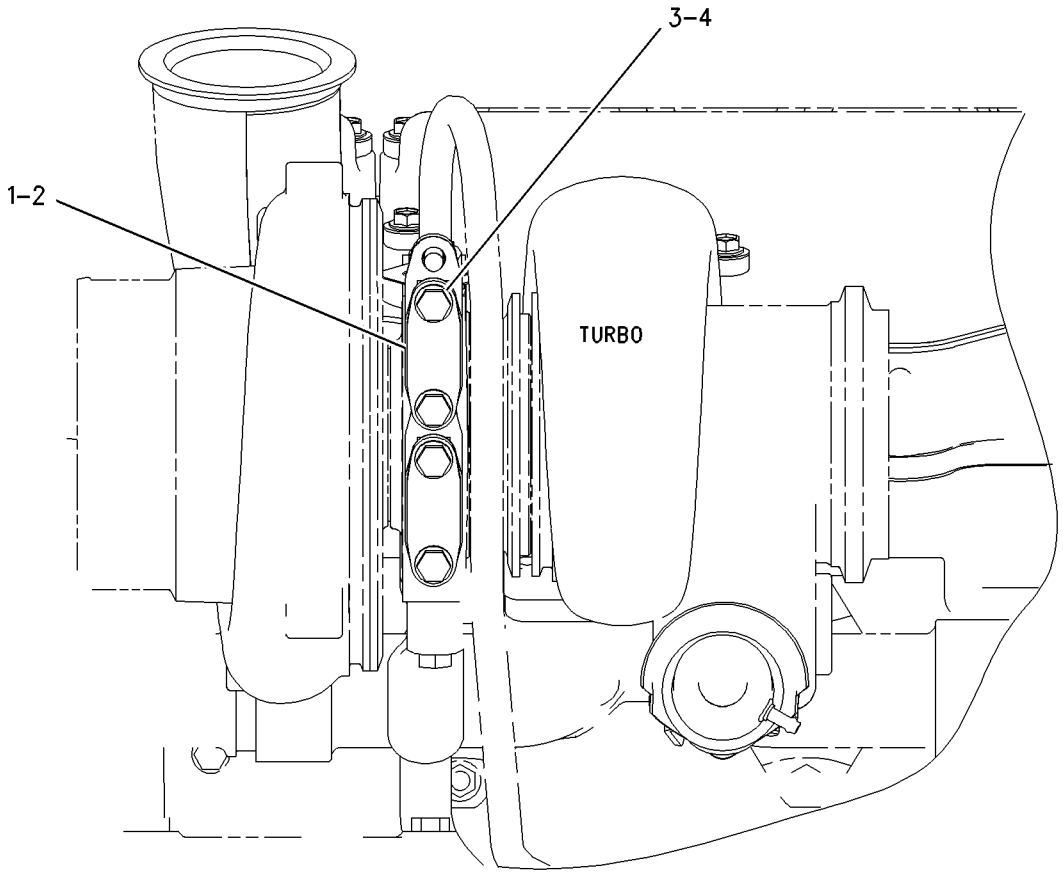


RIGHT SIDE VIEW

GRAPHIC #1 **<END>** g01002636

# AIR INLET AND EXHAUST SYSTEM

## *275-9329* ELBOW GP-EXHAUST

**S/N: RLB1-UP**
**PART OF 295-1789, 295-1790 EXHAUST AR-ENGINE**
**AN ATTACHMENT**

**SMCS-1061** **i02635390**

| NOTE | REF NO | GRAPHIC REF | PART NUMBER | QTY | PART NAME 1 2 3 4 5 6 (PRODUCT LEVEL) | SEE PAGE |
|---|---|---|---|---|---|---|
| | 1 | 1 | **5T-2760** | 4 | SPRING | |
| | 2 | 1 | **249-8686** | 1 | PLATE-WEAR | |
| | 3 | 1 | **275-9323** | 1 | ELBOW | |
| | 4 | 1 | **275-9324** | 1 | PISTON | |
| | 5 | 1 | **284-4811** | 3 | LOCK | |
| | 6 | 1 | **2G-9177** | 1 | RING-SEAL | |
| | 7 | 1 | **4M-0061** | 6 | BOLT (5/16-18X0.75-IN) | |
| | 8 | 1 | **5C-6565** | 4 | BOLT (1/2-13X1.125-IN) | |
| | 9 | 1 | **5P-1076** | 4 | WASHER-HARD (13.5X30X4-MM THK) | |
| | 10 | 1 | **8T-4223** | 4 | WASHER-HARD (13.5X25.5X3-MM THK) | |
| | 11 | 1 | **8T-4224** | 6 | WASHER-HARD (8.8X16X2-MM THK) | |
| M | 12 | 1 | **8T-4244** | 4 | NUT (M12X1.75-THD) | |

M-METRIC PART

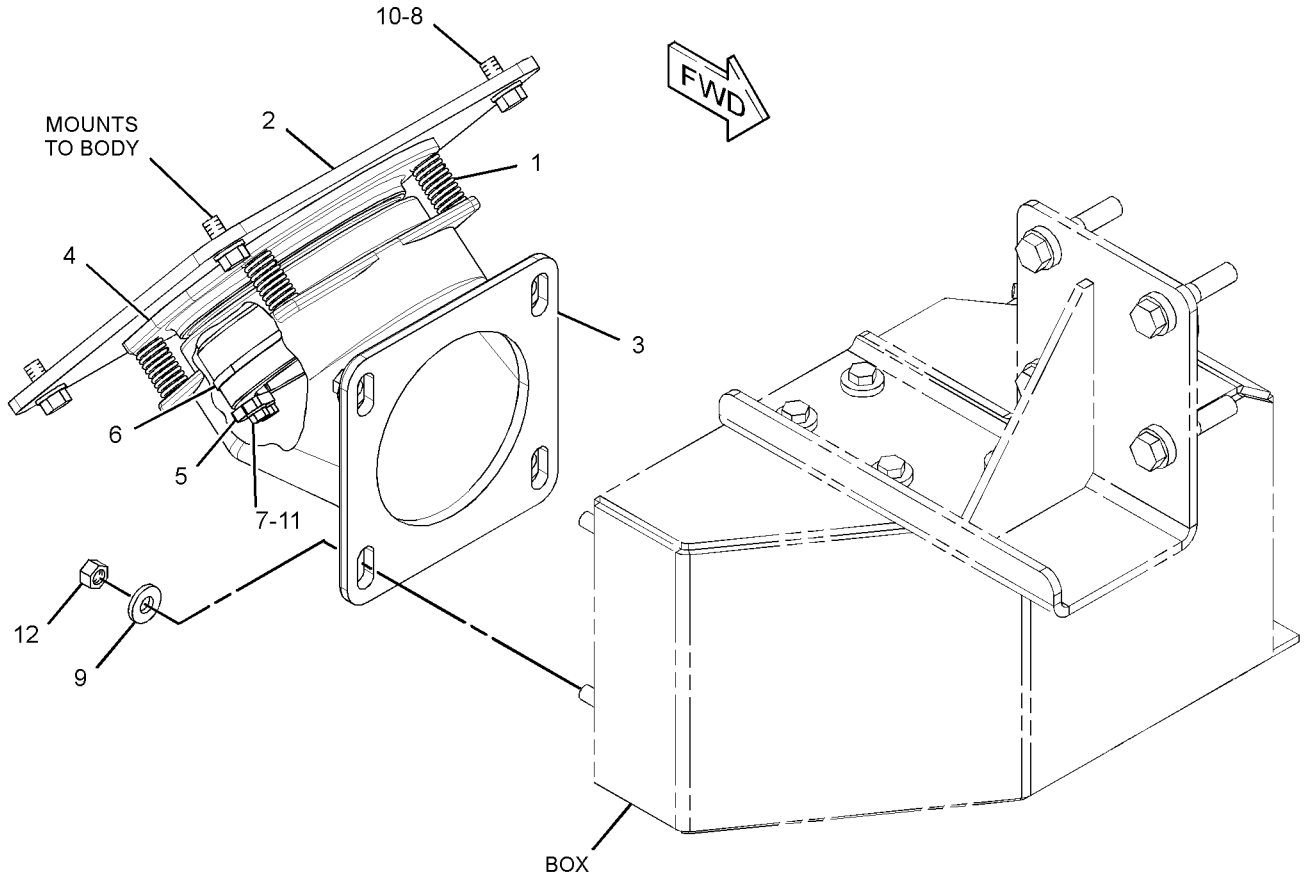


GRAPHIC #1 **<END>** g01340951

# AIR INLET AND EXHAUST SYSTEM

## *295-1788* EXHAUST AR-ENGINE

**S/N: RLB1-UP**
**CANNOT BE USED WITH 295-1789—PAGE 194, 295-1790—PAGE 194**
**AN ATTACHMENT**

**SMCS-1061** **i02679103**

| NOTE | PART NUMBER | QTY | PART NAME 1 2 3 4 5 6 (PRODUCT LEVEL) | SEE PAGE |
|---|---|---|---|---|
| Y | *288-5292* | 1 | LINES GP-AIR | 197 |
| Y | *288-5308* | 1 | LINES GP-EXHAUST | 199 |
| Y | *288-5290* | 1 | MUFFLER GP | 202 |
| Y-SEPARATE ILLUSTRATION | | | | |

**<END>**

## *295-1789* EXHAUST AR-ENGINE

**S/N: RLB1-UP**
**CANNOT BE USED WITH EUROPEAN AR**
**AN ATTACHMENT**

**SMCS-1061** **i02630115**

| NOTE | PART NUMBER | QTY | PART NAME 1 2 3 4 5 6 (PRODUCT LEVEL) | SEE PAGE |
|---|---|---|---|---|
| Y | *275-9329* | 1 | ELBOW GP-EXHAUST | 193 |
| Y | *288-5292* | 1 | LINES GP-AIR | 197 |
| Y | *288-5316* | 1 | PIPE GP-EXHAUST | 205 |
| Y-SEPARATE ILLUSTRATION | | | | |

**<END>**

## *295-1790* EXHAUST AR-ENGINE

**S/N: RLB1-UP**
**CANNOT BE USED WITH 295-1788—PAGE 194, 295-1789—PAGE 194**
**AN ATTACHMENT**

**SMCS-1061** **i02606145**

| NOTE | PART NUMBER | QTY | PART NAME 1 2 3 4 5 6 (PRODUCT LEVEL) | SEE PAGE |
|---|---|---|---|---|
| Y | *275-9329* | 1 | ELBOW GP-EXHAUST | 193 |
| Y | *288-5292* | 1 | LINES GP-AIR (EXHAUST) | 197 |
| Y | *288-5293* | 1 | LINES GP-AIR (EXHAUST DIVERTER) | 198 |
| Y | *288-5290* | 1 | MUFFLER GP | 202 |
| Y | *288-5291* | 1 | PIPE GP-EXHAUST | 203 |
| Y-SEPARATE ILLUSTRATION | | | | |

**<END>**

# AIR INLET AND EXHAUST SYSTEM

## *270-4219* LINES GP-AIR

**S/N: RLB1-UP**

**PART OF 270-4248, 308-5826 INSTALLATION AR-ENGINE**

**SMCS-1071** **i02616239**

| NOTE | REF NO | GRAPHIC REF | PART NUMBER | QTY | PART NAME 1 2 3 4 5 6 (PRODUCT LEVEL) | SEE PAGE |
|---|---|---|---|---|---|---|
| | 1 | 1 | **7S-8780** | 2 | HOSE | |
| | 2 | 1 | **101-3125** | 1 | GASKET (AIR INLET MANIFOLD) | |
| | 3 | 1 | **109-4203** | 1 | ELBOW | |
| | 4 | 1 | **127-0929** | 1 | CLAMP | |
| | 5 | 1 | **217-8946** | 1 | ELBOW | |
| | 6 | 1 | **276-0430** | 1 | TUBE | |
| | 7 | 1 | **276-0433** | 1 | TUBE | |
| | 8 | 1 | **279-5721** | 1 | BRACKET AS | |
| M | | 1 | **8T-3490** | 1 | NUT-WELD (M10X1.5-THD) | |
| | 9 | 1 | **279-5738** | 1 | BRACKET AS | |
| M | | 1 | **8T-3490** | 1 | NUT-WELD (M10X1.5-THD) | |
| | 10 | 1 | **198-4777** | 4 | WASHER-HARD (11X25X10-MM THK) | |
| | 11 | 1 | **208-7448** | 8 | CLAMP | |
| | 12 | 1 | **4L-9337** | 4 | BOLT (3/8-16X1.5-IN) | |
| | 13 | 1 | **5M-6213** | 1 | PLUG-PIPE | |
| | 14 | 1 | **6V-5048** | 1 | SEAL-O-RING | |
| | 15 | 1 | **6V-6782** | 2 | CLIP (SLOT) | |
| | 16 | 1 | **6V-6783** | 2 | CLIP (TAB) | |
| | 17 | 1 | **7E-8630** | 2 | HOSE-AIR INLET | |
| | 18 | 1 | **8C-3089** | 1 | SEAL-O-RING | |
| | 19 | 1 | **8T-4121** | 2 | WASHER-HARD (11X21X2.5-MM THK) | |
| M | 20 | 1 | **8T-4195** | 4 | BOLT (M10X1.5X30-MM) | |
| M | 21 | 1 | **8T-4196** | 2 | BOLT (M10X1.5X35-MM) | |
| | 22 | 1 | **8T-4896** | 4 | WASHER-HARD (10.2X18.5X2.5-MM THK) | |
| | 23 | 1 | **9S-8002** | 1 | PLUG-O-RING | |

M-METRIC PART

*270-4219* **LINES GP-AIR** *(contd.)* **i02616239**

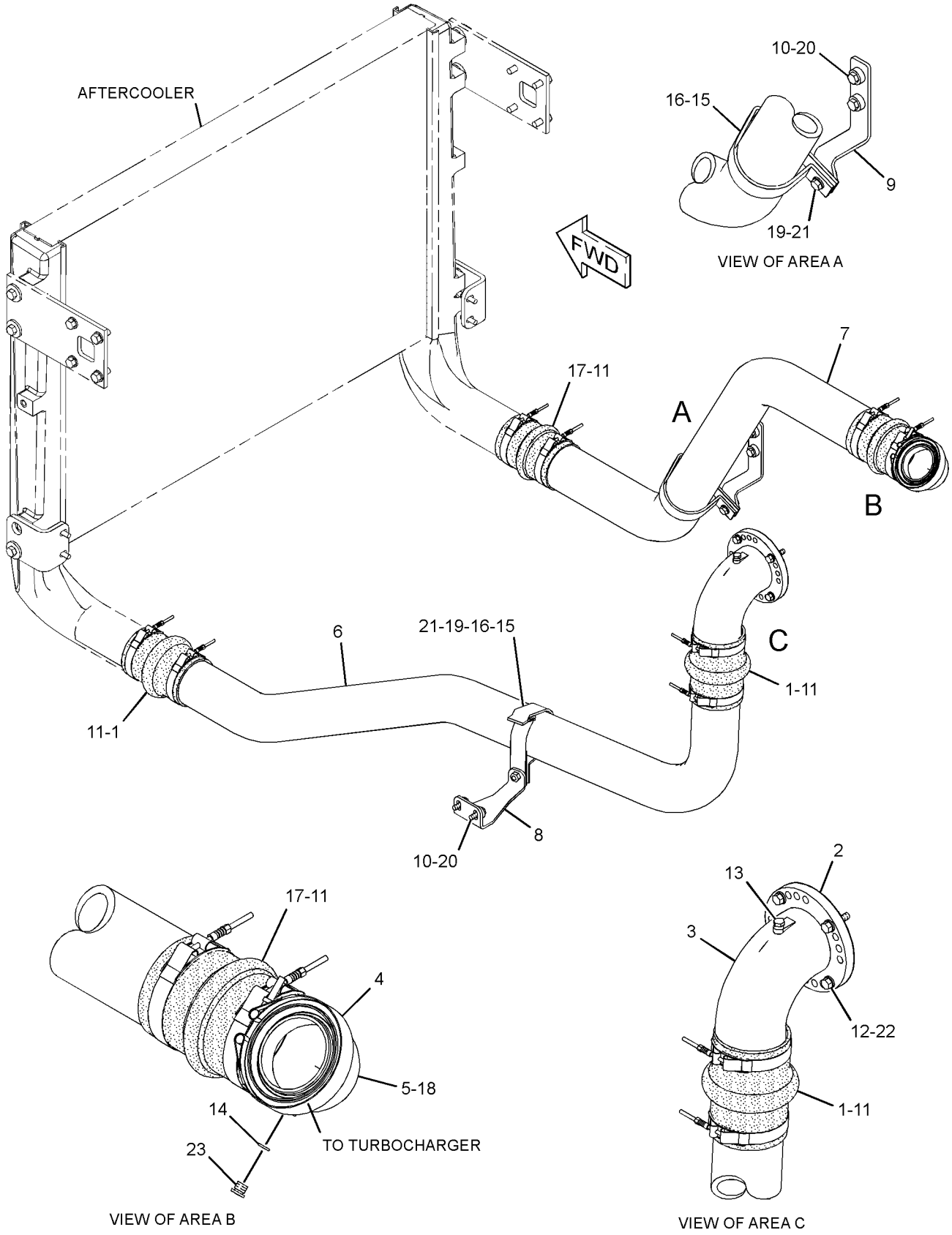


GRAPHIC #1 **<END>** g01320827

# AIR INLET AND EXHAUST SYSTEM

## *288-5292* LINES GP-AIR

**S/N: RLB1-UP**

**PART OF 295-1788, 295-1789, 295-1790 EXHAUST AR-ENGINE**

**AN ATTACHMENT**

**SMCS-1071** **i02853317**

| NOTE | REF NO | GRAPHIC REF | PART NUMBER | QTY | PART NAME 1 2 3 4 5 6 (PRODUCT LEVEL) | SEE PAGE |
|---|---|---|---|---|---|---|
| | 1 | 1 | **4W-9160** | 1 | CLAMP-V BAND | |
| | 2 | 1 | **7E-1397** | 1 | CLAMP-PIPE | |
| | 3 | 1 | **8N-4401** | 1 | CLAMP-V-BAND | |
| | 4 | 1 | **176-8102** | 1 | CLAMP | |
| | 5 | 1 | **275-9321** | 1 | TUBE AS | |
| | 6 | 1 | **288-5274** | 1 | TUBE AS | |
| | 7 | 1 | **288-5299** | 1 | BRACKET AS | |
| | 8 | 1 | **198-4777** | 2 | WASHER-HARD (11X25X10-MM THK) | |
| | 9 | 1 | **2N-2766** | 2 | LOCKNUT (3/8-16-THD) | |
| M | 10 | 1 | **8T-4195** | 2 | BOLT (M10X1.5X30-MM) | |
| | 11 | 1 | **8T-4896** | 2 | WASHER-HARD (10.2X18.5X2.5-MM THK) | |

M-METRIC PART

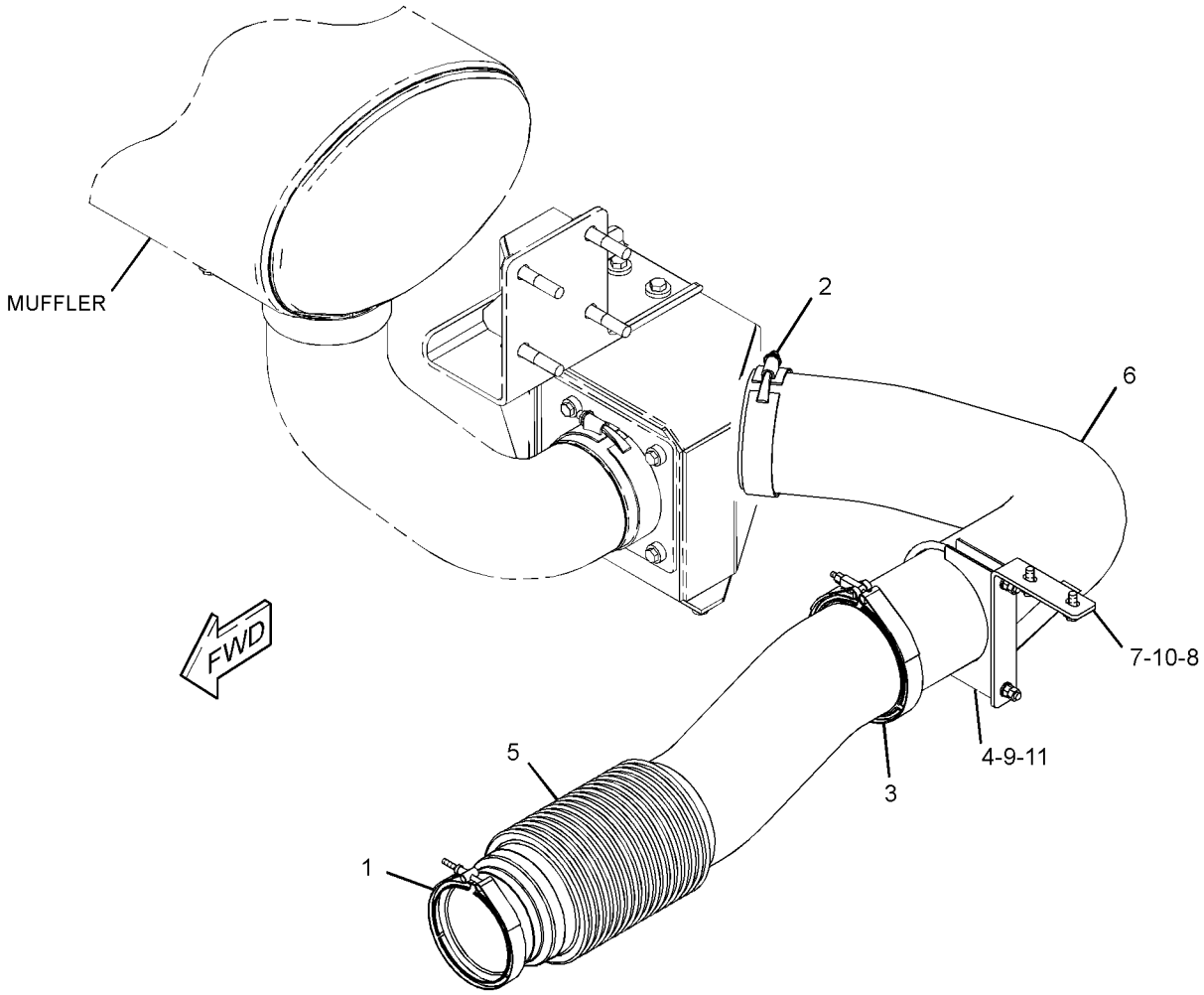


GRAPHIC #1 **<END>** g01365374

# AIR INLET AND EXHAUST SYSTEM

## *288-5293* LINES GP-AIR

**S/N: RLB1-UP**
**PART OF 295-1790 EXHAUST AR-ENGINE**
**AN ATTACHMENT**

**SMCS-1071** **i02606161**

| NOTE | REF NO | GRAPHIC REF | PART NUMBER | QTY | PART NAME 1 2 3 4 5 6 (PRODUCT LEVEL) | SEE PAGE |
|---|---|---|---|---|---|---|
| | 1 | 1 | **7E-1397** | 2 | CLAMP-PIPE | |
| | 2 | 1 | **288-5279** | 1 | TUBE | |

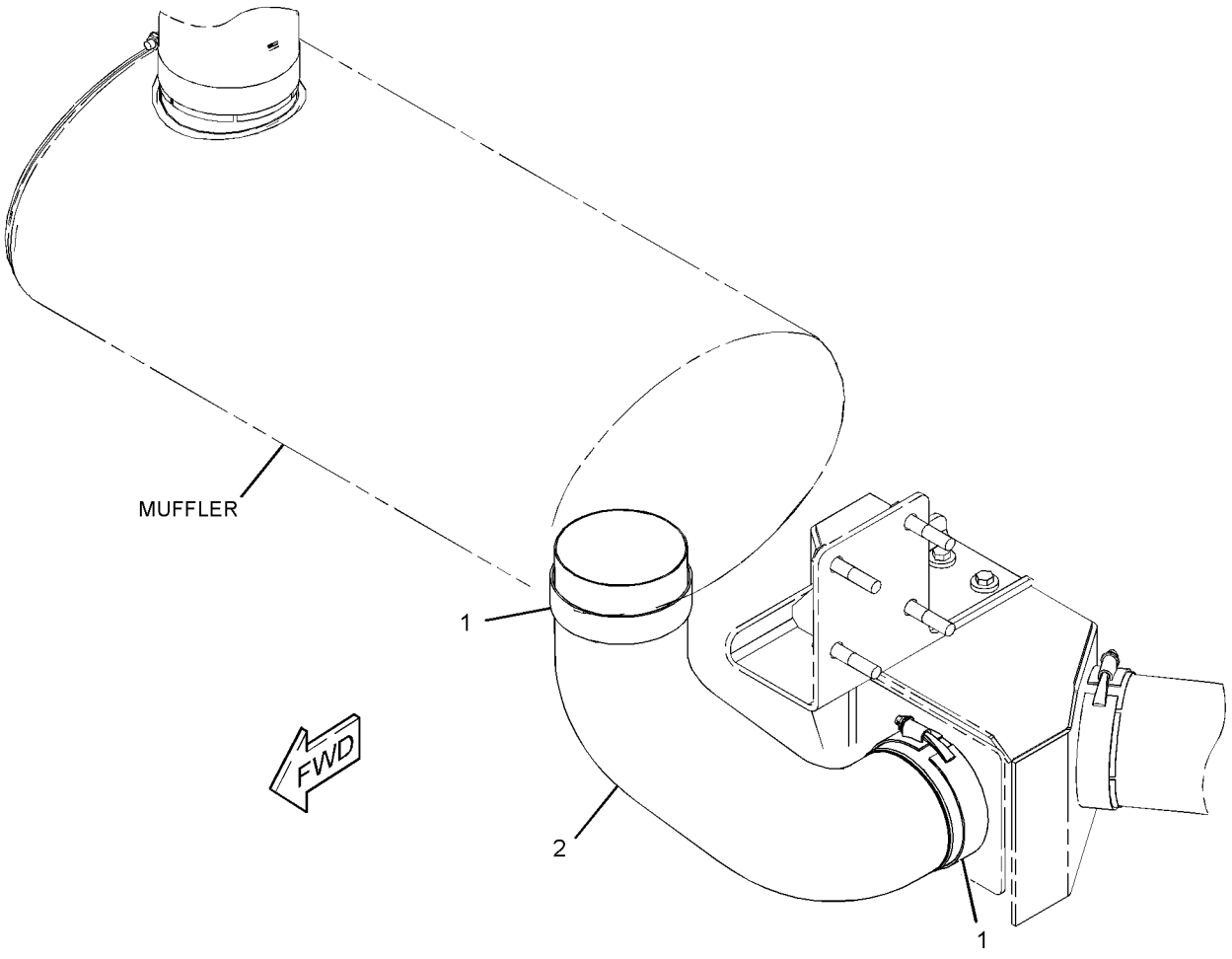


GRAPHIC #1 **<END>** g01311587

# AIR INLET AND EXHAUST SYSTEM

## *288-5308* LINES GP-EXHAUST

**S/N: RLB1-UP**
**PART OF 295-1788 EXHAUST AR-ENGINE**
**AN ATTACHMENT**
**TYPE 1**

**SMCS-1061** **i02679171**

| NOTE | REF NO | GRAPHIC REF | PART NUMBER | QTY | PART NAME 1 2 3 4 5 6 (PRODUCT LEVEL) | SEE PAGE |
|---|---|---|---|---|---|---|
| | 1 | 1 | **7E-1397** | 1 | CLAMP-PIPE | |
| | 2 | 1 | **176-8102** | 1 | CLAMP (EXHAUST) | |
| | 3 | 1 | **280-8922** | 1 | PLATE | |
| | 4 | 1 | **288-5307** | 1 | TUBE | |
| | 5 | 1 | **300-2798** | 1 | BRACKET AS | |
| | 6 | 1 | **198-4780** | 4 | WASHER-HARD (17.5X32X8-MM THK) | |
| | 7 | 1 | **5P-1076** | 4 | WASHER-HARD (13.5X30X4-MM THK) | |
| | 8 | 1 | **5P-2228** | 4 | BOLT (1/2-13X1-IN) | |
| | 9 | 1 | **6V-8801** | 2 | NUT (3/8-16-THD) | |
| M | 10 | 1 | **7X-2554** | 4 | BOLT (M16X2X70-MM) | |
| | 11 | 1 | **7X-7729** | 2 | WASHER (11X25X3-MM THK) | |
| M | 12 | 1 | **8T-4136** | 2 | BOLT (M10X1.5X25-MM) | |

M-METRIC PART

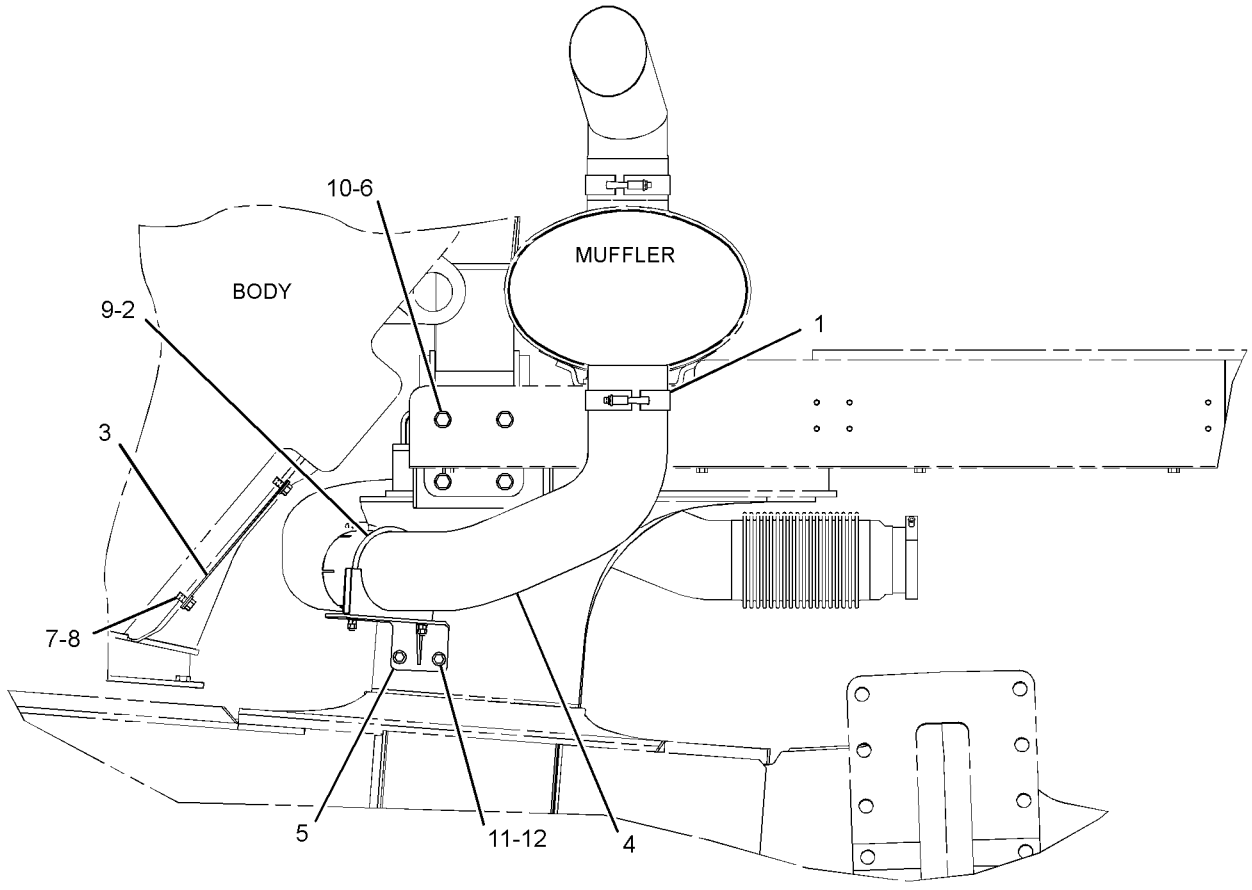


RIGHT SIDE VIEW

GRAPHIC #1 **<END>** g01350946

# AIR INLET AND EXHAUST SYSTEM

## *288-5308* LINES GP-EXHAUST

**S/N: RLB1-UP**
**PART OF 295-1788 EXHAUST AR-ENGINE**
**AN ATTACHMENT**
**TYPE 2**

**SMCS-1061** **i02881079**

| NOTE | REF NO | GRAPHIC REF | PART NUMBER | QTY | PART NAME 1 2 3 4 5 6 (PRODUCT LEVEL) | SEE PAGE |
|---|---|---|---|---|---|---|
| | 1 | 1 | **7E-1397** | 1 | CLAMP-PIPE | |
| | 2 | 1 | **176-8102** | 1 | CLAMP (EXHAUST) | |
| | 3 | 1 | **280-8922** | 1 | PLATE | |
| | 4 | 1 | **288-5307** | 1 | TUBE | |
| | 5 | 1 | **300-2798** | 1 | BRACKET AS | |
| | 6 | 1 | **5P-1076** | 4 | WASHER-HARD (13.5X30X4-MM THK) | |
| | 7 | 1 | **5P-2228** | 4 | BOLT (1/2-13X1-IN) | |
| | 8 | 1 | **6V-8801** | 2 | NUT (3/8-16-THD) | |
| | 9 | 1 | **7X-7729** | 2 | WASHER (11X25X3-MM THK) | |
| M | 10 | 1 | **8T-4136** | 2 | BOLT (M10X1.5X25-MM) | |

M-METRIC PART

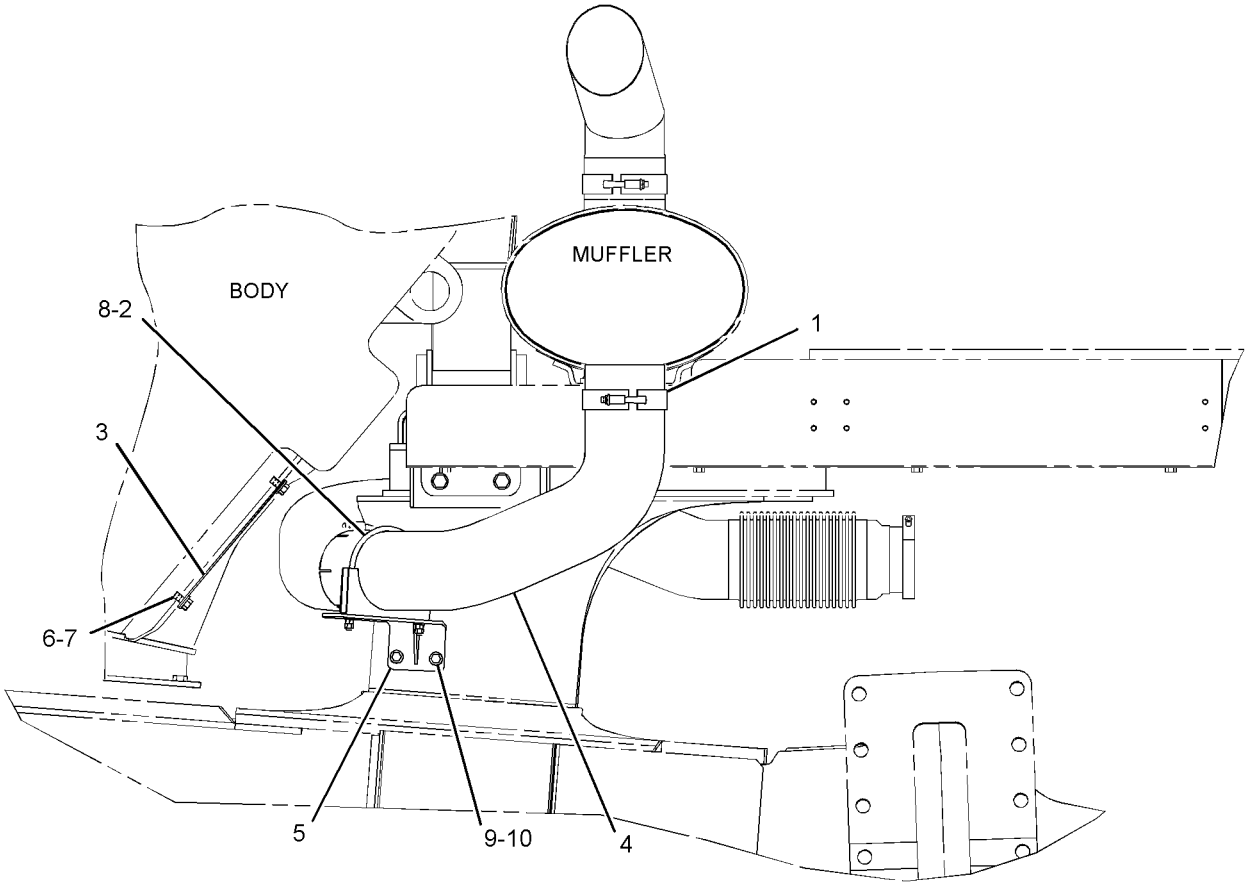


RIGHT SIDE VIEW

GRAPHIC #1 **<END>** g01435877

# *220-6372* MANIFOLD GP-EXHAUST

**S/N: RHX1-UP**

**PART OF 221-8124, 247-3315, 272-3086, 272-3087, 292-2553, 292-2554 ENGINE**

**AR-COMPLETE**

**AN ATTACHMENT**

**SMCS-1059** **i02869541**

| NOTE | REF NO | GRAPHIC REF | PART NUMBER | QTY | PART NAME 1 2 3 4 5 6 (PRODUCT LEVEL) | SEE PAGE |
|---|---|---|---|---|---|---|
| | 1 | 1 | **238-4665** | 4 | STUD-TAPERLOCK (3/8-16-THD) (HIGH TEMPERATURE) | |
| | 2 | 1 | **106-1792** | 12 | STUD-TAPERLOCK (3/8-16X4-IN) (HIGH TEMPERATURE) | |
| | 3 | 1 | **108-3612** | 12 | SPACER (11.13X19.05X53-MM THK) | |
| | 4 | 1 | **133-3359** | 2 | MANIFOLD-EXHAUST (END) | |
| | 5 | 1 | **221-1426** | 1 | MANIFOLD-EXHAUST (CENTER) | |
| | 6 | 1 | **168-7800** | 12 | LOCKNUT (3/8-16-THD) | |

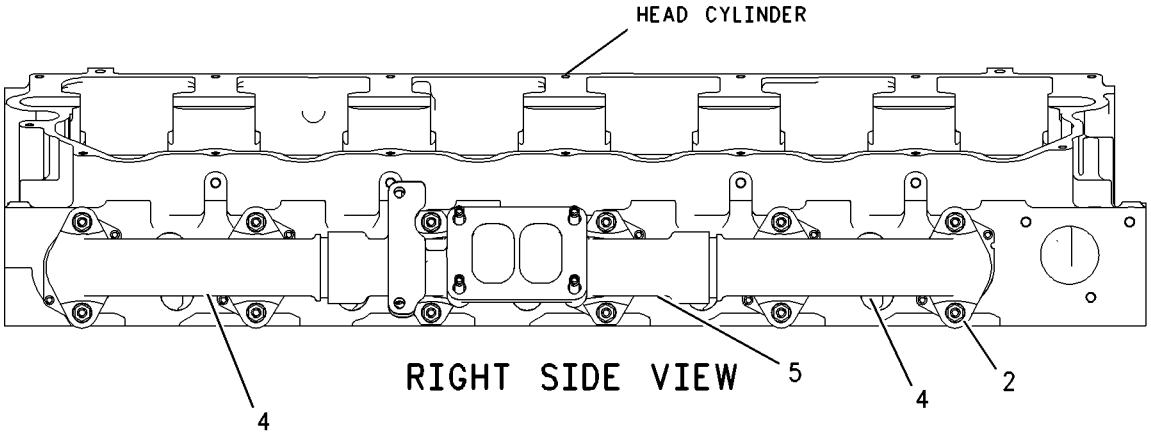


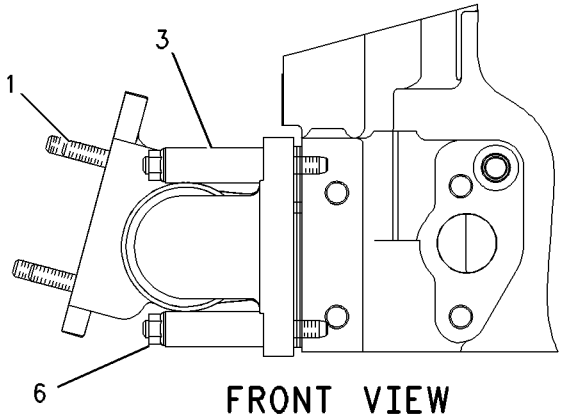


GRAPHIC #1 **<END>** g01002978

# AIR INLET AND EXHAUST SYSTEM

## *288-5290* MUFFLER GP

**S/N: RLB1-UP**

**PART OF 295-1788, 295-1790 EXHAUST AR-ENGINE**

**AN ATTACHMENT**

**SMCS-1062** **i02754449**

| NOTE | REF NO | GRAPHIC REF | PART NUMBER | QTY | PART NAME 1 2 3 4 5 6 (PRODUCT LEVEL) | SEE PAGE |
|---|---|---|---|---|---|---|
| | 1 | 1 | **158-3528** | 1 | CLAMP-PIPE | |
| | 2 | 1 | **288-5284** | 1 | PIPE-EXTENSION | |
| | 3 | 1 | **288-5312** | 1 | MUFFLER AS | |
| | 4 | 1 | **198-4778** | 4 | WASHER-HARD (13.5X30X12-MM THK) | |
| M | 5 | 1 | **8T-4184** | 4 | BOLT (M12X1.75X45-MM) | |

M-METRIC PART

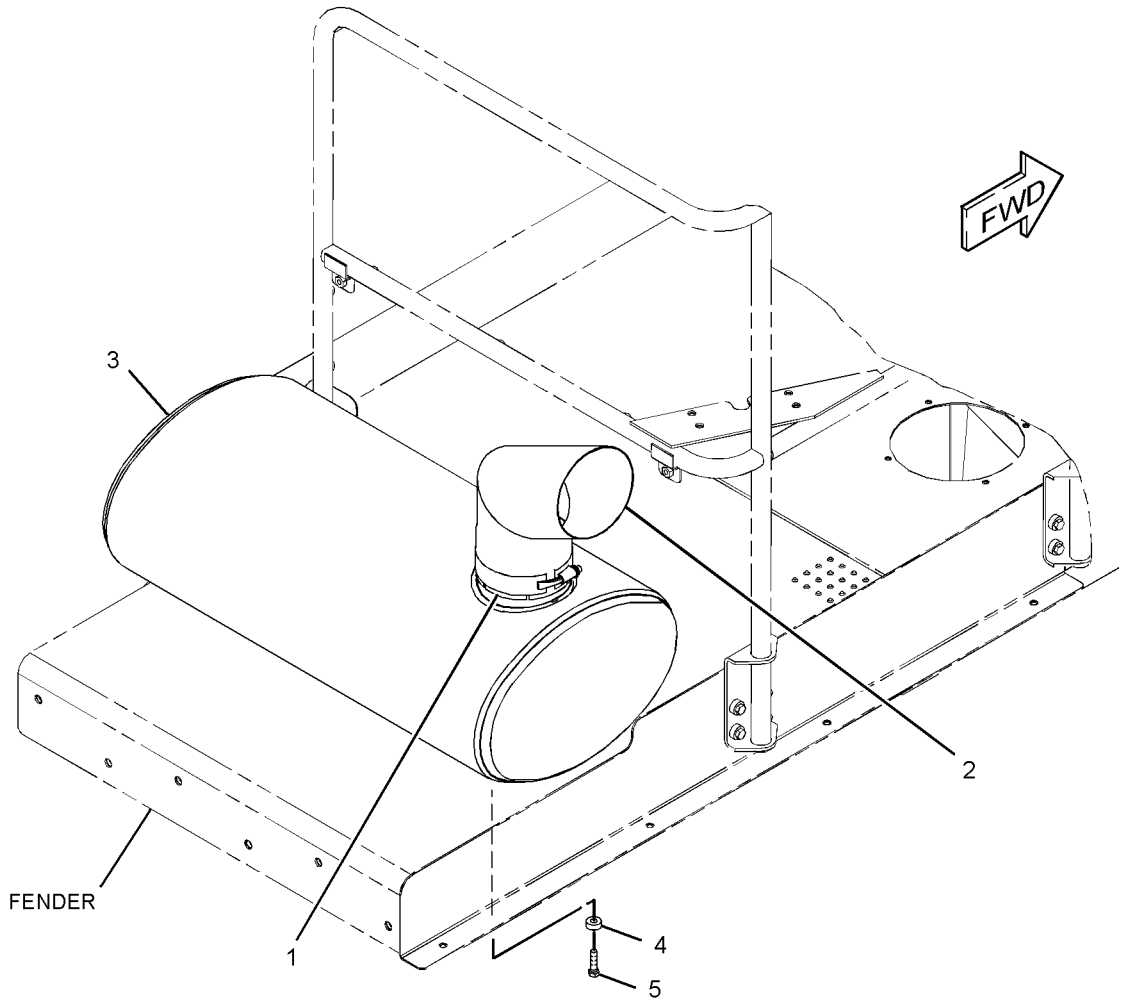


GRAPHIC #1 **<END>** g01340039

# AIR INLET AND EXHAUST SYSTEM

## *288-5291* PIPE GP-EXHAUST

**S/N: RLB1-UP**
**PART OF 295-1790 EXHAUST AR-ENGINE**
**AN ATTACHMENT**

**SMCS-1061** **i02880221**

| NOTE | REF NO | GRAPHIC REF | PART NUMBER | QTY | PART NAME 1 2 3 4 5 6 (PRODUCT LEVEL) | SEE PAGE |
|---|---|---|---|---|---|---|
| | 1 | 1 | **288-5269** | 1 | BOX AS | |
| M | | 1 | **8T-3490** | 4 | NUT-WELD (M10X1.5-THD) | |
| M | | 1 | **9R-2613** | 1 | BOSS-WELD (M10X1.5X25-MM) | |
| M | | 1 | **9R-2640** | 4 | BOSS (M12X1.75X25-MM) | |
| M | | 1 | **9R-2672** | 3 | BOSS (M10X1.5X20-MM) | |
| | | 1 | **200-4586** | 4 | BOSS (M12X1.75X43-MM) | |
| | 2 | 1 | **288-5283** | 1 | TUBE AS | |
| | 3 | 1 | **288-5285** | 1 | SHAFT | |
| | 4 | 1 | **288-5296** | 1 | LEVER-CONTROL | |
| | 5 | 1 | **288-5303** | 1 | PLATE AS | |
| | 6 | 1 | **306-3028** | 4 | PLATE | |
| | 7 | 1 | **306-3029** | 1 | BRACKET AS | |
| | 8 | 1 | **198-4766** | 4 | WASHER-HARD (11X25X10-MM THK) | |
| | 9 | 1 | **198-4767** | 4 | WASHER-HARD (13.5X30X12-MM THK) | |
| | 10 | 1 | **198-4778** | 8 | WASHER-HARD (13.5X30X12-MM THK) | |
| | 11 | 1 | **1B-8706** | 2 | KEY-WOODRUFF | |
| | 12 | 1 | **1V-0019** | 1 | LEVER | |
| | 13 | 1 | **3T-6822** | 1 | SPACER (10X17.5X1.8-MM THK) | |
| | 14 | 1 | **5P-8026** | 1 | PIN-COTTER | |
| M | 15 | 1 | **6V-2317** | 1 | BOLT (M8X1.25X30-MM) | |
| M | 16 | 1 | **6V-3822** | 4 | BOLT (M10X1.5X35-MM) | |
| M | 17 | 1 | **6V-7673** | 4 | BOLT (M12X1.75X50-MM) | |
| | 18 | 1 | **6V-8801** | 1 | NUT (3/8-16-THD) | |
| | 19 | 1 | **7X-0288** | 1 | BOLT (3/8-16X1.625-IN) | |
| | 20 | 1 | **7X-0795** | 1 | PIN | |
| M | 21 | 1 | **7X-3342** | 4 | STUD-LOCKING (M12X1.75X60-MM) | |
| M | 22 | 1 | **8T-4176** | 8 | BOLT (M12X1.75X90-MM) | |

M-METRIC PART

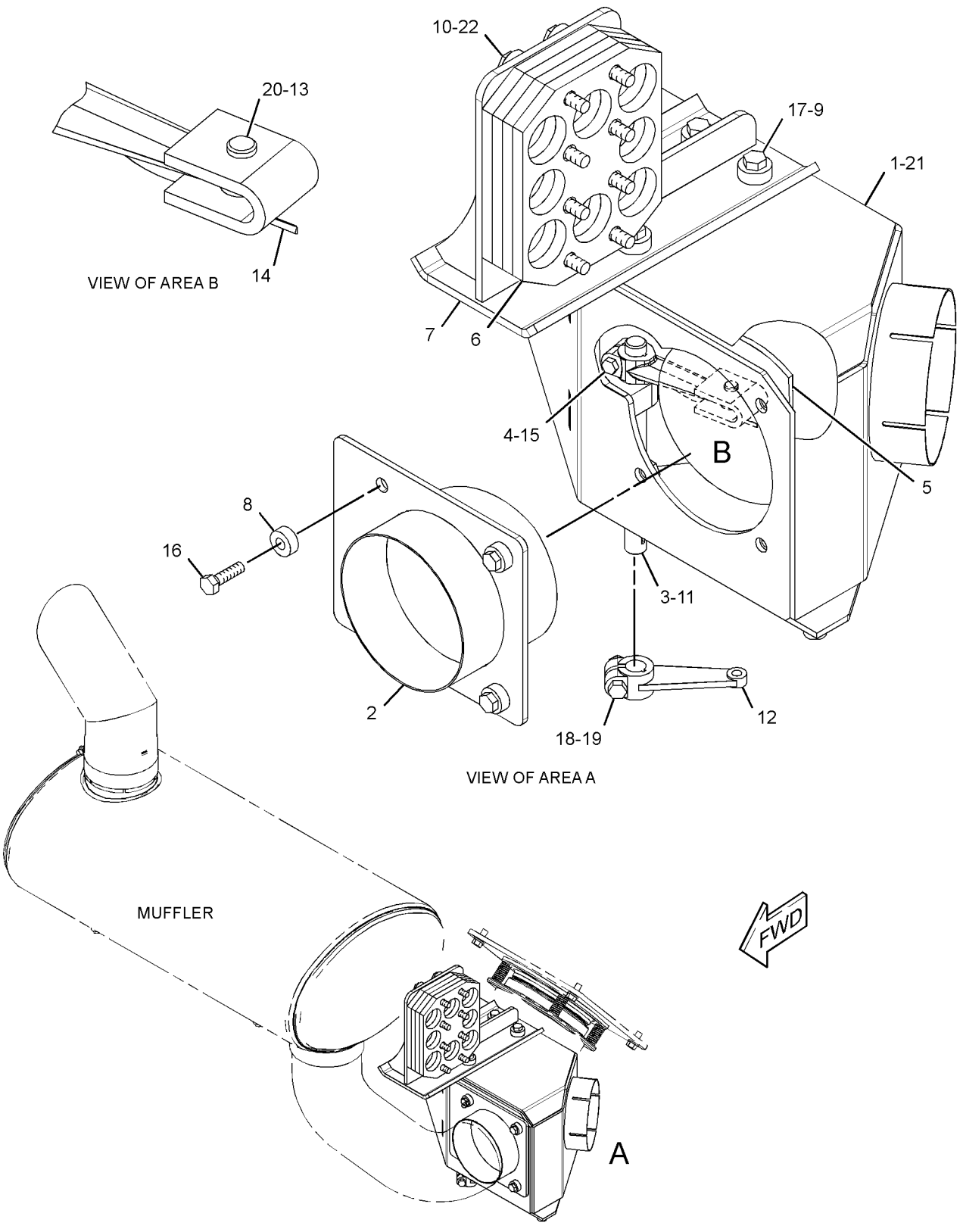


GRAPHIC #1 **<END>** g01436286

## *288-5316* PIPE GP-EXHAUST

**S/N: RLB1-UP**

**PART OF 295-1789 EXHAUST AR-ENGINE**

**AN ATTACHMENT**

**SMCS-1061** **i02880482**

| NOTE | REF NO | GRAPHIC REF | PART NUMBER | QTY | PART NAME 1 2 3 4 5 6 (PRODUCT LEVEL) | SEE PAGE |
|---|---|---|---|---|---|---|
| | 1 | 1 | **288-5317** | 1 | BOX AS | |
| | | 1 | **200-4586** | 4 | BOSS (M12X1.75X43-MM) (M12X1.75X43) | |
| M | | 1 | **9R-2640** | 4 | BOSS (M12X1.75X25-MM) | |
| M | | 1 | **9R-2672** | 3 | BOSS (M10X1.5X20-MM) | |
| | 2 | 1 | **306-3028** | 4 | PLATE | |
| | 3 | 1 | **306-3029** | 1 | BRACKET AS | |
| | 4 | 1 | **198-4767** | 4 | WASHER-HARD (13.5X30X12-MM THK) | |
| | 5 | 1 | **198-4778** | 8 | WASHER-HARD (13.5X30X12-MM THK) | |
| M | 6 | 1 | **6V-7673** | 4 | BOLT (M12X1.75X50-MM) | |
| M | 7 | 1 | **7X-3342** | 4 | STUD-LOCKING (M12X1.75X60-MM) | |
| M | 8 | 1 | **8T-4176** | 8 | BOLT (M12X1.75X90-MM) | |

M-METRIC PART

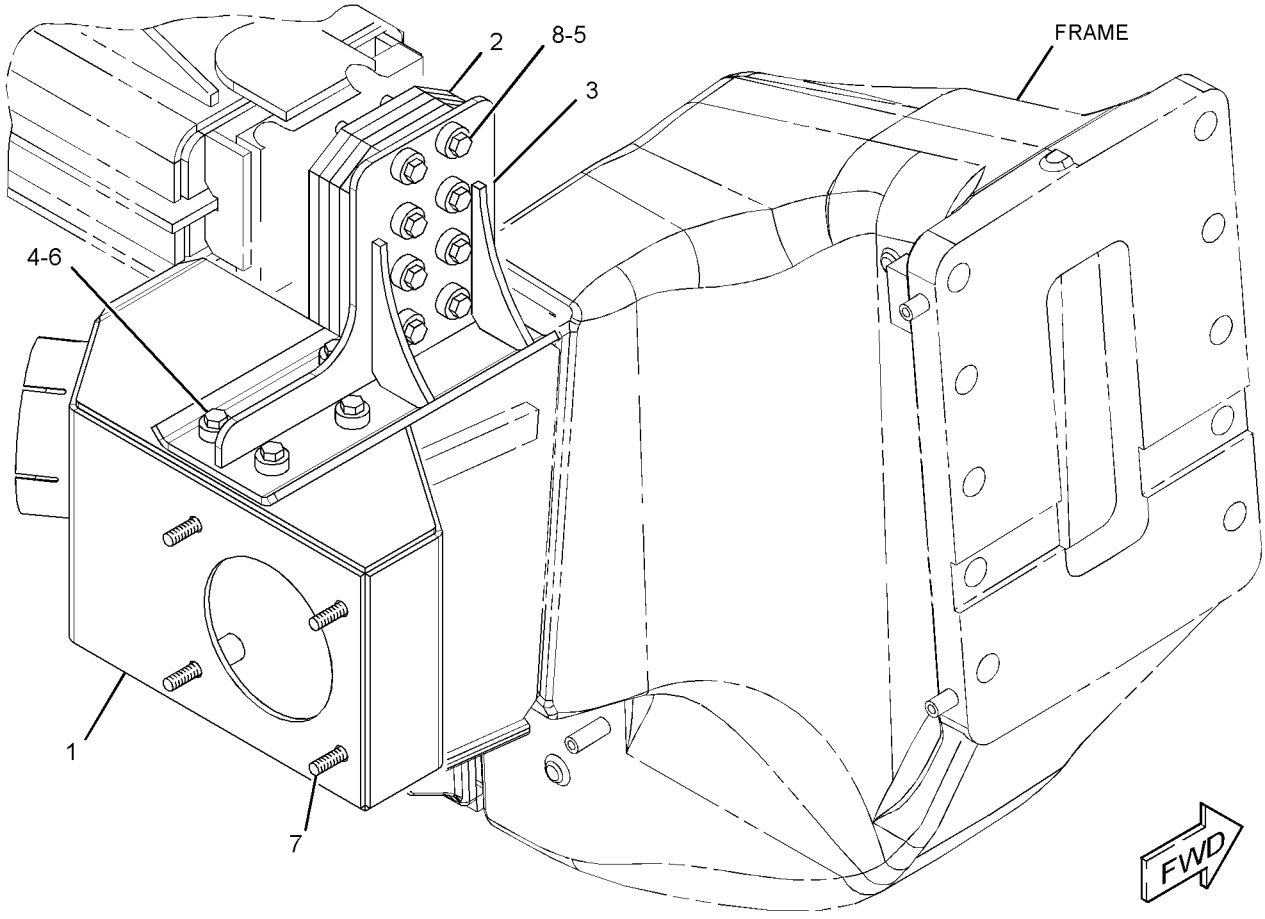


GRAPHIC #1 **<END>** g01434632

# AIR INLET AND EXHAUST SYSTEM

## *245-8474* TURBOCHARGER GP

**S/N: RHX1-611**
**WATERCOOLED CENTER SECTION**
**PART OF 247-3315 ENGINE AR-COMPLETE**
**AN ATTACHMENT**

**SMCS-1052, 1053** **i02810055**

| NOTE | REF NO | GRAPHIC REF | PART NUMBER | QTY | PART NAME 1 2 3 4 5 6 (PRODUCT LEVEL) | SEE PAGE |
|---|---|---|---|---|---|---|
| | 1 | 1 | **1S-4295** | 1 | GASKET (TURBOCHARGER) | |
| | 2 | 1 | **168-7800** | 4 | LOCKNUT (3/8-16-THD) | |
| | 3 | 1 | **245-3812** | 1 | TURBOCHARGER GP | |

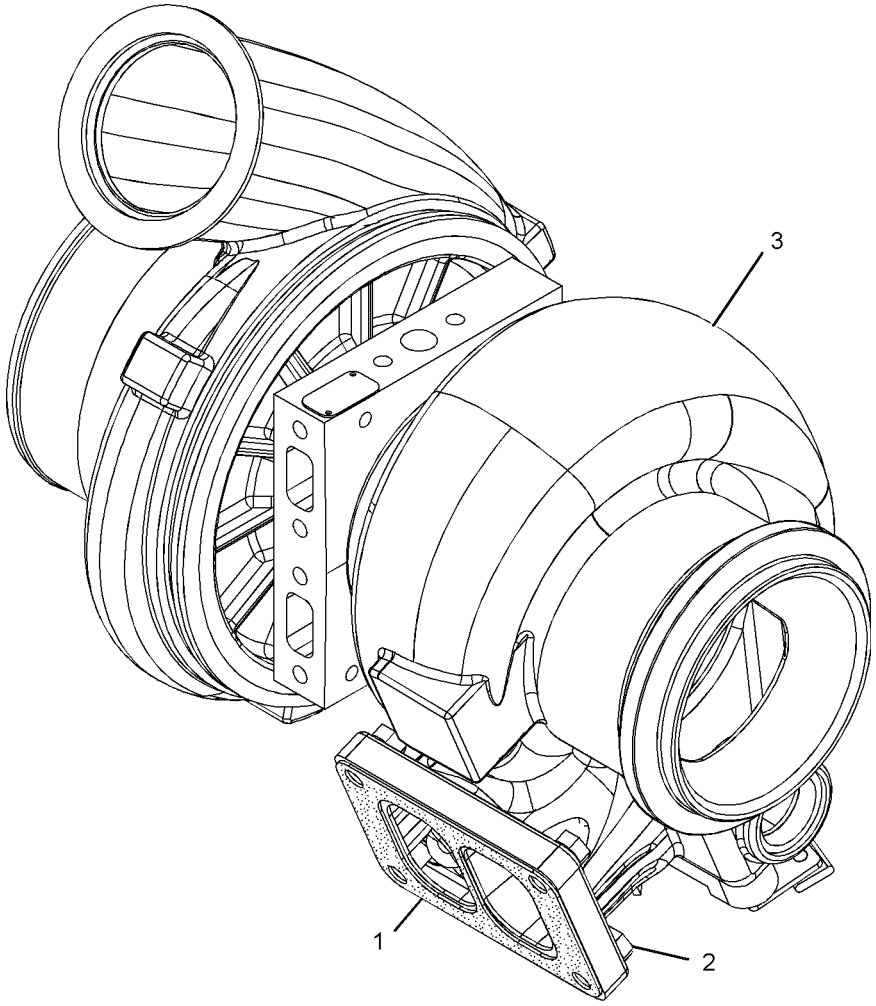


GRAPHIC #1 **<END>** g01058578

# AIR INLET AND EXHAUST SYSTEM

## *245-8474* TURBOCHARGER GP

**S/N: RHX612-2077**
**WATERCOOLED CENTER SECTION**
**PART OF 247-3315 ENGINE AR-COMPLETE**
**AN ATTACHMENT**

**SMCS-1052, 1053** **i02252913**

| NOTE | REF NO | GRAPHIC REF | PART NUMBER | QTY | PART NAME 1 2 3 4 5 6 (PRODUCT LEVEL) | SEE PAGE |
|---|---|---|---|---|---|---|
| | 1 | 1 | **1S-4295** | 1 | GASKET (TURBOCHARGER) | |
| | 2 | 1 | **168-7800** | 4 | LOCKNUT (3/8-16-THD) | |
| C | 3 | 1 | **255-8182** | 1 | TURBOCHARGER GP | |

C-CHANGE FROM PREVIOUS TYPE

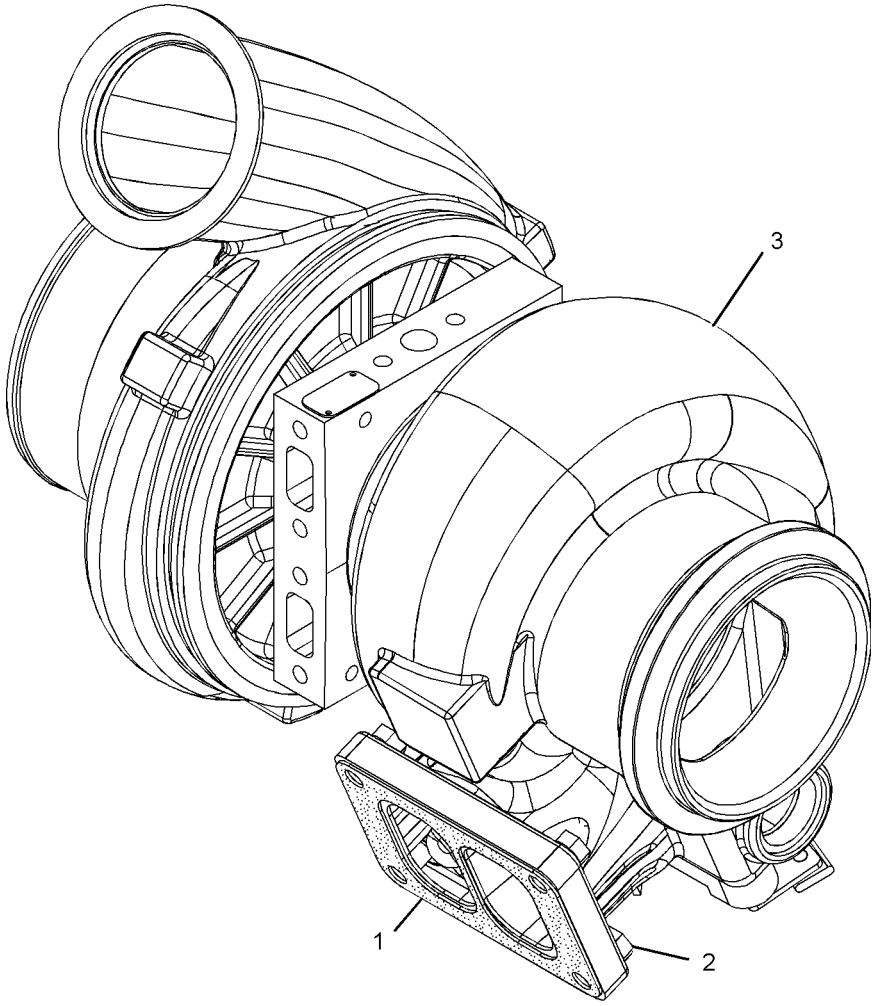


GRAPHIC #1 **<END>** g01058578

# AIR INLET AND EXHAUST SYSTEM

## *245-8474* TURBOCHARGER GP

**S/N: RHX2078-4155**
**WATERCOOLED CENTER SECTION**
**PART OF 247-3315 ENGINE AR-COMPLETE**
**AN ATTACHMENT**

**SMCS-1052, 1053** **i02482473**

| NOTE | REF NO | GRAPHIC REF | PART NUMBER | QTY | PART NAME 1 2 3 4 5 6 (PRODUCT LEVEL) | SEE PAGE |
|---|---|---|---|---|---|---|
| | 1 | 1 | **1S-4295** | 1 | GASKET (TURBOCHARGER) | |
| | 2 | 1 | **168-7800** | 4 | LOCKNUT (3/8-16-THD) | |
| C | 3 | 1 | **266-0198** | 1 | TURBOCHARGER GP (BASIC) | |

C-CHANGE FROM PREVIOUS TYPE

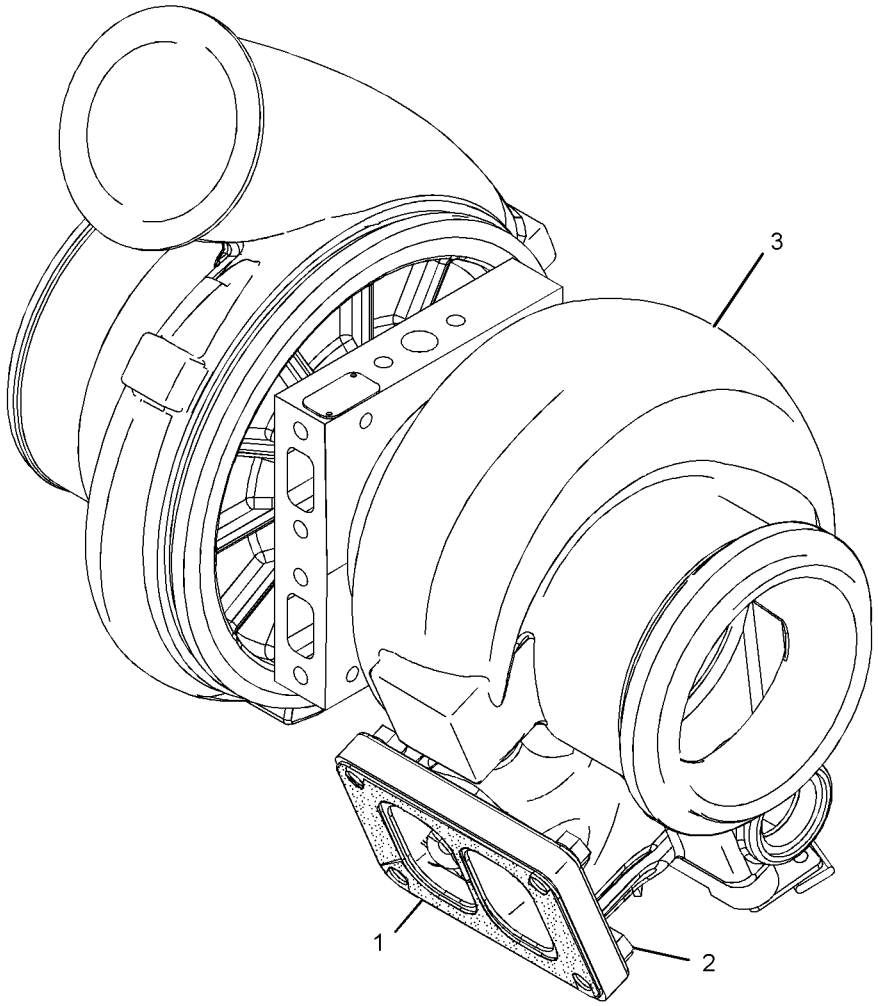


GRAPHIC #1 **<END>** g01242461

## *262-1080* TURBOCHARGER GP

**S/N: RHX1-UP**
**WET CENTER SECTION, EXHAUST REAR**
**PART OF 221-8124, 272-3086, 272-3087, 292-2553, 292-2554 ENGINE AR-COMPLETE**
**AN ATTACHMENT**

**SMCS-1052, 1053** **i02396606**

| NOTE | REF NO | GRAPHIC REF | PART NUMBER | QTY | PART NAME 1 2 3 4 5 6 (PRODUCT LEVEL) | SEE PAGE |
|---|---|---|---|---|---|---|
| | 1 | 1 | **1S-4295** | 1 | GASKET (TURBOCHARGER) | |
| | 2 | 1 | **168-7800** | 4 | LOCKNUT (3/8-16-THD) | |
| Y | 3 | 1 | **266-0196** | 1 | TURBOCHARGER GP | 210 |

Y-SEPARATE ILLUSTRATION

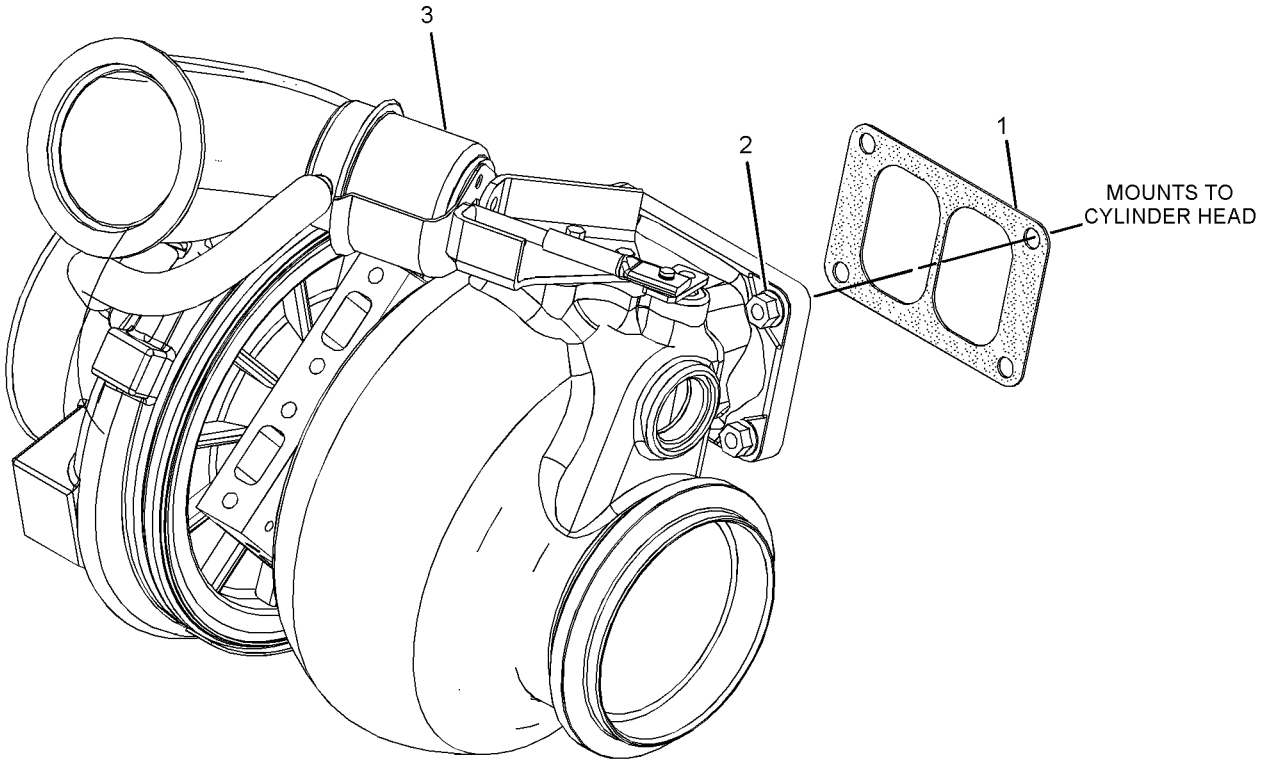


GRAPHIC #1 **<END>** g01269293

# 266-0196 TURBOCHARGER GP

**S/N: RHX1-UP**
**PART OF 262-1080 TURBOCHARGER GP**
**AN ATTACHMENT**

**SMCS-1052, 1053** **i03157120**

| NOTE | REF NO | GRAPHIC REF | PART NUMBER | QTY | PART NAME 1 2 3 4 5 6 (PRODUCT LEVEL) | SEE PAGE |
|---|---|---|---|---|---|---|
| | 1 | 1 | **9N-2038** | 1 | CLAMP AS-TURBINE | |
| | | 1 | **7M-9918** | 1 | LOCKNUT (1/4-28-THD) | |
| | 2 | 1 | **161-6963** | 2 | CLAMP | |
| R | 3 | 1 | **267-8658** | 1 | CARTRIDGE GP-TURBOCHARGER | |
| | 4 | 1 | **268-2960** | 1 | CLAMP AS (COMPRESSOR) | |
| | | 1 | **7M-9918** | 1 | LOCKNUT (1/4-28-THD) | |
| E | 5 | 1 | **242-3360** | | HOSE (27-CM) | |
| E | 6 | 1 | **258-4524** | | SLEEVE (26-CM) | |

E-ORDER BY THE CENTIMETER
R-REMFG PART MAY BE AVAILABLE

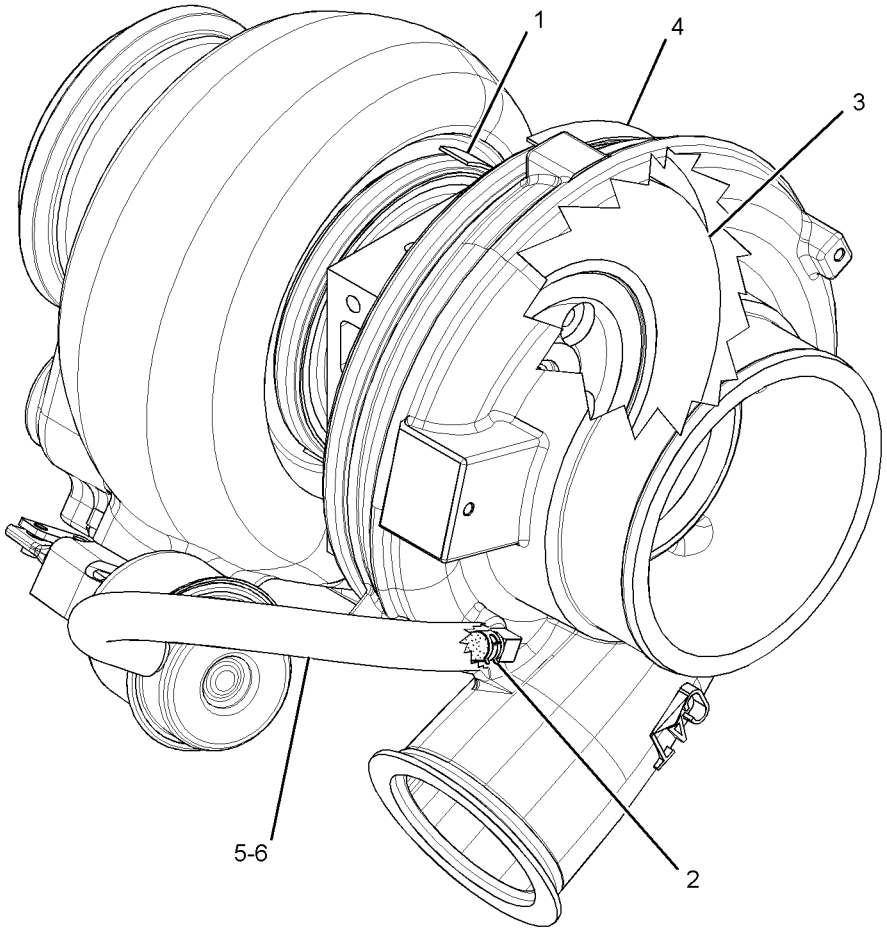


GRAPHIC #1 **<END>** g01643035

# 9D-9880 ADAPTER GP-FAST FILL FUEL

**S/N: RLB1-UP**
**AN ATTACHMENT**

**SMCS-1710** **i02694578**

| NOTE | REF NO | GRAPHIC REF | PART NUMBER | QTY | PART NAME 1 2 3 4 5 6 (PRODUCT LEVEL) | SEE PAGE |
|---|---|---|---|---|---|---|
| | 1 | 1 | **9D-0630** | 1 | CAP-DUST | |
| C | 2 | 1 | **101-8909** | 1 | CAP AS-FILLER (FAST FILL FUEL) | |
| C | | 1 | **9X-8600** | 1 | SEAL-O-RING | |
| C | 3 | 1 | **124-2463** | 1 | ADAPTER-FAST FILL FUEL | |
| | 4 | 1 | **127-4471** | 1 | CLAMP-HOSE | |
| C | 5 | 1 | **223-5874** | 1 | COVER AS | |
| | 6 | 1 | **4D-7794** | 1 | CLIP | |
| | 7 | 1 | **5M-3062** | 1 | BOLT (3/8-16X0.75-IN) | |
| C | 8 | 1 | **5P-1075** | 5 | WASHER-HARD (10.2X22.5X3-MM THK) | |
| J | 9 | 1 | **6G-7803** | 1 | VENT AS | |
| | 10 | 1 | **7D-1553** | 1 | CLIP | |
| | 11 | 1 | **8T-4896** | 1 | WASHER-HARD (10.2X18.5X2.5-MM THK) | |
| CE | 12 | 1 | **5P-6412** | | HOSE (50-CM) | |
| | | | | | AVAILABLE REPAIR KIT(S): | |
| J | | | **272-1595** | 1 | KIT-VENT (FUEL) | |
| | | | | | (INCLUDES BODY SEAL, SCREEN, SEAL, CLAMP, BALL CAGE, COVER, O-RINGS, SOLID BALL, HOLLOW BALLS, & SPRING PINS | |
| J | | | **5T-8645** | 1 | KIT-VENT (FUEL) | |
| | | | | | (INCLUDES BALLS, CAGE, CLAMPS, COVERS, SEALS, PINS, SCREENS & INSTRUCTIONS) | |

C-CHANGE FROM PREVIOUS TYPE
E-ORDER BY THE CENTIMETER
J-KITS MARKED J SERVICES PART MARKED J

**9D-9880 ADAPTER GP-FAST FILL FUEL** *(contd.)* **i02694578**

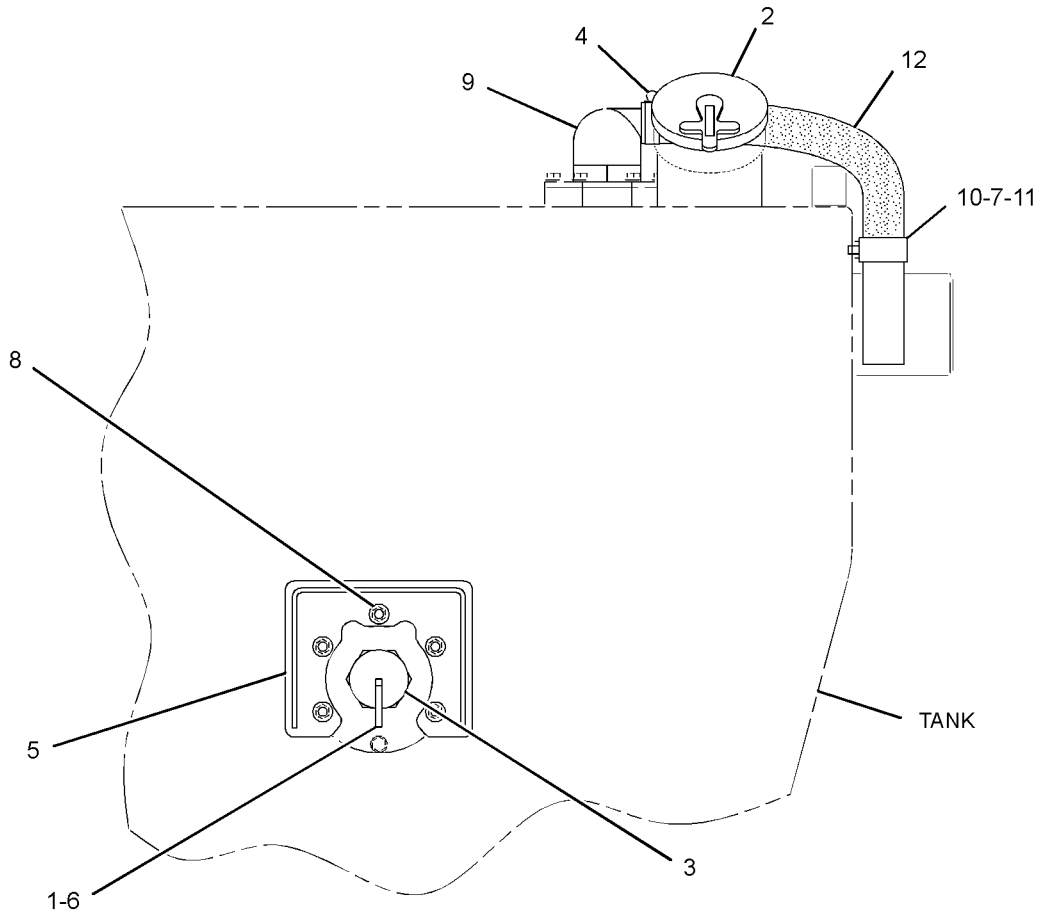


LEFT SIDE VIEW

GRAPHIC #1 **<END>** g01257108

# *223-5872* ADAPTER GP-FAST FILL FUEL

**S/N: RLB1-UP**
**AN ATTACHMENT**

**SMCS-1710** **i02345310**

| NOTE | REF NO | GRAPHIC REF | PART NUMBER | QTY | PART NAME 1 2 3 4 5 6 (PRODUCT LEVEL) | SEE PAGE |
|---|---|---|---|---|---|---|
| | 1 | 1 | **9D-0630** | 1 | CAP-DUST | |
| C | 2 | 1 | **232-1767** | 1 | RECEIVER AS (FAST FILL FUEL) | |
| | 3 | 1 | **127-4471** | 1 | CLAMP-HOSE | |
| | 4 | 1 | **163-5455** | 1 | VALVE AS-SHUTOFF (FAST FILL FUEL) (RECEIVER ADAPTER) | |
| | 5 | 1 | **222-0494** | 1 | HOSE AS | |
| | 6 | 1 | **223-4591** | 1 | VENT AS | |
| | 7 | 1 | **223-5874** | 1 | COVER AS | |
| C | 8 | 1 | **1P-4582** | 2 | FLANGE-HALF | |
| | 9 | 1 | **1H-8128** | 1 | SEAL-O-RING | |
| | 10 | 1 | **1J-9671** | 2 | SEAL-O-RING | |
| | 11 | 1 | **1S-0833** | 1 | CLIP | |
| C | 12 | 1 | **8T-8919** | 4 | BOLT (1/2-13X1.75-IN) | |
| | 13 | 1 | **4J-0527** | 1 | SEAL-O-RING | |
| | 14 | 1 | **4L-6454** | 7 | BOLT (3/8-16X1-IN) | |
| | 15 | 1 | **5H-6734** | 1 | SEAL-O-RING | |
| | 16 | 1 | **5M-3062** | 1 | BOLT (3/8-16X0.75-IN) | |
| | 17 | 1 | **5P-1075** | 5 | WASHER-HARD (10.2X22.5X3-MM THK) | |
| | 18 | 1 | **5P-2618** | 1 | CONNECTOR | |
| | 19 | 1 | **5S-7382** | 5 | BOLT (3/8-16X1.375-IN) | |
| | 20 | 1 | **8K-0968** | 1 | ELBOW | |
| | 21 | 1 | **8T-4896** | 8 | WASHER-HARD (10.2X18.5X2.5-MM THK) | |
| E | 22 | 1 | **5P-1252** | | HOSE (50-CM) | |
| C | 23 | 1 | **8T-4223** | 4 | WASHER-HARD (13.5X25.5X3-MM THK) | |
| C | 24 | 1 | **8M-2772** | 1 | CLIP | |

C-CHANGE FROM PREVIOUS TYPE
E-ORDER BY THE CENTIMETER

*223-5872* **ADAPTER GP-FAST FILL FUEL** *(contd.)* **i02345310**

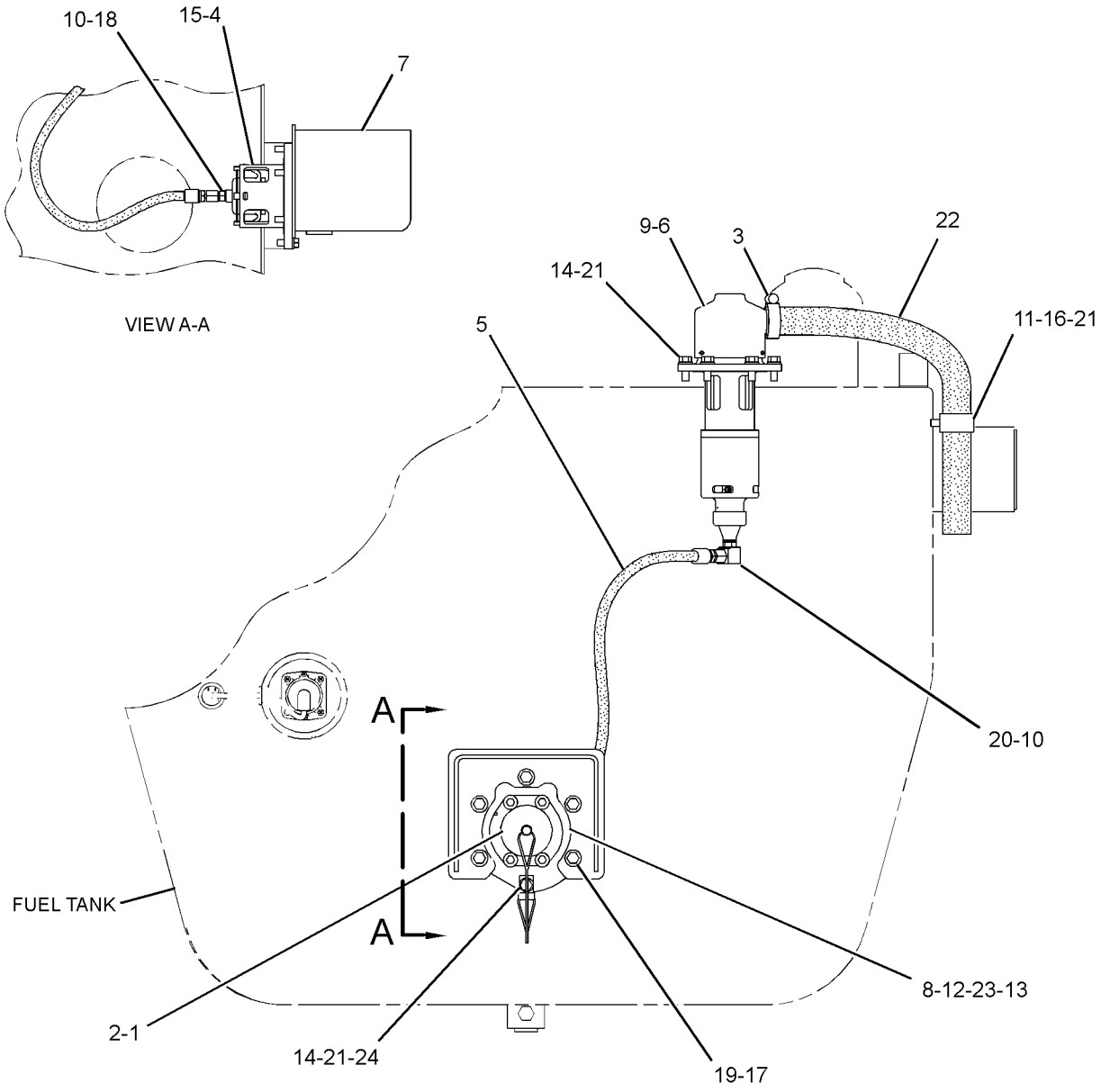


LEFT SIDE VIEW

GRAPHIC #1 **<END>** g01164890

# *205-7303* ADAPTER-FAST FILL FUEL

**S/N: RLB1-UP**
**VENT AS**
**PART OF 271-8531 TANK GP-FUEL**

**SMCS-1710** **i02418917**

| NOTE | REF NO | GRAPHIC REF | PART NUMBER | QTY | PART NAME 1 2 3 4 5 6 (PRODUCT LEVEL) | SEE PAGE |
|---|---|---|---|---|---|---|
| | | | | | (NO SERVICED PARTS) | |

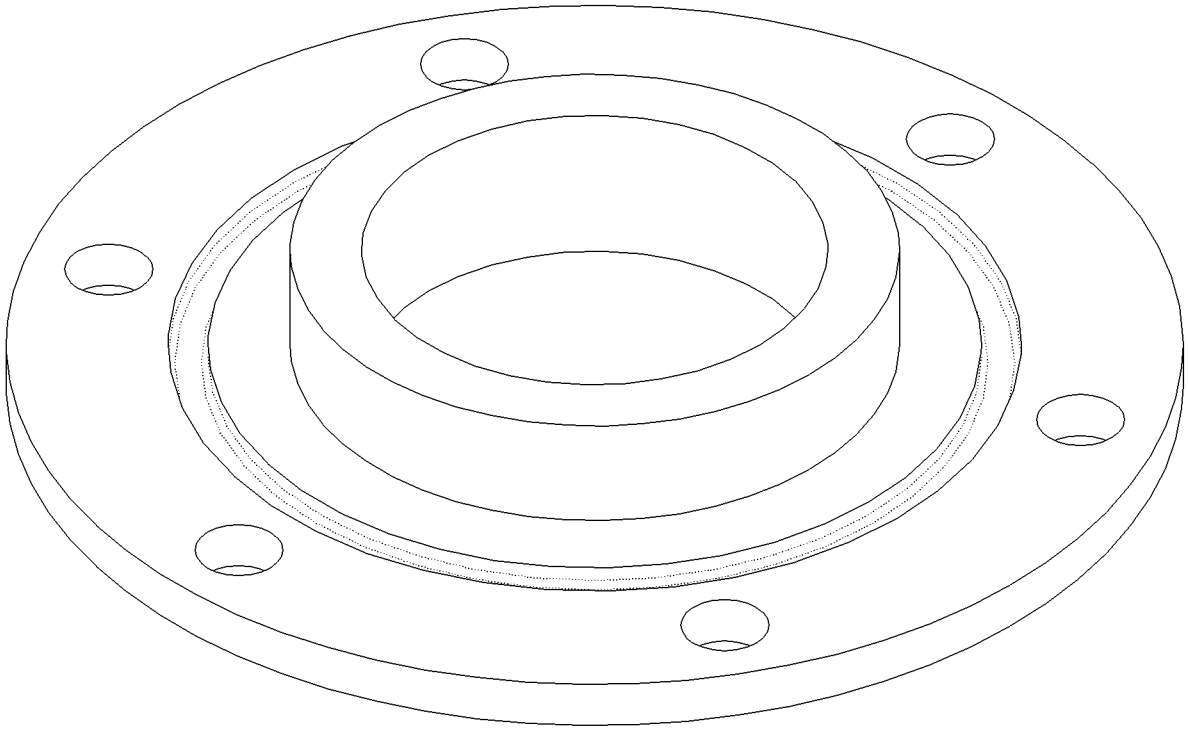

GRAPHIC #1 **<END>** g00859063

# *278-5962* CONTROL GP-GOVERNOR–ACCELERATOR

**S/N: RLB1-UP**

**PART OF 269-8820 CAB AR**

**SMCS-1265, 1276** **i02617132**

| NOTE | REF NO | GRAPHIC REF | PART NUMBER | QTY | PART NAME 1 2 3 4 5 6 (PRODUCT LEVEL) | SEE PAGE |
|---|---|---|---|---|---|---|
| Y | 1 | 1 | **113-4799** | 1 | PEDAL GP-GOVERNOR | 783 |
| | 2 | 1 | **162-9112** | 1 | GROMMET-SPLIT | |
| M | 3 | 1 | **6V-2317** | 3 | BOLT (M8X1.25X30-MM) | |
| | 4 | 1 | **9M-1974** | 3 | WASHER-HARD (8.8X16X2-MM THK) | |

M-METRIC PART
Y-SEPARATE ILLUSTRATION

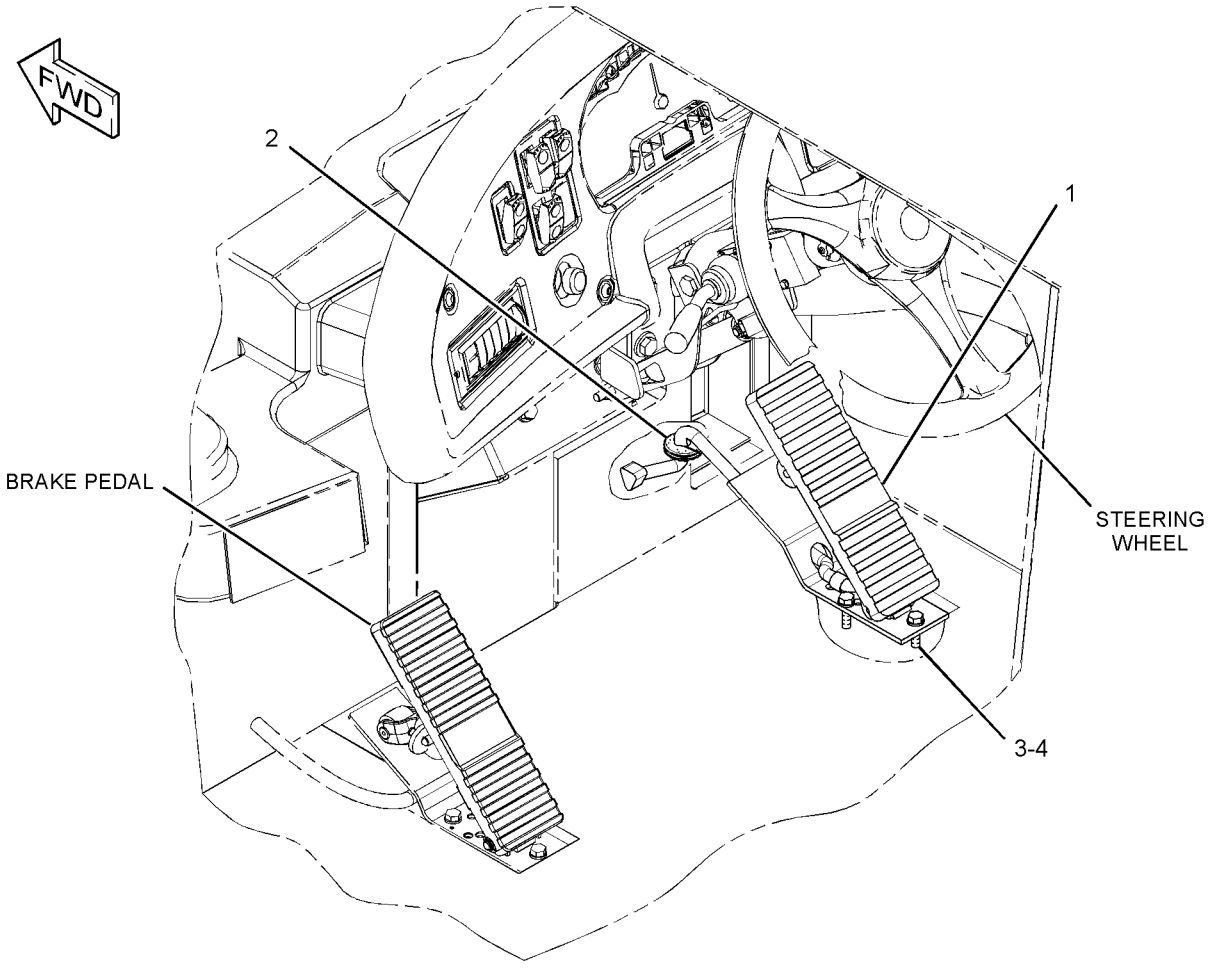


GRAPHIC #1 **<END>** g01337484

# FUEL SYSTEM

## *174-9570* FILTER GP-WATER SEP & FUEL

**S/N: RHX1-UP**

**PART OF 190-8977 PUMP GP-FUEL PRM & WATER SEP**

**AN ATTACHMENT**

**SMCS-1261, 1263** **i03181920**

| NOTE | REF NO | GRAPHIC REF | PART NUMBER | QTY | PART NAME 1 2 3 4 5 6 (PRODUCT LEVEL) | SEE PAGE |
|---|---|---|---|---|---|---|
| | 1 | 1 | **326-1644** | 1 | FILTER AS-WATER SEP & FUEL (PRIMARY) | |
| | 1A | 1 | **220-8678** | 1 | SEAL-RING (FUEL, WATER SEPARATOR) | |
| | 2 | 1 | **270-5320** | 1 | BOWL AS (FUEL, WATER SEPARATOR) | |

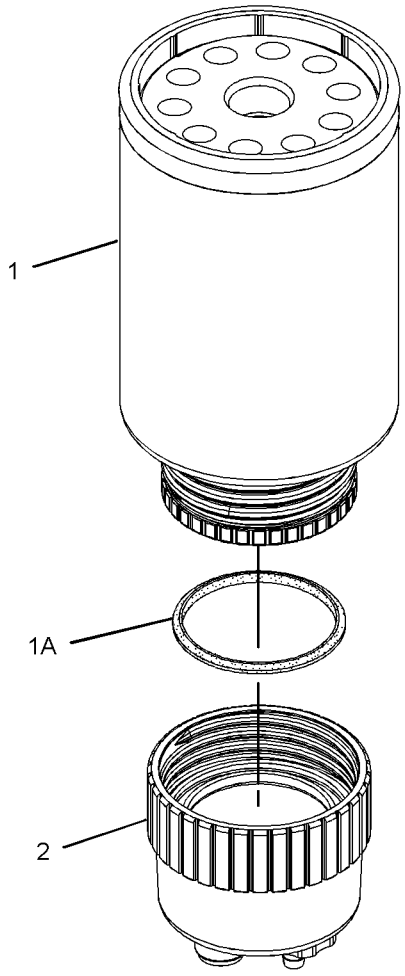


GRAPHIC #1 **<END>** g01179858

# FUEL SYSTEM

## *270-4235* HEATER GP-FUEL

**S/N: RLB1-UP**
**CANNOT BE USED WITH 270-4220—PAGE 225**
**AN ATTACHMENT**

**SMCS-1296** **i03129723**

| NOTE | REF NO | GRAPHIC REF | PART NUMBER | QTY | PART NAME 1 2 3 4 5 6 (PRODUCT LEVEL) | SEE PAGE |
|---|---|---|---|---|---|---|
| | 1 | 1 | **279-6387** | 1 | PLATE AS | |
| I | 2 | 1 | **286-8108** | 1 | HOSE AS | |
| I | 3 | 1 | **286-8109** | 1 | HOSE AS | |
| J | 4 | 1 | **303-3463** | 1 | HEATER-FUEL | |
| | 5 | 1 | **061-8005** | 3 | SPACER (9.25X13.72X16-MM) | |
| | 6 | 1 | **302-3908** | 1 | SPACER (11X20X30-MM THK) | |
| | 7 | 1 | **4L-6459** | 2 | BOLT (3/8-16X2.5-IN) | |
| | 8 | 1 | **100-4336** | 4 | CLIP | |
| | 9 | 1 | **124-0174** | 1 | CLIP | |
| | 10 | 1 | **133-6934** | 1 | SPACER (11X20X25-MM THK) | |
| | 11 | 1 | **7C-6921** | 1 | SPACER (11X20X22.8-MM THK) | |
| | 12 | 1 | *148-8345* | 1 | CONNECTOR AS | |
| | | 1 | **6V-8638** | 1 | CONNECTOR | |
| | | 1 | **2M-9780** | 1 | SEAL-O-RING | |
| | | 1 | **6V-8398** | 1 | SEAL-O-RING | |
| | 13 | 1 | *148-8358* | 1 | ELBOW AS | |
| | | 1 | **6V-8624** | 1 | ELBOW | |
| | | 1 | **2M-9780** | 1 | SEAL-O-RING | |
| | | 1 | **6V-8398** | 1 | SEAL-O-RING | |
| | 14 | 1 | *148-8374* | 1 | ELBOW AS | |
| | | 1 | **6V-8723** | 1 | ELBOW | |
| | | 1 | **3K-0360** | 1 | SEAL-O-RING | |
| | | 1 | **6V-8397** | 1 | SEAL-O-RING | |
| | 15 | 1 | *148-8381* | 1 | ELBOW AS | |
| | | 1 | **8T-5429** | 1 | ELBOW | |
| | | 1 | **3D-2824** | 1 | SEAL-O-RING | |
| | | 1 | **6V-8398** | 1 | SEAL-O-RING | |
| I | 16 | 1 | **149-0196** | 1 | HOSE AS | |
| | 17 | 1 | *155-3504* | 1 | ELBOW AS | |
| | | 1 | **6V-9003** | 1 | ELBOW | |
| | | 1 | **2M-9780** | 1 | SEAL-O-RING | |
| | | 1 | **7J-9108** | 1 | SEAL-O-RING | |
| I | 18 | 1 | **188-0839** | 1 | HOSE AS | |
| | 19 | 1 | **1S-0994** | 4 | CLIP | |
| | 20 | 1 | *205-3692* | 1 | ELBOW AS | |
| | | 1 | **9X-2134** | 1 | ELBOW | |
| | | 1 | **2M-9780** | 1 | SEAL-O-RING | |
| | | 1 | **6V-8397** | 1 | SEAL-O-RING | |
| | 21 | 1 | **2K-5232** | 1 | SPACER (0.406X0.75X1.81-IN THK) | |
| | 22 | 1 | **4D-9517** | 2 | CLIP | |
| | 23 | 1 | **6W-6672** | 2 | SPACER (10.5X20X38-MM THK) | |
| | 24 | 1 | **6S-8620** | 1 | CLAMP-HOSE | |
| | 25 | 1 | **8T-4896** | 3 | WASHER-HARD (10.2X18.5X2.5-MM THK) | |
| | 26 | 1 | **7X-0300** | 1 | BOLT (3/8-16X6.5-IN) | |
| | 27 | 1 | **8T-4121** | 9 | WASHER-HARD (11X21X2.5-MM THK) | |
| M | 28 | 1 | **8T-4136** | 4 | BOLT (M10X1.5X25-MM) | |
| M | 29 | 1 | **8T-4137** | 2 | BOLT (M10X1.5X20-MM) | |
| | 31 | 1 | **8T-4224** | 3 | WASHER-HARD (8.8X16X2-MM THK) | |
| M | 32 | 1 | **8T-6466** | 3 | BOLT (M10X1.5X60-MM) | |
| M | 33 | 1 | **8T-6912** | 3 | BOLT (M8X1.25X50-MM) | |
| E | 34 | 1 | **8C-6959** | | HOSE (121-CM) | |
| E | 35 | 1 | **5P-1300** | | HOSE (164-CM) | |
| | 36 | 1 | **3S-2093** | 1 | STRAP-CABLE | |

*270-4235* **HEATER GP-FUEL** ***(contd.)*** **i03129723**

| NOTE | REF NO | GRAPHIC REF | PART NUMBER | QTY | PART NAME 1 2 3 4 5 6 (PRODUCT LEVEL) | SEE PAGE |
|---|---|---|---|---|---|---|
| | | | | | AVAILABLE REPAIR KIT(S): | |
| J | | | **138-1240** | 1 | KIT-ADAPTER (FUEL HEATER) | |
| | | | | | (INCLUDES SEAL-ADAPTER & ADAPTER-FUEL INLET) | |

E-ORDER BY THE CENTIMETER
I-REFER TO HYDRAULIC INFORMATION SYSTEM
J-KIT MARKED J SERVICES PART(S) MARKED J
M-METRIC PART

*270-4235* **HEATER GP-FUEL** *(contd.)* **i03129723**

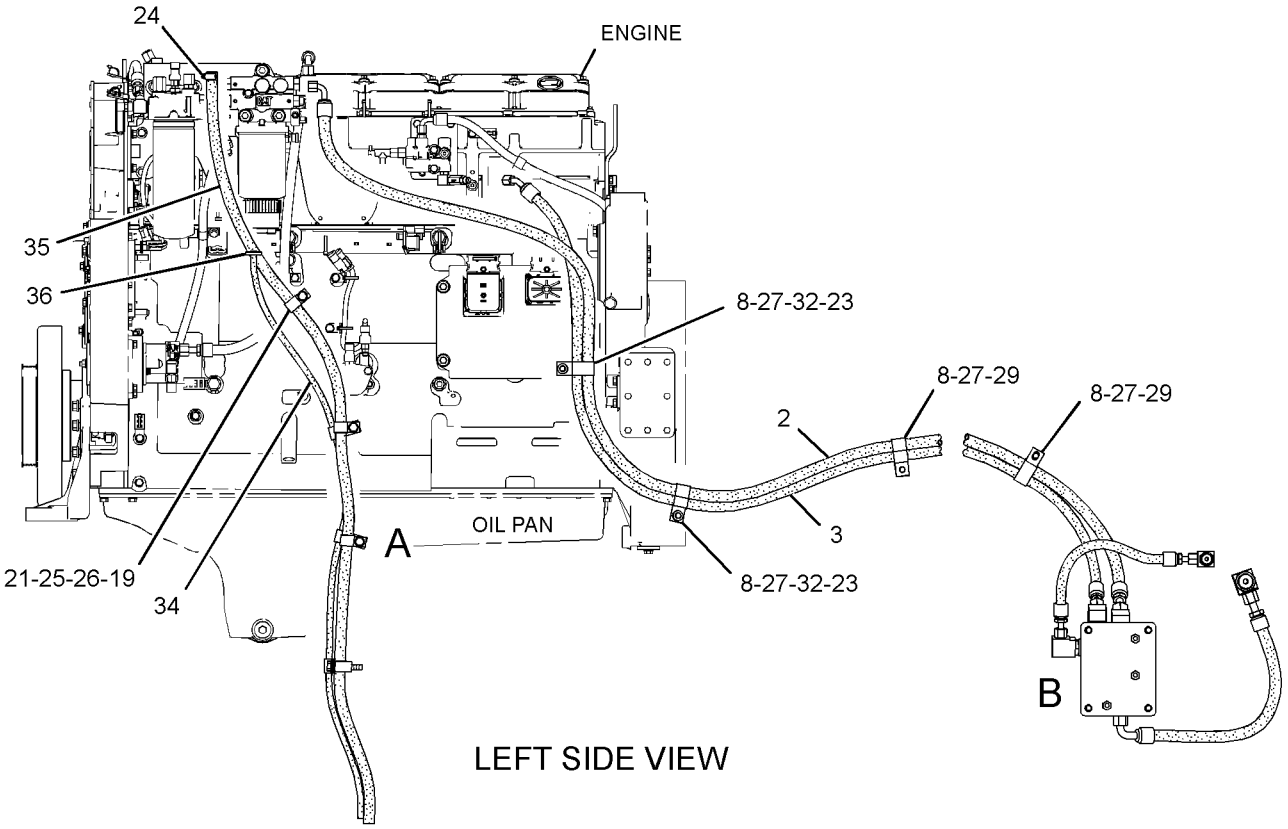


LEFT SIDE VIEW

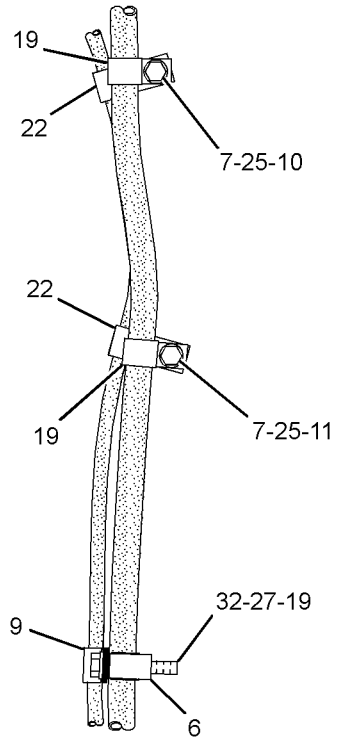


VIEW OF AREA A

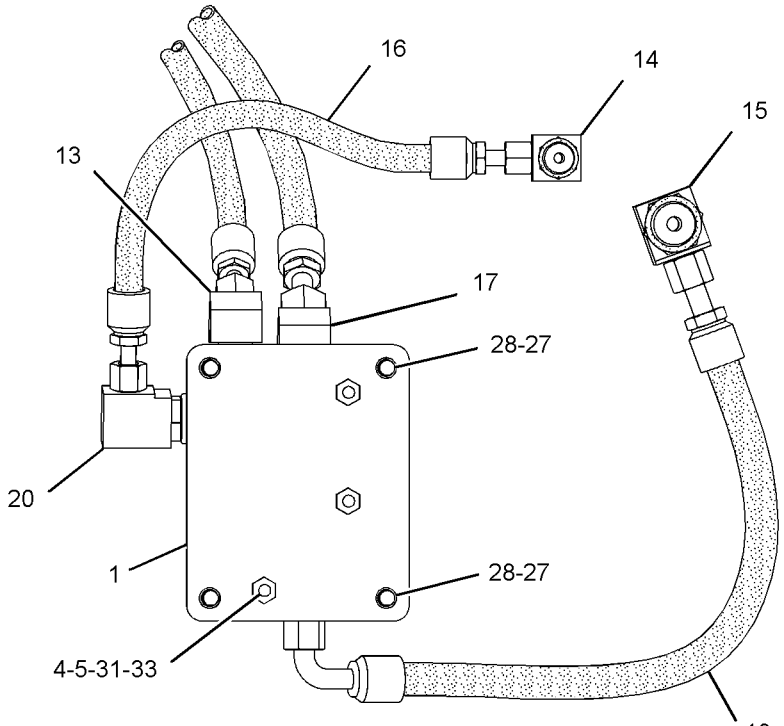


VIEW OF AREA B

GRAPHIC #1

**<END>**

g01421212

# 291-5911 INJECTOR GP-FUEL

**S/N: RHX3837-UP**
**PART OF 294-7615 PUMP GP-FUEL INJECTION**
**AN ATTACHMENT**

**SMCS-1251, 1254, 1290, 1713** **i02640186**

| NOTE | REF NO | GRAPHIC REF | PART NUMBER | QTY | PART NAME 1 2 3 4 5 6 (PRODUCT LEVEL) | SEE PAGE |
|---|---|---|---|---|---|---|
| | 1 | 1 | **230-3728** | 1 | SEAL-O-RING | |
| | 2 | 1 | **230-3775** | 1 | SEAL-O-RING | |
| | 3 | 1 | **9X-7317** | 1 | SEAL-O-RING | |

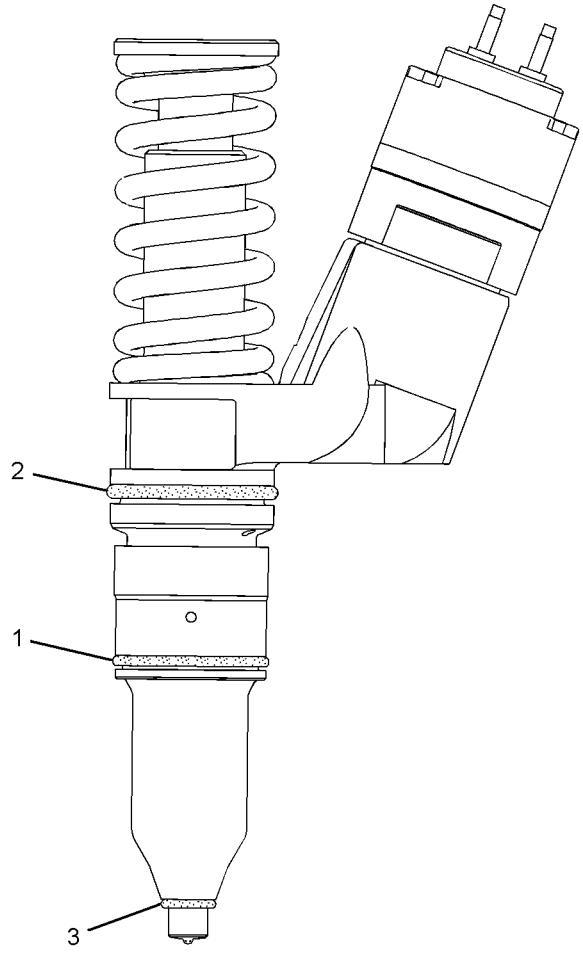


GRAPHIC #1 **<END>** g01325636

# FUEL SYSTEM

## *246-1175* LINES GP-FUEL

**S/N: RHX1-UP**

**PART OF 221-8124, 247-3315, 272-3086, 272-3087, 292-2553, 292-2554 ENGINE**

**AR-COMPLETE**

**AN ATTACHMENT**

**SMCS-1274** **i03075504**

| NOTE | REF NO | GRAPHIC REF | PART NUMBER | QTY | PART NAME 1 2 3 4 5 6 (PRODUCT LEVEL) | SEE PAGE |
|---|---|---|---|---|---|---|
| | 1 | 1 | **6V-0852** | 1 | CAP-DUST | |
| | 2 | 1 | **103-4656** | 1 | MANIFOLD-FUEL | |
| | 3 | 2 | **110-8330** | 1 | SPACER (11.3X19.05X90-MM THK) | |
| | 4 | 2 | **147-3396** | 1 | CONNECTOR-PORT | |
| | 5 | 1,2 | *191-7805* | 2 | ELBOW AS | |
| | | | | | (EACH INCLUDES) | |
| | | 1,2 | **6V-5049** | 1 | SEAL-O-RING | |
| | | 1,2 | **030-7947** | 1 | ELBOW | |
| | 6 | 1 | **210-9528** | 1 | VALVE-CHECK | |
| Y | 7 | 1 | *233-6742* | 1 | VALVE GP-CHECK (FUEL) | 244 |
| | 8 | 1 | **246-1475** | 1 | BRACKET AS | |
| | | 1 | **8T-5912** | 2 | NUT-WELD (3/8-16-THD) | |
| I | 9 | 1 | **326-2823** | 1 | HOSE AS | |
| I | 10 | 1 | **257-4154** | 1 | HOSE AS | |
| I | 11 | 1 | **257-4155** | 1 | HOSE AS | |
| I | 12 | 1 | **294-9703** | 1 | HOSE AS | |
| | 13 | 1 | **4P-7581** | 1 | CLIP | |
| | 14 | 2 | **118-4728** | 1 | ELBOW | |
| | 15 | 2 | **033-6042** | 1 | SEAL-O-RING | |
| | 16 | 1 | **0S-1588** | 1 | BOLT (3/8-16X1.25-IN) | |
| | 17 | 1 | **0S-1594** | 2 | BOLT (3/8-16X1-IN) | |
| | 18 | 1 | **0S-1619** | 3 | BOLT (3/8-16X3-IN) | |
| | 20 | 2 | **1A-5964** | 1 | BOLT (3/8-16X4.5-IN) | |
| | 21 | 2 | **1S-0994** | 1 | CLIP | |
| | 22 | 2 | **2P-7214** | 1 | ELBOW | |
| | 23 | 1 | *186-1667* | 1 | CONNECTOR AS | |
| | | 1 | **2R-6806** | 1 | CONNECTOR-O-RING | |
| | | 1 | **6V-5049** | 1 | SEAL-O-RING | |
| | 24 | 1 | **067-2551** | 1 | CLIP | |
| | 25 | 1,2 | **4D-7735** | 3 | CLIP | |
| | 26 | 1 | **5G-9603** | 1 | SPACER (11.03X26.6X50-MM THK) | |
| | 27 | 1,2 | **5M-2894** | 6 | WASHER-HARD (10.2X18.5X2.5-MM THK) | |
| | 28 | 1 | **6V-0484** | 1 | ADAPTER-O-RING | |
| | 29 | 1 | **6V-3965** | 1 | FITTING (QUICK DISCONNECT) | |
| | 30 | 1,2 | **6V-5048** | 2 | SEAL-O-RING | |
| | 31 | 1,2 | **6V-5049** | 4 | SEAL-O-RING | |
| | 32 | 1 | **6V-5839** | 1 | WASHER (11X21X2.5-MM THK) | |
| M | 33 | 1 | **6V-6317** | 1 | BOLT (M10X1.5X20-MM) | |
| | 34 | 2 | **8L-2786** | 2 | SEAL-O-RING | |
| | 35 | 1 | **8T-2353** | 1 | ADAPTER | |
| | 36 | 2 | **9S-8002** | 1 | PLUG-O-RING | |
| | 37 | 1,2 | *183-3408* | 4 | PLUG AS | |
| | | | | | (EACH INCLUDES) | |
| | | 1,2 | **6V-5049** | 1 | SEAL-O-RING | |
| | | 1,2 | **9S-8004** | 1 | PLUG-O-RING | |
| | 38 | 2 | **9S-8005** | 1 | PLUG-O-RING | |
| | 39 | 1 | **9X-6458** | 1 | WASHER-HARD (10.2X22.5X3-MM THK) | |

I-REFER TO HYDRAULIC INFORMATION SYSTEM
M-METRIC PART
Y-SEPARATE ILLUSTRATION

REFER TO ALL ILLUSTRATIONS OF THIS GROUP FOR AUXILIARY VIEWS.

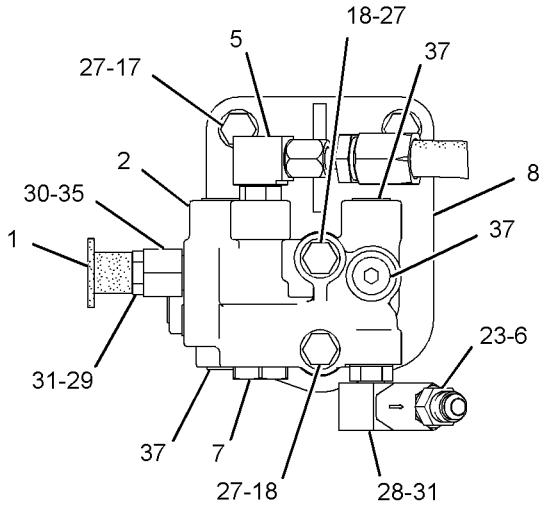


VIEW OF AREA B

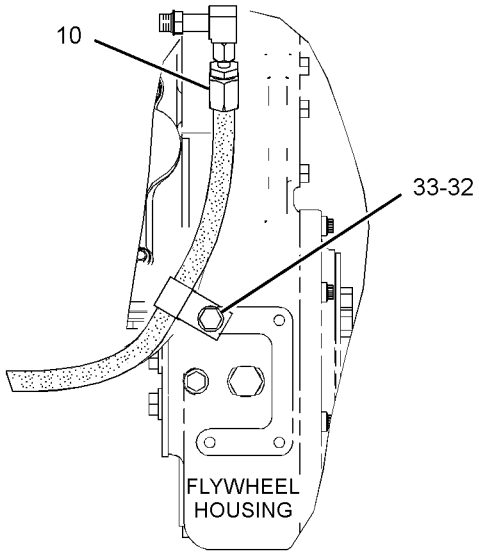


VIEW A-A

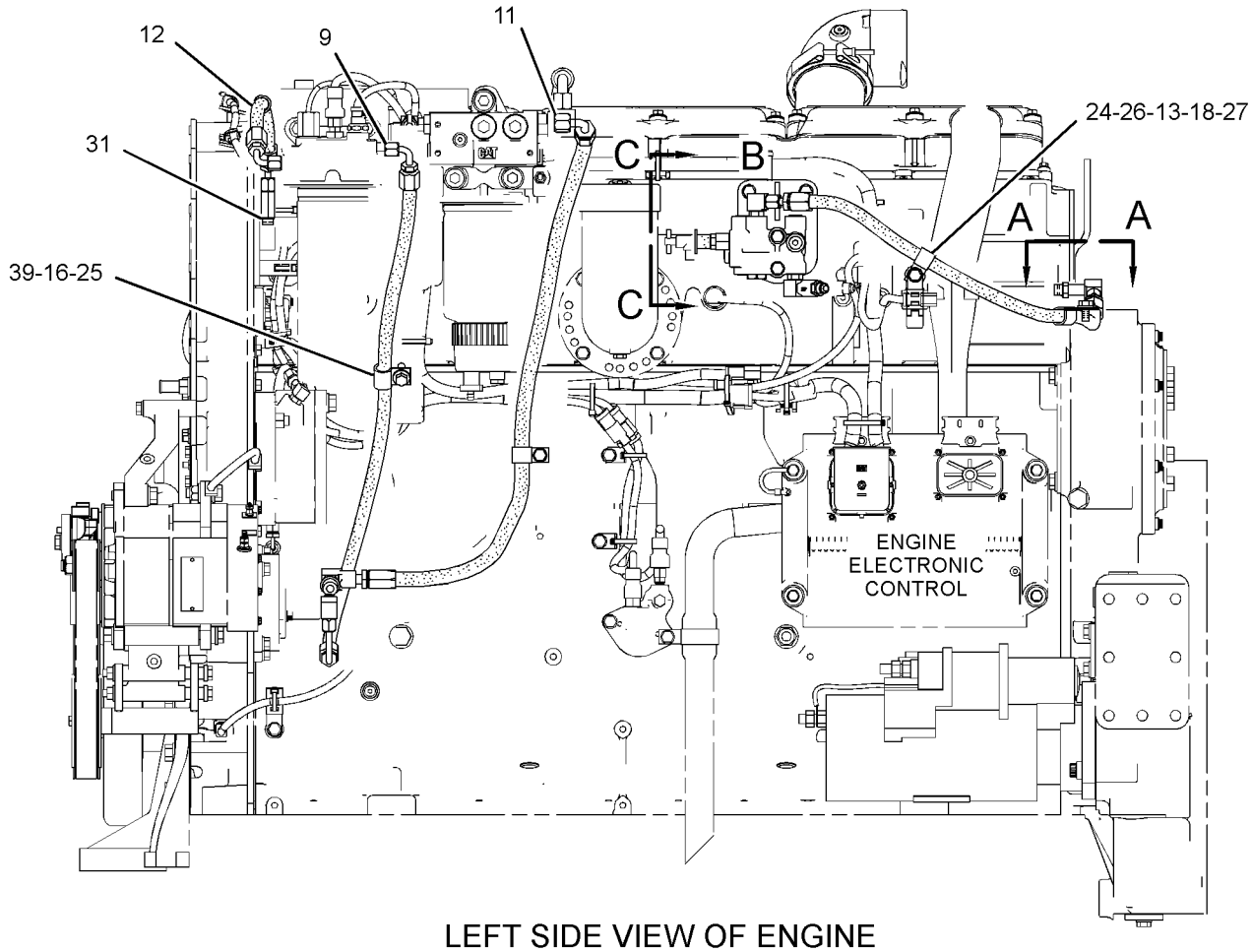


LEFT SIDE VIEW OF ENGINE

GRAPHIC #1 g01636687

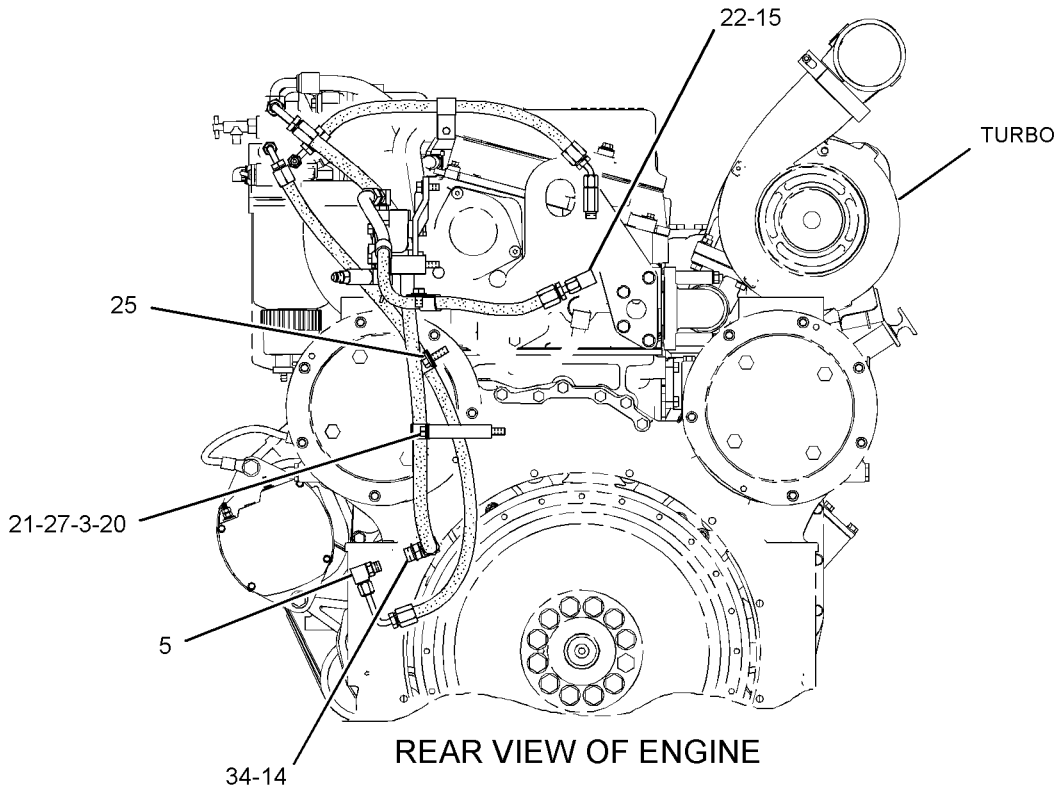


REAR VIEW OF ENGINE

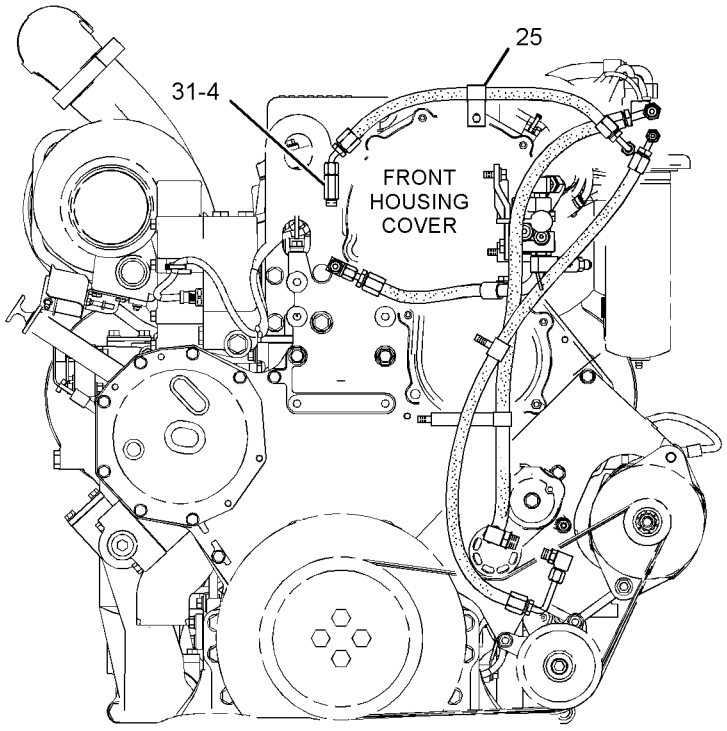


FRONT VIEW OF ENGINE

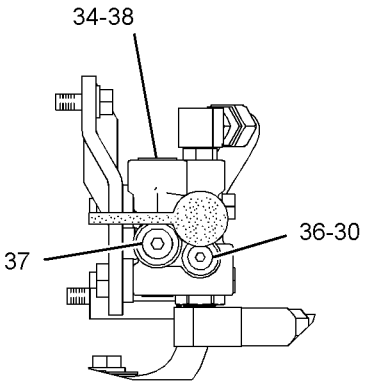


VIEW C-C

GRAPHIC #2 **<END>** g01636686

# FUEL SYSTEM

## *270-4220* LINES GP-FUEL

**S/N: RLB1-318**

**CANNOT BE USED WITH 270-4235—PAGE 218**

**AN ATTACHMENT**

**SMCS-1274** **i02707358**

| NOTE | REF NO | GRAPHIC REF | PART NUMBER | QTY | PART NAME 1 2 3 4 5 6 (PRODUCT LEVEL) | SEE PAGE |
|---|---|---|---|---|---|---|
| | 1 | 1 | **090-8747** | 1 | SPACER (11X19X32-MM THK) | |
| | 2 | 1 | **0L-1143** | 2 | BOLT (3/8-16X2.5-IN) | |
| | 3 | 1 | **100-4336** | 4 | CLIP | |
| | 4 | 1 | **124-0174** | 1 | CLIP | |
| | 5 | 1 | **133-6934** | 2 | SPACER (11X20X25-MM THK) | |
| | 6 | 1 | **144-8344** | 1 | SPACER (11X19X20-MM THK) | |
| | 7 | 1 | *148-8354* | 1 | ELBOW AS | |
| | | 1 | **6V-9002** | 1 | ELBOW | |
| | | 1 | **3K-0360** | 1 | SEAL-O-RING | |
| | | 1 | **6V-8398** | 1 | SEAL-O-RING | |
| | 8 | 1 | *148-8381* | 1 | ELBOW AS | |
| | | 1 | **8T-5429** | 1 | ELBOW | |
| | | 1 | **3D-2824** | 1 | SEAL-O-RING | |
| | | 1 | **6V-8398** | 1 | SEAL-O-RING | |
| | 9 | 1 | **1S-0994** | 4 | CLIP | |
| I | 10 | 1 | **277-4796** | 1 | HOSE AS | |
| I | 11 | 1 | **299-2548** | 1 | HOSE AS | |
| | 12 | 1 | **2K-5232** | 1 | SPACER (0.406X0.75X1.81-IN THK) | |
| | 13 | 1 | **4D-9517** | 2 | CLIP | |
| | 14 | 1 | **4W-7627** | 2 | SPACER (11X19X37-MM THK) | |
| | 15 | 1 | **5D-1026** | 1 | CLAMP-HOSE | |
| | 16 | 1 | **5M-2894** | 3 | WASHER-HARD (10.2X18.5X2.5-MM THK) | |
| | 17 | 1 | **7X-0300** | 1 | BOLT (3/8-16X6.5-IN) | |
| | 18 | 1 | **8T-4121** | 5 | WASHER-HARD (11X21X2.5-MM THK) | |
| M | 19 | 1 | **8T-4137** | 2 | BOLT (M10X1.5X20-MM) | |
| M | 20 | 1 | **8T-4172** | 1 | BOLT (M10X1.5X80-MM) | |
| M | 21 | 1 | **8T-6466** | 2 | BOLT (M10X1.5X60-MM) | |
| E | 22 | 1 | **8C-6959** | | HOSE (121-CM) | |
| E | 23 | 1 | **5P-1300** | | HOSE (294-CM) | |

E-ORDER BY THE CENTIMETER
I-REFER TO HYDRAULIC INFORMATION SYSTEM
M-METRIC PART

*270-4220* **LINES GP-FUEL** *(contd.)* **i02707358**

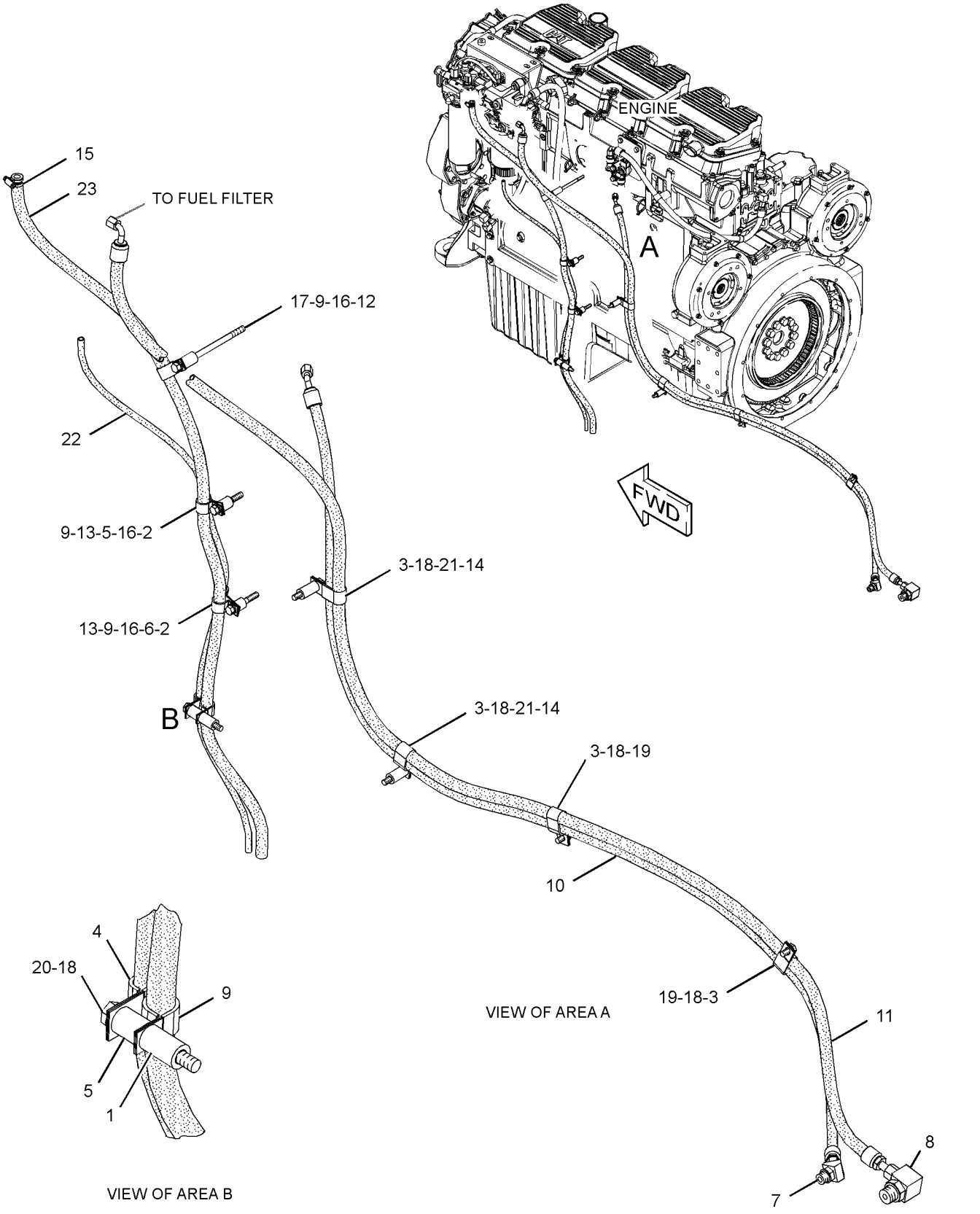


GRAPHIC #1 **<END>** g01365702

# FUEL SYSTEM

## *270-4220* LINES GP-FUEL

**S/N: RLB319-UP**
**CANNOT BE USED WITH 270-4235—PAGE 218**
**AN ATTACHMENT**

**SMCS-1274** **i03071474**

| NOTE | REF NO | GRAPHIC REF | PART NUMBER | QTY | PART NAME 1 2 3 4 5 6 (PRODUCT LEVEL) | SEE PAGE |
|---|---|---|---|---|---|---|
| I | 1 | 1 | **299-2548** | 1 | HOSE AS | |
| | 2 | 1 | **302-3908** | 1 | SPACER (11X20X30-MM THK) | |
| | 3 | 1 | **4L-6459** | 2 | BOLT (3/8-16X2.5-IN) | |
| | 4 | 1 | **100-4336** | 4 | CLIP | |
| | 5 | 1 | **124-0174** | 1 | CLIP | |
| C | 6 | 1 | **133-6934** | 1 | SPACER (11X20X25-MM THK) | |
| | 7 | 1 | **7C-6921** | 1 | SPACER (11X20X22.8-MM THK) | |
| | 8 | 1 | *148-8354* | 1 | ELBOW AS | |
| | | 1 | **6V-9002** | 1 | ELBOW | |
| | | 1 | **3K-0360** | 1 | SEAL-O-RING | |
| | | 1 | **6V-8398** | 1 | SEAL-O-RING | |
| | 9 | 1 | *148-8381* | 1 | ELBOW AS | |
| | | 1 | **8T-5429** | 1 | ELBOW | |
| | | 1 | **3D-2824** | 1 | SEAL-O-RING | |
| | | 1 | **6V-8398** | 1 | SEAL-O-RING | |
| | 10 | 1 | **1S-0994** | 4 | CLIP | |
| I | 11 | 1 | **277-4796** | 1 | HOSE AS | |
| | 12 | 1 | **2K-5232** | 1 | SPACER (0.406X0.75X1.81-IN THK) | |
| C | 13 | 1 | **3S-2093** | 1 | STRAP-CABLE | |
| | 14 | 1 | **4D-9517** | 2 | CLIP | |
| | 15 | 1 | **6S-8620** | 1 | CLAMP-HOSE | |
| | 16 | 1 | **8T-4896** | 3 | WASHER-HARD (10.2X18.5X2.5-MM THK) | |
| C | 17 | 1 | **6W-6672** | 2 | SPACER (10.5X20X38-MM THK) | |
| | 18 | 1 | **7X-0300** | 1 | BOLT (3/8-16X6.5-IN) | |
| | 19 | 1 | **8T-4121** | 5 | WASHER-HARD (11X21X2.5-MM THK) | |
| M | 20 | 1 | **8T-4137** | 2 | BOLT (M10X1.5X20-MM) | |
| CM | 21 | 1 | **8T-6466** | 3 | BOLT (M10X1.5X60-MM) | |
| E | 22 | 1 | **8C-6959** | | HOSE (121-CM) | |
| CE | 23 | 1 | **5P-1300** | | HOSE (164-CM) | |

C-CHANGE FROM PREVIOUS TYPE
E-ORDER BY THE CENTIMETER
I-REFER TO HYDRAULIC INFORMATION SYSTEM
M-METRIC PART

*270-4220* **LINES GP-FUEL** *(contd.)* **i03071474**

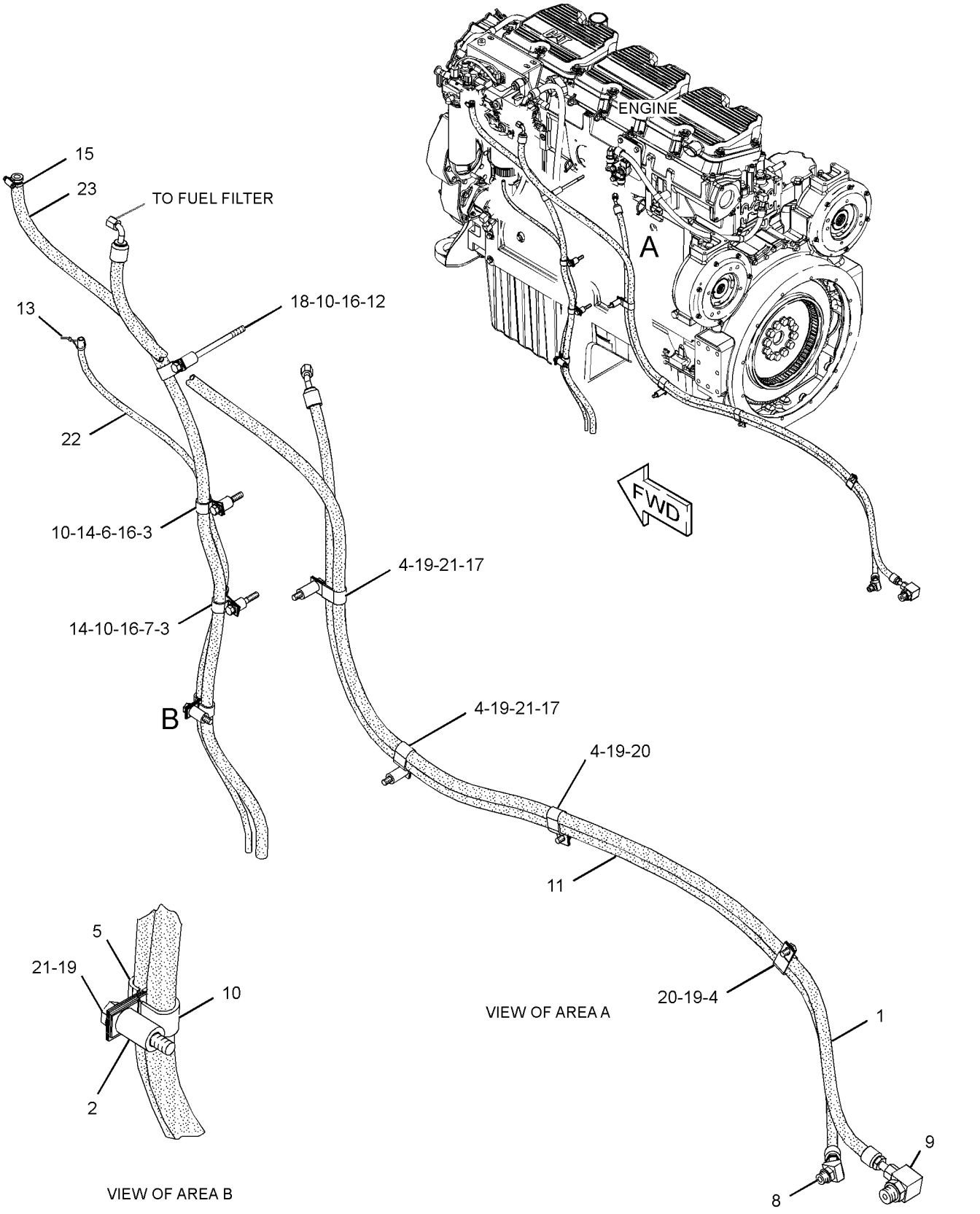


GRAPHIC #1 **<END>** g01437325

# *150-4279* PUMP & MTG GP-FUEL TRANSFER–REAR

**S/N: RHX1-UP**

**ALLOWS USE OF FRONT MOUNTED PUMP EXCEPT WHEN LH MOUNTING GP-ALTERNATOR IS PROVIDED**

**PART OF 221-8124, 247-3315, 272-3086, 272-3087 ENGINE AR-COMPLETE AN ATTACHMENT**

**SMCS-1256** **i02510710**

| NOTE | REF NO | GRAPHIC REF | PART NUMBER | QTY | PART NAME 1 2 3 4 5 6 (PRODUCT LEVEL) | SEE PAGE |
|---|---|---|---|---|---|---|
| C | 1 | 1 | **231-3947** | 1 | PUMP GP-FUEL TRANSFER | |
| | 2 | 1 | **1T-0765** | 2 | BOLT (3/8-16X1-IN) | |
| | 3 | 1 | **5M-2894** | 2 | WASHER-HARD (10.2X18.5X2.5-MM THK) | |
| | 4 | 1 | **107-5769** | 2 | SEAL-O-RING | |
| | 5 | 1 | **0S-0699** | 2 | STUD | |
| | 6 | 1 | **9S-8752** | 2 | NUT-FULL (3/8-16-THD) | |
| | 7 | 1 | **133-9116** | 1 | COVER | |

C-CHANGE FROM PREVIOUS TYPE

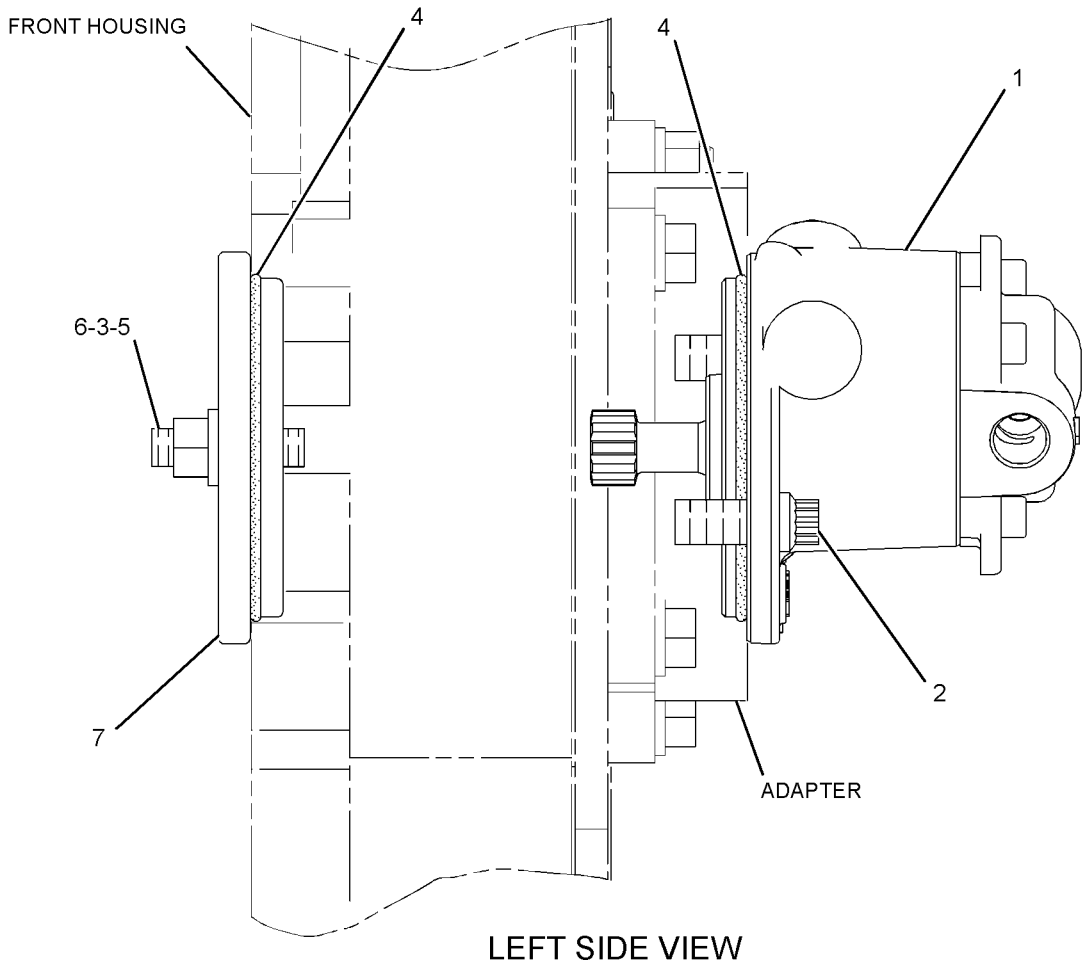


LEFT SIDE VIEW

GRAPHIC #1 **<END>** g01262029

# *150-4279* PUMP & MTG GP-FUEL TRANSFER–REAR

**S/N: RHX3002-UP**

**ALLOWS USE OF FRONT MOUNTED PUMP EXCEPT WHEN LH MOUNTING GP-ALTERNATOR IS PROVIDED**

**PART OF 272-3086, 272-3087, 292-2553, 292-2554 ENGINE AR-COMPLETE AN ATTACHMENT**

**SMCS-1256** **i02835970**

| NOTE | REF NO | GRAPHIC REF | PART NUMBER | QTY | PART NAME 1 2 3 4 5 6 (PRODUCT LEVEL) | SEE PAGE |
|---|---|---|---|---|---|---|
| | 1 | 1 | **133-9116** | 1 | COVER | |
| C | 2 | 1 | **316-6864** | 1 | PUMP GP-FUEL TRANSFER | |
| | 3 | 1 | **0S-0699** | 2 | STUD | |
| | 4 | 1 | **107-5769** | 2 | SEAL-O-RING | |
| | 5 | 1 | **1T-0765** | 2 | BOLT (3/8-16X1-IN) | |
| | 6 | 1 | **5M-2894** | 2 | WASHER-HARD (10.2X18.5X2.5-MM THK) | |
| | 7 | 1 | **9S-8752** | 2 | NUT-FULL (3/8-16-THD) | |

C-CHANGE FROM PREVIOUS TYPE

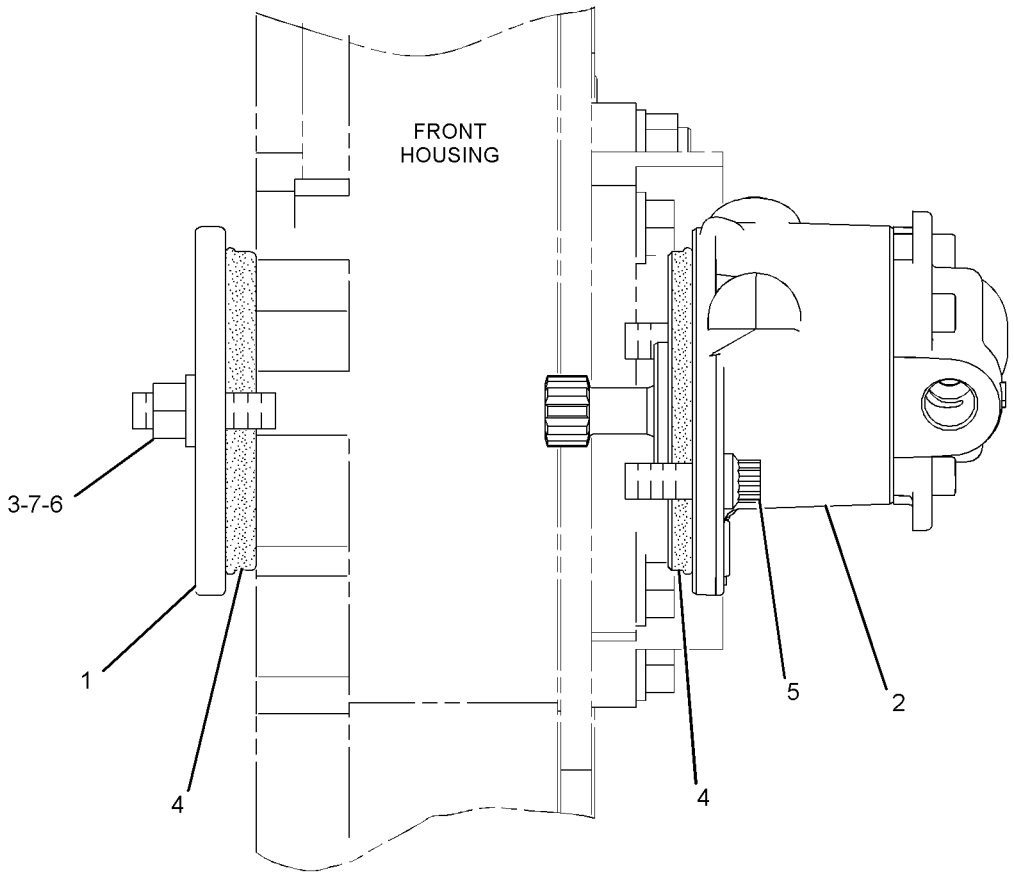


LEFT SIDE VIEW OF ENGINE

GRAPHIC #1

**<END>**

g01364794

# 235-1403 PUMP GP-FUEL INJECTION

**S/N: RHX1-625**
**PART OF 241-5935, 241-5936 ENGINE AR-CORE**
**AN ATTACHMENT**

**SMCS-1251, 1290** **i02199956**

| NOTE | REF NO | GRAPHIC REF | PART NUMBER | QTY | PART NAME 1 2 3 4 5 6 (PRODUCT LEVEL) | SEE PAGE |
|---|---|---|---|---|---|---|
| | 1 | 1 | **6I-0213** | 1 | CLAMP | |
| | 2 | 1 | **100-5072** | 1 | SPACER (9.8X15.85X37.6-MM THK) | |
| | 3 | 1 | **244-7718** | 1 | INJECTOR GP-FUEL | |
| | 3A | 1 | **9X-7317** | 1 | SEAL-O-RING | |
| | 3B | 1 | **230-3728** | 1 | SEAL-O-RING | |
| | 3C | 1 | **230-3775** | 1 | SEAL-O-RING | |
| | 4 | 1 | **8S-9191** | 1 | BOLT (3/8-16X4-IN) | |

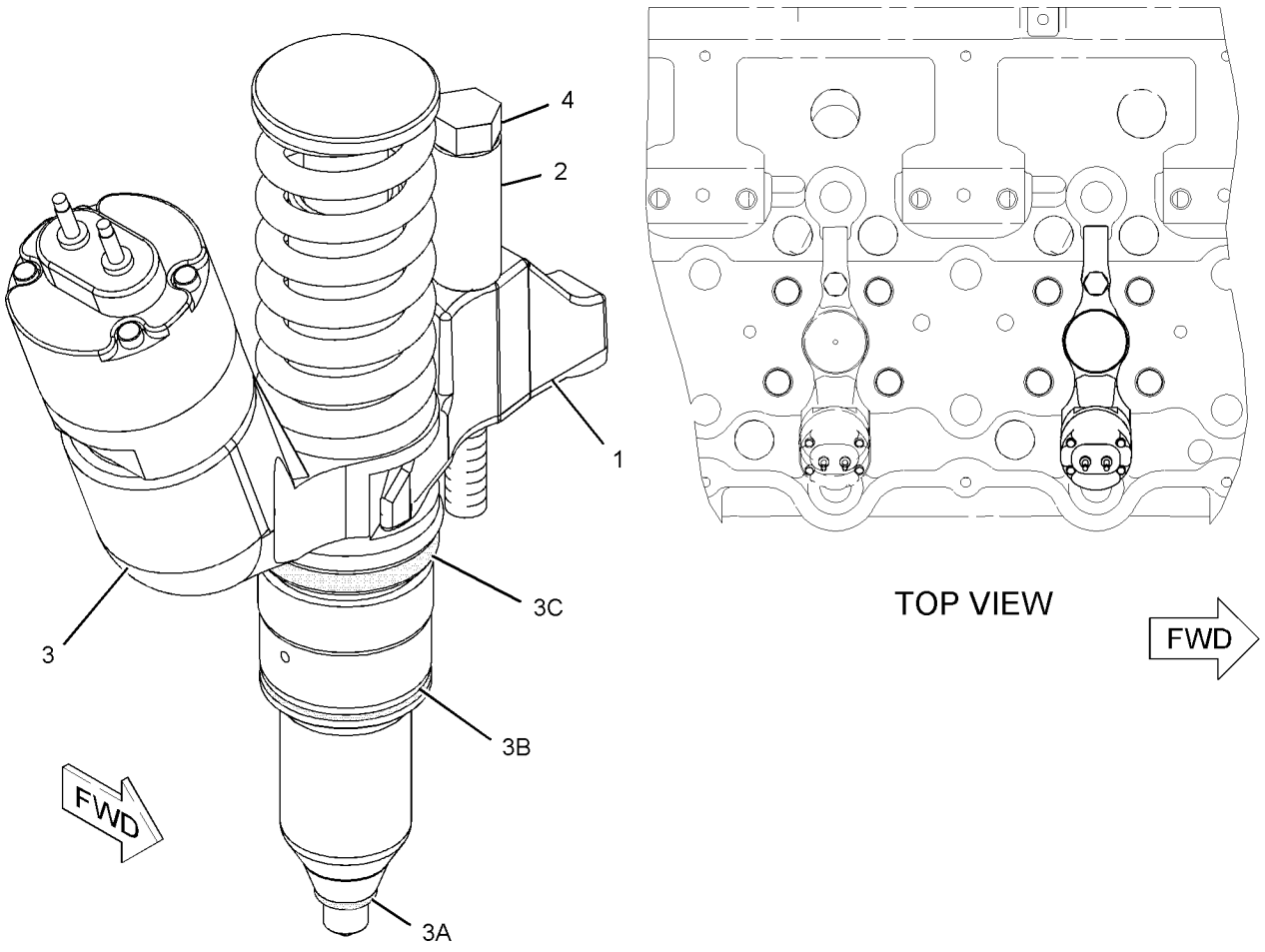


GRAPHIC #1 **<END>** g01033421

# *235-1403* PUMP GP-FUEL INJECTION

**S/N: RHX626-UP**
**PART OF 241-5935, 241-5936 ENGINE AR-CORE**
**AN ATTACHMENT**

**SMCS-1251, 1290** **i02310975**

| NOTE | REF NO | GRAPHIC REF | PART NUMBER | QTY | PART NAME 1 2 3 4 5 6 (PRODUCT LEVEL) | SEE PAGE |
|---|---|---|---|---|---|---|
| | 1 | 1 | **6I-0213** | 1 | CLAMP | |
| | 2 | 1 | **100-5072** | 1 | SPACER (9.8X15.85X37.6-MM THK) | |
| CR | 3 | 1 | **253-0618** | 1 | INJECTOR GP-FUEL | |
| | 3A | 1 | **9X-7317** | 1 | SEAL-O-RING | |
| | 3B | 1 | **230-3728** | 1 | SEAL-O-RING | |
| | 3C | 1 | **230-3775** | 1 | SEAL-O-RING | |
| | 4 | 1 | **8S-9191** | 1 | BOLT (3/8-16X4-IN) | |

C-CHANGE FROM PREVIOUS TYPE
R-REMFG PART MAY BE AVAILABLE

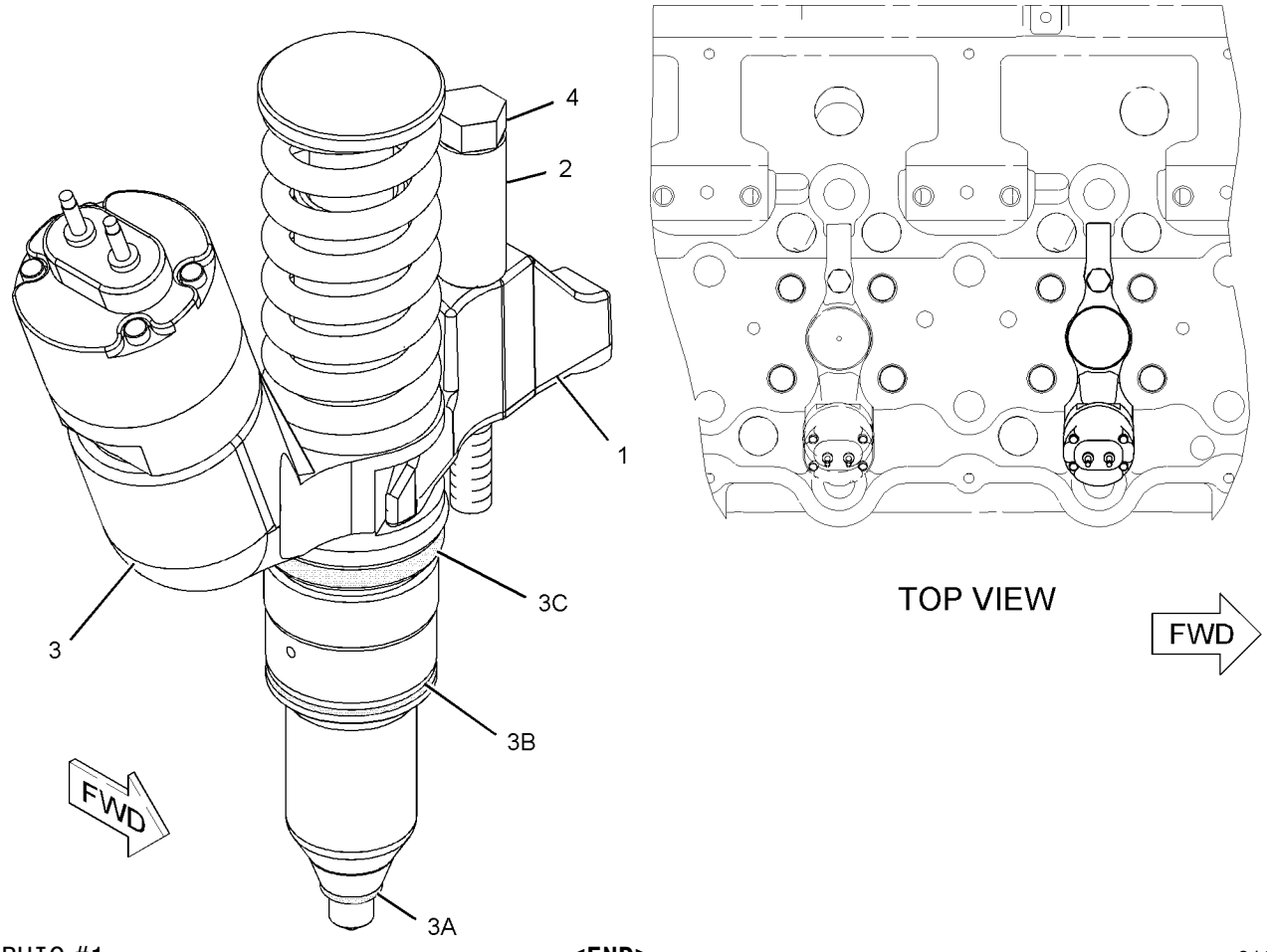


GRAPHIC #1 **<END>** g01033421

# *294-7615* PUMP GP-FUEL INJECTION

**S/N: RHX3837-UP**

**PART OF 294-3050, 294-7614, 297-3206 ENGINE AR-CORE**

**AN ATTACHMENT**

**SMCS-1251, 1290** **i02640179**

| NOTE | REF NO | GRAPHIC REF | PART NUMBER | QTY | PART NAME 1 2 3 4 5 6 (PRODUCT LEVEL) | SEE PAGE |
|---|---|---|---|---|---|---|
| | 1 | 1 | **6I-0213** | 1 | CLAMP | |
| | 2 | 1 | **100-5072** | 1 | SPACER (9.8X15.85X37.6-MM THK) | |
| Y | 3 | 1 | **291-5911** | 1 | INJECTOR GP-FUEL | 221 |
| | 4 | 1 | **8S-9191** | 1 | BOLT (3/8-16X4-IN) | |
| Y-SEPARATE ILLUSTRATION | | | | | | |

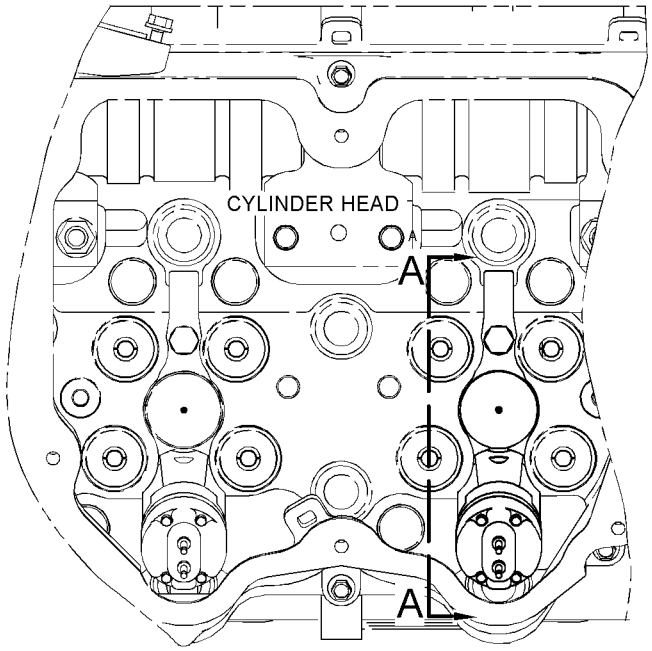


TOP VIEW OF ENGINE

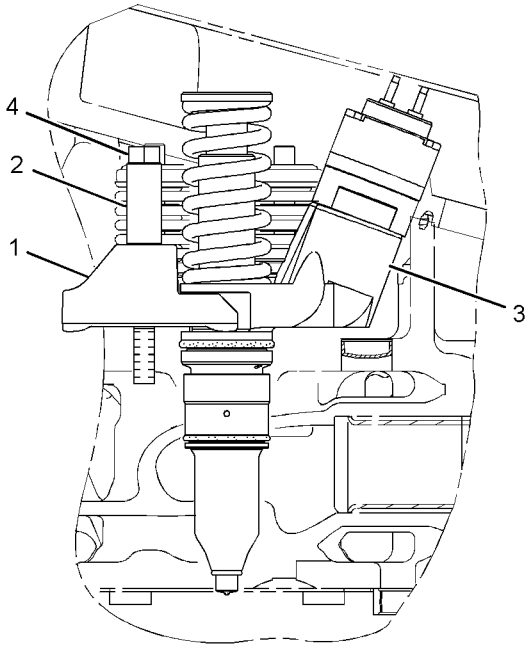


VIEW A-A
(ROTATED 90° CCW)

GRAPHIC #1 **<END>** g01325596

# FUEL SYSTEM

## *246-1053* PUMP GP-FUEL PRM & PRIM FILTER

**S/N: RHX1-UP**

**PART OF 221-8124, 247-3315, 272-3086, 272-3087, 292-2553 ENGINE AR-COMPLETE AN ATTACHMENT**

**SMCS-1258, 1260, 1261** **i02752125**

| NOTE | REF NO | GRAPHIC REF | PART NUMBER | QTY | PART NAME 1 2 3 4 5 6 (PRODUCT LEVEL) | SEE PAGE |
|---|---|---|---|---|---|---|
| | 1 | 1 | **1R-0762** | 1 | FILTER-FUEL (ADVANCED EFFICIENCY) (SECONDARY) | |
| | 2 | 1 | **3S-2093** | 3 | STRAP-CABLE | |
| | 3 | 1 | **6V-2611** | 1 | VALVE (DRAIN) | |
| | 4 | 1 | **9X-0262** | 1 | ADAPTER | |
| | 5 | 1 | **3B-1915** | 2 | BOLT (3/8-16X1.375-IN) | |
| Y | 6 | 1 | **165-5970** | 1 | SWITCH GP-TOGGLE (FUEL PRIMING PUMP) | 341 |
| Y | 7 | 1 | **190-8977** | 1 | PUMP GP-FUEL PRM & WATER SEP | 239 |
| | 8 | 1 | **191-1782** | 1 | SPACER (8.5X12.7X38.2-MM THK) | |
| Y | 9 | 1 | *197-8391* | 1 | SENSOR GP-TEMPERATURE | 319 |
| | 10 | 1 | *201-4340* | 2 | PLUG AS | |
| | | | | | (EACH INCLUDES) | |
| | | 1 | **6V-4589** | 1 | SEAL-O-RING | |
| | | 1 | **9S-8006** | 1 | PLUG-O-RING | |
| | 11 | 1 | **205-3079** | 1 | ADAPTER | |
| | 12 | 1 | **209-7659** | 1 | PLATE-INFORMATION (FUEL PRIMING PUMP) | |
| Y | 13 | 1 | **212-2768** | 1 | SWITCH GP-PRESSURE | 336 |
| | 14 | 1 | **227-3815** | 1 | HARNESS AS-PUMP (FUEL PRIMING) | |
| | 15 | 1 | **232-1374** | 1 | BRACKET | |
| | 16 | 1 | **232-1376** | 2 | SPACER (8.5X12.7X139.1-MM THK) | |
| | 17 | 1 | **237-9308** | 1 | BASE AS | |
| | | 1 | **9S-4167** | 1 | STUD-HOLLOW (1-14X1.47-IN) | |
| Y | 18 | 1 | *239-2396* | 1 | SENSOR GP-PRESSURE (FUEL) | 307 |
| | 19 | 1 | *282-4399* | 1 | BRACKET AS | |
| | 20 | 1 | **005-4362** | 1 | ELBOW | |
| | 21 | 1 | **030-8188** | 1 | CONNECTOR | |
| | 23 | 1 | *278-1504* | 1 | PLATE AS | |
| | 24 | 1 | *148-8395* | 2 | PLUG AS | |
| | | | | | (EACH INCLUDES) | |
| | | 1 | **3K-0360** | 2 | SEAL-O-RING | |
| | | 1 | **9S-8005** | 2 | PLUG-O-RING | |
| | 25 | 1 | **1D-4539** | 1 | BOLT (5/16-18X2.5-IN) | |
| | 26 | 1 | **1J-9671** | 1 | SEAL-O-RING | |
| | 27 | 1 | **3K-0360** | 5 | SEAL-O-RING | |
| | 28 | 1 | **3P-1932** | 1 | ADAPTER | |
| | 29 | | **4F-3508** | 2 | BOLT (5/16-18X6.5-IN) | |
| | 32 | 1 | **5P-1404** | 1 | ADAPTER-O-RING | |
| | 33 | 1 | **6K-3607** | 1 | CONNECTOR | |
| | 34 | 1 | **6V-0484** | 1 | ADAPTER-O-RING | |
| | 35 | 1 | **6V-4589** | 2 | SEAL-O-RING | |
| | 36 | 1 | **6V-5048** | 2 | SEAL-O-RING | |
| | 37 | 1 | **6V-5049** | 2 | SEAL-O-RING | |
| | 38 | 1 | **7X-0613** | 3 | WASHER-HARD (8.8X25.5X5-MM THK) | |
| | 41 | 1 | **8T-9655** | 8 | MOUNT-ISOLATION | |
| | 42 | 1 | **9N-0869** | 3 | WASHER-HARD (8.8X25.5X2-MM THK) | |
| | 43 | 1 | **9X-6458** | 4 | WASHER-HARD (10.2X22.5X3-MM THK) | |
| | 44 | 1 | **9S-8005** | 1 | PLUG-O-RING | |
| | | | | | | |
| F | | 1 | **0S-1571** | 2 | BOLT (3/8-16X1.75-IN) | |
| F | | 1 | **4P-7581** | 1 | CLIP | |
| F | | 1 | **5M-2894** | 2 | WASHER-HARD (10.2X18.5X2.5-MM THK) | |
| F | | 1 | **8T-4224** | 1 | WASHER-HARD (8.8X16X2-MM THK) | |
| F | | 1 | **8T-9043** | 1 | BOLT (5/16-18X0.875-IN) | |

F-NOT SHOWN
Y-SEPARATE ILLUSTRATION

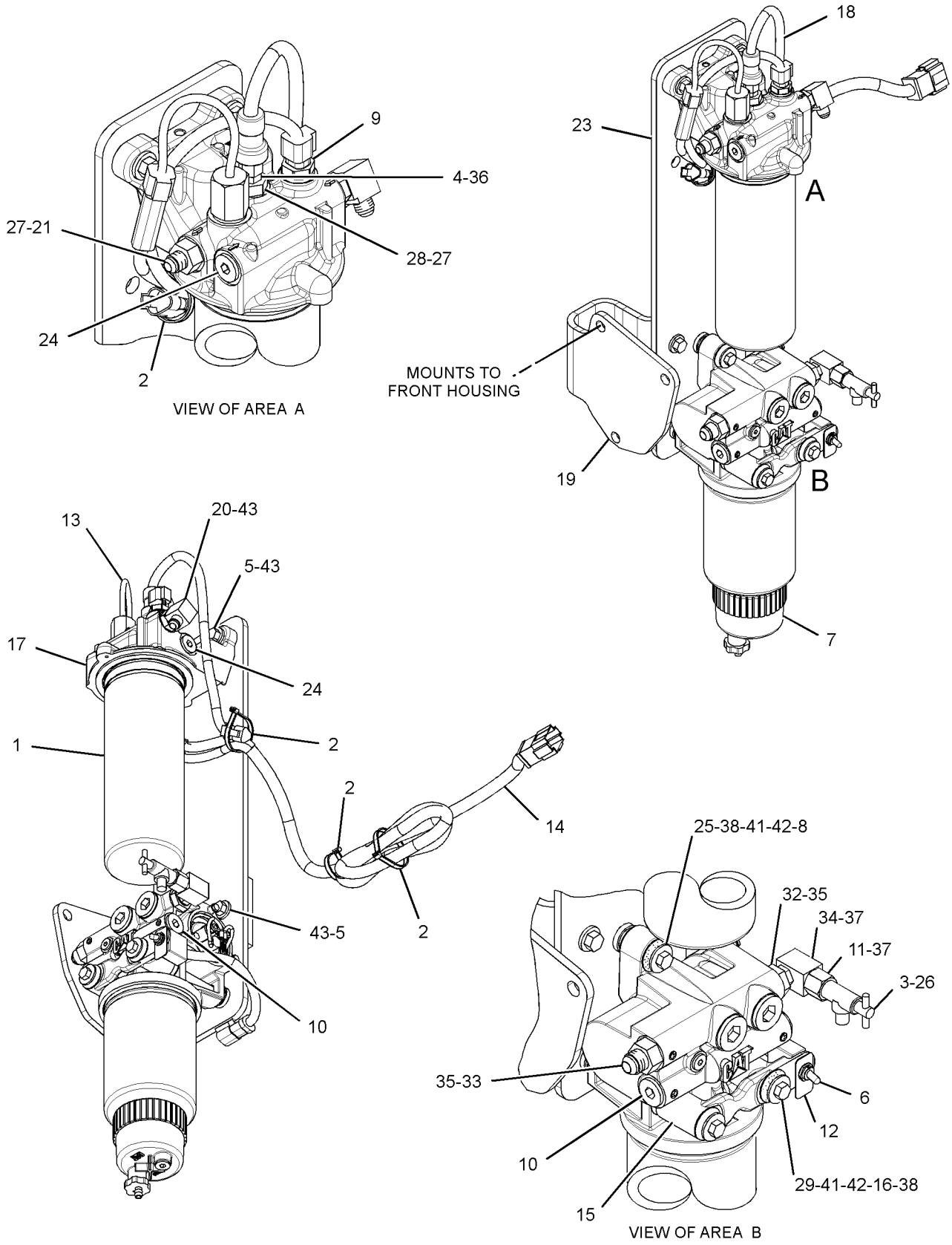


GRAPHIC #1 **<END>** g01655354

# *298-6412* PUMP GP-FUEL PRM & PRIM FILTER

**S/N: RHX3791-UP**

**PART OF 272-3086, 272-3087, 292-2553, 292-2554 ENGINE AR-COMPLETE**

**AN ATTACHMENT**

**SMCS-1258, 1260, 1261** **i03137550**

| NOTE | REF NO | GRAPHIC REF | PART NUMBER | QTY | PART NAME 1 2 3 4 5 6 (PRODUCT LEVEL) | SEE PAGE |
|---|---|---|---|---|---|---|
| | 1 | 1 | **3S-2093** | 8 | STRAP-CABLE | |
| | 2 | 1 | **8T-9655** | 8 | MOUNT-ISOLATION | |
| | 3 | 1 | **9X-0262** | 1 | ADAPTER | |
| | 4 | 1 | **101-3120** | 4 | SPACER (10.5X25X20-MM THK) | |
| Y | 6 | 1 | **165-5970** | 1 | SWITCH GP-TOGGLE (FUEL PRIMING PUMP) | 341 |
| Y | 7 | 1 | **190-8977** | 1 | PUMP GP-FUEL PRM & WATER SEP | 239 |
| | 8 | 1 | **191-1782** | 1 | SPACER (8.5X12.7X38.2-MM THK) | |
| | 9 | 1 | **201-4340** | 1 | PLUG AS | |
| | | 1 | **6V-4589** | 1 | SEAL-O-RING | |
| | | 1 | **9S-8006** | 1 | PLUG-O-RING | |
| | 10 | 1 | **209-7659** | 1 | PLATE-INFORMATION (FUEL PRIMING PUMP) | |
| | 11 | 1 | **231-7086** | 1 | BRACKET AS | |
| | | 1 | **1F-0750** | 3 | NUT-WELD (3/8-16-THD) | |
| | | 1 | **4K-9097** | 3 | NUT-WELD (5/16-18-THD) | |
| | | 1 | **7T-1099** | 7 | LINK | |
| | 12 | 1 | **232-1374** | 1 | BRACKET | |
| | 13 | 1 | **232-1376** | 2 | SPACER (8.5X12.7X139.1-MM THK) | |
| Y | 14 | 1 | *234-5013* | 1 | SENSOR GP-TEMPERATURE | 323 |
| | 15 | 1 | **237-9308** | 1 | BASE AS | |
| | | 1 | **9S-4167** | 1 | STUD-HOLLOW (1-14X1.47-IN) | |
| Y | 16 | 1 | *239-2396* | 1 | SENSOR GP-PRESSURE (FUEL) | 307 |
| Y | 17 | 1 | **275-1253** | 1 | SWITCH GP-PRESSURE (FUEL FILTER, DIFFERENTIAL) | 338 |
| | 18 | 1 | **276-3106** | 1 | HARNESS AS-WIRING (JUMPER) | |
| | | 1 | **102-8803** | 1 | KIT-RECEPTACLE (3-PIN) | |
| | | 1 | **102-8806** | 1 | KIT-RECEPTACLE (8-PIN) | |
| | | | | | (EACH RECEPTACLE KIT INCLUDES RECEPTACLE AS & WEDGE) | |
| | | 1 | **230-4011** | 1 | PLUG AS-CONNECTOR (2-PIN) | |
| | | 1 | **230-4012** | 1 | RECEPTACLE AS-CONNECTOR (2-PIN) | |
| E | | 1 | **114-8843** | | SLEEVE-PLASTIC (60-CM) | |
| | 19 | 1 | **030-8188** | 2 | CONNECTOR | |
| | 20 | 1 | **030-8194** | 1 | CONNECTOR | |
| | 21 | 1 | **0S-1571** | 6 | BOLT (3/8-16X1.75-IN) | |
| | 22 | 1 | **109-3206** | 1 | SEAL-O-RING | |
| | 23 | 1 | *148-8395* | 2 | PLUG AS | |
| | | | | | (EACH INCLUDES) | |
| | | 1 | **3K-0360** | 1 | SEAL-O-RING | |
| | | 1 | **9S-8005** | 1 | PLUG-O-RING | |
| | 24 | 1 | **1D-4539** | 1 | BOLT (5/16-18X2.5-IN) | |
| | 25 | 1 | **1R-0762** | 1 | FILTER-FUEL (ADVANCED EFFICIENCY) | |
| | 26 | 1 | **205-3079** | 1 | ADAPTER | |
| | 27 | 1 | **2A-4639** | 2 | BOLT (3/8-16X1.625-IN) | |
| | 29 | 1 | **3K-0360** | 3 | SEAL-O-RING | |
| | 30 | 1 | **3P-1932** | 1 | ADAPTER | |
| | 31 | 1 | **4F-3508** | 2 | BOLT (5/16-18X6.5-IN) | |
| | 32 | 1 | **5M-2894** | 6 | WASHER-HARD (10.2X18.5X2.5-MM THK) | |
| | 33 | 1 | **5P-1404** | 1 | ADAPTER-O-RING | |
| | 34 | 1 | **6V-0484** | 1 | ADAPTER-O-RING | |
| | 36 | 1 | **6V-2611** | 1 | VALVE (DRAIN) | |
| | 38 | 1 | **6V-4589** | 3 | SEAL-O-RING | |
| | 39 | 1 | **6V-5048** | 1 | SEAL-O-RING | |
| | 40 | 1 | **6V-5049** | 2 | SEAL-O-RING | |
| | 41 | 1 | **6K-3607** | 1 | CONNECTOR | |
| | 42 | 1 | **7X-0613** | 3 | WASHER-HARD (8.8X25.5X5-MM THK) | |
| | 43 | 1 | **9N-0869** | 3 | WASHER-HARD (8.8X25.5X2-MM THK) | |

## *298-6412* PUMP GP-FUEL PRM & PRIM FILTER *(contd.)* i03137550

| NOTE | REF NO | GRAPHIC REF | PART NUMBER | QTY | PART NAME 1 2 3 4 5 6 (PRODUCT LEVEL) | SEE PAGE |
|---|---|---|---|---|---|---|
| | 44 | 1 | **9X-6458** | 2 | WASHER-HARD (10.2X22.5X3-MM THK) | |
| | 45 | 1 | **4P-7581** | 2 | CLIP | |

E-ORDER BY THE CENTIMETER
Y-SEPARATE ILLUSTRATION

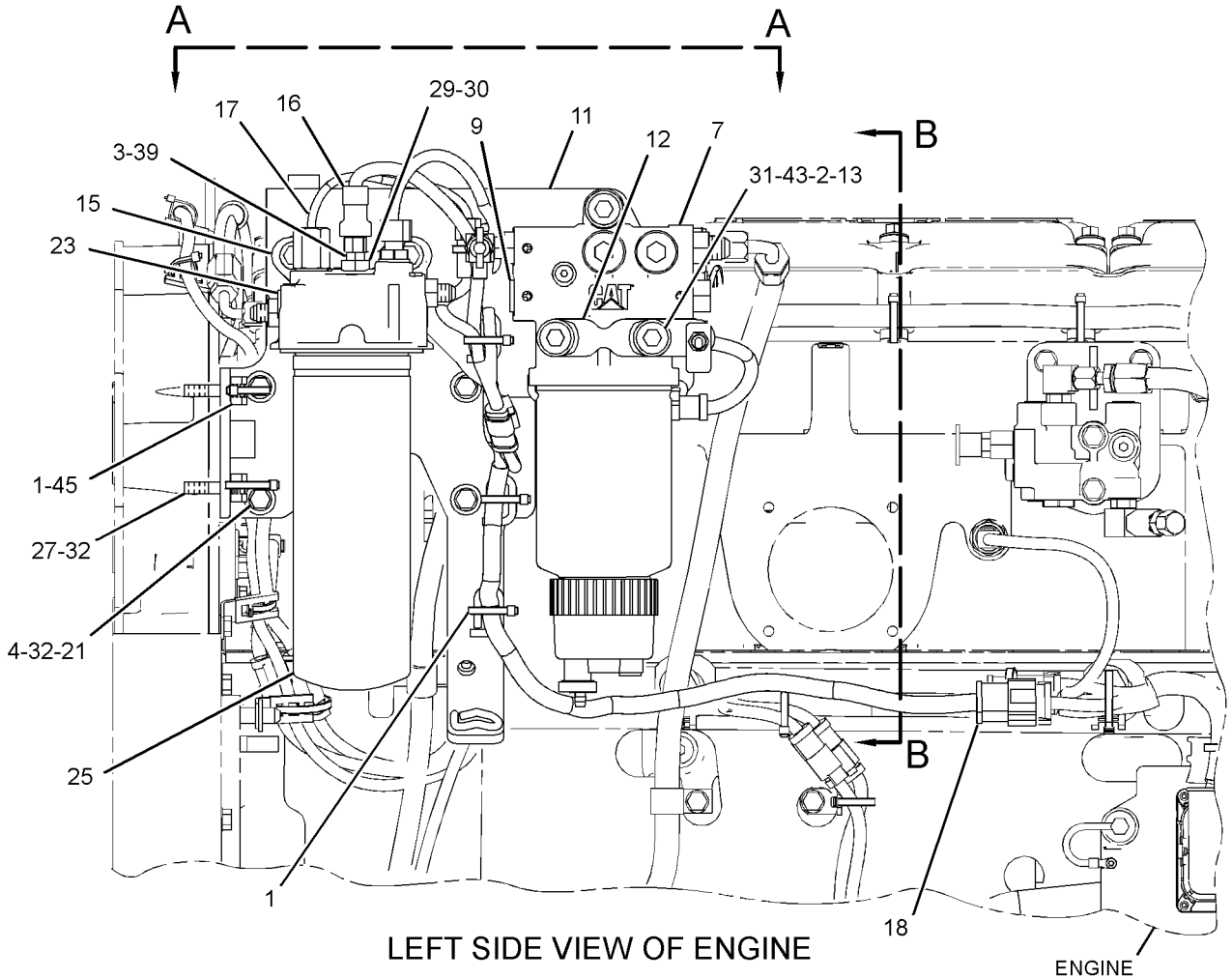


LEFT SIDE VIEW OF ENGINE

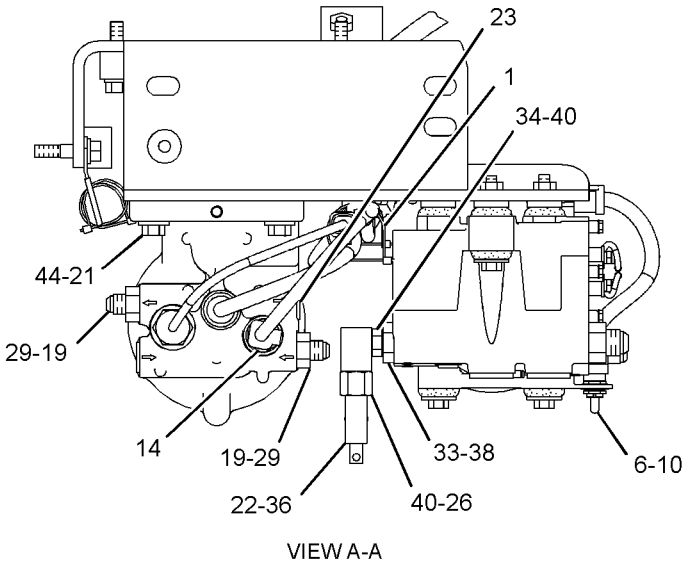


VIEW A-A

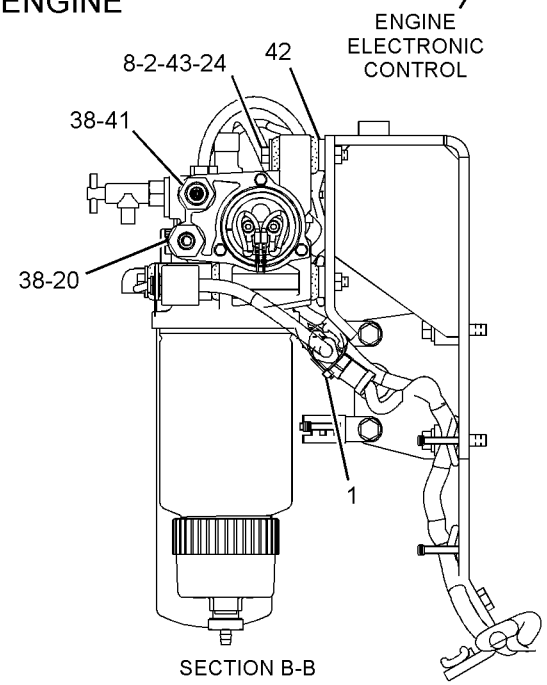


SECTION B-B

GRAPHIC #1 **<END>** g01644059

# 190-8977 PUMP GP-FUEL PRM & WATER SEP

**S/N: RHX1-UP**

**PART OF 246-1053, 298-6412 PUMP GP-FUEL PRM & PRIM FILTER**

**AN ATTACHMENT**

**SMCS-1258, 1261, 1263** **i02361234**

| NOTE | REF NO | GRAPHIC REF | PART NUMBER | QTY | PART NAME 1 2 3 4 5 6 (PRODUCT LEVEL) | SEE PAGE |
|---|---|---|---|---|---|---|
| Y | 1 | 1 | *174-9570* | 1 | FILTER GP-WATER SEP & FUEL (PRIMARY) | 217 |
| | 2 | 1 | **190-8970** | 1 | BASE AS (FUEL PRIMING PUMP) | |

Y-SEPARATE ILLUSTRATION

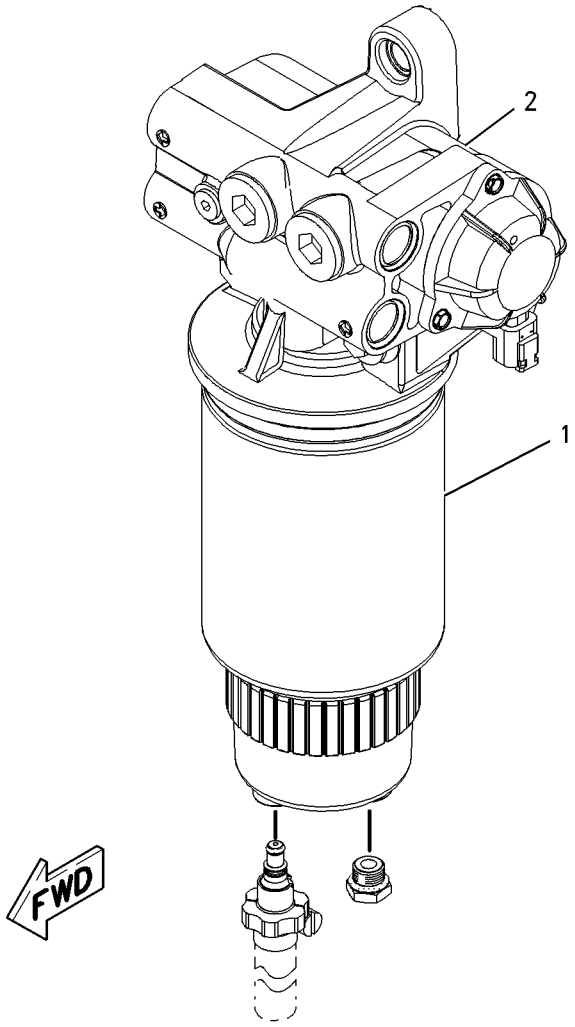


GRAPHIC #1 **<END>** g00904493

# 212-1438 SENDER GP-FUEL LEVEL

**S/N: RLB1-UP**

**PART OF 271-8531 TANK GP-FUEL**

**SMCS-7481, 7857** **i02160316**

| NOTE | REF NO | GRAPHIC REF | PART NUMBER | QTY | PART NAME 1 2 3 4 5 6 (PRODUCT LEVEL) | SEE PAGE |
|---|---|---|---|---|---|---|
| | 1 | 1 | **139-8667** | 1 | KIT-LEVEL SENDER (FUEL LEVEL) | |
| | | | | | (INCLUDES SENSOR AS. AND RECEPTACLE KIT) | |
| | 2 | 1 | **5P-3729** | 1 | SEAL-RECTANGULAR | |
| | 3 | 1 | **4B-1326** | 4 | SCREW-MACHINE (1/4-28XO.625-IN) | |
| | 4 | 1 | **102-8802** | 1 | KIT-RECEPTACLE (2-PIN) | |
| | | | | | (INCLUDES RECEPTACLE AS & WEDGE) | |
| | 5 | 1 | **3E-3365** | 1 | WEDGE-RECEPTACLE LOCK (2-PIN) | |
| | 6 | 1 | **186-3735** | 2 | PIN-CONNECTOR (16-GA TO 18-GA) | |

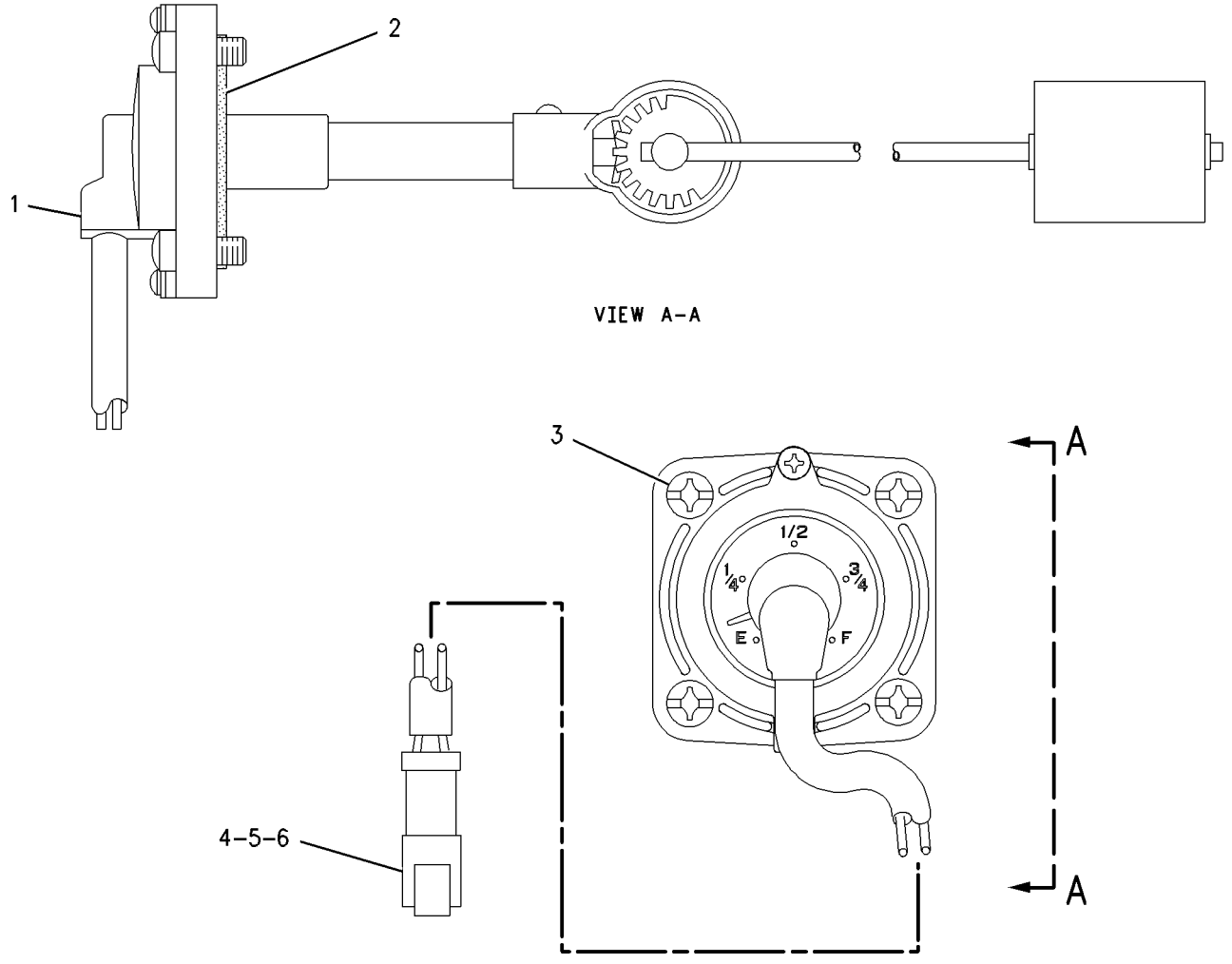


GRAPHIC #1 **<END>** g00826411

# FUEL SYSTEM

## *271-8530* TANK GP-FUEL

**S/N: RLB1-UP**
**530-LITERS (140-US GAL)**
**PART OF 269-8700 PLATFORM AR**

**SMCS-1273** **i02618395**

| NOTE | REF NO | GRAPHIC REF | PART NUMBER | QTY | PART NAME 1 2 3 4 5 6 (PRODUCT LEVEL) | SEE PAGE |
|---|---|---|---|---|---|---|
| | 1 | 1 | **5D-5654** | 2 | MOUNTING | |
| | 2 | 1 | **9D-9438** | 1 | WASHER (21X111X10-MM THK) | |
| Y | 3 | 1 | **271-8531** | 1 | TANK GP-FUEL | 242 |
| | 4 | 1 | **271-8534** | 1 | PLATE AS | |
| | 5 | 1 | **132-5787** | 2 | U-BOLT (1/2-13-THD) | |
| | 6 | 1 | **1K-6870** | 1 | LOCKNUT (3/4-10-THD) | |
| | 7 | 1 | **5P-1076** | 4 | WASHER-HARD (13.5X30X4-MM THK) | |
| M | 8 | 1 | **8T-4183** | 4 | BOLT (M12X1.75X40-MM) | |
| | 9 | 1 | **8T-4223** | 4 | WASHER-HARD (13.5X25.5X3-MM THK) | |
| | 10 | 1 | **8T-4994** | 1 | WASHER-HARD (20X36.5X3.5-MM THK) | |
| | 11 | 1 | **8T-9311** | 1 | BOLT (3/4-10X4.5-IN) | |
| | 12 | 1 | **9X-0941** | 4 | LOCKNUT (1/2-13-THD) | |

M-METRIC PART
Y-SEPARATE ILLUSTRATION

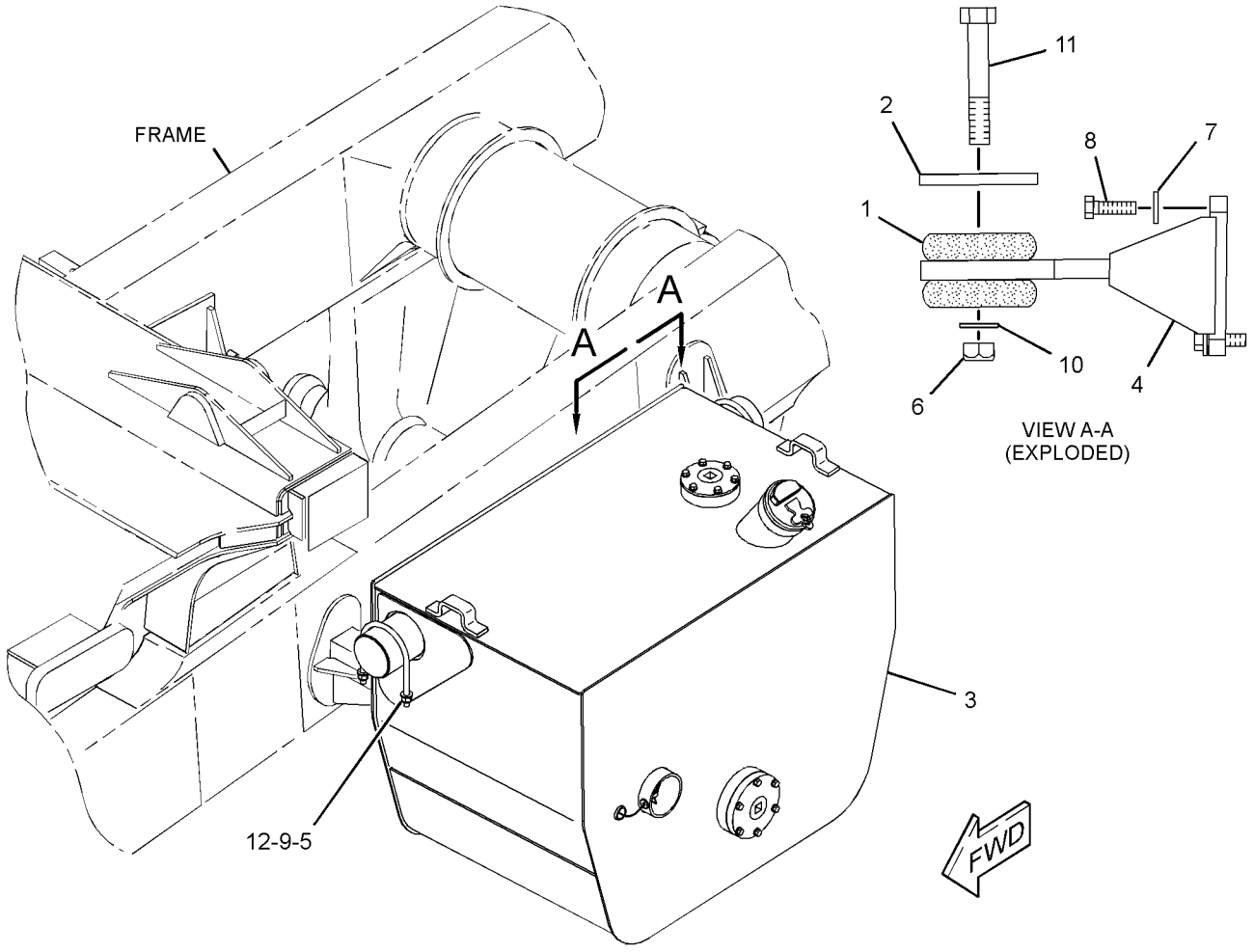


GRAPHIC #1 **<END>** g01339432

# FUEL SYSTEM

## 271-8531 TANK GP-FUEL

**S/N: RLB1-UP**

**PART OF 271-8530 TANK GP-FUEL**

**SMCS-1273** **i03266883**

| NOTE | REF NO | GRAPHIC REF | PART NUMBER | QTY | PART NAME 1 2 3 4 5 6 (PRODUCT LEVEL) | SEE PAGE |
|---|---|---|---|---|---|---|
| | 1 | 1 | **1H-8305** | 1 | BLOCK | |
| | 2 | 1 | **1H-8306** | 1 | SCREW-PURGE (1/2-20X1.625-IN) | |
| J | 8 | 1 | **7X-7700** | 1 | CAP AS-FILLER (FUEL TANK) | |
| | | 1 | **9X-8600** | 1 | SEAL-O-RING | |
| | 9 | 1 | **9P-7121** | 1 | STRAINER-FUEL | |
| | 10 | 1 | **9X-2206** | 1 | ADAPTER AS-FUEL | |
| | 22 | 1 | *183-6187* | 1 | VALVE GP-SHUTOFF (MANUAL) | |
| | | 1 | **3D-2824** | 1 | SEAL-O-RING | |
| | | 1 | **6V-8358** | 1 | VALVE-BALL | |
| Y | 24 | 1 | **205-7303** | 1 | ADAPTER-FAST FILL FUEL | 215 |
| Y | 25 | 1 | **212-1438** | 1 | SENDER GP-FUEL LEVEL | 240 |
| | 26 | 1 | **221-2372** | 1 | ADAPTER (FAST FILL FUEL) | |
| | 32 | 1 | **1H-8128** | 1 | SEAL-O-RING | |
| | 34 | 1 | **3B-0551** | 1 | PLUG-PIPE | |
| | 35 | 1 | **4H-9027** | 2 | PLUG-PIPE | |
| | 36 | 1 | **4L-9337** | 6 | BOLT (3/8-16X1.5-IN) | |
| | 37 | 1 | **5H-6734** | 1 | SEAL-O-RING | |
| | 38 | 1 | **5P-6459** | 1 | GROMMET | |
| | 39 | 1 | **5S-7379** | 6 | BOLT (3/8-16X0.875-IN) | |
| | 42 | 1 | **8T-4896** | 12 | WASHER-HARD (10.2X18.5X2.5-MM THK) | |
| | | | | | AVAILABLE REPAIR KIT(S): | |
| J | | | **9X-2205** | 1 | KIT-CAP FILTER (FUEL TANK) | |
| | | | | | (INCLUDES FILTER AS, SCREWS, GASKETS, & VALVE) | |

J-KIT MARKED J SERVICES PART(S) MARKED J
Y-SEPARATE ILLUSTRATION

**271-8531 TANK GP-FUEL** *(contd. )* **i03266883**

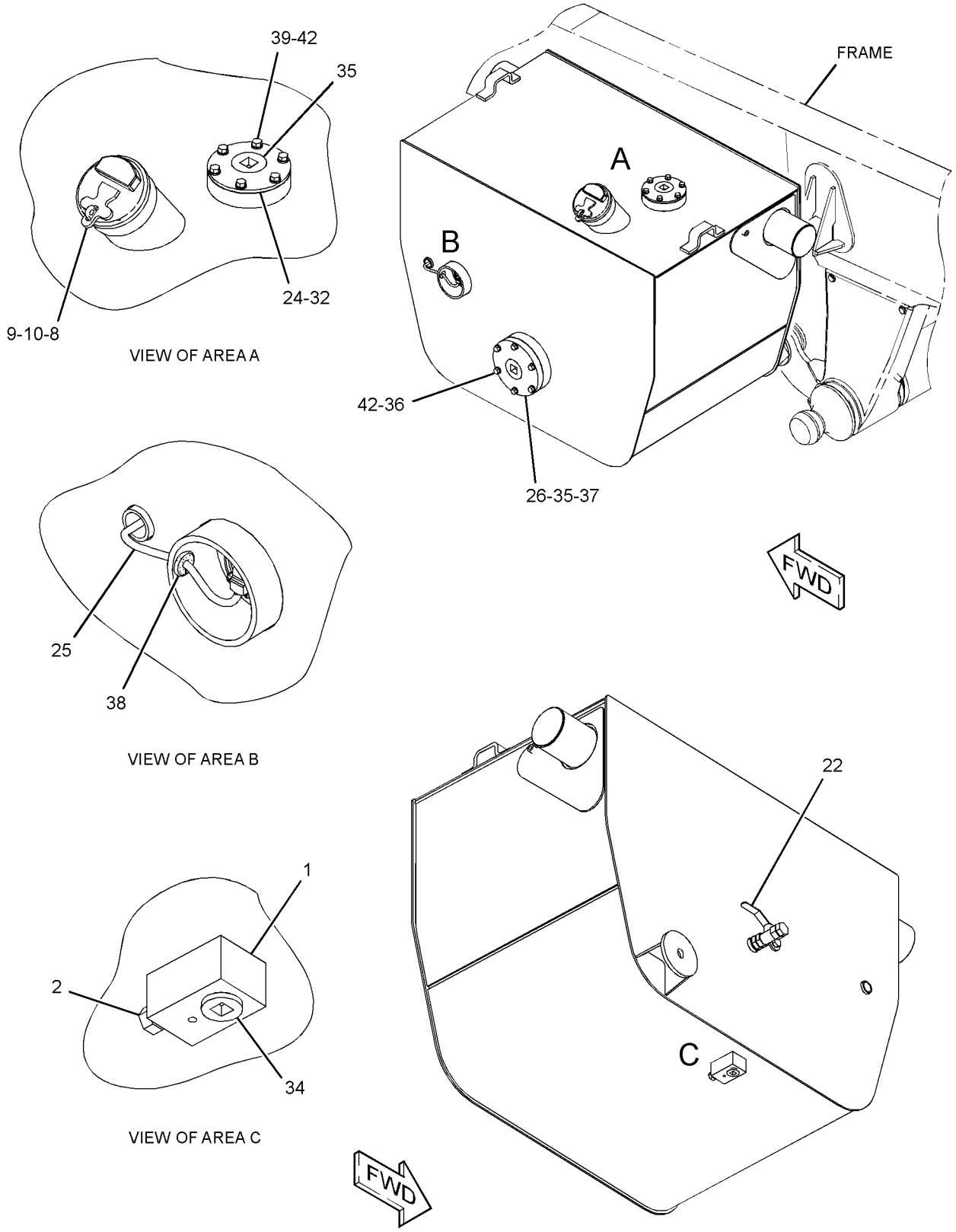


GRAPHIC #1 **<END>** g01343089

# *233-6742* VALVE GP-CHECK–FUEL

**S/N: RHX1-UP**
**PART OF 246-1175 LINES GP-FUEL**
**AN ATTACHMENT**
**TYPE 1**

**SMCS-1251, 1274** **i02274525**

| NOTE | REF NO | GRAPHIC REF | PART NUMBER | QTY | PART NAME 1 2 3 4 5 6 (PRODUCT LEVEL) | SEE PAGE |
|---|---|---|---|---|---|---|
| Y | 1 | 1 | **238-0296** | 1 | VALVE GP-CHECK (FUEL) | 246 |
| | 2 | 1 | **6V-4589** | 1 | SEAL-O-RING | |

Y-SEPARATE ILLUSTRATION

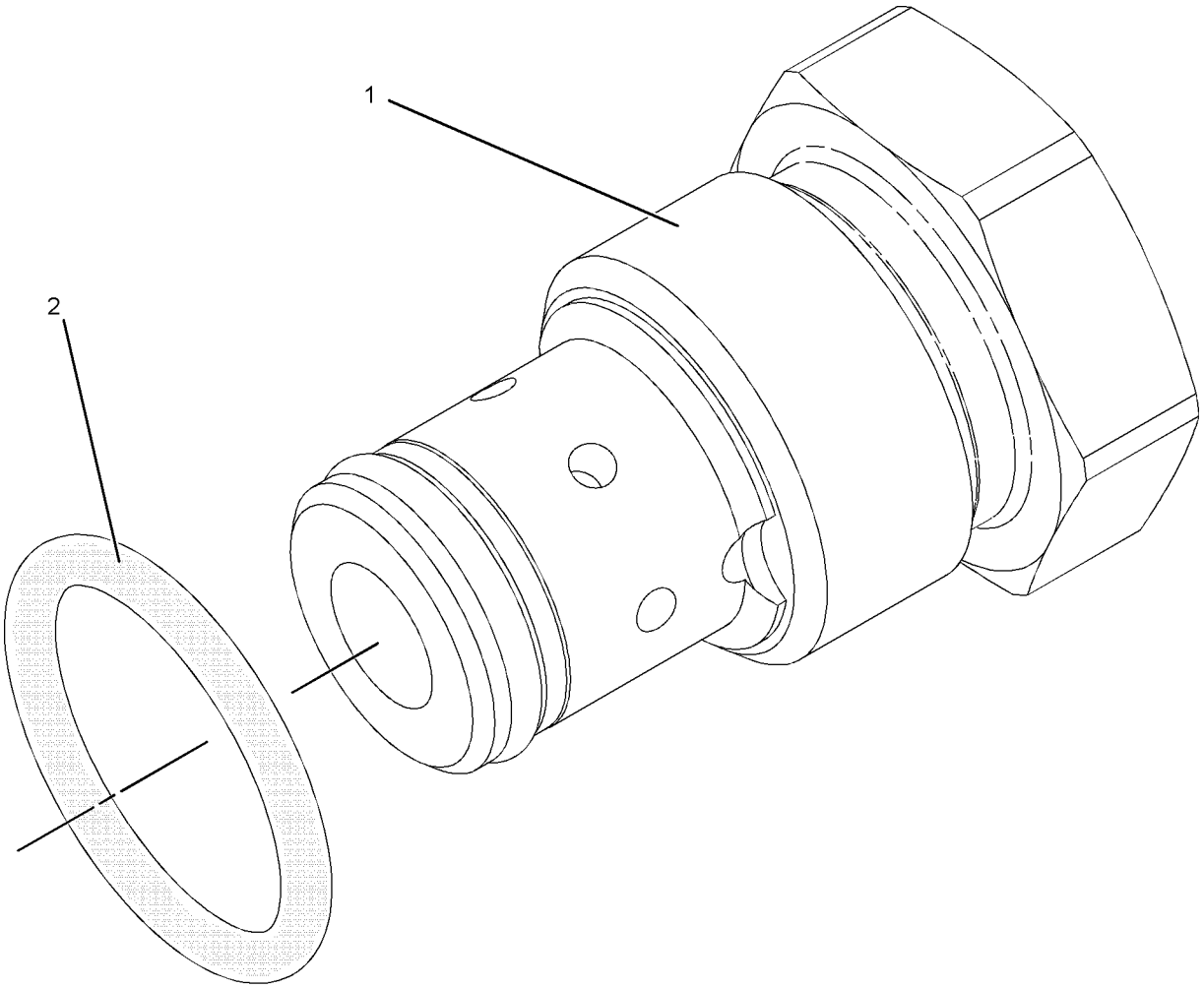


GRAPHIC #1 **<END>** g01031823

# *233-6742* VALVE GP-CHECK–FUEL

**S/N: RHX1-UP**
**PART OF 246-1175 LINES GP-FUEL**
**AN ATTACHMENT**
**TYPE 2**

**SMCS-1251, 1274** **i02443795**

| NOTE | REF NO | GRAPHIC REF | PART NUMBER | QTY | PART NAME 1 2 3 4 5 6 (PRODUCT LEVEL) | SEE PAGE |
|---|---|---|---|---|---|---|
| CY | 1 | 1 | **281-2725** | 1 | VALVE GP-CHECK (FUEL) | 247 |
| | 2 | 1 | **6V-4589** | 1 | SEAL-O-RING | |

C-CHANGE FROM PREVIOUS TYPE
Y-SEPARATE ILLUSTRATION

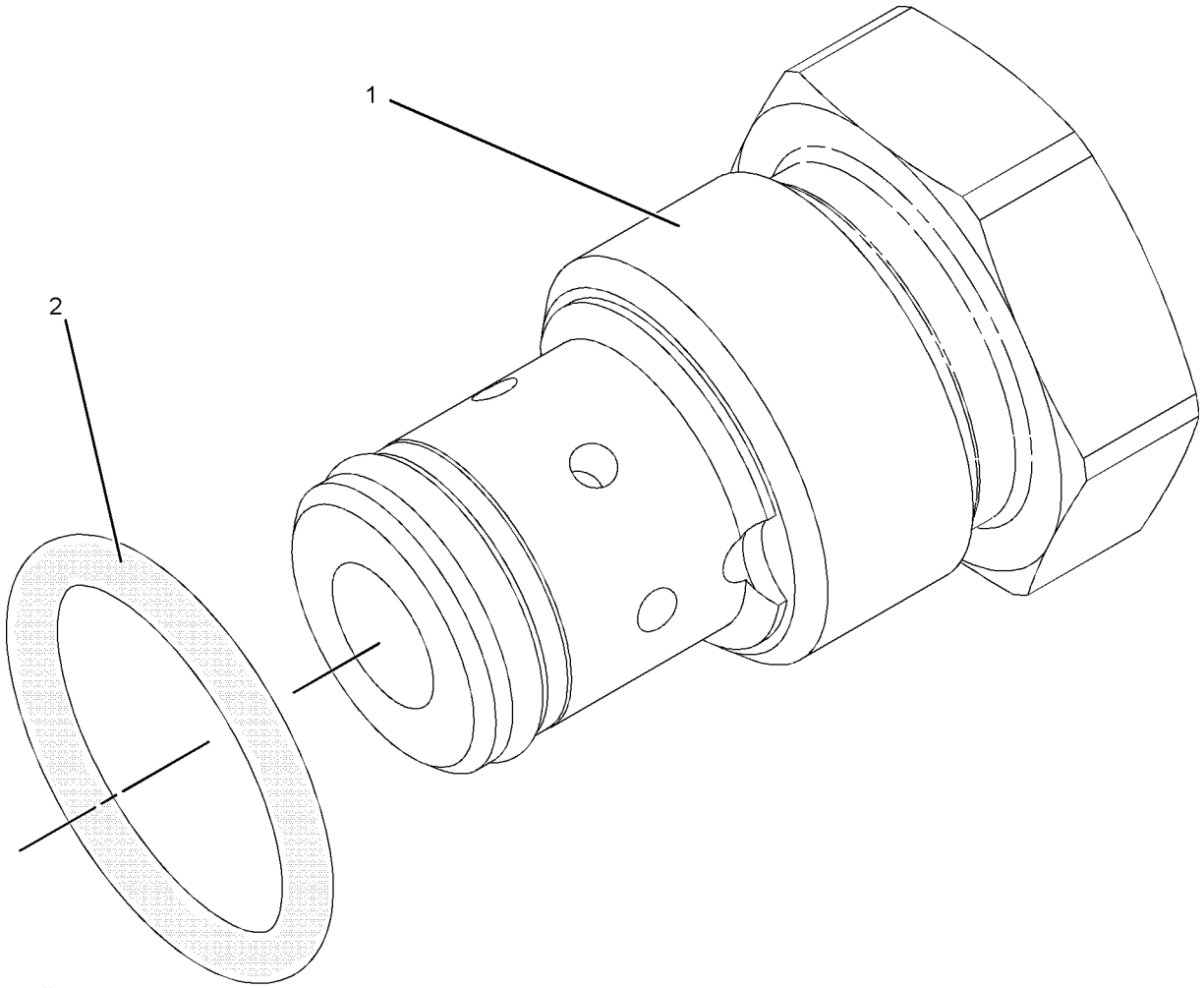


GRAPHIC #1 **<END>** g01031823

# 238-0296 VALVE GP-CHECK–FUEL

**S/N: RHX1-UP**
**PART OF 233-6742 VALVE GP-CHECK**
**AN ATTACHMENT**

**SMCS-1251, 1274** **i02140024**

| NOTE | REF NO | GRAPHIC REF | PART NUMBER | QTY | PART NAME 1 2 3 4 5 6 (PRODUCT LEVEL) | SEE PAGE |
|---|---|---|---|---|---|---|
| | 1 | 1 | **6V-6923** | 1 | RING-BACKUP | |
| | 2 | 1 | **033-6033** | 1 | SEAL-O-RING | |

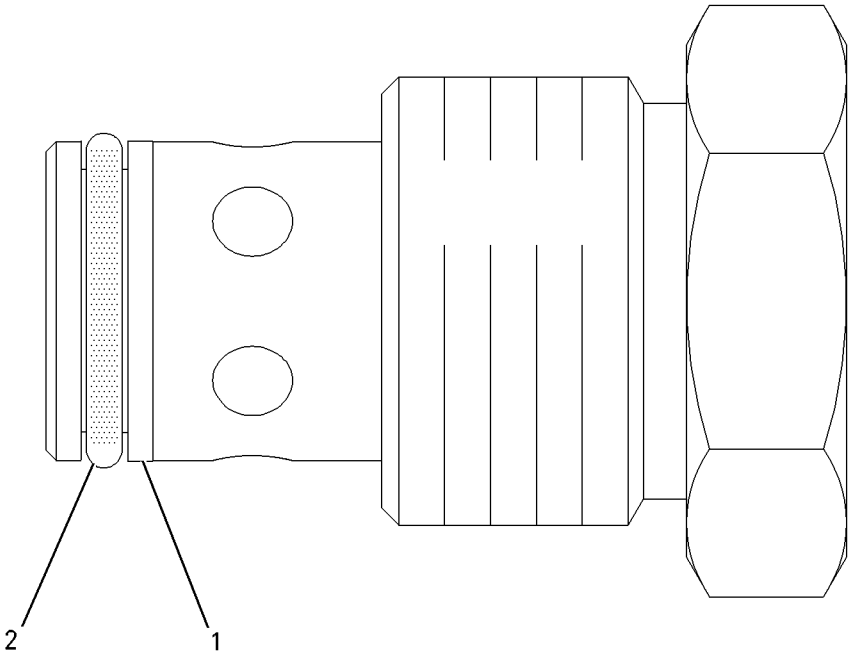


GRAPHIC #1 **<END>** g00864141

# 281-2725 VALVE GP-CHECK–FUEL

**S/N: RHX1-UP**
**PART OF 233-6742 VALVE GP-CHECK**
**AN ATTACHMENT**

**SMCS-1251, 1274** **i02444582**

| NOTE | REF NO | GRAPHIC REF | PART NUMBER | QTY | PART NAME 1 2 3 4 5 6 (PRODUCT LEVEL) | SEE PAGE |
|---|---|---|---|---|---|---|
| | 1 | 1 | **6V-6923** | 1 | RING-BACKUP | |
| | 2 | 1 | **033-6033** | 1 | SEAL-O-RING | |

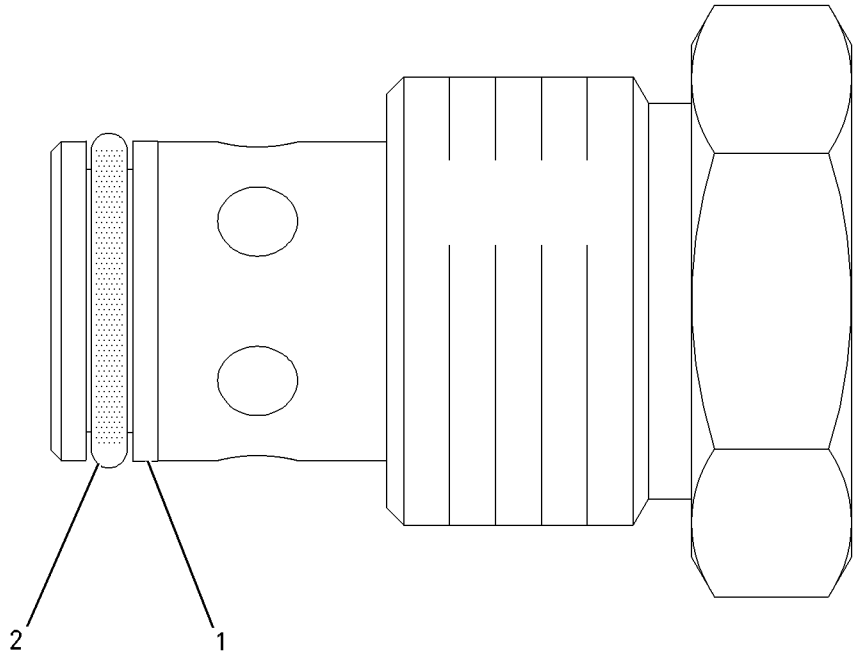


GRAPHIC #1 **<END>** g00864141

# 3E-6328 ALARM GP–ACTION

**S/N: RLB1-UP**
**24-VOLT**
**PART OF 267-8952 CIRCUIT BREAKER GP**

**SMCS-7400, 7402, 7407** **i02610072**

| NOTE | REF NO | GRAPHIC REF | PART NUMBER | QTY | PART NAME 1 2 3 4 5 6 (PRODUCT LEVEL) | SEE PAGE |
|---|---|---|---|---|---|---|
| | 1 | 1 | **102-8802** | 1 | KIT-RECEPTACLE (2-PIN) | |
| | | | | | (INCLUDES RECEPTACLE AS & WEDGE) | |
| | 2 | 1 | **186-3735** | 2 | PIN-CONNECTOR (16-GA TO 18-GA) | |
| | 3 | 1 | **3E-3365** | 1 | WEDGE-RECEPTACLE LOCK (2-PIN) | |

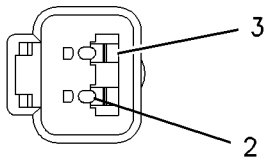


VIEW A–A

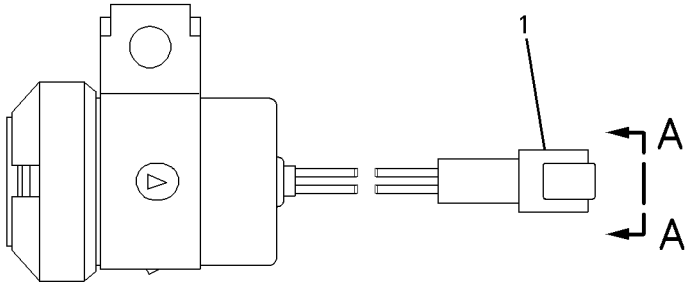


GRAPHIC #1 **<END>** g00826023

# *197-8820* ALTERNATOR GP-CHARGING*R

**S/N: RLB1-UP**
**24-VOLT, 95-AMPERE**
**PART OF 270-4282 DRIVE GP-ACCESSORY**

**SMCS-1405** **i02741069**

| NOTE | REF NO | GRAPHIC REF | PART NUMBER | QTY | PART NAME 1 2 3 4 5 6 (PRODUCT LEVEL) | SEE PAGE |
|---|---|---|---|---|---|---|
| | 1 | 1 | **185-2653** | 1 | FRAME | |
| | 2 | 1 | **5S-7349** | 1 | BOLT (1/4-20X0.5-IN) | |
| | 3 | 1 | **185-2639** | 1 | FAN AS | |
| | 4 | 1 | **1H-3244** | 1 | LOCKWASHER | |
| | 5 | 1 | **185-2645** | 1 | FRAME | |
| | 6 | 1 | **2K-4821** | 1 | LOCKNUT (5/8-18-THD) | |
| | 7 | 1 | **5P-8247** | 1 | WASHER-HARD (17X32X3.5-MM THK) | |
| | 8 | 1 | **185-2651** | 1 | COVER | |
| | 9 | 1 | **8T-4205** | 1 | WASHER-HARD (7.2X14.5X2-MM THK) | |
| | 10 | 1 | **185-2647** | 1 | GROMMET | |
| | 11 | 1 | **9L-6770** | 1 | CAP-DUST | |
| | 12 | 1 | **205-0626** | 1 | STATOR AS-ALTERNATOR | |
| | 13 | 1 | **185-2638** | 2 | COLLAR | |
| | 14 | 1 | **185-2654** | 1 | PLATE | |
| | 15 | 1 | **185-2650** | 1 | ROTOR AS (ALTERNATOR) | |
| | 16 | 1 | **185-2644** | 1 | COIL AS | |
| | 17 | 1 | **185-2648** | 1 | REGULATOR AS-VOLTAGE (24-VOLT) (ALTERNATOR) | |
| | 18 | 1 | **6V-8189** | 1 | NUT (5/16-18-THD) | |
| | 19 | 1 | **8T-4224** | 1 | WASHER-HARD (8.8X16X2-MM THK) | |
| | 20 | 1 | **3F-9556** | 1 | LOCKWASHER | |
| | | | | | AVAILABLE REPAIR KIT(S): | |
| | | | **185-2655** | 1 | KIT-BEARING (ALTERNATOR) | |
| | | | | | (INCLUDES 2 BEARINGS) | |
| | | | **199-8436** | 1 | KIT-TERMINAL (ALTERNATOR) | |
| | | | | | (INCLUDES HOLDER AS, PLATE, INSULATOR, PIN, BOLTS, GROMMET & NUT) | |
| | | | **199-7891** | 1 | KIT-TERMINAL (ALTERNATOR) | |
| | | | | | (INCLUDES INSULATORS, WASHERS & NUTS) | |
| | | | **185-2658** | 1 | KIT-HARDWARE (ALTERNATOR) | |
| | | | | | (INCLUDES BOLTS) | |

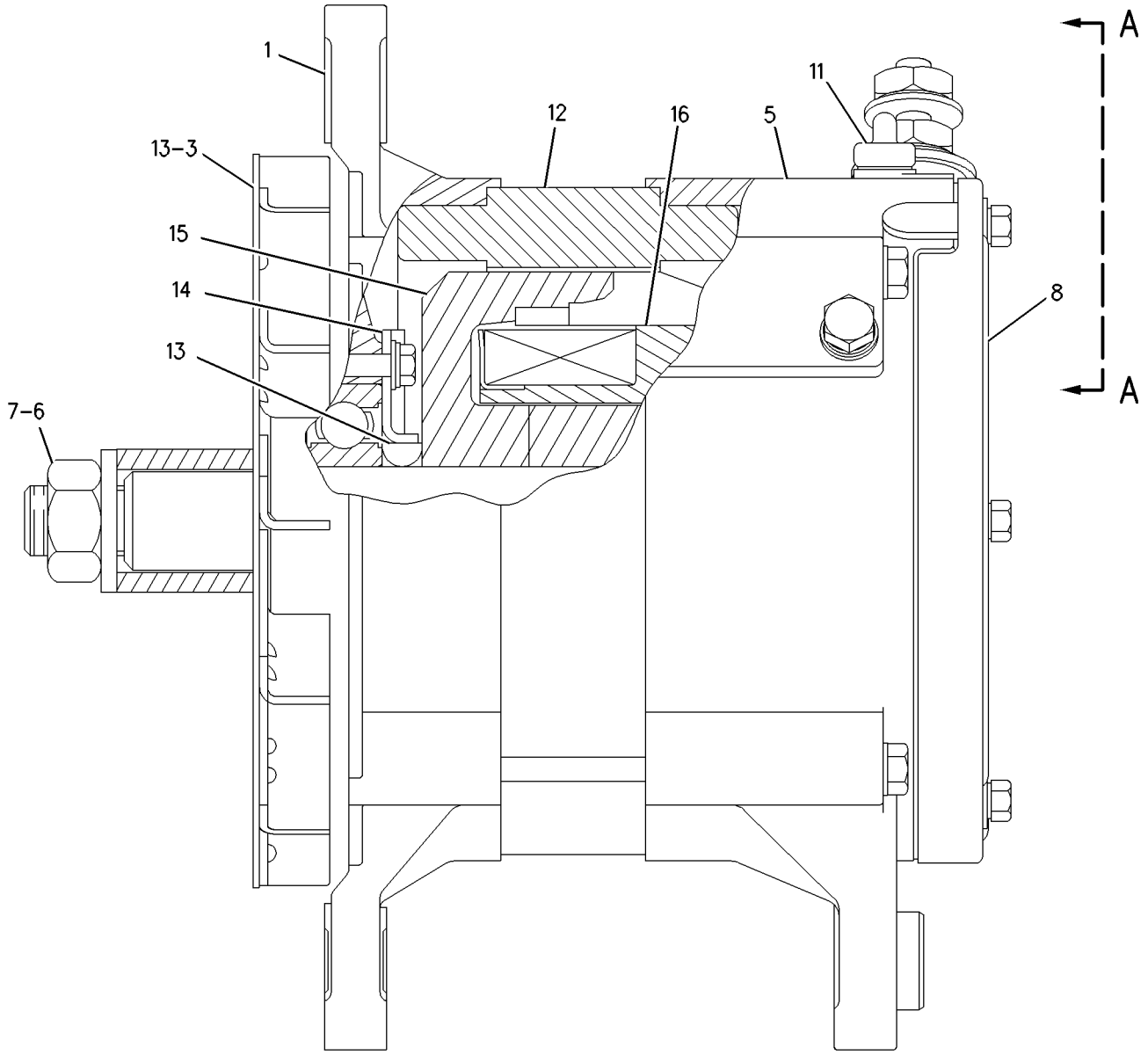


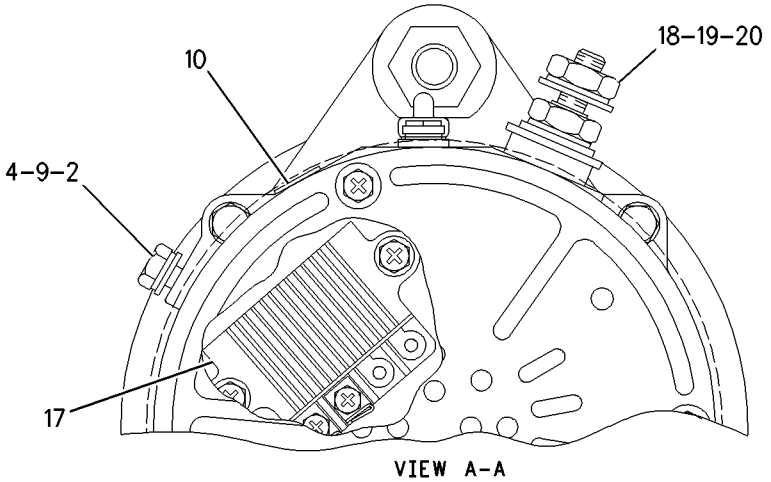


VIEW A-A

GRAPHIC #1 **<END>** g00873198

## *247-7036* APPLICATION GP-MONITOR—MESSENGER

**S/N: RLB1-UP**
**PART OF 236-0986 PANEL GP-INSTRUMENT**
**FIELD REPLACEMENT ORDER 239-5025—PAGE 744**

**SMCS-7620** **i02113019**

| NOTE | PART NUMBER | QTY | PART NAME 1 2 3 4 5 6 (PRODUCT LEVEL) | SEE PAGE |
|---|---|---|---|---|
| Y | **239-5025** | 1 | CONTROL GP-UNPRGMED MONITOR (MESSENGER) | 744 |

Y-SEPARATE ILLUSTRATION

**<END>**

## *247-7038* APPLICATION GP-MONITOR—PAYLOAD MONITOR

**S/N: RLB1-UP**
**PART OF 249-0219 CONTROL & MTG GP-MONITOR**
**FIELD REPLACEMENT ORDER 169-0489—PAGE 743**
**AN ATTACHMENT**

**SMCS-7620** **i03267404**

| NOTE | PART NUMBER | QTY | PART NAME 1 2 3 4 5 6 (PRODUCT LEVEL) | SEE PAGE |
|---|---|---|---|---|
| YR | **169-0489** | 1 | CONTROL GP-UNPRGMED MONITOR | 743 |

R-REMFG PART MAY BE AVAILABLE
Y-SEPARATE ILLUSTRATION

**<END>**

# ELECTRICAL AND STARTING SYSTEM

## *270-1501* BATTERY & WIRING GP

**S/N: RLB1-UP**

**PART OF 270-1500 ELECTRICAL AR**

**SMCS-1401, 1402, 1408** **i02706972**

| NOTE | REF NO | GRAPHIC REF | PART NUMBER | QTY | PART NAME 1 2 3 4 5 6 (PRODUCT LEVEL) | SEE PAGE |
|---|---|---|---|---|---|---|
| | 1 | 1 | **3S-2093** | 15 | STRAP-CABLE | |
| | 2 | 1 | **5T-3907** | 2 | CLAMP | |
| | 3 | 1 | **8W-0301** | 1 | FLANGE | |
| | 4 | 1 | **9G-2758** | 1 | LOCKOUT AS-SWITCH (BATTERY DISCONNECT) | |
| | 5 | 1 | **9L-1566** | 3 | SUPPORT | |
| | 6 | 1 | **153-5710** | 2 | BATTERY (12-VOLT, MAINTENANCE FREE) | |
| Y | 7 | 1 | **237-7602** | 1 | SWITCH GP-DISCONNECT (BATTERY) | 330 |
| | 8 | 1 | **250-2185** | 1 | BRACKET | |
| | 9 | 1 | **250-2186** | 2 | BRACKET | |
| | 10 | 1 | **250-3386** | 1 | BAR | |
| | 11 | 1 | **270-1490** | 1 | CABLE AS | |
| | | 1 | **7N-5274** | 1 | COVER-TERMINAL (BLACK) | |
| | | 1 | **3S-6050** | 1 | TERMINAL AS-BATTERY (NEGATIVE) | |
| | | 1 | **1M-6119** | 1 | BOLT (5/16-18X1.375-IN) | |
| | | 1 | **1M-6120** | 1 | NUT (5/16-18-THD) | |
| | | 1 | **9X-5699** | 1 | BOOT (BLACK) | |
| | | 1 | **9X-9825** | 1 | TERMINAL-CABLE (00-GA, 1/2-IN BOLT) | |
| E | | 1 | **159-8050** | | CABLE (00-GA, BLACK) (29-CM) | |
| | 12 | 1 | **270-1491** | 1 | CABLE AS | |
| | | 1 | **9X-9120** | 1 | BOOT (RED) | |
| | | 1 | **9X-9825** | 1 | TERMINAL-CABLE (00-GA, 1/2-IN BOLT) | |
| | | 1 | **8N-1725** | 1 | COVER-TERMINAL (RED) | |
| | | 1 | **3S-6049** | 1 | TERMINAL AS-BATTERY (POSITIVE) | |
| | | 1 | **1M-6119** | 1 | BOLT (5/16-18X1.375-IN) | |
| | | 1 | **1M-6120** | 1 | NUT (5/16-18-THD) | |
| E | | 1 | **159-8049** | | CABLE (00-GA, RED) (23-CM) | |
| | 13 | 1 | **270-1492** | 1 | CABLE AS | |
| | | 1 | **1S-7251** | 2 | TERMINAL-CABLE (00-GA, 1/2-IN BOLT) | |
| | | 1 | **1S-7252** | 1 | TERMINAL-CABLE (00-GA, 3/8-IN BOLT) | |
| | | 1 | **8N-0869** | 3 | COVER-TERMINAL (RED) | |
| E | | 1 | **159-8049** | | CABLE (00-GA, RED) (362-CM) | |
| | 14 | 1 | **270-1493** | 1 | CABLE AS | |
| | | 1 | **1S-7251** | 2 | TERMINAL-CABLE (00-GA, 1/2-IN BOLT) | |
| | | 1 | **9G-8909** | 2 | COVER-TERMINAL (BLACK) | |
| E | | 1 | **159-8050** | | CABLE (00-GA, BLACK) (105-CM) | |
| | 15 | 1 | **270-1494** | 1 | CABLE AS | |
| | | 1 | **1S-7251** | 1 | TERMINAL-CABLE (00-GA, 1/2-IN BOLT) | |
| | | 1 | **8N-0869** | 1 | COVER-TERMINAL (RED) | |
| | | 1 | **8S-3020** | 1 | TERMINAL-CABLE (00-GA, 3/8-IN BOLT) | |
| | | 1 | **9X-9120** | 1 | BOOT (RED) | |
| E | | 1 | **159-8049** | | CABLE (00-GA, RED) (69-CM) | |
| | 16 | 1 | **270-1495** | 1 | CABLE AS | |
| | | 1 | **1S-7251** | 2 | TERMINAL-CABLE (00-GA, 1/2-IN BOLT) | |
| | | 1 | **9G-8909** | 2 | COVER-TERMINAL (BLACK) | |
| E | | 1 | **159-8050** | | CABLE (00-GA, BLACK) (46-CM) | |
| | 17 | 1 | **270-1496** | 1 | CABLE AS | |
| | | 1 | **1S-7251** | 1 | TERMINAL-CABLE (00-GA, 1/2-IN BOLT) | |
| | | 1 | **9G-8909** | 1 | COVER-TERMINAL (BLACK) | |
| | | 1 | **9X-5699** | 1 | BOOT (BLACK) | |
| | | 1 | **9X-9825** | 1 | TERMINAL-CABLE (00-GA, 1/2-IN BOLT) | |
| E | | 1 | **159-8050** | | CABLE (00-GA, BLACK) (50-CM) | |
| | 18 | 1 | **2V-1771** | 15 | GROMMET | |
| | 19 | 1 | **2Y-5429** | 1 | GROMMET | |
| | 20 | 1 | **5H-1504** | 1 | WASHER-HARD (20X33.5X5-MM THK) | |
| | 21 | 1 | **5M-3062** | 2 | BOLT (3/8-16X0.75-IN) | |
| | 22 | 1 | **5P-1075** | 2 | WASHER-HARD (10.2X22.5X3-MM THK) | |

## *270-1501* **BATTERY & WIRING GP** *(contd.)* **i02706972**

| NOTE | REF NO | GRAPHIC REF | PART NUMBER | QTY | PART NAME 1 2 3 4 5 6 (PRODUCT LEVEL) | SEE PAGE |
|---|---|---|---|---|---|---|
| | 23 | 1 | **5P-8167** | 2 | BOLT (3/8-16X0.625-IN) | |
| | 24 | 1 | **246-2641** | 1 | PADLOCK GP | |
| | | 1 | **5P-8500** | 1 | KEY | |
| | 25 | 1 | **6D-4246** | 15 | CLIP | |
| M | 26 | 1 | **7X-2549** | 2 | BOLT (M12X1.75X100-MM) | |
| M | 27 | 1 | **8T-0389** | 2 | LOCKNUT (M10X1.5-THD) | |
| | 28 | 1 | **8T-4121** | 31 | WASHER-HARD (11X21X2.5-MM THK) | |
| M | 29 | 1 | **8T-4133** | 5 | NUT (M10X1.5-THD) | |
| M | 30 | 1 | **8T-4136** | 3 | BOLT (M10X1.5X25-MM) | |
| M | 31 | 1 | **8T-4137** | 16 | BOLT (M10X1.5X20-MM) | |
| M | 32 | 1 | **8T-6466** | 2 | BOLT (M10X1.5X60-MM) | |
| M | 33 | 1 | **8T-4189** | 1 | BOLT (M8X1.25X20-MM) | |
| M | 34 | 1 | **8T-4192** | 3 | BOLT (M12X1.75X25-MM) | |
| | 35 | 1 | **8T-4223** | 5 | WASHER-HARD (13.5X25.5X3-MM THK) | |
| | 36 | 1 | **8V-0622** | 1 | CABLE AS | |
| | | 1 | **8C-5917** | 1 | TERMINAL AS-BATTERY (POSITIVE) | |
| | | 1 | **8T-9757** | 1 | TERMINAL AS-BATTERY (NEGATIVE) | |
| | | | | | (EACH TERMINAL AS INCLUDES) | |
| | | 1 | **1M-6119** | 1 | BOLT (5/16-18X1.375-IN) | |
| | | 1 | **1M-6120** | 1 | NUT (5/16-18-THD) | |
| E | | 1 | **5P-0761** | | CABLE (00-GA, RED) (14-CM) | |
| | | 1 | **9G-0003** | 1 | COVER-TERMINAL (BLACK) | |
| | | 1 | **9G-0004** | 1 | COVER-TERMINAL (RED) | |
| | 37 | 1 | **9R-6414** | 2 | ROD | |

E-ORDER BY THE CENTIMETER
M-METRIC PART
Y-SEPARATE ILLUSTRATION

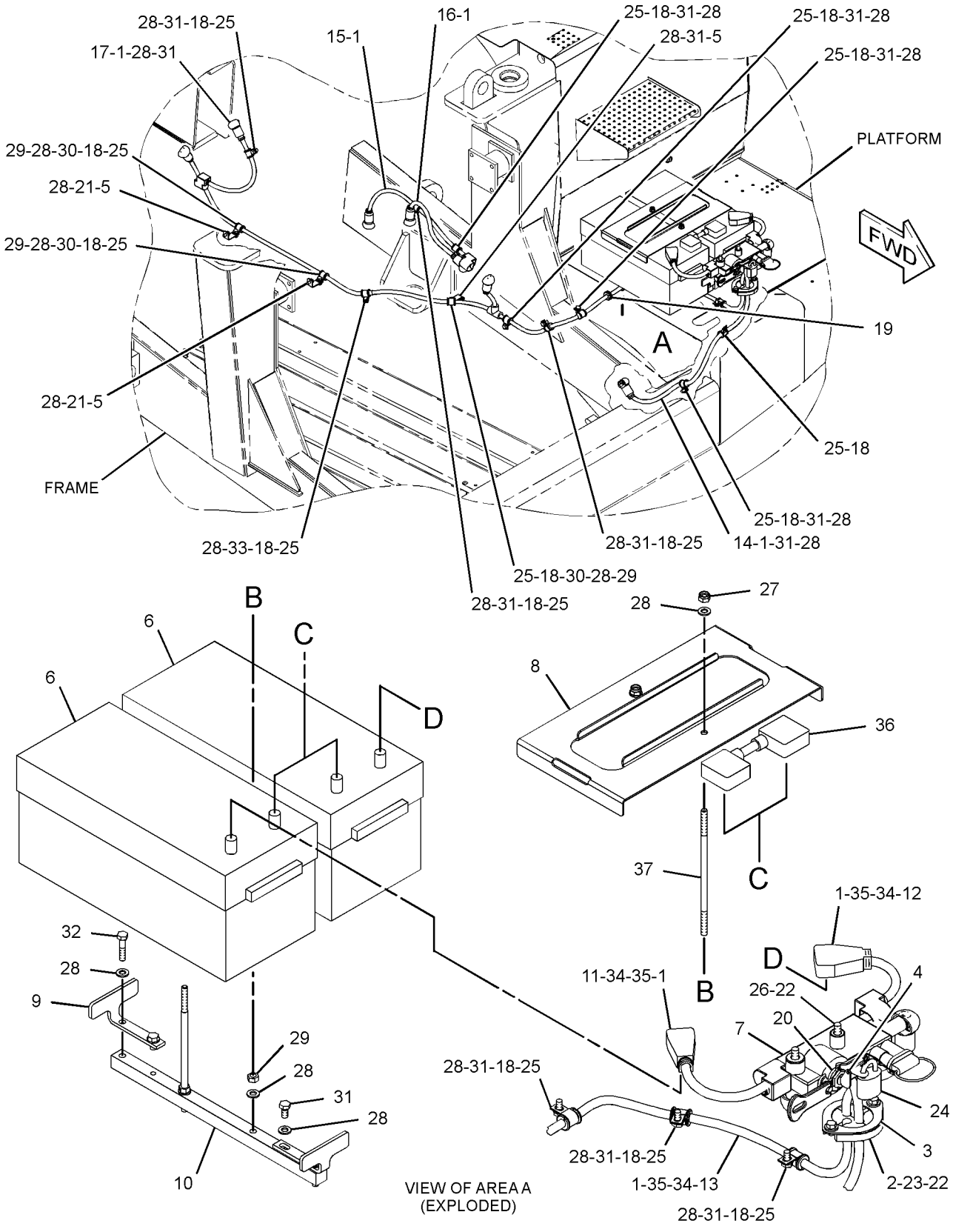


GRAPHIC #1 **<END>** g01342174

## *316-6380* CAMERA AR—WORK AREA VISUAL SYSTEM

**S/N: RLB1-UP**

**AN ATTACHMENT**

**SMCS-7348** **i03116421**

| NOTE | PART NUMBER | QTY | PART NAME 1 2 3 4 5 6 (PRODUCT LEVEL) | SEE PAGE |
|---|---|---|---|---|
| Y | *311-1674* | 1 | DISPLAY GP-CAMERA | 750 |
| Y | *270-1507* | 1 | WIRING GP-CAMERA | 347 |

Y-SEPARATE ILLUSTRATION

**<END>**

# ELECTRICAL AND STARTING SYSTEM

## *267-8952* CIRCUIT BREAKER GP

**S/N: RLB1-UP**

**PART OF 269-8820 CAB AR**

**SMCS-1420** **i03266960**

| NOTE | REF NO | GRAPHIC REF | PART NUMBER | QTY | PART NAME 1 2 3 4 5 6 (PRODUCT LEVEL) | SEE PAGE |
|---|---|---|---|---|---|---|
| | 1 | 2 | **2S-9255** | 4 | BOLT-SOCKET HEAD (4-40X0.375-IN) | |
| Y | 2 | 1 | **3E-6328** | 1 | ALARM GP (24-VOLT) (ACTION, EMS) | 248 |
| | 3 | 2 | **6T-3643** | 1 | CIRCUIT BREAKER AS (15-AMPERE) (ENGINE ECM) | |
| | 3A | 2 | **6T-3643** | 1 | CIRCUIT BREAKER AS (15-AMPERE) (AIR CONDITIONER) | |
| | | | | | (EACH INCLUDES) | |
| | | 2 | **6V-8376** | 2 | SCREW-MACHINE (8-32X0.25-IN) | |
| | | 2 | **9B-7233** | 2 | LOCKWASHER | |
| | 4 | 2 | **8D-9537** | 1 | CAP AS-DUST | |
| | 5 | 2 | **9W-1441** | 7 | FUSE (15-AMPERE) | |
| | 6 | 2 | **9W-1442** | 14 | FUSE (10-AMPERE) | |
| | 7 | 2 | **9W-1446** | 3 | FUSE (20-AMPERE) | |
| | 8 | 2 | **106-6553** | 1 | BUMPER-CONICAL | |
| | 9 | 1,2 | **116-0118** | 2 | CLIP | |
| | 10 | 2 | **117-2311** | 1 | RECEPTACLE AS-POWER (12-VOLT) | |
| | 11 | 2 | **180-9900** | 1 | CAP AS | |
| | | 2 | **5P-7958** | 1 | SLEEVE-CABLE SPLICE | |
| | | 2 | **8C-6354** | 1 | CAP-RECEPTACLE | |
| | | 2 | **179-9392** | 1 | LANYARD | |
| | 12 | 1 | **189-2512** | 1 | PLATE | |
| | 13 | 2 | **202-4327** | 1 | PULLER-FUSE | |
| | 14 | 2 | **224-6193** | 4 | BOLT-SOCKET HEAD (M3X0.5-THD) | |
| Y | 15 | 2 | **241-8368** | 1 | SWITCH GP-MAGNETIC (24-VOLT) (MAIN RELAY) | 335 |
| | 16 | 1 | **267-8953** | 1 | HARNESS AS-CAB | |
| | 17 | 1 | **267-8954** | 1 | PLATE AS | |
| M | | 1 | **6V-9632** | 6 | NUT-WELD (M6X1-THD) | |
| M | | 1 | **8T-3612** | 1 | NUT-WELD (M8X1.25-THD) | |
| | 19 | 2 | **276-9467** | 1 | PLATE-CONNECTOR | |
| | 20 | 2 | **277-8498** | 1 | FILM-IDENTIFICATION (FUSE PANEL) | |
| | 21 | 1 | **132-5789** | 1 | CLIP | |
| | 22 | 2 | **193-4623** | 4 | SCREW-BUTTON HEAD (10-32X11.11-MM) | |
| | 23 | 2 | **200-8577** | 1 | CIRCUIT BREAKER AS (20-AMPERE) (LIGHTING) | |
| | | 2 | **6V-8376** | 2 | SCREW-MACHINE (8-32X0.25-IN) | |
| | | 2 | **9B-7233** | 2 | LOCKWASHER | |
| | 24 | 1 | **5P-4115** | 1 | WASHER-HARD (7.2X19X2-MM THK) | |
| M | 25 | 1 | **6V-8225** | 1 | NUT (M6X1-THD) | |
| | 26 | 1 | **7K-1181** | 1 | STRAP-CABLE | |
| | 27 | 1,2 | **7U-4892** | 6 | SCREW (8-32X0.75-IN) | |
| M | 28 | 2 | **8T-4133** | 1 | NUT (M10X1.5-THD) | |
| M | 29 | 2 | **8T-4138** | 2 | BOLT (M6X1X20-MM) | |
| M | 30 | 1 | **8T-4200** | 1 | BOLT (M8X1.25X16-MM) | |
| | 31 | 2 | **8T-4222** | 2 | WASHER-PLATED (11X32X2.5-MM THK) | |
| | 32 | 1 | **8T-4224** | 1 | WASHER-HARD (8.8X16X2-MM THK) | |
| M | 33 | 2 | **9X-2045** | 8 | SCREW-TRUSS HEAD (M6X1X20-MM) | |
| | 34 | 2 | **9X-8256** | 2 | WASHER (6.6X12X2-MM THK) | |
| E | 35 | 2 | **103-2543** | | SEAL (3-CM) | |
| | 36 | 2 | **114-6658** | 4 | WASHER (6.5X17X1-MM THK) | |
| | 37 | 2 | **101-2867** | 2 | WASHER-HARD (7.2X25X2-MM THK) | |

E-ORDER BY THE CENTIMETER
M-METRIC PART
Y-SEPARATE ILLUSTRATION

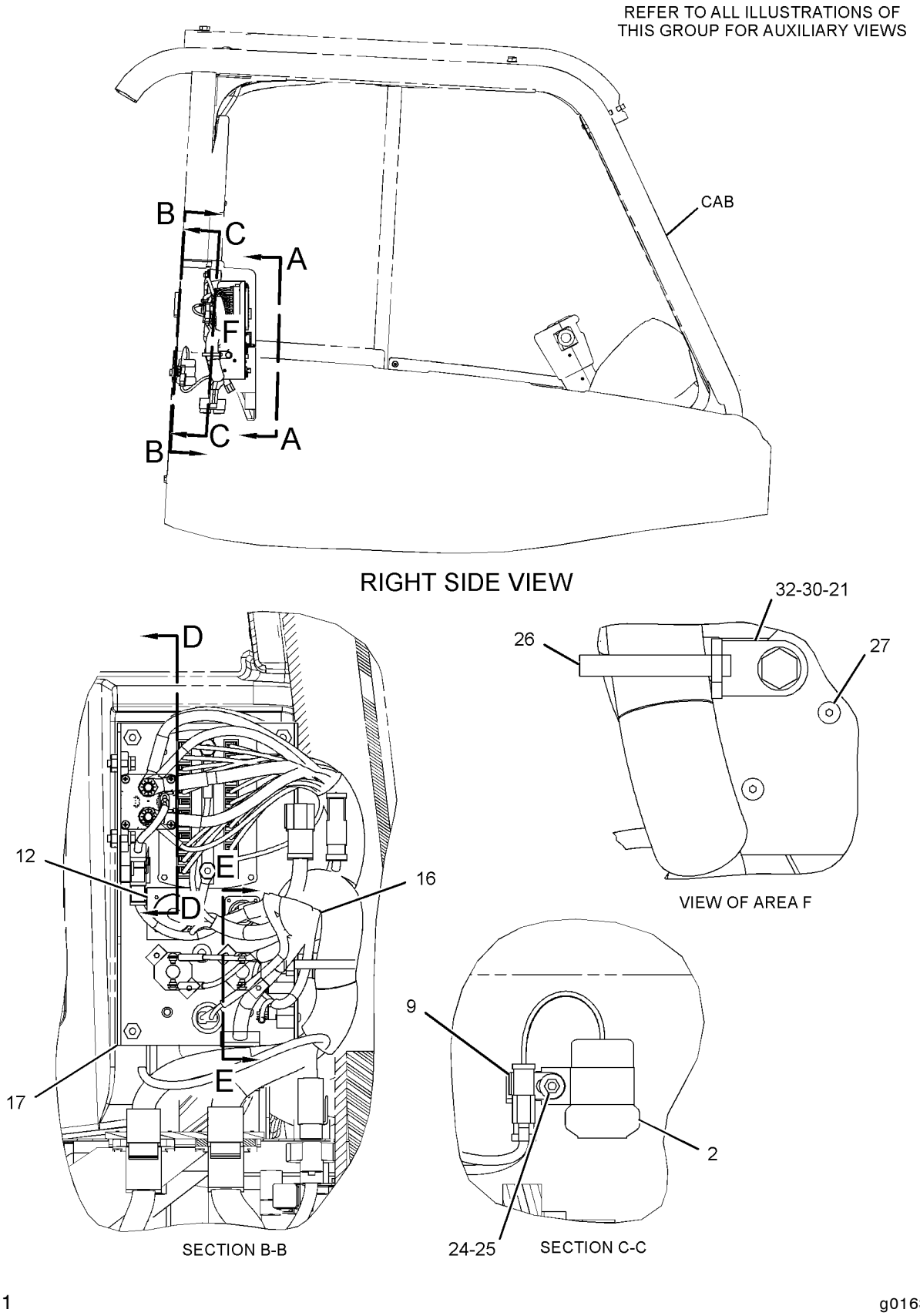


GRAPHIC #1

g01630621

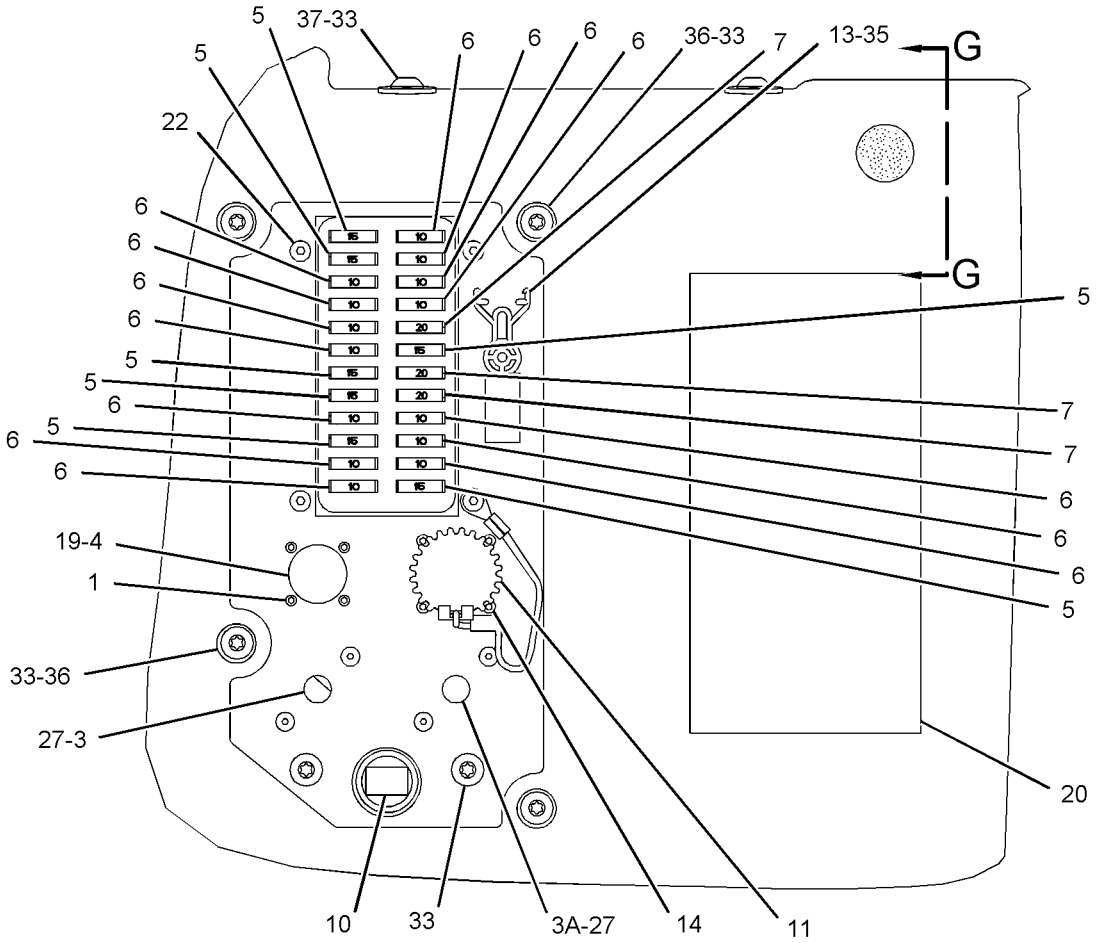


VIEW A-A

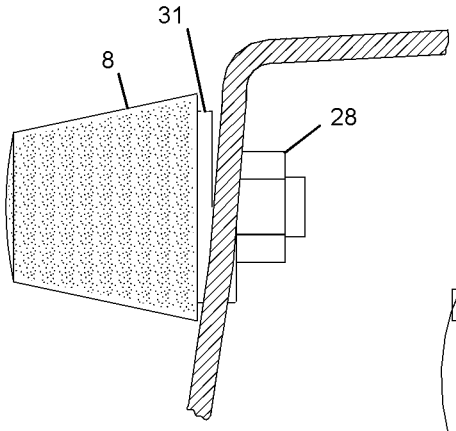


SECTION G-G

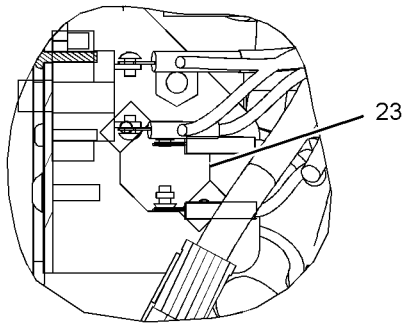


SECTION E-E

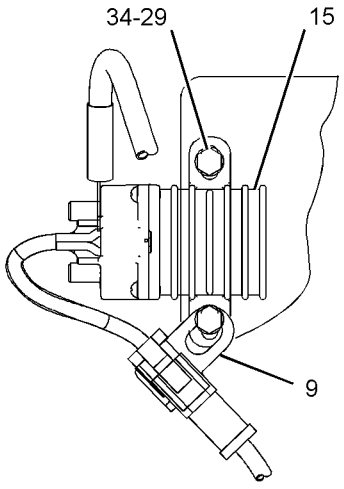


SECTION D-D

GRAPHIC #2 **<END>** g01630622

## *126-7631* CONNECTION GP-ELECTRICAL

**S/N: RHX1-UP**
**PART OF 221-8124, 247-3315, 272-3086, 272-3087, 292-2553, 292-2554 ENGINE**
**AR-COMPLETE**
**FOR USE WITH BLOCK SOUND PANEL**
**AN ATTACHMENT**

**SMCS-1408** **i02756705**

| NOTE | REF NO | GRAPHIC REF | PART NUMBER | QTY | PART NAME 1 2 3 4 5 6 (PRODUCT LEVEL) | SEE PAGE |
|---|---|---|---|---|---|---|
| | 1 | 1 | **126-8449** | 1 | STUD | |
| | 2 | 1 | **8T-4896** | 2 | WASHER-HARD (10.2X18.5X2.5-MM THK) | |
| | 3 | 1 | **6V-8801** | 1 | NUT (3/8-16-THD) | |
| | 4 | 1 | **9M-7783** | 1 | SPACER (0.65X1.188X0.81-IN THK) | |
| | 5 | 1 | **5P-8247** | 1 | WASHER-HARD (17X32X3.5-MM THK) | |

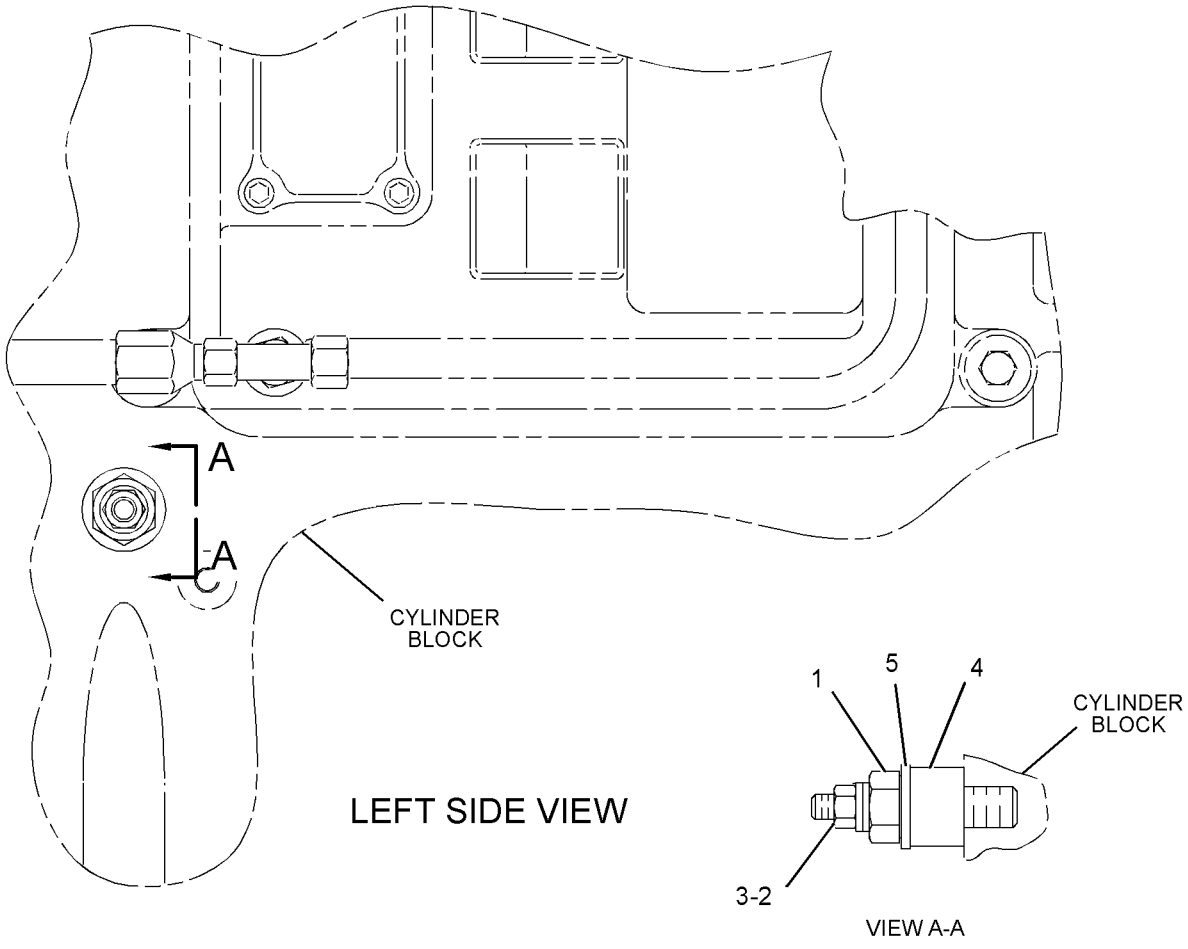


GRAPHIC #1 **<END>** g01380369

# *241-7598* CONTROL & MTG GP-ENGINE ELEK

**S/N: RHX1-UP**
**ADEM-IV. FUEL COOLED**
**PART OF 221-8124, 247-3315, 272-3086, 272-3087, 292-2553, 292-2554 ENGINE**
**AR-COMPLETE**
**AN ATTACHMENT**

**SMCS-1901** **i02855415**

| NOTE | REF NO | GRAPHIC REF | PART NUMBER | QTY | PART NAME 1 2 3 4 5 6 (PRODUCT LEVEL) | SEE PAGE |
|---|---|---|---|---|---|---|
| | 1 | 1 | **6I-1418** | 4 | SPACER (8.2X12.7X28.7-MM THK) | |
| | 2 | 1 | **155-0696** | 1 | SUPPORT AS | |
| | | 1 | **5L-3708** | 1 | STUD-TAPERLOCK | |
| | 3 | 1 | **155-0698** | 1 | SUPPORT AS | |
| | | 1 | **5L-3708** | 1 | STUD-TAPERLOCK | |
| | 5 | 1 | **161-7419** | 4 | STUD | |
| R | 6 | 1 | **255-5285** | 1 | CONTROL GP-UNPROGRAMMED | |
| | 7 | 1 | **233-0891** | 2 | BRACKET AS | |
| | 8 | 1 | **8T-9655** | 8 | MOUNT-ISOLATION | |
| | 10 | 1 | **9N-0869** | 8 | WASHER-HARD (8.8X25.5X2-MM THK) | |

R-REMFG PART MAY BE AVAILABLE

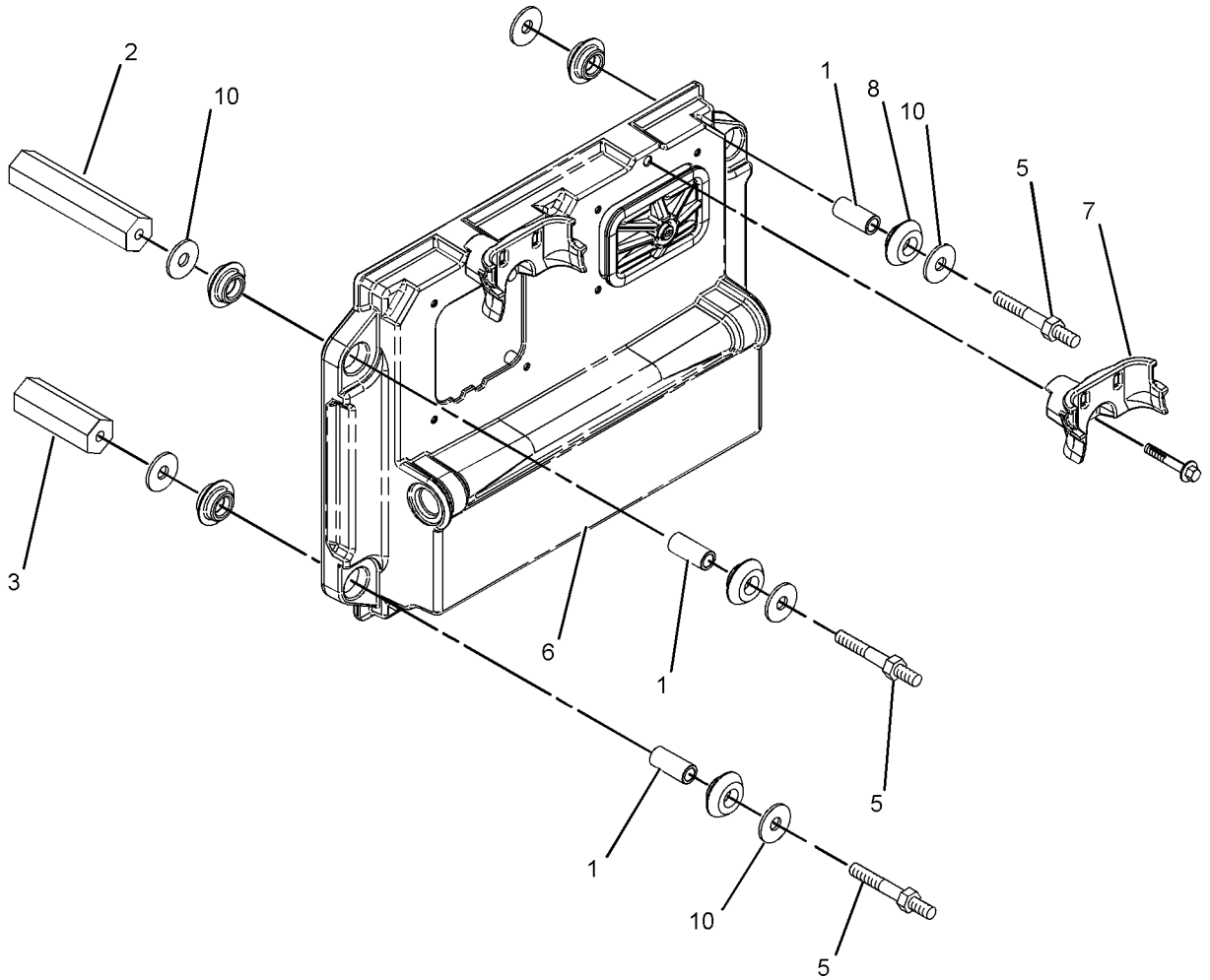


GRAPHIC #1 **<END>** g01422434

# *249-0219* CONTROL & MTG GP-MONITOR–PAYLOAD

**S/N: RLB1-UP**

**PART OF 280-1651 INSTALLATION AR-PAYLOAD**

**AN ATTACHMENT**

**SMCS-7490** **i02113054**

| NOTE | REF NO | GRAPHIC REF | PART NUMBER | QTY | PART NAME 1 2 3 4 5 6 (PRODUCT LEVEL) | SEE PAGE |
|---|---|---|---|---|---|---|
| | 1 | 1 | **6I-1418** | 4 | SPACER (8.2X12.7X28.7-MM THK) | |
| | 2 | 1 | **155-0576** | 8 | MOUNT-ISOLATION | |
| Y | 3 | 1 | **247-7038** | 1 | APPLICATION GP-MONITOR (PAYLOAD MONITOR) | 251 |
| M | 4 | 1 | **8T-6912** | 4 | BOLT (M8X1.25X50-MM) | |
| | 5 | 1 | **9N-0869** | 4 | WASHER-HARD (8.8X25.5X2-MM THK) | |

M-METRIC PART
Y-SEPARATE ILLUSTRATION

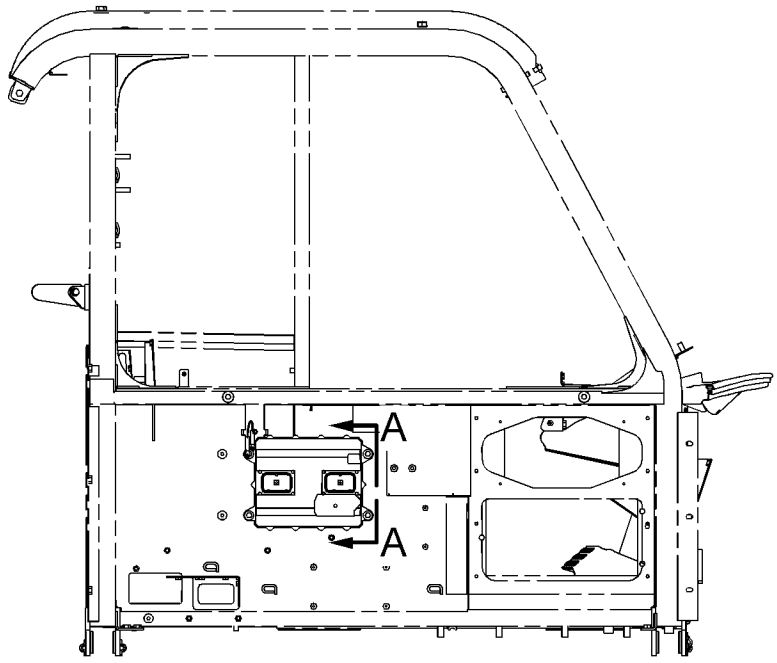


FRONT VIEW

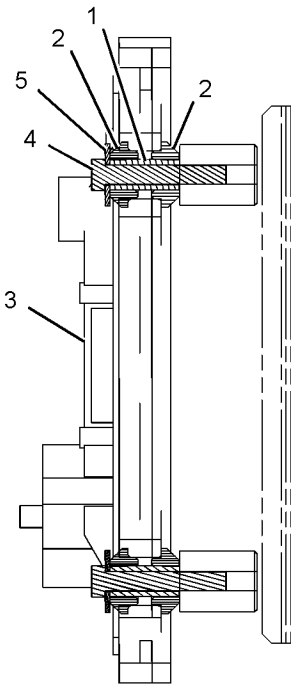


VIEW A-A

GRAPHIC #1 **<END>** g01057316

# *236-0982* CONTROL GP-MACHINE

**S/N: RLB1-UP**

**PART OF 269-8820 CAB AR**

**SMCS-7600, 7610** **i02444920**

| NOTE | REF NO | GRAPHIC REF | PART NUMBER | QTY | PART NAME 1 2 3 4 5 6 (PRODUCT LEVEL) | SEE PAGE |
|---|---|---|---|---|---|---|
| | 1 | 1 | **6I-1418** | 4 | SPACER (8.2X12.7X28.7-MM THK) | |
| | 2 | 1 | **155-0576** | 8 | MOUNT-ISOLATION | |
| CR | 3 | 1 | **262-1408** | 1 | CONTROL GP-UNPROGRAMMED (CHASSIS) | |
| M | 4 | 1 | **8T-6912** | 4 | BOLT (M8X1.25X50-MM) | |
| | 5 | 1 | **9N-0869** | 4 | WASHER-HARD (8.8X25.5X2-MM THK) | |

C-CHANGE FROM PREVIOUS TYPE
M-METRIC PART
R-REMFG PART MAY BE AVAILABLE

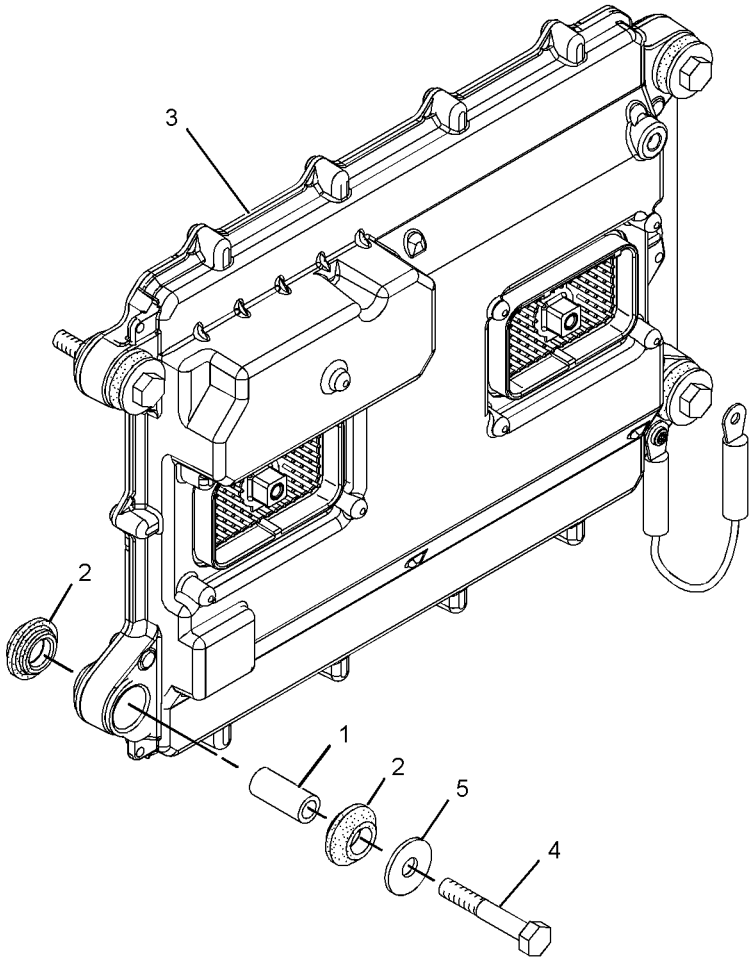


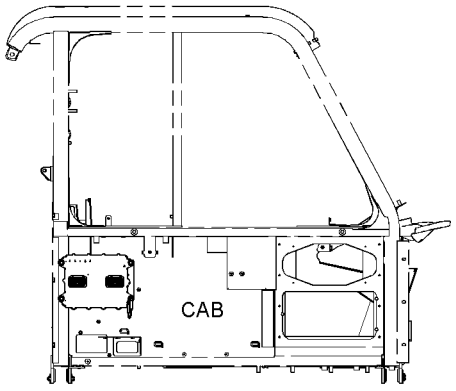


RIGHT SIDE VIEW

GRAPHIC #1 **<END>** g01256906

## *270-1500* ELECTRICAL AR

**S/N: RLB1-UP**

**PART OF 268-7810 GENERAL AR**

**SMCS-1408, 1429** **i02612686**

| NOTE | PART NUMBER | QTY | PART NAME 1 2 3 4 5 6 (PRODUCT LEVEL) | SEE PAGE |
|---|---|---|---|---|
| Y | *270-1501* | 1 | BATTERY & WIRING GP | 252 |
| Y | *270-1502* | 1 | WIRING GP-CHASSIS | 348 |
| Y | *270-1503* | 1 | WIRING GP-ENGINE | 375 |
| Y | *270-1504* | 1 | WIRING GP-LIGHTING | 377 |
| Y | *270-1505* | 1 | WIRING GP-RADIO | 382 |
| Y-SEPARATE ILLUSTRATION | | | | |

**<END>**

## *262-1421* ELECTRONICS GP-COMMUNICATION–

**PRODUCT LINK 300**

**S/N: RLB1-UP**

**PART OF 276-9462, 312-8302 INSTALLATION GP-COMMUNICATION**

**AN ATTACHMENT**

**SMCS-7606, 7610, 7620** **i03171663**

| NOTE | PART NUMBER | QTY | PART NAME 1 2 3 4 5 6 (PRODUCT LEVEL) | SEE PAGE |
|---|---|---|---|---|
| | **330-3409** | 1 | SOFTWARE GP-COMMUNICATION (PRODUCT LINK 300) | |
| | | | -OR- | |
| | **330-3410** | 1 | SERVICE GP-COMMUNICATION (PRODUCT LINK 300) | |
| | | | (OPTIONAL SERVICE REPLACEMENT)(INCLUDES CONTROL GP & SOFTWARE) | |
| | **7X-6315** | 1 | STRAP AS-GROUND | |
| | **126-7574** | 1 | SCREW-PAN HEAD (8-32X9.52-MM) | |
| | **134-4126** | 1 | WASHER (4.52X8.28X0.76-MM THK) | |

**<END>**

## *262-2043* ELECTRONICS GP-COMMUNICATION–

**PRODUCT LINK 300**

**S/N: RLB1-UP**

**PART OF 268-7807 INSTALLATION AR-COMMUNICATION, 313-5950 INSTALLATION GP-COMMUNICATION**

**AN ATTACHMENT**

**SMCS-7606, 7610, 7620** **i03121760**

| NOTE | PART NUMBER | QTY | PART NAME 1 2 3 4 5 6 (PRODUCT LEVEL) | SEE PAGE |
|---|---|---|---|---|
| | **330-3409** | 1 | SOFTWARE GP-COMMUNICATION (PRODUCT LINK 300) | |
| | | | -OR- | |
| | **330-3410** | 1 | SERVICE GP-COMMUNICATION (PRODUCT LINK 300) | |
| | | | (OPTIONAL SERVICE REPLACEMENT) (INCLUDES CONTROL GP & SOFTWARE) | |
| | **7X-6315** | 1 | STRAP AS-GROUND | |
| | **126-7574** | 1 | SCREW-PAN HEAD (8-32X9.52-MM) | |
| | **134-4126** | 1 | WASHER (4.52X8.28X0.76-MM THK) | |

**<END>**

## *256-5347* ELECTRONICS GP-MACHINE

**S/N: RLB1-UP**

**PART OF 268-7810 GENERAL AR**

**SMCS-7610, 7620** **i03016890**

| NOTE | PART NUMBER | QTY | PART NAME 1 2 3 4 5 6 (PRODUCT LEVEL) | SEE PAGE |
|---|---|---|---|---|
| | **324-7760** | 1 | SOFTWARE GP-MACHINE (CHASSIS) | |
| | | | -OR- | |
| | **324-7761** | 1 | SERVICE GP-MACHINE (CHASSIS) | |
| | | | (OPTIONAL SERVICE REPLACEMENT)(INCLUDES CONTROL GP & SOFTWARE) | |

**<END>**

## *247-4997* ELECTRONICS GP-MONITOR—PAYLOAD CONTROL

**S/N: RLB1-UP**

**PART OF 280-1651 INSTALLATION AR-PAYLOAD**

**AN ATTACHMENT**

**SMCS-7490, 7601, 7610, 7620** **i02674042**

| NOTE | PART NUMBER | QTY | PART NAME 1 2 3 4 5 6 (PRODUCT LEVEL) | SEE PAGE |
|---|---|---|---|---|
| | **247-4956** | 1 | SOFTWARE GP-MONITOR (PAYLOAD CONTROL) | |
| | | | -OR- | |
| | **247-4957** | 1 | SERVICE GP-MONITOR (PAYLOAD CONTROL) | |
| | | | (OPTIONAL SERVICE REPLACEMENT)(INCLUDES CONTROL GP & SOFTWARE) | |
| | **7X-6315** | 1 | STRAP AS-GROUND | |
| | **134-4126** | 1 | WASHER (4.52X8.28X0.76-MM THK) | |
| | **184-2472** | 1 | SCREW-PAN HEAD (NO 8-32X9.52-MM) | |
| R-REMFG PART MAY BE AVAILABLE | | | | |

**<END>**

## *247-7039* ELECTRONICS GP-MONITOR—ENGLISH, SPANISH, FRENCH, PORT

**S/N: RLB1-UP**

**CANNOT BE USED WITH 303-1546—PAGE 265, 303-1547—PAGE 265, 303-1548—PAGE 266, 303-1549—PAGE 266, 303-1550—PAGE 266, 303-1551—PAGE 267, 303-1552—PAGE 267, 303-1553—PAGE 267, 303-1554—PAGE 268, 303-1555—PAGE 268, 303-1556—PAGE 268, 303-1545—PAGE 265, 303-1557—PAGE 269, 303-2270—PAGE 269, 303-2273—PAGE 269**

**AN ATTACHMENT**

**SMCS-7490, 7601, 7610, 7620** **i03023839**

| NOTE | PART NUMBER | QTY | PART NAME 1 2 3 4 5 6 (PRODUCT LEVEL) | SEE PAGE |
|---|---|---|---|---|
| | **327-2129** | 1 | SOFTWARE GP-MONITOR | |
| | | | -OR- | |
| | **327-2130** | 1 | SERVICE GP-MONITOR | |
| | | | (OPTIONAL SERVICE REPLACEMENT)(INCLUDES CONTROL GP & SOFTWARE) | |

**<END>**

## *303-1545* ELECTRONICS GP-MONITOR—ENGLISH, KOREAN

**S/N: RLB1-UP**

**CANNOT BE USED WITH 247-7039—PAGE 264, 303-1546—PAGE 265, 303-1547—PAGE 265, 303-1548—PAGE 266, 303-1549—PAGE 266, 303-1550—PAGE 266, 303-1551—PAGE 267, 303-1552—PAGE 267, 303-1553—PAGE 267, 303-1554—PAGE 268, 303-1555—PAGE 268, 303-1556—PAGE 268, 303-1557—PAGE 269, 303-2270—PAGE 269, 303-2273—PAGE 269 AN ATTACHMENT**

**SMCS-7490, 7601, 7610, 7620** **i03021337**

| NOTE | PART NUMBER | QTY | PART NAME 1 2 3 4 5 6 (PRODUCT LEVEL) | SEE PAGE |
|---|---|---|---|---|
| | 327-2153 | 1 | SOFTWARE GP-MONITOR | |
| | | | -OR- | |
| | 327-2154 | 1 | SERVICE GP-MONITOR | |
| | | | (OPTIONAL SERVICE REPLACEMENT)(INCLUDES CONTROL GP & SOFTWARE) | |

**<END>**

## *303-1546* ELECTRONICS GP-MONITOR— ENGLISH, FRENCH, GERMAN, ITALIAN

**S/N: RLB1-UP**

**CANNOT BE USED WITH 247-7039—PAGE 264, 303-1547—PAGE 265, 303-1548—PAGE 266, 303-1549—PAGE 266, 303-1550—PAGE 266, 303-1551—PAGE 267, 303-1552—PAGE 267, 303-1553—PAGE 267, 303-1554—PAGE 268, 303-1555—PAGE 268, 303-1556—PAGE 268, 303-1545—PAGE 265, 303-1557—PAGE 269, 303-2270—PAGE 269, 303-2273—PAGE 269 AN ATTACHMENT**

**SMCS-7490, 7601, 7610, 7620** **i03021367**

| NOTE | PART NUMBER | QTY | PART NAME 1 2 3 4 5 6 (PRODUCT LEVEL) | SEE PAGE |
|---|---|---|---|---|
| | 327-2131 | 1 | SOFTWARE GP-MONITOR | |
| | | | —OR— | |
| | 327-2132 | 1 | SERVICE GP-MONITOR | |
| | | | (OPTIONAL SERVICE REPLACEMENT)(INCLUDES CONTROL GP & SOFTWARE) | |

**<END>**

## *303-1547* ELECTRONICS GP-MONITOR— DANISH, DUTCH, ENGLISH, GERMAN

**S/N: RLB1-UP**

**CANNOT BE USED WITH 247-7039—PAGE 264, 303-1546—PAGE 265, 303-1548—PAGE 266, 303-1549—PAGE 266, 303-1550—PAGE 266, 303-1551—PAGE 267, 303-1552—PAGE 267, 303-1553—PAGE 267, 303-1554—PAGE 268, 303-1555—PAGE 268, 303-1556—PAGE 268, 303-1545—PAGE 265, 303-1557—PAGE 269, 303-2270—PAGE 269, 303-2273—PAGE 269 AN ATTACHMENT**

**SMCS-7490, 7601, 7610, 7620** **i03022479**

| NOTE | PART NUMBER | QTY | PART NAME 1 2 3 4 5 6 (PRODUCT LEVEL) | SEE PAGE |
|---|---|---|---|---|
| | 327-2133 | 1 | SOFTWARE GP-MONITOR | |
| | | | -OR- | |
| | 327-2134 | 1 | SERVICE GP-MONITOR | |
| | | | (OPTIONAL SERVICE REPLACEMENT)(INCLUDES CONTROL GP & SOFTWARE) | |

**<END>**

## *303-1548* ELECTRONICS GP-MONITOR–
**ENGLISH, FINNISH, NORWEGIAN, SWEDISH**

**S/N: RLB1-UP**

**CANNOT BE USED WITH 247-7039–PAGE 264, 303-1546–PAGE 265, 303-1547–PAGE 265, 303-1549–PAGE 266, 303-1550–PAGE 266, 303-1551–PAGE 267, 303-1552–PAGE 267, 303-1553–PAGE 267, 303-1554–PAGE 268, 303-1555–PAGE 268, 303-1556–PAGE 268, 303-1545–PAGE 265, 303-1557–PAGE 269, 303-2270–PAGE 269, 303-2273–PAGE 269 AN ATTACHMENT**

**SMCS-7490, 7601, 7610, 7620** **i03022481**

| NOTE | PART NUMBER | QTY | PART NAME 1 2 3 4 5 6 (PRODUCT LEVEL) | SEE PAGE |
|---|---|---|---|---|
| | **327-2135** | 1 | SOFTWARE GP-MONITOR | |
| | | | -OR- | |
| | **327-2136** | 1 | SERVICE GP-MONITOR | |
| | | | (OPTIONAL SERVICE REPLACEMENT)(INCLUDES CONTROL GP & SOFTWARE) | |

**<END>**

## *303-1549* ELECTRONICS GP-MONITOR–
**CZECH, ENGLISH, POLISH, RUSSIAN**

**S/N: RLB1-UP**

**CANNOT BE USED WITH 247-7039–PAGE 264, 303-1546–PAGE 265, 303-1547–PAGE 265, 303-1548–PAGE 266, 303-1550–PAGE 266, 303-1551–PAGE 267, 303-1552–PAGE 267, 303-1553–PAGE 267, 303-1554–PAGE 268, 303-1555–PAGE 268, 303-1556–PAGE 268, 303-1545–PAGE 265, 303-1557–PAGE 269, 303-2270–PAGE 269, 303-2273–PAGE 269 AN ATTACHMENT**

**SMCS-7490, 7601, 7610, 7620** **i03022487**

| NOTE | PART NUMBER | QTY | PART NAME 1 2 3 4 5 6 (PRODUCT LEVEL) | SEE PAGE |
|---|---|---|---|---|
| | **327-2137** | 1 | SOFTWARE GP-MONITOR | |
| | | | -OR- | |
| | **327-2138** | 1 | SERVICE GP-MONITOR | |
| | | | (OPTIONAL SERVICE REPLACEMENT)(INCLUDES CONTROL GP & SOFTWARE) | |

**<END>**

## *303-1550* ELECTRONICS GP-MONITOR–
**ENGLISH, GERMAN, HUNGARIAN, RUSSIAN**

**S/N: RLB1-UP**

**CANNOT BE USED WITH 247-7039–PAGE 264, 303-1546–PAGE 265, 303-1547–PAGE 265, 303-1548–PAGE 266, 303-1549–PAGE 266, 303-1551–PAGE 267, 303-1552–PAGE 267, 303-1553–PAGE 267, 303-1554–PAGE 268, 303-1555–PAGE 268, 303-1556–PAGE 268, 303-1545–PAGE 265, 303-1557–PAGE 269, 303-2270–PAGE 269, 303-2273–PAGE 269 AN ATTACHMENT**

**SMCS-7490, 7601, 7610, 7620** **i03022527**

| NOTE | PART NUMBER | QTY | PART NAME 1 2 3 4 5 6 (PRODUCT LEVEL) | SEE PAGE |
|---|---|---|---|---|
| | **327-2139** | 1 | SOFTWARE GP-MONITOR | |
| | | | -OR- | |
| | **327-2140** | 1 | SERVICE GP-MONITOR | |
| | | | (OPTIONAL SERVICE REPLACEMENT)(INCLUDES CONTROL GP & SOFTWARE) | |

**<END>**

## *303-1551* ELECTRONICS GP-MONITOR–
**ENGLISH, FINNISH, ICELANDIC, NORWEGIAN**

**S/N: RLB1-UP**

**CANNOT BE USED WITH 247-7039–PAGE 264, 303-1546–PAGE 265, 303-1547–PAGE 265, 303-1548–PAGE 266, 303-1549–PAGE 266, 303-1550–PAGE 266, 303-1552–PAGE 267, 303-1553–PAGE 267, 303-1554–PAGE 268, 303-1555–PAGE 268, 303-1556–PAGE 268, 303-1545–PAGE 265, 303-1557–PAGE 269, 303-2270–PAGE 269, 303-2273–PAGE 269 AN ATTACHMENT**

**SMCS-7490, 7601, 7610, 7620** **i03022546**

| NOTE | PART NUMBER | QTY | PART NAME 1 2 3 4 5 6 (PRODUCT LEVEL) | SEE PAGE |
|---|---|---|---|---|
| | **327-2141** | 1 | SOFTWARE GP-MONITOR | |
| | | | –OR– | |
| | **327-2142** | 1 | SERVICE GP-MONITOR | |
| | | | (OPTIONAL SERVICE REPLACEMENT)(INCLUDES CONTROL GP & SOFTWARE) | |

**<END>**

## *303-1552* ELECTRONICS GP-MONITOR–
**ENGLISH, INDONESIAN, MALAYSIAN, THAI**

**S/N: RLB1-UP**

**CANNOT BE USED WITH 247-7039–PAGE 264, 303-1546–PAGE 265, 303-1547–PAGE 265, 303-1548–PAGE 266, 303-1549–PAGE 266, 303-1550–PAGE 266, 303-1551–PAGE 267, 303-1553–PAGE 267, 303-1554–PAGE 268, 303-1555–PAGE 268, 303-1556–PAGE 268, 303-1545–PAGE 265, 303-1557–PAGE 269, 303-2270–PAGE 269, 303-2273–PAGE 269 AN ATTACHMENT**

**SMCS-7490, 7601, 7610, 7620** **i03023913**

| NOTE | PART NUMBER | QTY | PART NAME 1 2 3 4 5 6 (PRODUCT LEVEL) | SEE PAGE |
|---|---|---|---|---|
| | **327-2143** | 1 | SOFTWARE GP-MONITOR | |
| | | | –OR– | |
| | **327-2144** | 1 | SERVICE GP-MONITOR | |
| | | | (OPTIONAL SERVICE REPLACEMENT)(INCLUDES CONTROL GP & SOFTWARE) | |

**<END>**

## *303-1553* ELECTRONICS GP-MONITOR–
**BURMESE, ENGLISH, INDONESIAN, VIETNAMESE**

**S/N: RLB1-UP**

**CANNOT BE USED WITH 247-7039–PAGE 264, 303-1546–PAGE 265, 303-1547–PAGE 265, 303-1548–PAGE 266, 303-1549–PAGE 266, 303-1550–PAGE 266, 303-1551–PAGE 267, 303-1552–PAGE 267, 303-1554–PAGE 268, 303-1555–PAGE 268, 303-1556–PAGE 268, 303-1545–PAGE 265, 303-1557–PAGE 269, 303-2270–PAGE 269, 303-2273–PAGE 269 AN ATTACHMENT**

**SMCS-7490, 7601, 7610, 7620** **i03023918**

| NOTE | PART NUMBER | QTY | PART NAME 1 2 3 4 5 6 (PRODUCT LEVEL) | SEE PAGE |
|---|---|---|---|---|
| | **327-2145** | 1 | SOFTWARE GP-MONITOR | |
| | | | -OR- | |
| | **327-2146** | 1 | SERVICE GP-MONITOR | |
| | | | (OPTIONAL SERVICE REPLACEMENT)(INCLUDES CONTROL GP & SOFTWARE) | |

**<END>**

## *303-1554* ELECTRONICS GP-MONITOR–ENGLISH, GREEK, HEBREW, ITALIAN

**S/N: RLB1-UP**

**CANNOT BE USED WITH 247-7039–PAGE 264, 303-1546–PAGE 265, 303-1547–PAGE 265, 303-1548–PAGE 266, 303-1549–PAGE 266, 303-1550–PAGE 266, 303-1551–PAGE 267, 303-1552–PAGE 267, 303-1553–PAGE 267, 303-1555–PAGE 268, 303-1556–PAGE 268, 303-1545–PAGE 265, 303-1557–PAGE 269, 303-2270–PAGE 269, 303-2273–PAGE 269 AN ATTACHMENT**

**SMCS-7490, 7601, 7610, 7620** **i03023925**

| NOTE | PART NUMBER | QTY | PART NAME 1 2 3 4 5 6 (PRODUCT LEVEL) | SEE PAGE |
|---|---|---|---|---|
| | 327-2147 | 1 | SOFTWARE GP-MONITOR | |
| | | | –OR– | |
| | 327-2148 | 1 | SERVICE GP-MONITOR | |
| | | | (OPTIONAL SERVICE REPLACEMENT)(INCLUDES CONTROL GP & SOFTWARE) | |

**<END>**

## *303-1555* ELECTRONICS GP-MONITOR–ENGLISH, JAPANESE

**S/N: RLB1-UP**

**CANNOT BE USED WITH 247-7039–PAGE 264, 303-1546–PAGE 265, 303-1547–PAGE 265, 303-1548–PAGE 266, 303-1549–PAGE 266, 303-1550–PAGE 266, 303-1551–PAGE 267, 303-1552–PAGE 267, 303-1553–PAGE 267, 303-1554–PAGE 268, 303-1556–PAGE 268, 303-1545–PAGE 265, 303-1557–PAGE 269, 303-2270–PAGE 269, 303-2273–PAGE 269 AN ATTACHMENT**

**SMCS-7490, 7601, 7610, 7620** **i03023929**

| NOTE | PART NUMBER | QTY | PART NAME 1 2 3 4 5 6 (PRODUCT LEVEL) | SEE PAGE |
|---|---|---|---|---|
| | 327-2149 | 1 | SOFTWARE GP-MONITOR | |
| | | | –OR– | |
| | 327-2150 | 1 | SERVICE GP-MONITOR | |
| | | | (OPTIONAL SERVICE REPLACEMENT)(INCLUDES CONTROL GP & SOFTWARE) | |

**<END>**

## *303-1556* ELECTRONICS GP-MONITOR–ENGLISH, CHINESE

**S/N: RLB1-UP**

**CANNOT BE USED WITH 247-7039–PAGE 264, 303-1546–PAGE 265, 303-1547–PAGE 265, 303-1548–PAGE 266, 303-1549–PAGE 266, 303-1550–PAGE 266, 303-1551–PAGE 267, 303-1552–PAGE 267, 303-1553–PAGE 267, 303-1554–PAGE 268, 303-1555–PAGE 268, 303-1545–PAGE 265, 303-1557–PAGE 269, 303-2270–PAGE 269, 303-2273–PAGE 269 AN ATTACHMENT**

**SMCS-7490, 7601, 7610, 7620** **i03023933**

| NOTE | PART NUMBER | QTY | PART NAME 1 2 3 4 5 6 (PRODUCT LEVEL) | SEE PAGE |
|---|---|---|---|---|
| | 327-2151 | 1 | SOFTWARE GP-MONITOR | |
| | | | –OR– | |
| | 327-2152 | 1 | SERVICE GP-MONITOR | |
| | | | (OPTIONAL SERVICE REPLACEMENT)(INCLUDES CONTROL GP & SOFTWARE) | |

**<END>**

## *303-1557* ELECTRONICS GP-MONITOR–
**ARABIC, ENGLISH, TURKISH**

**S/N: RLB1-UP**

**CANNOT BE USED WITH 247-7039–PAGE 264, 303-1546–PAGE 265, 303-1547–PAGE 265, 303-1548–PAGE 266, 303-1549–PAGE 266, 303-1550–PAGE 266, 303-1551–PAGE 267, 303-1552–PAGE 267, 303-1553–PAGE 267, 303-1554–PAGE 268, 303-1555–PAGE 268, 303-1556–PAGE 268, 303-1545–PAGE 265, 303-2270–PAGE 269, 303-2273–PAGE 269 AN ATTACHMENT**

**SMCS-7490, 7601, 7610, 7620** **i03023936**

| NOTE | PART NUMBER | QTY | PART NAME 1 2 3 4 5 6 (PRODUCT LEVEL) | SEE PAGE |
|---|---|---|---|---|
| | **327-2155** | 1 | SOFTWARE GP-MONITOR | |
| | | | –OR– | |
| | **327-2156** | 1 | SERVICE GP-MONITOR | |
| | | | (OPTIONAL SERVICE REPLACEMENT)(INCLUDES CONTROL GP & SOFTWARE) | |

**<END>**

## *303-2270* ELECTRONICS GP-MONITOR–
**CROATIAN, ENGLISH, MONGOLIAN, SERBIAN**

**S/N: RLB1-UP**

**CANNOT BE USED WITH 247-7039–PAGE 264, 303-1546–PAGE 265, 303-1547–PAGE 265, 303-1548–PAGE 266, 303-1549–PAGE 266, 303-1550–PAGE 266, 303-1551–PAGE 267, 303-1552–PAGE 267, 303-1553–PAGE 267, 303-1554–PAGE 268, 303-1555–PAGE 268, 303-1556–PAGE 268, 303-1545–PAGE 265, 303-1557–PAGE 269, 303-2273–PAGE 269 AN ATTACHMENT**

**SMCS-7490, 7601, 7610, 7620** **i03105383**

| NOTE | PART NUMBER | QTY | PART NAME 1 2 3 4 5 6 (PRODUCT LEVEL) | SEE PAGE |
|---|---|---|---|---|
| | **327-2157** | 1 | SOFTWARE GP-MONITOR | |
| | | | -OR- | |
| | **327-2158** | 1 | SERVICE GP-MONITOR | |
| | | | (OPTIONAL SERVICE REPLACEMENT)(INCLUDES CONTROL GP & SOFTWARE) | |

**<END>**

## *303-2273* ELECTRONICS GP-MONITOR–
**ENGLISH, HUNGARIAN, SLOVAKIAN**

**S/N: RLB1-UP**

**CANNOT BE USED WITH 247-7039–PAGE 264, 303-1546–PAGE 265, 303-1547–PAGE 265, 303-1548–PAGE 266, 303-1549–PAGE 266, 303-1550–PAGE 266, 303-1551–PAGE 267, 303-1552–PAGE 267, 303-1553–PAGE 267, 303-1554–PAGE 268, 303-1555–PAGE 268, 303-1556–PAGE 268, 303-1545–PAGE 265, 303-1557–PAGE 269, 303-2270–PAGE 269 AN ATTACHMENT**

**SMCS-7490, 7601, 7610, 7620** **i03106626**

| NOTE | PART NUMBER | QTY | PART NAME 1 2 3 4 5 6 (PRODUCT LEVEL) | SEE PAGE |
|---|---|---|---|---|
| | **327-2159** | 1 | SOFTWARE GP-MONITOR | |
| | | | -OR- | |
| | **327-2160** | 1 | SERVICE GP-MONITOR | |
| | | | (OPTIONAL SERVICE REPLACEMENT)(INCLUDES CONTROL GP & SOFTWARE) | |

**<END>**

# *224-9776* HEATER GP-JACKET WATER

**S/N: RLB1-UP**
**AN ATTACHMENT**

**SMCS-1383** **i02697612**

| NOTE | REF NO | GRAPHIC REF | PART NUMBER | QTY | PART NAME 1 2 3 4 5 6 (PRODUCT LEVEL) | SEE PAGE |
|---|---|---|---|---|---|---|
| | 1 | 1 | **4N-8227** | 1 | CORD AS-JACKET WATER HEATER | |
| | 2 | 1 | **207-6901** | 1 | ELEMENT AS-JACKET WATER HEATER (240-VOLT, 1500-WATT) | |
| | 2A | 1 | **133-6517** | 1 | CAP AS-DUST | |

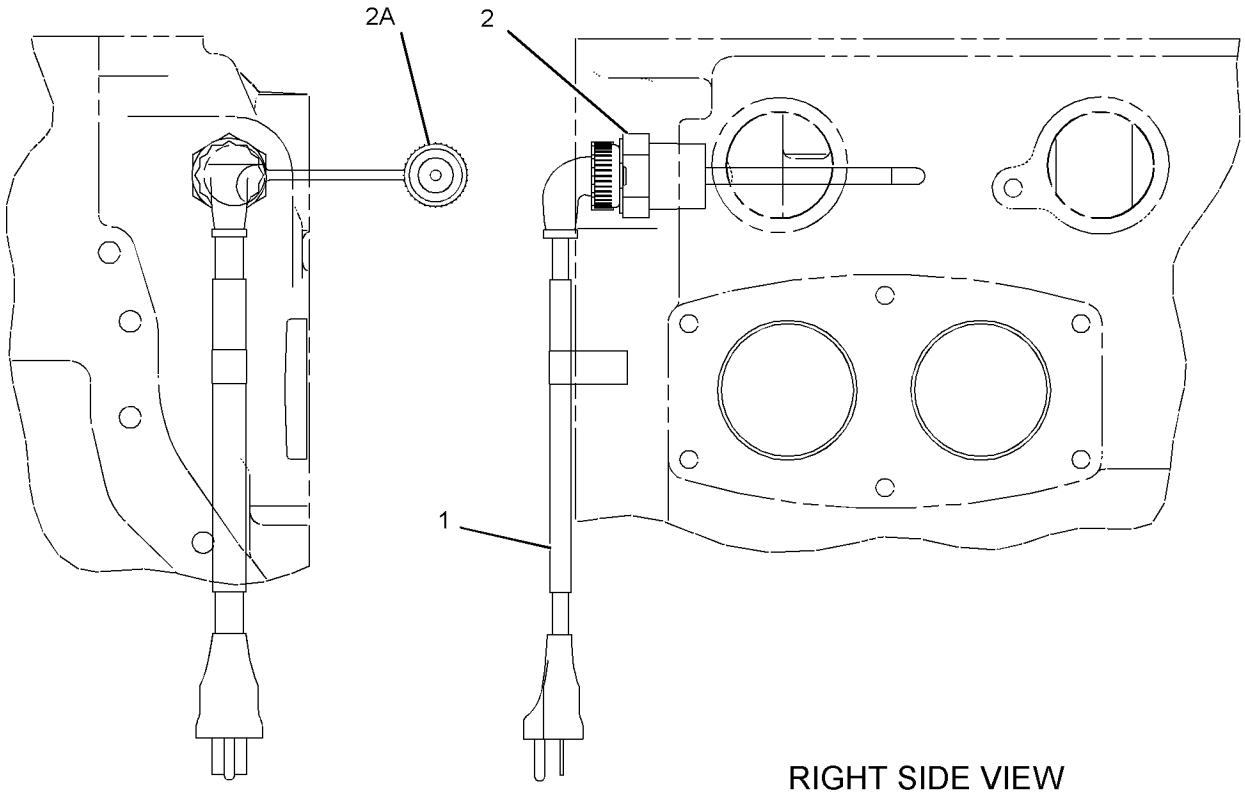


GRAPHIC #1 **<END>** g01055344

# *248-7661* HEATER GP-JACKET WATER

**S/N: RLB1-UP**
**120-VOLT**
**AN ATTACHMENT**

**SMCS-1383** **i02825942**

| NOTE | REF NO | GRAPHIC REF | PART NUMBER | QTY | PART NAME 1 2 3 4 5 6 (PRODUCT LEVEL) | SEE PAGE |
|---|---|---|---|---|---|---|
| | 1 | 1 | **9N-5253** | 1 | CORD AS-JACKET WATER HEATER (120-VOLT) | |
| | 2 | 1 | **207-7025** | 1 | ELEMENT AS-JACKET WATER HEATER (120-VOLT, 1500-WATT) | |
| | | 1 | **133-6517** | 1 | CAP AS-DUST | |

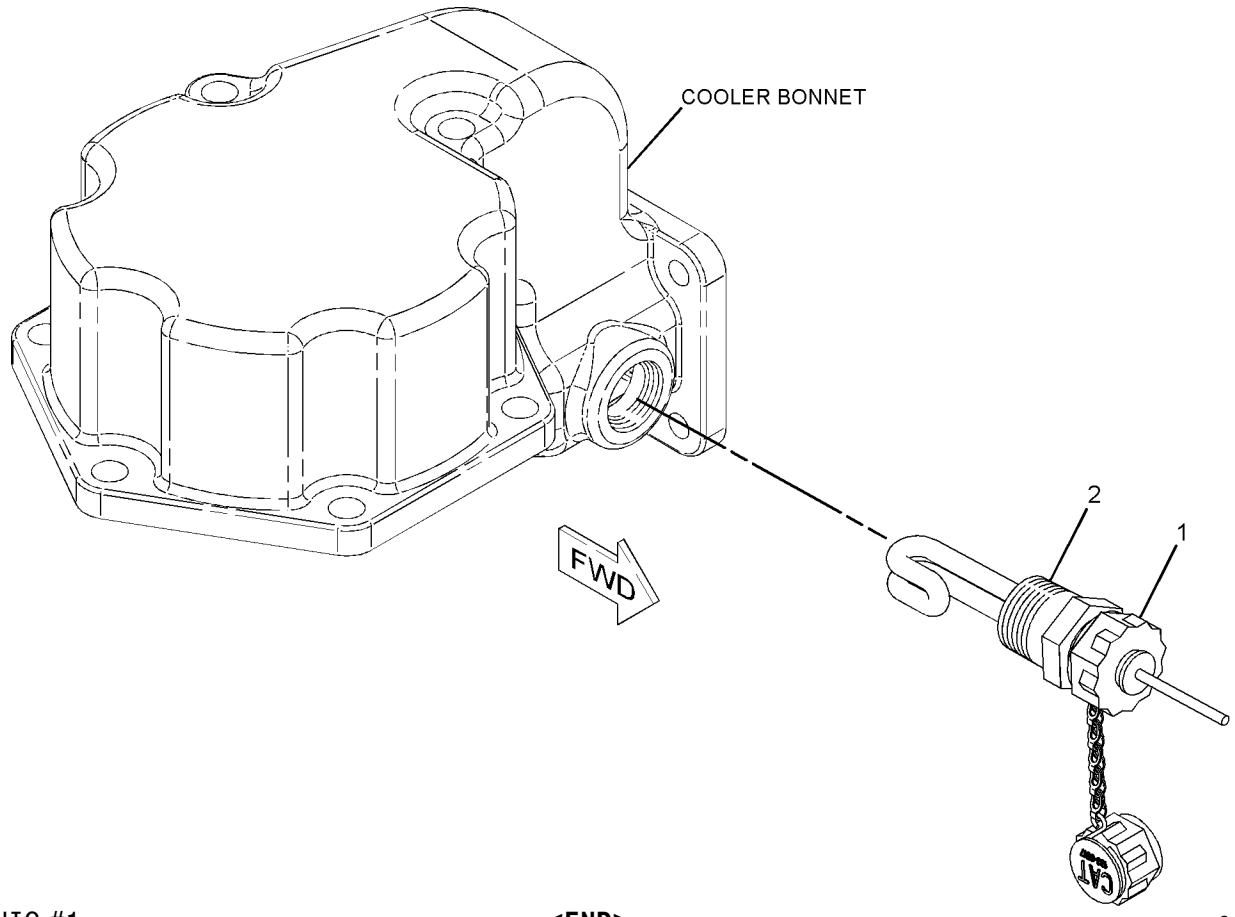


GRAPHIC #1 **<END>** g01059586

## *268-7807* INSTALLATION AR-COMMUNICATION–

**PRODUCT LINK 321SR**

**S/N: RLB1-UP**

**AN ATTACHMENT**

**SMCS-7606** **i03267002**

| NOTE | PART NUMBER | QTY | PART NAME 1 2 3 4 5 6 (PRODUCT LEVEL) | SEE PAGE |
|---|---|---|---|---|
| Y | *262-2043* | 1 | ELECTRONICS GP-COMMUNICATION (PRODUCT LINK 300) | 263 |
| | | | S/N: RLB1-416 | |
| Y | *276-9462* | 1 | INSTALLATION GP-COMMUNICATION | 273 |
| Y | *270-1506* | 1 | WIRING GP-COMMUNICATION | 368 |

Y-SEPARATE ILLUSTRATION

**<END>**

## *280-1651* INSTALLATION AR-PAYLOAD

**S/N: RLB1-UP**

**AN ATTACHMENT**

**SMCS-7494** **i03132100**

| NOTE | PART NUMBER | QTY | PART NAME 1 2 3 4 5 6 (PRODUCT LEVEL) | SEE PAGE |
|---|---|---|---|---|
| Y | *249-0219* | 1 | CONTROL & MTG GP-MONITOR (PAYLOAD CONTROL) | 261 |
| Y | *247-4997* | 1 | ELECTRONICS GP-MONITOR (PAYLOAD CONTROL) | 264 |
| Y | *270-1510* | 1 | LAMP GP-PAYLOAD SIGNAL | 285 |
| Y | *278-4376* | 1 | SENSOR & MTG GP-PAYLOAD | 294 |
| | | | | |
| J | *277-0589* | 1 | CONFIGURATION-PREMIUM (TRUCK PAYLOAD MEASUREMENT SYS) | |

J-DLR INSTALL CONFIG:SEE IRM:EES03-01
Y-SEPARATE ILLUSTRATION

**<END>**

# *276-9462* INSTALLATION GP-COMMUNICATION

**S/N: RLB1-UP**

**PART OF 268-7807 INSTALLATION AR-COMMUNICATION**

**AN ATTACHMENT**

**SMCS-7606** **i03116403**

| NOTE | REF NO | GRAPHIC REF | PART NUMBER | QTY | PART NAME 1 2 3 4 5 6 (PRODUCT LEVEL) | SEE PAGE |
|---|---|---|---|---|---|---|
| | 1 | 1 | **7K-1181** | 2 | STRAP-CABLE | |
| | 2 | 1 | **230-1341** | 1 | FILM-WARNING (PRODUCT LINK RADIO, INTL) | |
| Y | 3 | 1 | *262-1421* | 1 | ELECTRONICS GP-COMMUNICATION (PRODUCT LINK 300) | 263 |
| Y | 4 | 1 | **263-9088** | 1 | RADIO GP-COMMUNICATION (PRODUCT LINK 121SR) | 293 |
| | 5 | 1 | **276-9463** | 1 | HARNESS AS-CONTROL | |
| | | 1 | **102-8801** | 1 | KIT-RECEPTACLE (12-PIN) | |
| | | | | | (INCLUDES RECEPTACLE AS & WEDGE) | |
| | | 1 | **155-2255** | 1 | KIT-CONNECTING PLUG (12-PIN) | |
| | | | | | (INCLUDES PLUG AS, WEDGE & INTERFACE SEAL) | |
| | | 1 | **160-7690** | 1 | PLUG AS-CONNECTOR (70-PIN) | |
| | | 1 | **9X-6772** | 2 | STRAP-CABLE | |
| | | 1 | **126-1774** | 1 | COVER-CONNECTOR | |
| | 6 | 1 | **156-6175** | 2 | CLIP | |
| | 7 | 1 | **8C-5607** | 8 | MOUNT-ISOLATION | |
| | 8 | 1 | **8C-5608** | 4 | SPACER (6.5X9.5X25.4-MM THK) | |
| M | 9 | 1 | **8C-8451** | 4 | BOLT (M6X1X40-MM) | |
| M | 10 | 1 | **8T-4138** | 4 | BOLT (M6X1X20-MM) | |
| | 11 | 1 | **9X-6165** | 4 | WASHER (6.5X22X2.5-MM THK) | |
| | 12 | 1 | **9X-8256** | 4 | WASHER (6.6X12X2-MM THK) | |
| | 13 | 1 | **307-0047** | 1 | FILM-INFORMATION (PRODUCT LINK, READ OMM) | |

M-METRIC PART
Y-SEPARATE ILLUSTRATION

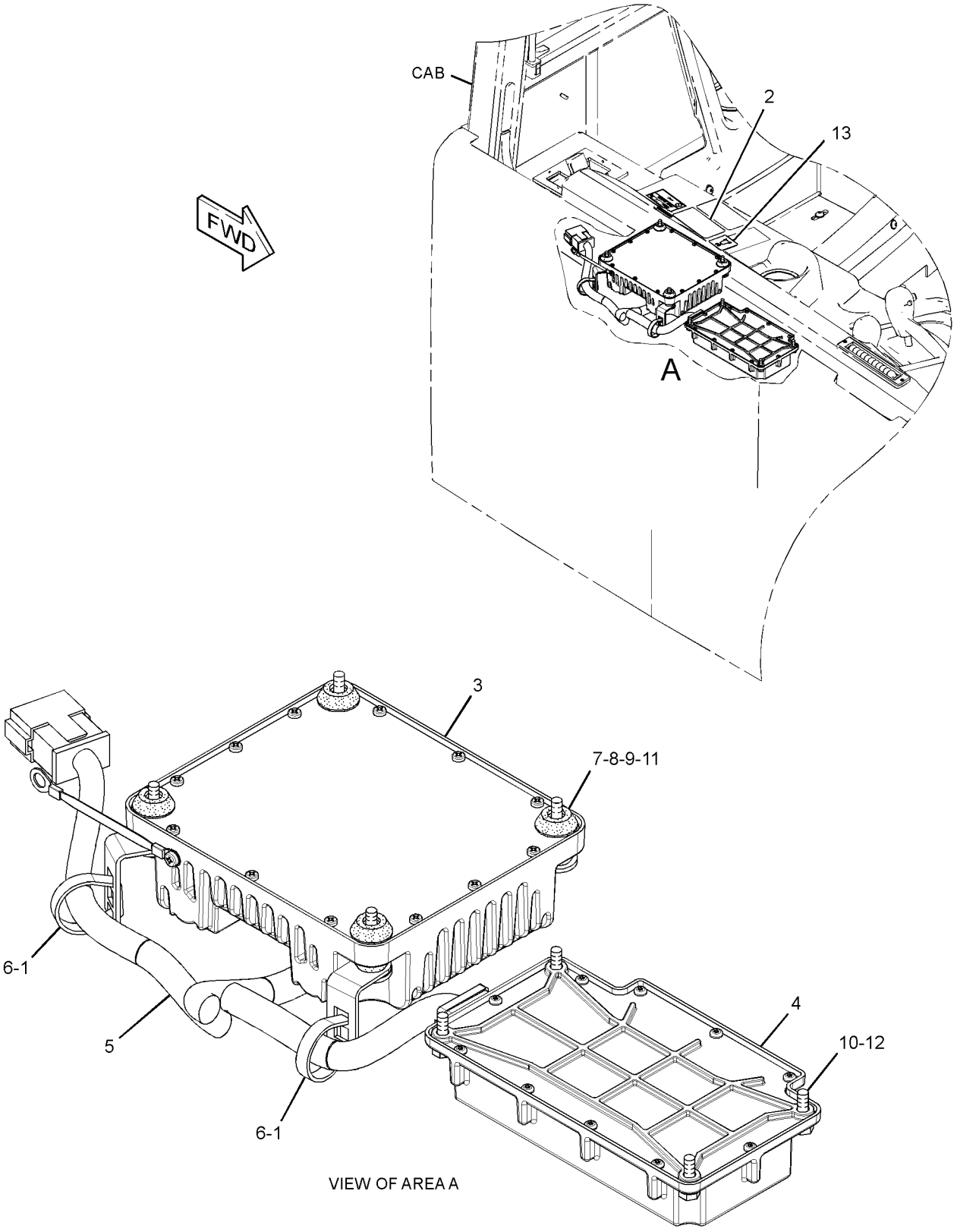


VIEW OF AREA A

GRAPHIC #1 **<END>** g01430997

# *312-8302* INSTALLATION GP-COMMUNICATION

**S/N: RLB1-UP**

**PART OF 313-5950 INSTALLATION GP-COMMUNICATION**

**AN ATTACHMENT**

**SMCS-7606** **i03207837**

| NOTE | REF NO | GRAPHIC REF | PART NUMBER | QTY | PART NAME 1 2 3 4 5 6 (PRODUCT LEVEL) | SEE PAGE |
|---|---|---|---|---|---|---|
| | 1 | 1 | **7K-1181** | 2 | STRAP-CABLE | |
| | 2 | 1 | **230-1340** | 1 | FILM-WARNING (PRODUCT LINK RADIO, U.S.) | |
| Y | 3 | 1 | *262-1421* | 1 | ELECTRONICS GP-COMMUNICATION (PRODUCT LINK 300) | 263 |
| Y | 4 | 1 | **263-9088** | 1 | RADIO GP-COMMUNICATION (PRODUCT LINK 121SR) | 293 |
| | 5 | 1 | **276-9463** | 1 | HARNESS AS-CONTROL | |
| | 6 | 1 | **307-0047** | 1 | FILM-INFORMATION (PRODUCT LINK, READ OMM) | |
| | 7 | 1 | **156-6175** | 2 | CLIP | |
| | 8 | 1 | **8C-5607** | 8 | MOUNT-ISOLATION | |
| | 9 | 1 | **8C-5608** | 4 | SPACER (6.5X9.5X25.4-MM THK) | |
| M | 10 | 1 | **8C-8451** | 4 | BOLT (M6X1X40-MM) | |
| M | 11 | 1 | **8T-4138** | 4 | BOLT (M6X1X20-MM) | |
| | 12 | 1 | **9X-6165** | 4 | WASHER (6.5X22X2.5-MM THK) | |
| | 13 | 1 | **9X-8256** | 4 | WASHER (6.6X12X2-MM THK) | |

M-METRIC PART
Y-SEPARATE ILLUSTRATION

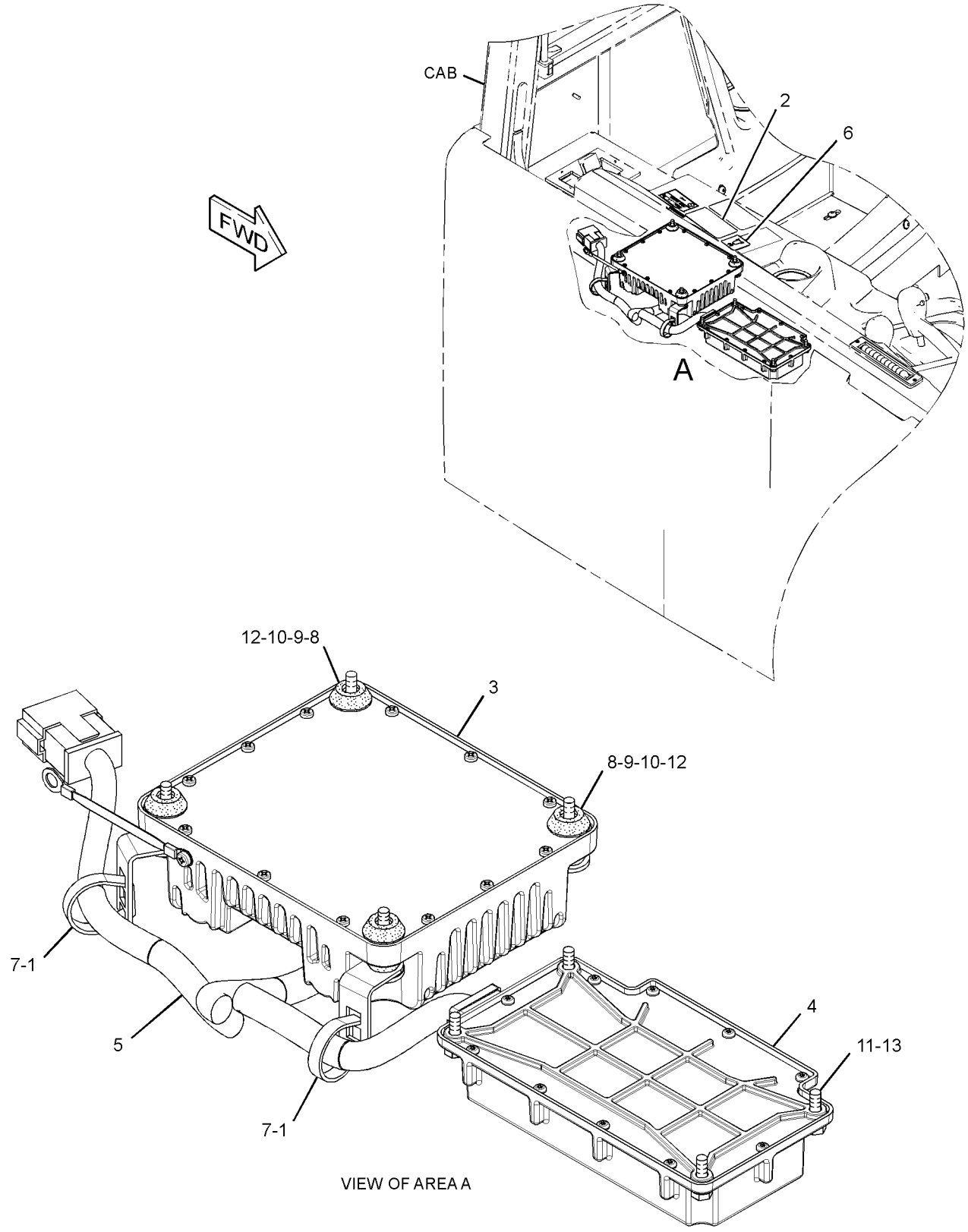


VIEW OF AREA A

GRAPHIC #1 **<END>** g01523955

# *313-5950* INSTALLATION GP-COMMUNICATION

**S/N: RLB1-UP**

**CANNOT BE USED WITH 268-7807—PAGE 272**

**AN ATTACHMENT**

**SMCS-7606** **i03131863**

| NOTE | PART NUMBER | QTY | PART NAME 1 2 3 4 5 6 (PRODUCT LEVEL) | SEE PAGE |
|---|---|---|---|---|
| Y | *262-2043* | 1 | ELECTRONICS GP-COMMUNICATION (PRODUCT LINK 300) | 263 |
| | | | S/N: RLB1-356 | |
| Y | *312-8302* | 1 | INSTALLATION GP-COMMUNICATION | 275 |
| Y | *270-1506* | 1 | WIRING GP-COMMUNICATION | 368 |

Y-SEPARATE ILLUSTRATION

**<END>**

# 3E-6389 LAMP GP-DOME

**S/N: RLB1-UP**
**24-VOLT. WITH SWITCH**
**PART OF 236-0985 WIRING GP-CAB**

**SMCS-1433** **i03205534**

| NOTE | REF NO | GRAPHIC REF | PART NUMBER | QTY | PART NAME 1 2 3 4 5 6 (PRODUCT LEVEL) | SEE PAGE |
|---|---|---|---|---|---|---|
| | 1 | 1 | **7N-9943** | 1 | LAMP (24-VOLT) (DOME) | |
| | 2 | 1 | **102-8803** | 1 | KIT-RECEPTACLE (3-PIN) | |
| | | | | | (INCLUDES RECEPTACLE AS & WEDGE) | |
| | 3 | 1 | **186-3735** | 3 | PIN-CONNECTOR (16-GA TO 18-GA) | |
| | 4 | 1 | **7T-0020** | 1 | LENS-DOME LAMP | |

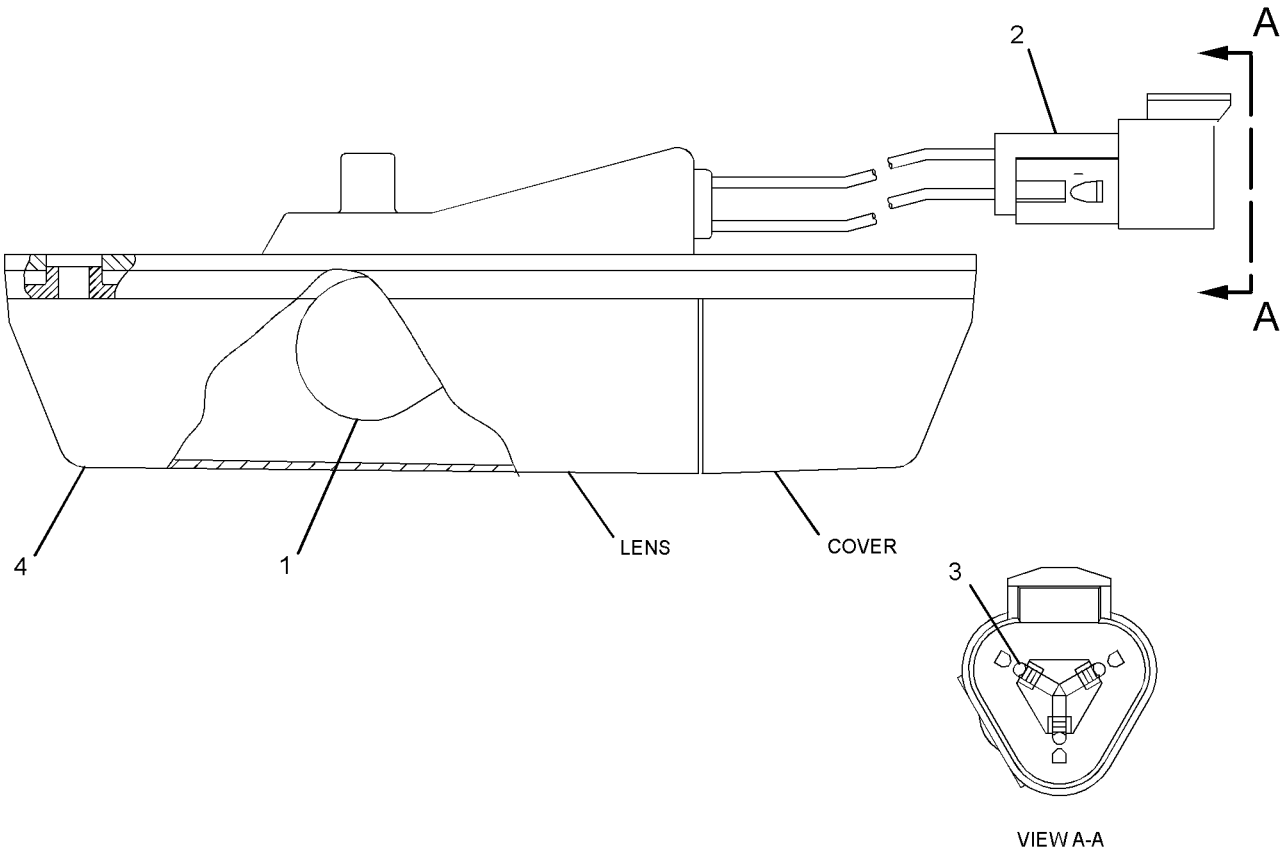


GRAPHIC #1 **<END>** g01270113

# 219-6485 LAMP GP-FLOOD

**S/N: RLB1-UP**
**24-VOLT**
**PART OF 270-1504 WIRING GP-LIGHTING**

**SMCS-1434** **i02890506**

| NOTE | REF NO | GRAPHIC REF | PART NUMBER | QTY | PART NAME 1 2 3 4 5 6 (PRODUCT LEVEL) | SEE PAGE |
|---|---|---|---|---|---|---|
| | 1 | 1 | **9X-3463** | 1 | LAMP-HALOGEN (24-VOLT, 65-WATT) | |
| | 2 | 1 | **9X-4244** | 2 | SCREW-SPECIAL | |
| | 4 | 1 | **202-6614** | 1 | LENS AS (FLOODLIGHT) | |
| | 5 | 1 | **175-4292** | 1 | BODY AS | |
| | 6 | 1 | **164-7556** | 1 | BRACKET (LAMP RETAINING) | |
| | 7 | 1 | **247-4285** | 1 | BOLT (M8X1.25X50-MM) | |
| M | 8 | 1 | **6V-9189** | 1 | LOCKNUT (M8X1.25-THD) | |
| | 9 | 1 | **8T-4224** | 2 | WASHER-HARD (8.8X16X2-MM THK) | |
| | 10 | 1 | **175-4291** | 1 | BRACKET AS | |

M-METRIC PART

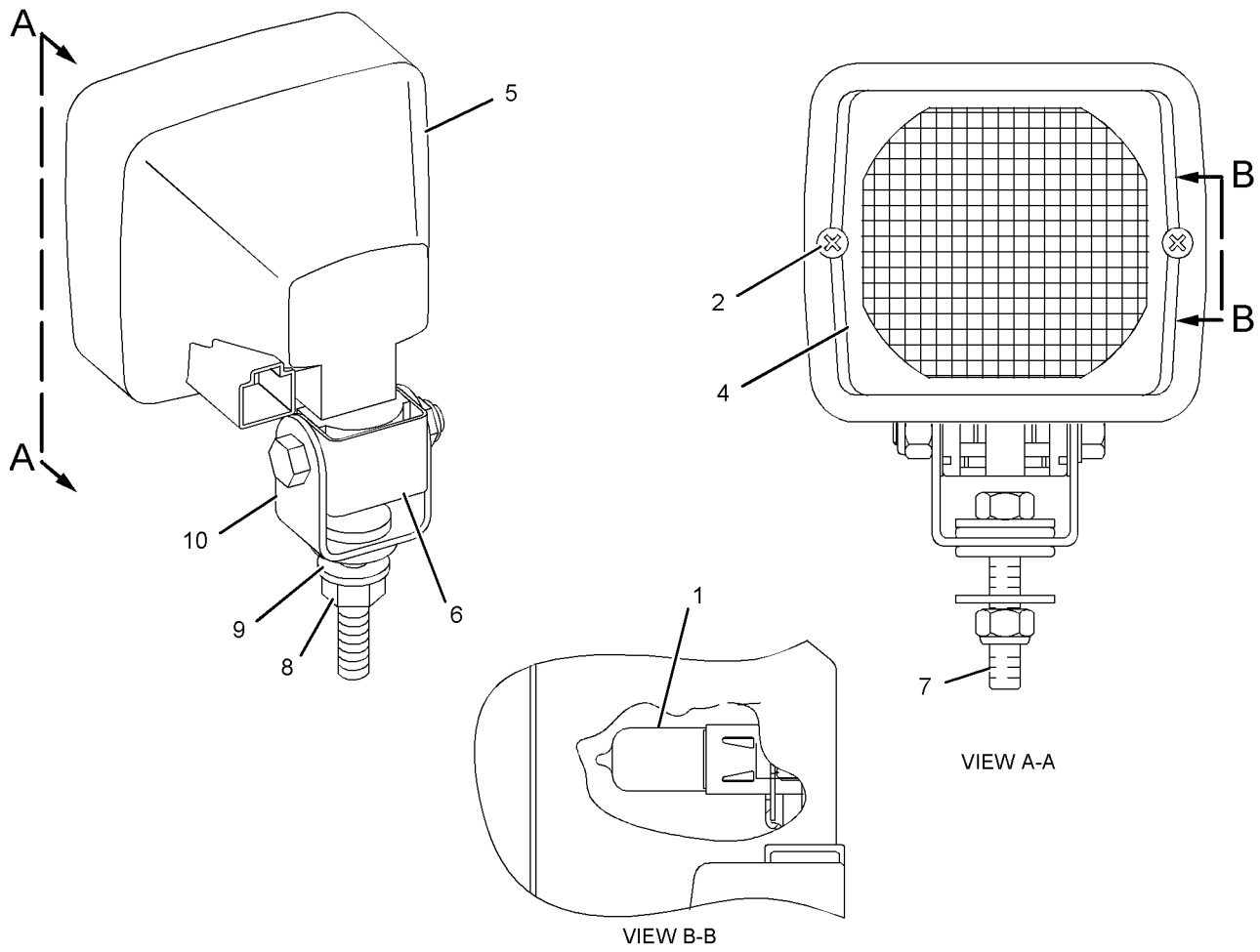


GRAPHIC #1 **<END>** g01146647

# 219-6486 LAMP GP-FLOOD

**S/N: RLB1-UP**
**24-VOLT**
**PART OF 270-1504 WIRING GP-LIGHTING**

**SMCS-1434** **i02807309**

| NOTE | REF NO | GRAPHIC REF | PART NUMBER | QTY | PART NAME 1 2 3 4 5 6 (PRODUCT LEVEL) | SEE PAGE |
|---|---|---|---|---|---|---|
| | 1 | 1 | **9X-3463** | 1 | LAMP-HALOGEN (24-VOLT, 65-WATT) | |
| | 2 | 1 | **9X-4244** | 2 | SCREW-SPECIAL | |
| | 3 | 1 | **202-6611** | 1 | LENS AS | |
| | 4 | 1 | **175-4292** | 1 | BODY AS | |
| | 5 | 1 | **164-7556** | 1 | BRACKET (LAMP RETAINING) | |
| M | 6 | 1 | **6V-2317** | 1 | BOLT (M8X1.25X30-MM) | |
| M | 7 | 1 | **6V-9189** | 1 | LOCKNUT (M8X1.25-THD) | |
| | 8 | 1 | **8T-4224** | 2 | WASHER-HARD (8.8X16X2-MM THK) | |
| | 9 | 1 | **175-4291** | 1 | BRACKET AS | |

M-METRIC PART

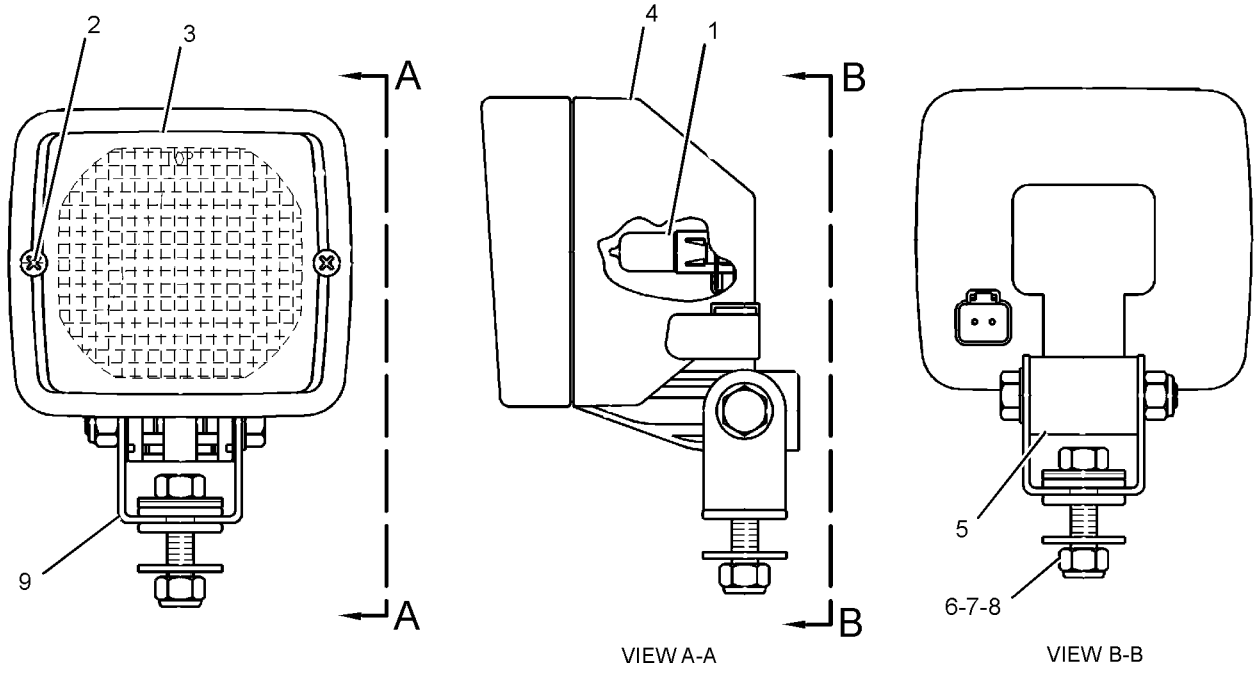


VIEW A-A VIEW B-B

GRAPHIC #1 **<END>** g01307925

# 219-6487 LAMP GP-FLOOD

**S/N: RLB1-UP**
**24-VOLT, 65-WATT**
**PART OF 296-0485, 296-0486 LIGHTING GP-FLOOD**

**SMCS-1434** **i02940523**

| NOTE | REF NO | GRAPHIC REF | PART NUMBER | QTY | PART NAME 1 2 3 4 5 6 (PRODUCT LEVEL) | SEE PAGE |
|---|---|---|---|---|---|---|
| | 1 | 1 | **9X-3463** | 1 | LAMP-HALOGEN (24-VOLT, 65-WATT) | |
| M | 2 | 1 | **8T-6912** | 1 | BOLT (M8X1.25X50-MM) | |
| M | 3 | 1 | **6V-9189** | 1 | LOCKNUT (M8X1.25-THD) | |
| | 4 | 1 | **8T-4224** | 2 | WASHER-HARD (8.8X16X2-MM THK) | |
| | 5 | 1 | **9X-4244** | 2 | SCREW-SPECIAL | |
| | 7 | 1 | **202-6614** | 1 | LENS AS (FLOODLIGHT) | |
| | 8 | 1 | **175-4292** | 1 | BODY AS | |
| | 9 | 1 | **164-7556** | 1 | BRACKET (LAMP RETAINING) | |
| | 10 | 1 | **175-4291** | 1 | BRACKET AS | |

M-METRIC PART

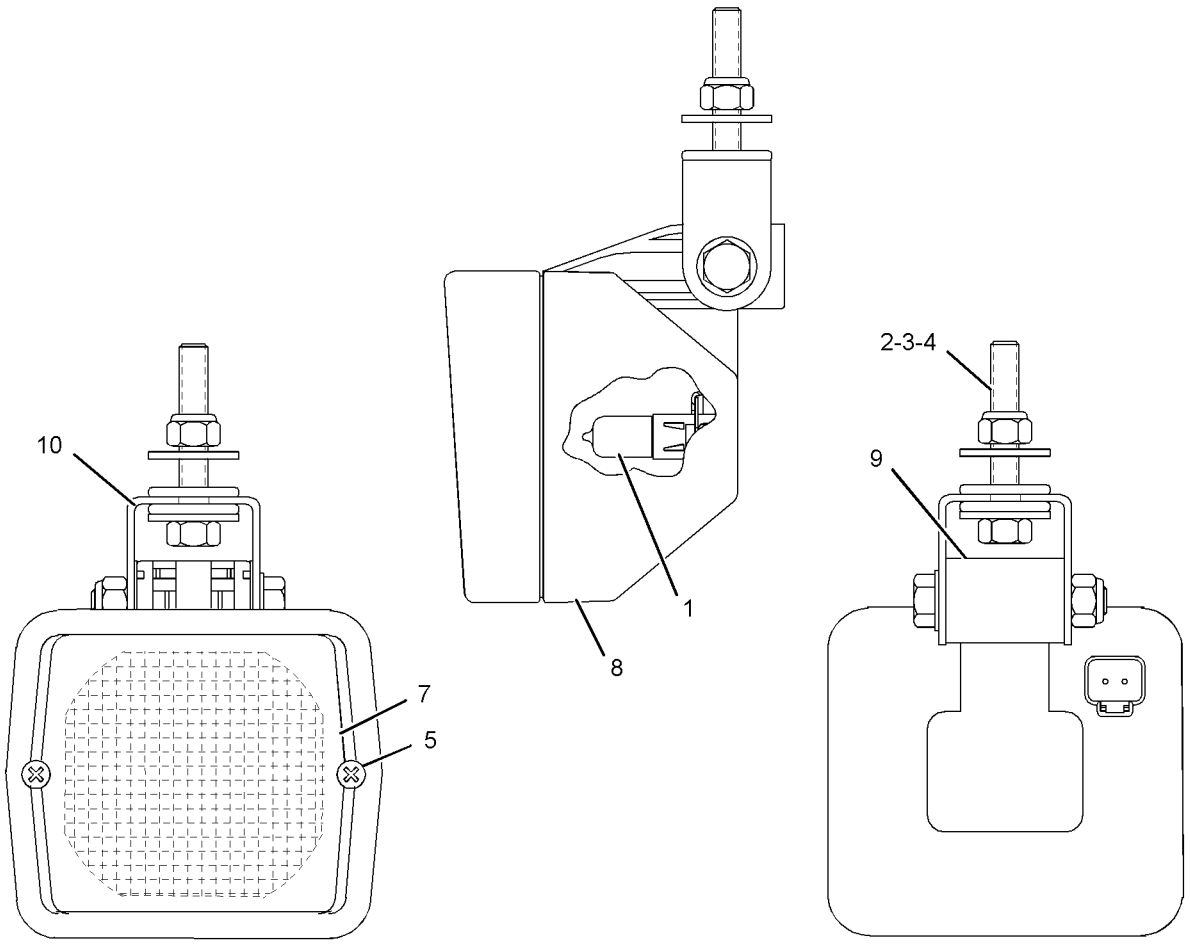


GRAPHIC #1 **<END>** g01457540

# 238-2797 LAMP GP-HEAD & SIGNAL–RH

**S/N: RLB1-UP**
**24-VOLT**
**PART OF 270-1504 WIRING GP-LIGHTING**

**SMCS-1429, 1430** **i02254218**

| NOTE | REF NO | GRAPHIC REF | PART NUMBER | QTY | PART NAME 1 2 3 4 5 6 (PRODUCT LEVEL) | SEE PAGE |
|---|---|---|---|---|---|---|
| | 1 | 1 | **228-6053** | 1 | BODY AS | |
| | 2 | 1 | **228-6054** | 1 | BEZEL | |
| | 3 | 1 | **228-6051** | 1 | LENS AS (HEADLIGHT) | |
| | 4 | 1 | **228-6052** | 1 | LENS AS (TURN SIGNAL) | |
| | 5 | 1 | **228-6056** | 6 | SCREW (4-32X1.26-IN) | |
| | 6 | 1 | **9X-3465** | 1 | LAMP (24-VOLT, 75/70-WATT) (CLEAR) | |
| | 7 | 1 | **130-3515** | 1 | LAMP (24-VOLT, 5-WATT) (CLEAR) | |
| | 8 | 1 | **242-0588** | 1 | LAMP (24-VOLT, 21-WATT) (AMBER) | |
| M | 9 | 1 | **8T-0389** | 1 | LOCKNUT (M10X1.15-THD) | |
| | 10 | 1 | **100-3253** | 1 | SPACER (SPHERICAL) | |
| | 11 | 1 | **100-3254** | 1 | SPACER (SPHERICAL) | |
| | 12 | 1 | **100-3255** | 1 | WASHER (SPHERICAL) | |
| | 13 | 1 | **102-8805** | 1 | KIT-RECEPTACLE (6-PIN) | |
| | | | | | (INCLUDES RECEPTACLE AS & WEDGE) | |
| | 14 | 1 | **186-3735** | 5 | PIN-CONNECTOR (16-GA TO 18-GA) | |
| | 15 | 1 | **8T-8737** | 1 | PLUG-SEAL | |

M-METRIC PART

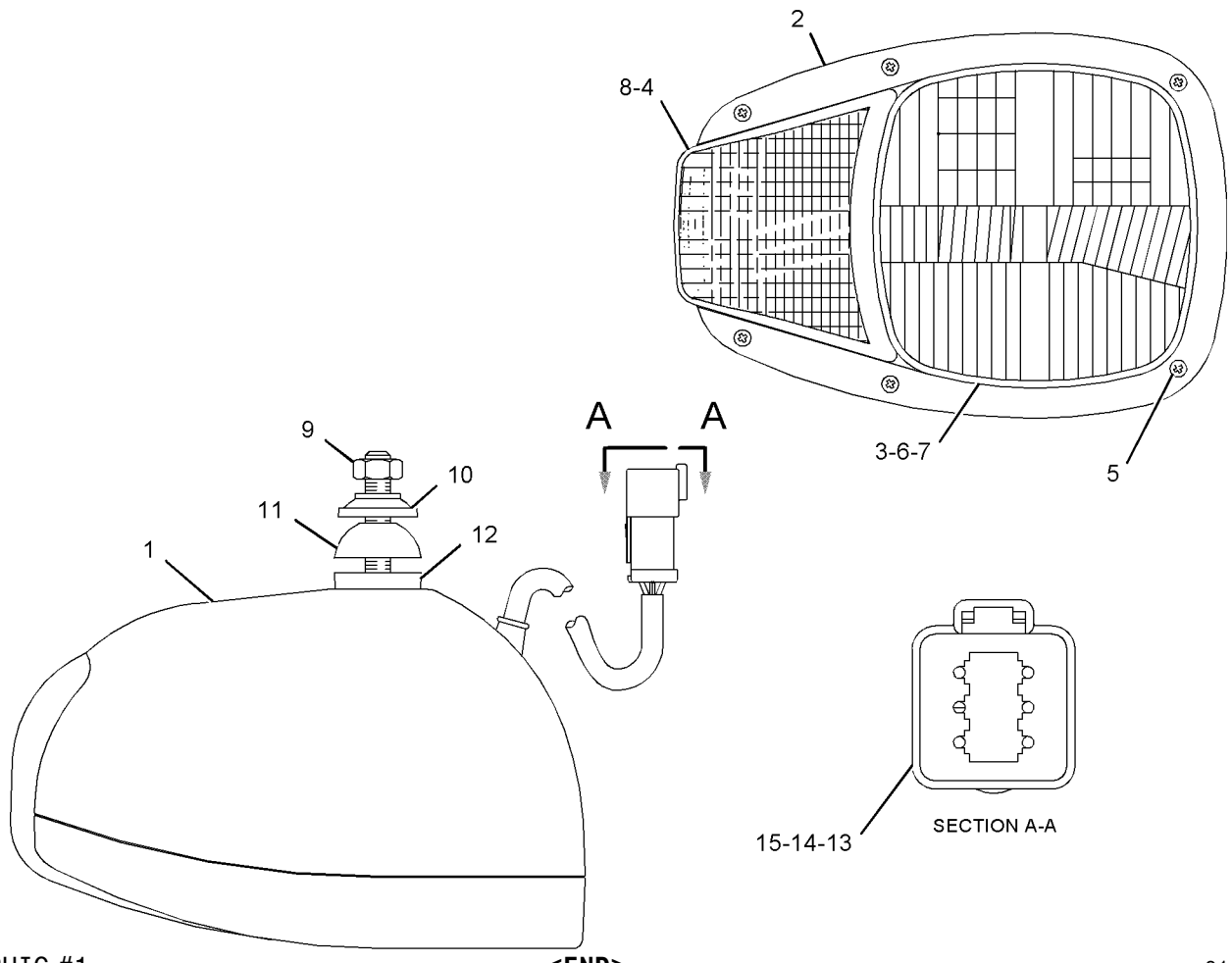


GRAPHIC #1 **<END>** g01106470

# 238-2798 LAMP GP-HEAD & SIGNAL–LH

**S/N: RLB1-UP**
**24-VOLT**
**PART OF 270-1504 WIRING GP-LIGHTING**

**SMCS-1429, 1430** **i02333915**

| NOTE | REF NO | GRAPHIC REF | PART NUMBER | QTY | PART NAME 1 2 3 4 5 6 (PRODUCT LEVEL) | SEE PAGE |
|---|---|---|---|---|---|---|
| | 1 | 1 | **228-6053** | 1 | BODY AS | |
| | 2 | 1 | **228-6054** | 1 | BEZEL | |
| | 3 | 1 | **228-6051** | 1 | LENS AS (HEADLIGHT) | |
| | 4 | 1 | **228-6052** | 1 | LENS AS (TURN SIGNAL) | |
| | 5 | 1 | **228-6056** | 6 | SCREW (4-32X1.26-IN) | |
| | 6 | 1 | **9X-3465** | 1 | LAMP (24-VOLT, 75/70-WATT) (CLEAR) | |
| | 7 | 1 | **130-3515** | 1 | LAMP (24-VOLT, 5-WATT) (CLEAR) | |
| | 8 | 1 | **242-0588** | 1 | LAMP (24-VOLT, 21-WATT) (AMBER) | |
| M | 9 | 1 | **8T-0389** | 1 | LOCKNUT (M10X1.15-THD) | |
| | 10 | 1 | **100-3253** | 1 | SPACER (SPHERICAL) | |
| | 11 | 1 | **100-3254** | 1 | SPACER (SPHERICAL) | |
| | 12 | 1 | **100-3255** | 1 | WASHER (SPHERICAL) | |
| | 13 | 1 | **102-8805** | 1 | KIT-RECEPTACLE (6-PIN) | |
| | | | | | (INCLUDES RECEPTACE AS & WEDGE) | |
| | 14 | 1 | **186-3735** | 5 | PIN-CONNECTOR (16-GA TO 18-GA) | |
| | 15 | 1 | **8T-8737** | 1 | PLUG-SEAL | |

M-METRIC PART

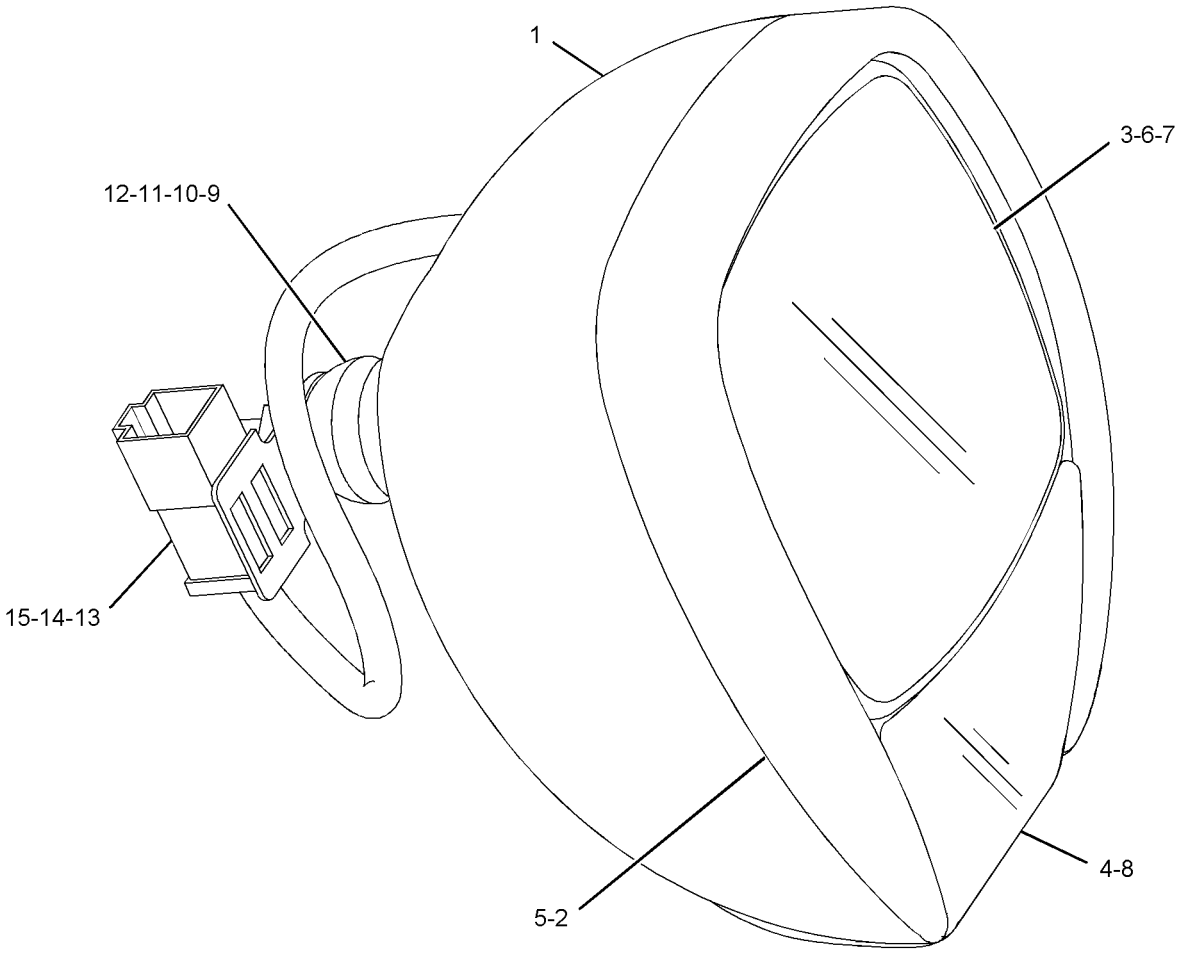


GRAPHIC #1 **<END>** g01110953

# 246-9871 LAMP GP-MARKER

**S/N: RLB1-UP**

**PART OF 270-1504 WIRING GP-LIGHTING**

**SMCS-1429** **i02501716**

| NOTE | REF NO | GRAPHIC REF | PART NUMBER | QTY | PART NAME 1 2 3 4 5 6 (PRODUCT LEVEL) | SEE PAGE |
|---|---|---|---|---|---|---|
| | 1 | 1 | **102-8802** | 1 | KIT-RECEPTACLE (2-PIN) | |
| | | | | | (INCLUDES RECEPTACLE AS & WEDGE) | |
| | 2 | 1 | **186-3735** | 2 | PIN-CONNECTOR (16-GA TO 18-GA) | |

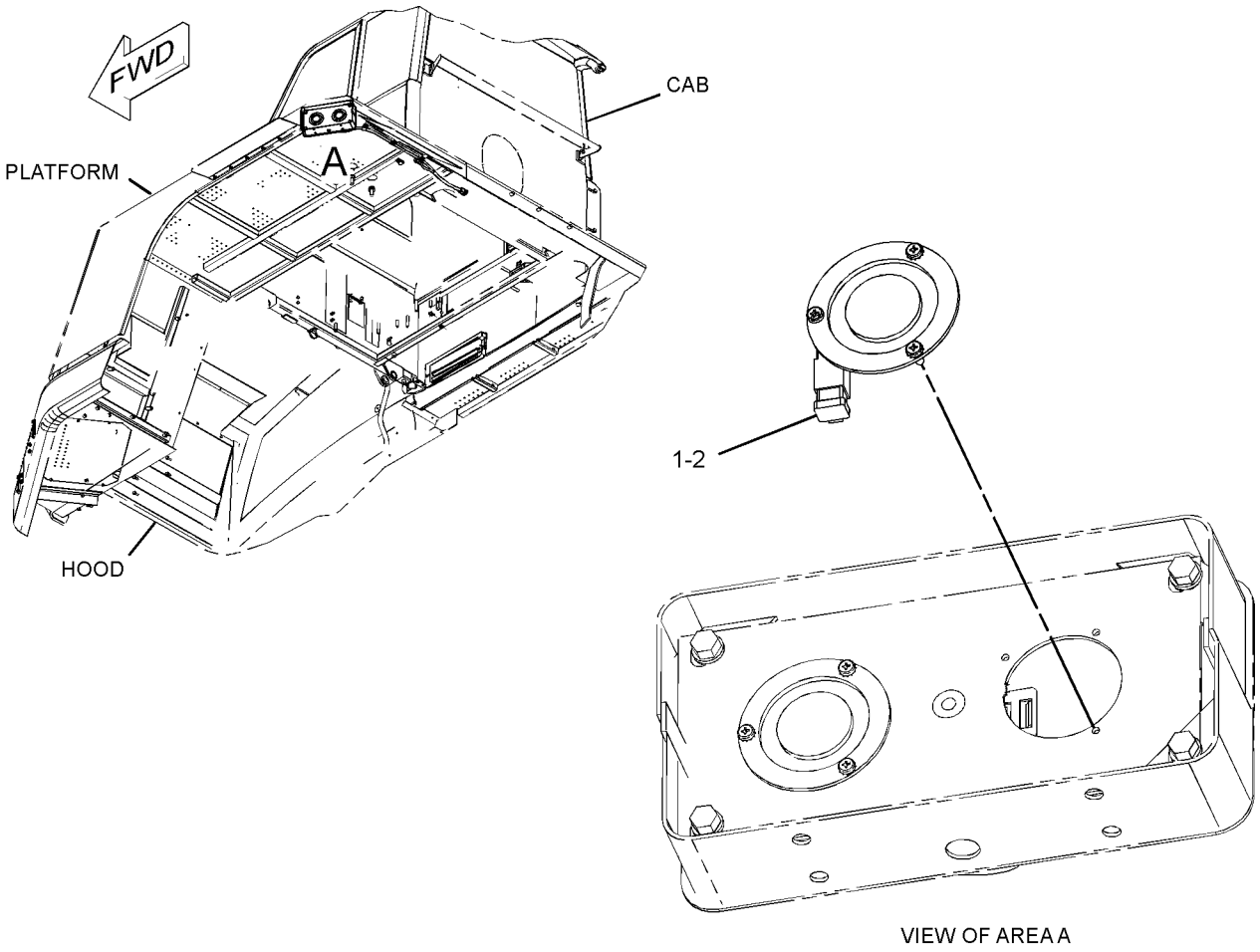


VIEW OF AREA A

GRAPHIC #1 **<END>** g01251622

# *270-1510* LAMP GP-PAYLOAD SIGNAL

**S/N: RLB1-UP**
**PART OF 280-1651 INSTALLATION AR-PAYLOAD**
**AN ATTACHMENT**

**SMCS-1429** **i02606730**

| NOTE | REF NO | GRAPHIC REF | PART NUMBER | QTY | PART NAME 1 2 3 4 5 6 (PRODUCT LEVEL) | SEE PAGE |
|---|---|---|---|---|---|---|
| | 1 | 1 | **3S-2093** | 17 | STRAP-CABLE | |
| | 2 | 1 | **9F-8125** | 12 | LOCKWASHER | |
| | 3 | 1 | **248-1264** | 2 | PLATE AS | |
| | 4 | 1 | **248-1265** | 2 | BRACKET AS | |
| | | | | | (EACH INCLUDES) | |
| | | 1 | **1F-0750** | 4 | NUT-WELD (3/8-16-THD) | |
| M | | 1 | **8T-3490** | 4 | NUT-WELD (M10X1.5-THD) | |
| | 5 | 1 | **277-7646** | 1 | HARNESS AS-MONITOR (FRONT, RH) | |
| | | 1 | **102-8803** | 1 | KIT-RECEPTACLE (3-PIN) | |
| | | 1 | **102-8806** | 1 | KIT-RECEPTACLE (8-PIN) | |
| | | | | | (EACH INCLUDES RECEPTACLE AS & WEDGE) | |
| | | 1 | **155-2270** | 2 | KIT-CONNECTING PLUG (2-PIN) | |
| | | | | | (EACH INCLUDES PLUG AS, WEDGE, & INTERFACE SEAL) | |
| | 6 | 1 | **277-7647** | 1 | HARNESS AS-MONITOR (FRONT, LH) | |
| | | 1 | **102-8803** | 1 | KIT-RECEPTACLE (3-PIN) | |
| | | 1 | **102-8806** | 1 | KIT-RECEPTACLE (8-PIN) | |
| | | | | | (EACH INCLUDES RECEPTACLE AS & WEDGE) | |
| | | 1 | **155-2270** | 2 | KIT-CONNECTING PLUG (2-PIN) | |
| | | | | | (EACH INCLUDES PLUG AS, WEDGE, & INTERFACE SEAL) | |
| | 7 | 1 | **277-7648** | 1 | HARNESS AS-MONITOR (REAR, RH) | |
| | | 1 | **102-8803** | 1 | KIT-RECEPTACLE (3-PIN) | |
| | | | | | (INCLUDES RECEPTACLE AS & WEDGE) | |
| | | 1 | **155-2260** | 1 | KIT-CONNECTING PLUG (3-PIN) | |
| | | | | | (INCLUDES PLUG AS, WEDGE, & INTERFACE SEAL) | |
| | 8 | 1 | **277-7649** | 1 | HARNESS AS-MONITOR (REAR, LH) | |
| | | 1 | **102-8803** | 1 | KIT-RECEPTACLE (3-PIN) | |
| | | | | | (INCLUDES RECEPTACLE AS & WEDGE) | |
| | | 1 | **155-2260** | 1 | KIT-CONNECTING PLUG (3-PIN) | |
| | | | | | (INCLUDES PLUG AS, WEDGE, & INTERFACE SEAL) | |
| | 9 | 1 | **299-5668** | 1 | PLATE | |
| | 10 | 1 | **030-9612** | 12 | SCREW-FORMING (10-24X0.5-IN) | |
| | 11 | 1 | **130-5300** | 8 | CLIP | |
| | 12 | 1 | **246-9869** | 2 | LAMP GP-PAYLOAD SIGNAL (24-VOLT) (PAYLOAD MONITOR) | |
| | | | | | (EACH INCLUDES) | |
| | | 1 | **102-8802** | 2 | KIT-RECEPTACLE (2-PIN) | |
| | | | | | (EACH INCLUDES RECEPTACLE AS & WEDGE) | |
| | | 1 | **186-3735** | 2 | PIN-CONNECTOR (16-GA TO 18-GA) | |
| | 13 | 1 | **246-9870** | 2 | LAMP GP-PAYLOAD SIGNAL (24-VOLT) (PAYLOAD MONITOR) | |
| | | | | | (EACH INCLUDES) | |
| | | 1 | **102-8802** | 2 | KIT-RECEPTACLE (2-PIN) | |
| | | | | | (EACH INCLUDES RECEPTACLE AS & WEDGE) | |
| | | 1 | **186-3735** | 2 | PIN-CONNECTOR (16-GA TO 18-GA) | |
| | 14 | 1 | **4P-7581** | 3 | CLIP | |
| | 15 | 1 | **5M-3062** | 8 | BOLT (3/8-16X0.75-IN) | |
| | 16 | 1 | **5S-7379** | 2 | BOLT (3/8-16X0.875-IN) | |
| | 17 | 1 | **8K-1433** | 2 | GROMMET | |
| | 18 | 1 | **8T-4121** | 19 | WASHER-HARD (11X21X2.5-MM THK) | |
| M | 19 | 1 | **8T-4137** | 19 | BOLT (M10X1.5X20-MM) | |
| | 20 | 1 | **8T-4896** | 10 | WASHER-HARD (10.2X18.5X2.5-MM THK) | |
| | 21 | 1 | **9D-3769** | 1 | GROMMET | |

M-METRIC PART

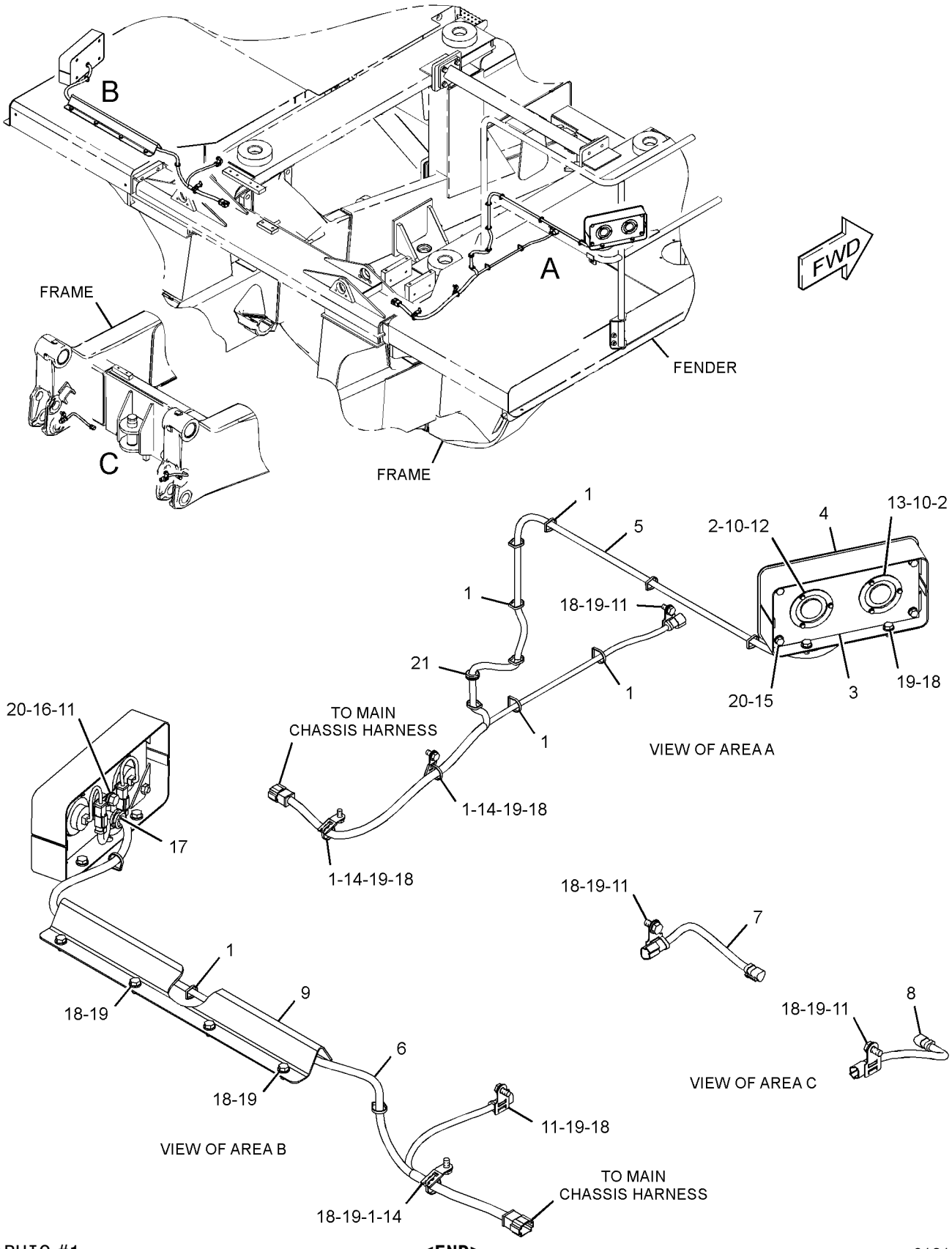


GRAPHIC #1 **<END>** g01316028

## *296-0485* LIGHTING GP-FLOOD–REAR, RH

**S/N: RLB1-UP**

**PART OF 270-1502 WIRING GP-CHASSIS**

**SMCS-1434** **i02881074**

| NOTE | REF NO | GRAPHIC REF | PART NUMBER | QTY | PART NAME 1 2 3 4 5 6 (PRODUCT LEVEL) | SEE PAGE |
|---|---|---|---|---|---|---|
| | 1 | 1 | **3S-2093** | 5 | STRAP-CABLE | |
| Y | 2 | 1 | **219-6487** | 1 | LAMP GP-FLOOD (24-VOLT, 65-WATT) (BACKUP LIGHT) | 281 |
| | 3 | 1 | **247-5638** | 1 | BRACKET AS | |
| | 4 | 1 | **247-5643** | 1 | HARNESS AS-LIGHTING | |
| | | 1 | **102-8803** | 1 | KIT-RECEPTACLE (3-PIN) | |
| | | 1 | **102-8801** | 1 | KIT-RECEPTACLE (12-PIN) | |
| | | | | | (EACH INCLUDES RECEPTACLE AS & WEDGE) | |
| | | 1 | **186-3735** | 11 | PIN-CONNECTOR (16-GA TO 18-GA) | |
| | | 1 | **155-2271** | 1 | KIT-CONNECTING PLUG (4-PIN) | |
| | | 1 | **155-2260** | 1 | KIT-CONNECTING PLUG (3-PIN) | |
| | | 1 | **155-2270** | 1 | KIT-CONNECTING PLUG (2-PIN) | |
| | | | | | (EACH INCLUDES PLUG AS, WEDGE, & INTERFACE SEAL) | |
| | 5 | 1 | **130-5300** | 2 | CLIP | |
| | 6 | 1 | **232-6136** | 1 | LAMP GP-SIGNAL (24-VOLT) (STOP, TURN, TAIL, RH) | |
| | | 1 | **3E-3377** | 1 | WEDGE-RECEPTACLE LOCK (4-PIN) | |
| | | 1 | **102-8804** | 1 | KIT-RECEPTACLE (4-PIN) | |
| | | | | | (INCLUDES RECEPTACLE AS & WEDGE) | |
| | | 1 | **186-3735** | 4 | PIN-CONNECTOR (16-GA TO 18-GA) | |
| M | 7 | 1 | **6V-8225** | 3 | NUT (M6X1-THD) | |
| | 8 | 1 | **8T-4121** | 2 | WASHER-HARD (11X21X2.5-MM THK) | |
| M | 9 | 1 | **8T-4191** | 2 | BOLT (M10X1.5X16-MM) | |
| | 10 | 1 | **8T-4205** | 3 | WASHER-HARD (7.2X14.5X2-MM THK) | |

M-METRIC PART
Y-SEPARATE ILLUSTRATION

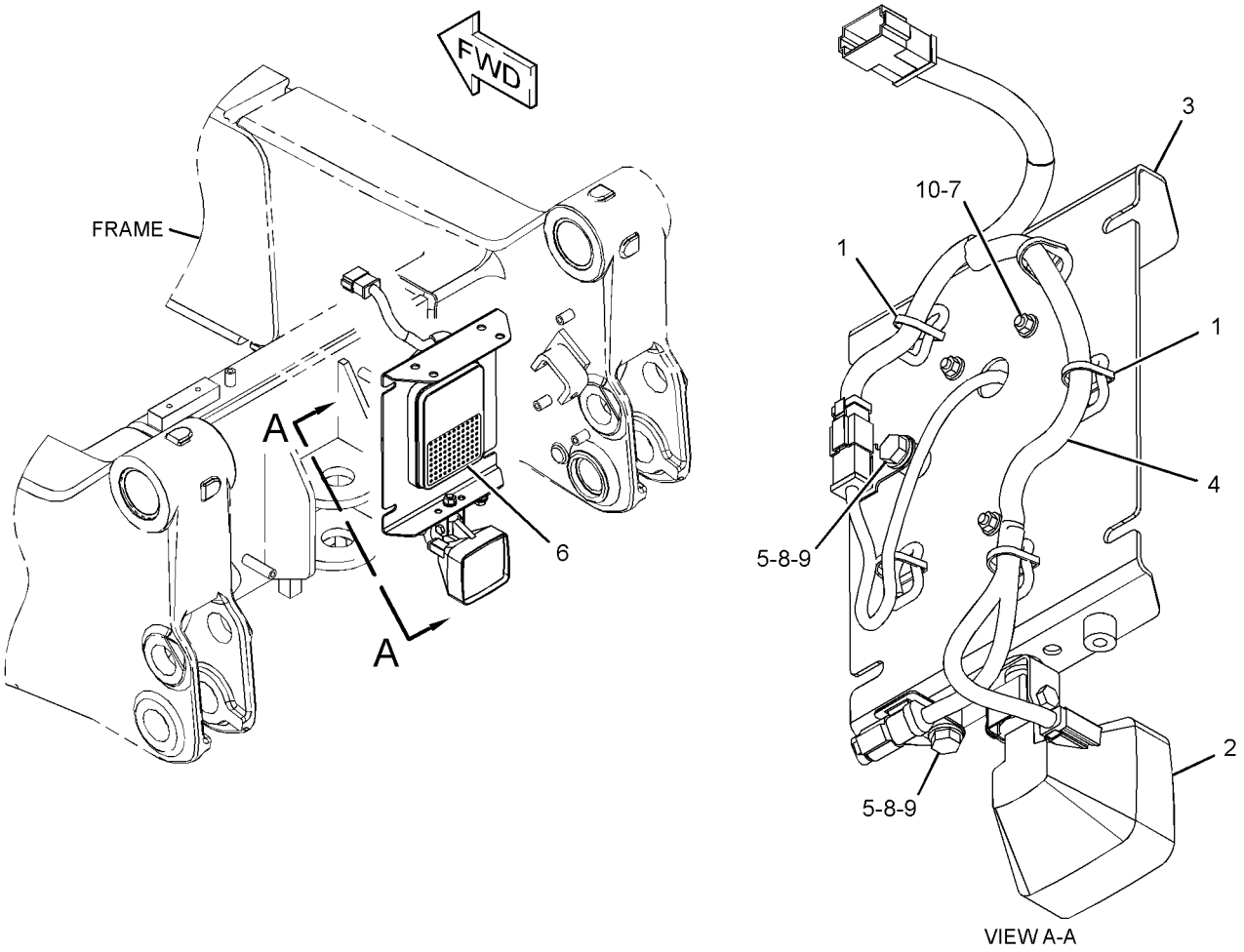


GRAPHIC #1 **<END>** g01436170

## *296-0486* LIGHTING GP-FLOOD–REAR, LH

**S/N: RLB1-UP**

**PART OF 270-1502 WIRING GP-CHASSIS**

**SMCS-1434** **i02886374**

| NOTE | REF NO | GRAPHIC REF | PART NUMBER | QTY | PART NAME 1 2 3 4 5 6 (PRODUCT LEVEL) | SEE PAGE |
|---|---|---|---|---|---|---|
| | 1 | 1 | **3S-2093** | 5 | STRAP-CABLE | |
| Y | 2 | 1 | **219-6487** | 1 | LAMP GP-FLOOD (24-VOLT, 65-WATT) | 281 |
| | 3 | 1 | **232-6136** | 1 | LAMP GP-SIGNAL (24-VOLT) (STOP, TAIL, TURN, LH) | |
| | | 1 | **3E-3377** | 1 | WEDGE-RECEPTACLE LOCK (4-PIN) | |
| | | 1 | **102-8804** | 1 | KIT-RECEPTACLE (4-PIN) | |
| | | | | | (INCLUDES RECEPTACLE AS & WEDGE) | |
| | | 1 | **186-3735** | 4 | PIN-CONNECTOR (16-GA TO 18-GA) | |
| | 4 | 1 | **247-5638** | 1 | BRACKET AS | |
| | 5 | 1 | **247-5641** | 1 | HARNESS AS-LIGHTING | |
| | | 1 | **102-8803** | 1 | KIT-RECEPTACLE (3-PIN) | |
| | | 1 | **102-8801** | 1 | KIT-RECEPTACLE (12-PIN) | |
| | | | | | (EACH INCLUDES RECEPTACLE AS & WEDGE) | |
| | | 1 | **155-2270** | 1 | KIT-CONNECTING PLUG (2-PIN) | |
| | | 1 | **155-2271** | 1 | KIT-CONNECTING PLUG (4-PIN) | |
| | | 1 | **155-2260** | 1 | KIT-CONNECTING PLUG (3-PIN) | |
| | | | | | (EACH INCLUDES PLUG AS, WEDGE, & INTERFACE SEAL) | |
| | 6 | 1 | **130-5300** | 2 | CLIP | |
| | 7 | 1 | **213-9100** | 1 | ALARM GP (BACKUP) | |
| | | 1 | **102-8802** | 2 | KIT-RECEPTACLE (2-PIN) | |
| | | | | | (EACH INCLUDES RECEPTACLE AS & WEDGE) | |
| | | 1 | **186-3735** | 2 | PIN-CONNECTOR (16-GA TO 18-GA) | |
| E | | 1 | **9X-1813** | | SLEEVE (31-CM) | |
| D | | 1 | **5P-5623** | | WIRE-ELECTRICAL (16-GA, BLACK) (0.8-M) | |
| M | 8 | 1 | **6V-8225** | 3 | NUT (M6X1-THD) | |
| | 9 | 1 | **8T-4121** | 6 | WASHER-HARD (11X21X2.5-MM THK) | |
| M | 10 | 1 | **8T-4137** | 4 | BOLT (M10X1.5X20-MM) | |
| M | 11 | 1 | **8T-4191** | 2 | BOLT (M10X1.5X16-MM) | |
| | 12 | 1 | **8T-4205** | 3 | WASHER-HARD (7.2X14.5X2-MM THK) | |

D-ORDER BY THE METER
E-ORDER BY THE CENTIMETER
M-METRIC PART
Y-SEPARATE ILLUSTRATION

*296-0486* **LIGHTING GP-FLOOD** *(contd. )* **i02886374**

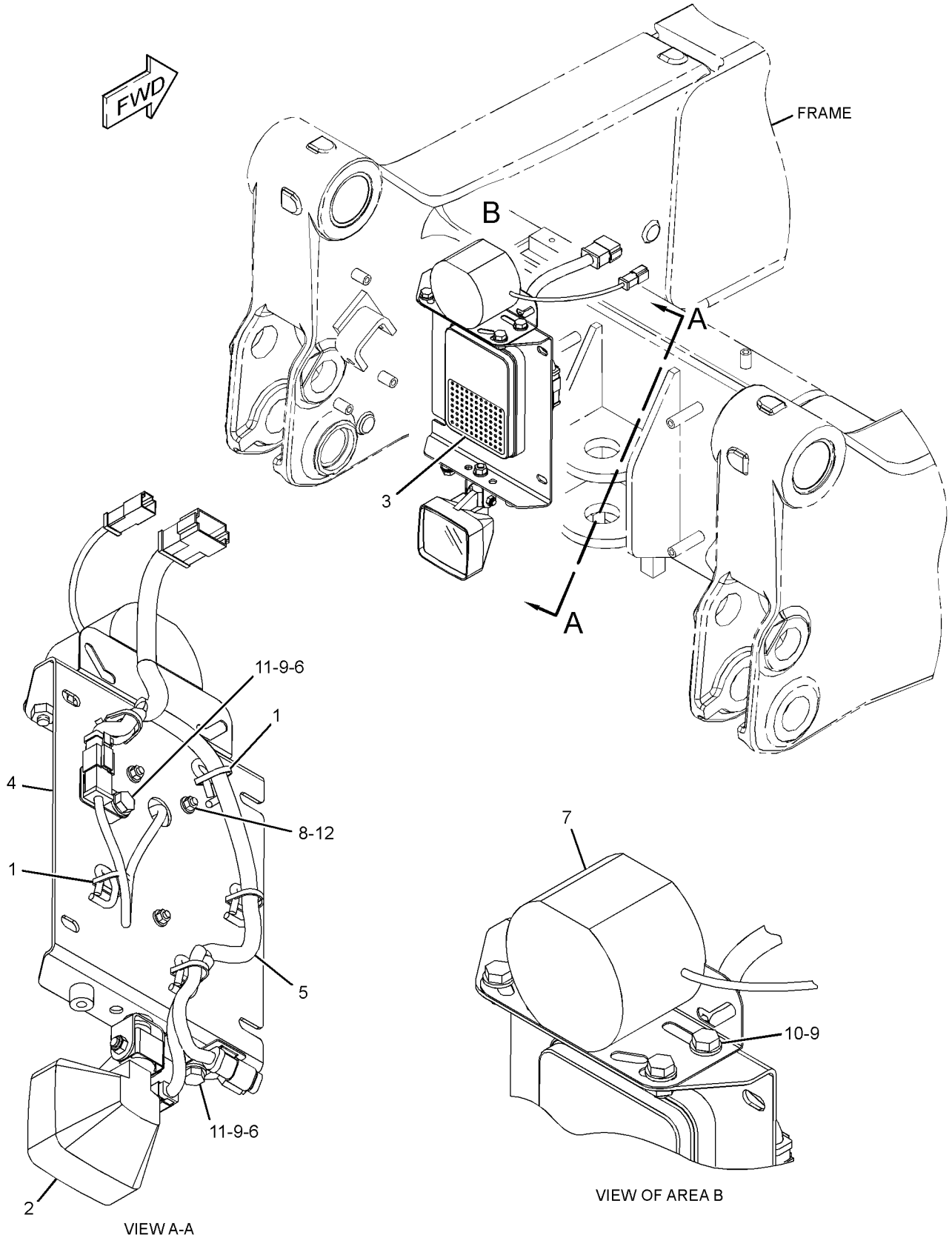


GRAPHIC #1 **<END>** g01336108

# *250-2304* MOUNTING GP-PRESSURE SENSOR–

**ATMOSPHERIC, ENGINE OIL**

**S/N: RHX3791-UP**

**PART OF 272-3086, 272-3087, 292-2553, 292-2554 ENGINE AR-COMPLETE**

**AN ATTACHMENT**

**SMCS-1408, 1923, 1924** **i02898040**

| NOTE | REF NO | GRAPHIC REF | PART NUMBER | QTY | PART NAME 1 2 3 4 5 6 (PRODUCT LEVEL) | SEE PAGE |
|---|---|---|---|---|---|---|
| | 1 | 1 | **228-7082** | 1 | ADAPTER | |
| | 2 | 1 | **1T-0720** | 2 | BOLT-12 POINT HEAD (3/8-16X1.25-IN) | |
| | 3 | 1 | **6V-3683** | 1 | SEAL-O-RING | |
| | 4 | 1 | **8J-4351** | 1 | SEAL-O-RING | |

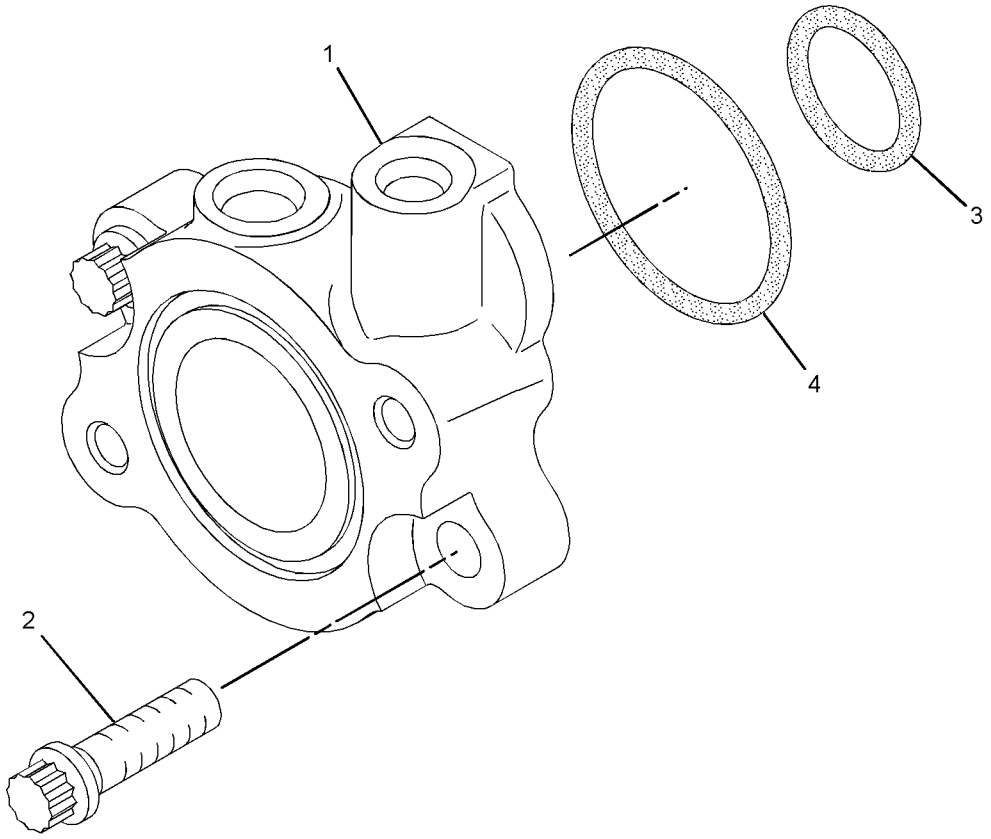


GRAPHIC #1 **<END>** g01332115

# *197-7415* MOUNTING GP-SENSOR–ATMOSPHERIC AIR, ENGINE OIL

**S/N: RHX1-UP**
**CUSTOMER OIL SUPPLY CONNECTION LOCATION WITH NO.4 PORT THREADS**
**PART OF 221-8124, 247-3315 ENGINE AR-COMPLETE**
**FOR USE WITH OIL AND ATMOSPHERIC PRESSURE SENSORS**
**AN ATTACHMENT**

**SMCS-1923, 1924** **i02667181**

| NOTE | REF NO | GRAPHIC REF | PART NUMBER | QTY | PART NAME 1 2 3 4 5 6 (PRODUCT LEVEL) | SEE PAGE |
|---|---|---|---|---|---|---|
| | 1 | 1 | **166-6693** | 1 | ADAPTER | |
| | 2 | 1 | **1T-0720** | 2 | BOLT-12 POINT HEAD (3/8-16X1.25-IN) | |
| | 3 | 1 | **5M-2894** | 2 | WASHER-HARD (10.2X18.5X2.5-MM THK) | |
| | 4 | 1 | **6V-3683** | 1 | SEAL-O-RING | |
| | 5 | 1 | **6V-5048** | 1 | SEAL-O-RING | |
| | 6 | 1 | **8J-4351** | 1 | SEAL-O-RING | |
| | 7 | 1 | **9S-4182** | 1 | PLUG-O-RING | |

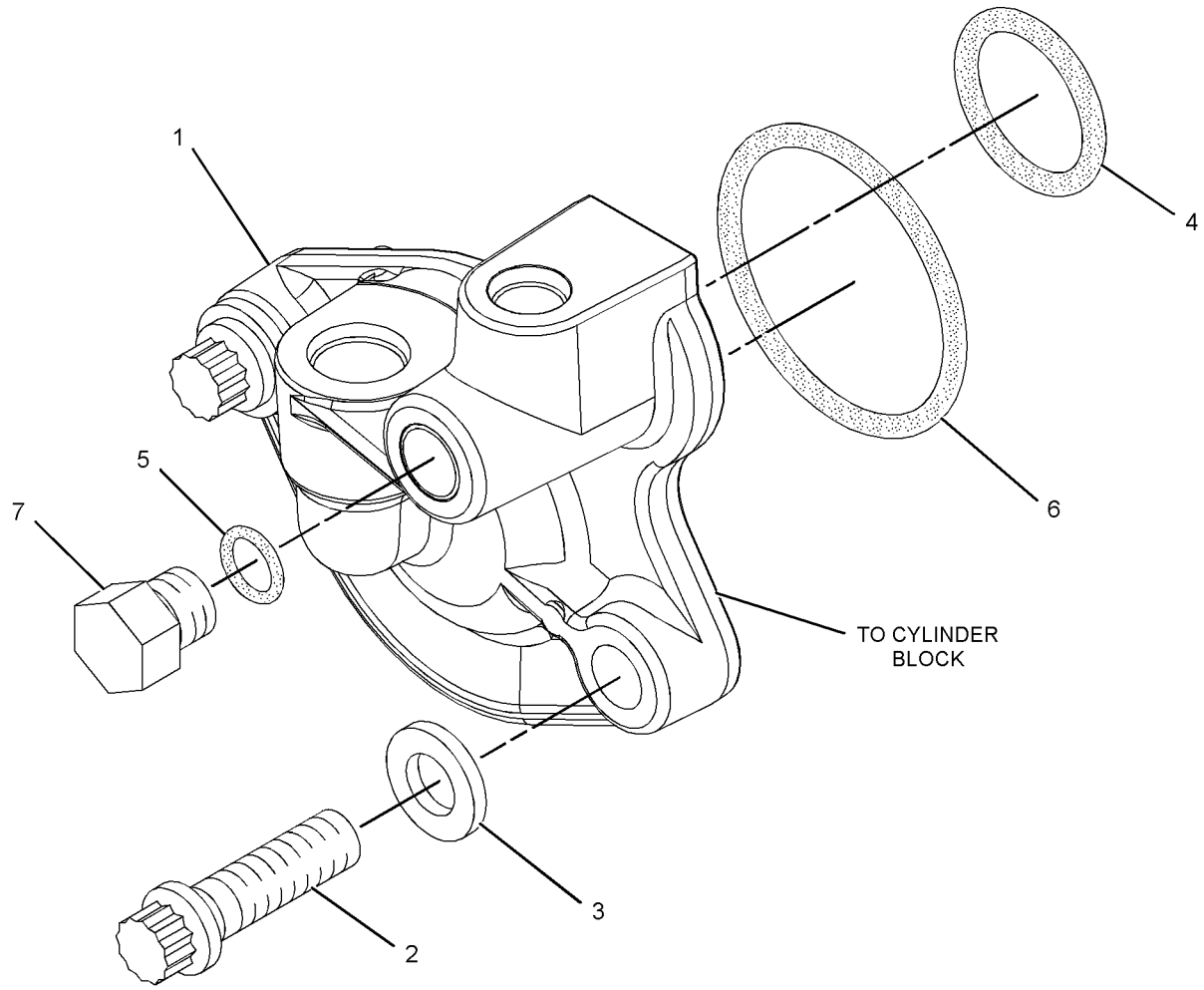


GRAPHIC #1 **<END>** g01341504

## *263-9088* RADIO GP-COMMUNICATION–PRODUCT LINK 121SR

**S/N: RLB1-UP**

**PART OF 276-9462, 312-8302 INSTALLATION GP-COMMUNICATION**

**AN ATTACHMENT**

**SMCS-733T** **i03121722**

| NOTE | PART NUMBER | QTY | PART NAME 1 2 3 4 5 6 (PRODUCT LEVEL) | SEE PAGE |
|---|---|---|---|---|
| | | | (NO SERVICED PARTS) | |

**<END>**

# ELECTRICAL AND STARTING SYSTEM

## *278-4376* SENSOR & MTG GP-PAYLOAD

**S/N: RLB1-UP**

**PART OF 280-1651 INSTALLATION AR-PAYLOAD**

**AN ATTACHMENT**

**SMCS-1439** **i03116340**

| NOTE | REF NO | GRAPHIC REF | PART NUMBER | QTY | PART NAME 1 2 3 4 5 6 (PRODUCT LEVEL) | SEE PAGE |
|---|---|---|---|---|---|---|
| | 1 | 1 | **4L-7124** | 4 | BOLT (1/4-20X1.25-IN) | |
| | 2 | 1 | **129-1029** | 2 | VALVE GP-CHECK (PAYLOAD MONITOR) | |
| | | | | | (EACH INCLUDES) | |
| | | 1 | **175-3185** | 1 | CORE-VALVE | |
| Y | 3 | 1 | **221-3417** | 4 | SENSOR GP-PRESSURE (PAYLOAD MONITOR) | 305 |
| | 4 | 1 | **228-4929** | 2 | BLOCK AS | |
| | | | | | (EACH INCLUDES) | |
| | | 1 | **3J-1907** | 1 | SEAL-O-RING | |
| | 5 | 1 | **238-9928** | 4 | VALVE AS (SUSPENSION CYLINDER CHARGING) | |
| | | | | | (EACH INCLUDES) | |
| | | 1 | **239-5304** | 1 | CAP | |
| | | 1 | **239-5305** | 1 | CORE-VALVE | |
| | | 1 | **242-4313** | 1 | SEAL-O-RING | |
| | 6 | 1 | **305-1349** | 2 | COVER AS | |
| | 7 | 1 | **307-0641** | 2 | COVER AS | |
| | 8 | 1 | **5F-7054** | 4 | SEAL-O-RING | |
| | 9 | 1 | **7X-0289** | 4 | BOLT (3/8-16X1.875-IN) | |
| | 10 | 1 | **8T-4205** | 4 | WASHER-HARD (7.2X14.5X2-MM THK) | |
| | 11 | 1 | **8T-4896** | 4 | WASHER-HARD (10.2X18.5X2.5-MM THK) | |
| | 12 | 1 | **8T-9378** | 4 | BOLT (3/8-16X4-IN) | |
| | 13 | 1 | **030-0167** | 2 | RING-BACKUP | |
| | 14 | 1 | **033-6039** | 2 | SEAL-O-RING | |
| | 15 | 1 | **114-3361** | 2 | SEAL-O-RING | |
| | 16 | 1 | **3J-1907** | 4 | SEAL-O-RING | |

Y-SEPARATE ILLUSTRATION

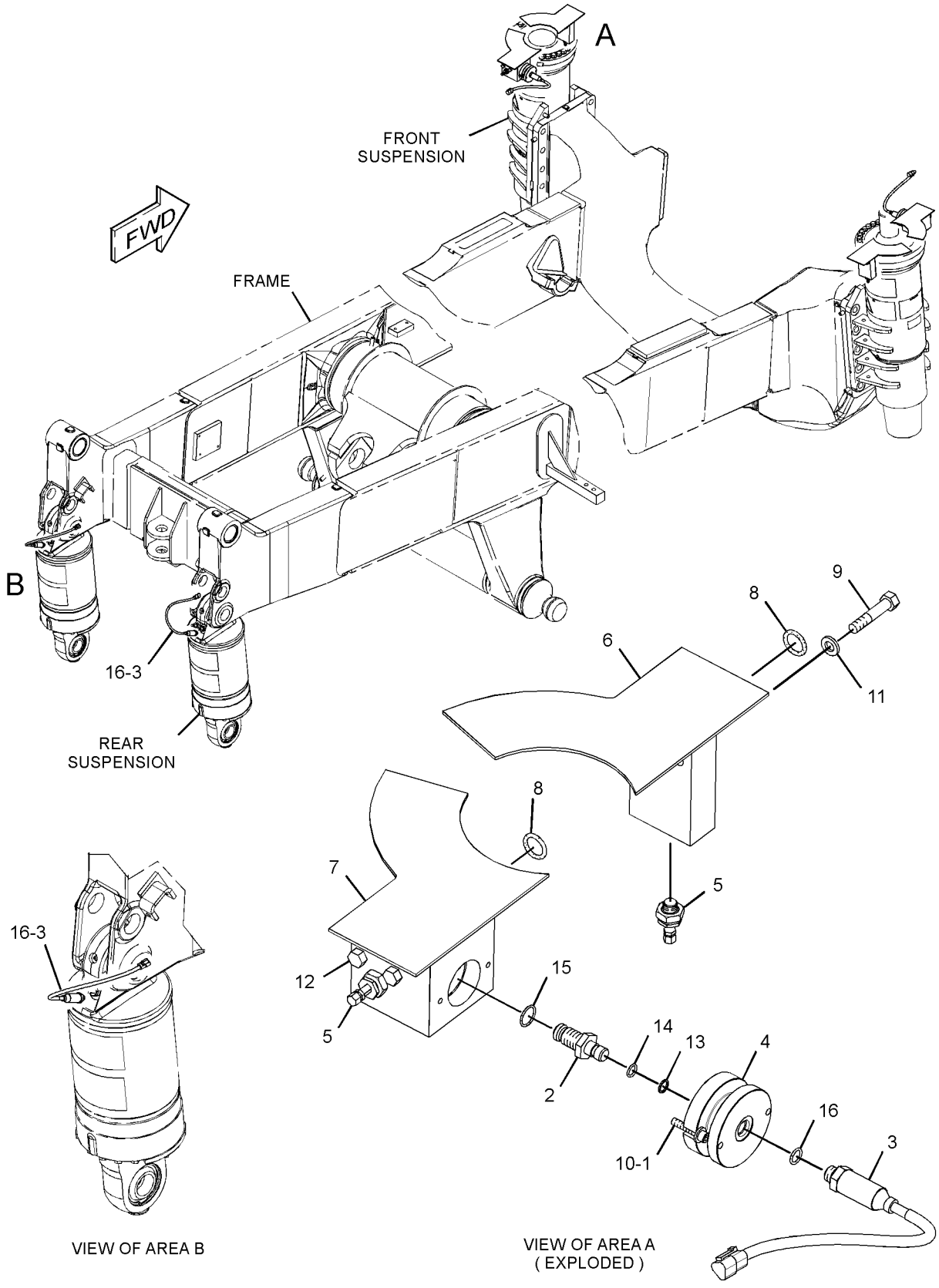


GRAPHIC #1 **<END>** g01595553

# *243-1563* SENSOR GP-ENGINE

**S/N: RHX1-UP**

**PART OF 221-8124, 247-3315, 272-3086, 272-3087, 292-2553, 292-2554 ENGINE**

**AR-COMPLETE**

**AN ATTACHMENT**

**SMCS-1439** **i02040686**

| NOTE | REF NO | GRAPHIC REF | PART NUMBER | QTY | PART NAME 1 2 3 4 5 6 (PRODUCT LEVEL) | SEE PAGE |
|---|---|---|---|---|---|---|
| | 1 | 1 | **9X-0262** | 1 | ADAPTER | |
| | 2 | 1 | **132-9770** | 1 | SPACER AS | |
| | | 1 | **1W-6448** | 2 | DOWEL | |
| Y | 3 | 1 | *197-8391* | 1 | SENSOR GP-TEMPERATURE (INTAKE AIR MANIFOLD) | 319 |
| Y | 4 | 1 | *197-8392* | 1 | SENSOR GP-TEMPERATURE (COOLANT) | 321 |
| Y | 5 | 1 | *214-2484* | 1 | SENSOR GP-SPEED (TIMING, CRANKSHAFT) | 313 |
| Y | 6 | 1 | *239-2395* | 1 | SENSOR GP-PRESSURE (ATMOSPHERIC) | 306 |
| Y | 7 | 1 | *239-2396* | 1 | SENSOR GP-PRESSURE (OIL) | 307 |
| Y | 8 | 1 | *239-5928* | 1 | SENSOR GP-SPEED (TIMING, CAMSHAFT) | 314 |
| | 9 | 1 | **241-6186** | 1 | ELBOW | |
| | 10 | 1 | **0S-1591** | 1 | BOLT (3/8-16X1.5-IN) | |
| Y | 11 | 1 | *239-5674* | 1 | SENSOR GP-PRESSURE (INTAKE AIR MANIFOLD) | 309 |
| | 12 | 1 | **2H-3755** | 2 | BOLT (5/16-18X0.43-IN) | |
| | 13 | 1 | **3P-1155** | 1 | SEAL-O-RING | |
| | 14 | 1 | **5M-2894** | 1 | WASHER-HARD (10.2X18.5X2.5-MM THK) | |
| | 15 | 1 | **6V-5048** | 1 | SEAL-O-RING | |
| | 16 | 1 | **6V-5049** | 1 | SEAL-O-RING | |
| | 17 | 1 | **9M-1974** | 2 | WASHER-HARD (8.8X16X2-MM THK) | |

Y-SEPARATE ILLUSTRATION

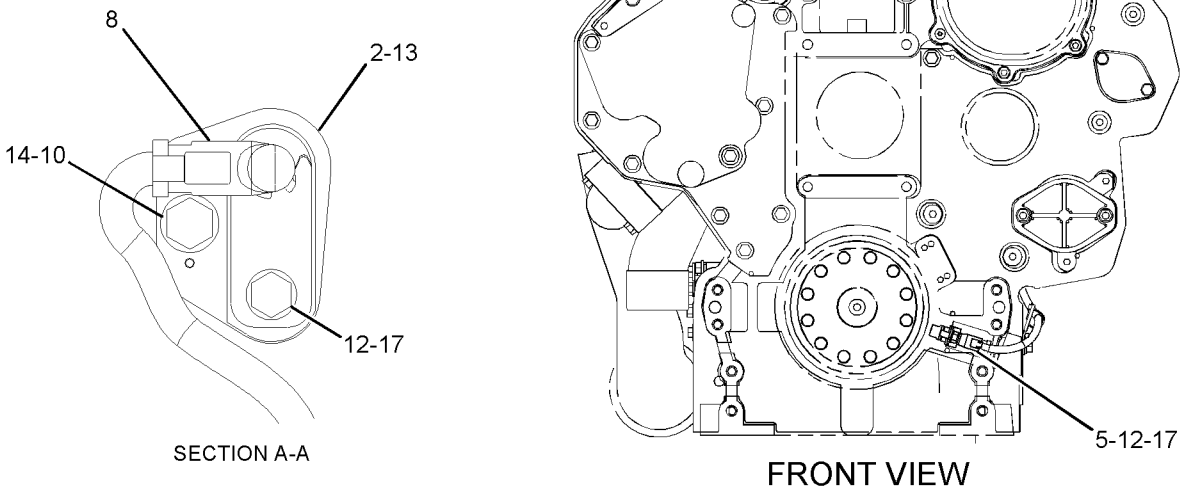


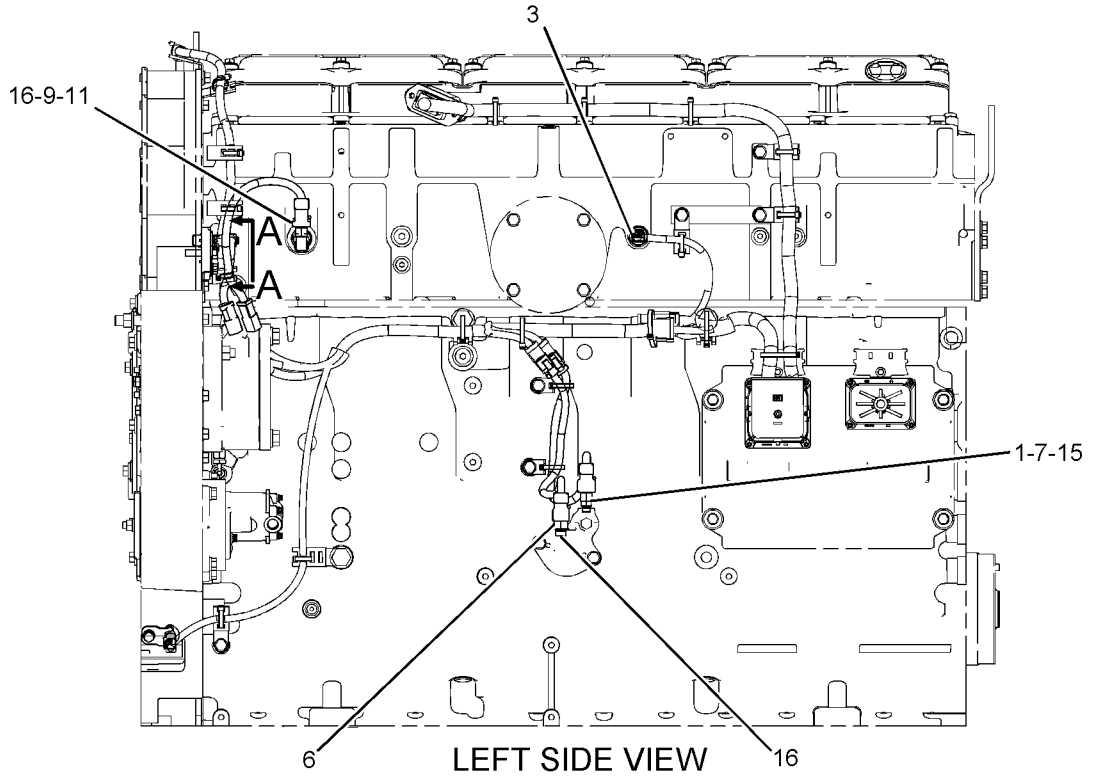


GRAPHIC #1

**<END>**

g01054674

# *204-7949* SENSOR GP-POSITION

**S/N: RLB1-UP**

**72-DEGREE**

**PART OF 240-2139 CONTROL GP-FOOT BRAKE, 113-4799 PEDAL GP-GOVERNOR**

**SMCS-1408, 3168, 3175, 4269, 4809, 7494** **i02582120**

| NOTE | REF NO | GRAPHIC REF | PART NUMBER | QTY | PART NAME 1 2 3 4 5 6 (PRODUCT LEVEL) | SEE PAGE |
|---|---|---|---|---|---|---|
| | 1 | 1 | **102-8803** | 1 | KIT-RECEPTACLE (3-PIN) | |
| | | | | | (INCLUDES RECEPTACLE AS AND WEDGE) | |
| | 2 | 1 | **3E-3371** | 1 | WEDGE-RECEPTACLE LOCK (3-PIN) | |
| | 3 | 1 | **186-3735** | 3 | PIN-CONNECTOR (16-GA TO 18-GA) | |

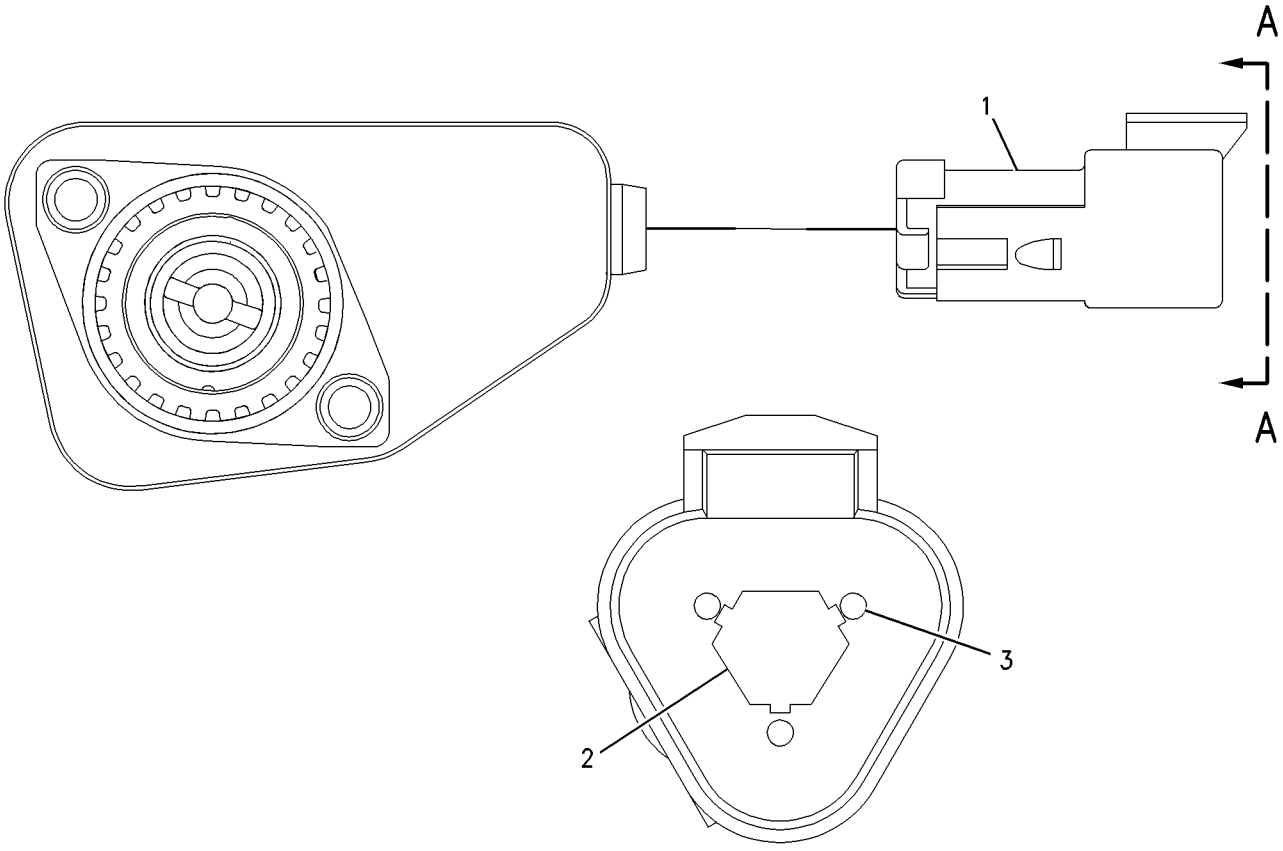


VIEW A-A

GRAPHIC #1 **<END>** g00925280

# *216-0280* SENSOR GP-POSITION

**S/N: NDG1-UP**

**PART OF 294-5559 CONTROL GP-TRANSMISSION HYD**

**SMCS-1408, 3168, 3175, 4269, 4809, 7494** **i02515723**

| NOTE | REF NO | GRAPHIC REF | PART NUMBER | QTY | PART NAME 1 2 3 4 5 6 (PRODUCT LEVEL) | SEE PAGE |
|---|---|---|---|---|---|---|
| Z | 1 | 1 | | 1 | SENSOR AS-POSITION | |
| | 3 | 1 | **9X-2026** | 4 | WASHER (6.5X17X1-MM THK) | |
| | 4 | 1 | **7B-2742** | 2 | BOLT (1/4-20X1.25-IN) | |
| | 5 | 1 | **8C-9649** | 2 | SPACER (6.38X9.52X20-MM THK) | |
| | 6 | 1 | **8C-9648** | 4 | MOUNT-ISOLATION | |
| | 7 | 1 | **7X-2031** | 2 | RETAINER | |
| | 8 | 1 | **7T-7376** | 1 | SPACER (1.22-MM THK) | |

Z-NOT SERVICED SEPARATELY

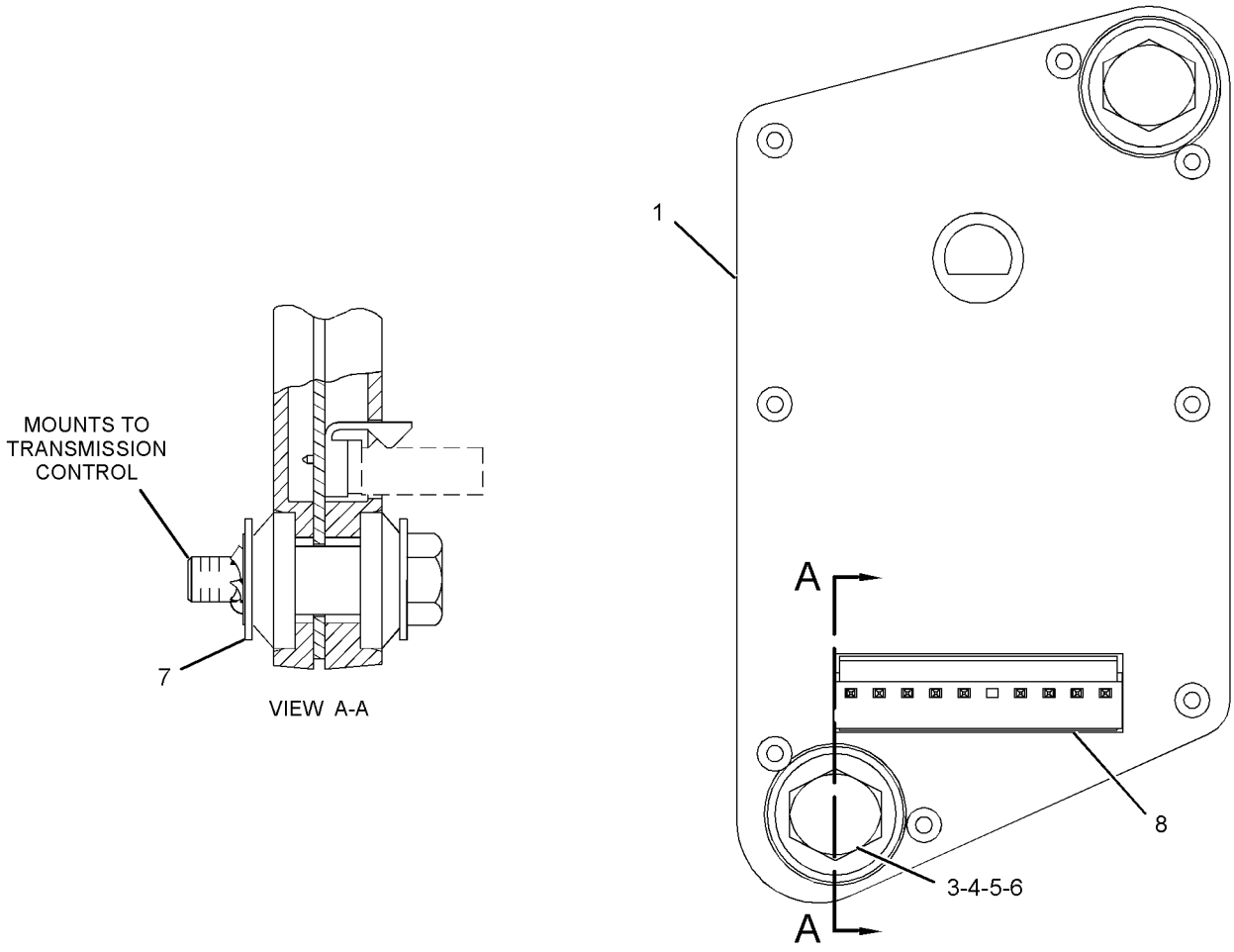


GRAPHIC #1 **<END>** g01259488

# 266-1466 SENSOR GP-POSITION

**S/N: RLB1-UP**

**PART OF 310-7260 CONTROL GP-FOOT BRAKE, 113-4799 PEDAL GP-GOVERNOR**

**SMCS-1408, 3168, 3175, 4269, 4809, 7494** **i03018526**

| NOTE | REF NO | GRAPHIC REF | PART NUMBER | QTY | PART NAME 1 2 3 4 5 6 (PRODUCT LEVEL) | SEE PAGE |
|---|---|---|---|---|---|---|
| | 1 | 1 | **3E-3371** | 1 | WEDGE-RECEPTACLE LOCK (3-PIN) | |
| | 2 | 1 | **102-8803** | 1 | KIT-RECEPTACLE (3-PIN) | |
| | | | | | (INCLUDES RECEPTACLE AS & WEDGE) | |
| | 3 | 1 | **9X-3401** | 3 | PIN-CONNECTOR (16-GA TO 18-GA) | |
| | | | | | —OR— | |
| | | 1 | **126-1767** | 3 | PIN-CONNECTOR (14-GA) | |

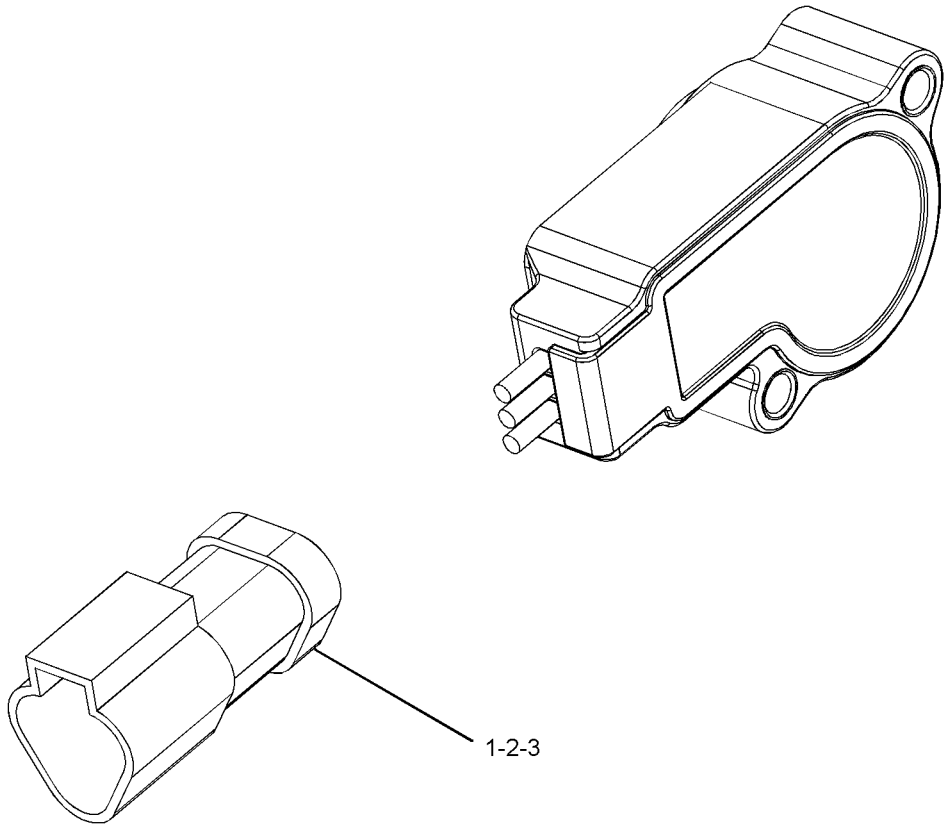


GRAPHIC #1 **<END>** g01526690

# *161-9926* SENSOR GP-PRESSURE

**S/N: RLB1-UP**

**PART OF 270-1504 WIRING GP-LIGHTING**

**SMCS-1408, 1439, 1718, 1916, 1917, 1923, 1924, 1925, 7494**

**i03287162**

| NOTE | REF NO | GRAPHIC REF | PART NUMBER | QTY | PART NAME 1 2 3 4 5 6 (PRODUCT LEVEL) | SEE PAGE |
|---|---|---|---|---|---|---|
| E | 1 | 1 | **9X-1813** | | SLEEVE (34-CM) | |
| | 2 | 1 | **155-2260** | 1 | KIT-CONNECTING PLUG (3-PIN) | |
| | | | | | (INCLUDES PLUG AS AND WEDGE) | |
| | 3 | 1 | **180-9340** | 3 | SOCKET-CONNECTOR | |
| | 4 | 1 | **3E-3368** | 1 | WEDGE-PLUG LOCK (3-PIN) | |

E-ORDER BY THE CENTIMETER

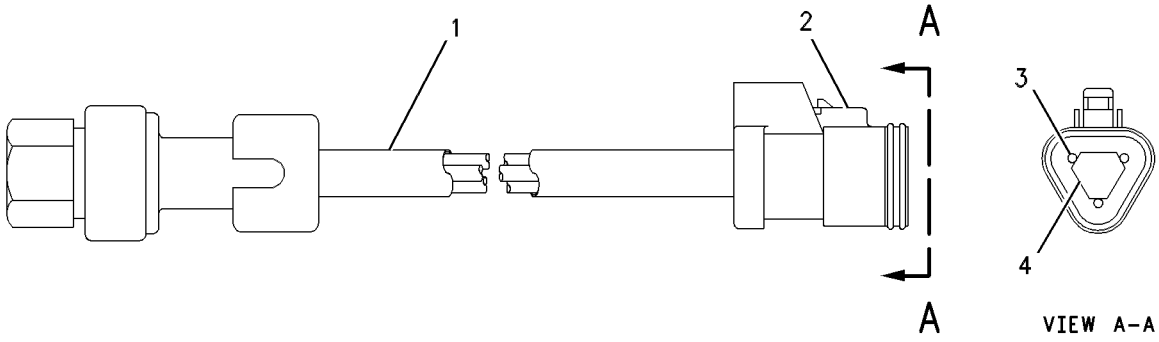


GRAPHIC #1

**<END>**

g00513129

# *194-6722* SENSOR GP-PRESSURE

**S/N: RHX1-UP**
**PART OF 239-2395 SENSOR GP-PRESSURE**
**AN ATTACHMENT**

**SMCS-1408, 1439, 1718, 1916, 1917, 1923, 1924, 1925, 7494**

**i03260203**

| NOTE | REF NO | GRAPHIC REF | PART NUMBER | QTY | PART NAME 1 2 3 4 5 6 (PRODUCT LEVEL) | SEE PAGE |
|---|---|---|---|---|---|---|
| E | 1 | 1 | **9X-1813** | | SLEEVE (34-CM) | |
| | 2 | 1 | **155-2260** | 1 | KIT-CONNECTING PLUG (3-PIN) | |
| | | | | | (INCLUDES PLUG AS, WEDGE & INTERFACE SEAL) | |
| | 3 | 1 | **180-9340** | 3 | SOCKET-CONNECTOR | |

E-ORDER BY THE CENTIMETER

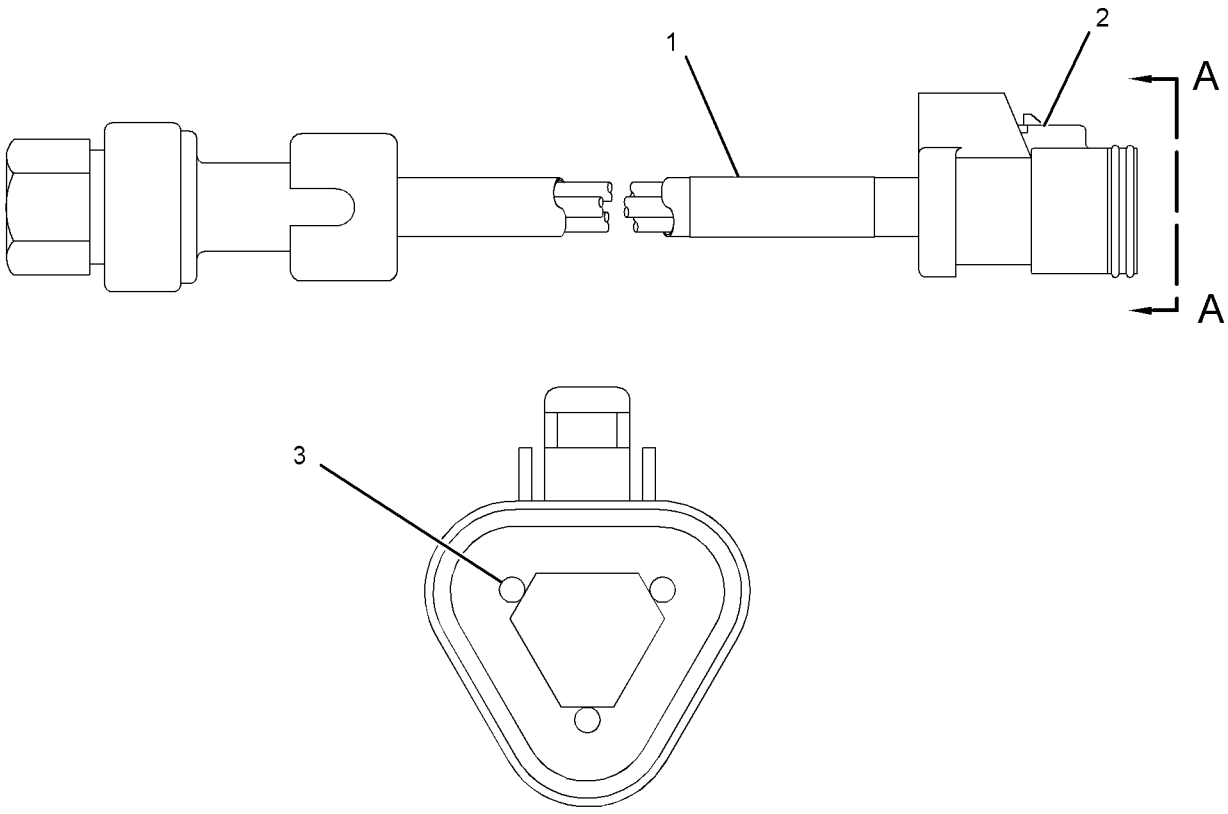


VIEW A-A

GRAPHIC #1

**<END>**

g01381175

# 194-6725 SENSOR GP-PRESSURE

**S/N: RHX1-UP**
**PART OF 239-2396 SENSOR GP-PRESSURE**
**AN ATTACHMENT**

**SMCS-1408, 1439, 1718, 1916, 1917, 1923, 1924, 1925, 7494**

**i03260080**

| NOTE | REF NO | GRAPHIC REF | PART NUMBER | QTY | PART NAME 1 2 3 4 5 6 (PRODUCT LEVEL) | SEE PAGE |
|---|---|---|---|---|---|---|
| E | 1 | 1 | **9X-1813** | | SLEEVE (34-CM) | |
| | 2 | 1 | **155-2260** | 1 | KIT-CONNECTING PLUG (3-PIN) | |
| | | | | | (INCLUDES PLUG AS, INTERFACE SEAL & WEDGE) | |
| | 3 | 1 | **180-9340** | 3 | SOCKET-CONNECTOR | |

E-ORDER BY THE CENTIMETER

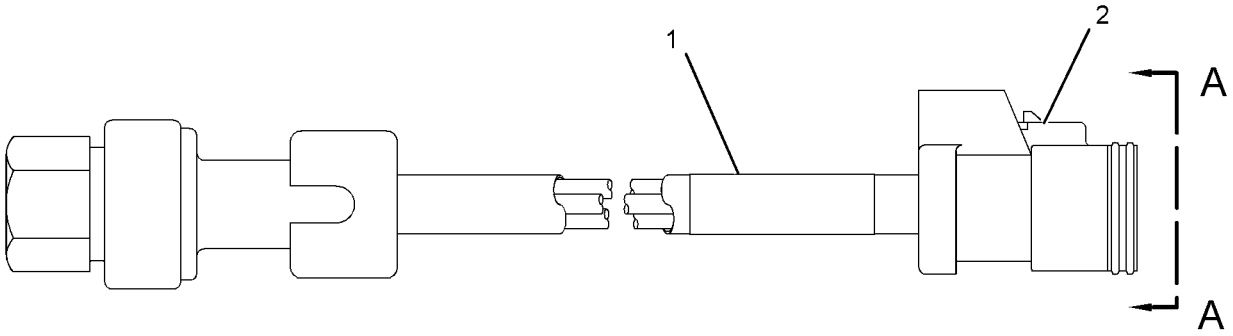


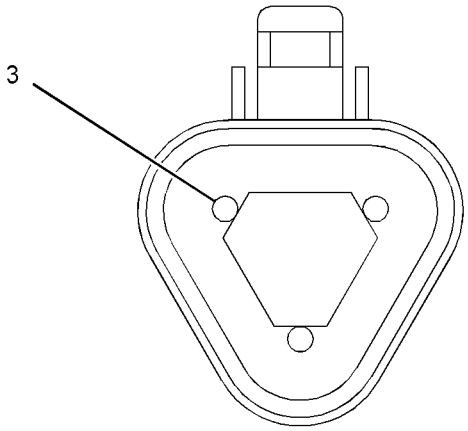


VIEW A-A

GRAPHIC #1

**<END>**

g01662003

# 214-6863 SENSOR GP-PRESSURE

**S/N: RLB1-UP**
**HYDRAULIC**
**PART OF 275-8982 MANIFOLD GP-CONTROL**
**AN ATTACHMENT**

**SMCS-1408, 1439, 1718, 1916, 1917, 1923, 1924, 1925, 7494**

**i01990672**

| NOTE | REF NO | GRAPHIC REF | PART NUMBER | QTY | PART NAME 1 2 3 4 5 6 (PRODUCT LEVEL) | SEE PAGE |
|---|---|---|---|---|---|---|
| | 1 | 1 | **155-2260** | 1 | KIT-CONNECTING PLUG (3-PIN) | |
| | | | | | (INCLUDES PLUG AS & WEDGE) | |
| | 2 | 1 | **180-9340** | 3 | SOCKET-CONNECTOR | |
| | 3 | 1 | **155-2276** | 1 | WEDGE-PLUG LOCK (3-PIN) | |

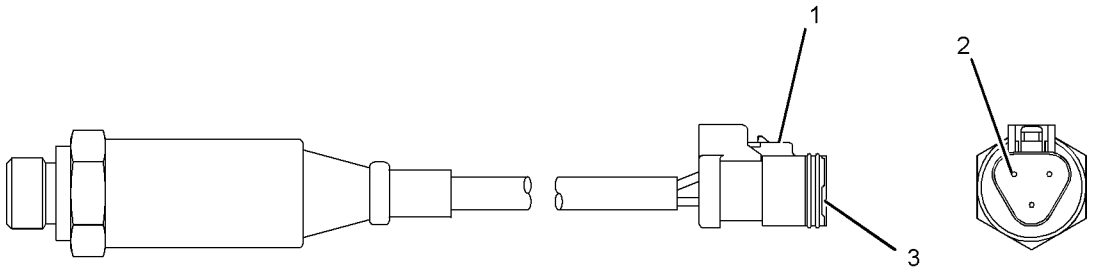


GRAPHIC #1

**<END>**

g01035358

# *221-3417* SENSOR GP-PRESSURE

**S/N: RLB1-UP**

**PART OF 278-4376 SENSOR & MTG GP-PAYLOAD**

**AN ATTACHMENT**

**SMCS-1408, 1439, 1718, 1916, 1917, 1923, 1924, 1925, 7494**

**i01990844**

| NOTE | REF NO | GRAPHIC REF | PART NUMBER | QTY | PART NAME 1 2 3 4 5 6 (PRODUCT LEVEL) | SEE PAGE |
|---|---|---|---|---|---|---|
| | 1 | 1 | **155-2260** | 1 | KIT-CONNECTING PLUG (3-PIN) | |
| | | | | | (INCLUDES PLUG AS & WEDGE) | |
| | 2 | 1 | **194-5226** | 3 | WIRE AS-HARNESS (16-GA TO 18-GA) | |
| | 3 | 1 | **155-2276** | 1 | WEDGE-PLUG LOCK (3-PIN) | |

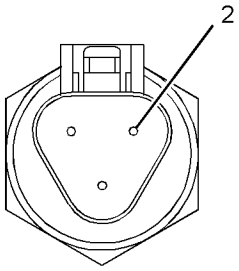


VIEW A-A

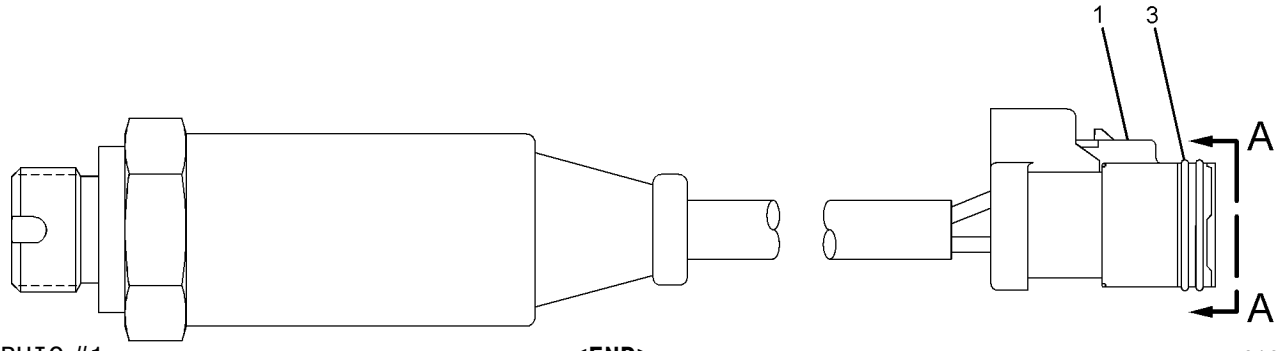


GRAPHIC #1

**<END>**

g01060815

# *239-2395* SENSOR GP-PRESSURE

**S/N: RHX1-UP**
**PART OF 243-1563 SENSOR GP-ENGINE**
**AN ATTACHMENT**

**SMCS-1408, 1439, 1718, 1916, 1917, 1923, 1924, 1925, 7494**

**i02837580**

| NOTE | REF NO | GRAPHIC REF | PART NUMBER | QTY | PART NAME 1 2 3 4 5 6 (PRODUCT LEVEL) | SEE PAGE |
|---|---|---|---|---|---|---|
| Y | 1 | 1 | **194-6722** | 1 | SENSOR GP-PRESSURE | 302 |
| | 2 | 1 | **6V-5049** | 1 | SEAL-O-RING | |

Y-SEPARATE ILLUSTRATION

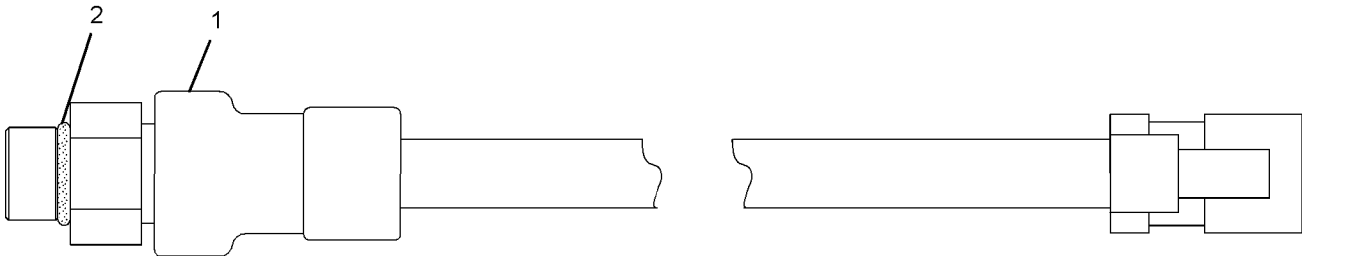


GRAPHIC #1

**<END>**

g01019702

# *239-2396* SENSOR GP-PRESSURE

**S/N: RHX1-UP**

**PART OF 246-1053, 298-6412 PUMP GP-FUEL PRM & PRIM FILTER, 243-1563 SENSOR GP-ENGINE**

**AN ATTACHMENT**

**SMCS-1408, 1439, 1718, 1916, 1917, 1923, 1924, 1925, 7494**

**i02870189**

| NOTE | REF NO | GRAPHIC REF | PART NUMBER | QTY | PART NAME 1 2 3 4 5 6 (PRODUCT LEVEL) | SEE PAGE |
|---|---|---|---|---|---|---|
| Y | 1 | 1 | **194-6725** | 1 | SENSOR GP-PRESSURE | 303 |
| | 2 | 1 | **6V-5048** | 1 | SEAL-O-RING | |

Y-SEPARATE ILLUSTRATION

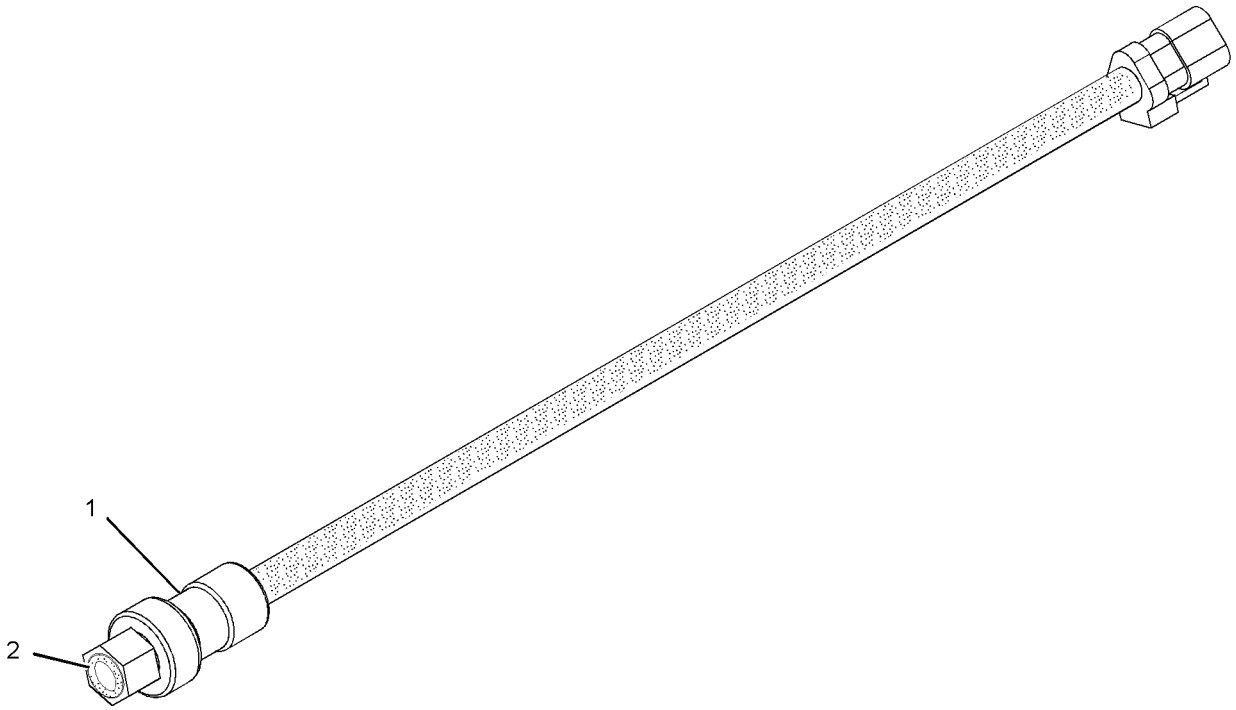


GRAPHIC #1

**<END>**

g01019323

# *239-3478* SENSOR GP-PRESSURE

**S/N: RHX1-UP**
**PART OF 239-5674 SENSOR GP-PRESSURE**
**AN ATTACHMENT**

**SMCS-1408, 1439, 1718, 1916, 1917, 1923, 1924, 1925, 7494**

**i02813588**

| NOTE | REF NO | GRAPHIC REF | PART NUMBER | QTY | PART NAME 1 2 3 4 5 6 (PRODUCT LEVEL) | SEE PAGE |
|---|---|---|---|---|---|---|
| BE | 1 | 1 | **9X-1813** | | SLEEVE | |
| | 2 | 1 | **102-8803** | 1 | KIT-RECEPTACLE (3-PIN) | |
| | | | | | (INCLUDES RECEPTACLE AS & WEDGE) | |
| | 3 | 1 | **9X-3401** | 3 | PIN-CONNECTOR (16-GA TO 18-GA) | |
| | 4 | 1 | **3E-3371** | 1 | WEDGE-RECEPTACLE LOCK (3-PIN) | |

B-USE AS REQUIRED
E-ORDER BY THE CENTIMETER

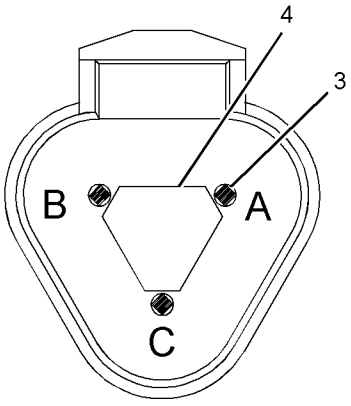


VIEW A-A

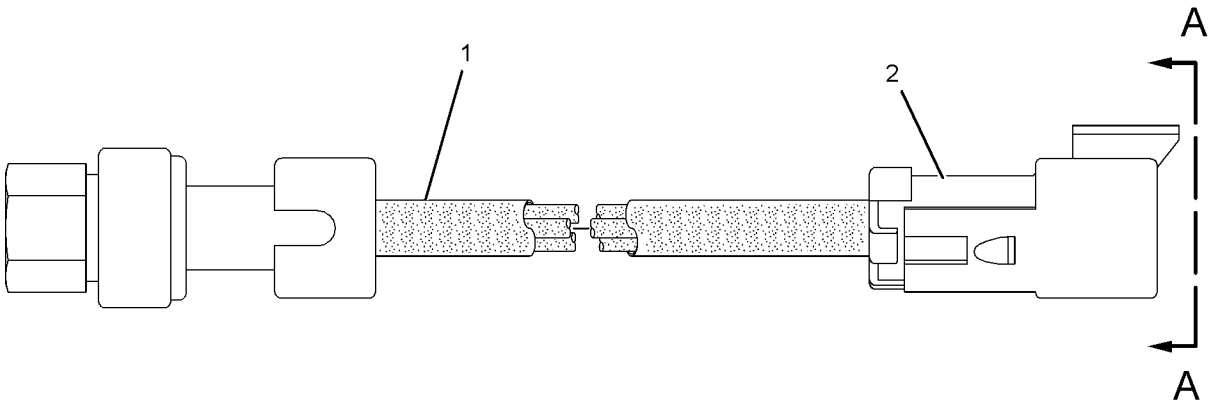


GRAPHIC #1

**<END>**

g01019421

# *239-5674* SENSOR GP-PRESSURE

**S/N: RHX1-UP**
**PART OF 243-1563 SENSOR GP-ENGINE**
**AN ATTACHMENT**

**SMCS-1408, 1439, 1718, 1916, 1917, 1923, 1924, 1925, 7494**

**i02953984**

| NOTE | REF NO | GRAPHIC REF | PART NUMBER | QTY | PART NAME 1 2 3 4 5 6 (PRODUCT LEVEL) | SEE PAGE |
|---|---|---|---|---|---|---|
| Y | 1 | 1 | **239-3478** | 1 | SENSOR GP-PRESSURE | 308 |
| | 2 | 1 | **6V-5048** | 1 | SEAL-O-RING | |

Y-SEPARATE ILLUSTRATION

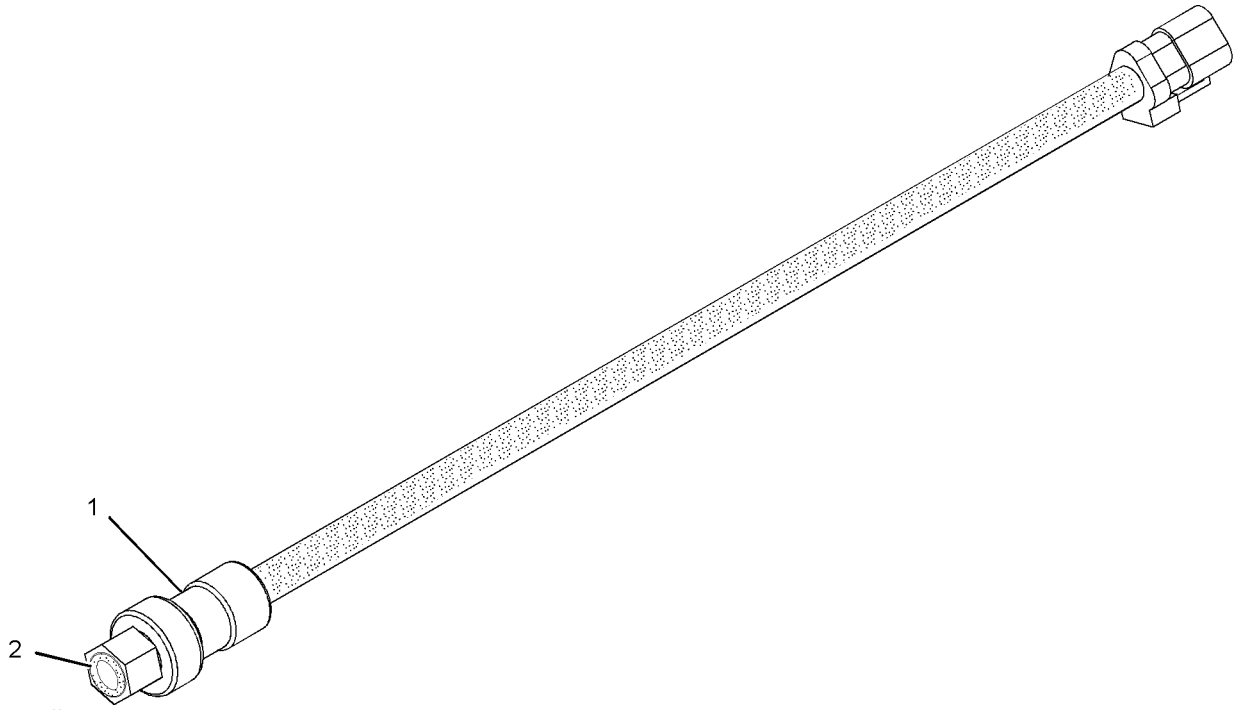


GRAPHIC #1

**<END>**

g01019323

# *189-5746* SENSOR GP-SPEED

**S/N: RLB1-UP**

**PART OF 270-1503 WIRING GP-ENGINE**

**SMCS-1439** **i03276881**

| NOTE | REF NO | GRAPHIC REF | PART NUMBER | QTY | PART NAME 1 2 3 4 5 6 (PRODUCT LEVEL) | SEE PAGE |
|---|---|---|---|---|---|---|
| | 1 | 1 | **171-5349** | 1 | STRAP-MARKER | |
| | 2 | 1 | **102-8802** | 1 | KIT-RECEPTACLE (2-PIN) | |
| | | | | | (INCLUDES RECEPTACLE AS & WEDGE) | |
| | 3 | 1 | **144-1636** | 2 | PIN-CONNECTOR (14-GA TO 18-GA) | |
| E | 4 | 1 | **9X-1386** | | SLEEVE (14-CM) | |

E-ORDER BY THE CENTIMETER

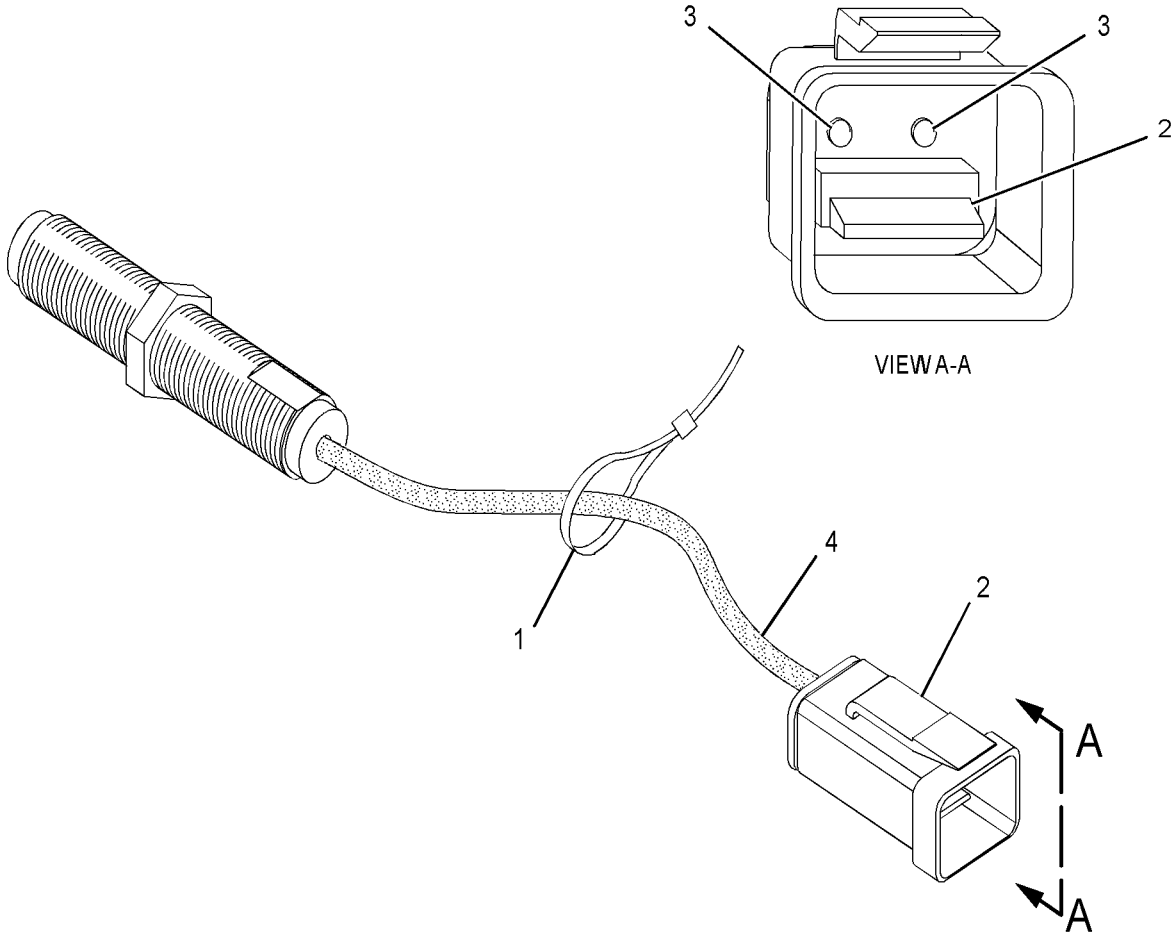


GRAPHIC #1 **<END>** g01353977

# *201-6615* SENSOR GP-SPEED

**S/N: NDG1-UP**

**PART OF 245-2774 SENSOR GP-SPEED**

**SMCS-1439** **i02945649**

| NOTE | REF NO | GRAPHIC REF | PART NUMBER | QTY | PART NAME 1 2 3 4 5 6 (PRODUCT LEVEL) | SEE PAGE |
|---|---|---|---|---|---|---|
| | 1 | 1 | **133-0260** | 1 | BRACKET | |
| | 2 | 1 | **188-9429** | 1 | HARNESS AS-SENSOR (SPEED) | |

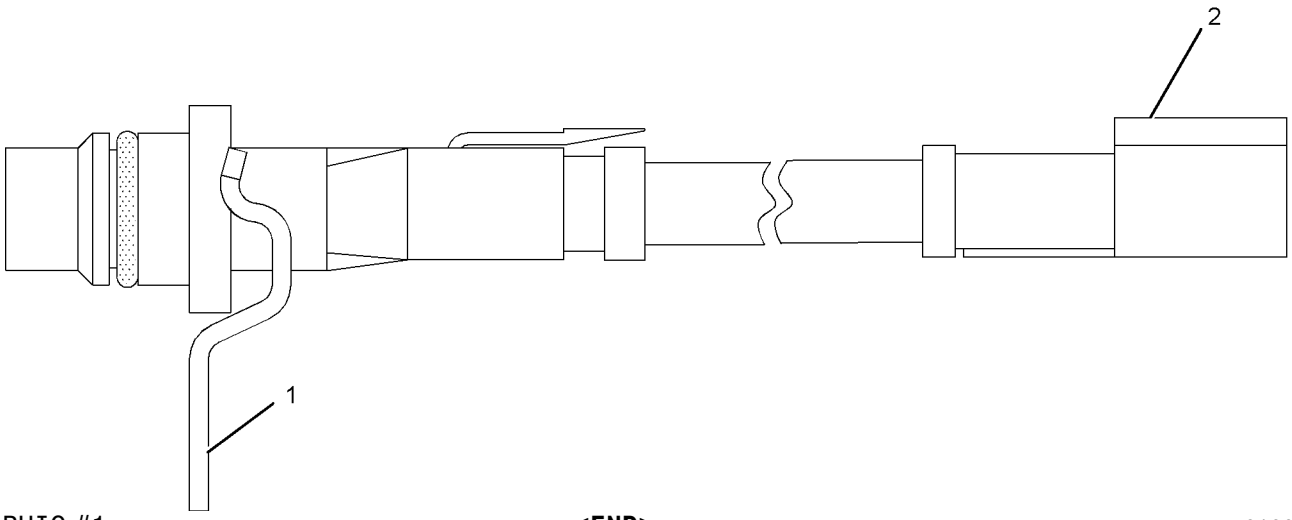


GRAPHIC #1 **<END>** g01009894

# 201-6617 SENSOR GP-SPEED

**S/N: RHX1-UP**
**PART OF 239-5928 SENSOR GP-SPEED**
**AN ATTACHMENT**

**SMCS-1439** **i03164580**

| NOTE | REF NO | GRAPHIC REF | PART NUMBER | QTY | PART NAME 1 2 3 4 5 6 (PRODUCT LEVEL) | SEE PAGE |
|---|---|---|---|---|---|---|
| | 1 | 1 | **133-0261** | 1 | BRACKET | |
| | 2 | 1 | **189-0852** | 1 | HARNESS AS-WIRING (SPEED SENSOR) | |

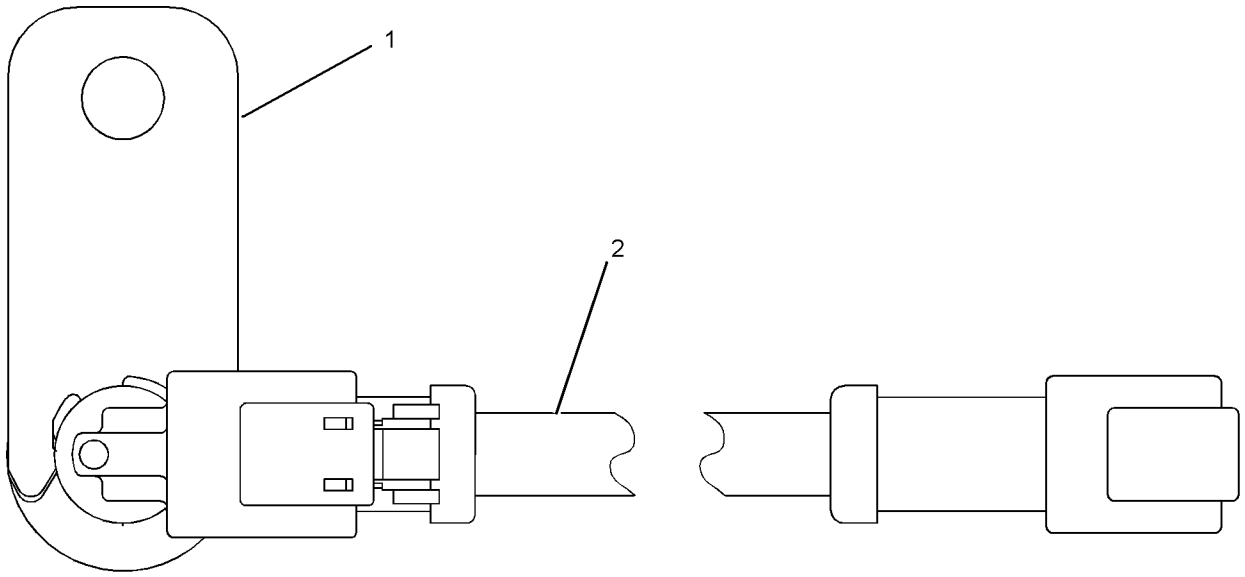


GRAPHIC #1 **<END>** g01071396

# *214-2484* SENSOR GP-SPEED

**S/N: RHX1-UP**
**PART OF 243-1563 SENSOR GP-ENGINE**
**AN ATTACHMENT**

**SMCS-1439** **i02840211**

| NOTE | REF NO | GRAPHIC REF | PART NUMBER | QTY | PART NAME 1 2 3 4 5 6 (PRODUCT LEVEL) | SEE PAGE |
|---|---|---|---|---|---|---|
| | 1 | 1 | **203-3940** | 1 | SEAL-O-RING | |
| | 2 | 1 | **191-8303** | 1 | SENSOR GP-SPEED | |

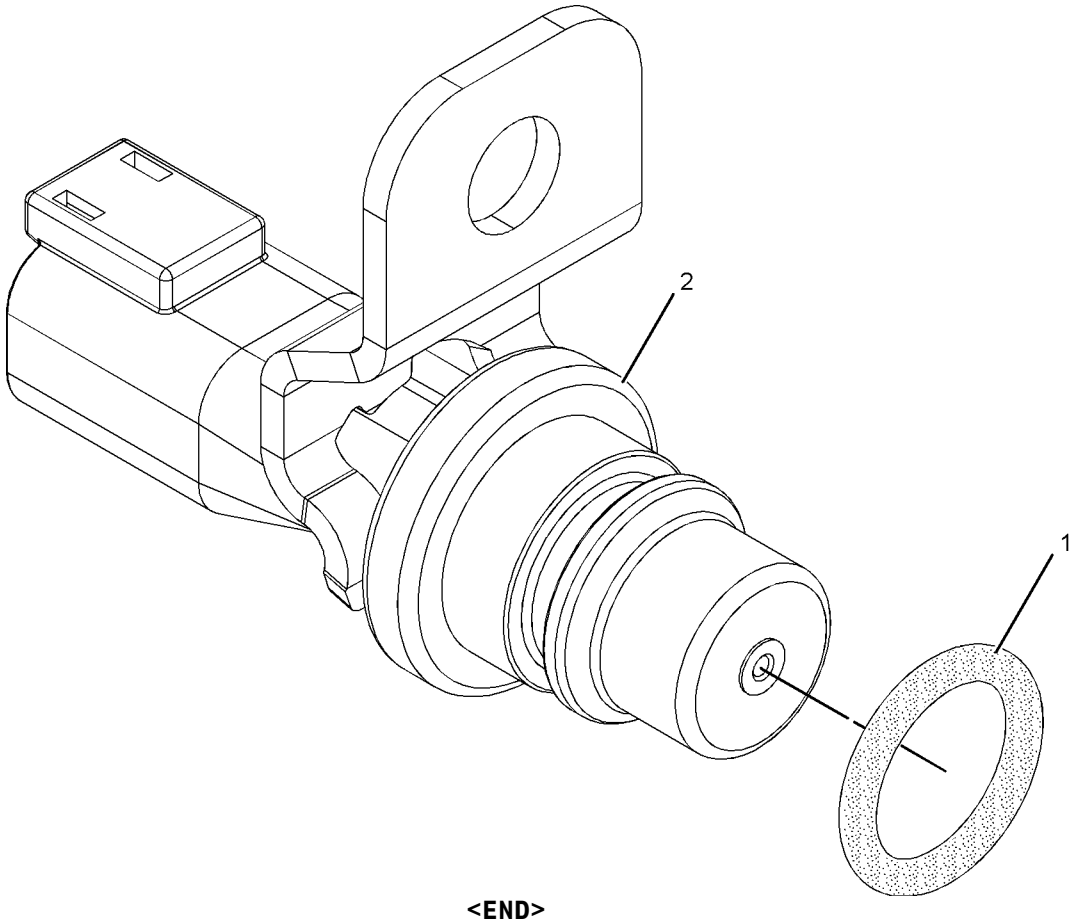


GRAPHIC #1 **<END>** g01021497

# *239-5928* SENSOR GP-SPEED

**S/N: RHX1-UP**
**PART OF 243-1563 SENSOR GP-ENGINE**
**AN ATTACHMENT**

**SMCS-1439** **i03186390**

| NOTE | REF NO | GRAPHIC REF | PART NUMBER | QTY | PART NAME 1 2 3 4 5 6 (PRODUCT LEVEL) | SEE PAGE |
|---|---|---|---|---|---|---|
| | 1 | 1 | **228-4947** | 1 | SEAL-O-RING | |
| Y | 2 | 1 | **201-6617** | 1 | SENSOR GP-SPEED | 312 |

Y-SEPARATE ILLUSTRATION

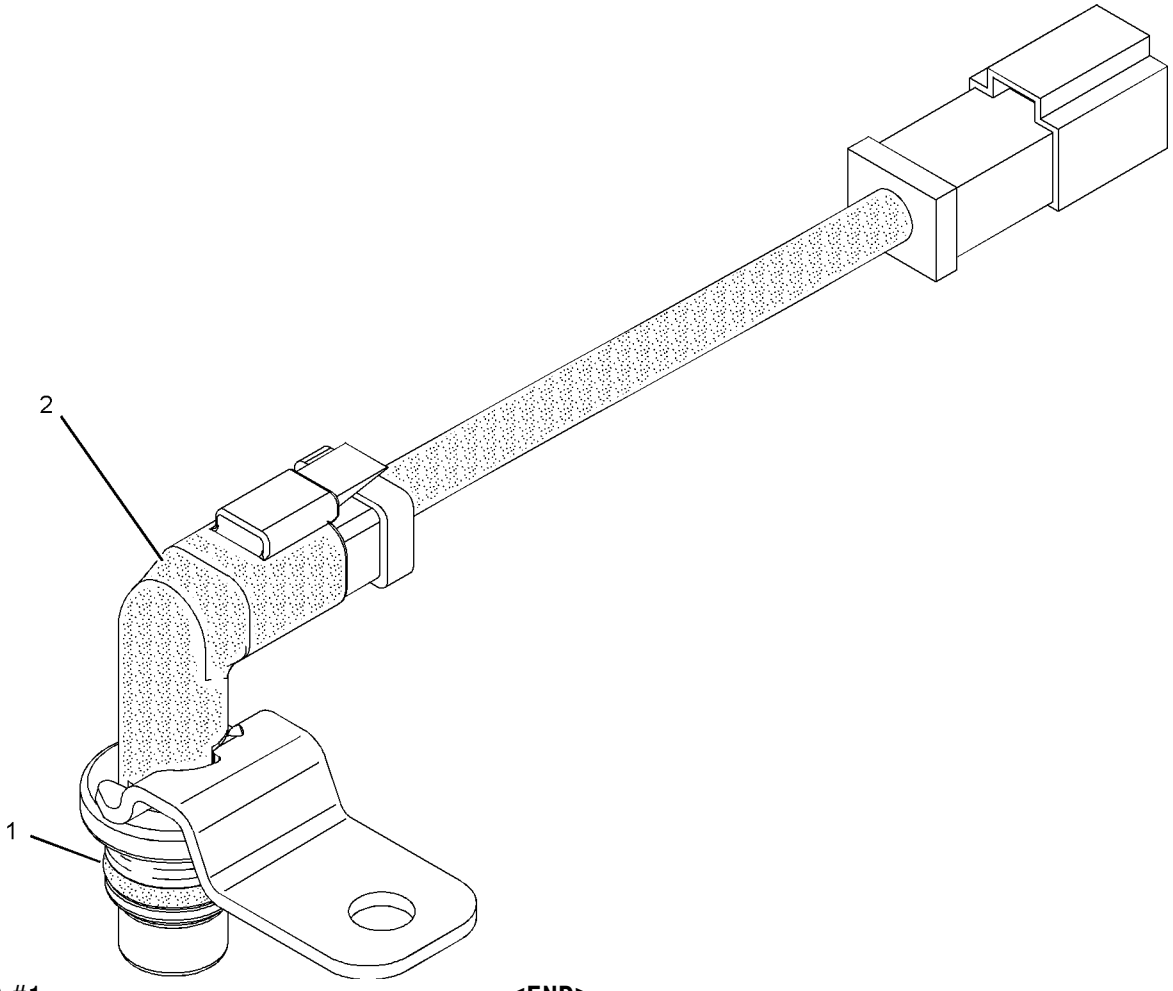


GRAPHIC #1 **<END>** g01019337

# *245-2774* SENSOR GP-SPEED

**S/N: NDG1-UP**

**PART OF 294-5560 TRANSMISSION AR**

**SMCS-1439** **i02992518**

| NOTE | REF NO | GRAPHIC REF | PART NUMBER | QTY | PART NAME 1 2 3 4 5 6 (PRODUCT LEVEL) | SEE PAGE |
|---|---|---|---|---|---|---|
| | 1 | 1 | **1B-3867** | 1 | BALL BEARING | |
| | 2 | 1 | **6T-5611** | 5 | SPACER (9.75X17.5X16.25-MM THK) | |
| | 3 | 1 | **6T-5612** | 5 | GROMMET | |
| | 4 | 1 | **6T-5613** | 1 | SPACER (7.85-MM THK) | |
| | 5 | 1 | **117-1385** | 2 | SEAL-O-RING | |
| | 6 | 1 | **148-1507** | 1 | ROTOR-SENSOR | |
| Y | 7 | 1 | **201-6615** | 2 | SENSOR GP-SPEED (TRANSMISSION) | 311 |
| | 8 | 1 | **203-2060** | 1 | RETAINER-BEARING | |
| | 9 | 1 | **258-0771** | 1 | GUARD AS | |
| | 10 | 1 | **258-0953** | 1 | HOUSING | |
| | 11 | 1 | **0L-1351** | 4 | BOLT (3/8-16X0.875-IN) | |
| | 12 | 1 | **130-5300** | 2 | CLIP | |
| | 13 | 1 | **2A-4639** | 2 | BOLT (3/8-16X1.625-IN) | |
| | 14 | 1 | **2H-3755** | 2 | BOLT (5/16-18X0.43-IN) | |
| | 15 | 1 | **2S-6160** | 5 | WASHER-HARD (10.2X32X5-MM THK) | |
| | 16 | 1 | **3B-1915** | 3 | BOLT (3/8-16X1.375-IN) | |
| | 17 | 1 | **4P-8134** | 3 | CLIP | |
| | 18 | 1 | **5M-2894** | 4 | WASHER-HARD (10.2X18.5X2.5-MM THK) | |
| | 19 | 1 | **5P-0537** | 4 | WASHER-HARD (7.2X14.5X2-MM THK) | |
| | 20 | 1 | **7K-1181** | 2 | STRAP-CABLE | |
| | 21 | 1 | **8H-3128** | 4 | BOLT-SOCKET HEAD (1/4-20X0.625-IN) | |
| | 22 | 1 | **8H-3981** | 1 | RING-RETAINING | |

Y-SEPARATE ILLUSTRATION

*245-2774* **SENSOR GP-SPEED** *(contd.)* **i02992518**

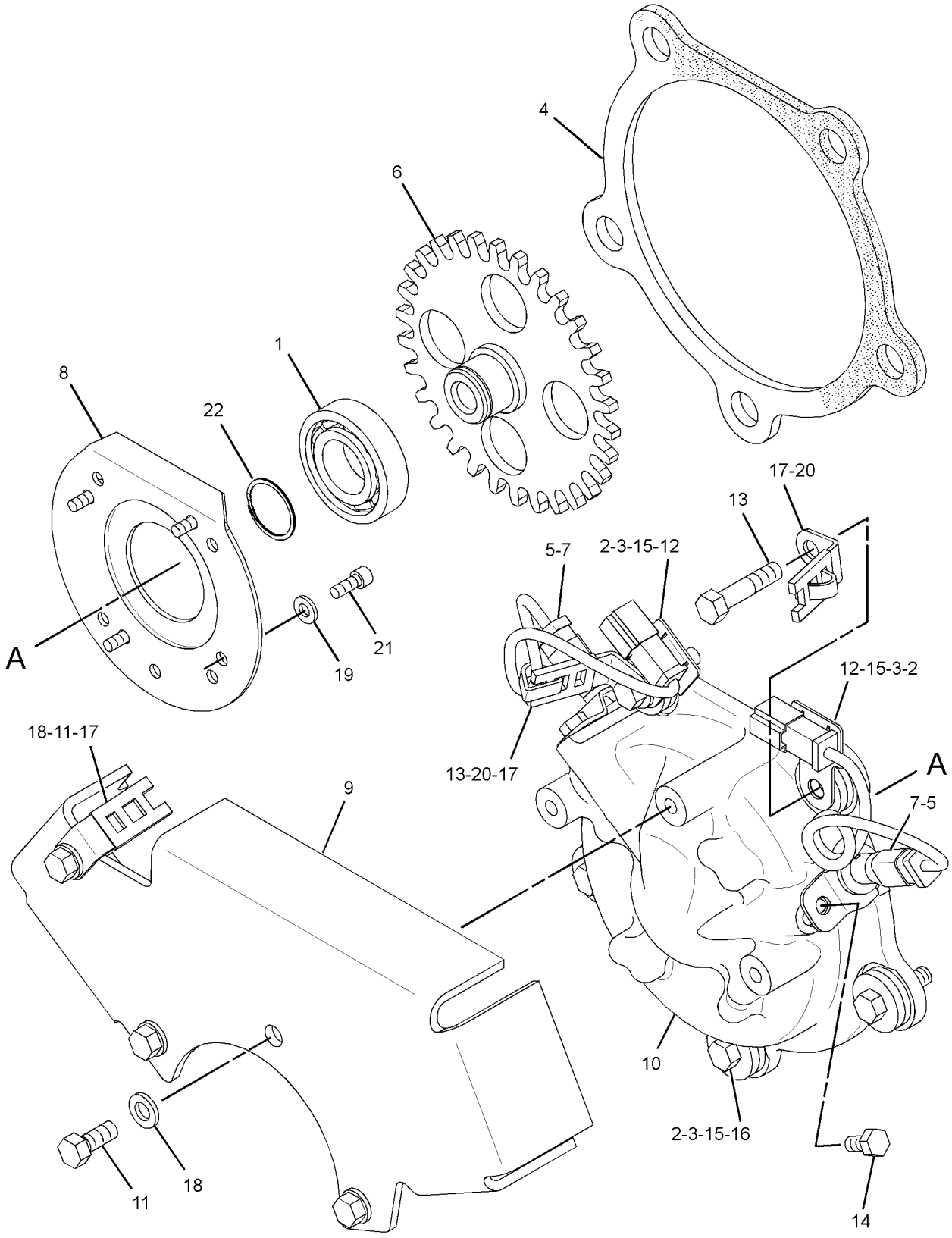


GRAPHIC #1 **<END>** g01523702

# *279-9017* SENSOR GP-SPEED

**S/N: RLB1-UP**
**PART OF 277-7540 CONTROL AR-TRACTION**
**AN ATTACHMENT**

**SMCS-1439** **i02496227**

| NOTE | REF NO | GRAPHIC REF | PART NUMBER | QTY | PART NAME 1 2 3 4 5 6 (PRODUCT LEVEL) | SEE PAGE |
|---|---|---|---|---|---|---|
| | 1 | 1 | **6G-0969** | 1 | RING | |
| | 2 | 1 | **6G-1999** | 1 | CLAMP | |
| | 3 | 1 | **279-8822** | 1 | PLATE | |
| | 4 | 1 | **279-8823** | 1 | HOUSING | |
| | 5 | 1 | **1T-0284** | 2 | BOLT-SOCKET HEAD (5/16-18X1-IN) | |
| | 6 | 1 | **6V-5839** | 6 | WASHER (11X21X2.5-MM THK) | |
| M | 7 | 1 | **6V-5842** | 6 | BOLT (M10X1.5X40-MM) | |

M-METRIC PART

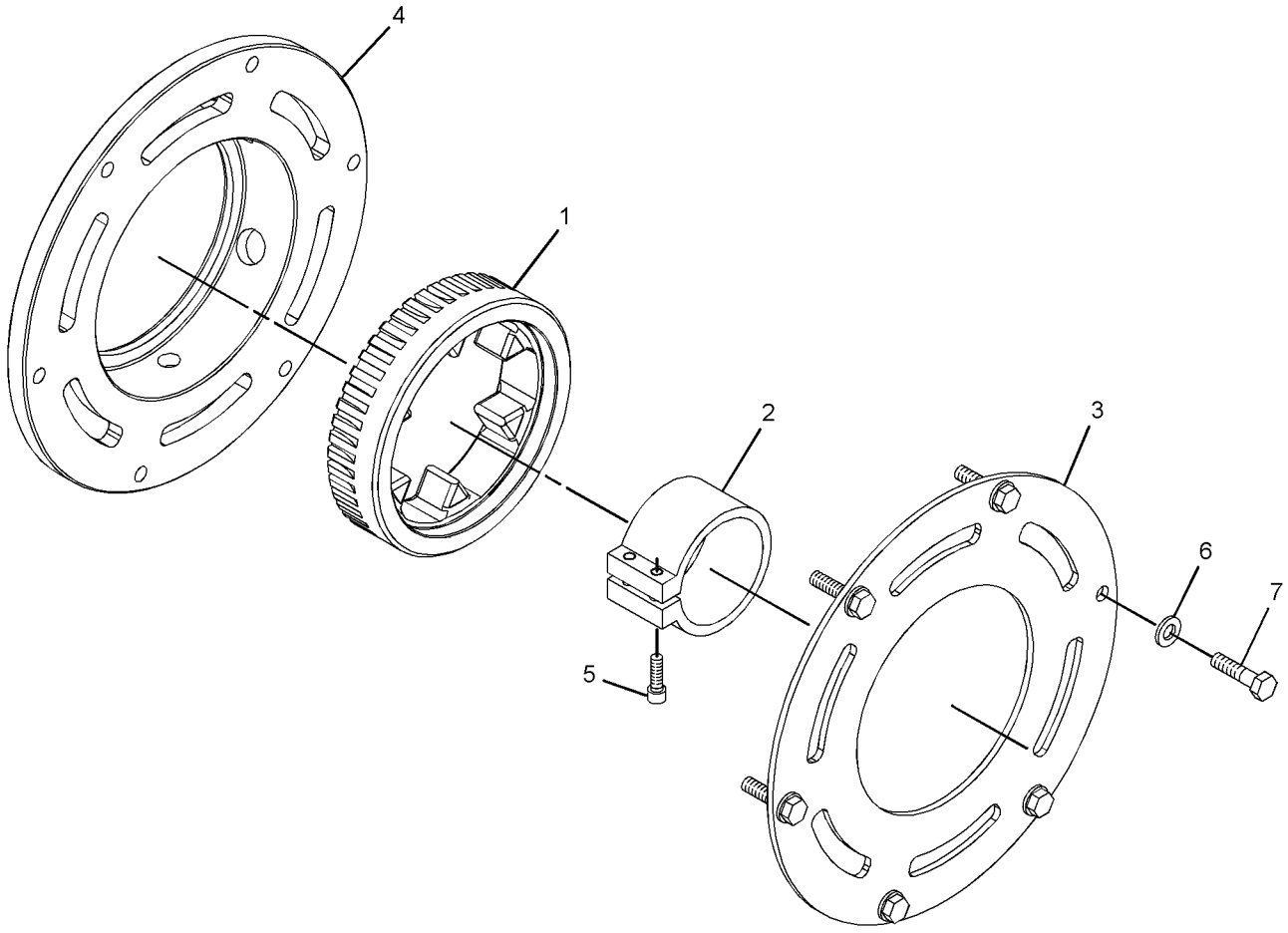


GRAPHIC #1 **<END>** g01248832

# *134-2252* SENSOR GP-TEMPERATURE

**S/N: RLB1-UP**

**PART OF 270-1502 WIRING GP-CHASSIS, 270-1503 WIRING GP-ENGINE**

**SMCS-1408, 1439, 1906, 1919, 1921, 1922, 1928, 1929, 192T, 1932, 301T, 3194, 3290, 429T, 509T, 7344**

**i02895310**

| NOTE | REF NO | GRAPHIC REF | PART NUMBER | QTY | PART NAME 1 2 3 4 5 6 (PRODUCT LEVEL) | SEE PAGE |
|---|---|---|---|---|---|---|
| | 1 | 1 | **3E-3371** | 1 | WEDGE-RECEPTACLE LOCK (3-PIN) | |
| BE | 2 | 1 | **9X-1386** | | SLEEVE | |
| | 3 | 1 | **102-8803** | 1 | KIT-RECEPTACLE (3-PIN) | |
| | | | | | (INCLUDES RECEPTACLE AS & WEDGE) | |
| | 4 | 1 | **8T-8729** | 3 | PIN-CONNECTOR | |

B-USE AS REQUIRED
E-ORDER BY THE CENTIMETER

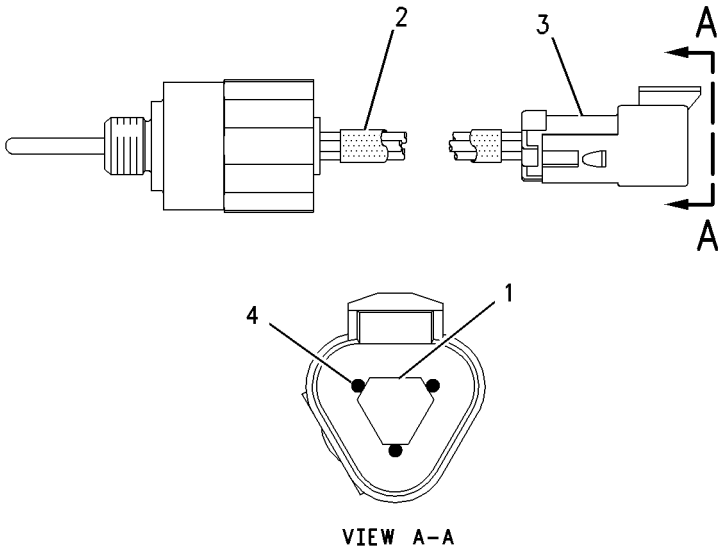


VIEW A-A

GRAPHIC #1

**<END>**

g00658816

# *197-8391* SENSOR GP-TEMPERATURE

**S/N: RHX1-UP**

**PART OF 246-1053 PUMP GP-FUEL PRM & PRIM FILTER, 243-1563 SENSOR GP-ENGINE**

**AN ATTACHMENT**

**TYPE 1**

**SMCS-1408, 1439, 1906, 1919, 1921, 1922, 1928, 1929, 192T, 1932, 301T, 3194, 3290, 429T, 509T, 7344**

**i02938842**

| NOTE | REF NO | GRAPHIC REF | PART NUMBER | QTY | PART NAME 1 2 3 4 5 6 (PRODUCT LEVEL) | SEE PAGE |
|---|---|---|---|---|---|---|
| | 1 | 1 | **130-9811** | 1 | SENSOR GP-TEMPERATURE | |
| | | 1 | **137-6645** | 1 | PAD | |
| | 2 | 1 | **8L-2786** | 1 | SEAL-O-RING | |

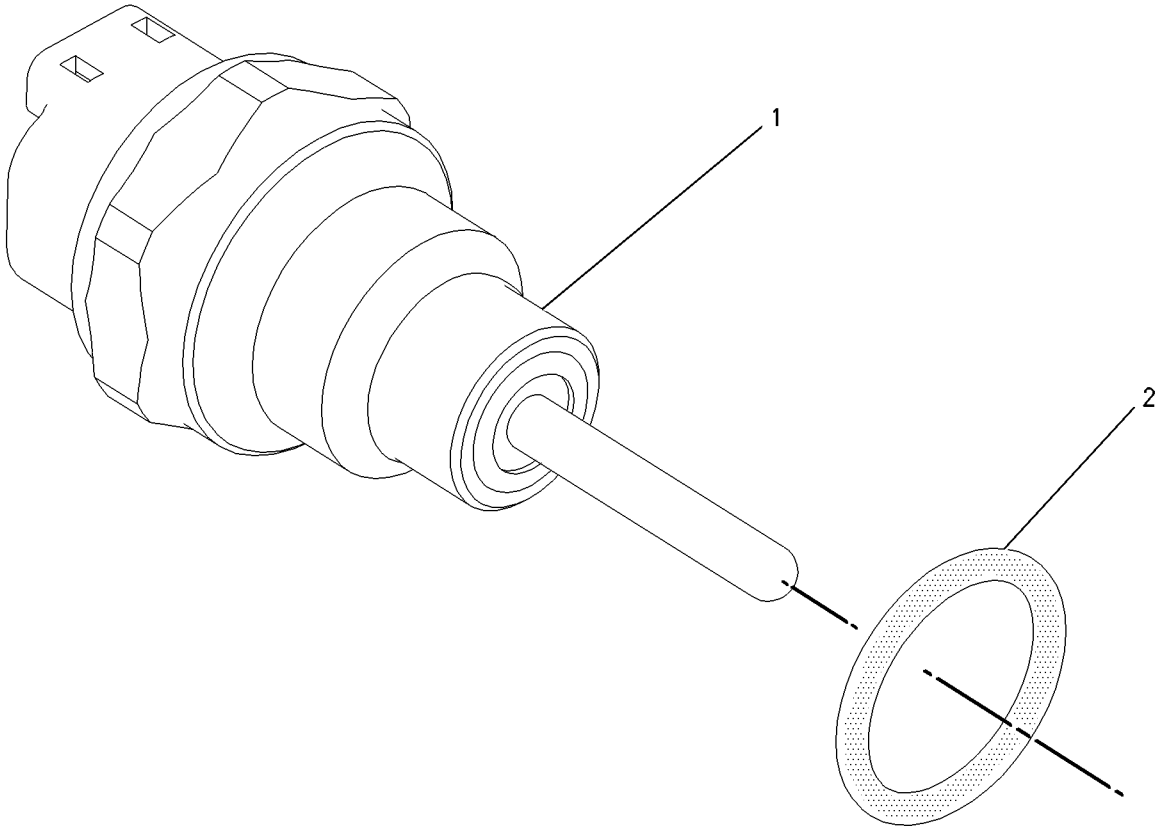


GRAPHIC #1

**<END>**

g00856011

# *197-8391* SENSOR GP-TEMPERATURE

**S/N: RHX1-UP**
**PART OF 243-1563 SENSOR GP-ENGINE**
**AN ATTACHMENT**
**TYPE 2**

**SMCS-1408, 1439, 1906, 1919, 1921, 1922, 1928, 1929, 192T, 1932, 301T, 3194, 3290, 429T, 509T, 7344**

**i02939540**

| NOTE | REF NO | GRAPHIC REF | PART NUMBER | QTY | PART NAME 1 2 3 4 5 6 (PRODUCT LEVEL) | SEE PAGE |
|---|---|---|---|---|---|---|
| C | 1 | 1 | **264-4297** | 1 | SENSOR GP-TEMPERATURE | |
| | | 1 | **137-6645** | 1 | PAD | |
| | 2 | 1 | **8L-2786** | 1 | SEAL-O-RING | |

C-CHANGE FROM PREVIOUS TYPE

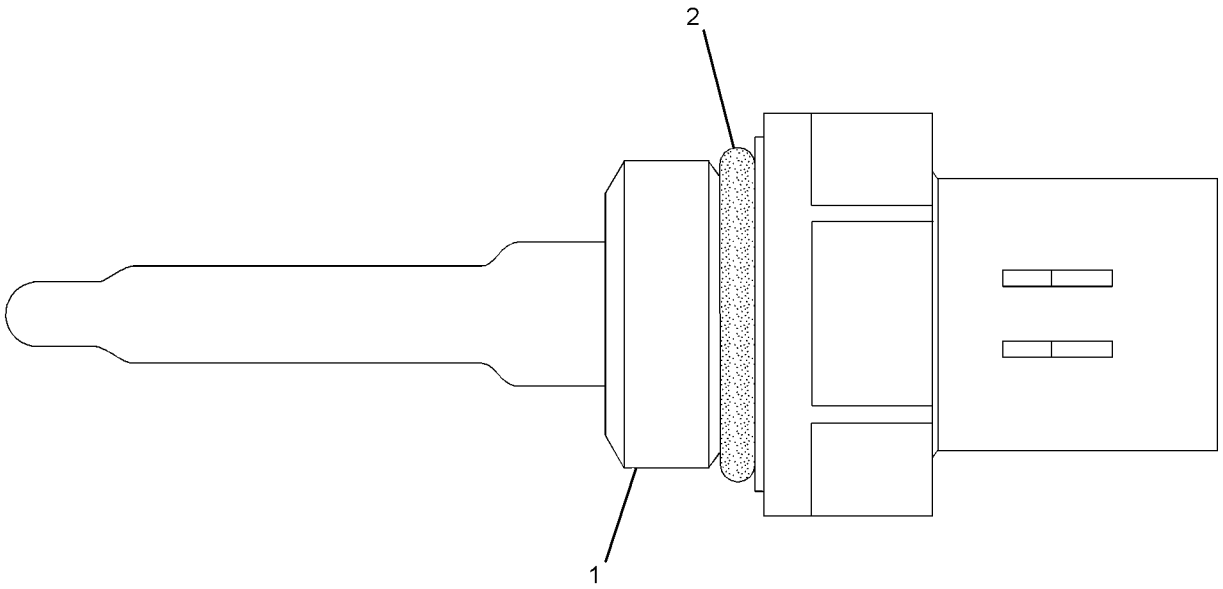


GRAPHIC #1

**<END>**

g01164268

# *197-8392* SENSOR GP-TEMPERATURE

**S/N: RHX1-UP**
**PART OF 243-1563 SENSOR GP-ENGINE**
**AN ATTACHMENT**
**TYPE 1**

**SMCS-1408, 1439, 1906, 1919, 1921, 1922, 1928, 1929, 192T, 1932, 301T, 3194, 3290, 429T, 509T, 7344** **i03151493**

| NOTE | REF NO | GRAPHIC REF | PART NUMBER | QTY | PART NAME 1 2 3 4 5 6 (PRODUCT LEVEL) | SEE PAGE |
|---|---|---|---|---|---|---|
| | 1 | 1 | **130-9811** | 1 | SENSOR GP-TEMPERATURE | |
| | | 1 | **137-6645** | | PAD | |
| | 2 | 1 | **6V-6609** | 1 | SEAL-O-RING | |

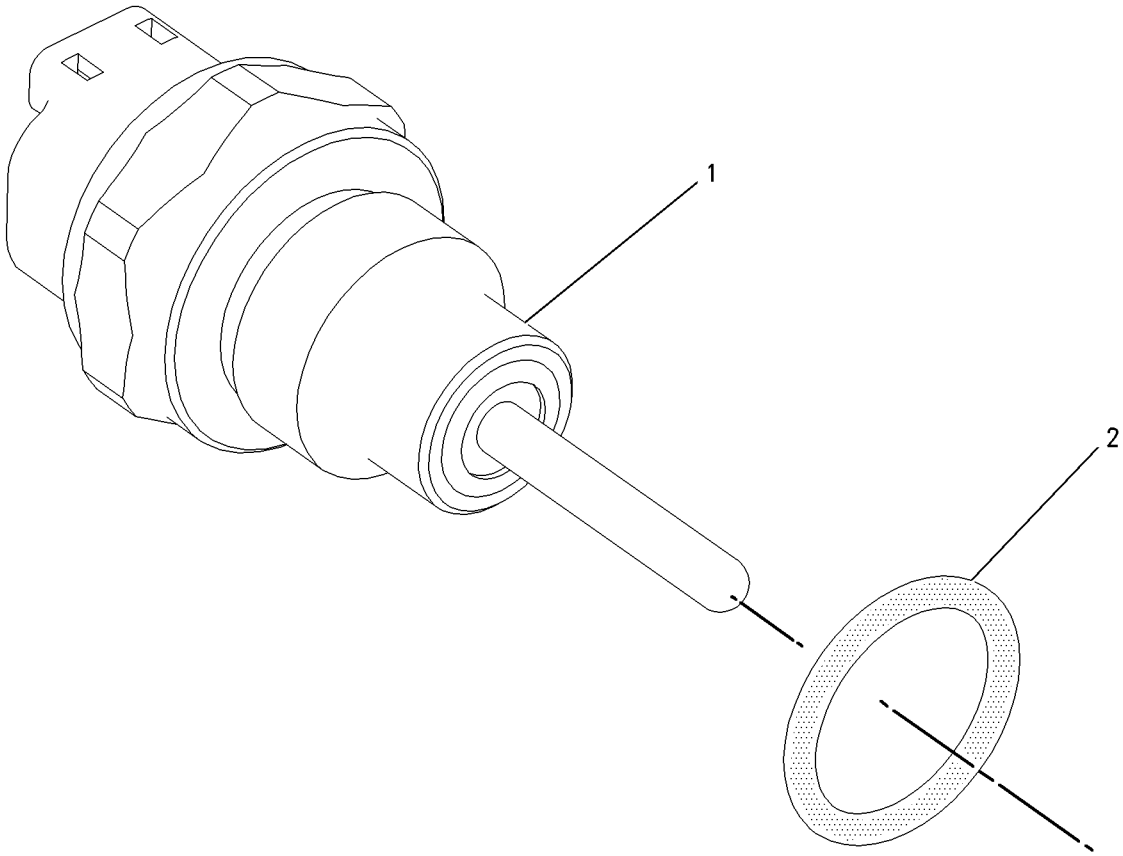


GRAPHIC #1 **<END>** g00856005

# *197-8392* SENSOR GP-TEMPERATURE

**S/N: RHX1-UP**
**PART OF 243-1563 SENSOR GP-ENGINE**
**AN ATTACHMENT**
**TYPE 2**

**SMCS-1408, 1439, 1906, 1919, 1921, 1922, 1928, 1929, 192T, 1932, 301T, 3194, 3290, 429T, 509T, 7344**

**i02864759**

| NOTE | REF NO | GRAPHIC REF | PART NUMBER | QTY | PART NAME 1 2 3 4 5 6 (PRODUCT LEVEL) | SEE PAGE |
|---|---|---|---|---|---|---|
| C | 1 | 1 | **264-4297** | 1 | SENSOR GP-TEMPERATURE | |
| | | 1 | **137-6645** | 1 | PAD | |
| | 2 | 1 | **6V-6609** | 1 | SEAL-O-RING | |

C-CHANGE FROM PREVIOUS TYPE

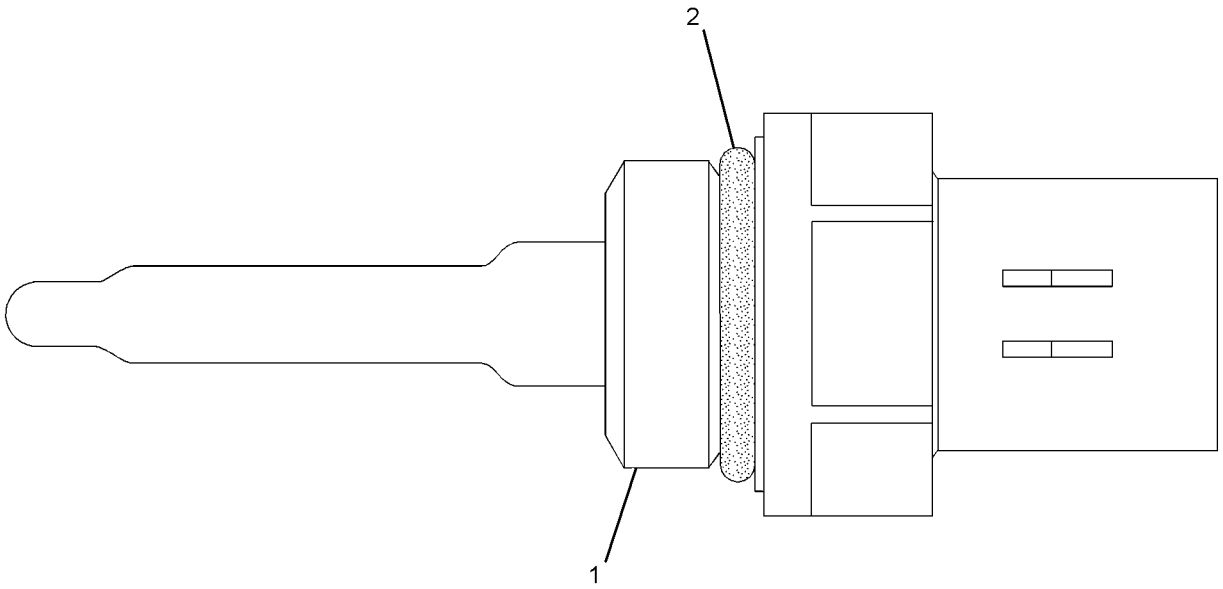


GRAPHIC #1

**<END>**

g01164268

# *234-5013* SENSOR GP-TEMPERATURE

**S/N: RHX3837-UP**
**AMPSEAL CONNECTOR**
**PART OF 298-6412 PUMP GP-FUEL PRM & PRIM FILTER**
**AN ATTACHMENT**

**SMCS-1408, 1439, 1906, 1919, 1921, 1922, 1928, 1929, 192T, 1932, 301T, 3194, 3290, 429T, 509T, 7344**

**i02857732**

| NOTE | REF NO | GRAPHIC REF | PART NUMBER | QTY | PART NAME 1 2 3 4 5 6 (PRODUCT LEVEL) | SEE PAGE |
|---|---|---|---|---|---|---|
| | 1 | 1 | **256-6453** | 1 | SENSOR AS-TEMPERATURE | |
| | 2 | 1 | **8L-2786** | 1 | SEAL-O-RING | |

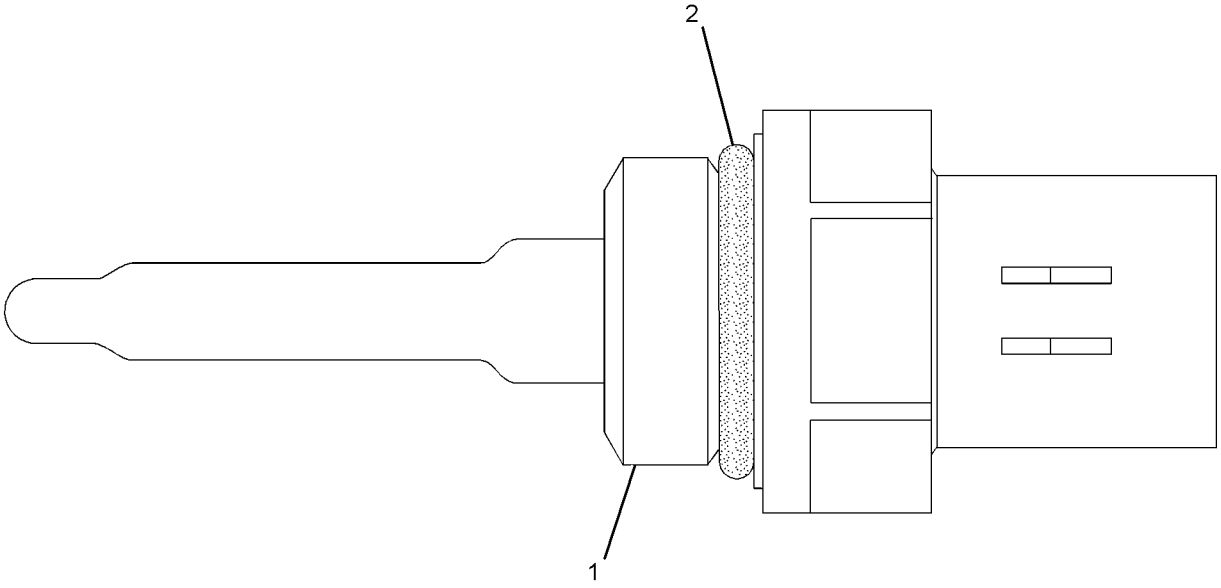


GRAPHIC #1

**<END>**

g01164268

# ELECTRICAL AND STARTING SYSTEM

## *270-4231* STARTING AID GP-ETHER

**S/N: RLB1-UP**
**AN ATTACHMENT**

**SMCS-1456** **i02706960**

| NOTE | REF NO | GRAPHIC REF | PART NUMBER | QTY | PART NAME 1 2 3 4 5 6 (PRODUCT LEVEL) | SEE PAGE |
|---|---|---|---|---|---|---|
| | 1 | 1 | **7N-2059** | 1 | CLAMP AS | |
| | 2 | 1 | **118-8454** | 1 | NOZZLE AS-ETHER | |
| Y | 3 | 1 | **239-1134** | 1 | VALVE GP-ETHER STARTING (24-VOLT) | 342 |
| | 4 | 1 | **277-7693** | 1 | HOSE AS | |
| | 5 | 1 | **282-9866** | 1 | FITTING | |
| | 6 | 1 | **3B-6768** | 1 | BUSHING-REDUCER | |
| | 8 | 1 | **8M-2772** | 4 | CLIP | |
| | 9 | 1 | **8T-4121** | 3 | WASHER-HARD (11X21X2.5-MM THK) | |
| M | 10 | 1 | **8T-4137** | 3 | BOLT (M10X1.5X20-MM) | |
| M | 11 | 1 | **8T-4200** | 3 | BOLT (M8X1.25X16-MM) | |
| | 12 | 1 | **8T-4224** | 3 | WASHER-HARD (8.8X16X2-MM THK) | |
| | | | | | | |
| A | | | **7N-0296** | 1 | CYLINDER AS-ETHER | |
| | | | | | (MUST BE PROCURED LOCALLY FROM YOUR CATERPILLAR DEALER) | |

A-NOT PART OF THIS GROUP
M-METRIC PART
Y-SEPARATE ILLUSTRATION

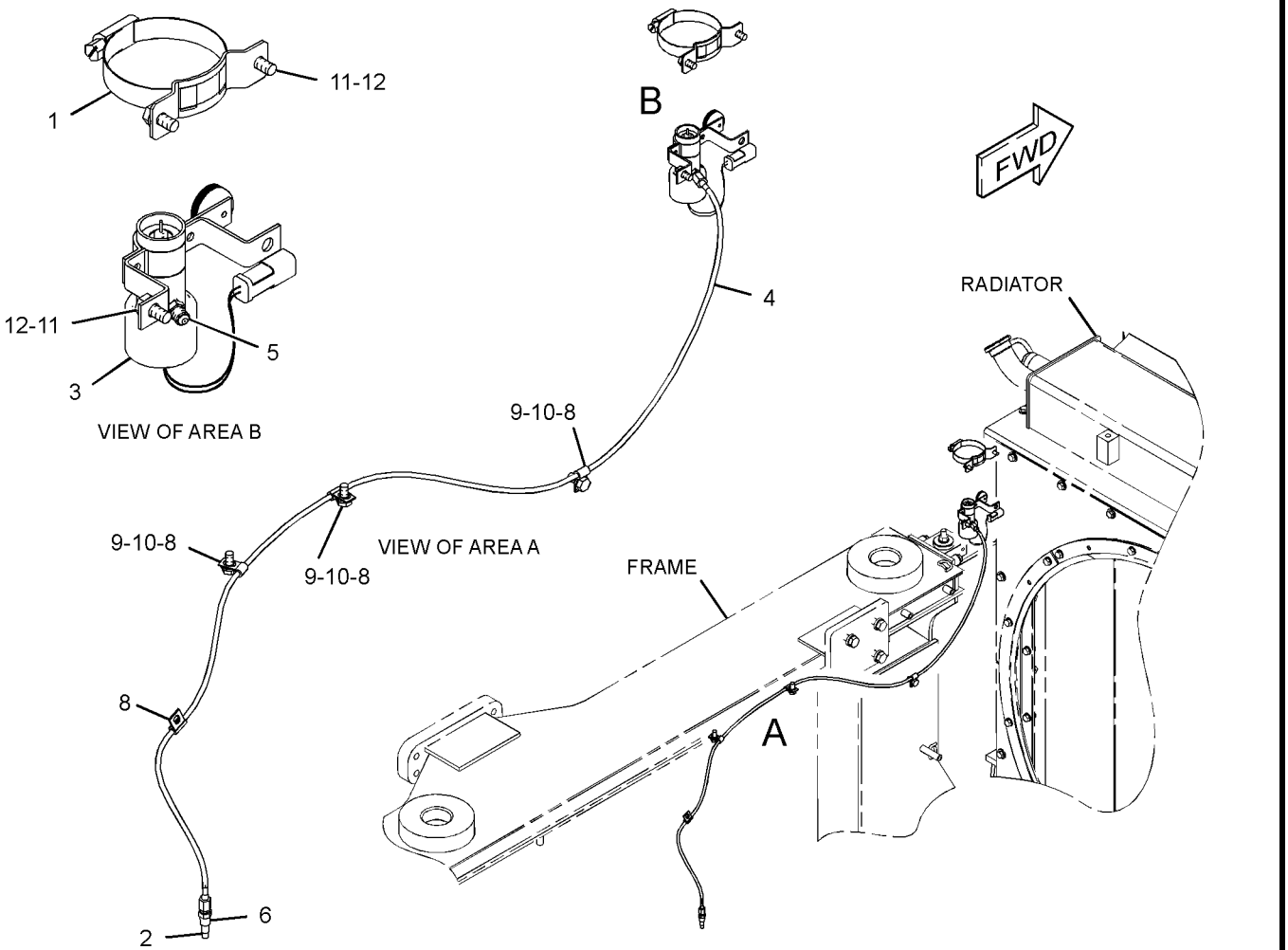


GRAPHIC #1 **<END>** g01368702

# *227-8842* STARTING MOTOR GP-ELECTRIC

**S/N: RLB1-UP**

**PART OF 270-4248, 308-5826 INSTALLATION AR-ENGINE**

**SMCS-1453** **i03287241**

| NOTE | REF NO | GRAPHIC REF | PART NUMBER | QTY | PART NAME 1 2 3 4 5 6 (PRODUCT LEVEL) | SEE PAGE |
|---|---|---|---|---|---|---|
| YR | 1 | 1 | **237-1962** | 1 | STARTING MOTOR GP-ELECTRIC (24-VOLT) (HEAVY-DUTY, LH) | 326 |
| | 2 | 1 | **251-1636** | 1 | GASKET | |
| | 3 | 1 | **299-5738** | 1 | CABLE AS | |
| | | 1 | **1S-7251** | 1 | TERMINAL-CABLE (00-GA, 1/2-IN BOLT) | |
| | | 1 | **1S-7252** | 1 | TERMINAL-CABLE (00-GA, 3/8-IN BOLT) | |
| E | | 1 | **159-8050** | | CABLE (00-GA, BLACK) (24-CM) | |
| | 4 | 1 | **299-3437** | 3 | BOLT (M16X2X45-MM) | |

E-ORDER BY THE CENTIMETER
R-REMFG PART MAY BE AVAILABLE
Y-SEPARATE ILLUSTRATION

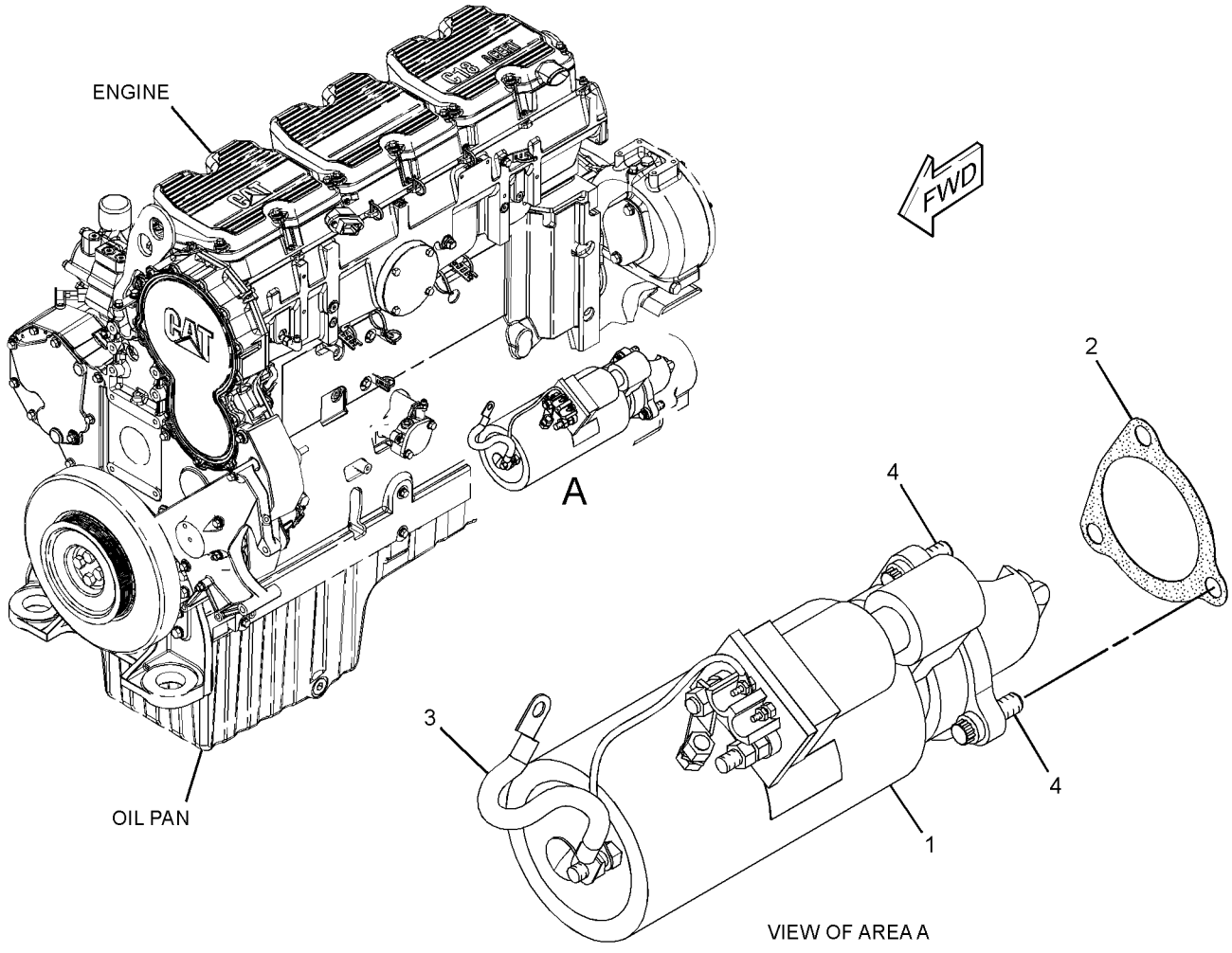


GRAPHIC #1 **<END>** g01334587

## *237-1962* STARTING MOTOR GP-ELECTRIC—HEAVY-DUTY, LH*R

**S/N: RLB1-UP**

**24-VOLT**

**PART OF 227-8842 STARTING MOTOR GP-ELECTRIC**

**SMCS-1453** **i02927711**

| NOTE | REF NO | GRAPHIC REF | PART NUMBER | QTY | PART NAME 1 2 3 4 5 6 (PRODUCT LEVEL) | SEE PAGE |
|---|---|---|---|---|---|---|
| | 1 | 1 | **7M-0326** | 1 | CONNECTOR | |
| | 2 | 1 | **9H-3757** | 2 | WASHER (0.516X1X0.094-IN THK) | |
| | 3 | 1 | **1S-7446** | 3 | SCREW-MACHINE (8-32X0.437-IN) | |
| | 4 | 1 | **8C-9660** | 3 | WASHER (4.6X7.9X0.8-MM THK) | |
| | 5 | 1 | **9S-2544** | 9 | SCREW-HEX HEAD (8-32X11.13-MM) | |
| | 6 | 1 | **7M-0327** | 1 | WASHER-THRUST (17.4X25.4X1.6-MM THK) | |
| | 7 | 1 | **3T-3418** | 1 | FRAME AS-END | |
| | | 1 | **3T-3423** | 1 | CUP | |
| | | 1 | **3T-3424** | 1 | PLUG-FELT | |
| | | 1 | **9G-4101** | 1 | BUSHING-END | |
| | 8 | 1 | **3T-9525** | 1 | PLATE AS-BRUSH | |
| | 8A | 1 | **6T-0371** | 1 | INSULATOR | |
| | 8B | 1 | **5P-6298** | 12 | SCREW-MACHINE (10-32X0.5-IN) | |
| | | 1 | **9F-5599** | 12 | LOCKWASHER | |
| | 8C | 1 | **7F-3525** | 6 | WASHER-BUSHING (0.207X0.39X0.09-IN THK) | |
| | 8D | 1 | **6T-0372** | 1 | PLATE | |
| | 8E | 1 | **3T-4709** | 3 | PLATE | |
| | 8F | 1 | **2L-6679** | 3 | PLATE-INSULATOR | |
| | 8G | 1 | **3T-4710** | 3 | PLATE | |
| | 8H | 1 | **6T-0363** | 6 | HOLDER AS-BRUSH (STARTING MOTOR) | |
| | | | | | (EACH INCLUDES) | |
| | 8J | 1 | **3T-9494** | 1 | SPRING | |
| | 9 | 1 | **7F-3491** | 2 | WASHER (0.516X1X0.094-IN THK) | |
| | 10 | 1 | **3T-3422** | 1 | WIRE AS (STARTING MOTOR) | |
| | 11 | 1 | **2J-8163** | 2 | SEAL-O-RING | |
| | 12 | 1 | **7X-3373** | 1 | BOLT (5/16-18X0.88-IN) | |
| | 13 | 1 | **3T-3434** | 6 | PLUG | |
| | 14 | 1 | **5J-5314** | 5 | BOLT (5/16-18X1.5-IN) | |
| | 15 | 1 | **3L-3380** | 1 | BUSHING-TERMINAL | |
| | 16 | 1 | **036-9821** | 1 | WASHER | |
| | 17 | 1 | **4M-1828** | 1 | RETAINER-SPRING | |
| | 18 | 1 | **306-3998** | 1 | BOOT-RUBBER | |
| | 19 | 1 | **9M-7609** | 1 | SPRING (SHIFT LEVER) | |
| | 20 | 1 | **4M-1827** | 1 | RETAINER-SPRING | |
| | 21 | 1 | **8C-3089** | 1 | SEAL-O-RING | |
| | 22 | 1 | **4M-1853** | 1 | LEVER AS-SHIFT | |
| | 23 | 1 | **5M-3034** | 1 | LOCKNUT (5/16-24-THD) | |
| | 24 | 1 | **7L-2894** | 4 | GASKET | |
| | 25 | 1 | **4M-1831** | 4 | PLUG-LEVER HOUSING | |
| | 26 | 1 | **4M-1854** | 1 | SHAFT-LEVER | |
| | 27 | 1 | **1H-1023** | 1 | SEAL-O-RING | |
| | 28 | 1 | **2D-6392** | 1 | SEAL-O-RING | |
| | 29 | 1 | **7T-3974** | 1 | HOUSING AS-DRIVE | |
| | 30 | 1 | **6N-3826** | 1 | DRIVE AS-MOTOR | |
| | 31 | 1 | **2H-3429** | 2 | RING-RETAINING | |
| | 32 | 1 | **6V-1322** | 4 | BOLT (1/4-20X0.375-IN) | |
| | 33 | 1 | **8T-4205** | 4 | WASHER-HARD (7.2X14.5X2-MM THK) | |
| | 34 | 1 | **6N-3279** | 1 | INSULATOR | |
| | 35 | 1 | **036-9823** | 13 | BOLT (1/4-28X1-IN) | |
| | 36 | 1 | **1M-9971** | 1 | SPACER (0.835X1.72X0.188-IN THK) | |
| | 37 | 1 | **1H-2629** | 3 | STRIP-INSULATION | |
| | 38 | 1 | **7M-0324** | 1 | COIL AS-FIELD | |
| | 39 | 1 | **3R-8797** | 12 | SCREW & WASHER AS (3/8-24X0.72-IN) | |
| | 40 | 1 | **7F-3488** | 6 | SHOE-POLE | |
| | 41 | 1 | **7M-8651** | 1 | ARMATURE AS | |

## *237-1962* **STARTING MOTOR GP-ELECTRIC** *(contd.)* **i02927711**

| NOTE | REF NO | GRAPHIC REF | PART NUMBER | QTY | PART NAME 1 2 3 4 5 6 (PRODUCT LEVEL) | SEE PAGE |
|---|---|---|---|---|---|---|
| | 42 | 1 | **7M-0325** | 1 | INSULATOR | |
| | 43 | 1 | **3T-9524** | 6 | BRUSH AS | |
| | 44 | 1 | **3N-3763** | 1 | KIT-TERMINAL (STARTING MOTOR) | |
| | | | | | (INCLUDES BUSHINGS & WASHERS) | |
| | 45 | 1 | **125-6537** | 1 | INSULATOR | |
| | 46 | 1 | **3R-8801** | 1 | CLAMP | |
| | 47 | 1 | **8F-1434** | 2 | LOCKWASHER | |
| | 48 | 1 | **6V-8188** | 6 | NUT (1/2-13-THD) | |
| | 49 | 1 | **7X-0562** | 6 | WASHER-HARD (13.5X19X0.8-MM THK) | |
| | 50 | 1 | **4B-2049** | 6 | NUT (10-32-THD) | |
| | 51 | 1 | **8T-0328** | 10 | WASHER-HARD (5.5X10X1-MM THK) | |
| | 52 | 1 | **3T-9494** | 6 | SPRING (STARTING MOTOR) | |
| | 53 | 1 | **3E-7771** | 1 | HOUSING AS (STARTING MOTOR) | |
| | 54 | 1 | **9G-4101** | 1 | BUSHING-END | |
| | 55 | 1 | **3T-3424** | 3 | PLUG-FELT | |
| | 56 | 1 | **3T-3423** | 3 | CUP | |
| | 57 | 1 | **1M-9968** | 1 | BUSHING | |
| | 58 | 1 | **2F-6678** | 1 | SEAL-LIP TYPE | |
| | 59 | 1 | **4L-2729** | 1 | WASHER (0.844X1.9X0.188-IN THK) | |
| | 60 | 1 | **4M-1896** | 1 | BUSHING-TERMINAL | |
| | 61 | 1 | **045-4065** | 4 | SCREW-MACHINE (10-32X0.75-IN) | |
| | 62 | 1 | **125-6535** | 1 | COVER-STARTING MOTOR | |
| | 63 | 1 | **7T-9123** | 1 | GASKET-PLATE | |
| | 64 | 1 | **318-2082** | 1 | SOLENOID AS-STARTING MOTOR (24-VOLT) | |
| | 65 | 1 | **125-6536** | 1 | TERMINAL AS | |

## *237-1962* **STARTING MOTOR GP-ELECTRIC** *(contd.)* **i02927711**

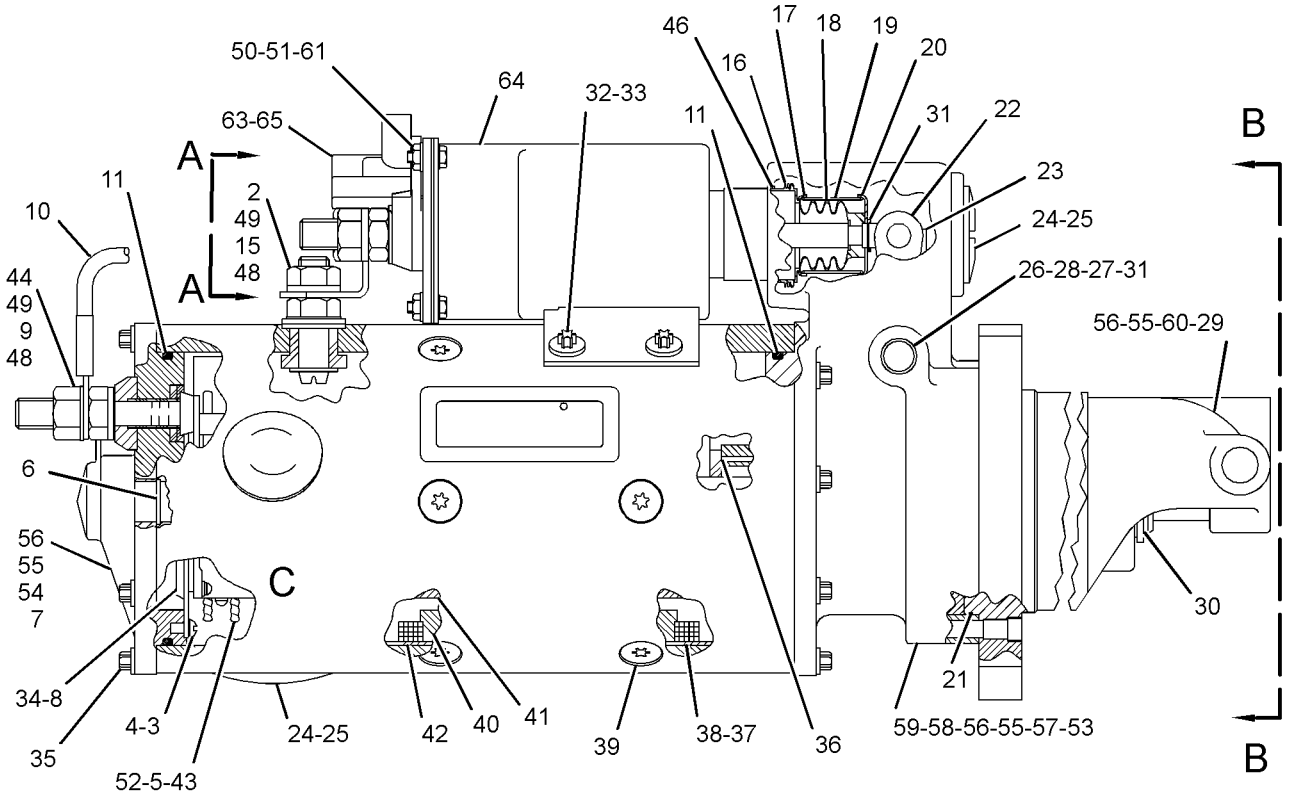


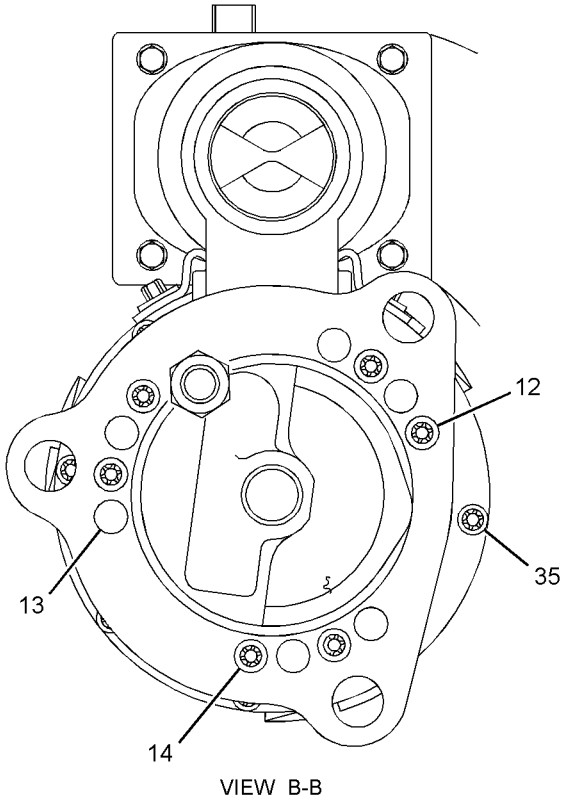


VIEW B-B

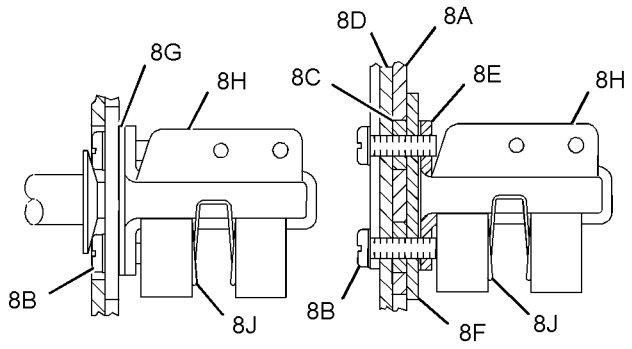


VIEW OF AREA C

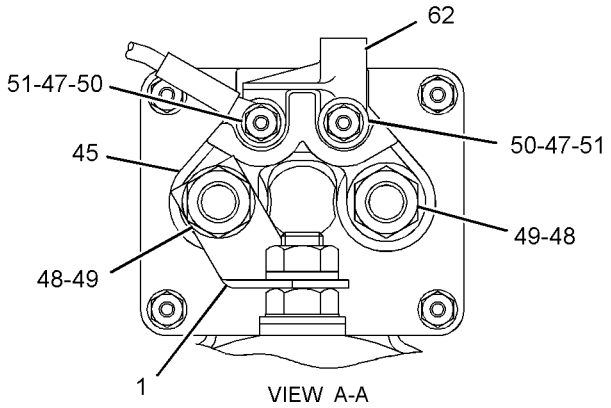


VIEW A-A

GRAPHIC #1 **<END>** g01453239

## *7N-0718* SWITCH GP-DISCONNECT–BATTERY

**S/N: RLB1-UP**
**12-VOLT**
**PART OF 237-7602 SWITCH GP-DISCONNECT**

**SMCS-1411** **i02459121**

| NOTE | REF NO | GRAPHIC REF | PART NUMBER | QTY | PART NAME 1 2 3 4 5 6 (PRODUCT LEVEL) | SEE PAGE |
|---|---|---|---|---|---|---|
| | 1 | 1 | **8H-5306** | 1 | KEY (BATTERY DISCONNECT) | |
| | 2 | 1 | **8H-5303** | 1 | NUT (3/4-16-THD) | |
| | 3 | 1 | **2H-3922** | 2 | LOCKWASHER | |
| | 4 | 1 | **9F-5644** | 2 | LOCKWASHER | |
| | 5 | 1 | **6F-7045** | 2 | NUT-FULL (3/8-24-THD) | |

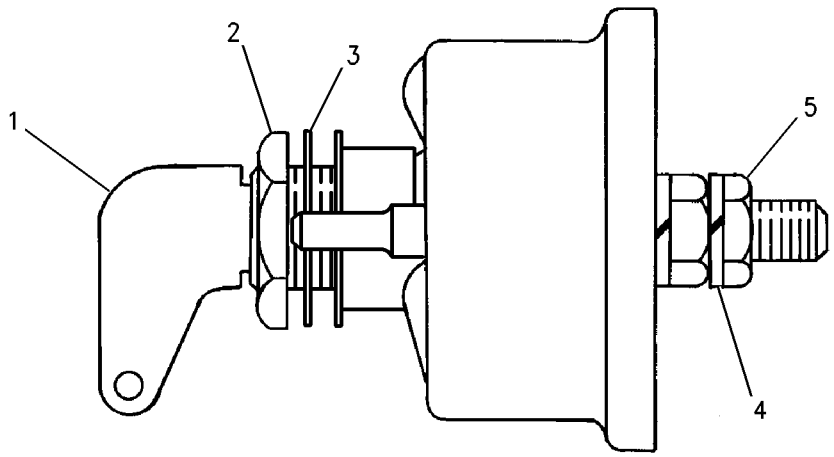


GRAPHIC #1 **<END>** g00715584

# 237-7602 SWITCH GP-DISCONNECT–BATTERY

**S/N: RLB1-UP**

**PART OF 270-1501 BATTERY & WIRING GP**

**SMCS-1411** **i03287248**

| NOTE | REF NO | GRAPHIC REF | PART NUMBER | QTY | PART NAME 1 2 3 4 5 6 (PRODUCT LEVEL) | SEE PAGE |
|---|---|---|---|---|---|---|
| Y | 1 | 1 | **7N-0718** | 1 | SWITCH GP-DISCONNECT (BATTERY) | 329 |
| | 2 | 1 | **8S-2634** | 1 | COVER AS | |

Y-SEPARATE ILLUSTRATION

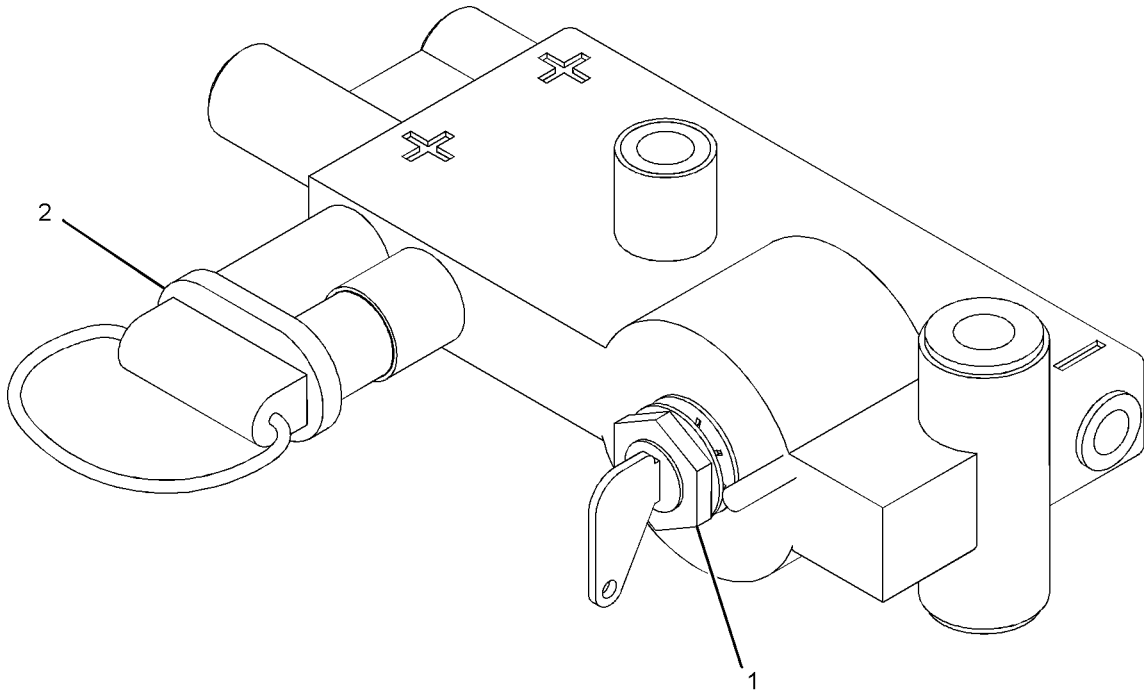


GRAPHIC #1 **<END>** g01029108

# *118-3534* SWITCH GP-MAGNETIC

**S/N: RLB1-UP**
**24-VOLT**
**PART OF 270-1502 WIRING GP-CHASSIS**

**SMCS-7499** **i02883861**

| NOTE | PART NUMBER | QTY | PART NAME 1 2 3 4 5 6 (PRODUCT LEVEL) | SEE PAGE |
|---|---|---|---|---|
| Y | *175-2308* | 1 | SWITCH GP-MAGNETIC (24-VOLT) (START RELAY) | 332 |
| | | | —OR— | |
| Y | *175-2309* | 1 | SWITCH GP-MAGNETIC (24-VOLT) (START RELAY) | 333 |

Y-SEPARATE ILLUSTRATION

**<END>**

# *175-2308* SWITCH GP-MAGNETIC

**S/N: RLB1-UP**
**24-VOLT**
**PART OF 118-3534 SWITCH GP-MAGNETIC**

**SMCS-7499** **i02939090**

| NOTE | REF NO | GRAPHIC REF | PART NUMBER | QTY | PART NAME 1 2 3 4 5 6 (PRODUCT LEVEL) | SEE PAGE |
|---|---|---|---|---|---|---|
| | 1 | 1 | **102-8802** | 1 | KIT-RECEPTACLE (2-PIN) | |
| | | | | | (INCLUDES RECEPTACLE AS & WEDGE) | |
| | 2 | 1 | **186-3735** | 2 | PIN-CONNECTOR (16-GA TO 18-GA) | |
| | 3 | 1 | **1H-3338** | 2 | LOCKWASHER | |
| | 4 | 1 | **012-0380** | 2 | LOCKWASHER | |
| M | 5 | 1 | **5C-2890** | 2 | NUT (M6X1-THD) | |
| BE | 6 | 1 | **9X-1813** | | SLEEVE | |

B-USE AS REQUIRED
E-ORDER BY THE CENTIMETER
M-METRIC PART

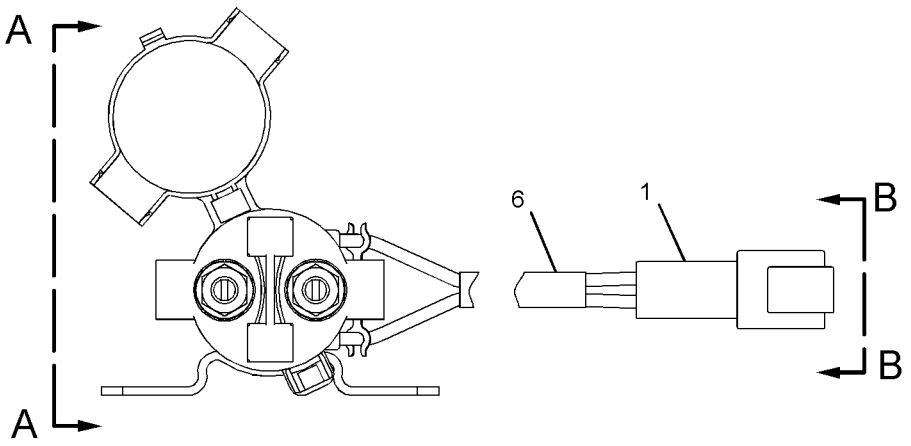


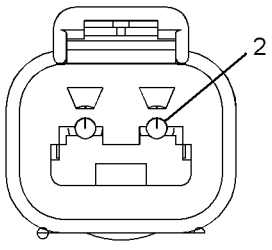


VIEW B-B

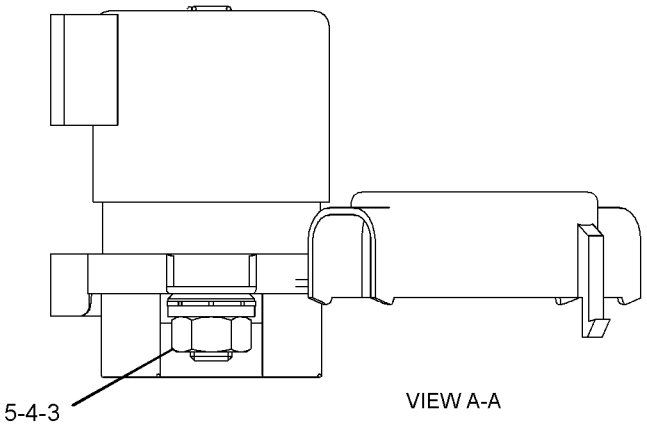


VIEW A-A

GRAPHIC #1 **<END>** g01266266

# *175-2309* SWITCH GP-MAGNETIC

**S/N: RLB1-UP**
**24-VOLT**
**PART OF 118-3534 SWITCH GP-MAGNETIC**

**SMCS-7499** **i02939089**

| NOTE | REF NO | GRAPHIC REF | PART NUMBER | QTY | PART NAME 1 2 3 4 5 6 (PRODUCT LEVEL) | SEE PAGE |
|---|---|---|---|---|---|---|
| | 1 | 1 | **117-9081** | 1 | SWITCH AS-MAGNETIC (START RELAY) | |
| | 1A | 1 | **1H-3338** | 2 | LOCKWASHER | |
| M | 1B | 1 | **5C-2890** | 2 | NUT (M6X1-THD) | |
| | 1C | 1 | **012-0380** | 2 | LOCKWASHER | |
| | 2 | 1 | **102-8802** | 1 | KIT-RECEPTACLE (2-PIN) | |
| | | | | | (INCLUDES RECEPTACLE AS & WEDGE) | |
| | 3 | 1 | **186-3735** | 2 | PIN-CONNECTOR (16-GA TO 18-GA) | |
| BE | 4 | 1 | **9X-1813** | | SLEEVE | |

B-USE AS REQUIRED
E-ORDER BY THE CENTIMETER
M-METRIC PART

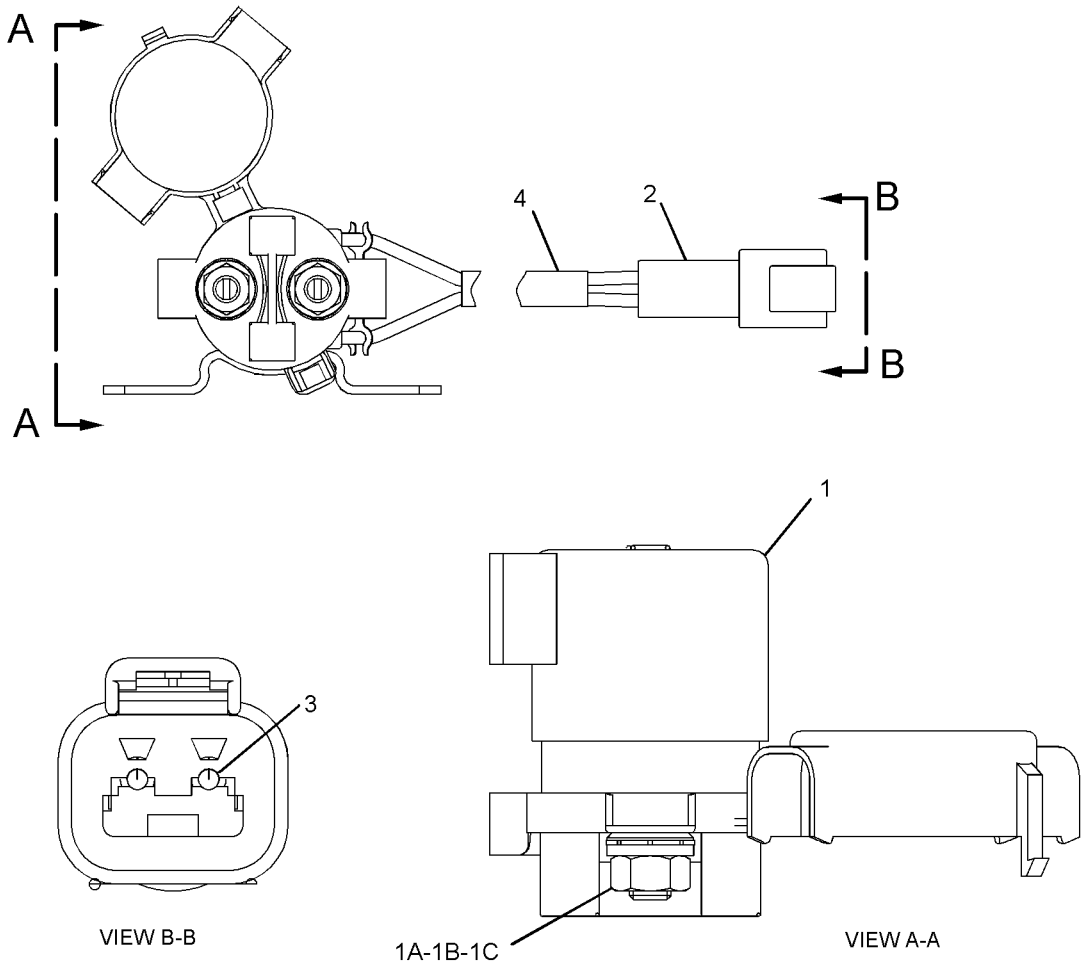


GRAPHIC #1 **<END>** g01266277

# *230-6278* SWITCH GP-MAGNETIC

**S/N: RLB1-UP**
**24-VOLT - 32-VOLT**
**PART OF 270-1502 WIRING GP-CHASSIS**

**SMCS-7499** **i02013921**

| NOTE | REF NO | GRAPHIC REF | PART NUMBER | QTY | PART NAME 1 2 3 4 5 6 (PRODUCT LEVEL) | SEE PAGE |
|---|---|---|---|---|---|---|
| | 1 | 1 | **7X-0620** | 2 | WASHER-HARD (5.5X13X1.6-MM THK) | |
| | 2 | 1 | **8F-1434** | 2 | LOCKWASHER | |
| | 3 | 1 | **6V-8378** | 2 | NUT (10-32-THD) | |
| | 4 | 1 | **6V-8801** | 2 | NUT (3/8-16-THD) | |
| | 5 | 1 | **7X-0608** | 2 | WASHER-HARD (10.2X16X2-MM THK) | |
| | 6 | 1 | **4D-1326** | 2 | LOCKWASHER | |

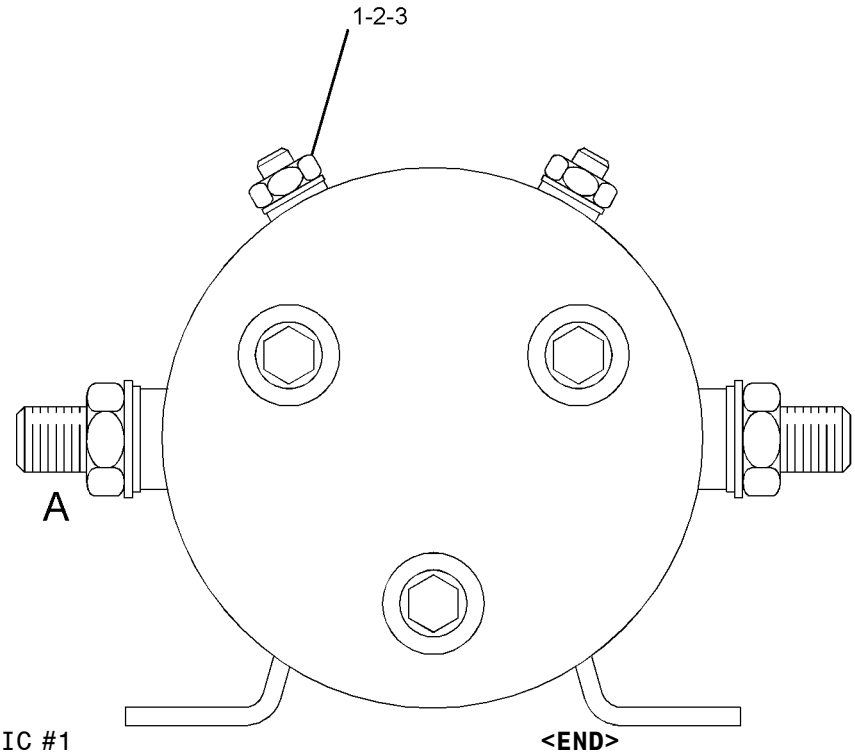


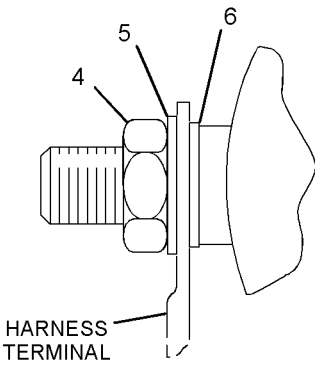


VIEW OF AREA A

GRAPHIC #1 **<END>** g01045840

# *241-8368* SWITCH GP-MAGNETIC

**S/N: RLB1-UP**
**24-VOLT**
**PART OF 267-8952 CIRCUIT BREAKER GP**

**SMCS-7499** **i02325242**

| NOTE | REF NO | GRAPHIC REF | PART NUMBER | QTY | PART NAME 1 2 3 4 5 6 (PRODUCT LEVEL) | SEE PAGE |
|---|---|---|---|---|---|---|
| | 1 | 1 | **155-2270** | 1 | KIT-CONNECTING PLUG (2-PIN) | |
| | | | | | (INCLUDES PLUG AS, WEDGE & INTERFACE SEAL) | |
| | 2 | 1 | **4F-2294** | 2 | NUT-JAM (5/16-24-THD) | |
| | 3 | 1 | **186-3736** | 2 | SOCKET-CONNECTOR (16-GA TO 18-GA) | |

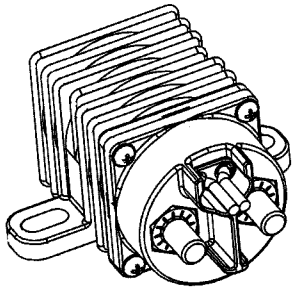

ISOMETRIC VIEW

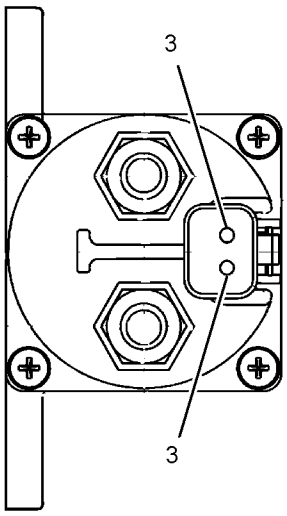


VIEW A-A

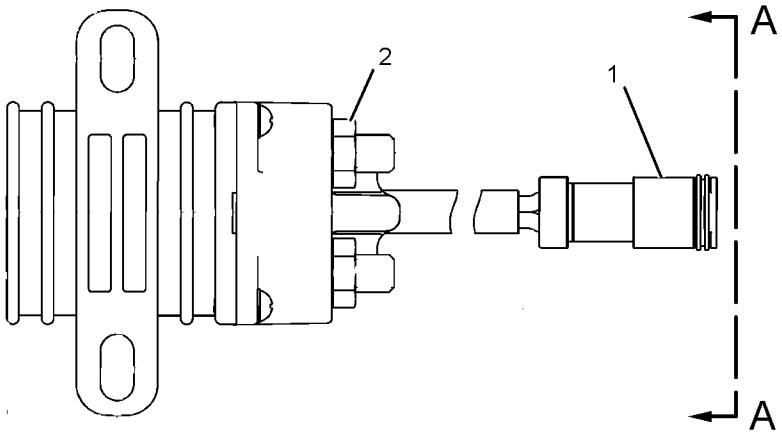


GRAPHIC #1 **<END>** g01077362

# *212-2768* SWITCH GP-PRESSURE

**S/N: RHX1-UP**
**PART OF 246-1053 PUMP GP-FUEL PRM & PRIM FILTER**
**FIELD REPLACEMENT ORDER 258-0883—PAGE 337**
**AN ATTACHMENT**

**SMCS-1408, 1435** **i03159142**

| NOTE | REF NO | GRAPHIC REF | PART NUMBER | QTY | PART NAME 1 2 3 4 5 6 (PRODUCT LEVEL) | SEE PAGE |
|---|---|---|---|---|---|---|
| | 1 | 1 | **102-8802** | 1 | KIT-RECEPTACLE (2-PIN) | |
| | | | | | (INCLUDES RECEPTACLE AS & WEDGE) | |
| | 2 | 1 | **3E-3365** | 1 | WEDGE-RECEPTACLE LOCK (2-PIN) | |
| | 3 | 1 | **186-3735** | 2 | PIN-CONNECTOR (16-GA TO 18-GA) | |
| BE | 4 | 1 | **9X-1813** | | SLEEVE | |
| | 5 | 1 | **6V-4589** | 1 | SEAL-O-RING | |
| | 6 | 1 | **7L-9061** | 1 | SEAL-O-RING | |

B-USE AS REQUIRED
E-ORDER BY THE CENTIMETER

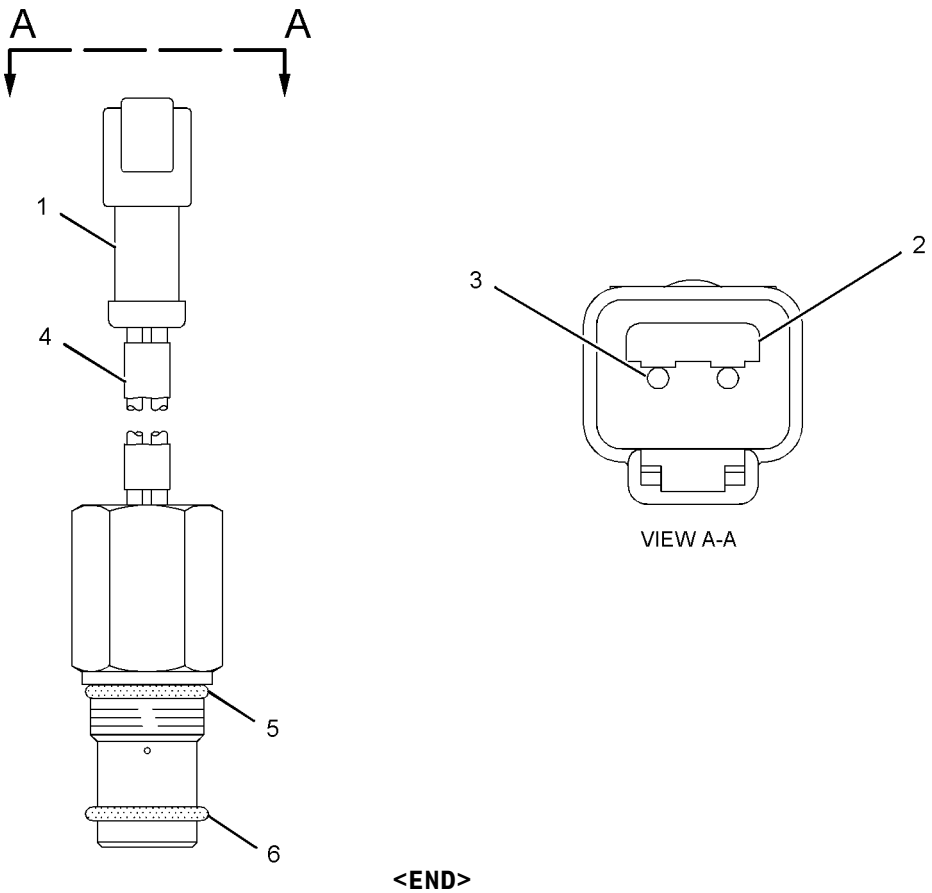


GRAPHIC #1 **<END>** g01072091

# *258-0883* SWITCH GP-PRESSURE

**S/N: RHX1-UP**

**FIELD REPLACEMENT FOR 212-2768—PAGE 336**

**SMCS-1408, 1435** **i03301781**

| NOTE | REF NO | GRAPHIC REF | PART NUMBER | QTY | PART NAME 1 2 3 4 5 6 (PRODUCT LEVEL) | SEE PAGE |
|---|---|---|---|---|---|---|
| | 1 | 1 | **102-8802** | 1 | KIT-RECEPTACLE (2-PIN) | |
| | | | | | (INCLUDES RECEPTACLE AS & WEDGE) | |
| | 3 | 1 | **186-3735** | 2 | PIN-CONNECTOR (16-GA TO 18-GA) | |
| BE | 4 | 1 | **9X-1813** | | SLEEVE | |
| | 5 | 1 | **6V-4589** | 1 | SEAL-O-RING | |
| | 6 | 1 | **7L-9061** | 1 | SEAL-O-RING | |

B-USE AS REQUIRED
E-ORDER BY THE CENTIMETER

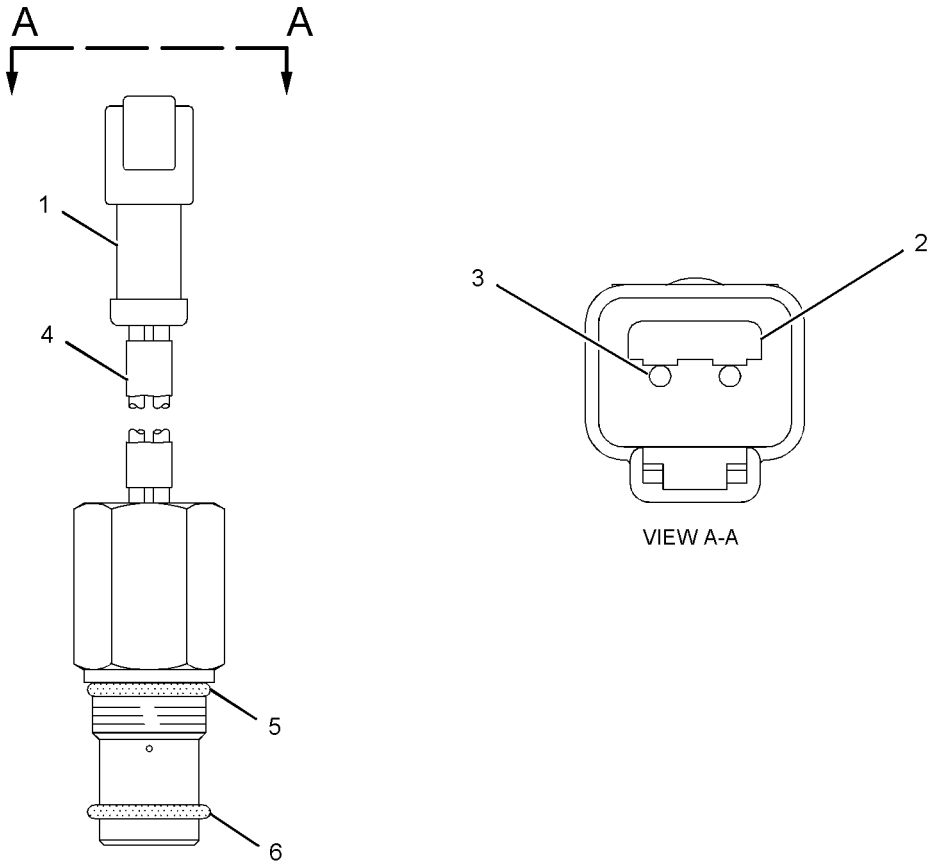


GRAPHIC #1 **<END>** g01072091

# 275-1253 SWITCH GP-PRESSURE–FUEL FILTER

**S/N: RHX3837-UP**
**AMPSEAL CONNECTOR**
**PART OF 298-6412 PUMP GP-FUEL PRM & PRIM FILTER**
**AN ATTACHMENT**

**SMCS-1408, 1435** **i02813653**

| NOTE | REF NO | GRAPHIC REF | PART NUMBER | QTY | PART NAME 1 2 3 4 5 6 (PRODUCT LEVEL) | SEE PAGE |
|---|---|---|---|---|---|---|
| | 1 | 1 | **230-4011** | 1 | PLUG AS-CONNECTOR (2-PIN) | |
| E | 2 | 1 | **9X-1813** | | SLEEVE | |
| | 3 | 1 | **6V-4589** | 1 | SEAL-O-RING | |
| | 4 | 1 | **7L-9061** | 1 | SEAL-O-RING | |
| | 5 | 1 | **144-1636** | 2 | PIN-CONNECTOR (14-GA TO 18-GA) | |

E-ORDER BY THE CENTIMETER

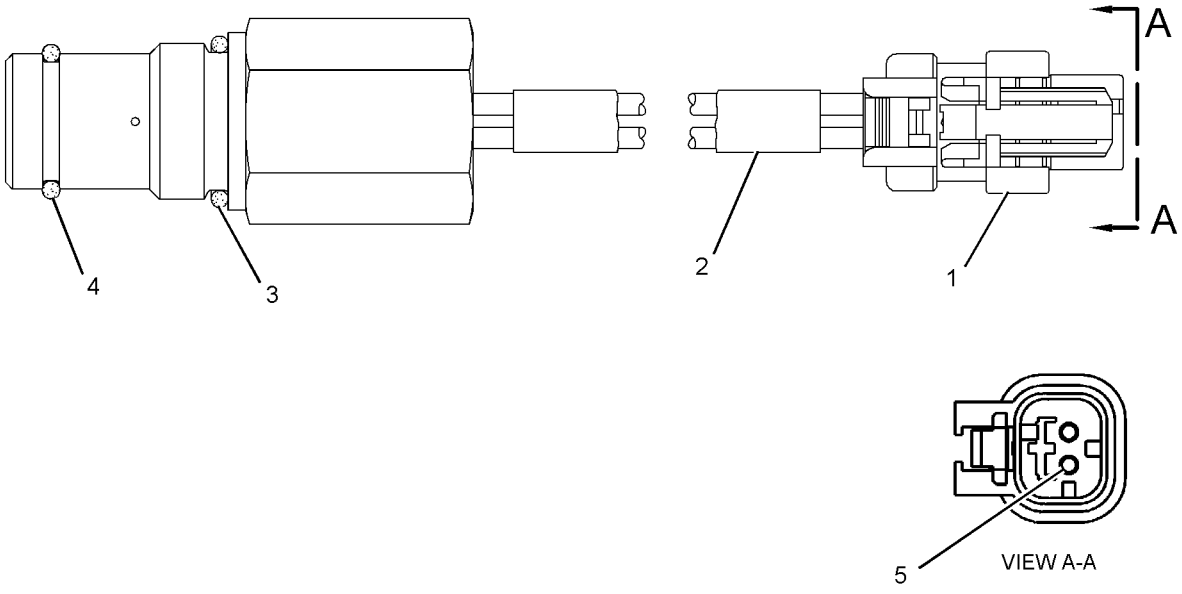


GRAPHIC #1 **<END>** g01238534

## *259-8902* SWITCH GP-ROCKER—TRACTION CONTROL SELECT

**S/N: RLB1-UP**

**PART OF 277-7540 CONTROL AR-TRACTION**

**AN ATTACHMENT**

**SMCS-7332** **i02610055**

| NOTE | REF NO | GRAPHIC REF | PART NUMBER | QTY | PART NAME 1 2 3 4 5 6 (PRODUCT LEVEL) | SEE PAGE |
|---|---|---|---|---|---|---|
| | 1 | 1 | **232-0314** | 1 | SWITCH AS-ROCKER (24-VOLT, SEALED, ILLUMINATED) (TRACTION CONTROL SELECT) | |

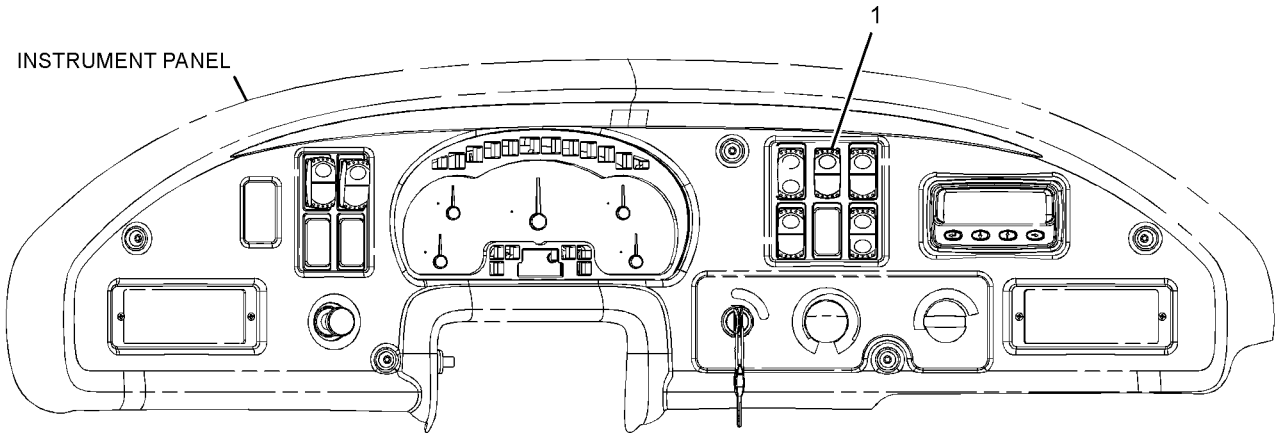


REAR VIEW

GRAPHIC #1 **<END>** g01311436

# *280-2181* SWITCH GP-ROCKER

**S/N: RLB1-UP**
**PART OF 280-2296, 299-6756 ENGINE AR-COMPLETE**
**AN ATTACHMENT**

**SMCS-7332** **i02520077**

| NOTE | REF NO | GRAPHIC REF | PART NUMBER | QTY | PART NAME 1 2 3 4 5 6 (PRODUCT LEVEL) | SEE PAGE |
|---|---|---|---|---|---|---|
| | 1 | 1 | **278-8040** | 1 | SWITCH AS-ROCKER | |

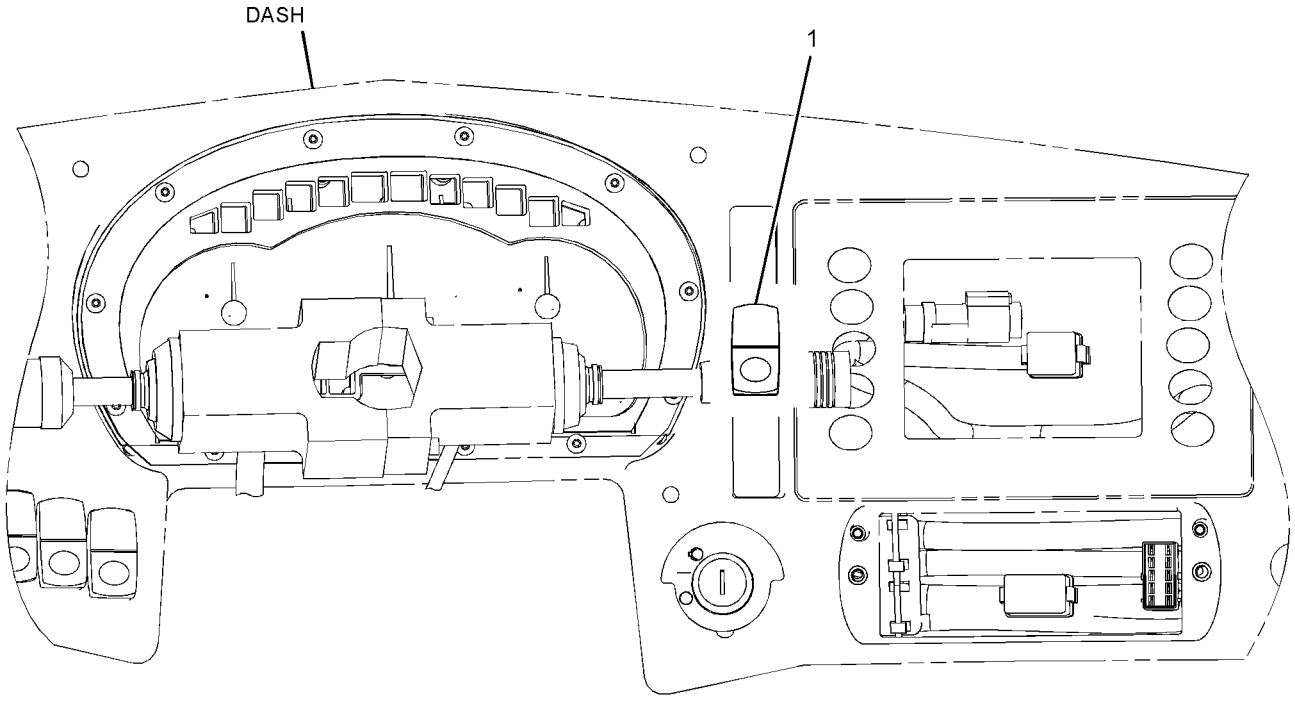


REAR VIEW

GRAPHIC #1 **<END>** g01261387

# *165-5970* SWITCH GP-TOGGLE

**S/N: RHX1-UP**

**PART OF 246-1053, 298-6412 PUMP GP-FUEL PRM & PRIM FILTER**

**AN ATTACHMENT**

**SMCS-7332** **i02612568**

| NOTE | REF NO | GRAPHIC REF | PART NUMBER | QTY | PART NAME 1 2 3 4 5 6 (PRODUCT LEVEL) | SEE PAGE |
|---|---|---|---|---|---|---|
| | 1 | 1 | **6T-3631** | 2 | NUT-HEX (15/32-32-THD) | |
| | 2 | 1 | **6T-3632** | 1 | LOCKWASHER | |
| | 3 | 1 | **6T-3633** | 1 | RING-LOCKING | |
| | 4 | 1 | **102-8803** | 1 | KIT-RECEPTACLE (3-PIN) | |
| | | | | | (INCLUDES RECEPTACLE AS & WEDGE) | |
| | 5 | 1 | **3E-3371** | 1 | WEDGE-RECEPTACLE LOCK (3-PIN) | |
| | 6 | 1 | **186-3735** | 3 | PIN-CONNECTOR (16-GA TO 18-GA) | |

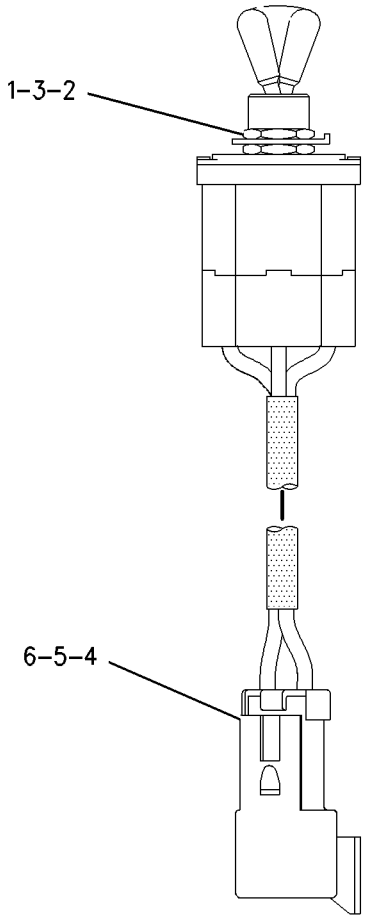


GRAPHIC #1 **<END>** g00749466

# 239-1134 VALVE GP-ETHER STARTING

**S/N: RLB1-UP**
**24-VOLT**
**PART OF 270-4231 STARTING AID GP-ETHER**
**AN ATTACHMENT**

**SMCS-1456** **i03159431**

| NOTE | REF NO | GRAPHIC REF | PART NUMBER | QTY | PART NAME 1 2 3 4 5 6 (PRODUCT LEVEL) | SEE PAGE |
|---|---|---|---|---|---|---|
| | 1 | 1 | **7N-9801** | 1 | GASKET | |
| | 2 | 1 | **102-8802** | 1 | KIT-RECEPTACLE (2-PIN) | |
| | | | | | (INCLUDES RECEPTACLE AS & WEDGE) | |
| | 3 | 1 | **186-3735** | 2 | PIN-CONNECTOR (16-GA TO 18-GA) | |

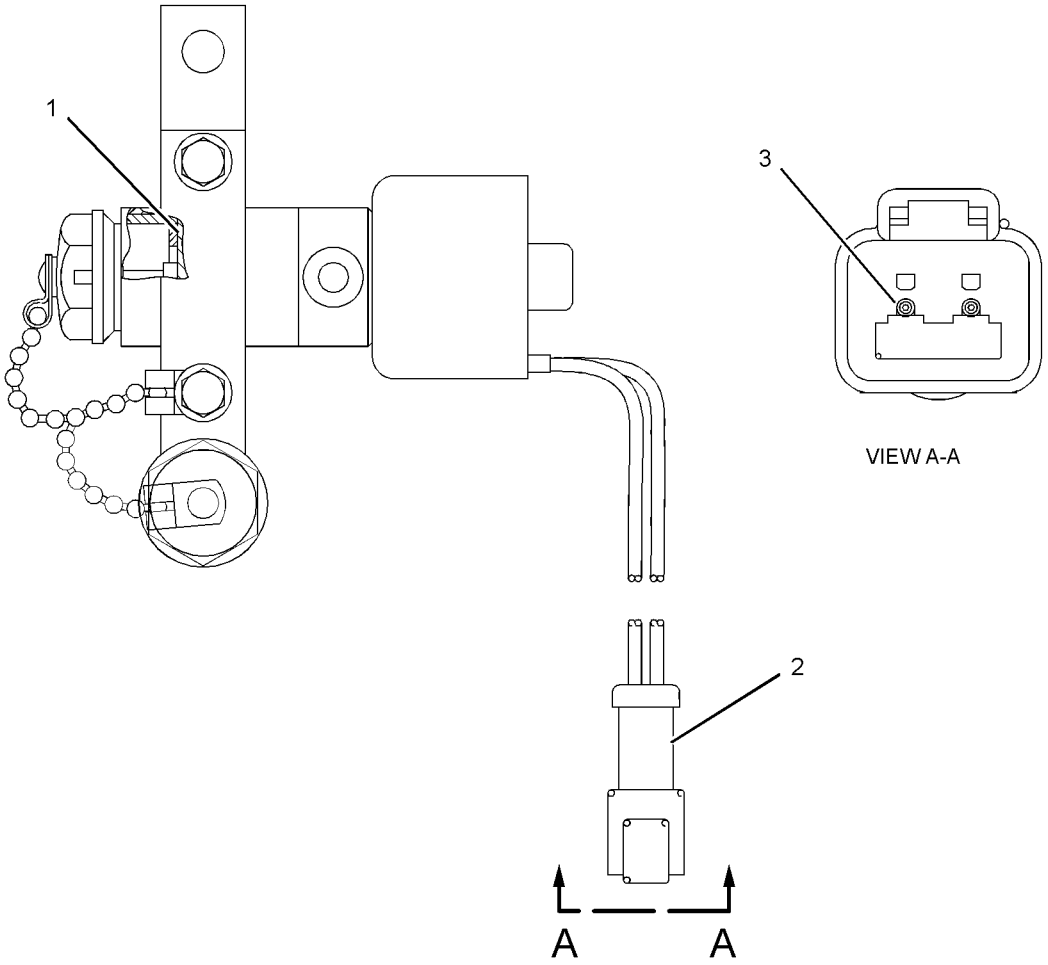


GRAPHIC #1 **<END>** g01375620

# *236-0985* WIRING GP-CAB

**S/N: RLB1-UP**

**PART OF 269-8820 CAB AR**

**SMCS-1408, 7301** **i03159524**

| NOTE | REF NO | GRAPHIC REF | PART NUMBER | QTY | PART NAME 1 2 3 4 5 6 (PRODUCT LEVEL) | SEE PAGE |
|---|---|---|---|---|---|---|
| | 1 | 1 | **3E-5239** | 1 | RELAY AS (24-VOLT) (EXHAUST DIVERTER) | |
| Y | 2 | 1 | **3E-6389** | 1 | LAMP GP-DOME (24-VOLT) | 278 |
| | 3 | 1 | **3S-2093** | 9 | STRAP-CABLE | |
| | 4 | 2 | **7G-1060** | 1 | STRAP AS-GROUND | |
| | 5 | 1,2 | **7K-1181** | 42 | STRAP-CABLE | |
| | 6 | 2 | **9D-4068** | 1 | SWITCH AS-PUSH (DOOR) | |
| | 7 | 2 | **163-6088** | 1 | MODULE AS (INTERMITTENT WIPER) | |
| | | 2 | **102-8803** | 1 | KIT-RECEPTACLE (3-PIN) | |
| | | | | | (INCLUDES RECEPTACLE AS & WEDGE) | |
| | | 2 | **186-3735** | 3 | PIN-CONNECTOR (16-GA TO 18-GA) | |
| | 8 | 2 | **209-0381** | 1 | CONVERTER-POWER (24-VOLT TO 12-VOLT) | |
| | 9 | 2 | **238-2260** | 1 | CABLE | |
| | 10 | 1 | **241-8488** | 4 | PLATE | |
| | 11 | 1 | **241-8879** | 1 | HARNESS AS-CAB | |
| | | 1 | **155-2260** | 1 | KIT-CONNECTING PLUG (3-PIN) | |
| | | 1 | **155-2265** | 1 | KIT-CONNECTING PLUG (8-PIN) | |
| | | | | | (EACH PLUG KIT INCLUDES PLUG AS, WEDGE & INTERFACE SEAL) | |
| | 12 | 1 | **241-8880** | 1 | HARNESS AS-CONSOLE | |
| | | 1 | **180-0050** | 2 | KIT-CONNECTING PLUG (4-PIN) | |
| | | 1 | **155-2274** | 1 | KIT-CONNECTING PLUG (6-PIN) | |
| | | 1 | **155-2255** | 1 | KIT-CONNECTING PLUG (12-PIN) | |
| | | | | | (EACH PLUG KIT INCLUDES PLUG AS, WEDGE & INTERFACE SEAL) | |
| | 13 | 2 | **304-7866** | 1 | HARNESS AS-FRONT | |
| | | 2 | **7X-6222** | 1 | PLUG AS-CONNECTOR (24-PIN) | |
| | | 2 | **275-7878** | 1 | BLOCK AS-FUSE | |
| | | 2 | **155-2274** | 1 | KIT-CONNECTING PLUG (6-PIN) | |
| | | 2 | **155-2270** | 1 | KIT-CONNECTING PLUG (2-PIN) | |
| | | 2 | **155-2260** | 1 | KIT-CONNECTING PLUG (3-PIN) | |
| | | 2 | **155-2265** | 1 | KIT-CONNECTING PLUG (8-PIN) | |
| | | 2 | **155-2255** | 1 | KIT-CONNECTING PLUG (12-PIN) | |
| | | | | | (EACH INCLUDES PLUG AS, WEDGE & INTERFACE SEAL) | |
| | | 2 | **102-8806** | 2 | KIT-RECEPTACLE (8-PIN) | |
| | | | | | (EACH INCLUDES RECEPTACLE AS & WEDGE) | |
| | 14 | 2 | **242-6120** | 1 | KIT-CONNECTING PLUG (8-PIN) | |
| | | | | | (INCLUDES PLUG AS, WEDGE & INTERFACE SEAL) | |
| | 15 | 2 | **245-7643** | 1 | BLOCK AS-FUSE (RELAY PANEL) | |
| | | 2 | **248-2841** | 12 | RELAY AS (24-VOLT) | |
| | | 2 | **265-8182** | 1 | COVER-FUSE BLOCK | |
| | 16 | 2 | **246-2669** | 1 | SWITCH GP-MULTIFUNCTION (TURN SIGNAL, WIPER, WASHER) | |
| | 17 | 2 | **287-8436** | 1 | PLATE | |
| | 18 | 2 | **291-2110** | 1 | FILM-IDENTIFICATION (RELAY PANEL) | |
| | 19 | 1 | **320-8150** | 1 | HARNESS AS-CAB | |
| M | 20 | 2 | **095-0642** | 2 | BOLT-SOCKET HEAD (M5X0.8X50-MM) | |
| M | 21 | 1 | **096-4833** | 3 | BOLT-SOCKET HEAD (M5X0.8X20-MM) | |
| | 22 | 1 | **130-5300** | 2 | CLIP | |
| | 23 | 1,2 | **132-5789** | 7 | CLIP | |
| M | 24 | 2 | **150-4086** | 4 | SCREW (M4X0.7X16-MM) | |
| M | 25 | 1,2 | **151-4957** | 16 | BOLT-SOCKET HEAD (M3X0.5X25-MM) | |
| | 26 | 1 | **162-9112** | 1 | GROMMET-SPLIT | |
| | 27 | 2 | **204-6102** | 4 | WASHER-HARD (4.45X9.52X1-MM THK) | |
| | 28 | 2 | **242-8901** | 1 | SWITCH AS (BRAKE RETARDER) | |
| | 29 | 2 | **4B-4274** | 4 | WASHER (5.5X13X1.2-MM THK) | |
| | 30 | 2 | **4P-7581** | 3 | CLIP | |

*236-0985* **WIRING GP-CAB** ***(contd.)*** **i03159524**

| NOTE | REF NO | GRAPHIC REF | PART NUMBER | QTY | PART NAME 1 2 3 4 5 6 (PRODUCT LEVEL) | SEE PAGE |
|---|---|---|---|---|---|---|
| M | 31 | 2 | **8T-4133** | 1 | NUT (M10X1.5-THD) | |
| M | 32 | 1 | **6V-8225** | 1 | NUT (M6X1-THD) | |
| | 33 | 1 | **7D-7233** | 2 | CLIP | |
| | 34 | 1,2 | **8C-8533** | 10 | CLIP | |
| | 35 | 1,2 | **8C-9660** | 16 | WASHER (4.6X7.9X0.8-MM THK) | |
| | 36 | 2 | **8D-6946** | 1 | FLASHER AS (TURN SIGNAL) | |
| M | 37 | 2 | **8T-0337** | 4 | SCREW-MACHINE (M4X0.7X12-MM) | |
| | 38 | 1,2 | **8T-4121** | 22 | WASHER-HARD (11X21X2.5-MM THK) | |
| M | 39 | 1,2 | **8T-4137** | 13 | BOLT (M10X1.5X20-MM) | |
| M | 40 | 1,2 | **8T-4970** | 8 | BOLT (M6X1X14-MM) | |
| M | 41 | 1,2 | **9X-2044** | 4 | SCREW-TRUSS HEAD (M6X1X16-MM) | |
| | 42 | 1,2 | **9X-8256** | 9 | WASHER (6.6X12X2-MM THK) | |
| D | 43 | 2 | **3U-4762** | | TRIM-DASH (0.11-M) | |
| D | 43A | 2 | **3U-4762** | | TRIM-DASH (0.8-M) | |
| D | 43B | 2 | **3U-4762** | | TRIM-DASH (0.14-M) | |
| | 44 | 2 | **248-2841** | 5 | RELAY AS (24-VOLT) | |
| | 45 | 2 | **193-4623** | 4 | SCREW-BUTTON HEAD (10-32X11.11-MM) | |
| | 46 | 2 | **9G-2673** | 1 | GROMMET | |
| | 47 | 2 | **8T-0328** | 4 | WASHER-HARD (5.5X10X1-MM THK) | |
| | 48 | 1 | **8M-2772** | 1 | CLIP | |
| | 49 | 2 | **7R-2751** | 8 | PLUG-CONNECTOR | |
| M | 50 | 1,2 | **8T-4136** | 9 | BOLT (M10X1.5X25-MM) | |

D-ORDER BY THE METER
M-METRIC PART
Y-SEPARATE ILLUSTRATION

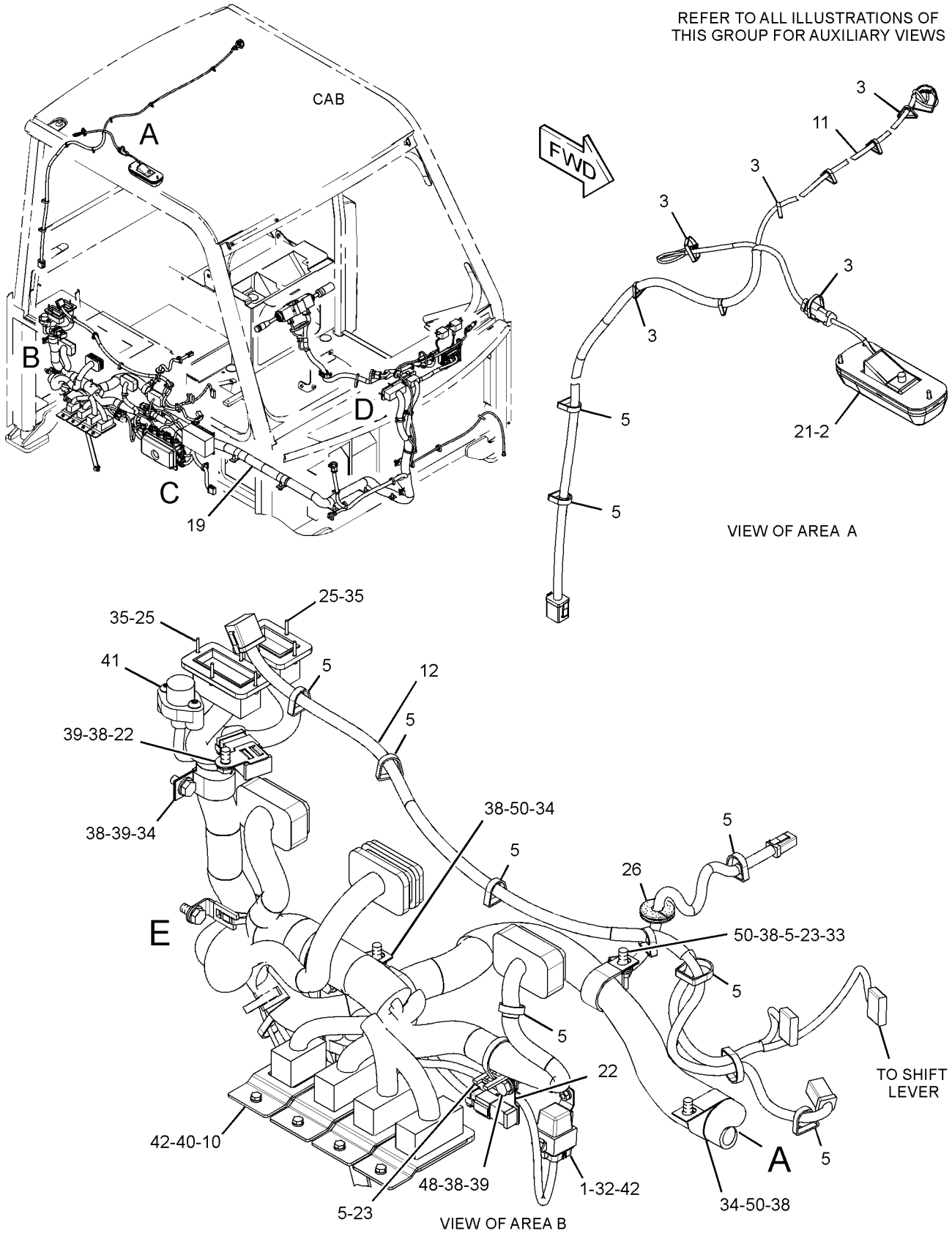


GRAPHIC #1

g01637181

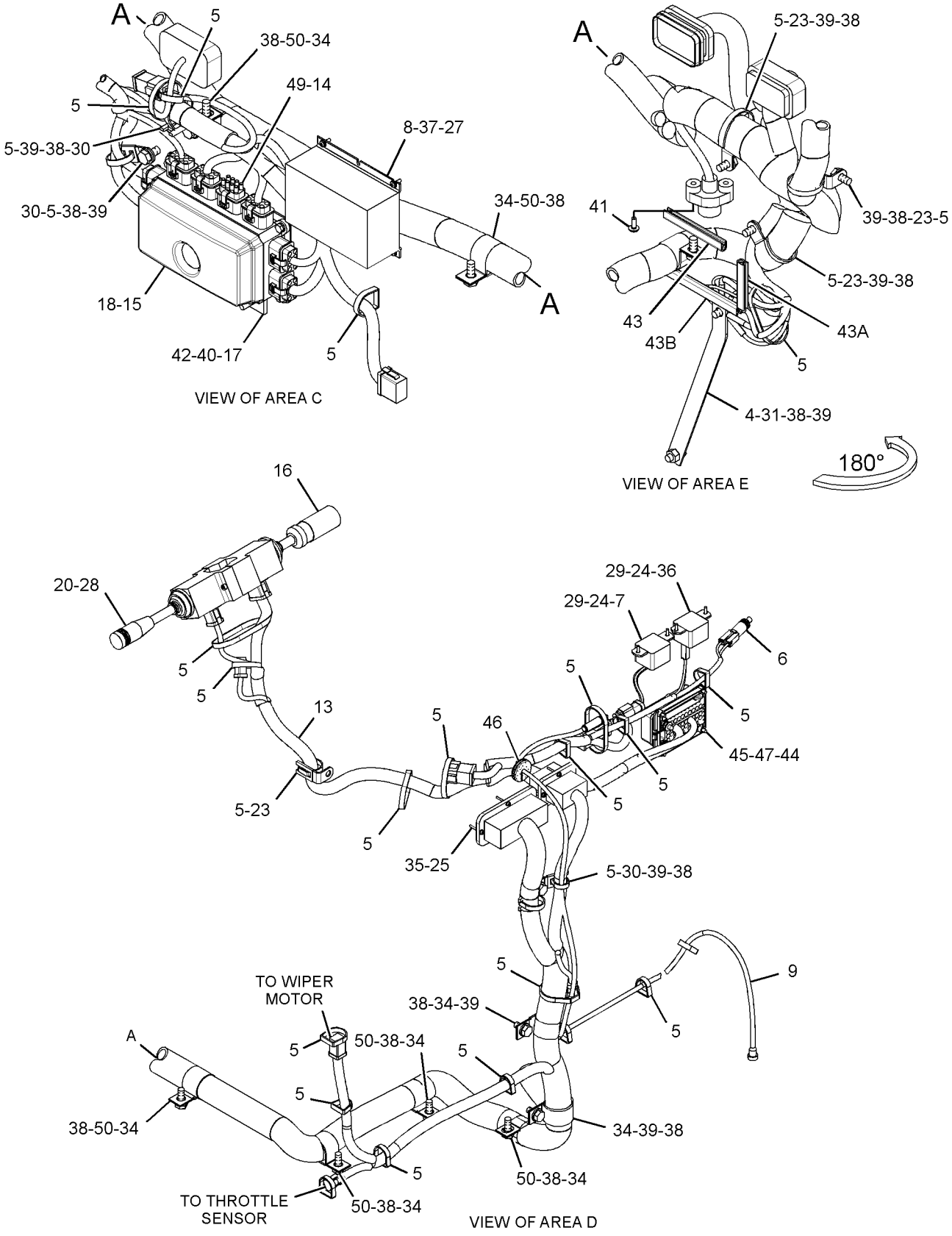


GRAPHIC #2 **<END>** g01637183

# *270-1507* WIRING GP-CAMERA

**S/N: RLB1-UP**
**PART OF 316-6380 CAMERA AR**
**AN ATTACHMENT**

**SMCS-1408, 7348** **i03287500**

| NOTE | REF NO | GRAPHIC REF | PART NUMBER | QTY | PART NAME 1 2 3 4 5 6 (PRODUCT LEVEL) | SEE PAGE |
|---|---|---|---|---|---|---|
| D | 1 | 1 | **251-4169** | 1 | CABLE AS-COAXIAL (11-M) | |
| | 2 | 1 | **287-1671** | 1 | BRACKET AS | |
| J | 3 | 1 | **251-4160** | 1 | CAMERA GP (115-DEG, COLOR) | |
| | 4 | 1 | **4P-8134** | 2 | CLIP | |
| | 5 | 1 | **7K-1181** | 24 | STRAP-CABLE | |
| | 6 | 1 | **8T-4121** | 2 | WASHER-HARD (11X21X2.5-MM THK) | |
| M | 7 | 1 | **8T-4137** | 2 | BOLT (M10X1.5X20-MM) | |
| | | | | | AVAILABLE REPAIR KIT(S): | |
| J | | | **251-4162** | 1 | KIT-BRACKET (CAMERA) | |
| | | | | | ( INCLUDES BRACKET,BOLTS,LOCK-NUTS,BOLT-SOCKETS,GASKET,ALLENKEY) | |

D-ORDER BY THE METER
J-KIT MARKED J SERVICES PARTS MARKED J
M-METRIC PART

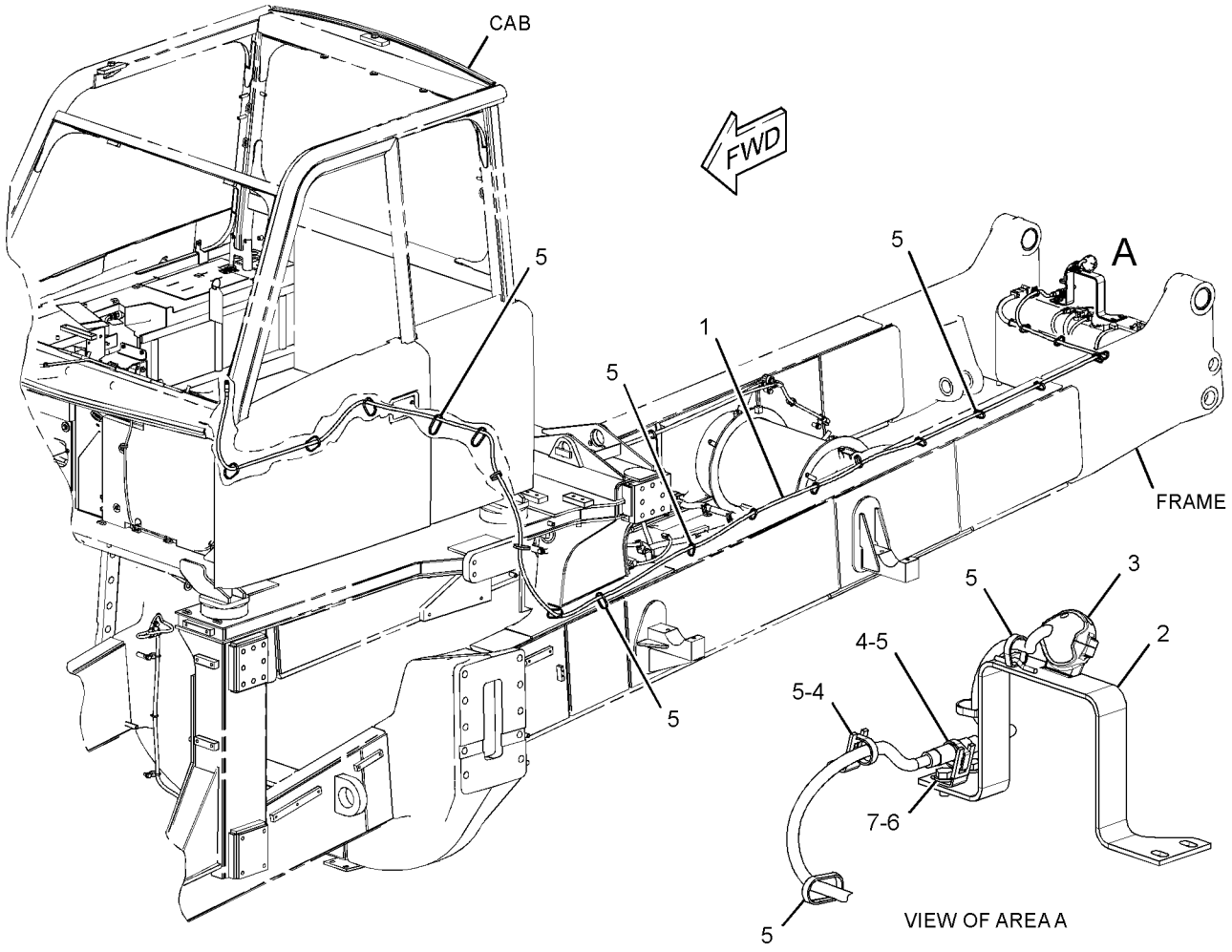


GRAPHIC #1 **<END>** g01600513

## *270-1502* WIRING GP-CHASSIS

**S/N: RLB1-333**

**PART OF 270-1500 ELECTRICAL AR**

**SMCS-1408** **i02707341**

| NOTE | REF NO | GRAPHIC REF | PART NUMBER | QTY | PART NAME 1 2 3 4 5 6 (PRODUCT LEVEL) | SEE PAGE |
|---|---|---|---|---|---|---|
| | 1 | 1,2,3 | **3S-2093** | 14 | STRAP-CABLE | |
| D | 2 | 3 | **5P-6029** | | LOCKWIRE (0.3-M) | |
| | 3 | 1 | **6V-4283** | 2 | PLATE-IDENTIFICATION (ALTERNATOR) | |
| | 4 | 1 | **9F-8125** | 4 | LOCKWASHER | |
| | 5 | 2,3 | **9L-1566** | 3 | SUPPORT | |
| Y | 6 | 2 | **118-3534** | 1 | SWITCH GP-MAGNETIC (24-VOLT) (STARTING AID RELAY) | 331 |
| Y | 7 | 3 | **134-2252** | 1 | SENSOR GP-TEMPERATURE (BRAKE OIL) | 318 |
| | 8 | 2,3 | **169-5414** | 2 | CLIP | |
| | 9 | 1 | **209-4562** | 1 | PLATE AS | |
| | 10 | 3 | **227-6744** | 1 | SWITCH GP-PRESSURE (HYDRAULIC) | |
| | | 3 | **102-8802** | 1 | KIT-RECEPTACLE (2-PIN) | |
| | | | | | (INCLUDES RECEPTACLE AS & WEDGE) | |
| | | 3 | **186-3735** | 2 | PIN-CONNECTOR (16-GA TO 18-GA) | |
| E | | 3 | **9X-1813** | | SLEEVE (14-CM) | |
| Y | 11 | 1 | **230-6278** | 1 | SWITCH GP-MAGNETIC (SECONDARY STEERING) | 334 |
| | 12 | 2 | **235-0084** | 1 | HARNESS AS-SENSOR (FUEL LEVEL) | |
| | | 2 | **102-8802** | 1 | KIT-RECEPTACLE (2-PIN) | |
| | | | | | (INCLUDES RECEPTACLE AS & WEDGE) | |
| | | 2 | **155-2270** | 1 | KIT-CONNECTING PLUG (2-PIN) | |
| | | | | | (INCLUDES PLUG AS, WEDGE, & INTERFACE SEAL) | |
| | 13 | 2,3 | **241-8488** | 3 | PLATE | |
| | 14 | 3 | **261-8652** | 1 | SWITCH AS-LIMIT (ACCESS PLATFORM UPPER TRAVEL) | |
| | | 3 | **9X-3401** | 4 | PIN-CONNECTOR (16-GA TO 18-GA) | |
| | | 3 | **102-8804** | 1 | KIT-RECEPTACLE (4-PIN) | |
| | | | | | (INCLUDES RECEPTACLE AS & WEDGE) | |
| | 15 | 2 | **272-8402** | 1 | HARNESS AS-CHASSIS (SECONDARY STEERING) | |
| | | 2 | **7X-6222** | 2 | PLUG AS-CONNECTOR (24-PIN) | |
| | | 2 | **9X-0141** | 1 | PLUG AS-CONNECTOR (40-PIN) | |
| | | 2 | **9X-7147** | 1 | PLUG AS-CONNECTOR (40-PIN) | |
| | | 2 | **127-5483** | 2 | PLUG AS-CONNECTOR (1-PIN) | |
| | | 2 | **9X-0145** | 3 | RECEPTACLE AS-CONNECTOR (24-PIN) | |
| | | 2 | **9X-1343** | 1 | RECEPTACLE AS-CONNECTOR (40-PIN) | |
| | | 2 | **188-6210** | 1 | RECEPTACLE AS-CONNECTOR (1-PIN) | |
| | | 2 | **155-2271** | 1 | KIT-CONNECTING PLUG (4-PIN) | |
| | | 2 | **155-2255** | 1 | KIT-CONNECTING PLUG (12-PIN) | |
| | | 2 | **155-2265** | 2 | KIT-CONNECTING PLUG (8-PIN) | |
| | | 2 | **155-2260** | 4 | KIT-CONNECTING PLUG (3-PIN) | |
| | | 2 | **155-2270** | 11 | KIT-CONNECTING PLUG (2-PIN) | |
| | | | | | (EACH PLUG KIT INCLUDES PLUG AS, WEDGE, & INTERFACE SEAL) | |
| | | 2 | **102-8802** | 3 | KIT-RECEPTACLE (2-PIN) | |
| | | 2 | **102-8803** | 2 | KIT-RECEPTACLE (3-PIN) | |
| | | 2 | **102-8806** | 2 | KIT-RECEPTACLE (8-PIN) | |
| | | | | | (EACH RECEPTACLE KIT INCLUDES RECEPTACLE AS & WEDGE) | |
| | 16 | 3 | **272-8403** | 1 | HARNESS AS-CHASSIS (BODY, BRAKE) | |
| | | 3 | **7X-6222** | 1 | PLUG AS-CONNECTOR (24-PIN) | |
| | | 3 | **102-8802** | 2 | KIT-RECEPTACLE (2-PIN) | |
| | | 3 | **102-8803** | 1 | KIT-RECEPTACLE (3-PIN) | |
| | | | | | (EACH RECEPTACLE KIT INCLUDES RECEPTACLE AS & WEDGE) | |
| | | 3 | **155-2260** | 1 | KIT-CONNECTING PLUG (3-PIN) | |
| | | 3 | **155-2270** | 8 | KIT-CONNECTING PLUG (2-PIN) | |
| | | | | | (EACH PLUG KIT INCLUDES PLUG AS, WEDGE, & INTERFACE SEAL) | |
| | 17 | 3 | **272-8404** | 1 | HARNESS AS-REAR | |

*270-1502* **WIRING GP-CHASSIS** *(contd.)* **i02707341**

| NOTE | REF NO | GRAPHIC REF | PART NUMBER | QTY | PART NAME 1 2 3 4 5 6 (PRODUCT LEVEL) | SEE PAGE |
|---|---|---|---|---|---|---|
| | | 3 | **155-2271** | 2 | KIT-CONNECTING PLUG (4-PIN) | |
| | | | | | (EACH INCLUDES PLUG AS, WEDGE, & INTERFACE SEAL) | |
| | | 3 | **9X-0145** | 1 | RECEPTACLE AS-CONNECTOR (24-PIN) | |
| | | 3 | **102-8804** | 1 | KIT-RECEPTACLE (4-PIN) | |
| | | 3 | **102-8805** | 1 | KIT-RECEPTACLE (6-PIN) | |
| | | 3 | **102-8801** | 2 | KIT-RECEPTACLE (12-PIN) | |
| | | | | | (EACH RECEPTACLE KIT INCLUDES RECEPTACLE AS & WEDGE) | |
| | | 3 | **155-2255** | 2 | KIT-CONNECTING PLUG (12-PIN) | |
| | | 3 | **155-2270** | 1 | KIT-CONNECTING PLUG (2-PIN) | |
| | | 3 | **155-2274** | 1 | KIT-CONNECTING PLUG (6-PIN) | |
| | | | | | (EACH PLUG KIT INCLUDES PLUG AS, WEDGE, & INTERFACE SEAL) | |
| | 18 | 3 | **272-8405** | 1 | HARNESS AS-TRANSMISSION | |
| | | 3 | **7D-1962** | 1 | PLUG AS-CONNECTOR (10-PIN) | |
| | | 3 | **7X-6222** | 1 | PLUG AS-CONNECTOR (24-PIN) | |
| | | 3 | **102-8801** | 1 | KIT-RECEPTACLE (12-PIN) | |
| | | | | | (INCLUDES RECEPTACLE AS & WEDGE) | |
| | | 3 | **155-2255** | 1 | KIT-CONNECTING PLUG (12-PIN) | |
| | | 3 | **155-2270** | 4 | KIT-CONNECTING PLUG (2-PIN) | |
| | | | | | (EACH PLUG KIT INCLUDES PLUG AS, WEDGE, & INTERFACE SEAL) | |
| | 19 | 2 | **276-7447** | 1 | PLATE AS | |
| Y | 20 | 3 | *296-0485* | 1 | LIGHTING GP-FLOOD (REAR, RH) | 287 |
| Y | 21 | 3 | *296-0486* | 1 | LIGHTING GP-FLOOD (REAR, LH) | 289 |
| | 22 | 3 | **298-6122** | 1 | PLATE | |
| M | 23 | 3 | **095-0642** | 2 | BOLT-SOCKET HEAD (M5X0.8X50-MM) | |
| | 24 | 1,2,3 | **130-5300** | 19 | CLIP | |
| | 25 | 2 | **132-5789** | 1 | CLIP | |
| | 26 | 2 | **133-6934** | 1 | SPACER (11X20X25-MM THK) | |
| | 27 | 2 | **139-1398** | 1 | CLIP | |
| | 28 | 2 | **149-7738** | 1 | CLIP | |
| | 29 | 3 | **161-6987** | 2 | WASHER-HARD (5.2X16X1.5-MM THK) | |
| | 30 | 2 | **169-7443** | 1 | TIMER AS-ON DELAY (24-VOLT) | |
| | | 2 | **3E-3377** | 1 | WEDGE-RECEPTACLE LOCK (4-PIN) | |
| | | 2 | **186-3735** | 4 | PIN-CONNECTOR (16-GA TO 18-GA) | |
| | | 2 | **102-8804** | 1 | KIT-RECEPTACLE (4-PIN) | |
| | | | | | (INCLUDES RECEPTACLE & WEDGE) | |
| | 31 | 1 | **171-2211** | 1 | CIRCUIT BREAKER AS (90-AMPERE) (ALTERNATOR) | |
| | 31A | 1 | **171-2211** | 1 | CIRCUIT BREAKER AS (90-AMPERE) (MAIN) | |
| | | | | | (EACH CIRCUIT BREAKER ASSEMBLY INCLUDES) | |
| | | 1 | **6V-8187** | 2 | NUT (1/4-28-THD) | |
| | | 1 | **8T-4205** | 2 | WASHER-HARD (7.2X14.5X2-MM THK) | |
| | | 1 | **253-2111** | 2 | LOCKWASHER | |
| | 32 | 2 | **218-4935** | 1 | SUPPRESSOR-ARC | |
| | 33 | 3 | **2P-8421** | 1 | ADAPTER-O-RING | |
| | 34 | 3 | **3D-2824** | 1 | SEAL-O-RING | |
| | 35 | 3 | **3J-1907** | 1 | SEAL-O-RING | |
| | 36 | 3 | **4P-7429** | 1 | CLIP | |
| | 37 | 1,2,3 | **4P-7581** | 38 | CLIP | |
| | 38 | 3 | **4P-8134** | 10 | CLIP | |
| | 39 | 3 | **4S-4455** | 2 | CLIP | |
| | 40 | 3 | **6D-4244** | 2 | CLIP | |
| | 41 | 3 | **6D-4246** | 1 | CLIP | |
| M | 42 | 2 | **6V-7744** | 1 | LOCKNUT (M10X1.5-THD) | |
| | 43 | 1 | **6V-7978** | 4 | SCREW-MACHINE (10-32X0.375-IN) | |
| M | 44 | 3 | **6V-8127** | 2 | NUT (M5X0.8-THD) | |
| | 45 | 1 | **7C-4354** | 1 | CLIP | |
| | 46 | 2 | **7D-1553** | 2 | CLIP | |

*270-1502* **WIRING GP-CHASSIS** *(contd.)* **i02707341**

| NOTE | REF NO | GRAPHIC REF | PART NUMBER | QTY | PART NAME 1 2 3 4 5 6 (PRODUCT LEVEL) | SEE PAGE |
|---|---|---|---|---|---|---|
| | 47 | 1,2,3 | **7K-1181** | 82 | STRAP-CABLE | |
| | 48 | 3 | **8D-4656** | 1 | LEVER | |
| | 49 | 1,2,3 | **8T-4121** | 79 | WASHER-HARD (11X21X2.5-MM THK) | |
| M | 50 | 2,3 | **8T-4133** | 6 | NUT (M10X1.5-THD) | |
| M | 51 | 1,2,3 | **8T-4136** | 10 | BOLT (M10X1.5X25-MM) | |
| M | 52 | 1,2,3 | **8T-4137** | 61 | BOLT (M10X1.5X20-MM) | |
| M | 53 | 1,2 | **8T-4171** | 10 | BOLT (M6X1X12-MM) | |
| M | 54 | 2 | **8T-4185** | 1 | BOLT (M10X1.5X50-MM) | |
| M | 55 | 2 | **8T-9405** | 8 | BOLT-SOCKET HEAD (M4X0.7X16-MM) | |
| | 56 | 3 | **9M-8406** | 1 | CLIP | |
| | 57 | 1,2 | **9X-8256** | 10 | WASHER (6.6X12X2-MM THK) | |

D-ORDER BY THE METER
E-ORDER BY THE CENTIMETER
M-METRIC PART
Y-SEPARATE ILLUSTRATION

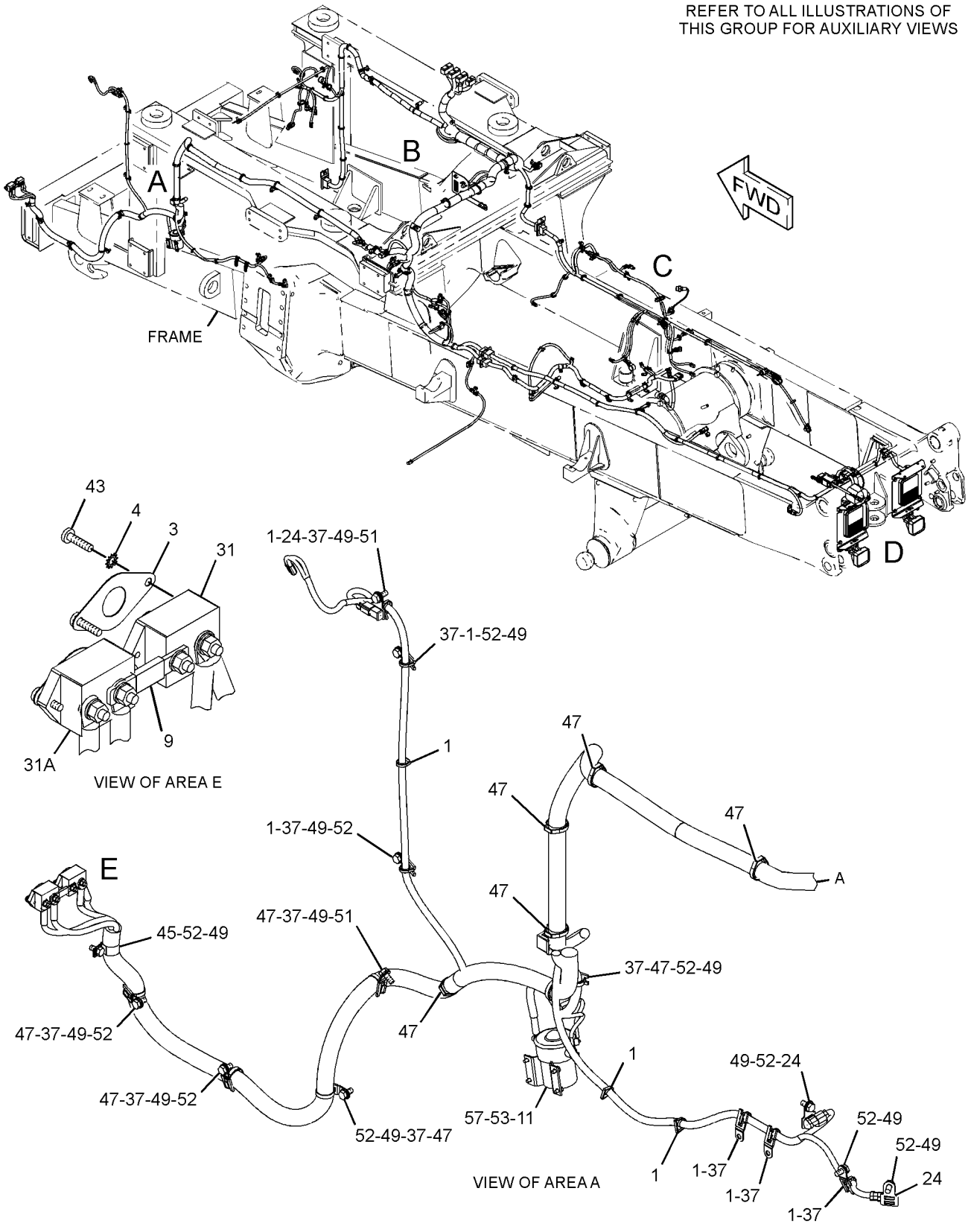


GRAPHIC #1

g01367850

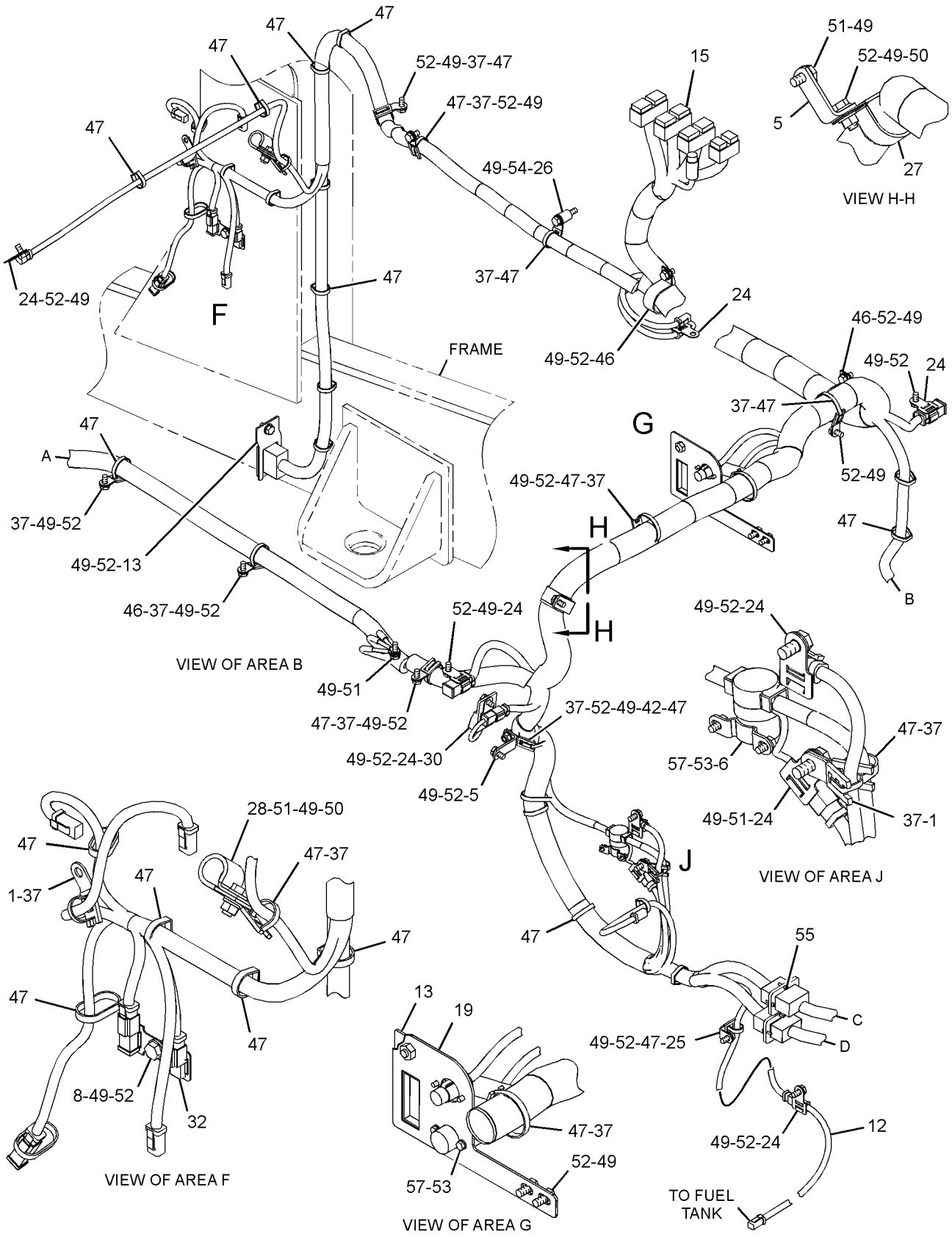


GRAPHIC #2

g01367852

*270 - 1502* **WIRING GP - CHASSIS** *(contd. )* **i02707341**

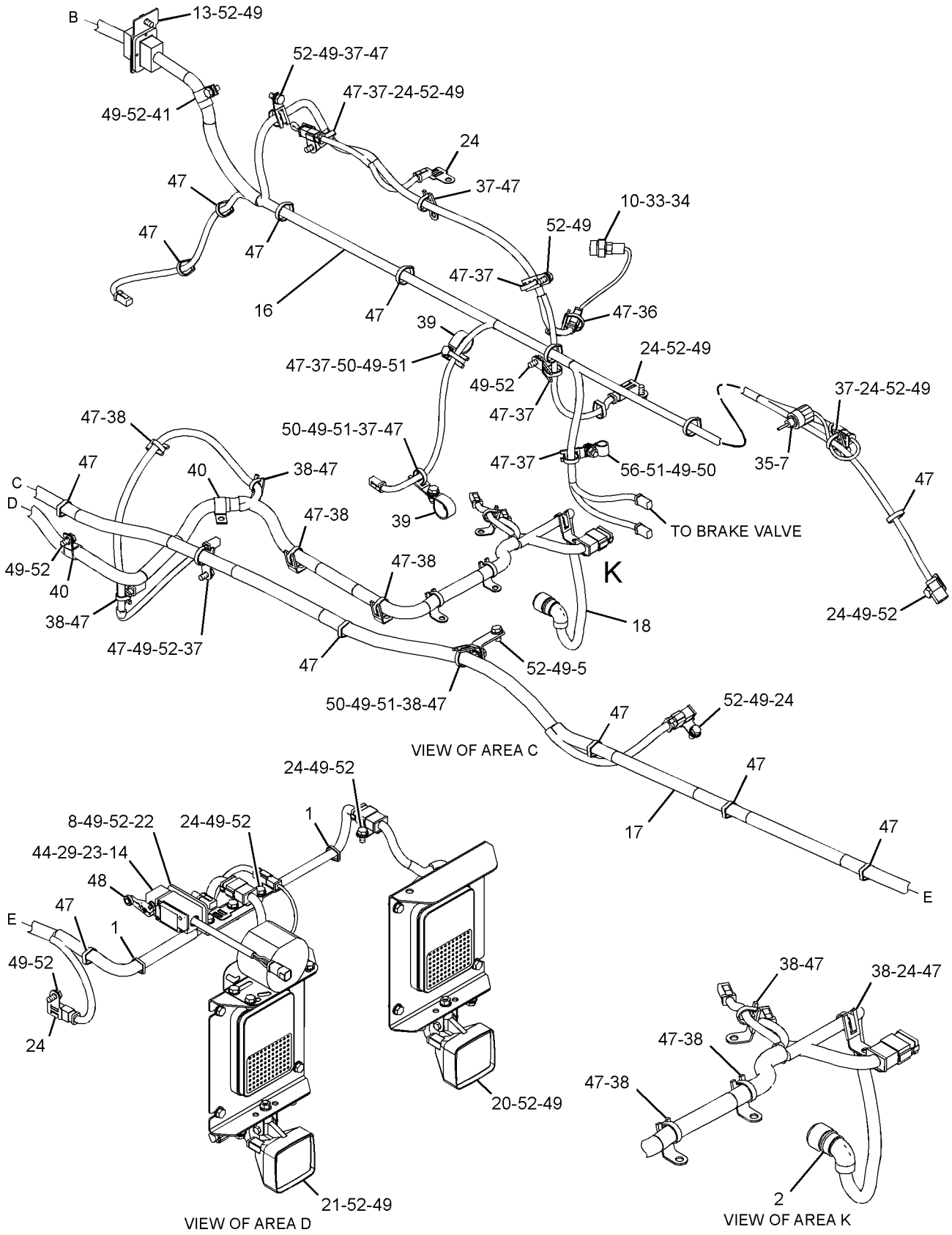


GRAPHIC #3 **<END>** g01367853

# ELECTRICAL AND STARTING SYSTEM

## *270-1502* WIRING GP-CHASSIS

**S/N: RLB334-349**

**PART OF 270-1500 ELECTRICAL AR**

**SMCS-1408** **i02857548**

| NOTE | REF NO | GRAPHIC REF | PART NUMBER | QTY | PART NAME 1 2 3 4 5 6 (PRODUCT LEVEL) | SEE PAGE |
|---|---|---|---|---|---|---|
| | 1 | 2,3,4,5 | **3S-2093** | 14 | STRAP-CABLE | |
| D | 2 | 5 | **5P-6029** | | LOCKWIRE (0.3-M) | |
| C | 3 | 2 | **6V-4283** | 2 | PLATE-IDENTIFICATION (ALTERNATOR) | |
| | 4 | 2 | **9F-8125** | 4 | LOCKWASHER | |
| | 5 | 3,4 | **9L-1566** | 3 | SUPPORT | |
| Y | 6 | 3 | **118-3534** | 1 | SWITCH GP-MAGNETIC (24-VOLT) (STARTING AID RELAY) | 331 |
| Y | 7 | 5 | **134-2252** | 1 | SENSOR GP-TEMPERATURE (BRAKE OIL) | 318 |
| | 8 | 4,5 | **169-5414** | 2 | CLIP | |
| | 9 | 4 | **200-6345** | 1 | MOUNT (DUAL SWIVEL) | |
| | 10 | 2 | **209-4562** | 1 | PLATE AS | |
| | 11 | 4 | **227-6744** | 1 | SWITCH GP-PRESSURE (HYDRAULIC) | |
| | | 4 | **102-8802** | 1 | KIT-RECEPTACLE (2-PIN) | |
| | | | | | (INCLUDES RECEPTACLE AS & WEDGE) | |
| | | 4 | **186-3735** | 2 | PIN-CONNECTOR (16-GA TO 18-GA) | |
| E | | 4 | **9X-1813** | | SLEEVE (14-CM) | |
| Y | 12 | 2 | **230-6278** | 1 | SWITCH GP-MAGNETIC (SECONDARY STEERING) | 334 |
| | 13 | 3 | **235-0084** | 1 | HARNESS AS-SENSOR (FUEL LEVEL) | |
| | | 3 | **102-8802** | 1 | KIT-RECEPTACLE (2-PIN) | |
| | | | | | (INCLUDES RECEPTACLE AS & WEDGE) | |
| | | 3 | **155-2270** | 1 | KIT-CONNECTING PLUG (2-PIN) | |
| | | | | | (INCLUDES PLUG AS, WEDGE, & INTERFACE SEAL) | |
| | 14 | 3 | **241-8488** | 3 | PLATE | |
| | 15 | 5 | **261-8652** | 1 | SWITCH AS-LIMIT (ACCESS PLATFORM UPPER TRAVEL) | |
| | | 5 | **9X-3401** | 4 | PIN-CONNECTOR (16-GA TO 18-GA) | |
| | | 5 | **102-8804** | 1 | KIT-RECEPTACLE (4-PIN) | |
| | | | | | (INCLUDES RECEPTACLE AS & WEDGE) | |
| | 16 | 3 | **272-8402** | 1 | HARNESS AS-CHASSIS (SECONDARY STEERING) | |
| | | 3 | **7X-6222** | 2 | PLUG AS-CONNECTOR (24-PIN) | |
| | | 3 | **9X-0141** | 1 | PLUG AS-CONNECTOR (40-PIN) | |
| | | 3 | **9X-7147** | 1 | PLUG AS-CONNECTOR (40-PIN) | |
| | | 3 | **127-5483** | 2 | PLUG AS-CONNECTOR (1-PIN) | |
| | | 3 | **9X-0145** | 3 | RECEPTACLE AS-CONNECTOR (24-PIN) | |
| | | 3 | **9X-1343** | 1 | RECEPTACLE AS-CONNECTOR (40-PIN) | |
| | | 3 | **188-6210** | 1 | RECEPTACLE AS-CONNECTOR (1-PIN) | |
| | | 3 | **155-2271** | 1 | KIT-CONNECTING PLUG (4-PIN) | |
| | | 3 | **155-2255** | 1 | KIT-CONNECTING PLUG (12-PIN) | |
| | | 3 | **155-2265** | 2 | KIT-CONNECTING PLUG (8-PIN) | |
| | | 3 | **155-2260** | 4 | KIT-CONNECTING PLUG (3-PIN) | |
| | | 3 | **155-2270** | 11 | KIT-CONNECTING PLUG (2-PIN) | |
| | | | | | (EACH PLUG KIT INCLUDES PLUG AS, WEDGE, & INTERFACE SEAL) | |
| | | 3 | **102-8802** | 3 | KIT-RECEPTACLE (2-PIN) | |
| | | 3 | **102-8803** | 2 | KIT-RECEPTACLE (3-PIN) | |
| | | 3 | **102-8806** | 2 | KIT-RECEPTACLE (8-PIN) | |
| | | | | | (EACH RECEPTACLE KIT INCLUDES RECEPTACLE AS & WEDGE) | |
| | 17 | 4 | **272-8403** | 1 | HARNESS AS-CHASSIS (BODY, BRAKE) | |
| | | 4 | **7X-6222** | 1 | PLUG AS-CONNECTOR (24-PIN) | |
| | | 4 | **102-8802** | 2 | KIT-RECEPTACLE (2-PIN) | |
| | | 4 | **102-8803** | 1 | KIT-RECEPTACLE (3-PIN) | |
| | | | | | (EACH RECEPTACLE KIT INCLUDES RECEPTACLE AS & WEDGE) | |
| | | 4 | **155-2260** | 1 | KIT-CONNECTING PLUG (3-PIN) | |
| | | 4 | **155-2270** | 8 | KIT-CONNECTING PLUG (2-PIN) | |
| | | | | | (EACH PLUG KIT INCLUDES PLUG AS, WEDGE, & INTERFACE SEAL) | |

*270-1502* **WIRING GP-CHASSIS** *(contd.)* **i02857548**

| NOTE | REF NO | GRAPHIC REF | PART NUMBER | QTY | PART NAME 1 2 3 4 5 6 (PRODUCT LEVEL) | SEE PAGE |
|---|---|---|---|---|---|---|
| | 18 | 4 | **272-8404** | 1 | HARNESS AS-REAR | |
| | | 4 | **155-2271** | 2 | KIT-CONNECTING PLUG (4-PIN) | |
| | | | | | (EACH INCLUDES PLUG AS, WEDGE, & INTERFACE SEAL) | |
| | | 4 | **9X-0145** | 1 | RECEPTACLE AS-CONNECTOR (24-PIN) | |
| | | 4 | **102-8804** | 1 | KIT-RECEPTACLE (4-PIN) | |
| | | 4 | **102-8805** | 1 | KIT-RECEPTACLE (6-PIN) | |
| | | 4 | **102-8801** | 2 | KIT-RECEPTACLE (12-PIN) | |
| | | | | | (EACH RECEPTACLE KIT INCLUDES RECEPTACLE AS & WEDGE) | |
| | | 4 | **155-2255** | 2 | KIT-CONNECTING PLUG (12-PIN) | |
| | | 4 | **155-2270** | 1 | KIT-CONNECTING PLUG (2-PIN) | |
| | | 4 | **155-2274** | 1 | KIT-CONNECTING PLUG (6-PIN) | |
| | | | | | (EACH PLUG KIT INCLUDES PLUG AS, WEDGE, & INTERFACE SEAL) | |
| | 19 | 4 | **272-8405** | 1 | HARNESS AS-TRANSMISSION | |
| | | 4 | **7D-1962** | 1 | PLUG AS-CONNECTOR (10-PIN) | |
| | | 4 | **7X-6222** | 1 | PLUG AS-CONNECTOR (24-PIN) | |
| | | 4 | **102-8801** | 1 | KIT-RECEPTACLE (12-PIN) | |
| | | | | | (INCLUDES RECEPTACLE AS & WEDGE) | |
| | | 4 | **155-2255** | 1 | KIT-CONNECTING PLUG (12-PIN) | |
| | | 4 | **155-2270** | 4 | KIT-CONNECTING PLUG (2-PIN) | |
| | | | | | (EACH PLUG KIT INCLUDES PLUG AS, WEDGE, & INTERFACE SEAL) | |
| | 20 | 3 | **276-7447** | 1 | PLATE AS | |
| Y | 21 | 5 | *296-0485* | 1 | LIGHTING GP-FLOOD (REAR, RH) | 287 |
| Y | 22 | 5 | *296-0486* | 1 | LIGHTING GP-FLOOD (REAR, LH) | 289 |
| | 23 | 5 | **298-6122** | 1 | PLATE | |
| M | 24 | 5 | **095-0642** | 2 | BOLT-SOCKET HEAD (M5X0.8X50-MM) | |
| C | 25 | 2,3,4,5 | **130-5300** | 19 | CLIP | |
| | 26 | 3 | **132-5789** | 1 | CLIP | |
| | 27 | 3 | **133-6934** | 1 | SPACER (11X20X25-MM THK) | |
| | 28 | 3 | **139-1398** | 1 | CLIP | |
| | 29 | 4 | **149-7738** | 1 | CLIP | |
| | 30 | 5 | **161-6987** | 2 | WASHER-HARD (5.2X16X1.5-MM THK) | |
| | 31 | 3 | **169-7443** | 1 | TIMER AS-ON DELAY (24-VOLT) | |
| | | 3 | **3E-3377** | 1 | WEDGE-RECEPTACLE LOCK (4-PIN) | |
| | | 3 | **186-3735** | 4 | PIN-CONNECTOR (16-GA TO 18-GA) | |
| | | 3 | **102-8804** | 1 | KIT-RECEPTACLE (4-PIN) | |
| | | | | | (INCLUDES RECEPTACLE & WEDGE) | |
| | 32 | 2 | **171-2211** | 1 | CIRCUIT BREAKER AS (90-AMPERE) (ALTERNATOR) | |
| | 32A | 2 | **171-2211** | 1 | CIRCUIT BREAKER AS (90-AMPERE) (MAIN) | |
| | | | | | (EACH CIRCUIT BREAKER ASSEMBLY INCLUDES) | |
| | | 2 | **6V-8187** | 2 | NUT (1/4-28-THD) | |
| | | 2 | **8T-4205** | 2 | WASHER-HARD (7.2X14.5X2-MM THK) | |
| | | 2 | **253-2111** | 2 | LOCKWASHER | |
| C | 33 | 4 | **218-4935** | 1 | SUPPRESSOR-ARC | |
| | 34 | 4 | **2P-8421** | 1 | ADAPTER-O-RING | |
| | 35 | 4 | **3D-2824** | 1 | SEAL-O-RING | |
| | 36 | 5 | **3J-1907** | 1 | SEAL-O-RING | |
| | 37 | 4 | **4P-7429** | 1 | CLIP | |
| C | 38 | 2,3,4,5 | **4P-7581** | 37 | CLIP | |
| | 39 | 4,5 | **4P-8134** | 10 | CLIP | |
| | 40 | 4 | **4S-4455** | 1 | CLIP | |
| | 41 | 4 | **6D-4244** | 2 | CLIP | |
| | 42 | 4 | **6D-4246** | 1 | CLIP | |
| M | 43 | 3 | **6V-7744** | 1 | LOCKNUT (M10X1.5-THD) | |
| | 44 | 2 | **6V-7978** | 4 | SCREW-MACHINE (10-32X0.375-IN) | |
| M | 45 | 5 | **6V-8127** | 2 | NUT (M5X0.8-THD) | |
| | 46 | 2 | **7C-4354** | 1 | CLIP | |

## *270-1502* **WIRING GP-CHASSIS** *(contd.)* **i02857548**

| NOTE | REF NO | GRAPHIC REF | PART NUMBER | QTY | PART NAME 1 2 3 4 5 6 (PRODUCT LEVEL) | SEE PAGE |
|---|---|---|---|---|---|---|
| | 47 | 3 | **7D-1553** | 2 | CLIP | |
| C | 48 | 2,3,4,5 | **7K-1181** | 83 | STRAP-CABLE | |
| | 49 | 5 | **8D-4656** | 1 | LEVER | |
| C | 50 | 2,3,4,5 | **8T-4121** | 77 | WASHER-HARD (11X21X2.5-MM THK) | |
| CM | 51 | 3,4 | **8T-4133** | 5 | NUT (M10X1.5-THD) | |
| CM | 52 | 2,3,4 | **8T-4136** | 9 | BOLT (M10X1.5X25-MM) | |
| CM | 53 | 2,3,4,5 | **8T-4137** | 61 | BOLT (M10X1.5X20-MM) | |
| M | 54 | 2,3 | **8T-4171** | 10 | BOLT (M6X1X12-MM) | |
| M | 55 | 3 | **8T-4185** | 1 | BOLT (M10X1.5X50-MM) | |
| M | 56 | 3 | **8T-9405** | 8 | BOLT-SOCKET HEAD (M4X0.7X16-MM) | |
| | 57 | 4 | **9M-8406** | 1 | CLIP | |
| | 58 | 2,3 | **9X-8256** | 10 | WASHER (6.6X12X2-MM THK) | |

C-CHANGE FROM PREVIOUS TYPE
D-ORDER BY THE METER
E-ORDER BY THE CENTIMETER
M-METRIC PART
Y-SEPARATE ILLUSTRATION

REFER TO ALL ILLUSTRATIONS OF
THIS GROUP FOR AUXILIARY VIEWS

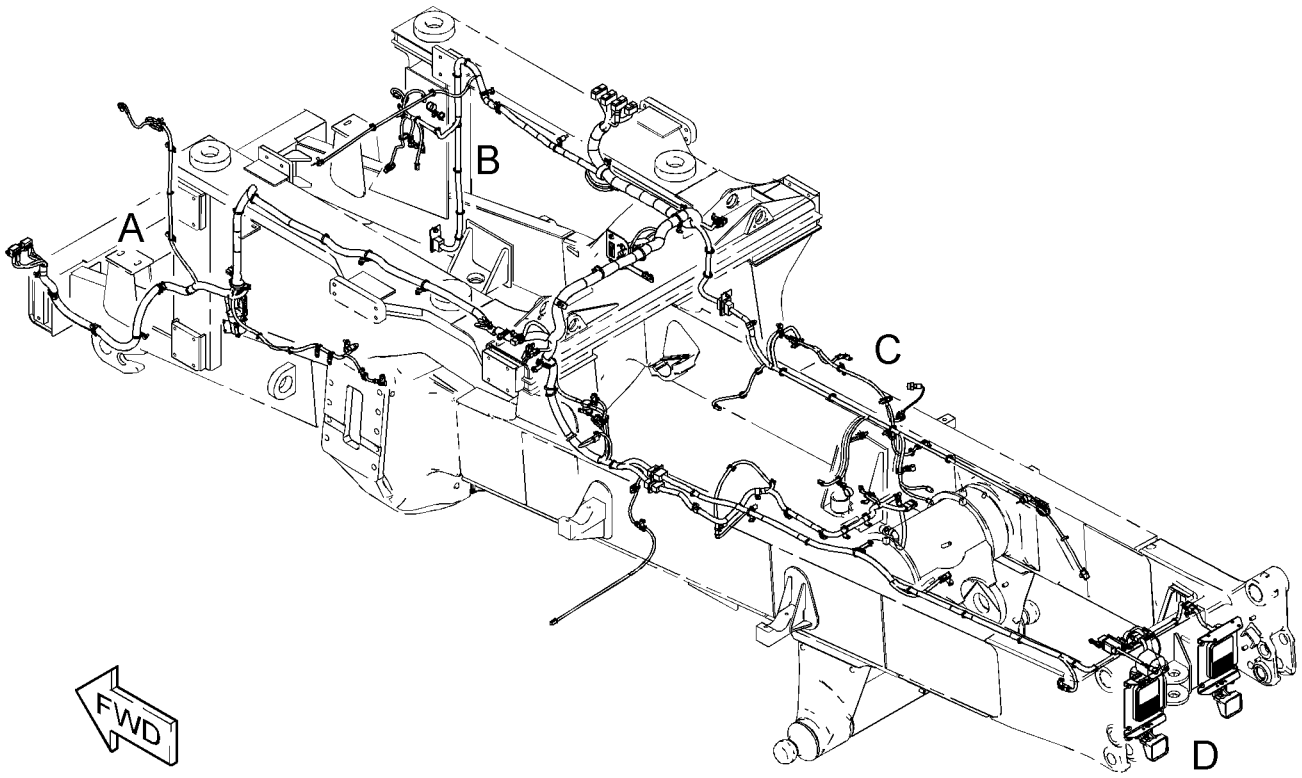


GRAPHIC #1 g01468967

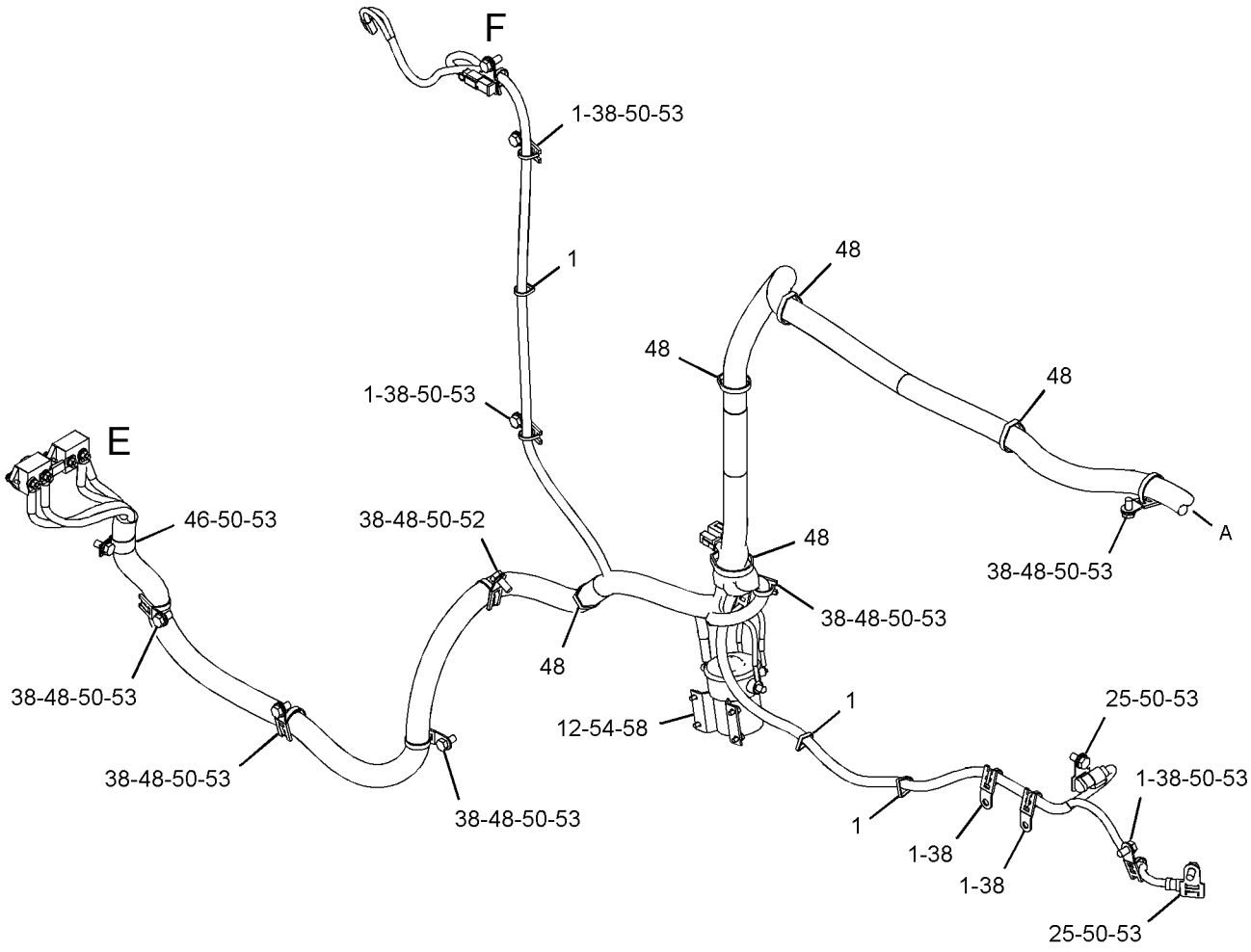


VIEW OF AREA A

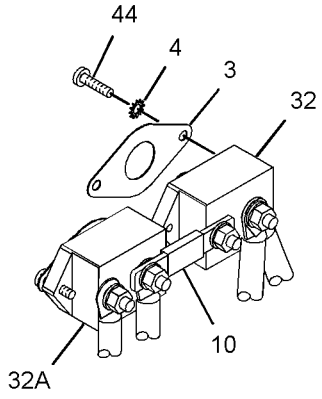


VIEW OF AREA E
(EXPLODED)

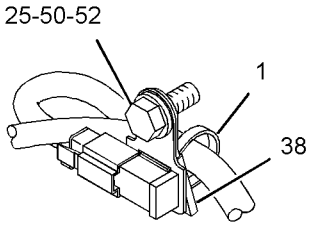


VIEW OF AREA F

GRAPHIC #2

g01463992

*270-1502* **WIRING GP-CHASSIS** *(contd.)* **i02857548**

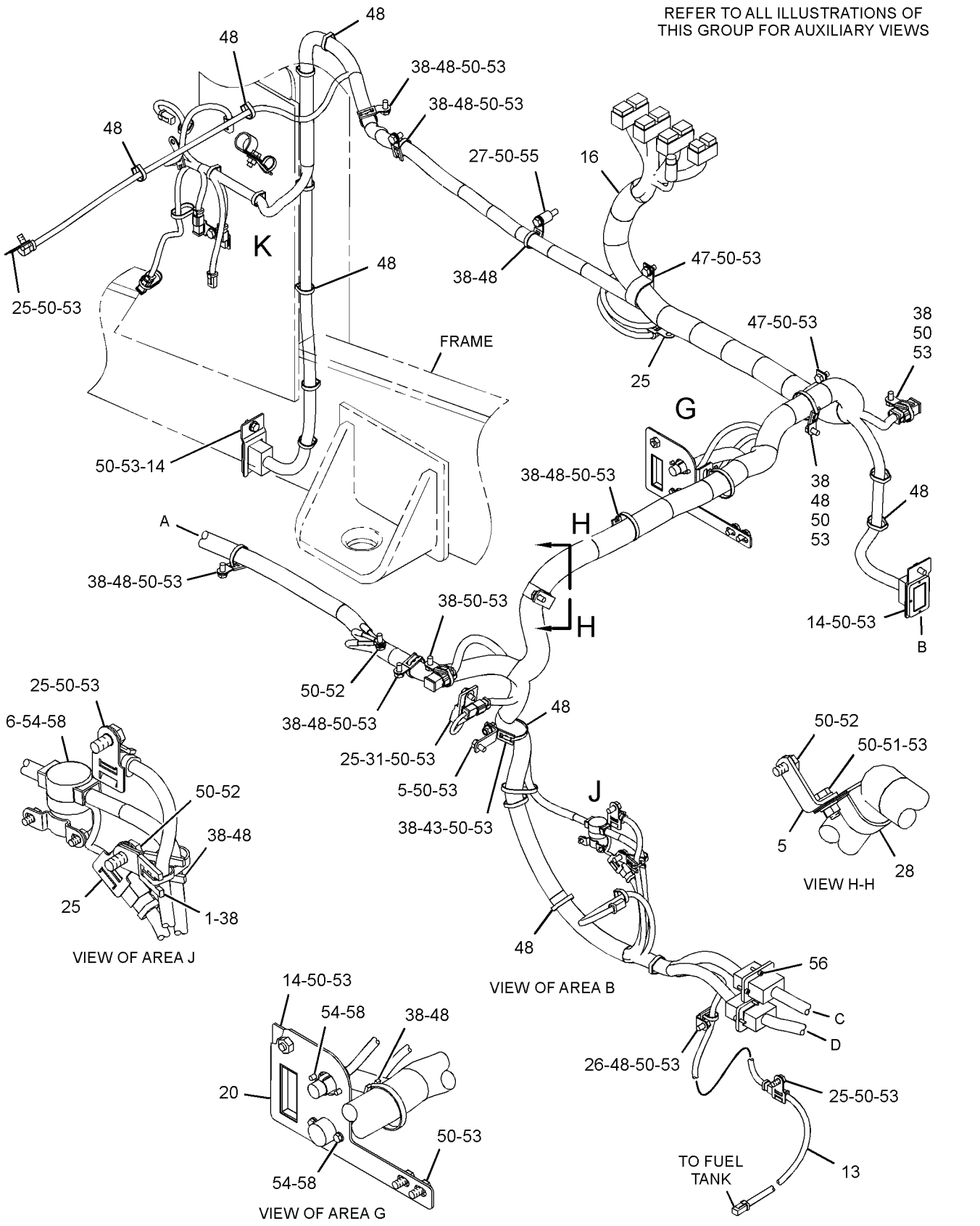


GRAPHIC #3

g01463993

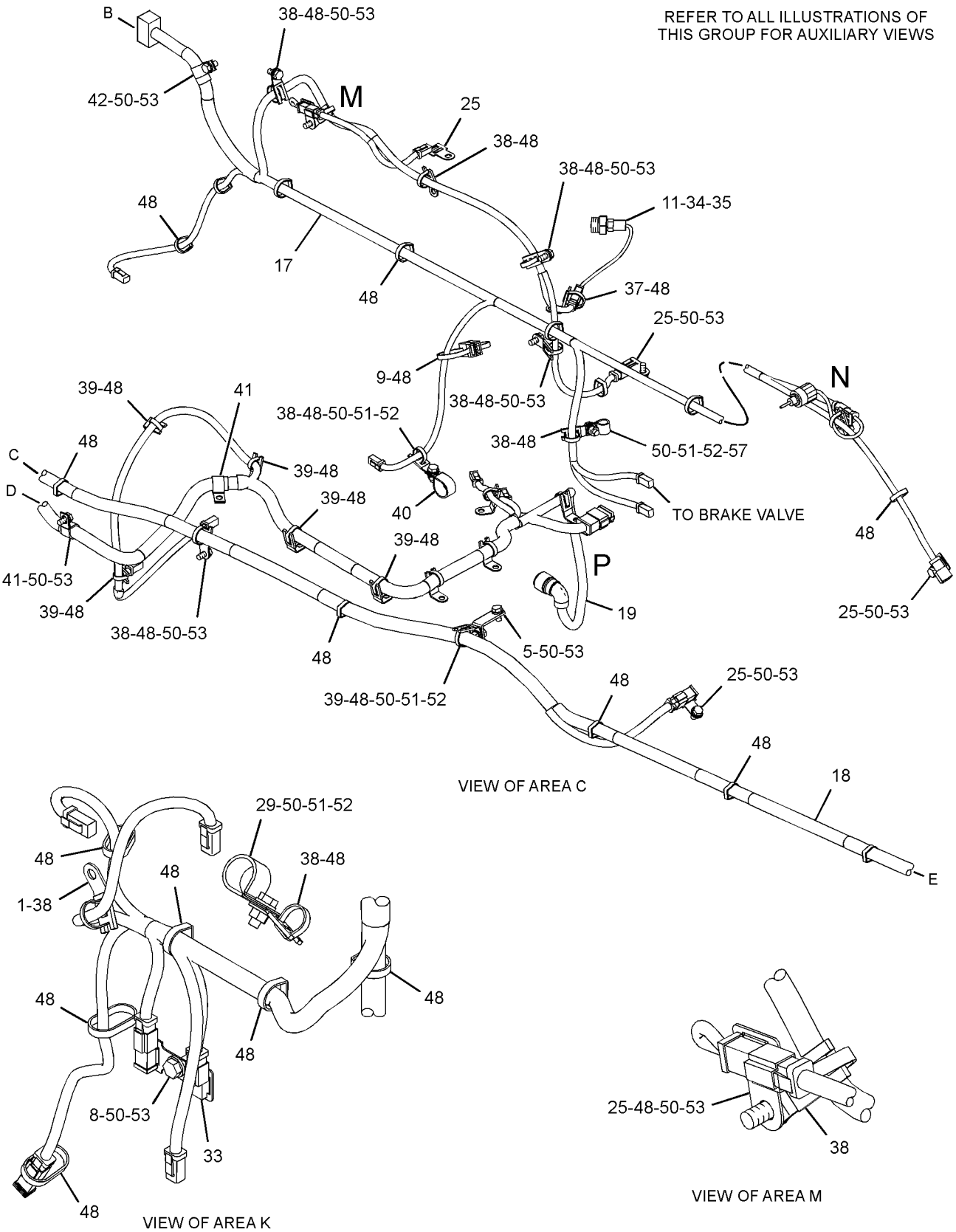


GRAPHIC #4

g01463994

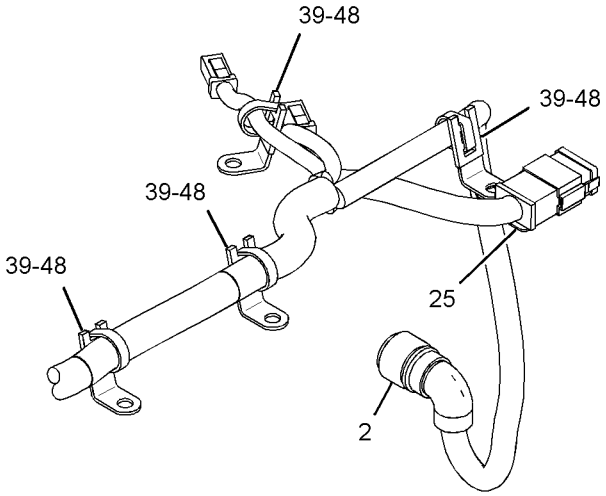


VIEW OF AREA P

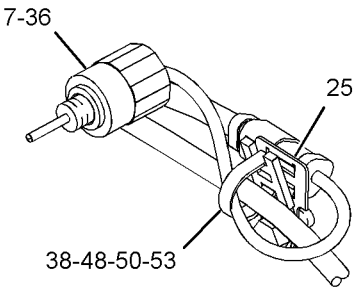


VIEW OF AREA N

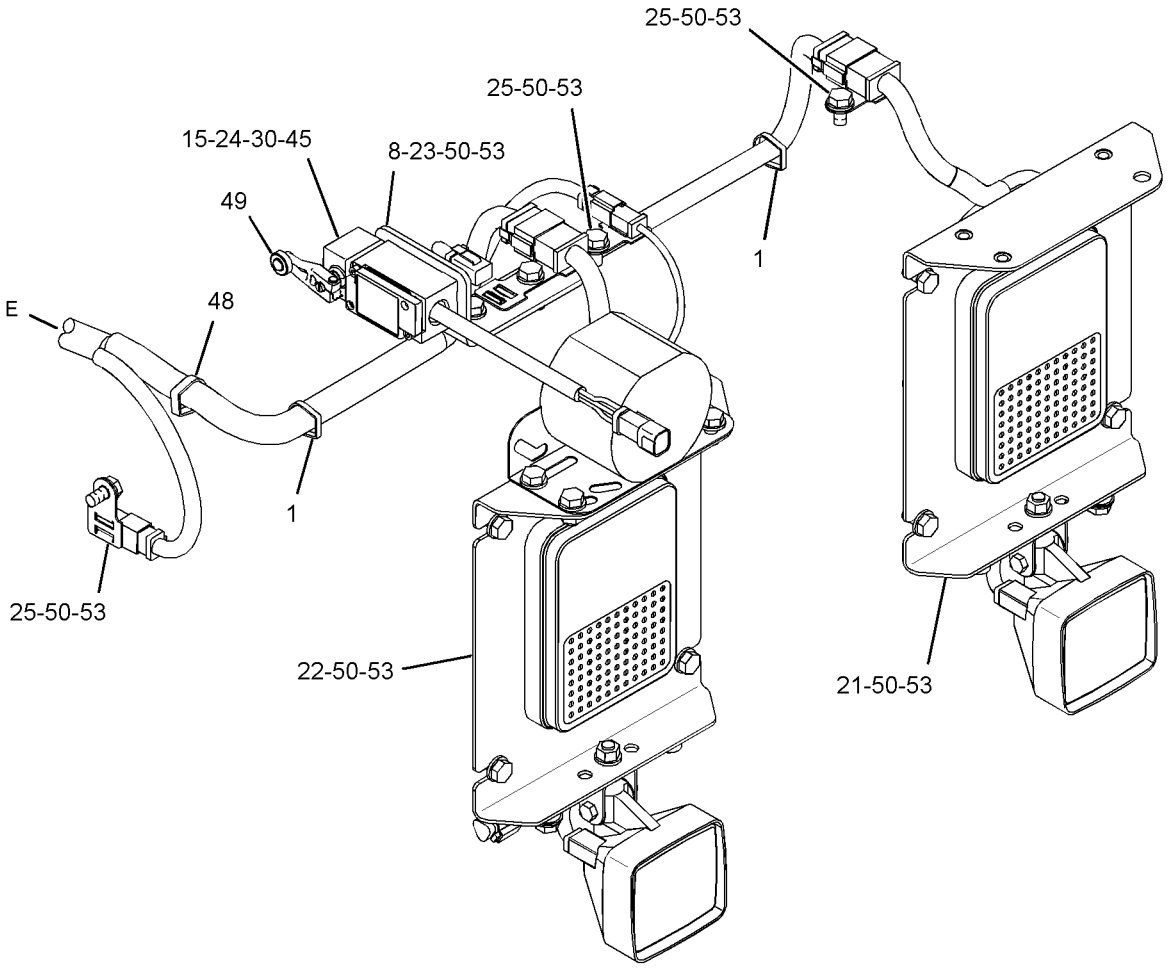


VIEW OF AREA D

GRAPHIC #5

**<END>**

g01469928

## *270-1502* WIRING GP-CHASSIS

**S/N: RLB350-UP**

**PART OF 270-1500 ELECTRICAL AR**

**SMCS-1408** **i02898229**

| NOTE | REF NO | GRAPHIC REF | PART NUMBER | QTY | PART NAME 1 2 3 4 5 6 (PRODUCT LEVEL) | SEE PAGE |
|---|---|---|---|---|---|---|
| | 1 | 2,3,4,5 | **3S-2093** | 14 | STRAP-CABLE | |
| D | 2 | 5 | **5P-6029** | | LOCKWIRE (0.3-M) | |
| C | 3 | 2 | **6V-4283** | 1 | PLATE-IDENTIFICATION (ALTERNATOR) | |
| | 4 | 2 | **9F-8125** | 4 | LOCKWASHER | |
| | 5 | 3,4 | **9L-1566** | 3 | SUPPORT | |
| Y | 6 | 3 | **118-3534** | 1 | SWITCH GP-MAGNETIC (24-VOLT) (STARTING AID RELAY) | 331 |
| Y | 7 | 5 | **134-2252** | 1 | SENSOR GP-TEMPERATURE (BRAKE OIL) | 318 |
| | 8 | 4,5 | **169-5414** | 2 | CLIP | |
| C | 9 | 2 | **189-0108** | 1 | PLATE | |
| | 10 | 4 | **200-6345** | 1 | MOUNT (DUAL SWIVEL) | |
| | 11 | 2 | **209-4562** | 1 | PLATE AS | |
| | 12 | 4 | **227-6744** | 1 | SWITCH GP-PRESSURE (HYDRAULIC) | |
| | | 4 | **102-8802** | 1 | KIT-RECEPTACLE (2-PIN) | |
| | | | | | (INCLUDES RECEPTACLE AS & WEDGE) | |
| | | 4 | **186-3735** | 2 | PIN-CONNECTOR (16-GA TO 18-GA) | |
| E | | 4 | **9X-1813** | | SLEEVE (14-CM) | |
| | | 4 | **3J-1907** | 1 | SEAL-O-RING | |
| | | 4 | **5F-9144** | 1 | SEAL-O-RING | |
| Y | 13 | 2 | **230-6278** | 1 | SWITCH GP-MAGNETIC (SECONDARY STEERING) | 334 |
| | 14 | 3 | **235-0084** | 1 | HARNESS AS-SENSOR (FUEL LEVEL) | |
| | | 3 | **102-8802** | 1 | KIT-RECEPTACLE (2-PIN) | |
| | | | | | (INCLUDES RECEPTACLE AS & WEDGE) | |
| | | 3 | **155-2270** | 1 | KIT-CONNECTING PLUG (2-PIN) | |
| | | | | | (INCLUDES PLUG AS, WEDGE, & INTERFACE SEAL) | |
| | 15 | 3 | **241-8488** | 3 | PLATE | |
| | 16 | 5 | **261-8652** | 1 | SWITCH AS-LIMIT (ACCESS PLATFORM UPPER TRAVEL) | |
| | | 5 | **9X-3401** | 4 | PIN-CONNECTOR (16-GA TO 18-GA) | |
| | | 5 | **102-8804** | 1 | KIT-RECEPTACLE (4-PIN) | |
| | | | | | (INCLUDES RECEPTACLE AS & WEDGE) | |
| | 17 | 1 | **272-8402** | 1 | HARNESS AS-CHASSIS (SECONDARY STEERING) | |
| | | 1 | **7X-6222** | 2 | PLUG AS-CONNECTOR (24-PIN) | |
| | | 1 | **9X-0141** | 1 | PLUG AS-CONNECTOR (40-PIN) | |
| | | 1 | **9X-7147** | 1 | PLUG AS-CONNECTOR (40-PIN) | |
| | | 1 | **127-5483** | 2 | PLUG AS-CONNECTOR (1-PIN) | |
| | | 1 | **9X-0145** | 3 | RECEPTACLE AS-CONNECTOR (24-PIN) | |
| | | 1 | **9X-1343** | 1 | RECEPTACLE AS-CONNECTOR (40-PIN) | |
| | | 1 | **188-6210** | 1 | RECEPTACLE AS-CONNECTOR (1-PIN) | |
| | | 1 | **155-2271** | 1 | KIT-CONNECTING PLUG (4-PIN) | |
| | | 1 | **155-2255** | 1 | KIT-CONNECTING PLUG (12-PIN) | |
| | | 1 | **155-2265** | 2 | KIT-CONNECTING PLUG (8-PIN) | |
| | | 1 | **155-2260** | 4 | KIT-CONNECTING PLUG (3-PIN) | |
| | | 1 | **155-2270** | 11 | KIT-CONNECTING PLUG (2-PIN) | |
| | | | | | (EACH PLUG KIT INCLUDES PLUG AS, WEDGE, & INTERFACE SEAL) | |
| | | 1 | **102-8802** | 3 | KIT-RECEPTACLE (2-PIN) | |
| | | 1 | **102-8803** | 2 | KIT-RECEPTACLE (3-PIN) | |
| | | 1 | **102-8806** | 2 | KIT-RECEPTACLE (8-PIN) | |
| | | | | | (EACH RECEPTACLE KIT INCLUDES RECEPTACLE AS & WEDGE) | |
| | 18 | 4 | **272-8403** | 1 | HARNESS AS-CHASSIS (BODY, BRAKE) | |
| | | 4 | **7X-6222** | 1 | PLUG AS-CONNECTOR (24-PIN) | |
| | | 4 | **102-8802** | 2 | KIT-RECEPTACLE (2-PIN) | |
| | | 4 | **102-8803** | 1 | KIT-RECEPTACLE (3-PIN) | |
| | | | | | (EACH RECEPTACLE KIT INCLUDES RECEPTACLE AS & WEDGE) | |
| | | 4 | **155-2260** | 1 | KIT-CONNECTING PLUG (3-PIN) | |

*270-1502* **WIRING GP-CHASSIS** *(contd.)* **i02898229**

| NOTE | REF NO | GRAPHIC REF | PART NUMBER | QTY | PART NAME 1 2 3 4 5 6 (PRODUCT LEVEL) | SEE PAGE |
|---|---|---|---|---|---|---|
| | | 4 | **155-2270** | 8 | KIT-CONNECTING PLUG (2-PIN) | |
| | | | | | (EACH PLUG KIT INCLUDES PLUG AS, WEDGE, & INTERFACE SEAL) | |
| | 19 | 4 | **272-8405** | 1 | HARNESS AS-TRANSMISSION | |
| | | 4 | **7D-1962** | 1 | PLUG AS-CONNECTOR (10-PIN) | |
| | | 4 | **7X-6222** | 1 | PLUG AS-CONNECTOR (24-PIN) | |
| | | 4 | **102-8801** | 1 | KIT-RECEPTACLE (12-PIN) | |
| | | | | | (INCLUDES RECEPTACLE AS & WEDGE) | |
| | | 4 | **155-2255** | 1 | KIT-CONNECTING PLUG (12-PIN) | |
| | | 4 | **155-2270** | 4 | KIT-CONNECTING PLUG (2-PIN) | |
| | | | | | (EACH PLUG KIT INCLUDES PLUG AS, WEDGE, & INTERFACE SEAL) | |
| | 20 | 3 | **276-7447** | 1 | PLATE AS | |
| Y | 21 | 5 | *296-0485* | 1 | LIGHTING GP-FLOOD (REAR, RH) | 287 |
| Y | 22 | 5 | *296-0486* | 1 | LIGHTING GP-FLOOD (REAR, LH) | 289 |
| | 23 | 5 | **298-6122** | 1 | PLATE | |
| C | 24 | 1 | **320-6067** | 1 | HARNESS AS-REAR | |
| M | 25 | 5 | **095-0642** | 2 | BOLT-SOCKET HEAD (M5X0.8X50-MM) | |
| C | 26 | 2,3,4,5 | **130-5300** | 20 | CLIP | |
| | 27 | 3 | **132-5789** | 1 | CLIP | |
| | 28 | 3 | **133-6934** | 1 | SPACER (11X20X25-MM THK) | |
| | 29 | 3 | **139-1398** | 1 | CLIP | |
| | 30 | 5 | **161-6987** | 2 | WASHER-HARD (5.2X16X1.5-MM THK) | |
| | 31 | 3 | **169-7443** | 1 | TIMER AS-ON DELAY (24-VOLT) | |
| | | 3 | **3E-3377** | 1 | WEDGE-RECEPTACLE LOCK (4-PIN) | |
| | | 3 | **186-3735** | 4 | PIN-CONNECTOR (16-GA TO 18-GA) | |
| | | 3 | **102-8804** | 1 | KIT-RECEPTACLE (4-PIN) | |
| | | | | | (INCLUDES RECEPTACLE & WEDGE) | |
| | 32 | 2 | **171-2211** | 1 | CIRCUIT BREAKER AS (90-AMPERE) (ALTERNATOR) | |
| | 32A | 2 | **171-2211** | 1 | CIRCUIT BREAKER AS (90-AMPERE) (MAIN) | |
| | | | | | (EACH CIRCUIT BREAKER ASSEMBLY INCLUDES) | |
| | | 2 | **6V-8187** | 2 | NUT (1/4-28-THD) | |
| | | 2 | **8T-4205** | 2 | WASHER-HARD (7.2X14.5X2-MM THK) | |
| | | 2 | **253-2111** | 2 | LOCKWASHER | |
| C | 33 | 2,4 | **218-4935** | 2 | SUPPRESSOR-ARC | |
| | 34 | 4 | **2P-8421** | 1 | ADAPTER-O-RING | |
| | 35 | 4 | **3D-2824** | 1 | SEAL-O-RING | |
| | 36 | 5 | **3J-1907** | 1 | SEAL-O-RING | |
| | 37 | 4 | **4P-7429** | 1 | CLIP | |
| C | 38 | 2,3,4,5 | **4P-7581** | 34 | CLIP | |
| | 39 | 4,5 | **4P-8134** | 10 | CLIP | |
| | 40 | 4 | **4S-4455** | 1 | CLIP | |
| CM | 41 | 5 | **5C-2874** | 2 | NUT (M5X0.8-THD) | |
| | 42 | 4 | **6D-4244** | 2 | CLIP | |
| | 43 | 3 | **6D-4246** | 1 | CLIP | |
| M | 44 | 3 | **6V-7744** | 1 | LOCKNUT (M10X1.5-THD) | |
| | 45 | 2 | **6V-7978** | 4 | SCREW-MACHINE (10-32X0.375-IN) | |
| | 46 | 2 | **7C-4354** | 1 | CLIP | |
| | 47 | 3 | **7D-1553** | 2 | CLIP | |
| C | 48 | 2,3,4,5 | **7K-1181** | 82 | STRAP-CABLE | |
| C | 49 | 5 | **7X-7729** | 8 | WASHER (11X25X3-MM THK) | |
| | 50 | 5 | **8D-4656** | 1 | LEVER | |
| C | 51 | 2,3,4,5 | **8T-4121** | 64 | WASHER-HARD (11X21X2.5-MM THK) | |
| CM | 52 | 3,4 | **8T-4133** | 4 | NUT (M10X1.5-THD) | |
| CM | 53 | 2,3,4 | **8T-4136** | 7 | BOLT (M10X1.5X25-MM) | |
| CM | 54 | 2,3,4,5 | **8T-4137** | 59 | BOLT (M10X1.5X20-MM) | |
| M | 55 | 2,3 | **8T-4171** | 10 | BOLT (M6X1X12-MM) | |
| M | 56 | 3 | **8T-4185** | 1 | BOLT (M10X1.5X50-MM) | |
| CM | 57 | 2 | **8T-4189** | 1 | BOLT (M8X1.25X20-MM) | |
| C | 58 | 2 | **8T-4224** | 1 | WASHER-HARD (8.8X16X2-MM THK) | |

*270-1502* **WIRING GP-CHASSIS** *(contd.)* **i02898229**

| NOTE | REF NO | GRAPHIC REF | PART NUMBER | QTY | PART NAME 1 2 3 4 5 6 (PRODUCT LEVEL) | SEE PAGE |
|---|---|---|---|---|---|---|
| M | 59 | 3 | **8T-9405** | 8 | BOLT-SOCKET HEAD (M4X0.7X16-MM) | |
| | 60 | 4 | **9M-8406** | 1 | CLIP | |
| | 61 | 2,3 | **9X-8256** | 10 | WASHER (6.6X12X2-MM THK) | |

C-CHANGE FROM PREVIOUS TYPE
D-ORDER BY THE METER
E-ORDER BY THE CENTIMETER
M-METRIC PART
Y-SEPARATE ILLUSTRATION

REFER TO ALL ILLUSTRATIONS OF THIS GROUP FOR AUXILIARY VIEWS

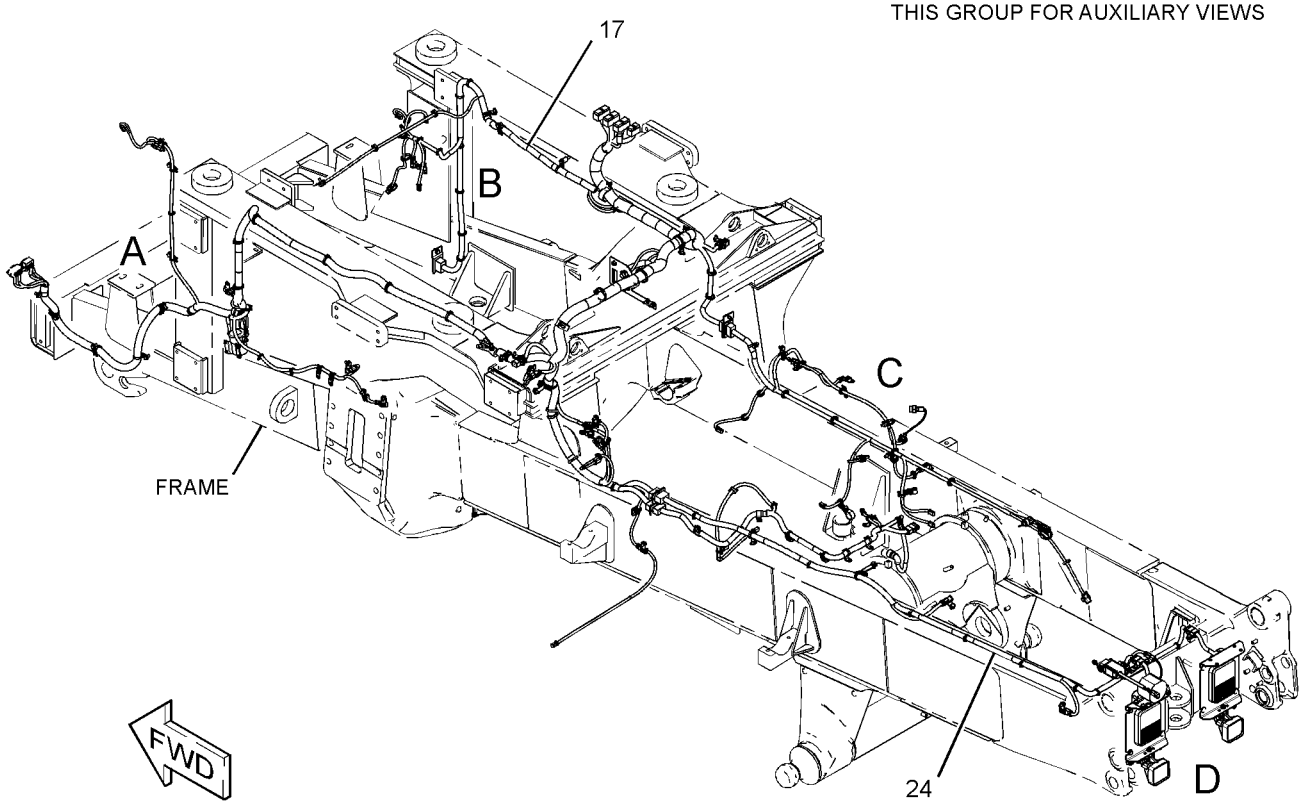


GRAPHIC #1 g01639855

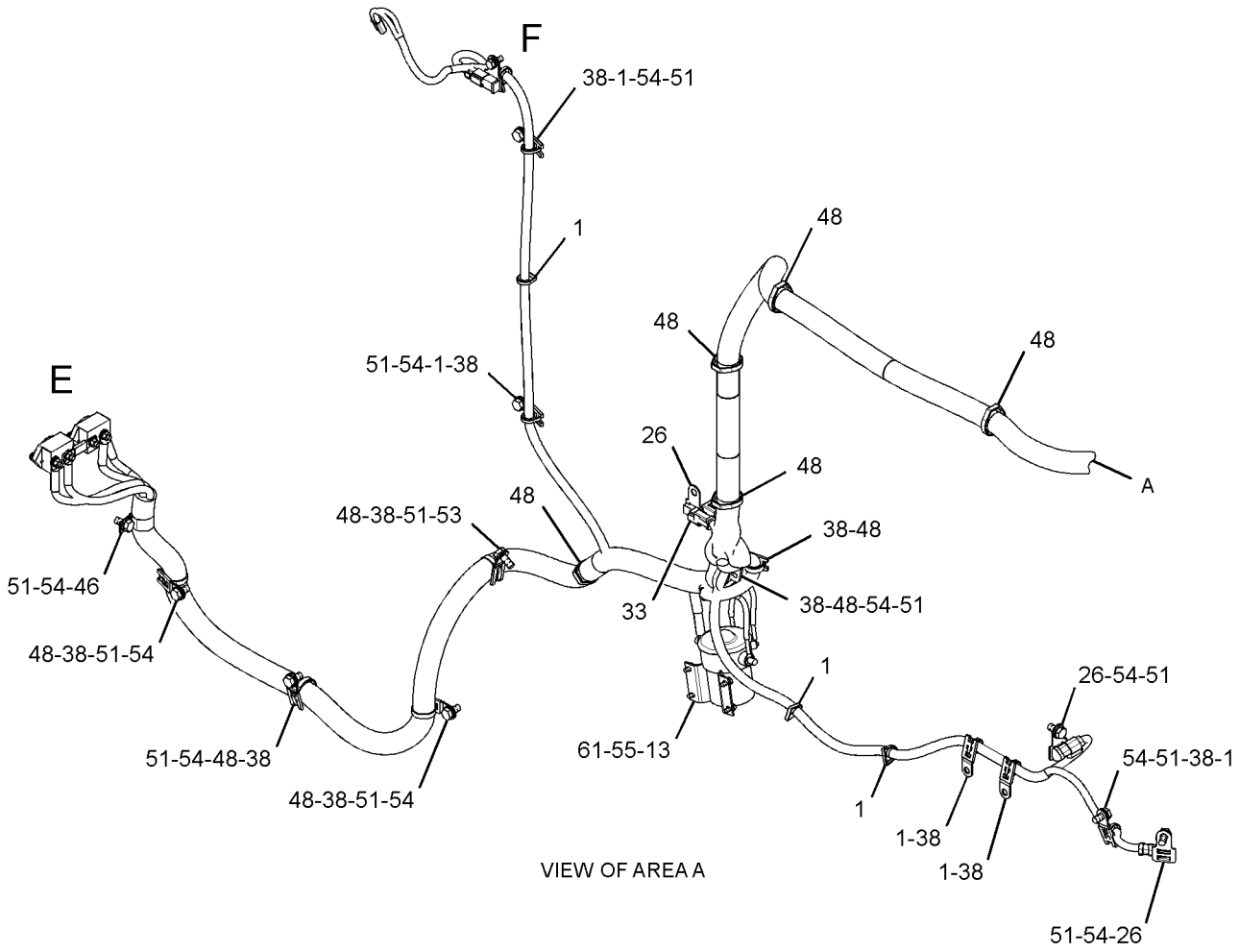


VIEW OF AREA A

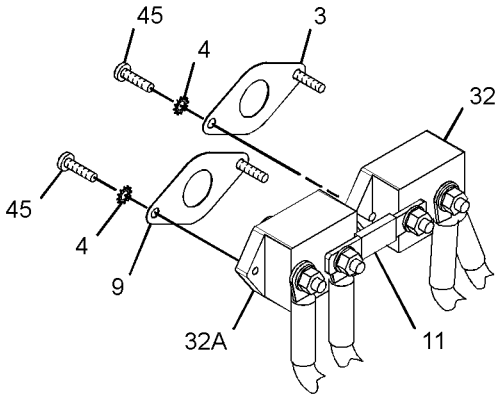


VIEW OF AREA E
( EXPLODED )

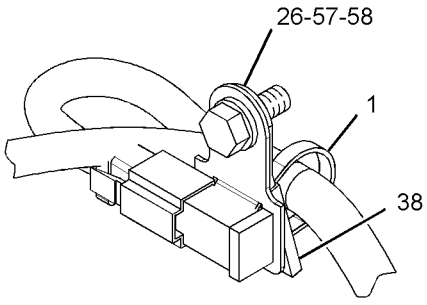


VIEW OF AREA F

GRAPHIC #2

g01639856

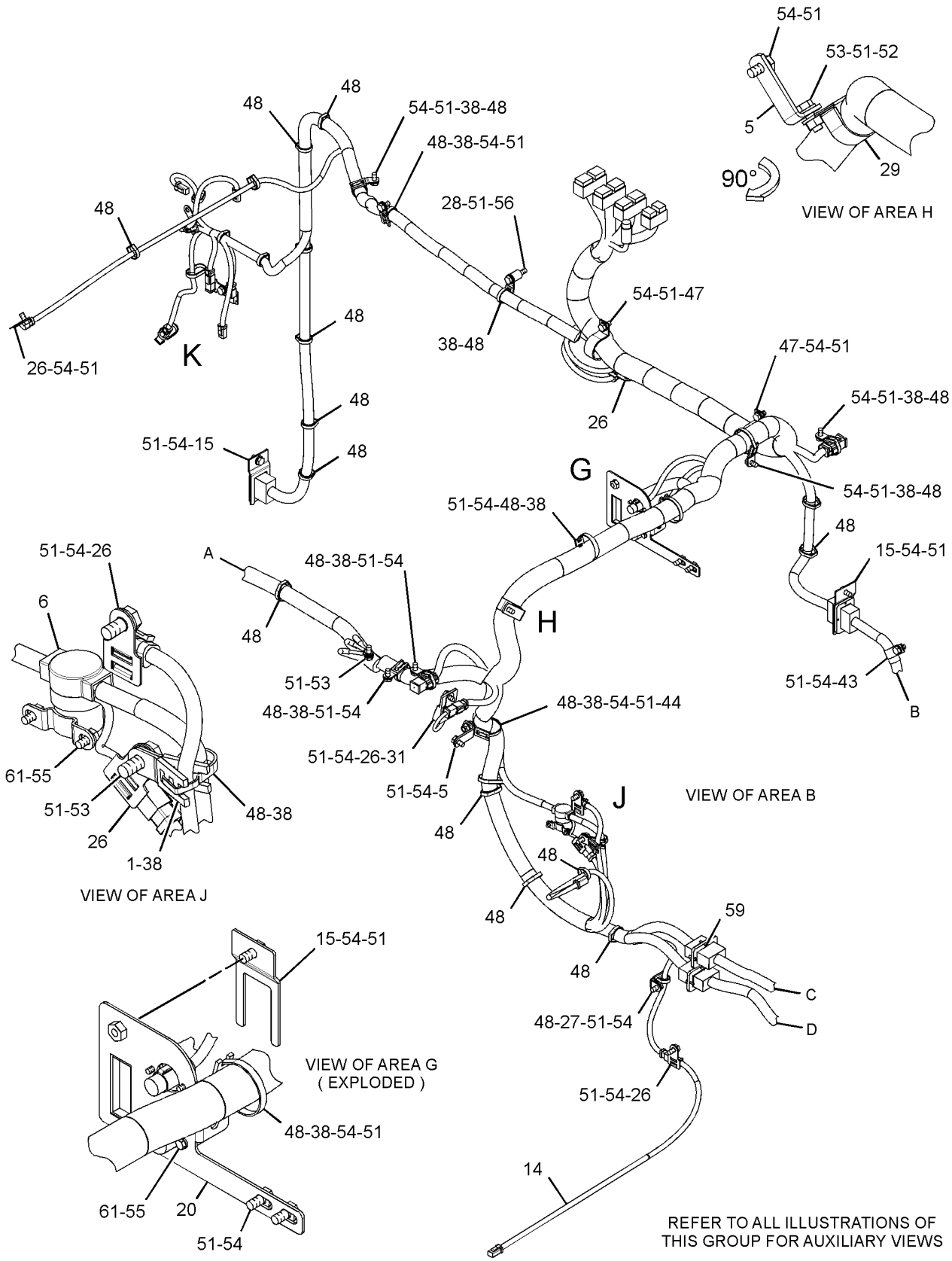


GRAPHIC #3

g01639857

*270-1502* **WIRING GP-CHASSIS** *(contd.)* **i02898229**

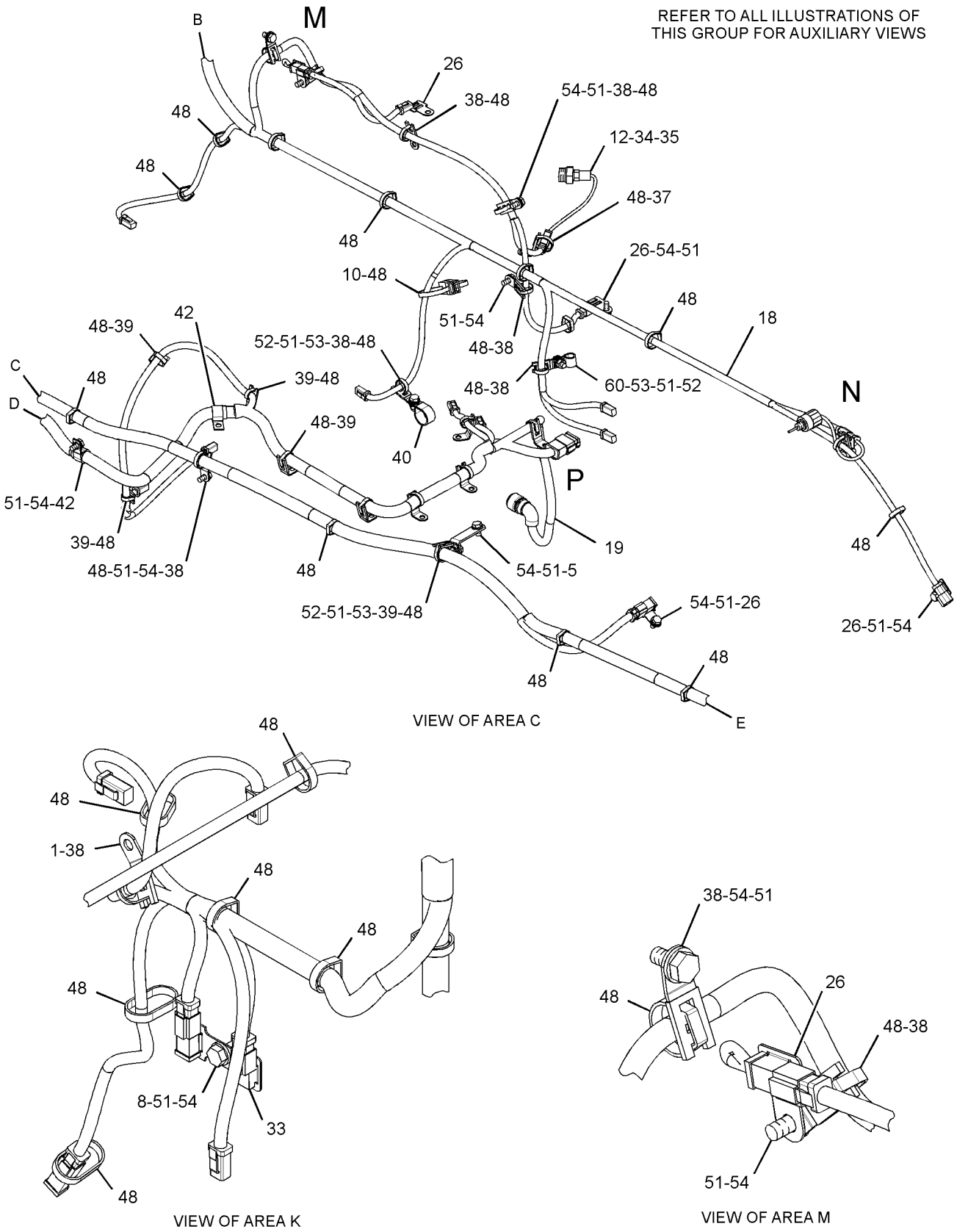


GRAPHIC #4 g01639858

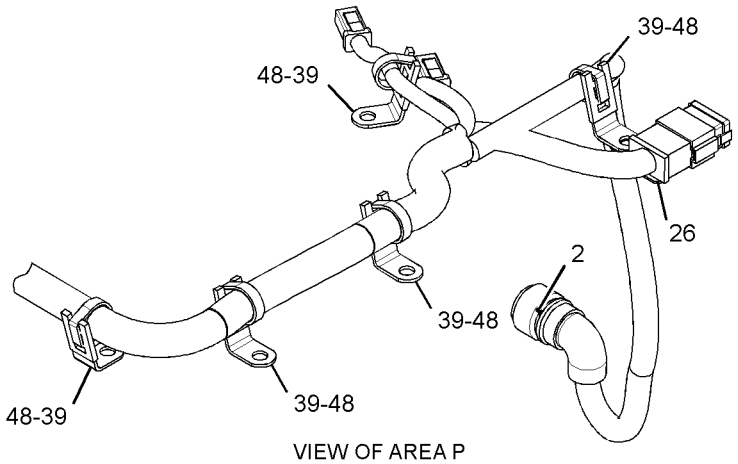


VIEW OF AREA P

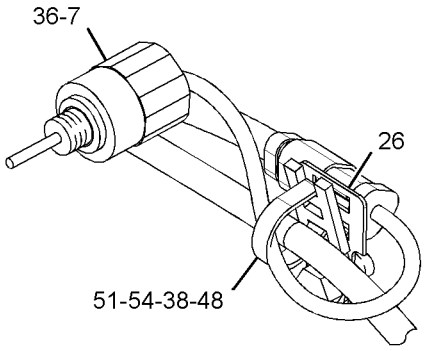


VIEW OF AREA N

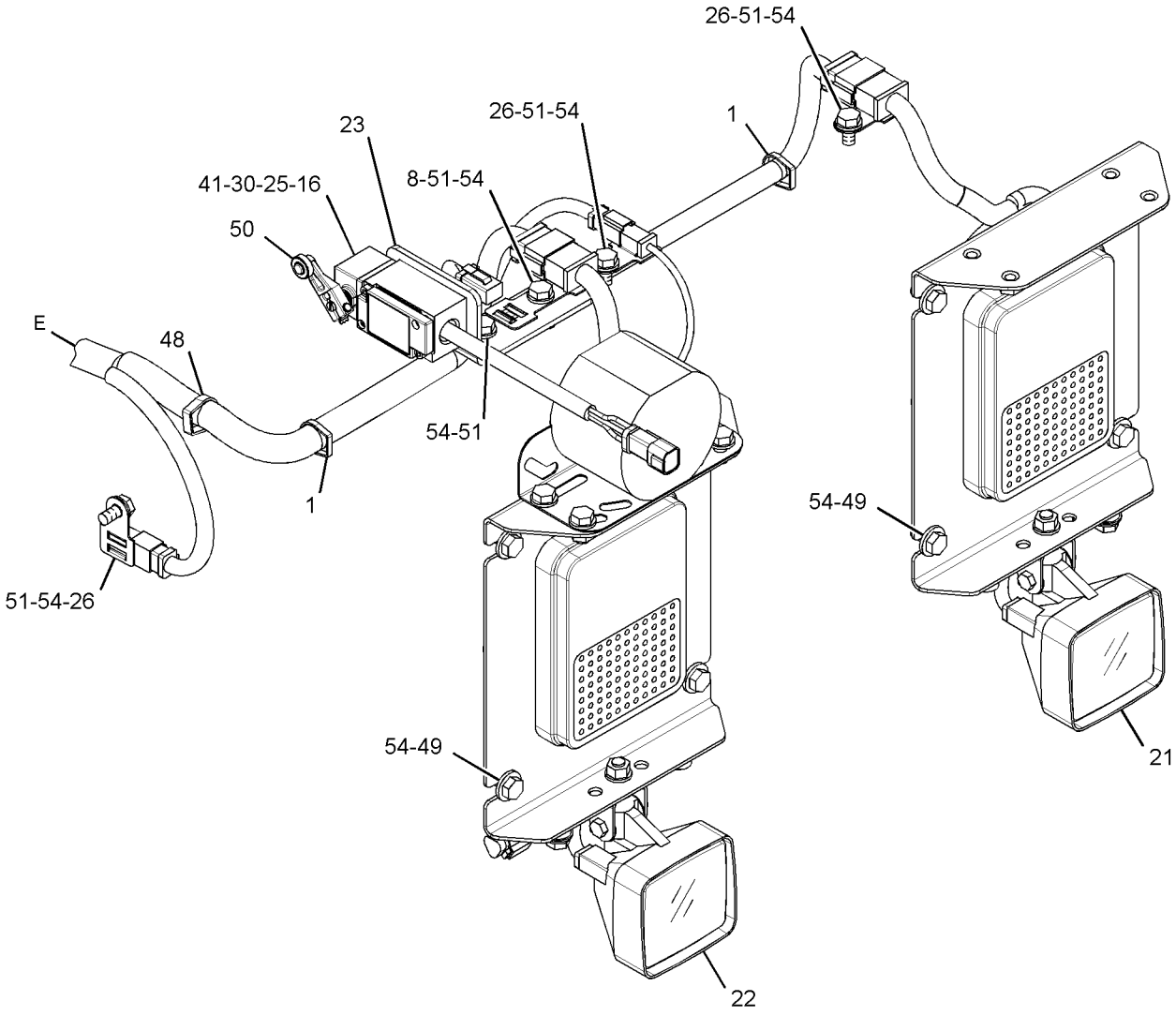


VIEW OF AREA D

GRAPHIC #5 **<END>** g01639859

# *270-1506* WIRING GP-COMMUNICATION

**S/N: RLB1-411**

**PART OF 268-7807 INSTALLATION AR-COMMUNICATION, 313-5950 INSTALLATION GP-COMMUNICATION**

**AN ATTACHMENT**

**SMCS-1408, 7606** **i02718107**

| NOTE | REF NO | GRAPHIC REF | PART NUMBER | QTY | PART NAME 1 2 3 4 5 6 (PRODUCT LEVEL) | SEE PAGE |
|---|---|---|---|---|---|---|
| | 1 | 1 | **3S-2093** | 14 | STRAP-CABLE | |
| | 2 | 1 | **263-8948** | 1 | ANTENNA AS (ROOF MOUNTED) | |
| | 3 | 1 | **283-5837** | 1 | PLATE | |
| | 4 | 1 | **7K-1181** | 1 | STRAP-CABLE | |

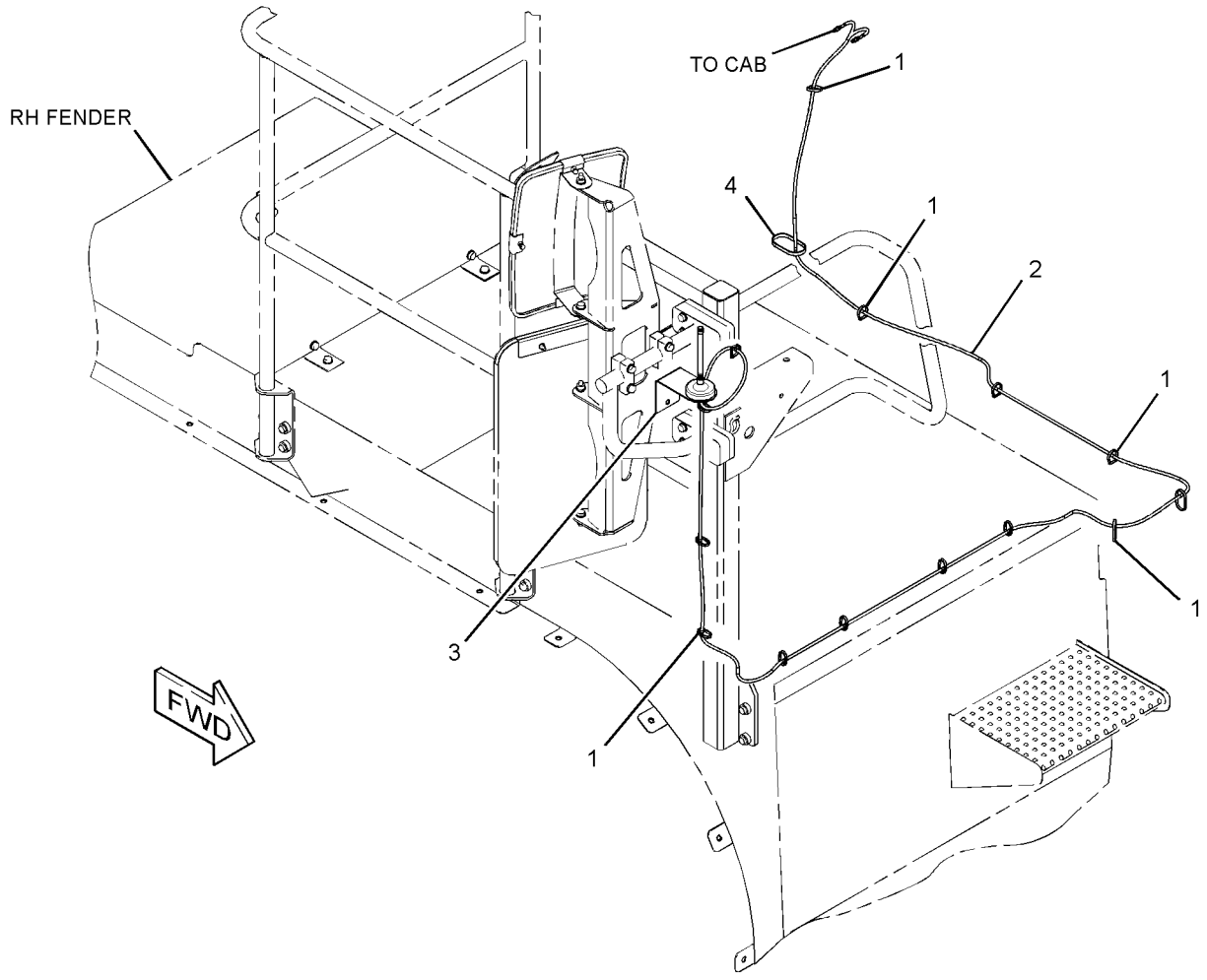


GRAPHIC #1 **<END>** g01366775

# *270-1506* WIRING GP-COMMUNICATION

**S/N: RLB412-UP**
**PART OF 268-7807 INSTALLATION AR-COMMUNICATION, 313-5950 INSTALLATION GP-COMMUNICATION**
**AN ATTACHMENT**

**SMCS-1408, 7606** **i02917010**

| NOTE | REF NO | GRAPHIC REF | PART NUMBER | QTY | PART NAME 1 2 3 4 5 6 (PRODUCT LEVEL) | SEE PAGE |
|---|---|---|---|---|---|---|
| | 1 | 1 | **3S-2093** | 14 | STRAP-CABLE | |
| C | 2 | 1 | **284-8533** | 1 | ANTENNA AS (ROOF MOUNTED) | |
| | | 1 | **301-0589** | 1 | ANTENNA (WHIP) | |
| | 3 | 1 | **283-5837** | 1 | PLATE | |
| | 4 | 1 | **7K-1181** | 1 | STRAP-CABLE | |

C-CHANGE FROM PREVIOUS TYPE

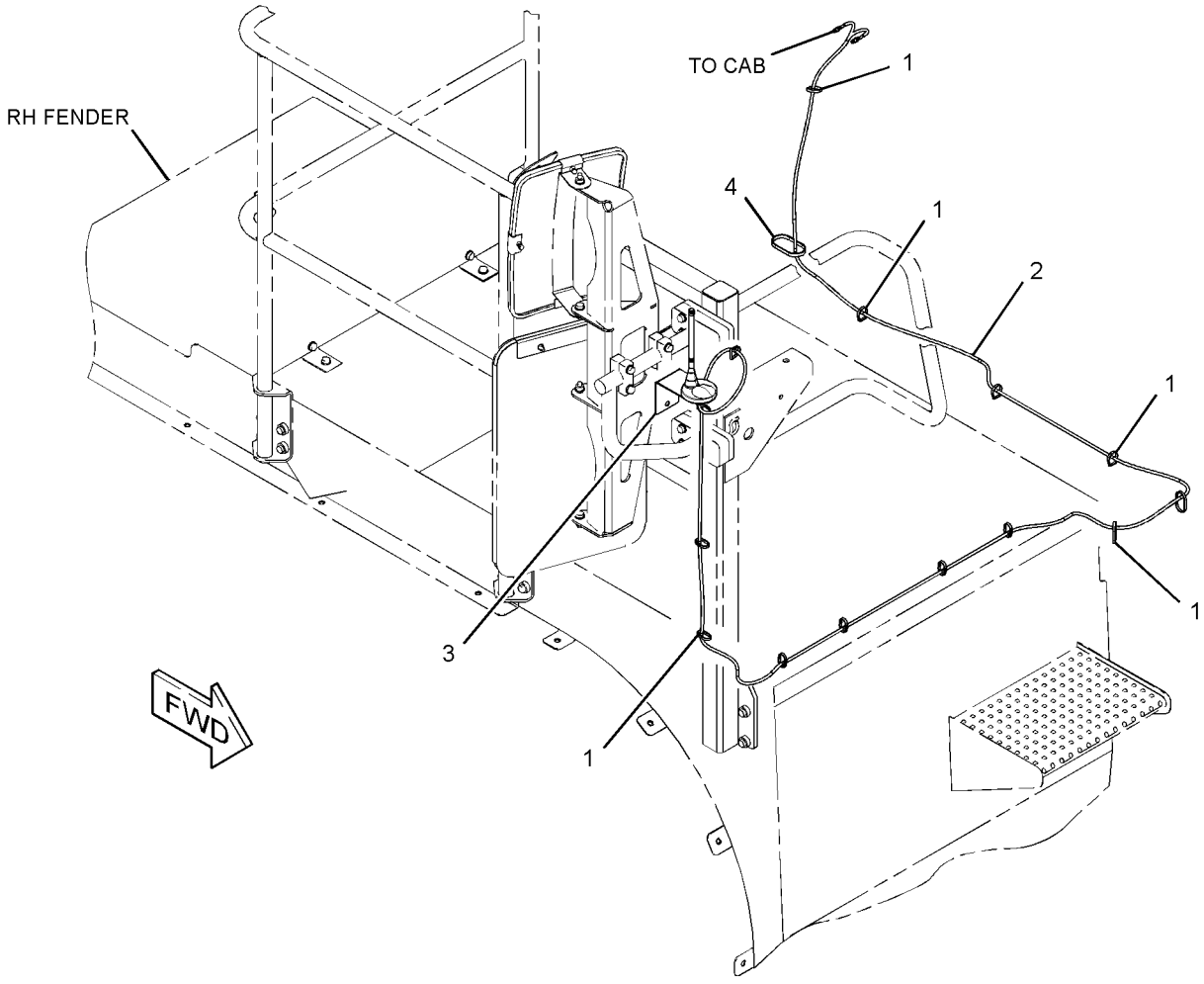


GRAPHIC #1 **<END>** g01457972

# *243-1561* WIRING GP-ENGINE

**S/N: RHX1-4174**

**PART OF 221-8124, 247-3315, 272-3086, 272-3087, 292-2553, 292-2554 ENGINE**

**AR-COMPLETE**

**AN ATTACHMENT**

**SMCS-1408** **i02186999**

| NOTE | REF NO | GRAPHIC REF | PART NUMBER | QTY | PART NAME 1 2 3 4 5 6 (PRODUCT LEVEL) | SEE PAGE |
|---|---|---|---|---|---|---|
| | 1 | 1,2 | **3S-2093** | 23 | STRAP-CABLE | |
| | 2 | 1 | **7T-0266** | 1 | BRACKET AS | |
| | | 1 | **1F-0750** | 1 | NUT-WELD (3/8-16-THD) | |
| | 4 | 1 | **239-5929** | 1 | HARNESS AS-ENGINE | |
| | | 1 | **102-8802** | 1 | KIT-RECEPTACLE (2-PIN) | |
| | | 1 | **102-8803** | 2 | KIT-RECEPTACLE (3-PIN) | |
| | | | | | (EACH INCLUDES RECEPTACLE AS AND WEDGE) | |
| | | 1 | **155-2255** | 1 | KIT-CONNECTING PLUG (12-PIN) | |
| | | 1 | **155-2265** | 1 | KIT-CONNECTING PLUG (8-PIN) | |
| | | 1 | **155-2260** | 1 | KIT-CONNECTING PLUG (3-PIN) | |
| | | 1 | **155-2270** | 6 | KIT-CONNECTING PLUG (2-PIN) | |
| | | | | | (EACH INCLUDES PLUG AS AND WEDGE) | |
| | | 1 | **227-4002** | 1 | PLUG AS-CONNECTOR (108-PIN) | |
| | 5 | 1 | **0L-1351** | 1 | BOLT (3/8-16X0.875-IN) | |
| | 6 | 1 | **0S-0509** | 4 | BOLT (3/8-16X0.75-IN) | |
| | 7 | 1 | **0S-1576** | 2 | BOLT (5/8-18X2-IN) | |
| | 8 | 1 | **104-6202** | 2 | CLIP | |
| | 9 | 1 | **132-5789** | 4 | CLIP | |
| | 10 | 1 | **1A-4273** | 1 | BOLT (5/8-18X1.25-IN) | |
| | 11 | 1 | **3B-1915** | 1 | BOLT (3/8-16X1.375-IN) | |
| | 12 | 1 | **4P-7429** | 1 | CLIP | |
| | 13 | 1,2 | **4P-7581** | 5 | CLIP | |
| | 14 | 1 | **4P-7582** | 1 | CLIP | |
| | 15 | 1,2 | **4P-8134** | 4 | CLIP | |
| | 16 | 1 | **5M-2894** | 6 | WASHER-HARD (10.2X18.5X2.5-MM THK) | |
| | 17 | 1 | **5P-8247** | 3 | WASHER-HARD (17X32X3.5-MM THK) | |
| | 18 | 1 | **8T-4223** | 1 | WASHER-HARD (13.5X25.5X3-MM THK) | |

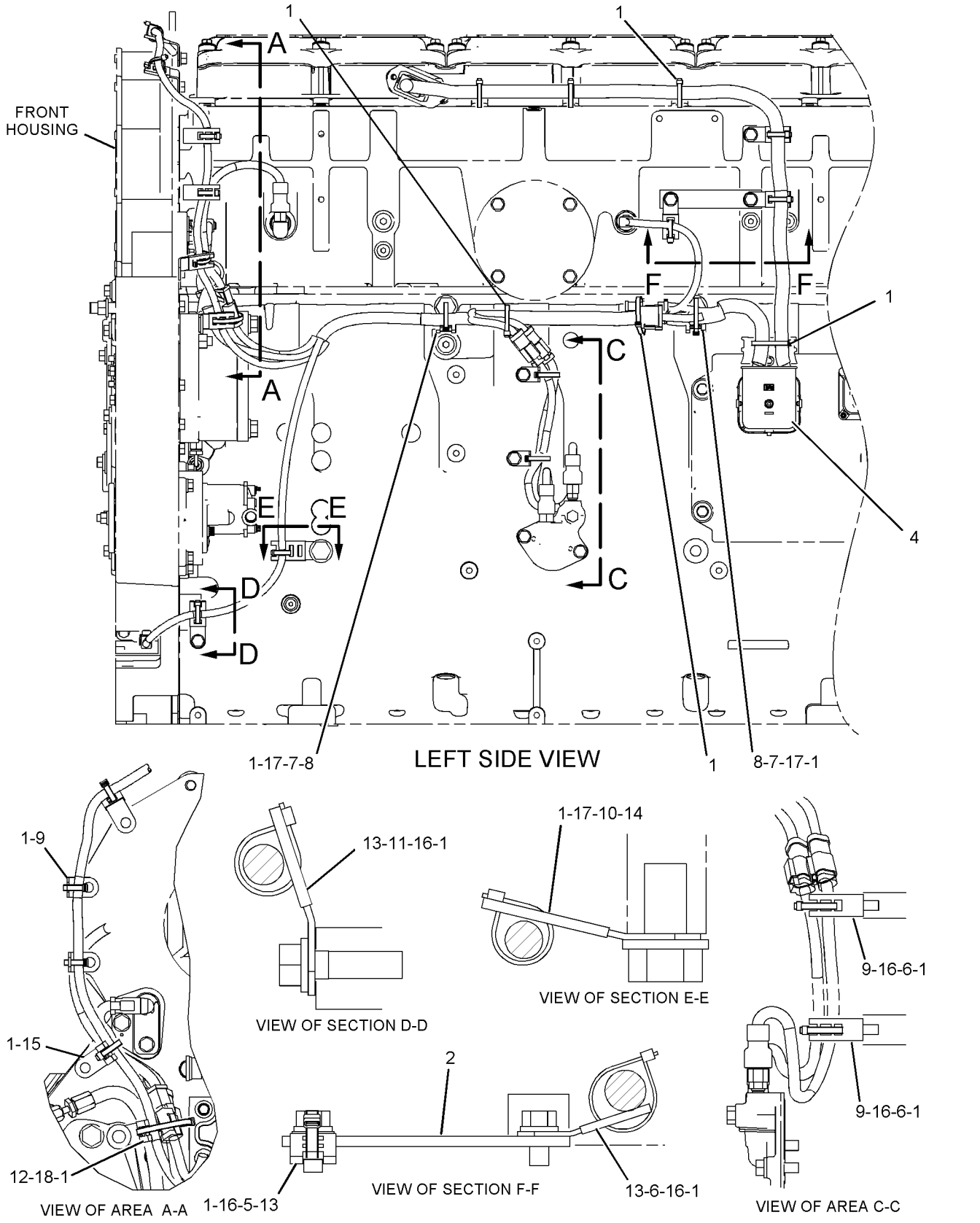


GRAPHIC #1

g01103169

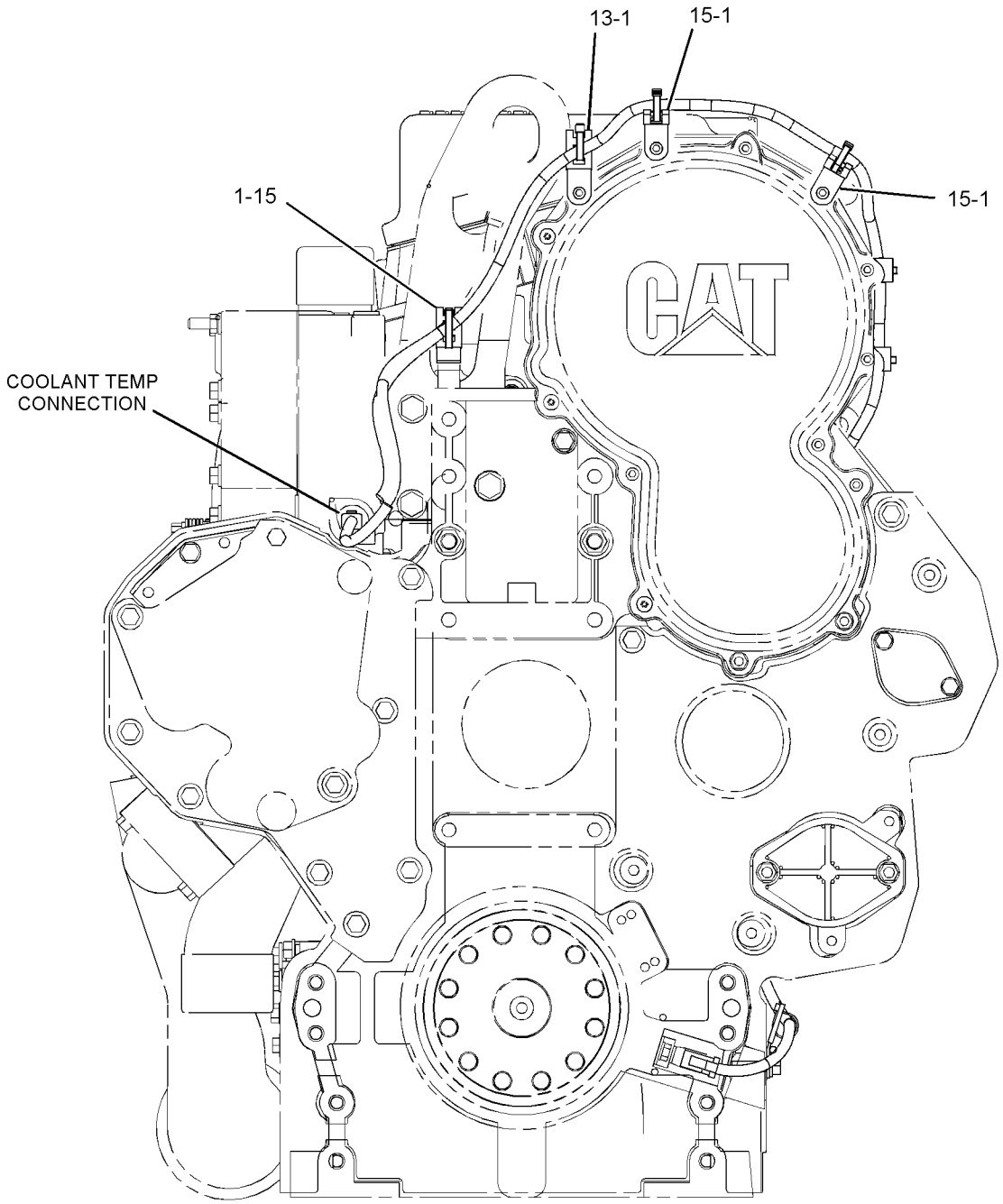


FRONT VIEW

GRAPHIC #2

**<END>**

g01109844

# *243-1561* WIRING GP-ENGINE

**S/N: RHX4175-UP**

**PART OF 221-8124, 272-3086, 272-3087, 292-2553, 292-2554 ENGINE AR-COMPLETE AN ATTACHMENT**

**SMCS-1408** **i02500077**

| NOTE | REF NO | GRAPHIC REF | PART NUMBER | QTY | PART NAME 1 2 3 4 5 6 (PRODUCT LEVEL) | SEE PAGE |
|---|---|---|---|---|---|---|
| C | 1 | 1 | **3S-2093** | 19 | STRAP-CABLE | |
| | 2 | 1 | **239-5929** | 1 | HARNESS AS-ENGINE | |
| | | 1 | **102-8802** | 1 | KIT-RECEPTACLE (2-PIN) | |
| | | | | | (INCLUDES RECEPTACLE AS AND WEDGE) | |
| | | 1 | **102-8803** | 2 | KIT-RECEPTACLE (3-PIN) | |
| | | | | | (EACH INCLUDES RECEPTACLE AS AND WEDGE) | |
| | | 1 | **155-2255** | 1 | KIT-CONNECTING PLUG (12-PIN) | |
| | | | | | (INCLUDES PLUG AS AND WEDGE) | |
| | | 1 | **155-2265** | 1 | KIT-CONNECTING PLUG (8-PIN) | |
| | | | | | (INCLUDES PLUG AS AND WEDGE) | |
| | | 1 | **155-2260** | 1 | KIT-CONNECTING PLUG (3-PIN) | |
| | | | | | (INCLUDES PLUG AS AND WEDGE) | |
| | | 1 | **155-2270** | 6 | KIT-CONNECTING PLUG (2-PIN) | |
| | | | | | (EACH INCLUDES PLUG AS AND WEDGE) | |
| | | 1 | **227-4002** | 1 | PLUG AS-CONNECTOR (108-PIN) | |
| C | 3 | 1 | **0S-0509** | 3 | BOLT (3/8-16X0.75-IN) | |
| | 4 | 1 | **0S-1576** | 2 | BOLT (5/8-18X2-IN) | |
| | 5 | 1 | **104-6202** | 2 | CLIP | |
| C | 6 | 1 | **132-5789** | 2 | CLIP | |
| | 7 | 1 | **1A-4273** | 1 | BOLT (5/8-18X1.25-IN) | |
| | 8 | 1 | **3B-1915** | 1 | BOLT (3/8-16X1.375-IN) | |
| | 9 | 1 | **4P-7429** | 1 | CLIP | |
| C | 10 | 1 | **4P-7581** | 2 | CLIP | |
| | 11 | 1 | **4P-7582** | 1 | CLIP | |
| | 12 | 1 | **4P-8134** | 4 | CLIP | |
| C | 13 | 1 | **5M-2894** | 4 | WASHER-HARD (10.2X18.5X2.5-MM THK) | |
| | 14 | 1 | **5P-8247** | 3 | WASHER-HARD (17X32X3.5-MM THK) | |
| | 15 | 1 | **8T-4223** | 1 | WASHER-HARD (13.5X25.5X3-MM THK) | |

C-CHANGE FROM PREVIOUS TYPE

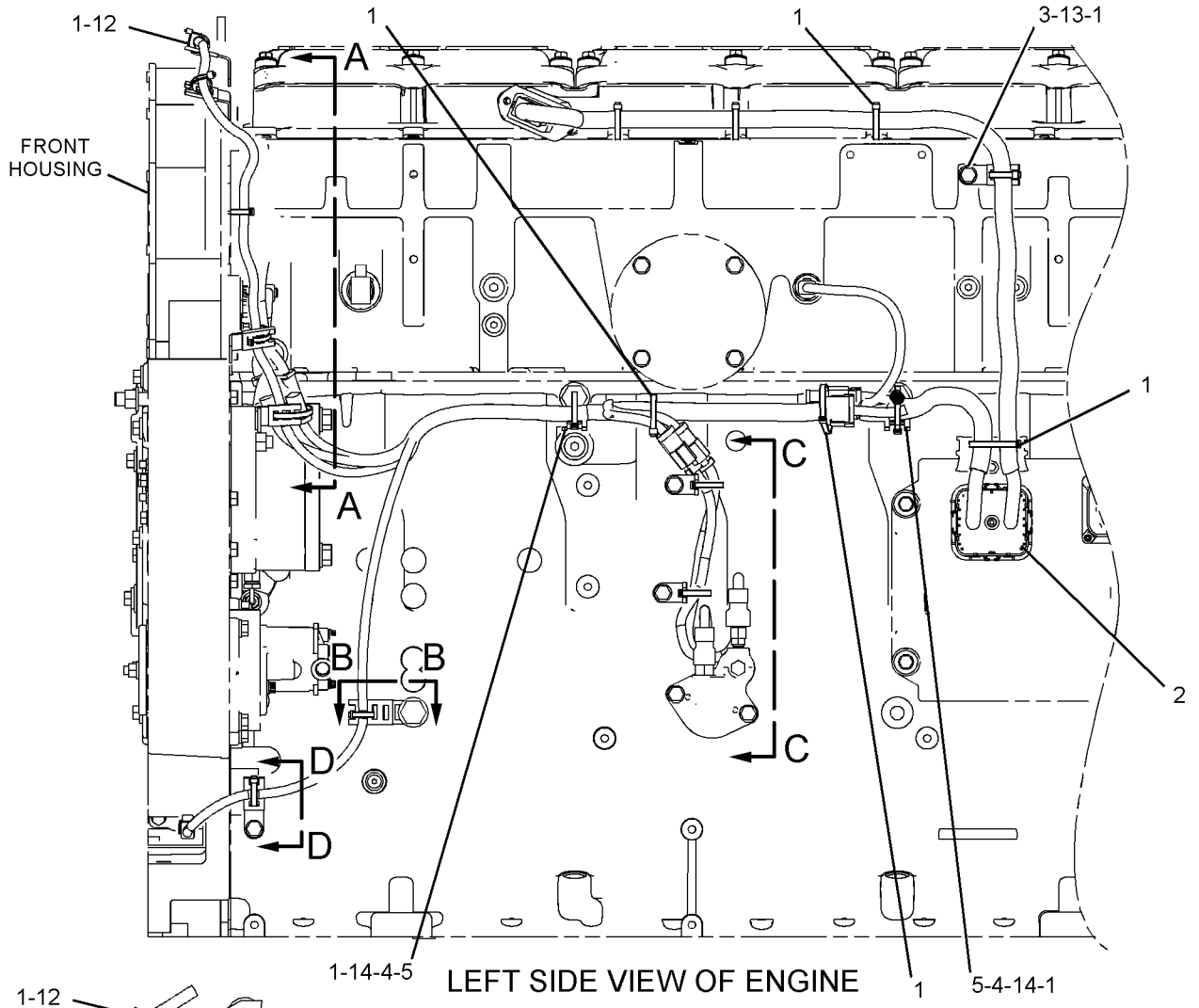


LEFT SIDE VIEW OF ENGINE

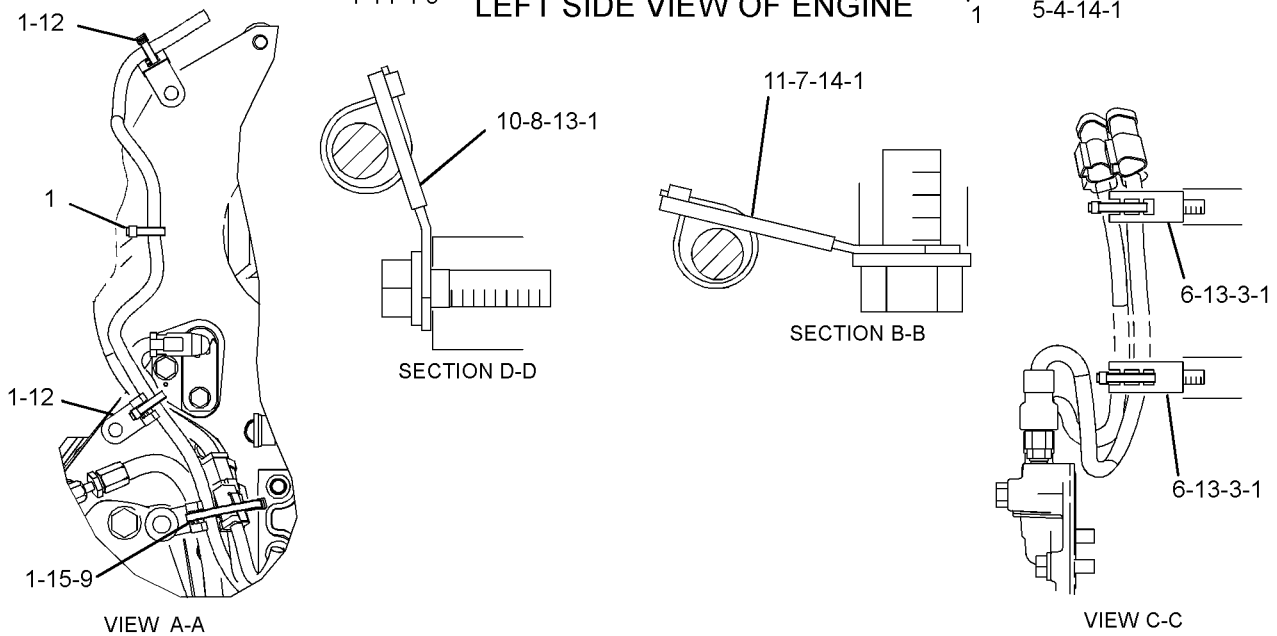


GRAPHIC #1 **<END>** g01308721

# *270-1503* WIRING GP-ENGINE

**S/N: RLB1-UP**

**PART OF 270-1500 ELECTRICAL AR**

**SMCS-1408** **i02618669**

| NOTE | REF NO | GRAPHIC REF | PART NUMBER | QTY | PART NAME 1 2 3 4 5 6 (PRODUCT LEVEL) | SEE PAGE |
|---|---|---|---|---|---|---|
| | 1 | 1 | **3S-2093** | 12 | STRAP-CABLE | |
| | 2 | 1 | **8T-8827** | 1 | BOOT | |
| | 3 | 1 | **114-5333** | 1 | SWITCH AS-PRESSURE (REFRIGERANT) | |
| | | 1 | **102-8802** | 1 | KIT-RECEPTACLE (2-PIN) | |
| | | | | | (INCLUDES RECEPTACLE AS & WEDGE) | |
| | | 1 | **186-3735** | 2 | PIN-CONNECTOR (16-GA TO 18-GA) | |
| E | | 1 | **9X-1386** | | SLEEVE (25-CM) | |
| Y | 4 | 1 | **134-2252** | 1 | SENSOR GP-TEMPERATURE (TORQUE CONVERTER OIL) | 318 |
| | 5 | 1 | **149-6371** | 1 | SWITCH AS-PRESSURE (AIR CONDITIONER, LOW SIDE) | |
| | | 1 | **102-8802** | 1 | KIT-RECEPTACLE (2-PIN) | |
| | | | | | (INCLUDES RECEPTACLE AS & WEDGE) | |
| | | 1 | **186-3735** | 2 | PIN-CONNECTOR (16-GA TO 18-GA) | |
| | 6 | 1 | **169-5414** | 1 | CLIP | |
| Y | 7 | 1 | **189-5746** | 1 | SENSOR GP-SPEED (ENGINE SPEED) | 310 |
| | 8 | 1 | **272-8407** | 1 | HARNESS AS-ENGINE | |
| | | 1 | **237-0336** | 1 | COVER | |
| | | 1 | **9X-0141** | 1 | PLUG AS-CONNECTOR (40-PIN) | |
| | | 1 | **127-5483** | 1 | PLUG AS-CONNECTOR (1-PIN) | |
| | | 1 | **160-7689** | 1 | PLUG AS-CONNECTOR (70-PIN) | |
| | | 1 | **188-6210** | 1 | RECEPTACLE AS-CONNECTOR (1-PIN) | |
| | | 1 | **155-2260** | 2 | KIT-CONNECTING PLUG (3-PIN) | |
| | | 1 | **155-2270** | 6 | KIT-CONNECTING PLUG (2-PIN) | |
| | | | | | (EACH INCLUDES PLUG AS, WEDGE, & INTERFACE SEAL) | |
| | 9 | 1 | **130-5300** | 2 | CLIP | |
| | 10 | 1 | **130-5301** | 2 | CLIP | |
| | 11 | 1 | **3J-1907** | 1 | SEAL-O-RING | |
| | 12 | 1 | **4P-7428** | 3 | CLIP | |
| | 13 | 1 | **4P-7581** | 6 | CLIP | |
| | 14 | 1 | **4P-7582** | 1 | CLIP | |
| | 15 | 1 | **4P-8134** | 3 | CLIP | |
| | 16 | 1 | **5S-7382** | 1 | BOLT (3/8-16X1.375-IN) | |
| | 17 | 1 | **6V-8801** | 1 | NUT (3/8-16-THD) | |
| | 18 | 1 | **7K-1181** | 1 | STRAP-CABLE | |
| | 19 | 1 | **8T-4121** | 2 | WASHER-HARD (11X21X2.5-MM THK) | |
| M | 20 | 1 | **8T-4137** | 2 | BOLT (M10X1.5X20-MM) | |
| | 21 | 1 | **8T-4896** | 2 | WASHER-HARD (10.2X18.5X2.5-MM THK) | |
| | 22 | 1 | **8T-7529** | 3 | CLIP | |
| | 23 | 1 | **9X-7378** | 1 | SEAL-O-RING | |

E-ORDER BY THE CENTIMETER
M-METRIC PART
Y-SEPARATE ILLUSTRATION

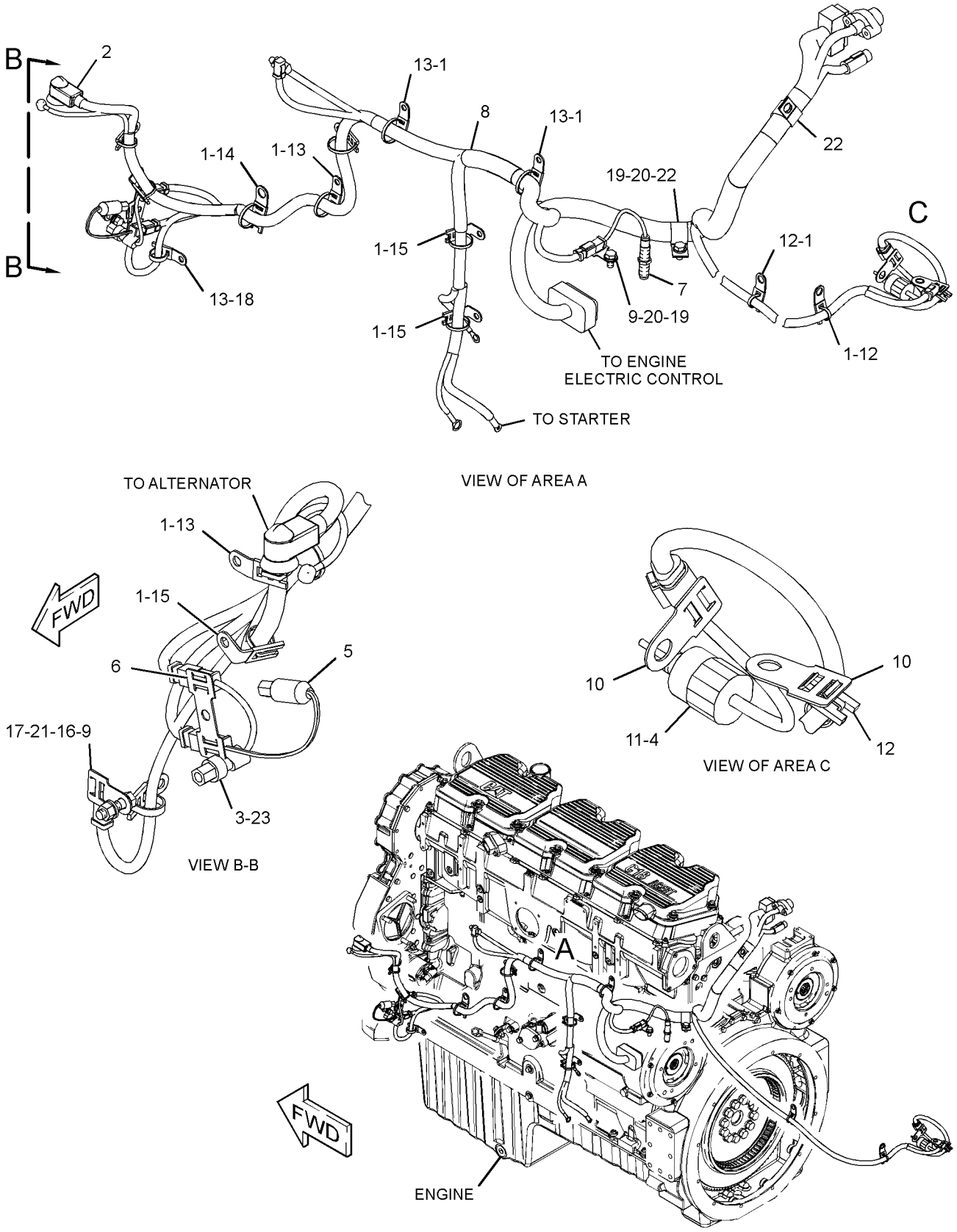


GRAPHIC #1 **<END>** g01333557

# ELECTRICAL AND STARTING SYSTEM

## *270-1504* WIRING GP-LIGHTING

**S/N: RLB1-UP**

**PART OF 270-1500 ELECTRICAL AR**

**SMCS-1408, 1429** **i03287713**

| NOTE | REF NO | GRAPHIC REF | PART NUMBER | QTY | PART NAME 1 2 3 4 5 6 (PRODUCT LEVEL) | SEE PAGE |
|---|---|---|---|---|---|---|
| | 1 | 2,3 | **3S-2093** | 23 | STRAP-CABLE | |
| | 2 | 2 | **5P-5528** | 1 | ADAPTER-O-RING | |
| | 3 | 2 | **9F-8125** | 6 | LOCKWASHER | |
| | 5 | 3 | **139-2116** | 1 | SWITCH AS-TOGGLE (MACHINE LOCKOUT) | |
| | 5A | 3 | **139-2116** | 1 | SWITCH AS-TOGGLE (ENGINE SHUTDOWN) | |
| | | | | | (EACH INCLUDES) | |
| | | 3 | **102-8803** | 1 | KIT-RECEPTACLE (3-PIN) | |
| | | | | | (INCLUDES RECEPTACLE AS & WEDGE) | |
| | | 3 | **3E-3371** | 1 | WEDGE-RECEPTACLE LOCK (3-PIN) | |
| | | 3 | **6T-3631** | 2 | NUT-HEX (15/32-32-THD) | |
| | | 3 | **6T-3632** | 1 | LOCKWASHER | |
| | | 3 | **6T-3633** | 1 | RING-LOCKING | |
| | | 3 | **186-3735** | 3 | PIN-CONNECTOR (16-GA TO 18-GA) | |
| Y | 6 | 2 | **161-9926** | 1 | SENSOR GP-PRESSURE (TURBOCHARGER INLET) | 301 |
| | 7 | 2 | **163-1201** | 1 | HORN AS (24-VOLT, LOW TONE) | |
| | 8 | 3 | **169-5414** | 1 | CLIP | |
| | 9 | 3 | **174-7875** | 1 | HORN AS (24-VOLT, HIGH TONE) | |
| Y | 10 | 2,3 | **219-6485** | 2 | LAMP GP-FLOOD (24-VOLT) | 279 |
| Y | 11 | 2,3 | **219-6486** | 2 | LAMP GP-FLOOD (24-VOLT) | 280 |
| Y | 12 | 2 | **238-2797** | 1 | LAMP GP-HEAD & SIGNAL (24-VOLT, RH) | 282 |
| Y | 13 | 2 | **246-9871** | 2 | LAMP GP-MARKER (AMBER, 24-VOLT) (SIDE MARKER, RH) | 284 |
| | 14 | 3 | **272-8408** | 1 | HARNESS AS-LIGHTING | |
| | | 3 | **155-2260** | 1 | KIT-CONNECTING PLUG (3-PIN) | |
| | | 3 | **155-2270** | 5 | KIT-CONNECTING PLUG (2-PIN) | |
| | | 3 | **155-2274** | 2 | KIT-CONNECTING PLUG (6-PIN) | |
| | | | | | (EACH PLUG KIT INCLUDES PLUG AS, WEDGE, & INTERFACE SEAL) | |
| | | 3 | **102-8802** | 2 | KIT-RECEPTACLE (2-PIN) | |
| | | 3 | **102-8801** | 1 | KIT-RECEPTACLE (12-PIN) | |
| | | | | | (EACH RECEPTACLE KIT INCLUDES RECEPTACLE AS & WEDGE) | |
| E | | 3 | **119-3662** | | TUBE-HEAT SHRINK (10.85-MM DIA) (26-CM) | |
| E | | 3 | **125-7875** | | TUBE-HEAT SHRINK (7.44-MM DIA) (5-CM) | |
| | 15 | 2 | **272-8409** | 1 | HARNESS AS-WIRING | |
| | | 2 | **155-2260** | 1 | KIT-CONNECTING PLUG (3-PIN) | |
| | | 2 | **155-2270** | 7 | KIT-CONNECTING PLUG (2-PIN) | |
| | | 2 | **155-2274** | 1 | KIT-CONNECTING PLUG (6-PIN) | |
| | | | | | (EACH PLUG KIT INCLUDES PLUG AS, WEDGE, & INTERFACE SEAL) | |
| | | 2 | **102-8802** | 2 | KIT-RECEPTACLE (2-PIN) | |
| | | 2 | **102-8803** | 1 | KIT-RECEPTACLE (3-PIN) | |
| | | | | | (EACH RECEPTACLE KIT INCLUDES RECEPTACLE AS & WEDGE) | |
| | | 2 | **7X-6222** | 1 | PLUG AS-CONNECTOR (24-PIN) | |
| E | | 2 | **119-3662** | | TUBE-HEAT SHRINK (10.85-MM DIA) (26-CM) | |
| E | | 2 | **125-7875** | | TUBE-HEAT SHRINK (7.44-MM DIA) (10-CM) | |
| | 16 | 3 | **276-2332** | 1 | SWITCH AS-TOGGLE (ENGINE LOCKOUT) | |
| | | 3 | **102-8805** | 1 | KIT-RECEPTACLE (6-PIN) | |
| | | | | | (INCLUDES RECEPTACLE AS & WEDGE) | |
| | | 3 | **3E-3383** | 1 | WEDGE-RECEPTACLE LOCK (6-PIN) | |
| | | 3 | **186-3735** | 6 | PIN-CONNECTOR (16-GA TO 18-GA) | |
| D | | 3 | **5P-5677** | | WIRE (18-GA, BLACK) (0.3-M) | |
| | 17 | 2 | **030-9612** | 6 | SCREW-FORMING (10-24X0.5-IN) | |
| | 18 | 2,3 | **130-5300** | 10 | CLIP | |
| Y | 19 | 3 | **238-2798** | 1 | LAMP GP-HEAD & SIGNAL (24-VOLT, LH) | 283 |
| | 20 | 3 | **3E-5169** | 1 | GUARD-SWITCH | |

## *270-1504* **WIRING GP-LIGHTING** *(contd.)* **i03287713**

| NOTE | REF NO | GRAPHIC REF | PART NUMBER | QTY | PART NAME 1 2 3 4 5 6 (PRODUCT LEVEL) | SEE PAGE |
|---|---|---|---|---|---|---|
| | 21 | 2 | **3J-7354** | 1 | SEAL-O-RING | |
| | 22 | 2,3 | **6V-3341** | 2 | GROMMET | |
| | 23 | 2,3 | **4H-2558** | 2 | GROMMET | |
| | 24 | 2,3 | **4P-7581** | 16 | CLIP | |
| | 25 | 2,3 | **7K-1181** | 22 | STRAP-CABLE | |
| | 26 | 3 | **8B-0544** | 1 | SPACER (1-IN THK) | |
| | 27 | 2,3 | **8T-4121** | 20 | WASHER-HARD (11X21X2.5-MM THK) | |
| M | 28 | 2,3 | **8T-4133** | 2 | NUT (M10X1.5-THD) | |
| M | 29 | 2,3 | **8T-4137** | 15 | BOLT (M10X1.5X20-MM) | |
| M | 30 | 2,3 | **8T-4182** | 3 | BOLT (M10X1.5X45-MM) | |
| | 31 | 2,3 | **8Y-8606** | 2 | GROMMET | |
| | 32 | 2,3 | **9C-5344** | 2 | SPACER (10.5X20X18-MM THK) | |
| | 33 | 3 | **9P-0719** | 1 | GROMMET | |

D-ORDER BY THE METER
E-ORDER BY THE CENTIMETER
M-METRIC PART
Y-SEPARATE ILLUSTRATION

REFER TO ALL ILLUSTRATIONS OF THIS GROUP FOR AUXILIARY VIEWS

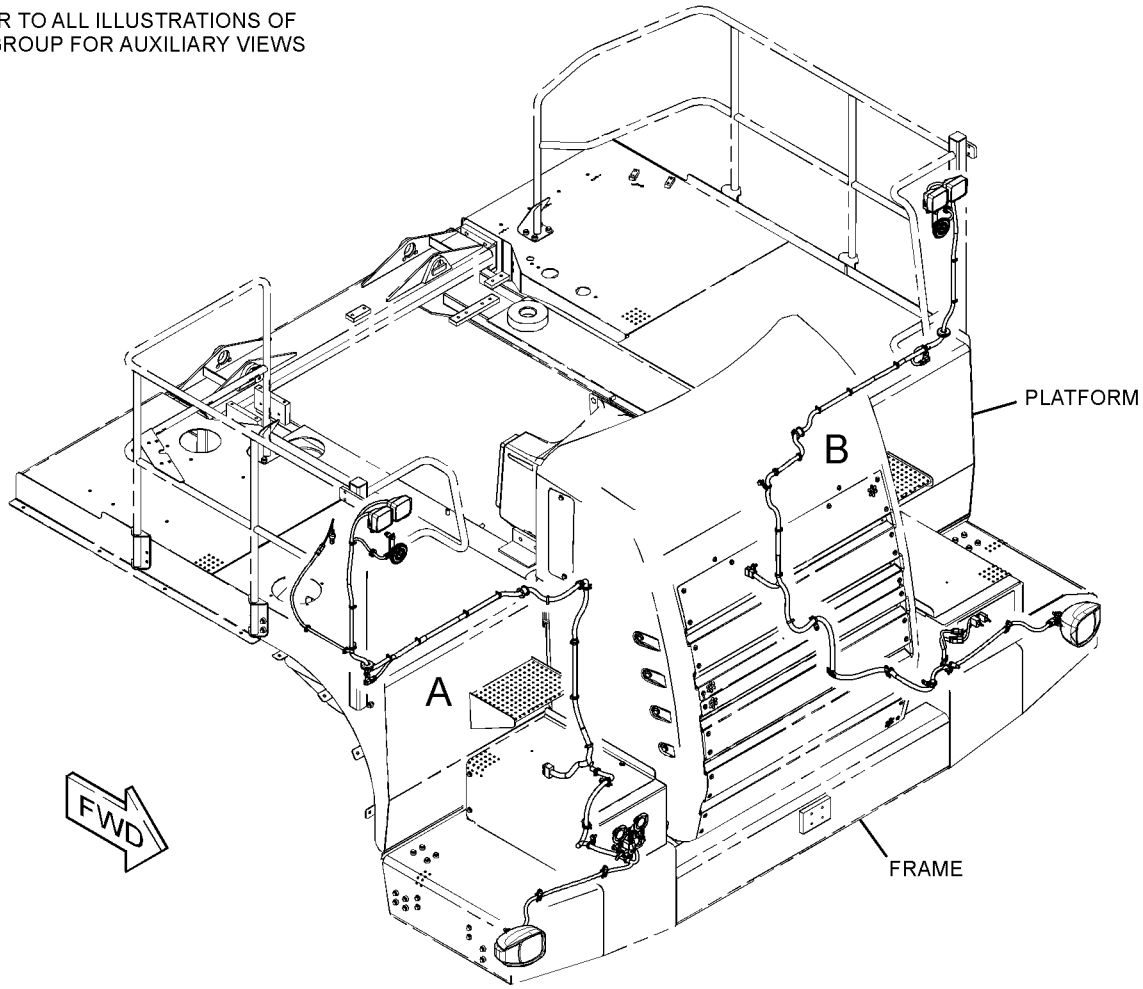


GRAPHIC #1 g01366949

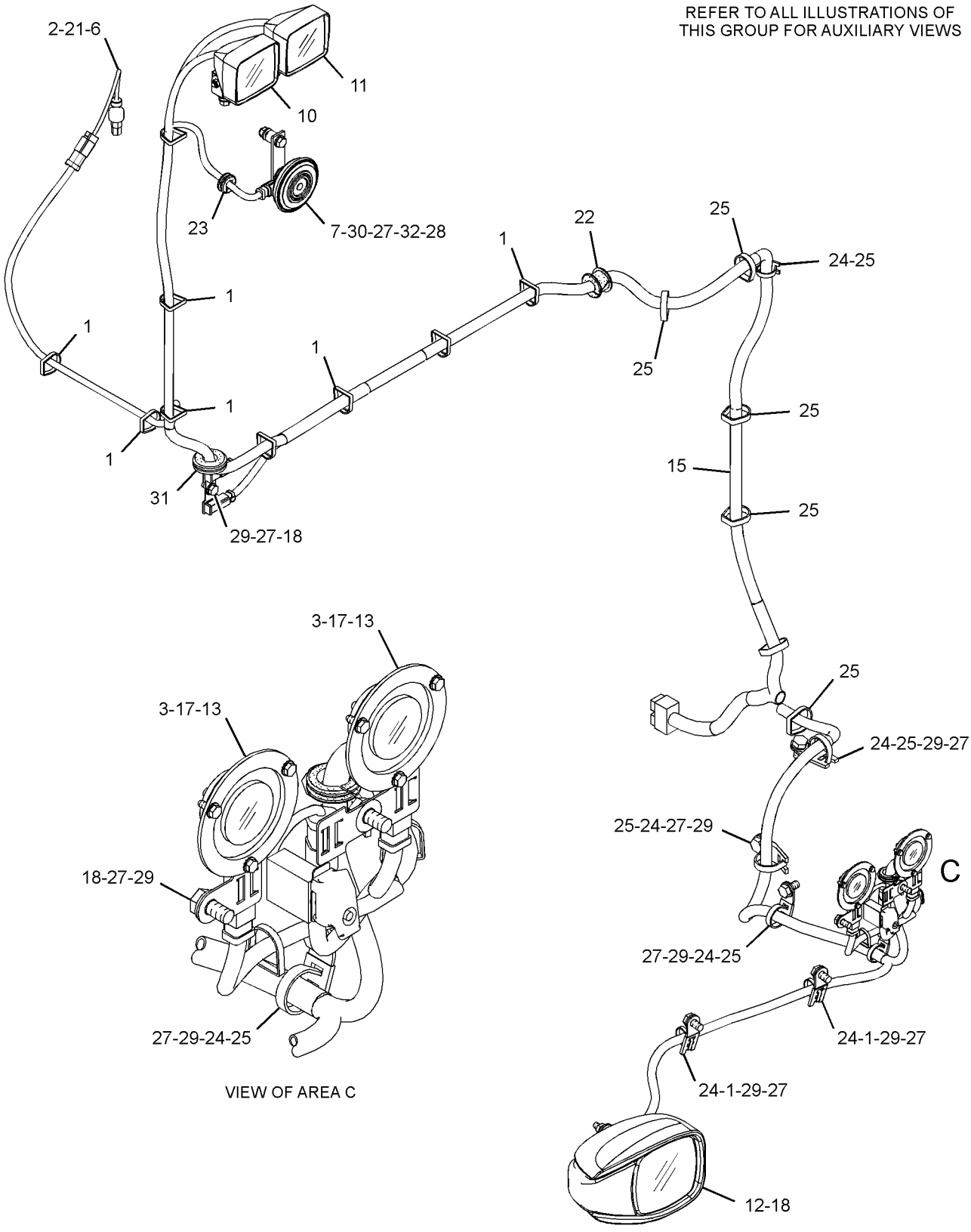


GRAPHIC #2

g01366950

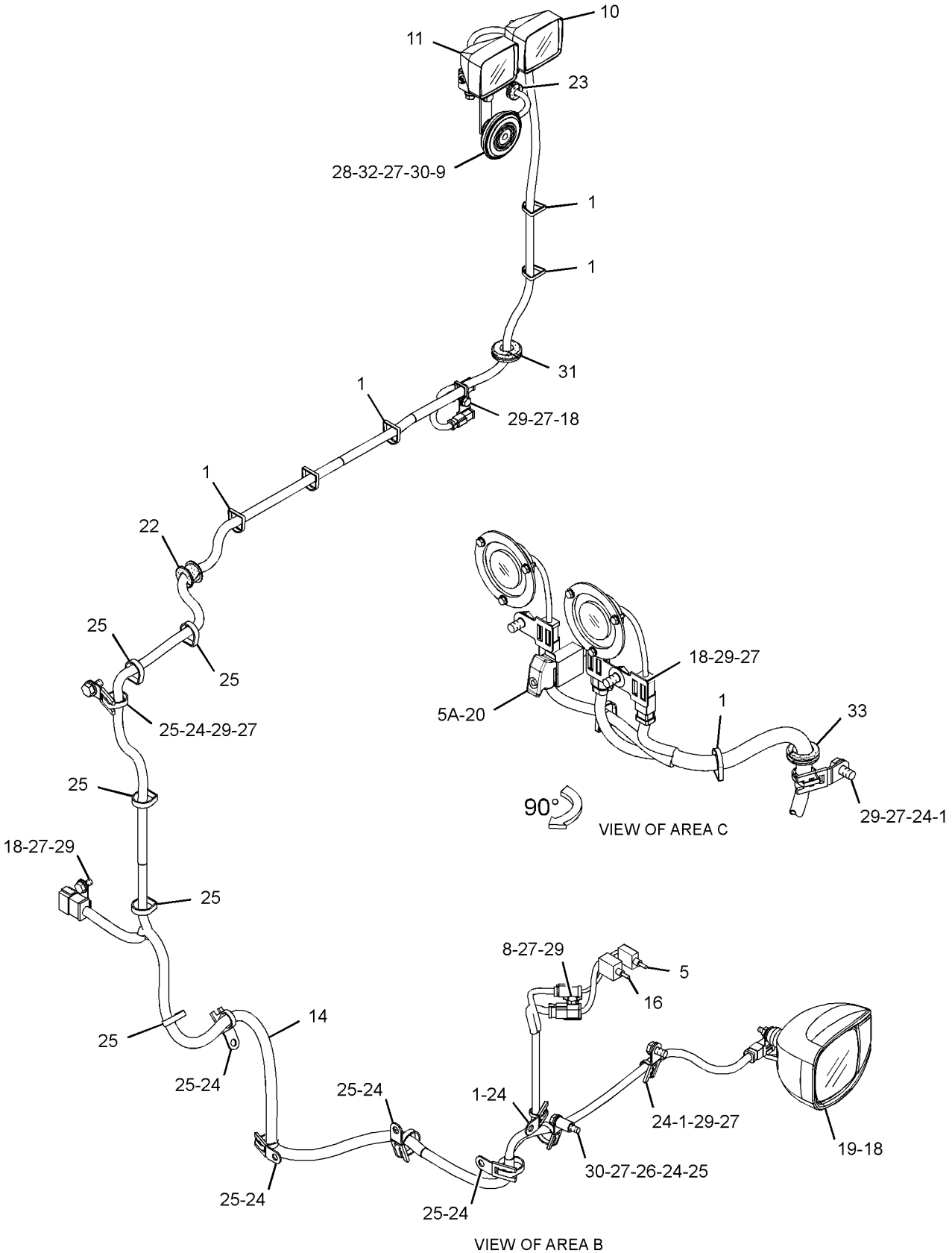


GRAPHIC #3 **<END>** g01366951

# *276-2608* WIRING GP-MIRROR

**S/N: RLB1-UP**
**PART OF 276-3800 MIRROR GP-REAR VIEW**
**AN ATTACHMENT**

**SMCS-1408, 7319** **i02702218**

| NOTE | REF NO | GRAPHIC REF | PART NUMBER | QTY | PART NAME 1 2 3 4 5 6 (PRODUCT LEVEL) | SEE PAGE |
|---|---|---|---|---|---|---|
| | 1 | 1 | **236-4630** | 1 | SWITCH AS-ROCKER (HEATED MIRRORS) | |
| | 2 | 1 | **251-6204** | 1 | FILM-IDENTIFICATION (RELAY) | |
| | 3 | 1 | **276-9466** | 1 | HARNESS AS-WIRING (HEATED MIRROR) | |
| | | 1 | **102-8804** | 1 | KIT-RECEPTACLE (4-PIN) | |
| | | | | | (INCLUDES RECEPTACLE AS & WEDGE) | |
| | | 1 | **128-4123** | 2 | SEAL | |
| | | 1 | **128-5016** | 2 | SEAL-CABLE | |
| | 4 | 1 | **297-0760** | 1 | RELAY AS (24-VDC, 20-AMPERE) (HEATED MIRROR TIMER) | |
| M | 5 | 1 | **6V-8225** | 1 | NUT (M6X1-THD) | |
| | 6 | 1 | **9X-8256** | 1 | WASHER (6.6X12X2-MM THK) | |

M-METRIC PART

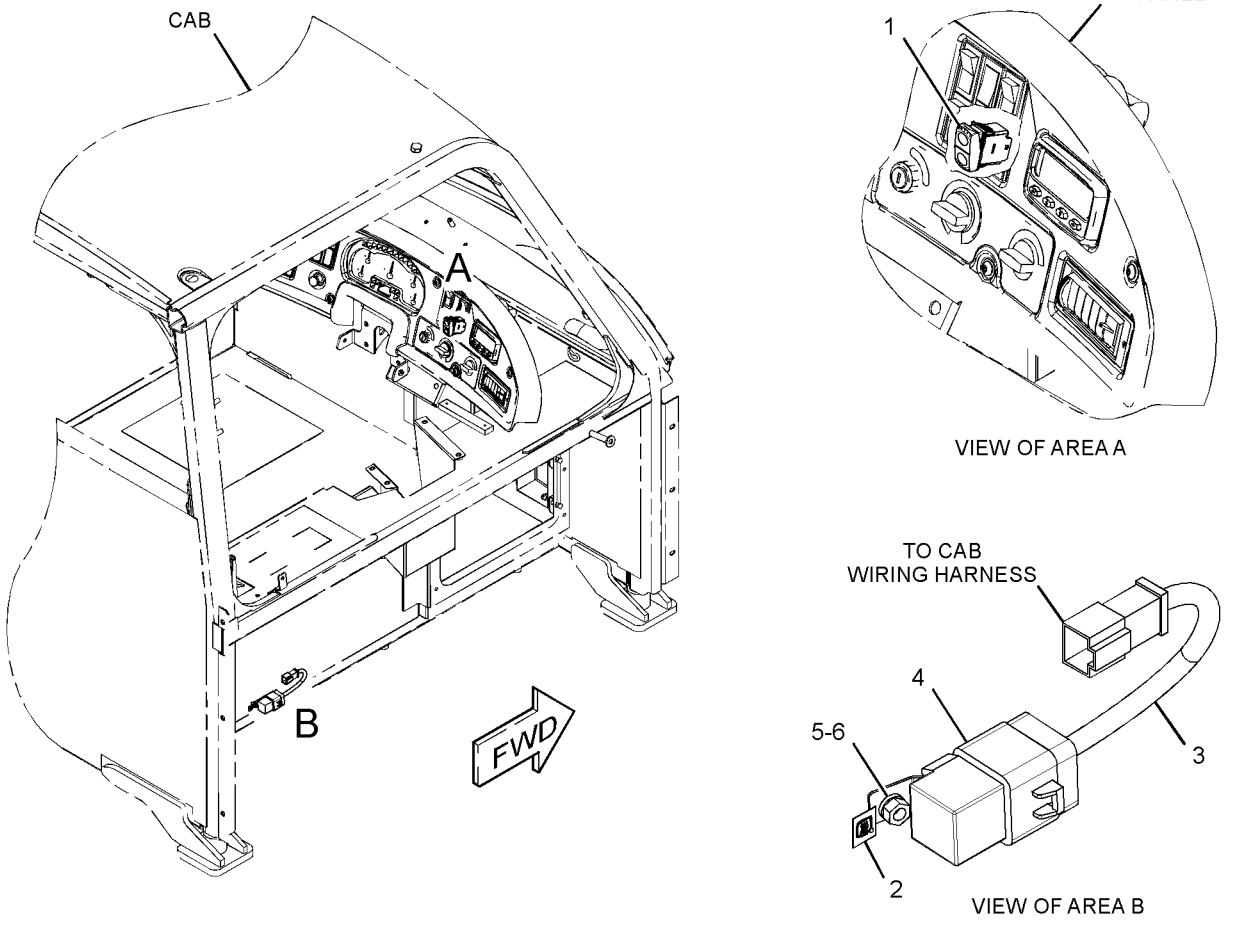


GRAPHIC #1 **<END>** g01365342

# ELECTRICAL AND STARTING SYSTEM

## *270-1505* WIRING GP-RADIO

**S/N: RLB1-UP**

**PART OF 270-1500 ELECTRICAL AR**

**SMCS-1408, 7338** **i02618721**

| NOTE | REF NO | GRAPHIC REF | PART NUMBER | QTY | PART NAME 1 2 3 4 5 6 (PRODUCT LEVEL) | SEE PAGE |
|---|---|---|---|---|---|---|
| | 1 | 1 | **3S-2093** | 1 | STRAP-CABLE | |
| | 2 | 1 | **9W-3072** | 1 | ANTENNA AS | |
| | 3 | 1 | **117-2932** | 1 | CABLE AS-COAXIAL | |
| | 4 | 1 | **279-7299** | 1 | PLATE | |
| | 5 | 1 | **7K-1181** | 11 | STRAP-CABLE | |

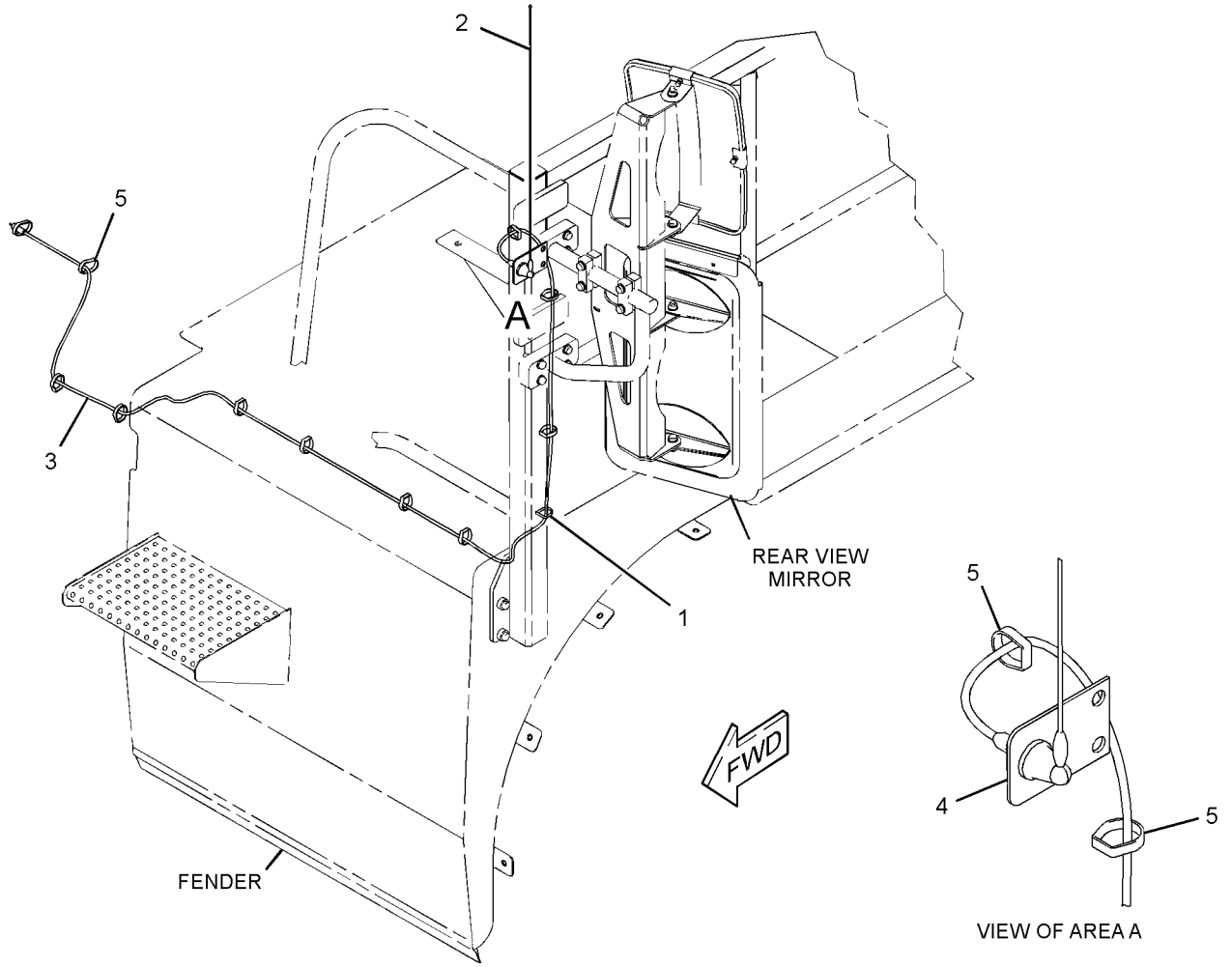


GRAPHIC #1 **<END>** g01333511

# *270-1509* WIRING GP-TRACTION CONTROL

**S/N: RLB1-UP**
**PART OF 277-7540 CONTROL AR-TRACTION**
**AN ATTACHMENT**

**SMCS-1408, 4801** **i02822131**

| NOTE | REF NO | GRAPHIC REF | PART NUMBER | QTY | PART NAME 1 2 3 4 5 6 (PRODUCT LEVEL) | SEE PAGE |
|---|---|---|---|---|---|---|
| | 1 | 1 | **3S-2093** | 8 | STRAP-CABLE | |
| | 2 | 1 | **204-0761** | 1 | SENSOR GP-SPEED (TCS, RIGHT WHEEL) | |
| | 2A | 1 | **204-0761** | 1 | SENSOR GP-SPEED (TCS, LEFT WHEEL) | |
| | | | | | (EACH INCLUDES) | |
| | | 1 | **230-4014** | 1 | RECEPTACLE AS-CONNECTOR (3-PIN) | |
| | | 1 | **171-5349** | 1 | STRAP-MARKER | |
| E | | 1 | **9X-1386** | | SLEEVE (35-CM) | |
| | | 1 | **186-3735** | 3 | PIN-CONNECTOR (16-GA TO 18-GA) | |
| | 3 | 1 | **235-0078** | 1 | HARNESS AS-SOLENOID | |
| | | 1 | **155-2272** | 1 | PLUG AS-CONNECTOR (4-PIN) | |
| | | 1 | **102-8804** | 1 | KIT-RECEPTACLE (4-PIN) | |
| | | | | | (INCLUDES RECEPTACLE AS & WEDGE) | |
| | | 1 | **155-2260** | 1 | KIT-CONNECTING PLUG (3-PIN) | |
| | | | | | (INCLUDES PLUG AS, WEDGE, & INTERFACE SEAL) | |
| | 4 | 1 | **272-8406** | 1 | HARNESS AS-SENSOR | |
| | | 1 | **102-8805** | 1 | KIT-RECEPTACLE (6-PIN) | |
| | | | | | (INCLUDES RECEPTACLE AS & WEDGE) | |
| | | 1 | **230-4013** | 2 | PLUG AS-CONNECTOR (3-PIN) | |
| | 5 | 1 | **130-5300** | 2 | CLIP | |
| | 6 | 1 | **149-9129** | 1 | CLIP | |
| | 7 | 1 | **3K-0360** | 2 | SEAL-O-RING | |
| | 8 | 1 | **4P-7581** | 8 | CLIP | |
| | 9 | 1 | **6D-3479** | 2 | CLIP | |
| | 10 | 1 | **8T-4121** | 18 | WASHER-HARD (11X21X2.5-MM THK) | |
| M | 11 | 1 | **8T-4133** | 8 | NUT (M10X1.5-THD) | |
| M | 12 | 1 | **8T-4136** | 8 | BOLT (M10X1.5X25-MM) | |
| M | 13 | 1 | **8T-4137** | 2 | BOLT (M10X1.5X20-MM) | |
| | 14 | 1 | **174-5907** | 8 | CLIP | |

E-ORDER BY THE CENTIMETER
M-METRIC PART

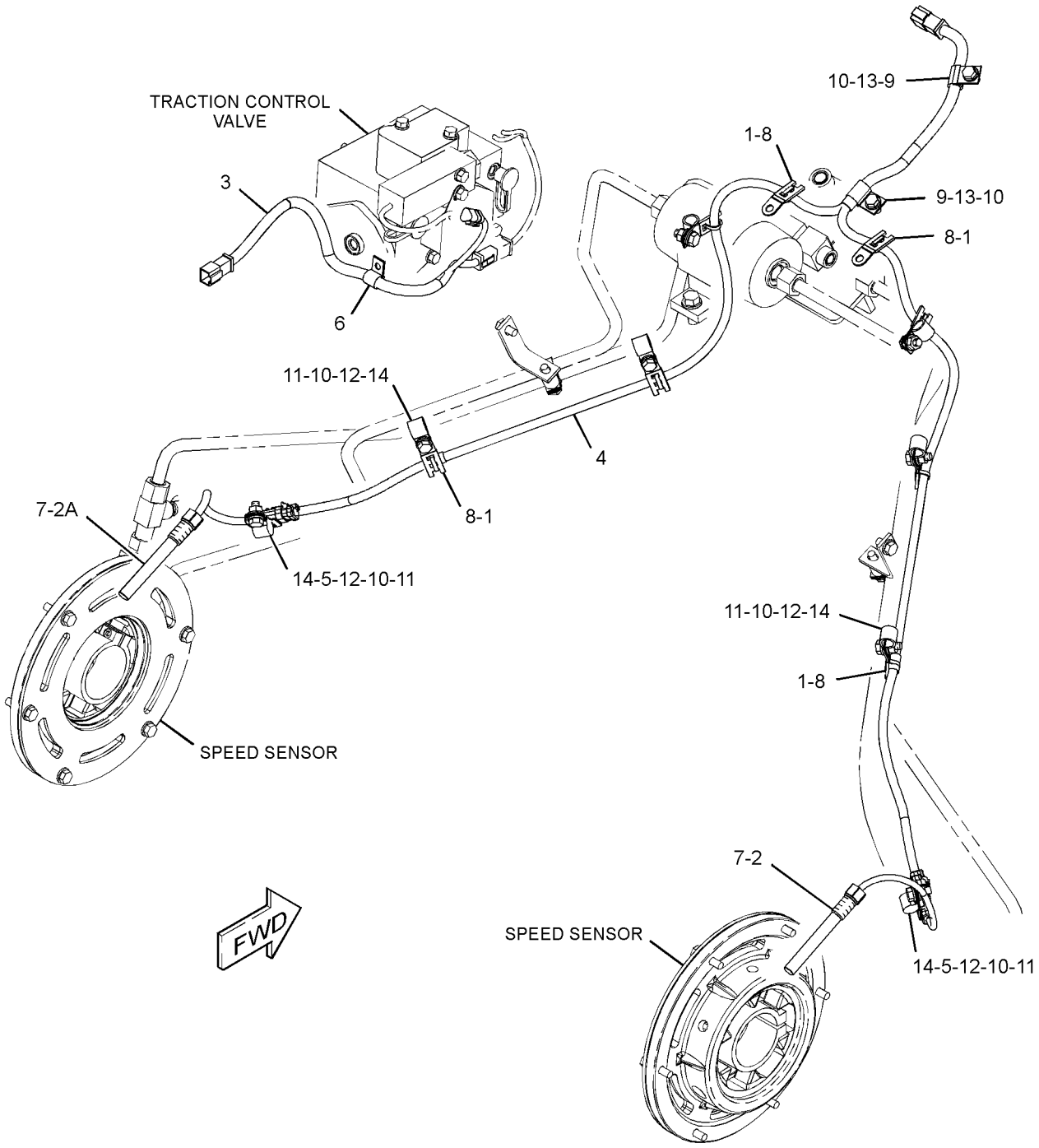


GRAPHIC #1 **<END>** g01316549

# 257-4183 WIRING GP-UNIT INJECTOR

**S/N: RLB1-UP**

**FOR USE AS SERVICE REPAIR FOR INJECTOR HARNESSES WITH THE 7E-6513 CONNECTOR**

**FIELD INSTALLATION**

**SMCS-1290, 1408** **i02231604**

| NOTE | PART NUMBER | QTY | PART NAME 1 2 3 4 5 6 (PRODUCT LEVEL) | SEE PAGE |
|---|---|---|---|---|
| | | | (NO SERVICED PARTS) | |

**<END>**

# 9W-4119 ACTUATOR GP-ROTARY

**S/N: NDG1-UP**

**PART OF 294-5557 VALVE GP-TRANSMISSION CONTROL**

**SMCS-3166** **i02478007**

| NOTE | REF NO | GRAPHIC REF | PART NUMBER | QTY | PART NAME 1 2 3 4 5 6 (PRODUCT LEVEL) | SEE PAGE |
|---|---|---|---|---|---|---|
| C | 1 | 1 | **8E-8440** | 1 | BODY AS-ACTUATOR | |
| C | 1A | 1 | **8E-8439** | 2 | DOWEL | |
| | 1B | 1 | **5P-9400** | 1 | BEARING-ROLLER | |
| | 2 | 1 | **9W-4118** | 1 | ROTOR AS-ACTUATOR | |
| | 3 | 1 | **9G-9440** | 1 | VANE-ACTUATOR | |
| | 4 | 1 | **5D-4697** | 2 | BOLT-12 POINT HEAD (1/4-20X1-IN) | |
| | 5 | 1 | **9W-4116** | 1 | COVER AS | |
| | 5A | 1 | **5P-9400** | 1 | BEARING-ROLLER | |
| | 6 | 1 | **1B-9575** | 2 | BOLT (5/16-18X1.56-IN) | |
| | 7 | 1 | **9W-6964** | 1 | VALVE AS-EXHAUST (UPSHIFT PRESSURE SIGNAL) | |
| | | 1 | **8N-4173** | 1 | DOWEL | |
| | | 1 | **3F-3152** | 1 | BALL | |
| | 7A | 1 | **9W-6964** | 1 | VALVE AS-EXHAUST (DOWNSHIFT PRESSURE SIGNAL) | |
| | | 1 | **8N-4173** | 1 | DOWEL | |
| | | 1 | **3F-3152** | 1 | BALL | |
| | 8 | 1 | **1J-9671** | 2 | SEAL-O-RING | |
| C | 9 | 1 | **9S-6155** | 2 | PLUG AS | |
| | | | | | (EACH INCLUDES) | |
| | | 1 | **6J-4694** | 1 | PLUG | |
| | 9A | 1 | **4H-8380** | 1 | PIN-SPRING | |
| | 10 | 1 | **9M-1974** | 2 | WASHER-HARD (8.8X16X2-MM THK) | |

C-CHANGE FROM PREVIOUS TYPE

**9W-4119 ACTUATOR GP-ROTARY** *(contd. )* **i02478007**

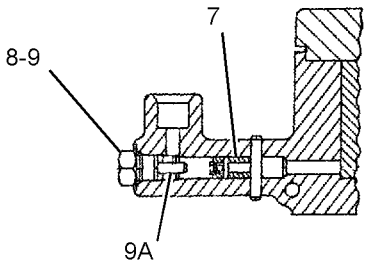


SECTION B-B

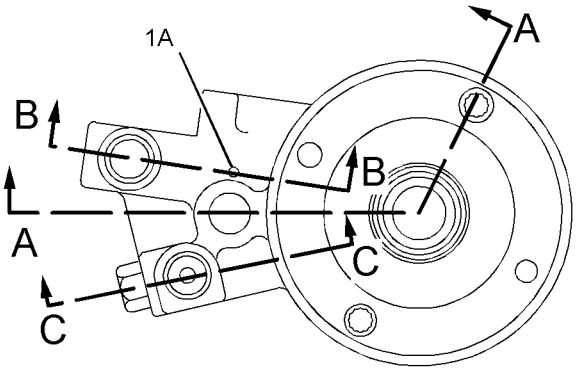


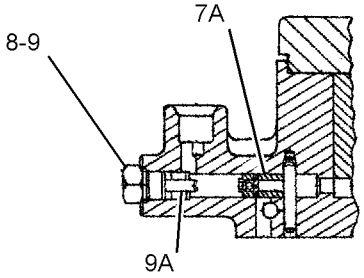


SECTION C-C

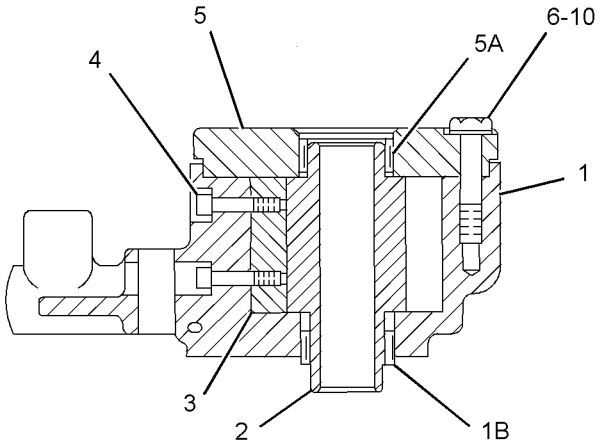


SECTION A-A

GRAPHIC #1 **<END>** g01237623

## *243-0023* AXLE & MOUNTING GP

**S/N: RLB1-UP**

**PART OF 270-5370 POWER TRAIN AR**

**SMCS-3259** **i02117360**

| NOTE | REF NO | GRAPHIC REF | PART NUMBER | QTY | PART NAME 1 2 3 4 5 6 (PRODUCT LEVEL) | SEE PAGE |
|---|---|---|---|---|---|---|
| | 1 | 1 | **7D-6705** | 2 | RING-RETAINING | |
| | 2 | 1 | **237-3812** | 1 | SHAFT-AXLE (LH) | |
| | 3 | 1 | **237-3816** | 1 | SHAFT-AXLE (RH) | |

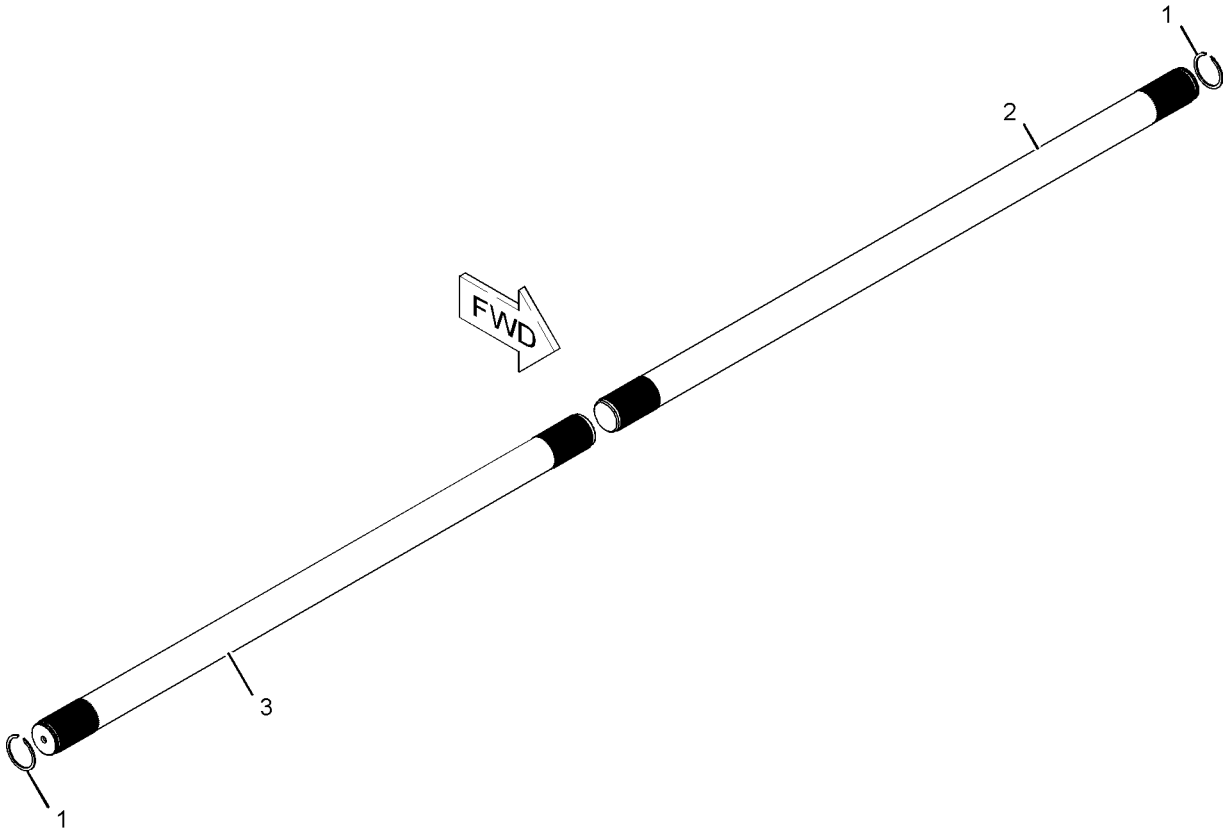


GRAPHIC #1 **<END>** g01079496

# *145-8280* CASE GP-TRANSMISSION

**S/N: NDG1-UP**

**PART OF 294-5560 TRANSMISSION AR**

**SMCS-3064** **i02672382**

| NOTE | REF NO | GRAPHIC REF | PART NUMBER | QTY | PART NAME 1 2 3 4 5 6 (PRODUCT LEVEL) | SEE PAGE |
|---|---|---|---|---|---|---|
| | 1 | 1 | **7G-1588** | 1 | CASE AS | |
| | 2 | 1 | **7G-6373** | 1 | GASKET | |
| | 3 | 1 | **9G-9915** | 1 | COVER AS | |
| | | 1 | **7M-7794** | 10 | STUD-WELD (9.4X21.5X25.5-MM) | |
| | 4 | 1 | **0S-0509** | 22 | BOLT (3/8-16X0.75-IN) | |
| | 5 | 1 | **7G-1594** | 1 | GASKET | |
| | 6 | 1 | **7G-1593** | 1 | COVER | |
| | 7 | 1 | **9S-8752** | 10 | NUT-FULL (3/8-16-THD) | |
| | 8 | 1 | **3J-1907** | 1 | SEAL-O-RING | |
| | 9 | 1 | **6V-3965** | 1 | FITTING (QUICK DISCONNECT) | |
| | 10 | 1 | **6V-0852** | 1 | CAP-DUST | |
| | 11 | 1 | **3D-2824** | 1 | SEAL-O-RING | |
| | 12 | 1 | **9S-4183** | 1 | PLUG-O-RING | |
| | 13 | 1 | **9G-9928** | 2 | FLANGE-ONE PIECE | |
| | 14 | 1 | **2H-3927** | 2 | SEAL-O-RING | |
| | 15 | 1 | **8W-5179** | 1 | ADAPTER | |
| | 16 | 1 | **8M-5661** | 1 | SEAL-O-RING | |
| | 17 | 1 | **1P-4579** | 4 | FLANGE-HALF | |
| | 18 | 1 | **2H-3932** | 1 | SEAL-O-RING | |
| | 19 | 1 | **9M-4218** | 1 | SEAL-O-RING | |
| | 20 | 1 | **9M-7002** | 1 | SEAL-O-RING | |
| | 21 | 1 | **7M-8485** | 1 | SEAL-O-RING | |
| | 22 | 1 | **5P-4483** | 1 | PLUG-O-RING | |
| | 23 | 1 | **1B-2886** | 4 | BOLT (1/2-13X3.75-IN) | |
| | 24 | 1 | **5P-8245** | 8 | WASHER-HARD (13.5X25.5X3-MM THK) | |
| | 25 | 1 | **9S-1366** | 4 | BOLT (1/2-13X2.5-IN) | |

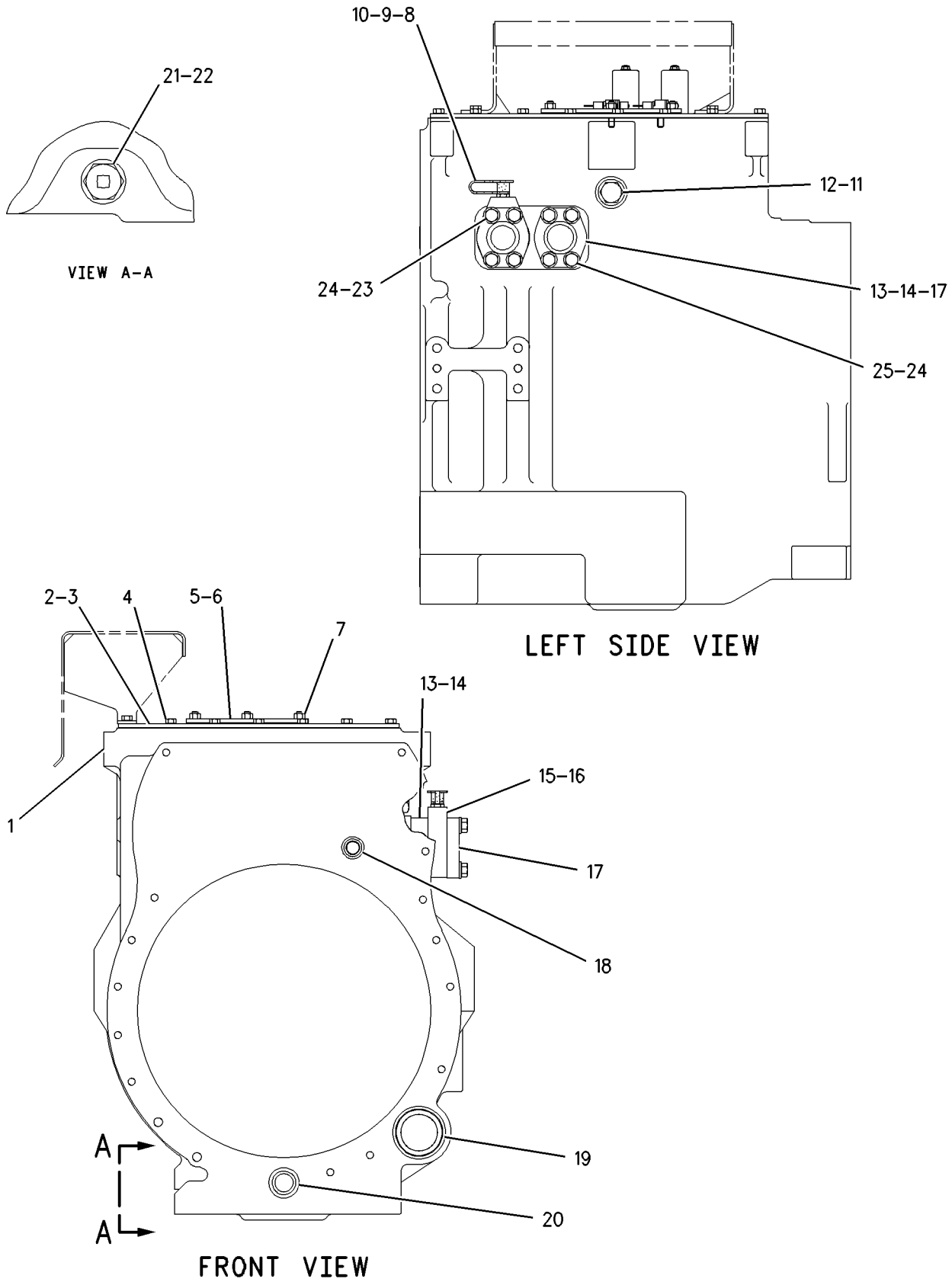


GRAPHIC #1 **<END>** g00730390

# *277-7540* CONTROL AR-TRACTION

**S/N: RLB1-UP**

**AN ATTACHMENT**

**SMCS-3288, 4294, 4801** **i03288482**

| NOTE | PART NUMBER | QTY | PART NAME 1 2 3 4 5 6 (PRODUCT LEVEL) | SEE PAGE |
|---|---|---|---|---|
| Y | *270-1756* | 1 | LINES GP-ATTACHMENT (TRACTION CONTROL SYSTEM) | 650 |
| Y | *279-9017* | 2 | SENSOR GP-SPEED | 317 |
| Y | *259-8902* | 1 | SWITCH GP-ROCKER | 339 |
| Y | *270-1509* | 1 | WIRING GP-TRACTION CONTROL | 383 |

Y-SEPARATE ILLUSTRATION

**<END>**

# POWER TRAIN

## *294-5559* CONTROL GP-TRANSMISSION HYD

**S/N: NDG1-UP**

**PART OF 294-5560 TRANSMISSION AR**

**SMCS-3167** **i03206151**

| NOTE | REF NO | GRAPHIC REF | PART NUMBER | QTY | PART NAME 1 2 3 4 5 6 (PRODUCT LEVEL) | SEE PAGE |
|---|---|---|---|---|---|---|
| | 1 | 1 | **2S-1457** | 1 | SLEEVE | |
| | 2 | 2 | **3D-4197** | 1 | COVER | |
| | 3 | 2 | **3T-0918** | 2 | SLEEVE | |
| | 4 | 2 | **3T-0919** | 1 | SLEEVE | |
| | 5 | 2 | **6T-5132** | 1 | COVER | |
| | 6 | 2 | **6T-5133** | 1 | GASKET | |
| | 7 | 1 | **6V-0852** | 1 | CAP-DUST | |
| | 8 | 2 | *315-9842* | 1 | PLUG AS | |
| | | 2 | **6Y-0789** | 1 | PLUG | |
| | | 2 | **228-4947** | 1 | SEAL-O-RING | |
| | | 2 | **238-5082** | 1 | SEAL-O-RING | |
| | 9 | 2 | **6Y-9850** | 1 | COUPLING AS | |
| | 10 | 1 | **7G-1595** | 2 | SLEEVE | |
| | 11 | 2 | **7G-9473** | 1 | SLEEVE | |
| | 12 | 2 | **7S-5757** | 1 | RING-RETAINING | |
| | 13 | 2 | **9G-9412** | 1 | ADAPTER | |
| | 14 | 2 | **100-3998** | 1 | MANIFOLD AS | |
| | | 2 | **5P-7661** | 1 | BEARING AS-NEEDLE | |
| | 15 | 2 | **120-9288** | 1 | HARNESS AS-TRANSMISSION | |
| | 16 | 2 | **302-3813** | 2 | VALVE GP-SOLENOID (UPSHIFT, DOWNSHIFT, LCL) | |
| | | | | | (EACH INCLUDES) | |
| | | 2 | **8C-9987** | 1 | WASHER (8.3X28X2.5-MM THK) | |
| | | 2 | **100-4083** | 1 | KIT-SEAL | |
| | | | | | (INCLUDES SEAL-O-RING & RING BACKUPS) | |
| | | 2 | **111-0343** | 1 | LOCKNUT (5/16-18-THD) | |
| | | 2 | **218-9894** | 1 | COIL AS | |
| | | 2 | **102-8802** | 1 | KIT-RECEPTACLE (2-PIN) | |
| | | | | | (INCLUDES RECEPTACLE AS & WEDGE) | |
| | | 2 | **186-3735** | 2 | PIN-CONNECTOR (16-GA TO 18-GA) | |
| Y | 17 | 2 | **216-0280** | 1 | SENSOR GP-POSITION (TRANSMISSION SPEED) | 299 |
| | 18 | 2 | **238-1034** | 1 | GUARD | |
| Y | 19 | 2 | **294-5557** | 1 | VALVE GP-TRANSMISSION CONTROL | 467 |
| | 20 | 2 | **0L-1351** | 2 | BOLT (3/8-16X0.875-IN) | |
| | 21 | 1 | **0L-2070** | 2 | BOLT (3/8-16X2.25-IN) | |
| | 22 | 2 | **0S-0509** | 2 | BOLT (3/8-16X0.75-IN) | |
| | 23 | 2 | **0S-1594** | 6 | BOLT (3/8-16X1-IN) | |
| | 24 | 2 | **0S-1617** | 6 | BOLT (5/16-18X0.75-IN) | |
| | 25 | 2 | **0S-1619** | 2 | BOLT (3/8-16X3-IN) | |
| | 26 | 2 | **130-5300** | 2 | CLIP | |
| | 27 | 2 | **1A-2029** | 2 | BOLT (3/8-16X1.125-IN) | |
| | 28 | 2 | **2S-6160** | 4 | WASHER-HARD (10.2X32X5-MM THK) | |
| | 29 | 1 | **5P-6718** | 5 | SEAL-O-RING | |
| | 30 | 2 | **5M-2894** | 6 | WASHER-HARD (10.2X18.5X2.5-MM THK) | |
| | 31 | 1 | *315-9835* | 1 | ADAPTER AS | |
| | | 1 | **6V-0484** | 1 | ADAPTER-O-RING | |
| | | 1 | **214-7568** | 1 | SEAL-O-RING | |
| | 32 | 1 | *164-5567* | 1 | COUPLER AS-QUICK DISCONNECT | |
| | | 1 | **6V-3965** | 1 | FITTING (QUICK DISCONNECT) | |
| | | 1 | **214-7568** | 1 | SEAL-O-RING | |
| | 33 | 2 | **6V-4365** | 6 | SEAL-O-RING | |
| | 34 | 2 | **5P-8118** | 2 | SEAL-O-RING | |
| | 35 | 1 | **3P-0647** | 2 | SEAL-O-RING | |
| | 36 | 2 | **6V-3683** | 1 | SEAL-O-RING | |
| | 37 | 2 | **3P-1155** | 1 | SEAL-O-RING | |
| | 38 | 2 | **061-8561** | 1 | SEAL-O-RING | |
| | 39 | 1 | **5P-8210** | 4 | SEAL-O-RING | |

## *294-5559* **CONTROL GP-TRANSMISSION HYD** *(contd.)* **i03206151**

| NOTE | REF NO | GRAPHIC REF | PART NUMBER | QTY | PART NAME 1 2 3 4 5 6 (PRODUCT LEVEL) | SEE PAGE |
|---|---|---|---|---|---|---|
| | 40 | 2 | **8S-5575** | 1 | SEAL-LIP TYPE | |
| | 41 | 2 | **8T-4896** | 2 | WASHER-HARD (10.2X18.5X2.5-MM THK) | |
| | 42 | 2 | **9F-2773** | 4 | BOLT (3/8-16X8.5-IN) | |
| | 43 | 1,2 | *321-8641* | 10 | PLUG AS | |
| | | | | | (EACH INCLUDES) | |
| | | 1,2 | **9S-8001** | 1 | PLUG-O-RING | |
| | | 1,2 | **238-5078** | 1 | SEAL-O-RING | |
| | 44 | 1 | *183-3407* | 1 | PLUG AS | |
| | | 1 | **9S-8004** | 1 | PLUG-O-RING | |
| | | 1 | **214-7568** | 1 | SEAL-O-RING | |
| | 45 | 2 | *307-2673* | 5 | PLUG AS | |
| | | | | | (EACH INCLUDES) | |
| | | 2 | **9S-8005** | 1 | PLUG-O-RING | |
| | | 2 | **238-5080** | 1 | SEAL-O-RING | |

Y-SEPARATE ILLUSTRATION

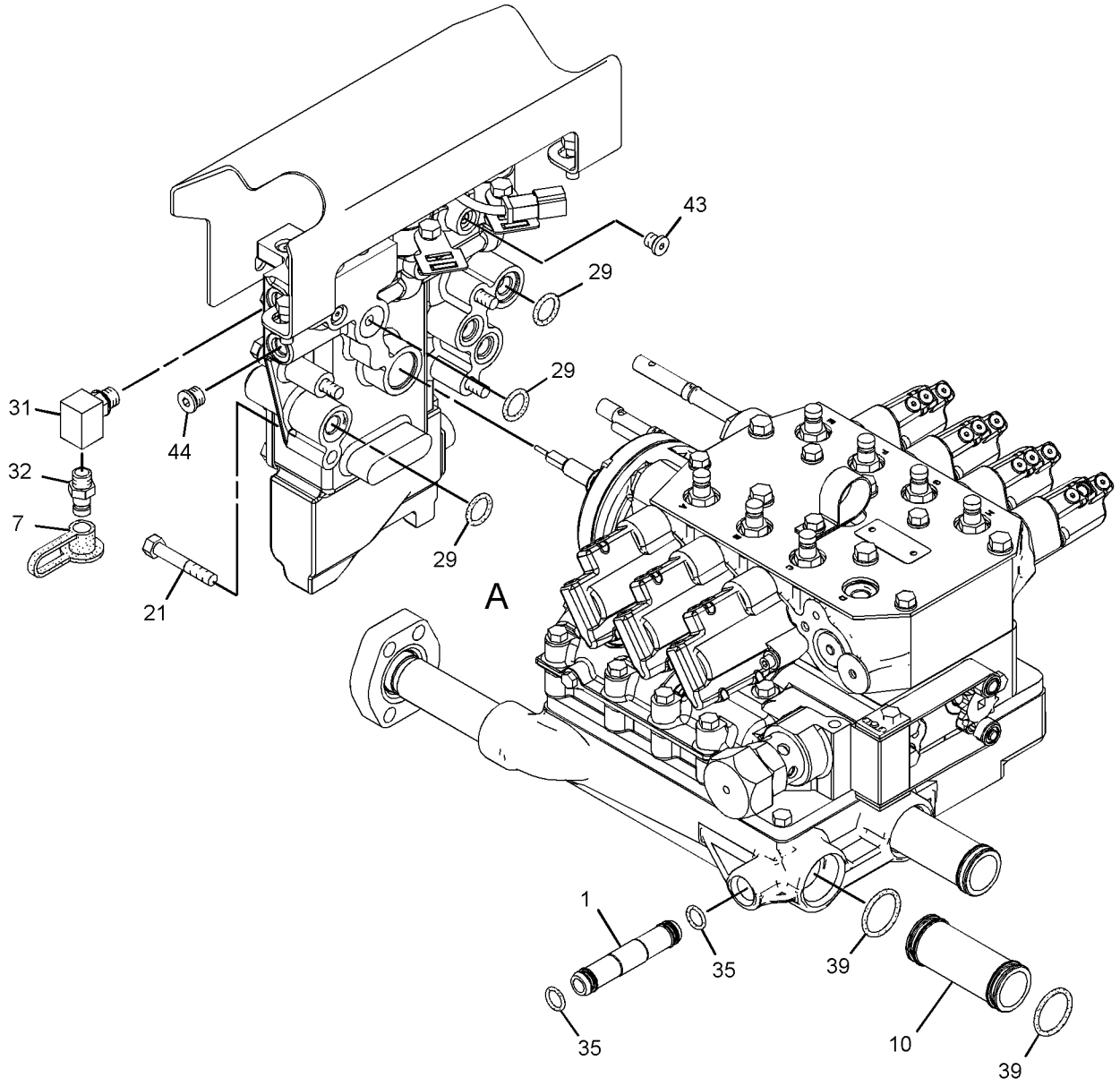


GRAPHIC #1 g01637034

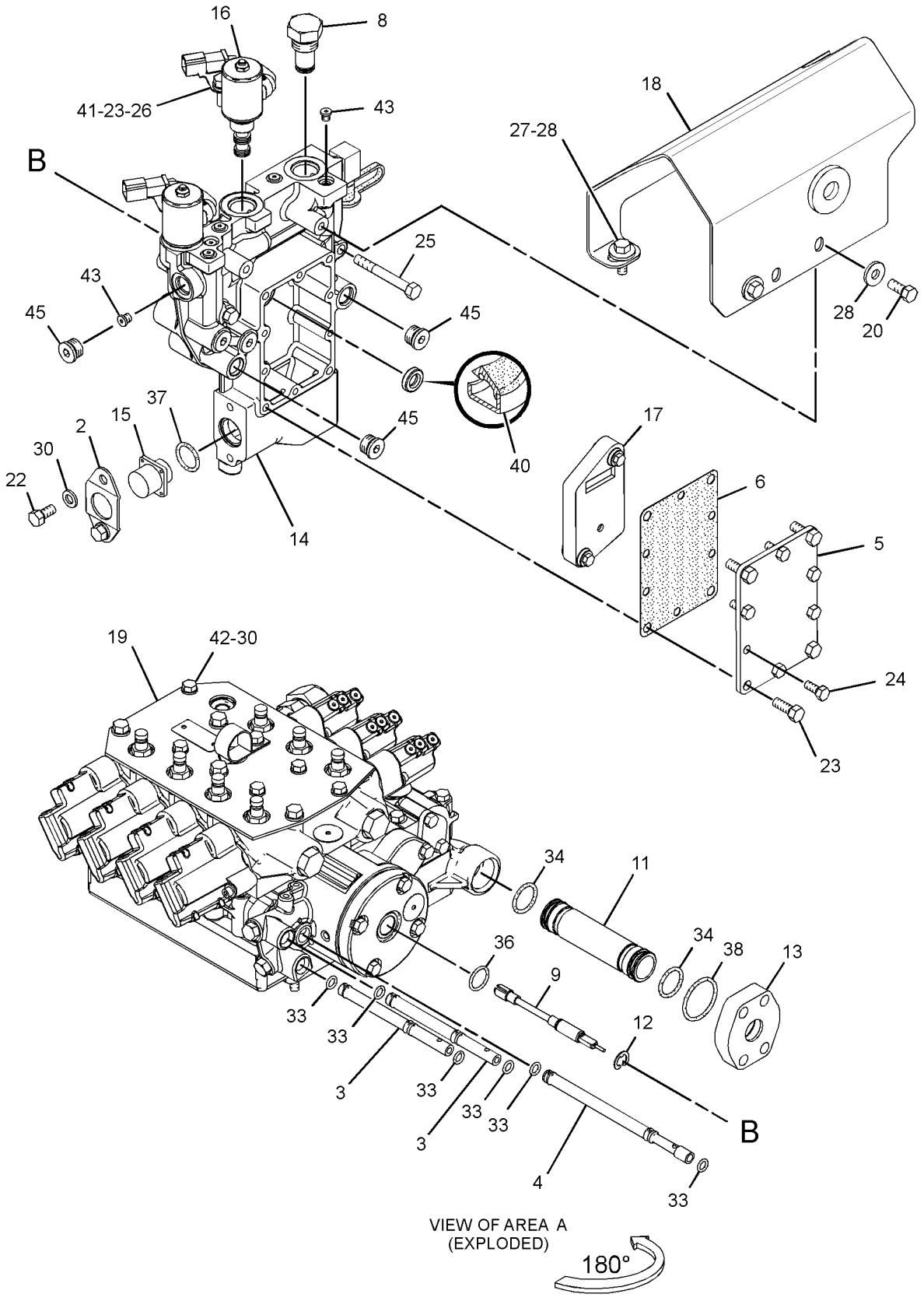


GRAPHIC #2 **<END>** g01637035

# *145-8282* COVER GP-SHIPPING

**S/N: NDG1-UP**

**PART OF 294-5560 TRANSMISSION AR**

**SMCS-3064** **i01354501**

| NOTE | REF NO | GRAPHIC REF | PART NUMBER | QTY | PART NAME 1 2 3 4 5 6 (PRODUCT LEVEL) | SEE PAGE |
|---|---|---|---|---|---|---|
| | 1 | 1 | **1S-3725** | 1 | COVER | |
| | 2 | 1 | **8E-7366** | 1 | GASKET | |
| | 3 | 1 | **0T-0768** | 4 | BOLT (7/16-14X1.75-IN) | |
| | 4 | 1 | **0T-0102** | 2 | BOLT (3/8-16X0.625-IN) | |
| | 5 | 1 | **8E-5287** | 1 | STRAP | |
| | 6 | 1 | **7J-0402** | 1 | COVER | |
| | 7 | 1 | **8E-7367** | 1 | GASKET | |
| | 8 | 1 | **0S-1620** | 4 | BOLT (1/2-13X0.75-IN) | |
| | 9 | 1 | **2J-2668** | 2 | COVER | |
| | 10 | 1 | **4J-0524** | 2 | SEAL-O-RING | |
| | 11 | 1 | **2B-0858** | 1 | PLUG-PIPE | |

*145 - 8282* **COVER GP - SHIPPING** *(contd. )* **i01354501**

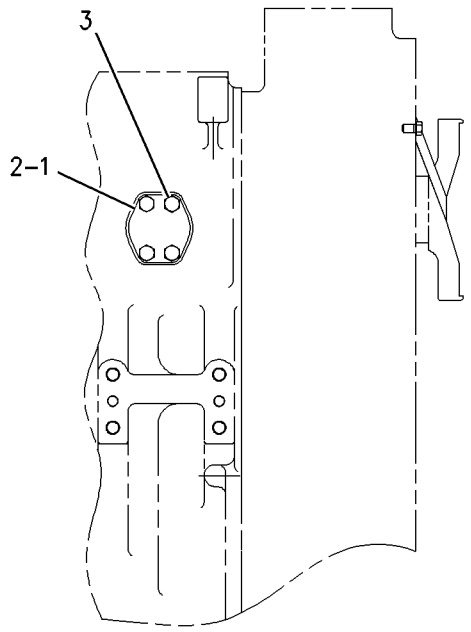


RIGHT SIDE VIEW

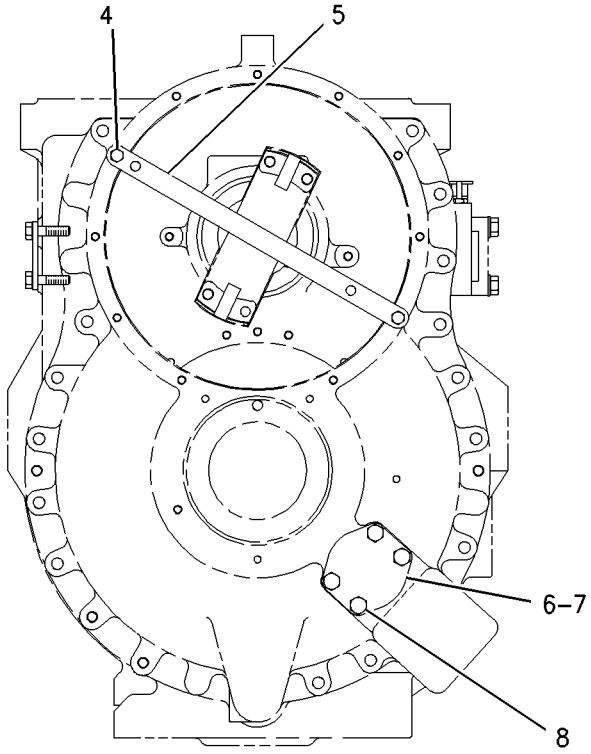


FRONT VIEW

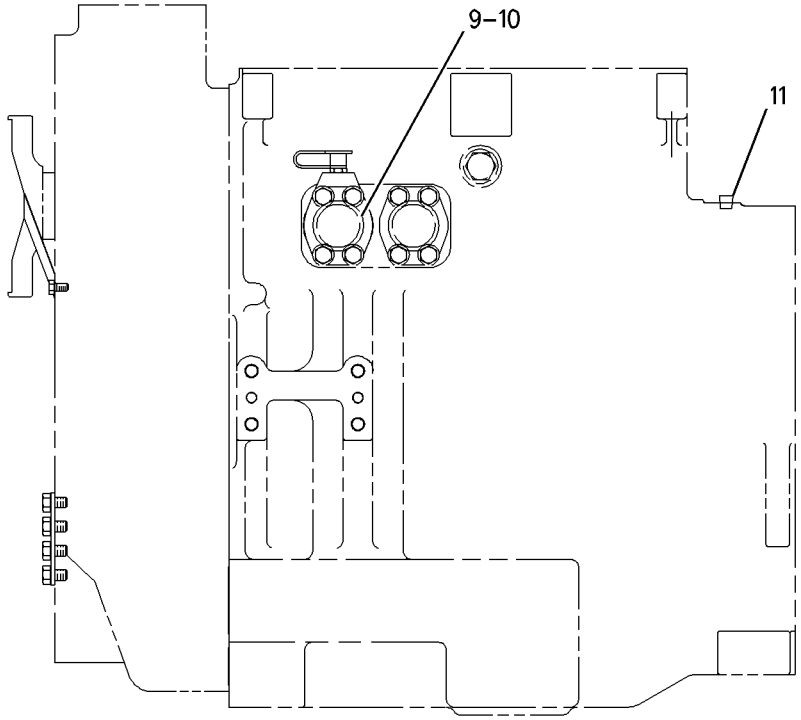


LEFT SIDE VIEW

GRAPHIC #1 **<END>** g00730157

# *267-1645* DIFFERENTIAL & BEVEL GEAR GP

**S/N: RLB1-UP**

**FIELD REPLACEMENT FOR 270-5383—PAGE 399**

**SMCS-3256, 3258, 3281** **i02829138**

| NOTE | REF NO | GRAPHIC REF | PART NUMBER | QTY | PART NAME 1 2 3 4 5 6 (PRODUCT LEVEL) | SEE PAGE |
|---|---|---|---|---|---|---|
| Y | 1 | 1 | *270-5383* | 1 | DIFFERENTIAL & BEVEL GEAR GP | 399 |

Y-SEPARATE ILLUSTRATION

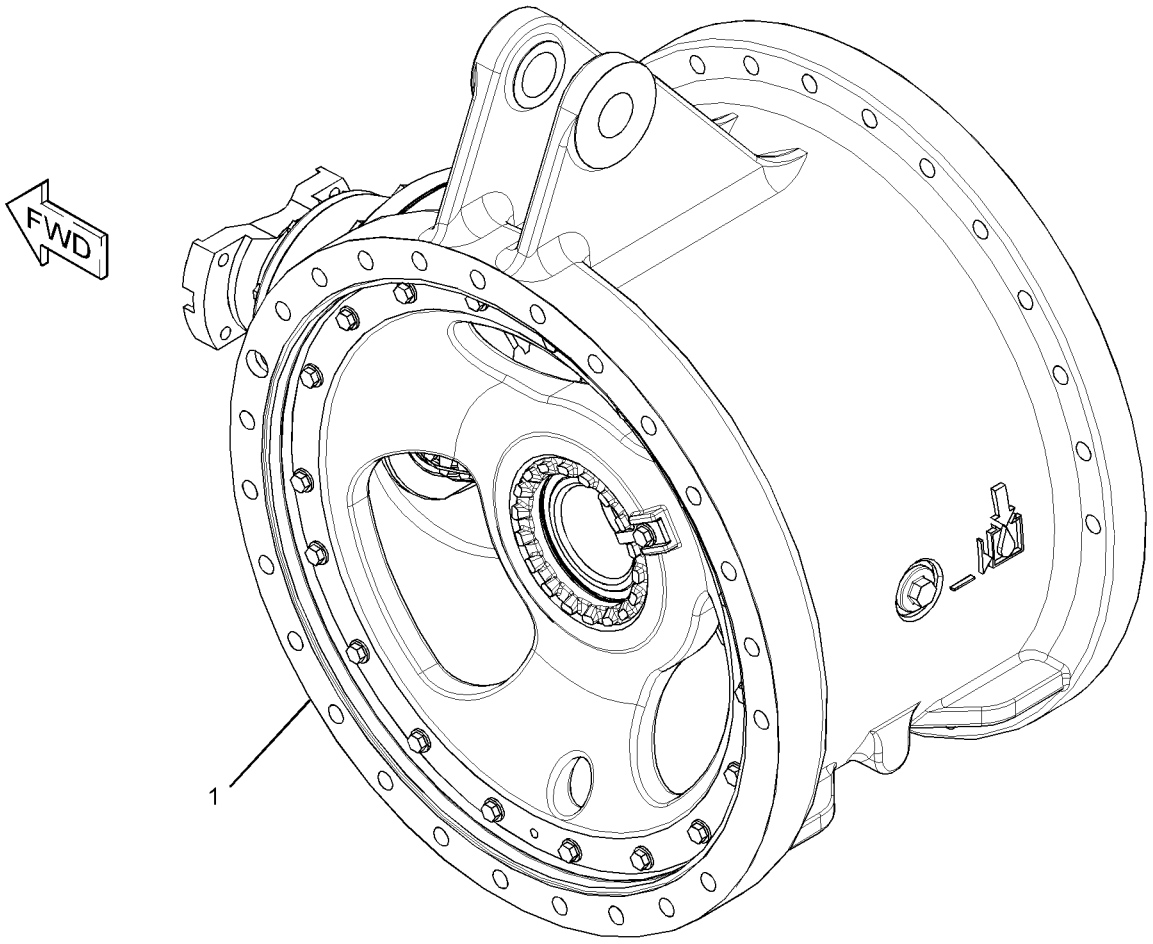


GRAPHIC #1 **<END>** g01502749

# *270-5383* DIFFERENTIAL & BEVEL GEAR GP

**S/N: RLB1-UP**

**PART OF 267-1645 DIFFERENTIAL & BEVEL GEAR GP, 270-5370 POWER TRAIN AR**

**FIELD REPLACEMENT ORDER 267-1645—PAGE 398**

**SMCS-3256, 3258, 3281** **i02619494**

| NOTE | REF NO | GRAPHIC REF | PART NUMBER | QTY | PART NAME 1 2 3 4 5 6 (PRODUCT LEVEL) | SEE PAGE |
|---|---|---|---|---|---|---|
| | 1 | 1 | **3P-1669** | 1 | RETAINER (SHAFT) | |
| | 2 | 1 | **4B-8393** | 1 | CUP-BEARING | |
| | 3 | 1 | **5P-8081** | 36 | BOLT-LOCKING (3/4-16X2-IN) | |
| | 4 | 1 | **6F-4868** | 1 | GASKET | |
| | 5 | 1 | **8M-5576** | 1 | PLUG-MAGNETIC (REAR AXLE) | |
| | 6 | 1 | **8W-3064** | 2 | RING-ADJUSTMENT | |
| | 7 | 1 | **9K-4454** | 2 | LOCK | |
| Y | 8 | 1 | *107-7857* | 1 | DIFFERENTIAL GP | 401 |
| | 9 | 1 | **237-2894** | 1 | SHIM PACK (INCLUDES 13-SHIMS) | |
| | 10 | 1 | **237-2895** | 1 | RETAINER | |
| | 11 | 1 | **237-4770** | 1 | COVER | |
| | 12 | 1 | **263-9559** | 1 | HOUSING | |
| | 13 | 1 | **271-0433** | 1 | HOUSING | |
| | 14 | 1 | *271-0434* | 1 | SET-BEVEL GEAR | |
| | | 1 | **237-8268** | 1 | GEAR-BEVEL (52-TEETH) | |
| | | 1 | **271-0435** | 1 | SHAFT-BEVEL PINION | |
| | 15 | 1 | **275-8878** | 1 | SHIM PACK (INCLUDES 13-SHIMS) | |
| | 16 | 1 | **7T-5646** | 1 | YOKE | |
| | 17 | 1 | **1B-4034** | 1 | CONE-BEARING | |
| | 18 | 1 | **1J-2860** | 1 | CUP-BEARING | |
| | 19 | 1 | **1J-4757** | 1 | CONE-BEARING | |
| | 20 | 1 | **2D-9457** | 1 | CONE-BEARING | |
| | 21 | 1 | **2K-4472** | 1 | SEAL-O-RING | |
| | 22 | 1 | **2S-7593** | 16 | WASHER-HARD (17X35X5-MM THK) | |
| | 23 | 1 | **4F-2041** | 1 | CUP-BEARING (TAPERED ROLLER) | |
| | 24 | 1 | **5H-2824** | 1 | SEAL-O-RING | |
| | 25 | 1 | **5P-2236** | 1 | SEAL-O-RING | |
| | 26 | 1 | **5P-8245** | 20 | WASHER-HARD (13.5X25.5X3-MM THK) | |
| | 27 | 1 | **5P-8248** | 36 | WASHER-HARD (20X36.5X3.5-MM THK) | |
| | 28 | 1 | **6V-0414** | 1 | CUP-BEARING | |
| | 29 | 1 | **6V-0415** | 1 | CONE-BEARING | |
| M | 30 | 1 | **6V-3303** | 16 | BOLT (M16X2X60-MM) | |
| M | 31 | 1 | **6V-3822** | 8 | BOLT (M10X1.5X35-MM) | |
| | 32 | 1 | **6V-5839** | 8 | WASHER (11X21X2.5-MM THK) | |
| M | 33 | 1 | **6V-7673** | 18 | BOLT (M12X1.75X50-MM) | |
| M | 34 | 1 | **6V-8675** | 2 | BOLT (M12X1.75X35-MM) | |
| | 35 | 1 | **8C-3084** | 1 | SEAL-LIP TYPE | |
| M | 36 | 1 | **8T-0358** | 1 | BOLT (M16X2X90-MM) | |

M-METRIC PART
Y-SEPARATE ILLUSTRATION

*270-5383* **DIFFERENTIAL & BEVEL GEAR GP** ***(contd.)*** **i02619494**

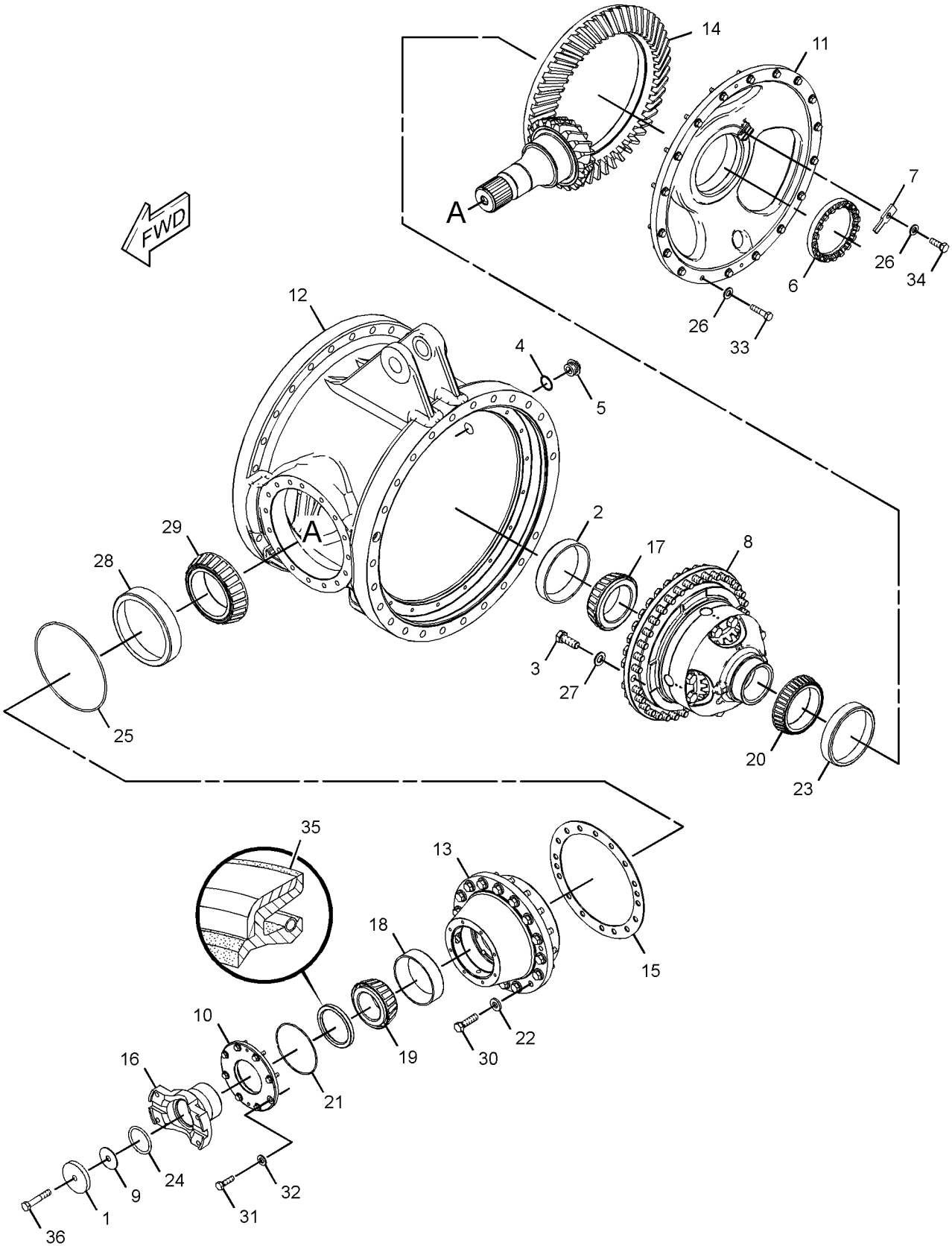


GRAPHIC #1 **<END>** g01329371

# *107-7857* DIFFERENTIAL GP

**S/N: RLB1-UP**

**PART OF 270-5383 DIFFERENTIAL & BEVEL GEAR GP**

**SMCS-3258** **i00116209**

| NOTE | REF NO | GRAPHIC REF | PART NUMBER | QTY | PART NAME 1 2 3 4 5 6 (PRODUCT LEVEL) | SEE PAGE |
|---|---|---|---|---|---|---|
| | 1 | 1 | **101-7517** | 1 | HOUSING | |
| | 2 | 1 | **3D-6509** | 2 | DOWEL | |
| | 3 | 1 | **6G-0703** | 1 | SPIDER-DIFFERENTIAL | |
| | 4 | 1 | **8W-8671** | 4 | PINION-DIFFERENTIAL BEVEL (20 TEETH) | |
| | 5 | 1 | **108-3187** | 1 | HOUSING AS-DIFFERENTIAL | |
| | 6 | 1 | **3D-6509** | 6 | DOWEL | |
| | 7 | 1 | **4D-8132** | 4 | BEARING AS-ROLLER | |
| | 8 | 1 | **4D-7536** | 4 | LOCK-NUT | |
| | 9 | 1 | **107-2958** | 4 | NUT (2-1/8 THD) | |
| | 10 | 1 | **2H-3749** | 8 | BOLT (3/4-16X7IN) | |
| | 11 | 1 | **2K-0337** | 8 | LOCKNUT (3/4-16 THD) | |
| | 12 | 1 | **5P-8248** | 8 | WASHER-HARD (3.5MM THK) | |
| | 13 | 1 | **3D-5564** | 2 | WASHER-THRUST | |
| | 14 | 1 | **4D-8131** | 4 | RETAINER | |
| | 15 | 1 | **8W-7702** | 2 | GEAR-DIFFERENTIAL BEVEL (24 TEETH) | |

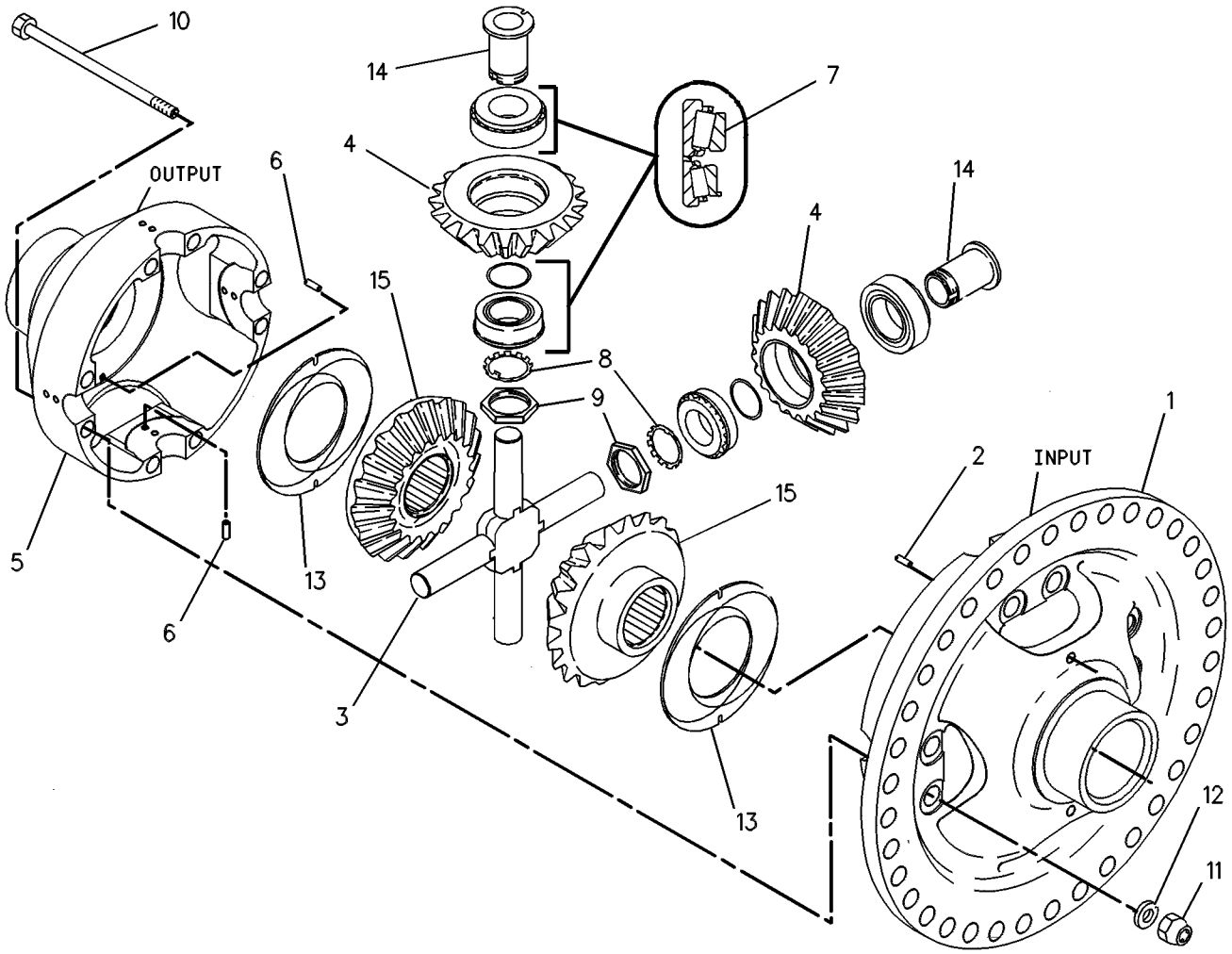


GRAPHIC #1 **<END>** g00084556

# 138-1509 DRAIN GP-ECOLOGY–POWER TRAIN OIL

**S/N: RLB1-UP**

**PART OF 227-1037 TORQUE CONVERTER GP**

**SMCS-3064, 3100, 3260** **i02746602**

| NOTE | REF NO | GRAPHIC REF | PART NUMBER | QTY | PART NAME 1 2 3 4 5 6 (PRODUCT LEVEL) | SEE PAGE |
|---|---|---|---|---|---|---|
| | 1 | 1 | **138-1510** | 1 | PLUG (TRANSMISSION OIL DRAIN) | |
| | 2 | 1 | **192-1023** | 1 | DRAIN AS | |
| | | 1 | **077-3241** | 1 | SEAL-O-RING | |
| | 3 | 1 | **7M-8485** | 1 | SEAL-O-RING | |

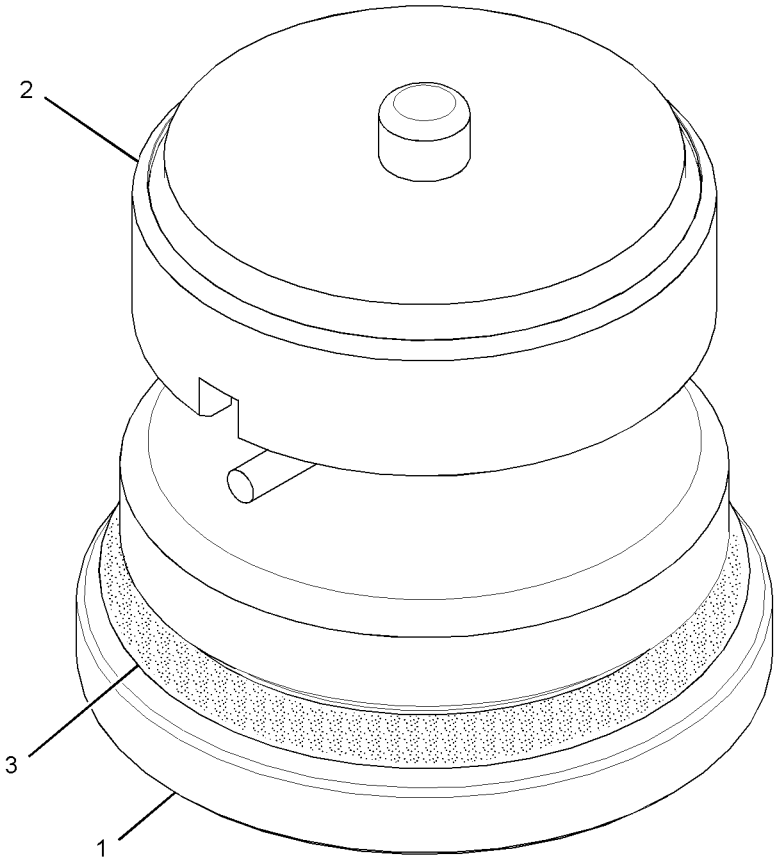


GRAPHIC #1 **<END>** g01298016

# 238-9912 FINAL DRIVE GP

**S/N: RLB1-UP**
**PART OF 271-3763, 279-7457 WHEEL GP-FINAL DRIVE & BRAKE**
**AN ATTACHMENT**

**SMCS-4050** **i02637004**

| NOTE | REF NO | GRAPHIC REF | PART NUMBER | QTY | PART NAME 1 2 3 4 5 6 (PRODUCT LEVEL) | SEE PAGE |
|---|---|---|---|---|---|---|
| | 1 | 1 | **2A-3398** | 1 | GASKET | |
| | 2 | 1 | **2R-0098** | 1 | SEAL-O-RING | |
| | 3 | 1 | **5F-0304** | 1 | PLUG (FINAL DRIVE, OIL DRAIN) | |
| | 4 | 1 | **6D-6961** | 1 | COVER AS | |
| | 5 | 1 | **8M-3837** | 1 | PLUG-MAGNETIC (FINAL DRIVE, OIL FILL) | |
| | 6 | 1 | **284-4272** | 4 | RETAINER | |
| | 7 | 1 | **9M-3860** | 1 | GEAR-RING (76-TEETH) | |
| | 8 | 1 | **229-7375** | 1 | BEARING | |
| | 9 | 1 | **284-5455** | 1 | HUB | |
| Y | 10 | 1 | **238-9916** | 1 | FINAL DRIVE GP | 405 |
| | 11 | 1 | **242-9979** | 1 | GEAR-SUN (20-TEETH) | |
| M | 12 | 1 | **6V-5843** | 12 | BOLT (M10X1.5X45-MM) | |
| M | 13 | 1 | **6V-3669** | 23 | BOLT (M20X2.5X80-MM) | |
| | 14 | 1 | **2A-1162** | 1 | GASKET | |
| | 15 | 1 | **5M-1932** | 8 | STUD-TAPERLOCK (1/2-13X2.17-IN) | |
| | 16 | 1 | **6V-5839** | 12 | WASHER (11X21X2.5-MM THK) | |
| | 17 | 1 | **198-4769** | 23 | WASHER (22X40X10-MM THK) | |
| | 18 | 1 | **6D-0692** | 1 | SEAL-O-RING | |
| | 19 | 1 | **6F-4855** | 1 | SEAL-O-RING | |
| | 20 | 1 | **6V-8188** | 8 | NUT (1/2-13-THD) | |
| | 21 | 1 | **8T-4223** | 8 | WASHER-HARD (13.5X25.5X3-MM THK) | |

M-METRIC PART
Y-SEPARATE ILLUSTRATION

## 238-9912 FINAL DRIVE GP *(contd. )* i02637004

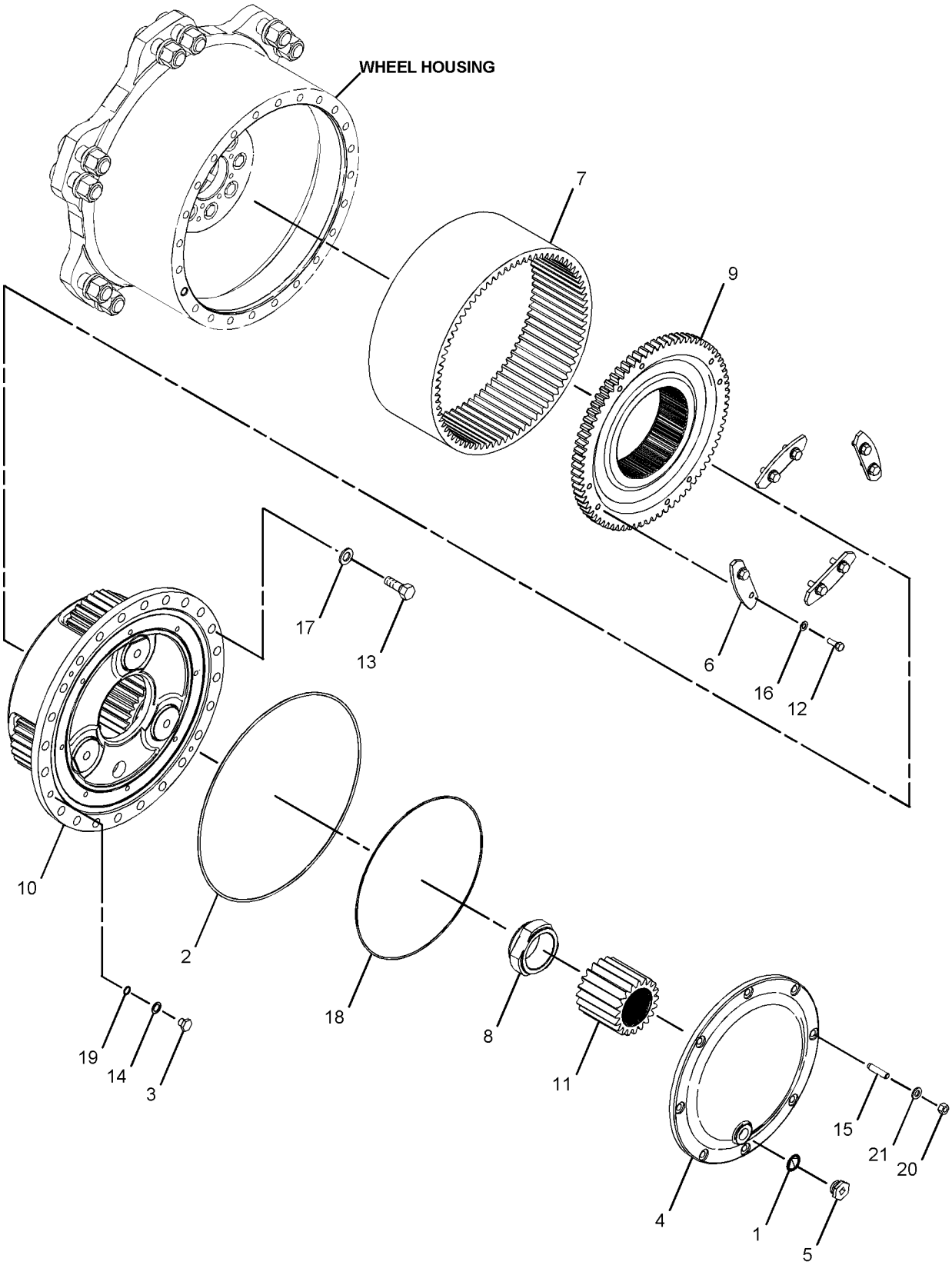


GRAPHIC #1 **<END>** g01080754

# 238-9916 FINAL DRIVE GP

**S/N: RLB1-UP**
**PART OF 238-9912 DRIVE GP-FINAL**
**AN ATTACHMENT**

**SMCS-4050** **i02532354**

| NOTE | REF NO | GRAPHIC REF | PART NUMBER | QTY | PART NAME 1 2 3 4 5 6 (PRODUCT LEVEL) | SEE PAGE |
|---|---|---|---|---|---|---|
| | 1 | 1 | **257-8532** | 1 | CARRIER-PLANETARY | |
| | 2 | 1 | **7H-0308** | 3 | RING-RETAINING | |
| | 3 | 1 | **237-3817** | 3 | SPACER (80X112X16.5-MM THK) | |
| | 4 | 1 | **240-8239** | 6 | BEARING-CAGED | |
| | 5 | 1 | **242-5414** | 3 | SHAFT-PLANETARY | |
| | 6 | 1 | **242-9980** | 3 | GEAR (27-TEETH) | |
| | 7 | 1 | **8X-4552** | 6 | WASHER (78X127X5-MM THK) | |

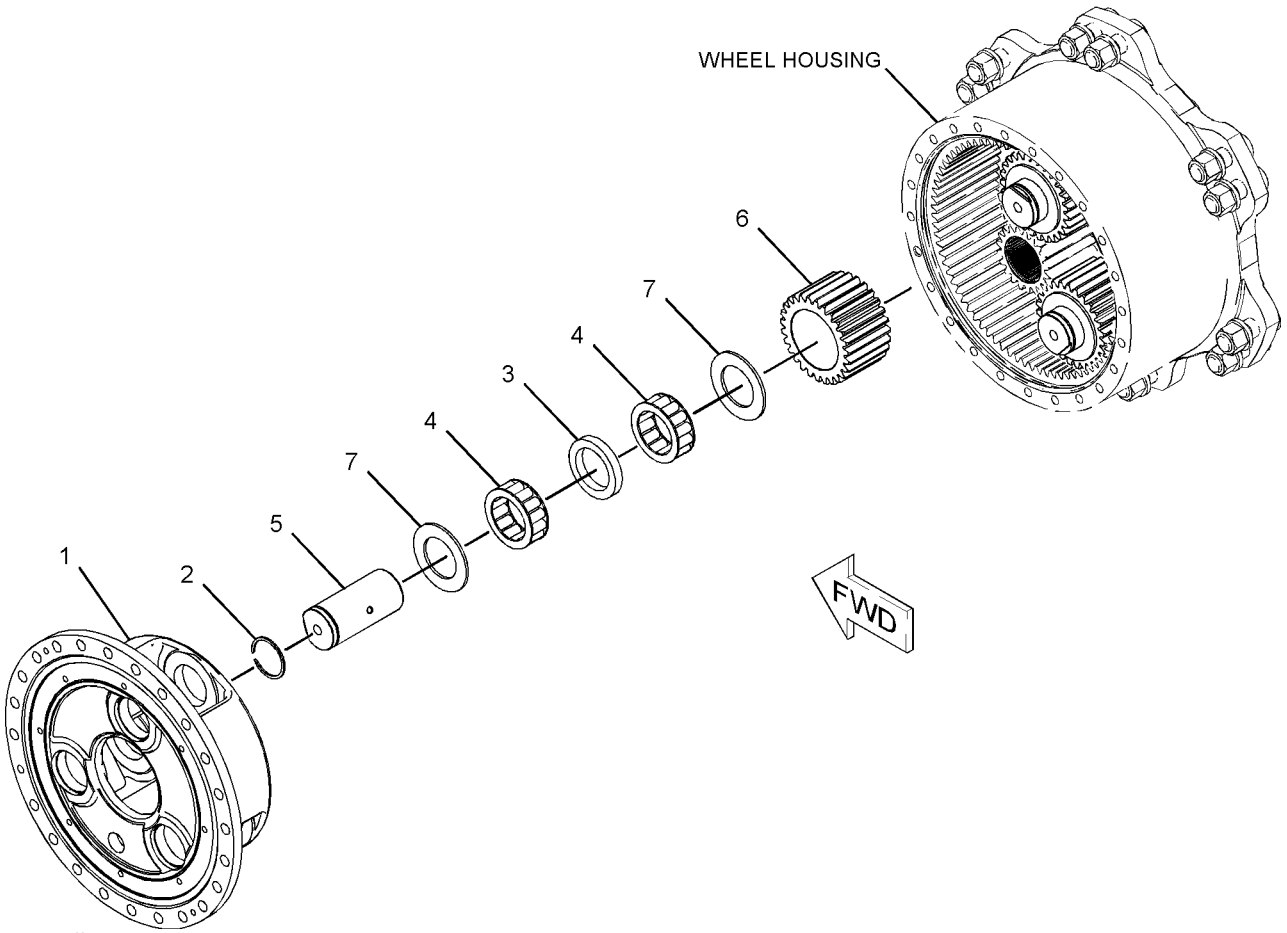


GRAPHIC #1 **<END>** g01080080

# 6P-4603 FILTER GP-OIL—POWER TRAIN

**S/N: RLB1-UP**

**PART OF 269-9199 LINES GP-POWER TRAIN OIL**

**SMCS-3067** **i02697440**

| NOTE | REF NO | GRAPHIC REF | PART NUMBER | QTY | PART NAME 1 2 3 4 5 6 (PRODUCT LEVEL) | SEE PAGE |
|---|---|---|---|---|---|---|
| | 1 | 1 | **3D-2824** | 1 | SEAL-O-RING | |
| | 2 | 1 | **3T-0688** | 1 | SPOOL | |
| | 3 | 1 | **9M-1986** | 1 | SPRING | |
| | 4 | 1 | **9S-4191** | 3 | PLUG-O-RING | |
| | | 1 | **3J-1907** | 3 | SEAL-O-RING | |
| | 5 | 1 | **6P-4227** | 1 | BASE-OIL FILTER | |
| | 6 | 1 | **1R-0719** | 1 | FILTER ELEMENT AS-OIL (STANDARD EFFICIENCY) | |
| | | | | | —OR— | |
| | | 1 | **132-8875** | 1 | FILTER ELEMENT AS-OIL (ULTRA HIGH EFFICIENCY) | |
| | | | | | (AFTER INITIAL 8 HOURS OF CONTINUOUS OPERATION CHANGE ELEMENT TO STANDARD EFFICIENCY ELEMENT) | |
| | 7 | 1 | **2J-6356** | 1 | RING-RETAINING | |
| | 8 | 1 | **7S-6745** | 1 | RETAINER | |
| | 9 | 1 | **3S-8652** | 1 | SPRING | |
| | 10 | 1 | **3P-0887** | 1 | HOUSING AS | |
| | 11 | 1 | **2S-8439** | 1 | SEAL-O-RING | |

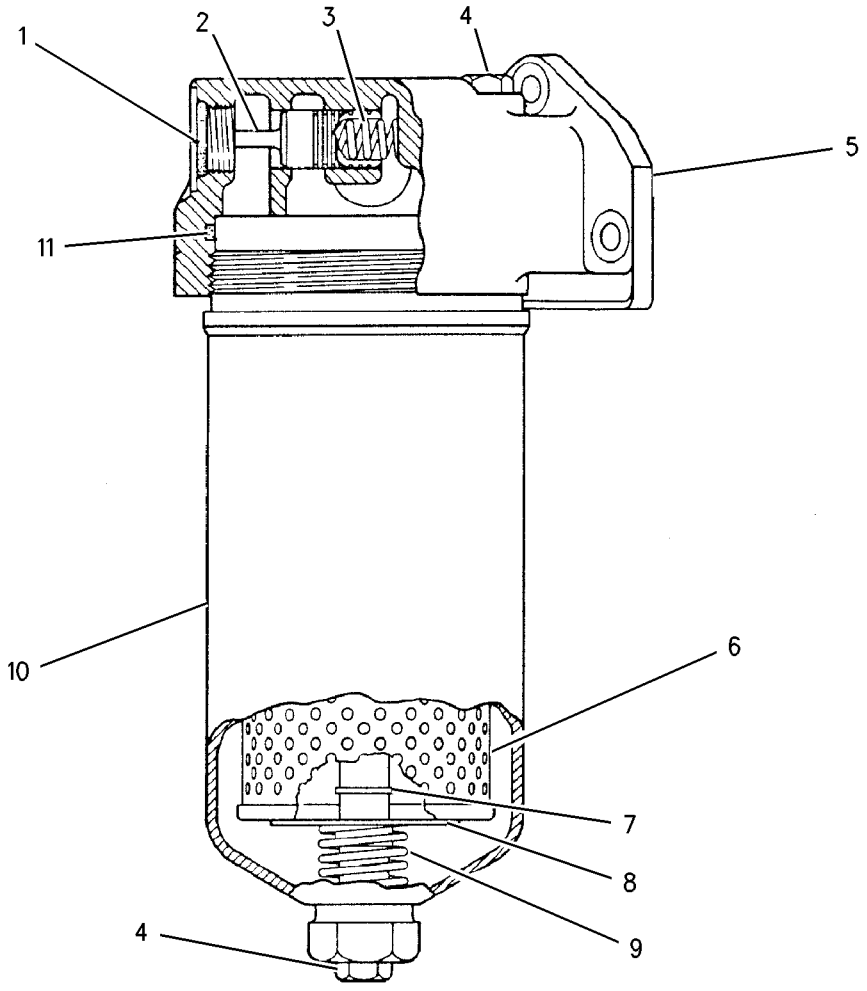


GRAPHIC #1 **<END>** g00830779

# *246-1001* FILTER GP-OIL—POWER TRAIN

**S/N: RLB357-UP**

**PART OF 269-9199 LINES GP-POWER TRAIN OIL**

**SMCS-3067** **i02126595**

| NOTE | REF NO | GRAPHIC REF | PART NUMBER | QTY | PART NAME 1 2 3 4 5 6 (PRODUCT LEVEL) | SEE PAGE |
|---|---|---|---|---|---|---|
| | 1 | 1 | **3P-0887** | 1 | HOUSING AS | |
| | 2 | 1 | **3S-8652** | 1 | SPRING | |
| | 3 | 1 | **3T-0688** | 1 | SPOOL | |
| | 4 | 1 | **6P-4227** | 1 | BASE-OIL FILTER | |
| | 6 | 1 | **7S-6745** | 1 | RETAINER | |
| | 7 | 1 | **9M-1986** | 1 | SPRING | |
| | 8 | 1 | **132-8875** | 1 | FILTER ELEMENT AS-OIL (ULTRA HIGH EFFICIENCY) | |
| | | | | | AFTER INITIAL 8 HOURS OF CONTINUOUS OPERATION CHANGE FILTER ELEMENT | |
| | 10 | 1 | *148-8407* | 3 | PLUG AS | |
| | | | | | (EACH INCLUDES) | |
| | | 1 | **9S-4191** | 1 | PLUG-O-RING | |
| | | 1 | **3J-1907** | 1 | SEAL-O-RING | |
| | 11 | 1 | **2J-6356** | 1 | RING-RETAINING | |
| | 12 | 1 | **2S-8439** | 1 | SEAL-O-RING | |
| | 13 | 1 | **3D-2824** | 1 | SEAL-O-RING | |

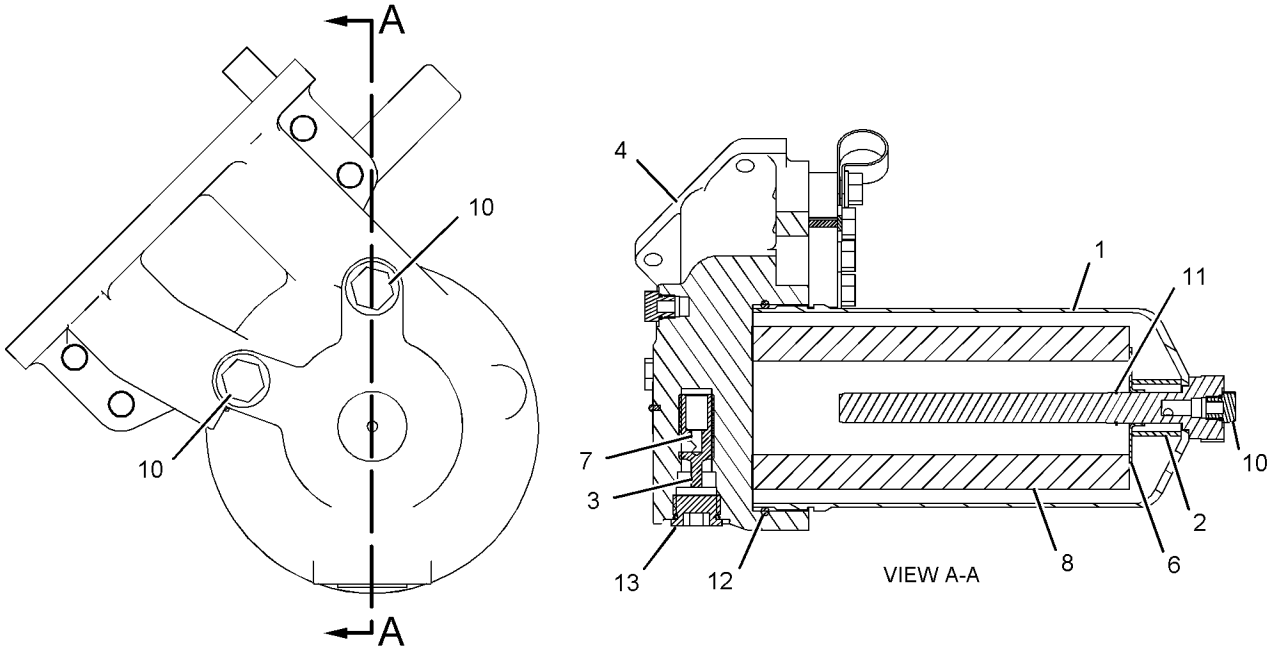


GRAPHIC #1 **<END>** g01065396

# POWER TRAIN

## *7G-1150* GEAR GP-TRANSFER—INPUT

**S/N: NDG1-UP**

**PART OF 294-5560 TRANSMISSION AR**

**SMCS-3159** **i02900397**

| NOTE | REF NO | GRAPHIC REF | PART NUMBER | QTY | PART NAME 1 2 3 4 5 6 (PRODUCT LEVEL) | SEE PAGE |
|---|---|---|---|---|---|---|
| | 1 | 2 | **3P-8143** | 1 | YOKE | |
| B | 2 | 2 | **3P-8147** | 1 | SHIM PACK (INCLUDES 9-SHIMS) | |
| | 3 | 2 | **4H-8878** | 1 | CLIP | |
| | 4 | 1 | **4S-8603** | 1 | SCREEN GP-MAGNETIC (TRANSFER GEAR) | |
| | | 1 | **8M-7160** | 3 | MAGNET | |
| | 5 | 2 | **5K-9243** | 1 | ELBOW-FLARED | |
| | 6 | 1 | **6P-2515** | 1 | RING AS-LIFTING | |
| | | 1 | **1K-0958** | 1 | CLAMP-CENTER | |
| | 7 | 1 | **7G-1151** | 1 | CASE-TRANSFER GEAR | |
| | 8 | 2 | **7G-1152** | 1 | TUBE AS | |
| | 9 | 1 | **7G-1156** | 1 | CAGE-BEARING | |
| B | 10 | 1 | **7G-1157** | 1 | SHIM PACK (INCLUDES 22-SHIMS) | |
| | 11 | 1 | **8P-3251** | 1 | COVER AS | |
| | | 1 | **8P-1722** | 1 | COVER | |
| | | 1 | **7S-2962** | 1 | WASHER-SPRING (52.3X82.5X9.1-MM THK) | |
| | | 1 | **7B-3028** | 2 | SCREW-DRIVE (NO 4X3/16-IN) | |
| | 12 | 1 | **8P-3795** | 1 | SCREEN-SUCTION (GEAR TRANSFER-INPUT) | |
| | 13 | 2 | **108-4879** | 1 | GEAR-TRANSFER (71-TEETH) | |
| | 14 | 1 | **108-4880** | 1 | GEAR-TRANSFER (54-TEETH) | |
| C | 15 | 2 | **235-2484** | 1 | SEAL-LIP TYPE | |
| C | 16 | 2 | **271-1627** | 1 | CAGE-BEARING | |
| | 17 | 1 | **030-0060** | 2 | CUP-BEARING | |
| | 18 | 1 | **0S-1566** | 2 | BOLT (5/8-11X1.5-IN) | |
| | 19 | 1 | **0S-1587** | 17 | BOLT (1/2-13X1.75-IN) | |
| | 20 | 1 | **0S-1588** | 13 | BOLT (3/8-16X1.25-IN) | |
| | 21 | 1 | **0S-1594** | 4 | BOLT (3/8-16X1-IN) | |
| | 22 | 2 | **0T-0102** | 1 | BOLT (3/8-16X0.625-IN) | |
| | 23 | 1 | **177-7886** | 2 | CONE | |
| | 24 | 2 | **1A-2029** | 10 | BOLT (3/8-16X1.125-IN) | |
| | 25 | 2 | **1P-3934** | 2 | CUP-BEARING | |
| | 26 | 2 | **1P-3935** | 2 | CONE-BEARING | |
| | 27 | 2 | **2A-4639** | 1 | BOLT (3/8-16X1.625-IN) | |
| | 28 | 2 | **2M-3818** | 1 | SEAL-O-RING | |
| | 29 | 1,2 | **5M-2894** | 29 | WASHER-HARD (10.2X18.5X2.5-MM THK) | |
| | 30 | 1 | **5P-8245** | 17 | WASHER-HARD (13.5X25.5X3-MM THK) | |
| | 31 | 1 | **5P-8247** | 2 | WASHER-HARD (17X32X3.5-MM THK) | |
| | 32 | 2 | **6B-2882** | 1 | SPACER (0.406X0.75X0.312-IN THK) | |
| | 33 | 1 | **6M-5218** | 1 | SEAL-O-RING | |
| | 34 | 1 | **8H-7521** | 1 | SEAL-O-RING | |

B-USE AS REQUIRED
C-CHANGE FROM PREVIOUS TYPE

*7G-1150* **GEAR GP-TRANSFER** *(contd.)* **i02900397**

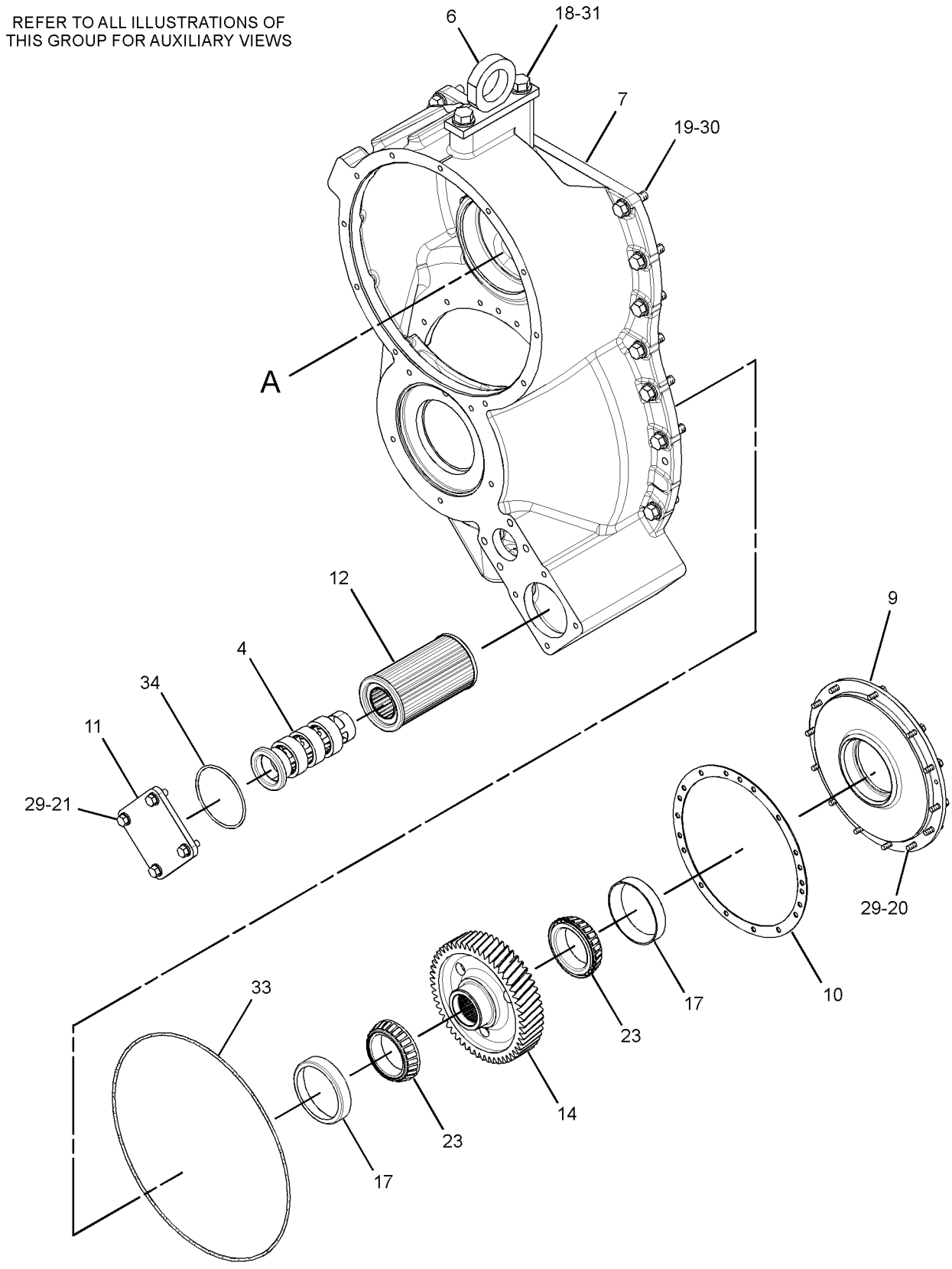


GRAPHIC #1 g01448867

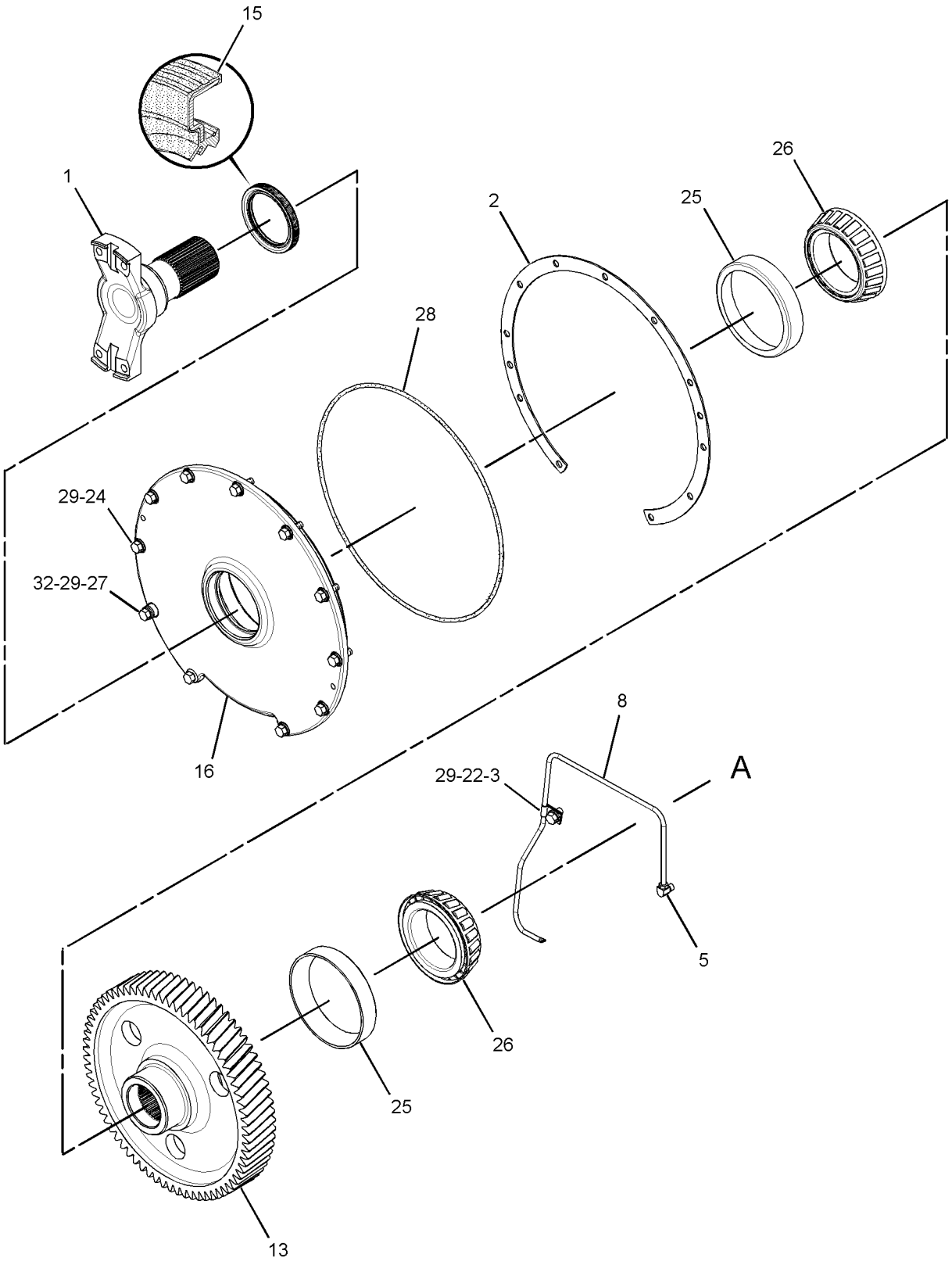


GRAPHIC #2 **<END>** g01448866

# *269-9198* LINES GP-POWER TRAIN COOLER

**S/N: RLB1-UP**

**PART OF 270-1748 HYDRAULIC AR**

**SMCS-1365, 1375, 3016** **i02616572**

| NOTE | REF NO | GRAPHIC REF | PART NUMBER | QTY | PART NAME 1 2 3 4 5 6 (PRODUCT LEVEL) | SEE PAGE |
|---|---|---|---|---|---|---|
| | 1 | 1 | **6V-0852** | 1 | CAP-DUST | |
| | 2 | 1 | *164-6874* | 1 | FITTING AS-ELBOW | |
| | | 1 | **085-7356** | 1 | FITTING | |
| | | 1 | **3J-1907** | 1 | SEAL-O-RING | |
| | 3 | 1 | **258-7627** | 1 | ADAPTER | |
| | 4 | 1 | **274-7879** | 1 | TUBE AS | |
| I | 5 | 1 | **275-0104** | 1 | HOSE AS | |
| | 6 | 1 | **275-0105** | 1 | TUBE AS | |
| | 7 | 1 | *164-5567* | 1 | COUPLER AS-QUICK DISCONNECT | |
| | | 1 | **6V-3965** | 1 | FITTING (QUICK DISCONNECT) | |
| | | 1 | **3J-1907** | 1 | SEAL-O-RING | |
| | 8 | 1 | **1P-4579** | 4 | FLANGE-HALF | |
| | 9 | 1 | **1P-4582** | 4 | FLANGE-HALF | |
| | 10 | 1 | **224-2335** | 1 | PLATE | |
| | 11 | 1 | **4J-0524** | 4 | SEAL-O-RING | |
| | 12 | 1 | **4J-0527** | 2 | SEAL-O-RING | |
| | 13 | 1 | **5P-7467** | 1 | CLIP (TAB) | |
| | 14 | 1 | **5P-7468** | 2 | CLIP (SLOT) | |
| | 15 | 1 | **5P-7469** | 1 | CLIP (TAB) | |
| | 16 | 1 | **5P-7470** | 1 | CLIP (SLOT) | |
| | 17 | 1 | **5P-7471** | 1 | CLIP (TAB) | |
| | 18 | 1 | **5P-7703** | 1 | GROMMET | |
| | 19 | 1 | **5P-8444** | 2 | GROMMET | |
| | 20 | 1 | **8T-4121** | 5 | WASHER-HARD (11X21X2.5-MM THK) | |
| M | 21 | 1 | **8T-4133** | 2 | NUT (M10X1.5-THD) | |
| M | 22 | 1 | **8T-4136** | 1 | BOLT (M10X1.5X25-MM) | |
| M | 23 | 1 | **8T-4195** | 1 | BOLT (M10X1.5X30-MM) | |
| M | 24 | 1 | **8T-4196** | 1 | BOLT (M10X1.5X35-MM) | |
| | 25 | 1 | **8T-4223** | 16 | WASHER-HARD (13.5X25.5X3-MM THK) | |
| | 26 | 1 | **8T-4835** | 4 | BOLT (1/2-13X2-IN) | |
| | 27 | 1 | **8T-8919** | 8 | BOLT (1/2-13X1.75-IN) | |
| | 28 | 1 | **8T-9389** | 4 | BOLT (1/2-13X2.75-IN) | |

I-REFER TO HYDRAULIC INFORMATION SYSTEM
M-METRIC PART

## *269-9198* **LINES GP-POWER TRAIN COOLER** *(contd.)* **i02616572**

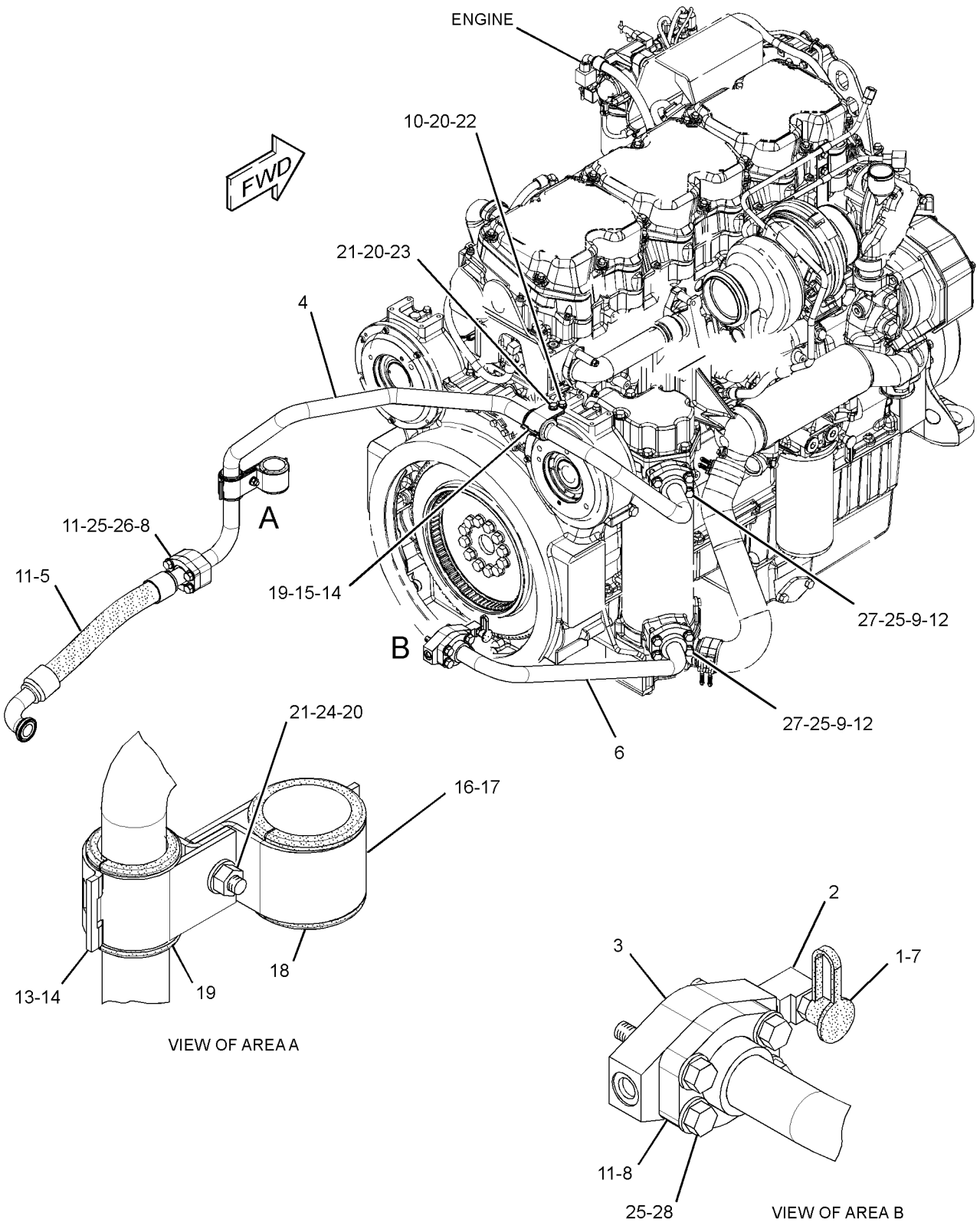


GRAPHIC #1 **<END>** g01343503

# POWER TRAIN

## *269-9199* LINES GP-POWER TRAIN OIL

**S/N: RLB1-356**

**PART OF 270-1748 HYDRAULIC AR**

**SMCS-3016, 3154** **i03290792**

| NOTE | REF NO | GRAPHIC REF | PART NUMBER | QTY | PART NAME 1 2 3 4 5 6 (PRODUCT LEVEL) | SEE PAGE |
|---|---|---|---|---|---|---|
| E | 1 | 2 | **5P-0763** | | HOSE (11.5-CM) | |
| | 2 | 2 | **6G-2168** | 1 | BLOCK | |
| Y | 3 | 2 | *6P-4603* | 1 | FILTER GP-OIL (POWER TRAIN) | 406 |
| | 4 | 2 | **6V-0852** | 2 | CAP-DUST | |
| | 5 | 2 | **7X-0871** | 1 | TEE | |
| | 6 | 2 | **8C-3447** | 1 | CAP-DUST | |
| | 7 | 2 | **8S-9009** | 1 | ELBOW | |
| | 8 | 1 | **9C-4937** | 1 | BREATHER AS (TORQUE CONVERTER, TRANSMISSION) | |
| | 9 | 1 | **9S-6524** | 2 | BRACKET | |
| | 10 | 2 | **002-3448** | 1 | CLIP | |
| | 11 | 2 | **141-4007** | 1 | SLEEVE | |
| | 12 | 2 | *164-6874* | 2 | FITTING AS-ELBOW | |
| | | | | | (EACH INCLUDES) | |
| | | 2 | **3J-1907** | 1 | SEAL-O-RING | |
| | | 2 | **085-7356** | 1 | FITTING | |
| | 13 | 2 | **254-4937** | 1 | COVER | |
| Y | 14 | 2 | **254-9238** | 1 | VALVE GP-LOCKUP CLUTCH & SOL (POWER TRAIN OIL) | 453 |
| I | 15 | 1 | **274-5061** | 1 | HOSE AS | |
| I | 16 | 1 | **274-5122** | 1 | HOSE AS | |
| I | 17 | 1 | **274-5554** | 1 | HOSE AS | |
| I | 18 | 1 | **274-5786** | 1 | HOSE AS | |
| I | 19 | 1 | **275-0106** | 1 | HOSE AS | |
| | 20 | 1 | **276-2754** | 1 | TUBE AS | |
| | 21 | 2 | **284-4253** | 1 | TUBE AS | |
| | 22 | 2 | **293-3369** | 1 | TUBE AS | |
| | 23 | 2 | **293-3377** | 1 | BRACKET | |
| I | 24 | 1 | **307-2682** | 1 | HOSE AS | |
| | 25 | 2 | **307-9341** | 1 | TUBE AS | |
| | 26 | 2 | **308-8616** | 1 | GAUGE AS-OIL LEVEL (DIPSTICK) (TRANSMISSION) | |
| | 27 | 2 | **308-8617** | 1 | TUBE | |
| | 28 | 2 | **310-1578** | 1 | PLATE AS | |
| I | 29 | 1 | **316-8153** | 1 | HOSE AS | |
| I | 30 | 1 | **316-8154** | 1 | HOSE AS | |
| | 31 | 1 | **030-8324** | 1 | ELBOW | |
| | 32 | 1 | **0S-1594** | 2 | BOLT (3/8-16X1-IN) | |
| | 33 | 2 | **144-3935** | 1 | CLIP | |
| | 34 | 2 | *148-8305* | 1 | ADAPTER AS | |
| | | 2 | **3J-1907** | 1 | SEAL-O-RING | |
| | | 2 | **5P-9617** | 1 | ADAPTER | |
| | 35 | 2 | *148-8347* | 2 | ELBOW AS | |
| | | | | | (EACH INCLUDES) | |
| | | 2 | **3D-2824** | 1 | SEAL-O-RING | |
| | | 2 | **6V-9007** | 1 | ELBOW | |
| | | 2 | **6V-9746** | 1 | SEAL-O-RING | |
| | 36 | 1,2 | *148-8364* | 2 | ELBOW AS | |
| | | | | | (EACH INCLUDES) | |
| | | 1,2 | **3K-0360** | 1 | SEAL-O-RING | |
| | | 1,2 | **6V-8398** | 1 | SEAL-O-RING | |
| | | 1,2 | **6V-8625** | 1 | ELBOW | |
| | 37 | 2 | *148-8365* | 1 | ELBOW AS | |
| | | 2 | **3J-1907** | 1 | SEAL-O-RING | |
| | | 2 | **6V-8398** | 1 | SEAL-O-RING | |
| | | 2 | **8T-6876** | 1 | ELBOW (90-DEG) | |
| | 38 | 2 | *148-8407* | 1 | PLUG AS | |
| | | 2 | **3J-1907** | 1 | SEAL-O-RING | |
| | | 2 | **9S-4191** | 1 | PLUG-O-RING | |

## *269-9199* **LINES GP-POWER TRAIN OIL** ***(contd.)*** **i03290792**

| NOTE | REF NO | GRAPHIC REF | PART NUMBER | QTY | PART NAME 1 2 3 4 5 6 (PRODUCT LEVEL) | SEE PAGE |
|---|---|---|---|---|---|---|
| | 39 | 2 | *164-5567* | 2 | COUPLER AS-QUICK DISCONNECT | |
| | | | | | (EACH INCLUDES) | |
| | | 2 | **3J-1907** | 1 | SEAL-O-RING | |
| | | 2 | **6V-3965** | 1 | FITTING (QUICK DISCONNECT) | |
| | 40 | 2 | *164-5590* | 1 | VALVE AS-FLUID SAMPLING (POWER TRAIN OIL) | |
| | | 2 | **3J-7354** | 1 | SEAL-O-RING | |
| | | 2 | **8C-3446** | 1 | VALVE-FLUID SAMPLING | |
| | 41 | 2 | **1P-3704** | 2 | SEAL-RECTANGULAR | |
| | 42 | 1,2 | **1P-3705** | 2 | SEAL-RECTANGULAR | |
| | 43 | 1 | **1P-4577** | 2 | FLANGE-HALF | |
| | 44 | 1,2 | **1P-4578** | 10 | FLANGE-HALF | |
| | 45 | 1,2 | **1P-4579** | 4 | FLANGE-HALF | |
| | 46 | 2 | **1P-4582** | 4 | FLANGE-HALF | |
| | 47 | 1 | **1S-0994** | 1 | CLIP | |
| | 48 | 2 | **222-1178** | 4 | CLAMP | |
| | 49 | 2 | **232-4901** | 1 | CLAMP | |
| | 50 | 2 | **2S-1647** | 1 | GROMMET | |
| | 51 | 2 | **3A-1689** | 1 | SPACER | |
| | 52 | 1 | **3B-7743** | 1 | FITTING | |
| | 53 | 2 | **3F-5792** | 1 | SEAL-O-RING | |
| | 54 | 1 | **4D-3734** | 1 | ELBOW | |
| | 55 | 1 | **4D-4917** | 1 | TEE | |
| | 56 | 1 | **4J-0520** | 1 | SEAL-O-RING | |
| | 57 | 1,2 | **4J-0522** | 4 | SEAL-O-RING | |
| | 58 | 1 | **4J-0524** | 2 | SEAL-O-RING | |
| | 59 | 2 | **4J-0527** | 3 | SEAL-O-RING | |
| | 60 | 2 | **4L-6454** | 3 | BOLT (3/8-16X1-IN) | |
| | 61 | 2 | **5P-1075** | 3 | WASHER-HARD (10.2X22.5X3-MM THK) | |
| | 62 | 1 | **5P-2369** | 1 | CLIP | |
| | 63 | 2 | **5P-7468** | 1 | CLIP (SLOT) | |
| | 64 | 2 | **5P-7469** | 1 | CLIP (TAB) | |
| | 65 | 2 | **5P-8444** | 1 | GROMMET | |
| | 66 | 1,2 | **5S-7382** | 7 | BOLT (3/8-16X1.375-IN) | |
| | 67 | 1 | **6D-4244** | 2 | CLIP | |
| | 68 | 1 | **6D-4247** | 1 | CLIP | |
| | 69 | 2 | **6V-1867** | 1 | CLIP (SLOT) | |
| | 70 | 2 | **6V-1868** | 1 | CLIP (TAB) | |
| | 71 | 2 | **6V-1869** | 1 | GROMMET | |
| | 72 | 1 | **6V-8398** | 1 | SEAL-O-RING | |
| | 73 | 1 | **7D-7233** | 1 | CLIP | |
| | 74 | 1 | **7E-9992** | 1 | BRACKET | |
| | 75 | 2 | **7X-0296** | 3 | BOLT (3/8-16X5.5-IN) | |
| | 76 | 1 | **7X-0310** | 4 | BOLT (7/16-14X2-IN) | |
| | 77 | 2 | **7X-0311** | 4 | BOLT (7/16-14X2.25-IN) | |
| | 78 | 2 | **7X-0318** | 4 | BOLT (7/16-14X4-IN) | |
| | 79 | 2 | **7X-0325** | 4 | BOLT (1/2-13X2.5-IN) | |
| | 80 | 2 | **8M-4433** | 2 | SEAL-O-RING | |
| | 81 | 2 | **8M-4435** | 2 | SEAL-O-RING | |
| | 82 | 1,2 | **8T-4121** | 21 | WASHER-HARD (11X21X2.5-MM THK) | |
| M | 83 | 1,2 | **8T-4133** | 4 | NUT (M10X1.5-THD) | |
| M | 84 | 1,2 | **8T-4136** | 7 | BOLT (M10X1.5X25-MM) | |
| M | 85 | 1,2 | **8T-4137** | 3 | BOLT (M10X1.5X20-MM) | |
| M | 86 | 2 | **8T-4186** | 4 | BOLT (M10X1.5X40-MM) | |
| M | 87 | 2 | **8T-4194** | 4 | BOLT (M12X1.75X50-MM) | |
| M | 88 | 1,2 | **8T-4195** | 3 | BOLT (M10X1.5X30-MM) | |
| | 89 | 1,2 | **8T-4223** | 20 | WASHER-HARD (13.5X25.5X3-MM THK) | |
| | 90 | 1,2 | **8T-4896** | 12 | WASHER-HARD (10.2X18.5X2.5-MM THK) | |
| | 91 | 1,2 | **8T-5360** | 20 | WASHER (12X22.5X2.5-MM THK) | |
| | 92 | 1,2 | **8T-8916** | 8 | BOLT (7/16-14X1.5-IN) | |

## *269-9199* **LINES GP-POWER TRAIN OIL** *(contd.)* **i03290792**

| NOTE | REF NO | GRAPHIC REF | PART NUMBER | QTY | PART NAME 1 2 3 4 5 6 (PRODUCT LEVEL) | SEE PAGE |
|---|---|---|---|---|---|---|
| | 93 | 1,2 | **8T-8919** | 12 | BOLT (1/2-13X1.75-IN) | |
| | 94 | 2 | **9L-2662** | 1 | GASKET | |
| E | 95 | 2 | **5P-0763** | | HOSE (122-CM) | |

E-ORDER BY THE CENTIMETER
I-REFER TO HYDRAULIC INFORMATION SYSTEM
M-METRIC PART
Y-SEPARATE ILLUSTRATION

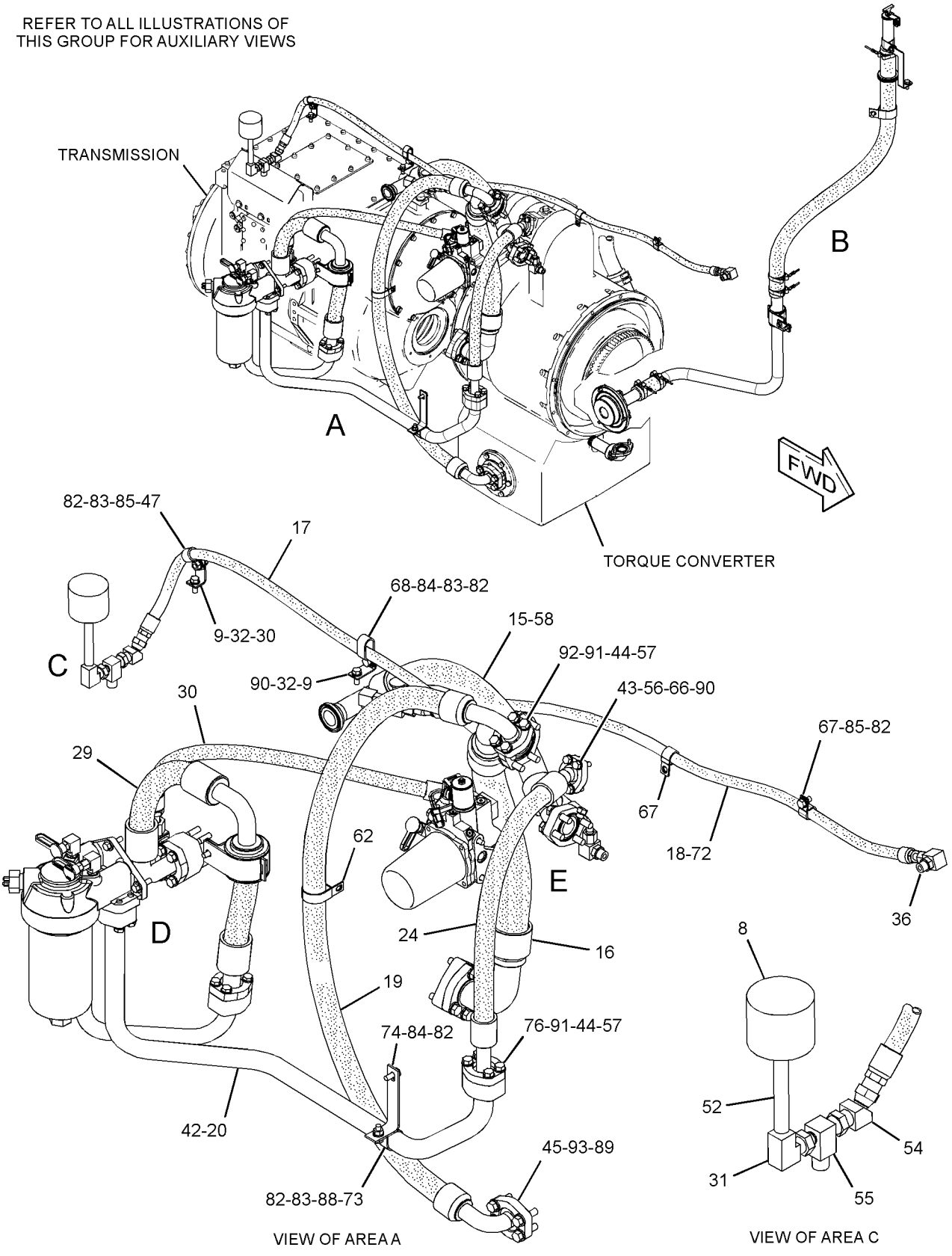


GRAPHIC #1

g01435804

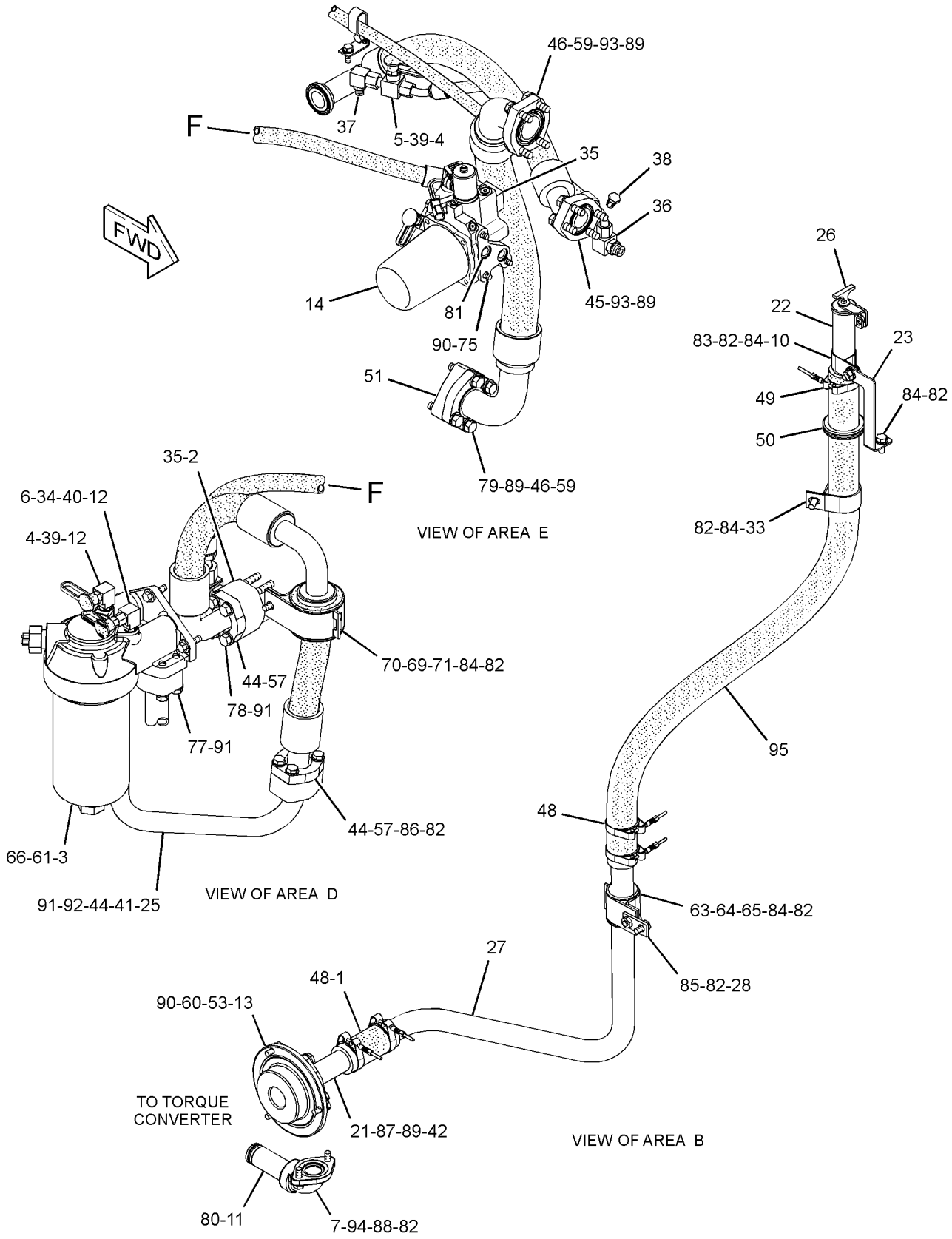


GRAPHIC #2 **<END>** g01437110

# POWER TRAIN

## *269-9199* LINES GP-POWER TRAIN OIL

**S/N: RLB357-UP**

**PART OF 270-1748 HYDRAULIC AR**

**SMCS-3016, 3154** **i03290675**

| NOTE | REF NO | GRAPHIC REF | PART NUMBER | QTY | PART NAME 1 2 3 4 5 6 (PRODUCT LEVEL) | SEE PAGE |
|---|---|---|---|---|---|---|
| E | 1 | 2 | **5P-0763** | | HOSE (11.5-CM) | |
| | 2 | 2 | **6G-2168** | 1 | BLOCK | |
| CY | 3 | 2 | *246-1001* | 1 | FILTER GP-OIL (POWER TRAIN) | 407 |
| | 4 | 2 | **6V-0852** | 2 | CAP-DUST | |
| | 5 | 2 | **7X-0871** | 1 | TEE | |
| | 6 | 2 | **8C-3447** | 1 | CAP-DUST | |
| | 7 | 2 | **8S-9009** | 1 | ELBOW | |
| | 8 | 1 | **9C-4937** | 1 | BREATHER AS (TORQUE CONVERTER, TRANSMISSION) | |
| | 9 | 1 | **9S-6524** | 2 | BRACKET | |
| | 10 | 2 | **002-3448** | 1 | CLIP | |
| | 11 | 2 | **141-4007** | 1 | SLEEVE | |
| | 12 | 2 | *164-6874* | 2 | FITTING AS-ELBOW | |
| | | | | | (EACH INCLUDES) | |
| | | 2 | **3J-1907** | 1 | SEAL-O-RING | |
| | | 2 | **085-7356** | 1 | FITTING | |
| | 13 | 2 | **254-4937** | 1 | COVER | |
| Y | 14 | 2 | **254-9238** | 1 | VALVE GP-LOCKUP CLUTCH & SOL (POWER TRAIN OIL) | 453 |
| I | 15 | 1 | **274-5061** | 1 | HOSE AS | |
| I | 16 | 1 | **274-5122** | 1 | HOSE AS | |
| I | 17 | 1 | **274-5554** | 1 | HOSE AS | |
| I | 18 | 1 | **274-5786** | 1 | HOSE AS | |
| I | 19 | 1 | **275-0106** | 1 | HOSE AS | |
| | 20 | 1 | **276-2754** | 1 | TUBE AS | |
| | 21 | 2 | **284-4253** | 1 | TUBE AS | |
| | 22 | 2 | **293-3369** | 1 | TUBE AS | |
| | 23 | 2 | **293-3377** | 1 | BRACKET | |
| I | 24 | 1 | **307-2682** | 1 | HOSE AS | |
| | 25 | 2 | **307-9341** | 1 | TUBE AS | |
| | 26 | 2 | **308-8616** | 1 | GAUGE AS-OIL LEVEL (DIPSTICK) (TRANSMISSION) | |
| | 27 | 2 | **308-8617** | 1 | TUBE | |
| | 28 | 2 | **310-1578** | 1 | PLATE AS | |
| I | 29 | 1 | **316-8153** | 1 | HOSE AS | |
| I | 30 | 1 | **316-8154** | 1 | HOSE AS | |
| | 31 | 1 | **030-8324** | 1 | ELBOW | |
| | 32 | 1 | **0S-1594** | 2 | BOLT (3/8-16X1-IN) | |
| | 33 | 2 | **144-3935** | 1 | CLIP | |
| | 34 | 2 | *148-8305* | 1 | ADAPTER AS | |
| | | 2 | **3J-1907** | 1 | SEAL-O-RING | |
| | | 2 | **5P-9617** | 1 | ADAPTER | |
| | 35 | 2 | *148-8347* | 2 | ELBOW AS | |
| | | | | | (EACH INCLUDES) | |
| | | 2 | **3D-2824** | 1 | SEAL-O-RING | |
| | | 2 | **6V-9007** | 1 | ELBOW | |
| | | 2 | **6V-9746** | 1 | SEAL-O-RING | |
| | 36 | 1,2 | *148-8364* | 2 | ELBOW AS | |
| | | | | | (EACH INCLUDES) | |
| | | 1,2 | **3K-0360** | 1 | SEAL-O-RING | |
| | | 1,2 | **6V-8398** | 1 | SEAL-O-RING | |
| | | 1,2 | **6V-8625** | 1 | ELBOW | |
| | 37 | 2 | *148-8365* | 1 | ELBOW AS | |
| | | 2 | **3J-1907** | 1 | SEAL-O-RING | |
| | | 2 | **6V-8398** | 1 | SEAL-O-RING | |
| | | 2 | **8T-6876** | 1 | ELBOW (90-DEG) | |
| | 38 | 2 | *148-8407* | 1 | PLUG AS | |
| | | 2 | **3J-1907** | 1 | SEAL-O-RING | |
| | | 2 | **9S-4191** | 1 | PLUG-O-RING | |

## *269-9199* LINES GP-POWER TRAIN OIL *(contd.)* i03290675

| NOTE | REF NO | GRAPHIC REF | PART NUMBER | QTY | PART NAME 1 2 3 4 5 6 (PRODUCT LEVEL) | SEE PAGE |
|---|---|---|---|---|---|---|
| | 39 | 2 | *164-5567* | 2 | COUPLER AS-QUICK DISCONNECT | |
| | | | | | (EACH INCLUDES) | |
| | | 2 | **3J-1907** | 1 | SEAL-O-RING | |
| | | 2 | **6V-3965** | 1 | FITTING (QUICK DISCONNECT) | |
| | 40 | 2 | *164-5590* | 1 | VALVE AS-FLUID SAMPLING (POWER TRAIN OIL) | |
| | | 2 | **3J-7354** | 1 | SEAL-O-RING | |
| | | 2 | **8C-3446** | 1 | VALVE-FLUID SAMPLING | |
| | 41 | 2 | **1P-3704** | 2 | SEAL-RECTANGULAR | |
| | 42 | 1,2 | **1P-3705** | 2 | SEAL-RECTANGULAR | |
| | 43 | 1 | **1P-4577** | 2 | FLANGE-HALF | |
| | 44 | 1,2 | **1P-4578** | 10 | FLANGE-HALF | |
| | 45 | 1,2 | **1P-4579** | 4 | FLANGE-HALF | |
| | 46 | 2 | **1P-4582** | 4 | FLANGE-HALF | |
| | 47 | 1 | **1S-0994** | 1 | CLIP | |
| | 48 | 2 | **222-1178** | 4 | CLAMP | |
| | 49 | 2 | **232-4901** | 1 | CLAMP | |
| | 50 | 2 | **2S-1647** | 1 | GROMMET | |
| | 51 | 2 | **3A-1689** | 1 | SPACER | |
| | 52 | 1 | **3B-7743** | 1 | FITTING | |
| | 53 | 2 | **3F-5792** | 1 | SEAL-O-RING | |
| | 54 | 1 | **4D-3734** | 1 | ELBOW | |
| | 55 | 1 | **4D-4917** | 1 | TEE | |
| | 56 | 1 | **4J-0520** | 1 | SEAL-O-RING | |
| | 57 | 1,2 | **4J-0522** | 4 | SEAL-O-RING | |
| | 58 | 1 | **4J-0524** | 2 | SEAL-O-RING | |
| | 59 | 2 | **4J-0527** | 3 | SEAL-O-RING | |
| | 60 | 2 | **4L-6454** | 3 | BOLT (3/8-16X1-IN) | |
| | 61 | 2 | **5P-1075** | 3 | WASHER-HARD (10.2X22.5X3-MM THK) | |
| | 62 | 1 | **5P-2369** | 1 | CLIP | |
| | 63 | 2 | **5P-7468** | 1 | CLIP (SLOT) | |
| | 64 | 2 | **5P-7469** | 1 | CLIP (TAB) | |
| | 65 | 2 | **5P-8444** | 1 | GROMMET | |
| | 66 | 1,2 | **5S-7382** | 7 | BOLT (3/8-16X1.375-IN) | |
| | 67 | 1 | **6D-4244** | 2 | CLIP | |
| | 68 | 1 | **6D-4247** | 1 | CLIP | |
| | 69 | 2 | **6V-1867** | 1 | CLIP (SLOT) | |
| | 70 | 2 | **6V-1868** | 1 | CLIP (TAB) | |
| | 71 | 2 | **6V-1869** | 1 | GROMMET | |
| | 72 | 1 | **6V-8398** | 1 | SEAL-O-RING | |
| | 73 | 1 | **7D-7233** | 1 | CLIP | |
| | 74 | 1 | **7E-9992** | 1 | BRACKET | |
| | 75 | 2 | **7X-0296** | 3 | BOLT (3/8-16X5.5-IN) | |
| | 76 | 1 | **7X-0310** | 4 | BOLT (7/16-14X2-IN) | |
| | 77 | 2 | **7X-0311** | 4 | BOLT (7/16-14X2.25-IN) | |
| | 78 | 2 | **7X-0318** | 4 | BOLT (7/16-14X4-IN) | |
| | 79 | 2 | **7X-0325** | 4 | BOLT (1/2-13X2.5-IN) | |
| | 80 | 2 | **8M-4433** | 2 | SEAL-O-RING | |
| | 81 | 2 | **8M-4435** | 2 | SEAL-O-RING | |
| | 82 | 1,2 | **8T-4121** | 21 | WASHER-HARD (11X21X2.5-MM THK) | |
| M | 83 | 1,2 | **8T-4133** | 4 | NUT (M10X1.5-THD) | |
| M | 84 | 1,2 | **8T-4136** | 7 | BOLT (M10X1.5X25-MM) | |
| M | 85 | 1,2 | **8T-4137** | 3 | BOLT (M10X1.5X20-MM) | |
| M | 86 | 2 | **8T-4186** | 4 | BOLT (M10X1.5X40-MM) | |
| M | 87 | 2 | **8T-4194** | 4 | BOLT (M12X1.75X50-MM) | |
| M | 88 | 1,2 | **8T-4195** | 3 | BOLT (M10X1.5X30-MM) | |
| | 89 | 1,2 | **8T-4223** | 20 | WASHER-HARD (13.5X25.5X3-MM THK) | |
| | 90 | 1,2 | **8T-4896** | 12 | WASHER-HARD (10.2X18.5X2.5-MM THK) | |
| | 91 | 1,2 | **8T-5360** | 20 | WASHER (12X22.5X2.5-MM THK) | |
| | 92 | 1,2 | **8T-8916** | 8 | BOLT (7/16-14X1.5-IN) | |

## *269-9199* **LINES GP-POWER TRAIN OIL** *(contd.)* **i03290675**

| NOTE | REF NO | GRAPHIC REF | PART NUMBER | QTY | PART NAME 1 2 3 4 5 6 (PRODUCT LEVEL) | SEE PAGE |
|---|---|---|---|---|---|---|
| | 93 | 1,2 | **8T-8919** | 12 | BOLT (1/2-13X1.75-IN) | |
| | 94 | 2 | **9L-2662** | 1 | GASKET | |
| E | 95 | 2 | **5P-0763** | | HOSE (122-CM) | |

C-CHANGE FROM PREVIOUS TYPE
E-ORDER BY THE CENTIMETER
I-REFER TO HYDRAULIC INFORMATION SYSTEM
M-METRIC PART
Y-SEPARATE ILLUSTRATION

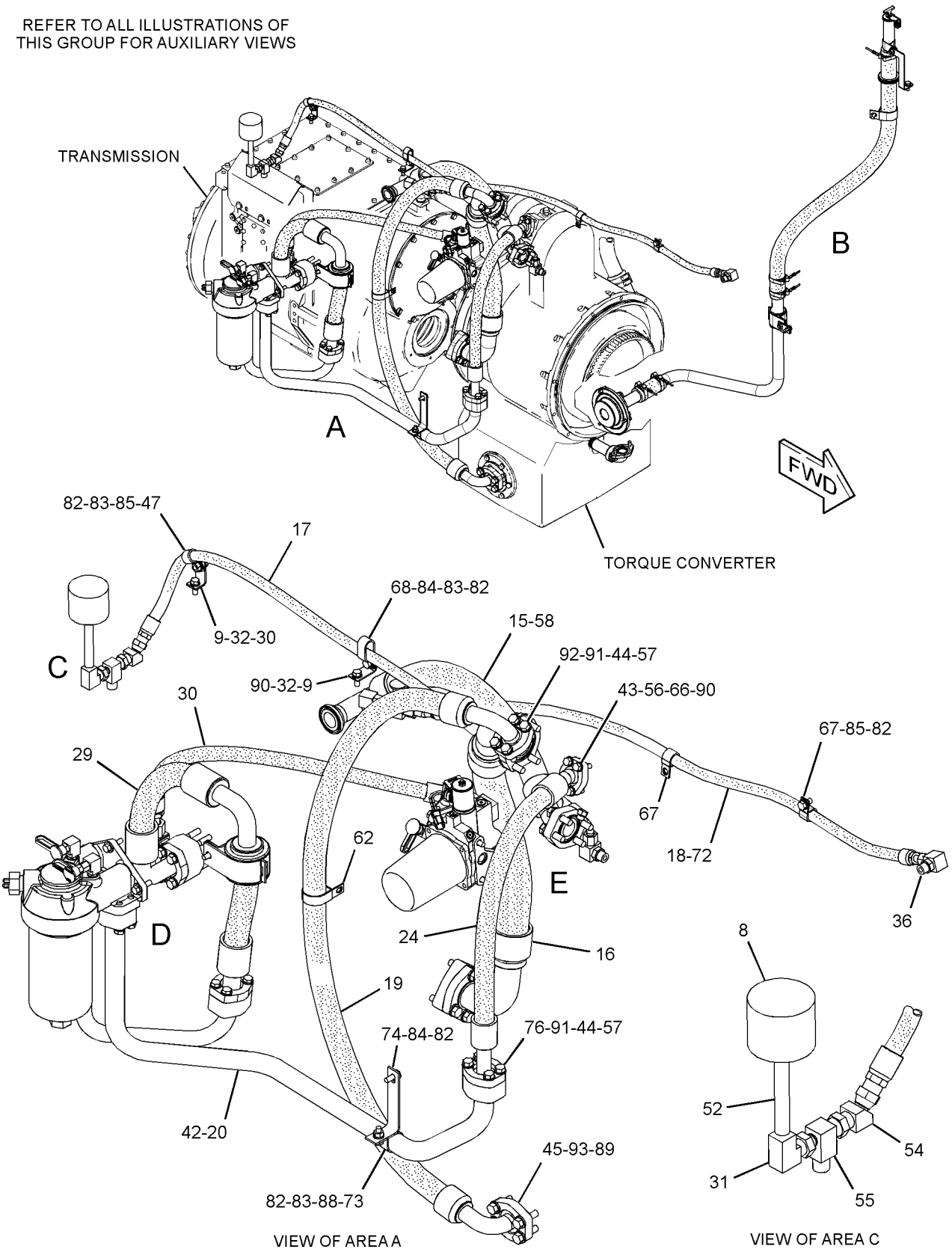


GRAPHIC #1

g01435804

## *269-9199* **LINES GP-POWER TRAIN OIL** *(contd.)* **i03290675**

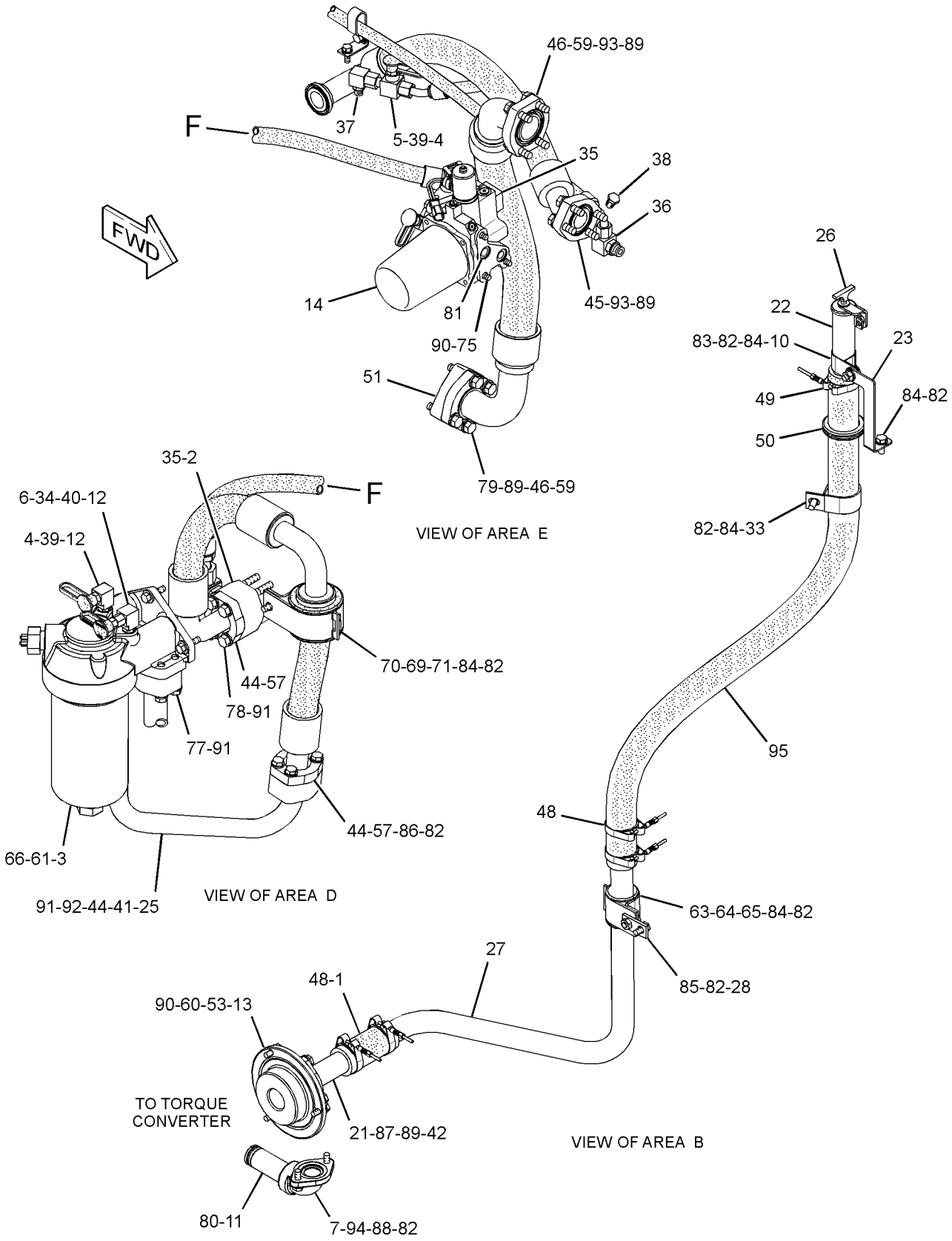


GRAPHIC #2 **<END>** g01437110

# 275-8982 MANIFOLD GP-CONTROL–
## BRAKE ACCUMULATOR CHARGE, HYDRAULIC FAN
**S/N: RLB1-UP**
**PART OF 279-2244, 297-1558 LINES GP-HYDRAULIC FAN**
**AN ATTACHMENT**

**SMCS-1359, 3206, 4050, 5137, 5264, 5479** **i02707451**

| NOTE | REF NO | GRAPHIC REF | PART NUMBER | QTY | PART NAME 1 2 3 4 5 6 (PRODUCT LEVEL) | SEE PAGE |
|---|---|---|---|---|---|---|
| | 1 | 1 | **3K-0360** | 2 | SEAL-O-RING | |
| H | 2 | 1 | **286-3577** | 1 | VALVE GP-RELIEF (DIRECT OPERATED) | |
| | | 1 | **2M-9780** | 1 | SEAL-O-RING | |
| | | 1 | **161-6149** | 1 | SEAL-O-RING | |
| | | 1 | **161-6161** | 2 | RING-BACKUP | |
| J | 3 | 1 | **239-3420** | 2 | VALVE-CHECK | |
| | 4 | 1 | **286-0426** | 1 | PLUG-ORIFICE | |
| L | 5 | 1 | **299-9333** | 1 | VALVE GP-PRESSURE REDUCING | |
| N | 6 | 1 | **279-5771** | 1 | VALVE GP-RELIEF (PILOT OPERATED) | |
| P | 7 | 1 | **277-6343** | 1 | VALVE GP-SOLENOID (FAN DRIVE) | |
| | | 1 | **254-0072** | 1 | COIL AS | |
| S | 8 | 1 | **286-3598** | 1 | VALVE GP-DIVERTER | |
| | | 1 | **6V-5142** | 1 | SEAL-O-RING | |
| | | 1 | **033-6043** | 1 | SEAL-O-RING | |
| | | 1 | **152-2939** | 1 | SEAL-O-RING | |
| | | 1 | **169-1616** | 2 | RING-BACKUP | |
| | | 1 | **169-1617** | 2 | RING-BACKUP | |
| T | 9 | 1 | **286-3599** | 1 | VALVE GP-RELIEF (DIRECT OPERATED) | |
| | 10 | 1 | **280-0947** | 1 | PLUG-ORIFICE | |
| | 11 | 1 | **6E-5066** | 1 | SCREEN (CONTROL MANIFOLD) | |
| Y | 12 | 1 | **214-6863** | 1 | SENSOR GP-PRESSURE (FAN DRIVE) | 304 |
| | 13 | 1 | **9S-8001** | 5 | PLUG-O-RING | |
| | 14 | 1 | **9S-8004** | 4 | PLUG-O-RING | |
| | 15 | 1 | **9S-8005** | 2 | PLUG-O-RING | |
| | 16 | 1 | **3J-1907** | 6 | SEAL-O-RING | |
| | 17 | 1 | **6V-0852** | 1 | CAP-DUST | |
| | 18 | 1 | **6V-3965** | 1 | FITTING (QUICK DISCONNECT) | |
| | 19 | 1 | **4J-7533** | 5 | SEAL-O-RING | |
| | | | | | AVAILABLE REPAIR KIT(S): | |
| H | | | **257-7707** | 1 | KIT-SEAL (RELIEF VALVE) | |
| | | | | | (INCLUDES O-RINGS & BACKUP RING) | |
| J | | | **237-0592** | 1 | KIT-SEAL (CHECK VALVE) | |
| L | | | **300-2683** | 1 | KIT-SEAL (PRESSURE REDUCING VALVE) | |
| | | | | | (INCLUDES O-RINGS & BACKUP RINGS) | |
| N | | | **273-3827** | 1 | KIT-SEAL (RELIEF VALVE) | |
| | | | | | (INCLUDES O-RINGS & BACKUP RING) | |
| P | | | **285-5622** | 1 | KIT-SEAL (SOLENOID VALVE) | |
| S | | | **286-3606** | 1 | KIT-SEAL (DIVERTER VALVE) | |
| | | | | | (INCLUDES O-RINGS & BACKUP RINGS) | |
| T | | | **225-9611** | 1 | KIT-SEAL (RELIEF VALVE) | |
| | | | | | (INCLUDES O-RINGS & BACKUP RINGS) | |

H-KIT MARKED H SERVICES PART(S) MARKED H
J-KIT MARKED J SERVICES PART(S) MARKED J
L-KIT MARKED L SERVICES PART(S) MARKED L
N-KIT MARKED N SERVICES PART(S) MARKED N
P-KIT MARKED P SERVICES PART(S) MARKED P
S-KIT MARKED S SERVICES PART(S) MARKED S
T-KIT MARKED T SERVICES PART(S) MARKED T
Y-SEPARATE ILLUSTRATION

**275-8982 MANIFOLD GP-CONTROL** *(contd. )* **i02707451**

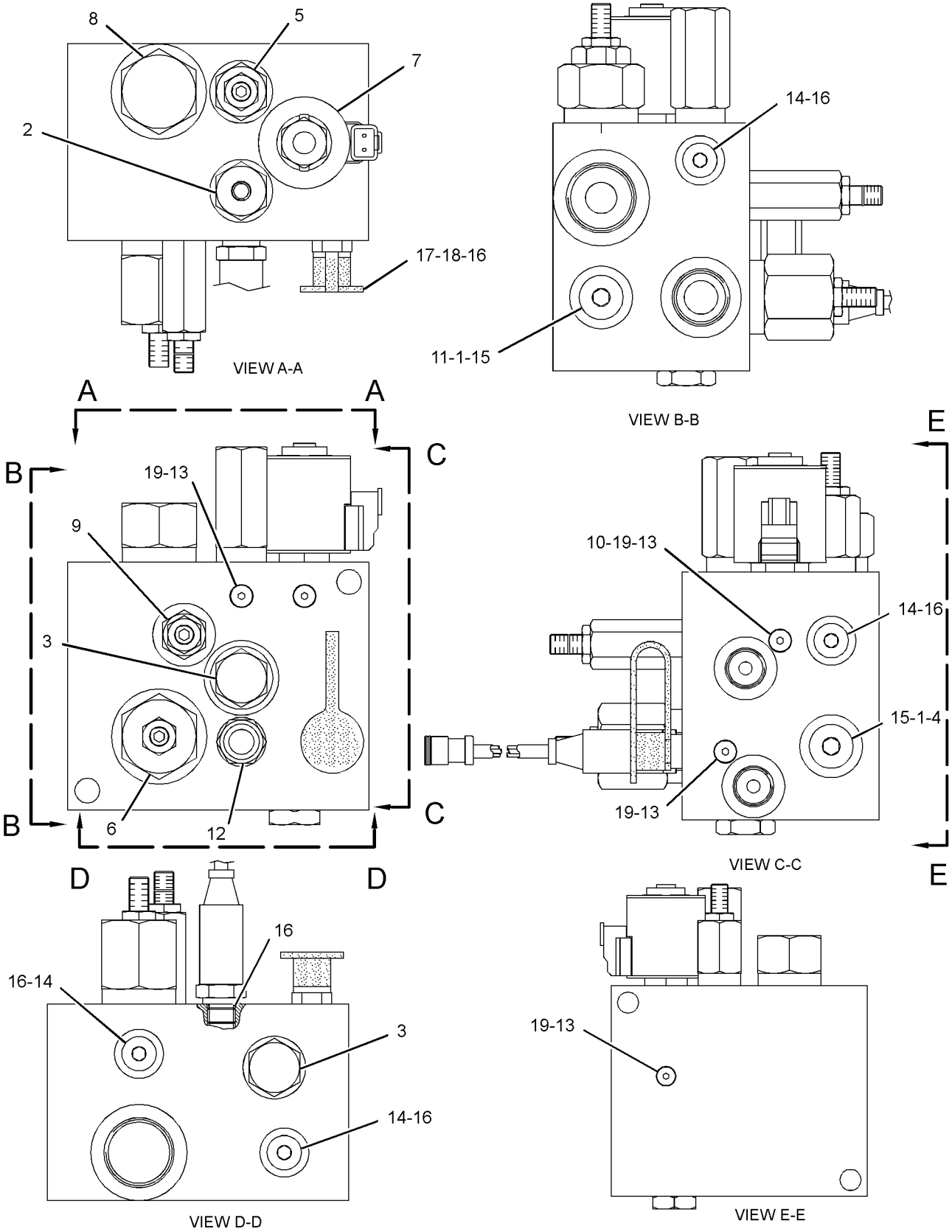


GRAPHIC #1 **<END>** g01360443

# 298-6175 MANIFOLD GP-CONTROL–EXHAUST DIVERTER, HYD FAN

**S/N: RLB1-287**

**PART OF 297-1558 LINES GP-HYDRAULIC FAN**

**AN ATTACHMENT**

**SMCS-1359, 3206, 4050, 5137, 5264, 5479** **i02672870**

| NOTE | PART NUMBER | QTY | PART NAME 1 2 3 4 5 6 (PRODUCT LEVEL) | SEE PAGE |
|---|---|---|---|---|
| Y | **297-4207** | 1 | VALVE GP-SOLENOID (24-VOLT) (EXHAUST DIVERTER) | 464 |
| | | | | |
| J | **301-7498** | 1 | VALVE GP-CHECK (HYDRAULIC FAN) | |
| N | **301-7500** | 1 | VALVE GP-RELIEF (HYDRAULIC FAN) | |
| | **279-6530** | 1 | VALVE GP-SOLENOID (FAN SPEED) | |
| | **261-6728** | 1 | COIL AS | |
| | | | AVAILABLE REPAIR KIT(S): | |
| J | **305-2416** | 1 | KIT-SEAL (CHECK VALVE) (HYDRAULIC FAN) | |
| N | **305-2415** | 1 | KIT-SEAL (HYDRAULIC FAN) | |
| | | | (EACH KIT INCLUDES BACK-UP RINGS & O-RINGS) | |

J-KIT MARKED J SERVICES PART(S) MARKED J
N-KIT MARKED N SERVICES PART(S) MARKED N
Y-SEPARATE ILLUSTRATION

**<END>**

# 298-6175 MANIFOLD GP-CONTROL–EXHAUST DIVERTER, HYD FAN

**S/N: RLB288-UP**

**PART OF 297-1558 LINES GP-HYDRAULIC FAN**

**AN ATTACHMENT**

**SMCS-1359, 3206, 4050, 5137, 5264, 5479** **i02728496**

| NOTE | REF NO | GRAPHIC REF | PART NUMBER | QTY | PART NAME 1 2 3 4 5 6 (PRODUCT LEVEL) | SEE PAGE |
|---|---|---|---|---|---|---|
| | 1 | 1 | **279-6530** | 1 | VALVE GP-SOLENOID (FAN SPEED) | |
| | | 1 | **261-6728** | 1 | COIL AS | |
| Y | 2 | 1 | **297-4207** | 1 | VALVE GP-SOLENOID (24-VOLT) (EXHAUST DIVERTER) | 464 |
| J | 3 | 1 | **301-7498** | 1 | VALVE GP-CHECK (HYDRAULIC FAN) | |
| | | | | | AVAILABLE REPAIR KIT(S): | |
| J | | | **305-2416** | 1 | KIT-SEAL (CHECK VALVE) | |
| | | | | | (INCLUDES BACK-UP RINGS & O-RINGS) | |

J-KIT MARKED J SERVICES PART(S) MARKED J
Y-SEPARATE ILLUSTRATION

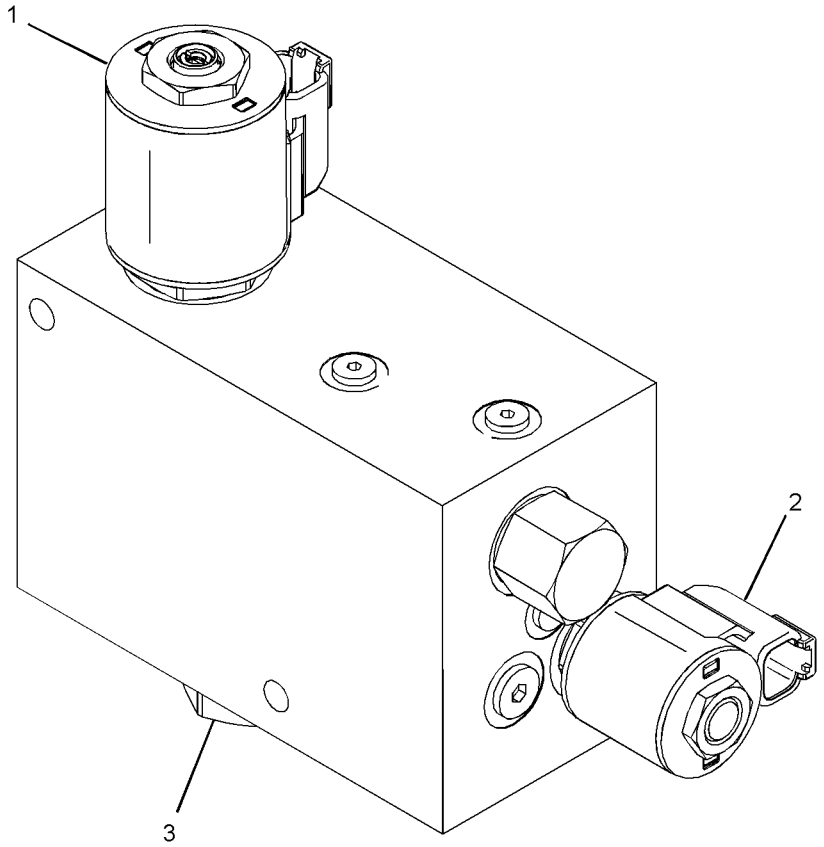


GRAPHIC #1 **<END>** g01372716

# 244-6627 MOUNTING GP-AXLE–REAR

**S/N: RLB1-UP**

**PART OF 270-5370 POWER TRAIN AR**

**SMCS-3278, 3282** **i02619421**

| NOTE | REF NO | GRAPHIC REF | PART NUMBER | QTY | PART NAME 1 2 3 4 5 6 (PRODUCT LEVEL) | SEE PAGE |
|---|---|---|---|---|---|---|
| | 1 | 1 | **3D-8242** | 2 | SLEEVE | |
| | 2 | 1 | **9T-1119** | 1 | BREATHER (REAR DIFFERENTIAL) | |
| | 3 | 1 | **272-6682** | 1 | TUBE-BREATHER | |
| | 4 | 1 | **3D-2824** | 2 | SEAL-O-RING | |
| | 5 | 1 | **5D-7523** | 2 | SEAL-O-RING | |
| | 6 | 1 | **6V-8237** | 50 | WASHER (26X44X4-MM THK) | |
| M | 7 | 1 | **8T-0666** | 50 | BOLT (M24X3X90-MM) | |
| | 8 | 1 | **126-8921** | 1 | PLUG-MAGNETIC (DIFFERENTIAL OIL) | |

M-METRIC PART

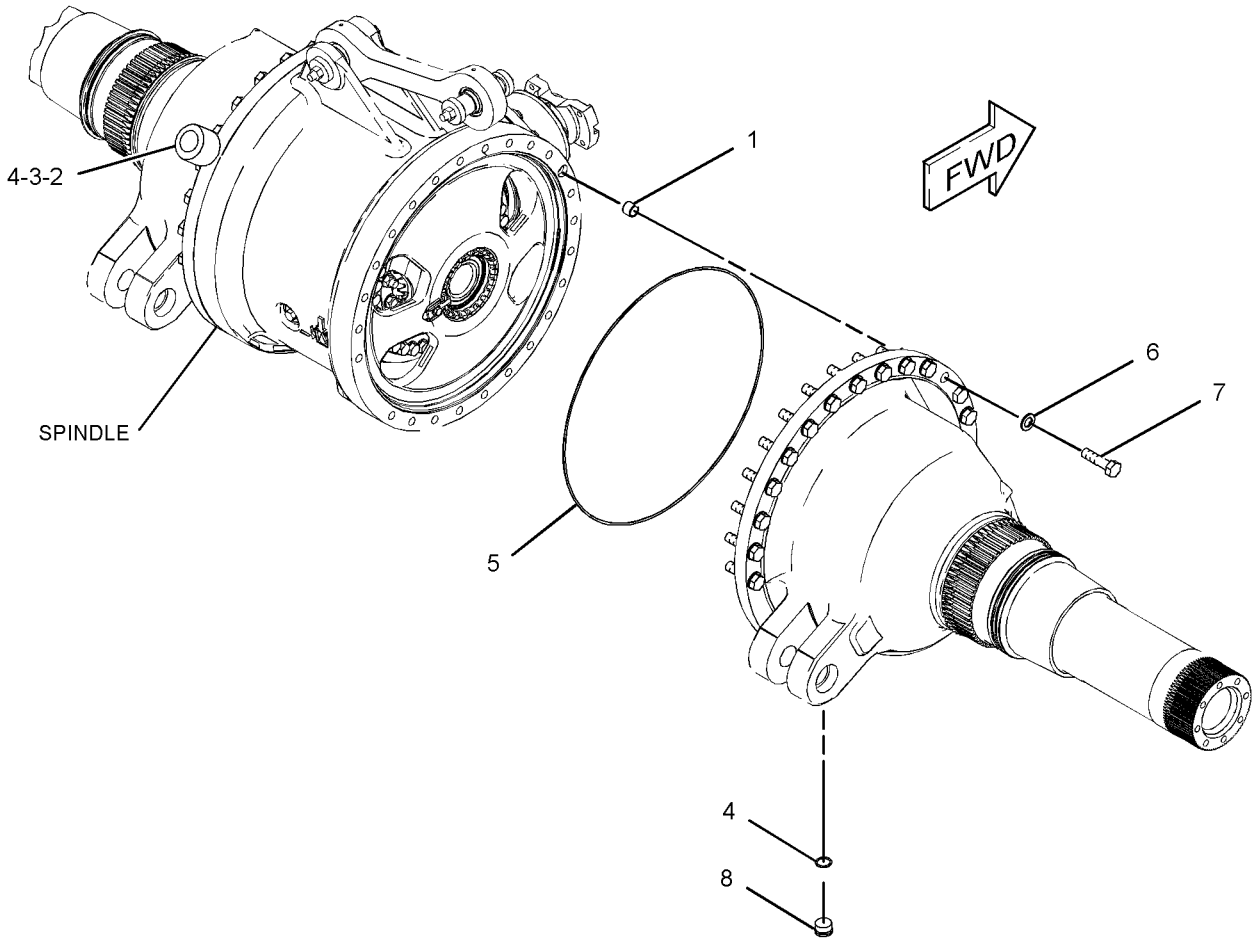


GRAPHIC #1 **<END>** g01270867

# 270-4258 MOUNTING GP-TORQUE CONVERTER

**S/N: RLB1-UP**

**PART OF 270-4248, 308-5826 INSTALLATION AR-ENGINE**

**SMCS-3101** **i02616317**

| NOTE | REF NO | GRAPHIC REF | PART NUMBER | QTY | PART NAME 1 2 3 4 5 6 (PRODUCT LEVEL) | SEE PAGE |
|---|---|---|---|---|---|---|
| | 1 | 1 | **299-3435** | 12 | BOLT (7/16-14X1.5-IN) | |
| | 2 | 1 | **8T-5360** | 12 | WASHER (12X22.5X2.5-MM THK) | |

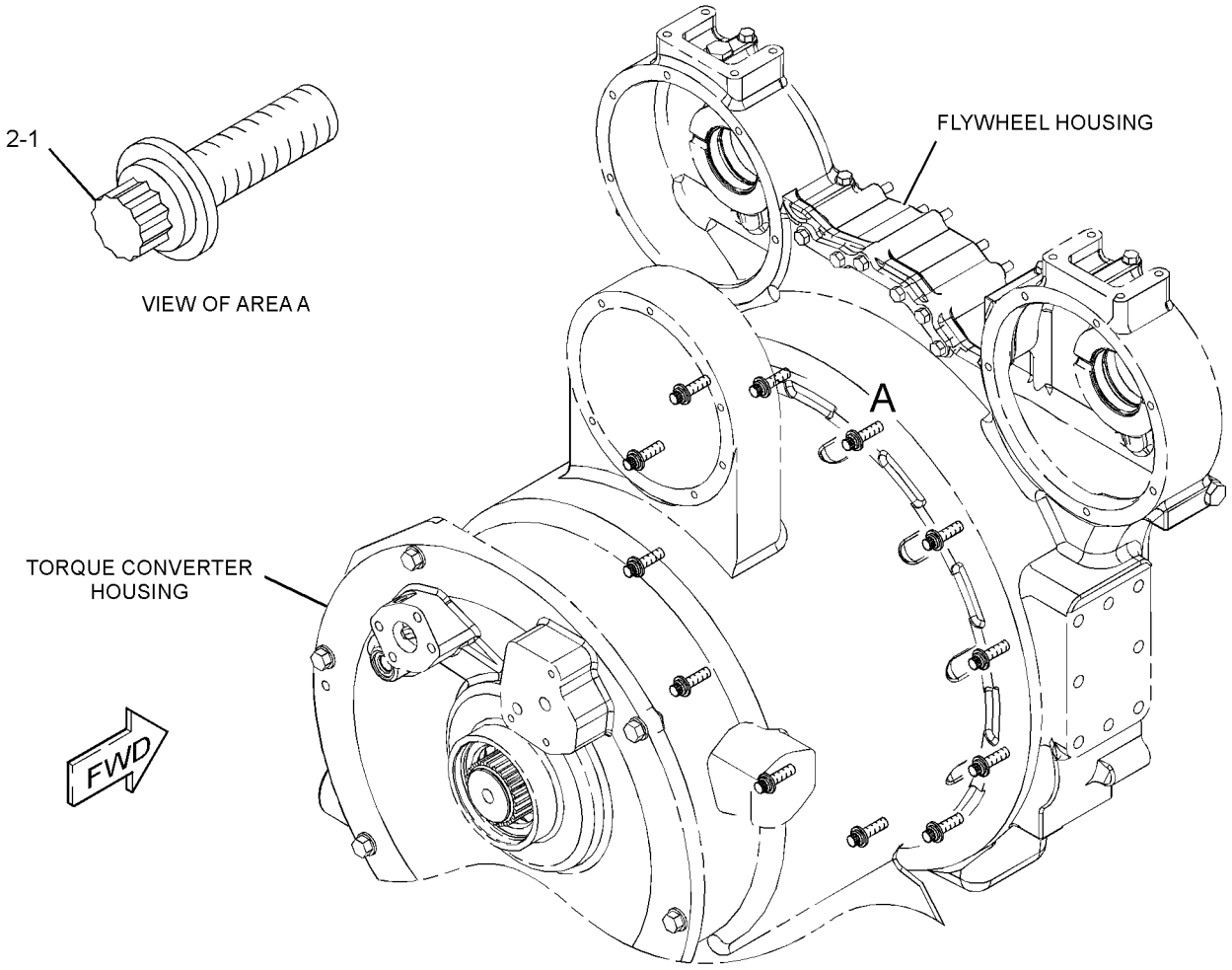


GRAPHIC #1 **<END>** g01320364

# *108-3587* MOUNTING GP-TRANSMISSION

**S/N: RLB1-UP**

**PART OF 268-7808 CHASSIS AR**

**SMCS-3082** **i03291782**

| NOTE | REF NO | GRAPHIC REF | PART NUMBER | QTY | PART NAME 1 2 3 4 5 6 (PRODUCT LEVEL) | SEE PAGE |
|---|---|---|---|---|---|---|
| | 1 | 1 | **7K-4370** | 8 | BOLT (5/8-11X1.75-IN) | |
| | 2 | 1 | **5T-4390** | 2 | BRACKET AS | |
| | | | | | (EACH INCLUDES) | |
| | | 1 | **1A-2223** | 2 | DOWEL | |
| | 3 | 1 | **7X-0444** | 4 | BOLT (1-8X6.5-IN) | |
| | 4 | 1 | **2G-7988** | 2 | PLATE | |
| | 5 | 1 | **8T-4835** | 2 | BOLT (1/2-13X2-IN) | |
| | 6 | 1 | **8T-4223** | 6 | WASHER-HARD (13.5X25.5X3-MM THK) | |
| | 7 | 1 | **8T-9389** | 4 | BOLT (1/2-13X2.75-IN) | |
| | 8 | 1 | **108-3589** | 2 | SPACER | |
| | 9 | 1 | **8P-3729** | 10 | BUSHING-TERMINAL | |
| | 10 | 1 | **5R-5927** | 2 | WASHER (14X65X6-MM THK) | |
| | 11 | 1 | **7X-3328** | 2 | BOLT-LOCKING (1/2-13X1-IN) | |
| | 12 | 1 | **6G-5341** | 1 | PIN | |
| | 13 | 1 | **108-3583** | 1 | BRACKET | |
| | 14 | 1 | **6V-8190** | 4 | NUT (1-8-THD) | |
| | 15 | 1 | **8T-4122** | 8 | WASHER-HARD (17X32X3.5-MM THK) | |

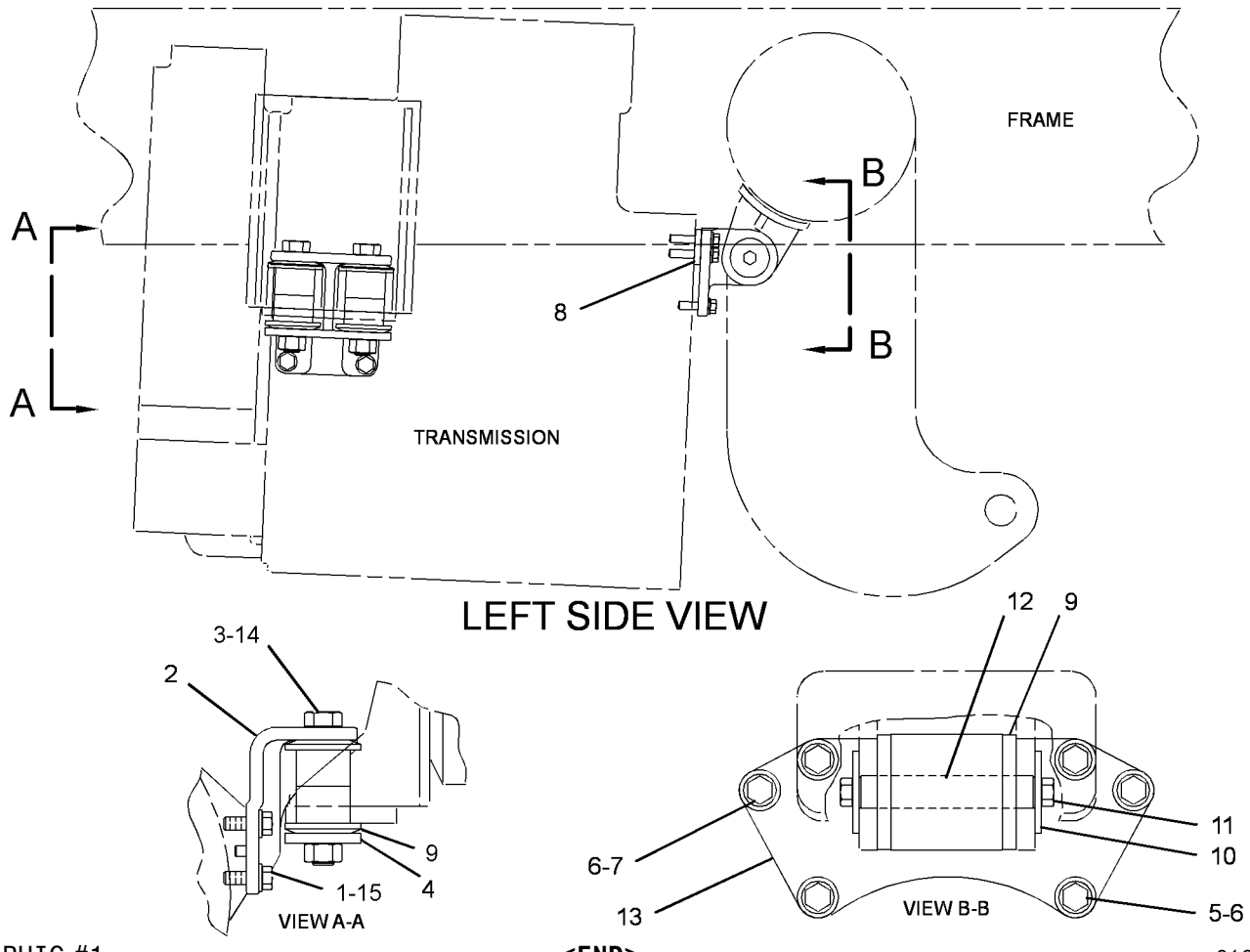


GRAPHIC #1

**<END>**

g01675794

# POWER TRAIN

## *307-9667* PLANETARY GP-TRANSMISSION

**S/N: NDG1-UP**

**PART OF 294-5560 TRANSMISSION AR**

**SMCS-3160** **i03200666**

| NOTE | REF NO | GRAPHIC REF | PART NUMBER | QTY | PART NAME 1 2 3 4 5 6 (PRODUCT LEVEL) | SEE PAGE |
|---|---|---|---|---|---|---|
| | 1 | 1,2 | **1A-2170** | 28 | SPRING-RETAINER | |
| | 2 | 3 | **1M-9691** | 10 | SPRING | |
| | 3 | 2 | **1T-0141** | 1 | RING-METAL SEAL | |
| | 4 | 2 | **3T-0697** | 1 | MANIFOLD-CENTER | |
| | 5 | 2 | **3T-0698** | 1 | HOUSING-CLUTCH | |
| | 6 | 3 | **3T-0703** | 1 | PLATE-END | |
| | 7 | 1,2 | **3T-0707** | 2 | PLATE AS | |
| | | | | | (EACH INCLUDES) | |
| | | 1,2 | **5H-6202** | 2 | PIN | |
| | 8 | 3 | **3T-0709** | 1 | HOUSING AS-CLUTCH | |
| | | 3 | **1A-2223** | 2 | DOWEL | |
| | 9 | 3 | **3T-1386** | 1 | RETAINER-BEARING | |
| | 10 | 2 | **3T-3723** | 1 | PISTON-BALANCE | |
| | 11 | 2 | **3T-3751** | 1 | PISTON-CLUTCH | |
| | 12 | 2 | **3T-3997** | 1 | BAFFLE AS | |
| | | 2 | **5C-1014** | 2 | BRACKET-LATCH | |
| | 13 | 1 | **3T-6999** | 1 | GEAR-SUN (30, 26-TEETH) | |
| | 14 | 1 | **3T-7000** | 1 | RING-RETAINING | |
| | 15 | 1 | **3T-7002** | 1 | CARRIER AS | |
| | 15A | 1 | **3T-7003** | 1 | BEARING-SLEEVE | |
| | 16 | 1,2 | **4M-9592** | 20 | SPRING | |
| | 17 | 2 | **4S-5816** | 1 | RING-SEAL | |
| | 18 | 3 | **5M-0578** | 8 | BEARING AS-ROLLER | |
| | 19 | 1,2 | **5M-6126** | 13 | BEARING AS-ROLLER | |
| | 20 | 1 | **5M-6212** | 3 | TUBE | |
| | 21 | 3 | **5P-9344** | 1 | BEARING AS-ROLLER | |
| | 22 | 3 | **5P-9345** | 8 | BEARING | |
| | 23 | 3 | **6T-1996** | 7 | PLATE-CLUTCH | |
| | 24 | 1 | **6V-1720** | 1 | PLATE-SERIAL NUMBER (TRANSMISSION) | |
| | 25 | 2 | **6Y-2281** | 2 | RING-SEAL | |
| | 26 | 2 | **6Y-5888** | 2 | RING-SEAL | |
| | 27 | 1,2 | **6Y-9807** | 5 | DISC-FRICTION | |
| | 28 | 2 | **7G-0713** | 1 | CARRIER AS | |
| | | 2 | **9L-9068** | 2 | DOWEL | |
| | 29 | 1 | **7G-0719** | 3 | SHAFT-PLANETARY | |
| | 30 | 1 | **7G-0720** | 3 | SHAFT-PLANETARY | |
| | 31 | 2 | **7G-0721** | 4 | SHAFT-PLANETARY | |
| | 32 | 1 | **7G-0725** | 1 | GEAR-RING (72-TEETH) | |
| | 33 | 2 | **7G-0727** | 1 | GEAR-RING (101-TEETH) | |
| | 34 | 3 | **7G-0728** | 1 | GEAR-RING (70-TEETH) | |
| | 35 | 3 | **7G-0729** | 1 | GEAR-RING (71-TEETH) | |
| | 36 | 1,2 | **7G-0731** | 2 | PISTON-CLUTCH | |
| | 37 | 3 | **7G-0732** | 2 | PISTON-CLUTCH | |
| | 38 | 2 | **7G-0739** | 1 | HOUSING AS | |
| | | 2 | **8M-6521** | 2 | DOWEL | |
| | 39 | 2 | **7G-0743** | 1 | PLATE | |
| | 40 | 2 | **7G-0744** | 1 | PLATE-RETAINER | |
| | 41 | 3 | **7G-0746** | 4 | SHAFT AS | |
| | | | | | (EACH INCLUDES) | |
| | | 3 | **5M-7921** | 1 | PLUG-CORE | |
| | 42 | 3 | **7G-0747** | 4 | SHAFT AS | |
| | | | | | (EACH INCLUDES) | |
| | | 3 | **2A-3746** | 1 | PLUG-CUP | |
| | 43 | 1,2 | **7G-0824** | 4 | PLATE-CLUTCH | |
| | 44 | 1,2 | **7G-0825** | 3 | PLATE-CLUTCH | |
| | 45 | 3 | **7G-1136** | 1 | GEAR AS-SUN | |

| NOTE | REF NO | GRAPHIC REF | PART NUMBER | QTY | PART NAME 1 2 3 4 5 6 (PRODUCT LEVEL) | SEE PAGE |
|---|---|---|---|---|---|---|
| | | 3 | **7G-1137** | 1 | GEAR-SUN (29-TEETH) | |
| | | 3 | **7G-1138** | 1 | HUB-COUPLING | |
| | | 3 | **9S-2843** | 1 | RING-LOCK | |
| | 46 | 3 | **7G-1141** | 1 | SHAFT-CENTER | |
| | 47 | 1 | **7G-1143** | 1 | GEAR AS (73-TEETH) | |
| | | 1 | **3T-3718** | 1 | GEAR-RING | |
| | | 1 | **9M-2001** | 1 | DOWEL | |
| | 48 | 2 | **7G-1146** | 1 | GEAR AS-SUN (55-TEETH) | |
| | | 2 | **9M-2001** | 1 | DOWEL | |
| | 49 | 2 | **7G-1148** | 1 | GEAR-SUN (30-TEETH) | |
| | 50 | 1 | **7G-1153** | 1 | SHAFT-SENSOR | |
| B | 51 | 3 | **7G-1158** | 1 | SHIM PACK (INCLUDES 17-SHIMS) | |
| | 52 | 3 | **7G-1159** | 1 | PLATE-RETAINER | |
| | 53 | 1 | **7G-1185** | 1 | SHAFT AS | |
| | 53A | 1 | **3D-8823** | 1 | BEARING-SLEEVE | |
| | 54 | 3 | **7G-1596** | 1 | RING-RETAINING | |
| | 55 | 1 | **7G-2475** | 3 | GEAR-PLANETARY (24-TEETH) | |
| | 56 | 1 | **7G-2476** | 6 | GEAR-PLANETARY (20-TEETH) | |
| | 57 | 2 | **7G-2516** | 4 | GEAR-PLANETARY (24-TEETH) | |
| | 58 | 1,3 | **7M-5813** | 20 | SPRING | |
| | 59 | 3 | **7T-7771** | 1 | CARRIER-PLANETARY | |
| | 60 | 1,2 | **8E-8304** | 26 | DISC-THRUST | |
| | 61 | 3 | **8E-8306** | 8 | DISC-THRUST | |
| | 62 | 3 | **8E-8307** | 8 | DISC-THRUST | |
| | 63 | 2 | **8E-9292** | 1 | MANIFOLD AS | |
| | | 2 | **8S-3426** | 1 | DOWEL | |
| | 64 | 1 | **8E-9598** | 1 | HOUSING-CLUTCH | |
| | 65 | 1 | **8E-9599** | 1 | PISTON-CLUTCH | |
| | 66 | 1 | **8E-9600** | 1 | CAGE-BEARING | |
| | 67 | 1 | **8E-9601** | 1 | MANIFOLD | |
| R | 68 | 1 | **8P-2051** | 1 | PLATE-CLUTCH | |
| | 69 | 1 | **8P-2053** | 1 | SEAL-RING | |
| | 70 | 2 | **9F-3788** | 1 | RING-METAL SEAL | |
| | 71 | 1 | **9F-3823** | 2 | RING-SEAL | |
| | 72 | 2 | **9M-1503** | 1 | RING-METAL SEAL | |
| | 73 | 2 | **9M-4355** | 10 | DAMPER-BOLT | |
| | 74 | 1 | **9P-7390** | 2 | DISC AS-FRICTION | |
| | 75 | 1,2,3 | **102-8671** | 14 | DISC-FRICTION | |
| | 76 | 3 | **9W-2985** | 1 | ADAPTER-SPEED | |
| | 77 | 1 | **9W-8571** | 1 | HUB AS | |
| | | 1 | **9M-2001** | 1 | DOWEL | |
| | 78 | 1 | **9W-8575** | 1 | HOUSING AS-CLUTCH | |
| | | 1 | **1A-2223** | 2 | DOWEL | |
| | 79 | 1 | **9W-9158** | 1 | PISTON-BALANCE | |
| | 80 | 1 | **9W-9159** | 1 | PISTON-CLUTCH | |
| | 81 | 2 | **9W-9161** | 1 | HOUSING AS | |
| | | 2 | **6B-6863** | 1 | PIN-SPRING | |
| | | 2 | **6P-7706** | 1 | CARRIER-RING | |
| | | 2 | **8M-6521** | 2 | DOWEL | |
| | | 2 | **8S-3426** | 1 | DOWEL | |
| | 82 | 3 | **164-9662** | 5 | DOWEL-REACTION | |
| | 83 | 2 | **165-2468** | 1 | HOUSING AS | |
| | | 2 | **1A-2223** | 4 | DOWEL | |
| | 84 | 3 | **171-7209** | 1 | RING-SEAL | |
| | 85 | 3 | **176-4114** | 1 | CARRIER AS | |
| | 85A | 3 | **6F-6547** | 1 | BEARING-SLEEVE | |
| | 86 | 3 | **224-4825** | 4 | GEAR-PLANETARY (20-TEETH) | |
| | 87 | 3 | **224-4826** | 4 | GEAR-PLANETARY (21-TEETH) | |
| | 88 | 3 | **244-5934** | 1 | YOKE AS | |

## *307-9667* PLANETARY GP-TRANSMISSION *(contd.)* i03200666

| NOTE | REF NO | GRAPHIC REF | PART NUMBER | QTY | PART NAME 1 2 3 4 5 6 (PRODUCT LEVEL) | SEE PAGE |
|---|---|---|---|---|---|---|
| | | 3 | **2V-4458** | 1 | CUP | |
| | 89 | 3 | **266-0830** | 1 | SEAL-LIP TYPE | |
| | 90 | 2 | **061-6712** | 1 | RING-RETAINING | |
| | 91 | 2 | **0L-1351** | 2 | BOLT (3/8-16X0.875-IN) | |
| | 92 | 2 | **0S-1571** | 9 | BOLT (3/8-16X1.75-IN) | |
| | 93 | 3 | **0S-1587** | 25 | BOLT (1/2-13X1.75-IN) | |
| | 94 | 1,2 | **0S-1588** | 40 | BOLT (3/8-16X1.25-IN) | |
| | 95 | 3 | **0S-1591** | 8 | BOLT (3/8-16X1.5-IN) | |
| | 96 | 2 | **0S-1617** | 4 | BOLT (5/16-18X0.75-IN) | |
| | 97 | 1 | **1A-7669** | 8 | BOLT (1/2-13X7-IN) | |
| | 98 | 2 | **1B-7182** | 2 | BOLT (5/16-18X1.25-IN) | |
| | 99 | 3 | **1D-4574** | 10 | BOLT (1/2-13X6-IN) | |
| | 100 | 2 | **1S-0579** | 1 | BALL BEARING | |
| | 101 | 3 | **1T-0720** | 4 | BOLT-12 POINT HEAD (3/8-16X1.25-IN) | |
| | 102 | 1 | **2B-0947** | 8 | BOLT (1/2-13X2.25-IN) | |
| | 103 | 2 | **2L-0043** | 1 | RING-RETAINING | |
| | 104 | 1 | **3D-9348** | 2 | BOLT (1/2-13X7.75-IN) | |
| | 105 | 3 | **3P-0896** | 2 | RING-RETAINING | |
| | 106 | 1,2,3 | **3P-2795** | 4 | SEAL-RING | |
| | 107 | 1,2,3 | **3S-2708** | 18 | PIN-SPRING | |
| | 108 | 2 | **3T-2299** | 2 | RING-SEAL EXTENSION | |
| | 109 | 1 | **3T-3725** | 2 | RING-SEAL EXTENSION | |
| | 110 | 1,2 | **4M-8871** | 10 | DOWEL | |
| | 111 | 3 | **4M-9641** | 10 | BOLT (1/2-13X12.75-IN) | |
| | 112 | 1,2 | **5L-4753** | 2 | RING-RETAINING | |
| | 113 | 1,2,3 | **5M-2894** | 59 | WASHER-HARD (10.2X18.5X2.5-MM THK) | |
| | 114 | 2 | **5P-0076** | 6 | BOLT-12 POINT HEAD (3/8-16X1.5-IN) | |
| | 115 | 3 | **5P-3092** | 1 | SEAL-O-RING | |
| | 116 | 1 | **5P-5296** | 1 | RING-RETAINING | |
| | 117 | 1 | **5P-6727** | 1 | BALL BEARING | |
| | 118 | 1,3 | **5P-8245** | 63 | WASHER-HARD (13.5X25.5X3-MM THK) | |
| | 119 | 2 | **5P-9362** | 1 | RING-RETAINING | |
| | 120 | 3 | **6L-4783** | 16 | BOLT-12 POINT HEAD (5/16-18X1.25-IN) | |
| | 121 | 1 | **6V-4323** | 1 | BALL BEARING | |
| | 122 | 3 | **7G-1186** | 2 | RING-SEAL (EXTERNAL) | |
| | 123 | 1 | **7T-5135** | 1 | SPACER (50.34X63.5X3.1-MM THK) | |
| | 124 | 3 | **8D-4771** | 1 | SEAL-O-RING | |
| | 125 | 3 | **8D-8621** | 1 | RING-RETAINING | |
| | 126 | 1 | **8L-9811** | 1 | RING-RETAINING | |
| | 127 | 1 | **8P-2022** | 1 | RING-SEAL | |
| | 128 | 1,2 | **8P-8744** | 2 | RING-SEAL EXTENSION | |
| | 129 | 1 | **8P-9569** | 1 | RING-SEAL | |
| | 130 | 2 | **8S-3370** | 1 | RING-SEAL | |
| | 131 | 1 | **9H-5545** | 5 | DOWEL-REACTION | |
| | 132 | 2 | **9M-1974** | 6 | WASHER-HARD (8.8X16X2-MM THK) | |
| | 133 | 2 | **106-7799** | 2 | BALL BEARING | |

B-USE AS REQUIRED
R-REMFG PART MAY BE AVAILABLE

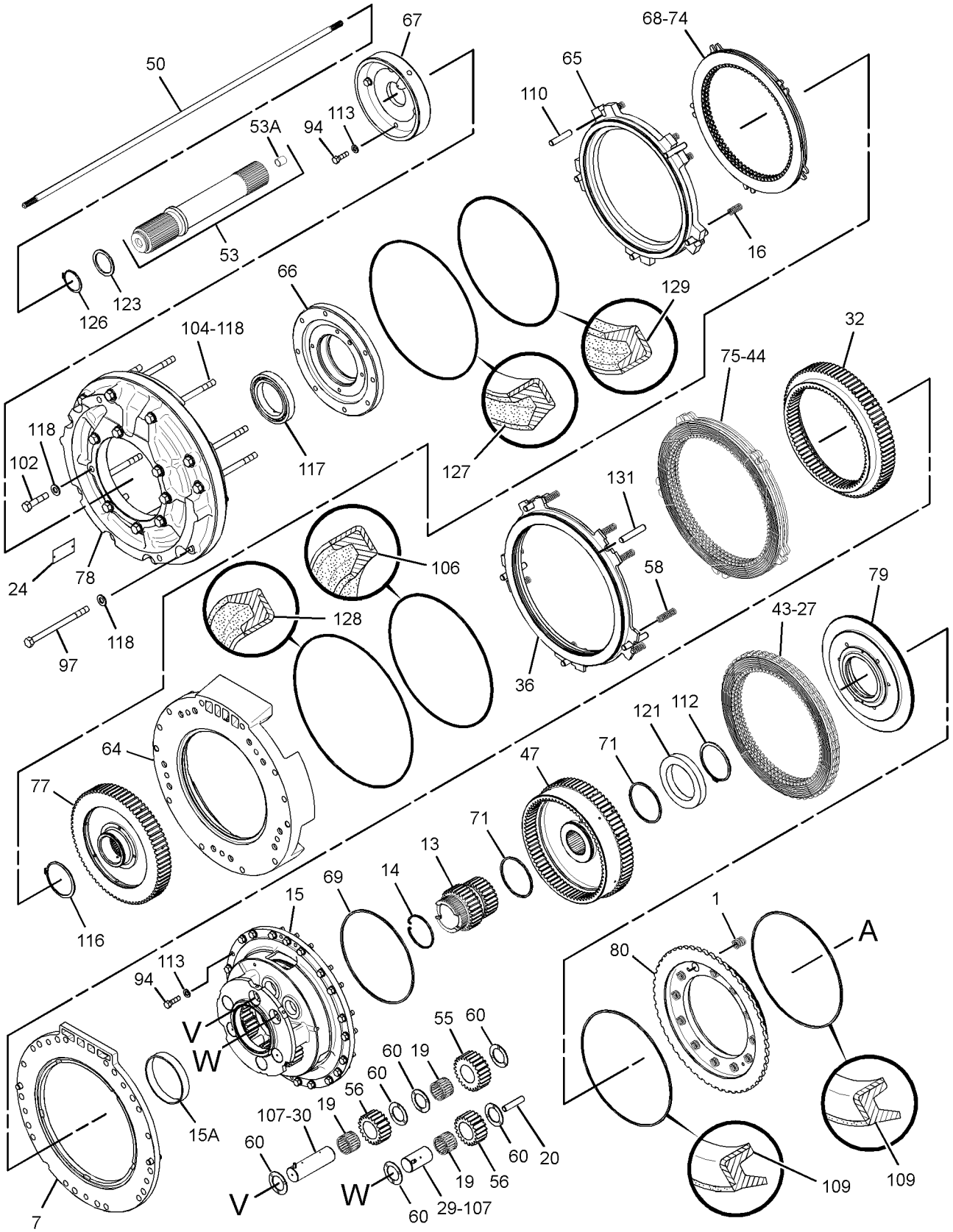


GRAPHIC #1

g01460723

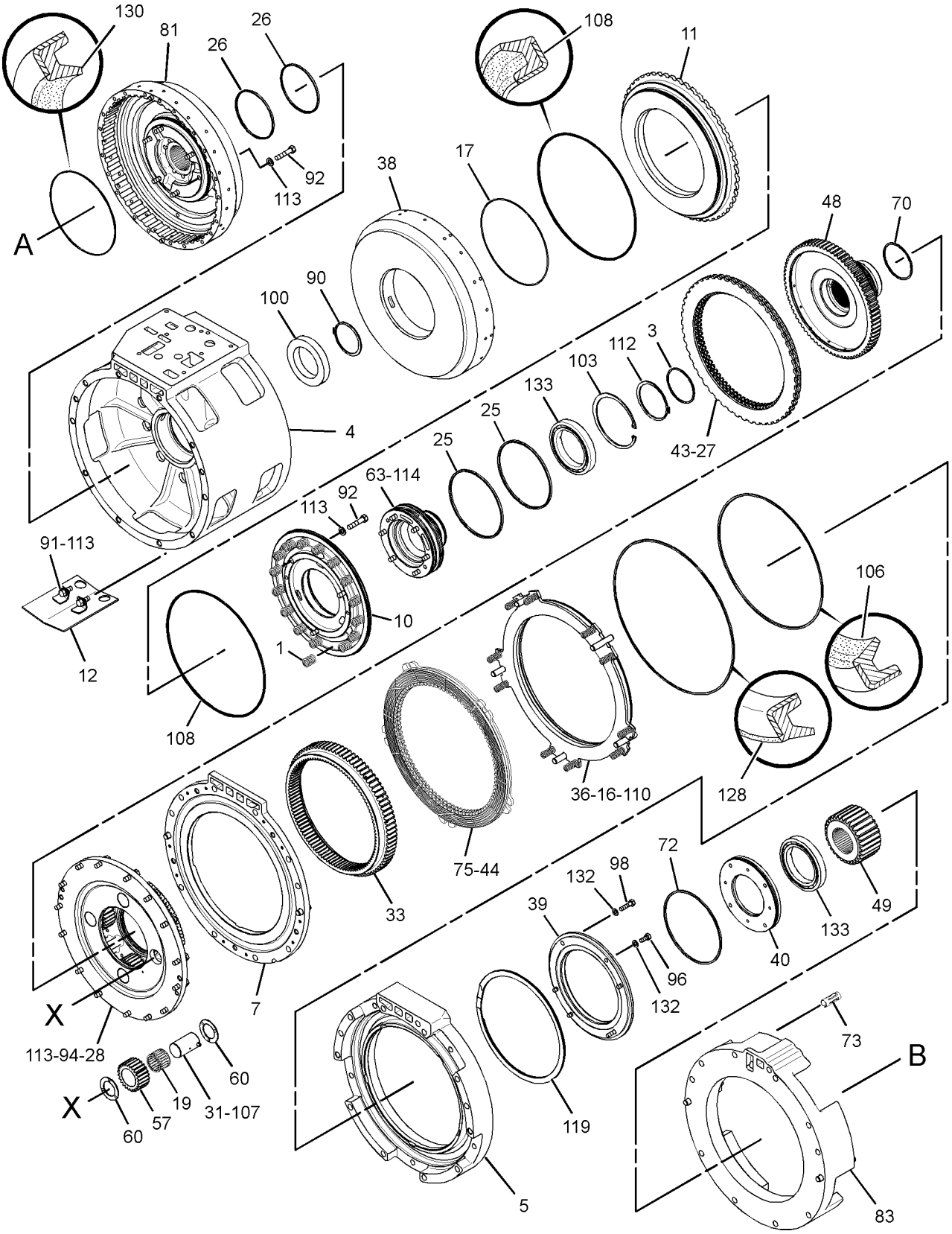


GRAPHIC #2

g01460724

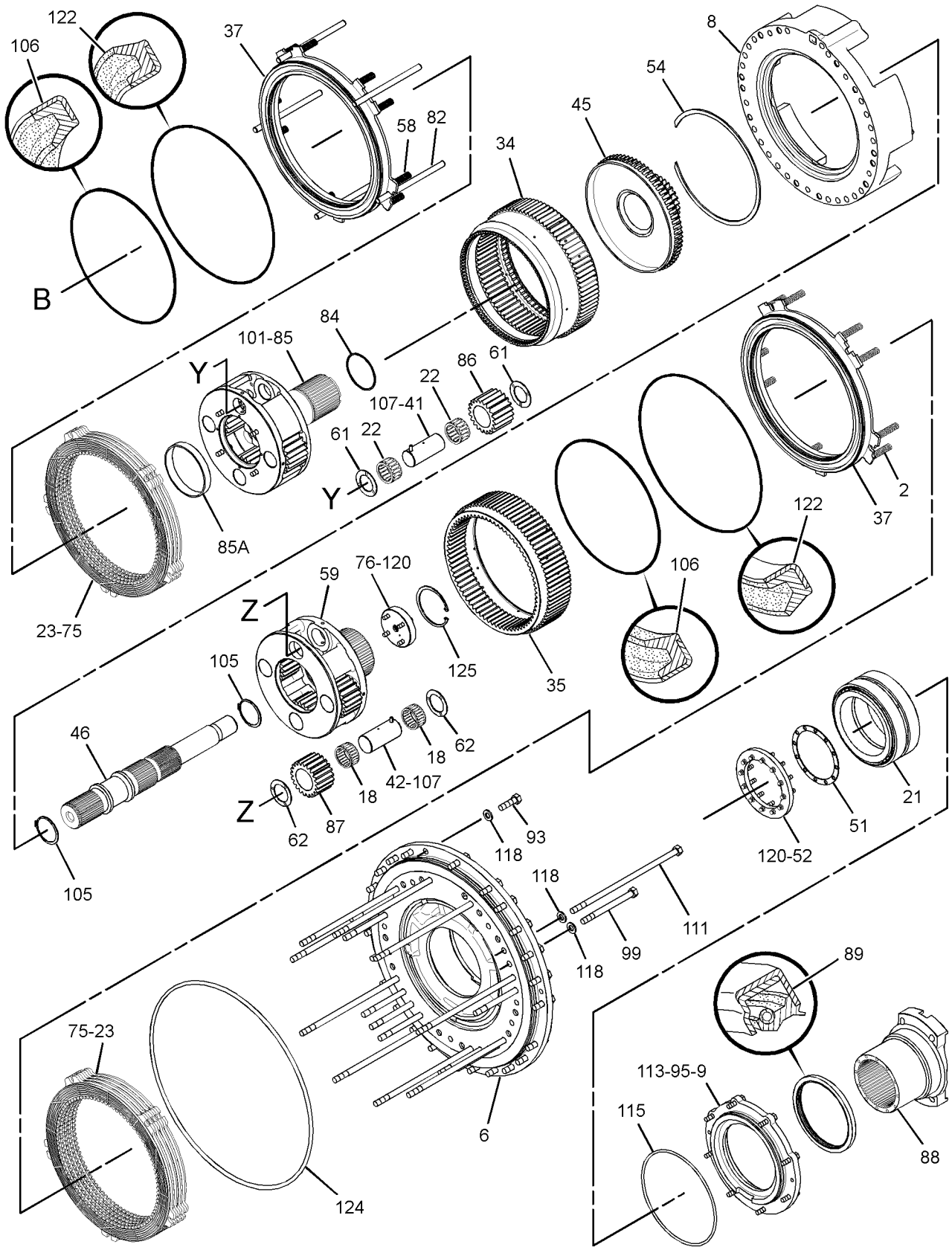


GRAPHIC #3 **<END>** g01636805

# *270-5370* POWER TRAIN AR

**S/N: RLB1-UP**

**PART OF 268-7810 GENERAL AR**

**SMCS-3000, 4000** **i03291818**

| NOTE | PART NUMBER | QTY | PART NAME 1 2 3 4 5 6 (PRODUCT LEVEL) | SEE PAGE |
|---|---|---|---|---|
| Y | *243-0023* | 1 | AXLE & MOUNTING GP | 388 |
| Y | *270-5383* | 1 | DIFFERENTIAL & BEVEL GEAR GP | 399 |
| Y | *271-0436* | 1 | LINK GP-UPPER | 529 |
| Y | *244-6627* | 1 | MOUNTING GP-AXLE (REAR) | 427 |
| Y | *266-1681* | 1 | RIM GP-DEMOUNTABLE | 440 |
| Y | *270-5382* | 1 | SHAFT AR-DRIVE | 440 |
| Y | *238-1332* | 1 | SUPPORT GP-AXLE HOUSING (REAR) | 443 |
| Y | *261-0649* | 2 | WHEEL GP-FRONT (RH, LH) | 479 |

Y-SEPARATE ILLUSTRATION

**<END>**

## *246-1106* PUMP GP-TRANSMISSION*R

**S/N: RLB1-UP**

**PART OF 227-1037 TORQUE CONVERTER GP**

**SMCS-3066** **i02053517**

| NOTE | REF NO | GRAPHIC REF | PART NUMBER | QTY | PART NAME 1 2 3 4 5 6 (PRODUCT LEVEL) | SEE PAGE |
|---|---|---|---|---|---|---|
| | 1 | 1 | **1P-1479** | 1 | BODY AS-OIL PUMP | |
| | | 1 | **8M-8489** | 4 | DOWEL | |
| | | 1 | **228-0563** | 1 | BODY-OIL PUMP | |
| | 2 | 1 | **3S-0004** | 6 | WASHER (0.406X0.728X0.09-IN THK) | |
| | 3 | 1 | **3T-6992** | 1 | BODY AS-OIL PUMP | |
| | | 1 | **8M-8489** | 4 | DOWEL | |
| | 6 | 1 | **9S-1018** | 8 | WASHER (9.73X19.05X0.84-MM THK) | |
| | 7 | 1 | **157-0681** | 1 | MANIFOLD AS | |
| | 8 | 1 | **246-1893** | 1 | COVER AS | |
| | | 1 | **1M-3909** | 2 | BEARING-SLEEVE | |
| | | 1 | **246-1894** | 1 | COVER-OIL PUMP | |
| | 9 | 1 | **246-1895** | 1 | GEAR AS-OIL PUMP | |
| | | 1 | **2B-9373** | 1 | KEY-WOODRUFF | |
| | 10 | 1 | **246-1896** | 1 | GEAR AS-OIL PUMP | |
| | | 1 | **2B-9373** | 1 | KEY-WOODRUFF | |
| | | 1 | **246-1897** | 1 | SHAFT | |
| | 11 | 1 | **247-3775** | 1 | MANIFOLD AS | |
| | | 1 | **247-3776** | 1 | MANIFOLD | |
| | 13 | 1 | **2B-9373** | 1 | KEY-WOODRUFF | |
| | 14 | 1 | **2D-8009** | 4 | SEAL-O-RING | |
| | 15 | 1 | **4F-0411** | 2 | BOLT (3/8-16X6.5-IN) | |
| | 16 | 1 | **8F-6350** | 2 | BOLT (3/8-16X8-IN) | |
| | 17 | 1 | **9F-2773** | 2 | BOLT (3/8-16X8.5-IN) | |

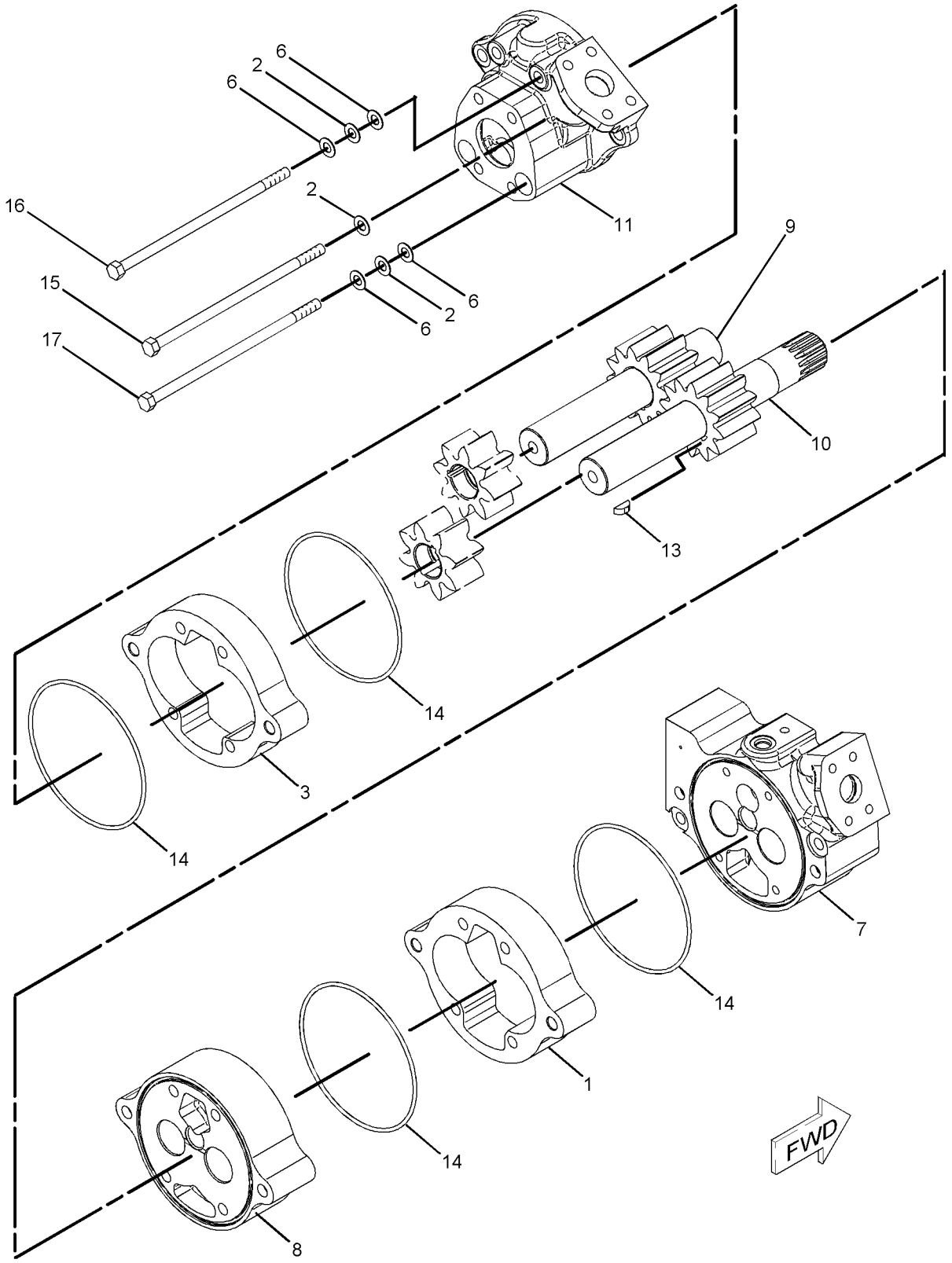


GRAPHIC #1 **<END>** g01058117

# *264-3169* RIM GP

**S/N: RLB1-UP**
**(15X33)**
**PART OF 266-1681 RIM GP-DEMOUNTABLE**
**ALSO AN ATTACHMENT**

**SMCS-4209** **i02605456**

| NOTE | REF NO | GRAPHIC REF | PART NUMBER | QTY | PART NAME 1 2 3 4 5 6 (PRODUCT LEVEL) | SEE PAGE |
|---|---|---|---|---|---|---|
| | 1 | 1 | **6G-1732** | 1 | RING-LOCK | |
| | 2 | 1 | **8X-3271** | 1 | BAND AS | |
| | 3 | 1 | **263-8883** | 1 | RIM AS (15X33) | |
| | 4 | 1 | **265-6623** | 2 | FLANGE | |

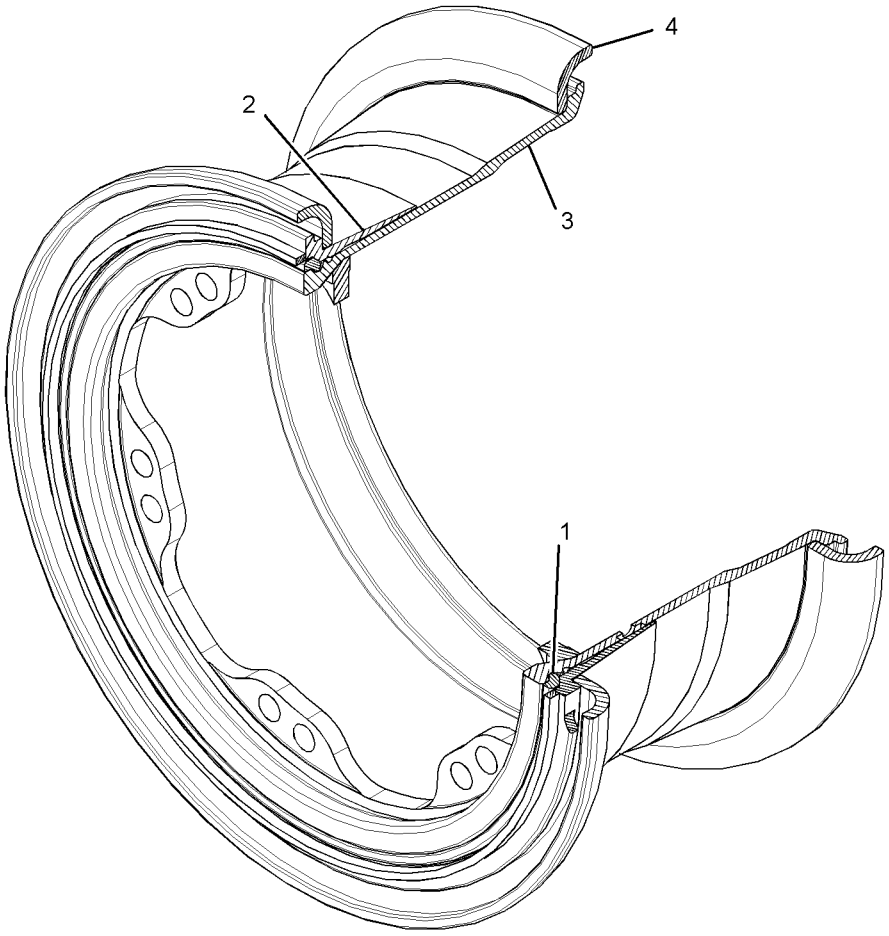


GRAPHIC #1 **<END>** g01318627

## *266-1681* RIM GP-DEMOUNTABLE

**S/N: RLB1-UP**

**PART OF 270-5370 POWER TRAIN AR**

**SMCS-4209** **i02674004**

| NOTE | PART NUMBER | QTY | PART NAME 1 2 3 4 5 6 (PRODUCT LEVEL) | SEE PAGE |
|---|---|---|---|---|
| Y | *264-3169* | 6 | RIM GP | 439 |
| | | | | |
| | *272-7940* | 2 | EXTENSION AS (STEM) | |
| | | | (EACH INCLUDES) | |
| | **5D-9661** | 1 | NUT-SEALING (0.482-26-THD) | |
| | **6F-3930** | 1 | CORE-VALVE | |
| | **1J-4246** | 6 | SEAL-O-RING | |
| | **7D-5252** | 6 | SPUD AS | |
| | | | (EACH INCLUDES) | |
| | **2D-2507** | 1 | SPUD | |
| | **2D-2508** | 1 | GROMMET | |
| | **2D-2509** | 1 | LOCKNUT (11/16-16-THD) | |
| | **4D-3398** | 6 | STEM AS | |
| | | | (EACH INCLUDES) | |
| | **6F-3930** | 1 | CORE-VALVE | |
| | **9K-7951** | 1 | CAP-VALVE (STEM) | |

Y-SEPARATE ILLUSTRATION

**<END>**

## *270-5382* SHAFT AR-DRIVE

**S/N: RLB1-UP**

**PART OF 270-5370 POWER TRAIN AR**

**SMCS-3253** **i02619433**

| NOTE | PART NUMBER | QTY | PART NAME 1 2 3 4 5 6 (PRODUCT LEVEL) | SEE PAGE |
|---|---|---|---|---|
| Y | *282-8205* | 1 | SHAFT GP-DRIVE | 441 |

Y-SEPARATE ILLUSTRATION

**<END>**

# *282-8205* SHAFT GP-DRIVE

**S/N: RLB1-UP**

**PART OF 270-5382 SHAFT AR-DRIVE**

**SMCS-3253** **i02619459**

| NOTE | REF NO | GRAPHIC REF | PART NUMBER | QTY | PART NAME 1 2 3 4 5 6 (PRODUCT LEVEL) | SEE PAGE |
|---|---|---|---|---|---|---|
| Y | 1 | 1 | **230-4114** | 1 | UNIVERSAL JOINT GP | 451 |
| Y | 2 | 1 | **282-8211** | 1 | SLIP JOINT GP | 442 |
| | 3 | 1 | **299-3398** | 8 | BOLT (1/2-20X2.25-IN) | |
| | 4 | 1 | **299-3434** | 8 | BOLT (5/8-18X3-IN) | |

Y-SEPARATE ILLUSTRATION

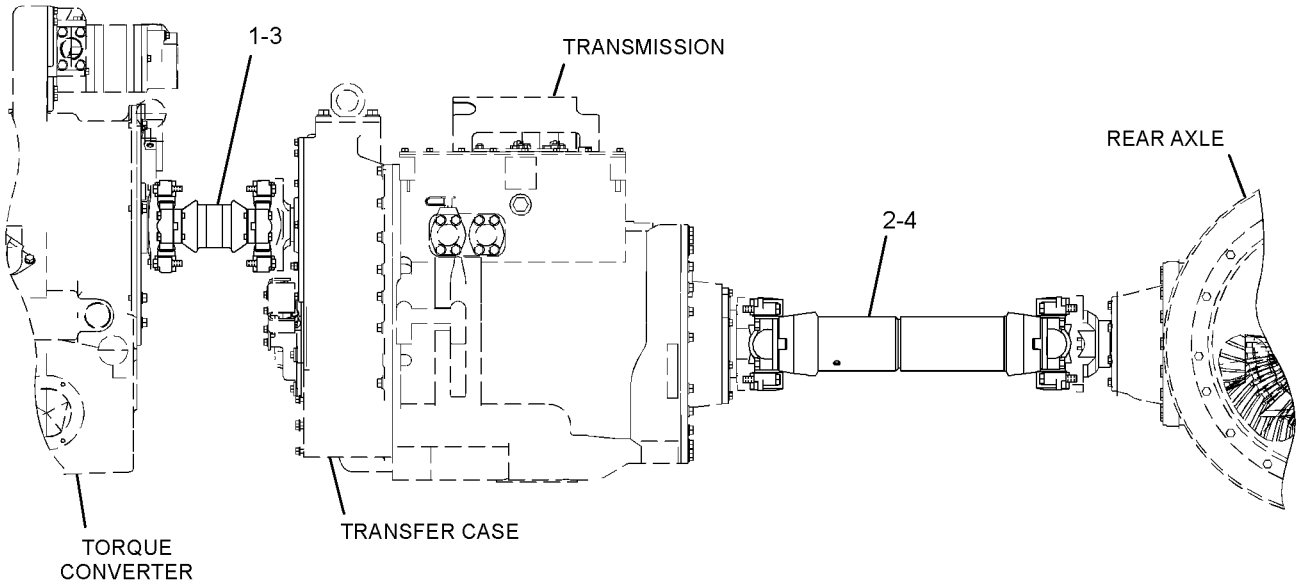


LEFT SIDE VIEW

GRAPHIC #1 **<END>** g01347833

# 282-8211 SLIP JOINT GP

**S/N: RLB1-UP**

**PART OF 282-8205 SHAFT GP-DRIVE**

**SMCS-3251** **i02829326**

| NOTE | REF NO | GRAPHIC REF | PART NUMBER | QTY | PART NAME 1 2 3 4 5 6 (PRODUCT LEVEL) | SEE PAGE |
|---|---|---|---|---|---|---|
| | 1 | 1 | **106-0933** | 2 | SPIDER & BEARING GP (DRIVE SHAFT) | |
| | 2 | 1 | **282-8212** | 1 | TUBE & YOKE AS | |
| | 3 | 1 | **8B-5144** | 8 | BOLT (5/8-18X3-IN) | |

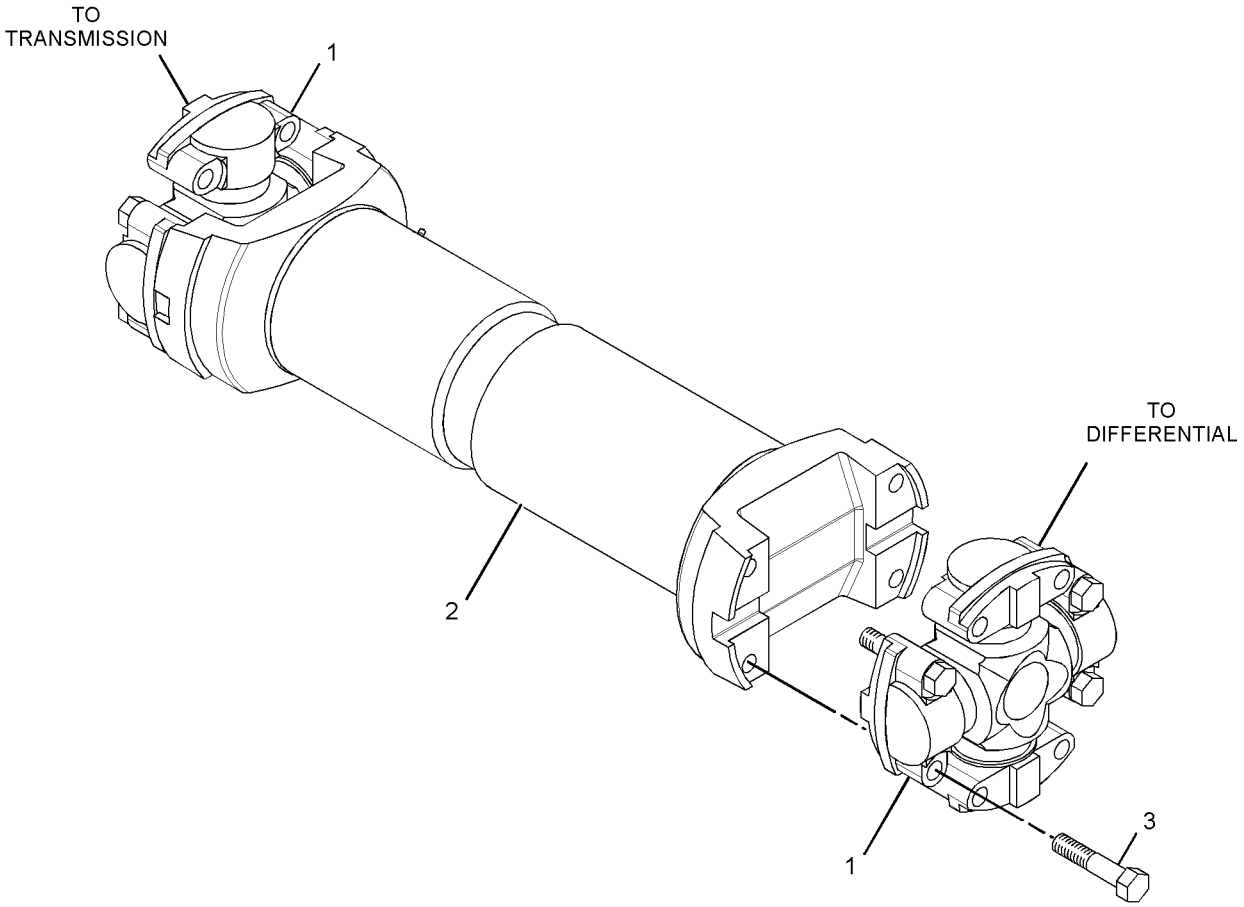


GRAPHIC #1 **<END>** g01418265

# 238-1332 SUPPORT GP-AXLE HOUSING

**S/N: RLB1-UP**

**PART OF 270-5370 POWER TRAIN AR**

**SMCS-3268** **i02619415**

| NOTE | REF NO | GRAPHIC REF | PART NUMBER | QTY | PART NAME 1 2 3 4 5 6 (PRODUCT LEVEL) | SEE PAGE |
|---|---|---|---|---|---|---|
| | 1 | 1 | **303-7504** | 1 | BEARING-SELF-ALIGNING | |
| | 2 | 1 | **9K-9731** | 1 | SPACER (20.4X28.5X14.2-MM THK) | |
| | 3 | 1 | **243-3071** | 2 | RING | |
| | 4 | 1 | **305-8924** | 1 | PIN AS | |
| | 5 | 1 | **288-0843** | 1 | SUPPORT | |
| | 6 | 1 | **288-2747** | 1 | NUT-SPECIAL | |
| | 7 | 1 | **288-2842** | 1 | LOCK | |
| | 8 | 1 | **198-4772** | 12 | WASHER-HARD (33X60X14-MM THK) | |
| M | 9 | 1 | **6V-4248** | 1 | BOLT (M10X1.5X25-MM) | |
| | 10 | 1 | **6V-5839** | 1 | WASHER (11X21X2.5-MM THK) | |
| | 11 | 1 | **7X-0582** | 1 | WASHER-HARD (20X44.5X6-MM THK) | |
| | 12 | 1 | **302-4536** | 12 | BOLT (M30X3.5X110-MM) | |
| | 13 | 1 | **8T-9398** | 1 | BOLT (3/4-10X1.75-IN) | |

M-METRIC PART

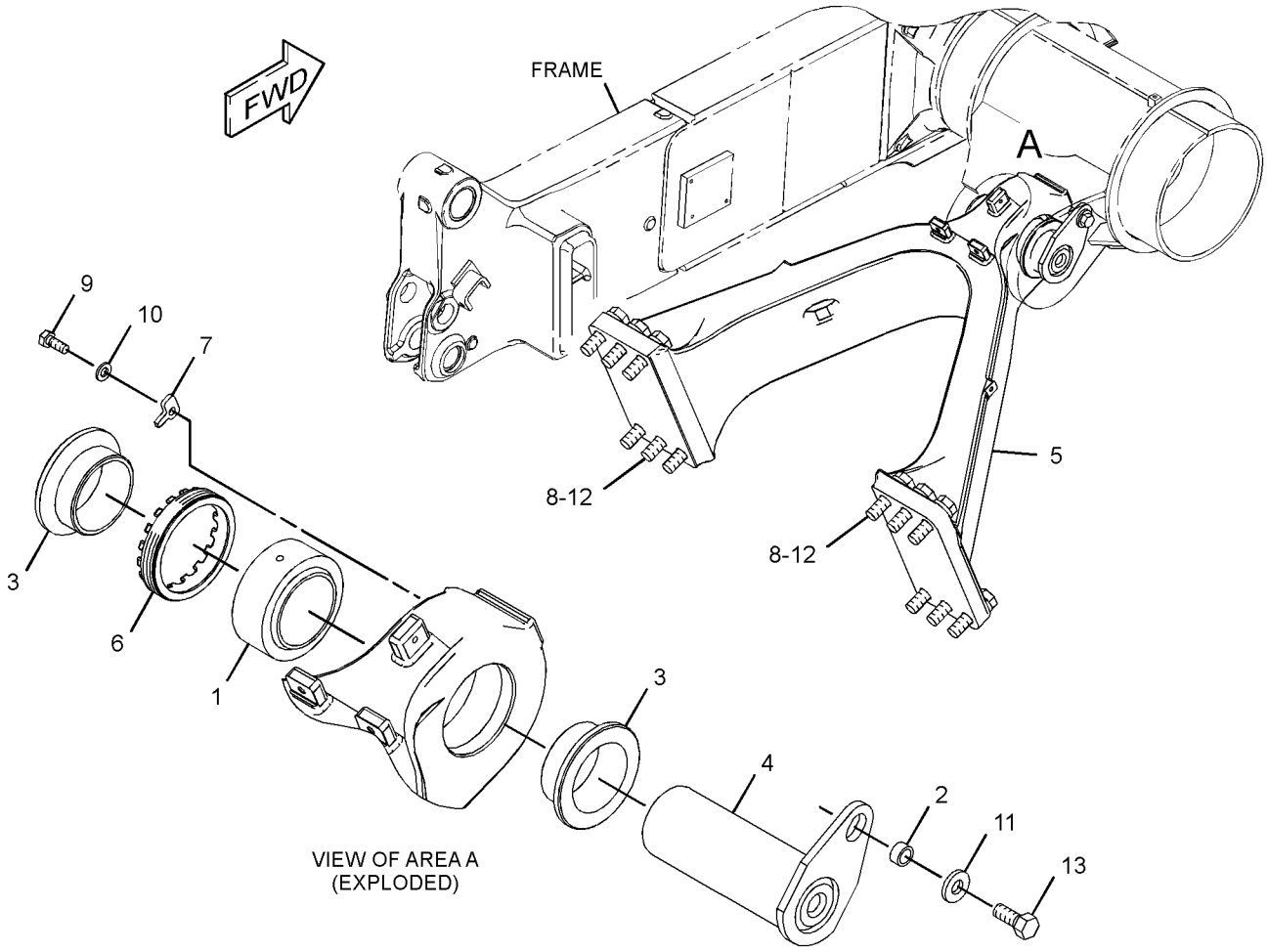


GRAPHIC #1 **<END>** g01333226

# POWER TRAIN

## 227-1037 TORQUE CONVERTER GP

**S/N: RLB1-UP**

**PART OF 268-7810 GENERAL AR**

**SMCS-3101** **i02875369**

| NOTE | REF NO | GRAPHIC REF | PART NUMBER | QTY | PART NAME 1 2 3 4 5 6 (PRODUCT LEVEL) | SEE PAGE |
|---|---|---|---|---|---|---|
| | 1 | 2 | **1T-0034** | 1 | RING-LOCK | |
| | 2 | 2 | **1T-0364** | 1 | FLANGE-JOINT | |
| | 3 | 2 | **1T-1006** | 1 | RETAINER | |
| B | 4 | 2 | **1T-1011** | 3 | SHIM (0.254-MM THK) | |
| B | 5 | 2 | **1T-1012** | 3 | SHIM (0.076-MM THK) | |
| | 6 | 2 | **5P-0597** | 4 | CLAMP-HOSE | |
| | 7 | 2 | **5P-1293** | 1 | HOSE | |
| | 8 | 2 | **7X-7816** | 1 | PLATE-SERIAL NUMBER (TORQUE CONVERTER) | |
| | 9 | 1 | **8P-3251** | 1 | COVER AS | |
| | | 1 | **8P-1722** | 1 | COVER | |
| | | 1 | **7B-3028** | 2 | SCREW-DRIVE (NO 4X3/16-IN) | |
| | | 1 | **7S-2962** | 1 | WASHER-SPRING (52.3X82.5X9.1-MM THK) | |
| | 10 | 2 | **8S-0617** | 1 | COVER | |
| | 11 | 1 | **9W-5531** | 1 | TUBE AS-SCREEN (MAGNETIC) (TRANSMISSION) | |
| | | 1 | **8M-7160** | 4 | MAGNET | |
| | 12 | 2 | **113-9558** | 1 | GASKET | |
| | 13 | 2 | **136-9150** | 1 | CAGE-BEARING | |
| Y | 14 | 2 | **138-1509** | 1 | DRAIN GP-ECOLOGY (POWER TRAIN OIL) | 402 |
| | 15 | 1 | **139-2403** | 1 | SHAFT-IDLER | |
| | 16 | 1 | **139-4635** | 1 | GEAR (58-TEETH) | |
| | 17 | 2 | **164-8453** | 1 | GEAR AS (56-TEETH) | |
| | | 2 | **5H-4279** | 1 | PLUG-CUP | |
| | 18 | 2 | **174-4111** | 1 | TUBE AS | |
| | 19 | 2 | **174-4112** | 1 | TUBE AS | |
| | 20 | 2 | **174-9412** | 1 | SPACER (80X94X8.5-MM THK) | |
| Y | 21 | 1 | *227-1039* | 1 | TORQUE CONVERTER GP | 447 |
| | 22 | 2 | **239-0334** | 1 | HOUSING AS-TORQUE CONVERTER | |
| | | 2 | **0L-1026** | 1 | PLUG-CUP | |
| | | 2 | **0S-0509** | 1 | BOLT (3/8-16X0.75-IN) | |
| | | 2 | **1A-2358** | 1 | PLUG-CUP | |
| | | 2 | **6N-8863** | 1 | WASHER (10.2X32X2.5-MM THK) | |
| | | 2 | **183-6386** | 1 | TUBE AS | |
| YR | 23 | 2 | **246-1106** | 1 | PUMP GP-TRANSMISSION (POWER TRAIN) | 437 |
| | 24 | 2 | **246-2124** | 1 | TUBE AS | |
| | 25 | 2 | **246-2387** | 1 | COVER | |
| | 26 | 2 | **0L-1352** | 2 | BOLT (3/8-16X3.25-IN) | |
| | 27 | 2 | **0S-1585** | 4 | BOLT (1/2-13X1.5-IN) | |
| | 28 | 1,2 | **0S-1594** | 7 | BOLT (3/8-16X1-IN) | |
| | 29 | 2 | **0S-1595** | 6 | BOLT (1/2-13X1.25-IN) | |
| | 30 | 2 | **139-5802** | 1 | SEAL-LIP TYPE | |
| | 31 | 2 | **149-5461** | 1 | SEAL-O-RING | |
| | 32 | 1,2 | **149-5462** | 3 | SEAL-O-RING | |
| | 33 | 2 | **1A-2029** | 6 | BOLT (3/8-16X1.125-IN) | |
| | 34 | 2 | **1H-8720** | 1 | SEAL-O-RING | |
| | 35 | 2 | **1T-0136** | 1 | SEAL-O-RING | |
| | 36 | 1 | **1T-1639** | 1 | RING | |
| | 37 | 2 | **2H-6184** | 1 | SEAL-O-RING | |
| | 38 | 2 | **3F-5792** | 1 | SEAL-O-RING | |
| | 39 | 2 | **3H-5368** | 2 | BOLT (7/16-14X1.375-IN) | |
| | 40 | 1 | **3S-3875** | 1 | SCREEN-SUCTION (TORQUE CONVERTER) | |
| | 41 | 1,2 | **4B-3665** | 2 | BALL BEARING | |
| | 42 | 1 | **5J-5793** | 1 | BOLT-12 POINT HEAD (1/2-13X1.75-IN) | |
| | 43 | 1,2 | **5M-2894** | 15 | WASHER-HARD (10.2X18.5X2.5-MM THK) | |
| | 44 | 2 | **5M-7142** | 1 | SEAL-O-RING | |
| | 45 | 2 | **5P-8244** | 2 | WASHER-HARD (12X22.5X2.5-MM THK) | |
| | 46 | 2 | **5P-8245** | 25 | WASHER-HARD (13.5X25.5X3-MM THK) | |

## 227-1037 TORQUE CONVERTER GP *(contd. )* i02875369

| NOTE | REF NO | GRAPHIC REF | PART NUMBER | QTY | PART NAME 1 2 3 4 5 6 (PRODUCT LEVEL) | SEE PAGE |
|---|---|---|---|---|---|---|
| | 47 | 2 | **8B-5144** | 1 | BOLT (5/8-18X3-IN) | |
| | 48 | 2 | **8F-6711** | 1 | SEAL-O-RING | |
| | 49 | 1 | **8H-7521** | 1 | SEAL-O-RING | |
| | 50 | 1,2 | **8J-7636** | 2 | RING-RETAINING | |
| | 51 | 2 | **8M-5007** | 1 | SEAL-O-RING | |
| | 52 | 2 | **8T-2502** | 6 | BOLT (3/8-16X1.125-IN) | |
| | 53 | 2 | **8T-4896** | 6 | WASHER-HARD (10.2X18.5X2.5-MM THK) | |
| | 54 | 1,2 | **9H-0846** | 2 | SEAL-O-RING | |
| | 55 | 2 | **9X-8874** | 15 | BOLT (1/2-13X3-IN) | |

B-USE AS REQUIRED
R-REMFG PART MAY BE AVAILABLE
Y-SEPARATE ILLUSTRATION

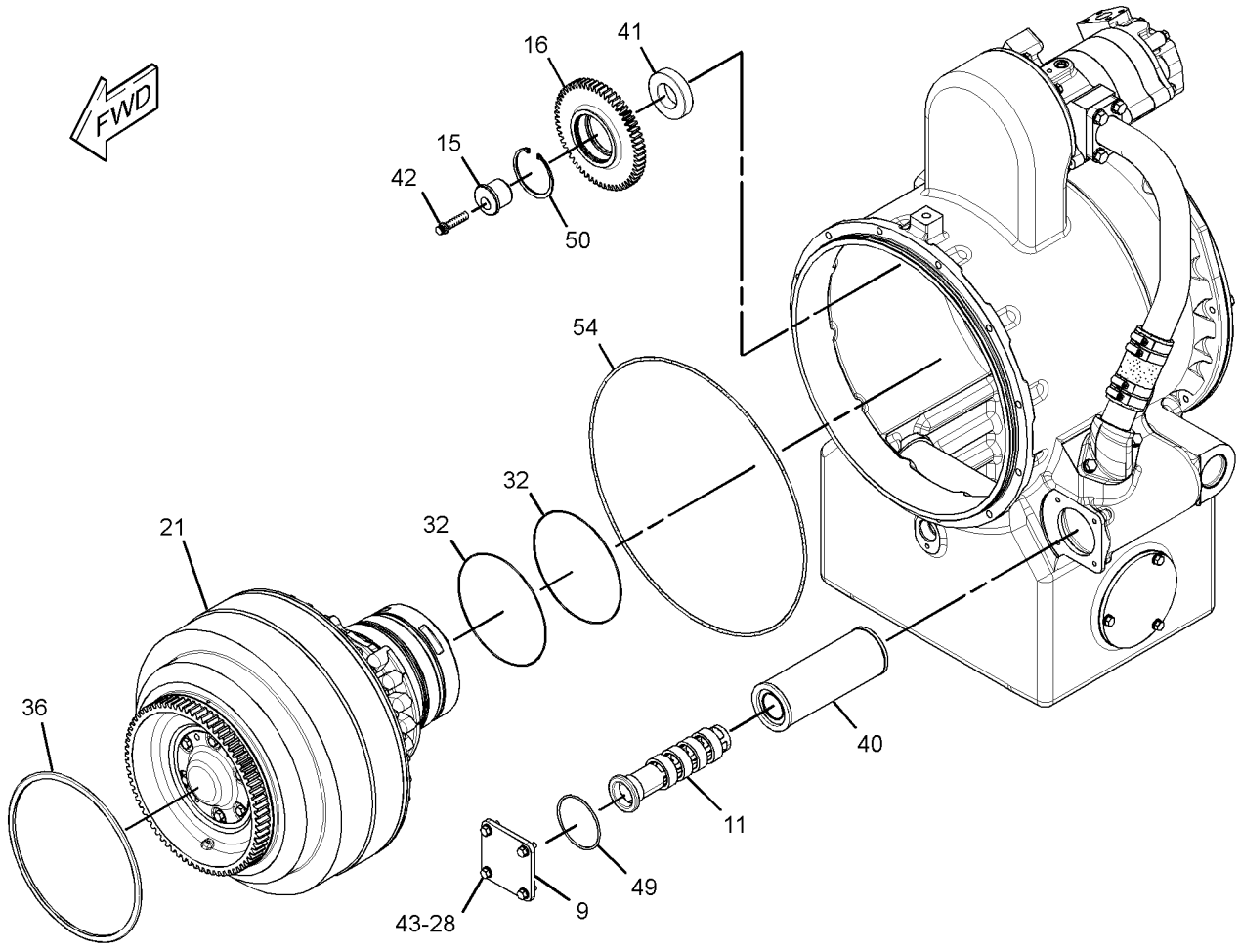


GRAPHIC #1 g01478168

## 227-1037 TORQUE CONVERTER GP *(contd. )* i02875369

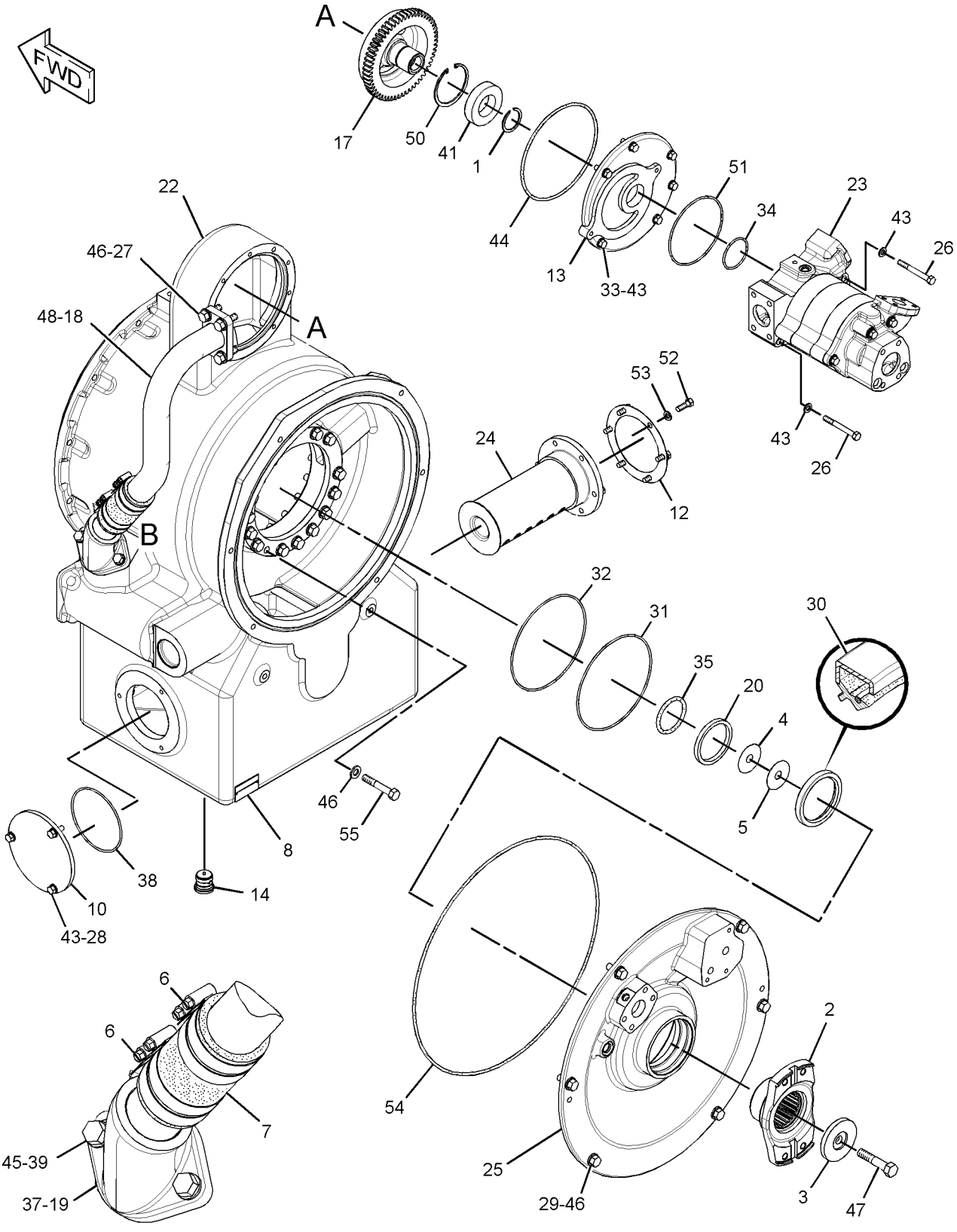


VIEW OF AREA B

GRAPHIC #2 **<END>** g01478169

# POWER TRAIN

## *227-1039* TORQUE CONVERTER GP

**S/N: T2C1-UP**

**PART OF 227-1037 TORQUE CONVERTER GP**

**SMCS-3101** **i02117489**

| NOTE | REF NO | GRAPHIC REF | PART NUMBER | QTY | PART NAME 1 2 3 4 5 6 (PRODUCT LEVEL) | SEE PAGE |
|---|---|---|---|---|---|---|
| | 1 | 1 | **1T-1496** | 1 | HOUSING AS | |
| | | 1 | **1T-0936** | 1 | PLUG-PIPE | |
| | 2 | 1 | **1T-1229** | 1 | IMPELLER-CONVERTER | |
| | 3 | 1 | **1T-0867** | 1 | PLATE-REINFORCEMENT | |
| | 4 | 1 | **139-4636** | 1 | GEAR-PUMP DRIVE | |
| | 5 | 1 | **139-4632** | 1 | HUB-IMPELLER | |
| | 6 | 1 | **246-0559** | 1 | SHAFT-OUTPUT | |
| | 7 | 1 | **1T-1220** | 1 | CARRIER-RING | |
| | 8 | 1 | **9X-6574** | 1 | RING-RETAINING | |
| | 9 | 1 | **1L-7205** | 1 | BALL BEARING | |
| | 10 | 1 | **246-0560** | 1 | CARRIER-BEARING | |
| | 11 | 1 | **6Y-5888** | 2 | RING-SEAL | |
| | 12 | 1 | **1T-0897** | 2 | RING-RETAINING | |
| | 13 | 1 | **3P-2573** | 1 | RACE-BEARING INNER | |
| | 14 | 1 | **3P-2574** | 1 | RACE & ROLLER AS | |
| | 15 | 1 | **1T-1221** | 1 | CARRIER-RING | |
| | 16 | 1 | **9W-6990** | 1 | RING-SEAL | |
| | 17 | 1 | **1T-1659** | 1 | SLEEVE AS | |
| | | 1 | **1T-1658** | 1 | SLEEVE-WEAR | |
| | | 1 | **5S-4441** | 1 | DOWEL | |
| | 18 | 1 | **9W-3136** | 1 | RING-RETAINING | |
| | 19 | 1 | **192-0875** | 1 | CARRIER AS | |
| | | 1 | **192-0877** | 1 | BEARING-SLEEVE | |
| | 20 | 1 | **5P-5855** | 8 | BOLT-12 POINT HEAD (1/2-13X1.75-IN) | |
| | 21 | 1 | **5F-3999** | 1 | SEAL-O-RING | |
| | 22 | 1 | **1T-0794** | 1 | RING-SEAL METAL | |
| | 23 | 1 | **1T-0807** | 2 | RACE-THRUST BEARING | |
| | 24 | 1 | **1T-0806** | 2 | RETAINER-BEARING | |
| | 25 | 1 | **0S-1588** | 36 | BOLT (3/8-16X1.25-IN) | |
| | 26 | 1 | **5M-2894** | 36 | WASHER-HARD (10.2X18.5X2.5-MM THK) | |
| | 27 | 1 | **1T-0795** | 3 | RING-RETAINING | |
| | 28 | 1 | **233-7564** | 1 | STATOR-CONVERTER | |
| | 29 | 1 | **1T-1423** | 1 | CAM-FREEWHEEL | |
| | 30 | 1 | **1T-1910** | 2 | PLATE | |
| | 31 | 1 | **1T-0792** | 1 | TURBINE-CONVERTER | |
| | 32 | 1 | **1T-0896** | 1 | RING-RETAINING | |
| | 33 | 1 | **6P-9553** | 1 | PLATE-CLUTCH BACKING | |
| | 34 | 1 | **1T-1315** | 2 | PLATE-CLUTCH | |
| | 35 | 1 | **1T-0887** | 2 | DISC AS-CLUTCH | |
| | 36 | 1 | **7G-0141** | 1 | RING-SEAL | |
| | 37 | 1 | **1T-1426** | 1 | PISTON-LOCKUP CLUTCH | |
| | 38 | 1 | **1T-0804** | 1 | RING-CLAMP | |
| | 39 | 1 | **8S-3371** | 1 | RING-SEAL | |
| | 40 | 1 | **192-0876** | 1 | HUB-TURBINE | |
| | 41 | 1 | **1T-0786** | 2 | BEARING-THRUST | |
| | 42 | 1 | **0L-1351** | 6 | BOLT (3/8-16X0.875-IN) | |
| | 43 | 1 | **1T-1356** | 1 | RING-SEAL | |
| | 44 | 1 | **1T-1616** | 1 | WASHER-SPRING (54.9X86.4X6.1-IN) | |
| | 45 | 1 | **1T-1617** | 1 | PLATE-RETAINER | |
| | 46 | 1 | **1T-1499** | 1 | COVER | |
| | 47 | 1 | **8S-4724** | 2 | BOLT (7/16-20X2.25-IN) | |
| | 48 | 1 | **1T-0895** | 1 | RING-RETAINING | |
| | 49 | 1 | **6V-9191** | 1 | BALL BEARING | |
| | 50 | 1 | **1T-0847** | 1 | LOCK PIN | |
| | 51 | 1 | **8M-2530** | 18 | BOLT-12 POINT HEAD (1/2-13X1.25-IN) | |
| | 52 | 1 | **1T-1410** | 13 | ROLLER-FREEWHEEL | |

## *227-1039* **TORQUE CONVERTER GP** *(contd.)* **i02117489**

| NOTE | REF NO | GRAPHIC REF | PART NUMBER | QTY | PART NAME 1 2 3 4 5 6 (PRODUCT LEVEL) | SEE PAGE |
|---|---|---|---|---|---|---|
| | 53 | 1 | **1T-0680** | 13 | SPRING-FREEWHEEL | |

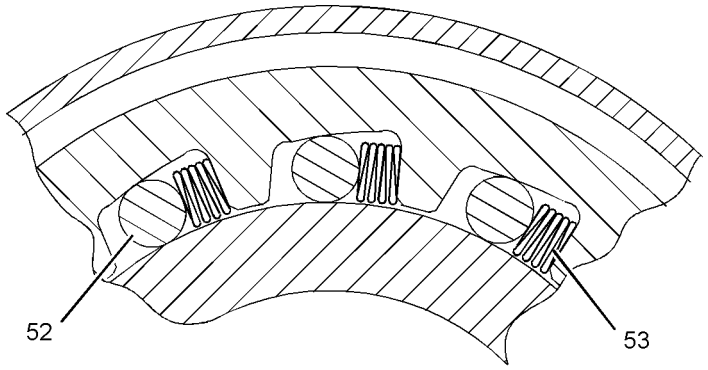


SECTION A-A

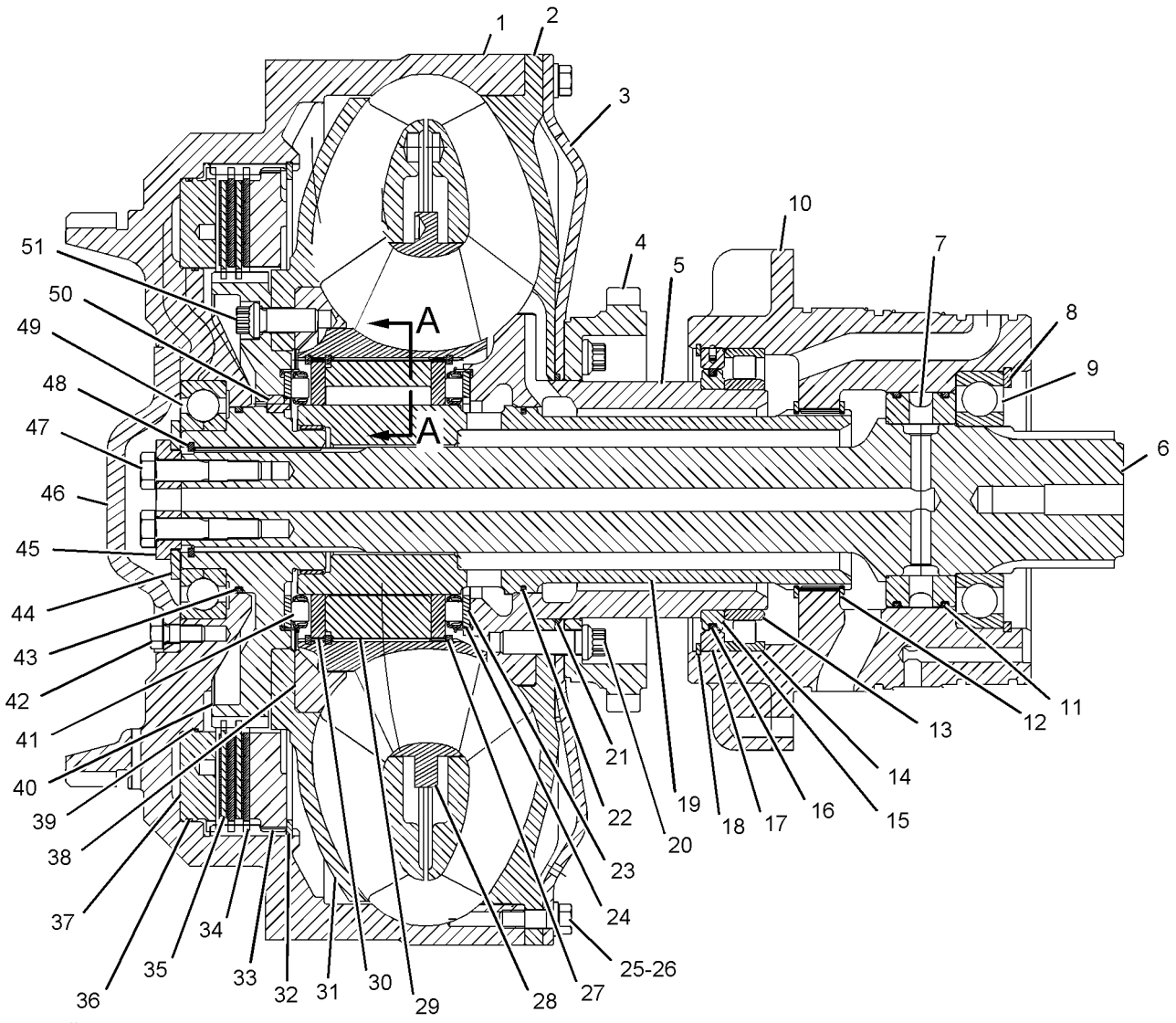


GRAPHIC #1 **<END>** g01058727

# 294-5560 TRANSMISSION AR

**S/N: NDG1-UP**

**PART OF 268-7810 GENERAL AR**

**SMCS-3030** **i02711639**

| NOTE | PART NUMBER | QTY | PART NAME 1 2 3 4 5 6 (PRODUCT LEVEL) | SEE PAGE |
|---|---|---|---|---|
| Y | *145-8280* | 1 | CASE GP-TRANSMISSION | 389 |
| Y | *294-5559* | 1 | CONTROL GP-TRANSMISSION HYD | 392 |
| Y | *145-8282* | 1 | COVER GP-SHIPPING (TRANSMISSION) | 396 |
| Y | *7G-1150* | 1 | GEAR GP-TRANSFER | 408 |
| Y | *307-9667* | 1 | PLANETARY GP-TRANSMISSION | 430 |
| Y | *245-2774* | 1 | SENSOR GP-SPEED (TRANSMISSION) | 315 |

Y-SEPARATE ILLUSTRATION

**<END>**

# 8X-0307 UNIVERSAL JOINT GP

**S/N: RLB1-UP**

**PART OF 230-4114 UNIVERSAL JOINT GP**

**FIELD REPLACEMENT ORDER 230-4114–PAGE 451**

**SMCS-3251, 3253** **i00116460**

| NOTE | REF NO | GRAPHIC REF | PART NUMBER | QTY | PART NAME 1 2 3 4 5 6 (PRODUCT LEVEL) | SEE PAGE |
|---|---|---|---|---|---|---|
| | 1 | 1 | **5T-2921** | 1 | TUBE | |
| | 2 | 1 | **9P-4809** | 2 | SPIDER & BEARING AS | |
| | 3 | 1 | **6H-7868** | 8 | BOLT | |

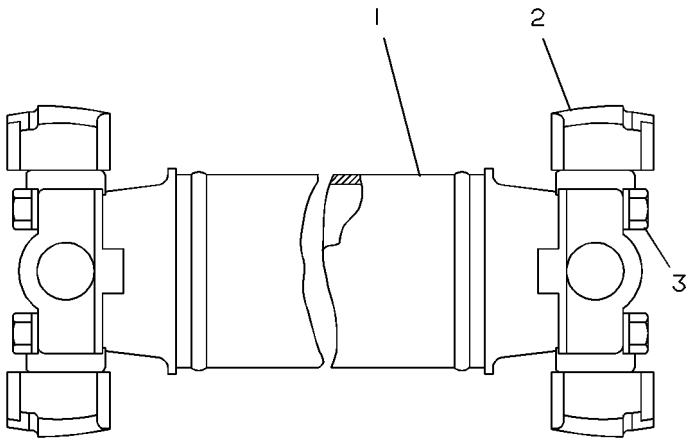


GRAPHIC #1 **<END>** g00082214

# 230-4114 UNIVERSAL JOINT GP

**S/N: RLB1-UP**

**PART OF 282-8205 SHAFT GP-DRIVE**

**FIELD REPLACEMENT FOR 8X-0307—PAGE 450**

**SMCS-3251, 3253** **i02112079**

| NOTE | PART NUMBER | QTY | PART NAME 1 2 3 4 5 6 (PRODUCT LEVEL) | SEE PAGE |
|---|---|---|---|---|
| Y | *8X-0307* | 1 | UNIVERSAL JOINT GP | 450 |
| | | | —OR— | |
| Y | *230-4115* | 1 | UNIVERSAL JOINT GP | 452 |

Y-SEPARATE ILLUSTRATION

**<END>**

# *230-4115* UNIVERSAL JOINT GP

**S/N: RLB1-UP**

**PART OF 230-4114 UNIVERSAL JOINT GP**

**SMCS-3251, 3253** **i02112086**

| NOTE | REF NO | GRAPHIC REF | PART NUMBER | QTY | PART NAME 1 2 3 4 5 6 (PRODUCT LEVEL) | SEE PAGE |
|---|---|---|---|---|---|---|
| | 1 | 1 | **0S-1579** | 8 | BOLT (1/2-20X2-IN) | |
| | 2 | 1 | **227-5605** | 2 | SPIDER & BEARING GP | |

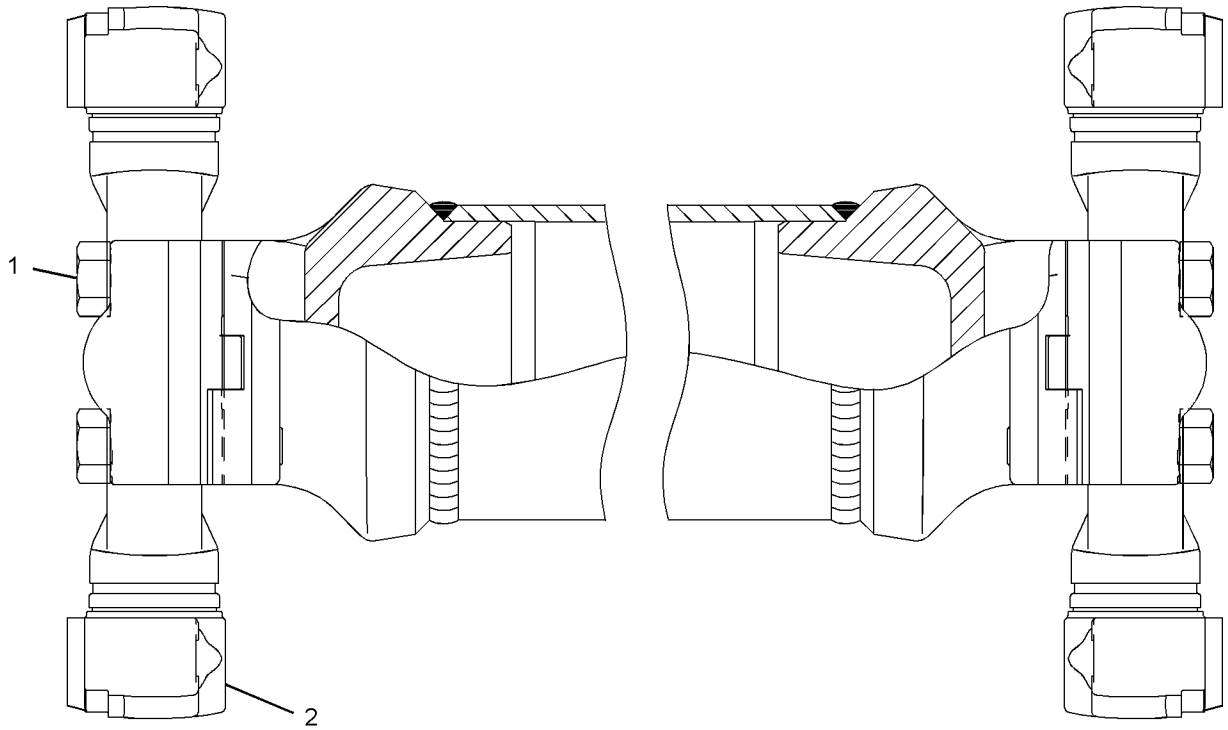


GRAPHIC #1 **<END>** g01088358

## 254-9238 VALVE GP-LOCKUP CLUTCH & SOL—POWER TRAIN OIL

**S/N: RLB1-484**

**PART OF 269-9199 LINES GP-POWER TRAIN OIL**

**SMCS-3124** **i03291825**

| NOTE | REF NO | GRAPHIC REF | PART NUMBER | QTY | PART NAME 1 2 3 4 5 6 (PRODUCT LEVEL) | SEE PAGE |
|---|---|---|---|---|---|---|
| | 1 | 1 | **6I-9475** | 1 | BODY AS-VALVE | |
| | | 1 | **5H-8985** | 1 | PIN-SPRING | |
| | | 1 | **8E-8439** | 1 | DOWEL | |
| | 2 | 1 | **9S-8008** | 2 | PLUG-O-RING | |
| | 3 | 1 | **3D-2824** | 2 | SEAL-O-RING | |
| | 4 | 1 | **9S-8001** | 7 | PLUG-O-RING | |
| | 5 | 1 | **4J-7533** | 7 | SEAL-O-RING | |
| Y | 6 | 1 | **193-8559** | 1 | VALVE GP-SOLENOID (TRANSMISSION) | 463 |
| | 7 | 1 | **3J-1907** | 5 | SEAL-O-RING | |
| | 8 | 1 | **6V-3965** | 1 | FITTING (QUICK DISCONNECT) | |
| | 9 | 1 | **6V-0852** | 1 | CAP-DUST | |
| | 10 | 1 | **9S-8004** | 3 | PLUG-O-RING | |
| | 12 | 1 | **5L-9018** | 2 | BOLT-SOCKET HEAD (1/4-20X1.75-IN) | |
| | 13 | 1 | **6Y-4539** | 1 | COVER | |
| | 14 | 1 | **0S-1618** | 6 | BOLT (5/16-18X1-IN) | |
| | 15 | 1 | **9M-1974** | 5 | WASHER-HARD (8.8X16X2-MM THK) | |
| | 16 | 1 | **2S-2182** | 1 | SEAL-O-RING | |
| | 17 | 1 | **6Y-7267** | 1 | SPRING | |
| | 18 | 1 | **8E-6144** | 1 | SPRING | |
| | 19 | 1 | **6Y-4540** | 1 | BODY | |
| B | 20 | 1 | **9J-1330** | 2 | SHIM (0.787-MM THK) | |
| B | 21 | 1 | **2S-0675** | 2 | SPACER (0.4-MM THK) | |
| B | 22 | 1 | **8J-4452** | 2 | SHIM (0.12-MM THK) | |
| | 23 | 1 | **6Y-4541** | 1 | PISTON-SELECTOR | |
| | 24 | 1 | **6Y-4542** | 1 | PISTON-LOAD | |
| | 25 | 1 | **2B-2695** | 2 | BOLT (5/16-18X0.875-IN) | |
| | 26 | 1 | **6Y-4538** | 1 | COVER | |
| | 27 | 1 | **8M-4986** | 1 | SEAL-O-RING | |
| | 28 | 1 | **8M-5127** | 1 | SEAL-O-RING | |
| | 29 | 1 | **8P-9739** | 1 | ORIFICE-CASCADE | |
| | 30 | 1 | **9D-7884** | 1 | SPRING | |
| | 31 | 1 | **8E-4592** | 1 | STOP | |
| | 32 | 1 | **6Y-8048** | 1 | SPOOL AS | |
| | | 1 | **1S-1636** | 1 | RETAINER | |
| | | 1 | **1S-1638** | 1 | RING-RETAINING | |
| | | 1 | **4B-9880** | 1 | BALL | |
| | | 1 | **4M-2381** | 1 | SPRING | |
| | 33 | 1 | **9P-0683** | 1 | SPRING | |
| | 34 | 1 | **5M-2504** | 2 | SLUG | |
| | 35 | 1 | **9W-6964** | 1 | VALVE AS-EXHAUST | |
| | | 1 | **3F-3152** | 1 | BALL | |
| | | 1 | **8N-4173** | 1 | DOWEL | |
| | 36 | 1 | **9S-8003** | 1 | PLUG | |
| | 37 | 1 | **1J-9671** | 1 | SEAL-O-RING | |
| B | 38 | 1 | **5J-2721** | 2 | SHIM (0.13-MM THK) | |
| B | 39 | 1 | **6J-3993** | 2 | SHIM (0.25-MM THK) | |
| B | 40 | 1 | **5J-1036** | 2 | SHIM (0.8-MM THK) | |
| | 41 | 1 | **6T-3724** | 1 | COVER | |
| | 42 | 1 | **9W-7410** | 1 | SPRING | |
| | 43 | 1 | **9P-0656** | 1 | SPOOL AS | |
| | | 1 | **1S-1636** | 1 | RETAINER | |
| | | 1 | **1S-1638** | 1 | RING-RETAINING | |
| | | 1 | **4B-9880** | 1 | BALL | |
| | | 1 | **4M-2381** | 1 | SPRING | |
| | 44 | 1 | **8M-4446** | 1 | SEAL-O-RING | |
| | 45 | 1 | **130-5300** | 1 | CLIP | |

## 254-9238 VALVE GP-LOCKUP CLUTCH & SOL *(contd.)* i03291825

| NOTE | REF NO | GRAPHIC REF | PART NUMBER | QTY | PART NAME 1 2 3 4 5 6 (PRODUCT LEVEL) | SEE PAGE |
|---|---|---|---|---|---|---|
| | 46 | 1 | **6V-0484** | 1 | ADAPTER-O-RING | |

B-USE AS REQUIRED
Y-SEPARATE ILLUSTRATION

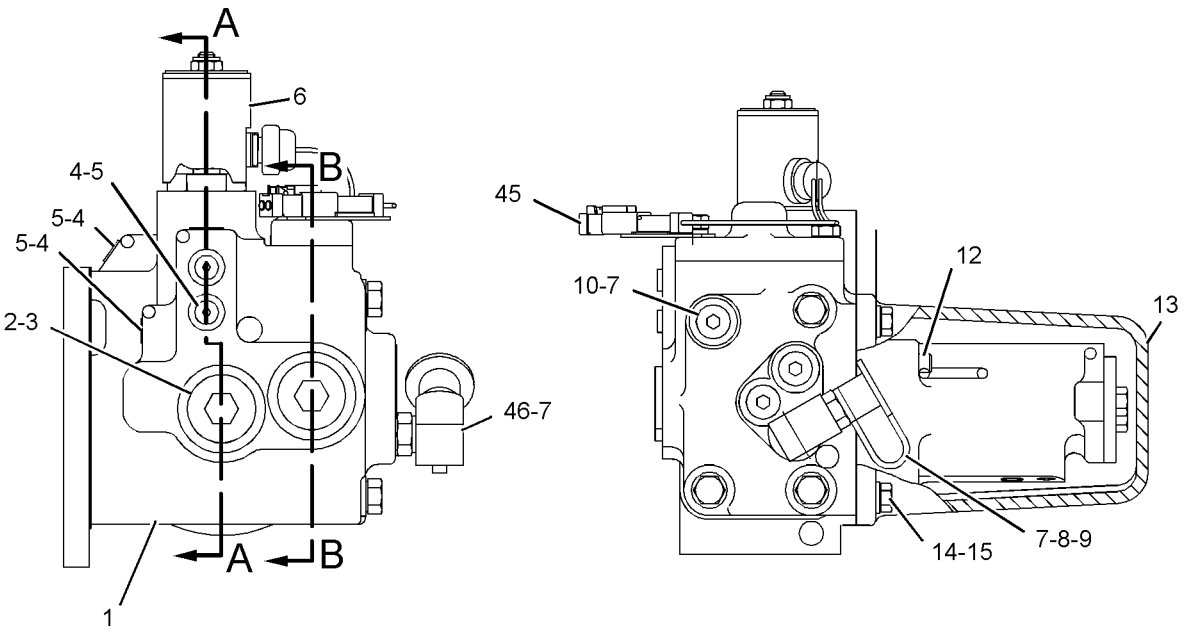


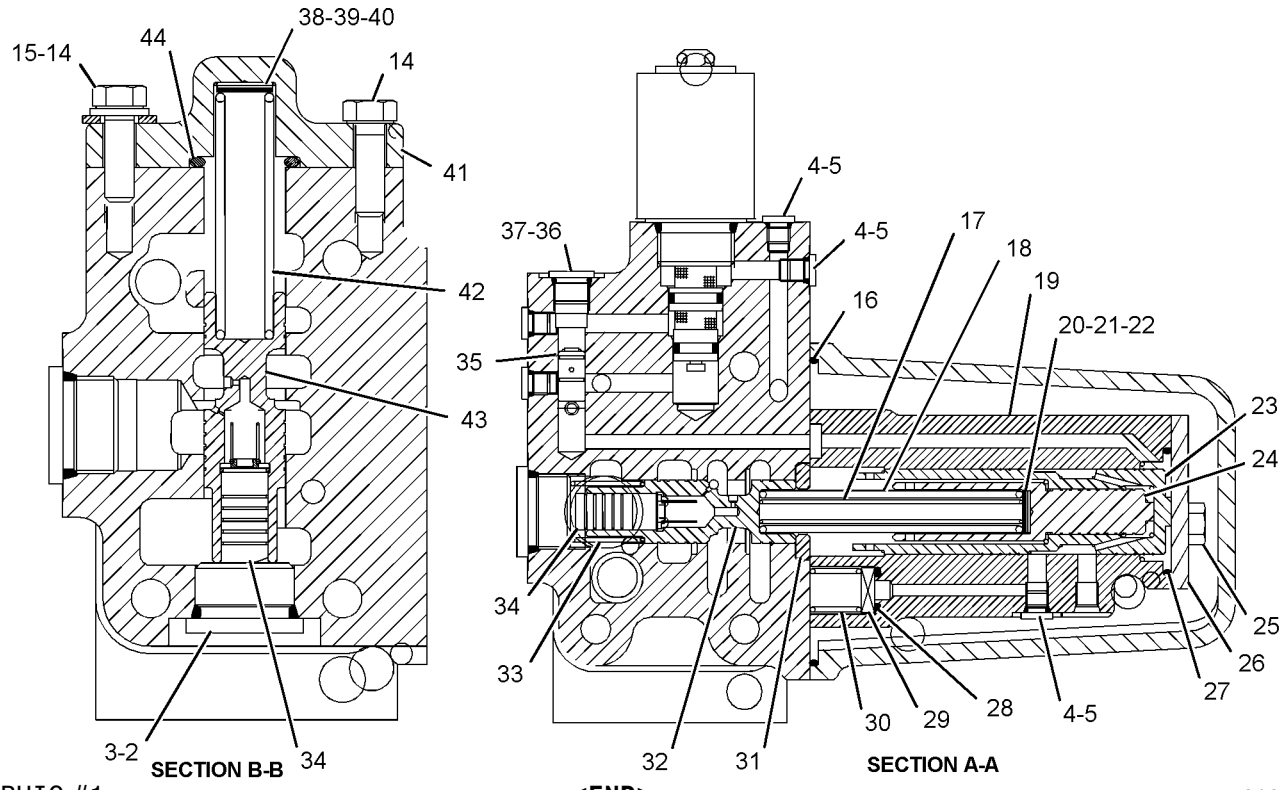


GRAPHIC #1

**<END>**

g01080954

## 254-9238 VALVE GP-LOCKUP CLUTCH & SOL—POWER TRAIN OIL

**S/N: RLB485-UP**

**PART OF 269-9199 LINES GP-POWER TRAIN OIL**

**SMCS-3124** **i03204818**

| NOTE | REF NO | GRAPHIC REF | PART NUMBER | QTY | PART NAME 1 2 3 4 5 6 (PRODUCT LEVEL) | SEE PAGE |
|---|---|---|---|---|---|---|
| | 1 | 1 | **6I-9475** | 1 | BODY AS-VALVE | |
| | | 1 | **5H-8985** | 1 | PIN-SPRING | |
| | | 1 | **8E-8439** | 1 | DOWEL | |
| C | 2 | 1 | *315-9859* | 2 | PLUG AS | |
| | | | | | (EACH INCLUDES) | |
| | | 1 | **9S-8008** | 1 | PLUG-O-RING | |
| | | 1 | **238-5082** | 1 | SEAL-O-RING | |
| C | 4 | 1 | *321-8641* | 7 | PLUG AS | |
| | | | | | (EACH INCLUDES) | |
| | | 1 | **9S-8001** | 1 | PLUG-O-RING | |
| | | 1 | **238-5078** | 1 | SEAL-O-RING | |
| C | 6 | 1 | **302-3813** | 1 | VALVE GP-SOLENOID (UPSHIFT, DOWNSHIFT) | |
| | | 1 | **8C-9987** | 1 | WASHER (8.3X28X2.5-MM THK) | |
| | | 1 | **100-4083** | 1 | KIT-SEAL | |
| | | | | | (INCLUDES SEAL-O-RINGS & RING-BACKUPS) | |
| | | 1 | **111-0343** | 1 | LOCKNUT (5/16-18-THD) | |
| | | 1 | **218-9894** | 1 | COIL AS | |
| C | 8 | 1 | *164-5567* | 1 | COUPLER AS-QUICK DISCONNECT | |
| | | 1 | **6V-3965** | 1 | FITTING (QUICK DISCONNECT) | |
| | | 1 | **214-7568** | 1 | SEAL-O-RING | |
| | 9 | 1 | **6V-0852** | 1 | CAP-DUST | |
| C | 10 | 1 | *183-3407* | 3 | PLUG AS | |
| | | | | | (EACH INCLUDES) | |
| | | 1 | **9S-8004** | 1 | PLUG-O-RING | |
| | | 1 | **214-7568** | 1 | SEAL-O-RING | |
| | 12 | 1 | **5L-9018** | 2 | BOLT-SOCKET HEAD (1/4-20X1.75-IN) | |
| | 13 | 1 | **6Y-4539** | 1 | COVER | |
| | 14 | 1 | **0S-1618** | 6 | BOLT (5/16-18X1-IN) | |
| | 15 | 1 | **9M-1974** | 5 | WASHER-HARD (8.8X16X2-MM THK) | |
| C | 16 | 1 | **6V-6353** | 1 | SEAL-O-RING | |
| | 17 | 1 | **6Y-7267** | 1 | SPRING | |
| | 18 | 1 | **8E-6144** | 1 | SPRING | |
| | 19 | 1 | **6Y-4540** | 1 | BODY | |
| B | 20 | 1 | **9J-1330** | 2 | SHIM (0.787-MM THK) | |
| B | 21 | 1 | **2S-0675** | 2 | SPACER (0.4-MM THK) | |
| B | 22 | 1 | **8J-4452** | 2 | SHIM (0.12-MM THK) | |
| | 23 | 1 | **6Y-4541** | 1 | PISTON-SELECTOR | |
| | 24 | 1 | **6Y-4542** | 1 | PISTON-LOAD | |
| | 25 | 1 | **2B-2695** | 2 | BOLT (5/16-18X0.875-IN) | |
| | 26 | 1 | **6Y-4538** | 1 | COVER | |
| C | 27 | 1 | **061-7540** | 1 | SEAL-O-RING | |
| C | 28 | 1 | **8L-2777** | 1 | SEAL-O-RING | |
| | 29 | 1 | **8P-9739** | 1 | ORIFICE-CASCADE | |
| | 30 | 1 | **9D-7884** | 1 | SPRING | |
| | 31 | 1 | **8E-4592** | 1 | STOP | |
| | 32 | 1 | **6Y-8048** | 1 | SPOOL AS | |
| | | 1 | **1S-1636** | 1 | RETAINER | |
| | | 1 | **1S-1638** | 1 | RING-RETAINING | |
| | | 1 | **4B-9880** | 1 | BALL | |
| | | 1 | **4M-2381** | 1 | SPRING | |
| | 33 | 1 | **9P-0683** | 1 | SPRING | |
| | 34 | 1 | **5M-2504** | 2 | SLUG | |
| | 35 | 1 | **9W-6964** | 1 | VALVE AS-EXHAUST | |
| | | 1 | **8N-4173** | 1 | DOWEL | |
| | | 1 | **3E-4354** | 1 | BALL | |
| C | 36 | 1 | *321-8642* | 1 | PLUG AS | |

## 254-9238 VALVE GP-LOCKUP CLUTCH & SOL *(contd.)* i03204818

| NOTE | REF NO | GRAPHIC REF | PART NUMBER | QTY | PART NAME 1 2 3 4 5 6 (PRODUCT LEVEL) | SEE PAGE |
|---|---|---|---|---|---|---|
| | | 1 | **9S-8003** | 1 | PLUG | |
| | | 1 | **214-7567** | 1 | SEAL-O-RING | |
| B | 38 | 1 | **5J-2721** | 2 | SHIM (0.13-MM THK) | |
| B | 39 | 1 | **6J-3993** | 2 | SHIM (0.25-MM THK) | |
| B | 40 | 1 | **5J-1036** | 2 | SHIM (0.8-MM THK) | |
| | 41 | 1 | **6T-3724** | 1 | COVER | |
| | 42 | 1 | **9W-7410** | 1 | SPRING | |
| | 43 | 1 | **9P-0656** | 1 | SPOOL AS | |
| | | 1 | **1S-1636** | 1 | RETAINER | |
| | | 1 | **1S-1638** | 1 | RING-RETAINING | |
| | | 1 | **4B-9880** | 1 | BALL | |
| | | 1 | **4M-2381** | 1 | SPRING | |
| C | 44 | 1 | **6V-3683** | 1 | SEAL-O-RING | |
| | 45 | 1 | **130-5300** | 1 | CLIP | |
| C | 46 | 1 | *315-9835* | 1 | ADAPTER AS | |
| | | 1 | **6V-0484** | 1 | ADAPTER-O-RING | |
| | | 1 | **214-7568** | 1 | SEAL-O-RING | |

B-USE AS REQUIRED
C-CHANGE FROM PREVIOUS TYPE

## 254-9238 VALVE GP-LOCKUP CLUTCH & SOL *(contd.)* i03204818

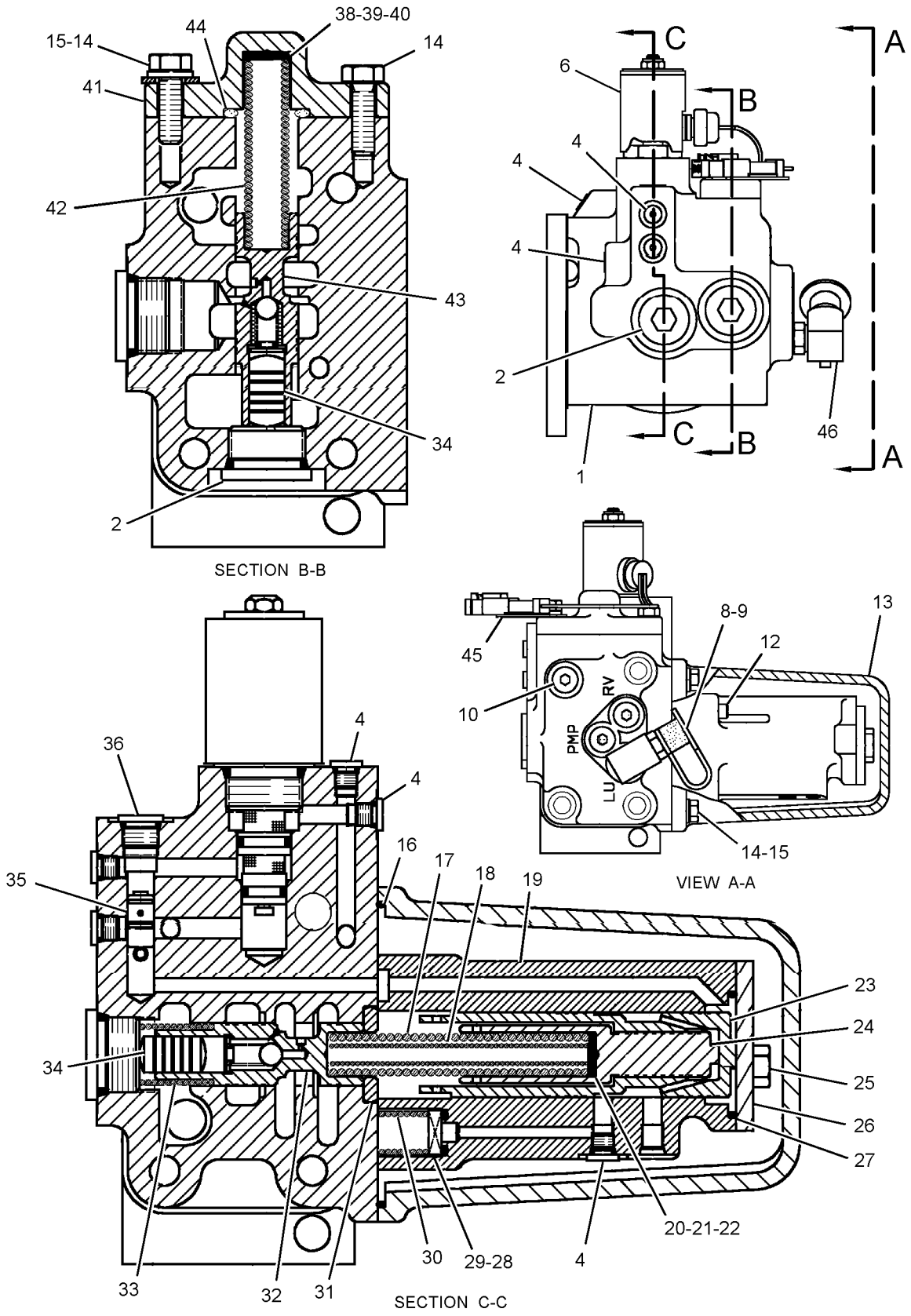


GRAPHIC #1 **<END>** g01636937

# POWER TRAIN

## 9U-9028 VALVE GP-PRESSURE CONTROL

**S/N: NDG1-UP**

**PART OF 294-5557 VALVE GP-TRANSMISSION CONTROL**

**SMCS-3074** **i01819187**

| NOTE | REF NO | GRAPHIC REF | PART NUMBER | QTY | PART NAME 1 2 3 4 5 6 (PRODUCT LEVEL) | SEE PAGE |
|---|---|---|---|---|---|---|
| | 1 | 1 | **6T-3773** | 4 | DOWEL | |
| | 2 | 1 | **5S-7906** | 4 | STOP | |
| | 3 | 1 | **5M-2504** | 7 | SLUG | |
| | 4 | 1 | **9P-0683** | 7 | SPRING | |
| | 5 | 1 | **8P-7385** | 1 | BODY-VALVE | |
| | 6 | 1 | **9P-0656** | 7 | SPOOL AS | |
| | | | | | (EACH INCLUDES) | |
| | 7 | 1 | **4B-9880** | 1 | BALL | |
| | 8 | 1 | **4M-2381** | 1 | SPRING | |
| | 9 | 1 | **1S-1636** | 1 | RETAINER | |
| | 10 | 1 | **1S-1638** | 1 | RING-RETAINING | |
| | 11 | 1 | **8E-4592** | 7 | STOP | |
| | 12 | 1 | **160-7578** | 7 | BODY-LOAD PISTON | |
| | 13 | 1 | **7S-4594** | 1 | PISTON-LOAD | |
| B | 14 | 1 | **4M-1751** | 14 | SPACER (15.09X0.4-MM THK) | |
| B | 15 | 1 | **5J-2721** | 14 | SHIM (0.13-MM THK) | |
| B | 16 | 1 | **6J-3993** | 14 | SHIM (0.25-MM THK) | |
| B | 17 | 1 | **5J-1036** | 35 | SHIM (0.8-MM THK) | |
| | 18 | 1 | **7G-7431** | 7 | PISTON-SELECTOR | |
| | 19 | 1 | **7T-0571** | 2 | SPRING (GREEN) | |
| | 20 | 1 | **9P-0687** | 3 | PISTON-LOAD | |
| | 21 | 1 | **9W-7410** | 1 | SPRING (BLUE) | |
| | 22 | 1 | **4J-7533** | 20 | SEAL-O-RING | |
| | 23 | 1 | **9S-8001** | 14 | PLUG-O-RING | |
| | 24 | 1 | **9W-7412** | 2 | SPRING (LT GREEN) | |
| | 25 | 1 | **8M-5127** | 7 | SEAL-O-RING | |
| | 26 | 1 | **9D-7884** | 7 | SPRING | |
| | 27 | 1 | **5P-9287** | 1 | WASHER-HARD (7.2X32X2-MM THK) | |
| | 28 | 1 | **5L-9018** | 14 | BOLT-SOCKET HEAD (1/4-20X1.75-IN) | |
| | 29 | 1 | **7T-0570** | 2 | SPRING (ORANGE) | |
| | 30 | 1 | **7T-0569** | 3 | SPRING (LT BLUE) | |
| | 31 | 1 | **8P-9737** | 2 | ORIFICE-CASCADE | |
| | 32 | 1 | **8P-9738** | 5 | ORIFICE-CASCADE | |
| | 33 | 1 | **9S-4190** | 2 | PLUG-O-RING | |
| | 34 | 1 | **9G-7131** | 3 | PLUG-ORIFICE | |
| | 35 | 1 | **9G-7132** | 3 | PLUG-ORIFICE | |
| | 36 | 1 | **7G-2674** | 2 | PIN | |
| | 37 | 1 | **5P-0537** | 14 | WASHER-HARD (7.2X14.5X2-MM THK) | |
| | 38 | 1 | **2M-9780** | 2 | SEAL-O-RING | |
| | 39 | 1 | **0S-1614** | 1 | BOLT (1/4-20X0.5-IN) | |
| | 40 | 1 | **3T-1437** | 1 | PISTON-LOAD | |
| | 41 | 1 | **9W-7411** | 4 | SPRING (YELLOW) | |
| | 42 | 1 | **6T-2293** | 3 | PISTON-LOAD | |

B-USE AS REQUIRED

**9U-9028 VALVE GP-PRESSURE CONTROL** *(contd.)* **i01819187**

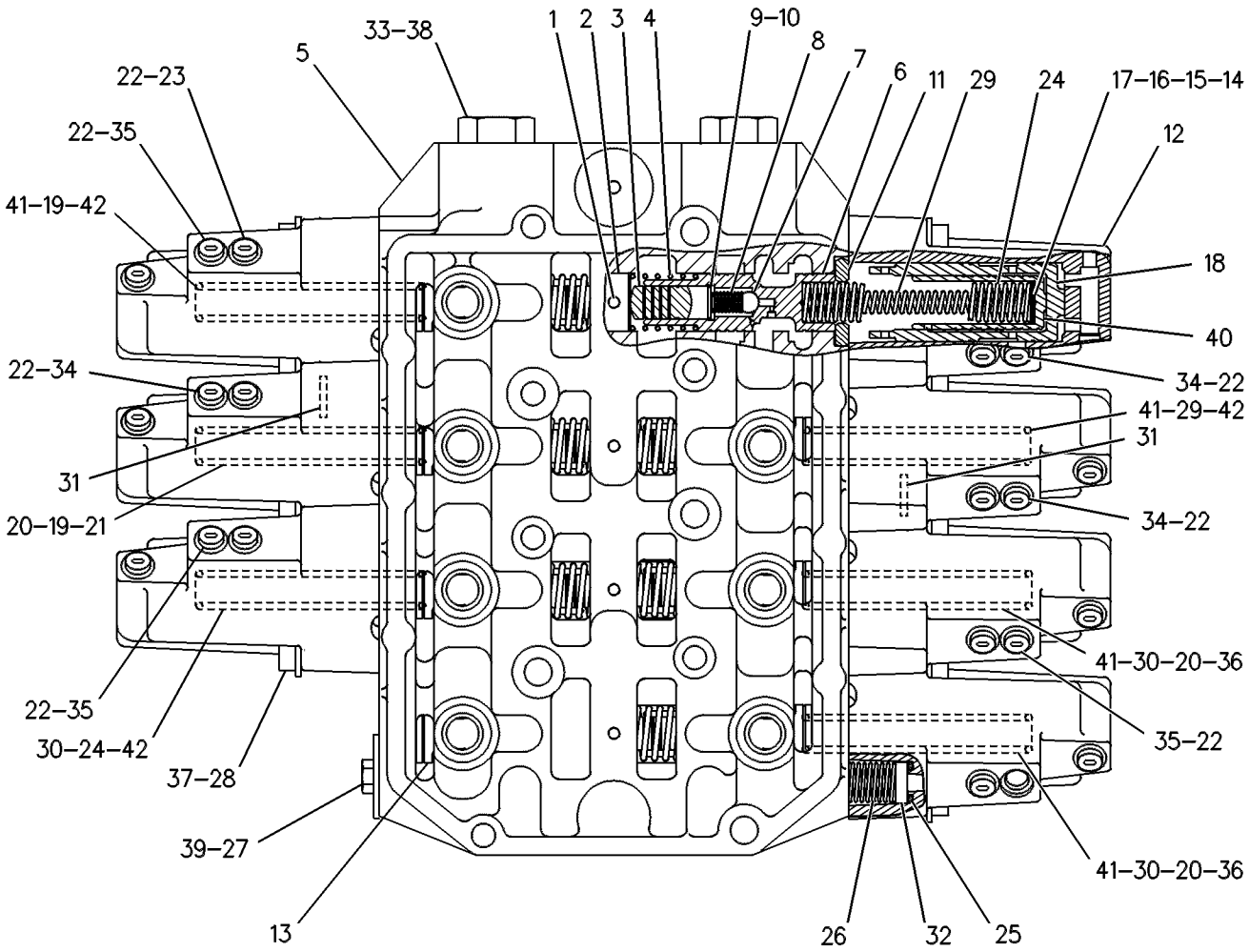


GRAPHIC #1 **<END>** g00084572

## 294-5556 VALVE GP-SELECTOR & PRESS CONT—TRANSMISSION

**S/N: NDG1-UP**

**PART OF 294-5557 VALVE GP-TRANSMISSION CONTROL**

**SMCS-3083** **i02665325**

| NOTE | REF NO | GRAPHIC REF | PART NUMBER | QTY | PART NAME 1 2 3 4 5 6 (PRODUCT LEVEL) | SEE PAGE |
|---|---|---|---|---|---|---|
| | 1 | 1 | **3T-9920** | 1 | SPRING | |
| | 3 | 1 | **6T-3115** | 1 | SPOOL AS | |
| | | 1 | **1H-4142** | 1 | RING-RETAINING | |
| | | 1 | **4B-9880** | 1 | BALL | |
| | | 1 | **4M-2381** | 1 | SPRING | |
| | | 1 | **5H-6005** | 1 | SEAL-O-RING | |
| | | 1 | **7T-6175** | 1 | SEAT | |
| | 4 | 1 | **6T-3177** | 1 | SPRING | |
| | 5 | 1 | **6T-3696** | 1 | SPOOL AS-REDUCING | |
| | | 1 | **1L-3162** | 1 | RING-RETAINING | |
| | | 1 | **5M-9548** | 1 | SPRING | |
| | | 1 | **8M-1078** | 1 | CHECK | |
| | | 1 | **8M-2537** | 1 | RETAINER | |
| | | 1 | **147-0045** | 1 | PIN-SPRING | |
| | 6 | 1 | **6T-5409** | 1 | SPRING | |
| | 7 | 1 | **7G-3472** | 1 | BODY-SELECTOR | |
| | 8 | 1 | **8E-4094** | 1 | SUPPORT AS-SPRING | |
| | | 1 | **8H-9208** | 2 | DOWEL | |
| | 9 | 1 | **8E-7192** | 1 | COVER | |
| | 10 | 1 | **8M-6402** | 1 | SPRING | |
| | 11 | 1 | **9P-0652** | 2 | RETAINER | |
| | 12 | 1 | **9P-0672** | 1 | CAP | |
| | 13 | 1 | **9P-0673** | 1 | VALVE | |
| | 14 | 1 | **9P-0674** | 1 | BODY | |
| | 15 | 1 | **9S-8413** | 1 | WASHER-RETAINING (0.344X1.5X0.23-IN THK) | |
| | 16 | 1 | **129-3033** | 2 | SPRING AS | |
| | | | | | (EACH INCLUDES) | |
| | | 1 | **3G-3916** | 1 | RING-RETAINING | |
| | | 1 | **6V-5701** | 2 | BEARING AS-NEEDLE | |
| | | 1 | **9W-7009** | 2 | RETAINER-BEARING | |
| | | 1 | **9W-7011** | 1 | PIN | |
| | 17 | 1 | **145-0108** | 1 | STOP | |
| | 18 | 1 | **145-0109** | 1 | SPOOL AS | |
| | | 1 | **2L-6726** | 1 | RING-RETAINING | |
| | | 1 | **4B-9880** | 1 | BALL | |
| | | 1 | **4M-2381** | 1 | SPRING | |
| | | 1 | **6T-5411** | 1 | SLUG | |
| | | 1 | **147-0045** | 1 | PIN-SPRING | |
| | 19 | 1 | **162-5802** | 1 | CAM-DETENT | |
| | 20 | 1 | **294-5555** | 1 | SPOOL AS (ROTARY) | |
| | | 1 | **3J-1907** | 1 | SEAL-O-RING | |
| | | 1 | **3T-5219** | 1 | PIN | |
| | | 1 | **6T-7640** | 1 | SCREEN-FILTER | |
| | | 1 | **9P-9650** | 1 | DOWEL | |
| | 22 | 1 | **031-4630** | 1 | BOLT-LOCKING (5/16-18X0.75-IN) | |
| | 23 | 1 | **138-1645** | 1 | PIN-SPRING (SLOTTED) | |
| | 24 | 1 | **145-0105** | 4 | SPACER (3.18X20.62X0.25-MM THK) | |
| | 25 | 1 | **145-0106** | 2 | SPACER (3.18X20.62.9-MM THK) | |
| | 26 | 1 | **145-0107** | 2 | SPACER (3.18X20.62X1.6-MM THK) | |
| | 27 | 1 | **1B-2790** | 1 | BOLT (5/16-18X1.375-IN) | |
| | 28 | 1 | **1D-4539** | 1 | BOLT (5/16-18X2.5-IN) | |
| | 29 | 1 | **1P-9620** | 2 | RING-RETAINING | |
| | 30 | 1 | **2S-0696** | 1 | DOWEL | |
| | 31 | 1 | **4B-3388** | 4 | BOLT (5/16-18X1.125-IN) | |
| | 32 | 1 | **4D-0514** | 2 | PLUG-PIPE | |
| | 33 | 1 | **5M-3492** | 3 | SPACER (3.18X19.05X0.25-MM THK) | |

## 294-5556 VALVE GP-SELECTOR & PRESS CONT *(contd. )* i02665325

| NOTE | REF NO | GRAPHIC REF | PART NUMBER | QTY | PART NAME 1 2 3 4 5 6 (PRODUCT LEVEL) | SEE PAGE |
|---|---|---|---|---|---|---|
| | 34 | 1 | **5M-6214** | 1 | PLUG-PIPE | |
| | 35 | 1 | **7L-6210** | 2 | BOLT-LOCATING (5/16-18X1-IN) | |
| | 36 | 1 | **7M-1397** | 2 | SPACER (3.18X19.05X0.9-MM THK) | |
| | 37 | 1 | **7M-8485** | 1 | SEAL-O-RING | |
| | 38 | 1 | **8M-8515** | 1 | SEAL-O-RING | |
| | 39 | 1 | **8P-9852** | 1 | COVER | |
| | 40 | 1 | **8T-2925** | 1 | PIN-SPRING | |
| | 41 | 1 | **9M-1974** | 2 | WASHER-HARD (8.8X16X2-MM THK) | |

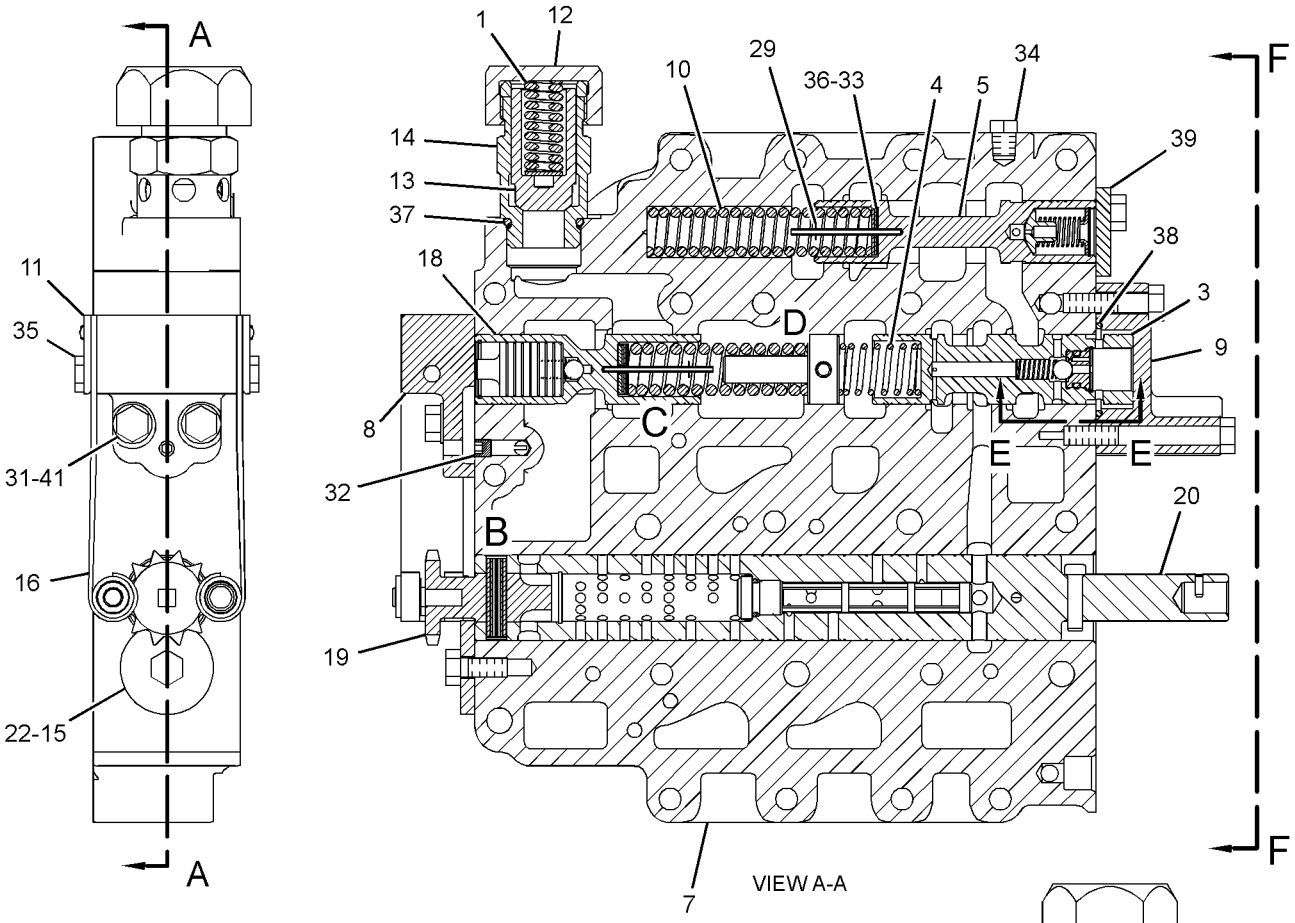


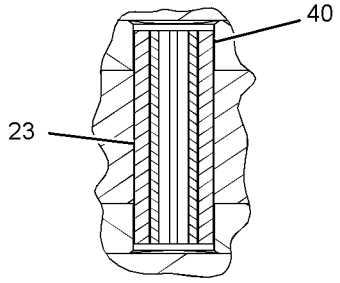


VIEW OF AREA B

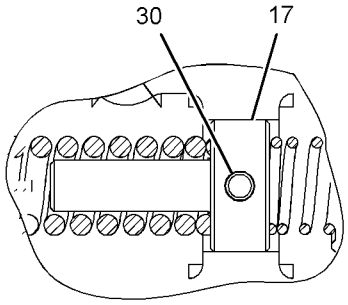


VIEW OF AREA D

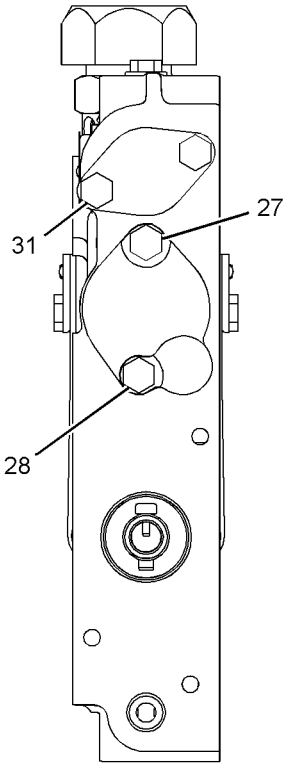


VIEW F-F

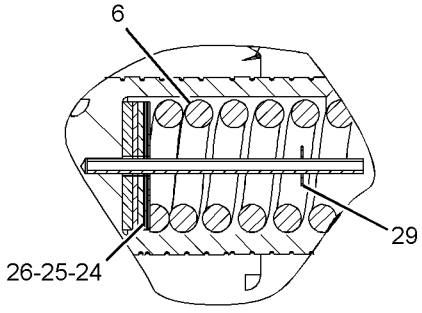


VIEW OF AREA C

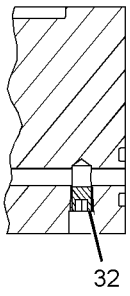


VIEW E-E

GRAPHIC #1

**<END>**

g01343770

# 193-8559 VALVE GP-SOLENOID

**S/N: RLB1-UP**
**24-VOLT**
**PART OF 254-9238 VALVE GP-LOCKUP CLUTCH & SOL**

**SMCS-3174, 7499** **i02656891**

| NOTE | REF NO | GRAPHIC REF | PART NUMBER | QTY | PART NAME 1 2 3 4 5 6 (PRODUCT LEVEL) | SEE PAGE |
|---|---|---|---|---|---|---|
| | 1 | 1 | **107-8611** | 1 | CARTRIDGE AS | |
| | | 1 | **111-0343** | 1 | LOCKNUT (5/16-18-THD) | |
| | | 1 | **149-5628** | 1 | WASHER (8.3X38.1X1.2-MM THK) | |
| | 2 | 1 | **111-0343** | 1 | LOCKNUT (5/16-18-THD) | |
| | 3 | 1 | **149-5628** | 1 | WASHER (8.3X38.1X1.2-MM THK) | |
| | 4 | 1 | **220-3629** | 1 | COIL AS | |
| | | 1 | **3E-3365** | 1 | WEDGE-RECEPTACLE LOCK (2-PIN) | |
| | | 1 | **1S-9593** | 2 | STRAP-CABLE | |
| | | 1 | **102-8802** | 1 | KIT-RECEPTACLE (2-PIN) | |
| | | | | | (INCLUDES RECEPTACLE AS & WEDGE) | |
| | | 1 | **186-3735** | 2 | PIN-CONNECTOR (16-GA TO 18-GA) | |
| | | | | | AVAILABLE REPAIR KIT(S): | |
| | | | **100-4083** | 1 | KIT-SEAL (SOLENOID VALVE) | |
| | | | | | (INCLUDES SEALS & RINGS) | |

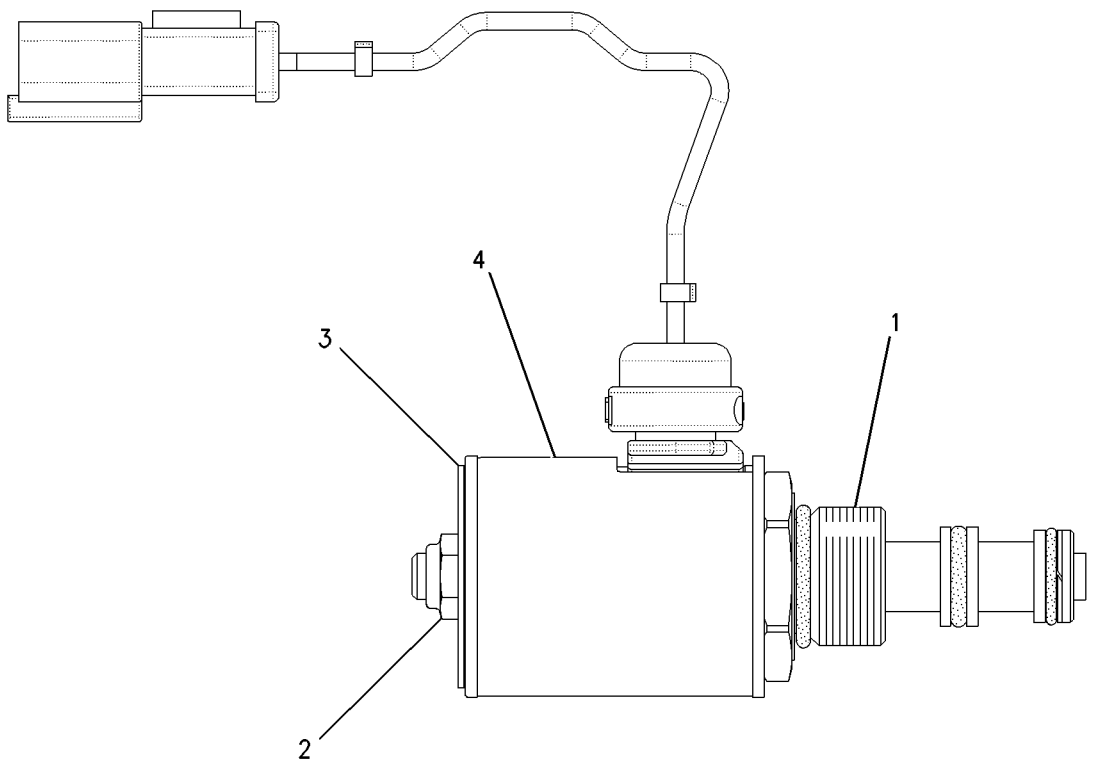


GRAPHIC #1 **<END>** g00895642

# 297-4207 VALVE GP-SOLENOID

**S/N: RLB1-UP**
**24-VOLT**
**PART OF 298-6175 MANIFOLD GP-CONTROL**
**AN ATTACHMENT**

**SMCS-1307, 3174, 5479, 7499** **i02672874**

| NOTE | REF NO | GRAPHIC REF | PART NUMBER | QTY | PART NAME 1 2 3 4 5 6 (PRODUCT LEVEL) | SEE PAGE |
|---|---|---|---|---|---|---|
| | 1 | 1 | **250-6148** | 1 | COIL AS (24-VOLT) | |

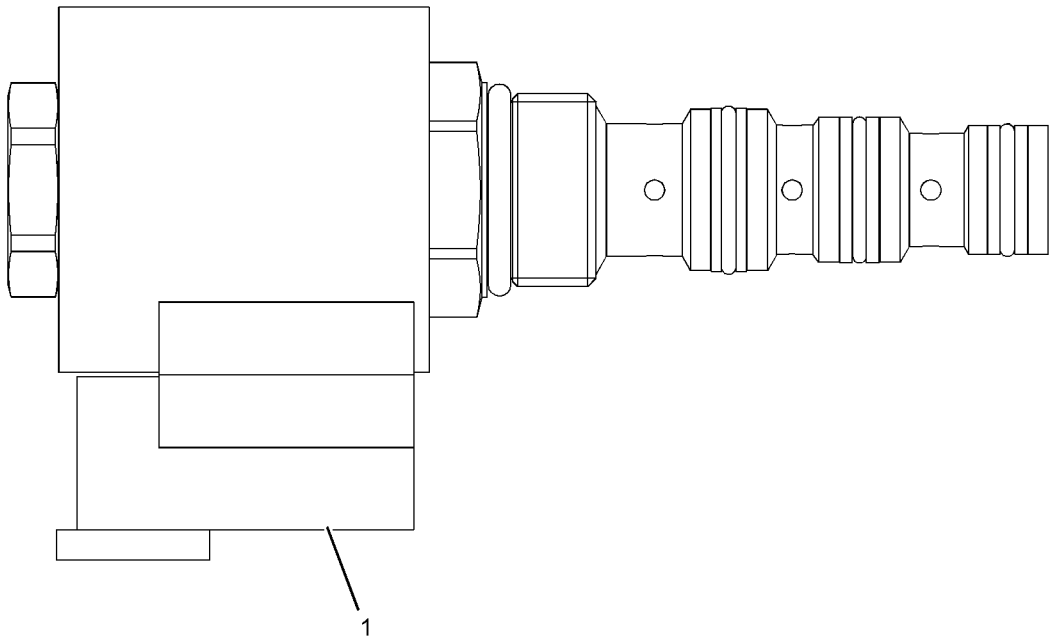


GRAPHIC #1 **<END>** g01343887

# 222-4744 VALVE GP-TRACTION CONTROL

**S/N: RLB1-UP**
**PART OF 270-1756 LINES GP-ATTACHMENT**
**AN ATTACHMENT**

**SMCS-4811** **i02756515**

| NOTE | REF NO | GRAPHIC REF | PART NUMBER | QTY | PART NAME 1 2 3 4 5 6 (PRODUCT LEVEL) | SEE PAGE |
|---|---|---|---|---|---|---|
| | 1 | 1 | **9G-9202** | 1 | BODY AS | |
| | 1A | 1 | **1J-5799** | 1 | PIN-SPRING | |
| | 1B | 1 | **4B-9782** | 2 | BALL | |
| | 1C | 1 | **5S-7906** | 1 | STOP | |
| | 1D | 1 | **8T-6757** | 3 | PLUG-PIPE | |
| | 1E | 1 | **9G-9201** | 1 | SEAT | |
| | 2 | 1 | **3T-2334** | 1 | MANIFOLD | |
| | 3 | 1 | **0L-1143** | 2 | BOLT (3/8-16X2.5-IN) | |
| | 4 | 1 | **5M-2894** | 6 | WASHER-HARD (10.2X18.5X2.5-MM THK) | |
| Y | 5 | 1 | **3E-8575** | 1 | VALVE GP-SOLENOID (TRACTION CONTROL SYSTEM) | 719 |
| | 6 | 1 | **0S-1619** | 2 | BOLT (3/8-16X3-IN) | |
| Y | 7 | 1 | **222-4741** | 1 | VALVE GP-SOLENOID (TRACTION CONTROL SYSTEM) | 720 |
| | 8 | 1 | **116-0118** | 2 | CLIP | |
| | 9 | 1 | **9G-9206** | 1 | COVER | |
| | 10 | 1 | **9G-9207** | 1 | COVER | |
| | 11 | 1 | **6V-3965** | 2 | FITTING (QUICK DISCONNECT) | |
| | 12 | 1 | **3J-1907** | 4 | SEAL-O-RING | |
| | 13 | 1 | **0S-1618** | 10 | BOLT (5/16-18X1-IN) | |
| | 14 | 1 | **0S-1590** | 2 | BOLT (3/8-16X2-IN) | |
| | 15 | 1 | **9M-1974** | 10 | WASHER-HARD (8.8X16X2-MM THK) | |
| | 16 | 1 | **9G-9203** | 2 | PLUG-STOP | |
| | 17 | 1 | **3T-9578** | 2 | SPOOL AS | |
| | | | | | (EACH INCLUDES) | |
| | 17A | 1 | **1S-1636** | 2 | RETAINER | |
| | 17B | 1 | **1S-1638** | 2 | RING-RETAINING | |
| | 17C | 1 | **3T-9560** | 2 | SPOOL | |
| | 17D | 1 | **3T-9836** | 2 | SPRING | |
| | 17E | 1 | **4B-9880** | 2 | BALL | |
| | 18 | 1 | **8M-4988** | 6 | SEAL-O-RING | |
| | 19 | 1 | **9G-9226** | 2 | SPRING | |
| | 20 | 1 | **5M-2504** | 2 | SLUG | |
| | 21 | 1 | **5P-5846** | 1 | SEAL-O-RING | |
| | 22 | 1 | **9G-9227** | 1 | SPRING | |
| | 23 | 1 | **4H-1349** | 1 | DOWEL | |
| | 24 | 1 | **1F-8419** | 1 | WASHER-VALVE (0.75X0.938X0.156-IN THK) | |
| | 25 | 1 | **1F-8359** | 1 | BALL | |
| | 26 | 1 | **2L-1699** | 1 | PIN-SPRING | |
| | 27 | 1 | **9G-9205** | 1 | PISTON-LOAD | |
| | 28 | 1 | **8M-5248** | 1 | SEAL-O-RING | |
| | 29 | 1 | **3K-0360** | 1 | SEAL-O-RING | |
| | 30 | 1 | **307-9890** | 2 | PLUG-PIPE | |
| | 31 | 1 | **8M-8282** | 5 | SEAL-O-RING | |
| | 32 | 1 | **6T-7532** | 1 | SCREEN AS (TRACTION CONTROL) | |
| | 33 | 1 | **8M-4436** | 2 | SEAL-O-RING | |
| | 34 | 1 | **172-6240** | 1 | COVER | |
| | 34A | 1 | **2K-9111** | 1 | PIN-SPRING | |
| | 35 | 1 | **172-6236** | 1 | RETAINER | |
| | 36 | 1 | **257-7440** | 1 | PLUG AS | |

Y-SEPARATE ILLUSTRATION

## 222-4744 VALVE GP-TRACTION CONTROL *(contd.)* i02756515

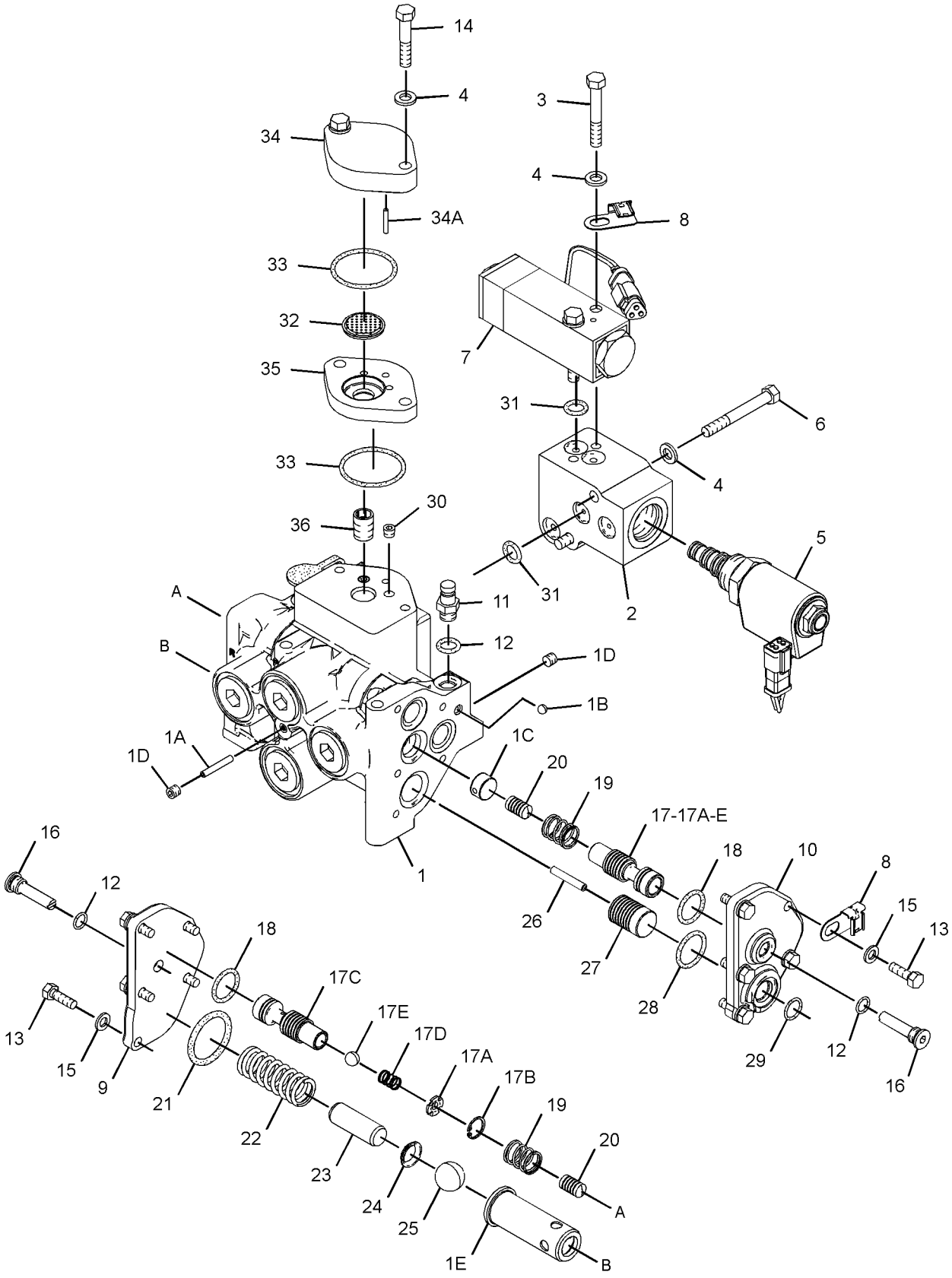


GRAPHIC #1

**<END>**

g01402197

# 294-5557 VALVE GP-TRANSMISSION CONTROL

**S/N: NDG1-UP**

**PART OF 294-5559 CONTROL GP-TRANSMISSION HYD**

**SMCS-3073, 3167** **i02665261**

| NOTE | REF NO | GRAPHIC REF | PART NUMBER | QTY | PART NAME 1 2 3 4 5 6 (PRODUCT LEVEL) | SEE PAGE |
|---|---|---|---|---|---|---|
| | 1 | 1 | **3T-0693** | 1 | MANIFOLD | |
| | 3 | 1 | **7G-2818** | 1 | PLATE | |
| | 4 | 1 | **7T-9791** | 1 | COVER | |
| Y | 5 | 1 | **9U-9028** | 1 | VALVE GP-PRESSURE CONTROL (CLUTCH OIL FLOW) | 458 |
| Y | 6 | 1 | **9W-4119** | 1 | ACTUATOR GP-ROTARY (TRANSMISSION CONTROL VALVE) | 386 |
| Y | 8 | 1 | **294-5556** | 1 | VALVE GP-SELECTOR & PRESS CONT (TRANSMISSION) | 460 |
| | 9 | 1 | **0S-1618** | 1 | BOLT (5/16-18X1-IN) | |
| | 10 | 1 | *164-5567* | 7 | COUPLER AS-QUICK DISCONNECT | |
| | | | | | (EACH INCLUDES) | |
| | | 1 | **6V-3965** | 1 | FITTING (QUICK DISCONNECT) | |
| | | 1 | **3J-1907** | 1 | SEAL-O-RING | |
| | 11 | 1 | **1D-4541** | 12 | BOLT (5/16-18X3-IN) | |
| | 12 | 1 | **1F-4111** | 1 | BOLT (5/16-18X3.5-IN) | |
| | 13 | 1 | **4B-3903** | 2 | BOLT (5/16-18X4-IN) | |
| | 14 | 1 | **4F-3508** | 5 | BOLT (5/16-18X6.5-IN) | |
| | 15 | 1 | **5M-2894** | 1 | WASHER-HARD (10.2X18.5X2.5-MM THK) | |
| | 16 | 1 | **8F-8544** | 1 | BOLT (3/8-16X6.25-IN) | |
| | 17 | 1 | **9M-1974** | 7 | WASHER-HARD (8.8X16X2-MM THK) | |

Y-SEPARATE ILLUSTRATION

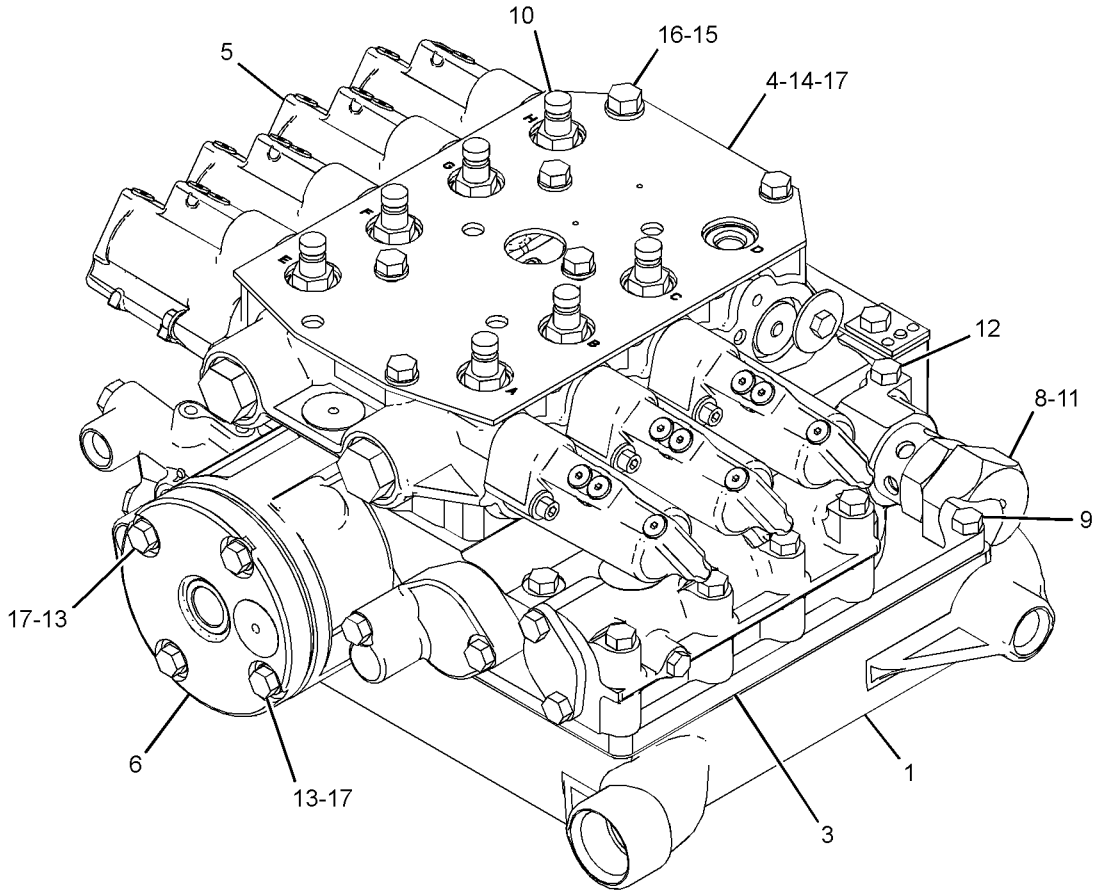


GRAPHIC #1 **<END>** g01343888

## *276-9966* WHEEL AR

**S/N: RLB1-UP**

**AN ATTACHMENT**

**SMCS-4201** **i02634579**

| NOTE | PART NUMBER | QTY | PART NAME 1 2 3 4 5 6 (PRODUCT LEVEL) | SEE PAGE |
|---|---|---|---|---|
| Y | *271-3763* | 2 | WHEEL GP-FINAL DRIVE & BRAKE | 470 |

Y-SEPARATE ILLUSTRATION

**<END>**

## *276-9967* WHEEL AR

**S/N: RLB1-UP**

**AN ATTACHMENT**

**SMCS-4201** **i02634667**

| NOTE | PART NUMBER | QTY | PART NAME 1 2 3 4 5 6 (PRODUCT LEVEL) | SEE PAGE |
|---|---|---|---|---|
| Y | *279-7457* | 2 | WHEEL GP-FINAL DRIVE & BRAKE | 474 |

Y-SEPARATE ILLUSTRATION

**<END>**

# *261-1072* WHEEL GP-FINAL DRIVE & BRAKE

**S/N: RLB1-UP**

**FIELD REPLACEMENT FOR 271-3763—PAGE 470**

**SMCS-4001, 4201** **i02829151**

| NOTE | REF NO | GRAPHIC REF | PART NUMBER | QTY | PART NAME 1 2 3 4 5 6 (PRODUCT LEVEL) | SEE PAGE |
|---|---|---|---|---|---|---|
| Y | 1 | 1 | *271-3763* | 1 | WHEEL GP-FINAL DRIVE & BRAKE | 470 |

Y-SEPARATE ILLUSTRATION

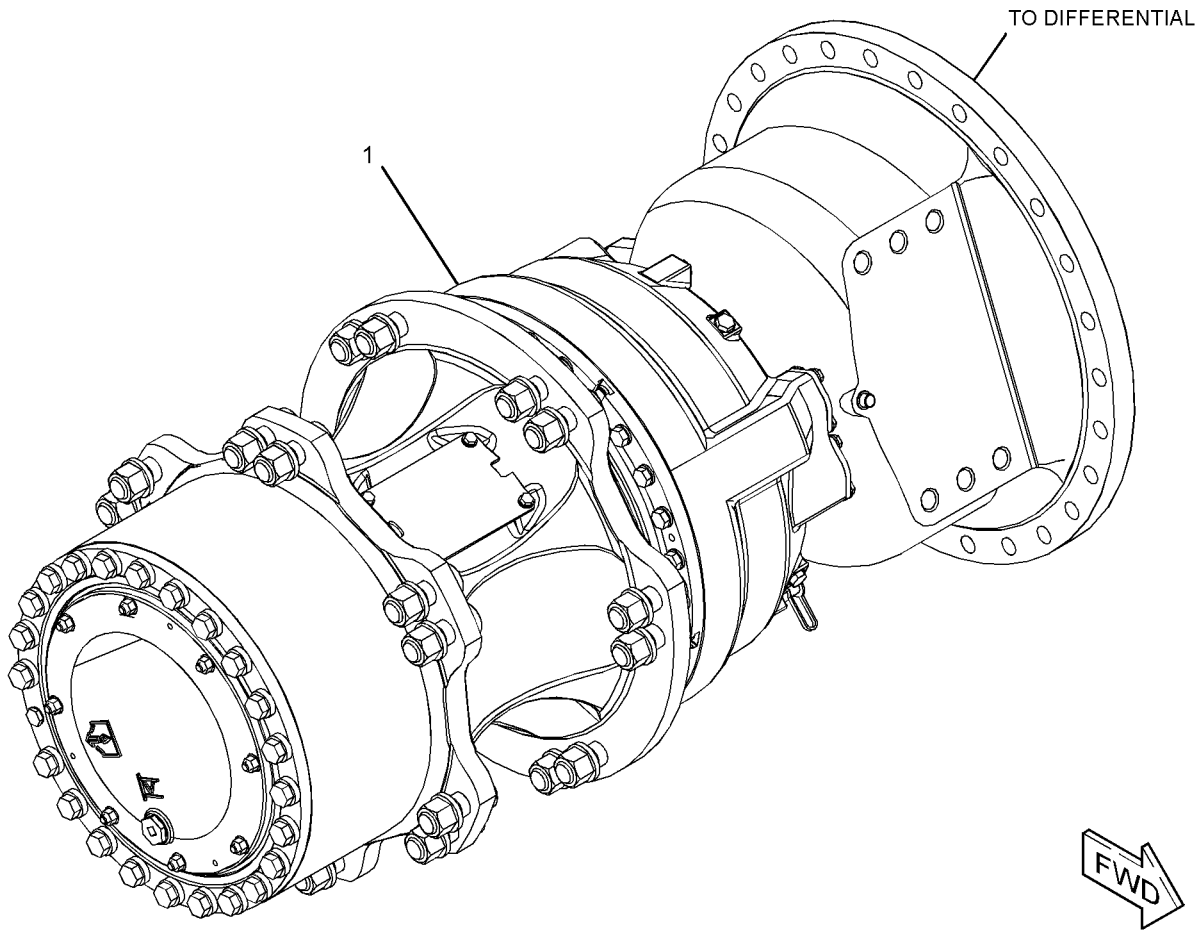


GRAPHIC #1 **<END>** g01411649

# 271-3763 WHEEL GP-FINAL DRIVE & BRAKE

**S/N: RLB1-322**

**PART OF 276-9966 WHEEL AR, 261-1072 WHEEL GP-FINAL DRIVE & BRAKE**

**FIELD REPLACEMENT ORDER 261-1072—PAGE 469**

**AN ATTACHMENT**

**SMCS-4001, 4201** **i03291851**

| NOTE | REF NO | GRAPHIC REF | PART NUMBER | QTY | PART NAME 1 2 3 4 5 6 (PRODUCT LEVEL) | SEE PAGE |
|---|---|---|---|---|---|---|
| | 1 | 1 | **3H-6828** | 1 | PLUG | |
| | 2 | 1 | **4D-8695** | 24 | BOLT (1.56X2X4.04-IN) | |
| | 3 | 1 | **5D-0765** | 24 | NUT-FULL (1-5/16-12-THD) | |
| | 4 | 1 | **163-6452** | 1 | SEAL GP-DUO-CONE | |
| | 5 | 1 | **208-8795** | 1 | RETAINER | |
| | 6 | 1 | **237-3811** | 1 | RETAINER | |
| | 7 | 1 | **238-9911** | 1 | WHEEL-REAR | |
| Y | 8 | 1 | **238-9912** | 1 | DRIVE GP-FINAL | 403 |
| Y | 9 | 1 | **239-1266** | 1 | BRAKE GP-SERVICE & PARKING (REAR) | 566 |
| | 10 | 1 | **240-8240** | 2 | BEARING AS | |
| | 11 | 1 | **303-2357** | 1 | SPINDLE | |
| | 12 | 1 | **281-2900** | 1 | PLATE AS | |
| | 13 | 1 | **297-9546** | 1 | SEAL GP-DUO-CONE | |
| | 14 | 1 | **244-6925** | 1 | RING-RETAINING | |
| | 15 | 1 | **2A-1913** | 1 | GASKET-PLUG | |
| | 16 | 1 | **3S-3074** | 1 | SEAL-O-RING | |
| B | 17 | 1 | **4D-5642** | 1 | SHIM PACK (INCLUDES 14-SHIMS) | |
| | 18 | 1 | **4M-0737** | 1 | SEAL-O-RING | |
| | 19 | 1 | **5D-0764** | 24 | WASHER-HARD (34X57X8-MM THK) | |
| | 20 | 1 | **5P-8247** | 8 | WASHER-HARD (17X32X3.5-MM THK) | |
| M | 21 | 1 | **8T-0357** | 8 | BOLT (M16X2X70-MM) | |
| | 22 | 1 | **8T-4121** | 4 | WASHER-HARD (11X21X2.5-MM THK) | |
| M | 23 | 1 | **8T-4137** | 4 | BOLT (M10X1.5X20-MM) | |

B-USE AS REQUIRED
M-METRIC PART
Y-SEPARATE ILLUSTRATION

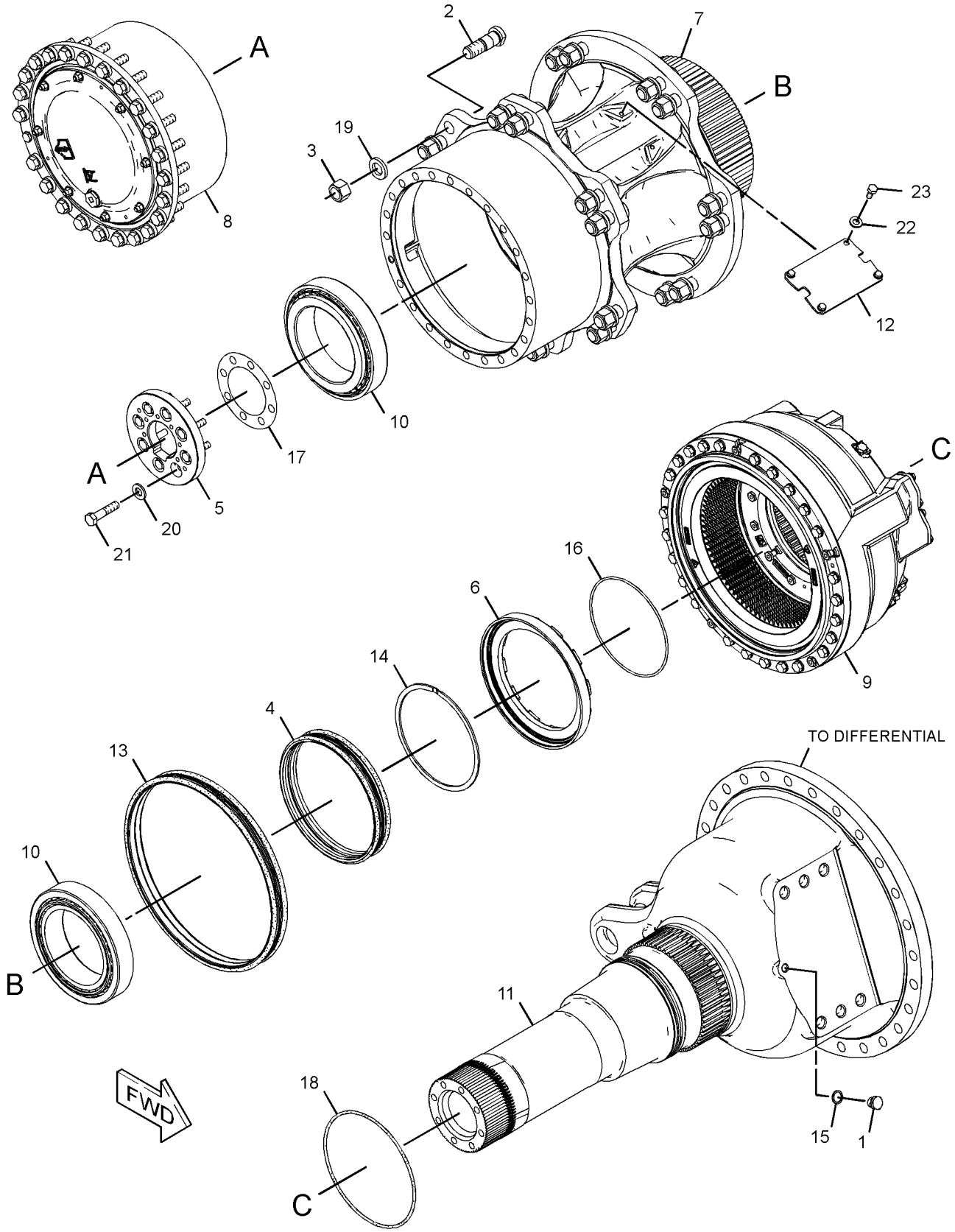


GRAPHIC #1 **<END>** g01335633

# 271-3763 WHEEL GP-FINAL DRIVE & BRAKE

**S/N: RLB323-UP**

**PART OF 276-9966 WHEEL AR, 261-1072 WHEEL GP-FINAL DRIVE & BRAKE**

**FIELD REPLACEMENT ORDER 261-1072—PAGE 469**

**AN ATTACHMENT**

**SMCS-4001, 4201** **i02953548**

| NOTE | REF NO | GRAPHIC REF | PART NUMBER | QTY | PART NAME 1 2 3 4 5 6 (PRODUCT LEVEL) | SEE PAGE |
|---|---|---|---|---|---|---|
| C | 1 | 1 | **9S-4185** | 1 | PLUG-O-RING | |
| | 2 | 1 | **4D-8695** | 24 | BOLT (1.56X2X4.04-IN) | |
| | 3 | 1 | **5D-0765** | 24 | NUT-FULL (1-5/16-12-THD) | |
| | 4 | 1 | **314-4122** | 1 | SEAL GP-DUO-CONE | |
| | | 1 | **314-4121** | 2 | RING-TORIC | |
| | 5 | 1 | **208-8795** | 1 | RETAINER | |
| | 6 | 1 | **237-3811** | 1 | RETAINER | |
| | 7 | 1 | **238-9911** | 1 | WHEEL-REAR | |
| Y | 8 | 1 | **238-9912** | 1 | FINAL DRIVE GP | 403 |
| Y | 9 | 1 | **239-1266** | 1 | BRAKE GP-SERVICE & PARKING (REAR) | 566 |
| | 10 | 1 | **240-8240** | 2 | BEARING AS | |
| | 11 | 1 | **303-2357** | 1 | SPINDLE | |
| | 12 | 1 | **281-2900** | 1 | PLATE AS | |
| | 13 | 1 | **297-9546** | 1 | SEAL GP-DUO-CONE | |
| | | 1 | **297-9545** | 2 | RING-TORIC | |
| | 14 | 1 | **244-6925** | 1 | RING-RETAINING | |
| C | 15 | 1 | **3K-0360** | 1 | SEAL-O-RING | |
| | 16 | 1 | **3S-3074** | 1 | SEAL-O-RING | |
| B | 17 | 1 | **4D-5642** | 1 | SHIM PACK (INCLUDES 14-SHIMS) | |
| | 18 | 1 | **4M-0737** | 1 | SEAL-O-RING | |
| | 19 | 1 | **5D-0764** | 24 | WASHER-HARD (34X57X8-MM THK) | |
| | 20 | 1 | **5P-8247** | 8 | WASHER-HARD (17X32X3.5-MM THK) | |
| M | 21 | 1 | **8T-0357** | 8 | BOLT (M16X2X70-MM) | |
| | 22 | 1 | **8T-4121** | 4 | WASHER-HARD (11X21X2.5-MM THK) | |
| M | 23 | 1 | **8T-4137** | 4 | BOLT (M10X1.5X20-MM) | |

B-USE AS REQUIRED
C-CHANGE FROM PREVIOUS TYPE
M-METRIC PART
Y-SEPARATE ILLUSTRATION

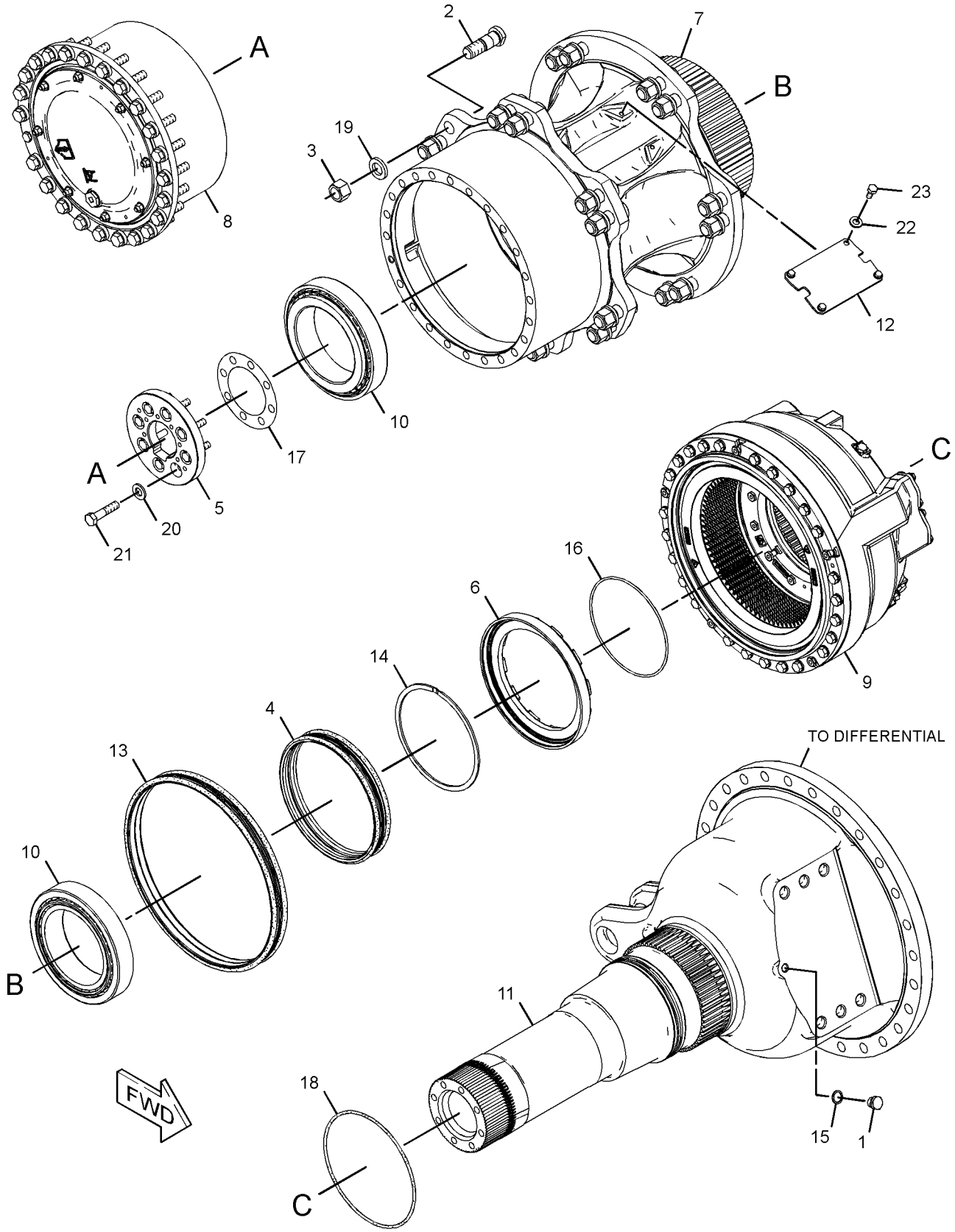


GRAPHIC #1 **<END>** g01335633

# *279-7457* WHEEL GP-FINAL DRIVE & BRAKE

**S/N: RLB1-322**

**PART OF 276-9967 WHEEL AR, 283-3548 WHEEL GP-FINAL DRIVE & BRAKE**

**FIELD REPLACEMENT ORDER 283-3548—PAGE 478**

**AN ATTACHMENT**

**SMCS-4001, 4201** **i02634668**

| NOTE | REF NO | GRAPHIC REF | PART NUMBER | QTY | PART NAME 1 2 3 4 5 6 (PRODUCT LEVEL) | SEE PAGE |
|---|---|---|---|---|---|---|
| | 1 | 1 | **3H-6828** | 1 | PLUG (FINAL DRIVE) | |
| | 2 | 1 | **4D-8695** | 24 | BOLT (1.56X2X4.04-IN) | |
| | 3 | 1 | **5D-0765** | 24 | NUT-FULL (1-5/16-12-THD) | |
| | 4 | 1 | **163-6452** | 1 | SEAL GP-DUO-CONE | |
| | 5 | 1 | **208-8795** | 1 | RETAINER | |
| | 6 | 1 | **237-3811** | 1 | RETAINER | |
| | 7 | 1 | **238-9911** | 1 | WHEEL-REAR | |
| Y | 8 | 1 | **238-9912** | 1 | FINAL DRIVE GP | 403 |
| | 9 | 1 | **240-8240** | 2 | BEARING AS | |
| | 10 | 1 | **303-2357** | 1 | SPINDLE | |
| Y | 11 | 1 | *279-7456* | 1 | BRAKE GP-SERVICE & PARKING | 572 |
| | 12 | 1 | **281-2900** | 1 | PLATE AS | |
| | 13 | 1 | **297-9546** | 1 | SEAL GP-DUO-CONE | |
| | 14 | 1 | **244-6925** | 1 | RING-RETAINING | |
| | 15 | 1 | **2A-1913** | 1 | GASKET-PLUG | |
| | 16 | 1 | **3S-3074** | 1 | SEAL-O-RING | |
| B | 17 | 1 | **4D-5642** | 1 | SHIM PACK (INCLUDES 14 SHIMS) | |
| | 18 | 1 | **4M-0737** | 1 | SEAL-O-RING | |
| | 19 | 1 | **5D-0764** | 24 | WASHER-HARD (34X57X8-MM THK) | |
| | 20 | 1 | **5P-8247** | 8 | WASHER-HARD (17X32X3.5-MM THK) | |
| M | 21 | 1 | **8T-0357** | 8 | BOLT (M16X2X70-MM) | |
| | 22 | 1 | **8T-4121** | 4 | WASHER-HARD (11X21X2.5-MM THK) | |
| M | 23 | 1 | **8T-4137** | 4 | BOLT (M10X1.5X20-MM) | |

B-USE AS REQUIRED
M-METRIC PART
Y-SEPARATE ILLUSTRATION

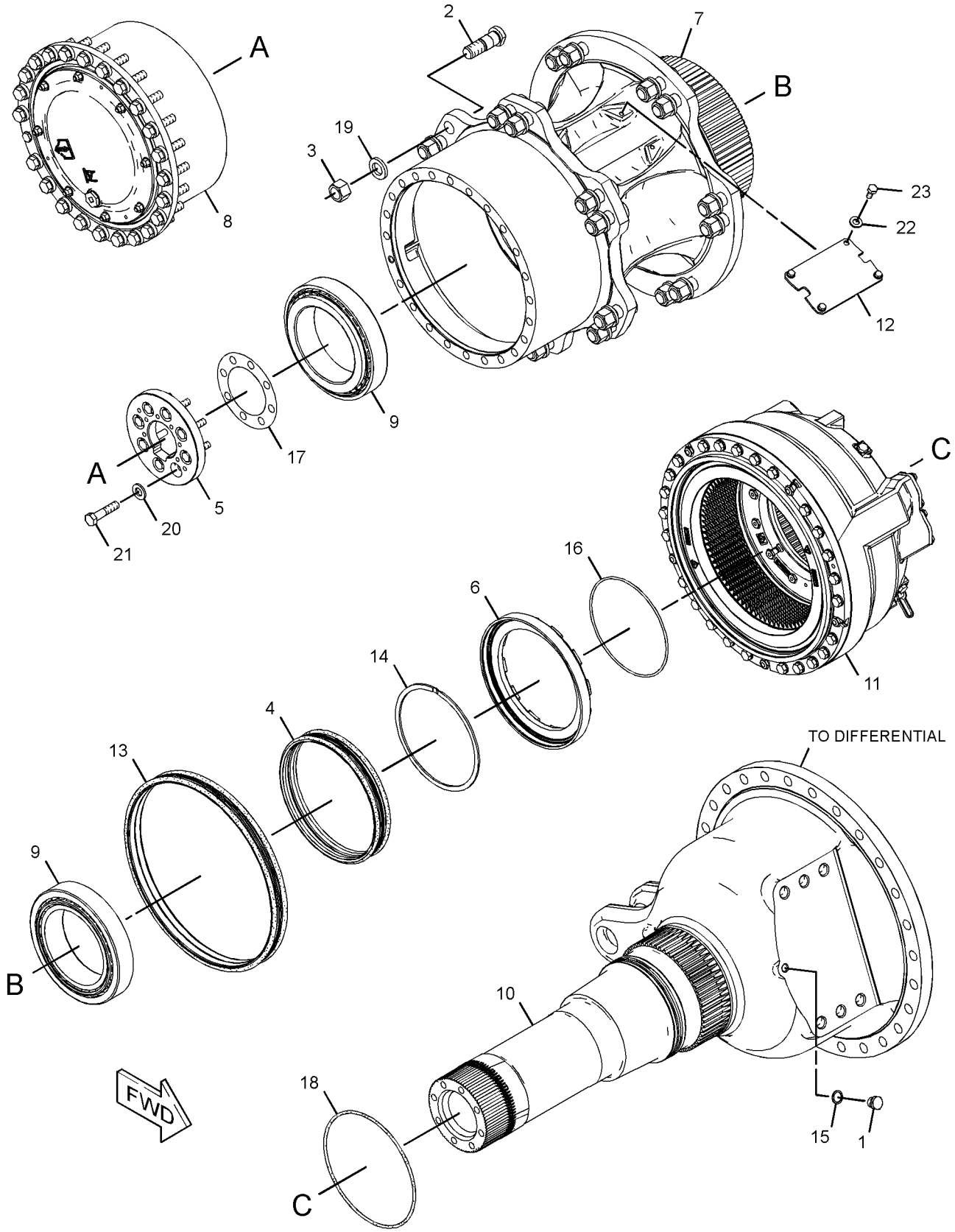


GRAPHIC #1 **<END>** g01335921

# 279-7457 WHEEL GP-FINAL DRIVE & BRAKE

**S/N: RLB323-UP**

**PART OF 276-9967 WHEEL AR, 283-3548 WHEEL GP-FINAL DRIVE & BRAKE**

**FIELD REPLACEMENT ORDER 283-3548—PAGE 478**

**AN ATTACHMENT**

**SMCS-4001, 4201** **i02953739**

| NOTE | REF NO | GRAPHIC REF | PART NUMBER | QTY | PART NAME 1 2 3 4 5 6 (PRODUCT LEVEL) | SEE PAGE |
|---|---|---|---|---|---|---|
| C | 1 | 1 | **9S-4185** | 1 | PLUG-O-RING | |
| | 2 | 1 | **4D-8695** | 24 | BOLT (1.56X2X4.04-IN) | |
| | 3 | 1 | **5D-0765** | 24 | NUT-FULL (1-5/16-12-THD) | |
| | 4 | 1 | **314-4122** | 1 | SEAL GP-DUO-CONE | |
| | | 1 | **314-4121** | 2 | RING-TORIC | |
| | 5 | 1 | **208-8795** | 1 | RETAINER | |
| | 6 | 1 | **237-3811** | 1 | RETAINER | |
| | 7 | 1 | **238-9911** | 1 | WHEEL-REAR | |
| Y | 8 | 1 | **238-9912** | 1 | FINAL DRIVE GP | 403 |
| | 9 | 1 | **240-8240** | 2 | BEARING AS | |
| | 10 | 1 | **303-2357** | 1 | SPINDLE | |
| Y | 11 | 1 | *279-7456* | 1 | BRAKE GP-SERVICE & PARKING | 572 |
| | 12 | 1 | **281-2900** | 1 | PLATE AS | |
| | 13 | 1 | **297-9546** | 1 | SEAL GP-DUO-CONE | |
| | | 1 | **297-9545** | 2 | RING-TORIC | |
| | 14 | 1 | **244-6925** | 1 | RING-RETAINING | |
| C | 15 | 1 | **3K-0360** | 1 | SEAL-O-RING | |
| | 16 | 1 | **3S-3074** | 1 | SEAL-O-RING | |
| B | 17 | 1 | **4D-5642** | 1 | SHIM PACK (INCLUDES 14-SHIMS) | |
| | 18 | 1 | **4M-0737** | 1 | SEAL-O-RING | |
| | 19 | 1 | **5D-0764** | 24 | WASHER-HARD (34X57X8-MM THK) | |
| | 20 | 1 | **5P-8247** | 8 | WASHER-HARD (17X32X3.5-MM THK) | |
| M | 21 | 1 | **8T-0357** | 8 | BOLT (M16X2X70-MM) | |
| | 22 | 1 | **8T-4121** | 4 | WASHER-HARD (11X21X2.5-MM THK) | |
| M | 23 | 1 | **8T-4137** | 4 | BOLT (M10X1.5X20-MM) | |

B-USE AS REQUIRED
C-CHANGE FROM PREVIOUS TYPE
M-METRIC PART
Y-SEPARATE ILLUSTRATION

## 279-7457 WHEEL GP-FINAL DRIVE & BRAKE *(contd. )* i02953739

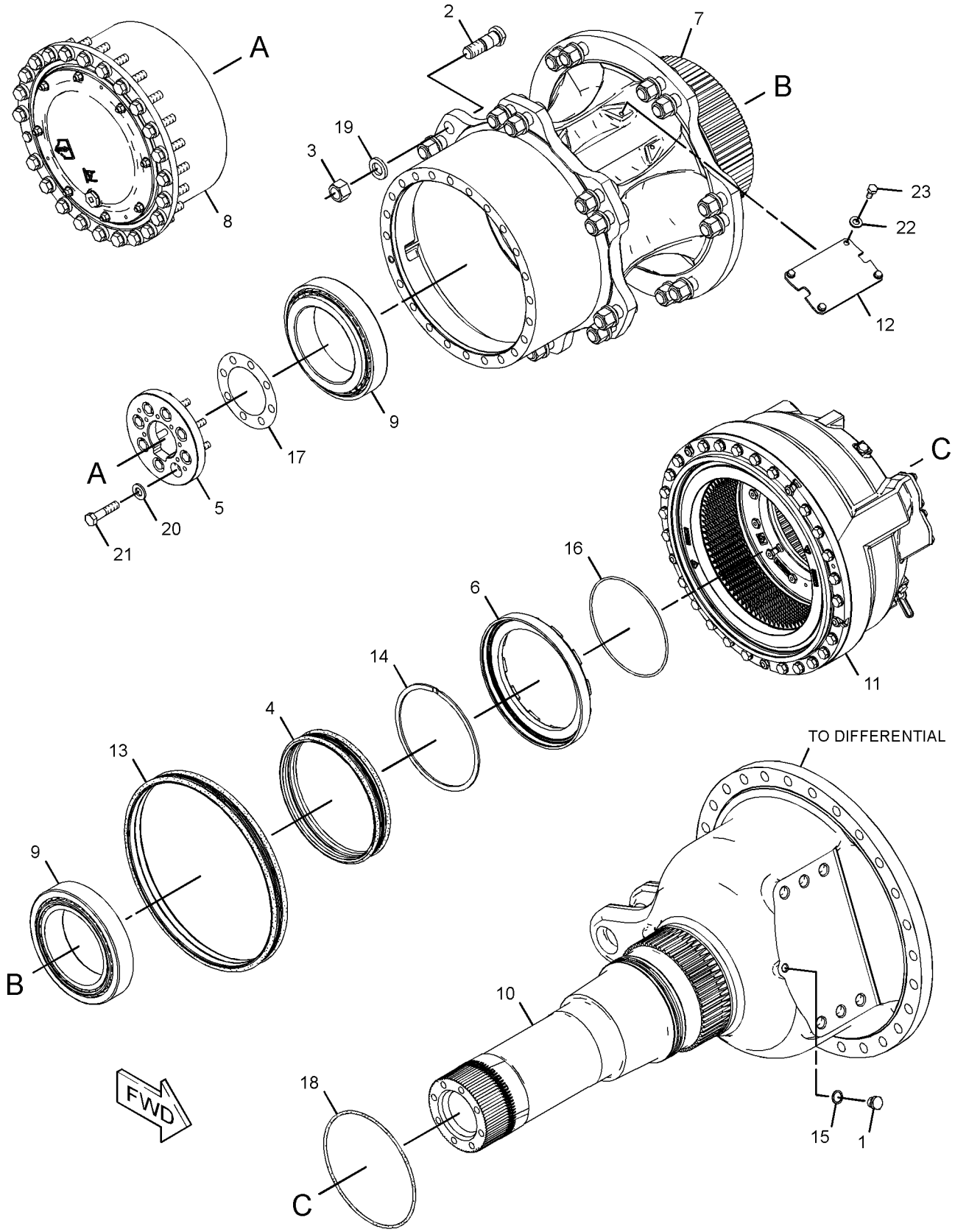


GRAPHIC #1 **<END>** g01335921

# 283-3548 WHEEL GP-FINAL DRIVE & BRAKE

**S/N: RLB1-UP**

**FIELD REPLACEMENT FOR 279-7457—PAGE 474**

**SMCS-4001, 4201** **i02830628**

| NOTE | REF NO | GRAPHIC REF | PART NUMBER | QTY | PART NAME 1 2 3 4 5 6 (PRODUCT LEVEL) | SEE PAGE |
|---|---|---|---|---|---|---|
| Y | 1 | 1 | **279-7457** | 1 | WHEEL GP-FINAL DRIVE & BRAKE | 474 |

Y-SEPARATE ILLUSTRATION

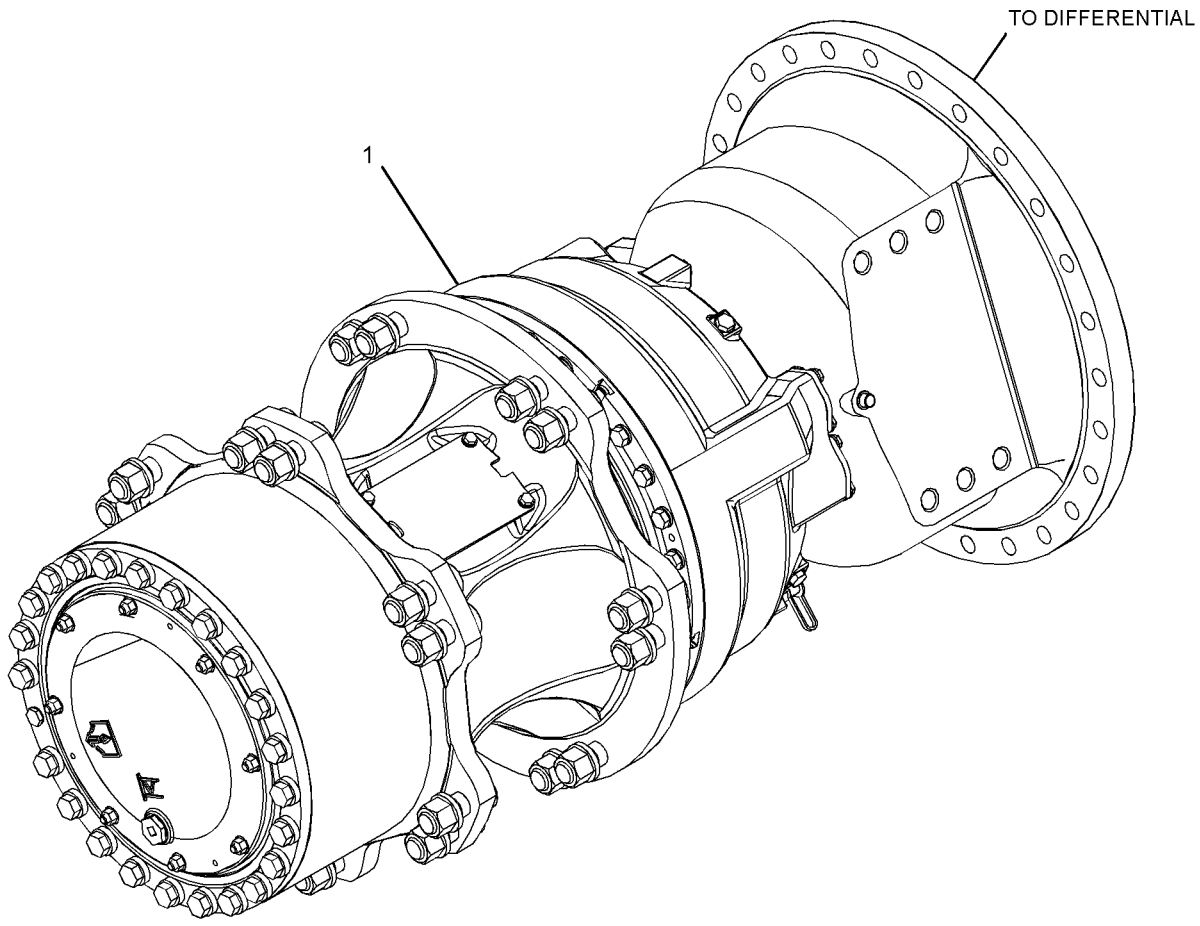


GRAPHIC #1 **<END>** g01412624

# *261-0649* WHEEL GP-FRONT

**S/N: RLB1-UP**

**PART OF 270-5370 POWER TRAIN AR**

**SMCS-3259, 4201, 4205** **i03291859**

| NOTE | REF NO | GRAPHIC REF | PART NUMBER | QTY | PART NAME 1 2 3 4 5 6 (PRODUCT LEVEL) | SEE PAGE |
|---|---|---|---|---|---|---|
| | 1 | 1 | **4D-8695** | 12 | BOLT (1.56X2X4.04-IN) | |
| | 2 | 1 | **5B-3265** | 1 | GASKET | |
| | 3 | 1 | **5D-0765** | 12 | NUT-FULL (1-5/16-12-THD) | |
| | 4 | 1 | **5F-0304** | 1 | PLUG (FRONT WHEEL, OIL DRAIN) | |
| | 5 | 1 | **5M-2894** | 6 | WASHER-HARD (10.2X18.5X2.5-MM THK) | |
| | 6 | 1 | **5M-6592** | 1 | CUP-BEARING | |
| | 7 | 1 | **6B-4852** | 1 | CONE-BEARING | |
| | 8 | 1 | **6D-0028** | 1 | COVER | |
| B | 9 | 1 | **6G-4362** | 1 | SHIM PACK (INCLUDES 16-SHIMS) | |
| | 10 | 1 | **7F-0880** | 1 | GASKET-COPPER | |
| | 11 | 1 | **8M-3837** | 1 | PLUG-MAGNETIC (FRONT WHEEL, OIL FILL) | |
| | 12 | 1 | **157-3896** | 1 | RETAINER | |
| | 13 | 1 | **157-3903** | 1 | RETAINER-SEAL | |
| | 14 | 1 | **213-7509** | 1 | SEAL GP-DUO-CONE | |
| Y | 15 | 1 | *239-1491* | 1 | BRAKE GP-SERVICE (FRONT) | 565 |
| | 16 | 1 | **261-0650** | 1 | SPINDLE-FRONT | |
| | 17 | 1 | **271-3761** | 1 | WHEEL-FRONT | |
| | 18 | 1 | **0S-1625** | 6 | BOLT (5/8-11X2.5-IN) | |
| | 19 | 1 | **1A-2029** | 6 | BOLT (3/8-16X1.125-IN) | |
| | 20 | 1 | **1J-2176** | 1 | SEAL-O-RING | |
| | 21 | 1 | **1L-7518** | 1 | CONE-BEARING | |
| | 22 | 1 | **5D-0764** | 12 | WASHER-HARD (34X57X8-MM THK) | |
| | 23 | 1 | **6B-4370** | 1 | CUP-BEARING | |
| | 24 | 1 | **6F-4855** | 1 | SEAL-O-RING | |
| | 25 | 1 | **8F-9516** | 1 | SEAL-O-RING | |

B-USE AS REQUIRED
Y-SEPARATE ILLUSTRATION

*261-0649* **WHEEL GP-FRONT** *(contd.)* **i03291859**

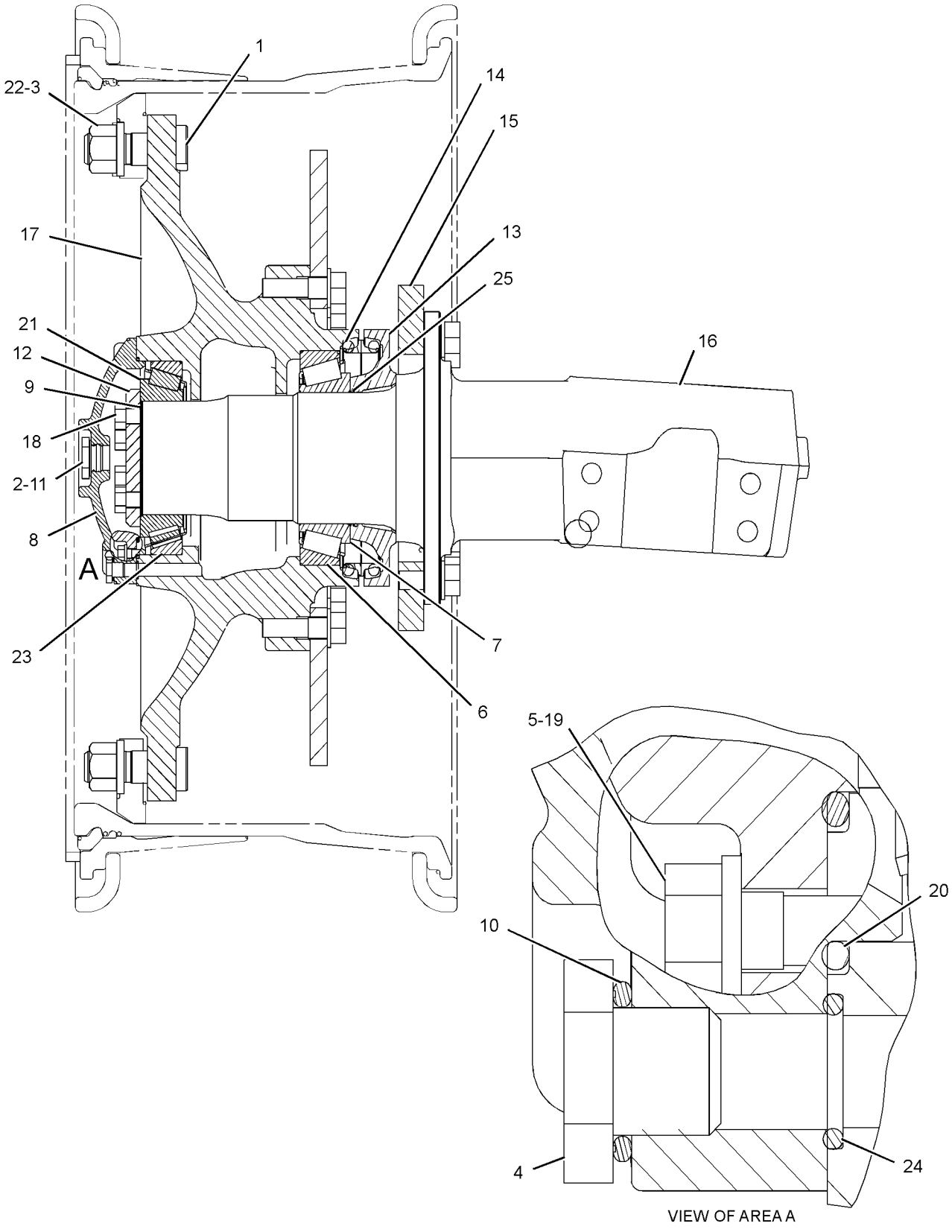


GRAPHIC #1 **<END>** g01282822

# FRAME AND BODY

## *270-4242* BAFFLE GP-RADIATOR

**S/N: RLB1-UP**

**PART OF 276-8860 COOLING AR**

**SMCS-1353, 1806** **i02707361**

| NOTE | REF NO | GRAPHIC REF | PART NUMBER | QTY | PART NAME 1 2 3 4 5 6 (PRODUCT LEVEL) | SEE PAGE |
|---|---|---|---|---|---|---|
| | 1 | 1 | **276-5320** | 1 | BAFFLE AS | |
| | | 1 | **6B-4594** | 8 | RIVET | |
| | 2 | 1 | **276-5323** | 1 | BAFFLE AS | |
| M | | 1 | **6V-8224** | 2 | NUT-WELD (M10X1.15-THD) | |
| | 3 | 1 | **276-5327** | 1 | PLATE | |
| | 4 | 1 | **276-5330** | 1 | PLATE | |
| | 5 | 1 | **280-0935** | 2 | STRIP | |
| | 6 | 1 | **280-1595** | 1 | SEAL | |
| | 7 | 1 | **280-1596** | 1 | SEAL | |
| | 8 | 1 | **280-1597** | 2 | SEAL | |
| | 9 | 1 | **7X-7729** | 40 | WASHER (11X25X3-MM THK) | |
| M | 10 | 1 | **8T-4133** | 6 | NUT (M10X1.5-THD) | |
| M | 11 | 1 | **8T-4136** | 28 | BOLT (M10X1.5X25-MM) | |
| M | 12 | 1 | **8T-4137** | 6 | BOLT (M10X1.5X20-MM) | |

M-METRIC PART

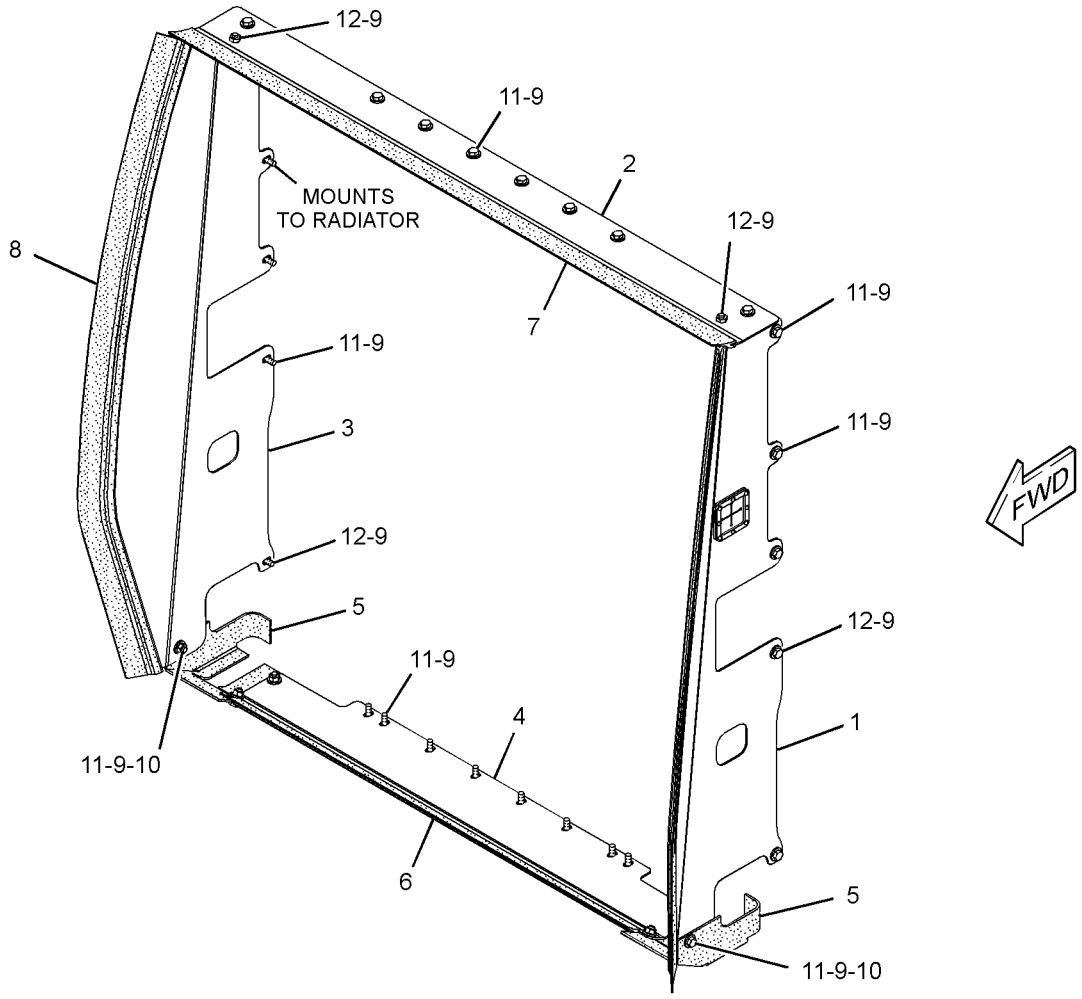


GRAPHIC #1 **<END>** g01320009

# FRAME AND BODY

## *269-8690* COWLING GP

**S/N: RLB1-UP**

**PART OF 269-8700 PLATFORM AR**

**SMCS-7051, 7155, 7251, 7254, 7267** **i02707327**

| NOTE | REF NO | GRAPHIC REF | PART NUMBER | QTY | PART NAME 1 2 3 4 5 6 (PRODUCT LEVEL) | SEE PAGE |
|---|---|---|---|---|---|---|
| | 1 | 1 | **276-6555** | 1 | GRILL | |
| | 2 | 1 | **278-4680** | 2 | BRACKET AS | |
| | 3 | 1 | **279-5010** | 1 | GRILL | |
| | 4 | 1 | **292-5481** | 1 | COWLING AS | |
| | 4A | 1 | **7X-7729** | 6 | WASHER (11X25X3-MM THK) | |
| M | 4B | 1 | **8T-4137** | 6 | BOLT (M10X1.5X20-MM) | |
| | 4C | 1 | **283-2458** | 27 | NUT-SPEED | |
| | 4D | 1 | **276-6151** | 1 | COWLING AS | |
| | 4E | 1 | **269-8692** | 1 | DOOR AS | |
| J | | 1 | **275-0572** | 2 | LATCH AS | |
| | 5 | 1 | **307-3738** | 1 | PLATE AS | |
| | 6 | 1 | **307-3739** | 1 | SUPPORT AS (LH) | |
| | 7 | 1 | **307-3740** | 1 | SUPPORT AS (RH) | |
| | 8 | 1 | **307-6721** | 1 | PLATE AS | |
| | 9 | 1 | **198-4778** | 8 | WASHER-HARD (13.5X30X12-MM THK) | |
| | 10 | 1 | **5P-1076** | 16 | WASHER-HARD (13.5X30X4-MM THK) | |
| M | 11 | 1 | **6V-7357** | 27 | BOLT (M6X1X25-MM) | |
| M | 12 | 1 | **8T-4139** | 2 | BOLT (M12X1.75X30-MM) | |
| M | 13 | 1 | **8T-4183** | 4 | BOLT (M12X1.75X40-MM) | |
| M | 14 | 1 | **8T-4194** | 16 | BOLT (M12X1.75X50-MM) | |
| M | 15 | 1 | **8T-4956** | 2 | BOLT (M12X1.75X35-MM) | |
| M | 16 | 1 | **8T-4971** | 8 | BOLT (M6X1X30-MM) | |
| | 17 | 1 | **9X-6165** | 35 | WASHER (6.5X22X2.5-MM THK) | |

J-REQUIRES CORPORATE KEY
M-METRIC PART

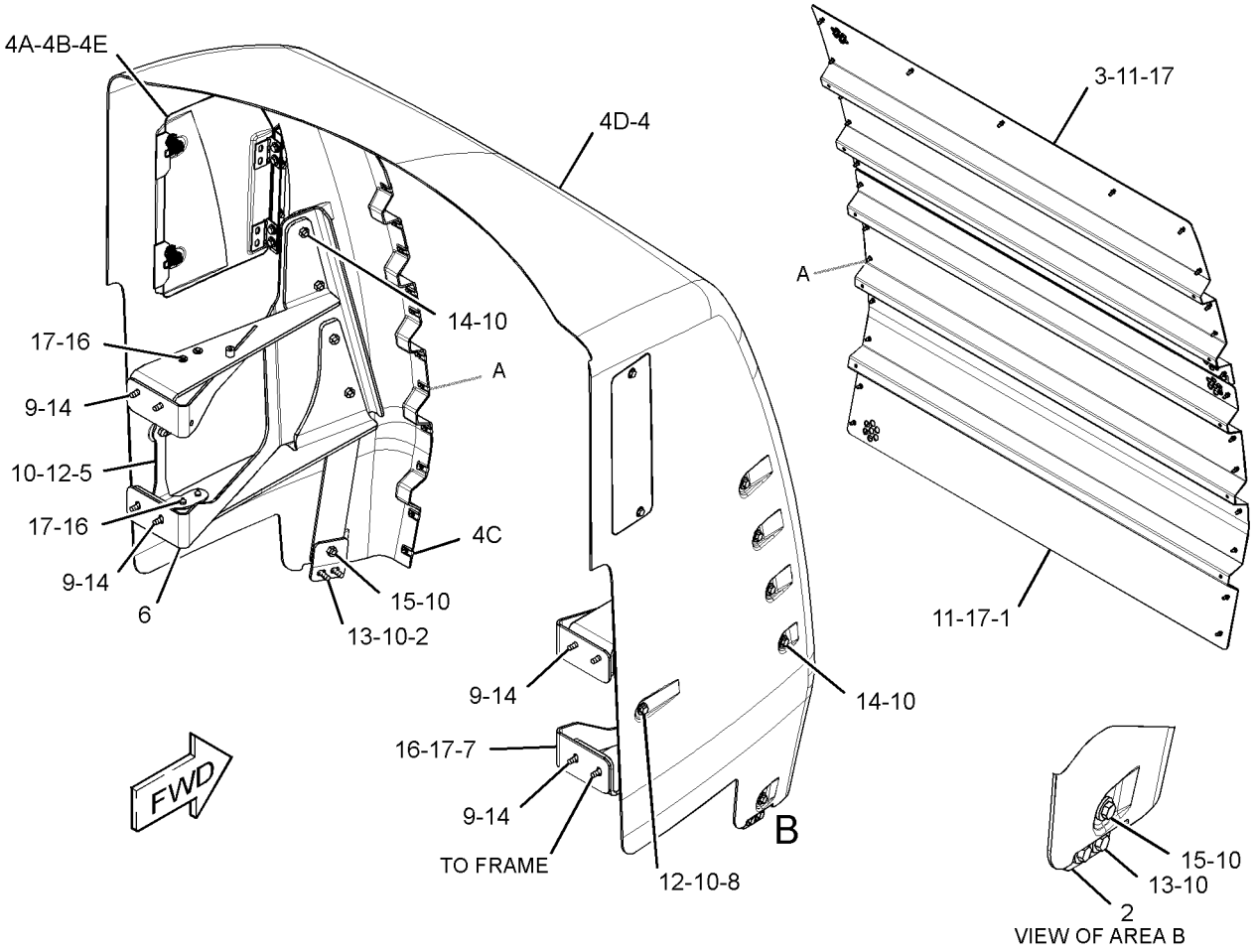


GRAPHIC #1 **<END>** g01363910

# *269-8640* FENDER GP–LH

**S/N: RLB1-383**

**PART OF 269-8700 PLATFORM AR**

**SMCS-7252** **i02613195**

| NOTE | REF NO | GRAPHIC REF | PART NUMBER | QTY | PART NAME 1 2 3 4 5 6 (PRODUCT LEVEL) | SEE PAGE |
|---|---|---|---|---|---|---|
| | 1 | 1 | **269-8641** | 1 | FENDER AS (LH) | |
| | | 1 | **5D-9629** | 9 | ROD | |
| M | | 1 | **8T-3490** | 38 | NUT-WELD (M10X1.5-THD) | |
| | | 1 | **8X-2338** | 2 | BAR | |
| M | | 1 | **9R-2613** | 1 | BOSS-WELD (M10X1.5X25-MM) | |
| | | 1 | **9R-6465** | 1 | BOSS | |
| | 2 | 1 | **292-5480** | 1 | SEAL | |
| | 3 | 1 | **306-6398** | 1 | PLATE | |
| M | 4 | 1 | **112-3927** | 16 | BOLT (M20X2.5X90-MM) | |
| | 5 | 1 | **198-4781** | 16 | WASHER-HARD (22X40X10-MM THK) | |
| | 6 | 1 | **306-5031** | 1 | PLATE | |

M-METRIC PART

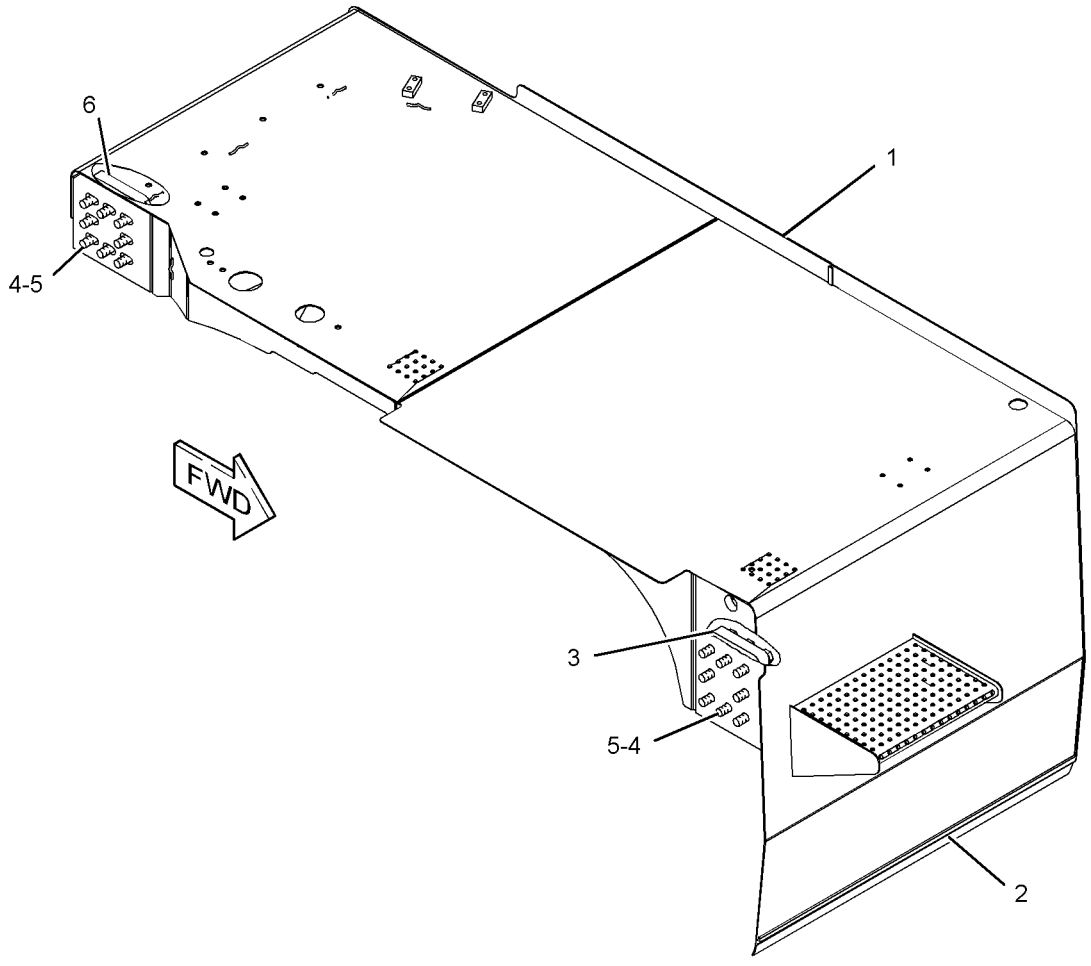


GRAPHIC #1 **<END>** g01345075

# *269-8640* FENDER GP–LH

**S/N: RLB384-UP**

**PART OF 269-8700 PLATFORM AR**

**SMCS-7252** **i02910070**

| NOTE | REF NO | GRAPHIC REF | PART NUMBER | QTY | PART NAME 1 2 3 4 5 6 (PRODUCT LEVEL) | SEE PAGE |
|---|---|---|---|---|---|---|
| C | 1 | 1 | **311-1536** | 1 | FENDER AS (LH) | |
| | | 1 | **7T-1099** | 9 | LINK | |
| M | | 1 | **8T-3490** | 38 | NUT-WELD (M10X1.5-THD) | |
| M | | 1 | **8T-3597** | 4 | NUT-WELD (M12X1.75-THD) | |
| | | 1 | **8Y-3925** | 2 | BOSS (3/8-16X1.2-IN) | |
| | 2 | 1 | **292-5480** | 1 | SEAL | |
| | 3 | 1 | **306-6398** | 1 | PLATE | |
| M | 4 | 1 | **112-3927** | 16 | BOLT (M20X2.5X90-MM) | |
| | 5 | 1 | **198-4781** | 16 | WASHER-HARD (22X40X10-MM THK) | |
| | 6 | 1 | **306-5031** | 1 | PLATE | |

C-CHANGE FROM PREVIOUS TYPE
M-METRIC PART

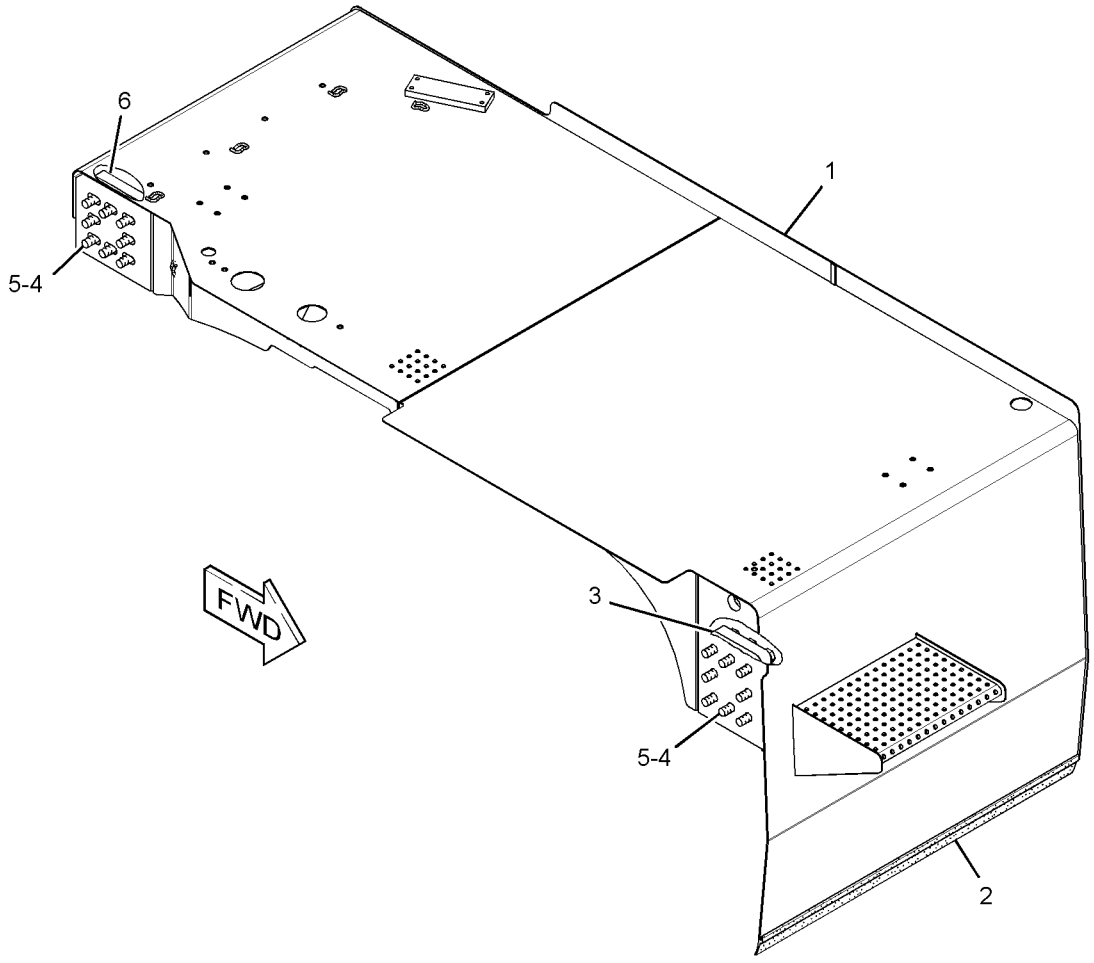


GRAPHIC #1 **<END>** g01456933

# *269-8650* FENDER GP–RH

**S/N: RLB1-383**

**PART OF 269-8700 PLATFORM AR**

**SMCS-7252** **i02708848**

| NOTE | REF NO | GRAPHIC REF | PART NUMBER | QTY | PART NAME 1 2 3 4 5 6 (PRODUCT LEVEL) | SEE PAGE |
|---|---|---|---|---|---|---|
| | 1 | 1 | **269-8651** | 1 | FENDER AS (RH) | |
| | | 1 | **5D-9629** | 6 | ROD | |
| M | | 1 | **8T-3490** | 35 | NUT-WELD (M10X1.5-THD) | |
| M | | 1 | **6V-9632** | 8 | NUT-WELD (M6X1-THD) | |
| M | | 1 | **9R-2613** | 2 | BOSS-WELD (M10X1.5X25-MM) | |
| | 2 | 1 | **292-5480** | 1 | SEAL | |
| | 3 | 1 | **300-6837** | 1 | SEAL | |
| | 4 | 1 | **306-5031** | 1 | PLATE | |
| | 5 | 1 | **306-6398** | 1 | PLATE | |
| | 6 | 1 | **308-3400** | 1 | PLATE | |
| | 7 | 1 | **308-3401** | 1 | PLATE | |
| M | 8 | 1 | **112-3927** | 16 | BOLT (M20X2.5X90-MM) | |
| | 9 | 1 | **198-4781** | 16 | WASHER-HARD (22X40X10-MM THK) | |
| | 10 | 1 | **8T-4121** | 8 | WASHER-HARD (11X21X2.5-MM THK) | |
| M | 11 | 1 | **8T-4137** | 8 | BOLT (M10X1.5X20-MM) | |

M-METRIC PART

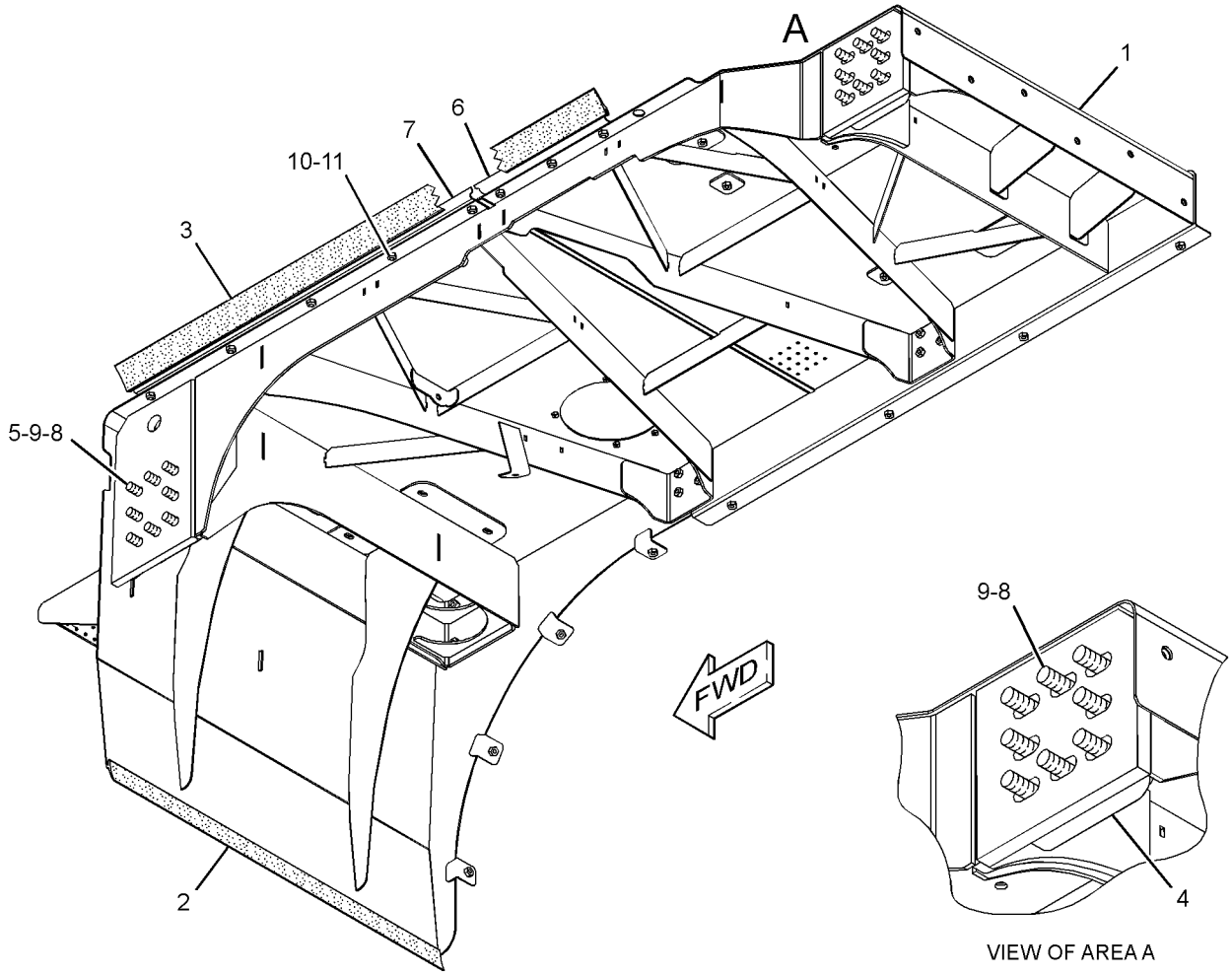


VIEW OF AREA A

GRAPHIC #1 **<END>** g01364484

# *269-8650* FENDER GP–RH

**S/N: RLB384-UP**

**PART OF 269-8700 PLATFORM AR**

**SMCS-7252** **i02910077**

| NOTE | REF NO | GRAPHIC REF | PART NUMBER | QTY | PART NAME 1 2 3 4 5 6 (PRODUCT LEVEL) | SEE PAGE |
|---|---|---|---|---|---|---|
| C | 1 | 1 | **311-1537** | 1 | FENDER AS | |
| | | 1 | **7T-1099** | 6 | LINK | |
| M | | 1 | **8T-3597** | 4 | NUT-WELD (M12X1.75-THD) | |
| | | 1 | **8Y-3925** | 2 | BOSS (3/8-16X1.2-IN) | |
| M | | 1 | **8T-3490** | 43 | NUT-WELD (M10X1.5-THD) | |
| M | | 1 | **6V-9632** | 9 | NUT-WELD (M6X1-THD) | |
| | 2 | 1 | **292-5480** | 1 | SEAL | |
| | 3 | 1 | **300-6837** | 1 | SEAL | |
| | 4 | 1 | **306-5031** | 1 | PLATE | |
| | 5 | 1 | **306-6398** | 1 | PLATE | |
| | 6 | 1 | **308-3400** | 1 | PLATE | |
| | 7 | 1 | **308-3401** | 1 | PLATE | |
| M | 8 | 1 | **112-3927** | 16 | BOLT (M20X2.5X90-MM) | |
| | 9 | 1 | **198-4781** | 16 | WASHER-HARD (22X40X10-MM THK) | |
| | 10 | 1 | **8T-4121** | 8 | WASHER-HARD (11X21X2.5-MM THK) | |
| M | 11 | 1 | **8T-4137** | 8 | BOLT (M10X1.5X20-MM) | |

C-CHANGE FROM PREVIOUS TYPE
M-METRIC PART

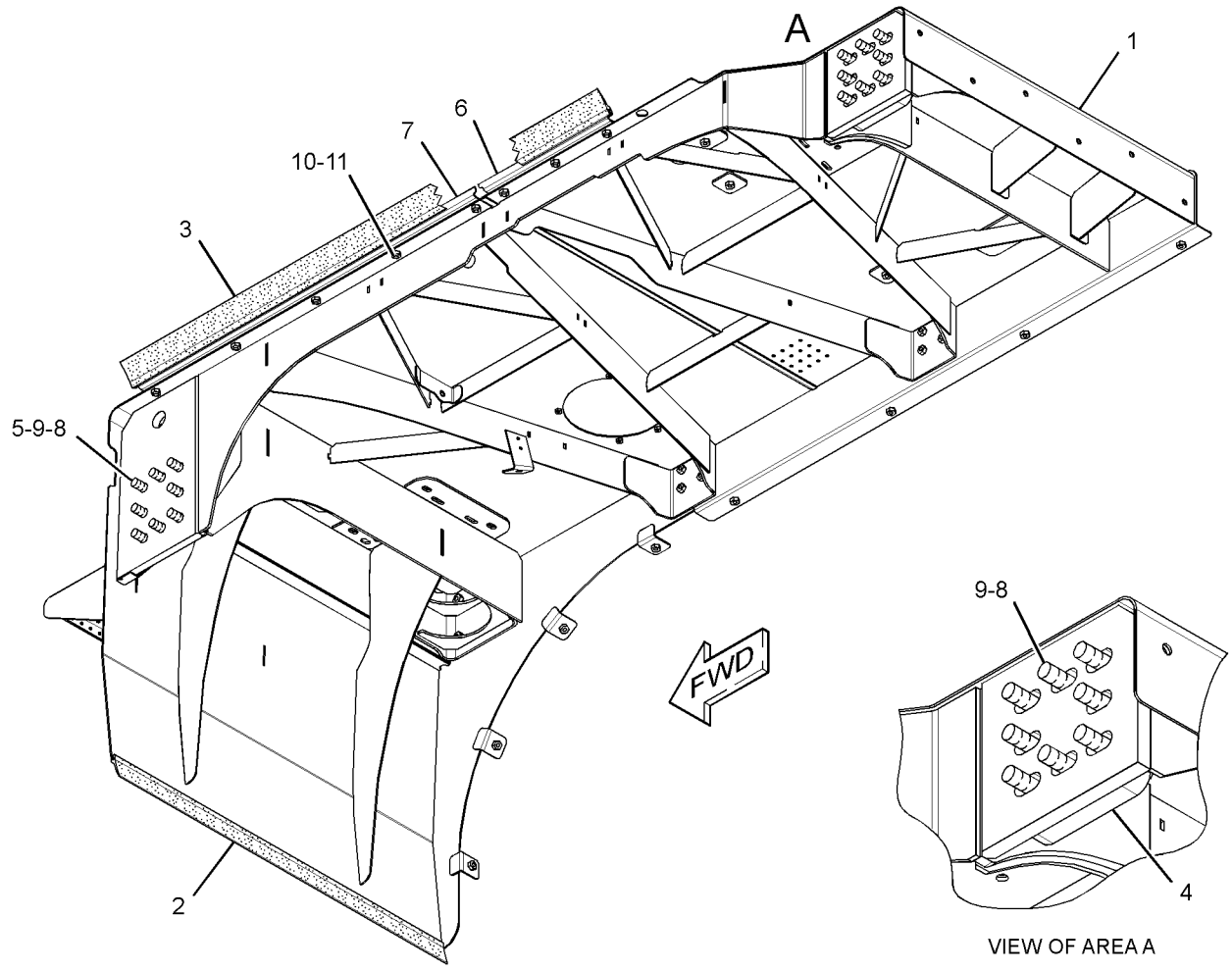


VIEW OF AREA A

GRAPHIC #1 **<END>** g01456901

# FRAME AND BODY

## *270-7722* FRAME GP

**S/N: RLB1-UP**

**PART OF 270-7723 FRAME GP**

**SMCS-7051** **i02618840**

| NOTE | REF NO | GRAPHIC REF | PART NUMBER | QTY | PART NAME 1 2 3 4 5 6 (PRODUCT LEVEL) | SEE PAGE |
|---|---|---|---|---|---|---|
| | 1 | 1 | **8F-5658** | 2 | RING-RETAINING | |
| | 2 | 1 | **9D-3434** | 1 | PIN | |
| | 4 | 1 | **271-8078** | 1 | TUBE AS | |
| B | 5 | 1 | **280-2125** | 6 | SHIM (1.6-MM THK) | |
| | 6 | 1 | **298-7137** | 8 | BOLT (M16X2X50-MM) | |
| | 7 | 1 | **299-3424** | 8 | WASHER-HARD (17.5X30X6-MM THK) | |
| | 8 | 1 | **7D-3807** | 2 | BEARING-SLEEVE | |
| | 9 | 1 | **9D-6314** | 2 | BALL | |

B-USE AS REQUIRED

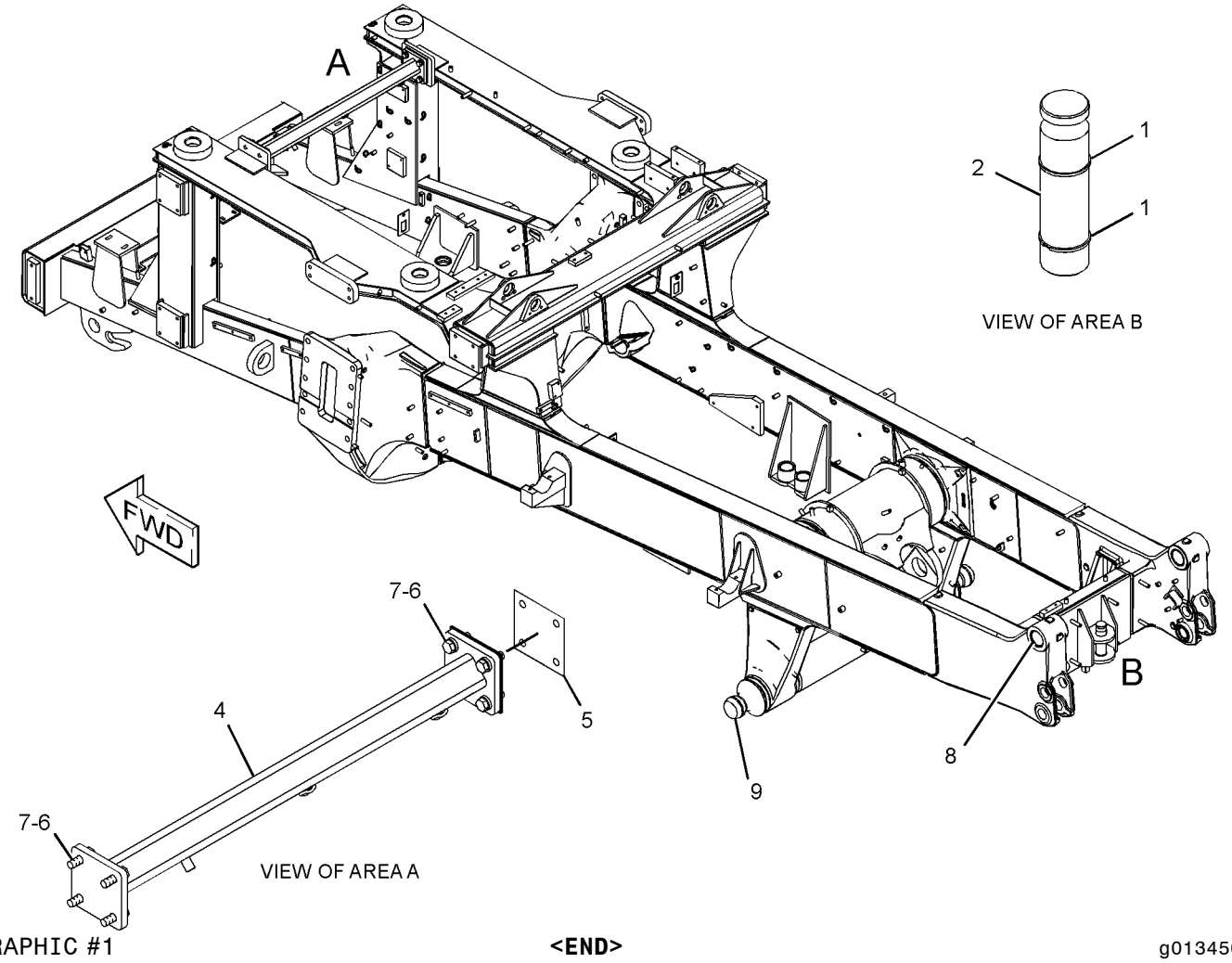


GRAPHIC #1 **<END>** g01345044

# FRAME AND BODY

## *270-7723* FRAME GP

**S/N: RLB1-UP**

**PART OF 268-7810 GENERAL AR**

**SMCS-7051** **i02612696**

| NOTE | PART NUMBER | QTY | PART NAME 1 2 3 4 5 6 (PRODUCT LEVEL) | SEE PAGE |
|---|---|---|---|---|
| Y | *270-7722* | 1 | FRAME GP | 488 |

Y-SEPARATE ILLUSTRATION

**<END>**

# *269-8735* GUARD GP-BOTTOM

**S/N: RLB1-UP**

**PART OF 269-8700 PLATFORM AR**

**SMCS-7153** **i02795648**

| NOTE | REF NO | GRAPHIC REF | PART NUMBER | QTY | PART NAME 1 2 3 4 5 6 (PRODUCT LEVEL) | SEE PAGE |
|---|---|---|---|---|---|---|
| | 1 | 1 | **279-1141** | 2 | GUARD | |
| M | 2 | 1 | **8T-4139** | 7 | BOLT (M12X1.75X30-MM) | |
| M | 3 | 1 | **8T-4183** | 16 | BOLT (M12X1.75X40-MM) | |
| | 4 | 1 | **8T-4223** | 46 | WASHER-HARD (13.5X25.5X3-MM THK) | |
| M | 5 | 1 | **8T-4244** | 23 | NUT (M12X1.75-THD) | |

M-METRIC PART

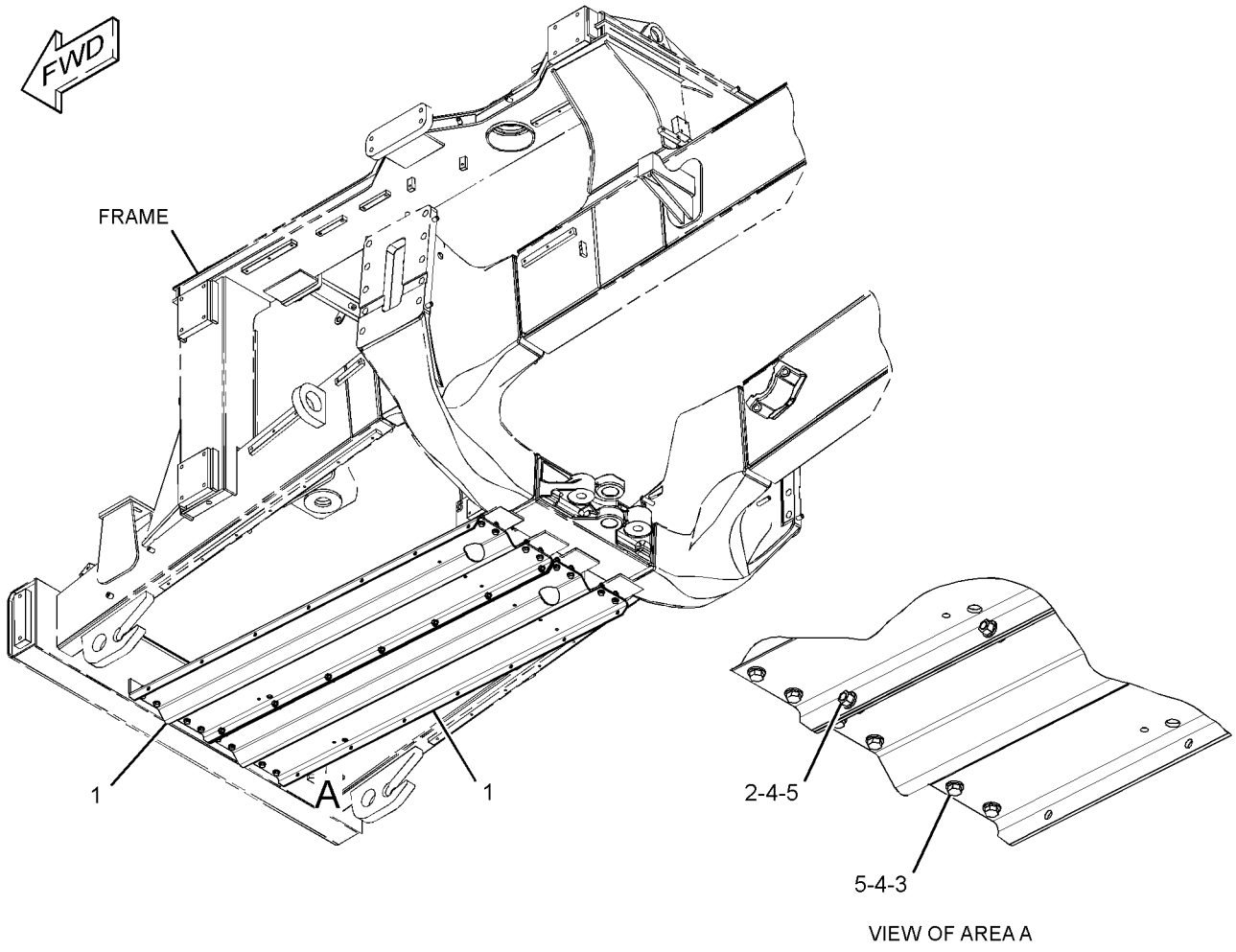


VIEW OF AREA A

GRAPHIC #1 **<END>** g01411997

# FRAME AND BODY

## *286-2397* GUARD GP-CANOPY

**S/N: RLB1-UP**

**AN ATTACHMENT**

**SMCS-7150, 7258** **i02606074**

| NOTE | REF NO | GRAPHIC REF | PART NUMBER | QTY | PART NAME 1 2 3 4 5 6 (PRODUCT LEVEL) | SEE PAGE |
|---|---|---|---|---|---|---|
| | 1 | 1 | **285-7531** | 1 | GUARD AS | |
| | 2 | 1 | **285-7532** | 1 | GUARD AS | |
| | 3 | 1 | **285-7533** | 1 | GUARD AS | |
| | 4 | 1 | **285-7535** | 1 | GUARD | |
| | 5 | 1 | **285-7536** | 1 | GUARD | |
| | 6 | 1 | **7X-7729** | 40 | WASHER (11X25X3-MM THK) | |
| M | 7 | 1 | **8T-4133** | 6 | NUT (M10X1.5-THD) | |
| M | 8 | 1 | **8T-4195** | 34 | BOLT (M10X1.5X30-MM) | |

M-METRIC PART

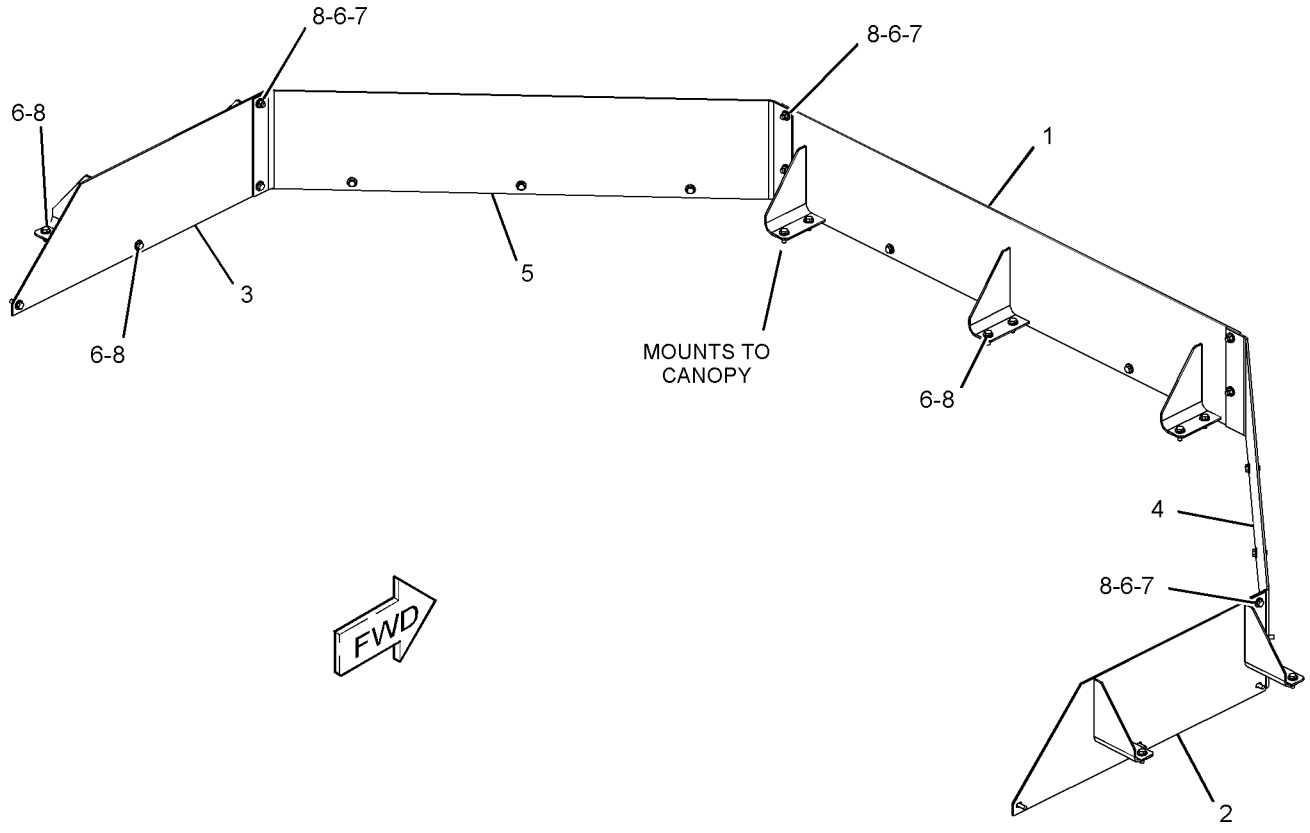


GRAPHIC #1 **<END>** g01345221

# *311-2299* GUARD GP-CANOPY

**S/N: RLB1-UP**

**FOR USE WITH 264-3434 BODY & CANOPY AS, 268-9491 BODY & CANOPY AS, 268-5570 BODY & CANOPY AS, 270-1621 BODY & CANOPY AS**

**AN ATTACHMENT**

**SMCS-7150, 7258** **i02852482**

| NOTE | REF NO | GRAPHIC REF | PART NUMBER | QTY | PART NAME 1 2 3 4 5 6 (PRODUCT LEVEL) | SEE PAGE |
|---|---|---|---|---|---|---|
| | 1 | 1 | **311-2294** | 1 | GUARD AS | |
| | 2 | 1 | **311-2295** | 1 | GUARD AS | |
| | 3 | 1 | **311-2296** | 1 | GUARD AS | |
| | 4 | 1 | **311-2301** | 1 | PLATE | |
| | 5 | 1 | **311-2302** | 1 | PLATE | |
| | 6 | 1 | **7X-7729** | 44 | WASHER (11X25X3-MM THK) | |
| M | 7 | 1 | **8T-4133** | 12 | NUT (M10X1.5-THD) | |
| M | 8 | 1 | **8T-4195** | 32 | BOLT (M10X1.5X30-MM) | |

M-METRIC PART

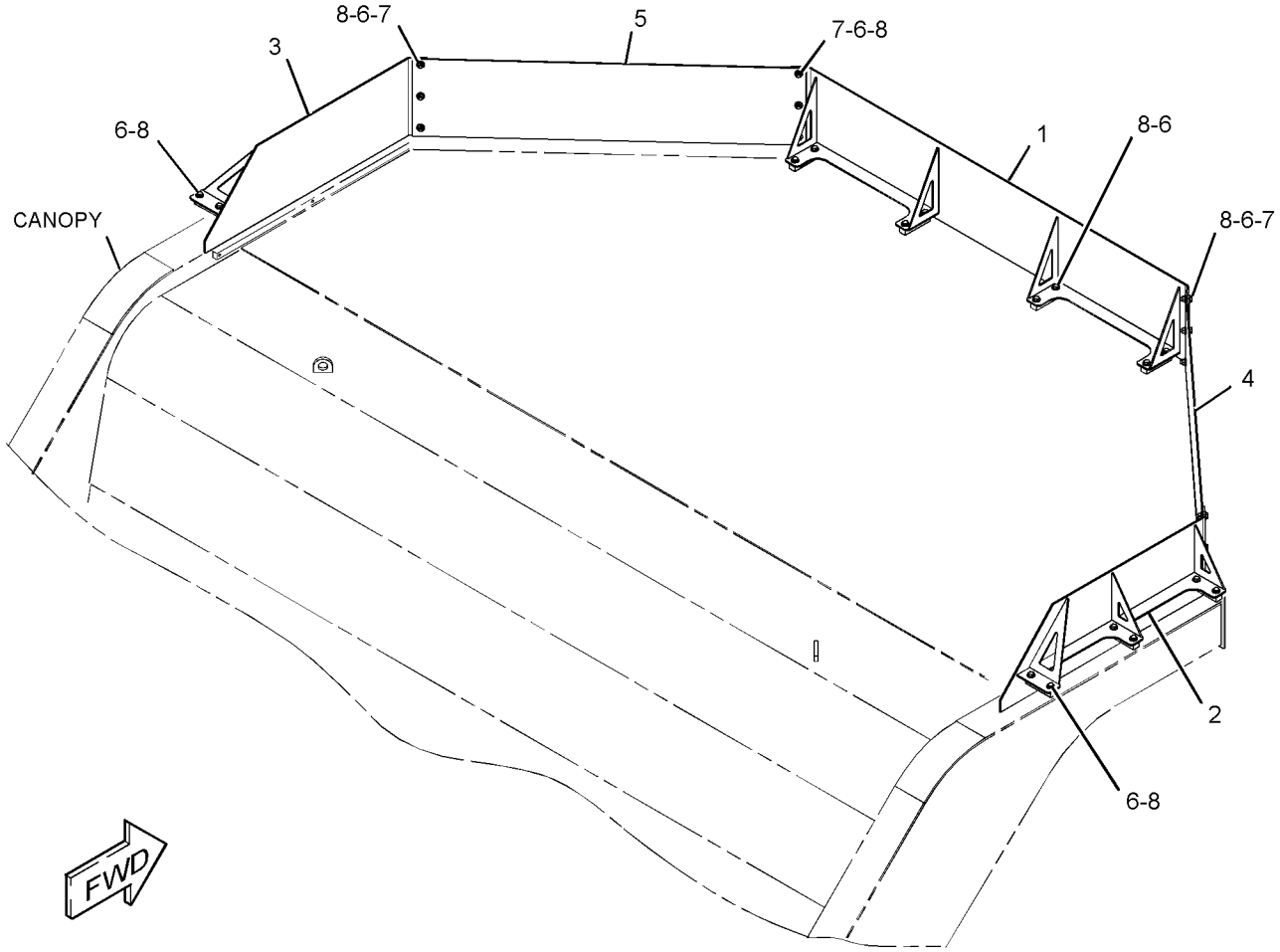


GRAPHIC #1 **<END>** g01426538

# *270-5357* GUARD GP-DRIVE SHAFT

**S/N: RLB1-UP**

**PART OF 269-8700 PLATFORM AR**

**SMCS-7153** **i02848762**

| NOTE | REF NO | GRAPHIC REF | PART NUMBER | QTY | PART NAME 1 2 3 4 5 6 (PRODUCT LEVEL) | SEE PAGE |
|---|---|---|---|---|---|---|
| | 1 | 1 | **269-8711** | 1 | GUARD AS | |
| | 2 | 1 | **270-5358** | 1 | GUARD AS | |
| | | 1 | **9F-2978** | 4 | NUT-WELD (3/8-16-THD) | |
| | 3 | 1 | **5M-3062** | 4 | BOLT (3/8-16X0.75-IN) | |
| | 4 | 1 | **5S-7382** | 4 | BOLT (3/8-16X1.375-IN) | |
| | 5 | 1 | **8T-4896** | 12 | WASHER-HARD (10.2X18.5X2.5-MM THK) | |

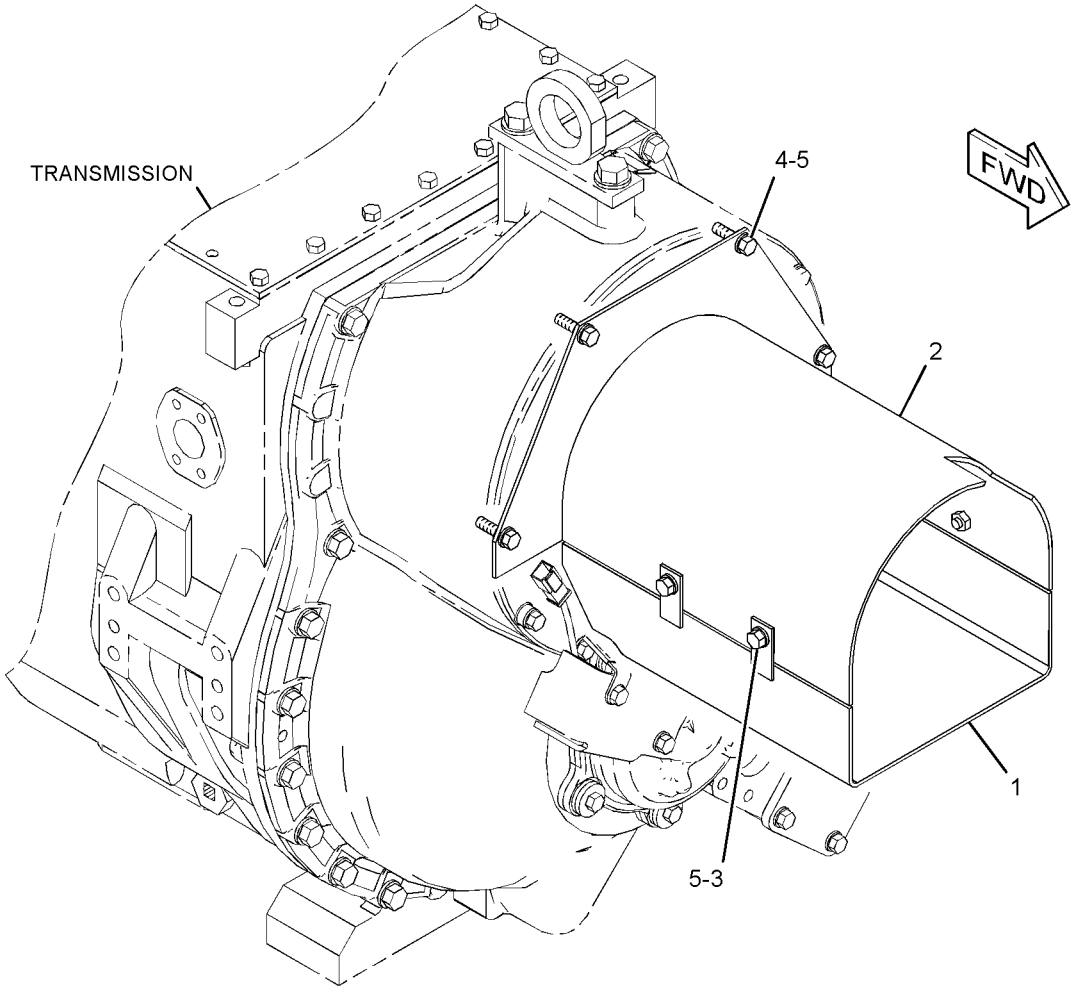


GRAPHIC #1 **<END>** g01422614

# *269-8731* GUARD GP-MUD

**S/N: RLB1-UP**

**FOR USE WITH 295-1790—PAGE 194. CANNOT BE USED WITH 295-1788—PAGE 194, 295-1789—PAGE 194**

**AN ATTACHMENT**

**SMCS-7258** **i02701964**

| NOTE | REF NO | GRAPHIC REF | PART NUMBER | QTY | PART NAME 1 2 3 4 5 6 (PRODUCT LEVEL) | SEE PAGE |
|---|---|---|---|---|---|---|
| | 1 | 1 | **269-8733** | 2 | GUARD-MUD | |
| | 2 | 1 | **276-3787** | 1 | DEFLECTOR-MUD | |
| | 3 | 1 | **276-3797** | 1 | DEFLECTOR-MUD | |
| | 4 | 1 | **276-3798** | 1 | GUARD AS | |
| | 5 | 1 | **279-1130** | 1 | PLATE AS | |
| M | | 1 | **8T-3490** | 4 | NUT-WELD (M10X1.5-THD) | |
| | 6 | 1 | **279-1131** | 1 | GUARD AS | |
| | 7 | 1 | **279-1132** | 1 | PLATE AS | |
| M | | 1 | **8T-3490** | 6 | NUT-WELD (M10X1.5-THD) | |
| | 8 | 1 | **279-1147** | 4 | PLATE | |
| | 9 | 1 | **291-0349** | 1 | PLATE | |
| | 10 | 1 | **296-7822** | 1 | PLATE | |
| | 11 | 1 | **296-7868** | 2 | PLATE AS | |
| | 12 | 1 | **296-8594** | 1 | DEFLECTOR-MUD | |
| | 13 | 1 | **299-6290** | 1 | DEFLECTOR-MUD | |
| | 14 | 1 | **300-7321** | 1 | PLATE AS | |
| M | | 1 | **8T-3490** | 3 | NUT-WELD (M10X1.5-THD) | |
| | 15 | 1 | **131-5879** | 8 | WASHER (11X32X3-MM THK) | |
| | 16 | 1 | **7X-0586** | 5 | WASHER-HARD (7.2X32X2-MM THK) | |
| | 17 | 1 | **7X-7729** | 36 | WASHER (11X25X3-MM THK) | |
| | 18 | 1 | **8T-4121** | 6 | WASHER-HARD (11X21X2.5-MM THK) | |
| M | 19 | 1 | **8T-4136** | 26 | BOLT (M10X1.5X25-MM) | |
| M | 20 | 1 | **8T-4137** | 12 | BOLT (M10X1.5X20-MM) | |
| M | 21 | 1 | **8T-4970** | 5 | BOLT (M6X1X14-MM) | |
| M | 22 | 1 | **8T-4195** | 12 | BOLT (M10X1.5X30-MM) | |

M-METRIC PART

*269-8731* **GUARD GP-MUD** ***(contd.)*** **i02701964**

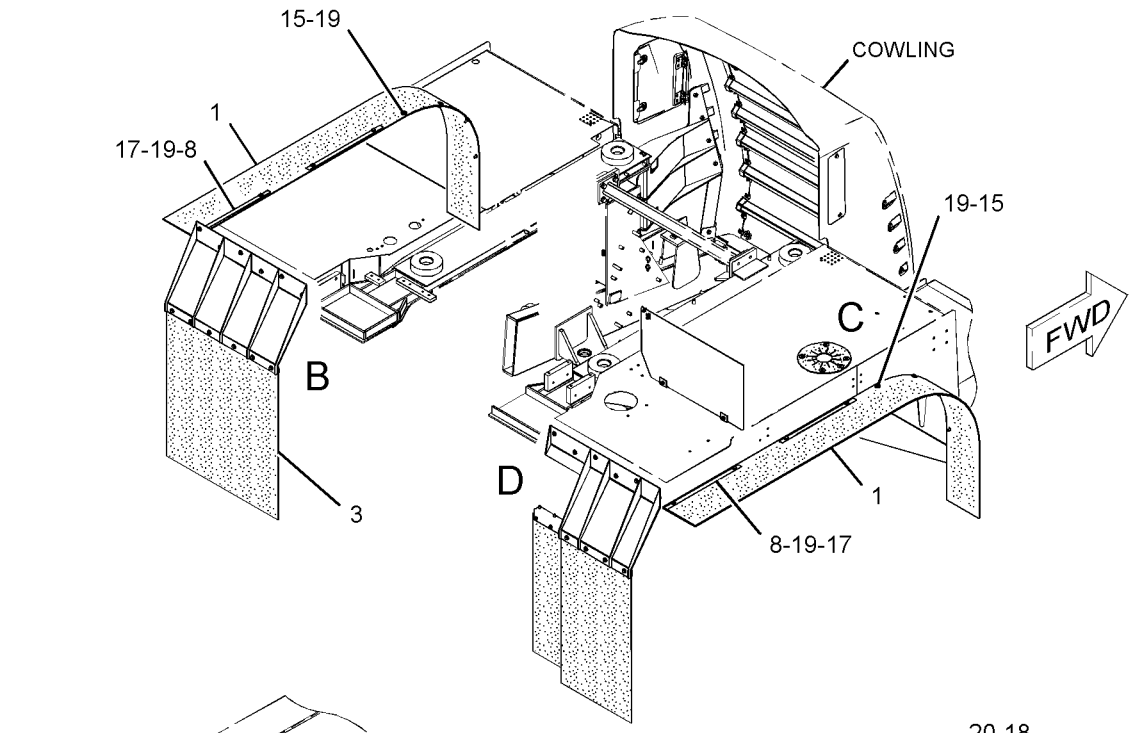


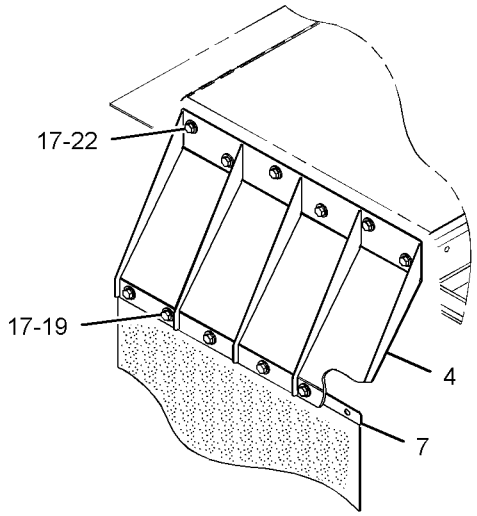


VIEW OF AREA B

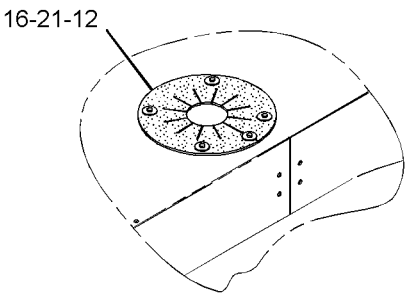


VIEW OF AREA C

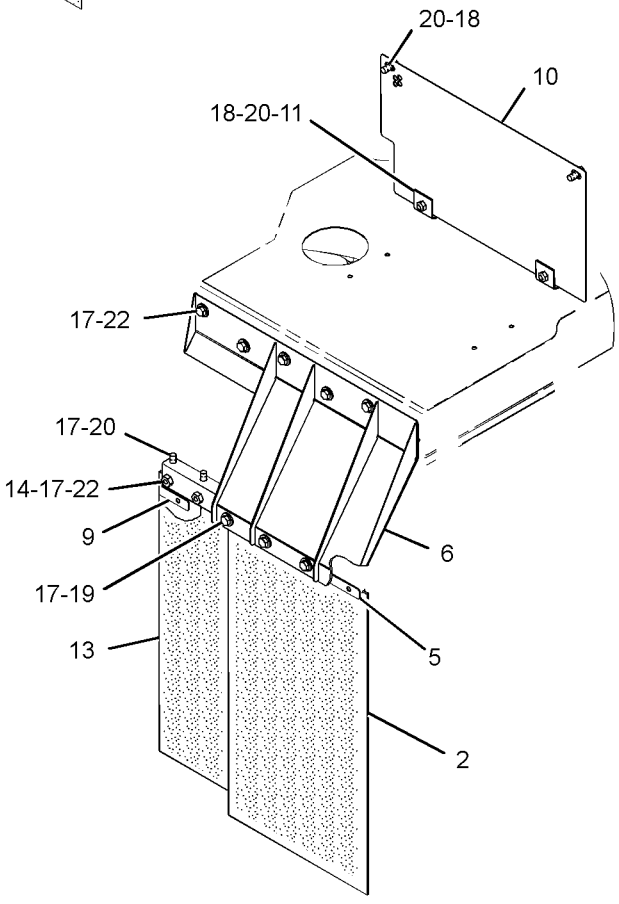


VIEW OF AREA D

GRAPHIC #1 **<END>** g01365278

# FRAME AND BODY

## *299-5526* GUARD GP-MUD

**S/N: RLB1-UP**

**AN ATTACHMENT**

**SMCS-7258** **i02702915**

| NOTE | REF NO | GRAPHIC REF | PART NUMBER | QTY | PART NAME 1 2 3 4 5 6 (PRODUCT LEVEL) | SEE PAGE |
|---|---|---|---|---|---|---|
| | 1 | 1 | **269-8733** | 2 | GUARD-MUD | |
| | 2 | 2 | **276-3787** | 1 | DEFLECTOR-MUD | |
| | 3 | 2 | **276-3797** | 1 | DEFLECTOR-MUD | |
| | 4 | 2 | **276-3798** | 1 | GUARD AS | |
| | 5 | 2 | **279-1130** | 1 | PLATE AS | |
| M | | 2 | **8T-3490** | 4 | NUT-WELD (M10X1.5-THD) | |
| | 6 | 2 | **279-1131** | 1 | GUARD AS | |
| | 7 | 2 | **279-1132** | 1 | PLATE AS | |
| M | | 2 | **8T-3490** | 6 | NUT-WELD (M10X1.5-THD) | |
| | 8 | 2 | **279-1147** | 4 | PLATE | |
| | 9 | 2 | **296-8594** | 1 | DEFLECTOR-MUD | |
| | 11 | 2 | **299-6290** | 1 | DEFLECTOR-MUD | |
| | 12 | 1,2 | **131-5879** | 8 | WASHER (11X32X3-MM THK) | |
| | 13 | 1,2 | **7X-7729** | 36 | WASHER (11X25X3-MM THK) | |
| M | 14 | 1,2 | **8T-4136** | 26 | BOLT (M10X1.5X25-MM) | |
| M | 15 | 2 | **8T-4137** | 3 | BOLT (M10X1.5X20-MM) | |
| M | 16 | 2 | **8T-4138** | 4 | BOLT (M6X1X20-MM) | |
| M | 17 | 2 | **8T-4195** | 15 | BOLT (M10X1.5X30-MM) | |
| | 18 | 2 | **9X-8256** | 4 | WASHER (6.6X12X2-MM THK) | |
| | 19 | 2 | **7X-0586** | 5 | WASHER-HARD (7.2X32X2-MM THK) | |
| M | 20 | 2 | **8T-4970** | 5 | BOLT (M6X1X14-MM) | |
| | 21 | 2 | **300-7321** | 1 | PLATE AS | |
| M | | 2 | **8T-3490** | 3 | NUT-WELD (M10X1.5-THD) | |
| | 22 | 2 | **291-0349** | 1 | PLATE | |
| | 23 | 2 | **299-5696** | 1 | PLATE | |

M-METRIC PART

*299-5526* **GUARD GP-MUD** *(contd.)* **i02702915**

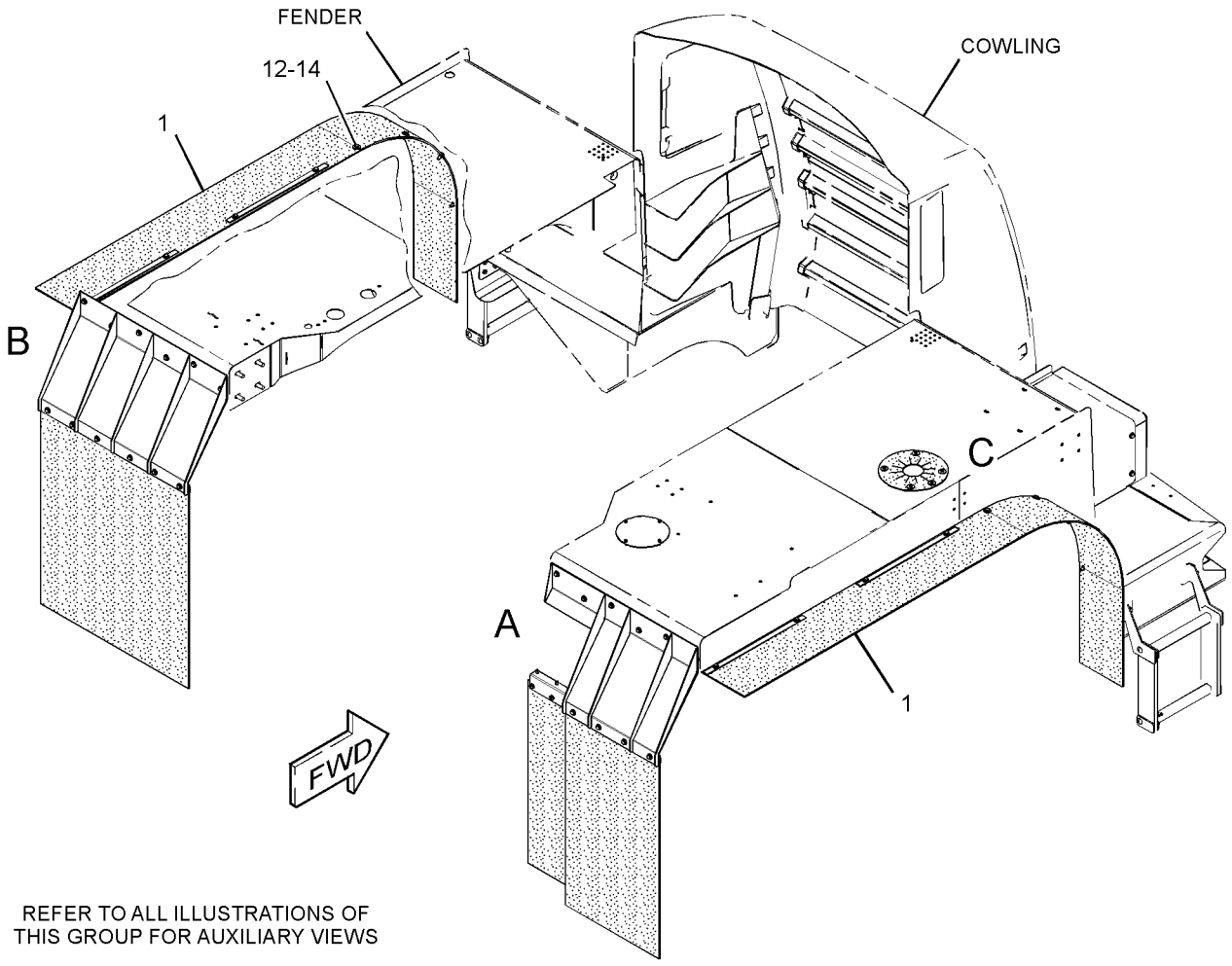


REFER TO ALL ILLUSTRATIONS OF
THIS GROUP FOR AUXILIARY VIEWS

GRAPHIC #1 g01393148

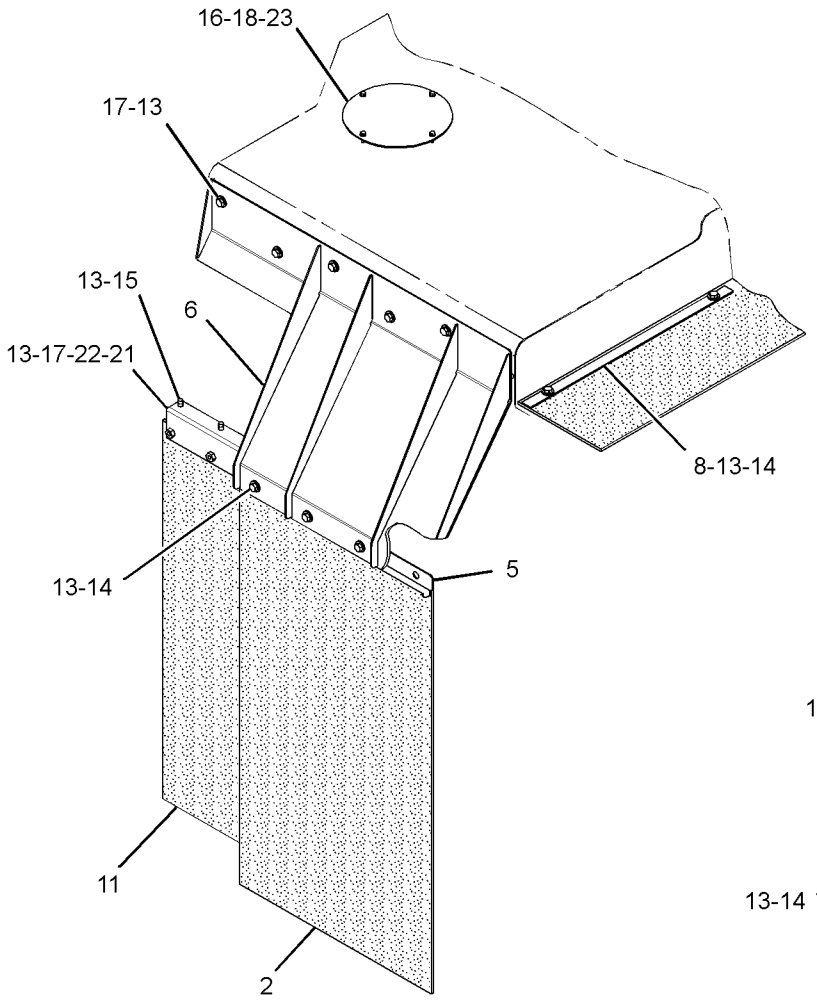


VIEW OF AREA A

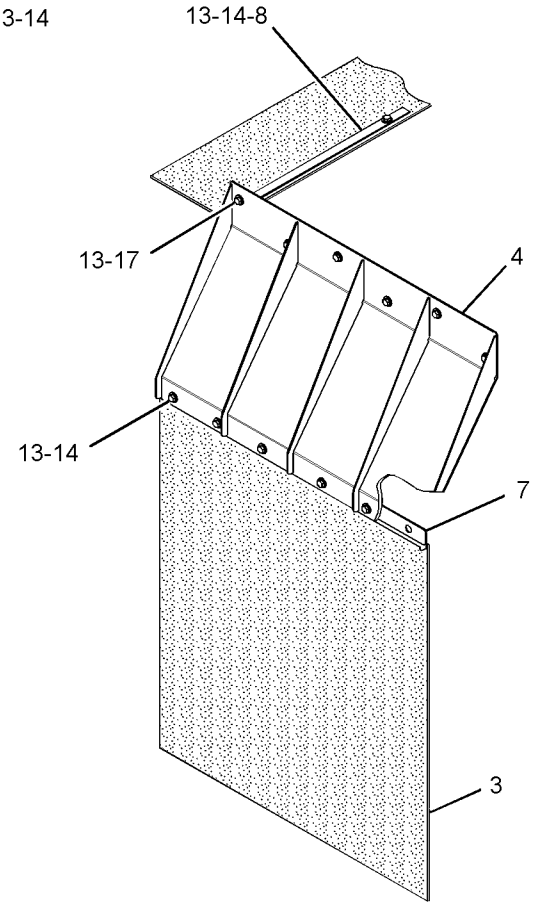


VIEW OF AREA B

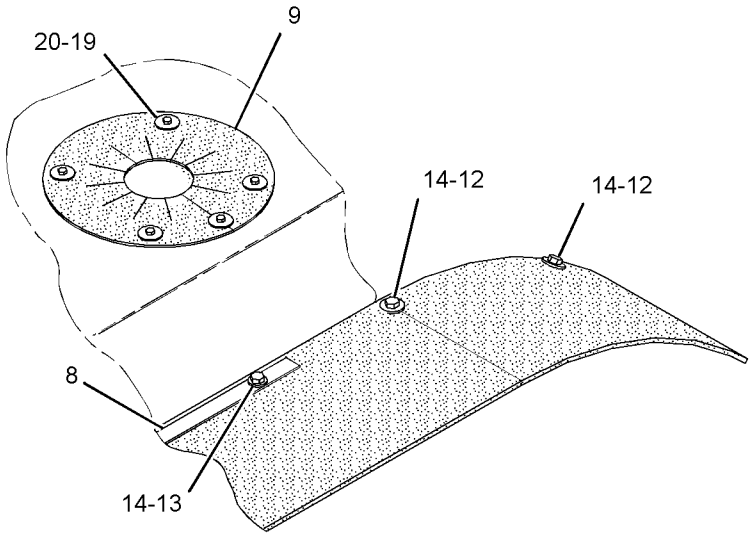


VIEW OF AREA C

GRAPHIC #2 **<END>** g01393149

## *299-5527* GUARD GP-MUD

**S/N: RLB1-UP**
**AN ATTACHMENT**

**SMCS-7258** **i02672733**

| NOTE | REF NO | GRAPHIC REF | PART NUMBER | QTY | PART NAME 1 2 3 4 5 6 (PRODUCT LEVEL) | SEE PAGE |
|---|---|---|---|---|---|---|
| | 1 | 1 | **276-3798** | 1 | GUARD AS | |
| | 2 | 1 | **279-1132** | 1 | PLATE AS | |
| M | | 1 | **8T-3490** | 6 | NUT-WELD (M10X1.5-THD) | |
| | 3 | 1 | **296-7822** | 1 | PLATE | |
| | 4 | 1 | **296-8594** | 1 | DEFLECTOR-MUD | |
| | 5 | 1 | **299-5698** | 1 | PLATE AS | |
| | 6 | 1 | **299-5834** | 1 | DEFLECTOR-MUD | |
| | 7 | 1 | **299-5836** | 1 | PLATE AS | |
| M | | 1 | **8T-3490** | 6 | NUT-WELD (M10X1.5-THD) | |
| | 10 | 1 | **131-5879** | 8 | WASHER (11X32X3-MM THK) | |
| | 11 | 1 | **7X-0586** | 4 | WASHER-HARD (7.2X32X2-MM THK) | |
| | 12 | 1 | **7X-7729** | 32 | WASHER (11X25X3-MM THK) | |
| | 13 | 1 | **8T-4121** | 6 | WASHER-HARD (11X21X2.5-MM THK) | |
| M | 14 | 1 | **8T-4136** | 28 | BOLT (M10X1.5X25-MM) | |
| M | 15 | 1 | **8T-4137** | 6 | BOLT (M10X1.5X20-MM) | |
| M | 16 | 1 | **8T-4138** | 4 | BOLT (M6X1X20-MM) | |
| M | 17 | 1 | **8T-4195** | 12 | BOLT (M10X1.5X30-MM) | |
| | 18 | 1 | **269-8733** | 2 | GUARD-MUD | |
| | 19 | 1 | **276-3797** | 1 | DEFLECTOR-MUD | |
| | 20 | 1 | **279-1147** | 4 | PLATE | |
| | 21 | 1 | **296-7868** | 2 | PLATE AS | |

M-METRIC PART

*299-5527* **GUARD GP-MUD** *(contd.)* **i02672733**

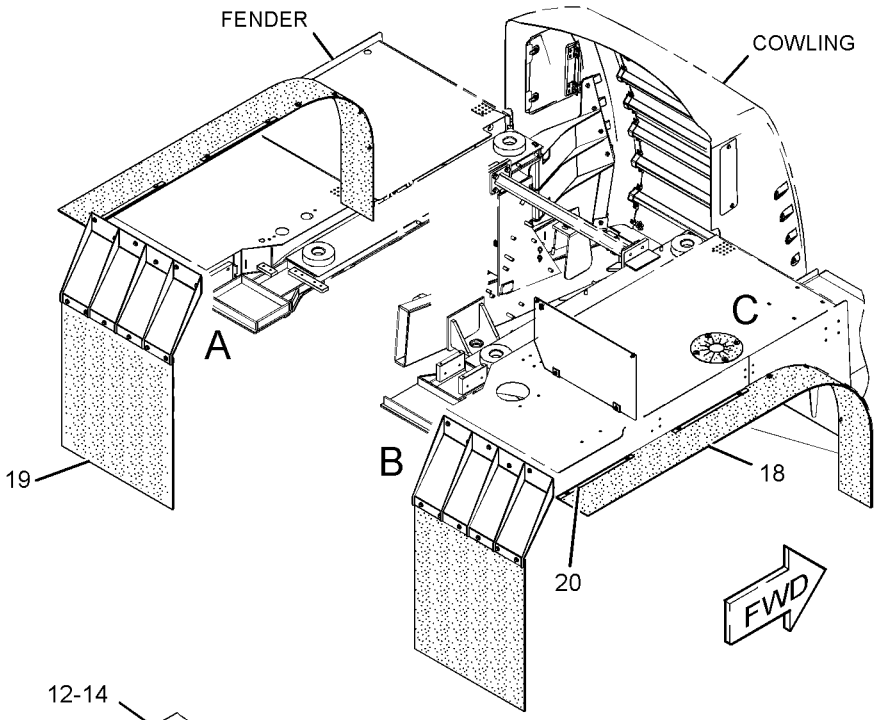


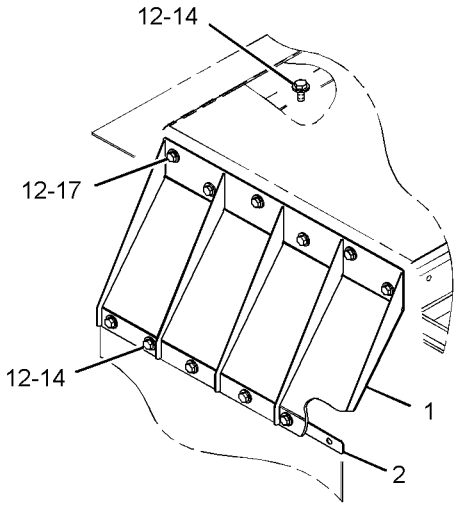


VIEW OF AREA A

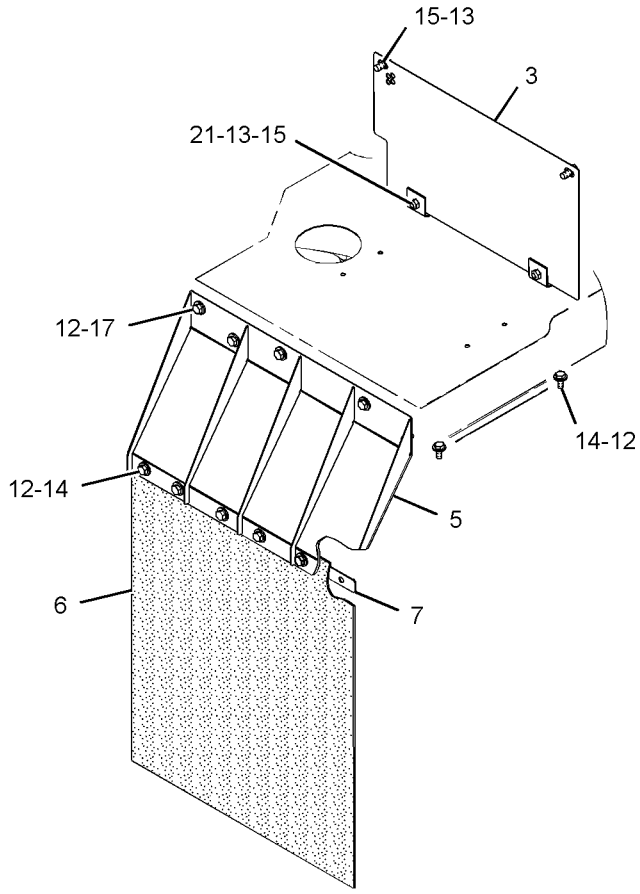


VIEW OF AREA B

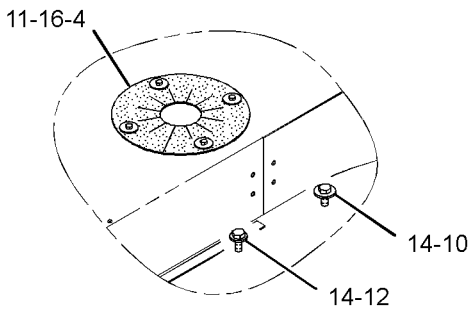


VIEW OF AREA C

GRAPHIC #1 **<END>** g01348579

# *303-0512* GUARD GP-MUD

**S/N: RLB1-UP**

**CANNOT BE USED WITH 270-5360—PAGE 542**

**AN ATTACHMENT**

**SMCS-7258** **i02665149**

| NOTE | REF NO | GRAPHIC REF | PART NUMBER | QTY | PART NAME 1 2 3 4 5 6 (PRODUCT LEVEL) | SEE PAGE |
|---|---|---|---|---|---|---|
| | 1 | 1 | **291-0349** | 4 | PLATE | |
| | 2 | 1 | **300-7321** | 2 | PLATE AS | |
| M | | 1 | **8T-3490** | 3 | NUT-WELD (M10X1.5-THD) | |
| | 3 | 1 | **300-7323** | 2 | DEFLECTOR-MUD | |
| | 4 | 1 | **7X-7729** | 18 | WASHER (11X25X3-MM THK) | |
| M | 5 | 1 | **8T-4137** | 12 | BOLT (M10X1.5X20-MM) | |
| M | 6 | 1 | **8T-4195** | 6 | BOLT (M10X1.5X30-MM) | |

M-METRIC PART

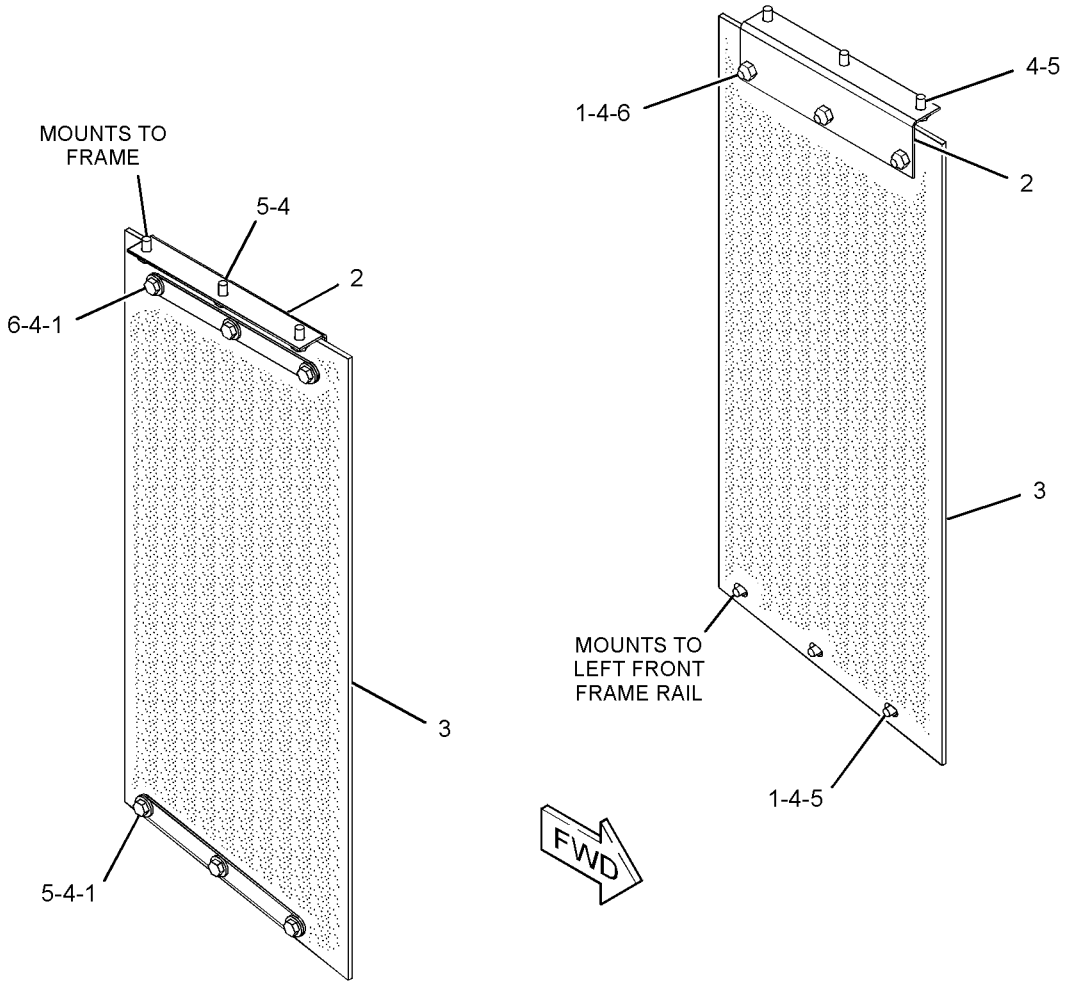


GRAPHIC #1 **<END>** g01345214

# *269-8680* HANDRAIL GP

**S/N: RLB1-UP**

**PART OF 269-8700 PLATFORM AR**

**SMCS-7256** **i02707310**

| NOTE | REF NO | GRAPHIC REF | PART NUMBER | QTY | PART NAME 1 2 3 4 5 6 (PRODUCT LEVEL) | SEE PAGE |
|---|---|---|---|---|---|---|
| | 1 | 1 | **7X-2393** | 1 | BUMPER-CONICAL | |
| | 2 | 1 | **269-8682** | 1 | HANDRAIL AS (LH) | |
| | 3 | 1 | **276-3776** | 1 | HANDRAIL AS (LH) | |
| | 4 | 1 | **276-3781** | 2 | HANDRAIL AS | |
| | 5 | 1 | **276-3784** | 1 | HANDRAIL AS (RH) | |
| | | 1 | **5D-9629** | 65 | ROD | |
| M | | 1 | **8T-3490** | 6 | NUT-WELD (M10X1.5-THD) | |
| | 6 | 1 | **276-3789** | 1 | HANDRAIL AS (RH) | |
| | 7 | 1 | **198-4777** | 64 | WASHER-HARD (11X25X10-MM THK) | |
| | 8 | 1 | **198-4778** | 8 | WASHER-HARD (13.5X30X12-MM THK) | |
| M | 9 | 1 | **5C-7261** | 1 | NUT (M8X1.25-THD) | |
| M | 10 | 1 | **8T-4194** | 8 | BOLT (M12X1.75X50-MM) | |
| M | 11 | 1 | **8T-4196** | 64 | BOLT (M10X1.5X35-MM) | |
| | 12 | 1 | **8T-4224** | 1 | WASHER-HARD (8.8X16X2-MM THK) | |

M-METRIC PART

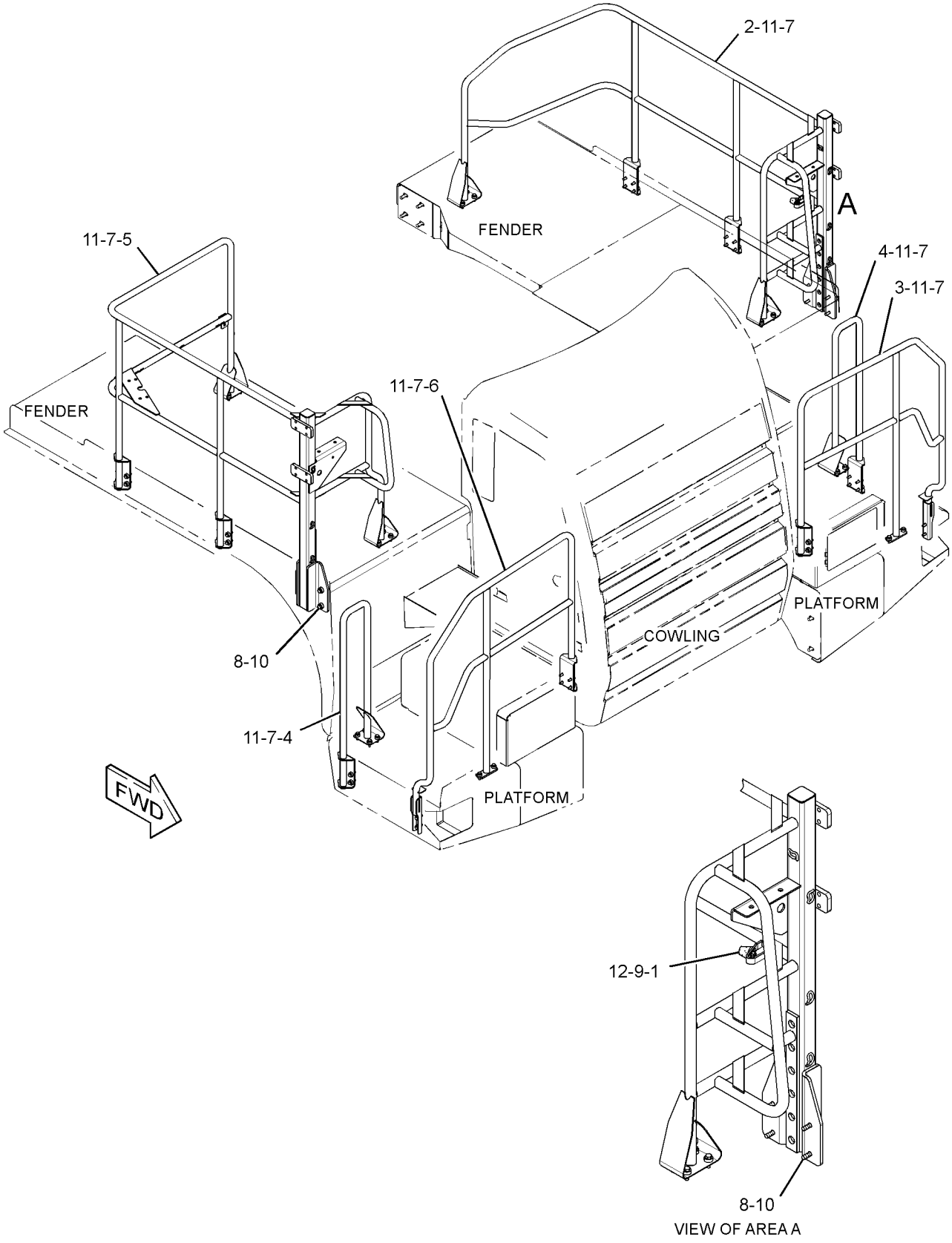


GRAPHIC #1 **<END>** g01363911

# *270-9148* LINES GP-CENTRAL LUBRICATION—BLADE CYLINDER

**S/N: RLB1-UP**

**CANNOT BE USED WITH 270-9147—PAGE 514**

**AN ATTACHMENT**

**SMCS-7510, 7540** **i02707398**

| NOTE | REF NO | GRAPHIC REF | PART NUMBER | QTY | PART NAME 1 2 3 4 5 6 (PRODUCT LEVEL) | SEE PAGE |
|---|---|---|---|---|---|---|
| | 1 | 1,2 | **2D-1683** | 23 | FITTING | |
| | 2 | 1 | **3B-6768** | 1 | BUSHING-REDUCER | |
| | 3 | 1 | **5P-3422** | 1 | TEE-PIPE | |
| | 4 | 1 | **119-8732** | 2 | COVER | |
| | 5 | 1 | **157-2016** | 1 | CAP-GREASE | |
| Y | 6 | 1 | *278-2461* | 1 | LINES GP-LUBRICATION (PRIMARY) | 519 |
| Y | 7 | 1 | *278-2463* | 1 | LINES GP-LUBRICATION (FRONT, RH) | 521 |
| Y | 8 | 1 | *278-2464* | 1 | LINES GP-LUBRICATION (FRONT, LH) | 523 |
| Y | 9 | 1 | *278-2465* | 1 | LINES GP-LUBRICATION (REAR, LH) | 525 |
| Y | 10 | 1 | *278-2467* | 1 | LINES GP-LUBRICATION (REAR, RH) | 527 |
| | 11 | 2 | **278-9032** | 2 | CLIP | |
| | 12 | 1 | **282-5058** | 2 | PLATE AS | |
| | | | | | (EACH INCLUDES) | |
| M | | 1 | **8T-3490** | 2 | NUT-WELD (M10X1.5-THD) | |
| | 13 | 1 | **288-9254** | 1 | COVER AS | |
| M | | 1 | **8T-3490** | 5 | NUT-WELD (M10X1.5-THD) | |
| | 14 | 1 | **290-2311** | 1 | BAFFLE AS | |
| | | 1 | **033-9412** | 6 | RIVET | |
| | | 1 | **290-2314** | 1 | PLATE AS | |
| | 15 | 1 | **290-2313** | 1 | BAFFLE AS | |
| | | 1 | **033-9412** | 4 | RIVET | |
| | 16 | 2 | **290-7409** | 1 | FILM-INFORMATION (GREASE POINT, UPPER RIGHT SIDE) | |
| | 17 | 2 | **290-7410** | 1 | FILM-INFORMATION (GREASE POINT, LOWER RIGHT SIDE) | |
| | 18 | 2 | **290-7411** | 1 | FILM-INFORMATION (GREASE POINT, UPPER LEFT SIDE) | |
| | 19 | 2 | **290-7412** | 1 | FILM-INFORMATION (GREASE POINT, LOWER LEFT SIDE) | |
| | 20 | 2 | **290-7413** | 1 | FILM-INFORMATION (GREASE POINT, RIGHT REAR) | |
| | 21 | 2 | **290-7414** | 1 | FILM-INFORMATION (GREASE POINT, LEFT REAR) | |
| | 22 | 2 | **293-4603** | 1 | BRACKET | |
| | 23 | 1 | **299-5716** | 1 | PUMP AS (LUBRICATION) | |
| | 24 | 2 | **154-2302** | 2 | SPACER (11X20X15-MM THK) | |
| | 25 | 1 | **222-3487** | 1 | ADAPTER | |
| | 26 | 1 | **290-7415** | 1 | FILM-INFORMATION (GREASE POINT, REAR PIVOT FRAME) | |
| | 27 | 1 | **2R-1939** | 3 | CLIP | |
| | 28 | 1 | **3B-8489** | 1 | FITTING-GREASE | |
| | 29 | 1 | **4P-7581** | 4 | CLIP | |
| M | 30 | 2 | **5C-2890** | 4 | NUT (M6X1-THD) | |
| M | 31 | 1 | **5C-9553** | 1 | BOLT (M6X1X16-MM) | |
| | 32 | 2 | **5J-0398** | 1 | CLIP | |
| | 33 | 1,2 | **5P-9085** | 40 | CLIP | |
| | 34 | 2 | **5S-7379** | 2 | BOLT (3/8-16X0.875-IN) | |
| | 35 | 1,2 | **6K-6967** | 7 | ADAPTER-PIPE | |
| | 36 | 1 | **7E-9992** | 1 | BRACKET | |
| | 37 | 1 | **7K-1181** | 4 | STRAP-CABLE | |
| M | 38 | 2 | **7X-2534** | 4 | BOLT (M6X1X50-MM) | |
| | 39 | 1 | **7X-7729** | 8 | WASHER (11X25X3-MM THK) | |
| M | 40 | 1 | **8C-8451** | 2 | BOLT (M6X1X40-MM) | |
| | 41 | 1,2 | **8L-5008** | 6 | ELBOW-PIPE | |
| | 42 | 1 | **8T-2502** | 4 | BOLT (3/8-16X1.125-IN) | |
| | 43 | 1,2 | **8T-4121** | 72 | WASHER-HARD (11X21X2.5-MM THK) | |
| M | 44 | 1 | **8T-4133** | 1 | NUT (M10X1.5-THD) | |
| M | 45 | 1,2 | **8T-4136** | 6 | BOLT (M10X1.5X25-MM) | |

## *270-9148* **LINES GP-CENTRAL LUBRICATION** *(contd.)* **i02707398**

| NOTE | REF NO | GRAPHIC REF | PART NUMBER | QTY | PART NAME 1 2 3 4 5 6 (PRODUCT LEVEL) | SEE PAGE |
|---|---|---|---|---|---|---|
| M | 46 | 1,2 | **8T-4137** | 67 | BOLT (M10X1.5X20-MM) | |
| M | 47 | 2 | **8T-4186** | 2 | BOLT (M10X1.5X40-MM) | |
| M | 48 | 1,2 | **8T-4191** | 8 | BOLT (M10X1.5X16-MM) | |
| | 49 | 1 | **8T-4224** | 3 | WASHER-HARD (8.8X16X2-MM THK) | |
| | 50 | 2 | **8T-4896** | 2 | WASHER-HARD (10.2X18.5X2.5-MM THK) | |
| M | 51 | 1 | **8T-7547** | 3 | BOLT (M8X1.25X30-MM) | |
| | 52 | 2 | **9M-4995** | 18 | CLIP | |
| M | 53 | 2 | **9X-2480** | 4 | BOLT (M6X1X45-MM) | |
| | 54 | 1,2 | **9X-8256** | 15 | WASHER (6.6X12X2-MM THK) | |
| | 55 | 1,2 | **9X-8582** | 11 | CLIP | |

M-METRIC PART
Y-SEPARATE ILLUSTRATION

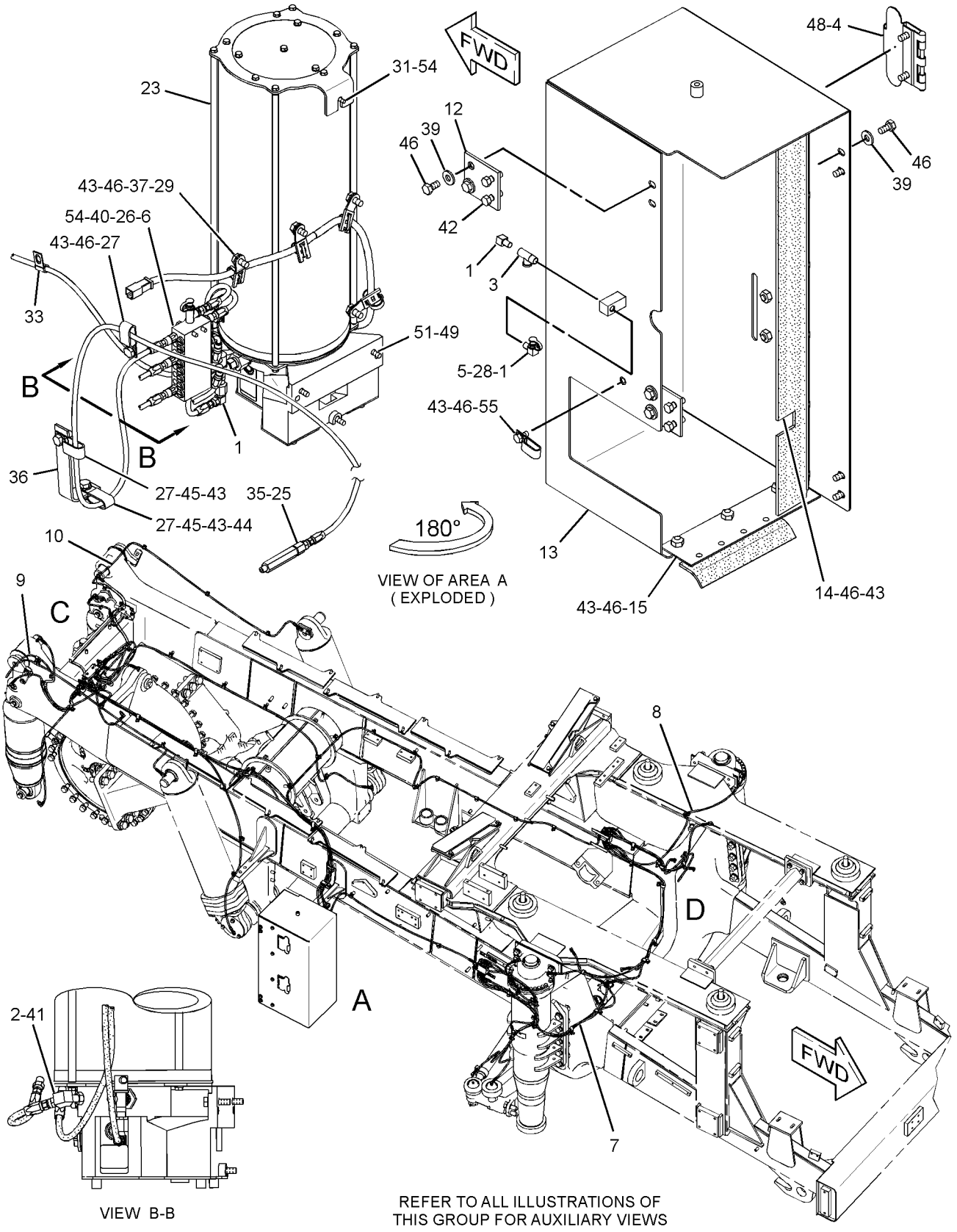


GRAPHIC #1

g01490513

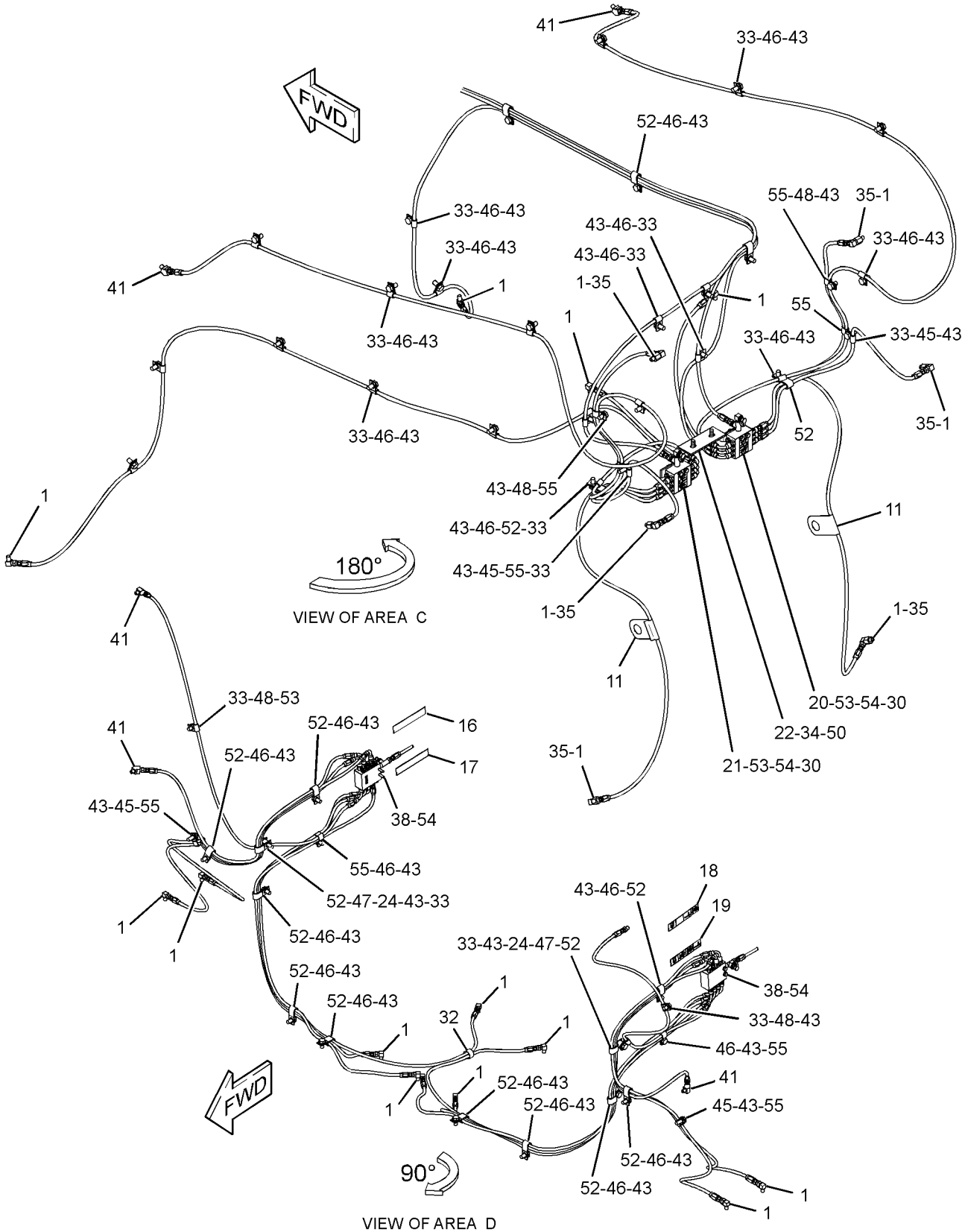


GRAPHIC #2 **<END>** g01490514

## *291-6348* LINES GP-CENTRAL LUBRICATION

**S/N: RLB1-333**
**AN ATTACHMENT**

**SMCS-7510, 7540** **i02707406**

| NOTE | REF NO | GRAPHIC REF | PART NUMBER | QTY | PART NAME 1 2 3 4 5 6 (PRODUCT LEVEL) | SEE PAGE |
|---|---|---|---|---|---|---|
| | 1 | 1 | **2D-1683** | 6 | FITTING (90-DEG) | |
| | 2 | 1 | **3B-8485** | 4 | FITTING-GREASE | |
| | 3 | 1 | **300-8742** | 1 | FILM-IDENTIFICATION (GREASE POINTS) (REAR CENTER) | |
| | 4 | 1 | **300-9496** | 1 | BRACKET | |
| Y | 5 | 1 | **302-1495** | 1 | LINES GP-CENTRAL LUBRICATION | 512 |
| | 6 | 1 | **302-1496** | 1 | VALVE AS (FRONT, LH) | |
| | | 1 | **3B-8489** | 1 | FITTING-GREASE | |
| | | 1 | **157-2016** | 1 | CAP-GREASE | |
| | | 1 | **300-6290** | 1 | BLOCK | |
| | | 1 | **300-6506** | 1 | HOSE AS | |
| | 7 | 1 | **302-1497** | 1 | VALVE AS (FRONT, RH) | |
| | | 1 | **3B-8489** | 1 | FITTING-GREASE | |
| | | 1 | **157-2016** | 1 | CAP-GREASE | |
| | | 1 | **300-6290** | 1 | BLOCK | |
| | | 1 | **300-6507** | 1 | HOSE AS | |
| | 8 | 1 | **222-3487** | 1 | ADAPTER (PIPE) | |
| | 9 | 1 | **302-2355** | 2 | FILM-IDENTIFICATION (GREASE POINT) (FRONT STRUT, RH, LH) | |
| | 10 | 1 | **5P-9085** | 22 | CLIP | |
| | 11 | 1 | **6K-6967** | 5 | ADAPTER-PIPE | |
| M | 12 | 1 | **8C-8451** | 2 | BOLT (M6X1X40-MM) | |
| | 13 | 1 | **8L-5008** | 3 | ELBOW-PIPE | |
| | 14 | 1 | **8T-2501** | 2 | BOLT (3/8-16X2-IN) | |
| | 15 | 1 | **8T-4121** | 23 | WASHER-HARD (11X21X2.5-MM THK) | |
| M | 16 | 1 | **8T-4137** | 23 | BOLT (M10X1.5X20-MM) | |
| | 17 | 1 | **8T-4896** | 2 | WASHER-HARD (10.2X18.5X2.5-MM THK) | |
| | 18 | 1 | **9X-8256** | 2 | WASHER (6.6X12X2-MM THK) | |
| | 19 | 1 | **9X-8582** | 6 | CLIP | |

M-METRIC PART
Y-SEPARATE ILLUSTRATION

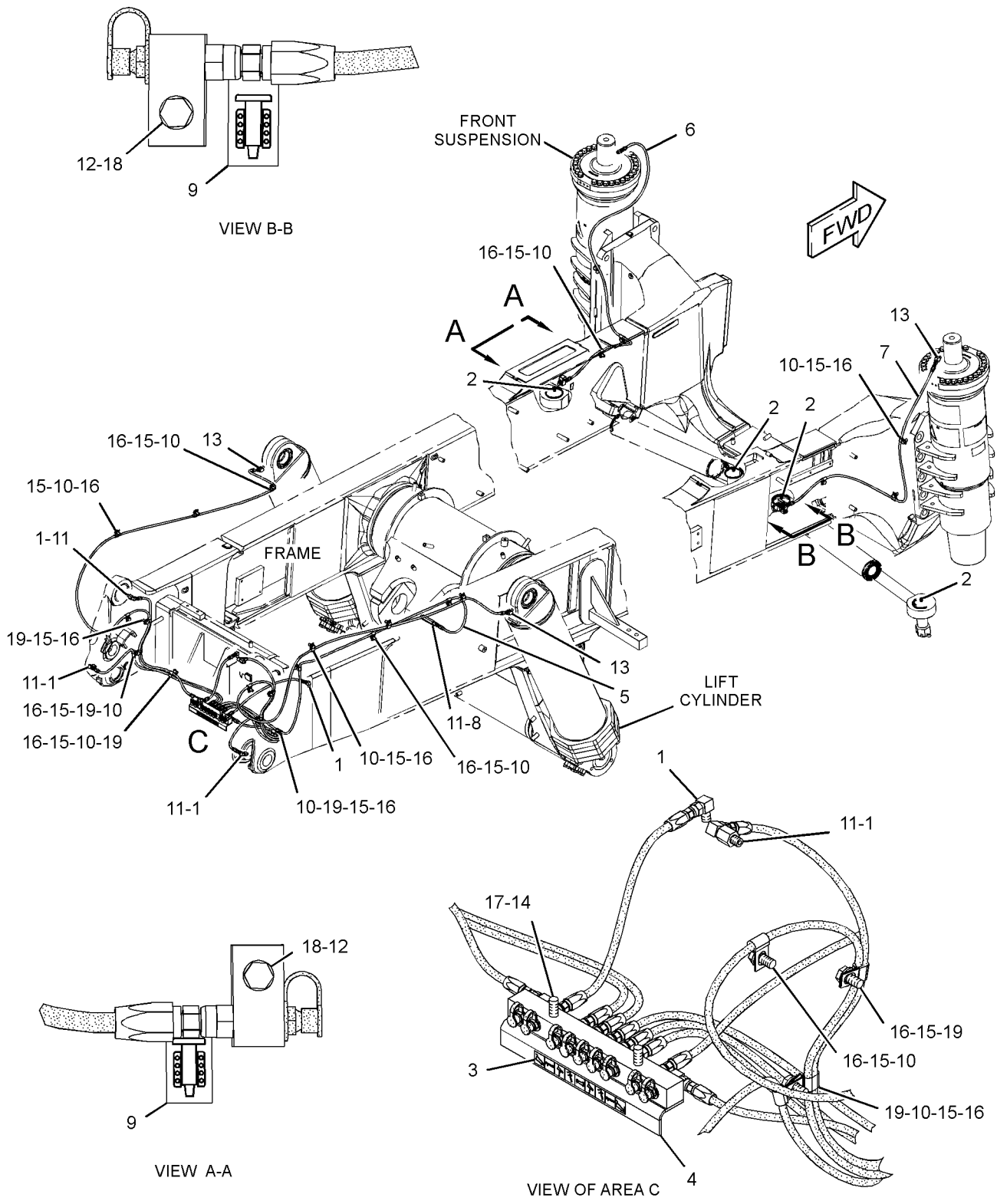


GRAPHIC #1 **<END>** g01370044

# *291-6348* LINES GP-CENTRAL LUBRICATION

**S/N: RLB334-UP**
**AN ATTACHMENT**

**SMCS-7510, 7540** **i02880748**

| NOTE | REF NO | GRAPHIC REF | PART NUMBER | QTY | PART NAME 1 2 3 4 5 6 (PRODUCT LEVEL) | SEE PAGE |
|---|---|---|---|---|---|---|
| | 1 | 1 | **2D-1683** | 6 | FITTING | |
| | 2 | 1 | **3B-8485** | 4 | FITTING-GREASE | |
| | 3 | 1 | **300-8742** | 1 | FILM-IDENTIFICATION (GREASE POINTS) (REAR CENTER) | |
| Y | 4 | 1 | **302-1495** | 1 | LINES GP-CENTRAL LUBRICATION | 512 |
| | 5 | 1 | **302-1496** | 1 | VALVE AS (FRONT, LH) | |
| | | 1 | **3B-8489** | 1 | FITTING-GREASE | |
| | | 1 | **157-2016** | 1 | CAP-GREASE | |
| | | 1 | **300-6290** | 1 | BLOCK | |
| | | 1 | **300-6506** | 1 | HOSE AS | |
| | 6 | 1 | **302-1497** | 1 | VALVE AS (FRONT, RH) | |
| | | 1 | **3B-8489** | 1 | FITTING-GREASE | |
| | | 1 | **157-2016** | 1 | CAP-GREASE | |
| | | 1 | **300-6290** | 1 | BLOCK | |
| | | 1 | **300-6507** | 1 | HOSE AS | |
| C | 7 | 1 | **312-5545** | 1 | BRACKET | |
| | 8 | 1 | **222-3487** | 1 | ADAPTER | |
| | 9 | 1 | **302-2355** | 2 | FILM-IDENTIFICATION (GREASE POINT) (FRONT STRUT, RH, LH) | |
| | 10 | 1 | **5P-9085** | 22 | CLIP | |
| | 11 | 1 | **6K-6967** | 5 | ADAPTER-PIPE | |
| M | 12 | 1 | **8C-8451** | 2 | BOLT (M6X1X40-MM) | |
| | 13 | 1 | **8L-5008** | 3 | ELBOW-PIPE | |
| C | 14 | 1 | **8T-4121** | 25 | WASHER-HARD (11X21X2.5-MM THK) | |
| M | 15 | 1 | **8T-4137** | 23 | BOLT (M10X1.5X20-MM) | |
| CM | 16 | 1 | **8T-4185** | 2 | BOLT (M10X1.5X50-MM) | |
| | 17 | 1 | **9X-8256** | 2 | WASHER (6.6X12X2-MM THK) | |
| | 18 | 1 | **9X-8582** | 6 | CLIP | |

C-CHANGE FROM PREVIOUS TYPE
M-METRIC PART
Y-SEPARATE ILLUSTRATION

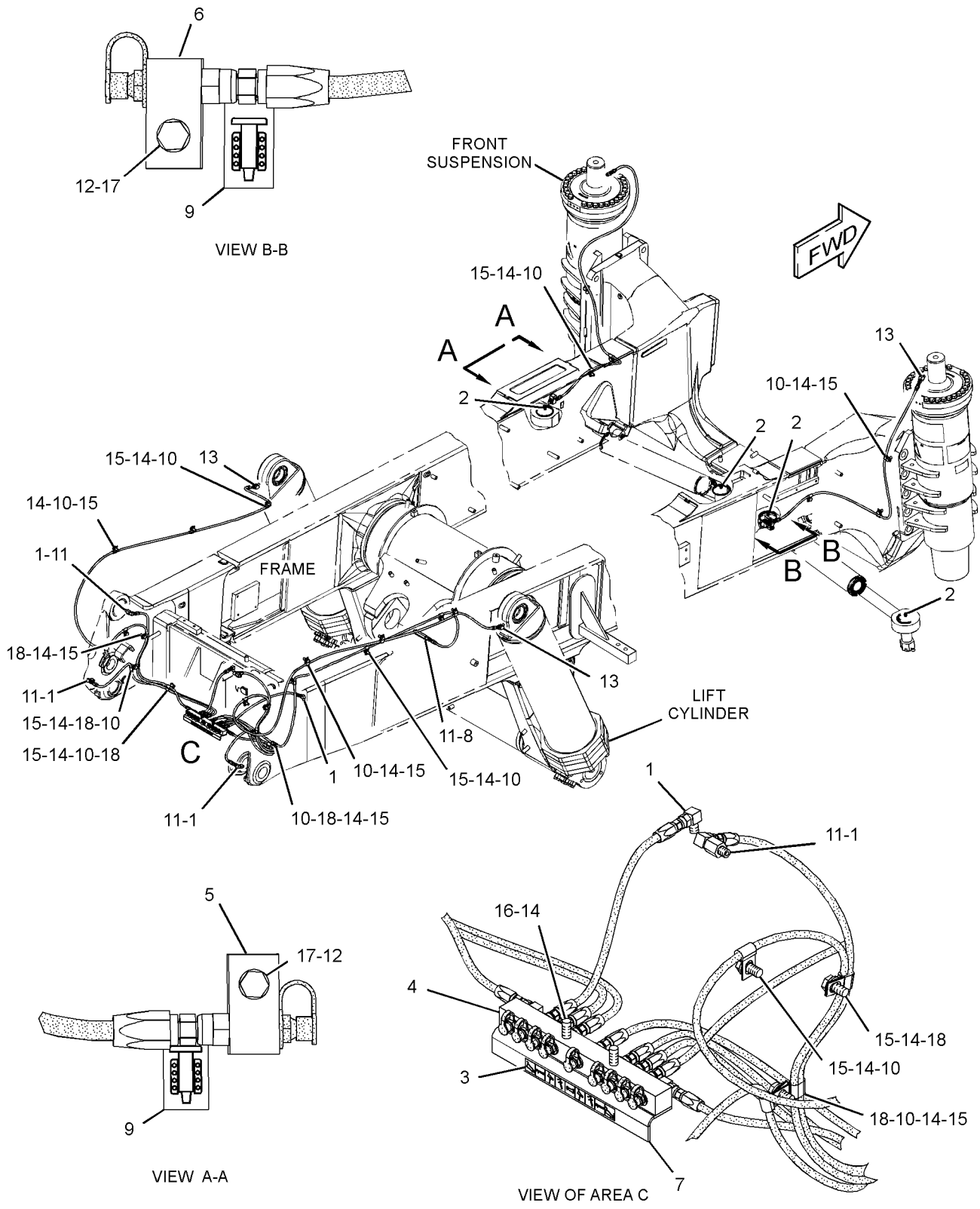


GRAPHIC #1 **<END>** g01437867

# FRAME AND BODY

## 302-1495 LINES GP-CENTRAL LUBRICATION

**S/N: RLB1-333**

**PART OF 291-6348 LINES GP-CENTRAL LUBRICATION**

**AN ATTACHMENT**

**SMCS-7510, 7540** **i02672026**

| NOTE | REF NO | GRAPHIC REF | PART NUMBER | QTY | PART NAME 1 2 3 4 5 6 (PRODUCT LEVEL) | SEE PAGE |
|---|---|---|---|---|---|---|
| | 1 | 1 | **2D-1683** | 2 | FITTING | |
| | 2 | 1 | **157-2016** | 9 | CAP-GREASE | |
| | 3 | 1 | **291-5117** | 2 | HOSE AS | |
| | 4 | 1 | **291-6338** | 2 | HOSE AS | |
| | 5 | 1 | **291-6339** | 1 | HOSE AS | |
| | 6 | 1 | **291-6342** | 1 | BLOCK | |
| | 7 | 1 | **300-6145** | 1 | HOSE AS | |
| | 8 | 1 | **300-6148** | 1 | HOSE AS | |
| | 9 | 1 | **300-6146** | 1 | HOSE AS | |
| | 10 | 1 | **300-6147** | 1 | HOSE AS | |
| | 11 | 1 | **3B-8489** | 9 | FITTING-GREASE | |

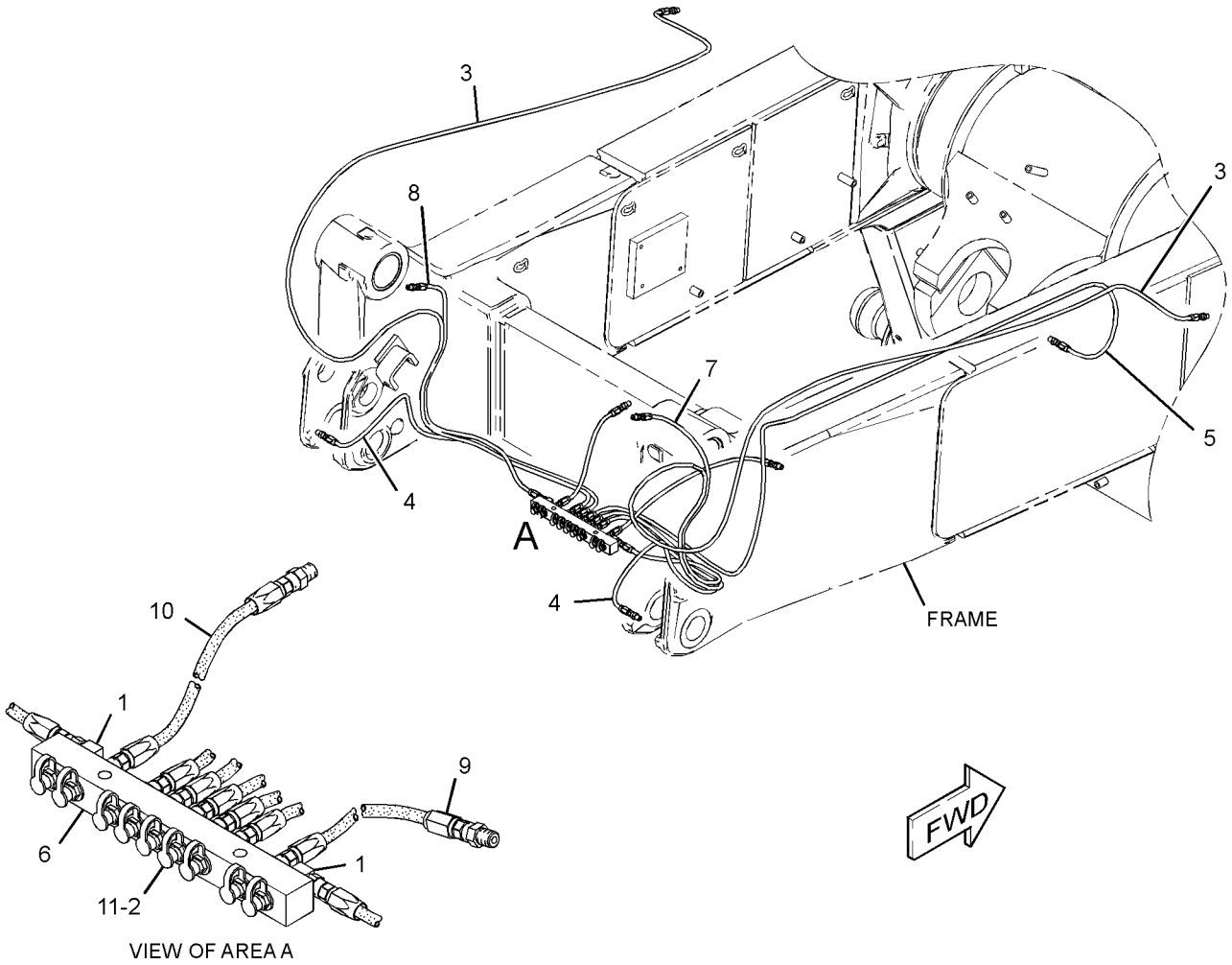


GRAPHIC #1 **<END>** g01345604

# 302-1495 LINES GP-CENTRAL LUBRICATION

**S/N: RLB334-UP**

**PART OF 291-6348 LINES GP-CENTRAL LUBRICATION**

**AN ATTACHMENT**

**SMCS-7510, 7540** **i02881088**

| NOTE | REF NO | GRAPHIC REF | PART NUMBER | QTY | PART NAME 1 2 3 4 5 6 (PRODUCT LEVEL) | SEE PAGE |
|---|---|---|---|---|---|---|
| | 1 | 1 | **2D-1683** | 2 | FITTING | |
| | 2 | 1 | **157-2016** | 9 | CAP-GREASE | |
| C | 3 | 1 | **312-5533** | 2 | HOSE AS | |
| C | 4 | 1 | **312-5534** | 1 | HOSE AS | |
| C | 5 | 1 | **312-5535** | 2 | HOSE AS | |
| C | 6 | 1 | **312-5536** | 2 | HOSE AS | |
| C | 7 | 1 | **312-5537** | 1 | HOSE AS | |
| C | 8 | 1 | **312-5540** | 1 | HOSE AS | |
| C | 9 | 1 | **312-5543** | 1 | BLOCK | |
| | 10 | 1 | **3B-8489** | 9 | FITTING-GREASE | |

C-CHANGE FROM PREVIOUS TYPE

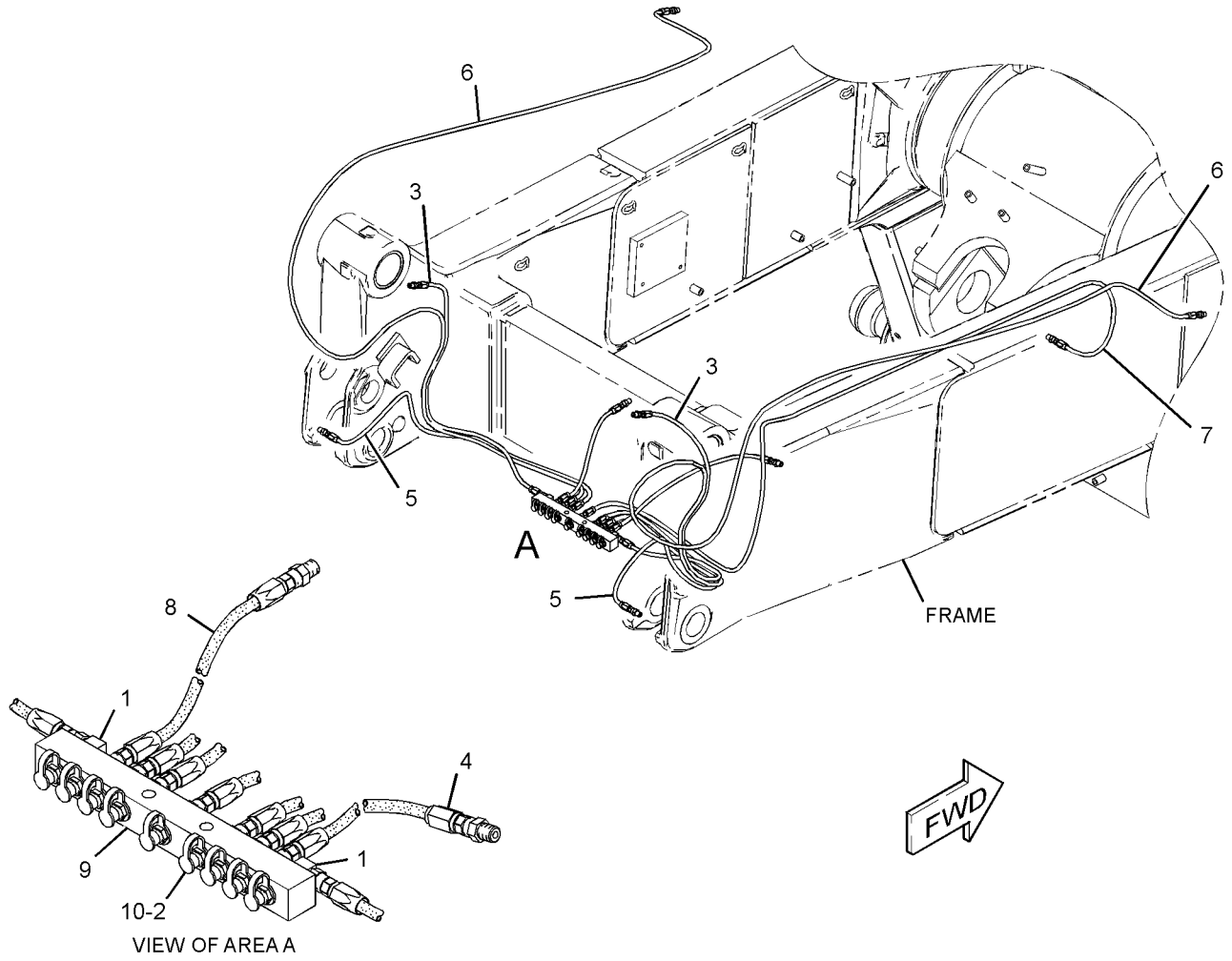


GRAPHIC #1 **<END>** g01435925

# *270-9147* LINES GP-LUBRICATION

**S/N: RLB1-UP**
**CANNOT BE USED WITH 270-9148—PAGE 504**
**AN ATTACHMENT**

**SMCS-7510, 7540** **i02879600**

| NOTE | REF NO | GRAPHIC REF | PART NUMBER | QTY | PART NAME 1 2 3 4 5 6 (PRODUCT LEVEL) | SEE PAGE |
|---|---|---|---|---|---|---|
| | 1 | 1,2,3,4 | **2D-1683** | 18 | FITTING (90-DEG) | |
| | 2 | 2 | **157-2016** | 1 | CAP-GREASE | |
| Y | 3 | 4 | *278-2463* | 1 | LINES GP-LUBRICATION (FRONT, RH) | 521 |
| Y | 4 | 3 | *278-2464* | 1 | LINES GP-LUBRICATION (FRONT, LH) | 523 |
| Y | 5 | 2 | *278-2465* | 1 | LINES GP-LUBRICATION (REAR, LH) | 525 |
| Y | 6 | 2 | *278-2467* | 1 | LINES GP-LUBRICATION (REAR, RH) | 527 |
| | 7 | 2 | **278-9032** | 2 | CLIP | |
| | 8 | 4 | **290-7409** | 1 | FILM-INFORMATION (GREASE POINT, UPPER RIGHT SIDE) | |
| | 9 | 4 | **290-7410** | 1 | FILM-INFORMATION (GREASE POINT, LOWER RIGHT SIDE) | |
| | 10 | 3 | **290-7411** | 1 | FILM-INFORMATION (GREASE POINT, UPPER LEFT SIDE) | |
| | 11 | 3 | **290-7412** | 1 | FILM-INFORMATION (GREASE POINT, LOWER LEFT SIDE) | |
| | 12 | 2 | **290-7413** | 1 | FILM-INFORMATION (GREASE POINT, RIGHT REAR) | |
| | 13 | 2 | **290-7414** | 1 | FILM-INFORMATION (GREASE POINT, LEFT REAR) | |
| | 14 | 2 | **309-6086** | 1 | PLATE AS | |
| | 15 | 2 | **298-6025** | 1 | HOSE AS | |
| | 17 | 3,4 | **154-2302** | 2 | SPACER (11X20X15-MM THK) | |
| | 18 | 2 | **222-3487** | 1 | ADAPTER (PIPE) | |
| | 19 | 2 | **290-7415** | 1 | FILM-INFORMATION (GREASE POINT, REAR PIVOT FRAME) | |
| | 20 | 2 | **3B-8489** | 1 | FITTING-GREASE | |
| M | 22 | 2 | **5C-2890** | 4 | NUT (M6X1-THD) | |
| | 23 | 4 | **5J-0398** | 1 | CLIP | |
| | 24 | 2,3,4 | **5M-6214** | 4 | PLUG-PIPE | |
| | 25 | 1,2,3,4 | **5P-9085** | 28 | CLIP | |
| | 26 | 1,2 | **6K-6967** | 5 | ADAPTER-PIPE | |
| M | 27 | 3,4 | **7X-2534** | 4 | BOLT (M6X1X50-MM) | |
| | 28 | 2,3,4 | **8L-5008** | 5 | ELBOW-PIPE | |
| | 29 | 1,2,3,4 | **8T-4121** | 48 | WASHER-HARD (11X21X2.5-MM THK) | |
| M | 30 | 1,3,4 | **8T-4136** | 4 | BOLT (M10X1.5X25-MM) | |
| M | 31 | 1,2,3,4 | **8T-4137** | 38 | BOLT (M10X1.5X20-MM) | |
| M | 32 | 3,4 | **8T-4186** | 2 | BOLT (M10X1.5X40-MM) | |
| M | 33 | 1,3,4 | **8T-4191** | 4 | BOLT (M10X1.5X16-MM) | |
| | 36 | 1,3,4 | **9M-4995** | 14 | CLIP | |
| M | 37 | 2 | **9X-2480** | 4 | BOLT (M6X1X45-MM) | |
| | 38 | 2,3,4 | **9X-8256** | 12 | WASHER (6.6X12X2-MM THK) | |
| | 39 | 1,2,3,4 | **9X-8582** | 13 | CLIP | |
| | 40 | 1 | **5D-0269** | 2 | ELBOW | |
| | 41 | 1 | **8C-7575** | 2 | ADAPTER | |

M-METRIC PART
Y-SEPARATE ILLUSTRATION

*270-9147* **LINES GP-LUBRICATION** *(contd.)* **i02879600**

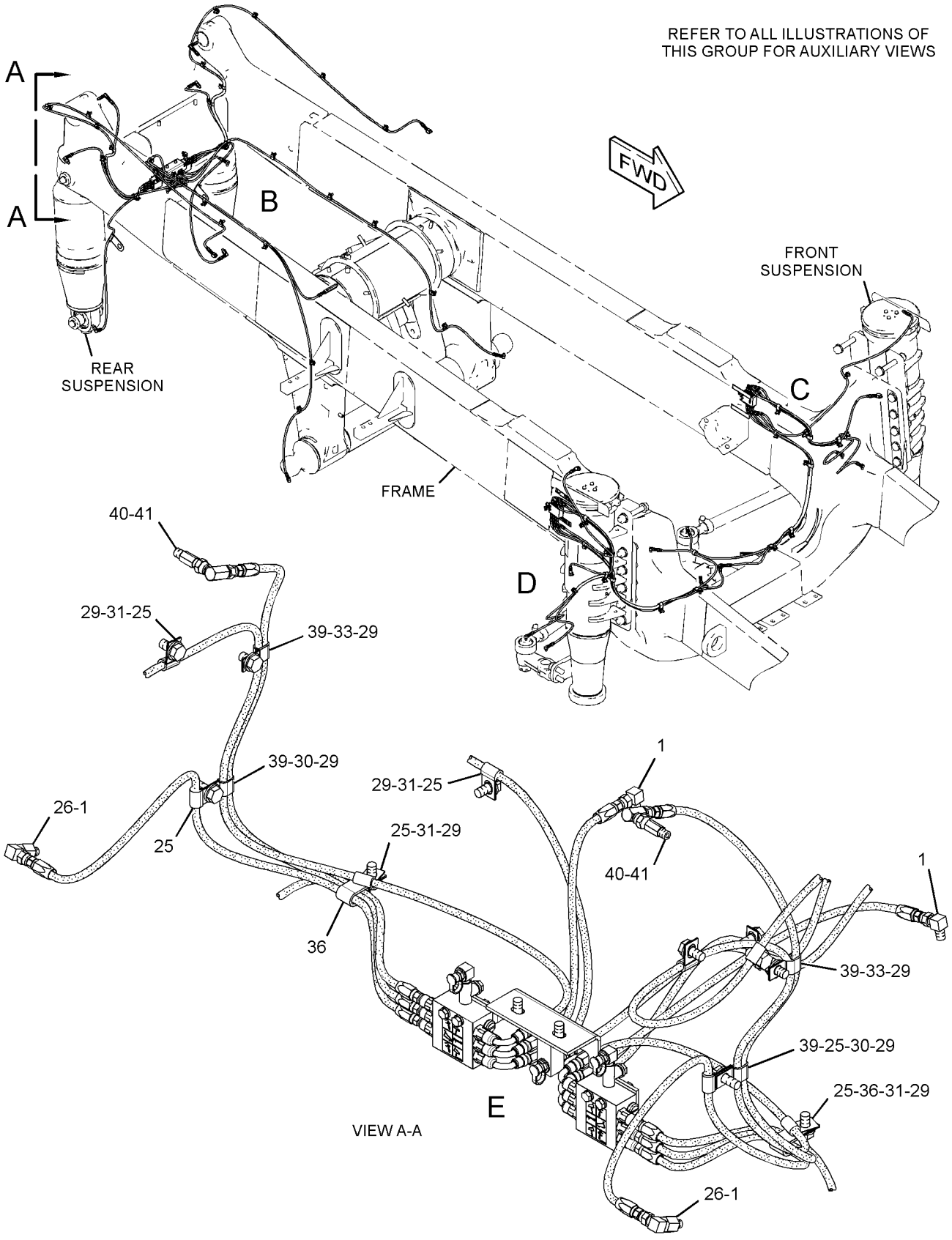


GRAPHIC #1 g01511436

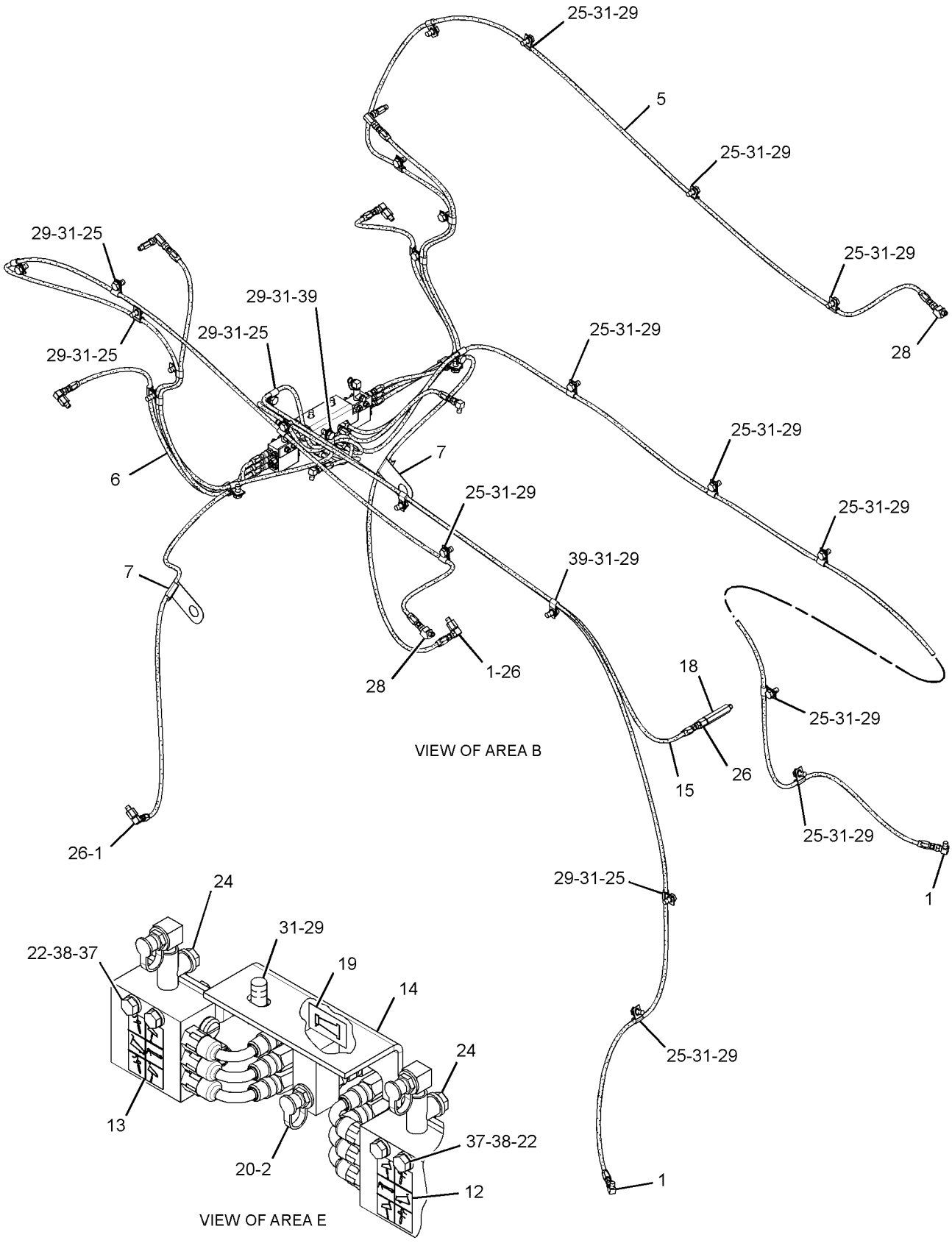


GRAPHIC #2

g01511440

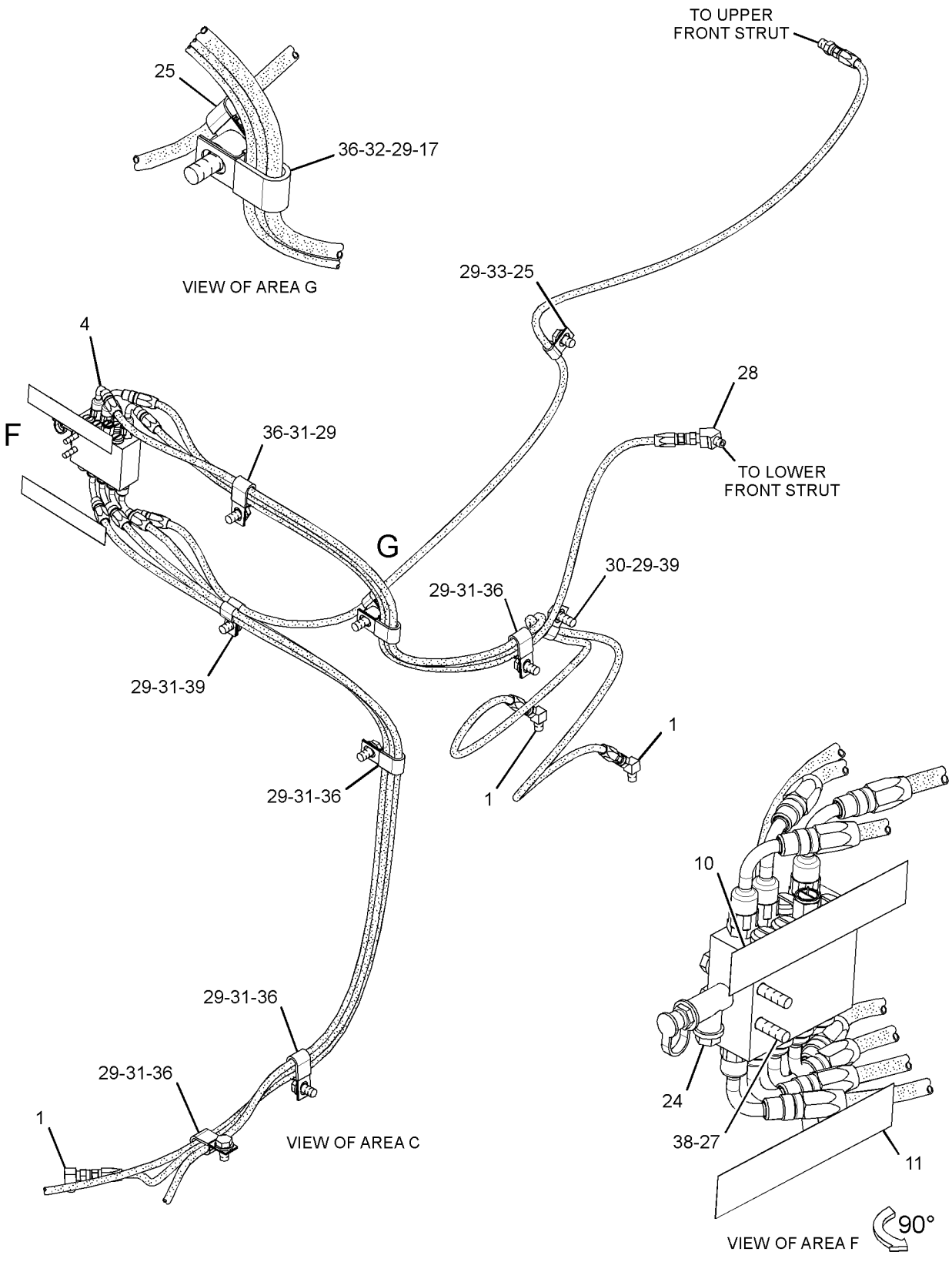


GRAPHIC #3

g01511443

*270-9147* **LINES GP-LUBRICATION** *(contd.)* **i02879600**

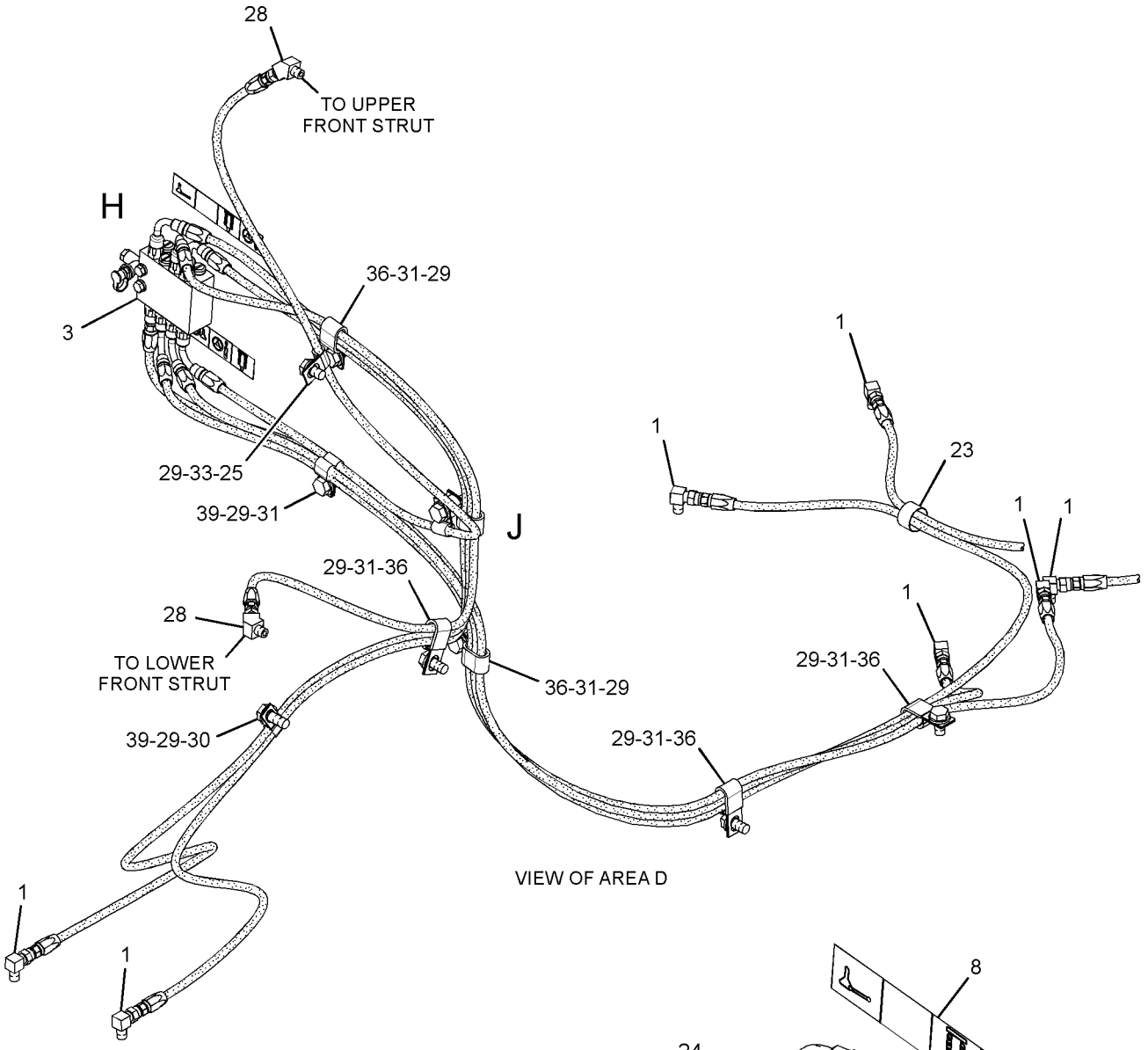


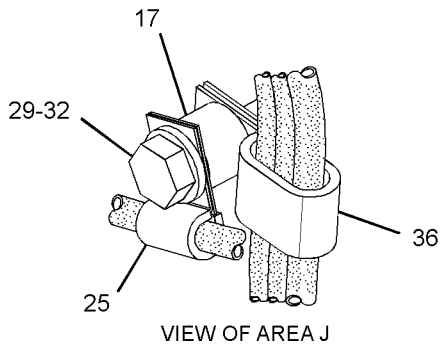


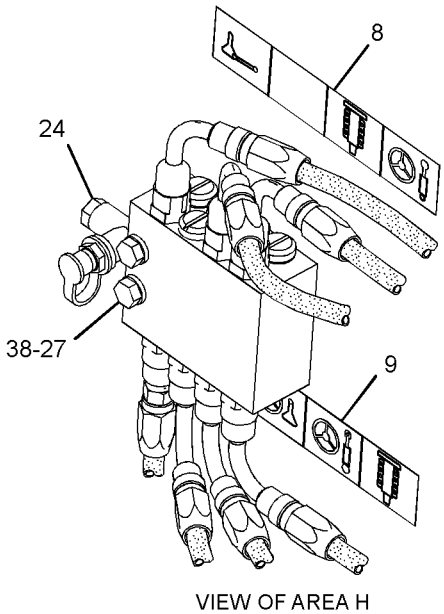


GRAPHIC #4 **<END>** g01511445

# *278-2461* LINES GP-LUBRICATION—PRIMARY

**S/N: RLB1-UP**

**PART OF 270-9148 LINES GP-CENTRAL LUBRICATION**

**AN ATTACHMENT**

**SMCS-7510, 7540** **i03292642**

| NOTE | REF NO | GRAPHIC REF | PART NUMBER | QTY | PART NAME 1 2 3 4 5 6 (PRODUCT LEVEL) | SEE PAGE |
|---|---|---|---|---|---|---|
| | 1 | 1 | **5P-3422** | 1 | TEE-PIPE | |
| | 2 | 1 | **157-2016** | 1 | CAP-GREASE | |
| | 3 | 1 | **272-8339** | 1 | HOSE AS | |
| | 4 | 1 | **275-0961** | 6 | ADAPTER | |
| | 5 | 1 | **275-1219** | 1 | VALVE AS-LUBE DISTRIBUTION (PRIMARY) | |
| | 6 | 1 | **275-9878** | 1 | HOSE AS | |
| | 7 | 1 | **275-9879** | 1 | HOSE AS | |
| | 8 | 1 | **276-7247** | 6 | CAP | |
| | 9 | 1 | **282-5050** | 1 | HOSE AS | |
| | 10 | 1 | **282-5051** | 1 | HOSE AS | |
| | 11 | 1 | **282-5052** | 1 | HOSE AS | |
| | 12 | 1 | **282-5053** | 1 | HOSE AS | |
| | 13 | 1 | **282-5054** | 1 | HOSE AS | |
| | 14 | 1 | **3B-8489** | 1 | FITTING-GREASE | |

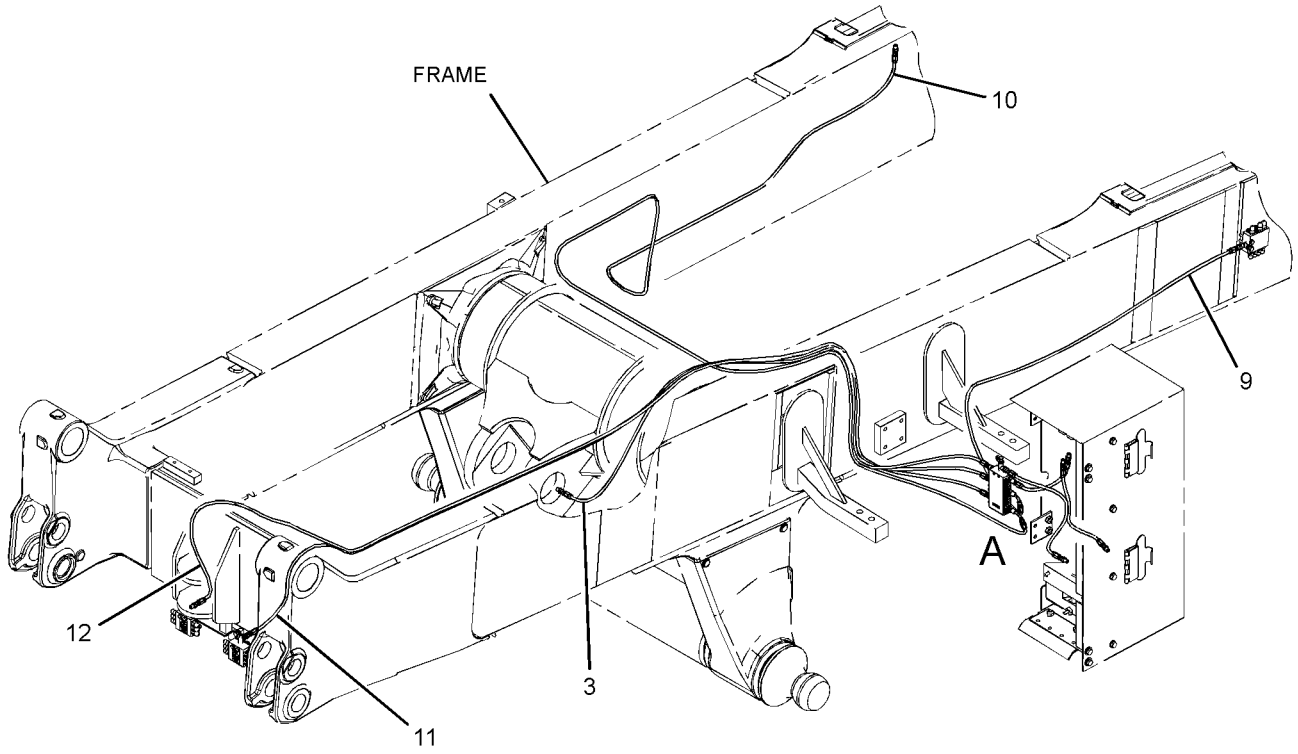


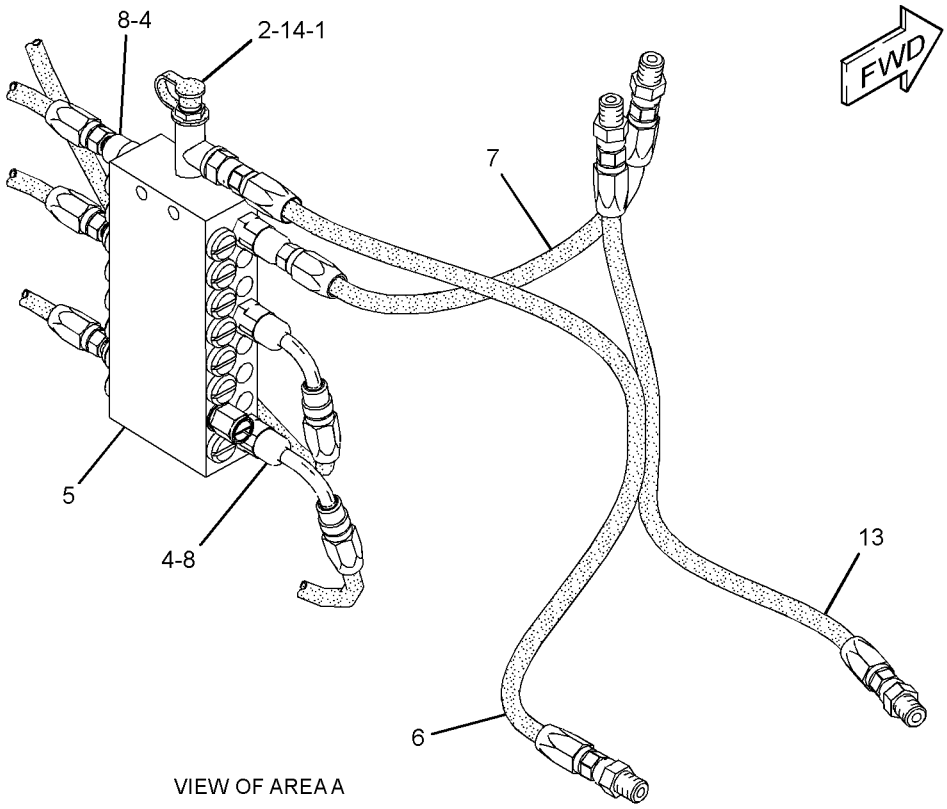


VIEW OF AREA A

GRAPHIC #1 **<END>** g01342606

# *278-2463* LINES GP-LUBRICATION—FRONT, RH

**S/N: RLB1-UP**

**PART OF 270-9148 LINES GP-CENTRAL LUBRICATION, 270-9147 LINES GP-LUBRICATION AN ATTACHMENT**

**SMCS-7510, 7540** **i03292660**

| NOTE | REF NO | GRAPHIC REF | PART NUMBER | QTY | PART NAME 1 2 3 4 5 6 (PRODUCT LEVEL) | SEE PAGE |
|---|---|---|---|---|---|---|
| | 1 | 2 | **5P-3422** | 1 | TEE-PIPE | |
| | 2 | 2 | **157-2016** | 1 | CAP-GREASE | |
| | 3 | 2 | **171-8867** | 1 | VALVE AS-LUBE DISTRIBUTION (FRONT, RH) | |
| | 4 | 2 | **171-8870** | 1 | PLUG | |
| | 5 | 2 | **275-0961** | 7 | ADAPTER | |
| | 6 | 2 | **276-7247** | 7 | CAP | |
| | 7 | 2 | **282-4186** | 1 | HOSE AS | |
| | 8 | 2 | **282-4187** | 1 | HOSE AS | |
| | 9 | 2 | **282-4189** | 1 | HOSE AS | |
| | 10 | 2 | **282-4190** | 1 | HOSE AS | |
| | 11 | 2 | **282-4191** | 1 | HOSE AS | |
| | 12 | 2 | **282-4192** | 1 | HOSE AS | |
| | 13 | 2 | **300-6143** | 1 | HOSE AS | |
| | 14 | 2 | **3B-8489** | 1 | FITTING-GREASE | |

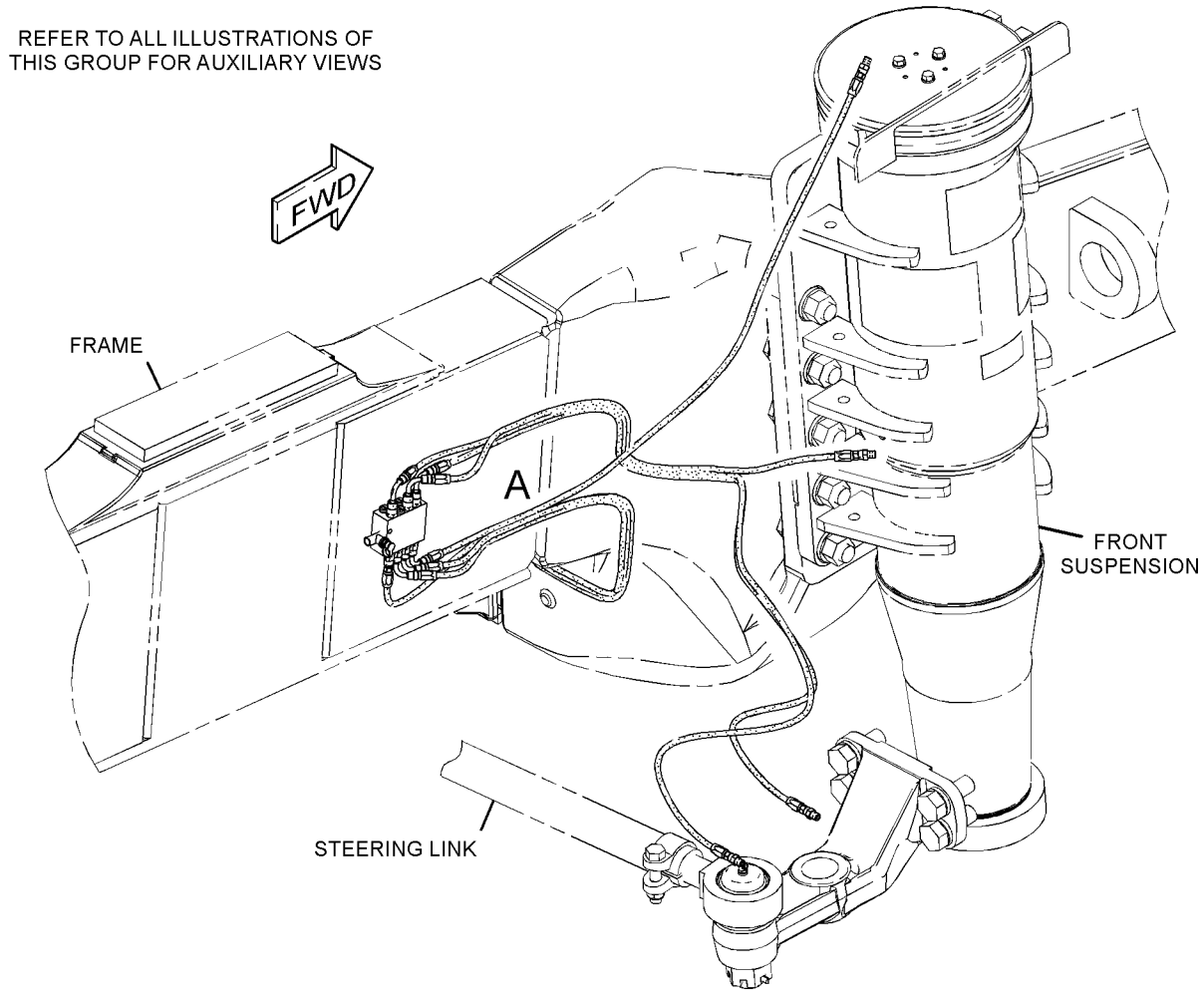


GRAPHIC #1 g01335046

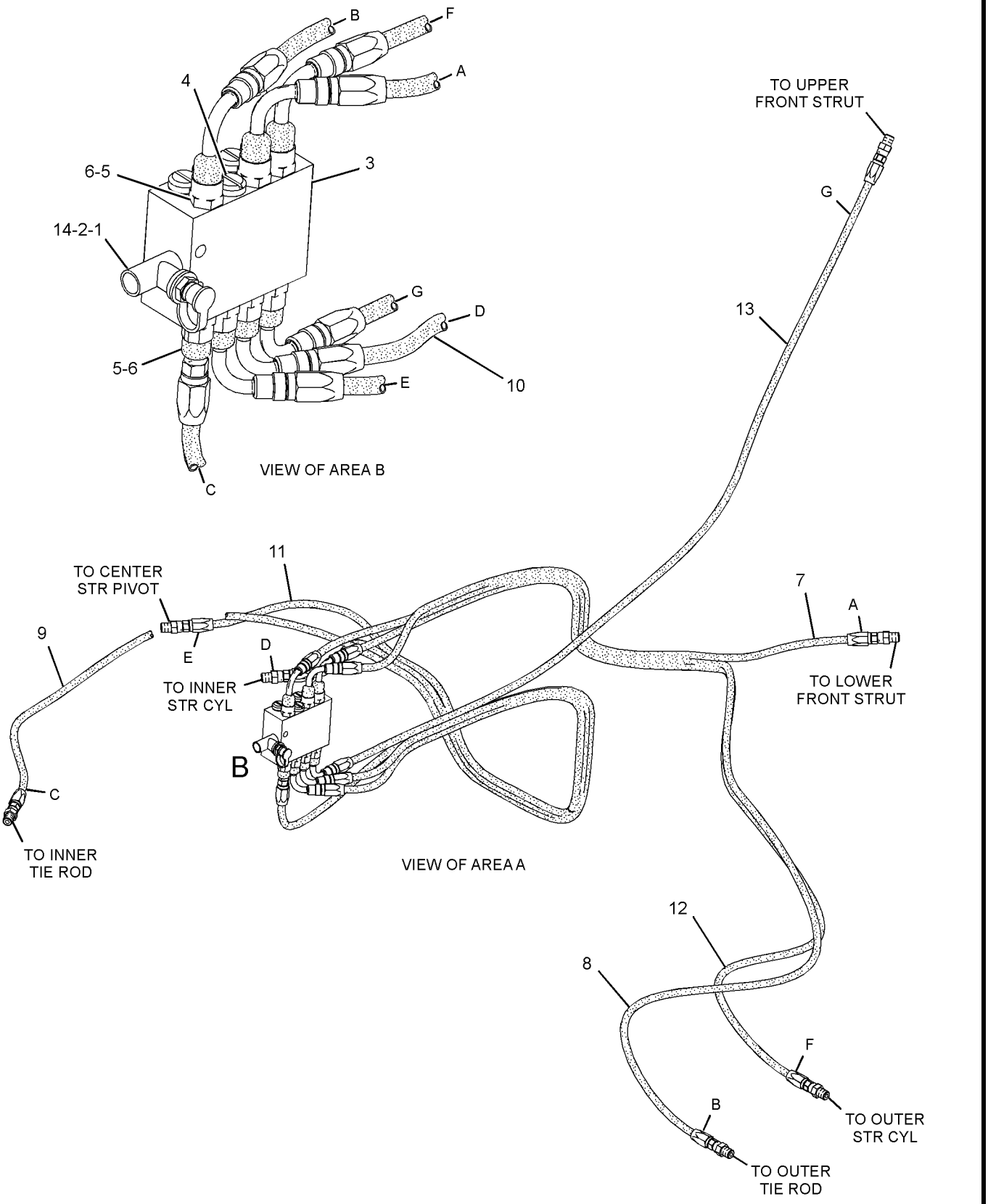


GRAPHIC #2 **<END>** g01335048

# *278-2464* LINES GP-LUBRICATION—FRONT, LH

**S/N: RLB1-UP**

**PART OF 270-9148 LINES GP-CENTRAL LUBRICATION, 270-9147 LINES GP-LUBRICATION AN ATTACHMENT**

**SMCS-7510, 7540** **i02623166**

| NOTE | REF NO | GRAPHIC REF | PART NUMBER | QTY | PART NAME 1 2 3 4 5 6 (PRODUCT LEVEL) | SEE PAGE |
|---|---|---|---|---|---|---|
| | 1 | 2 | **5P-3422** | 1 | TEE-PIPE | |
| | 2 | 2 | **157-2016** | 1 | CAP-GREASE | |
| | 3 | 2 | **171-8867** | 1 | VALVE AS-LUBE DISTRIBUTION (FRONT, LH) | |
| | 4 | 2 | **171-8870** | 1 | PLUG | |
| | 5 | 2 | **275-0961** | 7 | ADAPTER | |
| | 6 | 2 | **276-7247** | 7 | CAP | |
| | 7 | 2 | **282-4179** | 1 | HOSE AS | |
| | 8 | 2 | **282-4181** | 1 | HOSE AS | |
| | 9 | 2 | **282-4182** | 1 | HOSE AS | |
| | 10 | 2 | **282-4183** | 1 | HOSE AS | |
| | 11 | 2 | **282-4184** | 1 | HOSE AS | |
| | 12 | 2 | **282-4185** | 1 | HOSE AS | |
| | 13 | 2 | **300-6144** | 1 | HOSE AS | |
| | 14 | 2 | **3B-8489** | 1 | FITTING-GREASE | |

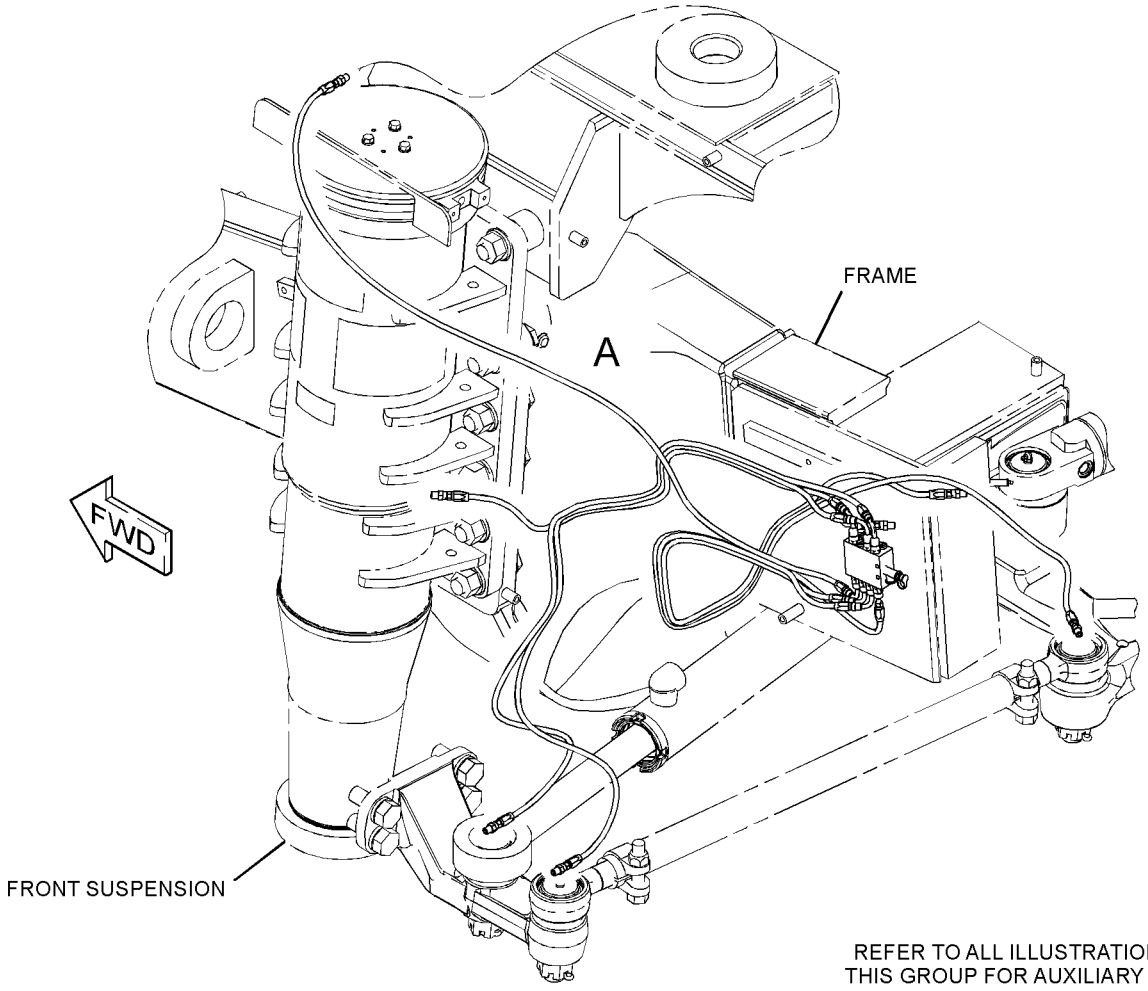


REFER TO ALL ILLUSTRATIONS OF THIS GROUP FOR AUXILIARY VIEWS

GRAPHIC #1

g01330311

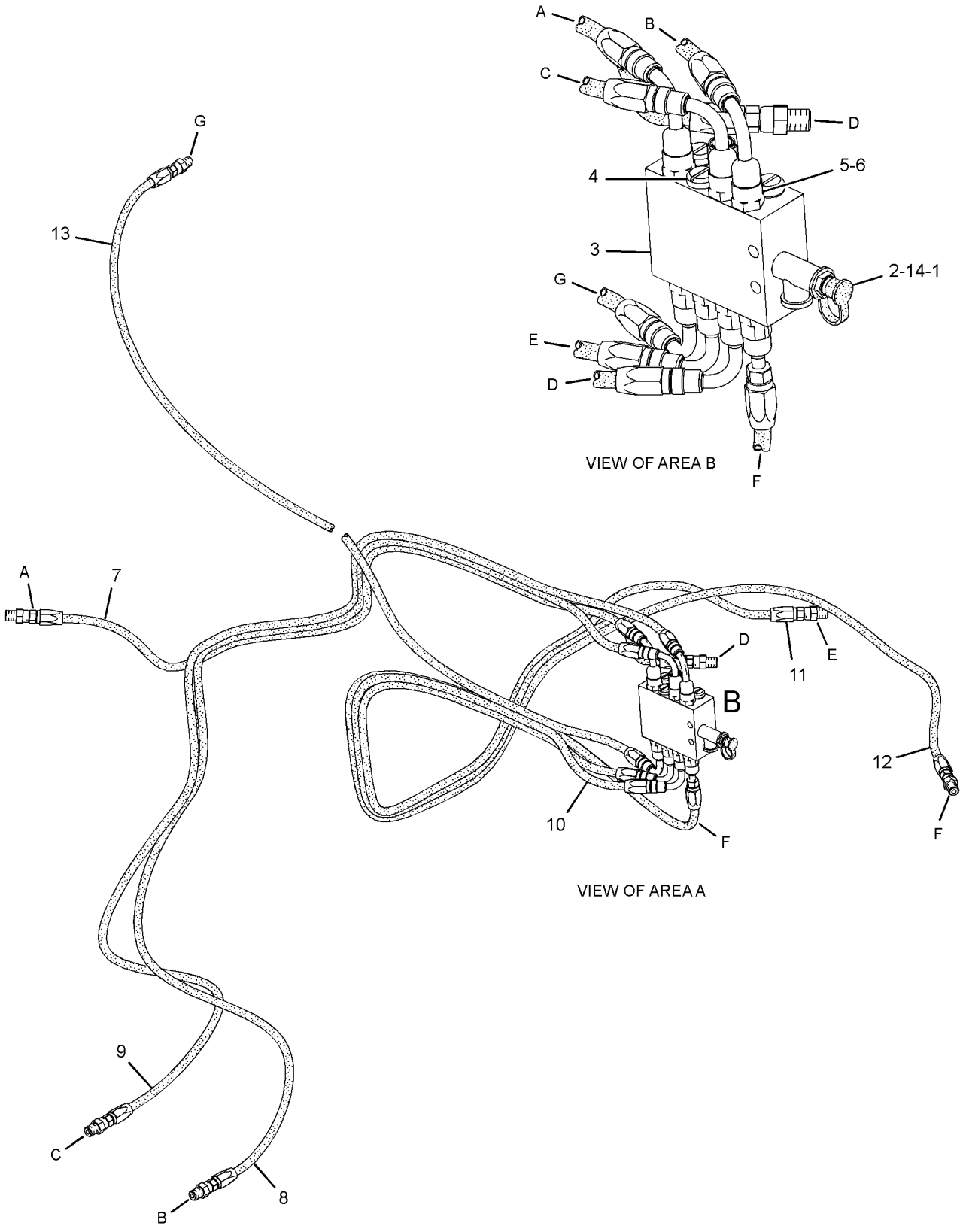


GRAPHIC #2 **<END>** g01330330

# *278-2465* LINES GP-LUBRICATION—REAR, LH

**S/N: RLB1-UP**

**PART OF 270-9148 LINES GP-CENTRAL LUBRICATION, 270-9147 LINES GP-LUBRICATION AN ATTACHMENT**

**SMCS-7510, 7540** **i03303441**

| NOTE | REF NO | GRAPHIC REF | PART NUMBER | QTY | PART NAME 1 2 3 4 5 6 (PRODUCT LEVEL) | SEE PAGE |
|---|---|---|---|---|---|---|
| | 1 | 2 | **2D-1683** | 1 | FITTING | |
| | 2 | 2 | **5P-3422** | 1 | TEE-PIPE | |
| | 3 | 2 | **157-2016** | 1 | CAP-GREASE | |
| | 4 | 2 | **177-4686** | 1 | VALVE AS-LUBE DISTRIBUTION (REAR, LH) | |
| | 5 | 2 | **275-0961** | 6 | ADAPTER | |
| | 6 | 2 | **276-7247** | 6 | CAP | |
| | 7 | 2 | **282-4194** | 1 | HOSE AS | |
| | 8 | 2 | **282-4195** | 1 | HOSE AS | |
| | 9 | 2 | **282-4196** | 1 | HOSE AS | |
| | 10 | 2 | **282-4197** | 1 | HOSE AS | |
| | 11 | 2 | **282-4198** | 1 | HOSE AS | |
| | 12 | 2 | **282-4193** | 1 | HOSE AS | |
| | 13 | 2 | **3B-8489** | 1 | FITTING-GREASE | |

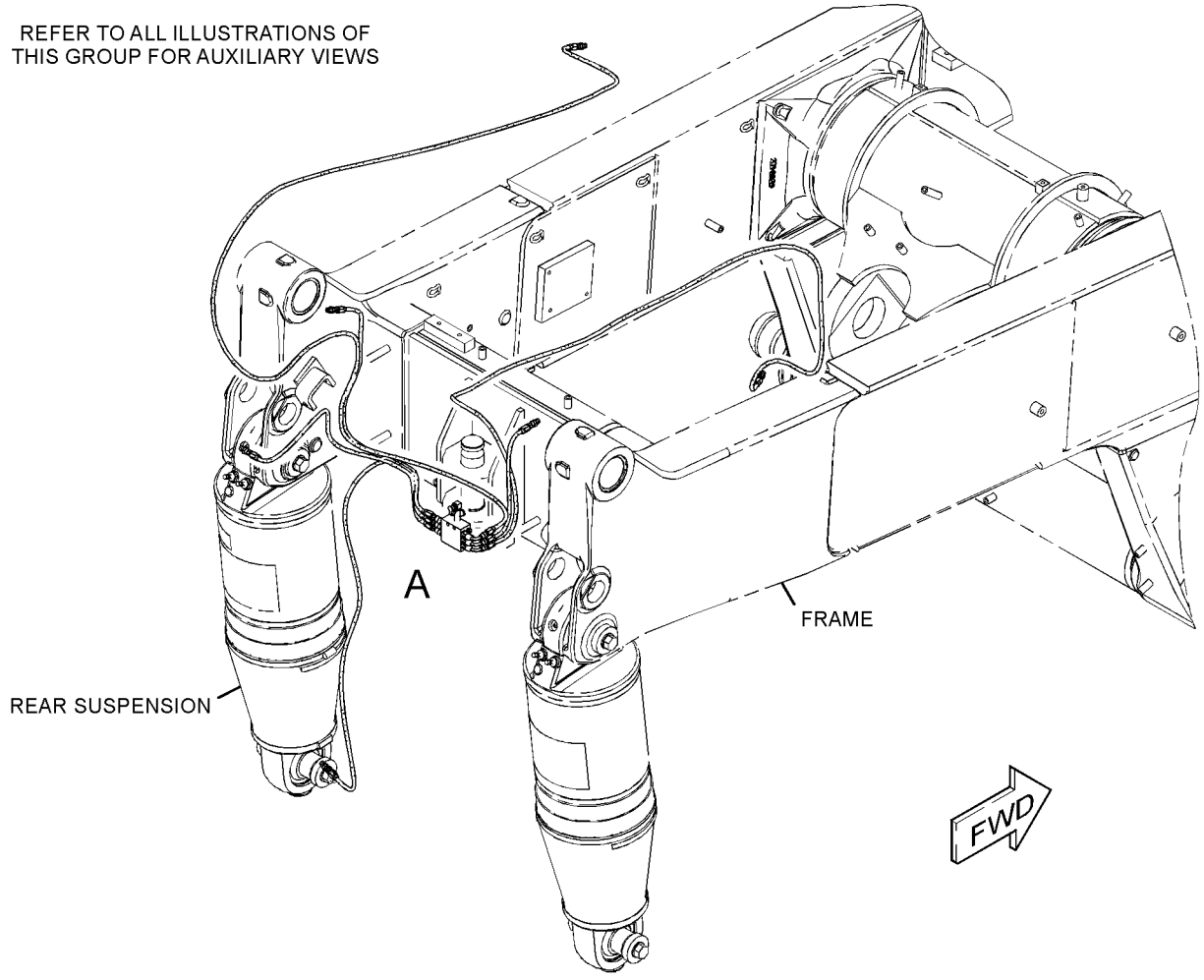


GRAPHIC #1 g01335509

*278-2465* **LINES GP-LUBRICATION** *(contd.)* **i03303441**

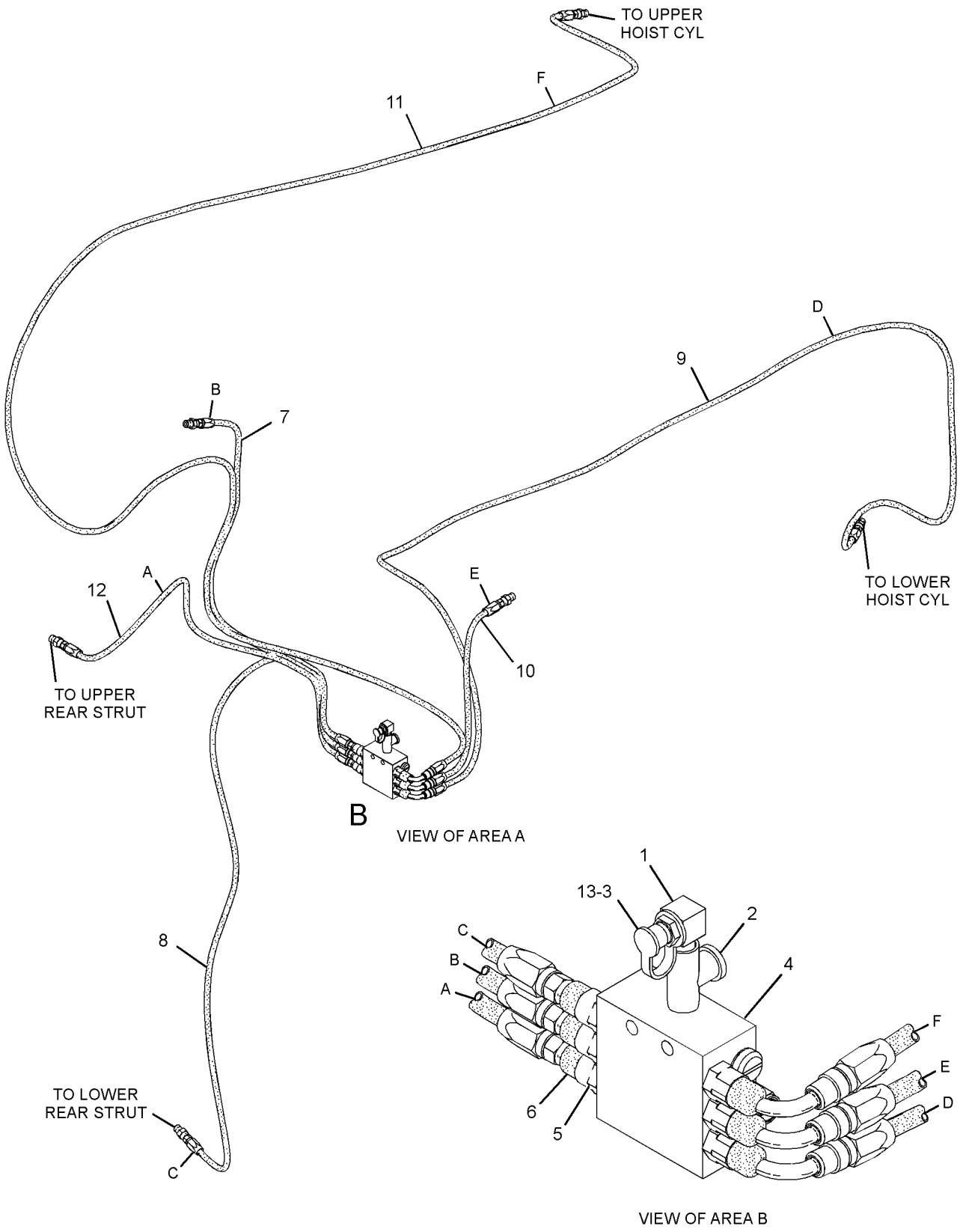


GRAPHIC #2 **<END>** g01335510

# *278-2467* LINES GP-LUBRICATION–RH, REAR

**S/N: RLB1-UP**

**PART OF 270-9148 LINES GP-CENTRAL LUBRICATION, 270-9147 LINES GP-LUBRICATION AN ATTACHMENT**

**SMCS-7510, 7540** **i03292715**

| NOTE | REF NO | GRAPHIC REF | PART NUMBER | QTY | PART NAME 1 2 3 4 5 6 (PRODUCT LEVEL) | SEE PAGE |
|---|---|---|---|---|---|---|
| | 1 | 2 | **2D-1683** | 1 | FITTING | |
| | 2 | 2 | **5P-3422** | 1 | TEE-PIPE | |
| | 3 | 2 | **157-2016** | 1 | CAP-GREASE | |
| | 4 | 2 | **177-4686** | 1 | VALVE AS-LUBE DISTRIBUTION (REAR, RH) | |
| | 5 | 2 | **275-0961** | 6 | ADAPTER | |
| | 6 | 2 | **276-7247** | 6 | CAP | |
| | 7 | 2 | **282-4199** | 1 | HOSE AS | |
| | 8 | 2 | **282-4200** | 1 | HOSE AS | |
| | 9 | 2 | **282-5046** | 1 | HOSE AS | |
| | 10 | 2 | **282-5047** | 1 | HOSE AS | |
| | 11 | 2 | **282-5048** | 1 | HOSE AS | |
| | 12 | 2 | **282-5049** | 1 | HOSE AS | |
| | 13 | 2 | **3B-8489** | 1 | FITTING-GREASE | |

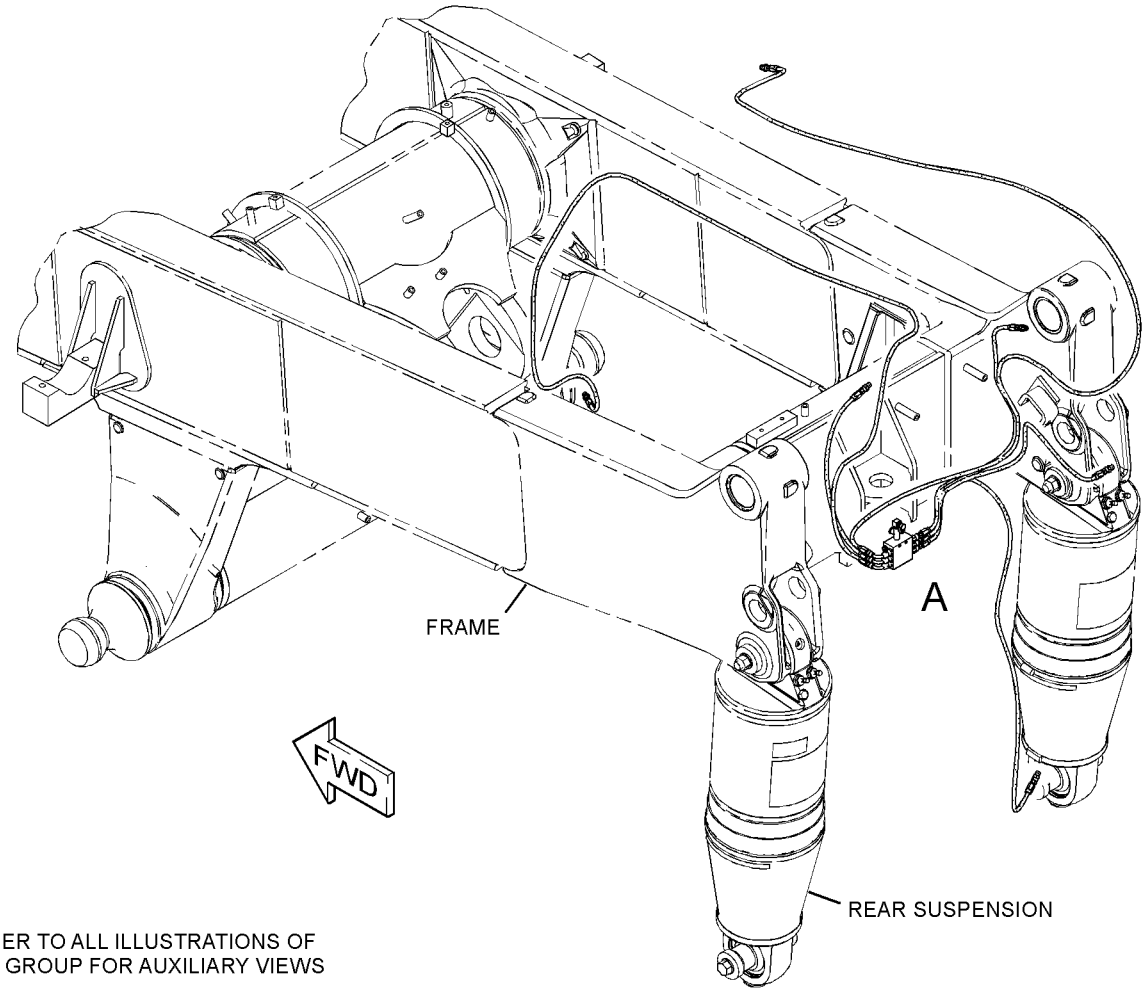


REFER TO ALL ILLUSTRATIONS OF THIS GROUP FOR AUXILIARY VIEWS

GRAPHIC #1 g01335674

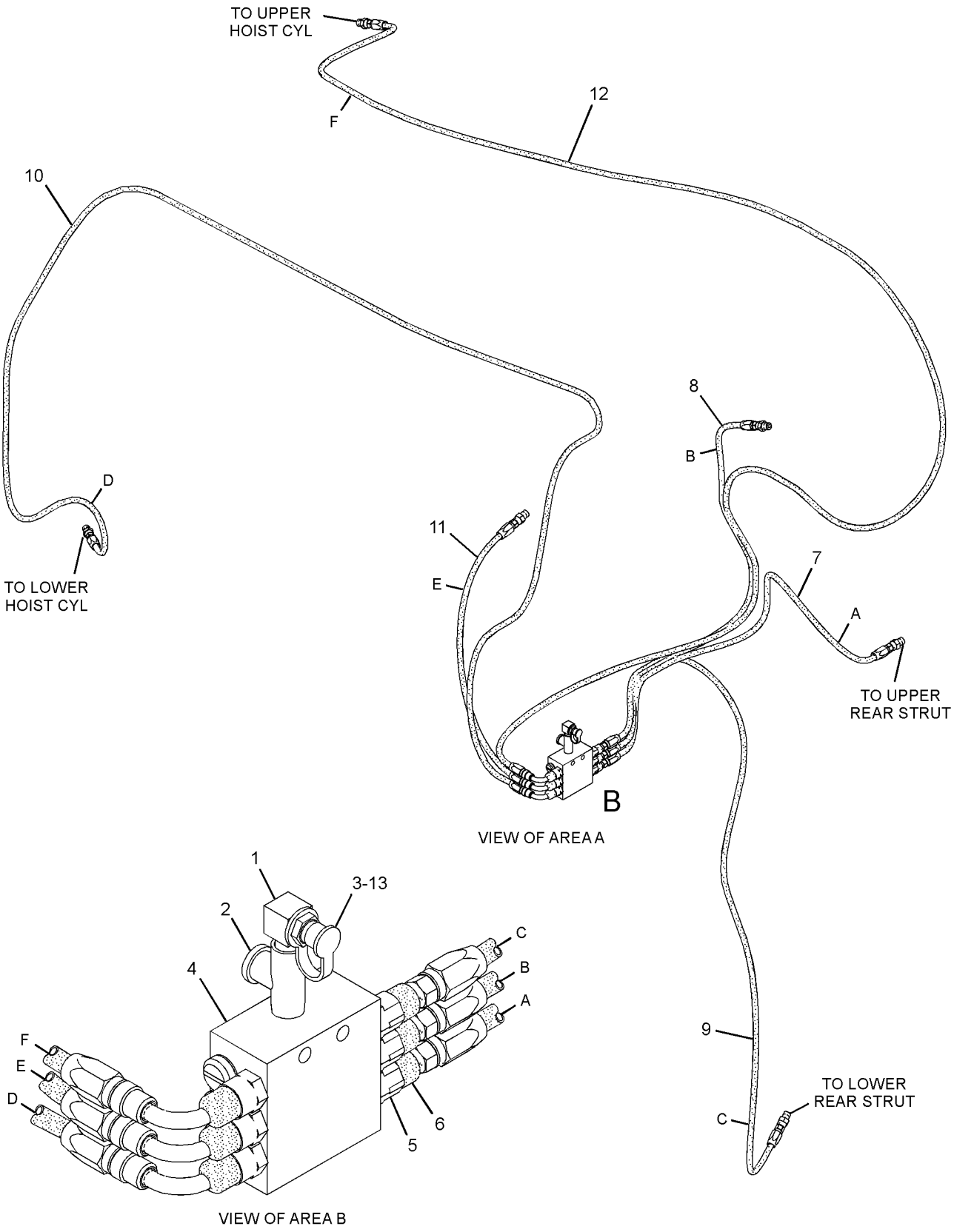


GRAPHIC #2 **<END>** g01335675

# FRAME AND BODY

## *271-0436* LINK GP-UPPER

**S/N: RLB1-UP**

**PART OF 270-5370 POWER TRAIN AR**

**SMCS-7200, 7230** **i02619511**

| NOTE | REF NO | GRAPHIC REF | PART NUMBER | QTY | PART NAME 1 2 3 4 5 6 (PRODUCT LEVEL) | SEE PAGE |
|---|---|---|---|---|---|---|
| | 1 | 1 | **8W-6928** | 2 | PIN | |
| | 2 | 1 | **9M-1608** | 4 | WASHER (0.262X0.781X0.625-IN THK) | |
| | 3 | 1 | **271-0437** | 1 | ROD | |
| | 4 | 1 | **274-6941** | 2 | BEARING-SELF-ALIGNING | |
| | 5 | 1 | **299-3399** | 2 | BOLT (3/4-10X8.5-IN) | |
| | 6 | 1 | **299-3405** | 2 | NUT (3/4-10-THD) | |
| | 7 | 1 | **8T-0707** | 2 | RING-RETAINING | |

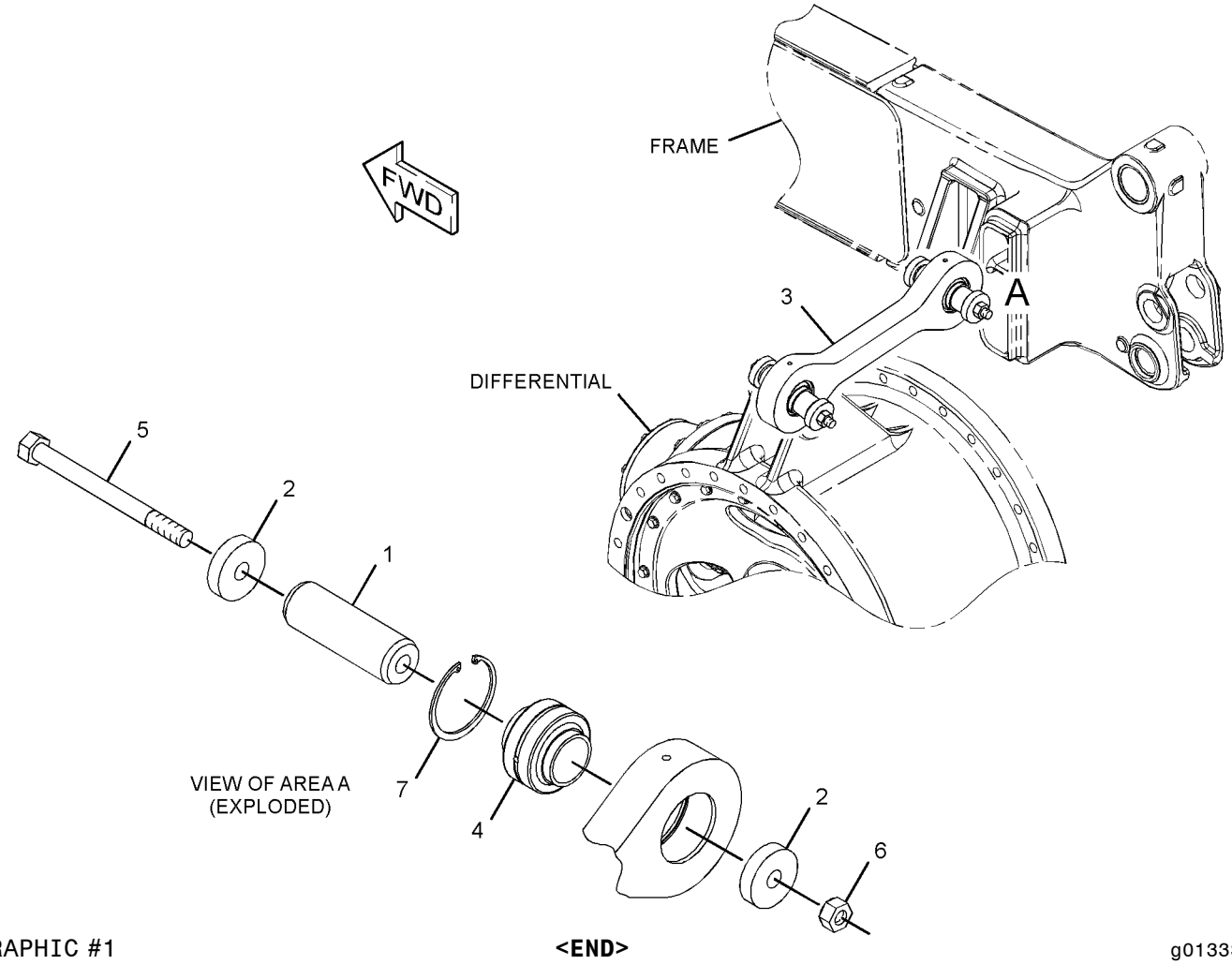


GRAPHIC #1 **<END>** g01333654

# *269-8720* MIRROR GP-REAR VIEW—WIDE TRUCK BODY

**S/N: RLB1-UP**

**CANNOT BE USED WITH 270-4220—PAGE 225**

**AN ATTACHMENT**

**SMCS-7319** **i02605865**

| NOTE | REF NO | GRAPHIC REF | PART NUMBER | QTY | PART NAME 1 2 3 4 5 6 (PRODUCT LEVEL) | SEE PAGE |
|---|---|---|---|---|---|---|
| | 1 | 1 | **134-0989** | 4 | BLOCK | |
| | 2 | 1 | *245-8946* | 2 | MIRROR AS | |
| | | | | | (EACH INCLUDES) | |
| M | 2A | 1 | **8T-4138** | 4 | BOLT (M6X1X20-MM) | |
| M | 2B | 1 | **5C-2890** | 4 | NUT (M6X1-THD) | |
| | 2C | 1 | **8C-6700** | 4 | CLIP | |
| | 3 | 1 | **250-7605** | 2 | BRACKET AS | |
| | 4 | 1 | **298-7329** | 2 | BRACKET AS | |
| | | | | | (EACH INCLUDES) | |
| | | 1 | **123-4586** | 2 | BLOCK | |
| | 5 | 1 | **298-8533** | 2 | MIRROR AS | |
| | 6 | 1 | **8T-4121** | 40 | WASHER-HARD (11X21X2.5-MM THK) | |
| M | 7 | 1 | **8T-4133** | 8 | NUT (M10X1.5-THD) | |
| M | 8 | 1 | **8T-4185** | 16 | BOLT (M10X1.5X50-MM) | |
| M | 9 | 1 | **8T-4186** | 8 | BOLT (M10X1.5X40-MM) | |
| M | 10 | 1 | **8T-4195** | 8 | BOLT (M10X1.5X30-MM) | |

M-METRIC PART

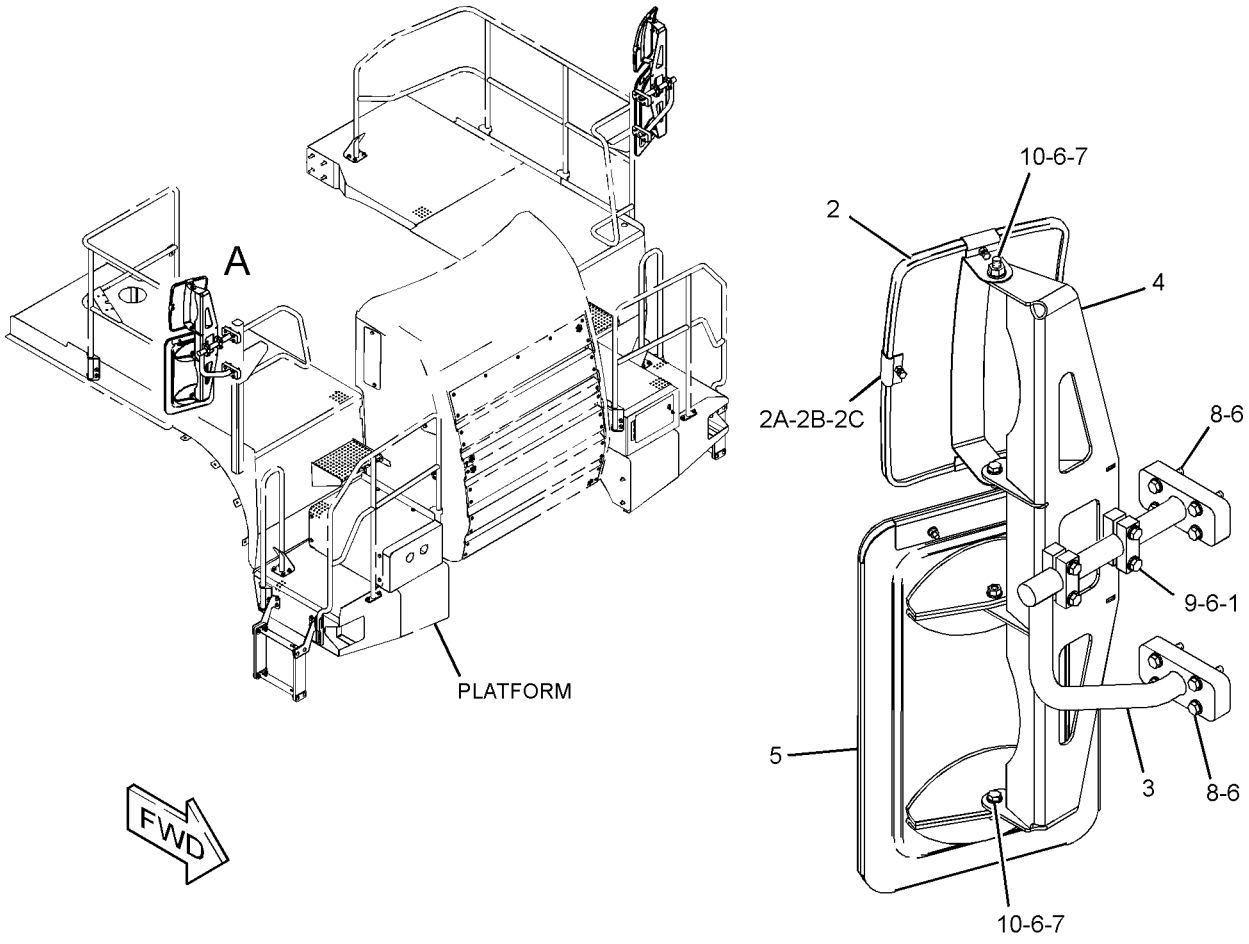


GRAPHIC #1 **<END>** g01341822

## *276-3800* MIRROR GP-REAR VIEW—HEATED

**S/N: RLB1-UP**

**AN ATTACHMENT**

**SMCS-7319** **i03292749**

| NOTE | PART NUMBER | QTY | PART NAME 1 2 3 4 5 6 (PRODUCT LEVEL) | SEE PAGE |
|---|---|---|---|---|
| Y | *277-0641* | 1 | MIRROR GP-REAR VIEW (HEATED) | 532 |
| Y | *276-2608* | 1 | WIRING GP-MIRROR (HEATED) | 381 |

Y-SEPARATE ILLUSTRATION

**<END>**

# *277-0641* MIRROR GP-REAR VIEW—HEATED

**S/N: RLB1-UP**
**PART OF 276-3800 MIRROR GP-REAR VIEW**
**AN ATTACHMENT**

**SMCS-7319** **i02661630**

| NOTE | REF NO | GRAPHIC REF | PART NUMBER | QTY | PART NAME 1 2 3 4 5 6 (PRODUCT LEVEL) | SEE PAGE |
|---|---|---|---|---|---|---|
| | 1 | 1 | **134-0989** | 4 | BLOCK | |
| | 2 | 1 | **250-7605** | 2 | BRACKET AS | |
| | 3 | 1 | **298-7329** | 2 | BRACKET AS | |
| | | | | | (EACH INCLUDES) | |
| | | 1 | **123-4586** | 2 | BLOCK | |
| | 4 | 1 | **300-5512** | 2 | MIRROR AS (HEATED) (UPPER) | |
| | 5 | 1 | **300-0560** | 2 | MIRROR AS (HEATED) (LOWER) | |
| | 6 | 1 | **8T-4121** | 40 | WASHER-HARD (11X21X2.5-MM THK) | |
| M | 7 | 1 | **8T-4133** | 8 | NUT (M10X1.5-THD) | |
| M | 8 | 1 | **8T-4185** | 16 | BOLT (M10X1.5X50-MM) | |
| M | 9 | 1 | **8T-4186** | 8 | BOLT (M10X1.5X40-MM) | |
| M | 10 | 1 | **8T-4195** | 8 | BOLT (M10X1.5X30-MM) | |

M-METRIC PART

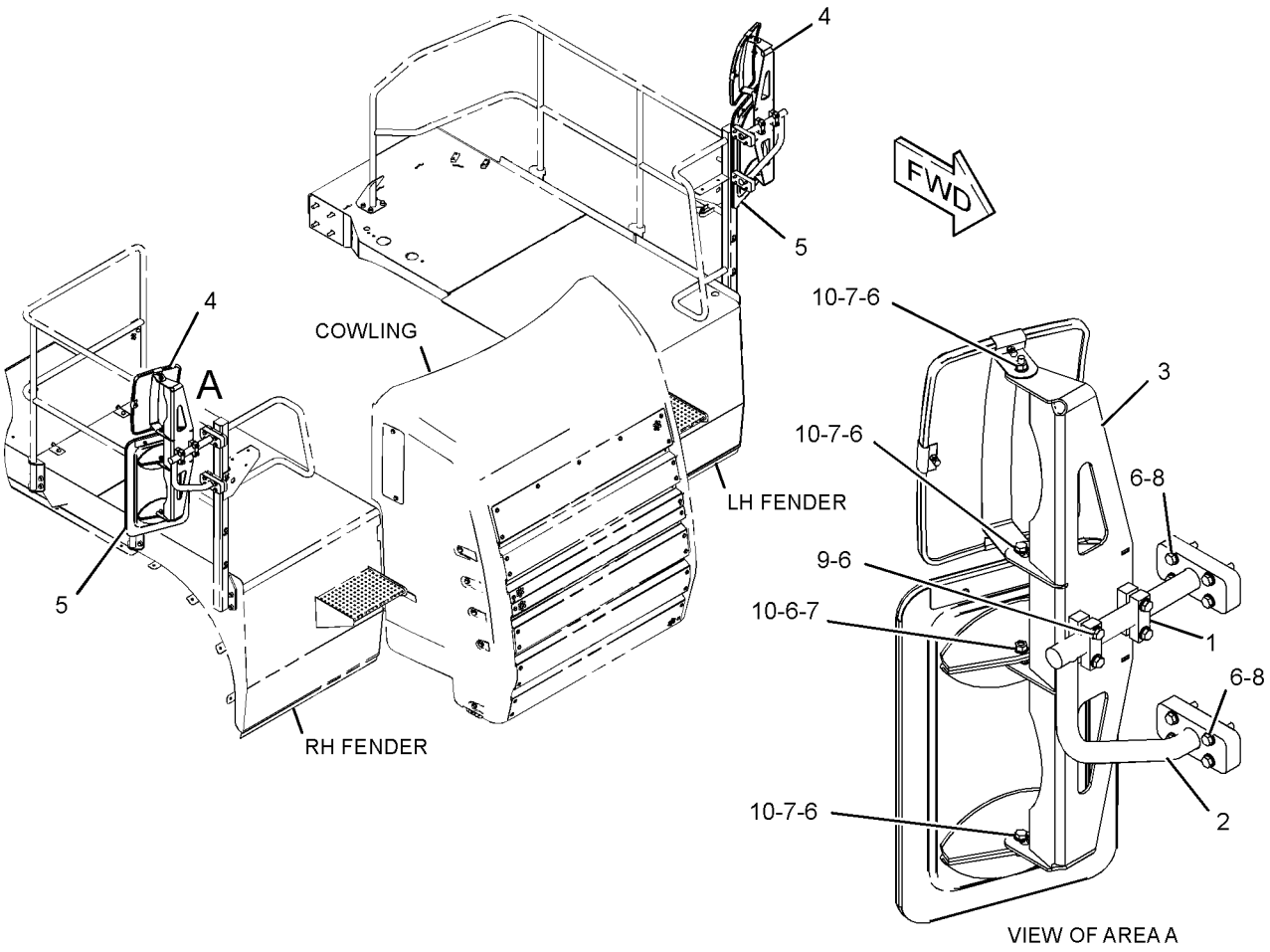


GRAPHIC #1 **<END>** g01344585

## *299-5701* MOUNTING AR-TRUCK BODY—FLAT FLOOR

**S/N: RLB1-UP**

**CANNOT BE USED WITH 299-5703—PAGE 533, 299-5705—PAGE 820, 299-5707—PAGE 820**

**AN ATTACHMENT**

**SMCS-7258** **i02668818**

| NOTE | PART NUMBER | QTY | PART NAME 1 2 3 4 5 6 (PRODUCT LEVEL) | SEE PAGE |
|---|---|---|---|---|
| Y | *270-1754* | 1 | CYLINDER & MTG GP-HOIST | 641 |
| Y | *289-2157* | 1 | FILM GP (FLAT FLOOR BODY) | 818 |
| Y | *279-2236* | 1 | LINES GP-HOIST | 653 |
| Y | *270-1618* | 1 | MOUNTING GP-TRUCK BODY | 534 |

Y-SEPARATE ILLUSTRATION

**<END>**

## *299-5703* MOUNTING AR-TRUCK BODY—DUAL SLOPE

**S/N: RLB1-UP**

**CANNOT BE USED WITH 299-5701—PAGE 533, 299-5707—PAGE 820**

**AN ATTACHMENT**

**SMCS-7258** **i02676884**

| NOTE | PART NUMBER | QTY | PART NAME 1 2 3 4 5 6 (PRODUCT LEVEL) | SEE PAGE |
|---|---|---|---|---|
| Y | *270-1754* | 1 | CYLINDER & MTG GP-HOIST | 641 |
| Y | *289-2158* | 1 | FILM GP (DUAL SLOPE BODY) | 819 |
| Y | *279-2236* | 1 | LINES GP-HOIST | 653 |
| Y | *270-1618* | 1 | MOUNTING GP-TRUCK BODY | 534 |

Y-SEPARATE ILLUSTRATION

**<END>**

# FRAME AND BODY

## *270-1618* MOUNTING GP-TRUCK BODY

**S/N: RLB1-UP**

**PART OF 299-5701, 299-5703 MOUNTING AR-TRUCK BODY**

**AN ATTACHMENT**

**SMCS-7258** **i02668822**

| NOTE | REF NO | GRAPHIC REF | PART NUMBER | QTY | PART NAME 1 2 3 4 5 6 (PRODUCT LEVEL) | SEE PAGE |
|---|---|---|---|---|---|---|
| | 1 | 1 | **2G-7826** | 2 | STRIP | |
| | 2 | 1 | **5D-3887** | 4 | ROD | |
| | 3 | 1 | **6F-8499** | 4 | SPRING | |
| | 4 | 1 | **6G-7773** | 2 | PIN | |
| B | 5 | 1 | **7D-7488** | 2 | WASHER-THRUST (77.77X146X5-MM THK) | |
| | 6 | 1 | **8W-3941** | 2 | SHOE AS | |
| | 7 | 1 | **054-3788** | 4 | WASHER (13.5X30X3-MM THK) | |
| B | 8 | 1 | **106-8224** | 28 | SHIM (2-MM THK) | |
| | 9 | 1 | **113-1216** | 1 | BAFFLE AS | |
| | | 1 | **4B-4450** | 4 | RIVET-FLAT HEAD | |
| B | 10 | 1 | **124-9014** | 2 | WASHER-THRUST (77.77X146X3-MM THK) | |
| | 11 | 1 | **132-6650** | 2 | PIN AS | |
| | 12 | 1 | **149-2085** | 2 | BAFFLE | |
| B | 13 | 1 | **229-6176** | 8 | PAD AS | |
| | | | | | (EACH INCLUDES) | |
| | | 1 | **106-8222** | 1 | SHIM (8-MM THK) | |
| | 14 | 1 | **270-7033** | 2 | PIN AS | |
| | 15 | 1 | **285-6576** | 2 | EJECTOR AS | |
| | 16 | 1 | **031-9831** | 2 | BOLT (3/8-16X3.75-IN) | |
| | 17 | 1 | **299-3443** | 16 | WASHER (45.25X76.2X6.35-MM THK) | |
| | 18 | 1 | **3B-4615** | 8 | PIN-COTTER | |
| | 19 | 1 | **3B-4647** | 4 | PIN-COTTER | |
| | 20 | 1 | **3B-8489** | 2 | FITTING-GREASE | |
| | 21 | 1 | **5P-1076** | 4 | WASHER-HARD (13.5X30X4-MM THK) | |
| | 22 | 1 | **5P-2566** | 42 | BOLT (1/2-13X1.5-IN) | |
| | 23 | 1 | **5T-1974** | 2 | PLATE | |
| | 24 | 1 | **5T-1977** | 2 | PIN | |
| | 25 | 1 | **6V-8188** | 14 | NUT (1/2-13-THD) | |
| | 26 | 1 | **8C-4436** | 4 | BOLT (1/2-13X1.375-IN) | |
| | 27 | 1 | **8T-4223** | 42 | WASHER-HARD (13.5X25.5X3-MM THK) | |
| | 28 | 1 | **8W-8456** | 2 | PLATE | |

B-USE AS REQUIRED

*270-1618* **MOUNTING GP-TRUCK BODY** *(contd.)* **i02668822**

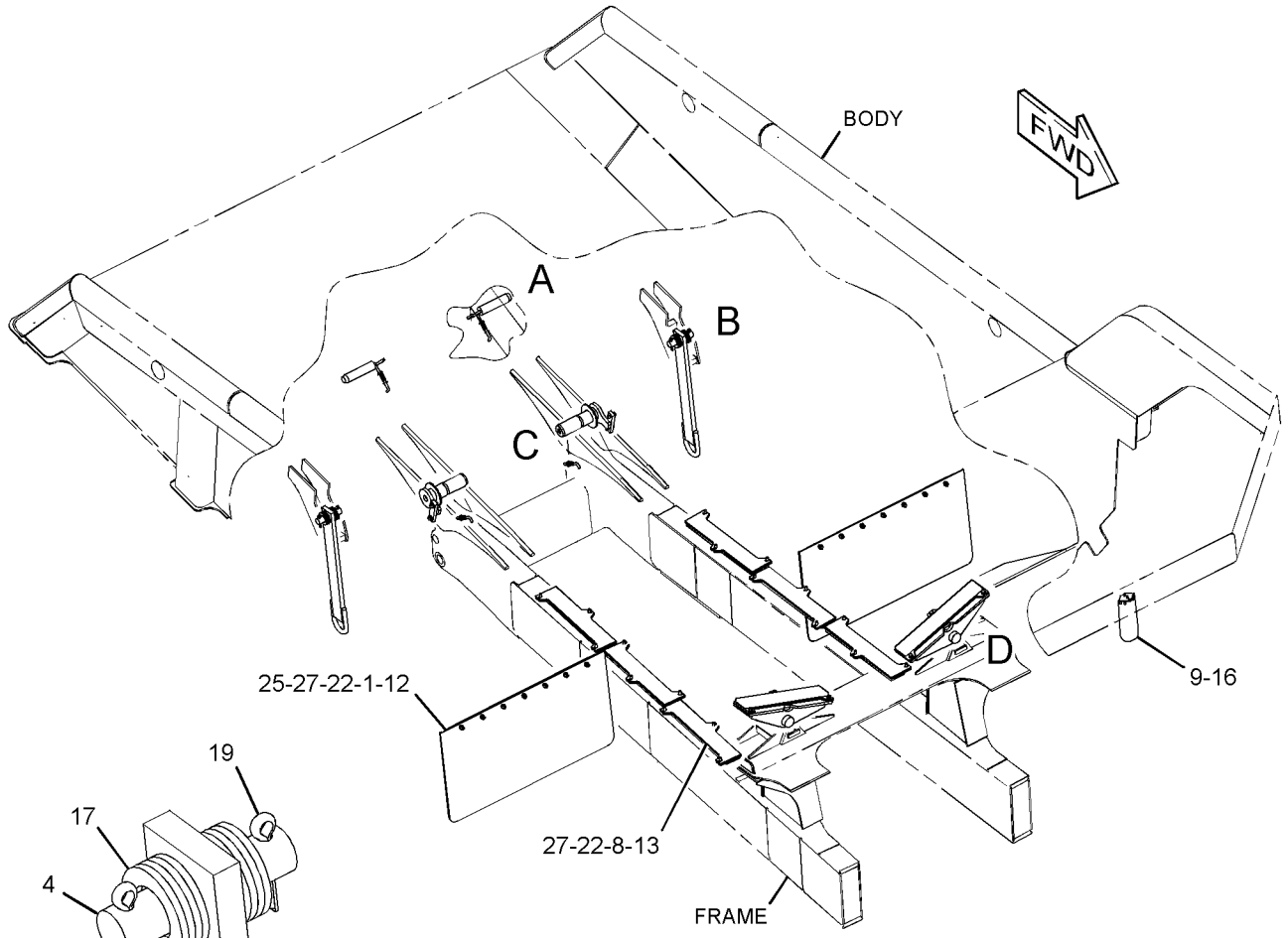





VIEW OF AREA B

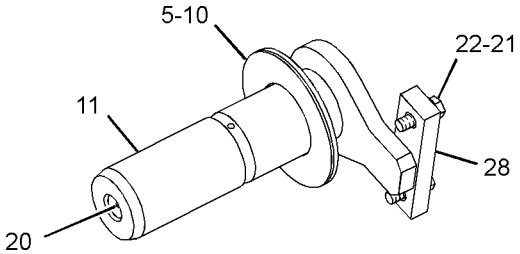


VIEW OF AREA C

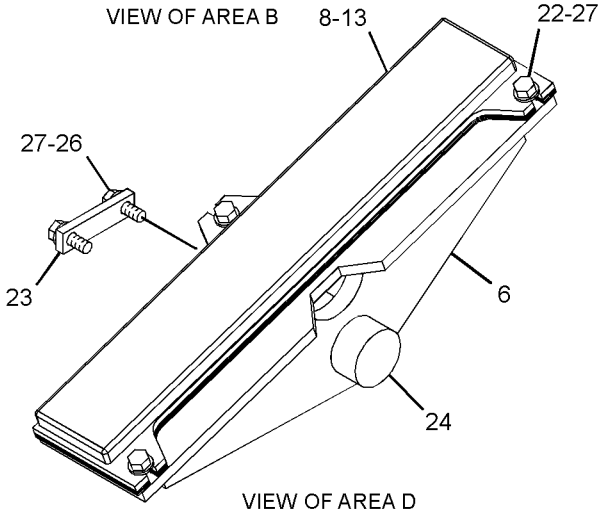


VIEW OF AREA D

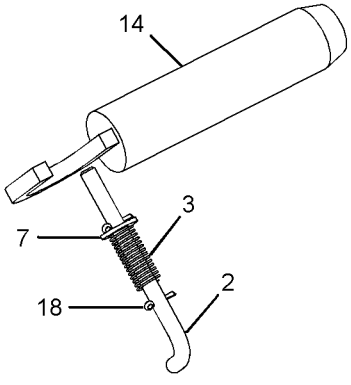


VIEW OF AREA A

GRAPHIC #1 **<END>** g01344566

## *300-5515* MOUNTING GP-TRUCK BODY–FLAT FLOOR

**S/N: RLB1-UP**

**PART OF 299-5707 LINES & MTG GP-WATER TANK, 299-5705 MOUNTING GP-WATER TANK**

**AN ATTACHMENT**

**SMCS-7258** **i02668330**

| NOTE | PART NUMBER | QTY | PART NAME 1 2 3 4 5 6 (PRODUCT LEVEL) | SEE PAGE |
|---|---|---|---|---|
| | **5P-2566** | 6 | BOLT (1/2-13X1.5-IN) | |
| | **8C-4436** | 4 | BOLT (1/2-13X1.375-IN) | |
| | **229-6176** | 2 | PAD AS | |
| | | | (EACH INCLUDES) | |
| B | **106-8222** | 1 | SHIM (8-MM THK) | |
| | **5T-1977** | 2 | PIN | |
| | **5T-1974** | 2 | PLATE | |
| | **5D-3887** | 1 | ROD | |
| B | **106-8224** | 6 | SHIM (2-MM THK) | |
| | **8W-3941** | 2 | SHOE AS | |
| | **8T-4223** | 10 | WASHER-HARD (13.5X25.5X3-MM THK) | |

B-USE AS REQUIRED

**<END>**

## *288-7335* SIDEBOARD AS-BODY

**S/N: RLB1-UP**

**AN ATTACHMENT**

**SMCS-7250** **i02667938**

| NOTE | PART NUMBER | QTY | PART NAME 1 2 3 4 5 6 (PRODUCT LEVEL) | SEE PAGE |
|---|---|---|---|---|
| | | | (NO SERVICED PARTS) | |

**<END>**

# FRAME AND BODY

## 311-9113 SIDEBOARD AS-BODY

**S/N: RLB1-UP**

**AN ATTACHMENT**

**SMCS-7250** **i02810323**

| NOTE | REF NO | GRAPHIC REF | PART NUMBER | QTY | PART NAME 1 2 3 4 5 6 (PRODUCT LEVEL) | SEE PAGE |
|---|---|---|---|---|---|---|
| | | | | | (NO SERVICED PARTS) | |

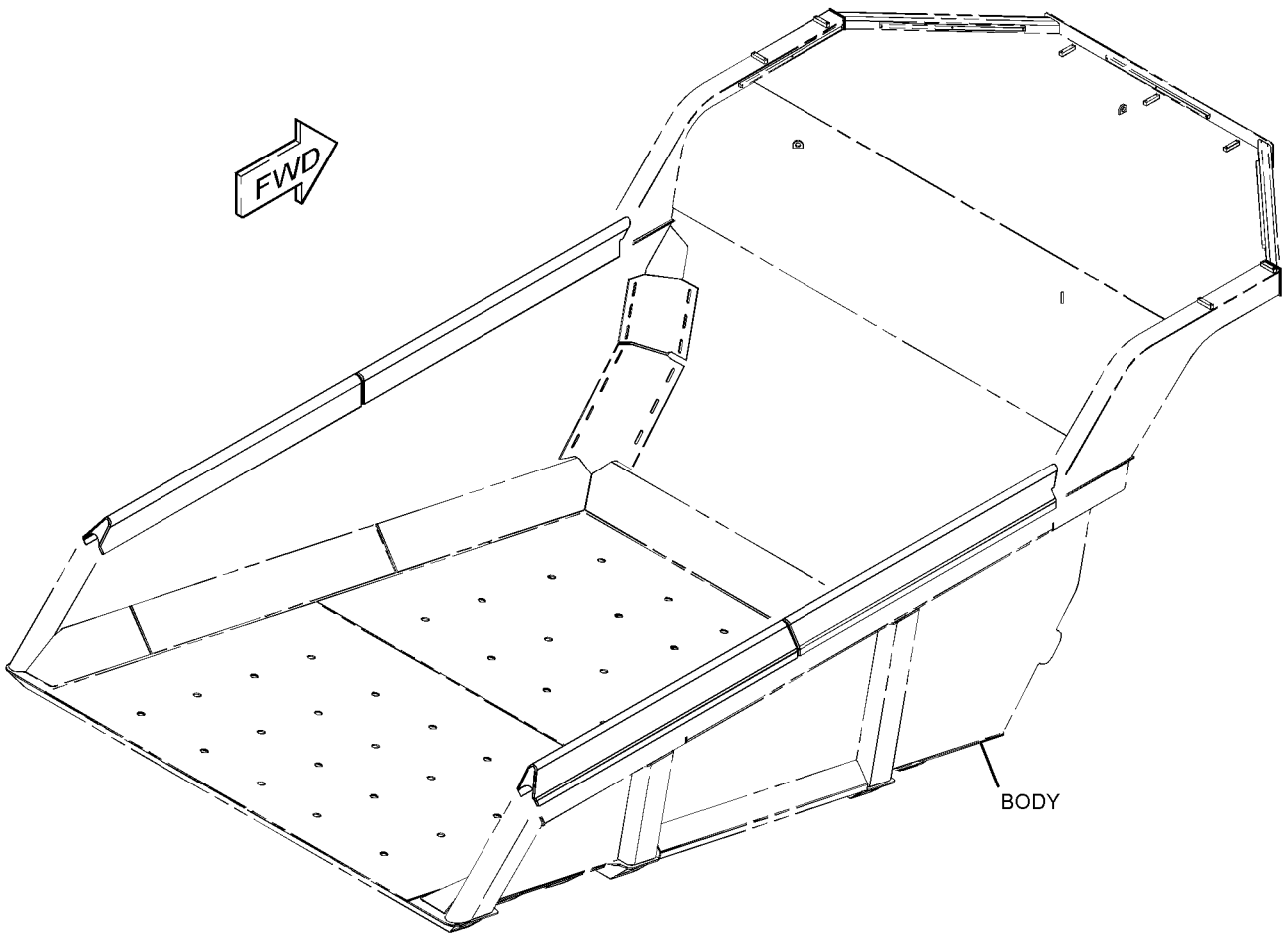


GRAPHIC #1 **<END>** g01336065

# FRAME AND BODY

## 311-9114 SIDEBOARD AS-BODY

**S/N: RLB1-UP**

**AN ATTACHMENT**

**SMCS-7250** **i02810305**

| NOTE | REF NO | GRAPHIC REF | PART NUMBER | QTY | PART NAME 1 2 3 4 5 6 (PRODUCT LEVEL) | SEE PAGE |
|---|---|---|---|---|---|---|
| | | | | | (NO SERVICED PARTS) | |

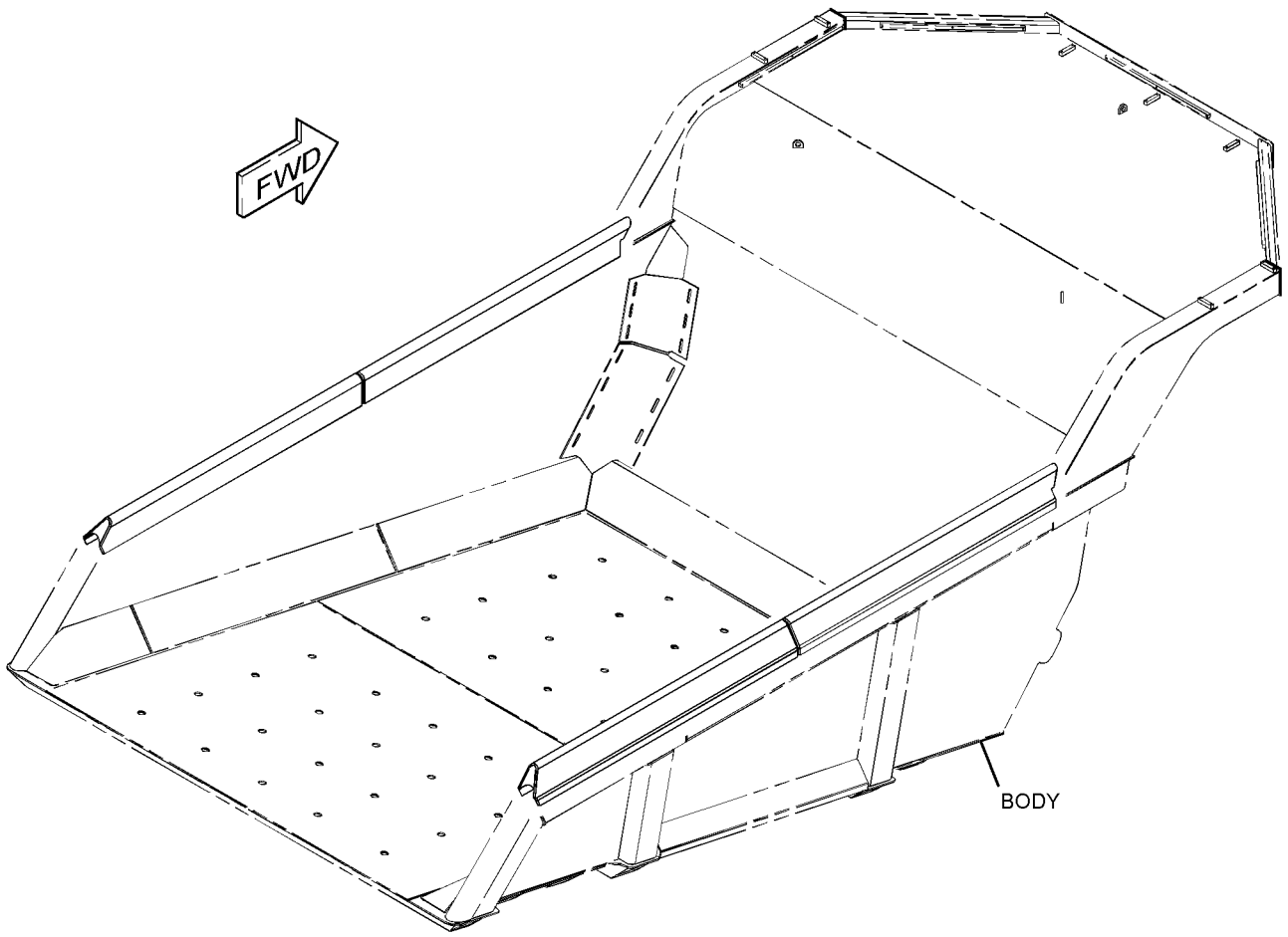


GRAPHIC #1 **<END>** g01336065

# FRAME AND BODY

## *250-9299* STEP GP

**S/N: RLB1-UP**

**PART OF 269-8710 STEP GP**

**SMCS-7254** **i02654936**

| NOTE | REF NO | GRAPHIC REF | PART NUMBER | QTY | PART NAME 1 2 3 4 5 6 (PRODUCT LEVEL) | SEE PAGE |
|---|---|---|---|---|---|---|
| | 1 | 1 | **4V-9804** | 2 | PLATE | |
| | 2 | 1 | **223-4472** | 2 | STEP AS | |
| | 3 | 1 | **249-4284** | 1 | PLATE | |
| | 4 | 1 | **249-4285** | 1 | PLATE | |
| | 5 | 1 | **250-3880** | 2 | SUPPORT-STEP (RUBBER) | |
| | 6 | 1 | **1D-4689** | 8 | BOLT (1/2-13X1.75-IN) | |
| | 7 | 1 | **1K-6872** | 8 | LOCKNUT (1/2-13-THD) | |
| | 8 | 1 | **8T-4223** | 8 | WASHER-HARD (13.5X25.5X3-MM THK) | |

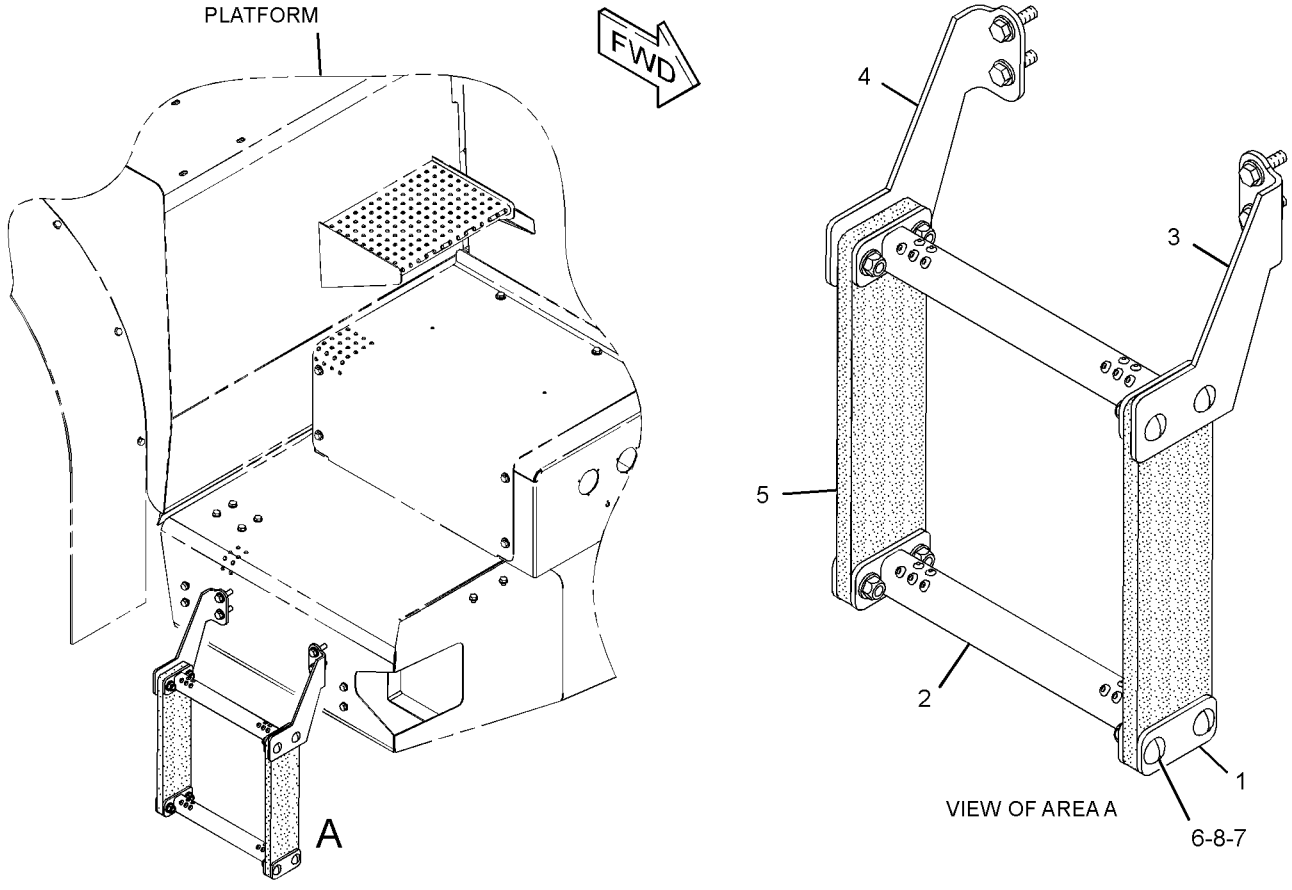


GRAPHIC #1 **<END>** g01342170

# *269-8710* STEP GP

**S/N: RLB1-UP**

**PART OF 269-8700 PLATFORM AR**

**SMCS-7254** **i02618232**

| NOTE | REF NO | GRAPHIC REF | PART NUMBER | QTY | PART NAME 1 2 3 4 5 6 (PRODUCT LEVEL) | SEE PAGE |
|---|---|---|---|---|---|---|
| Y | 1 | 1 | **250-9299** | 2 | STEP GP | 539 |
| M | 2 | 1 | **8T-4183** | 8 | BOLT (M12X1.75X40-MM) | |
| | 3 | 1 | **8T-4223** | 8 | WASHER-HARD (13.5X25.5X3-MM THK) | |

M-METRIC PART
Y-SEPARATE ILLUSTRATION

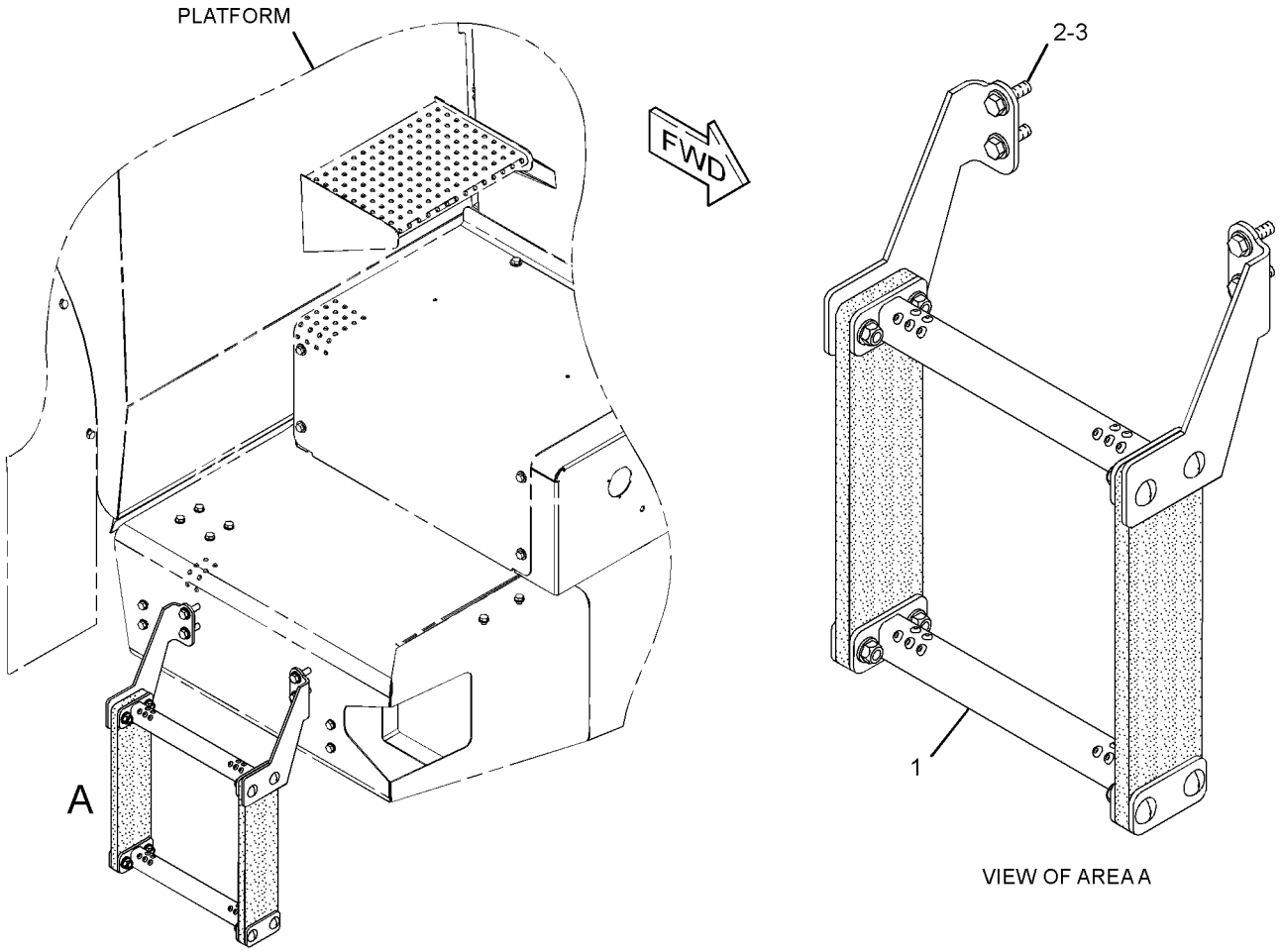


GRAPHIC #1 **<END>** g01342249

# FRAME AND BODY

## *262-6652* SUPPRESSION AR-SOUND—EUROPEAN MARKET

**S/N: RLB1-UP**

**CANNOT BE USED WITH 9D-9880—PAGE 211**

**AN ATTACHMENT**

**SMCS-7076, 7261** **i02667872**

| NOTE | PART NUMBER | QTY | PART NAME 1 2 3 4 5 6 (PRODUCT LEVEL) | SEE PAGE |
|---|---|---|---|---|
| Y | *270-5360* | 1 | SUPPRESSION GP-SOUND | 542 |
| | | | | |
| | **132-3392** | 1 | FORM-CERTIFICATION | |
| | | | (PLACE IN SHIPPING PACKET IN CAB) | |

Y-SEPARATE ILLUSTRATION

**<END>**

# FRAME AND BODY

## *270-5360* SUPPRESSION GP-SOUND

**S/N: RLB1-286**

**PART OF 299-6765 CERTIFICATION AR-MACHINE, 262-6652 SUPPRESSION AR-SOUND AN ATTACHMENT**

**SMCS-1801, 7076, 7261** **i02801526**

| NOTE | REF NO | GRAPHIC REF | PART NUMBER | QTY | PART NAME 1 2 3 4 5 6 (PRODUCT LEVEL) | SEE PAGE |
|---|---|---|---|---|---|---|
| | 1 | 1 | **247-4067** | 2 | PLATE | |
| | 2 | 1 | **278-0648** | 1 | INSULATION | |
| | 3 | 1 | **278-0650** | 1 | INSULATION | |
| | 4 | 1 | **278-3555** | 2 | PLATE | |
| Y | 5 | 1 | **279-1140** | 1 | SUPPRESSION GP-SOUND | 546 |
| | 6 | 1 | **290-9871** | 1 | INSULATION | |
| | 7 | 1 | **290-9872** | 1 | BAFFLE | |
| | 8 | 1 | **291-0349** | 3 | PLATE | |
| | 9 | 1 | **298-3744** | 1 | BAFFLE | |
| | 10 | 1 | **4L-9337** | 5 | BOLT (3/8-16X1.5-IN) | |
| | 11 | 1 | **5P-1076** | 28 | WASHER-HARD (13.5X30X4-MM THK) | |
| | 12 | 1 | **7X-7729** | 23 | WASHER (11X25X3-MM THK) | |
| | 13 | 1 | **8T-4121** | 61 | WASHER-HARD (11X21X2.5-MM THK) | |
| M | 14 | 1 | **8T-4133** | 11 | NUT (M10X1.5-THD) | |
| M | 15 | 1 | **8T-4136** | 27 | BOLT (M10X1.5X25-MM) | |
| M | 16 | 1 | **8T-4137** | 49 | BOLT (M10X1.5X20-MM) | |
| M | 17 | 1 | **8T-4139** | 14 | BOLT (M12X1.75X30-MM) | |
| M | 18 | 1 | **8T-4244** | 14 | NUT (M12X1.75-THD) | |
| | 19 | 1 | **8T-4897** | 5 | WASHER (10.2X35X6-MM THK) | |

M-METRIC PART
Y-SEPARATE ILLUSTRATION

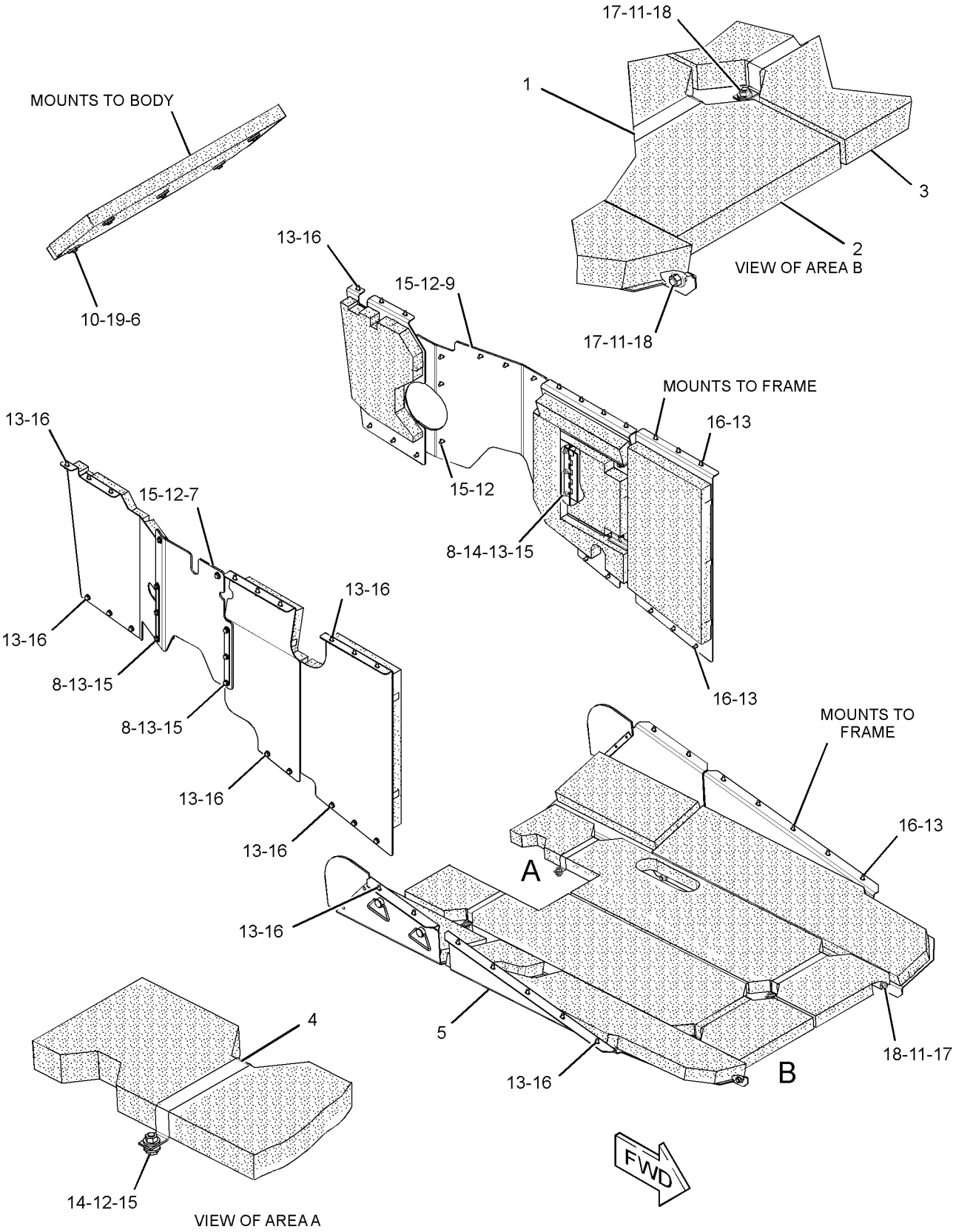


GRAPHIC #1 **<END>** g01352314

# *270-5360* SUPPRESSION GP-SOUND

**S/N: RLB287-UP**

**PART OF 299-6765 CERTIFICATION AR-MACHINE, 262-6652 SUPPRESSION AR-SOUND AN ATTACHMENT**

**SMCS-1801, 7076, 7261** **i03091885**

| NOTE | REF NO | GRAPHIC REF | PART NUMBER | QTY | PART NAME 1 2 3 4 5 6 (PRODUCT LEVEL) | SEE PAGE |
|---|---|---|---|---|---|---|
| | 1 | 1 | **247-4067** | 2 | PLATE | |
| | 2 | 1 | **278-0648** | 1 | INSULATION | |
| | 3 | 1 | **278-0650** | 1 | INSULATION | |
| | 4 | 1 | **278-3555** | 2 | PLATE | |
| Y | 5 | 1 | **279-1140** | 1 | SUPPRESSION GP-SOUND | 546 |
| | 6 | 1 | **290-9871** | 1 | INSULATION | |
| | 7 | 1 | **290-9872** | 1 | BAFFLE | |
| | 8 | 1 | **291-0349** | 3 | PLATE | |
| | 9 | 1 | **298-3744** | 1 | BAFFLE | |
| CY | 10 | 1 | **304-8357** | 1 | SUPPRESSION GP-SOUND (TRANSMISSION) | 550 |
| CY | 11 | 1 | **304-8369** | 1 | SUPPRESSION GP-SOUND (TORQUE CONVERTER, INNER) | 552 |
| | 12 | 1 | **311-0068** | 1 | SUPPRESSION GP-SOUND (TORQUE CONVERTER, OUTER) | |
| | | 1 | **311-0070** | 1 | INSULATION-SOUND SUPPRESSION | |
| | | 1 | **7K-1181** | 24 | STRAP-CABLE | |
| C | 13 | 1 | **115-6433** | 5 | WASHER (11X50X6-MM THK) | |
| | 14 | 1 | **5P-1076** | 28 | WASHER-HARD (13.5X30X4-MM THK) | |
| | 15 | 1 | **7X-7729** | 25 | WASHER (11X25X3-MM THK) | |
| | 16 | 1 | **8T-4121** | 64 | WASHER-HARD (11X21X2.5-MM THK) | |
| M | 17 | 1 | **8T-4133** | 11 | NUT (M10X1.5-THD) | |
| CM | 18 | 1 | **8T-4136** | 30 | BOLT (M10X1.5X25-MM) | |
| M | 19 | 1 | **8T-4137** | 51 | BOLT (M10X1.5X20-MM) | |
| M | 20 | 1 | **8T-4139** | 14 | BOLT (M12X1.75X30-MM) | |
| M | 21 | 1 | **8T-4195** | 5 | BOLT (M10X1.5X30-MM) | |
| M | 22 | 1 | **8T-4244** | 14 | NUT (M12X1.75-THD) | |
| Y | 23 | 1 | *311-0069* | 1 | SUPPRESSION GP-SOUND | 553 |

C-CHANGE FROM PREVIOUS TYPE
M-METRIC PART
Y-SEPARATE ILLUSTRATION

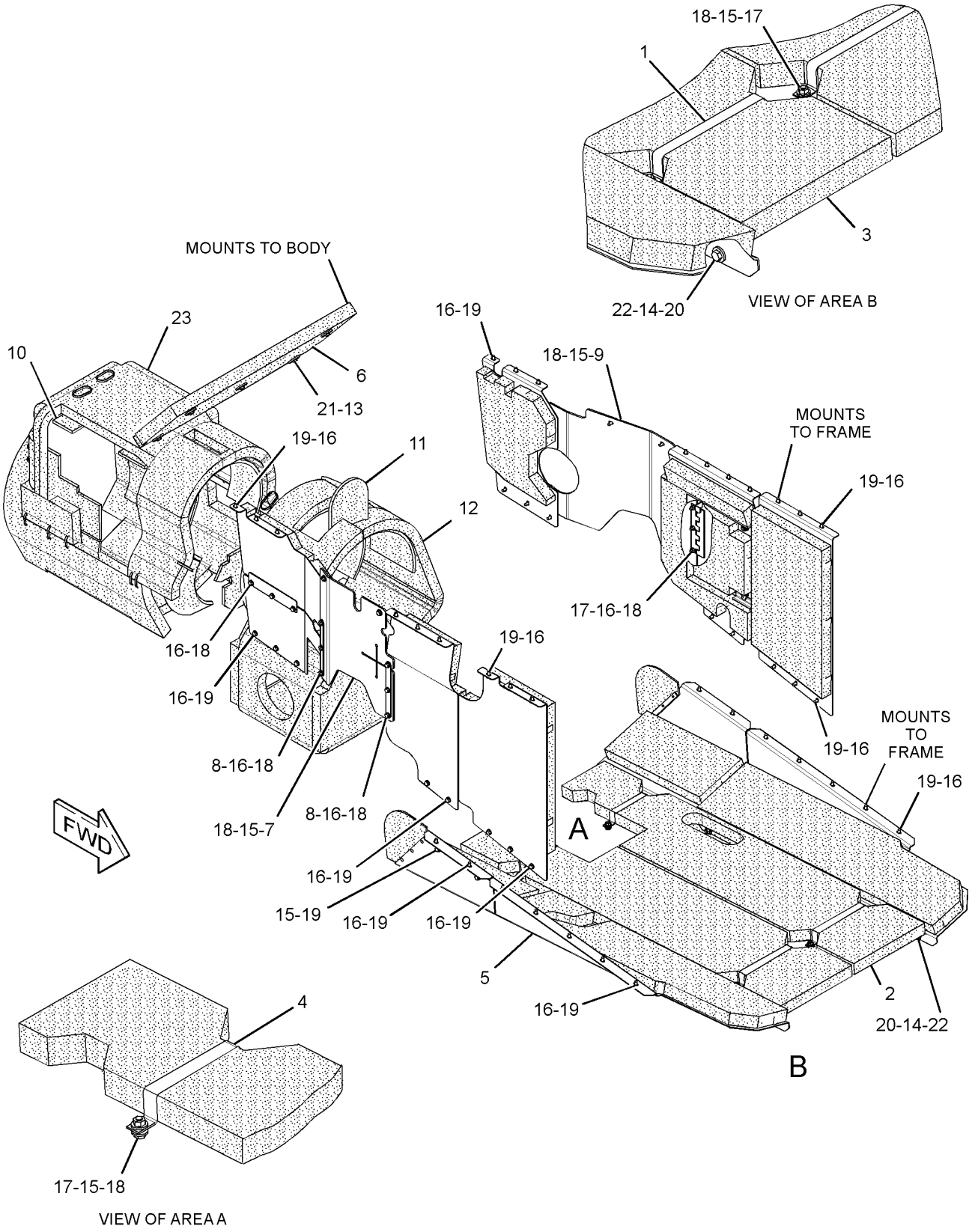


GRAPHIC #1 **<END>** g01612535

# 279-1140 SUPPRESSION GP-SOUND

**S/N: RLB1-446**
**PART OF 270-5360 SUPPRESSION GP-SOUND**
**AN ATTACHMENT**

**SMCS-1801, 7076, 7261** **i02891015**

| NOTE | REF NO | GRAPHIC REF | PART NUMBER | QTY | PART NAME 1 2 3 4 5 6 (PRODUCT LEVEL) | SEE PAGE |
|---|---|---|---|---|---|---|
| | 1 | 1 | **3V-7689** | 2 | HANDLE AS | |
| | 2 | 1 | **270-5363** | 1 | INSULATION | |
| | 3 | 1 | **271-8540** | 2 | INSULATION | |
| | 4 | 1 | **271-8541** | 1 | INSULATION | |
| | 5 | 1 | **271-8542** | 1 | INSULATION | |
| | 6 | 1 | **271-8543** | 1 | INSULATION | |
| | 7 | 1 | **271-8544** | 1 | INSULATION | |
| | 8 | 1 | **271-8545** | 1 | INSULATION | |
| | 9 | 1 | **278-0602** | 1 | PLATE AS | |
| | 10 | 1 | **278-0603** | 1 | PLATE AS | |
| | | 1 | **5T-0234** | 1 | HINGE | |
| | 11 | 1 | **278-0606** | 1 | INSULATION | |
| | 12 | 1 | **278-0607** | 1 | INSULATION | |
| | 13 | 1 | **278-2686** | 1 | INSULATION | |
| | 14 | 1 | **278-2687** | 1 | PLATE AS | |
| | 15 | 1 | **278-2688** | 1 | PLATE AS | |
| | 16 | 1 | **278-2689** | 1 | PLATE AS | |
| | 17 | 1 | **278-2690** | 1 | PLATE AS | |
| M | | 1 | **8T-3490** | 3 | NUT-WELD (M10X1.5-THD) | |
| | 18 | 1 | **278-2691** | 1 | PLATE AS | |
| M | | 1 | **8T-3490** | 3 | NUT-WELD (M10X1.5-THD) | |
| | 19 | 1 | **278-2692** | 1 | PLATE AS | |
| M | | 1 | **8T-3490** | 3 | NUT-WELD (M10X1.5-THD) | |
| | 20 | 1 | **278-2693** | 1 | PLATE AS | |
| | 21 | 1 | **278-2694** | 1 | PLATE AS | |
| M | | 1 | **8T-3490** | 3 | NUT-WELD (M10X1.5-THD) | |
| | 22 | 1 | **279-5340** | 1 | INSULATION | |
| | 23 | 1 | **313-9545** | 1 | DOOR AS-ACCESS | |
| | 24 | 1 | **314-2526** | 1 | PLATE AS | |

M-METRIC PART

**279-1140 SUPPRESSION GP-SOUND** *(contd. )* **i02891015**

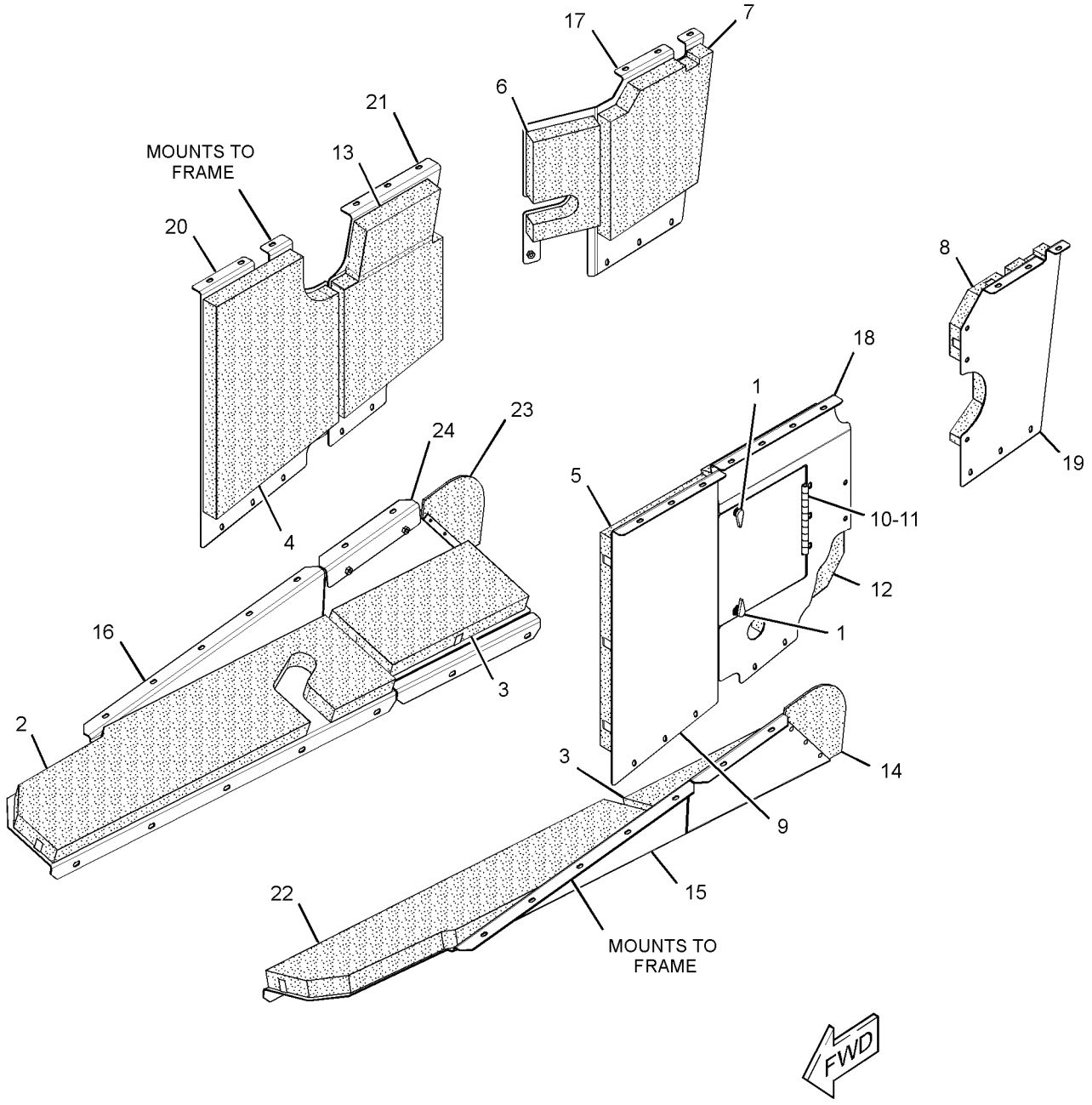


GRAPHIC #1 **<END>** g01460898

# FRAME AND BODY

## 279-1140 SUPPRESSION GP-SOUND

**S/N: RLB447-UP**
**PART OF 270-5360 SUPPRESSION GP-SOUND**
**AN ATTACHMENT**

**SMCS-1801, 7076, 7261** **i03132080**

| NOTE | REF NO | GRAPHIC REF | PART NUMBER | QTY | PART NAME 1 2 3 4 5 6 (PRODUCT LEVEL) | SEE PAGE |
|---|---|---|---|---|---|---|
| | 1 | 1 | **3V-7689** | 2 | HANDLE AS | |
| | 2 | 1 | **270-5363** | 1 | INSULATION | |
| | 3 | 1 | **271-8540** | 2 | INSULATION | |
| | 4 | 1 | **271-8541** | 1 | INSULATION | |
| | 5 | 1 | **271-8542** | 1 | INSULATION | |
| C | 6 | 1 | **319-3952** | 1 | INSULATION | |
| C | 7 | 1 | **319-3951** | 1 | INSULATION | |
| | 8 | 1 | **271-8545** | 1 | INSULATION | |
| | 9 | 1 | **278-0602** | 1 | PLATE AS | |
| | 10 | 1 | **278-0603** | 1 | PLATE AS | |
| | | 1 | **5T-0234** | 1 | HINGE | |
| | 11 | 1 | **278-0606** | 1 | INSULATION | |
| | 12 | 1 | **278-0607** | 1 | INSULATION | |
| | 13 | 1 | **278-2686** | 1 | INSULATION | |
| | 14 | 1 | **278-2687** | 1 | PLATE AS | |
| | 15 | 1 | **278-2688** | 1 | PLATE AS | |
| | 16 | 1 | **278-2689** | 1 | PLATE AS | |
| C | 17 | 1 | **319-3948** | 1 | PLATE AS | |
| | 18 | 1 | **278-2691** | 1 | PLATE AS | |
| M | | 1 | **8T-3490** | 3 | NUT-WELD (M10X1.5-THD) | |
| | 19 | 1 | **278-2692** | 1 | PLATE AS | |
| M | | 1 | **8T-3490** | 3 | NUT-WELD (M10X1.5-THD) | |
| | 20 | 1 | **278-2693** | 1 | PLATE AS | |
| | 21 | 1 | **278-2694** | 1 | PLATE AS | |
| M | | 1 | **8T-3490** | 3 | NUT-WELD (M10X1.5-THD) | |
| | 22 | 1 | **279-5340** | 1 | INSULATION | |
| | 23 | 1 | **313-9545** | 1 | DOOR AS-ACCESS | |
| | 24 | 1 | **314-2526** | 1 | PLATE AS | |
| C | 25 | 1 | **319-3950** | 1 | PLATE AS | |
| C | 26 | 1 | **319-3953** | 1 | INSULATION | |
| C | 27 | 1 | **319-3954** | 1 | INSULATION | |

C-CHANGE FROM PREVIOUS TYPE
M-METRIC PART

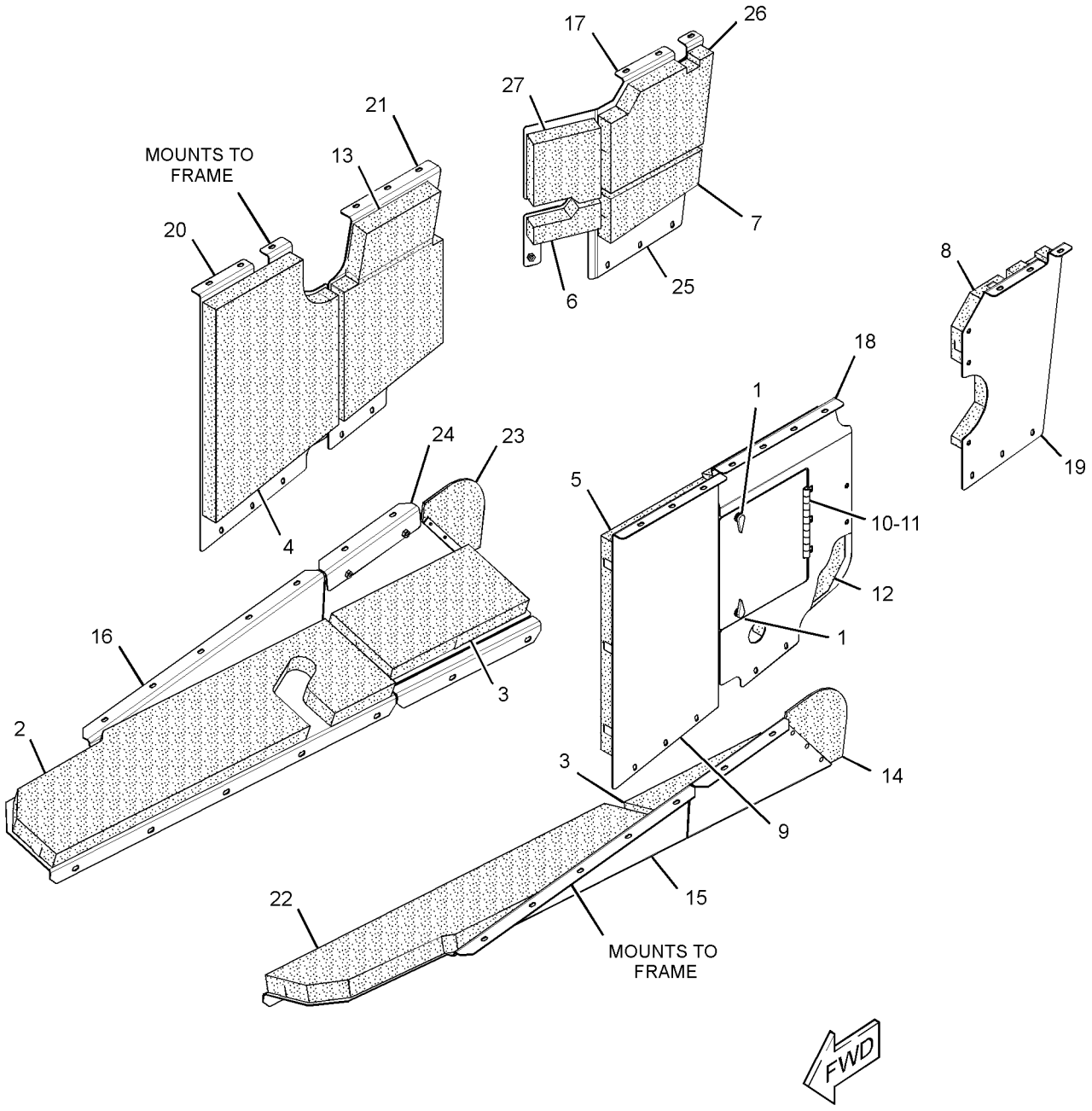


GRAPHIC #1 **<END>** g01611193

# *304-8357* SUPPRESSION GP-SOUND–TRANSMISSION

**S/N: RLB287-409**

**PART OF 270-5360 SUPPRESSION GP-SOUND**

**AN ATTACHMENT**

**SMCS-1801, 7076, 7261** **i02790805**

| NOTE | REF NO | GRAPHIC REF | PART NUMBER | QTY | PART NAME 1 2 3 4 5 6 (PRODUCT LEVEL) | SEE PAGE |
|---|---|---|---|---|---|---|
| | 1 | 1 | **304-8358** | 1 | WRAP | |
| | 2 | 1 | **304-8359** | 1 | WRAP | |
| | 3 | 1 | **304-8360** | 1 | WRAP | |
| | 4 | 1 | **304-8361** | 1 | WRAP | |
| | 5 | 1 | **304-8362** | 1 | WRAP | |
| | 6 | 1 | **304-8363** | 1 | WRAP | |
| | 7 | 1 | **304-8364** | 1 | WRAP | |
| | 8 | 1 | **304-8365** | 1 | WRAP | |
| | 9 | 1 | **304-8366** | 1 | WRAP | |
| | 10 | 1 | **304-8367** | 1 | WRAP | |
| | 11 | 1 | **305-0033** | 1 | WRAP | |
| | 12 | 1 | **309-9691** | 1 | WRAP | |

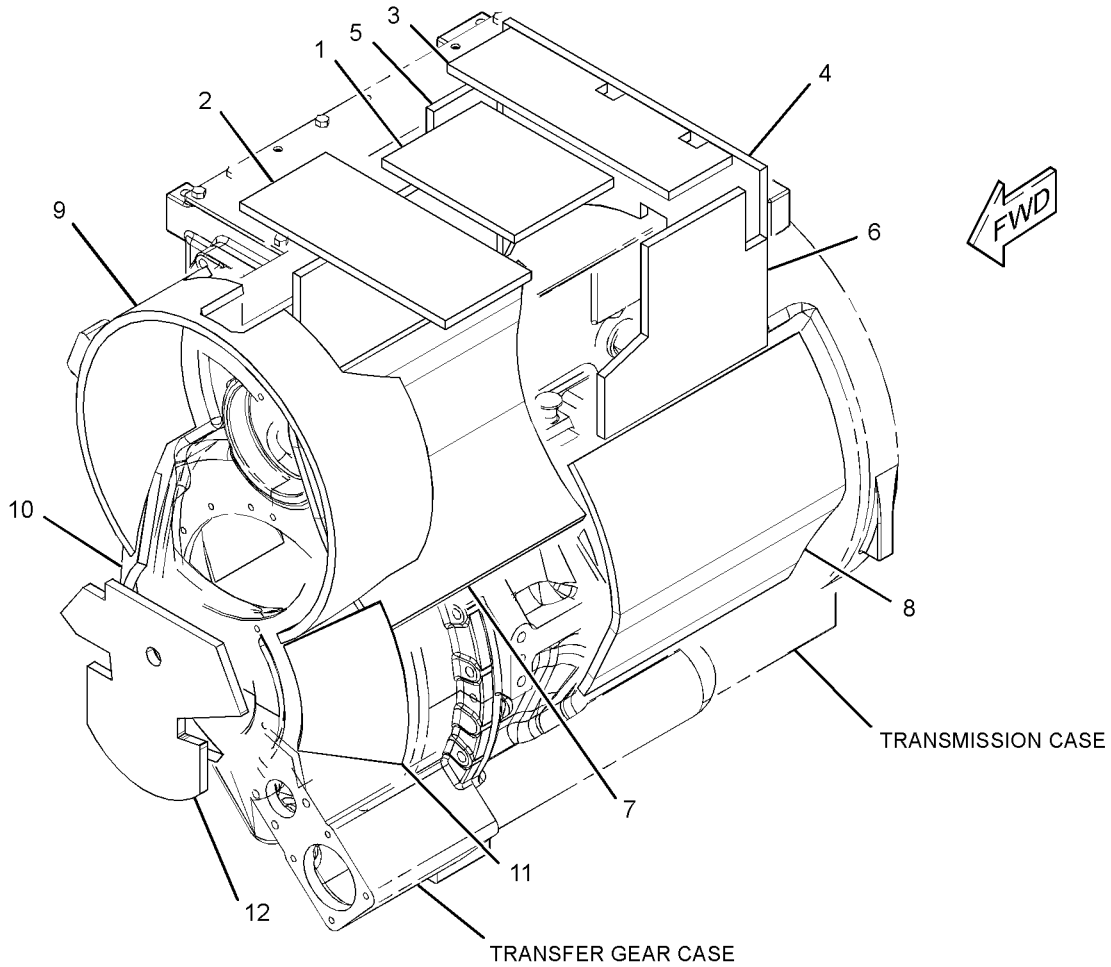


GRAPHIC #1 **<END>** g01404966

# 304-8357 SUPPRESSION GP-SOUND–TRANSMISSION

**S/N: RLB410-UP**

**PART OF 270-5360 SUPPRESSION GP-SOUND**

**AN ATTACHMENT**

**SMCS-1801, 7076, 7261** **i03130176**

| NOTE | REF NO | GRAPHIC REF | PART NUMBER | QTY | PART NAME 1 2 3 4 5 6 (PRODUCT LEVEL) | SEE PAGE |
|---|---|---|---|---|---|---|
| | 1 | 1 | **304-8358** | 1 | WRAP | |
| | 2 | 1 | **304-8359** | 1 | WRAP | |
| | 3 | 1 | **304-8360** | 1 | WRAP | |
| | 4 | 1 | **309-9691** | 1 | WRAP | |
| | 5 | 1 | **304-8362** | 1 | WRAP | |
| | 6 | 1 | **304-8363** | 1 | WRAP | |
| | 7 | 1 | **304-8364** | 1 | WRAP | |
| | 8 | 1 | **304-8365** | 1 | WRAP | |
| | 9 | 1 | **304-8366** | 1 | WRAP | |
| | 10 | 1 | **304-8367** | 1 | WRAP | |
| | 11 | 1 | **305-0033** | 1 | WRAP | |

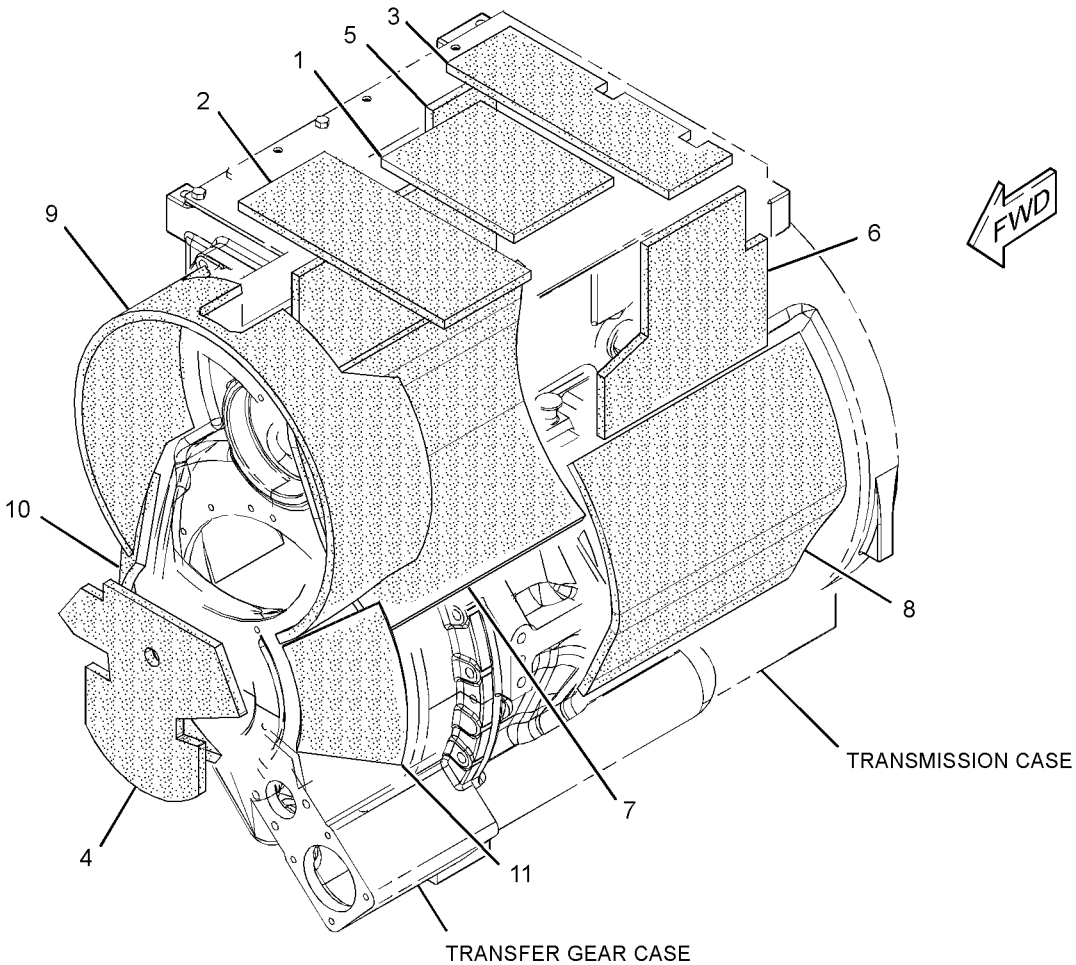


GRAPHIC #1 **<END>** g01611094

# *304-8369* SUPPRESSION GP-SOUND–TORQUE CONVERTER

**S/N: RLB287-UP**
**PART OF 270-5360 SUPPRESSION GP-SOUND**
**AN ATTACHMENT**

**SMCS-1801, 7076, 7261** **i02796046**

| NOTE | REF NO | GRAPHIC REF | PART NUMBER | QTY | PART NAME 1 2 3 4 5 6 (PRODUCT LEVEL) | SEE PAGE |
|---|---|---|---|---|---|---|
| | 1 | 1 | **304-8370** | 1 | WRAP | |
| | 2 | 1 | **304-8371** | 1 | WRAP | |
| | 3 | 1 | **304-8372** | 1 | WRAP | |
| | 4 | 1 | **304-8373** | 1 | WRAP | |
| | 5 | 1 | **309-9687** | 1 | WRAP | |
| | 6 | 1 | **309-9686** | 1 | WRAP | |

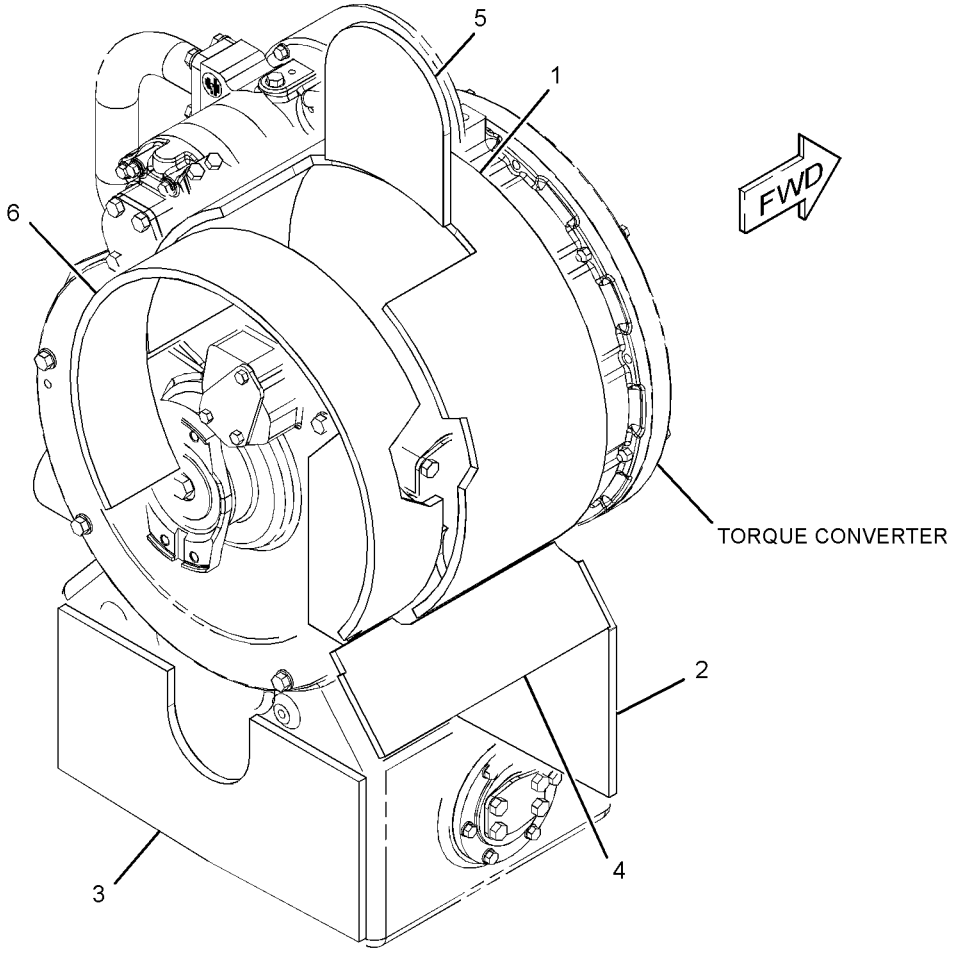


GRAPHIC #1 **<END>** g01404967

# *311-0069* SUPPRESSION GP-SOUND

**S/N: RLB410-UP**

**PART OF 270-5360 SUPPRESSION GP-SOUND**

**AN ATTACHMENT**

**SMCS-1801, 7076, 7261** **i03091902**

| NOTE | PART NUMBER | QTY | PART NAME 1 2 3 4 5 6 (PRODUCT LEVEL) | SEE PAGE |
|---|---|---|---|---|
| | **311-0071** | 1 | INSULATION | |
| | **311-0072** | 1 | INSULATION | |
| | **7K-1181** | 26 | STRAP-CABLE | |

**<END>**

## *299-7983* SUSPENSION GP-FRONT

**S/N: RLB1-UP**

**PART OF 268-7808 CHASSIS AR**

**SMCS-7201** **i02701759**

| NOTE | REF NO | GRAPHIC REF | PART NUMBER | QTY | PART NAME 1 2 3 4 5 6 (PRODUCT LEVEL) | SEE PAGE |
|---|---|---|---|---|---|---|
| | 1 | 1 | **2G-6478** | 2 | CAP | |
| | 2 | 1 | **2G-8201** | 2 | KEY | |
| | 3 | 1 | **5J-9451** | 2 | BEARING (SELF ALIGNING) | |
| | 4 | 1 | **6C-3213** | 20 | BOLT (1-8X4.25-IN) | |
| | 5 | 1 | **6F-7048** | 8 | WASHER (19.8X38.1X5-MM THK) | |
| | 6 | 1 | **7J-3296** | 2 | RING-LOCK | |
| | 7 | 1 | **116-1946** | 2 | COVER | |
| | 8 | 1 | **262-4466** | 2 | PLATE | |
| B | 9 | 1 | **301-5245** | 24 | SHIM (1-MM THK) | |
| B | 10 | 1 | **262-4467** | 2 | SHIM (4.5-MM THK) | |
| | 11 | 1 | **299-3423** | 20 | NUT (1-8-THD) | |
| | 12 | 1 | **299-3426** | 40 | WASHER-HARD (28X49X6-MM THK) | |
| | 13 | 1 | **299-3427** | 8 | WASHER-HARD (20X36.5X3.5-MM THK) | |
| | 14 | 1 | **299-3436** | 10 | BOLT (7/8-9X3.5-IN) | |
| | 15 | 1 | **299-3439** | 10 | WASHER-HARD (24X41.5X6-MM THK) | |
| | 16 | 1 | **299-5419** | 8 | BOLT (3/4-10X3.25-IN) | |
| Y | 17 | 1 | *299-7984* | 2 | SUSPENSION GP-FRONT | 556 |
| | 18 | 1 | **279-2269** | 4 | FILM-WARNING (CRUSH HAZARD, READ MANUAL) | |
| | 19 | 1 | **279-2271** | 4 | FILM-WARNING (HIGH PRESSURE, READ MANUAL) | |

B-USE AS REQUIRED
Y-SEPARATE ILLUSTRATION

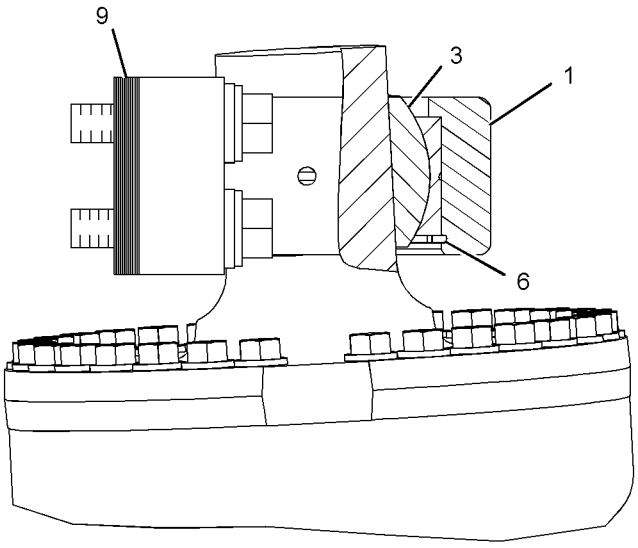


VIEW OF AREA A

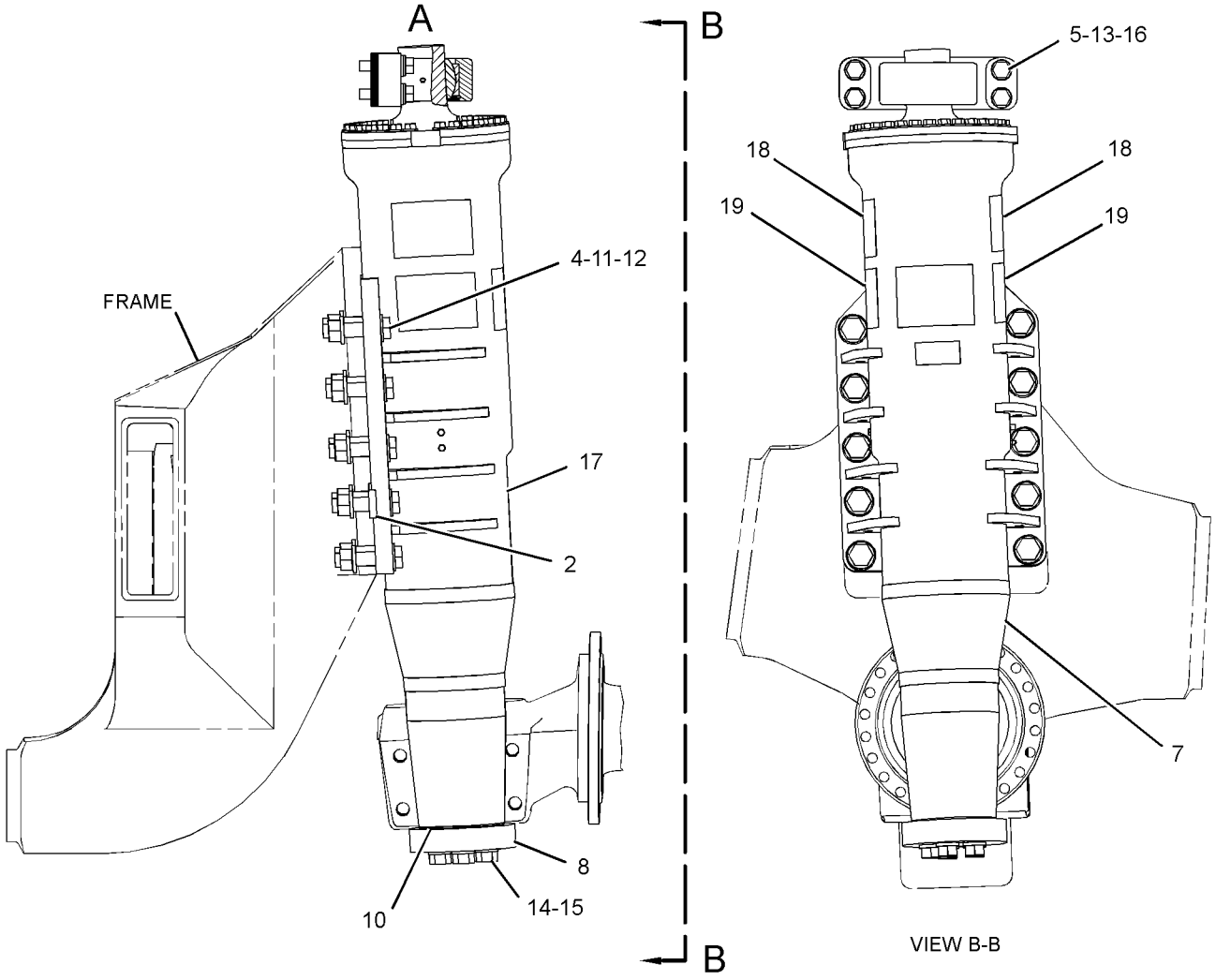


VIEW B-B

GRAPHIC #1 **<END>** g01362490

# FRAME AND BODY

## 299-7984 SUSPENSION GP-FRONT

**S/N: RLB1-UP**

**PART OF 299-7983 SUSPENSION GP-FRONT**

**SMCS-7201** **i03129091**

| NOTE | REF NO | GRAPHIC REF | PART NUMBER | QTY | PART NAME 1 2 3 4 5 6 (PRODUCT LEVEL) | SEE PAGE |
|---|---|---|---|---|---|---|
| | 1 | 1 | **3B-8489** | 1 | FITTING-GREASE | |
| | 2 | 1 | **101-0868** | 1 | PISTON | |
| | 3 | 1 | **223-4402** | 1 | GLAND | |
| | 4 | 1 | **223-4418** | 1 | TUBE | |
| | 5 | 1 | **305-1401** | 28 | BOLT (1/2-13X2-IN) | |
| R | 6 | 1 | **223-8458** | 1 | HOUSING AS | |
| | 7 | 1 | **320-2650** | 1 | ROD | |
| | 8 | 1 | **300-1975** | 1 | HEAD | |
| | 9 | 1 | **1H-8278** | 2 | SEAL-O-RING | |
| | 10 | 1 | **1K-6853** | 2 | FITTING | |
| | 11 | 1 | **223-4720** | 1 | PLATE-INFORMATION (STRUTS, TEMPERATURE) | |
| | 12 | 1 | **279-2269** | 2 | FILM-WARNING (CRUSH HAZARD, READ MANUAL) | |
| | 13 | 1 | **279-2271** | 2 | FILM-WARNING (HIGH PRESSURE, READ MANUAL) | |
| | 14 | 1 | **289-2934** | 1 | SEAL-RING | |
| | 15 | 1 | **289-2951** | 1 | SEAL-LIP TYPE | |
| | 16 | 1 | **289-2974** | 1 | SEAL-U-CUP | |
| | 17 | 1 | **3V-3306** | 10 | WASHER-HARD (13.5X27X3.5-MM THK) | |
| | 18 | 1 | **4B-9786** | 1 | BALL | |
| | 19 | 1 | **5J-5793** | 10 | BOLT-12 POINT HEAD (1/2-13X1.75-IN) | |
| | 20 | 1 | **5J-6444** | 2 | RING-BACKUP | |
| | 21 | 1 | **5M-6214** | 1 | PLUG-PIPE | |
| | 22 | 1 | **5P-8245** | 28 | WASHER-HARD (13.5X25.5X3-MM THK) | |
| | 23 | 1 | **8T-1127** | 1 | RING-WEAR | |
| | 24 | 1 | **8T-6376** | 1 | PLATE-INSTRUCTION (HYDRAULIC ACCUMULATOR) | |
| | 25 | 1 | **8T-7693** | 1 | RING | |
| | 26 | 1 | **8T-7695** | 1 | RING | |

R-REMFG PART MAY BE AVAILABLE

**299-7984 SUSPENSION GP-FRONT** *(contd.)* **i03129091**

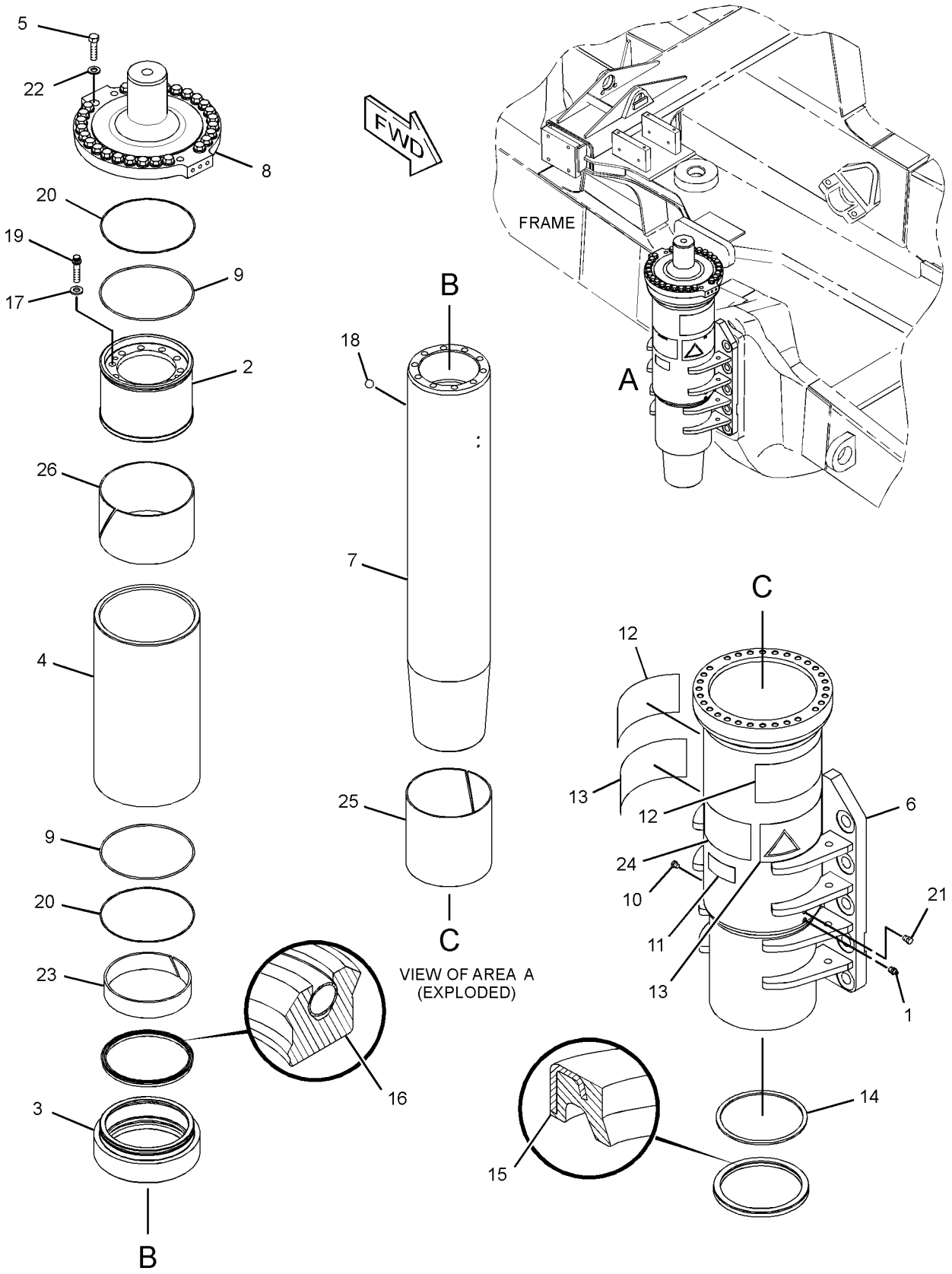


GRAPHIC #1 **<END>** g01434390

# 266-0341 SUSPENSION GP-REAR

**S/N: RLB1-UP**

**PART OF 270-6889 SUSPENSION GP-REAR**

**SMCS-7200, 7201, 7213** **i03198703**

| NOTE | REF NO | GRAPHIC REF | PART NUMBER | QTY | PART NAME 1 2 3 4 5 6 (PRODUCT LEVEL) | SEE PAGE |
|---|---|---|---|---|---|---|
| | 1 | 1 | **3B-8489** | 2 | FITTING-GREASE | |
| | 2 | 1 | **6J-1144** | 2 | BEARING (SELF ALIGNING) | |
| | 3 | 1 | **7J-5547** | 2 | COVER AS | |
| | 4 | 1 | **8T-7694** | 1 | RING-WEAR | |
| | 5 | 1 | **9T-5505** | 1 | PLATE | |
| | 6 | 1 | **223-4421** | 14 | BOLT (7/16-14X3.5-IN) | |
| | 7 | 1 | **223-6475** | 4 | BOLT (7/16-14X4-IN) | |
| | 9 | 1 | **238-9928** | 2 | VALVE AS | |
| | | | | | (EACH INCLUDES) | |
| | 9A | 1 | **239-5305** | 1 | CORE-VALVE | |
| | 9B | 1 | **239-5304** | 1 | CAP | |
| | 9C | 1 | **242-4313** | 1 | SEAL-O-RING | |
| | 10 | 1 | **239-5305** | 1 | CORE-VALVE | |
| | 11 | 1 | **240-3543** | 1 | HEAD | |
| R | 12 | 1 | **266-0342** | 1 | CYLINDER AS | |
| | 13 | 1 | **266-1962** | 1 | PLUG | |
| R | 14 | 1 | **302-5215** | 1 | ROD | |
| | 15 | 1 | **223-4720** | 1 | PLATE-INFORMATION (STRUTS, TEMPERATURE) | |
| | 16 | 1 | **279-2269** | 1 | FILM-WARNING (CRUSH HAZARD, READ MANUAL) | |
| | 17 | 1 | **279-2271** | 1 | FILM-WARNING (HIGH PRESSURE, READ MANUAL) | |
| | 18 | 1 | **280-9852** | 4 | RING-RETAINING | |
| | 19 | 1 | **9X-7333** | 1 | SEAL-LIP TYPE | |
| | 20 | 1 | **327-1055** | 1 | SEAL-U-CUP | |
| | 21 | 1 | **2H-5001** | 2 | SEAL-O-RING | |
| | 22 | 1 | **3J-1907** | 1 | SEAL-O-RING | |
| | 23 | 1 | **4B-9786** | 1 | BALL | |
| | 24 | 1 | **4J-6557** | 1 | RING | |
| | 25 | 1 | **5P-8244** | 18 | WASHER-HARD (12X22.5X2.5-MM THK) | |
| | 26 | 1 | **8T-6376** | 1 | PLATE-INSTRUCTION (HYDRAULIC ACCUMULATOR) | |
| | 27 | 1 | **9M-5024** | 1 | SEAL-O-RING | |

R-REMFG PART MAY BE AVAILABLE

## 266-0341 SUSPENSION GP-REAR *(contd. )* i03198703

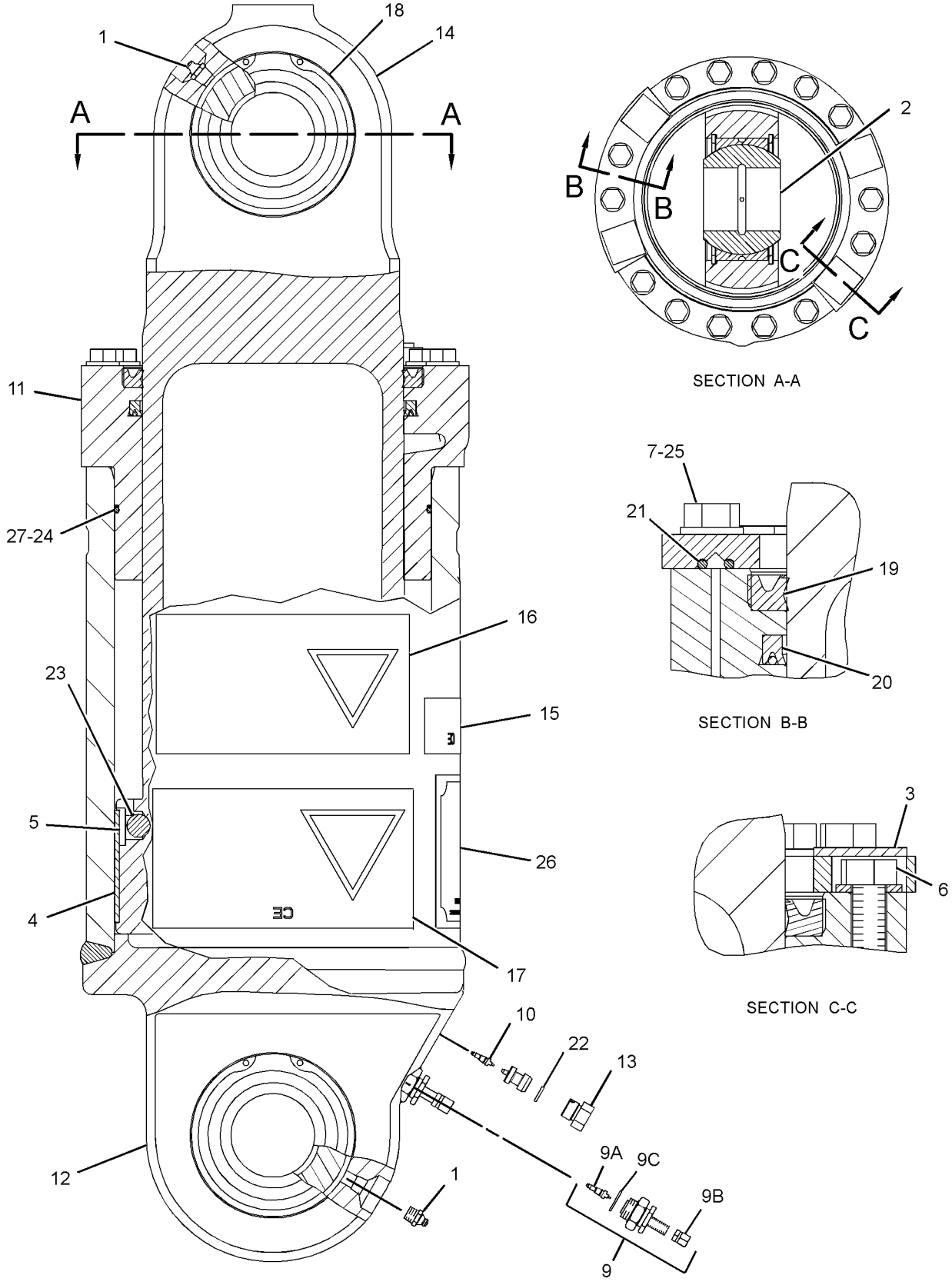


GRAPHIC #1 **<END>** g01434671

# *270-6889* SUSPENSION GP-REAR

**S/N: RLB1-UP**

**PART OF 268-7808 CHASSIS AR**

**SMCS-7200, 7201, 7213** **i02798981**

| NOTE | REF NO | GRAPHIC REF | PART NUMBER | QTY | PART NAME 1 2 3 4 5 6 (PRODUCT LEVEL) | SEE PAGE |
|---|---|---|---|---|---|---|
| | 1 | 1 | **4J-8536** | 2 | CLAMP | |
| | 2 | 1 | **9M-1608** | 8 | WASHER (0.262X0.781X0.625-IN THK) | |
| | 3 | 1 | **128-5311** | 2 | COVER | |
| | 4 | 1 | **134-8437** | 4 | PIN | |
| Y | 5 | 1 | *266-0341* | 2 | SUSPENSION GP-REAR | 558 |
| | 6 | 1 | **299-3399** | 4 | BOLT (3/4-10X8.5-IN) | |
| | 7 | 1 | **299-3405** | 4 | NUT (3/4-10-THD) | |
| | 8 | 1 | **299-3427** | 8 | WASHER-HARD (20X36.5X3.5-MM THK) | |
| | 9 | 1 | **279-2269** | 2 | FILM-WARNING (CRUSH HAZARD, READ MANUAL) | |
| | 10 | 1 | **279-2271** | 2 | FILM-WARNING (HIGH PRESSURE, READ MANUAL) | |

Y-SEPARATE ILLUSTRATION

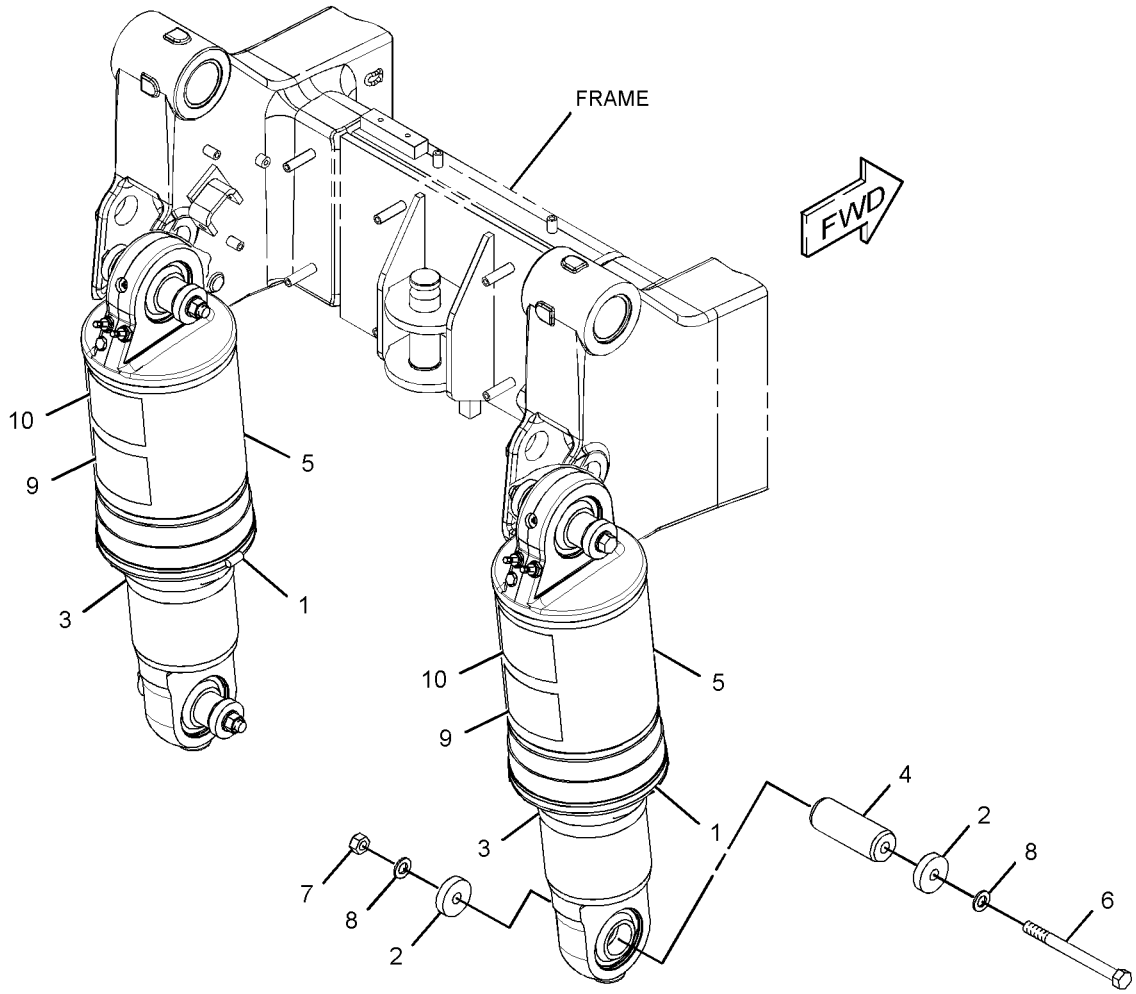


GRAPHIC #1 **<END>** g01409956

# *279-1153* VALVE GP-CHARGING

**S/N: RLB1-UP**
**PART OF 279-4590 VALVE GP-CHARGING**
**AN ATTACHMENT**

**SMCS-7201** **i02712855**

| NOTE | REF NO | GRAPHIC REF | PART NUMBER | QTY | PART NAME 1 2 3 4 5 6 (PRODUCT LEVEL) | SEE PAGE |
|---|---|---|---|---|---|---|
| | 1 | 1 | **238-9928** | 4 | VALVE AS (SUSPENSION CYLINDER CHARGING) | |
| | | | | | (EACH INCLUDES) | |
| | | 1 | **239-5304** | 1 | CAP | |
| | | 1 | **239-5305** | 1 | CORE-VALVE | |
| | | 1 | **242-4313** | 1 | SEAL-O-RING | |
| | 2 | 1 | **305-1349** | 2 | COVER AS (LH) | |
| | 3 | 1 | **305-1350** | 2 | COVER AS (RH) | |
| | 4 | 1 | **5F-7054** | 4 | SEAL-O-RING | |
| | 5 | 1 | **7X-0289** | 8 | BOLT (3/8-16X1.875-IN) | |
| | 6 | 1 | **8T-4896** | 8 | WASHER-HARD (10.2X18.5X2.5-MM THK) | |

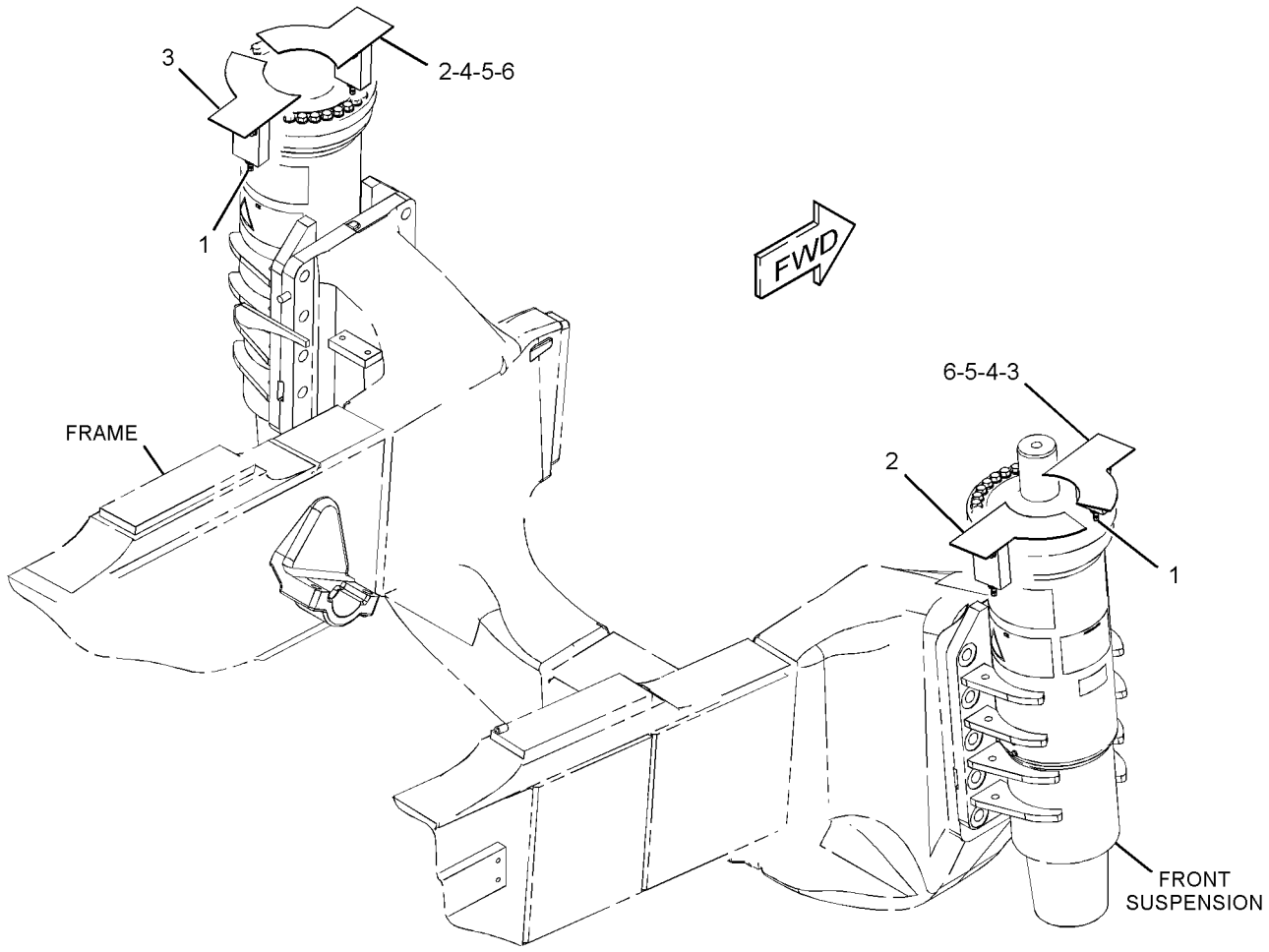


GRAPHIC #1 **<END>** g01370500

# *279-4590* VALVE GP-CHARGING

**S/N: RLB1-UP**

**AN ATTACHMENT**

**SMCS-7201** **i02606013**

| NOTE | PART NUMBER | QTY | PART NAME 1 2 3 4 5 6 (PRODUCT LEVEL) | SEE PAGE |
|---|---|---|---|---|
| Y | *279-1153* | 1 | VALVE GP-CHARGING (SUSPENSION) | 561 |

Y-SEPARATE ILLUSTRATION

**<END>**

# *220-5692* ACCUMULATOR GP-BRAKE–CHARGED

**S/N: RLB1-UP**

**PART OF 269-9191 LINES GP-ACCUMULATOR**

**FIELD REPLACEMENT ORDER 248-0307–PAGE 612**

**SMCS-4263** **i02896248**

| NOTE | REF NO | GRAPHIC REF | PART NUMBER | QTY | PART NAME 1 2 3 4 5 6 (PRODUCT LEVEL) | SEE PAGE |
|---|---|---|---|---|---|---|
| | 1 | 1 | **158-2306** | 1 | VALVE-GAS | |
| | 2 | 1 | **111-9110** | 1 | PROTECTOR-GAS VALVE | |
| | 3 | 1 | **170-0494** | 1 | KIT-SEAL (BRAKE ACCUMULATOR) | |
| | | | | | (INCLUDES O-RING,BACK-UP WASHERS, WEAR RINGS, END SEAL O-RINGS,END SEAL BACK-UPS, GAS VALVE O-RING,MS GAS VALVE O-RING, | |
| | | | | | KIT BAG & KIT LABEL) | |
| | 4 | 1 | **5M-3062** | 2 | BOLT (3/8-16X0.75-IN) | |
| B | 5 | 1 | **241-0037** | 2 | FILM-WARNING (HIGH PRESSURE, READ OMM) | |

B-USE AS REQUIRED

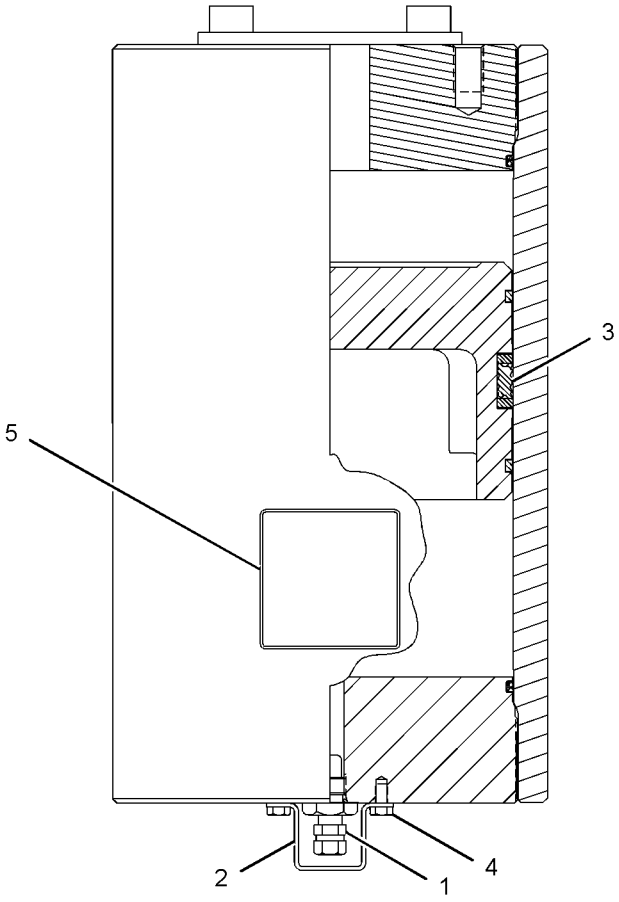


LEFT SIDE VIEW

GRAPHIC #1 **<END>** g01190667

# *125-1384* BRAKE GP-HYD CALIPER SERVICE–FRONT

**S/N: RLB1-UP**

**PART OF 239-1491 BRAKE GP-SERVICE**

**SMCS-4251, 4255, 4256, 4260, 4273** **i02686184**

| NOTE | REF NO | GRAPHIC REF | PART NUMBER | QTY | PART NAME 1 2 3 4 5 6 (PRODUCT LEVEL) | SEE PAGE |
|---|---|---|---|---|---|---|
| | 1 | 1 | **1A-0458** | 8 | BOLT (3/4-10X1.75-IN) | |
| | 2 | 1 | **2G-5459** | 2 | SCREW-PURGE (9/16-18-THD) | |
| | 3 | 1 | **5P-8248** | 8 | WASHER-HARD (20X36.5X3.5-MM THK) | |
| | 4 | 1 | **9V-6167** | 4 | PIN | |
| | 5 | 1 | **114-9297** | 1 | LINING AS-BRAKE (OUTBOARD) | |
| | 6 | 1 | **114-9299** | 1 | LINING AS-BRAKE (INBOARD) | |
| | 7 | 1 | **114-9303** | 1 | COVER | |
| | 8 | 1 | **114-9304** | 3 | PLUG | |
| | 9 | 1 | **114-9306** | 6 | PISTON | |
| | 10 | 1 | **3V-0197** | 4 | BOLT (3/8-16X1-IN) | |
| | | | | | AVAILABLE REPAIR KIT(S): | |
| | | | **114-9305** | 1 | KIT-SEAL (CALIPER BRAKE) | |
| | | | | | (INCLUDES PACKING PLUGS, PACKING PISTONS, BACKUP RINGS & BOOTS) | |

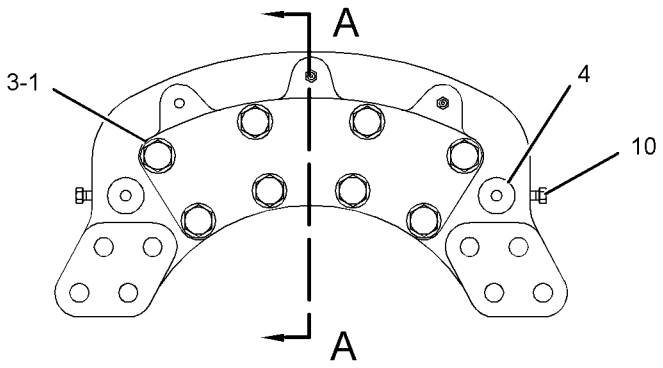


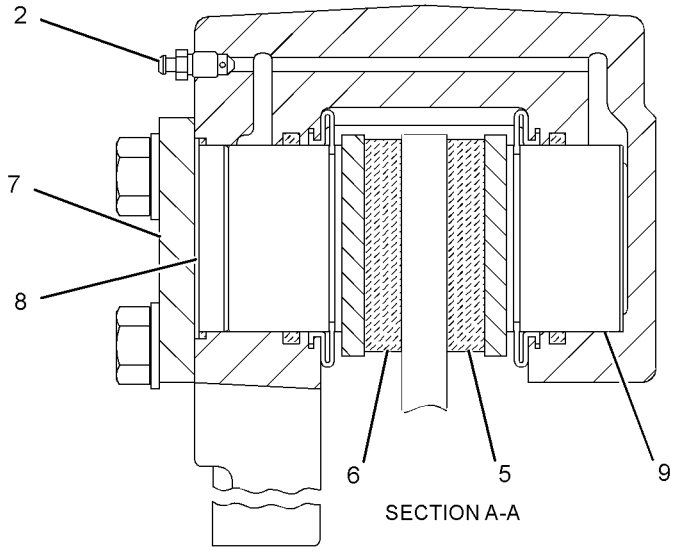


GRAPHIC #1 **<END>** g01266493

# *239-1491* BRAKE GP-SERVICE–FRONT

**S/N: RLB1-UP**

**PART OF 261-0649 WHEEL GP-FRONT**

**SMCS-4251** **i03292860**

| NOTE | REF NO | GRAPHIC REF | PART NUMBER | QTY | PART NAME 1 2 3 4 5 6 (PRODUCT LEVEL) | SEE PAGE |
|---|---|---|---|---|---|---|
| | 1 | 1 | **104-5510** | 1 | PLATE | |
| | 2 | 1 | **105-3207** | 1 | DISC | |
| Y | 3 | 1 | **125-1384** | 1 | BRAKE GP-HYD CALIPER SERVICE (FRONT) | 564 |
| | 4 | 1 | **0S-1973** | 17 | BOLT (7/8-9X2-IN) | |
| | 5 | 1 | **1D-4626** | 8 | BOLT (7/8-9X2.75-IN) | |
| | 6 | 1 | **1D-4627** | 18 | BOLT (7/8-9X3-IN) | |
| | 7 | 1 | **5P-8249** | 43 | WASHER-HARD (24X41.5X4-MM THK) | |

Y-SEPARATE ILLUSTRATION

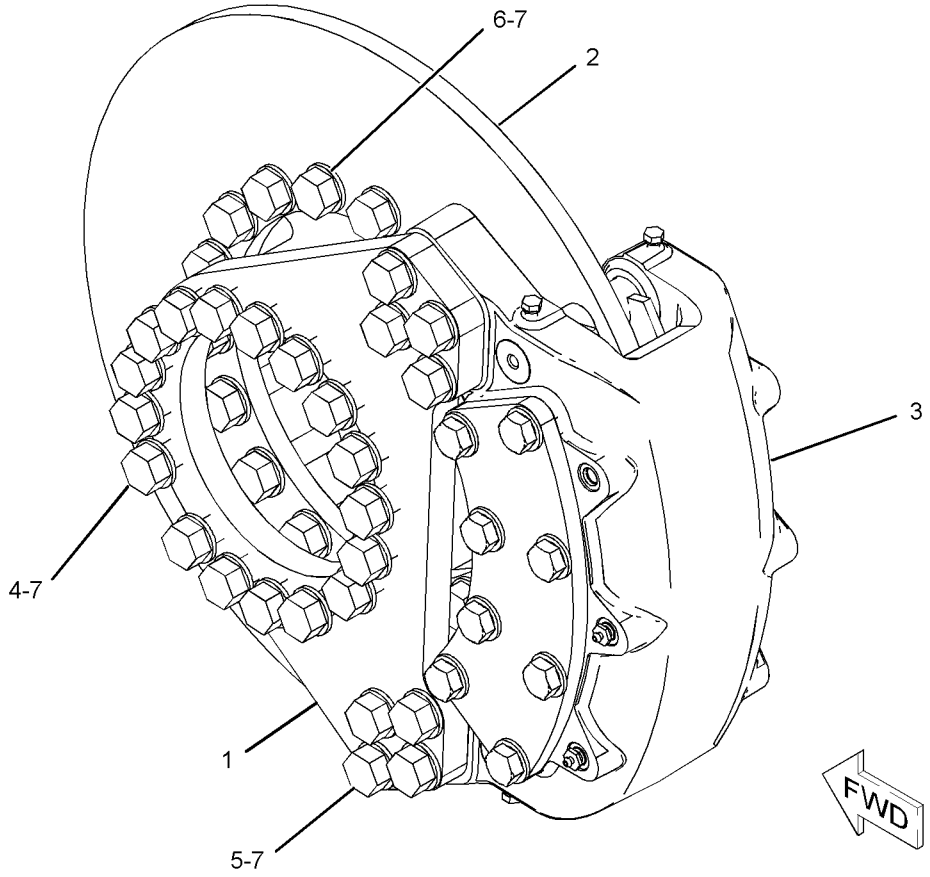


GRAPHIC #1 **<END>** g01056458

# 239-1266 BRAKE GP-SERVICE & PARKING–REAR

**S/N: RLB1-286**

**PART OF 271-3763 WHEEL GP-FINAL DRIVE & BRAKE**

**AN ATTACHMENT**

**SMCS-4251, 4267** **i02634577**

| NOTE | REF NO | GRAPHIC REF | PART NUMBER | QTY | PART NAME 1 2 3 4 5 6 (PRODUCT LEVEL) | SEE PAGE |
|---|---|---|---|---|---|---|
| | 1 | 2 | **6E-1299** | 4 | SPRING | |
| | 3 | 2 | **8E-2183** | 15 | DISC-FRICTION | |
| | 4 | 2 | **8X-4437** | 15 | PLATE | |
| | 5 | 2 | **9D-6093** | 20 | SPRING | |
| | 6 | 2 | **9D-9118** | 4 | SPRING-GUIDE | |
| | 8 | 2 | **137-8117** | 1 | SEAL-RING | |
| | 9 | 2 | **137-8119** | 1 | SEAL-RING | |
| | 10 | 1 | **237-9103** | 12 | NUT (M10X1.15-THD) | |
| | 11 | 2 | **238-6843** | 1 | PISTON | |
| | 12 | 2 | **238-6844** | 1 | PISTON-BRAKE | |
| | 13 | 2 | **238-6845** | 1 | HOUSING | |
| | 14 | 2 | **238-6846** | 1 | PLATE | |
| | 15 | 2 | **239-1267** | 1 | ANCHOR | |
| | 16 | 1 | **244-2306** | 5 | NUT (M12X1.75-THD) | |
| | 17 | 2 | **246-0609** | 1 | SEAL-RING | |
| | 18 | 2 | **246-0610** | 1 | SEAL-RING | |
| | 19 | 2 | **246-0611** | 1 | SEAL-RING | |
| | 20 | 2 | **246-0612** | 1 | SEAL-RING | |
| | 21 | 1 | **246-5451** | 5 | STUD-TAPERLOCK (M12X1.75X65-MM) | |
| | 22 | 2 | **247-8269** | 1 | DAMPER AS | |
| | 23 | 2 | **123-7267** | 1 | SEAL-RING | |
| | 24 | 2 | **123-7268** | 1 | SEAL-RING | |
| M | 25 | 1 | **231-0336** | 12 | STUD-TAPERLOCK (M10X1.5X70-MM) | |
| | 29 | 2 | **6M-9155** | 4 | PIN | |
| M | 30 | 1 | **6V-3303** | 25 | BOLT (M16X2X60-MM) | |
| | 31 | 1 | **6V-3538** | 1 | DOWEL | |
| | 32 | 2 | **9D-7984** | 2 | SEAL | |
| | 34 | 2 | **9X-7550** | 1 | SEAL-O-RING | |
| | 35 | 1 | **9X-8268** | 25 | WASHER (17.5X30X3.5-MM THK) | |
| | 36 | 1 | **6V-0852** | 1 | CAP-DUST | |
| | 37 | 1 | *148-8313* | 1 | ADAPTER AS | |
| | | 1 | **5P-6944** | 1 | ADAPTER | |
| | | 1 | **3K-0360** | 1 | SEAL-O-RING | |
| | 38 | 1 | *164-5567* | 1 | COUPLER AS-QUICK DISCONNECT | |
| | | 1 | **6V-3965** | 1 | FITTING (QUICK DISCONNECT) | |
| | | 1 | **3J-1907** | 1 | SEAL-O-RING | |

M-METRIC PART

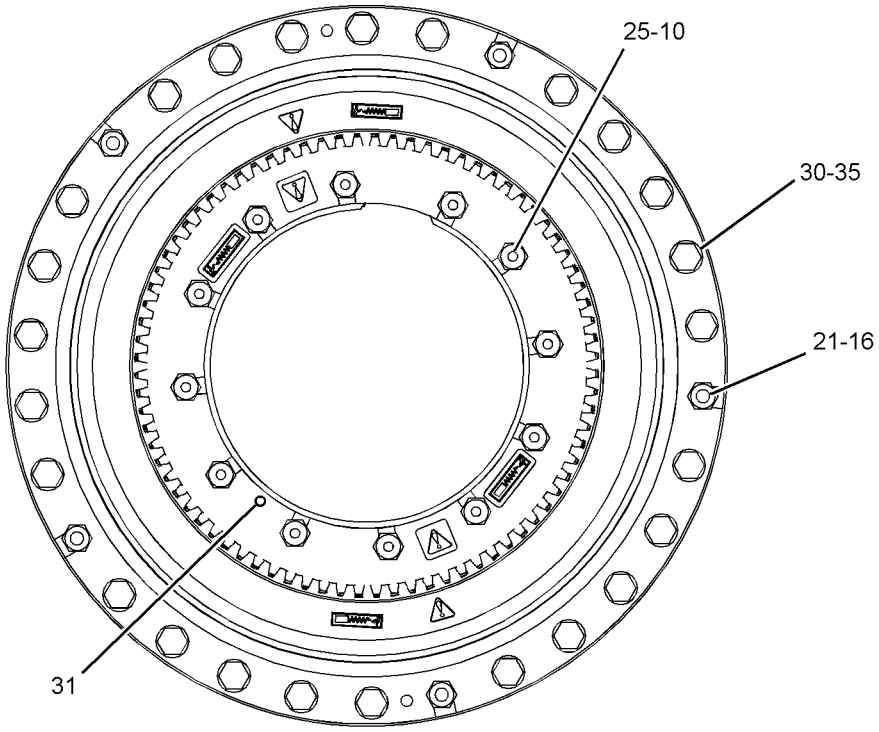


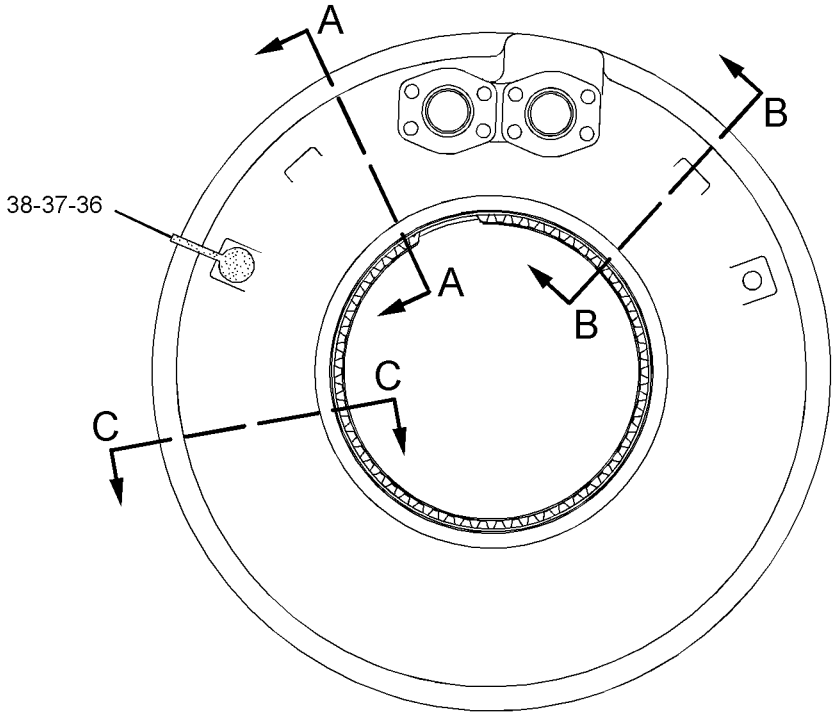


GRAPHIC #1

g01336319

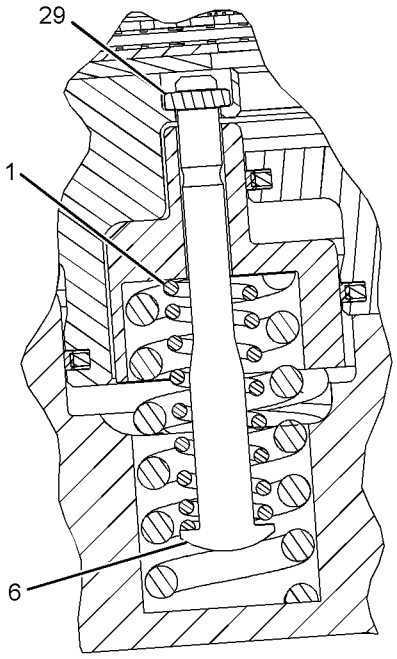


SECTION C-C

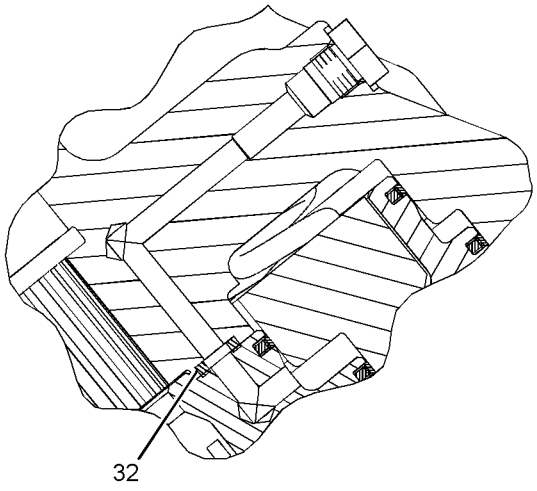


SECTION B-B

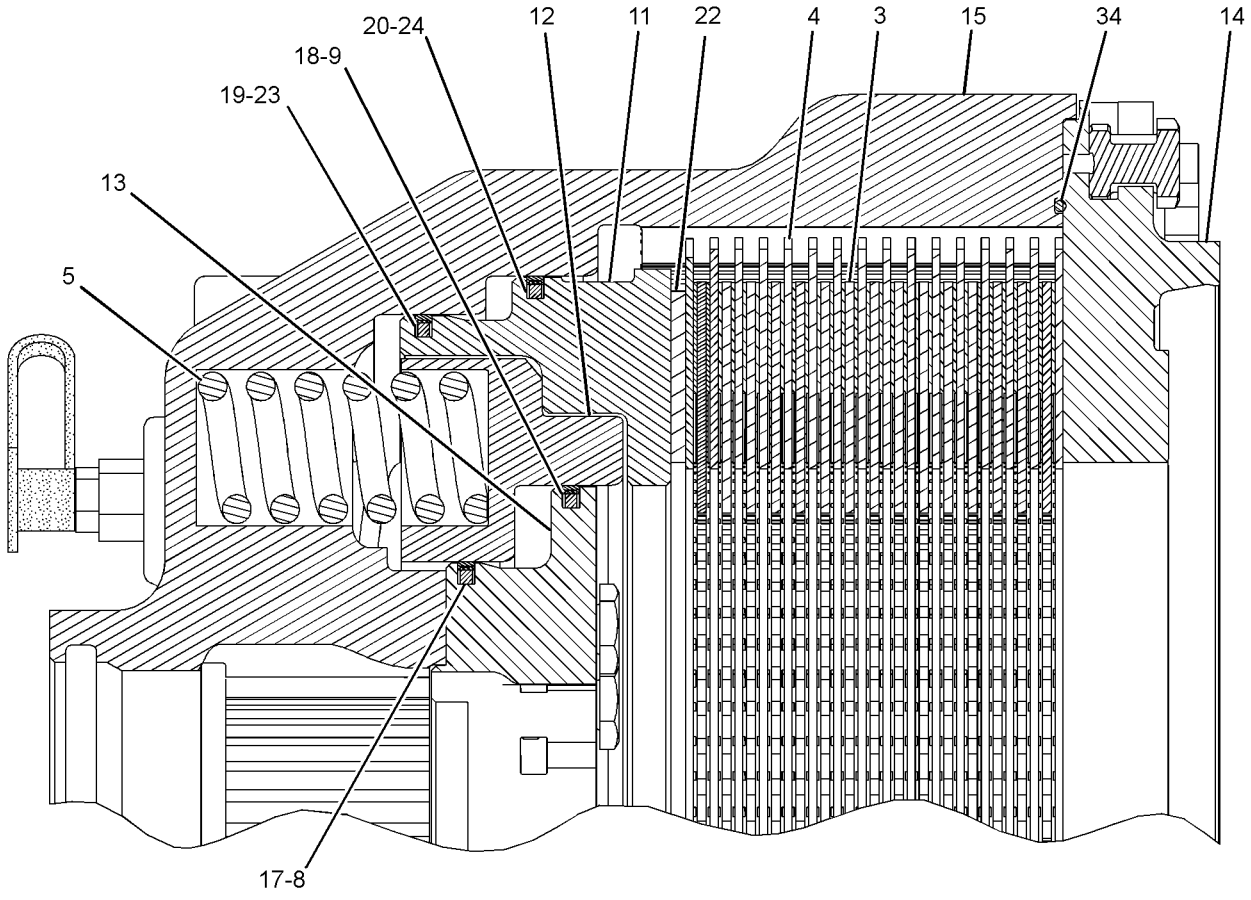


SECTION A-A

GRAPHIC #2 **<END>** g01336316

# 239-1266 BRAKE GP-SERVICE & PARKING—REAR

**S/N: RLB287-UP**

**PART OF 271-3763 WHEEL GP-FINAL DRIVE & BRAKE**

**AN ATTACHMENT**

**SMCS-4251, 4267** **i02718009**

| NOTE | REF NO | GRAPHIC REF | PART NUMBER | QTY | PART NAME 1 2 3 4 5 6 (PRODUCT LEVEL) | SEE PAGE |
|---|---|---|---|---|---|---|
| | 1 | 2 | **6E-1299** | 4 | SPRING | |
| | 2 | 2 | **6V-0852** | 1 | CAP-DUST | |
| | 3 | 2 | **8E-2183** | 15 | DISC-FRICTION | |
| | 4 | 2 | **8X-4437** | 15 | PLATE | |
| | 5 | 2 | **9D-6093** | 20 | SPRING | |
| | 6 | 2 | **9D-9118** | 4 | SPRING-GUIDE | |
| | 7 | 2 | **137-8117** | 1 | SEAL-RING | |
| | 8 | 2 | **137-8119** | 1 | SEAL-RING | |
| | 9 | 2 | **238-6843** | 1 | PISTON | |
| | 10 | 2 | **238-6844** | 1 | PISTON-BRAKE | |
| | 11 | 2 | **238-6846** | 1 | PLATE | |
| C | 12 | 1 | **244-2306** | 9 | NUT (M12X1.75-THD) | |
| | 13 | 2 | **246-0609** | 1 | SEAL-RING | |
| | 14 | 2 | **246-0610** | 1 | SEAL-RING | |
| | 15 | 2 | **246-0611** | 1 | SEAL-RING | |
| | 16 | 2 | **246-0612** | 1 | SEAL-RING | |
| | 17 | 2 | **247-8269** | 1 | DAMPER AS | |
| C | 18 | 2 | **307-5461** | 1 | HOUSING | |
| C | 19 | 2 | **307-5596** | 1 | ANCHOR | |
| | 20 | 2 | **123-7267** | 1 | SEAL-RING | |
| | 21 | 2 | **123-7268** | 1 | SEAL-RING | |
| | 22 | 2 | *148-8313* | 1 | ADAPTER AS | |
| | | 2 | **5P-6944** | 1 | ADAPTER | |
| | | 2 | **3K-0360** | 1 | SEAL-O-RING | |
| | 23 | 2 | *164-5567* | 1 | COUPLER AS-QUICK DISCONNECT | |
| | | 2 | **6V-3965** | 1 | FITTING (QUICK DISCONNECT) | |
| | | 2 | **3J-1907** | 1 | SEAL-O-RING | |
| C | 24 | 1 | **310-1945** | 9 | STUD-TAPERLOCK | |
| | 25 | 1 | **3K-0360** | 3 | SEAL-O-RING | |
| C | 26 | 1 | **5P-8245** | 8 | WASHER-HARD (13.5X25.5X3-MM THK) | |
| | 27 | 2 | **6M-9155** | 4 | PIN | |
| M | 28 | 1 | **6V-3303** | 25 | BOLT (M16X2X60-MM) | |
| | 29 | 1 | **6V-3538** | 1 | DOWEL | |
| CM | 30 | 1 | **6V-8336** | 5 | BOLT (M12X1.75X70-MM) | |
| CM | 31 | 1 | **8T-0372** | 3 | BOLT (M12X1.75X90-MM) | |
| | 32 | 2 | **9D-7984** | 2 | SEAL | |
| | 33 | 1 | **9S-4185** | 3 | PLUG-O-RING | |
| | 34 | 2 | **9X-7550** | 1 | SEAL-O-RING | |
| | 35 | 1 | **9X-8268** | 25 | WASHER (17.5X30X3.5-MM THK) | |

C-CHANGE FROM PREVIOUS TYPE
M-METRIC PART

REFER TO ALL ILLUSTRATIONS OF THIS GROUP FOR AUXILIARY VIEWS

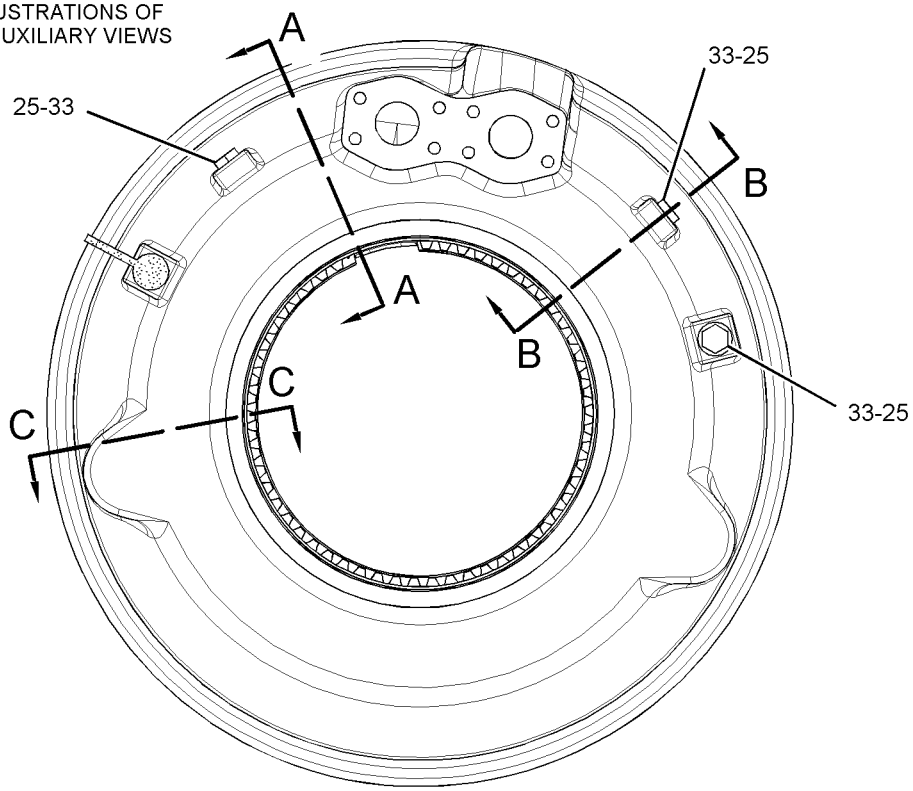


REAR VIEW

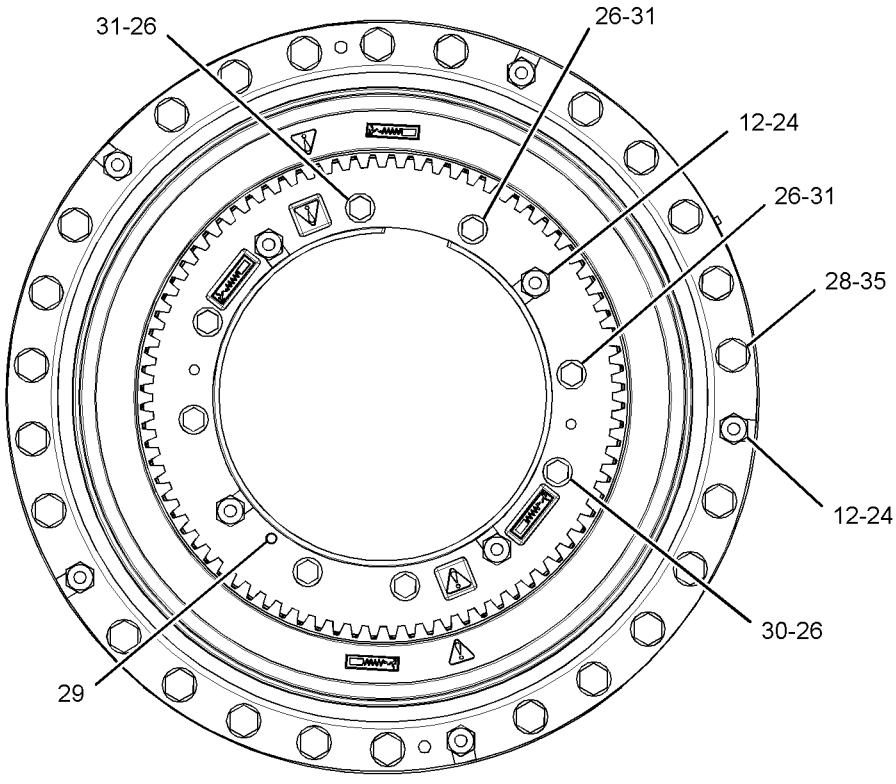


FRONT VIEW

GRAPHIC #1

g01434849

**239-1266 BRAKE GP-SERVICE & PARKING** *(contd.)* **i02718009**

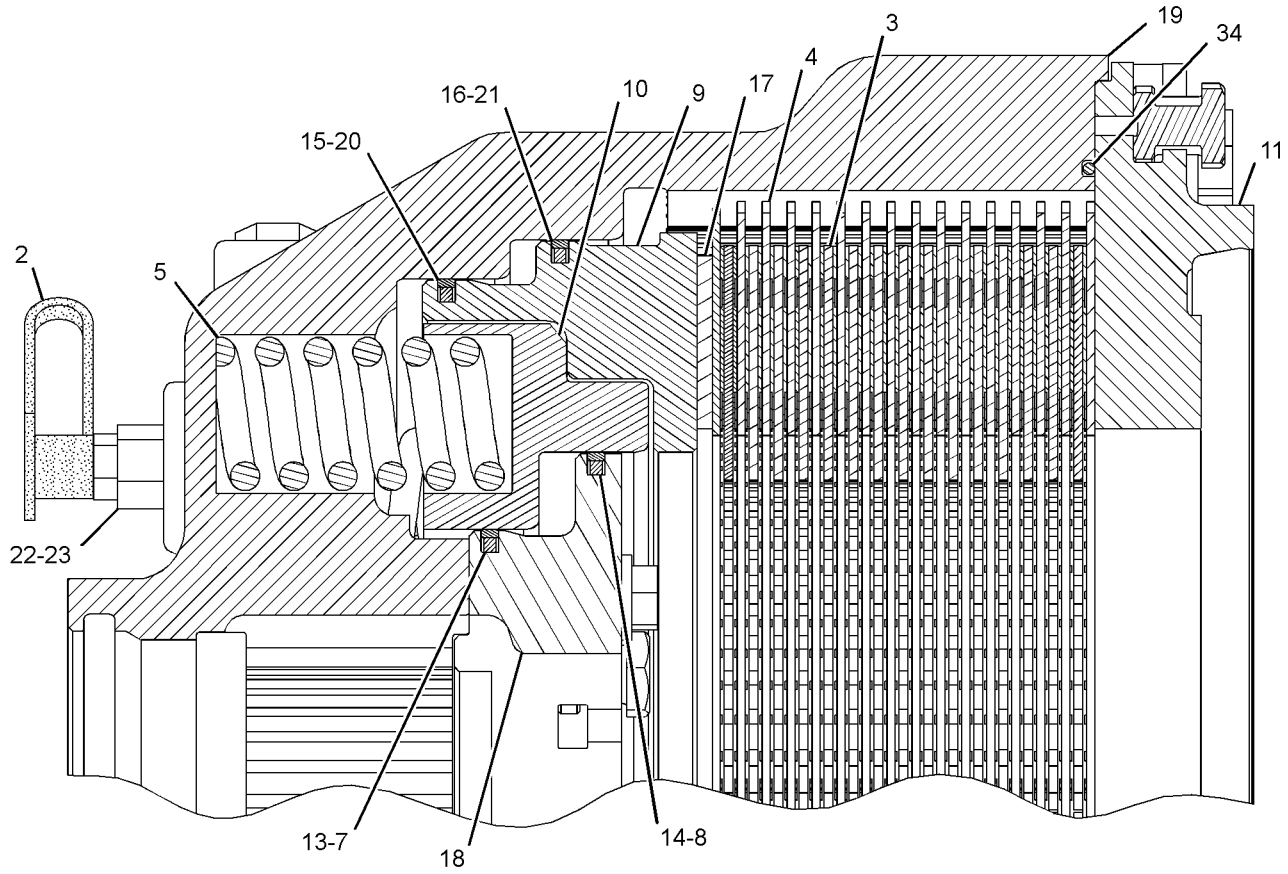


SECTION A-A

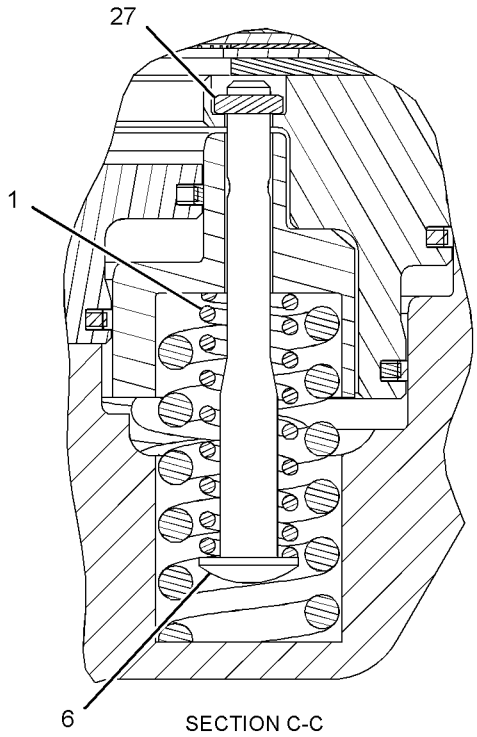


SECTION C-C

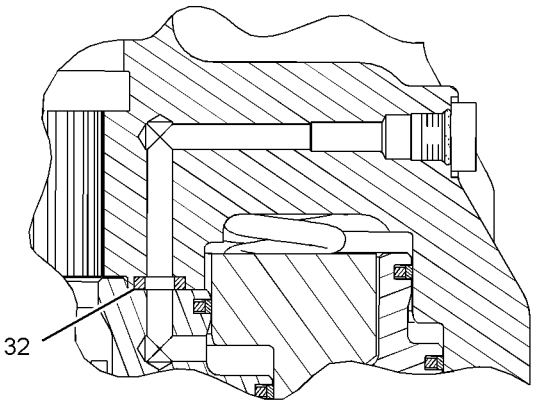


SECTION B-B

GRAPHIC #2 **<END>** g01434850

# BRAKING SYSTEM

## *279-7456* BRAKE GP-SERVICE & PARKING–REAR

**S/N: RLB1-UP**

**PART OF 279-7457 WHEEL GP-FINAL DRIVE & BRAKE**

**AN ATTACHMENT**

**SMCS-4251, 4267** **i02757393**

| NOTE | REF NO | GRAPHIC REF | PART NUMBER | QTY | PART NAME 1 2 3 4 5 6 (PRODUCT LEVEL) | SEE PAGE |
|---|---|---|---|---|---|---|
| | 1 | 1 | **6E-1299** | 4 | SPRING | |
| | 2 | 1 | **6V-0852** | 1 | CAP-DUST | |
| | 3 | 1 | **8X-4437** | 15 | PLATE | |
| | 4 | 1 | **9D-6093** | 20 | SPRING | |
| | 5 | 1 | **9D-9118** | 4 | SPRING-GUIDE | |
| | 6 | 1 | **137-8117** | 1 | SEAL-RING | |
| | 7 | 1 | **137-8119** | 1 | SEAL-RING | |
| | 8 | 1 | **221-0775** | 15 | DISC-FRICTION (EXTENDED LIFE) | |
| | 9 | 1 | **238-6843** | 1 | PISTON | |
| | 10 | 1 | **238-6844** | 1 | PISTON-BRAKE | |
| | 11 | 1 | **238-6846** | 1 | PLATE | |
| | 12 | 1 | **244-2306** | 9 | NUT (M12X1.75-THD) | |
| | 13 | 1 | **246-0609** | 1 | SEAL-RING | |
| | 14 | 1 | **246-0610** | 1 | SEAL-RING | |
| | 15 | 1 | **246-0611** | 1 | SEAL-RING | |
| | 16 | 1 | **246-0612** | 1 | SEAL-RING | |
| | 17 | 1 | **310-1945** | 9 | STUD-TAPERLOCK | |
| | 18 | 1 | **247-8269** | 1 | DAMPER AS | |
| | 19 | 1 | **307-5461** | 1 | HOUSING | |
| | 20 | 1 | **307-5596** | 1 | ANCHOR | |
| | 21 | 1 | **123-7267** | 1 | SEAL-RING | |
| | 22 | 1 | **123-7268** | 1 | SEAL-RING | |
| | 23 | 1 | *148-8313* | 1 | ADAPTER AS | |
| | | 1 | **5P-6944** | 1 | ADAPTER | |
| | | 1 | **3K-0360** | 1 | SEAL-O-RING | |
| | 24 | 1 | *164-5567* | 1 | COUPLER AS-QUICK DISCONNECT | |
| | | 1 | **6V-3965** | 1 | FITTING (QUICK DISCONNECT) | |
| | | 1 | **3J-1907** | 1 | SEAL-O-RING | |
| B | 25 | 1 | **3K-0360** | 3 | SEAL-O-RING | |
| | 26 | 1 | **5P-8245** | 8 | WASHER-HARD (13.5X25.5X3-MM THK) | |
| | 27 | 1 | **6M-9155** | 4 | PIN | |
| M | 28 | 1 | **6V-3303** | 25 | BOLT (M16X2X60-MM) | |
| | 29 | 1 | **6V-3538** | 1 | DOWEL | |
| M | 30 | 1 | **6V-8336** | 5 | BOLT (M12X1.75X70-MM) | |
| | 31 | 1 | **9D-7984** | 2 | SEAL | |
| B | 32 | 1 | **9S-4185** | 3 | PLUG-O-RING | |
| | 33 | 1 | **9X-7550** | 1 | SEAL-O-RING | |
| | 34 | 1 | **9X-8268** | 25 | WASHER (17.5X30X3.5-MM THK) | |
| M | 35 | 1 | **8T-0372** | 3 | BOLT (M12X1.75X90-MM) | |

B-USE AS REQUIRED
M-METRIC PART

*279-7456* **BRAKE GP-SERVICE & PARKING** *(contd.)* **i02757393**

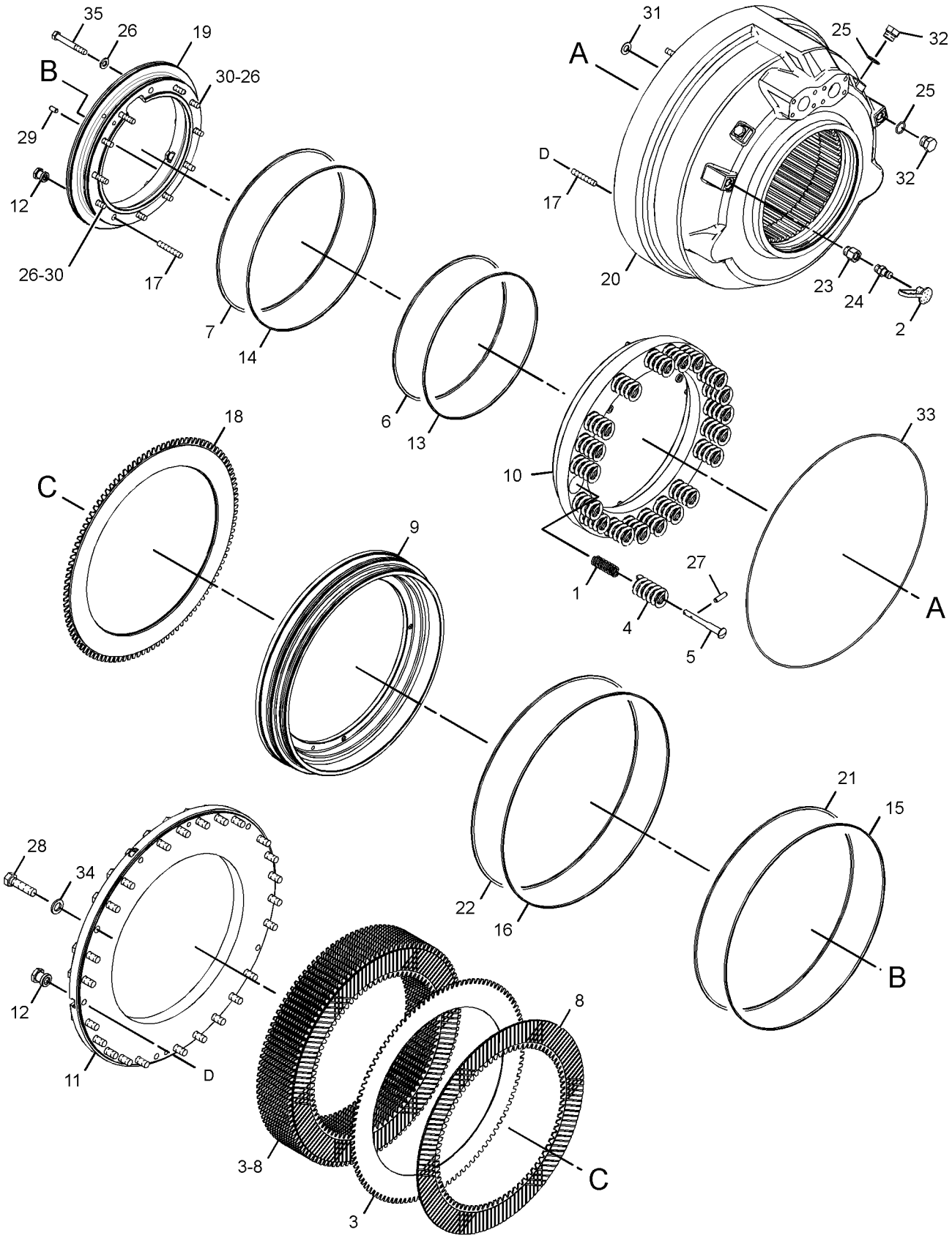


GRAPHIC #1 **<END>** g01404908

# BRAKING SYSTEM

## *310-8332* CONTROL GP-BRAKE

**S/N: RLB301-UP**

**PART OF 269-8820 CAB AR**

**SMCS-4257, 4265, 4269, 4280, 4290** **i02762399**

| NOTE | REF NO | GRAPHIC REF | PART NUMBER | QTY | PART NAME 1 2 3 4 5 6 (PRODUCT LEVEL) | SEE PAGE |
|---|---|---|---|---|---|---|
| Y | 1 | 1 | **310-7260** | 1 | CONTROL GP-FOOT BRAKE | 735 |
| | 2 | 1 | **310-8465** | 1 | GASKET | |
| | 3 | 1 | **162-9112** | 1 | GROMMET-SPLIT | |
| M | 4 | 1 | **6V-5218** | 3 | BOLT (M8X1.25X35-MM) | |
| | 5 | 1 | **9M-1974** | 3 | WASHER-HARD (8.8X16X2-MM THK) | |

M-METRIC PART
Y-SEPARATE ILLUSTRATION

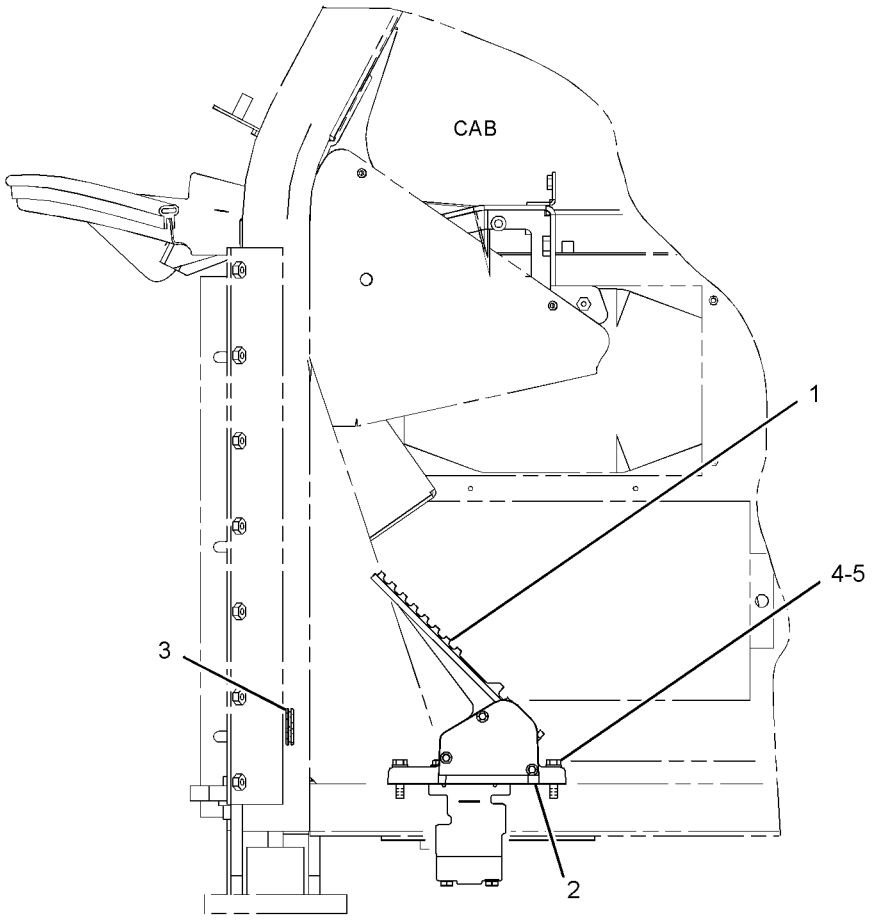


LEFT SIDE VIEW

GRAPHIC #1 **<END>** g01413917

# *270-4225* COOLER GP-BRAKE OIL

**S/N: RLB1-513**

**PART OF 270-4248, 308-5826 INSTALLATION AR-ENGINE**

**SMCS-1365** **i02798423**

| NOTE | REF NO | GRAPHIC REF | PART NUMBER | QTY | PART NAME 1 2 3 4 5 6 (PRODUCT LEVEL) | SEE PAGE |
|---|---|---|---|---|---|---|
| | 1 | 1 | **1P-6405** | 1 | BONNET-BRAKE OIL COOLER | |
| | 2 | 1 | **7S-8767** | 2 | GASKET | |
| | 3 | 1 | **208-6054** | 2 | CLAMP | |
| | 4 | 1 | **230-2200** | 2 | BRACKET | |
| | 5 | 1 | **230-2202** | 1 | BONNET | |
| | 6 | 1 | **276-1859** | 1 | HOSE | |
| | 7 | 1 | **276-1860** | 1 | HOSE | |
| | 8 | 1 | **283-9746** | 1 | CORE AS-OIL COOLER (BRAKE) | |
| | | 1 | **8T-6764** | 2 | PLUG-PIPE | |
| | 9 | 1 | **286-9746** | 2 | BRACKET AS | |
| M | | 1 | **8T-3490** | 1 | NUT-WELD (M10X1.5-THD) | |
| | 10 | 1 | **286-9815** | 2 | BRACKET AS | |
| | 11 | 1 | **299-2091** | 1 | BRACKET AS | |
| M | | 1 | **8T-3490** | 2 | NUT-WELD (M10X1.5-THD) | |
| | 12 | 1 | **122-3608** | 4 | CLIP | |
| | 13 | 1 | **198-4777** | 6 | WASHER-HARD (11X25X10-MM THK) | |
| | 14 | 1 | **198-4778** | 4 | WASHER-HARD (13.5X30X12-MM THK) | |
| | 15 | 1 | **5P-2566** | 11 | BOLT (1/2-13X1.5-IN) | |
| | 17 | 1 | **8T-4121** | 5 | WASHER-HARD (11X21X2.5-MM THK) | |
| M | 18 | 1 | **8T-4136** | 3 | BOLT (M10X1.5X25-MM) | |
| M | 19 | 1 | **8T-4137** | 2 | BOLT (M10X1.5X20-MM) | |
| M | 20 | 1 | **8T-4183** | 4 | BOLT (M12X1.75X40-MM) | |
| M | 21 | 1 | **8T-4196** | 2 | BOLT (M10X1.5X35-MM) | |
| | 22 | 1 | **8T-4223** | 12 | WASHER-HARD (13.5X25.5X3-MM THK) | |
| | 23 | 1 | **8T-8917** | 1 | BOLT (1/2-13X1.25-IN) | |
| M | 24 | 1 | **8T-4186** | 4 | BOLT (M10X1.5X40-MM) | |

M-METRIC PART

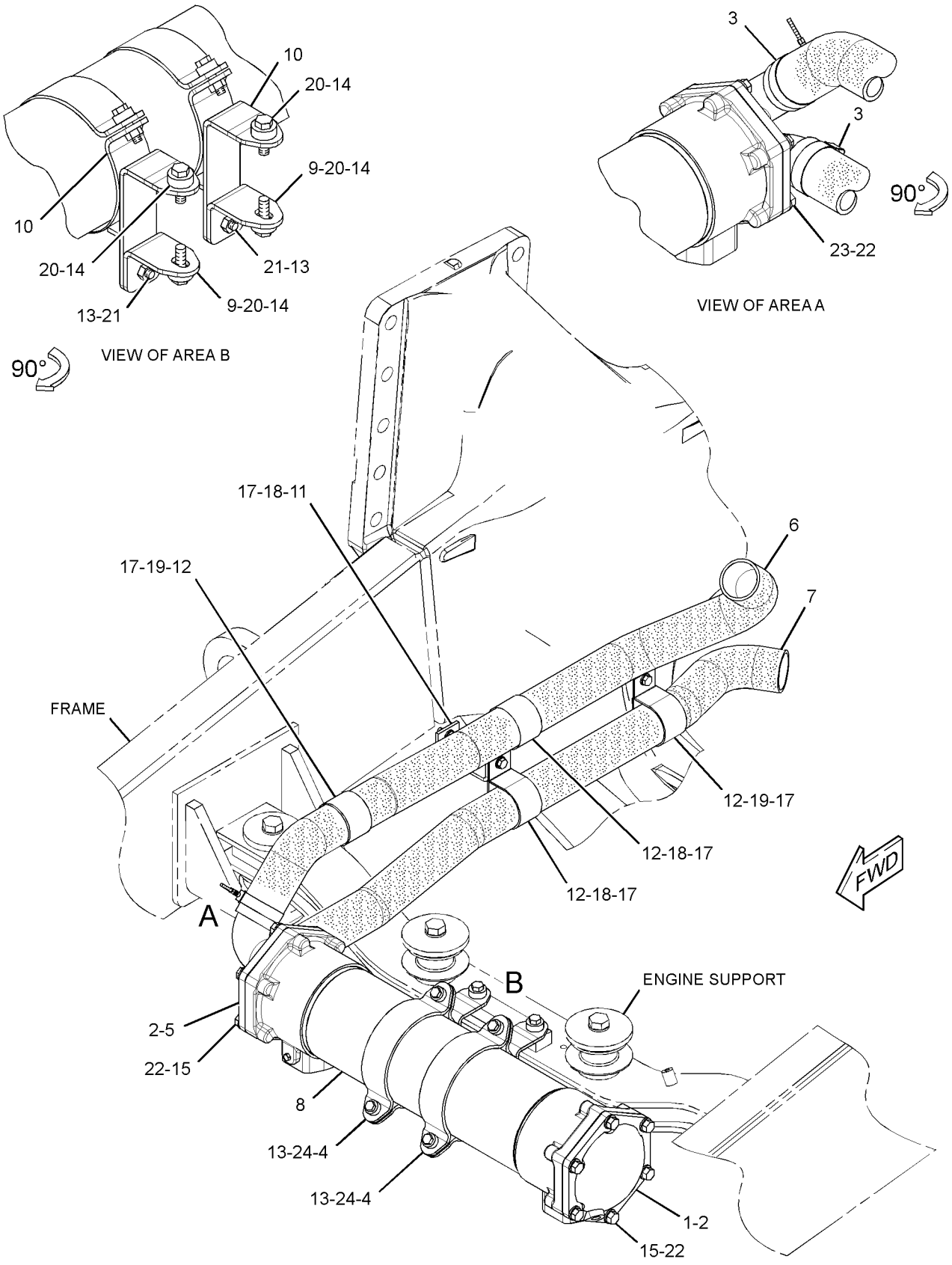


GRAPHIC #1 **<END>** g01416102

# *270-4225* COOLER GP-BRAKE OIL

**S/N: RLB514-UP**

**PART OF 308-5826 INSTALLATION AR-ENGINE**

**SMCS-1365** **i03286780**

| NOTE | REF NO | GRAPHIC REF | PART NUMBER | QTY | PART NAME 1 2 3 4 5 6 (PRODUCT LEVEL) | SEE PAGE |
|---|---|---|---|---|---|---|
| | 1 | 1 | **1P-6405** | 1 | BONNET-BRAKE OIL COOLER | |
| | 2 | 1 | **7S-8767** | 2 | GASKET | |
| C | 3 | 1 | **8T-4984** | 16 | CLAMP-HOSE | |
| | 4 | 1 | **230-2200** | 2 | BRACKET | |
| | 5 | 1 | **230-2202** | 1 | BONNET | |
| C | 6 | 1 | **259-8359** | 1 | PLATE | |
| | 7 | 1 | **283-9746** | 1 | CORE AS-OIL COOLER (BRAKE) | |
| | | 1 | **8T-6764** | 2 | PLUG-PIPE | |
| | 8 | 1 | **286-9746** | 2 | BRACKET AS | |
| M | | 1 | **8T-3490** | 1 | NUT-WELD (M10X1.5-THD) | |
| | 9 | 1 | **286-9815** | 2 | BRACKET AS | |
| C | 10 | 1 | **323-4709** | 1 | TUBE | |
| C | 11 | 1 | **323-4710** | 1 | TUBE | |
| C | 12 | 1 | **323-4711** | 1 | HOSE | |
| C | 13 | 1 | **324-9860** | 2 | HOSE | |
| C | 14 | 1 | **326-2945** | 1 | HOSE | |
| | 15 | 1 | **198-4777** | 6 | WASHER-HARD (11X25X10-MM THK) | |
| | 16 | 1 | **198-4778** | 4 | WASHER-HARD (13.5X30X12-MM THK) | |
| | 17 | 1 | **5P-2566** | 11 | BOLT (1/2-13X1.5-IN) | |
| C | 18 | 1 | **6V-1581** | 2 | CLIP (SLOT) | |
| C | 19 | 1 | **6V-1582** | 2 | CLIP (TAB) | |
| C | 20 | 1 | **7X-7729** | 4 | WASHER (11X25X3-MM THK) | |
| CM | 21 | 1 | **8T-4133** | 2 | NUT (M10X1.5-THD) | |
| M | 22 | 1 | **8T-4183** | 4 | BOLT (M12X1.75X40-MM) | |
| M | 23 | 1 | **8T-4186** | 4 | BOLT (M10X1.5X40-MM) | |
| CM | 24 | 1 | **8T-4196** | 4 | BOLT (M10X1.5X35-MM) | |
| | 25 | 1 | **8T-4223** | 12 | WASHER-HARD (13.5X25.5X3-MM THK) | |
| | 26 | 1 | **8T-8917** | 1 | BOLT (1/2-13X1.25-IN) | |

C-CHANGE FROM PREVIOUS TYPE
M-METRIC PART

*270-4225* **COOLER GP-BRAKE OIL** *(contd.)* **i03286780**

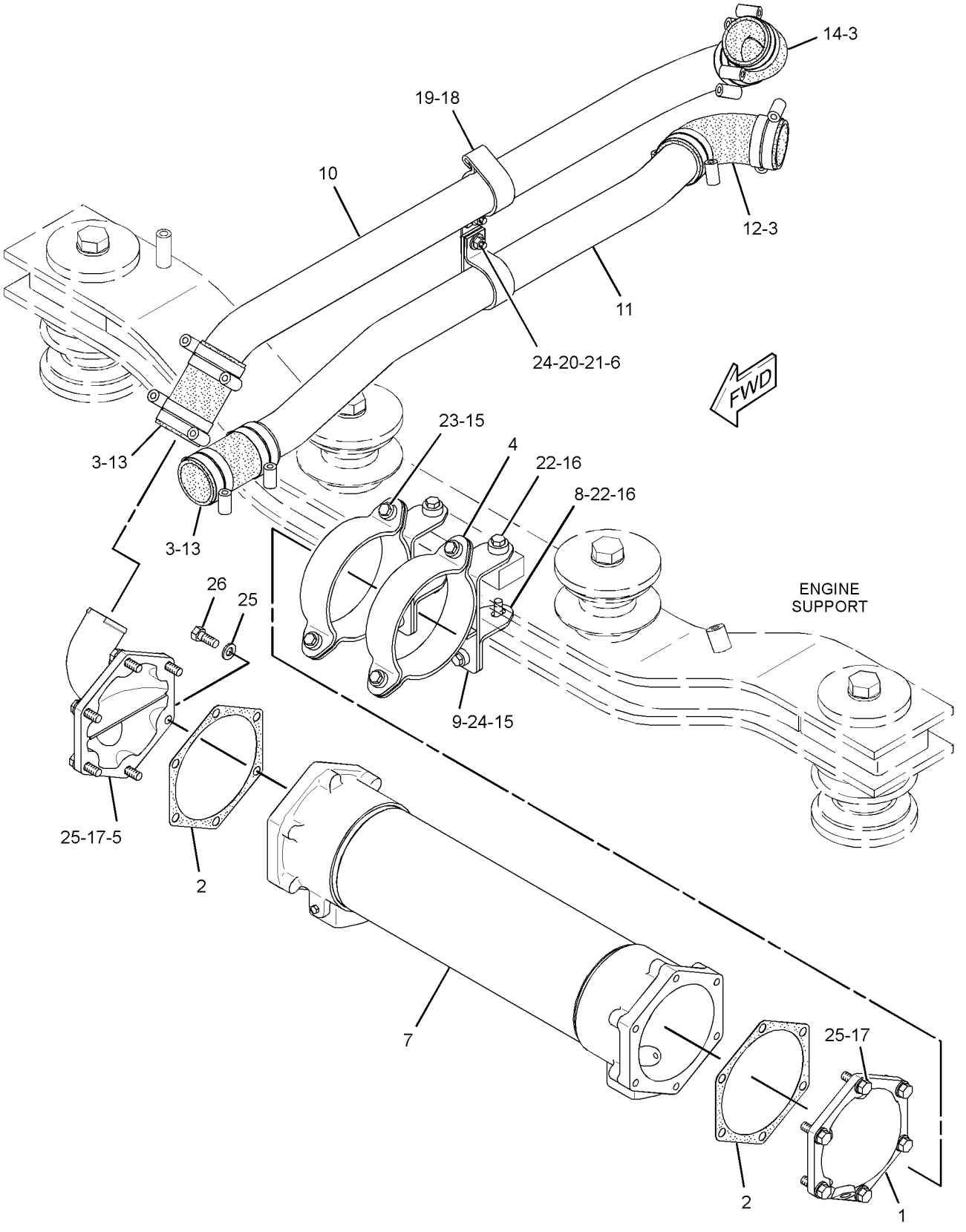


GRAPHIC #1 **<END>** g01677236

# BRAKING SYSTEM

## *269-9191* LINES GP-ACCUMULATOR–BRAKE

**S/N: RLB1-287**
**CHARGED**
**PART OF 270-1748 HYDRAULIC AR**

**SMCS-4257, 4263** **i02616365**

| NOTE | REF NO | GRAPHIC REF | PART NUMBER | QTY | PART NAME 1 2 3 4 5 6 (PRODUCT LEVEL) | SEE PAGE |
|---|---|---|---|---|---|---|
| | 1 | 1 | *148-8430* | 2 | TEE AS | |
| | | | | | (EACH INCLUDES) | |
| | | 1 | **7X-0873** | 1 | TEE (SWIVEL) | |
| | | 1 | **6V-9746** | 1 | SEAL-O-RING | |
| | 2 | 1 | *164-5567* | 2 | COUPLER AS-QUICK DISCONNECT | |
| | | | | | (EACH INCLUDES) | |
| | | 1 | **6V-3965** | 1 | FITTING (QUICK DISCONNECT) | |
| | | 1 | **3J-1907** | 1 | SEAL-O-RING | |
| I | 3 | 1 | **275-9256** | 1 | HOSE AS | |
| | 4 | 1 | **276-5204** | 1 | BRACKET AS | |
| | 5 | 1 | **276-7569** | 1 | TUBE AS | |
| | 6 | 1 | **276-7570** | 1 | TUBE AS | |
| | 7 | 1 | **278-6178** | 1 | BRACKET AS | |
| | 8 | 1 | **278-6179** | 1 | BRACKET AS | |
| | 9 | 1 | **278-6182** | 2 | BRACKET | |
| | 10 | 1 | **280-4109** | 1 | TUBE AS | |
| | 11 | 1 | **280-4110** | 1 | TUBE AS | |
| | 12 | 1 | **280-4111** | 1 | TUBE AS | |
| | 13 | 1 | **280-4112** | 1 | TUBE AS | |
| | 14 | 1 | **0S-1629** | 10 | BOLT (1/2-20X1-IN) | |
| | 15 | 1 | *148-8324* | 1 | CONNECTOR AS | |
| | | 1 | **6V-9874** | 1 | CONNECTOR | |
| | | 1 | **3K-0360** | 1 | SEAL-O-RING | |
| | | 1 | **6V-9746** | 1 | SEAL-O-RING | |
| | 16 | 1 | *148-8347* | 2 | ELBOW AS | |
| | | | | | (EACH INCLUDES) | |
| | | 1 | **6V-9007** | 1 | ELBOW (90-DEG) | |
| | | 1 | **3D-2824** | 1 | SEAL-O-RING | |
| | | 1 | **6V-9746** | 1 | SEAL-O-RING | |
| | 17 | 1 | *148-8359* | 1 | ELBOW AS | |
| | | 1 | **6V-9877** | 1 | ELBOW (90-DEG) | |
| | | 1 | **3K-0360** | 1 | SEAL-O-RING | |
| | | 1 | **6V-9746** | 1 | SEAL-O-RING | |
| | 18 | 1 | *148-8451* | 2 | TEE AS | |
| | | | | | (EACH INCLUDES) | |
| | | 1 | **6V-8791** | 1 | TEE-FACE SEAL | |
| | | 1 | **6V-9746** | 3 | SEAL-O-RING | |
| | 19 | 1 | **149-7738** | 1 | CLIP | |
| Y | 20 | 1 | *220-5692* | 2 | ACCUMULATOR GP-BRAKE (CHARGED) (PARKING) | 563 |
| | 21 | 1 | **5K-5338** | 1 | CLIP | |
| | 22 | 1 | **6D-4246** | 8 | CLIP | |
| | 23 | 1 | **6V-0852** | 2 | CAP-DUST | |
| | 24 | 1 | **6V-9746** | 1 | SEAL-O-RING | |
| | 25 | 1 | **7X-0605** | 4 | WASHER-HARD (13X28X1.6-MM THK) | |
| | 26 | 1 | **8T-4121** | 22 | WASHER-HARD (11X21X2.5-MM THK) | |
| M | 27 | 1 | **8T-4133** | 4 | NUT (M10X1.5-THD) | |
| M | 28 | 1 | **8T-4137** | 10 | BOLT (M10X1.5X20-MM) | |
| M | 29 | 1 | **8T-4183** | 4 | BOLT (M12X1.75X40-MM) | |
| M | 30 | 1 | **8T-4185** | 2 | BOLT (M10X1.5X50-MM) | |
| M | 31 | 1 | **8T-4195** | 6 | BOLT (M10X1.5X30-MM) | |
| | 32 | 1 | **8T-4223** | 10 | WASHER-HARD (13.5X25.5X3-MM THK) | |

I-REFER TO HYDRAULIC INFORMATION SYSTEM
M-METRIC PART
Y-SEPARATE ILLUSTRATION

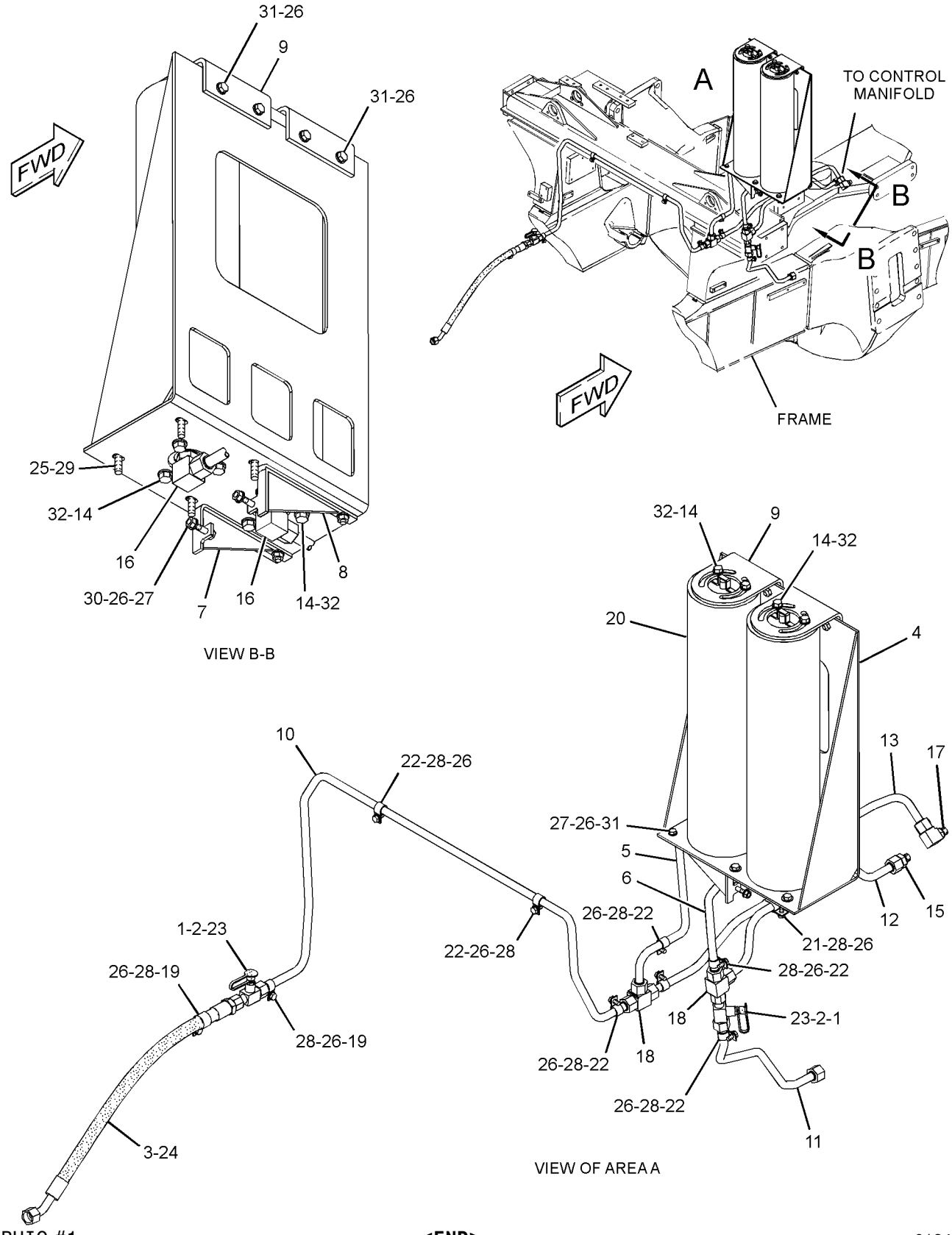


GRAPHIC #1 **<END>** g01345514

## *269-9191* LINES GP-ACCUMULATOR–BRAKE

**S/N: RLB288-UP**
**CHARGED**
**PART OF 270-1748 HYDRAULIC AR**

**SMCS-4257, 4263** **i02975466**

| NOTE | REF NO | GRAPHIC REF | PART NUMBER | QTY | PART NAME 1 2 3 4 5 6 (PRODUCT LEVEL) | SEE PAGE |
|---|---|---|---|---|---|---|
| | 1 | 1 | *148-8430* | 2 | TEE AS | |
| | | | | | (EACH INCLUDES) | |
| | | 1 | **7X-0873** | 1 | TEE | |
| | | 1 | **6V-9746** | 1 | SEAL-O-RING | |
| | 2 | 1 | *164-5567* | 2 | COUPLER AS-QUICK DISCONNECT | |
| | | | | | (EACH INCLUDES) | |
| | | 1 | **6V-3965** | 1 | FITTING (QUICK DISCONNECT) | |
| | | 1 | **3J-1907** | 1 | SEAL-O-RING | |
| I | 3 | 1 | **275-9256** | 1 | HOSE AS | |
| | 4 | 1 | **276-5204** | 1 | BRACKET AS | |
| | 5 | 1 | **278-6178** | 1 | BRACKET AS | |
| | 6 | 1 | **278-6179** | 1 | BRACKET AS | |
| | 7 | 1 | **278-6182** | 2 | BRACKET | |
| | 8 | 1 | **280-4109** | 1 | TUBE AS | |
| | 9 | 1 | **280-4112** | 1 | TUBE AS | |
| C | 10 | 1 | **306-9233** | 1 | TUBE AS | |
| C | 11 | 1 | **306-9234** | 1 | TUBE AS | |
| I | 12 | 1 | **310-8014** | 1 | HOSE AS | |
| I | 13 | 1 | **311-2574** | 1 | HOSE AS | |
| | 14 | 1 | **0S-1629** | 10 | BOLT (1/2-20X1-IN) | |
| | 15 | 1 | *148-8324* | 1 | CONNECTOR AS | |
| | | 1 | **6V-9874** | 1 | CONNECTOR | |
| | | 1 | **3K-0360** | 1 | SEAL-O-RING | |
| | | 1 | **6V-9746** | 1 | SEAL-O-RING | |
| C | 16 | 1 | *148-8327* | 2 | CONNECTOR AS | |
| | | | | | (EACH INCLUDES) | |
| | | 1 | **6V-8637** | 1 | CONNECTOR | |
| | | 1 | **3D-2824** | 1 | SEAL-O-RING | |
| | | 1 | **6V-9746** | 1 | SEAL-O-RING | |
| | 17 | 1 | *148-8359* | 1 | ELBOW AS | |
| | | 1 | **6V-9877** | 1 | ELBOW | |
| | | 1 | **3K-0360** | 1 | SEAL-O-RING | |
| | | 1 | **6V-9746** | 1 | SEAL-O-RING | |
| | 18 | 1 | *148-8451* | 2 | TEE AS | |
| | | | | | (EACH INCLUDES) | |
| | | 1 | **6V-8791** | 1 | TEE-FACE SEAL | |
| | | 1 | **6V-9746** | 3 | SEAL-O-RING | |
| | 19 | 1 | **149-7738** | 3 | CLIP | |
| | 20 | 1 | **1S-0994** | 1 | CLIP | |
| Y | 21 | 1 | *220-5692* | 2 | ACCUMULATOR GP-BRAKE (CHARGED) (PARKING) | 563 |
| | 22 | 1 | **6D-4246** | 5 | CLIP | |
| | 23 | 1 | **6V-0852** | 2 | CAP-DUST | |
| | 24 | 1 | **6V-2235** | 1 | CLIP | |
| | 25 | 1 | **6V-9746** | 1 | SEAL-O-RING | |
| | 26 | 1 | **7X-0605** | 4 | WASHER-HARD (13X28X1.6-MM THK) | |
| | 27 | 1 | **8T-4121** | 22 | WASHER-HARD (11X21X2.5-MM THK) | |
| M | 28 | 1 | **8T-4133** | 5 | NUT (M10X1.5-THD) | |
| M | 29 | 1 | **8T-4136** | 2 | BOLT (M10X1.5X25-MM) | |
| M | 30 | 1 | **8T-4137** | 7 | BOLT (M10X1.5X20-MM) | |
| M | 31 | 1 | **8T-4183** | 4 | BOLT (M12X1.75X40-MM) | |
| M | 32 | 1 | **8T-4185** | 2 | BOLT (M10X1.5X50-MM) | |
| M | 33 | 1 | **8T-4195** | 6 | BOLT (M10X1.5X30-MM) | |
| | 34 | 1 | **8T-4223** | 10 | WASHER-HARD (13.5X25.5X3-MM THK) | |

*269-9191* **LINES GP-ACCUMULATOR** ***(contd.)*** **i02975466**

C-CHANGE FROM PREVIOUS TYPE
I-REFER TO HYDRAULIC INFORMATION SYSTEM
M-METRIC PART
Y-SEPARATE ILLUSTRATION

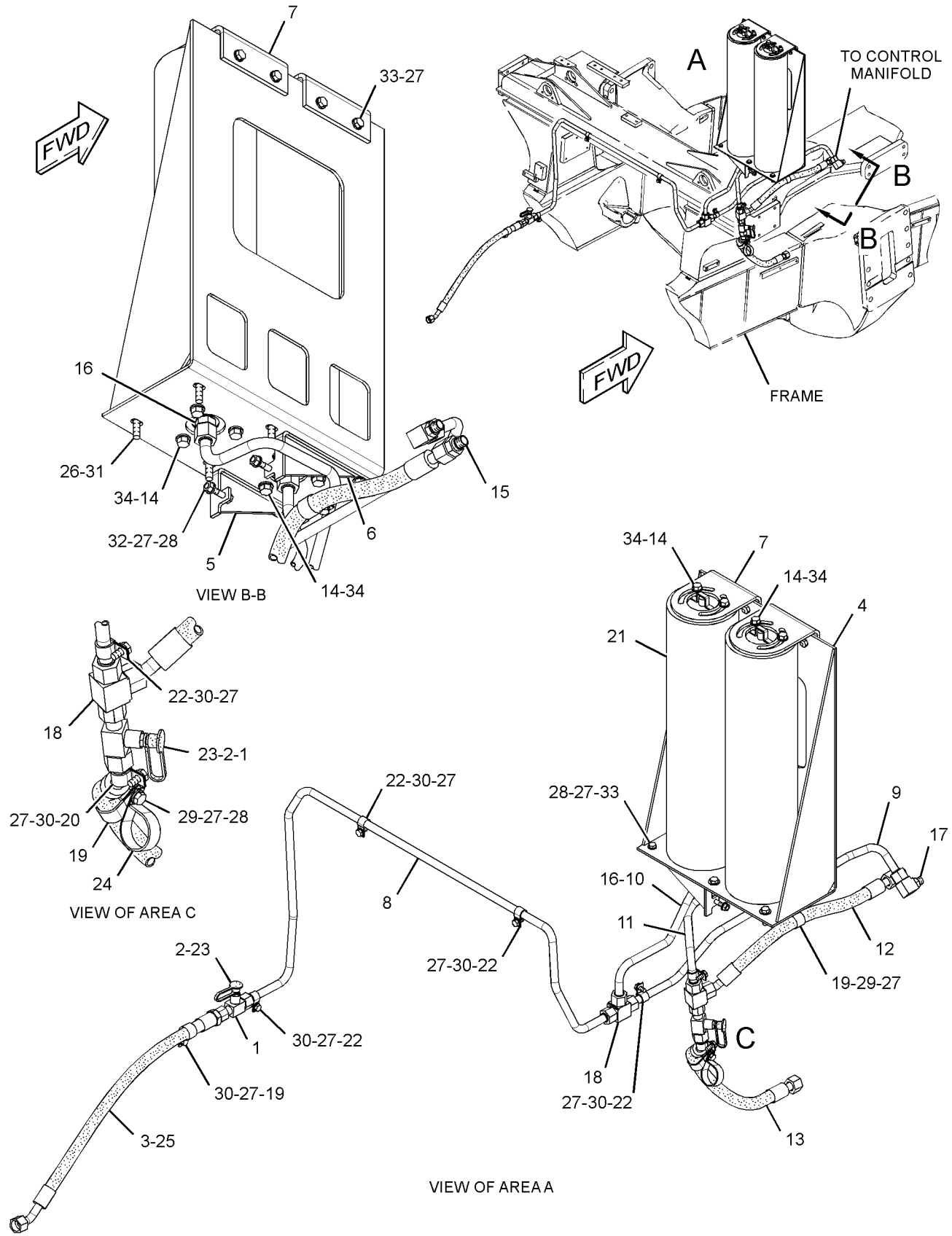


GRAPHIC #1

**<END>**

g01525615

# BRAKING SYSTEM

## *269-9194* LINES GP-BRAKE

**S/N: RLB1-333**

**PART OF 270-1748 HYDRAULIC AR**

**SMCS-4257** **i03120582**

| NOTE | REF NO | GRAPHIC REF | PART NUMBER | QTY | PART NAME 1 2 3 4 5 6 (PRODUCT LEVEL) | SEE PAGE |
|---|---|---|---|---|---|---|
| | 1 | 2 | **6N-6984** | 2 | MOUNT-RUBBER | |
| Y | 2 | 2 | **8J-6875** | 1 | VALVE GP-SHUTTLE | 611 |
| | 3 | 1 | **9S-6524** | 2 | BRACKET | |
| I | 4 | 1,2 | **143-6373** | 1 | HOSE AS | |
| | 5 | 2 | **160-2609** | 1 | SWITCH AS-PRESSURE (PARKING BRAKE) | |
| | | 2 | **155-2260** | 1 | KIT-CONNECTING PLUG (3-PIN) | |
| | | | | | (INCLUDES PLUG AS, WEDGE, & INTERFACE SEAL) | |
| | | 2 | **186-3736** | 3 | SOCKET-CONNECTOR (16-GA TO 18-GA) | |
| | 6 | 1,2 | *184-2420* | 2 | ADAPTER AS | |
| | | | | | (EACH INCLUDES) | |
| | | 1,2 | **3E-7401** | 1 | ADAPTER | |
| | | 1,2 | **6V-8397** | 1 | SEAL-O-RING | |
| | 7 | 1 | **185-4026** | 1 | VALVE GP-CHECK | |
| | | 1 | **3K-0360** | 1 | SEAL-O-RING | |
| | | 1 | **6V-8398** | 1 | SEAL-O-RING | |
| | 8 | 2 | **213-6754** | 2 | BOSS | |
| Y | 9 | 2 | **248-0054** | 1 | VALVE & MTG GP-BRAKE (FRONT BRAKE, RETARDER CONTROL) | 601 |
| | 10 | 1 | **274-6837** | 1 | TUBE AS | |
| | 11 | 1 | **274-6839** | 1 | TUBE AS | |
| | 12 | 1 | **274-6841** | 1 | TUBE AS | |
| | 13 | 1 | **274-6967** | 1 | PLATE | |
| I | 14 | 2 | **274-7872** | 1 | HOSE AS | |
| I | 15 | 2 | **274-7877** | 1 | HOSE AS | |
| | 16 | 1 | **274-7887** | 1 | TUBE AS | |
| I | 17 | 2 | **275-0099** | 1 | HOSE AS | |
| I | 18 | 2 | **275-0100** | 1 | HOSE AS | |
| I | 19 | 1 | **275-9238** | 1 | HOSE AS | |
| Y | 20 | 2 | *277-6941* | 1 | VALVE GP-BRAKE (TOW RELEASE) | 604 |
| I | 21 | 2 | **280-7534** | 1 | HOSE AS | |
| Y | 22 | 2 | **289-0585** | 1 | VALVE & MTG GP-BRAKE (ACCUMULATOR PURGE) | 603 |
| I | 23 | 2 | **290-5580** | 1 | HOSE AS | |
| I | 24 | 2 | **290-5581** | 1 | HOSE AS | |
| I | 25 | 1 | **302-1488** | 1 | HOSE AS | |
| | 26 | 1 | **310-8294** | 1 | TUBE AS | |
| I | 27 | 2 | **310-8298** | 1 | HOSE AS | |
| I | 28 | 1 | **310-8299** | 1 | HOSE AS | |
| I | 29 | 2 | **311-9253** | 1 | HOSE AS | |
| I | 30 | 2 | **311-9254** | 1 | HOSE AS | |
| I | 31 | 2 | **311-9255** | 1 | HOSE AS | |
| I | 32 | 2 | **311-9256** | 1 | HOSE AS | |
| I | 33 | 2 | **311-9257** | 1 | HOSE AS | |
| I | 34 | 2 | **311-9258** | 1 | HOSE AS | |
| | 35 | 2 | **311-9259** | 1 | TUBE AS | |
| | 36 | 2 | **311-9260** | 1 | TUBE AS | |
| | 37 | 2 | **311-9261** | 1 | PLATE | |
| | 38 | 2 | **127-6287** | 1 | ELBOW | |
| | 39 | 1 | **128-5091** | 1 | SWITCH AS-PRESSURE (SERVICE BRAKE, RETARDER) | |
| | | 1 | **102-8803** | 1 | KIT-RECEPTACLE (3-PIN) | |
| | | | | | (INCLUDES RECEPTACLE AS & WEDGE) | |
| | | 1 | **186-3735** | 3 | PIN-CONNECTOR (16-GA TO 18-GA) | |
| | 40 | 1 | **146-2282** | 2 | COLLAR | |
| | 41 | 2 | *148-8313* | 1 | ADAPTER AS | |
| | | 2 | **3K-0360** | 1 | SEAL-O-RING | |
| | | 2 | **5P-6944** | 3 | ADAPTER | |

*269-9194* **LINES GP-BRAKE** ***(contd.)*** **i03120582**

| NOTE | REF NO | GRAPHIC REF | PART NUMBER | QTY | PART NAME 1 2 3 4 5 6 (PRODUCT LEVEL) | SEE PAGE |
|---|---|---|---|---|---|---|
| | 42 | 2 | *148-8315* | 3 | CONNECTOR AS | |
| | | | | | (EACH INCLUDES) | |
| | | 2 | **2M-9780** | 1 | SEAL-O-RING | |
| | | 2 | **6V-8642** | 1 | CONNECTOR | |
| | | 2 | **7J-9108** | 1 | SEAL-O-RING | |
| | 43 | 2 | *148-8322* | 2 | CONNECTOR AS | |
| | | | | | (EACH INCLUDES) | |
| | | 1 | **2M-9780** | 1 | SEAL-O-RING | |
| | | 1 | **6V-8640** | 1 | CONNECTOR | |
| | | 1 | **6V-9746** | 1 | SEAL-O-RING | |
| | 44 | 2 | *148-8324* | 1 | CONNECTOR AS | |
| | | 2 | **3K-0360** | 1 | SEAL-O-RING | |
| | | 2 | **6V-9874** | 1 | CONNECTOR | |
| | | 2 | **6V-9746** | 1 | SEAL-O-RING | |
| | 45 | 2 | *148-8327* | 2 | CONNECTOR AS | |
| | | | | | (EACH INCLUDES) | |
| | | 1 | **3D-2824** | 1 | SEAL-O-RING | |
| | | 1 | **6V-8637** | 1 | CONNECTOR | |
| | | 1 | **6V-9746** | 1 | SEAL-O-RING | |
| | 46 | 2 | *148-8340* | 2 | CONNECTOR AS | |
| | | | | | (EACH INCLUDES) | |
| | | 2 | **3K-0360** | 1 | SEAL-O-RING | |
| | | 2 | **6V-8398** | 1 | SEAL-O-RING | |
| | | 2 | **6V-8639** | 1 | CONNECTOR | |
| | 48 | 2 | *148-8359* | 4 | ELBOW AS | |
| | | | | | (EACH INCLUDES) | |
| | | 2 | **3K-0360** | 1 | SEAL-O-RING | |
| | | 2 | **6V-9746** | 1 | SEAL-O-RING | |
| | | 2 | **6V-9877** | 1 | ELBOW | |
| | 49 | 2 | *148-8364* | 1 | ELBOW AS | |
| | | 2 | **3K-0360** | 1 | SEAL-O-RING | |
| | | 2 | **6V-8398** | 1 | SEAL-O-RING | |
| | | 2 | **6V-8625** | 1 | ELBOW | |
| | 50 | 2 | *148-8365* | 1 | ELBOW AS | |
| | | 2 | **3J-1907** | 1 | SEAL-O-RING | |
| | | 2 | **6V-8398** | 1 | SEAL-O-RING | |
| | | 2 | **8T-6876** | 1 | ELBOW (90-DEG) | |
| | 51 | 2 | *148-8374* | 1 | ELBOW AS | |
| | | 2 | **3K-0360** | 1 | SEAL-O-RING | |
| | | 2 | **6V-8397** | 1 | SEAL-O-RING | |
| | | 2 | **6V-8723** | 1 | ELBOW | |
| | 52 | 2 | *148-8378* | 1 | ELBOW AS | |
| | | 2 | **3J-1907** | 1 | SEAL-O-RING | |
| | | 2 | **6V-8397** | 1 | SEAL-O-RING | |
| | | 2 | **6V-8724** | 1 | ELBOW | |
| | 53 | 2 | *148-8390* | 2 | ELBOW AS | |
| | | | | | (EACH INCLUDES) | |
| | | 2 | **2M-9780** | 1 | SEAL-O-RING | |
| | | 2 | **6V-8626** | 1 | ELBOW | |
| | | 2 | **7J-9108** | 1 | SEAL-O-RING | |
| | 54 | 2 | *148-8449* | 2 | TEE AS-SWIVEL | |
| | | | | | (EACH INCLUDES) | |
| | | 2 | **6V-9746** | 2 | SEAL-O-RING | |
| | | 2 | **6V-9839** | 1 | TEE-SWIVEL | |
| | 55 | 1 | *148-8455* | 1 | UNION AS | |
| | | 1 | **6V-8997** | 1 | UNION | |
| | | 1 | **6V-9746** | 2 | SEAL-O-RING | |
| | 56 | 2 | *150-4043* | 1 | CONNECTOR AS | |
| | | 2 | **3J-1907** | 1 | SEAL-O-RING | |

## *269-9194* **LINES GP-BRAKE** *(contd.)* **i03120582**

| NOTE | REF NO | GRAPHIC REF | PART NUMBER | QTY | PART NAME 1 2 3 4 5 6 (PRODUCT LEVEL) | SEE PAGE |
|---|---|---|---|---|---|---|
| | | 2 | **6V-8398** | 1 | SEAL-O-RING | |
| | | 2 | **6V-9873** | 1 | CONNECTOR | |
| | 57 | 2 | *153-6237* | 2 | ELBOW AS | |
| | | | | | (EACH INCLUDES) | |
| | | 2 | **3D-2824** | 1 | SEAL-O-RING | |
| | | 2 | **6V-9004** | 1 | ELBOW | |
| | | 2 | **6V-9746** | 1 | SEAL-O-RING | |
| | 58 | 1 | *153-6244* | 1 | ELBOW AS | |
| | | 1 | **2M-9780** | 1 | SEAL-O-RING | |
| | | 1 | **6V-9746** | 1 | SEAL-O-RING | |
| | | 1 | **8T-5389** | 1 | ELBOW | |
| | 59 | 2 | **162-3122** | 1 | ELBOW | |
| | 60 | 2 | **164-6862** | 1 | TEE AS | |
| | | 1 | **6V-9160** | 1 | TEE-FACE SEAL | |
| | | 1 | **6V-9746** | 3 | SEAL-O-RING | |
| | 61 | 1 | *169-7409* | 2 | UNION AS | |
| | | | | | (EACH INCLUDES) | |
| | | 2 | **6V-8996** | 1 | UNION | |
| | | 2 | **7J-9108** | 2 | SEAL-O-RING | |
| | 62 | 2 | **172-8815** | 1 | ADAPTER AS | |
| | | 2 | **3J-1907** | 1 | SEAL-O-RING | |
| | | 2 | **9X-2847** | 1 | ADAPTER-SWIVEL | |
| | 63 | 2 | *212-1336* | 1 | TEE AS | |
| | | 2 | **2M-9780** | 1 | SEAL-O-RING | |
| | | 2 | **6V-8783** | 1 | TEE-FACE SEAL | |
| | | 2 | **7J-9108** | 2 | SEAL-O-RING | |
| | 64 | 2 | **224-2335** | 1 | PLATE | |
| | 65 | 2 | *241-6207* | 1 | TEE AS | |
| | | 2 | **6V-9746** | 3 | SEAL-O-RING | |
| | | 2 | **132-5152** | 1 | TEE-UNION | |
| | 66 | 2 | **299-3446** | 2 | WASHER (10.3X38.1X5-MM THK) | |
| | 67 | 2 | **1S-0994** | 1 | CLIP | |
| | 68 | 1,2 | **2P-1293** | 3 | LOCKNUT (1-3/16-12-THD) | |
| | 69 | 2 | **3J-1907** | 1 | SEAL-O-RING | |
| | 70 | 1,2 | **3K-0360** | 2 | SEAL-O-RING | |
| | 71 | 2 | **3P-2404** | 1 | CLIP | |
| | 72 | 1 | **4D-7735** | 4 | CLIP | |
| | 73 | 2 | **5D-0718** | 1 | CLIP | |
| | 74 | 1 | **5K-8451** | 4 | CLIP | |
| | 75 | 2 | **5P-7464** | 1 | CLIP (SLOT) | |
| | 76 | 2 | **5P-7465** | 1 | CLIP (TAB) | |
| | 77 | 2 | **5P-7468** | 1 | CLIP (SLOT) | |
| | 78 | 2 | **5P-7469** | 1 | CLIP (TAB) | |
| | 79 | 1 | **5P-9299** | 1 | CLIP | |
| | 80 | 2 | **6D-4244** | 4 | CLIP | |
| | 81 | 2 | **6V-1249** | 1 | GROMMET | |
| | 82 | 1,2 | **6V-1889** | 7 | CLIP | |
| | 83 | 2 | **6V-8398** | 1 | SEAL-O-RING | |
| | 84 | 1 | **6V-9168** | 2 | NUT (11/16-16-THD) | |
| | 85 | 1 | **6V-9170** | 2 | NUT-BULKHEAD (1-14-THD) | |
| | 86 | 2 | **6V-9746** | 1 | SEAL-O-RING | |
| | 87 | 1 | **7J-9108** | 1 | SEAL-O-RING | |
| | 88 | 2 | **7M-8485** | 1 | SEAL-O-RING | |
| | 89 | 1,2 | **8S-0948** | 3 | CLIP | |
| | 90 | 1,2 | **8T-4121** | 30 | WASHER-HARD (11X21X2.5-MM THK) | |
| M | 91 | 1,2 | **8T-4133** | 5 | NUT (M10X1.5-THD) | |
| M | 92 | 1,2 | **8T-4136** | 11 | BOLT (M10X1.5X25-MM) | |
| M | 93 | 1,2 | **8T-4137** | 3 | BOLT (M10X1.5X20-MM) | |
| M | 94 | 2 | **8T-4172** | 2 | BOLT (M10X1.5X80-MM) | |

## *269-9194* **LINES GP-BRAKE** *(contd.)* **i03120582**

| NOTE | REF NO | GRAPHIC REF | PART NUMBER | QTY | PART NAME 1 2 3 4 5 6 (PRODUCT LEVEL) | SEE PAGE |
|---|---|---|---|---|---|---|
| M | 95 | 2 | **8T-4195** | 3 | BOLT (M10X1.5X30-MM) | |
| M | 96 | 1,2 | **8T-4196** | 4 | BOLT (M10X1.5X35-MM) | |
| | 97 | 2 | **8T-4223** | 1 | WASHER-HARD (13.5X25.5X3-MM THK) | |
| M | 98 | 2 | **8T-5436** | 2 | BOLT (M10X1.5X130-MM) | |
| | 99 | 2 | **8T-8919** | 1 | BOLT (1/2-13X1.75-IN) | |
| | 100 | 2 | **9M-8406** | 1 | CLIP | |
| | 101 | 2 | **9R-4440** | 1 | PLATE | |

I-REFER TO HYDRAULIC INFORMATION SYSTEM
M-METRIC PART
Y-SEPARATE ILLUSTRATION

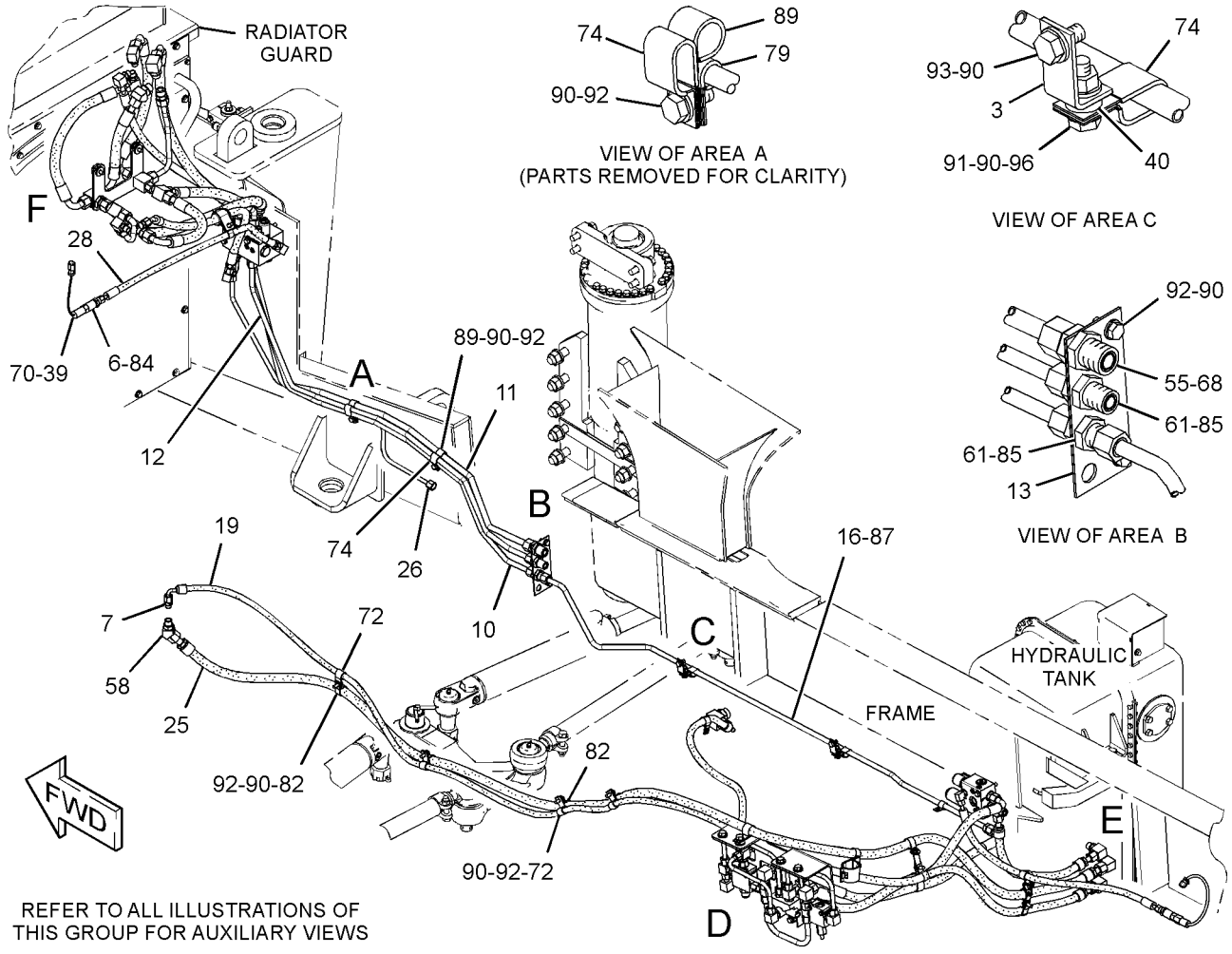


GRAPHIC #1 g01566633

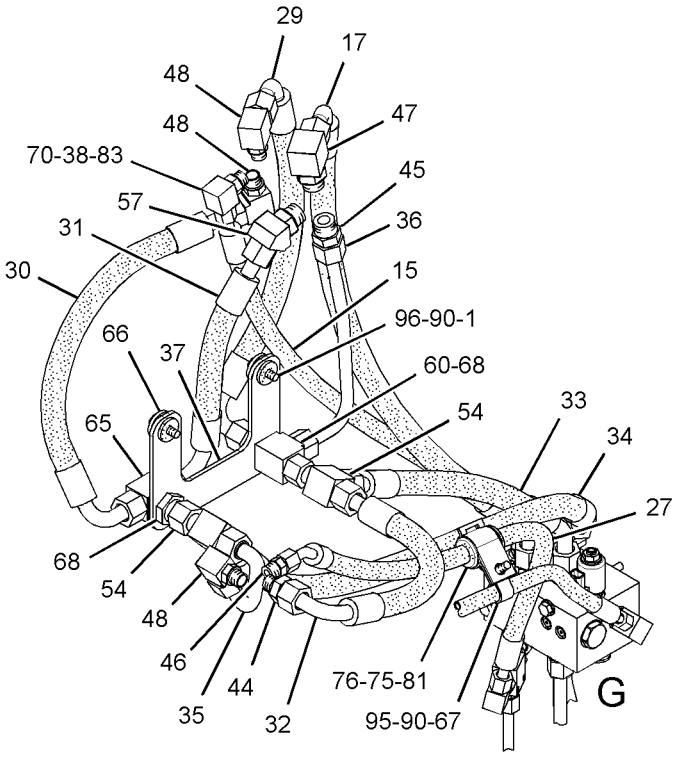


VIEW OF AREA F

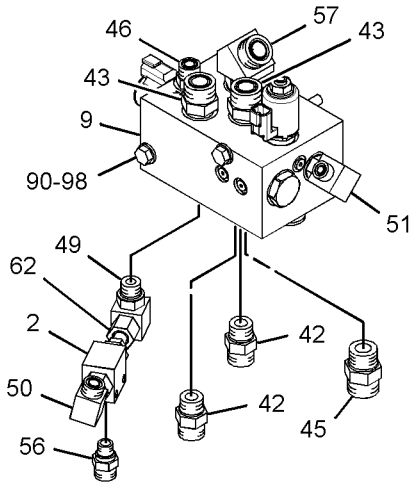


VIEW OF AREA G
(HOSES REMOVED AND EXPLODED)

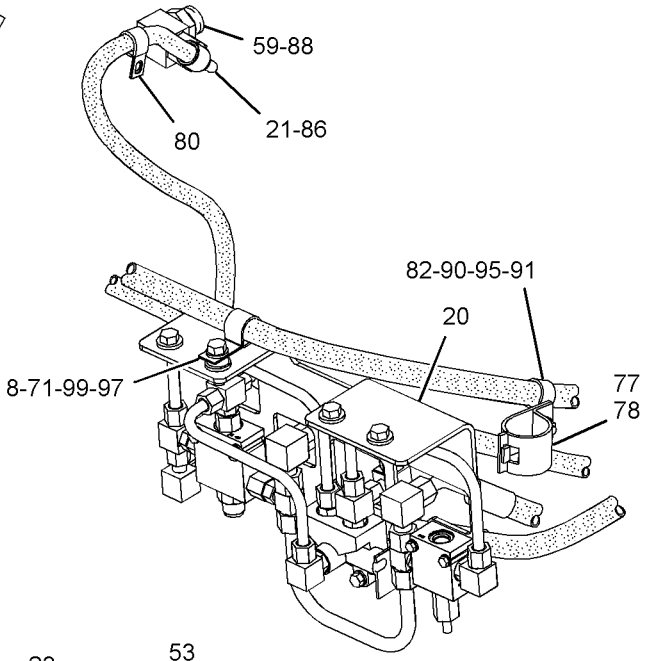


VIEW OF AREA D

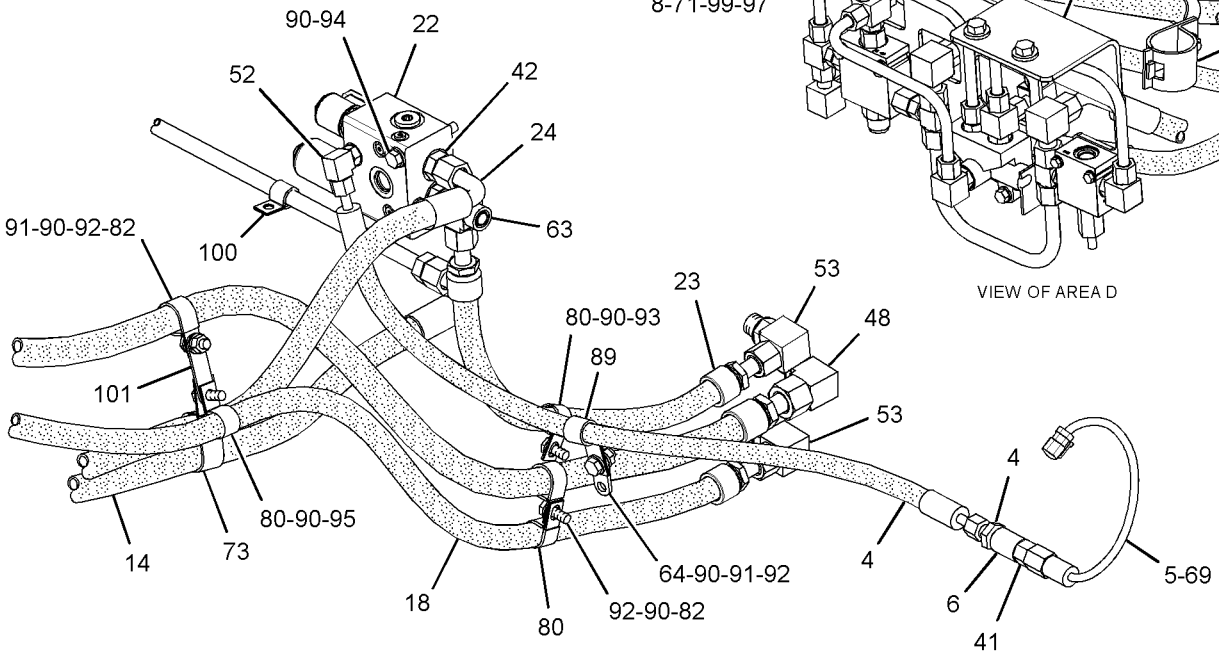


VIEW OF AREA E

GRAPHIC #2 **<END>** g01566634

# BRAKING SYSTEM

## *269-9194* LINES GP-BRAKE

**S/N: RLB334-UP**

**PART OF 270-1748 HYDRAULIC AR**

**SMCS-4257** **i02862112**

| NOTE | REF NO | GRAPHIC REF | PART NUMBER | QTY | PART NAME 1 2 3 4 5 6 (PRODUCT LEVEL) | SEE PAGE |
|---|---|---|---|---|---|---|
| | 1 | 2 | **6N-6984** | 2 | MOUNT-RUBBER | |
| Y | 2 | 2 | **8J-6875** | 1 | VALVE GP-SHUTTLE | 611 |
| | 3 | 1 | **9S-6524** | 2 | BRACKET | |
| I | 4 | 2 | **143-6373** | 1 | HOSE AS | |
| | 5 | 2 | **160-2609** | 1 | SWITCH AS-PRESSURE (PARKING BRAKE) | |
| | | 2 | **155-2260** | 1 | KIT-CONNECTING PLUG (3-PIN) | |
| | | | | | (INCLUDES PLUG AS, WEDGE, & INTERFACE SEAL) | |
| | | 2 | **186-3736** | 3 | SOCKET-CONNECTOR (16-GA TO 18-GA) | |
| | 6 | 1,2 | *184-2420* | 2 | ADAPTER AS | |
| | | | | | (EACH INCLUDES) | |
| | | 1,2 | **3E-7401** | 1 | ADAPTER | |
| | | 1,2 | **6V-8397** | 1 | SEAL-O-RING | |
| | 7 | 1 | **185-4026** | 1 | VALVE GP-CHECK | |
| | | 1 | **3K-0360** | 1 | SEAL-O-RING | |
| | | 1 | **6V-8398** | 1 | SEAL-O-RING | |
| | 8 | 2 | **213-6754** | 1 | BOSS | |
| Y | 9 | 2 | **248-0054** | 1 | VALVE & MTG GP-BRAKE (FRONT BRAKE, RETARDER CONTROL) | 601 |
| | 10 | 1 | **274-6837** | 1 | TUBE AS | |
| | 11 | 1 | **274-6839** | 1 | TUBE AS | |
| | 12 | 1 | **274-6841** | 1 | TUBE AS | |
| I | 14 | 2 | **274-7872** | 1 | HOSE AS | |
| I | 15 | 2 | **274-7877** | 1 | HOSE AS | |
| | 16 | 1 | **274-7887** | 1 | TUBE AS | |
| I | 17 | 2 | **275-0099** | 1 | HOSE AS | |
| I | 18 | 2 | **275-0100** | 1 | HOSE AS | |
| I | 19 | 1 | **275-9238** | 1 | HOSE AS | |
| Y | 20 | 2 | *277-6941* | 1 | VALVE GP-BRAKE (TOW RELEASE) | 604 |
| I | 21 | 2 | **280-7534** | 1 | HOSE AS | |
| Y | 22 | 2 | **289-0585** | 1 | VALVE & MTG GP-BRAKE (ACCUMULATOR PURGE) | 603 |
| I | 23 | 2 | **290-5580** | 1 | HOSE AS | |
| I | 24 | 2 | **290-5581** | 1 | HOSE AS | |
| I | 25 | 1 | **302-1488** | 1 | HOSE AS | |
| | 26 | 1 | **310-8294** | 1 | TUBE AS | |
| I | 27 | 2 | **310-8298** | 1 | HOSE AS | |
| I | 28 | 1 | **310-8299** | 1 | HOSE AS | |
| I | 29 | 2 | **311-9253** | 1 | HOSE AS | |
| I | 30 | 2 | **311-9254** | 1 | HOSE AS | |
| I | 31 | 2 | **311-9255** | 1 | HOSE AS | |
| I | 32 | 2 | **311-9256** | 1 | HOSE AS | |
| I | 33 | 2 | **311-9257** | 1 | HOSE AS | |
| I | 34 | 2 | **311-9258** | 1 | HOSE AS | |
| | 35 | 2 | **311-9259** | 1 | TUBE AS | |
| | 36 | 2 | **311-9260** | 1 | TUBE AS | |
| | 37 | 2 | **311-9261** | 1 | PLATE | |
| | 38 | 2 | **127-6287** | 1 | ELBOW | |
| | 39 | 1 | **128-5091** | 1 | SWITCH AS-PRESSURE (SERVICE BRAKE, RETARDER) | |
| | | 1 | **102-8803** | 1 | KIT-RECEPTACLE (3-PIN) | |
| | | | | | (INCLUDES RECEPTACLE AS & WEDGE) | |
| | | 1 | **186-3735** | 3 | PIN-CONNECTOR (16-GA TO 18-GA) | |
| | 40 | 1 | **146-2282** | 2 | COLLAR | |
| | 41 | 2 | *148-8313* | 1 | ADAPTER AS | |
| | | 2 | **3K-0360** | 1 | SEAL-O-RING | |
| | | 2 | **5P-6944** | 3 | ADAPTER | |
| | 42 | 2 | *148-8315* | 3 | CONNECTOR AS | |
| | | | | | (EACH INCLUDES) | |

## *269-9194* **LINES GP-BRAKE** *(contd.)* **i02862112**

| NOTE | REF NO | GRAPHIC REF | PART NUMBER | QTY | PART NAME 1 2 3 4 5 6 (PRODUCT LEVEL) | SEE PAGE |
|---|---|---|---|---|---|---|
| | | 2 | **2M-9780** | 1 | SEAL-O-RING | |
| | | 2 | **6V-8642** | 1 | CONNECTOR | |
| | | 2 | **7J-9108** | 1 | SEAL-O-RING | |
| | 43 | 2 | *148-8322* | 2 | CONNECTOR AS | |
| | | | | | (EACH INCLUDES) | |
| | | 2 | **2M-9780** | 1 | SEAL-O-RING | |
| | | 2 | **6V-8640** | 1 | CONNECTOR | |
| | | 2 | **6V-9746** | 1 | SEAL-O-RING | |
| | 44 | 2 | *148-8324* | 1 | CONNECTOR AS | |
| | | 2 | **3K-0360** | 1 | SEAL-O-RING | |
| | | 2 | **6V-9874** | 1 | CONNECTOR | |
| | | 2 | **6V-9746** | 1 | SEAL-O-RING | |
| | 45 | 2 | *148-8327* | 2 | CONNECTOR AS | |
| | | | | | (EACH INCLUDES) | |
| | | 2 | **3D-2824** | 1 | SEAL-O-RING | |
| | | 2 | **6V-8637** | 1 | CONNECTOR | |
| | | 2 | **6V-9746** | 1 | SEAL-O-RING | |
| | 46 | 2 | *148-8340* | 2 | CONNECTOR AS | |
| | | | | | (EACH INCLUDES) | |
| | | 2 | **3K-0360** | 1 | SEAL-O-RING | |
| | | 2 | **6V-8398** | 1 | SEAL-O-RING | |
| | | 2 | **6V-8639** | 1 | CONNECTOR | |
| | 48 | 2 | *148-8359* | 4 | ELBOW AS | |
| | | | | | (EACH INCLUDES) | |
| | | 2 | **3K-0360** | 1 | SEAL-O-RING | |
| | | 2 | **6V-9746** | 1 | SEAL-O-RING | |
| | | 2 | **6V-9877** | 1 | ELBOW | |
| | 49 | 2 | *148-8364* | 1 | ELBOW AS | |
| | | 2 | **3K-0360** | 1 | SEAL-O-RING | |
| | | 2 | **6V-8398** | 1 | SEAL-O-RING | |
| | | 2 | **6V-8625** | 1 | ELBOW | |
| | 50 | 2 | *148-8365* | 1 | ELBOW AS | |
| | | 2 | **3J-1907** | 1 | SEAL-O-RING | |
| | | 2 | **6V-8398** | 1 | SEAL-O-RING | |
| | | 2 | **8T-6876** | 1 | ELBOW (90-DEG) | |
| | 51 | 2 | *148-8374* | 1 | ELBOW AS | |
| | | 2 | **3K-0360** | 1 | SEAL-O-RING | |
| | | 2 | **6V-8397** | 1 | SEAL-O-RING | |
| | | 2 | **6V-8723** | 1 | ELBOW | |
| | 52 | 2 | *148-8378* | 1 | ELBOW AS | |
| | | 2 | **3J-1907** | 1 | SEAL-O-RING | |
| | | 2 | **6V-8397** | 1 | SEAL-O-RING | |
| | | 2 | **6V-8724** | 1 | ELBOW | |
| | 53 | 2 | *148-8390* | 2 | ELBOW AS | |
| | | | | | (EACH INCLUDES) | |
| | | 2 | **2M-9780** | 1 | SEAL-O-RING | |
| | | 2 | **6V-8626** | 1 | ELBOW | |
| | | 2 | **7J-9108** | 1 | SEAL-O-RING | |
| | 54 | 2 | *148-8449* | 2 | TEE AS-SWIVEL | |
| | | | | | (EACH INCLUDES) | |
| | | 2 | **6V-9746** | 2 | SEAL-O-RING | |
| | | 2 | **6V-9839** | 1 | TEE-SWIVEL | |
| | 55 | 1 | *148-8455* | 1 | UNION AS | |
| | | 1 | **6V-8997** | 1 | UNION | |
| | | 1 | **6V-9746** | 2 | SEAL-O-RING | |
| | 56 | 2 | *150-4043* | 1 | CONNECTOR AS | |
| | | 2 | **3J-1907** | 1 | SEAL-O-RING | |
| | | 2 | **6V-8398** | 1 | SEAL-O-RING | |
| | | 2 | **6V-9873** | 1 | CONNECTOR | |

## *269-9194* **LINES GP-BRAKE** *(contd.)* **i02862112**

| NOTE | REF NO | GRAPHIC REF | PART NUMBER | QTY | PART NAME 1 2 3 4 5 6 (PRODUCT LEVEL) | SEE PAGE |
|---|---|---|---|---|---|---|
| | 57 | 2 | *153-6237* | 2 | ELBOW AS | |
| | | | | | (EACH INCLUDES) | |
| | | 2 | **3D-2824** | 1 | SEAL-O-RING | |
| | | 2 | **6V-9004** | 1 | ELBOW | |
| | | 2 | **6V-9746** | 1 | SEAL-O-RING | |
| | 58 | 1 | *153-6244* | 1 | ELBOW AS | |
| | | 1 | **2M-9780** | 1 | SEAL-O-RING | |
| | | 1 | **6V-9746** | 1 | SEAL-O-RING | |
| | | 1 | **8T-5389** | 1 | ELBOW | |
| | 59 | 2 | **162-3122** | 1 | ELBOW | |
| | 60 | 2 | **164-6862** | 1 | TEE AS | |
| | | 2 | **6V-9160** | 1 | TEE-FACE SEAL | |
| | | 2 | **6V-9746** | 3 | SEAL-O-RING | |
| | 61 | 1 | *169-7409* | 2 | UNION AS | |
| | | | | | (EACH INCLUDES) | |
| | | 1 | **6V-8996** | 1 | UNION | |
| | | 1 | **7J-9108** | 2 | SEAL-O-RING | |
| | 62 | 2 | *172-8815* | 1 | ADAPTER AS | |
| | | 2 | **3J-1907** | 1 | SEAL-O-RING | |
| | | 2 | **9X-2847** | 1 | ADAPTER-SWIVEL | |
| | 63 | 2 | *212-1336* | 1 | TEE AS | |
| | | 2 | **2M-9780** | 1 | SEAL-O-RING | |
| | | 2 | **6V-8783** | 1 | TEE-FACE SEAL | |
| | | 2 | **7J-9108** | 2 | SEAL-O-RING | |
| | 64 | 2 | **224-2335** | 1 | PLATE | |
| | 65 | 2 | *241-6207* | 1 | TEE AS | |
| | | 2 | **6V-9746** | 3 | SEAL-O-RING | |
| | | 2 | **132-5152** | 1 | TEE-UNION | |
| | 66 | 2 | **299-3446** | 2 | WASHER (10.3X38.1X5-MM THK) | |
| | 67 | 2 | **1S-0994** | 1 | CLIP | |
| | 68 | 1,2 | **2P-1293** | 3 | LOCKNUT (1-3/16-12-THD) | |
| | 69 | 2 | **3J-1907** | 1 | SEAL-O-RING | |
| | 70 | 1,2 | **3K-0360** | 2 | SEAL-O-RING | |
| | 71 | 2 | **3P-2404** | 1 | CLIP | |
| | 72 | 1 | **4D-7735** | 4 | CLIP | |
| | 73 | 2 | **5D-0718** | 1 | CLIP | |
| | 74 | 1 | **5K-8451** | 4 | CLIP | |
| | 75 | 2 | **5P-7464** | 1 | CLIP (SLOT) | |
| | 76 | 2 | **5P-7465** | 1 | CLIP (TAB) | |
| | 77 | 2 | **5P-7468** | 1 | CLIP (SLOT) | |
| | 78 | 2 | **5P-7469** | 1 | CLIP (TAB) | |
| | 79 | 1 | **5P-9299** | 1 | CLIP | |
| | 80 | 2 | **6D-4244** | 4 | CLIP | |
| | 81 | 2 | **6V-1249** | 1 | GROMMET | |
| | 82 | 1,2 | **6V-1889** | 7 | CLIP | |
| | 83 | 2 | **6V-8398** | 1 | SEAL-O-RING | |
| | 84 | 1,2 | **6V-9168** | 2 | NUT (11/16-16-THD) | |
| | 85 | 1 | **6V-9170** | 2 | NUT-BULKHEAD (1-14-THD) | |
| | 86 | 2 | **6V-9746** | 1 | SEAL-O-RING | |
| | 87 | 1 | **7J-9108** | 1 | SEAL-O-RING | |
| | 88 | 2 | **7M-8485** | 1 | SEAL-O-RING | |
| | 89 | 1,2 | **8S-0948** | 3 | CLIP | |
| C | 90 | 1,2 | **7X-7729** | 30 | WASHER (11X25X3-MM THK) | |
| M | 91 | 1,2 | **8T-4133** | 5 | NUT (M10X1.5-THD) | |
| CM | 92 | 1,2 | **8T-4136** | 9 | BOLT (M10X1.5X25-MM) | |
| CM | 93 | 1,2 | **8T-4137** | 5 | BOLT (M10X1.5X20-MM) | |
| M | 94 | 2 | **8T-4172** | 2 | BOLT (M10X1.5X80-MM) | |
| M | 95 | 2 | **8T-4195** | 3 | BOLT (M10X1.5X30-MM) | |
| M | 96 | 1,2 | **8T-4196** | 4 | BOLT (M10X1.5X35-MM) | |

## *269-9194* **LINES GP-BRAKE** *(contd.)* **i02862112**

| NOTE | REF NO | GRAPHIC REF | PART NUMBER | QTY | PART NAME 1 2 3 4 5 6 (PRODUCT LEVEL) | SEE PAGE |
|---|---|---|---|---|---|---|
| | 97 | 2 | **8T-4223** | 1 | WASHER-HARD (13.5X25.5X3-MM THK) | |
| M | 98 | 2 | **8T-5436** | 2 | BOLT (M10X1.5X130-MM) | |
| | 100 | 2 | **9M-8406** | 1 | CLIP | |
| | 101 | 2 | **9R-4440** | 1 | PLATE | |
| C | 102 | 1 | **312-6220** | 1 | PLATE | |
| | 103 | 2 | **5P-1076** | 4 | WASHER-HARD (13.5X30X4-MM THK) | |
| M | 104 | 2 | **8T-4139** | 3 | BOLT (M12X1.75X30-MM) | |
| M | 105 | 2 | **8T-4194** | 1 | BOLT (M12X1.75X50-MM) | |
| | 106 | 2 | *148-8347* | 1 | ELBOW AS | |
| | | 2 | **3D-2824** | 1 | SEAL-O-RING | |
| | | 2 | **6V-9007** | 1 | ELBOW | |
| | | 2 | **6V-9746** | 1 | SEAL-O-RING | |

C-CHANGE FROM PREVIOUS TYPE
I-REFER TO HYDRAULIC INFORMATION SYSTEM
M-METRIC PART
Y-SEPARATE ILLUSTRATION

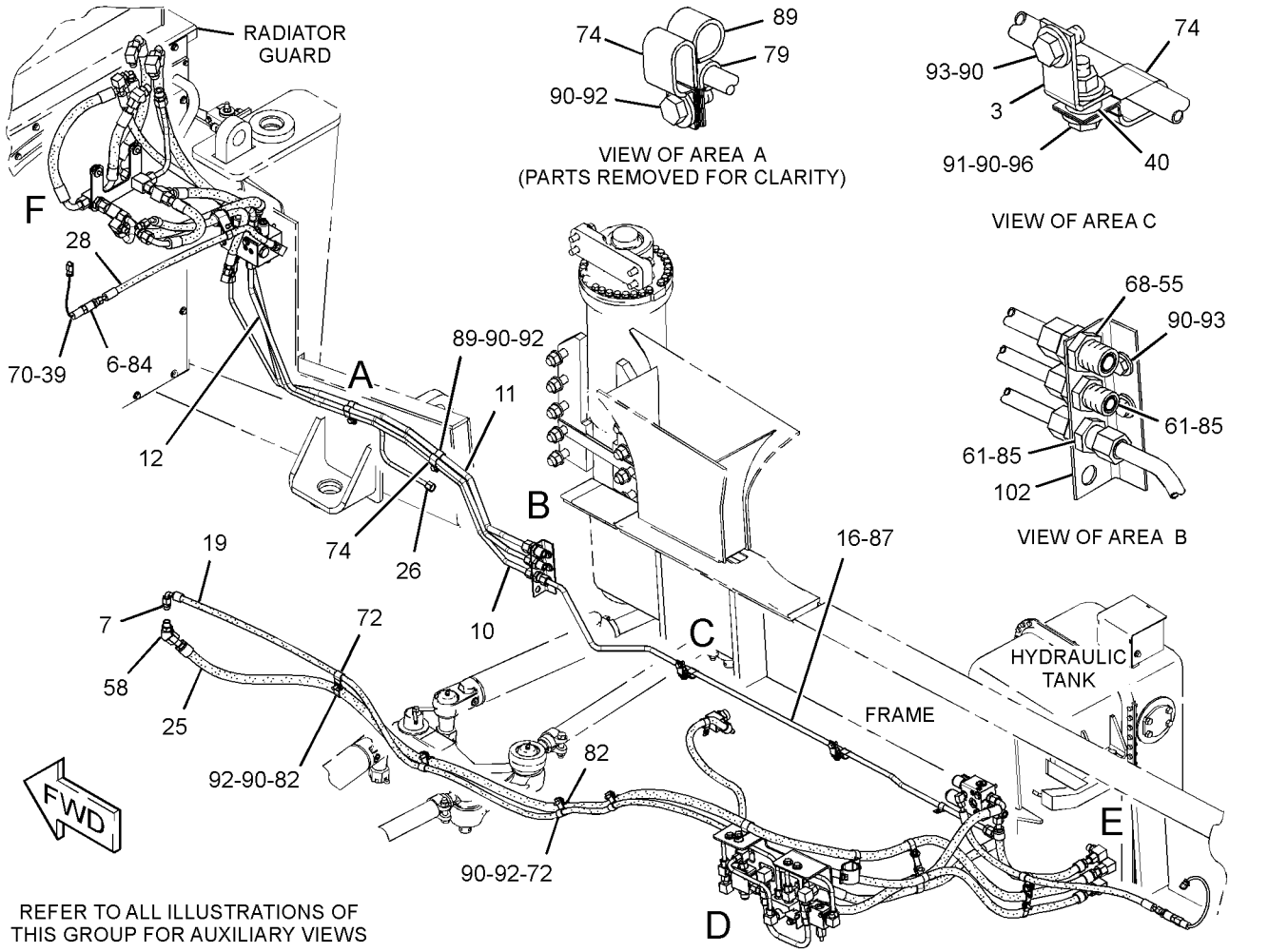


REFER TO ALL ILLUSTRATIONS OF THIS GROUP FOR AUXILIARY VIEWS

GRAPHIC #1

g01612433

*269-9194* **LINES GP-BRAKE** *(contd.)* **i02862112**

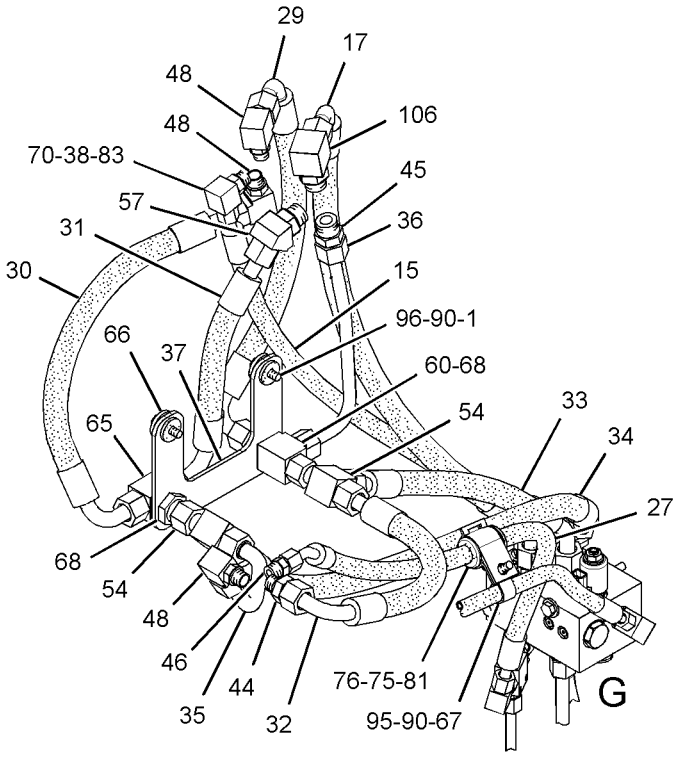


VIEW OF AREA F

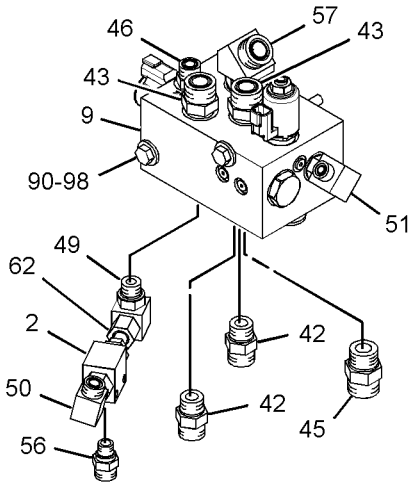


VIEW OF AREA G
(HOSES REMOVED AND EXPLODED)

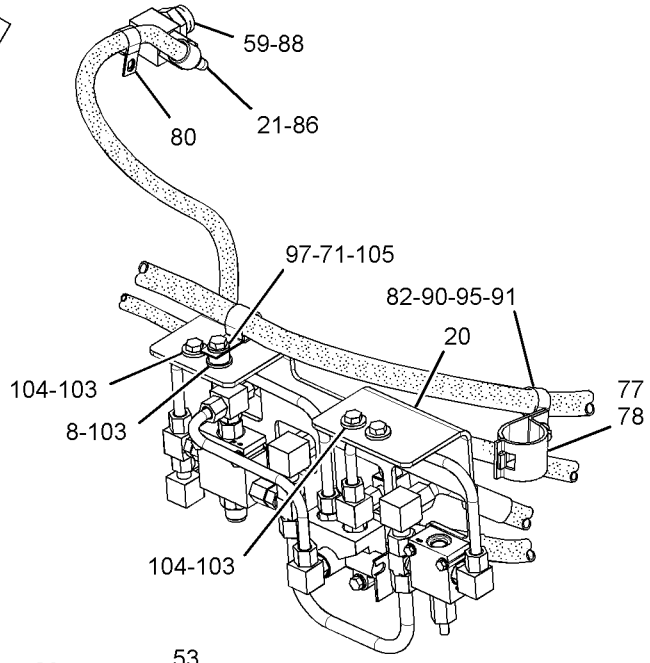


VIEW OF AREA D

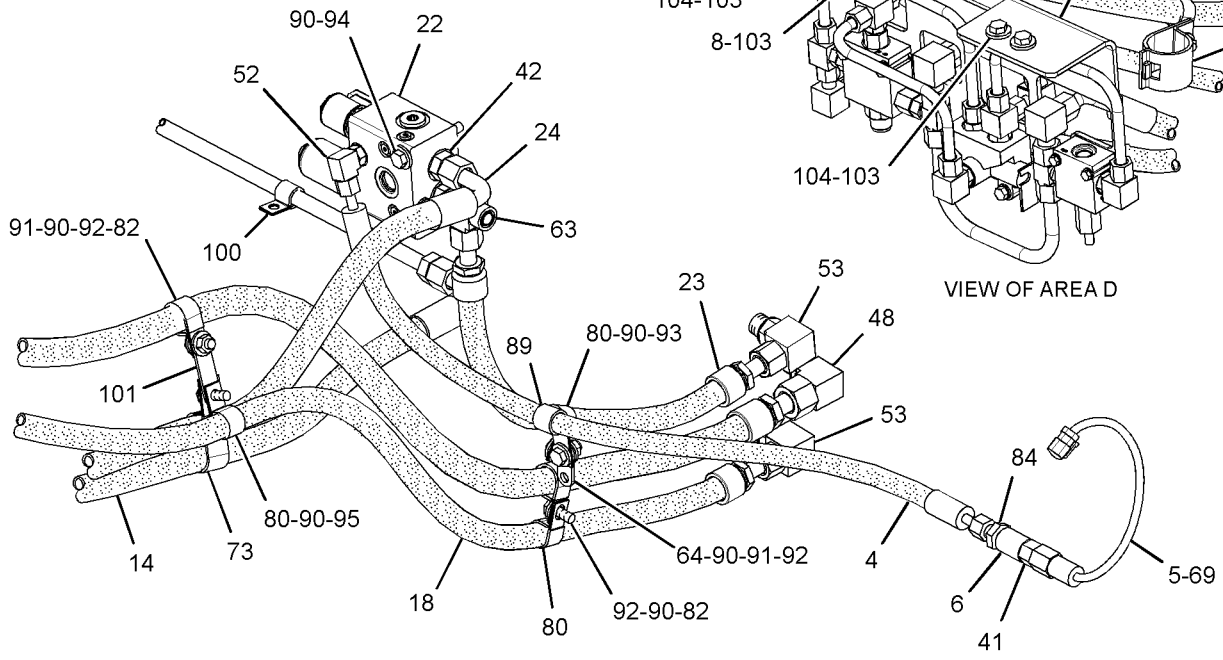


VIEW OF AREA E

GRAPHIC #2 **<END>** g01612434

# BRAKING SYSTEM

## *269-9193* LINES GP-SERVICE BRAKE

**S/N: RLB1-UP**

**PART OF 270-1748 HYDRAULIC AR**

**SMCS-4257** **i03113657**

| NOTE | REF NO | GRAPHIC REF | PART NUMBER | QTY | PART NAME 1 2 3 4 5 6 (PRODUCT LEVEL) | SEE PAGE |
|---|---|---|---|---|---|---|
| | 1 | 1 | **8T-0082** | 1 | TEE | |
| | 2 | 1 | *164-5567* | 1 | COUPLER AS-QUICK DISCONNECT | |
| | | 1 | **6V-3965** | 1 | FITTING (QUICK DISCONNECT) | |
| | | 1 | **3J-1907** | 1 | SEAL-O-RING | |
| | 4 | 1 | **274-6842** | 1 | TUBE AS | |
| | 5 | 1 | **274-6844** | 1 | TUBE AS | |
| | 6 | 1 | **274-6845** | 1 | TUBE AS | |
| I | 7 | 1 | **308-8432** | 1 | HOSE AS | |
| I | 8 | 1 | **308-8431** | 1 | HOSE AS | |
| | 9 | 1 | *148-8370* | 2 | ELBOW AS | |
| | | | | | (EACH INCLUDES) | |
| | | 1 | **6V-8398** | 1 | SEAL-O-RING | |
| | | 1 | **6V-9851** | 1 | ELBOW | |
| | 10 | 1 | *148-8375* | 1 | ELBOW AS | |
| | | 1 | **6V-8981** | 1 | ELBOW | |
| | | 1 | **6V-8398** | 2 | SEAL-O-RING | |
| | 11 | 1 | *148-8427* | 1 | TEE AS | |
| | | 1 | **6V-8398** | 3 | SEAL-O-RING | |
| | | 1 | **8T-6895** | 1 | TEE-UNION | |
| | 12 | 1 | *150-4043* | 2 | CONNECTOR AS | |
| | | | | | (EACH INCLUDES) | |
| | | 1 | **6V-9873** | 1 | CONNECTOR | |
| | | 1 | **3J-1907** | 1 | SEAL-O-RING | |
| | | 1 | **6V-8398** | 1 | SEAL-O-RING | |
| | 13 | 1 | **4D-9517** | 1 | CLIP | |
| | 14 | 1 | **5P-7464** | 2 | CLIP (SLOT) | |
| | 15 | 1 | **5P-7465** | 2 | CLIP (TAB) | |
| | 16 | 1 | **6V-0852** | 1 | CAP-DUST | |
| | 17 | 1 | **6V-1249** | 2 | GROMMET | |
| | 18 | 1 | **6V-8398** | 2 | SEAL-O-RING | |
| | 19 | 1 | **6V-9169** | 1 | NUT-BULKHEAD (13/16-16-THD) | |
| | 20 | 1 | **7J-9108** | 1 | SEAL-O-RING | |
| | 21 | 1 | **8M-2770** | 2 | CLIP | |
| | 22 | 1 | **8T-4121** | 8 | WASHER-HARD (11X21X2.5-MM THK) | |
| M | 23 | 1 | **8T-4133** | 1 | NUT (M10X1.5-THD) | |
| M | 24 | 1 | **8T-4136** | 2 | BOLT (M10X1.5X25-MM) | |
| M | 25 | 1 | **8T-4137** | 3 | BOLT (M10X1.5X20-MM) | |
| M | 26 | 1 | **8T-4195** | 2 | BOLT (M10X1.5X30-MM) | |
| | 27 | 1 | **9M-8406** | 2 | CLIP | |

I-REFER TO HYDRAULIC INFORMATION SYSTEM
M-METRIC PART

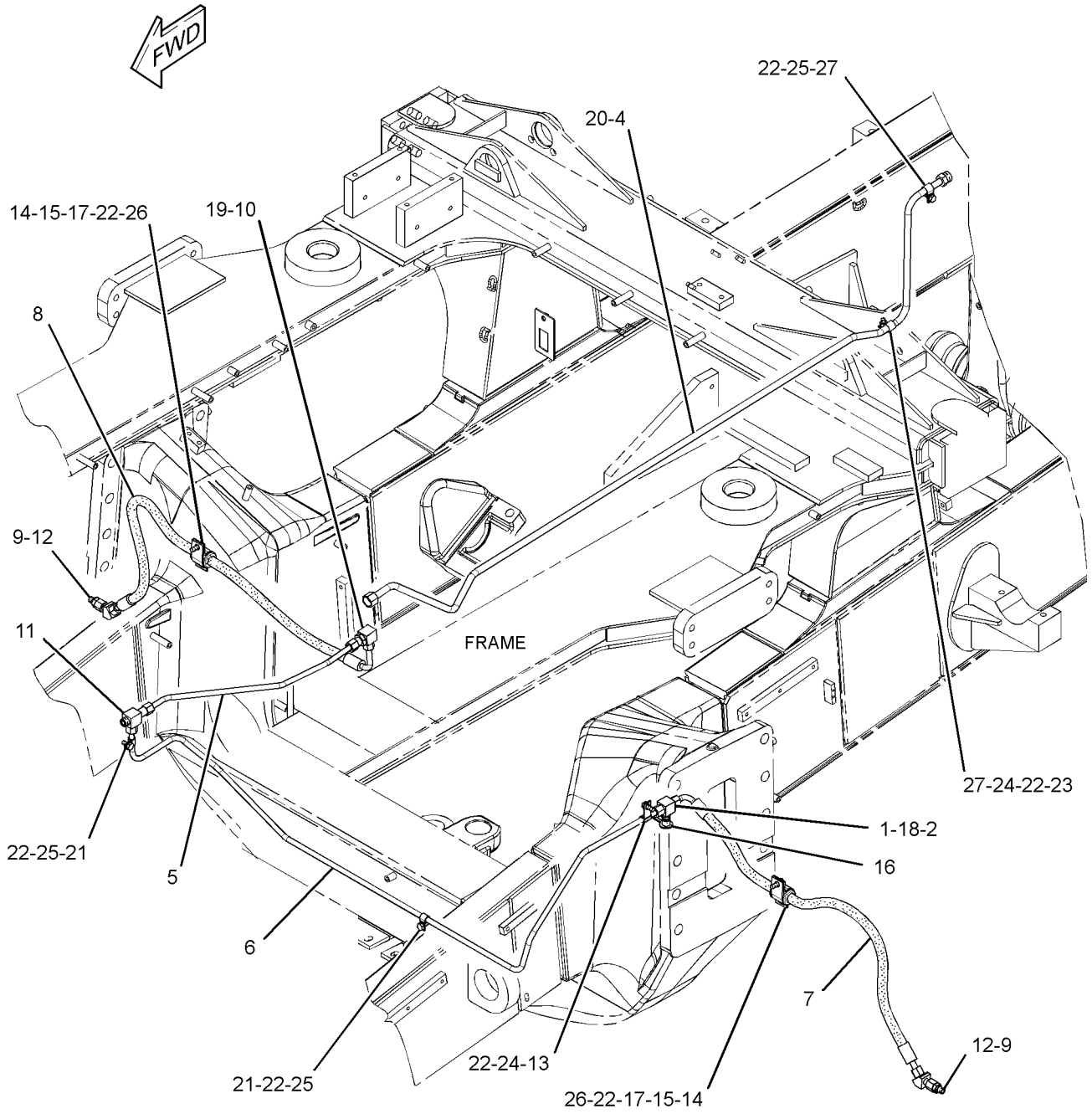


GRAPHIC #1 **<END>** g01450999

# BRAKING SYSTEM

## *282-3380* LINES GP-SERVICE BRAKE

**S/N: RLB1-UP**

**PART OF 282-9454 LINES GP-SERVICE BRAKE**

**AN ATTACHMENT**

**SMCS-4257** **i02795333**

| NOTE | REF NO | GRAPHIC REF | PART NUMBER | QTY | PART NAME 1 2 3 4 5 6 (PRODUCT LEVEL) | SEE PAGE |
|---|---|---|---|---|---|---|
| | 1 | 2 | **2G-5536** | 1 | BLOCK AS | |
| | | 2 | **2G-5538** | 1 | PLATE | |
| | 2 | 2 | **2H-1743** | 2 | CLIP | |
| | 4 | 2 | *148-8447* | 4 | TEE AS-SWIVEL | |
| | | | | | (EACH INCLUDES) | |
| | | 2 | **7X-0872** | 1 | TEE-SWIVEL | |
| | | 2 | **7J-9108** | 1 | SEAL-O-RING | |
| | 5 | 2 | *164-5567* | 5 | COUPLER AS-QUICK DISCONNECT | |
| | | | | | (EACH INCLUDES) | |
| | | 2 | **6V-3965** | 1 | FITTING (QUICK DISCONNECT) | |
| | | 2 | **3J-1907** | 1 | SEAL-O-RING | |
| | 6 | 2 | **249-0622** | 1 | PLATE AS | |
| Y | 7 | 2 | **252-2148** | 1 | SLACK ADJUSTER GP (REAR BRAKES) | 600 |
| | 8 | 2 | **268-2973** | 1 | TUBE AS | |
| | 9 | 2 | **268-2974** | 1 | TUBE AS | |
| | 10 | 2 | **268-2975** | 1 | TUBE AS | |
| | 11 | 2 | **268-2976** | 1 | TUBE AS | |
| | 12 | 2 | **275-2152** | 2 | BRACKET AS | |
| I | 13 | 2 | **275-9241** | 1 | HOSE AS | |
| | 14 | 2 | **278-0397** | 2 | BRACKET AS | |
| | | | | | (EACH INCLUDES) | |
| M | | 2 | **9R-2613** | 1 | BOSS-WELD (M10X1.5X25-MM) | |
| I | 15 | 2 | **280-7532** | 1 | HOSE AS | |
| I | 16 | 2 | **302-1498** | 1 | HOSE AS | |
| | 17 | 2 | *304-8006* | 1 | CONNECTOR AS | |
| | | 2 | **2M-9780** | 1 | SEAL-O-RING | |
| | | 2 | **7J-9108** | 1 | SEAL-O-RING | |
| | | 2 | **304-8005** | 1 | CONNECTOR | |
| | 18 | 2 | **130-9984** | 1 | CLIP | |
| | 19 | 2 | *148-8315* | 2 | CONNECTOR AS | |
| | | | | | (EACH INCLUDES) | |
| | | 2 | **6V-8642** | 1 | CONNECTOR | |
| | | 2 | **2M-9780** | 1 | SEAL-O-RING | |
| | | 2 | **7J-9108** | 1 | SEAL-O-RING | |
| | 20 | 2 | *148-8342* | 2 | CONNECTOR AS | |
| | | | | | (EACH INCLUDES) | |
| | | 2 | **6V-8632** | 1 | CONNECTOR | |
| | | 2 | **3K-0360** | 1 | SEAL-O-RING | |
| | | 2 | **7J-9108** | 1 | SEAL-O-RING | |
| | 21 | 2 | *148-8364* | 1 | ELBOW AS (FACE SEAL) | |
| | | 2 | **6V-8625** | 1 | ELBOW (90-DEG) | |
| | | 2 | **3K-0360** | 1 | SEAL-O-RING | |
| | | 2 | **6V-8398** | 1 | SEAL-O-RING | |
| | 22 | 2 | *148-8382* | 1 | ELBOW AS | |
| | | 2 | **8T-0404** | 1 | ELBOW (90-DEG) | |
| | | 2 | **3D-2824** | 1 | SEAL-O-RING | |
| | | 2 | **7J-9108** | 1 | SEAL-O-RING | |
| | 23 | 2 | *150-4048* | 4 | ELBOW AS | |
| | | | | | (EACH INCLUDES) | |
| | | 2 | **6V-8722** | 1 | ELBOW | |
| | | 2 | **3K-0360** | 1 | SEAL-O-RING | |
| | | 2 | **7J-9108** | 1 | SEAL-O-RING | |
| | 24 | 2 | *153-6232* | 1 | ELBOW AS | |
| | | 2 | **8T-0120** | 1 | ELBOW (45-DEG) | |
| | | 2 | **3D-2824** | 1 | SEAL-O-RING | |

## *282-3380* LINES GP-SERVICE BRAKE *(contd.)* i02795333

| NOTE | REF NO | GRAPHIC REF | PART NUMBER | QTY | PART NAME 1 2 3 4 5 6 (PRODUCT LEVEL) | SEE PAGE |
|---|---|---|---|---|---|---|
| | | 2 | **7J-9108** | 1 | SEAL-O-RING | |
| | 25 | 2 | **4D-7735** | 3 | CLIP | |
| | 26 | 2 | **5M-3062** | 3 | BOLT (3/8-16X0.75-IN) | |
| | 27 | 2 | **5P-1076** | 2 | WASHER-HARD (13.5X30X4-MM THK) | |
| | 29 | 2 | **6V-0852** | 5 | CAP-DUST | |
| | 30 | 2 | **6V-9831** | 1 | CAP AS | |
| | 31 | 2 | **8C-4436** | 2 | BOLT (1/2-13X1.375-IN) | |
| | 32 | 2 | **8T-2502** | 2 | BOLT (3/8-16X1.125-IN) | |
| | 33 | 2 | **8T-4121** | 8 | WASHER-HARD (11X21X2.5-MM THK) | |
| M | 34 | 2 | **8T-4133** | 2 | NUT (M10X1.5-THD) | |
| M | 35 | 2 | **8T-4137** | 4 | BOLT (M10X1.5X20-MM) | |
| M | 36 | 2 | **8T-4185** | 2 | BOLT (M10X1.5X50-MM) | |
| | 37 | 2 | **8T-4223** | 2 | WASHER-HARD (13.5X25.5X3-MM THK) | |
| | 38 | 2 | **8T-4896** | 5 | WASHER-HARD (10.2X18.5X2.5-MM THK) | |
| M | 39 | 2 | **8T-4956** | 2 | BOLT (M12X1.75X35-MM) | |
| | 40 | 2 | **9M-1974** | 1 | WASHER-HARD (8.8X16X2-MM THK) | |
| | 41 | 2 | **9M-8406** | 4 | CLIP | |
| | 42 | 2 | **4L-6459** | 1 | BOLT (3/8-16X2.5-IN) | |
| | 43 | 2 | **4W-7627** | 1 | SPACER (11X19X37-MM THK) | |

I-REFER TO HYDRAULIC INFORMATION SYSTEM
M-METRIC PART
Y-SEPARATE ILLUSTRATION

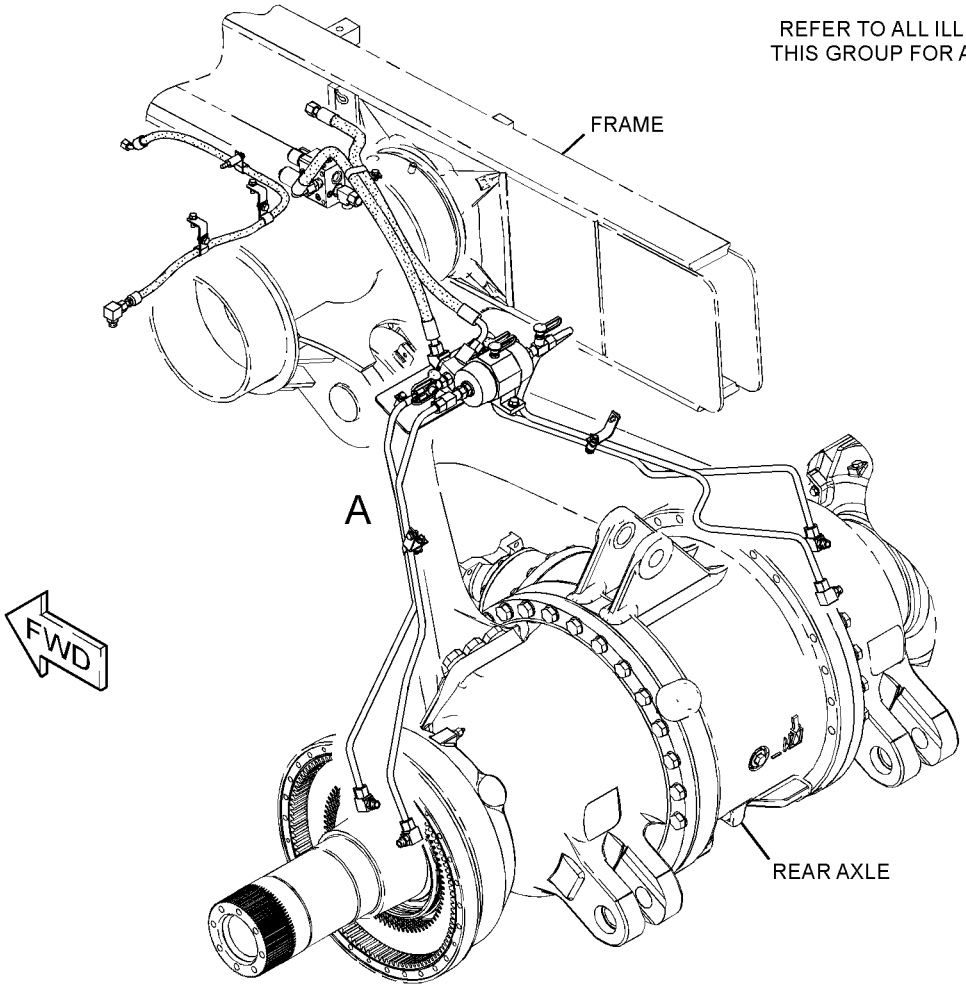


GRAPHIC #1 g01416987

## *282-3380* **LINES GP-SERVICE BRAKE** *(contd.)* **i02795333**

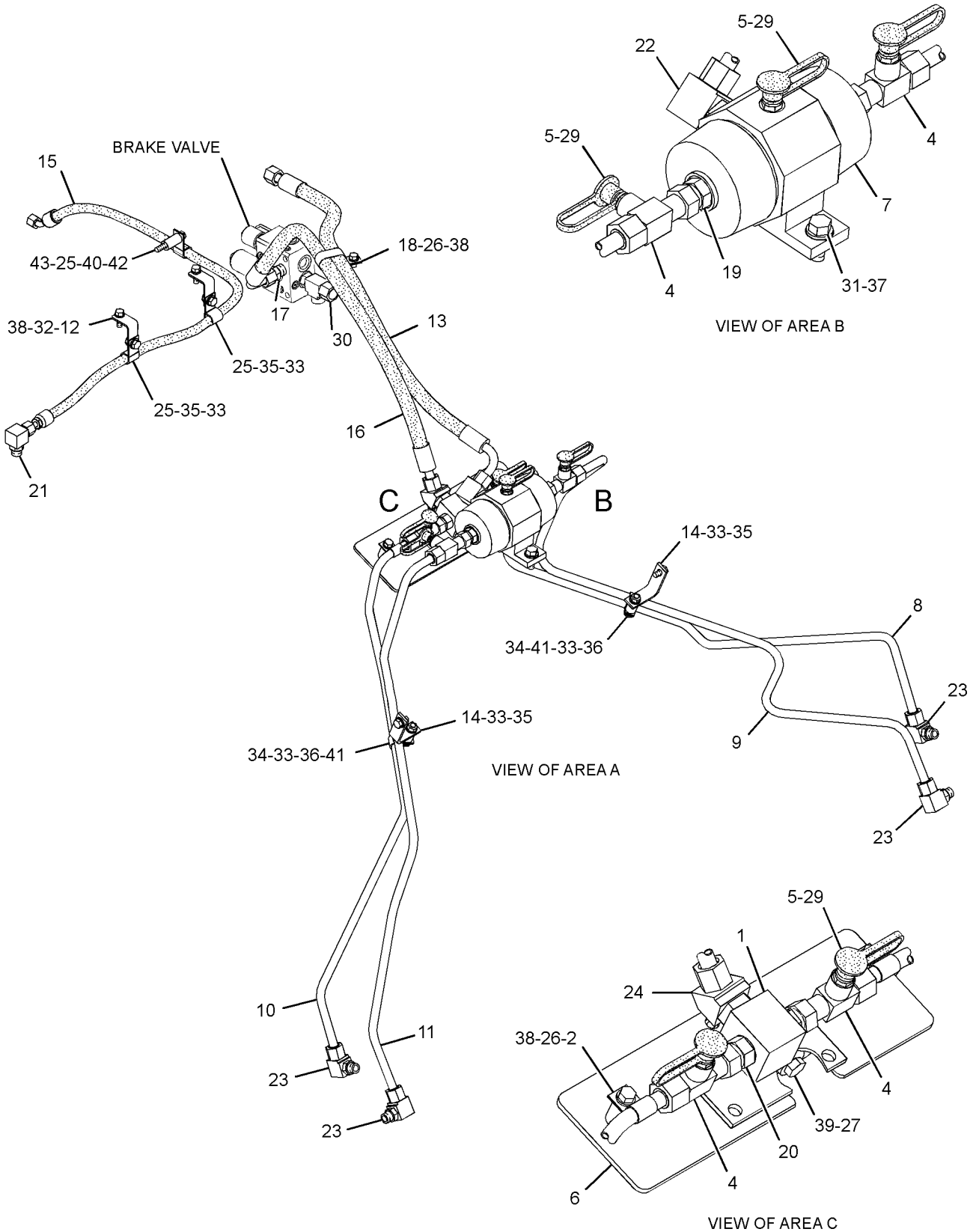


GRAPHIC #2 **<END>** g01416990

# BRAKING SYSTEM

## *282-9454* LINES GP-SERVICE BRAKE

**S/N: RLB1-UP**

**AN ATTACHMENT**

**SMCS-4257** **i02606834**

| NOTE | PART NUMBER | QTY | PART NAME 1 2 3 4 5 6 (PRODUCT LEVEL) | SEE PAGE |
|---|---|---|---|---|
| Y | *282-3380* | 1 | LINES GP-SERVICE BRAKE (W/O TRACTION CONTROL) | 596 |

Y-SEPARATE ILLUSTRATION

**<END>**

# 252-2148 SLACK ADJUSTER GP–REAR BRAKES

**S/N: RLB1-UP**

**PART OF 270-1756 LINES GP-ATTACHMENT, 282-3380 LINES GP-SERVICE BRAKE AN ATTACHMENT**

**SMCS-4261** **i02145943**

| NOTE | REF NO | GRAPHIC REF | PART NUMBER | QTY | PART NAME 1 2 3 4 5 6 (PRODUCT LEVEL) | SEE PAGE |
|---|---|---|---|---|---|---|
| | 1 | 1 | **2G-7282** | 1 | BASE | |
| J | 2 | 1 | **205-0561** | 2 | PISTON AS | |
| | 3 | 1 | **252-2149** | 2 | SPACER (69.85X82.17X6.35-MM THK) | |
| | 4 | 1 | **2G-1202** | 2 | SPRING | |
| | 5 | 1 | **2G-8932** | 2 | HOUSING | |
| | 6 | 1 | **2H-4145** | 2 | SEAL-O-RING | |
| | 7 | 1 | **7F-2122** | 2 | SEAL-O-RING | |
| | | | | | AVAILABLE REPAIR KIT(S): | |
| J | | | **205-0567** | | KIT-PISTON REPAIR (SLACK ADJUSTER) | |

J-KIT MARKED J INCLUDES PART MARKED J

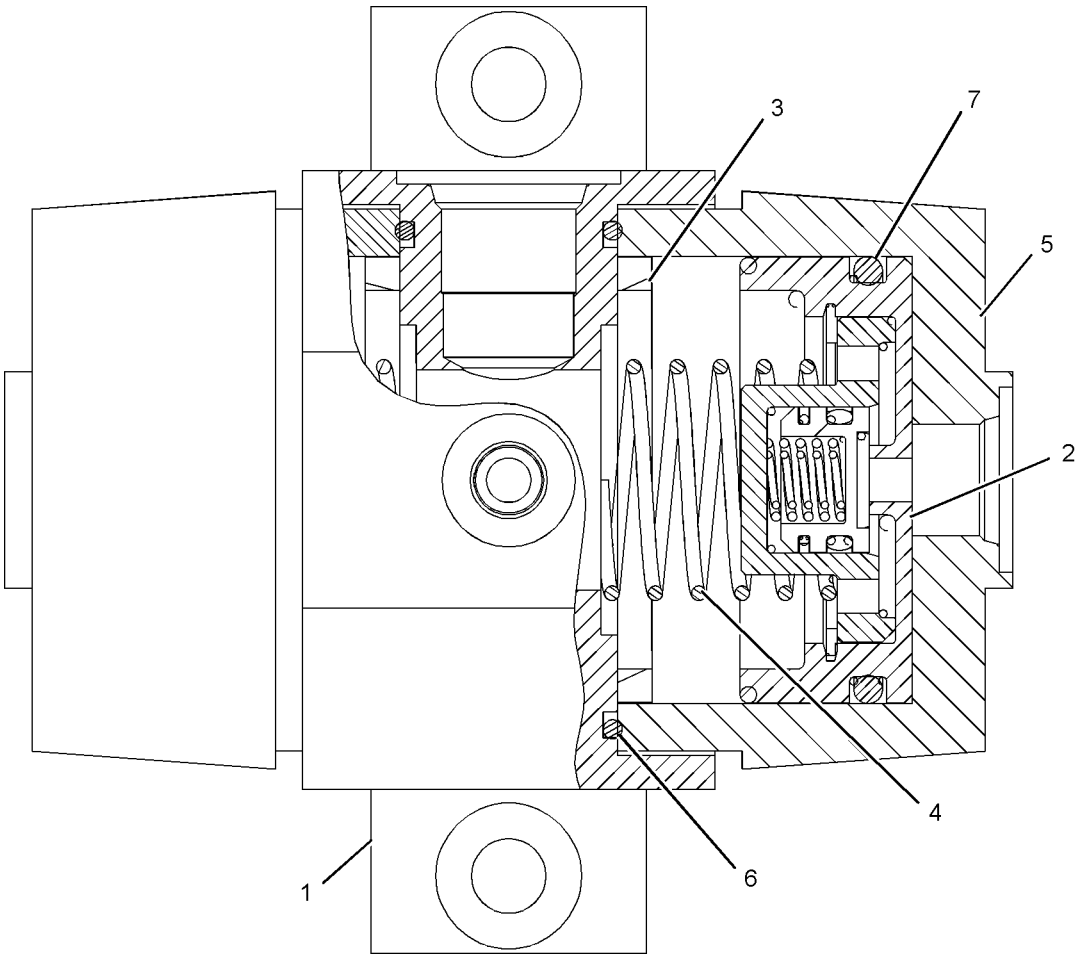


GRAPHIC #1 g01079980

**<END>**

# 248-0054 VALVE & MTG GP-BRAKE–
## FRONT BRAKE, RETARDER CONTROL
### S/N: RLB1-UP
### PART OF 269-9194 LINES GP-BRAKE

**SMCS-4265, 4282** **i02616701**

| NOTE | REF NO | GRAPHIC REF | PART NUMBER | QTY | PART NAME 1 2 3 4 5 6 (PRODUCT LEVEL) | SEE PAGE |
|---|---|---|---|---|---|---|
| | 1 | 1 | **6V-0852** | 1 | CAP-DUST | |
| | 2 | 1 | **235-6500** | 1 | VALVE GP-SOLENOID (AUTOMATIC RETARDER CONTROL) | |
| | | 1 | **145-1144** | 1 | COIL AS | |
| | | 1 | **164-2108** | 1 | WASHER (13.03X25.4X2.38-MM THK) | |
| | | 1 | **218-2373** | 1 | NUT (1/2-28-THD) | |
| | 3 | 1 | **251-3268** | 1 | VALVE GP-SOLENOID (FRONT BRAKE) | |
| | 4 | 1 | **251-6159** | 1 | VALVE GP-SHUTTLE (BRAKE) | |
| | 5 | 1 | **162-0177** | 1 | PLUG AS | |
| | | 1 | **3J-1907** | 1 | SEAL-O-RING | |
| | | 1 | **9S-8004** | 1 | PLUG-O-RING | |
| | 6 | 1 | **173-3993** | 5 | PLUG AS | |
| | | | | | (EACH INCLUDES) | |
| | | 1 | **9S-8001** | 1 | PLUG-O-RING | |
| | | 1 | **4J-7533** | 1 | SEAL-O-RING | |
| | 7 | 1 | **6V-3965** | 1 | FITTING (QUICK DISCONNECT) | |

## 248-0054 VALVE & MTG GP-BRAKE *(contd. )* i02616701

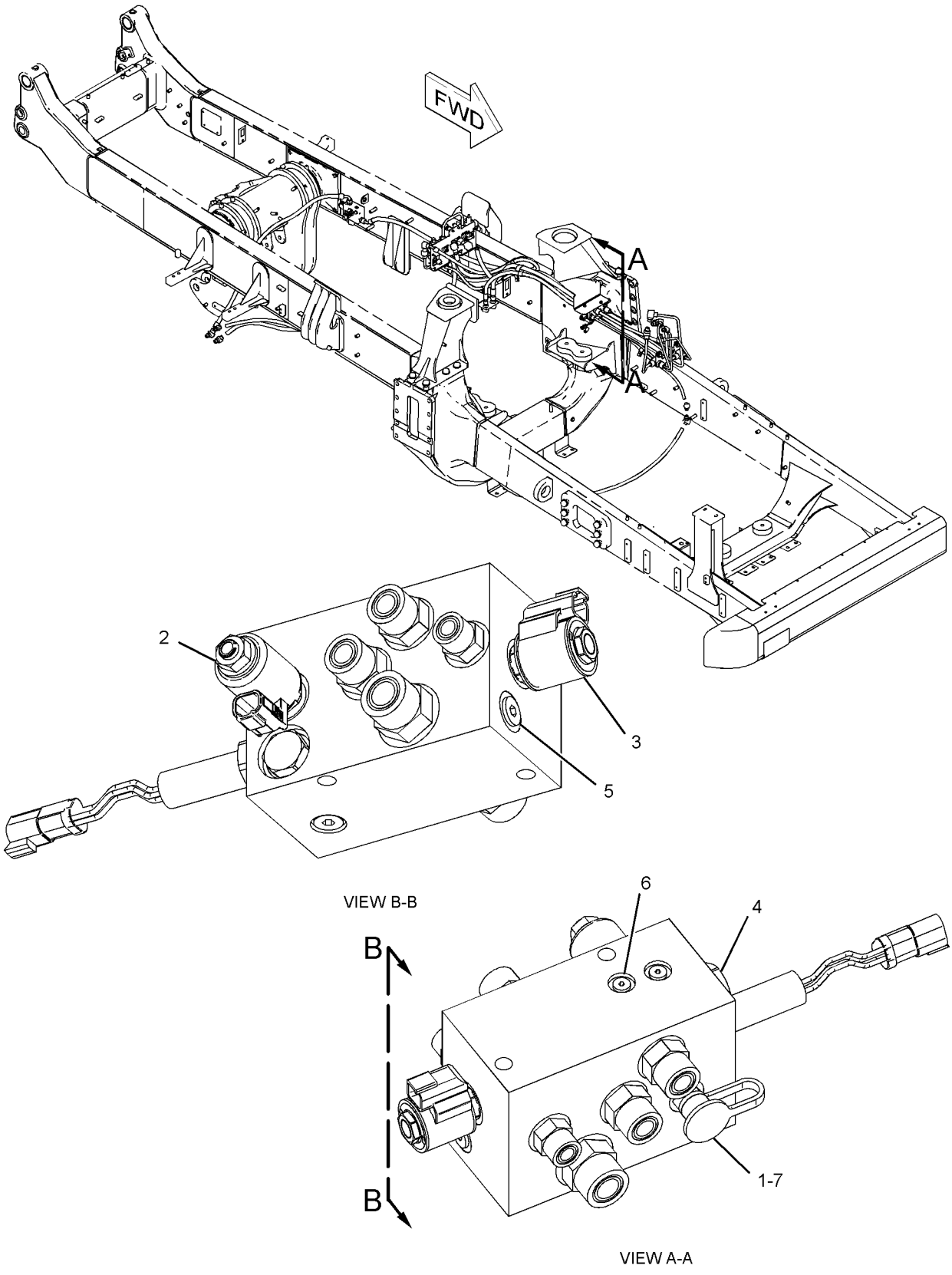


GRAPHIC #1 **<END>** g01330858

# BRAKING SYSTEM

## 289-0585 VALVE & MTG GP-BRAKE

**S/N: RLB1-UP**

**PART OF 269-9194 LINES GP-BRAKE**

**SMCS-4265, 4282** **i02597183**

| NOTE | REF NO | GRAPHIC REF | PART NUMBER | QTY | PART NAME 1 2 3 4 5 6 (PRODUCT LEVEL) | SEE PAGE |
|---|---|---|---|---|---|---|
| | 1 | 1 | **293-6585** | 1 | VALVE GP-SOLENOID (PARKING BRAKE) | |
| J | 2 | 1 | **241-5893** | 1 | VALVE GP-SOLENOID (ACCUMULATOR PURGE) | |
| | | | | | AVAILABLE REPAIR KIT(S): | |
| J | | | **189-2102** | 1 | KIT-SEAL (SOLENOID VALVE) | |
| | | | | | (INCLUDES O-RINGS & BACKUP RING) | |

J-KIT MARKED J SERVICES PART(S) MARKED J

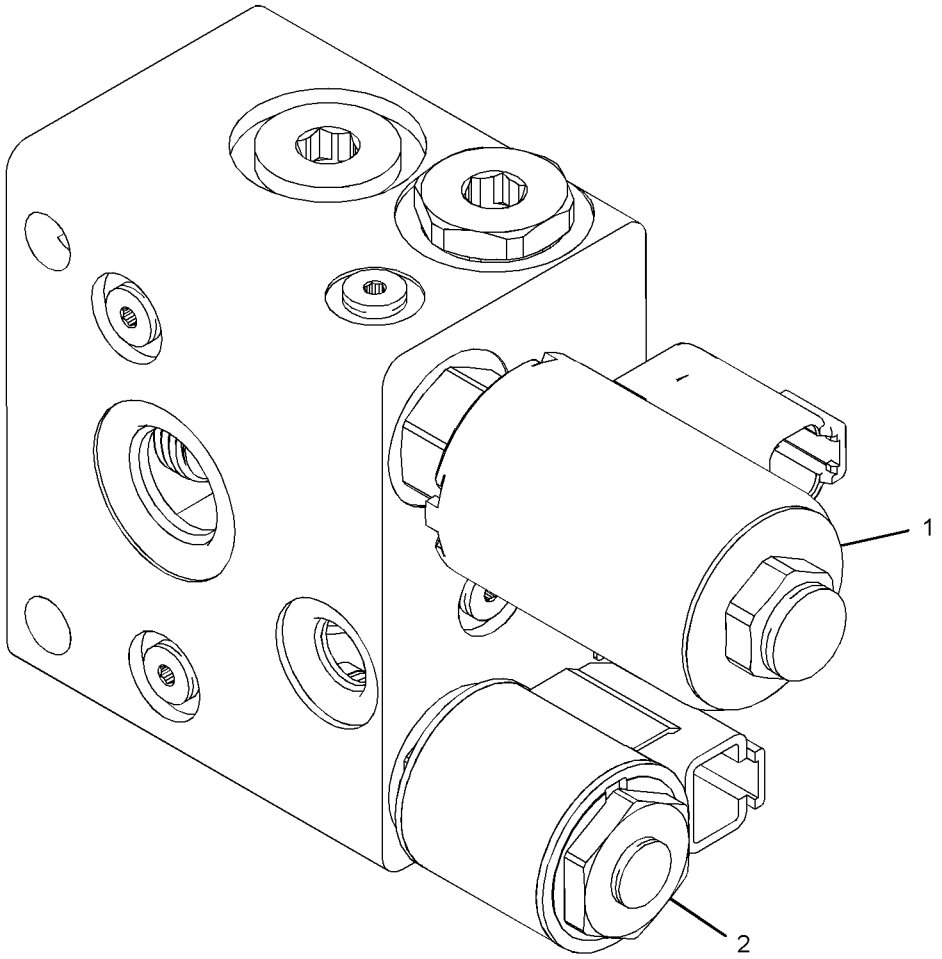


GRAPHIC #1 **<END>** g01262705

# BRAKING SYSTEM

## *277-6941* VALVE GP-BRAKE–TOW RELEASE

**S/N: RLB1-333**

**PART OF 269-9194 LINES GP-BRAKE**

**SMCS-4265, 4282, 4290** **i02616516**

| NOTE | REF NO | GRAPHIC REF | PART NUMBER | QTY | PART NAME 1 2 3 4 5 6 (PRODUCT LEVEL) | SEE PAGE |
|---|---|---|---|---|---|---|
| Y | 1 | 1 | **3G-2887** | 1 | VALVE GP-DIVERTER (TOWING, PARKING BRAKE RELEASE) | 610 |
| | 2 | 1 | **9D-6937** | 1 | BRACKET | |
| | 3 | 1 | *150-3032* | 1 | ELBOW AS | |
| | | 1 | **6V-9746** | 1 | SEAL-O-RING | |
| | | 1 | **8C-8762** | 1 | ELBOW | |
| | 4 | 1 | *161-9916* | 2 | ADAPTER AS | |
| | | | | | (EACH INCLUDES) | |
| | | 1 | **2M-9780** | 1 | SEAL-O-RING | |
| | | 1 | **6V-7420** | 1 | ADAPTER | |
| J | 5 | 1 | **228-7838** | 1 | VALVE GP-PRESSURE REDUCING (HOIST PILOT OIL) | |
| J | | 1 | **175-7002** | 1 | VALVE GP-PRESSURE REDUCING | |
| | 6 | 1 | **228-7839** | 1 | VALVE GP-RELIEF (TOWING) | |
| | 7 | 1 | **246-4521** | 1 | TUBE AS | |
| | 8 | 1 | **246-4523** | 1 | TUBE AS | |
| | 9 | 1 | **246-4524** | 1 | TUBE AS | |
| | 10 | 1 | **279-5006** | 1 | PLATE AS | |
| | | 1 | **1F-0750** | 4 | NUT-WELD (3/8-16-THD) | |
| | | 1 | **9F-6445** | 2 | NUT-WELD (1/4-20-THD) | |
| | 11 | 1 | **297-6164** | 1 | TUBE AS | |
| | 12 | 1 | **109-5811** | 2 | TEE-O-RING PORT | |
| | 13 | 1 | *148-8340* | 1 | CONNECTOR AS | |
| | | 1 | **3K-0360** | 1 | SEAL-O-RING | |
| | | 1 | **6V-8398** | 1 | SEAL-O-RING | |
| | | 1 | **6V-8639** | 1 | CONNECTOR | |
| | 14 | 1 | *148-8364* | 2 | ELBOW AS | |
| | | | | | (EACH INCLUDES) | |
| | | 1 | **3K-0360** | 1 | SEAL-O-RING | |
| | | 1 | **6V-8398** | 1 | SEAL-O-RING | |
| | | 1 | **6V-8625** | 1 | ELBOW | |
| | 15 | 1 | *148-8367* | 1 | ELBOW AS | |
| | | 1 | **6V-8397** | 1 | SEAL-O-RING | |
| | | 1 | **6V-9850** | 1 | ELBOW | |
| | 16 | 1 | *148-8370* | 1 | ELBOW AS | |
| | | 1 | **6V-8398** | 1 | SEAL-O-RING | |
| | | 1 | **6V-9851** | 1 | ELBOW | |
| | 17 | 1 | *148-8393* | 2 | ELBOW AS | |
| | | | | | (EACH INCLUDES) | |
| | | 1 | **6V-9852** | 1 | ELBOW | |
| | | 1 | **7J-9108** | 1 | SEAL-O-RING | |
| | 18 | 1 | *148-8426* | 1 | TEE AS | |
| | | 1 | **3K-0360** | 1 | SEAL-O-RING | |
| | | 1 | **6V-8397** | 1 | SEAL-O-RING | |
| | | 1 | **6V-8398** | 1 | SEAL-O-RING | |
| | | 1 | **8T-6696** | 1 | TEE-O-RING | |
| | 19 | 1 | *148-8428* | 1 | TEE AS | |
| | | 1 | **3K-0360** | 1 | SEAL-O-RING | |
| | | 1 | **6V-8398** | 2 | SEAL-O-RING | |
| | | 1 | **6V-8782** | 1 | TEE | |
| | 20 | 1 | *148-8436* | 1 | TEE AS | |
| | | 1 | **3K-0360** | 1 | SEAL-O-RING | |
| | | 1 | **6V-8398** | 2 | SEAL-O-RING | |
| | | 1 | **6V-8775** | 1 | TEE-FACE SEAL | |
| | 21 | 1 | *150-4037* | 1 | TEE AS | |
| | | 1 | **6V-8398** | 2 | SEAL-O-RING | |
| | | 1 | **6V-9844** | 1 | TEE-SWIVEL | |

*277-6941* **VALVE GP-BRAKE** ***(contd.)*** **i02616516**

| NOTE | REF NO | GRAPHIC REF | PART NUMBER | QTY | PART NAME 1 2 3 4 5 6 (PRODUCT LEVEL) | SEE PAGE |
|---|---|---|---|---|---|---|
| | 22 | 1 | *198-0143* | 1 | ELBOW AS | |
| | | 1 | **7J-9108** | 1 | SEAL-O-RING | |
| | | 1 | **157-2348** | 1 | ELBOW | |
| | 23 | 1 | **3J-7354** | 1 | SEAL-O-RING | |
| | 24 | 1 | **3K-0360** | 2 | SEAL-O-RING | |
| | 25 | 1 | **4L-6459** | 2 | BOLT (3/8-16X2.5-IN) | |
| | 26 | 1 | **5P-1076** | 4 | WASHER-HARD (13.5X30X4-MM THK) | |
| | 27 | 1 | **5P-2228** | 4 | BOLT (1/2-13X1-IN) | |
| | 28 | 1 | **7J-9108** | 4 | SEAL-O-RING | |
| | 29 | 1 | **8C-7325** | 1 | ADAPTER | |
| | 30 | 1 | **8T-2501** | 2 | BOLT (3/8-16X2-IN) | |
| | 31 | 1 | **8T-4205** | 2 | WASHER-HARD (7.2X14.5X2-MM THK) | |
| | 32 | 1 | **8T-4896** | 4 | WASHER-HARD (10.2X18.5X2.5-MM THK) | |
| | 33 | 1 | **8T-9368** | 2 | BOLT (1/4-20X2.25-IN) | |
| | | | | | AVAILABLE REPAIR KIT(S): | |
| J | | | **224-7135** | 1 | KIT-SEAL (PRESSURE REDUCING VALVE) | |
| | | | | | (INCLUDES SEALS & RINGS) | |

J-KIT MARKED J SERVICES PART(S) MARKED J
Y-SEPARATE ILLUSTRATION

*277-6941* **VALVE GP-BRAKE** *(contd.)* **i02616516**

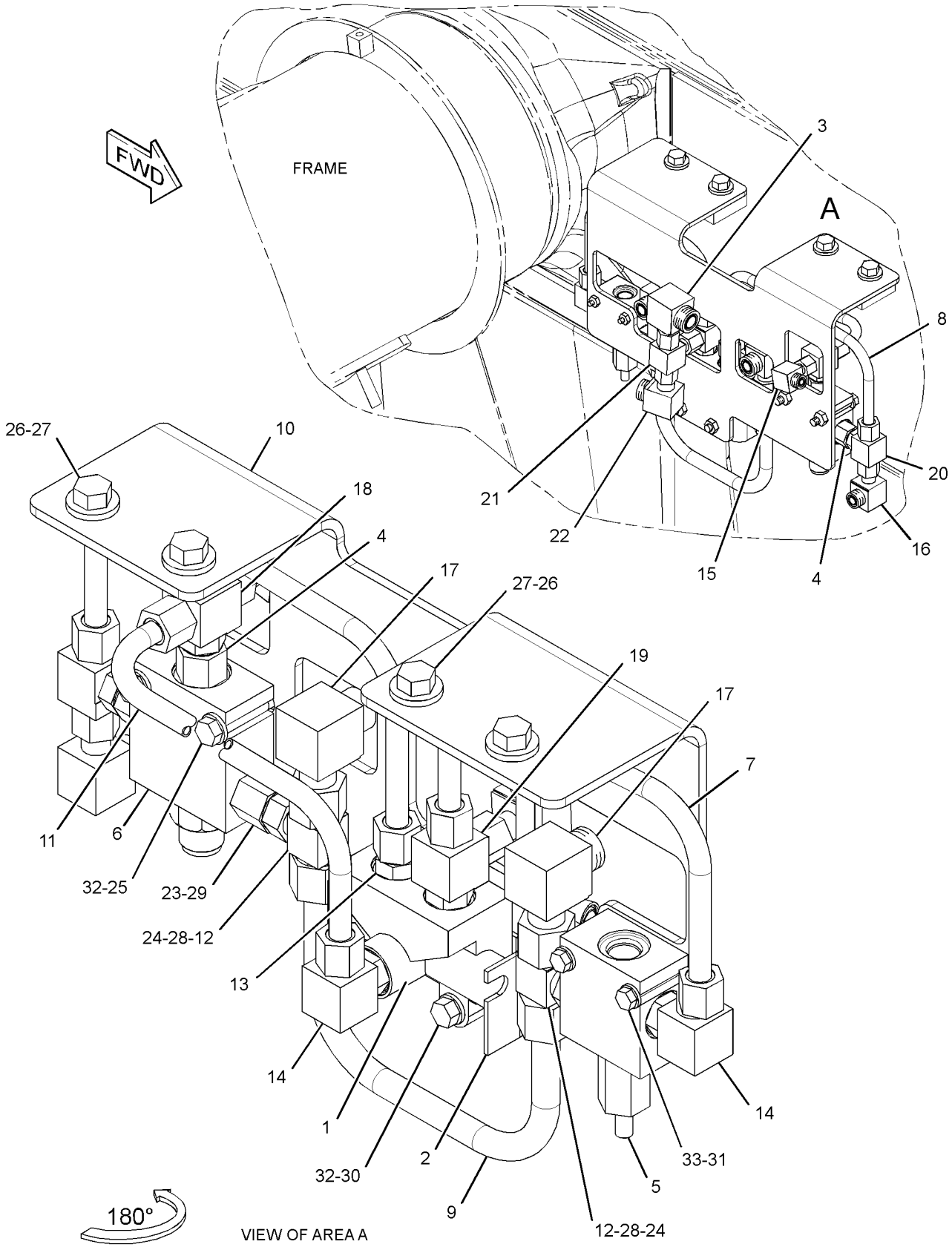


GRAPHIC #1 **<END>** g01341277

# *277-6941* VALVE GP-BRAKE–TOW RELEASE

**S/N: RLB334-UP**

**PART OF 269-9194 LINES GP-BRAKE**

**SMCS-4265, 4282, 4290** **i03017475**

| NOTE | REF NO | GRAPHIC REF | PART NUMBER | QTY | PART NAME 1 2 3 4 5 6 (PRODUCT LEVEL) | SEE PAGE |
|---|---|---|---|---|---|---|
| Y | 1 | 1 | **3G-2887** | 1 | VALVE GP-DIVERTER (TOWING, PARKING BRAKE RELEASE) | 610 |
| | 2 | 1 | **9D-6937** | 1 | BRACKET | |
| | 3 | 1 | *150-3032* | 1 | ELBOW AS | |
| | | 1 | **6V-9746** | 1 | SEAL-O-RING | |
| | | 1 | **8C-8762** | 1 | ELBOW | |
| | 4 | 1 | *161-9916* | 2 | ADAPTER AS | |
| | | | | | (EACH INCLUDES) | |
| | | 1 | **2M-9780** | 1 | SEAL-O-RING | |
| | | 1 | **6V-7420** | 1 | ADAPTER | |
| J | 5 | 1 | **228-7838** | 1 | VALVE GP-PRESSURE REDUCING (HOIST PILOT OIL) | |
| | 6 | 1 | **228-7839** | 1 | VALVE GP-RELIEF (TOWING) | |
| | 7 | 1 | **246-4521** | 1 | TUBE AS | |
| | 8 | 1 | **246-4523** | 1 | TUBE AS | |
| | 9 | 1 | **246-4524** | 1 | TUBE AS | |
| C | 10 | 1 | **312-6219** | 1 | PLATE AS | |
| | 11 | 1 | **297-6164** | 1 | TUBE AS | |
| | 12 | 1 | **109-5811** | 2 | TEE-O-RING PORT | |
| | 13 | 1 | *148-8340* | 1 | CONNECTOR AS | |
| | | 1 | **3K-0360** | 1 | SEAL-O-RING | |
| | | 1 | **6V-8398** | 1 | SEAL-O-RING | |
| | | 1 | **6V-8639** | 1 | CONNECTOR | |
| | 14 | 1 | *148-8364* | 2 | ELBOW AS | |
| | | | | | (EACH INCLUDES) | |
| | | 1 | **3K-0360** | 1 | SEAL-O-RING | |
| | | 1 | **6V-8398** | 1 | SEAL-O-RING | |
| | | 1 | **6V-8625** | 1 | ELBOW | |
| | 15 | 1 | *148-8367* | 1 | ELBOW AS | |
| | | 1 | **6V-8397** | 1 | SEAL-O-RING | |
| | | 1 | **6V-9850** | 1 | ELBOW | |
| | 16 | 1 | *148-8370* | 1 | ELBOW AS | |
| | | 1 | **6V-8398** | 1 | SEAL-O-RING | |
| | | 1 | **6V-9851** | 1 | ELBOW | |
| | 17 | 1 | *148-8393* | 2 | ELBOW AS | |
| | | | | | (EACH INCLUDES) | |
| | | 1 | **6V-9852** | 1 | ELBOW | |
| | | 1 | **7J-9108** | 1 | SEAL-O-RING | |
| | 18 | 1 | *148-8426* | 1 | TEE AS | |
| | | 1 | **3K-0360** | 1 | SEAL-O-RING | |
| | | 1 | **6V-8397** | 1 | SEAL-O-RING | |
| | | 1 | **6V-8398** | 1 | SEAL-O-RING | |
| | | 1 | **8T-6696** | 1 | TEE-O-RING | |
| | 19 | 1 | *148-8428* | 1 | TEE AS | |
| | | 1 | **3K-0360** | 1 | SEAL-O-RING | |
| | | 1 | **6V-8398** | 2 | SEAL-O-RING | |
| | | 1 | **6V-8782** | 1 | TEE | |
| | 20 | 1 | *148-8436* | 1 | TEE AS | |
| | | 1 | **3K-0360** | 1 | SEAL-O-RING | |
| | | 1 | **6V-8398** | 2 | SEAL-O-RING | |
| | | 1 | **6V-8775** | 1 | TEE-FACE SEAL | |
| | 21 | 1 | *150-4037* | 1 | TEE AS | |
| | | 1 | **6V-8398** | 2 | SEAL-O-RING | |
| | | 1 | **6V-9844** | 1 | TEE-SWIVEL | |
| | 22 | 1 | *198-0143* | 1 | ELBOW AS | |
| | | 1 | **7J-9108** | 1 | SEAL-O-RING | |
| | | 1 | **157-2348** | 1 | ELBOW | |

*277-6941* **VALVE GP-BRAKE** *(contd.)* **i03017475**

| NOTE | REF NO | GRAPHIC REF | PART NUMBER | QTY | PART NAME 1 2 3 4 5 6 (PRODUCT LEVEL) | SEE PAGE |
|---|---|---|---|---|---|---|
| | 23 | 1 | **3J-7354** | 1 | SEAL-O-RING | |
| | 24 | 1 | **3K-0360** | 2 | SEAL-O-RING | |
| | 25 | 1 | **4L-6459** | 2 | BOLT (3/8-16X2.5-IN) | |
| | 28 | 1 | **7J-9108** | 4 | SEAL-O-RING | |
| | 29 | 1 | **8C-7325** | 1 | ADAPTER | |
| | 30 | 1 | **8T-2501** | 2 | BOLT (3/8-16X2-IN) | |
| | 31 | 1 | **8T-4205** | 2 | WASHER-HARD (7.2X14.5X2-MM THK) | |
| | 32 | 1 | **8T-4896** | 4 | WASHER-HARD (10.2X18.5X2.5-MM THK) | |
| | 33 | 1 | **8T-9368** | 2 | BOLT (1/4-20X2.25-IN) | |
| | | | | | AVAILABLE REPAIR KIT(S): | |
| J | | | **224-7135** | 1 | KIT-SEAL (PRESSURE REDUCING VALVE) | |
| | | | | | (INCLUDES SEAL-O-RINGS & SEAL-BACK UP RINGS) | |

C-CHANGE FROM PREVIOUS TYPE
J-KIT MARKED J SERVICES PART(S) MARKED J
Y-SEPARATE ILLUSTRATION

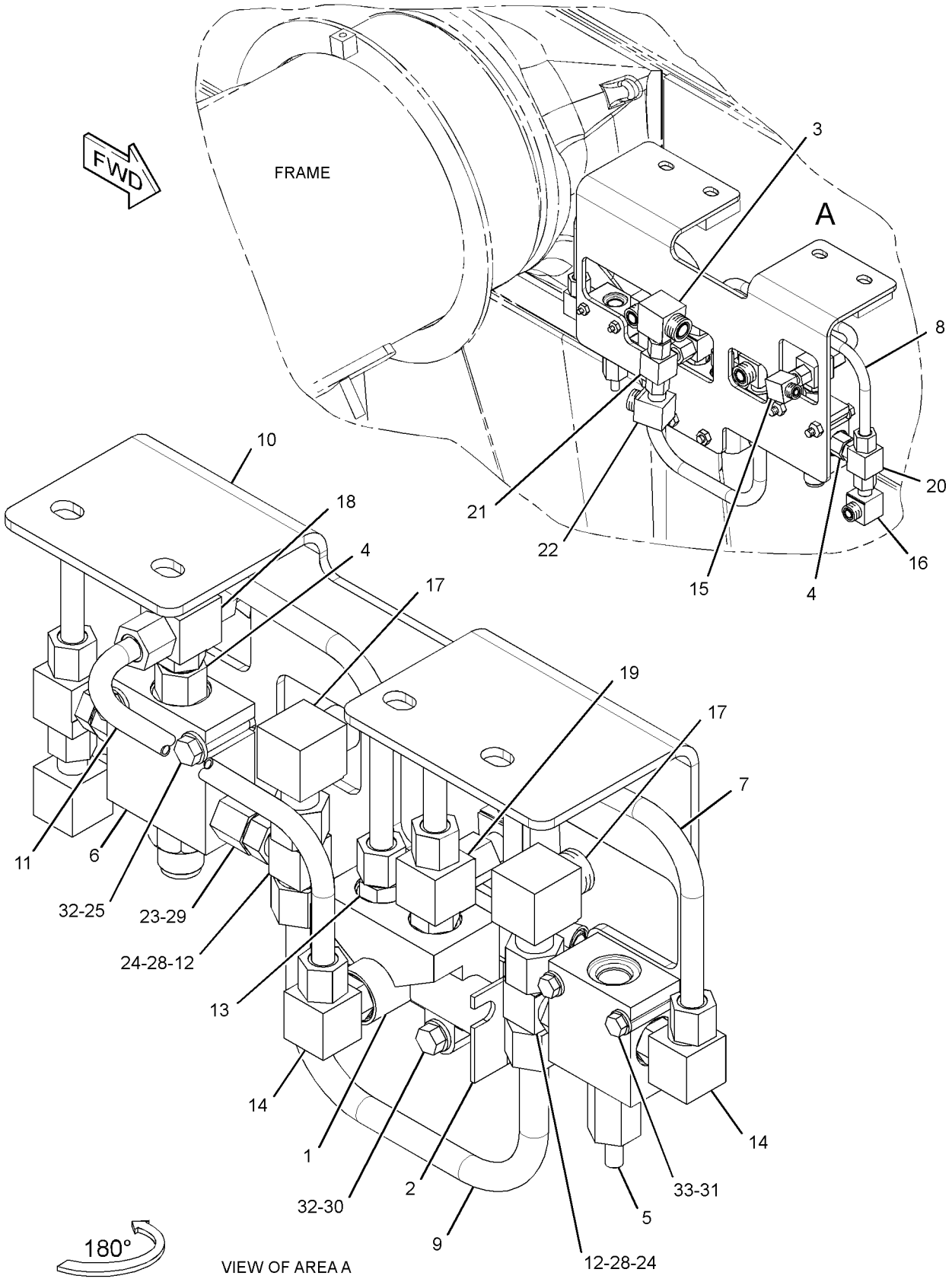


GRAPHIC #1 **<END>** g01526833

# 3G-2887 VALVE GP-DIVERTER

**S/N: RLB1-UP**

**PART OF 277-6941 VALVE GP-BRAKE**

**SMCS-4286** **i00115827**

| NOTE | REF NO | GRAPHIC REF | PART NUMBER | QTY | PART NAME 1 2 3 4 5 6 (PRODUCT LEVEL) | SEE PAGE |
|---|---|---|---|---|---|---|
| C | 1 | 1 | **8D-8256** | 2 | RING-RETAINING | |
| C | 2 | 1 | **8D-8255** | 2 | SEAL-QUAD RING | |

C-CHANGE FROM PREVIOUS TYPE

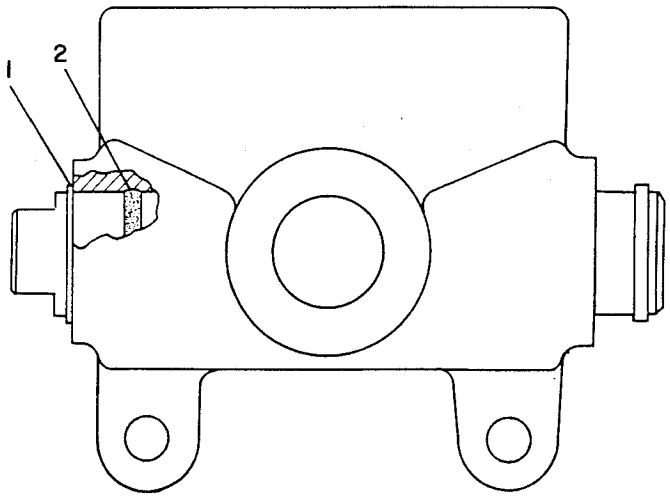


GRAPHIC #1 **<END>** g00081602

# *8J-6875* VALVE GP-SHUTTLE

**S/N: RLB301-UP**

**PART OF 269-9194 LINES GP-BRAKE**

**SMCS-4289** **i02773478**

| NOTE | REF NO | GRAPHIC REF | PART NUMBER | QTY | PART NAME 1 2 3 4 5 6 (PRODUCT LEVEL) | SEE PAGE |
|---|---|---|---|---|---|---|
| | 1 | 1 | **4T-9905** | 2 | ADAPTER | |
| | 2 | 1 | **2M-9780** | 2 | SEAL-O-RING | |
| | 3 | 1 | **4B-9784** | 1 | BALL | |

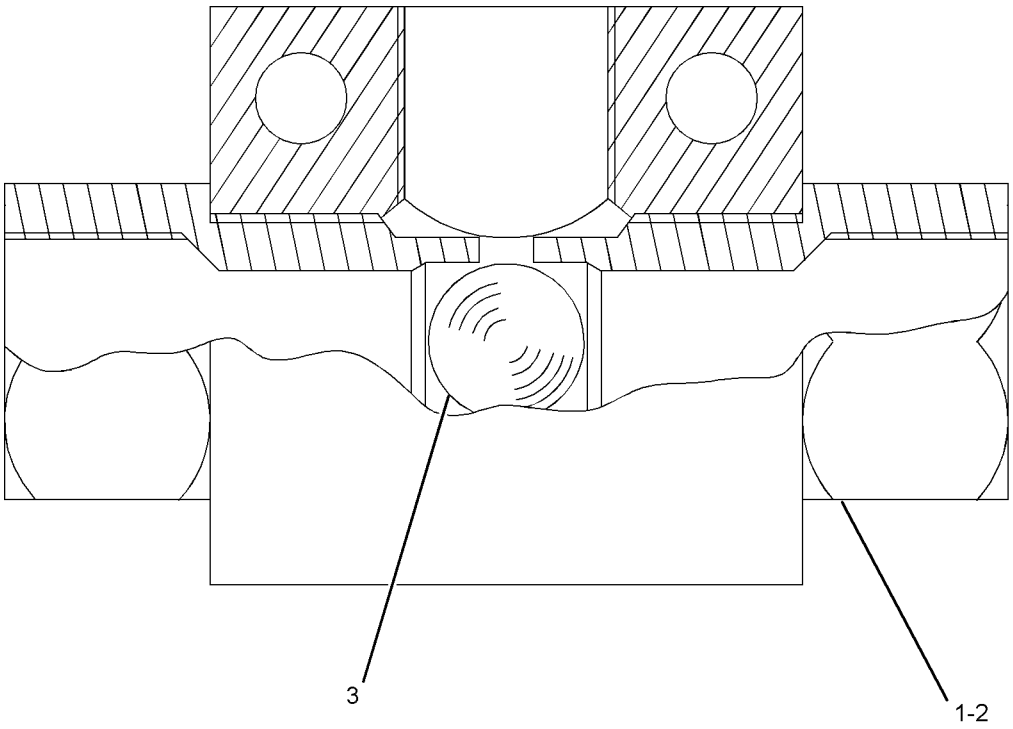


GRAPHIC #1 **<END>** g01047576

## 248-0307 ACCUMULATOR GP-HYDRAULIC—UNCHARGED

**S/N: RLB1-UP**

**FIELD REPLACEMENT FOR 220-5692—PAGE 563**

**SMCS-4331** **i02696939**

| NOTE | REF NO | GRAPHIC REF | PART NUMBER | QTY | PART NAME 1 2 3 4 5 6 (PRODUCT LEVEL) | SEE PAGE |
|---|---|---|---|---|---|---|
| | | | | | (NO SERVICED PARTS) | |

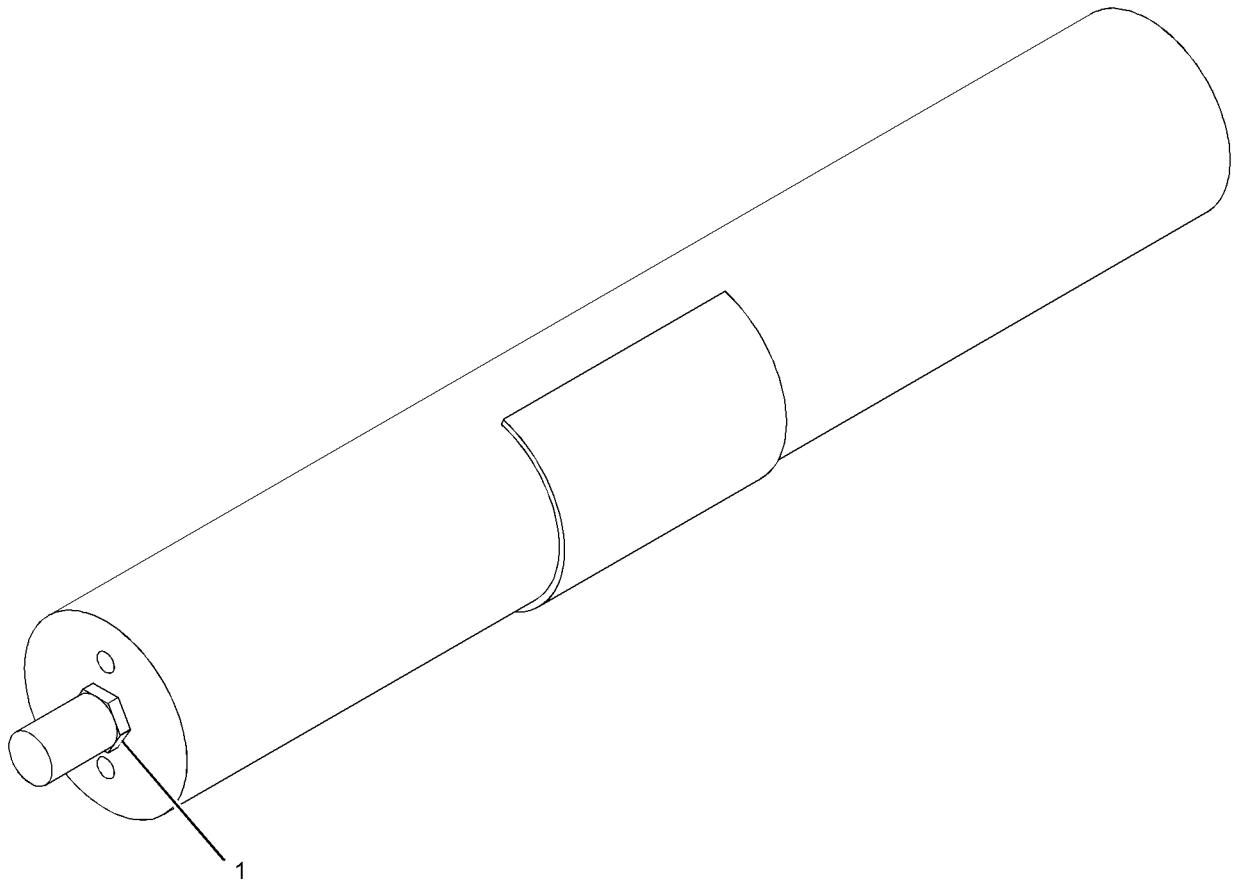


GRAPHIC #1 **<END>** g01107941

## *269-9205* CYLINDER & MTG GP-STEERING

**S/N: RLB1-UP**

**PART OF 270-1748 HYDRAULIC AR**

**SMCS-4303** **i02618759**

| NOTE | REF NO | GRAPHIC REF | PART NUMBER | QTY | PART NAME 1 2 3 4 5 6 (PRODUCT LEVEL) | SEE PAGE |
|---|---|---|---|---|---|---|
| | 1 | 1 | **3S-2909** | 4 | RING (LOCK, INTERNAL) | |
| | 2 | 1 | **7D-5435** | 4 | COVER | |
| | 3 | 1 | **273-0120** | 4 | STUD-BALL | |
| | 4 | 1 | **274-9256** | 4 | RACE | |
| Y | 5 | 1 | **276-5249** | 2 | CYLINDER GP-STEERING | 614 |
| | 6 | 1 | **283-5593** | 4 | SEAL | |
| | 7 | 1 | **299-3401** | 4 | NUT-HEX SLOTTED (1-1/2-12-THD) | |
| | 8 | 1 | **3B-5316** | 4 | PIN-COTTER | |

Y-SEPARATE ILLUSTRATION

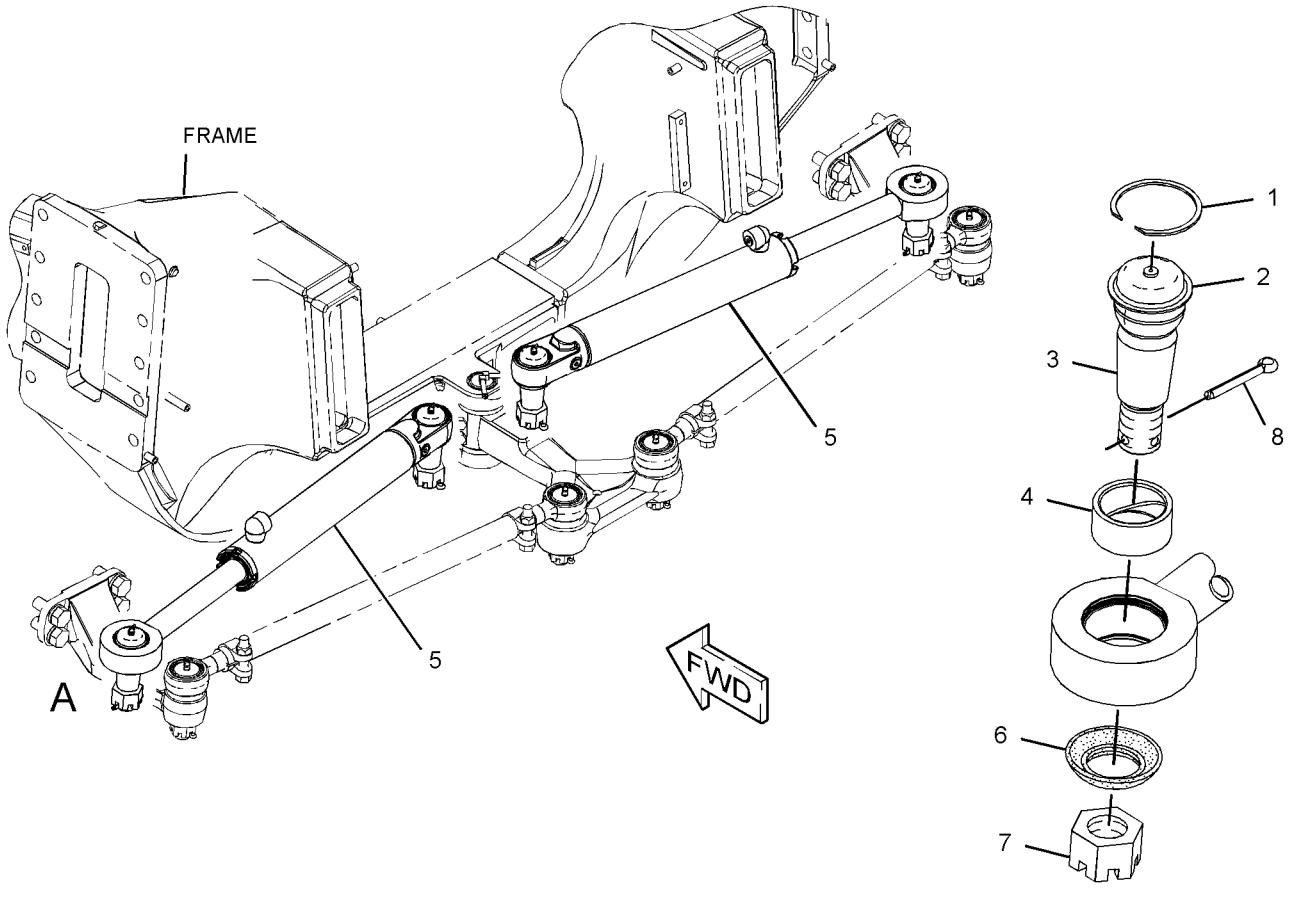


VIEW OF AREA A

GRAPHIC #1 **<END>** g01342652

## 276-5249 CYLINDER GP-STEERING

**S/N: RLB1-UP**
**76.2-MM (3-IN) BORE X 374.5-MM (14.7-IN) STROKE**
**PART OF 269-9205 CYLINDER & MTG GP-STEERING**

**SMCS-4303** **i02618760**

| NOTE | REF NO | GRAPHIC REF | PART NUMBER | QTY | PART NAME 1 2 3 4 5 6 (PRODUCT LEVEL) | SEE PAGE |
|---|---|---|---|---|---|---|
| | 1 | 1 | **6E-1131** | 1 | PISTON | |
| | 2 | 1 | **148-2593** | 1 | HEAD | |
| | 3 | 1 | **276-5244** | 1 | CYLINDER AS | |
| | | 1 | **9T-7045** | 1 | BOSS | |
| | 4 | 1 | **276-5250** | 1 | ROD AS | |
| M | 5 | 1 | **173-9683** | 1 | BOLT (M30X3.5X90-MM) | |
| | 6 | 1 | **175-7896** | 1 | SEAL-O-RING | |
| | 7 | 1 | **289-2935** | 1 | SEAL AS (BUFFER) | |
| | 8 | 1 | **289-2946** | 1 | SEAL-U-CUP | |
| | 9 | 1 | **289-2958** | 1 | SEAL-WIPER | |
| | 10 | 1 | **3K-0360** | 2 | SEAL-O-RING | |
| | 11 | 1 | **4T-5613** | 1 | RING-WEAR | |
| | 12 | 1 | **6J-1972** | 1 | SEAL AS | |
| | 13 | 1 | **6J-5731** | 1 | RING-BACKUP | |
| | 14 | 1 | **6J-5733** | 1 | RING-WEAR | |
| | 15 | 1 | **9S-8005** | 2 | PLUG-O-RING | |
| | 16 | 1 | **9X-8399** | 1 | WASHER (33X56X6-MM THK) | |

M-METRIC PART

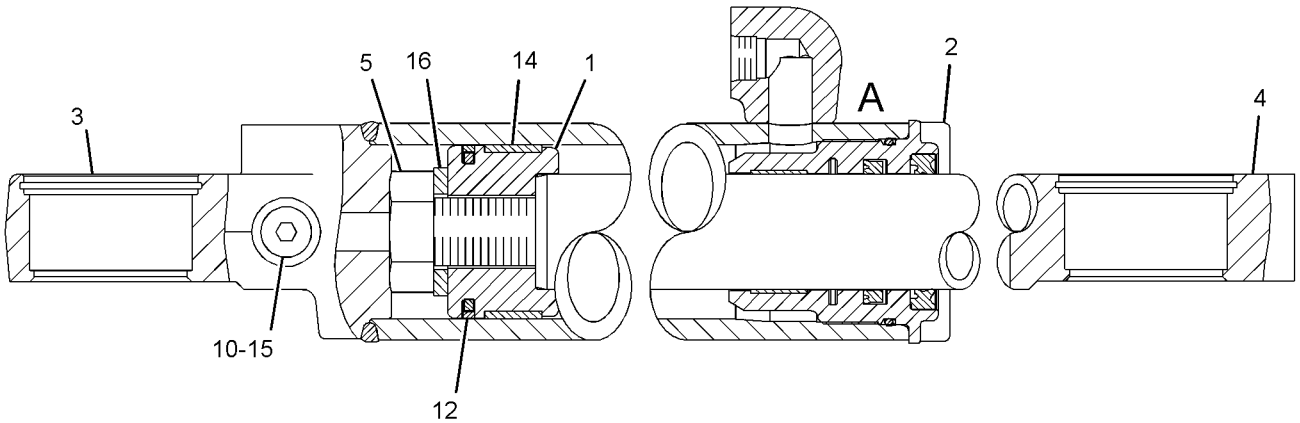


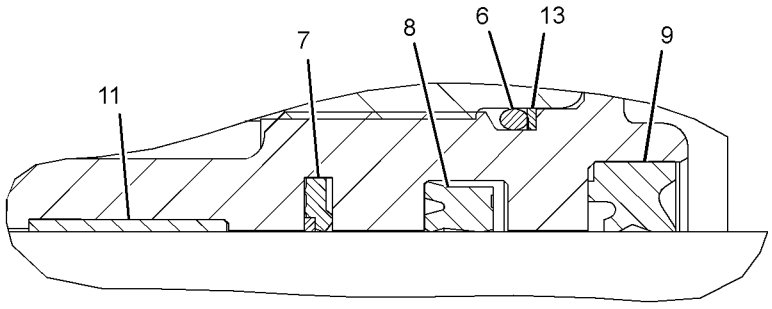


VIEW OF AREA A

GRAPHIC #1 **<END>** g01331174

## 249-2334 FILTER GP-OIL—ULTRA HIGH EFFICIENCY—
### STEERING RETURN
**S/N: RLB1-UP**
**PART OF 269-9203 TANK GP-HYDRAULIC**

**SMCS-5068** **i03037120**

| NOTE | REF NO | GRAPHIC REF | PART NUMBER | QTY | PART NAME 1 2 3 4 5 6 (PRODUCT LEVEL) | SEE PAGE |
|---|---|---|---|---|---|---|
| | 1 | 1 | **9T-8578** | 1 | FILTER-OIL (ADVANCED EFFICIENCY) (HYDRAULIC CASE DRAIN) | |
| | | | | | —OR— | |
| | | 1 | **144-0832** | 1 | FILTER-OIL (ULTRA HIGH EFFICIENCY) (HYDRAULIC CASE DRAIN) | |

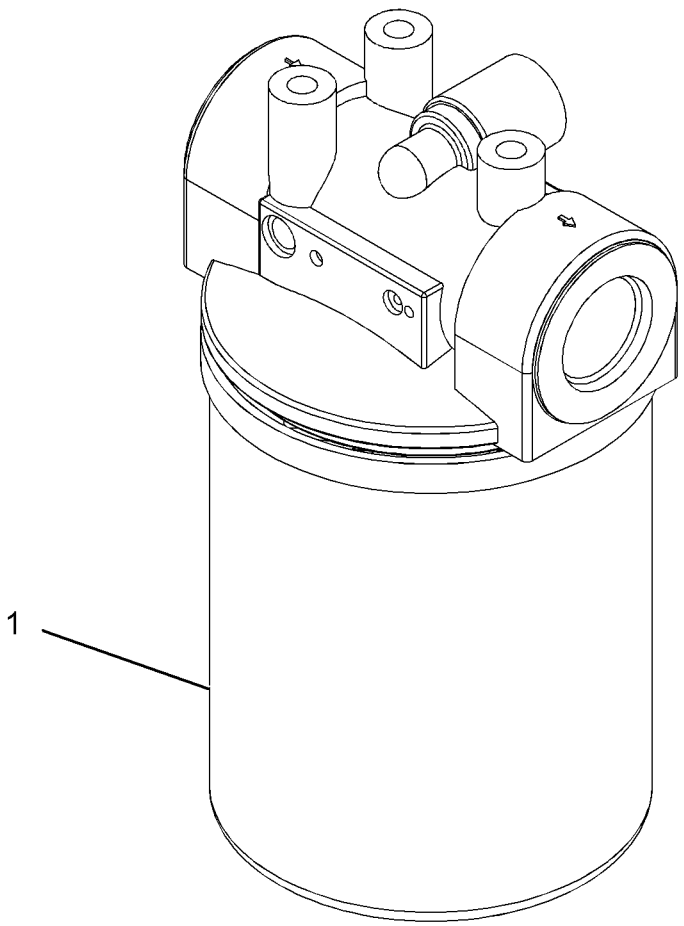


GRAPHIC #1 **<END>** g01216482

# STEERING SYSTEM

## *269-9200* LINES GP-STEERING

**S/N: RLB1-UP**

**PART OF 270-1748 HYDRAULIC AR**

**SMCS-4304** **i02701945**

| NOTE | REF NO | GRAPHIC REF | PART NUMBER | QTY | PART NAME 1 2 3 4 5 6 (PRODUCT LEVEL) | SEE PAGE |
|---|---|---|---|---|---|---|
| | 1 | 1 | **7E-9992** | 1 | BRACKET | |
| | 2 | 1 | **9X-4455** | 1 | SWITCH AS-PRESSURE (SECONDARY STEERING) | |
| | | 1 | **186-3735** | 3 | PIN-CONNECTOR (16-GA TO 18-GA) | |
| | | 1 | **102-8803** | 1 | KIT-RECEPTACLE (3-PIN) | |
| | | | | | (INCLUDES RECEPTACLE AS & WEDGE) | |
| | 3 | 1 | *217-5293* | 1 | TEE AS | |
| | | 1 | **6V-1625** | 1 | TEE-O-RING | |
| | | 1 | **3J-1907** | 1 | SEAL-O-RING | |
| I | 4 | 1 | **274-6412** | 1 | HOSE AS | |
| I | 5 | 1 | **274-6413** | 1 | HOSE AS | |
| | 6 | 1 | *297-7926* | 1 | TEE AS | |
| | | 1 | **9X-2235** | 1 | TEE-SWIVEL | |
| | | 1 | **5K-9090** | 1 | SEAL-O-RING | |
| | | 1 | **6V-9746** | 1 | SEAL-O-RING | |
| I | 7 | 1 | **301-7907** | 1 | HOSE AS | |
| | 8 | 1 | *148-8327* | 1 | CONNECTOR AS | |
| | | 1 | **6V-8637** | 1 | CONNECTOR | |
| | | 1 | **3D-2824** | 1 | SEAL-O-RING | |
| | | 1 | **6V-9746** | 1 | SEAL-O-RING | |
| | 9 | 1 | *148-8357* | 1 | ELBOW AS | |
| | | 1 | **6V-9008** | 1 | ELBOW | |
| | | 1 | **5K-9090** | 1 | SEAL-O-RING | |
| | | 1 | **7M-8485** | 1 | SEAL-O-RING | |
| | 10 | 1 | *148-8364* | 2 | ELBOW AS | |
| | | | | | (EACH INCLUDES) | |
| | | 1 | **6V-8625** | 1 | ELBOW | |
| | | 1 | **3K-0360** | 1 | SEAL-O-RING | |
| | | 1 | **6V-8398** | 1 | SEAL-O-RING | |
| | 11 | 1 | *148-8378* | 2 | ELBOW AS | |
| | | | | | (EACH INCLUDES) | |
| | | 1 | **6V-8724** | 1 | ELBOW | |
| | | 1 | **3J-1907** | 1 | SEAL-O-RING | |
| | | 1 | **6V-8397** | 1 | SEAL-O-RING | |
| | 12 | 1 | **1S-0994** | 1 | CLIP | |
| | 13 | 1 | **3K-0360** | 1 | SEAL-O-RING | |
| | 14 | 1 | **6D-4244** | 1 | CLIP | |
| | 15 | 1 | **6V-9832** | 1 | CAP AS | |
| | 16 | 1 | **7D-7233** | 3 | CLIP | |
| | 17 | 1 | **8S-0948** | 1 | CLIP | |
| | 18 | 1 | **8T-4121** | 3 | WASHER-HARD (11X21X2.5-MM THK) | |
| M | 19 | 1 | **8T-4133** | 1 | NUT (M10X1.5-THD) | |
| M | 20 | 1 | **8T-4136** | 1 | BOLT (M10X1.5X25-MM) | |
| M | 21 | 1 | **8T-4195** | 1 | BOLT (M10X1.5X30-MM) | |

I-REFER TO HYDRAULIC INFORMATION SYSTEM
M-METRIC PART

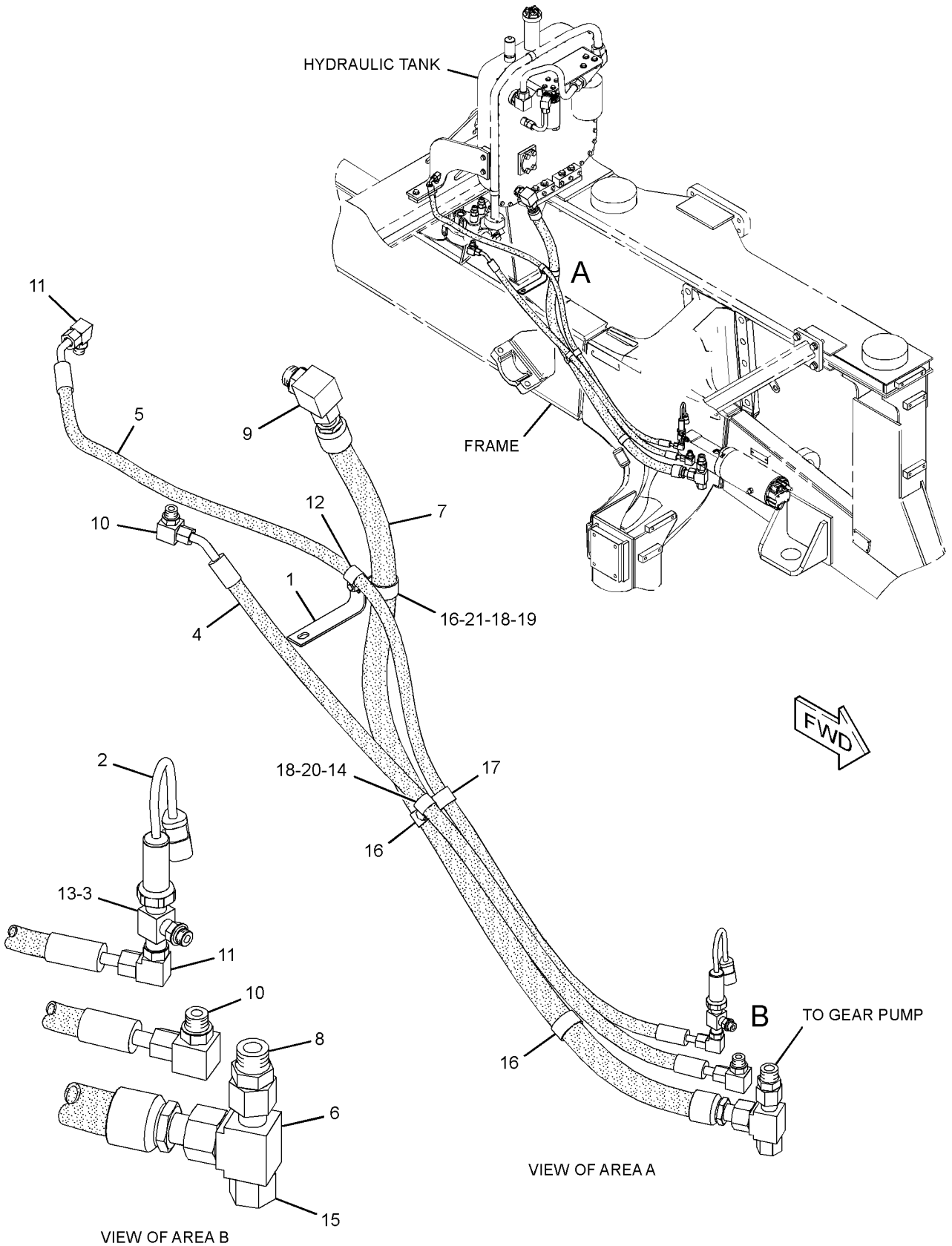


GRAPHIC #1

**<END>**

g01357174

# STEERING SYSTEM

## *269-9201* LINES GP-STEERING

**S/N: RLB1-UP**

**PART OF 270-1748 HYDRAULIC AR**

**SMCS-4304** **i02857372**

| NOTE | REF NO | GRAPHIC REF | PART NUMBER | QTY | PART NAME 1 2 3 4 5 6 (PRODUCT LEVEL) | SEE PAGE |
|---|---|---|---|---|---|---|
| | 1 | 1 | **2W-5317** | 1 | STRAP | |
| | 2 | 3 | **6V-0852** | 1 | CAP-DUST | |
| | 3 | 2,3 | **7D-1089** | 3 | CLIP | |
| | 4 | 3 | **8T-0082** | 1 | TEE | |
| | 5 | 2 | **8V-0442** | 1 | ANGLE | |
| Y | 6 | 2 | *175-7050* | 1 | VALVE GP-CHECK & RELIEF (STEERING LINES PRESSURE) | 632 |
| | 7 | 2 | *241-2443* | 1 | ELBOW AS | |
| | | 2 | **241-2451** | 1 | ELBOW | |
| | | 2 | **3J-1907** | 1 | SEAL-O-RING | |
| | | 2 | **7J-9108** | 1 | SEAL-O-RING | |
| I | 8 | 2 | **274-6415** | 1 | HOSE AS | |
| I | 9 | 2 | **274-6417** | 1 | HOSE AS | |
| I | 10 | 3 | **274-6418** | 1 | HOSE AS | |
| I | 11 | 3 | **274-6419** | 1 | HOSE AS | |
| | 12 | 2 | **274-6421** | 1 | TUBE AS | |
| | 13 | 3 | **274-6422** | 1 | TUBE AS | |
| | 14 | 3 | **274-6423** | 1 | TUBE AS | |
| | 15 | 2 | **274-6424** | 1 | TUBE AS | |
| | 16 | 3 | **274-6425** | 1 | TUBE AS | |
| I | 17 | 3 | **274-7868** | 1 | HOSE AS | |
| | 18 | 3 | **274-7878** | 1 | TUBE AS | |
| I | 19 | 2 | **309-1585** | 1 | HOSE AS | |
| I | 20 | 3 | **291-6341** | 1 | HOSE AS | |
| | 21 | 3 | **291-9974** | 1 | TUBE AS | |
| | 22 | 3 | **291-9976** | 1 | BRACKET | |
| I | 23 | 2 | **293-9036** | 1 | HOSE AS | |
| I | 24 | 2 | **310-8576** | 1 | HOSE AS | |
| | 25 | 2 | **297-3194** | 1 | TUBE AS | |
| I | 26 | 1 | **301-7942** | 1 | HOSE AS | |
| I | 27 | 2 | **301-7943** | 1 | HOSE AS | |
| I | 28 | 1 | **307-8800** | 1 | HOSE AS | |
| I | 29 | 1 | **310-5452** | 1 | HOSE AS | |
| I | 30 | 1 | **310-5453** | 1 | HOSE AS | |
| I | 31 | 3 | **307-9746** | 1 | HOSE AS | |
| | 32 | 2,3 | **132-7551** | 2 | SPACER (11X19X6-MM THK) | |
| | 33 | 3 | *148-8324* | 1 | CONNECTOR AS | |
| | | 3 | **6V-9874** | 1 | CONNECTOR | |
| | | 3 | **3K-0360** | 1 | SEAL-O-RING | |
| | | 3 | **6V-9746** | 1 | SEAL-O-RING | |
| | 34 | 2 | *148-8327* | 1 | CONNECTOR AS | |
| | | 2 | **6V-8637** | 1 | CONNECTOR | |
| | | 2 | **3D-2824** | 1 | SEAL-O-RING | |
| | | 2 | **6V-9746** | 1 | SEAL-O-RING | |
| | 35 | 2 | *148-8336* | 1 | CONNECTOR AS | |
| | | 2 | **6V-8636** | 1 | CONNECTOR | |
| | | 2 | **3J-1907** | 1 | SEAL-O-RING | |
| | | 2 | **6V-8397** | 1 | SEAL-O-RING | |
| | 36 | 1,2,3 | *148-8340* | 6 | CONNECTOR AS | |
| | | | | | (EACH INCLUDES) | |
| | | 1,2,3 | **6V-8639** | 1 | CONNECTOR | |
| | | 1,2,3 | **3K-0360** | 1 | SEAL-O-RING | |
| | | 1,2,3 | **6V-8398** | 1 | SEAL-O-RING | |
| | 37 | 2 | *148-8361* | 1 | ELBOW AS | |
| | | 2 | **6V-9200** | 1 | ELBOW (FACE SEAL) | |
| | | 2 | **3J-7354** | 1 | SEAL-O-RING | |

*269-9201* **LINES GP-STEERING** *(contd.)* **i02857372**

| NOTE | REF NO | GRAPHIC REF | PART NUMBER | QTY | PART NAME 1 2 3 4 5 6 (PRODUCT LEVEL) | SEE PAGE |
|---|---|---|---|---|---|---|
| | | 2 | **6V-8397** | 1 | SEAL-O-RING | |
| | 38 | 2 | *148-8372* | 1 | ELBOW AS | |
| | | 2 | **6V-8721** | 1 | ELBOW (90-DEG) | |
| | | 2 | **2M-9780** | 1 | SEAL-O-RING | |
| | | 2 | **6V-8398** | 1 | SEAL-O-RING | |
| | 39 | 1 | *148-8428* | 1 | TEE AS (ORFS) | |
| | | 1 | **6V-8782** | 1 | TEE (FACE SEAL) | |
| | | 1 | **3K-0360** | 1 | SEAL-O-RING | |
| | | 1 | **6V-8398** | 2 | SEAL-O-RING | |
| | 40 | 1 | *148-8444* | 1 | TEE AS-SWIVEL | |
| | | 1 | **6V-9837** | 1 | TEE-SWIVEL | |
| | | 1 | **6V-8398** | 2 | SEAL-O-RING | |
| | 41 | 2 | *149-5452* | 1 | UNION AS (ORFS) | |
| | | 2 | **6V-8994** | 1 | UNION (BULKHEAD) | |
| | | 2 | **6V-8397** | 2 | SEAL-O-RING | |
| | 42 | 2 | *150-3036* | 1 | ELBOW AS | |
| | | 2 | **8T-1905** | 1 | ELBOW (90-DEG) | |
| | | 2 | **3J-1907** | 1 | SEAL-O-RING | |
| | | 2 | **6V-8397** | 1 | SEAL-O-RING | |
| | 43 | 2 | *155-7321* | 1 | ADAPTER AS | |
| | | 2 | **6V-1722** | 1 | ADAPTER-O-RING | |
| | | 2 | **3D-2824** | 1 | SEAL-O-RING | |
| | 44 | 3 | *164-5567* | 1 | COUPLER AS-QUICK DISCONNECT | |
| | | 3 | **6V-3965** | 1 | FITTING (QUICK DISCONNECT) | |
| | | 3 | **3J-1907** | 1 | SEAL-O-RING | |
| | 45 | 3 | *164-7908* | 1 | ELBOW AS | |
| | | 3 | **8T-7546** | 1 | ELBOW | |
| | | 3 | **6V-8397** | 1 | SEAL-O-RING | |
| | | 3 | **3J-7354** | 1 | SEAL-O-RING | |
| | 46 | 2 | *268-1518* | 1 | TEE AS | |
| | | 2 | **6V-8790** | 1 | TEE-FACE SEAL | |
| | | 2 | **7J-9108** | 1 | SEAL-O-RING | |
| Y | 47 | 2 | **277-8869** | 1 | VALVE GP-SOLENOID & MANIFOLD (24-VDC) (STEERING LINES) | 637 |
| | 48 | 2 | **1P-3703** | 2 | SEAL-RECTANGULAR | |
| | 49 | 2 | **1P-4577** | 2 | FLANGE-HALF | |
| | 50 | 2 | **1P-4578** | 2 | FLANGE-HALF | |
| | 51 | 2 | **1P-4579** | 2 | FLANGE-HALF | |
| | 52 | 2,3 | **1S-0994** | 3 | CLIP | |
| | 53 | 1,3 | **3G-4214** | 7 | CLIP (SLOT) | |
| | 54 | 1,3 | **3G-4218** | 7 | CLIP (TAB) | |
| | 55 | 1 | **3P-9847** | 1 | CLIP | |
| | 56 | 3 | **3S-8665** | 1 | CLIP | |
| | 57 | 1 | **3W-9670** | 1 | BOSS | |
| | 58 | 1 | **4I-0472** | 2 | CLIP | |
| | 59 | 2 | **4J-0520** | 2 | SEAL-O-RING | |
| | 60 | 2 | **4J-0522** | 1 | SEAL-O-RING | |
| | 61 | 2 | **4J-0524** | 2 | SEAL-O-RING | |
| | 62 | 2 | **4J-0527** | 1 | SEAL-O-RING | |
| | 63 | 2 | **4L-9337** | 1 | BOLT (3/8-16X1.5-IN) | |
| | 64 | 2 | **4S-1962** | 2 | CLIP | |
| | 65 | 2 | **5P-1075** | 1 | WASHER-HARD (10.2X22.5X3-MM THK) | |
| | 66 | 3 | **5P-7466** | 1 | CLIP (SLOT) | |
| | 67 | 3 | **5P-7467** | 1 | CLIP (TAB) | |
| | 68 | 3 | **5P-8112** | 1 | GROMMET | |
| | 69 | 2 | **5S-7382** | 4 | BOLT (3/8-16X1.375-IN) | |
| | 70 | 2 | **6D-4244** | 1 | CLIP | |
| | 71 | 1,3 | **6V-7359** | 7 | GROMMET | |
| | 72 | 2 | **6V-8397** | 1 | SEAL-O-RING | |
| | 73 | 1,3 | **6V-8398** | 7 | SEAL-O-RING | |

## *269-9201* **LINES GP-STEERING** *(contd.)* **i02857372**

| NOTE | REF NO | GRAPHIC REF | PART NUMBER | QTY | PART NAME 1 2 3 4 5 6 (PRODUCT LEVEL) | SEE PAGE |
|---|---|---|---|---|---|---|
| | 74 | 3 | **6V-9746** | 1 | SEAL-O-RING | |
| | 75 | 2 | **7D-7233** | 1 | CLIP | |
| | 76 | 2 | **7X-0296** | 2 | BOLT (3/8-16X5.5-IN) | |
| | 77 | 2 | **7X-0301** | 1 | BOLT (3/8-16X7-IN) | |
| M | 78 | 2 | **7X-2547** | 2 | BOLT (M10X1.5X200-MM) | |
| | 79 | 2 | **7X-3186** | 4 | BOLT (3/8-16X2.125-IN) | |
| | 80 | 1 | **7X-7729** | 2 | WASHER (11X25X3-MM THK) | |
| | 81 | 2 | **8B-0544** | 1 | SPACER (1-IN THK) | |
| | 82 | 3 | **8M-2770** | 6 | CLIP | |
| | 83 | 2 | **8T-0192** | 4 | BOLT (3/8-16X2.25-IN) | |
| | 84 | 1,2,3 | **8T-4121** | 31 | WASHER-HARD (11X21X2.5-MM THK) | |
| M | 85 | 1,2,3 | **8T-4133** | 6 | NUT (M10X1.5-THD) | |
| M | 86 | 2,3 | **8T-4136** | 5 | BOLT (M10X1.5X25-MM) | |
| M | 87 | 2,3 | **8T-4137** | 6 | BOLT (M10X1.5X20-MM) | |
| M | 88 | 2 | **8T-4185** | 4 | BOLT (M10X1.5X50-MM) | |
| M | 89 | 1,2,3 | **8T-4195** | 6 | BOLT (M10X1.5X30-MM) | |
| M | 90 | 1 | **8T-4196** | 1 | BOLT (M10X1.5X35-MM) | |
| M | 91 | 2 | **8T-4198** | 1 | BOLT (M10X1.5X100-MM) | |
| | 92 | 2 | **8T-4223** | 4 | WASHER-HARD (13.5X25.5X3-MM THK) | |
| | 93 | 2 | **8T-4896** | 15 | WASHER-HARD (10.2X18.5X2.5-MM THK) | |
| M | 94 | 1 | **8T-6466** | 1 | BOLT (M10X1.5X60-MM) | |
| | 95 | 2 | **8T-8919** | 4 | BOLT (1/2-13X1.75-IN) | |
| | 96 | 2,3 | **9K-2464** | 5 | CLIP | |
| | 97 | 1 | **148-8346** | 1 | ELBOW AS | |
| | | 1 | **8T-1686** | 1 | ELBOW | |
| | | 1 | **3K-0360** | 1 | SEAL-O-RING | |
| | | 1 | **6V-8398** | 1 | SEAL-O-RING | |

I-REFER TO HYDRAULIC INFORMATION SYSTEM
M-METRIC PART
Y-SEPARATE ILLUSTRATION

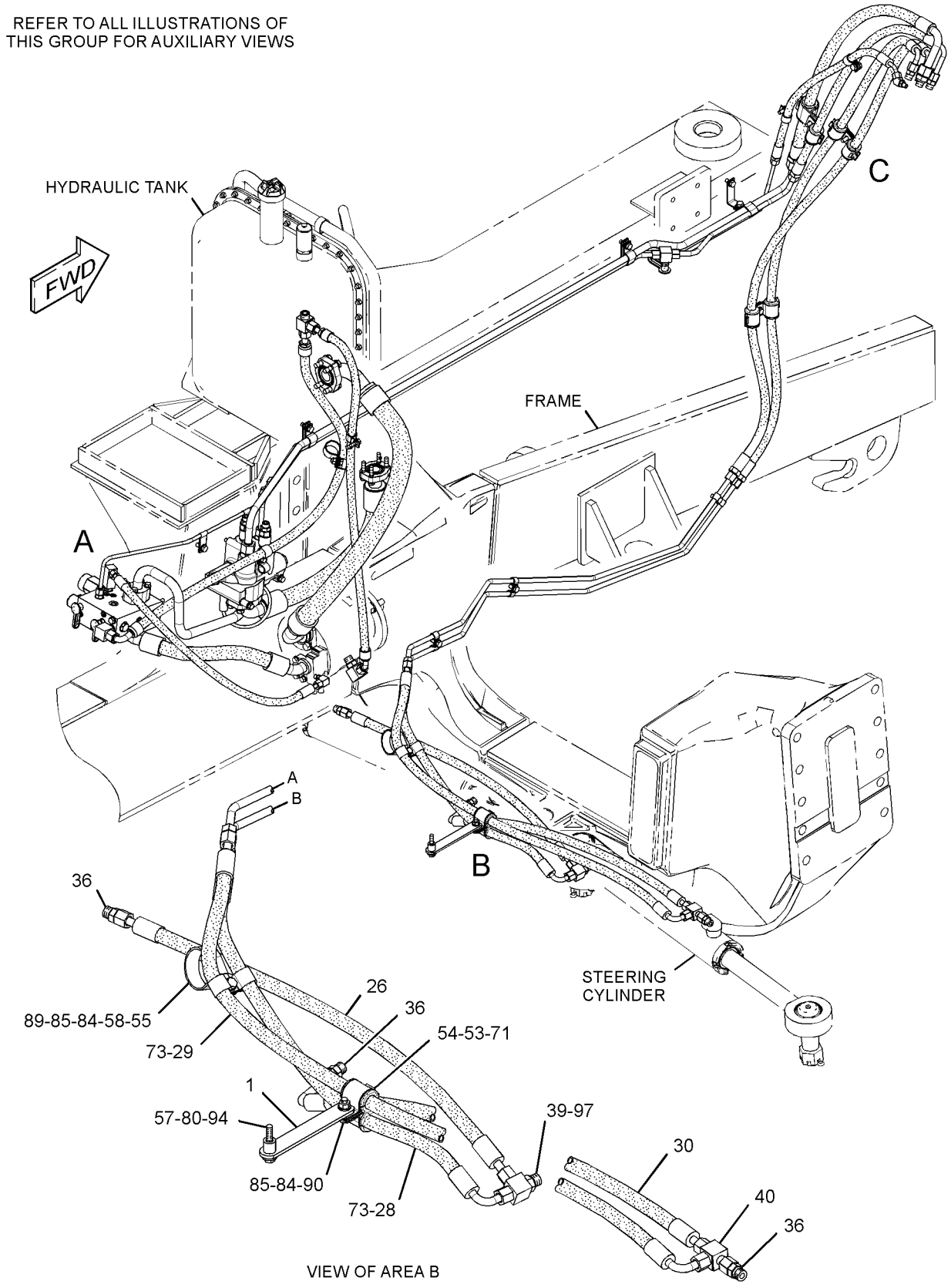


GRAPHIC #1

g01424099

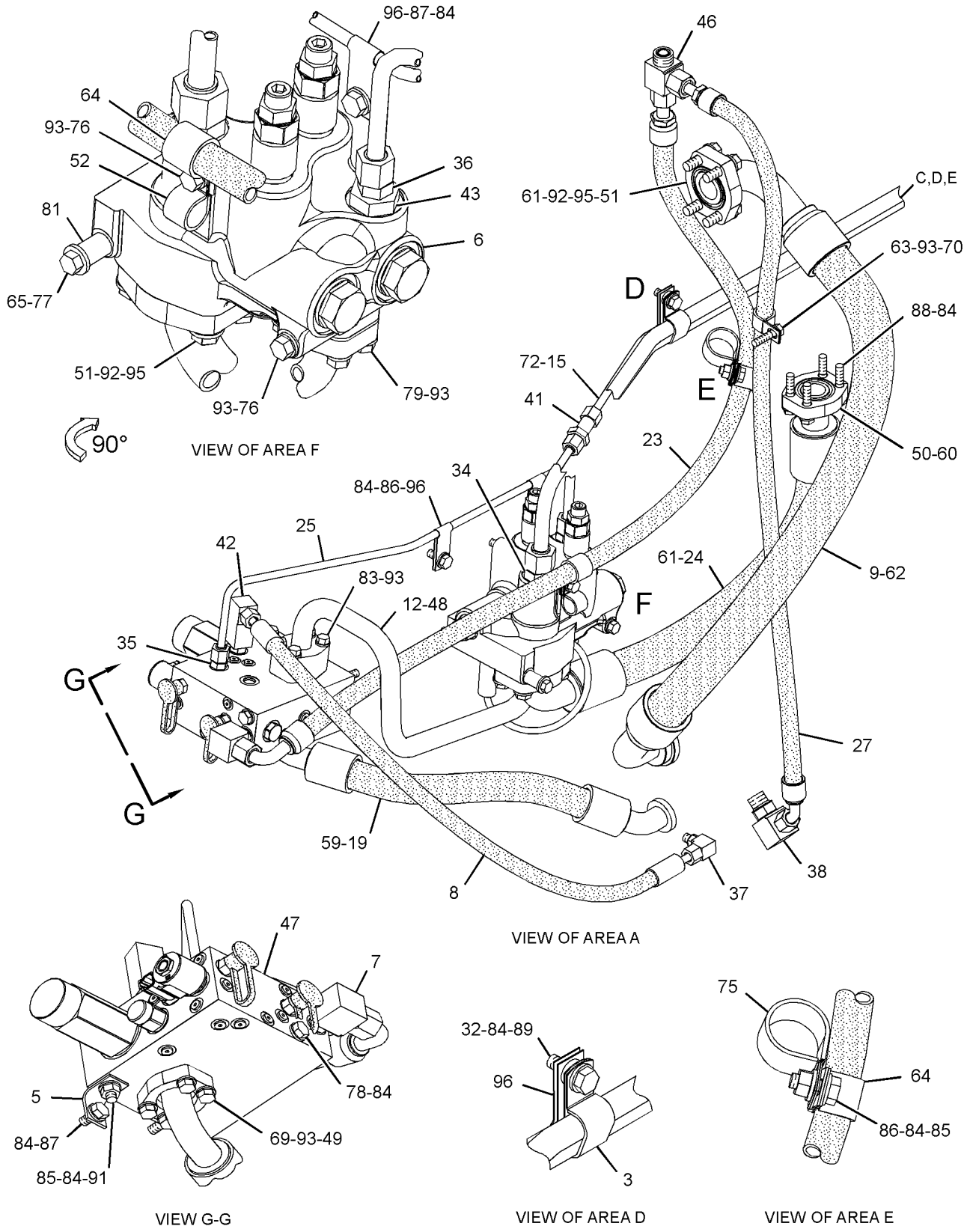


GRAPHIC #2

g01378969

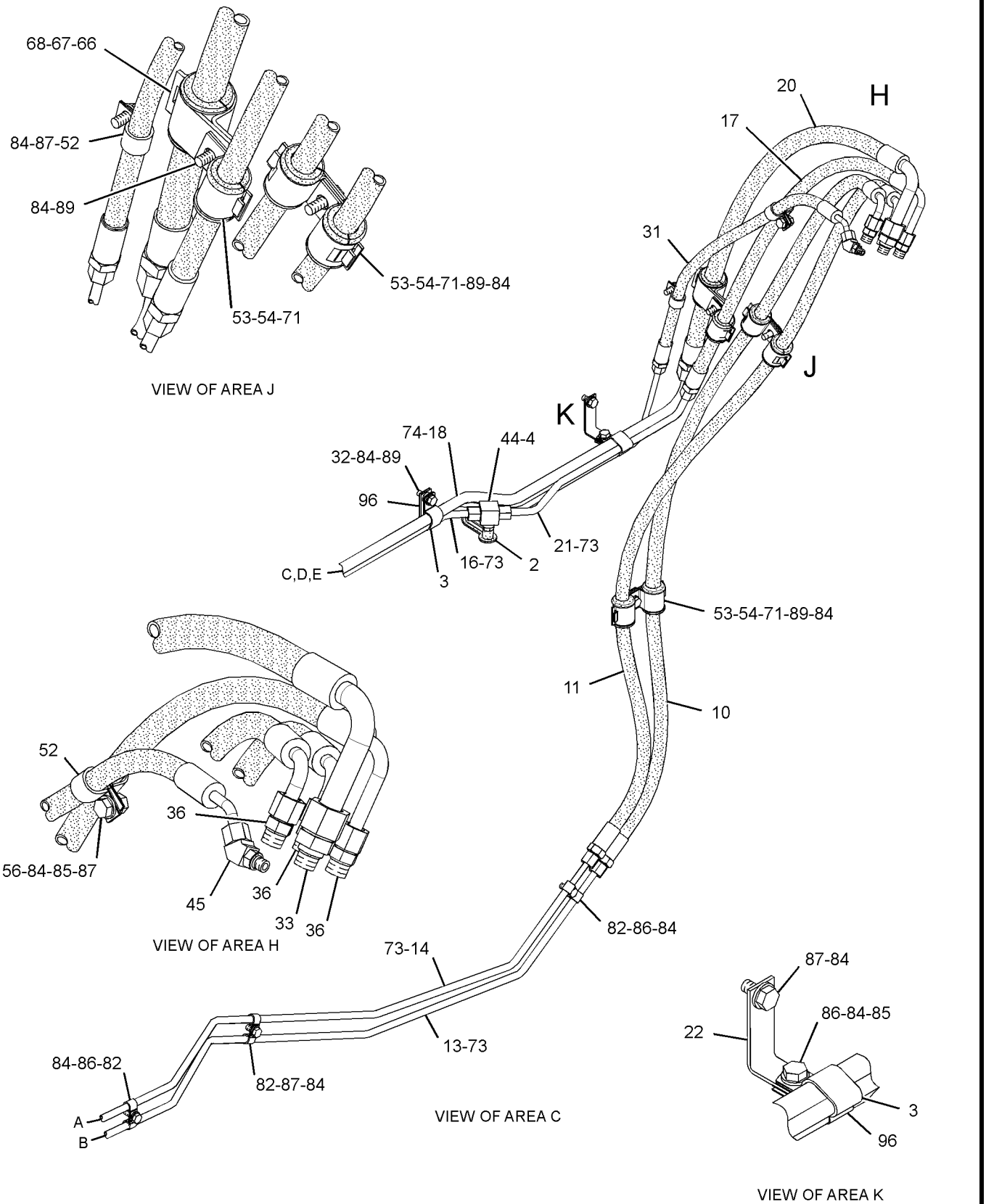


GRAPHIC #3 **<END>** g01378970

# STEERING SYSTEM

## *270-5317* LINK GP-STEERING

**S/N: RLB1-UP**

**PART OF 268-7808 CHASSIS AR**

**SMCS-4305** **i02613070**

| NOTE | REF NO | GRAPHIC REF | PART NUMBER | QTY | PART NAME 1 2 3 4 5 6 (PRODUCT LEVEL) | SEE PAGE |
|---|---|---|---|---|---|---|
| | 1 | 1 | **2D-1683** | 2 | FITTING | |
| | 2 | 1 | **3B-8485** | 4 | FITTING-GREASE | |
| | 3 | 1 | **3B-8491** | 2 | FITTING-GREASE (EXTENDED) | |
| | 4 | 1 | **4D-7779** | 1 | LOCK | |
| | 5 | 1 | **7D-8922** | 1 | PIN | |
| | 6 | 1 | **283-5593** | 4 | SEAL | |
| | 7 | 1 | **8X-6730** | 2 | BEARING-SLEEVE | |
| | 8 | 1 | **135-5263** | 1 | ARM-CENTER | |
| | 9 | 1 | **271-6462** | 2 | ARM | |
| | 10 | 1 | **275-5231** | 2 | LINK AS | |
| | | | | | (EACH INCLUDES) | |
| | 10A | 1 | **7D-2983** | 1 | TIE ROD | |
| | 10B | 1 | **127-6405** | 2 | CLAMP AS | |
| | 10C | 1 | **275-5232** | 1 | SOCKET AS | |
| | 10D | 1 | **275-5233** | 1 | SOCKET AS | |
| | | | | | (EACH SOCKET AS INCLUDES) | |
| | | 1 | **3S-2909** | 1 | RING (LOCK, INTERNAL) | |
| | | 1 | **7D-5435** | 1 | COVER | |
| | | 1 | **273-0120** | 1 | STUD-BALL | |
| | | 1 | **274-9256** | 1 | RACE | |
| | 11 | 1 | **299-3401** | 4 | NUT-HEX SLOTTED (1-1/2-12-THD) | |
| | 12 | 1 | **299-3416** | 8 | BOLT (1-8X2.5-IN) | |
| | 13 | 1 | **299-3441** | 8 | WASHER-HARD (28X44.5X6-MM THK) | |
| | 14 | 1 | **3B-5316** | 4 | PIN-COTTER | |
| | 15 | 1 | **6C-3281** | 2 | BOLT (5/8-11X3-IN) | |
| | 16 | 1 | **9F-2247** | 1 | PLUG-PIPE | |
| B | 17 | 1 | **8X-6731** | 3 | SHIM (1-MM THK) | |

B-USE AS REQUIRED

*270-5317* **LINK GP-STEERING** *(contd. )* **i02613070**

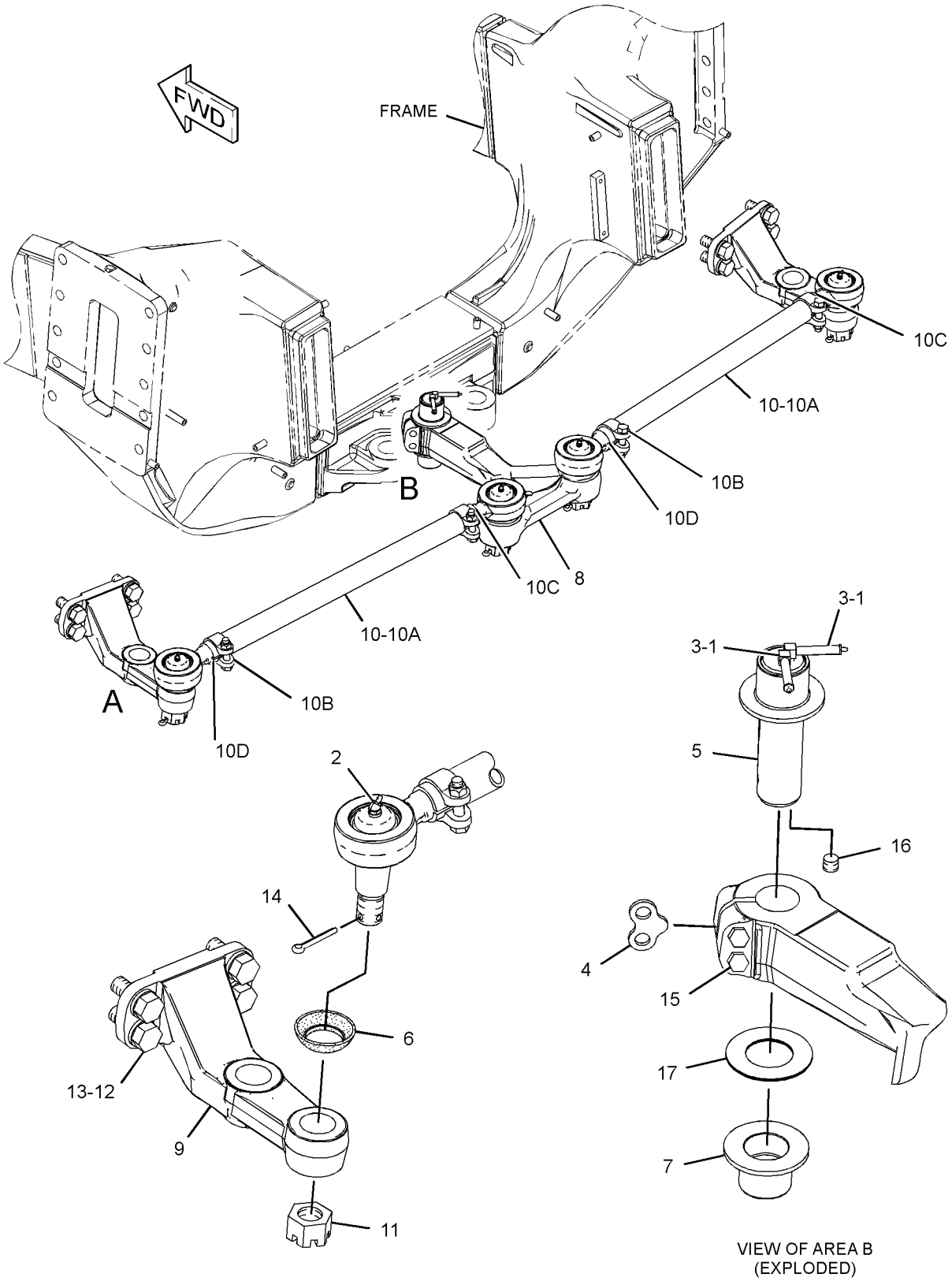


GRAPHIC #1 **<END>** g01346583

# *192-4286* PUMP GP-METERING–HMU

**S/N: RLB1-UP**

**PART OF 236-0983 CONTROL GP-STEERING**

**SMCS-4312** **i02686187**

| NOTE | REF NO | GRAPHIC REF | PART NUMBER | QTY | PART NAME 1 2 3 4 5 6 (PRODUCT LEVEL) | SEE PAGE |
|---|---|---|---|---|---|---|
| | 1 | 1 | **9J-5685** | 1 | BEARING | |
| | 2 | 1 | **142-7061** | 2 | RACE-BEARING | |
| | | | | | AVAILABLE REPAIR KIT(S): | |
| | | | **258-8412** | 1 | KIT-SEAL (STEERING METERING PUMP) | |
| | | | | | (INCLUDES SEALS & INSTRUCTIONS) | |

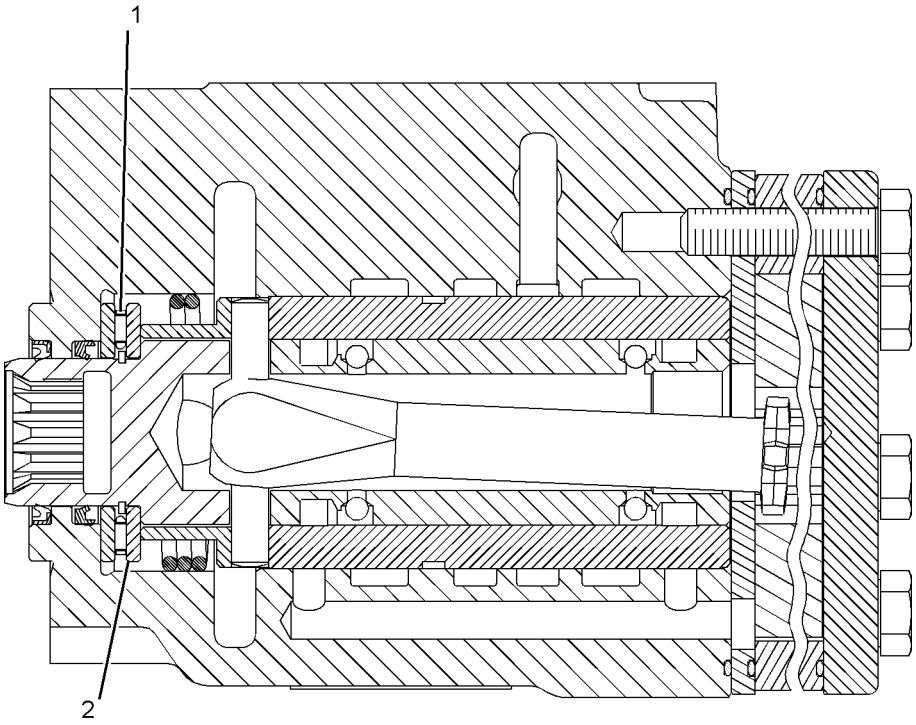


GRAPHIC #1 **<END>** g01102980

# STEERING SYSTEM

## 252-8050 STEERING COLUMN GP-ADJUSTABLE

**S/N: RLB1-UP**

**PART OF 236-0983 CONTROL GP-STEERING**

**FIELD REPLACEMENT ORDER 313-2466—PAGE 739**

**SMCS-4338** **i03001989**

| NOTE | REF NO | GRAPHIC REF | PART NUMBER | QTY | PART NAME 1 2 3 4 5 6 (PRODUCT LEVEL) | SEE PAGE |
|---|---|---|---|---|---|---|
| | 1 | 1 | **252-8051** | 1 | ADAPTER AS | |
| | 2 | 1 | **162-8550** | 1 | KIT-GAS STRUT (STEERING COLUMN TILT) | |
| | | | | | (INCLUDES STRUT, BOLTS, NUTS & SPACER) | |
| | 3 | 1 | **300-2960** | 1 | COLUMN AS (STEERING COLUMN) | |
| | 4 | 1 | **191-3700** | 1 | KIT-TILT LEVER (STEERING COLUMN) | |
| | | | | | (INCLUDES CONTROL AS, SCREW & CLAMP AS) | |
| | 5 | 1 | **252-8054** | 1 | KIT-CONTACT (STEERING COLUMN) | |
| | | | | | (INCLUDES HORN CONTACT AS & SCREW) | |
| M | 6 | 1 | **6V-8227** | 1 | NUT (M18X1.5-THD) | |
| | 7 | 1 | **189-9370** | 1 | SHAFT | |
| | 8 | 1 | **162-8551** | 2 | JOINT AS-UNIVERSAL | |
| | | | | | (EACH INCLUDES) | |
| M | | 1 | **099-3649** | 2 | BOLT (M8X1.25X40-MM) | |
| M | | 1 | **131-3540** | 2 | LOCKNUT (M8X1.25-THD) | |
| | 9 | 1 | **185-3886** | 1 | CLAMP AS-CABLE | |
| | 10 | 1 | **321-6951** | 1 | KIT-PIVOT (STEERING COLUMN) | |
| | | | | | (INCLUDES BUSHING & PIN PIVOTS) | |
| | 11 | 1 | **201-5121** | 1 | KIT-SHAFT (STEERING COLUMN) | |
| | | | | | (INCLUDES UPPER SHAFT, WASHERS, SPRING, PIN & HORN CONTACT) | |
| | 12 | 1 | **102-8802** | 1 | KIT-RECEPTACLE (2-PIN) | |
| | | | | | (INCLUDES RECEPTACLE AS & WEDGE) | |
| | 13 | 1 | **186-3735** | 1 | PIN-CONNECTOR (16-GA TO 18-GA) | |
| | 14 | 1 | **9G-3695** | 1 | PLUG | |

M-METRIC PART

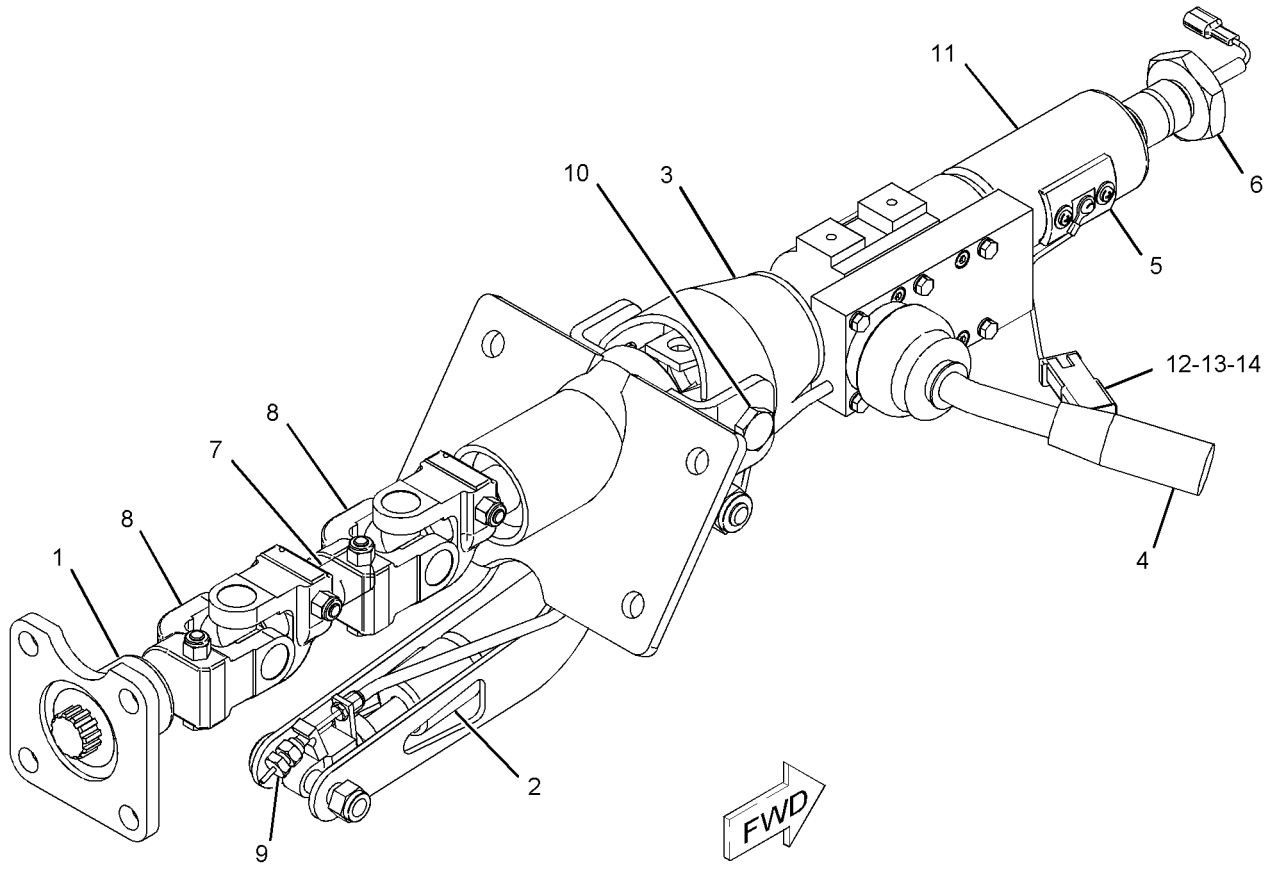


GRAPHIC #1 **<END>** g01121013

# STEERING SYSTEM

## *280-9600* TANK & FILTER GP-STEERING

**S/N: RLB1-UP**

**PART OF 269-9203 TANK GP-HYDRAULIC**

**SMCS-4332** **i02616815**

| NOTE | REF NO | GRAPHIC REF | PART NUMBER | QTY | PART NAME 1 2 3 4 5 6 (PRODUCT LEVEL) | SEE PAGE |
|---|---|---|---|---|---|---|
| | 1 | 1 | **2D-4202** | 1 | PLATE | |
| | 2 | 1 | **5D-7927** | 1 | STRAINER AS-OIL (HYDRAULIC TANK) | |
| | | 1 | **5F-3488** | 1 | END-STRAINER | |
| | 3 | 1 | **7H-1447** | 1 | CAP-FILLER (HYDRAULIC OIL,STEERING) | |
| | 4 | 1 | **8J-7409** | 1 | GASKET | |
| | 5 | 1 | **280-9601** | 1 | TANK AS-HYDRAULIC | |
| | 6 | 1 | **281-7729** | 1 | COVER AS-TANK | |
| | 7 | 1 | **303-0956** | 1 | GAUGE GP-SIGHT (SIGHT GLASS) (HYDRAULIC TANK OIL) | |
| | | 1 | **033-6033** | 2 | SEAL-O-RING | |
| | | 1 | **112-3102** | 4 | SEAL-O-RING | |
| | 8 | 1 | **120-6588** | 2 | BLOCK | |
| | 9 | 1 | **2K-4973** | 44 | LOCKNUT (3/8-16-THD) | |
| | 10 | 1 | **3D-2824** | 1 | SEAL-O-RING | |
| | 11 | 1 | **4L-6454** | 38 | BOLT (3/8-16X1-IN) | |
| | 12 | 1 | **6H-9361** | 1 | RING-RETAINING | |
| | 13 | 1 | **8T-2275** | 1 | BALL | |
| | 14 | 1 | **8T-9101** | 6 | BOLT (3/8-16X2.75-IN) | |
| | 15 | 1 | **9H-6454** | 1 | GASKET | |
| | 16 | 1 | **9T-0818** | 1 | VALVE-BREAKER RELIEF (HYDRAULIC TANK) | |

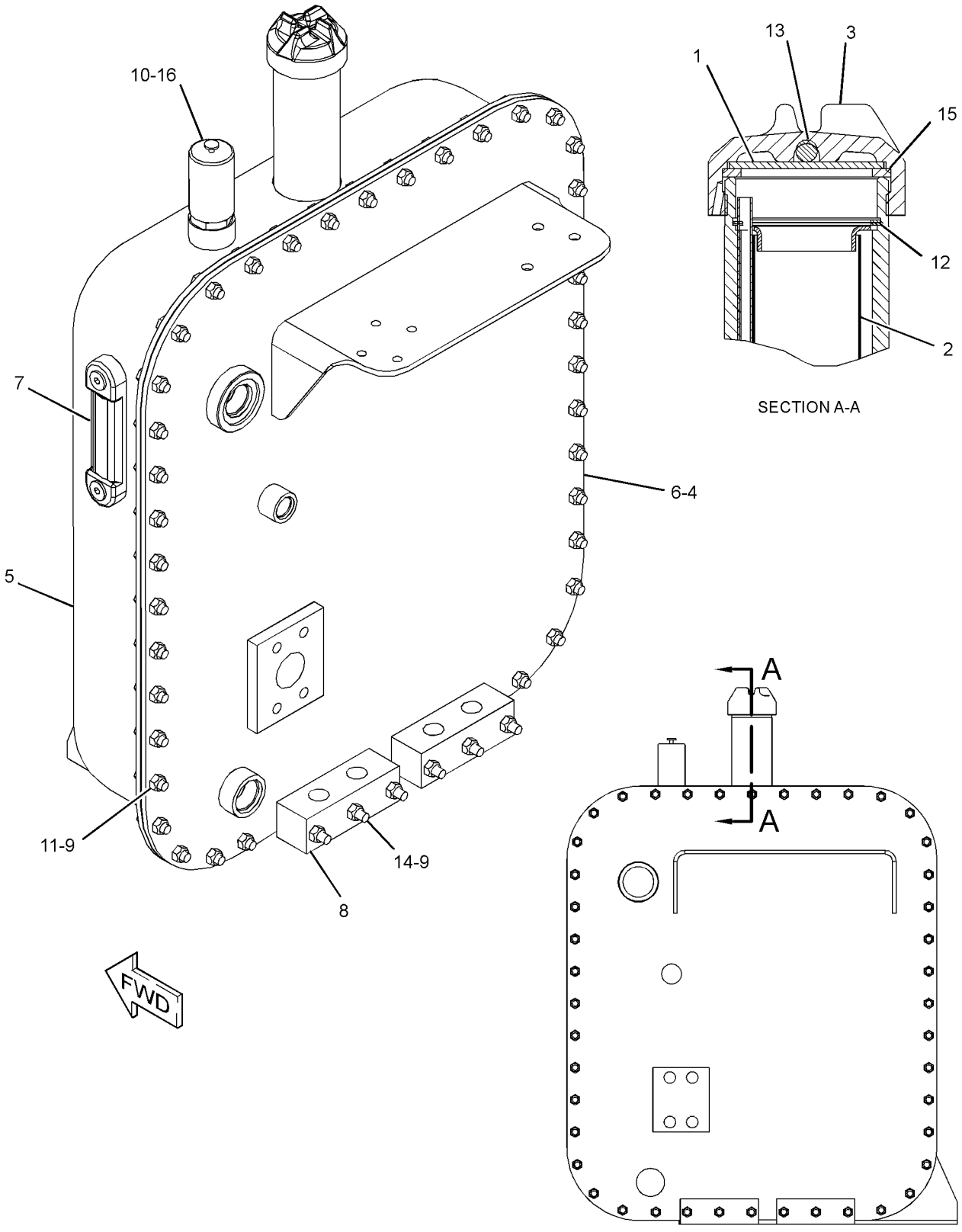


GRAPHIC #1 **<END>** g01342119

# STEERING SYSTEM

## *175-7050* VALVE GP-CHECK & RELIEF

**S/N: RLB1-UP**

**PART OF 269-9201 LINES GP-STEERING**

**SMCS-5453** **i03077105**

| NOTE | REF NO | GRAPHIC REF | PART NUMBER | QTY | PART NAME 1 2 3 4 5 6 (PRODUCT LEVEL) | SEE PAGE |
|---|---|---|---|---|---|---|
| | 1 | 1 | **2S-2596** | 2 | SPRING | |
| | 4 | 1 | **100-8010** | 2 | VALVE-CHECK | |
| | 5 | 1 | **100-8011** | 2 | PLUG | |
| Y | 6 | 1 | *108-2185* | 1 | VALVE GP-RELIEF (PRIMARY STEERING) | 636 |
| Y | 7 | 1 | *114-1267* | 1 | VALVE GP-PRESSURE REDUCING (STEERING) | 634 |
| | 8 | 1 | **1P-4577** | 2 | FLANGE-HALF | |
| | 9 | 1 | **1P-4579** | 2 | FLANGE-HALF | |
| | 10 | 1 | **313-5104** | 1 | SWITCH AS-PRESSURE (STEERING PUMP OIL LOW PRESSURE) | |
| | | 1 | **3E-3371** | 1 | WEDGE-RECEPTACLE LOCK (3-PIN) | |
| | | 1 | **102-8803** | 1 | KIT-RECEPTACLE (3-PIN) | |
| | | 1 | **186-3735** | | PIN-CONNECTOR (16-GA TO 18-GA) | |
| E | | 1 | **9X-1813** | | SLEEVE (28-CM) | |
| | 11 | 1 | **3K-0360** | 1 | SEAL-O-RING | |
| Y | 13 | 1 | *4T-2742* | 1 | VALVE GP-RELIEF (SECONDARY STEERING) | 635 |
| | 14 | 1 | **5S-7382** | 4 | BOLT (3/8-16X1.375-IN) | |
| | 15 | 1 | **7M-8485** | 2 | SEAL-O-RING | |
| | 16 | 1 | **8T-4223** | 4 | WASHER-HARD (13.5X25.5X3-MM THK) | |
| | 17 | 1 | **8T-4896** | 4 | WASHER-HARD (10.2X18.5X2.5-MM THK) | |
| | 18 | 1 | **8T-8919** | 4 | BOLT (1/2-13X1.75-IN) | |

E-ORDER BY THE CENTIMETER
Y-SEPARATE ILLUSTRATION

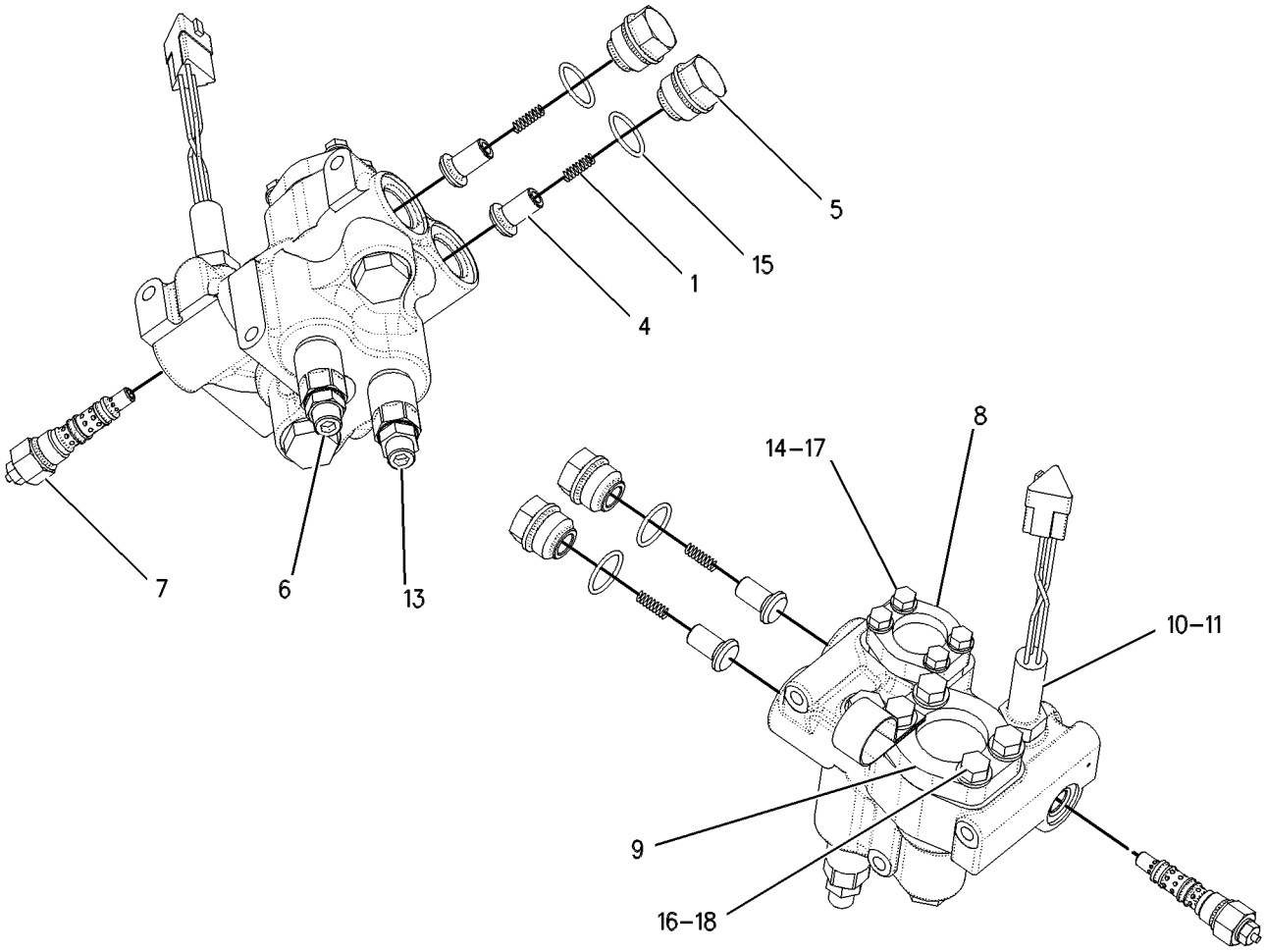


GRAPHIC #1 **<END>** g00613542

# *114-1267* VALVE GP-PRESSURE REDUCING

**S/N: RLB1-UP**

**PART OF 175-7050 VALVE GP-CHECK & RELIEF**

**SMCS-4337** **i02814113**

| NOTE | REF NO | GRAPHIC REF | PART NUMBER | QTY | PART NAME 1 2 3 4 5 6 (PRODUCT LEVEL) | SEE PAGE |
|---|---|---|---|---|---|---|
| | 1 | 1 | **2M-9780** | 1 | SEAL-O-RING | |
| | 2 | 1 | **6V-3505** | 1 | RING-BACKUP | |
| | 3 | 1 | **8C-3132** | 1 | SEAL-O-RING | |
| | 4 | 1 | **6E-0410** | 1 | SEAL-O-RING | |
| | 5 | 1 | **5P-2199** | 1 | RING-BACKUP | |

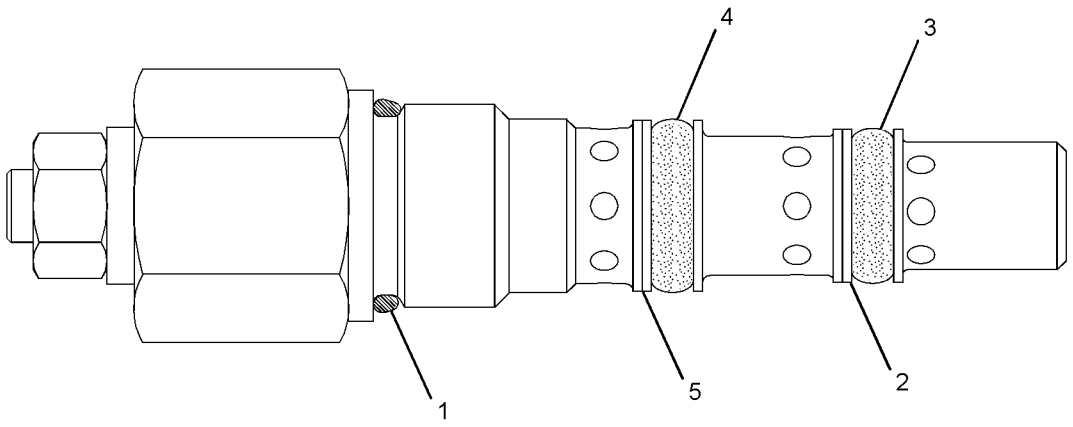


GRAPHIC #1 **<END>** g01404221

# 4T-2742 VALVE GP-RELIEF

**S/N: RLB1-UP**

**PART OF 175-7050 VALVE GP-CHECK & RELIEF**

**SMCS-5117, 7428** **i00113246**

| NOTE | REF NO | GRAPHIC REF | PART NUMBER | QTY | PART NAME 1 2 3 4 5 6 (PRODUCT LEVEL) | SEE PAGE |
|---|---|---|---|---|---|---|
| | 1 | 1 | **6E-1835** | 1 | RETAINER AS | |
| | 2 | 1 | **9X-6395** | 1 | NUT (3/4-16-THD) | |
| | 3 | 1 | **3K-0360** | 2 | SEAL-O-RING | |
| | 4 | 1 | **9M-1974** | 2 | WASHER-HARD (8.8X16X2-MM THK) | |
| | 5 | 1 | **4T-2741** | 1 | SPRING | |
| | 6 | 1 | **7J-9933** | 1 | SEAL-O-RING | |
| | 7 | 1 | **4T-7571** | 1 | PLATE | |
| | 8 | 1 | **6J-6439** | 1 | VALVE-POPPET | |

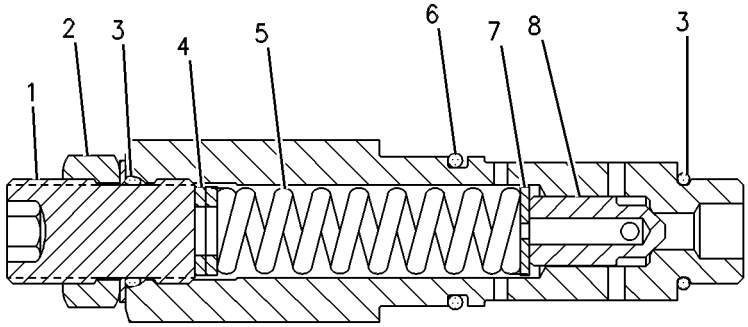


GRAPHIC #1 **<END>** g00087618

# 108-2185 VALVE GP-RELIEF

**S/N: RLB1-UP**
**DIRECT OPERATED**
**PART OF 175-7050 VALVE GP-CHECK & RELIEF**

**SMCS-5117, 7428** **i00116930**

| NOTE | REF NO | GRAPHIC REF | PART NUMBER | QTY | PART NAME 1 2 3 4 5 6 (PRODUCT LEVEL) | SEE PAGE |
|---|---|---|---|---|---|---|
| | 1 | 1 | **6E-1835** | 1 | RETAINER AS | |
| | 2 | 1 | **9X-6395** | 1 | NUT (3/4-16-THD) | |
| | 3 | 1 | **3K-0360** | 2 | SEAL-O-RING | |
| | 4 | 1 | **8T-4224** | 2 | WASHER-HARD (8.8X16X2-MM THK) | |
| | 5 | 1 | **4T-2741** | 1 | SPRING | |
| | 6 | 1 | **7J-9933** | 1 | SEAL-O-RING | |
| | 7 | 1 | **4T-7571** | 1 | PLATE | |
| | 8 | 1 | **6J-6439** | 1 | VALVE-POPPET | |

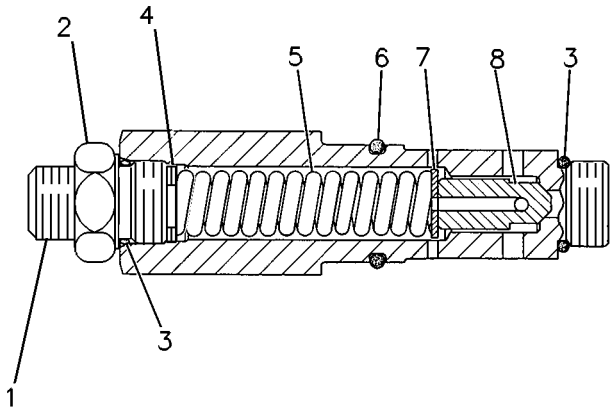


GRAPHIC #1 **<END>** g00106362

# STEERING SYSTEM

## 277-8869 VALVE GP-SOLENOID & MANIFOLD

**S/N: RLB1-UP**

**PART OF 269-9201 LINES GP-STEERING**

**SMCS-5264** **i02507276**

| NOTE | REF NO | GRAPHIC REF | PART NUMBER | QTY | PART NAME 1 2 3 4 5 6 (PRODUCT LEVEL) | SEE PAGE |
|---|---|---|---|---|---|---|
| | 1 | 1 | **6V-0852** | 1 | CAP-DUST | |
| | 2 | 1 | **8C-3451** | 1 | CAP-DUST | |
| | 3 | 1 | **248-3291** | 1 | VALVE GP-SHUTTLE | |
| | 4 | 1 | **263-1392** | 1 | VALVE GP-CHECK | |
| | 5 | 1 | **263-1393** | 1 | VALVE GP-DIVERTER | |
| | 6 | 1 | **263-1394** | 1 | VALVE GP-SOLENOID | |
| Z | 7 | 1 | | 1 | MANIFOLD AS | |
| | 8 | 1 | **277-8868** | 1 | VALVE GP-DIVERTER | |
| | 9 | 1 | **8C-3446** | 1 | VALVE-FLUID SAMPLING | |
| | | | **3J-7354** | 1 | SEAL-O-RING | |
| | 10 | 1 | **6V-3965** | 1 | FITTING (QUICK DISCONNECT) | |
| | 11 | 1 | **6V-5049** | 1 | SEAL-O-RING | |

Z-NOT SERVICED SEPARATELY

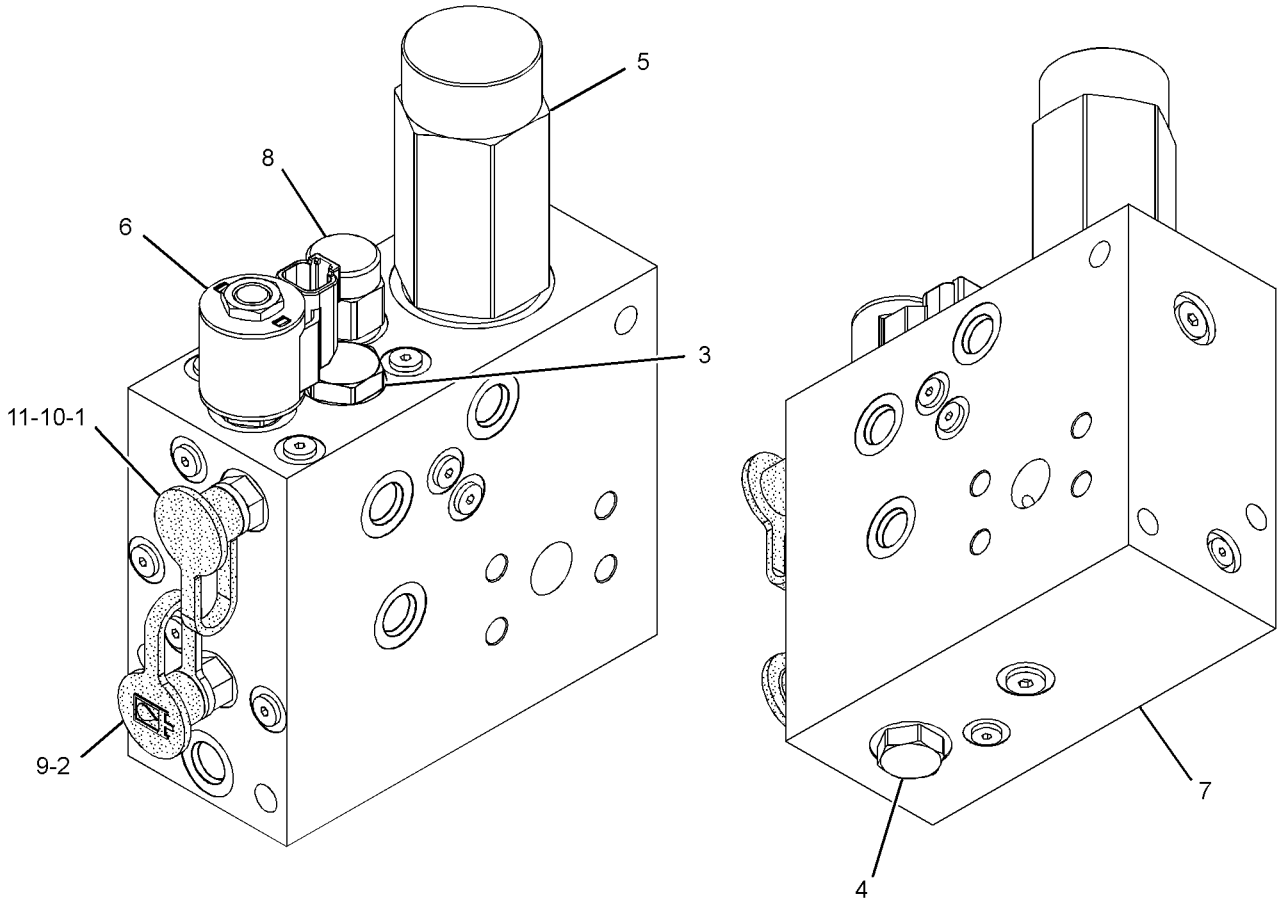


GRAPHIC #1 **<END>** g01265661

# 217-6720 ACTUATOR GP-PILOT CONTROL–

**PROPORTIONAL SOLENOID**

**S/N: RLB1-UP**

**PART OF 245-1669 VALVE GP-CONTROL**

**SMCS-5078** **i02530776**

| NOTE | REF NO | GRAPHIC REF | PART NUMBER | QTY | PART NAME 1 2 3 4 5 6 (PRODUCT LEVEL) | SEE PAGE |
|---|---|---|---|---|---|---|
| | 1 | 1 | **118-5083** | 1 | HOUSING | |
| | 2 | 1 | **118-5085** | 1 | RETAINER | |
| | 3 | 1 | **118-5086** | 1 | SPRING | |
| | 4 | 1 | **118-5087** | 1 | SPRING | |
| | 5 | 1 | **148-2350** | 1 | COIL AS | |
| | 6 | 1 | **154-4133** | 1 | CARTRIDGE AS | |
| | 7 | 1 | **155-2251** | 1 | PLATE | |
| | 8 | 1 | **6V-3965** | 1 | FITTING (QUICK DISCONNECT) | |
| | 9 | 1 | **162-0177** | 2 | PLUG AS | |
| | | | | | (EACH INCLUDES) | |
| | | 1 | **9S-8004** | 1 | PLUG-O-RING | |
| | | 1 | **3J-1907** | 1 | SEAL-O-RING | |
| | 10 | 1 | **030-4605** | 1 | SEAL-O-RING | |
| | 11 | 1 | **146-3728** | 1 | WASHER-SPRING | |
| | 12 | 1 | **121-2051** | 1 | SPRING | |
| | 13 | 1 | **177-1405** | 1 | SPRING | |
| | 14 | 1 | **1P-3709** | 1 | SEAL-RECTANGULAR | |
| | 15 | 1 | **2D-6648** | 1 | RING-RETAINING | |
| | 16 | 1 | **3C-8388** | 2 | PIN-ROLL | |
| | 18 | 1 | **5H-6005** | 2 | SEAL-O-RING | |
| M | 19 | 1 | **8T-3998** | 4 | BOLT (M4X0.7X12-MM) | |
| | 20 | 1 | **6V-0852** | 1 | CAP-DUST | |
| | 21 | 1 | **6K-0806** | 1 | STRAP-CABLE | |

M-METRIC PART

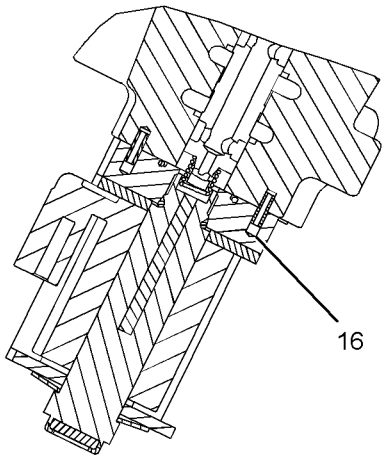


SECTION B-B

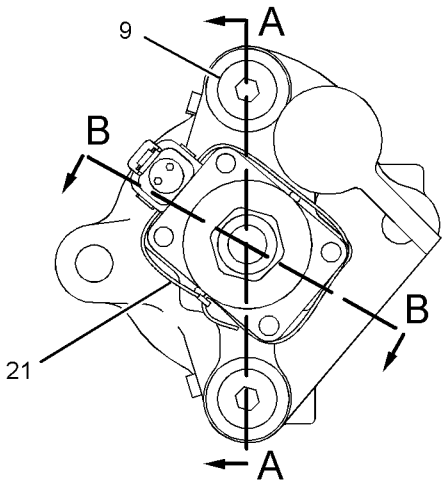


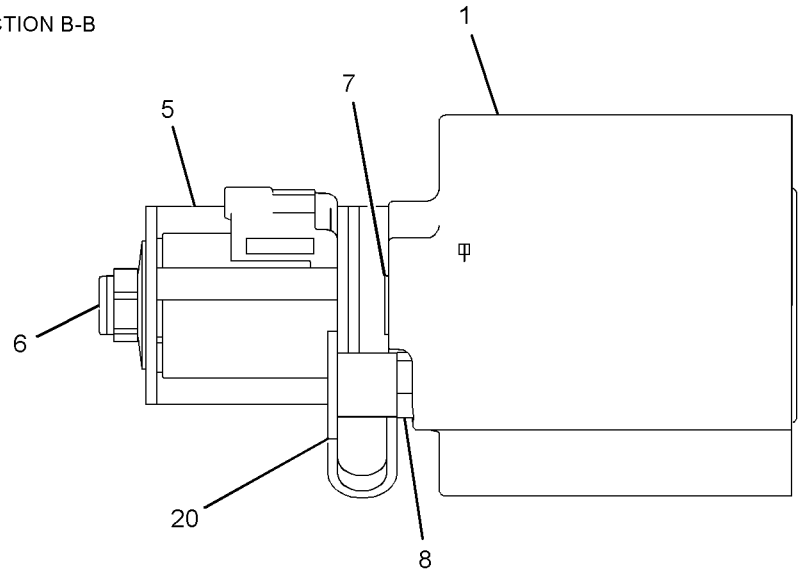


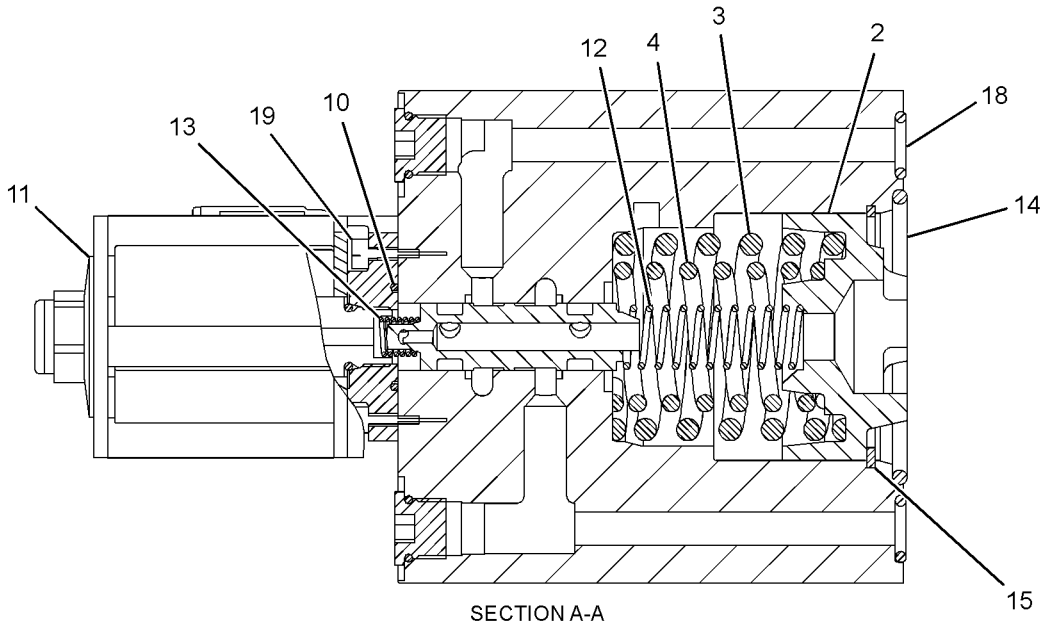


SECTION A-A

GRAPHIC #1 **<END>** g01260358

# HYDRAULIC SYSTEM

## *298-2744* CONTROL AR-FAN—HYDRAULIC

**S/N: RLB1-UP**

**CANNOT BE USED WITH 295-1788—PAGE 194, 298-2743—PAGE 684, 295-1789—PAGE 194 AN ATTACHMENT**

**SMCS-1386** **i02623745**

| NOTE | PART NUMBER | QTY | PART NAME 1 2 3 4 5 6 (PRODUCT LEVEL) | SEE PAGE |
|---|---|---|---|---|
| Y | *297-1558* | 1 | LINES GP-HYDRAULIC FAN | 673 |

Y-SEPARATE ILLUSTRATION

**<END>**

# *270-1754* CYLINDER & MTG GP-HOIST

**S/N: RLB1-UP**

**PART OF 299-5701, 299-5703 MOUNTING AR-TRUCK BODY, 299-5705 MOUNTING GP-WATER TANK**

**AN ATTACHMENT**

**SMCS-5102** **i03198661**

| NOTE | REF NO | GRAPHIC REF | PART NUMBER | QTY | PART NAME 1 2 3 4 5 6 (PRODUCT LEVEL) | SEE PAGE |
|---|---|---|---|---|---|---|
| | 1 | 1 | **7D-2955** | 4 | SPACER (2.531X3X0.531-IN THK) | |
| | 2 | 1 | **7D-3122** | 2 | COVER | |
| | 3 | 1 | **317-3911** | 2 | RACE-BEARING | |
| | 4 | 1 | **7D-3187** | 2 | RETAINER | |
| | 5 | 1 | **8W-1367** | 2 | PIN AS | |
| YR | 6 | 1 | **273-4989** | 2 | CYLINDER GP-HOIST (TELESCOPING) | 643 |
| | 7 | 1 | **303-1871** | 2 | PLATE | |
| | 8 | 1 | **5P-2566** | 4 | BOLT (1/2-13X1.5-IN) | |
| | 9 | 1 | **6V-4432** | 6 | BOLT (1/2-13X4-IN) | |
| | 10 | 1 | **8T-4223** | 10 | WASHER-HARD (13.5X25.5X3-MM THK) | |

R-REMFG PART MAY BE AVAILABLE
Y-SEPARATE ILLUSTRATION

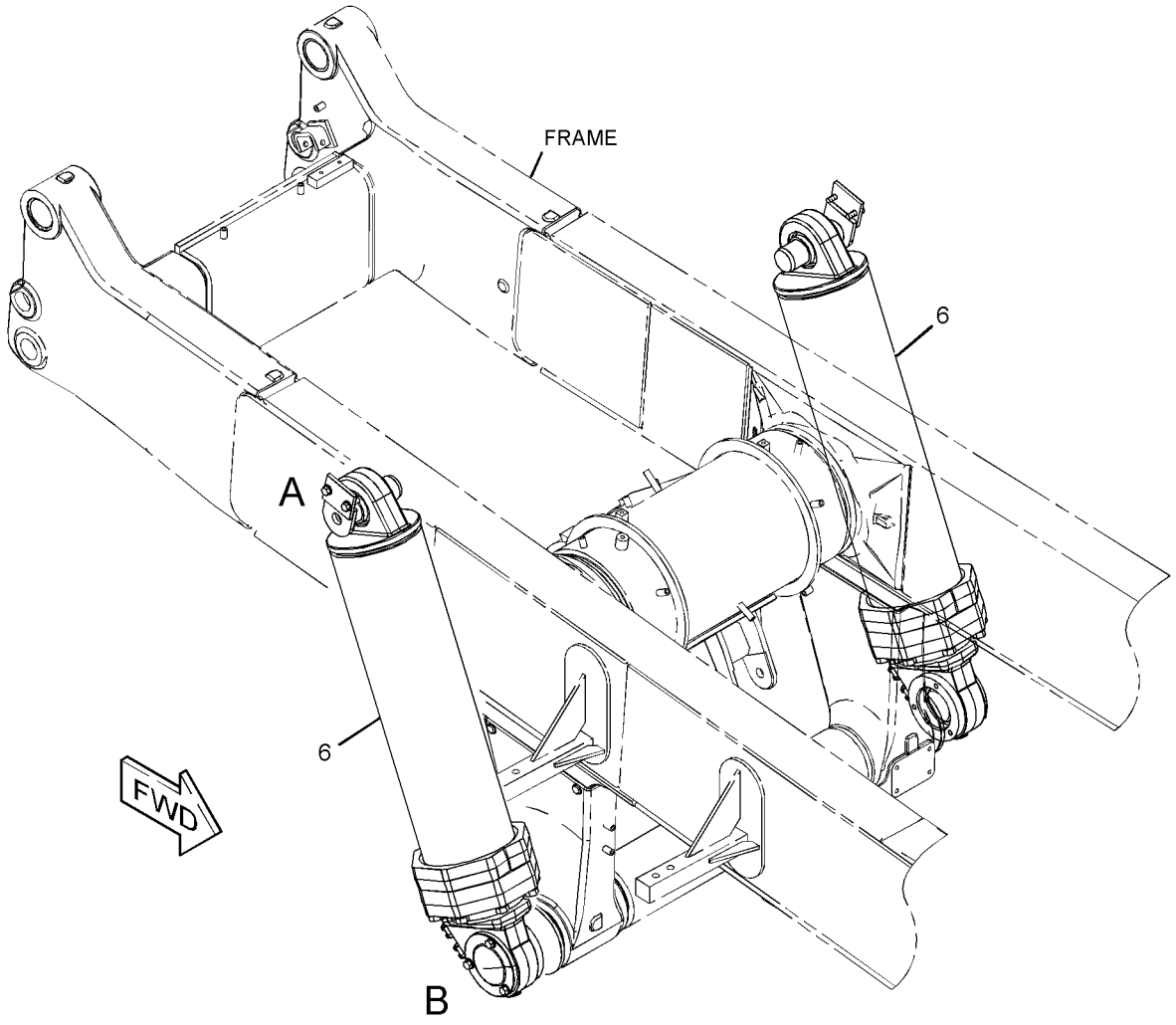


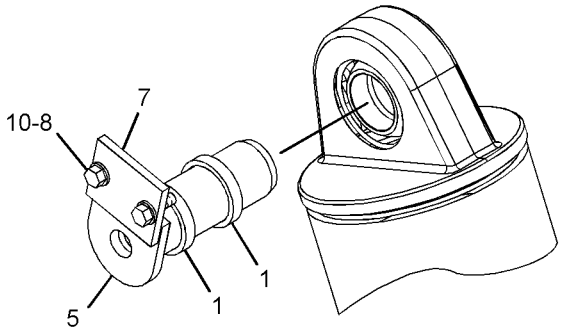


VIEW OF AREA A

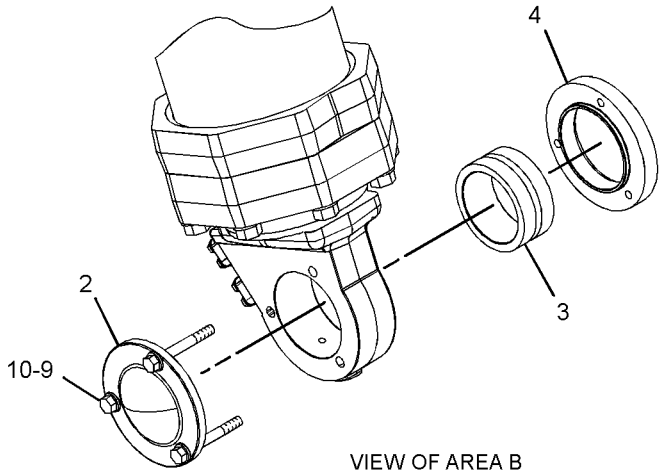


VIEW OF AREA B

GRAPHIC #1 **<END>** g01344334

# HYDRAULIC SYSTEM

## 273-4989 CYLINDER GP-HOIST—TELESCOPING

**S/N: RLB1-481**

**PART OF 270-1754 CYLINDER & MTG GP-HOIST**

**AN ATTACHMENT**

**SMCS-5102** **i02616851**

| NOTE | REF NO | GRAPHIC REF | PART NUMBER | QTY | PART NAME 1 2 3 4 5 6 (PRODUCT LEVEL) | SEE PAGE |
|---|---|---|---|---|---|---|
| | 1 | 1 | **3B-8485** | 2 | FITTING-GREASE | |
| | 2 | 1 | **9J-2521** | 1 | PISTON | |
| | 3 | 1 | **9J-2523** | 1 | HEAD | |
| R | 4 | 1 | **273-4990** | 1 | CYLINDER AS | |
| | 5 | 1 | **273-4992** | 1 | CYLINDER AS | |
| | | 1 | **2K-4472** | 1 | SEAL-O-RING | |
| | | 1 | **2K-4473** | 1 | RING-BACKUP | |
| | | 1 | **9T-6882** | 1 | HEAD | |
| | 6 | 1 | **290-3379** | 1 | ROD AS | |
| | | 1 | **3J-1907** | 2 | SEAL-O-RING | |
| | | 1 | **9S-8004** | 2 | PLUG-O-RING | |
| | 7 | 1 | **0S-1588** | 8 | BOLT (3/8-16X1.25-IN) | |
| | 8 | 1 | **1D-4586** | 6 | BOLT (5/8-11X3.5-IN) | |
| | 9 | 1 | **1D-4612** | 8 | BOLT (3/4-10X4-IN) | |
| | 10 | 1 | **1J-2176** | 1 | SEAL-O-RING | |
| | 11 | 1 | **1P-4576** | 4 | FLANGE-HALF | |
| | 12 | 1 | **237-4156** | 1 | BEARING-SELF-ALIGNING | |
| | 13 | 1 | **289-2930** | 1 | SEAL-WIPER | |
| | 14 | 1 | **289-2931** | 1 | SEAL-WIPER | |
| | 15 | 1 | **289-2940** | 1 | RING-BACKUP | |
| | 16 | 1 | **289-2943** | 1 | RING-BACKUP | |
| | 17 | 1 | **2J-0744** | 1 | RING-BACKUP | |
| | 18 | 1 | **4T-8695** | 1 | SEAL AS | |
| | 19 | 1 | **5J-3964** | 2 | RING-LOCK | |
| | 20 | 1 | **5M-2894** | 8 | WASHER-HARD (10.2X18.5X2.5-MM THK) | |
| | 21 | 1 | **5P-8248** | 8 | WASHER-HARD (20X36.5X3.5-MM THK) | |
| | 22 | 1 | **7J-3868** | 1 | SEAL-RING | |
| | 23 | 1 | **9J-0811** | 1 | RING-WEAR | |
| | 24 | 1 | **9J-3053** | 1 | SEAL-RING | |
| | 25 | 1 | **9J-3054** | 1 | RING-WEAR | |
| | 26 | 1 | **9J-3056** | 1 | RING-WEAR | |

R-REMFG PART MAY BE AVAILABLE

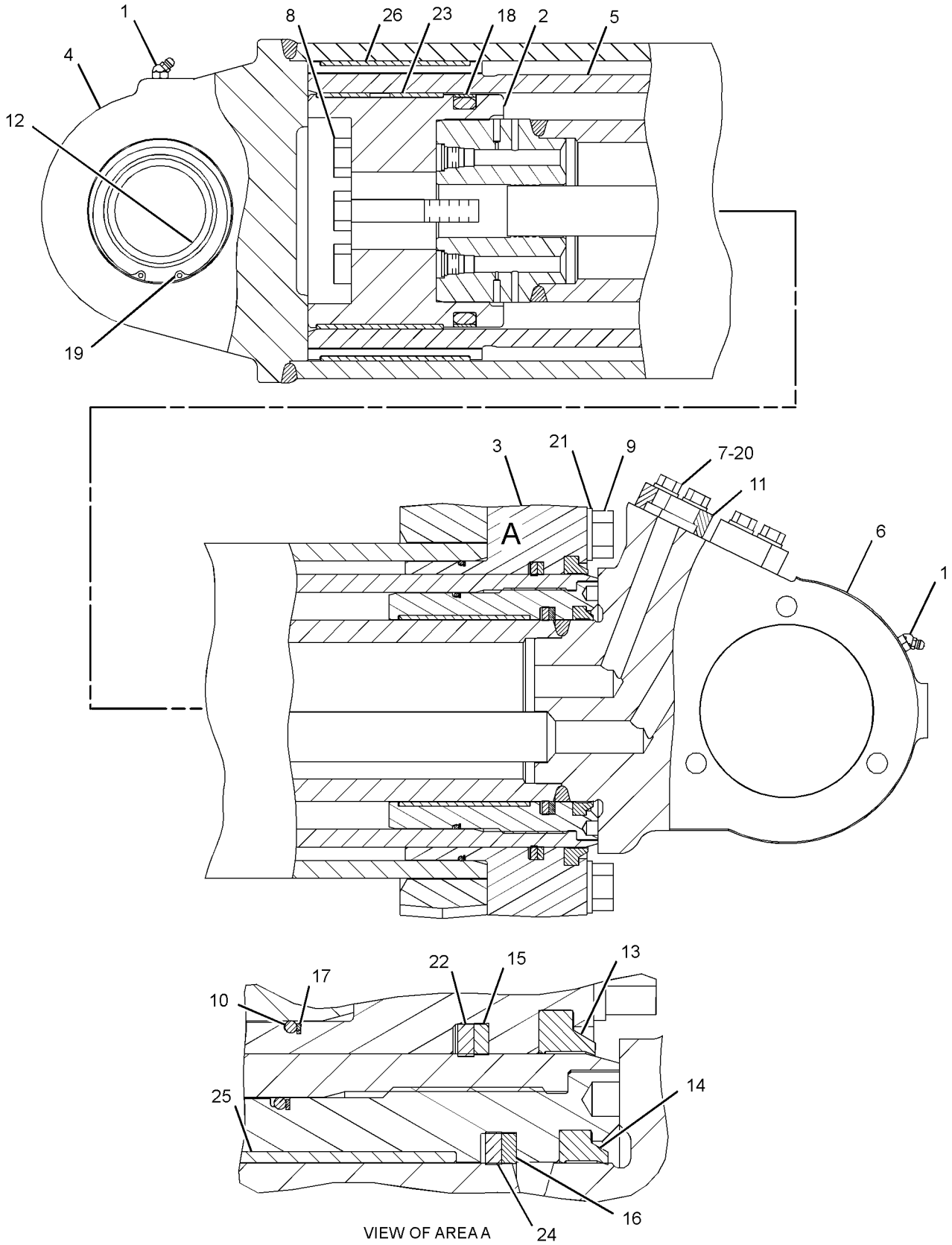


GRAPHIC #1

**<END>**

g01342098

# 273-4989 CYLINDER GP-HOIST–TELESCOPING*R

**S/N: RLB482-UP**

**PART OF 270-1754 CYLINDER & MTG GP-HOIST**

**AN ATTACHMENT**

**SMCS-5102** **i03199412**

| NOTE | REF NO | GRAPHIC REF | PART NUMBER | QTY | PART NAME 1 2 3 4 5 6 (PRODUCT LEVEL) | SEE PAGE |
|---|---|---|---|---|---|---|
| | 1 | 1 | **3B-8485** | 2 | FITTING-GREASE | |
| | 2 | 1 | **9J-2521** | 1 | PISTON | |
| | 3 | 1 | **9J-2523** | 1 | HEAD | |
| R | 4 | 1 | **273-4990** | 1 | CYLINDER AS | |
| | 5 | 1 | **273-4992** | 1 | CYLINDER AS | |
| | | 1 | **2K-4472** | 1 | SEAL-O-RING | |
| | | 1 | **2K-4473** | 1 | RING-BACKUP | |
| | | 1 | **9T-6882** | 1 | HEAD | |
| R | 6 | 1 | **290-3379** | 1 | ROD AS | |
| | | 1 | **3J-1907** | 2 | SEAL-O-RING | |
| | | 1 | **9S-8004** | 2 | PLUG-O-RING | |
| C | 7 | 1 | **9B-7237** | 8 | BOLT (3/8-16X1.25-IN) | |
| | 8 | 1 | **1D-4586** | 6 | BOLT (5/8-11X3.5-IN) | |
| | 9 | 1 | **1D-4612** | 8 | BOLT (3/4-10X4-IN) | |
| | 10 | 1 | **1J-2176** | 1 | SEAL-O-RING | |
| | 11 | 1 | **1P-4576** | 4 | FLANGE-HALF | |
| | 12 | 1 | **237-4156** | 1 | BEARING-SELF-ALIGNING | |
| | 13 | 1 | **289-2930** | 1 | SEAL-WIPER | |
| | 14 | 1 | **289-2931** | 1 | SEAL-WIPER | |
| | 17 | 1 | **2J-0744** | 1 | RING-BACKUP | |
| | 18 | 1 | **4T-8695** | 1 | SEAL AS | |
| | 19 | 1 | **5J-3964** | 2 | RING-LOCK | |
| | 20 | 1 | **5M-2894** | 8 | WASHER-HARD (10.2X18.5X2.5-MM THK) | |
| | 21 | 1 | **5P-8248** | 8 | WASHER-HARD (20X36.5X3.5-MM THK) | |
| | 23 | 1 | **9J-0811** | 1 | RING-WEAR | |
| | 25 | 1 | **9J-3054** | 1 | RING-WEAR | |
| | 26 | 1 | **9J-3056** | 1 | RING-WEAR | |
| C | 27 | 1 | **326-0766** | 1 | SEAL-U-CUP | |
| C | 28 | 1 | **326-0765** | 1 | SEAL-U-CUP | |

C-CHANGE FROM PREVIOUS TYPE
R-REMFG PART MAY BE AVAILABLE

**273-4989 CYLINDER GP-HOIST** *(contd. )* **i03199412**

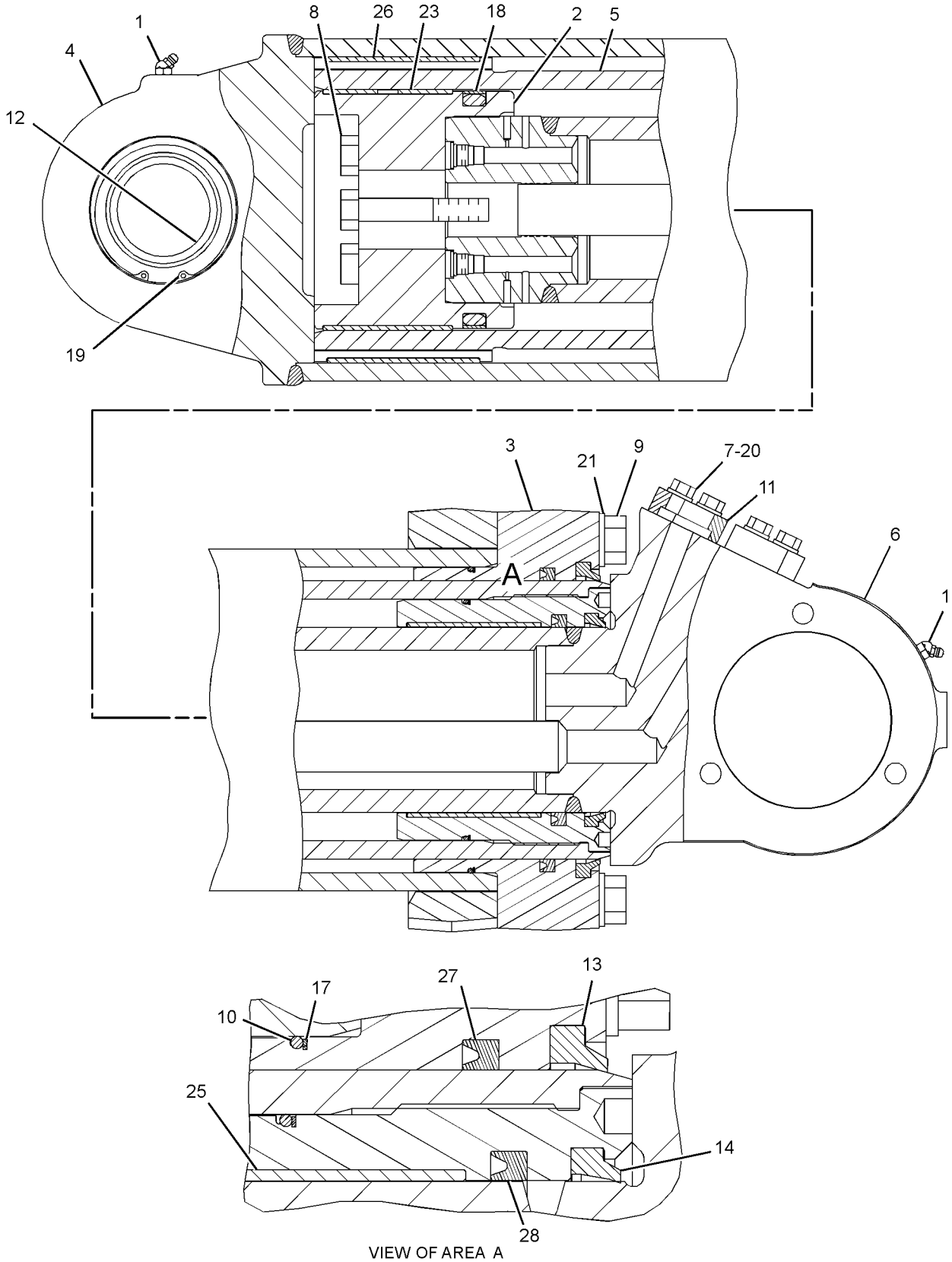


VIEW OF AREA A

GRAPHIC #1 **<END>** g01633598

# 155-6061 FILTER GP-OIL–HYDRAULIC FAN

**S/N: RLB1-UP**

**PART OF 279-2244, 297-1558 LINES GP-HYDRAULIC FAN**

**AN ATTACHMENT**

**SMCS-5068** **i03164040**

| NOTE | REF NO | GRAPHIC REF | PART NUMBER | QTY | PART NAME 1 2 3 4 5 6 (PRODUCT LEVEL) | SEE PAGE |
|---|---|---|---|---|---|---|
| | 1 | 1 | **134-0964** | 1 | FILTER ELEMENT AS-OIL (STANDARD EFFICIENCY) | |
| | 2 | 1 | **3J-1907** | 1 | SEAL-O-RING | |
| | 3 | 1 | **194-7986** | 1 | KIT-O-RING | |
| | 4 | 1 | **136-7032** | 1 | HOUSING-HYDRAULIC OIL FILTER | |
| | 5 | 1 | **3K-0360** | 1 | SEAL-O-RING | |
| | 6 | 1 | **9S-4185** | 1 | PLUG-O-RING | |
| | 7 | 1 | **156-1382** | 1 | SWITCH AS-DIFF PRESSURE (FILTER BYPASS) | |
| | | 1 | **102-8802** | 1 | KIT-RECEPTACLE (2-PIN) | |
| | | | | | (INCLUDES RECEPTACLE AS & WEDGE) | |
| | | 1 | **8T-8729** | 2 | PIN-CONNECTOR (16-GA TO 18-GA) | |
| E | | 1 | **9X-1813** | | SLEEVE (14-CM) | |
| | 8 | 1 | **5F-9144** | 1 | SEAL-O-RING | |

E-ORDER BY THE CENTIMETER

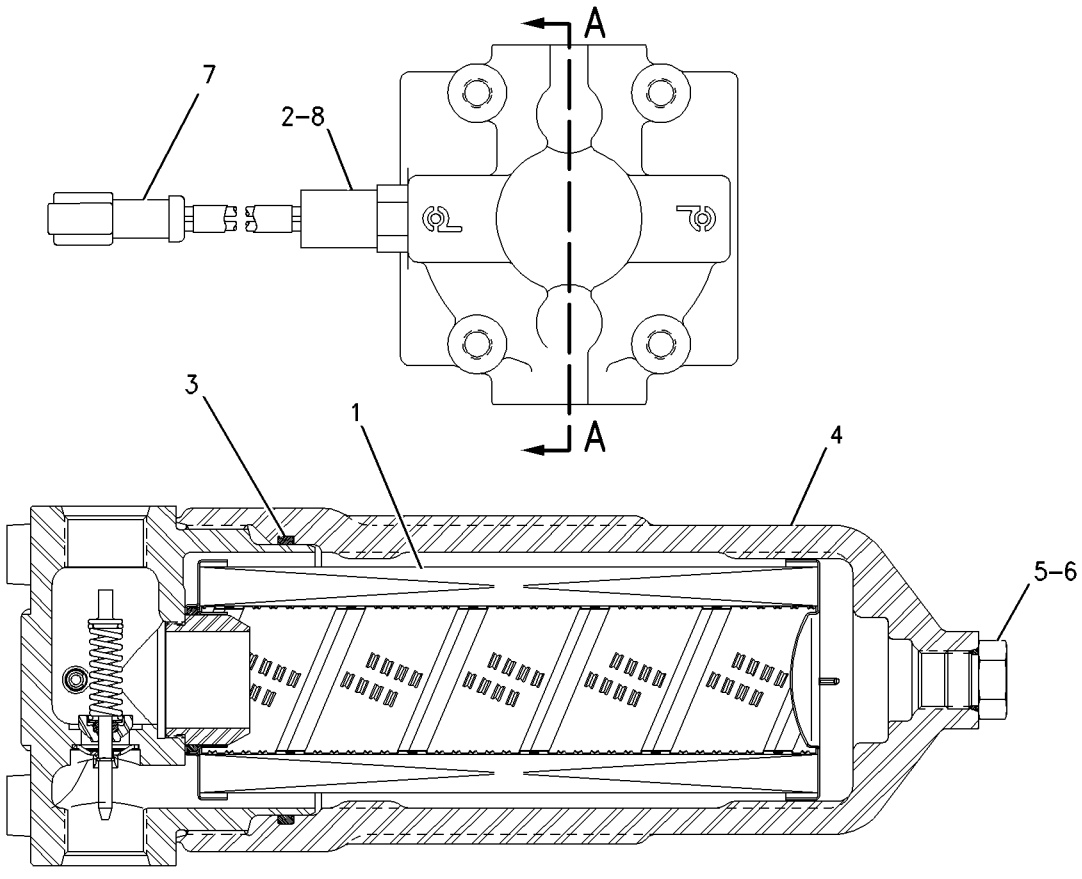


SECTION A-A

GRAPHIC #1 **<END>** g00865259

# 173-0159 FILTER GP-OIL–STEERING PUMP CASE DRAIN

**S/N: RLB1-UP**

**PART OF 269-9203 TANK GP-HYDRAULIC**

**SMCS-5068** **i02857915**

| NOTE | REF NO | GRAPHIC REF | PART NUMBER | QTY | PART NAME 1 2 3 4 5 6 (PRODUCT LEVEL) | SEE PAGE |
|---|---|---|---|---|---|---|
| | 1 | 1 | **2M-9780** | 1 | SEAL-O-RING | |
| | 2 | 1 | **126-1813** | 1 | FILTER-OIL (ULTRA HIGH EFFICIENCY) | |
| | 3 | 1 | **103-8236** | 1 | RING | |
| | 4 | 1 | **9S-8006** | 1 | PLUG-O-RING | |

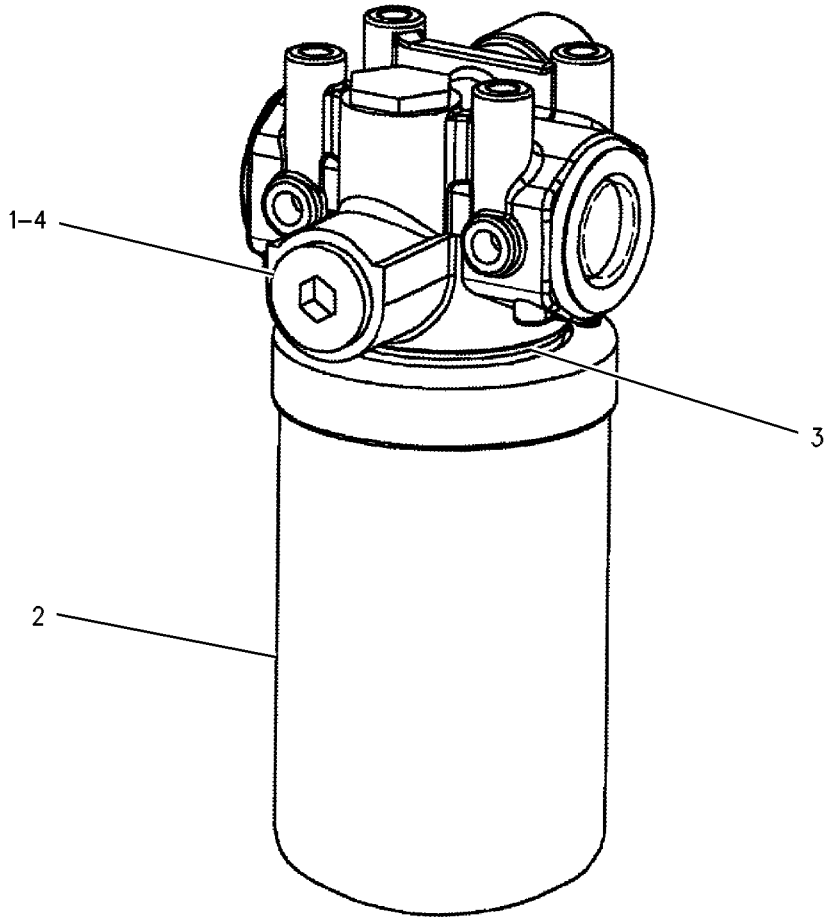


GRAPHIC #1 **<END>** g00642176

# HYDRAULIC SYSTEM

## *270-1748* HYDRAULIC AR

**S/N: RLB1-UP**

**PART OF 268-7810 GENERAL AR**

**SMCS-5050** **i03293208**

| NOTE | PART NUMBER | QTY | PART NAME 1 2 3 4 5 6 (PRODUCT LEVEL) | SEE PAGE |
|---|---|---|---|---|
| Y | *269-9205* | 1 | CYLINDER & MTG GP-STEERING | 613 |
| Y | *269-9191* | 1 | LINES GP-ACCUMULATOR (BRAKE) (CHARGED) | 579 |
| Y | *269-9190* | 1 | LINES GP-AIR CONDITIONER | 764 |
| Y | *269-9194* | 1 | LINES GP-BRAKE (PARKING) | 584 |
| Y | *269-9195* | 1 | LINES GP-HEATER | 768 |
| Y | *280-1619* | 1 | LINES GP-HYDRAULIC OIL COOLER (BRAKE COOLING) | 685 |
| Y | *269-9198* | 1 | LINES GP-POWER TRAIN COOLER (TORQUE CONVERTER, TRANSMISSION) | 411 |
| Y | *269-9199* | 1 | LINES GP-POWER TRAIN OIL | 413 |
| Y | *269-9193* | 1 | LINES GP-SERVICE BRAKE | 594 |
| Y | *269-9200* | 1 | LINES GP-STEERING (SECONDARY STEERING) | 617 |
| Y | *269-9201* | 1 | LINES GP-STEERING (PRIMARY STEERING) | 619 |
| Y | *300-6869* | 2 | PROTECTION GP-VANDALISM | 863 |
| Y | *270-8672* | 1 | PUMP GP-GEAR | 696 |
| Y | *219-4770* | 1 | PUMP GP-PISTON | 703 |
| Y | *269-9202* | 1 | TANK & MTG GP-HYDRAULIC (MOUNTING) | 705 |
| Y | *269-9203* | 1 | TANK GP-HYDRAULIC (STEERING) | 706 |
| Y | *194-1628* | 1 | VALVE & MTG GP-CONTROL (HOIST) | 710 |

Y-SEPARATE ILLUSTRATION

**<END>**

# HYDRAULIC SYSTEM

## *270-1756* LINES GP-ATTACHMENT—TRACTION CONTROL SYSTEM

**S/N: RLB1-UP**
**PART OF 277-7540 CONTROL AR-TRACTION**
**AN ATTACHMENT**

**SMCS-5057** **i02789744**

| NOTE | REF NO | GRAPHIC REF | PART NUMBER | QTY | PART NAME 1 2 3 4 5 6 (PRODUCT LEVEL) | SEE PAGE |
|---|---|---|---|---|---|---|
| | 1 | 1 | **2H-1743** | 2 | CLIP | |
| | 2 | 1 | **4W-7627** | 1 | SPACER (11X19X37-MM THK) | |
| | 3 | 1 | **131-5681** | 1 | CONNECTOR | |
| | 4 | 1 | *148-8447* | 4 | TEE AS-SWIVEL | |
| | | | | | (EACH INCLUDES) | |
| | | 1 | **7X-0872** | 1 | TEE-SWIVEL | |
| | | 1 | **7J-9108** | 1 | SEAL-O-RING | |
| | 5 | 1 | *164-5567* | 5 | COUPLER AS-QUICK DISCONNECT | |
| | | | | | (EACH INCLUDES) | |
| | | 1 | **6V-3965** | 1 | FITTING (QUICK DISCONNECT) | |
| | | 1 | **3J-1907** | 1 | SEAL-O-RING | |
| Y | 6 | 1 | **222-4744** | 1 | VALVE GP-TRACTION CONTROL | 465 |
| | 7 | 1 | **249-0622** | 1 | PLATE AS | |
| Y | 8 | 1 | **252-2148** | 1 | SLACK ADJUSTER GP (REAR BRAKES) | 600 |
| | 9 | 1 | **268-2973** | 1 | TUBE AS | |
| | 10 | 1 | **268-2974** | 1 | TUBE AS | |
| | 11 | 1 | **268-2975** | 1 | TUBE AS | |
| | 12 | 1 | **268-2976** | 1 | TUBE AS | |
| | 13 | 1 | **275-2152** | 2 | BRACKET AS | |
| I | 14 | 1 | **275-9241** | 1 | HOSE AS | |
| I | 15 | 1 | **275-9247** | 1 | HOSE AS | |
| I | 16 | 1 | **275-9249** | 1 | HOSE AS | |
| I | 17 | 1 | **275-9250** | 1 | HOSE AS | |
| | 18 | 1 | **278-0397** | 2 | BRACKET AS | |
| | | | | | (EACH INCLUDES) | |
| M | | 1 | **9R-2613** | 1 | BOSS-WELD (M10X1.5X25-MM) | |
| | 19 | 1 | **280-4116** | 1 | TUBE AS | |
| I | 20 | 1 | **280-7532** | | HOSE AS | |
| I | 21 | 1 | **280-7533** | 1 | HOSE AS | |
| I | 22 | 1 | **302-1499** | 1 | HOSE AS | |
| | 23 | 1 | **130-9984** | 1 | CLIP | |
| | 24 | 1 | *148-8315* | 3 | CONNECTOR AS | |
| | | | | | (EACH INCLUDES) | |
| | | 1 | **6V-8642** | 1 | CONNECTOR | |
| | | 1 | **2M-9780** | 1 | SEAL-O-RING | |
| | | 1 | **7J-9108** | 1 | SEAL-O-RING | |
| | 25 | 1 | *148-8340* | 1 | CONNECTOR AS | |
| | | 1 | **6V-8639** | 1 | CONNECTOR | |
| | | 1 | **3K-0360** | 1 | SEAL-O-RING | |
| | | 1 | **6V-8398** | 1 | SEAL-O-RING | |
| | 26 | 1 | *148-8360* | 2 | ELBOW AS | |
| | | | | | (EACH INCLUDES) | |
| | | 1 | **6V-9182** | 1 | ELBOW | |
| | | 1 | **6V-9746** | 1 | SEAL-O-RING | |
| | | 1 | **7M-8485** | 1 | SEAL-O-RING | |
| | 27 | 1 | *148-8382* | 1 | ELBOW AS | |
| | | 1 | **8T-0404** | 1 | ELBOW | |
| | | 1 | **3D-2824** | 1 | SEAL-O-RING | |
| | | 1 | **7J-9108** | 1 | SEAL-O-RING | |
| | 29 | 1 | *148-8393* | 1 | ELBOW AS | |
| | | 1 | **6V-9852** | 1 | ELBOW | |
| | | 1 | **7J-9108** | 1 | SEAL-O-RING | |
| | 30 | 1 | *148-8436* | 1 | TEE AS | |
| | | 1 | **6V-8775** | 1 | TEE-FACE SEAL | |
| | | 1 | **3K-0360** | 1 | SEAL-O-RING | |

## *270-1756* **LINES GP-ATTACHMENT** *(contd.)* **i02789744**

| NOTE | REF NO | GRAPHIC REF | PART NUMBER | QTY | PART NAME 1 2 3 4 5 6 (PRODUCT LEVEL) | SEE PAGE |
|---|---|---|---|---|---|---|
| | | 1 | **6V-8398** | 2 | SEAL-O-RING | |
| | 31 | 1 | *150-3035* | 2 | ELBOW AS | |
| | | | | | (EACH INCLUDES) | |
| | | 1 | **8T-1718** | 1 | ELBOW | |
| | | 1 | **6V-9746** | 1 | SEAL-O-RING | |
| | 32 | 1 | *150-4048* | 4 | ELBOW AS | |
| | | | | | (EACH INCLUDES) | |
| | | 1 | **6V-8722** | 1 | ELBOW | |
| | | 1 | **3K-0360** | 1 | SEAL-O-RING | |
| | | 1 | **7J-9108** | 1 | SEAL-O-RING | |
| | 33 | 1 | *153-6231* | 2 | UNION AS | |
| | | | | | (EACH INCLUDES) | |
| | | 1 | **6V-9809** | 1 | ELBOW | |
| | | 1 | **7J-9108** | 2 | SEAL-O-RING | |
| | 34 | 1 | *153-6242* | 1 | CONNECTOR AS | |
| | | 1 | **8T-0197** | 1 | CONNECTOR | |
| | | 1 | **6V-9746** | 1 | SEAL-O-RING | |
| | | 1 | **7M-8485** | 1 | SEAL-O-RING | |
| | 35 | 1 | **4L-6459** | 1 | BOLT (3/8-16X2.5-IN) | |
| | 36 | 1 | **4D-7735** | 3 | CLIP | |
| | 37 | 1 | **5M-3062** | 3 | BOLT (3/8-16X0.75-IN) | |
| | 38 | 1 | **6K-8178** | 1 | CLIP | |
| | 39 | 1 | **6V-0852** | 5 | CAP-DUST | |
| | 40 | 1 | **6V-1889** | 3 | CLIP | |
| | 41 | 1 | **7J-9108** | 1 | SEAL-O-RING | |
| | 42 | 1 | **7M-8485** | 1 | SEAL-O-RING | |
| | 43 | 1 | **7X-0299** | 2 | BOLT (3/8-16-THD) | |
| | 44 | 1 | **7X-0301** | 1 | BOLT (3/8-16X7-IN) | |
| | 45 | 1 | **8C-4436** | 2 | BOLT (1/2-13X1.375-IN) | |
| | 46 | 1 | **8T-2502** | 2 | BOLT (3/8-16X1.125-IN) | |
| | 47 | 1 | **8T-4121** | 13 | WASHER-HARD (11X21X2.5-MM THK) | |
| M | 48 | 1 | **8T-4137** | 7 | BOLT (M10X1.5X20-MM) | |
| M | 49 | 1 | **8T-4136** | 1 | BOLT (M10X1.5X25-MM) | |
| | 50 | 1 | **8T-4223** | 4 | WASHER-HARD (13.5X25.5X3-MM THK) | |
| | 51 | 1 | **8T-4896** | 8 | WASHER-HARD (10.2X18.5X2.5-MM THK) | |
| M | 52 | 1 | **8T-4956** | 2 | BOLT (M12X1.75X35-MM) | |
| | 53 | 1 | **9M-1974** | 1 | WASHER-HARD (8.8X16X2-MM THK) | |
| | 54 | 1 | **9M-8406** | 4 | CLIP | |
| | 55 | 1 | **9X-8250** | 2 | CLIP | |
| M | 56 | 1 | **8T-4133** | 3 | NUT (M10X1.5-THD) | |
| M | 57 | 1 | **8T-4185** | 2 | BOLT (M10X1.5X50-MM) | |
| | 58 | 1 | *304-8006* | 1 | CONNECTOR AS | |
| | | 1 | **304-8005** | 1 | CONNECTOR | |
| | | 1 | **2M-9780** | 1 | SEAL-O-RING | |
| | | 1 | **7J-9108** | 1 | SEAL-O-RING | |

I-REFER TO HYDRAULIC INFORMATION SYSTEM
M-METRIC PART
Y-SEPARATE ILLUSTRATION

*270-1756* **LINES GP-ATTACHMENT** *(contd.)* **i02789744**

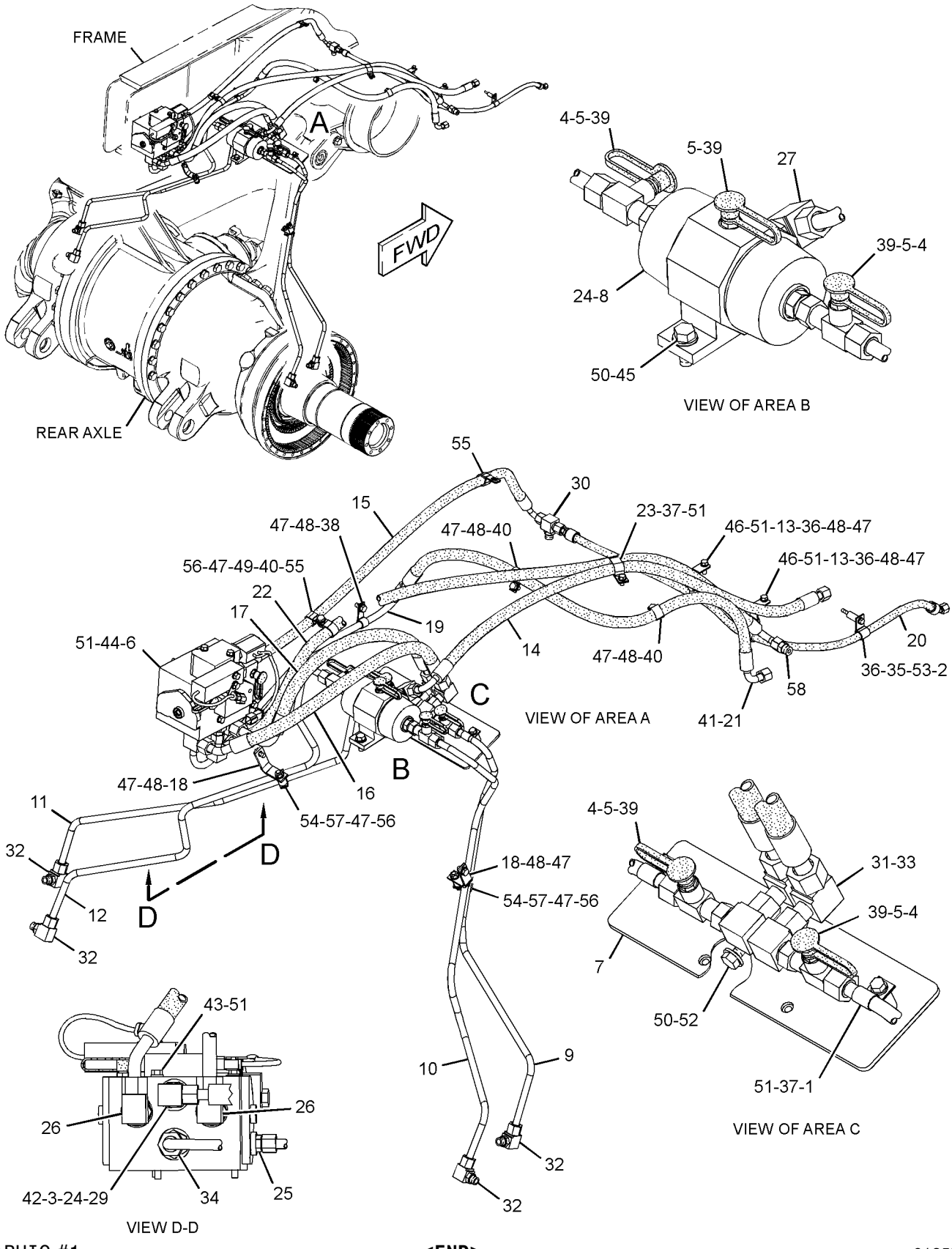


GRAPHIC #1 **<END>** g01357185

# HYDRAULIC SYSTEM

## *279-2236* LINES GP-HOIST

**S/N: RLB1-420**

**PART OF 299-5701, 299-5703 MOUNTING AR-TRUCK BODY, 299-5705 MOUNTING GP-WATER TANK**

**AN ATTACHMENT**

**SMCS-5057** **i02820481**

| NOTE | REF NO | GRAPHIC REF | PART NUMBER | QTY | PART NAME 1 2 3 4 5 6 (PRODUCT LEVEL) | SEE PAGE |
|---|---|---|---|---|---|---|
| E | 1 | 2 | **5P-1265** | | HOSE (18-CM) | |
| | 2 | 2 | **2W-5564** | 1 | STRAP | |
| E | 3 | 2 | **5P-0763** | | HOSE (11-CM) | |
| | 4 | 1,2 | **6V-0852** | 2 | CAP-DUST | |
| | 5 | 1 | **8X-3572** | 2 | PLATE-ORIFICE | |
| | 6 | 1,2 | **9M-0164** | 4 | CLAMP-HOSE | |
| | 7 | 1 | **132-7370** | 1 | HOSE | |
| | 8 | 2 | **136-8424** | 1 | HOSE | |
| | 9 | 1,2 | *164-5567* | 2 | COUPLER AS-QUICK DISCONNECT | |
| | | | | | (EACH INCLUDES) | |
| | | 1,2 | **6V-3965** | 1 | FITTING (QUICK DISCONNECT) | |
| | | 1,2 | **3J-1907** | 1 | SEAL-O-RING | |
| | 10 | 2 | **194-1624** | 1 | FLANGE | |
| | 11 | 2 | **237-9189** | 1 | MANIFOLD | |
| | 12 | 1 | **274-7881** | 1 | TUBE AS | |
| | 13 | 2 | **274-7882** | 1 | TUBE AS | |
| | 14 | 1 | **274-7883** | 1 | TUBE AS | |
| | 15 | 2 | **274-7884** | 1 | TUBE | |
| I | 16 | 1 | **275-0110** | 1 | HOSE AS | |
| I | 17 | 1 | **275-9231** | 1 | HOSE AS | |
| I | 18 | 1 | **275-9232** | 1 | HOSE AS | |
| I | 19 | 1 | **275-9233** | 1 | HOSE AS | |
| I | 20 | 1 | **275-9234** | 1 | HOSE AS | |
| I | 21 | 1 | **275-9235** | 1 | HOSE AS | |
| I | 22 | 1 | **275-9236** | 1 | HOSE AS | |
| I | 23 | 1 | **275-9237** | 1 | HOSE AS | |
| | 24 | 1 | **302-1494** | 1 | TUBE AS | |
| | 25 | 2 | **304-0490** | 1 | PLATE | |
| | 26 | 2 | **306-9216** | 1 | BLOCK | |
| I | 27 | 2 | **306-9218** | 1 | HOSE AS | |
| | 28 | 2 | **307-0722** | 1 | TUBE AS | |
| | 29 | 1 | **308-6357** | 1 | TUBE AS | |
| | 31 | 2 | *148-8327* | 1 | CONNECTOR AS | |
| | | 2 | **6V-8637** | 1 | CONNECTOR | |
| | | 2 | **3D-2824** | 1 | SEAL-O-RING | |
| | | 2 | **6V-9746** | 1 | SEAL-O-RING | |
| | 32 | 2 | *148-8347* | 1 | ELBOW AS | |
| | | 2 | **6V-9007** | 1 | ELBOW | |
| | | 2 | **3D-2824** | 1 | SEAL-O-RING | |
| | | 2 | **6V-9746** | 1 | SEAL-O-RING | |
| | 33 | 1 | *148-8378* | 1 | ELBOW AS | |
| | | 1 | **6V-8724** | 1 | ELBOW | |
| | | 1 | **3J-1907** | 1 | SEAL-O-RING | |
| | | 1 | **6V-8397** | 1 | SEAL-O-RING | |
| | 34 | 1 | *148-8435* | 1 | TEE AS | |
| | | 1 | **6V-8781** | 1 | TEE-FACE SEAL | |
| | | 1 | **3J-1907** | 1 | SEAL-O-RING | |
| | | 1 | **6V-8397** | 2 | SEAL-O-RING | |
| | 35 | 1,2 | **1P-3705** | 4 | SEAL-RECTANGULAR | |
| | 36 | 2 | **1P-3706** | 1 | SEAL-RECTANGULAR | |
| | 37 | 1 | **1P-3707** | 2 | SEAL-RECTANGULAR | |
| | 38 | 1,2 | **1P-4576** | 12 | FLANGE-HALF | |
| | 39 | 2 | **1P-4579** | 14 | FLANGE-HALF | |
| | 40 | 2 | **209-4581** | 4 | CLAMP | |

*279-2236* **LINES GP-HOIST** *(contd.)* **i02820481**

| NOTE | REF NO | GRAPHIC REF | PART NUMBER | QTY | PART NAME 1 2 3 4 5 6 (PRODUCT LEVEL) | SEE PAGE |
|---|---|---|---|---|---|---|
| | 41 | 2 | **2J-2668** | 1 | COVER | |
| | 42 | 1,2 | **4J-0524** | 8 | SEAL-O-RING | |
| | 43 | 1,2 | **4J-5267** | 8 | SEAL-O-RING | |
| | 44 | 1 | **5M-2894** | 16 | WASHER-HARD (10.2X18.5X2.5-MM THK) | |
| | 45 | 2 | **5P-1075** | 4 | WASHER-HARD (10.2X22.5X3-MM THK) | |
| | 46 | 1 | **5P-2424** | 8 | BOLT (1/2-13X2.25-IN) | |
| | 47 | 1 | **5P-7466** | 4 | CLIP (SLOT) | |
| | 48 | 1 | **5P-7467** | 4 | CLIP (TAB) | |
| | 49 | 2 | **5P-7470** | 3 | CLIP (SLOT) | |
| | 50 | 2 | **5P-7471** | 3 | CLIP (TAB) | |
| | 51 | 2 | **5P-7703** | 3 | GROMMET | |
| | 52 | 1 | **5P-8112** | 4 | GROMMET | |
| | 53 | 1,2 | **5S-7382** | 16 | BOLT (3/8-16X1.375-IN) | |
| | 54 | 1 | **5S-7383** | 8 | BOLT (3/8-16X1.75-IN) | |
| | 55 | 2 | **6V-5039** | 1 | CLIP (SLOT) | |
| | 56 | 2 | **6V-5040** | 1 | CLIP (TAB) | |
| | 57 | 2 | **7X-7729** | 5 | WASHER (11X25X3-MM THK) | |
| | 58 | 1 | **8C-5172** | 1 | SEAL-RECTANGULAR | |
| M | 59 | 2 | **8T-0106** | 4 | BOLT (M12X1.75X100-MM) | |
| | 60 | 1,2 | **8T-4121** | 6 | WASHER-HARD (11X21X2.5-MM THK) | |
| M | 61 | 2 | **8T-4133** | 1 | NUT (M10X1.5-THD) | |
| M | 62 | 2 | **8T-4136** | 1 | BOLT (M10X1.5X25-MM) | |
| M | 63 | 2 | **8T-4137** | 2 | BOLT (M10X1.5X20-MM) | |
| M | 64 | 1 | **8T-4140** | 4 | BOLT (M16X2X60-MM) | |
| M | 65 | 2 | **8T-4183** | 1 | BOLT (M12X1.75X40-MM) | |
| M | 66 | 2 | **8T-4186** | 4 | BOLT (M10X1.5X40-MM) | |
| M | 67 | 2 | **8T-4195** | 1 | BOLT (M10X1.5X30-MM) | |
| M | 68 | 1 | **8T-4196** | 2 | BOLT (M10X1.5X35-MM) | |
| | 69 | 1,2 | **8T-4223** | 44 | WASHER-HARD (13.5X25.5X3-MM THK) | |
| M | 70 | 2 | **8T-4244** | 6 | NUT (M12X1.75-THD) | |
| | 71 | 2 | **8T-4835** | 4 | BOLT (1/2-13X2-IN) | |
| | 72 | 2 | **8T-4896** | 8 | WASHER-HARD (10.2X18.5X2.5-MM THK) | |
| M | 73 | 1,2 | **8T-4910** | 8 | BOLT (M12X1.75X60-MM) | |
| M | 74 | 2 | **8T-4956** | 1 | BOLT (M12X1.75X35-MM) | |
| | 75 | 2 | **8T-7008** | 4 | BOLT (3/8-16X3-IN) | |
| | 76 | 2 | **8T-8919** | 12 | BOLT (1/2-13X1.75-IN) | |
| | 77 | 1 | **9X-8257** | 4 | WASHER (17.5X30X3.5-MM THK) | |

E-ORDER BY THE CENTIMETER
I-REFER TO HYDRAULIC INFORMATION SYSTEM
M-METRIC PART

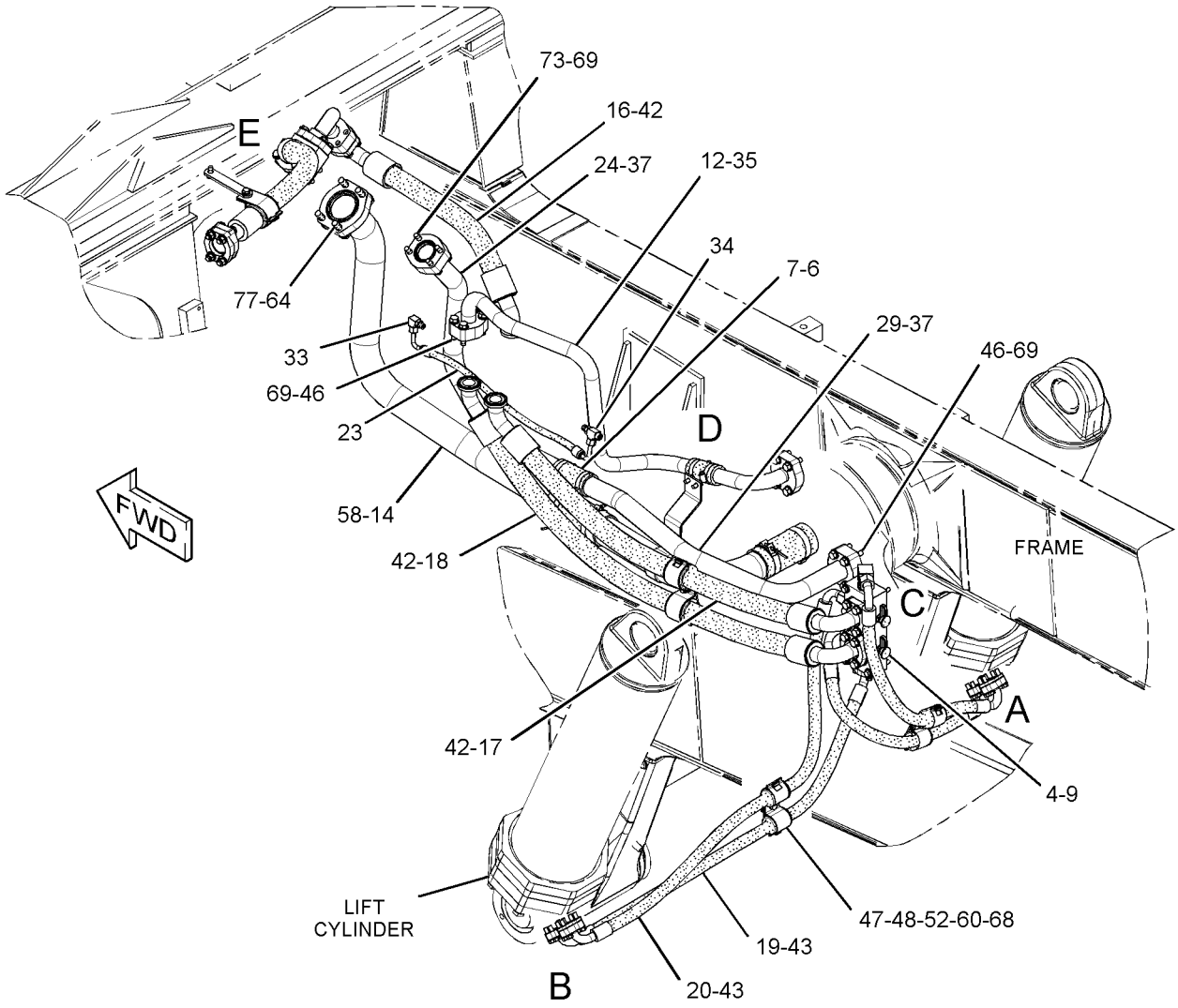


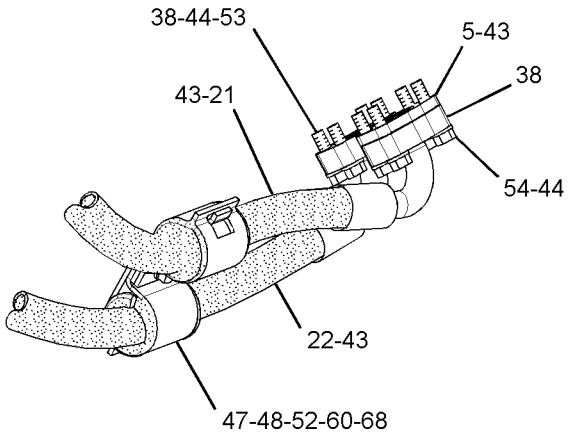


VIEW OF AREA A

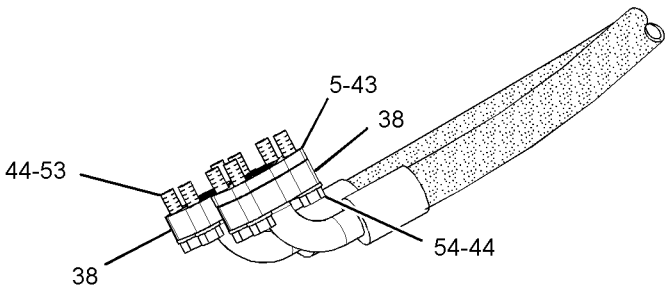


VIEW OF AREA B

GRAPHIC #1

g01417931

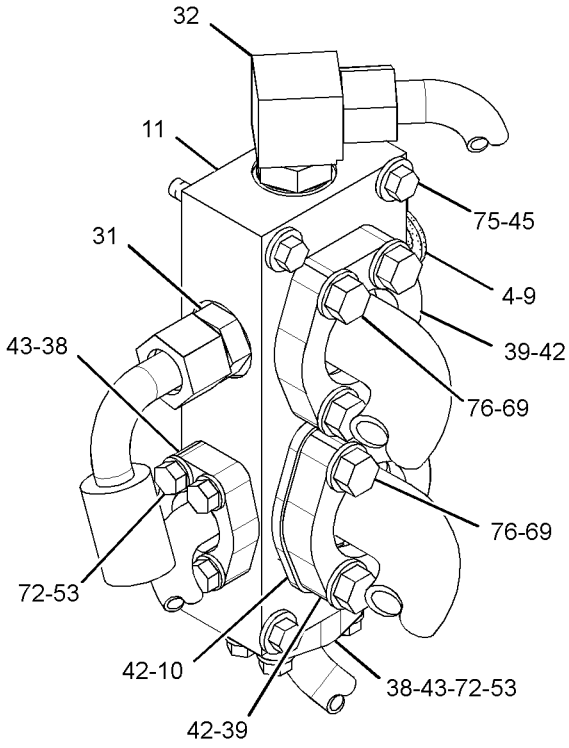


VIEW OF AREA C

90°

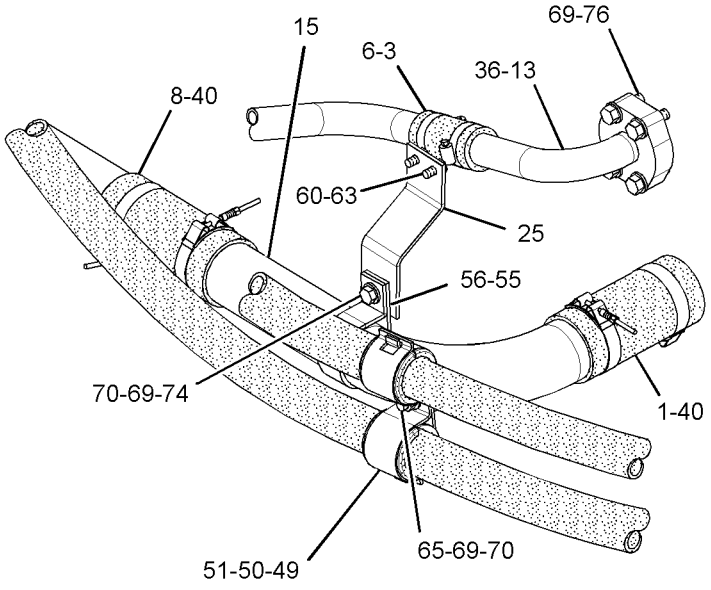


VIEW OF AREA D

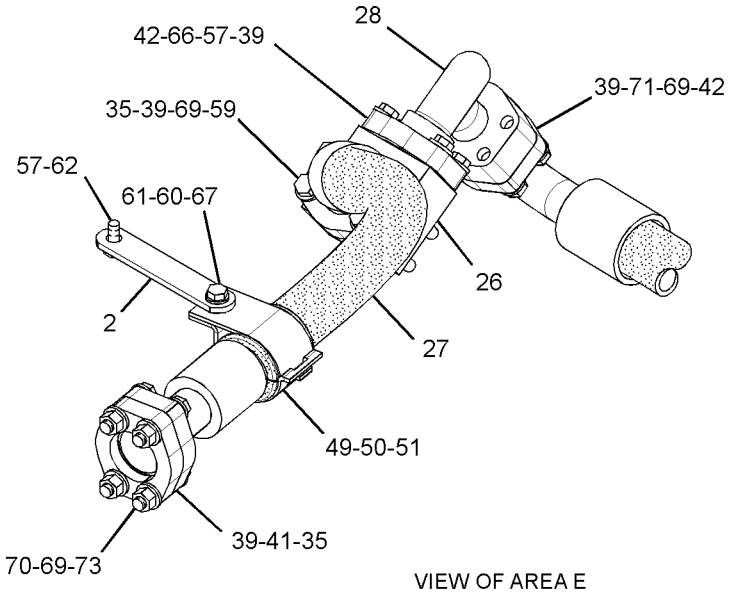


VIEW OF AREA E

GRAPHIC #2 **<END>** g01432948

# HYDRAULIC SYSTEM

## *279-2236* LINES GP-HOIST

**S/N: RLB421-446**

**PART OF 299-5701, 299-5703 MOUNTING AR-TRUCK BODY, 299-5705 MOUNTING GP-WATER TANK**

**AN ATTACHMENT**

**SMCS-5057** **i03022294**

| NOTE | REF NO | GRAPHIC REF | PART NUMBER | QTY | PART NAME 1 2 3 4 5 6 (PRODUCT LEVEL) | SEE PAGE |
|---|---|---|---|---|---|---|
| E | 1 | 2 | **5P-1265** | | HOSE (18-CM) | |
| | 2 | 2 | **2W-5564** | 1 | STRAP | |
| E | 3 | 2 | **5P-0763** | | HOSE (11-CM) | |
| | 4 | 1,2 | **6V-0852** | 2 | CAP-DUST | |
| | 5 | 1 | **8X-3572** | 2 | PLATE-ORIFICE | |
| | 6 | 1,2 | **9M-0164** | 4 | CLAMP-HOSE | |
| | 7 | 1 | **132-7370** | 1 | HOSE | |
| | 8 | 2 | **136-8424** | 1 | HOSE | |
| | 9 | 1,2 | *164-5567* | 2 | COUPLER AS-QUICK DISCONNECT | |
| | | | | | (EACH INCLUDES) | |
| | | 1,2 | **6V-3965** | 1 | FITTING (QUICK DISCONNECT) | |
| | | 1,2 | **3J-1907** | 1 | SEAL-O-RING | |
| | 10 | 2 | **194-1624** | 1 | FLANGE | |
| | 11 | 2 | **237-9189** | 1 | MANIFOLD | |
| C | 12 | 1 | **317-2710** | 1 | TUBE AS | |
| C | 13 | 2 | **317-1694** | 1 | TUBE AS | |
| | 14 | 1 | **274-7883** | 1 | TUBE AS | |
| | 15 | 2 | **274-7884** | 1 | TUBE | |
| I | 16 | 1 | **275-0110** | 1 | HOSE AS | |
| I | 17 | 1 | **275-9231** | 1 | HOSE AS | |
| I | 18 | 1 | **275-9232** | 1 | HOSE AS | |
| I | 19 | 1 | **275-9233** | 1 | HOSE AS | |
| I | 20 | 1 | **275-9234** | 1 | HOSE AS | |
| I | 21 | 1 | **275-9235** | 1 | HOSE AS | |
| I | 22 | 1 | **275-9236** | 1 | HOSE AS | |
| I | 23 | 1 | **275-9237** | 1 | HOSE AS | |
| | 24 | 1 | **302-1494** | 1 | TUBE AS | |
| | 25 | 2 | **304-0490** | 1 | PLATE | |
| C | 26 | 2 | **315-6728** | 1 | BLOCK | |
| C | 27 | 2 | **315-6732** | 1 | TUBE AS | |
| CI | 28 | 2 | **315-6729** | 1 | HOSE AS | |
| | 29 | 1 | **308-6357** | 1 | TUBE AS | |
| | 31 | 2 | *148-8327* | 1 | CONNECTOR AS | |
| | | 2 | **6V-8637** | 1 | CONNECTOR | |
| | | 2 | **3D-2824** | 1 | SEAL-O-RING | |
| | | 2 | **6V-9746** | 1 | SEAL-O-RING | |
| | 32 | 2 | *148-8347* | 1 | ELBOW AS | |
| | | 2 | **6V-9007** | 1 | ELBOW | |
| | | 2 | **3D-2824** | 1 | SEAL-O-RING | |
| | | 2 | **6V-9746** | 1 | SEAL-O-RING | |
| | 33 | 1 | *148-8378* | 1 | ELBOW AS | |
| | | 1 | **6V-8724** | 1 | ELBOW | |
| | | 1 | **3J-1907** | 1 | SEAL-O-RING | |
| | | 1 | **6V-8397** | 1 | SEAL-O-RING | |
| | 34 | 1 | *148-8435* | 1 | TEE AS | |
| | | 1 | **6V-8781** | 1 | TEE-FACE SEAL | |
| | | 1 | **3J-1907** | 1 | SEAL-O-RING | |
| | | 1 | **6V-8397** | 2 | SEAL-O-RING | |
| C | 35 | 1,2 | **1P-3705** | 2 | SEAL-RECTANGULAR | |
| C | 36 | 2 | **4J-0527** | 1 | SEAL-O-RING | |
| C | 37 | 1 | **1P-3708** | 2 | SEAL-RECTANGULAR | |
| | 38 | 1,2 | **1P-4576** | 12 | FLANGE-HALF | |
| C | 39 | 2 | **1P-4579** | 12 | FLANGE-HALF | |
| | 40 | 2 | **209-4581** | 4 | CLAMP | |

## *279-2236* **LINES GP-HOIST** *(contd.)* **i03022294**

| NOTE | REF NO | GRAPHIC REF | PART NUMBER | QTY | PART NAME 1 2 3 4 5 6 (PRODUCT LEVEL) | SEE PAGE |
|---|---|---|---|---|---|---|
| C | 41 | 2 | **2V-7343** | 1 | COVER | |
| C | 42 | 1,2 | **4J-0524** | 10 | SEAL-O-RING | |
| | 43 | 1,2 | **4J-5267** | 8 | SEAL-O-RING | |
| | 45 | 2 | **5P-1075** | 4 | WASHER-HARD (10.2X22.5X3-MM THK) | |
| | 46 | 1 | **5P-2424** | 8 | BOLT (1/2-13X2.25-IN) | |
| | 47 | 1 | **5P-7466** | 4 | CLIP (SLOT) | |
| | 48 | 1 | **5P-7467** | 4 | CLIP (TAB) | |
| | 49 | 2 | **5P-7470** | 3 | CLIP (SLOT) | |
| | 50 | 2 | **5P-7471** | 3 | CLIP (TAB) | |
| | 51 | 2 | **5P-7703** | 3 | GROMMET | |
| | 52 | 1 | **5P-8112** | 4 | GROMMET | |
| | 53 | 1,2 | **5S-7382** | 16 | BOLT (3/8-16X1.375-IN) | |
| | 54 | 1 | **5S-7383** | 8 | BOLT (3/8-16X1.75-IN) | |
| | 55 | 2 | **6V-5039** | 1 | CLIP (SLOT) | |
| | 56 | 2 | **6V-5040** | 1 | CLIP (TAB) | |
| | 57 | 2 | **7X-7729** | 5 | WASHER (11X25X3-MM THK) | |
| | 58 | 1 | **8C-5172** | 1 | SEAL-RECTANGULAR | |
| CM | 59 | 2 | **8T-5001** | 4 | BOLT (M12X1.75X130-MM) | |
| | 60 | 1,2 | **8T-4121** | 6 | WASHER-HARD (11X21X2.5-MM THK) | |
| M | 61 | 2 | **8T-4133** | 1 | NUT (M10X1.5-THD) | |
| M | 62 | 2 | **8T-4136** | 1 | BOLT (M10X1.5X25-MM) | |
| M | 63 | 2 | **8T-4137** | 2 | BOLT (M10X1.5X20-MM) | |
| M | 64 | 1 | **8T-4140** | 4 | BOLT (M16X2X60-MM) | |
| M | 65 | 2 | **8T-4183** | 1 | BOLT (M12X1.75X40-MM) | |
| M | 66 | 2 | **8T-4186** | 4 | BOLT (M10X1.5X40-MM) | |
| M | 67 | 2 | **8T-4195** | 1 | BOLT (M10X1.5X30-MM) | |
| M | 68 | 1 | **8T-4196** | 2 | BOLT (M10X1.5X35-MM) | |
| | 69 | 1,2 | **8T-4223** | 44 | WASHER-HARD (13.5X25.5X3-MM THK) | |
| CM | 70 | 2 | **8T-4244** | 2 | NUT (M12X1.75-THD) | |
| | 71 | 2 | **8T-4835** | 4 | BOLT (1/2-13X2-IN) | |
| C | 72 | 1,2 | **8T-4896** | 24 | WASHER-HARD (10.2X18.5X2.5-MM THK) | |
| CM | 73 | 1 | **8T-4910** | 4 | BOLT (M12X1.75X60-MM) | |
| M | 74 | 2 | **8T-4956** | 1 | BOLT (M12X1.75X35-MM) | |
| | 75 | 2 | **8T-7008** | 4 | BOLT (3/8-16X3-IN) | |
| C | 76 | 2 | **8T-8919** | 8 | BOLT (1/2-13X1.75-IN) | |
| | 77 | 1 | **9X-8257** | 4 | WASHER (17.5X30X3.5-MM THK) | |
| CM | 78 | 2 | **8T-8549** | 4 | LOCKNUT (M12X1.75-THD) | |
| CM | 79 | 2 | **8T-4648** | 4 | BOLT (M12X1.75X70-MM) | |
| C | 80 | 2 | **5P-2566** | 4 | BOLT (1/2-13X1.5-IN) | |
| C | 81 | 2 | **1P-4582** | 2 | FLANGE-HALF | |

C-CHANGE FROM PREVIOUS TYPE
E-ORDER BY THE CENTIMETER
I-REFER TO HYDRAULIC INFORMATION SYSTEM
M-METRIC PART

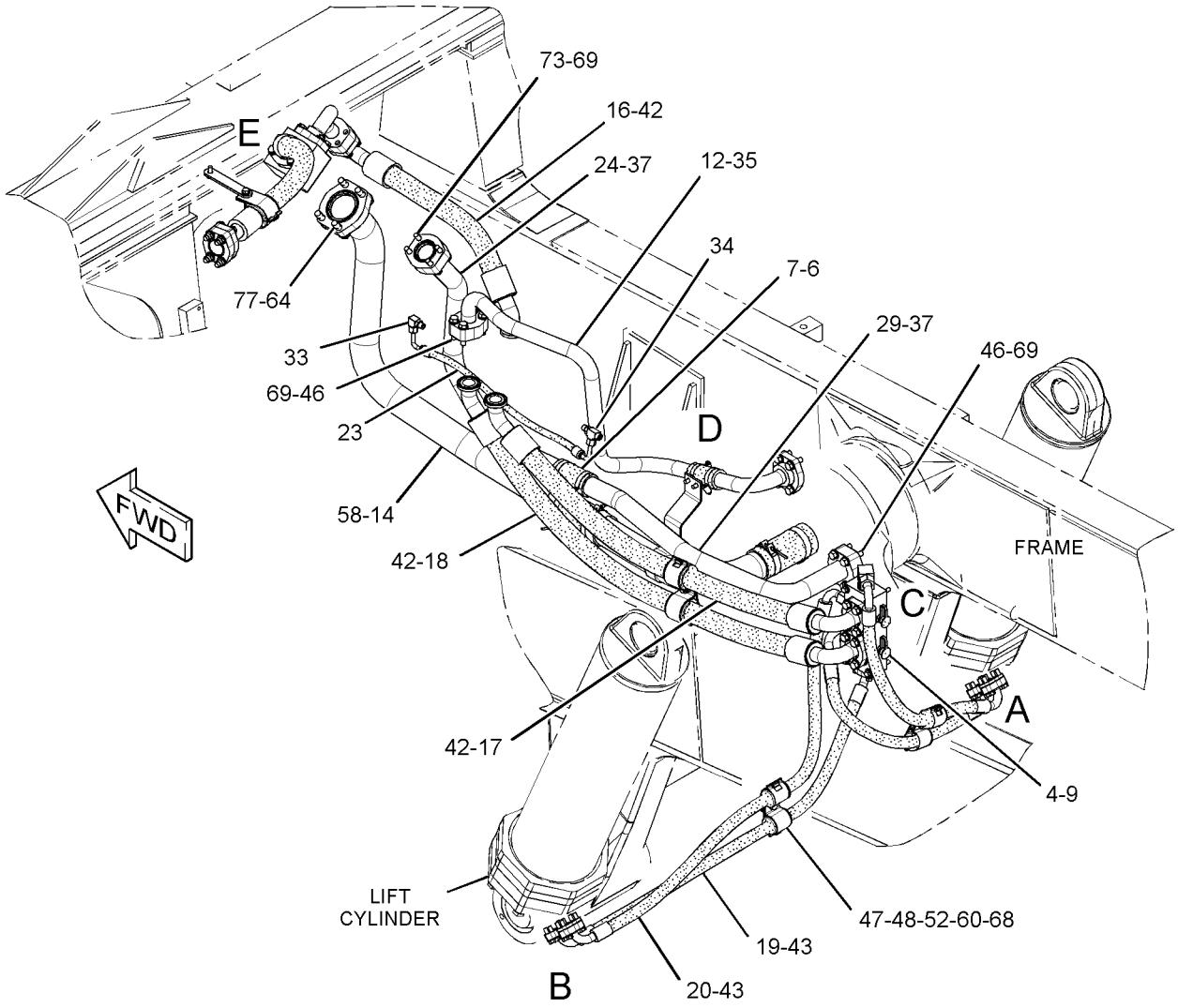


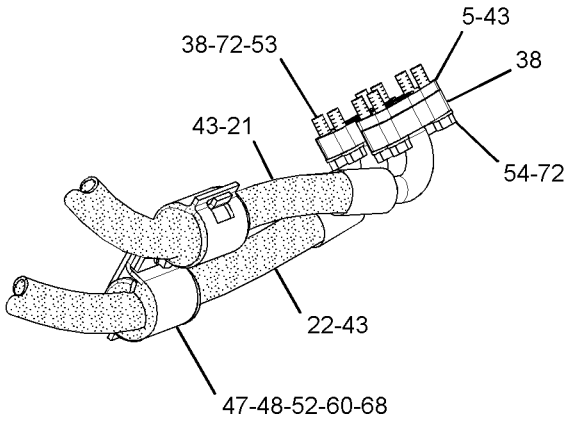


VIEW OF AREA A

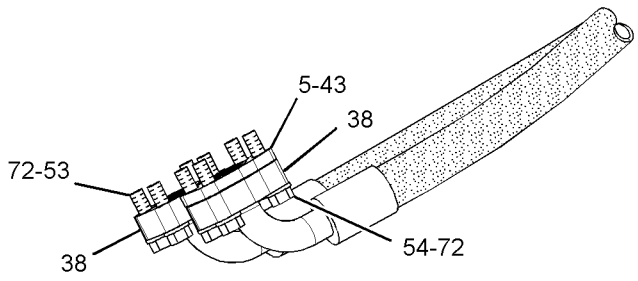


VIEW OF AREA B

GRAPHIC #1 g01593000

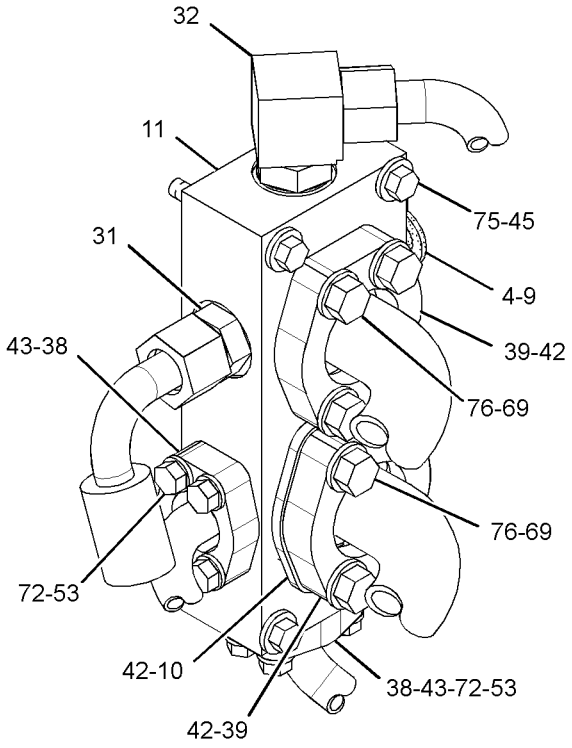


VIEW OF AREA C

90°

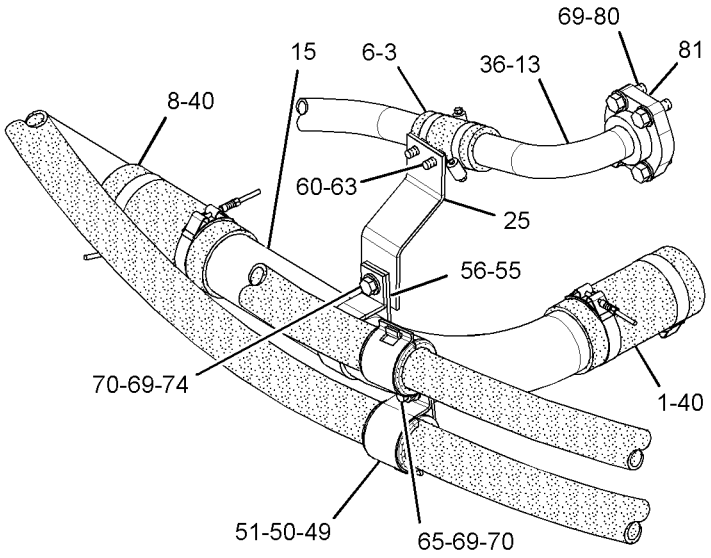


VIEW OF AREA D

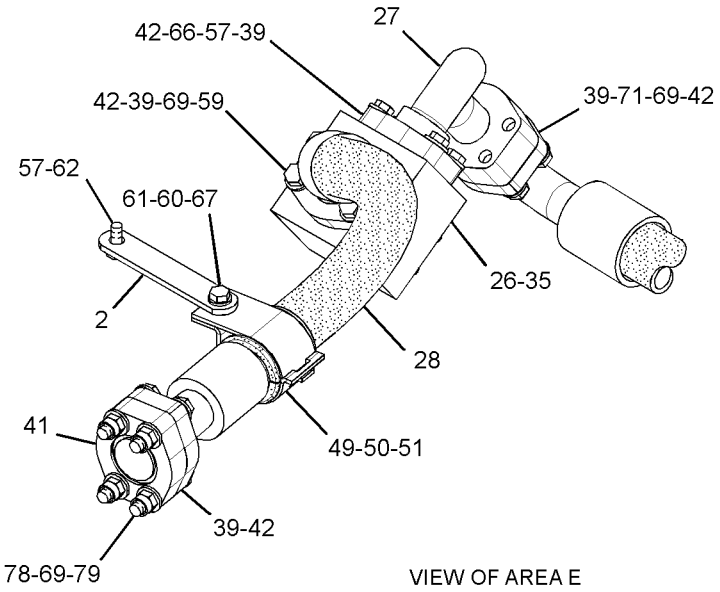


VIEW OF AREA E

GRAPHIC #2 **<END>** g01593001

# HYDRAULIC SYSTEM

## *279-2236* LINES GP-HOIST

**S/N: RLB447-UP**

**PART OF 299-5701, 299-5703 MOUNTING AR-TRUCK BODY, 299-5705 MOUNTING GP-WATER TANK**

**AN ATTACHMENT**

**SMCS-5057** **i03133820**

| NOTE | REF NO | GRAPHIC REF | PART NUMBER | QTY | PART NAME 1 2 3 4 5 6 (PRODUCT LEVEL) | SEE PAGE |
|---|---|---|---|---|---|---|
| E | 1 | 2 | **5P-1265** | | HOSE (18-CM) | |
| | 2 | 2 | **2W-5564** | 1 | STRAP | |
| CE | 3 | 2 | **5P-1291** | | HOSE (11-CM) | |
| | 4 | 1,2 | **6V-0852** | 2 | CAP-DUST | |
| | 5 | 1 | **8X-3572** | 2 | PLATE-ORIFICE | |
| C | 6 | 1 | **8T-4984** | 2 | CLAMP-HOSE | |
| C | 7 | 1 | **5P-1293** | | HOSE (12-CM) | |
| C | 8 | 2 | **7X-7893** | | HOSE (18-CM) | |
| C | 8A | 2 | **7X-7893** | | HOSE (20-CM) | |
| | 9 | 1,2 | *164-5567* | 2 | COUPLER AS-QUICK DISCONNECT | |
| | | | | | (EACH INCLUDES) | |
| | | 1,2 | **6V-3965** | 1 | FITTING (QUICK DISCONNECT) | |
| | | 1,2 | **3J-1907** | 1 | SEAL-O-RING | |
| | 10 | 2 | **194-1624** | 1 | FLANGE | |
| | 11 | 2 | **237-9189** | 1 | MANIFOLD | |
| | 12 | 1 | **317-2710** | 1 | TUBE AS | |
| | 13 | 2 | **317-1694** | 1 | TUBE AS | |
| | 14 | 1 | **274-7883** | 1 | TUBE AS | |
| | 15 | 2 | **274-7884** | 1 | TUBE | |
| I | 16 | 1 | **275-0110** | 1 | HOSE AS | |
| I | 17 | 1 | **275-9231** | 1 | HOSE AS | |
| I | 18 | 1 | **275-9232** | 1 | HOSE AS | |
| I | 19 | 1 | **275-9233** | 1 | HOSE AS | |
| I | 20 | 1 | **275-9234** | 1 | HOSE AS | |
| I | 21 | 1 | **275-9235** | 1 | HOSE AS | |
| I | 22 | 1 | **275-9236** | 1 | HOSE AS | |
| C | 23 | 1 | **320-2783** | 1 | HOSE AS | |
| | 24 | 1 | **302-1494** | 1 | TUBE AS | |
| | 25 | 2 | **304-0490** | 1 | PLATE | |
| | 26 | 2 | **315-6728** | 1 | BLOCK | |
| | 27 | 2 | **315-6732** | 1 | TUBE AS | |
| I | 28 | 2 | **315-6729** | 1 | HOSE AS | |
| | 29 | 1 | **308-6357** | 1 | TUBE AS | |
| | 31 | 2 | *148-8327* | 1 | CONNECTOR AS | |
| | | 2 | **6V-8637** | 1 | CONNECTOR | |
| | | 2 | **3D-2824** | 1 | SEAL-O-RING | |
| | | 2 | **6V-9746** | 1 | SEAL-O-RING | |
| | 32 | 2 | *148-8347* | 1 | ELBOW AS | |
| | | 2 | **6V-9007** | 1 | ELBOW | |
| | | 2 | **3D-2824** | 1 | SEAL-O-RING | |
| | | 2 | **6V-9746** | 1 | SEAL-O-RING | |
| C | 33 | 1 | *148-8367* | 1 | ELBOW AS | |
| | | 1 | **6V-9850** | 1 | ELBOW | |
| | | 1 | **6V-8397** | 1 | SEAL-O-RING | |
| C | 34 | 1 | *148-8433* | 1 | TEE AS | |
| | | 1 | **6V-9836** | 1 | TEE-SWIVEL | |
| | | 1 | **6V-8397** | 2 | SEAL-O-RING | |
| | 35 | 1,2 | **1P-3705** | 2 | SEAL-RECTANGULAR | |
| | 36 | 2 | **4J-0527** | 1 | SEAL-O-RING | |
| | 37 | 1 | **1P-3708** | 2 | SEAL-RECTANGULAR | |
| | 38 | 1,2 | **1P-4576** | 12 | FLANGE-HALF | |
| | 39 | 2 | **1P-4579** | 12 | FLANGE-HALF | |
| C | 40 | 2 | **8T-4985** | 4 | CLAMP-HOSE | |
| C | 41 | 2 | **319-9026** | 1 | COVER | |

## *279-2236* **LINES GP-HOIST** *(contd.)* **i03133820**

| NOTE | REF NO | GRAPHIC REF | PART NUMBER | QTY | PART NAME 1 2 3 4 5 6 (PRODUCT LEVEL) | SEE PAGE |
|---|---|---|---|---|---|---|
| | 42 | 1,2 | **4J-0524** | 10 | SEAL-O-RING | |
| | 43 | 1,2 | **4J-5267** | 8 | SEAL-O-RING | |
| | 45 | 2 | **5P-1075** | 4 | WASHER-HARD (10.2X22.5X3-MM THK) | |
| | 46 | 1 | **5P-2424** | 8 | BOLT (1/2-13X2.25-IN) | |
| | 47 | 1 | **5P-7466** | 4 | CLIP (SLOT) | |
| | 48 | 1 | **5P-7467** | 4 | CLIP (TAB) | |
| | 49 | 2 | **5P-7470** | 3 | CLIP (SLOT) | |
| | 50 | 2 | **5P-7471** | 3 | CLIP (TAB) | |
| | 51 | 2 | **5P-7703** | 3 | GROMMET | |
| | 52 | 1 | **5P-8112** | 4 | GROMMET | |
| | 53 | 1,2 | **5S-7382** | 16 | BOLT (3/8-16X1.375-IN) | |
| | 54 | 1 | **5S-7383** | 8 | BOLT (3/8-16X1.75-IN) | |
| | 55 | 2 | **6V-5039** | 1 | CLIP (SLOT) | |
| | 56 | 2 | **6V-5040** | 1 | CLIP (TAB) | |
| | 57 | 2 | **7X-7729** | 5 | WASHER (11X25X3-MM THK) | |
| | 58 | 1 | **8C-5172** | 1 | SEAL-RECTANGULAR | |
| M | 59 | 2 | **8T-5001** | 4 | BOLT (M12X1.75X130-MM) | |
| | 60 | 1,2 | **8T-4121** | 6 | WASHER-HARD (11X21X2.5-MM THK) | |
| M | 61 | 2 | **8T-4133** | 1 | NUT (M10X1.5-THD) | |
| M | 62 | 2 | **8T-4136** | 1 | BOLT (M10X1.5X25-MM) | |
| M | 63 | 2 | **8T-4137** | 2 | BOLT (M10X1.5X20-MM) | |
| M | 64 | 1 | **8T-4140** | 4 | BOLT (M16X2X60-MM) | |
| M | 65 | 2 | **8T-4183** | 1 | BOLT (M12X1.75X40-MM) | |
| M | 66 | 2 | **8T-4186** | 4 | BOLT (M10X1.5X40-MM) | |
| M | 67 | 2 | **8T-4195** | 1 | BOLT (M10X1.5X30-MM) | |
| M | 68 | 1 | **8T-4196** | 2 | BOLT (M10X1.5X35-MM) | |
| | 69 | 1,2 | **8T-4223** | 44 | WASHER-HARD (13.5X25.5X3-MM THK) | |
| M | 70 | 2 | **8T-4244** | 2 | NUT (M12X1.75-THD) | |
| | 71 | 2 | **8T-4835** | 4 | BOLT (1/2-13X2-IN) | |
| | 72 | 1,2 | **8T-4896** | 24 | WASHER-HARD (10.2X18.5X2.5-MM THK) | |
| M | 73 | 1 | **8T-4910** | 4 | BOLT (M12X1.75X60-MM) | |
| M | 74 | 2 | **8T-4956** | 1 | BOLT (M12X1.75X35-MM) | |
| | 75 | 2 | **8T-7008** | 4 | BOLT (3/8-16X3-IN) | |
| | 76 | 2 | **8T-8919** | 8 | BOLT (1/2-13X1.75-IN) | |
| | 77 | 1 | **9X-8257** | 4 | WASHER (17.5X30X3.5-MM THK) | |
| M | 78 | 2 | **8T-8549** | 4 | LOCKNUT (M12X1.75-THD) | |
| M | 79 | 2 | **8T-4648** | 4 | BOLT (M12X1.75X70-MM) | |
| | 80 | 2 | **5P-2566** | 4 | BOLT (1/2-13X1.5-IN) | |
| | 81 | 2 | **1P-4582** | 2 | FLANGE-HALF | |
| C | 82 | 1 | **148-8336** | 2 | CONNECTOR AS | |
| | | | | | (EACH INCLUDES) | |
| | | 1 | **6V-8636** | 1 | CONNECTOR | |
| | | 1 | **3J-1907** | 1 | SEAL-O-RING | |
| | | 1 | **6V-8397** | 1 | SEAL-O-RING | |
| C | 83 | 1 | **5P-4295** | 1 | CLIP | |
| C | 84 | 2 | **8T-6703** | 2 | CLAMP-HOSE | |

C-CHANGE FROM PREVIOUS TYPE
E-ORDER BY THE CENTIMETER
I-REFER TO HYDRAULIC INFORMATION SYSTEM
M-METRIC PART

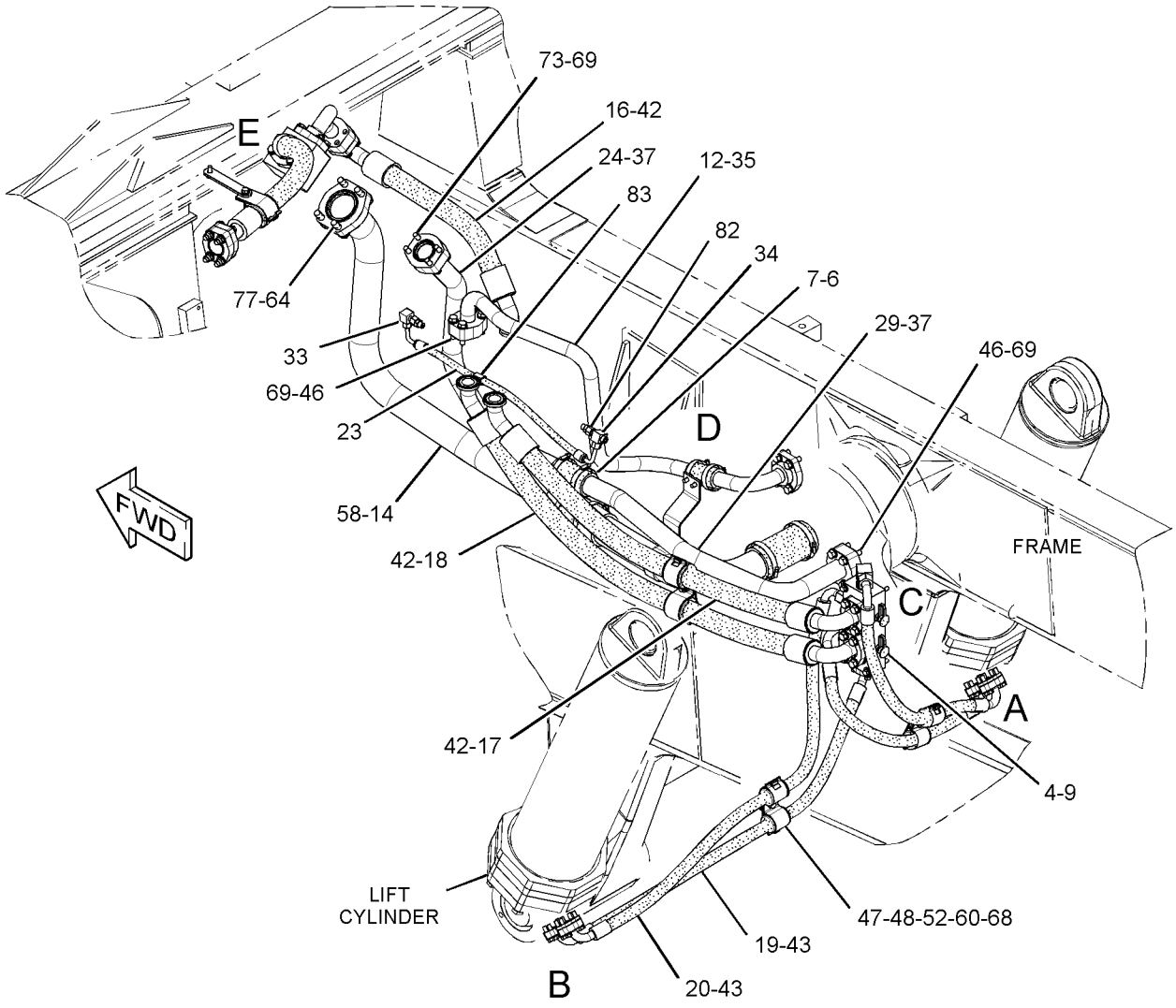


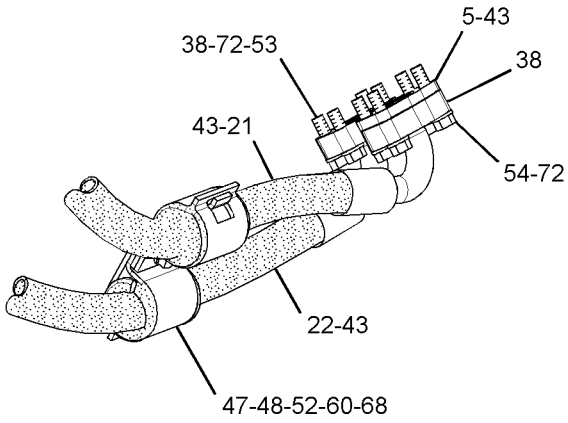


VIEW OF AREA A

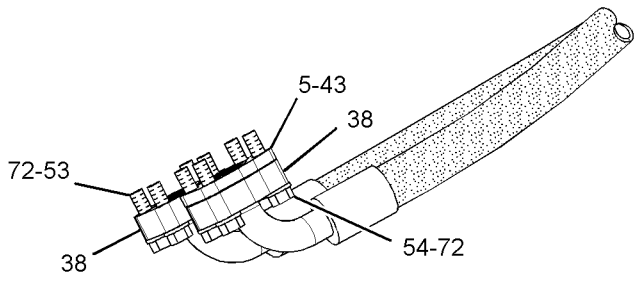


VIEW OF AREA B

GRAPHIC #1

g01653353

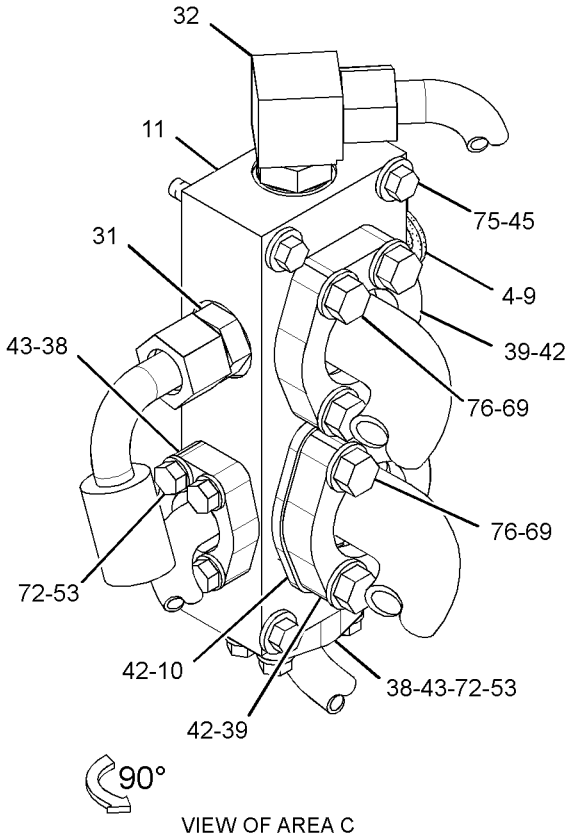


VIEW OF AREA C

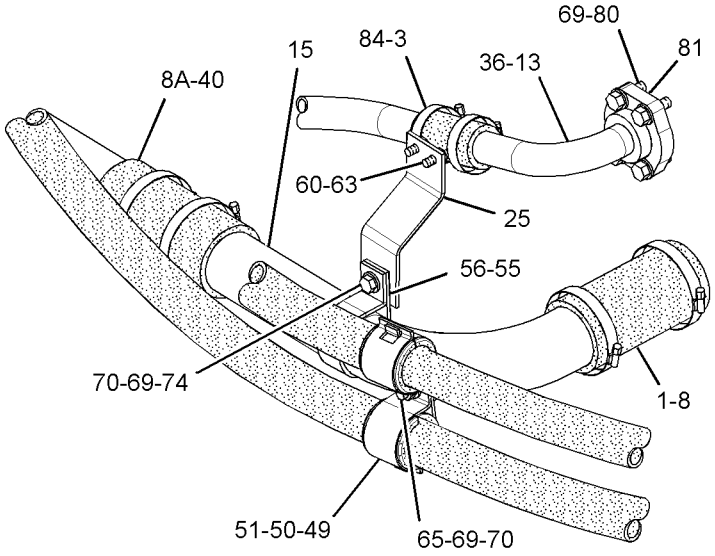


VIEW OF AREA D
(TUBE REMOVED FOR CLARITY)

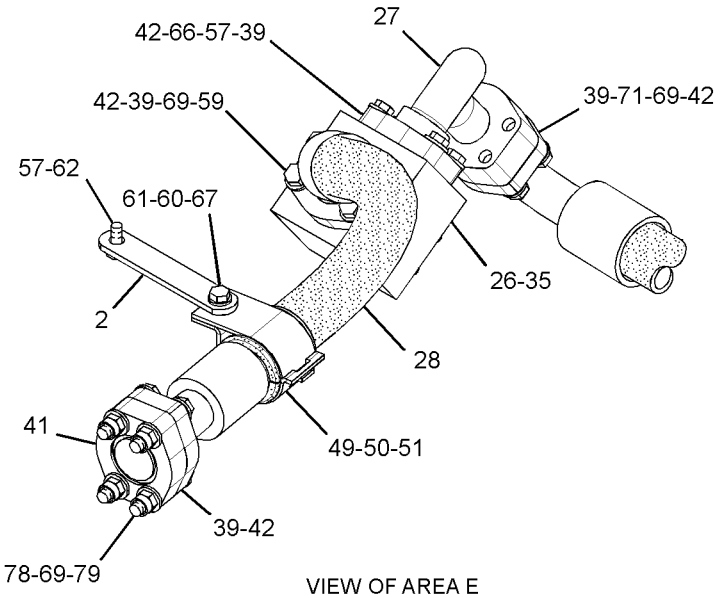


VIEW OF AREA E

GRAPHIC #2 **<END>** g01653354

# HYDRAULIC SYSTEM

## *279-2244* LINES GP-HYDRAULIC FAN

**S/N: RLB1-333**

**PART OF 298-2743 LINES GP-HYDRAULIC FAN**

**AN ATTACHMENT**

**SMCS-1386, 1387, 5057** **i03293239**

| NOTE | REF NO | GRAPHIC REF | PART NUMBER | QTY | PART NAME 1 2 3 4 5 6 (PRODUCT LEVEL) | SEE PAGE |
|---|---|---|---|---|---|---|
| | 1 | 1 | **6G-2168** | 1 | BLOCK | |
| | 2 | 2 | **6V-0852** | 3 | CAP-DUST | |
| | 3 | 2 | **8R-6784** | 2 | FLANGE | |
| Y | 4 | 1 | **155-6061** | 2 | FILTER GP-OIL (BRAKE, HYDRAULIC FAN) | 647 |
| | 5 | 2 | *164-5567* | 3 | COUPLER AS-QUICK DISCONNECT | |
| | | | | | (EACH INCLUDES) | |
| | | 2 | **3J-1907** | 1 | SEAL-O-RING | |
| | | 2 | **6V-3965** | 1 | FITTING (QUICK DISCONNECT) | |
| Y | 6 | 2 | **270-0510** | 1 | MANIFOLD GP-CONTROL (HYDRAULIC FAN) | 155 |
| I | 7 | 1 | **275-9253** | 1 | HOSE AS | |
| I | 8 | 2 | **276-4517** | 1 | HOSE AS | |
| I | 9 | 2 | **280-6907** | 1 | HOSE AS | |
| I | 10 | 1 | **280-7531** | 1 | HOSE AS | |
| | 11 | 1 | **293-7852** | 1 | TUBE AS | |
| | 12 | 1 | **293-8255** | 1 | BRACKET AS | |
| I | 13 | 2 | **294-4776** | 1 | HOSE AS | |
| | 14 | 2 | **297-4887** | 1 | PLATE | |
| I | 15 | 1 | **297-5605** | 1 | HOSE AS | |
| | 16 | 1 | **301-9276** | 1 | GUARD | |
| I | 17 | 2 | **307-9390** | 1 | HOSE AS | |
| I | 18 | 2 | **307-9391** | 1 | HOSE AS | |
| I | 19 | 1 | **308-6420** | 1 | HOSE AS | |
| | 20 | 1 | **308-6421** | 1 | TUBE AS | |
| | 21 | 1 | *148-8317* | 1 | CONNECTOR AS | |
| | | 1 | **3D-2824** | 1 | SEAL-O-RING | |
| | | 1 | **5K-9090** | 1 | SEAL-O-RING | |
| | | 1 | **6V-8714** | 1 | CONNECTOR | |
| | 22 | 1,2 | *148-8327* | 2 | CONNECTOR AS | |
| | | | | | (EACH INCLUDES) | |
| | | 1,2 | **3D-2824** | 1 | SEAL-O-RING | |
| | | 1,2 | **6V-8637** | 1 | CONNECTOR | |
| | | 1,2 | **6V-9746** | 1 | SEAL-O-RING | |
| | 23 | 2 | *148-8333* | 1 | CONNECTOR AS | |
| | | 2 | **6V-8400** | 1 | SEAL-O-RING | |
| | | 2 | **7M-8485** | 1 | SEAL-O-RING | |
| | | 2 | **8T-7927** | 1 | CONNECTOR | |
| | 24 | 2 | *148-8335* | 3 | CONNECTOR AS | |
| | | | | | (EACH INCLUDES) | |
| | | 2 | **5K-9090** | 1 | SEAL-O-RING | |
| | | 2 | **6V-8635** | 1 | CONNECTOR | |
| | | 2 | **7M-8485** | 1 | SEAL-O-RING | |
| | 25 | 2 | *148-8357* | 1 | ELBOW AS | |
| | | 2 | **5K-9090** | 1 | SEAL-O-RING | |
| | | 2 | **6V-9008** | 1 | ELBOW | |
| | | 2 | **7M-8485** | 1 | SEAL-O-RING | |
| | 26 | 1 | *148-8362* | 1 | ELBOW AS | |
| | | 1 | **3D-2824** | 1 | SEAL-O-RING | |
| | | 1 | **5K-9090** | 1 | SEAL-O-RING | |
| | | 1 | **8T-6684** | 1 | ELBOW | |
| | 27 | 2 | *148-8373* | 1 | ELBOW AS | |
| | | 2 | **6V-8400** | 1 | SEAL-O-RING | |
| | | 2 | **7M-8485** | 1 | SEAL-O-RING | |
| | | 2 | **8C-3364** | 1 | ELBOW | |
| | 28 | 2 | *148-8376* | 1 | ELBOW AS | |
| | | 2 | **6V-8983** | 1 | ELBOW | |

## *279-2244* **LINES GP-HYDRAULIC FAN** *(contd.)* **i03293239**

| NOTE | REF NO | GRAPHIC REF | PART NUMBER | QTY | PART NAME 1 2 3 4 5 6 (PRODUCT LEVEL) | SEE PAGE |
|---|---|---|---|---|---|---|
| | | 2 | **6V-9746** | 2 | SEAL-O-RING | |
| | 29 | 1 | *148-8429* | 1 | TEE AS | |
| | | 1 | **5K-9090** | 2 | SEAL-O-RING | |
| | | 1 | **6V-9840** | 1 | TEE-SWIVEL | |
| | 30 | 2 | *155-2026* | 1 | UNION AS | |
| | | 2 | **5K-9090** | 2 | SEAL-O-RING | |
| | | 2 | **6V-8998** | 1 | UNION | |
| | 31 | 2 | *164-4180* | 2 | PLUG AS | |
| | | | | | (EACH INCLUDES) | |
| | | 2 | **7M-8485** | 1 | SEAL-O-RING | |
| | | 2 | **9S-4181** | 1 | PLUG-O-RING | |
| | 32 | 1 | *164-5574* | 1 | TEE AS | |
| | | 1 | **3D-2824** | 1 | SEAL-O-RING | |
| | | 1 | **6V-8784** | 1 | TEE-FACE SEAL | |
| | | 1 | **6V-9746** | 2 | SEAL-O-RING | |
| | 33 | 2 | **1P-3703** | 2 | SEAL-RECTANGULAR | |
| | 34 | 1 | **1P-4578** | 2 | FLANGE-HALF | |
| Y | 35 | 2 | **275-8982** | 1 | MANIFOLD GP-CONTROL (BRAKE ACCUM CHARGE, HYD FAN) | 423 |
| | 36 | 2 | **2P-1293** | 1 | LOCKNUT (1-3/16-12-THD) | |
| | 37 | 1 | **3D-2824** | 2 | SEAL-O-RING | |
| | 38 | 1 | **3P-2404** | 1 | CLIP | |
| | 39 | 2 | **4J-0520** | 2 | SEAL-O-RING | |
| | 40 | 1 | **4J-0522** | 3 | SEAL-O-RING | |
| | 41 | 1 | **4S-1962** | 1 | CLIP | |
| | 42 | 1 | **4S-4455** | 1 | CLIP | |
| | 43 | 1 | **5K-9090** | 1 | SEAL-O-RING | |
| | 44 | 2 | **5P-6944** | 1 | ADAPTER | |
| | 45 | 1 | **6V-1889** | 2 | CLIP | |
| | 46 | 2 | **6V-9172** | 1 | NUT (1-7/16-12-THD) | |
| M | 47 | 2 | **7X-2543** | 2 | BOLT (M10X1.5X120-MM) | |
| | 48 | 1 | **7X-3166** | 2 | ADAPTER-SWIVEL | |
| | 49 | 1 | **7X-7729** | 8 | WASHER (11X25X3-MM THK) | |
| | 50 | 2 | **8C-3206** | 4 | FLANGE-HALF | |
| | 51 | 1,2 | **8T-4121** | 24 | WASHER-HARD (11X21X2.5-MM THK) | |
| M | 52 | 1 | **8T-4133** | 4 | NUT (M10X1.5-THD) | |
| M | 53 | 1,2 | **8T-4136** | 7 | BOLT (M10X1.5X25-MM) | |
| M | 54 | 1 | **8T-4137** | 3 | BOLT (M10X1.5X20-MM) | |
| M | 55 | 2 | **8T-4139** | 4 | BOLT (M12X1.75X30-MM) | |
| M | 56 | 2 | **8T-4177** | 2 | BOLT (M8X1.25X90-MM) | |
| M | 57 | 1,2 | **8T-4178** | 12 | BOLT (M10X1.5X90-MM) | |
| M | 58 | 1 | **8T-4195** | 4 | BOLT (M10X1.5X30-MM) | |
| | 59 | 2 | **8T-4223** | 4 | WASHER-HARD (13.5X25.5X3-MM THK) | |
| | 60 | 2 | **8T-4224** | 2 | WASHER-HARD (8.8X16X2-MM THK) | |
| | 61 | 1 | **8X-6166** | 1 | COVER | |

I-REFER TO HYDRAULIC INFORMATION SYSTEM
M-METRIC PART
Y-SEPARATE ILLUSTRATION

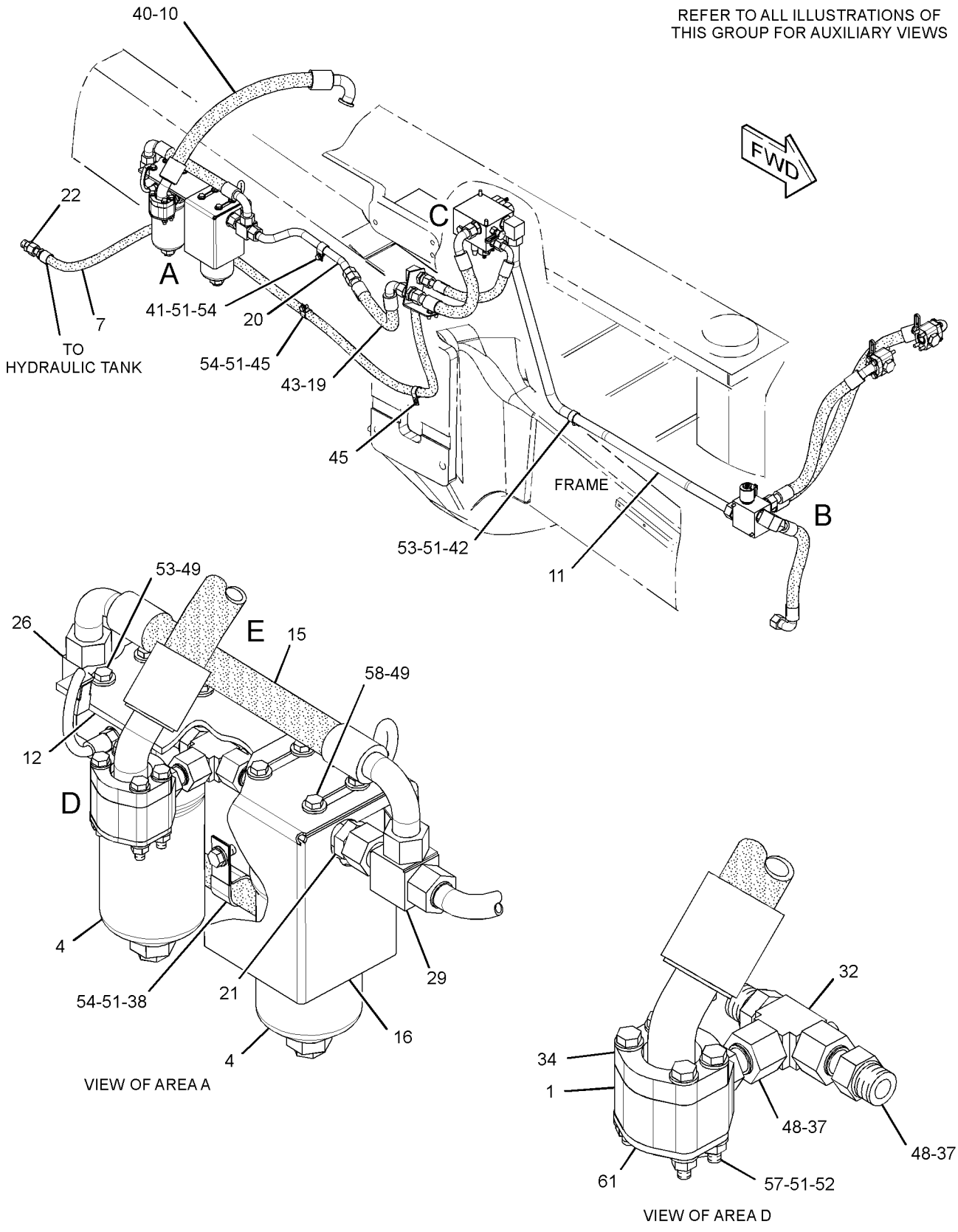


GRAPHIC #1

g01394494

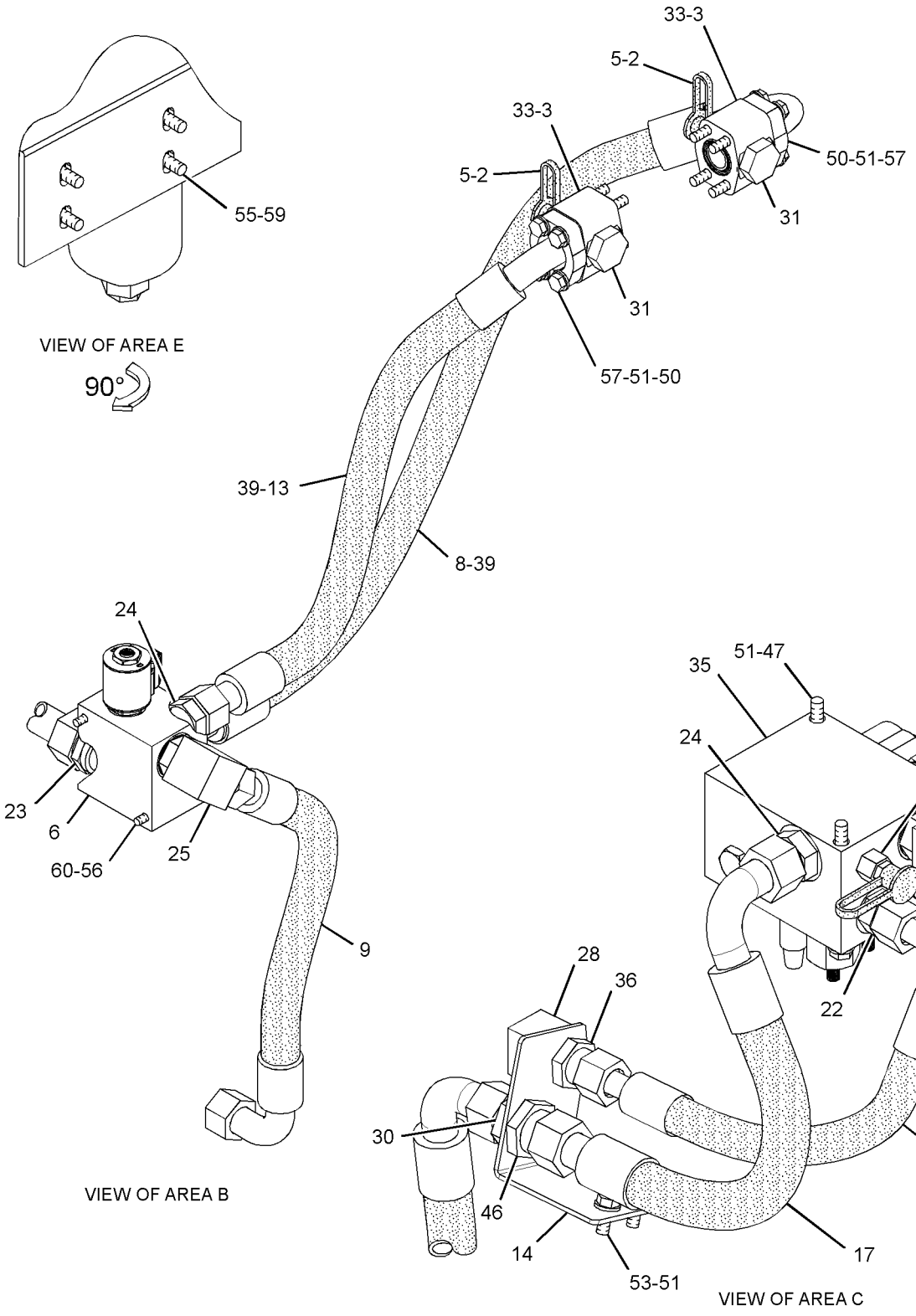


GRAPHIC #2 **<END>** g01394496

# HYDRAULIC SYSTEM

## *279-2244* LINES GP-HYDRAULIC FAN

**S/N: RLB334-UP**

**PART OF 298-2743 LINES GP-HYDRAULIC FAN**

**AN ATTACHMENT**

**SMCS-1386, 1387, 5057** **i03293243**

| NOTE | REF NO | GRAPHIC REF | PART NUMBER | QTY | PART NAME 1 2 3 4 5 6 (PRODUCT LEVEL) | SEE PAGE |
|---|---|---|---|---|---|---|
| | 1 | 1 | **6G-2168** | 1 | BLOCK | |
| | 2 | 2 | **6V-0852** | 3 | CAP-DUST | |
| | 3 | 2 | **8R-6784** | 2 | FLANGE | |
| Y | 4 | 1 | **155-6061** | 2 | FILTER GP-OIL (BRAKE, HYDRAULIC FAN) | 647 |
| | 5 | 2 | *164-5567* | 3 | COUPLER AS-QUICK DISCONNECT | |
| | | | | | (EACH INCLUDES) | |
| | | 2 | **3J-1907** | 1 | SEAL-O-RING | |
| | | 2 | **6V-3965** | 1 | FITTING (QUICK DISCONNECT) | |
| Y | 6 | 2 | **270-0510** | 1 | MANIFOLD GP-CONTROL (HYDRAULIC FAN) | 155 |
| I | 7 | 1 | **275-9253** | 1 | HOSE AS | |
| I | 8 | 2 | **276-4517** | 1 | HOSE AS | |
| I | 9 | 1 | **280-6907** | 1 | HOSE AS | |
| I | 10 | 1 | **280-7531** | 1 | HOSE AS | |
| | 11 | 1 | **293-8255** | 1 | BRACKET AS | |
| I | 12 | 2 | **294-4776** | 1 | HOSE AS | |
| | 13 | 2 | **297-4887** | 1 | PLATE | |
| I | 14 | 1 | **297-5605** | 1 | HOSE AS | |
| | 15 | 1 | **301-9276** | 1 | GUARD | |
| I | 16 | 2 | **307-9390** | 1 | HOSE AS | |
| I | 17 | 2 | **307-9391** | 1 | HOSE AS | |
| I | 18 | 1 | **308-6420** | 1 | HOSE AS | |
| | 19 | 1 | **308-6421** | 1 | TUBE AS | |
| C | 20 | 2 | **309-1366** | 1 | GUARD | |
| C | 21 | 2 | **309-1368** | 2 | BRACKET AS | |
| CI | 22 | 1 | **311-0623** | 1 | HOSE AS | |
| C | 23 | 2 | **148-8313** | 1 | ADAPTER AS | |
| | | 2 | **3K-0360** | 1 | SEAL-O-RING | |
| | | 2 | **5P-6944** | 1 | ADAPTER | |
| | 24 | 1 | *148-8317* | 1 | CONNECTOR AS | |
| | | 1 | **3D-2824** | 1 | SEAL-O-RING | |
| | | 1 | **5K-9090** | 1 | SEAL-O-RING | |
| | | 1 | **6V-8714** | 1 | CONNECTOR | |
| | 25 | 1,2 | *148-8327* | 2 | CONNECTOR AS | |
| | | | | | (EACH INCLUDES) | |
| | | 1,2 | **3D-2824** | 1 | SEAL-O-RING | |
| | | 1,2 | **6V-8637** | 1 | CONNECTOR | |
| | | 1,2 | **6V-9746** | 1 | SEAL-O-RING | |
| | 26 | 2 | *148-8333* | 1 | CONNECTOR AS | |
| | | 2 | **6V-8400** | 1 | SEAL-O-RING | |
| | | 2 | **7M-8485** | 1 | SEAL-O-RING | |
| | | 2 | **8T-7927** | 1 | CONNECTOR | |
| | 27 | 2 | *148-8335* | 3 | CONNECTOR AS | |
| | | | | | (EACH INCLUDES) | |
| | | 2 | **5K-9090** | 1 | SEAL-O-RING | |
| | | 2 | **6V-8635** | 1 | CONNECTOR | |
| | | 2 | **7M-8485** | 1 | SEAL-O-RING | |
| | 28 | 2 | *148-8357* | 1 | ELBOW AS | |
| | | 2 | **5K-9090** | 1 | SEAL-O-RING | |
| | | 2 | **6V-9008** | 1 | ELBOW | |
| | | 2 | **7M-8485** | 1 | SEAL-O-RING | |
| | 29 | 1 | *148-8362* | 1 | ELBOW AS | |
| | | 1 | **3D-2824** | 1 | SEAL-O-RING | |
| | | 1 | **5K-9090** | 1 | SEAL-O-RING | |
| | | 1 | **8T-6684** | 1 | ELBOW | |
| | 30 | 2 | *148-8373* | 1 | ELBOW AS | |

## *279-2244* **LINES GP-HYDRAULIC FAN** *(contd.)* **i03293243**

| NOTE | REF NO | GRAPHIC REF | PART NUMBER | QTY | PART NAME 1 2 3 4 5 6 (PRODUCT LEVEL) | SEE PAGE |
|---|---|---|---|---|---|---|
| | | 2 | **6V-8400** | 1 | SEAL-O-RING | |
| | | 2 | **7M-8485** | 1 | SEAL-O-RING | |
| | | 2 | **8C-3364** | 1 | ELBOW | |
| | 31 | 2 | *148-8376* | 1 | ELBOW AS | |
| | | 2 | **6V-8983** | 1 | ELBOW | |
| | | 2 | **6V-9746** | 2 | SEAL-O-RING | |
| | 32 | 1 | *148-8429* | 1 | TEE AS | |
| | | 1 | **5K-9090** | 2 | SEAL-O-RING | |
| | | 1 | **6V-9840** | 1 | TEE-SWIVEL | |
| | 33 | 2 | *155-2026* | 1 | UNION AS | |
| | | 2 | **5K-9090** | 2 | SEAL-O-RING | |
| | | 2 | **6V-8998** | 1 | UNION | |
| | 34 | 2 | *164-4180* | 2 | PLUG AS | |
| | | | | | (EACH INCLUDES) | |
| | | 2 | **7M-8485** | 1 | SEAL-O-RING | |
| | | 2 | **9S-4181** | 1 | PLUG-O-RING | |
| | 35 | 1 | *164-5574* | 1 | TEE AS | |
| | | 1 | **3D-2824** | 1 | SEAL-O-RING | |
| | | 1 | **6V-8784** | 1 | TEE-FACE SEAL | |
| | | 1 | **6V-9746** | 2 | SEAL-O-RING | |
| | 36 | 2 | **1P-3703** | 2 | SEAL-RECTANGULAR | |
| | 37 | 1 | **1P-4578** | 2 | FLANGE-HALF | |
| Y | 38 | 2 | **275-8982** | 1 | MANIFOLD GP-CONTROL (BRAKE ACCUM CHARGE, HYD FAN) | 423 |
| | 39 | 2 | **2P-1293** | 1 | LOCKNUT (1-3/16-12-THD) | |
| | 40 | 1 | **3D-2824** | 2 | SEAL-O-RING | |
| | 41 | 1 | **3P-2404** | 1 | CLIP | |
| | 42 | 2 | **4J-0520** | 2 | SEAL-O-RING | |
| | 43 | 1 | **4J-0522** | 3 | SEAL-O-RING | |
| | 44 | 1 | **4S-1962** | 1 | CLIP | |
| | 45 | 1 | **5K-9090** | 1 | SEAL-O-RING | |
| C | 46 | 1 | **5P-7470** | 1 | CLIP (SLOT) | |
| C | 47 | 1 | **5P-7471** | 1 | CLIP (TAB) | |
| C | 48 | 1 | **5P-8182** | 1 | GROMMET | |
| | 49 | 1 | **6V-1889** | 2 | CLIP | |
| | 50 | 2 | **6V-9172** | 1 | NUT (1-7/16-12-THD) | |
| | 51 | 1 | **7X-3166** | 2 | ADAPTER-SWIVEL | |
| | 52 | 1 | **7X-7729** | 8 | WASHER (11X25X3-MM THK) | |
| | 53 | 2 | **8C-3206** | 4 | FLANGE-HALF | |
| C | 54 | 1,2 | **8T-4121** | 28 | WASHER-HARD (11X21X2.5-MM THK) | |
| M | 55 | 1 | **8T-4133** | 4 | NUT (M10X1.5-THD) | |
| CM | 56 | 1,2 | **8T-4136** | 8 | BOLT (M10X1.5X25-MM) | |
| CM | 57 | 1,2 | **8T-4137** | 5 | BOLT (M10X1.5X20-MM) | |
| M | 58 | 2 | **8T-4139** | 4 | BOLT (M12X1.75X30-MM) | |
| M | 59 | 2 | **8T-4177** | 2 | BOLT (M8X1.25X90-MM) | |
| M | 60 | 1,2 | **8T-4178** | 12 | BOLT (M10X1.5X90-MM) | |
| CM | 61 | 2 | **8T-4186** | 1 | BOLT (M10X1.5X40-MM) | |
| M | 62 | 1 | **8T-4195** | 4 | BOLT (M10X1.5X30-MM) | |
| | 63 | 2 | **8T-4223** | 4 | WASHER-HARD (13.5X25.5X3-MM THK) | |
| | 64 | 2 | **8T-4224** | 2 | WASHER-HARD (8.8X16X2-MM THK) | |
| CM | 65 | 2 | **8T-5436** | 2 | BOLT (M10X1.5X130-MM) | |
| | 66 | 1 | **8X-6166** | 1 | COVER | |
| C | 67 | 2 | **9V-9116** | 1 | SPACER (11.11X19.05X165-MM THK) | |

C-CHANGE FROM PREVIOUS TYPE
I-REFER TO HYDRAULIC INFORMATION SYSTEM
M-METRIC PART
Y-SEPARATE ILLUSTRATION

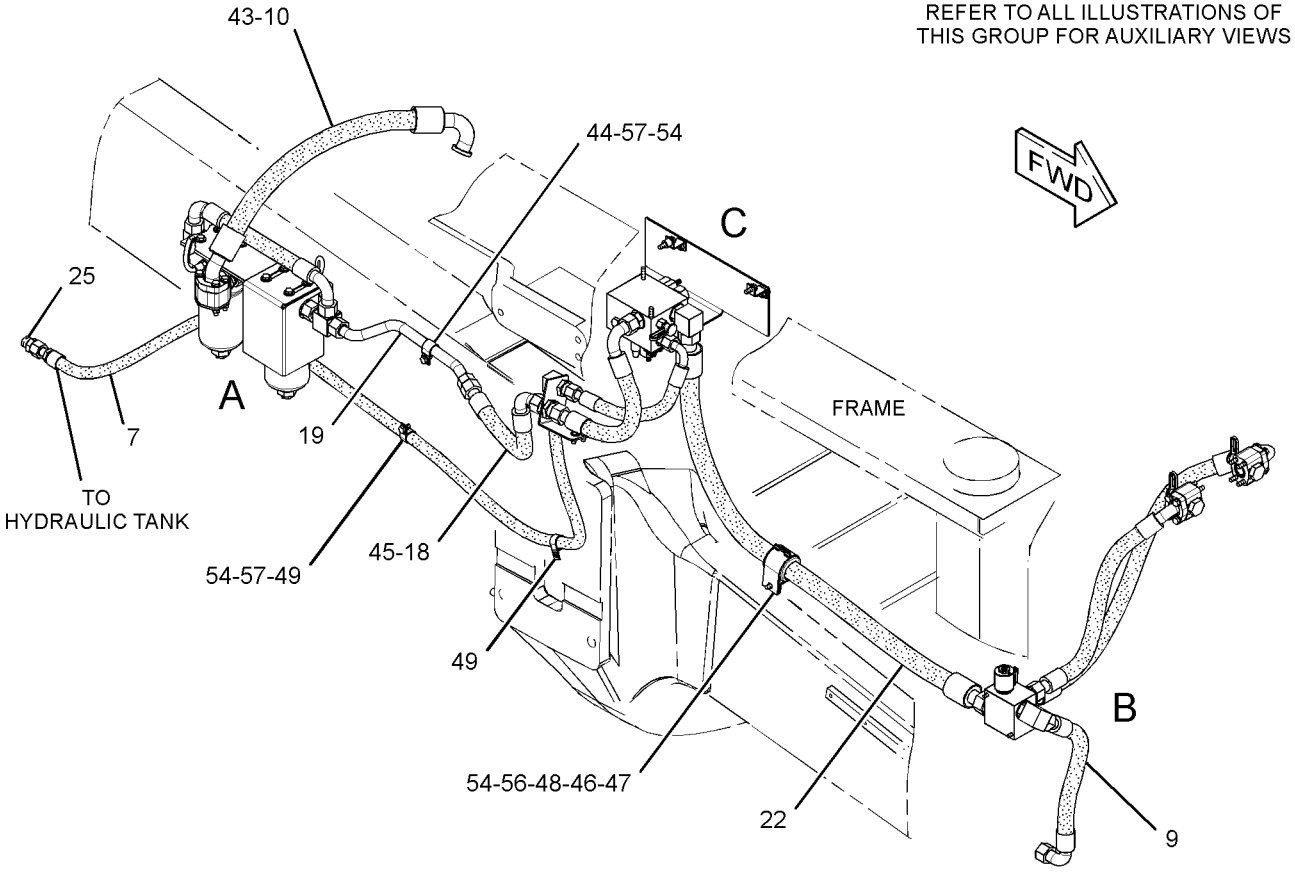


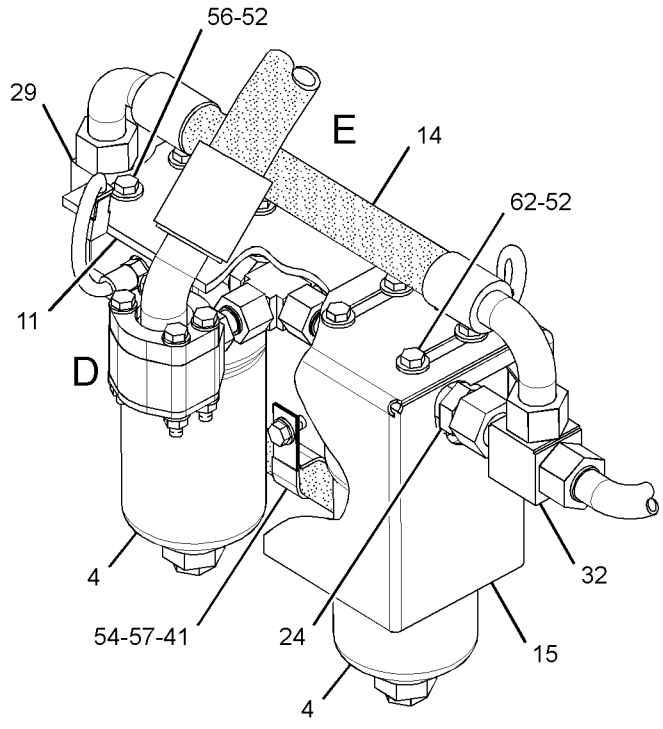


VIEW OF AREA A

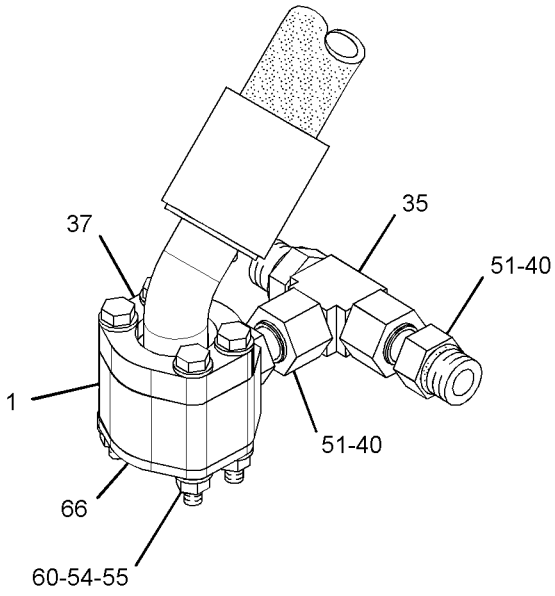


VIEW OF AREA D

GRAPHIC #1

g01445403

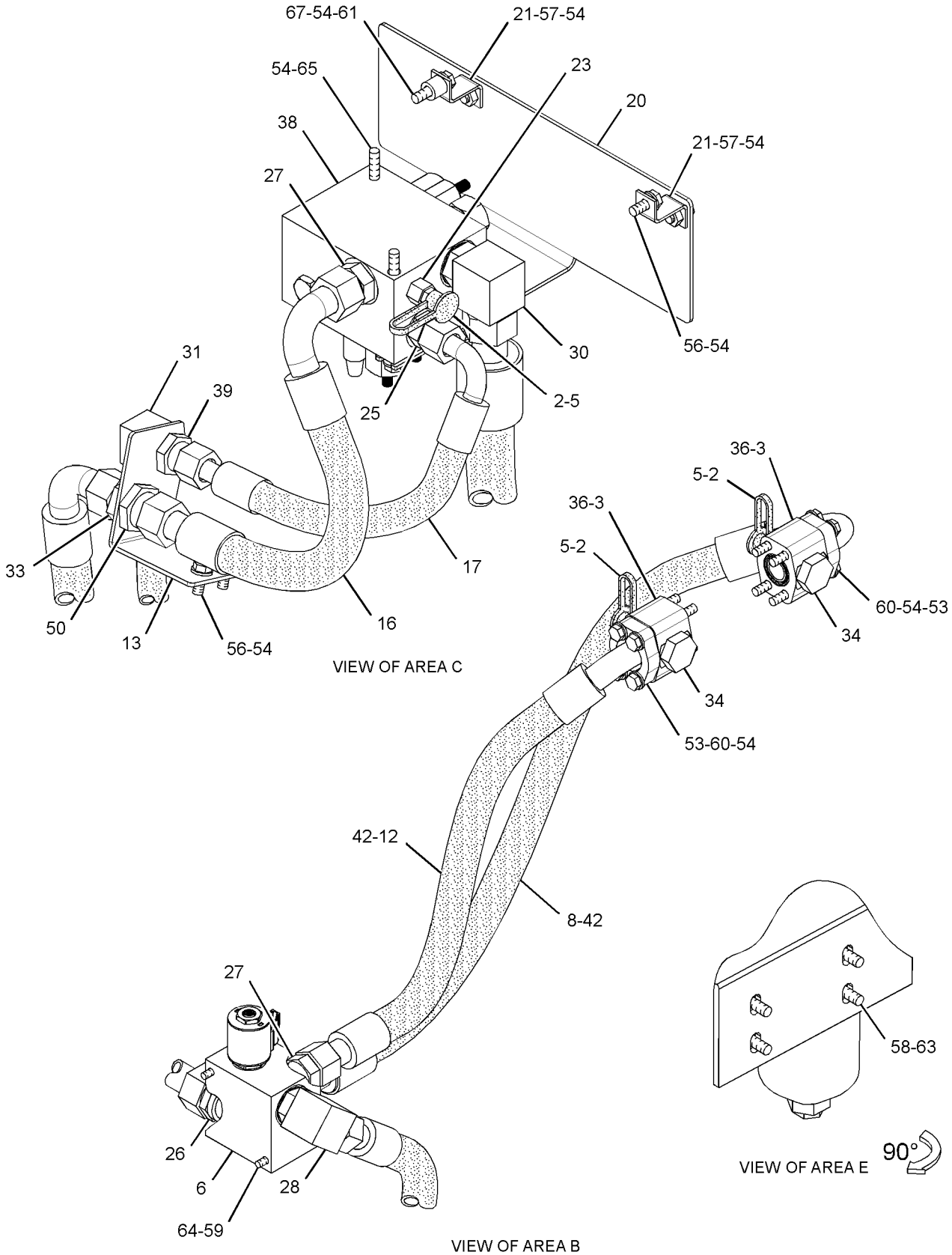


GRAPHIC #2 **<END>** g01445404

# HYDRAULIC SYSTEM

## *297-1558* LINES GP-HYDRAULIC FAN

**S/N: RLB1-333**

**PART OF 298-2744 CONTROL AR-FAN**

**AN ATTACHMENT**

**SMCS-1386, 1387, 5057** **i02889928**

| NOTE | REF NO | GRAPHIC REF | PART NUMBER | QTY | PART NAME 1 2 3 4 5 6 (PRODUCT LEVEL) | SEE PAGE |
|---|---|---|---|---|---|---|
| | 1 | 2 | **2W-5562** | 1 | STRAP | |
| | 2 | 1 | **6G-2168** | 1 | BLOCK | |
| | 3 | 2,3 | **6V-0852** | 3 | CAP-DUST | |
| | 4 | 3 | **8R-6784** | 2 | FLANGE | |
| Y | 5 | 1 | **155-6061** | 2 | FILTER GP-OIL (BRAKE, HYDRAULIC FAN) | 647 |
| I | 6 | 1 | **275-9253** | 1 | HOSE AS | |
| I | 7 | 3 | **276-4517** | 1 | HOSE AS | |
| I | 8 | 1 | **308-9740** | 1 | HOSE AS | |
| I | 9 | 1 | **280-7531** | 1 | HOSE AS | |
| | 10 | 2 | **288-5287** | 1 | BUSHING | |
| | 11 | 1 | **293-7852** | 1 | TUBE AS | |
| | 12 | 2 | **293-8255** | 1 | BRACKET AS | |
| I | 13 | 1 | **294-4776** | 1 | HOSE AS | |
| | 14 | 2 | **297-4887** | 1 | PLATE | |
| I | 15 | 1 | **297-5605** | 1 | HOSE AS | |
| I | 16 | 2 | **298-3853** | 1 | HOSE AS | |
| I | 17 | 2 | **298-3854** | 1 | HOSE AS | |
| Y | 18 | 3 | *298-6175* | 1 | MANIFOLD GP-CONTROL (EXHAUST DIVERTER, HYD FAN) | 425 |
| I | 19 | 3 | **301-7944** | 1 | HOSE AS | |
| | 20 | 1 | **301-9276** | 1 | GUARD | |
| I | 21 | 2 | **302-1483** | 1 | HOSE AS | |
| | 22 | 2 | **306-5114** | 1 | COVER | |
| I | 23 | 2 | **307-9390** | 1 | HOSE AS | |
| I | 24 | 2 | **307-9391** | 1 | HOSE AS | |
| I | 25 | 1 | **308-6420** | 1 | HOSE AS | |
| | 26 | 1 | **308-6421** | 1 | TUBE AS | |
| | 27 | 1,2 | **100-4336** | 5 | CLIP | |
| | 28 | 2 | **133-6934** | 1 | SPACER (11X20X25-MM THK) | |
| | 29 | 1 | *148-8317* | 1 | CONNECTOR AS | |
| | | 1 | **6V-8714** | 1 | CONNECTOR | |
| | | 1 | **3D-2824** | 1 | SEAL-O-RING | |
| | | 1 | **5K-9090** | 1 | SEAL-O-RING | |
| | 30 | 1,2 | *148-8327* | 2 | CONNECTOR AS | |
| | | | | | (EACH INCLUDES) | |
| | | 1,2 | **6V-8637** | 1 | CONNECTOR | |
| | | 1,2 | **3D-2824** | 1 | SEAL-O-RING | |
| | | 1,2 | **6V-9746** | 1 | SEAL-O-RING | |
| | 31 | 3 | *148-8333* | 1 | CONNECTOR AS | |
| | | 3 | **8T-7927** | 1 | CONNECTOR | |
| | | 3 | **6V-8400** | 1 | SEAL-O-RING | |
| | | 3 | **7M-8485** | 1 | SEAL-O-RING | |
| | 32 | 2,3 | *148-8335* | 3 | CONNECTOR AS | |
| | | | | | (EACH INCLUDES) | |
| | | 2,3 | **6V-8635** | 1 | CONNECTOR | |
| | | 2,3 | **5K-9090** | 1 | SEAL-O-RING | |
| | | 2,3 | **7M-8485** | 1 | SEAL-O-RING | |
| | 33 | 2,3 | *148-8336* | 3 | CONNECTOR AS | |
| | | | | | (EACH INCLUDES) | |
| | | 2,3 | **6V-8636** | 1 | CONNECTOR | |
| | | 2,3 | **3J-1907** | 1 | SEAL-O-RING | |
| | | 2,3 | **6V-8397** | 1 | SEAL-O-RING | |
| | 34 | 3 | *148-8352* | 1 | ELBOW AS | |
| | | 3 | **5K-9090** | 1 | SEAL-O-RING | |
| | | 3 | **6V-9854** | 1 | ELBOW | |
| | 35 | 1 | *148-8362* | 1 | ELBOW AS | |

*297-1558* **LINES GP-HYDRAULIC FAN** *(contd.)* **i02889928**

| NOTE | REF NO | GRAPHIC REF | PART NUMBER | QTY | PART NAME 1 2 3 4 5 6 (PRODUCT LEVEL) | SEE PAGE |
|---|---|---|---|---|---|---|
| | | 1 | **8T-6684** | 1 | ELBOW | |
| | | 1 | **3D-2824** | 1 | SEAL-O-RING | |
| | | 1 | **5K-9090** | 1 | SEAL-O-RING | |
| | 36 | 2 | *148-8367* | 1 | ELBOW AS | |
| | | 2 | **6V-9850** | 1 | ELBOW | |
| | | 2 | **6V-8397** | 1 | SEAL-O-RING | |
| | 37 | 3 | *148-8369* | 1 | ELBOW AS | |
| | | 3 | **6V-8628** | 1 | ELBOW | |
| | | 3 | **3J-7354** | 1 | SEAL-O-RING | |
| | | 3 | **4J-5477** | 1 | SEAL-O-RING | |
| | 38 | 2 | *148-8373* | 1 | ELBOW AS | |
| | | 2 | **8C-3364** | 1 | ELBOW | |
| | | 2 | **6V-8400** | 1 | SEAL-O-RING | |
| | | 2 | **7M-8485** | 1 | SEAL-O-RING | |
| | 39 | 2,3 | *148-8378* | 2 | ELBOW AS | |
| | | | | | (EACH INCLUDES) | |
| | | 2,3 | **6V-8724** | 1 | ELBOW | |
| | | 2,3 | **3J-1907** | 1 | SEAL-O-RING | |
| | | 2,3 | **6V-8397** | 1 | SEAL-O-RING | |
| | 40 | 1 | *148-8429* | 1 | TEE AS | |
| | | 1 | **6V-9840** | 1 | TEE-SWIVEL | |
| | | 1 | **5K-9090** | 2 | SEAL-O-RING | |
| | 41 | 3 | *148-8433* | 1 | TEE AS | |
| | | 3 | **6V-9836** | 1 | TEE-SWIVEL | |
| | | 3 | **6V-8397** | 2 | SEAL-O-RING | |
| | 42 | 2 | *155-2026* | 1 | UNION AS | |
| | | 2 | **6V-8998** | 1 | UNION | |
| | | 2 | **5K-9090** | 2 | SEAL-O-RING | |
| | 43 | 3 | *164-4180* | 2 | PLUG AS | |
| | | | | | (EACH INCLUDES) | |
| | | 3 | **9S-4181** | 1 | PLUG-O-RING | |
| | | 3 | **7M-8485** | 1 | SEAL-O-RING | |
| | 44 | 2,3 | *164-5567* | 3 | COUPLER AS-QUICK DISCONNECT | |
| | | | | | (EACH INCLUDES) | |
| | | 2,3 | **6V-3965** | 1 | FITTING (QUICK DISCONNECT) | |
| | | 2,3 | **3J-1907** | 1 | SEAL-O-RING | |
| | 45 | 1 | *164-5574* | 1 | TEE AS | |
| | | 1 | **6V-8784** | 1 | TEE-FACE SEAL | |
| | | 1 | **3D-2824** | 1 | SEAL-O-RING | |
| | | 1 | **6V-9746** | 2 | SEAL-O-RING | |
| | 46 | 2 | **164-6862** | 1 | TEE AS | |
| | | 2 | **6V-9160** | 1 | TEE-FACE SEAL | |
| | | 2 | **6V-9746** | 3 | SEAL-O-RING | |
| | 47 | 2 | **198-4778** | 1 | WASHER-HARD (13.5X30X12-MM THK) | |
| | 48 | 3 | **1P-3703** | 2 | SEAL-RECTANGULAR | |
| | 49 | 1 | **1P-4578** | 2 | FLANGE-HALF | |
| | 50 | 1 | **1S-0994** | 1 | CLIP | |
| Y | 51 | 2 | **275-8982** | 1 | MANIFOLD GP-CONTROL (BRAKE ACCUM CHARGE, HYD FAN) | 423 |
| | 52 | 2 | **278-4526** | 1 | CYLINDER GP-HYDRAULIC (EXHAUST DIVERTER) | |
| | 53 | 2 | **2P-1293** | 1 | LOCKNUT (1-3/16-12-THD) | |
| | 54 | 1 | **3D-2824** | 2 | SEAL-O-RING | |
| | 55 | 2 | **3H-8538** | 1 | PIN | |
| | 56 | 2 | **3P-2404** | 1 | CLIP | |
| | 57 | 1,3 | **4J-0520** | 2 | SEAL-O-RING | |
| | 58 | 1 | **4J-0522** | 3 | SEAL-O-RING | |
| | 59 | 3 | **4K-8864** | 1 | CLIP | |
| | 60 | 1 | **4S-1962** | 1 | CLIP | |
| | 61 | 1 | **4S-4455** | 1 | CLIP | |
| | 62 | 1 | **5K-9090** | 1 | SEAL-O-RING | |

## *297-1558* **LINES GP-HYDRAULIC FAN** *(contd.)* **i02889928**

| NOTE | REF NO | GRAPHIC REF | PART NUMBER | QTY | PART NAME 1 2 3 4 5 6 (PRODUCT LEVEL) | SEE PAGE |
|---|---|---|---|---|---|---|
| | 63 | 2 | **5P-6944** | 1 | ADAPTER | |
| | 64 | 2 | **5P-8026** | 1 | PIN-COTTER | |
| | 65 | 1 | **6V-1889** | 2 | CLIP | |
| | 66 | 2 | **6V-8556** | 1 | NUT (1-3/16-12-THD) | |
| | 67 | 2 | **6V-8941** | 1 | REDUCER | |
| | 68 | 2 | **6V-9172** | 1 | NUT (1-7/16-12-THD) | |
| | 69 | 3 | **7D-7233** | 1 | CLIP | |
| M | 70 | 2 | **7X-2543** | 2 | BOLT (M10X1.5X120-MM) | |
| | 71 | 1 | **7X-3166** | 2 | ADAPTER-SWIVEL | |
| | 72 | 1,2 | **7X-7729** | 8 | WASHER (11X25X3-MM THK) | |
| | 73 | 3 | **8C-3206** | 4 | FLANGE-HALF | |
| | 74 | 1 | **8D-9671** | 1 | CLIP | |
| | 75 | 2 | **8S-0948** | 1 | CLIP | |
| | 76 | 1,2,3 | **8T-4121** | 34 | WASHER-HARD (11X21X2.5-MM THK) | |
| M | 77 | 1,2,3 | **8T-4133** | 6 | NUT (M10X1.5-THD) | |
| M | 78 | 1,2 | **8T-4136** | 11 | BOLT (M10X1.5X25-MM) | |
| M | 79 | 1,2,3 | **8T-4137** | 4 | BOLT (M10X1.5X20-MM) | |
| M | 80 | 2 | **8T-4139** | 4 | BOLT (M12X1.75X30-MM) | |
| M | 81 | 3 | **8T-4177** | 2 | BOLT (M8X1.25X90-MM) | |
| M | 82 | 1,3 | **8T-4178** | 12 | BOLT (M10X1.5X90-MM) | |
| M | 83 | 2 | **8T-4185** | 1 | BOLT (M10X1.5X50-MM) | |
| M | 84 | 1 | **8T-4195** | 4 | BOLT (M10X1.5X30-MM) | |
| M | 85 | 2 | **8T-4196** | 1 | BOLT (M10X1.5X35-MM) | |
| | 86 | 2 | **8T-4223** | 4 | WASHER-HARD (13.5X25.5X3-MM THK) | |
| | 87 | 3 | **8T-4224** | 2 | WASHER-HARD (8.8X16X2-MM THK) | |
| M | 88 | 2 | **8T-6466** | 1 | BOLT (M10X1.5X60-MM) | |
| | 89 | 1 | **8X-6166** | 1 | COVER | |
| | 90 | 3 | **225-1912** | 1 | VALVE GP-CHECK | |

I-REFER TO HYDRAULIC INFORMATION SYSTEM
M-METRIC PART
Y-SEPARATE ILLUSTRATION

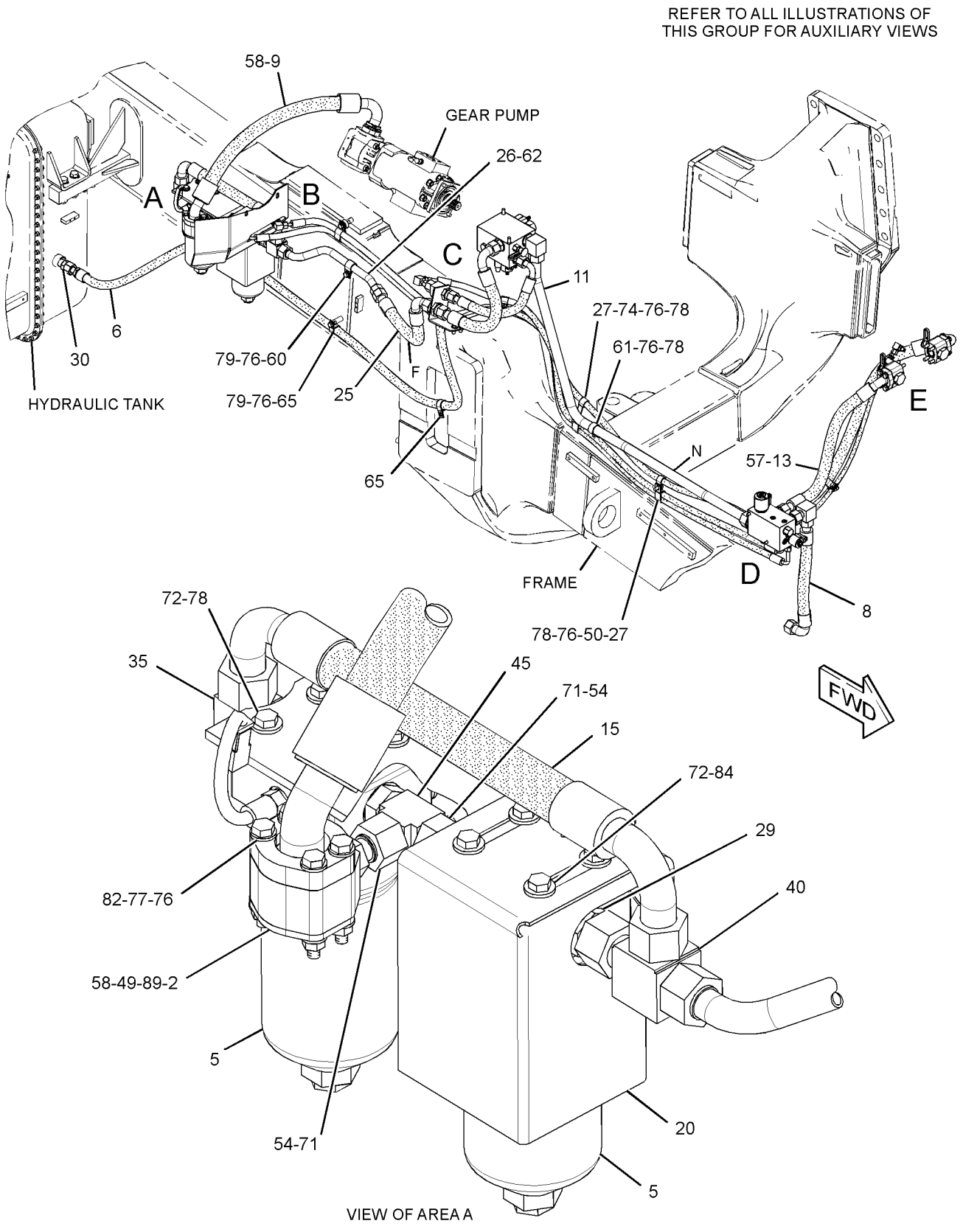


GRAPHIC #1

g01411616

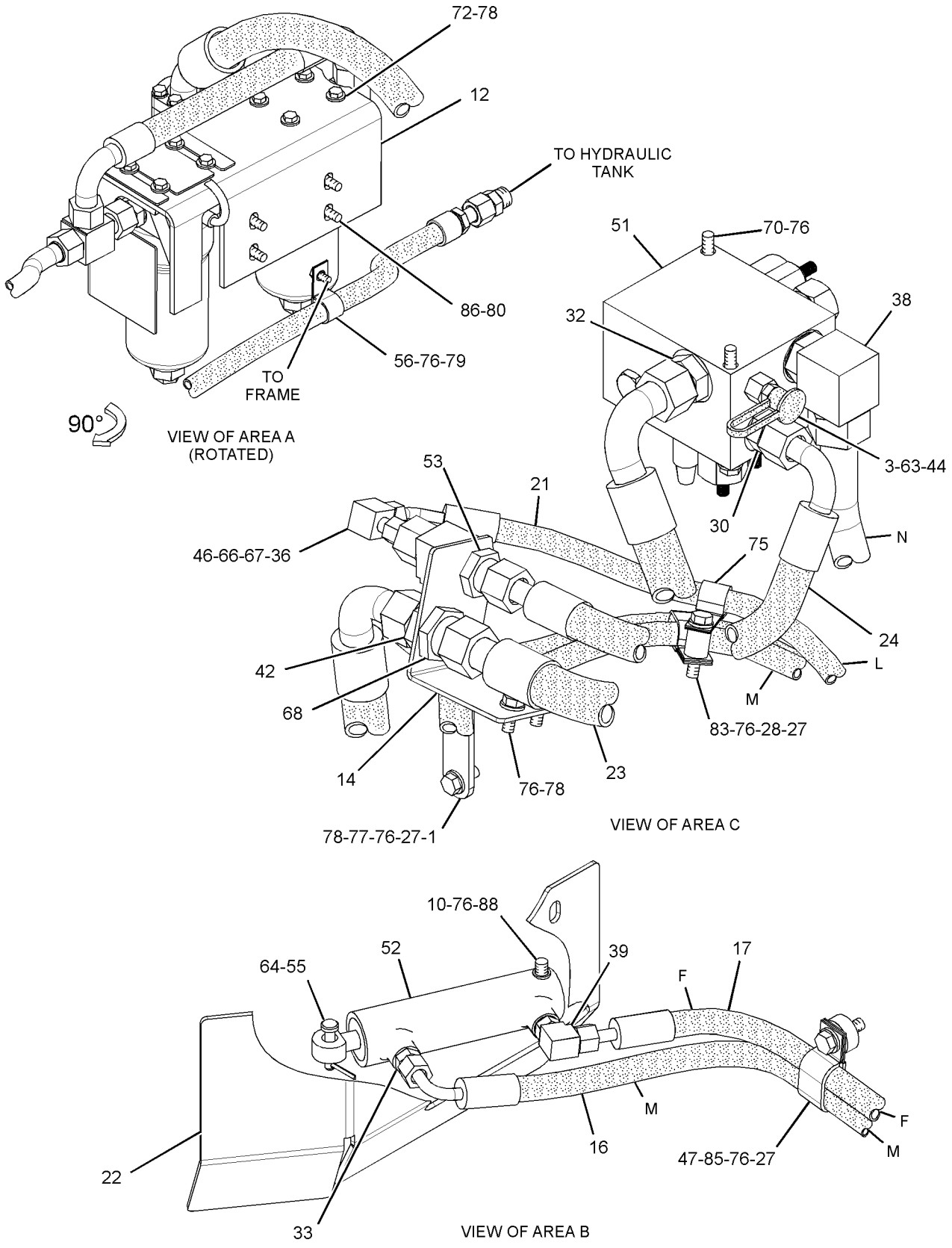


GRAPHIC #2

g01413071

*297-1558* **LINES GP-HYDRAULIC FAN** *(contd.)* **i02889928**

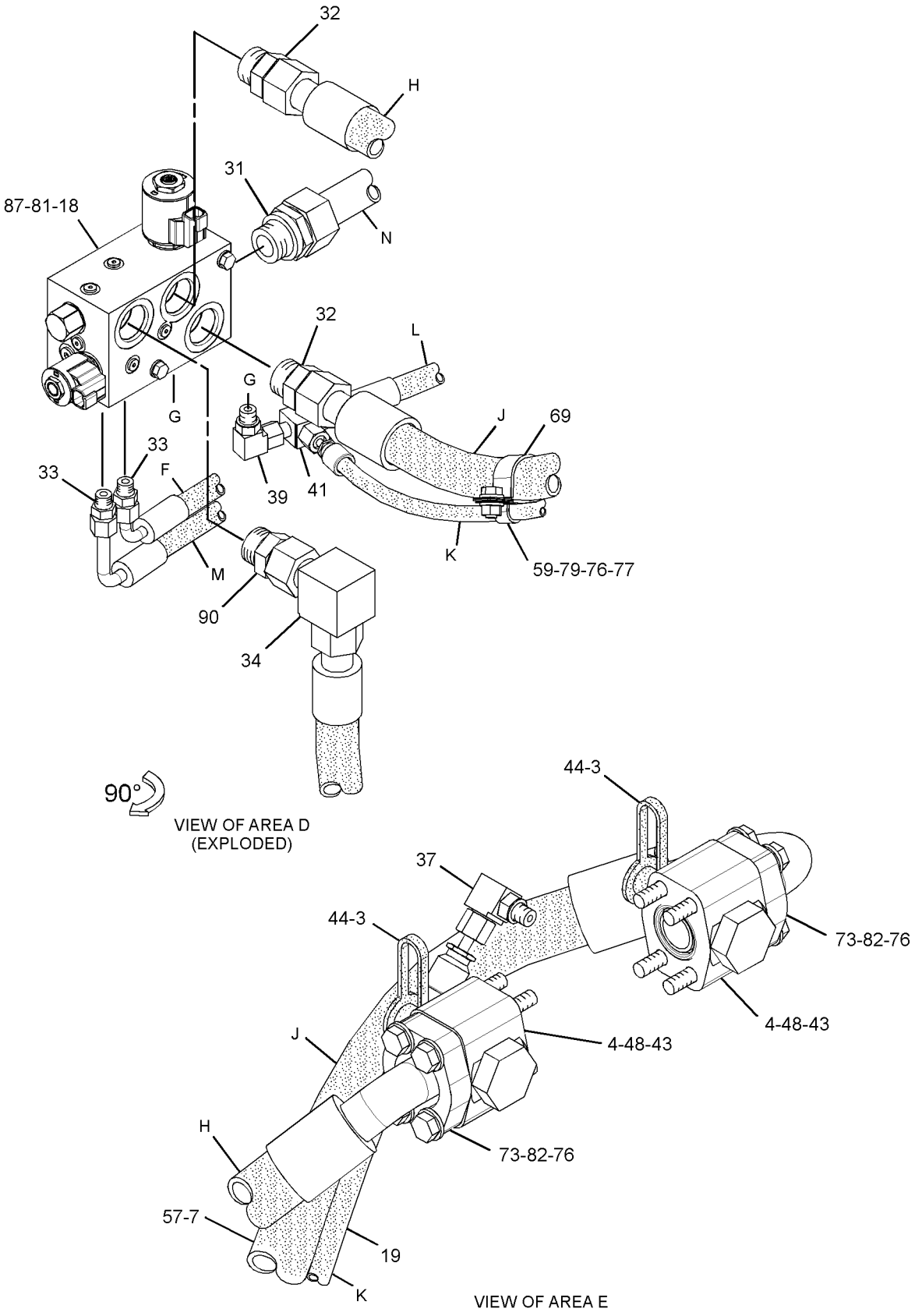


GRAPHIC #3 **<END>** g01411618

# HYDRAULIC SYSTEM

## *297-1558* LINES GP-HYDRAULIC FAN

**S/N: RLB334-UP**
**PART OF 298-2744 CONTROL AR-FAN**
**AN ATTACHMENT**

**SMCS-1386, 1387, 5057** **i02957528**

| NOTE | REF NO | GRAPHIC REF | PART NUMBER | QTY | PART NAME 1 2 3 4 5 6 (PRODUCT LEVEL) | SEE PAGE |
|---|---|---|---|---|---|---|
| | 1 | 2 | **2W-5562** | 1 | STRAP | |
| | 2 | 1 | **6G-2168** | 1 | BLOCK | |
| | 3 | 2 | **6V-0852** | 3 | CAP-DUST | |
| | 4 | 2 | **8R-6784** | 2 | FLANGE | |
| Y | 5 | 1 | **155-6061** | 2 | FILTER GP-OIL (BRAKE, HYDRAULIC FAN) | 647 |
| I | 6 | 1 | **275-9253** | 1 | HOSE AS | |
| I | 7 | 1 | **276-4517** | 1 | HOSE AS | |
| I | 8 | 1 | **280-7531** | 1 | HOSE AS | |
| | 9 | 2 | **288-5287** | 1 | BUSHING | |
| | 10 | 1 | **293-8255** | 1 | BRACKET AS | |
| I | 11 | 1 | **294-4776** | 1 | HOSE AS | |
| | 12 | 2 | **297-4887** | 1 | PLATE | |
| I | 13 | 1 | **297-5605** | 1 | HOSE AS | |
| I | 14 | 1 | **298-3853** | 1 | HOSE AS | |
| I | 15 | 1 | **298-3854** | 1 | HOSE AS | |
| Y | 16 | 2 | *298-6175* | 1 | MANIFOLD GP-CONTROL (EXHAUST DIVERTER, HYD FAN) | 425 |
| I | 17 | 1 | **301-7944** | 1 | HOSE AS | |
| | 18 | 1 | **301-9276** | 1 | GUARD | |
| I | 19 | 1 | **302-1483** | 1 | HOSE AS | |
| | 20 | 1 | **306-5114** | 1 | COVER | |
| I | 21 | 2 | **307-9390** | 1 | HOSE AS | |
| I | 22 | 2 | **307-9391** | 1 | HOSE AS | |
| I | 23 | 1 | **308-6420** | 1 | HOSE AS | |
| | 24 | 1 | **308-6421** | 1 | TUBE AS | |
| I | 25 | 1 | **308-9740** | 1 | HOSE AS | |
| C | 26 | 2 | **309-1366** | 1 | GUARD | |
| C | 27 | 2 | **309-1368** | 2 | BRACKET AS | |
| CI | 28 | 1 | **311-0623** | 1 | HOSE AS | |
| | 29 | 1,2 | **100-4336** | 5 | CLIP | |
| | 30 | 2 | **133-6934** | 1 | SPACER (11X20X25-MM THK) | |
| C | 31 | 2 | *148-8313* | 1 | ADAPTER AS | |
| | | 2 | **3K-0360** | 1 | SEAL-O-RING | |
| | | 2 | **5P-6944** | 1 | ADAPTER | |
| | 32 | 1 | *148-8317* | 1 | CONNECTOR AS | |
| | | 1 | **6V-8714** | 1 | CONNECTOR | |
| | | 1 | **3D-2824** | 1 | SEAL-O-RING | |
| | | 1 | **5K-9090** | 1 | SEAL-O-RING | |
| | 33 | 1,2 | *148-8327* | 2 | CONNECTOR AS | |
| | | | | | (EACH INCLUDES) | |
| | | 1,2 | **6V-8637** | 1 | CONNECTOR | |
| | | 1,2 | **3D-2824** | 1 | SEAL-O-RING | |
| | | 1,2 | **6V-9746** | 1 | SEAL-O-RING | |
| | 34 | 2 | *148-8333* | 1 | CONNECTOR AS | |
| | | 2 | **8T-7927** | 1 | CONNECTOR | |
| | | 2 | **6V-8400** | 1 | SEAL-O-RING | |
| | | 2 | **7M-8485** | 1 | SEAL-O-RING | |
| | 35 | 2 | *148-8335* | 3 | CONNECTOR AS | |
| | | | | | (EACH INCLUDES) | |
| | | 2 | **6V-8635** | 1 | CONNECTOR | |
| | | 2 | **5K-9090** | 1 | SEAL-O-RING | |
| | | 2 | **7M-8485** | 1 | SEAL-O-RING | |
| | 36 | 2 | *148-8336* | 3 | CONNECTOR AS | |
| | | | | | (EACH INCLUDES) | |
| | | 2 | **6V-8636** | 1 | CONNECTOR | |
| | | 2 | **3J-1907** | 1 | SEAL-O-RING | |

## *297-1558* **LINES GP-HYDRAULIC FAN** *(contd.)* **i02957528**

| NOTE | REF NO | GRAPHIC REF | PART NUMBER | QTY | PART NAME 1 2 3 4 5 6 (PRODUCT LEVEL) | SEE PAGE |
|---|---|---|---|---|---|---|
| | | 2 | **6V-8397** | 1 | SEAL-O-RING | |
| | 37 | 2 | *148-8352* | 1 | ELBOW AS | |
| | | 2 | **5K-9090** | 1 | SEAL-O-RING | |
| | | 2 | **6V-9854** | 1 | ELBOW | |
| | 38 | 1 | *148-8362* | 1 | ELBOW AS | |
| | | 1 | **8T-6684** | 1 | ELBOW | |
| | | 1 | **3D-2824** | 1 | SEAL-O-RING | |
| | | 1 | **5K-9090** | 1 | SEAL-O-RING | |
| | 39 | 2 | *148-8367* | 1 | ELBOW AS | |
| | | 2 | **6V-9850** | 1 | ELBOW | |
| | | 2 | **6V-8397** | 1 | SEAL-O-RING | |
| | 40 | 2 | *148-8369* | 1 | ELBOW AS | |
| | | 2 | **6V-8628** | 1 | ELBOW | |
| | | 2 | **3J-7354** | 1 | SEAL-O-RING | |
| | | 2 | **4J-5477** | 1 | SEAL-O-RING | |
| | 41 | 2 | *148-8373* | 1 | ELBOW AS | |
| | | 2 | **8C-3364** | 1 | ELBOW | |
| | | 2 | **6V-8400** | 1 | SEAL-O-RING | |
| | | 2 | **7M-8485** | 1 | SEAL-O-RING | |
| | 42 | 2 | *148-8378* | 2 | ELBOW AS | |
| | | | | | (EACH INCLUDES) | |
| | | 2 | **6V-8724** | 1 | ELBOW | |
| | | 2 | **3J-1907** | 1 | SEAL-O-RING | |
| | | 2 | **6V-8397** | 1 | SEAL-O-RING | |
| C | 43 | 2 | *148-8417* | 1 | REDUCER AS | |
| | | 2 | **6V-8397** | 1 | SEAL-O-RING | |
| | | 2 | **6V-8941** | 1 | REDUCER | |
| | 44 | 1 | *148-8429* | 1 | TEE AS | |
| | | 1 | **6V-9840** | 1 | TEE-SWIVEL | |
| | | 1 | **5K-9090** | 2 | SEAL-O-RING | |
| | 45 | 2 | *148-8433* | 1 | TEE AS | |
| | | 2 | **6V-9836** | 1 | TEE-SWIVEL | |
| | | 2 | **6V-8397** | 2 | SEAL-O-RING | |
| | 46 | 2 | *155-2026* | 1 | UNION AS | |
| | | 2 | **6V-8998** | 1 | UNION | |
| | | 2 | **5K-9090** | 2 | SEAL-O-RING | |
| | 47 | 2 | *164-4180* | 2 | PLUG AS | |
| | | | | | (EACH INCLUDES) | |
| | | 2 | **9S-4181** | 1 | PLUG-O-RING | |
| | | 2 | **7M-8485** | 1 | SEAL-O-RING | |
| | 48 | 2 | *164-5567* | 3 | COUPLER AS-QUICK DISCONNECT | |
| | | | | | (EACH INCLUDES) | |
| | | 2 | **6V-3965** | 1 | FITTING (QUICK DISCONNECT) | |
| | | 2 | **3J-1907** | 1 | SEAL-O-RING | |
| | 49 | 1 | *164-5574* | 1 | TEE AS | |
| | | 1 | **6V-8784** | 1 | TEE-FACE SEAL | |
| | | 1 | **3D-2824** | 1 | SEAL-O-RING | |
| | | 1 | **6V-9746** | 2 | SEAL-O-RING | |
| | 50 | 2 | *164-6862* | 1 | TEE AS | |
| | | 2 | **6V-9160** | 1 | TEE-FACE SEAL | |
| | | 2 | **6V-9746** | 3 | SEAL-O-RING | |
| | 51 | 1 | **198-4778** | 1 | WASHER-HARD (13.5X30X12-MM THK) | |
| | 52 | 2 | **1P-3703** | 2 | SEAL-RECTANGULAR | |
| | 53 | 1 | **1P-4578** | 2 | FLANGE-HALF | |
| C | 54 | 1 | **1S-0994** | 2 | CLIP | |
| | 55 | 2 | **225-1912** | 1 | VALVE GP-CHECK | |
| Y | 56 | 2 | **275-8982** | 1 | MANIFOLD GP-CONTROL (BRAKE ACCUM CHARGE, HYD FAN) | 423 |
| | 57 | 2 | **278-4526** | 1 | CYLINDER GP-HYDRAULIC (EXHAUST DIVERTER) | |
| C | 58 | 2 | **2B-0941** | 1 | SPACER (10.5X19X19-MM THK) | |

## *297-1558* **LINES GP-HYDRAULIC FAN** *(contd.)* **i02957528**

| NOTE | REF NO | GRAPHIC REF | PART NUMBER | QTY | PART NAME 1 2 3 4 5 6 (PRODUCT LEVEL) | SEE PAGE |
|---|---|---|---|---|---|---|
| | 59 | 2 | **2P-1293** | 1 | LOCKNUT (1-3/16-12-THD) | |
| | 60 | 1 | **3D-2824** | 2 | SEAL-O-RING | |
| | 61 | 2 | **3H-8538** | 1 | PIN | |
| | 62 | 1 | **3P-2404** | 1 | CLIP | |
| | 63 | 1 | **4J-0520** | 2 | SEAL-O-RING | |
| | 64 | 1 | **4J-0522** | 3 | SEAL-O-RING | |
| | 65 | 2 | **4K-8864** | 1 | CLIP | |
| | 66 | 1 | **4S-1962** | 1 | CLIP | |
| | 67 | 1 | **5K-9090** | 1 | SEAL-O-RING | |
| C | 68 | 1 | **5P-7470** | 1 | CLIP (SLOT) | |
| C | 69 | 1 | **5P-7471** | 1 | CLIP (TAB) | |
| | 70 | 2 | **5P-8026** | 1 | PIN-COTTER | |
| C | 71 | 1 | **5P-8182** | 1 | GROMMET | |
| | 72 | 1 | **6V-1889** | 2 | CLIP | |
| | 73 | 2 | **6V-8556** | 1 | NUT (1-3/16-12-THD) | |
| | 74 | 2 | **6V-9172** | 1 | NUT (1-7/16-12-THD) | |
| | 75 | 2 | **7D-7233** | 1 | CLIP | |
| | 76 | 1 | **7X-3166** | 2 | ADAPTER-SWIVEL | |
| | 77 | 1 | **7X-7729** | 8 | WASHER (11X25X3-MM THK) | |
| | 78 | 2 | **8C-3206** | 4 | FLANGE-HALF | |
| | 79 | 2 | **8S-0948** | 1 | CLIP | |
| C | 80 | 1,2 | **8T-4121** | 38 | WASHER-HARD (11X21X2.5-MM THK) | |
| M | 81 | 1,2 | **8T-4133** | 6 | NUT (M10X1.5-THD) | |
| CM | 82 | 1,2 | **8T-4136** | 12 | BOLT (M10X1.5X25-MM) | |
| CM | 83 | 1,2 | **8T-4137** | 6 | BOLT (M10X1.5X20-MM) | |
| M | 84 | 1 | **8T-4139** | 4 | BOLT (M12X1.75X30-MM) | |
| M | 85 | 2 | **8T-4177** | 2 | BOLT (M8X1.25X90-MM) | |
| M | 86 | 1,2 | **8T-4178** | 12 | BOLT (M10X1.5X90-MM) | |
| M | 87 | 2 | **8T-4185** | 1 | BOLT (M10X1.5X50-MM) | |
| CM | 88 | 2 | **8T-4186** | 1 | BOLT (M10X1.5X40-MM) | |
| M | 89 | 1 | **8T-4195** | 4 | BOLT (M10X1.5X30-MM) | |
| M | 90 | 1 | **8T-4196** | 1 | BOLT (M10X1.5X35-MM) | |
| | 91 | 1 | **8T-4223** | 4 | WASHER-HARD (13.5X25.5X3-MM THK) | |
| | 92 | 2 | **8T-4224** | 2 | WASHER-HARD (8.8X16X2-MM THK) | |
| CM | 93 | 2 | **8T-5436** | 2 | BOLT (M10X1.5X130-MM) | |
| M | 94 | 2 | **8T-6466** | 1 | BOLT (M10X1.5X60-MM) | |
| | 95 | 1 | **8X-6166** | 1 | COVER | |

C-CHANGE FROM PREVIOUS TYPE
I-REFER TO HYDRAULIC INFORMATION SYSTEM
M-METRIC PART
Y-SEPARATE ILLUSTRATION

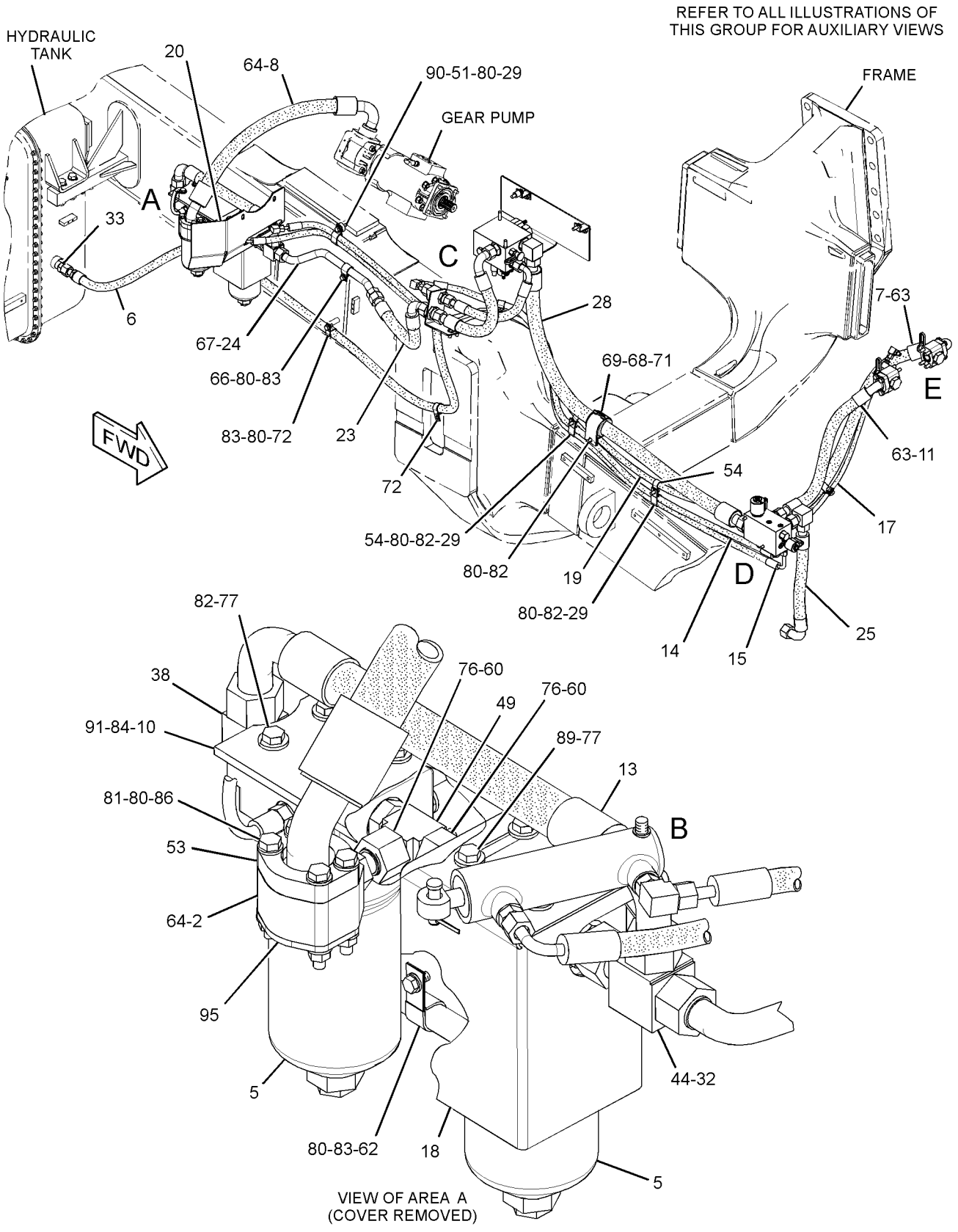


GRAPHIC #1 g01507777

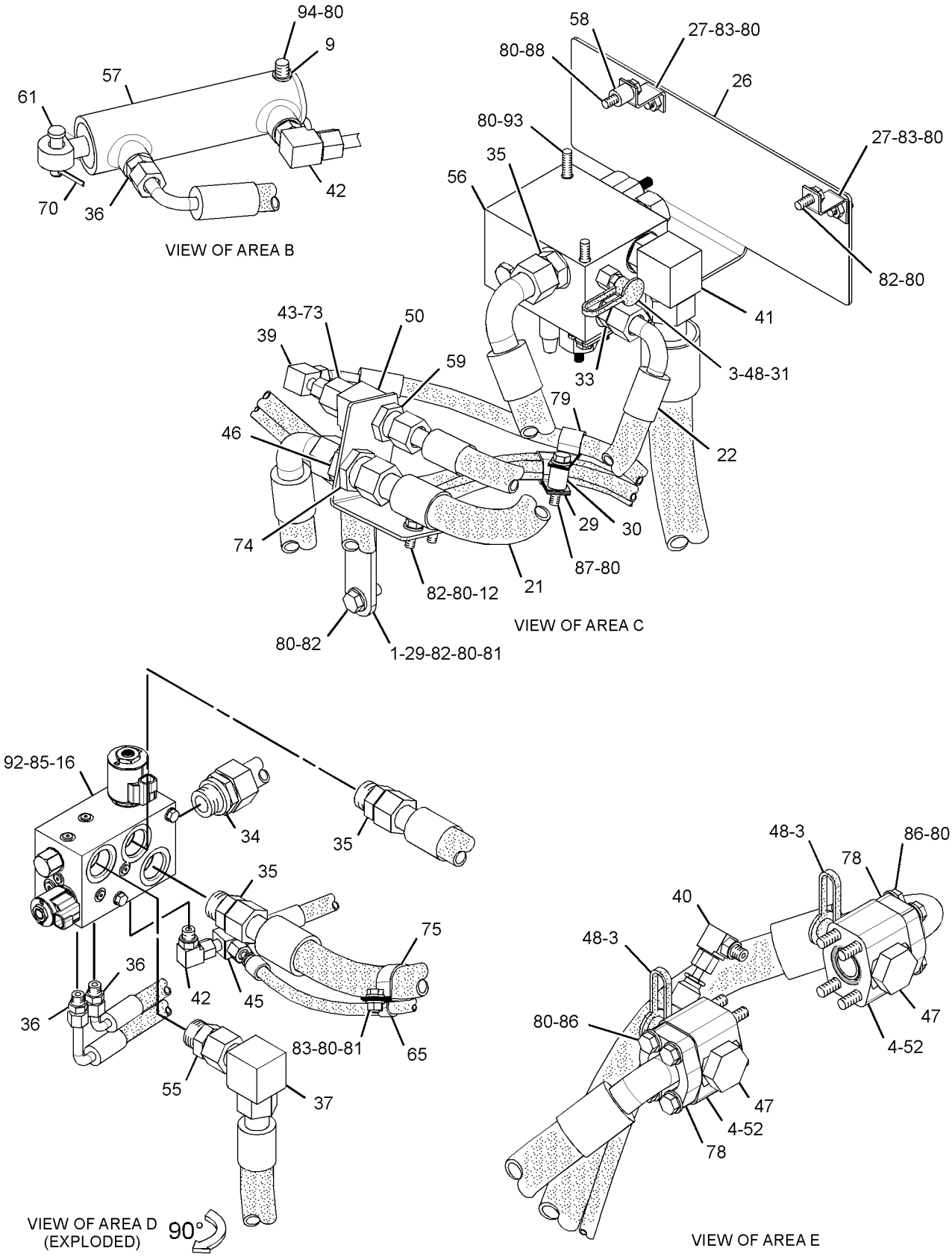


GRAPHIC #2 **<END>** g01507778

# HYDRAULIC SYSTEM

## *298-2743* LINES GP-HYDRAULIC FAN

**S/N: RLB1-UP**

**CANNOT BE USED WITH 298-2744—PAGE 640, 295-1790—PAGE 194**

**AN ATTACHMENT**

**SMCS-1386, 1387, 5057** **i02606938**

| NOTE | PART NUMBER | QTY | PART NAME 1 2 3 4 5 6 (PRODUCT LEVEL) | SEE PAGE |
|---|---|---|---|---|
| Y | *279-2244* | 1 | LINES GP-HYDRAULIC FAN | 665 |

Y-SEPARATE ILLUSTRATION

**<END>**

# HYDRAULIC SYSTEM

## *280-1619* LINES GP-HYDRAULIC OIL COOLER

**S/N: RLB1-UP**

**PART OF 270-1748 HYDRAULIC AR**

**SMCS-1374, 5057** **i03022475**

| NOTE | REF NO | GRAPHIC REF | PART NUMBER | QTY | PART NAME 1 2 3 4 5 6 (PRODUCT LEVEL) | SEE PAGE |
|---|---|---|---|---|---|---|
| E | 1 | 1 | **5P-1292** | | HOSE (17-CM EACH) | |
| | 3 | 2 | **6E-6640** | 1 | SCREEN AS (HYDRAULIC OIL) | |
| | 4 | 2 | **6G-1444** | 2 | ADAPTER | |
| | 5 | 1 | **6G-2871** | 1 | MANIFOLD | |
| | 6 | 2 | **8C-3451** | 1 | CAP-DUST | |
| | 7 | 2 | **8V-0442** | 1 | ANGLE | |
| | 8 | 1 | **8W-5566** | 1 | ADAPTER | |
| | 9 | 2 | **9L-1566** | 1 | SUPPORT | |
| | 10 | 2 | *148-8425* | 1 | TEE AS | |
| | | 2 | **8T-4834** | 1 | TEE-SWIVEL ORIFICE | |
| | | 2 | **5K-9090** | 1 | SEAL-O-RING | |
| | 11 | 1 | **153-2446** | 1 | BRACKET | |
| | 12 | 2 | *155-3624* | 1 | PLUG AS | |
| | | 2 | **9S-4182** | 1 | PLUG-O-RING | |
| | | 2 | **3J-7354** | 1 | SEAL-O-RING | |
| | 13 | 1 | *164-5567* | 1 | COUPLER AS-QUICK DISCONNECT | |
| | | 1 | **6V-3965** | 1 | FITTING (QUICK DISCONNECT) | |
| | | 1 | **3J-1907** | 1 | SEAL-O-RING | |
| | 14 | 2 | *174-1530* | 1 | PLUG AS | |
| | | 2 | **1N-5998** | 1 | PLUG | |
| | | 2 | **6K-6307** | 1 | SEAL-O-RING | |
| | 15 | 1 | **236-7272** | 1 | ADAPTER | |
| I | 16 | 2 | **275-9243** | 1 | HOSE AS | |
| I | 17 | 1 | **275-9244** | 1 | HOSE AS | |
| I | 18 | 1 | **275-9245** | 1 | HOSE AS | |
| I | 19 | 2 | **275-9246** | 1 | HOSE AS | |
| | 21 | 1 | **279-6535** | 1 | TUBE AS | |
| | 22 | 1 | **296-0578** | 1 | TUBE AS | |
| | 23 | 1 | **296-0579** | 1 | TUBE AS | |
| | 24 | 1 | **296-0580** | 1 | TUBE AS | |
| | 25 | 1 | **296-0581** | 1 | TUBE AS | |
| | 26 | 2 | **307-8796** | 1 | TUBE AS | |
| | 27 | 2 | **104-7657** | 1 | ELBOW | |
| | 28 | 2 | *148-8305* | 1 | ADAPTER AS | |
| | | 2 | **5P-9617** | 1 | ADAPTER | |
| | | 2 | **3J-1907** | 1 | SEAL-O-RING | |
| | 29 | 2 | *148-8335* | 1 | CONNECTOR AS | |
| | | 2 | **6V-8635** | 1 | CONNECTOR | |
| | | 2 | **5K-9090** | 1 | SEAL-O-RING | |
| | | 2 | **7M-8485** | 1 | SEAL-O-RING | |
| | 30 | 1 | *148-8411* | 1 | PLUG AS | |
| | | 1 | **9S-4185** | 1 | PLUG-O-RING | |
| | | 1 | **3K-0360** | 1 | SEAL-O-RING | |
| | 31 | 2 | *164-5590* | 1 | VALVE AS-FLUID SAMPLING (HYDRAULIC OIL) | |
| | | 2 | **8C-3446** | 1 | VALVE-FLUID SAMPLING | |
| | | 2 | **3J-7354** | 1 | SEAL-O-RING | |
| | 32 | 1 | **308-2041** | 1 | TUBE AS | |
| | 33 | 1 | **308-2042** | 1 | TUBE AS | |
| | 34 | 1 | **308-2043** | 1 | TUBE AS | |
| | 35 | 1 | **308-2044** | 1 | TUBE AS | |
| | 36 | 1,2 | **1P-3707** | 8 | SEAL-RECTANGULAR | |
| | 37 | 1 | **1P-4579** | 8 | FLANGE-HALF | |
| | 38 | 1,2 | **1P-4582** | 16 | FLANGE-HALF | |
| | 39 | 1 | **4J-0524** | 4 | SEAL-O-RING | |
| | 40 | 1,2 | **4J-0527** | 9 | SEAL-O-RING | |
| | 41 | 1 | **4L-6454** | 1 | BOLT (3/8-16X1-IN) | |

## *280-1619* LINES GP-HYDRAULIC OIL COOLER *(contd.)* i03022475

| NOTE | REF NO | GRAPHIC REF | PART NUMBER | QTY | PART NAME 1 2 3 4 5 6 (PRODUCT LEVEL) | SEE PAGE |
|---|---|---|---|---|---|---|
| | 42 | 1 | **4L-9337** | 2 | BOLT (3/8-16X1.5-IN) | |
| | 43 | 1 | **5P-1075** | 3 | WASHER-HARD (10.2X22.5X3-MM THK) | |
| | 44 | 2 | **5P-2566** | 4 | BOLT (1/2-13X1.5-IN) | |
| | 45 | 1,2 | **5P-7468** | 5 | CLIP (SLOT) | |
| | 46 | 1,2 | **5P-7469** | 5 | CLIP (TAB) | |
| | 47 | 2 | **5P-7470** | 1 | CLIP (SLOT) | |
| | 48 | 2 | **5P-7471** | 1 | CLIP (TAB) | |
| | 49 | 2 | **6F-8146** | 1 | SEAL-O-RING | |
| | 50 | 1 | **6V-0852** | 1 | CAP-DUST | |
| | 51 | 2 | **6V-1867** | 1 | CLIP (SLOT) | |
| | 52 | 2 | **6V-1868** | 1 | CLIP (TAB) | |
| | 53 | 2 | **6V-1869** | 1 | GROMMET | |
| | 54 | 2 | **6V-2235** | 1 | CLIP | |
| | 55 | 2 | **6V-4432** | 4 | BOLT (1/2-13X4-IN) | |
| | 56 | 1,2 | **7X-0328** | 8 | BOLT (1/2-13X3.5-IN) | |
| | 57 | 1 | **7X-0331** | 4 | BOLT (1/2-13X4.25-IN) | |
| | 58 | 1 | **8T-2501** | 6 | BOLT (3/8-16X2-IN) | |
| | 59 | 1 | **8T-2885** | 1 | SEAL-RECTANGULAR | |
| | 60 | 1,2 | **8T-4121** | 11 | WASHER-HARD (11X21X2.5-MM THK) | |
| M | 61 | 1,2 | **8T-4133** | 3 | NUT (M10X1.5-THD) | |
| M | 62 | 1,2 | **8T-4136** | 2 | BOLT (M10X1.5X25-MM) | |
| M | 63 | 1,2 | **8T-4137** | 2 | BOLT (M10X1.5X20-MM) | |
| M | 64 | 1 | **8T-4139** | 1 | BOLT (M12X1.75X30-MM) | |
| M | 65 | 1 | **8T-4183** | 16 | BOLT (M12X1.75X40-MM) | |
| M | 66 | 1,2 | **8T-4194** | 8 | BOLT (M12X1.75X50-MM) | |
| M | 67 | 1,2 | **8T-4195** | 4 | BOLT (M10X1.5X30-MM) | |
| | 68 | 1,2 | **8T-4223** | 61 | WASHER-HARD (13.5X25.5X3-MM THK) | |
| | 69 | 2 | **8T-4835** | 4 | BOLT (1/2-13X2-IN) | |
| | 70 | 1 | **8T-4896** | 8 | WASHER-HARD (10.2X18.5X2.5-MM THK) | |
| | 72 | 1 | **8T-8915** | 2 | BOLT (3/8-16X3.25-IN) | |
| | 73 | 1 | **8T-8919** | 8 | BOLT (1/2-13X1.75-IN) | |
| | 74 | 2 | **8T-9391** | 4 | BOLT (1/2-13X3.75-IN) | |
| | 75 | 1 | **309-4068** | 1 | TUBE AS | |
| | 76 | 1 | **8T-6703** | 8 | CLAMP-HOSE | |

E-ORDER BY THE CENTIMETER
I-REFER TO HYDRAULIC INFORMATION SYSTEM
M-METRIC PART

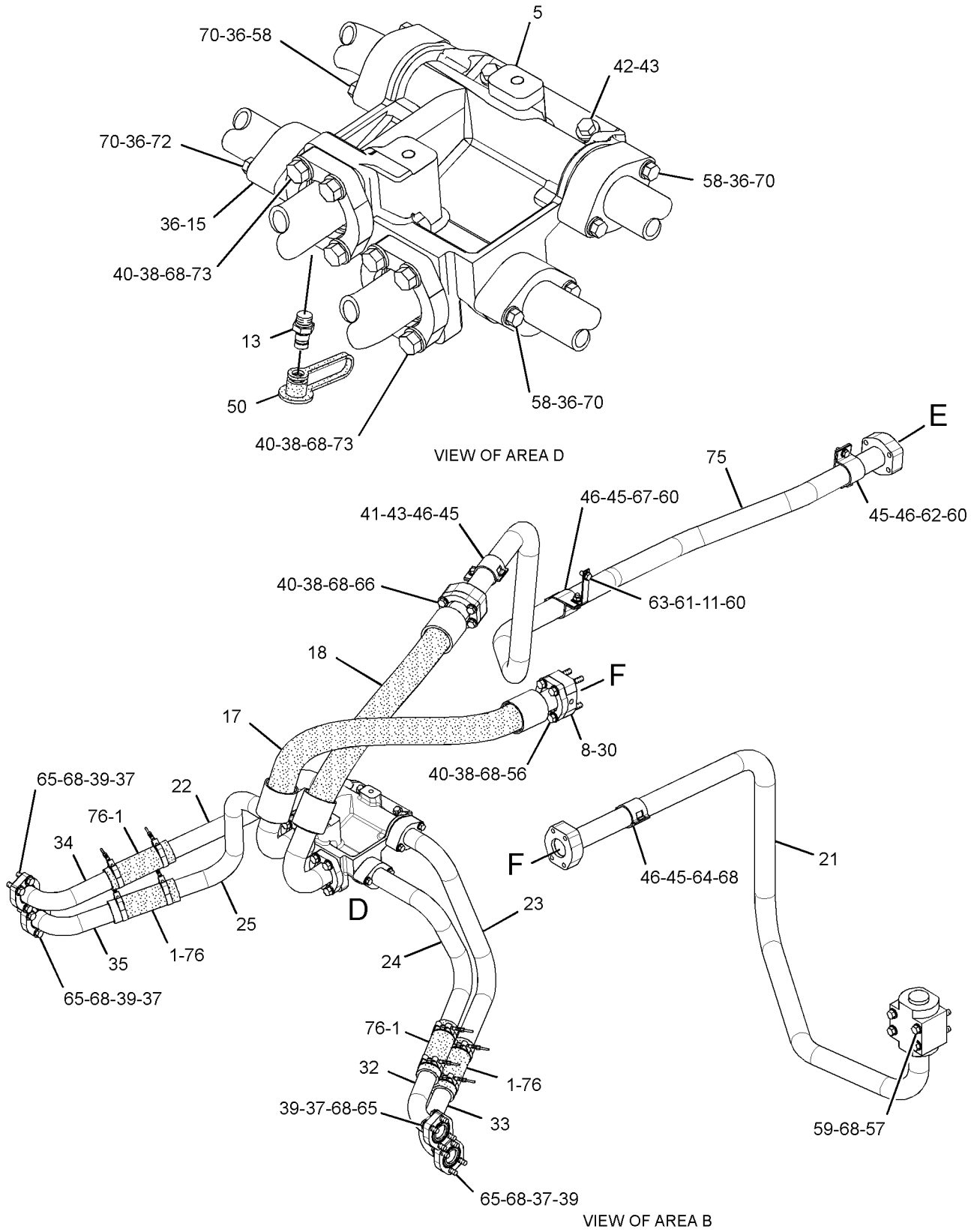


GRAPHIC #1

g01412080

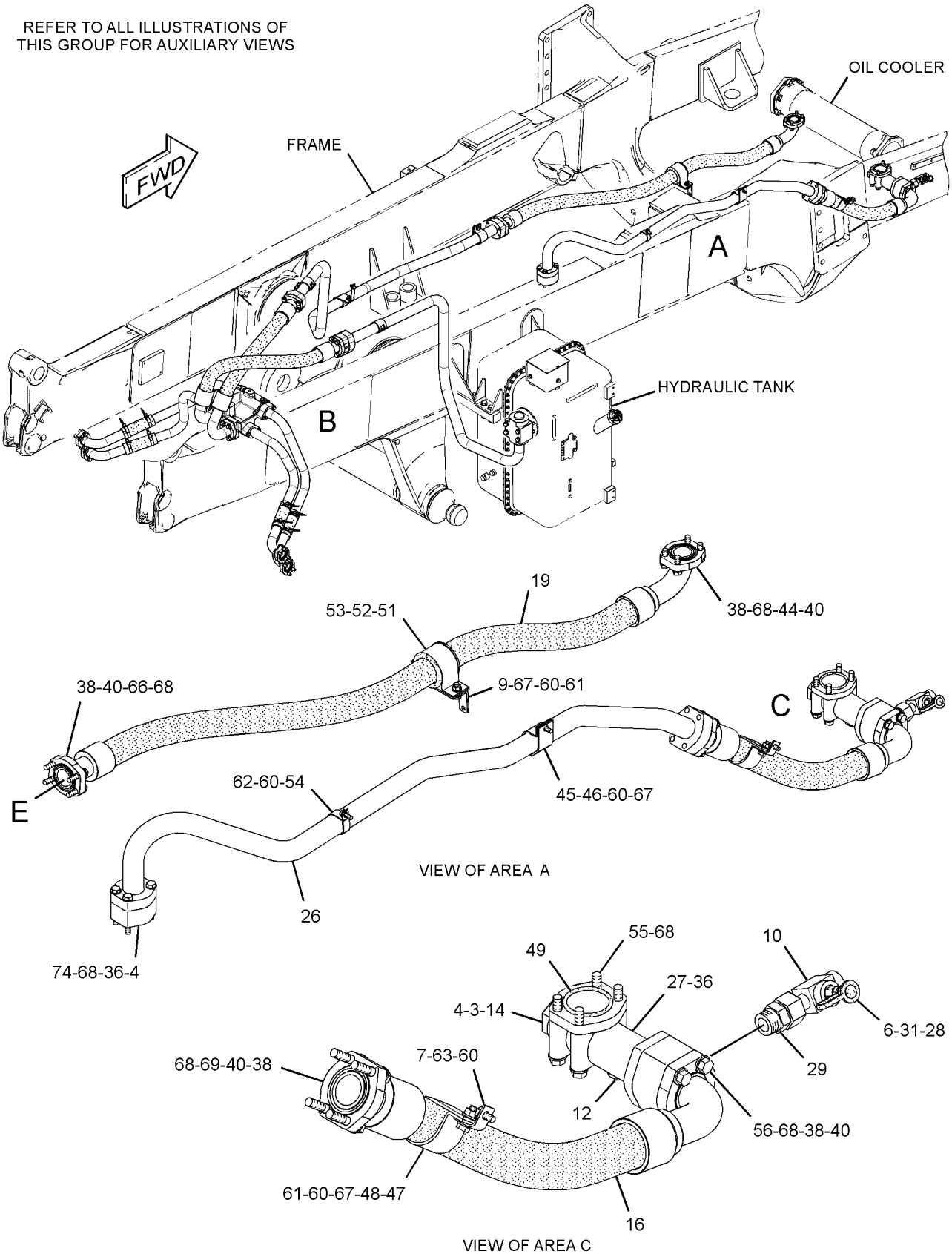


GRAPHIC #2 **<END>** g01529064

# 273-3803 MOTOR GP-GEAR–HYDRAULIC FAN

**S/N: RLB1-UP**

**PART OF 276-8911 MOTOR GP-GEAR**

**SMCS-1386, 5061** **i02702925**

| NOTE | REF NO | GRAPHIC REF | PART NUMBER | QTY | PART NAME 1 2 3 4 5 6 (PRODUCT LEVEL) | SEE PAGE |
|---|---|---|---|---|---|---|
| | 1 | 1 | **285-6325** | 4 | STUD (M14X2X65-MM) | |
| M | 2 | 1 | **6V-8673** | 4 | LOCKNUT (M14X2-THD) | |
| | 3 | 1 | **271-2360** | 4 | WASHER-HARD (15X22X2.5-MM THK) | |
| | 4 | 1 | **285-5776** | 2 | PLATE-PRESSURE | |
| | 5 | 1 | **9S-8002** | 1 | PLUG-O-RING | |
| | 6 | 1 | **3J-7354** | 1 | SEAL-O-RING | |
| | | | | | AVAILABLE REPAIR KIT(S): | |
| | | | **283-2530** | 1 | KIT-SEAL (HYDRAULIC FAN MOTOR) | |
| | | | | | (INCLUDES SEAL-LIP TYPE, SEAL-O-RINGS, SEAL-MIDDLES, SEAL-BACKUPS, & SEAL-ENDS) | |

M-METRIC PART

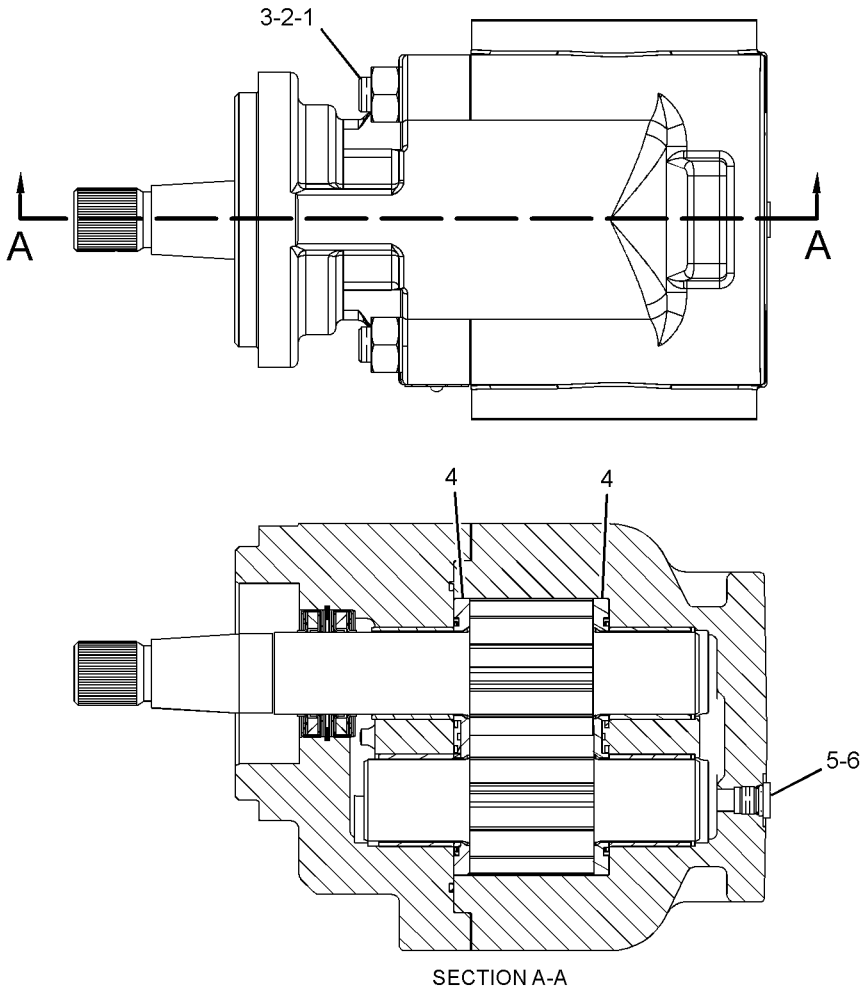


SECTION A-A

GRAPHIC #1 **<END>** g01318399

## *276-8911* MOTOR GP-GEAR–HYDRAULIC FAN

**S/N: RLB1-UP**

**PART OF 276-8860 COOLING AR**

**SMCS-1386, 5061** **i02613143**

| NOTE | REF NO | GRAPHIC REF | PART NUMBER | QTY | PART NAME 1 2 3 4 5 6 (PRODUCT LEVEL) | SEE PAGE |
|---|---|---|---|---|---|---|
| | 1 | 1 | **1B-4209** | 1 | NUT-FULL (1-14-THD) | |
| Y | 2 | 1 | **273-3803** | 1 | MOTOR GP-GEAR (HYDRAULIC FAN) | 689 |
| M | 3 | 1 | **8T-4183** | 4 | BOLT (M12X1.75X40-MM) | |
| | 4 | 1 | **8T-4223** | 4 | WASHER-HARD (13.5X25.5X3-MM THK) | |
| | 5 | 1 | **8T-5361** | 1 | WASHER-HARD (28X49X5-MM THK) | |

M-METRIC PART
Y-SEPARATE ILLUSTRATION

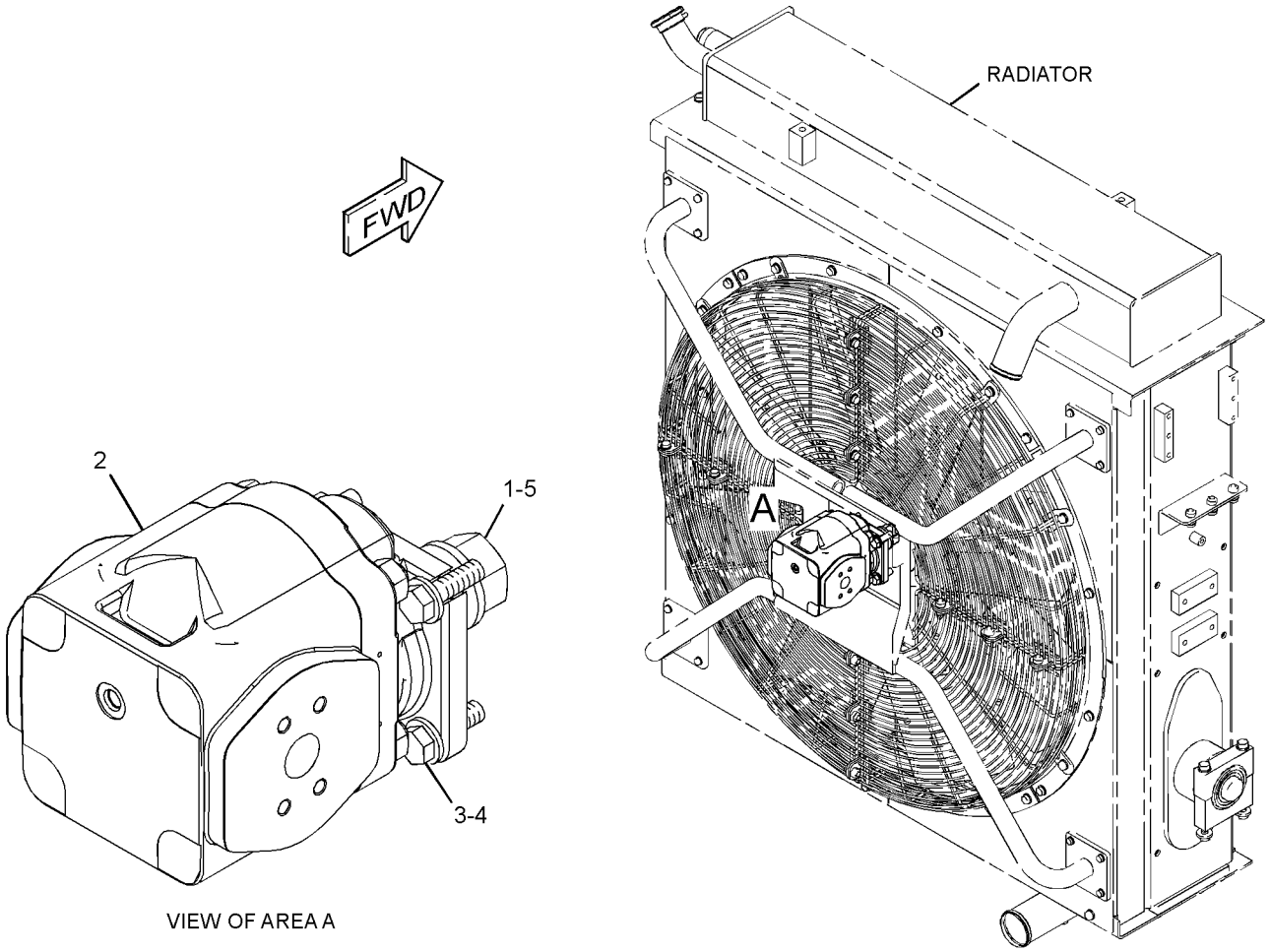


GRAPHIC #1 **<END>** g01318354

# *227-5525* PUMP & MOTOR GP-HYDRAULIC–
## SECONDARY STEERING, BRAKE RELEASE, HIGH SPEED OIL CHANGE
### S/N: RLB1-UP
### PART OF 270-4251, 308-5828 PUMP & LINES GP

**SMCS-5073, 5927** **i02875366**

| NOTE | REF NO | GRAPHIC REF | PART NUMBER | QTY | PART NAME 1 2 3 4 5 6 (PRODUCT LEVEL) | SEE PAGE |
|---|---|---|---|---|---|---|
| | 1 | 1 | **228-2651** | 2 | BRACKET | |
| | 2 | 1 | **228-2652** | 2 | BRACKET | |
| Y | 3 | 1 | **230-2637** | 1 | PUMP & MOTOR GP-HYDRAULIC (ELECTRIC DRIVE) | 692 |

Y-SEPARATE ILLUSTRATION

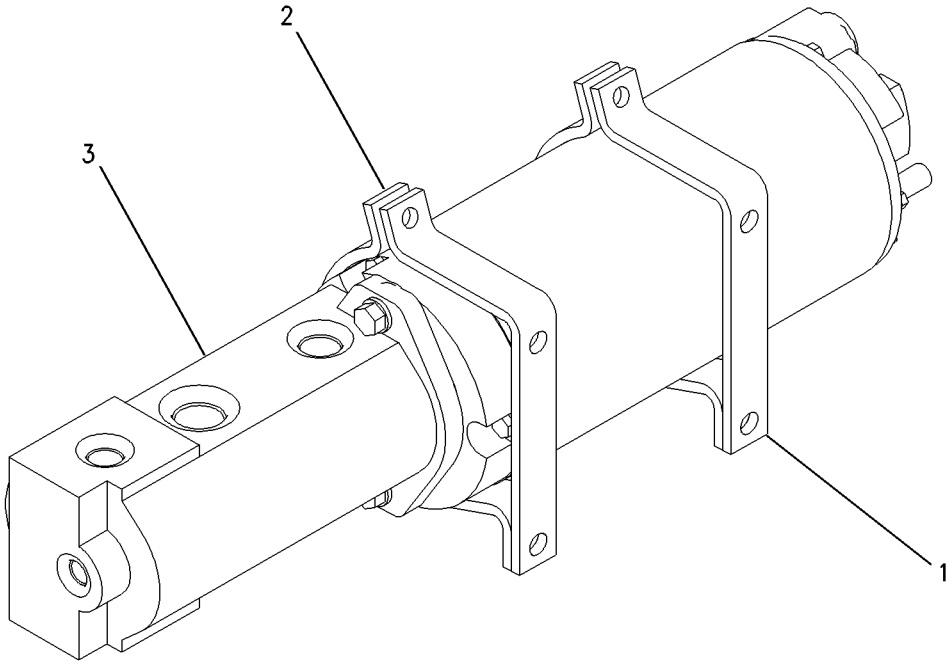


GRAPHIC #1 **<END>** g01003819

# 230-2637 PUMP & MOTOR GP-HYDRAULIC–

**SECONDARY STEERING, BRAKE RELEASE, HIGH SPEED OIL CHANGE**

**S/N: RLB1-UP**

**PART OF 227-5525 PUMP & MOTOR GP-HYDRAULIC**

**SMCS-5073, 5927** **i03293325**

| NOTE | REF NO | GRAPHIC REF | PART NUMBER | QTY | PART NAME 1 2 3 4 5 6 (PRODUCT LEVEL) | SEE PAGE |
|---|---|---|---|---|---|---|
| Y | 1 | 1 | **177-0274** | 1 | PUMP GP-GEAR (SEC STEERING, BRAKE RELEASE) | 693 |
| Y | 2 | 1 | **230-2638** | 1 | PUMP GP-GEAR (ELECTRIC DRIVE) | 695 |
| | 3 | 1 | **0S-1597** | 3 | BOLT (1/4-28X1-IN) | |
| | 4 | 1 | **117-5268** | 1 | GASKET | |
| | 5 | 1 | **8T-4896** | 2 | WASHER-HARD (10.2X18.5X2.5-MM THK) | |
| | 6 | 1 | **8T-8889** | 2 | BOLT (3/8-24X1.25-IN) | |

Y-SEPARATE ILLUSTRATION

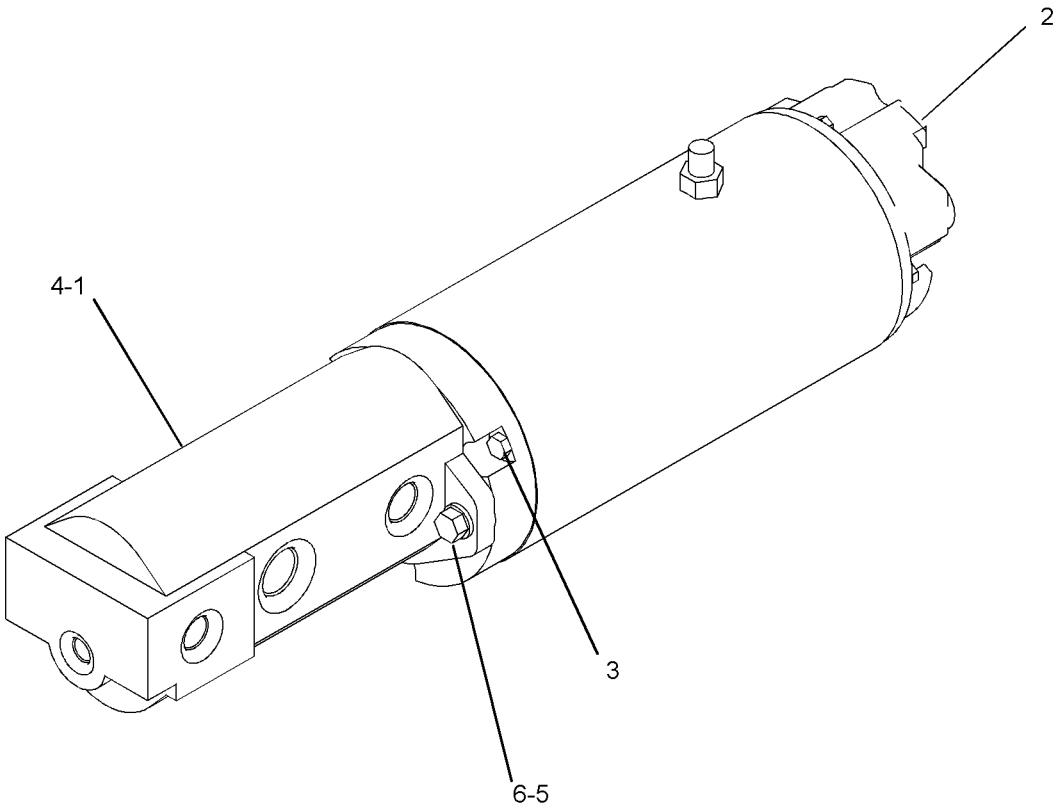


GRAPHIC #1 **<END>** g01434976

## *177-0274* PUMP GP-GEAR–SECONDARY STEERING, BRAKE RELEASE

**S/N: RLB1-318**

**PART OF 230-2637 PUMP & MOTOR GP-HYDRAULIC**

**SMCS-5073** **i02882249**

| NOTE | REF NO | GRAPHIC REF | PART NUMBER | QTY | PART NAME 1 2 3 4 5 6 (PRODUCT LEVEL) | SEE PAGE |
|---|---|---|---|---|---|---|
| | 1 | 1 | **8J-6273** | 1 | RING-RETAINING | |
| J | 2 | 1 | **135-5935** | 1 | SEAL-SHAFT | |
| | 3 | 1 | **145-6899** | 1 | FLANGE | |
| | 4 | 1 | **099-3095** | 8 | DOWEL | |
| | 5 | 1 | **154-3028** | 1 | COUPLING | |
| | 6 | 1 | **154-3029** | 1 | PLATE | |
| J | 7 | 1 | **197-9201** | 1 | KIT-SEAL (GEAR PUMP) | |
| | | | | | (INCLUDES RINGS & SEALS) | |
| | 8 | 1 | **145-6902** | 1 | VALVE GP-PUMP CONTROL (PRESSURE COMPENSATION) | |
| | 8A | 1 | **2M-9780** | 2 | SEAL-O-RING | |
| | 8B | 1 | **3J-7354** | 2 | SEAL-O-RING | |
| | 8C | 1 | **3J-1907** | 1 | SEAL-O-RING | |
| M | 9 | 1 | **6E-5293** | 4 | BOLT (M10X1.5X210-MM) | |
| J | 10 | 1 | **154-3031** | 2 | SEAL | |

J-KIT MARKED J INCLUDES PARTS MARKED J
M-METRIC PART

*177-0274* **PUMP GP-GEAR** *(contd.)* **i02882249**

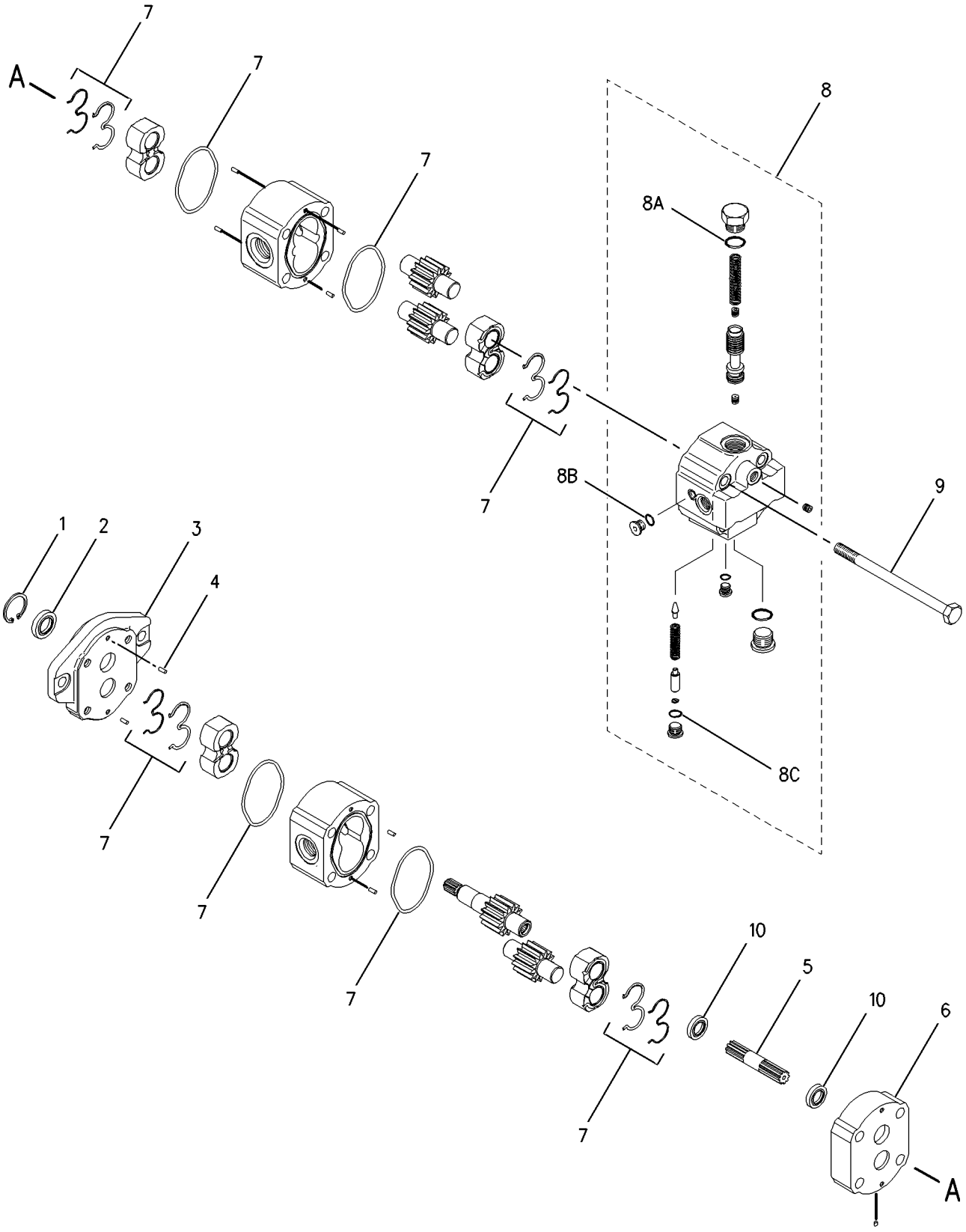


GRAPHIC #1 **<END>** g00756678

## *230-2638* PUMP GP-GEAR—HIGH SPEED OIL CHANGE, PRELUBE

**S/N: RLB1-318**

**PART OF 230-2637 PUMP & MOTOR GP-HYDRAULIC**

**SMCS-5073** **i01930629**

| NOTE | PART NUMBER | QTY | PART NAME 1 2 3 4 5 6 (PRODUCT LEVEL) | SEE PAGE |
|---|---|---|---|---|
| | | | SERVICEABLE PARTS IDENTIFICATION FOR THIS GROUP WAS NOT AVAILABLE AT TIME OF THIS PUBLICATION. | |
| | | | REFER TO THE SERVICE INFORMATION SYSTEM (SIS) FOR THE LATEST AVAILABLE PARTS INFORMATION. | |
| | | | **<END>** | |

# HYDRAULIC SYSTEM

## *270-8672* PUMP GP-GEAR–HOIST, BRAKE

**S/N: RLB1-UP**

**PART OF 270-1748 HYDRAULIC AR**

**SMCS-5073** **i02618766**

| NOTE | REF NO | GRAPHIC REF | PART NUMBER | QTY | PART NAME 1 2 3 4 5 6 (PRODUCT LEVEL) | SEE PAGE |
|---|---|---|---|---|---|---|
| Y | 1 | 1 | **281-0106** | 1 | PUMP GP-GEAR (HOIST, BRAKE) | 697 |
| | 2 | 1 | **1P-4578** | 2 | FLANGE-HALF | |
| | 3 | 1 | **6V-8260** | 1 | SEAL-O-RING | |
| | 4 | 1 | **8C-4436** | 4 | BOLT (1/2-13X1.375-IN) | |
| | 5 | 1 | **8T-4121** | 4 | WASHER-HARD (11X21X2.5-MM THK) | |
| M | 6 | 1 | **8T-4186** | 4 | BOLT (M10X1.5X40-MM) | |
| | 7 | 1 | **8T-4223** | 4 | WASHER-HARD (13.5X25.5X3-MM THK) | |

M-METRIC PART
Y-SEPARATE ILLUSTRATION

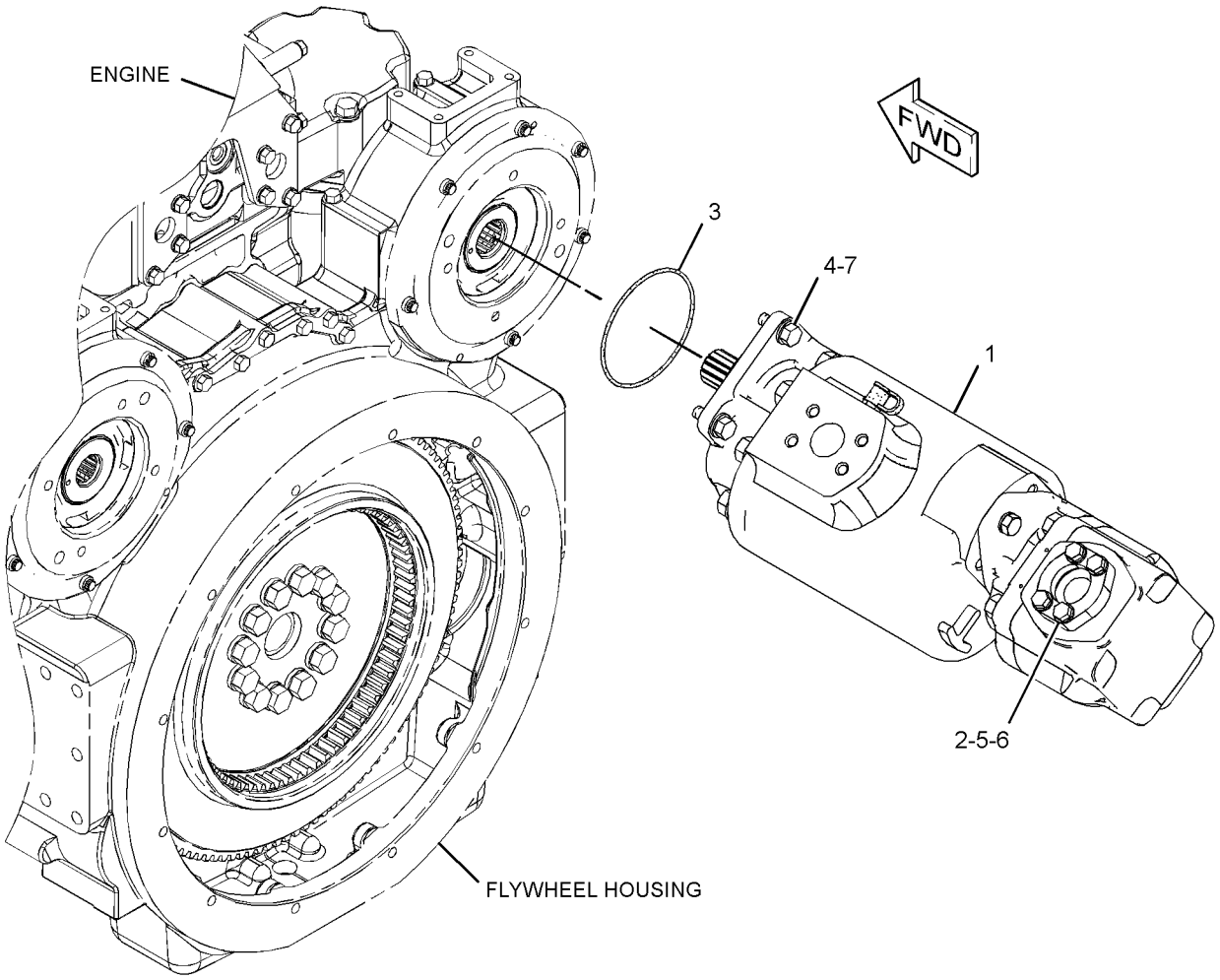


GRAPHIC #1 **<END>** g01333760

# 281-0106 PUMP GP-GEAR–BRAKE, HOIST

**S/N: RLB1-UP**

**PART OF 270-8672 PUMP GP-GEAR**

**SMCS-5073** **i02718937**

| NOTE | REF NO | GRAPHIC REF | PART NUMBER | QTY | PART NAME 1 2 3 4 5 6 (PRODUCT LEVEL) | SEE PAGE |
|---|---|---|---|---|---|---|
| | 1 | 1 | **224-4507** | 1 | PLATE-PRESSURE (TOP) | |
| | 2 | 1 | **224-4508** | 1 | PLATE-PRESSURE (BOTTOM) | |
| | 3 | 1 | **8C-4405** | 1 | RING-RETAINING | |
| | 4 | 1 | **3K-0715** | 1 | SEAL-O-RING | |
| | 5 | 1 | **6V-0852** | 1 | CAP-DUST | |
| | 6 | 1 | **6V-3965** | 1 | FITTING (QUICK DISCONNECT) | |
| | 7 | 1 | **267-8946** | 4 | DOWEL | |
| | 8 | 1 | **285-5799** | 1 | COUPLING | |
| | 9 | 1 | **6B-6683** | 8 | NUT (5/8-18-THD) | |
| M | 10 | 1 | **256-2439** | 8 | STUD (5/8-11, 5/8-18X10.53-MM) | |
| | 11 | 1 | **3H-5826** | 2 | BOLT (1/2-13X1.5-IN) | |
| Y | 12 | 1 | **285-5800** | 1 | PUMP GP-GEAR (FRONT SECTION) (BRAKE, HOIST) | 699 |
| J | 13 | 1 | **285-5745** | 1 | PUMP GP-GEAR (BRAKE, HOIST) | |
| M | | 1 | **6V-8673** | 4 | LOCKNUT (M14X2-THD) | |
| | | 1 | **271-2360** | 4 | WASHER-HARD (15X22X2.5-MM THK) | |
| | | 1 | **285-6325** | 4 | STUD (M14X2X65-MM) | |
| | | 1 | **285-6381** | 2 | PLATE-PRESSURE | |
| | 14 | 1 | **8D-5054** | 8 | WASHER-HARD (17X30X3-MM THK) | |
| | 15 | 1 | **150-5310** | 2 | WASHER (13.5X25.4X3-MM THK) | |
| | 16 | 1 | **3J-1907** | 1 | SEAL-O-RING | |
| | | | | | AVAILABLE REPAIR KIT(S): | |
| J | | | **285-5811** | 1 | KIT-SEAL (GEAR PUMP) | |
| | | | | | (INCLUDES PRESSURE SEALS, SHAFT SEAL, SEAL BACK-UPS, & O-RING SEAL) | |

J-KIT MARKED J SERVICES PART(S) MARKED J
M-METRIC PART
Y-SEPARATE ILLUSTRATION

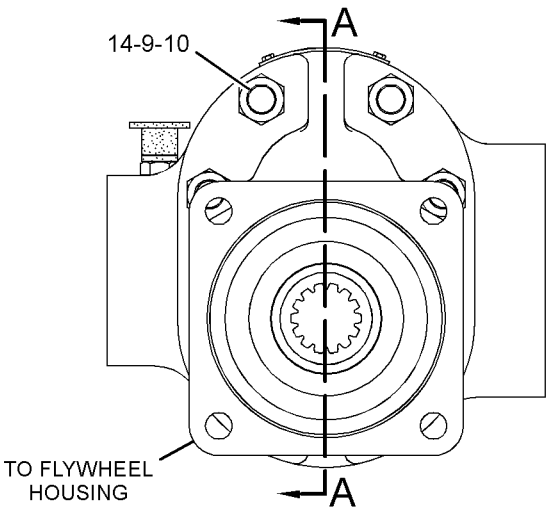


FRONT VIEW

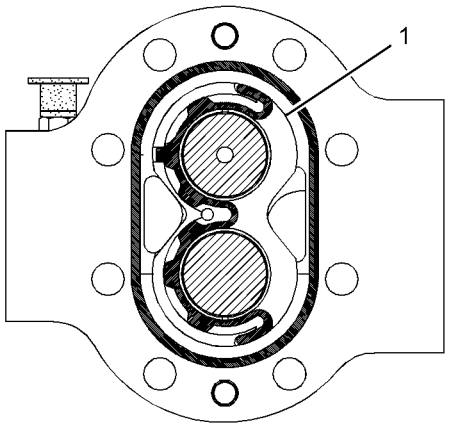


SECTION B-B

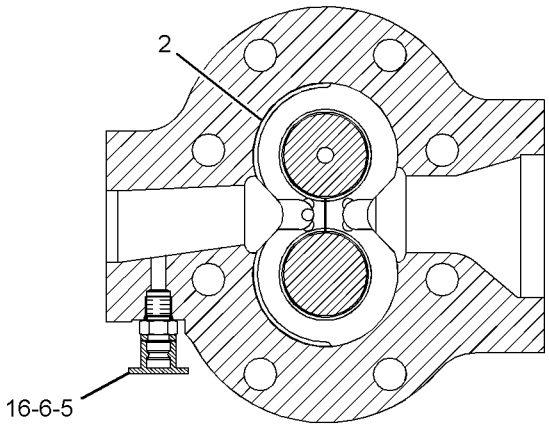


SECTION C-C

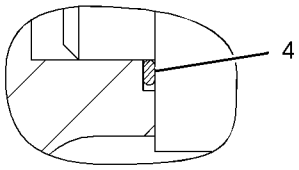


VIEW OF AREA D

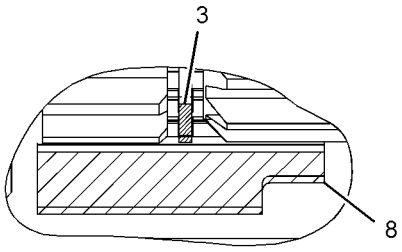


VIEW OF AREA E

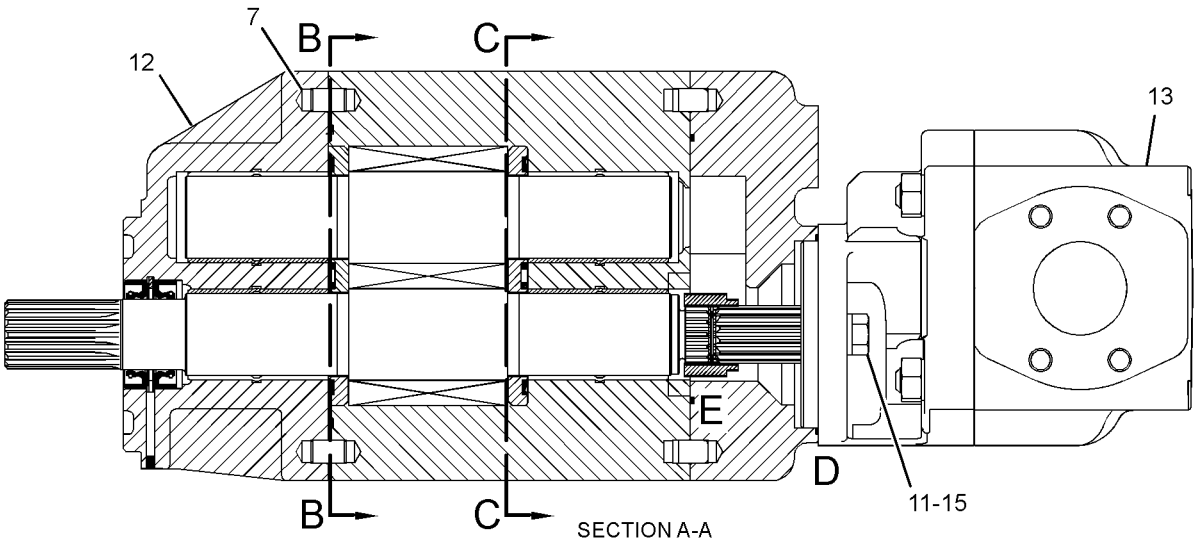


SECTION A-A

GRAPHIC #1

**<END>**

g01336263

# 285-5800 PUMP GP-GEAR–BRAKE, HOIST

**S/N: RLB1-UP**

**PART OF 281-0106 PUMP GP-GEAR**

**SMCS-5073** **i02631381**

| NOTE | REF NO | GRAPHIC REF | PART NUMBER | QTY | PART NAME 1 2 3 4 5 6 (PRODUCT LEVEL) | SEE PAGE |
|---|---|---|---|---|---|---|
| | 1 | 1 | **224-4507** | 1 | PLATE-PRESSURE (TOP) | |
| | 2 | 1 | **224-4508** | 1 | PLATE-PRESSURE (BOTTOM) | |
| | 3 | 1 | **8C-4405** | 1 | RING-RETAINING | |
| J | 4 | 1 | **3K-0715** | 1 | SEAL-O-RING | |
| J | 5 | 1 | **6V-0852** | 1 | CAP-DUST | |
| | 6 | 1 | **6V-3965** | 1 | FITTING (QUICK DISCONNECT) | |
| | 7 | 1 | **3J-1907** | 1 | SEAL-O-RING | |
| | 8 | 1 | **267-8946** | 4 | DOWEL | |
| | 9 | 1 | **285-5799** | 1 | COUPLING | |
| | | | | | AVAILABLE REPAIR KIT(S): | |
| J | | | **285-5810** | 1 | KIT-SEAL (GEAR PUMP) | |
| | | | | | (INCLUDES SEALS, RINGS, BREATHER PLUG, & DUST CAP) | |

J-KIT MARKED J SERVICES PART(S) MARKED J

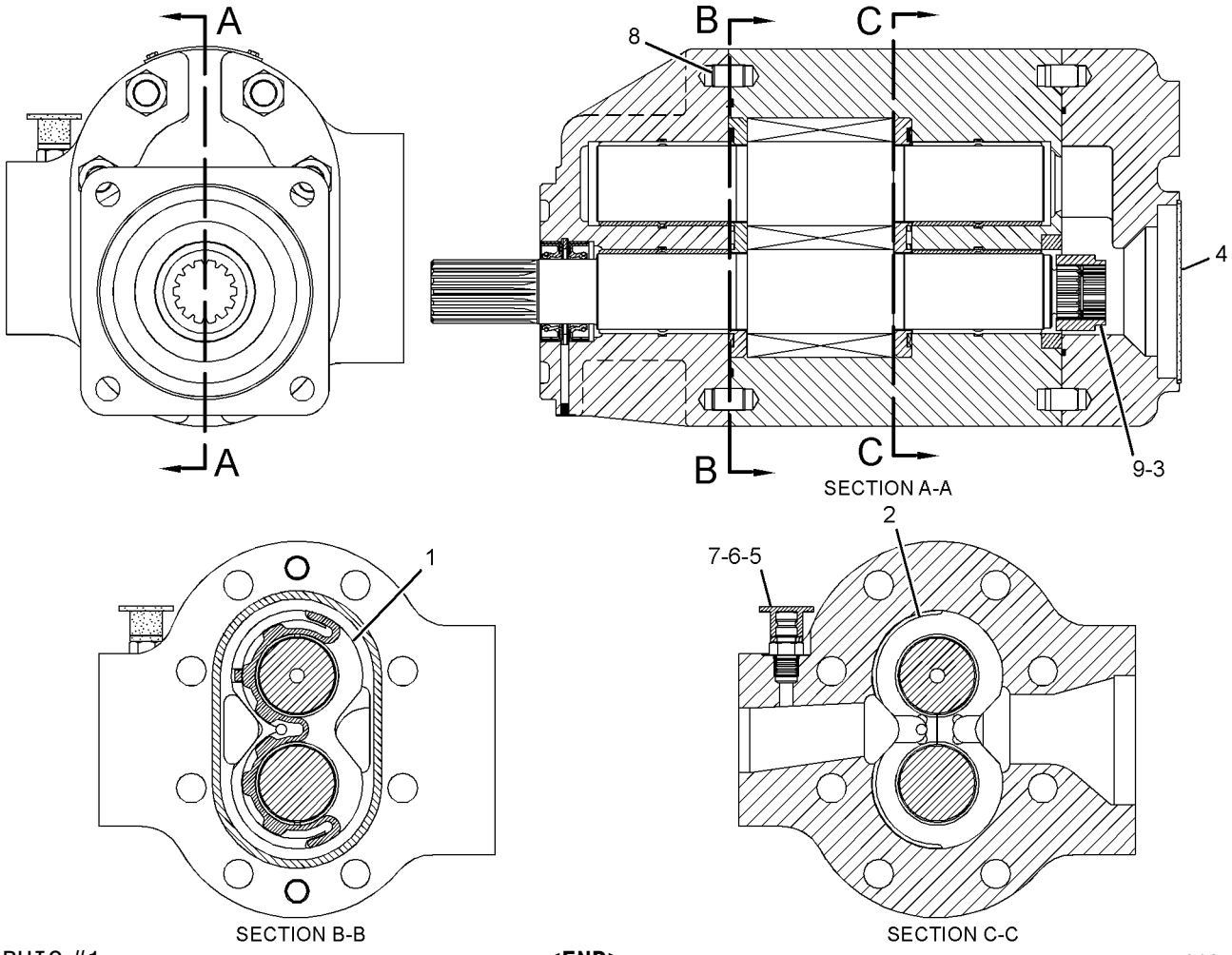


GRAPHIC #1 **<END>** g01347834

## *219-1964* PUMP GP-PISTON—STEERING*R

**S/N: RLB1-UP**

**PART OF 219-4770 PUMP GP-PISTON**

**SMCS-5070** **i03294857**

| NOTE | REF NO | GRAPHIC REF | PART NUMBER | QTY | PART NAME 1 2 3 4 5 6 (PRODUCT LEVEL) | SEE PAGE |
|---|---|---|---|---|---|---|
| | 1 | 2 | **180-6213** | 1 | RING-RETAINING | |
| | 2 | 2 | **6E-4003** | 2 | BEARING | |
| | 3 | 2 | **135-6614** | 1 | HOUSING-PUMP | |
| Y | 4 | 2 | **192-9218** | 1 | ROTATING GP-PUMP (STEERING) | 704 |
| | 5 | 2 | **3E-6769** | 4 | SEAL-O-RING | |
| M | 6 | 2 | **095-9805** | 4 | BOLT-SOCKET HEAD (M14X2X40-MM) | |
| | 7 | 2 | **1P-6872** | 1 | CUP-BEARING | |
| | 8 | 2 | **109-1779** | 1 | CONE-BEARING | |
| | 9 | 2 | **6E-4000** | 1 | SPACER (25.5X35X3-MM THK) | |
| | 10 | 2 | **3E-6770** | 1 | SEAL-O-RING | |
| | 11 | 2 | **6E-3264** | 1 | CYLINDER | |
| | 12 | 2 | **6E-3265** | 1 | SPRING | |
| | 13 | 2 | **6E-3263** | 1 | PISTON | |
| | 14 | 2 | **9S-8006** | 1 | PLUG-O-RING (STEERING PUMP CASE DRAIN) | |
| | 15 | 2 | **2M-9780** | 1 | SEAL-O-RING | |
| | 16 | 2 | **162-1604** | 1 | SHAFT-DRIVE | |
| | 17 | 2 | **292-5254** | 1 | CONE-TAPERED | |
| | 18 | 2 | **3B-5790** | 1 | CUP-BEARING | |
| | 19 | 2 | **168-7319** | 2 | SEAL-SHAFT | |
| | 20 | 2 | **121-3042** | 1 | SWASHPLATE AS | |
| | 21 | 2 | **120-5727** | 1 | PISTON-CONTROL | |
| | 22 | 2 | **120-5729** | 1 | GUIDE-PISTON | |
| | 23 | 2 | **136-8423** | 1 | PLUG-BREAK OFF | |
| | 24 | 2 | **9X-8979** | 2 | DOWEL | |
| Y | 25 | 1 | **196-0228** | 1 | VALVE GP-PUMP CONTROL (PRESSURE, FLOW COMPENSATOR) | 715 |
| M | 26 | 1 | **8T-8442** | 4 | BOLT-SOCKET HEAD (M6X1X30-MM) | |
| | 27 | 1 | **9X-7680** | 3 | SEAL-O-RING | |
| | 28 | 1 | **9S-8002** | 1 | PLUG-O-RING | |
| | 29 | 1 | **3J-7354** | 1 | SEAL-O-RING | |
| | 30 | 2 | **173-0641** | 1 | PLUG-FILTER | |

M-METRIC PART
Y-SEPARATE ILLUSTRATION

*219-1964* **PUMP GP-PISTON** *(contd.)* **i03294857**

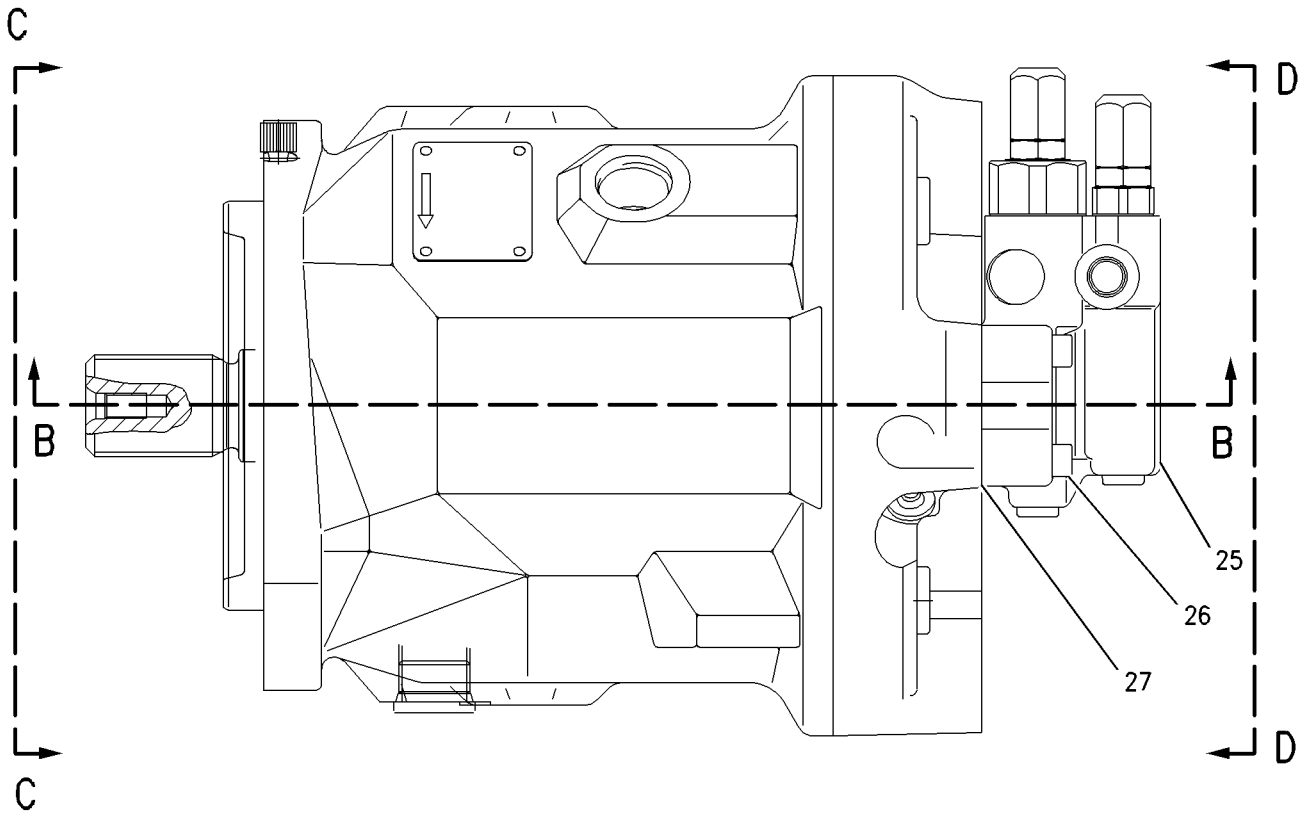


REFER TO ALL ILLUSTRATIONS OF
THIS GROUP FOR AUXILIARY VIEWS

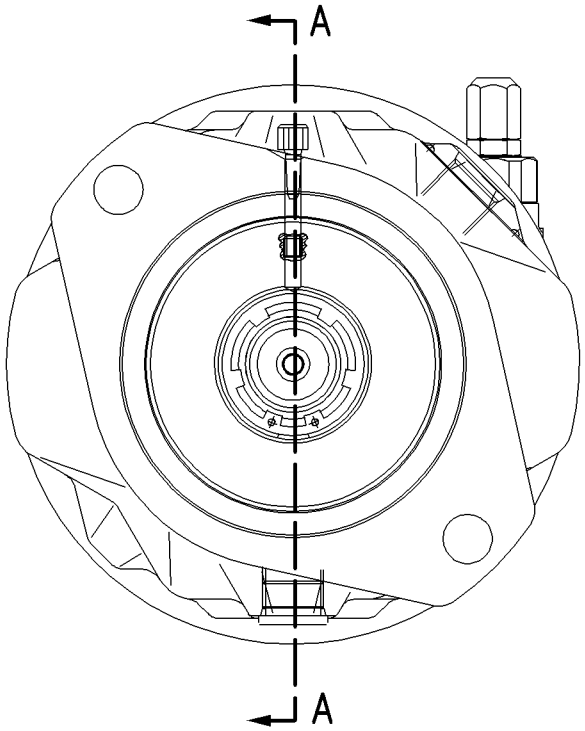


VIEW C-C

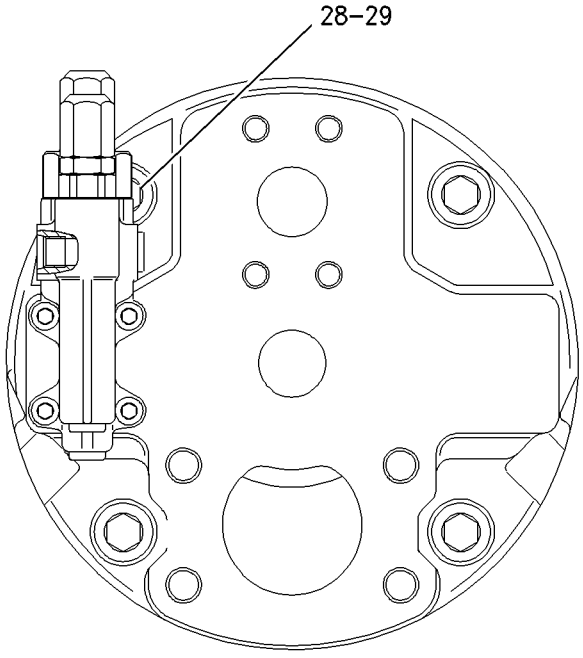


VIEW D-D

GRAPHIC #1 g00783197

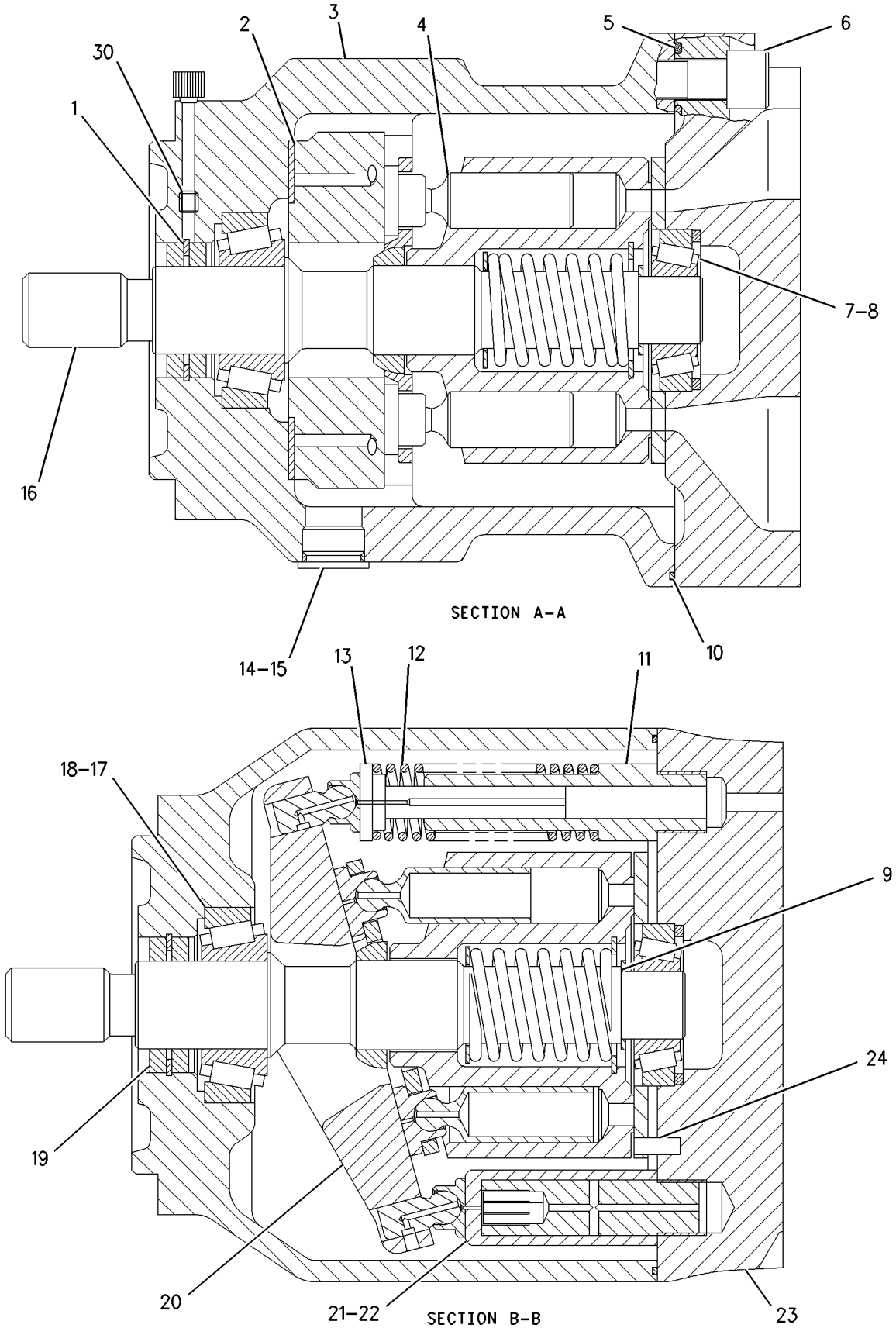


GRAPHIC #2

**<END>**

g00783198

# *219-4770* PUMP GP-PISTON—STEERING

**S/N: RLB1-UP**

**PART OF 270-1748 HYDRAULIC AR**

**SMCS-5070** **i02618744**

| NOTE | REF NO | GRAPHIC REF | PART NUMBER | QTY | PART NAME 1 2 3 4 5 6 (PRODUCT LEVEL) | SEE PAGE |
|---|---|---|---|---|---|---|
| YR | 1 | 1 | **219-1964** | 1 | PUMP GP-PISTON (STEERING) | 700 |
| | 2 | 1 | **1P-4577** | 2 | FLANGE-HALF | |
| | 3 | 1 | **1P-4582** | 2 | FLANGE-HALF | |
| | 4 | 1 | **6V-8260** | 1 | SEAL-O-RING | |
| | 5 | 1 | **5S-7382** | 4 | BOLT (3/8-16X1.375-IN) | |
| | 6 | 1 | **7X-0345** | 2 | BOLT (5/8-11X1.75-IN) | |
| | 7 | 1 | **8T-4122** | 2 | WASHER-HARD (17X32X3.5-MM THK) | |
| | 8 | 1 | **8T-4223** | 4 | WASHER-HARD (13.5X25.5X3-MM THK) | |
| | 9 | 1 | **8T-4896** | 4 | WASHER-HARD (10.2X18.5X2.5-MM THK) | |
| | 10 | 1 | **8T-8919** | 4 | BOLT (1/2-13X1.75-IN) | |

R-REMFG PART MAY BE AVAILABLE
Y-SEPARATE ILLUSTRATION

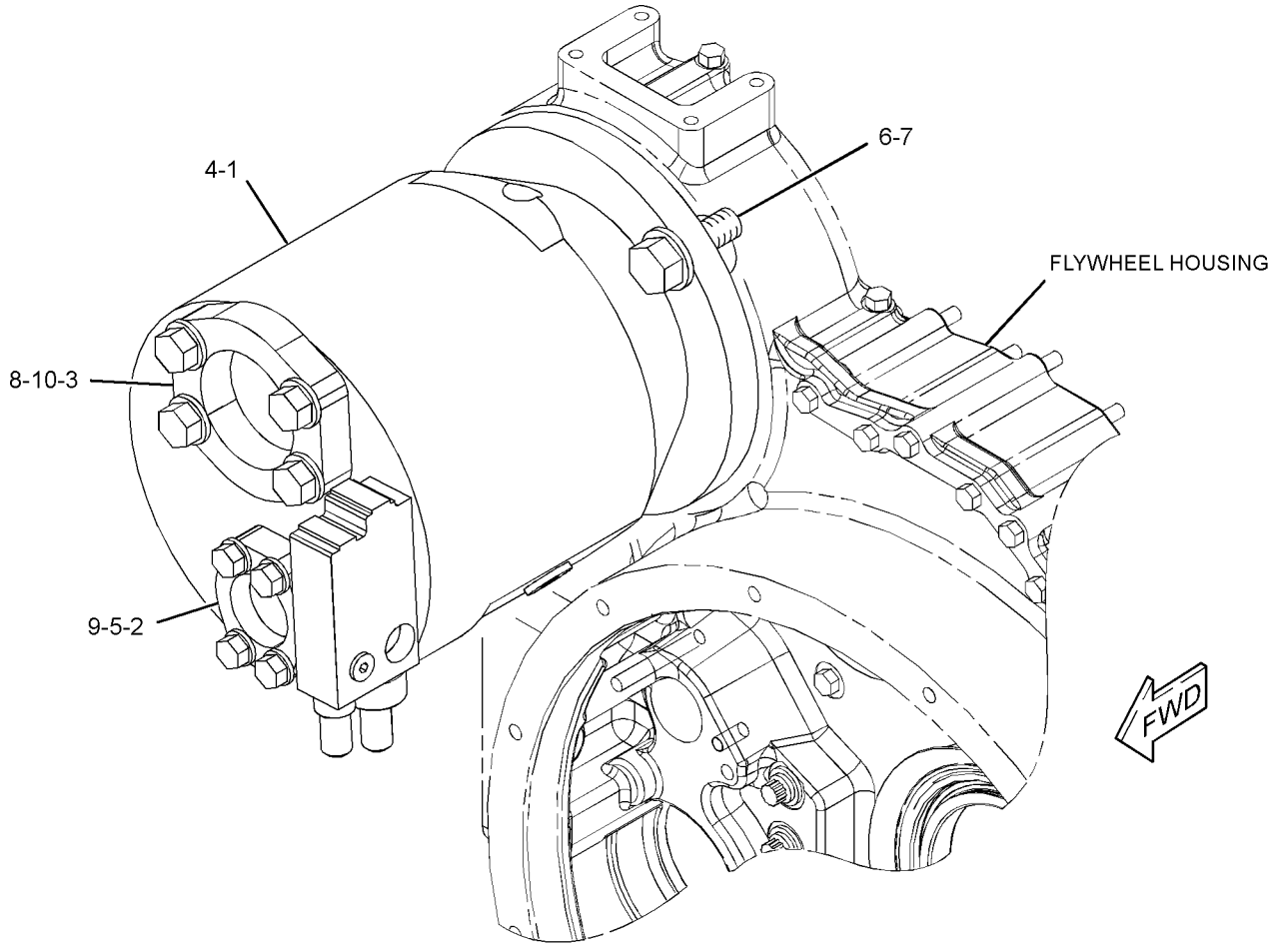


GRAPHIC #1 **<END>** g01312846

# HYDRAULIC SYSTEM

## *192-9218* ROTATING GP-PUMP

**S/N: RLB1-UP**

**PART OF 219-1964 PUMP GP-PISTON**

**SMCS-5070** **i02868134**

| NOTE | REF NO | GRAPHIC REF | PART NUMBER | QTY | PART NAME 1 2 3 4 5 6 (PRODUCT LEVEL) | SEE PAGE |
|---|---|---|---|---|---|---|
| | 1 | 1 | **192-9219** | 1 | PLATE | |
| | 2 | 1 | **6E-6151** | 9 | PISTON AS | |
| | 3 | 1 | **196-0226** | 1 | BARREL | |
| | 4 | 1 | **192-9221** | 1 | PLATE | |
| | 5 | 1 | **6E-6155** | 1 | BEARING | |
| | 6 | 1 | **6E-4009** | 1 | SPRING | |
| | 7 | 1 | **168-3379** | 3 | PIN | |
| | 8 | 1 | **6E-6158** | 1 | RING | |
| | 9 | 1 | **6E-3341** | 1 | SEAT-SPRING | |

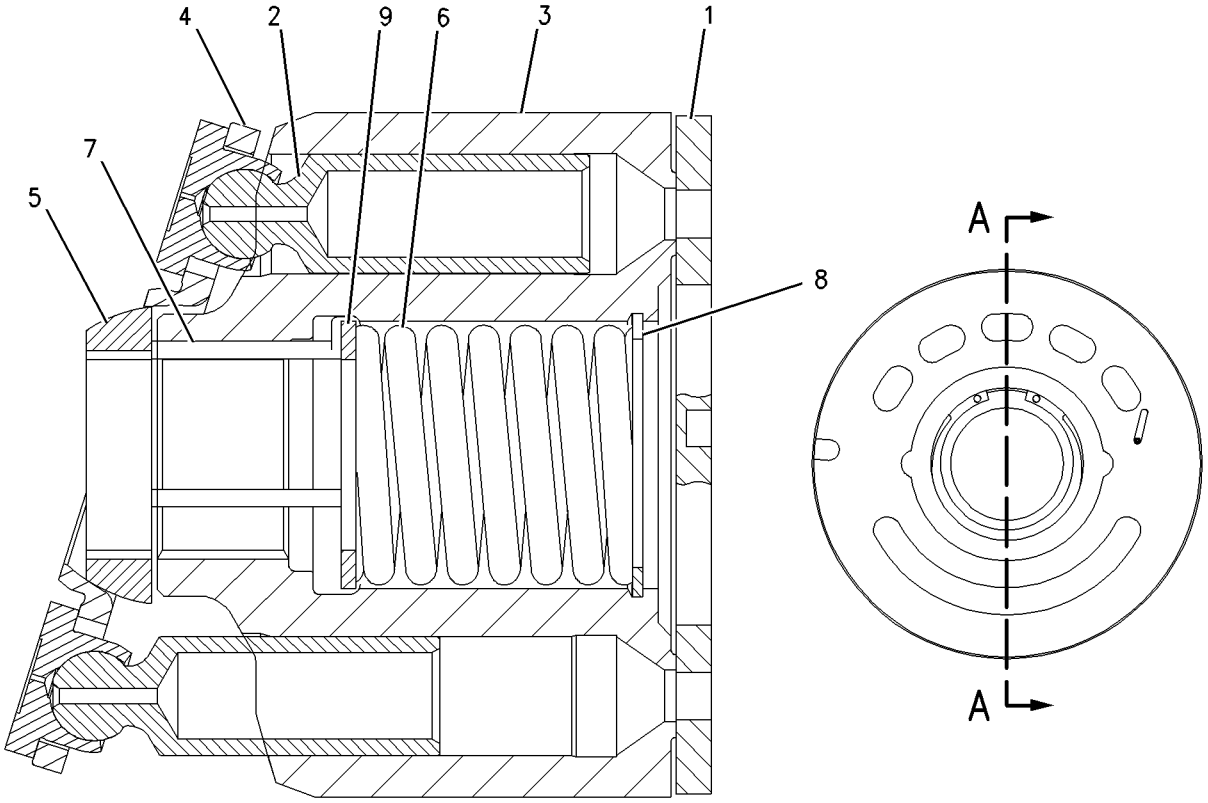


SECTION A–A

GRAPHIC #1 **<END>** g00753104

# HYDRAULIC SYSTEM

## *269-9202* TANK & MTG GP-HYDRAULIC

**S/N: RLB1-UP**

**PART OF 270-1748 HYDRAULIC AR**

**SMCS-5056** **i02797571**

| NOTE | REF NO | GRAPHIC REF | PART NUMBER | QTY | PART NAME 1 2 3 4 5 6 (PRODUCT LEVEL) | SEE PAGE |
|---|---|---|---|---|---|---|
| | 1 | 1 | **9M-0164** | 1 | CLAMP-HOSE | |
| | 2 | 1 | **119-8732** | 1 | COVER | |
| | 3 | 1 | **131-1159** | 1 | PLATE | |
| | 4 | 1 | **236-7271** | 1 | COVER AS | |
| | 5 | 1 | **294-2090** | 1 | AIR CLEANER AS (HYDRAULIC TANK) | |
| Y | 6 | 1 | *281-4550* | 1 | TANK GP-HYDRAULIC | 708 |
| | 7 | 1 | **4L-6454** | 3 | BOLT (3/8-16X1-IN) | |
| | 8 | 1 | **5P-1075** | 3 | WASHER-HARD (10.2X22.5X3-MM THK) | |
| | 9 | 1 | **5P-1076** | 4 | WASHER-HARD (13.5X30X4-MM THK) | |
| M | 10 | 1 | **8T-4956** | 4 | BOLT (M12X1.75X35-MM) | |
| M | 11 | 1 | **8T-4175** | 4 | BOLT (M16X2X90-MM) | |
| M | 12 | 1 | **8T-7338** | 2 | BOLT (M16X2X45-MM) | |
| M | 13 | 1 | **8T-4132** | 6 | NUT (M16X2-THD) | |
| | 14 | 1 | **9X-8257** | 12 | WASHER (17.5X30X3.5-MM THK) | |
| | 15 | 1 | **270-8622** | 1 | COVER | |
| | 16 | 1 | **8T-4896** | 2 | WASHER-HARD (10.2X18.5X2.5-MM THK) | |
| | 17 | 1 | **5D-0353** | 4 | BOLT-LOCKING (3/8-16X1-IN) | |

M-METRIC PART
Y-SEPARATE ILLUSTRATION

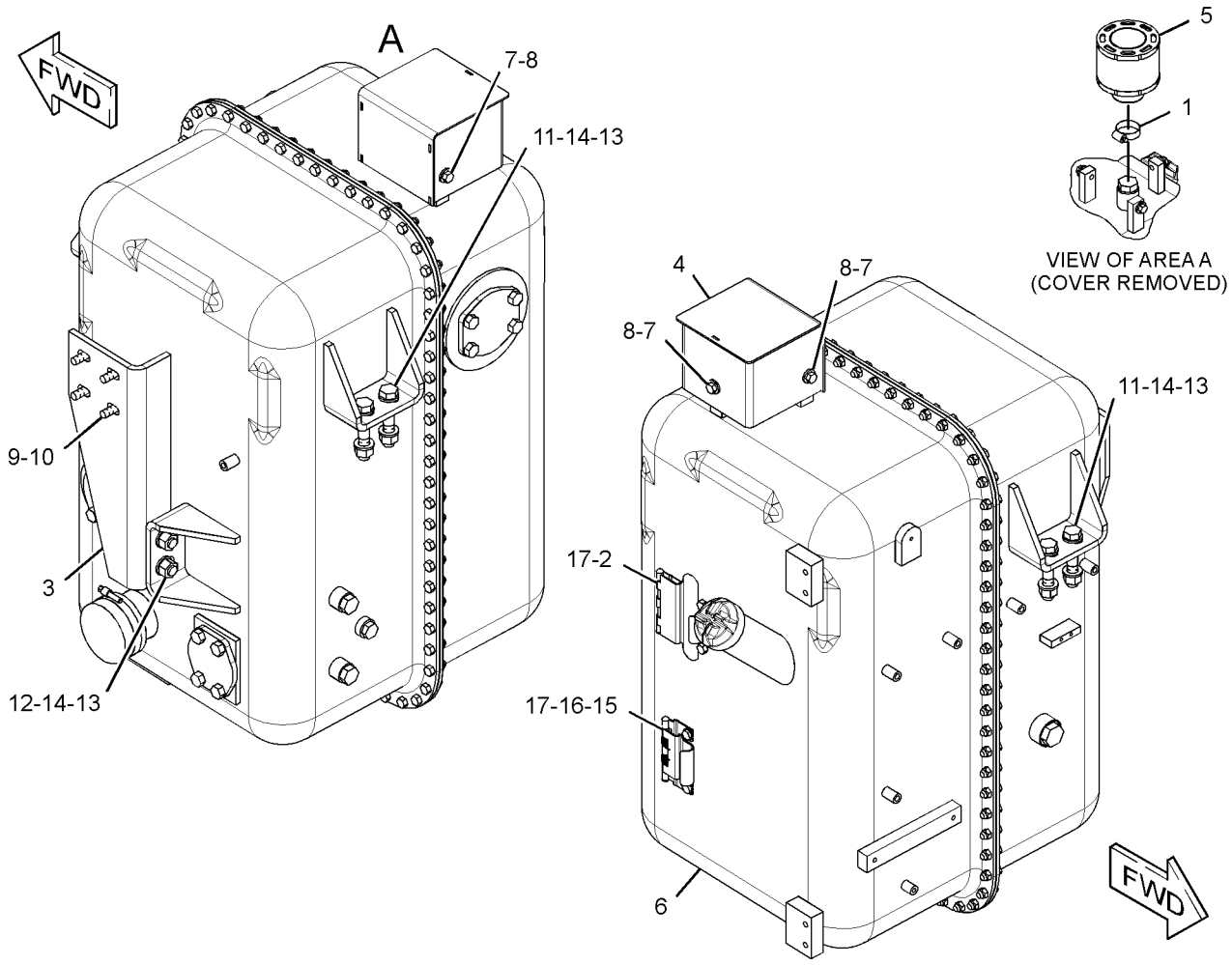


GRAPHIC #1 **<END>** g01416076

# HYDRAULIC SYSTEM

## *269-9203* TANK GP-HYDRAULIC

**S/N: RLB1-UP**

**PART OF 270-1748 HYDRAULIC AR**

**SMCS-5056** **i02682244**

| NOTE | REF NO | GRAPHIC REF | PART NUMBER | QTY | PART NAME 1 2 3 4 5 6 (PRODUCT LEVEL) | SEE PAGE |
|---|---|---|---|---|---|---|
| Y | 1 | 1 | **173-0159** | 1 | FILTER GP-OIL (ULTRA HIGH EFFICIENCY) (STEERING PUMP CASE DRAIN) | 648 |
| | 2 | 1 | **280-3983** | 1 | BRACKET | |
| Y | 3 | 1 | *280-9600* | 1 | TANK & FILTER GP-STEERING | 630 |
| | 4 | 1 | **287-5843** | 1 | TUBE AS | |
| | 5 | 1 | **287-5844** | 1 | TUBE AS | |
| | 6 | 1 | **293-4884** | 1 | TUBE AS | |
| | 7 | 1 | **299-5210** | 1 | TUBE AS | |
| | 8 | 1 | *148-8315* | 1 | CONNECTOR AS | |
| | | 1 | **6V-8642** | 1 | CONNECTOR | |
| | | 1 | **2M-9780** | 1 | SEAL-O-RING | |
| | | 1 | **7J-9108** | 1 | SEAL-O-RING | |
| | 9 | 1 | *148-8335* | 1 | CONNECTOR AS | |
| | | 1 | **6V-8635** | 1 | CONNECTOR | |
| | | 1 | **5K-9090** | 1 | SEAL-O-RING | |
| | | 1 | **7M-8485** | 1 | SEAL-O-RING | |
| | 10 | 1 | *148-8357* | 1 | ELBOW AS | |
| | | 1 | **6V-9008** | 1 | ELBOW | |
| | | 1 | **5K-9090** | 1 | SEAL-O-RING | |
| | | 1 | **7M-8485** | 1 | SEAL-O-RING | |
| | 11 | 1 | *148-8373* | 1 | ELBOW AS | |
| | | 1 | **8C-3364** | 1 | ELBOW | |
| | | 1 | **6V-8400** | 1 | SEAL-O-RING | |
| | | 1 | **7M-8485** | 1 | SEAL-O-RING | |
| | 12 | 1 | *148-8390* | 2 | ELBOW AS | |
| | | | | | (EACH INCLUDES) | |
| | | 1 | **6V-8626** | 1 | ELBOW | |
| | | 1 | **2M-9780** | 1 | SEAL-O-RING | |
| | | 1 | **7J-9108** | 1 | SEAL-O-RING | |
| Y | 13 | 1 | **249-2334** | 1 | FILTER GP-OIL (ULTRA HIGH EFFICIENCY) (STEERING RETURN) | 615 |
| | 14 | 1 | **4S-4455** | 2 | CLIP | |
| | 15 | 1 | **5P-1076** | 4 | WASHER-HARD (13.5X30X4-MM THK) | |
| | 16 | 1 | **5P-4116** | 4 | WASHER-HARD (8.8X20.5X2-MM THK) | |
| | 17 | 1 | **7X-7729** | 3 | WASHER (11X25X3-MM THK) | |
| | 18 | 1 | **8T-4121** | 2 | WASHER-HARD (11X21X2.5-MM THK) | |
| M | 19 | 1 | **8T-4136** | 2 | BOLT (M10X1.5X25-MM) | |
| M | 20 | 1 | **8T-4137** | 3 | BOLT (M10X1.5X20-MM) | |
| M | 21 | 1 | **8T-4139** | 4 | BOLT (M12X1.75X30-MM) | |
| M | 22 | 1 | **8T-4189** | 4 | BOLT (M8X1.25X20-MM) | |
| | 23 | 1 | **8T-4223** | 4 | WASHER-HARD (13.5X25.5X3-MM THK) | |
| M | 24 | 1 | **8T-4910** | 4 | BOLT (M12X1.75X60-MM) | |

M-METRIC PART
Y-SEPARATE ILLUSTRATION

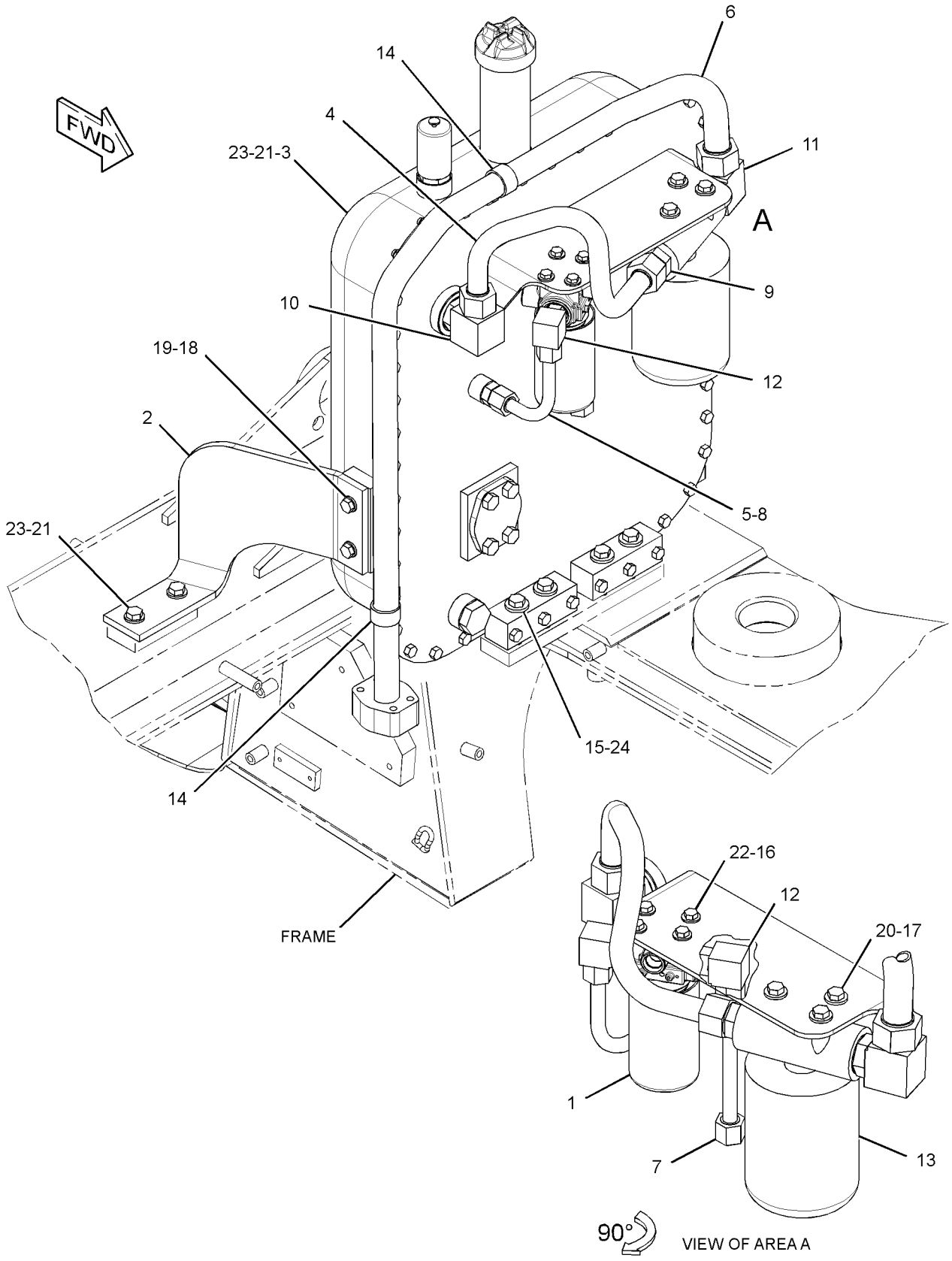


GRAPHIC #1 **<END>** g01338676

# HYDRAULIC SYSTEM

## *281-4550* TANK GP-HYDRAULIC

**S/N: RLB1-UP**

**PART OF 269-9202 TANK & MTG GP-HYDRAULIC**

**SMCS-5056** **i02899206**

| NOTE | REF NO | GRAPHIC REF | PART NUMBER | QTY | PART NAME 1 2 3 4 5 6 (PRODUCT LEVEL) | SEE PAGE |
|---|---|---|---|---|---|---|
| | 1 | 1 | **1U-1643** | 1 | VALVE | |
| | 2 | 1 | **1U-2827** | 1 | GUIDE-VALVE | |
| | 3 | 1 | **2D-4202** | 1 | PLATE | |
| | 4 | 1 | **2J-6114** | 1 | SPRING (OUTER) | |
| | 5 | 1 | **3S-8652** | 1 | SPRING (INNER) | |
| | 6 | 1 | **4J-8251** | 1 | GROMMET | |
| | 7 | 1 | **4J-8252** | 1 | GAUGE-SIGHT (HYDRAULIC TANK) | |
| | 8 | 1 | **6J-1080** | 1 | GROMMET | |
| | 9 | 1 | **7B-3039** | 1 | SPRING | |
| | 10 | 1 | **7H-1447** | 1 | CAP-FILLER (HYDRAULIC TANK FILL) | |
| | 11 | 1 | **8J-8782** | 1 | BODY-DRAIN VALVE | |
| | 12 | 1 | **8J-8783** | 1 | VALVE (HYDRAULIC TANK DRAIN) | |
| | 13 | 1 | **8T-3298** | 1 | SEAL-RECTANGULAR | |
| | 14 | 1 | **9J-7031** | 1 | PLUG-DRAIN (HYDRAULIC TANK) | |
| | 15 | 1 | **9J-8243** | 1 | RETAINER | |
| | 16 | 1 | **9T-9227** | 1 | SCREEN AS | |
| | 17 | 1 | **166-9050** | 1 | SEAT | |
| | 18 | 1 | **238-1825** | 1 | GASKET | |
| | 19 | 1 | **239-5646** | 1 | HOUSING AS | |
| | 20 | 1 | **239-8460** | 1 | SCREEN AS (HYDRAULIC TANK) | |
| | 21 | 1 | **244-5693** | 1 | PLATE | |
| | 22 | 1 | **248-5064** | 1 | TANK AS | |
| | 23 | 1 | **281-4551** | 1 | TANK AS-HYDRAULIC | |
| | 24 | 1 | **103-9603** | 1 | GAUGE-SIGHT (HYDRAULIC TANK) | |
| | 25 | 1 | **2K-4973** | 79 | LOCKNUT (3/8-16-THD) | |
| | 26 | 1 | **3G-2692** | 1 | RETAINER | |
| | 27 | 1 | **4L-6454** | 70 | BOLT (3/8-16X1-IN) | |
| | 28 | 1 | **5D-0353** | 70 | BOLT-LOCKING (3/8-16X1-IN) | |
| | 29 | 1 | **5H-6005** | 6 | SEAL-O-RING | |
| | 30 | 1 | **5J-7438** | 1 | STRAINER AS (HYDRAULIC TANK) | |
| | | 1 | **5F-3488** | 1 | END-STRAINER | |
| | 31 | 1 | **5M-2057** | 1 | SEAL-O-RING | |
| | 32 | 1 | **276-8943** | 1 | PLATE-GAUGE (HYDRAULIC OIL LEVEL, BODY UP) | |
| | 33 | 1 | **6V-5839** | 7 | WASHER (11X21X2.5-MM THK) | |
| | 34 | 1 | **276-8944** | 1 | PLATE-GAUGE (HYDRAULIC OIL LEVEL) | |
| | 35 | 1 | **8T-2275** | 1 | BALL | |
| M | 36 | 1 | **8T-4778** | 1 | LOCKNUT (M16X2-THD) | |
| | 37 | 1 | **8T-4896** | 2 | WASHER-HARD (10.2X18.5X2.5-MM THK) | |
| | 38 | 1 | **9H-6454** | 1 | GASKET | |

M-METRIC PART

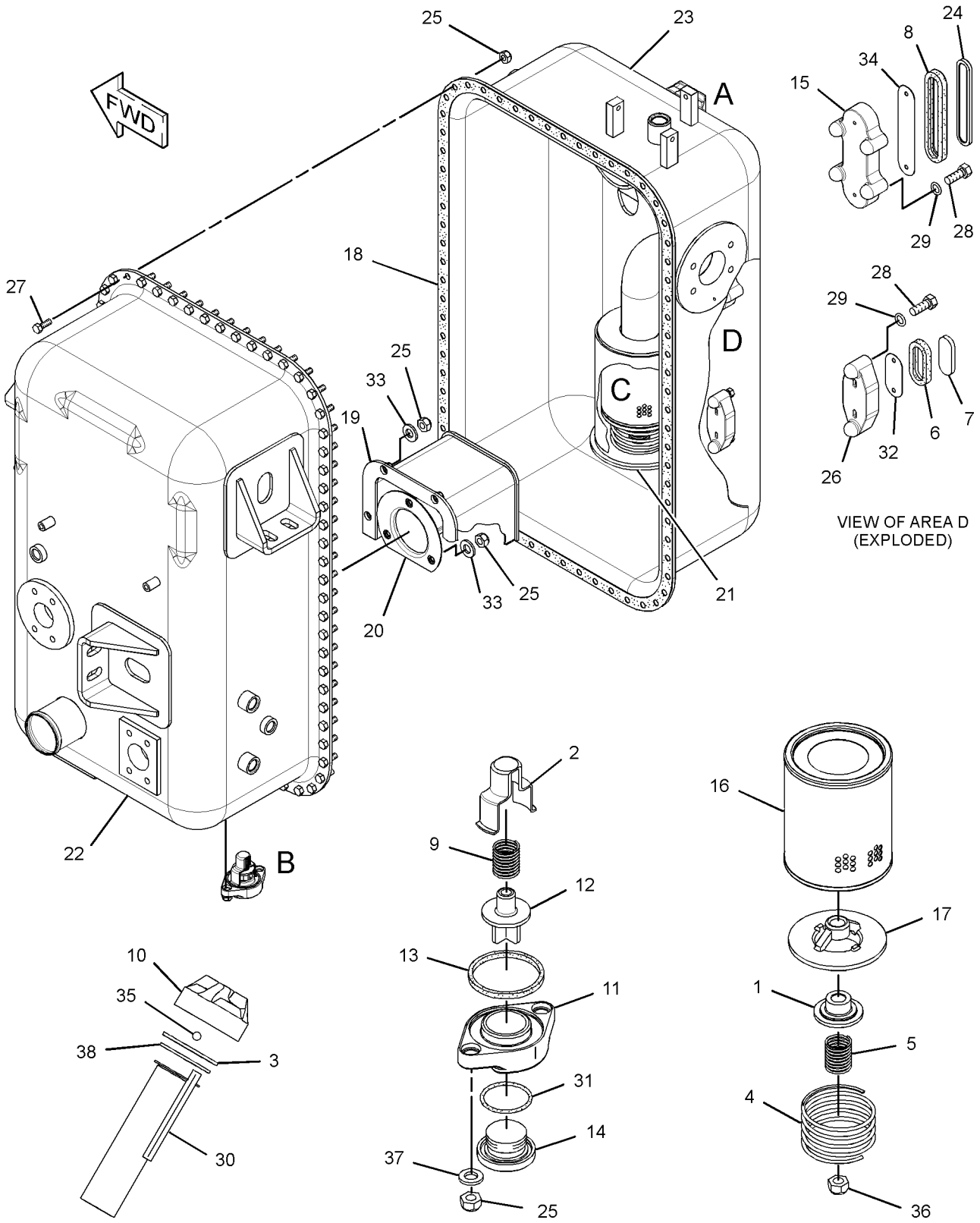


GRAPHIC #1 **<END>** g01520137

# HYDRAULIC SYSTEM

## 194-1628 VALVE & MTG GP-CONTROL

**S/N: RLB1-UP**

**PART OF 270-1748 HYDRAULIC AR**

**SMCS-5051** **i03295281**

| NOTE | REF NO | GRAPHIC REF | PART NUMBER | QTY | PART NAME 1 2 3 4 5 6 (PRODUCT LEVEL) | SEE PAGE |
|---|---|---|---|---|---|---|
| Y | 1 | 1 | **245-1669** | 1 | VALVE GP-CONTROL (HOIST) | 711 |
| | 2 | 1 | **293-9002** | 2 | BOLT (1/2-13X11-IN) | |
| | 3 | 1 | **8T-4223** | 3 | WASHER-HARD (13.5X25.5X3-MM THK) | |
| | 4 | 1 | **7X-0481** | 1 | BOLT (1/2-13X8-IN) | |

Y-SEPARATE ILLUSTRATION

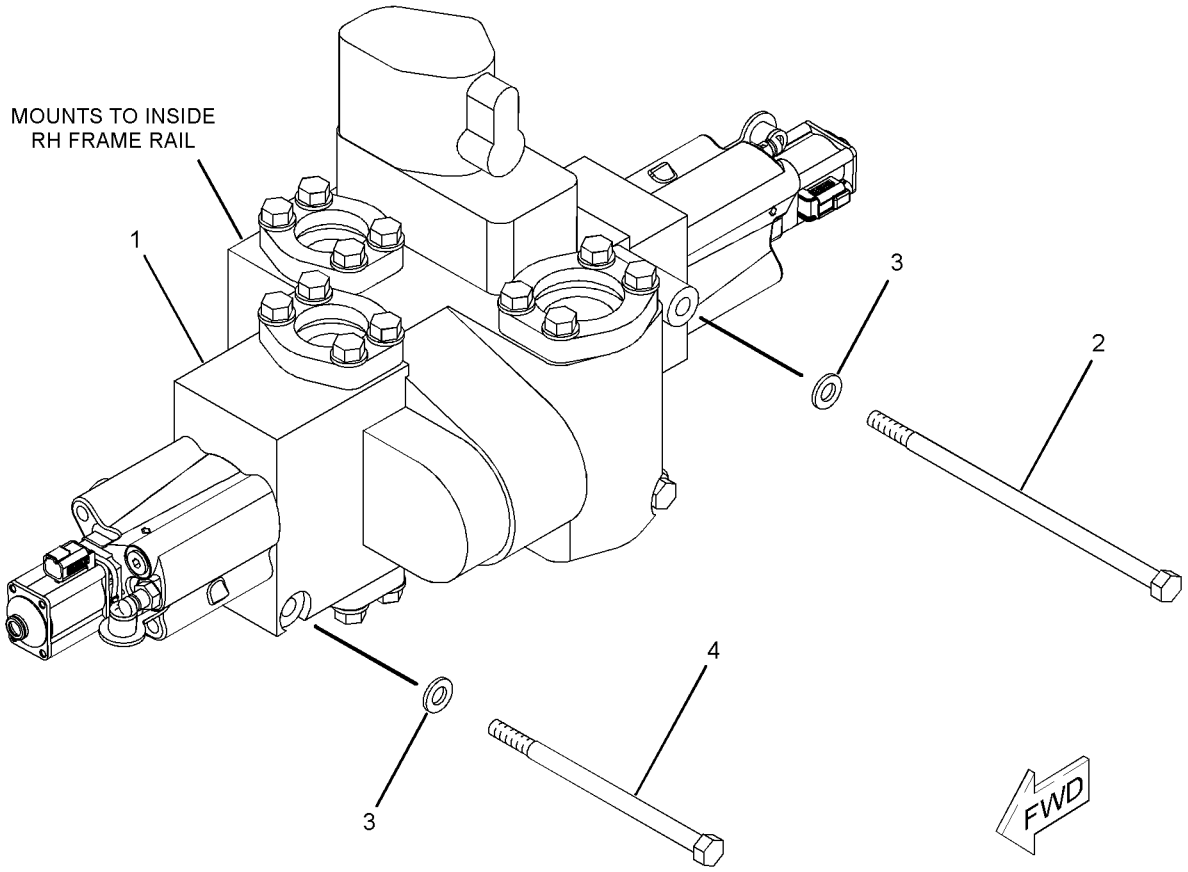


GRAPHIC #1 **<END>** g01418787

# HYDRAULIC SYSTEM

## 245-1669 VALVE GP-CONTROL—HOIST

**S/N: RLB1-UP**

**PART OF 194-1628 VALVE & MTG GP-CONTROL**

**SMCS-5051** **i03296161**

| NOTE | REF NO | GRAPHIC REF | PART NUMBER | QTY | PART NAME 1 2 3 4 5 6 (PRODUCT LEVEL) | SEE PAGE |
|---|---|---|---|---|---|---|
| | 1 | 2 | **1P-6744** | 1 | SPRING | |
| | 2 | 2 | **1U-0323** | 1 | PLUG AS | |
| | | 2 | **3G-2683** | 1 | PLUG | |
| | | 2 | **1U-0322** | 1 | BEARING-SLEEVE | |
| | 4 | 2 | **6J-3380** | 1 | SPRING | |
| | 5 | 2 | **6J-3405** | 1 | SEAT | |
| | 6 | 2 | **7J-7423** | 1 | VALVE | |
| B | 7 | 2 | **8B-4624** | 4 | SHIM (0.032-IN THK) | |
| | 8 | 1 | **106-7683** | 1 | ADAPTER | |
| | 9 | 1 | **113-8263** | 1 | PISTON | |
| | 10 | 2 | **126-6612** | 1 | BODY | |
| Y | 11 | 2 | **148-2962** | 1 | VALVE GP-RELIEF (HOIST HIGH PRESSURE, RAISE) | 718 |
| Y | 14 | 1 | **217-6720** | 2 | ACTUATOR GP-PILOT CONTROL (PROPORTIONAL SOLENOID) | 638 |
| | 16 | 2 | **030-4606** | 1 | SEAL-O-RING | |
| | 17 | 2 | **105-1583** | 1 | VALVE GP (MAIN RELIEF) | |
| | 18 | 2 | **105-1584** | 1 | VALVE GP (HOIST DUAL STAGE) | |
| Y | 19 | 2 | **106-7372** | 1 | VALVE GP-RELIEF (HOIST LOW PRESSURE, LOWER) | 717 |
| | 20 | 2 | **126-6104** | 1 | PLUG | |
| | 21 | 1 | **1P-3709** | 1 | SEAL-RECTANGULAR | |
| | 22 | 1 | **1P-4579** | 8 | FLANGE-HALF | |
| | 23 | 2 | **1P-4582** | 2 | FLANGE-HALF | |
| | 24 | 2 | **2R-1256** | 1 | RING-RETAINING | |
| | 25 | 2 | **2S-4078** | 1 | SEAL-O-RING | |
| | 26 | 1 | **4H-5232** | 3 | PIN-SPRING | |
| | 27 | 2 | **4J-0519** | 2 | SEAL-O-RING | |
| | 28 | 2 | **4J-2506** | 2 | SEAL-O-RING | |
| | 29 | 1,2 | **5H-6005** | 2 | SEAL-O-RING | |
| | 30 | 2 | **5J-4664** | 1 | SPRING | |
| | 31 | 1,2 | **5P-2566** | 20 | BOLT (1/2-13X1.5-IN) | |
| | 32 | 2 | **6E-1297** | 1 | SCREEN (HOIST CONTROL VALVE) | |
| | 33 | 2 | **6K-6307** | 1 | SEAL-O-RING | |
| | 34 | 1 | **6V-4432** | 1 | BOLT (1/2-13X4-IN) | |
| | 35 | 2 | **6V-8676** | 1 | SEAL-O-RING | |
| | 36 | 2 | **7D-8048** | 2 | SEAL-O-RING | |
| | 37 | 2 | **7S-8491** | 1 | SPRING | |
| | 38 | 1 | **7X-0293** | 2 | BOLT (3/8-16X4.75-IN) | |
| | 39 | 1 | **7X-0301** | 2 | BOLT (3/8-16X7-IN) | |
| | 40 | 1 | **7X-0326** | 2 | BOLT (1/2-13X3-IN) | |
| | 41 | 1 | **7X-0339** | 2 | BOLT (1/2-13X6.25-IN) | |
| | 42 | 2 | **8J-2379** | 1 | VALVE-RELIEF (BRAKE COOLING) | |
| | 43 | 1,2 | **8T-4223** | 20 | WASHER-HARD (13.5X25.5X3-MM THK) | |
| | 44 | 1 | **9P-8217** | 4 | WASHER (10X14.68X1.65-MM THK) | |
| | 45 | 2 | **4J-9780** | 1 | PLUG-ORIFICE | |
| | 46 | 1 | **3D-4603** | 1 | PLUG-PIPE | |
| | 47 | 2 | *148-8395* | 2 | PLUG AS | |
| | | | | | (EACH INCLUDES) | |
| | | 2 | **9S-8005** | 1 | PLUG-O-RING | |
| | | 2 | **3K-0360** | 1 | SEAL-O-RING | |
| | 48 | 1,2 | *173-3993* | 4 | PLUG AS | |
| | | | | | (EACH INCLUDES) | |
| | | 1,2 | **9S-8001** | 1 | PLUG-O-RING | |
| | | 1,2 | **4J-7533** | 1 | SEAL-O-RING | |
| | 49 | 2 | *183-7263* | 2 | PLUG AS | |
| | | | | | (EACH INCLUDES) | |
| | | 2 | **9S-8002** | 1 | PLUG-O-RING | |

## 245-1669 VALVE GP-CONTROL *(contd. )* i03296161

| NOTE | REF NO | GRAPHIC REF | PART NUMBER | QTY | PART NAME 1 2 3 4 5 6 (PRODUCT LEVEL) | SEE PAGE |
|---|---|---|---|---|---|---|
| | | 2 | **3J-7354** | 1 | SEAL-O-RING | |
| | 50 | 1 | *164-5619* | 1 | PLUG AS | |
| | | 1 | **9S-8006** | 1 | PLUG-O-RING | |
| | | 1 | **2M-9780** | 1 | SEAL-O-RING | |
| | 51 | 1 | *148-8407* | 1 | PLUG AS | |
| | | 1 | **9S-4191** | 1 | PLUG-O-RING | |
| | | 1 | **3J-1907** | 1 | SEAL-O-RING | |

B-USE AS REQUIRED
Y-SEPARATE ILLUSTRATION

**245-1669 VALVE GP-CONTROL** *(contd.)* **i03296161**

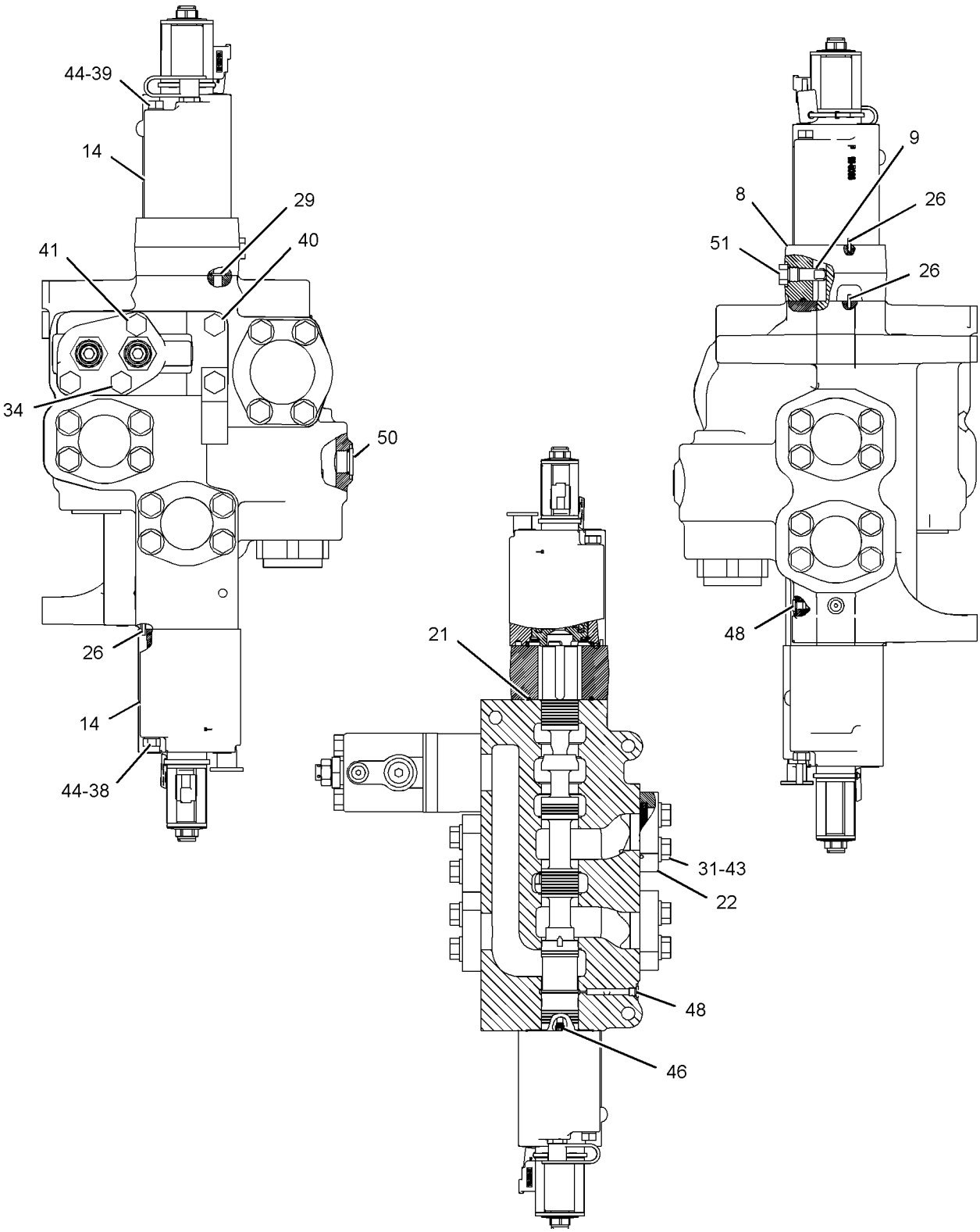


GRAPHIC #1 g01077504

## 245-1669 VALVE GP-CONTROL *(contd. )* i03296161

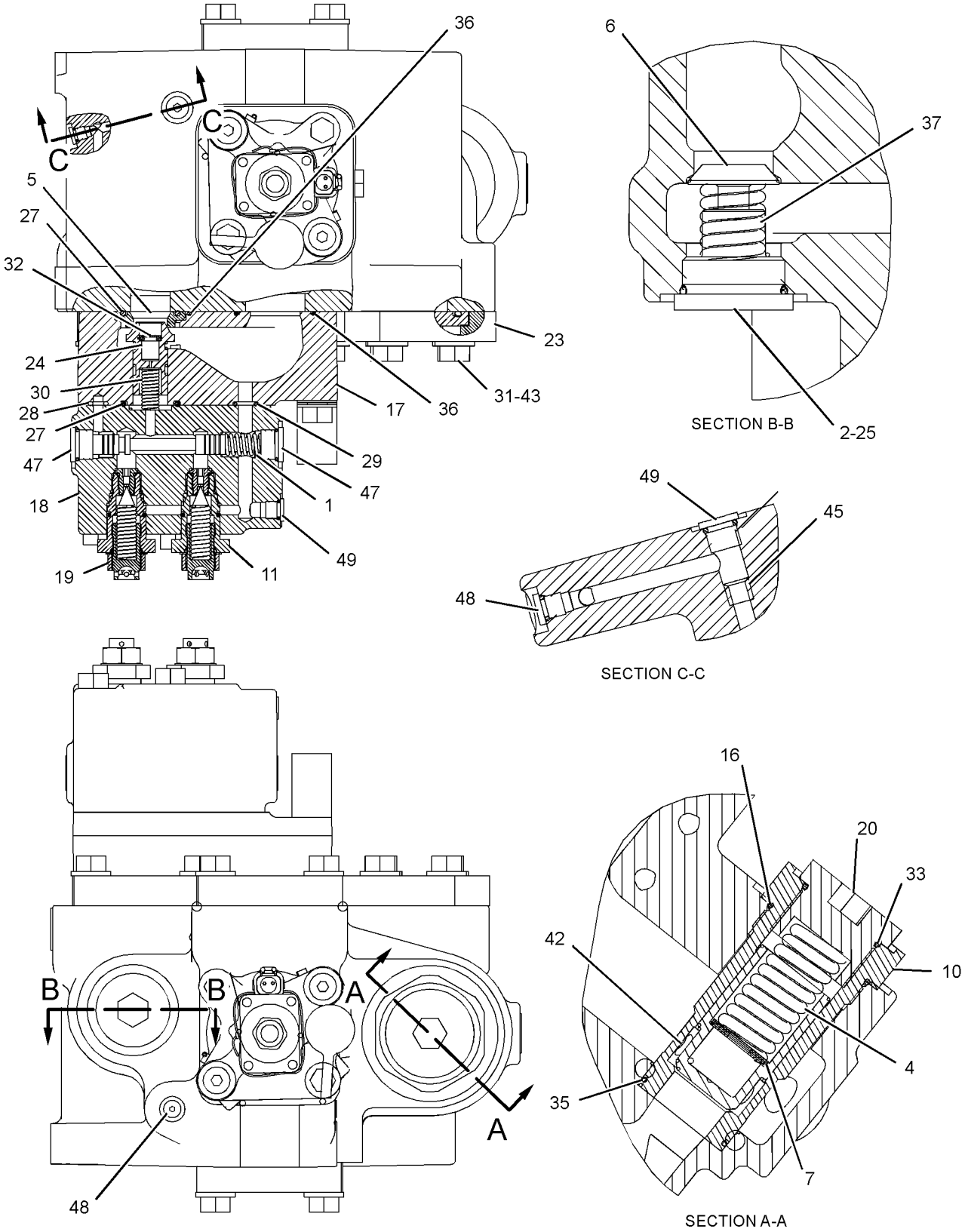


GRAPHIC #2 **<END>** g01209685

## *196-0228* VALVE GP-PUMP CONTROL

**S/N: RLB1-UP**

**PART OF 219-1964 PUMP GP-PISTON**

**SMCS-5455** **i01653921**

| NOTE | REF NO | GRAPHIC REF | PART NUMBER | QTY | PART NAME 1 2 3 4 5 6 (PRODUCT LEVEL) | SEE PAGE |
|---|---|---|---|---|---|---|
| | 1 | 1 | **6E-6528** | 6 | SEAL | |
| | 2 | 1 | **6E-6527** | 2 | PLUG | |
| | 3 | 1 | **193-3086** | 1 | RETAINER | |
| | 4 | 1 | **193-3087** | 1 | SPRING | |
| | 5 | 1 | **5P-9262** | 1 | SEAL-O-RING | |
| | 6 | 1 | **033-6043** | 1 | SEAL-O-RING | |
| | 7 | 1 | **6E-3272** | 1 | SEAT | |
| | 8 | 1 | **6E-6540** | 1 | PLUG | |
| M | 9 | 1 | **6E-6538** | 2 | NUT-ADJUSTMENT (M8X1-THD) | |
| M | 10 | 1 | **6E-6537** | 2 | SCREW-ADJUSTMENT (M8X1X28-MM) | |
| M | 11 | 1 | **6E-6539** | 2 | NUT-CAP (M8X1-THD) | |
| | 12 | 1 | **6E-3273** | 1 | SEAT | |
| | 13 | 1 | **6E-6536** | 1 | PLUG | |
| | 14 | 1 | **6V-8352** | 1 | SEAL-O-RING | |
| | 15 | 1 | **9S-8002** | 1 | PLUG-O-RING | |
| | 16 | 1 | **3J-7354** | 1 | SEAL-O-RING | |
| | 17 | 1 | **193-1036** | 1 | SPRING | |
| | 18 | 1 | **6E-3276** | 1 | SPRING | |
| | 19 | 1 | **6E-3269** | 1 | RETAINER-SPRING | |
| | 20 | 1 | **105-2145** | 1 | VALVE-ORIFICE | |

M-METRIC PART

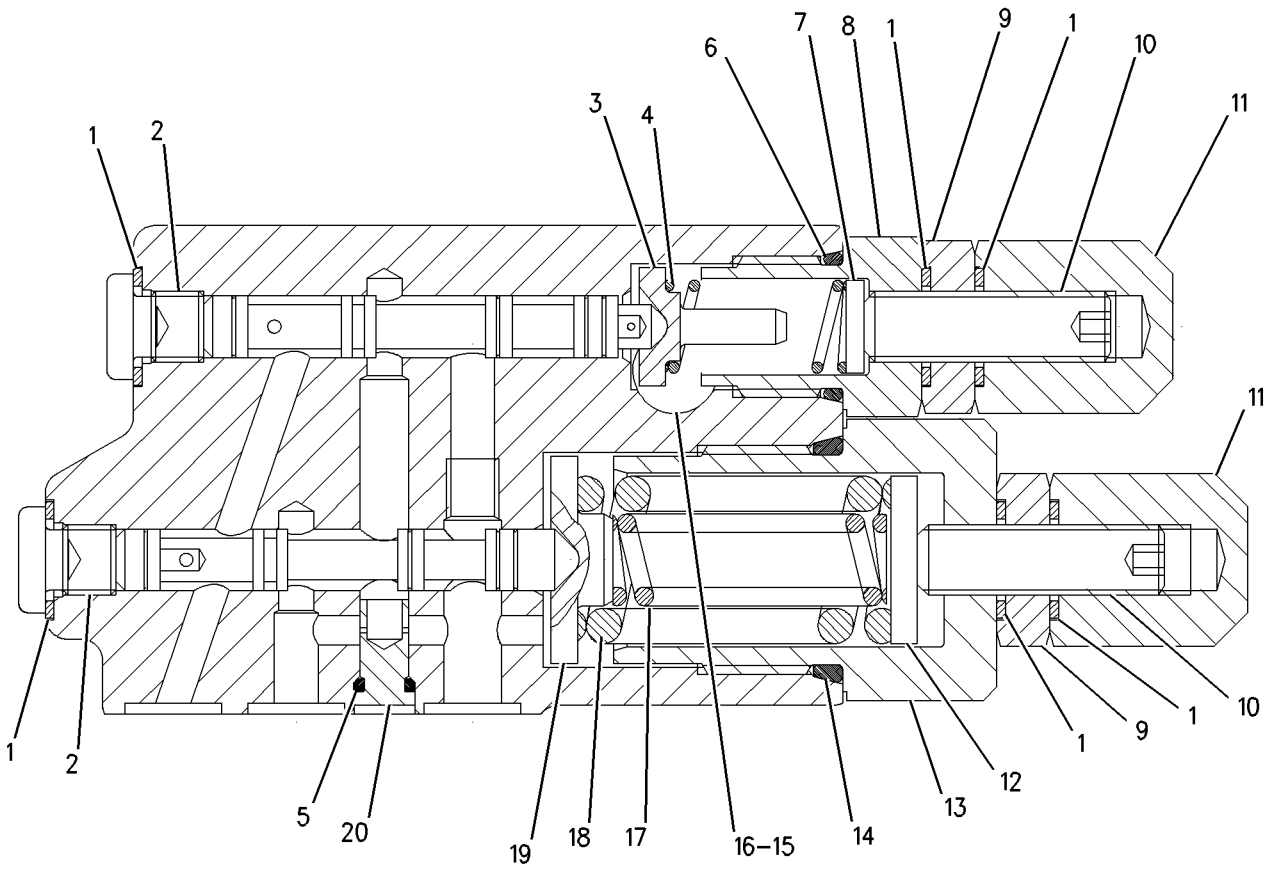


GRAPHIC #1 **<END>** g00782933

# HYDRAULIC SYSTEM

## *106-7372* VALVE GP-RELIEF

**S/N: RLB1-UP**
**DIRECT OPERATED**
**PART OF 245-1669 VALVE GP-CONTROL**

**SMCS-5069, 5117** **i02707230**

| NOTE | REF NO | GRAPHIC REF | PART NUMBER | QTY | PART NAME 1 2 3 4 5 6 (PRODUCT LEVEL) | SEE PAGE |
|---|---|---|---|---|---|---|
| | 1 | 1 | **9T-7202** | 1 | RETAINER AS | |
| | 2 | 1 | **9X-6395** | 1 | NUT (3/4-16-THD) | |
| | 3 | 1 | *112-2158* | 1 | BODY AS | |
| | 3A | 1 | **111-6878** | 1 | BODY | |
| | 3B | 1 | **3J-7354** | 1 | SEAL-O-RING | |
| | 4 | 1 | **112-4397** | 1 | SPRING | |
| | 5 | 1 | **5P-3108** | 1 | SEAL-O-RING | |
| | 6 | 1 | **1J-8497** | 1 | VALVE (PUSH-PULL) | |
| | 7 | 1 | **3K-0360** | 2 | SEAL-O-RING | |

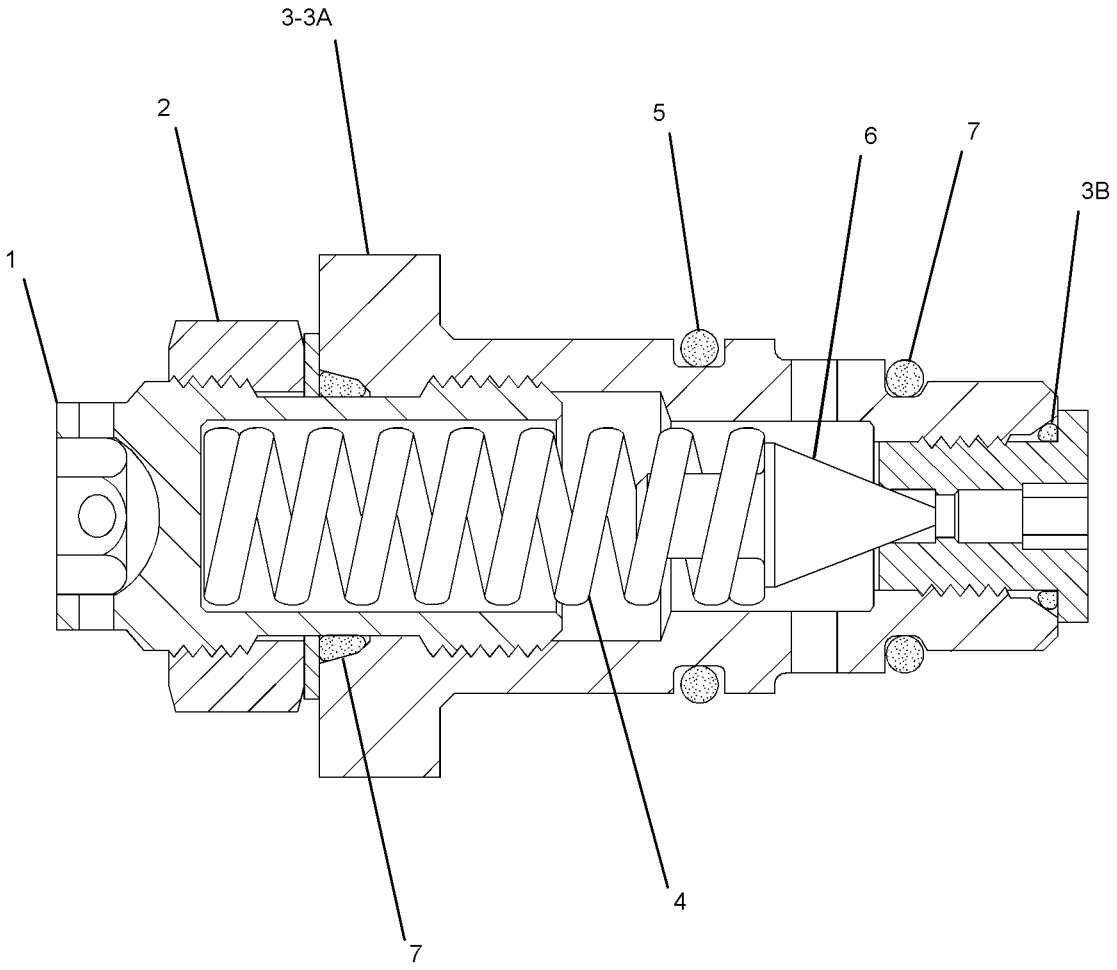


GRAPHIC #1 **<END>** g01358102

# HYDRAULIC SYSTEM

## 148-2962 VALVE GP-RELIEF

**S/N: RLB1-UP**
**DIRECT OPERATED**
**PART OF 245-1669 VALVE GP-CONTROL**

**SMCS-5069, 5117** **i01654810**

| NOTE | REF NO | GRAPHIC REF | PART NUMBER | QTY | PART NAME 1 2 3 4 5 6 (PRODUCT LEVEL) | SEE PAGE |
|---|---|---|---|---|---|---|
| | 1 | 1 | **9T-7202** | 1 | RETAINER AS | |
| | 2 | 1 | **9X-6395** | 1 | NUT (3/4-16-THD) | |
| | 3 | 1 | **111-6878** | | BODY | |
| | 3A | 1 | **3J-7354** | 1 | SEAL-O-RING | |
| | 4 | 1 | **2J-6089** | 1 | SPRING | |
| | 5 | 1 | **5P-3108** | 1 | SEAL-O-RING | |
| | 6 | 1 | **1J-8497** | 1 | VALVE | |
| | 7 | 1 | **3K-0360** | 2 | SEAL-O-RING | |

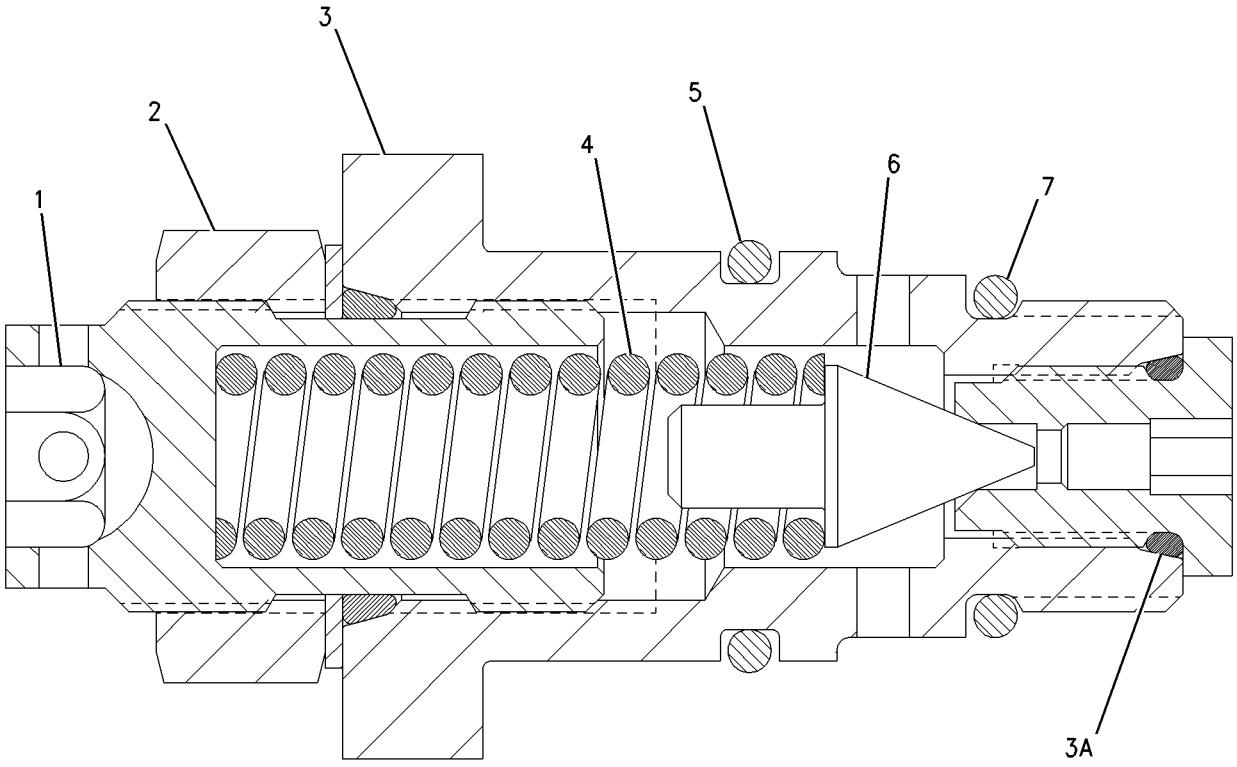


GRAPHIC #1 **<END>** g00854484

# 3E-8575 VALVE GP-SOLENOID

**S/N: RLB1-UP**
**PART OF 222-4744 VALVE GP-TRACTION CONTROL**
**AN ATTACHMENT**

**SMCS-3174, 5479, 7499** **i01896778**

| NOTE | REF NO | GRAPHIC REF | PART NUMBER | QTY | PART NAME 1 2 3 4 5 6 (PRODUCT LEVEL) | SEE PAGE |
|---|---|---|---|---|---|---|
| | 1 | 1 | **6T-3382** | 1 | CARTRIDGE AS | |
| | 2 | 1 | **160-5843** | 1 | WASHER (16.8X38.1X0.5-MM THK) | |
| | 3 | 1 | **157-2284** | 1 | LOCKNUT-SPECIAL (5/8-18-THD) | |
| | 4 | 1 | **160-5844** | 1 | WASHER-SPRING (16.3X31.5X1.85-MM THK) | |
| | 5 | 1 | **3E-8581** | 1 | COIL AS | |
| | 6 | 1 | **102-8804** | 1 | KIT-RECEPTACLE (4-PIN) | |
| | | | | | (INCLUDES RECEPTACLE AS & WEDGE) | |
| | 7 | 1 | **8T-8729** | 4 | PIN-CONNECTOR (16-GA TO 18-GA) | |
| | 8 | 1 | **1S-9593** | 2 | STRAP-CABLE | |
| | 9 | 1 | **3E-3377** | 1 | WEDGE-RECEPTACLE LOCK (4-PIN) | |
| | | | | | AVAILABLE REPAIR KIT(S): | |
| | | | **126-5948** | 1 | KIT-SEAL (SOLENOID VALVE) | |
| | | | | | (INCLUDES SEAL-O-RINGS & RING-BACKUPS) | |

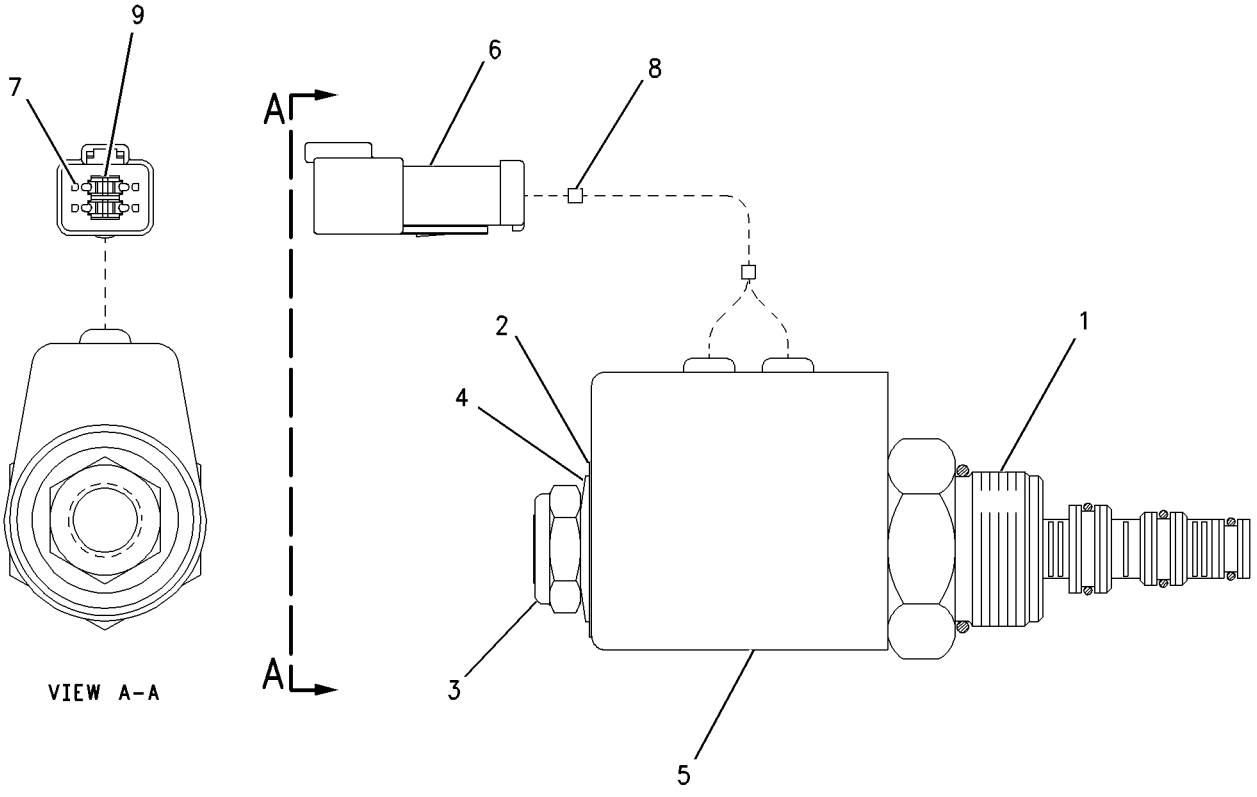


GRAPHIC #1 **<END>** g00623320

# HYDRAULIC SYSTEM

## 222-4741 VALVE GP-SOLENOID

**S/N: RLB1-UP**

**PART OF 222-4744 VALVE GP-TRACTION CONTROL**

**AN ATTACHMENT**

**SMCS-3174, 5479, 7499** **i02052517**

| NOTE | REF NO | GRAPHIC REF | PART NUMBER | QTY | PART NAME 1 2 3 4 5 6 (PRODUCT LEVEL) | SEE PAGE |
|---|---|---|---|---|---|---|
| | 1 | 1 | **130-4834** | 1 | SCREEN AS (HYDRAULIC) | |
| | 2 | 1 | **117-8803** | 1 | SEAL-O-RING | |
| | 3 | 1 | **1S-9593** | 2 | STRAP-CABLE | |
| | 4 | 1 | **102-8803** | 1 | KIT-RECEPTACLE (3-PIN) | |
| | | | | | (INCLUDES RECEPTACLE AS & WEDGE) | |
| | 5 | 1 | **186-3735** | 2 | PIN-CONNECTOR (16-GA TO 18-GA) | |
| | 6 | 1 | **8T-8737** | 1 | PLUG-SEAL | |
| | 7 | 1 | **3E-3371** | 1 | WEDGE-RECEPTACLE LOCK (3-PIN) | |

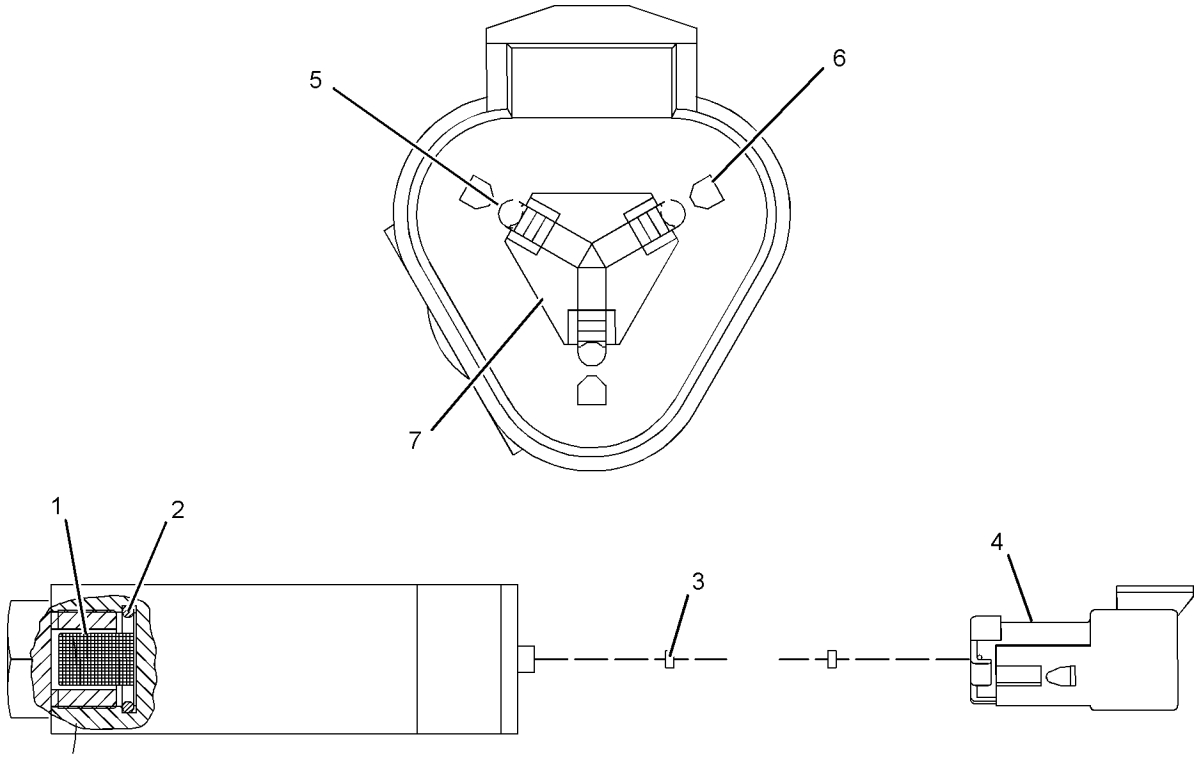


GRAPHIC #1 **<END>** g01058912

# OPERATOR STATION

## *249-2969* ADJUSTER GP-SEAT

**S/N: RLB1-UP**

**PART OF 226-7677 SEAT GP**

**SMCS-7321** **i02157990**

| NOTE | REF NO | GRAPHIC REF | PART NUMBER | QTY | PART NAME 1 2 3 4 5 6 (PRODUCT LEVEL) | SEE PAGE |
|---|---|---|---|---|---|---|
| | 1 | 1 | **4V-8256** | 4 | SPRING | |
| | 2 | 1 | **117-4492** | 1 | ROD | |
| | 3 | 1 | **136-1544** | 1 | LATCH AS-LH | |
| | 4 | 1 | **156-5545** | 1 | LATCH AS-RH | |
| | 5 | 1 | **164-4531** | 1 | ROD | |
| | 6 | 1 | **170-1115** | 1 | HANDLE (TILT) | |
| | 7 | 1 | **241-0504** | 1 | PLATE AS | |
| | 8 | 1 | **241-0506** | 1 | HANDLE (SLIDE) | |
| | 9 | 1 | **132-0338** | 2 | WASHER-PLASTIC (13X31.7X0.8-MM THK) | |
| | 10 | 1 | **2K-4973** | 2 | LOCKNUT (3/8-16-THD) | |
| | 11 | 1 | **7X-0608** | 2 | WASHER-HARD (10.2X16X2-MM THK) | |

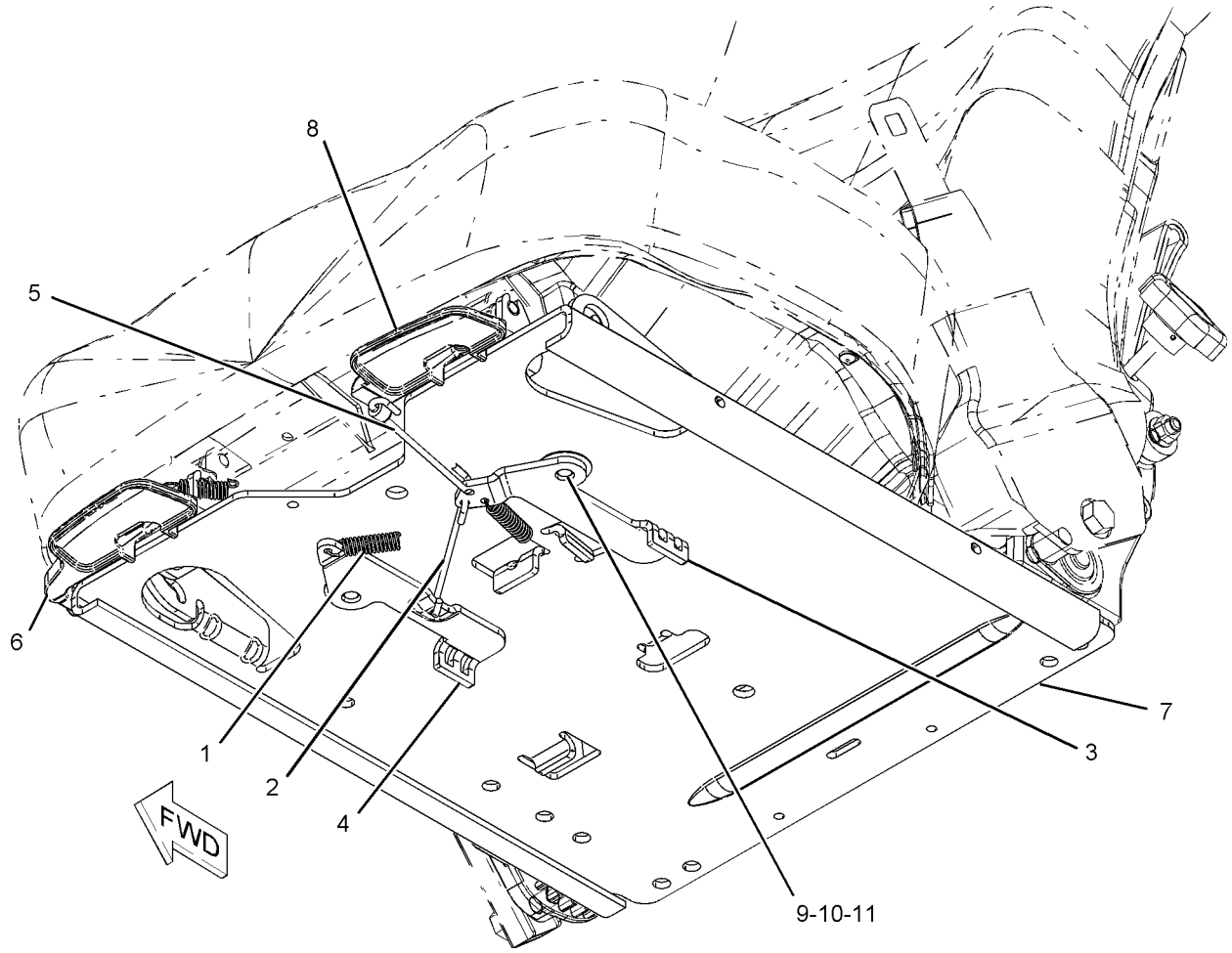


GRAPHIC #1 **<END>** g01096916

# OPERATOR STATION

## *237-3970* AIR COMPRESSOR GP-SEAT

**S/N: RLB1-UP**

**FOR OPTIONAL FIELD REPLACEMENT ORDER 214-0783 COMPRESSOR, 211-5358 CONDUIT(100-CM) & 5P-6010 TUBE (1-M), PROVIDES HEAVY DUTY SEAT COMPRESSOR**

**PART OF 199-5725 SUSPENSION GP-SEAT**

**SMCS-731S, 7324** **i02012095**

| NOTE | REF NO | GRAPHIC REF | PART NUMBER | QTY | PART NAME 1 2 3 4 5 6 (PRODUCT LEVEL) | SEE PAGE |
|---|---|---|---|---|---|---|
| | | | | | (NO SERVICED PARTS) | |

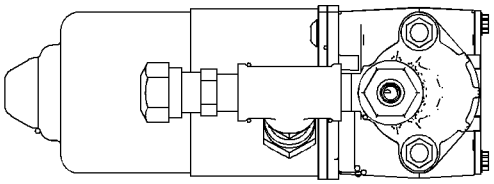

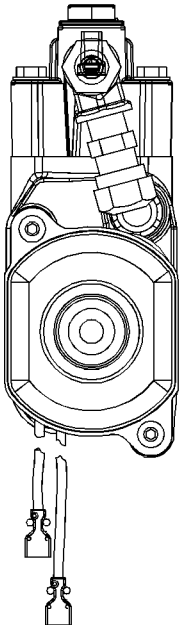

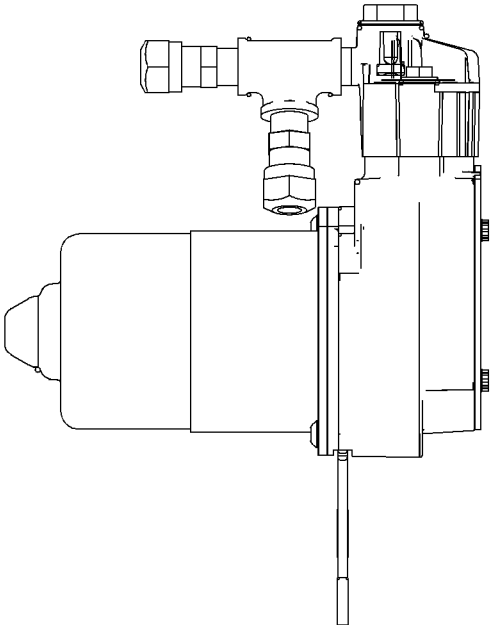

GRAPHIC #1

**<END>**

g01040576

# OPERATOR STATION

## *309-0916* AIR CONDITIONER & MOUNTING GP

**S/N: RLB1-UP**

**PART OF 269-8820 CAB AR**

**SMCS-7320** **i02955280**

| NOTE | REF NO | GRAPHIC REF | PART NUMBER | QTY | PART NAME 1 2 3 4 5 6 (PRODUCT LEVEL) | SEE PAGE |
|---|---|---|---|---|---|---|
| | 1 | 1 | **8Y-6388** | 1 | LOUVER AS-VENT | |
| | 2 | 1 | **104-5604** | 4 | WASHER (2-MM THK) | |
| | 3 | 1 | **120-3950** | 1 | GASKET | |
| | 4 | 1 | **151-5715** | 1 | LOUVER AS-VENT | |
| | 5 | 1 | **160-8720** | 1 | PLENUM | |
| | 6 | 1 | **170-4855** | 1 | PLENUM | |
| | 7 | 1 | **170-5337** | 1 | GASKET | |
| | 8 | 1 | **170-5338** | 2 | GASKET | |
| | 9 | 1 | **170-5339** | 1 | GASKET | |
| | 10 | 1 | **170-5340** | 2 | GASKET | |
| | 11 | 1 | **170-5341** | 1 | GASKET | |
| | 12 | 1 | **170-5342** | 1 | COVER | |
| M | 13 | 1 | **175-7141** | 6 | NUT-HEX FLANGE (M10X1.5-THD) | |
| | 14 | 1 | **185-9464** | 3 | LATCH AS | |
| | 15 | 1 | **268-6704** | 1 | FILTER ELEMENT-CAB AIR (CAB HEATER, AIR CONDITIONER) | |
| | 16 | 1 | **272-0216** | 1 | BRACKET AS | |
| M | | 1 | **6V-9632** | 1 | NUT-WELD (M6X1-THD) | |
| Y | 17 | 1 | **308-9434** | 1 | HEATER & AIR CONDITIONER GP | 755 |
| J | 18 | 1 | **309-1009** | 1 | INSULATION | |
| J | 19 | 1 | **309-1010** | 1 | INSULATION | |
| J | 20 | 1 | **309-1011** | 1 | INSULATION | |
| J | 21 | 1 | **309-1012** | 1 | INSULATION | |
| J | 22 | 1 | **309-1013** | 1 | INSULATION | |
| J | 23 | 1 | **309-1014** | 1 | INSULATION | |
| J | 24 | 1 | **309-1015** | 1 | INSULATION | |
| | 25 | 1 | **104-2091** | 2 | SCREW-FLAT HEAD (NO 6X0.5-IN) | |
| | 26 | 1 | **118-5619** | 2 | SCREW-FLAT HEAD (NO 6X1-IN) | |
| J | 27 | 1 | **309-1016** | 1 | INSULATION | |
| M | 28 | 1 | **6V-7357** | 2 | BOLT (M6X1X25-MM) | |
| M | 29 | 1 | **7X-2533** | 2 | BOLT (M6X1X35-MM) | |
| M | 30 | 1 | **7X-2619** | 2 | BOLT (M6X1X10-MM) | |
| M | 31 | 1 | **7X-2621** | 5 | BOLT (M10X1.5X12-MM) | |
| | 32 | 1 | **8T-4121** | 5 | WASHER-HARD (11X21X2.5-MM THK) | |
| M | 33 | 1 | **8T-7004** | 6 | STUD-TAPERLOCK | |
| M | 34 | 1 | **9X-2044** | 4 | SCREW-TRUSS HEAD (M6X1X16-MM) | |
| | 35 | 1 | **9X-8256** | 2 | WASHER (6.6X12X2-MM THK) | |
| | 36 | 1 | **7K-1181** | 2 | STRAP-CABLE | |
| | | | | | AVAILABLE REPAIR KIT(S): | |
| J | | | **309-1008** | 1 | KIT-INSULATION | |

J-KIT MARKED J SERVICES PART(S) MARKED J
M-METRIC PART
Y-SEPARATE ILLUSTRATION

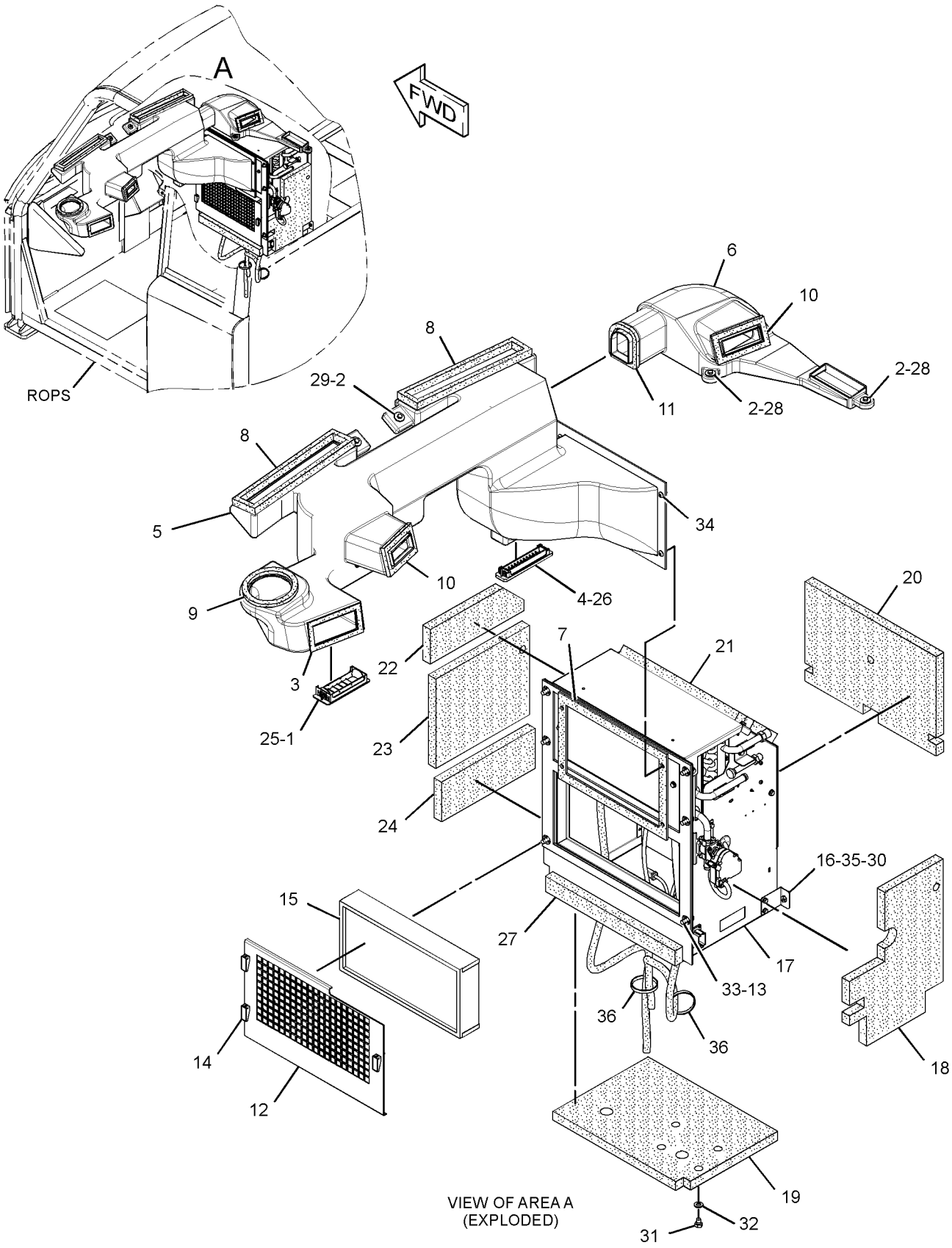


VIEW OF AREA A
(EXPLODED)

GRAPHIC #1

**<END>**

g01627798

# OPERATOR STATION

## *8Y-5904* ARMREST GP

**S/N: RLB1-UP**

**PART OF 162-8447, 162-8448 ARMREST GP**

**SMCS-7307** **i03177492**

| NOTE | REF NO | GRAPHIC REF | PART NUMBER | QTY | PART NAME 1 2 3 4 5 6 (PRODUCT LEVEL) | SEE PAGE |
|---|---|---|---|---|---|---|
| | 1 | 1 | **8Y-5906** | 1 | BASE-ARMREST (LH) | |
| L | 2 | 1 | **8S-7803** | 1 | RING-RETAINING | |
| J | 3 | 1 | **6V-2687** | 4 | SCREW-PAN HEAD (10-24X1-IN) | |
| L | 4 | 1 | **8T-8641** | 1 | WASHER (M9.8X16X0.8-MM THK) | |
| L | 5 | 1 | **3E-4312** | 1 | NUT-SQUARE (3/8-16-THD) | |
| | | | | | AVAILABLE REPAIR KIT(S): | |
| J | | | **8Y-5988** | 1 | KIT-CUSHION (ARMREST) | |
| | | | | | (INCLUDES CUSHION AS & SCREWS) | |
| L | | | **8Y-6028** | 1 | KIT-ADJUSTER (ARMREST) | |
| | | | | | (INCLUDES KNOB AS, NUT, WASHER, RING & SPRING) | |

J-KIT MARKED J SERVICES PART MARKED J
L-KIT MARKED L SERVICES PART(S) MARKED L

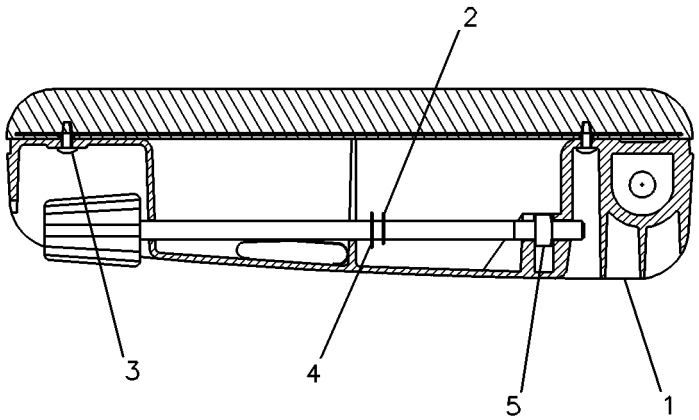


GRAPHIC #1 **<END>** g00083048

# 162-8447 ARMREST GP–LH

**S/N: RLB1-UP**

**PART OF 240-8718 SEAT GP**

**SMCS-7307** **i02869622**

| NOTE | REF NO | GRAPHIC REF | PART NUMBER | QTY | PART NAME 1 2 3 4 5 6 (PRODUCT LEVEL) | SEE PAGE |
|---|---|---|---|---|---|---|
| Y | 1 | 1 | **8Y-5904** | 1 | ARMREST GP (LH) | 725 |
| | 2 | 1 | **143-1288** | 1 | LOCKNUT-FLANGE (3/8-16-THD) | |
| | 3 | 1 | **163-1149** | 1 | BRACKET AS | |
| | 4 | 1 | **1K-6872** | 1 | LOCKNUT (1/2-13-THD) | |
| | 5 | 1 | **4L-6454** | 1 | BOLT (3/8-16X1-IN) | |
| | 6 | 1 | **5P-8245** | 1 | WASHER-HARD (13.5X25.5X3-MM THK) | |
| | 7 | 1 | **9X-8873** | 1 | BOLT (1/2-13X2.25-IN) | |

Y-SEPARATE ILLUSTRATION

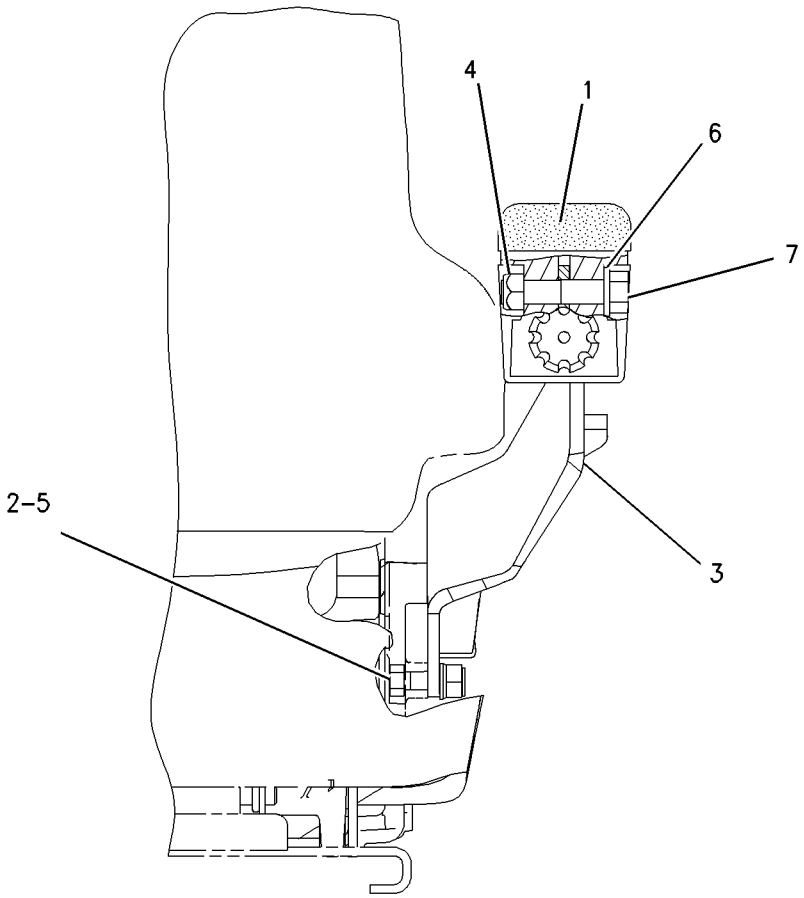


FRONT VIEW

GRAPHIC #1 **<END>** g00800891

# OPERATOR STATION

## 162-8448 ARMREST GP–RH

**S/N: RLB1-UP**

**PART OF 240-8718 SEAT GP**

**SMCS-7307** **i02836617**

| NOTE | REF NO | GRAPHIC REF | PART NUMBER | QTY | PART NAME 1 2 3 4 5 6 (PRODUCT LEVEL) | SEE PAGE |
|---|---|---|---|---|---|---|
| Y | 1 | 1 | **8Y-5904** | 1 | ARMREST GP | 725 |
| | 2 | 1 | **143-1288** | 1 | LOCKNUT-FLANGE (3/8-16-THD) | |
| | 3 | 1 | **163-1148** | 1 | BRACKET AS | |
| | 4 | 1 | **1K-6872** | 1 | LOCKNUT (1/2-13-THD) | |
| | 5 | 1 | **4L-6454** | 1 | BOLT (3/8-16X1-IN) | |
| | 6 | 1 | **5P-8245** | 1 | WASHER-HARD (13.5X25.5X3-MM THK) | |
| | 7 | 1 | **9X-8873** | 1 | BOLT (1/2-13X2.25-IN) | |

Y-SEPARATE ILLUSTRATION

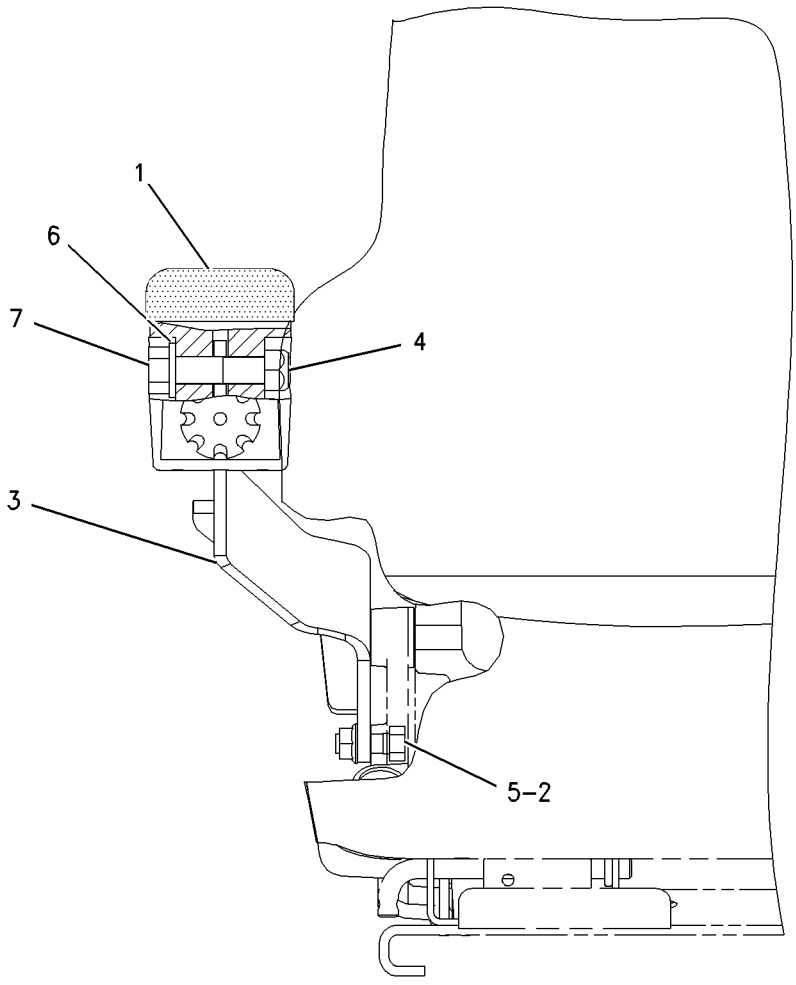


GRAPHIC #1 **<END>** g00801340

# OPERATOR STATION

## *269-8820* CAB AR

**S/N: RLB1-UP**

**PART OF 268-7810 GENERAL AR**

**SMCS-7301** **i03296705**

| NOTE | PART NUMBER | QTY | PART NAME 1 2 3 4 5 6 (PRODUCT LEVEL) | SEE PAGE |
|---|---|---|---|---|
| Y | *309-0916* | 1 | AIR CONDITIONER & MOUNTING GP | 723 |
| Y | *267-8952* | 1 | CIRCUIT BREAKER GP | 256 |
| Y | *279-5647* | 1 | CONTROL GP-FOOT BRAKE (SECONDARY BRAKE) | 734 |
| | | | S/N: RLB1-300 | |
| Y | *310-8332* | 1 | CONTROL GP-BRAKE | 574 |
| | | | S/N: RLB301-UP | |
| Y | *278-5962* | 1 | CONTROL GP-GOVERNOR | 216 |
| Y | *236-0982* | 1 | CONTROL GP-MACHINE (CHASSIS) | 262 |
| Y | *236-0981* | 1 | CONTROL GP-SERVICE BRAKE | 736 |
| Y | *236-0983* | 1 | CONTROL GP-STEERING | 738 |
| Y | *240-2220* | 1 | CONTROL GP-TRANSMISSION (OPERATOR) | 741 |
| Y | *149-0082* | 1 | DOOR GP-CAB | 751 |
| | | | S/N: RLB1-477 | |
| Y | *322-2080* | 1 | DOOR GP-CAB | 753 |
| | | | S/N: RLB478-UP | |
| Y | *265-6540* | 1 | INSTALLATION GP-RADIO | 759 |
| Y | *236-1030* | 1 | LINER GP-CAB (SOUND SUPPRESSION) | 762 |
| Y | *309-0924* | 1 | LINES GP-AIR CONDITIONER | 766 |
| Y | *279-8120* | 1 | PANEL GP-CAB | 775 |
| Y | *236-0986* | 1 | PANEL GP-INSTRUMENT | 777 |
| Y | *236-5373* | 1 | PLATE & FILM GP (CAB) | 821 |
| Y | *265-0700* | 1 | ROPS GP | 789 |
| Y | *265-9521* | 1 | SEAT GP-ADJUSTABLE | 798 |
| Y | *149-0088* | 1 | SEAT GP-COMPANION | 799 |
| | | | S/N: RLB1-409 | |
| Y | *318-8302* | 1 | SEAT GP-COMPANION | 800 |
| | | | S/N: RLB410-UP | |
| Y | *241-8896* | 1 | TRIM GP-CAB | 804 |
| Y | *149-0087* | 1 | VISOR GP-CAB | 808 |
| Y | *281-7041* | 1 | WINDOW GP-CAB | 814 |
| Y | *241-4157* | 1 | WIPER & WASHER GP-WINDOW | 815 |
| Y | *236-0985* | 1 | WIRING GP-CAB | 343 |

Y-SEPARATE ILLUSTRATION

**<END>**

# OPERATOR STATION

## *275-6690* COIL GP-HEATER

**S/N: RLB1-UP**

**PART OF 308-9434 HEATER & AIR CONDITIONER GP**

**SMCS-7304** **i02639522**

| NOTE | REF NO | GRAPHIC REF | PART NUMBER | QTY | PART NAME 1 2 3 4 5 6 (PRODUCT LEVEL) | SEE PAGE |
|---|---|---|---|---|---|---|
| | 1 | 1 | **9X-2185** | 4 | SCREW (8-15X0.44-IN) | |
| | 2 | 1 | **248-6772** | 4 | SCREW-MACHINE (8-16X7.75-IN) | |
| Y | 3 | 1 | **275-6691** | 1 | VALVE GP-WATER (HEATER) | 807 |
| | 4 | 1 | **275-6693** | 1 | PLATE | |
| | 5 | 1 | **294-8679** | 2 | KIT-GASKET (HEATER) | |
| | | | | | (EACH INCLUDES GASKETS) | |
| | 6 | 1 | **4M-6582** | 1 | SEAL-O-RING | |

Y-SEPARATE ILLUSTRATION

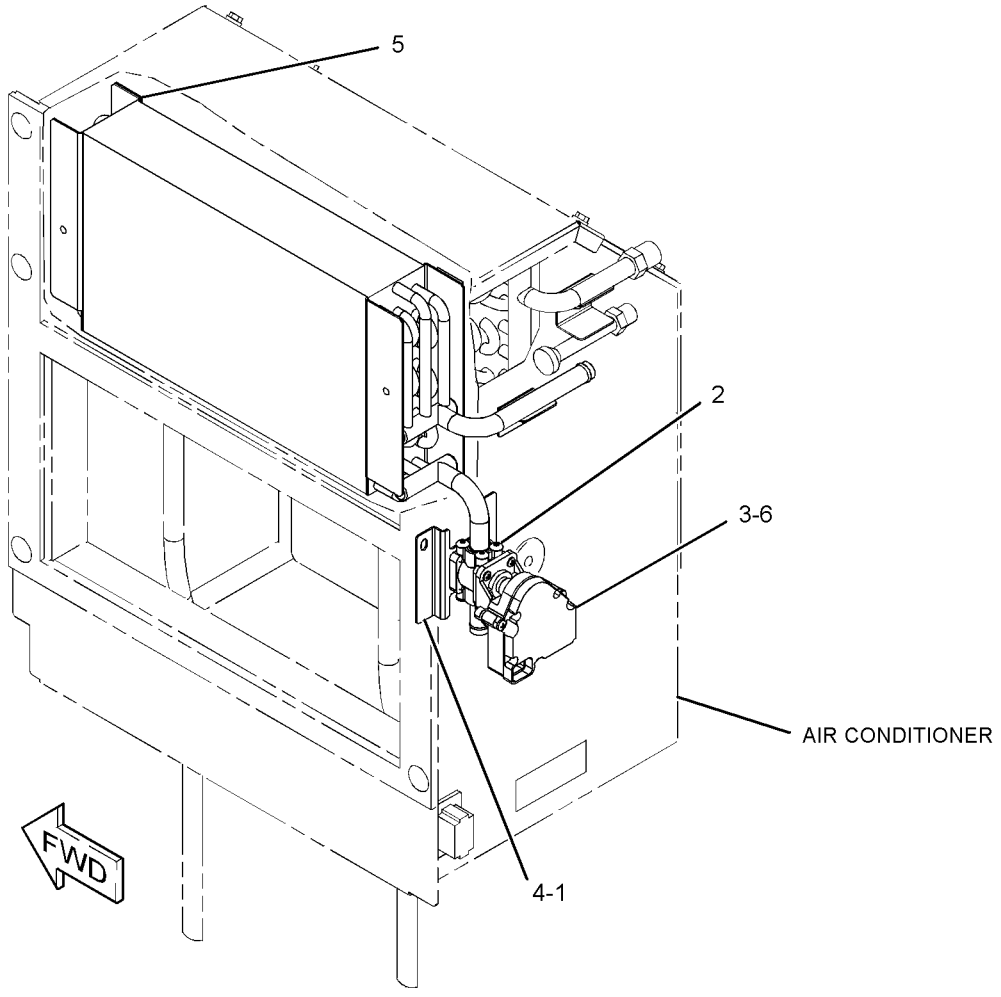


GRAPHIC #1 **<END>** g01324314

# OPERATOR STATION

## 218-0324 COMPRESSOR GP-REFRIGERANT

**S/N: RLB1-UP**

**PART OF 270-4282 DRIVE GP-ACCESSORY**

**SMCS-1802** **i02930106**

| NOTE | REF NO | GRAPHIC REF | PART NUMBER | QTY | PART NAME 1 2 3 4 5 6 (PRODUCT LEVEL) | SEE PAGE |
|---|---|---|---|---|---|---|
| | 1 | 1 | **102-8802** | 1 | KIT-RECEPTACLE (2-PIN) | |
| | | | | | (INCLUDES RECEPTACLE AS & WEDGE) | |
| | 2 | 1 | **314-4018** | 1 | VALVE AS (REFRIGERANT COMPRESSOR) | |
| | | 1 | **9X-7378** | 1 | SEAL-O-RING | |
| | 3 | 1 | **7T-4532** | 1 | PLUG AS | |
| | 4 | 1 | **9X-7385** | 2 | SEAL-O-RING | |
| | 6 | 1 | **180-9339** | 2 | PIN-CONNECTOR (14-GA TO 18-GA) | |

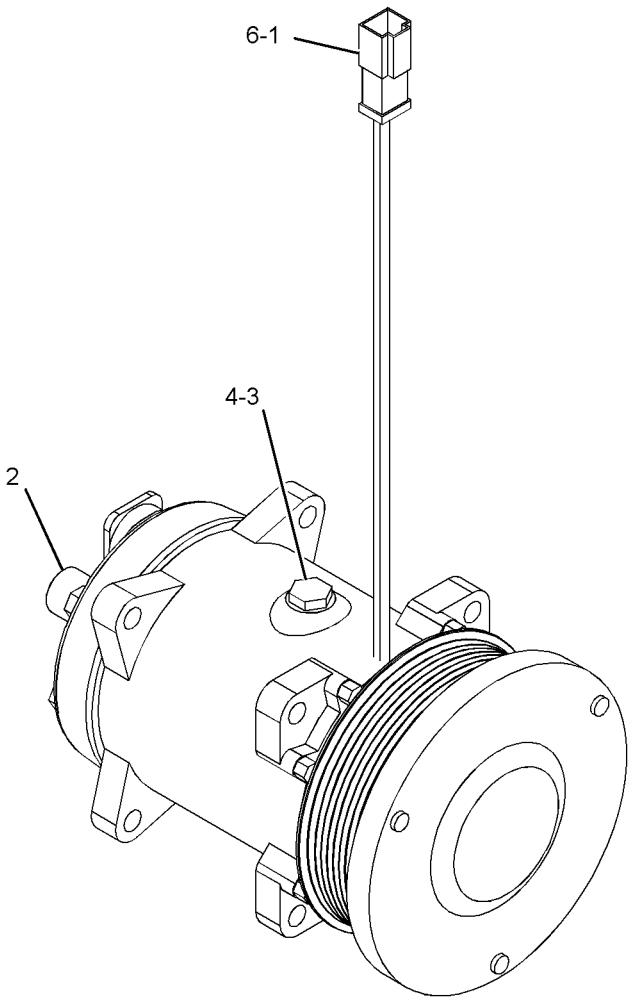


GRAPHIC #1 **<END>** g01455552

# OPERATOR STATION

## *275-4256* CONDENSER & MTG GP-REFRIGERANT

**S/N: RLB1-UP**

**PART OF 276-8860 COOLING AR**

**SMCS-1805** **i02881570**

| NOTE | REF NO | GRAPHIC REF | PART NUMBER | QTY | PART NAME 1 2 3 4 5 6 (PRODUCT LEVEL) | SEE PAGE |
|---|---|---|---|---|---|---|
| | 1 | 1 | **313-6008** | 1 | CORE AS-CONDENSER (REFRIGERENT) | |
| | 2 | 1 | **276-5998** | 1 | PLATE AS | |
| M | | 1 | **8T-3490** | 4 | NUT-WELD (M10X1.5-THD) | |
| | 3 | 1 | **276-5999** | 1 | PLATE AS | |
| M | | 1 | **8T-3490** | 4 | NUT-WELD (M10X1.5-THD) | |
| | 4 | 1 | **280-1598** | 2 | HINGE | |
| | 5 | 1 | **300-5370** | 1 | BRACKET AS | |
| M | | 1 | **8T-3490** | 4 | NUT-WELD (M10X1.5-THD) | |
| | 6 | 1 | **6N-8744** | 6 | MOUNT | |
| | 7 | 1 | **7X-0603** | 6 | WASHER-HARD (9.9X35X2.5-MM THK) | |
| | 8 | 1 | **8T-4121** | 4 | WASHER-HARD (11X21X2.5-MM THK) | |
| M | 9 | 1 | **8T-4133** | 4 | NUT (M10X1.5-THD) | |
| M | 10 | 1 | **8T-4136** | 8 | BOLT (M10X1.5X25-MM) | |
| M | 11 | 1 | **8T-4137** | 4 | BOLT (M10X1.5X20-MM) | |
| M | 12 | 1 | **8T-4195** | 10 | BOLT (M10X1.5X30-MM) | |
| | 13 | 1 | **7X-7729** | 16 | WASHER (11X25X3-MM THK) | |

M-METRIC PART

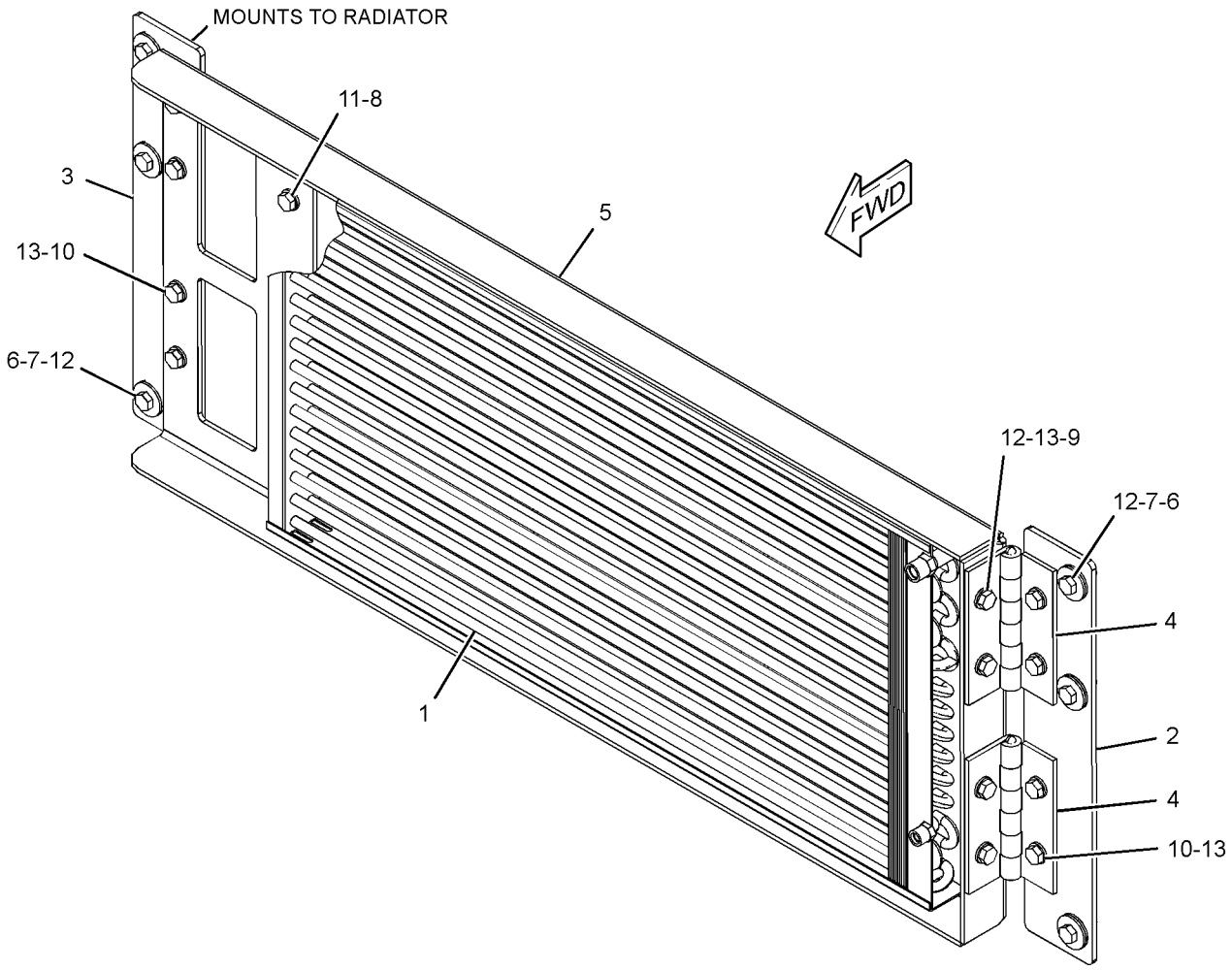


GRAPHIC #1 **<END>** g01356749

# OPERATOR STATION

## 218-7311 CONTROL GP-FOOT BRAKE–SERVICE

**S/N: RLB1-UP**

**PART OF 236-0981 CONTROL GP-SERVICE BRAKE**

**SMCS-4265, 4269** **i02050376**

| NOTE | REF NO | GRAPHIC REF | PART NUMBER | QTY | PART NAME 1 2 3 4 5 6 (PRODUCT LEVEL) | SEE PAGE |
|---|---|---|---|---|---|---|
| | 1 | 1 | **248-6586** | 1 | VALVE GP-BRAKE (SERVICE) | |
| | 2 | 1 | **248-6599** | 1 | PEDAL AS | |
| | 3 | 1 | **248-6614** | 1 | KIT-SEAL | |

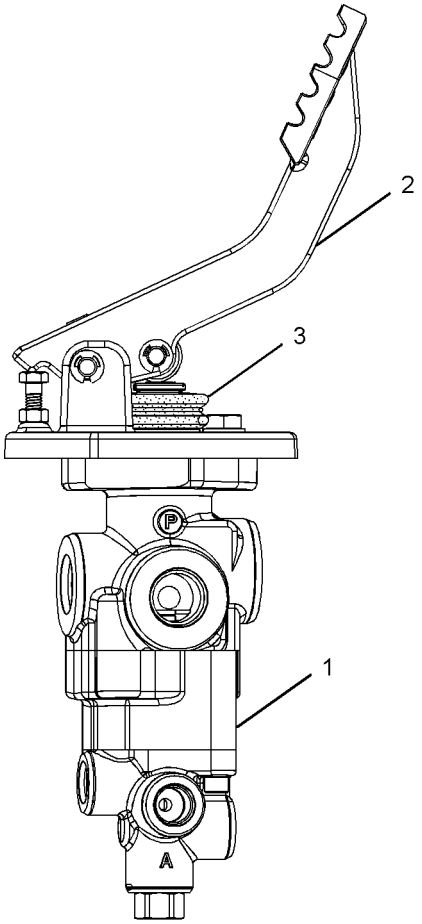


RIGHT SIDE VIEW

GRAPHIC #1

**<END>**

g01059468

## 240-2139 CONTROL GP-FOOT BRAKE

**S/N: RLB1-300**

**PART OF 279-5647 CONTROL GP-FOOT BRAKE**

**SMCS-4265, 4269** **i02559057**

| NOTE | REF NO | GRAPHIC REF | PART NUMBER | QTY | PART NAME 1 2 3 4 5 6 (PRODUCT LEVEL) | SEE PAGE |
|---|---|---|---|---|---|---|
| | 1 | 1 | **286-3119** | 1 | COVER | |
| | 2 | 1 | **140-2961** | 1 | KIT-ROLLER (FOOT BRAKE CONTROL) | |
| | | | | | (KIT INCLUDES ROLLER & ROLLER PIN) | |
| | 3 | 1 | **274-9189** | 1 | KIT-TREADLE PIN (FOOT BRAKE CONTROL) | |
| | | | | | (KIT INCLUDES BUSHINGS, PIN & PUSH NUT) | |
| | 4 | 1 | **140-2963** | 2 | SCREW | |
| | 5 | 1 | **287-6937** | 1 | PLATE AS | |
| | 6 | 1 | **160-6365** | 1 | SCREW | |
| | 7 | 1 | **287-6929** | 1 | CLIP | |
| Y | 8 | 1 | **204-7949** | 1 | SENSOR GP-POSITION (ROTARY) (FOOT BRAKE CONTROL) | 298 |
| | 9 | 1 | **6V-0894** | 1 | SEAL-O-RING | |
| | 10 | 1 | **288-3672** | 1 | SPRING | |

Y-SEPARATE ILLUSTRATION

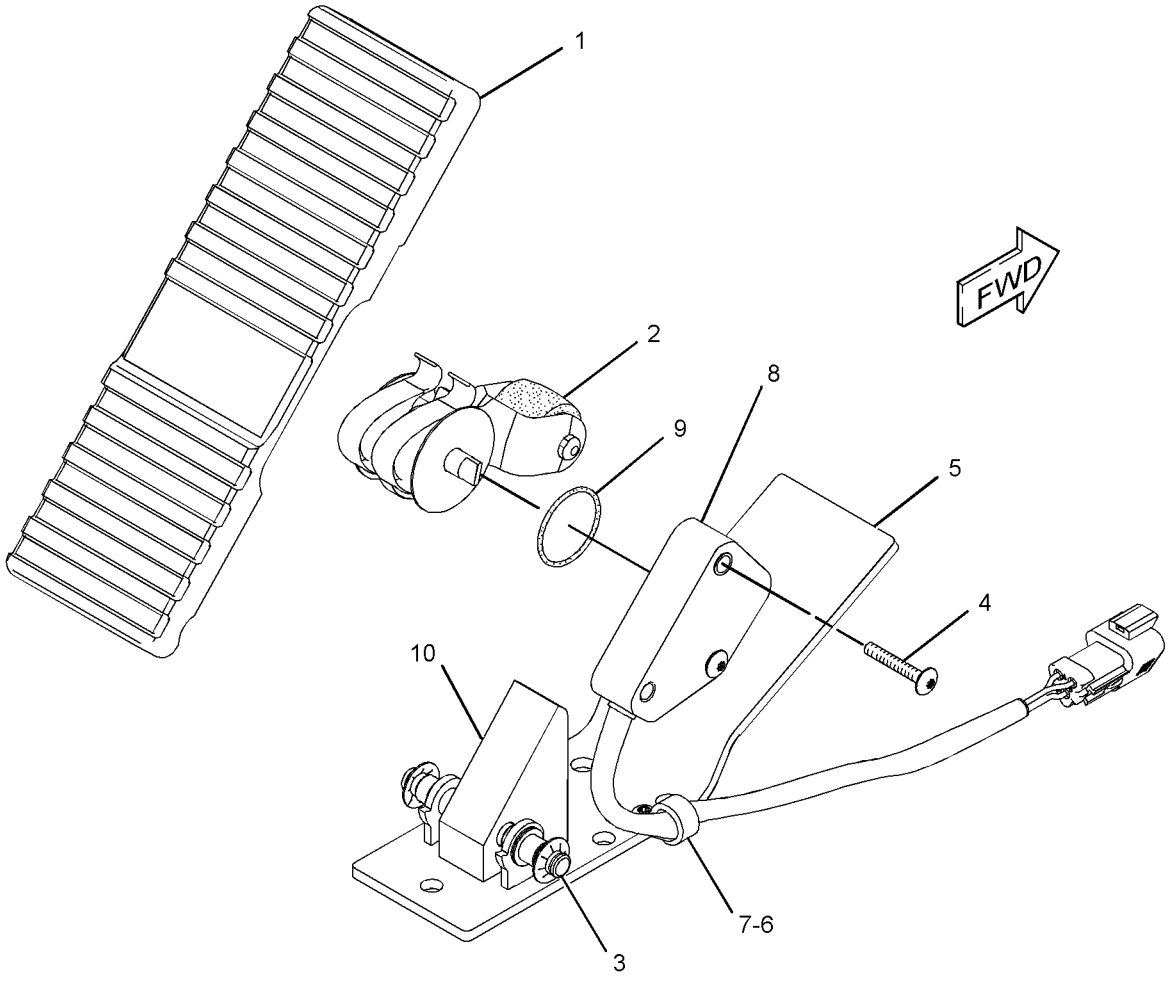


GRAPHIC #1 **<END>** g01290593

## *279-5647* CONTROL GP-FOOT BRAKE–SECONDARY

**S/N: RLB1-300**

**PART OF 269-8820 CAB AR**

**SMCS-4265, 4269** **i02617143**

| NOTE | REF NO | GRAPHIC REF | PART NUMBER | QTY | PART NAME 1 2 3 4 5 6 (PRODUCT LEVEL) | SEE PAGE |
|---|---|---|---|---|---|---|
| Y | 1 | 1 | **240-2139** | 1 | CONTROL GP-FOOT BRAKE | 733 |
| | 2 | 1 | **162-9112** | 1 | GROMMET-SPLIT | |
| M | 3 | 1 | **6V-2317** | 3 | BOLT (M8X1.25X30-MM) | |
| | 4 | 1 | **9M-1974** | 3 | WASHER-HARD (8.8X16X2-MM THK) | |

M-METRIC PART
Y-SEPARATE ILLUSTRATION

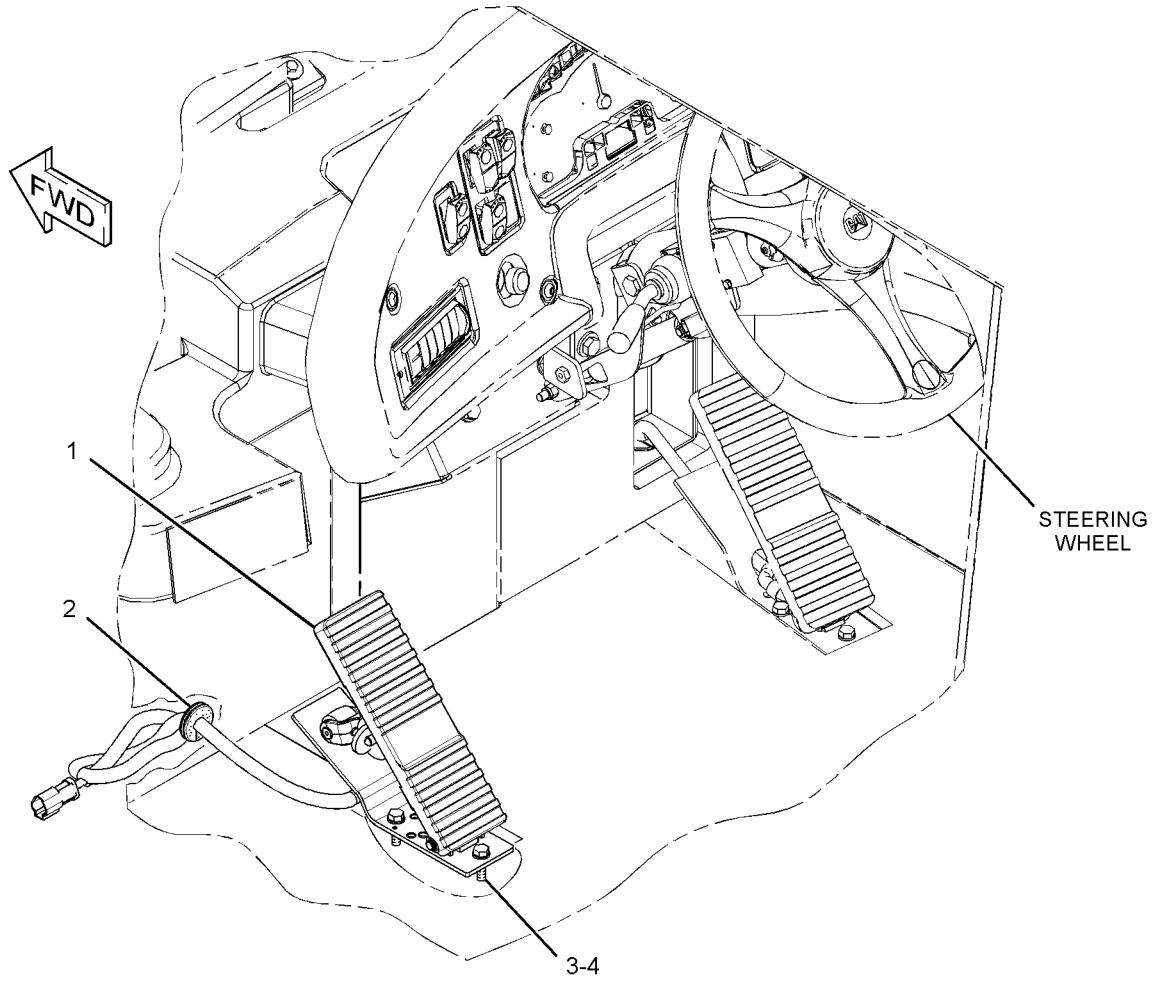


GRAPHIC #1 **<END>** g01337479

# OPERATOR STATION

## 310-7260 CONTROL GP-FOOT BRAKE

**S/N: RLB301-UP**

**PART OF 310-8332 CONTROL GP-BRAKE**

**SMCS-4265, 4269** **i03296449**

| NOTE | REF NO | GRAPHIC REF | PART NUMBER | QTY | PART NAME 1 2 3 4 5 6 (PRODUCT LEVEL) | SEE PAGE |
|---|---|---|---|---|---|---|
| Y | 1 | 1 | **266-1466** | 1 | SENSOR GP-POSITION (FOOT BRAKE CONTROL) | 300 |
| J | 2 | 1 | **310-7651** | 1 | VALVE AS-FOOT BRAKE CONTROL | |
| | | | | | AVAILABLE REPAIR KIT(S): | |
| J | | | **204-0273** | 1 | KIT-REPAIR | |
| | | | | | (INCLUDES SEALS & BOOT) | |

J-KIT MARKED J SERVICES PARTS MARKED J
Y-SEPARATE ILLUSTRATION

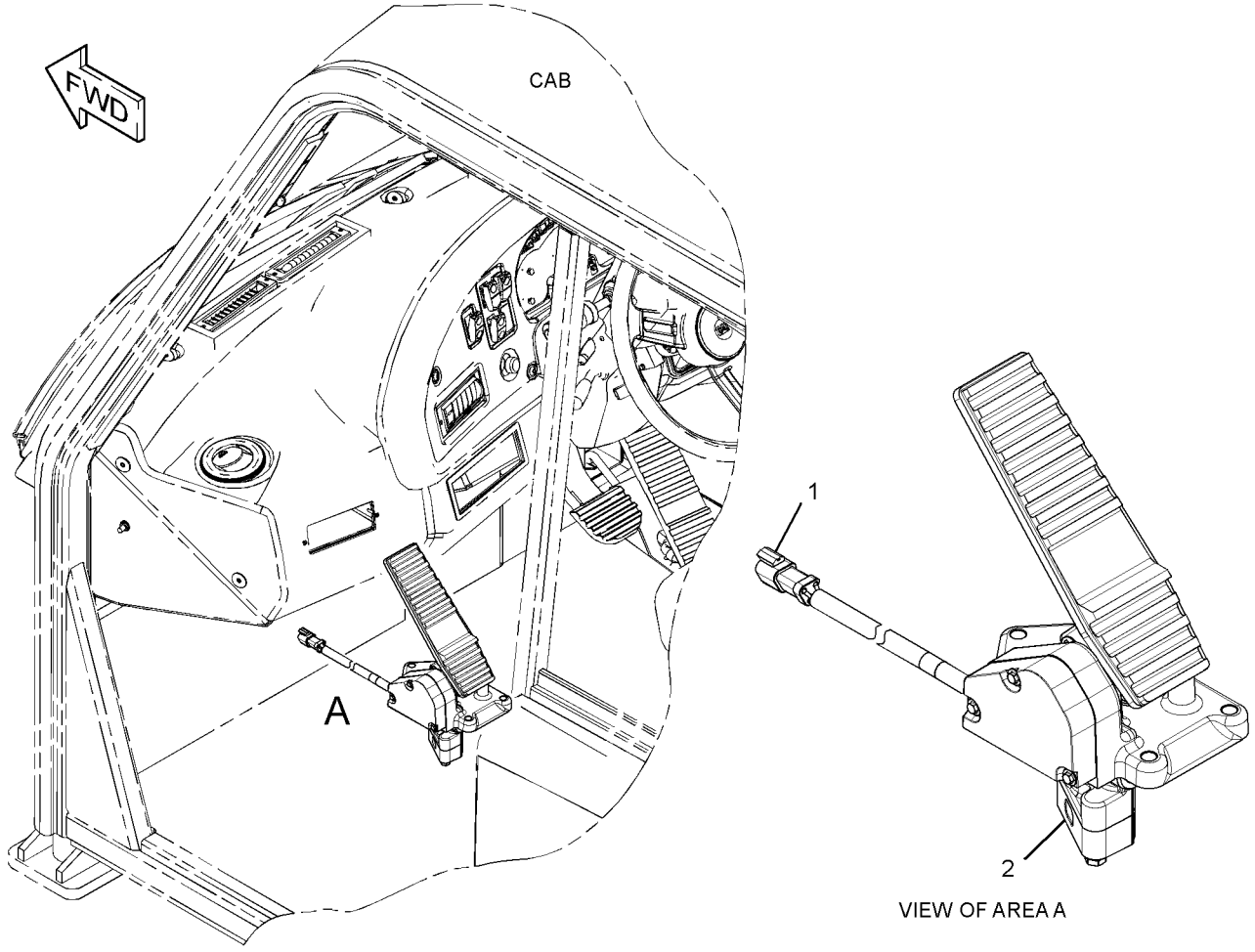


VIEW OF AREA A

GRAPHIC #1 **<END>** g01513795

# OPERATOR STATION

## *236-0981* CONTROL GP-SERVICE BRAKE

**S/N: RLB1-UP**

**PART OF 269-8820 CAB AR**

**SMCS-4269** **i02049980**

| NOTE | REF NO | GRAPHIC REF | PART NUMBER | QTY | PART NAME 1 2 3 4 5 6 (PRODUCT LEVEL) | SEE PAGE |
|---|---|---|---|---|---|---|
| | 1 | 1 | **6N-6984** | 4 | MOUNT-RUBBER | |
| | 2 | 1 | **180-8145** | 1 | SEAL | |
| Y | 3 | 1 | **218-7311** | 1 | CONTROL GP-FOOT BRAKE | 732 |
| | 4 | 1 | **247-9701** | 1 | PLATE AS | |
| M | | 1 | **6V-9632** | 3 | NUT-WELD (M6X1-THD) | |
| | 5 | 1 | **247-9702** | 1 | GASKET | |
| | 6 | 1 | **8M-4069** | 4 | WASHER (10.3X38.1X5-MM THK) | |
| | 7 | 1 | **8T-4121** | 4 | WASHER-HARD (11X21X2.5-MM THK) | |
| M | 8 | 1 | **8T-4186** | 4 | BOLT (M10X1.5X40-MM) | |
| M | 9 | 1 | **8T-4971** | 3 | BOLT (M6X1X30-MM) | |
| | 10 | 1 | **9X-8256** | 3 | WASHER (6.6X12X2-MM THK) | |

M-METRIC PART
Y-SEPARATE ILLUSTRATION

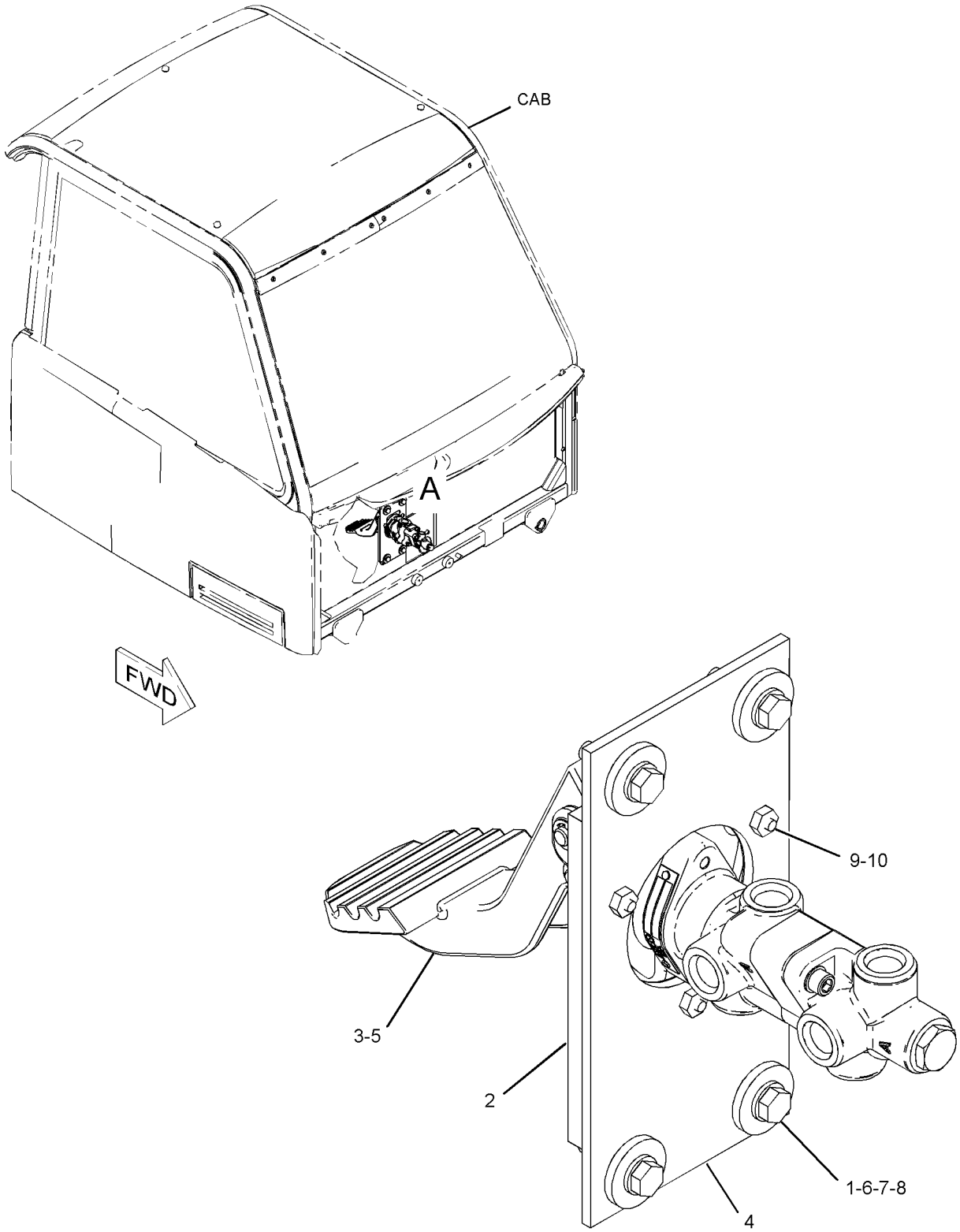


VIEW OF AREA A

GRAPHIC #1 **<END>** g01056367

# OPERATOR STATION

## *236-0983* CONTROL GP-STEERING

**S/N: RLB1-UP**

**PART OF 269-8820 CAB AR**

**SMCS-4309, 4310, 4343** **i02705507**

| NOTE | REF NO | GRAPHIC REF | PART NUMBER | QTY | PART NAME 1 2 3 4 5 6 (PRODUCT LEVEL) | SEE PAGE |
|---|---|---|---|---|---|---|
| | 1 | 1 | **2T-3360** | 1 | BUTTON AS-HORN | |
| | 2 | 1 | **6N-6984** | 4 | MOUNT-RUBBER | |
| | 3 | 1 | **191-1786** | 1 | PLATE AS | |
| M | | 1 | **8T-3490** | 4 | NUT-WELD (M10X1.5-THD) | |
| Y | 4 | 1 | **192-4286** | 1 | PUMP GP-METERING (HMU) | 627 |
| | 5 | 1 | **250-1058** | 1 | SHIM (1-MM THK) | |
| Y | 6 | 1 | **252-8050** | 1 | STEERING COLUMN GP-ADJUSTABLE | 628 |
| M | 9 | 1 | **6V-4248** | 4 | BOLT (M10X1.5X25-MM) | |
| | 10 | 1 | **6V-5839** | 4 | WASHER (11X21X2.5-MM THK) | |
| | 11 | 1 | **7X-7729** | 4 | WASHER (11X25X3-MM THK) | |
| | 12 | 1 | **8M-4069** | 8 | WASHER (10.3X38.1X5-MM THK) | |
| | 13 | 1 | **8T-4121** | 4 | WASHER-HARD (11X21X2.5-MM THK) | |
| M | 14 | 1 | **8T-4182** | 4 | BOLT (M10X1.5X45-MM) | |
| M | 15 | 1 | **8T-4195** | 4 | BOLT (M10X1.5X30-MM) | |
| | 16 | 1 | **2U-9074** | 1 | STEERING WHEEL | |

M-METRIC PART
Y-SEPARATE ILLUSTRATION

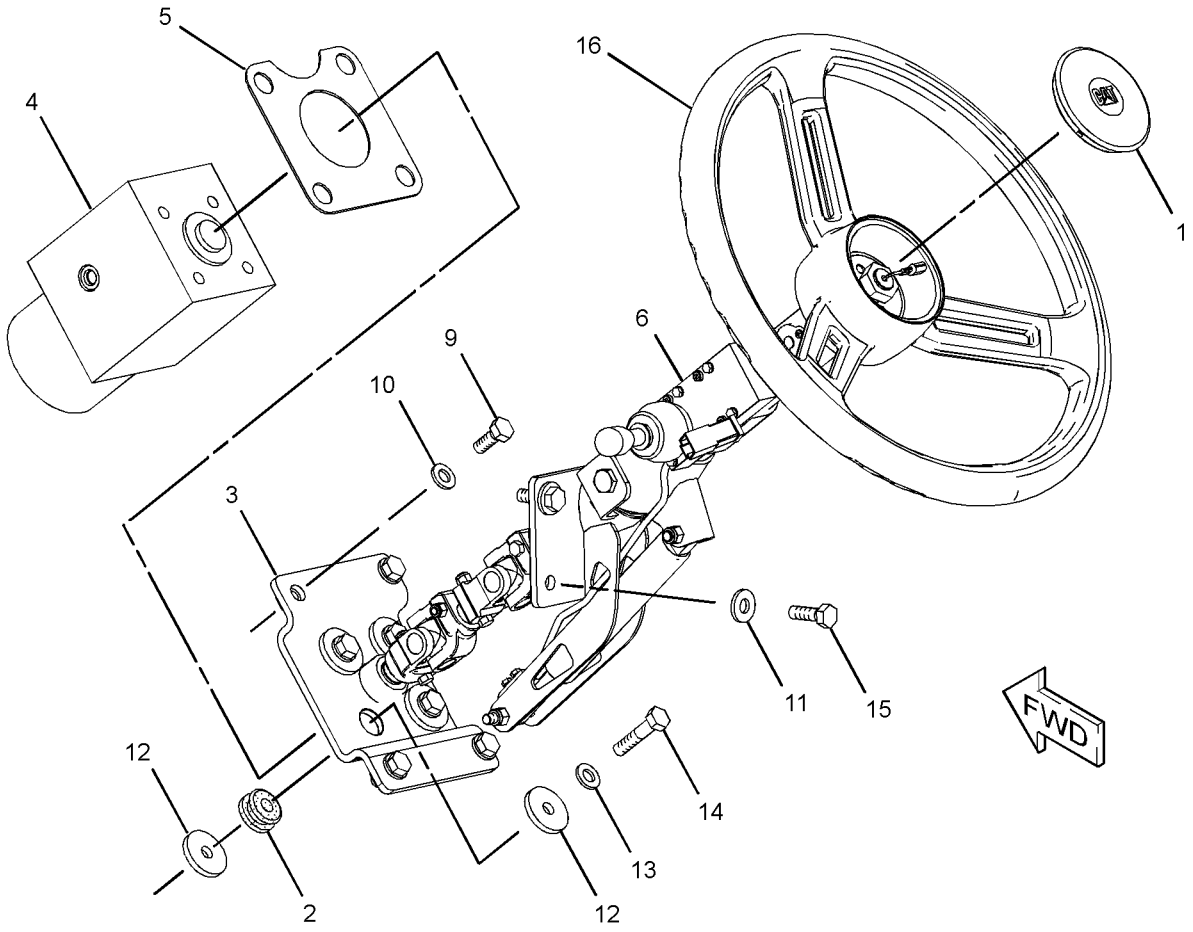


GRAPHIC #1 **<END>** g01395714

# OPERATOR STATION

## 313-2466 CONTROL GP-STEERING

**S/N: RLB1-UP**

**FIELD REPLACEMENT FOR 252-8050—PAGE 628**

**SMCS-4309, 4310, 4343** **i03131945**

| NOTE | REF NO | GRAPHIC REF | PART NUMBER | QTY | PART NAME 1 2 3 4 5 6 (PRODUCT LEVEL) | SEE PAGE |
|---|---|---|---|---|---|---|
| | 1 | 1 | **252-8051** | 1 | ADAPTER AS | |
| | 2 | 1 | **162-8550** | 1 | KIT-GAS STRUT | |
| | | | | | (INCLUDES GAS STRUT, BOLTS, NUTS & SPACERS) | |
| | 3 | 1 | **300-2960** | 1 | COLUMN AS | |
| | 4 | 1 | **191-3700** | 1 | KIT-TILT LEVER | |
| | | | | | (INCLUDES CONTROL AS, CLAMP AS & SCREWS) | |
| | 5 | 1 | **252-8054** | 2 | KIT-CONTACT | |
| | | | | | (EACH KIT INCLUDES HORN CONTACT AS & SCREWS) | |
| M | 6 | 1 | **6V-8227** | 1 | NUT (M18X1.5-THD) | |
| | 7 | 1 | **257-4263** | 1 | SHAFT | |
| | 8 | 1 | **162-8551** | 2 | JOINT AS-UNIVERSAL | |
| | | | | | (EACH INCLUDES) | |
| M | | 1 | **099-3649** | 2 | BOLT (M8X1.25X40-MM) | |
| M | | 1 | **131-3540** | 2 | LOCKNUT (M8X1.25-THD) | |
| | 9 | 1 | **185-3886** | 1 | CLAMP AS-CABLE | |
| | 10 | 1 | **321-6951** | 1 | KIT-PIVOT | |
| | | | | | (INCLUDES PIN-PIVOTS & BUSHING-PIVOTS) | |
| | 11 | 1 | **201-5121** | 1 | KIT-SHAFT (STEERING COLUMN) | |
| | | | | | (INCLUDES UPPER SHAFT, WASHERS, SPRING, PIN & HORN CONTACT) | |
| | 12 | 1 | **102-8802** | 1 | KIT-RECEPTACLE (2-PIN) | |
| | | | | | (INCLUDES RECEPTACLE AS & WEDGE) | |
| | 13 | 1 | **186-3735** | 1 | PIN-CONNECTOR (16-GA TO 18-GA) | |
| | 14 | 1 | **9G-3695** | 1 | PLUG | |

M-METRIC PART

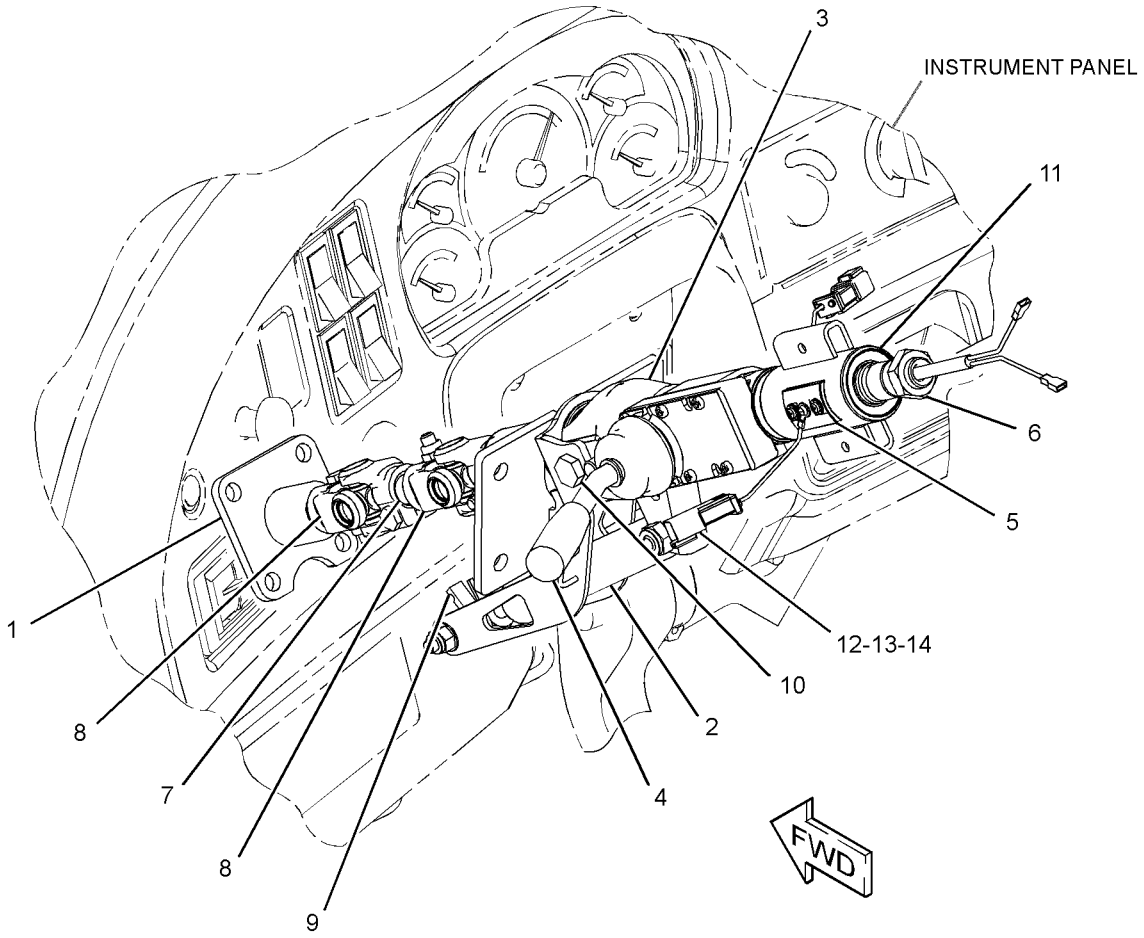


GRAPHIC #1 **<END>** g01616894

# OPERATOR STATION

## *240-2220* CONTROL GP-TRANSMISSION

**S/N: RLB1-278**

**PART OF 269-8820 CAB AR**

**SMCS-3065** **i02141191**

| NOTE | PART NUMBER | QTY | PART NAME 1 2 3 4 5 6 (PRODUCT LEVEL) | SEE PAGE |
|---|---|---|---|---|
| Y | **245-5894** | 1 | CONTROL GP-TMSN & HOIST | 745 |
| | | | | |
| M | **8C-8585** | 4 | SCREW-BUTTON HEAD (M10X1.5X20-MM) | |

M-METRIC PART
Y-SEPARATE ILLUSTRATION

**<END>**

# OPERATOR STATION

## *240-2220* CONTROL GP-TRANSMISSION

**S/N: RLB279-UP**

**PART OF 269-8820 CAB AR**

**SMCS-3065** **i02741310**

| NOTE | REF NO | GRAPHIC REF | PART NUMBER | QTY | PART NAME 1 2 3 4 5 6 (PRODUCT LEVEL) | SEE PAGE |
|---|---|---|---|---|---|---|
| CY | 1 | 1 | **300-6862** | 1 | CONTROL GP-TMSN & HOIST | 747 |
| M | 2 | 1 | **8C-8585** | 4 | SCREW-BUTTON HEAD (M10X1.5X20-MM) | |

C-CHANGE FROM PREVIOUS TYPE
M-METRIC PART
Y-SEPARATE ILLUSTRATION

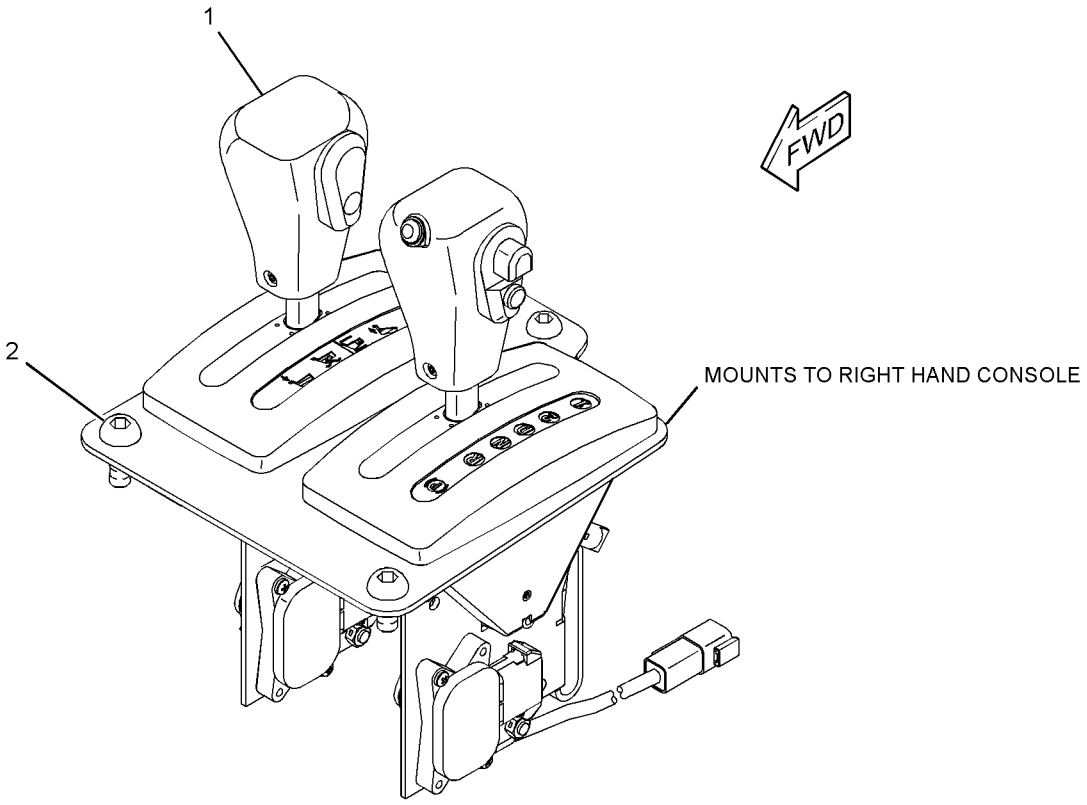


GRAPHIC #1 **<END>** g01374969

# OPERATOR STATION

## 169-0489 CONTROL GP-UNPRGMED MONITOR*R

**S/N: RLB1-UP**
**PART OF 247-7038 APPLICATION GP-MONITOR**
**FIELD REPLACEMENT FOR 247-7038—PAGE 251**
**AN ATTACHMENT**

**SMCS-7610** **i02023801**

| NOTE | REF NO | GRAPHIC REF | PART NUMBER | QTY | PART NAME 1 2 3 4 5 6 (PRODUCT LEVEL) | SEE PAGE |
|---|---|---|---|---|---|---|
| | 1 | 1 | **134-4126** | 1 | WASHER (4.52X8.28X0.76-MM THK) | |
| | 2 | 1 | **184-2472** | 2 | SCREW-PAN HEAD (NO 8-32X9.52-MM) | |
| | 3 | 1 | **7X-6315** | 1 | STRAP AS-GROUND | |
| Z | 4 | 1 | | 1 | CONTROL AS | |

Z-NOT SERVICED SEPARATELY

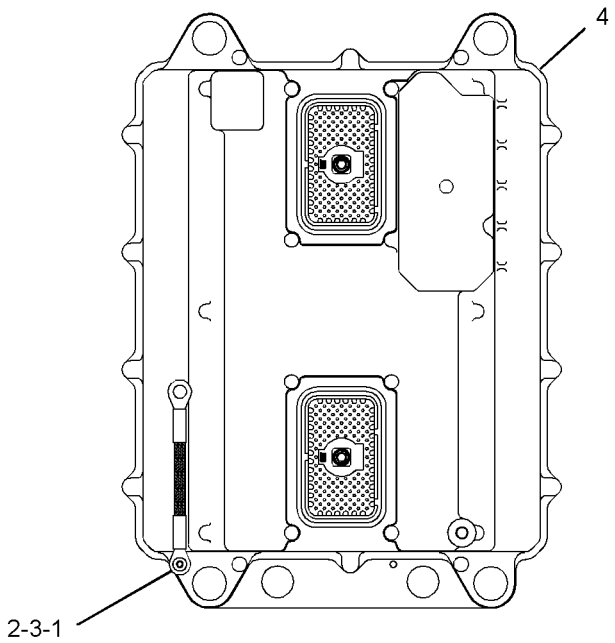


GRAPHIC #1 **<END>** g01044926

# OPERATOR STATION

## 239-5025 CONTROL GP-UNPRGMED MONITOR—MESSENGER

**S/N: RLB1-UP**

**PART OF 247-7036 APPLICATION GP-MONITOR**

**FIELD REPLACEMENT FOR 247-7036—PAGE 251**

**SMCS-7610** **i02584534**

| NOTE | REF NO | GRAPHIC REF | PART NUMBER | QTY | PART NAME 1 2 3 4 5 6 (PRODUCT LEVEL) | SEE PAGE |
|---|---|---|---|---|---|---|
| Z | 1 | 1 | | 2 | BRACKET | |
| | 2 | 1 | *239-5024* | 1 | CONTROL GP-MONITOR (MESSENGER) | |
| | 2A | 1 | **124-0312** | 1 | SCREW-PAN HEAD (8-16X0.32-IN) | |
| | 3 | 1 | **242-2461** | 1 | BEZEL | |
| Z | 4 | 1 | | 4 | SCREW-MACHINE (6-20X0.37-IN) | |

Z-NOT SERVICED SEPARATELY

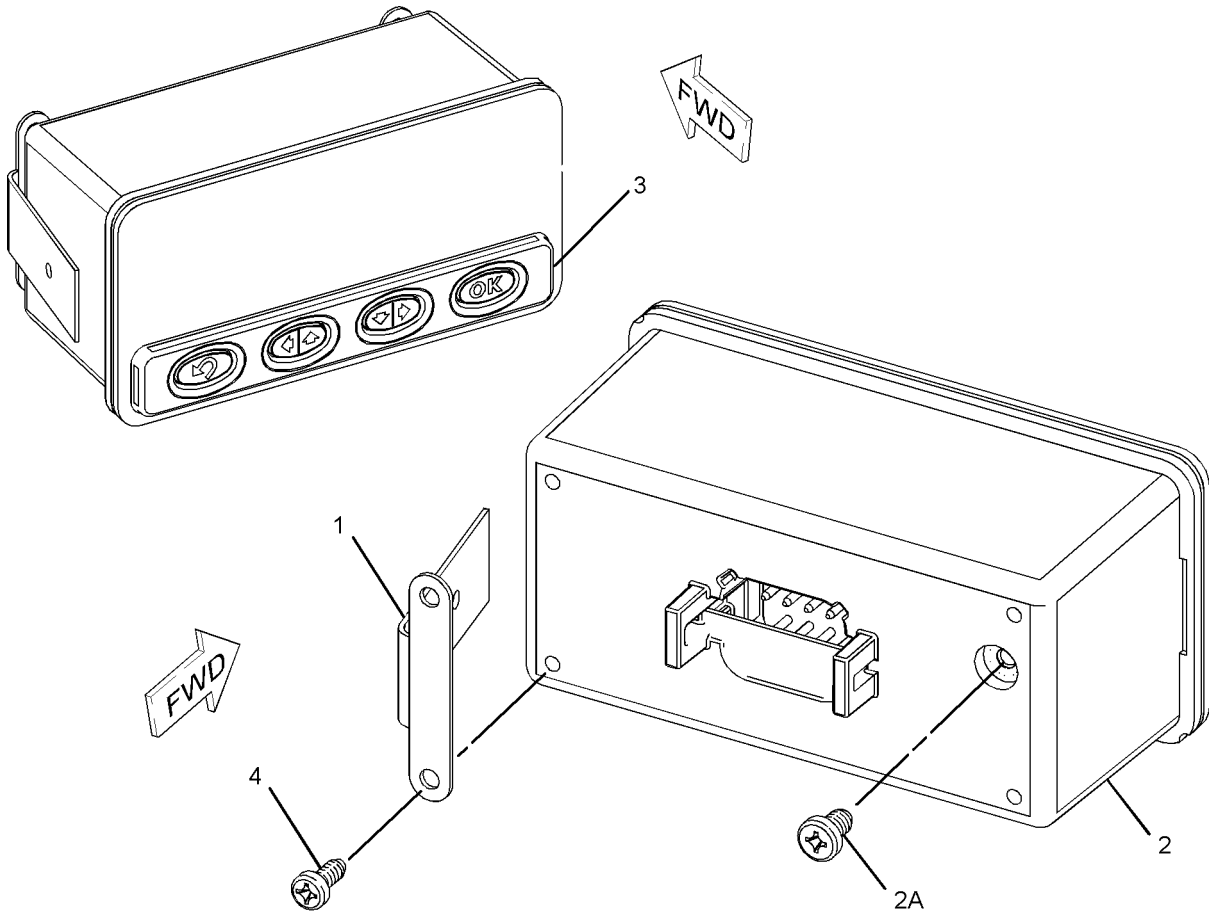


GRAPHIC #1 **<END>** g01103089

# OPERATOR STATION

## 245-5894 CONTROL GP-TMSN & HOIST

**S/N: RLB1-278**

**PART OF 240-2220 CONTROL GP-TRANSMISSION**

**FIELD REPLACEMENT ORDER 300-6862—PAGE 747**

**SMCS-3065, 5063** **i02877903**

| NOTE | REF NO | GRAPHIC REF | PART NUMBER | QTY | PART NAME 1 2 3 4 5 6 (PRODUCT LEVEL) | SEE PAGE |
|---|---|---|---|---|---|---|
| | 1 | 1 | **145-0875** | 1 | HANDLE GP-MODULAR (TRANSMISSION) | |
| | 2 | 1 | **145-0874** | 1 | HANDLE GP-MODULAR (HOIST) | |
| | 3 | 1 | **102-8805** | 1 | KIT-RECEPTACLE (6-PIN) | |
| | | | | | (INCLUDES RECEPTACLE AS & WEDGE) | |
| | 4 | 1 | **186-3735** | 6 | PIN-CONNECTOR (16-GA TO 18-GA) | |
| | 5 | 1 | **287-7198** | 2 | LAMP AS-INDICATOR (WHITE, 24-VOLT) | |
| | | | | | (EACH INCLUDES) | |
| | | 1 | **186-3735** | 2 | PIN-CONNECTOR (16-GA TO 18-GA) | |
| M | 6 | 1 | **150-1293** | 4 | SCREW-BUTTON HEAD (M4X0.7X12-MM) | |
| | 7 | 1 | **200-5965** | 2 | LEVER AS | |
| | 8 | 1 | **290-2932** | 1 | INDICATOR (TRANSMISSION SPEED) | |
| | 9 | 1 | **290-2933** | 1 | INDICATOR (BODY POSITION) | |
| | 10 | 1 | **254-1117** | 1 | PLATE-MOUNTING | |
| | 11 | 1 | **304-3593** | 1 | CONTROL GP-ELECTROHYDRAULIC (TRANSMISSION) | |
| | 11A | 1 | **257-8858** | 1 | SENSOR GP-POSITION (TRANSMISSION) | |
| | 12 | 1 | **304-3601** | 1 | CONTROL GP-ELECTROHYDRAULIC (HOIST) | |
| | 12A | 1 | **257-2531** | 1 | SENSOR GP-POSITION (HOIST) | |
| | 13 | 1 | **300-6857** | 2 | KIT-SPRING (HOIST, TRANSMISSION CONTROL) | |
| | | | | | (INCLUDES SPRING AS, BRACKET SUPPORT, BOLTS, & NYLON LOCK NUTS) | |

M-METRIC PART

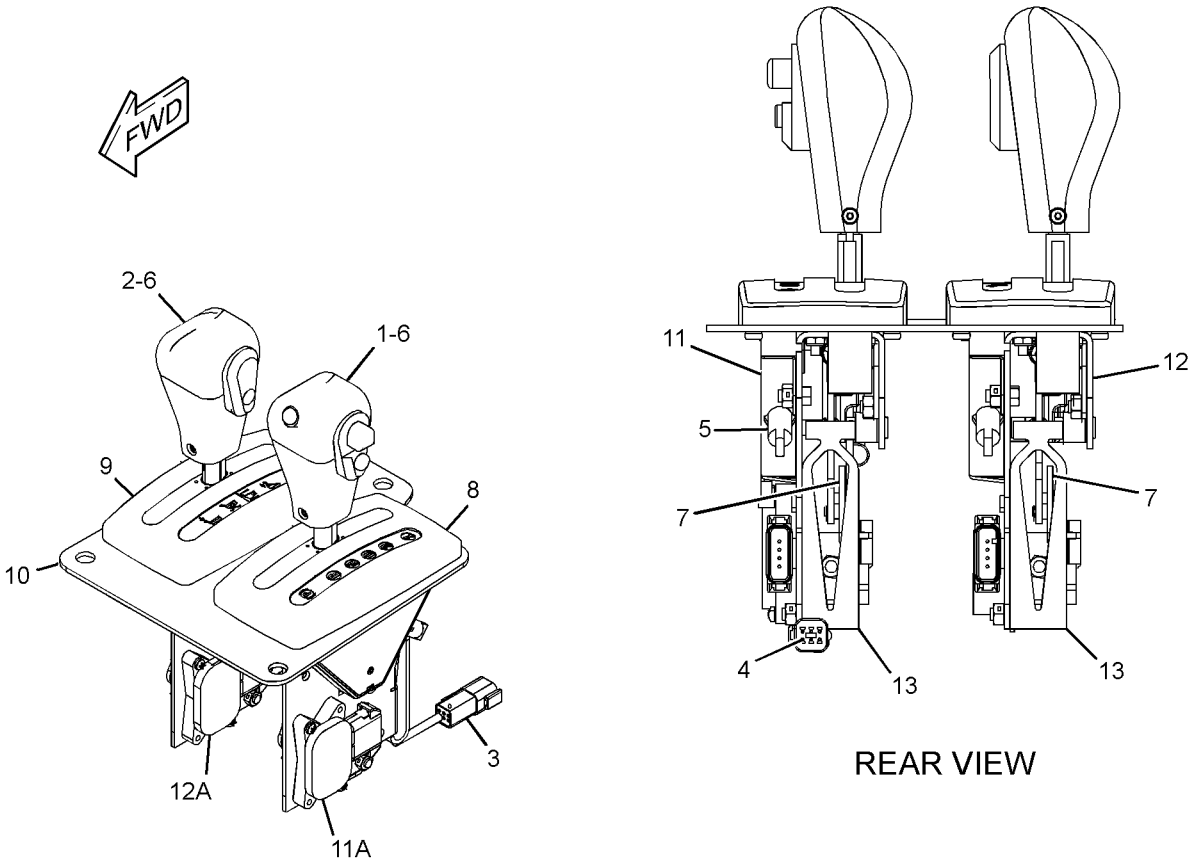


GRAPHIC #1 **<END>** g01375000

# OPERATOR STATION

## 300-6862 CONTROL GP-TMSN & HOIST

**S/N: RLB279-UP**

**PART OF 240-2220 CONTROL GP-TRANSMISSION**

**FIELD REPLACEMENT FOR 245-5894—PAGE 745**

**SMCS-3065, 5063** **i02878130**

| NOTE | REF NO | GRAPHIC REF | PART NUMBER | QTY | PART NAME 1 2 3 4 5 6 (PRODUCT LEVEL) | SEE PAGE |
|---|---|---|---|---|---|---|
| | 1 | 1 | **145-0875** | 1 | HANDLE GP-MODULAR (TRANSMISSION) | |
| | 2 | 1 | **145-0874** | 1 | HANDLE GP-MODULAR (HOIST) | |
| | 3 | 1 | **102-8805** | 1 | KIT-RECEPTACLE (6-PIN) | |
| | | | | | (INCLUDES RECEPTACLE AS & WEDGE) | |
| | 4 | 1 | **186-3735** | 6 | PIN-CONNECTOR (16-GA TO 18-GA) | |
| | 5 | 1 | **287-7198** | 2 | LAMP AS-INDICATOR (WHITE, 24-VOLT) | |
| | | | | | (EACH INCLUDES) | |
| | | 1 | **186-3735** | 2 | PIN-CONNECTOR (16-GA TO 18-GA) | |
| M | 6 | 1 | **150-1293** | 4 | SCREW-BUTTON HEAD (M4X0.7X12-MM) | |
| | 7 | 1 | **200-5965** | 2 | LEVER AS | |
| | 8 | 1 | **290-2932** | 1 | INDICATOR (TRANSMISSION SPEED) | |
| | 9 | 1 | **290-2933** | 1 | INDICATOR (BODY POSITION) | |
| | 10 | 1 | **254-1117** | 1 | PLATE-MOUNTING | |
| | 11 | 1 | **304-3593** | 1 | CONTROL GP-ELECTROHYDRAULIC (TRANSMISSION) | |
| | 11A | 1 | **257-8858** | 1 | SENSOR GP-POSITION (TRANSMISSION) | |
| | 12 | 1 | **304-3601** | 1 | CONTROL GP-ELECTROHYDRAULIC (HOIST) | |
| | 12A | 1 | **257-2531** | 1 | SENSOR GP-POSITION (HOIST) | |
| | 13 | 1 | **300-6857** | 2 | KIT-SPRING (HOIST, TRANSMISSION CONTROL) | |
| | | | | | (INCLUDES SPRING AS, BRACKET SUPPORT, BOLTS, & NYLON LOCK NUTS) | |

M-METRIC PART

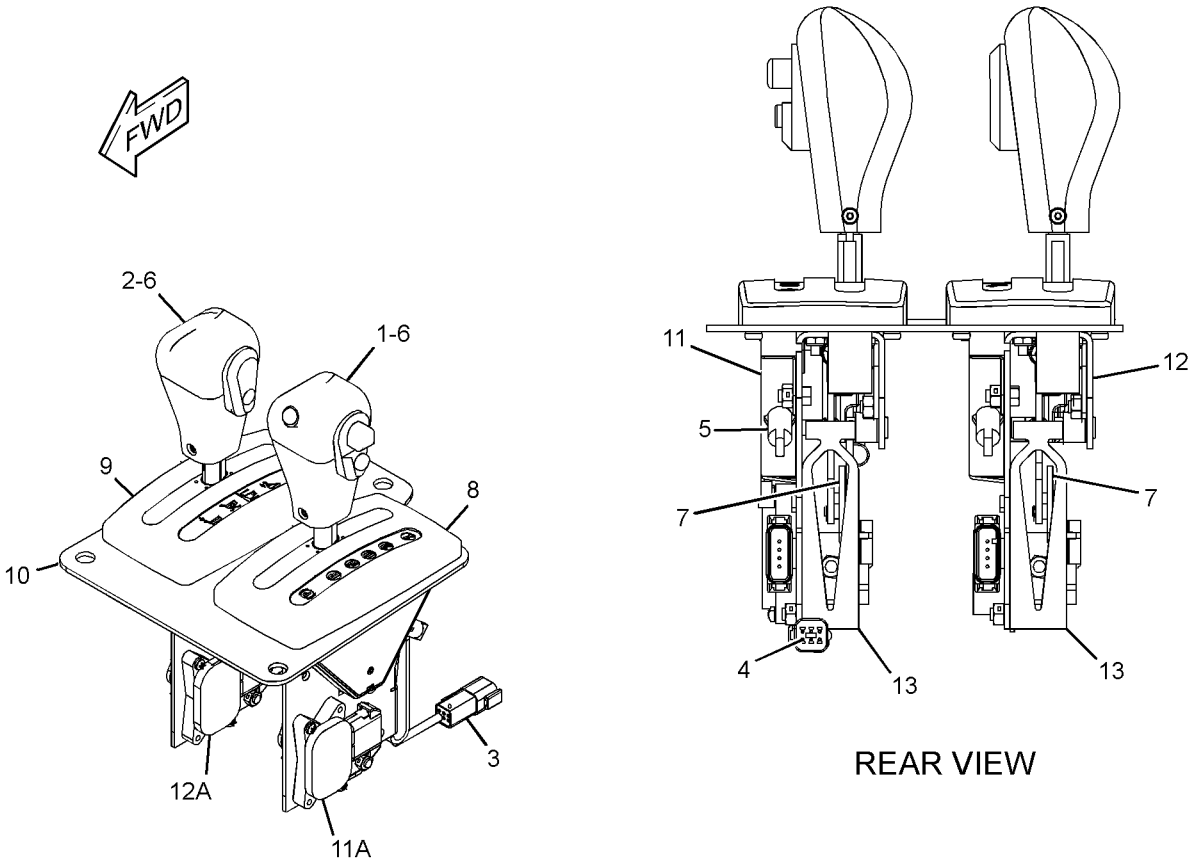


GRAPHIC #1 **<END>** g01375000

# OPERATOR STATION

## *226-8720* COVER GP-SEAT BELT

**S/N: RLB1-UP**

**PART OF 240-8718 SEAT GP**

**SMCS-7307, 7327** **i02657216**

| NOTE | REF NO | GRAPHIC REF | PART NUMBER | QTY | PART NAME 1 2 3 4 5 6 (PRODUCT LEVEL) | SEE PAGE |
|---|---|---|---|---|---|---|
| | 1 | 1 | **226-1985** | 1 | COVER-FRONT | |
| | 2 | 1 | **226-1986** | 1 | COVER AS (REAR) | |
| | 3 | 1 | **5P-0537** | 2 | WASHER-HARD (7.2X14.5X2-MM THK) | |
| | 4 | 1 | **6V-8969** | 2 | SCREW-BUTTON HEAD (1/4-20X0.5-IN) | |

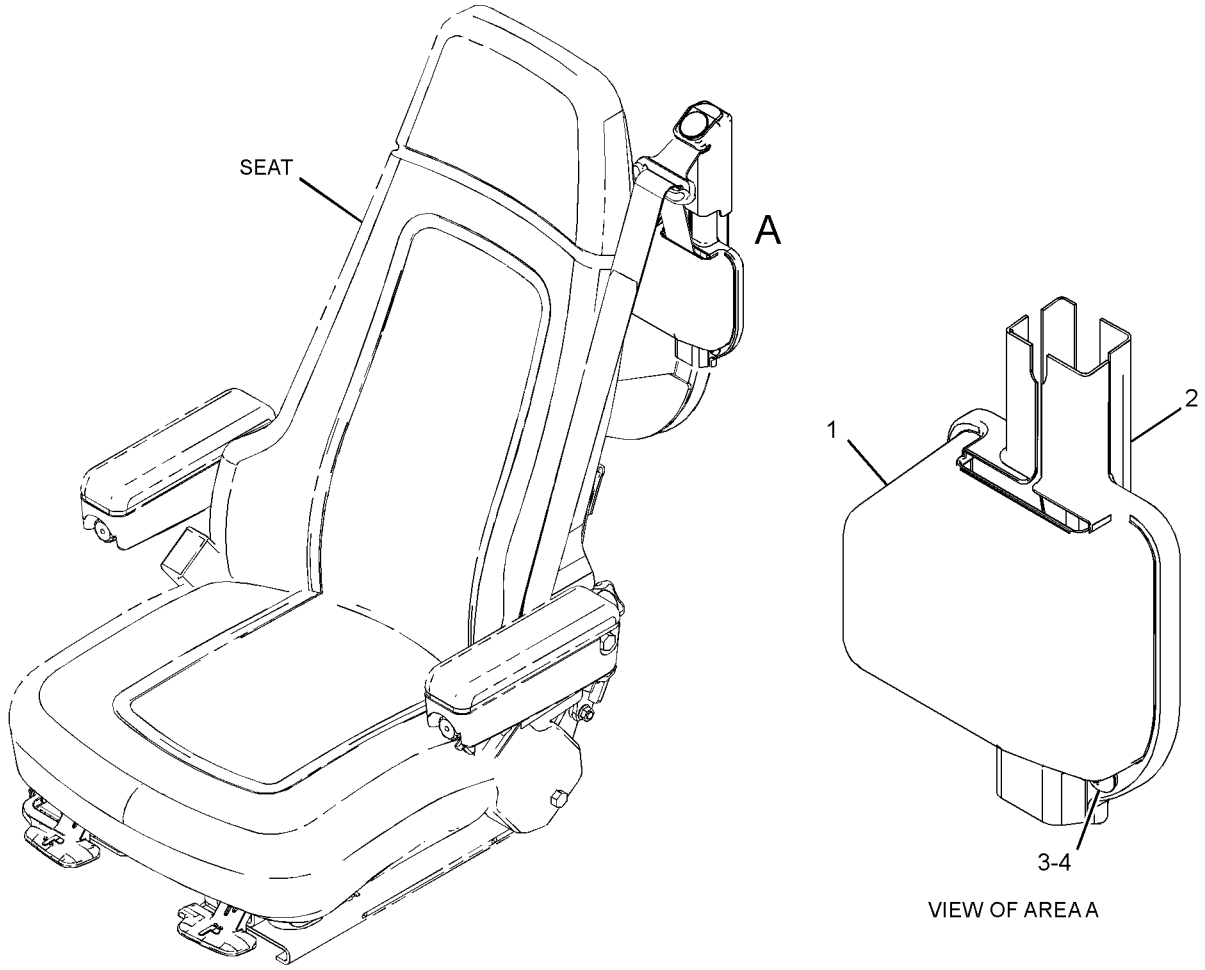


VIEW OF AREA A

GRAPHIC #1 **<END>** g01335103

# OPERATOR STATION

## *311-1674* DISPLAY GP-CAMERA

**S/N: RLB1-UP**
**PART OF 316-6380 CAMERA AR**
**AN ATTACHMENT**

**SMCS-7347** **i03116442**

| NOTE | REF NO | GRAPHIC REF | PART NUMBER | QTY | PART NAME 1 2 3 4 5 6 (PRODUCT LEVEL) | SEE PAGE |
|---|---|---|---|---|---|---|
| | 1 | 1 | **251-4157** | 1 | MODULE GP-DISPLAY (WORK AREA VISUAL SYSTEM) | |
| | | 1 | **8T-8737** | 1 | PLUG-SEAL | |
| | | 1 | **102-8804** | 1 | KIT-RECEPTACLE (4-PIN) | |
| | | | | | (INCLUDES RECEPTACLE AS & WEDGE) | |
| | | 1 | **186-3735** | 5 | PIN-CONNECTOR (16-GA TO 18-GA) | |
| | | 1 | **280-2690** | 1 | HARNESS AS-MONITOR (WORK AREA VISUAL SYSTEM) | |
| | 2 | 1 | **251-4243** | 1 | CONNECTOR GP-ELECTRONIC | |
| | 3 | 1 | **259-4397** | 1 | CLAMP GP | |
| | 4 | 1 | **259-4399** | 2 | BASE | |
| | 5 | 1 | **4B-4274** | 4 | WASHER (5.5X13X1.2-MM THK) | |
| | 6 | 1 | **5P-6264** | 1 | GROMMET | |
| | 7 | 1 | **7K-1181** | 4 | STRAP-CABLE | |
| M | 8 | 1 | **8T-0288** | 4 | BOLT (M5X0.8X12-MM) | |
| M | 9 | 1 | **8T-4970** | 4 | BOLT (M6X1X14-MM) | |

M-METRIC PART

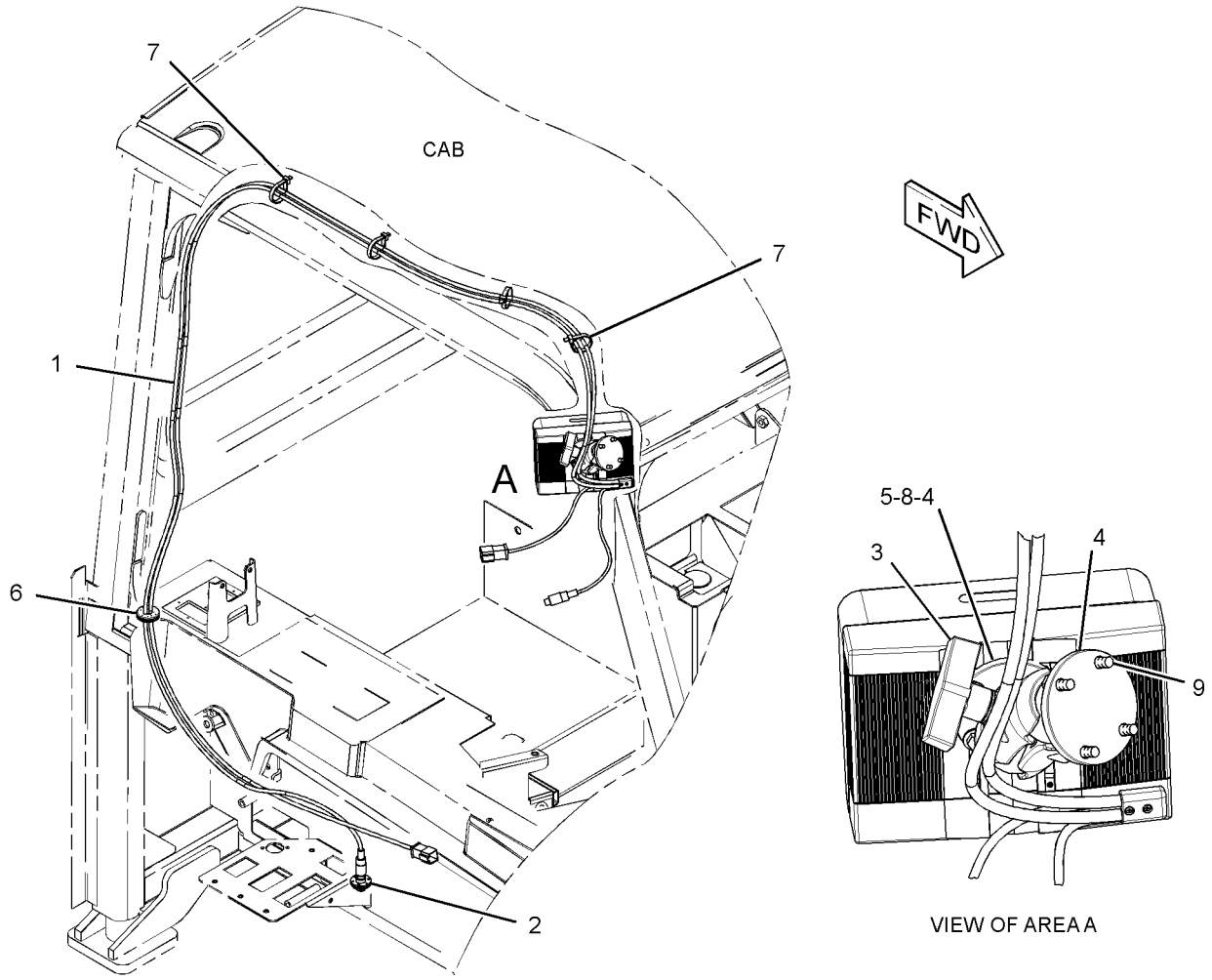


GRAPHIC #1 **<END>** g01600796

# OPERATOR STATION

## *149-0082* DOOR GP-CAB

**S/N: RLB1-477**

**PART OF 269-8820 CAB AR**

**SMCS-7308** **i02657376**

| NOTE | REF NO | GRAPHIC REF | PART NUMBER | QTY | PART NAME 1 2 3 4 5 6 (PRODUCT LEVEL) | SEE PAGE |
|---|---|---|---|---|---|---|
| | 1 | 1 | **7X-2497** | 1 | HANDLE-DOOR | |
| M | 2 | 1 | **8T-0267** | 1 | BOLT-SOCKET HEAD (M6X1X12-MM) | |
| | 3 | 1 | **8Y-6386** | 1 | SEAL-HANDLE | |
| | 4 | 1 | **126-2373** | 1 | HANDLE AS-PULL | |
| | 5 | 1 | **147-3019** | 2 | BRACKET | |
| | 6 | 1 | **155-1576** | 1 | HINGE-DOOR | |
| | 7 | 1 | **155-1578** | 1 | DOOR AS | |
| | 8 | 1 | **164-0043** | 1 | LATCH AS-DOOR | |
| | 9 | 1 | **164-0044** | 1 | HANDLE AS | |
| B | 10 | 1 | **169-4782** | 1 | SHIM (2-MM THK) | |
| | 11 | 1 | **178-7881** | 1 | COVER-LATCH | |
| E | 12 | 1 | **133-3234** | | SEAL (470-CM) | |
| M | 13 | 1 | **163-3274** | 4 | SCREW-MACHINE (M5X0.8X25-MM) | |
| M | 14 | 1 | **8T-0269** | 2 | BOLT-SOCKET HEAD (M6X1X20-MM) | |
| | 15 | 1 | **8T-4224** | 14 | WASHER-HARD (8.8X16X2-MM THK) | |
| M | 16 | 1 | **8T-4908** | 14 | BOLT (M8X1.25X25-MM) | |
| M | 17 | 1 | **9X-2042** | 2 | SCREW-TRUSS HEAD (M6X1X12-MM) | |
| M | 18 | 1 | **9X-6155** | 4 | BOLT-SOCKET HEAD (M6X1X16.7-MM) | |
| | 19 | 1 | **114-6658** | 2 | WASHER (6.5X17X1-MM THK) | |

B-USE AS REQUIRED
E-ORDER BY THE CENTIMETER
M-METRIC PART

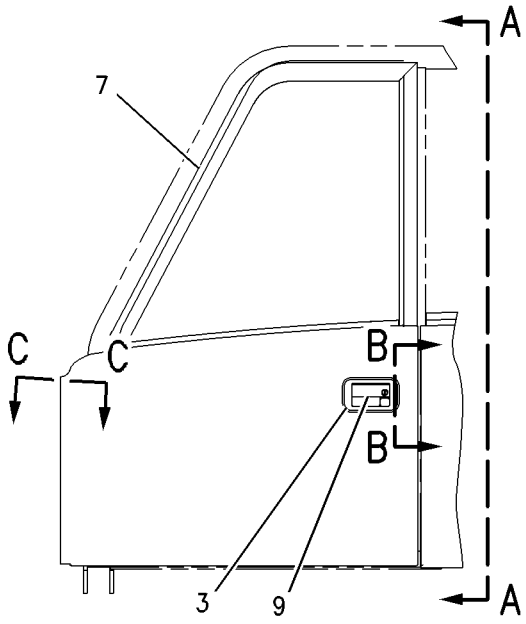


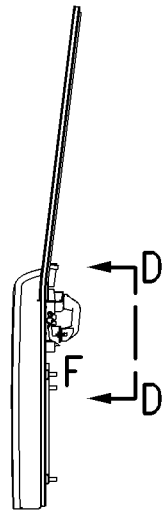


VIEW A-A

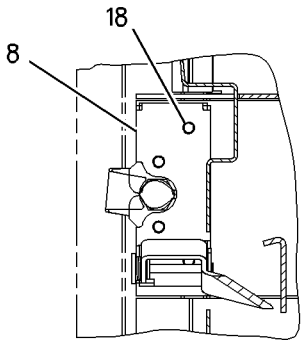


SECTION B-B

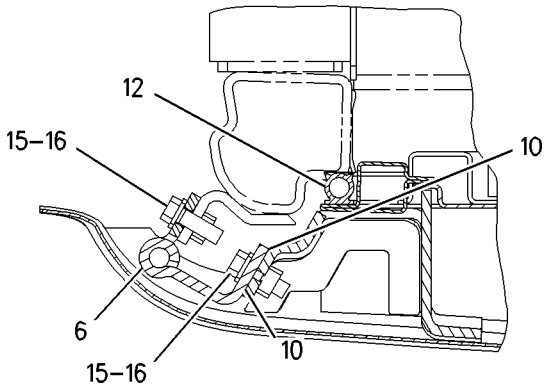


SECTION C-C

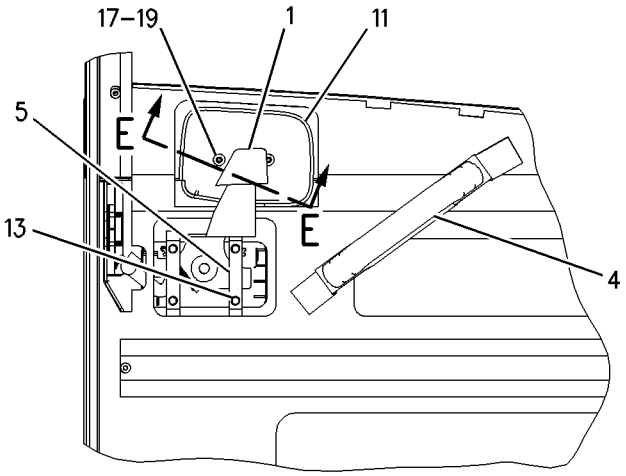


SECTION D-D

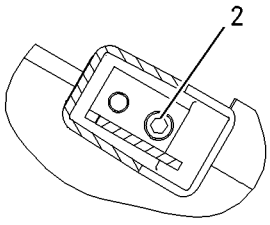


SECTION E-E

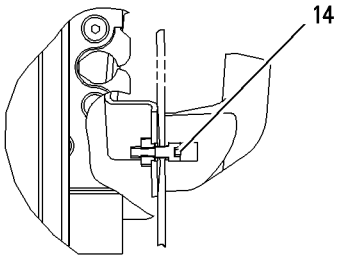


VIEW OF AREA F

GRAPHIC #1 **<END>** g00846400

# OPERATOR STATION

## *322-2080* DOOR GP-CAB

**S/N: RLB478-UP**

**PART OF 269-8820 CAB AR**

**SMCS-7308** **i03133150**

| NOTE | REF NO | GRAPHIC REF | PART NUMBER | QTY | PART NAME 1 2 3 4 5 6 (PRODUCT LEVEL) | SEE PAGE |
|---|---|---|---|---|---|---|
| | 1 | 1 | **7X-2497** | 1 | HANDLE-DOOR (LH) | |
| | 2 | 1 | **8Y-6386** | 1 | SEAL-HANDLE (MOUNTING) | |
| | 3 | 1 | **126-2373** | 1 | HANDLE AS-PULL | |
| | 4 | 1 | **147-3019** | 2 | BRACKET | |
| | 5 | 1 | **155-1576** | 1 | HINGE-DOOR | |
| | 6 | 1 | **155-1578** | 1 | DOOR AS | |
| | 7 | 1 | **160-8718** | 1 | PANEL AS-DOOR | |
| | 8 | 1 | **163-3272** | 1 | WINDOW-DOOR | |
| | 9 | 1 | **164-0043** | 1 | LATCH AS-DOOR | |
| J | 10 | 1 | **164-0044** | 1 | HANDLE AS | |
| B | 11 | 1 | **169-4782** | 1 | SHIM (2-MM THK) | |
| | 12 | 1 | **178-7881** | 1 | COVER-LATCH | |
| | 13 | 1 | **133-3234** | | SEAL (470-CM) | |
| | 14 | 1 | **198-6074** | 1 | LINER | |
| | 15 | 1 | **114-6658** | 10 | WASHER (6.5X17X1-MM THK) | |
| M | 16 | 1 | **163-3274** | 4 | SCREW-MACHINE (M5X0.8X25-MM) | |
| M | 17 | 1 | **8T-0267** | 1 | BOLT-SOCKET HEAD (M6X1X12-MM) | |
| M | 18 | 1 | **8T-0269** | 2 | BOLT-SOCKET HEAD (M6X1X20-MM) | |
| | 19 | 1 | **8T-4224** | 14 | WASHER-HARD (8.8X16X2-MM THK) | |
| M | 20 | 1 | **8T-4908** | 14 | BOLT (M8X1.25X25-MM) | |
| M | 21 | 1 | **9X-2042** | 10 | SCREW-TRUSS HEAD (M6X1X12-MM) | |
| M | 22 | 1 | **9X-6155** | 4 | BOLT-SOCKET HEAD (M6X1X16.7-MM) | |

B-USE AS REQUIRED
J-REQUIRES CORPORATE KEY
M-METRIC PART

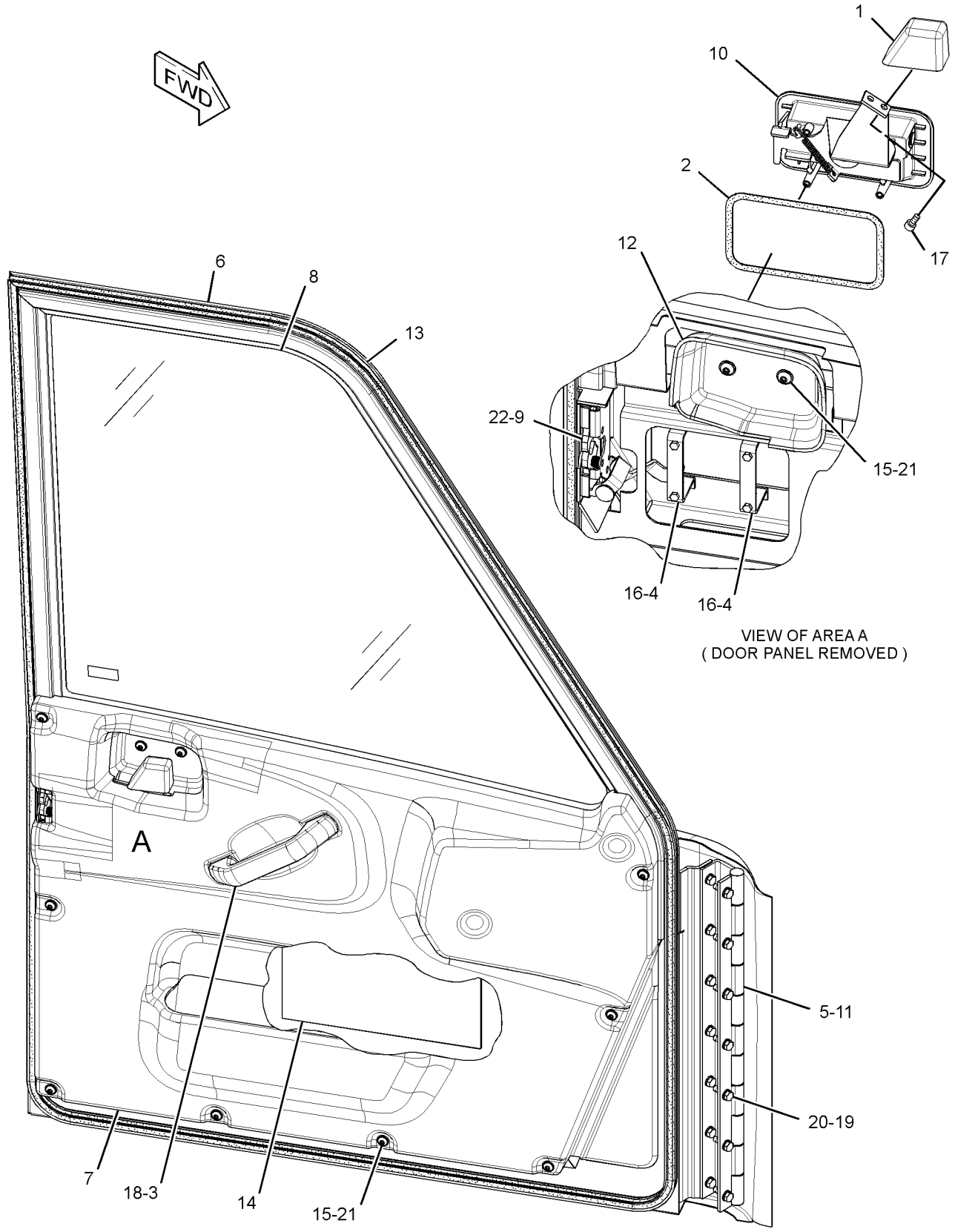


GRAPHIC #1 **<END>** g01637227

# OPERATOR STATION

## 308-9434 HEATER & AIR CONDITIONER GP

**S/N: RLB1-UP**

**PART OF 309-0916 AIR CONDITIONER & MOUNTING GP**

**SMCS-7304, 7309, 7320** **i03296284**

| NOTE | REF NO | GRAPHIC REF | PART NUMBER | QTY | PART NAME 1 2 3 4 5 6 (PRODUCT LEVEL) | SEE PAGE |
|---|---|---|---|---|---|---|
| | 1 | 2 | **3E-5464** | 1 | THERMOSTAT (CAB AIR) (AIR CONDITIONER) | |
| | 2 | 1 | **8C-3756** | 1 | FILM-IDENTIFICATION | |
| | 3 | 1 | **134-3518** | 2 | TIE-PUSH MOUNT | |
| J | 4 | 2 | **153-6932** | 1 | GASKET | |
| | 5 | 2 | **239-9368** | 1 | RESISTOR AS | |
| | 6 | 2 | **247-8302** | 8 | RIVET | |
| | 7 | 2 | **257-5029** | 1 | RESISTOR AS | |
| | 8 | 2 | **259-3222** | 1 | FILTER ELEMENT-AIR (CAB) | |
| Y | 9 | 2 | *275-6658* | 1 | PAN GP-DRAIN (AIR CONDITIONER) | 774 |
| | 10 | 1 | **275-6660** | 1 | HARNESS AS-MOTOR | |
| | | 1 | **155-2270** | 1 | KIT-CONNECTING PLUG (2-PIN) | |
| | | | | | (INCLUDES PLUG AS, WEDGE & INTERFACE SEAL) | |
| | | 1 | **166-5229** | 1 | KIT-RECEPTACLE (12-PIN) | |
| | | | | | (INCLUDES RECEPTACLE AS & WEGE) | |
| | | 1 | **2U-4729** | 1 | GROMMET-BLIND | |
| | | 1 | **9V-2818** | 1 | GROMMET | |
| | | 1 | **100-6674** | 3 | SEAL-CONNECTOR | |
| E | | 1 | **119-3662** | | TUBE-HEAT SHRINK (10.85-MM DIA) (20-CM) | |
| J | 11 | 2 | *275-6682* | 1 | GASKET | |
| J | 12 | 2 | *275-6687* | 1 | GASKET | |
| J | 13 | 1 | **275-6688** | 1 | GASKET | |
| J | 14 | 1 | *275-6689* | 1 | GASKET | |
| Y | 15 | 1 | **275-6690** | 1 | COIL GP-HEATER | 729 |
| J | 16 | 1 | *275-6697* | 1 | GASKET | |
| J | 17 | 2 | *275-6699* | 2 | GASKET | |
| | 18 | 1 | **275-6702** | 1 | PLATE AS | |
| J | 19 | 1 | *275-6704* | 2 | GASKET | |
| | 20 | 2 | **275-6706** | 1 | MOTOR-BLOWER (24-VOLT, A/C, HEATER) | |
| | 21 | 1 | **275-6708** | 1 | PLATE | |
| | 22 | 2 | **275-6709** | 1 | PLATE | |
| | 23 | 2 | **275-6710** | 1 | RETAINER | |
| | 24 | 2 | **292-2905** | 1 | PLATE AS | |
| M | | 2 | **6V-9632** | 3 | NUT-WELD (M6X1-THD) | |
| M | | 2 | **9X-2032** | 8 | NUT-WELD (M4X0.7-THD) | |
| | 25 | 1 | **299-4728** | 1 | CASE AS | |
| M | | 1 | **6V-9632** | 17 | NUT-WELD (M6X1-THD) | |
| M | | 1 | **8T-3490** | 5 | NUT-WELD (M10X1.5-THD) | |
| M | | 1 | **9X-2032** | 4 | NUT-WELD (M4X0.7-THD) | |
| | 26 | 1 | **308-9435** | 1 | COIL AS-EVAPORATOR | |
| M | 27 | 1 | **096-4034** | 1 | BOLT-WING (M6X1X15-MM) | |
| | 28 | 2 | **096-6166** | 10 | WASHER-HARD (4.5X9X1-MM THK) | |
| | 29 | 2 | **3B-4501** | 2 | LOCKWASHER | |
| M | 30 | 1 | **5C-9553** | 21 | BOLT (M6X1X16-MM) | |
| | 31 | 2 | **8C-8514** | 2 | SCREW-MACHINE (8-32X0.375-IN) | |
| M | 32 | 2 | **8T-0337** | 10 | SCREW-MACHINE (M4X0.7X12-MM) | |
| | 33 | 1 | **8T-4205** | 22 | WASHER-HARD (7.2X14.5X2-MM THK) | |
| | | | | | AVAILABLE REPAIR KIT(S): | |
| J | | | **294-8679** | 1 | KIT-GASKET (AIR CONDITIONER) | |
| | | | | | (INCLUDES GASKETS) | |

E-ORDER BY THE CENTIMETER
J-KIT MARKED J SERVICES PART(S) MARKED J
M-METRIC PART
Y-SEPARATE ILLUSTRATION

## 308-9434 HEATER & AIR CONDITIONER GP *(contd. )* i03296284

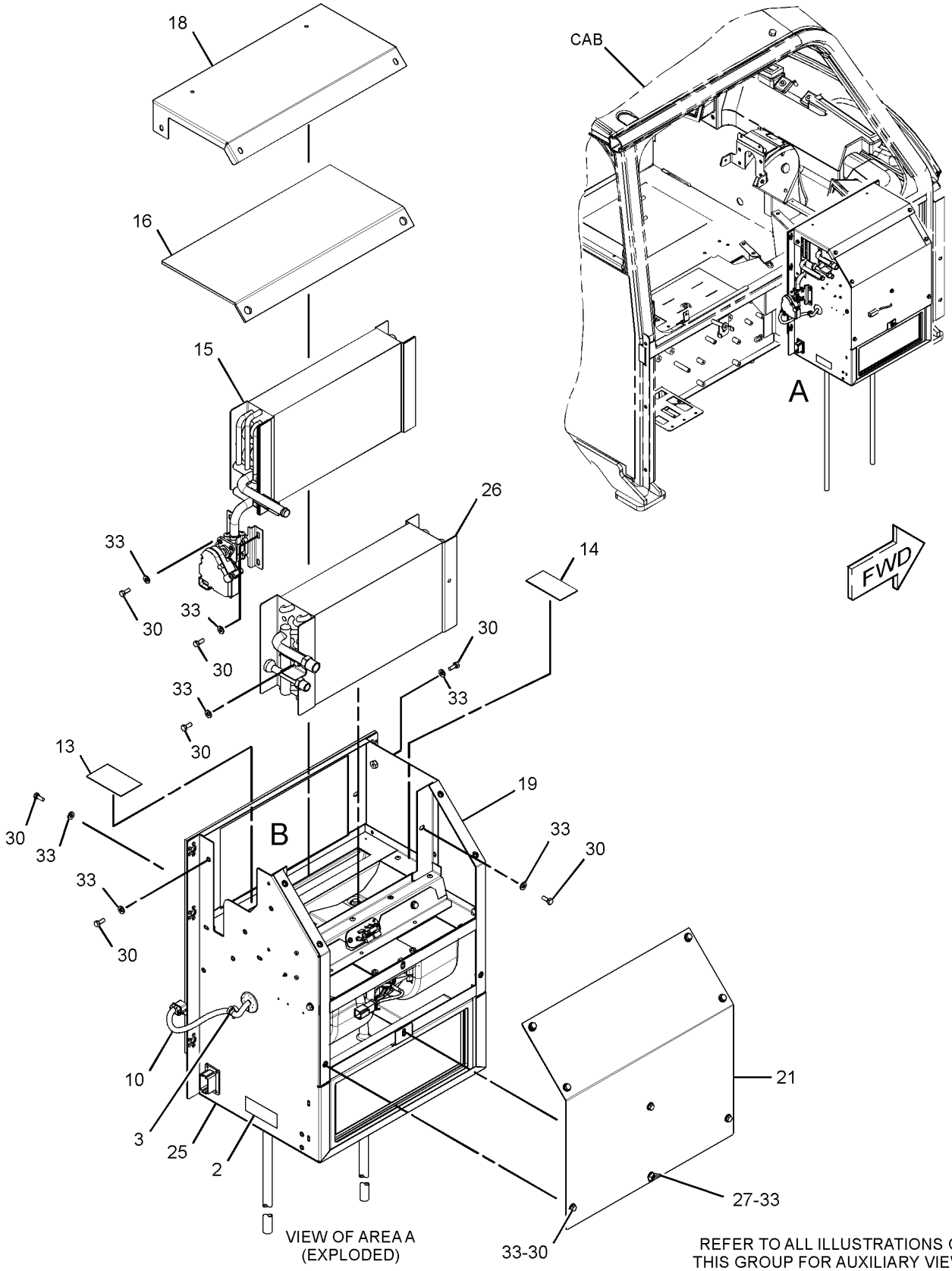


GRAPHIC #1 g01372974

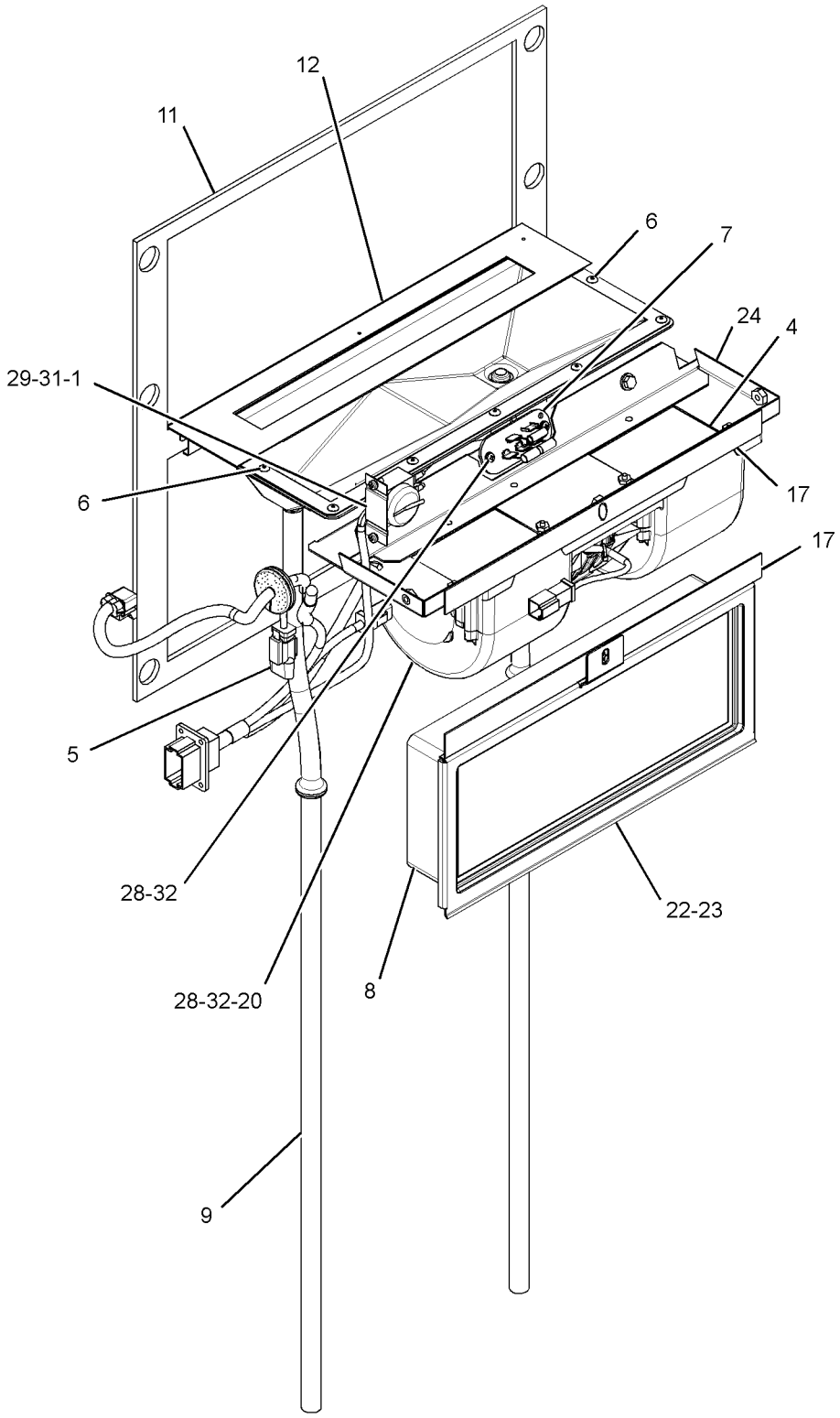


VIEW OF AREA B
(COVERS REMOVED)

GRAPHIC #2 **<END>** g01372975

# OPERATOR STATION

## *149-5824* INSTALLATION GP-RADIO

**S/N: RLB1-UP**

**AN ATTACHMENT**

**SMCS-7338** **i01373582**

| NOTE | REF NO | GRAPHIC REF | PART NUMBER | QTY | PART NAME 1 2 3 4 5 6 (PRODUCT LEVEL) | SEE PAGE |
|---|---|---|---|---|---|---|
| | 1 | 1 | **4E-1411** | 1 | BUSHING-TERMINAL | |
| | 2 | 1 | **8E-1118** | 1 | ANTENNA AS | |
| | 3 | 1 | **124-6046** | 2 | SPEAKER AS-RADIO | |
| | 4 | 1 | **175-3565** | 1 | PLATE AS | |
| M | | 1 | **6V-9632** | 2 | NUT-WELD (M6X1-THD) | |
| | 5 | 1 | **175-3567** | 1 | PLATE AS | |
| | 6 | 1 | **175-3570** | 1 | PLATE | |
| | 7 | 1 | **189-3744** | 1 | SEAL | |
| | 8 | 1 | **5P-4115** | 6 | WASHER-HARD (7.2X19X2-MM THK) | |
| M | 9 | 1 | **8T-4171** | 6 | BOLT (M6X1X12-MM) | |

M-METRIC PART

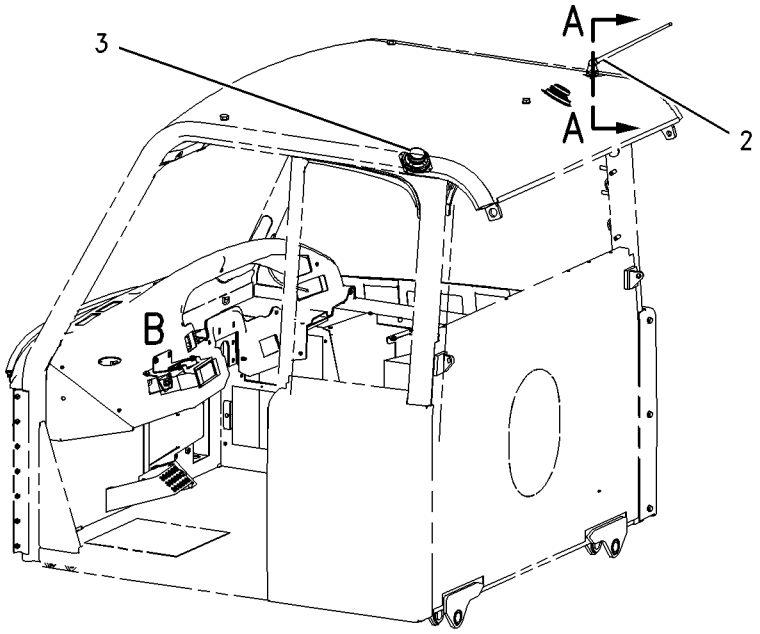


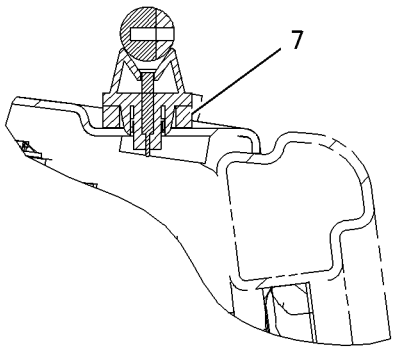


SECTION A-A

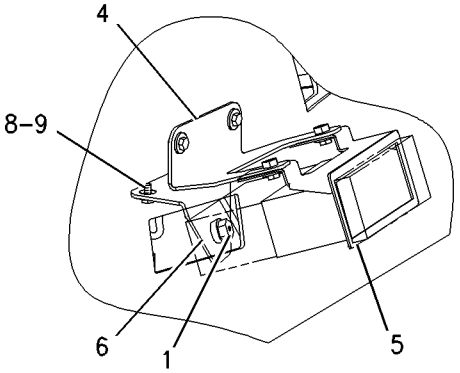


VIEW OF AREA B

GRAPHIC #1 **<END>** g00725452

# OPERATOR STATION

## *265-6540* INSTALLATION GP-RADIO

**S/N: RLB1-UP**

**PART OF 269-8820 CAB AR**

**SMCS-7338** **i02665797**

| NOTE | REF NO | GRAPHIC REF | PART NUMBER | QTY | PART NAME 1 2 3 4 5 6 (PRODUCT LEVEL) | SEE PAGE |
|---|---|---|---|---|---|---|
| | 1 | 1 | **4E-1411** | 1 | BUSHING-TERMINAL | |
| | 2 | 1 | **175-3565** | 1 | PLATE AS | |
| M | | 1 | **6V-9632** | 2 | NUT-WELD (M6X1-THD) | |
| | 3 | 1 | **175-3567** | 1 | PLATE AS | |
| | 4 | 1 | **175-3570** | 1 | PLATE | |
| | 5 | 1 | **124-6046** | 2 | SPEAKER AS-RADIO | |
| | 6 | 1 | **5P-4115** | 6 | WASHER-HARD (7.2X19X2-MM THK) | |
| M | 7 | 1 | **8T-4171** | 6 | BOLT (M6X1X12-MM) | |

M-METRIC PART

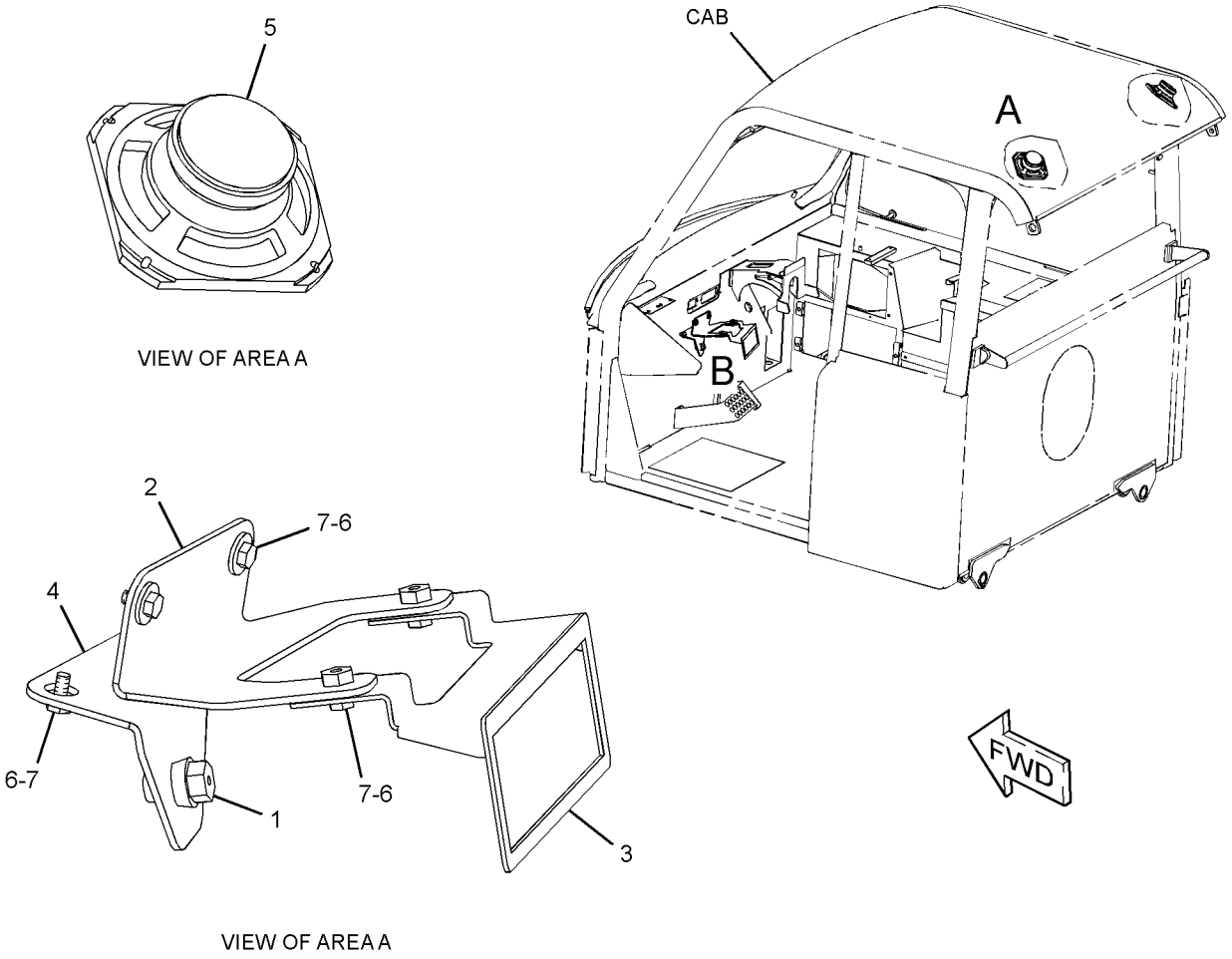


GRAPHIC #1 **<END>** g01342448

# OPERATOR STATION

## *308-3275* INSULATION GP-HEAT

**S/N: RLB287-UP**

**PART OF 269-8700 PLATFORM AR**

**SMCS-7301, 7329** **i02718338**

| NOTE | REF NO | GRAPHIC REF | PART NUMBER | QTY | PART NAME 1 2 3 4 5 6 (PRODUCT LEVEL) | SEE PAGE |
|---|---|---|---|---|---|---|
| | 1 | 1 | **308-3273** | 1 | INSULATION | |
| | 2 | 1 | **308-3274** | 2 | SEAL | |
| | 3 | 1 | **7K-1181** | 27 | STRAP-CABLE | |

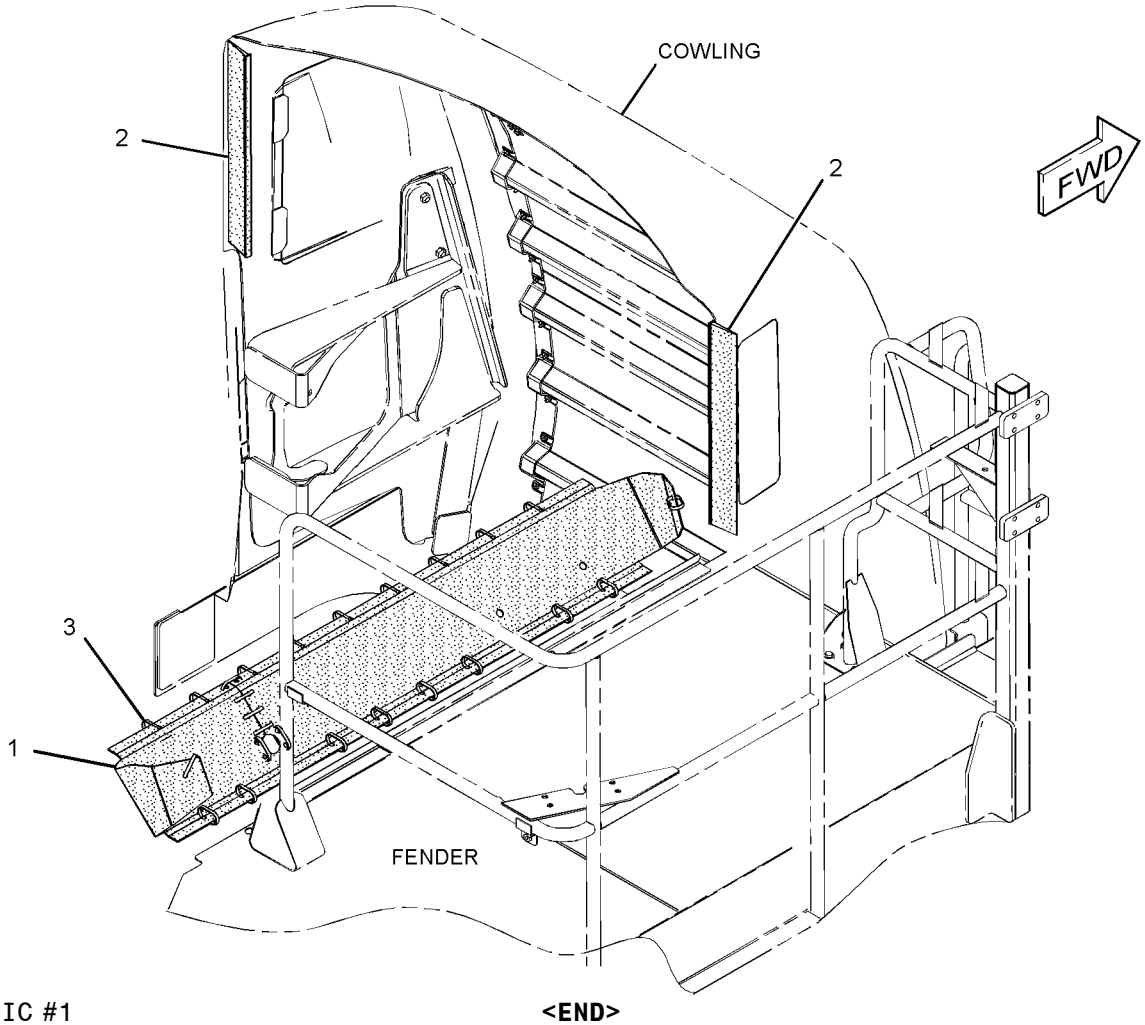


GRAPHIC #1 **<END>** g01378745

# OPERATOR STATION

## 274-8879 KIT-FLOW CONTROL VALVE—AIR CONDITIONER, HEATER

**S/N: RLB1-UP**

**FIELD INSTALLATION**

**SMCS-5137, 7309** **i03296729**

| NOTE | PART NUMBER | QTY | PART NAME 1 2 3 4 5 6 (PRODUCT LEVEL) | SEE PAGE |
|---|---|---|---|---|
| | **244-2477** | 1 | BRACKET | |
| | **239-5611** | 1 | BRACKET AS | |
| | **242-0583** | 1 | BRACKET AS | |
| | **205-4285** | 1 | CONVERTER GP-ELECTRICAL (24-VOLT TO 12-VOLT) | |
| | **241-7692** | 1 | HARNESS AS-HEATER & AIR COND | |
| | **155-2270** | 1 | KIT-CONNECTING PLUG (2-PIN) | |
| | **155-2274** | 1 | KIT-CONNECTING PLUG (6-PIN) | |
| | | | (EACH INCLUDES PLUG AS & WEDGE) | |
| | **241-7693** | 1 | HARNESS AS-POWER (AIR CONDITIONER, HEATER CONT) | |
| | **239-9368** | 1 | RESISTOR AS | |
| M | **8T-0285** | 2 | SCREW-MACHINE (M4X0.7X12-MM) | |
| | **241-5670** | 1 | VALVE AS-WATER | |
| | **096-6166** | 2 | WASHER-HARD (4.5X9X1-MM THK) | |

M-METRIC PART

**<END>**

# OPERATOR STATION

## *236-1030* LINER GP-CAB—SOUND SUPPRESSION

**S/N: RLB1-UP**

**PART OF 269-8820 CAB AR**

**SMCS-7301** **i03157626**

| NOTE | REF NO | GRAPHIC REF | PART NUMBER | QTY | PART NAME 1 2 3 4 5 6 (PRODUCT LEVEL) | SEE PAGE |
|---|---|---|---|---|---|---|
| | 1 | 1 | **6P-2216** | 27 | CAP | |
| | 2 | 1 | **170-4880** | 1 | TRIM-FRONT PANEL | |
| | 3 | 1 | **300-9499** | 1 | INSULATION | |
| | 4 | 1 | **198-6081** | 1 | INSULATION | |
| | 5 | 1 | **198-7409** | 2 | PLUG | |
| | 6 | 1 | **242-8551** | 1 | INSULATION | |
| | 7 | 1 | **277-3254** | 1 | INSULATION | |
| | 8 | 1 | **277-3255** | 1 | INSULATION | |
| | 9 | 1 | **277-3256** | 1 | INSULATION | |
| | 10 | 1 | **277-3257** | 1 | INSULATION | |
| | 11 | 1 | **277-3258** | 1 | INSULATION | |
| | 12 | 1 | **277-3260** | 1 | FLOOR MAT | |
| | 13 | 1 | **278-2171** | 1 | INSULATION | |
| | 14 | 1 | **278-8699** | 1 | FLOOR MAT | |
| | 15 | 1 | **279-9341** | 1 | TRIM-FRONT PANEL | |
| | 16 | 1 | **290-0347** | 1 | INSULATION | |

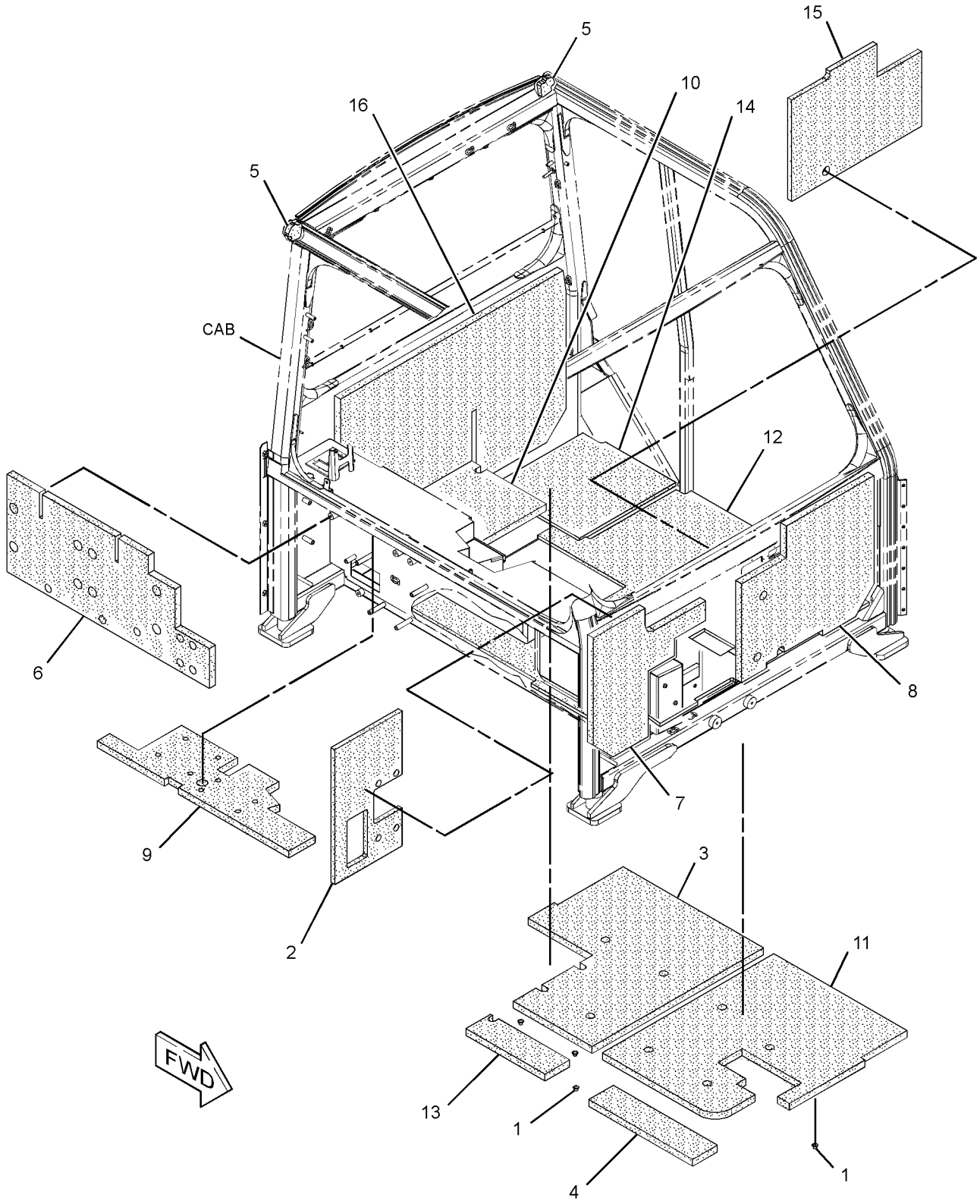


GRAPHIC #1 **<END>** g01637178

# OPERATOR STATION

## *269-9190* LINES GP-AIR CONDITIONER

**S/N: RLB1-UP**

**PART OF 270-1748 HYDRAULIC AR**

**SMCS-1808** **i02702151**

| NOTE | REF NO | GRAPHIC REF | PART NUMBER | QTY | PART NAME 1 2 3 4 5 6 (PRODUCT LEVEL) | SEE PAGE |
|---|---|---|---|---|---|---|
| | 1 | 1 | **1P-6356** | 1 | PLATE | |
| | 2 | 1 | **4S-6668** | 2 | CLIP | |
| | 3 | 1 | **9G-7101** | 1 | SPACER (10.5X20X30-MM THK) | |
| | 4 | 1 | **103-6100** | 1 | FITTING AS-AIR CONDITIONER (QUICK DISCONNECT) | |
| | | 1 | **9X-7382** | 2 | SEAL-O-RING | |
| | 5 | 1 | **187-8661** | 1 | FITTING AS-AIR CONDITIONER | |
| | | 1 | **3E-4051** | 1 | CAP-SEAL | |
| | | 1 | **3E-4057** | 1 | VALVE AS | |
| | | 1 | **172-4880** | 1 | CAP-SEAL | |
| | | 1 | **180-7180** | 1 | CORE-VALVE | |
| | | 1 | **180-7181** | 1 | BODY-VALVE | |
| I | 6 | 1 | **307-8799** | 1 | HOSE AS | |
| I | 7 | 1 | **307-8803** | 1 | HOSE AS | |
| I | 8 | 1 | **308-5077** | 1 | HOSE AS | |
| | 9 | 1 | **116-6202** | 1 | BOOT | |
| | 10 | 1 | **146-2282** | 1 | COLLAR | |
| | 11 | 1 | **154-2302** | 2 | SPACER (11X20X15-MM THK) | |
| | 12 | 1 | **3E-4053** | 1 | FITTING AS-AIR CONDITIONER | |
| | | 1 | **3E-4052** | 1 | CAP-SEAL | |
| | | 1 | **3E-4058** | 1 | VALVE AS | |
| | 13 | 1 | **4V-4125** | 6 | CLIP | |
| | 14 | 1 | **6D-4246** | 2 | CLIP | |
| | 15 | 1 | **6K-8178** | 1 | CLIP | |
| | 16 | 1 | **6V-6782** | 1 | CLIP (SLOT) | |
| | 17 | 1 | **6V-6783** | 1 | CLIP (TAB) | |
| | 18 | 1 | **7X-7729** | 1 | WASHER (11X25X3-MM THK) | |
| | 19 | 1 | **8T-4121** | 13 | WASHER-HARD (11X21X2.5-MM THK) | |
| M | 20 | 1 | **8T-4133** | 1 | NUT (M10X1.5-THD) | |
| M | 21 | 1 | **8T-4136** | 6 | BOLT (M10X1.5X25-MM) | |
| M | 22 | 1 | **8T-4137** | 1 | BOLT (M10X1.5X20-MM) | |
| M | 23 | 1 | **8T-4182** | 1 | BOLT (M10X1.5X45-MM) | |
| M | 24 | 1 | **8T-4185** | 1 | BOLT (M10X1.5X50-MM) | |
| M | 25 | 1 | **8T-4186** | 1 | BOLT (M10X1.5X40-MM) | |
| M | 26 | 1 | **8T-4195** | 2 | BOLT (M10X1.5X30-MM) | |
| M | 27 | 1 | **8T-4196** | 1 | BOLT (M10X1.5X35-MM) | |
| M | 28 | 1 | **8T-6466** | 1 | BOLT (M10X1.5X60-MM) | |
| | 29 | 1 | **8T-7934** | 1 | WASHER-HARD (11X21X5-MM THK) | |
| | 30 | 1 | **9M-8406** | 7 | CLIP | |
| | 31 | 1 | **9X-7380** | 2 | SEAL-O-RING | |
| | 32 | 1 | **9X-7381** | 1 | SEAL-O-RING | |
| | 33 | 1 | **9X-7383** | 1 | SEAL-O-RING | |
| | 34 | 1 | **9X-7385** | 2 | SEAL-O-RING | |

I-REFER TO HYDRAULIC INFORMATION SYSTEM
M-METRIC PART

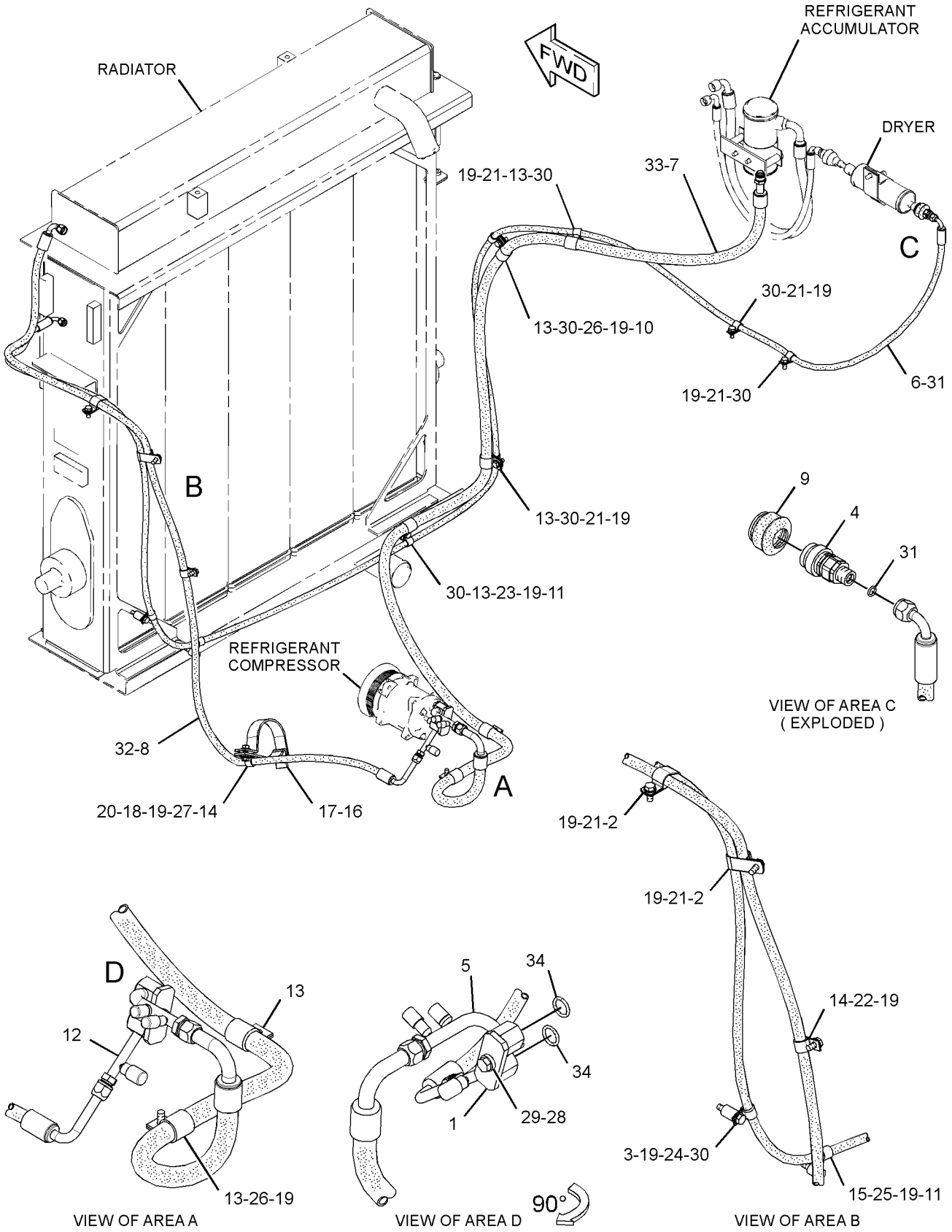


GRAPHIC #1

**<END>**

g01378577

# OPERATOR STATION

## *309-0924* LINES GP-AIR CONDITIONER

**S/N: RLB1-UP**

**PART OF 269-8820 CAB AR**

**SMCS-1808** **i02718139**

| NOTE | REF NO | GRAPHIC REF | PART NUMBER | QTY | PART NAME 1 2 3 4 5 6 (PRODUCT LEVEL) | SEE PAGE |
|---|---|---|---|---|---|---|
| | 1 | 1 | **175-7162** | 1 | RECEIVER-DRYER GP (REFRIGERANT) | |
| | 2 | 1 | **103-6100** | 1 | FITTING AS-AIR CONDITIONER (QUICK DISCONNECT) | |
| | | 1 | **9X-7382** | 2 | SEAL-O-RING | |
| | 3 | 1 | **116-6202** | 1 | BOOT | |
| | 4 | 1 | **185-6981** | 1 | BRACKET AS | |
| | 5 | 1 | **186-6189** | 1 | ACCUMULATOR-REFRIGERANT | |
| I | 6 | 1 | **309-1001** | 1 | HOSE AS | |
| | 7 | 1 | **101-8296** | 2 | CLIP | |
| | 8 | 1 | **109-1633** | 1 | CLIP (SLOT) | |
| | 9 | 1 | **109-1634** | 1 | CLIP (TAB) | |
| I | 10 | 1 | **184-6140** | 1 | HOSE AS | |
| | 11 | 1 | **8T-4121** | 5 | WASHER-HARD (11X21X2.5-MM THK) | |
| M | 12 | 1 | **8T-4136** | 1 | BOLT (M10X1.5X25-MM) | |
| M | 13 | 1 | **8T-4137** | 4 | BOLT (M10X1.5X20-MM) | |
| | 14 | 1 | **9X-7380** | 1 | SEAL-O-RING | |
| | 15 | 1 | **9X-7381** | 1 | SEAL-O-RING | |
| | 16 | 1 | **9X-7382** | 1 | SEAL-O-RING | |
| | 17 | 1 | **9X-7383** | 1 | SEAL-O-RING | |
| D | 18 | 1 | **6V-2495** | 1 | SEAL (0.3-M) | |

D-ORDER BY THE METER
I-REFER TO HYDRAULIC INFORMATION SYSTEM
M-METRIC PART

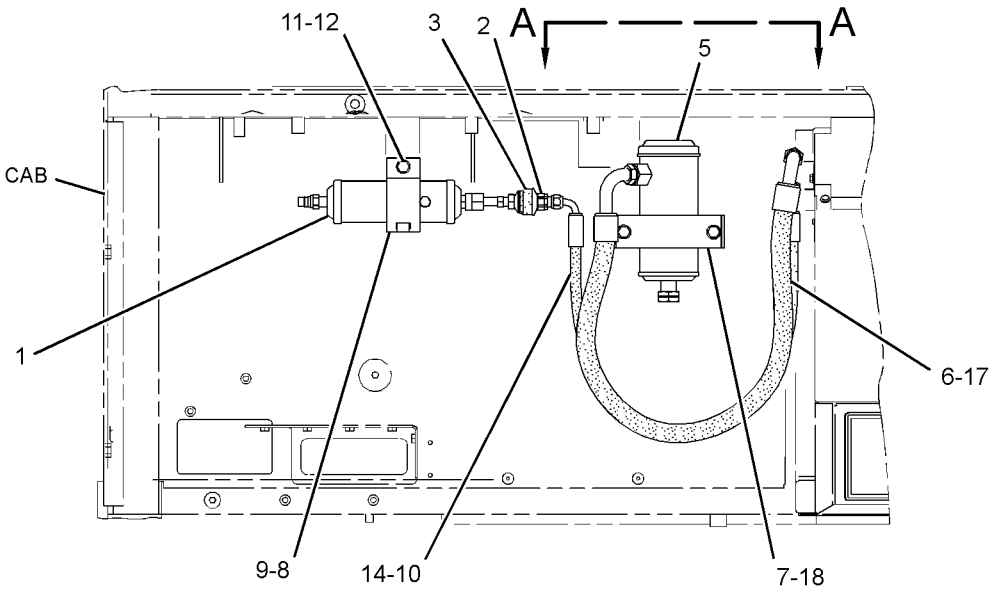


RIGHT SIDE VIEW

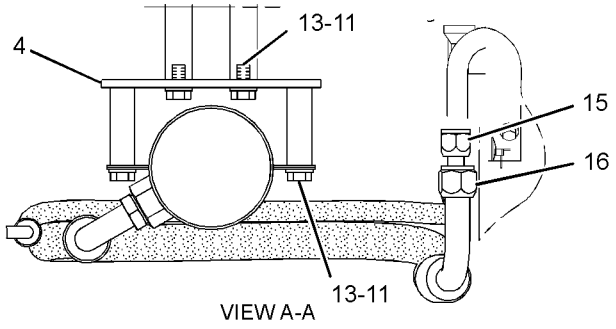


VIEW A-A

GRAPHIC #1 **<END>** g01368178

# OPERATOR STATION

## *269-9195* LINES GP-HEATER

**S/N: RLB1-333**

**PART OF 270-1748 HYDRAULIC AR**

**SMCS-7304** **i02701944**

| NOTE | REF NO | GRAPHIC REF | PART NUMBER | QTY | PART NAME 1 2 3 4 5 6 (PRODUCT LEVEL) | SEE PAGE |
|---|---|---|---|---|---|---|
| | 1 | 1 | **5D-1026** | 4 | CLAMP-HOSE | |
| | 2 | 1 | **6V-7483** | 2 | ADAPTER | |
| | 3 | 1 | **9S-6524** | 1 | BRACKET | |
| | 4 | 1 | **005-7889** | 2 | VALVE AS-DRAIN (HEATER) | |
| | 5 | 1 | **011-5224** | 2 | BUSHING-REDUCING | |
| | 6 | 1 | **6D-1641** | 4 | CLIP | |
| | 7 | 1 | **8T-4121** | 3 | WASHER-HARD (11X21X2.5-MM THK) | |
| M | 8 | 1 | **8T-4133** | 1 | NUT (M10X1.5-THD) | |
| M | 9 | 1 | **8T-4136** | 1 | BOLT (M10X1.5X25-MM) | |
| E | 10 | 1 | **5P-0767** | | HOSE (239.5-CM) | |
| E | 10A | 1 | **5P-0767** | | HOSE (190.5-CM) | |
| | 11 | 1 | **3D-2824** | 2 | SEAL-O-RING | |
| M | 12 | 1 | **8T-4137** | 1 | BOLT (M10X1.5X20-MM) | |

E-ORDER BY THE CENTIMETER
M-METRIC PART

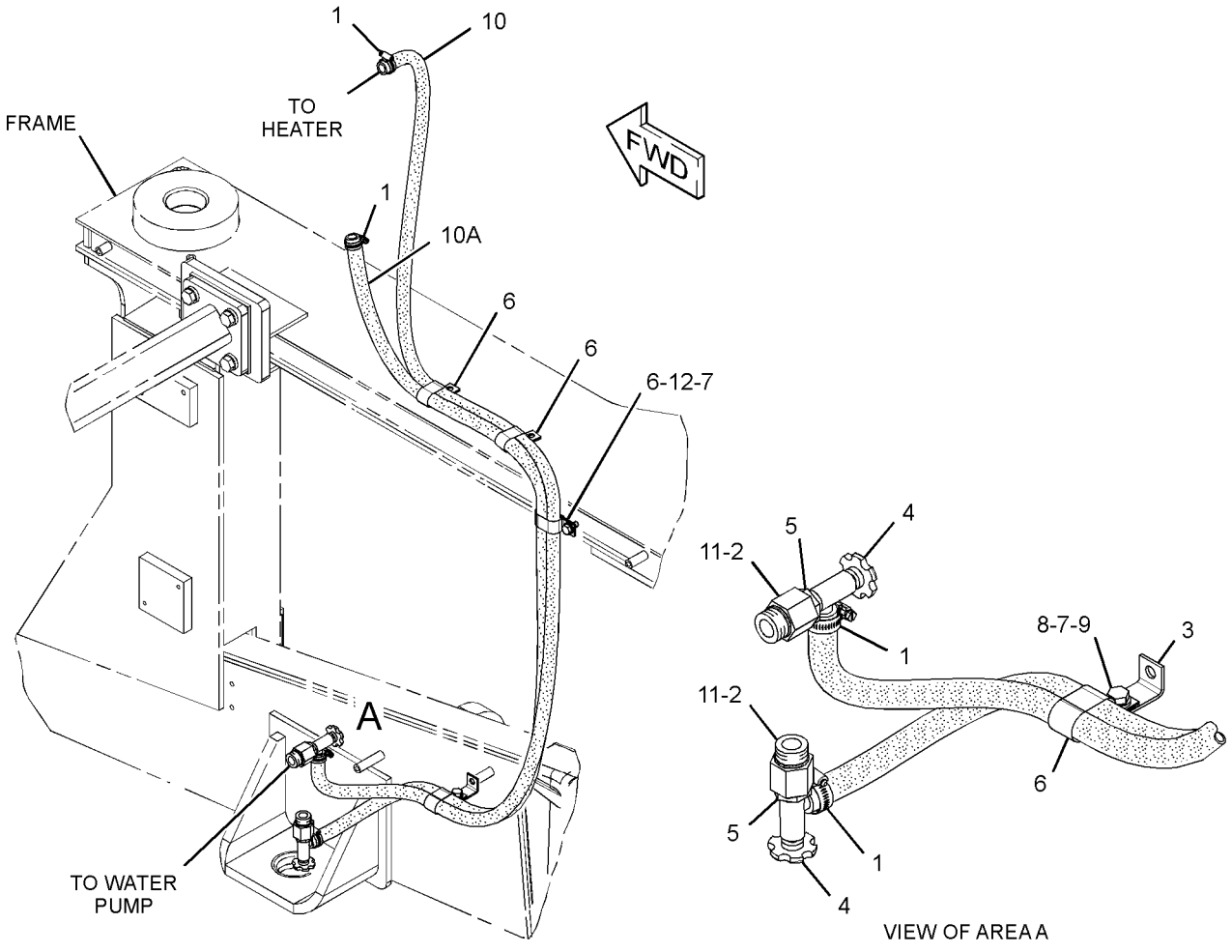


GRAPHIC #1 **<END>** g01365300

# OPERATOR STATION

## *269-9195* LINES GP-HEATER

**S/N: RLB334-UP**

**PART OF 270-1748 HYDRAULIC AR**

**SMCS-7304** **i02862366**

| NOTE | REF NO | GRAPHIC REF | PART NUMBER | QTY | PART NAME 1 2 3 4 5 6 (PRODUCT LEVEL) | SEE PAGE |
|---|---|---|---|---|---|---|
| | 1 | 1 | **5D-1026** | 4 | CLAMP-HOSE | |
| | 2 | 1 | **6V-7483** | 2 | ADAPTER | |
| C | 3 | 1 | **3S-1784** | 1 | BRACKET | |
| | 4 | 1 | **005-7889** | 2 | VALVE AS-DRAIN (HEATER) | |
| | 5 | 1 | **011-5224** | 2 | BUSHING-REDUCING | |
| | 6 | 1 | **6D-1641** | 4 | CLIP | |
| | 7 | 1 | **8T-4121** | 3 | WASHER-HARD (11X21X2.5-MM THK) | |
| M | 8 | 1 | **8T-4133** | 1 | NUT (M10X1.5-THD) | |
| M | 9 | 1 | **8T-4136** | 1 | BOLT (M10X1.5X25-MM) | |
| CE | 10 | 1 | **5P-0767** | | HOSE (235.5-CM) | |
| CE | 10A | 1 | **5P-0767** | | HOSE (186-CM) | |
| | 11 | 1 | **3D-2824** | 2 | SEAL-O-RING | |
| M | 12 | 1 | **8T-4137** | 1 | BOLT (M10X1.5X20-MM) | |

C-CHANGE FROM PREVIOUS TYPE
E-ORDER BY THE CENTIMETER
M-METRIC PART

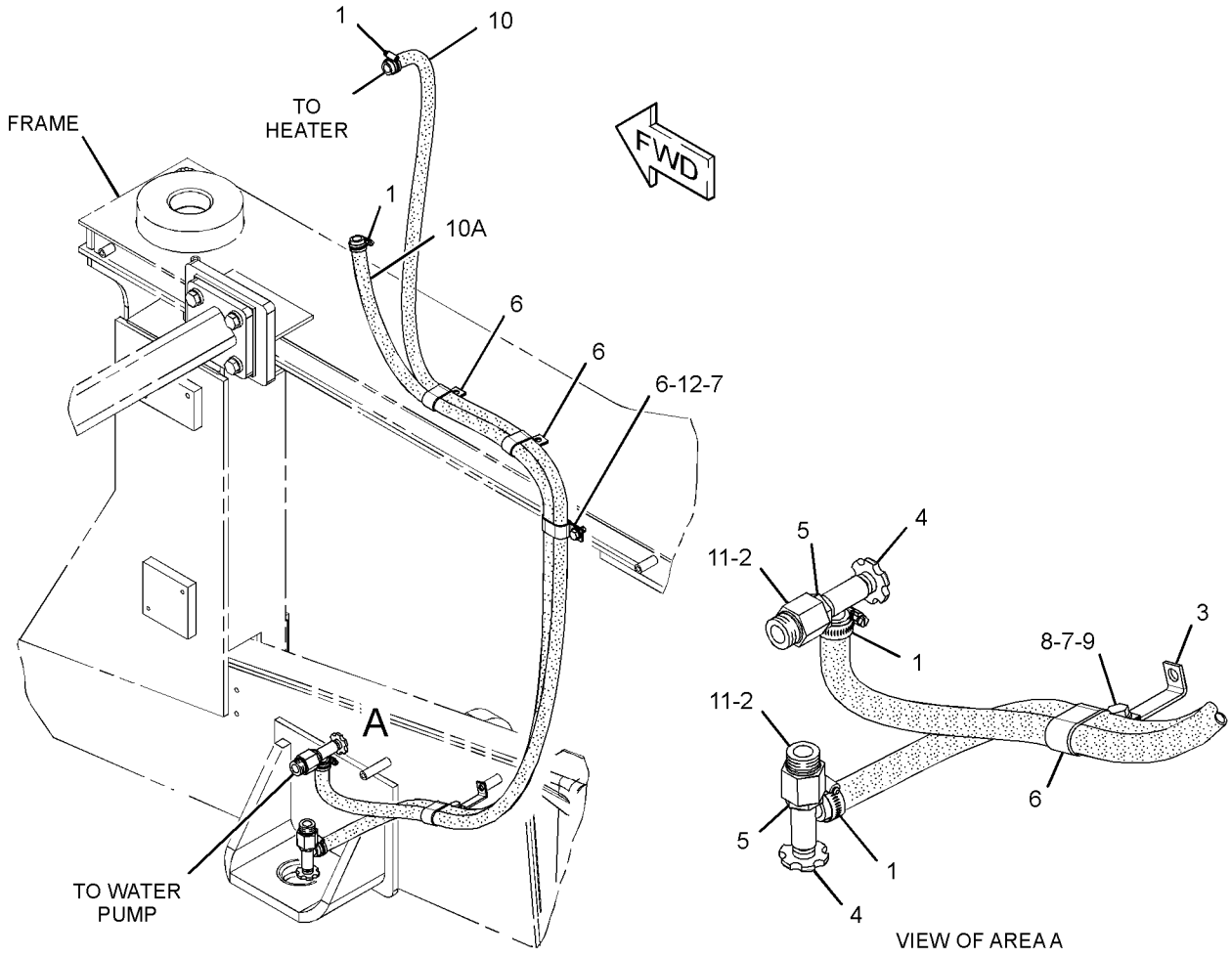


GRAPHIC #1 **<END>** g01439620

# OPERATOR STATION

## *6V-1970* LITERATURE GP

**S/N: RLB1-UP**

**PART OF 268-7808 CHASSIS AR**

**SMCS-0374, 0375** **i02831417**

| NOTE | PART NUMBER | QTY | PART NAME 1 2 3 4 5 6 (PRODUCT LEVEL) | SEE PAGE |
|---|---|---|---|---|
| | **5P-8500** | 2 | KEY (LITERATURE COMPARTMENT) | |
| | **5P-7958** | 1 | SLEEVE-CABLE SPLICE | |

**<END>**

# OPERATOR STATION

## 323-1076 MOTOR GP-WINDOW WIPER

**S/N: RLB1-UP**

**PART OF 241-4157 WIPER & WASHER GP-WINDOW**

**SMCS-7305** **i03016661**

| NOTE | REF NO | GRAPHIC REF | PART NUMBER | QTY | PART NAME 1 2 3 4 5 6 (PRODUCT LEVEL) | SEE PAGE |
|---|---|---|---|---|---|---|
| | 1 | 1 | **194-3710** | 1 | CAP-WIPER | |
| | 2 | 1 | **328-2264** | 1 | MOTOR GP-WINDOW WIPER | |
| | | 1 | **8T-8737** | 1 | PLUG-SEAL | |
| | | 1 | **102-8805** | 1 | KIT-RECEPTACLE (6-PIN) | |
| | | | | | (INCLUDES RECEPTACLE AS & WEDGE) | |
| | | 1 | **186-3735** | 5 | PIN-CONNECTOR (16-GA TO 18-GA) | |
| | 3 | 1 | **3F-9556** | 1 | LOCKWASHER | |
| M | 4 | 1 | **5C-7261** | 1 | NUT (M8X1.25-THD) | |

M-METRIC PART

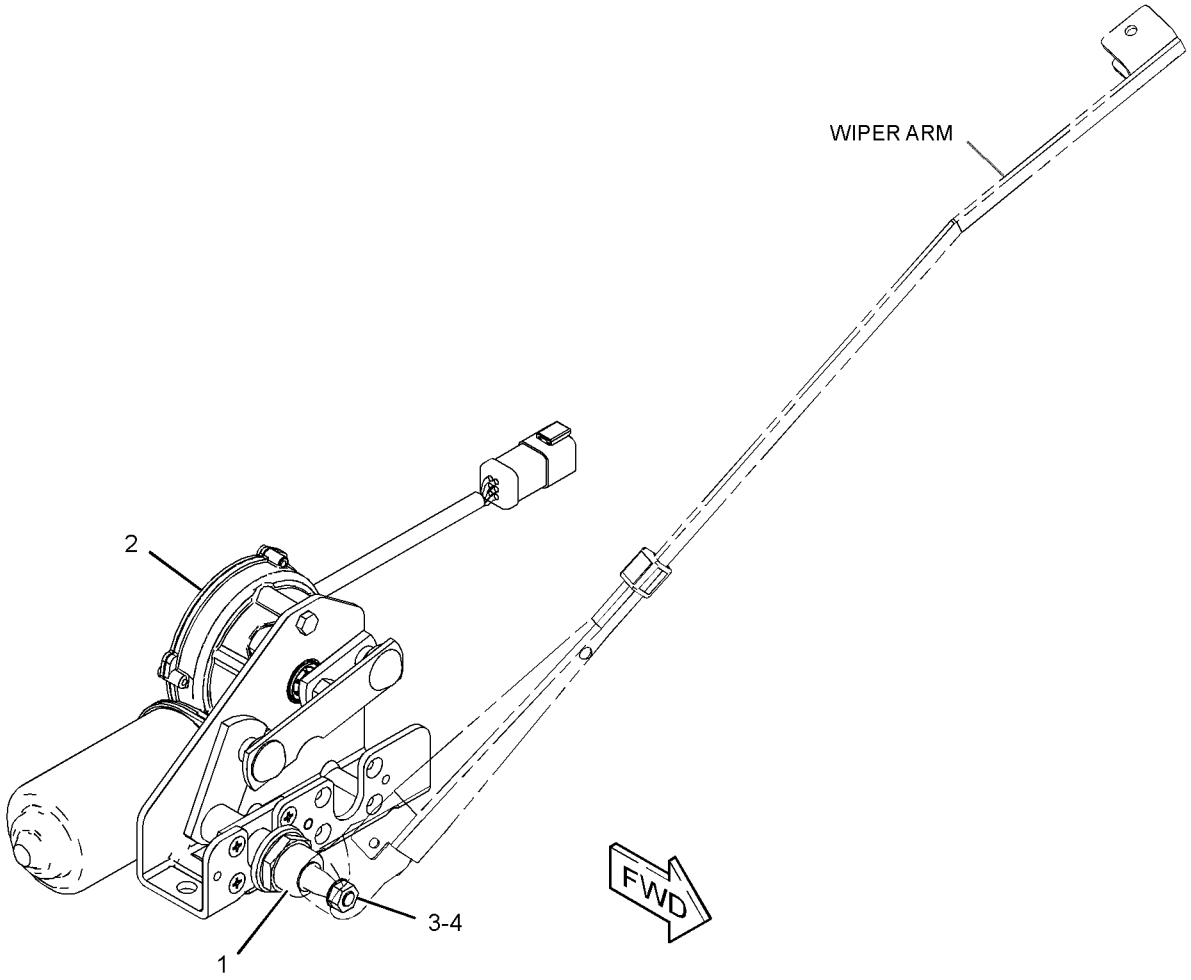


GRAPHIC #1 **<END>** g01529205

# OPERATOR STATION

## *265-0730* MOUNTING GP-CAB

**S/N: RLB1-UP**

**PART OF 268-7808 CHASSIS AR**

**SMCS-7266, 7301** **i02613048**

| NOTE | REF NO | GRAPHIC REF | PART NUMBER | QTY | PART NAME 1 2 3 4 5 6 (PRODUCT LEVEL) | SEE PAGE |
|---|---|---|---|---|---|---|
| | 1 | 1 | **9U-0512** | 4 | WASHER (32X144X12-MM THK) | |
| | 2 | 1 | **117-8131** | 8 | MOUNT AS | |
| | 3 | 1 | **133-1618** | 4 | SLEEVE | |
| | 4 | 1 | **297-0846** | 4 | BOLT (M30X3.5X180-MM) | |
| | 5 | 1 | **7X-0593** | 4 | WASHER-HARD (34X57X6-MM THK) | |

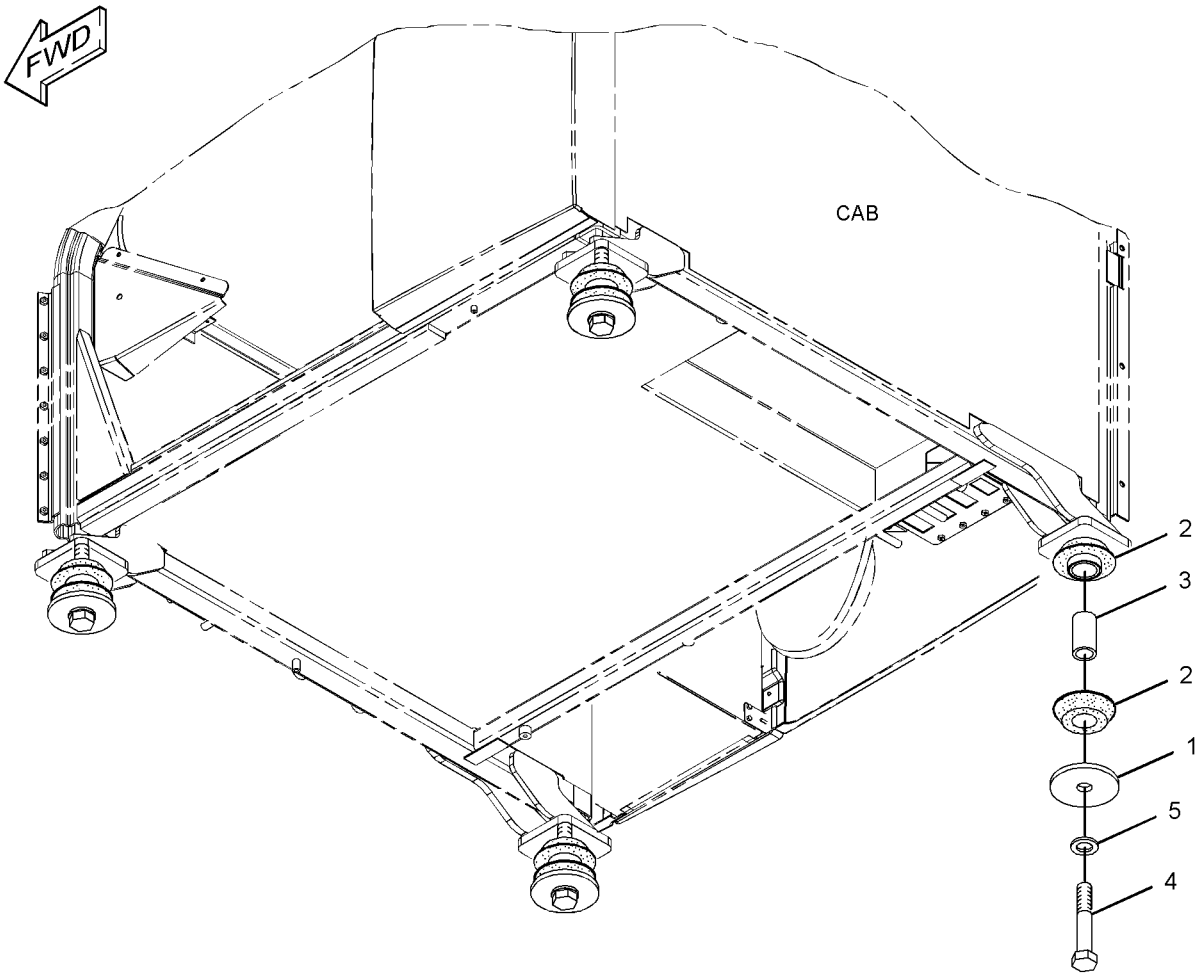


GRAPHIC #1 **<END>** g01337524

# OPERATOR STATION

## *226-7674* PAN GP-BACKREST–CLOTH

**S/N: RLB1-UP**

**PART OF 226-7677 SEAT GP**

**SMCS-7312** **i02163024**

| NOTE | REF NO | GRAPHIC REF | PART NUMBER | QTY | PART NAME 1 2 3 4 5 6 (PRODUCT LEVEL) | SEE PAGE |
|---|---|---|---|---|---|---|
| | 1 | 1 | **4K-9429** | 8 | RIVET-POP | |
| | 2 | 1 | **5P-7957** | 1 | LANYARD | |
| | 3 | 1 | **136-1543** | 1 | PLATE AS-LUMBAR | |
| | 4 | 1 | **164-4883** | 1 | KNOB-LUMBAR | |
| | 5 | 1 | **173-2052** | 1 | RETAINER | |
| | 6 | 1 | **177-4930** | 1 | PAN AS-BACKREST | |
| | 7 | 1 | **178-7907** | 1 | HOLDER | |
| | 8 | 1 | **8T-7566** | 1 | PIN-SPRING | |

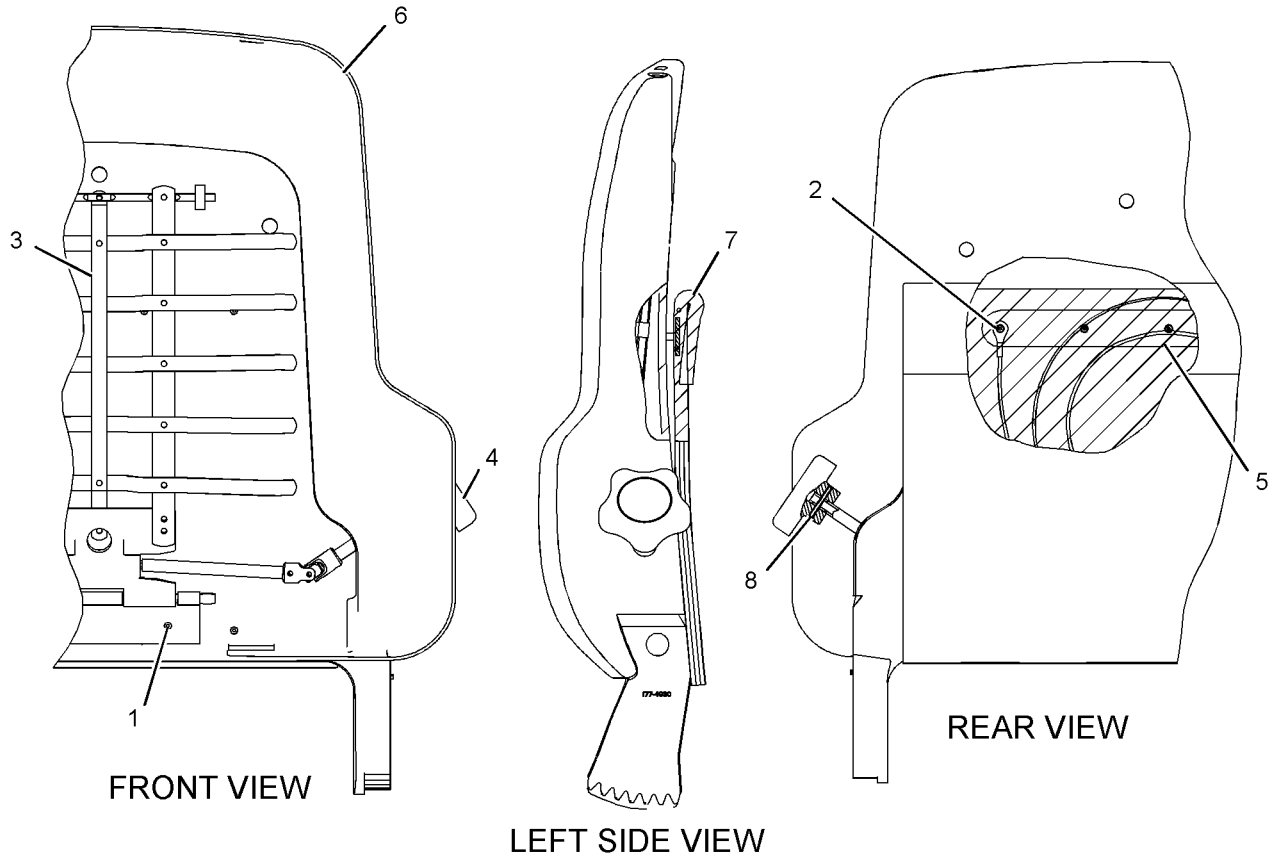


GRAPHIC #1

**<END>**

g01096896

# OPERATOR STATION

## *275-6658* PAN GP-DRAIN—AIR CONDITIONER

**S/N: RLB1-UP**

**PART OF 308-9434 HEATER & AIR CONDITIONER GP**

**SMCS-7320** **i02639468**

| NOTE | REF NO | GRAPHIC REF | PART NUMBER | QTY | PART NAME 1 2 3 4 5 6 (PRODUCT LEVEL) | SEE PAGE |
|---|---|---|---|---|---|---|
| | 1 | 1 | **157-2501** | 1 | PAN-DRAIN | |
| | 2 | 1 | **247-8272** | 1 | GASKET | |
| | 3 | 1 | **247-8302** | 4 | RIVET | |
| | 4 | 1 | **275-6684** | 2 | TUBE AS | |
| | 5 | 1 | **275-6686** | 1 | PLATE | |

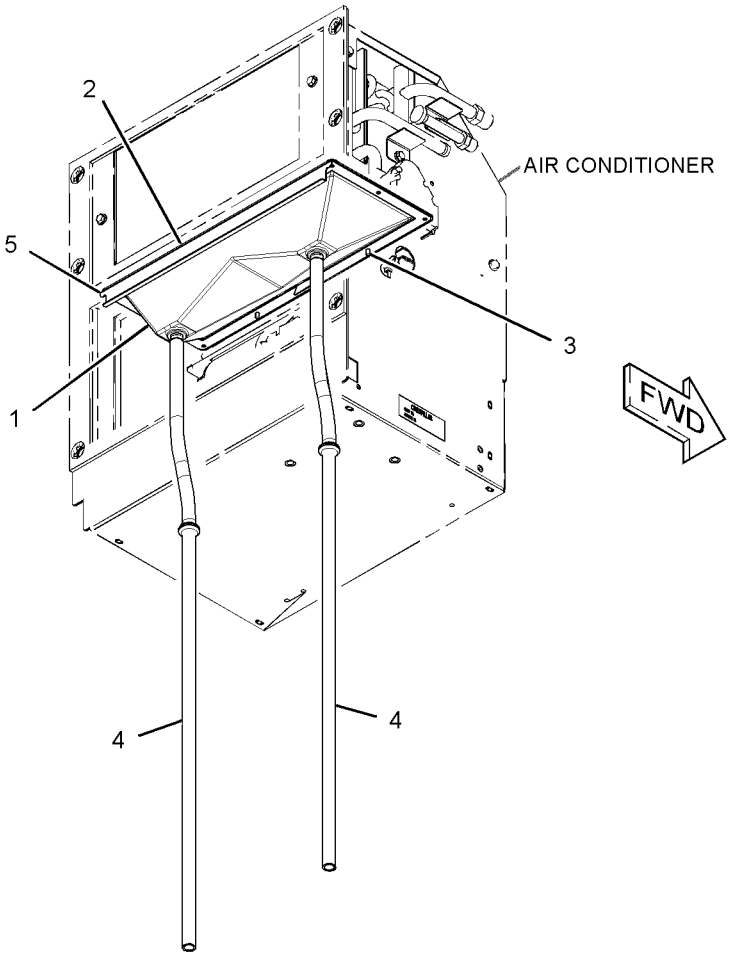


GRAPHIC #1 **<END>** g01324453

# OPERATOR STATION

## *279-8120* PANEL GP-CAB

**S/N: RLB1-UP**

**PART OF 269-8820 CAB AR**

**SMCS-7301** **i02801420**

| NOTE | REF NO | GRAPHIC REF | PART NUMBER | QTY | PART NAME 1 2 3 4 5 6 (PRODUCT LEVEL) | SEE PAGE |
|---|---|---|---|---|---|---|
| | 1 | 1 | **2R-2376** | 2 | WASHER (7X16X0.8-MM THK) | |
| | 2 | 1 | **8C-6368** | 2 | SCREW AS-WING | |
| | 3 | 1 | **297-5177** | 1 | PANEL AS | |
| | | 1 | **279-8121** | 1 | PANEL-RIGHT | |
| | 4 | 1 | **279-8122** | 1 | COVER | |
| | 5 | 1 | **279-8124** | 2 | GASKET-TOP | |
| | 6 | 1 | **280-2591** | 2 | GASKET (SIDE) | |
| | 7 | 1 | **5P-4115** | 1 | WASHER-HARD (7.2X19X2-MM THK) | |
| | 8 | 1 | **7X-7729** | 3 | WASHER (11X25X3-MM THK) | |
| M | 9 | 1 | **8T-4136** | 6 | BOLT (M10X1.5X25-MM) | |
| M | 10 | 1 | **8T-4138** | 1 | BOLT (M6X1X20-MM) | |
| | 11 | 1 | **7F-6998** | 3 | LOCKWASHER | |

M-METRIC PART

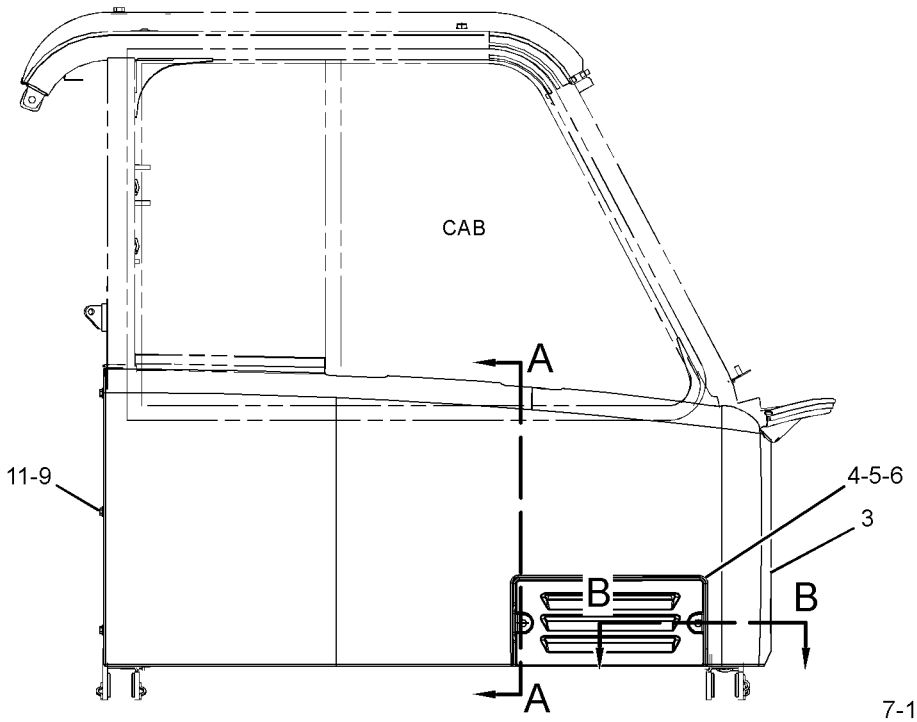


RIGHT SIDE VIEW

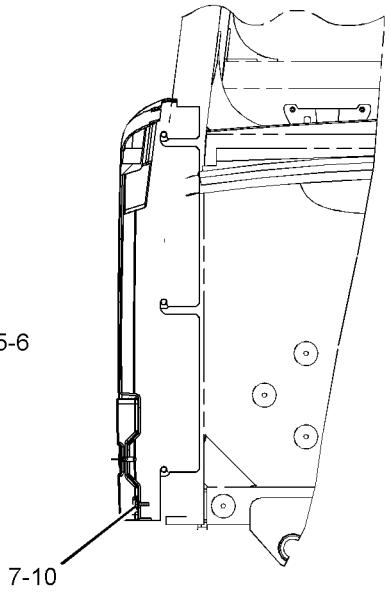


SECTION A-A

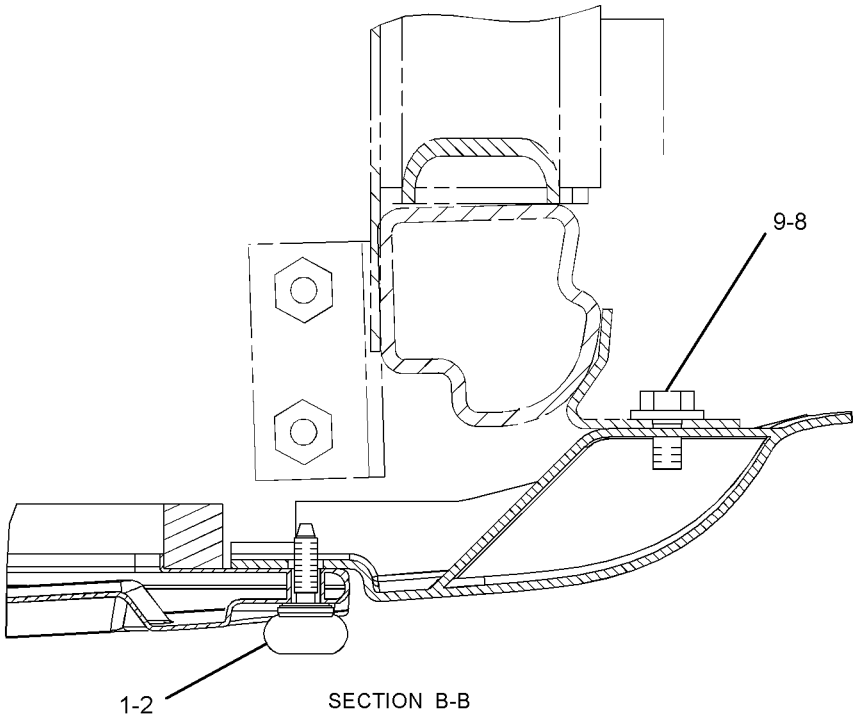


SECTION B-B

GRAPHIC #1

**<END>**

g01294060

# OPERATOR STATION

## *236-0986* PANEL GP-INSTRUMENT

**S/N: RLB1-UP**

**PART OF 269-8820 CAB AR**

**SMCS-7450, 7451** **i02898850**

| NOTE | REF NO | GRAPHIC REF | PART NUMBER | QTY | PART NAME 1 2 3 4 5 6 (PRODUCT LEVEL) | SEE PAGE |
|---|---|---|---|---|---|---|
| | 1 | 2 | **2P-4339** | 1 | NUT-JAM (7/16-28-THD) | |
| | 2 | 2 | **5P-8500** | 2 | KEY | |
| | 3 | 2 | **8L-8413** | 1 | STRAP-CABLE | |
| | 4 | 2 | **8Y-6388** | 2 | LOUVER AS-VENT | |
| | 5 | 2 | **110-7887** | 1 | SWITCH AS-START (KEY) | |
| | | 2 | **7T-6799** | 1 | NUT-MOUNTING (1-32-THD) | |
| | | 2 | **102-8804** | 1 | KIT-RECEPTACLE (4-PIN) | |
| | | | | | (INCLUDES RECEPTACLE AS & WEDGE) | |
| | | 2 | **186-3735** | 4 | PIN-CONNECTOR (16-GA TO 18-GA) | |
| | 6 | 2 | **291-2165** | 1 | POTENTIOMETER AS (TEMPERATURE CONTROL) | |
| | | 2 | **102-8803** | 1 | KIT-RECEPTACLE (3-PIN) | |
| | | | | | (INCLUDES RECEPTACLE AS & WEDGE) | |
| | | 2 | **186-3735** | 4 | PIN-CONNECTOR (16-GA TO 18-GA) | |
| | | 2 | **236-8722** | 1 | WASHER (10.5X22.2X1.6-MM THK) | |
| | 7 | 1 | **163-6508** | 2 | LAMP-LED (24-VOLT, WHITE) (DASH) | |
| | 8 | 1 | **168-2260** | 2 | PLATE | |
| | 9 | 2 | **228-6089** | 3 | PLUG (ROCKER SWITCH) | |
| | 10 | 2 | **229-2580** | 1 | SWITCH AS-ROCKER (THROTTLE LOCK) | |
| | 11 | 2 | **236-4615** | 1 | SWITCH AS-ROCKER (SECONDARY STEERING) | |
| | 12 | 2 | **236-4616** | 1 | SWITCH AS-ROCKER (HAZARD) | |
| | 13 | 2 | **239-3846** | 1 | PANEL AS-INSTRUMENT | |
| | 14 | 2 | **251-1198** | 1 | SWITCH AS-ROCKER (24-VOLT) (AIR CONDITIONER ON, OFF) | |
| | 15 | 2 | **251-3539** | 1 | SWITCH AS-ROCKER (HEADLIGHT) | |
| | 16 | 2 | **255-0020** | 1 | SWITCH AS-ROCKER (FRONT BRAKE) | |
| | 17 | 2 | **271-7312** | 1 | KNOB (TEMPERATURE CONTROL) | |
| | 18 | 2 | **307-0649** | 1 | KNOB | |
| | 19 | 1 | **291-6215** | 1 | HARNESS AS-DASH | |
| | | 1 | **107-1984** | 2 | SOCKET-LAMP | |
| | | 1 | **7X-6222** | 1 | PLUG AS-CONNECTOR (24-PIN) | |
| | | 1 | **9X-4391** | 1 | PLUG AS-CONNECTOR (70-PIN) | |
| | | 1 | **134-2540** | 2 | RECEPTACLE AS (3-PIN) | |
| | | 1 | **167-7801** | 2 | RESISTOR AS (390-OHM, 2-WATT) | |
| | | 1 | **155-2265** | 2 | KIT-CONNECTING PLUG (8-PIN) | |
| | | 1 | **155-2260** | 1 | KIT-CONNECTING PLUG (3-PIN) | |
| | | 1 | **155-2270** | 2 | KIT-CONNECTING PLUG (2-PIN) | |
| | | 1 | **155-2271** | 1 | KIT-CONNECTING PLUG (4-PIN) | |
| | | 1 | **155-2274** | 1 | KIT-CONNECTING PLUG (6-PIN) | |
| | | 1 | **174-0503** | 2 | KIT-CONNECTING PLUG (3-PIN) | |
| | | | | | (EACH INCLUDES PLUG AS, WEDGE, & INTERFACE SEAL) | |
| | 20 | 2 | **104-2091** | 4 | SCREW-FLAT HEAD (NO 6X0.5-IN) | |
| | 21 | 1 | **132-5789** | 3 | CLIP | |
| | 22 | 2 | **145-0846** | 1 | KNOB AS-LIGHTER | |
| | 23 | 2 | **145-0847** | 1 | HOUSING AS | |
| | | 2 | **6V-8376** | 1 | SCREW-MACHINE (8-32X0.25-IN) | |
| | | 2 | **9B-7233** | 1 | LOCKWASHER | |
| | 24 | 1 | **156-6175** | 1 | CLIP | |
| | 25 | 2 | **157-1361** | 1 | SWITCH AS-ROTARY (FAN SPEED) | |
| | | 2 | **9W-0852** | 6 | PIN-CONNECTOR (14-GA) | |
| | | 2 | **102-8805** | 1 | KIT-RECEPTACLE (6-PIN) | |
| | | | | | (INCLUDES RECEPTACLE AS & WEDGE) | |
| M | 26 | 1 | **158-4781** | 2 | SCREW (M6X1X16-MM) | |
| M | 27 | 1 | **096-5969** | 6 | BOLT-SOCKET HEAD (M5X0.8X25-MM) | |
| | 28 | 2 | **242-5044** | 1 | FILM-IDENTIFICATION (INSTRUMENT PANEL) (DASH) | |
| Y | 29 | 2 | *247-7036* | 1 | APPLICATION GP-MONITOR | 251 |

*236-0986* **PANEL GP-INSTRUMENT** *(contd.)* **i02898850**

| NOTE | REF NO | GRAPHIC REF | PART NUMBER | QTY | PART NAME 1 2 3 4 5 6 (PRODUCT LEVEL) | SEE PAGE |
|---|---|---|---|---|---|---|
| | 30 | 2 | **313-2153** | 1 | MODULE GP-DISPLAY (ELECTRONIC) | |
| | 31 | 2 | **284-3621** | 1 | SWITCH AS-ROCKER (BACKLIGHT) | |
| | 32 | 2 | **284-3622** | 1 | SWITCH AS-ROCKER (ARC ON, OFF) | |
| M | 33 | 1 | **4I-8439** | 2 | SCREW (M8X1.25X16-MM) | |
| | 34 | 2 | **7F-6998** | 1 | LOCKWASHER | |
| | 35 | 1 | **7K-1181** | 10 | STRAP-CABLE | |
| | 36 | 1 | **8T-4121** | 1 | WASHER-HARD (11X21X2.5-MM THK) | |
| M | 37 | 1 | **8T-4191** | 1 | BOLT (M10X1.5X16-MM) | |
| M | 38 | 2 | **9X-2046** | 5 | SCREW-TRUSS HEAD (M6X1X35-MM) | |
| | 39 | 1 | **9F-5599** | 6 | LOCKWASHER | |
| | 40 | 2 | **9X-2038** | 5 | WASHER (7X19X2-MM THK) | |

M-METRIC PART
Y-SEPARATE ILLUSTRATION

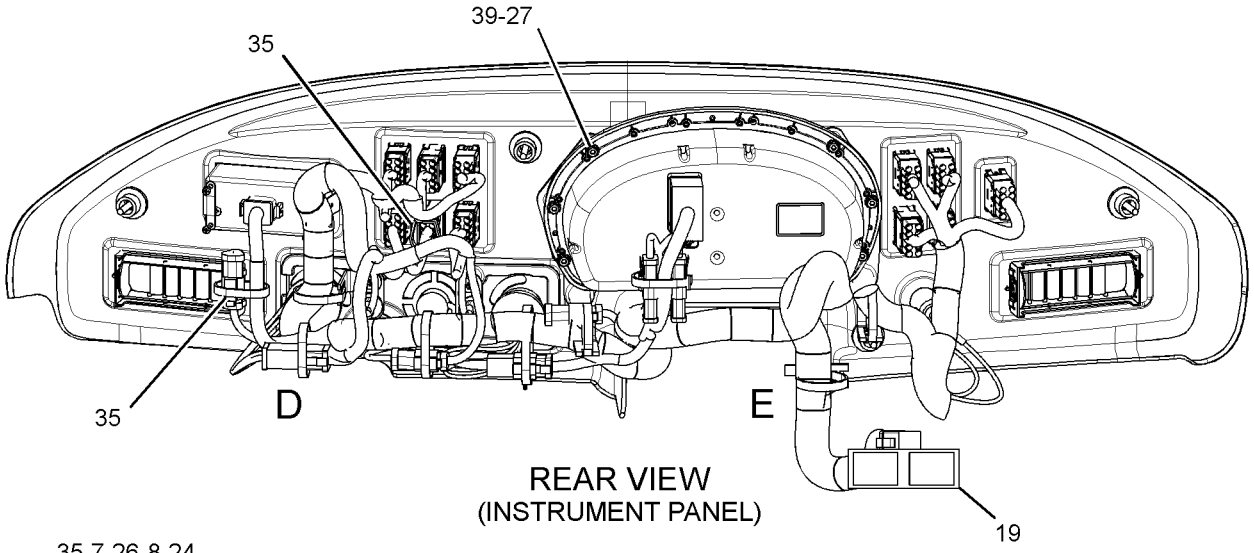


REAR VIEW
(INSTRUMENT PANEL)

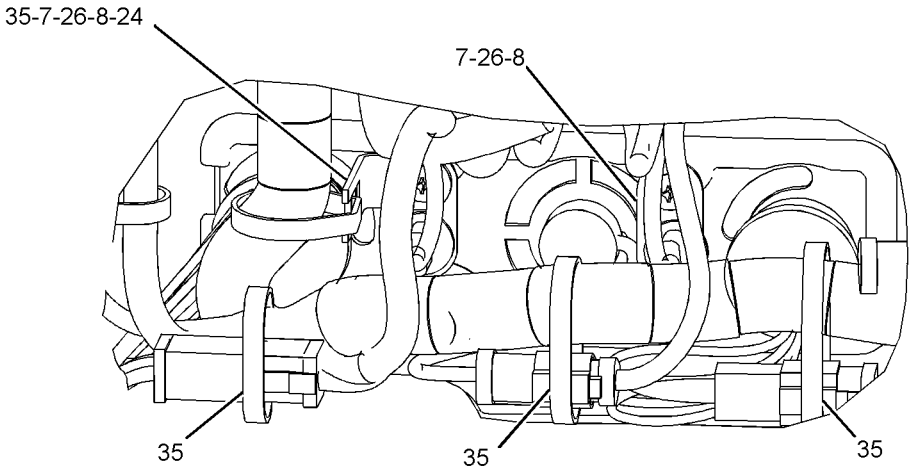


VIEW OF AREA D

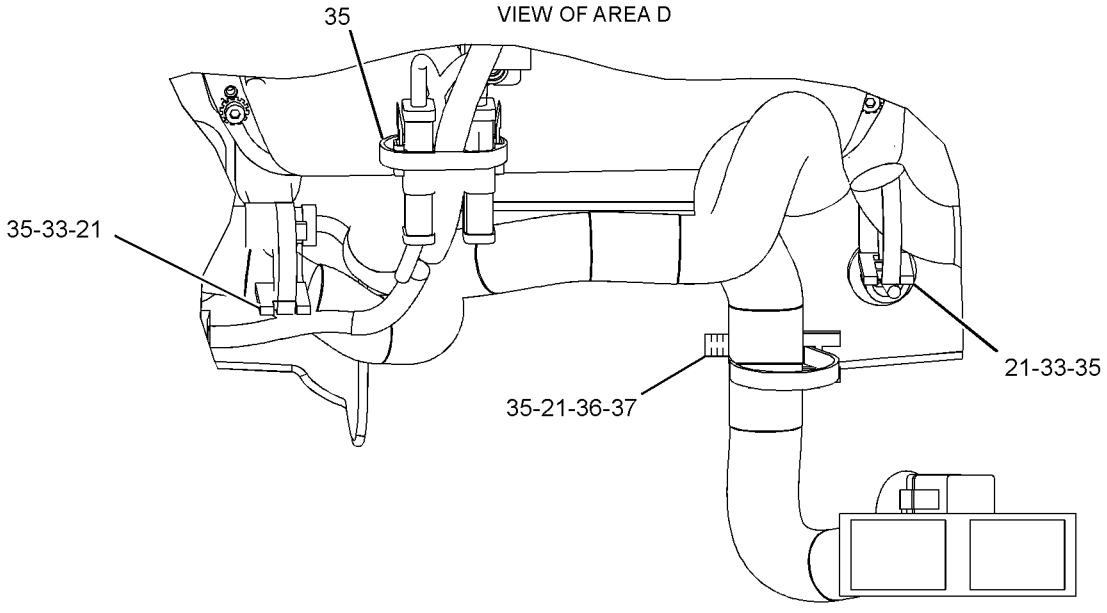


VIEW OF AREA E

GRAPHIC #1

g01450881

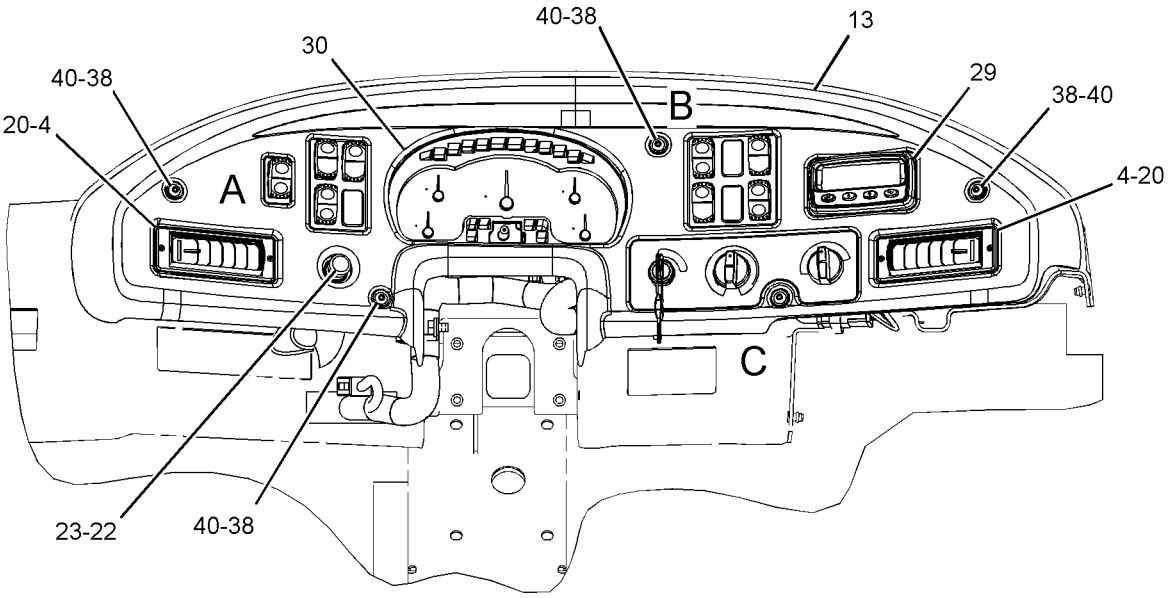


FRONT VIEW
(INSTRUMENT PANEL)

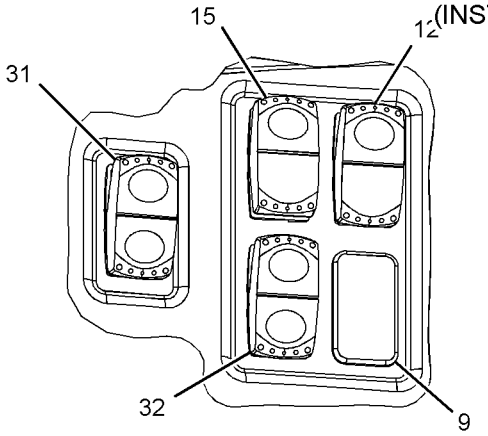


VIEW OF AREA A

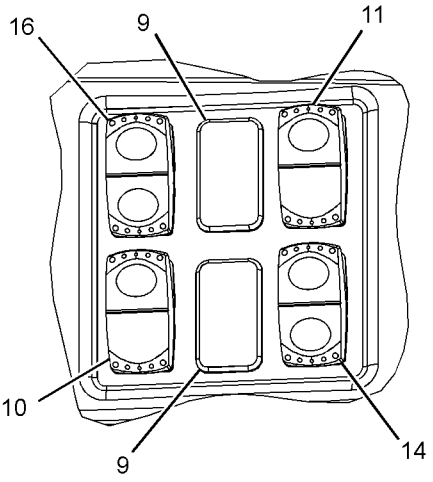


VIEW OF AREA B

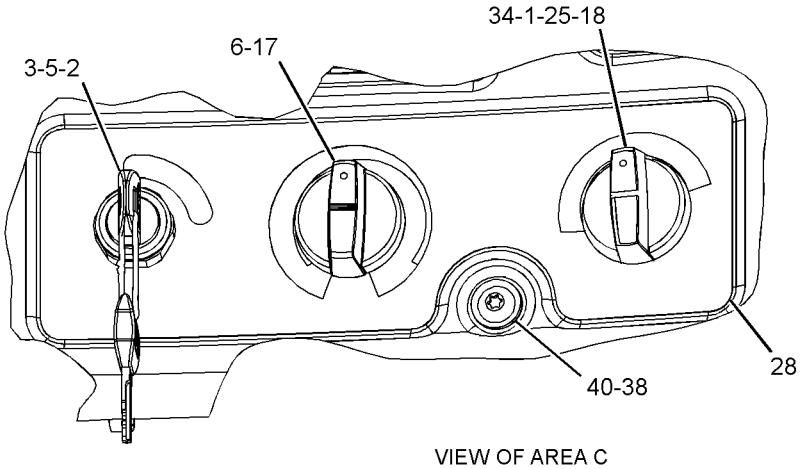


VIEW OF AREA C

GRAPHIC #2 **<END>** g01450884

# OPERATOR STATION

## *174-3874* PANEL GP-SOUND SUPPRESSION

**S/N: RHX1-UP**
**LEFT HAND MOUNTED SOUND PANEL**
**PART OF 221-8124, 247-3315, 272-3086, 272-3087, 292-2553, 292-2554 ENGINE AR-COMPLETE**
**FOR USE WITH BRAKESAVER OR NON-BRAKESAVER ENGINES, ALL APPLICATIONS**
**AN ATTACHMENT**

**SMCS-7329** **i02716705**

| NOTE | REF NO | GRAPHIC REF | PART NUMBER | QTY | PART NAME 1 2 3 4 5 6 (PRODUCT LEVEL) | SEE PAGE |
|---|---|---|---|---|---|---|
| | 1 | 1 | **173-1957** | 1 | PANEL AS | |
| | 2 | 1 | **0S-1588** | 3 | BOLT (3/8-16X1.25-IN) | |
| | 3 | 1 | **9X-6458** | 3 | WASHER-HARD (10.2X22.5X3-MM THK) | |

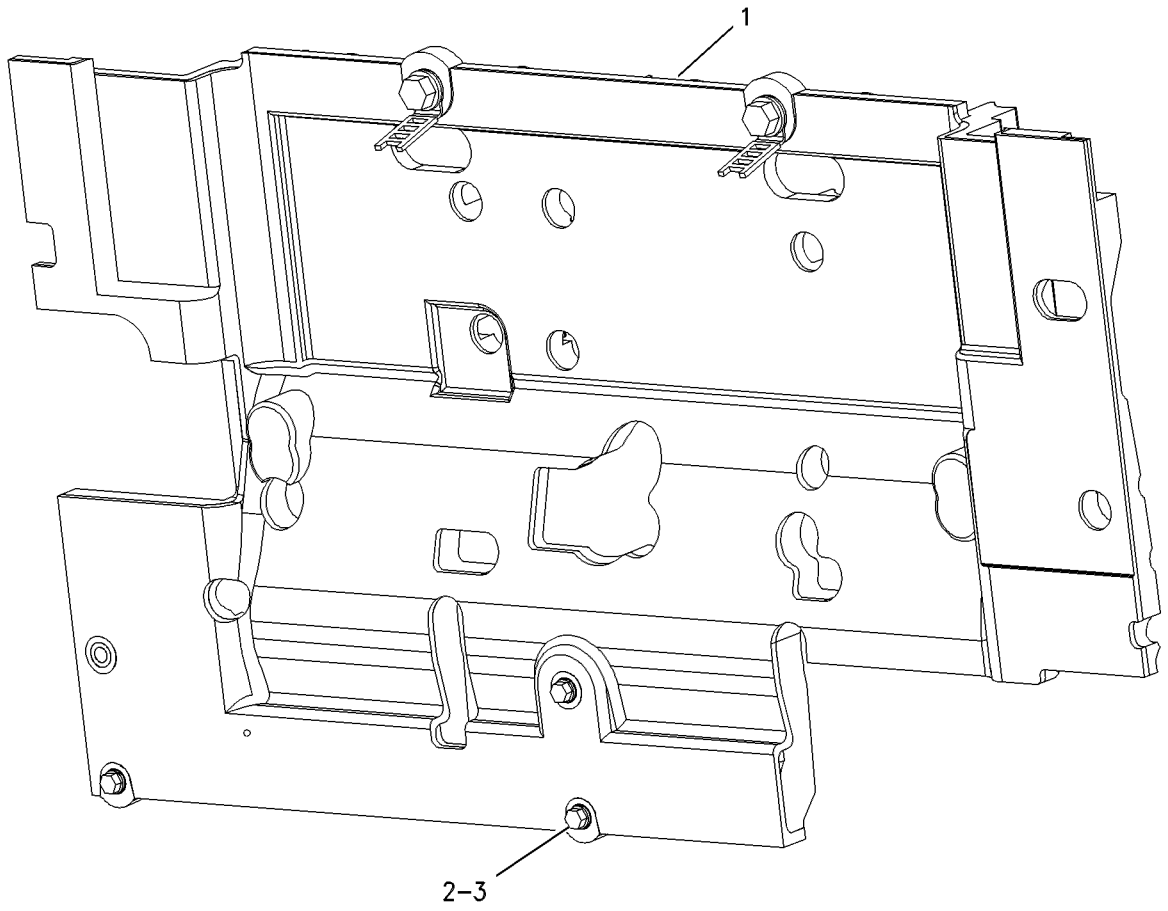


GRAPHIC #1 **<END>** g00618571

# *227-9980* PANEL GP-SOUND SUPPRESSION–

**ENGINE FRONT HOUSING**

**S/N: RHX1-UP**

**PART OF 221-8124, 247-3315, 272-3086, 272-3087, 292-2553, 292-2554 ENGINE**

**AR-COMPLETE**

**CANNOT BE USED WITH ALTERNATOR MOUNTING GROUPS AND ACCESSORY DRIVE GROUPS**

**AN ATTACHMENT**

**SMCS-7329** **i03202335**

| NOTE | REF NO | GRAPHIC REF | PART NUMBER | QTY | PART NAME 1 2 3 4 5 6 (PRODUCT LEVEL) | SEE PAGE |
|---|---|---|---|---|---|---|
| | 1 | 1 | **324-6804** | 1 | COVER AS (SOUND SUPPRESSION) | |
| | 2 | 1 | **0S-1588** | 1 | BOLT (3/8-16X1.25-IN) | |
| | 3 | 1 | **0S-1594** | 3 | BOLT (3/8-16X1-IN) (MARKED X) | |
| | 4 | 1 | **0T-0055** | 2 | BOLT (3/8-16X4.25-IN) | |
| | 5 | 1 | **1A-5964** | 4 | BOLT (3/8-16X4.5-IN) (MARKED Y) | |
| | 6 | 1 | **5M-2894** | 2 | WASHER-HARD (10.2X18.5X2.5-MM THK) | |
| | 7 | 1 | **9S-8752** | 1 | NUT-FULL (3/8-16-THD) | |
| | 8 | 1 | **9X-6458** | 9 | WASHER-HARD (10.2X22.5X3-MM THK) | |

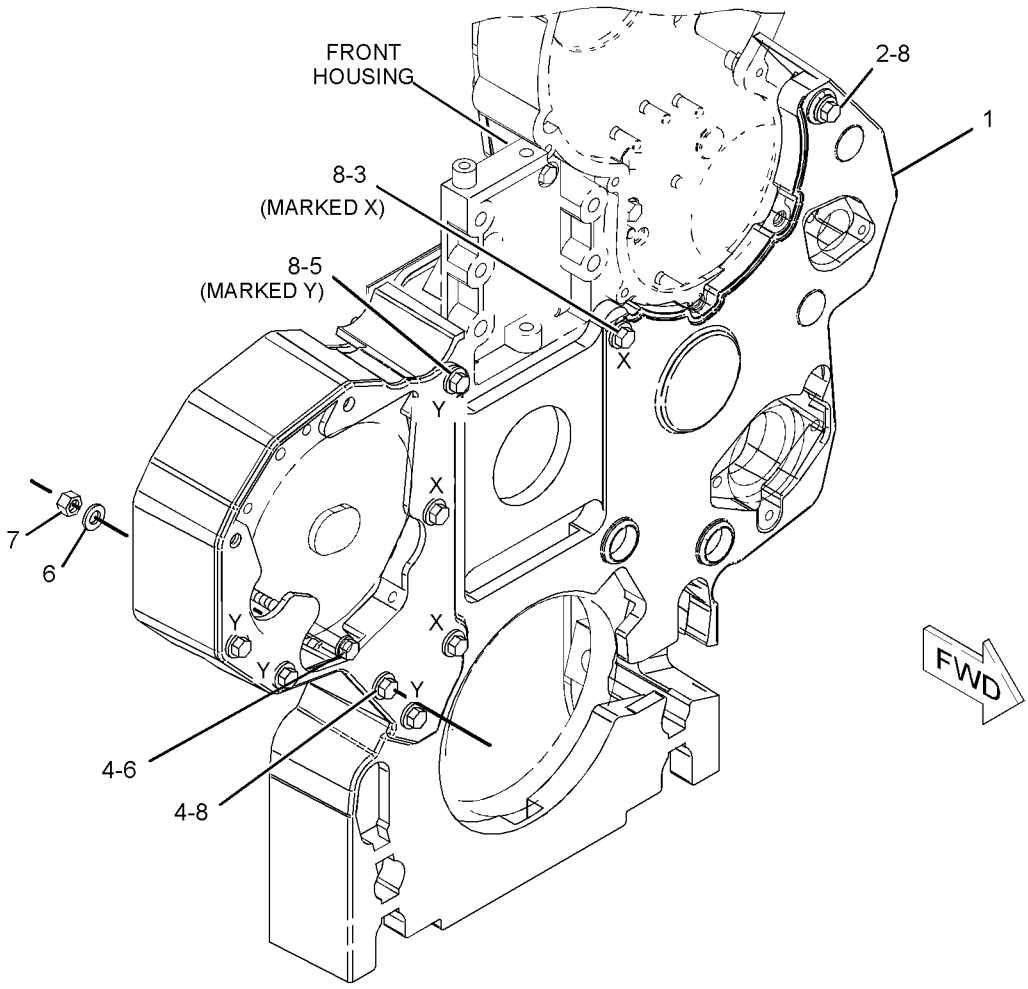


GRAPHIC #1 **<END>** g01436233

# OPERATOR STATION

## 113-4799 PEDAL GP-GOVERNOR

**S/N: RLB1-UP**

**PART OF 278-5962 CONTROL GP-GOVERNOR**

**TYPE 1**

**SMCS-1276** **i02852226**

| NOTE | REF NO | GRAPHIC REF | PART NUMBER | QTY | PART NAME 1 2 3 4 5 6 (PRODUCT LEVEL) | SEE PAGE |
|---|---|---|---|---|---|---|
| | 1 | 1 | **123-9431** | 1 | COVER | |
| | 2 | 1 | **140-2961** | 1 | KIT-ROLLER (FOOT BRAKE CONTROL) (GOVERNOR PEDAL) | |
| | | | | | (INCLUDES ROLLERS) | |
| | 3 | 1 | **274-9189** | 1 | KIT-TREADLE PIN (FOOT BRAKE CONTROL) (GOVERNOR PEDAL) | |
| | | | | | (INCLUDES BUSHINGS, PIN, PUSH NUT & SERVICE BULLETIN) | |
| | 4 | 1 | **140-2963** | 2 | SCREW | |
| | 5 | 1 | **160-6354** | 1 | PLATE AS | |
| | 6 | 1 | **160-6365** | 2 | SCREW | |
| | 7 | 1 | **160-6366** | 2 | CLIP | |
| Y | 8 | 1 | **204-7949** | 1 | SENSOR GP-POSITION (ROTARY) (FOOT BRAKE CONTROL) | 298 |
| | 9 | 1 | **6V-0894** | 1 | SEAL-O-RING | |

Y-SEPARATE ILLUSTRATION

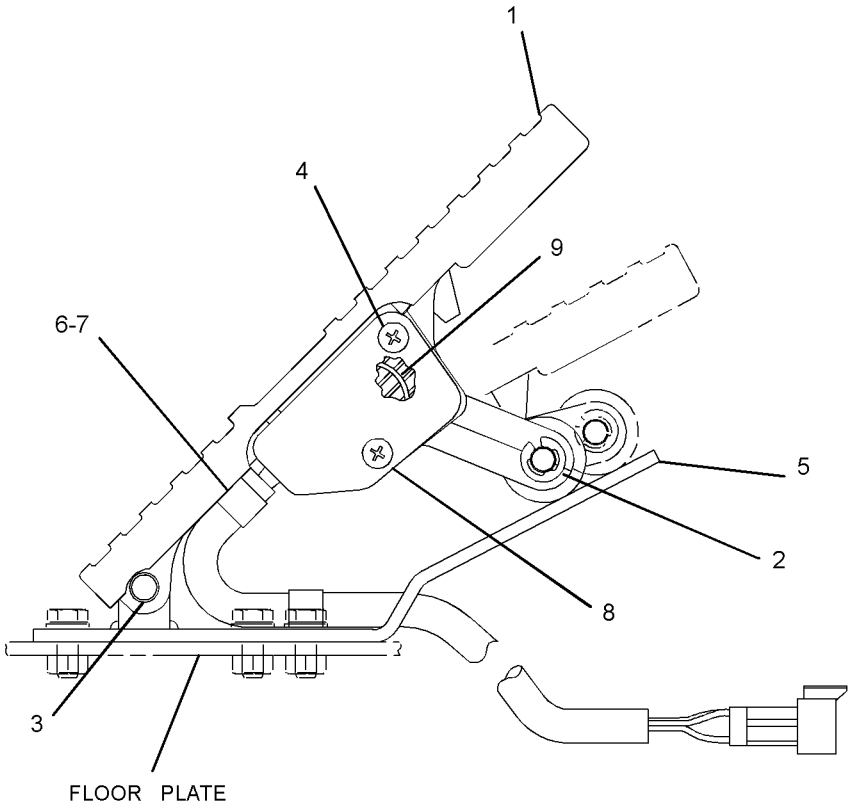


RIGHT SIDE VIEW

GRAPHIC #1 **<END>** g01225854

# OPERATOR STATION

## 113-4799 PEDAL GP-GOVERNOR

**S/N: RLB1-UP**

**PART OF 278-5962 CONTROL GP-GOVERNOR**

**TYPE 2**

**SMCS-1276** **i02908663**

| NOTE | REF NO | GRAPHIC REF | PART NUMBER | QTY | PART NAME 1 2 3 4 5 6 (PRODUCT LEVEL) | SEE PAGE |
|---|---|---|---|---|---|---|
| | 1 | 1 | **123-9431** | 1 | COVER | |
| | 2 | 1 | **140-2961** | 1 | KIT-ROLLER (FOOT BRAKE CONTROL) | |
| | | | | | (INCLUDES ROLLERS) | |
| | 3 | 1 | **274-9189** | 1 | KIT-TREADLE PIN (FOOT BRAKE CONTROL) | |
| | | | | | (INCLUDES BUSHINGS, PIN, PUSH NUT & SERVICE BULLETIN) | |
| | 4 | 1 | **140-2963** | 2 | SCREW | |
| | 5 | 1 | **160-6354** | 1 | PLATE AS | |
| | 6 | 1 | **160-6365** | 2 | SCREW | |
| | 7 | 1 | **160-6366** | 2 | CLIP | |
| CY | 8 | 1 | **266-1466** | 1 | SENSOR GP-POSITION (FOOT BRAKE CONTROL) | 300 |
| | 9 | 1 | **6V-0894** | 1 | SEAL-O-RING | |

C-CHANGE FROM PREVIOUS TYPE
Y-SEPARATE ILLUSTRATION

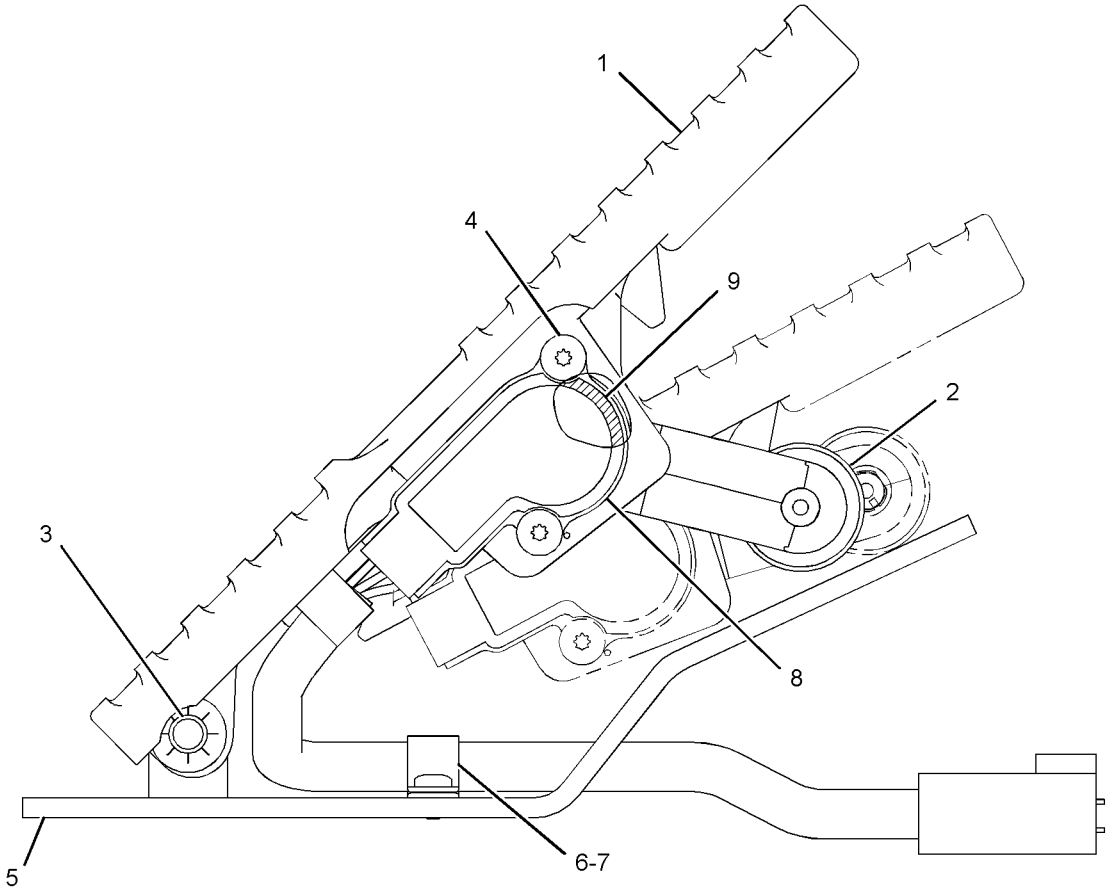


RIGHT SIDE VIEW

GRAPHIC #1 **<END>** g01438826

# OPERATOR STATION

## *269-8700* PLATFORM AR

**S/N: RLB1-UP**

**PART OF 268-7810 GENERAL AR**

**SMCS-7253** **i02718336**

| NOTE | PART NUMBER | QTY | PART NAME 1 2 3 4 5 6 (PRODUCT LEVEL) | SEE PAGE |
|---|---|---|---|---|
| Y | *269-8690* | 1 | COWLING GP | 482 |
| Y | *269-8640* | 1 | FENDER GP (LH) | 484 |
| Y | *269-8650* | 1 | FENDER GP (RH) | 486 |
| Y | *269-8735* | 1 | GUARD GP-BOTTOM | 490 |
| Y | *270-5357* | 1 | GUARD GP-DRIVE SHAFT | 493 |
| Y | *269-8680* | 1 | HANDRAIL GP | 502 |
| Y | *308-3275* | 1 | INSULATION GP-HEAT (AIR CONDITIONER, CAB) | 760 |
| | | | S/N: RLB287-UP | |
| Y | *269-8660* | 1 | PLATFORM GP (LH) | 786 |
| Y | *269-8670* | 1 | PLATFORM GP (RH) | 787 |
| Y | *269-8710* | 1 | STEP GP | 540 |
| Y | *271-8530* | 1 | TANK GP-FUEL | 241 |

Y-SEPARATE ILLUSTRATION

**<END>**

# OPERATOR STATION

## *269-8660* PLATFORM GP–LH

**S/N: RLB1-UP**

**PART OF 269-8700 PLATFORM AR**

**SMCS-7253** **i02627589**

| NOTE | REF NO | GRAPHIC REF | PART NUMBER | QTY | PART NAME 1 2 3 4 5 6 (PRODUCT LEVEL) | SEE PAGE |
|---|---|---|---|---|---|---|
| | 1 | 1 | **203-6066** | 1 | LATCH AS | |
| | 2 | 1 | **269-8639** | 1 | PLATE AS | |
| | 3 | 1 | **269-8661** | 1 | PLATFORM AS (LH) | |
| | 4 | 1 | **198-4780** | 6 | WASHER-HARD (17.5X32X8-MM THK) | |
| M | 5 | 1 | **7X-2555** | 4 | BOLT (M16X2X80-MM) | |
| | 6 | 1 | **7X-7729** | 6 | WASHER (11X25X3-MM THK) | |
| M | 7 | 1 | **8T-4137** | 6 | BOLT (M10X1.5X20-MM) | |
| M | 8 | 1 | **8T-4140** | 2 | BOLT (M16X2X60-MM) | |

M-METRIC PART

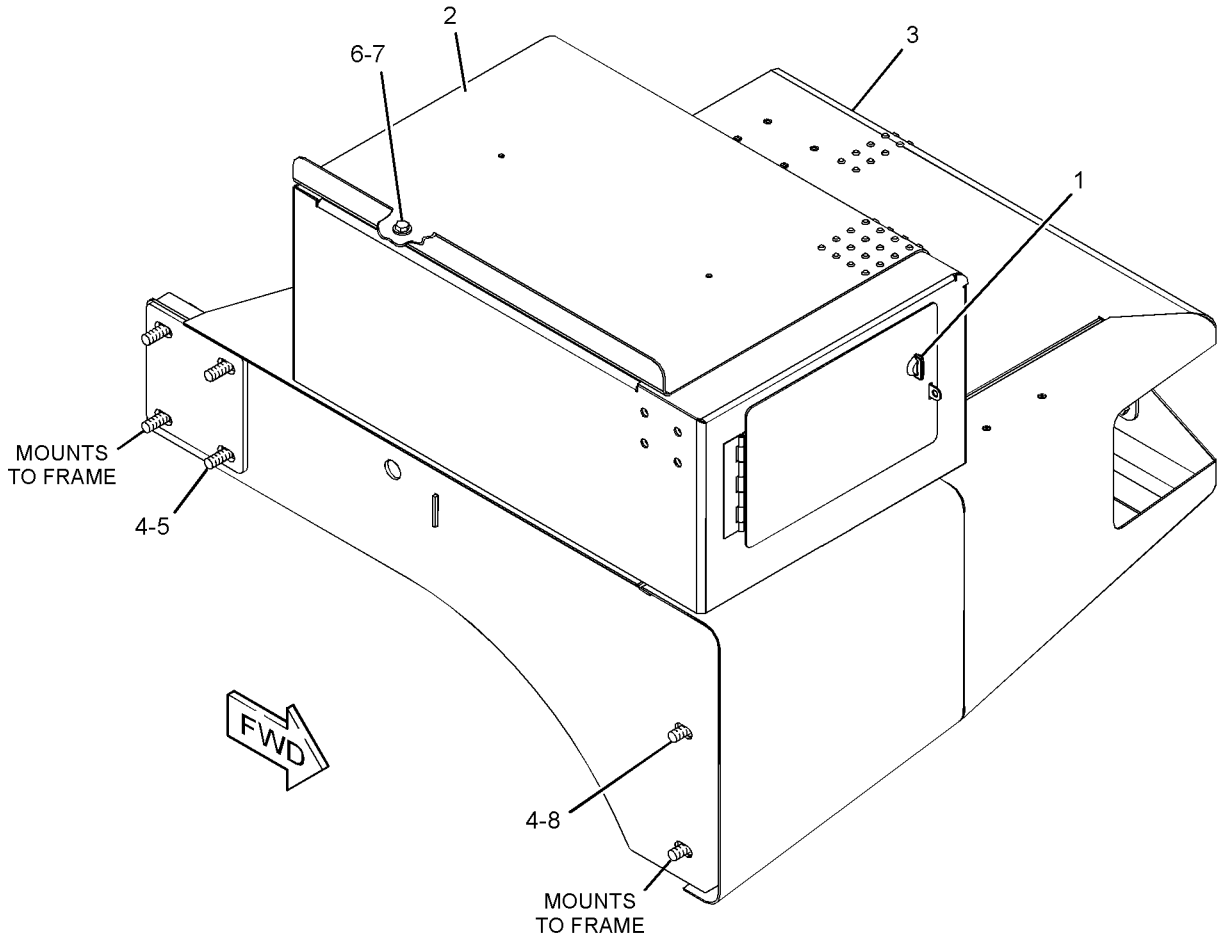


GRAPHIC #1 **<END>** g01318211

# OPERATOR STATION

## *269-8670* PLATFORM GP–RH

**S/N: RLB1-UP**

**PART OF 269-8700 PLATFORM AR**

**SMCS-7253** **i02618067**

| NOTE | REF NO | GRAPHIC REF | PART NUMBER | QTY | PART NAME 1 2 3 4 5 6 (PRODUCT LEVEL) | SEE PAGE |
|---|---|---|---|---|---|---|
| | 1 | 1 | **269-8639** | 1 | PLATE AS | |
| | 2 | 1 | **269-8671** | 1 | PLATFORM AS (RH) | |
| | 3 | 1 | **198-4780** | 6 | WASHER-HARD (17.5X32X8-MM THK) | |
| M | 4 | 1 | **7X-2555** | 4 | BOLT (M16X2X80-MM) | |
| | 5 | 1 | **7X-7729** | 6 | WASHER (11X25X3-MM THK) | |
| M | 6 | 1 | **8T-4137** | 6 | BOLT (M10X1.5X20-MM) | |
| M | 7 | 1 | **8T-4140** | 2 | BOLT (M16X2X60-MM) | |

M-METRIC PART

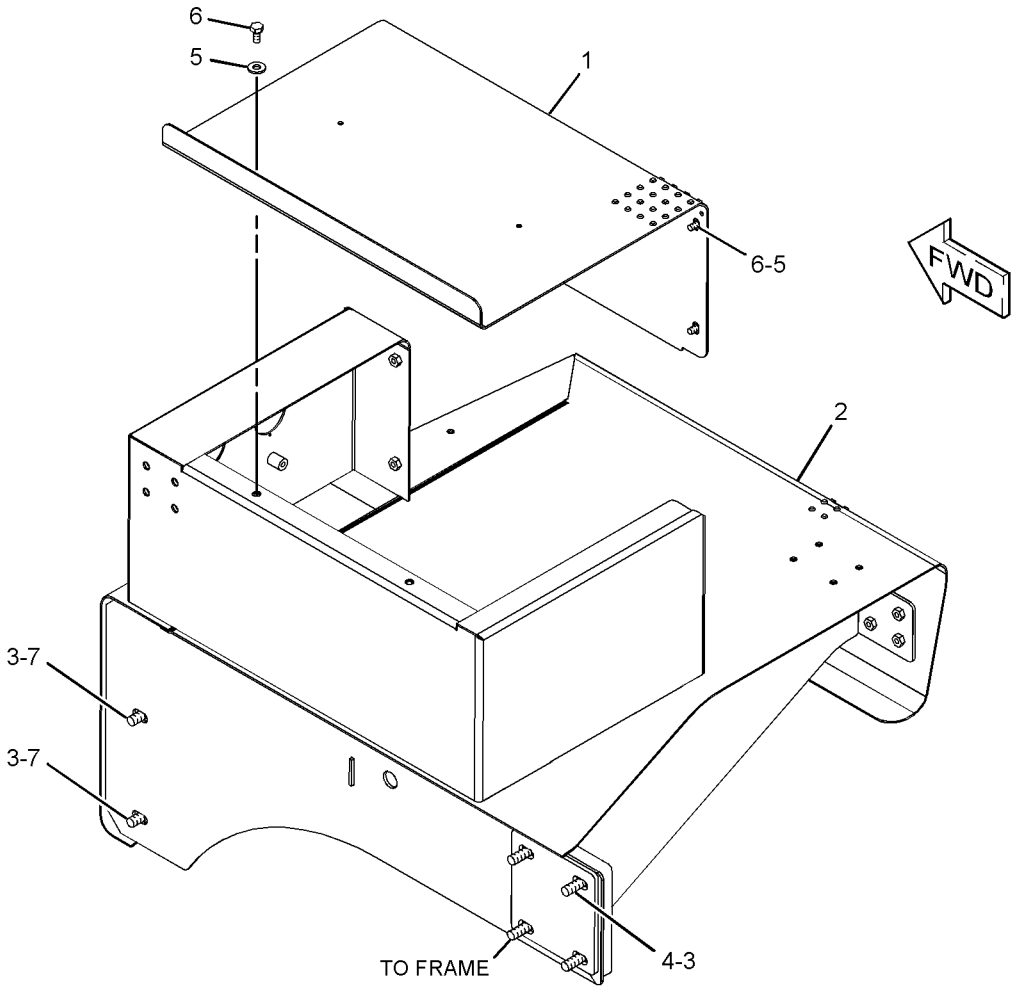


GRAPHIC #1 **<END>** g01332598

# OPERATOR STATION

## *210-2270* RECLINER GP-SEAT

**S/N: RLB1-UP**

**PART OF 226-7677 SEAT GP**

**SMCS-7312** **i02709288**

| NOTE | REF NO | GRAPHIC REF | PART NUMBER | QTY | PART NAME 1 2 3 4 5 6 (PRODUCT LEVEL) | SEE PAGE |
|---|---|---|---|---|---|---|
| | 1 | 1 | **177-1862** | 1 | BRACKET (SEAT BELT) | |
| | 2 | 1 | **210-2262** | 1 | BRACKET AS | |
| | 3 | 1 | **210-2263** | 1 | BRACKET AS | |
| | 4 | 1 | **210-2266** | 1 | GEAR-LOCK (14-TEETH) | |
| | 5 | 1 | **293-2911** | 1 | SHAFT AS | |
| | | 1 | **2L-5893** | 2 | PIN-SPRING | |
| | | 1 | **170-8590** | 1 | SPRING | |
| | 6 | 1 | **217-7933** | 1 | LATCH | |
| | 7 | 1 | **236-5197** | 1 | SPRING | |
| | 8 | 1 | **031-0214** | 1 | BOLT-LOCKING (1/4-20X0.5-IN) | |
| | 9 | 1 | **101-2867** | 1 | WASHER-HARD (7.2X25X2-MM THK) | |
| | 10 | 1 | **4M-6425** | 1 | BOLT (5/16-18X1-IN) | |
| | 11 | 1 | **5M-2894** | 1 | WASHER-HARD (10.2X18.5X2.5-MM THK) | |
| | 12 | 1 | **5S-7383** | 1 | BOLT (3/8-16X1.75-IN) | |
| | 13 | 1 | **8T-4224** | 1 | WASHER-HARD (8.8X16X2-MM THK) | |

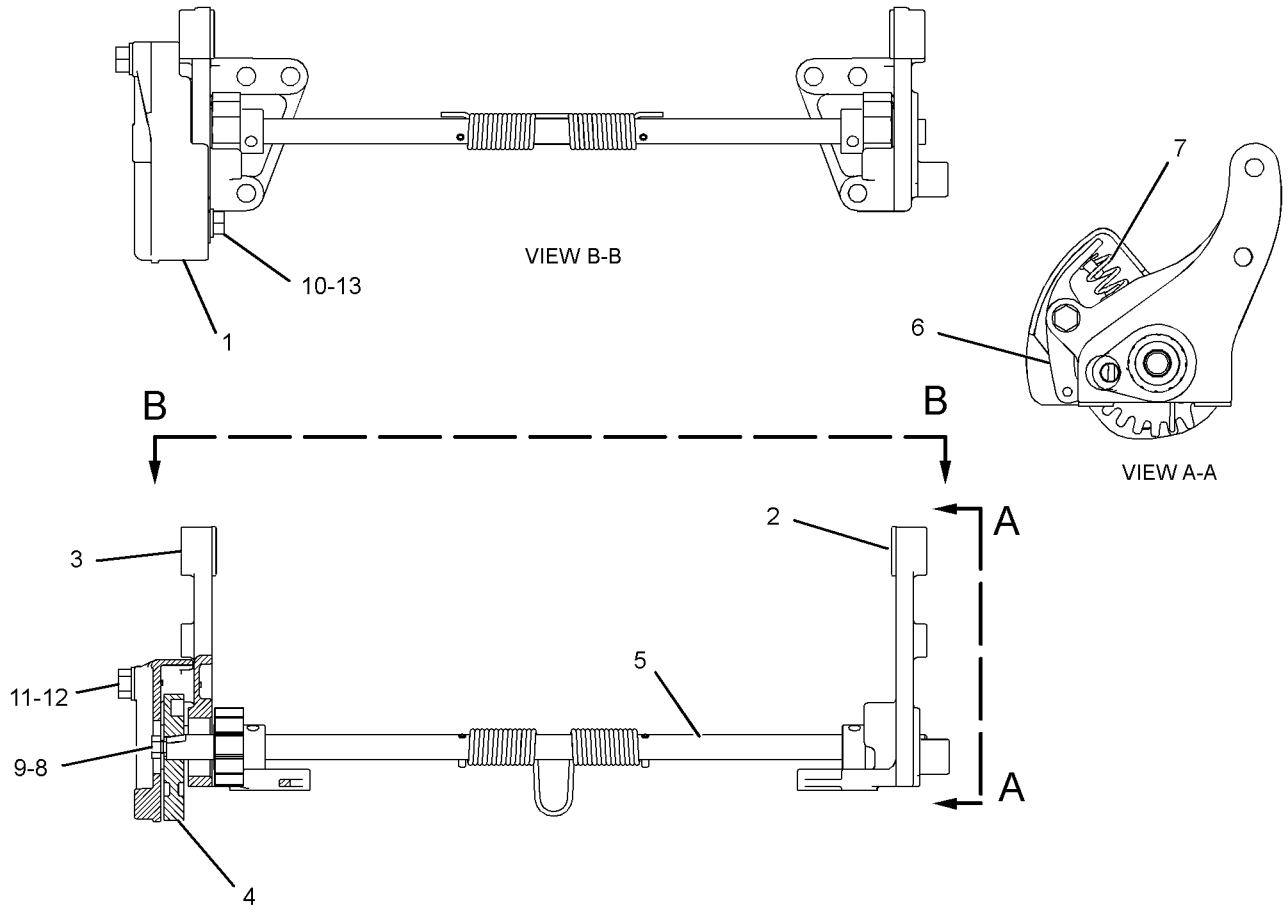


GRAPHIC #1 **<END>** g01296294

# OPERATOR STATION

## *265-0700* ROPS GP

**S/N: RLB1-UP**

**PART OF 269-8820 CAB AR**

**SMCS-7301, 7323** **i02789781**

| NOTE | REF NO | GRAPHIC REF | PART NUMBER | QTY | PART NAME 1 2 3 4 5 6 (PRODUCT LEVEL) | SEE PAGE |
|---|---|---|---|---|---|---|
| | 1 | 1 | **8N-4409** | 3 | WASHER (16.89X27.05X1.91-MM THK) | |
| B | 2 | 1 | **8T-0318** | 1 | SHIM (0.8-MM THK) | |
| | 3 | 1 | **8Y-6385** | 1 | SHIELD-STRIKER | |
| | 4 | 1 | **140-9628** | 6 | PLUG | |
| | 5 | 1 | **168-0371** | 1 | PANEL | |
| | 6 | 1 | **180-1546** | 1 | PLATE-COVER | |
| M | 7 | 1 | **184-0983** | 1 | NUT-HEX FLANGE (M12X1.75-THD) | |
| | 8 | 1 | **192-6437** | 1 | STRIKER AS | |
| | 9 | 1 | **265-0701** | 1 | CAB AS-ROPS | |
| M | 10 | 1 | **6V-2316** | 2 | BOLT (M8X1.25X12-MM) | |
| M | 11 | 1 | **7X-2552** | 3 | BOLT (M16X2X30-MM) | |
| M | 12 | 1 | **9X-2042** | 2 | SCREW-TRUSS HEAD (M6X1X12-MM) | |
| E | 13 | 1 | **3E-6600** | | SEAL (127-CM) | |
| E | 14 | 1 | **123-3827** | | SEAL (150-CM) | |

B-USE AS REQUIRED
E-ORDER BY THE CENTIMETER
M-METRIC PART

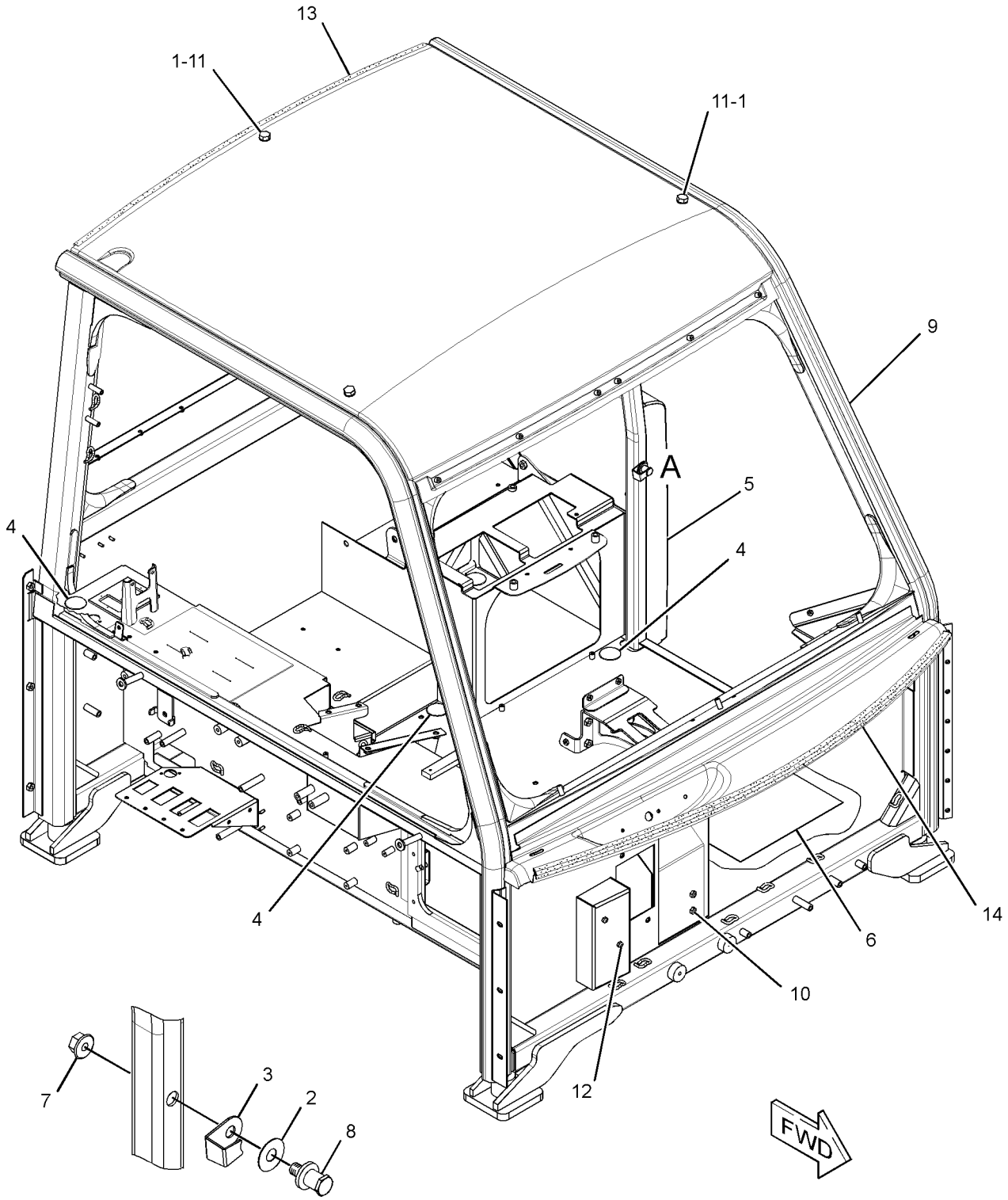


VIEW OF AREA A
(EXPLODED)

GRAPHIC #1 **<END>** g01406732

# OPERATOR STATION

## 156-1145 SEAT BELT GP–RETRACTABLE

**S/N: RLB1-UP**

**PART OF 149-0088 SEAT GP-COMPANION**

**SMCS-7327** **i02408594**

| NOTE | REF NO | GRAPHIC REF | PART NUMBER | QTY | PART NAME 1 2 3 4 5 6 (PRODUCT LEVEL) | SEE PAGE |
|---|---|---|---|---|---|---|
| | 1 | 1 | **0T-0244** | 1 | BOLT (7/16-20X1.25-IN) | |
| | 2 | 1 | **0T-0489** | 1 | BOLT (7/16-20X2-IN) | |
| | 3 | 1 | **8T-5360** | 1 | WASHER (12X22.5X2.5-MM THK) | |

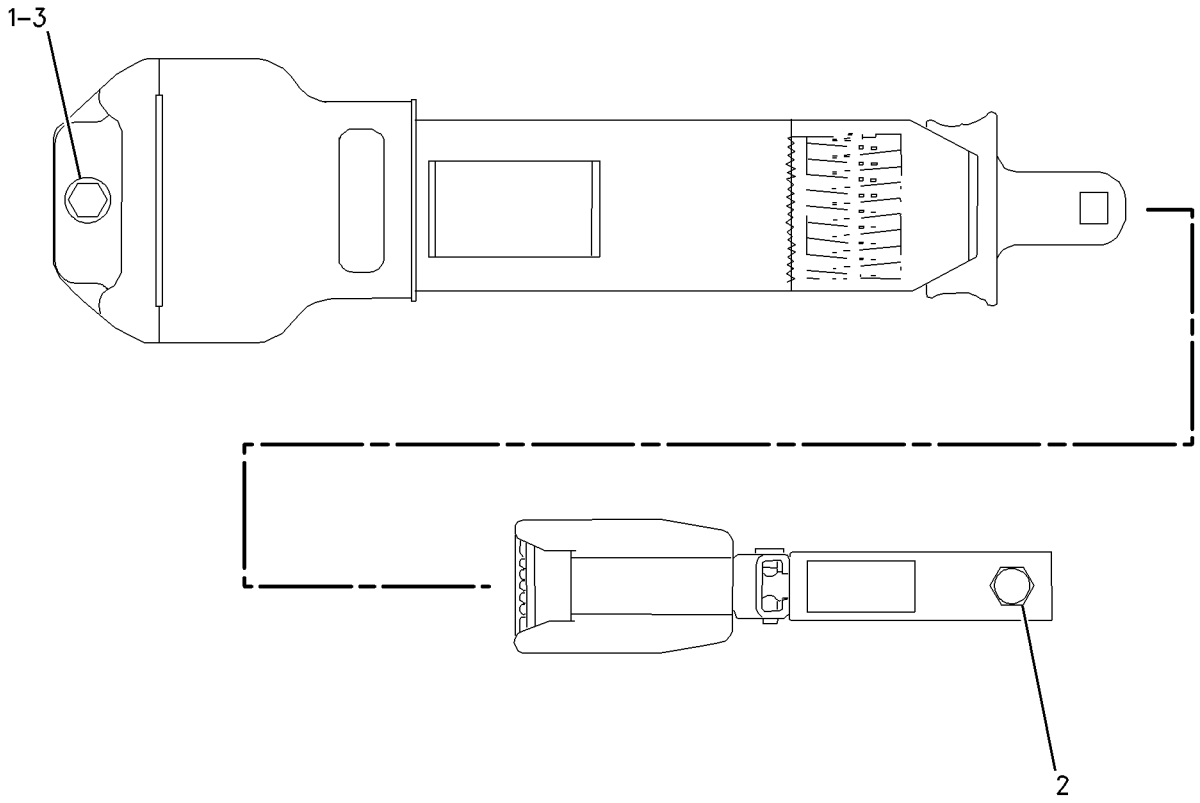


GRAPHIC #1 **<END>** g00643555

# OPERATOR STATION

## *220-0131* SEAT BELT GP–RETRACTABLE

**S/N: RLB1-UP**

**PART OF 240-8718 SEAT GP**

**SMCS-7327** **i02219772**

| NOTE | PART NUMBER | QTY | PART NAME 1 2 3 4 5 6 (PRODUCT LEVEL) | SEE PAGE |
|---|---|---|---|---|
| | **8S-4724** | 1 | BOLT (7/16-20X2.25-IN) | |
| | **5V-5262** | 1 | BOLT-SHOULDER (7/16-20X1.26-IN) | |
| | **227-1356** | 1 | BUSHING | |
| | **9S-8905** | 1 | NUT-FULL (7/16-20-THD) | |
| | **180-5559** | 1 | SCREW-PAN HEAD (7/16-20X1.75-IN) | |
| | **180-5560** | 1 | SCREW-PAN HEAD (7/16-20X1.25-IN) | |
| | **177-4937** | 1 | SPACER (11.7X19.8X20.3-MM THK) | |
| | **8T-5360** | 1 | WASHER (12X22.5X2.5-MM THK) | |

**<END>**

# OPERATOR STATION

## 280-8111 SEAT BELT GP–RETRACTABLE

**S/N: RLB1-UP**

**PART OF 240-8718 SEAT GP**

**SMCS-7327** **i02649891**

| NOTE | REF NO | GRAPHIC REF | PART NUMBER | QTY | PART NAME 1 2 3 4 5 6 (PRODUCT LEVEL) | SEE PAGE |
|---|---|---|---|---|---|---|
| | 1 | 1 | **177-4937** | 1 | SPACER (11.7X19.8X20.3-MM THK) | |
| | 2 | 1 | **0T-0244** | 1 | BOLT (7/16-20X1.25-IN) | |
| | 3 | 1 | **205-6388** | 1 | BOLT (7/16-20X1.75-IN) | |
| | 4 | 1 | **227-1356** | 1 | BUSHING | |
| | 5 | 1 | **293-2669** | 1 | BOLT-SHOULDER (7/16-20-THD) | |
| | 6 | 1 | **8S-4724** | 1 | BOLT (7/16-20X2.25-IN) | |
| | 7 | 1 | **8T-5360** | 2 | WASHER (12X22.5X2.5-MM THK) | |
| | 8 | 1 | **9S-8905** | 1 | NUT-FULL (7/16-20-THD) | |

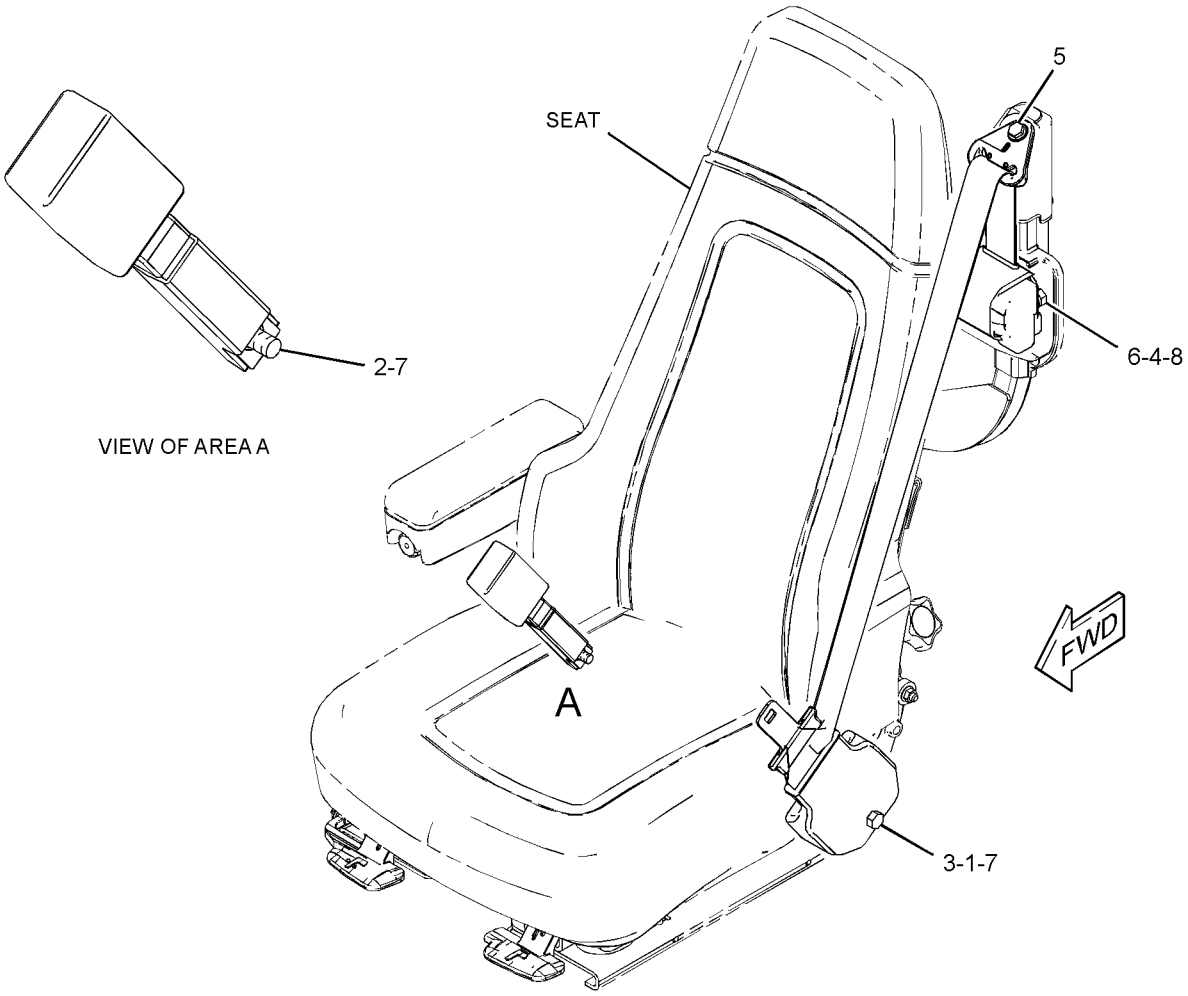


GRAPHIC #1 **<END>** g01347327

# OPERATOR STATION

## 226-7677 SEAT GP–CLOTH

**S/N: RLB1-UP**

**PART OF 240-8718 SEAT GP**

**SMCS-7312** **i03126730**

| NOTE | REF NO | GRAPHIC REF | PART NUMBER | QTY | PART NAME 1 2 3 4 5 6 (PRODUCT LEVEL) | SEE PAGE |
|---|---|---|---|---|---|---|
| | 1 | 1 | **142-8425** | 1 | SPRING | |
| | 2 | 1 | **143-1288** | 8 | LOCKNUT-FLANGE (3/8-16-THD) | |
| | 3 | 1 | **172-2416** | 2 | PIN | |
| | 4 | 1 | **177-1863** | 2 | BOLT-PIVOT (3/8-16X2.89-IN) | |
| | 5 | 1 | **184-2298** | 1 | ROD | |
| | 6 | 1 | **184-2299** | 4 | WASHER (7X25.4X2.54-MM THK) | |
| Y | 7 | 1 | *210-2270* | 1 | RECLINER GP-SEAT (CLOTH) | 788 |
| | 8 | 1 | **218-2529** | 3 | PLUG | |
| | 9 | 1 | **220-0160** | 1 | CUSHION AS-SEAT (BACK) | |
| | 10 | 1 | **223-8340** | 1 | ROD | |
| | 11 | 1 | **223-8341** | 1 | COVER | |
| Y | 12 | 1 | **226-7674** | 1 | PAN GP-BACKREST (CLOTH) | 773 |
| | 13 | 1 | **226-7678** | 1 | PAN AS-SEAT | |
| | | 1 | **8T-9082** | 5 | RIVET-POP | |
| | | 1 | **226-7168** | 1 | CUSHION AS-SEAT | |
| | 14 | 1 | **241-0509** | 14 | SPACER | |
| | 15 | 1 | **241-6749** | 1 | BAR | |
| Y | 16 | 1 | *249-2969* | 1 | ADJUSTER GP-SEAT | 721 |
| | 17 | 1 | **095-0843** | 2 | PIN-COTTER | |
| | 18 | 1 | **5P-0537** | 4 | WASHER-HARD (7.2X14.5X2-MM THK) | |
| | 19 | 1 | **5V-1496** | 2 | RETAINER | |
| | 20 | 1 | **6V-7646** | 2 | WASHER-HARD (7.2X25X2-MM THK) | |
| | 21 | 1 | **6V-8969** | 4 | SCREW-BUTTON HEAD (1/4-20X0.5-IN) | |
| | 22 | 1 | **7X-0480** | 6 | SCREW-HEX SOCKET (3/8-16X2-IN) | |
| | 23 | 1 | **8T-0328** | 1 | WASHER-HARD (5.5X10X1-MM THK) | |
| | 24 | 1 | **8T-4205** | 1 | WASHER-HARD (7.2X14.5X2-MM THK) | |
| | 25 | 1 | **294-5042** | 2 | SPACER (11.1X19.5X9.67-MM THK) | |

Y-SEPARATE ILLUSTRATION

**226-7677 SEAT GP** *(contd. )* **i03126730**

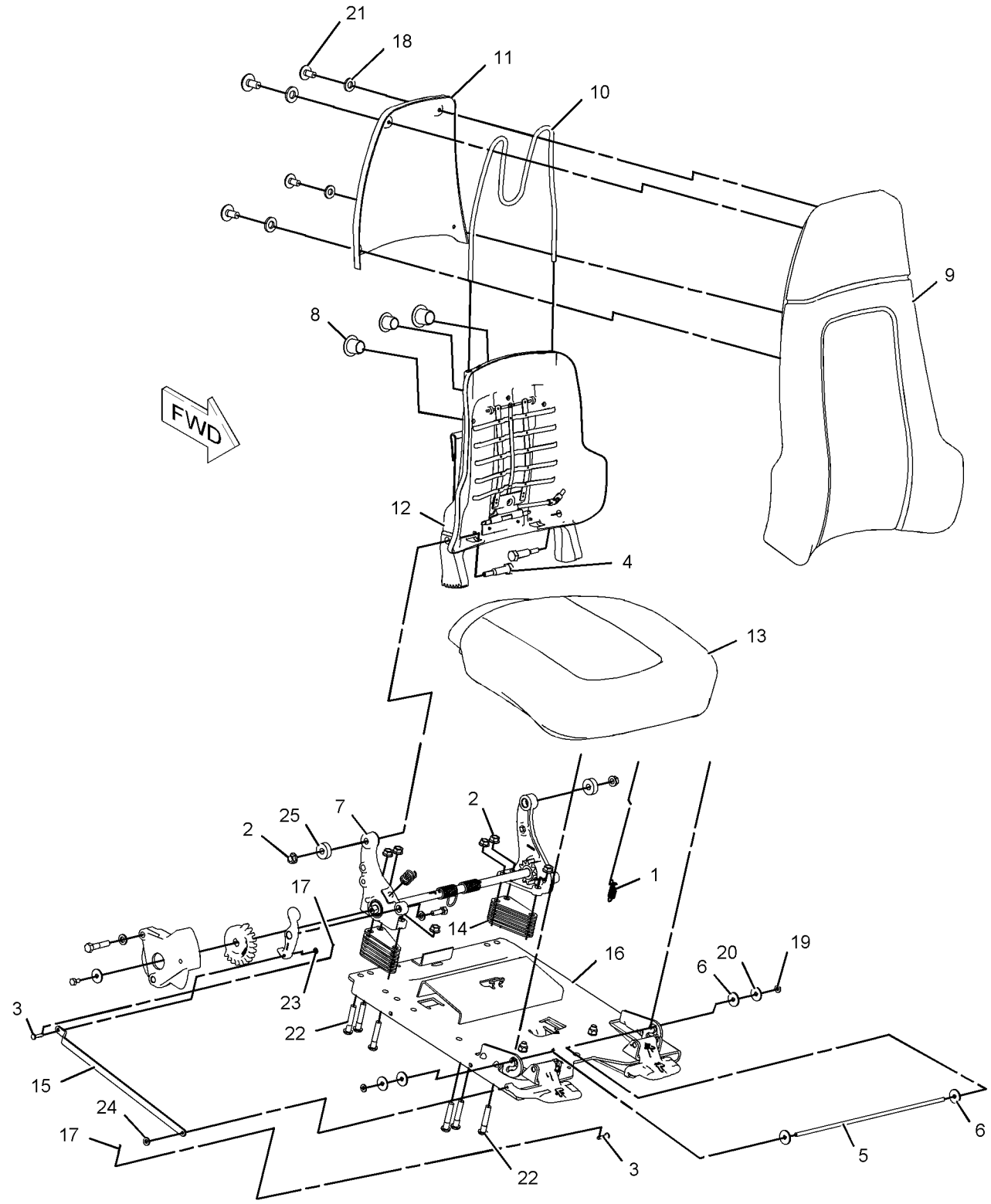


GRAPHIC #1 **<END>** g01097284

# OPERATOR STATION

## *240-8718* SEAT GP–CLOTH

**S/N: RLB1-UP**
**PART OF 240-8716 SEAT GP-SUSPENSION**
**TYPE 1**

**SMCS-7312** **i02648889**

| NOTE | REF NO | GRAPHIC REF | PART NUMBER | QTY | PART NAME 1 2 3 4 5 6 (PRODUCT LEVEL) | SEE PAGE |
|---|---|---|---|---|---|---|
| Y | 1 | 1 | **162-8447** | 1 | ARMREST GP (LH) | 726 |
| Y | 2 | 1 | **162-8448** | 1 | ARMREST GP (RH) | 727 |
| | 3 | 1 | **177-4937** | 1 | SPACER (11.7X19.8X20.3-MM THK) | |
| Y | 4 | 1 | **220-0131** | 1 | SEAT BELT GP (RETRACTABLE) | 792 |
| Y | 5 | 1 | **226-7677** | 1 | SEAT GP (CLOTH) (CLOTH) | 794 |
| Y | 6 | 1 | *226-8720* | 1 | COVER GP-SEAT BELT | 749 |
| | 7 | 1 | *256-8700* | 1 | SUPPORT AS (OPERATOR SEAT) | |
| | | 1 | **254-5708** | 1 | BOLSTER AS | |
| M | | 1 | **8T-3490** | 4 | NUT-WELD (M10X1.5-THD) | |
| | 8 | 1 | **256-8795** | 1 | SPACER (11.7X19.8X50.8-MM THK) | |
| | 9 | 1 | *263-5430* | 1 | SUPPORT GP-SEAT BELT (3-POINT) | |
| | | 1 | **5S-2671** | 1 | BOLT (M10X24X12.7-MM) | |
| | | 1 | **242-7009** | 1 | LATCH AS | |
| | | 1 | **8C-5899** | 1 | PIN-SPRING | |
| M | 10 | 1 | **141-9203** | 7 | SCREW-BUTTON HEAD (M10X1.5X30-MM) | |
| M | 11 | 1 | **2Y-5829** | 3 | NUT (M10X1.5-THD) | |
| | 12 | 1 | **6V-5839** | 10 | WASHER (11X21X2.5-MM THK) | |

M-METRIC PART
Y-SEPARATE ILLUSTRATION

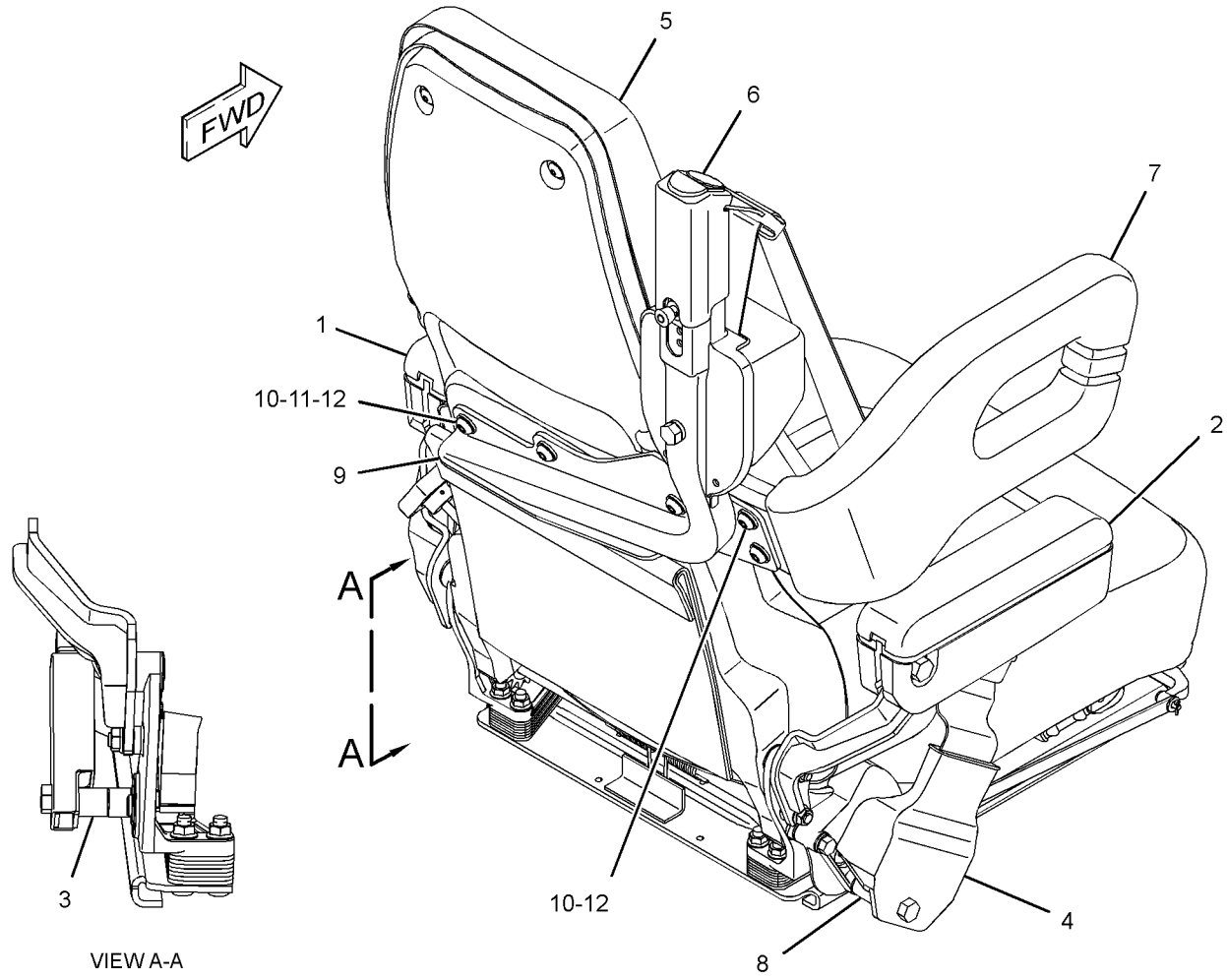


VIEW A-A

GRAPHIC #1 **<END>** g01264915

# OPERATOR STATION

## *240-8718* SEAT GP–CLOTH

**S/N: RLB1-UP**
**PART OF 240-8716 SEAT GP-SUSPENSION**
**TYPE 2**

**SMCS-7312** **i02830364**

| NOTE | REF NO | GRAPHIC REF | PART NUMBER | QTY | PART NAME 1 2 3 4 5 6 (PRODUCT LEVEL) | SEE PAGE |
|---|---|---|---|---|---|---|
| C | 1 | 1 | **092-4924** | 1 | PLUG-BUTTON | |
| Y | 2 | 1 | **162-8447** | 1 | ARMREST GP (LH) | 726 |
| Y | 3 | 1 | **162-8448** | 1 | ARMREST GP (RH) | 727 |
| | 4 | 1 | **177-4937** | 1 | SPACER (11.7X19.8X20.3-MM THK) | |
| Y | 5 | 1 | **226-7677** | 1 | SEAT GP (CLOTH) (CLOTH) | 794 |
| Y | 6 | 1 | *226-8720* | 1 | COVER GP-SEAT BELT | 749 |
| | 7 | 1 | **256-8700** | 1 | SUPPORT AS (OPERATOR SEAT) | |
| | 8 | 1 | **256-8795** | 1 | SPACER (11.7X19.8X50.8-MM THK) | |
| | 9 | 1 | *263-5430* | 1 | SUPPORT GP-SEAT BELT (3-POINT) | |
| | | 1 | **5S-2671** | 1 | BOLT (M10X24X12.7-MM) | |
| | | 1 | **242-7009** | 1 | LATCH AS | |
| | | 1 | **8C-5899** | 1 | PIN-SPRING | |
| CY | 10 | 1 | **280-8111** | 1 | SEAT BELT GP (RETRACTABLE) | 793 |
| C | 11 | 1 | **293-2659** | 1 | COVER | |
| M | 12 | 1 | **141-9203** | 7 | SCREW-BUTTON HEAD (M10X1.5X30-MM) | |
| M | 13 | 1 | **2Y-5829** | 3 | NUT (M10X1.5-THD) | |
| | 14 | 1 | **6V-5839** | 10 | WASHER (11X21X2.5-MM THK) | |

C-CHANGE FROM PREVIOUS TYPE
M-METRIC PART
Y-SEPARATE ILLUSTRATION

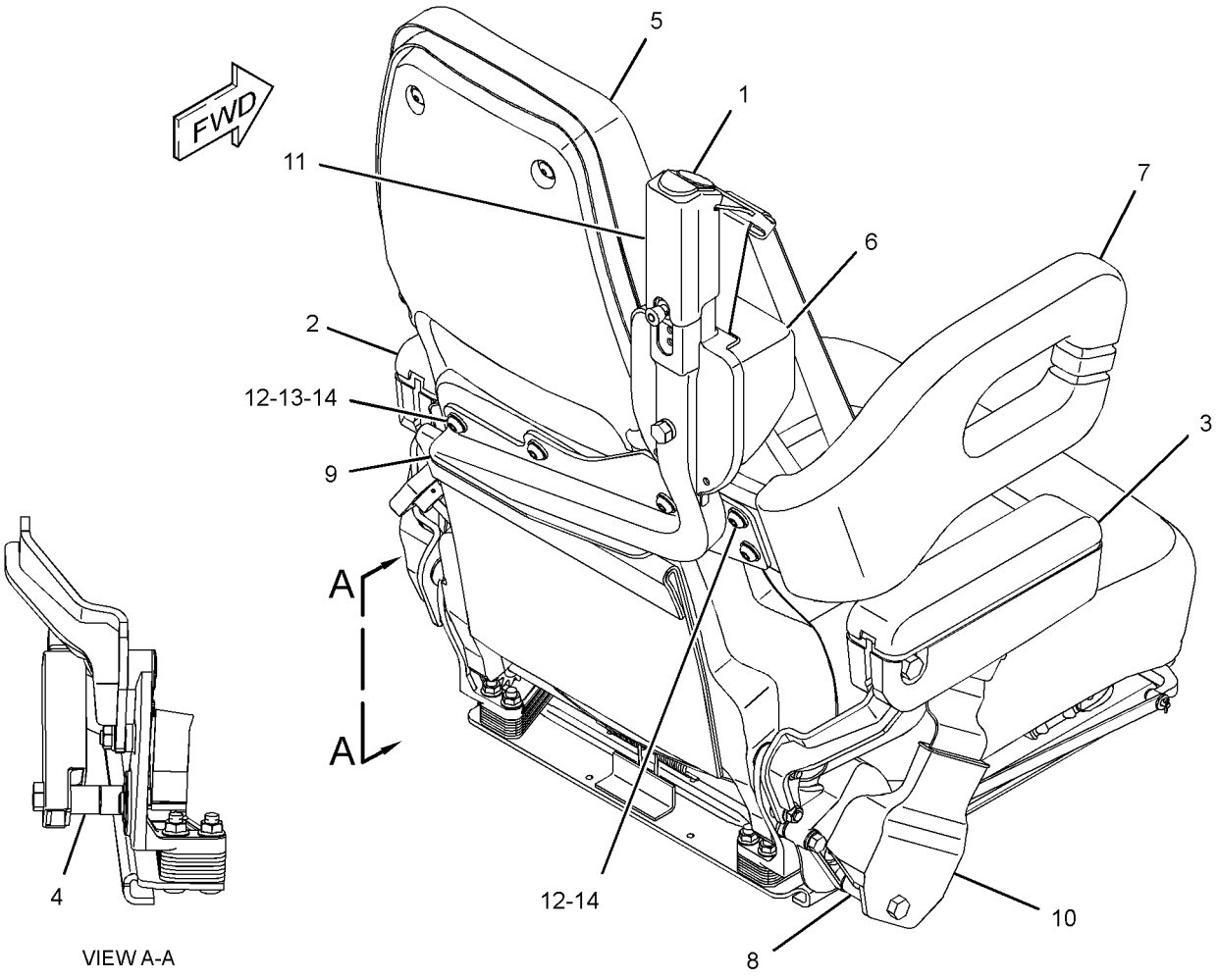


GRAPHIC #1 **<END>** g01411883

# OPERATOR STATION

## *265-9521* SEAT GP-ADJUSTABLE

**S/N: RLB1-UP**

**PART OF 269-8820 CAB AR**

**SMCS-7312** **i02657333**

| NOTE | REF NO | GRAPHIC REF | PART NUMBER | QTY | PART NAME 1 2 3 4 5 6 (PRODUCT LEVEL) | SEE PAGE |
|---|---|---|---|---|---|---|
| Y | 1 | 1 | *240-8716* | 1 | SEAT GP-SUSPENSION | 801 |
| | 2 | 1 | **265-9432** | 1 | SUPPORT AS | |
| | 3 | 1 | **5P-1075** | 8 | WASHER-HARD (10.2X22.5X3-MM THK) | |
| M | 4 | 1 | **8T-4186** | 4 | BOLT (M10X1.5X40-MM) | |
| M | 5 | 1 | **8T-4195** | 4 | BOLT (M10X1.5X30-MM) | |

M-METRIC PART
Y-SEPARATE ILLUSTRATION

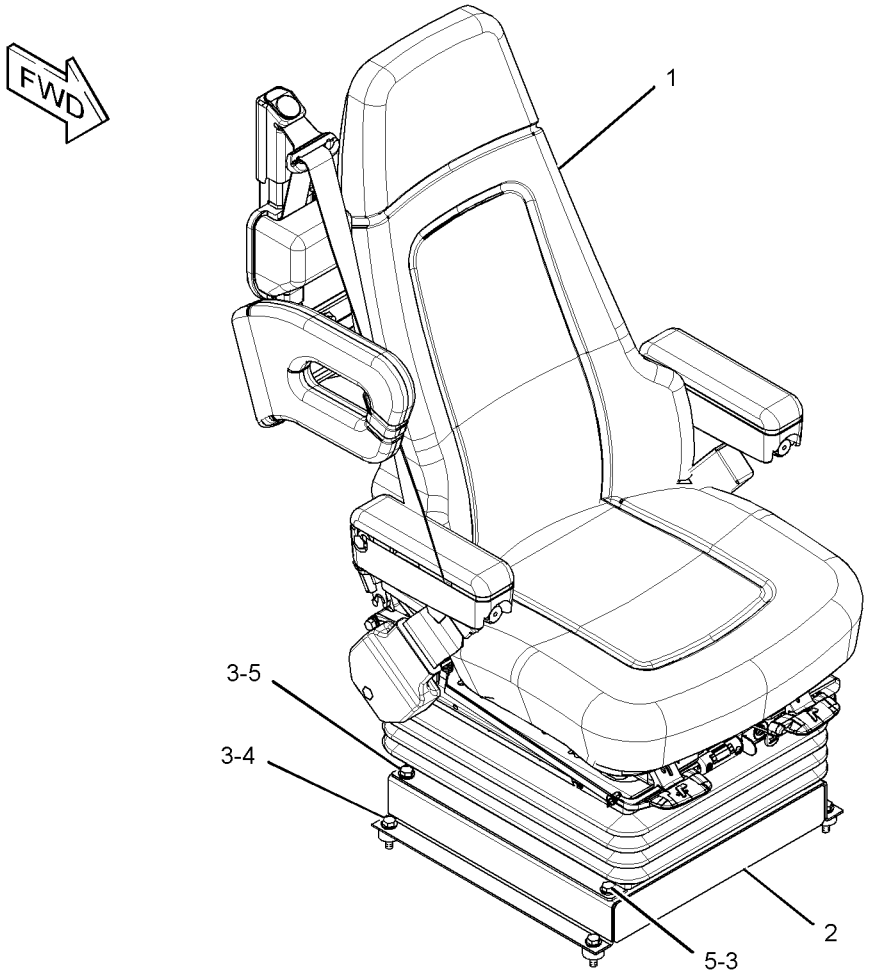


GRAPHIC #1 **<END>** g01337772

# OPERATOR STATION

## *149-0088* SEAT GP-COMPANION

**S/N: RLB1-409**

**PART OF 269-8820 CAB AR**

**SMCS-7312** **i02182062**

| NOTE | REF NO | GRAPHIC REF | PART NUMBER | QTY | PART NAME 1 2 3 4 5 6 (PRODUCT LEVEL) | SEE PAGE |
|---|---|---|---|---|---|---|
| | 1 | 1 | **145-2894** | 1 | SEAT AS | |
| Y | 2 | 1 | **156-1145** | 1 | SEAT BELT GP | 791 |
| | 3 | 1 | **6V-8918** | 4 | BOLT (5/16-18X1.25-IN) | |
| | 4 | 1 | **8T-4224** | 4 | WASHER-HARD (8.8X16X2-MM THK) | |

Y-SEPARATE ILLUSTRATION

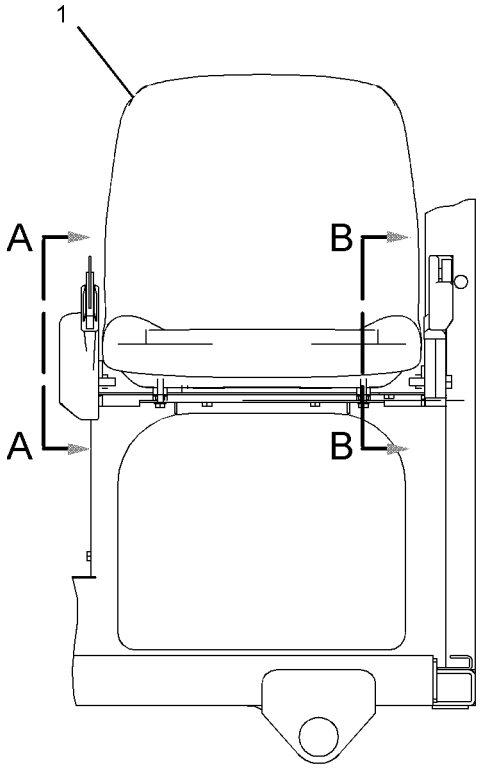


FRONT VIEW

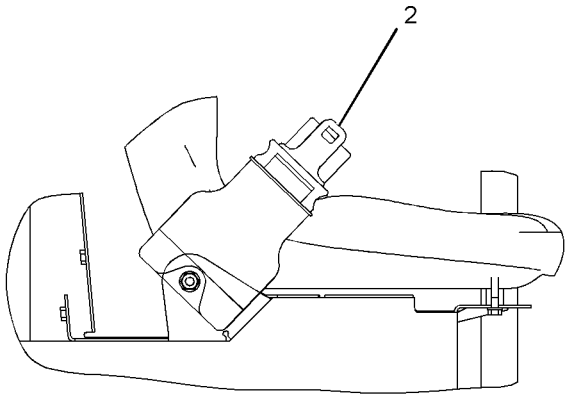


SECTION A-A

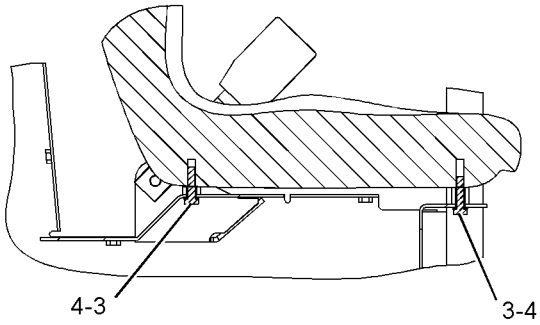


SECTION B-B

GRAPHIC #1 **<END>** g01104038

# OPERATOR STATION

## *318-8302* SEAT GP-COMPANION

**S/N: RLB410-UP**

**PART OF 269-8820 CAB AR**

**SMCS-7312** **i03080982**

| NOTE | REF NO | GRAPHIC REF | PART NUMBER | QTY | PART NAME 1 2 3 4 5 6 (PRODUCT LEVEL) | SEE PAGE |
|---|---|---|---|---|---|---|
| | 1 | 1 | **5V-5262** | 2 | BOLT-SHOULDER (7/16-20X1.26-IN) | |
| | 2 | 1 | **8Y-4030** | 1 | SEAT BELT GP | |
| | 3 | 1 | **145-2894** | 1 | SEAT AS | |
| | 4 | 1 | **6V-8918** | 4 | BOLT (5/16-18X1.25-IN) | |
| | 5 | 1 | **8T-4224** | 4 | WASHER-HARD (8.8X16X2-MM THK) | |

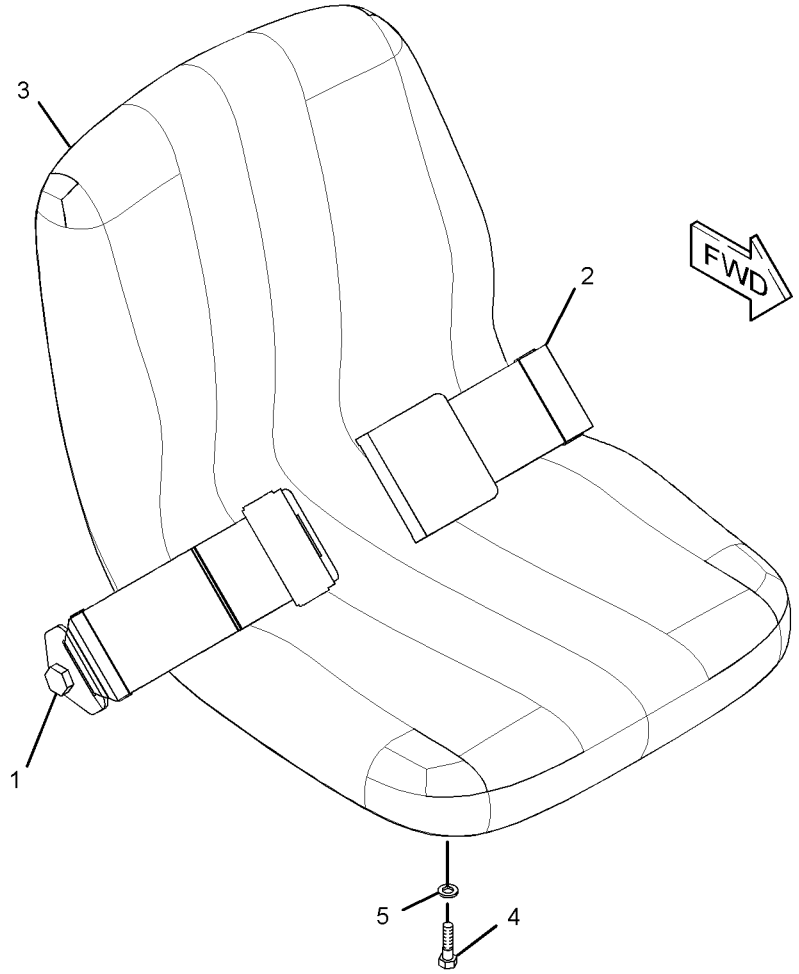


GRAPHIC #1 **<END>** g01569119

## *240-8716* SEAT GP—SUSPENSION-CLOTH, LUMBAR

**S/N: RLB1-UP**

**PART OF 265-9521 SEAT GP-ADJUSTABLE**

**SMCS-7324, 7336** **i02506584**

| NOTE | REF NO | GRAPHIC REF | PART NUMBER | QTY | PART NAME 1 2 3 4 5 6 (PRODUCT LEVEL) | SEE PAGE |
|---|---|---|---|---|---|---|
| | 1 | 1 | **173-7035** | 1 | KIT-SLIDER BLOCK | |
| | | | | | (INCLUDES BOLT, SLIDERS, SETSCREWS & WASHERS) | |
| | 2 | 1 | **173-5787** | 4 | SETSCREW (1/4-20-THD) | |
| Y | 3 | 1 | **199-5725** | 1 | SUSPENSION GP-SEAT (AIR) | 802 |
| | 4 | 1 | **203-7703** | 2 | WASHER-HARD (10.2X22.22X2.38-MM THK) | |
| Y | 5 | 1 | *240-8718* | 1 | SEAT GP | 796 |
| | 6 | 1 | **4F-4879** | 1 | BOLT (3/8-16X0.5-IN) | |

Y-SEPARATE ILLUSTRATION

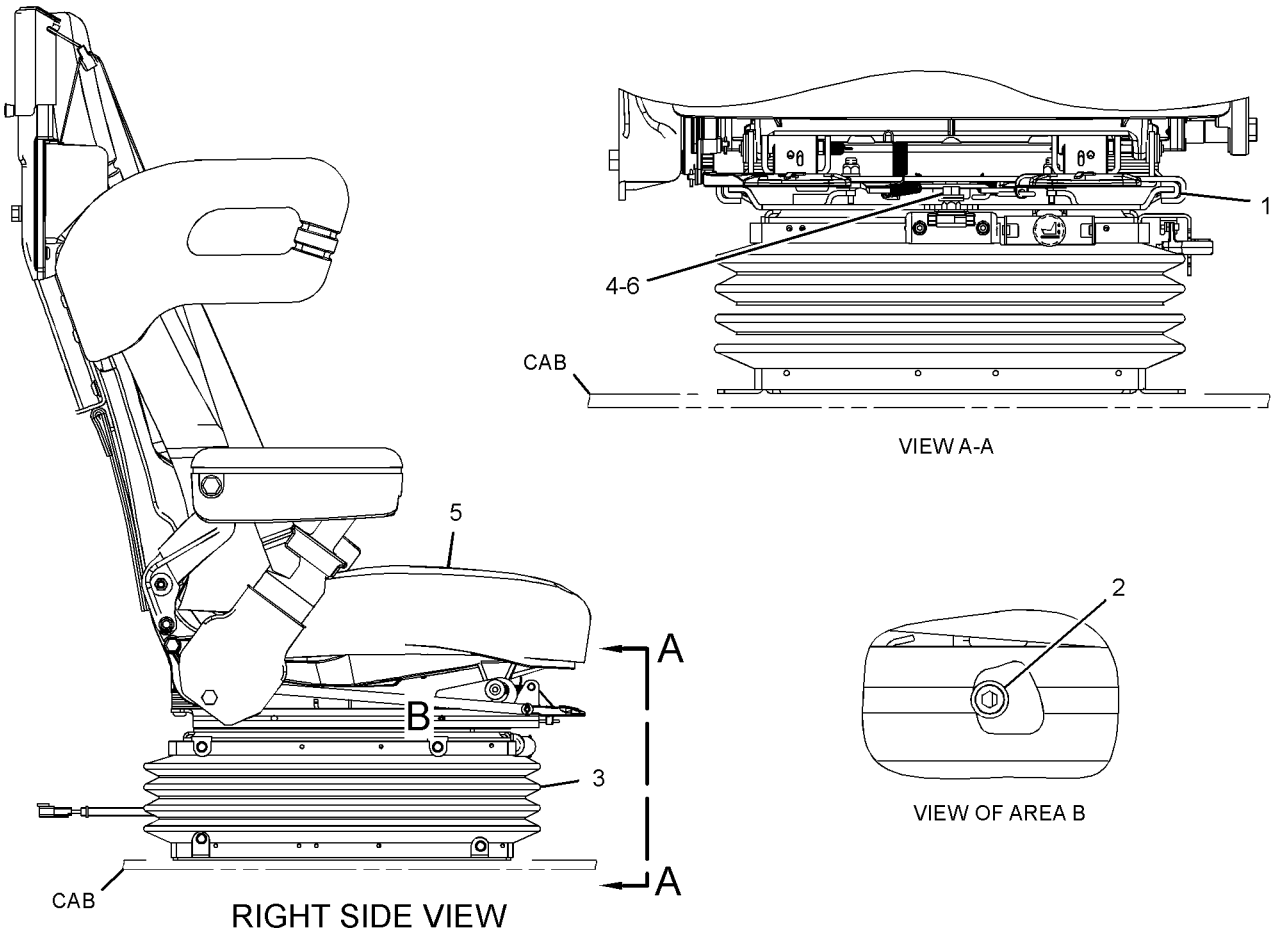


GRAPHIC #1 **<END>** g01255926

# OPERATOR STATION

## 199-5725 SUSPENSION GP-SEAT—AIR

**S/N: RLB1-UP**

**PART OF 240-8716 SEAT GP-SUSPENSION**

**SMCS-7324** **i03297986**

| NOTE | REF NO | GRAPHIC REF | PART NUMBER | QTY | PART NAME 1 2 3 4 5 6 (PRODUCT LEVEL) | SEE PAGE |
|---|---|---|---|---|---|---|
| | 1 | 1 | **3P-9900** | 5 | WASHER (10.5X30X3-MM THK) | |
| | 2 | 1 | **4B-4278** | 2 | WASHER (10.2X20.5X1.6-MM THK) | |
| | 3 | 1 | **4V-8577** | 12 | BEARING | |
| | 4 | 1 | **8L-8413** | 1 | STRAP-CABLE | |
| | 5 | 1 | **145-0326** | 1 | FILM-INSTRUCTION (SEAT ADJUSTMENT) | |
| | 6 | 1 | **237-3943** | 1 | BRACKET | |
| | 7 | 1 | **164-1234** | 1 | PLATE | |
| | 8 | 1 | **101-0003** | 26 | FASTENER | |
| | 9 | 1 | **169-7380** | 1 | BOLT-SOCKET HEAD (3/8-16X0.375-IN) | |
| | 10 | 1 | **186-5107** | 2 | SCREW-DRIVE (NO 8X1.25-IN) | |
| | 11 | 1 | **192-7752** | 4 | SHAFT AS | |
| | 12 | 1 | **192-7755** | 1 | HOUSING AS (LOWER) | |
| | 13 | 1 | **192-7760** | 1 | SHAFT | |
| | 14 | 1 | **192-7767** | 1 | SCISSORS AS | |
| | 15 | 1 | **192-7783** | 1 | TOGGLE AS (WIDE) | |
| | 16 | 1 | **192-7787** | 1 | TOGGLE AS (NARROW) | |
| | 17 | 1 | **192-7790** | 1 | HOUSING AS (UPPER) | |
| | 18 | 1 | **192-7795** | 1 | BOOT | |
| | 19 | 1 | **192-7805** | 1 | HARNESS AS-VALVE (SEAT AIR COMPRESSOR) | |
| | 20 | 1 | **192-7810** | 1 | SPRING AS-AIR | |
| | | 1 | **163-1135** | 1 | SPRING | |
| | | 1 | **5P-4423** | 1 | ELBOW | |
| | 21 | 1 | **192-7812** | 1 | BOLT-SHOULDER (3/8-16X2-IN) | |
| | 22 | 1 | **192-7820** | 3 | BUMPER | |
| | 23 | 1 | **192-7822** | 1 | SHAFT | |
| Y | 24 | 1 | **237-3970** | 1 | AIR COMPRESSOR GP-SEAT | 722 |
| | 25 | 1 | **108-4311** | 1 | SCREW-MACHINE (3/8-16X0.75-IN) | |
| | 26 | 1 | **2K-4973** | 8 | LOCKNUT (3/8-16-THD) | |
| | 27 | 1 | **3J-4818** | 1 | LOCKWASHER | |
| M | 28 | 1 | **5C-2890** | 3 | NUT (M6X1-THD) | |
| | 29 | 1 | **8T-9371** | 1 | BOLT (3/8-16X0.5-IN) | |
| E | 30 | 1 | **211-5358** | | CONDUIT-FLEXIBLE (26.7-CM) | |
| E | 30A | 1 | **211-5358** | | CONDUIT-FLEXIBLE (35.6-CM) | |
| D | 32 | 1 | **5P-6010** | | TUBE (0.267-M) | |
| D | 32A | 1 | **5P-6010** | | TUBE (0.356-M) | |
| | | | | | AVAILABLE REPAIR KIT(S): | |
| | | | **192-7799** | 1 | KIT-AIR VALVE (SEAT) | |
| | | | | | (INCLUDES KNOB ASSEMBLY) | |
| | | | **212-7779** | 1 | KIT-SHOCK ABSORBER (SUSPENSION SEAT) | |
| | | | | | (INCLUDES LOCKNUTS, BALL, LOCKWASHER, STRAP, SPRING, CLAMP, ADJUSTERS, BOLTS, BEARINGS, WASHERS, SHOCK ABSORBER, | |
| | | | | | BRACKETS, KIT, CABLE ASSEMBLY & KNOB) | |
| | | | **213-5170** | 1 | KIT-INDICATOR (SEAT ADJUSTMENT) | |
| | | | | | (INCLUDES BOLTS, NUTS, ROD, ARM & HOUSING) | |
| | | | **211-9294** | 1 | KIT-TETHER (SEAT) | |
| | | | | | (INCLUDES TETHER) | |

D-ORDER BY THE METER
E-ORDER BY THE CENTIMETER
M-METRIC PART
Y-SEPARATE ILLUSTRATION

## 199-5725 SUSPENSION GP-SEAT *(contd. )* i03297986

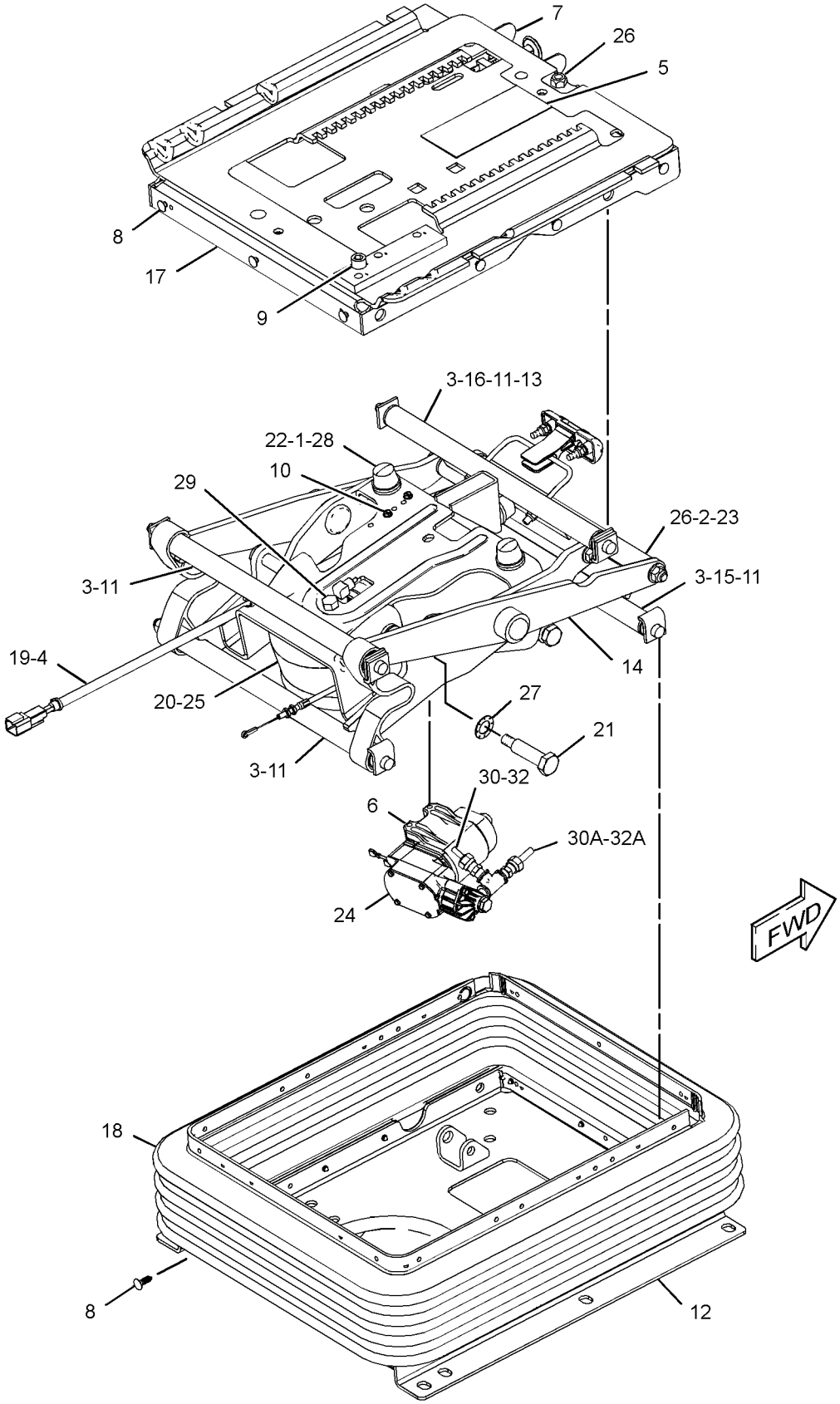


GRAPHIC #1 **<END>** g01614078

# OPERATOR STATION

## *241-8896* TRIM GP-CAB

**S/N: RLB1-UP**

**PART OF 269-8820 CAB AR**

**SMCS-7329** **i03251860**

| NOTE | REF NO | GRAPHIC REF | PART NUMBER | QTY | PART NAME 1 2 3 4 5 6 (PRODUCT LEVEL) | SEE PAGE |
|---|---|---|---|---|---|---|
| | 1 | 2 | **6V-8928** | 1 | HOOK-COAT | |
| | 2 | 2 | **8C-0618** | 1 | ASHTRAY AS | |
| | 3 | 2 | **8Y-6388** | 1 | LOUVER AS-VENT | |
| | 4 | 2 | **9U-8263** | 1 | COVER | |
| | 5 | 1,2 | **114-6658** | 16 | WASHER (6.5X17X1-MM THK) | |
| | 6 | 2 | **151-5715** | 5 | LOUVER AS-VENT | |
| | 7 | 2 | **154-7468** | 1 | COVER AS | |
| | 8 | 2 | **154-7470** | 1 | COVER | |
| | 9 | 2 | **155-9708** | 1 | COVER AS | |
| | 10 | 2 | **155-9709** | 1 | COVER (BOTTOM) | |
| | 11 | 1 | **295-1777** | 1 | HEADLINER AS | |
| M | | 1 | **9X-1046** | 8 | SCREW (M4X0.7X18-MM) | |
| M | | 1 | **9X-2045** | 4 | SCREW-TRUSS HEAD (M6X1X20-MM) | |
| | | 1 | **160-8684** | 1 | COVER | |
| | | 1 | **173-9164** | 2 | GRILL-SPEAKER | |
| | 12 | 1 | **160-8686** | 1 | CHANNEL-REAR | |
| | 13 | 1 | **160-8687** | 1 | COVER (REAR, LH) | |
| | 14 | 1 | **160-8688** | 1 | COVER (REAR, RH) | |
| | 16 | 1 | **160-8723** | 1 | TRIM AS-PANEL | |
| | | 1 | **114-9125** | 1 | HOLDER-CUP | |
| | 17 | 1 | **160-8724** | 1 | TRIM AS | |
| | 18 | 2 | **160-8728** | 1 | TRIM | |
| | 19 | 1,2 | **164-8473** | 2 | LOUVER AS | |
| | 20 | 1 | **170-6019** | 1 | STORAGE AS | |
| | 21 | 2 | **172-6030** | 1 | GASKET | |
| | 22 | 1 | **305-2380** | 1 | PLATE AS | |
| | 24 | 2 | **228-7260** | 1 | DOOR AS | |
| | | 2 | **3H-0240** | 11 | WASHER (5X9.7X0.8-MM THK) | |
| | | 2 | **9M-5733** | 11 | RIVET-POP | |
| | | 2 | **160-8733** | 1 | DOOR AS | |
| | | 2 | **165-0399** | 1 | HINGE AS | |
| | | 2 | **188-8846** | 1 | LATCH AS | |
| | 25 | 2 | **272-6604** | 1 | DASH AS | |
| | 26 | 1 | **243-2998** | 1 | CONSOLE AS | |
| | 27 | 1,2 | **101-2867** | 42 | WASHER-HARD (7.2X25X2-MM THK) | |
| | 28 | 1,2 | **104-2091** | 8 | SCREW-FLAT HEAD (NO 6X0.5-IN) | |
| | 29 | 2 | **118-5619** | 14 | SCREW-FLAT HEAD (NO 6X1-IN) | |
| M | 30 | 2 | **3E-4313** | 10 | SCREW-BUTTON HEAD (M4X0.7X8-MM) | |
| | 31 | 2 | **6V-0292** | 1 | PLUG | |
| M | 32 | 1,2 | **9X-2042** | 22 | SCREW-TRUSS HEAD (M6X1X12-MM) | |
| M | 33 | 1,2 | **9X-2044** | 29 | SCREW-TRUSS HEAD (M6X1X16-MM) | |
| M | 34 | 1,2 | **9X-2045** | 10 | SCREW-TRUSS HEAD (M6X1X20-MM) | |
| B | 35 | 2 | **148-7361** | | FASTENER-HOOK & LOOP (ADHESIVE BACKED) | |
| B | 36 | 2 | **148-7362** | | FASTENER-HOOK & LOOP (ADHESIVE BACKED) | |
| | 37 | 1 | **240-2169** | 1 | RETAINER | |
| | 38 | 1 | **295-7965** | 1 | PLATE | |
| | 39 | 1 | **228-6089** | 6 | PLUG (ROCKER SWITCH) | |
| | 40 | 2 | **9X-2038** | 2 | WASHER (7X19X2-MM THK) | |
| M | 41 | 1 | **9X-1046** | 6 | SCREW (M4X0.7X18-MM) | |
| | 42 | 2 | **201-2647** | 2 | GASKET | |

B-USE AS REQUIRED
M-METRIC PART

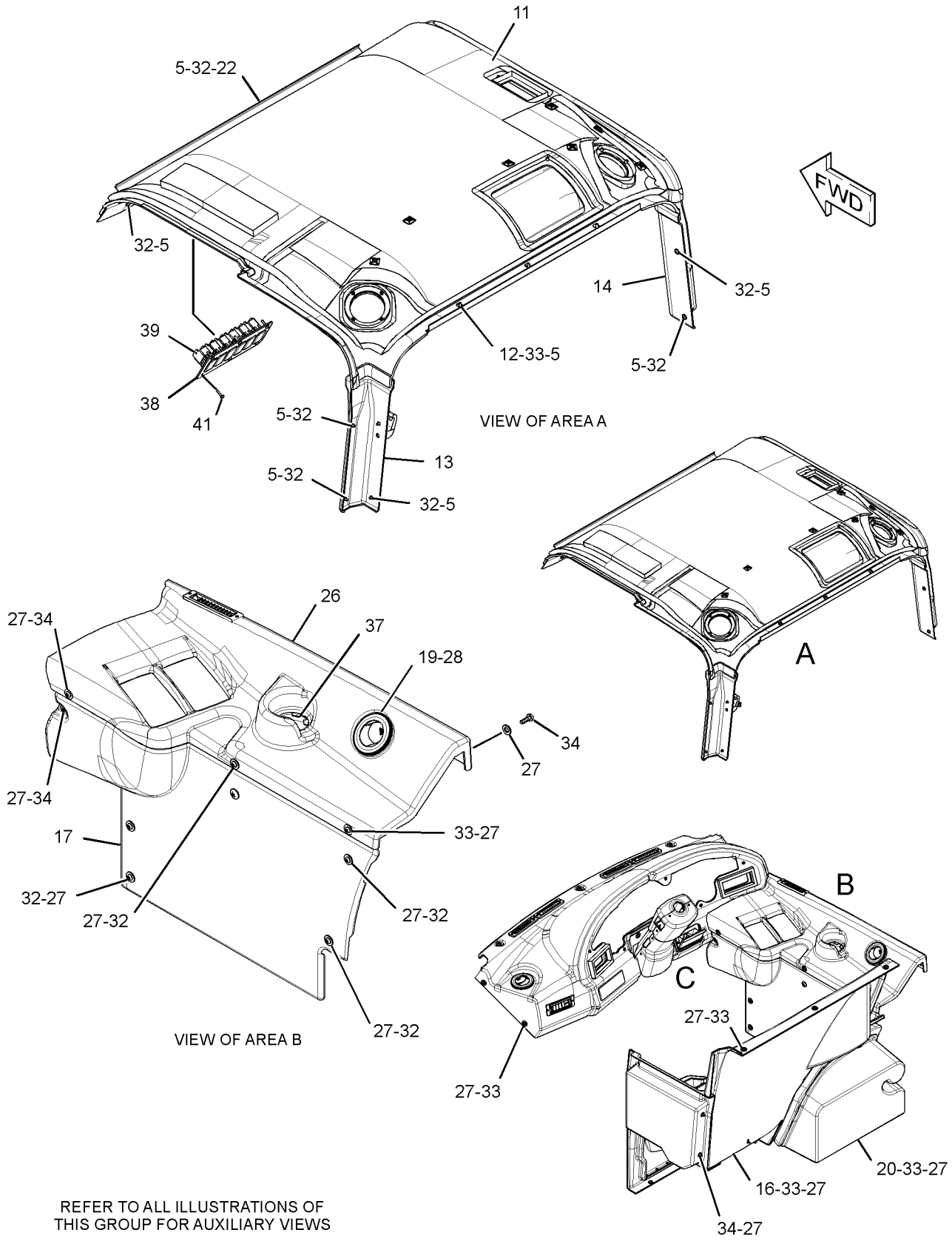


REFER TO ALL ILLUSTRATIONS OF
THIS GROUP FOR AUXILIARY VIEWS

GRAPHIC #1 g01609554

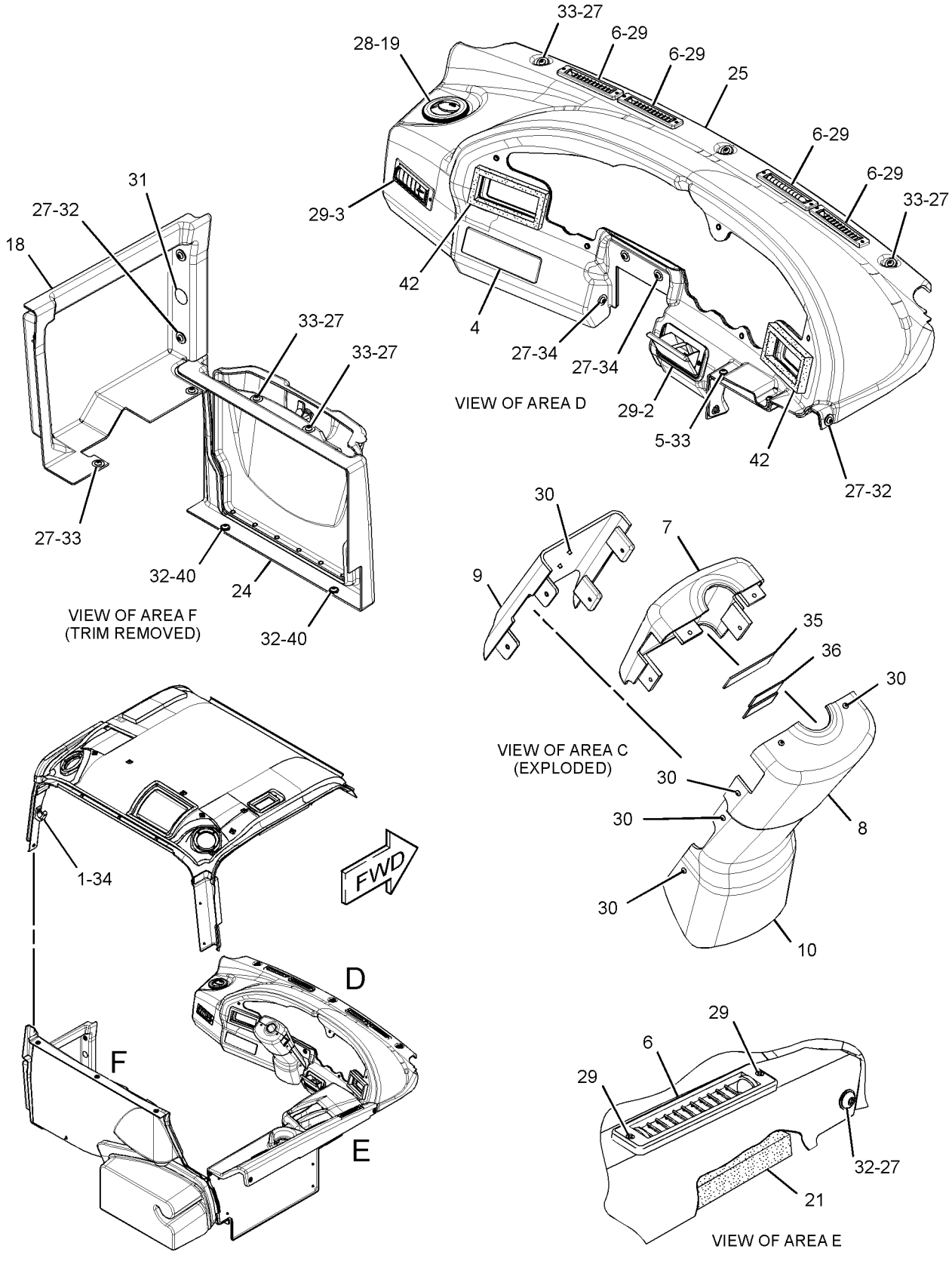


GRAPHIC #2 **<END>** g01609555

# OPERATOR STATION

## *275-6691* VALVE GP-WATER–HEATER

**S/N: RLB1-UP**

**PART OF 275-6690 COIL GP-HEATER**

**SMCS-7304, 7320** **i02639524**

| NOTE | REF NO | GRAPHIC REF | PART NUMBER | QTY | PART NAME 1 2 3 4 5 6 (PRODUCT LEVEL) | SEE PAGE |
|---|---|---|---|---|---|---|
| | 1 | 1 | **131-3093** | 1 | BUSHING | |
| | 2 | 1 | **156-8315** | 3 | SCREW-PAN HEAD (10-16X0.5-IN) | |
| | 3 | 1 | **245-1596** | 1 | ACTUATOR | |
| | 4 | 1 | **248-6772** | 4 | SCREW-MACHINE (8-16X7.75-IN) | |
| | 5 | 1 | **4M-6582** | 1 | SEAL-O-RING | |
| | 6 | 1 | **275-6692** | 1 | TUBE | |

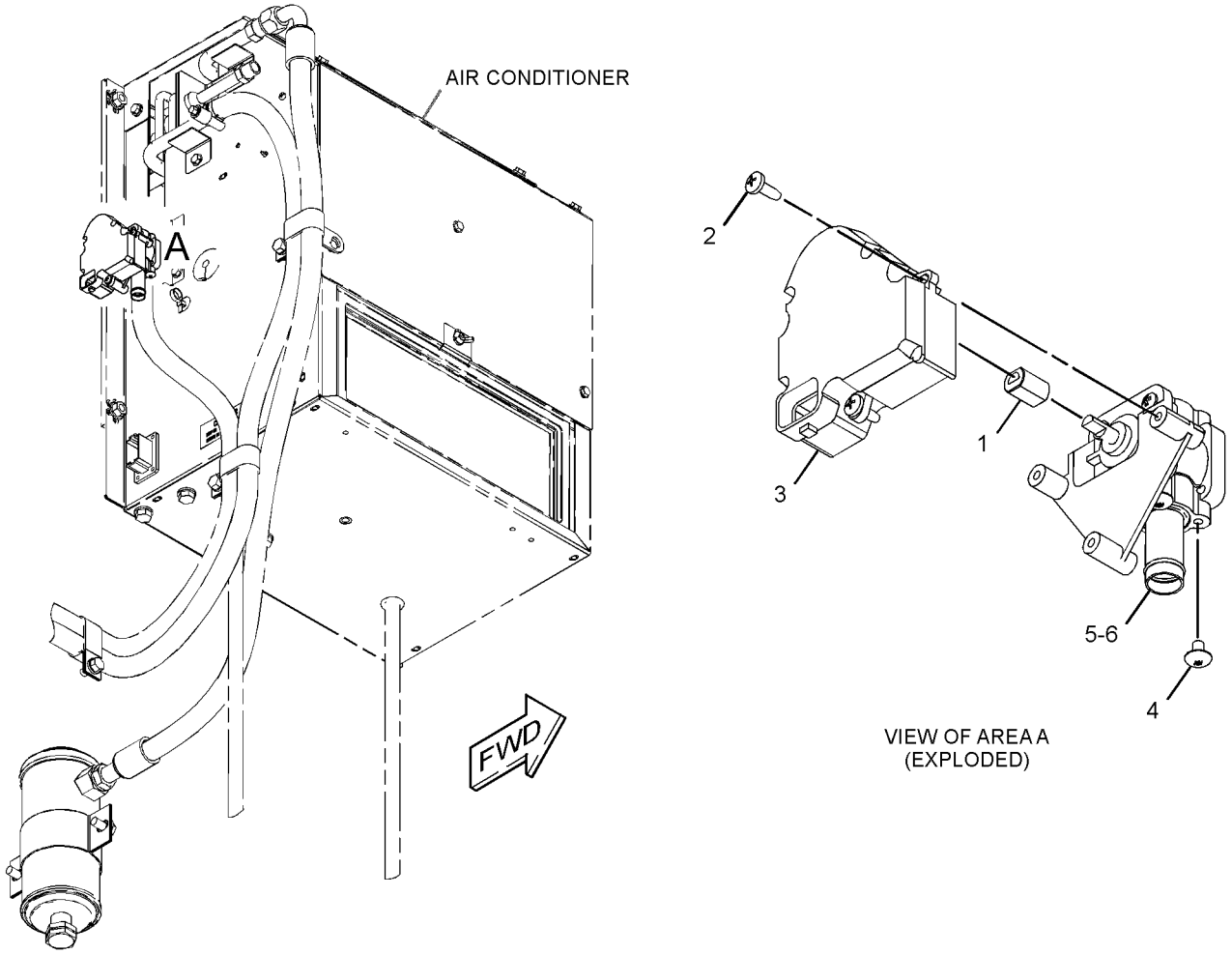


GRAPHIC #1 **<END>** g01324329

# OPERATOR STATION

## *149-0087* VISOR GP-CAB

**S/N: RLB1-UP**

**PART OF 269-8820 CAB AR**

**SMCS-7301** **i02056101**

| NOTE | REF NO | GRAPHIC REF | PART NUMBER | QTY | PART NAME 1 2 3 4 5 6 (PRODUCT LEVEL) | SEE PAGE |
|---|---|---|---|---|---|---|
| C | 1 | 1 | **243-3544** | 1 | VISOR GP-CAB | |
| CM | 2 | 1 | **9X-2044** | 4 | SCREW-TRUSS HEAD | |

C-CHANGE FROM PREVIOUS TYPE
M-METRIC PART

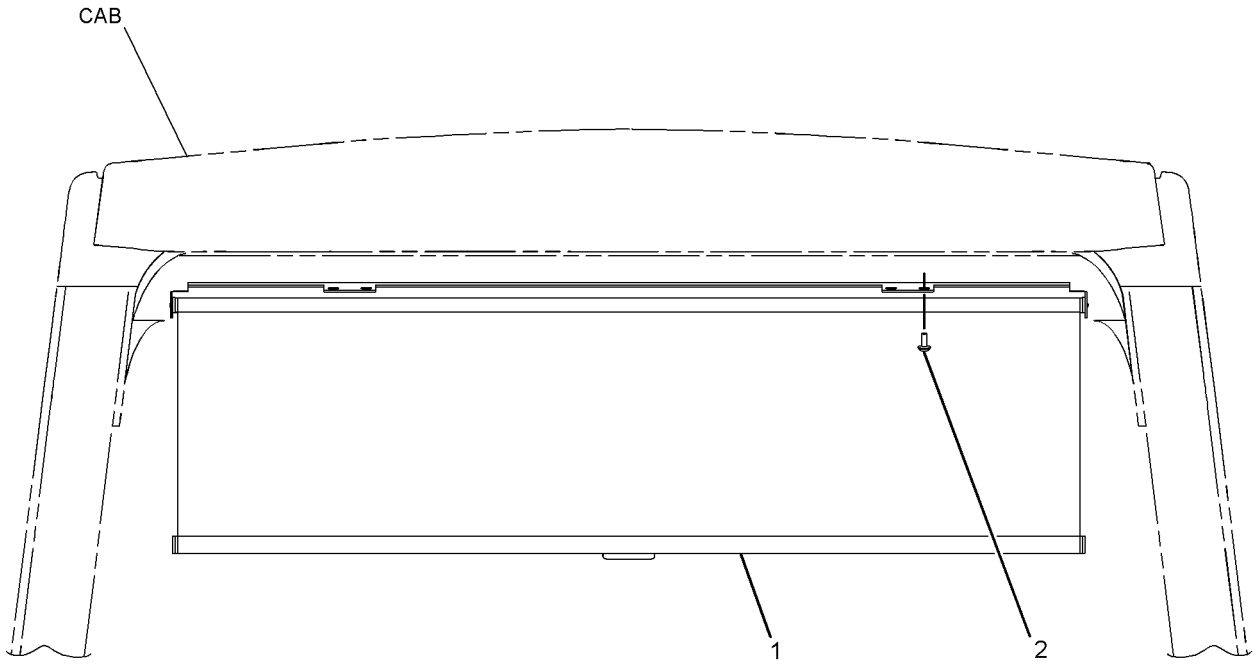


REAR VIEW

GRAPHIC #1

**<END>**

g01055572

# OPERATOR STATION

## *277-3276* WASHER GP-WINDOW

**S/N: RLB1-UP**

**PART OF 276-8860 COOLING AR**

**SMCS-7306** **i03193522**

| NOTE | REF NO | GRAPHIC REF | PART NUMBER | QTY | PART NAME 1 2 3 4 5 6 (PRODUCT LEVEL) | SEE PAGE |
|---|---|---|---|---|---|---|
| | 1 | 1 | **131-3714** | 1 | TANK AS-WINDOW WASHER | |
| | | 1 | **7T-8891** | 1 | PUMP AS-WASHER | |
| | | 1 | **8E-8292** | 1 | CAP-VENTED (WINDOW WASHER RESERVOIR) | |
| | | 1 | **8E-8293** | 1 | GROMMET | |
| | 2 | 1 | **323-1311** | 1 | PLATE AS | |
| | 3 | 1 | **5P-9085** | 2 | CLIP | |
| M | 4 | 1 | **8T-4189** | 10 | BOLT (M8X1.25X20-MM) | |
| | 5 | 1 | **8T-4224** | 10 | WASHER-HARD (8.8X16X2-MM THK) | |
| E | 6 | 1 | **144-0195** | | HOSE (84-CM) | |

E-ORDER BY THE CENTIMETER
M-METRIC PART

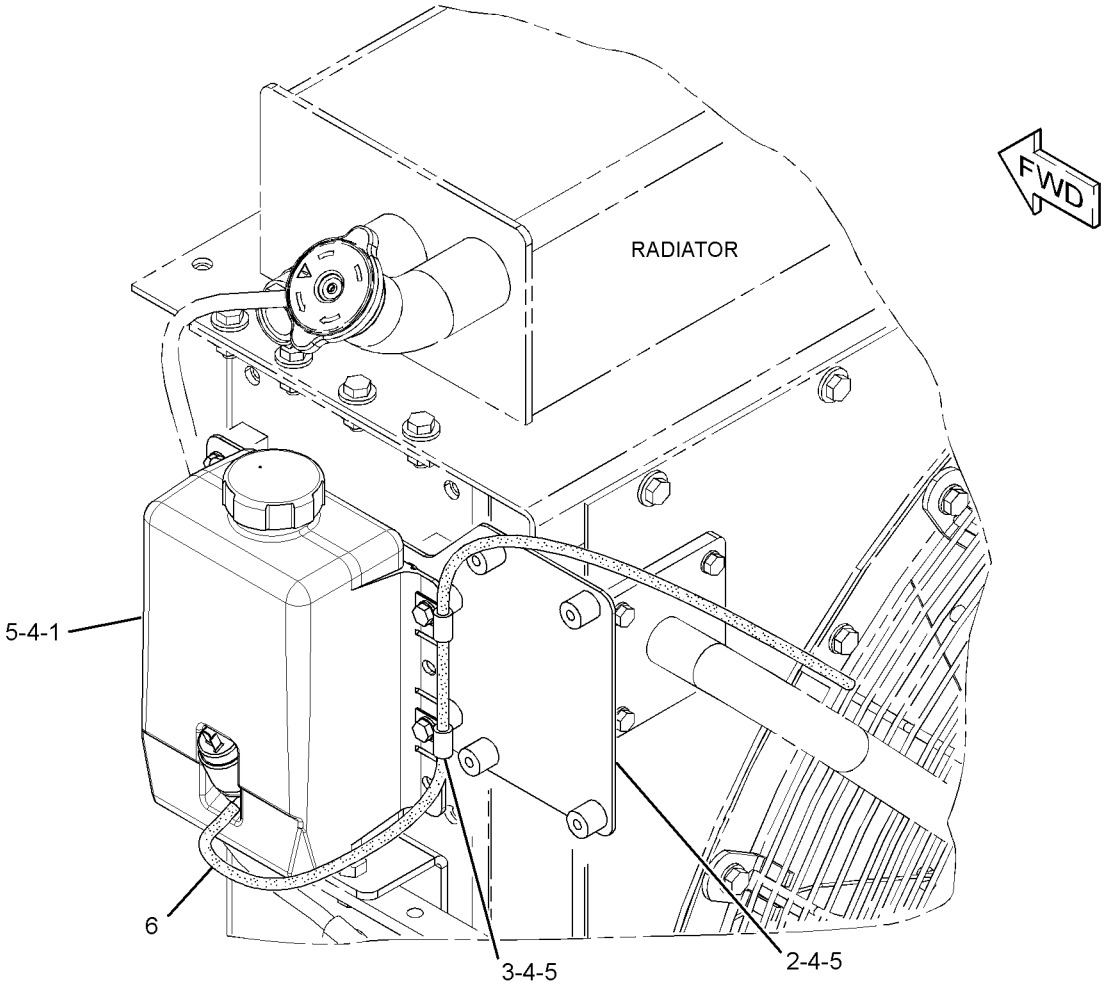


GRAPHIC #1 **<END>** g01637136

# OPERATOR STATION

## 141-4691 WINDOW GP

**S/N: RLB1-UP**

**PART OF 281-7041 WINDOW GP-CAB**

**SMCS-7310, 7340** **i02720034**

| NOTE | REF NO | GRAPHIC REF | PART NUMBER | QTY | PART NAME 1 2 3 4 5 6 (PRODUCT LEVEL) | SEE PAGE |
|---|---|---|---|---|---|---|
| | 1 | 2 | **296-1462** | 1 | SLIDER AS (FRONT) | |
| | 2 | 2 | **296-1466** | 1 | GLASS-FRONT | |
| | 3 | 2 | **169-6596** | 2 | LATCH AS-WINDOW | |
| | 4 | 1 | **296-1468** | 1 | PLATE AS | |
| | 5 | 1 | **169-6597** | 1 | PLATE AS | |
| | 6 | 2 | **145-9087** | 2 | CUSHION | |
| | 7 | 2 | **296-1471** | 1 | SPACER | |
| | 8 | 1 | **157-8931** | 1 | SPACER (3-MM THK) | |
| M | 9 | 1 | **5C-2874** | 4 | NUT (M5X0.8-THD) | |
| | 10 | 2 | **296-1464** | 1 | SLIDER AS (REAR) | |
| | 11 | 2 | **296-1467** | 1 | GLASS-REAR | |
| E | 12 | 1 | **145-9090** | | WEATHERSTRIP (88-CM EACH) | |
| | 13 | 2 | **296-1472** | 1 | RAIL | |
| M | 14 | 2 | **099-0857** | 4 | SCREW-MACHINE (M5X0.8X5.2-MM) | |
| D | 15 | 2 | **9X-2533** | | STOP (0.08-M EACH) | |
| | 16 | 2 | **156-0276** | 1 | KNOB | |
| | 17 | 2 | **6C-4016** | 2 | CAP | |
| | 18 | 2 | **212-4219** | 1 | KNOB | |
| E | 19 | 2 | **8Y-6896** | | GLAZING (106-CM EACH) | |

D-ORDER BY THE METER
E-ORDER BY THE CENTIMETER
M-METRIC PART

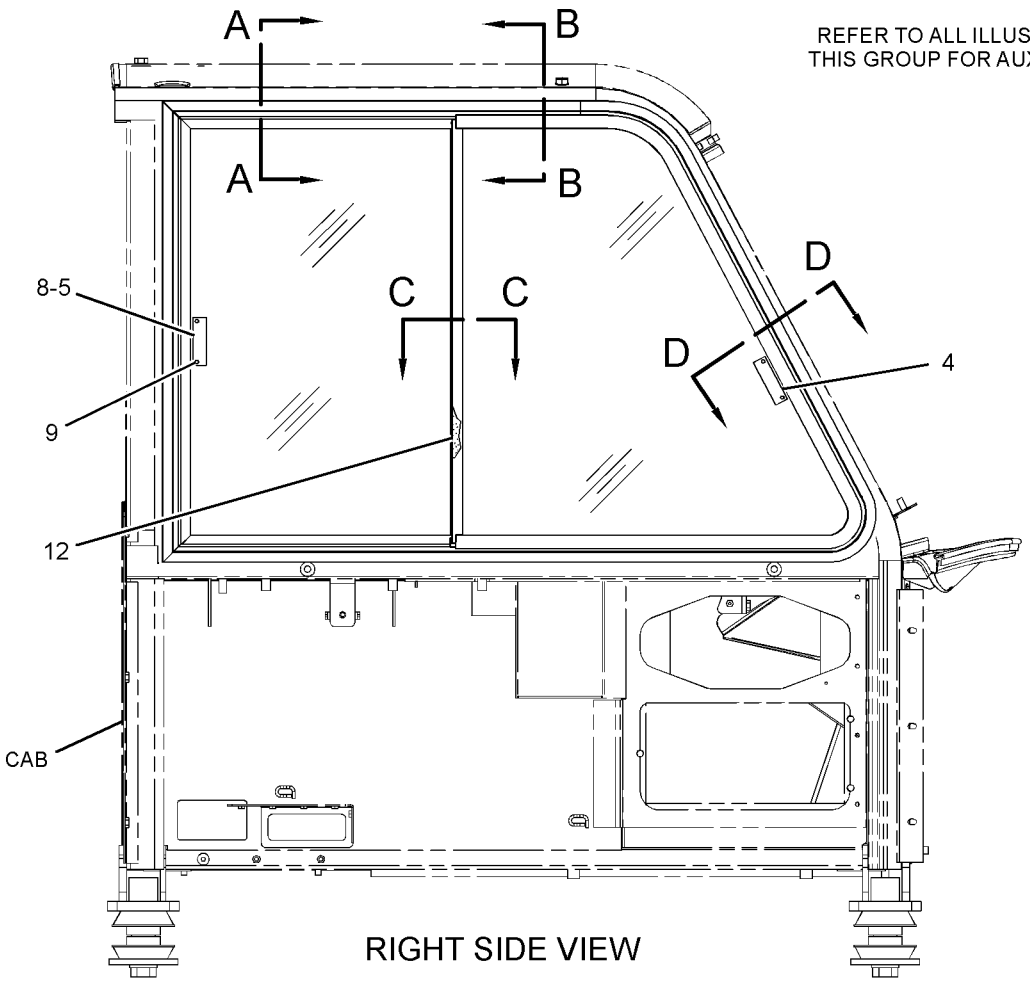


GRAPHIC #1 g01337806

**141-4691 WINDOW GP** *(contd. )* **i02720034**

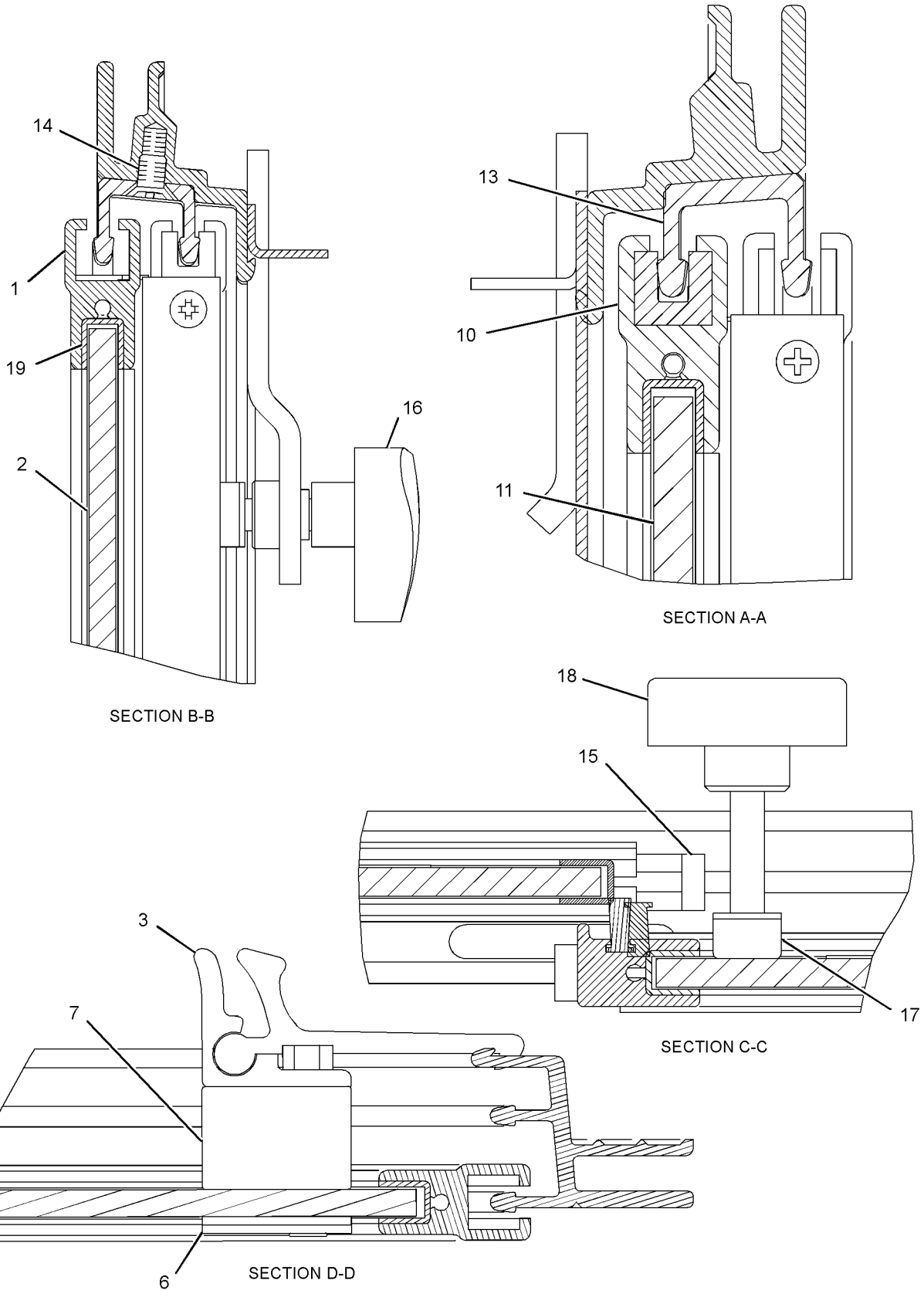


GRAPHIC #2 **<END>** g01337862

## *168-6450* WINDOW GP—VENTILATION, LH

**S/N: RLB1-UP**

**PART OF 281-7041 WINDOW GP-CAB**

**SMCS-7310, 7340** **i03298100**

| NOTE | REF NO | GRAPHIC REF | PART NUMBER | QTY | PART NAME 1 2 3 4 5 6 (PRODUCT LEVEL) | SEE PAGE |
|---|---|---|---|---|---|---|
| | 1 | 1 | **8Y-8294** | 1 | LATCH AS-WINDOW | |
| | 2 | 1 | **201-9807** | 1 | GLASS | |
| | 3 | 1 | **201-9808** | 1 | SEAL | |
| | 4 | 1 | **201-9810** | 1 | HINGE | |
| | 5 | 1 | **201-9817** | 1 | BRACKET | |
| | 6 | 1 | **246-5905** | 1 | FASTENER | |

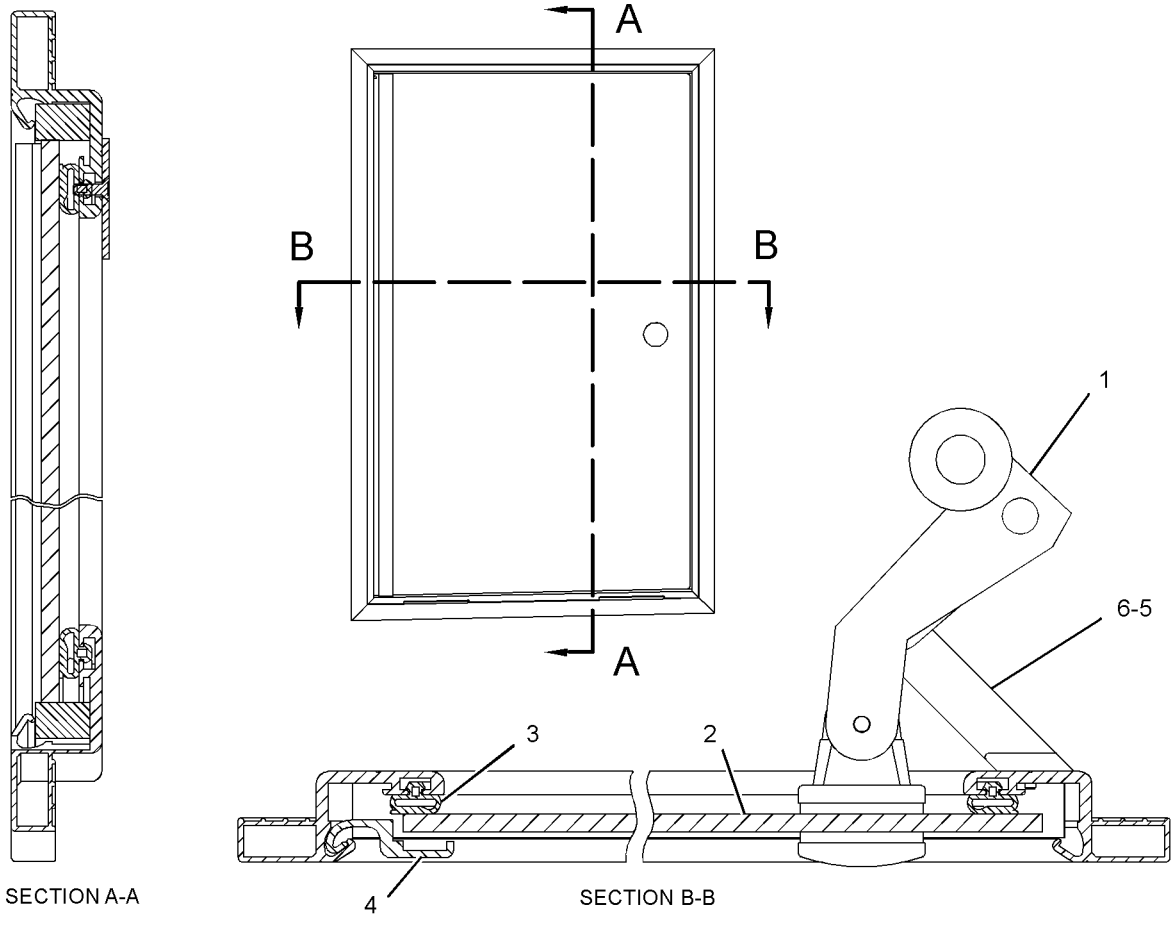


GRAPHIC #1 **<END>** g01681901

# OPERATOR STATION

## *281-7041* WINDOW GP-CAB

**S/N: RLB1-UP**

**PART OF 269-8820 CAB AR**

**SMCS-7310** **i03298280**

| NOTE | REF NO | GRAPHIC REF | PART NUMBER | QTY | PART NAME 1 2 3 4 5 6 (PRODUCT LEVEL) | SEE PAGE |
|---|---|---|---|---|---|---|
| B | 1 | 1 | **110-7524** | 5 | BUTTON | |
| Y | 2 | 1 | *141-4691* | 1 | WINDOW GP (RH) | 810 |
| | 3 | 1 | **158-0988** | 1 | WINDOW (FRONT) | |
| | 4 | 1 | **162-4284** | 1 | CLAMP | |
| | 5 | 1 | **162-7588** | 1 | WINDOW-REAR | |
| | 6 | 1 | **162-7589** | 2 | PLATE-CLAMP | |
| | 7 | 1 | **162-7590** | 1 | TRIM-WINDOW(LH) | |
| | 8 | 1 | **162-7591** | 1 | TRIM-WINDOW(RH) | |
| E | 9 | 1 | **3E-6600** | | SEAL (128-CM) | |
| | 10 | 1 | **168-0229** | 1 | CLAMP | |
| Y | 11 | 1 | *168-6450* | 1 | WINDOW GP (VENTILATION, LH) | 813 |
| M | 12 | 1 | **184-0982** | 6 | SCREW-PAN HEAD (M6X1X16-MM) | |
| M | 13 | 1 | **8T-4171** | 2 | BOLT (M6X1X12-MM) | |
| | 14 | 1 | **9X-8256** | 2 | WASHER (6.6X12X2-MM THK) | |

B-USE AS REQUIRED
E-ORDER BY THE CENTIMETER
M-METRIC PART
Y-SEPARATE ILLUSTRATION

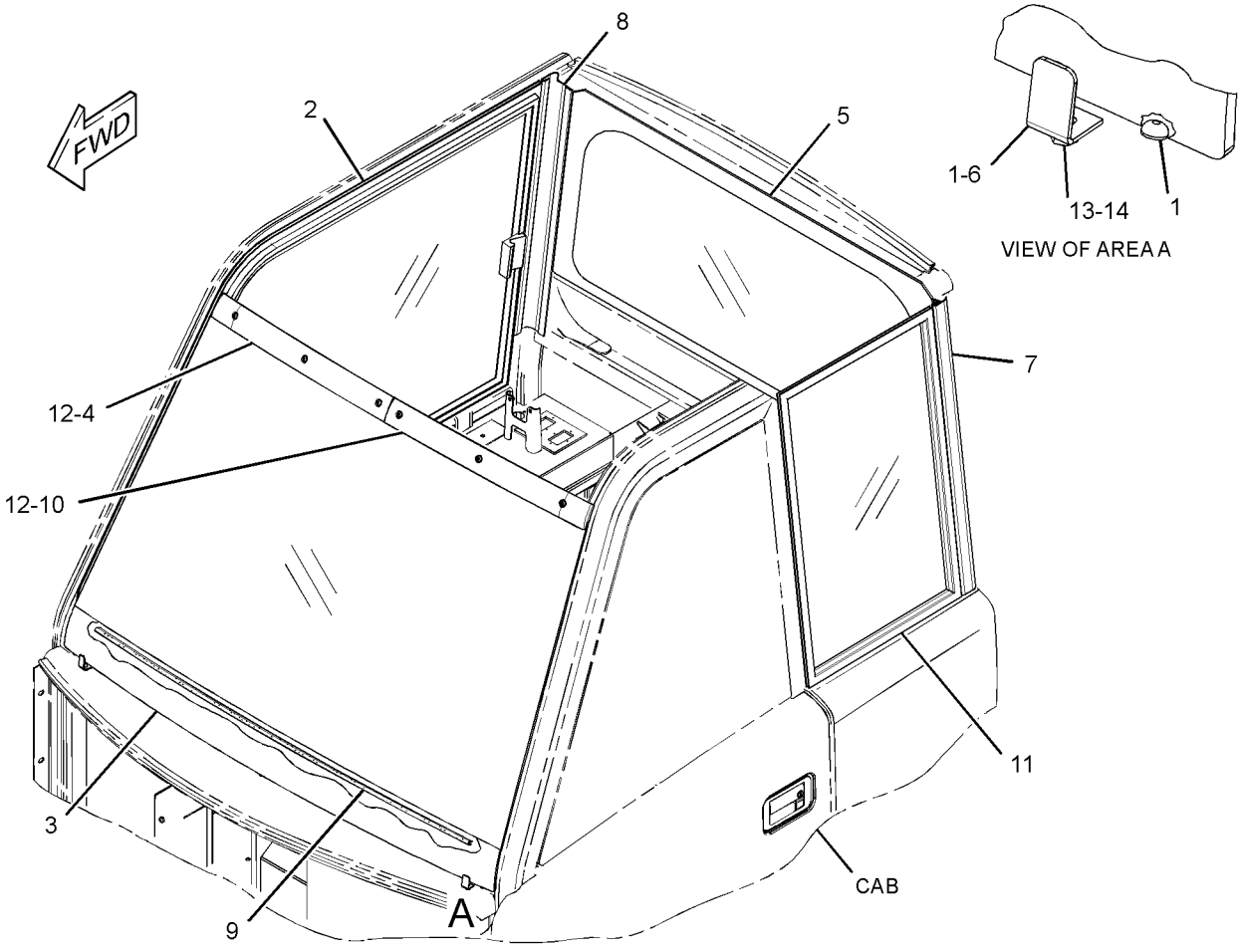


GRAPHIC #1 **<END>** g01637141

# OPERATOR STATION

## *241-4157* WIPER & WASHER GP-WINDOW

**S/N: RLB1-UP**

**PART OF 269-8820 CAB AR**

**SMCS-7305, 7306** **i03195170**

| NOTE | REF NO | GRAPHIC REF | PART NUMBER | QTY | PART NAME 1 2 3 4 5 6 (PRODUCT LEVEL) | SEE PAGE |
|---|---|---|---|---|---|---|
| | 1 | 1 | **6V-7419** | 1 | BLADE AS-WIPER (700-MM) (FRONT WINDOW) | |
| | 2 | 1 | **8T-5400** | 1 | CONNECTOR AS | |
| Y | 3 | 1 | **323-1076** | 1 | MOTOR GP-WINDOW WIPER (FRONT) | 771 |
| | 4 | 1 | **168-8927** | 1 | ARM AS-WINDOW WIPER (FRONT) | |
| | 5 | 1 | **204-2581** | 1 | VALVE AS-CHECK (WINDOW WASHER) | |
| | 6 | 1 | **3S-2093** | 6 | STRAP-CABLE | |
| M | 7 | 1 | **5C-9553** | 2 | BOLT (M6X1X16-MM) | |
| | 8 | 1 | **9X-8256** | 2 | WASHER (6.6X12X2-MM THK) | |
| E | 9 | 1 | **144-0195** | | HOSE (155-CM) | |

E-ORDER BY THE CENTIMETER
M-METRIC PART
Y-SEPARATE ILLUSTRATION

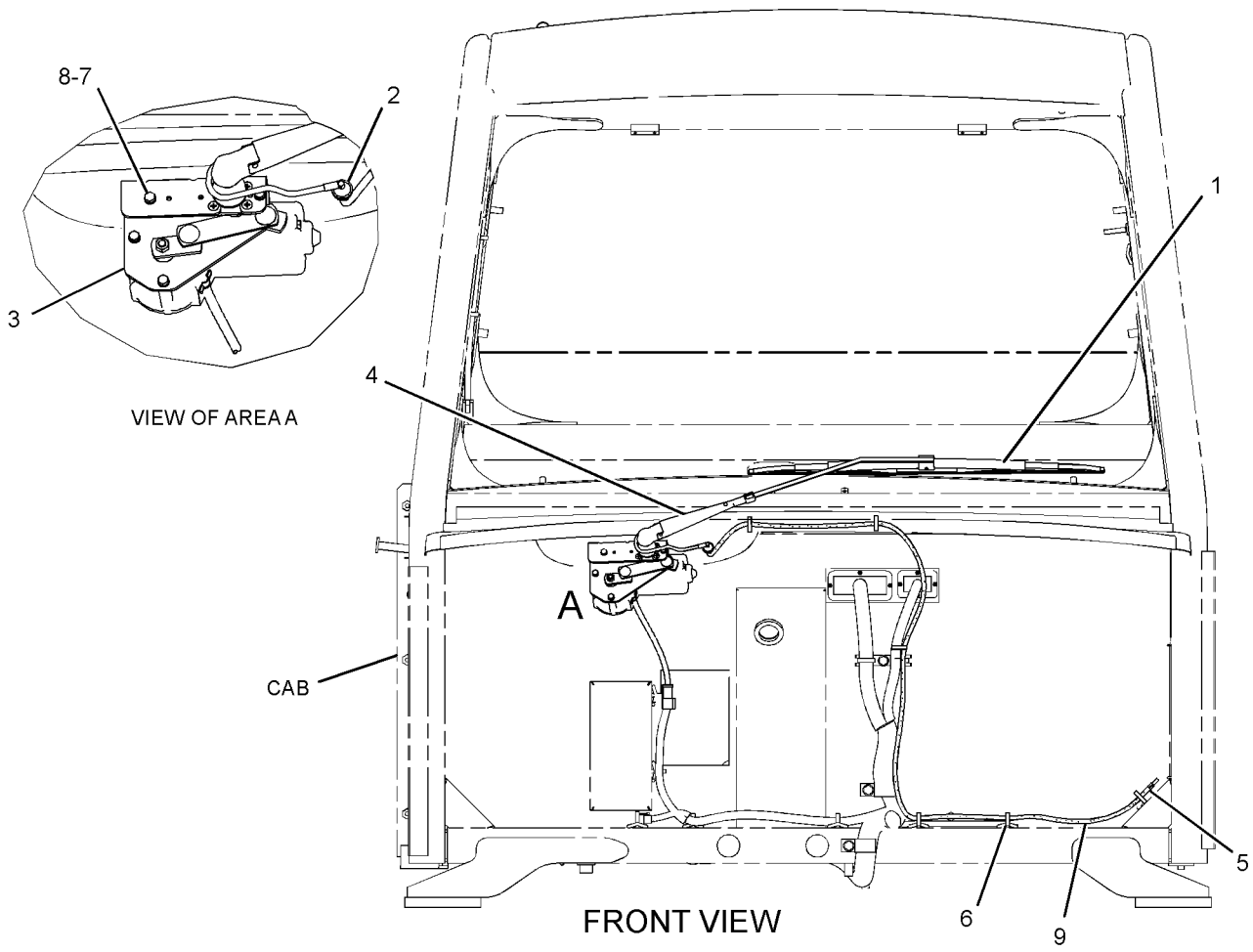


GRAPHIC #1

**<END>**

g01320169

# SERVICE EQUIPMENT AND SUPPLIES

## *278-4507* CHOCK GP-WHEEL

**S/N: RLB1-UP**

**AN ATTACHMENT**

**SMCS-7000** **i02623202**

| NOTE | REF NO | GRAPHIC REF | PART NUMBER | QTY | PART NAME 1 2 3 4 5 6 (PRODUCT LEVEL) | SEE PAGE |
|---|---|---|---|---|---|---|
| | 1 | 1 | **105-1385** | 2 | CHOCK-WHEEL | |
| | 2 | 1 | **293-6295** | 1 | BRACKET AS | |
| | 3 | 1 | **301-6819** | 1 | CABLE AS | |
| | 4 | 1 | **246-2641** | 1 | PADLOCK GP | |
| | | 1 | **5P-8500** | 1 | KEY | |
| M | 5 | 1 | **8T-4192** | 4 | BOLT (M12X1.75X25-MM) | |
| | 6 | 1 | **8T-4223** | 4 | WASHER-HARD (13.5X25.5X3-MM THK) | |

M-METRIC PART

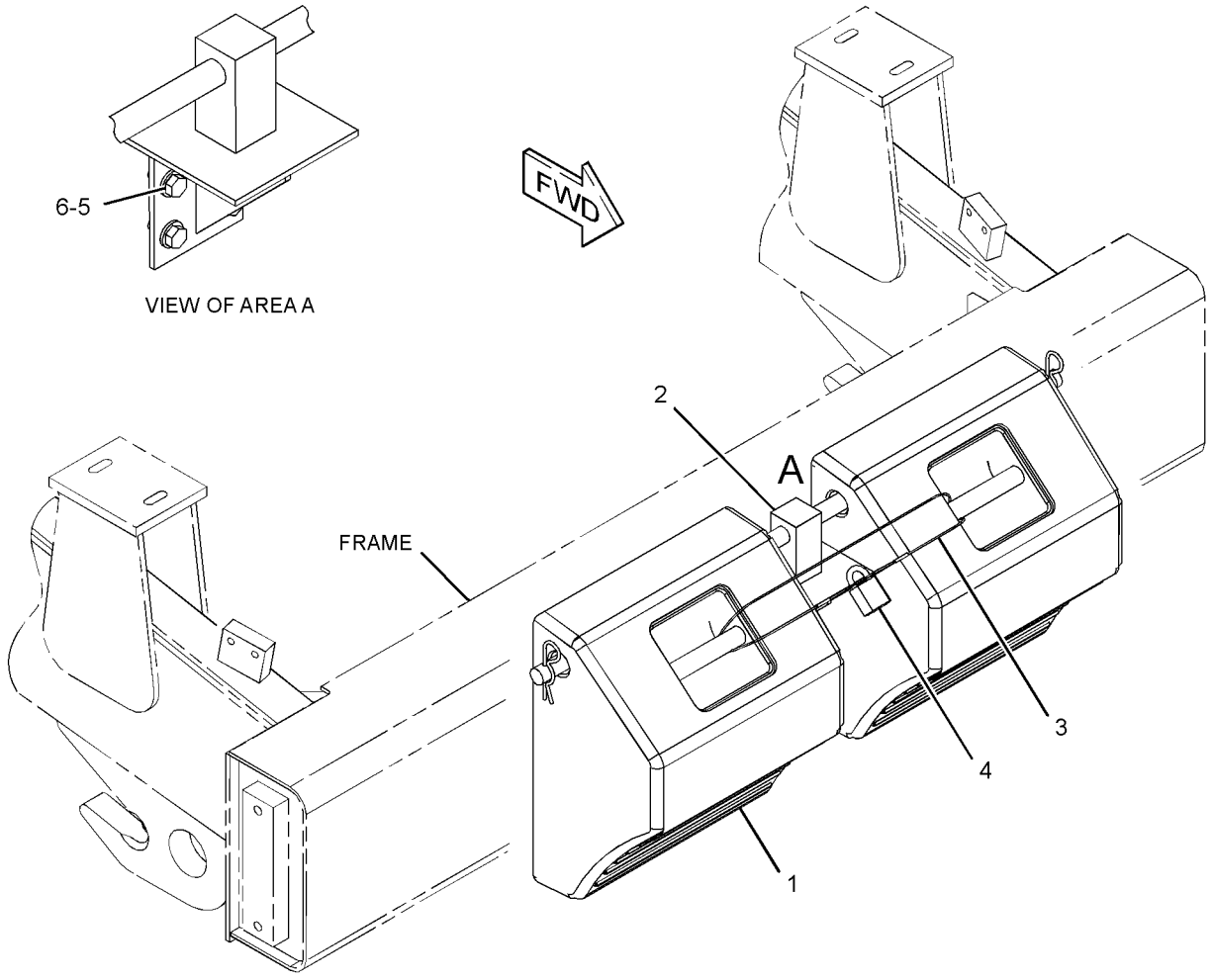


GRAPHIC #1 **<END>** g01335851

# SERVICE EQUIPMENT AND SUPPLIES

## *289-2153* FILM GP

**S/N: RLB1-UP**

**PART OF 270-9143, 270-9144 PLATE & FILM GP**

**AN ATTACHMENT**

**SMCS-7405, 7557** **i02606713**

| NOTE | REF NO | GRAPHIC REF | PART NUMBER | QTY | PART NAME 1 2 3 4 5 6 (PRODUCT LEVEL) | SEE PAGE |
|---|---|---|---|---|---|---|
| | 1 | 1 | **289-9258** | 1 | FILM-IDENTIFICATION (CATERPILLAR) | |
| | 2 | 1 | **253-0861** | 2 | FILM-INFORMATION (CAT POWER, ACERT TECHNOLOGY) | |
| | 3 | 1 | **289-9261** | 1 | FILM-STRIPE (FRONT, LH) | |
| | 4 | 1 | **289-9264** | 1 | FILM-STRIPE (CENTER, RH) | |
| | 5 | 1 | **289-9265** | 1 | FILM-STRIPE (FRONT, RH) | |

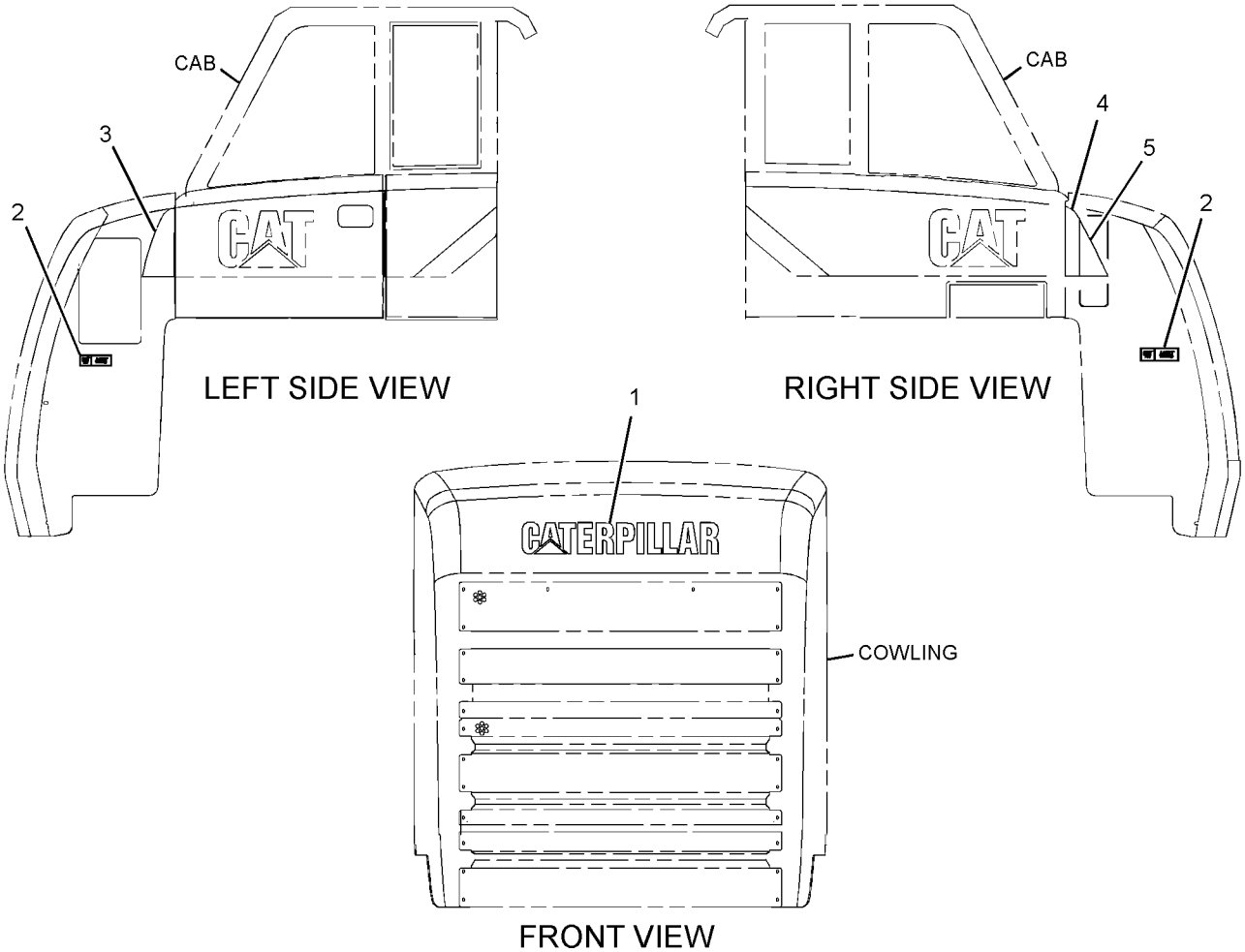


GRAPHIC #1

**<END>**

g01315994

# SERVICE EQUIPMENT AND SUPPLIES

## *289-2157* FILM GP–FLAT FLOOR BODY

**S/N: RLB1-UP**
**PART OF 299-5701 MOUNTING AR-TRUCK BODY**
**AN ATTACHMENT**

**SMCS-7405, 7557** **i02797514**

| NOTE | REF NO | GRAPHIC REF | PART NUMBER | QTY | PART NAME 1 2 3 4 5 6 (PRODUCT LEVEL) | SEE PAGE |
|---|---|---|---|---|---|---|
| | 1 | 1 | **289-9257** | 1 | FILM-STRIPE (772, RH) | |
| | 2 | 1 | **289-9256** | 1 | FILM-STRIPE (772, LH) | |
| | 3 | 1 | **289-9243** | 1 | FILM-IDENTIFICATION (CATERPILLAR) | |

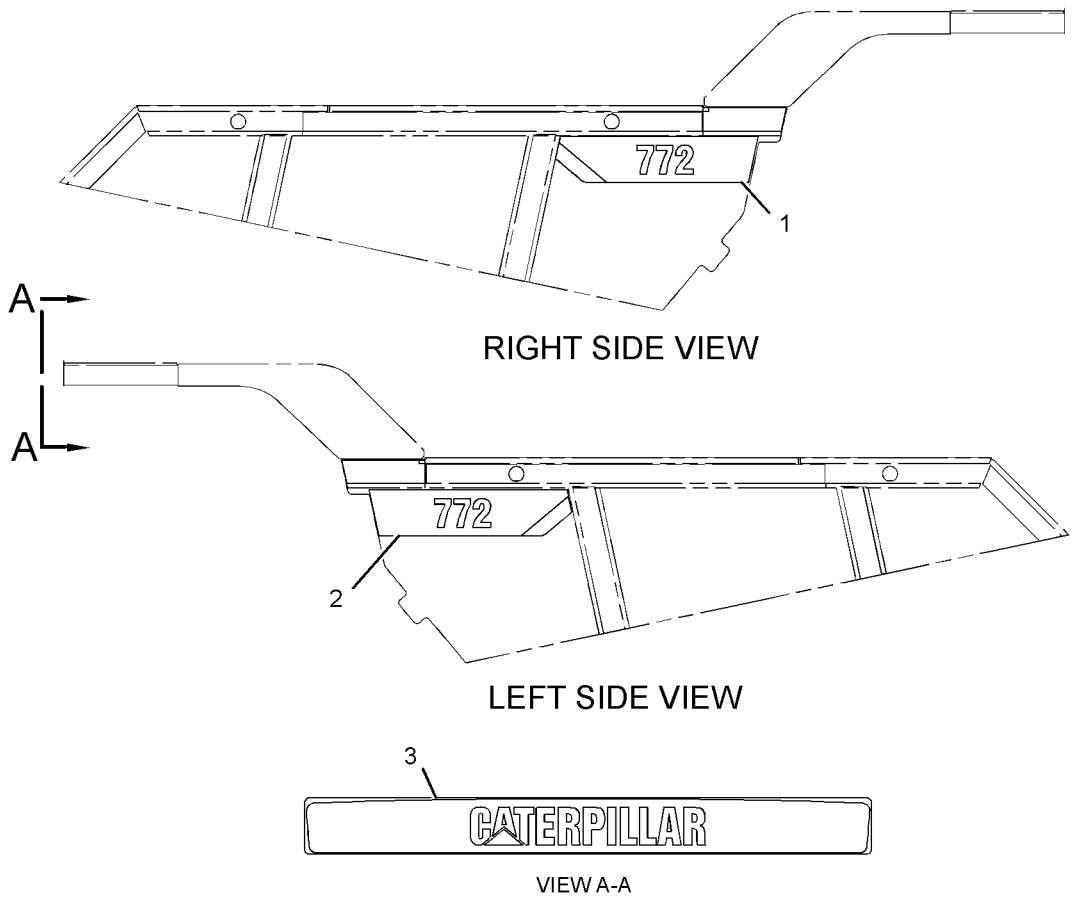


RIGHT SIDE VIEW

LEFT SIDE VIEW

VIEW A-A

GRAPHIC #1 **<END>** g01344169

## *289-2158* FILM GP–DUAL SLOPE BODY

**S/N: RLB1-UP**

**PART OF 299-5703 MOUNTING AR-TRUCK BODY**

**AN ATTACHMENT**

**SMCS-7405, 7557** **i02825121**

| NOTE | REF NO | GRAPHIC REF | PART NUMBER | QTY | PART NAME 1 2 3 4 5 6 (PRODUCT LEVEL) | SEE PAGE |
|---|---|---|---|---|---|---|
| | 1 | 1 | **289-9254** | 1 | FILM-STRIPE (772, RH) | |
| | 2 | 1 | **289-9253** | 1 | FILM-STRIPE (772, LH) | |
| | 3 | 1 | **289-9243** | 1 | FILM-IDENTIFICATION (CATERPILLAR) | |

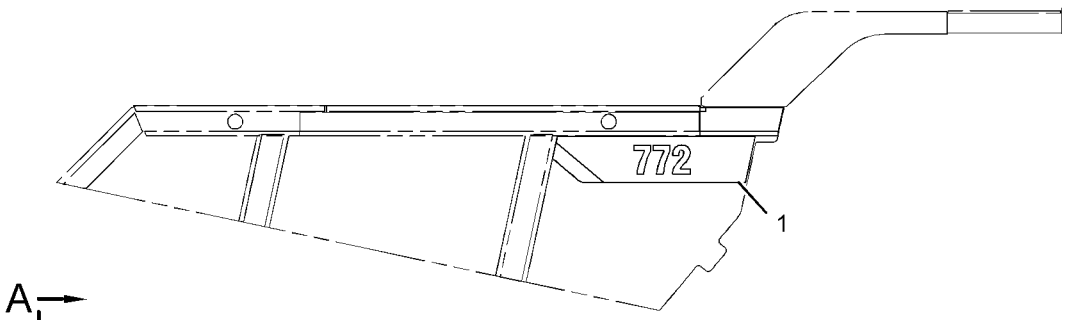


RIGHT SIDE VIEW

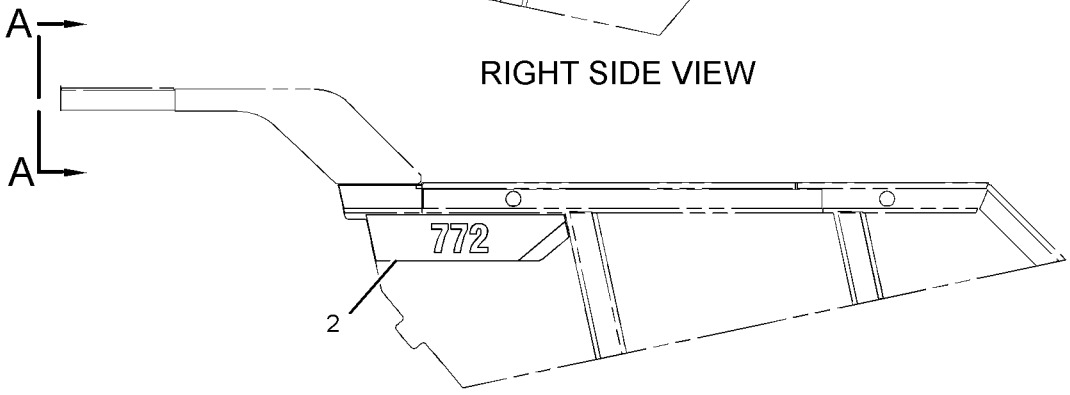


LEFT SIDE VIEW




VIEW A-A

GRAPHIC #1 **<END>** g01344169

## *299-5707* LINES & MTG GP-WATER TANK

**S/N: RLB1-UP**

**FOR USE WITH 299-6765—PAGE 1. CANNOT BE USED WITH 288-7335—PAGE 536, 286-2397—PAGE 491, 299-5701—PAGE 533, 299-5703—PAGE 533, 299-5705—PAGE 820 AN ATTACHMENT**

**SMCS-5612, 5613** **i02675558**

| NOTE | PART NUMBER | QTY | PART NAME 1 2 3 4 5 6 (PRODUCT LEVEL) | SEE PAGE |
|---|---|---|---|---|
| Y | *299-6272* | 1 | LINES GP-WATER | 174 |
| Y | *300-5515* | 1 | MOUNTING GP-TRUCK BODY | 536 |

Y-SEPARATE ILLUSTRATION

**<END>**

## *299-5705* MOUNTING GP-WATER TANK

**S/N: RLB1-UP**

**FOR USE WITH 299-6765—PAGE 1. CANNOT BE USED WITH 299-5701—PAGE 533, 299-5703—PAGE 533, 299-5707—PAGE 820, 288-7335—PAGE 536, 286-2397—PAGE 491 AN ATTACHMENT**

**SMCS-5613** **i02669578**

| NOTE | PART NUMBER | QTY | PART NAME 1 2 3 4 5 6 (PRODUCT LEVEL) | SEE PAGE |
|---|---|---|---|---|
| Y | *270-1754* | 1 | CYLINDER & MTG GP-HOIST | 641 |
| Y | *279-2236* | 1 | LINES GP-HOIST | 653 |
| Y | *300-5515* | 1 | MOUNTING GP-TRUCK BODY | 536 |

Y-SEPARATE ILLUSTRATION

**<END>**

# SERVICE EQUIPMENT AND SUPPLIES

## *236-5373* PLATE & FILM GP

**S/N: RLB1-UP**

**PART OF 269-8820 CAB AR**

**SMCS-7405, 7557** **i03298038**

| NOTE | REF NO | GRAPHIC REF | PART NUMBER | QTY | PART NAME 1 2 3 4 5 6 (PRODUCT LEVEL) | SEE PAGE |
|---|---|---|---|---|---|---|
| | 1 | 1 | **110-6393** | 1 | PLATE-INSTRUCTION (AIR CONDITIONER) | |
| | 2 | 1 | **246-3331** | 1 | FILM-INFORMATION (PAYLOAD) | |
| B | 3 | 1 | **259-1172** | 1 | FILM-INSTRUCTION (RETARDING GUIDELINES) | |
| B | 4 | 1 | **259-1173** | 1 | FILM-INSTRUCTION (RETARDING GUIDELINES) | |
| | 6 | 1 | **280-2235** | 1 | FILM-INSTRUCTION (RETARDER CONTROL) | |
| | 7 | 1 | **289-9247** | 1 | FILM-STRIPE (LH) | |
| | 8 | 1 | **289-9248** | 1 | FILM-IDENTIFICATION (CAT, LH) | |
| | 9 | 1 | **289-9250** | 1 | FILM-STRIPE (CAT, RH) | |
| | 10 | 1 | **290-7164** | 1 | FILM-INSTRUCTION (TRANSMISSION SHIFT) | |

B-USE AS REQUIRED

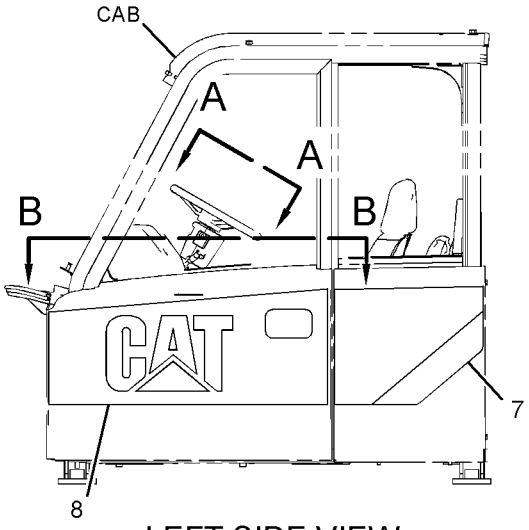


LEFT SIDE VIEW

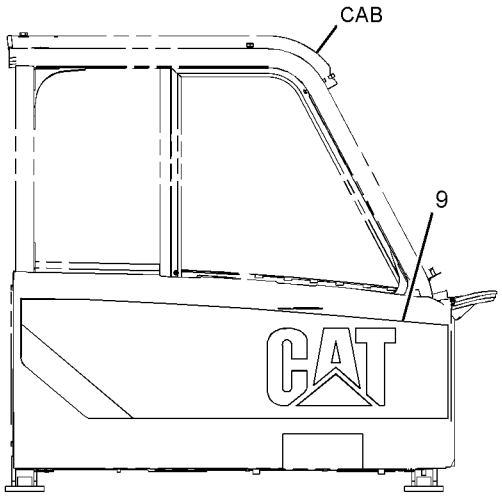


RIGHT SIDE VIEW

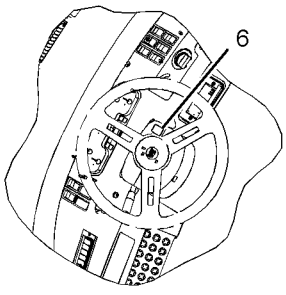


VIEW A-A

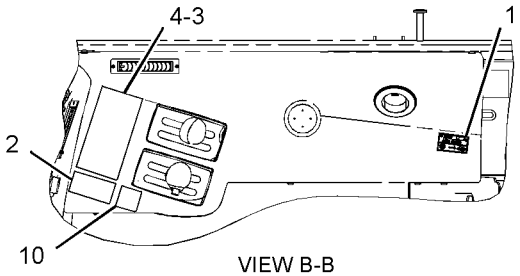


VIEW B-B

GRAPHIC #1 **<END>** g01371492

# SERVICE EQUIPMENT AND SUPPLIES

## *270-9143* PLATE & FILM GP

**S/N: RLB1-270**

**CANNOT BE USED WITH 270-9144—PAGE 837**

**AN ATTACHMENT**

**SMCS-7405, 7557** **i02606687**

| NOTE | REF NO | GRAPHIC REF | PART NUMBER | QTY | PART NAME 1 2 3 4 5 6 (PRODUCT LEVEL) | SEE PAGE |
|---|---|---|---|---|---|---|
| | 1 | 3 | **5P-1174** | 1 | FILM-IDENTIFICATION (TRANSMISSION OIL FILL CAP) | |
| | 2 | 1 | **5P-1175** | 1 | FILM-IDENTIFICATION (ENGINE OIL FILL) | |
| | 3 | 4 | **5P-2494** | 1 | FILM-INSTRUCTION (TOWING) | |
| | 4 | 3 | **109-0361** | 1 | FILM-INSTRUCTION (ENGINE SHUTDOWN) | |
| | 5 | 1 | **126-3106** | 1 | FILM-IDENTIFICATION (ELECTRICAL OUTLET) | |
| | 6 | 4 | **134-7258** | 1 | FILM-INFORMATION (EXTENDED LIFE COOLANT,READ OMM) | |
| | 7 | 1 | **146-6747** | 1 | FILM-INFORMATION (24-VOLT) | |
| | 8 | 1 | **158-7864** | 1 | FILM-IDENTIFICATION (HYDRAULIC OIL) | |
| | 9 | 2 | **176-0245** | 2 | FILM-STRIPE (REFLECTIVE) | |
| | 10 | 4 | **209-5776** | 1 | FILM-INFORMATION (ENGINE COOLANT) | |
| | 11 | 3 | **219-0302** | 1 | FILM-WARNING (NO WELD, NO DRILL, READ OMM) | |
| | 12 | 2 | **221-8045** | 1 | FILM-WARNING (SEAT BELT, INTERNATIONAL) | |
| | 13 | 3 | **225-0312** | 2 | FILM-WARNING (JUMP START, READ OMM, INTL) | |
| | 14 | 4 | **235-1368** | 1 | FILM-WARNING (RADIATOR) | |
| | 15 | 4 | **242-5054** | 3 | FILM-WARNING (NO STEP) | |
| | 16 | 2 | **248-5245** | 2 | FILM-INFORMATION (LIFT EYE, TIE-DOWN LOCATION) | |
| | 17 | 2 | **252-2156** | 2 | FILM-INSTRUCTION (LIFT EYE LOCATION) | |
| | 18 | 2,4 | **252-2157** | 3 | FILM-INFORMATION (TIE-DOWN) | |
| | 19 | 4 | **254-6134** | 1 | PLATE-INFORMATION (FUEL PUMP, PRIMER) | |
| | 20 | 4 | **298-5702** | 1 | FILM-WARNING (HOT FLUID UND PRESS, READ OMM) | |
| | 21 | 1 | **270-8642** | 1 | FILM-IDENTIFICATION (LOCKOUT) | |
| | 22 | 3 | **270-8643** | 1 | FILM-SERVICE (LOCKOUT INDICATOR) | |
| | 23 | 3 | **270-8645** | 1 | FILM-IDENTIFICATION (TRANSMISSION, STEERING, HOIST) | |
| | 24 | 3 | **303-3142** | 1 | FILM-WARNING (ROPS, FOPS, READ OMM) | |
| | 25 | 1 | **279-4535** | 1 | FILM-IDENTIFICATION (TRANSMISSION, STEERING, HOIST) | |
| Y | 26 | 2 | *289-2153* | 1 | FILM GP | 817 |
| | 27 | 2 | **224-0554** | 1 | FILM-WARNING (UNIVERSAL, READ OMM, INTL) | |
| Y | 28 | 1 | *212-3432* | 1 | PROTECTION GP-VANDALISM | 862 |
| | 29 | 2 | **239-6986** | 1 | PLATE-IDENTIFICATION (MACHINE) | |

Y-SEPARATE ILLUSTRATION

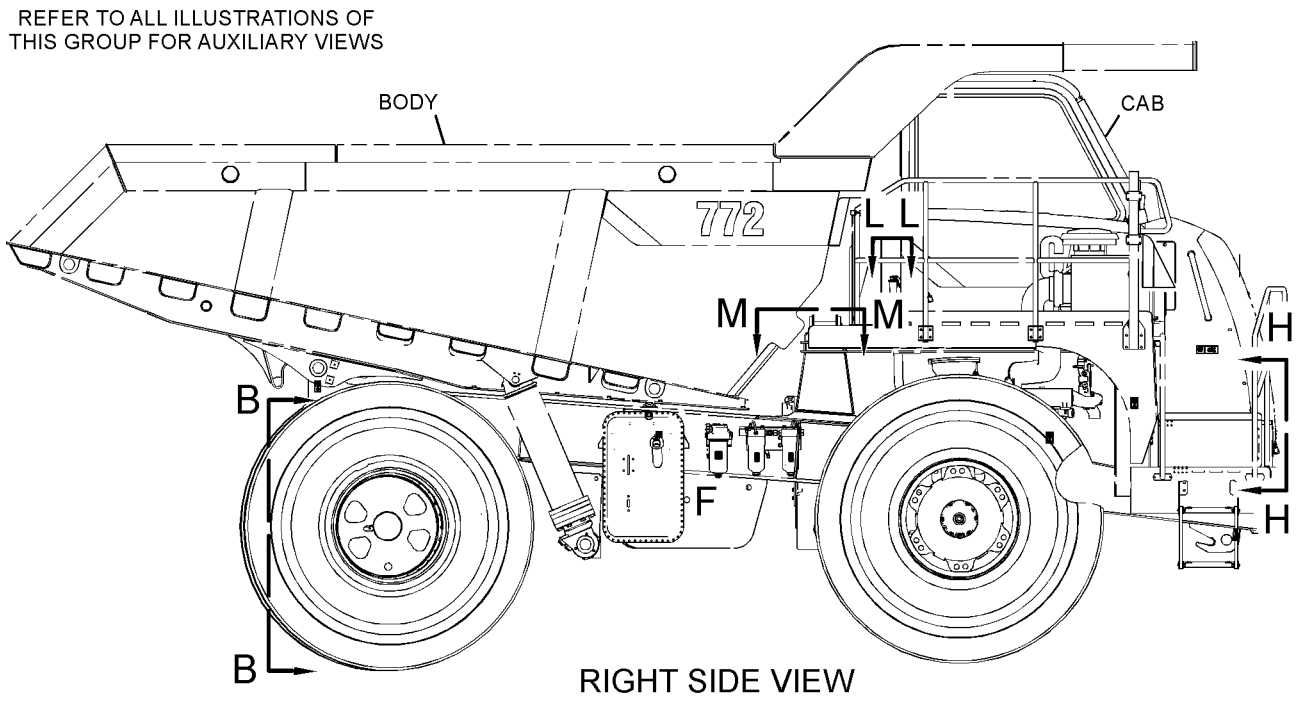


RIGHT SIDE VIEW

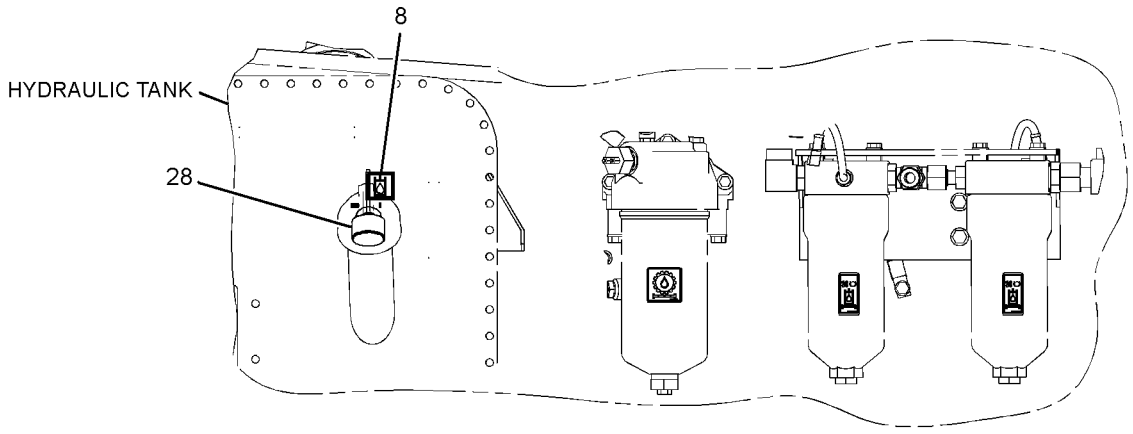


VIEW OF AREA F

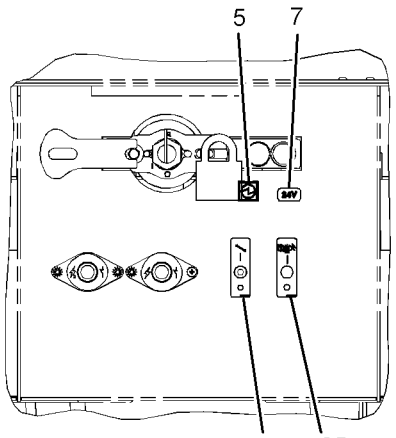


VIEW H-H

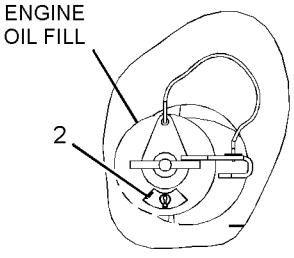


VIEW L-L

GRAPHIC #1 g01347612

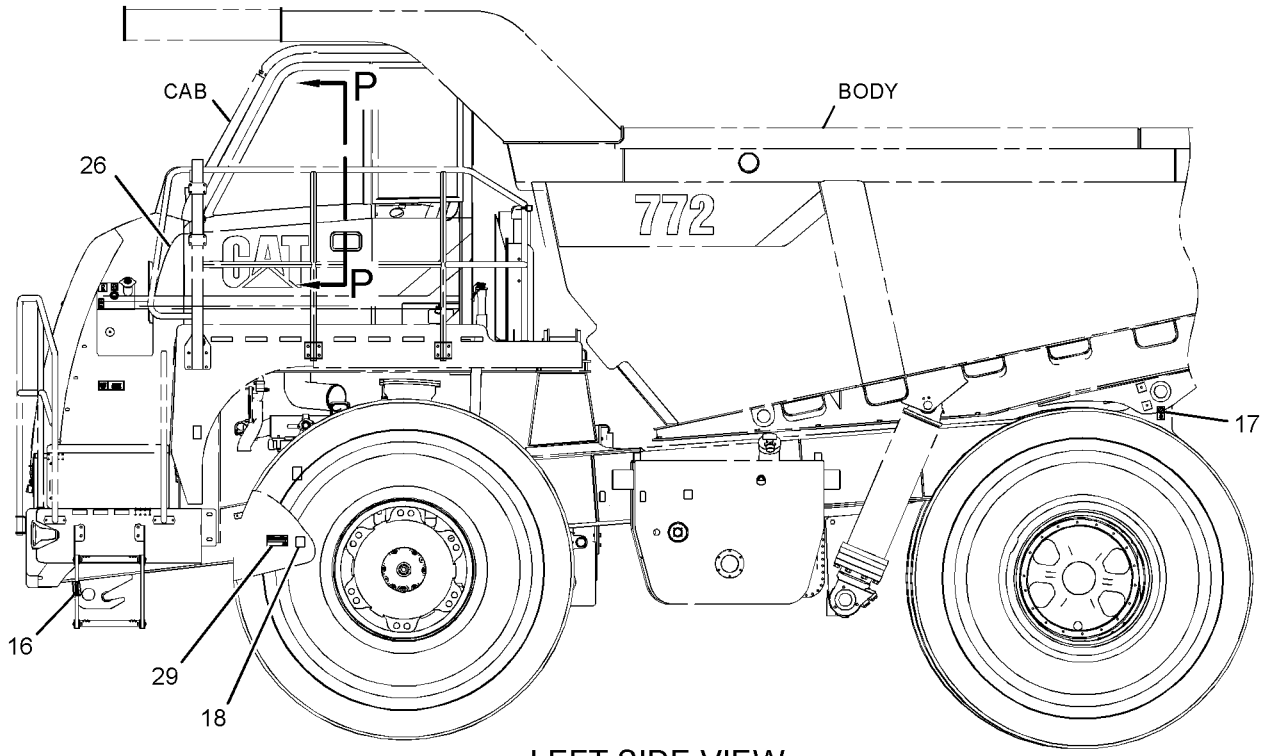


LEFT SIDE VIEW

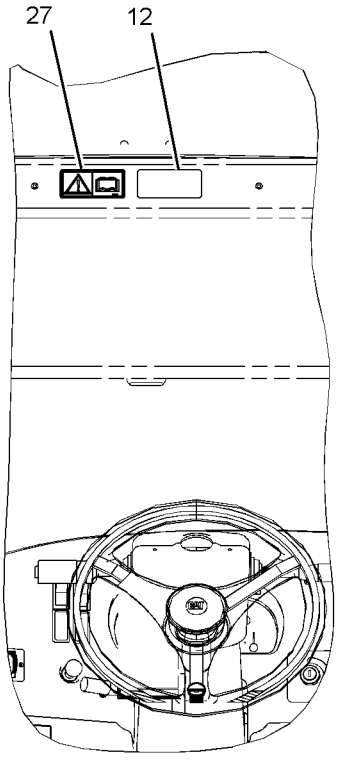


VIEW P-P

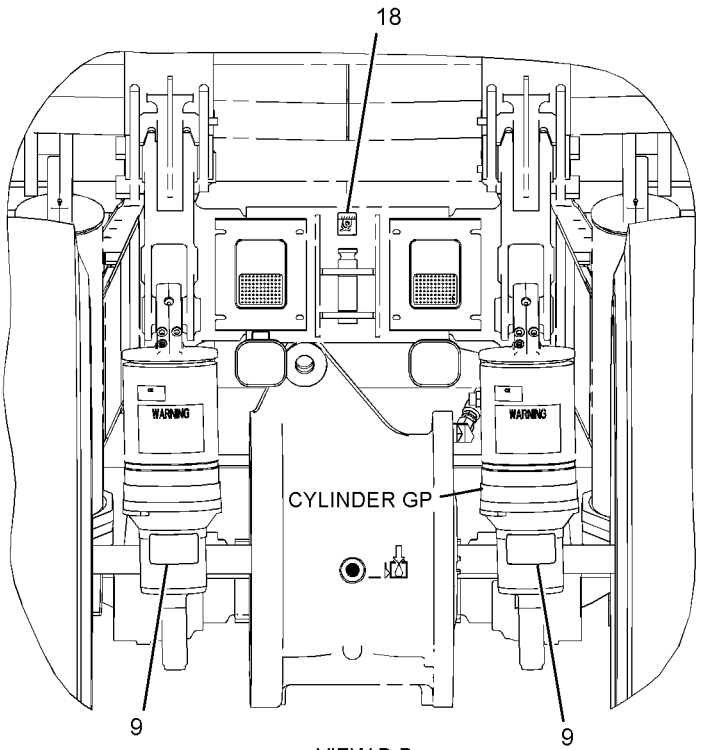


VIEW B-B

GRAPHIC #2

g01347618

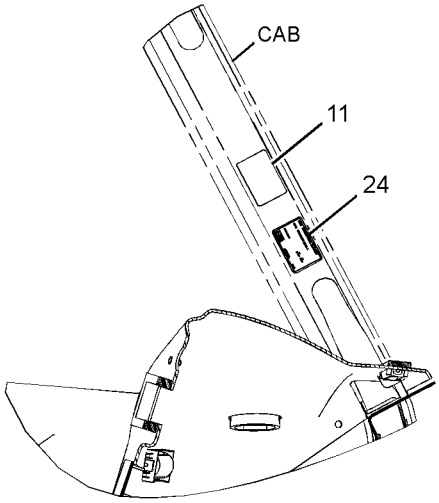


VIEW N-N

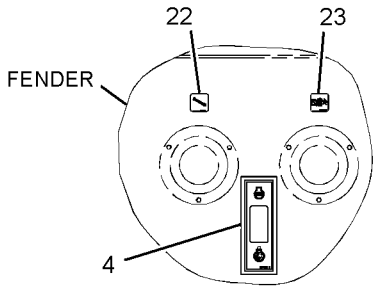


VIEW OF AREA T

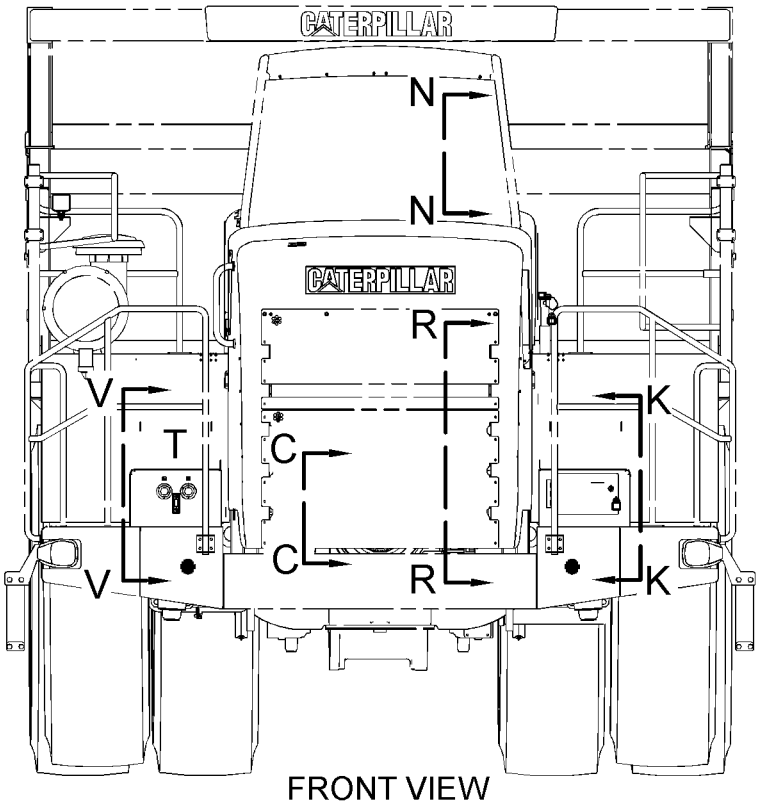


FRONT VIEW

REFER TO ALL ILLUSTRATIONS OF THIS GROUP FOR AUXILIARY VIEWS

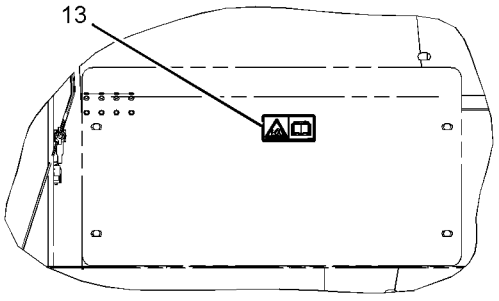


VIEW V-V

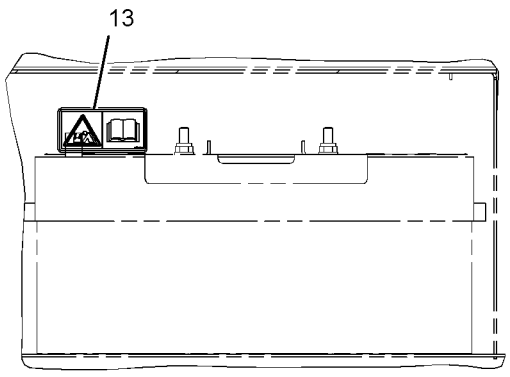


VIEW K-K

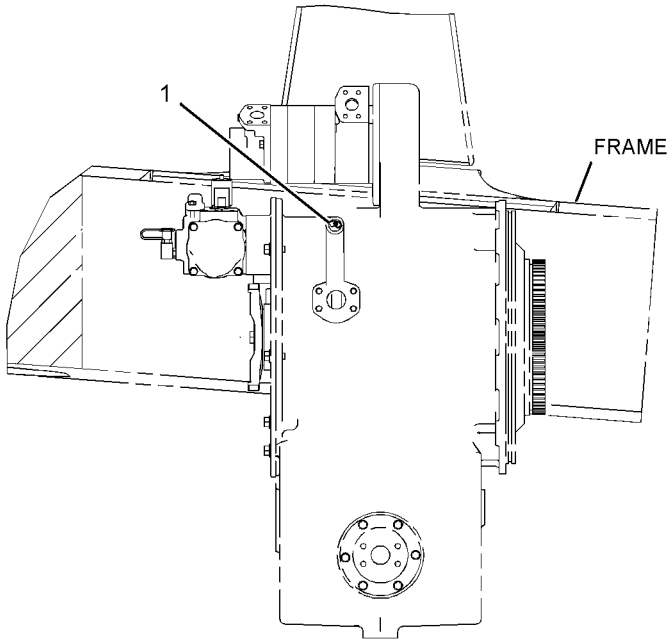


VIEW C-C

GRAPHIC #3

g01347620

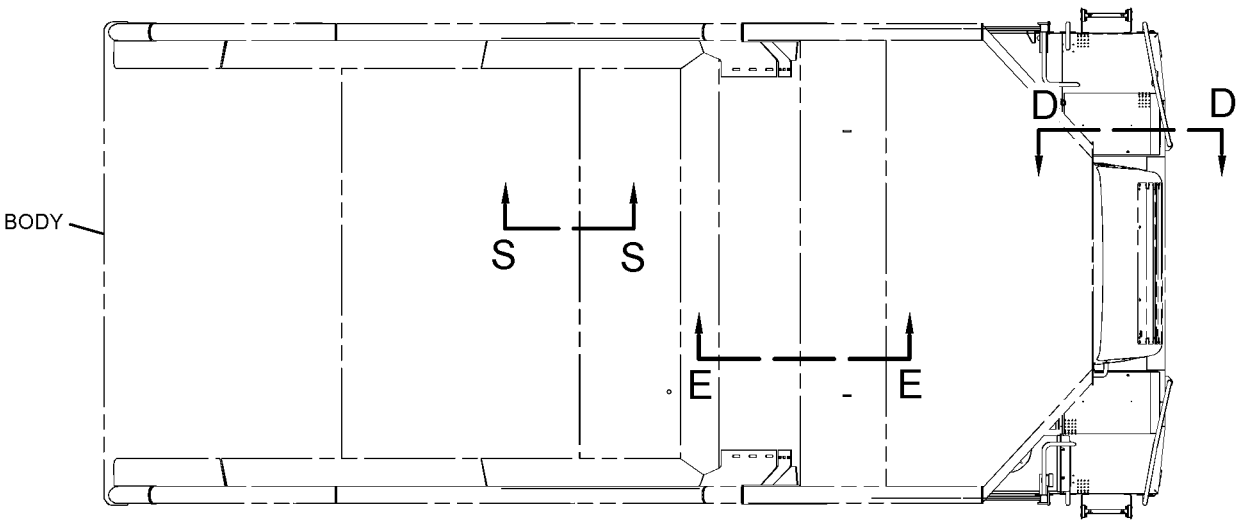


TOP VIEW

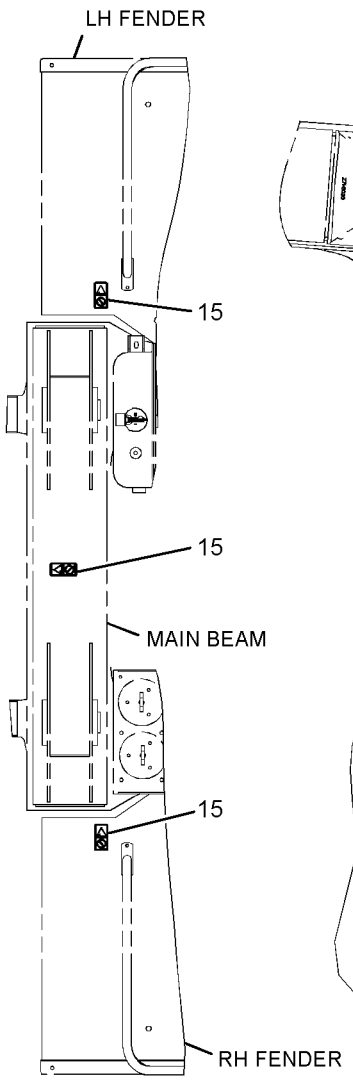


VIEW M-M

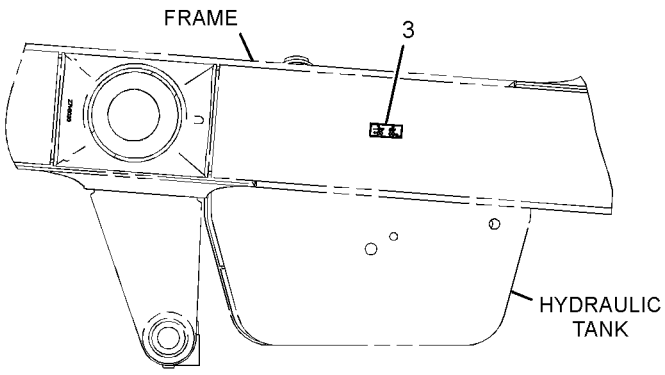


VIEW S-S

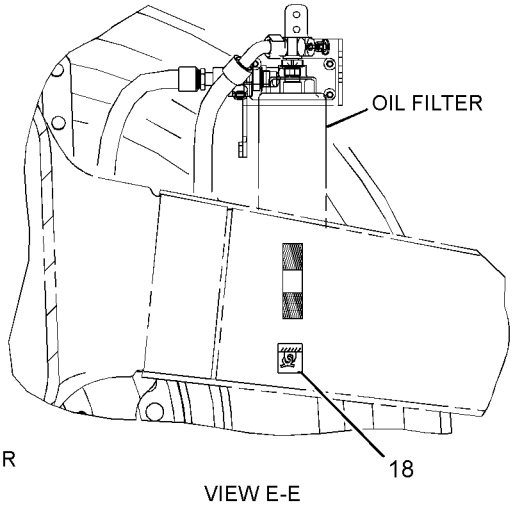


VIEW E-E

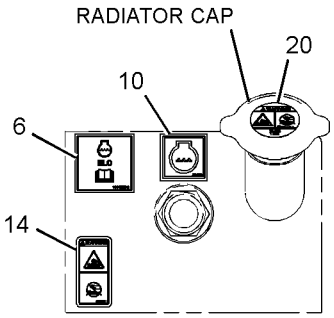


VIEW D-D

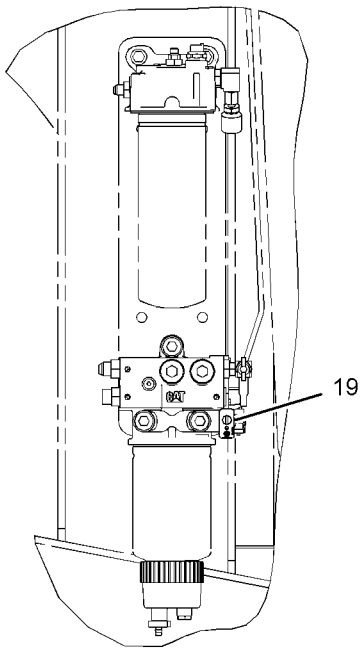


VIEW R-R

GRAPHIC #4

**<END>**

g01347626

# SERVICE EQUIPMENT AND SUPPLIES

## *270-9143* PLATE & FILM GP

**S/N: RLB271-341**
**CANNOT BE USED WITH 270-9144—PAGE 837**
**AN ATTACHMENT**

**SMCS-7405, 7557** **i02807310**

| NOTE | REF NO | GRAPHIC REF | PART NUMBER | QTY | PART NAME 1 2 3 4 5 6 (PRODUCT LEVEL) | SEE PAGE |
|---|---|---|---|---|---|---|
| | 1 | 3 | **5P-1174** | 1 | FILM-IDENTIFICATION (TRANSMISSION OIL FILL CAP) | |
| | 2 | 1 | **5P-1175** | 1 | FILM-IDENTIFICATION (ENGINE OIL FILL) | |
| | 3 | 4 | **5P-2494** | 1 | FILM-INSTRUCTION (TOWING) | |
| | 4 | 3 | **109-0361** | 1 | FILM-INSTRUCTION (ENGINE SHUTDOWN) | |
| | 6 | 4 | **134-7258** | 1 | FILM-INFORMATION (EXTENDED LIFE COOLANT,READ OMM) | |
| | 7 | 1 | **146-6747** | 1 | FILM-INFORMATION (24-VOLT) | |
| | 8 | 1 | **158-7864** | 1 | FILM-IDENTIFICATION (HYDRAULIC OIL) | |
| | 9 | 2 | **176-0245** | 2 | FILM-STRIPE (REFLECTIVE) | |
| | 10 | 4 | **209-5776** | 1 | FILM-INFORMATION (ENGINE COOLANT) | |
| | 11 | 3 | **219-0302** | 1 | FILM-WARNING (NO WELD, NO DRILL, READ OMM) | |
| | 12 | 2 | **221-8045** | 1 | FILM-WARNING (SEAT BELT, INTERNATIONAL) | |
| | 13 | 3 | **225-0312** | 2 | FILM-WARNING (JUMP START, READ OMM, INTL) | |
| | 15 | 4 | **242-5054** | 3 | FILM-WARNING (NO STEP) | |
| | 16 | 2 | **248-5245** | 2 | FILM-INFORMATION (LIFT EYE, TIE-DOWN LOCATION) | |
| | 17 | 2 | **252-2156** | 2 | FILM-INSTRUCTION (LIFT EYE LOCATION) | |
| | 18 | 2,4 | **252-2157** | 3 | FILM-INFORMATION (TIE-DOWN) | |
| | 19 | 4 | **254-6134** | 1 | PLATE-INFORMATION (FUEL PUMP, PRIMER) | |
| | 20 | 4 | **298-5702** | 1 | FILM-WARNING (HOT FLUID UND PRESS, READ OMM) | |
| | 21 | 1 | **270-8642** | 1 | FILM-IDENTIFICATION (LOCKOUT) | |
| | 22 | 3 | **270-8643** | 1 | FILM-SERVICE (LOCKOUT INDICATOR) | |
| | 23 | 3 | **270-8645** | 1 | FILM-IDENTIFICATION (TRANSMISSION, STEERING, HOIST) | |
| | 24 | 1 | **303-3142** | 1 | FILM-WARNING (ROPS, FOPS, READ OMM) | |
| | 25 | 1 | **279-4535** | 1 | FILM-IDENTIFICATION (TRANSMISSION, STEERING, HOIST) | |
| Y | 26 | 2 | *289-2153* | 1 | FILM GP | 817 |
| | 27 | 2 | **224-0554** | 1 | FILM-WARNING (UNIVERSAL, READ OMM, INTL) | |
| Y | 28 | 1 | *212-3432* | 1 | PROTECTION GP-VANDALISM | 862 |
| | 29 | 2 | **239-6986** | 1 | PLATE-IDENTIFICATION (MACHINE) | |
| C | 30 | 1 | **211-0686** | 1 | FILM-INSTRUCTION (BATTERY DISCONNECT) | |

C-CHANGE FROM PREVIOUS TYPE
Y-SEPARATE ILLUSTRATION

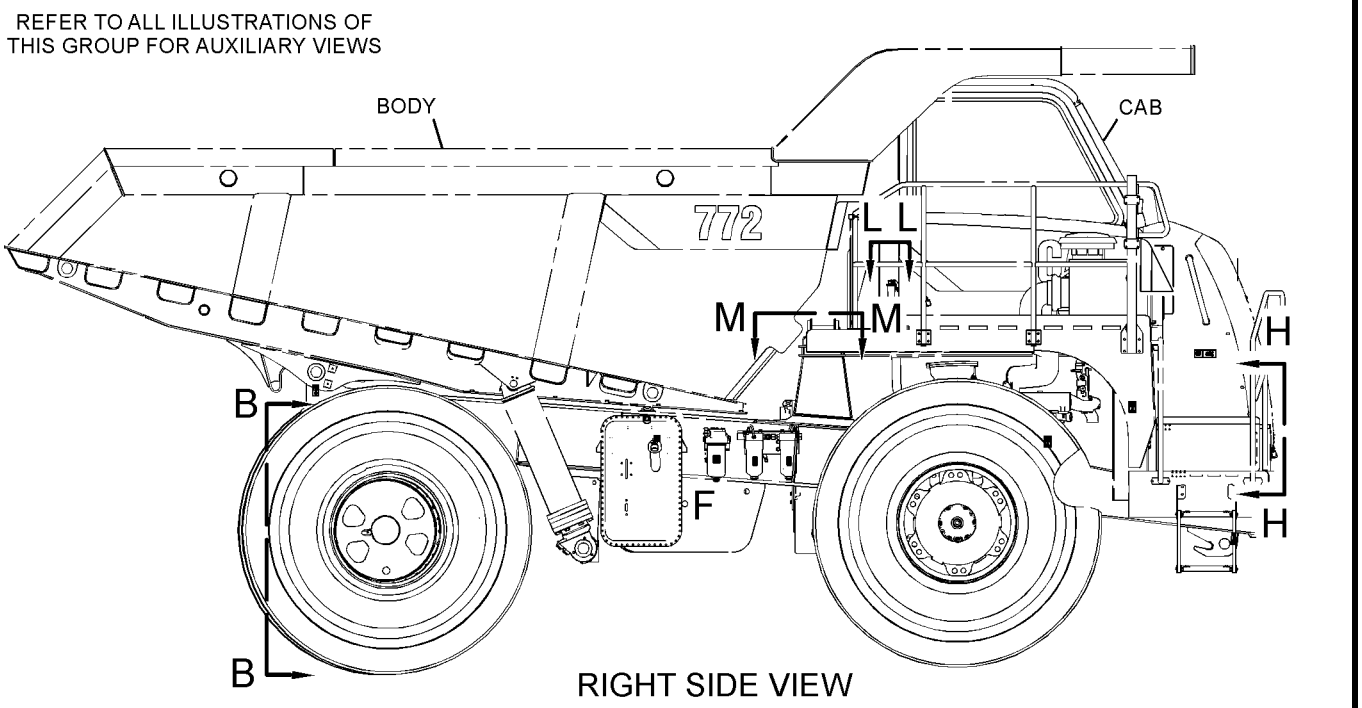


RIGHT SIDE VIEW

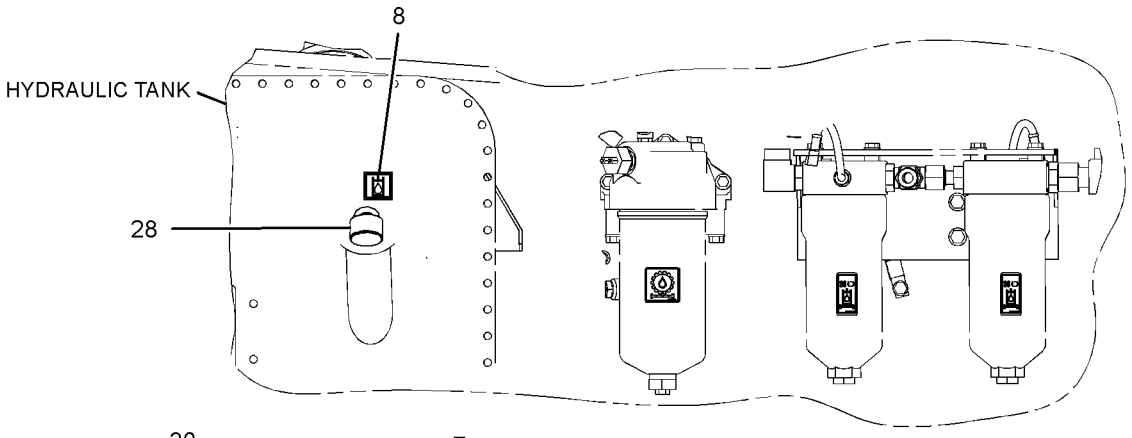


VIEW OF AREA F

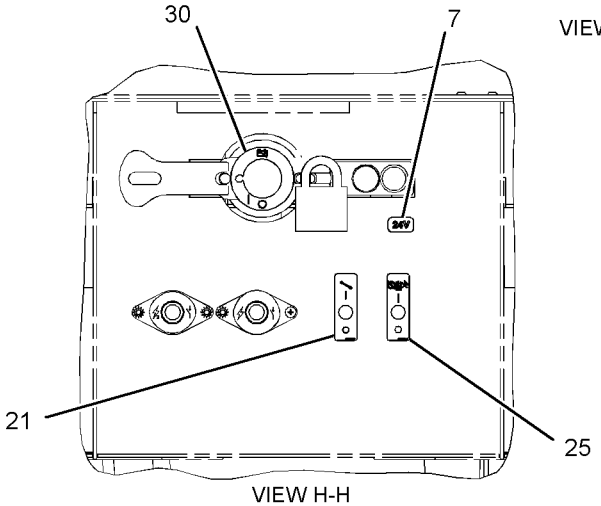


VIEW H-H

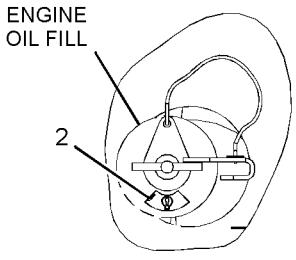


VIEW L-L

GRAPHIC #1

g01402361

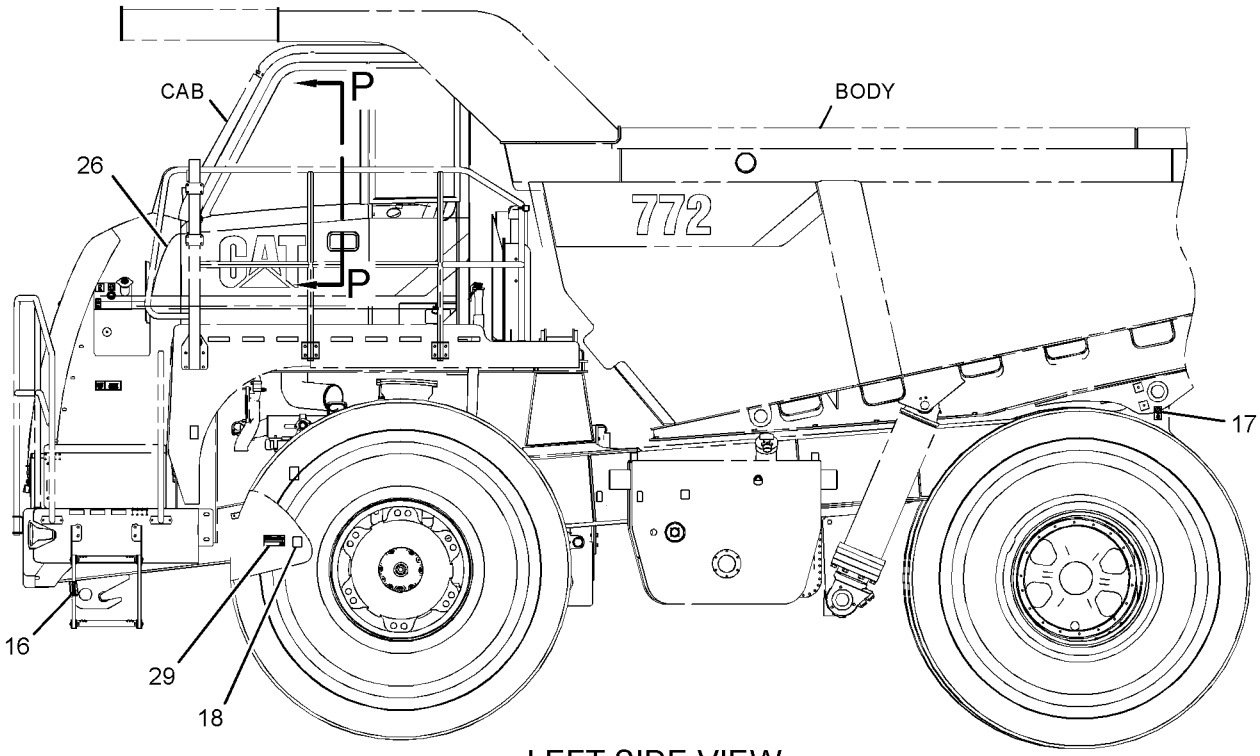


LEFT SIDE VIEW

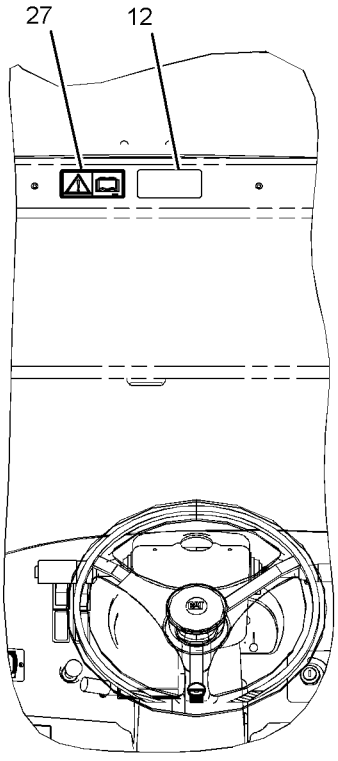


VIEW P-P

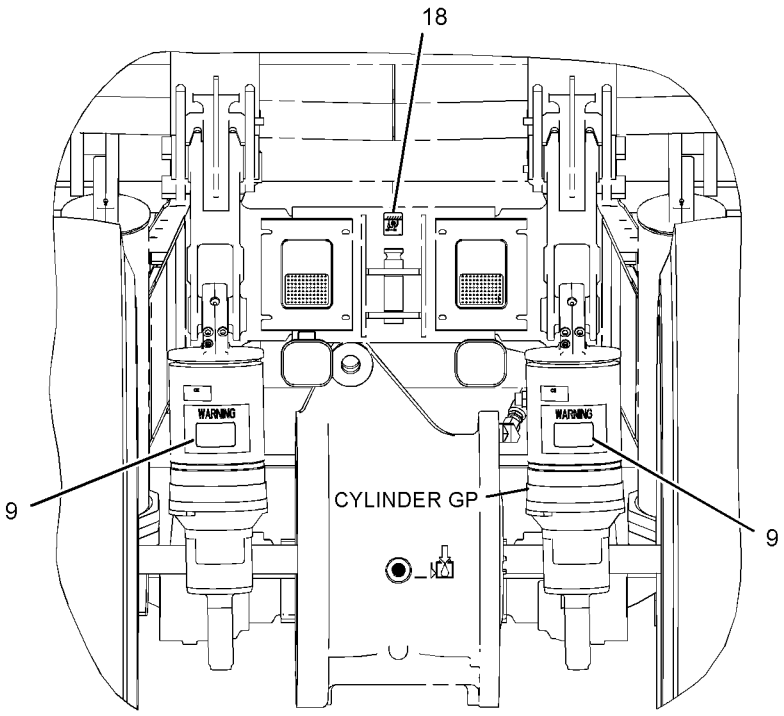


VIEW B-B

GRAPHIC #2

g01402369

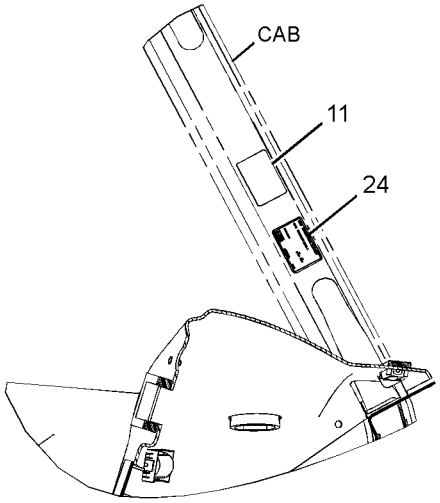


VIEW N-N

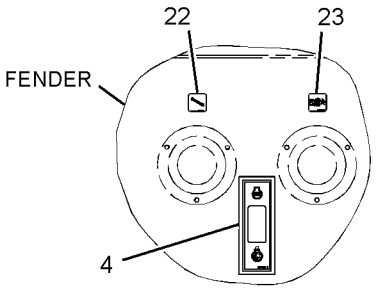


VIEW OF AREA T

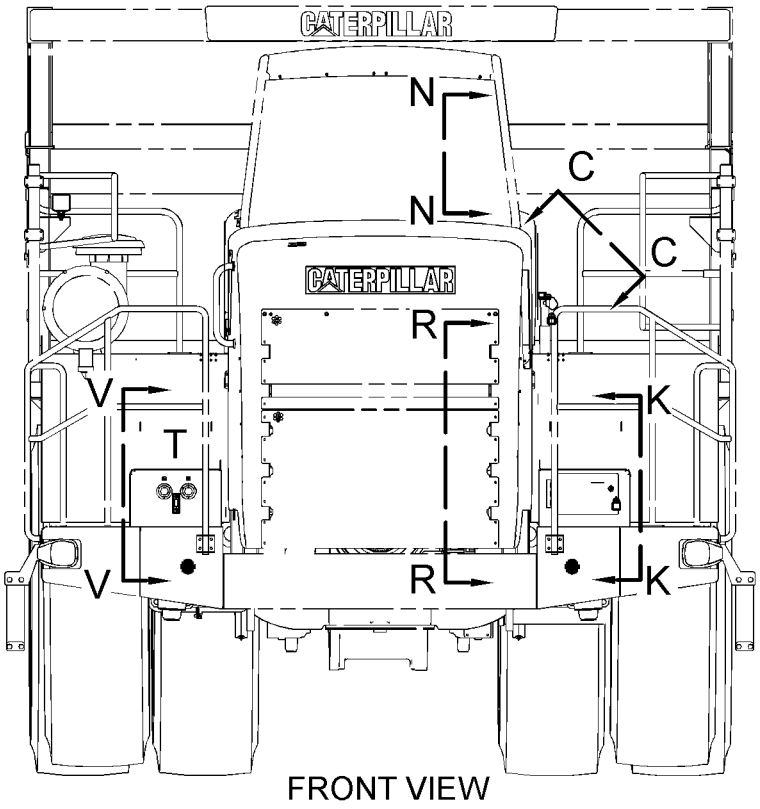


FRONT VIEW

REFER TO ALL ILLUSTRATIONS OF THIS GROUP FOR AUXILIARY VIEWS

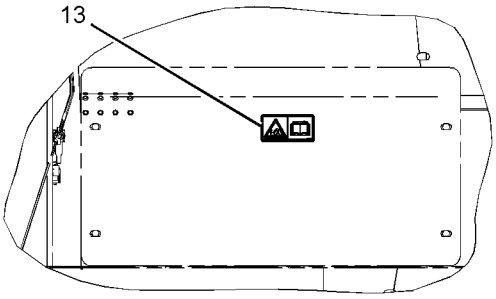


VIEW V-V

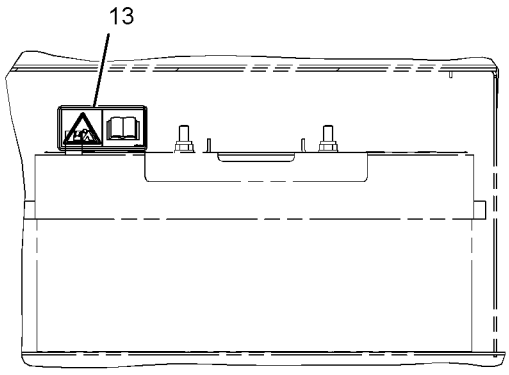


VIEW K-K

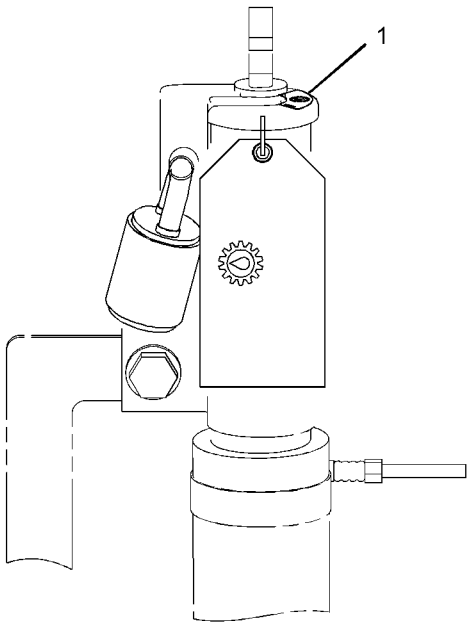


VIEW C-C

GRAPHIC #3

g01402364

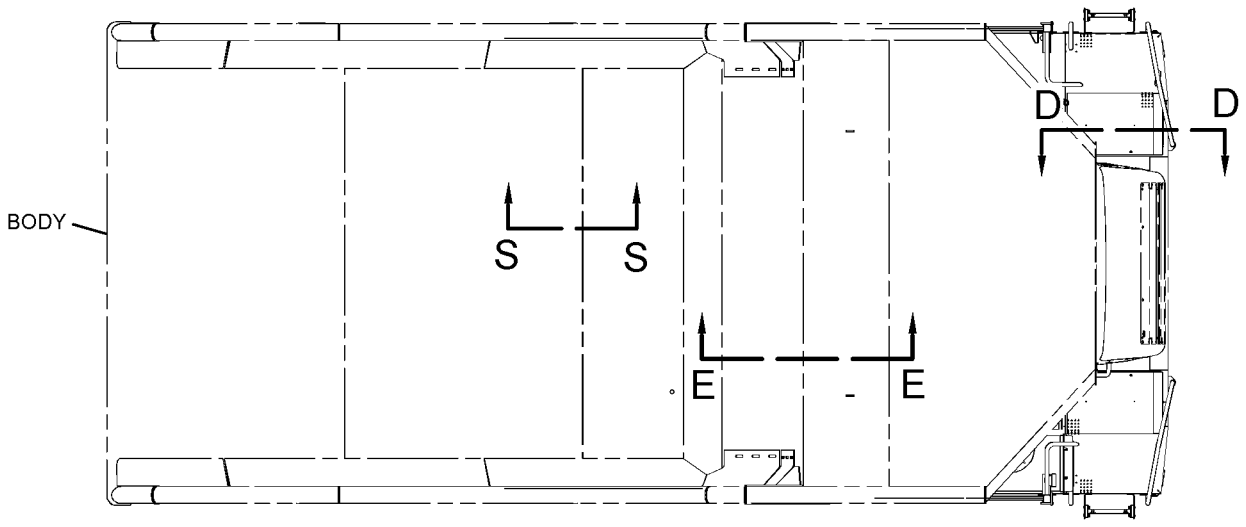


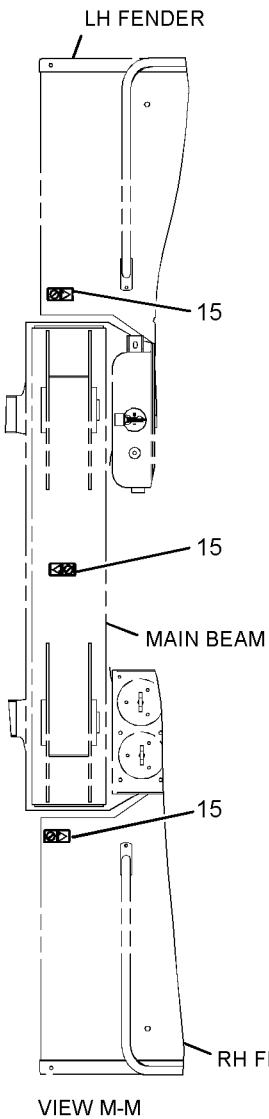


VIEW M-M

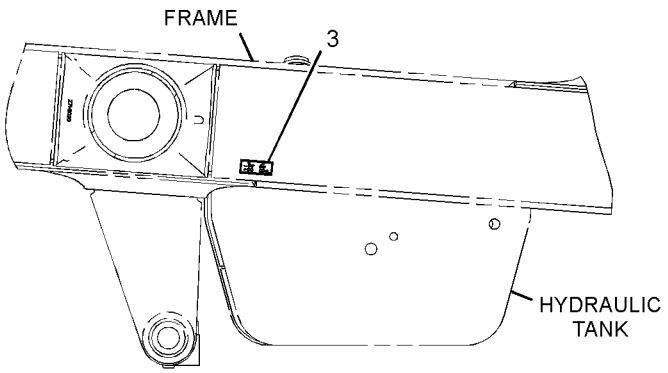


VIEW S-S

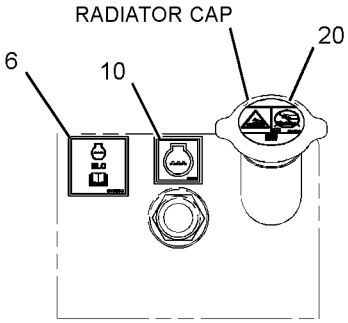


VIEW D-D

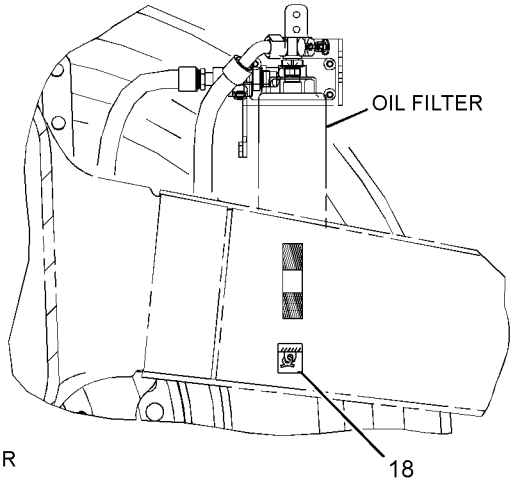


VIEW E-E

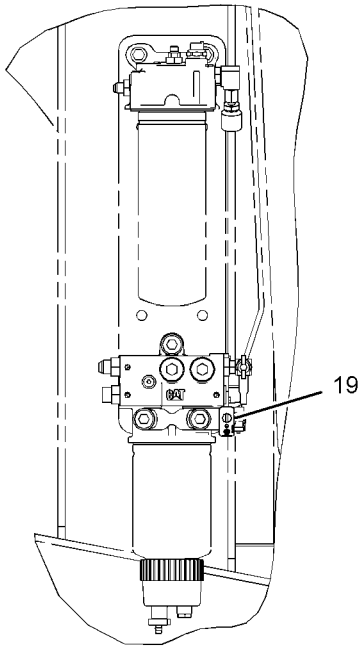


VIEW R-R

GRAPHIC #4 **<END>** g01402366

# SERVICE EQUIPMENT AND SUPPLIES

## *270-9143* PLATE & FILM GP

**S/N: RLB342-UP**
**CANNOT BE USED WITH 270-9144—PAGE 837**
**AN ATTACHMENT**

**SMCS-7405, 7557** **i03131988**

| NOTE | REF NO | GRAPHIC REF | PART NUMBER | QTY | PART NAME 1 2 3 4 5 6 (PRODUCT LEVEL) | SEE PAGE |
|---|---|---|---|---|---|---|
| | 1 | 3 | **5P-1174** | 1 | FILM-IDENTIFICATION (TRANSMISSION OIL FILL CAP) | |
| | 2 | 1 | **5P-1175** | 1 | FILM-IDENTIFICATION (ENGINE OIL FILL) | |
| | 3 | 4 | **5P-2494** | 1 | FILM-INSTRUCTION (TOWING) | |
| | 4 | 3 | **109-0361** | 1 | FILM-INSTRUCTION (ENGINE SHUTDOWN) | |
| | 6 | 4 | **134-7258** | 1 | FILM-INFORMATION (EXTENDED LIFE COOLANT,READ OMM) | |
| | 7 | 1 | **146-6747** | 1 | FILM-INFORMATION (24-VOLT) | |
| | 8 | 1 | **158-7864** | 1 | FILM-IDENTIFICATION (HYDRAULIC OIL) | |
| | 9 | 2 | **176-0245** | 2 | FILM-STRIPE (REFLECTIVE) | |
| | 10 | 4 | **209-5776** | 1 | FILM-INFORMATION (ENGINE COOLANT) | |
| | 11 | 3 | **219-0302** | 1 | FILM-WARNING (NO WELD, NO DRILL, READ OMM) | |
| | 12 | 1 | **221-8045** | 1 | FILM-WARNING (SEAT BELT, INTERNATIONAL) | |
| | 13 | 3 | **225-0312** | 2 | FILM-WARNING (JUMP START, READ OMM) | |
| | 15 | 4 | **242-5054** | 3 | FILM-WARNING (NO STEP) | |
| | 16 | 2 | **248-5245** | 2 | FILM-INFORMATION (LIFT EYE, TIE-DOWN LOCATION) | |
| | 17 | 1,2 | **252-2156** | 2 | FILM-INSTRUCTION (LIFT EYE LOCATION) | |
| | 18 | 2,4 | **252-2157** | 3 | FILM-INFORMATION (TIE-DOWN) | |
| | 19 | 4 | **254-6134** | 1 | PLATE-INFORMATION (FUEL PUMP, PRIMER) | |
| | 20 | 4 | **298-5702** | 1 | FILM-WARNING (HOT FLUID UND PRESS, READ OMM) | |
| | 21 | 1 | **270-8642** | 1 | FILM-IDENTIFICATION (LOCKOUT) | |
| | 22 | 3 | **270-8643** | 1 | FILM-SERVICE (LOCKOUT INDICATOR) | |
| | 23 | 3 | **270-8645** | 1 | FILM-IDENTIFICATION (TRANSMISSION, STEERING, HOIST) | |
| | 24 | 3 | **303-3142** | 1 | FILM-WARNING (ROPS, FOPS, READ OMM) | |
| | 25 | 1 | **279-4535** | 1 | FILM-IDENTIFICATION (TRANSMISSION, STEERING, HOIST) | |
| Y | 26 | 2 | *289-2153* | 1 | FILM GP | 817 |
| | 27 | 1 | **224-0554** | 1 | FILM-WARNING (UNIVERSAL, READ OMM, INTL) | |
| Y | 28 | 1 | *212-3432* | 1 | PROTECTION GP-VANDALISM | 862 |
| | 29 | 2 | **239-6986** | 1 | PLATE-IDENTIFICATION (MACHINE) | |
| | 30 | 1 | **211-0686** | 1 | FILM-INSTRUCTION (BATTERY DISCONNECT) | |
| | 31 | 1 | **230-1341** | 1 | FILM-WARNING (PRODUCT LINK RADIO, INTL) | |
| | 32 | 1 | **307-0047** | 1 | FILM-INFORMATION (PRODUCT LINK, READ OMM) | |
| | | | | | | |
| AF | | | **3N-3790** | 1 | PLATE-SERIAL NUMBER (ENGINE) (ON RH SIDE OF BLOCK) | |

A-NOT PART OF THIS GROUP
F-NOT SHOWN
Y-SEPARATE ILLUSTRATION

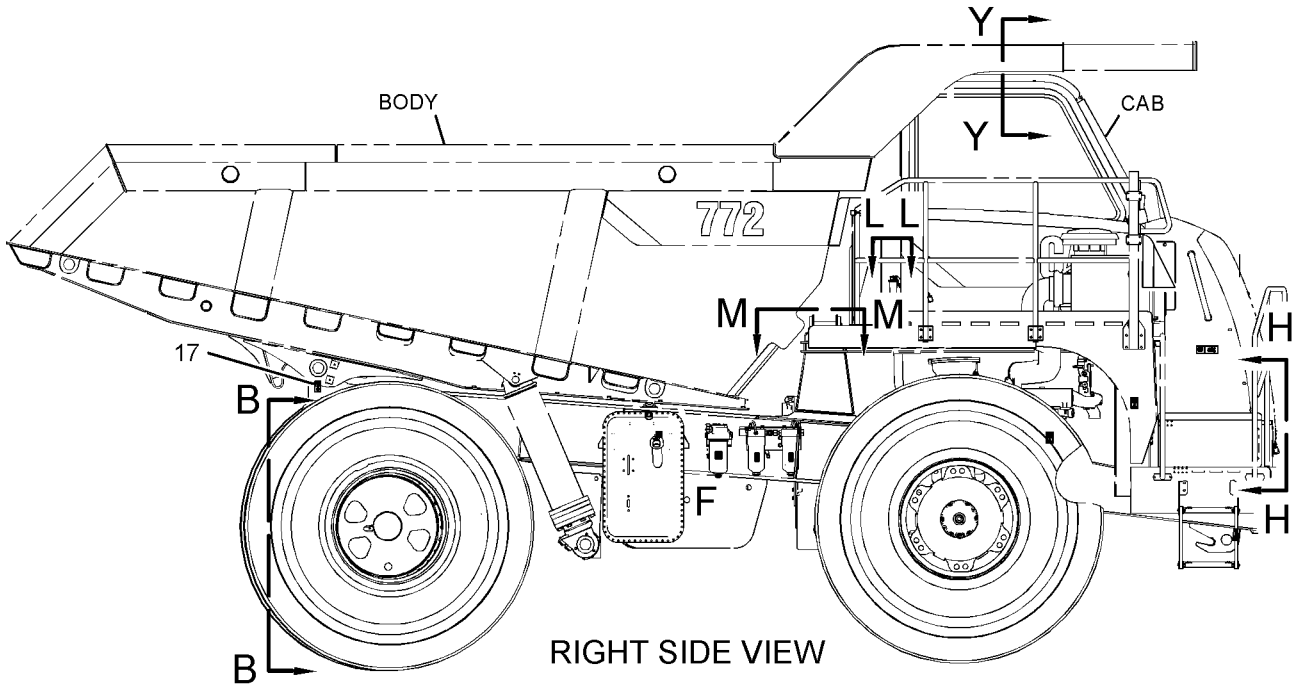


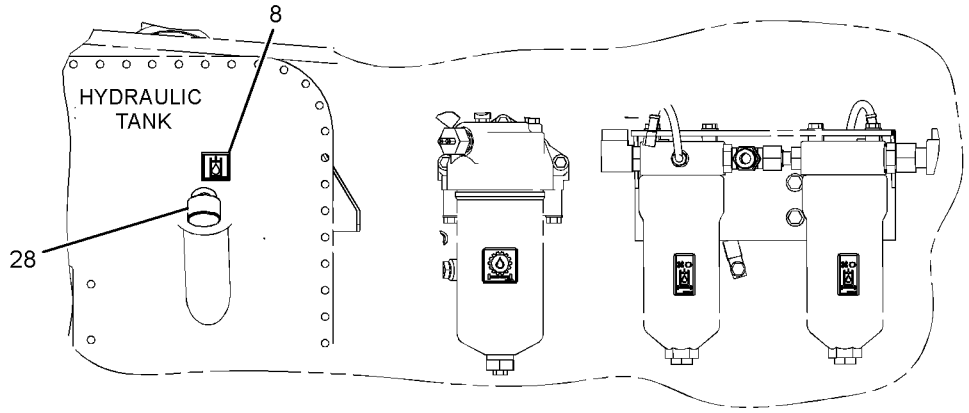


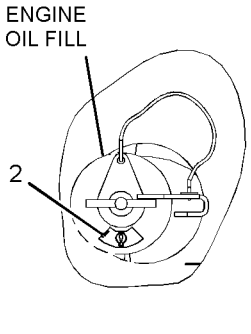


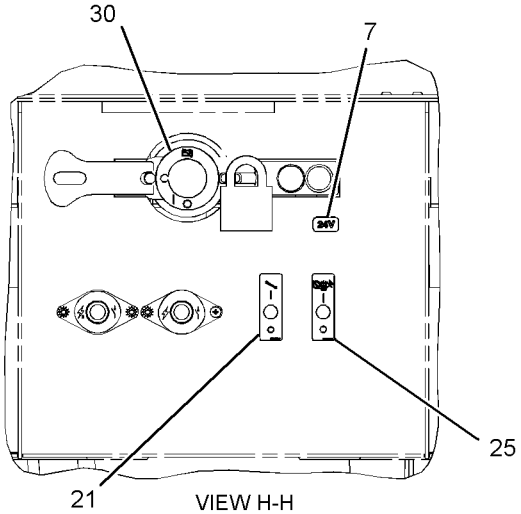


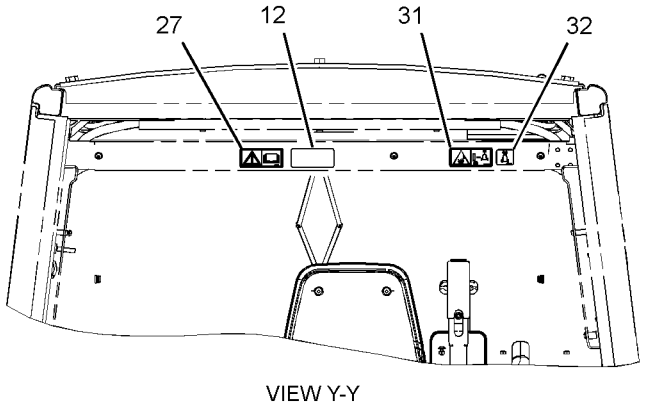


REFER TO ALL ILLUSTRATIONS OF THIS GROUP FOR AUXILIARY VIEWS

GRAPHIC #1

g01637224

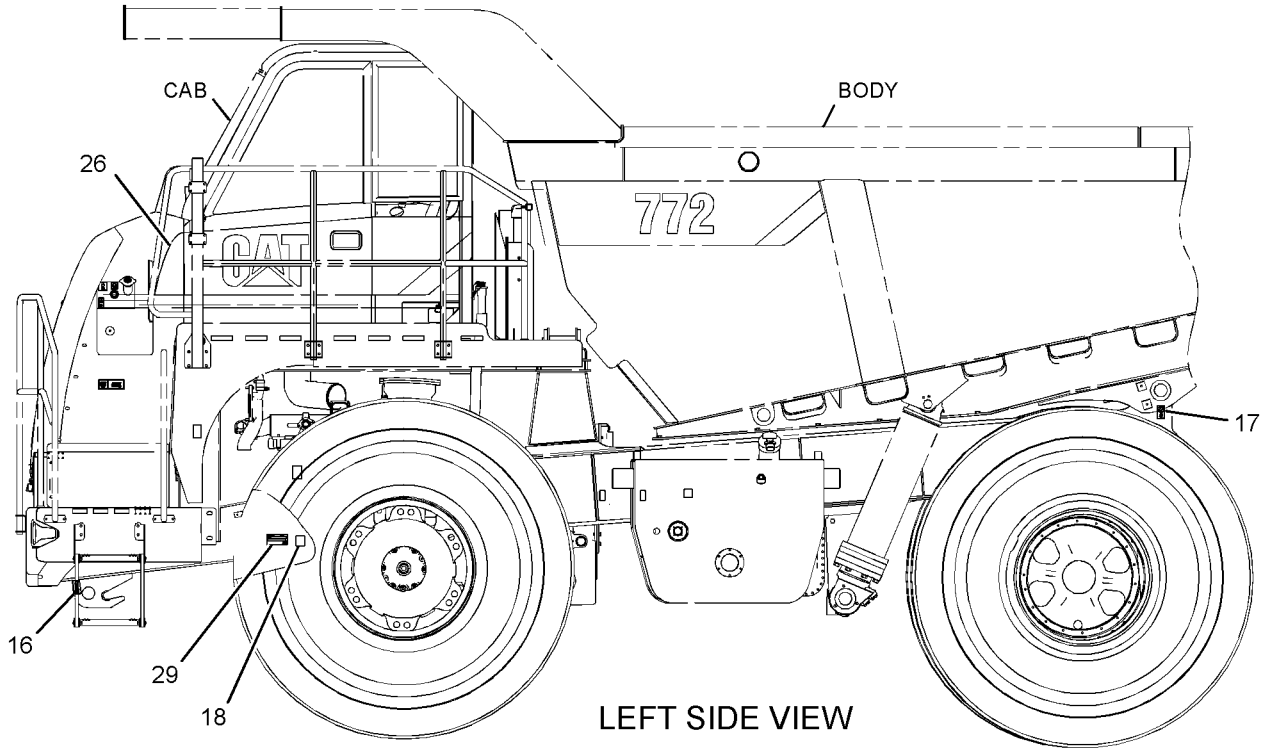


LEFT SIDE VIEW

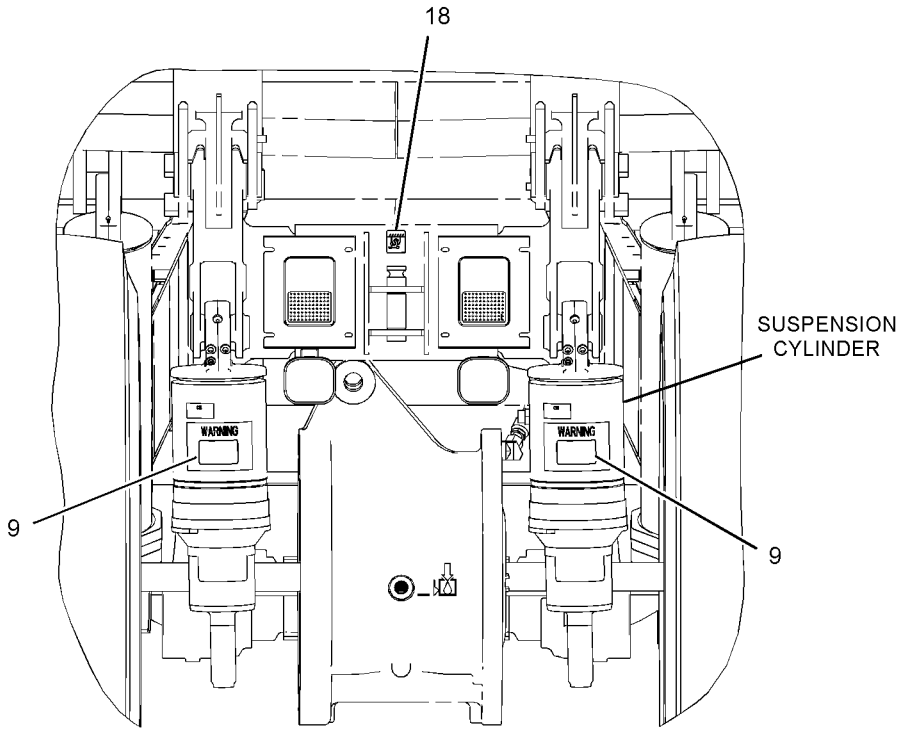


VIEW B-B

REFER TO ALL ILLUSTRATIONS OF
THIS GROUP FOR AUXILIARY VIEWS

GRAPHIC #2

g01644097

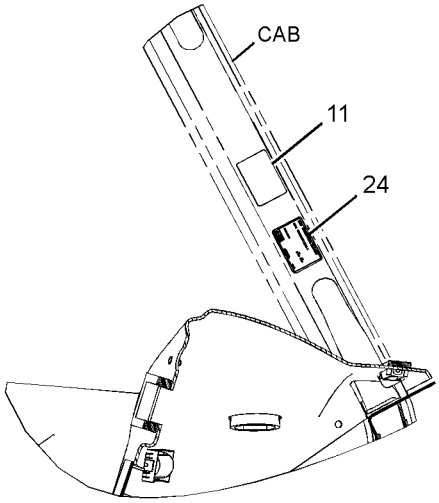


VIEW N-N

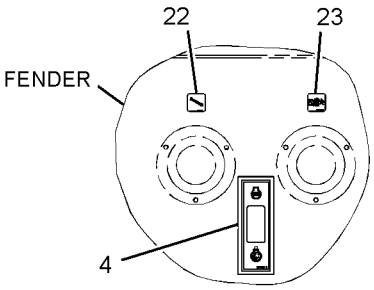


VIEW OF AREA T

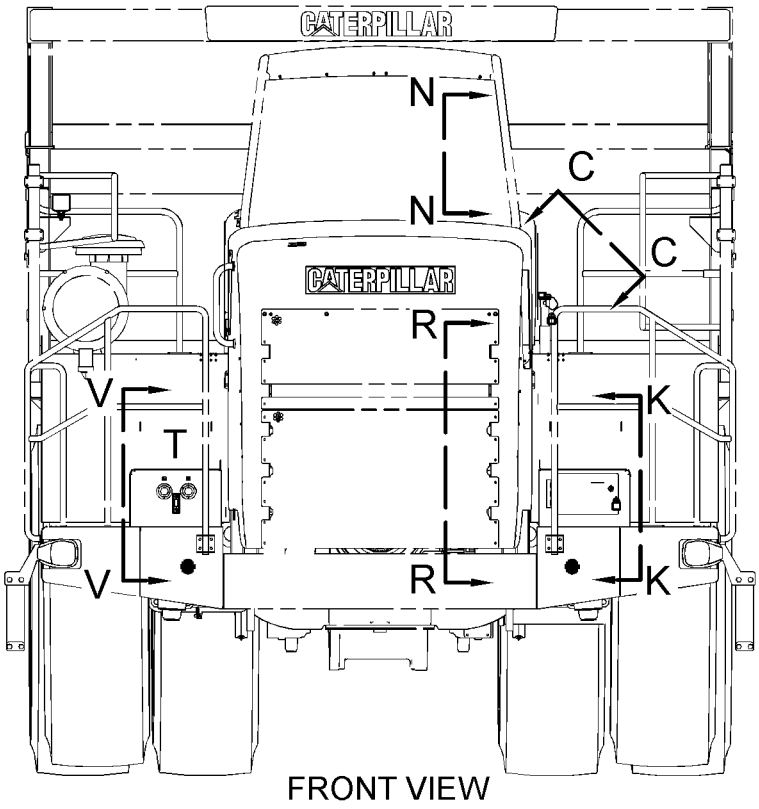


FRONT VIEW

REFER TO ALL ILLUSTRATIONS OF THIS GROUP FOR AUXILIARY VIEWS

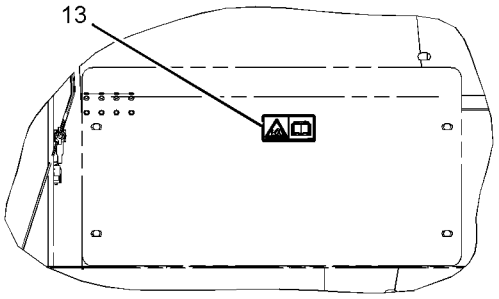


VIEW V-V

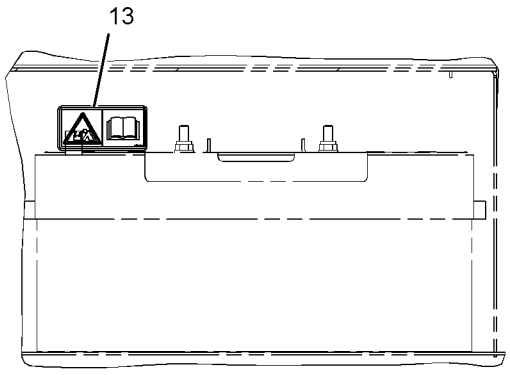


VIEW K-K

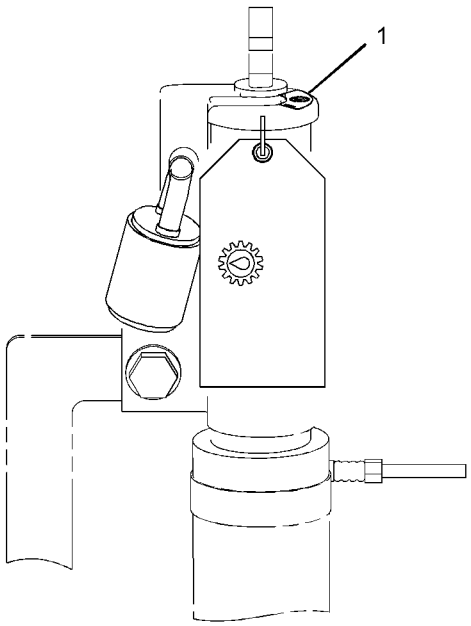


VIEW C-C

GRAPHIC #3

g01402364

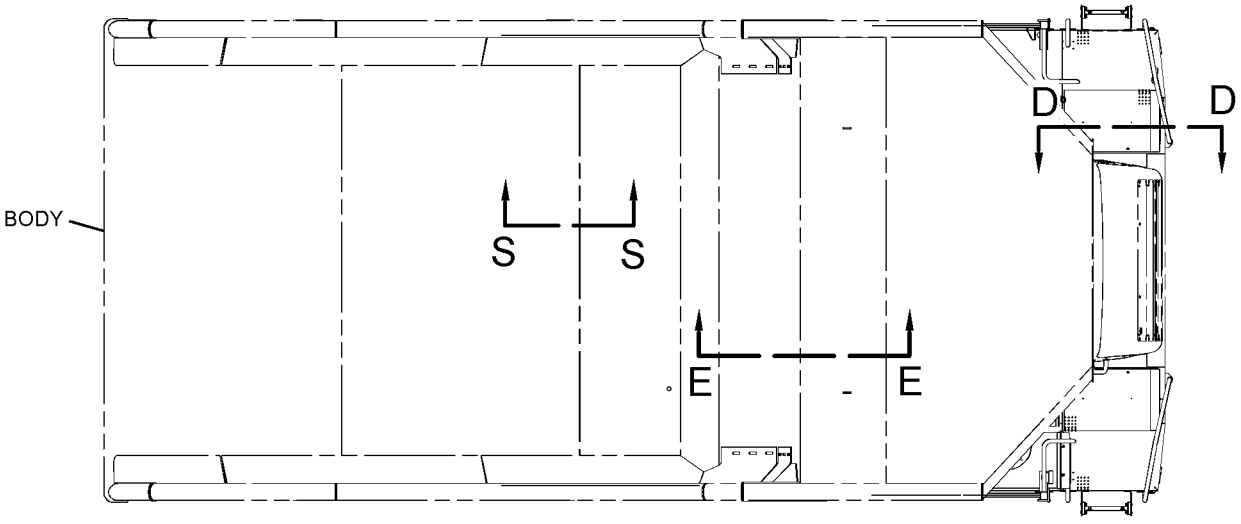


FWD

TOP VIEW

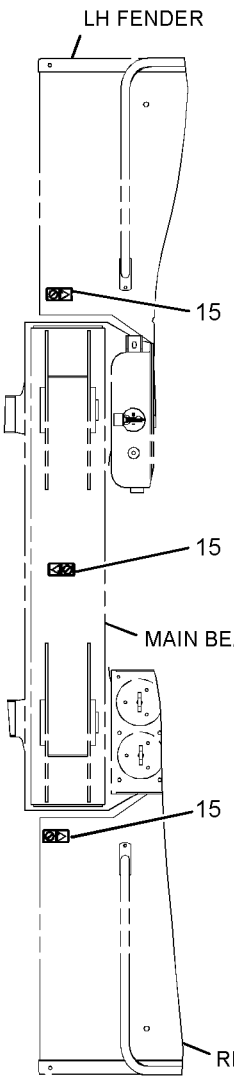


VIEW M-M

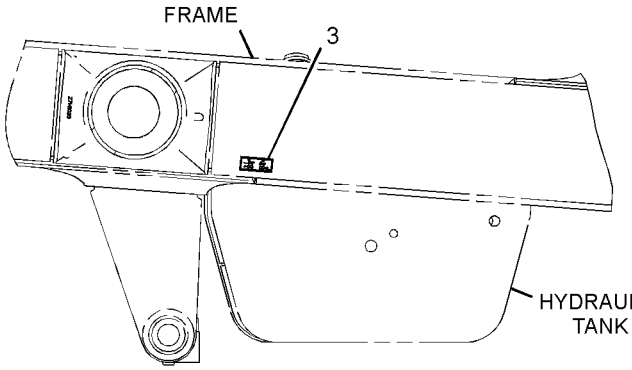


VIEW S-S

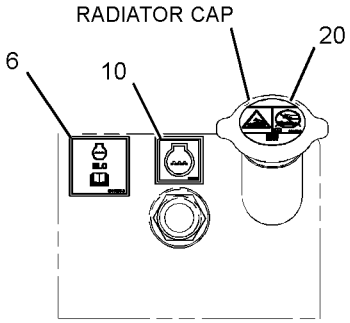


VIEW D-D

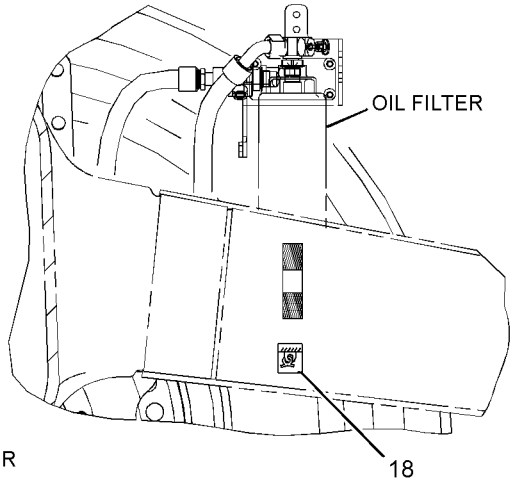


VIEW E-E

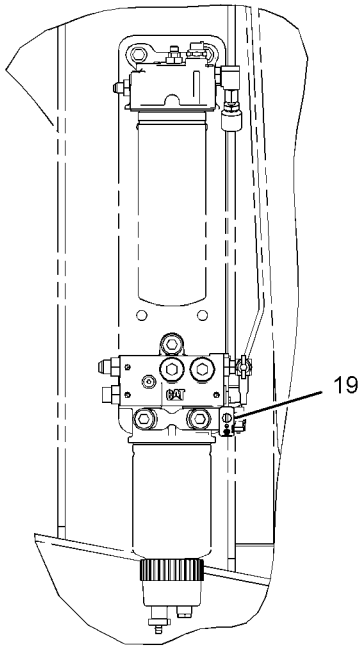


VIEW R-R

GRAPHIC #4

**<END>**

g01402366

# SERVICE EQUIPMENT AND SUPPLIES

## *270-9144* PLATE & FILM GP

**S/N: RLB1-318**

**CANNOT BE USED WITH 270-9143—PAGE 822**

**AN ATTACHMENT**

**SMCS-7405, 7557** **i03298058**

| NOTE | REF NO | GRAPHIC REF | PART NUMBER | QTY | PART NAME 1 2 3 4 5 6 (PRODUCT LEVEL) | SEE PAGE |
|---|---|---|---|---|---|---|
| | 2 | 1 | **3E-1552** | 1 | FILM-INSTRUCTION (TRANSMISSION FILTER) | |
| | 3 | 3 | **5P-1174** | 1 | FILM-IDENTIFICATION (TRANSMISSION OIL FILL CAP) | |
| | 4 | 1 | **5P-1175** | 1 | FILM-IDENTIFICATION (ENGINE OIL FILL) | |
| | 5 | 4 | **5P-2494** | 1 | FILM-INSTRUCTION (TOWING) | |
| | 7 | 3 | **109-0361** | 1 | FILM-INSTRUCTION (ENGINE SHUTDOWN) | |
| | 8 | 1 | **126-3106** | 1 | FILM-IDENTIFICATION (ELECTRICAL OUTLET) | |
| | 11 | 4 | **134-7258** | 1 | FILM-INFORMATION (EXTENDED LIFE COOLANT,READ OMM) | |
| | 13 | 1 | **146-6747** | 1 | FILM-INFORMATION (24-VOLT) | |
| | 14 | 1 | **158-7864** | 1 | FILM-IDENTIFICATION (HYDRAULIC OIL) | |
| | 15 | 2 | **176-0245** | 2 | FILM-STRIPE (REFLECTIVE) | |
| | 17 | 4 | **209-5776** | 1 | FILM-INFORMATION (ENGINE COOLANT) | |
| | 18 | 3 | **219-0302** | 1 | FILM-WARNING (NO WELD, NO DRILL, READ OMM) | |
| | 19 | 2 | **224-7717** | 1 | FILM-WARNING (SEAT BELT, U.S.) | |
| | 20 | 3 | **225-0313** | 2 | FILM-WARNING (JUMP START, READ OMM) | |
| | 21 | 4 | **235-1365** | 1 | FILM-WARNING (HOT FLUID UNDER PRESSURE) | |
| | 24 | 4 | **242-5055** | 3 | FILM-WARNING (NO STEP) | |
| | 26 | 2 | **248-5245** | 2 | FILM-INFORMATION (LIFT EYE, TIE-DOWN LOCATION) | |
| | 27 | 2 | **252-2156** | 2 | FILM-INSTRUCTION (LIFT EYE LOCATION) | |
| | 28 | 2,4 | **252-2157** | 3 | FILM-INFORMATION (TIE-DOWN) | |
| | 29 | 4 | **254-6134** | 1 | PLATE-INFORMATION (FUEL PUMP, PRIMER) | |
| | 30 | 4 | **259-4401** | 1 | FILM-WARNING (HOT FLUID UND PRESS, READ OMM) | |
| | 32 | 1 | **270-8642** | 1 | FILM-IDENTIFICATION (LOCKOUT) | |
| | 33 | 3 | **270-8643** | 1 | FILM-SERVICE (LOCKOUT INDICATOR) | |
| | 34 | 3 | **270-8645** | 1 | FILM-IDENTIFICATION (TRANSMISSION, STEERING, HOIST) | |
| | 35 | 3 | **303-3142** | 1 | FILM-WARNING (ROPS, FOPS, READ OMM) | |
| | 36 | 1 | **279-4535** | 1 | FILM-IDENTIFICATION (TRANSMISSION, STEERING, HOIST) | |
| Y | 37 | 2 | *289-2153* | 1 | FILM GP | 817 |
| | 38 | 1 | **292-5050** | 2 | FILM-IDENTIFICATION (BRAKE FILTER) | |
| | 39 | 2 | **225-3305** | 1 | FILM-WARNING (UNIVERSAL, READ OMM, U.S.) | |
| Y | 40 | 1 | *212-3432* | 1 | PROTECTION GP-VANDALISM | 862 |
| | 41 | 2 | **239-6986** | 1 | PLATE-IDENTIFICATION (MACHINE) | |

Y-SEPARATE ILLUSTRATION

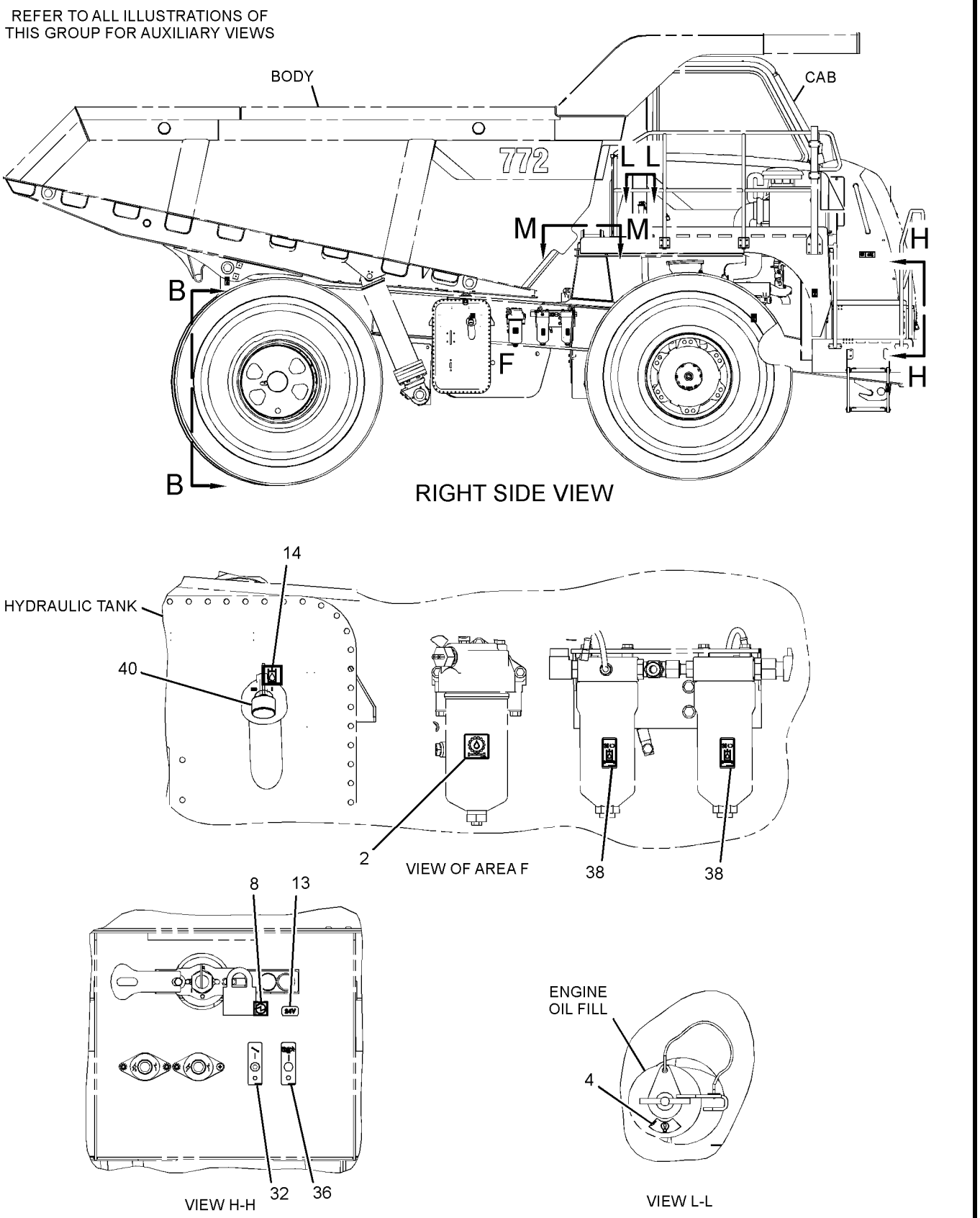


GRAPHIC #1

g01322312

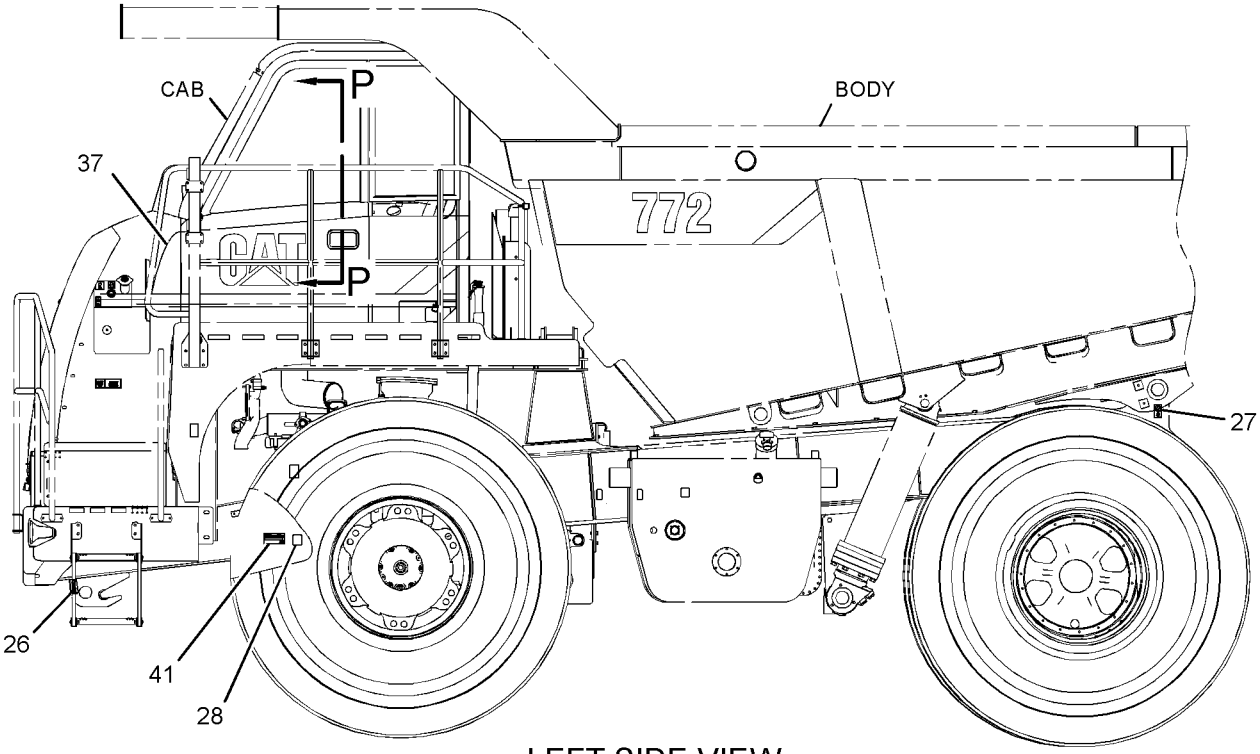


LEFT SIDE VIEW

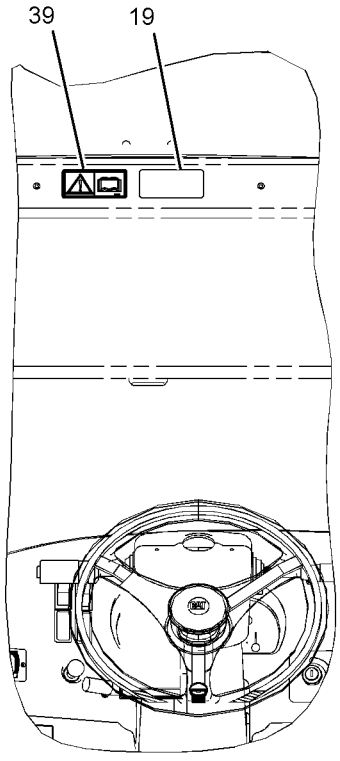


VIEW P-P

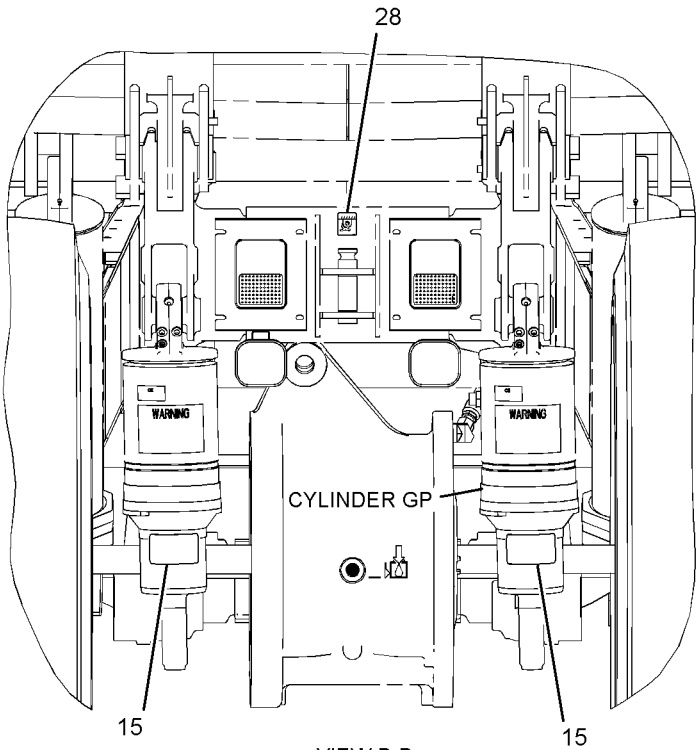


VIEW B-B

GRAPHIC #2

g01316820

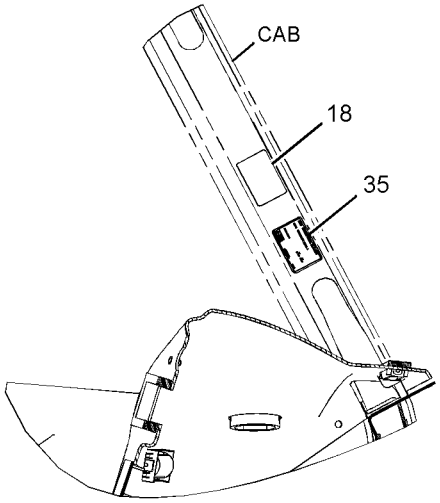


VIEW N-N

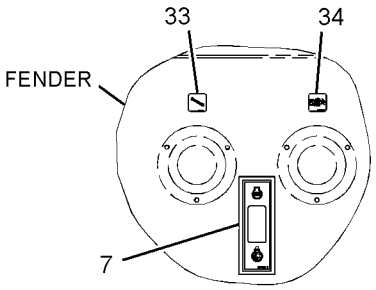


VIEW OF AREA T

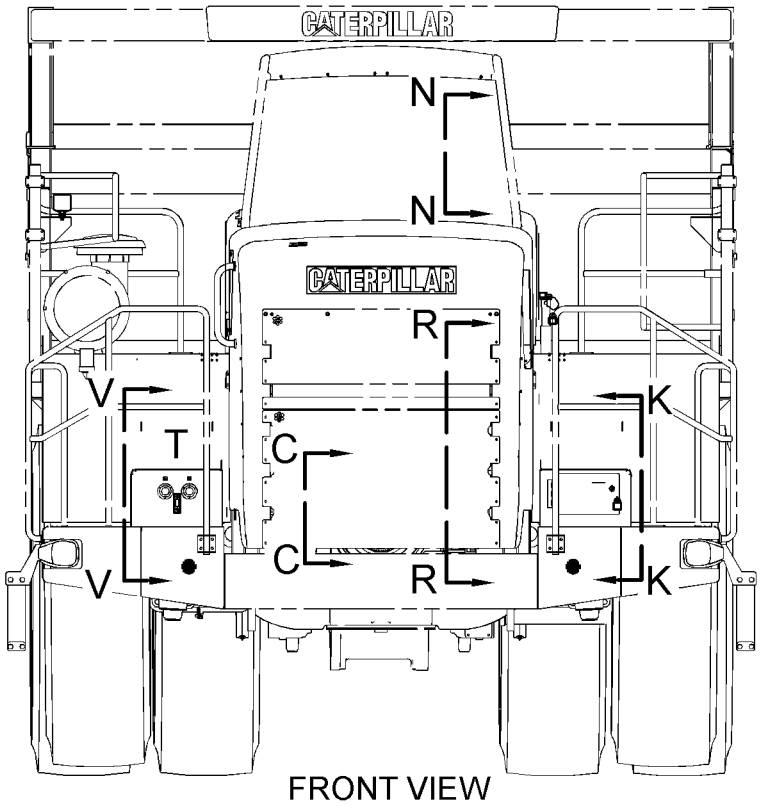


FRONT VIEW

REFER TO ALL ILLUSTRATIONS OF THIS GROUP FOR AUXILIARY VIEWS

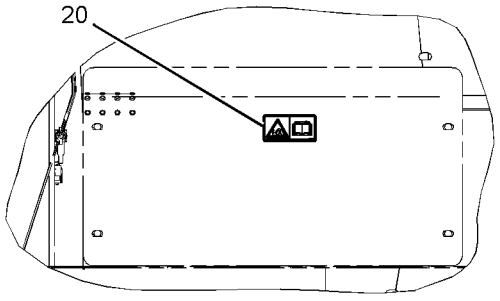


VIEW V-V

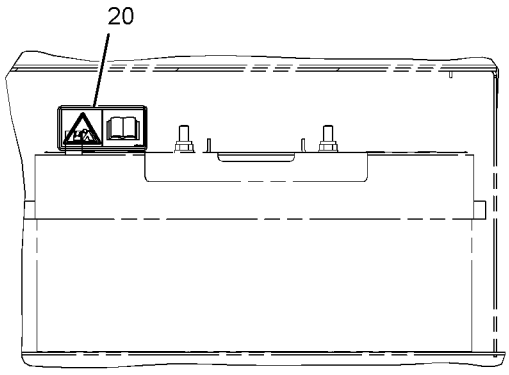


VIEW K-K

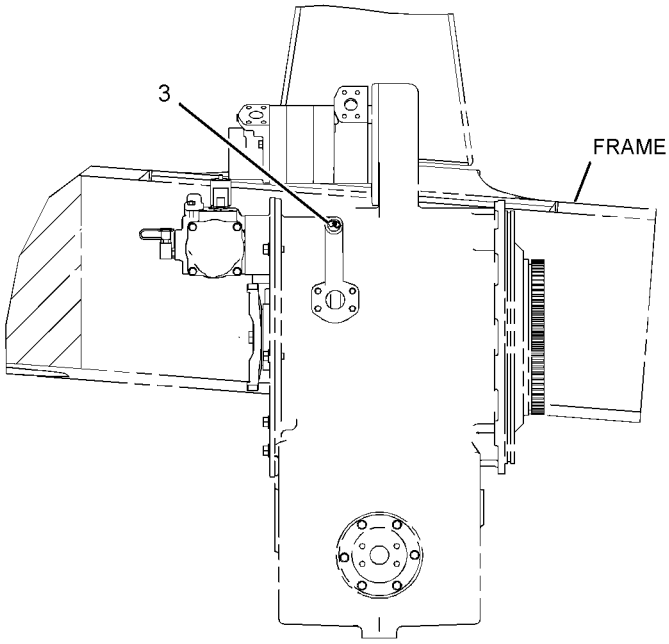


VIEW C-C

GRAPHIC #3

g01316821

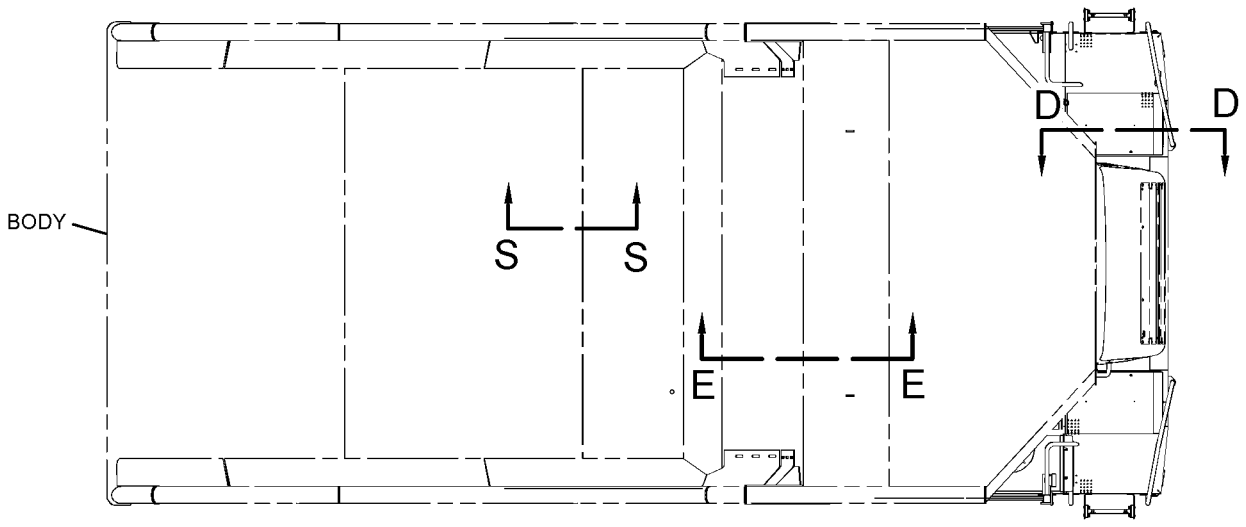


TOP VIEW

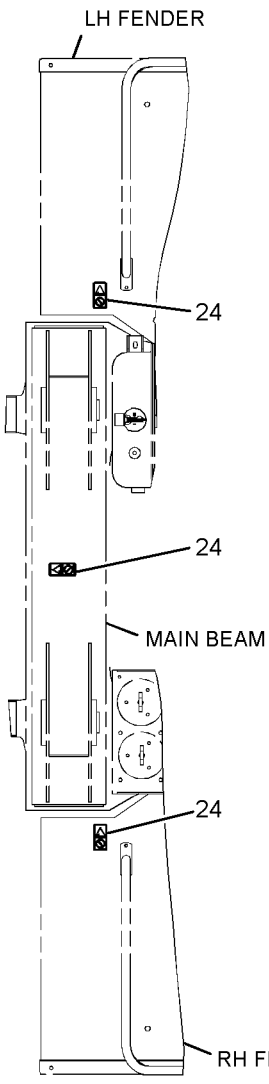


VIEW M-M

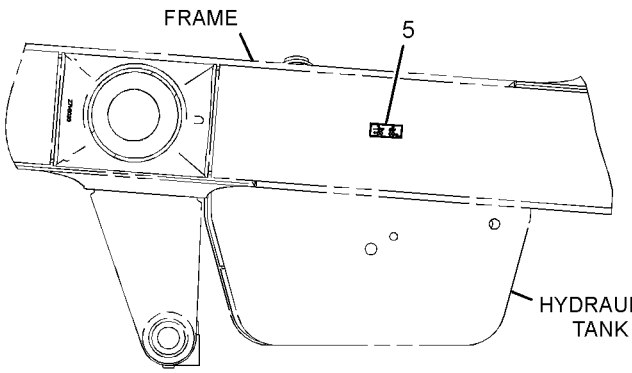


VIEW S-S

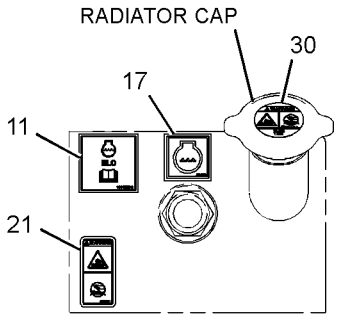


VIEW D-D

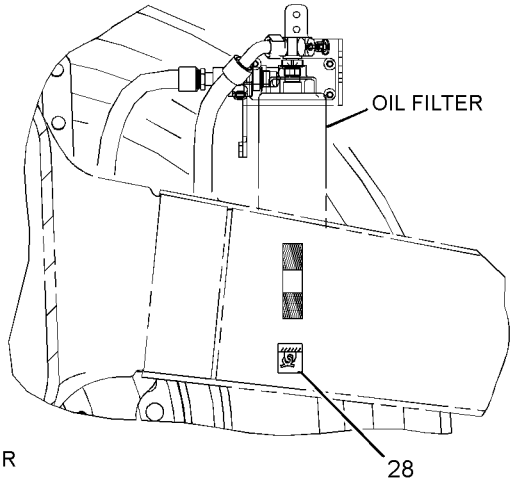


VIEW E-E

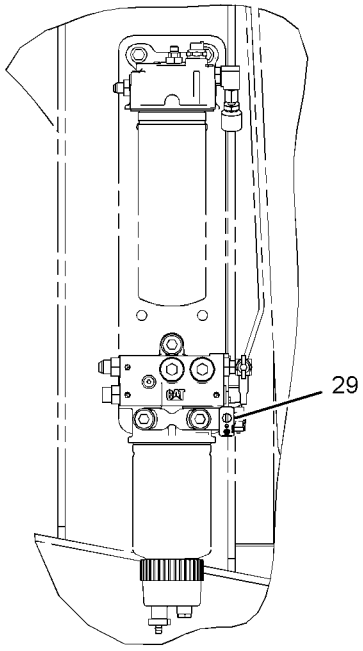


VIEW R-R

GRAPHIC #4 **<END>** g01316822

# SERVICE EQUIPMENT AND SUPPLIES

## *270-9144* PLATE & FILM GP

**S/N: RLB319-341**
**CANNOT BE USED WITH 270-9143—PAGE 822**
**AN ATTACHMENT**

**SMCS-7405, 7557** **i03298084**

| NOTE | REF NO | GRAPHIC REF | PART NUMBER | QTY | PART NAME 1 2 3 4 5 6 (PRODUCT LEVEL) | SEE PAGE |
|---|---|---|---|---|---|---|
| C | 1 | 1 | **211-0686** | 1 | FILM-INSTRUCTION (BATTERY DISCONNECT) | |
| | 2 | 1 | **3E-1552** | 1 | FILM-INSTRUCTION (TRANSMISSION FILTER) | |
| | 3 | 3 | **5P-1174** | 1 | FILM-IDENTIFICATION (TRANSMISSION OIL FILL CAP) | |
| | 4 | 1 | **5P-1175** | 1 | FILM-IDENTIFICATION (ENGINE OIL FILL) | |
| | 5 | 4 | **5P-2494** | 1 | FILM-INSTRUCTION (TOWING) | |
| | 7 | 3 | **109-0361** | 1 | FILM-INSTRUCTION (ENGINE SHUTDOWN) | |
| | 11 | 4 | **134-7258** | 1 | FILM-INFORMATION (EXTENDED LIFE COOLANT,READ OMM) | |
| | 13 | 1 | **146-6747** | 1 | FILM-INFORMATION (24-VOLT) | |
| | 14 | 1 | **158-7864** | 1 | FILM-IDENTIFICATION (HYDRAULIC OIL) | |
| | 15 | 2 | **176-0245** | 2 | FILM-STRIPE (REFLECTIVE) | |
| | 17 | 4 | **209-5776** | 1 | FILM-INFORMATION (ENGINE COOLANT) | |
| | 18 | 3 | **219-0302** | 1 | FILM-WARNING (NO WELD, NO DRILL, READ OMM) | |
| | 19 | 2 | **224-7717** | 1 | FILM-WARNING (SEAT BELT, U.S.) | |
| | 20 | 3 | **225-0313** | 2 | FILM-WARNING (JUMP START, READ OMM) | |
| | 24 | 4 | **242-5055** | 3 | FILM-WARNING (NO STEP) | |
| | 26 | 2 | **248-5245** | 2 | FILM-INFORMATION (LIFT EYE, TIE-DOWN LOCATION) | |
| | 27 | 2 | **252-2156** | 2 | FILM-INSTRUCTION (LIFT EYE LOCATION) | |
| | 28 | 2,4 | **252-2157** | 3 | FILM-INFORMATION (TIE-DOWN) | |
| | 29 | 4 | **254-6134** | 1 | PLATE-INFORMATION (FUEL PUMP, PRIMER) | |
| | 32 | 1 | **270-8642** | 1 | FILM-IDENTIFICATION (LOCKOUT) | |
| | 33 | 3 | **270-8643** | 1 | FILM-SERVICE (LOCKOUT INDICATOR) | |
| | 34 | 3 | **270-8645** | 1 | FILM-IDENTIFICATION (TRANSMISSION, STEERING, HOIST) | |
| | 35 | 3 | **303-3142** | 1 | FILM-WARNING (ROPS, FOPS, READ OMM) | |
| | 36 | 1 | **279-4535** | 1 | FILM-IDENTIFICATION (TRANSMISSION, STEERING, HOIST) | |
| Y | 37 | 2 | *289-2153* | 1 | FILM GP | 817 |
| | 38 | 1 | **292-5050** | 2 | FILM-IDENTIFICATION (BRAKE FILTER) | |
| | 39 | 2 | **225-3305** | 1 | FILM-WARNING (UNIVERSAL, READ OMM, U.S.) | |
| Y | 40 | 1 | *212-3432* | 1 | PROTECTION GP-VANDALISM | 862 |
| | 41 | 2 | **239-6986** | 1 | PLATE-IDENTIFICATION (MACHINE) | |
| | 43 | 4 | **298-5701** | 1 | FILM-WARNING (HOT FLUID UND PRESS, READ OMM) | |

C-CHANGE FROM PREVIOUS TYPE
Y-SEPARATE ILLUSTRATION

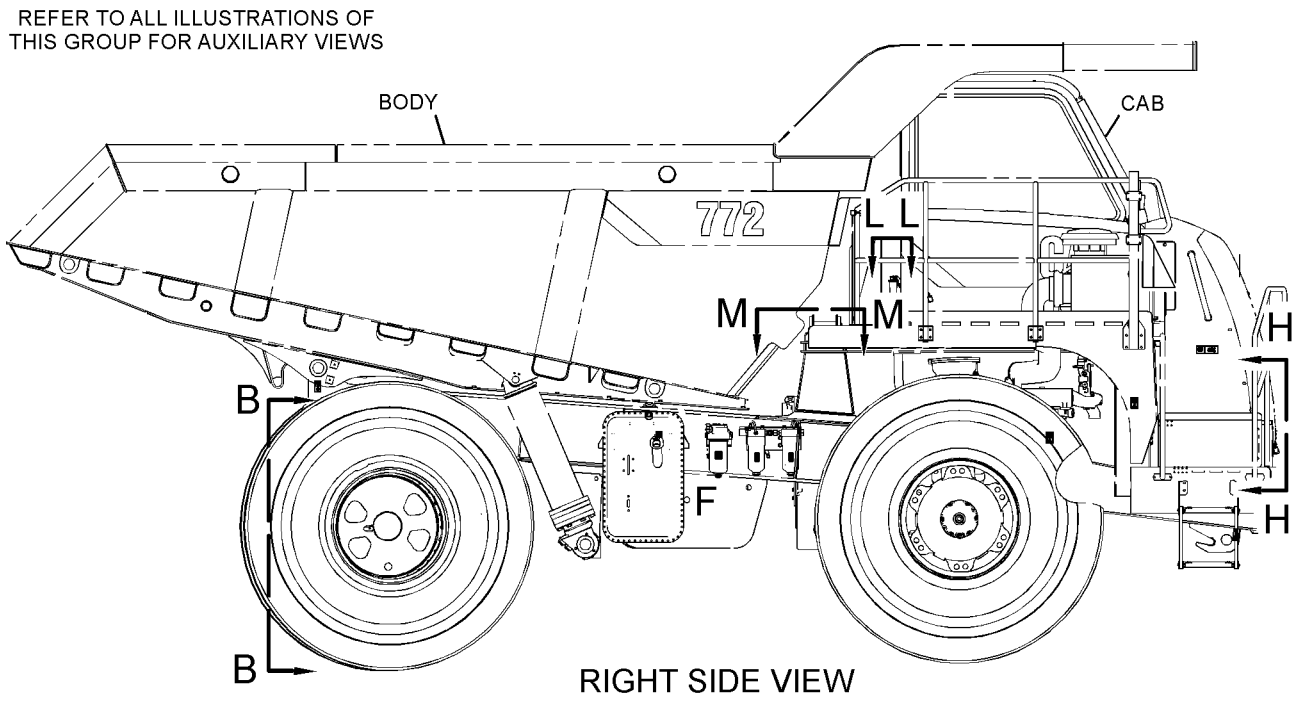


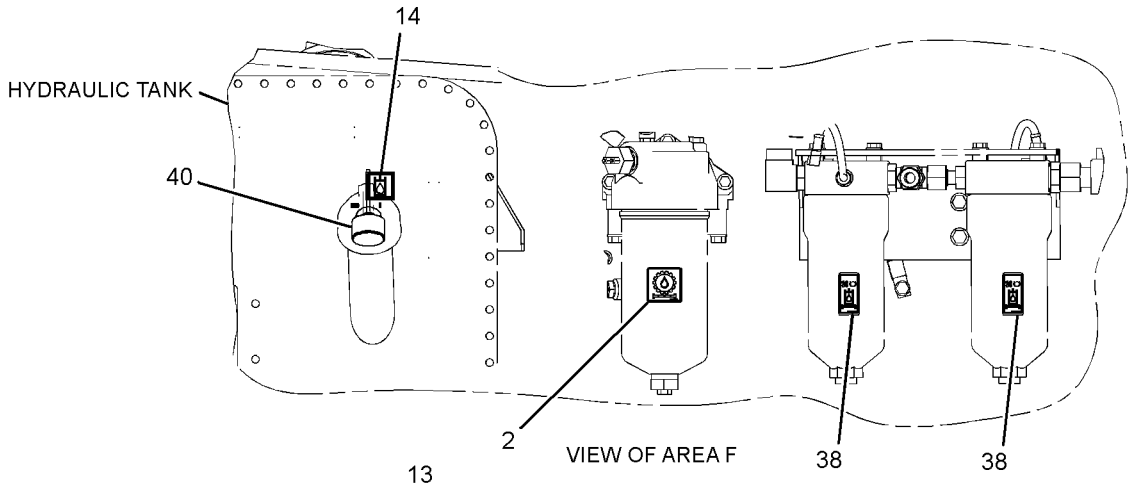


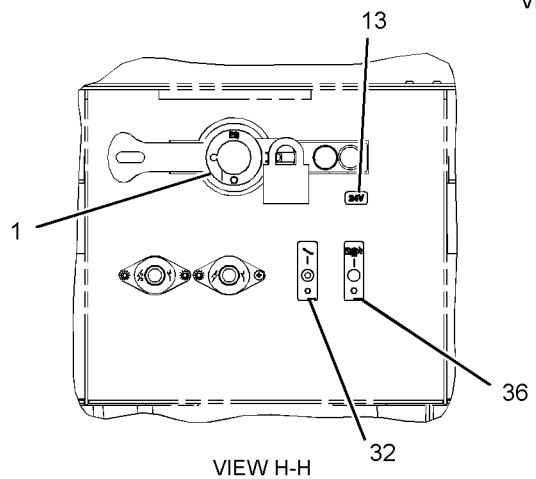


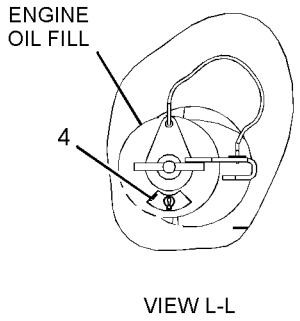


GRAPHIC #1 g01414186

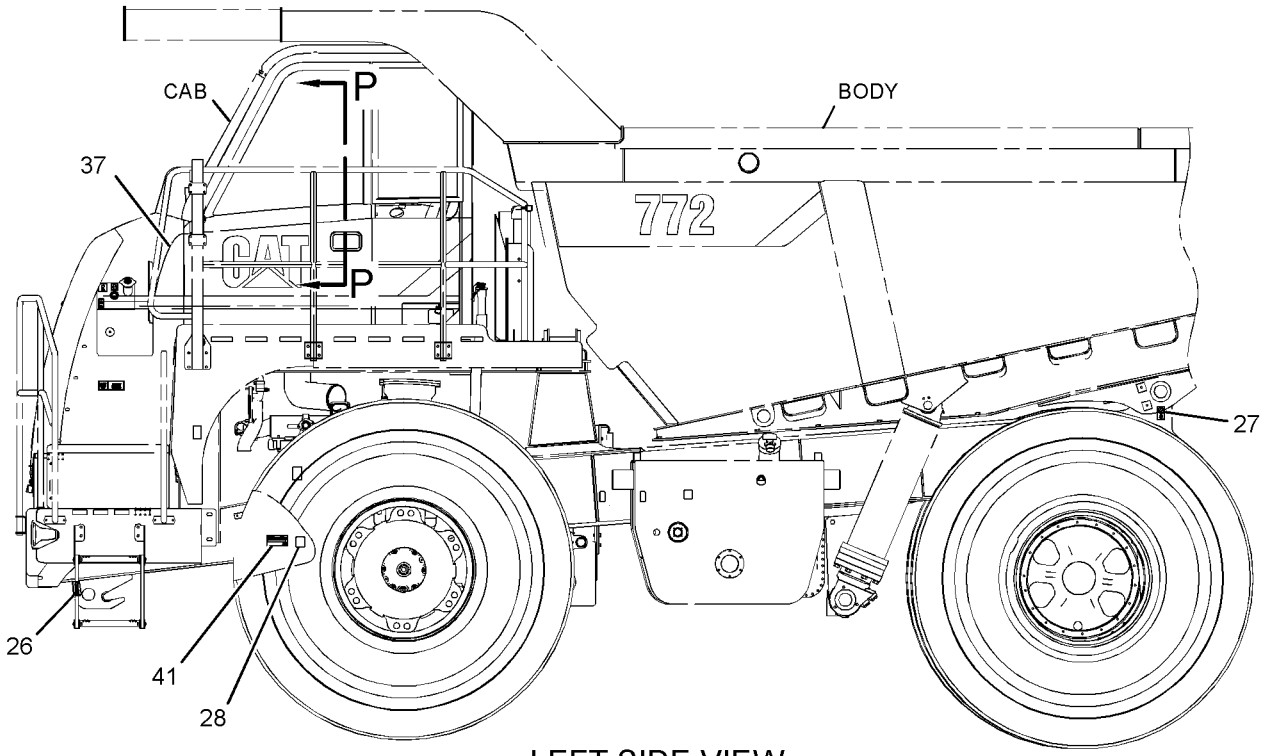


LEFT SIDE VIEW

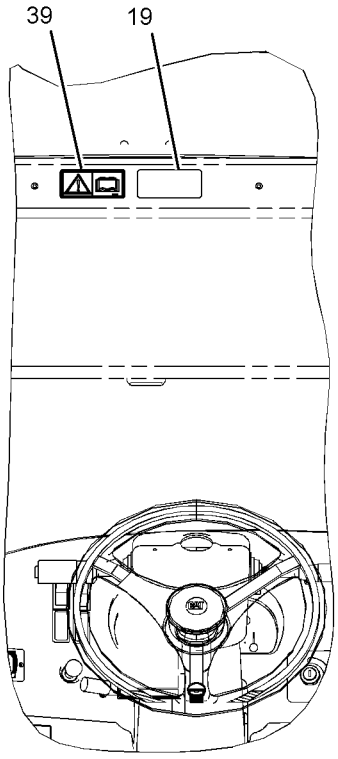


VIEW P-P

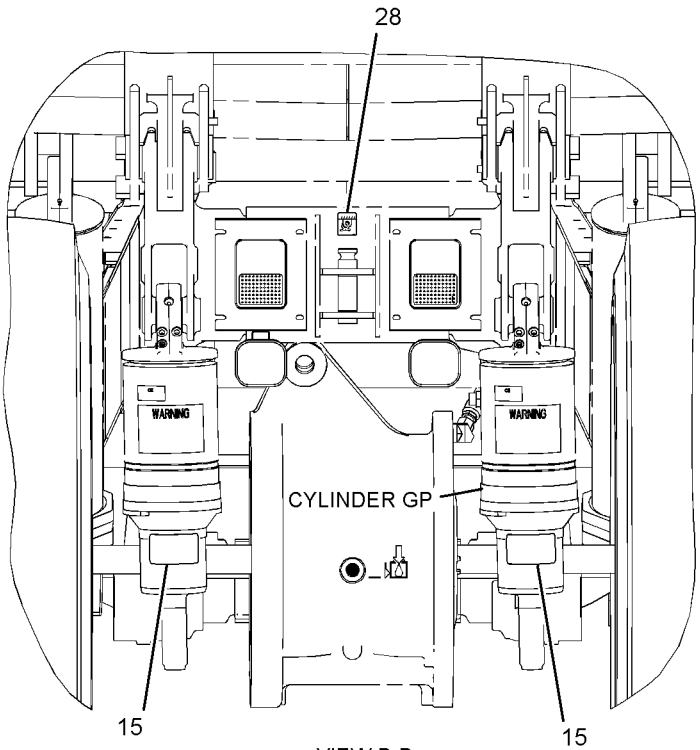


VIEW B-B

GRAPHIC #2

g01316820

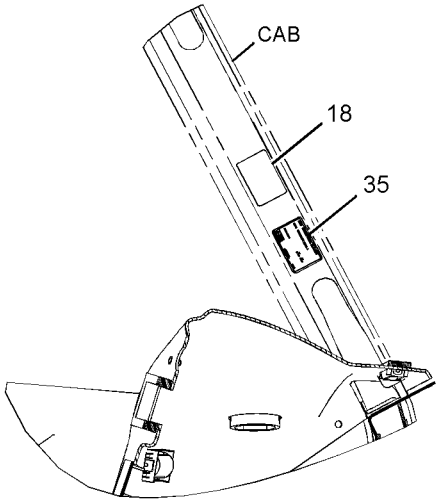


VIEW N-N

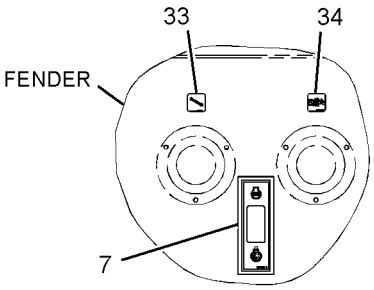


VIEW OF AREA T

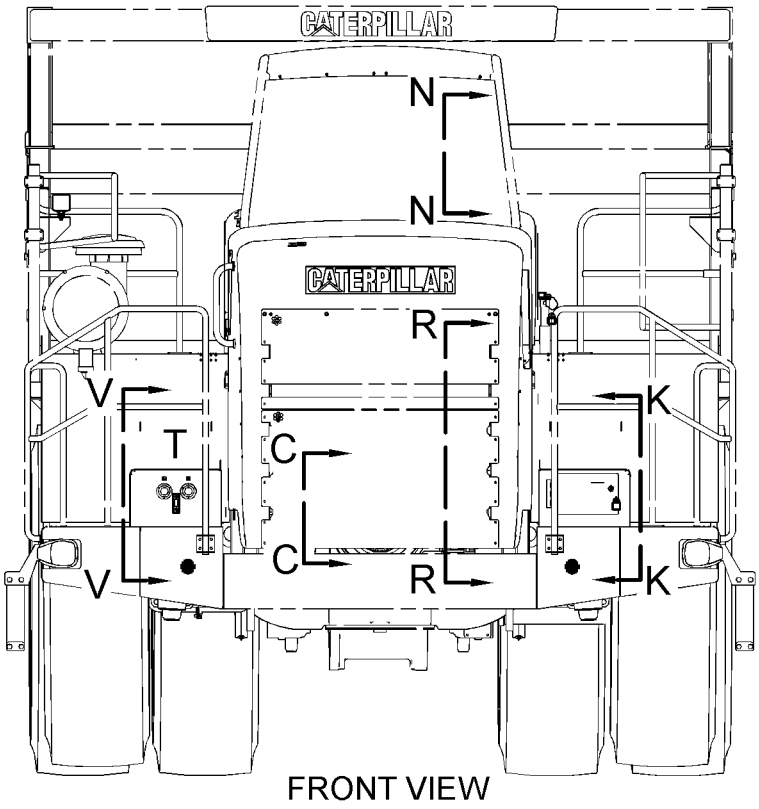


FRONT VIEW

REFER TO ALL ILLUSTRATIONS OF THIS GROUP FOR AUXILIARY VIEWS

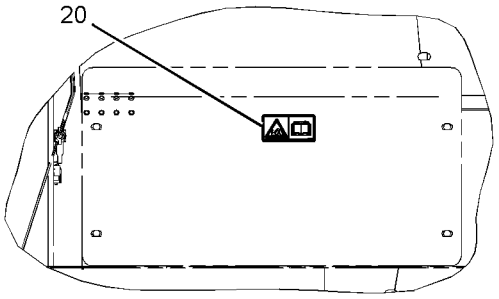


VIEW V-V

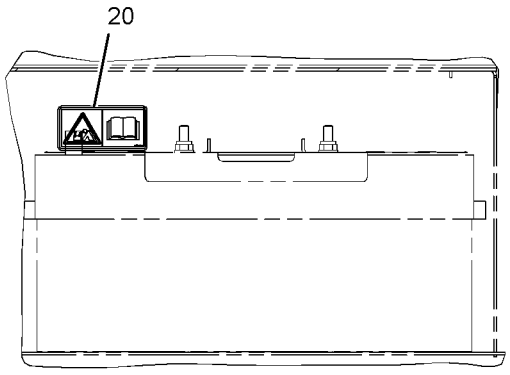


VIEW K-K

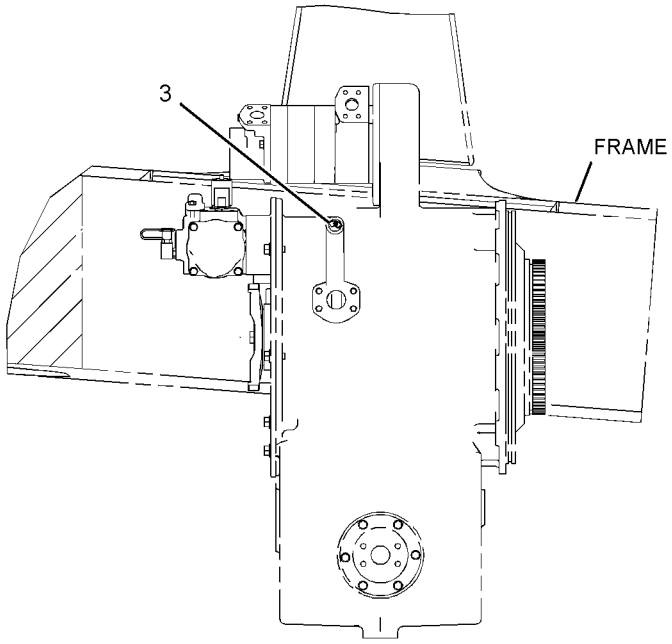


VIEW C-C

GRAPHIC #3

g01316821

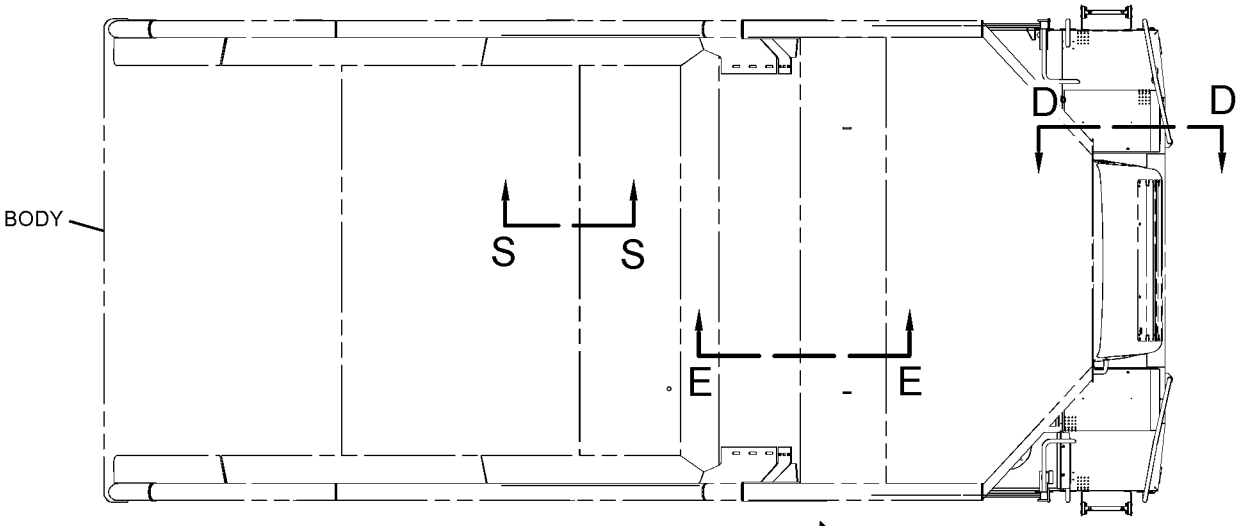


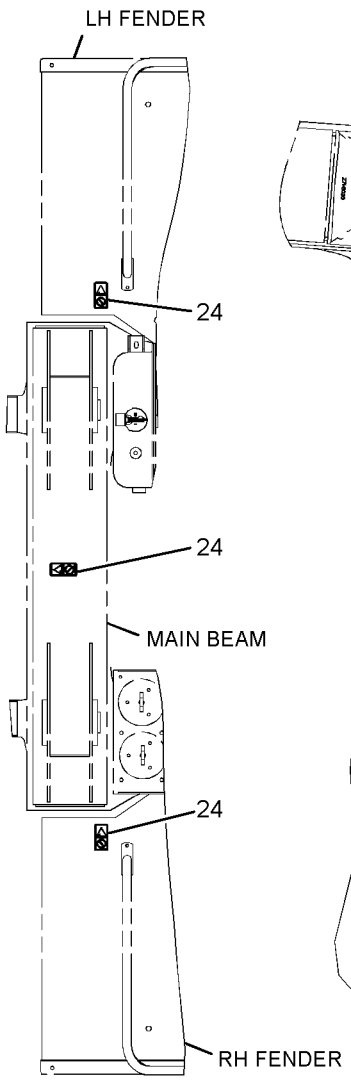


VIEW M-M

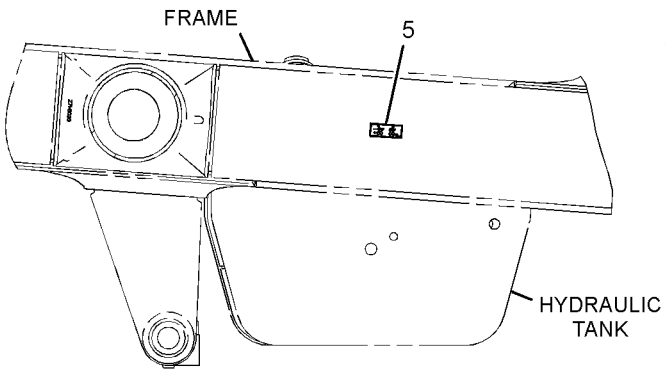


VIEW S-S

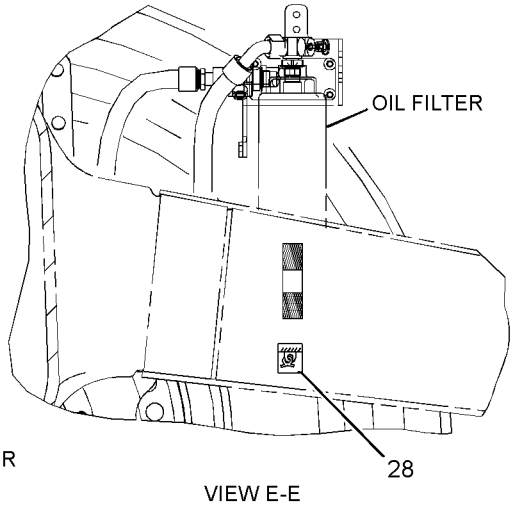


VIEW E-E

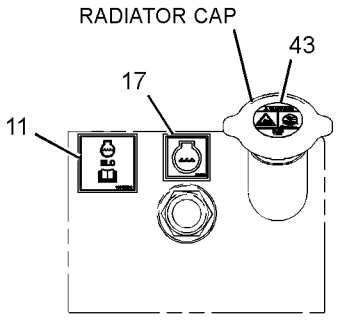


VIEW D-D

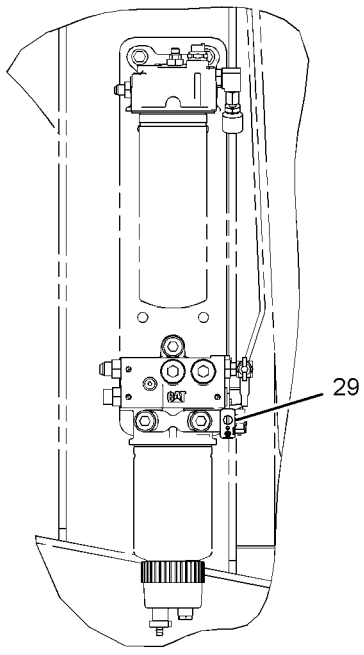


VIEW R-R

GRAPHIC #4

**<END>**

g01414185

# SERVICE EQUIPMENT AND SUPPLIES

## *270-9144* PLATE & FILM GP

**S/N: RLB342-UP**
**CANNOT BE USED WITH 270-9143—PAGE 822**
**AN ATTACHMENT**

**SMCS-7405, 7557** **i03131983**

| NOTE | REF NO | GRAPHIC REF | PART NUMBER | QTY | PART NAME 1 2 3 4 5 6 (PRODUCT LEVEL) | SEE PAGE |
|---|---|---|---|---|---|---|
| | 1 | 1 | **211-0686** | 1 | FILM-INSTRUCTION (BATTERY DISCONNECT) | |
| | 2 | 1 | **3E-1552** | 1 | FILM-INSTRUCTION (TRANSMISSION FILTER) | |
| | 3 | 3 | **5P-1174** | 1 | FILM-IDENTIFICATION (TRANSMISSION OIL FILL CAP) | |
| | 4 | 1 | **5P-1175** | 1 | FILM-IDENTIFICATION (ENGINE OIL FILL) | |
| | 5 | 4 | **5P-2494** | 1 | FILM-INSTRUCTION (TOWING) | |
| | 7 | 3 | **109-0361** | 1 | FILM-INSTRUCTION (ENGINE SHUTDOWN) | |
| | 11 | 4 | **134-7258** | 1 | FILM-INFORMATION (EXTENDED LIFE COOLANT,READ OMM) | |
| | 13 | 1 | **146-6747** | 1 | FILM-INFORMATION (24-VOLT) | |
| | 14 | 1 | **158-7864** | 1 | FILM-IDENTIFICATION (HYDRAULIC OIL) | |
| | 15 | 2 | **176-0245** | 2 | FILM-STRIPE (REFLECTIVE) | |
| | 17 | 4 | **209-5776** | 1 | FILM-INFORMATION (ENGINE COOLANT) | |
| | 18 | 3 | **219-0302** | 1 | FILM-WARNING (NO WELD, NO DRILL, READ OMM) | |
| | 19 | 3 | **224-7717** | 1 | FILM-WARNING (SEAT BELT, U.S.) | |
| | 20 | 3 | **225-0313** | 2 | FILM-WARNING (JUMP START, READ OMM) | |
| | 24 | 4 | **242-5055** | 3 | FILM-WARNING (NO STEP) | |
| | 26 | 2 | **248-5245** | 2 | FILM-INFORMATION (LIFT EYE, TIE-DOWN LOCATION) | |
| | 27 | 1,2 | **252-2156** | 2 | FILM-INSTRUCTION (LIFT EYE LOCATION) | |
| | 28 | 2,4 | **252-2157** | 3 | FILM-INFORMATION (TIE-DOWN) | |
| | 29 | 4 | **254-6134** | 1 | PLATE-INFORMATION (FUEL PUMP, PRIMER) | |
| | 32 | 1 | **270-8642** | 1 | FILM-IDENTIFICATION (LOCKOUT) | |
| | 33 | 3 | **270-8643** | 1 | FILM-SERVICE (LOCKOUT INDICATOR) | |
| | 34 | 3 | **270-8645** | 1 | FILM-IDENTIFICATION (TRANSMISSION, STEERING, HOIST) | |
| | 35 | 3 | **303-3142** | 1 | FILM-WARNING (ROPS, FOPS, READ OMM) | |
| | 36 | 1 | **279-4535** | 1 | FILM-IDENTIFICATION (TRANSMISSION, STEERING, HOIST) | |
| Y | 37 | 2 | *289-2153* | 1 | FILM GP | 817 |
| | 38 | 1 | **292-5050** | 2 | FILM-IDENTIFICATION (BRAKE FILTER) | |
| | 39 | 3 | **225-3305** | 1 | FILM-WARNING (UNIVERSAL, READ OMM, U.S.) | |
| Y | 40 | 1 | *212-3432* | 1 | PROTECTION GP-VANDALISM | 862 |
| | 41 | 2 | **239-6986** | 1 | PLATE-IDENTIFICATION (MACHINE) | |
| | 43 | 4 | **298-5701** | 1 | FILM-WARNING (HOT FLUID UND PRESS, READ OMM) | |
| | 44 | 3 | **230-1340** | 1 | FILM-WARNING (PRODUCT LINK RADIO, U.S.) | |
| | 45 | 3 | **307-0047** | 1 | FILM-INFORMATION (PRODUCT LINK, READ OMM) | |
| | | | | | | |
| AF | | | **3N-3790** | 1 | PLATE-SERIAL NUMBER (ENGINE) | |
| | | | | | (ON LOWER RH REAR CORNER OF CYLINDER BLOCK) | |

A-NOT PART OF THIS GROUP
F-NOT SHOWN
Y-SEPARATE ILLUSTRATION

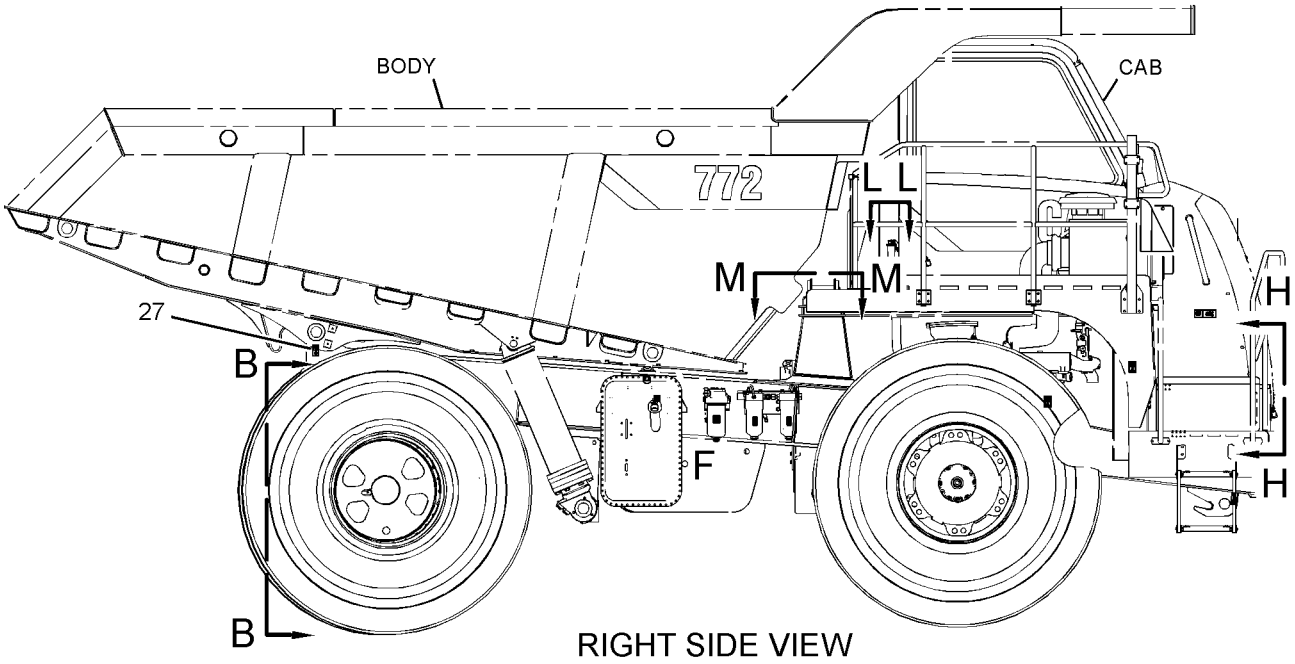


RIGHT SIDE VIEW

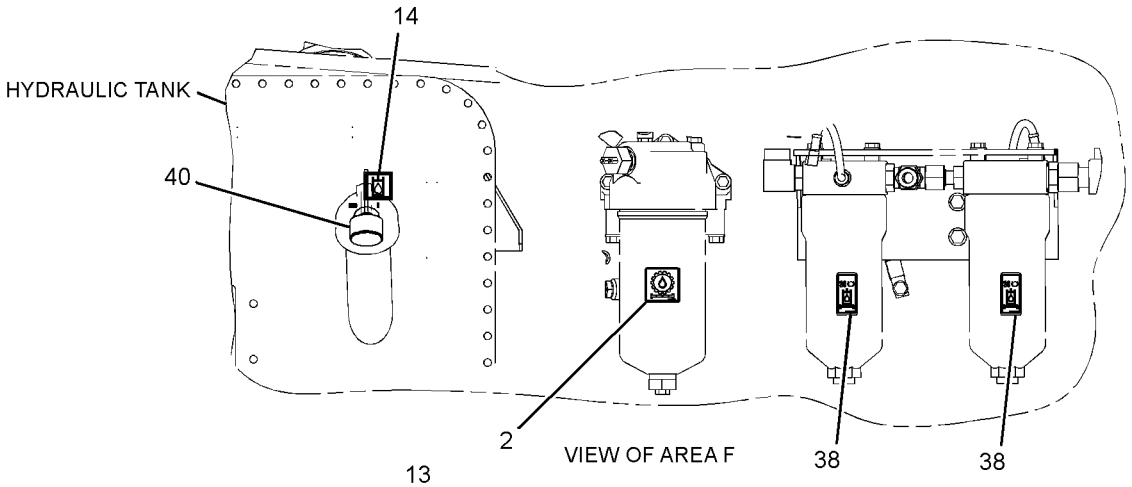


VIEW OF AREA F

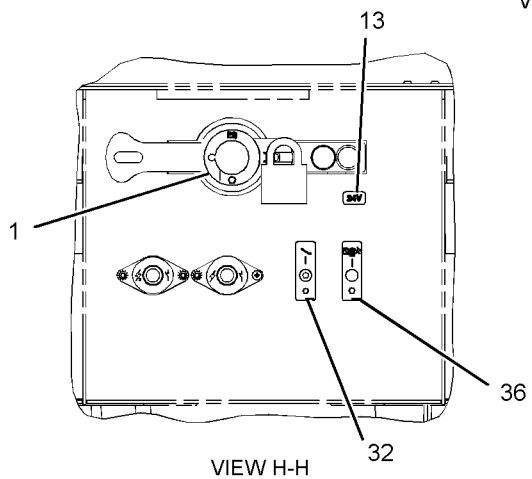


VIEW H-H

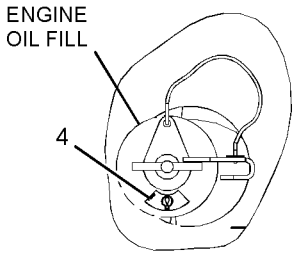


VIEW L-L

REFER TO ALL ILLUSTRATIONS OF THIS GROUP FOR AUXILIARY VIEWS

GRAPHIC #1

g01637184

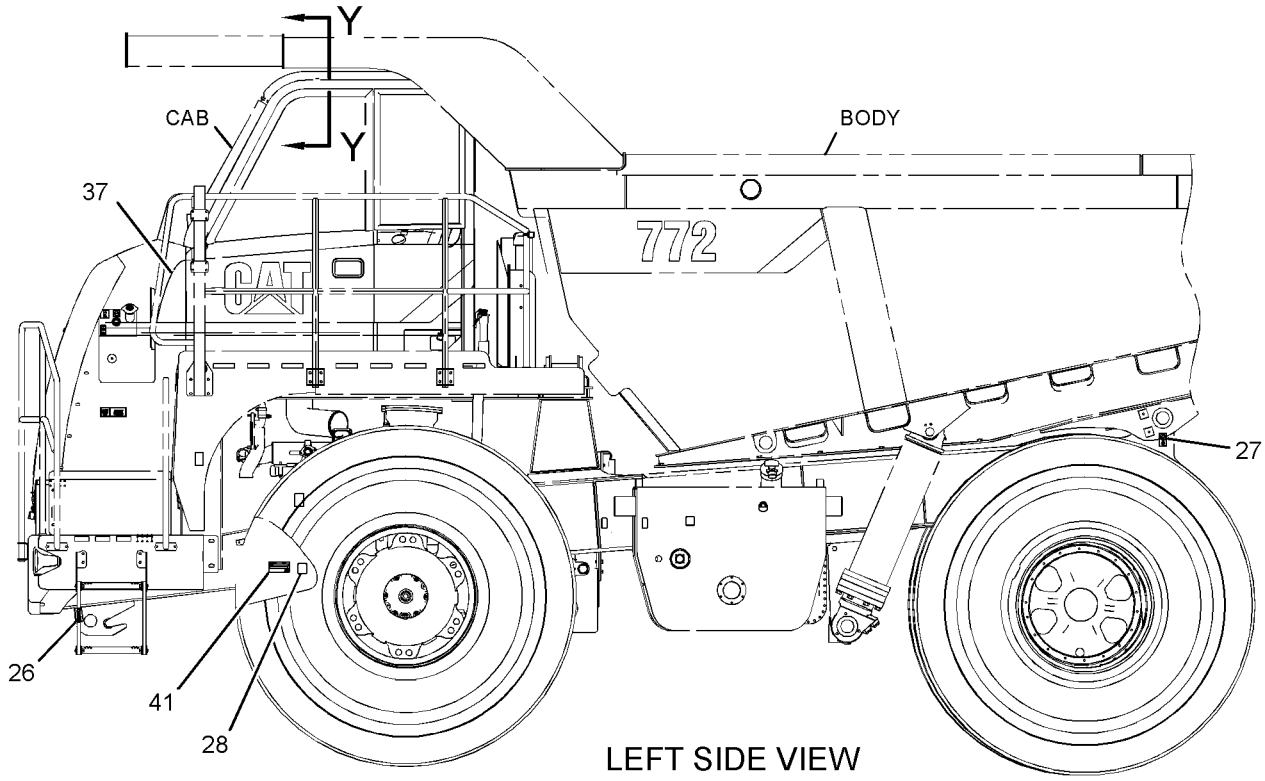


LEFT SIDE VIEW

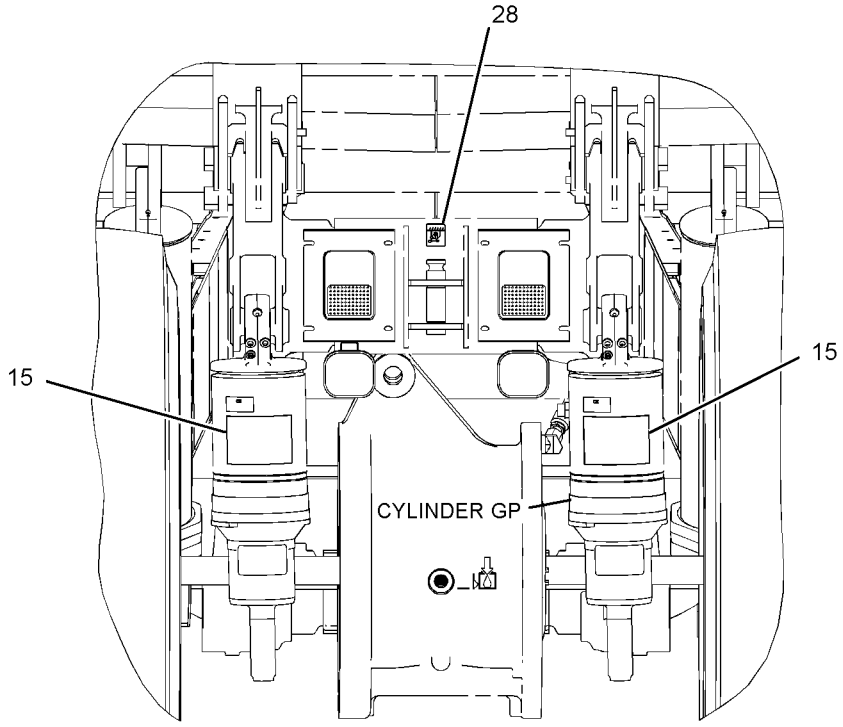


VIEW B-B

REFER TO ALL ILLUSTRATIONS OF THIS GROUP FOR AUXILIARY VIEWS

GRAPHIC #2

g01637179

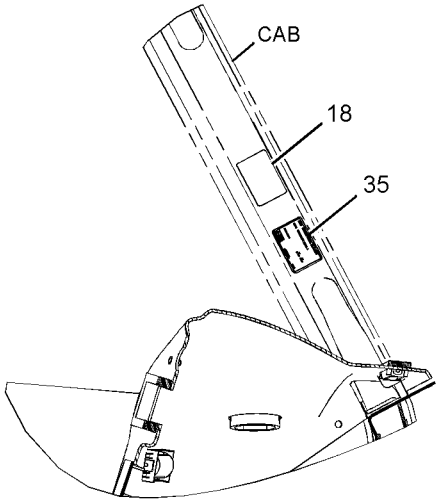


VIEW N-N

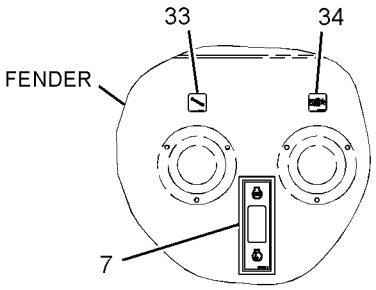


VIEW OF AREA T

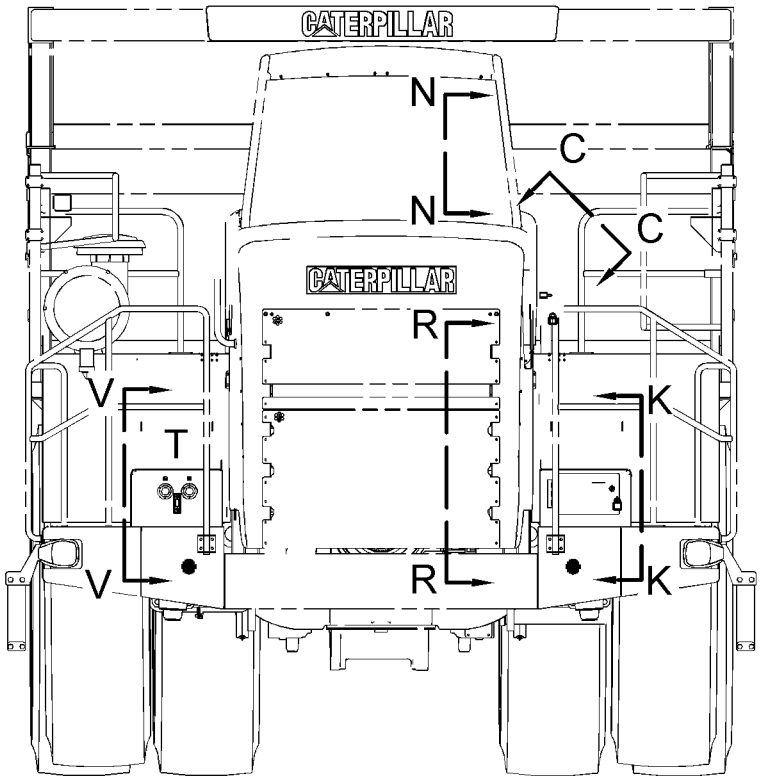


FRONT VIEW

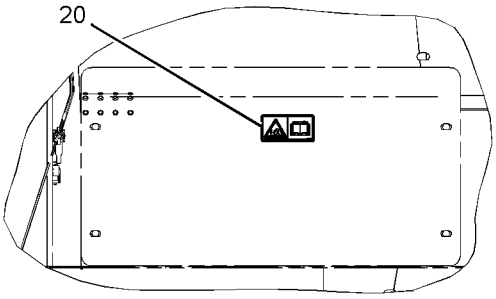


VIEW V-V

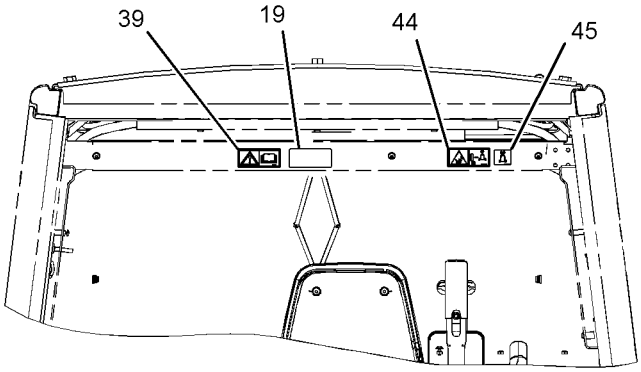


VIEW Y-Y

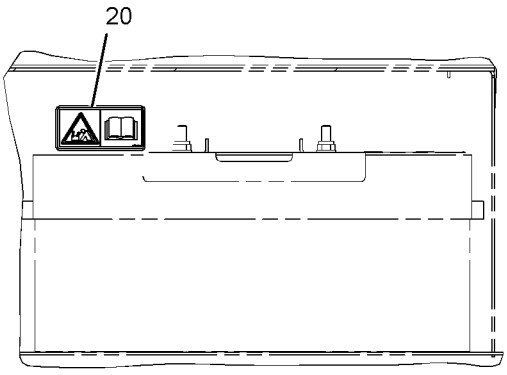


VIEW K-K

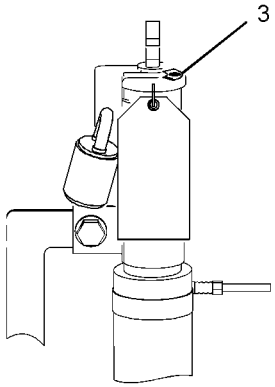


VIEW C-C

REFER TO ALL ILLUSTRATIONS OF THIS GROUP FOR AUXILIARY VIEWS

GRAPHIC #3

g01637180

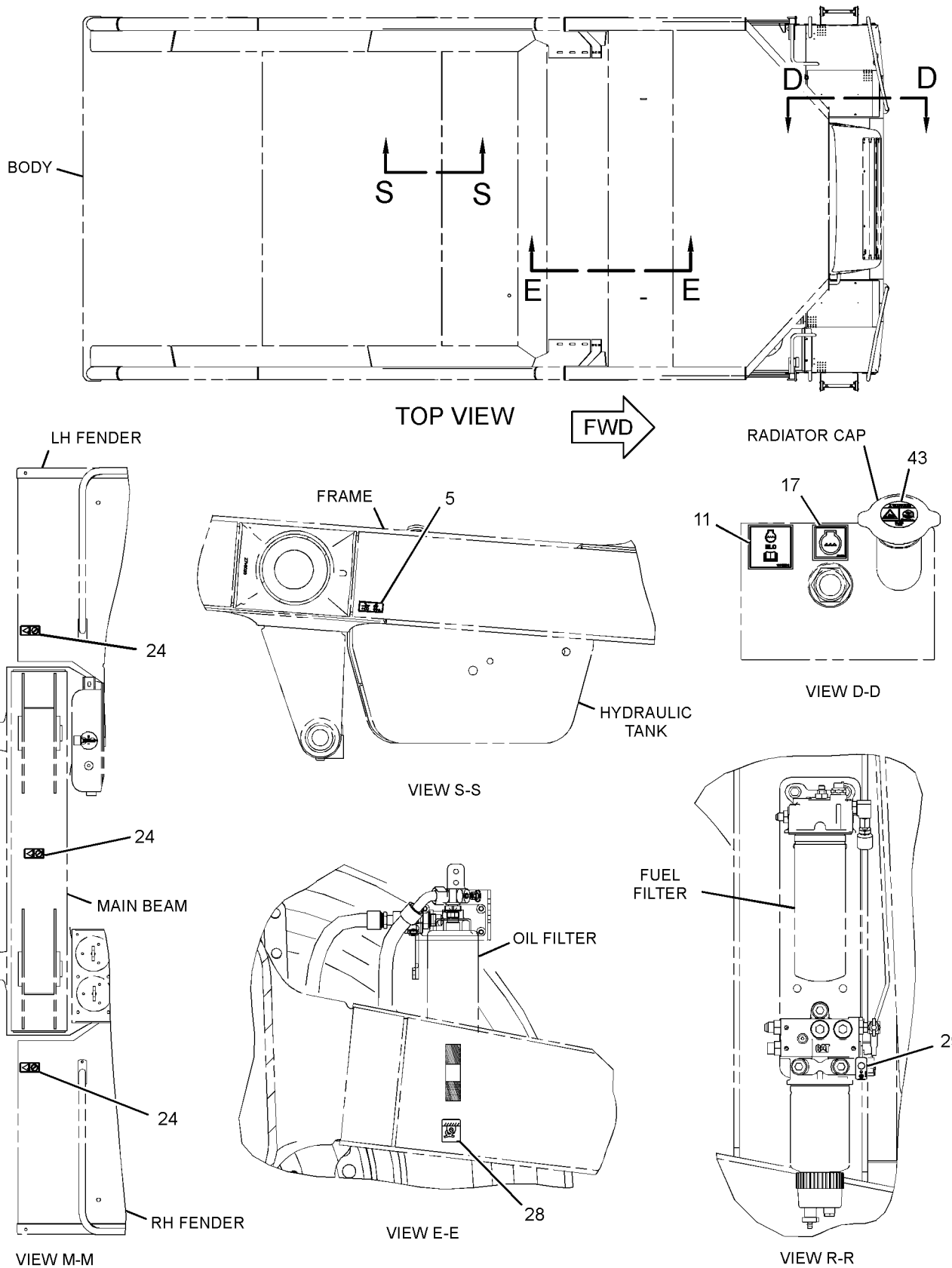


GRAPHIC #4 **<END>** g01637182

## *285-8584* PLATE & FILM GP—ARABIC

**S/N: RLB1-UP**
**PART OF 303-4451 PLATE & FILM GP**
**AN ATTACHMENT**

**SMCS-7405, 7557** **i02694595**

| NOTE | PART NUMBER | QTY | PART NAME 1 2 3 4 5 6 (PRODUCT LEVEL) | SEE PAGE |
|---|---|---|---|---|
| | 102-6627 | 4 | FILM-INSTRUCTION (HYDRAULIC ACCUMULATOR) (ARABIC) | |
| | | | 1-ON EACH HYDRAULIC ACCUMULATOR | |

**<END>**

## *285-8585* PLATE & FILM GP—DANISH

**S/N: RLB1-UP**
**PART OF 303-4452 PLATE & FILM GP**
**AN ATTACHMENT**

**SMCS-7405, 7557** **i02694596**

| NOTE | PART NUMBER | QTY | PART NAME 1 2 3 4 5 6 (PRODUCT LEVEL) | SEE PAGE |
|---|---|---|---|---|
| | 3E-5547 | 4 | PLATE-INSTRUCTION (HYDRAULIC ACCUMULATOR) (DANISH) | |

**<END>**

## *285-8586* PLATE & FILM GP—DUTCH

**S/N: RLB1-UP**
**PART OF 303-4463 PLATE & FILM GP**
**AN ATTACHMENT**

**SMCS-7405, 7557** **i02694598**

| NOTE | PART NUMBER | QTY | PART NAME 1 2 3 4 5 6 (PRODUCT LEVEL) | SEE PAGE |
|---|---|---|---|---|
| | 3E-5549 | 4 | FILM-INSTRUCTION (HYDRAULIC ACCUMULATOR) (DUTCH) | |

**<END>**

## *285-8587* PLATE & FILM GP—FINNISH

**S/N: RLB1-UP**
**PART OF 303-4453 PLATE & FILM GP**
**AN ATTACHMENT**

**SMCS-7405, 7557** **i02694599**

| NOTE | PART NUMBER | QTY | PART NAME 1 2 3 4 5 6 (PRODUCT LEVEL) | SEE PAGE |
|---|---|---|---|---|
| | 133-7643 | 4 | FILM-INSTRUCTION (HYDRAULIC ACCUMULATOR) (FINNISH) | |

**<END>**

# SERVICE EQUIPMENT AND SUPPLIES

## *285-8588* PLATE & FILM GP—INDONESIAN

**S/N: RLB1-UP**
**PART OF 303-4456 PLATE & FILM GP**
**AN ATTACHMENT**

**SMCS-7405, 7557** **i02694600**

| NOTE | PART NUMBER | QTY | PART NAME 1 2 3 4 5 6 (PRODUCT LEVEL) | SEE PAGE |
|---|---|---|---|---|
| | 173-8301 | 4 | FILM-INSTRUCTION (HYDRAULIC ACCUMULATOR) (INDONESIAN) | |

**<END>**

## *285-8589* PLATE & FILM GP—GERMAN

**S/N: RLB1-UP**
**PART OF 303-4454 PLATE & FILM GP**
**AN ATTACHMENT**

**SMCS-7405, 7557** **i02694609**

| NOTE | PART NUMBER | QTY | PART NAME 1 2 3 4 5 6 (PRODUCT LEVEL) | SEE PAGE |
|---|---|---|---|---|
| | 3E-5545 | 4 | FILM-INSTRUCTION (HYDRAULIC ACCUMULATOR) (GERMAN) | |

**<END>**

## *285-8590* PLATE & FILM GP—GREEK

**S/N: RLB1-UP**
**PART OF 303-4455 PLATE & FILM GP**
**AN ATTACHMENT**

**SMCS-7405, 7557** **i02694610**

| NOTE | PART NUMBER | QTY | PART NAME 1 2 3 4 5 6 (PRODUCT LEVEL) | SEE PAGE |
|---|---|---|---|---|
| | 3E-5548 | 4 | FILM-INSTRUCTION (HYDRAULIC ACCUMULATOR) (GREEK) | |

**<END>**

## *285-8591* PLATE & FILM GP—ITALIAN

**S/N: RLB1-UP**
**PART OF 303-4457 PLATE & FILM GP**
**AN ATTACHMENT**

**SMCS-7405, 7557** **i02694611**

| NOTE | PART NUMBER | QTY | PART NAME 1 2 3 4 5 6 (PRODUCT LEVEL) | SEE PAGE |
|---|---|---|---|---|
| | 3E-5546 | 4 | FILM-INSTRUCTION (HYDRAULIC ACCUMULATOR) (ITALIAN) | |

**<END>**

## *285-8592* PLATE & FILM GP—JAPANESE

**S/N: RLB1-UP**
**PART OF 303-4458 PLATE & FILM GP**
**AN ATTACHMENT**

**SMCS-7405, 7557** **i02694612**

| NOTE | PART NUMBER | QTY | PART NAME 1 2 3 4 5 6 (PRODUCT LEVEL) | SEE PAGE |
|---|---|---|---|---|
| | 102-6628 | 4 | FILM-INSTRUCTION (HYDRAULIC ACCUMULATOR) (JAPANESE) | |

**<END>**

## *285-8593* PLATE & FILM GP—NORWEGIAN

**S/N: RLB1-UP**
**PART OF 303-4459 PLATE & FILM GP**
**AN ATTACHMENT**

**SMCS-7405, 7557** **i02694630**

| NOTE | PART NUMBER | QTY | PART NAME 1 2 3 4 5 6 (PRODUCT LEVEL) | SEE PAGE |
|---|---|---|---|---|
| | 133-7642 | 4 | FILM-INSTRUCTION (HYDRAULIC ACCUMULATOR) (NORWEGIAN) | |

**<END>**

## *285-8594* PLATE & FILM GP—PORTUGUESE

**S/N: RLB1-UP**
**PART OF 303-4448 PLATE & FILM GP**
**AN ATTACHMENT**

**SMCS-7405, 7557** **i02694619**

| NOTE | PART NUMBER | QTY | PART NAME 1 2 3 4 5 6 (PRODUCT LEVEL) | SEE PAGE |
|---|---|---|---|---|
| | 3E-5544 | 4 | FILM-INSTRUCTION (HYDRAULIC ACCUMULATOR) (PORTUGUESE) | |

**<END>**

## *285-8595* PLATE & FILM GP—RUSSIAN

**S/N: RLB1-UP**
**PART OF 303-4450 PLATE & FILM GP**
**AN ATTACHMENT**

**SMCS-7405, 7557** **i02694620**

| NOTE | PART NUMBER | QTY | PART NAME 1 2 3 4 5 6 (PRODUCT LEVEL) | SEE PAGE |
|---|---|---|---|---|
| | 9X-8757 | 4 | FILM-INSTRUCTION (HYDRAULIC ACCUMULATOR) (RUSSIAN) | |

**<END>**

## *285-8596* PLATE & FILM GP—SPANISH

**S/N: RLB1-UP**
**PART OF 303-4449 PLATE & FILM GP**
**AN ATTACHMENT**

**SMCS-7405, 7557** **i02694621**

| NOTE | PART NUMBER | QTY | PART NAME 1 2 3 4 5 6 (PRODUCT LEVEL) | SEE PAGE |
|---|---|---|---|---|
| | 3E-5543 | 4 | PLATE-INSTRUCTION (HYDRAULIC ACCUMULATOR) (SPANISH) | |

**<END>**

## *285-8597* PLATE & FILM GP—SWEDISH

**S/N: RLB1-UP**
**PART OF 303-4460 PLATE & FILM GP**
**AN ATTACHMENT**

**SMCS-7405, 7557** **i02694622**

| NOTE | PART NUMBER | QTY | PART NAME 1 2 3 4 5 6 (PRODUCT LEVEL) | SEE PAGE |
|---|---|---|---|---|
| | 102-6623 | 4 | FILM-INSTRUCTION (HYDRAULIC ACCUMULATOR) (SWEDISH) | |

**<END>**

## *285-8741* PLATE & FILM GP—SLOVAKIAN

**S/N: RLB1-UP**
**PART OF 303-4461 PLATE & FILM GP**
**AN ATTACHMENT**

**SMCS-7405, 7557** **i02694629**

| NOTE | PART NUMBER | QTY | PART NAME 1 2 3 4 5 6 (PRODUCT LEVEL) | SEE PAGE |
|---|---|---|---|---|
| | 285-8714 | 4 | FILM-INSTRUCTION (HYDRAULIC ACCUMULATOR) (SLOVAKIAN) | |

**<END>**

## *285-8777* PLATE & FILM GP—SLOVAKIAN

**S/N: RLB1-UP**
**PART OF 303-4462 PLATE & FILM GP**
**AN ATTACHMENT**

**SMCS-7405, 7557** **i02694639**

| NOTE | PART NUMBER | QTY | PART NAME 1 2 3 4 5 6 (PRODUCT LEVEL) | SEE PAGE |
|---|---|---|---|---|
| | 285-8715 | 4 | FILM-INSTRUCTION (HYDRAULIC ACCUMULATOR) (SLOVAKIAN) | |

**<END>**

## *303-4448* PLATE & FILM GP—PORTUGUESE

**S/N: RLB1-UP**
**AN ATTACHMENT**

**SMCS-7405, 7557** **i02694660**

| NOTE | PART NUMBER | QTY | PART NAME 1 2 3 4 5 6 (PRODUCT LEVEL) | SEE PAGE |
|---|---|---|---|---|
| Y | *285-8594* | 1 | PLATE & FILM GP (PORTUGUESE) | 854 |

Y-SEPARATE ILLUSTRATION

**<END>**

## *303-4449* PLATE & FILM GP—SPANISH

**S/N: RLB1-UP**
**AN ATTACHMENT**

**SMCS-7405, 7557** **i02694661**

| NOTE | PART NUMBER | QTY | PART NAME 1 2 3 4 5 6 (PRODUCT LEVEL) | SEE PAGE |
|---|---|---|---|---|
| Y | *285-8596* | 1 | PLATE & FILM GP (SPANISH) | 855 |

Y-SEPARATE ILLUSTRATION

**<END>**

## *303-4450* PLATE & FILM GP—RUSSIAN

**S/N: RLB1-UP**
**AN ATTACHMENT**

**SMCS-7405, 7557** **i02694662**

| NOTE | PART NUMBER | QTY | PART NAME 1 2 3 4 5 6 (PRODUCT LEVEL) | SEE PAGE |
|---|---|---|---|---|
| Y | *285-8595* | 1 | PLATE & FILM GP (RUSSIAN) | 854 |

Y-SEPARATE ILLUSTRATION

**<END>**

## *303-4451* PLATE & FILM GP—ARABIC

**S/N: RLB1-UP**
**AN ATTACHMENT**

**SMCS-7405, 7557** **i02694663**

| NOTE | PART NUMBER | QTY | PART NAME 1 2 3 4 5 6 (PRODUCT LEVEL) | SEE PAGE |
|---|---|---|---|---|
| Y | *285-8584* | 1 | PLATE & FILM GP (ARABIC) | 852 |

Y-SEPARATE ILLUSTRATION

**<END>**

## *303-4452* PLATE & FILM GP—DANISH

**S/N: RLB1-UP**
**AN ATTACHMENT**

**SMCS-7405, 7557** **i02694664**

| NOTE | PART NUMBER | QTY | PART NAME 1 2 3 4 5 6 (PRODUCT LEVEL) | SEE PAGE |
|---|---|---|---|---|
| Y | *285-8585* | 1 | PLATE & FILM GP (DANISH) | 852 |

Y-SEPARATE ILLUSTRATION

**<END>**

# SERVICE EQUIPMENT AND SUPPLIES

## *303-4453* PLATE & FILM GP—FINNISH

**S/N: RLB1-UP**
**AN ATTACHMENT**

**SMCS-7405, 7557** **i02694665**

| NOTE | PART NUMBER | QTY | PART NAME 1 2 3 4 5 6 (PRODUCT LEVEL) | SEE PAGE |
|---|---|---|---|---|
| Y | *285-8587* | 1 | PLATE & FILM GP (FINNISH) | 852 |
| Y-SEPARATE ILLUSTRATION | | | | |

**<END>**

## *303-4454* PLATE & FILM GP—GERMAN

**S/N: RLB1-UP**
**AN ATTACHMENT**

**SMCS-7405, 7557** **i02694666**

| NOTE | PART NUMBER | QTY | PART NAME 1 2 3 4 5 6 (PRODUCT LEVEL) | SEE PAGE |
|---|---|---|---|---|
| Y | *285-8589* | 1 | PLATE & FILM GP (GERMAN) | 853 |
| Y-SEPARATE ILLUSTRATION | | | | |

**<END>**

## *303-4455* PLATE & FILM GP—GREEK

**S/N: RLB1-UP**
**AN ATTACHMENT**

**SMCS-7405, 7557** **i02694648**

| NOTE | PART NUMBER | QTY | PART NAME 1 2 3 4 5 6 (PRODUCT LEVEL) | SEE PAGE |
|---|---|---|---|---|
| Y | *285-8590* | 1 | PLATE & FILM GP (GREEK) | 853 |
| Y-SEPARATE ILLUSTRATION | | | | |

**<END>**

## *303-4456* PLATE & FILM GP—INDONESIAN

**S/N: RLB1-UP**
**AN ATTACHMENT**

**SMCS-7405, 7557** **i02694649**

| NOTE | PART NUMBER | QTY | PART NAME 1 2 3 4 5 6 (PRODUCT LEVEL) | SEE PAGE |
|---|---|---|---|---|
| Y | *285-8588* | 1 | PLATE & FILM GP (INDONESIAN) | 853 |
| Y-SEPARATE ILLUSTRATION | | | | |

**<END>**

## *303-4457* PLATE & FILM GP—ITALIAN

**S/N: RLB1-UP**
**AN ATTACHMENT**

**SMCS-7405, 7557** **i02694672**

| NOTE | PART NUMBER | QTY | PART NAME 1 2 3 4 5 6 (PRODUCT LEVEL) | SEE PAGE |
|---|---|---|---|---|
| Y | *285-8591* | 1 | PLATE & FILM GP (ITALIAN) | 853 |
| Y-SEPARATE ILLUSTRATION | | | | |

**<END>**

## *303-4458* PLATE & FILM GP—JAPANESE

**S/N: RLB1-UP**
**AN ATTACHMENT**

**SMCS-7405, 7557** **i02694673**

| NOTE | PART NUMBER | QTY | PART NAME 1 2 3 4 5 6 (PRODUCT LEVEL) | SEE PAGE |
|---|---|---|---|---|
| Y | *285-8592* | 1 | PLATE & FILM GP (JAPANESE) | 854 |

Y-SEPARATE ILLUSTRATION

**<END>**

## *303-4459* PLATE & FILM GP—NORWEGIAN

**S/N: RLB1-UP**
**AN ATTACHMENT**

**SMCS-7405, 7557** **i02694674**

| NOTE | PART NUMBER | QTY | PART NAME 1 2 3 4 5 6 (PRODUCT LEVEL) | SEE PAGE |
|---|---|---|---|---|
| Y | *285-8593* | 1 | PLATE & FILM GP (NORWEGIAN) | 854 |

Y-SEPARATE ILLUSTRATION

**<END>**

## *303-4460* PLATE & FILM GP—SWEDISH

**S/N: RLB1-UP**
**AN ATTACHMENT**

**SMCS-7405, 7557** **i02694675**

| NOTE | PART NUMBER | QTY | PART NAME 1 2 3 4 5 6 (PRODUCT LEVEL) | SEE PAGE |
|---|---|---|---|---|
| Y | *285-8597* | 1 | PLATE & FILM GP (SWEDISH) | 855 |

Y-SEPARATE ILLUSTRATION

**<END>**

## *303-4461* PLATE & FILM GP—CZECH

**S/N: RLB1-UP**
**AN ATTACHMENT**

**SMCS-7405, 7557** **i02668884**

| NOTE | PART NUMBER | QTY | PART NAME 1 2 3 4 5 6 (PRODUCT LEVEL) | SEE PAGE |
|---|---|---|---|---|
| Y | *285-8741* | 1 | PLATE & FILM GP (CZECH) | 855 |

Y-SEPARATE ILLUSTRATION

**<END>**

## *303-4462* PLATE & FILM GP—SLOVAKIAN

**S/N: RLB1-UP**
**AN ATTACHMENT**

**SMCS-7405, 7557** **i02668893**

| NOTE | PART NUMBER | QTY | PART NAME 1 2 3 4 5 6 (PRODUCT LEVEL) | SEE PAGE |
|---|---|---|---|---|
| Y | *285-8777* | 1 | PLATE & FILM GP (SLOVAKIAN) | 855 |

Y-SEPARATE ILLUSTRATION

**<END>**

## *303-4463* PLATE & FILM GP—DUTCH

**S/N: RLB1-UP**
**AN ATTACHMENT**

**SMCS-7405, 7557** **i02668939**

| NOTE | PART NUMBER | QTY | PART NAME 1 2 3 4 5 6 (PRODUCT LEVEL) | SEE PAGE |
|---|---|---|---|---|
| Y | *285-8586* | 1 | PLATE & FILM GP (DUTCH) | 852 |
| Y-SEPARATE ILLUSTRATION | | | | |

**<END>**

## *303-4465* PLATE & FILM GP—HEBREW

**S/N: RLB1-UP**
**AN ATTACHMENT**

**SMCS-7405, 7557** **i02668945**

| NOTE | PART NUMBER | QTY | PART NAME 1 2 3 4 5 6 (PRODUCT LEVEL) | SEE PAGE |
|---|---|---|---|---|
| Y | *303-4467* | 1 | PLATE & FILM GP (HEBREW) | 859 |
| Y-SEPARATE ILLUSTRATION | | | | |

**<END>**

## *303-4466* PLATE & FILM GP—SERBIAN

**S/N: RLB1-UP**
**AN ATTACHMENT**

**SMCS-7405, 7557** **i02669007**

| NOTE | PART NUMBER | QTY | PART NAME 1 2 3 4 5 6 (PRODUCT LEVEL) | SEE PAGE |
|---|---|---|---|---|
| Y | *303-4468* | 1 | PLATE & FILM GP (SERBIAN) | 859 |
| Y-SEPARATE ILLUSTRATION | | | | |

**<END>**

## *303-4467* PLATE & FILM GP—HEBREW

**S/N: RLB1-UP**
**PART OF 303-4465 PLATE & FILM GP**
**AN ATTACHMENT**

**SMCS-7405, 7557** **i02668951**

| NOTE | PART NUMBER | QTY | PART NAME 1 2 3 4 5 6 (PRODUCT LEVEL) | SEE PAGE |
|---|---|---|---|---|
| | **301-3013** | 4 | FILM-INSTRUCTION (HYDRAULIC ACCUMULATOR) (HEBREW) | |

**<END>**

## *303-4468* PLATE & FILM GP—SERBIAN

**S/N: RLB1-UP**
**PART OF 303-4466 PLATE & FILM GP**
**AN ATTACHMENT**

**SMCS-7405, 7557** **i02669036**

| NOTE | PART NUMBER | QTY | PART NAME 1 2 3 4 5 6 (PRODUCT LEVEL) | SEE PAGE |
|---|---|---|---|---|
| | **302-4011** | 4 | FILM-INSTRUCTION (HYDRAULIC ACCUMULATOR) (SERBIAN) | |

**<END>**

# SERVICE EQUIPMENT AND SUPPLIES

## *224-3979* PLATE GP-ENGINE IDENTIFICATION

**S/N: RHX1-4799**

**PART OF 272-3086, 272-3087, 292-2553, 292-2554 ENGINE AR-COMPLETE**

**AN ATTACHMENT**

**SMCS-7557** **i02682761**

| NOTE | REF NO | GRAPHIC REF | PART NUMBER | QTY | PART NAME 1 2 3 4 5 6 (PRODUCT LEVEL) | SEE PAGE |
|---|---|---|---|---|---|---|
| | 1 | 1 | **229-5669** | 1 | PLATE-IDENTIFICATION (C18 ACERT) | |
| | 2 | 1 | **234-1400** | 1 | PLATE-IDENTIFICATION (BLANK) | |
| | 3 | 1 | **234-1401** | 1 | PLATE-IDENTIFICATION (CAT) | |

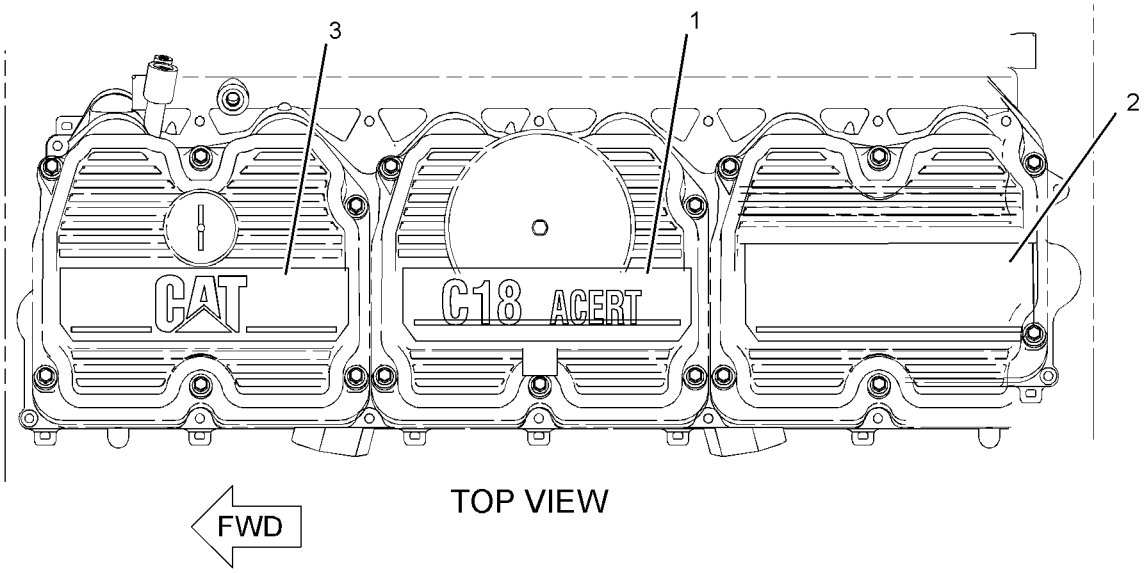


TOP VIEW

GRAPHIC #1 **<END>** g01348241

# SERVICE EQUIPMENT AND SUPPLIES

## *224-3979* PLATE GP-ENGINE IDENTIFICATION

**S/N: RHX3387-UP**

**PART OF 292-2553 ENGINE AR-COMPLETE**

**AN ATTACHMENT**

**SMCS-7557** **i02716734**

| NOTE | REF NO | GRAPHIC REF | PART NUMBER | QTY | PART NAME 1 2 3 4 5 6 (PRODUCT LEVEL) | SEE PAGE |
|---|---|---|---|---|---|---|
| C | 1 | 1 | **300-0572** | 1 | PLATE-IDENTIFICATION (CAT C18 ACERT) | |

C-CHANGE FROM PREVIOUS TYPE

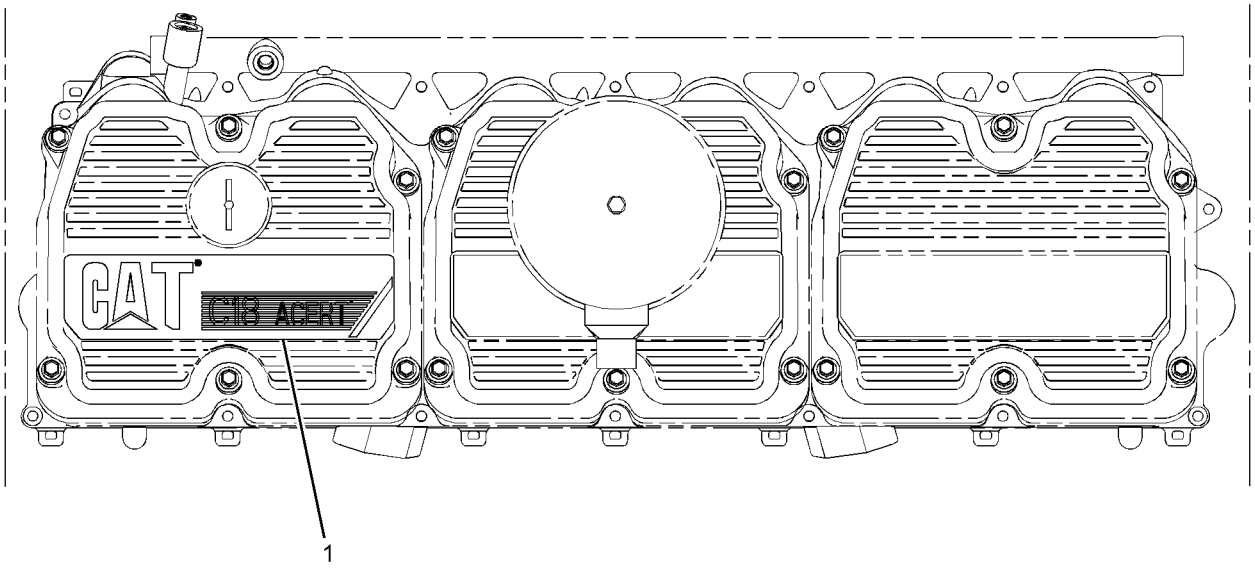


TOP VIEW OF ENGINE

GRAPHIC #1 **<END>** g01367503

# SERVICE EQUIPMENT AND SUPPLIES

## *212-3432* PROTECTION GP-VANDALISM

**S/N: RLB1-UP**

**PART OF 270-9143, 270-9144 PLATE & FILM GP**

**AN ATTACHMENT**

**SMCS-7315** **i02160289**

| NOTE | PART NUMBER | QTY | PART NAME 1 2 3 4 5 6 (PRODUCT LEVEL) | SEE PAGE |
|---|---|---|---|---|
| | **246-2641** | 3 | PADLOCK GP (VANDALISM GUARD) | |
| | | | (EACH INCLUDES) | |
| | **5P-8500** | 1 | KEY | |

**<END>**

## *300-6869* PROTECTION GP-VANDALISM—HYDRAULIC TANK

**S/N: RLB1-UP**

**PART OF 270-1748 HYDRAULIC AR**

**SMCS-7315** **i02796739**

| NOTE | REF NO | GRAPHIC REF | PART NUMBER | QTY | PART NAME 1 2 3 4 5 6 (PRODUCT LEVEL) | SEE PAGE |
|---|---|---|---|---|---|---|
| | 1 | 1 | **5D-1911** | 1 | COVER-HYDRAULIC CAP | |
| | 2 | 1 | **9M-7394** | 1 | LEVER | |
| | 3 | 1 | **1L-5072** | 1 | DOWEL | |
| | 4 | 1 | **2J-7761** | 1 | RING-RETAINING | |

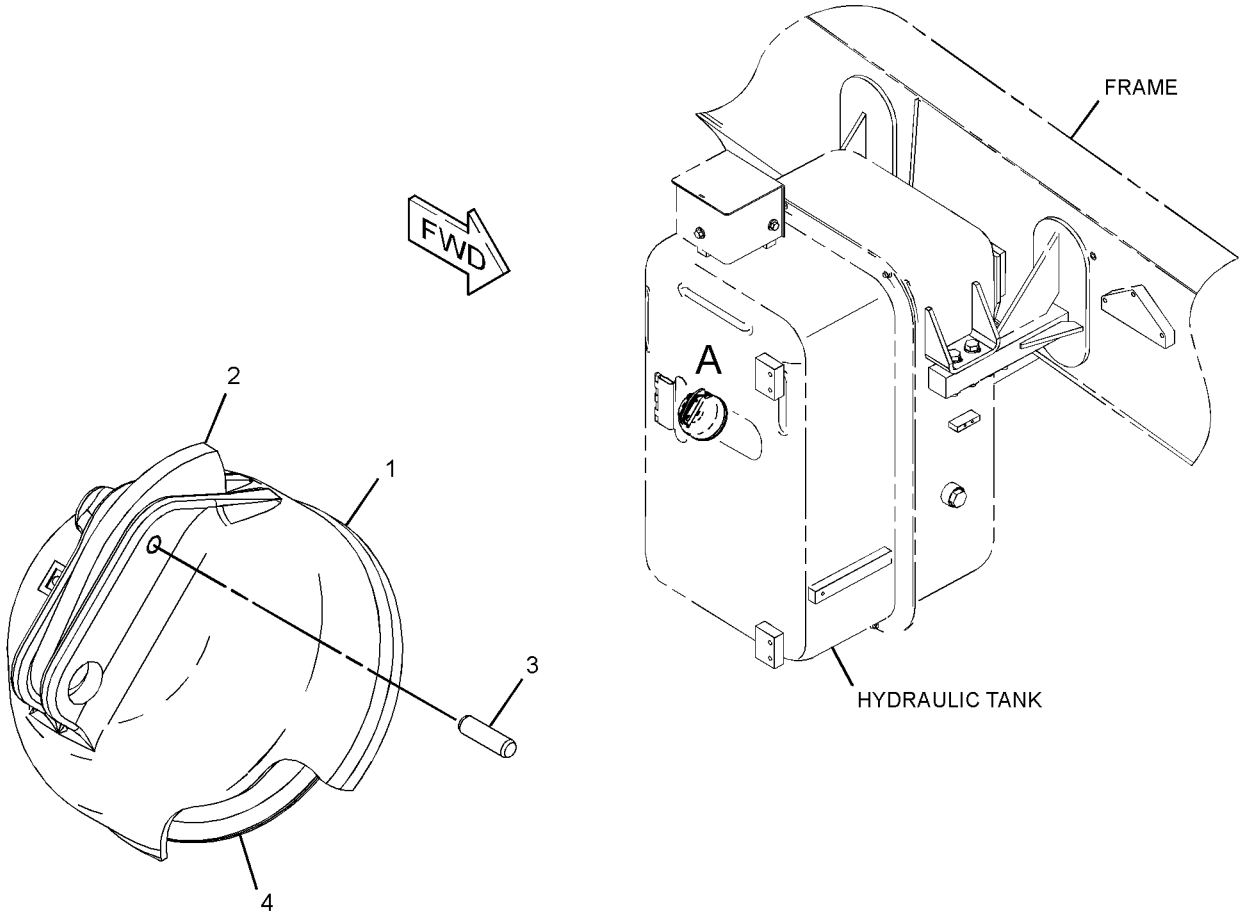


VIEW OF AREA A

GRAPHIC #1 **<END>** g01403759

# MEMORANDA

# PART NUMBER INDEX


| Part | Page |
|---|---|
| **0** | |
| 0L-1026 | 444 |
| 0L-1143 | 138 |
| | 225 |
| | 465 |
| 0L-1351 | 109 |
| | 111 |
| | 144 |
| | 151 |
| | 152 |
| | 315 |
| | 370 |
| | 392 |
| | 432 |
| | 447 |
| 0L-1352 | 166 |
| | 444 |
| 0L-2070 | 96 |
| | 142 |
| | 392 |
| 0S-0509 | 370 |
| | 373 |
| | 389 |
| | 392 |
| | 444 |
| 0S-0699 | 229 |
| | 230 |
| 0S-1566 | 408 |
| 0S-1571 | 86 |
| | 131 |
| | 154 |
| | 234 |
| | 236 |
| | 432 |
| 0S-1576 | 370 |
| | 373 |
| 0S-1579 | 452 |
| 0S-1585 | 77 |
| | 109 |
| | 444 |
| 0S-1587 | 107 |
| | 408 |
| | 432 |
| 0S-1588 | 37 |
| | 96 |
| | 107 |
| | 136 |
| | 141 |
| | 142 |
| | 144 |
| | 146 |
| | 152 |
| | 170 |
| | 222 |
| | 408 |
| | 432 |
| | 447 |
| | 643 |
| | 781 |
| | 782 |
| 0S-1590 | 79 |
| | 138 |
| | 142 |
| | 144 |
| | 465 |
| 0S-1591 | 109 |
| | 111 |
| | 131 |
| | 151 |
| | 152 |
| | 166 |
| | 182 |
| | 296 |
| | 432 |
| 0S-1594 | 30 |
| | 31 |
| | 32 |
| | 33 |
| | 81 |
| | 98 |
| | 142 |
| | 166 |
| | 170 |
| | 192 |
| | 222 |
| | 392 |
| | 408 |
| | 413 |
| | 418 |
| | 444 |
| | 782 |
| 0S-1595 | 99 |
| | 100 |
| | 111 |
| | 444 |
| 0S-1597 | 692 |
| 0S-1602 | 84 |
| 0S-1608 | 106 |
| | 144 |
| | 146 |
| | 147 |
| 0S-1614 | 458 |
| 0S-1617 | 392 |
| | 432 |
| 0S-1618 | 453 |
| | 455 |
| | 465 |
| | 467 |
| 0S-1619 | 38 |
| | 144 |
| | 146 |
| | 147 |
| | 222 |
| | 392 |
| | 465 |
| 0S-1620 | 396 |
| 0S-1625 | 479 |
| 0S-1629 | 579 |
| | 581 |
| 0S-1973 | 565 |
| 0T-0055 | 37 |
| | 96 |
| | 782 |
| 0T-0065 | 142 |
| | 166 |
| 0T-0102 | 396 |
| | 408 |
| 0T-0244 | 791 |
| | 793 |
| 0T-0489 | 791 |
| 0T-0573 | 106 |
| 0T-0768 | 396 |
| **1** | |
| 1A-0458 | 564 |
| 1A-1135 | 182 |
| 1A-2029 | 107 |
| | 109 |
| | 111 |
| | 144 |
| | 146 |
| | 147 |
| | 151 |
| | 152 |
| | 166 |
| | 170 |
| | 392 |
| | 408 |
| | 444 |
| | 479 |
| 1A-2170 | 430 |
| 1A-2223 | 429 |
| | 430 |
| | 431 |
| 1A-2358 | 444 |
| 1A-3203 | 77 |
| 1A-4273 | 370 |
| | 373 |
| 1A-5183 | 37 |
| 1A-5964 | 222 |
| | 782 |
| 1A-7669 | 432 |
| 1B-2790 | 460 |
| 1B-2886 | 389 |
| 1B-3867 | 23 |
| | 315 |
| 1B-4034 | 399 |
| 1B-4209 | 690 |
| 1B-7182 | 182 |
| | 432 |
| 1B-8705 | 86 |
| 1B-8706 | 203 |
| 1B-9575 | 386 |
| 1D-4539 | 234 |
| | 236 |
| | 460 |
| 1D-4541 | 467 |
| 1D-4574 | 432 |
| 1D-4586 | 643 |
| | 645 |
| 1D-4612 | 643 |
| | 645 |
| 1D-4626 | 565 |
| 1D-4627 | 565 |
| 1D-4689 | 539 |
| 1F-0750 | 157 |
| | 160 |
| | 170 |
| | 236 |
| | 285 |
| | 370 |
| | 604 |
| 1F-3674 | 160 |
| 1F-4111 | 467 |
| 1F-7958 | 29 |
| | 82 |
| 1F-8359 | 465 |
| 1F-8419 | 465 |
| 1H-1023 | 326 |
| 1H-2629 | 326 |
| 1H-3244 | 249 |
| 1H-3338 | 332 |
| | 333 |
| 1H-4142 | 460 |
| 1H-8128 | 213 |
| | 242 |
| 1H-8278 | 556 |
| 1H-8305 | 242 |
| 1H-8306 | 242 |
| 1H-8647 | 23 |
| 1H-8720 | 444 |
| 1J-2176 | 479 |
| | 643 |
| | 645 |
| 1J-2860 | 399 |
| 1J-4246 | 440 |
| 1J-4757 | 399 |
| 1J-5799 | 465 |
| 1J-8497 | 717 |
| | 718 |
| 1J-9671 | 92 |
| | 94 |
| | 213 |
| | 234 |
| | 386 |
| | 453 |
| 1K-0958 | 408 |
| 1K-4649 | 185 |
| 1K-6853 | 556 |
| 1K-6870 | 241 |
| 1K-6872 | 539 |
| | 726 |
| | 727 |
| 1L-3162 | 460 |
| 1L-5072 | 863 |
| 1L-7205 | 447 |
| 1L-7518 | 479 |
| 1M-0644 | 163 |
| 1M-3909 | 437 |
| 1M-6119 | 252 |
| | 253 |
| 1M-6120 | 252 |
| | 253 |
| 1M-9691 | 430 |
| 1M-9968 | 327 |
| 1M-9971 | 326 |
| 1N-5998 | 685 |
| 1P-1367 | 137 |
| 1P-1479 | 437 |
| 1P-3703 | 620 |
| | 666 |
| | 670 |
| | 674 |
| | 680 |
| 1P-3704 | 414 |
| | 419 |
| 1P-3705 | 174 |


► **PRIMARY REFERENCE**

# PART NUMBER INDEX


| Part | Page |
|---|---|
| | 176 |
| | 179 |
| | 414 |
| | 419 |
| | 653 |
| | 657 |
| | 661 |
| 1P-3706 | 174 |
| | 176 |
| | 653 |
| 1P-3707 | 174 |
| | 176 |
| | 179 |
| | 653 |
| | 685 |
| 1P-3708 | 657 |
| | 661 |
| 1P-3709 | 638 |
| | 711 |
| 1P-3934 | 408 |
| 1P-3935 | 408 |
| 1P-4576 | 643 |
| | 645 |
| | 653 |
| | 657 |
| | 661 |
| 1P-4577 | 414 |
| | 419 |
| | 620 |
| | 632 |
| | 703 |
| 1P-4578 | 414 |
| | 419 |
| | 620 |
| | 666 |
| | 670 |
| | 674 |
| | 680 |
| | 696 |
| 1P-4579 | 174 |
| | 176 |
| | 179 |
| | 389 |
| | 411 |
| | 414 |
| | 419 |
| | 620 |
| | 632 |
| | 653 |
| | 657 |
| | 661 |
| | 685 |
| | 711 |
| 1P-4582 | 179 |
| | 213 |
| | 411 |
| | 414 |
| | 419 |
| | 658 |
| | 662 |
| | 685 |
| | 703 |
| | 711 |
| 1P-6356 | 764 |
| 1P-6405 | 575 |
| | 577 |
| 1P-6744 | 711 |
| 1P-6872 | 700 |
| 1P-7346 | 86 |
| 1P-9620 | 460 |
| 1R-0716 | 142 |
| | 144 |
| 1R-0719 | 406 |
| 1R-0762 | 234 |
| | 236 |
| 1R-1808 | 146 |
| | 147 |
| 1S-0579 | 432 |
| 1S-0833 | 213 |
| 1S-0994 | 157 |
| | 160 |
| | 218 |
| | 222 |
| | 225 |
| | 227 |
| | 414 |
| | 419 |
| | 581 |
| | 586 |
| | 591 |
| | 617 |
| | 620 |
| | 674 |
| | 680 |
| 1S-1636 | 453 |
| | 455 |
| | 456 |
| | 458 |
| | 465 |
| 1S-1638 | 453 |
| | 455 |
| | 456 |
| | 458 |
| | 465 |
| 1S-3725 | 396 |
| 1S-4295 | 206 |
| | 207 |
| | 208 |
| | 209 |
| 1S-7251 | 252 |
| | 325 |
| 1S-7252 | 252 |
| | 325 |
| 1S-7446 | 326 |
| 1S-9540 | 49 |
| | 51 |
| | 53 |
| | 55 |
| | 57 |
| 1S-9593 | 463 |
| | 719 |
| | 720 |
| 1T-0034 | 444 |
| 1T-0136 | 444 |
| 1T-0141 | 430 |
| 1T-0284 | 317 |
| 1T-0364 | 444 |
| 1T-0680 | 448 |
| 1T-0720 | 32 |
| | 291 |
| | 292 |
| | 432 |
| 1T-0765 | 229 |
| | 230 |
| 1T-0786 | 447 |
| 1T-0792 | 447 |
| 1T-0794 | 447 |
| 1T-0795 | 447 |
| 1T-0804 | 447 |
| 1T-0806 | 447 |
| 1T-0807 | 447 |
| 1T-0847 | 447 |
| 1T-0867 | 447 |
| 1T-0887 | 447 |
| 1T-0895 | 447 |
| 1T-0896 | 447 |
| 1T-0897 | 447 |
| 1T-0936 | 447 |
| 1T-1006 | 444 |
| 1T-1011 | 444 |
| 1T-1012 | 444 |
| 1T-1220 | 447 |
| 1T-1221 | 447 |
| 1T-1229 | 447 |
| 1T-1315 | 447 |
| 1T-1356 | 447 |
| 1T-1410 | 447 |
| 1T-1423 | 447 |
| 1T-1426 | 447 |
| 1T-1496 | 447 |
| 1T-1499 | 447 |
| 1T-1616 | 447 |
| 1T-1617 | 447 |
| 1T-1639 | 444 |
| 1T-1658 | 447 |
| 1T-1659 | 447 |
| 1T-1910 | 447 |
| 1U-0322 | 711 |
| 1U-0323 | 711 |
| 1U-1643 | 708 |
| 1U-2827 | 708 |
| 1V-0019 | 203 |
| 1W-3136 | 92 |
| | 94 |
| 1W-6448 | 296 |
| 1W-7238 | 163 |
| 1W-7239 | 163 |
| | 2 |
| 2A-1162 | 92 |
| | 94 |
| | 403 |
| 2A-1913 | 470 |
| | 474 |
| 2A-3398 | 403 |
| 2A-3746 | 430 |
| 2A-4429 | 69 |
| | 70 |
| | 73 |
| 2A-4639 | 236 |
| | 315 |
| | 408 |
| 2B-0858 | 396 |
| 2B-0941 | 680 |
| 2B-0947 | 432 |
| 2B-2695 | 35 |
| | 453 |
| | 455 |
| 2B-9373 | 437 |
| 2D-1683 | 504 |
| | 508 |
| | 510 |
| | 512 |
| | 513 |
| | 514 |
| | 525 |
| | 527 |
| | 625 |
| 2D-2507 | 440 |
| 2D-2508 | 440 |
| 2D-2509 | 440 |
| 2D-4202 | 630 |
| | 708 |
| 2D-6392 | 326 |
| 2D-6648 | 638 |
| 2D-8009 | 437 |
| 2D-9457 | 399 |
| 2F-6678 | 327 |
| 2G-1202 | 600 |
| 2G-5459 | 564 |
| 2G-5536 | 596 |
| 2G-5538 | 596 |
| 2G-6478 | 554 |
| 2G-7282 | 600 |
| 2G-7826 | 534 |
| 2G-7988 | 429 |
| 2G-8201 | 554 |
| 2G-8932 | 600 |
| 2G-9177 | 193 |
| 2H-1743 | 596 |
| | 650 |
| 2H-3429 | 326 |
| 2H-3749 | 401 |
| 2H-3755 | 296 |
| | 315 |
| 2H-3922 | 329 |
| 2H-3927 | 389 |
| 2H-3932 | 389 |
| 2H-4145 | 600 |
| 2H-5001 | 558 |
| 2H-6184 | 444 |
| 2J-0744 | 643 |
| | 645 |
| 2J-2668 | 174 |
| | 176 |
| | 179 |
| | 396 |
| | 654 |
| 2J-3118 | 86 |
| 2J-6089 | 718 |
| 2J-6114 | 708 |
| 2J-6356 | 406 |
| | 407 |
| 2J-7761 | 863 |
| 2J-8163 | 326 |
| 2K-0337 | 401 |
| 2K-4472 | 399 |
| | 643 |


► **PRIMARY REFERENCE**

# PART NUMBER INDEX


| Part | Page | Part | Page | Part | Page | Part | Page |
|---|---|---|---|---|---|---|---|
| | 645 | | 144 | | 234 | | 657 |
| 2K-4473 | 643 | 2P-4339 | 777 | | 315 | | 661 |
| | 645 | 2P-7214 | 222 | | 370 | | 665 |
| 2K-4821 | 249 | 2P-8421 | 349 | | 373 | | 666 |
| 2K-4973 | 109 | | 355 | 3B-4501 | 755 | | 669 |
| | 111 | | 362 | 3B-4615 | 534 | | 670 |
| | 630 | 2R-0098 | 403 | 3B-4647 | 534 | | 673 |
| | 708 | 2R-1256 | 711 | 3B-5316 | 613 | | 674 |
| | 721 | 2R-1939 | 504 | | 625 | | 679 |
| | 802 | 2R-2376 | 775 | 3B-5790 | 700 | | 680 |
| 2K-5232 | 218 | 2R-6806 | 222 | 3B-6768 | 324 | | 681 |
| | 225 | 2S-0675 | 453 | | 504 | | 768 |
| | 227 | | 455 | 3B-7722 | 172 | | 769 |
| 2K-9111 | 465 | 2S-0696 | 460 | 3B-7743 | 414 | 3D-4197 | 392 |
| 2L-0043 | 432 | 2S-0795 | 166 | | 419 | 3D-4603 | 711 |
| 2L-1699 | 465 | 2S-1212 | 185 | 3B-8485 | 508 | 3D-5564 | 401 |
| 2L-5893 | 788 | 2S-1457 | 392 | | 510 | 3D-6509 | 401 |
| 2L-6679 | 326 | 2S-1647 | 414 | | 625 | 3D-8242 | 427 |
| 2L-6726 | 460 | | 419 | | 643 | 3D-8823 | 431 |
| 2M-3818 | 408 | 2S-2182 | 453 | | 645 | 3D-9348 | 432 |
| 2M-9780 | 142 | 2S-2596 | 632 | 3B-8489 | 504 | 3E-1552 | 837 |
| | 147 | 2S-2760 | 163 | | 508 | | 842 |
| | 157 | 2S-3625 | 32 | | 510 | | 847 |
| | 160 | 2S-4078 | 711 | | 512 | 3E-3365 | 240 |
| | 218 | 2S-6160 | 315 | | 513 | | 248 |
| | 423 | | 392 | | 514 | | 336 |
| | 458 | 2S-7593 | 399 | | 519 | | 463 |
| | 585 | 2S-7905 | 163 | | 521 | 3E-3368 | 301 |
| | 586 | 2S-8439 | 406 | | 523 | 3E-3371 | 298 |
| | 590 | | 407 | | 525 | | 300 |
| | 591 | 2S-9255 | 256 | | 527 | | 308 |
| | 596 | 2T-3360 | 738 | | 534 | | 318 |
| | 604 | 2U-4729 | 755 | | 556 | | 341 |
| | 607 | 2U-9074 | 738 | | 558 | | 377 |
| | 611 | 2V-1771 | 252 | 3B-8491 | 625 | | 632 |
| | 620 | 2V-4458 | 432 | 3C-8388 | 638 | | 720 |
| | 634 | 2V-7343 | 658 | 3D-2824 | 166 | 3E-3377 | 287 |
| | 648 | 2W-2072 | 89 | | 218 | | 289 |
| | 650 | | 90 | | 225 | | 349 |
| | 651 | 2W-5317 | 619 | | 227 | | 355 |
| | 693 | 2W-5562 | 673 | | 242 | | 362 |
| | 700 | | 679 | | 349 | | 719 |
| | 706 | 2W-5564 | 176 | | 355 | 3E-3383 | 377 |
| | 712 | | 179 | | 362 | 3E-4051 | 764 |
| 2N-2766 | 197 | | 653 | | 389 | 3E-4052 | 764 |
| 2N-8037 | 172 | | 657 | | 406 | 3E-4053 | 764 |
| 2P-1293 | 586 | | 661 | | 407 | 3E-4057 | 764 |
| | 591 | 2Y-5429 | 252 | | 413 | 3E-4058 | 764 |
| | 666 | 2Y-5829 | 796 | | 418 | 3E-4312 | 725 |
| | 670 | | 797 | | 427 | 3E-4313 | 804 |
| | 674 | 2Y-6448 | 170 | | 453 | 3E-4354 | 455 |
| | 681 | | | | 579 | 3E-5169 | 377 |
| 2P-1974 | 106 | | | | 581 | 3E-5239 | 343 |
| 2P-2717 | 139 | **3** | | | 585 | 3E-5464 | 755 |
| 2P-2772 | 92 | | | | 586 | 3E-5543 | 855 |
| | 94 | 3A-1689 | 414 | | 590 | 3E-5544 | 854 |
| 2P-3204 | 109 | | 419 | | 591 | 3E-5545 | 853 |
| 2P-3205 | 107 | 3B-0551 | 242 | | 592 | 3E-5546 | 853 |
| | 111 | 3B-0623 | 61 | | 596 | 3E-5547 | 852 |
| | 163 | | 64 | | 617 | 3E-5548 | 853 |
| 2P-3760 | 142 | | 67 | | 619 | 3E-5549 | 852 |
| 2P-3761 | 142 | 3B-0645 | 61 | | 620 | 3E-6328 | ▶248 |
| 2P-4304 | 134 | | 64 | | 630 | | 256 |
| | 135 | | 67 | | 650 | 3E-6389 | ▶278 |
| | 142 | 3B-1915 | 107 | | 653 | | 343 |


▶ **PRIMARY REFERENCE**

# PART NUMBER INDEX


| Part | Page |
|---|---|
| 3E-6600 | 789 |
| | 814 |
| 3E-6769 | 700 |
| 3E-6770 | 700 |
| 3E-6772 | 71 |
| | 72 |
| | 75 |
| 3E-7401 | 584 |
| | 589 |
| 3E-7771 | 327 |
| 3E-8044 | 96 |
| 3E-8575 | 465 |
| | ▶719 |
| 3E-8581 | 719 |
| 3F-3152 | 386 |
| | 453 |
| 3F-5792 | 414 |
| | 419 |
| | 444 |
| 3F-9556 | 249 |
| | 771 |
| 3G-2683 | 711 |
| 3G-2692 | 708 |
| 3G-2887 | 604 |
| | 607 |
| | ▶610 |
| 3G-3916 | 460 |
| 3G-4214 | 620 |
| 3G-4218 | 620 |
| 3H-0240 | 804 |
| 3H-1461 | 32 |
| 3H-5368 | 444 |
| 3H-5826 | 697 |
| 3H-6828 | 470 |
| | 474 |
| 3H-8538 | 674 |
| | 681 |
| 3J-1907 | 142 |
| | 144 |
| | 157 |
| | 160 |
| | 166 |
| | 172 |
| | 174 |
| | 176 |
| | 179 |
| | 294 |
| | 349 |
| | 355 |
| | 361 |
| | 362 |
| | 375 |
| | 389 |
| | 406 |
| | 407 |
| | 411 |
| | 413 |
| | 414 |
| | 418 |
| | 419 |
| | 423 |
| | 453 |
| | 460 |
| | 465 |
| | 467 |
| | 558 |
| | 566 |
| | 569 |
| | 572 |
| | 579 |
| | 581 |
| | 585 |
| | 586 |
| | 590 |
| | 591 |
| | 594 |
| | 596 |
| | 601 |
| | 617 |
| | 619 |
| | 620 |
| | 638 |
| | 643 |
| | 645 |
| | 647 |
| | 650 |
| | 653 |
| | 657 |
| | 661 |
| | 662 |
| | 665 |
| | 669 |
| | 673 |
| | 674 |
| | 679 |
| | 680 |
| | 685 |
| | 693 |
| | 697 |
| | 699 |
| | 712 |
| 3J-4818 | 802 |
| 3J-7354 | 92 |
| | 94 |
| | 137 |
| | 166 |
| | 378 |
| | 414 |
| | 419 |
| | 605 |
| | 608 |
| | 619 |
| | 620 |
| | 637 |
| | 674 |
| | 680 |
| | 685 |
| | 689 |
| | 693 |
| | 700 |
| | 712 |
| | 715 |
| | 717 |
| | 718 |
| 3K-0360 | 92 |
| | 94 |
| | 157 |
| | 160 |
| | 166 |
| | 167 |
| | 218 |
| | 225 |
| | 227 |
| | 234 |
| | 236 |
| | 383 |
| | 413 |
| | 418 |
| | 423 |
| | 465 |
| | 472 |
| | 476 |
| | 566 |
| | 569 |
| | 572 |
| | 579 |
| | 581 |
| | 584 |
| | 585 |
| | 586 |
| | 589 |
| | 590 |
| | 591 |
| | 596 |
| | 604 |
| | 605 |
| | 607 |
| | 608 |
| | 614 |
| | 617 |
| | 619 |
| | 620 |
| | 621 |
| | 632 |
| | 635 |
| | 636 |
| | 647 |
| | 650 |
| | 651 |
| | 669 |
| | 679 |
| | 685 |
| | 711 |
| | 717 |
| | 718 |
| 3K-0715 | 697 |
| | 699 |
| 3L-3380 | 326 |
| 3N-3763 | 327 |
| 3N-3790 | 832 |
| | 847 |
| 3P-0647 | 392 |
| 3P-0650 | 142 |
| | 144 |
| | 146 |
| | 147 |
| 3P-0887 | 406 |
| | 407 |
| 3P-0896 | 432 |
| 3P-1155 | 296 |
| | 392 |
| 3P-1669 | 399 |
| 3P-1932 | 234 |
| | 236 |
| 3P-2404 | 586 |
| 3P-2573 | 447 |
| 3P-2574 | 447 |
| 3P-2795 | 432 |
| 3P-8143 | 408 |
| 3P-8147 | 408 |
| 3P-9847 | 620 |
| 3P-9900 | 802 |
| 3R-8797 | 326 |
| 3R-8801 | 327 |
| 3S-0004 | 437 |
| 3S-1784 | 769 |
| 3S-2093 | 218 |
| | 227 |
| | 234 |
| | 236 |
| | 252 |
| | 285 |
| | 287 |
| | 289 |
| | 343 |
| | 348 |
| | 354 |
| | 361 |
| | 368 |
| | 369 |
| | 370 |
| | 373 |
| | 375 |
| | 377 |
| | 382 |
| | 383 |
| | 815 |
| 3S-2708 | 432 |
| 3S-2909 | 613 |
| | 625 |
| 3S-3074 | 470 |
| | 472 |
| | 474 |
| | 476 |
| 3S-3875 | 444 |
| 3S-6049 | 252 |
| 3S-6050 | 252 |
| 3S-7712 | 172 |
| 3S-8652 | 406 |
| | 407 |
| | 708 |
| 3S-8665 | 620 |
| 3S-9643 | 166 |
| 3T-0688 | 406 |
| | 407 |
| 3T-0693 | 467 |
| 3T-0697 | 430 |
| 3T-0698 | 430 |
| 3T-0703 | 430 |
| 3T-0707 | 430 |
| 3T-0709 | 430 |
| 3T-0918 | 392 |
| 3T-0919 | 392 |
| 3T-1386 | 430 |
| 3T-1437 | 458 |


▶ **PRIMARY REFERENCE**

# PART NUMBER INDEX


| Part | Page | Part | Page | Part | Page | Part | Page |
|---|---|---|---|---|---|---|---|
| 3T-2299 | 432 | | 460 | | 674 | | 651 |
| 3T-2334 | 465 | | 465 | | 681 | 4L-7124 | 294 |
| 3T-3418 | 326 | 4D-0514 | 460 | 4J-0522 | 414 | 4L-9337 | 153 |
| 3T-3422 | 326 | 4D-1326 | 334 | | 419 | | 154 |
| 3T-3423 | 326 | 4D-3398 | 440 | | 620 | | 195 |
| | 327 | 4D-3704 | 84 | | 666 | | 242 |
| 3T-3424 | 326 | 4D-3734 | 414 | | 670 | | 542 |
| | 327 | | 419 | | 674 | | 620 |
| 3T-3434 | 326 | 4D-4917 | 414 | | 681 | | 686 |
| 3T-3718 | 431 | | 419 | 4J-0524 | 174 | 4M-0061 | 193 |
| 3T-3723 | 430 | 4D-5642 | 470 | | 176 | 4M-0189 | 92 |
| 3T-3725 | 432 | | 472 | | 179 | | 94 |
| 3T-3751 | 430 | | 474 | | 396 | 4M-0737 | 470 |
| 3T-3997 | 430 | | 476 | | 411 | | 472 |
| 3T-4709 | 326 | 4D-7536 | 401 | | 414 | | 474 |
| 3T-4710 | 326 | 4D-7735 | 172 | | 419 | | 476 |
| 3T-5219 | 460 | | 222 | | 620 | 4M-1751 | 458 |
| 3T-6822 | 203 | | 586 | | 654 | 4M-1827 | 326 |
| 3T-6992 | 437 | | 591 | | 658 | 4M-1828 | 326 |
| 3T-6999 | 430 | | 597 | | 662 | 4M-1831 | 326 |
| 3T-7000 | 430 | | 651 | | 685 | 4M-1853 | 326 |
| 3T-7002 | 430 | 4D-7779 | 625 | 4J-0527 | 179 | 4M-1854 | 326 |
| 3T-7003 | 430 | 4D-7794 | 211 | | 213 | 4M-1896 | 327 |
| 3T-9494 | 326 | 4D-8131 | 401 | | 411 | 4M-2381 | 453 |
| | 327 | 4D-8132 | 401 | | 414 | | 455 |
| 3T-9524 | 327 | 4D-8695 | 470 | | 419 | | 456 |
| 3T-9525 | 326 | | 472 | | 620 | | 458 |
| 3T-9560 | 465 | | 474 | | 657 | | 460 |
| 3T-9578 | 465 | | 476 | | 661 | 4M-6425 | 788 |
| 3T-9836 | 465 | | 479 | | 685 | 4M-6480 | 34 |
| 3T-9920 | 460 | 4D-9517 | 218 | 4J-2506 | 711 | 4M-6582 | 729 |
| 3U-4762 | 344 | | 225 | 4J-5267 | 654 | | 807 |
| 3V-0197 | 564 | | 227 | | 658 | 4M-8871 | 432 |
| 3V-3306 | 556 | | 594 | | 662 | 4M-9592 | 430 |
| 3V-7689 | 546 | 4E-1411 | 758 | 4J-5477 | 674 | 4M-9641 | 432 |
| | 548 | | 759 | | 680 | 4N-0683 | 49 |
| 3W-9670 | 620 | 4F-0411 | 166 | 4J-6557 | 558 | | 51 |
| | | | 437 | 4J-7533 | 423 | | 53 |
| | | 4F-2041 | 399 | | 453 | | 55 |
| **4** | | 4F-2294 | 335 | | 458 | | 57 |
| | | 4F-3508 | 234 | | 601 | | 130 |
| 4B-1326 | 240 | | 236 | | 711 | 4N-0684 | 42 |
| 4B-2049 | 327 | | 467 | 4J-8251 | 708 | | 89 |
| 4B-3388 | 460 | 4F-4879 | 801 | 4J-8252 | 708 | | 90 |
| 4B-3665 | 444 | 4F-6024 | 89 | 4J-8536 | 560 | 4N-0699 | 30 |
| 4B-3903 | 467 | | 90 | 4J-9780 | 711 | | 31 |
| 4B-4274 | 343 | 4F-7957 | 23 | 4K-8864 | 674 | | 33 |
| | 750 | | 24 | | 681 | 4N-0913 | 151 |
| 4B-4278 | 802 | | 25 | 4K-9097 | 236 | | 152 |
| 4B-4314 | 139 | | 26 | 4K-9429 | 773 | 4N-0914 | 151 |
| 4B-4450 | 534 | | 27 | 4L-2729 | 327 | | 152 |
| 4B-8393 | 399 | 4H-1349 | 465 | 4L-6454 | 213 | 4N-0933 | 92 |
| 4B-9782 | 121 | 4H-2558 | 378 | | 414 | | 94 |
| | 123 | 4H-5232 | 711 | | 419 | 4N-1151 | 107 |
| | 124 | 4H-8380 | 386 | | 630 | | 109 |
| | 125 | 4H-8878 | 408 | | 685 | 4N-1650 | 49 |
| | 126 | 4H-9027 | 242 | | 705 | | 51 |
| | 465 | 4I-0472 | 620 | | 708 | | 53 |
| 4B-9784 | 611 | 4I-8439 | 778 | | 726 | | 55 |
| 4B-9786 | 556 | 4J-0519 | 711 | | 727 | | 57 |
| | 558 | 4J-0520 | 414 | 4L-6459 | 218 | 4N-2481 | 2 |
| 4B-9880 | 453 | | 419 | | 227 | | 3 |
| | 455 | | 620 | | 597 | | 4 |
| | 456 | | 666 | | 605 | | 6 |
| | 458 | | 670 | | 608 | | 9 |


► **PRIMARY REFERENCE**

# PART NUMBER INDEX


| Part | Page |
|---|---|
| | 11 |
| | ▶138 |
| 4N-2514 | 84 |
| 4N-8150 | 134 |
| | 137 |
| 4N-8227 | 270 |
| 4P-0519 | 107 |
| | 111 |
| 4P-2383 | 184 |
| 4P-4278 | 121 |
| 4P-4279 | 121 |
| 4P-4460 | 153 |
| | 154 |
| 4P-6846 | 2 |
| | 3 |
| | 4 |
| | 6 |
| | 9 |
| | 11 |
| | ▶81 |
| 4P-7371 | 121 |
| 4P-7373 | 109 |
| | 111 |
| | 151 |
| | 152 |
| 4P-7428 | 375 |
| 4P-7429 | 349 |
| | 355 |
| | 362 |
| | 370 |
| | 373 |
| 4P-7581 | 222 |
| | 234 |
| | 237 |
| | 285 |
| | 343 |
| | 349 |
| | 355 |
| | 362 |
| | 370 |
| | 373 |
| | 375 |
| | 378 |
| | 383 |
| | 504 |
| 4P-7582 | 370 |
| | 373 |
| | 375 |
| 4P-8134 | 315 |
| | 347 |
| | 349 |
| | 355 |
| | 362 |
| | 370 |
| | 373 |
| | 375 |
| 4P-9131 | 151 |
| | 152 |
| 4S-1962 | 620 |
| | 666 |
| | 670 |
| | 674 |
| | 681 |
| 4S-4455 | 349 |
| | 355 |
| | 362 |
| | 666 |
| | 674 |
| | 706 |
| | 430 |
| 4S-5816 | 764 |
| 4S-6668 | 172 |
| 4S-6822 | 408 |
| 4S-8603 | 635 |
| 4T-2741 | 636 |
| | 632 |
| 4T-2742 | ▶635 |
| | 614 |
| 4T-5613 | 635 |
| 4T-7571 | 636 |
| | 643 |
| 4T-8695 | 645 |
| | 611 |
| 4T-9905 | 764 |
| 4V-4125 | 721 |
| 4V-8256 | 802 |
| 4V-8577 | 539 |
| 4V-9804 | 42 |
| 4W-5698 | 42 |
| 4W-5699 | 42 |
| 4W-5700 | 42 |
| 4W-5701 | 225 |
| 4W-7627 | 597 |
| | 650 |
| 4W-9160 | 197 |
| 4W-9890 | 30 |
| | 31 |
| | 33 |
| | |
| | |
| |

# PART NUMBER INDEX


| Part | Page | Part | Page | Part | Page | Part | Page |
|---|---|---|---|---|---|---|---|
| | 170 | | 653 | 5P-1404 . . . . . | 234 | 5P-5855 . . . . . | 447 |
| | 192 | | 657 | | 236 | 5P-6010 . . . . . | 802 |
| | 222 | 5P-0767 . . . . . | 157 | 5P-2199 . . . . . | 634 | 5P-6029 . . . . . | 348 |
| | 225 | | 768 | 5P-2228 . . . . . | 199 | | 354 |
| | 229 | | 769 | | 200 | | 361 |
| | 230 | 5P-0840 . . . . . | 49 | | 605 | 5P-6264 . . . . . | 750 |
| | 234 | | 51 | 5P-2236 . . . . . | 399 | 5P-6298 . . . . . | 326 |
| | 236 | | 53 | 5P-2369 . . . . . | 148 | 5P-6412 . . . . . | 211 |
| | 292 | | 55 | | 414 | 5P-6459 . . . . . | 242 |
| | 296 | | 57 | | 419 | 5P-6718 . . . . . | 392 |
| | 315 | | 71 | 5P-2424 . . . . . | 174 | 5P-6727 . . . . . | 432 |
| | 370 | | 72 | | 176 | 5P-6944 . . . . . | 166 |
| | 373 | | 75 | | 179 | | 566 |
| | 392 | 5P-1075 . . . . . | 211 | | 654 | | 569 |
| | 408 | | 213 | | 658 | | 572 |
| | 432 | | 252 | | 662 | | 584 |
| | 444 | | 414 | 5P-2494 . . . . . | 822 | | 589 |
| | 447 | | 419 | | 827 | | 666 |
| | 465 | | 620 | | 832 | | 669 |
| | 467 | | 654 | | 837 | | 675 |
| | 479 | | 658 | | 842 | | 679 |
| | 643 | | 662 | | 847 | 5P-7211 . . . . . | 187 |
| | 645 | | 686 | 5P-2566 . . . . . | 166 | 5P-7464 . . . . . | 586 |
| | 654 | | 705 | | 179 | | 591 |
| | 782 | | 798 | | 534 | | 594 |
| | 788 | 5P-1076 . . . . . | 193 | | 536 | 5P-7465 . . . . . | 586 |
| 5M-3034 . . . . . | 326 | | 199 | | 575 | | 591 |
| 5M-3062 . . . . . | 211 | | 200 | | 577 | | 594 |
| | 213 | | 241 | | 641 | 5P-7466 . . . . . | 620 |
| | 252 | | 482 | | 658 | | 654 |
| | 285 | | 534 | | 662 | | 658 |
| | 493 | | 542 | | 686 | | 662 |
| | 563 | | 544 | | 711 | 5P-7467 . . . . . | 411 |
| | 597 | | 592 | 5P-2618 . . . . . | 213 | | 620 |
| | 651 | | 597 | 5P-3092 . . . . . | 432 | | 654 |
| 5M-3492 . . . . . | 460 | | 605 | 5P-3108 . . . . . | 717 | | 658 |
| 5M-6126 . . . . . | 430 | | 705 | | 718 | | 662 |
| 5M-6212 . . . . . | 430 | | 706 | 5P-3422 . . . . . | 504 | 5P-7468 . . . . . | 411 |
| 5M-6213 . . . . . | 195 | 5P-1174 . . . . . | 822 | | 519 | | 414 |
| 5M-6214 . . . . . | 461 | | 827 | | 521 | | 419 |
| | 514 | | 832 | | 523 | | 586 |
| | 556 | | 837 | | 525 | | 591 |
| 5M-6592 . . . . . | 479 | | 842 | | 527 | | 686 |
| 5M-7142 . . . . . | 444 | | 847 | 5P-3501 . . . . . | 134 | 5P-7469 . . . . . | 411 |
| 5M-7921 . . . . . | 430 | 5P-1175 . . . . . | 822 | | 144 | | 414 |
| 5M-9548 . . . . . | 460 | | 827 | 5P-3729 . . . . . | 240 | | 419 |
| 5P-0076 . . . . . | 432 | | 832 | 5P-4115 . . . . . | 256 | | 586 |
| 5P-0537 . . . . . | 24 | | 837 | | 758 | | 591 |
| | 25 | | 842 | | 759 | | 686 |
| | 26 | | 847 | | 775 | 5P-7470 . . . . . | 176 |
| | 27 | 5P-1252 . . . . . | 213 | 5P-4116 . . . . . | 91 | | 179 |
| | 315 | 5P-1265 . . . . . | 174 | | 706 | | 411 |
| | 458 | | 176 | 5P-4142 . . . . . | 86 | | 654 |
| | 749 | | 653 | 5P-4255 . . . . . | 96 | | 658 |
| | 794 | | 657 | 5P-4295 . . . . . | 179 | | 662 |
| 5P-0597 . . . . . | 444 | | 661 | | 662 | | 670 |
| 5P-0600 . . . . . | 191 | 5P-1291 . . . . . | 180 | 5P-4423 . . . . . | 802 | | 681 |
| 5P-0743 . . . . . | 172 | | 661 | 5P-4483 . . . . . | 389 | | 686 |
| 5P-0761 . . . . . | 253 | 5P-1292 . . . . . | 685 | 5P-5296 . . . . . | 432 | 5P-7471 . . . . . | 176 |
| 5P-0763 . . . . . | 174 | 5P-1293 . . . . . | 180 | 5P-5528 . . . . . | 377 | | 179 |
| | 176 | | 444 | 5P-5623 . . . . . | 289 | | 411 |
| | 413 | | 661 | 5P-5677 . . . . . | 377 | | 654 |
| | 415 | 5P-1300 . . . . . | 218 | 5P-5678 . . . . . | 24 | | 658 |
| | 418 | | 225 | | 26 | | 662 |
| | 420 | | 227 | 5P-5846 . . . . . | 465 | | 670 |


► **PRIMARY REFERENCE**

# PART NUMBER INDEX


| Part | Page |
|---|---|
| | 681 |
| | 686 |
| 5P-7661 | 392 |
| 5P-7701 | 107 |
| | 109 |
| | 111 |
| | 134 |
| | 137 |
| | 156 |
| 5P-7703 | 176 |
| | 179 |
| | 411 |
| | 654 |
| | 658 |
| | 662 |
| 5P-7957 | 773 |
| 5P-7958 | 256 |
| | 770 |
| 5P-8026 | 203 |
| | 675 |
| | 681 |
| 5P-8081 | 399 |
| 5P-8112 | 620 |
| | 654 |
| | 658 |
| | 662 |
| 5P-8118 | 392 |
| 5P-8167 | 253 |
| 5P-8182 | 670 |
| | 681 |
| 5P-8210 | 392 |
| 5P-8244 | 444 |
| | 558 |
| 5P-8245 | 29 |
| | 82 |
| | 92 |
| | 94 |
| | 99 |
| | 100 |
| | 129 |
| | 130 |
| | 389 |
| | 399 |
| | 408 |
| | 432 |
| | 444 |
| | 556 |
| | 569 |
| | 572 |
| | 726 |
| | 727 |
| 5P-8247 | 249 |
| | 259 |
| | 370 |
| | 373 |
| | 408 |
| | 470 |
| | 472 |
| | 474 |
| | 476 |
| 5P-8248 | 399 |
| | 401 |
| | 564 |
| | 643 |
| | 645 |
| 5P-8249 | 565 |
| 5P-8444 | 411 |
| | 414 |
| | 419 |
| 5P-8500 | 253 |
| | 770 |
| | 777 |
| | 816 |
| | 862 |
| 5P-9085 | 504 |
| | 508 |
| | 510 |
| | 514 |
| | 809 |
| 5P-9262 | 715 |
| 5P-9287 | 458 |
| 5P-9299 | 139 |
| | 170 |
| | 586 |
| | 591 |
| 5P-9344 | 430 |
| 5P-9345 | 430 |
| 5P-9362 | 432 |
| 5P-9400 | 386 |
| 5P-9617 | 166 |
| | 413 |
| | 418 |
| | 685 |
| 5R-5927 | 429 |
| 5S-0581 | 182 |
| 5S-2671 | 796 |
| | 797 |
| 5S-4441 | 447 |
| 5S-7349 | 249 |
| 5S-7379 | 157 |
| | 160 |
| | 242 |
| | 285 |
| | 504 |
| 5S-7382 | 213 |
| | 375 |
| | 414 |
| | 419 |
| | 493 |
| | 620 |
| | 632 |
| | 654 |
| | 658 |
| | 662 |
| | 703 |
| 5S-7383 | 153 |
| | 154 |
| | 654 |
| | 658 |
| | 662 |
| | 788 |
| 5S-7906 | 458 |
| | 465 |
| 5T-0234 | 546 |
| | 548 |
| 5T-1974 | 534 |
| | 536 |
| 5T-1977 | 534 |
| | 536 |
| 5T-2760 | 193 |
| 5T-2921 | 450 |
| 5T-3907 | 252 |
| 5T-4390 | 429 |
| 5T-8645 | 211 |
| 5V-1496 | 794 |
| 5V-5262 | 792 |
| | 800 |

## 6

| Part | Page |
|---|---|
| 6A-5591 | 92 |
| | 94 |
| 6B-2882 | 408 |
| 6B-4370 | 479 |
| 6B-4594 | 481 |
| 6B-4852 | 479 |
| 6B-6683 | 697 |
| 6B-6863 | 431 |
| 6B-9081 | 111 |
| 6C-3213 | 554 |
| 6C-3281 | 625 |
| 6C-4016 | 810 |
| 6D-0028 | 479 |
| 6D-0692 | 403 |
| 6D-1641 | 768 |
| | 769 |
| 6D-3479 | 383 |
| 6D-3534 | 111 |
| 6D-4244 | 349 |
| | 355 |
| | 362 |
| | 414 |
| | 419 |
| | 586 |
| | 591 |
| | 617 |
| | 620 |
| 6D-4246 | 253 |
| | 349 |
| | 355 |
| | 362 |
| | 579 |
| | 581 |
| | 764 |
| 6D-4247 | 414 |
| | 419 |
| 6D-6961 | 403 |
| 6E-0410 | 634 |
| 6E-1131 | 614 |
| 6E-1297 | 711 |
| 6E-1299 | 566 |
| | 569 |
| | 572 |
| 6E-1835 | 635 |
| | 636 |
| 6E-3263 | 700 |
| 6E-3264 | 700 |
| 6E-3265 | 700 |
| 6E-3269 | 715 |
| 6E-3272 | 715 |
| 6E-3273 | 715 |
| 6E-3276 | 715 |
| 6E-3341 | 704 |
| 6E-4000 | 700 |
| 6E-4003 | 700 |
| 6E-4009 | 704 |
| 6E-5066 | 423 |
| 6E-5293 | 693 |
| 6E-6151 | 704 |
| 6E-6155 | 704 |
| 6E-6158 | 704 |
| 6E-6527 | 715 |
| 6E-6528 | 715 |
| 6E-6536 | 715 |
| 6E-6537 | 715 |
| 6E-6538 | 715 |
| 6E-6539 | 715 |
| 6E-6540 | 715 |
| 6E-6640 | 685 |
| 6F-3930 | 440 |
| 6F-4855 | 403 |
| | 479 |
| 6F-4868 | 399 |
| 6F-6547 | 431 |
| 6F-7045 | 329 |
| 6F-7048 | 554 |
| 6F-8146 | 686 |
| 6F-8499 | 534 |
| 6G-0703 | 401 |
| 6G-0969 | 317 |
| 6G-1444 | 685 |
| 6G-1732 | 439 |
| 6G-1999 | 317 |
| 6G-2168 | 413 |
| | 418 |
| | 665 |
| | 669 |
| | 673 |
| | 679 |
| 6G-2871 | 685 |
| 6G-4362 | 479 |
| 6G-5341 | 429 |
| 6G-7773 | 534 |
| 6G-7803 | 211 |
| 6H-7868 | 450 |
| 6H-9361 | 630 |
| 6I-0213 | 231 |
| | 232 |
| | 233 |
| 6I-0901 | 121 |
| | 123 |
| | 124 |
| | 126 |
| 6I-0928 | 69 |
| | 70 |
| | 73 |
| 6I-1055 | 49 |
| | 51 |
| | 53 |
| | 55 |
| | 57 |
| 6I-1418 | 260 |
| | 261 |
| | 262 |
| 6I-1458 | 101 |
| | 102 |
| | 103 |
| | 104 |
| | 105 |

# PART NUMBER INDEX


| Part | Page | Part | Page | Part | Page | Part | Page |
|---|---|---|---|---|---|---|---|
| 6I-3623 | 86 | 6P-2216 | 762 | | 594 | | 572 |
| 6I-3624 | 86 | 6P-2515 | 408 | | 597 | 6V-3341 | 378 |
| 6I-3625 | 86 | 6P-4227 | 406 | | 601 | 6V-3505 | 634 |
| 6I-3638 | 2 | | 407 | | 619 | 6V-3538 | 566 |
| | 3 | 6P-4603 | ▶406 | | 637 | | 569 |
| | 4 | | 413 | | 638 | | 572 |
| | 6 | 6P-7706 | 431 | | 651 | 6V-3669 | 403 |
| | 9 | 6P-9553 | 447 | | 653 | 6V-3677 | 86 |
| | 11 | 6S-8620 | 218 | | 657 | 6V-3683 | 32 |
| | ▶79 | | 227 | | 661 | | 291 |
| 6I-3968 | 131 | 6T-0363 | 326 | | 665 | | 292 |
| 6I-4025 | 71 | 6T-0371 | 326 | | 669 | | 392 |
| | 72 | 6T-0372 | 326 | | 673 | | 456 |
| | 75 | 6T-1996 | 430 | | 679 | 6V-3822 | 203 |
| 6I-4421 | 49 | 6T-2293 | 458 | | 686 | | 399 |
| | 51 | 6T-3115 | 460 | | 697 | 6V-3830 | 107 |
| | 53 | 6T-3177 | 460 | | 699 | | 109 |
| | 55 | 6T-3382 | 719 | 6V-0894 | 733 | | 111 |
| | 57 | 6T-3631 | 341 | | 783 | 6V-3908 | 142 |
| 6I-4575 | 23 | | 377 | | 784 | 6V-3965 | 222 |
| 6I-4582 | 86 | 6T-3632 | 341 | 6V-1197 | 28 | | 389 |
| 6I-9475 | 453 | | 377 | 6V-1249 | 586 | | 392 |
| | 455 | 6T-3633 | 341 | | 591 | | 411 |
| 6J-1080 | 708 | | 377 | | 594 | | 414 |
| 6J-1144 | 558 | 6T-3643 | 256 | 6V-1322 | 326 | | 419 |
| 6J-1972 | 614 | 6T-3696 | 460 | 6V-1581 | 577 | | 423 |
| 6J-3380 | 711 | 6T-3724 | 453 | 6V-1582 | 577 | | 453 |
| 6J-3405 | 711 | | 456 | 6V-1625 | 617 | | 455 |
| 6J-3993 | 453 | 6T-3773 | 458 | 6V-1720 | 430 | | 465 |
| | 456 | 6T-5132 | 392 | 6V-1722 | 620 | | 467 |
| | 458 | 6T-5133 | 392 | 6V-1820 | 144 | | 566 |
| 6J-4694 | 386 | 6T-5409 | 460 | 6V-1867 | 414 | | 569 |
| 6J-5731 | 614 | 6T-5411 | 460 | | 419 | | 572 |
| 6J-5733 | 614 | 6T-5611 | 315 | | 686 | | 579 |
| 6J-6439 | 635 | 6T-5612 | 315 | 6V-1868 | 414 | | 581 |
| | 636 | 6T-5613 | 315 | | 419 | | 594 |
| 6K-0806 | 638 | 6T-7532 | 465 | | 686 | | 596 |
| 6K-3607 | 234 | 6T-7640 | 460 | 6V-1869 | 414 | | 601 |
| | 236 | 6V-0128 | 24 | | 419 | | 620 |
| 6K-5741 | 172 | | 25 | | 686 | | 637 |
| 6K-6307 | 685 | | 26 | 6V-1889 | 157 | | 638 |
| | 711 | | 27 | | 586 | | 650 |
| 6K-6967 | 504 | 6V-0292 | 804 | | 591 | | 653 |
| | 508 | 6V-0414 | 399 | | 651 | | 657 |
| | 510 | 6V-0415 | 399 | | 666 | | 661 |
| | 514 | 6V-0484 | 222 | | 670 | | 665 |
| 6K-8178 | 651 | | 234 | | 675 | | 669 |
| | 764 | | 236 | | 681 | | 674 |
| 6L-4783 | 432 | | 392 | 6V-1970 | 1 | | 680 |
| 6M-5218 | 408 | | 454 | | ▶770 | | 685 |
| 6M-9155 | 566 | | 456 | 6V-2235 | 581 | | 697 |
| | 569 | 6V-0852 | 222 | | 686 | | 699 |
| | 572 | | 389 | 6V-2316 | 789 | 6V-4248 | 34 |
| 6N-1931 | 163 | | 392 | 6V-2317 | 203 | | 92 |
| 6N-2985 | 139 | | 411 | | 216 | | 94 |
| 6N-3279 | 326 | | 413 | | 280 | | 443 |
| 6N-3826 | 326 | | 418 | | 734 | | 738 |
| 6N-6984 | 584 | | 423 | 6V-2495 | 766 | 6V-4283 | 348 |
| | 589 | | 453 | 6V-2611 | 234 | | 354 |
| | 736 | | 455 | | 236 | | 361 |
| | 738 | | 566 | 6V-2687 | 725 | 6V-4323 | 432 |
| 6N-7654 | 77 | | 569 | 6V-3251 | 119 | 6V-4365 | 392 |
| 6N-8599 | 165 | | 572 | 6V-3303 | 399 | 6V-4432 | 166 |
| 6N-8744 | 731 | | 579 | | 566 | | 185 |
| 6N-8863 | 444 | | 581 | | 569 | | 641 |


▶ **PRIMARY REFERENCE**

# PART NUMBER INDEX


| Part | Page |
|---|---|
| | 686 |
| | 711 |
| 6V-4589 | 53 |
| | 55 |
| | 234 |
| | 236 |
| | 244 |
| | 245 |
| | 336 |
| | 337 |
| | 338 |
| 6V-5039 | 174 |
| | 176 |
| | 179 |
| | 654 |
| | 658 |
| | 662 |
| 6V-5040 | 174 |
| | 176 |
| | 179 |
| | 654 |
| | 658 |
| | 662 |
| 6V-5048 | 195 |
| | 222 |
| | 234 |
| | 236 |
| | 292 |
| | 296 |
| | 307 |
| | 309 |
| 6V-5049 | 71 |
| | 72 |
| | 134 |
| | 137 |
| | 222 |
| | 234 |
| | 236 |
| | 296 |
| | 306 |
| | 637 |
| 6V-5063 | 166 |
| 6V-5065 | 118 |
| 6V-5142 | 423 |
| 6V-5218 | 574 |
| 6V-5701 | 460 |
| 6V-5839 | 34 |
| | 92 |
| | 94 |
| | 142 |
| | 144 |
| | 222 |
| | 317 |
| | 399 |
| | 403 |
| | 443 |
| | 708 |
| | 738 |
| | 796 |
| | 797 |
| 6V-5842 | 317 |
| 6V-5843 | 403 |
| 6V-6317 | 222 |
| 6V-6353 | 455 |
| 6V-6609 | 29 |
| | 117 |
| | 119 |
| | 166 |
| | 321 |
| | 322 |
| 6V-6782 | 195 |
| | 764 |
| 6V-6783 | 195 |
| | 764 |
| 6V-6923 | 246 |
| | 247 |
| 6V-7357 | 482 |
| | 723 |
| 6V-7359 | 620 |
| 6V-7419 | 815 |
| 6V-7420 | 604 |
| | 607 |
| 6V-7483 | 768 |
| | 769 |
| 6V-7646 | 794 |
| 6V-7673 | 203 |
| | 205 |
| | 399 |
| 6V-7744 | 349 |
| | 355 |
| | 362 |
| 6V-7978 | 349 |
| | 355 |
| | 362 |
| 6V-8076 | 144 |
| 6V-8077 | 166 |
| 6V-8127 | 349 |
| | 355 |
| 6V-8187 | 349 |
| | 355 |
| | 362 |
| 6V-8188 | 185 |
| | 327 |
| | 403 |
| | 534 |
| 6V-8189 | 157 |
| | 160 |
| | 249 |
| 6V-8190 | 429 |
| 6V-8224 | 481 |
| 6V-8225 | 256 |
| | 287 |
| | 289 |
| | 344 |
| | 381 |
| 6V-8227 | 628 |
| | 739 |
| 6V-8237 | 427 |
| 6V-8260 | 696 |
| | 703 |
| 6V-8336 | 569 |
| | 572 |
| 6V-8352 | 715 |
| 6V-8358 | 242 |
| 6V-8376 | 256 |
| | 777 |
| 6V-8378 | 334 |
| 6V-8397 | 153 |
| | 154 |
| | 172 |
| | 174 |
| | 176 |
| | 179 |
| | 218 |
| | 584 |
| | 585 |
| | 589 |
| | 590 |
| | 604 |
| | 607 |
| | 617 |
| | 619 |
| | 620 |
| | 653 |
| | 657 |
| | 661 |
| | 662 |
| | 673 |
| | 674 |
| | 680 |
| 6V-8398 | 157 |
| | 160 |
| | 172 |
| | 218 |
| | 225 |
| | 227 |
| | 413 |
| | 414 |
| | 418 |
| | 419 |
| | 584 |
| | 585 |
| | 586 |
| | 589 |
| | 590 |
| | 591 |
| | 594 |
| | 596 |
| | 604 |
| | 607 |
| | 617 |
| | 619 |
| | 620 |
| | 621 |
| | 650 |
| | 651 |
| 6V-8400 | 665 |
| | 669 |
| | 670 |
| | 673 |
| | 674 |
| | 679 |
| | 680 |
| | 706 |
| 6V-8556 | 675 |
| | 681 |
| 6V-8624 | 218 |
| 6V-8625 | 170 |
| | 413 |
| | 418 |
| | 585 |
| | 590 |
| | 596 |
| | 604 |
| | 607 |
| | 617 |
| 6V-8626 | 157 |
| | 160 |
| | 585 |
| | 590 |
| | 706 |
| 6V-8628 | 674 |
| | 680 |
| 6V-8632 | 596 |
| 6V-8634 | 153 |
| | 154 |
| 6V-8635 | 144 |
| | 157 |
| | 665 |
| | 669 |
| | 673 |
| | 679 |
| | 685 |
| | 706 |
| 6V-8636 | 179 |
| | 619 |
| | 662 |
| | 673 |
| | 679 |
| 6V-8637 | 581 |
| | 585 |
| | 590 |
| | 617 |
| | 619 |
| | 653 |
| | 657 |
| | 661 |
| | 665 |
| | 669 |
| | 673 |
| | 679 |
| 6V-8638 | 218 |
| 6V-8639 | 585 |
| | 590 |
| | 604 |
| | 607 |
| | 619 |
| | 650 |
| 6V-8640 | 585 |
| | 590 |
| 6V-8642 | 585 |
| | 590 |
| | 596 |
| | 650 |
| | 706 |
| 6V-8673 | 689 |
| | 697 |
| 6V-8675 | 399 |
| 6V-8676 | 139 |
| | 711 |
| 6V-8714 | 665 |
| | 669 |
| | 673 |
| | 679 |
| 6V-8721 | 620 |
| 6V-8722 | 157 |
| | 160 |
| | 596 |
| | 651 |
| 6V-8723 | 218 |


► **PRIMARY REFERENCE**

# PART NUMBER INDEX


| Part | Page |
|---|---|
| | 585 |
| | 590 |
| 6V-8724 | 172 |
| | 174 |
| | 176 |
| | 585 |
| | 590 |
| | 617 |
| | 653 |
| | 657 |
| | 674 |
| | 680 |
| 6V-8775 | 604 |
| | 607 |
| | 650 |
| 6V-8781 | 174 |
| | 176 |
| | 653 |
| | 657 |
| 6V-8782 | 604 |
| | 607 |
| | 620 |
| 6V-8783 | 586 |
| | 591 |
| 6V-8784 | 666 |
| | 670 |
| | 674 |
| | 680 |
| 6V-8790 | 620 |
| 6V-8791 | 579 |
| | 581 |
| 6V-8801 | 199 |
| | 200 |
| | 203 |
| | 259 |
| | 334 |
| | 375 |
| 6V-8918 | 157 |
| | 160 |
| | 799 |
| | 800 |
| 6V-8928 | 804 |
| 6V-8941 | 675 |
| | 680 |
| 6V-8969 | 749 |
| | 794 |
| 6V-8981 | 594 |
| 6V-8983 | 665 |
| | 670 |
| 6V-8994 | 620 |
| 6V-8996 | 586 |
| | 591 |
| 6V-8997 | 585 |
| | 590 |
| 6V-8998 | 666 |
| | 670 |
| | 674 |
| | 680 |
| 6V-9002 | 225 |
| | 227 |
| 6V-9003 | 218 |
| 6V-9004 | 586 |
| | 591 |
| 6V-9007 | 413 |
| | 418 |
| | 579 |
| | 592 |
| | 653 |
| | 657 |
| | 661 |
| 6V-9008 | 142 |
| | 144 |
| | 617 |
| | 665 |
| | 669 |
| | 706 |
| 6V-9160 | 586 |
| | 591 |
| | 674 |
| | 680 |
| 6V-9168 | 586 |
| | 591 |
| 6V-9169 | 594 |
| 6V-9170 | 157 |
| | 160 |
| | 586 |
| | 591 |
| 6V-9172 | 157 |
| | 160 |
| | 666 |
| | 670 |
| | 675 |
| | 681 |
| 6V-9182 | 650 |
| 6V-9189 | 279 |
| | 280 |
| | 281 |
| 6V-9191 | 447 |
| 6V-9200 | 619 |
| 6V-9632 | 256 |
| | 486 |
| | 487 |
| | 723 |
| | 736 |
| | 755 |
| | 758 |
| | 759 |
| 6V-9746 | 413 |
| | 418 |
| | 579 |
| | 581 |
| | 585 |
| | 586 |
| | 590 |
| | 591 |
| | 592 |
| | 604 |
| | 607 |
| | 617 |
| | 619 |
| | 621 |
| | 650 |
| | 651 |
| 6V-9809 | 651 |
| 6V-9830 | 150 |
| 6V-9831 | 597 |
| 6V-9832 | 617 |
| 6V-9833 | 144 |
| | 157 |
| | 160 |
| 6V-9836 | 179 |
| | 661 |
| | 674 |
| | 680 |
| 6V-9837 | 620 |
| 6V-9839 | 585 |
| | 590 |
| 6V-9840 | 144 |
| | 666 |
| | 670 |
| | 674 |
| | 680 |
| 6V-9844 | 604 |
| | 607 |
| 6V-9850 | 179 |
| | 604 |
| | 607 |
| 6V-9851 | 172 |
| | 594 |
| | 604 |
| | 607 |
| 6V-9852 | 604 |
| | 607 |
| | 650 |
| 6V-9854 | 157 |
| | 160 |
| | 673 |
| | 680 |
| 6V-9873 | 586 |
| | 590 |
| | 594 |
| 6V-9874 | 579 |
| | 581 |
| | 585 |
| | 590 |
| | 619 |
| 6V-9877 | 579 |
| | 581 |
| | 585 |
| | 590 |
| 6W-6672 | 218 |
| | 227 |
| 6Y-0789 | 392 |
| 6Y-2065 | 132 |
| 6Y-2281 | 430 |
| 6Y-4538 | 453 |
| | 455 |
| 6Y-4539 | 453 |
| | 455 |
| 6Y-4540 | 453 |
| | 455 |
| | 673 |
| | 674 |
| | 679 |
| | 680 |
| 6Y-4541 | 453 |
| | 455 |
| 6Y-4542 | 453 |
| | 455 |
| 6Y-5888 | 430 |
| | 447 |
| 6Y-7267 | 453 |
| | 455 |
| 6Y-8048 | 453 |
| | 455 |
| 6Y-9807 | 430 |
| 6Y-9850 | 392 |
| | 661 |
| | 674 |
| | 680 |
| | 620 |
| 7B-2742 | 299 |
| 7B-3028 | 408 |
| | 444 |
| 7B-3039 | 708 |
| 7C-1445 | 35 |
| 7C-4354 | 149 |
| | 349 |
| | 355 |
| | 362 |
| 7C-6921 | 218 |
| | 227 |
| 7D-1089 | 619 |
| 7D-1553 | 211 |
| | 349 |
| | 356 |
| | 362 |
| 7D-1962 | 349 |
| | 355 |
| | 362 |
| 7D-2955 | 641 |
| 7D-2983 | 625 |
| 7D-3122 | 641 |
| 7D-3187 | 641 |
| 7D-3807 | 488 |
| 7D-5252 | 440 |
| 7D-5435 | 613 |
| | 625 |
| 7D-6705 | 388 |
| 7D-7233 | 344 |
| | 414 |
| | 419 |
| | 617 |
| | 621 |
| | 675 |
| | 681 |
| 7D-7488 | 534 |
| 7D-8048 | 711 |
| 7D-8922 | 625 |
| 7E-0658 | 132 |
| 7E-1397 | 197 |
| | 198 |
| | 199 |
| | 200 |
| 7E-3076 | 160 |
| 7E-4341 | 107 |
| 7E-4342 | 107 |
| 7E-4508 | 151 |
| | 152 |
| 7E-6508 | 24 |


**7**

► **PRIMARY REFERENCE**

# PART NUMBER INDEX


| Part | Page | Part | Page | Part | Page | Part | Page |
|---|---|---|---|---|---|---|---|
| | 25 | 7G-9473 | 392 | 7M-8485 | 142 | 7T-3974 | 326 |
| | 26 | 7H-0308 | 405 | | 144 | 7T-4532 | 730 |
| | 27 | 7H-1447 | 630 | | 156 | 7T-5135 | 432 |
| 7E-8630 | 195 | | 708 | | 157 | 7T-5646 | 399 |
| 7E-9992 | 414 | 7J-0402 | 396 | | 160 | 7T-6175 | 460 |
| | 419 | 7J-3296 | 554 | | 185 | 7T-6799 | 777 |
| | 504 | 7J-3868 | 643 | | 389 | 7T-7376 | 299 |
| | 617 | 7J-5547 | 558 | | 402 | 7T-7771 | 431 |
| 7F-0880 | 479 | 7J-6285 | 29 | | 461 | 7T-8891 | 809 |
| 7F-2122 | 600 | 7J-7423 | 711 | | 586 | 7T-9123 | 327 |
| 7F-3488 | 326 | 7J-9108 | 157 | | 591 | 7T-9791 | 467 |
| 7F-3491 | 326 | | 160 | | 617 | 7U-4892 | 256 |
| 7F-3525 | 326 | | 218 | | 632 | 7W-0205 | 166 |
| 7F-6998 | 775 | | 585 | | 650 | 7X-0288 | 203 |
| | 778 | | 586 | | 651 | 7X-0289 | 294 |
| 7G-0141 | 447 | | 590 | | 665 | | 561 |
| 7G-0713 | 430 | | 591 | | 666 | 7X-0293 | 711 |
| 7G-0719 | 430 | | 594 | | 669 | 7X-0296 | 414 |
| 7G-0720 | 430 | | 596 | | 670 | | 419 |
| 7G-0721 | 430 | | 597 | | 673 | | 621 |
| 7G-0725 | 430 | | 604 | | 674 | 7X-0299 | 651 |
| 7G-0727 | 430 | | 605 | | 679 | 7X-0300 | 218 |
| 7G-0728 | 430 | | 607 | | 680 | | 225 |
| 7G-0729 | 430 | | 608 | | 685 | | 227 |
| 7G-0731 | 430 | | 619 | | 706 | 7X-0301 | 621 |
| 7G-0732 | 430 | | 620 | 7M-8651 | 326 | | 651 |
| 7G-0739 | 430 | | 650 | 7M-9918 | 210 | | 711 |
| 7G-0743 | 430 | | 651 | 7N-0296 | 324 | 7X-0310 | 414 |
| 7G-0744 | 430 | | 706 | 7N-0452 | 81 | | 419 |
| 7G-0746 | 430 | 7J-9933 | 635 | 7N-0718 | ▶329 | 7X-0311 | 414 |
| 7G-0747 | 430 | | 636 | | 330 | | 419 |
| 7G-0824 | 430 | 7K-1181 | 256 | 7N-2043 | 113 | 7X-0318 | 414 |
| 7G-0825 | 430 | | 273 | 7N-2059 | 324 | | 419 |
| 7G-1060 | 343 | | 275 | 7N-2156 | 163 | 7X-0325 | 414 |
| 7G-1136 | 430 | | 315 | 7N-3451 | 142 | | 419 |
| 7G-1137 | 431 | | 343 | 7N-5274 | 252 | 7X-0326 | 711 |
| 7G-1138 | 431 | | 347 | 7N-7559 | 153 | 7X-0328 | 686 |
| 7G-1141 | 431 | | 350 | | 154 | 7X-0331 | 686 |
| 7G-1143 | 431 | | 356 | 7N-7628 | 170 | 7X-0334 | 166 |
| 7G-1146 | 431 | | 362 | 7N-7878 | 170 | 7X-0339 | 711 |
| 7G-1148 | 431 | | 368 | | 192 | 7X-0345 | 120 |
| 7G-1150 | ▶408 | | 369 | 7N-7988 | 185 | | 703 |
| | 449 | | 375 | 7N-9801 | 342 | 7X-0444 | 429 |
| 7G-1151 | 408 | | 378 | 7N-9943 | 278 | 7X-0480 | 794 |
| 7G-1152 | 408 | | 382 | 7R-2751 | 344 | 7X-0481 | 710 |
| 7G-1153 | 431 | | 504 | 7R-6776 | 190 | 7X-0562 | 327 |
| 7G-1156 | 408 | | 544 | 7S-2962 | 408 | 7X-0582 | 443 |
| 7G-1157 | 408 | | 553 | | 444 | 7X-0586 | 494 |
| 7G-1158 | 431 | | 723 | 7S-4594 | 458 | | 496 |
| 7G-1159 | 431 | | 750 | 7S-5005 | 42 | | 499 |
| 7G-1185 | 431 | | 760 | 7S-5757 | 392 | 7X-0593 | 772 |
| 7G-1186 | 432 | | 778 | 7S-6745 | 406 | 7X-0603 | 731 |
| 7G-1588 | 389 | 7K-4370 | 429 | | 407 | 7X-0605 | 579 |
| 7G-1593 | 389 | 7L-2894 | 326 | 7S-8491 | 711 | | 581 |
| 7G-1594 | 389 | 7L-6210 | 461 | 7S-8767 | 575 | 7X-0608 | 334 |
| 7G-1595 | 392 | 7L-9061 | 336 | | 577 | | 721 |
| 7G-1596 | 431 | | 337 | 7S-8780 | 195 | 7X-0613 | 234 |
| 7G-2475 | 431 | | 338 | 7T-0020 | 278 | | 236 |
| 7G-2476 | 431 | 7M-0324 | 326 | 7T-0266 | 370 | 7X-0618 | 189 |
| 7G-2516 | 431 | 7M-0325 | 327 | 7T-0569 | 458 | 7X-0620 | 334 |
| 7G-2674 | 458 | 7M-0326 | 326 | 7T-0570 | 458 | 7X-0795 | 203 |
| 7G-2818 | 467 | 7M-0327 | 326 | 7T-0571 | 458 | 7X-0871 | 413 |
| 7G-3472 | 460 | 7M-1397 | 461 | 7T-1099 | 236 | | 418 |
| 7G-6373 | 389 | 7M-5813 | 431 | | 485 | 7X-0872 | 596 |
| 7G-7431 | 458 | 7M-7794 | 389 | | 487 | | 650 |


▶ PRIMARY REFERENCE

# PART NUMBER INDEX


| Part | Page |
|---|---|
| 7X-0873 | 579 |
| | 581 |
| 7X-2031 | 299 |
| 7X-2393 | 502 |
| 7X-2497 | 751 |
| | 753 |
| 7X-2532 | 132 |
| 7X-2533 | 723 |
| 7X-2534 | 504 |
| | 514 |
| 7X-2543 | 666 |
| | 675 |
| 7X-2547 | 621 |
| 7X-2549 | 253 |
| 7X-2552 | 789 |
| 7X-2554 | 199 |
| 7X-2555 | 786 |
| | 787 |
| 7X-2568 | 132 |
| 7X-2569 | 132 |
| 7X-2619 | 723 |
| 7X-2621 | 723 |
| 7X-3166 | 666 |
| | 670 |
| | 675 |
| | 681 |
| 7X-3167 | 156 |
| 7X-3186 | 621 |
| 7X-3328 | 429 |
| 7X-3342 | 203 |
| | 205 |
| 7X-3373 | 326 |
| 7X-4736 | 139 |
| 7X-6222 | 343 |
| | 348 |
| | 349 |
| | 354 |
| | 355 |
| | 361 |
| | 362 |
| | 377 |
| | 777 |
| 7X-6315 | 263 |
| | 264 |
| | 743 |
| 7X-7700 | 242 |
| 7X-7729 | 91 |
| | 157 |
| | 160 |
| | 165 |
| | 172 |
| | 176 |
| | 179 |
| | 185 |
| | 187 |
| | 189 |
| | 199 |
| | 200 |
| | 362 |
| | 481 |
| | 482 |
| | 491 |
| | 492 |
| | 494 |
| | 496 |
| 7X-7816 | 444 |
| 7X-7893 | 180 |
| | 661 |
| 8B-0544 | 378 |
| | 621 |
| 8B-4624 | 711 |
| 8B-5144 | 442 |
| | 445 |
| 8C-0618 | 804 |
| 8C-3051 | 156 |
| 8C-3084 | 399 |
| 8C-3089 | 195 |
| | 326 |
| 8C-3132 | 634 |
| 8C-3206 | 666 |
| | 670 |
| | 675 |
| | 681 |
| 8C-3364 | 665 |
| | 670 |
| | 674 |
| | 680 |
| | 706 |
| 8C-3445 | 137 |
| | 142 |
| | 144 |
| 8C-3446 | 137 |
| | 414 |
| | 419 |
| | 637 |
| | 685 |
| 8C-3447 | 413 |
| | 418 |
| 8C-3451 | 637 |
| | 685 |
| 8C-3681 | 185 |
| 8C-3756 | 755 |
| 8C-4405 | 697 |
| | 699 |
| 8C-4436 | 534 |
| | 536 |
| | 597 |
| | 651 |
| | 696 |
| 8C-5172 | 174 |
| | 176 |
| | 179 |
| | 654 |
| | 658 |
| | 662 |
| 8C-5230 | 142 |
| | 144 |
| | 146 |
| | 147 |
| 8C-5607 | 273 |
| | 275 |
| 8C-5608 | 273 |
| | 275 |
| 8C-5899 | 796 |
| | 797 |
| 8C-5917 | 253 |
| 8C-6354 | 256 |
| 8C-6368 | 775 |
| 8C-6515 | 142 |
| | 144 |
| 8C-6700 | 530 |
| 8C-6712 | 137 |
| 8C-6959 | 218 |
| | 225 |
| | 227 |
| 8C-7325 | 605 |
| | 608 |
| 8C-7575 | 514 |
| 8C-8451 | 273 |
| | 275 |
| | 504 |
| | 508 |
| | 510 |
| 8C-8514 | 755 |
| 8C-8533 | 344 |
| 8C-8585 | 741 |
| | 742 |
| 8C-8762 | 604 |
| | 607 |
| 8C-9648 | 299 |
| 8C-9649 | 299 |
| 8C-9660 | 326 |
| | 344 |
| 8C-9987 | 392 |
| | 455 |
| 8D-3786 | 189 |
| 8D-4656 | 350 |
| | 356 |
| | 362 |
| 8D-4771 | 432 |
| 8D-5054 | 697 |
| 8D-6946 | 344 |
| 8D-8255 | 610 |
| 8D-8256 | 610 |
| 8D-8621 | 432 |
| 8D-9537 | 256 |
| 8D-9671 | 675 |
| 8E-1118 | 758 |
| 8E-2183 | 566 |
| | 569 |
| 8E-4094 | 460 |
| 8E-4592 | 453 |
| | 455 |
| | 458 |
| 8E-5287 | 396 |
| 8E-6144 | 453 |
| | 455 |
| 8E-7192 | 460 |
| 8E-7366 | 396 |
| 8E-7367 | 396 |
| 8E-8292 | 809 |
| 8E-8293 | 809 |
| 8E-8304 | 431 |
| 8E-8306 | 431 |
| 8E-8307 | 431 |
| 8E-8439 | 386 |
| | 453 |
| | 455 |
| 8E-8440 | 386 |
| 8E-9292 | 431 |
| 8E-9598 | 431 |
| 8E-9599 | 431 |
| 8E-9600 | 431 |
| 8E-9601 | 431 |
| 8F-1434 | 327 |
| | 334 |
| 8F-5658 | 488 |
| 8F-6350 | 437 |
| 8F-6711 | 445 |
| 8F-8151 | 172 |
| 8F-8544 | 467 |
| 8F-8804 | 130 |
| 8F-9516 | 479 |
| 8H-3127 | 24 |
| | 25 |
| | 26 |
| | 27 |
| 8H-3128 | 315 |
| 8H-3981 | 315 |
| 8H-5303 | 329 |
| 8H-5306 | 329 |
| 8H-7521 | 408 |
| | 445 |
| 8H-9208 | 460 |
| 8J-2379 | 711 |
| 8J-4351 | 32 |
| | 291 |
| | 292 |
| 8J-4452 | 453 |
| | 455 |
| 8J-6273 | 693 |
| 8J-6875 | 584 |
| | 589 |
| | ▶611 |
| 8J-7409 | 630 |
| 8J-7636 | 445 |
| 8J-8782 | 708 |
| 8J-8783 | 708 |
| 8K-0968 | 213 |
| 8K-1433 | 285 |
| 8L-2777 | 121 |
| | 123 |
| | 124 |
| | 125 |


8

▶ **PRIMARY REFERENCE**

# PART NUMBER INDEX


| Part | Page | Part | Page | Part | Page | Part | Page |
|---|---|---|---|---|---|---|---|
| | 126 | 8N-4409 | 789 | | 755 | | 487 |
| | 455 | 8P-1722 | 408 | 8T-0357 | 470 | 8T-3612 | 256 |
| 8L-2786 | 29 | | 444 | | 472 | 8T-3851 | 132 |
| | 117 | 8P-2022 | 432 | | 474 | 8T-3998 | 638 |
| | 153 | 8P-2051 | 431 | | 476 | 8T-4121 | 78 |
| | 154 | 8P-2053 | 431 | 8T-0358 | 399 | | 139 |
| | 170 | 8P-3251 | 408 | 8T-0372 | 569 | | 149 |
| | 222 | | 444 | | 572 | | 157 |
| | 319 | 8P-3729 | 429 | 8T-0389 | 253 | | 160 |
| | 320 | 8P-3795 | 408 | | 282 | | 165 |
| | 323 | 8P-7385 | 458 | | 283 | | 172 |
| 8L-5008 | 504 | 8P-8744 | 432 | 8T-0404 | 596 | | 174 |
| | 508 | 8P-9569 | 432 | | 650 | | 176 |
| | 510 | 8P-9737 | 458 | 8T-0643 | 92 | | 179 |
| | 514 | 8P-9738 | 458 | | 94 | | 185 |
| 8L-8413 | 83 | 8P-9739 | 453 | 8T-0666 | 427 | | 191 |
| | 777 | | 455 | 8T-0707 | 529 | | 195 |
| | 802 | 8P-9852 | 461 | 8T-1127 | 556 | | 218 |
| 8L-9811 | 432 | 8R-6784 | 665 | 8T-1686 | 621 | | 225 |
| 8M-1078 | 460 | | 669 | 8T-1718 | 651 | | 227 |
| 8M-2530 | 447 | | 673 | 8T-1905 | 620 | | 253 |
| 8M-2537 | 460 | | 679 | 8T-2275 | 630 | | 285 |
| 8M-2770 | 149 | 8S-0617 | 444 | | 708 | | 287 |
| | 594 | 8S-0948 | 586 | 8T-2353 | 222 | | 289 |
| | 621 | | 591 | 8T-2501 | 508 | | 324 |
| 8M-2772 | 213 | | 617 | | 605 | | 344 |
| | 324 | | 675 | | 608 | | 347 |
| | 344 | | 681 | | 686 | | 350 |
| 8M-3837 | 403 | 8S-2634 | 330 | 8T-2502 | 139 | | 356 |
| | 479 | 8S-3020 | 252 | | 445 | | 362 |
| 8M-4069 | 736 | 8S-3370 | 432 | | 504 | | 375 |
| | 738 | 8S-3371 | 447 | | 597 | | 378 |
| 8M-4433 | 414 | 8S-3426 | 431 | | 651 | | 383 |
| | 419 | 8S-4724 | 447 | 8T-2885 | 686 | | 411 |
| 8M-4435 | 414 | | 792 | 8T-2925 | 461 | | 414 |
| | 419 | | 793 | 8T-3298 | 708 | | 419 |
| 8M-4436 | 465 | 8S-5575 | 393 | 8T-3490 | 91 | | 470 |
| 8M-4446 | 453 | 8S-6511 | 163 | | 139 | | 472 |
| 8M-4553 | 170 | 8S-7803 | 725 | | 157 | | 474 |
| 8M-4986 | 453 | 8S-9009 | 413 | | 160 | | 476 |
| 8M-4988 | 465 | | 418 | | 165 | | 486 |
| 8M-5007 | 445 | 8S-9094 | 49 | | 172 | | 487 |
| 8M-5127 | 453 | | 51 | | 185 | | 494 |
| | 458 | | 57 | | 195 | | 499 |
| 8M-5248 | 465 | 8S-9191 | 231 | | 203 | | 504 |
| 8M-5576 | 399 | | 232 | | 285 | | 508 |
| 8M-5661 | 389 | | 233 | | 484 | | 510 |
| 8M-6402 | 460 | 8T-0082 | 594 | | 485 | | 514 |
| 8M-6521 | 430 | | 619 | | 486 | | 530 |
| | 431 | 8T-0106 | 176 | | 487 | | 532 |
| 8M-7160 | 408 | | 654 | | 494 | | 542 |
| | 444 | 8T-0120 | 596 | | 496 | | 544 |
| 8M-8161 | 155 | 8T-0192 | 621 | | 499 | | 575 |
| 8M-8282 | 465 | 8T-0197 | 651 | | 501 | | 579 |
| 8M-8489 | 163 | 8T-0267 | 751 | | 502 | | 581 |
| | 437 | | 753 | | 504 | | 586 |
| 8M-8515 | 461 | 8T-0269 | 751 | | 546 | | 594 |
| 8N-0869 | 252 | | 753 | | 548 | | 597 |
| 8N-1725 | 252 | 8T-0285 | 761 | | 575 | | 617 |
| 8N-2104 | 151 | 8T-0288 | 750 | | 577 | | 621 |
| | 152 | 8T-0318 | 789 | | 731 | | 651 |
| 8N-4173 | 386 | 8T-0328 | 327 | | 738 | | 654 |
| | 453 | | 344 | | 755 | | 658 |
| | 455 | | 794 | | 796 | | 662 |
| 8N-4401 | 197 | 8T-0337 | 344 | 8T-3597 | 485 | | 666 |


► **PRIMARY REFERENCE**

# PART NUMBER INDEX


| Part | Page | Part | Page | Part | Page | Part | Page |
|---|---|---|---|---|---|---|---|
| | 670 | | 768 | | 253 | | 191 |
| | 675 | | 769 | | 285 | | 482 |
| | 681 | 8T-4136 . . . . . | 139 | | 289 | | 490 |
| | 686 | | 149 | | 324 | | 542 |
| | 696 | | 157 | | 344 | | 544 |
| | 706 | | 165 | | 347 | | 592 |
| | 723 | | 176 | | 350 | | 666 |
| | 731 | | 179 | | 356 | | 670 |
| | 736 | | 185 | | 362 | | 675 |
| | 738 | | 187 | | 375 | | 681 |
| | 764 | | 191 | | 378 | | 686 |
| | 766 | | 199 | | 383 | | 706 |
| | 768 | | 200 | | 414 | 8T-4140 . . . . . | 179 |
| | 769 | | 218 | | 419 | | 654 |
| | 778 | | 253 | | 470 | | 658 |
| 8T-4122 . . . . . | 429 | | 344 | | 472 | | 662 |
| | 703 | | 350 | | 474 | | 786 |
| 8T-4123 . . . . . | 132 | | 356 | | 476 | | 787 |
| 8T-4131 . . . . . | 132 | | 362 | | 481 | 8T-4171 . . . . . | 350 |
| 8T-4132 . . . . . | 185 | | 383 | | 482 | | 356 |
| | 705 | | 411 | | 486 | | 362 |
| 8T-4133 . . . . . | 157 | | 414 | | 487 | | 758 |
| | 172 | | 419 | | 494 | | 759 |
| | 176 | | 481 | | 496 | | 814 |
| | 179 | | 494 | | 499 | 8T-4172 . . . . . | 78 |
| | 187 | | 496 | | 501 | | 225 |
| | 253 | | 499 | | 505 | | 586 |
| | 256 | | 504 | | 508 | | 591 |
| | 344 | | 514 | | 510 | 8T-4175 . . . . . | 705 |
| | 350 | | 542 | | 514 | 8T-4176 . . . . . | 203 |
| | 356 | | 544 | | 542 | | 205 |
| | 362 | | 575 | | 544 | 8T-4177 . . . . . | 666 |
| | 378 | | 581 | | 575 | | 670 |
| | 383 | | 586 | | 579 | | 675 |
| | 411 | | 591 | | 581 | | 681 |
| | 414 | | 594 | | 586 | 8T-4178 . . . . . | 666 |
| | 419 | | 617 | | 591 | | 670 |
| | 481 | | 621 | | 594 | | 675 |
| | 491 | | 651 | | 597 | | 681 |
| | 492 | | 654 | | 621 | 8T-4182 . . . . . | 378 |
| | 504 | | 658 | | 651 | | 738 |
| | 530 | | 662 | | 654 | | 764 |
| | 532 | | 666 | | 658 | 8T-4183 . . . . . | 241 |
| | 542 | | 670 | | 662 | | 482 |
| | 544 | | 675 | | 666 | | 490 |
| | 577 | | 681 | | 670 | | 540 |
| | 579 | | 686 | | 675 | | 575 |
| | 581 | | 706 | | 681 | | 577 |
| | 586 | | 731 | | 686 | | 579 |
| | 591 | | 764 | | 706 | | 581 |
| | 594 | | 766 | | 731 | | 654 |
| | 597 | | 768 | | 764 | | 658 |
| | 617 | | 769 | | 766 | | 662 |
| | 621 | | 775 | | 768 | | 686 |
| | 651 | 8T-4137 . . . . . | 91 | | 769 | | 690 |
| | 654 | | 139 | | 786 | 8T-4184 . . . . . | 202 |
| | 658 | | 157 | | 787 | 8T-4185 . . . . . | 350 |
| | 662 | | 160 | 8T-4138 . . . . . | 256 | | 356 |
| | 666 | | 174 | | 273 | | 362 |
| | 670 | | 176 | | 275 | | 510 |
| | 675 | | 179 | | 496 | | 530 |
| | 681 | | 185 | | 499 | | 532 |
| | 686 | | 218 | | 530 | | 579 |
| | 731 | | 225 | | 775 | | 581 |
| | 764 | | 227 | 8T-4139 . . . . . | 165 | | 597 |


► **PRIMARY REFERENCE**

# PART NUMBER INDEX


| Part | Page | Part | Page | Part | Page | Part | Page |
|---|---|---|---|---|---|---|---|
| | 621 | | 532 | | 373 | | 176 |
| | 651 | | 544 | | 403 | | 179 |
| | 675 | | 579 | | 411 | | 193 |
| | 681 | | 581 | | 414 | | 490 |
| | 764 | | 587 | | 419 | | 542 |
| 8T-4186 . . . . . | 176 | | 591 | | 429 | | 544 |
| | 179 | | 594 | | 490 | | 654 |
| | 414 | | 617 | | 534 | | 658 |
| | 419 | | 621 | | 536 | | 662 |
| | 505 | | 654 | | 539 | 8T-4648 . . . . . | 179 |
| | 514 | | 658 | | 540 | | 658 |
| | 530 | | 662 | | 575 | | 662 |
| | 532 | | 666 | | 577 | 8T-4778 . . . . . | 708 |
| | 575 | | 670 | | 579 | 8T-4834 . . . . . | 685 |
| | 577 | | 675 | | 581 | 8T-4835 . . . . . | 78 |
| | 654 | | 681 | | 587 | | 174 |
| | 658 | | 686 | | 592 | | 176 |
| | 662 | | 731 | | 597 | | 179 |
| | 670 | | 738 | | 621 | | 411 |
| | 681 | | 764 | | 632 | | 429 |
| | 696 | | 798 | | 641 | | 654 |
| | 736 | 8T-4196 . . . . . | 195 | | 651 | | 658 |
| | 764 | | 411 | | 654 | | 662 |
| | 798 | | 502 | | 658 | | 686 |
| 8T-4189 . . . . . | 253 | | 575 | | 662 | 8T-4896 . . . . . | 157 |
| | 362 | | 577 | | 666 | | 160 |
| | 706 | | 587 | | 670 | | 185 |
| | 809 | | 591 | | 675 | | 195 |
| 8T-4191 . . . . . | 149 | | 621 | | 681 | | 197 |
| | 287 | | 654 | | 686 | | 211 |
| | 289 | | 658 | | 690 | | 213 |
| | 505 | | 662 | | 696 | | 218 |
| | 514 | | 675 | | 703 | | 227 |
| | 778 | | 681 | | 706 | | 242 |
| 8T-4192 . . . . . | 253 | | 764 | | 710 | | 259 |
| | 816 | 8T-4198 . . . . . | 621 | | 711 | | 285 |
| 8T-4193 . . . . . | 174 | 8T-4200 . . . . . | 256 | | 816 | | 294 |
| | 176 | | 324 | 8T-4224 . . . . . | 157 | | 375 |
| 8T-4194 . . . . . | 414 | 8T-4205 . . . . . | 249 | | 160 | | 393 |
| | 419 | | 287 | | 165 | | 414 |
| | 482 | | 289 | | 193 | | 419 |
| | 502 | | 294 | | 218 | | 445 |
| | 592 | | 326 | | 234 | | 493 |
| | 686 | | 349 | | 249 | | 505 |
| 8T-4195 . . . . . | 139 | | 355 | | 256 | | 508 |
| | 142 | | 362 | | 279 | | 561 |
| | 165 | | 605 | | 280 | | 597 |
| | 172 | | 608 | | 281 | | 605 |
| | 176 | | 755 | | 324 | | 608 |
| | 179 | | 794 | | 362 | | 621 |
| | 185 | 8T-4222 . . . . . | 256 | | 502 | | 632 |
| | 187 | 8T-4223 . . . . . | 78 | | 505 | | 651 |
| | 189 | | 165 | | 636 | | 654 |
| | 195 | | 166 | | 666 | | 658 |
| | 197 | | 174 | | 670 | | 662 |
| | 411 | | 176 | | 675 | | 686 |
| | 414 | | 179 | | 681 | | 692 |
| | 419 | | 185 | | 751 | | 703 |
| | 491 | | 189 | | 753 | | 705 |
| | 492 | | 191 | | 788 | | 708 |
| | 494 | | 193 | | 799 | 8T-4897 . . . . . | 542 |
| | 496 | | 213 | | 800 | 8T-4908 . . . . . | 91 |
| | 499 | | 241 | | 809 | | 751 |
| | 501 | | 253 | 8T-4244 . . . . . | 78 | | 753 |
| | 530 | | 370 | | 174 | 8T-4910 . . . . . | 174 |


► PRIMARY REFERENCE

# PART NUMBER INDEX


| Part | Page |
|---|---|
| | 177 |
| | 180 |
| | 185 |
| | 654 |
| | 658 |
| | 662 |
| | 706 |
| 8T-4935 | 132 |
| 8T-4956 | 174 |
| | 177 |
| | 180 |
| | 482 |
| | 597 |
| | 651 |
| | 654 |
| | 658 |
| | 662 |
| | 705 |
| 8T-4970 | 344 |
| | 494 |
| | 496 |
| | 750 |
| 8T-4971 | 482 |
| | 736 |
| 8T-4984 | 180 |
| | 577 |
| | 661 |
| 8T-4985 | 180 |
| | 661 |
| 8T-4994 | 241 |
| 8T-5001 | 180 |
| | 658 |
| | 662 |
| 8T-5092 | 78 |
| 8T-5360 | 414 |
| | 419 |
| | 428 |
| | 791 |
| | 792 |
| | 793 |
| 8T-5361 | 690 |
| 8T-5389 | 586 |
| | 591 |
| 8T-5400 | 815 |
| 8T-5429 | 218 |
| | 225 |
| | 227 |
| 8T-5436 | 78 |
| | 587 |
| | 592 |
| | 670 |
| | 681 |
| 8T-5439 | 132 |
| 8T-5912 | 222 |
| 8T-6356 | 142 |
| 8T-6376 | 556 |
| | 558 |
| 8T-6383 | 185 |
| 8T-6466 | 218 |
| | 225 |
| | 227 |
| | 253 |
| | 621 |
| | 675 |
| | 681 |
| | 764 |
| 8T-6684 | 665 |
| | 669 |
| | 674 |
| | 680 |
| 8T-6685 | 91 |
| 8T-6696 | 604 |
| | 607 |
| 8T-6703 | 180 |
| | 662 |
| | 686 |
| 8T-6757 | 61 |
| | 64 |
| | 67 |
| | 465 |
| 8T-6761 | 166 |
| 8T-6764 | 575 |
| | 577 |
| 8T-6765 | 134 |
| | 144 |
| 8T-6868 | 174 |
| 8T-6876 | 413 |
| | 418 |
| | 585 |
| | 590 |
| 8T-6895 | 594 |
| 8T-6912 | 218 |
| | 261 |
| | 262 |
| | 281 |
| 8T-7004 | 723 |
| 8T-7008 | 654 |
| | 658 |
| | 662 |
| 8T-7062 | 21 |
| | 22 |
| 8T-7338 | 132 |
| | 166 |
| | 705 |
| 8T-7529 | 375 |
| 8T-7546 | 620 |
| 8T-7547 | 165 |
| | 505 |
| 8T-7566 | 773 |
| 8T-7693 | 556 |
| 8T-7694 | 558 |
| 8T-7695 | 556 |
| 8T-7927 | 665 |
| | 669 |
| | 673 |
| | 679 |
| 8T-7934 | 764 |
| 8T-8442 | 700 |
| 8T-8549 | 180 |
| | 658 |
| | 662 |
| 8T-8641 | 725 |
| 8T-8729 | 318 |
| | 647 |
| | 719 |
| 8T-8737 | 282 |
| | 283 |
| | 720 |
| | 750 |
| | 771 |
| 8T-8827 | 375 |
| 8T-8889 | 692 |
| 8T-8915 | 686 |
| 8T-8916 | 414 |
| | 419 |
| 8T-8917 | 189 |
| | 575 |
| | 577 |
| 8T-8919 | 174 |
| | 177 |
| | 189 |
| | 213 |
| | 411 |
| | 415 |
| | 420 |
| | 587 |
| | 621 |
| | 632 |
| | 654 |
| | 658 |
| | 662 |
| | 686 |
| | 703 |
| 8T-9043 | 234 |
| 8T-9082 | 794 |
| 8T-9101 | 185 |
| | 630 |
| 8T-9311 | 241 |
| 8T-9368 | 605 |
| | 608 |
| 8T-9371 | 802 |
| 8T-9378 | 294 |
| 8T-9389 | 411 |
| | 429 |
| 8T-9391 | 686 |
| 8T-9398 | 443 |
| 8T-9405 | 350 |
| | 356 |
| | 363 |
| 8T-9527 | 79 |
| 8T-9655 | 234 |
| | 236 |
| | 260 |
| 8T-9757 | 253 |
| 8V-0442 | 619 |
| | 685 |
| 8V-0622 | 253 |
| 8W-0301 | 252 |
| 8W-1367 | 641 |
| 8W-3064 | 399 |
| 8W-3941 | 534 |
| | 536 |
| 8W-5179 | 389 |
| 8W-5566 | 685 |
| 8W-6731 | 132 |
| 8W-6928 | 529 |
| 8W-7702 | 401 |
| 8W-8456 | 534 |
| 8W-8671 | 401 |
| 8X-0307 | ▶450 |
| | 451 |
| 8X-2338 | 484 |
| 8X-3271 | 439 |
| 8X-3572 | 653 |
| | 657 |
| 8X-4437 | 566 |
| | 569 |
| | 572 |
| 8X-4552 | 405 |
| 8X-6166 | 666 |
| | 670 |
| | 675 |
| | 681 |
| 8X-6730 | 625 |
| 8X-6731 | 625 |
| 8Y-3925 | 485 |
| | 487 |
| 8Y-4030 | 800 |
| 8Y-5904 | ▶725 |
| | 726 |
| | 727 |
| 8Y-5906 | 725 |
| 8Y-5988 | 725 |
| 8Y-6028 | 725 |
| 8Y-6385 | 789 |
| 8Y-6386 | 751 |
| | 753 |
| 8Y-6388 | 723 |
| | 777 |
| | 804 |
| 8Y-6896 | 810 |
| 8Y-8294 | 813 |
| 8Y-8606 | 378 |
| | |
| | |
| 9B-7233 | 256 |
| | 777 |
| 9B-7237 | 157 |
| | 160 |
| | 645 |
| 9C-4937 | 413 |
| | 418 |
| 9C-5344 | 378 |
| 9D-0630 | 211 |
| | 213 |
| 9D-3434 | 488 |
| 9D-3769 | 285 |
| 9D-4068 | 343 |
| 9D-6093 | 566 |
| | 569 |
| | 572 |
| 9D-6314 | 488 |
| 9D-6937 | 604 |
| | 607 |
| 9D-7884 | 453 |
| | 455 |
| | 458 |
| 9D-7984 | 566 |
| | 569 |
| | 572 |
| 9D-9118 | 566 |
| | 569 |
| | 572 |
| 9D-9438 | 241 |
| 9D-9880 | ▶211 |
| 9F-2247 | 625 |
| 9F-2773 | 393 |


## 9

▶ **PRIMARY REFERENCE**

# PART NUMBER INDEX


| Part | Page |
|---|---|
| | 437 |
| 9F-2978 | 493 |
| 9F-3788 | 431 |
| 9F-3823 | 431 |
| 9F-5599 | 326 |
| | 778 |
| 9F-5644 | 329 |
| 9F-6445 | 604 |
| 9F-8125 | 285 |
| | 348 |
| | 354 |
| | 361 |
| | 377 |
| 9G-0003 | 253 |
| 9G-0004 | 253 |
| 9G-2673 | 344 |
| 9G-2758 | 252 |
| 9G-3695 | 628 |
| | 739 |
| 9G-4101 | 326 |
| | 327 |
| 9G-7101 | 764 |
| 9G-7131 | 458 |
| 9G-7132 | 458 |
| 9G-8909 | 252 |
| 9G-9201 | 465 |
| 9G-9202 | 465 |
| 9G-9203 | 465 |
| 9G-9205 | 465 |
| 9G-9206 | 465 |
| 9G-9207 | 465 |
| 9G-9226 | 465 |
| 9G-9227 | 465 |
| 9G-9412 | 392 |
| 9G-9440 | 386 |
| 9G-9915 | 389 |
| 9G-9928 | 389 |
| 9H-0846 | 445 |
| 9H-1031 | 44 |
| | 46 |
| | 58 |
| 9H-3757 | 326 |
| 9H-5545 | 432 |
| 9H-6454 | 630 |
| | 708 |
| 9J-0811 | 643 |
| | 645 |
| 9J-1330 | 453 |
| | 455 |
| 9J-2521 | 643 |
| | 645 |
| 9J-2523 | 643 |
| | 645 |
| 9J-3053 | 643 |
| 9J-3054 | 643 |
| | 645 |
| 9J-3056 | 643 |
| | 645 |
| 9J-5685 | 627 |
| 9J-7031 | 708 |
| 9J-8243 | 708 |
| 9K-2464 | 621 |
| 9K-4454 | 399 |
| 9K-7951 | 440 |
| 9K-9731 | 443 |
| 9L-1566 | 252 |
| | 348 |
| | 354 |
| | 361 |
| | 685 |
| 9L-2662 | 415 |
| | 420 |
| 9L-5854 | 43 |
| | 45 |
| | 47 |
| | 48 |
| | 59 |
| | 60 |
| 9L-6770 | 249 |
| 9L-7657 | 134 |
| | 135 |
| 9L-8925 | 24 |
| | 25 |
| | 26 |
| | 27 |
| 9L-9068 | 430 |
| 9M-0164 | 148 |
| | 174 |
| | 176 |
| | 653 |
| | 657 |
| | 705 |
| 9M-0853 | 134 |
| 9M-1503 | 431 |
| 9M-1608 | 529 |
| | 560 |
| 9M-1974 | 35 |
| | 216 |
| | 296 |
| | 386 |
| | 432 |
| | 453 |
| | 455 |
| | 461 |
| | 465 |
| | 467 |
| | 574 |
| | 597 |
| | 635 |
| | 651 |
| | 734 |
| 9M-1986 | 406 |
| | 407 |
| 9M-2001 | 431 |
| 9M-2904 | 160 |
| 9M-3786 | 184 |
| 9M-3860 | 403 |
| 9M-4218 | 389 |
| 9M-4355 | 431 |
| 9M-4995 | 505 |
| | 514 |
| 9M-5024 | 558 |
| 9M-5733 | 804 |
| 9M-6527 | 182 |
| 9M-7002 | 389 |
| 9M-7394 | 863 |
| 9M-7609 | 326 |
| 9M-7783 | 259 |
| 9M-8406 | 350 |
| | 356 |
| | 363 |
| | 587 |
| | 592 |
| | 594 |
| | 597 |
| | 651 |
| | 764 |
| 9N-0869 | 234 |
| | 236 |
| | 260 |
| | 261 |
| | 262 |
| 9N-2038 | 210 |
| 9N-3167 | 107 |
| | 109 |
| | 111 |
| 9N-5253 | 271 |
| 9N-6108 | 38 |
| 9P-0652 | 460 |
| 9P-0656 | 453 |
| | 456 |
| | 458 |
| 9P-0672 | 460 |
| 9P-0673 | 460 |
| 9P-0674 | 460 |
| 9P-0683 | 453 |
| | 455 |
| | 458 |
| 9P-0687 | 458 |
| 9P-0719 | 378 |
| 9P-4809 | 450 |
| 9P-7121 | 242 |
| 9P-7390 | 431 |
| 9P-8217 | 711 |
| 9P-9650 | 460 |
| 9R-2613 | 132 |
| | 203 |
| | 484 |
| | 486 |
| | 596 |
| | 650 |
| 9R-2640 | 203 |
| | 205 |
| 9R-2672 | 203 |
| | 205 |
| 9R-4440 | 587 |
| | 592 |
| 9R-6414 | 253 |
| 9R-6465 | 484 |
| 9S-1018 | 437 |
| 9S-1366 | 389 |
| 9S-2544 | 326 |
| 9S-2843 | 431 |
| 9S-4167 | 234 |
| | 236 |
| 9S-4181 | 666 |
| | 670 |
| | 674 |
| | 680 |
| 9S-4182 | 92 |
| | 94 |
| | 292 |
| | 685 |
| 9S-4183 | 166 |
| | 389 |
| 9S-4185 | 92 |
| | 94 |
| | 166 |
| | 472 |
| | 476 |
| | 569 |
| | 572 |
| | 647 |
| | 685 |
| 9S-4190 | 458 |
| 9S-4191 | 134 |
| | 137 |
| | 144 |
| | 166 |
| | 406 |
| | 407 |
| | 413 |
| | 418 |
| | 712 |
| 9S-6155 | 386 |
| 9S-6524 | 413 |
| | 418 |
| | 584 |
| | 589 |
| | 768 |
| 9S-7325 | 185 |
| 9S-8001 | 393 |
| | 423 |
| | 453 |
| | 455 |
| | 458 |
| | 601 |
| | 711 |
| 9S-8002 | 29 |
| | 117 |
| | 195 |
| | 222 |
| | 689 |
| | 700 |
| | 711 |
| | 715 |
| 9S-8003 | 92 |
| | 94 |
| | 453 |
| | 456 |
| 9S-8004 | 71 |
| | 72 |
| | 119 |
| | 166 |
| | 222 |
| | 393 |
| | 423 |
| | 453 |
| | 455 |
| | 601 |
| | 638 |
| | 643 |
| | 645 |
| 9S-8005 | 29 |
| | 92 |
| | 94 |
| | 117 |
| | 119 |
| | 167 |
| | 222 |


► **PRIMARY REFERENCE**

# PART NUMBER INDEX


| Part | Page |
|---|---|
| | 234 |
| | 236 |
| | 393 |
| | 423 |
| | 614 |
| | 711 |
| 9S-8006 | 53 |
| | 55 |
| | 117 |
| | 119 |
| | 142 |
| | 147 |
| | 234 |
| | 236 |
| | 648 |
| | 700 |
| | 712 |
| 9S-8008 | 167 |
| | 453 |
| | 455 |
| 9S-8010 | 118 |
| 9S-8413 | 460 |
| 9S-8752 | 79 |
| | 86 |
| | 96 |
| | 106 |
| | 229 |
| | 230 |
| | 389 |
| | 782 |
| 9S-8905 | 792 |
| | 793 |
| 9S-9334 | 107 |
| | 109 |
| | 111 |
| | 134 |
| | 137 |
| | 144 |
| | 146 |
| 9T-0818 | 630 |
| 9T-1013 | 157 |
| | 160 |
| 9T-1119 | 427 |
| 9T-5505 | 558 |
| 9T-6882 | 643 |
| | 645 |
| 9T-7045 | 614 |
| 9T-7202 | 717 |
| | 718 |
| 9T-8578 | 615 |
| 9T-9227 | 708 |
| 9U-0512 | 772 |
| 9U-8263 | 804 |
| 9U-9028 | ▶458 |
| | 467 |
| 9V-2818 | 755 |
| 9V-6167 | 564 |
| 9V-9116 | 670 |
| 9W-0852 | 777 |
| 9W-1441 | 256 |
| 9W-1442 | 256 |
| 9W-1446 | 256 |
| 9W-2985 | 431 |
| 9W-3072 | 382 |
| 9W-3136 | 447 |
| 9W-4116 | 386 |
| 9W-4118 | 386 |
| 9W-4119 | ▶386 |
| | 467 |
| 9W-5531 | 444 |
| 9W-6582 | 132 |
| 9W-6584 | 132 |
| 9W-6964 | 386 |
| | 453 |
| | 455 |
| 9W-6990 | 447 |
| 9W-7009 | 460 |
| 9W-7011 | 460 |
| 9W-7410 | 453 |
| | 456 |
| | 458 |
| 9W-7411 | 458 |
| 9W-7412 | 458 |
| 9W-8571 | 431 |
| 9W-8575 | 431 |
| 9W-9158 | 431 |
| 9W-9159 | 431 |
| 9W-9161 | 431 |
| 9W-9930 | 132 |
| 9X-0141 | 348 |
| | 354 |
| | 361 |
| | 375 |
| 9X-0145 | 348 |
| | 349 |
| | 354 |
| | 355 |
| | 361 |
| 9X-0262 | 234 |
| | 236 |
| | 296 |
| 9X-0941 | 241 |
| 9X-1046 | 804 |
| 9X-1343 | 348 |
| | 354 |
| | 361 |
| 9X-1386 | 310 |
| | 318 |
| | 375 |
| 9X-1813 | 289 |
| | 301 |
| | 302 |
| | 303 |
| | 308 |
| | 332 |
| | 333 |
| | 336 |
| | 337 |
| | 338 |
| | 348 |
| | 354 |
| | 361 |
| | 632 |
| | 647 |
| 9X-2026 | 299 |
| 9X-2032 | 755 |
| 9X-2038 | 23 |
| | 778 |
| | 804 |
| 9X-2042 | 751 |
| | 753 |
| | 789 |
| | 804 |
| 9X-2044 | 344 |
| | 723 |
| | 804 |
| | 808 |
| 9X-2045 | 256 |
| | 804 |
| 9X-2046 | 778 |
| 9X-2134 | 218 |
| 9X-2185 | 729 |
| 9X-2205 | 242 |
| 9X-2206 | 242 |
| 9X-2235 | 617 |
| 9X-2379 | 160 |
| 9X-2480 | 505 |
| | 514 |
| 9X-2533 | 810 |
| 9X-2847 | 586 |
| | 591 |
| 9X-3401 | 300 |
| | 308 |
| | 348 |
| | 354 |
| | 361 |
| 9X-3463 | 279 |
| | 280 |
| | 281 |
| 9X-3465 | 282 |
| | 283 |
| 9X-4244 | 279 |
| | 280 |
| | 281 |
| 9X-4391 | 777 |
| 9X-4455 | 617 |
| 9X-5699 | 252 |
| 9X-6155 | 751 |
| | 753 |
| 9X-6165 | 273 |
| | 275 |
| | 482 |
| 9X-6395 | 635 |
| | 636 |
| | 717 |
| | 718 |
| 9X-6458 | 37 |
| | 86 |
| | 109 |
| | 111 |
| | 151 |
| | 152 |
| | 222 |
| | 234 |
| | 237 |
| | 781 |
| | 782 |
| 9X-6574 | 447 |
| 9X-6772 | 273 |
| 9X-7147 | 348 |
| | 354 |
| | 361 |
| 9X-7317 | 221 |
| | 231 |
| | 232 |
| 9X-7333 | 558 |
| 9X-7378 | 375 |
| | 730 |
| 9X-7380 | 764 |
| | 766 |
| 9X-7381 | 764 |
| | 766 |
| 9X-7382 | 764 |
| | 766 |
| 9X-7383 | 764 |
| | 766 |
| 9X-7385 | 730 |
| | 764 |
| 9X-7430 | 61 |
| | 64 |
| | 67 |
| 9X-7550 | 566 |
| | 569 |
| | 572 |
| 9X-7680 | 700 |
| 9X-8250 | 651 |
| 9X-8256 | 256 |
| | 273 |
| | 275 |
| | 344 |
| | 350 |
| | 356 |
| | 363 |
| | 381 |
| | 496 |
| | 505 |
| | 508 |
| | 510 |
| | 514 |
| | 723 |
| | 736 |
| | 814 |
| | 815 |
| 9X-8257 | 132 |
| | 167 |
| | 174 |
| | 177 |
| | 180 |
| | 654 |
| | 658 |
| | 662 |
| | 705 |
| 9X-8268 | 566 |
| | 569 |
| | 572 |
| 9X-8399 | 614 |
| 9X-8582 | 505 |
| | 508 |
| | 510 |
| | 514 |
| 9X-8600 | 211 |
| | 242 |
| 9X-8757 | 854 |
| 9X-8872 | 85 |
| 9X-8873 | 726 |
| | 727 |
| 9X-8874 | 445 |
| 9X-8878 | 129 |
| 9X-8979 | 700 |


▶ **PRIMARY REFERENCE**

# PART NUMBER INDEX


| Part | Page |
|---|---|
| 9X-9120 | 252 |
| 9X-9825 | 252 |
| 9Y-1792 | 163 |
| 9Y-6089 | 166 |
| 9Y-6102 | 191 |
| 9Y-7770 | 130 |
| 9Y-9236 | 185 |
| **0** | |
| 002-3448 | 413 |
| | 418 |
| 002-5299 | 172 |
| 005-4362 | 234 |
| 005-7889 | 768 |
| | 769 |
| 011-5224 | 768 |
| | 769 |
| 012-0380 | 332 |
| | 333 |
| 030-0060 | 408 |
| 030-0167 | 294 |
| 030-4605 | 638 |
| 030-4606 | 711 |
| 030-7947 | 222 |
| 030-8188 | 234 |
| | 236 |
| 030-8194 | 236 |
| 030-8324 | 413 |
| | 418 |
| 030-9612 | 285 |
| | 377 |
| 031-0214 | 788 |
| 031-3185 | 86 |
| 031-4155 | 36 |
| 031-4630 | 460 |
| 031-9831 | 534 |
| 032-1267 | 172 |
| 032-9313 | 121 |
| 033-5853 | 29 |
| | 117 |
| 033-6033 | 150 |
| | 170 |
| | 246 |
| | 247 |
| | 630 |
| 033-6039 | 294 |
| 033-6042 | 222 |
| 033-6043 | 423 |
| | 715 |
| 033-8248 | 185 |
| 033-9412 | 504 |
| 036-9821 | 326 |
| 036-9823 | 326 |
| 045-4065 | 327 |
| 054-3788 | 534 |
| 061-6712 | 432 |
| 061-7540 | 136 |
| | 141 |
| | 455 |
| 061-8005 | 218 |
| 061-8561 | 392 |
| 061-8639 | 121 |
| | 123 |
| | 124 |
| | 125 |
| | 126 |
| | 150 |
| 061-9455 | 35 |
| 067-2551 | 222 |
| 077-3241 | 402 |
| 085-7356 | 411 |
| | 413 |
| | 418 |
| 090-8747 | 225 |
| 092-4924 | 797 |
| 095-0642 | 343 |
| | 349 |
| | 355 |
| | 362 |
| 095-0843 | 794 |
| 095-9805 | 700 |
| 096-4034 | 755 |
| 096-4833 | 343 |
| 096-5969 | 777 |
| 096-6166 | 755 |
| | 761 |
| 099-0857 | 810 |
| 099-3095 | 693 |
| 099-3649 | 628 |
| | 739 |
| **1** | |
| 100-3098 | 37 |
| 100-3253 | 282 |
| | 283 |
| 100-3254 | 282 |
| | 283 |
| 100-3255 | 282 |
| | 283 |
| 100-3998 | 392 |
| 100-4083 | 392 |
| | 455 |
| | 463 |
| 100-4336 | 218 |
| | 225 |
| | 227 |
| | 673 |
| | 679 |
| 100-5072 | 231 |
| | 232 |
| | 233 |
| 100-5218 | 24 |
| | 25 |
| | 26 |
| | 27 |
| 100-5219 | 24 |
| | 25 |
| | 26 |
| | 27 |
| 100-6674 | 755 |
| 100-7399 | 49 |
| | 51 |
| | 53 |
| | 55 |
| | 57 |
| 100-7870 | 157 |
| | 160 |
| 100-8010 | 632 |
| 100-8011 | 632 |
| 101-0003 | 802 |
| 101-0868 | 556 |
| 101-2867 | 256 |
| | 788 |
| | 804 |
| 101-3120 | 131 |
| | 236 |
| 101-3125 | 195 |
| 101-7517 | 401 |
| 101-8296 | 766 |
| 101-8468 | 86 |
| 101-8909 | 211 |
| 102-5828 | 142 |
| 102-5829 | 142 |
| 102-5861 | 86 |
| 102-6623 | 855 |
| 102-6627 | 852 |
| 102-6628 | 854 |
| 102-8671 | 431 |
| 102-8801 | 273 |
| | 287 |
| | 289 |
| | 349 |
| | 355 |
| | 362 |
| | 377 |
| 102-8802 | 240 |
| | 248 |
| | 284 |
| | 285 |
| | 289 |
| | 310 |
| | 332 |
| | 333 |
| | 336 |
| | 337 |
| | 342 |
| | 348 |
| | 354 |
| | 361 |
| | 370 |
| | 373 |
| | 377 |
| | 584 |
| | 589 |
| | 617 |
| | 632 |
| | 720 |
| | 777 |
| 102-8804 | 287 |
| | 289 |
| | 348 |
| | 349 |
| | 354 |
| | 355 |
| | 361 |
| | 362 |
| | 381 |
| | 383 |
| | 719 |
| | 750 |
| | 777 |
| 102-8805 | 282 |
| | 283 |
| | 349 |
| | 355 |
| | 377 |
| | 383 |
| | 745 |
| | 747 |
| | 771 |
| | 777 |
| 102-8806 | 236 |
| | 285 |
| | 343 |
| | 348 |
| | 354 |
| | 361 |
| 102-9089 | 28 |
| 103-0126 | 85 |
| 103-2543 | 256 |
| 103-4656 | 222 |
| 103-6100 | 764 |
| | 766 |
| 103-8134 | 26 |
| 103-8236 | 648 |
| 103-9603 | 708 |
| 104-2091 | 723 |
| | 777 |
| | 804 |
| 104-3173 | 139 |
| 104-5510 | 565 |
| 104-5604 | 723 |
| 104-6202 | 370 |
| | 373 |
| 104-7657 | 685 |
| 104-7995 | 142 |
| | 144 |
| 105-1385 | 816 |
| 105-1583 | 711 |
| 105-1584 | 711 |
| 105-2145 | 715 |
| 105-3207 | 565 |


► **PRIMARY REFERENCE**

# PART NUMBER INDEX


| Part | Page |
|---|---|
| 106-0933 | 442 |
| 106-1792 | 201 |
| 106-5673 | 71 |
| | 72 |
| | 75 |
| 106-6553 | 256 |
| 106-7372 | 711 |
| | ▶717 |
| 106-7683 | 711 |
| 106-7799 | 432 |
| 106-8222 | 534 |
| | 536 |
| 106-8224 | 534 |
| | 536 |
| 107-0583 | 86 |
| 107-1984 | 777 |
| 107-2958 | 401 |
| 107-5769 | 229 |
| | 230 |
| 107-6736 | 4 |
| | 6 |
| | 9 |
| | 11 |
| | ▶30 |
| 107-6737 | 4 |
| | 6 |
| | 9 |
| | 11 |
| | ▶31 |
| 107-7857 | 399 |
| | ▶401 |
| 107-8611 | 463 |
| 108-2185 | 632 |
| | ▶636 |
| 108-3187 | 401 |
| 108-3583 | 429 |
| 108-3587 | 1 |
| | ▶429 |
| 108-3589 | 429 |
| 108-3612 | 201 |
| 108-4311 | 802 |
| 108-4879 | 408 |
| 108-4880 | 408 |
| 108-7930 | 182 |
| 108-9382 | 2 |
| | 3 |
| | 4 |
| | 6 |
| | 9 |
| | 11 |
| | ▶82 |
| 109-0072 | 109 |
| | 111 |
| | 151 |
| | 152 |
| 109-0076 | 107 |
| 109-0077 | 166 |
| | 184 |
| 109-0078 | 109 |
| | 111 |
| | 151 |
| | 152 |
| 109-0361 | 822 |
| | 827 |
| | 832 |
| | 837 |
| | 842 |
| | 847 |
| 109-1633 | 766 |
| 109-1634 | 766 |
| 109-1657 | 14 |
| | 16 |
| | 18 |
| | ▶83 |
| 109-1779 | 700 |
| 109-3206 | 236 |
| 109-4203 | 195 |
| 109-5811 | 604 |
| | 607 |
| 109-5839 | 107 |
| | 111 |
| 109-5840 | 111 |
| 109-9985 | 98 |
| 110-4344 | 99 |
| 110-6393 | 821 |
| 110-7524 | 814 |
| 110-7887 | 777 |
| 110-8330 | 222 |
| 110-8826 | 156 |
| 110-8827 | 156 |
| 111-0343 | 392 |
| | 455 |
| | 463 |
| 111-2088 | 2 |
| | 3 |
| | 4 |
| | 6 |
| | 9 |
| | 11 |
| | ▶98 |
| 111-2355 | 3 |
| | ▶99 |
| 111-6878 | 717 |
| | 718 |
| 111-9110 | 563 |
| 112-2158 | 717 |
| 112-3102 | 630 |
| 112-3927 | 484 |
| | 485 |
| | 486 |
| | 487 |
| 112-4397 | 717 |
| 112-9217 | 86 |
| 113-1216 | 534 |
| 113-4799 | 216 |
| | ▶783 |
| | ▶784 |
| 113-5253 | 139 |
| 113-8263 | 711 |
| 113-9558 | 444 |
| 114-1267 | 632 |
| | ▶634 |
| 114-3361 | 294 |
| 114-5333 | 375 |
| 114-6658 | 256 |
| | 751 |
| | 753 |
| | 804 |
| 114-8843 | 236 |
| 114-9125 | 804 |
| 114-9297 | 564 |
| 114-9299 | 564 |
| 114-9303 | 564 |
| 114-9304 | 564 |
| 114-9305 | 564 |
| 114-9306 | 564 |
| 115-2365 | 109 |
| | 111 |
| 115-6433 | 544 |
| 116-0118 | 256 |
| | 465 |
| 116-1946 | 554 |
| 116-6202 | 764 |
| | 766 |
| 117-1385 | 315 |
| 117-2311 | 256 |
| 117-2932 | 382 |
| 117-4492 | 721 |
| 117-5268 | 692 |
| 117-8131 | 772 |
| 117-8801 | 86 |
| 117-8803 | 720 |
| 117-9081 | 333 |
| 118-3534 | ▶331 |
| | 348 |
| | 354 |
| | 361 |
| 118-4728 | 222 |
| 118-5083 | 638 |
| 118-5085 | 638 |
| 118-5086 | 638 |
| 118-5087 | 638 |
| 118-5619 | 723 |
| | 804 |
| 118-8454 | 324 |
| 119-0036 | 28 |
| 119-3662 | 377 |
| | 755 |
| 119-6220 | 157 |
| | 160 |
| 119-8732 | 504 |
| | 705 |
| 120-3950 | 723 |
| 120-5727 | 700 |
| 120-5729 | 700 |
| 120-5867 | 172 |
| 120-6588 | 630 |
| 120-9243 | 96 |
| 120-9288 | 392 |
| 120-9847 | 2 |
| | 3 |
| | 4 |
| | 6 |
| | 9 |
| | 11 |
| | ▶35 |
| 121-2051 | 638 |
| 121-2471 | ▶134 |
| | 141 |
| 121-3042 | 700 |
| 122-0447 | 61 |
| | 64 |
| | 67 |
| 122-1472 | 24 |
| | 25 |
| | 26 |
| | 27 |
| 122-3608 | 575 |
| 122-3772 | 184 |
| 122-7375 | 61 |
| | 64 |
| | 67 |
| 122-8612 | 61 |
| | 64 |
| | 67 |
| 123-3202 | 24 |
| | 25 |
| | 26 |
| | 27 |
| 123-3827 | 789 |
| 123-4586 | 530 |
| | 532 |
| 123-7267 | 566 |
| | 569 |
| | 572 |
| 123-7268 | 566 |
| | 569 |
| | 572 |
| 123-9431 | 783 |
| | 784 |
| 124-0174 | 218 |
| | 225 |
| | 227 |
| 124-0312 | 744 |
| 124-1854 | 71 |
| | 72 |
| | 75 |
| 124-1855 | 71 |
| | 72 |
| | 75 |
| 124-2463 | 211 |
| 124-6046 | 758 |
| | 759 |
| 124-9014 | 534 |
| 125-0434 | 166 |
| 125-1384 | ▶564 |
| | 565 |
| 125-6535 | 327 |
| 125-6536 | 327 |
| 125-6537 | 327 |
| 125-7875 | 377 |
| 126-1756 | 86 |
| 126-1757 | 96 |
| 126-1767 | 300 |
| 126-1774 | 273 |
| 126-1813 | 648 |
| 126-2373 | 751 |
| | 753 |
| 126-3106 | 822 |
| | 837 |
| 126-4935 | 166 |
| 126-5948 | 719 |
| 126-6104 | 711 |
| 126-6612 | 711 |
| 126-7574 | 263 |
| 126-7631 | 2 |
| | 3 |
| | 4 |
| | 6 |
| | 9 |


▶ **PRIMARY REFERENCE**

# PART NUMBER INDEX


| Part | Page | Part | Page | Part | Page | Part | Page |
|---|---|---|---|---|---|---|---|
| | 11 | 131-5681 | 650 | 134-7258 | 822 | 141-9203 | 796 |
| | ▶259 | 131-5879 | 494 | | 827 | | 797 |
| 126-8449 | 259 | | 496 | | 832 | 142-0038 | 142 |
| 126-8921 | 427 | | 499 | | 837 | | 144 |
| 127-0563 | 100 | 131-7123 | 86 | | 842 | 142-2329 | 49 |
| 127-0564 | 2 | 132-0338 | 721 | | 847 | | 51 |
| | 4 | 132-3392 | 541 | 134-8437 | 560 | | 53 |
| | 6 | 132-5152 | 586 | 135-4928 | 182 | | 55 |
| | 9 | | 591 | 135-5263 | 625 | | 57 |
| | 11 | 132-5787 | 241 | 135-5935 | 693 | 142-5867 | 128 |
| | ▶100 | 132-5789 | 256 | 135-6614 | 700 | 142-5868 | 127 |
| 127-0929 | 195 | | 343 | 136-1107 | 182 | 142-7061 | 627 |
| 127-4471 | 211 | | 349 | 136-1543 | 773 | 142-8425 | 794 |
| | 213 | | 355 | 136-1544 | 721 | 143-1288 | 726 |
| 127-5483 | 348 | | 362 | 136-3742 | 182 | | 727 |
| | 354 | | 370 | 136-4183 | 89 | | 794 |
| | 361 | | 373 | | 90 | 143-6373 | 584 |
| | 375 | | 777 | 136-4190 | 191 | | 589 |
| 127-6287 | 584 | 132-6650 | 534 | 136-4191 | 191 | 144-0195 | 809 |
| | 589 | 132-7370 | 174 | 136-7032 | 647 | | 815 |
| 127-6356 | 163 | | 176 | 136-7227 | 117 | 144-0832 | 615 |
| 127-6405 | 625 | | 653 | 136-8423 | 700 | 144-1636 | 310 |
| 128-0317 | 182 | | 657 | 136-8424 | 174 | | 338 |
| 128-4123 | 381 | 132-7551 | 619 | | 176 | 144-3935 | 413 |
| 128-5016 | 381 | 132-8875 | 406 | | 653 | | 418 |
| 128-5091 | 584 | | 407 | | 657 | 144-8344 | 225 |
| | 589 | 132-9770 | 296 | 136-9150 | 444 | 145-0105 | 460 |
| 128-5311 | 560 | 133-0125 | 166 | 137-6645 | 319 | 145-0106 | 460 |
| 129-1029 | 294 | 133-0260 | 311 | | 320 | 145-0107 | 460 |
| 129-3033 | 460 | 133-0261 | 312 | | 321 | 145-0108 | 460 |
| 129-3172 | 144 | 133-1618 | 772 | | 322 | 145-0109 | 460 |
| | 146 | 133-3234 | 751 | 137-8117 | 566 | 145-0326 | 802 |
| | 147 | | 753 | | 569 | 145-0846 | 777 |
| 129-5427 | 96 | 133-3359 | 201 | | 572 | 145-0847 | 777 |
| 129-5428 | 96 | 133-6517 | 270 | 137-8119 | 566 | 145-0874 | 745 |
| 129-9907 | 182 | | 271 | | 569 | | 747 |
| 130-3515 | 282 | 133-6934 | 218 | | 572 | 145-0875 | 745 |
| | 283 | | 225 | 138-1240 | 219 | | 747 |
| 130-4698 | 86 | | 227 | 138-1509 | ▶402 | 145-1144 | 601 |
| 130-4701 | 86 | | 349 | | 444 | 145-2894 | 799 |
| 130-4834 | 720 | | 355 | 138-1510 | 402 | | 800 |
| 130-5300 | 285 | | 362 | 138-1645 | 460 | 145-6899 | 693 |
| | 287 | | 673 | 138-6744 | 182 | 145-6902 | 693 |
| | 289 | | 679 | 139-1398 | 139 | 145-8280 | ▶389 |
| | 315 | 133-7642 | 854 | | 349 | | 449 |
| | 343 | 133-7643 | 852 | | 355 | 145-8282 | ▶396 |
| | 349 | 133-9116 | 229 | | 362 | | 449 |
| | 355 | | 230 | 139-2116 | 377 | 145-9087 | 810 |
| | 362 | 133-9906 | 23 | 139-2403 | 444 | 145-9090 | 810 |
| | 375 | 133-9907 | ▶23 | 139-4632 | 447 | 146-2282 | 584 |
| | 377 | | 79 | 139-4635 | 444 | | 589 |
| | 383 | 134-0964 | 647 | 139-4636 | 447 | | 764 |
| | 392 | 134-0989 | 530 | 139-5802 | 444 | 146-3728 | 638 |
| | 453 | | 532 | 139-8667 | 240 | 146-6747 | 822 |
| | 456 | 134-2252 | ▶318 | 140-2961 | 733 | | 827 |
| 130-5301 | 375 | | 348 | | 783 | | 832 |
| 130-9811 | 319 | | 354 | | 784 | | 837 |
| | 321 | | 361 | 140-2963 | 733 | | 842 |
| 130-9984 | 596 | | 375 | | 783 | | 847 |
| | 650 | 134-2540 | 777 | | 784 | 147-0045 | 460 |
| 131-1159 | 705 | 134-3518 | 755 | 140-9628 | 789 | 147-0385 | 185 |
| 131-3093 | 807 | 134-3987 | 185 | 141-4007 | 413 | 147-3019 | 751 |
| 131-3540 | 628 | 134-4126 | 263 | | 418 | | 753 |
| | 739 | | 264 | 141-4691 | ▶810 | 147-3396 | 222 |
| 131-3714 | 809 | | 743 | | 814 | 148-1507 | 315 |


▶ PRIMARY REFERENCE

# PART NUMBER INDEX


| Part | Page | Part | Page | Part | Page | Part | Page |
|---|---|---|---|---|---|---|---|
| 148-2350 . . . . . | 638 | | 607 | | 706 | | 176 |
| 148-2593 . . . . . | 614 | | 619 | 148-8374 . . . . . | 218 | | 653 |
| 148-2962 . . . . . | 711 | | 650 | | 585 | | 657 |
| | ▶718 | 148-8342 . . . . . | 596 | | 590 | 148-8436 . . . . . | 604 |
| 148-7361 . . . . . | 804 | 148-8345 . . . . . | 218 | 148-8375 . . . . . | 594 | | 607 |
| 148-7362 . . . . . | 804 | 148-8346 . . . . . | 621 | 148-8376 . . . . . | 665 | | 650 |
| 148-7482 . . . . . | 14 | 148-8347 . . . . . | 413 | | 670 | 148-8444 . . . . . | 620 |
| | ▶101 | | 418 | 148-8378 . . . . . | 172 | 148-8447 . . . . . | 596 |
| 148-8305 . . . . . | 413 | | 579 | | 174 | | 650 |
| | 418 | | 592 | | 176 | 148-8449 . . . . . | 585 |
| | 685 | | 653 | | 585 | | 590 |
| 148-8313 . . . . . | 566 | | 657 | | 590 | 148-8451 . . . . . | 579 |
| | 569 | | 661 | | 617 | | 581 |
| | 572 | 148-8352 . . . . . | 157 | | 653 | 148-8455 . . . . . | 585 |
| | 584 | | 160 | | 657 | | 590 |
| | 589 | | 673 | | 674 | 149-0082 . . . . . | 728 |
| | 669 | | 680 | | 680 | | ▶751 |
| | 679 | 148-8354 . . . . . | 225 | 148-8381 . . . . . | 218 | 149-0087 . . . . . | 728 |
| 148-8315 . . . . . | 585 | | 227 | | 225 | | ▶808 |
| | 589 | 148-8357 . . . . . | 142 | | 227 | 149-0088 . . . . . | 728 |
| | 596 | | 144 | 148-8382 . . . . . | 596 | | ▶799 |
| | 650 | | 617 | | 650 | 149-0196 . . . . . | 218 |
| | 706 | | 665 | 148-8390 . . . . . | 157 | 149-2085 . . . . . | 534 |
| 148-8317 . . . . . | 665 | | 669 | | 160 | 149-5268 . . . . . | 82 |
| | 669 | | 706 | | 585 | 149-5452 . . . . . | 620 |
| | 673 | 148-8358 . . . . . | 218 | | 590 | 149-5461 . . . . . | 444 |
| | 679 | 148-8359 . . . . . | 579 | | 706 | 149-5462 . . . . . | 444 |
| 148-8322 . . . . . | 585 | | 581 | 148-8393 . . . . . | 604 | 149-5628 . . . . . | 463 |
| | 590 | | 585 | | 607 | 149-5824 . . . . . | ▶758 |
| 148-8324 . . . . . | 579 | | 590 | | 650 | 149-6371 . . . . . | 375 |
| | 581 | 148-8360 . . . . . | 650 | 148-8395 . . . . . | 92 | 149-7378 . . . . . | 39 |
| | 585 | 148-8361 . . . . . | 619 | | 94 | | 40 |
| | 590 | 148-8362 . . . . . | 665 | | 167 | 149-7738 . . . . . | 349 |
| | 619 | | 669 | | 234 | | 355 |
| 148-8327 . . . . . | 581 | | 673 | | 236 | | 579 |
| | 585 | | 680 | | 711 | | 581 |
| | 590 | 148-8364 . . . . . | 413 | 148-8407 . . . . . | 166 | 149-9110 . . . . . | 86 |
| | 617 | | 418 | | 407 | 149-9129 . . . . . | 383 |
| | 619 | | 585 | | 413 | 150-1293 . . . . . | 745 |
| | 653 | | 590 | | 418 | | 747 |
| | 657 | | 596 | | 712 | 150-3032 . . . . . | 604 |
| | 661 | | 604 | 148-8408 . . . . . | 166 | | 607 |
| | 665 | | 607 | 148-8411 . . . . . | 92 | 150-3035 . . . . . | 651 |
| | 669 | | 617 | | 94 | 150-3036 . . . . . | 620 |
| | 673 | 148-8365 . . . . . | 413 | | 685 | 150-4037 . . . . . | 604 |
| | 679 | | 418 | 148-8417 . . . . . | 680 | | 607 |
| 148-8333 . . . . . | 665 | | 585 | 148-8425 . . . . . | 685 | 150-4043 . . . . . | 585 |
| | 669 | | 590 | 148-8426 . . . . . | 604 | | 590 |
| | 673 | 148-8367 . . . . . | 179 | | 607 | | 594 |
| | 679 | | 604 | 148-8427 . . . . . | 594 | 150-4048 . . . . . | 157 |
| 148-8335 . . . . . | 144 | | 607 | 148-8428 . . . . . | 604 | | 160 |
| | 665 | | 661 | | 607 | | 596 |
| | 669 | | 674 | | 620 | | 651 |
| | 673 | | 680 | 148-8429 . . . . . | 144 | 150-4086 . . . . . | 343 |
| | 679 | 148-8369 . . . . . | 674 | | 666 | 150-4279 . . . . . | 2 |
| | 685 | | 680 | | 670 | | 3 |
| | 706 | 148-8370 . . . . . | 172 | | 674 | | 4 |
| 148-8336 . . . . . | 179 | | 594 | | 680 | | 6 |
| | 619 | | 604 | 148-8430 . . . . . | 579 | | 9 |
| | 662 | | 607 | | 581 | | 11 |
| | 673 | 148-8372 . . . . . | 620 | 148-8433 . . . . . | 179 | | ▶229 |
| | 679 | 148-8373 . . . . . | 665 | | 661 | | ▶230 |
| 148-8340 . . . . . | 585 | | 669 | | 674 | 150-5310 . . . . . | 697 |
| | 590 | | 674 | | 680 | 151-4957 . . . . . | 343 |
| | 604 | | 680 | 148-8435 . . . . . | 174 | 151-5715 . . . . . | 723 |


▶ **PRIMARY REFERENCE**

# PART NUMBER INDEX


| Part | Page | Part | Page | Part | Page | Part | Page |
|---|---|---|---|---|---|---|---|
| | 804 | | 354 | | 777 | | 842 |
| 151-5925 | 113 | | 355 | 155-2276 | 304 | | 847 |
| | 115 | | 361 | | 305 | 159-1533 | 86 |
| 151-5966 | 86 | | 362 | 155-2793 | 43 | 159-6159 | 2 |
| 152-2939 | 423 | | 370 | | 45 | | 3 |
| 152-7582 | 63 | | 373 | | 47 | | 4 |
| 153-1256 | 182 | 155-2260 | 285 | | 48 | | 6 |
| 153-2446 | 685 | | 287 | | 59 | | 9 |
| 153-2995 | 157 | | 289 | | 60 | | 11 |
| | 160 | | 301 | 155-3504 | 218 | | ▶36 |
| 153-5710 | 252 | | 302 | 155-3624 | 92 | 159-8049 | 252 |
| 153-6231 | 651 | | 303 | | 94 | 159-8050 | 252 |
| 153-6232 | 596 | | 304 | | 685 | | 325 |
| 153-6237 | 586 | | 305 | 155-4800 | ▶141 | 159-8524 | 86 |
| | 591 | | 343 | | 144 | 159-9038 | 155 |
| 153-6242 | 651 | | 348 | 155-5619 | 92 | 159-9362 | 2 |
| 153-6244 | 586 | | 354 | | 94 | | 3 |
| | 591 | | 361 | 155-6061 | ▶647 | | 4 |
| 153-6680 | 136 | | 370 | | 665 | | 6 |
| | 141 | | 373 | | 669 | | 9 |
| 153-6932 | 755 | | 375 | | 673 | | 11 |
| 153-7023 | 69 | | 377 | | 679 | | ▶148 |
| | 70 | | 383 | 155-7321 | 620 | 160-2609 | 584 |
| 153-7024 | 69 | | 584 | 155-9524 | 96 | | 589 |
| | 70 | | 589 | 155-9708 | 804 | 160-5843 | 719 |
| | 73 | | 777 | 155-9709 | 804 | 160-5844 | 719 |
| 153-9023 | 182 | 155-2265 | 343 | 156-0276 | 810 | 160-6354 | 783 |
| 154-2302 | 504 | | 348 | 156-1145 | ▶791 | | 784 |
| | 514 | | 354 | | 799 | 160-6365 | 733 |
| | 764 | | 361 | 156-1382 | 647 | | 783 |
| 154-3028 | 693 | | 370 | 156-5545 | 721 | | 784 |
| 154-3029 | 693 | | 373 | 156-6175 | 273 | 160-6366 | 783 |
| 154-3031 | 693 | | 777 | | 275 | | 784 |
| 154-4133 | 638 | 155-2270 | 285 | | 777 | 160-7271 | 36 |
| 154-7159 | 157 | | 287 | 156-8315 | 807 | 160-7578 | 458 |
| | 160 | | 289 | 157-0670 | 166 | 160-7689 | 375 |
| 154-7468 | 804 | | 335 | 157-0681 | 437 | 160-7690 | 273 |
| 154-7470 | 804 | | 343 | 157-1361 | 777 | 160-8684 | 804 |
| 154-9023 | 166 | | 348 | 157-2016 | 504 | 160-8686 | 804 |
| 155-0576 | 261 | | 349 | | 508 | 160-8687 | 804 |
| | 262 | | 354 | | 510 | 160-8688 | 804 |
| 155-0696 | 260 | | 355 | | 512 | 160-8718 | 753 |
| 155-0698 | 260 | | 361 | | 513 | 160-8720 | 723 |
| 155-0809 | 43 | | 362 | | 514 | 160-8723 | 804 |
| | 45 | | 370 | | 519 | 160-8724 | 804 |
| | 47 | | 373 | | 521 | 160-8728 | 804 |
| | 48 | | 375 | | 523 | 160-8733 | 804 |
| | 59 | | 377 | | 525 | 161-4113 | 2 |
| | 60 | | 755 | | 527 | | 3 |
| 155-0810 | 43 | | 761 | 157-2284 | 719 | | 4 |
| | 45 | | 777 | 157-2348 | 605 | | 7 |
| | 47 | 155-2271 | 287 | | 607 | | 9 |
| 155-1576 | 751 | | 289 | 157-2501 | 774 | | 11 |
| | 753 | | 348 | 157-3896 | 479 | | ▶163 |
| 155-1578 | 751 | | 349 | 157-3903 | 479 | 161-5718 | 182 |
| | 753 | | 354 | 157-8931 | 810 | 161-5719 | ▶182 |
| 155-2026 | 666 | | 355 | 158-0988 | 814 | | 184 |
| | 670 | | 361 | 158-2306 | 563 | 161-6149 | 423 |
| | 674 | | 777 | 158-3416 | 86 | 161-6161 | 423 |
| | 680 | 155-2272 | 383 | 158-3528 | 202 | 161-6622 | 148 |
| 155-2251 | 638 | 155-2274 | 343 | 158-4781 | 777 | 161-6963 | 210 |
| 155-2255 | 273 | | 349 | 158-7864 | 822 | 161-6987 | 349 |
| | 343 | | 355 | | 827 | | 355 |
| | 348 | | 377 | | 832 | | 362 |
| | 349 | | 761 | | 837 | 161-7419 | 260 |


▶ PRIMARY REFERENCE

# PART NUMBER INDEX


| Part | Page |
|---|---|
| 161-9916 | 604 |
| | 607 |
| 161-9926 | ▶301 |
| | 377 |
| 162-0177 | 166 |
| | 601 |
| | 638 |
| 162-1604 | 700 |
| 162-3122 | 586 |
| | 591 |
| 162-4284 | 814 |
| 162-5802 | 460 |
| 162-7588 | 814 |
| 162-7589 | 814 |
| 162-7590 | 814 |
| 162-7591 | 814 |
| 162-8447 | ▶726 |
| | 796 |
| | 797 |
| 162-8448 | ▶727 |
| | 796 |
| | 797 |
| 162-8550 | 628 |
| | 739 |
| 162-8551 | 628 |
| | 739 |
| 162-9112 | 149 |
| | 216 |
| | 343 |
| | 574 |
| | 734 |
| 163-1135 | 802 |
| 163-1148 | 727 |
| 163-1149 | 726 |
| 163-1201 | 377 |
| 163-2478 | 69 |
| | 70 |
| | 73 |
| 163-3272 | 753 |
| 163-3274 | 751 |
| | 753 |
| 163-4565 | 36 |
| 163-5455 | 213 |
| 163-6088 | 343 |
| 163-6452 | 470 |
| | 474 |
| 163-6508 | 777 |
| 164-0043 | 751 |
| | 753 |
| 164-0044 | 751 |
| | 753 |
| 164-1234 | 802 |
| 164-2108 | 601 |
| 164-4180 | 666 |
| | 670 |
| | 674 |
| | 680 |
| 164-4531 | 721 |
| 164-4883 | 773 |
| 164-5567 | 392 |
| | 411 |
| | 414 |
| | 419 |
| | 455 |
| | 467 |
| 164-5574 | 666 |
| | 670 |
| | 674 |
| | 680 |
| 164-5590 | 414 |
| | 419 |
| | 685 |
| 164-5619 | 712 |
| 164-6862 | 586 |
| | 591 |
| | 674 |
| | 680 |
| 164-6874 | 411 |
| | 413 |
| | 418 |
| 164-7556 | 279 |
| | 280 |
| | 281 |
| 164-7908 | 620 |
| 164-8453 | 444 |
| 164-8473 | 804 |
| 164-9662 | 431 |
| 165-0399 | 804 |
| 165-2468 | 431 |
| 165-3930 | 92 |
| | 94 |
| 165-3932 | 92 |
| | 94 |
| 165-5970 | 234 |
| | 236 |
| | ▶341 |
| 165-6170 | 32 |
| | 33 |
| | 150 |
| 166-2903 | 64 |
| 166-2904 | 61 |
| | 64 |
| | 67 |
| 166-3501 | 166 |
| 166-5229 | 755 |
| 166-6693 | 292 |
| 166-9050 | 708 |
| 166-9144 | 96 |
| 167-0642 | 63 |
| 167-0643 | 63 |
| 167-4407 | 166 |
| 167-7801 | 777 |
| 167-8081 | 44 |
| | 46 |
| | 58 |
| 167-8083 | 44 |
| | 46 |
| | 58 |
| 167-8130 | 77 |
| 168-0229 | 814 |
| 168-0371 | 789 |
| 168-2260 | 777 |
| 168-3379 | 704 |
| 168-6450 | ▶813 |
| | 814 |
| 168-7319 | 700 |
| 168-7800 | 201 |
| | 206 |
| | 207 |
| | 208 |
| | 209 |
| 168-8927 | 815 |
| 169-0489 | 251 |
| | ▶743 |
| 169-1616 | 423 |
| 169-1617 | 423 |
| 169-4782 | 751 |
| | 753 |
| 169-5414 | 348 |
| | 354 |
| | 361 |
| | 375 |
| | 377 |
| 169-6596 | 810 |
| 169-6597 | 810 |
| 169-7380 | 802 |
| 169-7409 | 586 |
| | 591 |
| 169-7443 | 349 |
| | 355 |
| | 362 |
| 170-0494 | 563 |
| 170-0612 | 38 |
| 170-1115 | 721 |
| 170-1757 | 4 |
| | 6 |
| | 9 |
| | 11 |
| | ▶120 |
| 170-4737 | 63 |
| 170-4738 | 63 |
| 170-4855 | 723 |
| 170-4880 | 762 |
| 170-5337 | 723 |
| 170-5338 | 723 |
| 170-5339 | 723 |
| 170-5340 | 723 |
| 170-5341 | 723 |
| 170-5342 | 723 |
| 170-6019 | 804 |
| 170-8590 | 788 |
| 171-2211 | 349 |
| | 355 |
| | 362 |
| 171-4358 | 166 |
| 171-5349 | 310 |
| | 383 |
| 171-7209 | 431 |
| 171-8867 | 521 |
| | 523 |
| 171-8870 | 521 |
| | 523 |
| 172-2416 | 794 |
| 172-4848 | 120 |
| 172-4880 | 764 |
| 172-6030 | 804 |
| 172-6236 | 465 |
| 172-6240 | 465 |
| 172-8815 | 586 |
| | 591 |
| 173-0159 | ▶648 |
| | 706 |
| 173-0641 | 700 |
| 173-1957 | 781 |
| 173-2052 | 773 |
| 173-3993 | 601 |
| | 711 |
| 173-5787 | 801 |
| 173-7035 | 801 |
| 173-8301 | 853 |
| 173-9164 | 804 |
| 173-9683 | 614 |
| 174-0503 | 777 |
| 174-1530 | 685 |
| 174-3874 | 2 |
| | 3 |
| | 4 |
| | 6 |
| | 9 |
| | 11 |
| | ▶781 |
| 174-4111 | 444 |
| 174-4112 | 444 |
| 174-5907 | 383 |
| 174-5986 | 2 |
| | 3 |
| | 5 |
| | 7 |
| | 9 |
| | 11 |
| | ▶184 |
| 174-7875 | 377 |
| 174-9412 | 444 |
| 174-9570 | ▶217 |
| | 239 |
| 175-1366 | 36 |
| 175-1367 | 36 |
| 175-2308 | 331 |
| | ▶332 |
| 175-2309 | 331 |
| | ▶333 |
| 175-3185 | 294 |
| 175-3565 | 758 |
| | 759 |
| 175-3567 | 758 |
| | 759 |
| 175-3570 | 758 |
| | 759 |
| 175-3617 | 63 |
| 175-3721 | 92 |
| | 94 |
| 175-3860 | 2 |
| | 3 |


▶ **PRIMARY REFERENCE**

# PART NUMBER INDEX


| Part | Page |
|---|---|
| | ▶107 |
| 175-3868 | 107 |
| 175-4291 | 279 |
| | 280 |
| | 281 |
| 175-4292 | 279 |
| | 280 |
| | 281 |
| 175-7002 | 604 |
| 175-7050 | 619 |
| | ▶632 |
| 175-7141 | 723 |
| 175-7162 | 766 |
| 175-7896 | 614 |
| 176-0245 | 822 |
| | 827 |
| | 832 |
| | 837 |
| | 842 |
| | 847 |
| 176-1363 | 134 |
| | ▶135 |
| | 137 |
| 176-4114 | 431 |
| 176-8102 | 197 |
| | 199 |
| | 200 |
| 177-0274 | 692 |
| | ▶693 |
| 177-1405 | 638 |
| 177-1862 | 788 |
| 177-1863 | 794 |
| 177-4152 | 24 |
| | 26 |
| 177-4686 | 525 |
| | 527 |
| 177-4930 | 773 |
| 177-4937 | 792 |
| | 793 |
| | 796 |
| | 797 |
| 177-7886 | 408 |
| 178-7881 | 751 |
| | 753 |
| 178-7907 | 773 |
| 179-3211 | 107 |
| 179-9392 | 256 |
| 180-0050 | 343 |
| 180-1546 | 789 |
| 180-5559 | 792 |
| 180-5560 | 792 |
| 180-6213 | 700 |
| 180-7180 | 764 |
| 180-7181 | 764 |
| 180-7350 | 113 |
| | 115 |
| 180-8145 | 736 |
| 180-9339 | 730 |
| 180-9340 | 301 |
| | 302 |
| | 303 |
| | 304 |
| 180-9900 | 256 |
| 183-3407 | 393 |
| | 455 |
| 183-3408 | 72 |
| | 75 |
| | 119 |
| | 222 |
| 183-3409 | 29 |
| 183-6187 | 242 |
| 183-6386 | 444 |
| 183-7263 | 711 |
| 183-7264 | 142 |
| | 144 |
| 184-0982 | 814 |
| 184-0983 | 789 |
| 184-2298 | 794 |
| 184-2299 | 794 |
| 184-2420 | 584 |
| | 589 |
| 184-2472 | 264 |
| | 743 |
| 184-6140 | 766 |
| 185-2638 | 249 |
| 185-2639 | 249 |
| 185-2644 | 249 |
| 185-2645 | 249 |
| 185-2647 | 249 |
| 185-2648 | 249 |
| 185-2650 | 249 |
| 185-2651 | 249 |
| 185-2653 | 249 |
| 185-2654 | 249 |
| 185-2655 | 249 |
| 185-2658 | 249 |
| 185-3886 | 628 |
| | 739 |
| 185-4026 | 584 |
| | 589 |
| 185-6278 | 5 |
| | 7 |
| | 10 |
| | 11 |
| | ▶129 |
| 185-6981 | 766 |
| 185-9464 | 723 |
| 186-1667 | 222 |
| 186-2001 | 69 |
| | 70 |
| | 73 |
| 186-3735 | 240 |
| | 248 |
| | 278 |
| | 282 |
| | 283 |
| | 284 |
| | 285 |
| | 287 |
| | 289 |
| | 298 |
| | 332 |
| | 333 |
| | 336 |
| | 337 |
| | 341 |
| | 342 |
| | 343 |
| | 348 |
| | 349 |
| | 354 |
| | 355 |
| | 361 |
| | 362 |
| | 375 |
| | 377 |
| | 383 |
| | 392 |
| | 463 |
| | 584 |
| | 589 |
| | 617 |
| | 628 |
| | 632 |
| | 720 |
| | 739 |
| | 745 |
| | 747 |
| | 750 |
| | 771 |
| | 777 |
| 186-3736 | 335 |
| | 584 |
| | 589 |
| 186-5107 | 802 |
| 186-6189 | 766 |
| 187-1503 | 113 |
| 187-8661 | 764 |
| 187-8979 | 86 |
| 187-8981 | 42 |
| 188-0210 | 111 |
| 188-0839 | 218 |
| 188-1754 | 2 |
| | 3 |
| | 4 |
| | 6 |
| | 9 |
| | 11 |
| | ▶106 |
| 188-1755 | 106 |
| 188-6210 | 348 |
| | 354 |
| | 361 |
| | 375 |
| 188-8846 | 804 |
| 188-9429 | 311 |
| 189-0108 | 361 |
| 189-0852 | 312 |
| 189-2102 | 603 |
| 189-2512 | 256 |
| 189-3744 | 758 |
| 189-4918 | 42 |
| 189-5746 | ▶310 |
| | 375 |
| 189-6123 | 89 |
| | 90 |
| 189-9370 | 628 |
| 190-0009 | 16 |
| | 18 |
| | ▶102 |
| 190-8970 | 239 |
| 190-8977 | 234 |
| | 236 |
| | ▶239 |
| 191-1782 | 234 |
| | 236 |
| 191-1786 | 738 |
| 191-3700 | 628 |
| | 739 |
| 191-7805 | 222 |
| 191-8303 | 313 |
| 192-0875 | 447 |
| 192-0876 | 447 |
| 192-0877 | 447 |
| 192-1023 | 402 |
| 192-4151 | 121 |
| | 123 |
| | 124 |
| | 125 |
| | 126 |
| 192-4286 | ▶627 |
| | 738 |
| 192-6437 | 789 |
| 192-7752 | 802 |
| 192-7755 | 802 |
| 192-7760 | 802 |
| 192-7767 | 802 |
| 192-7783 | 802 |
| 192-7787 | 802 |
| 192-7790 | 802 |
| 192-7795 | 802 |
| 192-7799 | 802 |
| 192-7805 | 802 |
| 192-7810 | 802 |
| 192-7812 | 802 |
| 192-7820 | 802 |
| 192-7822 | 802 |
| 192-9218 | 700 |
| | ▶704 |
| 192-9219 | 704 |
| 192-9221 | 704 |
| 193-1036 | 715 |
| 193-3086 | 715 |
| 193-3087 | 715 |
| 193-4623 | 256 |
| | 344 |
| 193-8335 | 157 |
| | 160 |
| 193-8559 | 453 |
| | ▶463 |
| 194-1624 | 653 |
| | 657 |
| | 661 |
| 194-1628 | 649 |
| | ▶710 |
| 194-3710 | 771 |
| 194-5226 | 305 |
| 194-6722 | ▶302 |
| | 306 |
| 194-6725 | ▶303 |
| | 307 |
| 194-7986 | 647 |
| 196-0226 | 704 |
| 196-0228 | 700 |
| | ▶715 |
| 196-5069 | 121 |
| | 123 |
| | 124 |
| | 125 |
| | 126 |


▶ PRIMARY REFERENCE

# PART NUMBER INDEX


| Part | Page |
|---|---|
| 196-5070 | 121 |
| | 123 |
| | 124 |
| | 125 |
| | 126 |
| 197-4971 | 86 |
| 197-7415 | 2 |
| | 3 |
| | ▶292 |
| 197-8391 | 234 |
| | 296 |
| | ▶319 |
| | ▶320 |
| 197-8392 | 296 |
| | ▶321 |
| | ▶322 |
| 197-8820 | 78 |
| | ▶249 |
| 197-9201 | 693 |
| 197-9296 | 113 |
| 197-9360 | 113 |
| 198-0143 | 605 |
| | 607 |
| 198-4766 | 203 |
| 198-4767 | 203 |
| | 205 |
| 198-4769 | 403 |
| 198-4772 | 443 |
| 198-4777 | 195 |
| | 197 |
| | 502 |
| | 575 |
| | 577 |
| 198-4778 | 202 |
| | 203 |
| | 205 |
| | 482 |
| | 502 |
| | 575 |
| | 577 |
| | 674 |
| | 680 |
| 198-4780 | 185 |
| | 199 |
| | 786 |
| | 787 |
| 198-4781 | 484 |
| | 485 |
| | 486 |
| | 487 |
| 198-6074 | 753 |
| 198-6081 | 762 |
| 198-7409 | 762 |
| 198-9898 | 101 |
| | ▶121 |
| 199-5725 | 801 |
| | ▶802 |
| 199-7891 | 249 |
| 199-8436 | 249 |

**2**

| Part | Page |
|---|---|
| 200-0654 | ▶136 |
| | 146 |
| | 147 |
| 200-0655 | 136 |
| | ▶137 |
| 200-4246 | 144 |
| 200-4586 | 203 |
| | 205 |
| 200-5965 | 745 |
| | 747 |
| 200-6345 | 354 |
| | 361 |
| 200-8577 | 256 |
| 201-2647 | 804 |
| 201-4340 | 53 |
| | 55 |
| | 234 |
| | 236 |
| 201-5121 | 628 |
| | 739 |
| 201-6615 | ▶311 |
| | 315 |
| 201-6617 | ▶312 |
| | 314 |
| 201-9807 | 813 |
| 201-9808 | 813 |
| 201-9810 | 813 |
| 201-9817 | 813 |
| 202-4327 | 256 |
| 202-6611 | 280 |
| 202-6614 | 279 |
| | 281 |
| 203-2060 | 315 |
| 203-3940 | 313 |
| 203-6066 | 786 |
| 203-7703 | 801 |
| 203-8822 | 121 |
| 203-8824 | 121 |
| | 124 |
| | 125 |
| | 126 |
| 204-0273 | 735 |
| 204-0761 | 383 |
| 204-2581 | 815 |
| 204-6102 | 343 |
| 204-7949 | ▶298 |
| | 733 |
| | 783 |
| 204-9316 | ▶85 |
| | 86 |
| 205-0561 | 600 |
| 205-0567 | 600 |
| 205-0626 | 249 |
| 205-3079 | 234 |
| | 236 |
| 205-3692 | 218 |
| 205-4285 | 761 |
| 205-6388 | 793 |
| 205-7303 | ▶215 |
| | 242 |
| 206-4198 | 89 |
| 207-0449 | 14 |
| | 15 |
| | 16 |
| | 17 |
| | 18 |
| | ▶86 |

| Part | Page |
|---|---|
| 207-5248 | 121 |
| 207-6901 | 270 |
| 207-7025 | 271 |
| 207-8128 | 148 |
| 207-8211 | 89 |
| 208-5033 | 144 |
| 208-5034 | 144 |
| 208-6054 | 575 |
| 208-7448 | 195 |
| 208-8795 | 470 |
| | 472 |
| | 474 |
| | 476 |
| 209-0381 | 343 |
| 209-3569 | 36 |
| 209-4562 | 348 |
| | 354 |
| | 361 |
| 209-4573 | 172 |
| 209-4579 | 172 |
| 209-4581 | 174 |
| | 176 |
| | 653 |
| | 657 |
| 209-5776 | 822 |
| | 827 |
| | 832 |
| | 837 |
| | 842 |
| | 847 |
| 209-7659 | 234 |
| | 236 |
| 209-8621 | 89 |
| | 90 |
| 209-8622 | 92 |
| | 94 |
| 209-8624 | 89 |
| | 90 |
| 209-9770 | 89 |
| | 90 |
| 210-2262 | 788 |
| 210-2263 | 788 |
| 210-2266 | 788 |
| 210-2270 | ▶788 |
| | 794 |
| 210-9246 | 153 |
| | 154 |
| 210-9528 | 222 |
| 211-0686 | 827 |
| | 832 |
| | 842 |
| | 847 |
| 211-3122 | 69 |
| | 70 |
| | 73 |
| 211-3123 | 69 |
| 211-5358 | 802 |
| 211-9294 | 802 |
| 212-1336 | 586 |
| | 591 |
| 212-1438 | ▶240 |
| | 242 |
| 212-2768 | 234 |
| | ▶336 |
| 212-3432 | 822 |

| Part | Page |
|---|---|
| | 827 |
| | 832 |
| | 837 |
| | 842 |
| | 847 |
| | ▶862 |
| 212-4219 | 810 |
| 212-7779 | 802 |
| 213-3217 | 113 |
| | 115 |
| 213-5170 | 802 |
| 213-6754 | 584 |
| | 589 |
| 213-7509 | 479 |
| 213-9100 | 289 |
| 214-2484 | 296 |
| | ▶313 |
| 214-6863 | ▶304 |
| | 423 |
| 214-7567 | 456 |
| 214-7568 | 119 |
| | 392 |
| | 393 |
| | 455 |
| | 456 |
| 215-2985 | 43 |
| 215-4011 | 139 |
| 216-0280 | ▶299 |
| | 392 |
| 216-5540 | 2 |
| | 3 |
| | 4 |
| | 6 |
| | 9 |
| | 11 |
| | ▶34 |
| 216-5582 | 61 |
| | 64 |
| | 67 |
| 217-0751 | 61 |
| | 64 |
| | 67 |
| 217-0752 | 61 |
| | 64 |
| | 67 |
| 217-1546 | 170 |
| 217-1547 | 170 |
| 217-5293 | 617 |
| 217-5900 | 34 |
| 217-6720 | ▶638 |
| | 711 |
| 217-7933 | 788 |
| 217-8938 | 78 |
| 217-8946 | 195 |
| 218-0324 | 78 |
| | ▶730 |
| 218-2373 | 601 |
| 218-2529 | 794 |
| 218-4935 | 349 |
| | 355 |
| | 362 |
| 218-7311 | ▶732 |
| | 736 |
| 218-9894 | 392 |
| | 455 |


▶ **PRIMARY REFERENCE**

# PART NUMBER INDEX


| Part | Page |
|---|---|
| 219-0302 | 822 |
| | 827 |
| | 832 |
| | 837 |
| | 842 |
| | 847 |
| 219-1964 | ▶700 |
| | 703 |
| 219-4438 | 2 |
| | 3 |
| | 4 |
| | 6 |
| | 9 |
| | 11 |
| | ▶84 |
| 219-4441 | 2 |
| | 3 |
| | 4 |
| | 6 |
| | 9 |
| | 11 |
| | ▶166 |
| 219-4458 | 115 |
| 219-4770 | 649 |
| | ▶703 |
| 219-6485 | ▶279 |
| | 377 |
| 219-6486 | ▶280 |
| | 377 |
| 219-6487 | ▶281 |
| | 287 |
| | 289 |
| 219-7186 | 2 |
| | 3 |
| | 5 |
| | 7 |
| | 10 |
| | 11 |
| 220-0131 | ▶792 |
| | 796 |
| 220-0160 | 794 |
| 220-0717 | 166 |
| 220-0718 | 166 |
| 220-3629 | 463 |
| 220-5692 | ▶563 |
| | 579 |
| | 581 |
| 220-6372 | 2 |
| | 3 |
| | 4 |
| | 6 |
| | 9 |
| | 11 |
| | ▶201 |
| 220-8678 | 217 |
| 221-0775 | 572 |
| 221-1426 | 201 |
| 221-2372 | 242 |
| 221-3417 | 294 |
| | ▶305 |
| 221-8045 | 822 |
| | 827 |
| | 832 |
| 221-8124 | ▶2 |
| 222-0494 | 213 |
| 222-1178 | 414 |
| | 419 |
| 222-1975 | ▶43 |
| | 49 |
| 222-3487 | 504 |
| | 508 |
| | 510 |
| | 514 |
| 222-4741 | 465 |
| | ▶720 |
| 222-4744 | ▶465 |
| | 650 |
| 223-0533 | 96 |
| 223-4402 | 556 |
| 223-4418 | 556 |
| 223-4421 | 558 |
| 223-4422 | 92 |
| 223-4423 | 2 |
| | 3 |
| | ▶92 |
| 223-4472 | 539 |
| 223-4591 | 213 |
| 223-4720 | 556 |
| | 558 |
| 223-4730 | 2 |
| | 3 |
| | 4 |
| | 6 |
| | 9 |
| | 11 |
| 223-4903 | 92 |
| | 94 |
| 223-5089 | 187 |
| 223-5872 | ▶213 |
| 223-5874 | 211 |
| | 213 |
| 223-6475 | 558 |
| 223-7263 | ▶61 |
| | 64 |
| | 70 |
| 223-8340 | 794 |
| 223-8341 | 794 |
| 223-8458 | 556 |
| 223-9159 | 113 |
| | 115 |
| 223-9250 | ▶69 |
| | ▶70 |
| | 71 |
| 223-9253 | 14 |
| | 15 |
| | ▶49 |
| 223-9732 | 14 |
| | 15 |
| | 16 |
| | 17 |
| | 18 |
| | ▶42 |
| 224-0554 | 822 |
| | 827 |
| | 832 |
| 224-2335 | 411 |
| | 586 |
| | 591 |
| 224-3245 | 113 |
| | 115 |
| 224-3246 | 113 |
| | 115 |
| 224-3979 | 4 |
| | 6 |
| | 9 |
| | 11 |
| | ▶860 |
| | ▶861 |
| 224-3983 | 61 |
| 224-4507 | 697 |
| | 699 |
| 224-4508 | 697 |
| | 699 |
| 224-4825 | 431 |
| 224-4826 | 431 |
| 224-5122 | 71 |
| | 72 |
| | 75 |
| 224-6193 | 256 |
| 224-7135 | 605 |
| | 608 |
| 224-7717 | 837 |
| | 842 |
| | 847 |
| 224-9695 | 2 |
| | 3 |
| | 4 |
| | 6 |
| | ▶89 |
| 224-9776 | ▶270 |
| 225-0312 | 822 |
| | 827 |
| | 832 |
| 225-0313 | 837 |
| | 842 |
| | 847 |
| 225-1144 | 39 |
| 225-1148 | ▶39 |
| | 41 |
| 225-1912 | 675 |
| | 680 |
| 225-3305 | 837 |
| | 842 |
| | 847 |
| 225-4127 | 4 |
| | 6 |
| | 9 |
| | 11 |
| | ▶170 |
| 225-9611 | 423 |
| 226-1985 | 749 |
| 226-1986 | 749 |
| 226-5561 | 61 |
| | 67 |
| 226-7168 | 794 |
| 226-7674 | ▶773 |
| | 794 |
| 226-7677 | ▶794 |
| | 796 |
| | 797 |
| 226-7678 | 794 |
| 226-8720 | ▶749 |
| | 796 |
| | 797 |
| 227-1037 | 1 |
| | ▶444 |
| 227-1039 | 444 |
| | ▶447 |
| 227-1204 | 49 |
| | 51 |
| | 53 |
| | 55 |
| | 57 |
| 227-1356 | 792 |
| | 793 |
| 227-3704 | 77 |
| 227-3705 | 2 |
| | 3 |
| | 4 |
| | 6 |
| | 9 |
| | 11 |
| | ▶77 |
| 227-3815 | 234 |
| 227-3872 | 129 |
| 227-3917 | 2 |
| | 3 |
| | ▶151 |
| | ▶152 |
| 227-4002 | 370 |
| | 373 |
| 227-4239 | 64 |
| 227-5525 | 157 |
| | 160 |
| | ▶691 |
| 227-5605 | 452 |
| 227-6744 | 348 |
| | 354 |
| | 361 |
| 227-8842 | 19 |
| | 20 |
| | ▶325 |
| 227-8851 | 166 |
| 227-8852 | 166 |
| 227-9980 | 2 |
| | 3 |
| | 4 |
| | 6 |
| | 9 |
| | 11 |
| | ▶782 |
| 228-0563 | 437 |
| 228-2651 | 691 |
| 228-2652 | 691 |
| 228-4929 | 294 |
| 228-4947 | 314 |
| | 392 |
| 228-6051 | 282 |
| | 283 |
| 228-6052 | 282 |
| 228-6053 | 282 |
| | 283 |
| 228-6054 | 282 |
| | 283 |
| 228-6056 | 282 |
| | 283 |
| 228-6089 | 777 |
| | 804 |


▶ PRIMARY REFERENCE

# PART NUMBER INDEX


| Part | Page |
|---|---|
| 228-7082 | 291 |
| 228-7083 | 4 |
| | 6 |
| | ▶32 |
| 228-7260 | 804 |
| 228-7838 | 604 |
| | 607 |
| 228-7839 | 604 |
| | 607 |
| 229-1472 | 89 |
| 229-2580 | 777 |
| 229-5669 | 860 |
| 229-6176 | 534 |
| | 536 |
| 229-6259 | 113 |
| | 115 |
| 229-6711 | 2 |
| | 3 |
| | 4 |
| | 6 |
| | 9 |
| | 11 |
| | ▶119 |
| 229-7375 | 403 |
| 229-8568 | 43 |
| | ▶44 |
| | 45 |
| 230-0104 | 2 |
| | 3 |
| | 4 |
| | 6 |
| | 9 |
| | 11 |
| | ▶37 |
| 230-1340 | 275 |
| | 847 |
| 230-1341 | 273 |
| | 832 |
| 230-2200 | 575 |
| | 577 |
| 230-2202 | 575 |
| | 577 |
| 230-2569 | 113 |
| | 115 |
| 230-2637 | 691 |
| | ▶692 |
| 230-2638 | 692 |
| | ▶695 |
| 230-3728 | 221 |
| | 231 |
| | 232 |
| 230-3775 | 221 |
| | 231 |
| | 232 |
| 230-4011 | 236 |
| | 338 |
| 230-4012 | 236 |
| 230-4013 | 383 |
| 230-4014 | 383 |
| 230-4069 | 89 |
| 230-4114 | 441 |
| | ▶451 |
| 230-4115 | 451 |
| | ▶452 |
| 230-6278 | ▶334 |
| | 348 |
| | 354 |
| | 361 |
| 230-7201 | 109 |
| 230-9446 | 80 |
| 230-9447 | 80 |
| 231-0336 | 566 |
| 231-3947 | 229 |
| 231-7086 | 236 |
| 231-9394 | 189 |
| 232-0253 | 121 |
| | 123 |
| | 124 |
| 232-0314 | 339 |
| 232-1374 | 234 |
| | 236 |
| 232-1376 | 234 |
| | 236 |
| 232-1767 | 213 |
| 232-3235 | 113 |
| | 115 |
| 232-3236 | 113 |
| | 115 |
| 232-4901 | 414 |
| | 419 |
| 232-6136 | 287 |
| | 289 |
| 233-0891 | 260 |
| 233-6742 | 222 |
| | ▶244 |
| | ▶245 |
| 233-7245 | 15 |
| | 17 |
| | ▶21 |
| | ▶22 |
| 233-7564 | 447 |
| 233-7644 | 165 |
| 233-8350 | 191 |
| 233-8484 | 191 |
| 234-1400 | 860 |
| 234-1401 | 860 |
| 234-5002 | 24 |
| 234-5005 | 14 |
| | 15 |
| | 17 |
| | ▶24 |
| | ▶25 |
| 234-5013 | 236 |
| | ▶323 |
| 234-5858 | 113 |
| 234-6136 | 14 |
| | 15 |
| | 16 |
| | 17 |
| | 18 |
| | ▶113 |
| | ▶115 |
| 234-7960 | 191 |
| 234-9505 | 21 |
| | 22 |
| 234-9508 | 21 |
| | 22 |
| 235-0078 | 383 |
| 235-0084 | 348 |
| | 354 |
| | 361 |
| 235-0382 | 15 |
| | ▶103 |
| 235-0658 | 21 |
| 235-1054 | 2 |
| | 3 |
| | 4 |
| | 6 |
| | 9 |
| | 11 |
| | ▶153 |
| | ▶154 |
| 235-1088 | 21 |
| | 22 |
| 235-1089 | 21 |
| | 22 |
| 235-1365 | 837 |
| 235-1368 | 822 |
| 235-1403 | 14 |
| | 15 |
| | ▶231 |
| | ▶232 |
| 235-1587 | 163 |
| 235-2484 | 408 |
| 235-2974 | 14 |
| | 15 |
| | 16 |
| | 18 |
| | ▶71 |
| | ▶72 |
| 235-5021 | 2 |
| | 3 |
| | ▶130 |
| 235-5805 | 9 |
| | ▶131 |
| 235-6500 | 601 |
| 235-7071 | 185 |
| 235-8397 | 2 |
| | 3 |
| | 4 |
| | 6 |
| | 9 |
| | 11 |
| | ▶117 |
| 236-0981 | 728 |
| | ▶736 |
| 236-0982 | ▶262 |
| | 728 |
| 236-0983 | 728 |
| | ▶738 |
| 236-0985 | ▶343 |
| | 728 |
| 236-0986 | 728 |
| | ▶777 |
| 236-1030 | 728 |
| | ▶762 |
| 236-1687 | 166 |
| 236-4417 | 84 |
| 236-4615 | 777 |
| 236-4616 | 777 |
| 236-4630 | 381 |
| 236-5197 | 788 |
| 236-5373 | 728 |
| | ▶821 |
| 236-5605 | 73 |
| 236-7271 | 705 |
| 236-7272 | 685 |
| 236-8722 | 777 |
| 237-0336 | 375 |
| 237-0592 | 423 |
| 237-1962 | 325 |
| | ▶326 |
| 237-1964 | 3 |
| | ▶192 |
| 237-2520 | 166 |
| 237-2521 | 166 |
| 237-2789 | 170 |
| 237-2894 | 399 |
| 237-2895 | 399 |
| 237-3811 | 470 |
| | 472 |
| | 474 |
| | 476 |
| 237-3812 | 388 |
| 237-3816 | 388 |
| 237-3817 | 405 |
| 237-3943 | 802 |
| 237-3970 | ▶722 |
| | 802 |
| 237-4156 | 643 |
| | 645 |
| 237-4770 | 399 |
| 237-7602 | 252 |
| | ▶330 |
| 237-8268 | 399 |
| 237-9103 | 566 |
| 237-9189 | 653 |
| | 657 |
| | 661 |
| 237-9308 | 234 |
| | 236 |
| 238-0296 | 244 |
| | ▶246 |
| 238-1034 | 392 |
| 238-1332 | 436 |
| | ▶443 |
| 238-1825 | 708 |
| 238-2260 | 343 |
| 238-2707 | 115 |
| 238-2797 | ▶282 |
| | 377 |
| 238-2798 | ▶283 |
| | 377 |
| 238-4665 | 201 |
| 238-5078 | 393 |
| | 455 |
| 238-5080 | 393 |
| 238-5082 | 392 |
| | 455 |
| 238-6843 | 566 |
| | 569 |
| | 572 |
| 238-6844 | 566 |
| | 569 |
| | 572 |
| 238-6845 | 566 |
| 238-6846 | 566 |
| | 569 |
| | 572 |
| 238-9811 | 185 |


▶ **PRIMARY REFERENCE**

# PART NUMBER INDEX


| Part | Page |
|---|---|
| 238-9812 | 185 |
| 238-9837 | 185 |
| 238-9838 | 185 |
| 238-9911 | 470 |
| | 472 |
| | 474 |
| | 476 |
| 238-9912 | ▶403 |
| | 470 |
| | 472 |
| | 474 |
| | 476 |
| 238-9916 | 403 |
| | ▶405 |
| 238-9928 | 294 |
| | 558 |
| | 561 |
| 239-0334 | 444 |
| 239-1134 | 324 |
| | ▶342 |
| 239-1266 | 470 |
| | 472 |
| | ▶566 |
| | ▶569 |
| 239-1267 | 566 |
| 239-1491 | 479 |
| | ▶565 |
| 239-2395 | 296 |
| | ▶306 |
| 239-2396 | 234 |
| | 236 |
| | 296 |
| | ▶307 |
| 239-3420 | 423 |
| 239-3478 | ▶308 |
| | 309 |
| 239-3846 | 777 |
| 239-4111 | ▶40 |
| | 41 |
| 239-4113 | 2 |
| | 3 |
| | 4 |
| | 6 |
| | 9 |
| | 11 |
| | ▶41 |
| 239-5024 | 744 |
| 239-5025 | 251 |
| | ▶744 |
| 239-5304 | 294 |
| | 558 |
| | 561 |
| 239-5305 | 294 |
| | 558 |
| | 561 |
| 239-5611 | 761 |
| 239-5646 | 708 |
| 239-5674 | 296 |
| | ▶309 |
| 239-5928 | 296 |
| | ▶314 |
| 239-5929 | 370 |
| | 373 |
| 239-6139 | 28 |
| 239-6986 | 822 |
| | 827 |
| | 832 |
| | 837 |
| | 842 |
| | 847 |
| 239-8460 | 708 |
| 239-9368 | 755 |
| | 761 |
| 239-9624 | 21 |
| | 22 |
| | ▶80 |
| 240-2139 | ▶733 |
| | 734 |
| 240-2169 | 804 |
| 240-2220 | 728 |
| | ▶741 |
| | ▶742 |
| 240-3543 | 558 |
| 240-8239 | 405 |
| 240-8240 | 470 |
| | 472 |
| | 474 |
| | 476 |
| 240-8716 | 798 |
| | ▶801 |
| 240-8718 | ▶796 |
| | ▶797 |
| | 801 |
| 241-0037 | 563 |
| 241-0478 | 96 |
| 241-0504 | 721 |
| 241-0506 | 721 |
| 241-0509 | 794 |
| 241-2443 | 619 |
| 241-2451 | 619 |
| 241-3283 | 192 |
| 241-4157 | 728 |
| | ▶815 |
| 241-5670 | 761 |
| 241-5893 | 603 |
| 241-5935 | 3 |
| | 6 |
| | ▶14 |
| 241-5936 | 2 |
| | 4 |
| | 9 |
| | ▶15 |
| 241-6186 | 296 |
| 241-6207 | 586 |
| | 591 |
| 241-6208 | 157 |
| | 160 |
| 241-6749 | 794 |
| 241-7598 | 2 |
| | 3 |
| | 4 |
| | 6 |
| | 9 |
| | 11 |
| | ▶260 |
| 241-7692 | 761 |
| 241-7693 | 761 |
| 241-8368 | 256 |
| | ▶335 |
| 241-8488 | 343 |
| | 348 |
| | 354 |
| | 361 |
| 241-8879 | 343 |
| 241-8880 | 343 |
| 241-8896 | 728 |
| | ▶804 |
| 242-0583 | 761 |
| 242-0588 | 282 |
| | 283 |
| 242-2461 | 744 |
| 242-3360 | 210 |
| 242-3375 | 153 |
| | 154 |
| 242-3376 | 153 |
| 242-4313 | 294 |
| | 558 |
| | 561 |
| 242-5044 | 777 |
| 242-5054 | 822 |
| | 827 |
| | 832 |
| 242-5055 | 837 |
| | 842 |
| | 847 |
| 242-5414 | 405 |
| 242-6120 | 343 |
| 242-7009 | 796 |
| | 797 |
| 242-8551 | 762 |
| 242-8901 | 343 |
| 242-9537 | 39 |
| | 40 |
| 242-9979 | 403 |
| 242-9980 | 405 |
| 243-0023 | ▶388 |
| | 436 |
| 243-0551 | 14 |
| | 15 |
| | 16 |
| | 17 |
| | 18 |
| | ▶28 |
| 243-0943 | ▶63 |
| | 64 |
| 243-1159 | 39 |
| | 40 |
| 243-1561 | 2 |
| | 3 |
| | 5 |
| | 7 |
| | 10 |
| | 11 |
| | ▶370 |
| | ▶373 |
| 243-1563 | 2 |
| | 3 |
| | 5 |
| | 7 |
| | 10 |
| | 11 |
| | ▶296 |
| 243-2466 | 123 |
| 243-2467 | 103 |
| | ▶123 |
| 243-2998 | 804 |
| 243-3071 | 443 |
| 243-3544 | 808 |
| 243-6741 | ▶64 |
| | 69 |
| 244-2306 | 566 |
| | 569 |
| | 572 |
| 244-2477 | 761 |
| 244-2509 | 2 |
| | 3 |
| | 4 |
| | 6 |
| | 9 |
| | 11 |
| | ▶96 |
| 244-5693 | 708 |
| 244-5929 | 165 |
| 244-5934 | 431 |
| 244-6627 | ▶427 |
| | 436 |
| 244-6815 | 2 |
| | 3 |
| | 4 |
| | 6 |
| | 9 |
| | 11 |
| | ▶142 |
| | ▶144 |
| | ▶146 |
| | ▶147 |
| 244-6816 | 142 |
| | 144 |
| 244-6817 | 142 |
| | 144 |
| 244-6818 | 142 |
| | 144 |
| 244-6925 | 470 |
| | 472 |
| | 474 |
| | 476 |
| 244-7718 | 231 |
| 245-1363 | 132 |
| 245-1596 | 807 |
| 245-1669 | 710 |
| | ▶711 |
| 245-2774 | ▶315 |
| | 449 |
| 245-3812 | 206 |
| 245-5894 | 741 |
| | ▶745 |
| 245-7643 | 343 |
| 245-8474 | 3 |
| | ▶206 |
| | ▶207 |
| | ▶208 |
| 245-8946 | 530 |
| 246-0559 | 447 |
| 246-0560 | 447 |
| 246-0609 | 566 |
| | 569 |
| | 572 |
| 246-0610 | 566 |
| | 569 |
| | 572 |


▶ PRIMARY REFERENCE

# PART NUMBER INDEX


| Part | Page |
|---|---|
| 246-0611 | 566 |
| | 569 |
| | 572 |
| 246-0612 | 566 |
| | 569 |
| | 572 |
| 246-1001 | ▶407 |
| | 418 |
| 246-1053 | 2 |
| | 3 |
| | 4 |
| | 6 |
| | 9 |
| | ▶234 |
| 246-1106 | ▶437 |
| | 444 |
| 246-1175 | 2 |
| | 3 |
| | 4 |
| | 6 |
| | 9 |
| | 11 |
| | ▶222 |
| 246-1475 | 222 |
| 246-1893 | 437 |
| 246-1894 | 437 |
| 246-1895 | 437 |
| 246-1896 | 437 |
| 246-1897 | 437 |
| 246-2124 | 444 |
| 246-2387 | 444 |
| 246-2641 | 253 |
| | 816 |
| | 862 |
| 246-2669 | 343 |
| 246-3331 | 821 |
| 246-4521 | 604 |
| | 607 |
| 246-4523 | 604 |
| | 607 |
| 246-4524 | 604 |
| | 607 |
| 246-5008 | 190 |
| 246-5009 | 190 |
| 246-5010 | 190 |
| 246-5451 | 566 |
| 246-5659 | 115 |
| 246-5905 | 813 |
| 246-6036 | 154 |
| 246-9869 | 285 |
| 246-9870 | 285 |
| 246-9871 | ▶284 |
| | 377 |
| 247-0025 | 2 |
| | 3 |
| | ▶33 |
| 247-3315 | ▶3 |
| 247-3775 | 437 |
| 247-3776 | 437 |
| 247-4067 | 542 |
| | 544 |
| 247-4285 | 279 |
| 247-4956 | 264 |
| 247-4957 | 264 |
| 247-4997 | ▶264 |
| | 272 |
| 247-5638 | 287 |
| | 289 |
| 247-5641 | 289 |
| 247-5643 | 287 |
| 247-7036 | ▶251 |
| | 777 |
| 247-7038 | ▶251 |
| | 261 |
| 247-7039 | ▶264 |
| 247-7745 | 115 |
| 247-8269 | 566 |
| | 569 |
| | 572 |
| 247-8272 | 774 |
| 247-8302 | 755 |
| | 774 |
| 247-8640 | 190 |
| 247-9701 | 736 |
| 247-9702 | 736 |
| 247-9908 | 70 |
| | 73 |
| 248-0054 | 584 |
| | 589 |
| | ▶601 |
| 248-0307 | ▶612 |
| 248-1264 | 285 |
| 248-1265 | 285 |
| 248-2772 | 166 |
| 248-2841 | 343 |
| | 344 |
| 248-3291 | 637 |
| 248-5064 | 708 |
| 248-5245 | 822 |
| | 827 |
| | 832 |
| | 837 |
| | 842 |
| | 847 |
| 248-5513 | 166 |
| 248-6586 | 732 |
| 248-6599 | 732 |
| 248-6614 | 732 |
| 248-6772 | 729 |
| | 807 |
| 248-6827 | 185 |
| 248-7661 | ▶271 |
| 249-0073 | 157 |
| | 160 |
| 249-0219 | ▶261 |
| | 272 |
| 249-0622 | 596 |
| | 650 |
| 249-2334 | ▶615 |
| | 706 |
| 249-2969 | ▶721 |
| | 794 |
| 249-4284 | 539 |
| 249-4285 | 539 |
| 249-8686 | 193 |
| 250-0466 | 49 |
| | 51 |
| | 53 |
| | 55 |
| | 57 |
| 250-1058 | 738 |
| 250-1488 | 157 |
| | 160 |
| 250-2185 | 252 |
| 250-2186 | 252 |
| 250-2304 | 4 |
| | 6 |
| | 9 |
| | 11 |
| | ▶291 |
| 250-3386 | 252 |
| 250-3880 | 539 |
| 250-6148 | 464 |
| 250-7605 | 530 |
| | 532 |
| 250-9299 | ▶539 |
| | 540 |
| 250-9378 | 80 |
| 251-1198 | 777 |
| 251-1636 | 325 |
| 251-3268 | 601 |
| 251-3539 | 777 |
| 251-4157 | 750 |
| 251-4160 | 347 |
| 251-4162 | 347 |
| 251-4169 | 347 |
| 251-4243 | 750 |
| 251-6159 | 601 |
| 251-6204 | 381 |
| 252-2148 | 596 |
| | ▶600 |
| | 650 |
| 252-2149 | 600 |
| 252-2156 | 822 |
| | 827 |
| | 832 |
| | 837 |
| | 842 |
| | 847 |
| 252-2157 | 822 |
| | 827 |
| | 832 |
| | 837 |
| | 842 |
| | 847 |
| 252-8050 | ▶628 |
| | 738 |
| 252-8051 | 628 |
| | 739 |
| 252-8054 | 628 |
| | 739 |
| 253-0618 | 232 |
| 253-0861 | 817 |
| 253-1752 | 42 |
| 253-2111 | 349 |
| | 355 |
| | 362 |
| 253-8766 | 45 |
| | 47 |
| 254-0072 | 423 |
| 254-1117 | 745 |
| | 747 |
| 254-3566 | ▶190 |
| | 191 |
| 254-4104 | 139 |
| 254-4293 | 191 |
| 254-4937 | 413 |
| | 418 |
| 254-5708 | 796 |
| 254-6134 | 822 |
| | 827 |
| | 832 |
| | 837 |
| | 842 |
| | 847 |
| 254-6999 | 154 |
| 254-7000 | 154 |
| 254-9238 | 413 |
| | 418 |
| | ▶453 |
| | ▶455 |
| 255-0020 | 777 |
| 255-5285 | 260 |
| 255-8182 | 207 |
| 256-2439 | 697 |
| 256-5347 | 1 |
| | ▶264 |
| 256-6453 | 323 |
| 256-8700 | 796 |
| | 797 |
| 256-8795 | 796 |
| | 797 |
| 257-2531 | 745 |
| | 747 |
| 257-4154 | 222 |
| 257-4155 | 222 |
| 257-4183 | ▶385 |
| 257-4263 | 739 |
| 257-5029 | 755 |
| 257-7440 | 465 |
| 257-7707 | 423 |
| 257-8532 | 405 |
| 257-8858 | 745 |
| | 747 |
| 258-0771 | 315 |
| 258-0883 | ▶337 |
| 258-0953 | 315 |
| 258-4524 | 210 |
| 258-7627 | 411 |
| 258-8412 | 627 |
| 258-8721 | 121 |
| | 123 |
| | 124 |
| | 125 |
| | 126 |
| 259-1172 | 821 |
| 259-1173 | 821 |
| 259-3222 | 755 |
| 259-4397 | 750 |
| 259-4399 | 750 |
| 259-4401 | 837 |
| 259-6122 | 123 |
| 259-8359 | 577 |
| 259-8902 | ▶339 |
| | 391 |
| 261-0052 | ▶45 |
| | 51 |
| 261-0191 | 14 |
| | 15 |
| | 16 |


▶ **PRIMARY REFERENCE**

# PART NUMBER INDEX


| Part | Page |
|---|---|
| | 17 |
| | ▶51 |
| | ▶53 |
| | ▶55 |
| 261-0649 | 436 |
| | ▶479 |
| 261-0650 | 479 |
| 261-1072 | ▶469 |
| 261-3429 | 61 |
| | 64 |
| | 67 |
| 261-3430 | 61 |
| | 64 |
| | 67 |
| 261-4377 | 156 |
| 261-6728 | 155 |
| | 425 |
| | 426 |
| 261-8652 | 348 |
| | 354 |
| | 361 |
| 262-1080 | 2 |
| | 5 |
| | 7 |
| | 10 |
| | 11 |
| | ▶209 |
| 262-1408 | 262 |
| 262-1421 | ▶263 |
| | 273 |
| | 275 |
| 262-2043 | ▶263 |
| | 272 |
| | 277 |
| 262-4466 | 554 |
| 262-4467 | 554 |
| 262-6652 | ▶541 |
| 262-6880 | 124 |
| 262-7100 | 104 |
| | ▶124 |
| 263-1392 | 637 |
| 263-1393 | 637 |
| 263-1394 | 637 |
| 263-4920 | 61 |
| | 67 |
| 263-5055 | 72 |
| | ▶73 |
| | 75 |
| 263-5430 | 796 |
| | 797 |
| 263-8883 | 439 |
| 263-8948 | 368 |
| 263-9088 | 273 |
| | 275 |
| | ▶293 |
| 263-9559 | 399 |
| 264-3169 | ▶439 |
| | 440 |
| 264-4297 | 320 |
| | 322 |
| 265-0700 | 728 |
| | ▶789 |
| 265-0701 | 789 |
| 265-0730 | 1 |
| | ▶772 |
| 265-6540 | 728 |
| | ▶759 |
| 265-6623 | 439 |
| 265-8182 | 343 |
| 265-9432 | 798 |
| 265-9521 | 728 |
| | ▶798 |
| 266-0196 | 209 |
| | ▶210 |
| 266-0198 | 208 |
| 266-0341 | ▶558 |
| | 560 |
| 266-0342 | 558 |
| 266-0830 | 432 |
| 266-1466 | ▶300 |
| | 735 |
| | 784 |
| 266-1681 | 436 |
| | ▶440 |
| 266-1962 | 558 |
| 266-3699 | 15 |
| | 17 |
| | ▶104 |
| | ▶105 |
| 267-1645 | ▶398 |
| 267-4631 | ▶46 |
| | 47 |
| | 48 |
| | 60 |
| 267-8658 | 210 |
| 267-8946 | 697 |
| | 699 |
| 267-8952 | ▶256 |
| | 728 |
| 267-8953 | 256 |
| 267-8954 | 256 |
| 268-1518 | 620 |
| 268-2960 | 210 |
| 268-2973 | 596 |
| | 650 |
| 268-2974 | 596 |
| | 650 |
| 268-2975 | 596 |
| | 650 |
| 268-2976 | 596 |
| | 650 |
| 268-6704 | 723 |
| 268-7807 | ▶272 |
| 268-7808 | ▶1 |
| 268-7810 | ▶1 |
| 269-4136 | 124 |
| 269-6348 | 40 |
| 269-8639 | 786 |
| | 787 |
| 269-8640 | ▶484 |
| | ▶485 |
| | 785 |
| 269-8641 | 484 |
| 269-8650 | ▶486 |
| | ▶487 |
| | 785 |
| 269-8651 | 486 |
| 269-8660 | 785 |
| | ▶786 |
| 269-8661 | 786 |
| 269-8670 | 785 |
| | ▶787 |
| 269-8671 | 787 |
| 269-8680 | ▶502 |
| | 785 |
| 269-8682 | 502 |
| 269-8690 | ▶482 |
| | 785 |
| 269-8692 | 482 |
| 269-8700 | 1 |
| | ▶785 |
| 269-8710 | ▶540 |
| | 785 |
| 269-8711 | 493 |
| 269-8720 | ▶530 |
| 269-8731 | ▶494 |
| 269-8733 | 494 |
| | 496 |
| | 499 |
| 269-8735 | ▶490 |
| | 785 |
| 269-8820 | 1 |
| | ▶728 |
| 269-9190 | 649 |
| | ▶764 |
| 269-9191 | ▶579 |
| | ▶581 |
| | 649 |
| 269-9193 | ▶594 |
| | 649 |
| 269-9194 | ▶584 |
| | ▶589 |
| | 649 |
| 269-9195 | 649 |
| | ▶768 |
| | ▶769 |
| 269-9198 | ▶411 |
| | 649 |
| 269-9199 | ▶413 |
| | ▶418 |
| | 649 |
| 269-9200 | ▶617 |
| | 649 |
| 269-9201 | ▶619 |
| | 649 |
| 269-9202 | 649 |
| | ▶705 |
| 269-9203 | 649 |
| | ▶706 |
| 269-9205 | ▶613 |
| | 649 |
| 269-9423 | 91 |
| 270-0510 | ▶155 |
| | 665 |
| | 669 |
| 270-1490 | 252 |
| 270-1491 | 252 |
| 270-1492 | 252 |
| 270-1493 | 252 |
| 270-1494 | 252 |
| 270-1495 | 252 |
| 270-1496 | 252 |
| 270-1500 | 1 |
| | ▶263 |
| 270-1501 | ▶252 |
| | 263 |
| 270-1502 | 263 |
| | ▶348 |
| | ▶354 |
| | ▶361 |
| 270-1503 | 263 |
| | ▶375 |
| 270-1504 | 263 |
| | ▶377 |
| 270-1505 | 263 |
| | ▶382 |
| 270-1506 | 272 |
| | 277 |
| | ▶368 |
| | ▶369 |
| 270-1507 | 255 |
| | ▶347 |
| 270-1509 | ▶383 |
| | 391 |
| 270-1510 | 272 |
| | ▶285 |
| 270-1618 | 533 |
| | ▶534 |
| 270-1748 | 1 |
| | ▶649 |
| 270-1754 | 533 |
| | ▶641 |
| | 820 |
| 270-1756 | 391 |
| | ▶650 |
| 270-4218 | 19 |
| | 20 |
| | ▶172 |
| 270-4219 | 19 |
| | 20 |
| | ▶195 |
| 270-4220 | ▶225 |
| | ▶227 |
| 270-4221 | 19 |
| | 20 |
| | ▶139 |
| 270-4223 | 19 |
| | 20 |
| | ▶191 |
| 270-4225 | 19 |
| | 20 |
| | ▶575 |
| | ▶577 |
| 270-4231 | ▶324 |
| 270-4232 | ▶156 |
| 270-4235 | ▶218 |
| 270-4239 | 164 |
| | ▶185 |
| 270-4240 | 164 |
| | ▶189 |
| 270-4241 | 164 |
| | ▶165 |
| 270-4242 | 164 |
| | ▶481 |
| 270-4248 | 1 |
| | ▶19 |
| 270-4249 | 19 |
| | 20 |
| | ▶132 |
| 270-4251 | 19 |


▶ PRIMARY REFERENCE

# PART NUMBER INDEX


| Part | Page |
|---|---|
| | ▶157 |
| 270-4252 | 19 |
| | 20 |
| | ▶149 |
| 270-4258 | 19 |
| | 20 |
| | ▶428 |
| 270-4282 | 19 |
| | 20 |
| | ▶78 |
| 270-5317 | 1 |
| | ▶625 |
| 270-5320 | 217 |
| 270-5357 | ▶493 |
| | 785 |
| 270-5358 | 493 |
| 270-5360 | 1 |
| | 541 |
| | ▶542 |
| | ▶544 |
| 270-5363 | 546 |
| | 548 |
| 270-5370 | 1 |
| | ▶436 |
| 270-5382 | 436 |
| | ▶440 |
| 270-5383 | 398 |
| | ▶399 |
| | 436 |
| 270-6889 | 1 |
| | ▶560 |
| 270-7033 | 534 |
| 270-7722 | ▶488 |
| | 489 |
| 270-7723 | 1 |
| | ▶489 |
| 270-8622 | 705 |
| 270-8642 | 822 |
| | 827 |
| | 832 |
| | 837 |
| | 842 |
| | 847 |
| 270-8643 | 822 |
| | 827 |
| | 832 |
| | 837 |
| | 842 |
| | 847 |
| 270-8645 | 822 |
| | 827 |
| | 832 |
| | 837 |
| | 842 |
| | 847 |
| 270-8672 | 649 |
| | ▶696 |
| 270-9143 | ▶822 |
| | ▶827 |
| | ▶832 |
| 270-9144 | ▶837 |
| | ▶842 |
| | ▶847 |
| 270-9147 | ▶514 |
| 270-9148 | ▶504 |
| 271-0433 | 399 |
| 271-0434 | 399 |
| 271-0435 | 399 |
| 271-0436 | 436 |
| | ▶529 |
| 271-0437 | 529 |
| 271-1627 | 408 |
| 271-2360 | 689 |
| | 697 |
| 271-3761 | 479 |
| 271-3763 | 468 |
| | 469 |
| | ▶470 |
| | ▶472 |
| 271-6462 | 625 |
| 271-7312 | 777 |
| 271-8078 | 488 |
| 271-8530 | ▶241 |
| | 785 |
| 271-8531 | 241 |
| | ▶242 |
| 271-8534 | 241 |
| 271-8540 | 546 |
| | 548 |
| 271-8541 | 546 |
| | 548 |
| 271-8542 | 546 |
| | 548 |
| 271-8543 | 546 |
| 271-8544 | 546 |
| 271-8545 | 546 |
| | 548 |
| 272-0216 | 723 |
| 272-0390 | 25 |
| | 27 |
| 272-1595 | 211 |
| 272-3086 | ▶4 |
| | 8 |
| 272-3087 | ▶6 |
| 272-5438 | 187 |
| 272-6604 | 804 |
| 272-6682 | 427 |
| 272-7940 | 440 |
| 272-8339 | 519 |
| 272-8402 | 348 |
| | 354 |
| | 361 |
| 272-8403 | 348 |
| | 354 |
| | 361 |
| 272-8404 | 348 |
| | 355 |
| 272-8405 | 349 |
| | 355 |
| | 362 |
| 272-8406 | 383 |
| 272-8407 | 375 |
| 272-8408 | 377 |
| 272-8409 | 377 |
| 273-0120 | 613 |
| | 625 |
| 273-2417 | 187 |
| 273-2444 | 185 |
| | ▶187 |
| 273-3219 | 78 |
| 273-3803 | ▶689 |
| | 690 |
| 273-3827 | 423 |
| 273-4204 | 78 |
| 273-4989 | 641 |
| | ▶643 |
| | ▶645 |
| 273-4990 | 643 |
| | 645 |
| 273-4992 | 643 |
| | 645 |
| 273-9919 | 149 |
| 273-9921 | 132 |
| 274-1953 | 16 |
| | 17 |
| | ▶75 |
| 274-4491 | 125 |
| | 126 |
| 274-5061 | 413 |
| | 418 |
| 274-5122 | 413 |
| | 418 |
| 274-5554 | 413 |
| | 418 |
| 274-5786 | 413 |
| | 418 |
| 274-6412 | 617 |
| 274-6413 | 617 |
| 274-6415 | 619 |
| 274-6417 | 619 |
| 274-6418 | 619 |
| 274-6419 | 619 |
| 274-6421 | 619 |
| 274-6422 | 619 |
| 274-6423 | 619 |
| 274-6424 | 619 |
| 274-6425 | 619 |
| 274-6837 | 584 |
| | 589 |
| 274-6839 | 584 |
| | 589 |
| 274-6841 | 584 |
| | 589 |
| 274-6842 | 594 |
| 274-6844 | 594 |
| 274-6845 | 594 |
| 274-6941 | 529 |
| 274-6967 | 584 |
| 274-7868 | 619 |
| 274-7872 | 584 |
| | 589 |
| 274-7877 | 584 |
| | 589 |
| 274-7878 | 619 |
| 274-7879 | 411 |
| 274-7881 | 174 |
| | 176 |
| | 653 |
| 274-7882 | 174 |
| | 176 |
| | 653 |
| 274-7883 | 174 |
| | 176 |
| | 179 |
| | 653 |
| 274-7884 | 174 |
| | 176 |
| | 179 |
| | 653 |
| | 657 |
| | 661 |
| 274-7887 | 584 |
| | 589 |
| 274-8359 | 115 |
| 274-8879 | ▶761 |
| 274-9189 | 733 |
| | 783 |
| | 784 |
| 274-9256 | 613 |
| | 625 |
| 275-0099 | 584 |
| | 589 |
| 275-0100 | 584 |
| | 589 |
| 275-0104 | 411 |
| 275-0105 | 411 |
| 275-0106 | 413 |
| | 418 |
| 275-0110 | 174 |
| | 176 |
| | 179 |
| | 653 |
| | 657 |
| | 661 |
| 275-0572 | 482 |
| 275-0961 | 519 |
| | 521 |
| | 523 |
| | 525 |
| | 527 |
| 275-1219 | 519 |
| 275-1253 | 236 |
| | ▶338 |
| 275-2152 | 91 |
| | 596 |
| | 650 |
| 275-2192 | 78 |
| | ▶91 |
| 275-4162 | 94 |
| 275-4185 | 4 |
| | 6 |
| | 9 |
| | 11 |
| | ▶94 |
| 275-4256 | 164 |
| | ▶731 |
| 275-4261 | 109 |
| | 111 |
| 275-5231 | 625 |
| 275-5232 | 625 |
| 275-5233 | 625 |
| 275-5840 | 165 |
| 275-6658 | 755 |
| | ▶774 |
| 275-6660 | 755 |
| 275-6682 | 755 |
| 275-6684 | 774 |
| 275-6686 | 774 |


▶ **PRIMARY REFERENCE**

# PART NUMBER INDEX


| Part | Page | Part | Page | Part | Page | Part | Page |
|---|---|---|---|---|---|---|---|
| 275-6687 | 755 | 275-9324 | 193 | 276-7544 | 157 | | 548 |
| 275-6688 | 755 | 275-9329 | ▶193 | | 160 | 278-0607 | 546 |
| 275-6689 | 755 | | 194 | 276-7569 | 579 | | 548 |
| 275-6690 | ▶729 | 275-9878 | 519 | 276-7570 | 579 | 278-0648 | 542 |
| | 755 | 275-9879 | 519 | 276-8859 | 189 | | 544 |
| 275-6691 | 729 | 276-0430 | 195 | 276-8860 | 1 | 278-0650 | 542 |
| | ▶807 | 276-0433 | 195 | | ▶164 | | 544 |
| 275-6692 | 807 | 276-1859 | 575 | 276-8911 | 164 | 278-1363 | 126 |
| 275-6693 | 729 | 276-1860 | 575 | | ▶690 | 278-1365 | 125 |
| 275-6697 | 755 | 276-2332 | 377 | 276-8943 | 708 | 278-1504 | 234 |
| 275-6699 | 755 | 276-2608 | ▶381 | 276-8944 | 708 | 278-1929 | 102 |
| 275-6702 | 755 | | 531 | 276-9462 | 272 | | ▶125 |
| 275-6704 | 755 | 276-2754 | 413 | | ▶273 | 278-1938 | 105 |
| 275-6706 | 755 | | 418 | 276-9463 | 273 | | ▶126 |
| 275-6708 | 755 | 276-3106 | 236 | | 275 | 278-2171 | 762 |
| 275-6709 | 755 | 276-3776 | 502 | 276-9466 | 381 | 278-2461 | 504 |
| 275-6710 | 755 | 276-3781 | 502 | 276-9467 | 256 | | ▶519 |
| 275-7878 | 343 | 276-3784 | 502 | 276-9966 | ▶468 | 278-2463 | 504 |
| 275-8878 | 399 | 276-3787 | 494 | 276-9967 | ▶468 | | 514 |
| 275-8982 | ▶423 | | 496 | 277-0589 | 272 | | ▶521 |
| | 666 | 276-3789 | 502 | 277-0641 | 531 | 278-2464 | 504 |
| | 670 | 276-3797 | 494 | | ▶532 | | 514 |
| | 674 | | 496 | 277-3254 | 762 | | ▶523 |
| | 680 | | 499 | 277-3255 | 762 | 278-2465 | 504 |
| 275-9231 | 653 | 276-3798 | 494 | 277-3256 | 762 | | 514 |
| | 657 | | 496 | 277-3257 | 762 | | ▶525 |
| | 661 | | 499 | 277-3258 | 762 | 278-2467 | 504 |
| 275-9232 | 653 | 276-3800 | ▶531 | 277-3260 | 762 | | 514 |
| | 657 | 276-4132 | 126 | 277-3276 | 164 | | ▶527 |
| | 661 | 276-4517 | 665 | | ▶809 | 278-2686 | 546 |
| 275-9233 | 653 | | 669 | 277-3483 | 187 | | 548 |
| | 657 | | 673 | 277-4796 | 225 | 278-2687 | 546 |
| | 661 | | 679 | | 227 | | 548 |
| 275-9234 | 653 | 276-4776 | 191 | 277-6343 | 423 | 278-2688 | 546 |
| | 657 | 276-5204 | 579 | 277-6941 | 584 | | 548 |
| | 661 | | 581 | | 589 | 278-2689 | 546 |
| 275-9235 | 653 | 276-5244 | 614 | | ▶604 | | 548 |
| | 657 | 276-5249 | 613 | | ▶607 | 278-2690 | 546 |
| | 661 | | ▶614 | 277-7540 | ▶391 | 278-2691 | 546 |
| 275-9236 | 653 | 276-5250 | 614 | 277-7646 | 285 | | 548 |
| | 657 | 276-5317 | 121 | 277-7647 | 285 | 278-2692 | 546 |
| | 661 | | 123 | 277-7648 | 285 | | 548 |
| 275-9237 | 174 | | 124 | 277-7649 | 285 | 278-2693 | 546 |
| | 176 | | 125 | 277-7693 | 324 | | 548 |
| | 653 | | 126 | 277-8107 | 139 | 278-2694 | 546 |
| | 657 | 276-5320 | 481 | 277-8129 | 139 | | 548 |
| 275-9238 | 584 | 276-5323 | 481 | 277-8461 | 4 | 278-3387 | 165 |
| | 589 | 276-5327 | 481 | | 6 | 278-3555 | 542 |
| 275-9241 | 596 | 276-5330 | 481 | | 9 | | 544 |
| | 650 | 276-5998 | 731 | | 11 | 278-4376 | 272 |
| 275-9243 | 685 | 276-5999 | 731 | | ▶109 | | ▶294 |
| 275-9244 | 685 | 276-6039 | 165 | | ▶111 | 278-4507 | ▶816 |
| 275-9245 | 685 | 276-6151 | 482 | 277-8498 | 256 | 278-4526 | 674 |
| 275-9246 | 685 | 276-6555 | 482 | 277-8868 | 637 | | 680 |
| 275-9247 | 650 | 276-7247 | 519 | 277-8869 | 620 | 278-4680 | 482 |
| 275-9249 | 650 | | 521 | | ▶637 | 278-4822 | 139 |
| 275-9250 | 650 | | 523 | 277-9406 | 157 | 278-5638 | 172 |
| 275-9253 | 665 | | 525 | | 160 | 278-5640 | 172 |
| | 669 | | 527 | 278-0397 | 596 | 278-5657 | 26 |
| | 673 | 276-7447 | 349 | | 650 | 278-5662 | 14 |
| | 679 | | 355 | 278-0602 | 546 | | 16 |
| 275-9256 | 579 | | 362 | | 548 | | 18 |
| | 581 | 276-7542 | 172 | 278-0603 | 546 | | ▶26 |
| 275-9321 | 197 | 276-7543 | 157 | | 548 | | ▶27 |
| 275-9323 | 193 | | 160 | 278-0606 | 546 | 278-5663 | 172 |


▶ PRIMARY REFERENCE

# PART NUMBER INDEX


| Part | Page |
|---|---|
| 278-5962 | ▶216 |
| | 728 |
| 278-6178 | 579 |
| | 581 |
| 278-6179 | 579 |
| | 581 |
| 278-6182 | 579 |
| | 581 |
| 278-8040 | 340 |
| 278-8699 | 762 |
| 278-9032 | 504 |
| | 514 |
| 279-1130 | 494 |
| | 496 |
| 279-1131 | 494 |
| | 496 |
| 279-1132 | 494 |
| | 496 |
| | 499 |
| 279-1140 | 542 |
| | 544 |
| | ▶546 |
| | ▶548 |
| 279-1141 | 490 |
| 279-1147 | 494 |
| | 496 |
| | 499 |
| 279-1153 | ▶561 |
| | 562 |
| 279-2236 | 533 |
| | ▶653 |
| | ▶657 |
| | ▶661 |
| | 820 |
| 279-2244 | ▶665 |
| | ▶669 |
| | 684 |
| 279-2269 | 554 |
| | 556 |
| | 558 |
| | 560 |
| 279-2271 | 554 |
| | 556 |
| | 558 |
| | 560 |
| 279-4535 | 822 |
| | 827 |
| | 832 |
| | 837 |
| | 842 |
| | 847 |
| 279-4590 | ▶562 |
| 279-5006 | 604 |
| 279-5010 | 482 |
| 279-5340 | 546 |
| | 548 |
| 279-5647 | 728 |
| | ▶734 |
| 279-5721 | 195 |
| 279-5738 | 195 |
| 279-5771 | 423 |
| 279-6387 | 218 |
| 279-6418 | 157 |
| | 160 |
| 279-6530 | 155 |
| | 425 |
| | 426 |
| 279-6535 | 685 |
| 279-7299 | 382 |
| 279-7456 | 474 |
| | 476 |
| | ▶572 |
| 279-7457 | 468 |
| | ▶474 |
| | ▶476 |
| | 478 |
| 279-8120 | 728 |
| | ▶775 |
| 279-8121 | 775 |
| 279-8122 | 775 |
| 279-8124 | 775 |
| 279-8822 | 317 |
| 279-8823 | 317 |
| 279-9017 | ▶317 |
| | 391 |
| 279-9341 | 762 |
| 280-0935 | 481 |
| 280-0947 | 423 |
| 280-1595 | 481 |
| 280-1596 | 481 |
| 280-1597 | 481 |
| 280-1598 | 731 |
| 280-1619 | 649 |
| | ▶685 |
| 280-1651 | ▶272 |
| 280-2125 | 488 |
| 280-2181 | 8 |
| | 13 |
| | ▶340 |
| 280-2235 | 821 |
| 280-2296 | ▶8 |
| 280-2486 | 174 |
| | 176 |
| | 179 |
| 280-2591 | 775 |
| 280-2690 | 750 |
| 280-3979 | 67 |
| 280-3983 | 706 |
| 280-4109 | 579 |
| | 581 |
| 280-4110 | 579 |
| 280-4111 | 579 |
| 280-4112 | 579 |
| | 581 |
| 280-4116 | 650 |
| 280-6907 | 665 |
| | 669 |
| 280-7531 | 665 |
| | 669 |
| | 673 |
| | 679 |
| 280-7532 | 596 |
| | 650 |
| 280-7533 | 650 |
| 280-7534 | 584 |
| | 589 |
| 280-8111 | ▶793 |
| | 797 |
| 280-8922 | 199 |
| | 200 |
| 280-9600 | ▶630 |
| | 706 |
| 280-9601 | 630 |
| 280-9852 | 558 |
| 281-0106 | 696 |
| | ▶697 |
| 281-0570 | 109 |
| | 111 |
| 281-1640 | ▶67 |
| | 73 |
| 281-2725 | 245 |
| | ▶247 |
| 281-2900 | 470 |
| | 472 |
| | 474 |
| | 476 |
| 281-3436 | 89 |
| | 90 |
| 281-4550 | 705 |
| | ▶708 |
| 281-4551 | 708 |
| 281-7041 | 728 |
| | ▶814 |
| 281-7729 | 630 |
| 281-8261 | 71 |
| | 72 |
| | 75 |
| 282-2406 | 150 |
| 282-2409 | 4 |
| | 6 |
| | 9 |
| | 11 |
| | ▶150 |
| 282-3380 | ▶596 |
| | 599 |
| 282-3731 | 22 |
| 282-4179 | 523 |
| 282-4181 | 523 |
| 282-4182 | 523 |
| 282-4183 | 523 |
| 282-4184 | 523 |
| 282-4185 | 523 |
| 282-4186 | 521 |
| 282-4187 | 521 |
| 282-4189 | 521 |
| 282-4190 | 521 |
| 282-4191 | 521 |
| 282-4192 | 521 |
| 282-4193 | 525 |
| 282-4194 | 525 |
| 282-4195 | 525 |
| 282-4196 | 525 |
| 282-4197 | 525 |
| 282-4198 | 525 |
| 282-4199 | 527 |
| 282-4200 | 527 |
| 282-4399 | 234 |
| 282-5046 | 527 |
| 282-5047 | 527 |
| 282-5048 | 527 |
| 282-5049 | 527 |
| 282-5050 | 519 |
| 282-5051 | 519 |
| 282-5052 | 519 |
| 282-5053 | 519 |
| 282-5054 | 519 |
| 282-5058 | 504 |
| 282-5346 | 157 |
| | 160 |
| 282-8205 | 440 |
| | ▶441 |
| 282-8211 | 441 |
| | ▶442 |
| 282-8212 | 442 |
| 282-9454 | ▶599 |
| 282-9866 | 324 |
| 283-2458 | 482 |
| 283-2530 | 689 |
| 283-3548 | ▶478 |
| 283-5593 | 613 |
| | 625 |
| 283-5837 | 368 |
| | 369 |
| 283-7180 | 38 |
| 283-7182 | 11 |
| | ▶38 |
| 283-9746 | 575 |
| | 577 |
| 284-3502 | 154 |
| 284-3621 | 778 |
| 284-3622 | 778 |
| 284-4253 | 413 |
| | 418 |
| 284-4272 | 403 |
| 284-4811 | 193 |
| 284-5455 | 403 |
| 284-8533 | 369 |
| 285-0823 | 29 |
| 285-5622 | 423 |
| 285-5745 | 697 |
| 285-5776 | 689 |
| 285-5799 | 697 |
| | 699 |
| 285-5800 | 697 |
| | ▶699 |
| 285-5810 | 699 |
| 285-5811 | 697 |
| 285-6325 | 689 |
| | 697 |
| 285-6381 | 697 |
| 285-6576 | 534 |
| 285-7531 | 491 |
| 285-7532 | 491 |
| 285-7533 | 491 |
| 285-7535 | 491 |
| 285-7536 | 491 |
| 285-8584 | ▶852 |
| | 856 |
| 285-8585 | ▶852 |
| | 856 |
| 285-8586 | ▶852 |
| | 859 |
| 285-8587 | ▶852 |
| | 857 |
| 285-8588 | ▶853 |
| | 857 |
| 285-8589 | ▶853 |
| | 857 |
| 285-8590 | ▶853 |
| | 857 |


▶ **PRIMARY REFERENCE**

# PART NUMBER INDEX


| Part | Page |
|---|---|
| 285-8591 | ▶853 |
| | 857 |
| 285-8592 | ▶854 |
| | 858 |
| 285-8593 | ▶854 |
| | 858 |
| 285-8594 | ▶854 |
| | 856 |
| 285-8595 | ▶854 |
| | 856 |
| 285-8596 | ▶855 |
| | 856 |
| 285-8597 | ▶855 |
| | 858 |
| 285-8714 | 855 |
| 285-8715 | 855 |
| 285-8741 | ▶855 |
| | 858 |
| 285-8777 | ▶855 |
| | 858 |
| 286-0426 | 423 |
| 286-2397 | ▶491 |
| 286-3119 | 733 |
| 286-3577 | 423 |
| 286-3598 | 423 |
| 286-3599 | 423 |
| 286-3606 | 423 |
| 286-7253 | 139 |
| 286-8108 | 218 |
| 286-8109 | 218 |
| 286-9746 | 575 |
| | 577 |
| 286-9815 | 575 |
| | 577 |
| 287-1671 | 347 |
| 287-5843 | 706 |
| 287-5844 | 706 |
| 287-6929 | 733 |
| 287-6937 | 733 |
| 287-7198 | 745 |
| | 747 |
| 287-8436 | 343 |
| 288-0843 | 443 |
| 288-2747 | 443 |
| 288-2842 | 443 |
| 288-3672 | 733 |
| 288-4109 | 21 |
| 288-4658 | 174 |
| 288-4881 | 67 |
| 288-4882 | 67 |
| 288-4883 | 61 |
| | 67 |
| 288-4884 | 61 |
| | 67 |
| 288-5269 | 203 |
| 288-5274 | 197 |
| 288-5279 | 198 |
| 288-5283 | 203 |
| 288-5284 | 202 |
| 288-5285 | 203 |
| 288-5287 | 673 |
| | 679 |
| 288-5290 | 194 |
| | ▶202 |
| 288-5291 | 194 |
| 288-5292 | 194 |
| | ▶197 |
| 288-5293 | 194 |
| | ▶198 |
| 288-5296 | 203 |
| 288-5299 | 197 |
| 288-5303 | 203 |
| 288-5307 | 199 |
| | 200 |
| 288-5308 | 194 |
| | ▶199 |
| | ▶200 |
| 288-5312 | 202 |
| 288-5316 | 194 |
| | ▶205 |
| 288-5317 | 205 |
| 288-7335 | ▶536 |
| 288-9254 | 504 |
| 289-0585 | 584 |
| | 589 |
| | ▶603 |
| 289-2153 | ▶817 |
| | 822 |
| | 827 |
| | 832 |
| | 837 |
| | 842 |
| | 847 |
| 289-2157 | 533 |
| | ▶818 |
| 289-2158 | 533 |
| | ▶819 |
| 289-2930 | 643 |
| | 645 |
| 289-2931 | 643 |
| | 645 |
| 289-2934 | 556 |
| 289-2935 | 614 |
| 289-2940 | 643 |
| 289-2943 | 643 |
| 289-2946 | 614 |
| 289-2951 | 556 |
| 289-2958 | 614 |
| 289-2974 | 556 |
| 289-8215 | 25 |
| | 27 |
| 289-9243 | 818 |
| | 819 |
| 289-9247 | 821 |
| 289-9248 | 821 |
| 289-9250 | 821 |
| 289-9253 | 819 |
| 289-9254 | 819 |
| 289-9256 | 818 |
| 289-9257 | 818 |
| 289-9258 | 817 |
| 289-9261 | 817 |
| 289-9264 | 817 |
| 289-9265 | 817 |
| 290-0347 | 762 |
| 290-2311 | 504 |
| 290-2313 | 504 |
| 290-2314 | 504 |
| 290-2932 | 745 |
| 290-2933 | 745 |
| | 747 |
| 290-3379 | 643 |
| | 645 |
| 290-5580 | 584 |
| | 589 |
| 290-5581 | 584 |
| | 589 |
| 290-7164 | 821 |
| 290-7409 | 504 |
| | 514 |
| 290-7410 | 504 |
| | 514 |
| 290-7411 | 504 |
| | 514 |
| 290-7412 | 504 |
| | 514 |
| 290-7413 | 504 |
| | 514 |
| 290-7414 | 504 |
| | 514 |
| 290-7415 | 504 |
| | 514 |
| 290-9871 | 542 |
| | 544 |
| 290-9872 | 542 |
| | 544 |
| 291-0349 | 494 |
| | 496 |
| | 501 |
| | 542 |
| | 544 |
| 291-2110 | 343 |
| 291-2165 | 777 |
| 291-5117 | 512 |
| 291-5911 | ▶221 |
| | 233 |
| 291-6215 | 777 |
| 291-6338 | 512 |
| 291-6339 | 512 |
| 291-6341 | 619 |
| 291-6342 | 512 |
| 291-6348 | ▶508 |
| | ▶510 |
| 291-9974 | 619 |
| 291-9976 | 619 |
| 292-2553 | ▶9 |
| | 13 |
| 292-2554 | ▶11 |
| 292-2905 | 755 |
| 292-3504 | 90 |
| 292-3510 | 90 |
| 292-3512 | 90 |
| 292-3514 | 90 |
| 292-5050 | 837 |
| | 842 |
| | 847 |
| 292-5254 | 700 |
| 292-5480 | 484 |
| | 485 |
| | 486 |
| | 487 |
| 292-5481 | 482 |
| 293-0989 | 9 |
| | 11 |
| | ▶90 |
| 293-2659 | 797 |
| 293-2669 | 793 |
| 293-2911 | 788 |
| 293-3035 | 172 |
| 293-3369 | 413 |
| | 418 |
| 293-3377 | 413 |
| | 418 |
| 293-4603 | 504 |
| 293-4884 | 706 |
| 293-6295 | 816 |
| 293-6585 | 603 |
| 293-7852 | 665 |
| | 673 |
| 293-8255 | 665 |
| | 669 |
| | 673 |
| | 679 |
| 293-9002 | 710 |
| 293-9036 | 619 |
| 294-2090 | 705 |
| 294-3050 | 6 |
| | 11 |
| | ▶16 |
| 294-3342 | 185 |
| 294-4776 | 665 |
| | 669 |
| | 673 |
| | 679 |
| 294-5042 | 794 |
| 294-5555 | 460 |
| 294-5556 | ▶460 |
| | 467 |
| 294-5557 | 392 |
| | ▶467 |
| 294-5559 | ▶392 |
| | 449 |
| 294-5560 | 1 |
| | ▶449 |
| 294-5809 | 189 |
| 294-7614 | 4 |
| | 9 |
| | ▶17 |
| 294-7615 | 16 |
| | 17 |
| | 18 |
| | ▶233 |
| 294-8679 | 729 |
| | 755 |
| 294-9703 | 222 |
| 295-1777 | 804 |
| 295-1788 | ▶194 |
| 295-1789 | ▶194 |
| 295-1790 | ▶194 |
| 295-7965 | 804 |
| 296-0485 | ▶287 |
| | 349 |
| | 355 |
| | 362 |
| 296-0486 | ▶289 |
| | 349 |
| | 355 |
| | 362 |


▶ PRIMARY REFERENCE

# PART NUMBER INDEX


| Part | Page |
|---|---|
| 296-0578 | 685 |
| 296-0579 | 685 |
| 296-0580 | 685 |
| 296-0581 | 685 |
| 296-1462 | 810 |
| 296-1464 | 810 |
| 296-1466 | 810 |
| 296-1467 | 810 |
| 296-1468 | 810 |
| 296-1471 | 810 |
| 296-1472 | 810 |
| 296-7822 | 494 |
| | 499 |
| 296-7868 | 494 |
| | 499 |
| 296-8594 | 494 |
| | 496 |
| | 499 |
| 297-0760 | 381 |
| 297-0846 | 772 |
| 297-1558 | 640 |
| | ▶673 |
| | ▶679 |
| 297-1813 | 36 |
| 297-3194 | 619 |
| 297-3206 | 6 |
| | 11 |
| | ▶18 |
| 297-3207 | 18 |
| | ▶57 |
| 297-4207 | 425 |
| | 426 |
| | ▶464 |
| 297-4266 | ▶58 |
| | 59 |
| 297-4267 | 57 |
| | ▶59 |
| | ▶60 |
| 297-4887 | 665 |
| | 669 |
| | 673 |
| | 679 |
| 297-5177 | 775 |
| 297-5605 | 665 |
| | 669 |
| | 673 |
| | 679 |
| 297-6164 | 604 |
| | 607 |
| 297-7926 | 617 |
| 297-9545 | 472 |
| | 476 |
| 297-9546 | 470 |
| | 472 |
| | 474 |
| | 476 |
| 298-2743 | ▶684 |
| 298-2744 | ▶640 |
| 298-3744 | 542 |
| | 544 |
| 298-3853 | 673 |
| | 679 |
| 298-3854 | 673 |
| | 679 |
| 298-5701 | 842 |
| 298-5702 | 822 |
| | 827 |
| | 832 |
| 298-6025 | 514 |
| 298-6122 | 349 |
| | 355 |
| | 362 |
| 298-6172 | 91 |
| 298-6175 | ▶425 |
| | ▶426 |
| | 673 |
| | 679 |
| 298-6412 | 5 |
| | 6 |
| | 9 |
| | 11 |
| | ▶236 |
| 298-7137 | 488 |
| 298-7329 | 530 |
| | 532 |
| 298-8533 | 530 |
| 299-2091 | 575 |
| 299-2548 | 225 |
| | 227 |
| 299-3398 | 441 |
| 299-3399 | 529 |
| | 560 |
| 299-3401 | 613 |
| | 625 |
| 299-3405 | 529 |
| | 560 |
| 299-3416 | 625 |
| 299-3423 | 554 |
| 299-3424 | 488 |
| 299-3426 | 554 |
| 299-3427 | 554 |
| | 560 |
| 299-3434 | 441 |
| 299-3435 | 428 |
| 299-3436 | 554 |
| 299-3437 | 325 |
| 299-3439 | 554 |
| 299-3441 | 625 |
| 299-3443 | 534 |
| 299-3446 | 586 |
| | 591 |
| 299-4728 | 755 |
| 299-5210 | 706 |
| 299-5419 | 554 |
| 299-5526 | ▶496 |
| 299-5527 | ▶499 |
| 299-5668 | 285 |
| 299-5696 | 496 |
| 299-5698 | 499 |
| 299-5701 | ▶533 |
| 299-5703 | ▶533 |
| 299-5705 | ▶820 |
| 299-5707 | ▶820 |
| 299-5716 | 504 |
| 299-5738 | 325 |
| 299-5834 | 499 |
| 299-5836 | 499 |
| 299-6272 | ▶174 |
| | ▶176 |
| | ▶179 |
| | 820 |
| 299-6290 | 494 |
| | 496 |
| 299-6756 | ▶13 |
| 299-6765 | ▶1 |
| 299-7983 | 1 |
| | ▶554 |
| 299-7984 | 554 |
| | ▶556 |
| 299-9333 | 423 |
| | 3 |
| 300-0560 | 532 |
| 300-0572 | 861 |
| 300-1975 | 556 |
| 300-2683 | 423 |
| 300-2798 | 199 |
| | 200 |
| 300-2960 | 628 |
| | 739 |
| 300-3798 | 172 |
| 300-5370 | 731 |
| 300-5512 | 532 |
| 300-5515 | ▶536 |
| | 820 |
| 300-6143 | 521 |
| 300-6144 | 523 |
| 300-6145 | 512 |
| 300-6146 | 512 |
| 300-6147 | 512 |
| 300-6148 | 512 |
| 300-6290 | 508 |
| | 510 |
| 300-6506 | 508 |
| | 510 |
| 300-6507 | 508 |
| | 510 |
| 300-6837 | 486 |
| | 487 |
| 300-6857 | 745 |
| | 747 |
| 300-6862 | 742 |
| | ▶747 |
| 300-6869 | 649 |
| | ▶863 |
| 300-7321 | 494 |
| | 496 |
| | 501 |
| 300-7323 | 501 |
| 300-8571 | 91 |
| 300-8742 | 508 |
| | 510 |
| 300-9496 | 508 |
| 300-9499 | 762 |
| 301-0589 | 369 |
| 301-3013 | 859 |
| 301-3018 | ▶47 |
| | 53 |
| 301-5245 | 554 |
| 301-6819 | 816 |
| 301-7498 | 425 |
| | 426 |
| 301-7500 | 425 |
| 301-7907 | 617 |
| 301-7942 | 619 |
| 301-7943 | 619 |
| 301-7944 | 673 |
| | 679 |
| 301-9276 | 665 |
| | 669 |
| | 673 |
| | 679 |
| 302-1483 | 673 |
| | 679 |
| 302-1488 | 584 |
| | 589 |
| 302-1494 | 174 |
| | 176 |
| | 179 |
| | 653 |
| | 657 |
| | 661 |
| 302-1495 | 508 |
| | 510 |
| | ▶512 |
| | ▶513 |
| 302-1496 | 508 |
| | 510 |
| 302-1497 | 508 |
| | 510 |
| 302-1498 | 596 |
| 302-1499 | 650 |
| 302-2355 | 508 |
| | 510 |
| 302-3813 | 392 |
| | 455 |
| 302-3908 | 218 |
| | 227 |
| 302-4011 | 859 |
| 302-4536 | 443 |
| 302-5215 | 558 |
| 302-8161 | 155 |
| 303-0512 | ▶501 |
| 303-0956 | 630 |
| 303-1545 | ▶265 |
| 303-1546 | ▶265 |
| 303-1547 | ▶265 |
| 303-1548 | ▶266 |
| 303-1549 | ▶266 |
| 303-1550 | ▶266 |
| 303-1551 | ▶267 |
| 303-1552 | ▶267 |
| 303-1553 | ▶267 |
| 303-1554 | ▶268 |
| 303-1555 | ▶268 |
| 303-1556 | ▶268 |
| 303-1557 | ▶269 |
| 303-1871 | 641 |
| 303-2270 | ▶269 |
| 303-2273 | ▶269 |
| 303-2357 | 470 |
| | 472 |
| | 474 |
| | 476 |
| 303-3142 | 822 |
| | 827 |
| | 832 |


▶ **PRIMARY REFERENCE**

# PART NUMBER INDEX


| Part | Page |
|---|---|
| | 837 |
| | 842 |
| | 847 |
| 303-3463 | 218 |
| 303-4448 | ▶856 |
| 303-4449 | ▶856 |
| 303-4450 | ▶856 |
| 303-4451 | ▶856 |
| 303-4452 | ▶856 |
| 303-4453 | ▶857 |
| 303-4454 | ▶857 |
| 303-4455 | ▶857 |
| 303-4456 | ▶857 |
| 303-4457 | ▶857 |
| 303-4458 | ▶858 |
| 303-4459 | ▶858 |
| 303-4460 | ▶858 |
| 303-4461 | ▶858 |
| 303-4462 | ▶858 |
| 303-4463 | ▶859 |
| 303-4465 | ▶859 |
| 303-4466 | ▶859 |
| 303-4467 | 859 |
| 303-4468 | ▶859 |
| 303-7504 | 443 |
| 304-0490 | 174 |
| | 176 |
| | 179 |
| | 653 |
| | 657 |
| | 661 |
| 304-3593 | 745 |
| | 747 |
| 304-3601 | 745 |
| | 747 |
| 304-7866 | 343 |
| 304-8005 | 596 |
| | 651 |
| 304-8006 | 596 |
| | 651 |
| 304-8357 | 544 |
| | ▶550 |
| | ▶551 |
| 304-8358 | 550 |
| | 551 |
| 304-8359 | 550 |
| | 551 |
| 304-8360 | 550 |
| | 551 |
| 304-8361 | 550 |
| 304-8362 | 550 |
| | 551 |
| 304-8363 | 550 |
| | 551 |
| 304-8364 | 550 |
| | 551 |
| 304-8365 | 550 |
| | 551 |
| 304-8366 | 550 |
| | 551 |
| 304-8367 | 550 |
| | 551 |
| 304-8369 | 544 |
| | ▶552 |
| 304-8370 | 552 |
| 304-8371 | 552 |
| 304-8372 | 552 |
| 304-8373 | 552 |
| 304-9553 | 22 |
| 304-9856 | 59 |
| | 60 |
| 305-0033 | 550 |
| | 551 |
| 305-1349 | 294 |
| | 561 |
| 305-1350 | 561 |
| 305-1401 | 556 |
| 305-2380 | 804 |
| 305-2415 | 425 |
| 305-2416 | 425 |
| | 426 |
| 305-7084 | 185 |
| 305-8924 | 443 |
| 305-9196 | 53 |
| | 55 |
| | ▶118 |
| 306-3028 | 203 |
| | 205 |
| 306-3029 | 203 |
| | 205 |
| 306-3998 | 326 |
| 306-5031 | 484 |
| | 485 |
| | 486 |
| | 487 |
| 306-5114 | 673 |
| | 679 |
| 306-6398 | 484 |
| | 485 |
| | 486 |
| | 487 |
| 306-9216 | 176 |
| | 653 |
| 306-9218 | 176 |
| | 653 |
| 306-9233 | 581 |
| 306-9234 | 581 |
| 307-0047 | 273 |
| | 275 |
| | 832 |
| | 847 |
| 307-0641 | 294 |
| 307-0649 | 777 |
| 307-0722 | 176 |
| | 653 |
| 307-1610 | 25 |
| 307-1611 | 27 |
| 307-2673 | 393 |
| 307-2682 | 413 |
| | 418 |
| 307-3738 | 482 |
| 307-3739 | 482 |
| 307-3740 | 482 |
| 307-5461 | 569 |
| | 572 |
| 307-5596 | 569 |
| | 572 |
| 307-6721 | 482 |
| 307-8322 | 125 |
| 307-8796 | 685 |
| 307-8799 | 764 |
| 307-8800 | 619 |
| 307-8803 | 764 |
| 307-9341 | 413 |
| | 418 |
| 307-9390 | 665 |
| | 669 |
| | 673 |
| | 679 |
| 307-9391 | 665 |
| | 669 |
| | 673 |
| | 679 |
| 307-9667 | ▶430 |
| | 449 |
| 307-9746 | 619 |
| 307-9890 | 465 |
| 308-2041 | 685 |
| 308-2042 | 685 |
| 308-2043 | 685 |
| 308-2044 | 685 |
| 308-3273 | 760 |
| 308-3274 | 760 |
| 308-3275 | ▶760 |
| | 785 |
| 308-3400 | 486 |
| | 487 |
| 308-3401 | 486 |
| | 487 |
| 308-5077 | 764 |
| 308-5826 | 1 |
| | ▶20 |
| 308-5828 | 20 |
| | ▶160 |
| 308-6357 | 174 |
| | 176 |
| | 179 |
| | 653 |
| | 657 |
| | 661 |
| 308-6420 | 665 |
| | 669 |
| | 673 |
| | 679 |
| 308-6421 | 665 |
| | 669 |
| | 673 |
| | 679 |
| 308-8431 | 594 |
| 308-8432 | 594 |
| 308-8616 | 413 |
| | 418 |
| 308-8617 | 413 |
| | 418 |
| 308-9434 | 723 |
| | ▶755 |
| 308-9435 | 755 |
| 308-9740 | 673 |
| | 679 |
| 309-0916 | ▶723 |
| | 728 |
| 309-0924 | 728 |
| | ▶766 |
| 309-1001 | 766 |
| 309-1008 | 723 |
| 309-1009 | 723 |
| 309-1010 | 723 |
| 309-1011 | 723 |
| 309-1012 | 723 |
| 309-1013 | 723 |
| 309-1014 | 723 |
| 309-1015 | 723 |
| 309-1016 | 723 |
| 309-1366 | 669 |
| | 679 |
| 309-1368 | 669 |
| | 679 |
| 309-1585 | 619 |
| 309-4068 | 686 |
| 309-6086 | 514 |
| 309-9686 | 552 |
| 309-9687 | 552 |
| 309-9691 | 550 |
| | 551 |
| 310-1578 | 413 |
| | 418 |
| 310-1945 | 569 |
| | 572 |
| 310-5452 | 619 |
| 310-5453 | 619 |
| 310-7260 | 574 |
| | ▶735 |
| 310-7651 | 735 |
| 310-8014 | 581 |
| 310-8294 | 584 |
| | 589 |
| 310-8298 | 584 |
| | 589 |
| 310-8299 | 584 |
| | 589 |
| 310-8332 | ▶574 |
| | 728 |
| 310-8465 | 574 |
| 310-8576 | 619 |
| 311-0068 | 544 |
| 311-0069 | 544 |
| | ▶553 |
| 311-0070 | 544 |
| 311-0071 | 553 |
| 311-0072 | 553 |
| 311-0623 | 669 |
| | 679 |
| 311-1536 | 485 |
| 311-1537 | 487 |
| 311-1674 | 255 |
| | ▶750 |
| 311-2294 | 492 |
| 311-2295 | 492 |
| 311-2296 | 492 |
| 311-2299 | ▶492 |
| 311-2301 | 492 |
| 311-2302 | 492 |
| 311-2574 | 581 |
| 311-9113 | ▶537 |
| 311-9114 | ▶538 |
| 311-9253 | 584 |
| | 589 |
| 311-9254 | 584 |
| | 589 |
| 311-9255 | 584 |


▶ PRIMARY REFERENCE

# PART NUMBER INDEX


| Part | Page | Part | Page | Part | Page | Part | Page |
|---|---|---|---|---|---|---|---|
| | 589 | 317-1694 . . . . . | 179 | 327-2138 . . . . . | 266 | | |
| 311-9256 . . . . . | 584 | | 657 | 327-2139 . . . . . | 266 | | |
| | 589 | | 661 | 327-2140 . . . . . | 266 | | |
| 311-9257 . . . . . | 584 | 317-2710 . . . . . | 179 | 327-2141 . . . . . | 267 | | |
| | 589 | | 657 | 327-2142 . . . . . | 267 | | |
| 311-9258 . . . . . | 584 | | 661 | 327-2143 . . . . . | 267 | | |
| | 589 | 317-3911 . . . . . | 641 | 327-2144 . . . . . | 267 | | |
| 311-9259 . . . . . | 584 | 317-8766 . . . . . | 42 | 327-2145 . . . . . | 267 | | |
| | 589 | 318-2082 . . . . . | 327 | 327-2146 . . . . . | 267 | | |
| 311-9260 . . . . . | 584 | 318-8302 . . . . . | 728 | 327-2147 . . . . . | 268 | | |
| | 589 | | ▶800 | 327-2148 . . . . . | 268 | | |
| 311-9261 . . . . . | 584 | 319-0785 . . . . . | 92 | 327-2149 . . . . . | 268 | | |
| | 589 | | 94 | 327-2150 . . . . . | 268 | | |
| 312-5533 . . . . . | 513 | | ▶127 | 327-2151 . . . . . | 268 | | |
| 312-5534 . . . . . | 513 | 319-3948 . . . . . | 548 | 327-2152 . . . . . | 268 | | |
| 312-5535 . . . . . | 513 | 319-3950 . . . . . | 548 | 327-2153 . . . . . | 265 | | |
| 312-5536 . . . . . | 513 | 319-3951 . . . . . | 548 | 327-2154 . . . . . | 265 | | |
| 312-5537 . . . . . | 513 | 319-3952 . . . . . | 548 | 327-2155 . . . . . | 269 | | |
| 312-5540 . . . . . | 513 | 319-3953 . . . . . | 548 | 327-2156 . . . . . | 269 | | |
| 312-5543 . . . . . | 513 | 319-3954 . . . . . | 548 | 327-2157 . . . . . | 269 | | |
| 312-5545 . . . . . | 510 | 319-7401 . . . . . | 42 | 327-2158 . . . . . | 269 | | |
| 312-6219 . . . . . | 607 | | ▶128 | 327-2159 . . . . . | 269 | | |
| 312-6220 . . . . . | 592 | 319-9026 . . . . . | 179 | 327-2160 . . . . . | 269 | | |
| 312-8302 . . . . . | ▶275 | | 661 | 328-2264 . . . . . | 771 | | |
| | 277 | 320-2650 . . . . . | 556 | 329-7062 . . . . . | 32 | | |
| 313-2153 . . . . . | 778 | 320-2783 . . . . . | 179 | 330-3409 . . . . . | 263 | | |
| 313-2466 . . . . . | ▶739 | | 661 | 330-3410 . . . . . | 263 | | |
| 313-5104 . . . . . | 632 | 320-6067 . . . . . | 362 | | | | |
| 313-5950 . . . . . | ▶277 | 320-8150 . . . . . | 343 | | | | |
| 313-6008 . . . . . | 731 | 321-6951 . . . . . | 628 | | | | |
| 313-9545 . . . . . | 546 | | 739 | | | | |
| | 548 | 321-8641 . . . . . | 393 | | | | |
| 314-2526 . . . . . | 546 | | 455 | | | | |
| | 548 | 321-8642 . . . . . | 455 | | | | |
| 314-3063 . . . . . | 61 | 322-1126 . . . . . | 48 | | | | |
| 314-3064 . . . . . | 61 | 322-2080 . . . . . | 728 | | | | |
| 314-3065 . . . . . | 61 | | ▶753 | | | | |
| 314-3066 . . . . . | 61 | 323-1076 . . . . . | ▶771 | | | | |
| 314-3067 . . . . . | 61 | | 815 | | | | |
| 314-3068 . . . . . | 61 | 323-1311 . . . . . | 809 | | | | |
| 314-3069 . . . . . | 61 | 323-4709 . . . . . | 577 | | | | |
| 314-4018 . . . . . | 730 | 323-4710 . . . . . | 577 | | | | |
| 314-4121 . . . . . | 472 | 323-4711 . . . . . | 577 | | | | |
| | 476 | 323-8451 . . . . . | ▶48 | | | | |
| 314-4122 . . . . . | 472 | | 55 | | | | |
| | 476 | 324-6804 . . . . . | 782 | | | | |
| 315-6728 . . . . . | 179 | 324-7760 . . . . . | 264 | | | | |
| | 657 | 324-7761 . . . . . | 264 | | | | |
| | 661 | 324-9860 . . . . . | 577 | | | | |
| 315-6729 . . . . . | 179 | 326-0765 . . . . . | 645 | | | | |
| | 657 | 326-0766 . . . . . | 645 | | | | |
| | 661 | 326-1644 . . . . . | 217 | | | | |
| 315-6732 . . . . . | 179 | 326-2823 . . . . . | 222 | | | | |
| | 657 | 326-2944 . . . . . | 187 | | | | |
| | 661 | 326-2945 . . . . . | 577 | | | | |
| 315-9835 . . . . . | 392 | 327-1055 . . . . . | 558 | | | | |
| | 456 | 327-2129 . . . . . | 264 | | | | |
| 315-9842 . . . . . | 392 | 327-2130 . . . . . | 264 | | | | |
| 315-9859 . . . . . | 455 | 327-2131 . . . . . | 265 | | | | |
| 316-6380 . . . . . | ▶255 | 327-2132 . . . . . | 265 | | | | |
| 316-6864 . . . . . | 230 | 327-2133 . . . . . | 265 | | | | |
| 316-8153 . . . . . | 413 | 327-2134 . . . . . | 265 | | | | |
| | 418 | 327-2135 . . . . . | 266 | | | | |
| 316-8154 . . . . . | 413 | 327-2136 . . . . . | 266 | | | | |
| | 418 | 327-2137 . . . . . | 266 | | | | |


▶ **PRIMARY REFERENCE**

# MEMORANDA



© 2008 CATERPILLAR
ALL RIGHTS RESERVED

CAT, CATERPILLAR, THEIR RESPECTIVE LOGOS, “CATERPILLAR YELLOW” AND THE POWER EDGE TRADE DRESS, AS WELL AS CORPORATE AND PRODUCT IDENTITY USED HEREIN, ARE TRADEMARKS OF CATERPILLAR AND MAY NOT BE USED WITHOUT PERMISSION.

PRINTED IN U.S.A.