RUTHZIL TRATOR COMERCIAL DE PEÇAS LTDA 11 97083-6812 ROLANDO

JULHO 2009

773

Bobcat®

G-SERIES Parts Manual

S/N 500K11001 & Above
S/N 518011001 & Above
S/N 518111001 - 518114999
S/N 519011001 - 519027999
S/N 519211001 - 519214999
S/N 517611001 - 517624999

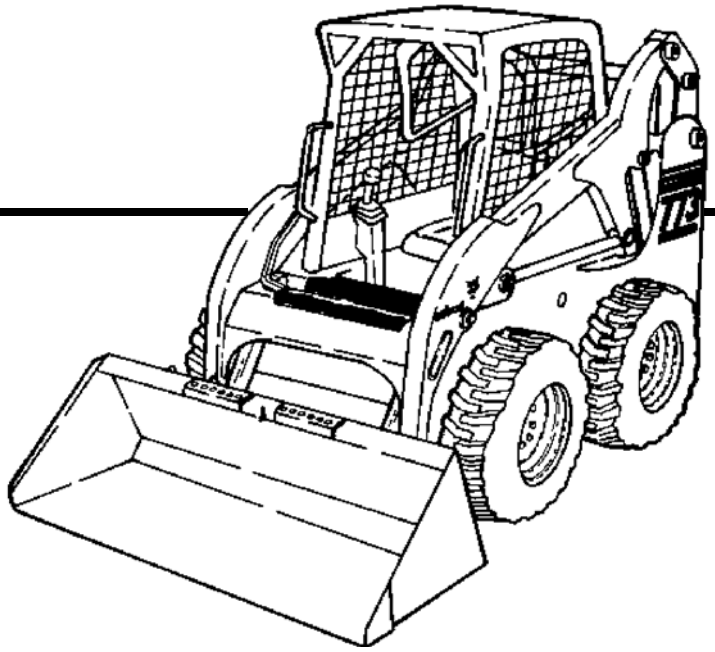

EQUIPPED WITH BOBCAT INTERLOCK CONTROL SYSTEM (BICS)

6900939 (5-05) Revised (7-09)

Printed in U.S.A.

© Bobcat Company 2009

Page 1 - OSS# 2071349 - All rights reserved by Bobcat Company - 12/01/2009 - 20:50:59 - Produced by Ken Cook Co. with mediaioff

GENERAL INFORMATION

Before ordering parts, ALWAYS provide dealer with your product model number and complete serial number information. Before ordering parts, verify correct part numbers and/or serial numbers with your dealer. When using the machine serial number, use the complete number.

Some serial number breaks are not available at time of printing.
These are listed as & Bel or & Abv or - (thru)

The number shown in the quantity column in this manual is the number of parts needed for the illustration on the page. For some parts an "x" will be shown in the quantity column. This "x" indicates that the quantity to be used is "As Needed".

When references LH (Left Hand) and RH (Right Hand) are used in this manual, it is done from the operator's seat in the forward operating position.

When "See Illustration…." appears in the remarks column, refer to the contents page for the illustration title to find page number location.

Some of the illustrations and information found in this parts manual were supplied to Bobcat by machine component companies.

For additional information on the Bobcat website visit www.bobcat.com

ABBREVIATIONS

SALES	= Order from Gwinner Sales Department	PM	= Parts Manual
NSS	= Not Serviced Separately	S/L	= Service Letter
NAP	= Not Available as Parts	W/	= With
BTI	= Bobcat Technical Information Bulletin	W/ O	= Without
OM	= Operation & Maintenance Manual	ID	= Inside Diameter
SM	= Service Manual	OD	= Outside Diameter
AHC	= Advanced Hand Controls	"	= Inches
ACS	= Advanced Control System	'	= Feet
SJC	= Selectable Joystick Controls	MM	= Millimeters

TRANSLATION KITS & DECAL KITS

AR = Argentina (Spanish) BR = Brazil (Portugese) JP = Japanese
(Translation Kit includes Safety Manual, Operators Manual & Decal Kit)

DISPOSITION

(Found in the Remarks Column)

[A]	=	Use Up
[B]	=	Use Up on Other Applications
[C]	=	File PDR Report with Bobcat Parts Sales
[D]	=	Part Number Error

Page 2 - OSS# 2071349 - All rights reserved by Bobcat Company - 12/01/2009 - 20:50:59 - Produced by Ken Cook Co. with mediaioff

NOTE D'INFORMATION

Pour toute référence au numéro de série de l'engin, toujours donner le numéro complet.

Le chiffré apparaissant dans la colonne des quantités de ce manuel représentent le nombre de pièces nécessaires pour l'illustration reprise sur la page. Dans certains cas, on lira un "x" dans la colonne des quantités. Cet "x" indique que la quantité nécessaire est "selon besoin".

Pour toute référence vers la GAUCHE ou la DROITE dans ce manuel, considérer que la personne se trouve assise dans le siège de l'opérateur, en position de fonctionnement en marche avant.

Certaines illustrations et informations reprises dans ce manuel de pièces de rechange ont été fournies à Bobcat/Ingersoll–Rand par des fabricants de composants.

ABREVIATIONS & SYMBOLES

SALES	= Commander au Service Ventes à Bruxelles
NSS	= Pas vendu séparément
NAP	= Non disponible comme pièce de rechange
*****	= Chapitre, page ou numéro de pièce modifié ou supplémentaire
BTI	= Bobcat Technical Information Bulletin : voir à la fin de la microfiché du modèle concerné ou la microfiche générale reprenant l' ensemble des "BTI".
was 6535403	= était avant 6535403
adj. (adjustment)	= réglage
Assembly	= ensemble
available W/Ref.	= disponible avec réf.
bulk/sold per foot	= en vrac/vendu par pied
does not include	= ne comprend pas
included with	= compris dans
I.D.	= D.I. (diamètre intérieur)
O.D.	= D.E. (diamètre extérieur)
not in kit	= pas en kit
W/ – WO/	= inclus/ – non inclus/
Qty	= quantité requise
see page/ref.	= voir page/réf.
used with ref/	= utilisé avec réf.
0,05 inch thickness	= 0,05 pouce d'épaisseur (un pouce = 25.4 mm)
weld on	= à souder

Page 3 - OSS# 2071349 - All rights reserved by Bobcat Company - 12/01/2009 - 20:50:59 - Produced by Ken Cook Co. with mediaioff

ALLGEMEINE INFORMATIONEN

Bei Angabe der Maschinen-Seriennummer stets die komplette Nummer angeben.

Bei der in der Mengenspalte (Anzahl) in diesem Handbuch angegebenen Zahl handelt es sich um die Anzahl von Teilen, die für die Abbildung auf der betreffenden Seite benötigt werden. Bei manchen Teilen in der Mengenspalte ist ein “x” angegeben. Dieses “x” weist darauf hin, dass sich die Anzahl der verwendeten Teile auf den “Bedarf” bezieht.

Bei Verwendung der Seitenangaben links und rechts in diesem Handbuch gelten diese für die Blickrichtung vom Fahrersitz aus, und zwar in Vorwärts-Betriebsrichtung.

Einige der in diesem Ersatzteilhandbuch aufgeführten Abbildungen und Informationen wurden der Bobcat/Ingersoll-Rand von den Herstellern von Maschinenbauteilen zur Verfügung gestellt.

ABKÜRZUNGEN UND SYMBOLE

SALES	= Bestellung bei der Verkaufsabteilung in Brüssel
NSS	= Nicht einzeln erhältlich
NAP	= Nicht als Ersatzteil erhältlich
*****	= Geänderte oder hinzugefügte Abschnitte, Seiten oder Teilenummern
BTI	= Bobcat Technical Information Bulletin : Siehe am Ende der Mikrokarte des jeweiligen Modells oder der allgemeinen Mikrokarte der BTI.
was 6535403	= War 6535403
adj.	= Einstellung
Assembly	= Baugruppe
available W/Ref.	= erhältlich mit der Referenz
bulk/sold per foot	= Mengenabnahme / Verkauf pro Fuss
does not include	= beinhaltet nicht
included with	= enthalten in
I.D.	= Innendurchmesser
O.D.	= Aussendurchmesser
not in kit	= nicht in Bausatz
W/ - WO/	= mit/ - ohne/
Qty	= Anzahl
see page/ref.	= Siehe Seite / Referenz
used with ref.	= verwendet mit Referenz
0.05 inch thickness	= Dicke : 0.05 Zoll (ein Zoll = 25.4 mm)
weld on	= anschweissen

Page 4 - OSS# 2071349 - All rights reserved by Bobcat Company - 12/01/2009 - 20:50:59 - Produced by Ken Cook Co. with mediaIoff

INFORMAZIONI GENERALI

Quando si usa il numero di serie della macchina usare il numero completo.

Il numero mostrato nella colonna della quantità di questo manuale corrisponde al numero di componenti necessari per l'illustrazione della pagina. Per alcuni componenti appare "X" nella colonna delle quantità. Questa "X" indica che la quantità da usare è "come necessario".

See in questo manuale si fa riferimento alla parte destra o sinistra, si intende dal sedile dell'operatore nella posizione in avanti di funzionamento.

Alcune delle illustrazioni e informazioni trovate in questo manuale di componenti sono state fornite alla Bobcat/Ingersoll–Rand da società di componenti di macchine.

SIMBOLI E ABBREVIAZIONI

SALES	= Ordinare al servizio vendite di Bruxelles
NSS	= Non vendute separatamente
NAP	= Non disponibile come componente
*	= Sezioni, pagine o numeri di componente cambiati o aggiunti
BTI	= (Bobcat Technical information) Ved. al termine del microfiche del modello relativo oppure microfiche generale
was 6535403	= era 6535403
adj. (adjustment)	= regol. (regolazione)
Assembly	= Complessivo
available W/Ref.	= disponibile con rif.
bulk/sold per foot	= alla rinfusa/venduto al piede
does not include	= non comprende
Included with	= compreso con
I.D.	= d. i.
O.D.	= d. e.
not in kit	= non fa parte del kit
W/ – WO/	= con – senza
Qty	= Qtà
see page/ref	= ved. pagina/rif.
used with ref.	= usato con il rif.
0,05 inch thickness	= spessore 0,05 pollici (un pollice = 25,4 mm)
weld on	= a saldare

Page 5 - OSS# 2071349 - All rights reserved by Bobcat Company - 12/01/2009 - 20:50:59 - Produced by Ken Cook Co. with mediaioff

INFORMACION GENERAL

Al utilizar el número de serie de la máquina, debe emplearse el número completo.

El número que figura en la columna de “Unidades” en este manual es el número de piezas que se necesitan para la ilustración que consta en la página. En algunas piezas aparece una “x” en la columna de “Unidades”. Esta “x” indica que las unidades a utilizar son “según sea necesario”.

Cuando se empleen las referencias izq. y dcha., éstas se entienden mirando desde el asiento del conductor, en posición de marcha adelante.

Algunas de las ilustraciones y la información que figuran en este manual de piezas han sido facilitadas a Bobcat/Ingersoll–Rand por empresas de componentes de máquinas.

ABREVIATURAS Y SIMBOLOS

VENTAS	= Pedido al Departamento de Ventas de Bruselas
NSS	= No se vende por separado
NAP	= No disponible como pieza de repuesto
*****	= Secciones, páginas o referencias modificadas o añadidas
BTI	= (Bobcat Tecnical Information) Ver al final de la microficha del modelo afectado o en la microficha general “Boletín de Información Técnica Bobcat”.
was 6535403	= era anteriormente el 6535403
adj. (adjustment)	= ajuste
assembly	= conjunto
available W/Ref.	= disponible con la ref.
bulk/sold per foot	= a granel/vendido por pies
does not include	= no incluye
included with	= incluido en
I.D.	= diámetro interior
O.D.	= diámetro exterior
not in kit	= no en el kit
W/ – WO/	= con/ – sin
Qty	= Unidades
see page /ref.	= ver página/ref.
used with ref.	= empleado con la ref.
0,05 inch thickness	= 0,05 pulgadas de espesor (1 pulgada = 25,4 mm)
weld on	= debe ser soldado

Page 6 - OSS# 2071349 - All rights reserved by Bobcat Company - 12/01/2009 - 20:50:59 - Produced by Ken Cook Co. with mediaoff

ALGEMENE INFORMATIE

Als u het serienummer van de machine gebruikt, geef dan het gehele serienummer.

Het cijfer dat voorkomt in de kolom “Aantal”, in deze handleiding, is het aantal onderdelen dat nodig is van de illustratie op de pagina. Voor sommige onderdelen staat er een “x” in de kolom “Aantal”. Deze “x” betekent dat er een aantal “zoals nodig” vereist is.

Wanneer er in deze handleiding naar “links” en naar “rechts” gerefereerd wordt, moet dit verstaan worden voor een bestuurder die in de bestuurdersstoel zit in de voorwaartse bedrijfsstand.

Sommige van de illustraties en informatie in deze onderdelen-handleiding werden door firma’s van machine-componenten geleverd aan Bobcat/Ingersoll-Rand.

AFKORTINGEN EN SYMBOLEN

SALES	= Bestellen bij de Verkoopafdeling te Brussel
NSS	= Niet afzonderlijk te verkrijgen
NAP	= Niet beschikbaar als onderdeel
*****	= Gewijzigde of toegevoegde paragrafen, pagina’s of onderdeelnummers
BTI	= Bobcat Technical Information Bulletin : Zie einde van de microfiche van het desbetreffende model of einde van de algemene microfiche die het geheel van alle “BTI” herneemt.
was 6535403	= was vroeger 6535403
adj. (adjustment)	= afstelling
Assembly	= geheel
available W/Ref.	= beschikbaar met ref.
bulk/sold per foot	= bulk/aan de meter verkocht
does not include	= bevat niet
includes with	= is bevat in
I.D.	= ϕ inw. (inwendige diameter)
O.D.	= ϕ uitw. (uitwendige diameter)
not in kit	= niet in de kit
W/ - WO/	= met/ - zonder/
Qty	= vereiste aantal
see page/ref.	= zie pagina/ref.
used with ref/	= gebruikt met ref.
0,05 inch thickness	= 0.05 inch dik (een inch = 25.4 mm)
weld on	= te lassen

Page 7 - OSS# 2071349 - All rights reserved by Bobcat Company - 12/01/2009 - 20:50:59 - Produced by Ken Cook Co. with mediaioff

Use only Bobcat belts and hoses to maintain maximum service life.

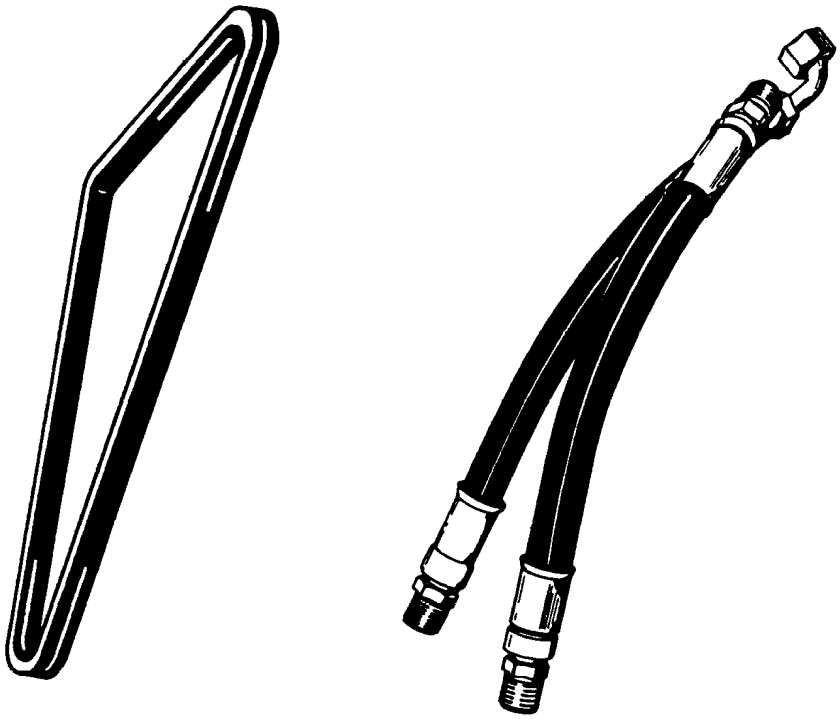

Available from Bobcat Parts.

Bobcat®

Page 8 - OSS# 2071349 - All rights reserved by Bobcat Company - 12/01/2009 - 20:50:59 - Produced by Ken Cook Co. with mediaioff

CONTENTS

MAINTENANCE ITEMS 1-2
MAINTENANCE ITEMS 1

MAIN FRAME 3-32
SEAT & SEAT BAR 11
SEAT 13
PANELS 15
REAR DOOR 17-20
LIFT ARMS & BOB-TACH 21-26
BOB-TACH 27
FUEL SYSTEM 29-32
MAIN FRAME 3-6
OPERATOR CAB 7-10

DRIVE TRAIN 33-44
DRIVE TRAIN 33
AXLE 35
MOTOR CARRIER 37
DISC BRAKE 39-44

HYDRAULIC SYSTEM 45-146
BICS CONTROL VALVE 141
MANUAL LIFT RELEASE VALVE 143
PRESSURE RELEASE VALVE 145
HYDRAULIC CIRCUITRY 45-68
MANUAL LIFT RELEASE SYSTEM 69
AUXILIARY HYDRAULICS 71-80
TILT CYLINDER 81-86
LIFT CYLINDER 87-92
CONTROL PEDALS 93
HYDRAULIC CONTROL VALVE 95-140

HIGH FLOW HYDRAULICS 147-162
HIGH FLOW HYDRAULICS 147-162

HYDROSTATIC SYSTEM 163-206
HYDROSTATIC CIRCUITRY 163-178
HAND CONTROLS 179-182
HYDROSTATIC MOTOR 183-186
HYDROSTATIC PUMP 187-198
GEAR PUMP 199-202
HYDROSTATIC OIL FILTER 203-206

ELECTRICAL SYSTEM 207-250
CAB ELECTRICAL CIRCUITRY 207-210
ENGINE ELECTRICAL CIRCUITRY 211-218
CONTROLS ELECTRICAL 219-242
ALTERNATOR 243-246
STARTER 247-250

POWER UNIT 251-368
COOLING SYSTEM 251-254
ENGINE & ATTACHING PARTS 255-268
THROTTLE 269
COOLING FAN DRIVE ASSY. 271-274
ENGINE & GASKET KITS 275-320
GEARCASE 279-322
CRANKCASE 281-328
ROCKER ARM COVER 283-330

Page 9 - OSS# 2071349 - All rights reserved by Bobcat Company - 12/01/2009 - 20:50:59 - Produced by Ken Cook Co. with mediaioff

CONTENTS (Cont'd)

POWER UNIT

VALVE ROCKER ARM 285-332
CYLINDER HEAD 287-334
OIL PAN 289-336
PISTON & CRANKSHAFT 291-338
FUEL CAMSHAFT 293-340
CAMSHAFT 295-342
WATER PUMP 297-344
WATER FLANGE & THERMOSTAT 299-346
MANIFOLDS 301-348
ENGINE STOP LEVER 303-354
GOVERNOR 305-356
SPEED CONTROL PLATE 307-358
FUEL & INJECTION PUMPS 309-360
INJECTION PUMP 311-362
INJECTOR NOZZLES 313-364
INJECTOR HOLDER 315-366
OIL COOLER 323-326
TURBO CHARGER 349
OIL PIPE 351
AIR CLEANER 367

REPLACEMENT ENGINE 369-446

ENGINE & GASKET KITS 369-406
GEARCASE 371-408
OIL PAN 373-420
CRANKCASE 375-412
ROCKER ARM COVER 377-414
VALVE ROCKER ARM 379-416
CYLINDER HEAD 381-418
PISTON & CRANKSHAFT 383-422
FUEL CAMSHAFT 385-424
CAMSHAFT 387-426
WATER PUMP 389-428
WATER FLANGE & THERMOSTAT 391-430
MANIFOLDS 393-432
ENGINE STOP LEVER 395-438
GOVERNOR 397-440
SPEED CONTROL PLATE 399-442
FUEL & INJECTION PUMP 401
INJECTOR NOZZLES 403-446
OIL COOLER 409
TURBO CHARGER 433
OIL PIPE 435
FUEL & INJECTION PUMPS 443

ACCESSORIES & OPTIONS 447-666

ACCESS COVER 447
ACCESSORIES HARNESS 449
ACS CONVERSION KIT 451
AXLE SEAL KIT 453
BACK-UP ALARM 455
BEACON 457
BLOCK HEATER 459

Page 10 - OSS# 2071349 - All rights reserved by Bobcat Company - 12/01/2009 - 20:50:59 - Produced by Ken Cook Co. with media1off

CONTENTS (Cont'd)

ACCESSORIES & OPTIONS

BOB-TACH LEVERS 461
BUCKET POSITIONING VALVE KIT 463-468
BUCKET POSITIONING VALVE 469
CAB DOOR 471-490
CAB ENCLOSURE 491-494
CAB WINDOWS 495-502
COUNTERWEIGHT KIT 503-506
DECALS 507-510
DELUXE CAB 511-514
DUAL BATTERY KIT 515-518
ELECTRICAL CONNECTOR KIT 519
ELECTRICAL CONTROLS KIT 521-528
ENGINE MOUNT KIT 529
EUROPEAN ACCESSORIES 531-536
EUROPEAN ACCESSORIES 537-540
FIRE EXTINGUISHER 541
F.O.P.S. KIT 543
FLASHER LIGHTS 545
GAS SPRING KIT 547
FRONT AUXILIARY 549
HAND CONTROL KIT 551-554
HEATER & A/C 555-580
HEATER 573
HORN KIT 581
LIFT KIT 583-586
LIGHT KIT 587
MUFFLER/PURIFIER KIT 589
PEDAL EXTENDERS 591
POWER BOB-TACH KIT 593-600
POWER BOB-TACH 601-614
RADIATOR SCREEN KIT 615
REAR AUXILIARY 617-630
REAR AUXILIARY VALVE 631
REAR DOOR LOCK 633
SEAL ENCLOSURE KIT 635
REAR WIPER 637
SEAT 639-642
SEAT BELT 643-648
SOUND KIT 649
SOUND OPTION 651
SOUND REDUCTION HARDHAT 653
STROBE LIGHT 655
TIRES & RIMS 657-660
WHITE DECAL KIT 661
BULK ITEMS 663-666

NUMERICAL INDEX 668-731

Page 11 - OSS# 2071349 - All rights reserved by Bobcat Company - 12/01/2009 - 20:50:59 - Produced by Ken Cook Co. with media1off

MAINTENANCE ITEMS

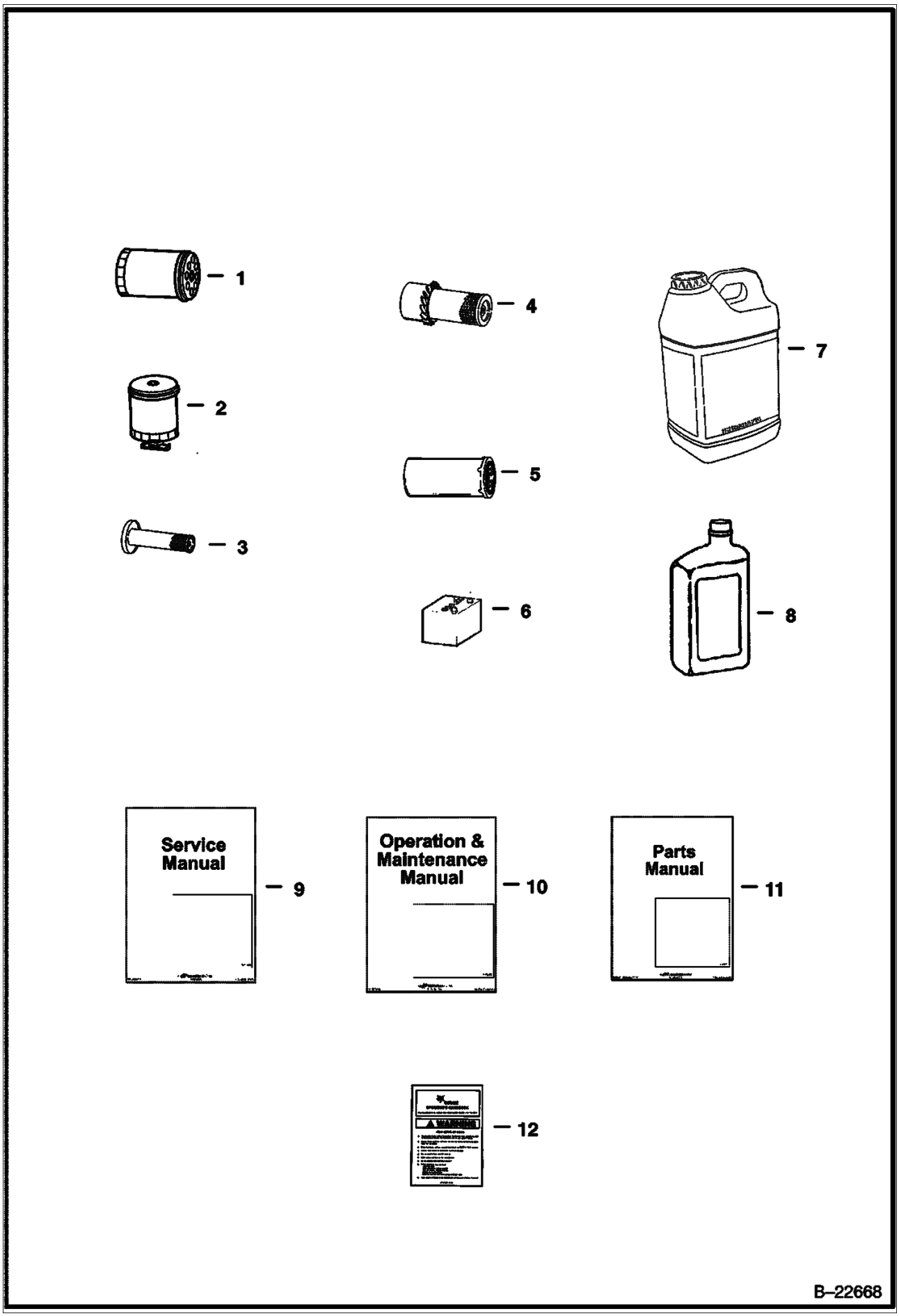

Page 12 - OSS# 2071349 - All rights reserved by Bobcat Company - 12/01/2009 - 20:50:59 - Produced by Ken Cook Co. with media1off

Ref No	Part Number	Description	Remarks	Serial Number	Qty
1	6675517	FILTER, OIL ENG	See Illustration GEARCASE/ B17146 See Illustration GEARCASE/ B13160		x
2	6667352	FILTER, FUEL W/SEPERATOR 12	See Illustration FUEL SYSTEM/ PE1627		x
3	6598362	ELEMENT	See Illustration AIR CLEANER/ B16478 - inner air cleaner		x
4	6598492	ELEMENT	See Illustration AIR CLEANER/ B16478 - outer air cleaner		x
5	6661248	FILTER, OIL HYD 12	See Illustration HYDROSTATIC OIL FILTER/ B17469 hydrostatic #3 media - 6" (152,4mm) long		x
5	6661807	FILTER, OIL HYD	See Illustration HYDROSTATIC OIL FILTER/ B13527 - in-line		x
6	6674687	BATTERY, DRY 600 AMP	See Illustration ENGINE ELECTRICAL CIRCUITRY/ PE1040R See Illustration ENGINE ELECTRICAL CIRCUITRY/ PE1104		x
7	6903117	FLUID, OIL HYD 2.5 GAL 2	Was 6563328 [A]		x
7	6903118	FLUID, OIL HYD 5 GAL	Was 6722344 [A]		x
7	6903119	FLUID, OIL HYD 55 GAL	Was 6563330 [A]		x
8	6903107	OIL, 10W30 QT. 12	Was 6657301 [A]		x
8	6903108	OIL, 10W30 GAL. 6	Was 6724557 [A]		x
8	6903112	OIL, 10W30 2.5 GAL 2	Was 6674205 [A]		x
8	6903105	OIL, 15W40 QT. 12	Was 6657299 [A]		x
8	6903106	OIL, 15W40 GAL. 6	Was 6724558 [A]		x
8	6903113	OIL, 15W40 2.5 GAL. 2	Was 6674204 [A]		x
8	6903109	OIL 30W QT. 12	Was 6657303 [A]		x
8	6903110	OIL, 30W GAL. 6	Was 6724559 [A]		x
8	6903111	OIL 30W 2.5 GAL 2	Was 6674206 [A]		x
9	6900834	MANUAL SERVICE 773 LOADER	Service Manual		1
10	6900842	MANUAL OPERATION 773/773H LOADER	Operation & Maintenance Manual		1
11	6900939	MANUAL PARTS 773 LOADER	printed		1
11	6900939-CD	MANUAL PARTS 773 LOADER CD			1
12	6718719	HANDBOOK, OPERATOR'S	See Illustration DECALS/ B17183 W/wire rope [A]		1

Page 13 - OSS# 2071349 - All rights reserved by Bobcat Company - 12/01/2009 - 20:50:59 - Produced by Ken Cook Co. with media1off

MAIN FRAME

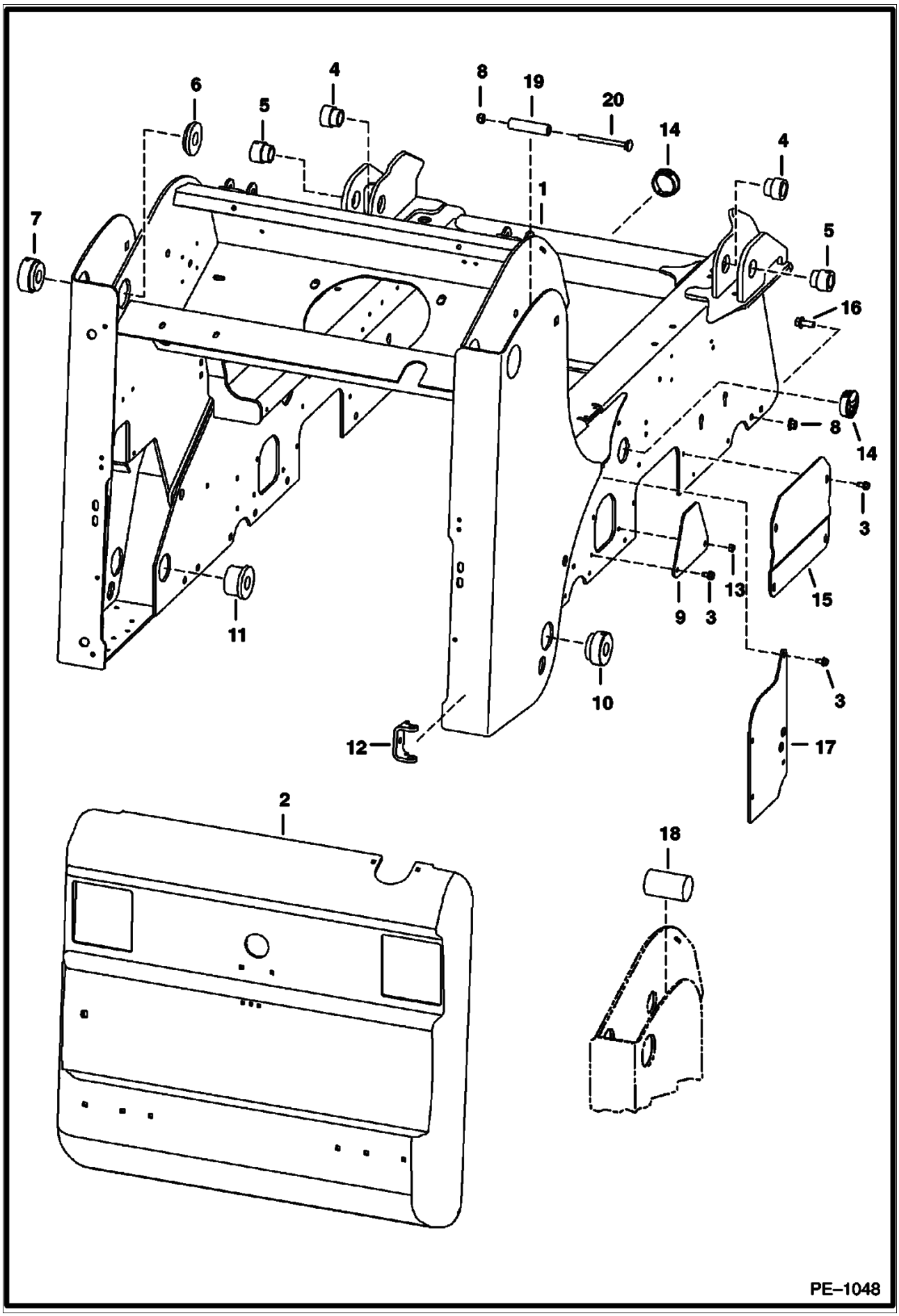

Page 14 - OSS# 2071349 - All rights reserved by Bobcat Company - 12/01/2009 - 20:50:59 - Produced by Ken Cook Co. with media1off

Ref No	Part Number	Description	Remarks	Serial Number	Qty
1	6717052	MAIN FRAME		5176 18740 & Bel	1
1	6717052	MAIN FRAME		5180 12130 & Bel	1
1	6717052	MAIN FRAME		5190 17712 & Bel	1
1	6717052	MAIN FRAME		5181 12066 & Bel	1
1	6717052	MAIN FRAME		5192 12070 & Bel	1
1		MAIN FRAME	NAP - Order 6733002 Main Frame & 2 of Ref. 15 (6719201 cover) - Was 6726150 [A]	500K 11001 & Abv	1
1		MAIN FRAME	NAP - Order 6733002 Main Frame & 2 of Ref. 15 (6719201 cover) - Was 6726150 [A]	5176 18741 & Abv	1
1		MAIN FRAME	NAP - Order 6733002 Main Frame & 2 of Ref. 15 (6719201 cover) - Was 6726150 [A]	5181 12067 & Abv	1
1		MAIN FRAME	NAP - Order 6733002 Main Frame & 2 of Ref. 15 (6719201 cover) - Was 6726150 [A]	5180 12131 & Abv	1
1		MAIN FRAME	NAP - Order 6733002 Main Frame & 2 of Ref. 15 (6719201 cover) - Was 6726150 [A]	5190 17713 & Abv	1
1		MAIN FRAME	NAP - Order 6733002 Main Frame & 2 of Ref. 15 (6719201 cover) - Was 6726150 [A]	5192 12071 & Abv	1
1	6733002	MAIN FRAME			1
2	6711524	REAR DOOR	See Illustration REAR DOOR/ TS1523		1
3	84G3712	BOLT		5176 18740 & Bel	11
3	84G3712	BOLT		5192 12070 & Bel	11
3	84G3712	BOLT		5180 12130 & Bel	11
3	84G3712	BOLT		5181 12066 & Bel	11
3	84G3712	BOLT		5190 17712 & Bel	11
3	84G3712	BOLT		500K 11001 & Abv	23
3	84G3712	BOLT		5180 12131 & Abv	23
3	84G3712	BOLT		5190 17713 & Abv	23
3	84G3712	BOLT		5192 12071 & Abv	23
3	84G3712	BOLT		5181 12067 & Abv	23
3	84G3712	BOLT		5176 18741 & Abv	23
4	6717278	BUSHING	weld on		2
5	6717277	BUSHING	weld on		2
6	6717356	BUSHING	weld on		2
7	6717357	BUSHING	weld on - flat edge		2
7	6731578	BUSHING	weld on - tapered edge		2
8	83D8	NUT 5		5176 18740 & Bel	28
8	83D8	NUT 5		5192 12070 & Bel	28
8	83D8	NUT 5		5180 12130 & Bel	28
8	83D8	NUT 5		5181 12066 & Bel	28
8	83D8	NUT 5		5190 17712 & Bel	28
8	83D8	NUT 5		500K 11001 & Abv	26
8	83D8	NUT 5		5180 12131 & Abv	26
8	83D8	NUT 5		5190 17713 & Abv	26
8	83D8	NUT 5		5192 12071 & Abv	26
8	83D8	NUT 5		5181 12067 & Abv	26
8	83D8	NUT 5		5176 18741 & Abv	26
9	6718791	COVER		5176 18740 & Bel	2
9	6718791	COVER		5180 12130 & Bel	2
9	6718791	COVER		5181 12066 & Bel	2
9	6718791	COVER		5192 12070 & Bel	2
9	6718791	COVER		5190 17712 & Bel	2
9	7136696	COVER	Was 6726069 [A]	500K 11001 & Abv	2
9	7136696	COVER	Was 6726069 [A]	5190 17713 & Abv	2
9	7136696	COVER	Was 6726069 [A]	5192 12071 & Abv	2
9	7136696	COVER	Was 6726069 [A]	5181 12067 & Abv	2
9	7136696	COVER	Was 6726069 [A]	5176 18741 & Abv	2
9	7136696	COVER	Was 6726069 [A]	5180 12131 & Abv	2

Page 15 - OSS# 2071349 - All rights reserved by Bobcat Company - 12/01/2009 - 20:50:59 - Produced by Ken Cook Co. with media1off

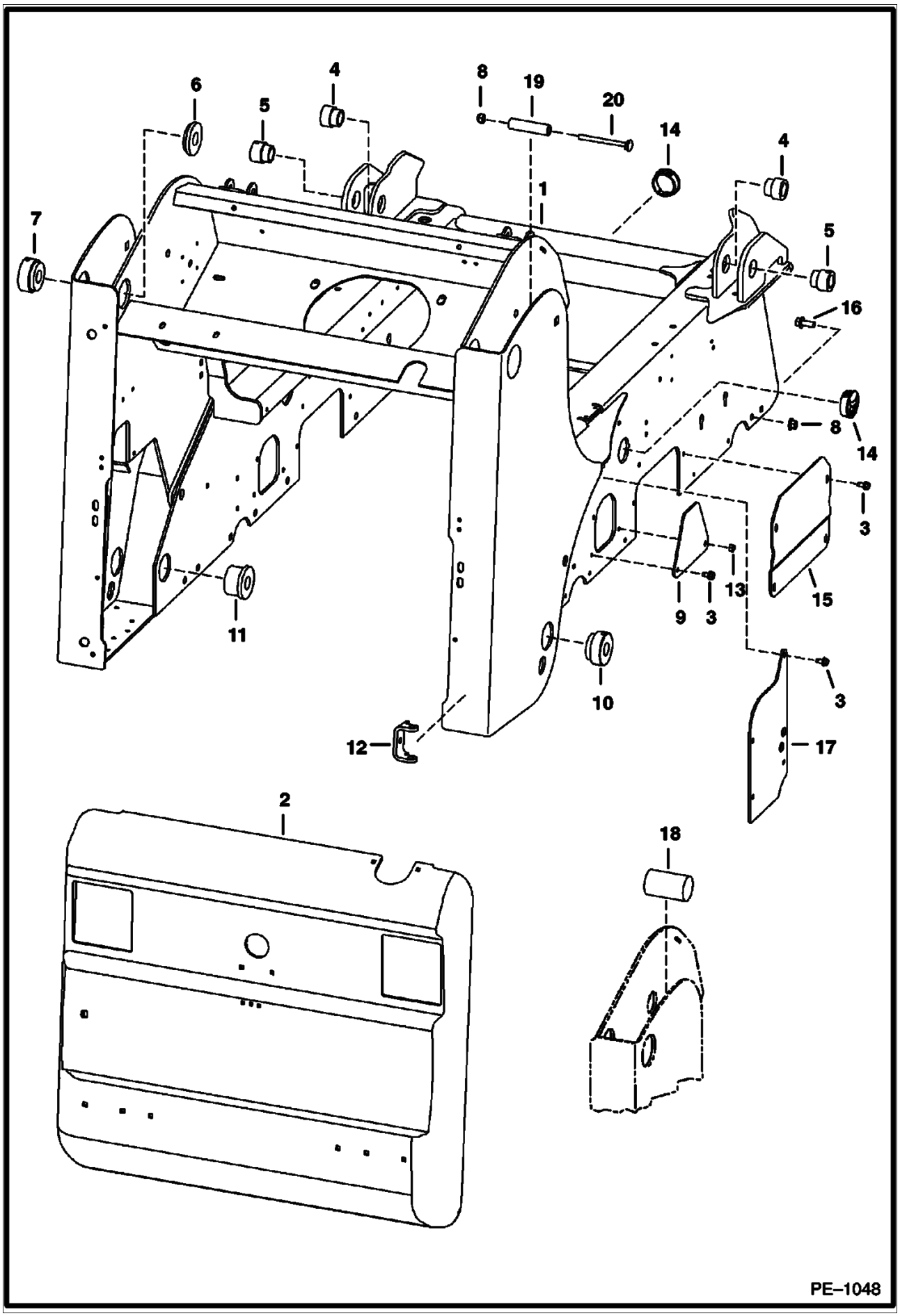

Page 16 - OSS# 2071349 - All rights reserved by Bobcat Company - 12/01/2009 - 20:50:59 - Produced by Ken Cook Co. with media1off

Ref No	Part Number	Description	Remarks	Serial Number	Qty
10	6717359	BUSHING	weld on - bottom upright		2
10	6731578	BUSHING	weld on - bottom upright		2
11	6717358	BUSHING	weld on		2
12	6708987	HINGE, WELD-ON			2
13	61D6	NUT 5			1
14	6718796	PLUG			3
15	6706808	COVER	A - 12.80" (325,1 mm) hole pattern		2
15	6719201	COVER	13.80" (350,5 mm) hole pattern		2
16	31C820	BOLT		5176 18740 & Bel	28
16	31C820	BOLT		5181 12066 & Bel	28
16	31C820	BOLT		5192 12070 & Bel	28
16	31C820	BOLT		5190 17712 & Bel	28
16	31C820	BOLT		5180 12130 & Bel	28
16	31C820	BOLT		500K 11001 & Abv	26
16	31C820	BOLT		5180 12131 & Abv	26
16	31C820	BOLT		5176 18741 & Abv	26
16	31C820	BOLT		5181 12067 & Abv	26
16	31C820	BOLT		5192 12071 & Abv	26
16	31C820	BOLT		5190 17713 & Abv	26
17	6726062	SHIELD		500K 11001 & Abv	2
17	6726062	SHIELD		5180 12131 & Abv	2
17	6726062	SHIELD		5192 12071 & Abv	2
17	6726062	SHIELD		5190 17713 & Abv	2
17	6726062	SHIELD		5181 12067 & Abv	2
17	6726062	SHIELD		5176 18741 & Abv	2
18	6718994	MOUNT	weld on - solid		2
19	6732225	SPACER	hollow - .56" ID		2
20	37C888	BOLT	Use W/Ref. 19		2

Page 17 - OSS# 2071349 - All rights reserved by Bobcat Company - 12/01/2009 - 20:50:59 - Produced by Ken Cook Co. with media1off

OPERATOR CAB

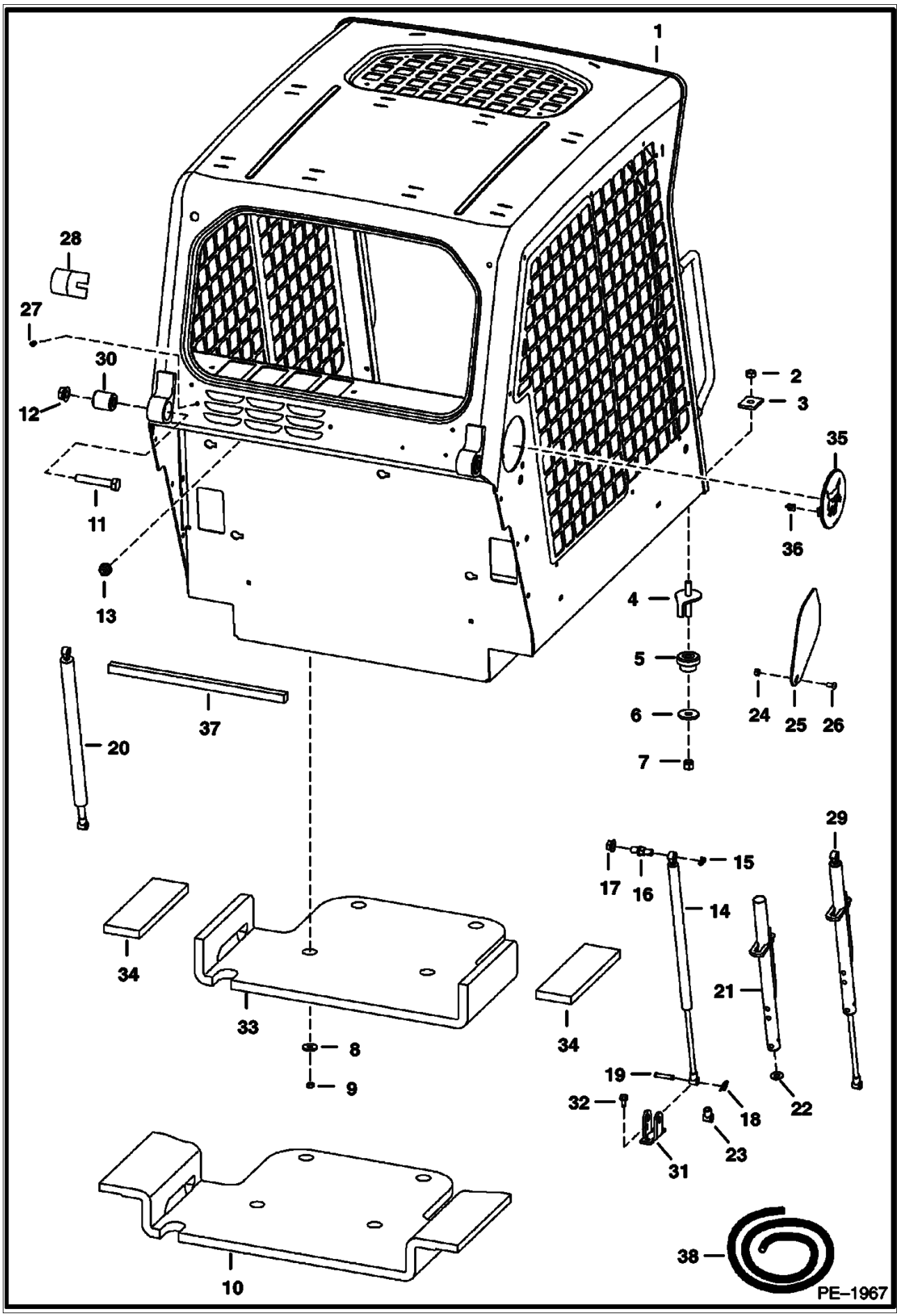

Page 18 - OSS# 2071349 - All rights reserved by Bobcat Company - 12/01/2009 - 20:50:59 - Produced by Ken Cook Co. with media1off

Ref No	Part Number	Description	Remarks	Serial Number	Qty
1		OPERATOR CAB	Does not include cab decals - Order 6719672 cab & 7129949 cover		1
2	59D8	NUT 5			2
3	6553709	WASHER	rectangular		2
4	6702971	BOLT			2
5	6560633	DAMPENER			2
6	6515817	WASHER			2
7	85D8	NUT, 5			2
8	619021	WASHER, 5			4
9	59D5	NUT 5			4
10		INSULATION	NAP - seat pan - Order Ref. 33 & (2) Ref. 34 - Was 6719360 [A]		1
11	17C1056	BOLT			2
12	53D10	NUT			2
13	53D6	NUT			4
14	6675135	GAS SPRING	RH		1
15	6675140	SNAP RING			2
16	6719064	MOUNT	Was 6719005 [A]		2
17	95D8	NUT	Was 83D000008B [B]		2
18	6631418	PIN	ring		2
19	6567743	PIN			2
20	6675134	GAS SPRING	L.H.		1
20	6675136	GAS SPRING	LH - heavy duty		1
21	6708189	TUBE	stop - RH		1
22	6701174	WASHER			1
23	6675257	CLEVIS			1
24	95D5	NUT			2
25	6718784	COVER			2
26	25G512	SCREW	Was 25G000510B [B]		2
27	6675033	INSERT	filter cover		2
28	6579613	STOP			2
29		GAS SPRING	NAP - R.H. - W/latch - Order Ref. 14 & 21-23 - Was 6719072 [A]		1
30	6562602	BUSHING			2
31	6706349	MOUNT	gas spring		2
32	84G3112	BOLT 5			4
33	6729013	INSULATION	seat pan		1
34	6729012	INSULATION	seat pan		2
35	6733107	PLUG ASSY	W/Bobcat head & Ref. 35		2
36	6679990	CLIP			2
37	6679994	SEAL	32" (818,8 mm) long		1
38		SEAL	NAP -bulk - Sold Per Foot - Order Ref. 37		x

Page 19 - OSS# 2071349 - All rights reserved by Bobcat Company - 12/01/2009 - 20:50:59 - Produced by Ken Cook Co. with media1off

OPERATOR CAB

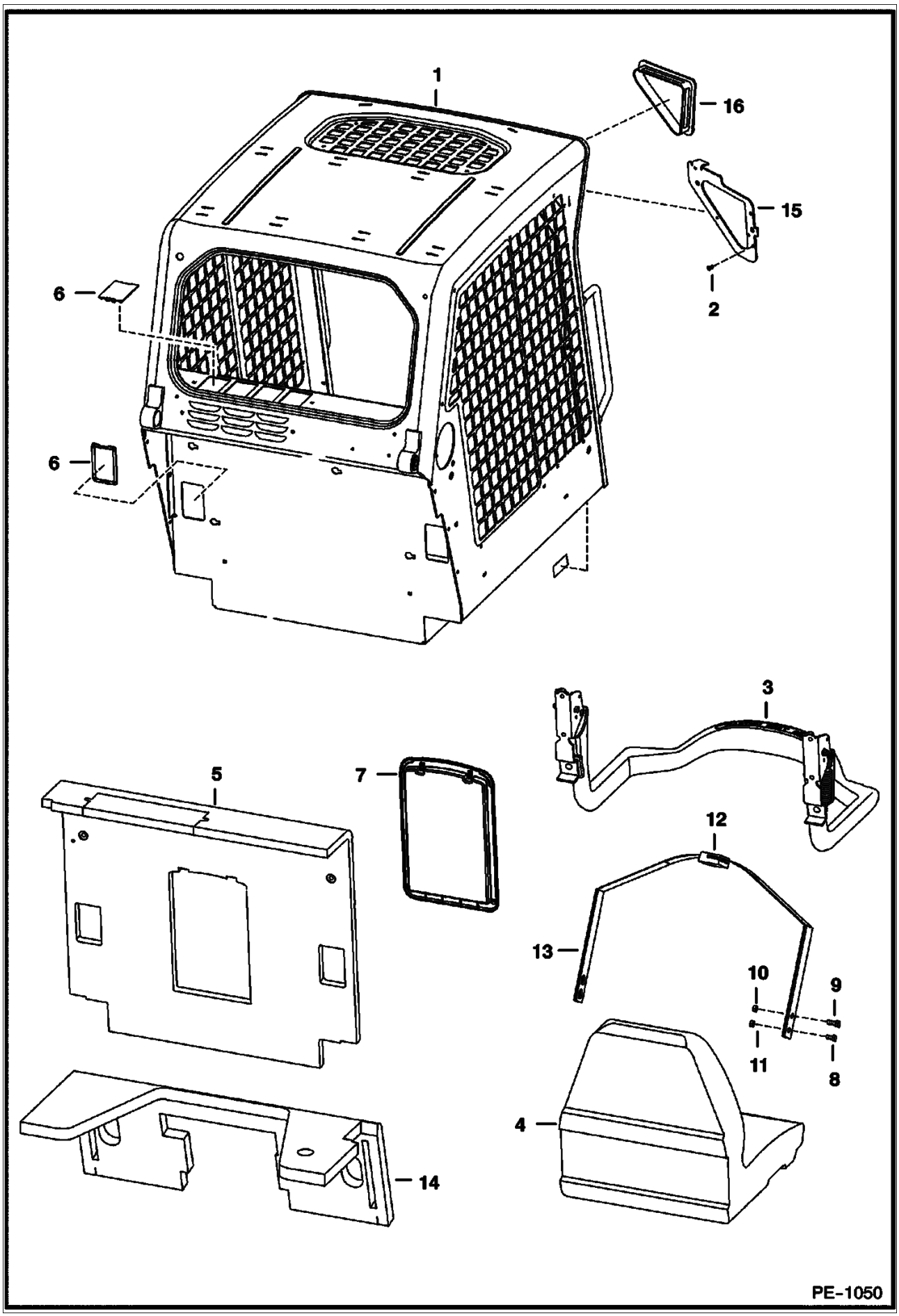

Page 20 - OSS# 2071349 - All rights reserved by Bobcat Company - 12/01/2009 - 20:50:59 - Produced by Ken Cook Co. with media1off

Ref No	Part Number	Description	Remarks	Serial Number	Qty
1		OPERATOR CAB	See Illustration OPERATOR CAB/ PE1967 Does not include cab decals		1
2	6675033	INSERT	See Illustration CAB ELECTRICAL CIRCUITRY/ PE1039		6
3		SEAT BAR	See Illustration SEAT & SEAT BAR/ B16482		1
4	6669135	SEAT	See Illustration SEAT/ B14720		1
5	6719504	INSULATION	W/Ref. 7		1
6	6718101	COVER			6
7		CONTAINER	NAP - manuals - Order 6725301 container & 6725303 cover - Was 6719503 [A]		1
7	6675524	CLIP			2
7	6725301	OP MANUAL COVER			1
7	6725303	OP MANUAL PAN			1
8	17C612	BOLT 5	3/8 x 3/4		2
9	17C716	BOLT			4
10	85D7	NUT			2
11	85D6	LOCK NUT			2
12		SEAT BELT	NAP - Order 6675074 Seat Belt & (2) of Ref. 13 (6725373 Spring Plate) - Was 6667875 [A]		1
12		SEAT BELT	NAP - W/spring plates - Order 6675074 Seat Belt & (2) of Ref. 13 (6725373 Spring Plate) - Was 6725403 [A]		1
12	6675074	SEAT BELT	W/O spring plates		1
13		GUIDE ASSY	NAP - Order 6711908 Spring Plate, 6565355 Guide & (2) of 6630207 Rivets - Was 6711907 [A]		2
13	6711908	SPRING PLATE	Use W/Ref. 12 (NAP/6667875 Seat Belt)		2
13		GUIDE	NAP - Order 6703703 - Was 6565355		2
13	6630207	RIVET			4
13	6725373	SPRING PLATE	Use W/Ref. 12 (6675074 Seat Belt)		2
14	7139184	INSULATION	steering panel - Was 6718489 [A]		1
15		PLATE	NSS - R.H. - weld on		1
15		PLATE	NSS - L.H. - weld on		1
16	6674403	COVER	no lights		2

Page 21 - OSS# 2071349 - All rights reserved by Bobcat Company - 12/01/2009 - 20:50:59 - Produced by Ken Cook Co. with media1off

SEAT & SEAT BAR

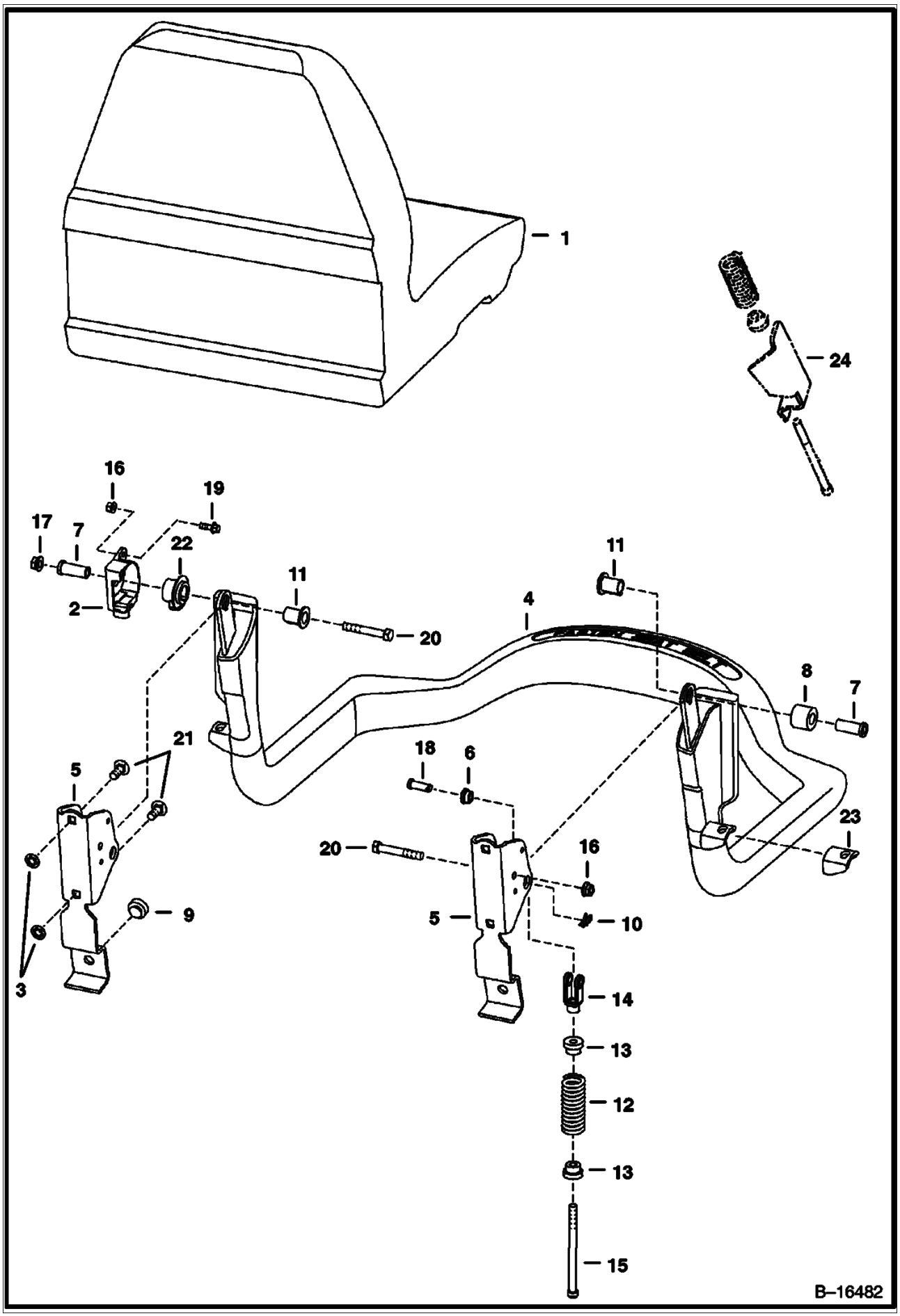

Page 22 - OSS# 2071349 - All rights reserved by Bobcat Company - 12/01/2009 - 20:50:59 - Produced by Ken Cook Co. with media1off

Ref No	Part Number	Description	Remarks	Serial Number	Qty
1	6669135	SEAT	See Illustration SEAT/ B14720		1
2	6680429	SENSOR, SEAT BAR POSITION	Was 6674406 [A]		1
3	6674894	NUT			4
4	6715860	SEAT BAR			1
5	6715863	BRACKET			1
6	6715864	BUSHING			2
7	6715865	BUSHING			2
8	6715866	BUSHING			1
9	6519178	BUMPER			2
10	6631418	PIN	ring		2
11	6680441	BUSHING	keyed - Was 6664882 [A]		2
12	6701535	SPRING			2
13	6710659	BUSHING			2
14	6713589	CLEVIS			2
15	6713887	BOLT			2
16	83D4	NUT 10			1
17	53D6	NUT			2
18	4F6106	PIN			2
19	35C412	BOLT			1
20	17C640	BOLT 5			2
21	10C616	BOLT 10			4
22	6680443	BUSHING, MAGNET	Was 6674405 [A]		1
23		MOUNT	NAP - Order Ref. 4	& Abv	1
24		MOUNT	NAP - Order Ref. 4	& Bel	1

Page 23 - OSS# 2071349 - All rights reserved by Bobcat Company - 12/01/2009 - 20:50:59 - Produced by Ken Cook Co. with media1off

SEAT
(Michigan)

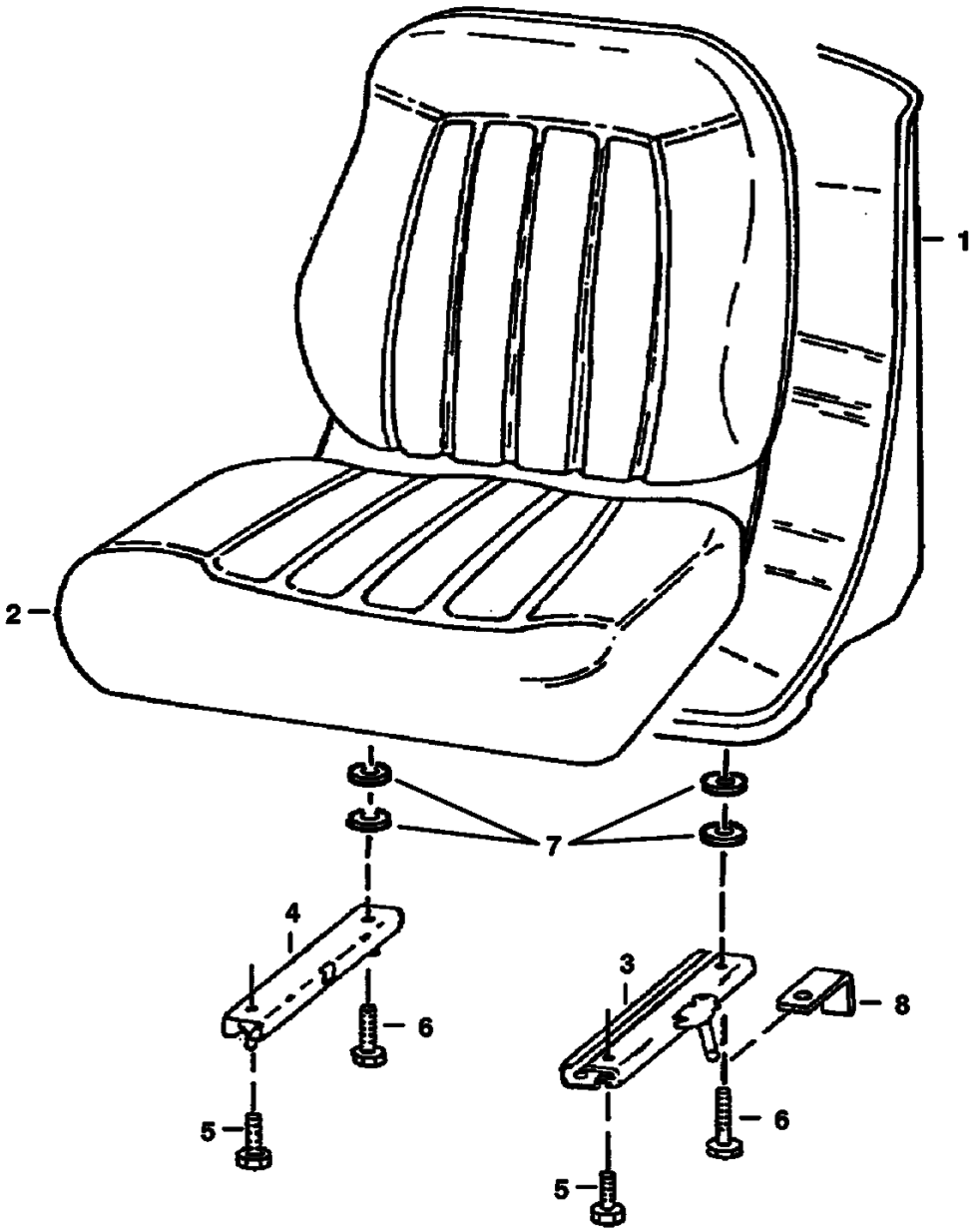

Page 24 - OSS# 2071349 - All rights reserved by Bobcat Company - 12/01/2009 - 20:50:59 - Produced by Ken Cook Co. with media1off

SEAT (Cont'd)
(Michigan)

Ref No	Part Number	Description	Remarks	Serial Number	Qty
1	6669135	SEAT	W/Ref. 2-7		1
2	6670160	CUSHION	W/edging, clip & (2) grommets		1
2		EDGING	NSS		1
2		CLIP	NSS		1
3	6674013	TRACK	LH - W/ 8" (203,2 mm) latch		1
4	6669089	TRACK	RH - W/O latch		1
5	25G512	SCREW			2
6	25G520	SCREW			2
7	6672715	SPACER	Was 7000010 [A]		4
8	6668953	BRACKET			2

Page 25 - OSS# 2071349 - All rights reserved by Bobcat Company - 12/01/2009 - 20:50:59 - Produced by Ken Cook Co. with media1off

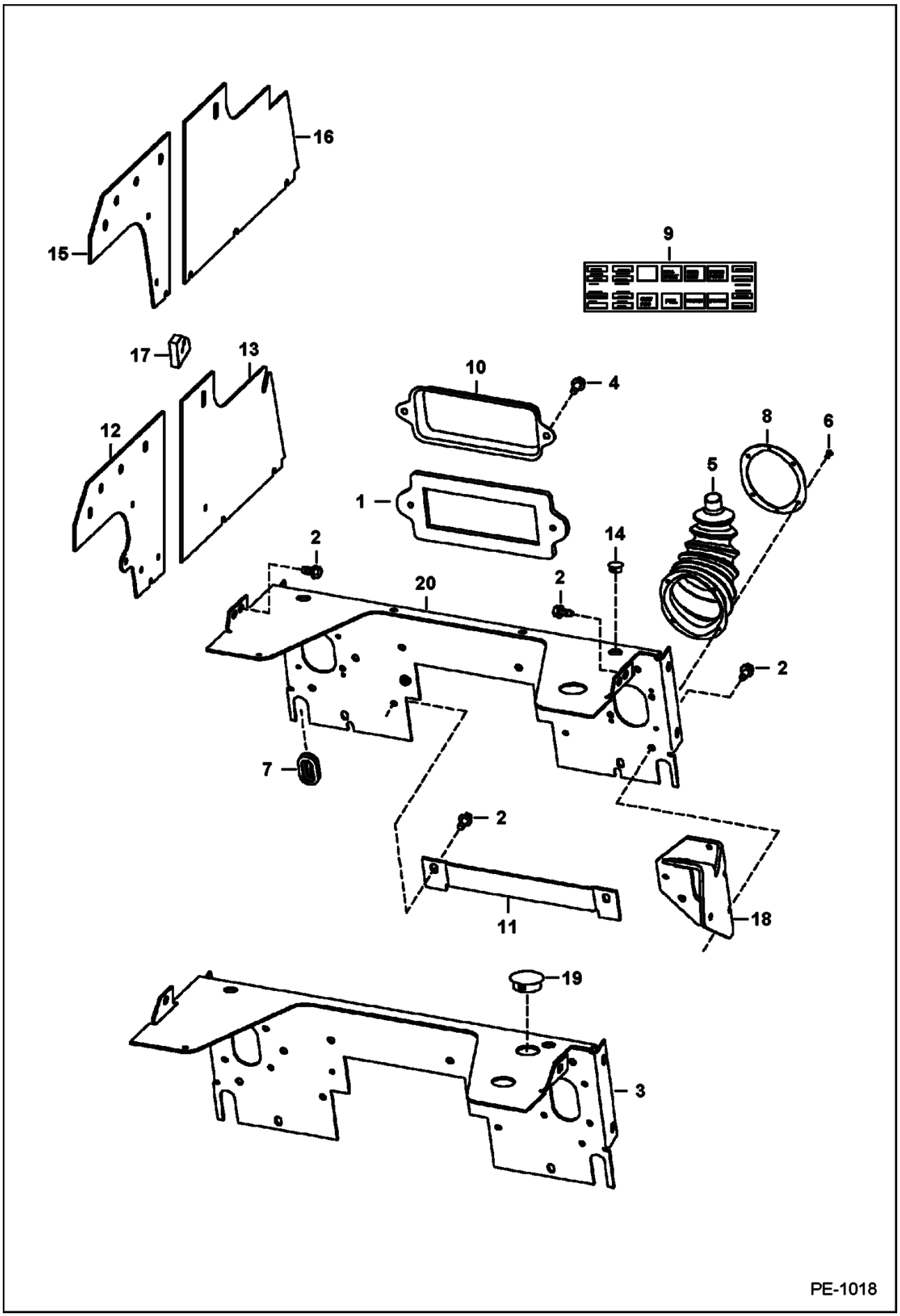

Page 26 - OSS# 2071349 - All rights reserved by Bobcat Company - 12/01/2009 - 20:50:59 - Produced by Ken Cook Co. with media1off

Ref No	Part Number	Description	Remarks	Serial Number	Qty
1	6725302	GASKET			1
2	84G3712	BOLT	Use W/Ref. 12 & 13		16
2	84G3712	BOLT	Use W/Ref. 15 & 16		14
3		SHIELD	NAP - Order Ref. 20 & 6734520 cover - Was 7106687 [A]		1
4	84G3112	BOLT 5			2
5	6532127	BOOT	W/Ref. 8		2
6	6630207	RIVET			12
7	6577961	GROMMET			2
8		PLATE	NAP - Order Ref. 5		2
9		DECAL	NAP - fuse/relay - 2.10" x 9.40" (53,3 mm x 238,8 mm) - Order 6718774 Decal		1
9	6718774	DECAL	fuse/relay - 2" x 7" (50,8 mm x 177,8 mm)		1
10	6716621	COVER	fuse/relay		1
10	6736071	KIT	extreme applications - W/decal & insulation		1
10	6718774	DECAL	extreme applications		1
10	6731275	INSULATION	fuse/ relay		1
11	6717890	COVER			1
12	6717207	PANEL	side		2
13	6717313	PANEL	side front		2
14	6657719	PLUG	for .75" (19,1 mm) dia hole		2
14	6648348	PLUG	for .812" (20,6 mm) dia hole		2
15	7117232	PANEL	rear side - Was 6732620 [A]		2
16	6732621	PANEL	side - front		2
17	6733529	SEAL	Use W/Ref. 16		2
18		BRACKET	See Illustration HAND CONTROLS/ B21594 R.H. - Was 6733022 [A]		1
18		BRACKET	See Illustration HAND CONTROLS/ B21594 L.H. - Was 6733024 [A]		1
19	6681469	PLUG	for 1.375" (34,9 mm) dia hole - Was 6665697 [A]		1
20	7139183	SHIELD			1

Page 27 - OSS# 2071349 - All rights reserved by Bobcat Company - 12/01/2009 - 20:50:59 - Produced by Ken Cook Co. with media1off

REAR DOOR
S/N 500K12464 & BEL, 517620710 & BEL, 518012495 & BEL, 518112378 & Bel, 519022771 & Bel, 519212427 & Bel)

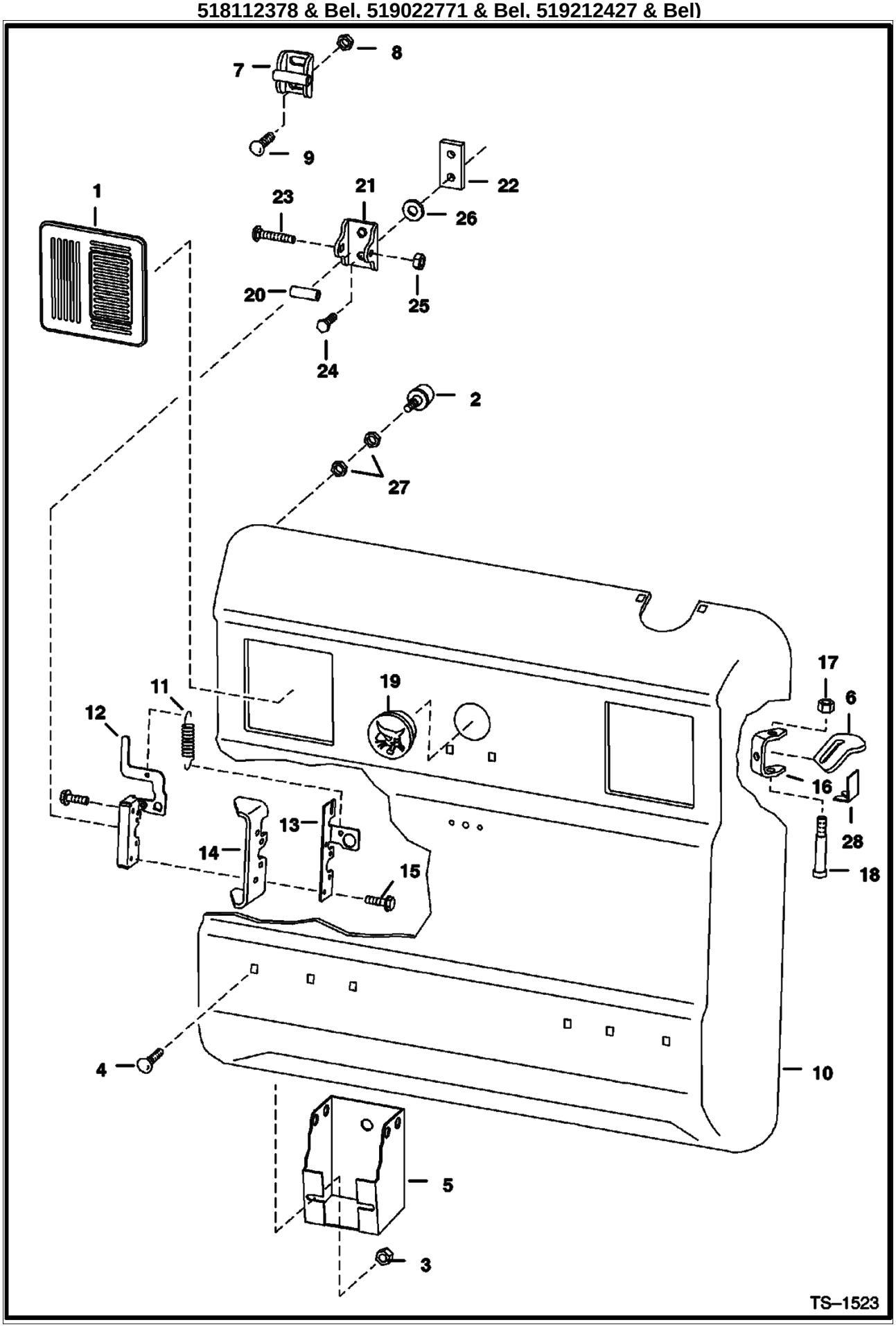

Page 28 - OSS# 2071349 - All rights reserved by Bobcat Company - 12/01/2009 - 20:50:59 - Produced by Ken Cook Co. with media1off

REAR DOOR (Cont'd)
S/N 500K12464 & BEL, 517620710 & BEL, 518012495 & BEL, 518112378 & Bel, 519022771 & Bel, 519212427 & Bel)

Ref No	Part Number	Description	Remarks	Serial Number	Qty
1	6670287	COVER			2
2	6655399	BUMPER	Was 6714454 [B,D]		2
3	55D6	NUT			2
4	37C612	BOLT			2
5	6715318	TOOL HOLDER			1
6	6714126	DOOR STOP			1
7		STRIKER ASSY.	NAP - Order Ref. 20 - 26 - Was 6715157 [A]		1
8	57D8	NUT 10			2
9	37C820	BOLT	carriage		2
10		REAR DOOR	See BTI357 NAP - Was 6711524 [A]		1
11	6714210	SPRING			1
12	6670867	LATCH, REAR DOOR			1
13	6711664	GUIDE, LATCH	latch		1
14	6711527	LATCH PLATE	weld on		1
15	31C420	BOLT 5			4
16	6733575	HINGE, REAR DOOR	weld on - Was 6711526 [A]		2
17	59D6	NUT			2
18	6809845	BOLT	Was 38C000856B [B]		2
19	6718796	PLUG	Was 6660646 [A]		1
20	6719550	TUBE	striker		1
21	6719524	STRIKER			1
22	6719525	BAR	threaded striker		1
23	37C644	BOLT	carriage		1
24	17C820	BOLT			2
25	61D6	NUT 5			2
26	6675273	WASHER	lock - Was 6675263 [B,D]		2
27	61D5	NUT			2
28	6719766	STOP			1

Page 29 - OSS# 2071349 - All rights reserved by Bobcat Company - 12/01/2009 - 20:50:59 - Produced by Ken Cook Co. with media1off

REAR DOOR
S/N 500K12465 & Abv, 517620711 & Abv, 518012496 & Abv, 518112379 & Abv, 519022772 & Abv, 519212428 & Abv)

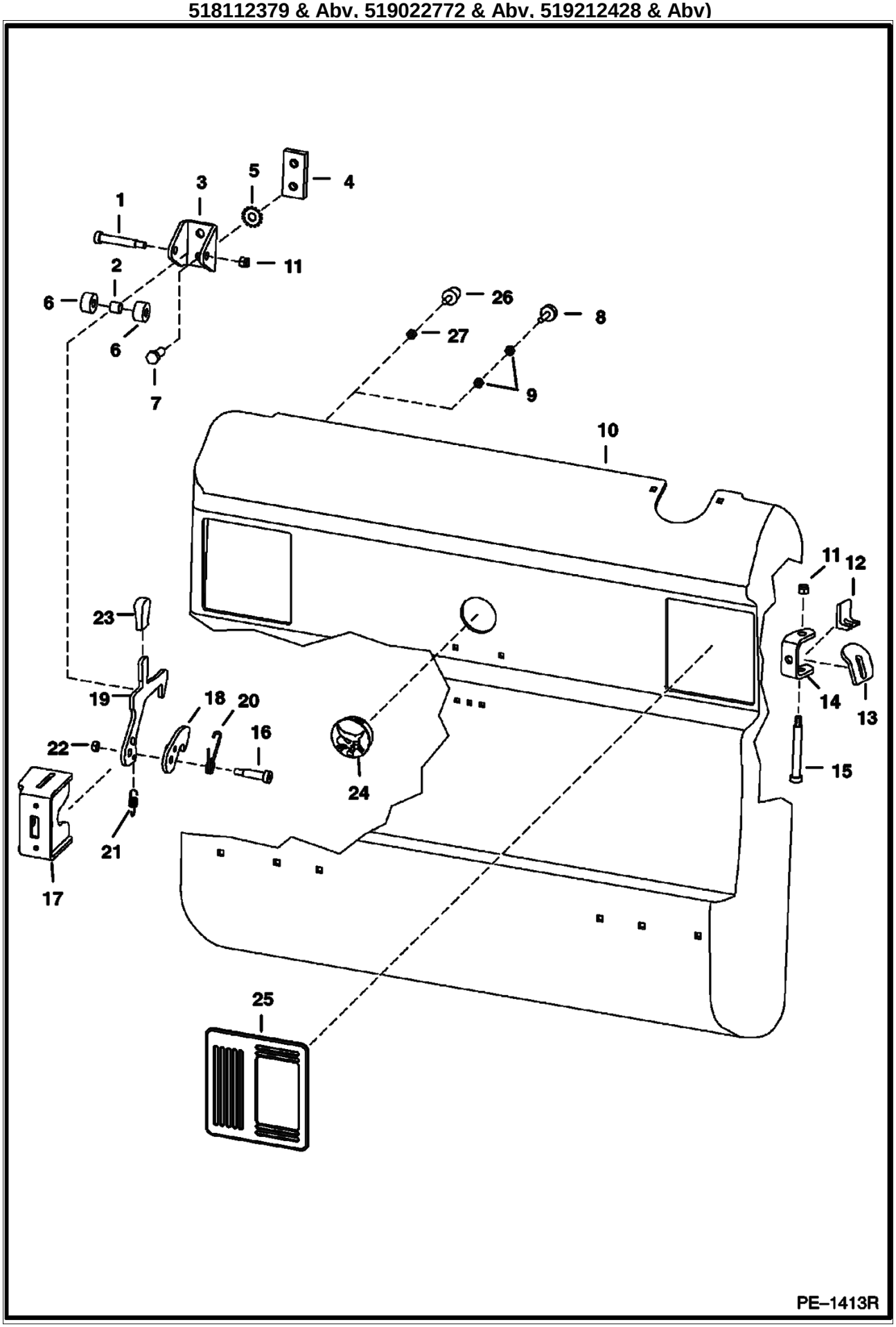

Page 30 - OSS# 2071349 - All rights reserved by Bobcat Company - 12/01/2009 - 20:50:59 - Produced by Ken Cook Co. with mediaioff

REAR DOOR (Cont'd)
S/N 500K12465 & Abv, 517620711 & Abv, 518012496 & Abv, 518112379 & Abv, 519022772 & Abv, 519212428 & Abv)

Ref No	Part Number	Description	Remarks	Serial Number	Qty
1	38C840	BOLT	carriage		1
2	6809734	BUSHING	flat - Use W/Ref. 10 (NAP - Rear Door)		1
3	6809727	CHANNEL			1
4	6719525	BAR	threaded striker		1
5	6675273	WASHER	lock		2
6	6809726	ROLLER			2
7	17C820	BOLT			2
8	6655399	BUMPER			2
9	61D5	NUT			4
10		REAR DOOR	NAP - W/ two hole bumper braces - order 6729991 Rear Door & 2 of Ref. 26 - Was 6729991 [A]		1
10	6729991	REAR DOOR	W/ one hole bumper braces		1
11	59D6	NUT			3
12	6719766	STOP			1
13	6714126	DOOR STOP			1
14	6733575	HINGE, REAR DOOR	weld on - Was 6711526 [A]		2
15	6809845	BOLT	Was 38C000856B [B]		2
16	38C824	SCREW			1
17	6729939	LATCH PLATE	weld on		1
18	6733667	LATCH, REAR DOOR	Was 6811910 [A]		1
19	6732715	LATCH	Was 6729685 [A]		1
20	6810132	SPRING			1
21	6810141	SPRING			1
22	85D6	LOCK NUT			1
23	6564452	GRIP			1
24	6718796	PLUG			1
25	6670287	COVER			2
26	6733616	BUMPER	tapered - Use w/ Ref. 10 (6729991 Rear Door)		2
27	61D5	NUT			2

Page 31 - OSS# 2071349 - All rights reserved by Bobcat Company - 12/01/2009 - 20:50:59 - Produced by Ken Cook Co. with media1off

LIFT ARMS & BOB-TACH

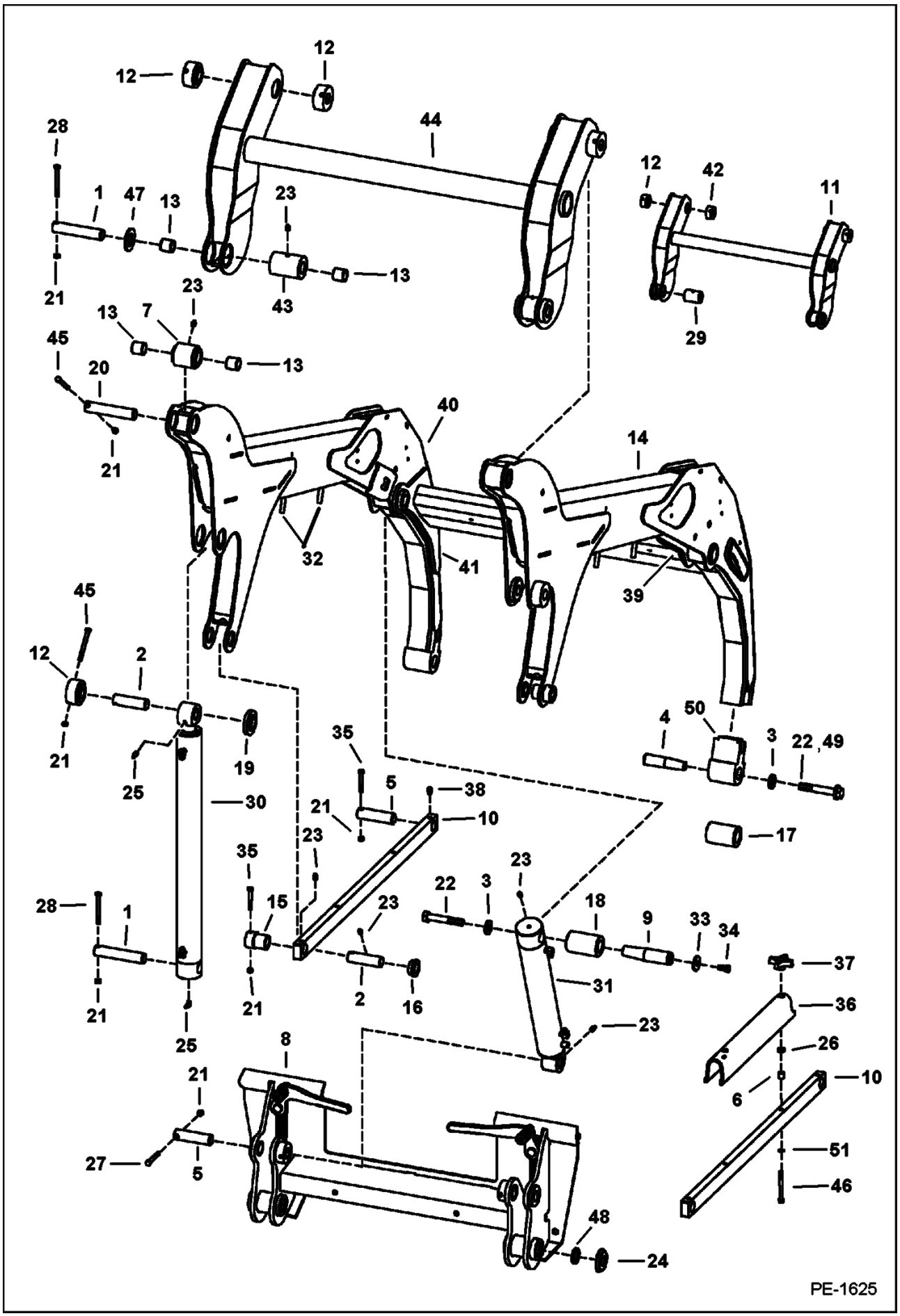

Page 32 - OSS# 2071349 - All rights reserved by Bobcat Company - 12/01/2009 - 20:50:59 - Produced by Ken Cook Co. with media1off

Ref No	Part Number	Description	Remarks	Serial Number	Qty
1	6717560	PIN	1.25" x 6.46" (31,8 mm x 164,0 mm)		6
2	6718789	PIN	1.25" x 4.40" (31,8 mm x 111,8 mm)		4
3	6576033	WASHER	.15" thickness x 1.5" O.D.		4
3	6718723	WASHER	.25" thickness x 1.625 - Use W/Ref. 22 (17C-1272 bolt)		4
3	27E10	WASHER	Use W/Ref. 22 (17C-1080 bolt)		4
4	6717536	PIN	tapered - 1.5" x 4.8 or 4.65" (38,1 mm x 121,9 mm or 118,1 mm)		2
4		PIN	tapered - 1.5" x 4.17" (38,1 mm x 105,9 mm) - Was 6734661 [A]	& Abv	2
4	7101078	PIN, PIVOT TAPERED	tapered - 1.5" x 4.05" (38,1 mm x 102,9 mm)		2
5	6577954	PIN	1.25" x 4.65" (31,7 mm x 118 mm)		4
6	6532347	SPACER	Was 6718816 [A]		2
7	6717039	BUSHING	weld on		2
8		BOB-TACH	See Illustration BOB-TACH/ PE1626 SALES		2
9	6717486	PIN	tapered - 1.5" x 6.2" (38,1 mm x 157,5 mm)		2
9	6734662	PIN, PIVOT TAPERED	tapered - 1.5" x 5.7" (38,1 mm x 144,8 mm)		2
10	6717015	ROD LINK		5176 18180 & Bel	2
10	6717015	ROD LINK		5180 12038 & Bel	2
10	6717015	ROD LINK		5181 12013 & Bel	2
10	6717015	ROD LINK		5192 12013 & Bel	2
10	6717015	ROD LINK		5190 16400 & Bel	2
10	6727863	ROD LINK		500K 11001 & Abv	2
10	6727863	ROD LINK		5180 12039 & Abv	2
10	6727863	ROD LINK		5176 18181 & Abv	2
10	6727863	ROD LINK		5181 12014 & Abv	2
10	6727863	ROD LINK		5191 11001 & Abv	2
10	6727863	ROD LINK		5192 12014 & Abv	2
10	6727863	ROD LINK		5190 16401 & Abv	2
11		FRAME LINK	NAP - Order 6732264 frame link & (2) of Ref. 10 (6727863 Rod Link) & (2) of Ref. 47 - Was 6717243 [A]	5176 18180 & Bel	1
11		FRAME LINK	NAP - Order 6732264 frame link & (2) of Ref. 10 (6727863 Rod Link) & (2) of Ref. 47 - Was 6717243 [A]	5180 12038 & Bel	1
11		FRAME LINK	NAP - Order 6732264 frame link & (2) of Ref. 10 (6727863 Rod Link) & (2) of Ref. 47 - Was 6717243 [A]	5181 12013 & Bel	1
11		FRAME LINK	NAP - Order 6732264 frame link & (2) of Ref. 10 (6727863 Rod Link) & (2) of Ref. 47 - Was 6717243 [A]	5192 12013 & Bel	1
11		FRAME LINK	NAP - Order 6732264 frame link & (2) of Ref. 10 (6727863 Rod Link) & (2) of Ref. 47 - Was 6717243 [A]	5190 16400 & Bel	1
12	6717246	BUSHING	weld on	5180 12038 & Bel	4
12	6717246	BUSHING	weld on	5181 12013 & Bel	4
12	6717246	BUSHING	weld on	5190 16400 & Bel	4
12	6717246	BUSHING	weld on	5192 12013 & Bel	4
12	6717246	BUSHING	weld on	5176 18180 & Bel	4
12	6717246	BUSHING	weld on	500K 11001 & Abv	6
12	6717246	BUSHING	weld on	5176 18181 & Abv	6
12	6717246	BUSHING	weld on	5180 12039 & Abv	6
12	6717246	BUSHING	weld on	5192 12014 & Abv	6
12	6717246	BUSHING	weld on	5191 11001 & Abv	6
12	6717246	BUSHING	weld on	5190 16401 & Abv	6

Page 33 - OSS# 2071349 - All rights reserved by Bobcat Company - 12/01/2009 - 20:50:59 - Produced by Ken Cook Co. with media1off

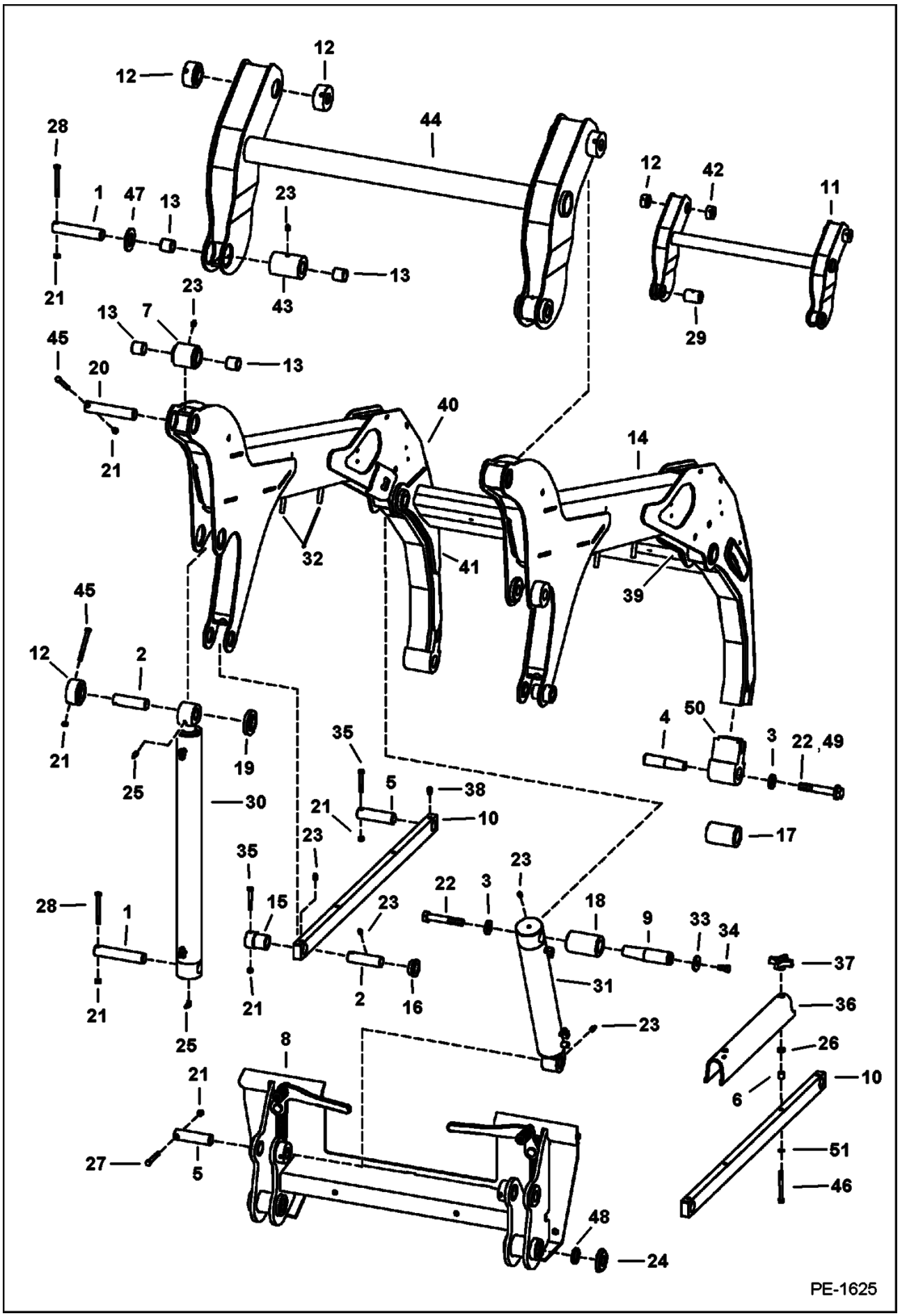

Page 34 - OSS# 2071349 - All rights reserved by Bobcat Company - 12/01/2009 - 20:50:59 - Produced by Ken Cook Co. with media1off

Ref No	Part Number	Description	Remarks	Serial Number	Qty
12	6717246	BUSHING	weld on	5181 12014 & Abv	6
13	6717562	BUSHING	wear		8
14		LIFT ARM	NAP - Order 7114257 lift arm, 6735669 boom step & (2) ea. of Ref. 3 (27E-10 washer), Ref. 4 (6734661 pin), Ref. 9 (6734662 pin), Ref. 33 (6731160 washer), Ref. 34 (17C-1016 bolt) & Ref. 49 (47C-1088 bolt) - Was 6717017		1
14		LIFT ARM	NAP - Order 7114257 lift arm, 6735669 boom step & (2) ea. of Ref. 3 (27E-10 washer), Ref. 4 (6734661 pin), Ref. 9 (6734662 pin), Ref. 33 (6731160 washer), Ref. 34 (17C-1016 bolt) & Ref. 49 (47C-1088 bolt) - Was 6729824 [A]		1
14		LIFT ARM	NAP - Order 7114257 lift arm & (2) of Ref. 49 (47C-1088 bolt) - Was 7114758 [A]		1
14	7114257	LIFT ARM			1
15	6717026	BUSHING	weld on - 1.26" ID		2
16	6717025	BUSHING	weld on		2
17	6717037	BUSHING	weld on - W/ tapered hole for Ref. 4 (6717536 pin)		2
17		BUSHING	NAP - weld on - w/tapered hole for Ref. 4 (NAP/ 6734661 pin)		2
17	7120498	BUSHING	weld on - service only - 3.05" (77,5 mm) long - W/tapered hole for 1.5" (38,1 mm) dia pin - use W/Ref. 14 (NAP/6734088 lift arm)		2
17	7160425	BUSHING, TAPERED	weld on - service only - 3.50" (87,6 mm) long for Ref.14 (7114257 lift arm) - W/tapered hole for 1.5" (38,1 mm) dia pin		2
18		BUSHING	NAP - weld on - Use W/Ref. 14 - (NAP/ 6717017 lift arm) - Order 6729819 bushing - Was 6717038 [A]		2
18	6729819	BUSHING	weld on - Use W/Ref. 14 (NAP/ 6729824 lift arm)		2
18	6734660	BUSHING	weld on - Use W/Ref. 14 (7114257 lift arm & NAP/ 7114758 lift arm)		2
19	6717041	BUSHING	weld on		2
20		PIN	NAP - 1.25" x 6.5" (31,8 mm x 165 mm) - Order Ref. 1 - Was 6717561 [A]		4
21	85D6	LOCK NUT			14
22	17C1272	BOLT	Use W/Ref. 4 (6717536 pin) & Ref. 9 (6717486 pin)		4
22	17C1080	SCREW	Use W/Ref. 4 (6734661 pin) & Ref. 9 (6734662 pin)		4
22	17C1080	SCREW	Use W/Ref. 4 (6734661 pin) & Ref. 9 (6734662 pin)		2
23	10H25	FITTING, GREASE 5			10
24	6732443	CUP	seal		2
25	11H15	GREASE FITTING			4
26	6718942	NUT			2
27	17C648	BOLT 5			2
28	17C660	BOLT			4
29	6717021	BUSHING	weld on	5176 18180 & Bel	2
29	6717021	BUSHING	weld on	5192 12013 & Bel	2
29	6717021	BUSHING	weld on	5180 12038 & Bel	2
29	6717021	BUSHING	weld on	5181 12013 & Bel	2
29	6717021	BUSHING	weld on	5190 16400 & Bel	2
30		CYLINDER	See Illustration LIFT CYLINDER/ B13593 LIFT		2
31		CYLINDER	See Illustration TILT CYLINDER/ B17176 TILT		2
32	1313995	STUD	weld on		4
33	6515817	WASHER	Use W/Ref. 34 (17C-816 bolt)		2
33	6731160	WASHER	Use W/Ref. 34 (17C-1016 bolt)		1
34	17C816	BOLT	Use W/Ref. 9 (6717486 pin)		2
34	17C1016	SCREW	Use W/Ref. 9 (6734662 pin)		2

Page 35 - OSS# 2071349 - All rights reserved by Bobcat Company - 12/01/2009 - 20:50:59 - Produced by Ken Cook Co. with media1off

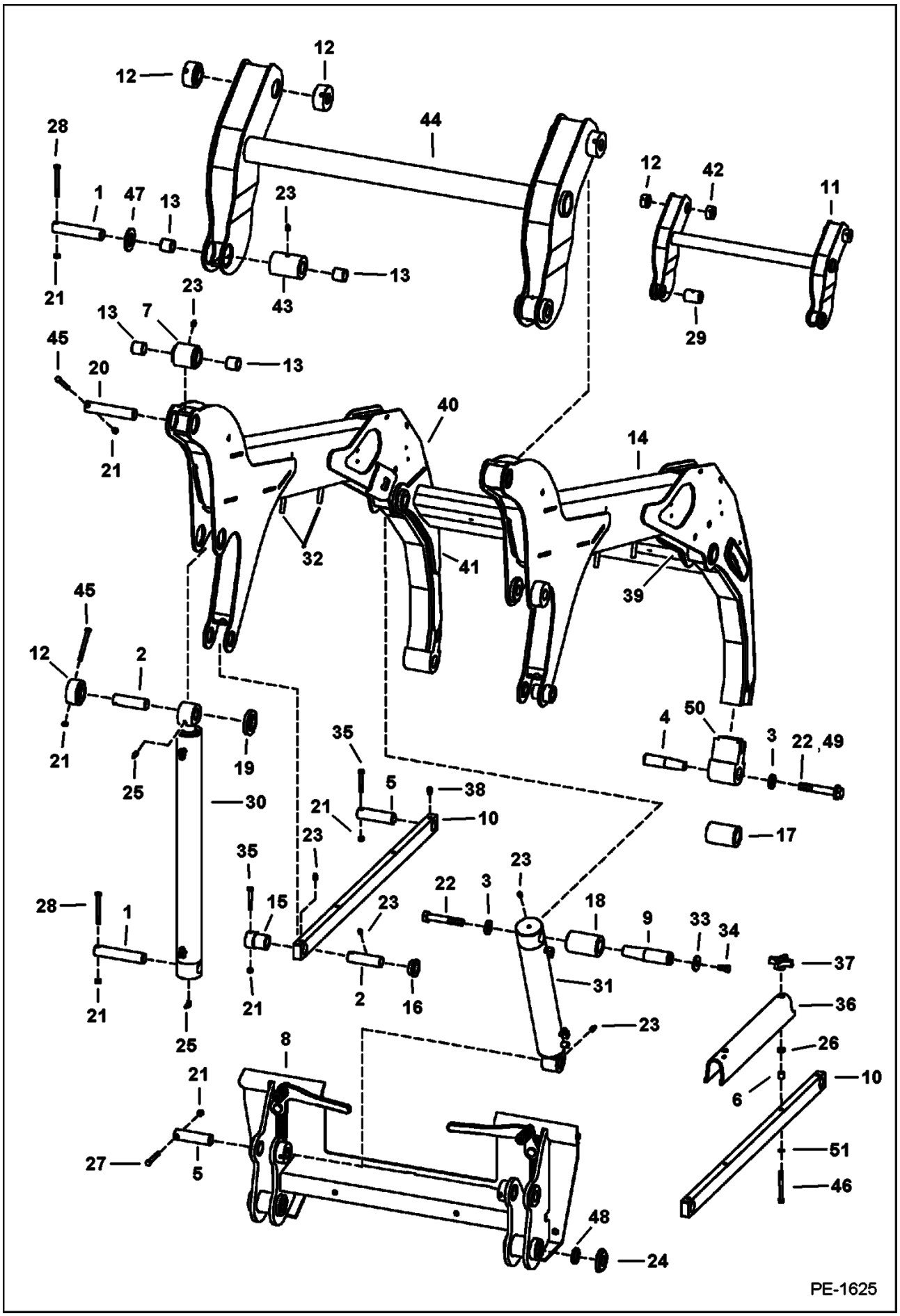

Page 36 - OSS# 2071349 - All rights reserved by Bobcat Company - 12/01/2009 - 20:50:59 - Produced by Ken Cook Co. with media1off

Ref No	Part Number	Description	Remarks	Serial Number	Qty
35	17C640	BOLT 5			4
36	6718312	STOP	lift arm		1
37	6684932	KNOB	Was 6675358 [A]		2
38	12H15	GREASE ZERK			2
39	6718880	GUSSET	R.H.		1
40		GUSSET	NAP - L.H. - Was 6718879 [A]		1
41	6717961	GUSSET			2
42	6725291	BUSHING	weld on	5176 18180 & Bel	2
42	6725291	BUSHING	weld on	5180 12038 & Bel	2
42	6725291	BUSHING	weld on	5181 12013 & Bel	2
42	6725291	BUSHING	weld on	5192 12013 & Bel	2
42	6725291	BUSHING	weld on	5190 16400 & Bel	2
43	6726897	BUSHING	weld on - 3.625" (92,1 mm) wide	500K 11001 & Abv	2
43	6726897	BUSHING	weld on - 3.625" (92,1 mm) wide	5180 12039-12548	2
43	6726897	BUSHING	weld on - 3.625" (92,1 mm) wide	5190 16401-23927	2
43	6726897	BUSHING	weld on - 3.625" (92,1 mm) wide	5192 12014-12460	2
43	6726897	BUSHING	weld on - 3.625" (92,1 mm) wide	5181 12014-12462	2
43	6726897	BUSHING	weld on - 3.625" (92,1 mm) wide	5176 18181-21116	2
43	6732265	BUSHING	weld on - 3.80" (96,5 mm) wide	5176 21117 & Abv	2
43	6732265	BUSHING	weld on - 3.80" (96,5 mm) wide	5181 12463 & Abv	2
43	6732265	BUSHING	weld on - 3.80" (96,5 mm) wide	5180 12549 & Abv	2
43	6732265	BUSHING	weld on - 3.80" (96,5 mm) wide	5190 23928 & Abv	2
43	6732265	BUSHING	weld on - 3.80" (96,5 mm) wide	5192 12461 & Abv	2
44		FRAME LINK	NAP - Order 6732264 frame link & (2) of Ref. 47 - Was 6727862 [A]	500K 11001 & Abv	1
44		FRAME LINK	NAP - Order 6732264 frame link & (2) of Ref. 47 - Was 6727862 [A]	5176 18181-21116	1
44		FRAME LINK	NAP - Order 6732264 frame link & (2) of Ref. 47 - Was 6727862 [A]	5190 16401-23927	1
44		FRAME LINK	NAP - Order 6732264 frame link & (2) of Ref. 47 - Was 6727862 [A]	5181 12014-12462	1
44		FRAME LINK	NAP - Order 6732264 frame link & (2) of Ref. 47 - Was 6727862 [A]	5180 12039-12548	1
44		FRAME LINK	NAP - Order 6732264 frame link & (2) of Ref. 47 - Was 6727862 [A]	5192 12014-12460	1
44	6732264	FRAME LINK		5176 21117 & Abv	1
44	6732264	FRAME LINK		5192 12461 & Abv	1
44	6732264	FRAME LINK		5190 23928 & Abv	1
44	6732264	FRAME LINK		5181 12463 & Abv	1
44	6732264	FRAME LINK		5180 12549 & Abv	1
45	17C656	BOLT			4
46	6730290	BOLT	stainless steel		2
47	6732280	SHIM	.175" thickness	5176 21116 & Bel	2
47	6732280	SHIM	.175" thickness	5192 12460 & Bel	2
47	6732280	SHIM	.175" thickness	5190 23927 & Bel	2
47	6732280	SHIM	.175" thickness	5180 12548 & Bel	2
47	6732280	SHIM	.175" thickness	5181 12462 & Bel	2
48	6651709	SEAL			2
49	47C1080	BOLT	W/pre-applied thread lock - Use W/Ref. 14 (NAP/ 6734088 lift arm)		2
49	47C1088	BOLT	W/pre-applied thread lock - Use W/Ref. 14 (7114257 lift arm)		2
50		ARM	NSS- lower - weld on		2
51	6E6	WASHER			2

Page 37 - OSS# 2071349 - All rights reserved by Bobcat Company - 12/01/2009 - 20:50:59 - Produced by Ken Cook Co. with media1off

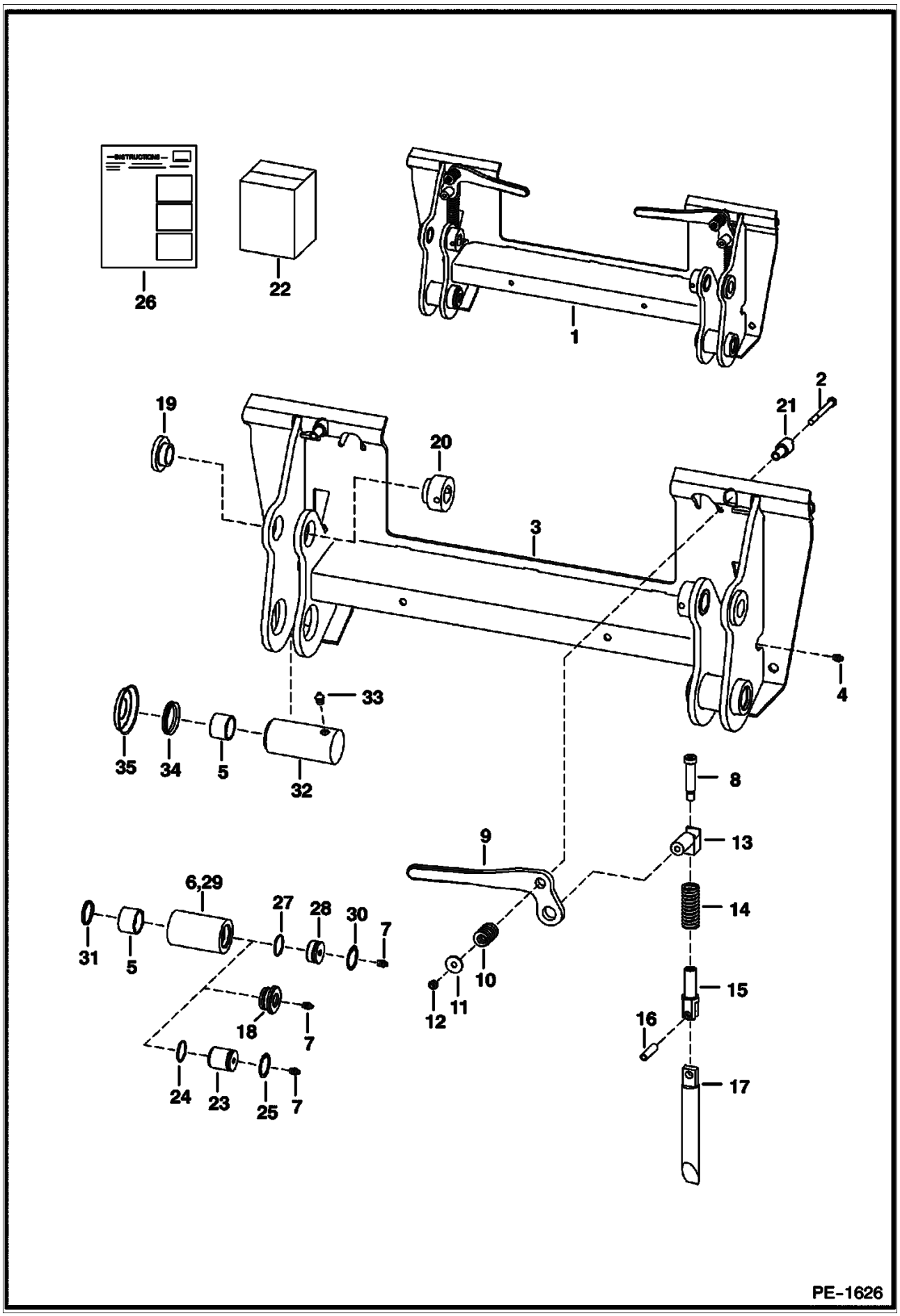

Page 38 - OSS# 2071349 - All rights reserved by Bobcat Company - 12/01/2009 - 20:50:59 - Produced by Ken Cook Co. with media1off

Ref No	Part Number	Description	Remarks	Serial Number	Qty
1		BOB-TACH	See Illustration DECALS/ B17183 Also Order 6561383 decal - NAP - Ref. 2-31 - Order 7143508 Bob-Tach & (2) each of 6734661 pin, 17C1080 bolt, Ref. 34 & 35 - Was 6717284 [A]		1
1	7143508	BOB-TACH	Ref. 2-17, 19-21, 32 & 33 - Was 6732537 [A]		1
1		KIT	See Illustration POWER BOB-TACH KIT/ TS2033 POWER BOB-TACH		1
2	17C660	BOLT			2
3		FRAME	NAP		1
4	10H35	GREASE ZERK			2
5	6730997	BUSHING	Press Fit - Was 711273B [A]		2
6		BUSHING	NAP - 1.48"(37,6 mm) I.D. - weld on - W/Ref. 5 - Order Ref. 27 - 29 - Was 6717190 [A]	5176 13470 & Bel	2
6				5180 11111 & Bel	2
6				5190 11218 & Bel	2
7	10H25	FITTING, GREASE 5			2
8	6728473	BOLT	shoulder - Was 38C001036B [A]		2
9	6702904	LEVER	RH		1
9	6702903	LEVER	LH		1
10	6713040	SPRING			2
11	619021	WASHER, 5			2
12	85D6	LOCK NUT			2
13	6731119	PIVOT, WEDGE	Was 6704240 [B,D]		2
14	6578253	SPRING, COMPRESSION	Was 6562018 [A]		2
15	6704248	PIVOT	wedge		2
16	14J5032	PIN, STRAIGHT			2
17	6737191	WEDGE	Was 6704242 [A]		2
18		PLUG	NAP - urethane - Order Ref. 22 - Was 6717361 [A]		2
19	6717259	BUSHING	weld on		2
20	6717260	BUSHING	weld on		2
21	6702958	BUSHING, WELD-ON			2
22	6725318	KIT	plug - Ref. 7 & 23-26 - Use W/Ref. 6		1
23	6719510	PLUG	1.48"(37,6 mm) O.D. x 1.71"(43,4 mm) long		2
24	25K40108	O RING 10			2
25	7JM38	SNAP RING	Was 7JM00038B [A]		2
26	6900999	INSTRUCTIONS			1
27	25K30112	O-RING			2
28	6725293	PLUG	1.55"(39,4 mm) O.D. x .75"(19,1 mm) long		2
29	6725295	BUSHING	weld on - 1.55"(39,4 mm) I.D. - 2.50" (57,15 mm) O.D. x 4.06" (103,11 mm) long - Order Ref. 5, 32 & 33		2
30	7JM40	SNAP RING			2
31	6631067	SEAL, OIL			2
32	6731979	BUSHING	weld on - 2.50" (57,15 mm) O.D. x 5.28" (134,11 mm) long - also order Ref. 5 & 33		2
33	743332	GREASE ZERK 5			2
34	6651709	SEAL	See Illustration LIFT ARMS & BOB-TACH/ PE1625		2
35	6732443	CUP	See Illustration LIFT ARMS & BOB-TACH/ PE1625 seal		2

Page 39 - OSS# 2071349 - All rights reserved by Bobcat Company - 12/01/2009 - 20:50:59 - Produced by Ken Cook Co. with media1off

FUEL SYSTEM

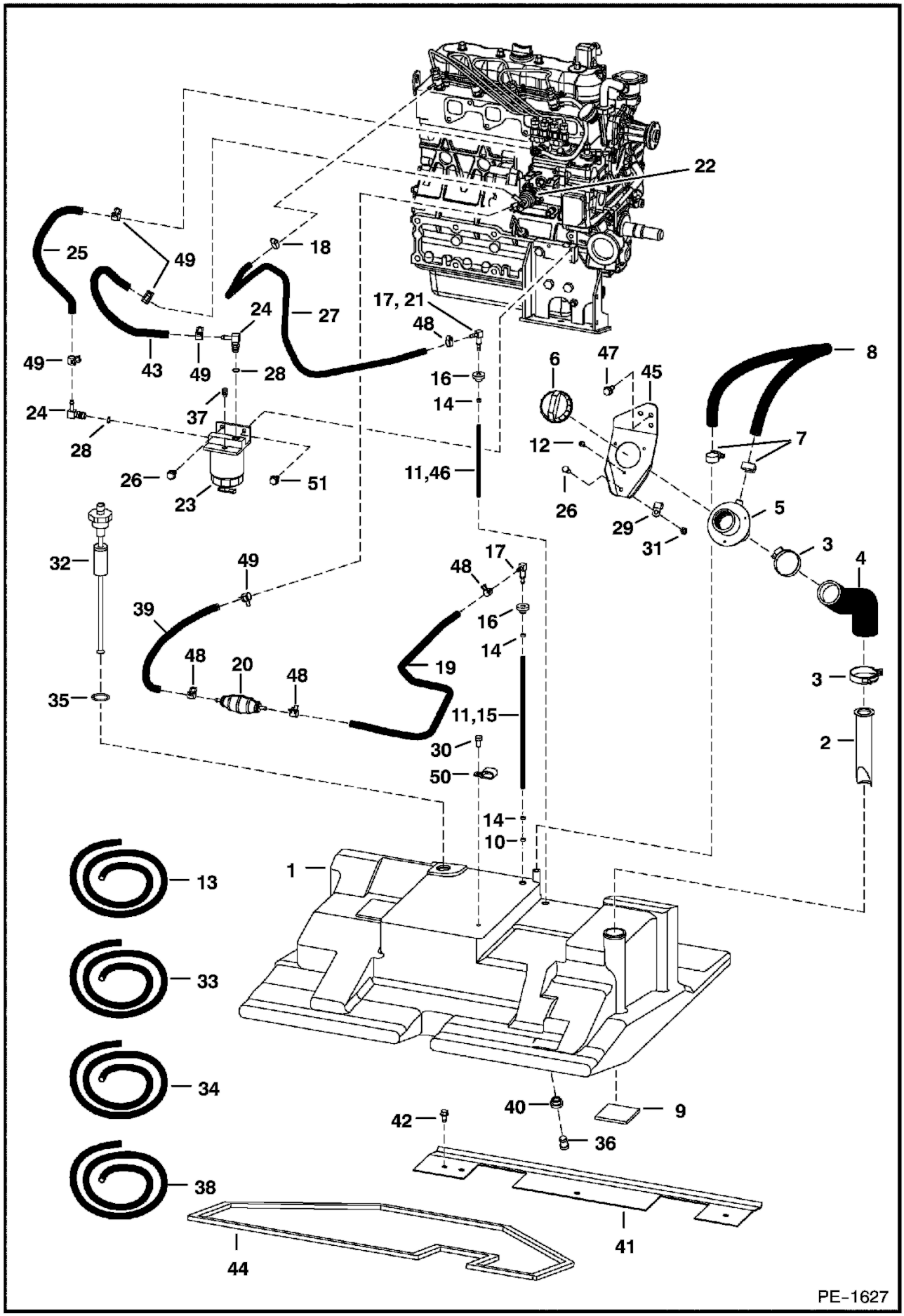

Page 40 - OSS# 2071349 - All rights reserved by Bobcat Company - 12/01/2009 - 20:50:59 - Produced by Ken Cook Co. with mediaioff

Ref No	Part Number	Description	Remarks	Serial Number	Qty
1		TANK	NAP - Order 6736660 & Ref. 41 (6737368 bracket) - Was 6717067 [A]		1
2	6569219	SCREEN			1
3	42H32	HS CLAMP5	worm gear		2
3	5HM58	CLAMP	constant tension		2
4	6717704	HOSE			1
5	6701449	FILLER TUBE			1
6	6661114	CAP	green		1
6		CAP	NAP - locking - W/Key - Code GC020		1
6	6654374	KEY	Code GC020		1
6	6661696	CAP	locking - W/Key - Code PK510		1
6	6587458	KEY	Code PK510		1
7	42H10	HOSECLAM5	worm gear		2
7	5HM24	CLAMP	constant tension		2
8		HOSE	NAP - 24''(609,6 mm)long - Order Ref. 15		1
9	6578278	PAD	self adhesive one side		2
10	6650239	SCREEN, FUEL PICKUP	Used W/Ref. 11 & 15		1
11		HOSE	NAP - 12.5"(317,5 mm) long - Was 6579554 [A]		2
12	6706517	SCREW			3
13	6578172	HOSE	bulk - sold per foot		x
14	6661213	RING, COMPRESSION	Use W/Ref. 17		3
15		HOSE	NAP - 9.75"(247,7 mm) long - Was 6729853 [D]		1
15	6729853	HOSE	10.25"(260,4 mm) long		1
16	6553411	BUSHING	.375" (9,53 mm) ID		2
17	6598908	ELBOW	single barb on inlet & outlet - Was 6681462 [A]		2
18	42HS4	CLAMP	Was 6515575 [B]		2
19		HOSE	NAP - 35'' (889,0 mm) long - Order Ref. 33		1
20	6657734	PUMP	hand primer - 4.88" long (123.9 mm)		1
21	7101291	ELBOW	3 barb on outlet end		1
22	6655216	FUEL PUMP	See Illustration FUEL & INJECTION PUMPS/ B13157A See Illustration FUEL & INJECTION PUMPS/ B13157		1
23	6667353	FILTER ASSY	W/Ref. 37		1
23	6667352	FILTER, FUEL W/SEPERATOR 12			1
23	72F1	FITTING			1
24	6715183	ELBOW	W/Ref. 28 - check boss face to determine correct replacement o-ring		2
25		HOSE	See Illustration FUEL & INJECTION PUMPS/ B13157A See Illustration FUEL & INJECTION PUMPS/ B13157 NAP - 13'' (330,2 mm) long - Order Ref. 34		2
26	17C512	BOLT 5			3
26	17C516	BOLT	See Illustration ENGINE & ATTACHING PARTS/ E2098 Used W/Ref. 35 - W/ threaded thru holes		2
27	84G3112	BOLT 5	5/16 x 3/4" - thread rolling		1
27		HOSE	NAP - 53'' (1346,2 mm) long - Order Ref. 38		1
28	99K5	O-RING	tapered boss face		x
28	79K8	O RING 10	flat boss face		x
29	30H22	CLIP			1
30	17C610	BOLT	Was 17C000612B [B]		1
31	85D5	NUT 5			1
32		SENSOR	See Illustration ENGINE ELECTRICAL CIRCUITRY/ PE1040R See Illustration ENGINE ELECTRICAL		1

Page 41 - OSS# 2071349 - All rights reserved by Bobcat Company - 12/01/2009 - 20:50:59 - Produced by Ken Cook Co. with media1off

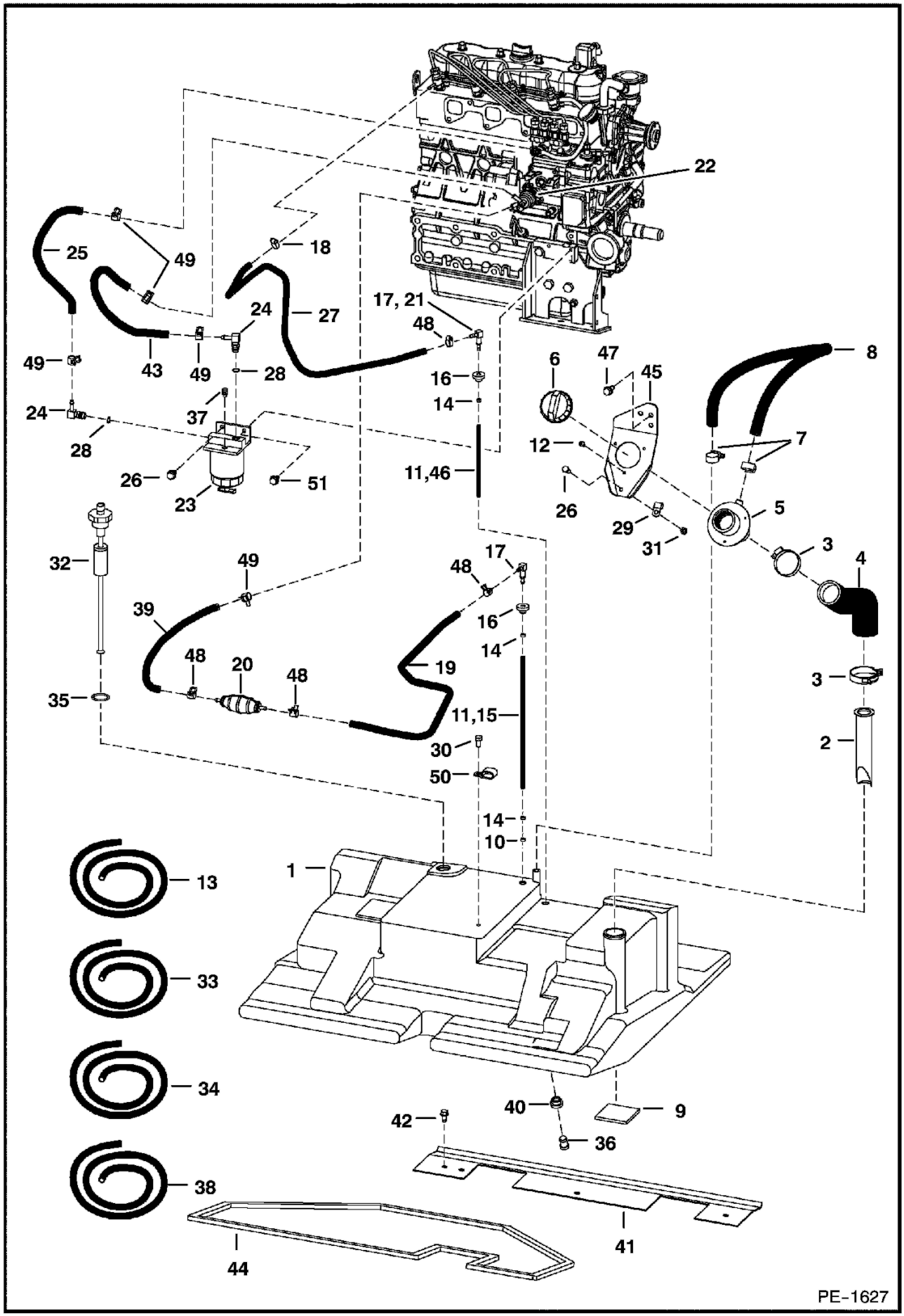

Page 42 - OSS# 2071349 - All rights reserved by Bobcat Company - 12/01/2009 - 20:50:59 - Produced by Ken Cook Co. with media1off

Ref No	Part Number	Description	Remarks	Serial Number	Qty
			CIRCUITRY/ PE1104 NAP - FUEL - W/Ref. 35 (79K-14 O-RING) - ORDER 6680436 SENSOR - WAS 7000004 [D]		
32	6680436	SENSOR	fuel - W/Ref. 35 (6717579 Gasket) - Was 7000004 [A]		1
33	6577821	HOSE	bulk - sold per foot		x
34	6577822	HOSE	bulk - sold per foot		x
35	79K14	O RING 10			1
35	6717579	GASKET			1
36	6717401	PLUG	fuel drain		1
37	6658180	PLUG, BLEED	bleed		1
38	6578169	HOSE	.187" (4,75 mm) ID - bulk - sold per foot		x
39		HOSE	See Illustration FUEL & INJECTION PUMPS/ B13157A See Illustration FUEL & INJECTION PUMPS/ B13157 NAP - 18"(457,2 mm)long - Order Ref. 13		1
40	6717402	BUSHING	.54" (13,7mm) ID		1
41	6717504	BRACKET	Use W/Ref. 1 (NAP/6717067 tank)		1
41	6737368	BRACKET	Use W/Ref. 1 (6736660 Tank)		1
42	84G3712	BOLT			2
43		HOSE	See Illustration FUEL & INJECTION PUMPS/ B13157A See Illustration FUEL & INJECTION PUMPS/ B13157 NAP - 42"(1066,8 mm)long - Order Ref. 13		x
44	6717859	GASKET	.375" x .75" x 106.75" long		1
45	6731059	INLET	fuel fill - Was 6717705 [A]		1
46		HOSE	NAP - 12"(304,8 mm) long - Was 6729854 [A]		1
46	6729854	TUBE	12.5"(317,5 mm) long		1
47	84G3716	SCREW 5	3/8 x 1" - thread rolling		2
48	5HM13	CLAMP			4
49	5HM14	CLAMP			5
50	31H27	CLIP			1
51	84G3116	SCREW	thread rolling - 5/16 x 1"		1

Page 43 - OSS# 2071349 - All rights reserved by Bobcat Company - 12/01/2009 - 20:50:59 - Produced by Ken Cook Co. with media1off

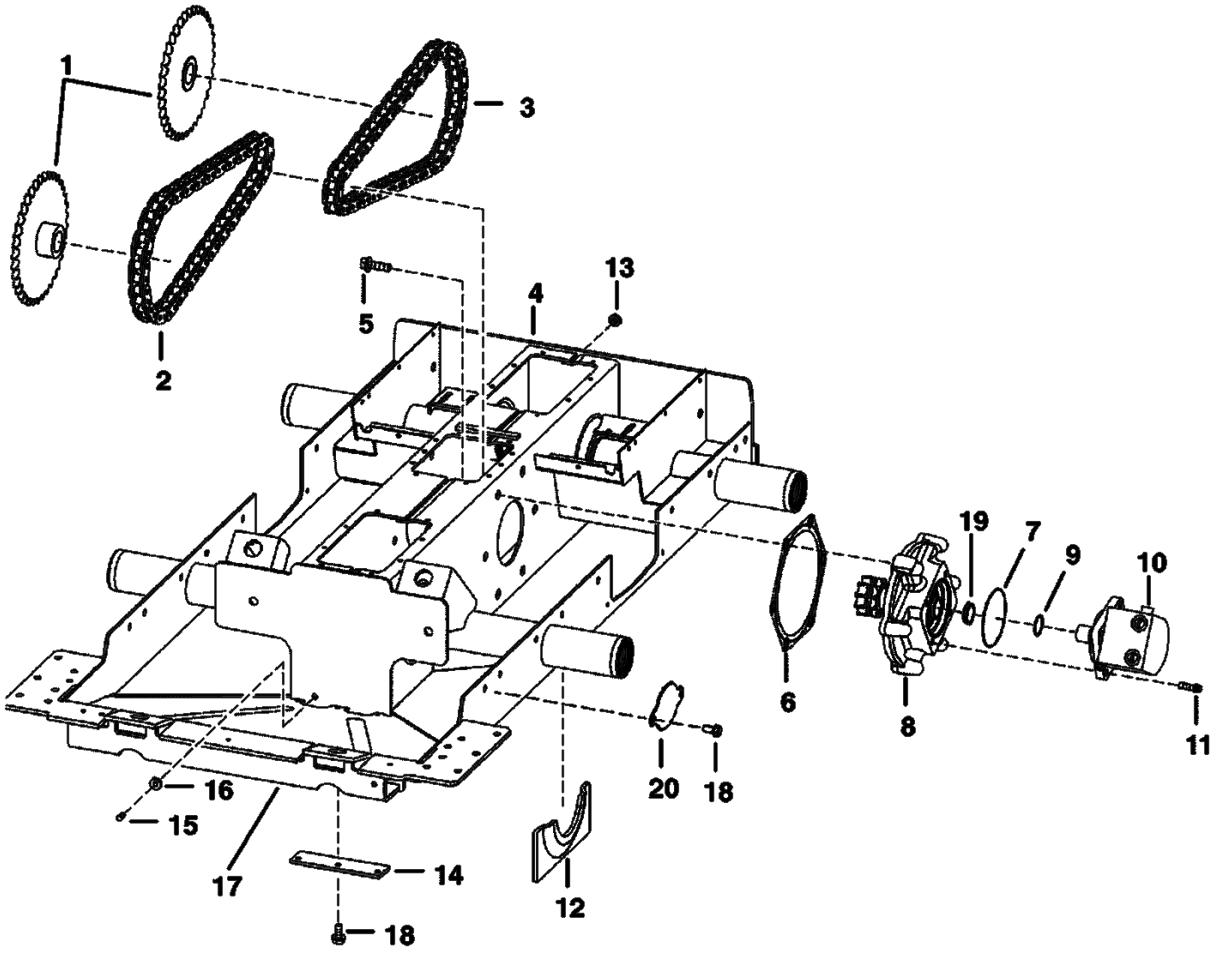

PE–1054

Page 44 - OSS# 2071349 - All rights reserved by Bobcat Company - 12/01/2009 - 20:50:59 - Produced by Ken Cook Co. with mediaioff

Ref No	Part Number	Description	Remarks	Serial Number	Qty
1	7134137	SPROCKET	Was 6577204 [A]		4
2		CHAIN	NAP - 68 pitch - hour glass shape link - Diamond - Was 6703915 [A]		2
2		CHAIN	NAP - 68 pitch - oval shape link - Diamond - Was 6731217 [A]		2
2	6689652	CHAIN, DRIVE	68 pitch - hour glass shape link - Tsubaki		2
2	6510171	LINK	conn. - hour glass shape - Diamond		x
2	6675332	LINK	conn. - oval shape - Diamond		x
2	6690709	LINK	conn. - hour glass shape - Tsubaki		x
3		CHAIN	NAP - 62 pitch - hour glass shape link - Diamond - Was 6579127 [A]		2
3		CHAIN	NAP - 62 pitch - oval shape link - Diamond - Was 6731218 [A]		2
3	6689651	CHAIN, DRIVE	62 pitch - hour glass shape link - Tsubaki		x
3	6510171	LINK	conn. - hour glass shape - Diamond		x
3	6675332	LINK	conn. - oval shape - Diamond		x
3	6690709	LINK	conn. - hour glass shape - Tsubaki		x
4		CHAINCASE	See BTI359 NAP - Was 6717106 [A]		1
4		CHAINCASE	See BTI359 NAP - flat top - Was 6734230 [A]		1
5	35C1032	BOLT			12
6	6704878	GASKET	install W/rib toward chaincase		2
7	25K30508	O-RING, 10			2
8	6712402	MOUNT ASSY.	See Illustration MOTOR CARRIER/ MC1937 DRIVE MOTOR		2
9	6664815	SEAL, OIL	supplied W/motor		2
10		MOTOR	See Illustration HYDROSTATIC MOTOR/ C3431 - W/Ref. 9		2
11	93G824	BOLT	Was 73G824 [A]		8
12	6707647	BRACE	axle		4
13	6731121	PLUG	chaincase fill - Was 11F000012B [A]		1
14	6700182	COVER, DRAIN			1
15	6599645	PLUG, STEEL	chaincase drain		1
16	6553411	BUSHING			2
17	6706485	HOOK	tie down - weld on		2
18	84G3712	BOLT			11
19	6735505	SPACER	hardened .25" thick x 1.25" O.D.		1
20	6730078	COVER			2

Page 45 - OSS# 2071349 - All rights reserved by Bobcat Company - 12/01/2009 - 20:50:59 - Produced by Ken Cook Co. with media1off

AXLE

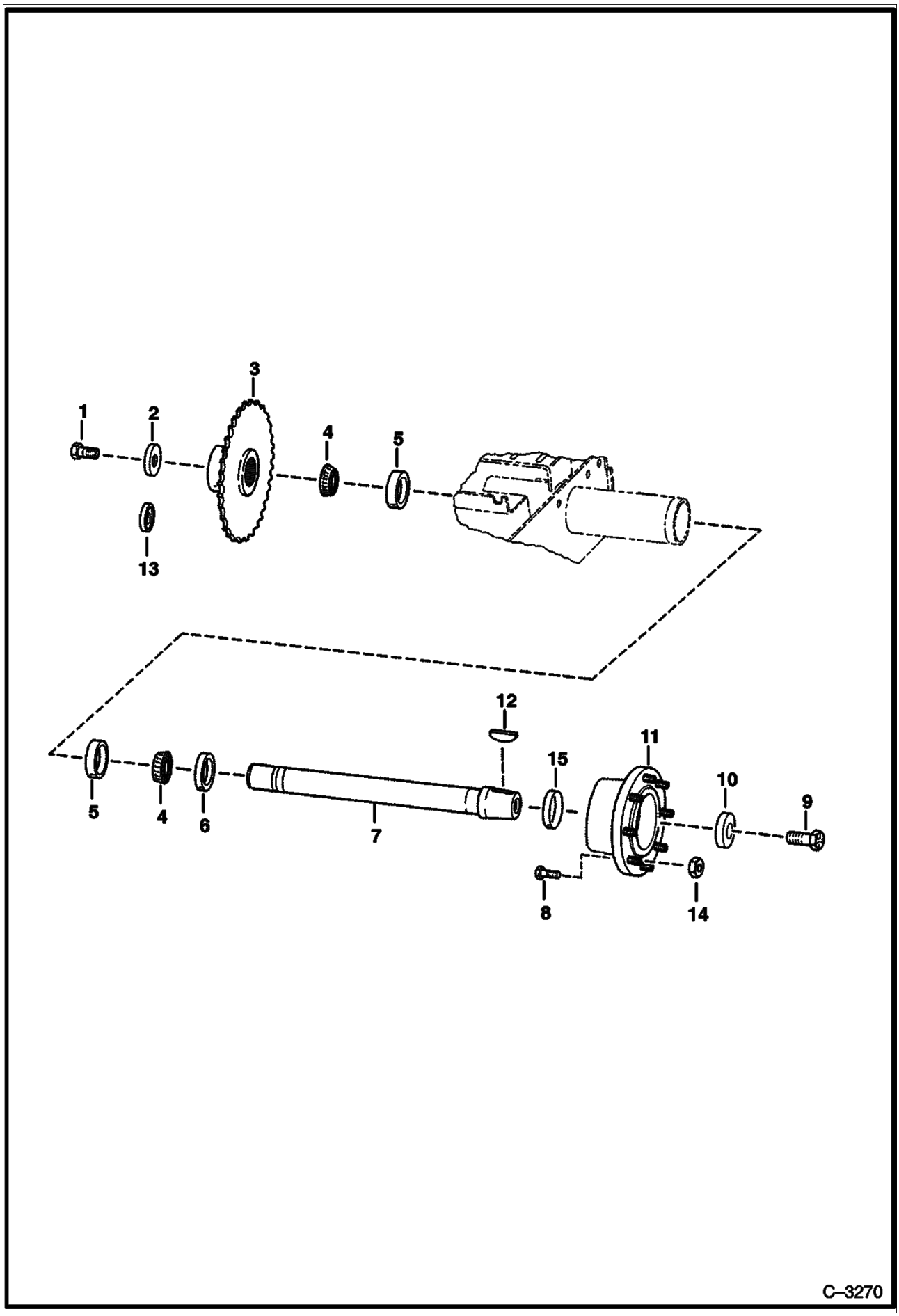

Page 46 - OSS# 2071349 - All rights reserved by Bobcat Company - 12/01/2009 - 20:50:59 - Produced by Ken Cook Co. with medialoff

Ref No	Part Number	Description	Remarks	Serial Number	Qty
1	18C1224	BOLT	1.50"(38,1 mm) long		1
1	6679247	BOLT	plated - 1.75" (44,5 mm) long		1
2	6552871	WASHER			1
3	7134137	SPROCKET	Was 6577204 [A]		1
4	6689775	BEARING, AXLE	Was 6519925 [A]		2
5	6689638	CUP, BEARING	Was 6634609 [A]		2
6	6658228	SEAL, OIL			1
7		AXLE	NAP - W/ .75" dia. x 1.25" deep full threaded end - Use W/Ref. 1 (18C-1224 bolt) - Was 6706427 [A]		1
7	6706427	AXLE	W/ .75" dia. x 1.50" deep full threaded end - Use W/Ref. 1 (6679247 bolt)		1
8	6559502	STUD	wheel		8
9	18C1636	BOLT	2.25"(57,2 mm) long		1
10	6716843	WASHER	recessed		1
11	6578689	HUB	W/Ref. 8		1
12	6J1664	KEY			1
13	6563606	WASHER	recessed - Used to take up .005 or .010 end play on axle		1
14	6564669	NUT	wheel		8
15	6662306	RING	wear - service part only		1
15	6722907	KIT	See Illustration AXLE SEAL KIT/ B4041 - axle seal & wear sleeve		4

Page 47 - OSS# 2071349 - All rights reserved by Bobcat Company - 12/01/2009 - 20:50:59 - Produced by Ken Cook Co. with media1off

MOTOR CARRIER
(Drive Motor Mount Assy.)

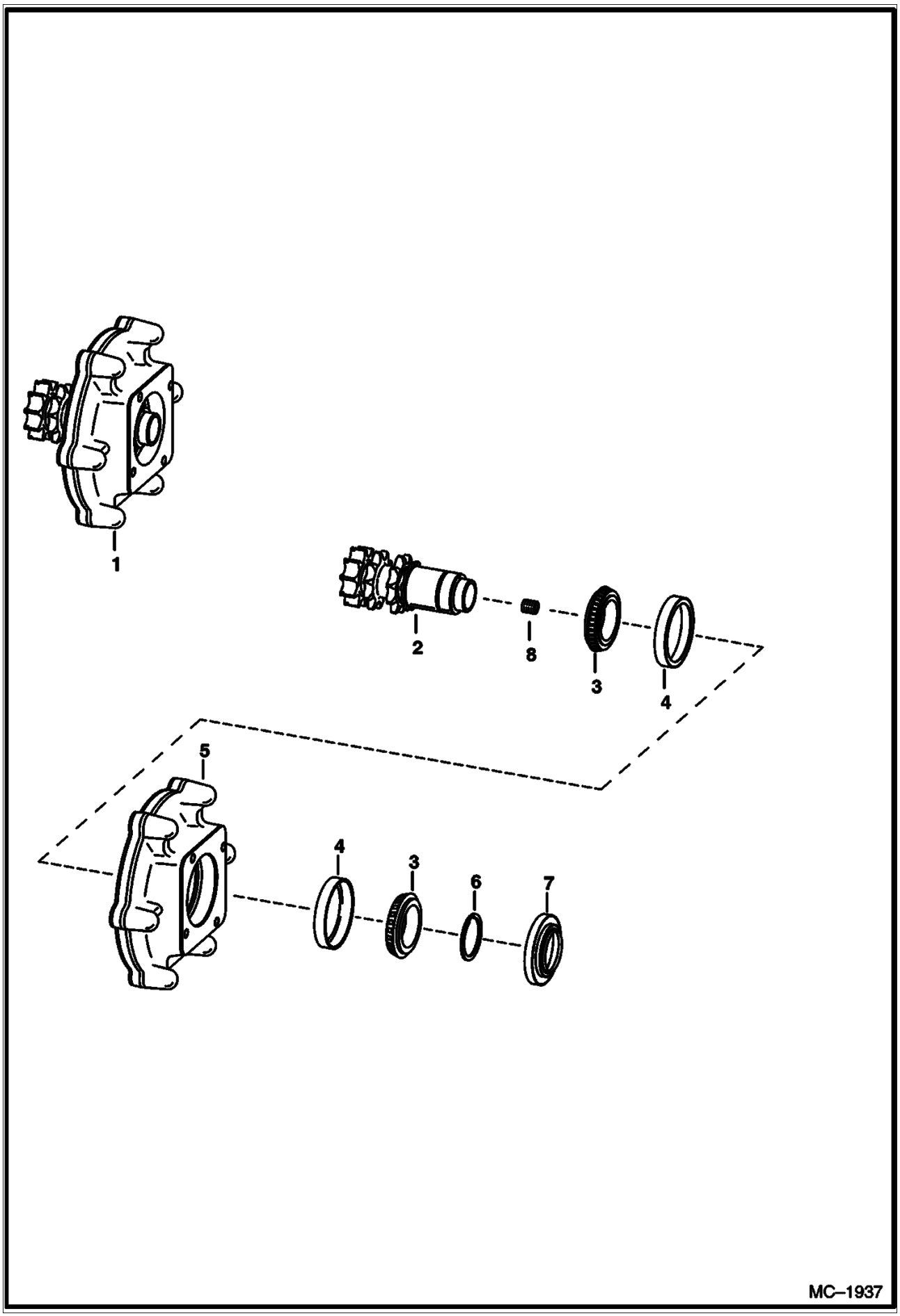

Page 48 - OSS# 2071349 - All rights reserved by Bobcat Company - 12/01/2009 - 20:50:59 - Produced by Ken Cook Co. with media1off

Ref No	Part Number	Description	Remarks	Serial Number	Qty
1		MOUNT ASSY.	NAP - drive motor - Ref. 2 - 7 - Order 6733695 Mount Assy. - Was 6712402 [A]		1
2	6713456	SHAFT, TRANS	W/double snap ring groove		1
3	6632218	CONE, BEARING			2
4	6632541	RACE			2
5	6704492	HOUSING			1
6	6571851	SNAP RING	.118" (3,0 mm) thickness		1
6	6571852	SNAP RING	.125" (3,18 mm) thickness		1
7	6705847	SEAL, OIL			1
8		PLUG	NSS - Was 16F000006B [B]		1

Page 49 - OSS# 2071349 - All rights reserved by Bobcat Company - 12/01/2009 - 20:50:59 - Produced by Ken Cook Co. with media1off

DISC BRAKE
(Non-Flat Top Chaincase) (S/N 517617999 & Below, 518011999 & Below, 518111999 & Below, 519015999 & Below, 519211999 & Below)

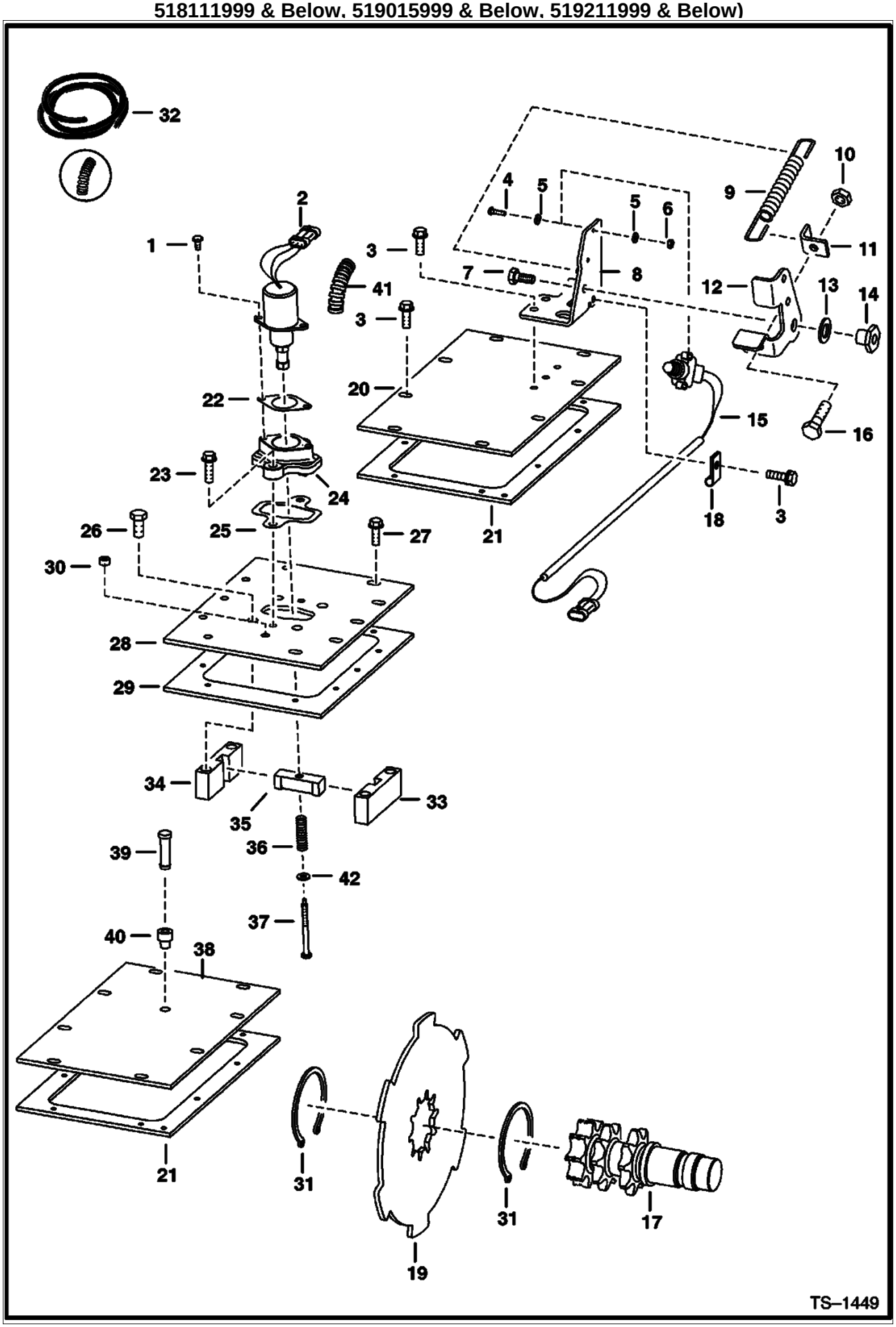

Page 50 - OSS# 2071349 - All rights reserved by Bobcat Company - 12/01/2009 - 20:50:59 - Produced by Ken Cook Co. with media1off

DISC BRAKE (Cont'd)
(Non-Flat Top Chaincase) (S/N 517617999 & Below, 518011999 & Below, 518111999 & Below, 519015999 & Below, 519211999 & Below)

Ref No	Part Number	Description	Remarks	Serial Number	Qty
1	17C412	BOLT 5			2
2	6681512	SOLENOID	W/Ref. 41 - Was 6667992 [A]		1
3	84G3712	BOLT			18
4	23G812	SCREW			2
5	25E8	WSHR			4
6	12D8	NUT			2
7	17C610	BOLT			1
8	6707313	PEDAL MOUNT			1
9	6585860	SPRING			1
10	95D6	NUT	Was 91D000006B [A]		2
11	6707315	ANGLE			1
12	6707314	PEDAL	brake		1
13	6700170	WASHER	plastic		2
14	6559479	NUT			1
15	6707337	SWITCH, LOCK TRACTION			1
16	17C620	BOLT			2
17	6713456	SHAFT, TRANS	See Illustration MOTOR CARRIER/ MC1937 DOUBLE SNAP RING GROOVE		2
18	30H23	CLAMP			1
19	7120111	BRAKE, DISC	disc - Was 6716228 [A]		2
20	6578505	COVER			1
21	6703097	GASKET, TRANS COVER			2
22	6706737	GASKET			1
23	84G3720	BOLT			2
24	6706718	MOUNT			1
25	6708016	GASKET			1
26	17C820	BOLT			4
26	47C820	BOLT			4
27	84G3716	SCREW 5			10
28	6706042	COVER			1
29	6706968	GASKET			1
30	6544654	BUSHING	spacer		1
31	6658672	SNAP RING			4
32	6584978	CONDUIT	bulk - sold per foot		x
33	6719057	BLOCK	guide - RH		1
34	6719056	BLOCK	guide - LH		1
35	6714278	GUIDE			1
36	6708018	SPRING			1
37	6708267	BOLT			1
38	6700330	COVER			1
39	6680970	BREATHER	Was 6670627 [A]		1
40	6553411	BUSHING			1
41		CONDUIT	NAP - 5" (127 mm) long - Order Ref. 32		1
42	25E13	WASHER 5			1

Page 51 - OSS# 2071349 - All rights reserved by Bobcat Company - 12/01/2009 - 20:50:59 - Produced by Ken Cook Co. with media1off

DISC BRAKE
S/N 500K11001 & Above, 517618000 & Above, 518012000 & Above, 518112000 & Above, 519016000 & Above, 519212000 & Above)

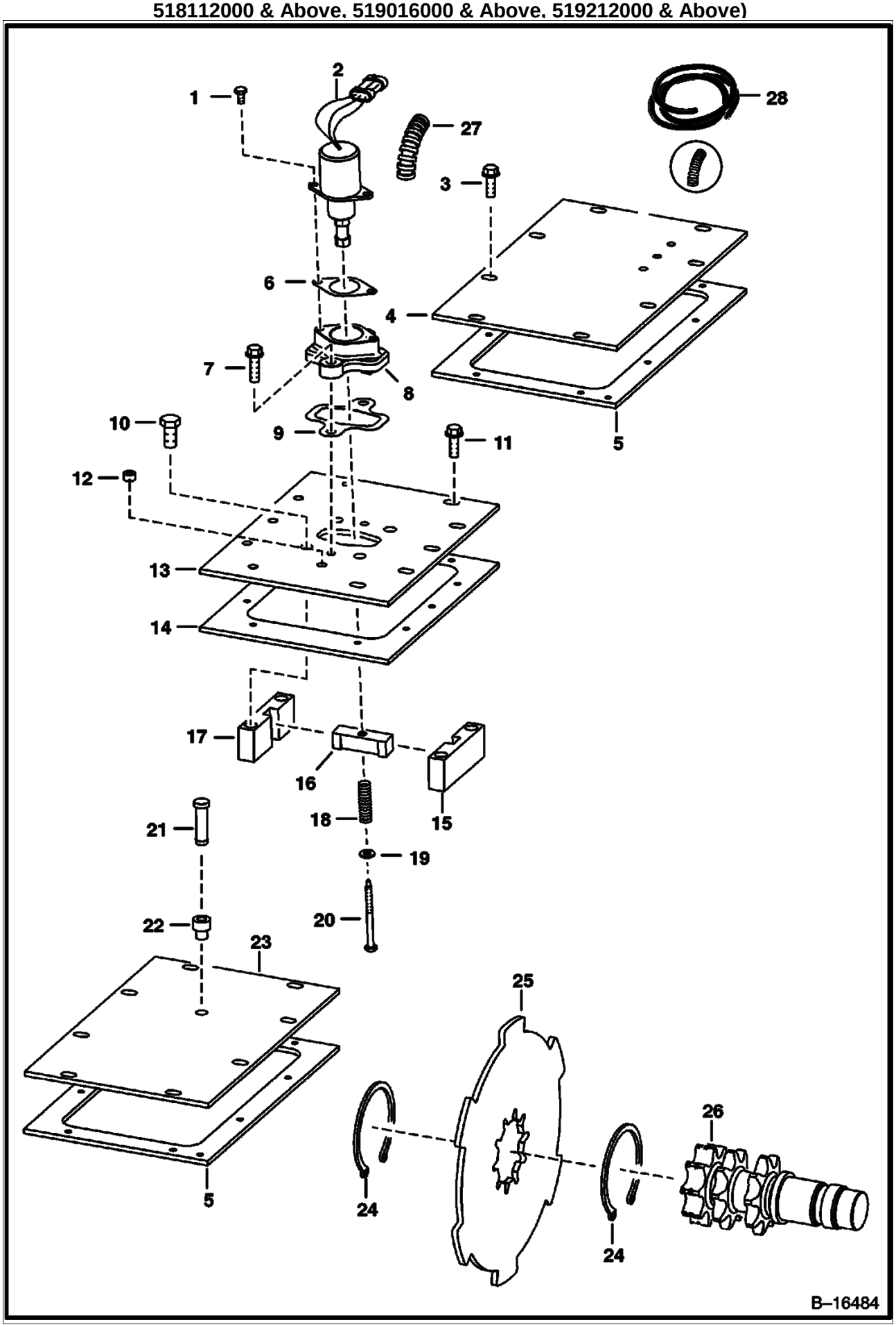

Page 52 - OSS# 2071349 - All rights reserved by Bobcat Company - 12/01/2009 - 20:50:59 - Produced by Ken Cook Co. with media1off

DISC BRAKE (Cont'd)
S/N 500K11001 & Above, 517618000 & Above, 518012000 & Above, 518112000 & Above, 519016000 & Above, 519212000 & Above)

Ref No	Part Number	Description	Remarks	Serial Number	Qty
1	17C412	BOLT 5			2
2	6681512	SOLENOID	Was 6667992 [A]		1
3	84G3712	BOLT			14
4	6729173	COVER			1
5	6703097	GASKET, TRANS COVER			2
6	6706737	GASKET			1
7	84G3720	BOLT			2
8	6706718	MOUNT			1
9	6708016	GASKET			1
10	17C820	BOLT			4
10	47C820	BOLT			4
11	84G3716	SCREW 5			10
12	6544654	BUSHING	spacer		1
13	6706042	COVER			1
14	6706968	GASKET			1
15	6719057	BLOCK	guide - RH		1
16	6714278	GUIDE			1
17	6719056	BLOCK	guide - LH		1
18	6708018	SPRING			1
19	25E13	WASHER 5			1
20	6708267	BOLT			1
21	6680970	BREATHER	Was 6670627 [A]		1
22	6553411	BUSHING			1
23	6700330	COVER			1
24	6658672	SNAP RING			4
25	7120111	BRAKE, DISC	disc - Was 6716228 [A]		2
26	6713456	SHAFT, TRANS	See Illustration MOTOR CARRIER/ MC1937 DOUBLE SNAP RING GROOVE		2
27		CONDUIT	NAP - 5" (127 mm) long - Order Ref. 28		1
28	6584978	CONDUIT	bulk - sold per foot		x

Page 53 - OSS# 2071349 - All rights reserved by Bobcat Company - 12/01/2009 - 20:50:59 - Produced by Ken Cook Co. with media1off

DISC BRAKE
(Flat Top Chaincase)
(Modified Design)

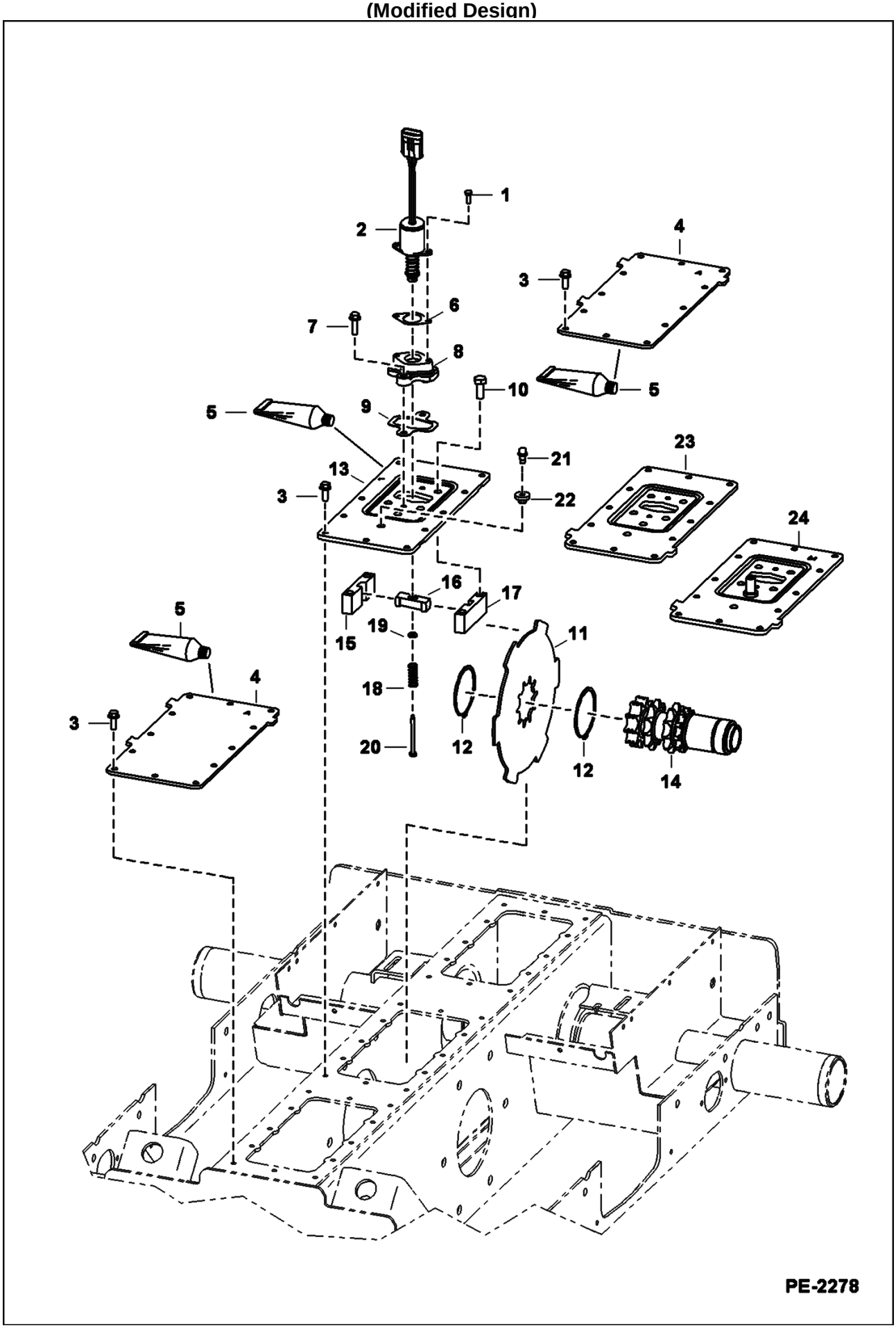

Page 54 - OSS# 2071349 - All rights reserved by Bobcat Company - 12/01/2009 - 20:50:59 - Produced by Ken Cook Co. with media1off

Ref No	Part Number	Description	Remarks	Serial Number	Qty
1	17C412	BOLT 5			2
2	6681512	SOLENOID			1
3	84G3716	SCREW 5			36
4	7129987	COVER	Was 6733956 [A]		2
5	6685372	SEALANT, GASKET LIQUID	tube - 20 oz		x
6	6706737	GASKET			1
7	84G3720	BOLT			2
8	6706718	MOUNT			1
9	6708016	GASKET			1
10	47C820	BOLT			4
11	7120111	BRAKE, DISC	disc - Was 6716228 [A]		2
12	6658672	SNAP RING			4
13	6735316	COVER	B stamped		1
14	7161187	SHAFT, TRANS	double snap ring groove - Was 6733621 [A]		2
15	6719056	BLOCK	guide - LH		1
16	6714278	GUIDE			1
17	6719057	BLOCK	guide - RH		1
18	6708018	SPRING			1
19	25E13	WASHER 5			1
20	6708267	BOLT			1
21	6680970	BREATHER			1
22	6553411	BUSHING			1
23		COVER	NAP - M stamped - Order Ref. 24, 17C612 bolt & 6557831 washer - Was 7130297 [A]		1
24	7156265	COVER	See Illustration CONTROL PEDALS/ PE1031 - M stamped		1

Page 55 - OSS# 2071349 - All rights reserved by Bobcat Company - 12/01/2009 - 20:50:59 - Produced by Ken Cook Co. with media1off

HYDRAULIC CIRCUITRY
(W/O) (S/N 500K11038 & Below, 517619258 & Below, 518012218 & Below, 518112089 & Below, 519018909 & Below, 519212154 & Below)

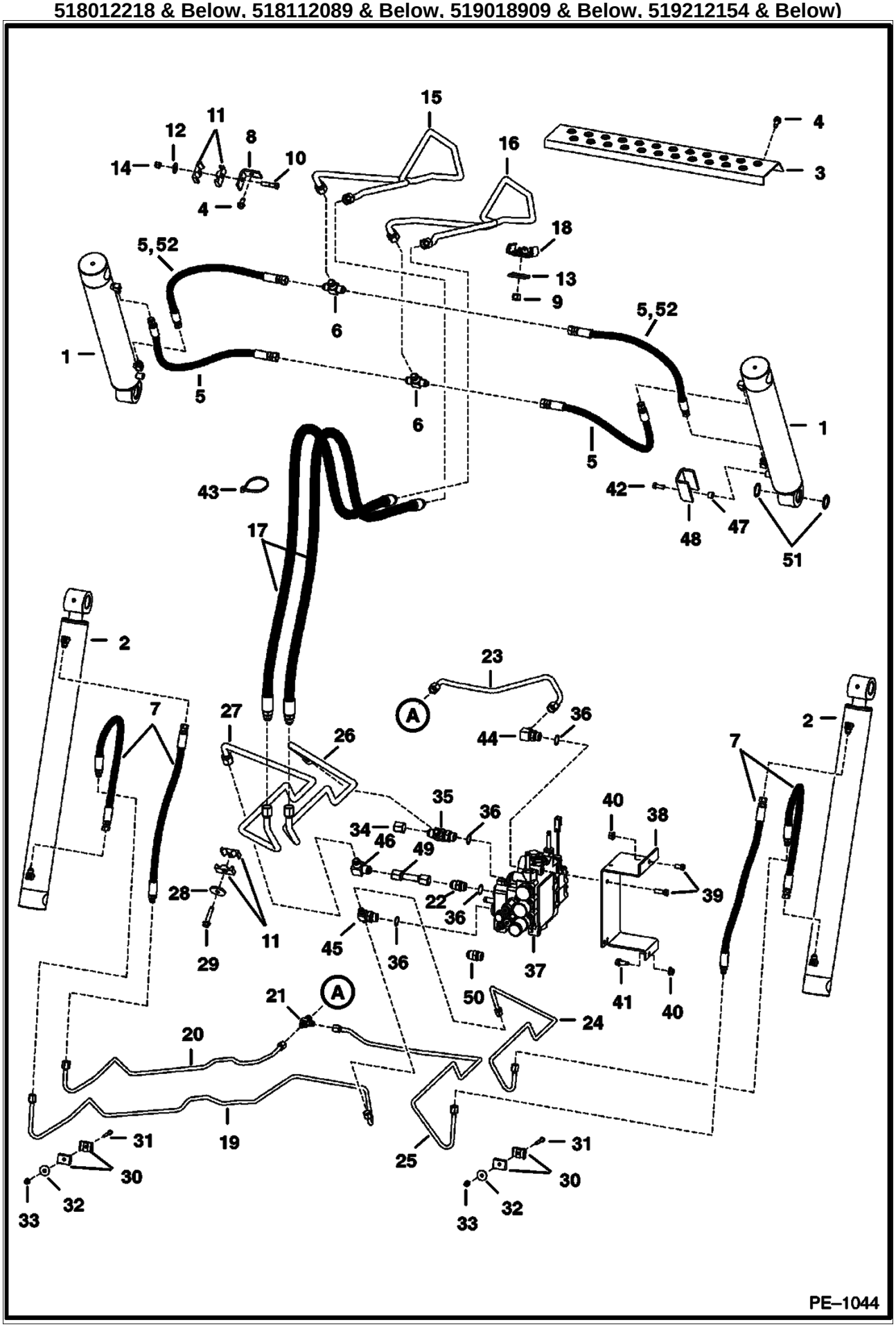

Page 56 - OSS# 2071349 - All rights reserved by Bobcat Company - 12/01/2009 - 20:50:59 - Produced by Ken Cook Co. with media1off

HYDRAULIC CIRCUITRY (Cont'd)
(W/O) (S/N 500K11038 & Below, 517619258 & Below, 518012218 & Below, 518112089 & Below, 519018909 & Below, 519212154 & Below)

Ref No	Part Number	Description	Remarks	Serial Number	Qty
1		CYLINDER	See Illustration TILT CYLINDER/ B17176 TILT		2
2		CYLINDER	See Illustration LIFT CYLINDER/ B13593 LIFT		2
3	6717502	BOOM STEP	W/ 2" (598 mm) mtg. hole surface		1
3	6735669	BOOM STEP	W/ 3.4" (86,4 mm) mtg hole surface		1
4	84G3712	BOLT			4
5	6718066	HOSE	.5625" thread & .75" thread female ends - Use (2) per tilt cylinder W/.5625" thread base end fitting		4
5			.5625" thread & .75" thread female ends - Use (1) per tilt cylinder W/.75" thread base end fitting		2
6	6716061	TEE			2
7	7116564	HOSE	Was 7104132 [A]		4
8	6718238	BRACKET			1
9	59D8	NUT 5			2
10	17C628	BOLT			1
11	6701893	CLAMP			2
12	27E6	WASHER 5			1
13	6553709	WASHER			2
14	59D6	NUT			1
15	6718030	TUBE			1
16	6725337	TUBE	routes behind lift arm crossmember		1
17	6719439	HOSE			2
18	6717933	CLAMP			2
19	6717437	TUBE			1
20	6717441	TUBE			1
21	6719424	TEE			1
22	15KB1010	FITTING	W/Ref. 36 - check boss face to determine correct replacement o-ring - Was 15KV00007B [A]		1
22	97K10	O-RING 10	flared end		1
23	6717382	TUBE			1
24	6717444	TUBE			1
25	6717445	TUBE			1
26	6717442	TUBE			1
27	6717443	TUBE			1
28	872229	WASHER			1
29	84G3732	BOLT			1
30	6578870	CLAMP			4
31	17C428	BOLT			2
32	6701174	WASHER			2
33	83D4	NUT 10			2
34	36K7	FITTING			1
35	21KB1010	TEE	W/Ref. 36 - check boss face to determine correct replacement o-ring - Was 21KN00007B [A]		2
35	97K10	O-RING 10	flared end		1
36	99K10	O'RING	tapered boss face		x
36	79K10	O RING 10	flat boss face		x
37		VALVE	See Illustration HYDRAULIC CONTROL VALVE/ B17144		1
38	6717143	MOUNT			1
39	17C612	BOLT 5			2
40	83D6	NUT 5			2
41	84G3716	SCREW 5			1
42	17C616	BOLT 5			2
43	6624289	STRAP 10			2
44		ELBOW	NAP - W/Ref. 36 - flat boss face - Was 6715716 [A]		1
44	97K8	O-RING	flared end		1
44	17KB810	ELBOW	W/Ref. 36 - flat boss face		1
45		TEE	See Illustration HYDRAULIC CONTROL VALVE/		1

Page 57 - OSS# 2071349 - All rights reserved by Bobcat Company - 12/01/2009 - 20:50:59 - Produced by Ken Cook Co. with media1off

HYDRAULIC CIRCUITRY (Cont'd)
(W/O) (S/N 500K11038 & Below, 517619258 & Below,
518012218 & Below, 518112089 & Below, 519018909 & Below, 519212154 & Below)

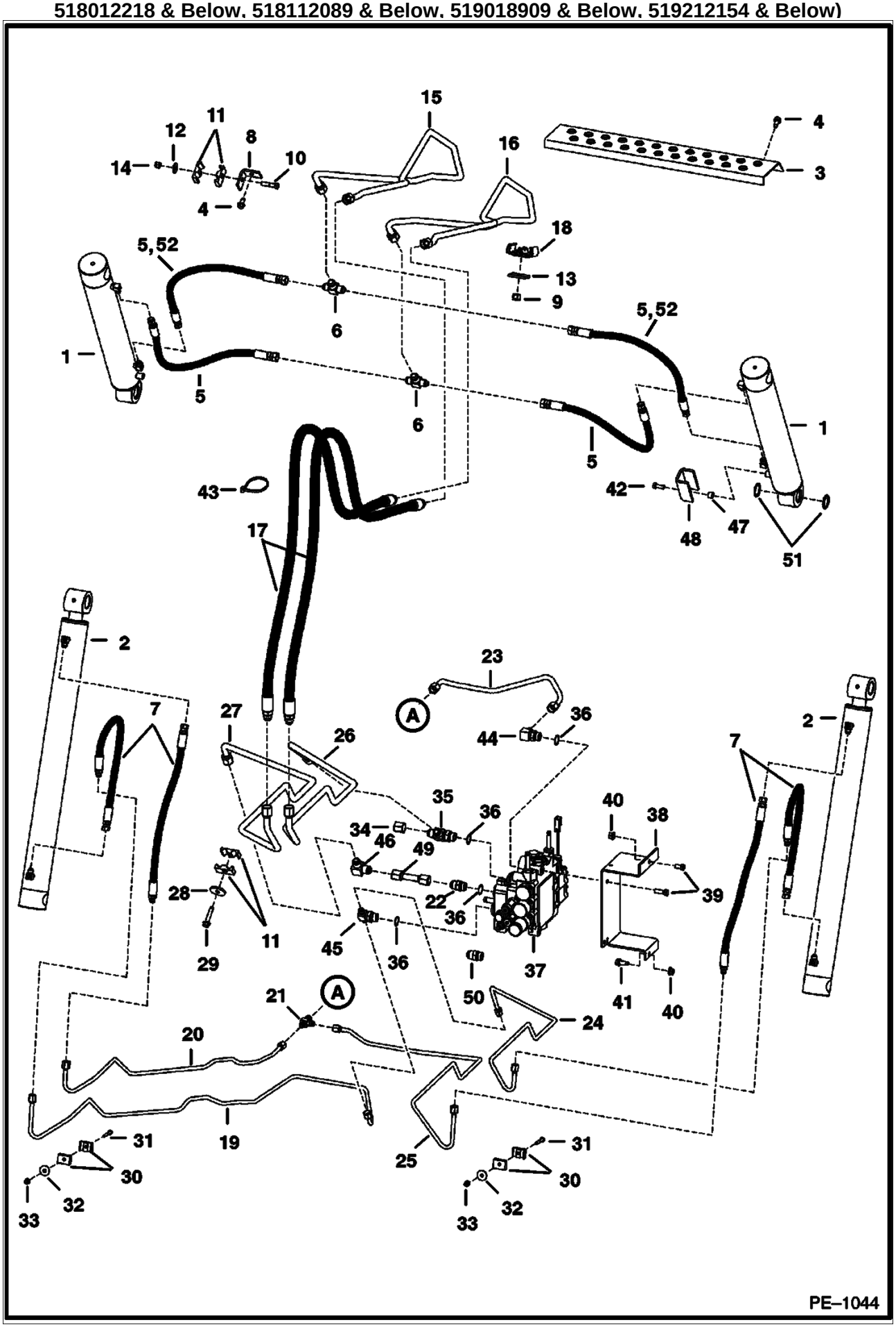

Page 58 - OSS# 2071349 - All rights reserved by Bobcat Company - 12/01/2009 - 20:50:59 - Produced by Ken Cook Co. with media1off

HYDRAULIC CIRCUITRY (Cont'd)
(W/O) (S/N 500K11038 & Below, 517619258 & Below,
518012218 & Below, 518112089 & Below, 519018909 & Below, 519212154 & Below)

Ref No	Part Number	Description	Remarks	Serial Number	Qty
			B17144 NAP - W/Ref. 36 - USE W/VALVE - tapered boss face - Was 6717492 [A]		
45	97K6	O'RING	flared end		2
45	19KB610	TEE	W/Ref. 36 - flat boss face - Was 19KB00610B [A]		1
46	77F7	ELBOW			1
47	6725969	SPACER			2
48	6725592	GUARD			2
49	6710573	TUBE			1
50	6715184	ADAPTER	See Illustration HYDRAULIC CONTROL VALVE/ B17144 USE W/VALVE		1
51	6654117	SEAL, OIL	2" (5,08 mm) OD		4
51	225855	SEAL, OIL	1.5" (3,81 mm) OD		4
52	7114236	HOSE	.75" thread female ends - Use (1) per tilt cylinder W/.75" thread base end fitting		2

Page 59 - OSS# 2071349 - All rights reserved by Bobcat Company - 12/01/2009 - 20:50:59 - Produced by Ken Cook Co. with media1off

HYDRAULIC CIRCUITRY
(W/O BPV) S/N 500K11039-11977, 517619259-20140
518012219-12386, 518112090-12245, 519018910-21020, 519212155-12363)

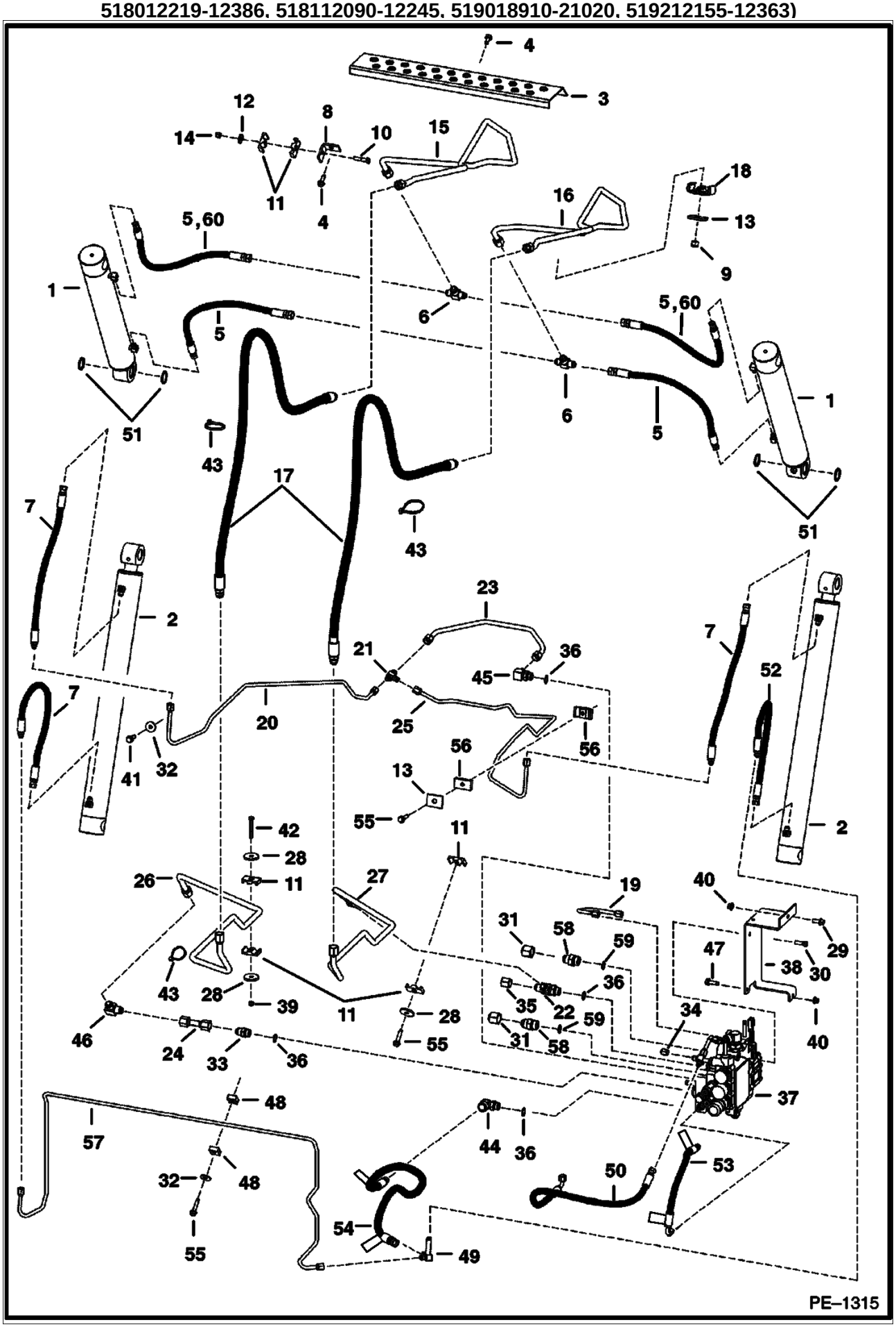

Page 60 - OSS# 2071349 - All rights reserved by Bobcat Company - 12/01/2009 - 20:50:59 - Produced by Ken Cook Co. with media1off

HYDRAULIC CIRCUITRY (Cont'd)
(W/O BPV) S/N 500K11039-11977, 517619259-20140
518012219-12386, 518112090-12245, 519018910-21020, 519212155-12363)

Ref No	Part Number	Description	Remarks	Serial Number	Qty
1		CYLINDER	See Illustration TILT CYLINDER/ PE1056 TILT		2
2		CYLINDER	See Illustration LIFT CYLINDER/ B13593 LIFT		2
3	6717502	BOOM STEP	W/ 2" (50,8 mm) mtg. hole surface		1
3	6735669	BOOM STEP	W/ 3.4" (86,4 mm) mtg hole surface		1
4	84G3712	BOLT			4
5	6718066	HOSE	.5625" thread & .75" thread female ends - Use (2) per tilt cylinder W/.5625" thread base end fitting		4
5			.5625" thread & .75" thread female ends - Use (1) per tilt cylinder W/.75" thread base end fitting		2
6	6716061	TEE			2
7	7116564	HOSE	Was 7104132 [A]		3
8	6718238	BRACKET			1
9	59D8	NUT 5			2
10	17C628	BOLT			1
11	6701893	CLAMP			6
12	27E6	WASHER 5			1
13	6553709	WASHER			2
14	59D6	NUT			1
15	6718030	TUBE			1
16	6725337	TUBE			1
17	6719439	HOSE			2
18	6717933	CLAMP			2
19	6727702	TUBE			1
20	6726168	TUBE			1
21	6719424	TEE			1
21	97K6	O'RING	flared end		2
21	97K8	O-RING	flared end		1
22	21KB1010	TEE	W/Ref. 36 - check boss face to determine correct replacement o-ring - Was 21KN00007B [A]		1
22	97K10	O-RING 10	flared end		1
23	6726166	TUBE			1
24	6727644	TUBE			1
25	6726169	TUBE			1
26	6726172	TUBE			1
27	6726171	TUBE			1
28	872229	WASHER			3
29	35C616	BOLT 5			2
30	17C620	BOLT			2
31	36K8	CAP			2
32	619021	WASHER, 5			2
33	15KB1010	FITTING	W/Ref. 36 - check boss face to determine correct replacement o-ring - Was 15KV00007B [A]		2
33	97K10	O-RING 10	flared end		1
34	36K5	CAP			1
35	36K7	FITTING			1
36	99K10	O'RING	tapered boss face		x
36	79K10	O RING 10	flat boss face		x
37		VALVE	See Illustration HYDRAULIC CONTROL VALVE/ B17144		1
38	6726253	MOUNT			1
39	59D5	NUT 5			1
40	83D6	NUT 5			4
41	84G3724	BOLT			1
42	17C540	BOLT			1
43	6624289	STRAP 10			3
44		ELBOW	NAP - W/ 1.0" W/Ref. 36 (99K-12 o-ring) - Was 6727639 [A]		1

Page 61 - OSS# 2071349 - All rights reserved by Bobcat Company - 12/01/2009 - 20:50:59 - Produced by Ken Cook Co. with media1off

HYDRAULIC CIRCUITRY (Cont'd)
(W/O BPV) S/N 500K11039-11977, 517619259-20140
518012219-12386, 518112090-12245, 519018910-21020, 519212155-12363)

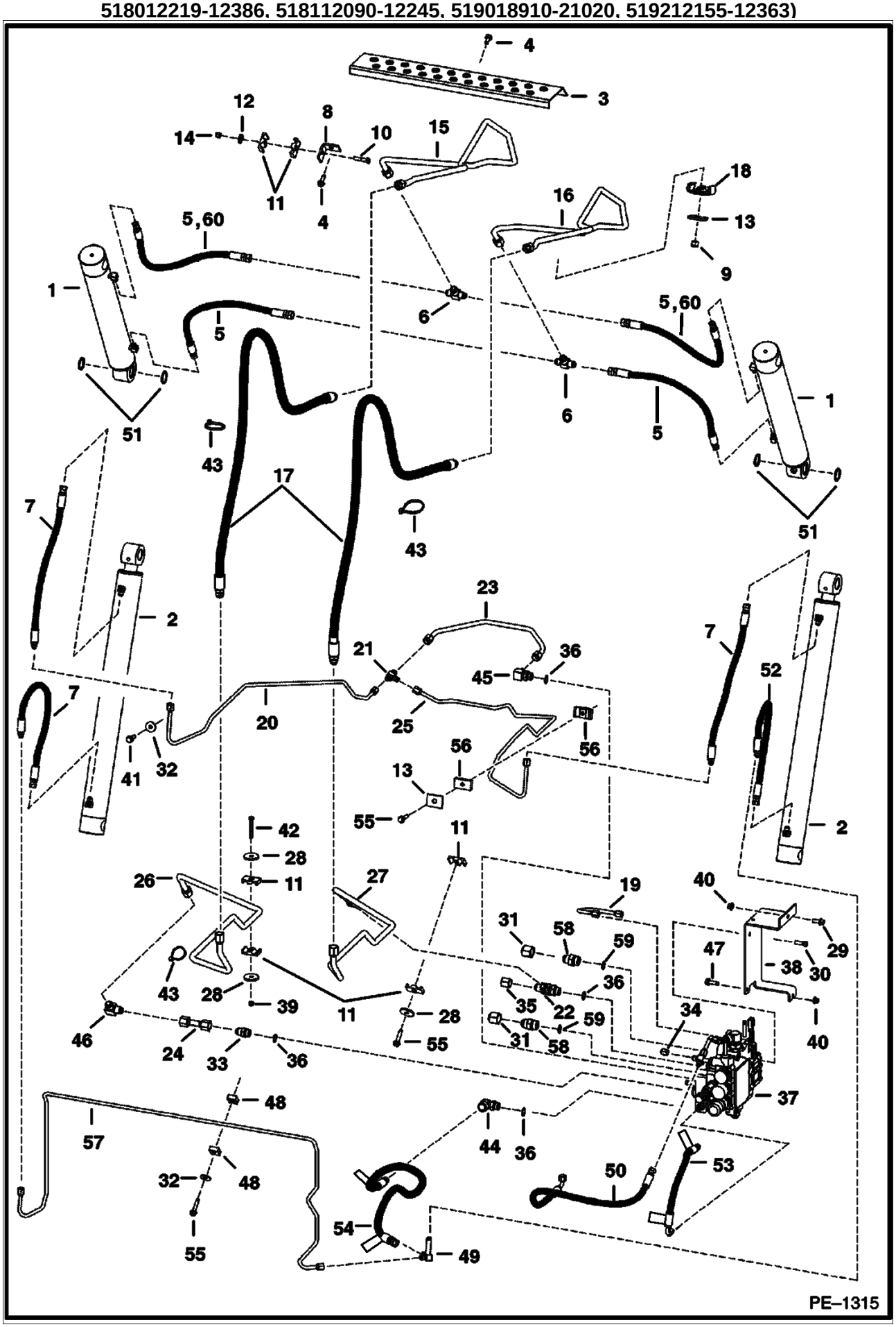

Page 62 - OSS# 2071349 - All rights reserved by Bobcat Company - 12/01/2009 - 20:50:59 - Produced by Ken Cook Co. with media1off

Ref No	Part Number	Description	Remarks	Serial Number	Qty
44	6814531	ELBOW	W/ 1.0625" nut - W/Ref. 36 (79K-10 o-ring)		1
45		ELBOW	NAP - W/Ref. 36 - flat boss face - Was 6715716 [A]		1
45	97K8	O-RING	flared end		1
45	17KB810	ELBOW	W/Ref. 36 - flat boss face		1
46	77F7	ELBOW	Was 77FN00007B [A]		1
47	6727640	TUBE	See Illustration HYDROSTATIC CIRCUITRY/ PE1629 Ref. 7		1
48	6727707	CLAMP			2
49	6727638	TEE			1
49	97K6	O'RING	flared end		2
49	97K8	O-RING	flared end		1
50	6737648	HOSE	Was 6725436 [A]		1
51	6654117	SEAL, OIL	2" (5,08 mm) OD		4
51	225855	SEAL, OIL	1.5" (3,81 mm) OD		4
52	7116565	HOSE	Was 7104133 [A]		2
53	6727703	HOSE	available only as an assembly W/two danger decals installed		1
53	6809511	DECAL	danger		2
54	6727705	HOSE	available only as an assembly W/two danger decals installed		1
54	6809511	DECAL	danger		2
54	79K8	O RING 10			1
55	84G3728	BOLT			3
56	6727708	CLAMP			2
57	6726167	TUBE			1
58	15KB1212	ADAPTER	W/Ref. 59 - check boss face to determine correct replacement o-ring - Was 15KV00008B [A]		2
58	97K12	O'RING	flared end		1
59	99K12	O'RING	tapered boss face		x
59	79K12	O RING 10	flat boss face		x
60	7114236	HOSE	.75" thread female ends - Use (1) per tilt cylinder W/.75" thread base end fitting		2

Page 63 - OSS# 2071349 - All rights reserved by Bobcat Company - 12/01/2009 - 20:50:59 - Produced by Ken Cook Co. with media1off

HYDRAULIC CIRCUITRY
(W/O BPV) (S/N 500K11978 & Above, 517620141 & Above, 518012387 & Above, 518112246 & Above, 519021021 & Above, 519212364 & Above)

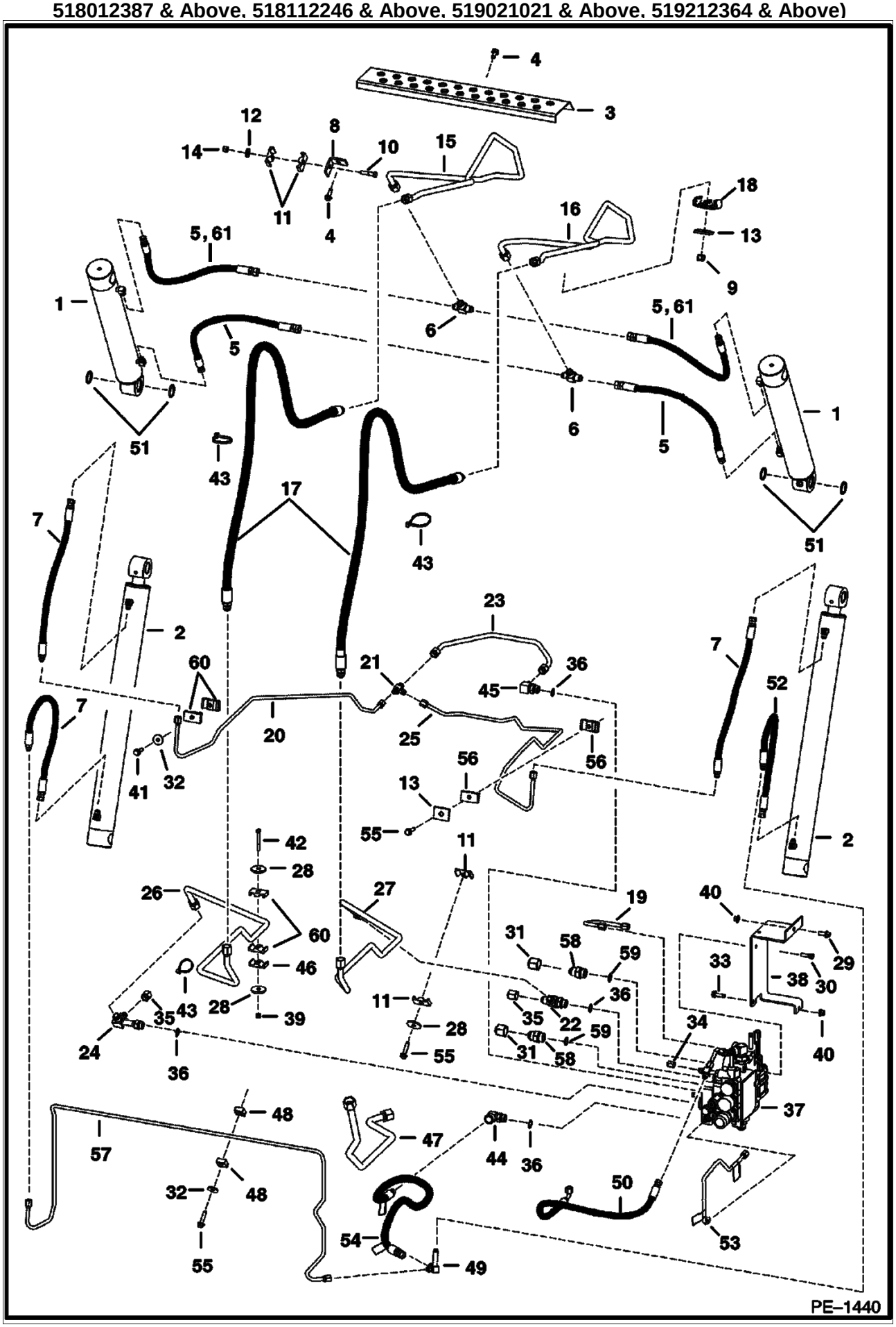

Page 64 - OSS# 2071349 - All rights reserved by Bobcat Company - 12/01/2009 - 20:50:59 - Produced by Ken Cook Co. with media1off

HYDRAULIC CIRCUITRY (Cont'd)
(W/O BPV) (S/N 500K11978 & Above, 517620141 & Above, 518012387 & Above, 518112246 & Above, 519021021 & Above, 519212364 & Above)

Ref No	Part Number	Description	Remarks	Serial Number	Qty
1		CYLINDER	See Illustration TILT CYLINDER/ PE1056 TILT		2
2		CYLINDER	See Illustration LIFT CYLINDER/ B13593 LIFT		2
3	6717502	BOOM STEP	W/ 2" (50,8 mm) mtg. hole surface		1
3	6735669	BOOM STEP	W/ 3.4" (86,4 mm) mtg hole surface		1
4	84G3712	BOLT			4
5	6718066	HOSE	.5625" thread & .75" thread female ends - Use (2) per tilt cylinder W/.5625" thread base end fitting		4
5			.5625" thread & .75" thread female ends - Use (1) per tilt cylinder W/.75" thread base end fitting		2
6	6716061	TEE			2
7	7116564	HOSE	Was 7104132 [A]		3
8	6718238	BRACKET			1
9	59D8	NUT 5			2
10	17C628	BOLT			1
11	6701893	CLAMP			6
12	27E6	WASHER 5			1
13	6553709	WASHER			2
14	59D6	NUT			1
15	6718030	TUBE			1
16	6725337	TUBE			1
17	6719439	HOSE			2
18	6717933	CLAMP			2
19	6727702	TUBE	See Illustration MANUAL LIFT RELEASE SYSTEM/ PE1492R		1
20	6726168	TUBE			1
21	6719424	TEE			1
21	97K6	O'RING	flared end		2
21	97K8	O-RING	flared end		1
22	21KB1010	TEE	W/Ref. 36 - check boss face to determine correct replacement o-ring - Was 21KN00007B [A]		1
22	97K10	O-RING 10	flared end		1
23	6726166	TUBE			1
24	6730142	TEE	W/Ref. 36 - check boss face to determine correct replacement o-ring		1
24	99K10	O'RING	flared end		x
25	6730201	TUBE			1
26	6730203	TUBE			1
27	6730202	TUBE			1
28	872229	WASHER			3
29	35C616	BOLT 5			2
30	17C620	BOLT			2
31	36K8	CAP			2
32	619021	WASHER, 5			2
33	84G3720	BOLT			1
34	36K5	CAP			1
35	36K7	FITTING			2
36	79K10	O RING 10	flat boss face		x
36	99K10	O'RING	tapered boss face		x
37		VALVE	See Illustration HYDRAULIC CONTROL VALVE/ B17144		1
38	6726253	MOUNT			1
39	59D5	NUT 5			1
40	83D6	NUT 5			2
41	84G3724	BOLT			1
42	17C540	BOLT			1
43	6624289	STRAP 10			2
44		ELBOW	NAP - W/ 1.0" nut - W/Ref. 36 - check boss face to		1

Page 65 - OSS# 2071349 - All rights reserved by Bobcat Company - 12/01/2009 - 20:50:59 - Produced by Ken Cook Co. with media1off

HYDRAULIC CIRCUITRY (Cont'd)
(W/O BPV) (S/N 500K11978 & Above, 517620141 & Above,
518012387 & Above, 518112246 & Above, 519021021 & Above, 519212364 & Above)

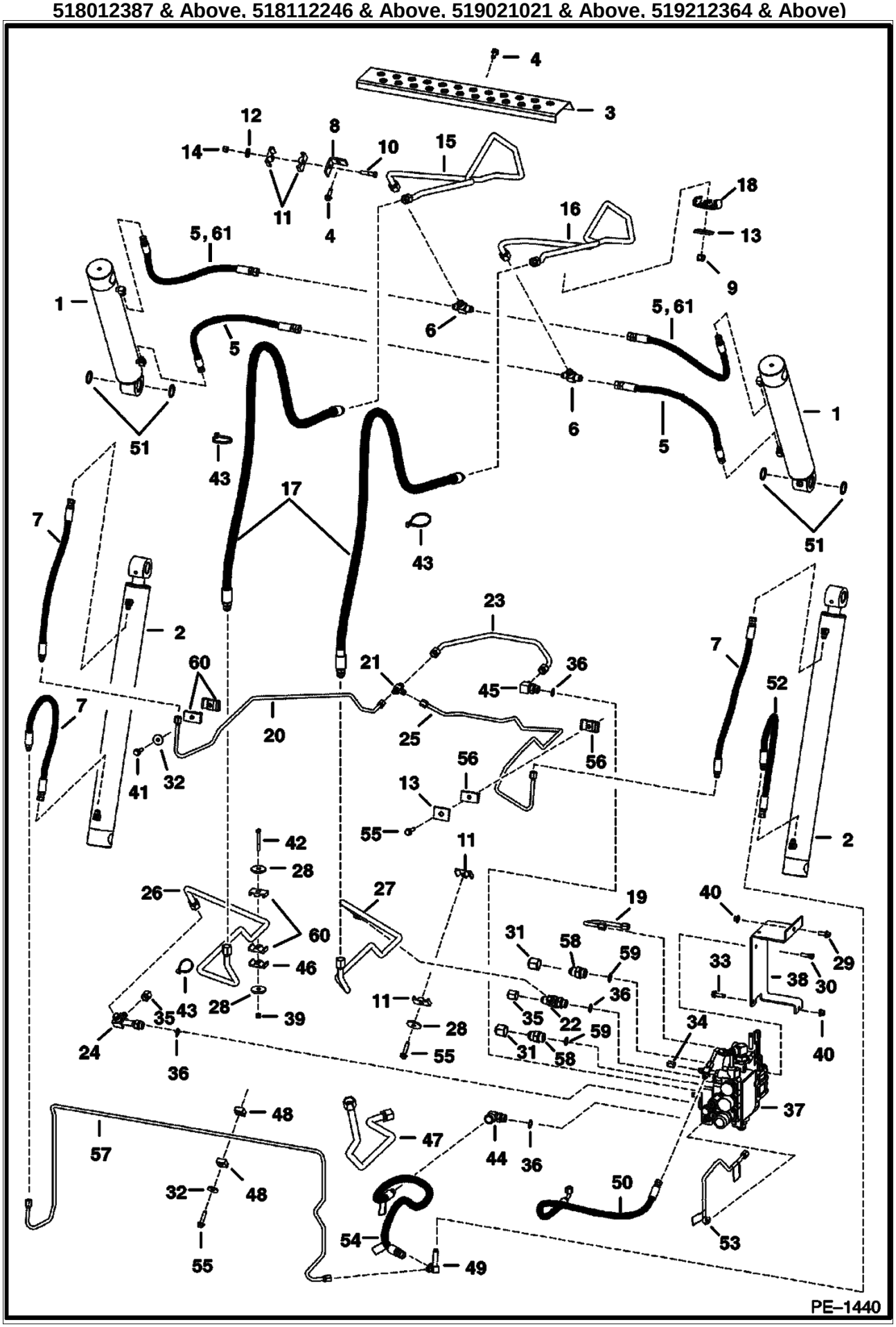

Page 66 - OSS# 2071349 - All rights reserved by Bobcat Company - 12/01/2009 - 20:50:59 - Produced by Ken Cook Co. with media1off

Ref No	Part Number	Description	Remarks	Serial Number	Qty
			determine correct replacement o-ring - Was 6727639 [A]		
44	6814531	ELBOW	W/ 1.06.25" nut - W/Ref. 36 - flat boss face		1
45		ELBOW	NAP - W/Ref. 36 - tapered boss face - Was 6715716 [A]		1
45	97K8	O-RING	flared end		2
45	17KB810	ELBOW	W/Ref. 36 - flat boss face		1
46	30H45	CLIP			1
47	6727640	TUBE	See Illustration HYDROSTATIC CIRCUITRY/ PE1629 Ref. 7		1
48	6727707	CLAMP			2
49	6727638	TEE			1
49	97K6	O'RING	flared end		2
49	97K8	O-RING	flared end		1
50	6737648	HOSE	See Illustration HYDROSTATIC CIRCUITRY/ PE1364 Ref. 55 - Was 6725436 [A]		1
51	6654117	SEAL, OIL	2" (5,08 mm) OD		4
51	225855	SEAL, OIL	1.5" (3,81 mm) OD		4
52	7116564	HOSE	Was 7104132 [A]		2
53	6729909	TUBE			1
53	6809511	DECAL	danger		2
54	6727705	HOSE	available only as an assembly W/two danger decals installed		1
54	6809511	DECAL	danger		2
54	79K8	O RING 10			1
55	84G3728	BOLT			3
56	6727708	CLAMP			2
57	6726167	TUBE			1
58	15KB1212	ADAPTER	W/Ref. 59 - check boss face to determine correct replacement o-ring - Was 15KV00008B [A]		2
58	97K12	O'RING	flared end		1
59	99K12	O'RING			x
59	79K12	O RING 10	flat boss face		x
60	6726277	CLAMP			4
61	7114236	HOSE	.75" thread female ends - Use (1) per tilt cylinder W/.75" thread base end fitting		2

Page 67 - OSS# 2071349 - All rights reserved by Bobcat Company - 12/01/2009 - 20:50:59 - Produced by Ken Cook Co. with media1off

HYDRAULIC CIRCUITRY
(W/BPV) (S/N 500K11038 & Below, 517619258 & Below, 518012218 & Below, 518112089 & Below, 519018909 & Below, 519212154 & Below)

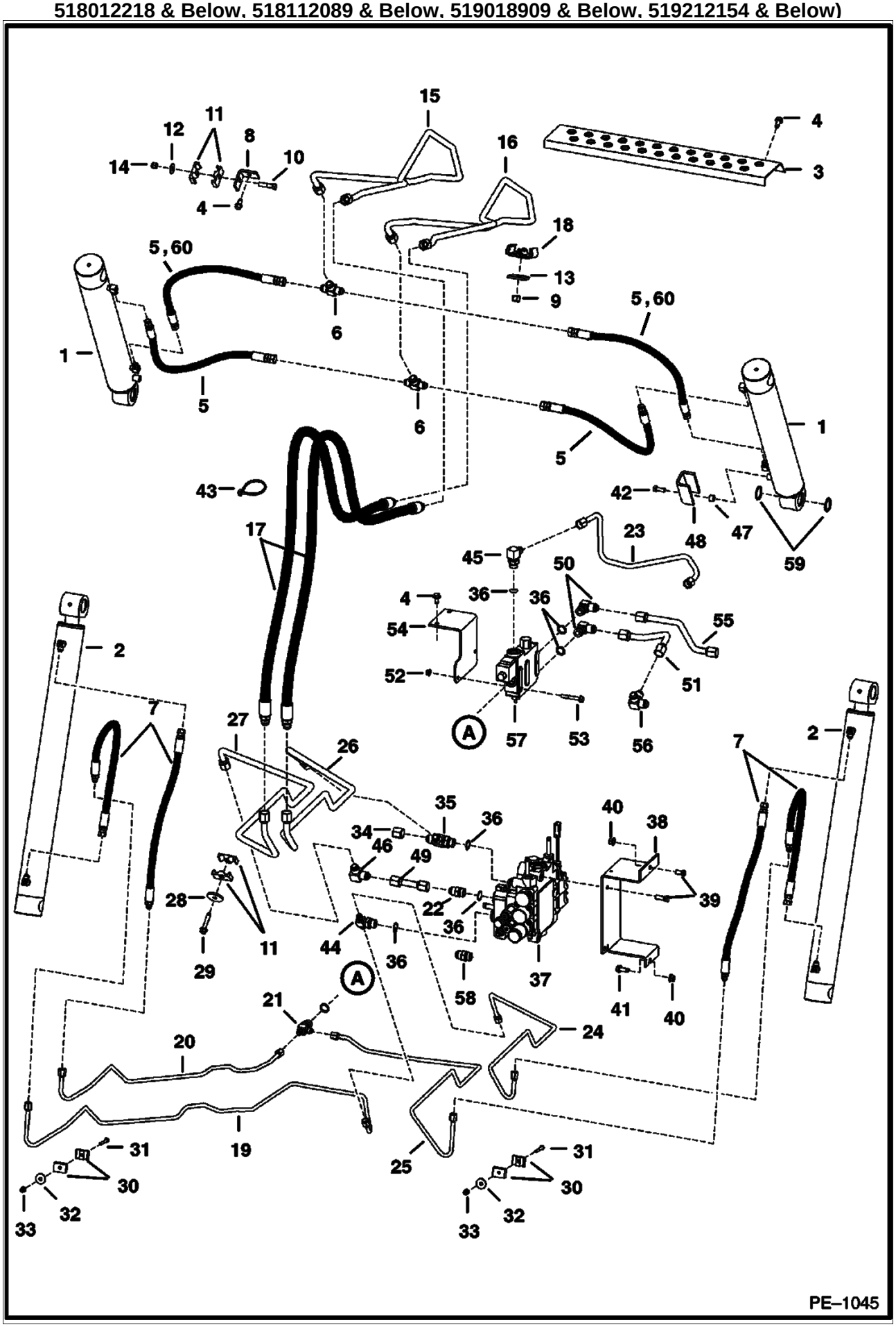

Page 68 - OSS# 2071349 - All rights reserved by Bobcat Company - 12/01/2009 - 20:50:59 - Produced by Ken Cook Co. with media1off

Ref No	Part Number	Description	Remarks	Serial Number	Qty
1		CYLINDER	See Illustration TILT CYLINDER/ B17176 TILT		2
2		CYLINDER	See Illustration LIFT CYLINDER/ B13593 LIFT		2
3	6717502	BOOM STEP	W/ 2" (50,8 mm) mtg. hole surface		1
3	6735669	BOOM STEP	W/ 3.4" (86,4 mm) mtg hole surface		1
4	84G3712	BOLT			4
5	6718066	HOSE	.5625" thread & .75" thread female ends - Use (2) per tilt cylinder W/.5625" thread base end fitting		4
5	6718066	HOSE	.5625" thread & .75" thread female ends - Use (1) per tilt cylinder W/.75" thread base end fitting		2
6	6716061	TEE			2
7	7116564	HOSE	Was 7104132 [A]		4
8	6718238	BRACKET			1
9	59D8	NUT 5			2
10	17C628	BOLT			1
11	6701893	CLAMP			2
12	27E6	WASHER 5			1
13	6553709	WASHER			2
14	59D6	NUT			1
15	6718030	TUBE			1
16	6725337	TUBE			1
17	6719439	HOSE			2
18	6717933	CLAMP			2
19	6717437	TUBE			1
20	6717441	TUBE			1
21		TEE	NAP - W/Ref. 36 - tapered boss face - Was 6717503 [A]		1
21	97K6	O'RING	flared end		2
21	21KB610	FITTING	W/Ref. 36 - flat boss face		1
22	15KB1010	FITTING	W/Ref. 36 - check boss face to determine correct replacement o-ring - Was 15KV00007B [A]		1
22	97K10	O-RING 10	flared end		1
23	6717436	TUBE			1
24	6717444	TUBE			1
25	6717445	TUBE			1
26	6717442	TUBE			1
27	6717443	TUBE			1
28	872229	WASHER			1
29	84G3732	BOLT			1
30	6578870	CLAMP			4
31	17C428	BOLT			2
32	6701174	WASHER			2
33	83D4	NUT 10			2
34	36K7	FITTING			1
35	21KB1010	TEE	W/Ref. 36 - check boss face to determine correct replacement o-ring - Was 21KN00007B [A]		1
35	97K10	O-RING 10	flared end		6
36	99K10	O'RING	tapered boss face		x
36	79K10	O RING 10	flat boss face		x
37		VALVE	See Illustration HYDRAULIC CONTROL VALVE/ B17144		1
38	6717143	MOUNT			1
39	17C620	BOLT	Was 17C000612B [B]		2
40	83D6	NUT 5			2
41	84G3716	SCREW 5			1
42	17C616	BOLT 5			2
43	6624289	STRAP 10			2
44		TEE	NAP - W/Ref. 36 - tapered boss face - Was 6717492		1

Page 69 - OSS# 2071349 - All rights reserved by Bobcat Company - 12/01/2009 - 20:50:59 - Produced by Ken Cook Co. with media1off

HYDRAULIC CIRCUITRY (Cont'd)
(W/BPV) (S/N 500K11038 & Below, 517619258 & Below,
518012218 & Below, 518112089 & Below, 519018909 & Below, 519212154 & Below)

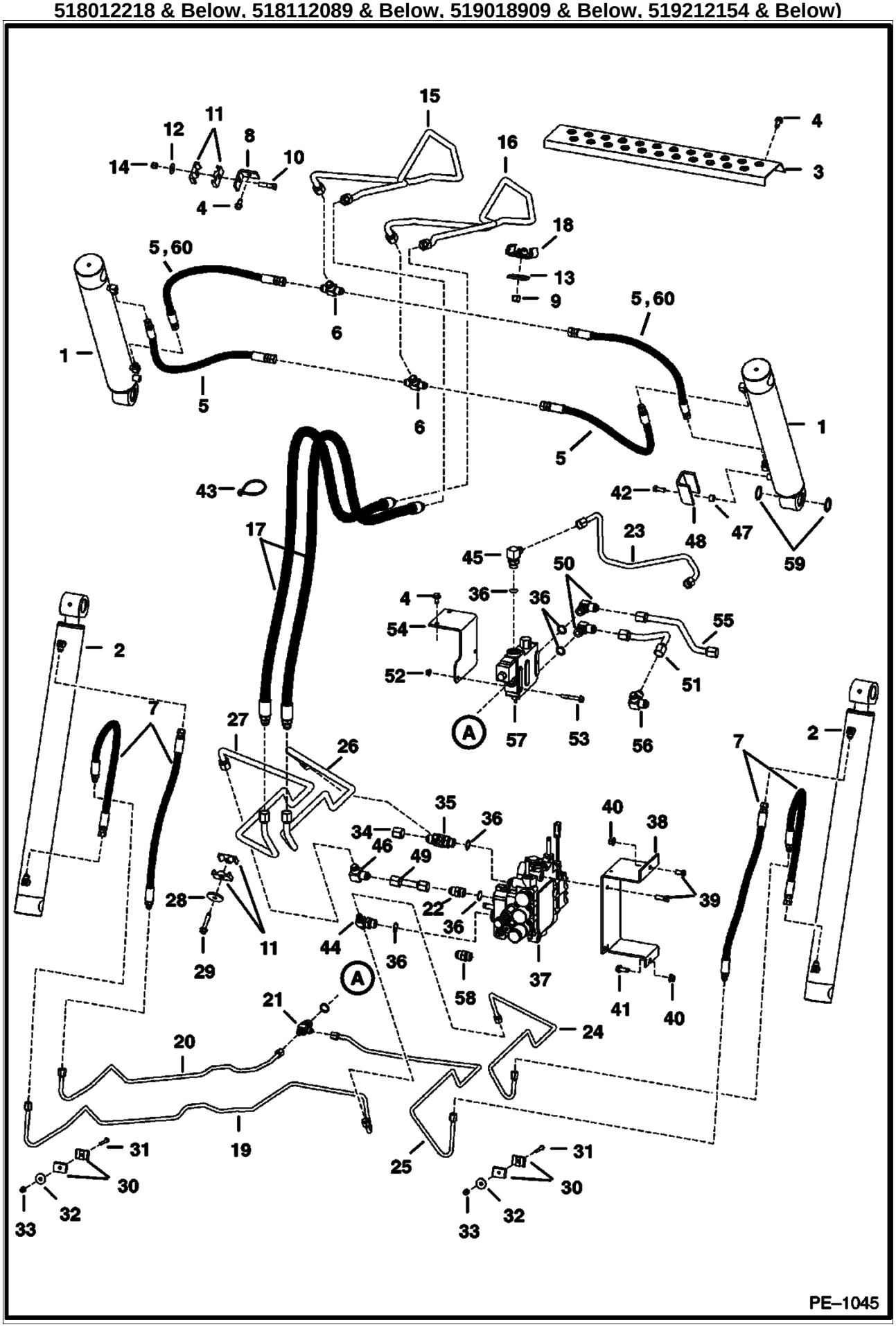

Page 70 - OSS# 2071349 - All rights reserved by Bobcat Company - 12/01/2009 - 20:50:59 - Produced by Ken Cook Co. with media1off

HYDRAULIC CIRCUITRY (Cont'd)
(W/BPV) (S/N 500K11038 & Below, 517619258 & Below, 518012218 & Below, 518112089 & Below, 519018909 & Below, 519212154 & Below)

Ref No	Part Number	Description	Remarks	Serial Number	Qty
			[A]		
44	19KB610	TEE	W/Ref. 36 - flat boss face		1
45		ELBOW	NAP - W/Ref. 36 - flat boss face - Was 6715716 [A]		2
45	97K8	O-RING	flared end		6
45	17KB810	ELBOW	W/Ref. 36 - flat boss face		2
46	77F7	ELBOW			1
47	6725969	SPACER			2
48	6725592	GUARD	U shaped guard		2
49	6710573	TUBE	3.25"(82,6 mm) long		1
50	17KB1010	ELBOW	W/Ref. 36 - check boss face to determine correct replacement o-ring - Was 17KV00007B		2
50	97K10	O-RING 10	flared end		6
51	6717435	TUBE			1
52	57D5	NUT			2
53	35C536	BOLT			2
54	6717142	BRACKET			1
55	6717434	TUBE			1
56	6705070	TEE			1
57		VALVE	See Illustration BUCKET POSITIONING VALVE/ MS1943 NAP - order 6673959 valve - If loader is not equipped with an on/off switch also order 6647784 pluf, 79K8 O-ring, 6647785 spring, & 6647783 load check - Was 6666341		1
58	6715184	ADAPTER	See Illustration HYDRAULIC CONTROL VALVE/ B17144 USE W/VALVE		1
59	6654117	SEAL, OIL	2" (5,08 mm) OD		4
59	225855	SEAL, OIL	1.5" (3,81 mm) OD		4
60	7114236	HOSE	.75" thread female ends - Use (1) per tilt cylinder W/.75" thread base end fitting		2

Page 71 - OSS# 2071349 - All rights reserved by Bobcat Company - 12/01/2009 - 20:50:59 - Produced by Ken Cook Co. with media1off

HYDRAULIC CIRCUITRY
(W/BPV) (S/N 500K11039-11977, 517619259-20140
518012219-12386, 518112090-12245, 519018910-21020, 519212155-12363)

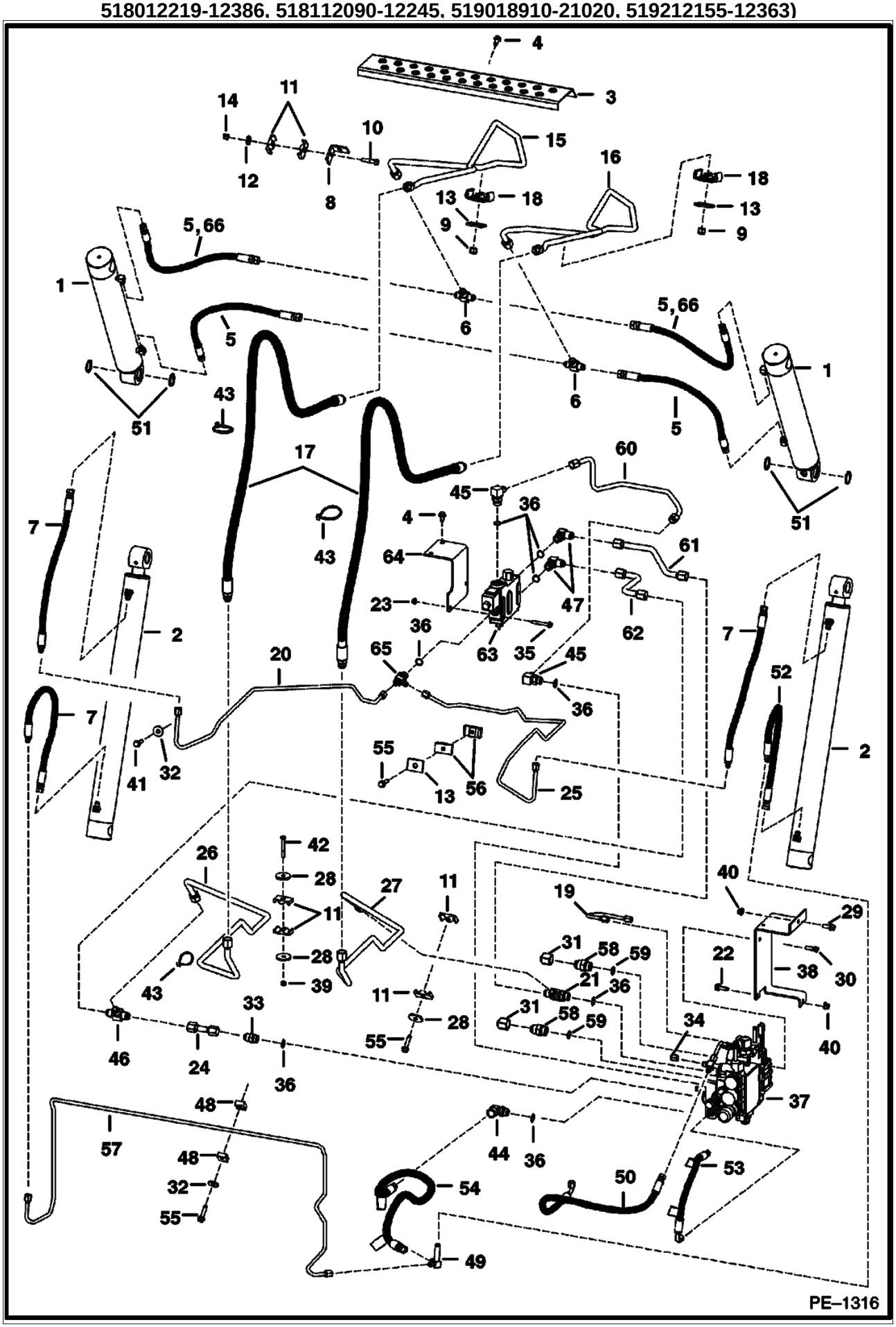

Page 72 - OSS# 2071349 - All rights reserved by Bobcat Company - 12/01/2009 - 20:50:59 - Produced by Ken Cook Co. with media1off

HYDRAULIC CIRCUITRY (Cont'd)
(W/BPV) (S/N 500K11039-11977, 517619259-20140
518012219-12386, 518112090-12245, 519018910-21020, 519212155-12363)

Ref No	Part Number	Description	Remarks	Serial Number	Qty
1		CYLINDER	See Illustration TILT CYLINDER/ PE1056 TILT		2
2		CYLINDER	See Illustration LIFT CYLINDER/ B13593 LIFT		2
3	6717502	BOOM STEP	W/ 2" (50,8 mm) mtg. hole surface		1
3	6735669	BOOM STEP	W/ 3.4" (86,4 mm) mtg hole surface		1
4	84G3712	BOLT			4
5	6718066	HOSE	.5625" thread & .75" thread female ends - Use (2) per tilt cylinder W/.5625" thread base end fitting		4
5	6718066	HOSE	.5625" thread & .75" thread female ends - Use (1) per tilt cylinder W/.75" thread base end fitting		2
6	6716061	TEE			2
7	7116564	HOSE	Was 7104132 [A]		3
8	6718238	BRACKET			1
9	59D8	NUT 5			2
10	17C628	BOLT			1
11	6701893	CLAMP			6
12	27E6	WASHER 5			1
13	6553709	WASHER			2
14	59D6	NUT			1
15	6718030	TUBE			1
16	6725337	TUBE			1
17	6719439	HOSE			2
18	6717933	CLAMP			2
19	6727702	TUBE			1
20	6726168	TUBE			1
21	10K7	TEE	Was 10KN00007B [A]		1
21	97K6	O'RING	flared end		2
21	97K8	O-RING	flared end		1
22	84G3720	BOLT			1
23	57D5	NUT			2
24	6727644	TUBE	2.75"(69,9 mm) long		1
25	6730201	TUBE	Was 6726169 [C]		1
26	6726172	TUBE			1
27	6726171	TUBE			1
28	872229	WASHER			3
29	35C616	BOLT 5			2
30	17C620	BOLT			2
31	36K8	CAP			2
32	619021	WASHER, 5			2
33	15KB1010	FITTING	W/Ref. 36 - check boss face to determine correct replacement o-ring - Was 15KV00007B [A]		1
33	97K10	O-RING 10	flared end		1
34	36K5	CAP			1
35	35C536	BOLT			2
36	99K10	O'RING	tapered boss face		x
36	79K10	O RING 10	flat boss face		x
37		VALVE	See Illustration HYDRAULIC CONTROL VALVE/ B17144		1
38	6726253	MOUNT			1
39	59D5	NUT 5			1
40	83D6	NUT 5			4
41	84G3724	BOLT			1
42	17C540	BOLT			1
43	6624289	STRAP 10			3
44		ELBOW	NAP - W/ 1.0" nut - W/Ref. 36 - check boss face to determine correct replacement o-ring- Was 6727639 [A]		1
44	6814531	ELBOW	W/ 1.0625" nut - W/Ref. 36 - flat boss face		1

Page 73 - OSS# 2071349 - All rights reserved by Bobcat Company - 12/01/2009 - 20:50:59 - Produced by Ken Cook Co. with media1off

HYDRAULIC CIRCUITRY (Cont'd)
(W/BPV) (S/N 500K11039-11977, 517619259-20140
518012219-12386, 518112090-12245, 519018910-21020, 519212155-12363)

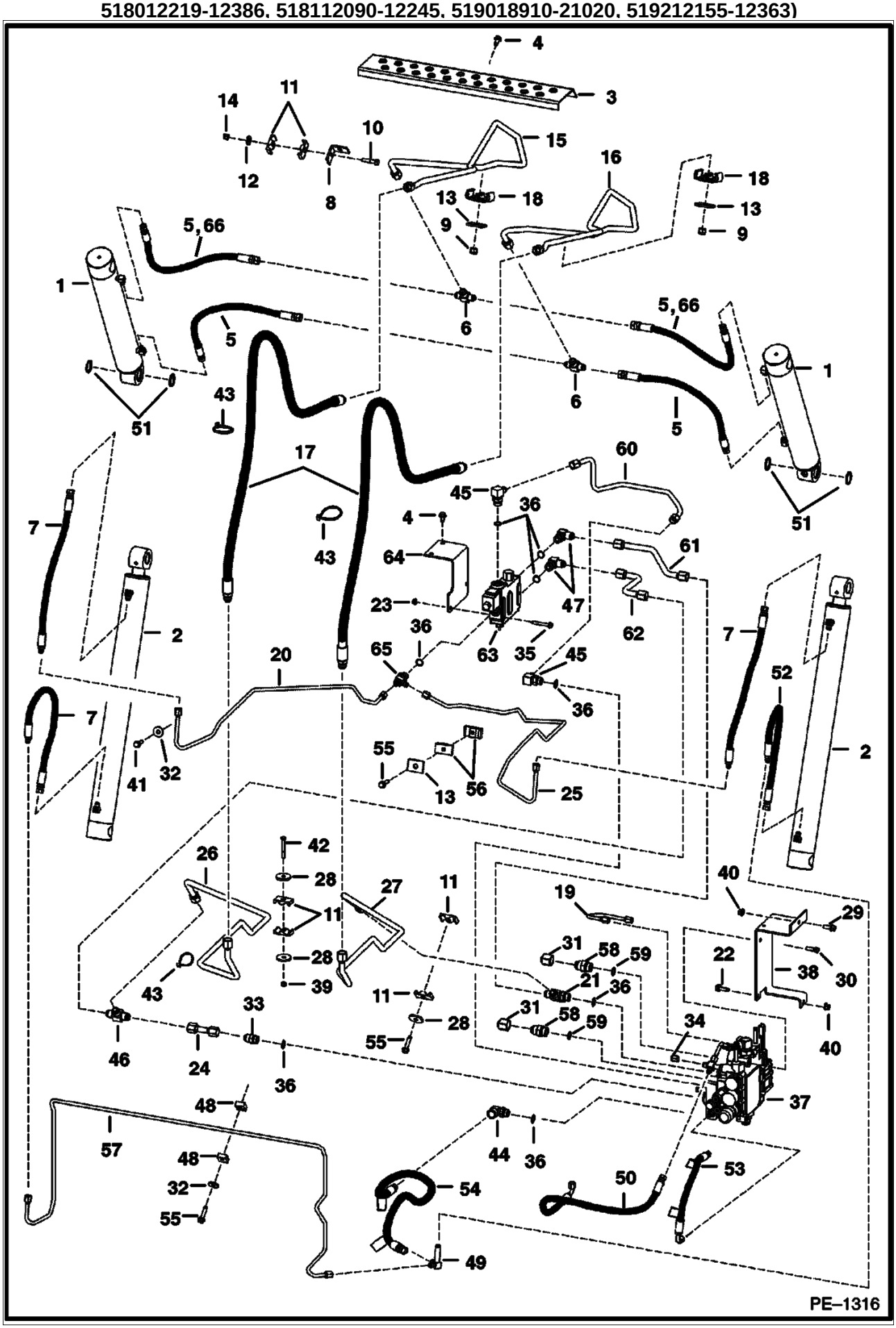

Page 74 - OSS# 2071349 - All rights reserved by Bobcat Company - 12/01/2009 - 20:50:59 - Produced by Ken Cook Co. with media1off

Ref No	Part Number	Description	Remarks	Serial Number	Qty
45		ELBOW	NAP - W/Ref. 36 - check boss face to determine correct replacement o-ring - Was 6715716 [A]		2
45	97K8	O-RING	flared end		2
45	17KB810	ELBOW	W/Ref. 36 - flat boss face		2
46	77F7	ELBOW	Was 77FN00007B [A]		1
47		ELBOW	NAP - W/Ref. 36 - tapered boss face - Was 17KV00007B [A]		2
47	17KB1010	ELBOW	W/Ref. 36 - flat boss face		2
47	97K10	O-RING 10	flare end		2
48	6727707	CLAMP			2
49	6727638	TEE			1
49	97K6	O'RING	flared end		2
49	97K8	O-RING	flared end		1
50	6737648	HOSE	Was 6725436 [A]		1
51	6654117	SEAL, OIL	2" (5,08 mm) OD		4
51	225855	SEAL, OIL	1.5" (3,81 mm) OD		4
52	7116565	HOSE	Was 7104133 [A]		1
53	6727703	HOSE	available only as an assembly W/two danger decals installed		1
53	6809511	DECAL	danger		2
54	6727705	HOSE	available only as an assembly W/two danger decals installed		1
54	6809511	DECAL	danger		2
54	79K8	O RING 10			1
55	84G3728	BOLT			3
56	6727708	CLAMP			2
57	6726167	TUBE			1
58	15KB1212	ADAPTER	W/Ref. 59 - check boss face to determine correct replacement o-ring - Was 15KV00008B [A]		2
58	97K12	O'RING	flared end		2
59	99K12	O'RING			x
60	6726180	TUBE			1
61	6717434	TUBE			1
62	6726182	TUBE			1
63		VALVE	NAP - order 6673959 valve - Was 6666341 [A]		1
64	6727646	BRACKET			1
65		TEE	NAP - W/Ref. 36 - tapered boss face - Was 6717503 [A]		1
65	97K6	O'RING	flared end		2
65	21KB610	FITTING	W/Ref. 36 - flat boss face		1
66	7114236	HOSE	.75" thread female ends - Use (1) per tilt cylinder W/.75" thread base end fitting		2

Page 75 - OSS# 2071349 - All rights reserved by Bobcat Company - 12/01/2009 - 20:50:59 - Produced by Ken Cook Co. with media1off

HYDRAULIC CIRCUITRY
(W/BPV) (S/N 500K11978 & Above, 517620141 & Above,
518012387 & Abov, 518112246 & Above, 519021021 & Above, 519212364 & Above)

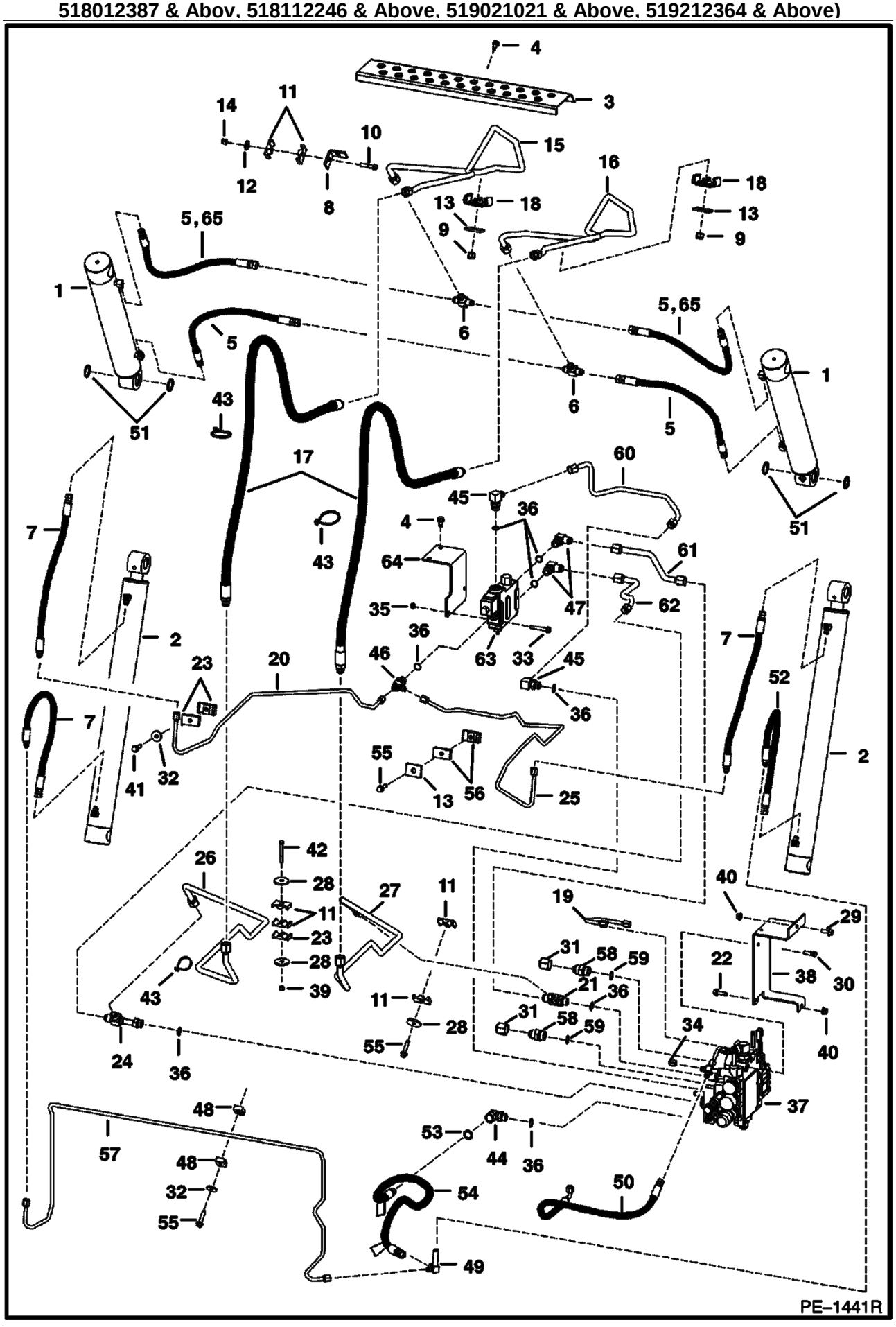

Page 76 - OSS# 2071349 - All rights reserved by Bobcat Company - 12/01/2009 - 20:50:59 - Produced by Ken Cook Co. with media1off

HYDRAULIC CIRCUITRY (Cont'd)
(W/BPV) (S/N 500K11978 & Above, 517620141 & Above,
518012387 & Abov, 518112246 & Above, 519021021 & Above, 519212364 & Above)

Ref No	Part Number	Description	Remarks	Serial Number	Qty
1		CYLINDER	See Illustration TILT CYLINDER/ PE1056 TILT		2
2		CYLINDER	See Illustration LIFT CYLINDER/ B13593 LIFT		2
3	6717502	BOOM STEP	W/ 2" (50,8 mm) mtg. hole surface		1
3	6735669	BOOM STEP	W/ 3.4" (86,4 mm) mtg hole surface		1
4	84G3712	BOLT			4
5	6718066	HOSE	.5625" thread & .75" thread female ends - Use (2) per tilt cylinder W/.5625" thread base end fitting		4
5	6718066	HOSE	.5625" thread & .75" thread female ends - Use (1) per tilt cylinder W/.75" thread base end fitting		2
6	6716061	TEE			2
7	7116564	HOSE	Was 7104132 [A]		3
8	6718238	BRACKET			1
9	59D8	NUT 5			2
10	17C628	BOLT			1
11	6701893	CLAMP			6
12	27E6	WASHER 5			1
13	6553709	WASHER			2
14	59D6	NUT			1
15	6718030	TUBE			1
16	6725337	TUBE			1
17	6719439	HOSE			2
18	6717933	CLAMP			2
19	6727702	TUBE	See Illustration MANUAL LIFT RELEASE SYSTEM/ PE1492R		1
20	6726168	TUBE			1
21	21KB1010	TEE	W/Ref. 36 - check boss face to determine correct replacement o-ring - Was 21KN00007B [A]		1
21	97K6	O'RING	flared end		2
22	84G3720	BOLT			1
23	6726277	CLAMP			4
24	6730142	TEE	W/Ref. 36 - check boss face to determine correct replacement o-ring		1
25	6730201	TUBE			1
26	6730203	TUBE			1
27	6730202	TUBE			1
28	872229	WASHER			3
29	35C616	BOLT 5			2
30	17C620	BOLT			2
31	36K8	CAP			2
32	619021	WASHER, 5			2
33	35C536	BOLT			2
34	36K5	CAP			1
35	57D5	NUT			2
36	99K10	O'RING	tapered boss face		x
36	79K10	O RING 10	flat boss face		x
37		VALVE	See Illustration HYDRAULIC CONTROL VALVE/ B17144		1
38	6726253	MOUNT			1
39	59D5	NUT 5			1
40	83D6	NUT 5			2
41	84G3724	BOLT			1
42	17C540	BOLT			1
43	6624289	STRAP 10			3
44		ELBOW	NAP - W/ 1.0" W/Ref. 36 - check boss face to determine correct replacement o-ring - Was 6727639 [A]		1
44	6814531	ELBOW	W/ 1.0625" nut - W/Ref. 36 - flat boss face		1

Page 77 - OSS# 2071349 - All rights reserved by Bobcat Company - 12/01/2009 - 20:50:59 - Produced by Ken Cook Co. with media1off

HYDRAULIC CIRCUITRY (Cont'd)
(W/BPV) (S/N 500K11978 & Above, 517620141 & Above,
518012387 & Abov, 518112246 & Above, 519021021 & Above, 519212364 & Above)

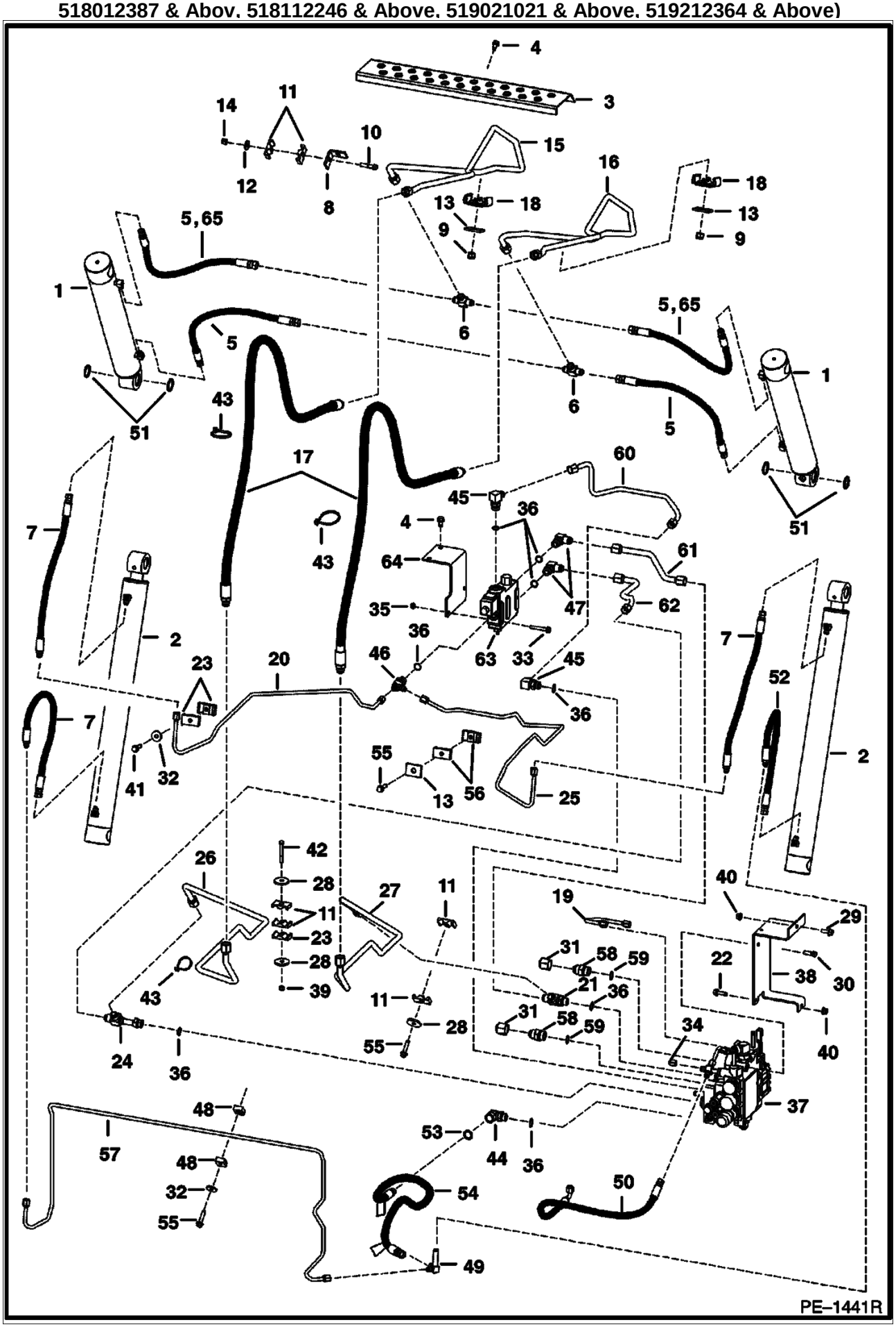

Page 78 - OSS# 2071349 - All rights reserved by Bobcat Company - 12/01/2009 - 20:50:59 - Produced by Ken Cook Co. with media1off

Ref No	Part Number	Description	Remarks	Serial Number	Qty
45		ELBOW	NAP - W/Ref. 36 - check boss face to determine correct replacement o-ring - Was 6715716 [A]		2
45	97K8	O-RING	flared end		2
45	17KB810	ELBOW	W/Ref. 36 - flat boss face		2
46		TEE	NAP - W/Ref. 36 - tapered boss face - Was 6717503 [A]		1
46	97K6	O'RING	flared end		2
46	21KB610	FITTING	W/Ref. 36 - flat boss face		1
47	17KB1010	ELBOW	W/Ref. 36 - check boss face to determine correct replacement o-ring - Was 17KV-7 [A]		2
47	97K10	O-RING 10	flared end		2
48	6727707	CLAMP			2
49	6727638	TEE			1
49	97K6	O'RING	flared end		2
49	97K8	O-RING	flared end		1
50	6737648	HOSE	Was 6725436 [A]		1
51	6654117	SEAL, OIL	2" (5,08 mm) OD		4
51	225855	SEAL, OIL	1.5" (3,81 mm) OD		4
52	7116565	HOSE	Was 7104133 [A]		1
53	79K8	O RING 10			1
54	6727705	HOSE	available only as an assembly W/two danger decals installed		1
54	6809511	DECAL	danger		2
55	84G3728	BOLT			3
56	6727708	CLAMP			2
57	6726167	TUBE			1
58	15KB1212	ADAPTER	W/Ref. 59 - flat boss face - Was 6812646 [A]		2
58	97K12	O'RING	flared end		1
59	79K12	O RING 10	flat boss face		x
60	6726180	TUBE			1
61	6733684	TUBE	Was 6730285 [A]		1
62	6730209	TUBE			1
63		VALVE	NAP - order 6673959 valve - Was 6666341 [A]		1
64	6727646	BRACKET			1
65	7114236	HOSE	.75" thread female ends - Use (1) per tilt cylinder W/.75" thread base end fitting		2

Page 79 - OSS# 2071349 - All rights reserved by Bobcat Company - 12/01/2009 - 20:50:59 - Produced by Ken Cook Co. with media1off

MANUAL LIFT RELEASE SYSTEM

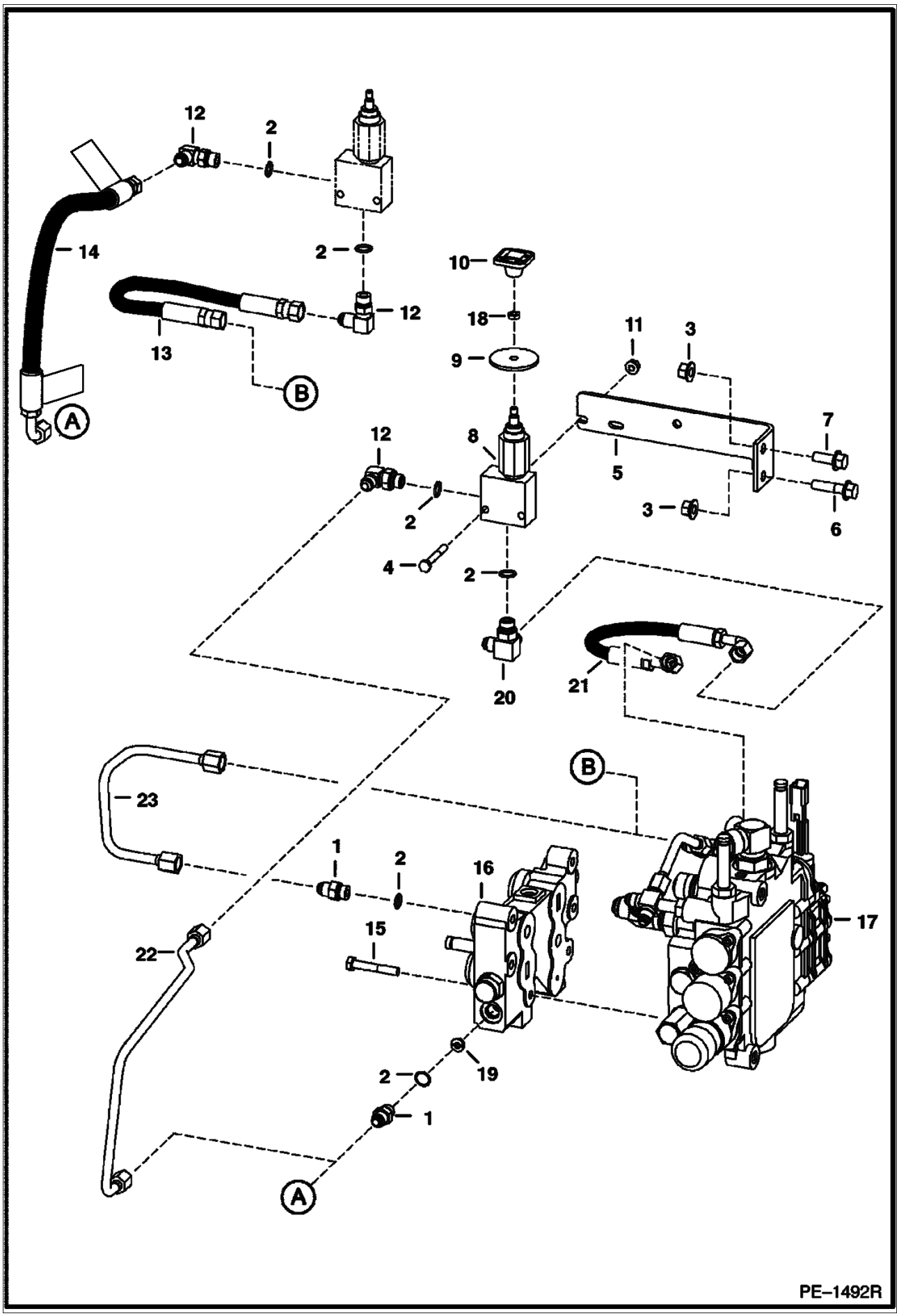

Page 80 - OSS# 2071349 - All rights reserved by Bobcat Company - 12/01/2009 - 20:50:59 - Produced by Ken Cook Co. with media1off

Ref No	Part Number	Description	Remarks	Serial Number	Qty
1		ADAPTER	NAP - W/Ref. 2 - check boss face to determine correct replacement o-ring - Was 15KV00005B [A]		2
1	97K6	O'RING	flared end		2
1	15KB606	ADAPTER	W/Ref. 2 - flat boss face		2
2	99K6	O'RING	tapered boss face		x
2	79K6	O RING 10	flat boss face		x
3	83D6	NUT 5			2
4	17C428	BOLT			2
5	6717151	MOUNT			1
6	17C624	BOLT 5			1
7	17C612	BOLT 5			1
8	6667844	VALVE, LIFT MANUAL	See Illustration MANUAL LIFT RELEASE VALVE/ C3422 - manual lift release		1
9	6707101	SEAL	neoprene		1
10	6737524	KNOB	red square - Was 6668913 [A]		1
11	83D4	NUT 10			2
12	17KB606	ELBOW	W/Ref. 2 - check boss face to determine correct replacement o-ring - Was 17KV00005B [A]		2
12	97K6	O'RING	flared end		2
13	6535451	HOSE			1
13	6727702	TUBE	Use W/Rear Aux. Power Bob-Tach & standard hyd. flow combination		1
14	6717386	HOSE			1
15	43C532	BOLT			6
16	6628571	VALVE ASSY	See Illustration BICS CONTROL VALVE/ TS1365 BICS CONTROL		1
17		VALVE	See Illustration HYDRAULIC CONTROL VALVE/ B17144 NSS - CONTROL - ORDER COMPLETE VALVE		1
18	7D4	NUT			1
19	6668791	ORIFICE			1
20	6725182	TEE	W/Ref. 2 - check boss face to determine correct replacement o-ring		1
21	6736213	HOSE			1
22	6729909	TUBE			1

Page 81 - OSS# 2071349 - All rights reserved by Bobcat Company - 12/01/2009 - 20:50:59 - Produced by Ken Cook Co. with media1off

AUXILIARY HYDRAULICS
(W/Pressure Relief) (S/N 500K11977 & Below, 517620140 & Below, 518012386 & Below, 518112245 & Below, 519021020 & Below, 519212363 & Below)

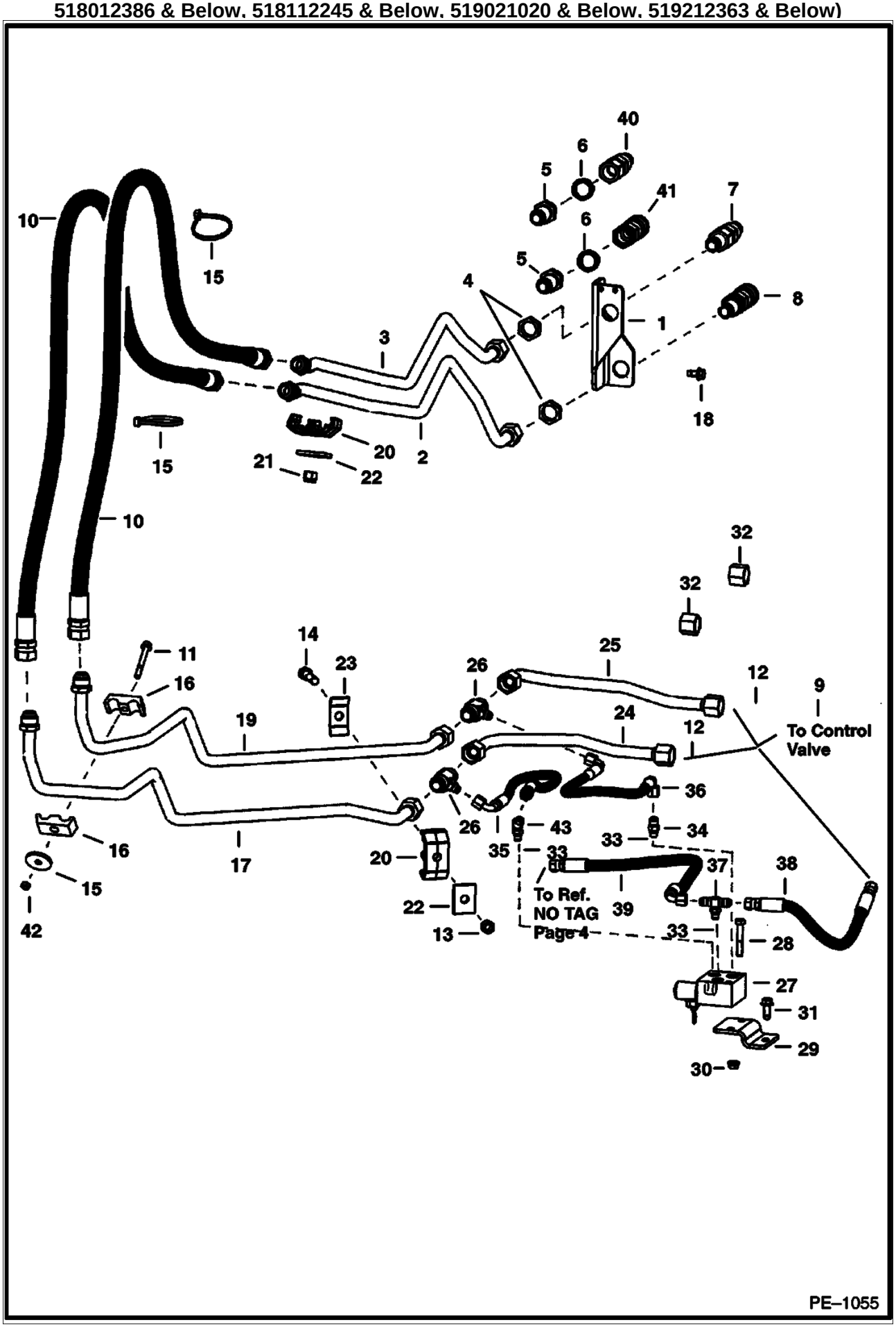

Page 82 - OSS# 2071349 - All rights reserved by Bobcat Company - 12/01/2009 - 20:50:59 - Produced by Ken Cook Co. with media1off

AUXILIARY HYDRAULICS (Cont'd)
(W/Pressure Relief) (S/N 500K11977 & Below, 517620140 & Below, 518012386 & Below, 518112245 & Below, 519021020 & Below, 519212363 & Below)

Ref No	Part Number	Description	Remarks	Serial Number	Qty
1	6714665	MOUNT			1
2	6718027	TUBE			1
3	6718028	TUBE			1
4	86F8	NUT 5			2
5		CONNECTOR	NAP - W/Ref. 6 - tapered boss face - Order 6812823 - Was 6716090 [A]		2
5	97K12	O'RING	flared end		1
5	6812823	ADAPTER	W/Ref. 6 - flat boss face		2
6	99K12	O'RING	tapered boss face		x
6	79K12	O RING 10	flat boss face		x
7	6676445	COUPLER	male - FF	500K 11001 & Abv	1
7	6676445	COUPLER		5176 18311 & Abv	1
7	6676445	COUPLER		5180 12074 & Abv	1
7	6676445	COUPLER		5181 12055 & Abv	1
7	6676445	COUPLER		5190 16765 & Abv	1
7	6676445	COUPLER		5192 12035 & Abv	1
8	6676447	COUPLER	female - FF	500K 11001 & Abv	1
8	6676447	COUPLER		5176 18311 & Abv	1
8	6676447	COUPLER		5180 12074 & Abv	1
8	6676447	COUPLER		5181 12055 & Abv	1
8	6676447	COUPLER		5190 16765 & Abv	1
8	6676447	COUPLER		5192 12035 & Abv	1
9		VALVE	See Illustration HYDRAULIC CONTROL VALVE/ B17144		1
10	6729161	HOSE	W/cover - Was 6718069 [A]		2
11	35C540	BOLT			1
12		ADAPTER	NAP - W/Ref. 6 - tapered boss face - Was 15KN00008B [A]		2
12	97K12	O'RING	flared end		2
12	15KB1212	ADAPTER	W/Ref. 6 - flat boss face		2
13	61D8	NUT 5			1
14	17C832	BOLT			1
15	6624289	STRAP 10			2
16	6592506	CLAMP			2
17	6717867	TUBE			1
18	84G3712	BOLT			2
19	6717440	TUBE			1
20	6717951	CLAMP			1
21	59D8	NUT 5			2
22	6553709	WASHER			3
23	6718657	CLAMP			1
24	6717866	TUBE			1
25	6717439	TUBE			1
26	6717923	TEE			2
26	97K12	O'RING	flared end		2
27		VALVE	See Illustration PRESSURE RELEASE VALVE/ PE1017 NAP - W/.4375" threaded ports - Order 6678150 valve, 15KB606, 17KB606 & 19KB606 fittings - Was 6674372 [A]		1
27	6678150	VALVE	See Illustration PRESSURE RELEASE VALVE/ PE1017 W/.5625" threaded ports		1
28	17C636	BOLT			2
29	6717384	BRACKET			1
30	55D6	NUT			2
31	84G3716	SCREW 5			1
32	36K8	CAP	W/O front auxiliaries		2
33	79K4	O RING 10	flat boss face		x

Page 83 - OSS# 2071349 - All rights reserved by Bobcat Company - 12/01/2009 - 20:50:59 - Produced by Ken Cook Co. with media1off

AUXILIARY HYDRAULICS (Cont'd)
(W/Pressure Relief) (S/N 500K11977 & Below, 517620140 & Below, 518012386 & Below, 518112245 & Below, 519021020 & Below, 519212363 & Below)

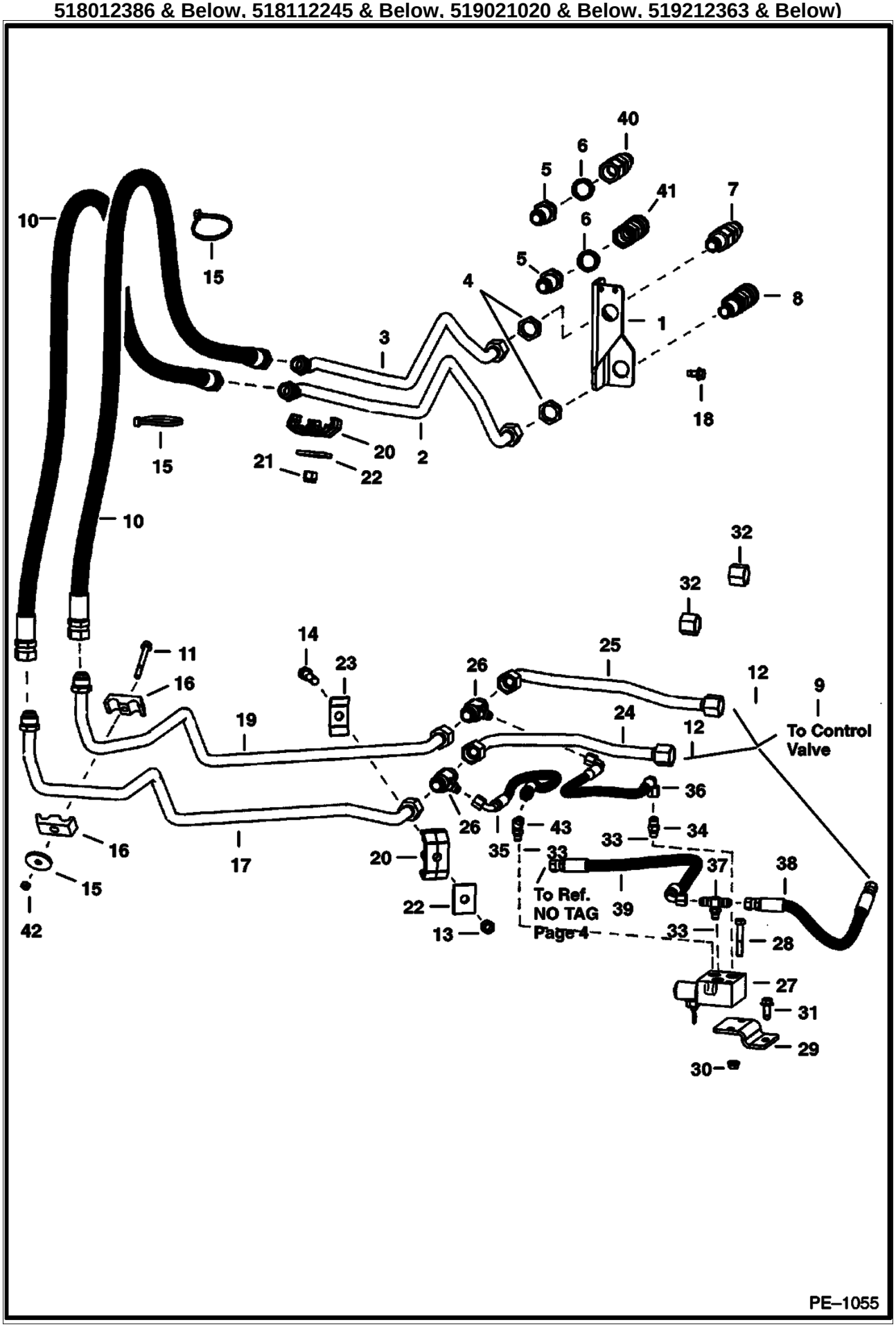

Page 84 - OSS# 2071349 - All rights reserved by Bobcat Company - 12/01/2009 - 20:50:59 - Produced by Ken Cook Co. with mediaioff

AUXILIARY HYDRAULICS (Cont'd)
(W/Pressure Relief) (S/N 500K11977 & Below, 517620140 & Below, 518012386 & Below, 518112245 & Below, 519021020 & Below, 519212363 & Below)

Ref No	Part Number	Description	Remarks	Serial Number	Qty
33	99K6	O'RING	tapered boss face		x
33	79K6	O RING 10	flat boss face		x
33	99K6	O'RING	tapered boss face		x
34		ADAPTER	NAP - W/Ref. 33 (99K4) - flat boss face - Use W/Ref. 27 (NAP/6674372 Valve) - Was 6718109 [A]		1
34	97K6	O'RING	flared end		1
34	15KB604	CONNECTOR	W/Ref. 33 (79K4) - flat boss face - Use W/Ref. 27 (NAP/6674372 Valve)		1
34		ADAPTER	W/Ref. 33 (99K6 O-Ring) - Use W/Ref. 27 (6678150 Valve) - Order 15KB606 - Was 15KV00005B [A]		1
34	97K6	O'RING	flared end		1
34	15KB606	ADAPTER	W/Ref. 33 (79K6) - Use W/Ref. 27 (6678150 Valve)		1
35	6718962	HOSE			1
36	6717387	HOSE			1
37		TEE	NAP - W/Ref. 33 (99K4 O-Ring) - Use W/Ref. 27 (NAP/6674372 Valve) - Order 19KB604 - Was 6718183 [A]		1
37	97K6	O'RING	flared end		2
37	19KB604	TEE	W/Ref. 33 (79K4) - flat boss face - Use W/Ref. 27 (NAP/6674372 Valve)		1
37		TEE	NAP - W/Ref. 33 (99K-4 O-Ring) - Use W/Ref. 27 (6678150 Valve) - Order 19KB606 - Was 19KV00005B [A]		1
37	97K6	O'RING	flared end		2
37	19KB606	TEE	W/Ref. 33 (79K6) - Use W/Ref. 27 (6678150 Valve)		1
38	6717385	HOSE			1
39	6711166	HOSE			1
40		QUICK COUPLER	NAP - male FF - Order Ref. 7 - Was 6667808 [B]		1
40	6679841	SEAL	Was 6672026 [A]		1
41		QUICK COUPLER	NAP - female FF - Order Ref. 8 - Was 6672960 [B]		1
42	85D5	NUT 5			1
43		ELBOW	NAP - W/Ref. 33 (99K4) - Use W/Ref. 27 (NAP/6674372 Valve) tapered boss face - Order 17KB604 - Was 6718182 [A]		1
43	97K6	O'RING	flared end		1
43	17KB604	ELBOW	W/Ref. 33 (79K4) - Use W/Ref. 27 (NAP/6674372 Valve) flat boss face		1
43		ELBOW	NAP - W/Ref. 33 (99K6) tapered boss face - Use W/Ref. 27 (6678150 Valve) Order 17KB606 - Was 17KV00005B [A]		1
43	97K6	O'RING	flared end		1
43	17KB606	ELBOW	W/Ref. 33 (79K6) - Use W/Ref. 27 (6678150 Valve)		1

Page 85 - OSS# 2071349 - All rights reserved by Bobcat Company - 12/01/2009 - 20:50:59 - Produced by Ken Cook Co. with media1off

AUXILIARY HYDRAULICS
(W/Pressure Relief)(S/N 500K 11978 & Abv, 5176 20141 - 21198
5180 12387-12551, 5181 12246-12468, 5190 21021 - 24161, 5192 12364 - 12516)

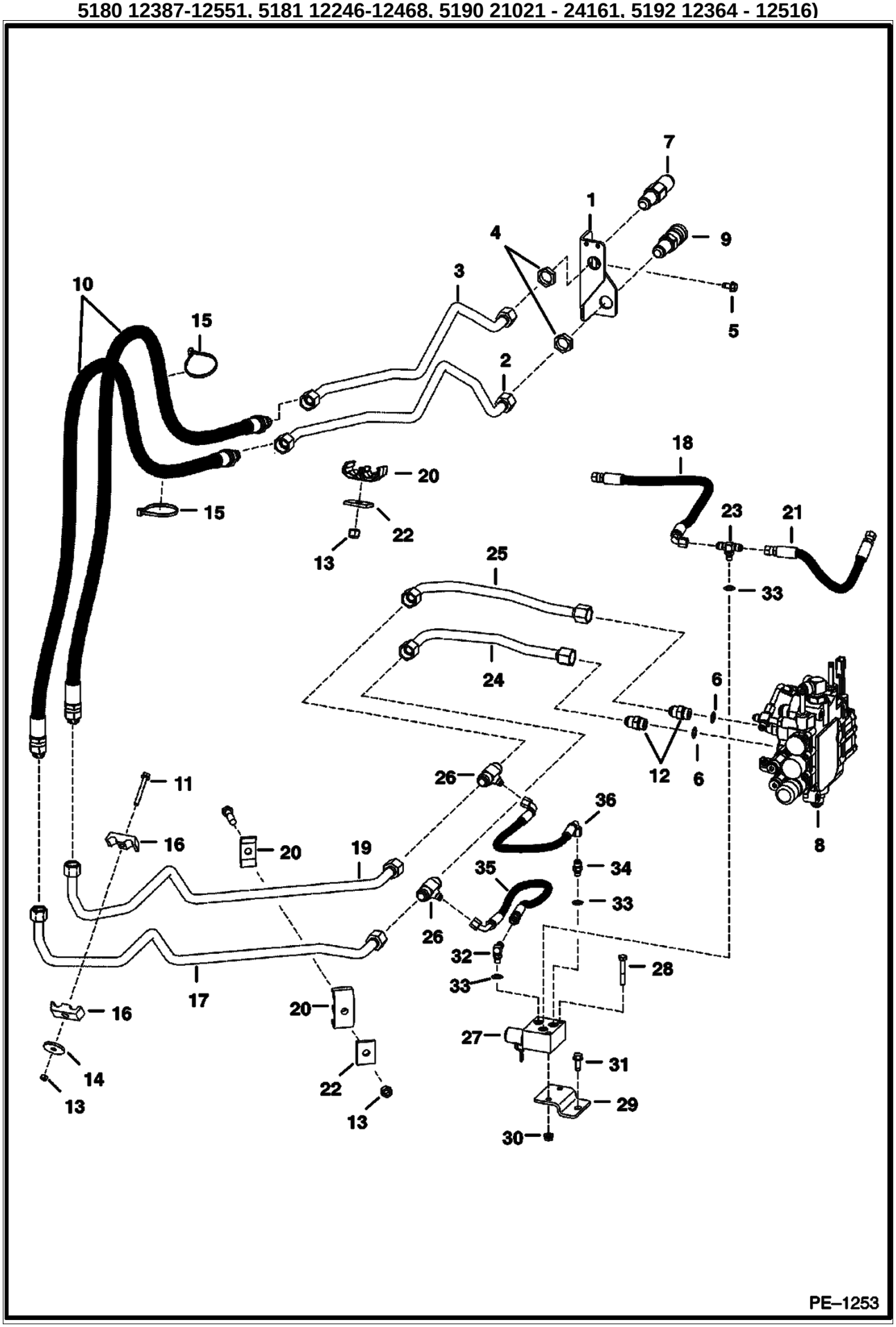

Page 86 - OSS# 2071349 - All rights reserved by Bobcat Company - 12/01/2009 - 20:50:59 - Produced by Ken Cook Co. with media1off

AUXILIARY HYDRAULICS (Cont'd)
(W/Pressure Relief)(S/N 500K 11978 & Abv, 5176 20141 - 21198 5180 12387-12551, 5181 12246-12468, 5190 21021 - 24161, 5192 12364 - 12516)

Ref No	Part Number	Description	Remarks	Serial Number	Qty
1	6714665	MOUNT			1
2	6727649	TUBE			1
3	6727658	TUBE			1
4	86F8	NUT 5			2
5	84G3712	BOLT			2
6	99K12	O'RING	tapered boss face		x
6	79K12	O RING 10	flat boss face		x
7	6676445	COUPLER	male - FF		1
8		VALVE	See Illustration HYDRAULIC CONTROL VALVE/ B17144A		1
9	6676447	COUPLER	female - FF		1
10	6727657	HOSE	W/cover		2
11	84G3736	BOLT			2
12		ADAPTER	NAP - W/Ref. 6 - tapered boss face - Order 15KB1212 - Was 15KV00008B [A]		2
12	97K12	O'RING	flared end		2
12	15KB1212	ADAPTER	W/Ref. 6 - flat boss face		2
13	59D8	NUT 5			2
14	872229	WASHER			1
15	6624289	STRAP 10			2
16	6592506	CLAMP			2
17	6726186	TUBE			1
18	6702669	HOSE			1
19	6726185	TUBE			1
20	6717951	CLAMP			2
21	6717385	HOSE			1
22	6553709	WASHER			2
23		TEE	NAP - W/Ref. 33 (99K4 O-ring) - Use W/Ref. 27 (NAP/6674372 Valve) - Order 19KB604 - Was 6718183 [A]		1
23	97K6	O'RING			2
23	19KB604	TEE	W/Ref. 33 (79K4) - flat boss face - Use W/Ref. 27 (NAP/6674372 Valve)		1
23		TEE	NAP - W/Ref. 33 (99K6 O-ring) - Use W/Ref. 27 (6678150 Valve) - Order 19KB606 - Was 19KV00005B [A]		1
23	97K6	O'RING	flared end		2
23	19KB606	TEE	W/Ref. 33 (79K6) - flat boss face - Use W/Ref. 27 (6678150 Valve)		1
24	6726188	TUBE			1
25	6726187	TUBE			1
26	6717923	TEE			2
26	97K12	O'RING	flared end		2
27		VALVE	See Illustration PRESSURE RELEASE VALVE/ PE1017 NAP - W/.4375" threaded ports - Order 6678150 valve, 15KB606, 17KB606 & 19KB606 fittings - Was 6674372		1
27	6678150	VALVE	See Illustration PRESSURE RELEASE VALVE/ PE1017 W/.5625" threaded ports		1
28	17C636	BOLT			2
29	6717384	BRACKET			1
30	55D6	NUT			2
31	84G3716	SCREW 5			1
32	6726270	HOSE			1
33	79K4	O RING 10	flat boss face		x
33	79K6	O RING 10	flat boss face		x
33	99K4	O'RING	tapered boss face		x

Page 87 - OSS# 2071349 - All rights reserved by Bobcat Company - 12/01/2009 - 20:50:59 - Produced by Ken Cook Co. with media1off

AUXILIARY HYDRAULICS (Cont'd)
(W/Pressure Relief)(S/N 500K 11978 & Abv, 5176 20141 - 21198
5180 12387-12551, 5181 12246-12468, 5190 21021 - 24161, 5192 12364 - 12516)

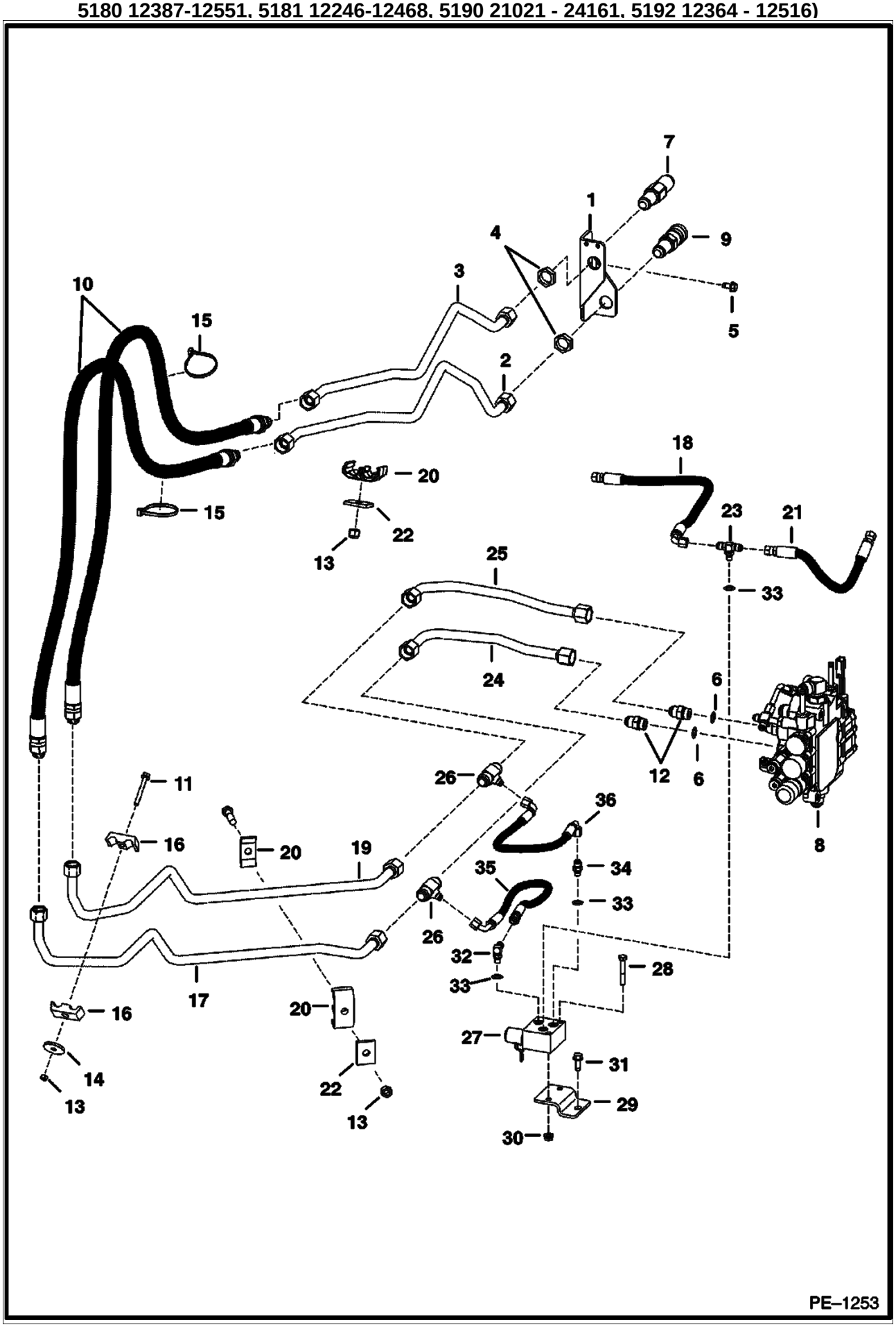

Page 88 - OSS# 2071349 - All rights reserved by Bobcat Company - 12/01/2009 - 20:50:59 - Produced by Ken Cook Co. with media1off

AUXILIARY HYDRAULICS (Cont'd)
(W/Pressure Relief)(S/N 500K 11978 & Abv, 5176 20141 - 21198
5180 12387-12551, 5181 12246-12468, 5190 21021 - 24161, 5192 12364 - 12516)

Ref No	Part Number	Description	Remarks	Serial Number	Qty
33	99K6	O'RING	tapered boss face		x
34		CONNECTOR	NAP - W/Ref. 33 (99K4) - tapered boss face - Use W/Ref. 27 (NAP/6674372 Valve) - Order 15KB604 - Was 6718109 [A]		1
34	97K6	O'RING			1
34	15KB604	CONNECTOR	W/Ref. 33 (79K4) - flat boss face - Use W/Ref. 27 (NAP/6674372 Valve)		1
34		ADAPTER	NAP - W/Ref. 33 (99K6) - Use W/Ref. 27 (6678150 Valve) - Order 15KB606 - Was 15KV00005B [A]		1
34	97K6	O'RING	flared end		1
34	15KB606	ADAPTER	W/Ref. 33 (79K6) - flat boss face		1
35		ELBOW	NAP - W/Ref. 33 (99K4) - Use W/Ref. 27 (NAP/6674372 Valve) - tapered boss face - Order 17KB604 - Was 6718182 [A]		1
35	97K6	O'RING	flared end		1
35	17KB604	ELBOW	W/Ref. 33 (79K4) - flat boss face - Use W/Ref. 27 (NAP/6674372 Valve)		1
35		ELBOW	NAP - W/Ref. 33 (99K6 O-ring) - Use W/Ref. 27 (6678150 Valve) - Order 17KB606 - Was 17KV00005B [A]		1
35	97K6	O'RING			1
35	17KB606	ELBOW	W/Ref. 33 (79K6) - flat boss face - Use W/Ref. 27 (6678150 Valve)		1
36	6717387	HOSE			1

Page 89 - OSS# 2071349 - All rights reserved by Bobcat Company - 12/01/2009 - 20:50:59 - Produced by Ken Cook Co. with media1off

AUXILIARY HYDRAULICS
(W/Pressure Relief) (519212517 & Above, 517621199 & Above, 518012552 & Above, 518112469 & Above, 519024162 & Above)

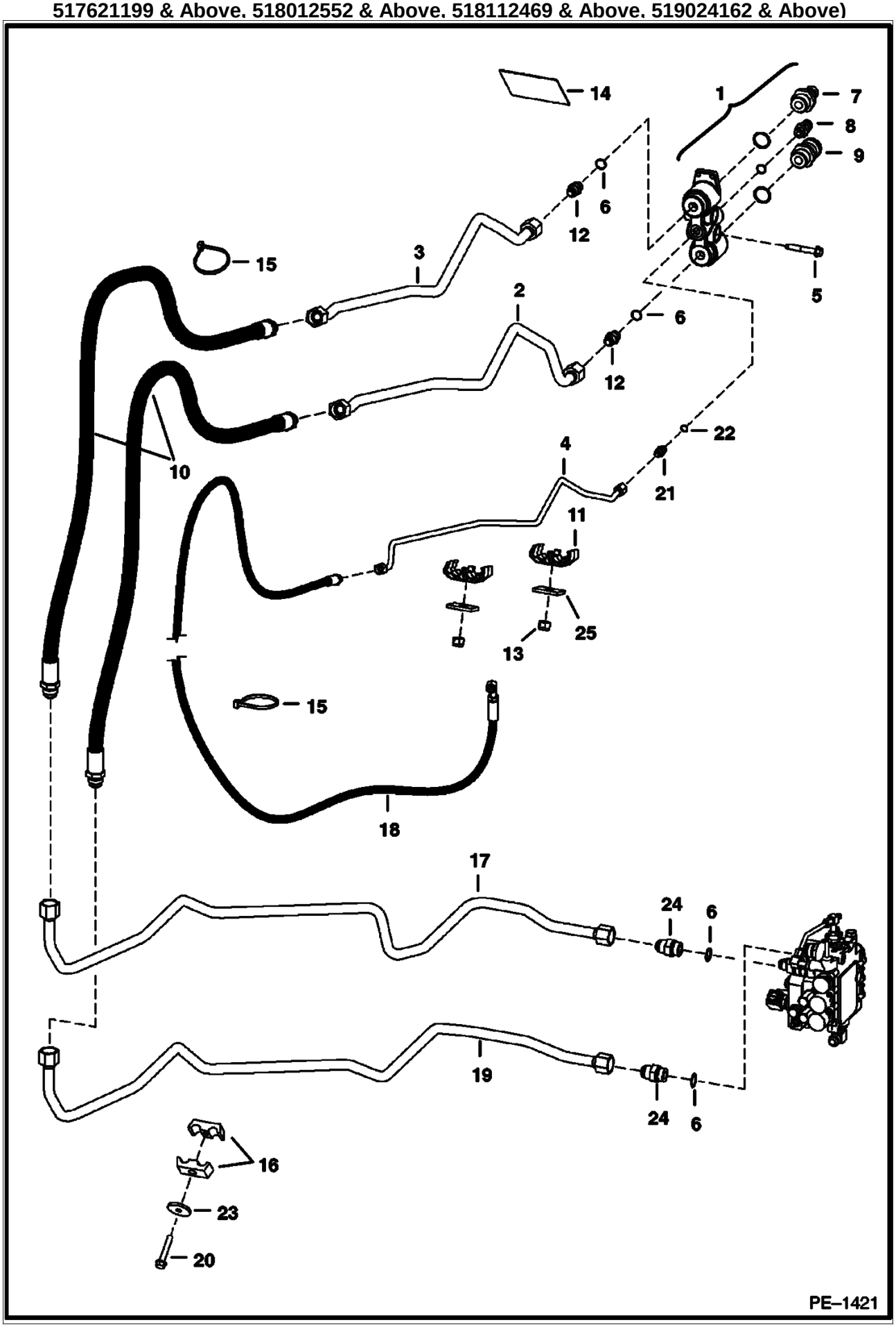

Page 90 - OSS# 2071349 - All rights reserved by Bobcat Company - 12/01/2009 - 20:50:59 - Produced by Ken Cook Co. with mediaioff

AUXILIARY HYDRAULICS (Cont'd)
(W/Pressure Relief) (519212517 & Above, 517621199 & Above, 518012552 & Above, 518112469 & Above, 519024162 & Above)

Ref No	Part Number	Description	Remarks	Serial Number	Qty
1	6678076	BLOCK	coupler - Ref. 7-9 & (2) of Ref. 12		1
2	6731230	TUBE			1
3	6731229	TUBE			1
4	6731231	TUBE			1
5	84G3740	BOLT			2
6	79K12	O RING 10			x
7	6679837	COUPLER	coupler - male - FF		1
7	6679841	SEAL	blue		1
7	6680020	SEAL KIT	(3) O-rings & (3) back-up washers		1
8	6679838	COUPLER	coupler - male		1
8	6679840	SEAL	blue		1
9		KIT	coupler - female - FF - Order 6680018 coupler kit - Was 6679839 [A]		1
9	6680018	COUPLER, KIT	female - Use W/hydraulic breaker		1
9	6680020	SEAL KIT	(3) O-rings & (3) back-up washers		1
10	6727657	HOSE	W/cover		2
11	6717951	CLAMP			2
12	6679836	ADAPTER	adapter - W/spring & Ref. 6		2
13	59D8	NUT 5			2
14	6731757	DECAL			1
15	6624289	STRAP 10			2
16	6592506	CLAMP			2
17	6733683	TUBE			1
18	6718311	HOSE			1
19	6731228	TUBE			1
20	84G3736	BOLT			1
21	15KB606	ADAPTER	W/Ref. 22		1
22	79K6	O RING 10			x
23	872229	WASHER			1
24	15KB1212	ADAPTER	W/Ref. 6		2
25	6553709	WASHER			2

Page 91 - OSS# 2071349 - All rights reserved by Bobcat Company - 12/01/2009 - 20:50:59 - Produced by Ken Cook Co. with media1off

TILT CYLINDER

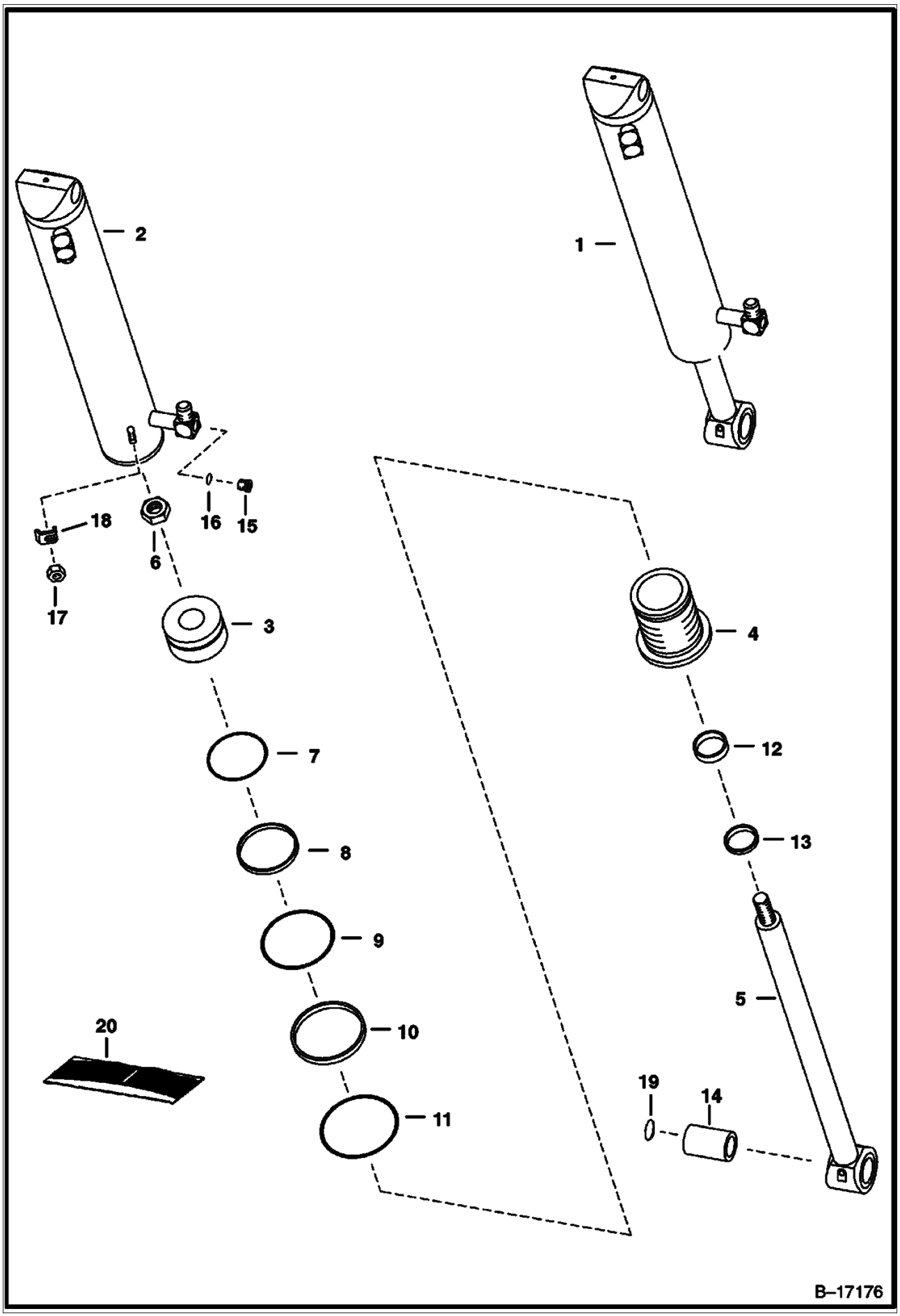

Page 92 - OSS# 2071349 - All rights reserved by Bobcat Company - 12/01/2009 - 20:50:59 - Produced by Ken Cook Co. with media1off

Ref No	Part Number	Description	Remarks	Serial Number	Qty
1		CYLINDER	See Illustration TILT CYLINDER/ PE1056 NAP - TILT - REF. 2-16 - .5625" thread base end fitting - ORDER 7117174 CYLINDER & 7114236 hose - WAS 6806331 [A]		2
2		CASE	See Illustration TILT CYLINDER/ PE1056 NAP - 2.75" (69,9 MM) I.D. - .5625" thread base end fitting - ORDER 7117175 case & 7114236 hose - WAS 6806337 [A]		1
3	6806315	PISTON			1
4	6536968	HEAD	Was 6806332 [A]		1
5	6809903	SHAFT, ROD CYL TILT	1.375" (34,9 mm) - W/Ref. 14 - Was 6806336 [A]		1
6	92D16	NUT			1
7	25K30210	O-RING	Was 54K30210 [B]		1
8	6516229	PISTON SEAL			1
9	25K60212	O RING 10	Was 54K60212 [B]		1
10	80K332	WASHER	back-up		1
11	25K40224	O RING 10	Was 54K40224 [B]		1
12	6667325	SEAL	rod		1
13	6666543	SEAL	wiper		1
14	6805453	BUSHING	wear		1
15	90KV2	PLUG	W/Ref. 16 - allen socket head - tapered boss face - Was 90KV00005B [A]		2
16	95K3	O'RING			2
17	85D6	LOCK NUT			1
18	6562266	CLAMP			1
19	6654117	SEAL, OIL	2" (5,08 mm) OD		2
19	225855	SEAL, OIL	1.5" (3,81 mm) OD		2
20	6806330	KIT, SEAL	Ref. 6-13		1

Page 93 - OSS# 2071349 - All rights reserved by Bobcat Company - 12/01/2009 - 20:50:59 - Produced by Ken Cook Co. with media1off

TILT CYLINDER

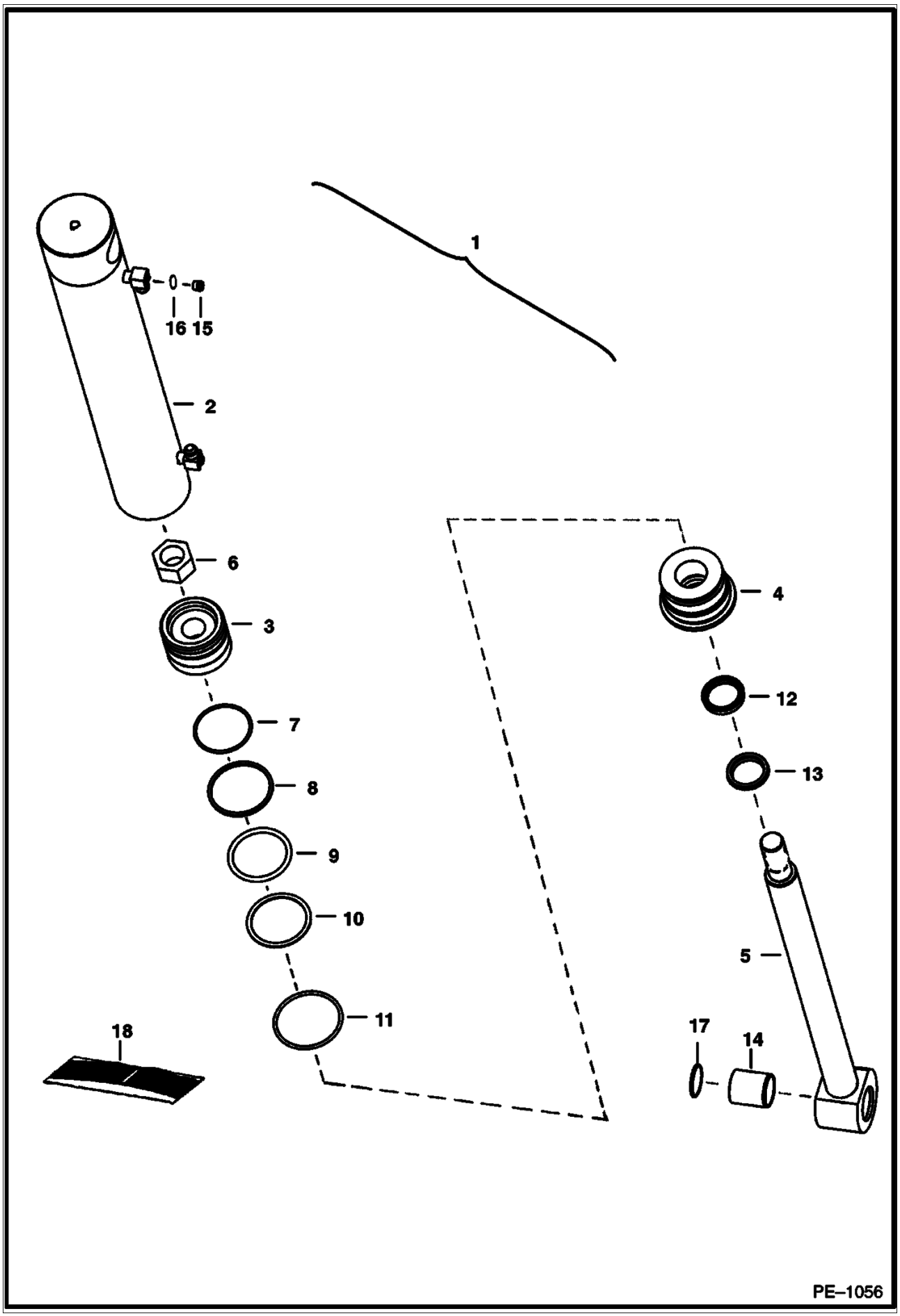

Page 94 - OSS# 2071349 - All rights reserved by Bobcat Company - 12/01/2009 - 20:50:59 - Produced by Ken Cook Co. with media1off

Ref No	Part Number	Description	Remarks	Serial Number	Qty
1		CYLINDER	See Illustration TILT CYLINDER/ PE1056 NAP - TILT - REF. 2-16 - .5625" thread base end fitting - ORDER 7117175 CYLINDER & 7114236 hose - WAS 6807415 [A]		2
2		CASE	NAP - 2.75" (69,9 mm) I.D. - W/.5625" thread base end fitting - Order 7117175 case & 7114236 hose - Was 6807440 [A]		1
3	6806315	PISTON			1
4	6536968	HEAD	Was 6806332 [A]		1
5	6809903	SHAFT, ROD CYL TILT	1.375" (34,9 mm) - W/Ref. 14 - Was 6806336 [A]		1
6	92D16	NUT			1
7	25K30210	O-RING	Was 54K30210 [B]		1
8	6516229	PISTON SEAL			1
9	25K60212	O RING 10	Was 54K60212 [B]		1
10	80K332	WASHER	back-up		1
11	25K40224	O RING 10	Was 54K40224 [B]		1
12	6667325	SEAL	rod		1
13	6666543	SEAL	wiper		1
14	6805453	BUSHING	wear		1
15	90KV2	PLUG	W/Ref. 16 - allen socket head - tapered boss face		2
16	95K3	O'RING			2
17	6654117	SEAL, OIL	2" (5,08 mm) OD		2
17	225855	SEAL, OIL	1.5" (3,81 mm) OD		2
18	6806330	KIT, SEAL	Ref. 6-13		1

Page 95 - OSS# 2071349 - All rights reserved by Bobcat Company - 12/01/2009 - 20:50:59 - Produced by Ken Cook Co. with media1off

TILT CYLINDER

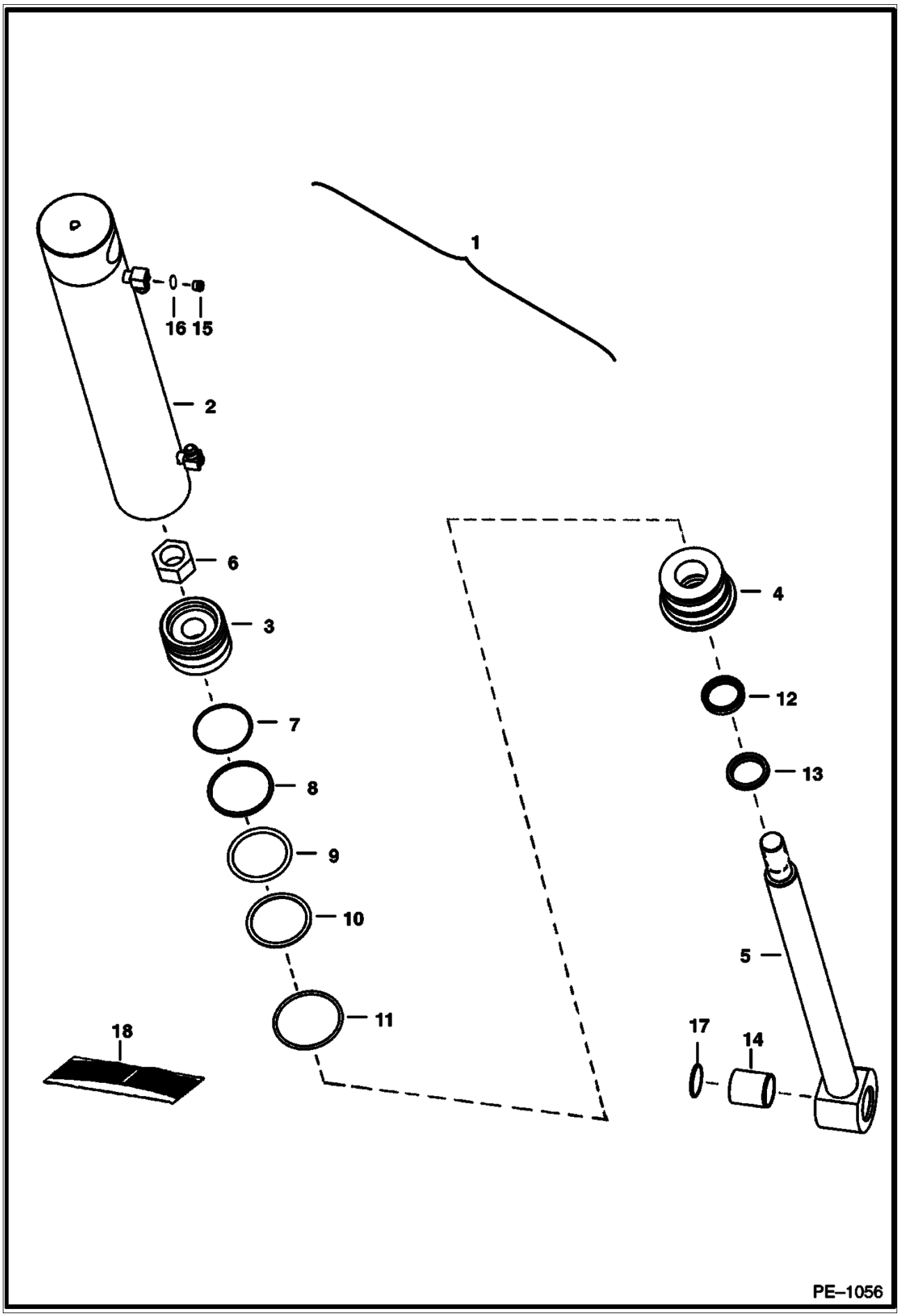

Page 96 - OSS# 2071349 - All rights reserved by Bobcat Company - 12/01/2009 - 20:50:59 - Produced by Ken Cook Co. with media1off

Ref No	Part Number	Description	Remarks	Serial Number	Qty
1		CYLINDER	NAP - tilt - Ref. 2-16 - W/.5625" thread base end fitting - Order 7117174 cylinder & 7114236 hose - Was 6809802		2
1	7117174	CYLINDER, TILT	tilt - Ref. 2-16 - W/.750" thread base end fitting		2
2		CASE	NAP - 2.75" (69,9 mm) I.D. - W/.5625" thread base end fitting - Order 7117175 case & 7114236 hose - Was 6809904		1
2	7117175	TUBE, CASE CYL TILT	tilt - 2.75" (69,9 mm) I.D. - W/.750" thread base end fitting		1
3	6806315	PISTON			1
4	6536968	HEAD	Was 6806332 [A]		1
5	6809903	SHAFT, ROD CYL TILT	1.375" (34,9 mm) - W/Ref. 14		1
6	92D16	NUT			1
7	25K30210	O-RING	Was 54K30210 [B]		1
8	6516229	PISTON SEAL			1
9	25K60212	O RING 10	Was 54K60212 [B]		1
10	80K332	WASHER	back-up		1
11	25K40224	O RING 10	Was 54K40224 [B]		1
12	6667325	SEAL	rod		1
13	6666543	SEAL	wiper		1
14	6805453	BUSHING	wear		1
15	90KV2	PLUG	W/Ref. 16 (95K-3 o-ring allen socket head - tapered boss face		2
15	6812170	PLUG	W/Ref. 16 (75k-3 o-ring) hex head - flat boss face		2
16	95K3	O'RING	tapered boss face		2
16	75K3	O-RING	flat boss face		2
17	6654117	SEAL, OIL	2" (5,08 mm) OD		2
17	225855	SEAL, OIL	1.5" (3,81 mm) OD		2
18	6806330	KIT, SEAL	Ref. 6-13		1

Page 97 - OSS# 2071349 - All rights reserved by Bobcat Company - 12/01/2009 - 20:50:59 - Produced by Ken Cook Co. with media1off

LIFT CYLINDER

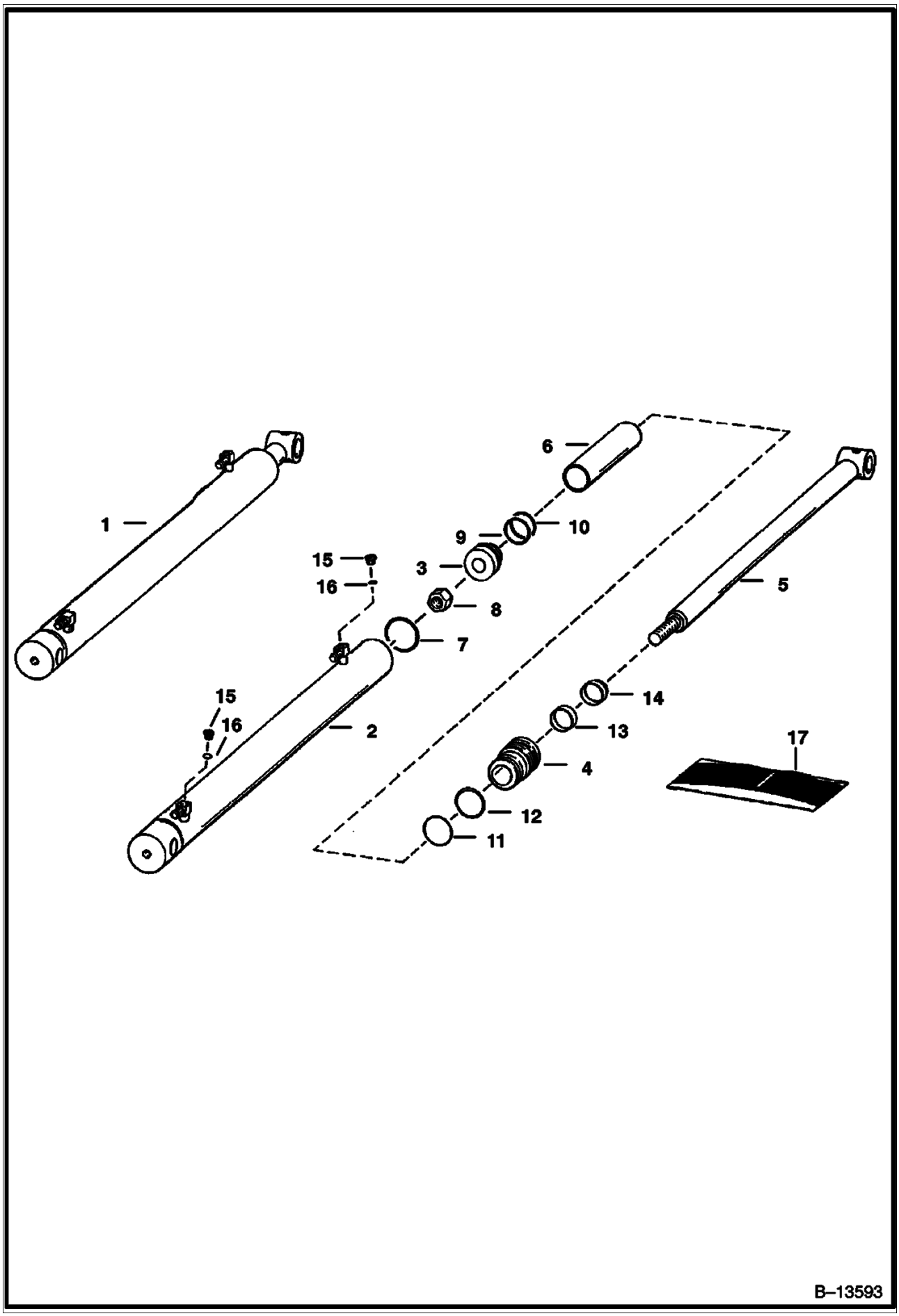

Page 98 - OSS# 2071349 - All rights reserved by Bobcat Company - 12/01/2009 - 20:50:59 - Produced by Ken Cook Co. with media1off

Ref No	Part Number	Description	Remarks	Serial Number	Qty
1		CYLINDER	See Illustration LIFT CYLINDER/ PE2748 NAP - Ref. 2 - 17 - Order 7117667 cylinder & 7116565 hose - Was 6805056 [A]		2
1		CYLINDER	See Illustration LIFT CYLINDER/ PE2748 NAP - Ref. 2 - 17 - Order 7117667 cylinder & 7116565 hose - Was 6811995 [A]		2
2		CASE	NAP - Order 7117667 cylinder & 7116565 hose - Was 6805087 [A]		1
3	6678931	PISTON	W/Ref. 9 & 10 - Also has Non-Replaceable wear sleeves - Was 6677197 [A]		1
4	6806124	HEAD			1
5	6810430	ROD	32.44" (824 mm) long - Was 6805086 [A]		1
6	6539645	SPACER	2.02" (51,3 mm) long		1
7	82K230	SEAL	Was 58K000230B [A]		1
8	6810539	NUT	Was 6804592 [A]		1
9	1522534	SEAL			1
10	25K30202	O RING 10			1
11	25K40208	O RING 10	Was 54K40208 [B]		1
12	73K228	BACK-UP RING	back-up		1
13	6667326	SEAL	rod		1
14	6690707	SEAL	wiper - Was 6665086 [A]		1
15	90KV2	PLUG	W/Ref. 16 (95K-3 O-ring) Allen Socket Head - tapered boss face		2
15	6812170	PLUG	W/Ref. 16 (75K-3 O-ring) hex head - flat boss face		2
16	95K3	O'RING	tapered boss face		2
16	75K3	O-RING	flat boss face		2
17	7135559	SEAL KIT	Ref. 7-14 - Was 6816537 [A]		1

Page 99 - OSS# 2071349 - All rights reserved by Bobcat Company - 12/01/2009 - 20:50:59 - Produced by Ken Cook Co. with media1off

LIFT CYLINDER

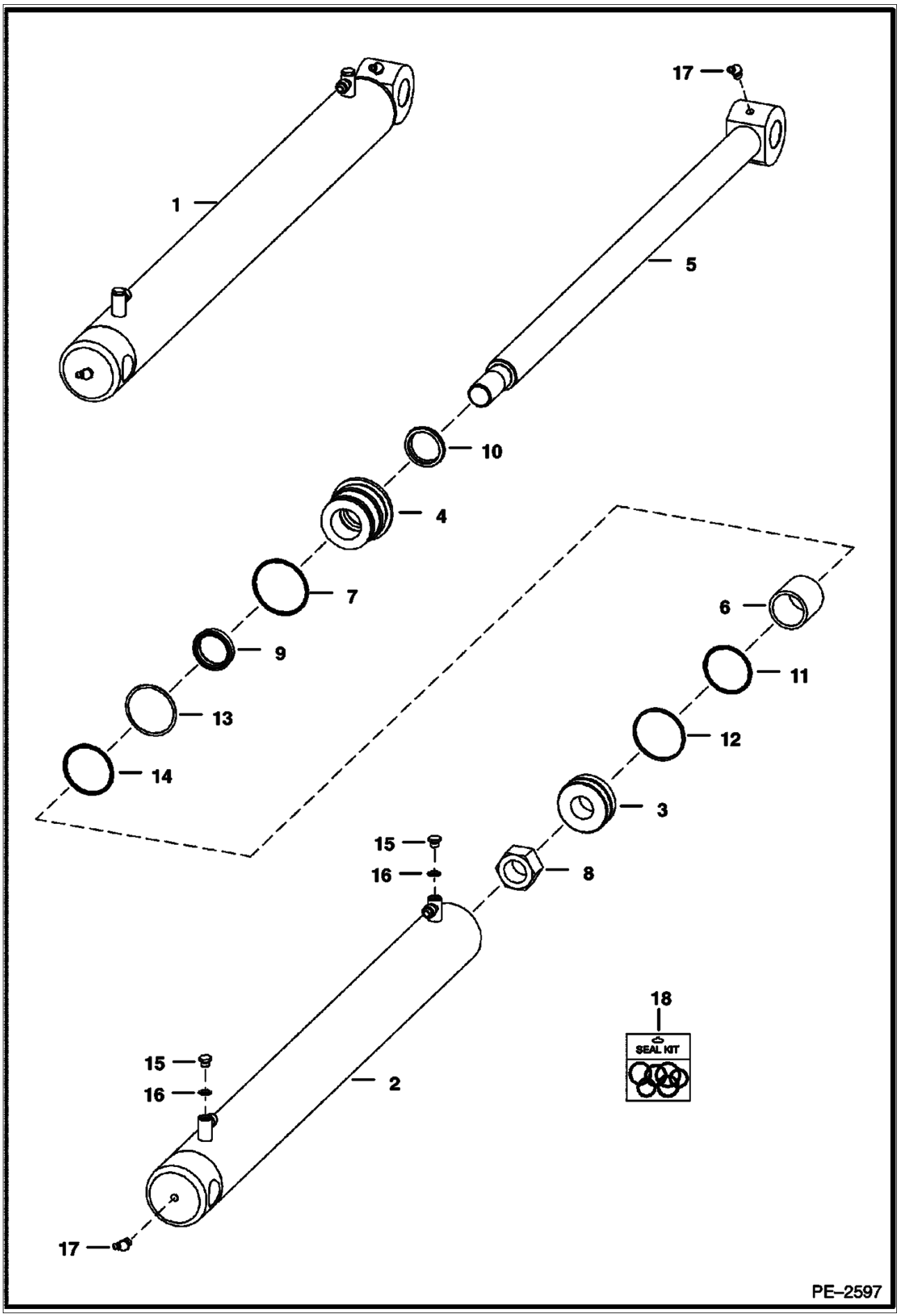

Page 100 - OSS# 2071349 - All rights reserved by Bobcat Company - 12/01/2009 - 20:50:59 - Produced by Ken Cook Co. with mediaioff

Ref No	Part Number	Description	Remarks	Serial Number	Qty
1		CYLINDER	See Illustration LIFT CYLINDER/ PE2748 NAP - Ref 2 - 17 - Order 7117667 cylinder & 7116565 hose - Was 7107895 [A]		2
2		CASE	See Illustration LIFT CYLINDER/ PE2748 NAP - Order 7117667 cylinder & 7116565 hose - Was 6805087 [A]		1
3	6678931	PISTON	W/Ref. 9 & 10 - Also has Non-Replaceable wear sleeves		1
4	6806124	HEAD			1
5	7107896	ROD	32.29" (820,2mm) long		1
6	6809593	SPACER			1
7	82K230	SEAL			1
8	6810539	NUT			1
9	1522534	SEAL			1
10	25K30202	O RING 10			1
11	25K40208	O RING 10	Was 54K40208 [B]		1
12	73K228	BACK-UP RING	back-up		1
13	6667326	SEAL	rod		1
14	6690707	SEAL	wiper - Was 6665086 [A]		1
15	6812170	PLUG	W/Ref. 16		2
16	75K3	O-RING			2
17	11H15	GREASE FITTING			2
18	7135559	SEAL KIT	Ref. 7-14 - Was 6816537 [A]		1

Page 101 - OSS# 2071349 - All rights reserved by Bobcat Company - 12/01/2009 - 20:50:59 - Produced by Ken Cook Co. with mediaioff

LIFT CYLINDER

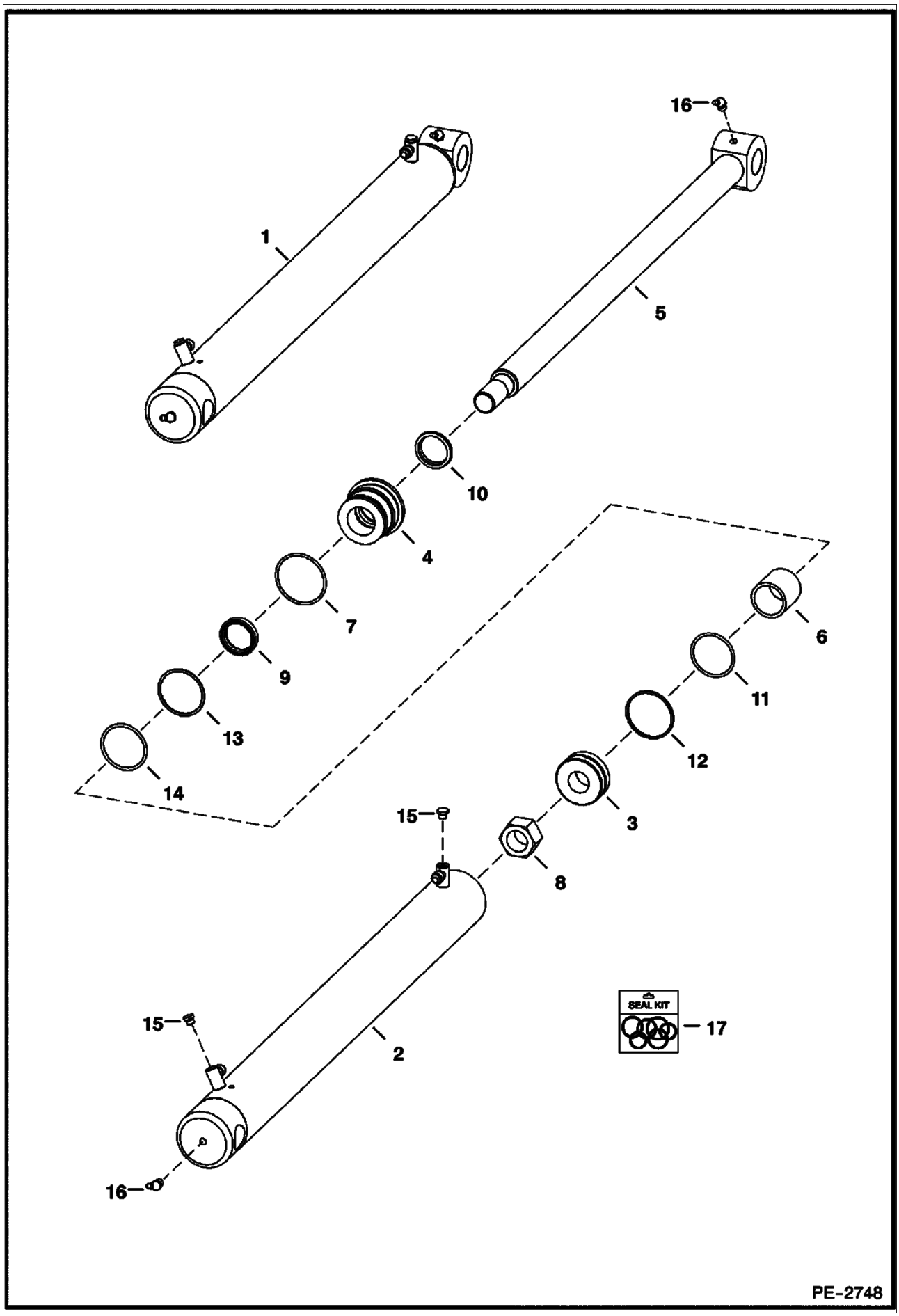

Page 102 - OSS# 2071349 - All rights reserved by Bobcat Company - 12/01/2009 - 20:50:59 - Produced by Ken Cook Co. with mediaioff

Ref No	Part Number	Description	Remarks	Serial Number	Qty
1	7117667	CYLINDER, LIFT	Ref. 2 - 16		2
2	7117668	TUBE, CASE CYL LIFT			1
3	6678931	PISTON	W/Ref. 9 & 10 - Also has Non-Replaceable wear sleeves		1
4	6806124	HEAD			1
5	7107896	ROD	32.29" (820,2mm) long		1
6	6809593	SPACER			1
7	82K230	SEAL			1
8	6810539	NUT			1
9	1522534	SEAL			1
10	25K30202	O RING 10			1
11	25K40208	O RING 10	Was 54K40208 [B]		1
12	73K228	BACK-UP RING	back-up		1
13	6667326	SEAL	rod		1
14	6690707	SEAL	wiper - Was 6665086 [A]		1
15	6812170	PLUG			2
15	75K3	O-RING			2
16	11H15	GREASE FITTING			2
17	7135559	SEAL KIT	Ref. 7-14 - Was 6816537 [A]		1

Page 103 - OSS# 2071349 - All rights reserved by Bobcat Company - 12/01/2009 - 20:50:59 - Produced by Ken Cook Co. with mediaioff

CONTROL PEDALS

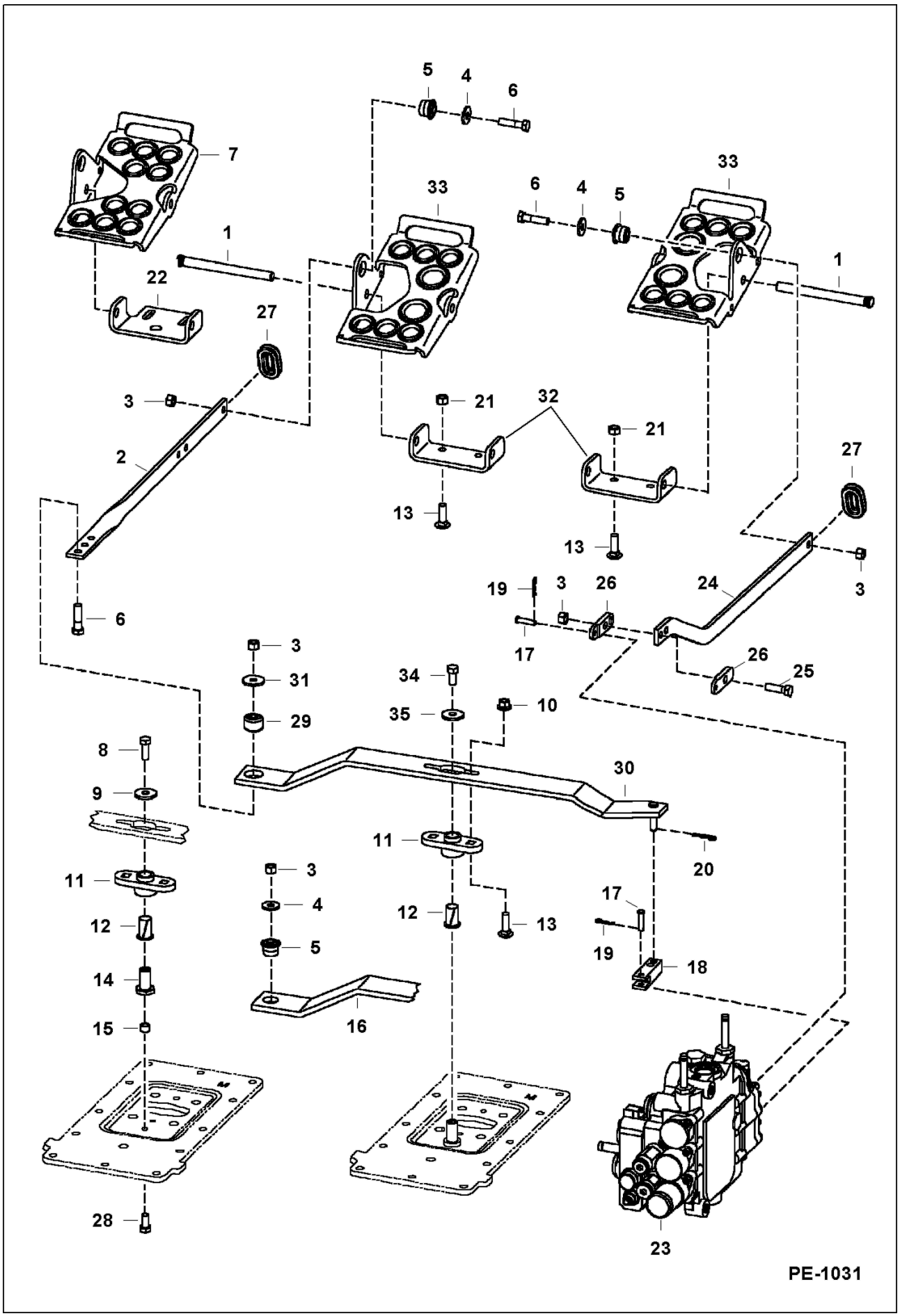

Page 104 - OSS# 2071349 - All rights reserved by Bobcat Company - 12/01/2009 - 20:50:59 - Produced by Ken Cook Co. with mediaioff

Ref No	Part Number	Description	Remarks	Serial Number	Qty
1	6564657	PIN			2
2	6576302	BAR			1
3	95D6	NUT			5
4	6563914	WASHER	Used W/Ref 5 - 1" OD x 3/8" ID		2
5	6665701	BUSHING, PRESS FIT	Use W/Ref. 33		2
6	17C624	BOLT 5	3/8 x 1.5" - grade 8		2
7		PEDAL	NAP - Order Ref. 33 - Was 6726680 [A]		2
8	6665839	BOLT			1
9	619021	WASHER, 5	1.25" (31,8 mm) OD		1
10	83D6	NUT 5			2
11	6708043	BUSHING	flange		1
12	6512026	BUSHING			1
13	37C620	BOLT	3/8 x 1.25" - carriage		5
14	6706104	RETAINING NUT			1
15	6544654	BUSHING	spacer		1
16	6717945	LEVER	flat sided		1
17		PIN	NAP - Was 6564654 [A]		2
18	6706105	YOKE			1
19	6513495	COTTER PIN			2
20	1306637	CLIP			1
21	57D6	NUT 5			4
22	6726679	MOUNT			2
23		VALVE			1
24	6717820	BAR			1
25	17C620	BOLT			1
26	6708009	LINK	2.69" (68,3 mm) long		2
27	6577961	GROMMET			2
28	35C612	BOLT			1
29	6685060	BUSHING, TORSION	torsion - 1.055" (26,797 mm) OD - Was 6678067 [A]		1
30	7108408	LEVER	side is notched - Was 6733940 [A]		1
31	6737388	WASHER	Used W/Ref. 5 & 16		2
32	7115220	MOUNT			2
33	7115219	PEDAL	Was 6726680 [A]		2
34	17C612	BOLT 5			1
35	6557831	WASHER	.875" (22,23 mm) OD		1

Page 105 - OSS# 2071349 - All rights reserved by Bobcat Company - 12/01/2009 - 20:50:59 - Produced by Ken Cook Co. with mediaioff

HYDRAULIC CONTROL VALVE
(BICS Combo Valve)

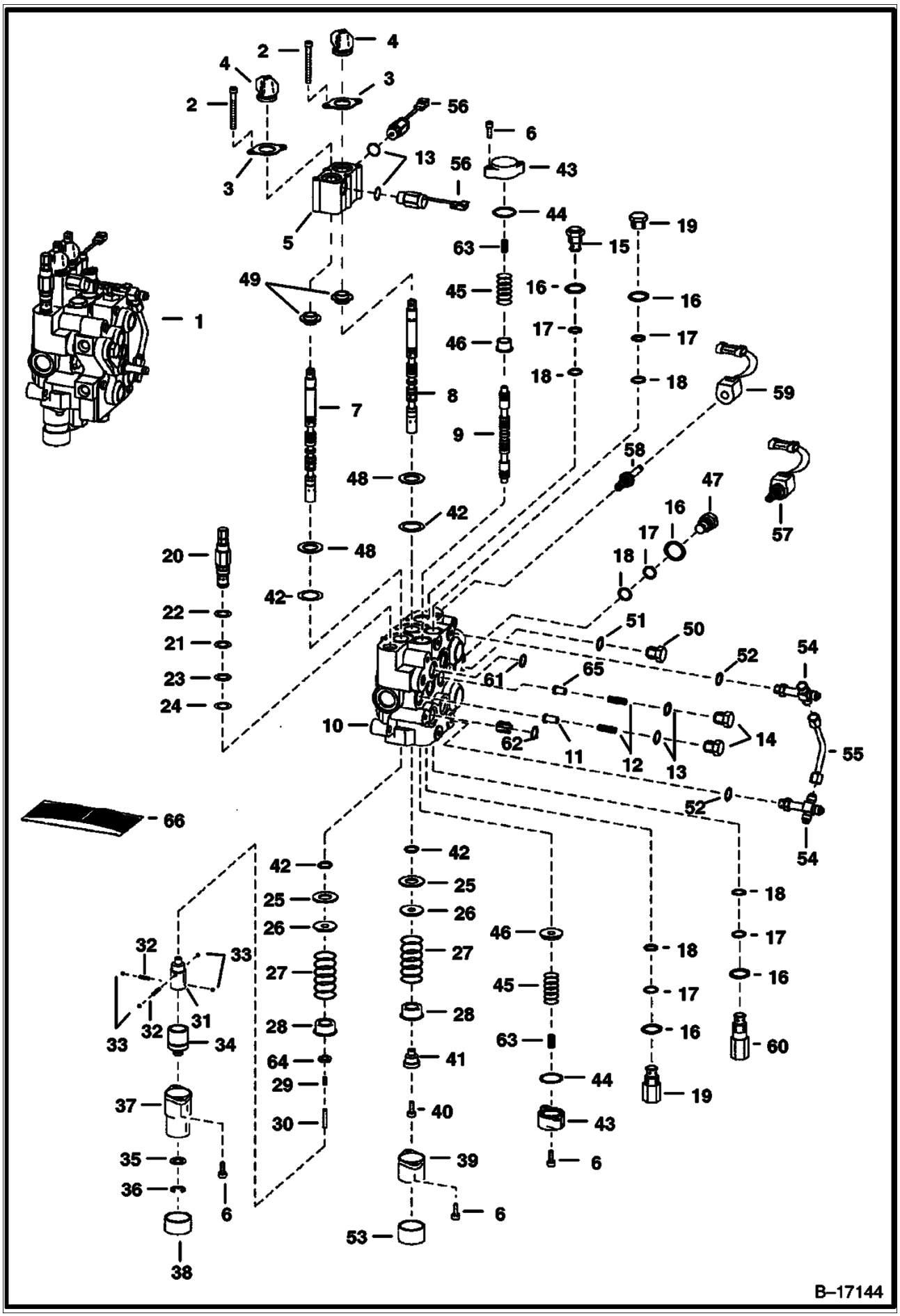

Page 106 - OSS# 2071349 - All rights reserved by Bobcat Company - 12/01/2009 - 20:50:59 - Produced by Ken Cook Co. with mediaioff

Ref No	Part Number	Description	Remarks	Serial Number	Qty
1		VALVE	See BTI336 - NAP - valve is minus all fittings, relief valves, anti-cavitation valves, solenoid coils & solenoid spools - remove & use existing parts from old valve or order new parts as needed - Was 6805516 [A]	500K 11038 & Bel	1
1		VALVE	See BTI336 - NAP - valve is minus all fittings, relief valves, anti-cavitation valves, solenoid coils & solenoid spools - remove & use existing parts from old valve or order new parts as needed - Was 6805516 [A]	5190 18909 & Bel	1
1		VALVE	See BTI336 - NAP - valve is minus all fittings, relief valves, anti-cavitation valves, solenoid coils & solenoid spools - remove & use existing parts from old valve or order new parts as needed - Was 6805516 [A]	5192 12154 & Bel	1
1		VALVE	See BTI336 - NAP - valve is minus all fittings, relief valves, anti-cavitation valves, solenoid coils & solenoid spools - remove & use existing parts from old valve or order new parts as needed - Was 6805516 [A]	5181 12089 & Bel	1
1		VALVE	See BTI336 - NAP - valve is minus all fittings, relief valves, anti-cavitation valves, solenoid coils & solenoid spools - remove & use existing parts from old valve or order new parts as needed - Was 6805516 [A]	5176 19258 & Bel.	1
1		VALVE	See BTI336 - NAP - valve is minus all fittings, relief valves, anti-cavitation valves, solenoid coils & solenoid spools - remove & use existing parts from old valve or order new parts as needed - Was 6805516 [A]	5180 12218 & Bel.	1
1		VALVE	See BTI336 - NAP - valve is minus all fittings, relief valves, anti-cavitation valves, solenoid coils & solenoid spools - remove & use existing parts from old valve or order new parts as needed - Was 6810451 [A]	500K 11039-11977	1
1		VALVE	See BTI336 - NAP - valve is minus all fittings, relief valves, anti-cavitation valves, solenoid coils & solenoid spools - remove & use existing parts from old valve or order new parts as needed - Was 6810451 [A]	5176 19259-20140	1
1		VALVE	See BTI336 - NAP - valve is minus all fittings, relief valves, anti-cavitation valves, solenoid coils & solenoid spools - remove & use existing parts from old valve or order new parts as needed - Was 6810451 [A]	5192 12155-12363	1
1		VALVE	See BTI336 - NAP - valve is minus all fittings, relief valves, anti-cavitation valves, solenoid coils & solenoid spools - remove & use existing parts from old valve or order new parts as needed - Was 6810451 [A]	5181 12090-12245	1
1		VALVE	See BTI336 - NAP - valve is minus all fittings, relief valves, anti-cavitation valves, solenoid coils & solenoid spools - remove & use existing parts from old valve or order new parts as needed - Was 6810451 [A]	5190 18910-21020	1
1		VALVE	See BTI336 - NAP - valve is minus all fittings, relief valves, anti-cavitation valves, solenoid coils &	5180 12219-12386	1

Page 107 - OSS# 2071349 - All rights reserved by Bobcat Company - 12/01/2009 - 20:50:59 - Produced by Ken Cook Co. with mediaioff

HYDRAULIC CONTROL VALVE (Cont'd)
(BICS Combo Valve)

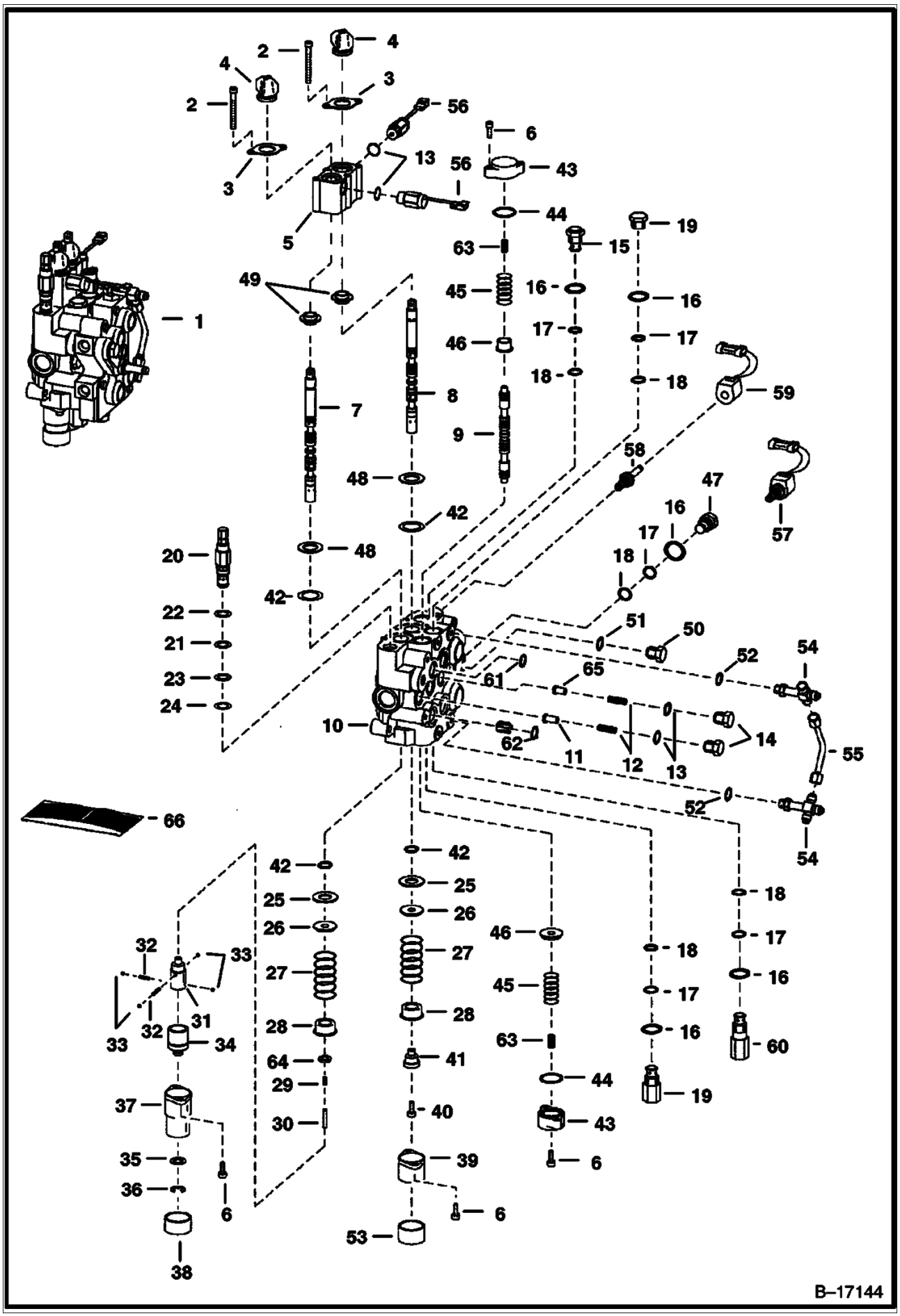

Page 108 - OSS# 2071349 - All rights reserved by Bobcat Company - 12/01/2009 - 20:50:59 - Produced by Ken Cook Co. with mediaioff

Ref No	Part Number	Description	Remarks	Serial Number	Qty
			solenoid spools - remove & use existing parts from old valve or order new parts as needed - Was 6810451 [A]		
1		VALVE ASSY	See Illustration BICS CONTROL VALVE/ TS1365 BICS CONTROL		1
2	29G444	BOLT			4
3	6589564	RETAINER			2
4	6587763	BOOT			2
5	6812031	BLOCK	Was 6805657 [A]		1
6	29G416	BOLT			8
7	6814511	SPOOL	lift - # 1 or Red - Was 6674808 [A]		1
8	6815152	SPOOL	tilt - # 1 or Red - Was 6674814 [A]		1
9	6588074	SPOOL	auxiliary		3
10		BODY	NSS		1
11	6592115	SEAT	load check		2
12	6592117	SPRING			3
13	79K8	O RING 10			3
14	6592116	NUT	load check		3
15	6667549	VALVE	anti-cavity check - W/Ref. 16-18 - Was 6675230 [B]		1
16	79K10	O RING 10			2
17	80K14	BACK-UP WASHER	Was 73K000014B		5
18	58K14	O RING 10			5
19	6678574	RELIEF VALVE	port relief - W/Ref. 16-18 - Was 6673184 [A]		2
20		VALVE	NAP - main relief - pressure preset at factory - W/Ref. 21-24 - Order 6686360 - Was 6676200 [A]		1
20	6686360	VALVE	pressure to be set in field		1
21	58K17	O RING 10			1
22	6665569	WASHER	back-up		1
23	25K20016	O RING 10			1
24	6665570	RING	glide		1
25	6595663	BUSHING			2
26	6587523	WASHER			2
27	6587580	SPRING			2
28	6592100	COLLAR			2
29	6596807	PLUG	plastic - .460" long		1
30	6586918	SCREW			1
31	6587575	ADAPTER			1
32	6592107	SPRING			2
33	6592105	BALL			4
34	6531270	SLEEVE			1
35	6592098	WASHER			1
36	799119	RING			1
37	6589226	BONNET	.625" flange		1
38	6660644	CAP			1
39	7101345	BONNET, DETENT HYD VALVE	Was 6587633 [A]		1
40	30G416	BOLT			1
41	6592109	ADAPTER			1
42	6683274	SEAL, SPOOL	See BTI374 - spool - Was 6665846 [A]		4
43	6588781	END CAP			2
44	58K124	O RING 10			2
45	6806007	SPRING			2
46	7108780	SLEEVE	Was 6595951 [A]		2
47	6592720	PLUG	W/Ref. 16 - 18		1
48	1K127	O-RING 10	Was 93K127 [A]		2

Page 109 - OSS# 2071349 - All rights reserved by Bobcat Company - 12/01/2009 - 20:50:59 - Produced by Ken Cook Co. with mediaioff

HYDRAULIC CONTROL VALVE (Cont'd)
(BICS Combo Valve)

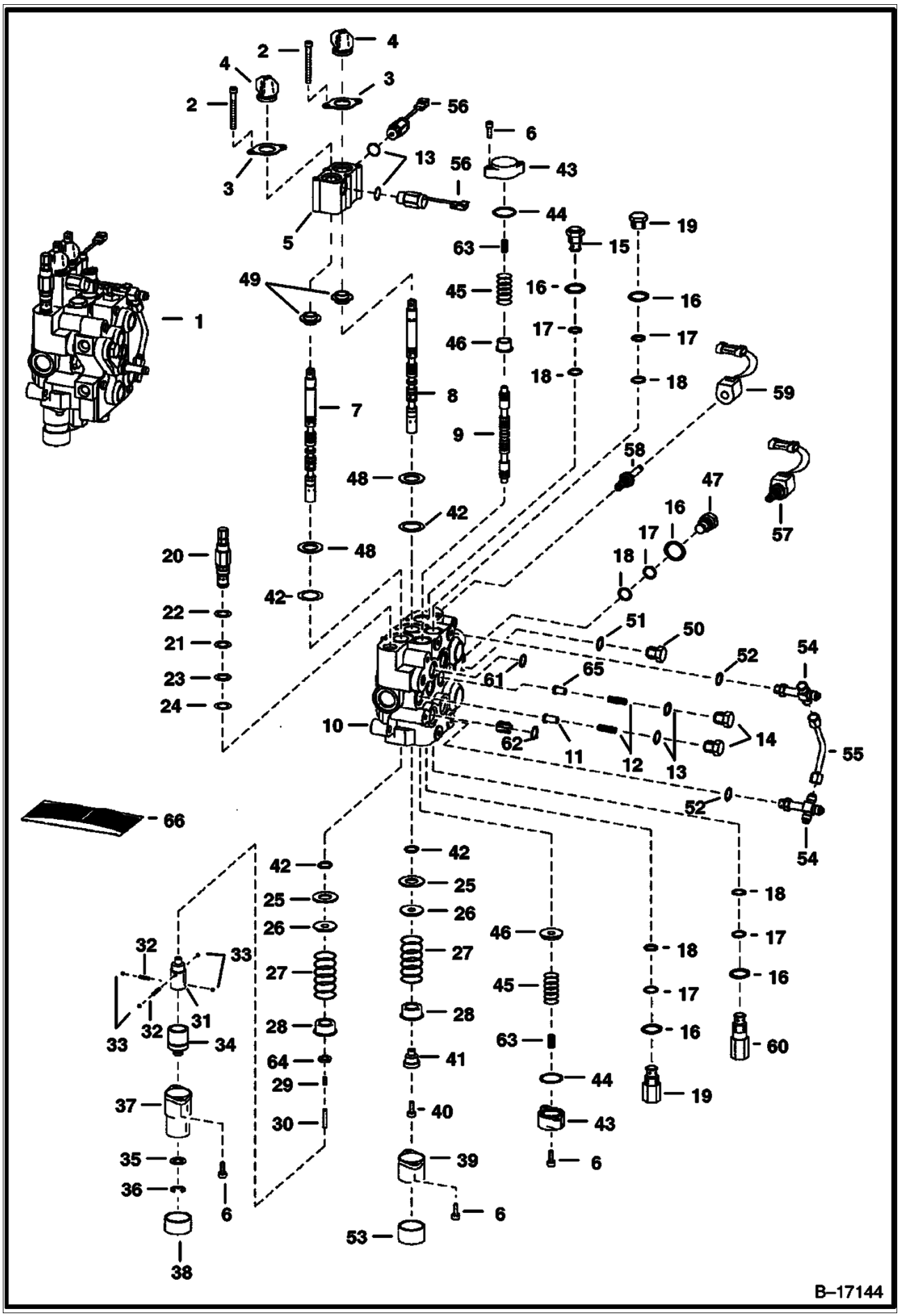

Page 110 - OSS# 2071349 - All rights reserved by Bobcat Company - 12/01/2009 - 20:50:59 - Produced by Ken Cook Co. with mediaioff

HYDRAULIC CONTROL VALVE (Cont'd)
(BICS Combo Valve)

Ref No	Part Number	Description	Remarks	Serial Number	Qty
49	6805102	BUSHING			2
50	90K8	PLUG	W/Ref. 51 - tapered boss face - socket head - Was 90KV00008B [A]		1
51	95K12	O-RING	tapered boss face		1
52	99K6	O'RING	tapered boss face		x
52	79K6	O RING 10	flat boss face		x
53	6662848	CAP			1
54	6817553	CROSS	W/Ref. 52 - flat boss face - Was 6805241 [A]		2
54	97K6	O'RING	flared end		6
55	6577690	TUBE			1
56		SOLENOID	NAP - spool lock - 3" (76,2 mm) wire - Order 6677383 Solenoid - W/Ref. 13 - Was 6674786 [A]		2
56	6676029	SOLENOID	spool lock - 5" (127mm) wire - Was 6677383 [A]		2
57	6665084	SOLENOID	W/Ref. 58 & 59		2
57	6586459	SEAL KIT			x
58	6666616	STEM			2
58	79K7	O RING 10			2
59	6717706	COIL, 10 VOLT	10 volt - W/nut - Was 6665759 [D]		2
59	6676566	NUT			2
60	6678552	VALVE	standard - port relief & anti-cav. W/Ref. 16 - 3500 PSI - use in tilt cylinder base end port - Was 6671632 [A]		1
61	55K204	O RING 10	See Illustration BICS CONTROL VALVE/ TS1365		1
62	55K212	O RING 10	See Illustration BICS CONTROL VALVE/ TS1365		4
63	6596332	SPRING			2
64	54K20002	O'RING 10			1
65	6596569	SEAT	aux. load		1
66	6816252	SEAL KIT	two spool - Ref. 2, 4, 29, 42, 48 & 64 - Was 6806941 [A]		x
66	6632279	KIT, SEAL	main relief - Ref. 21-24		x
66	6809425	SEAL KIT	Ref. 13 & 16-18 - Was 6586461 [A]		x
66	6816253	KIT, SEAL	complete - Ref. 2, 4, 13, 16-18, 21-24, 42, 44, 48, 52, 61 & 62 - also Order 6816252 seal kit - Was 6809448 [A]		x

Page 111 - OSS# 2071349 - All rights reserved by Bobcat Company - 12/01/2009 - 20:50:59 - Produced by Ken Cook Co. with mediaioff

HYDRAULIC CONTROL VALVE
(Service Valve) (BICS Combo Valve)

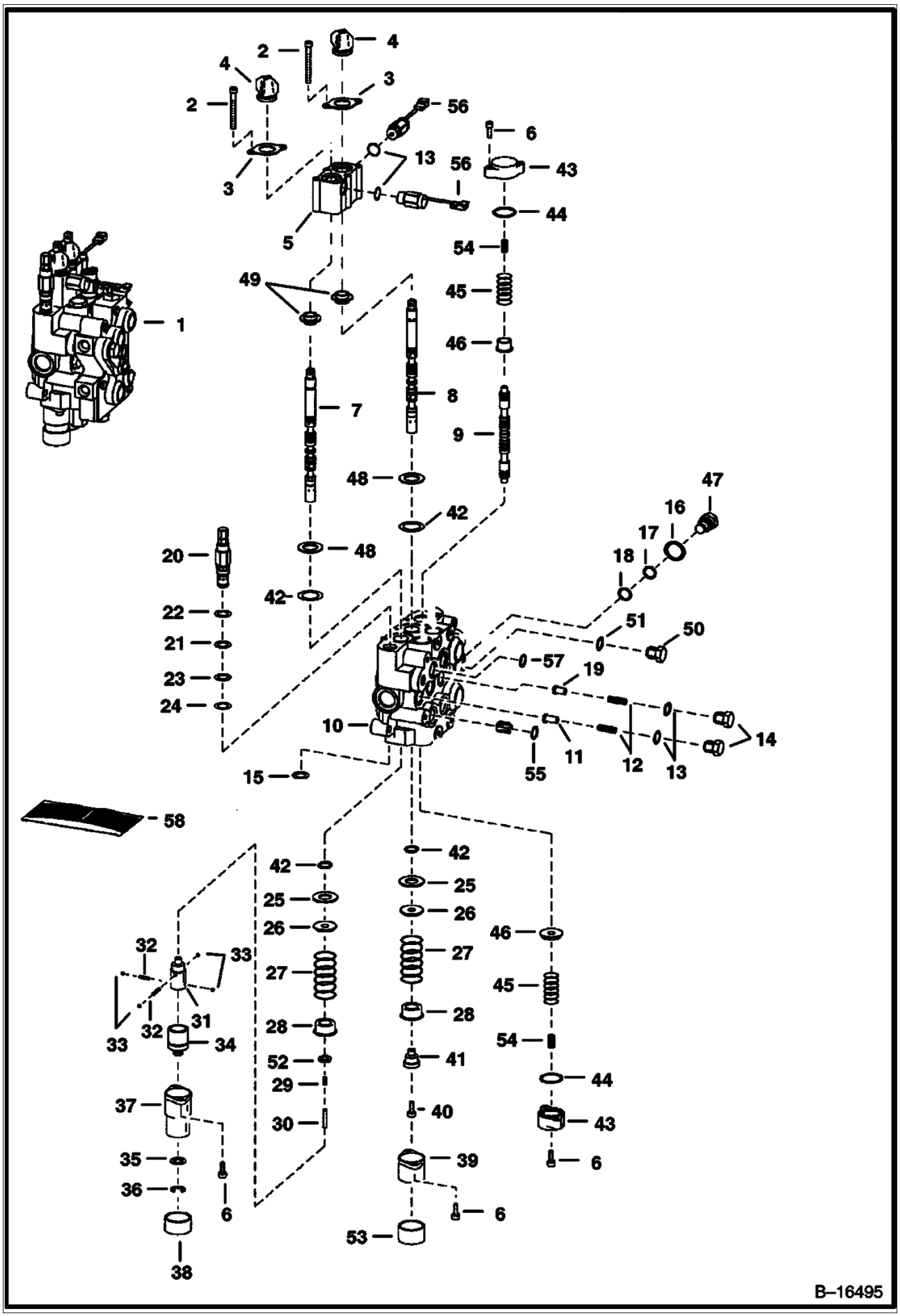

Page 112 - OSS# 2071349 - All rights reserved by Bobcat Company - 12/01/2009 - 20:50:59 - Produced by Ken Cook Co. with mediaioff

HYDRAULIC CONTROL VALVE (Cont'd)
(Service Valve) (BICS Combo Valve)

Ref No	Part Number	Description	Remarks	Serial Number	Qty
1	6812927	VALVE, CONTROL SERVICE	See BTI336 - valve is minus all fittings, relief valves, anti-cavitation valves, solenoid coils & solenoid spools - remove & use existing parts from old valve or order new parts as needed		1
1		VALVE ASSY	See Illustration BICS CONTROL VALVE/ TS1365 BICS control		1
2	29G444	BOLT			4
3	6589564	RETAINER			2
4	6587763	BOOT			2
5	6812031	BLOCK			1
6	29G416	BOLT			8
7	6814511	SPOOL	lift - Was 6674808 [A]		1
8	6815152	SPOOL	tilt - Was 6814512 [A]		1
9	6588074	SPOOL	auxiliary		3
10		BODY	NSS		1
11	6592115	SEAT	load check		3
12	6592117	SPRING			3
13	79K8	O RING 10			3
14	6592116	NUT	load check		3
15	6668791	ORIFICE			1
16	79K10	O RING 10			2
17	80K14	BACK-UP WASHER	Was 73K000014B		5
18	58K14	O RING 10			5
19	6596569	SEAT			1
20	6686360	VALVE	main relief - W/Ref. 21-24 - pressure to be set in field - Was 6685017 [A]		1
21	58K17	O RING 10			1
22	6665569	WASHER	back-up		1
23	25K20016	O RING 10			1
24	6665570	RING	glide		1
25	6595663	BUSHING			2
26	6587523	WASHER			2
27	6587580	SPRING			2
28	6592100	COLLAR			2
29	6596807	PLUG	plastic - .460" long		1
30	6586918	SCREW			1
31	6587575	ADAPTER			1
32	6592107	SPRING			2
33	6592105	BALL			4
34	6531270	SLEEVE			1
35	6592098	WASHER			1
36	799119	RING			1
37	6589226	BONNET	.625" flange		1
38	6660644	CAP			1
39	7101345	BONNET, DETENT HYD VALVE	Was 6587633 [A]		1
40	30G416	BOLT			1
41	6592109	ADAPTER			1
42	6683274	SEAL, SPOOL	See BTI374 - spool - Was 6665846 [A]		4
43	6588781	END CAP			2
44	58K124	O RING 10			2
45	6806007	SPRING			2
46	7108780	SLEEVE	Was 6595951 [A]		2
47	6592720	PLUG	W/Ref. 16-18		1
48	1K127	O-RING 10	Was 93K127 [A]		2

Page 113 - OSS# 2071349 - All rights reserved by Bobcat Company - 12/01/2009 - 20:50:59 - Produced by Ken Cook Co. with mediaioff

HYDRAULIC CONTROL VALVE (Cont'd)
(Service Valve) (BICS Combo Valve)

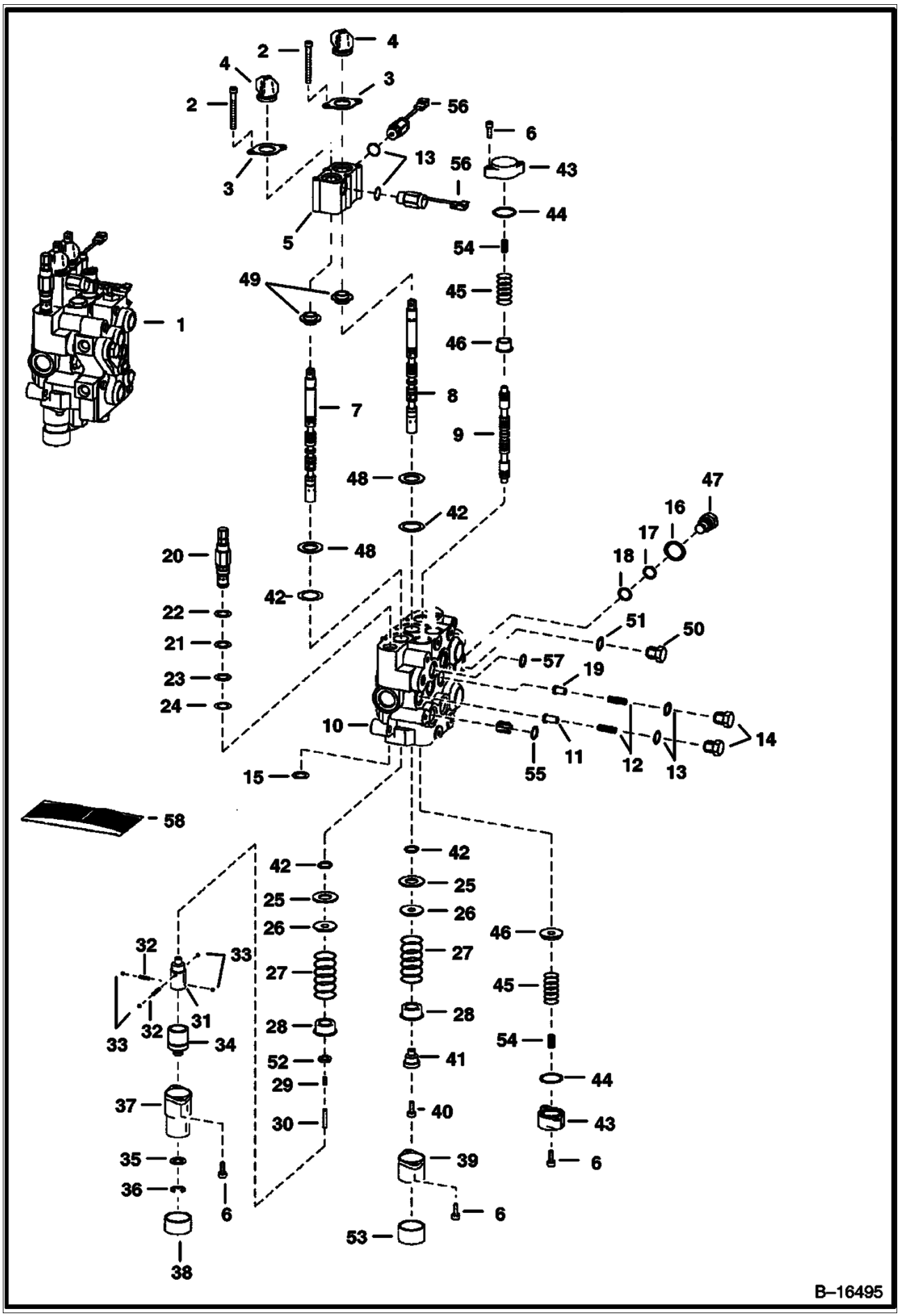

Page 114 - OSS# 2071349 - All rights reserved by Bobcat Company - 12/01/2009 - 20:50:59 - Produced by Ken Cook Co. with mediaioff

HYDRAULIC CONTROL VALVE (Cont'd)
(Service Valve) (BICS Combo Valve)

Ref No	Part Number	Description	Remarks	Serial Number	Qty
49	6805102	BUSHING			2
50	90K8	PLUG	W/Ref. 51 - socket head		1
51	95K12	O-RING			1
52	54K20002	O'RING 10			1
53	6662848	CAP			1
54	6596332	SPRING			2
55	55K212	O RING 10	See Illustration BICS CONTROL VALVE/ TS1365		4
56	6676029	SOLENOID	spool lock - 5" (127mm) wire - Was 6677383 [A]		2
57	55K204	O RING 10	See Illustration BICS CONTROL VALVE/ TS1365		1
58	6816252	SEAL KIT	one spool - Ref. 2, 4, 29, 42 48 & 52 - Was 6806941 [A]		x
58	6632279	KIT, SEAL	main relief - Ref. 21-24		x
58	6809425	SEAL KIT	Ref. 13 & 16-18		x
58	6816253	KIT, SEAL	complete - Ref. 2 4, 6, 13, 16-18, 21-24, 42, 44, 48, 55 & 57 - also Order 6816252 seal kit - Was 6809448 [A]		x

Page 115 - OSS# 2071349 - All rights reserved by Bobcat Company - 12/01/2009 - 20:50:59 - Produced by Ken Cook Co. with mediaioff

HYDRAULIC CONTROL VALVE
(BICS Combo Valve)

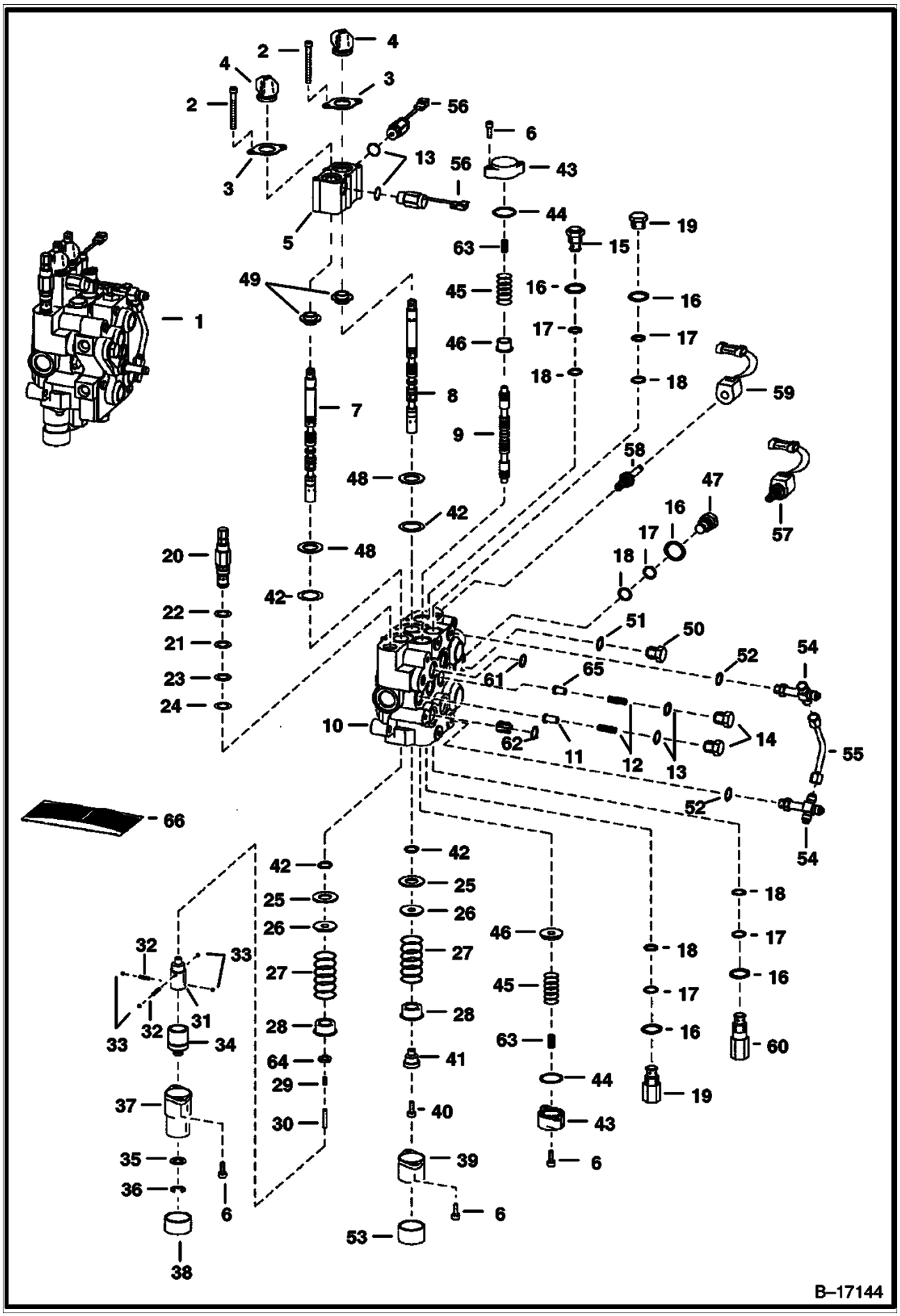

Page 116 - OSS# 2071349 - All rights reserved by Bobcat Company - 12/01/2009 - 20:50:59 - Produced by Ken Cook Co. with mediaioff

Ref No	Part Number	Description	Remarks	Serial Number	Qty
1		VALVE	See BTI336 - NAP - valve is minus all fittings, relief valves, anti-cavitation valves, solenoid coils & solenoid spools - remove & use existing parts from old valve or order new parts as needed - Was 6811069 [A]	500K 11978 & Abv	1
1		VALVE	See BTI336 - NAP - valve is minus all fittings, relief valves, anti-cavitation valves, solenoid coils & solenoid spools - remove & use existing parts from old valve or order new parts as needed - Was 6811069 [A]	5181 12246-12999	1
1		VALVE	See BTI336 - NAP - valve is minus all fittings, relief valves, anti-cavitation valves, solenoid coils & solenoid spools - remove & use existing parts from old valve or order new parts as needed - Was 6811069 [A]	5192 12364-12999	1
1		VALVE	See BTI336 - NAP - valve is minus all fittings, relief valves, anti-cavitation valves, solenoid coils & solenoid spools - remove & use existing parts from old valve or order new parts as needed - Was 6811069 [A]	5190 21021-24999	1
1		VALVE	See BTI336 - NAP - valve is minus all fittings, relief valves, anti-cavitation valves, solenoid coils & solenoid spools - remove & use existing parts from old valve or order new parts as needed - Was 6811069 [A]	5180 12387-12999	1
1		VALVE	See BTI336 - NAP - valve is minus all fittings, relief valves, anti-cavitation valves, solenoid coils & solenoid spools - remove & use existing parts from old valve or order new parts as needed - Was 6811069 [A]	5176 20141-21999	1
1		VALVE ASSY	See Illustration BICS CONTROL VALVE/ TS1365 BICS CONTROL		1
2	29G444	BOLT			4
3	6589564	RETAINER			2
4	6587763	BOOT			2
5	6812031	BLOCK	Was 6805657 [A]		1
6	29G416	BOLT			8
7	6812031	BLOCK	lift - # 1 or Red - Was 6674808 [A]		1
8	6815152	SPOOL	tilt - # 1 or Red - Was 6674814 [A]		1
9	6588074	SPOOL	auxiliary		3
10		BODY	NSS		1
11	6592115	SEAT	load check		3
12	6592117	SPRING			3
13	79K8	O RING 10			3
14	6592116	NUT	load check		3
15	6667549	VALVE	anti-cavity check - W/Ref. 16-18		1
16	79K10	O RING 10			2
17	80K14	BACK-UP WASHER	Was 73K000014B		5
18	58K14	O RING 10			5
19	6678574	RELIEF VALVE	port relief - W/Ref. 16 - 18 - Was 6673184 [A]		2
20		VALVE	NAP - main relief - pressure preset at factory - W/Ref. 21-24 - Was 6677669 [A]		1
20	6686360	VALVE	main relief - W/Ref. 21-24 - pressure to be set in field		1
21	58K17	O RING 10			1
22	6665569	WASHER	back-up		1
23	25K20016	O RING 10			1

Page 117 - OSS# 2071349 - All rights reserved by Bobcat Company - 12/01/2009 - 20:50:59 - Produced by Ken Cook Co. with mediaioff

HYDRAULIC CONTROL VALVE (Cont'd)
(BICS Combo Valve)

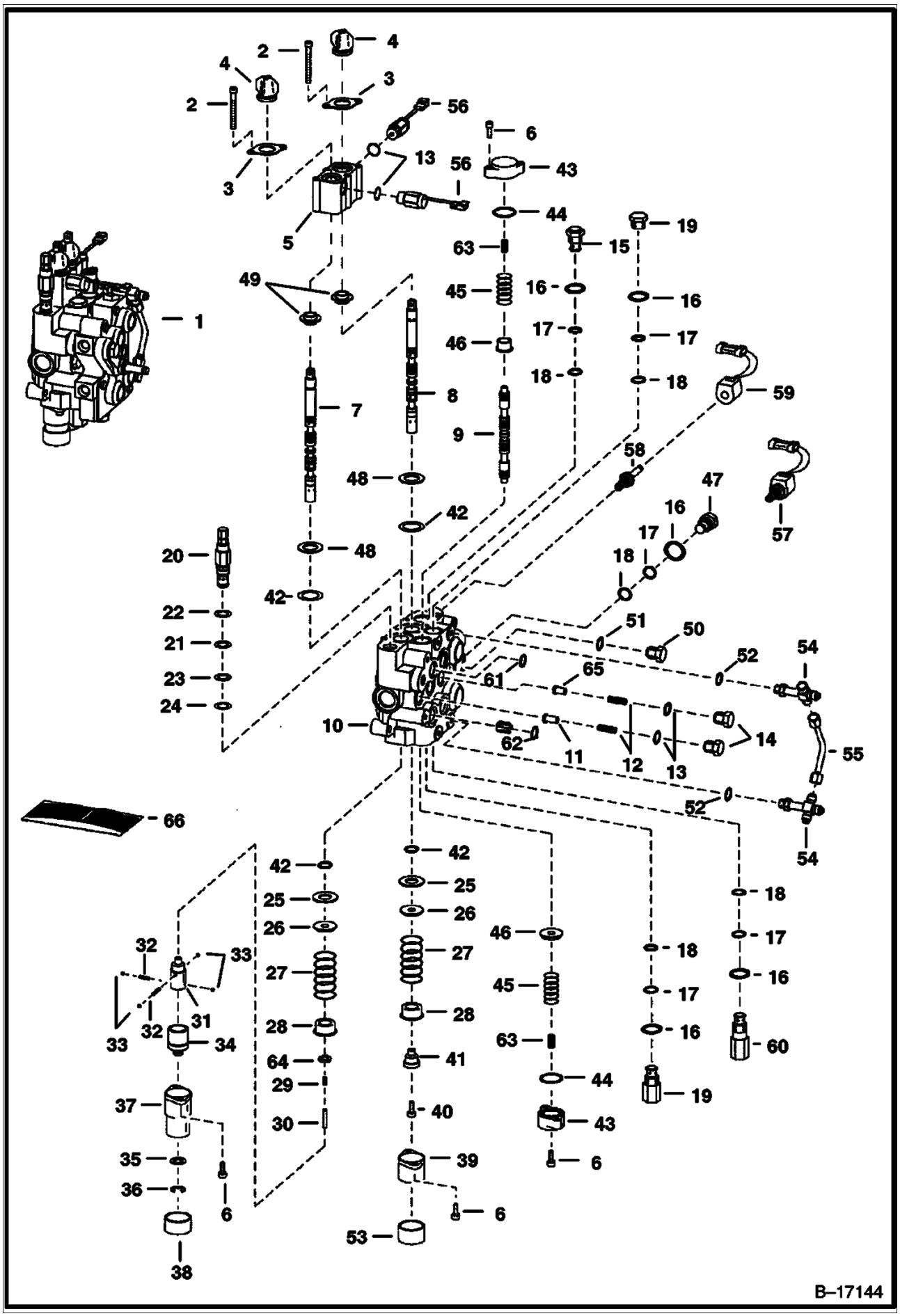

Page 118 - OSS# 2071349 - All rights reserved by Bobcat Company - 12/01/2009 - 20:50:59 - Produced by Ken Cook Co. with mediaioff

Ref No	Part Number	Description	Remarks	Serial Number	Qty
24	6665570	RING	glide		1
25	6595663	BUSHING			2
26	6587523	WASHER			2
27	6587580	SPRING			2
28	6592100	COLLAR			2
29	6596807	PLUG	plastic - .460" long		1
30	6586918	SCREW			1
31	6587575	ADAPTER			1
32	6592107	SPRING			2
33	6592105	BALL			4
34	6531270	SLEEVE			1
35	6592098	WASHER			1
36	799119	RING			1
37	6589226	BONNET	.625" flange		1
38	6660644	CAP			1
39	7101345	BONNET, DETENT HYD VALVE	Was 6587633 [A]		1
40	30G416	BOLT			1
41	6592109	ADAPTER			1
42	6683274	SEAL, SPOOL	See BTI374 - spool - Was 6665846 [A]		4
43	6588781	END CAP			2
44	58K124	O RING 10			2
45	6806007	SPRING			2
46	7108780	SLEEVE	Was 6595951 [A]		2
47	6592720	PLUG	W/Ref. 16-18		1
48	1K127	O-RING 10	Was 93K127 [A]		2
49	6805102	BUSHING			2
50	90K8	PLUG	W/Ref. 51 - socket head - Was 90KV00008B [A]		1
51	95K12	O-RING			1
52	99K6	O'RING	tapered boss face		x
52	79K6	O RING 10	flat boss face		x
53	6662848	CAP			1
54	6817553	CROSS	W/Ref. 52 - flat boss face - Was 6805241 [A]		2
54	97K6	O'RING	flared end		6
55	6577690	TUBE			1
56	6676029	SOLENOID	spool lock - 5" (127mm) wire - Was 6677383 [A]		2
57	6665084	SOLENOID	W/Ref. 58 & 59		2
57	6586459	SEAL KIT			x
57	6676566	NUT			x
58	6666616	STEM			2
58	79K7	O RING 10	Was 79K7 [B,D]		2
59	6717706	COIL, 10 VOLT	10 volt		2
59	6676566	NUT			2
60	6678552	VALVE	standard - port relief & anti-cav. W/Ref. 16 - 3500 PSI - use in tilt cylinder base end port - Was 6671632 [A]		1
61	55K204	O RING 10	See Illustration BICS CONTROL VALVE/ TS1365		1
62	55K212	O RING 10	See Illustration BICS CONTROL VALVE/ TS1365		4
63	6596332	SPRING			2
64	54K20002	O'RING 10			1
65	6596569	SEAT	aux. load		1
66	6816252	SEAL KIT	two spool - Ref. 2, 4, 29, 42, 48 & 64 - Was 6806941 [A]		x
66	6632279	KIT, SEAL	main relief - Ref. 21-24		x
66	6809425	SEAL KIT	Ref. 13 & 16-18		x
66	6816253	KIT, SEAL	complete - Ref. 2, 4, 6, 13, 16-18, 21-24, 42, 44, 48, 52, 61 & 62 - also Order 6816252 seal kit - Was		x

Page 119 - OS6# 2071349 - All rights reserved by Bobcat Company - 12/01/2009 - 20:50:59 - Produced by Ken Cook Co. with mediaioff

HYDRAULIC CONTROL VALVE (Cont'd)
(BICS Combo Valve)

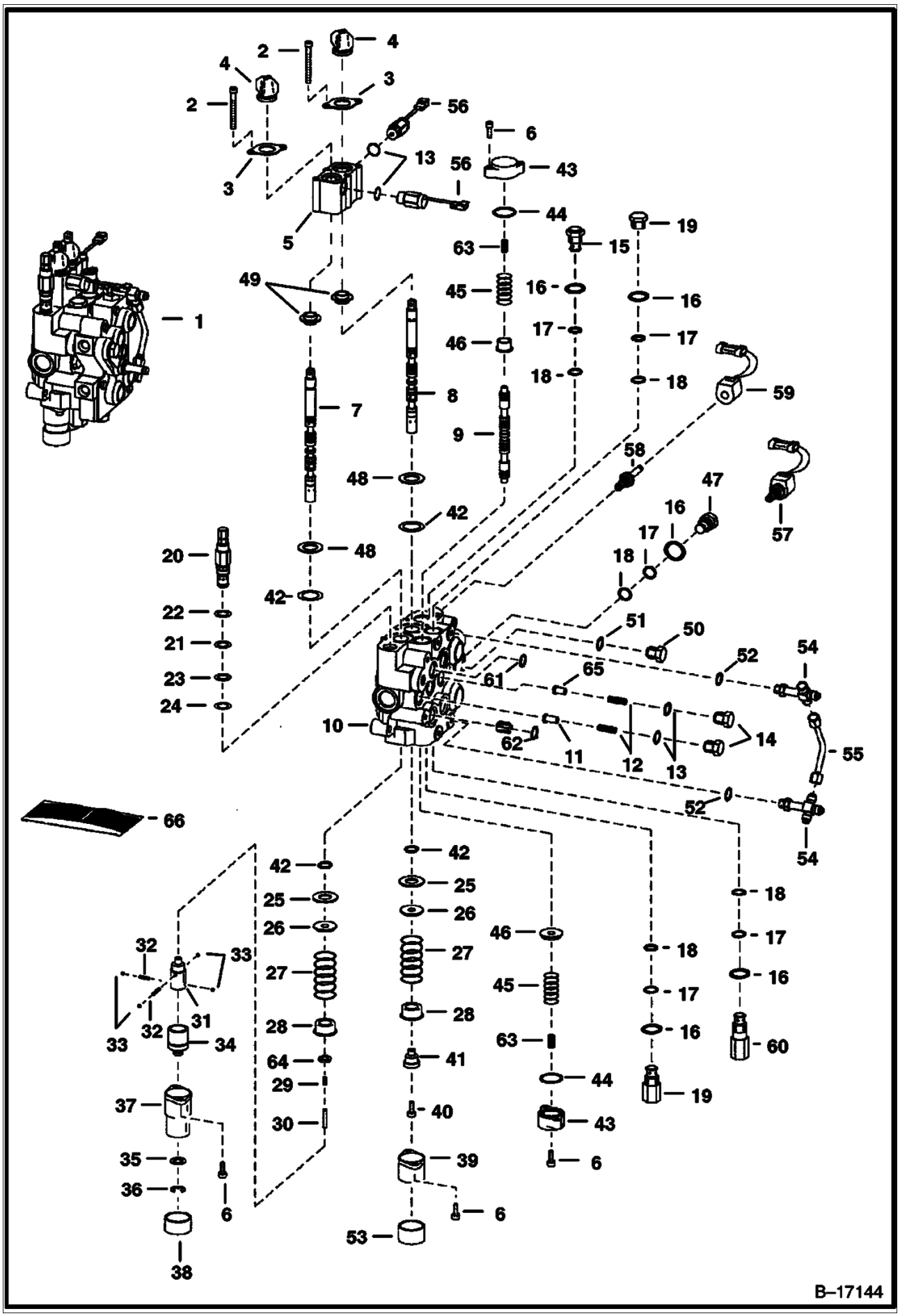

Page 120 - OSS# 2071349 - All rights reserved by Bobcat Company - 12/01/2009 - 20:50:59 - Produced by Ken Cook Co. with mediaioff

Ref No	Part Number	Description	Remarks	Serial Number	Qty
			6809448 [A]		

Page 121 - OSS# 2071349 - All rights reserved by Bobcat Company - 12/01/2009 - 20:50:59 - Produced by Ken Cook Co. with mediaioff

HYDRAULIC CONTROL VALVE
(BICS Combo Valve)

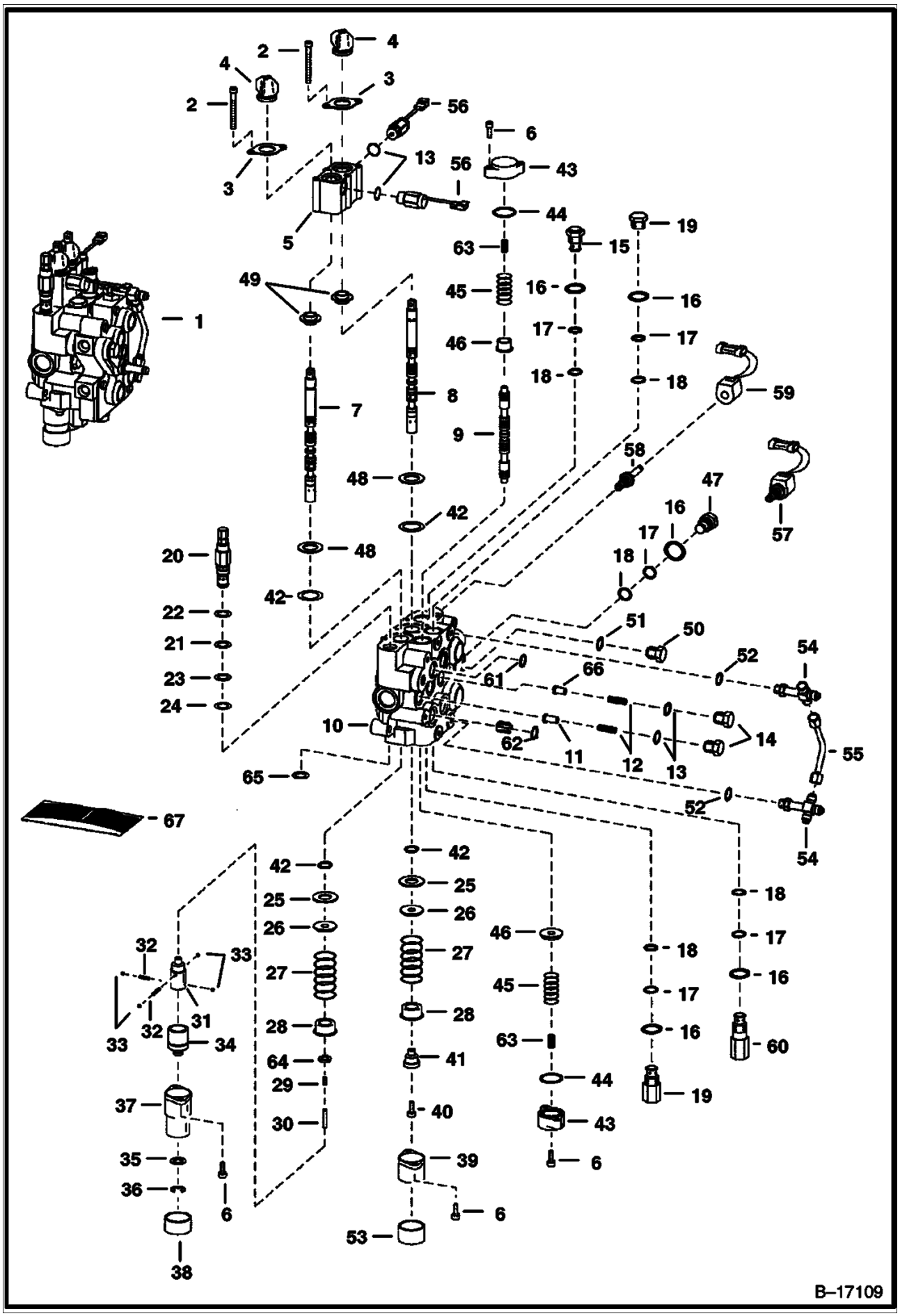

Page 122 - OSS# 2071349 - All rights reserved by Bobcat Company - 12/01/2009 - 20:50:59 - Produced by Ken Cook Co. with mediaioff

Ref No	Part Number	Description	Remarks	Serial Number	Qty
1		VALVE	See BTI336 - NAP - valve is minus all fittings, relief valves, anti-cavitation valves, solenoid coils & solenoid spools - remove & use existing parts from old valve or order new parts as needed - Was 6811966 [A]	5176 22000 & Abv	1
1		VALVE	See BTI336 - NAP - valve is minus all fittings, relief valves, anti-cavitation valves, solenoid coils & solenoid spools - remove & use existing parts from old valve or order new parts as needed - Was 6811966 [A]	5180 13000 & Abv	1
1		VALVE	See BTI336 - NAP - valve is minus all fittings, relief valves, anti-cavitation valves, solenoid coils & solenoid spools - remove & use existing parts from old valve or order new parts as needed - Was 6811966 [A]	5181 13000 & Abv	1
1		VALVE	See BTI336 - NAP - valve is minus all fittings, relief valves, anti-cavitation valves, solenoid coils & solenoid spools - remove & use existing parts from old valve or order new parts as needed - Was 6811966 [A]	5190 25000 & Abv.	1
1		VALVE	See BTI336 - NAP - valve is minus all fittings, relief valves, anti-cavitation valves, solenoid coils & solenoid spools - remove & use existing parts from old valve or order new parts as needed - Was 6811966 [A]	5192 13000 & Abv.	1
1		VALVE ASSY	See Illustration BICS CONTROL VALVE/ TS1365 BICS CONTROL		1
2	29G444	BOLT			4
3	6589564	RETAINER			2
4	6587763	BOOT			2
5	6812031	BLOCK	Was 6805657 [A]		1
6	29G416	BOLT			8
7		SPOOL	NAP - lift - #1 or red - Order 6814511 spool - Was 6674808 [A]		1
7		SPOOL	NAP - lift - #2 or green - Order 6814511 spool - Was 6674809 [A]		1
7		SPOOL	NAP - tilt - #3 or black - Order 6814511 spool - Was 6674810 [A]		1
7	6814511	SPOOL	lift		1
8		SPOOL	NAP - tilt - #1 or red - Order 6815152 spool - Was 6674814 [A]		1
8		SPOOL	NAP - tilt - #2 or green - Order 6815152 spool - Was 6674815 [A]		1
8		SPOOL	NAP - tilt - #3 or black - Order 6815152 spool - Was 6674816 [A]		1
8	6815152	SPOOL	tilt - Was 6814512 [A]		1
9	6588074	SPOOL	auxiliary		3
10		BODY	NSS		1
11	6592115	SEAT	load check		3
12	6592117	SPRING			3
13	79K8	O RING 10			3
14	6592116	NUT	load check		3
15	6667549	VALVE	anti-cavity check - W/Ref. 16-18		1
16	79K10	O RING 10			2
17	80K14	BACK-UP WASHER	Was 73K000014B		5
18	58K14	O RING 10			5

Page 123 - OSS# 2071349 - All rights reserved by Bobcat Company - 12/01/2009 - 20:50:59 - Produced by Ken Cook Co. with mediaioff

HYDRAULIC CONTROL VALVE (Cont'd)
(BICS Combo Valve)

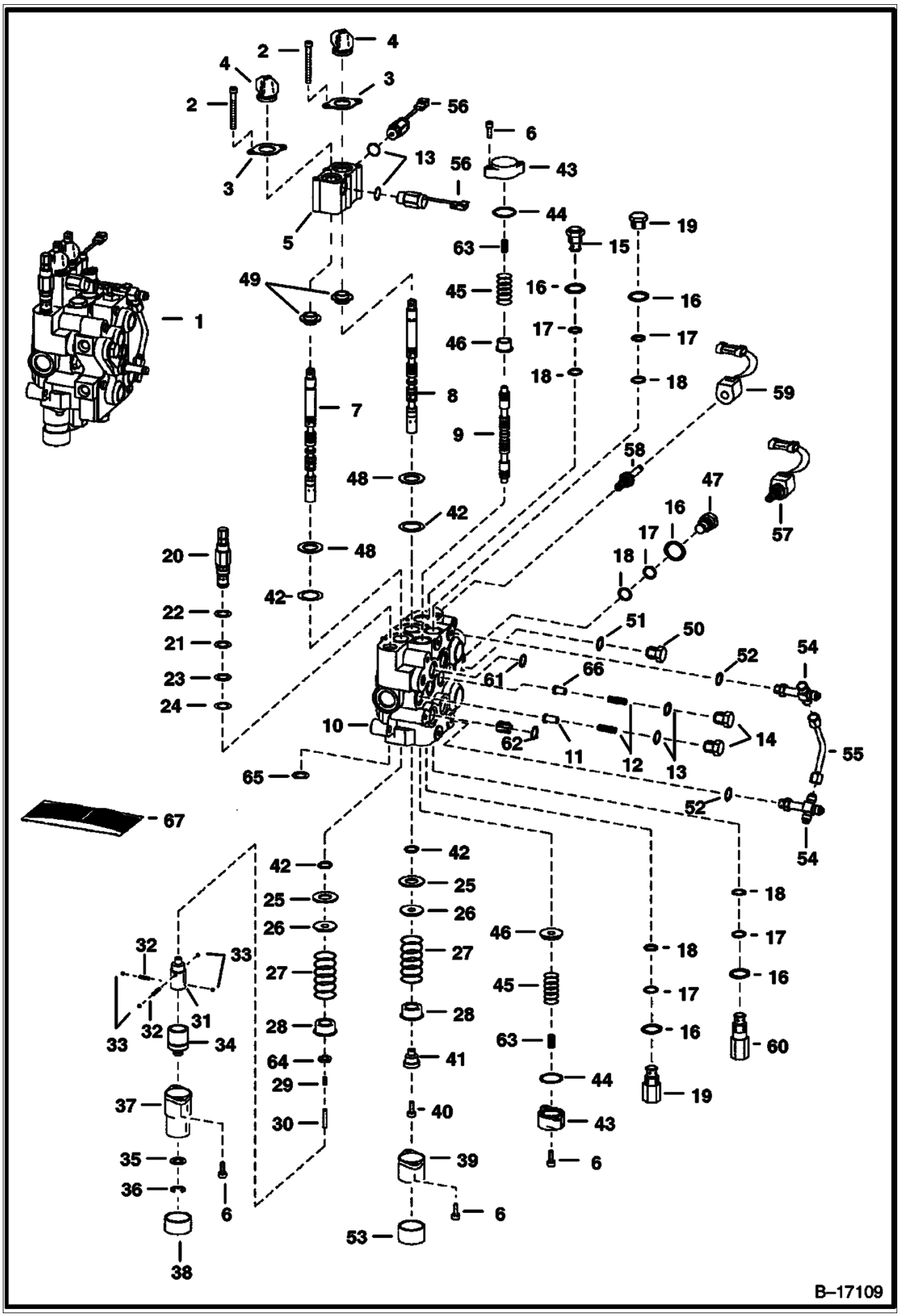

Page 124 - OSS# 2071349 - All rights reserved by Bobcat Company - 12/01/2009 - 20:50:59 - Produced by Ken Cook Co. with mediaioff

Ref No	Part Number	Description	Remarks	Serial Number	Qty
19	6678574	RELIEF VALVE	port relief - W/Ref. 16-18 - Was 6673184 [A]		2
20		VALVE	NAP - main relief - pressure preset at factory - W/Ref. 21-24 - Was 6677669 [A]		1
20	6686360	VALVE	main relief - W/Ref. 21-24 - pressure to be set in field		1
21	58K17	O RING 10			1
22	6665569	WASHER	back-up		1
23	25K20016	O RING 10			1
24	6665570	RING	glide		1
25	6595663	BUSHING			2
26	6587523	WASHER			2
27	6587580	SPRING			2
28	6592100	COLLAR			2
29	6596807	PLUG	plastic - .460" long		1
30	6586918	SCREW			1
31	6587575	ADAPTER			1
32	6592107	SPRING			2
33	6592105	BALL			4
34	6531270	SLEEVE			1
35	6592098	WASHER			1
36	799119	RING			1
37	6589226	BONNET	.625" flange		1
38	6660644	CAP			1
39	7101345	BONNET, DETENT HYD VALVE	Was 6587633 [A]		1
40	30G416	BOLT			1
41	6592109	ADAPTER			1
42	6683274	SEAL, SPOOL	See BTI374 - spool - Was 6665846 [A]		4
43	6588781	END CAP			2
44	58K124	O RING 10			2
45	6806007	SPRING			2
46	7108780	SLEEVE	Was 6595951 [A]		2
47	6592720	PLUG	W/Ref. 16 - 18		1
48	1K127	O-RING 10	Was 93K127 [A]		2
49	6805102	BUSHING			2
50	90K8	PLUG	W/Ref. 51 - socket head - Was 90KV00008B [A]		1
51	95K12	O-RING			1
52	99K6	O'RING	tapered boss face		x
52	79K6	O RING 10	flat boss face		x
53	6662848	CAP			1
54	6817553	CROSS	W/Ref. 52 - flat boss face - Was 6805241 [A]		2
54	97K6	O'RING	flared end		6
55	6577690	TUBE			1
56	6676029	SOLENOID	spool lock - 5" (127mm) wire - Was 6677383 [A]		2
57		SOLENOID	NAP - W/Ref. 58 & 59 - Was 6678893 [A]		2
57	6685603	SEAL KIT			x
58	6688743	STEM, VALVE CONTROL	w/ screen Was 6678892		2
58	79K7	O RING 10			2
59	6678891	COIL	10 volt - W/nut		2
59	6691022	NUT	Was 6690705 [A]		2
60	6678552	VALVE	standard - port relief & anti-cav. W/Ref. 16 - 3500 PSI - use in tilt cylinder base end port - Was 6671632 [A]		1
61	55K204	O RING 10	See Illustration BICS CONTROL VALVE/ TS1365		1
62	55K212	O RING 10	See Illustration BICS CONTROL VALVE/ TS1365		4
63	6596332	SPRING			2
64	54K20002	O'RING 10			1

Page 125 - OSS# 2071349 - All rights reserved by Bobcat Company - 12/01/2009 - 20:50:59 - Produced by Ken Cook Co. with mediaioff

HYDRAULIC CONTROL VALVE (Cont'd)
(BICS Combo Valve)

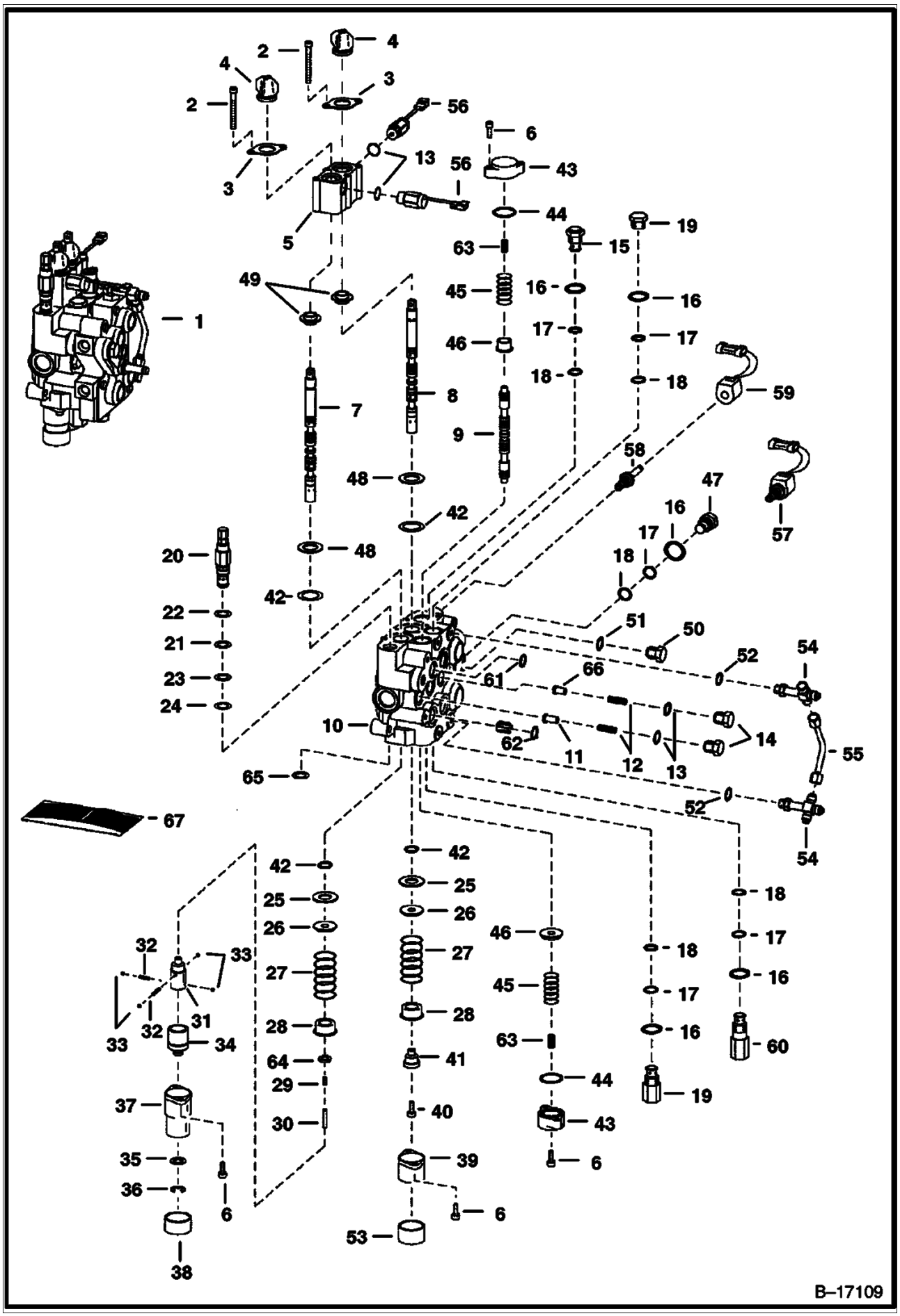

Page 126 - OSS# 2071349 - All rights reserved by Bobcat Company - 12/01/2009 - 20:50:59 - Produced by Ken Cook Co. with mediaioff

HYDRAULIC CONTROL VALVE (Cont'd)
(BICS Combo Valve)

Ref No	Part Number	Description	Remarks	Serial Number	Qty
65	6668791	ORIFICE			1
66	6596569	SEAT	aux. load		1
67	6816252	SEAL KIT	one spool - Ref. 2, 4, 29, 42, 48 & 64 - Was 6806941 [A]		x
67	6632279	KIT, SEAL	main relief - Ref. 21-24		x
67	6809425	SEAL KIT	Ref. 13 & 16-18		x
67	6816253	KIT, SEAL	complete - Ref. 4, 13, 16-18, 21-24, 42, 44, 52, 61 & 62 - also Order 6816252 seal kit - Was 6809448 [A]		x

Page 127 - OSS# 2071349 - All rights reserved by Bobcat Company - 12/01/2009 - 20:50:59 - Produced by Ken Cook Co. with mediaioff

HYDRAULIC CONTROL VALVE
(Service Valve) (BICS Combo Valve)

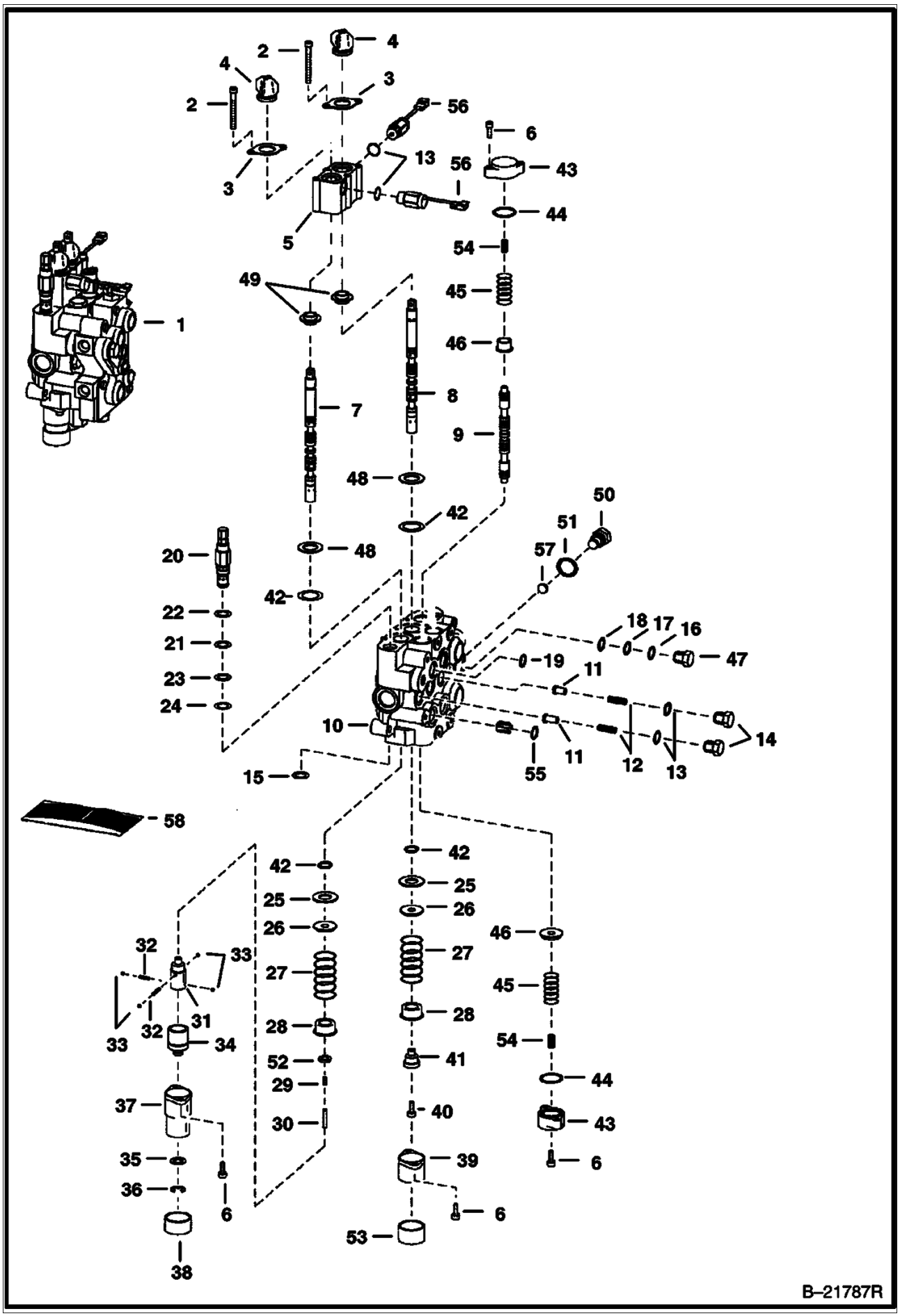

Page 128 - OSS# 2071349 - All rights reserved by Bobcat Company - 12/01/2009 - 20:50:59 - Produced by Ken Cook Co. with mediaioff

HYDRAULIC CONTROL VALVE (Cont'd)
(Service Valve) (BICS Combo Valve)

Ref No	Part Number	Description	Remarks	Serial Number	Qty
1	6815480	VALVE, CONTROL SERVICE	See BTI336 - valve is minus all fittings, relief valves, anti-cavitation valves, solenoid coils & solenoid spools - remove & use existing parts from old valve or order new parts as needed		1
1		BLOCK	See Illustration BICS CONTROL VALVE/ TS1365 - BICS CONTROL		1
2	29G444	BOLT			4
3	6589564	RETAINER			2
4	6587763	BOOT			2
5	6812031	BLOCK			1
6	29G416	BOLT			8
7	6814511	SPOOL	lift - # 1 or Red - Was 6674808 [A]		1
8	6815152	SPOOL	tilt - # 1 or Red - Was 6674814 [A]		1
9	6588074	SPOOL	auxiliary		3
10		BODY	NSS		1
11	6592115	SEAT	load check		3
12	6592117	SPRING			3
13	79K8	O RING 10			3
14	6592116	NUT	load check		3
15	6668791	ORIFICE	ORIFICE		1
16	79K10	O RING 10			2
17	80K14	BACK-UP WASHER	Was 73K000014B		5
18	58K14	O RING 10			5
19	55K204	O RING 10	See Illustration BICS CONTROL VALVE/ TS1365		1
20	6686360	VALVE	main relief - W/Ref. 21-24 - pressure to be set in field - Was 6685017 [A]		1
21	58K17	O RING 10			1
22	6665569	WASHER	back-up		1
23	25K20016	O RING 10			1
24	6665570	RING	glide		1
25	6595663	BUSHING			2
26	6587523	WASHER			2
27	6587580	SPRING			2
28	6592100	COLLAR			2
29	6596807	PLUG	plastic - .460" long		1
30	6586918	SCREW			1
31	6587575	ADAPTER			1
32	6592107	SPRING			2
33	6592105	BALL			4
34	6531270	SLEEVE			1
35	6592098	WASHER			1
36	799119	RING			1
37	6589226	BONNET	.625" flange		1
38	6660644	CAP			1
39	7101345	BONNET, DETENT HYD VALVE	Was 6587633 [A]		1
40	7102652	SCREW	Was 30G000416B [B]		1
41	6592109	ADAPTER			1
42	6683274	SEAL, SPOOL	See BTI374		4
43	6588781	END CAP			2
44	58K124	O RING 10			2
45	6596332	SPRING			2
46	7108780	SLEEVE	Was 6595951 [A]		2
47	6592720	PLUG	W/Ref. 16-18		1
48	1K127	O-RING 10	Was 93K127 [A]		2

Page 129 - OSS# 2071349 - All rights reserved by Bobcat Company - 12/01/2009 - 20:50:59 - Produced by Ken Cook Co. with mediaioff

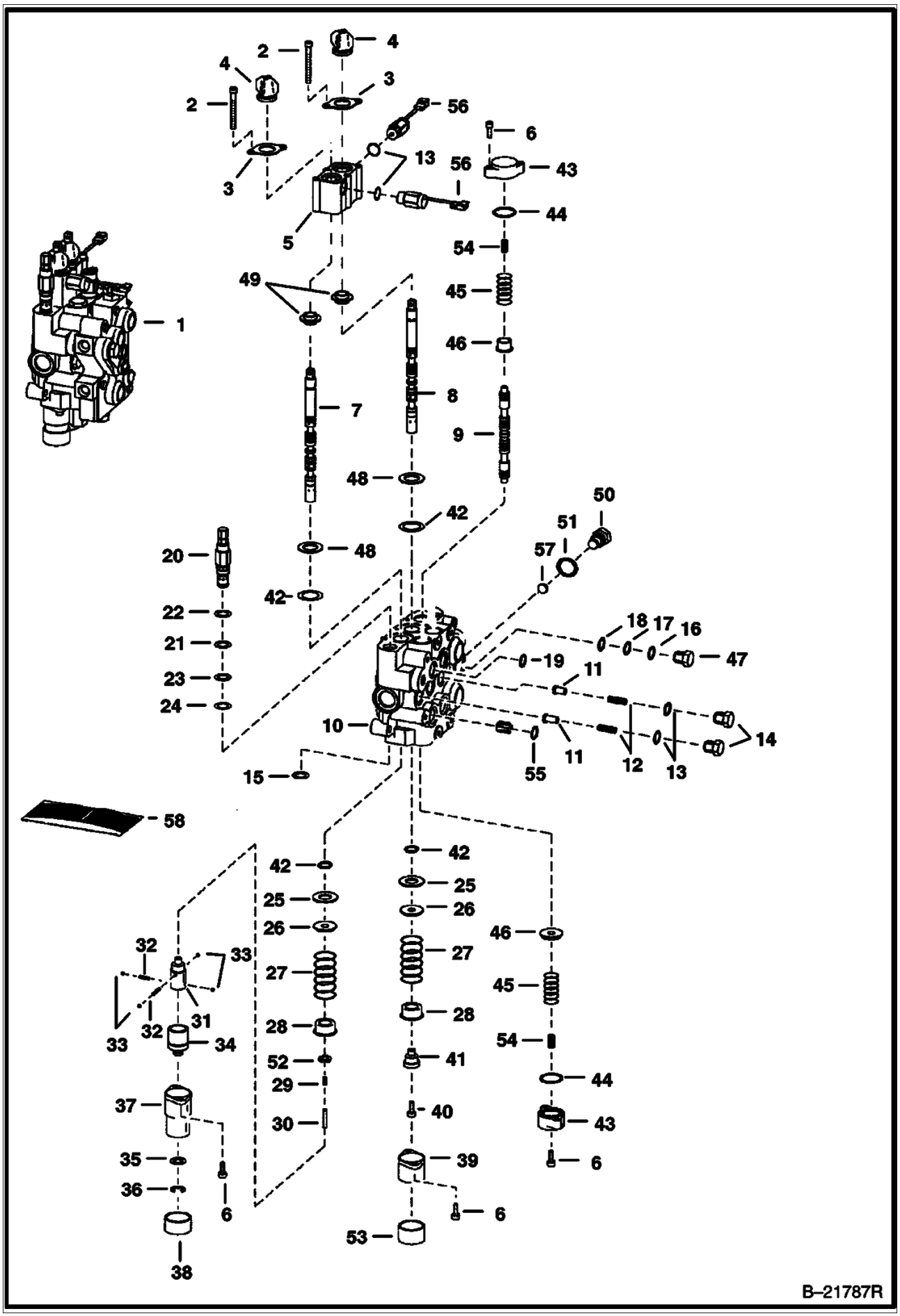

Page 130 - OSS# 2071349 - All rights reserved by Bobcat Company - 12/01/2009 - 20:50:59 - Produced by Ken Cook Co. with mediaioff

Ref No	Part Number	Description	Remarks	Serial Number	Qty
49	6805102	BUSHING			2
50	6806561	PLUG	W/Ref. 51 - socket head		1
51	95K12	O-RING			1
52	54K20002	O'RING 10			1
53	6662848	CAP			1
54	6806007	SPRING	blue		2
55	55K212	O RING 10	See Illustration BICS CONTROL VALVE/ TS1365		4
56	6676029	SOLENOID	spool lock - 5" (127mm) wire - Was 6677383 [A]		2
57	25K20012	O RING 10			1
58	6816252	SEAL KIT	two spool - Ref. 2, 4, 29, 42, 48 & 52		x
58	6632279	KIT, SEAL	main relief - Ref. 21-24		x
58	6809425	SEAL KIT	Ref. 13 & 16-18		x
58	6816253	KIT, SEAL	complete - Ref. 2, 4, 6, 13, 16-18, 21-24, 42, 44, 48 & 55 - also Order 6816252 seal kit		x

Page 131 - OSS# 2071349 - All rights reserved by Bobcat Company - 12/01/2009 - 20:50:59 - Produced by Ken Cook Co. with mediaioff

HYDRAULIC CONTROL VALVE
(Advanced Hand Controls) (W/BICS Combo Valve)

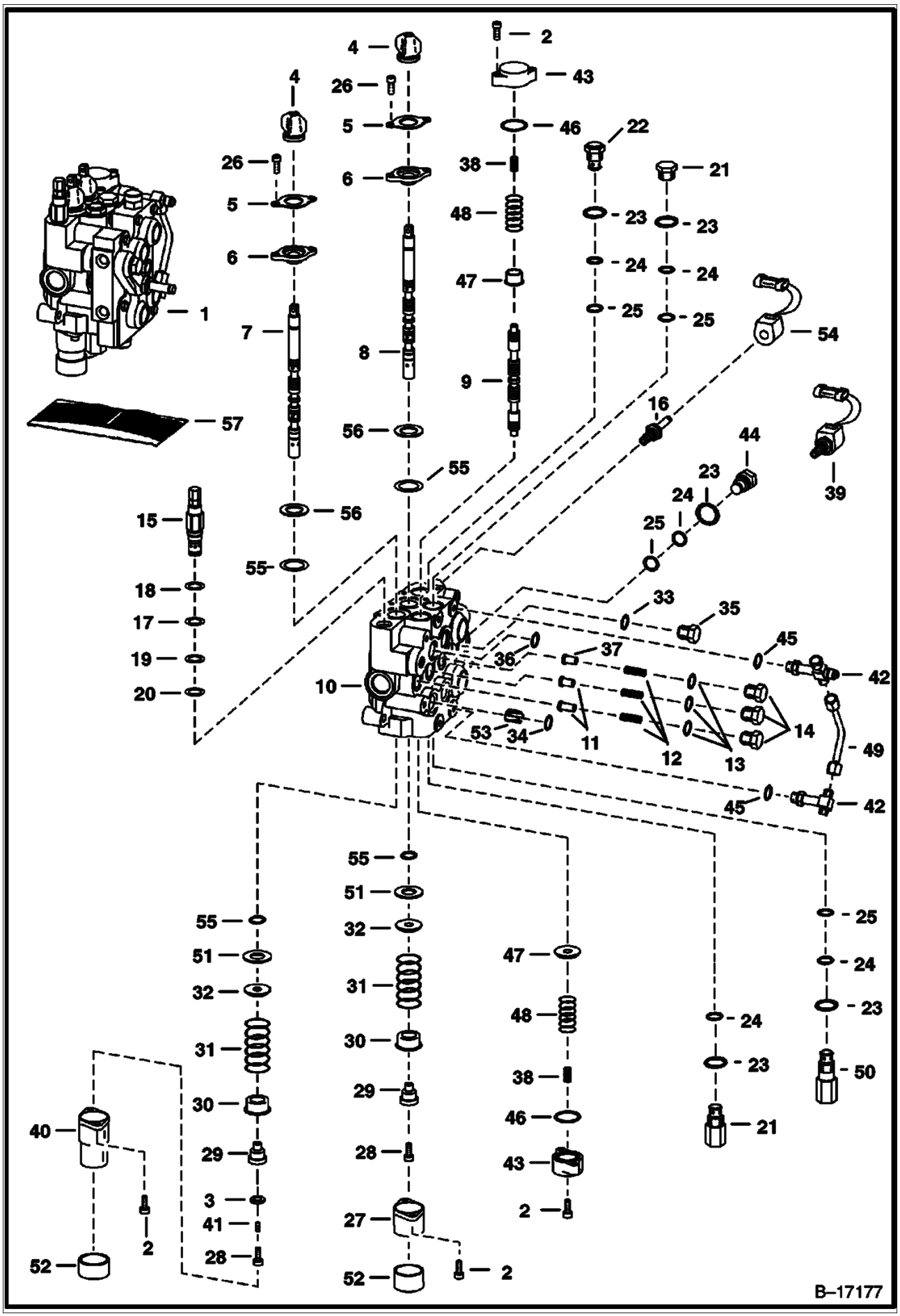

Page 132 - OSS# 2071349 - All rights reserved by Bobcat Company - 12/01/2009 - 20:50:59 - Produced by Ken Cook Co. with mediaioff

Ref No	Part Number	Description	Remarks	Serial Number	Qty
1		VALVE	See BTI368 - NAP - valve is minus all fittings, relief valves, anti-cavitation valves, solenoid coils & solenoid spools - remove & use existing parts from old valve or order new parts as needed - Was 6805929 [A]	5180 12385 & Bel	1
1		VALVE	See BTI368 - NAP - valve is minus all fittings, relief valves, anti-cavitation valves, solenoid coils & solenoid spools - remove & use existing parts from old valve or order new parts as needed - Was 6805929 [A]	5190 21019 & Bel	1
1		VALVE	See BTI368 - NAP - valve is minus all fittings, relief valves, anti-cavitation valves, solenoid coils & solenoid spools - remove & use existing parts from old valve or order new parts as needed - Was 6805929 [A]	5192 12362 & Bel	1
1		VALVE	See BTI368 - NAP - valve is minus all fittings, relief valves, anti-cavitation valves, solenoid coils & solenoid spools - remove & use existing parts from old valve or order new parts as needed - Was 6805929 [A]	5176 20139 & Bel	1
1		VALVE	See BTI368 - NAP - valve is minus all fittings, relief valves, anti-cavitation valves, solenoid coils & solenoid spools - remove & use existing parts from old valve or order new parts as needed - Was 6805929 [A]	5181 12244 & Bel	1
1		VALVE ASSY	See Illustration BICS CONTROL VALVE/ TS1365 - BICS CONTROL		1
2	29G416	BOLT			8
3	54K20002	O'RING 10			1
4	6587763	BOOT			2
5	6589564	RETAINER			2
6	6589565	BUSHING	seal		2
7	6674297	SPOOL	lift - # 1 or Red - Was 6674805 [B,D]		1
7	6674298	SPOOL	lift - # 2 or Green - Was 6674806 [B,D]		1
7	6674299	SPOOL	lift - # 3 or Black - Was 6674807 [B,D]		1
8	6674300	SPOOL	tilt - # 1 or Red - Was 6674811 [B,D]		1
8	6674301	SPOOL	tilt - # 2 or Green - Was 6674812 [B,D]		1
8	6674302	SPOOL	tilt - # 3 or Black - Was 6674813 [B,D]		1
9	6588074	SPOOL	auxiliary		3
10		BODY	NSS		1
11	6592115	SEAT	load check		2
12	6592117	SPRING			3
13	79K8	O RING 10			3
14	6592116	NUT	load check		3
15		VALVE	NAP - main relief - W/Ref. 17 - 20 2450 PSI - pressure preset at factory - Order 6686360 - Was 6676200 [A]		1
15	6686360	VALVE	pressure to be set in field		1
16	6666616	STEM			2
17	58K17	O RING 10			1
18	6665569	WASHER	back-up		1
19	25K20016	O RING 10			1
20	6665570	RING	glide		1
21	6678574	RELIEF VALVE	port relief - 3400-3600 PSI - W/Ref. 16-18 - Was 6673184 [A]		2
22	6667549	VALVE	anti-cavity check -W/Ref. 23-25 - Was 6675230 [A]		1
23	79K10	O RING 10			2
24	80K14	BACK-UP	Was 73K000014B		5

Page 133 - OSS# 2071349 - All rights reserved by Bobcat Company - 12/01/2009 - 20:50:59 - Produced by Ken Cook Co. with mediaioff

HYDRAULIC CONTROL VALVE (Cont'd)
(Advanced Hand Controls) (W/BICS Combo Valve)

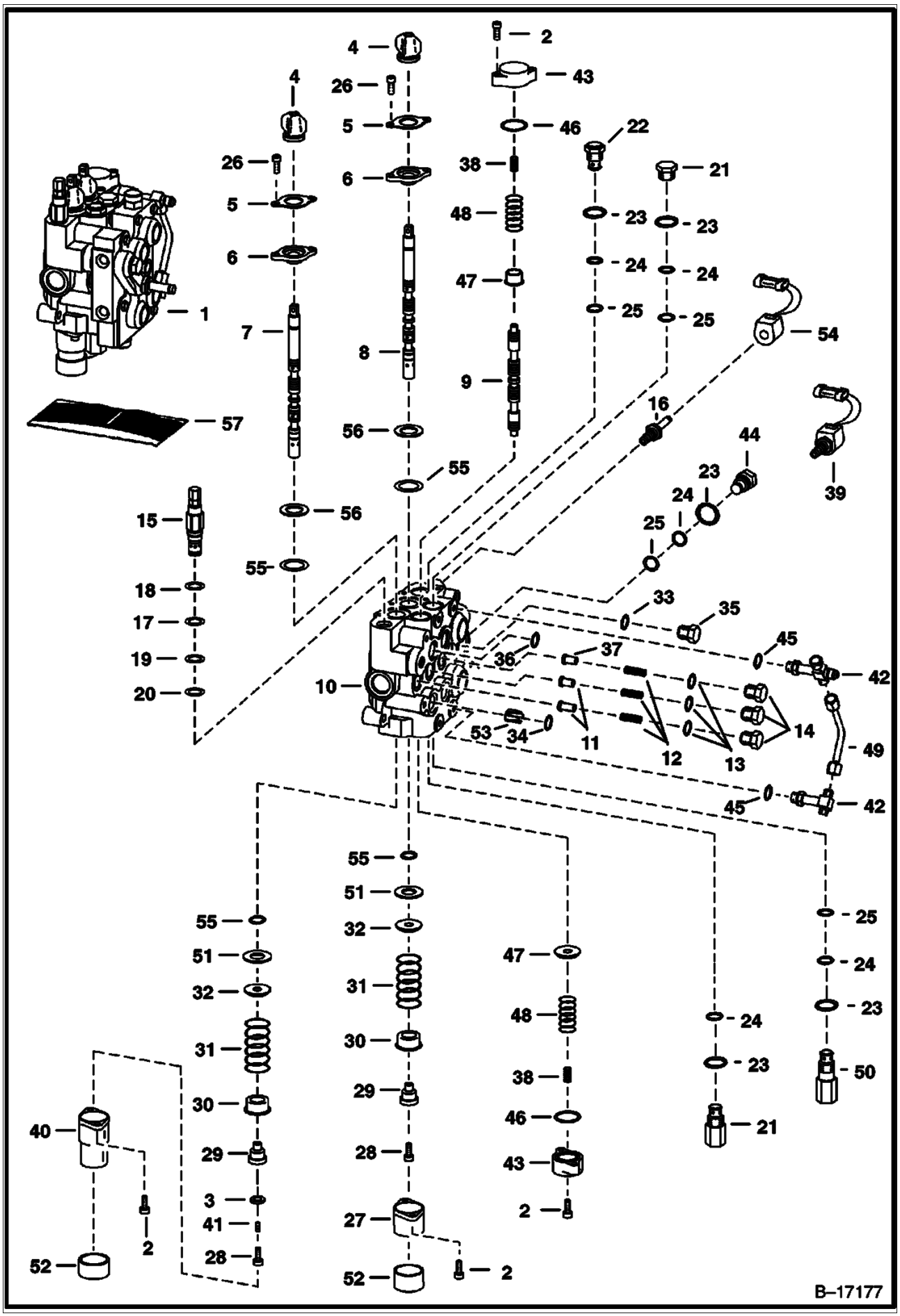

Page 134 - OSS# 2071349 - All rights reserved by Bobcat Company - 12/01/2009 - 20:50:59 - Produced by Ken Cook Co. with mediaioff

Ref No	Part Number	Description	Remarks	Serial Number	Qty
		WASHER			
25	58K14	O RING 10			5
26	29G412	BOLT			4
27	7101345	BONNET, DETENT HYD VALVE	Was 6587633 [A]		1
28	30G416	BOLT			2
29	6592109	ADAPTER			1
30	6592100	COLLAR			2
31	6587580	SPRING			2
32	6587523	WASHER			2
33	95K12	O-RING	tapered boss face - socket head - Was 99K000012B [B,D]		x
34	55K212	O RING 10			4
35	90K8	PLUG	W/Ref. 33 - tapered boss face - Was 90KV00008B [A]		1
36	55K204	O RING 10			1
37	6596569	SEAT			1
38	6806007	SPRING	white		2
39	6665084	SOLENOID	W/Ref. 16 & 54 -Was 6653395 [D]		2
39	6586459	SEAL KIT			x
40	6803092	BONNET	.625" flange		1
41	6801167	PLUG	plastic - .685" long		1
42	6817553	CROSS	W/Ref. 45 - flat boss face - Was 6805241 [A]		2
42	97K6	O'RING	flared end		2
43	6588781	END CAP			2
44	6592720	PLUG	W/Ref. 23-25		1
45	99K6	O'RING	Was 79K6 [A]		x
45	79K6	O RING 10	flat boss face		x
46	58K124	O RING 10			2
47	7108780	SLEEVE	Was 6595951 [A]		2
48	6596332	SPRING			2
49	6577690	TUBE			1
50	6678552	VALVE	port relief - 3400-3600 PSI - W/Ref. 23-25 - Was 6671632 [A]		1
51	6595663	BUSHING			2
52	6662848	CAP			1
53	6800124	ORIFICE	0.185		1
54	6717706	COIL, 10 VOLT	W/Nut - Was 6666547 [A]		2
54	6676566	NUT			2
55	6683274	SEAL, SPOOL	See BTI374 - spool - Was 6665846 [A]		4
56	1K127	O-RING 10	Was 93K127 [A]		2
57	6816250	KIT, SEAL	one spool - Ref. 2, 3, 4, 26, 55 & 56 - Was 6803605 [A]		x
57	6632279	KIT, SEAL	main relief - Ref. 17-20 - main relief		x
57	6809425	SEAL KIT	Ref. 13 & 23-25 - Was 6586461 [A]		x
57	6816253	KIT, SEAL	complete - Ref. 2, 4, 13, 17-20, 23-26, 34, 36, 45, 46 , 55 & 56 - also Order 6816250 seal kit - Was 6809448 [A]		x

Page 135 - OSS# 2071349 - All rights reserved by Bobcat Company - 12/01/2009 - 20:50:59 - Produced by Ken Cook Co. with mediaioff

HYDRAULIC CONTROL VALVE
(Advanced Control System) (W/BICS Combo Valve)

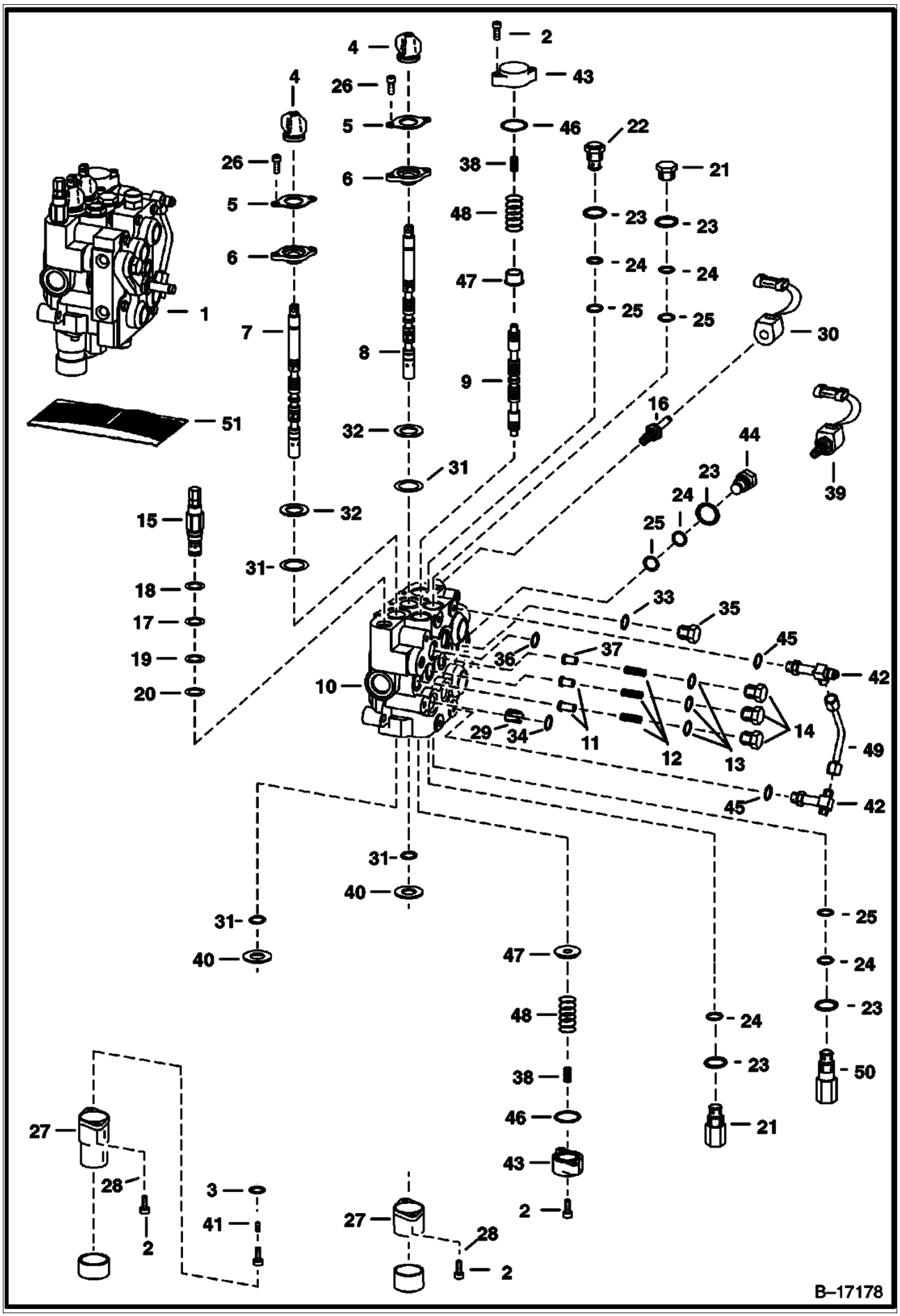

Page 136 - OSS# 2071349 - All rights reserved by Bobcat Company - 12/01/2009 - 20:50:59 - Produced by Ken Cook Co. with mediaIoff

Ref No	Part Number	Description	Remarks	Serial Number	Qty
1		VALVE	See BTI368 - NAP - valve is minus all fittings, relief valves, anti-cavitation valves, solenoid coils & solenoid spools - remove & use existing parts from old valve or order new parts as needed - Was 6809105 [A]		1
1		VALVE	See BTI368 - NAP - valve is minus all fittings, relief valves, anti-cavitation valves, solenoid coils & solenoid spools - remove & use existing parts from old valve or order new parts as needed - Was 6810453 [A]		1
1		VALVE	See BTI368 - NAP - valve is minus all fittings, relief valves, anti-cavitation valves, solenoid coils & solenoid spools - remove & use existing parts from old valve or order new parts as needed - Was 6811071 [A]	5176 20140-21999	1
1		VALVE	See BTI368 - NAP - valve is minus all fittings, relief valves, anti-cavitation valves, solenoid coils & solenoid spools - remove & use existing parts from old valve or order new parts as needed - Was 6811071 [A]	5180 12386-12999	1
1		VALVE	See BTI368 - NAP - valve is minus all fittings, relief valves, anti-cavitation valves, solenoid coils & solenoid spools - remove & use existing parts from old valve or order new parts as needed - Was 6811071 [A]	5190 21020-24999	1
1		VALVE	See BTI368 - NAP - valve is minus all fittings, relief valves, anti-cavitation valves, solenoid coils & solenoid spools - remove & use existing parts from old valve or order new parts as needed - Was 6811071 [A]	5192 12363-12999	1
1		VALVE	See BTI368 - NAP - valve is minus all fittings, relief valves, anti-cavitation valves, solenoid coils & solenoid spools - remove & use existing parts from old valve or order new parts as needed - Was 6811071 [A]	5181 12999-12999	1
1		VALVE	See BTI368 - NAP - valve is minus all fittings, relief valves, anti-cavitation valves, solenoid coils & solenoid spools - remove & use existing parts from old valve or order new parts as needed	5180 13000 & Abv.	1
1		VALVE	See BTI368 - NAP - valve is minus all fittings, relief valves, anti-cavitation valves, solenoid coils & solenoid spools - remove & use existing parts from old valve or order new parts as needed	5181 13000 & Abv.	1
1		VALVE	See BTI368 - NAP - valve is minus all fittings, relief valves, anti-cavitation valves, solenoid coils & solenoid spools - remove & use existing parts from old valve or order new parts as needed	5176 22000 & Abv.	1
1		VALVE	See BTI368 - NAP - valve is minus all fittings, relief valves, anti-cavitation valves, solenoid coils & solenoid spools - remove & use existing parts from old valve or order new parts as needed	5192 13000 & Abv.	1
1		VALVE	See BTI368 - NAP - valve is minus all fittings, relief valves, anti-cavitation valves, solenoid coils & solenoid spools - remove & use existing parts from old valve or order new parts as needed	5190 25000 & Abv.	1
1		VALVE ASSY	See Illustration BICS CONTROL VALVE/ TS1365 - BICS CONTROL		1

Page 137 - OSS# 2071349 - All rights reserved by Bobcat Company - 12/01/2009 - 20:50:59 - Produced by Ken Cook Co. with mediaioff

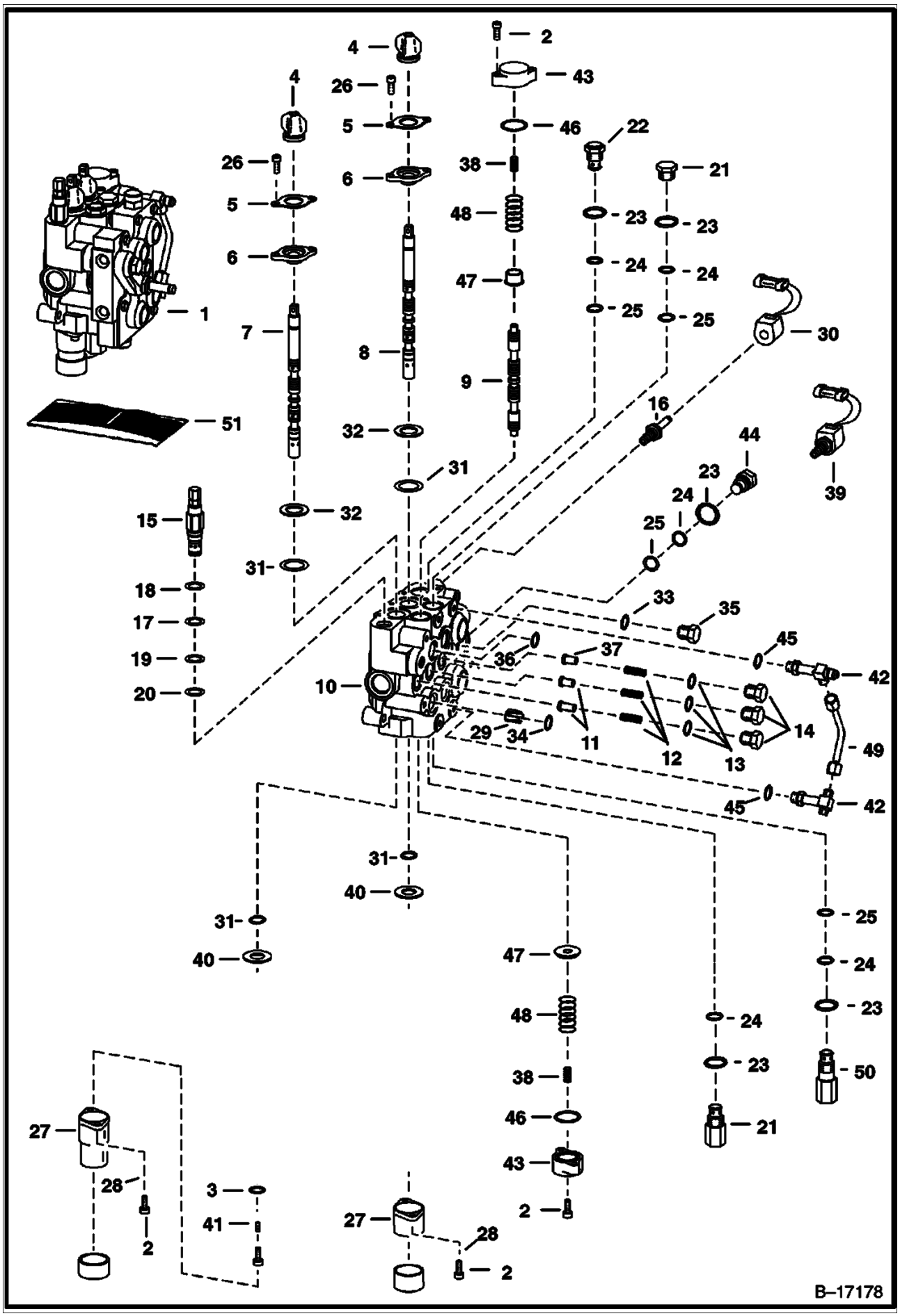

Page 138 - OSS# 2071349 - All rights reserved by Bobcat Company - 12/01/2009 - 20:50:59 - Produced by Ken Cook Co. with mediaIoff

Ref No	Part Number	Description	Remarks	Serial Number	Qty
2	29G416	BOLT			8
3	54K20002	O'RING 10			1
4	6587763	BOOT			2
5	6589564	RETAINER			2
6	6589565	BUSHING	seal		2
7		SPOOL	NAP - lift - # 1 or Red - Order 7108251 - Was 6677660 [A]		1
7		SPOOL	NAP - lift - # 2 or Green - Order 7108251 - Was 6677661 [A]		1
7	7108251	SPOOL	lift - Was 7101151 [A]		1
8		SPOOL	NAP - tilt - # 1 or Red - Order 7108242 - Was 6677662 [A]		1
8		SPOOL	NAP - tilt - # 2 or Green - Order 7108242 - Was 6677663 [A]		1
8	7108242	TILT SPOOL	tilt		1
9	6588074	SPOOL	auxiliary		3
10		BODY	NSS		1
11	6592115	SEAT	load check		2
12	6592117	SPRING			3
13	79K8	O RING 10			3
14	6592116	NUT	load check		3
15		VALVE	NAP - main relief - W/Ref. 17-20 - pressure preset in factory - Was 6676200 [A]		1
15	6686360	VALVE	main relief - W/Ref. 17-20 - pressure to be set in field		1
16	6666616	STEM		5180 12386 - 12999	2
16	6666616	STEM		5190 21020 - 24999	2
16	6666616	STEM		5192 12363 - 12999	2
16	6666616	STEM		5181 12999 - 12999	2
16	6666616	STEM		5176 20140 - 21999	2
16	6688743	STEM, VALVE CONTROL	W/Screen Was 6678892	5176 23000 & Abv.	2
16	6688743	STEM, VALVE CONTROL	W/Screen Was 6678892	5181 13000 & Abv.	2
16	6688743	STEM, VALVE CONTROL	W/Screen Was 6678892	5180 13000 & Abv.	2
16	6688743	STEM, VALVE CONTROL	W/Screen Was 6678892	5192 13000 & Abv.	2
16	6688743	STEM, VALVE CONTROL	W/Screen Was 6678892	5190 21020 - 24999	2
17	58K17	O RING 10			1
18	6665569	WASHER	back-up		1
19	25K20016	O RING 10			1
20	6665570	RING	glide		1
21	6678574	RELIEF VALVE	port relief - 3400-3600 PSI - W/Ref. 23-25 - Was 6673184 [A]		2
22	6667549	VALVE	anti-cavity check - W/Ref. 23-25		1
23	79K10	O RING 10			2
24	80K14	BACK-UP WASHER	Was 73K000014B		5
25	58K14	O RING 10			5
26	29G412	BOLT			4
27	6676496	BONNET			2

Page 139 - OSS# 2071349 - All rights reserved by Bobcat Company - 12/01/2009 - 20:50:59 - Produced by Ken Cook Co. with mediaioff

HYDRAULIC CONTROL VALVE (Cont'd)
(Advanced Control System) (W/BICS Combo Valve)

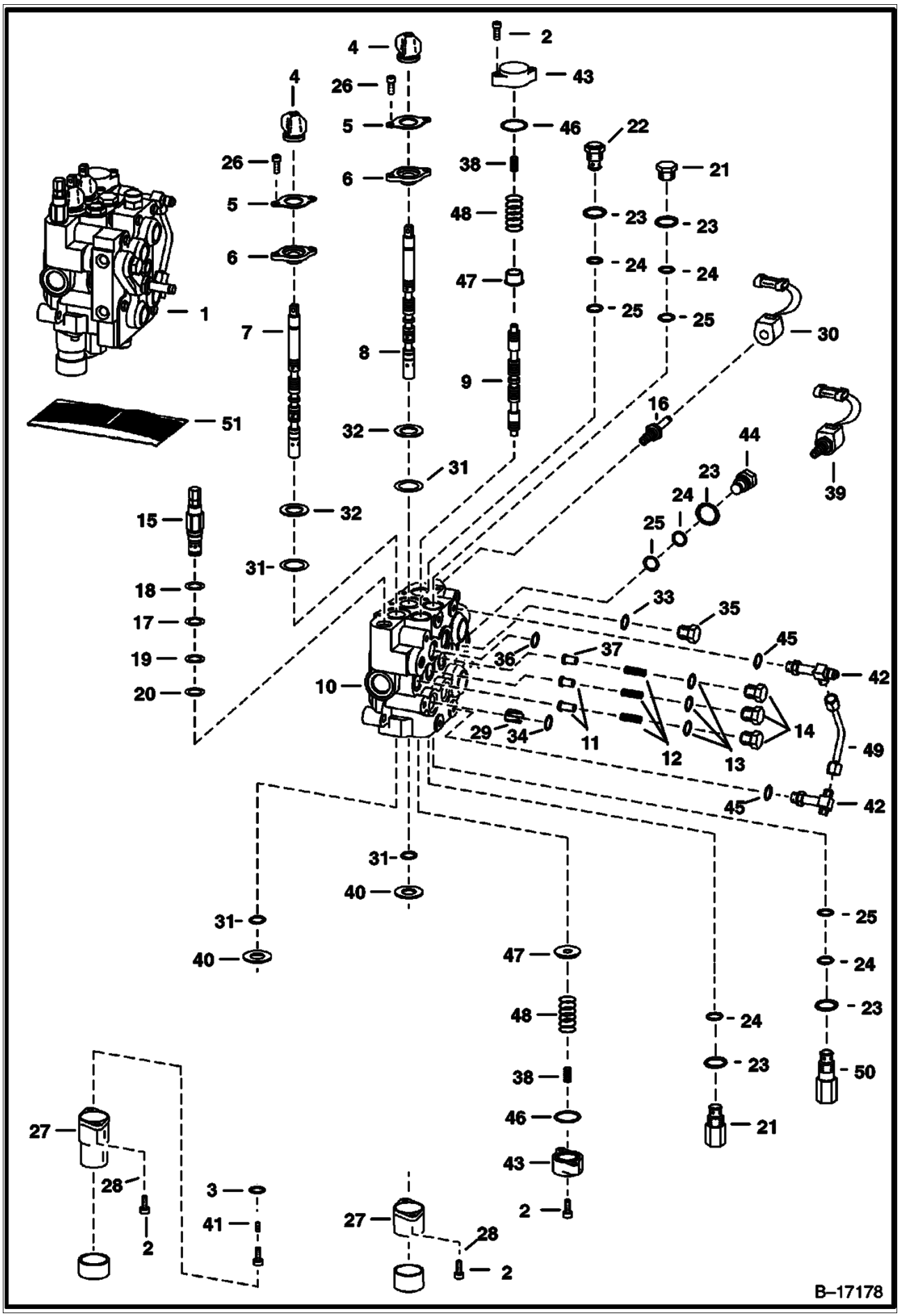

Page 140 - OSS# 2071349 - All rights reserved by Bobcat Company - 12/01/2009 - 20:50:59 - Produced by Ken Cook Co. with mediaioff

Ref No	Part Number	Description	Remarks	Serial Number	Qty
27	7101345	BONNET, DETENT HYD VALVE	for Ref. 1 (6812670 Valve) - Was 6587633 [A]		1
28	25E13	WASHER 5			4
29	6800124	ORIFICE	0.185		1
30	6717706	COIL, 10 VOLT	10 volt - W/ 6676566 nut - for 6666616 stem		2
30	6676566	NUT	for 6666616 stem and 6717706 coil		2
30	6678891	COIL	10 volt - W/ 6691022 nut - for 6688743 stem		2
30	6691022	NUT	for 6688743 stem and 6678891 coil - Was 6690705 [A]		2
31	6683274	SEAL, SPOOL	See BTI374 - spool - Was 6665846 [A]		4
32	1K127	O-RING 10	Was 93K127 [A]		2
33	95K12	O-RING	tapered boss face - Was 99K000012B [B]		x
34	55K212	O RING 10			4
35	90K8	PLUG	W/Ref. 33 - tapered boss face - socket head - Was 90KV00008B [A]		1
36	55K204	O RING 10			1
37	6596569	SEAT			1
38	6806007	SPRING	white		2
39	6665084	SOLENOID	W/Ref. 16 (6666616 stem) & 30 (6717706 coil)	5176 20140 - 21999	2
39	6665084	SOLENOID	W/Ref. 16 (6666616 stem) & 30 (6717706 coil)	5192 12363 - 12999	2
39	6665084	SOLENOID	W/Ref. 16 (6666616 stem) & 30 (6717706 coil)	5190 21020 - 24999	2
39	6665084	SOLENOID	W/Ref. 16 (6666616 stem) & 30 (6717706 coil)	5180 12386 - 12999	2
39	6665084	SOLENOID	W/Ref. 16 (6666616 stem) & 30 (6717706 coil)	5181 12999 - 12999	2
39	6586459	SEAL KIT			x
39		SOLENOID	NAP - W/Ref. 16 (6678892 Stem) & 30 (6678891 coil) - Was 6678893 [A]	5180 13000 & Abv.	2
39		SOLENOID	NAP - W/Ref. 16 (6678892 Stem) & 30 (6678891 coil) - Was 6678893 [A]	5181 13000 & Abv.	2
39		SOLENOID	NAP - W/Ref. 16 (6678892 Stem) & 30 (6678891 coil) - Was 6678893 [A]	5176 22000 & Abv.	2
39		SOLENOID	NAP - W/Ref. 16 (6678892 Stem) & 30 (6678891 coil) - Was 6678893 [A]	5190 25000 & Abv.	2
39		SOLENOID	NAP - W/Ref. 16 (6678892 Stem) & 30 (6678891 coil) - Was 6678893 [A]	5192 13000 & Abv.	2
40	6595663	BUSHING			2
41	6801167	PLUG	plastic - .685" long		1
42	6817553	CROSS	W/Ref. 45 - flat boss face - Was 6805241 [A]		2
42	97K6	O'RING	flared end		2
43	6588781	END CAP			2
44	6592720	PLUG	W/Ref. 23-25		1
45	97K6	O'RING			x
45	79K6	O RING 10	flat boss face		x
46	58K124	O RING 10			2
47	7108780	SLEEVE	Was 6595951 [A]		2
48	6596332	SPRING			2
49	6577690	TUBE			1
50	6678552	VALVE	port relief - 3400-3600 PSI - W/Ref. 23-25 - Was 6671632 [A]		1
51	6816250	KIT, SEAL	one spool - Ref. 2, 3, 4, 26, 32 & 32 - Was 6803605 [A]		x
51	6632279	KIT, SEAL	main relief - Ref. 17-20 - main relief		x

Page 141 - OSS# 2071349 - All rights reserved by Bobcat Company - 12/01/2009 - 20:50:59 - Produced by Ken Cook Co. with mediaioff

HYDRAULIC CONTROL VALVE (Cont'd)
(Advanced Control System) (W/BICS Combo Valve)

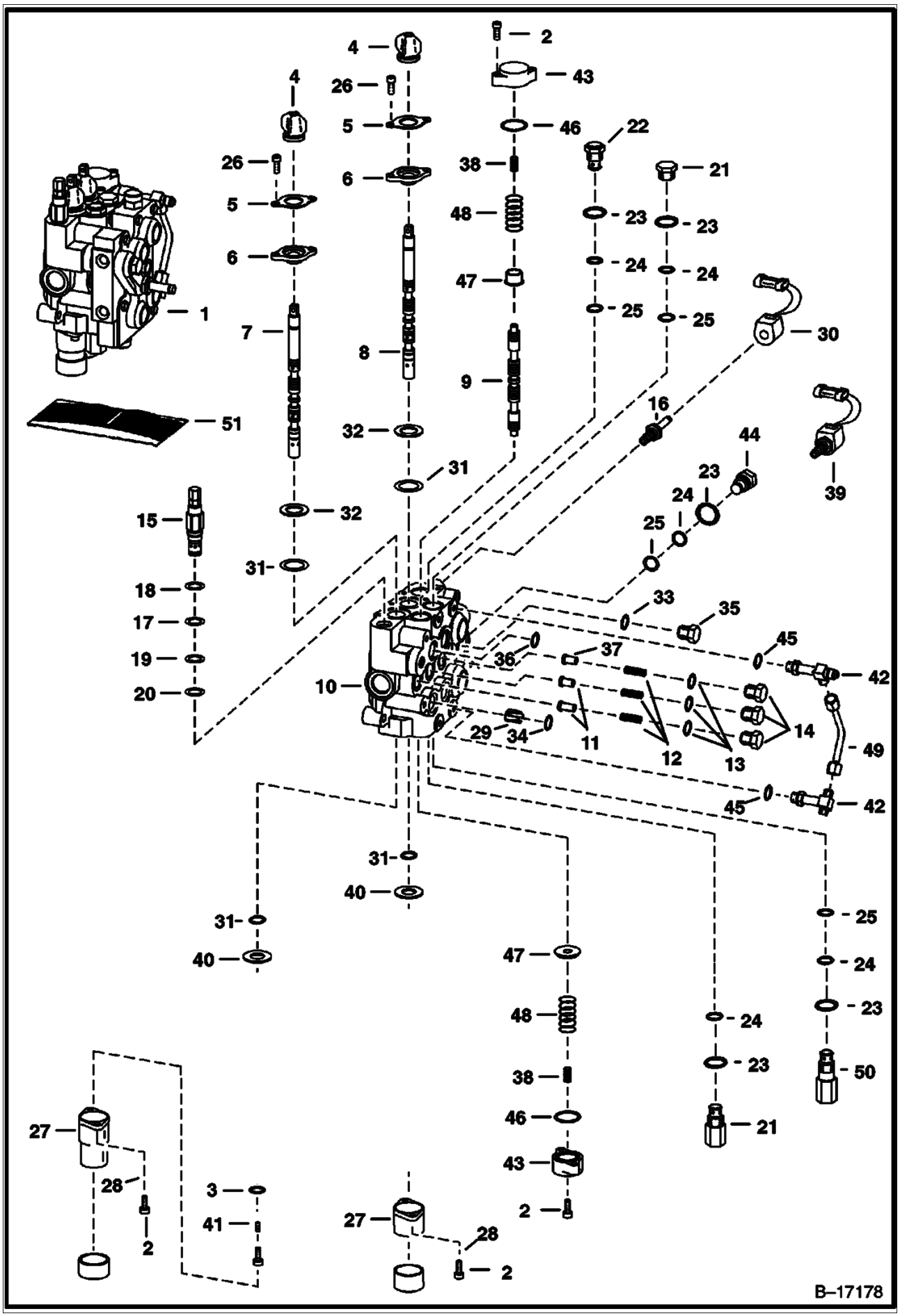

Page 142 - OSS# 2071349 - All rights reserved by Bobcat Company - 12/01/2009 - 20:50:59 - Produced by Ken Cook Co. with mediaioff

Ref No	Part Number	Description	Remarks	Serial Number	Qty
51	6809425	SEAL KIT	Ref. 13 & 23-25 - Was 6586461 [A]		x
51	6816253	KIT, SEAL	complete - Ref. 2, 4, 13, 17-20, 23-26, 31, 32, 34, 36, 45 & 46 - also Order 6816250 seal kit - Was 6809448 [A]		x

Page 143 - OSS# 2071349 - All rights reserved by Bobcat Company - 12/01/2009 - 20:50:59 - Produced by Ken Cook Co. with mediaioff

HYDRAULIC CONTROL VALVE
(Service Valve) (Advanced Control Systems)

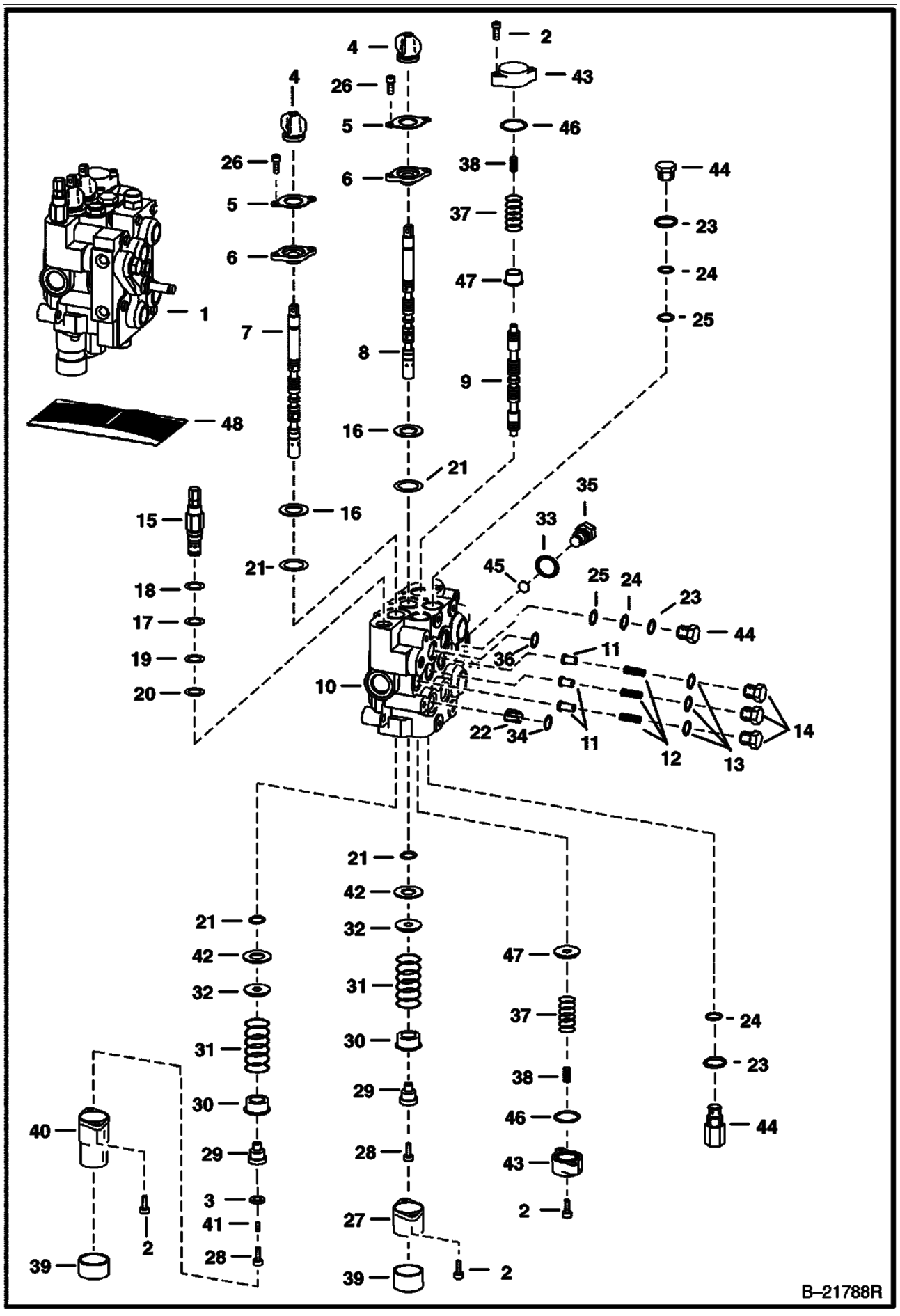

Page 144 - OSS# 2071349 - All rights reserved by Bobcat Company - 12/01/2009 - 20:50:59 - Produced by Ken Cook Co. with mediaioff

HYDRAULIC CONTROL VALVE (Cont'd)
(Service Valve) (Advanced Control Systems)

Ref No	Part Number	Description	Remarks	Serial Number	Qty
1		VALVE, CONTROL SERVICE	See BTI368 - NAP - valve is minus all fittings, relief valves, anti-cavitation valves, solenoid coils & solenoid spools - remove & use existing parts from old valve or order new parts as needed - Was 6815690 [A]		1
1		BODY	See Illustration BICS CONTROL VALVE/ TS1365 - NSS - BICS CONTROL - WAS 6628571 [D]		1
2	29G416	BOLT			8
3	54K20002	O'RING 10			1
4	6587763	BOOT			2
5	6589564	RETAINER			2
6	6589565	BUSHING	seal		2
7		SPOOL	NAP - Lift - #1 Or Red - Order 7108251 - Was 6677660 [A]		1
7		SPOOL	NAP - Lift - #2 Or Green - Order 7108251 - Was 6677661 [A]		1
7	7108251	SPOOL	lift - Was 7101151 [A]		1
8		SPOOL	NAP - tilt - # 1 or Red - Order 7108242 - Was 6677662 [A]		1
8		SPOOL	NAP - tilt - # 2 or Green - Order 7108242 - Was 6677663 [A]		1
8	7108242	TILT SPOOL	tilt		1
9	6588074	SPOOL	auxiliary		3
10		BODY	NSS		1
11	6592115	SEAT	load check		3
12	6592117	SPRING			3
13	79K8	O RING 10			3
14	6592116	NUT	load check		3
15		VALVE	NAP - Main Relief - W/Ref. 17-20 - Pressure Preset At Factory - Was 6676195 [A]		1
15	6686360	VALVE	Main Relief - W/Ref. 17-20 - Pressure To Be Set In Field - Was 6685017 [A]		1
16	1K127	O-RING 10	Was 93K127 [A]		2
17	58K17	O RING 10			1
18	6665569	WASHER	back-up		1
19	25K20016	O RING 10			1
20	6665570	RING	glide		1
21	6683274	SEAL, SPOOL	See BTI374 - spool - Was 6665846 [A]		4
22	6534630	RESTRICTOR	.134/.141		1
23	79K10	O RING 10			2
24	80K14	BACK-UP WASHER	Was 73K000014B		5
25	58K14	O RING 10	back-up washer required		5
25	6677106	O-RING	back-up washer not required		5
26	29G412	BOLT			4
27	7101345	BONNET, DETENT HYD VALVE	Was 6587633 [A]		1
28	7102652	SCREW	Was 30G000416B [B]		2
29	6592109	ADAPTER			1
30	6592100	COLLAR			2
31	6587580	SPRING			2
32	6587523	WASHER			2
33	79K7	O RING 10	Was 75K-12 [D]		x
34	55K212	O RING 10			4
35	6806561	PLUG	W/Ref. 33 & 48 - Hex Head		1
36	55K204	O RING 10			1

Page 145 - OSS# 2071349 - All rights reserved by Bobcat Company - 12/01/2009 - 20:50:59 - Produced by Ken Cook Co. with mediaioff

HYDRAULIC CONTROL VALVE (Cont'd)
(Service Valve) (Advanced Control Systems)

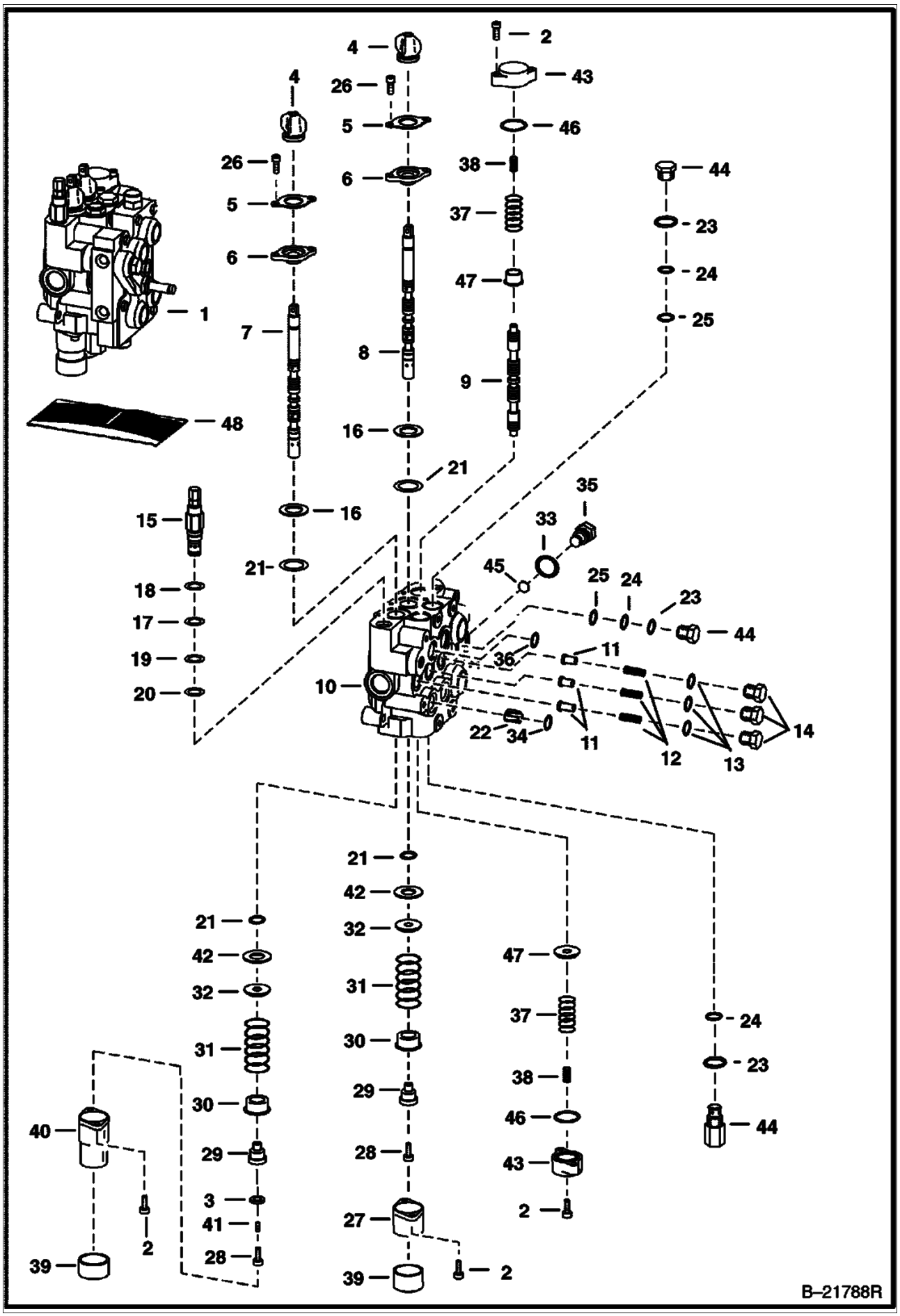

Page 146 - OSS# 2071349 - All rights reserved by Bobcat Company - 12/01/2009 - 20:50:59 - Produced by Ken Cook Co. with mediaioff

Ref No	Part Number	Description	Remarks	Serial Number	Qty
37	6596332	SPRING			2
38	6806007	SPRING	blue		2
39	6662848	CAP			1
40	6803092	BONNET	.625" flange		1
41	6801167	PLUG	plastic - .685" long		1
42	6595663	BUSHING			2
43	6588781	END CAP			2
44	6592720	PLUG	W/ Ref. 23-25		5
45	25K20012	O RING 10			1
46	58K124	O RING 10			2
47	7108780	SLEEVE	Was 6595951 [A]		2
48	6816250	KIT, SEAL	One Spool - Ref. 2, 3, 4, 16, 21 & 26 - Was 6803605 [A]		x
48	6632279	KIT, SEAL	main relief - Ref. 17-20 - main relief		x
48	6809425	SEAL KIT	Ref. 13 & 23-25		x
48	6816253	KIT, SEAL	Complete - Ref. 2, 4, 13, 16-20, 21, 23-26, 34, 36 & 46 - also Order 6816250 seal kit - Was 6809448 [A]		x

Page 147 - OSS# 2071349 - All rights reserved by Bobcat Company - 12/01/2009 - 20:50:59 - Produced by Ken Cook Co. with mediaioff

HYDRAULIC CONTROL VALVE
(Service Valve) (Advanced Control System)

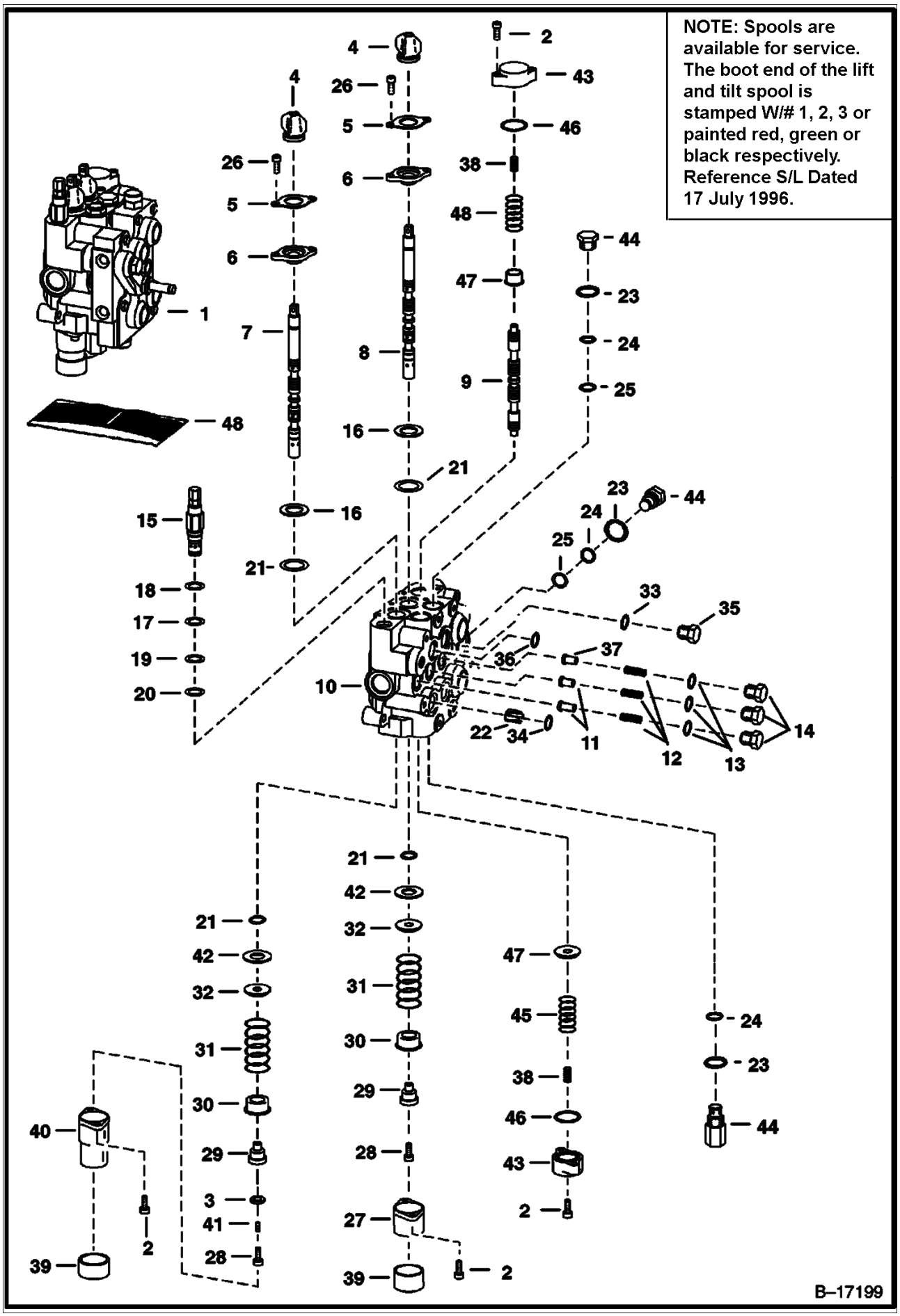

Page 148 - OSS# 2071349 - All rights reserved by Bobcat Company - 12/01/2009 - 20:50:59 - Produced by Ken Cook Co. with mediaioff

HYDRAULIC CONTROL VALVE (Cont'd)
(Service Valve) (Advanced Control System)

Ref No	Part Number	Description	Remarks	Serial Number	Qty
1	6810026	VALVE, CONTROL SERVICE	See BTI368 - valve is minus all fittings, relief valves, anti-cavitation valves, solenoid coils & solenoid spools - remove & use existing parts from old valve or order new parts as needed		1
1		VALVE ASSY	See Illustration BICS CONTROL VALVE/ TS1365 - BICS CONTROL		1
2	29G416	BOLT			8
3	54K20002	O'RING 10			1
4	6587763	BOOT			2
5	6589564	RETAINER			2
6	6589565	BUSHING	seal		2
7		SPOOL	NAP - lift - # 1 or Red - Order 7108251 - Was 6677660 [A]		1
7		SPOOL	NAP - lift - # 2 or Green - Order 7108251 - Was 6677660 [A]		1
7	7108251	SPOOL	lift - Was 7101151 [A]		1
8		SPOOL	NAP - tilt - # 1 or red - Order 7108242 spool - SEE NOTE - Was 6677662 [A]		1
8		SPOOL	NAP - tilt - # 2 or green - Order 7108242 spool - SEE NOTE - Was 6677663 [A]		1
9	6588074	SPOOL	auxiliary		3
10		BODY	NSS		1
11	6592115	SEAT	load check		2
12	6592117	SPRING			3
13	79K8	O RING 10			3
14	6592116	NUT	load check		3
15	6686360	VALVE	main relief W/Ref. 17-20 - Was 6685017 [A]		1
16	1K127	O-RING 10	Was 93K127 [A]		2
17	58K17	O RING 10			1
18	6665569	WASHER	back-up		1
19	25K20016	O RING 10			1
20	6665570	RING	glide		1
21	6683274	SEAL, SPOOL	See BTI374 - spool - Was 6665846 [A]		4
22	6534630	RESTRICTOR	.134/.141		1
23	79K10	O RING 10			2
24	80K14	BACK-UP WASHER	Was 73K000014B		5
25	58K14	O RING 10	back-up washer required		5
25	6677106	O-RING	back-up washer not required		5
26	29G412	BOLT			4
27	7101345	BONNET, DETENT HYD VALVE	Was 6587633 [A]		1
28	30G416	BOLT			2
29	6592109	ADAPTER			1
30	6592100	COLLAR			2
31	6587580	SPRING			2
32	6587523	WASHER			2
33	95K12	O-RING	tapered boss face - socket head		x
34	55K212	O RING 10			4
35	90K8	PLUG	W/Ref. 33 - tapered boss face - socket head - Was 90KV00008B [A]		1
36	55K204	O RING 10			1
37	6596569	SEAT			1
38	6589045	SPRING	white		2
39	6662848	CAP			1
40	6803092	BONNET	.625" flange		1

Page 149 - OSS# 2071349 - All rights reserved by Bobcat Company - 12/01/2009 - 20:50:59 - Produced by Ken Cook Co. with mediaioff

HYDRAULIC CONTROL VALVE (Cont'd)
(Service Valve) (Advanced Control System)

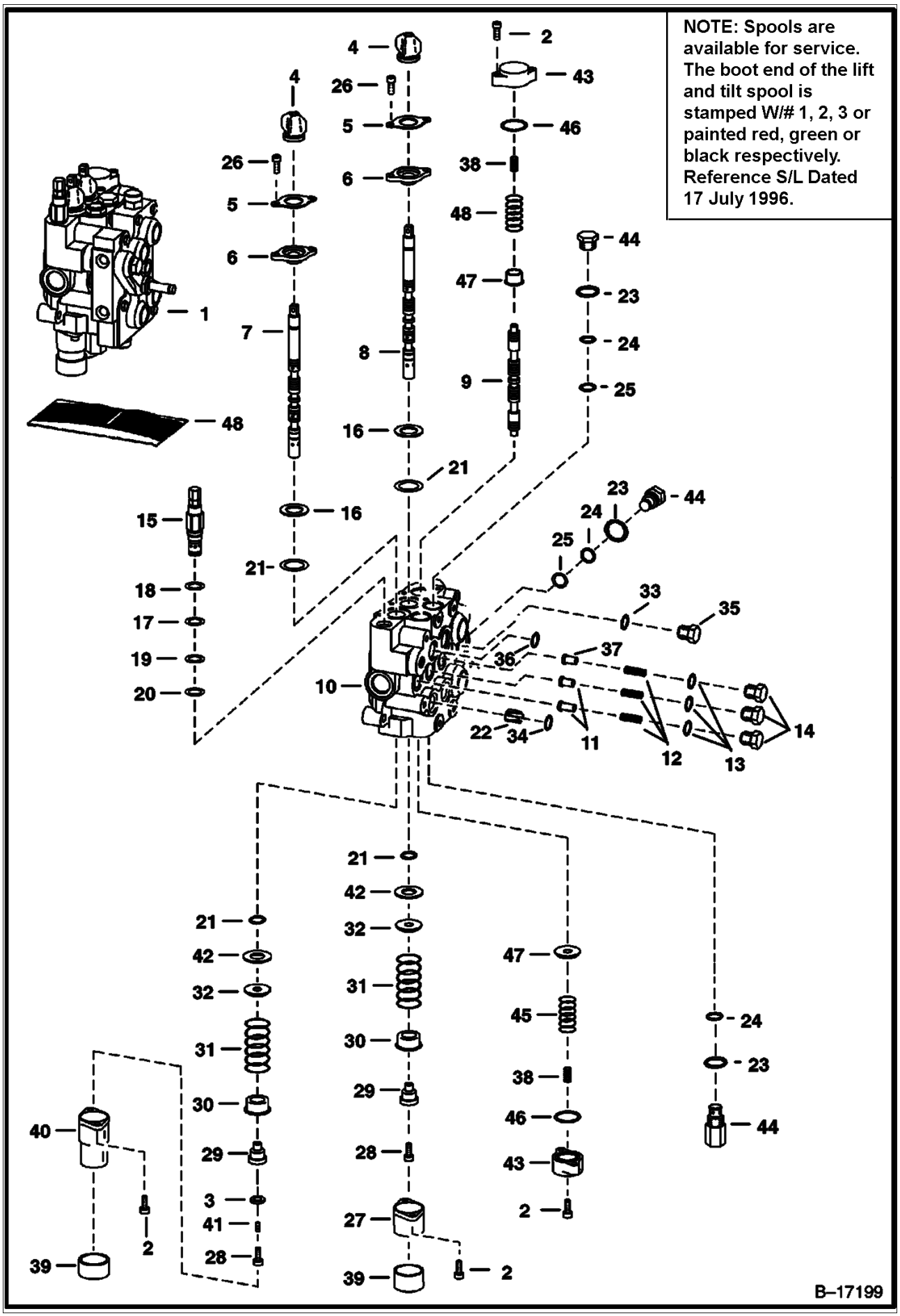

Page 150 - OSS# 2071349 - All rights reserved by Bobcat Company - 12/01/2009 - 20:50:59 - Produced by Ken Cook Co. with mediaioff

Ref No	Part Number	Description	Remarks	Serial Number	Qty
41	6801167	PLUG	plastic - .685" long		1
42	6595663	BUSHING			2
43	6588781	END CAP			2
44	6592720	PLUG	W/Ref. 23-25		1
45	6596332	SPRING			2
46	58K124	O RING 10			2
47	7108780	SLEEVE	Was 6595951 [A]		2
48	6816250	KIT, SEAL	one spool - Ref. 2, 3, 4, 16 & 21 - Was 6803605 [A]		x
48	6632279	KIT, SEAL	main relief - Ref. 17-20		x
48	6809425	SEAL KIT	Ref. 13 & 23-25		x
48	6816253	KIT, SEAL	complete - Ref. 2, 4, 13, 16-21, 23-25, 26, 34, & 46 - Was 6809448 [A]		x

Page 151 - OSS# 2071349 - All rights reserved by Bobcat Company - 12/01/2009 - 20:50:59 - Produced by Ken Cook Co. with mediaioff

BICS CONTROL VALVE

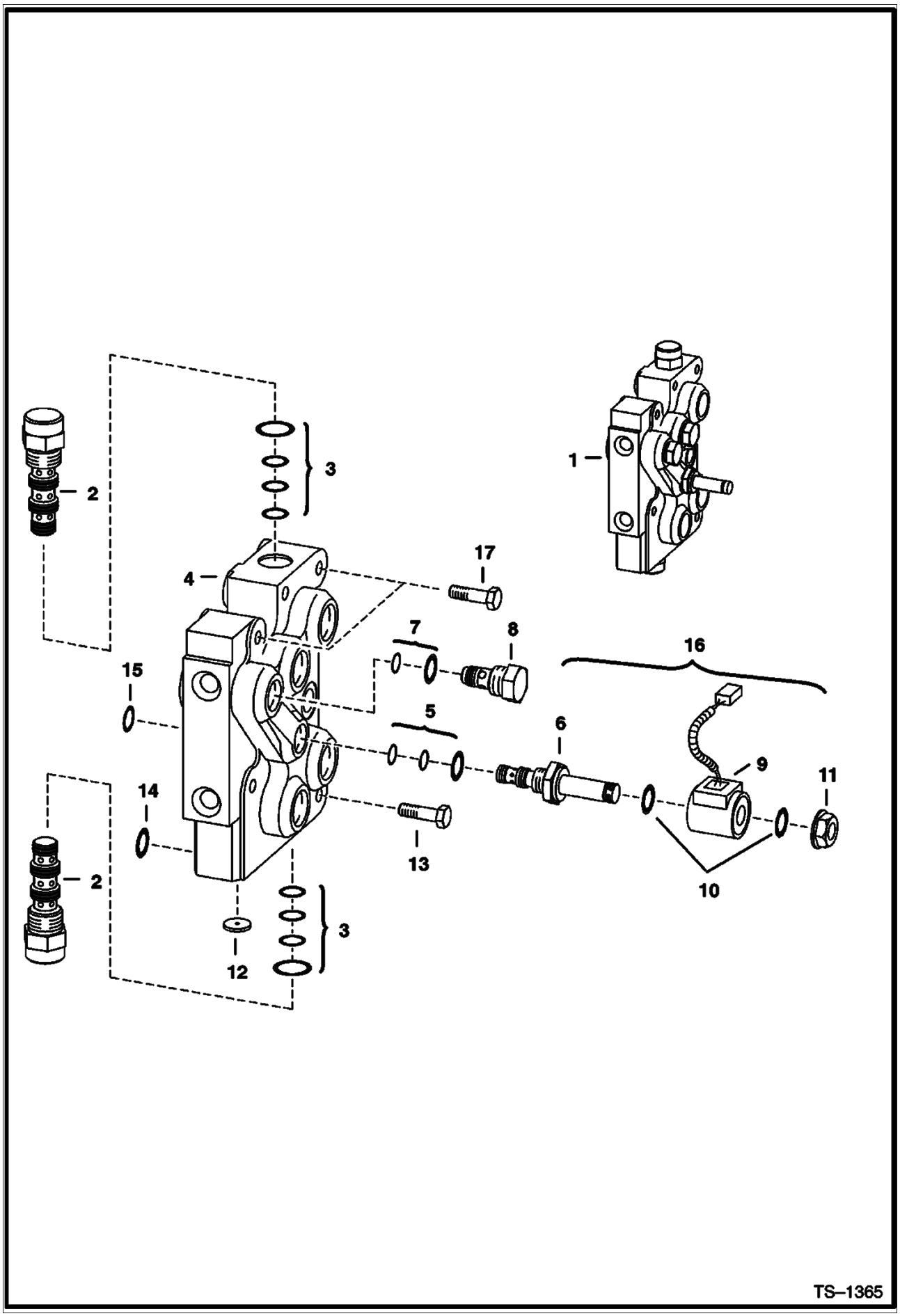

Page 152 - OSS# 2071349 - All rights reserved by Bobcat Company - 12/01/2009 - 20:50:59 - Produced by Ken Cook Co. with mediaioff

Ref No	Part Number	Description	Remarks	Serial Number	Qty
1	6628571	VALVE ASSY	Ref. 2 - 8		1
2	6689739	VALVE	pilot operated - Was 6668765 [A]		2
3	6669734	KIT, SEAL			x
4		BODY	NSS		1
5	6669732	KIT, SEAL			x
6	6667687	STEM	solenoid valve - Was 6665004 [A]		1
7	6669733	SEAL KIT			x
8	6669057	CHECK VALVE	filter		1
9	6671025	COIL	W/Ref. 10 & 11 - W/diode		1
10	54K20028	O RING 10			2
11	6668820	NUT			1
12	6668791	ORIFICE			1
13	43C532	BOLT			4
14	55K212	O RING 10			4
15	55K204	O RING 10			1
16	6672471	VALVE	W/Ref. 5, 6, & 9 - Was 6675559 [B]		1
17	43C524	BOLT			2

Page 153 - OSS# 2071349 - All rights reserved by Bobcat Company - 12/01/2009 - 20:50:59 - Produced by Ken Cook Co. with mediaioff

MANUAL LIFT RELEASE VALVE

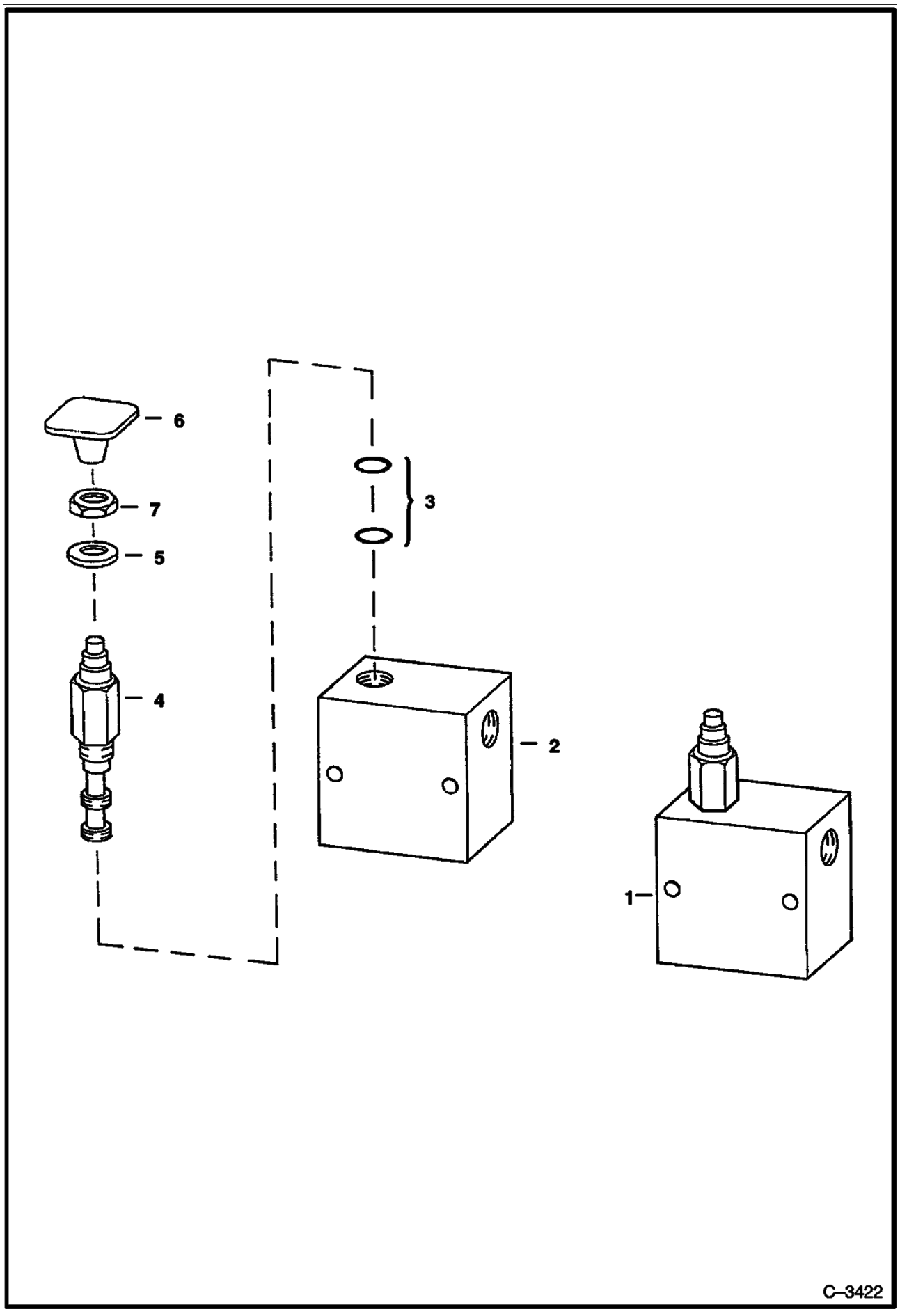

Page 154 - OSS# 2071349 - All rights reserved by Bobcat Company - 12/01/2009 - 20:50:59 - Produced by Ken Cook Co. with mediaioff

Ref No	Part Number	Description	Remarks	Serial Number	Qty
1	6667844	VALVE, LIFT MANUAL	Ref. 2-4		1
2		BLOCK	NSS		1
3	6669087	SEAL KIT			1
4		VALVE	NSS - Order Ref. 1 - Was 6669085 [A]		1
5	6707101	SEAL	neoprene		1
6	6737524	KNOB	red square - Was 6668913 [A]		1
7	7D4	NUT			1

Page 155 - OSS# 2071349 - All rights reserved by Bobcat Company - 12/01/2009 - 20:50:59 - Produced by Ken Cook Co. with mediaioff

PRESSURE RELEASE VALVE
(Front Auxiliary)

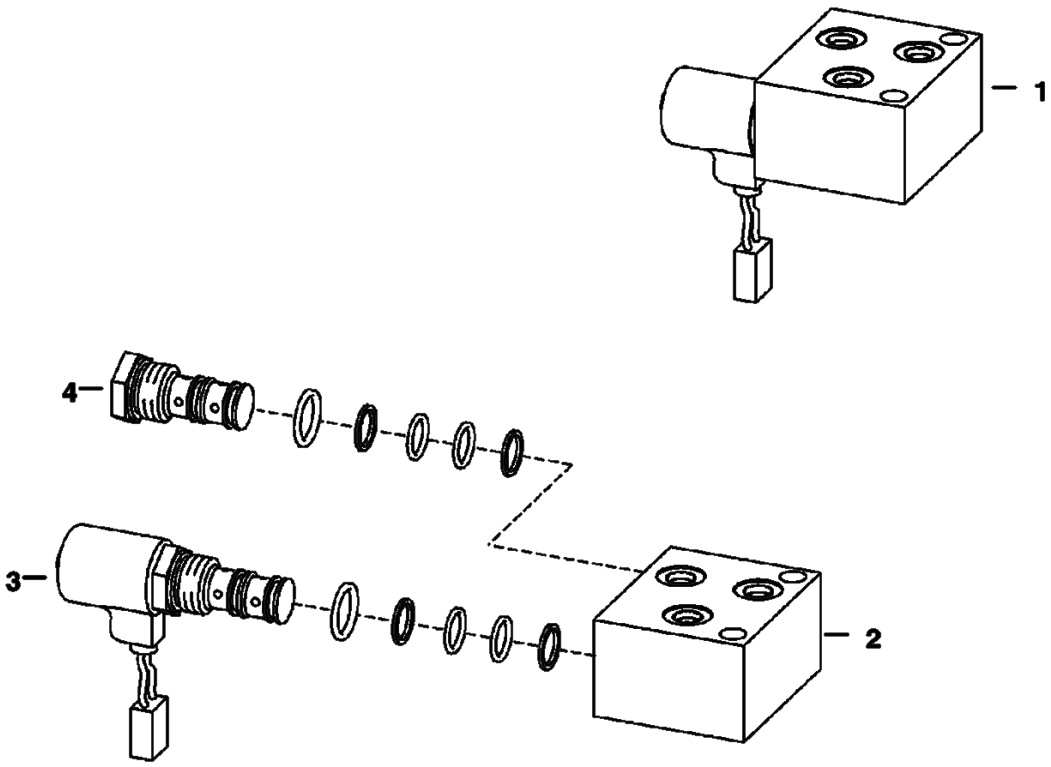

PE–1017

Page 156 - OSS# 2071349 - All rights reserved by Bobcat Company - 12/01/2009 - 20:50:59 - Produced by Ken Cook Co. with mediaioff

PRESSURE RELEASE VALVE (Cont'd)
(Front Auxiliary)

Ref No	Part Number	Description	Remarks	Serial Number	Qty
1		VALVE	NAP - W/.4375" threaded ports - Order 6678150 Valve, 15KB606 Adapter, 17KB606 Elbow & 19KB606 Tee - Was 6674372 [A]		1
1	6678150	VALVE	W/.5625" threaded ports		1
2		BLOCK	NSS		1
3		VALVE	NSS - solenoid		1
3	6675285	STEM			1
3	6676564	SEAL KIT			1
3	6672962	COIL			1
3	6676566	NUT			1
4	6675284	SHUTTLE VALVE			1
4	6657409	SEAL KIT			1

Page 157 - OSS# 2071349 - All rights reserved by Bobcat Company - 12/01/2009 - 20:50:59 - Produced by Ken Cook Co. with mediaioff

HIGH FLOW HYDRAULICS
(S/N 500K11038 & Below, 517619258 & Below, 518012218 & Below, 518112089 & Below, 519018909 & Below, 519212154 & Below)

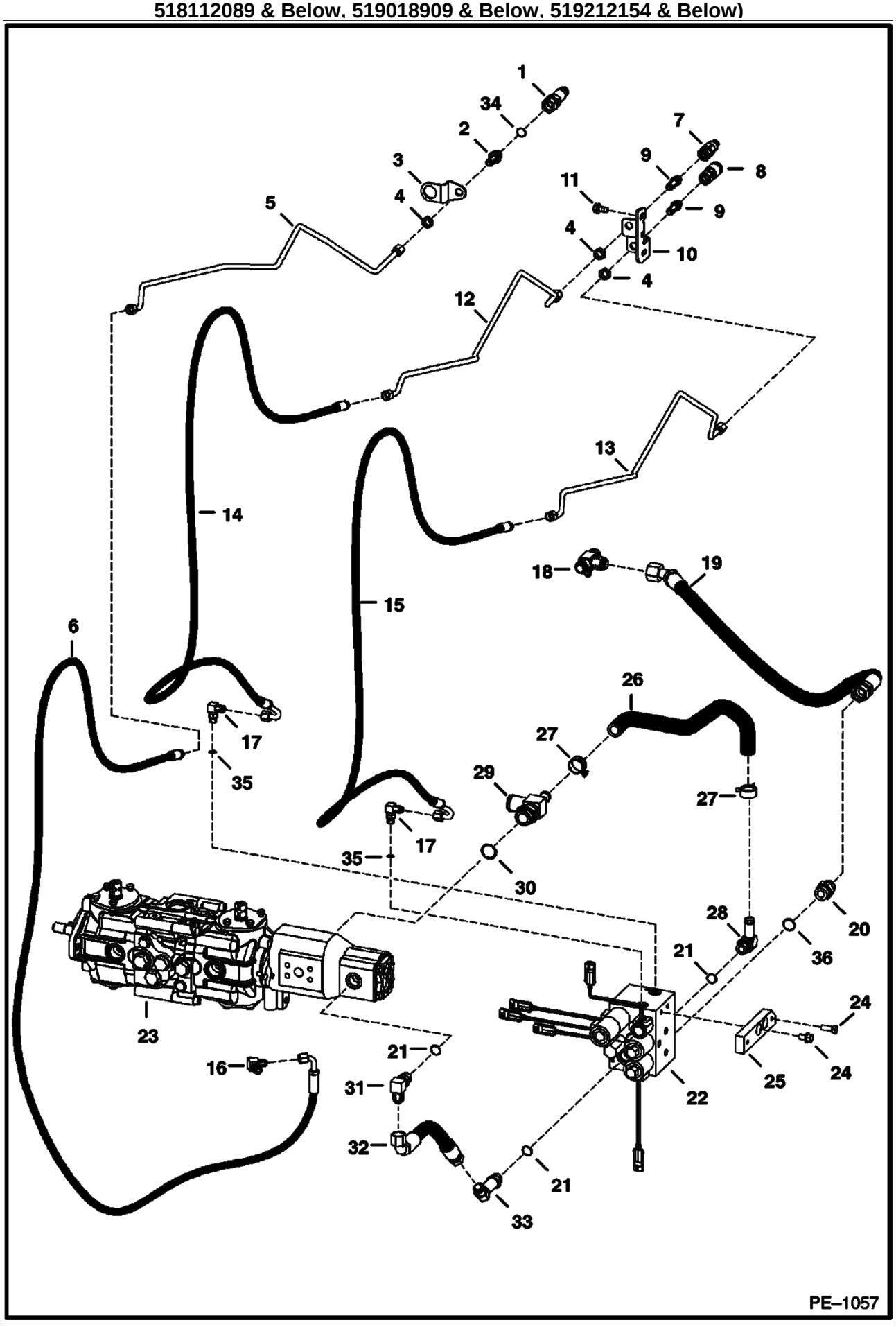

Page 158 - OSS# 2071349 - All rights reserved by Bobcat Company - 12/01/2009 - 20:50:59 - Produced by Ken Cook Co. with mediaioff

HIGH FLOW HYDRAULICS (Cont'd)
(S/N 500K11038 & Below, 517619258 & Below, 518012218 & Below, 518112089 & Below, 519018909 & Below, 519212154 & Below)

Ref No	Part Number	Description	Remarks	Serial Number	Qty
1	6667806	COUPLER	male		1
1	6669659	O-RING			1
2	6726479	ADAPTER	W/Ref. 34 - flat boss face - Was 6711628 [A]		1
2	6726479	ADAPTER	W/Ref. 34 - tapered boss face - Was 6711628 [A]		1
2	97K6	O'RING	flared end		1
3	6711913	BRACKET			1
4	86F5	NUT			3
5	6718136	TUBE			1
6	7114121	HOSE	Was 6734664 [A]		1
7	6667804	COUPLER	male		1
7	6669657	SEAL KIT			1
8	6667803	COUPLER	female		1
9	6716089	CONNECTOR	W/ O-rings		2
10	6711674	MOUNT			1
11	84G3712	BOLT			2
12	6718245	TUBE			1
13	6718244	TUBE			1
14		HOSE	NAP - Order Ref. 15 - Was 6718455 [A]		1
15	6718454	HOSE			1
16	21KB606	TEE	W/Ref. 21 - Was 21KV00005B [A]		1
16	97K6	O'RING	flared end		1
17	17KB606	ELBOW	W/Ref. 21 - Was 17KV00005B [A]		2
17	97K6	O'RING	flared end		2
18	6718098	CONNECTOR			1
19	6729146	HOSE	Was 6712856 [A]		1
20	6659459	CHECK VALVE	inline check		1
21	99K10	O'RING	tapered boss face		x
21	79K10	O RING 10	flat boss face		x
22	6669203	VALVE	See Illustration HIGH FLOW HYDRAULICS/ TS1434R - select		1
23		PUMP	See Illustration HYDROSTATIC PUMP/ B17103		1
24	17C616	BOLT 5			4
25	6705471	MOUNT			1
26	6717886	HOSE			1
27	5HM29	HOSECLAMP	constant tension - Was 5HM00027B [A]		2
28	6717885	ELBOW	W/Ref. 21 - check boss face to determine correct replacement o-ring		1
29	6714904	TEE	W/Ref. 30 - check boss face to determine correct replacement o-ring		1
30	79K16	O RING 10	flat boss face		x
30	99K16	O-RING	tapered boss face		x
31	17KB1010	ELBOW	W/Ref. 21 - Was 17KV00007B [A]		1
31	97K10	O-RING 10	flared end		1
32	6728613	HOSE	Was 6718074 [A]		1
33	6718080	ELBOW	W/Ref. 21		1
34	79K8	O RING 10	O-RING		1
34	99K8	O-RING	tapered boss face		1
35	79K6	O RING 10	flat boss face		x
35	99K6	O'RING	tapered boss face		x
36	79K12	O RING 10	flat boss face		x
36	99K12	O'RING	tapered boss face		x

Page 159 - OSS# 2071349 - All rights reserved by Bobcat Company - 12/01/2009 - 20:50:59 - Produced by Ken Cook Co. with mediaioff

HIGH FLOW HYDRAULICS
(S/N 500K11039-12193, 517619259-20247, 518012219 & Above, 518112090-12285, 519018910-21332, 519212155-12389)

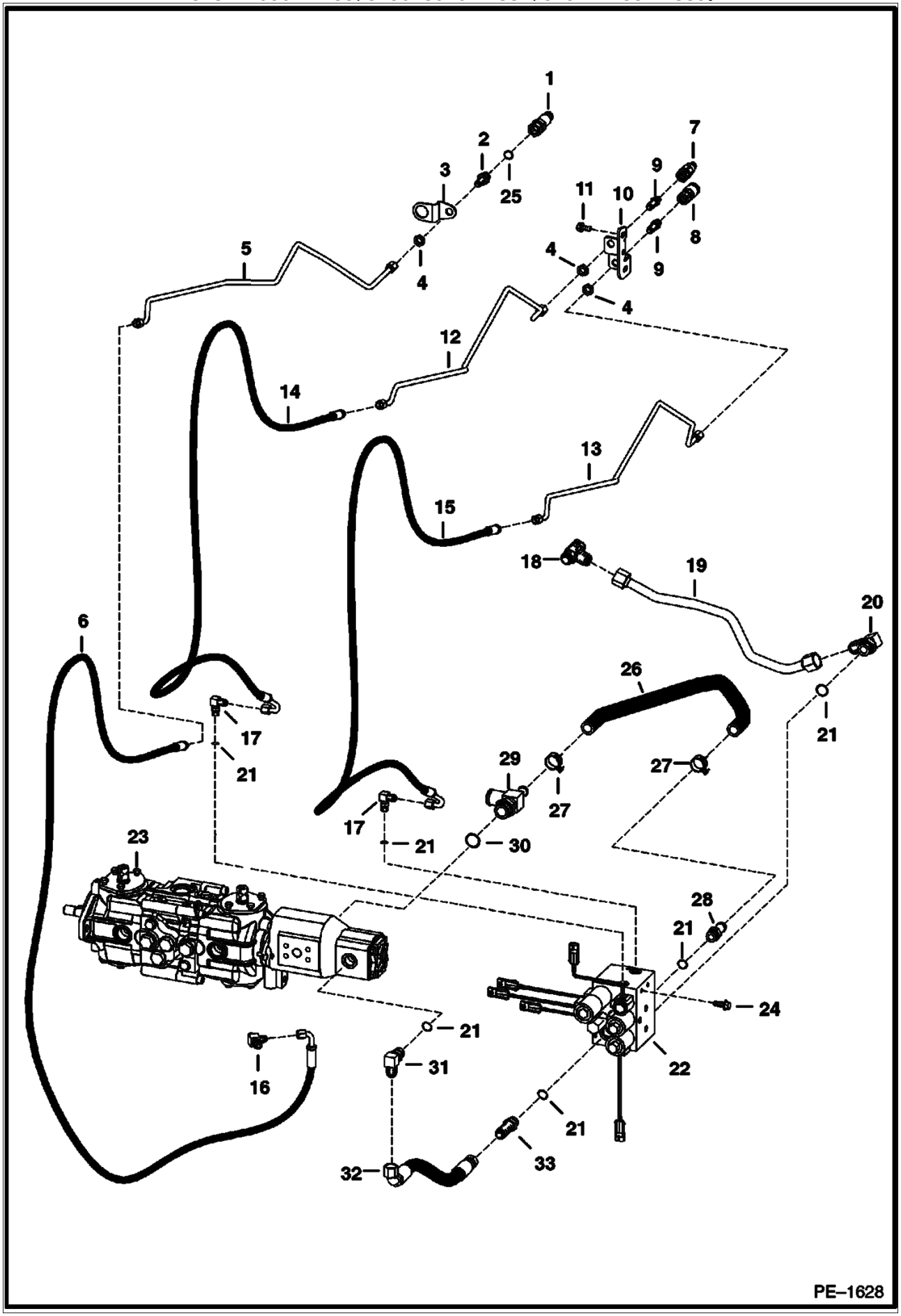

Page 160 - OSS# 2071349 - All rights reserved by Bobcat Company - 12/01/2009 - 20:50:59 - Produced by Ken Cook Co. with mediaioff

Ref No	Part Number	Description	Remarks	Serial Number	Qty
1	6667806	COUPLER	male		1
1	6669659	O-RING			1
2	6726479	ADAPTER	W/Ref. 25 - check boss face to determine correct replacement o-ring - Was 6711628 [A]		1
2	97K6	O'RING	flared end		1
3	6711913	BRACKET			1
4	86F5	NUT			3
5	6718136	TUBE			1
6	7114121	HOSE	Was 6734664 [A]		1
7	6667804	COUPLER	male		1
7	6669657	SEAL KIT			1
8	6667803	COUPLER	female		1
9	6716089	CONNECTOR	W/ O-rings		2
10	6711674	MOUNT			1
11	84G3712	BOLT			2
12	6718245	TUBE			1
13	6718244	TUBE			1
14		HOSE	NAP - Order Ref. 15 - Was 6718455 [A]		1
15	6718454	HOSE	107" (2,717 mm) long - 37 degree flare female swivel 90 degree and 37 degree flare male		2
16	21KB606	TEE	W/Ref. 34 - check boss face to determine correct replacement o-ring - Was 21KV00005B [A]		1
16	97K6	O'RING	flared end		1
16	17KB606	ELBOW	See Illustration HYDROSTATIC CIRCUITRY/ PE1037 W/Ref. 34 - check boss face to determine correct replacement o-ring - For Standard Flow Hydraulics See Ref. 28 on ILL. PE1037 - Was 17KV00005B [A]		1
17	17KB606	ELBOW	W/Ref. 34 - check boss face to determine correct replacement o-ring - Was 17KV00005B [A]		2
17	97K6	O'RING	flared end		2
18	6718098	CONNECTOR			1
19	6726192	TUBE			1
20	6676944	VALVE	90 degrees inline check - W/Ref. 35 - check boss face to determine correct replacement o-ring		1
21	99K10	O'RING	tapered boss face		x
21	79K10	O RING 10	flat boss face		x
22	6669203	VALVE	See Illustration HIGH FLOW HYDRAULICS/ TS1434R - select		1
23		PUMP	See Illustration HYDROSTATIC PUMP/ B17103		1
24	35C616	BOLT 5			2
25	99K8	O-RING	tapered boss face		1
25	79K8	O RING 10	flat boss face		x
26	6726196	HOSE			1
27	5HM29	HOSECLAMP	constant tension - Was 5HM00027B [A]		2
28	1316263	ADAPTER	W/Ref. 21 - check boss face to determine correct replacement o-ring		1
29	6714904	TEE	W/Ref. 30		1
30	79K16	O RING 10			x
31	17KB1010	ELBOW	W/Ref. 21 - check boss face to determine correct replacement o-ring - Was 17KV00007B [A]		1
31	97K10	O-RING 10	flared end		1
32	6729094	HOSE	Use W/Ref. 33 (16KN-7 Adapter)		1
32	6705497	HOSE	Use W/Ref. 33 (15KV-7 Adapter)		1
33	16KB1010	CONNECTOR	W/Ref. 21 - Use W/Ref. 32 - check boss face to determine correct replacement o-ring - (6729094 Hose) - Was 16KN00007B [A]		1
33	15KB1010	FITTING	W/Ref. 21 - Use W/Ref. 32 - check boss face to		1

Page 161 - OSS# 2071349 - All rights reserved by Bobcat Company - 12/01/2009 - 20:50:59 - Produced by Ken Cook Co. with mediaioff

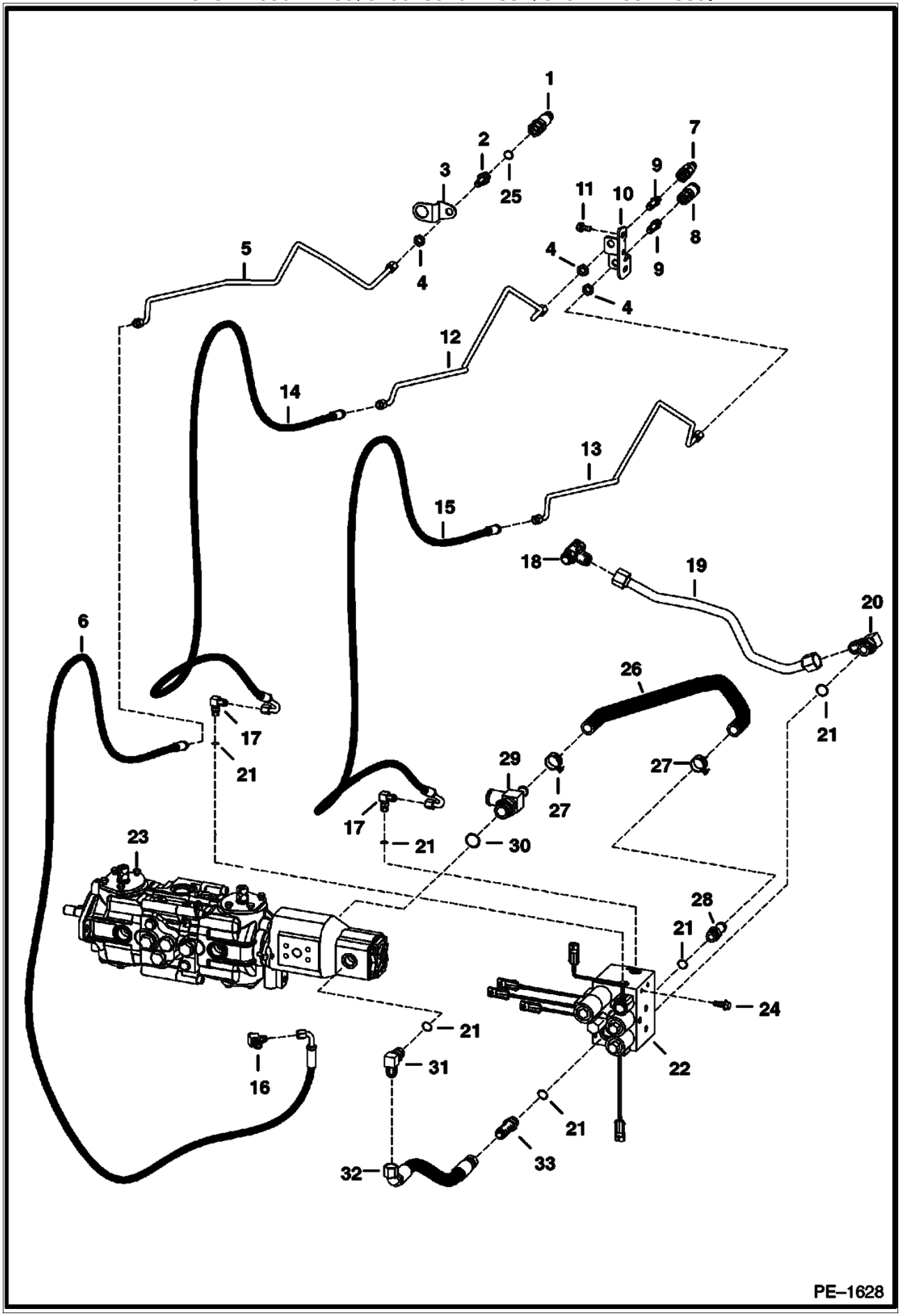

Page 162 - OSS# 2071349 - All rights reserved by Bobcat Company - 12/01/2009 - 20:50:59 - Produced by Ken Cook Co. with mediaioff

Ref No	Part Number	Description	Remarks	Serial Number	Qty
			determine correct replacement o-ring - (6705497 Hose) - Was 15KV00007B [A]		
34	99K6	O'RING	tapered boss face		x
34	79K6	O RING 10	flat boss face		x
35	99K12	O'RING	tapered boss face		x
35	79K12	O RING 10	flat boss face		x

Page 163 - OSS# 2071349 - All rights reserved by Bobcat Company - 12/01/2009 - 20:50:59 - Produced by Ken Cook Co. with mediaioff

HIGH FLOW HYDRAULICS
(S/N 500K12194 & Above, 517620248 - 517621198, 518112286 - 518112468
519021333 - 519024161, 519212390 - 519112516)

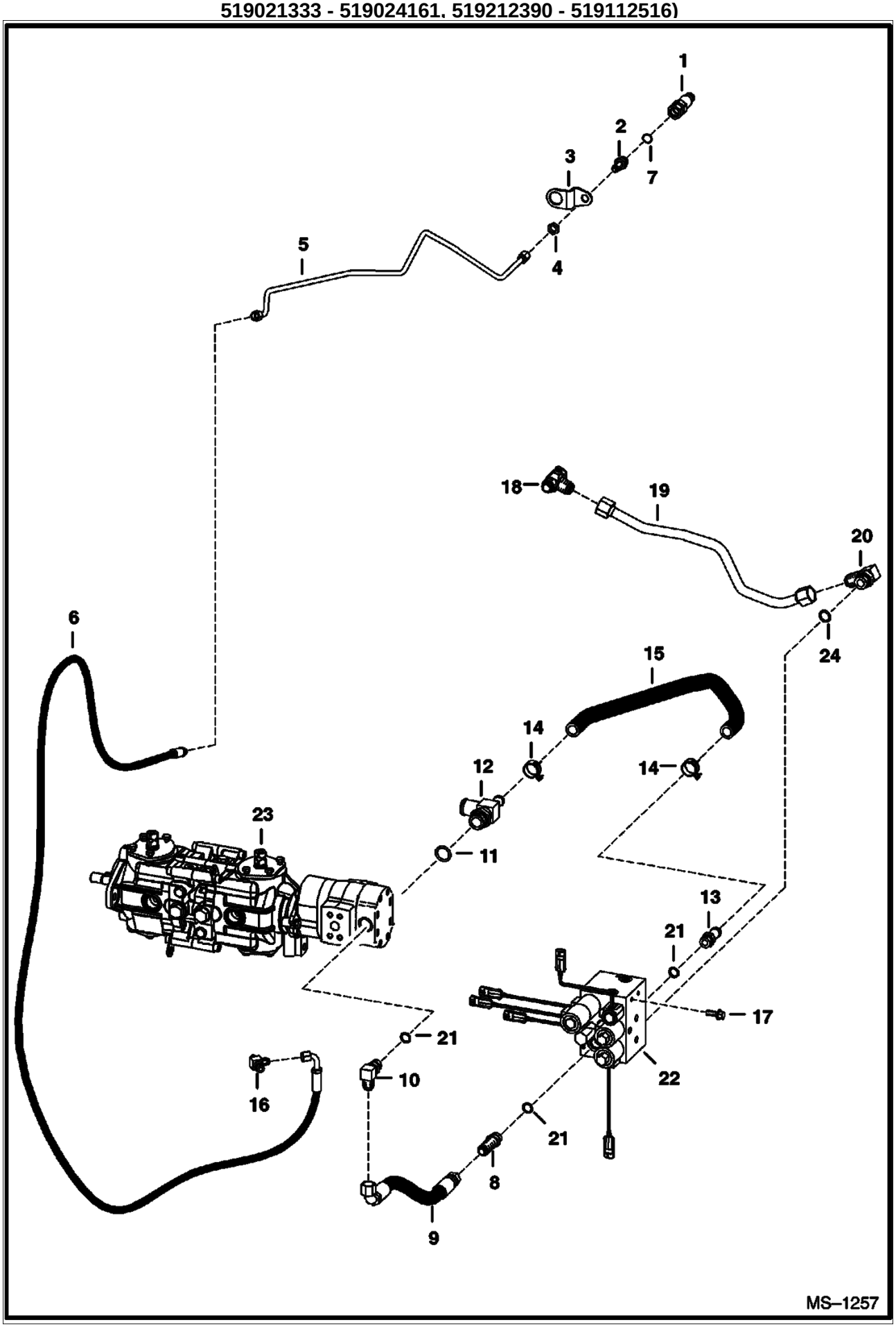

Page 164 - OSS# 2071349 - All rights reserved by Bobcat Company - 12/01/2009 - 20:50:59 - Produced by Ken Cook Co. with mediaioff

HIGH FLOW HYDRAULICS (Cont'd)
(S/N 500K12194 & Above, 517620248 - 517621198, 518112286 - 518112468
519021333 - 519024161, 519212390 - 519112516)

Ref No	Part Number	Description	Remarks	Serial Number	Qty
1	6667806	COUPLER	male		1
1	6669659	O-RING			1
2	6726479	ADAPTER	W/Ref. 7 - check boss face to determine correct replacement o-ring - Was 6711628 [A]		1
2	97K6	O'RING	flared end		1
3	6711913	BRACKET			1
4	86F5	NUT			3
5	6718136	TUBE			1
6	7114121	HOSE	Was 6734664 [A]		1
7	99K8	O-RING	tapered boss face		1
7	79K8	O RING 10	flat boss face		x
8	16KB1010	CONNECTOR	W/Ref. 21 - Was 16KN00007B [A]		1
9	6729094	HOSE			1
10	17KB1010	ELBOW	W/Ref. 21 - Was 17KV00007B [A]		1
10	97K10	O-RING 10	flared end		1
11	79K16	O RING 10	flat boss face		x
12	6714904	TEE	W/Ref. 11		1
13	1316263	ADAPTER	W/Ref. 21 - check boss face to determine correct replacement o-ring		1
14	5HM29	HOSECLAMP	constant tension - Was 5HM00027B [A]		2
15	6726196	HOSE			1
16	21KB606	TEE	Was 21KV00005B [A]		1
16	97K6	O'RING	flared end		1
16	17KB606	ELBOW	See Illustration HYDROSTATIC CIRCUITRY/ PE1037 for standard flow hydraulics see Ref. 28 on ILL. PE1037 - Was 17KV00005B [A]		1
16	99K6	O'RING	tapered boss face		x
16	79K6	O RING 10	flat boss face		x
17	35C616	BOLT 5			2
18	6718098	CONNECTOR			1
19	6726192	TUBE			1
20	6676944	VALVE	90 degrees inline check - W/Ref. 24 - check boss face to determine correct replacement o-ring		1
21	99K10	O'RING	tapered boss face		x
21	79K10	O RING 10	flat boss face		x
22	6669203	VALVE	See Illustration HIGH FLOW HYDRAULICS/ TS1434R - select		1
23		PUMP	See Illustration HYDROSTATIC PUMP/ B17103		1
24	99K12	O'RING	tapered boss face		x
24	79K12	O RING 10	flat boss face		x

Page 165 - OSS# 2071349 - All rights reserved by Bobcat Company - 12/01/2009 - 20:50:59 - Produced by Ken Cook Co. with mediaioff

HIGH FLOW HYDRAULICS
(S/N 517621199 & Above, 518112469 & Above, 519024162 & Above, 519212517 & Above)

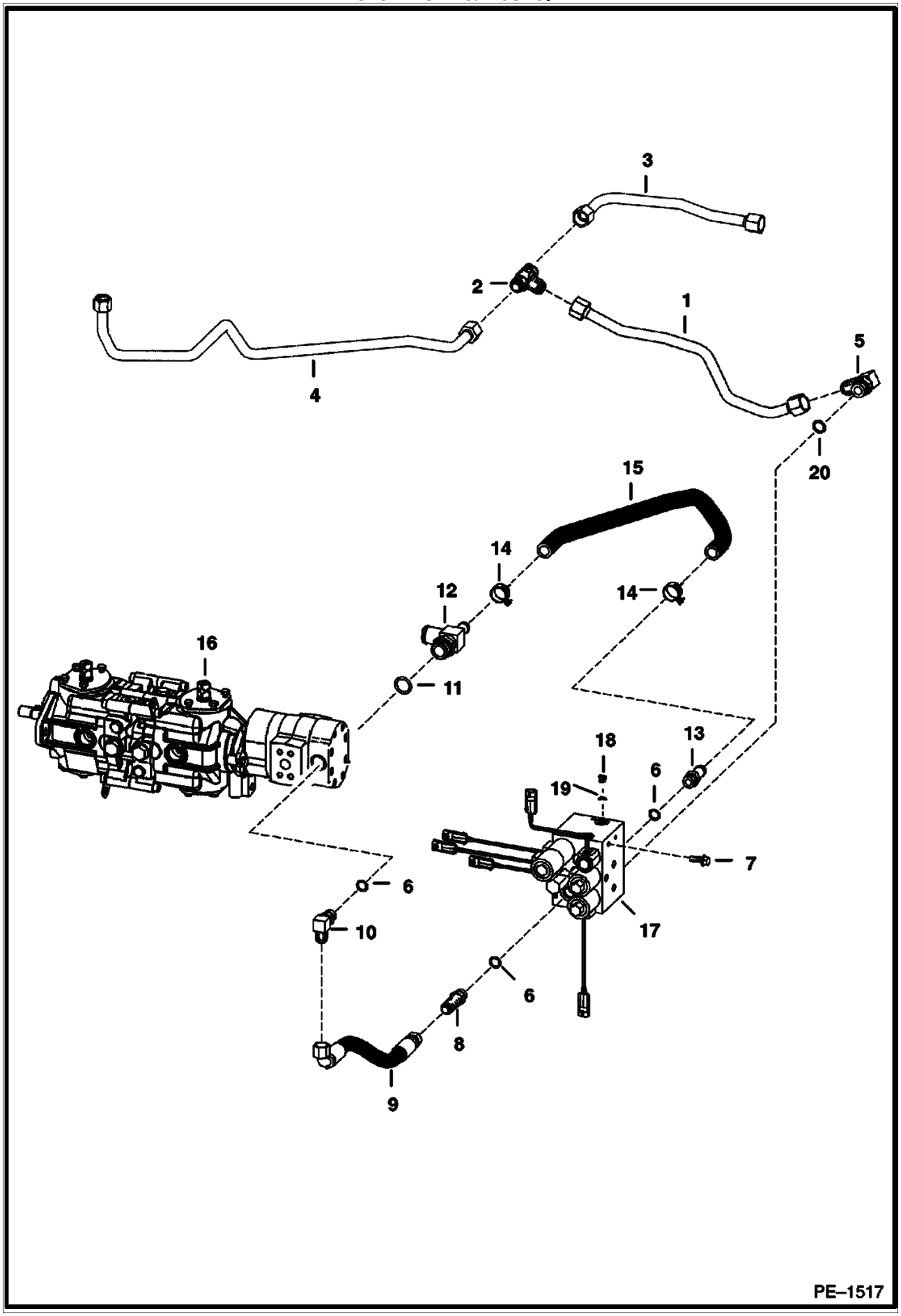

Page 166 - OSS# 2071349 - All rights reserved by Bobcat Company - 12/01/2009 - 20:50:59 - Produced by Ken Cook Co. with mediaioff

HIGH FLOW HYDRAULICS (Cont'd)
(S/N 517621199 & Above, 518112469 & Above, 519024162 & Above, 519212517 & Above)

Ref No	Part Number	Description	Remarks	Serial Number	Qty
1	6726192	TUBE			1
2	10K8	TEE			1
3	6726188	TUBE			1
4	6726186	TUBE			1
5	6676944	VALVE	90 degrees inline check - check boss face to determine correct replacement o-ring - W/Ref. 20		1
6	99K10	O'RING	tapered boss face		x
6	79K10	O RING 10	flat boss face		x
7	35C616	BOLT 5			2
8	15KB1010	FITTING	W/Ref. 6 - check boss face to determine correct replacement o-ring - Was 15KV00007B [A]		1
9	6705497	HOSE			1
10	17KB1010	ELBOW	W/Ref. 6 - check boss face to determine correct replacement o-ring - Was 17KV00007B [A]		1
10	97K10	O-RING 10	flared end		1
11	79K16	O RING 10			x
12	6714904	TEE	W/Ref. 11		1
13	1316263	ADAPTER	W/Ref. 6 - check boss face to determine correct replacement o-ring		1
14	5HM29	HOSECLAMP	constant tension - Was 5HM00027B [A]		2
15	6726196	HOSE			1
16		PUMP	See Illustration HYDROSTATIC PUMP/ B17103		1
17	6669203	VALVE	See Illustration HIGH FLOW HYDRAULICS/ TS1434R - select		1
18	90K5	PLUG	W/Ref. 19		2
19	79K6	O RING 10			2
20	99K12	O'RING	tapered boss face		x
20	79K12	O RING 10	flat boss face		x

Page 167 - OSS# 2071349 - All rights reserved by Bobcat Company - 12/01/2009 - 20:50:59 - Produced by Ken Cook Co. with mediaioff

HIGH FLOW HYDRAULICS
(Select Valve)

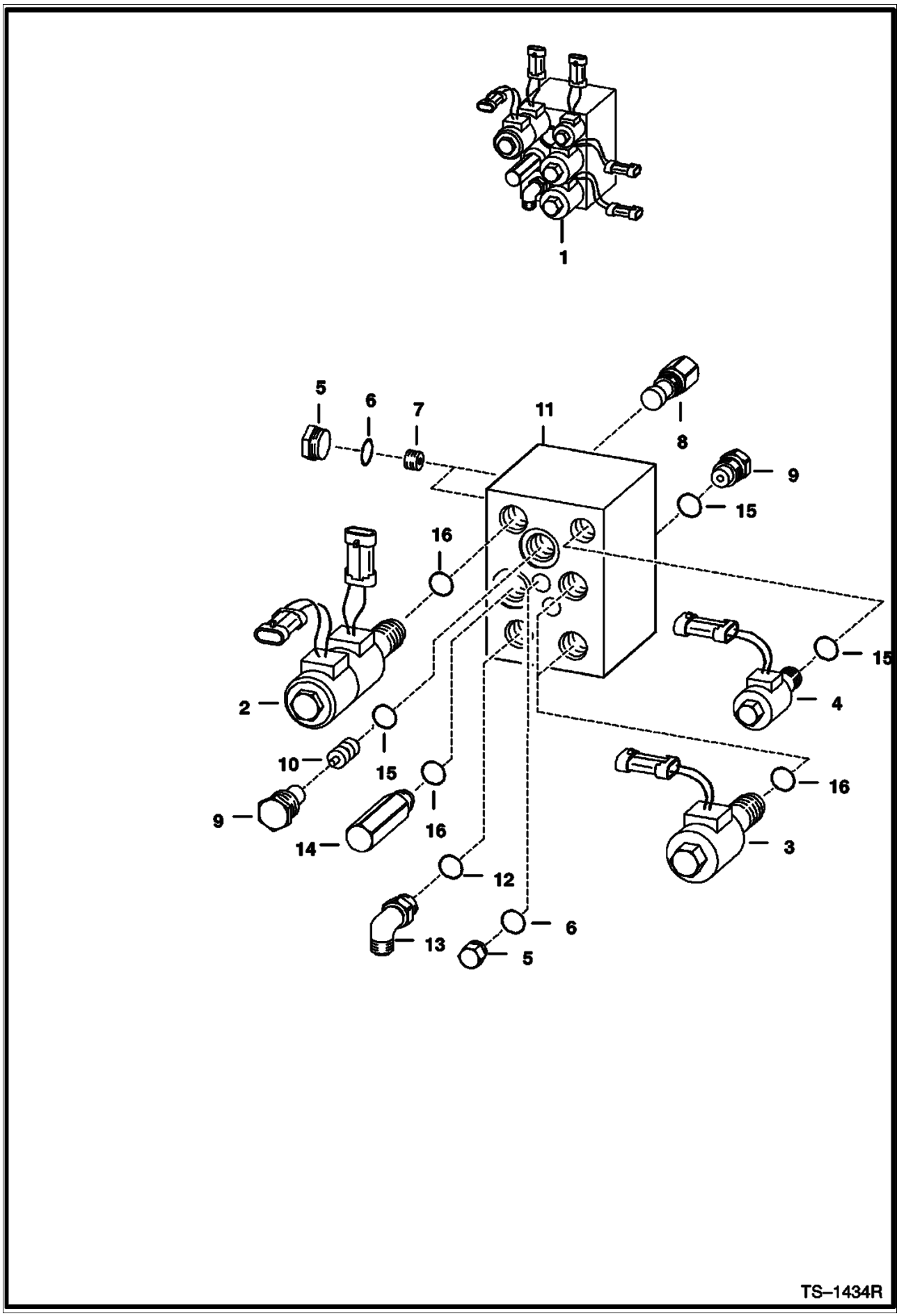

Page 168 - OSS# 2071349 - All rights reserved by Bobcat Company - 12/01/2009 - 20:50:59 - Produced by Ken Cook Co. with mediaIoff

HIGH FLOW HYDRAULICS (Cont'd)
(Select Valve)

Ref No	Part Number	Description	Remarks	Serial Number	Qty
1	6669203	VALVE	Ref. 2 - 12 & 14 - 16		1
2	6672450	VALVE ASSY.	solenoid - W/Ref. 16		1
2	6664025	STEM			1
2	6671026	COIL	W/Connector		2
2	6671628	NUT			1
2	6679068	SPACER			1
2	6661448	SEAL KIT			1
3	6672449	VALVE ASSY.	solenoid - W/Ref. 16		1
3	6664024	STEM			2
3	6671026	COIL	W/Connector		2
3	6671629	NUT			2
3	6664032	SEAL KIT			2
4	6672448	VALVE ASSY.	solenoid - W/Ref. 15		1
4	6665702	STEM			1
4	6671025	COIL	W/Connector		2
4	6671628	NUT			1
4	6672515	KIT, SEAL	Was 6664033 [A]		1
5	6665719	PLUG	W/Ref. 6		11
6	95K4	O-RING	Was 79K5 [D]		x
7	6669615	ORIFICE	0.02		2
8	6669729	SHUTTLE VALVE			1
8	6669736	SEAL KIT			1
9	6669728	CHECK VALVE	W/Ref. 15		2
9	6672515	KIT, SEAL	Was 6670635 [A]		1
10	6673990	PISTON	Was 6664028 [A]		1
11		BLOCK	NSS - Order Ref. 1		1
12	99K10	O'RING	tapered boss face		x
12	79K10	O RING 10	flat boss face		x
13		ELBOW	NAP - W/Ref. 12 - tapered boss face - Was 17KV00007B [A]		1
13	97K10	O-RING 10	flared end		1
13	17KB1010	ELBOW	W/Ref 12 - flat boss face		1
14		RELIEF VALVE	NAP - 2850 PSI - Order 6676155 Relief Valve - Was 6672451 [A]		1
14	6676155	RELIEF VALVE	3300 PSI - W/Ref. 16		1
14	6664032	SEAL KIT	Was 6669737 [A]		1
15	79K8	O RING 10			x
16	79K10	O RING 10			x

Page 169 - OSS# 2071349 - All rights reserved by Bobcat Company - 12/01/2009 - 20:50:59 - Produced by Ken Cook Co. with mediaioff

HIGH FLOW HYDRAULICS
(Double Gear Pump)

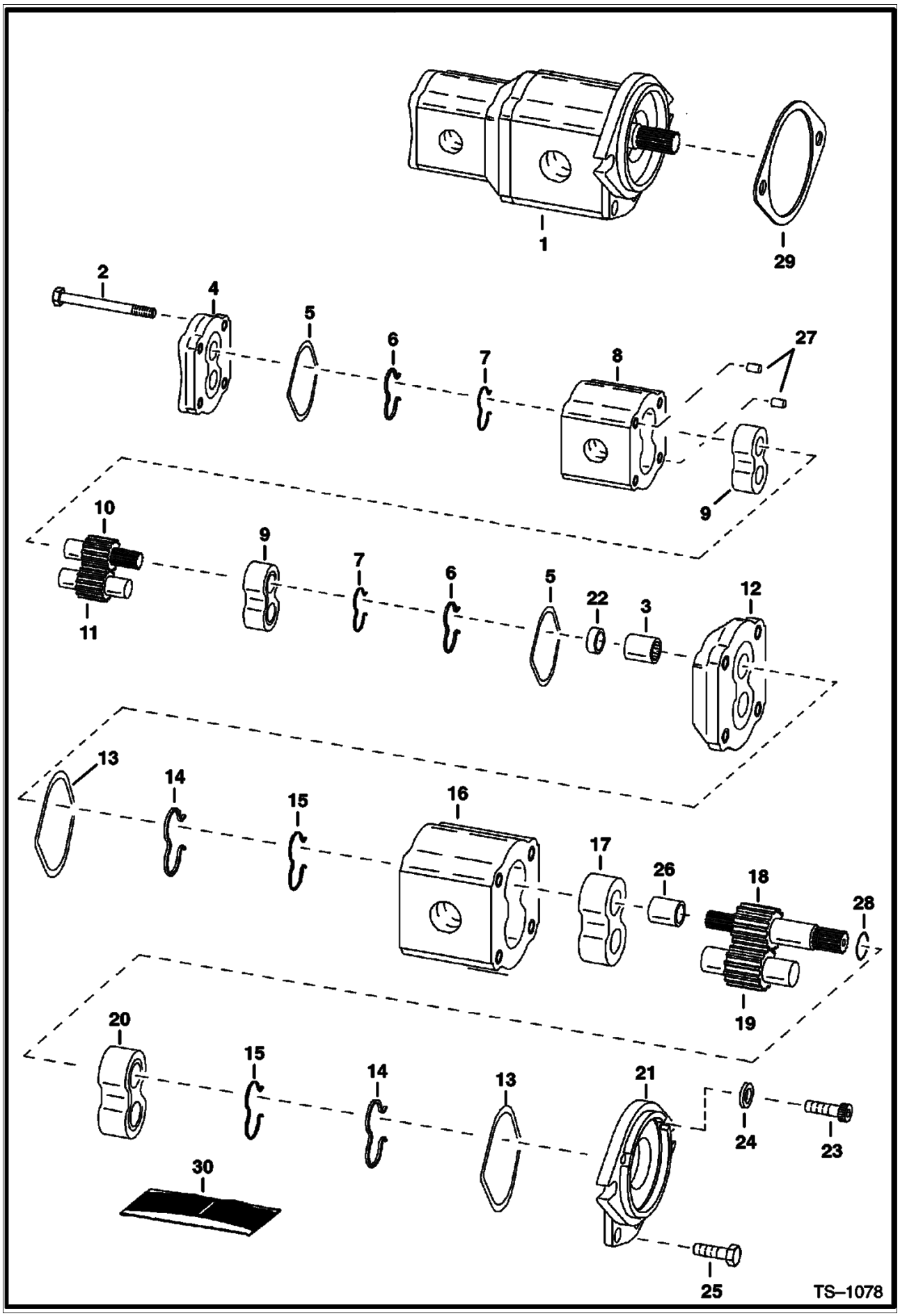

Page 170 - OSS# 2071349 - All rights reserved by Bobcat Company - 12/01/2009 - 20:50:59 - Produced by Ken Cook Co. with mediaioff

Ref No	Part Number	Description	Remarks	Serial Number	Qty
1	6675344	PUMP	See Illustration HYDROSTATIC PUMP/ B17103 MODEL B5501-37614 - USE W/6674379 PUMP		1
2		BOLT	NSS		4
3		COUPLER	NSS		1
4		COVER	NSS		1
5		O-RING	NSS - seal		2
6		SEAL	NSS		2
7		RING	NSS		2
8		BODY	NSS		1
9		BEARING	NSS		2
10		GEAR	NSS - drive		1
11		GEAR	NSS		1
12		COVER	NSS		1
13		O-RING	NSS - seal		2
14		SEAL	NSS		2
15		RING	NSS		2
16		BODY	NSS		1
17		BEARING	NSS		1
18		GEAR	NSS - drive		1
19		GEAR	NSS - idler		1
20		BEARING	NSS		1
21		COVER	NSS		1
22		BUSHING	NSS		1
23		BOLT	NSS		2
24		SEAL	NSS		2
25		BOLT	NSS		2
26		SPACER	NSS		1
27		DOWEL	NSS		2
28		RING	NSS - retaining		1
29	6660339	GASKET			1
30	6678853	SEAL KIT	Ref. 5-7, 13-15, 24 & 28 - Use W/Ref. 1 (6675344 Pump) - Was 6674370 [A]		1

Page 171 - OSS# 2071349 - All rights reserved by Bobcat Company - 12/01/2009 - 20:50:59 - Produced by Ken Cook Co. with mediaioff

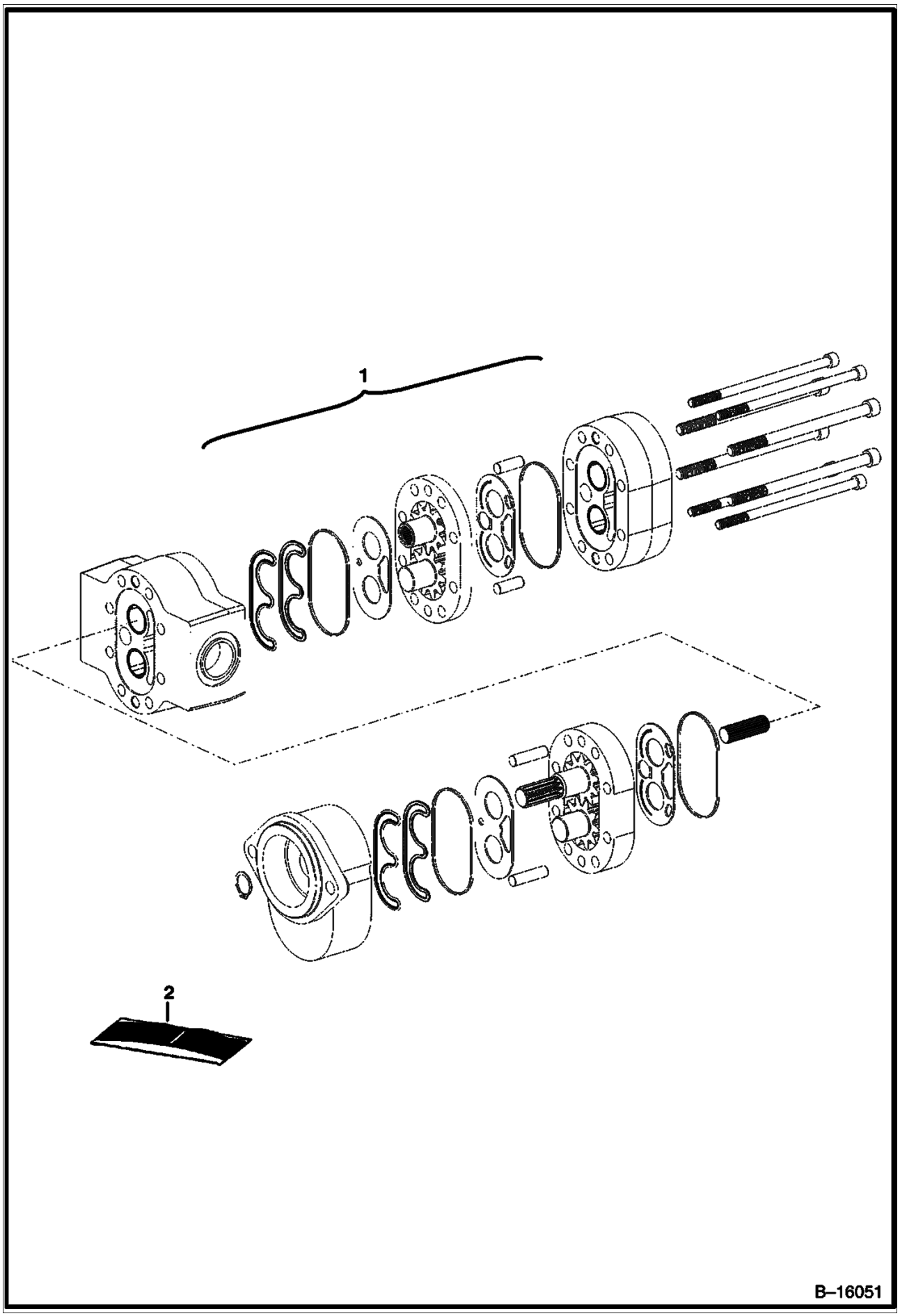

Page 172 - OSS# 2071349 - All rights reserved by Bobcat Company - 12/01/2009 - 20:50:59 - Produced by Ken Cook Co. with mediaioff

Ref No	Part Number	Description	Remarks	Serial Number	Qty
1		PUMP	See Illustration HYDROSTATIC PUMP/ B17103 NAP - MODEL 163D-1183 - USE W/6677648 PUMP - Order 6686705 Pump - Was 6678041 [A]		1
1		PUMP	NAP - Model 163D-1305 - Use W/ 6677648 - Order 6686705 pump - Was 6681594 [A]		1
1	6686705	PUMP, GEAR	Model 163D-1484		1
2	6688326	SEAL KIT	Was 6678733 [A]		1

Page 173 - OSS# 2071349 - All rights reserved by Bobcat Company - 12/01/2009 - 20:50:59 - Produced by Ken Cook Co. with mediaioff

HYDROSTATIC CIRCUITRY
(S/N 500K11038 & Below, 517619258 & Below,
518012218 & Below, 518112089 & Below, 519018909 & Below, 519212154 & Below)

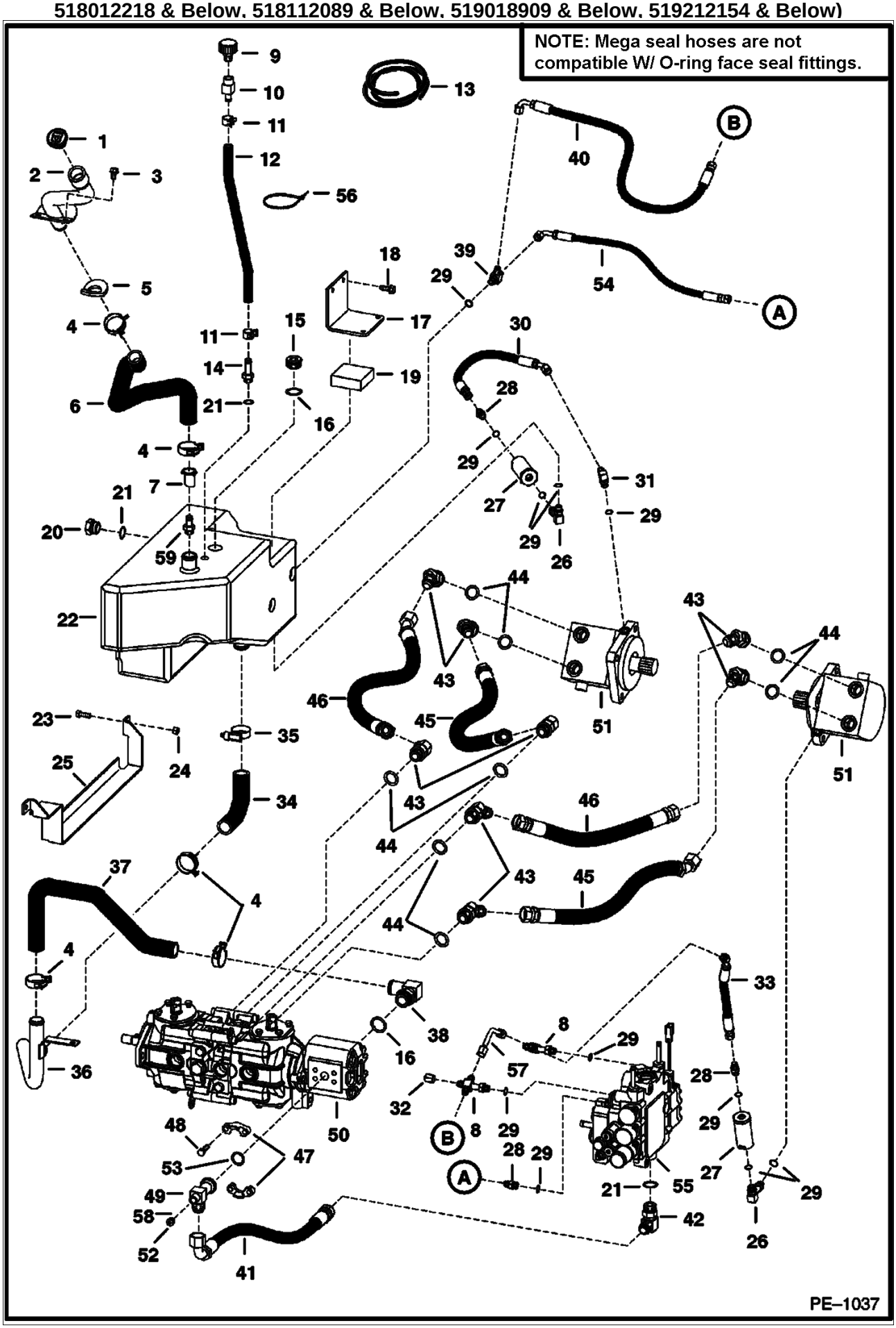

Page 174 - OSS# 2071349 - All rights reserved by Bobcat Company - 12/01/2009 - 20:50:59 - Produced by Ken Cook Co. with mediaIoff

Ref No	Part Number	Description	Remarks	Serial Number	Qty
1	6717827	CAP			1
2	6717830	TUBE			1
3	84G3710	SCREW			2
4	5HM42	HOSECLAMP			5
5	6718772	GASKET			1
6	6718020	HOSE			1
7	6726258	SCREEN		5176 18418 & Bel	1
7	6726258	SCREEN		5180 12703 & Bel	1
7	6726258	SCREEN		5181 12055 & Bel	1
7	6726258	SCREEN		5190 17043 & Bel	1
7	6726258	SCREEN		5192 12054 & Bel	1
8	6817553	CROSS	See Illustration HYDRAULIC CONTROL VALVE/ B17144 W/Ref. 29 - flat boss face - Was 6817553 [A]		2
8	97K6	O'RING	flared end		1
9	6684923	BREATHER	breather - Was 6648944 [A]		1
10	6717389	ADAPTER			1
11	5HM20	CLAMP			2
12		HOSE	NAP - 17.25"(438,1 mm) long - Order Ref. 13		1
13	6654057	HOSE	bulk - Sold Per Foot		x
14	1310706	FITTING HOSE			1
15	47K10	PLUG	W/Ref. 16		1
16	99K16	O-RING	tapered boss face		x
16	79K16	O RING 10	flat boss face		x
17	6718498	BRACKET			1
18	84G3716	SCREW 5			2
19	6716449	PAD	bumper		1
20	6665915	GAUGE	W/Ref. 21 - flat boss face		1
20	6734563	WASHER KIT			1
20	6734561	WASHER			1
20	25K30118	O RING 10			1
21	99K12	O'RING	tapered boss face		x
21	79K12	O RING 10	flat boss face		x
22		TANK	See BTI346 NAP - W/threaded inlet port - Used W/Ref. 7 - Was 6717112 [B]	5176 18418 & Bel	1
22		TANK	See BTI346 NAP - W/threaded inlet port - Used W/Ref. 7 - Was 6717112 [B]	5192 12054 & Bel	1
22		TANK	See BTI346 NAP - W/threaded inlet port - Used W/Ref. 7 - Was 6717112 [B]	5180 12103 & Bel	1
22		TANK	See BTI346 NAP - W/threaded inlet port - Used W/Ref. 7 - Was 6717112 [B]	5181 12055 & Bel	1
22		TANK	See BTI346 NAP - W/threaded inlet port - Used W/Ref. 7 - Was 6717112 [B]	5190 17043 & Bel	1
22		TANK	See BTI346 - NAP - W/O threaded inlet port - Was 6717112 [A]	500K 11038 & Bel	1
22		TANK	See BTI346 - NAP - W/O threaded inlet port - Was 6717112 [A]	5180 12056-12089	1
22		TANK	See BTI346 - NAP - W/O threaded inlet port - Was 6717112 [A]	5190 17047-18910	1
22		TANK	See BTI346 - NAP - W/O threaded inlet port - Was 6717112 [A]	5192 12055-12154	1
22		TANK	See BTI346 - NAP - W/O threaded inlet port - Was 6717112 [A]	5190 17044-18910	1
22		TANK	See BTI346 - NAP - W/O threaded inlet port - Was 6717112 [A]	5176 18419-19258	1
23	17C616	BOLT 5			2
24	61D6	NUT 5			2
25	6717145	BRACKET			1

Page 175 - OSS# 2071349 - All rights reserved by Bobcat Company - 12/01/2009 - 20:50:59 - Produced by Ken Cook Co. with mediaioff

HYDROSTATIC CIRCUITRY (Cont'd)
(S/N 500K11038 & Below, 517619258 & Below,
518012218 & Below, 518112089 & Below, 519018909 & Below, 519212154 & Below)

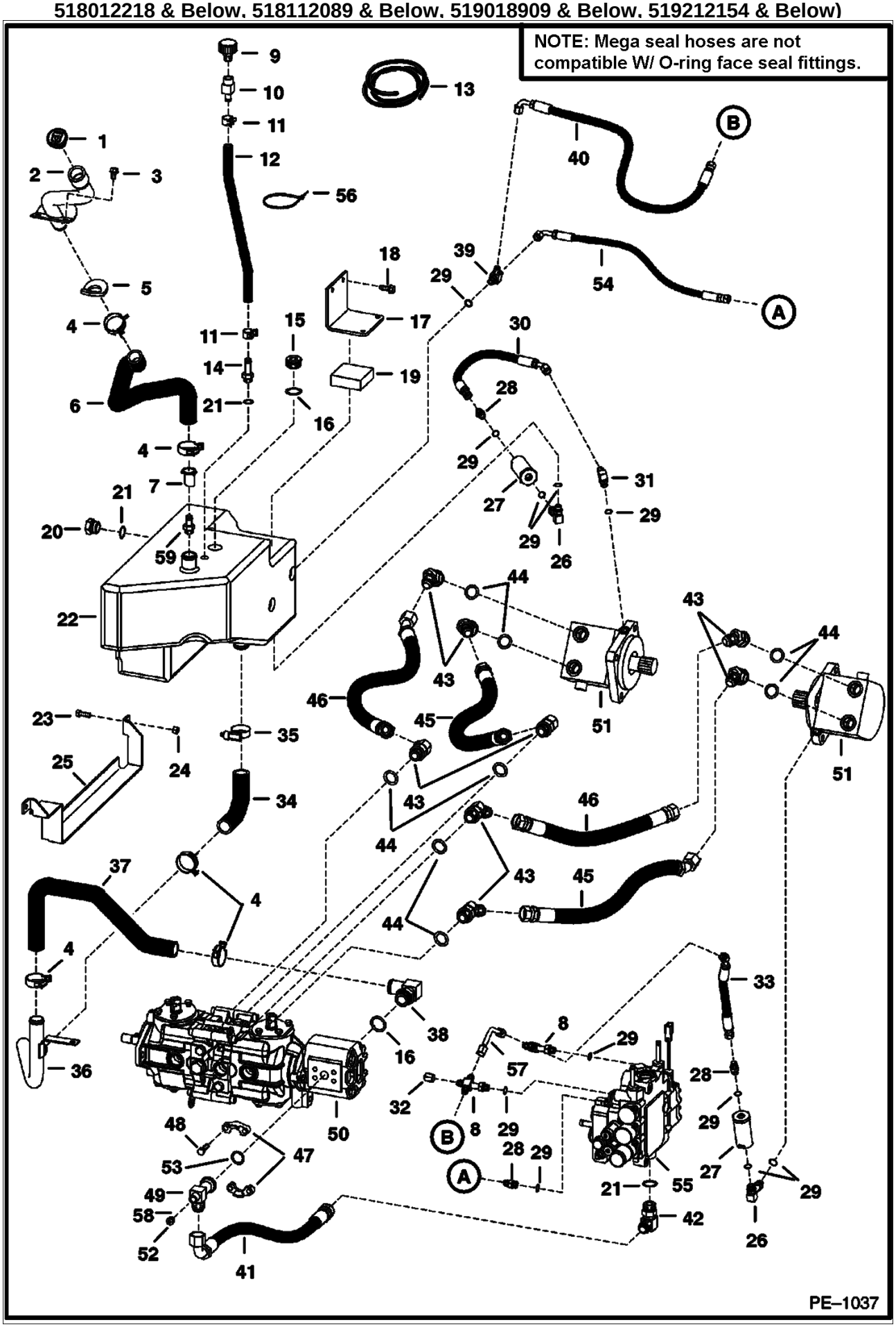

Page 176 - OSS# 2071349 - All rights reserved by Bobcat Company - 12/01/2009 - 20:50:59 - Produced by Ken Cook Co. with mediaioff

Ref No	Part Number	Description	Remarks	Serial Number	Qty
26	6715190	ELBOW	W/Ref. 29 - check boss face to determine correct replacement o-ring		2
27	6661022	FILTER			2
28	15KB606	ADAPTER	W/Ref. 29 - check boss face to determine correct replacement o-ring - Was 15KV00005B [A]		2
28	97K6	O'RING	flared end		1
28	21KB606	TEE	See Illustration HIGH FLOW HYDRAULICS/ PE1057 - W/Ref. 29 - check boss face to determine correct replacement o-ring - Was 21KV00005B [A]		1
28	97K6	O'RING	flared end		1
29	99K6	O'RING	tapered boss face [B]		x
29	79K6	O RING 10	flat boss face		x
30	6704631	HOSE			1
31	17KB606	ELBOW	W/Ref. 29 - check boss face to determine correct replacement o-ring - Was 17KV00005B		1
31	97K6	O'RING	flared end		1
32	36K5	CAP			1
33	6728079	HOSE	Was 6717332 [A]		1
34	6717905	HOSE			1
35	6672281	CLAMP			1
36	6717909	TUBE			1
37	6717908	HOSE			1
38	6715191	ELBOW	W/Ref. 16 - check boss face to determine correct replacement o-ring		1
39	21KB606	TEE	W/Ref. 29 - check boss face to determine correct replacement o-ring - Was 21KV00005B [A]		1
39	97K6	O'RING	flared end		1
39	6578209	TEE	for High Flow Hyd - W/Ref. 29 - check boss face to determine correct replacement o-ring - Was 6718250 [A]		1
39	97K6	O'RING	flared end		1
40	6714808	HOSE	W/O front aux. - Was 6711166 [B]		1
40	6717385	HOSE	See Illustration AUXILIARY HYDRAULICS/ PE1055 W/ FRONT AUX.		1
41	6717144	HOSE			1
42	17KB1212	ELBOW	W/Ref. 21 - check boss face to determine correct replacement o-ring - Was 17KV00008B		1
42	97K12	O'RING	flared end		1
43	6737453	ELBOW	W/Ref. 44 - check boss face to determine correct replacement o-ring - Was 6718181 [A]		8
43	99K12	O'RING	tapered boss face		8
44	79K12	O RING 10	flat boss face - Was 58K000018B [B]		8
45	6675144	HOSE, HYD ASSY	mega seal - SEE NOTE		2
46	6736200	HOSE	mega seal - SEE NOTE - Was 6675143 [A]		2
47	19J12	CLAMP			2
48	17C620	BOLT			4
49	7103953	TEE	split flange - Was 6717662 [A]		1
50		PUMP	See Illustration HYDROSTATIC PUMP/ B17103		1
51		MOTOR	See Illustration HYDROSTATIC MOTOR/ C3431		1
52	90KV5	PLUG	W/Ref. 58		1
53	58K214	O RING 10			1
54	6716391	HOSE			1
55		VALVE	See Illustration HYDRAULIC CONTROL VALVE/ B17144		1
56	6610510	TIE			2
57	6577690	TUBE	See Illustration HYDRAULIC CONTROL VALVE/		1

Page 177 - OS6# 2071349 - All rights reserved by Bobcat Company - 12/01/2009 - 20:50:59 - Produced by Ken Cook Co. with mediaioff

HYDROSTATIC CIRCUITRY (Cont'd)
(S/N 500K11038 & Below, 517619258 & Below,
518012218 & Below, 518112089 & Below, 519018909 & Below, 519212154 & Below)

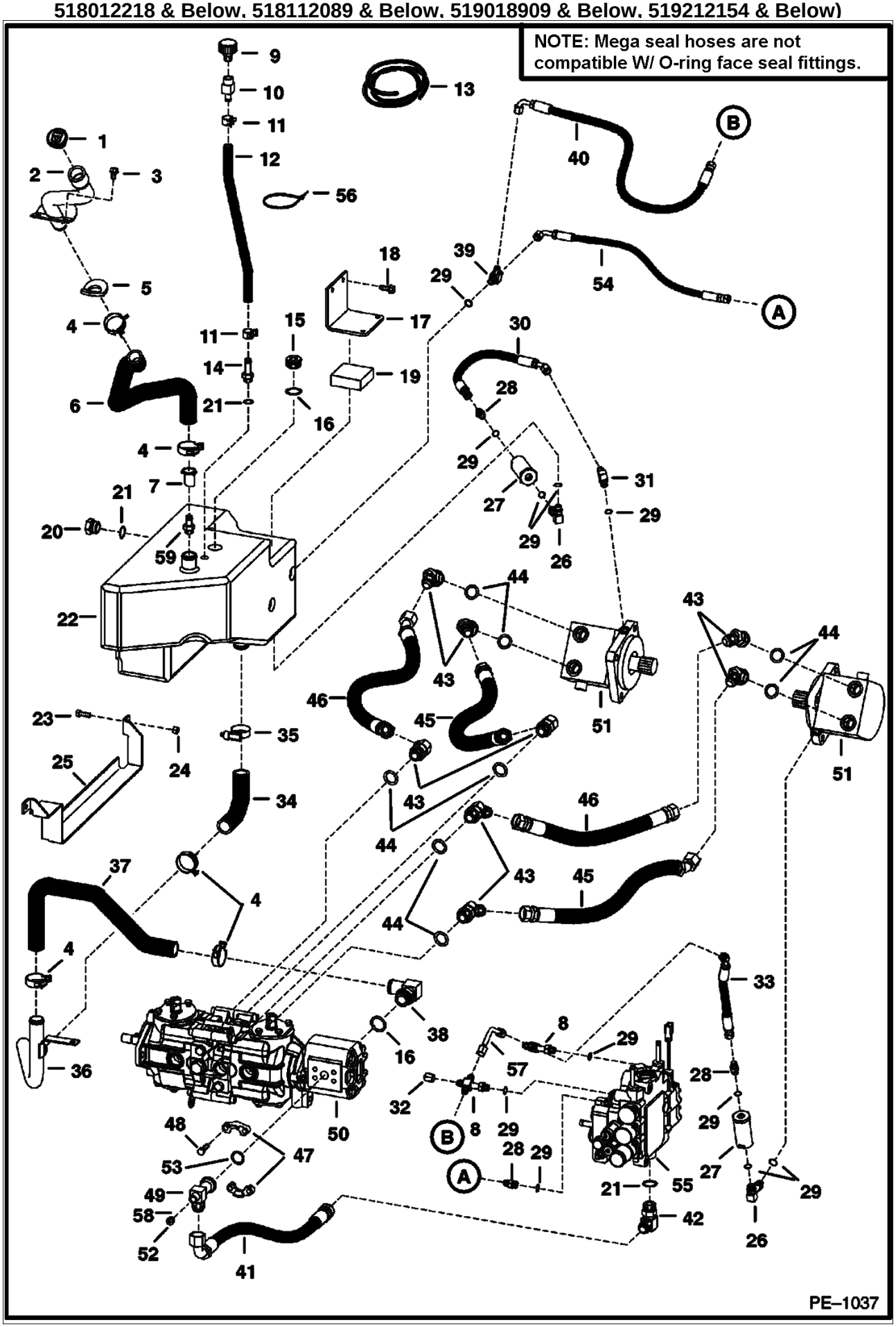

Page 178 - OSS# 2071349 - All rights reserved by Bobcat Company - 12/01/2009 - 20:50:59 - Produced by Ken Cook Co. with mediaioff

Ref No	Part Number	Description	Remarks	Serial Number	Qty
			B17144		
58	95K6	O'RING			1
59	6717815	ADAPTER		5176 17418 & Bel	1
59	6717815	ADAPTER		5192 12054 & Bel.	1
59	6717815	ADAPTER		5180 12703 & Bel	1
59	6717815	ADAPTER		5181 12055 & Bel.	1
59	6717815	ADAPTER		5190 17043 & Bel.	1

Page 179 - OSS# 2071349 - All rights reserved by Bobcat Company - 12/01/2009 - 20:50:59 - Produced by Ken Cook Co. with mediaioff

HYDROSTATIC CIRCUITRY
(S/N 500K11039 & Above, 517619259 & Above,
518012219 & Above, 518112090 & Above, 519018910 & Above, 519212155 & Above)

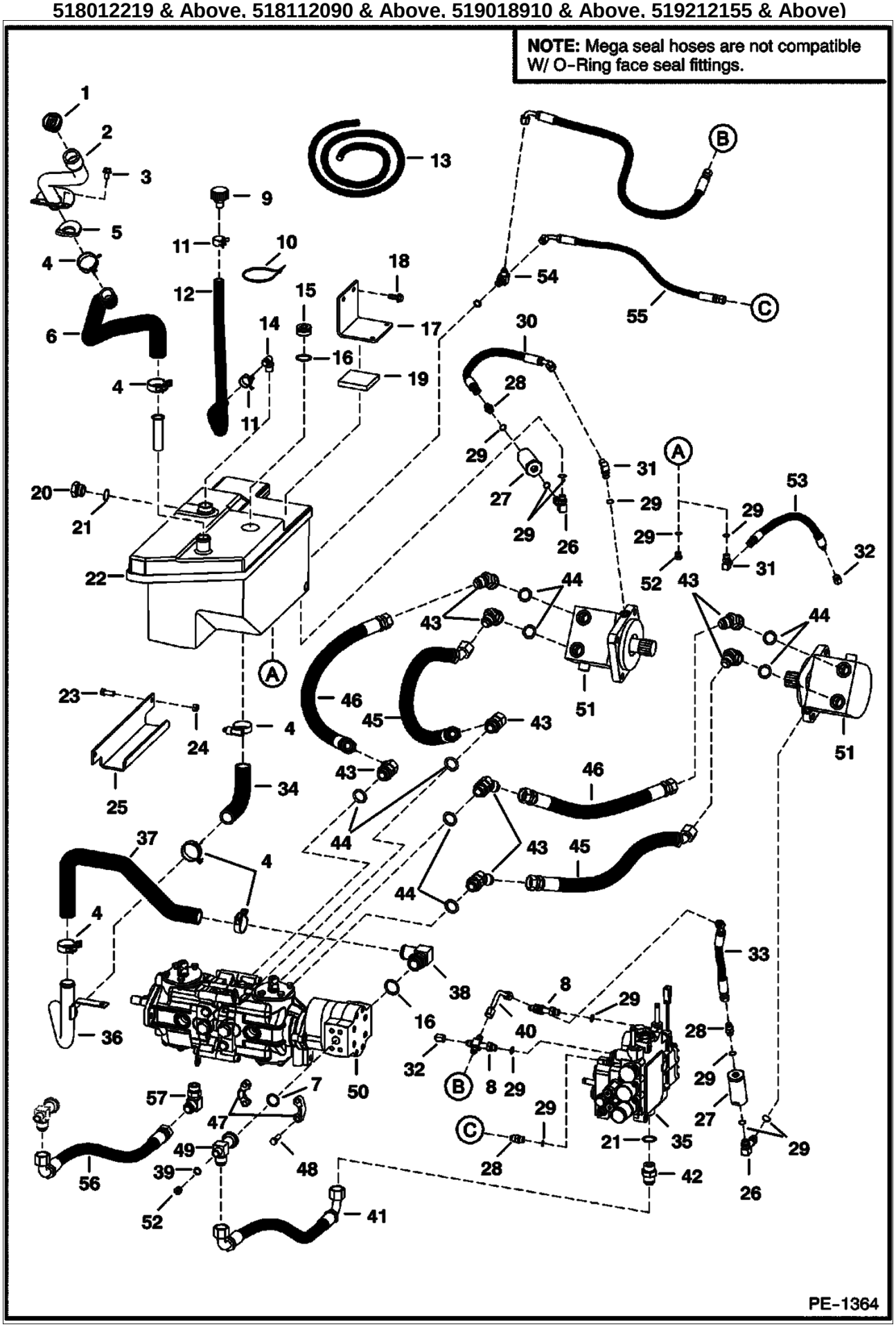

Page 180 - OSS# 2071349 - All rights reserved by Bobcat Company - 12/01/2009 - 20:50:59 - Produced by Ken Cook Co. with mediaioff

Ref No	Part Number	Description	Remarks	Serial Number	Qty
1	6717827	CAP			1
2	6717830	TUBE			1
3	84G3710	SCREW			2
4	5HM42	HOSECLAMP			6
5	6718772	GASKET			1
6	6718020	HOSE			1
7	58K214	O RING 10			1
8	6817553	CROSS	See Illustration HYDRAULIC CONTROL VALVE/ B17144 W/Ref. 29 - flat boss face - Was 6805241 [A]		2
8	97K6	O'RING	flared end		1
9	6684923	BREATHER	breather - Was 6648944 [A]		1
10	6610510	TIE			2
11	5HM24	CLAMP			2
12		HOSE	NAP - 21.5"(546,1 mm) long - Order Ref. 13		1
13	6578172	HOSE	bulk - sold per foot		x
14	6727637	ELBOW	barbed		1
15	47K10	PLUG	W/Ref. 16 - flat boss face		1
16	99K16	O-RING	tapered boss face		x
16	79K16	O RING 10	flat boss face		x
17	6726254	BRACKET			1
18	84G3716	SCREW 5			2
19	6726255	PAD	bumper		1
20	6665915	GAUGE	W/Ref. 21 - flat boss face		1
20	6734563	WASHER KIT			1
20	6734561	WASHER			1
20	25K30118	O RING 10			1
21	99K12	O'RING	tapered boss face		1
21	79K12	O RING 10	flat boss face		1
22	6728673	TANK			1
23	17C616	BOLT 5			2
24	61D6	NUT 5			2
25	6726162	BRACKET			1
26	6715190	ELBOW	W/Ref. 29 - check boss face to determine correct replacement o-ring		2
27	6661022	FILTER			2
28	15KB606	ADAPTER	W/Ref. 29 - check boss face to determine correct replacement o-ring - Was 15KV00005B [A]		1
28	97K6	O'RING	flared end		1
29	99K6	O'RING	tapered boss face		x
29	79K6	O RING 10	flat boss face		x
30	6704631	HOSE			1
31	17KB606	ELBOW	W/Ref. 29 - check boss face to determine correct replacement o-ring - Was 17KV00005B [A]		1
31	97K6	O'RING	flared end		1
32	36K5	CAP			2
33	6728079	HOSE			1
34	6717905	HOSE			1
35		VALVE	See Illustration HYDRAULIC CONTROL VALVE/ B17144		1
36	6727645	TUBE			1
37	6717908	HOSE			1
38	6715191	ELBOW	W/Ref. 16 - check boss face to determine correct replacement o-ring		1
39	95K6	O'RING			1
40	6577690	TUBE	See Illustration HYDRAULIC CONTROL VALVE/ B17144		1
41	6726251	HOSE		5176 19034 & Abv	1

Page 181 - OSS# 2071349 - All rights reserved by Bobcat Company - 12/01/2009 - 20:50:59 - Produced by Ken Cook Co. with mediaioff

HYDROSTATIC CIRCUITRY (Cont'd)
(S/N 500K11039 & Above, 517619259 & Above,
518012219 & Above, 518112090 & Above, 519018910 & Above, 519212155 & Above)

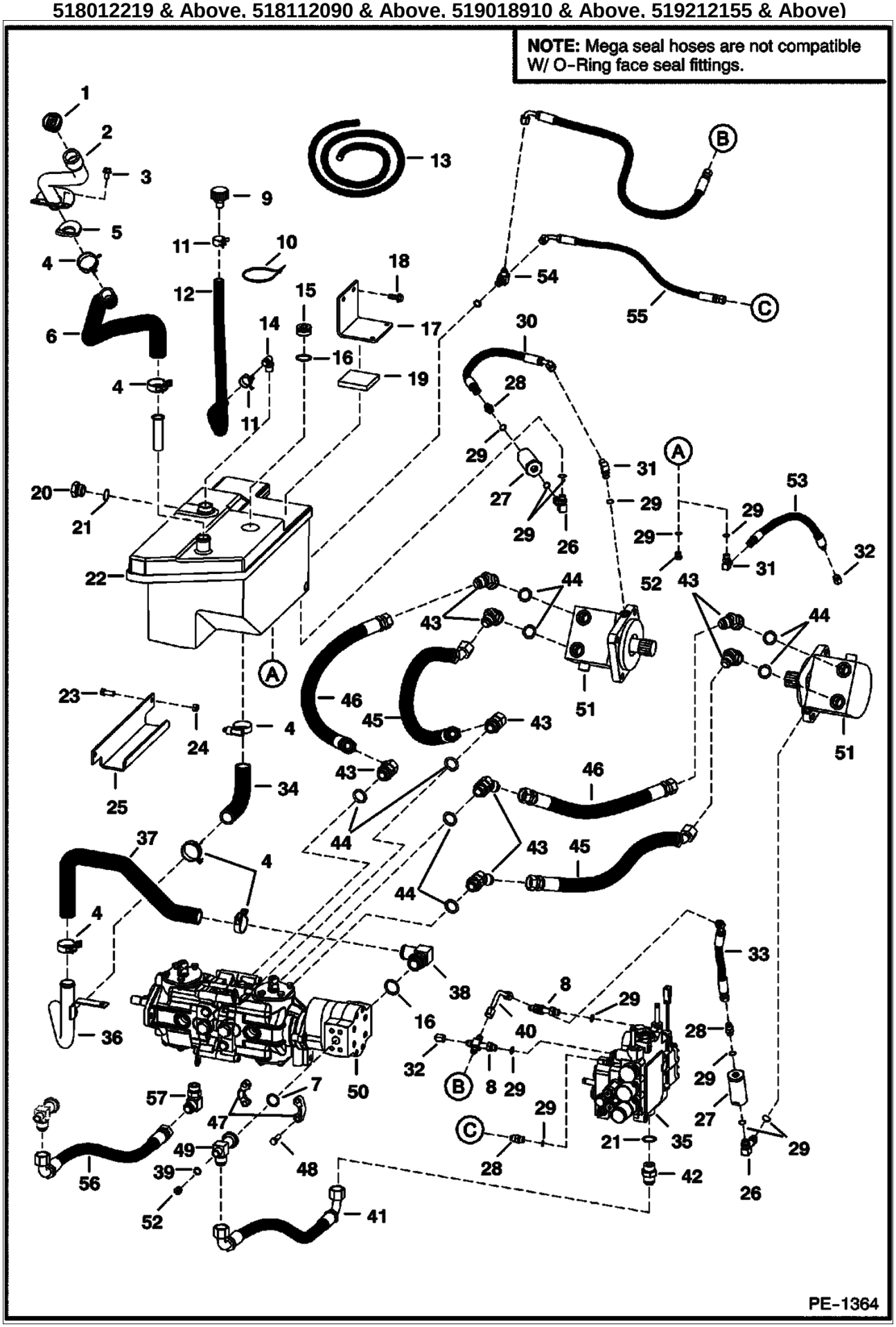

Page 182 - OSS# 2071349 - All rights reserved by Bobcat Company - 12/01/2009 - 20:50:59 - Produced by Ken Cook Co. with mediaioff

HYDROSTATIC CIRCUITRY (Cont'd)
(S/N 500K11039 & Above, 517619259 & Above,
518012219 & Above, 518112090 & Above, 519018910 & Above, 519212155 & Above)

Ref No	Part Number	Description	Remarks	Serial Number	Qty
42	15KB1212	ADAPTER	W/Ref. 21- check boss face to determine correct replacement o-ring - Was 15KV00008B [A]		1
42	97K12	O'RING	flared end		1
43	6737453	ELBOW	W/Ref. 44 - check boss face to determine correct replacement o-ring - Was 6718181 [A]		8
44	99K12	O'RING	tapered boss face		8
44	79K12	O RING 10	flat boss face - Was 58K000018B [B,D]		8
45	6675144	HOSE, HYD ASSY	mega seal - SEE NOTE		2
46	6736200	HOSE	mega seal - SEE NOTE - Was 6675143 [A]		2
47	19J12	CLAMP			2
48	17C620	BOLT			4
49	7103953	TEE	split flange - Was 6717662 [A]		1
50		PUMP	See Illustration HYDROSTATIC PUMP/ B17103		1
51		MOTOR	See Illustration HYDROSTATIC MOTOR/ C3431		1
52	90KV5	PLUG	W/Ref. 39		2
52	17KB606	ELBOW	See Illustration REAR AUXILIARY/ TS2011 - W/Ref. 29 - check boss face to determine correct replacement o-ring - Was 17KV00005B [A]		1
52	97K6	O'RING	flared end		1
52	21KB606	TEE	See Illustration HIGH FLOW HYDRAULICS/ PE1057 - Ref. 16 - W/Ref. 29 on this page - check boss face to determine correct replacement o-ring - Was 21KV00005B [A]		1
52	97K6	O'RING	flared end		1
53	7106212	HOSE	Was 6537040 [A]		1
54	6725182	TEE	W/Ref. 29 - check boss face to determine correct replacement o-ring		1
55	6719605	HOSE			1
56	6717144	HOSE		5176 19259-19833	1
57	17KB1212	ELBOW	W/Ref. 21 - flat boss face	5176 19259-19833	1

Page 183 - OSS# 2071349 - All rights reserved by Bobcat Company - 12/01/2009 - 20:50:59 - Produced by Ken Cook Co. with mediaioff

HYDROSTATIC CIRCUITRY

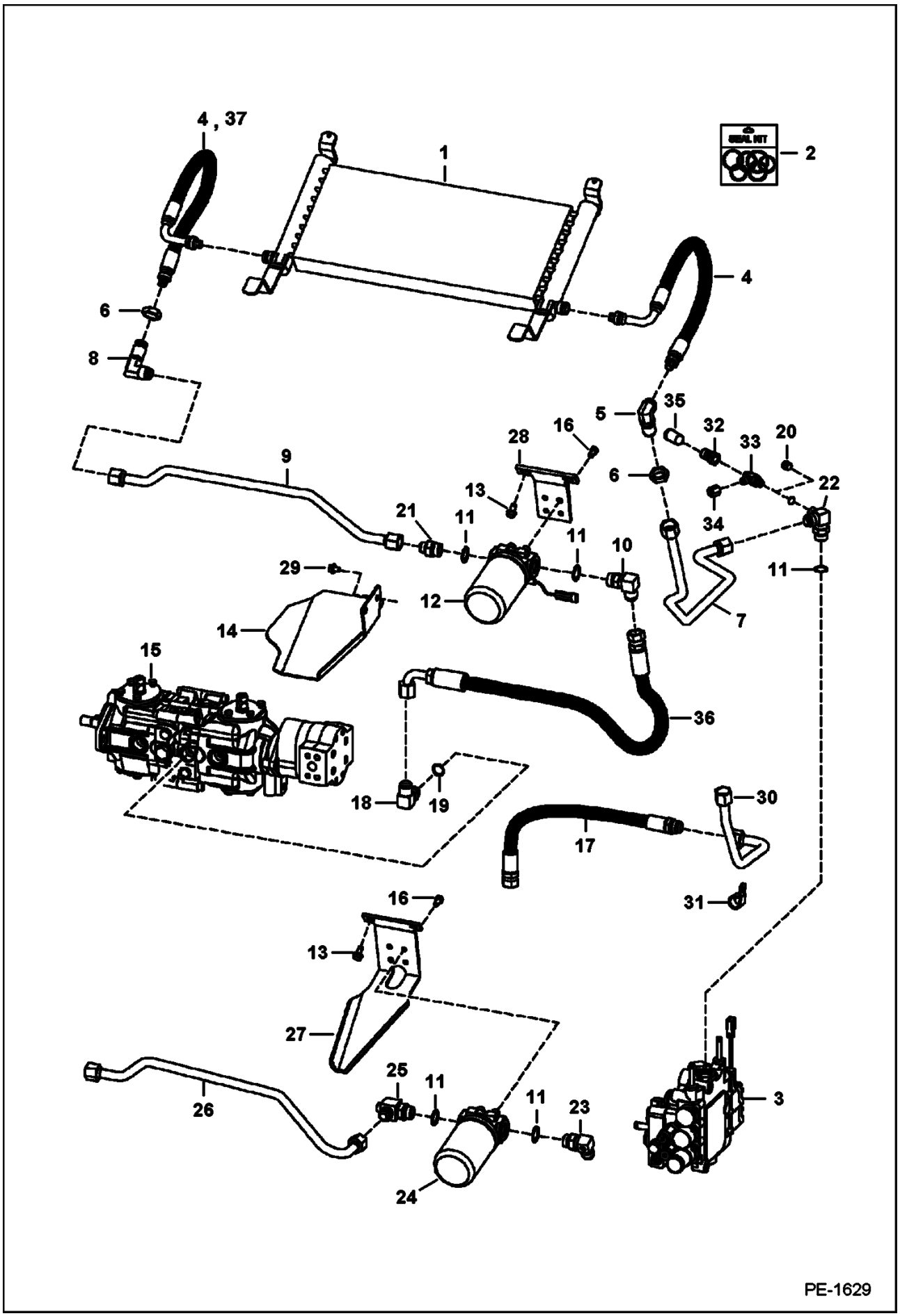

Page 184 - OSS# 2071349 - All rights reserved by Bobcat Company - 12/01/2009 - 20:50:59 - Produced by Ken Cook Co. with mediaioff

Ref No	Part Number	Description	Remarks	Serial Number	Qty
1	6675405	OIL COOLER	Was 6675130 [A]	500K 11038 & Bel	1
1	6675405	OIL COOLER		5176 17999 & Bel	1
1	6675405	OIL COOLER		5180 11999 & Bel	1
1	6675405	OIL COOLER		5181 11999 & Bel	1
1	6675405	OIL COOLER		5190 15999 & Bel	1
1	6675405	OIL COOLER		5192 11999 & Bel	1
1	6728157	EXCHANGER, OIL COOLER		500K 11039 & Abv	1
1	6728157	EXCHANGER, OIL COOLER		5176 18000 & Abv	1
1	6728157	EXCHANGER, OIL COOLER		5180 12000 & Abv	1
1	6728157	EXCHANGER, OIL COOLER		5181 12000 & Abv	1
1	6728157	EXCHANGER, OIL COOLER		5190 16000 & Abv	1
1	6728157	EXCHANGER, OIL COOLER		5192 12000 & Abv	1
2	6674798	REPAIR KIT	For Ref. 1, 5 or 8 - Includes internal retainer ring (1), o-ring (1), & backspring (1)		x
3		VALVE	See Illustration HYDRAULIC CONTROL VALVE/ B17144		1
4	6673828	HOSE, HYD ASSY	STC 90 degree fitting & STC straight fitting		2
5	6670831	ELBOW	STC & 37 degree flare		1
5	6690949	O-RING			1
6	86F8	NUT 5			2
7	6727640	TUBE	Was 6725369 [A]		1
8		ELBOW	NAP - STC & 37 degree flare - Order 88F10 (fitting), 86F8 (nut), & Ref. 37 - Was 6718748 [A]		1
8	88F10	FITTING	37 degree flare		1
8	97K12	O'RING	flared end		1
8	6690949	O-RING			1
9	6726649	TUBE		500K 11039 & Abv	1
9	6726649	TUBE		5176 18000 & Abv	1
9	6726649	TUBE		5180 12000 & Abv	1
9	6726649	TUBE		5181 12000 & Abv	1
9	6726649	TUBE		5190 16000 & Abv	1
9	6726649	TUBE		5192 12000 & Abv	1
10	17KB1212	ELBOW	W/Ref. 11 - check boss face to determine correct replacement o-ring - Was 17KV00008B [A]	500K 11039 & Abv	1
10	17KB1212	ELBOW	W/Ref. 11 - check boss face to determine correct replacement o-ring - Was 17KV00008B [A]	5176 18000 & Abv	1
10	17KB1212	ELBOW	W/Ref. 11 - check boss face to determine correct replacement o-ring - Was 17KV00008B [A]	5181 12000 & Abv	1
10	17KB1212	ELBOW	W/Ref. 11 - check boss face to determine correct replacement o-ring - Was 17KV00008B [A]	5192 12000 & Abv	1
10	17KB1212	ELBOW	W/Ref. 11 - check boss face to determine correct replacement o-ring - Was 17KV00008B [A]	5190 16000 & Abv	1
10	17KB1212	ELBOW	W/Ref. 11 - check boss face to determine correct replacement o-ring - Was 17KV00008B [A]	5180 12000 & Abv	1
10	97K12	O'RING	flared end		1
11	99K12	O'RING	tapered boss face		x
11	79K12	O RING 10	flat boss face		x
12		FILTER ASSY	See Illustration HYDROSTATIC OIL FILTER/ B17469		1
12	6661248	FILTER, OIL HYD 12	6" (152,4mm) long		1

Page 185 - OSS# 2071349 - All rights reserved by Bobcat Company - 12/01/2009 - 20:50:59 - Produced by Ken Cook Co. with mediaioff

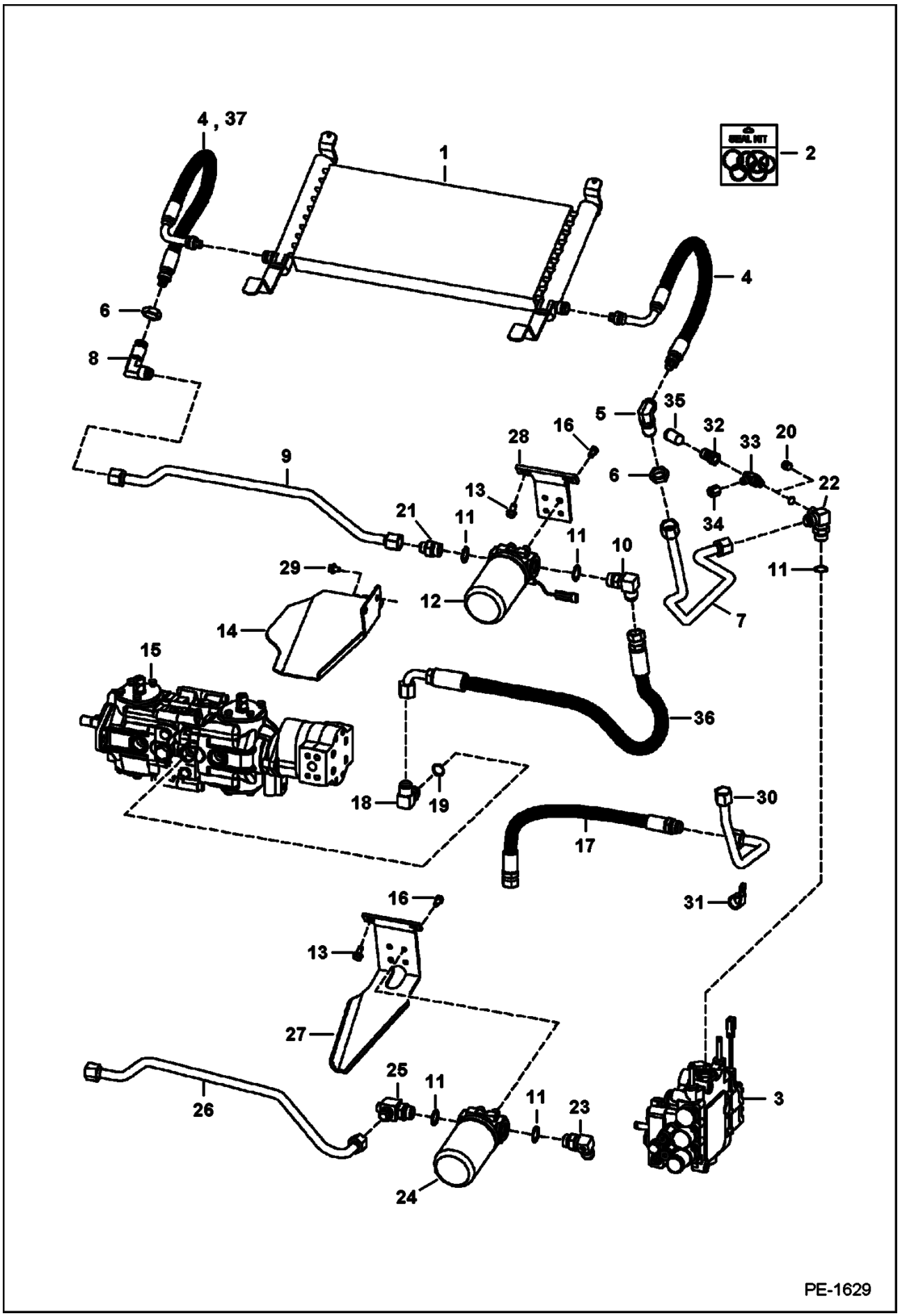

Page 186 - OSS# 2071349 - All rights reserved by Bobcat Company - 12/01/2009 - 20:50:59 - Produced by Ken Cook Co. with mediaioff

Ref No	Part Number	Description	Remarks	Serial Number	Qty
13	84G3712	BOLT			2
14	6729083	MOUNT	Was 6728140 [A]	500K 11039 & Abv	1
15		PUMP	See Illustration HYDROSTATIC PUMP/ B17103		1
16	17C610	BOLT			4
17		HOSE	NAP - 18.5" (469,9 mm) long - Order Ref. 36 - Was 6735651 [A]		1
18	17KB1210	ELBOW	W/Ref. 19 - Was 6714901 [A]		1
19	79K10	O RING 10			x
20	90K5	PLUG	socket head - check boss face to determine correct replacement o-ring - Was 90KV00008B [D]		1
21	15KB1212	ADAPTER	W/Ref. 11 - Was 15KV00008B	500K 11039 & Abv	1
21	15KB1212	ADAPTER	W/Ref. 11 - Was 15KV00008B	5190 16000 & Abv.	1
21	15KB1212	ADAPTER	W/Ref. 11 - Was 15KV00008B	5181 12000 & Abv	1
21	15KB1212	ADAPTER	W/Ref. 11 - Was 15KV00008B	5192 12000 & Abv	1
21	15KB1212	ADAPTER	W/Ref. 11 - Was 15KV00008B	5180 12000 & Abv	1
21	15KB1212	ADAPTER	W/Ref. 11 - Was 15KV00008B	5176 18000 & Abv	1
21	97K12	O'RING	flared end		1
22	6715653	TEE	W/Ref. 11 - check boss face to determine correct replacement o-ring		1
22	97K12	O'RING	flared end		1
23	6718661	ELBOW	W/Ref. 11 - check boss face to determine correct replacement o-ring	500K 11038 & Bel	1
23	6718661	ELBOW	W/Ref. 11 - check boss face to determine correct replacement o-ring	5192 11999 & Bel	1
23	6718661	ELBOW	W/Ref. 11 - check boss face to determine correct replacement o-ring	5180 11999 & Bel	1
23	6718661	ELBOW	W/Ref. 11 - check boss face to determine correct replacement o-ring	5181 11999 & Bel	1
23	6718661	ELBOW	W/Ref. 11 - check boss face to determine correct replacement o-ring	5190 15999 & Bel	1
23	6718661	ELBOW	W/Ref. 11 - check boss face to determine correct replacement o-ring	5176 17999 & Bel	1
24		FILTER ASSY	See Illustration HYDROSTATIC OIL FILTER/ B17469		1
24	6661248	FILTER, OIL HYD 12	6" (152,4mm) long		1
25	6700599	ELBOW	W/Ref. 11 - check boss face to determine correct replacement o-ring	500K 11038 & Bel	1
25	6700599	ELBOW	W/Ref. 11 - check boss face to determine correct replacement o-ring	5180 11999 & Bel	1
25	6700599	ELBOW	W/Ref. 11 - check boss face to determine correct replacement o-ring	5192 11999 & Bel	1
25	6700599	ELBOW	W/Ref. 11 - check boss face to determine correct replacement o-ring	5190 15999 & Bel	1
25	6700599	ELBOW	W/Ref. 11 - check boss face to determine correct replacement o-ring	5181 11999 & Bel	1
25	6700599	ELBOW	W/Ref. 11 - check boss face to determine correct replacement o-ring	5176 17999 & Bel	1
26	6719992	TUBE	Was 6717417 [A]	500K 11038 & Bel	1
26	6719992	TUBE	Was 6717417 [A]	5176 17999 & Bel	1
26	6719992	TUBE	Was 6717417 [A]	5180 11999 & Bel	1
26	6719992	TUBE	Was 6717417 [A]	5192 11999 & Bel	1
26	6719992	TUBE	Was 6717417 [A]	5190 15999 & Bel	1
26	6719992	TUBE	Was 6717417 [A]	5181 11999 & Bel	1
27		MOUNT	NAP - filter drain - Order Ref. 14, 28 & (2) of Ref. 29 - Was 6717381 [A]		1
28	6729082	MOUNT		5176 18000 & Abv	1

Page 187 - OSS# 2071349 - All rights reserved by Bobcat Company - 12/01/2009 - 20:50:59 - Produced by Ken Cook Co. with mediaioff

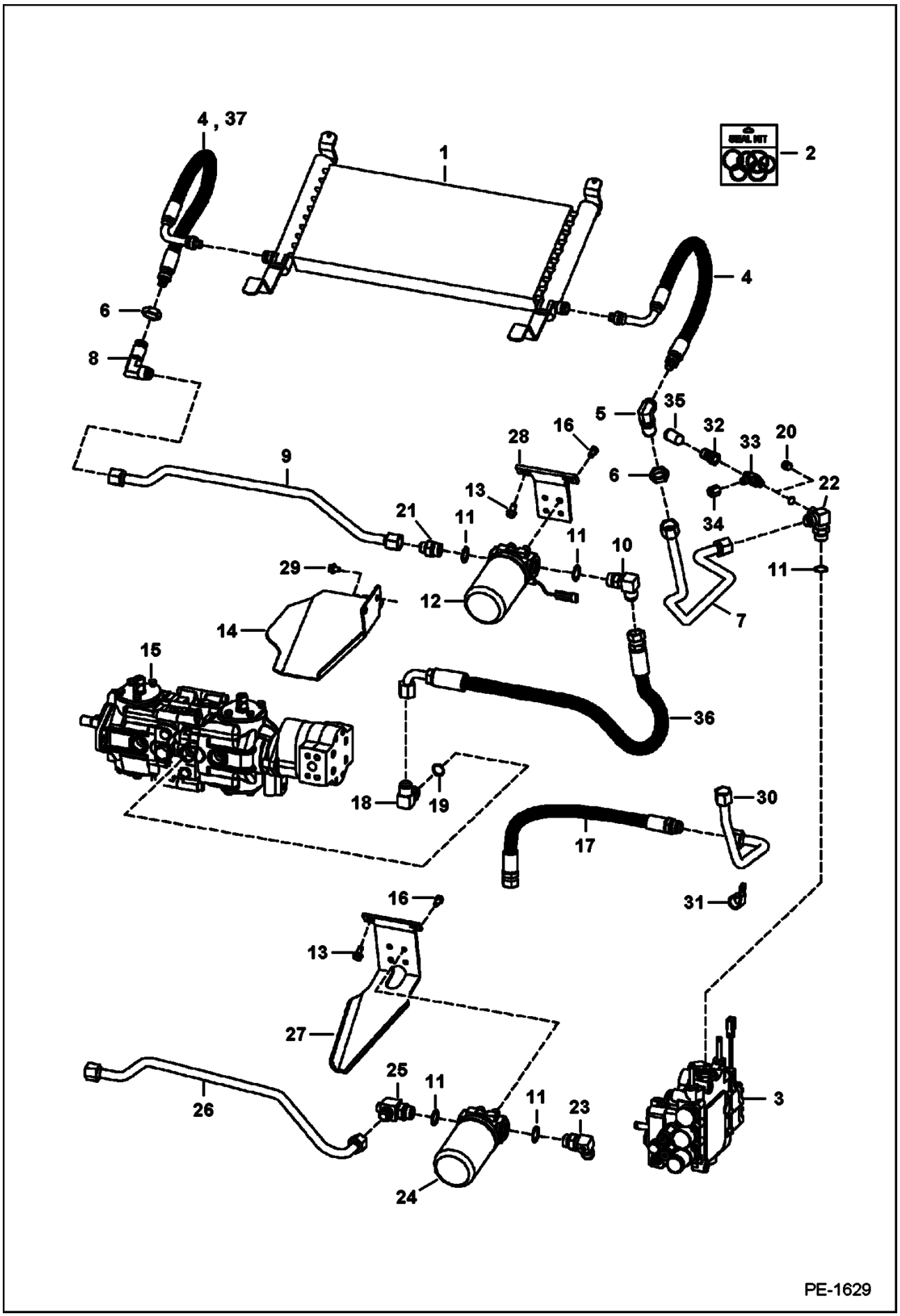

Page 188 - OSS# 2071349 - All rights reserved by Bobcat Company - 12/01/2009 - 20:50:59 - Produced by Ken Cook Co. with mediaioff

Ref No	Part Number	Description	Remarks	Serial Number	Qty
28	6729082	MOUNT		5192 12000 & Abv	1
28	6729082	MOUNT		5190 16000 & Abv	1
28	6729082	MOUNT		5181 12000 & Abv	1
28	6729082	MOUNT		5180 12000 & Abv	1
28	6729082	MOUNT		500K 11039 & Abv	1
29	84G3708	SCREW		5190 16000 & Abv	3
29	84G3708	SCREW		5176 18000 & Abv	3
29	84G3708	SCREW		5180 12000 & Abv	3
29	84G3708	SCREW		500K 11039 & Abv	3
29	84G3708	SCREW		5192 12000 & Abv	3
29	84G3708	SCREW		5181 12000 & Abv	3
30	6727647	TUBE			1
31	30H44	CLAMP		500K 11039 & Abv	1
31	30H44	CLAMP		5192 12000 & Abv	1
31	30H44	CLAMP		5190 16000 & Abv	1
31	30H44	CLAMP		5181 12000 & Abv	1
31	30H44	CLAMP		5180 12000 & Abv	1
31	30H44	CLAMP		5176 18000 & Abv	1
32	6684125	COUPLER			1
33		TEE	NAP - Order Ref. 20 - Was 6817237 [D]		1
34	36K5	CAP			1
35	6685602	CAP			1
36	7107782	HOSE	32" (812,8 mm) long		1
37	7169850	HOSE	90 degree STC end & straight end 37 degree flare		1

Page 189 - OSS# 2071349 - All rights reserved by Bobcat Company - 12/01/2009 - 20:50:59 - Produced by Ken Cook Co. with mediaioff

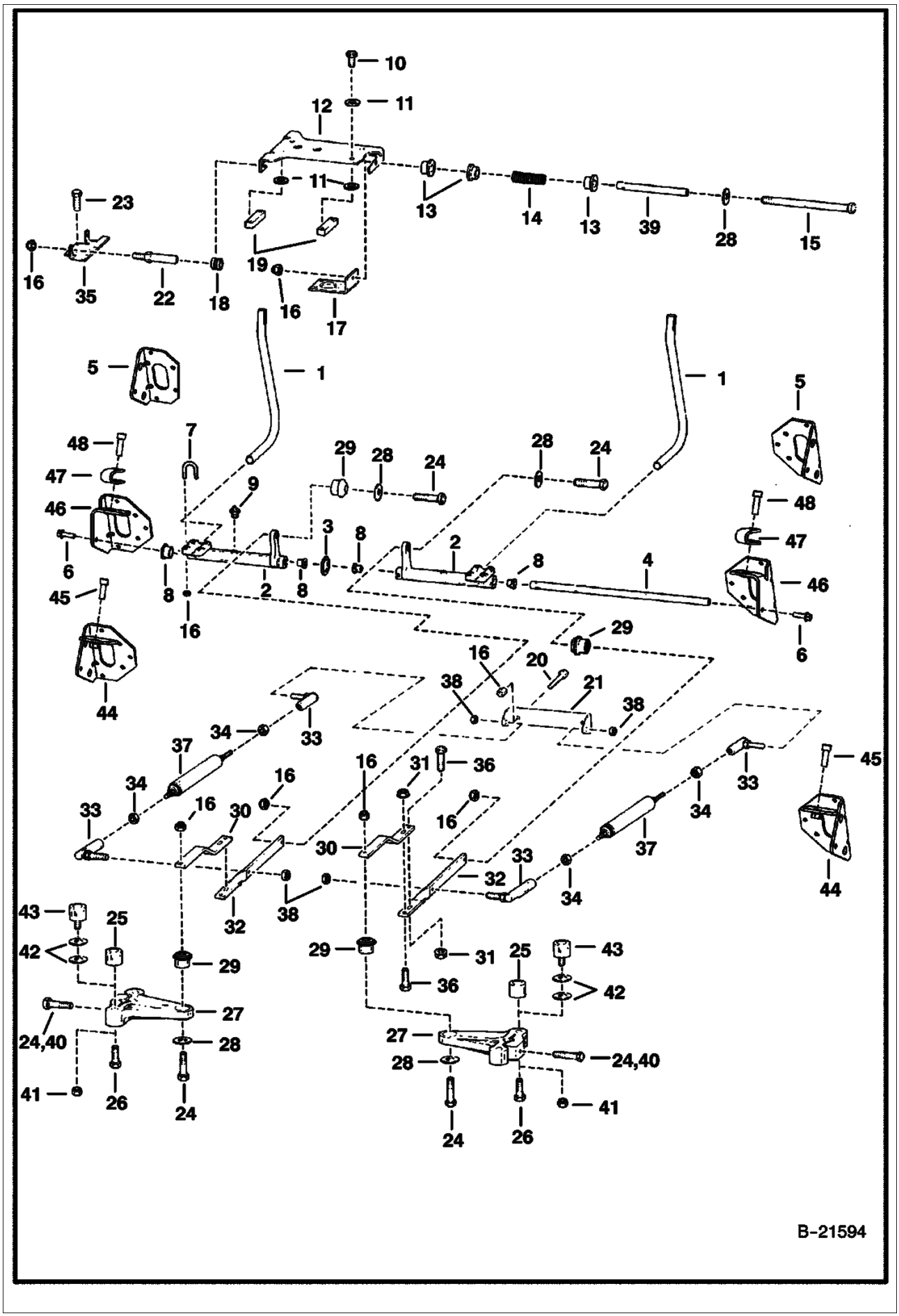

Page 190 - OSS# 2071349 - All rights reserved by Bobcat Company - 12/01/2009 - 20:50:59 - Produced by Ken Cook Co. with mediaioff

Ref No	Part Number	Description	Remarks	Serial Number	Qty
1	6702543	LEVER, STEERING			2
2		BELLCRANK	NAP - W/ Notch for bushing tab - Order 7110571 Bellcrank, Ref. 9 (10H35), Ref. 28 (619021B Washer) & Ref. 29 (6678067 Bushing) - Was 6703880 [A]		2
2		BELLCRANK	W/ Notch for bushing tab - Use W/Ref. 9 (6518200 Grease Zerk) - Order 7110571 Bellcrank & Ref. 9 (10H35 Grease Zerk) - Was 7101047 [A]		2
2	6716977	BELLCRANK	AHC - W/O Notch for bushing tab		2
2	7110571	BELLCRANK, STEERING	W/notch for Ref. 8 (6703897 bushing) - Use W/Ref. 9 (10H35 grease zerk)		2
3	6599741	WASHER	wave		1
4	6716545	ROD			1
5	6577230	BRACKET			2
6	45C620	BOLT			2
7	6732997	U-BOLT	Was 6700768 [A]		4
8	6703879	BUSHING, PLASTIC	W/tab		4
8	6673710	BEARING, NEEDLE	needle - AHC - W/O notch		2
9	6518200	GREASE ZERK	press fit		2
9	10H35	GREASE ZERK	threaded		2
10	17C616	BOLT 5	Was 8C616 [B,D]		4
11	6557831	WASHER			8
12	6706095	MOUNT			1
13	6715163	BUSHING, PRESS FIT			3
14	6701535	SPRING			1
15	17C680	BOLT			1
16	95D6	NUT	Was 91D6 [A]		21
17	6576196	MOUNT			1
18	6706098	GUIDE			2
19	6702716	BLOCK			2
20	17C612	BOLT 5			2
21	6706106	MOUNT			1
22	6577058	PIN			2
23	1CM820	BOLT			8
24	17C626	BOLT			6
24	17C626	BOLT	See Ref. 40		4
25	6711643	CAM			4
26	35C612	BOLT			4
27		LEVER	NAP - .8725"(22,2 mm) I.D. hole for Ref. 29 (6665701 bushing) - Order 6729956 Lever Ref. 28 (619021 washer) & Ref. 29 (6678067 Bushing) - Was 6711644 [A]		2
27	6729956	LEVER, PINTLE	1.0475"(26,5 mm) I.D. hole for Ref. 29 (6678067 bushing)		2
28	6563914	WASHER	1.00"(25,4 mm) O.D.		4
28	619021	WASHER, 5	1.25"(31,8 mm) O.D.		4
29	6665701	BUSHING, PRESS FIT	neoprene - .885"(22,5 mm) O.D.		4
29	6685060	BUSHING, TORSION	torsion - 1.055" (26,797 mm) OD - Was 6678067 [A]		4
30	6717239	LINK			2
31	83D6	NUT 5			4
32	6576195	LINK			2
33	6599744	BALL JOINT			4

Page 191 - OSS# 2071349 - All rights reserved by Bobcat Company - 12/01/2009 - 20:50:59 - Produced by Ken Cook Co. with mediaioff

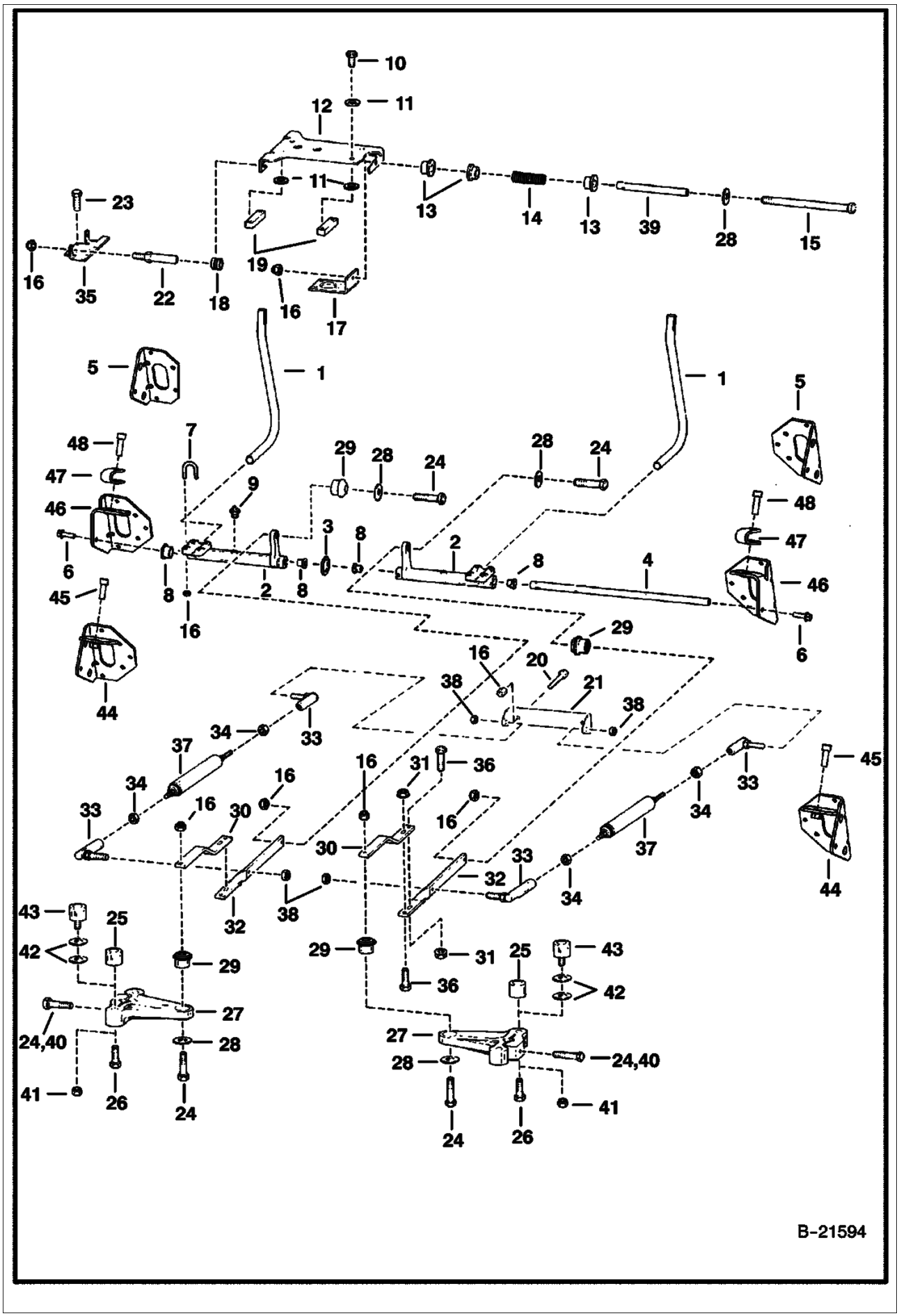

Page 192 - OSS# 2071349 - All rights reserved by Bobcat Company - 12/01/2009 - 20:50:59 - Produced by Ken Cook Co. with mediaioff

Ref No	Part Number	Description	Remarks	Serial Number	Qty
34	8D6	NUT 5			4
35	6706096	MOUNT			1
36	17C620	BOLT			4
37	6649551	SHOCK			2
38	62D6	NUT 5			2
39	6715164	SLEEVE, SPRING			1
40	35C624	BOLT	3/8 x 1.5" - grade 5		2
41	98D6	NUT	See Illustration CONTROLS ELECTRICAL/ PE1139 AHC		4
42	25E17	WASHER 5			8
43	6673789	BEARING	roller - AHC - W/ Threaded Stud		4
44		BRACKET	NAP -R.H. - Order Ref . 46-48 - Was 6733022 [A]		1
44		BRACKET	NAP - L.H. - Order Ref. 46-48 - Was 6733024 [A]		1
45	93G824	BOLT	Was 73G824 [A]		2
46	7128600	BRACKET	RH		1
46	7128601	BRACKET	LH		1
47	7121779	PAD			2
48	73G828	BOLT			2

Page 193 - OSS# 2071349 - All rights reserved by Bobcat Company - 12/01/2009 - 20:50:59 - Produced by Ken Cook Co. with mediaioff

HYDROSTATIC MOTOR

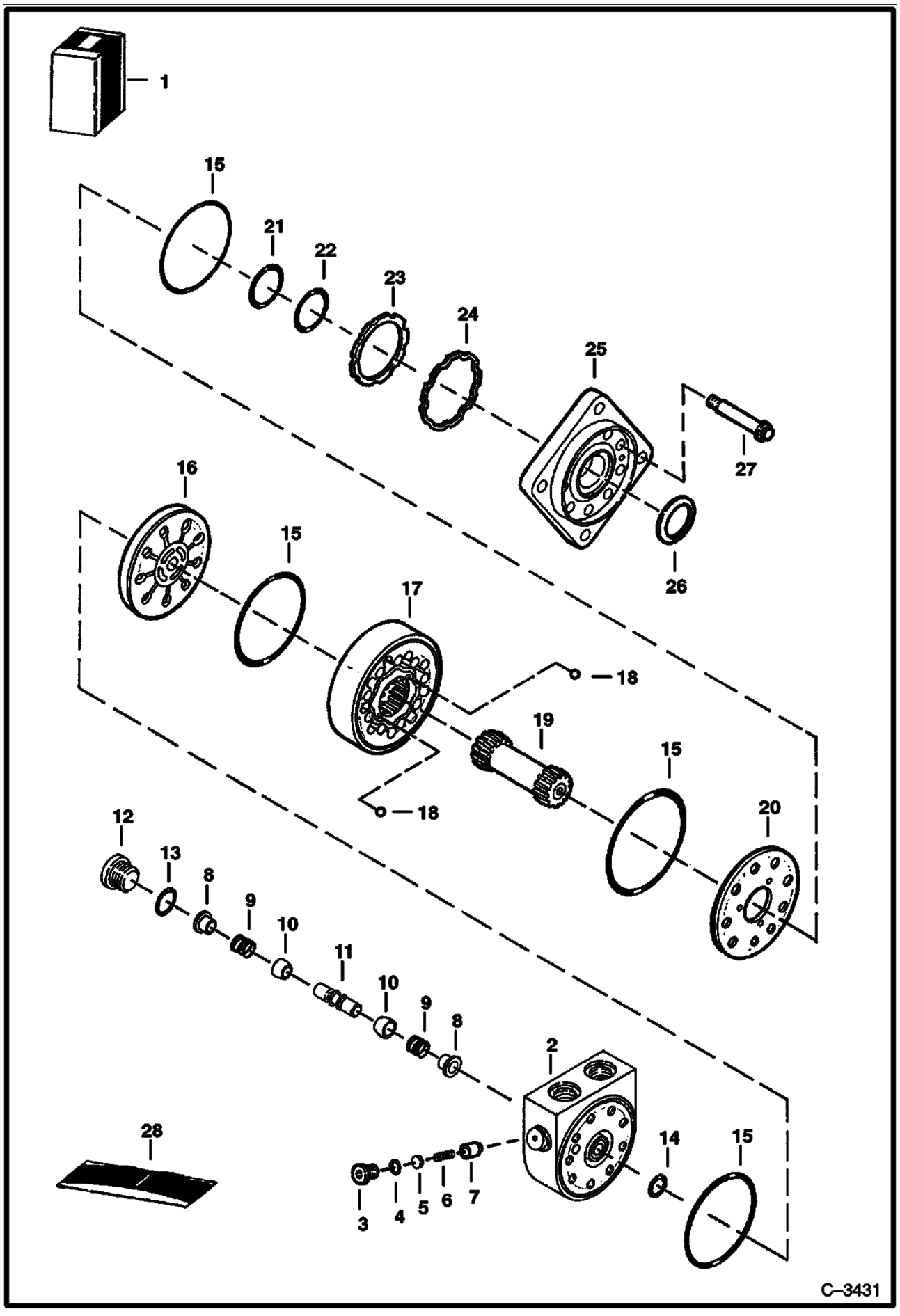

Page 194 - OSS# 2071349 - All rights reserved by Bobcat Company - 12/01/2009 - 20:50:59 - Produced by Ken Cook Co. with mediaIoff

Ref No	Part Number	Description	Remarks	Serial Number	Qty
1		MOTOR	See BTI367 NAP - Ref. 2-27 - Was 6671617 [A]		1
2	6669442	HOUSING	W/Ref. 3-7		1
3	6668079	PLUG	W/Ref. 4		1
4	79K5	O RING 10			1
5	6668080	SHIM			x
6	6669444	SPRING			1
7	6668082	POPPET			1
8	6561218	SHUTTLE			2
9	6513533	SPRING			2
10	6513532	POPPET			2
11	6668088	PISTON	shuttle - round		1
11	6668088	PISTON	shuttle - W/flat - fast acting - Was 6685066 [A]		1
12	6668089	PLUG	W/Ref. 13		1
13	79K6	O RING 10			1
14	6669452	O-RING			1
15	6669446	O-RING			4
16	6669447	PLATE	valve		1
17		GEROLER	NAP - Was 6672126 [A]		1
18	6651542	BALL			2
19	6669469	SHAFT			1
20	6669448	PLATE	balance		1
21	6669450	RING	backup		1
22	6669449	O-RING			1
23	6669453	SEAL			1
24	6669454	RING	backup		1
25	6669451	FLANGE	mounting		1
26	6664815	SEAL, OIL			1
27	6669470	BOLT			9
28	6669455	KIT, SEAL	W/Ref. 4, 13, 14, 21-24 & 26		1

Page 195 - OSS# 2071349 - All rights reserved by Bobcat Company - 12/01/2009 - 20:50:59 - Produced by Ken Cook Co. with mediaioff

HYDROSTATIC MOTOR

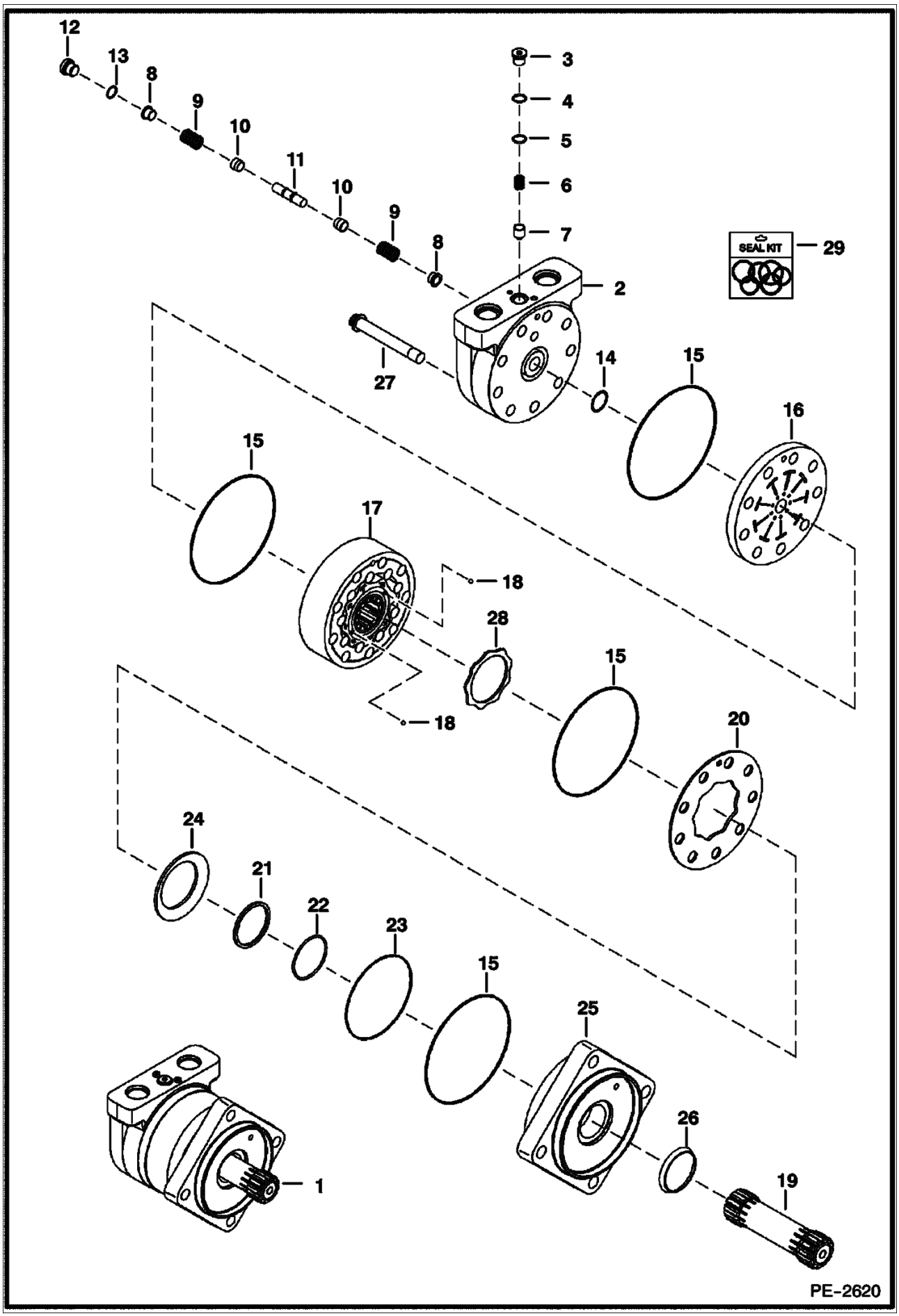

Page 196 - OSS# 2071349 - All rights reserved by Bobcat Company - 12/01/2009 - 20:50:59 - Produced by Ken Cook Co. with mediaioff

Ref No	Part Number	Description	Remarks	Serial Number	Qty
1	6682034	MOTOR	Ref. 2-27		1
2	6689697	HOUSING	W/Ref. 3-7 - Was 6685063 [B,D]		1
3	6668079	PLUG	W/Ref. 4		1
4	79K5	O RING 10			1
5	6668080	SHIM			x
6	6688521	SPRING			1
7	6668082	POPPET	Was 6685064 [A]		1
8	6685065	SHUTTLE			2
9	6513533	SPRING			2
10	6513532	POPPET			2
11	6668088	PISTON	shuttle - W/flat - fast acting - Was 6685066 [A]		1
12	6668089	PLUG	W/Ref. 13		1
13	79K6	O RING 10			1
14	6669452	O-RING			1
15	6678000	SEAL			4
16	6689698	PLATE	valve - Was 6678001 [B,D]		1
17	6691343	GEROLER	Was 6685067 [B,D]		1
18	6651542	BALL			2
19	6682862	SHAFT, DRIVE			1
20	6689700	PLATE	balance - outer - Was 6678003 [B,D]		1
21	6678006	BACK-UP RING	backup		1
22	6682860	O-RING			1
23	6682897	SEAL			1
24	6685069	RING,BACK-UP	backup		1
25	6685068	FLANGE	mounting		1
26	6664815	SEAL, OIL			1
27	6682863	BOLT			9
28	6678004	PLATE	balance - inner		1
29	6685070	KIT, SEAL COMPLETE	W/Ref. 4, 13-15, 21-23 & 26		1

Page 197 - OSS# 2071349 - All rights reserved by Bobcat Company - 12/01/2009 - 20:50:59 - Produced by Ken Cook Co. with mediaioff

HYDROSTATIC PUMP

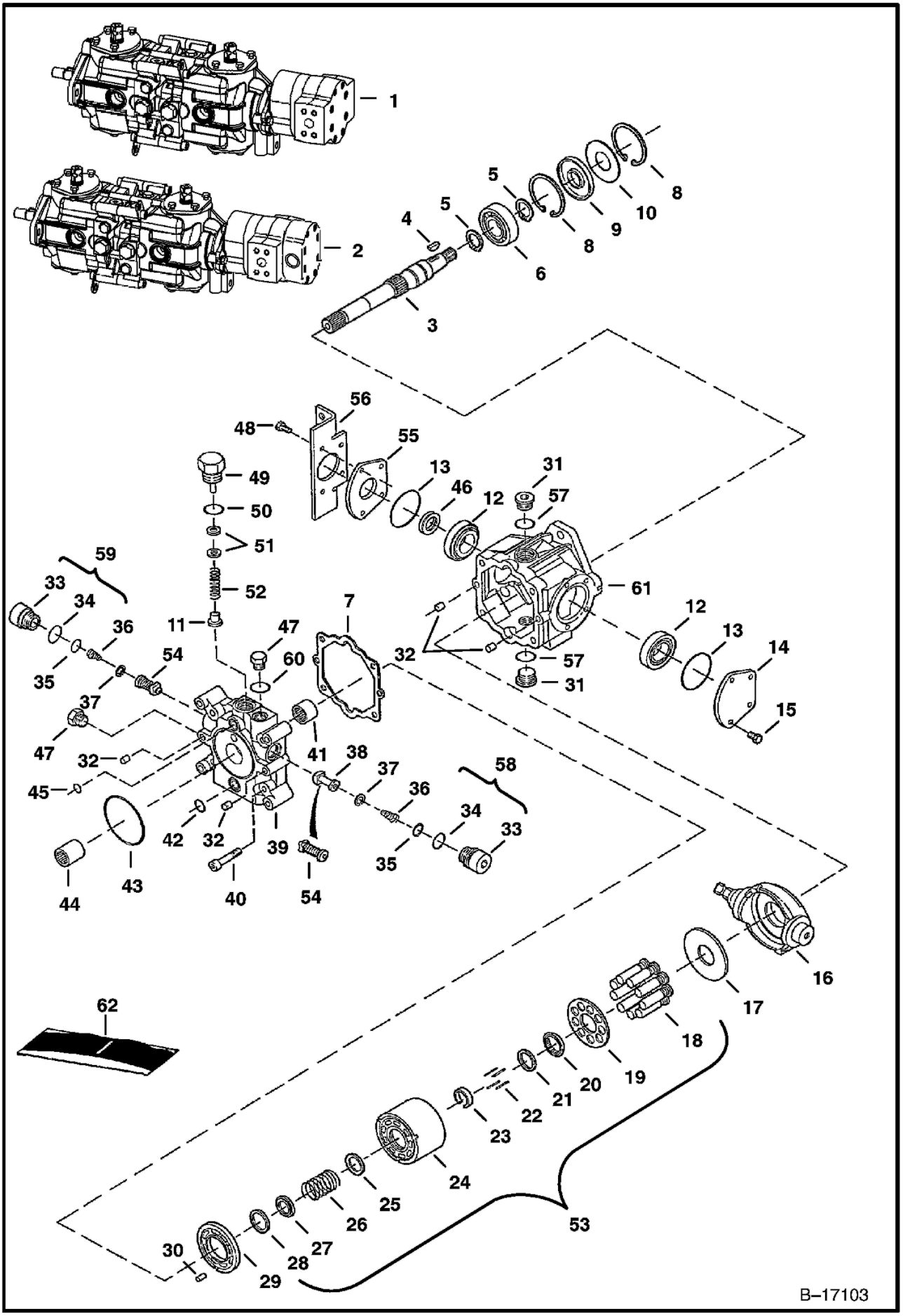

Page 198 - OSS# 2071349 - All rights reserved by Bobcat Company - 12/01/2009 - 20:50:59 - Produced by Ken Cook Co. with mediaIoff

Ref No	Part Number	Description	Remarks	Serial Number	Qty
1	6674378	PUMP, HYD TANDEM	Model 4445070 - W/aluminun gear pump - must use brackets 6576196 & 6706096 from old pump	500K 11563 & Bel	1
1	6674378	PUMP, HYD TANDEM	Model 4445070 - W/aluminun gear pump - must use brackets 6576196 & 6706096 from old pump	5181 12187 & Bel	1
1	6674378	PUMP, HYD TANDEM	Model 4445070 - W/aluminun gear pump - must use brackets 6576196 & 6706096 from old pump	5192 12217 & Bel	1
1	6674378	PUMP, HYD TANDEM	Model 4445070 - W/aluminun gear pump - must use brackets 6576196 & 6706096 from old pump	5190 20246 & Bel	1
1	6674378	PUMP, HYD TANDEM	Model 4445070 - W/aluminun gear pump - must use brackets 6576196 & 6706096 from old pump	5180 12335 & Bel	1
1	6674378	PUMP, HYD TANDEM	Model 4445070 - W/aluminun gear pump - must use brackets 6576196 & 6706096 from old pump	5176 19833 & Bel	1
1		PUMP	NAP - Model 4445096 - W/cast iron gear pump - Order 6686702 - Was 6677647 [A]		1
1		PUMP	NAP - Model 4445132 - W/cast iron gear pump - Order 6686702 - Was 6681635 [A]		1
1		PUMP	NAP - Model 4445160 - W/cast iron gear pump - Order 6686702 - Was 6685032 [A]		1
1		PUMP	NAP - Model 4445192 - Order 6686702 - Was 6687632 [A]		1
1	6686702	PUMP, HYD TANDEM	Model 4445187 - must use brackets 6576196 & 6706096 from old pump		1
2	6674379	PUMP	Model 4445071 - W/double aluminum gear pump for High Flow Hydraulics - must use brackets 6576196 & 6706096 from old pump	500K 11563 & Bel	1
2	6674379	PUMP	Model 4445071 - W/double aluminum gear pump for High Flow Hydraulics - must use brackets 6576196 & 6706096 from old pump	5181 12187 & Bel	1
2	6674379	PUMP	Model 4445071 - W/double aluminum gear pump for High Flow Hydraulics - must use brackets 6576196 & 6706096 from old pump	5180 12335 & Bel	1
2	6674379	PUMP	Model 4445071 - W/double aluminum gear pump for High Flow Hydraulics - must use brackets 6576196 & 6706096 from old pump	5176 19833 & Bel	1
2	6674379	PUMP	Model 4445071 - W/double aluminum gear pump for High Flow Hydraulics - must use brackets 6576196 & 6706096 from old pump	5190 20246 & Bel	1
2	6674379	PUMP	Model 4445071 - W/double aluminum gear pump for High Flow Hydraulics - must use brackets 6576196 & 6706096 from old pump	5192 12217 & Bel	1
2		PUMP	NAP - Model 4445097 - W/double cast iron gear pump for High Flow Hydraulics - Order 6686704 - Was 6681636 [A]		1
2		PUMP	NAP - Model 4445161 - W/double cast iron gear pump for High Flow Hydraulics - Order 6686704 - Was 6685033 [A]		1
2		PUMP	NAP - Model 4445202 - W/double cast iron gear pump for High Flow Hydraulics - Order 6686704 - Was 6687633 [A]		1
2	6686704	PUMP	Model 4445187 - must use brackets 6576196 & 6706096 from old pump		1
3		SHAFT	NAP - W/woodruff key - Order 6682260 Shaft and Ref. 4 (6682261 Key) - Was 6669408 [A]		1
3	6682260	SHAFT	W/square key		1
4	6J807	KEY, WOODRUFF			1
4	6682261	KEY	square		1

Page 199 - OSS# 2071349 - All rights reserved by Bobcat Company - 12/01/2009 - 20:50:59 - Produced by Ken Cook Co. with mediaioff

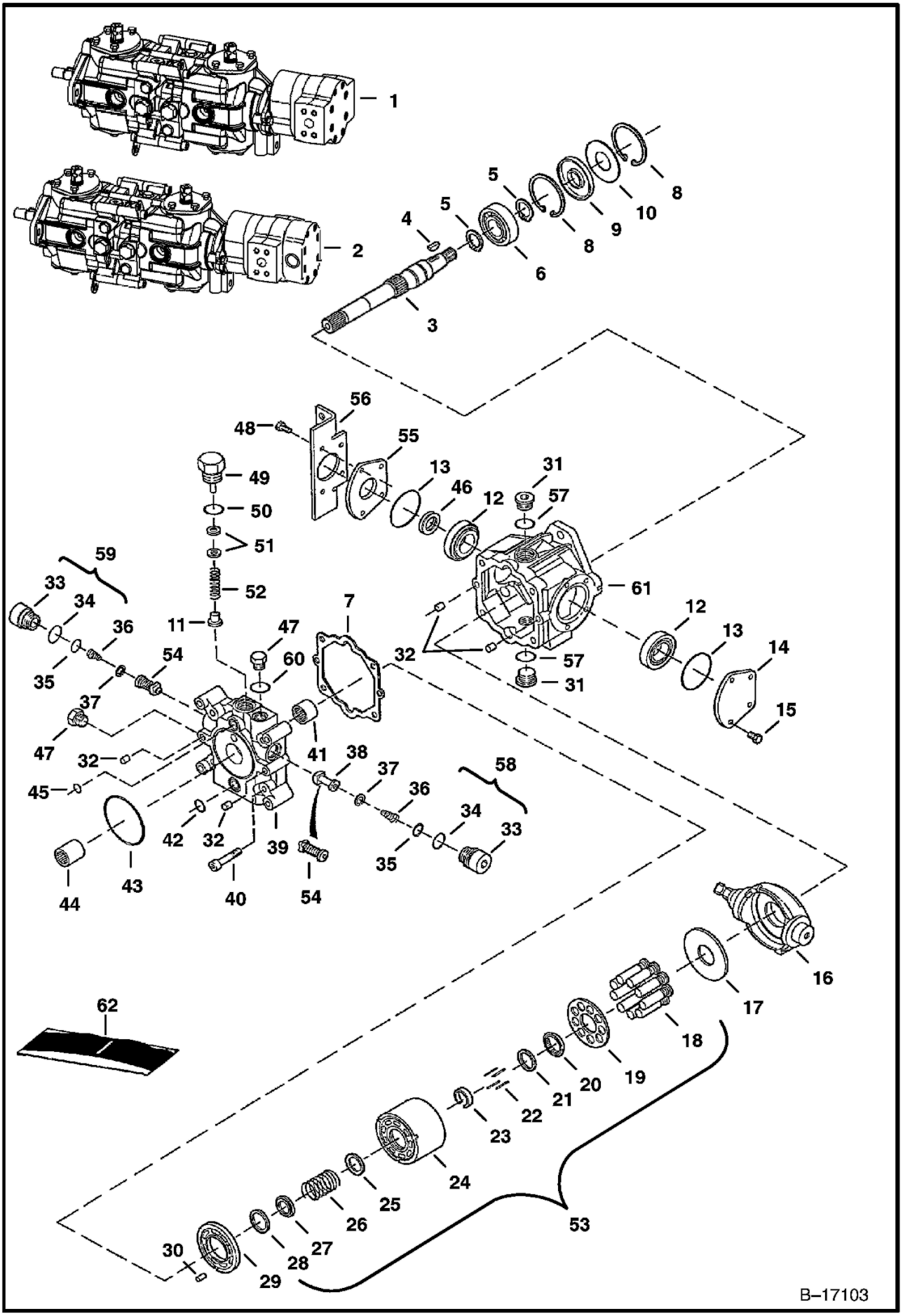

Page 200 - OSS# 2071349 - All rights reserved by Bobcat Company - 12/01/2009 - 20:50:59 - Produced by Ken Cook Co. with mediaIoff

Ref No	Part Number	Description	Remarks	Serial Number	Qty
5	658128	RING, SNAP			2
6	654299	BEARING			1
7	6650634	GASKET			1
8	669863	RING, SNAP			2
9	6687191	SEAL, OIL	Was 6645090 [A]		1
10	6669409	WASHER			1
11	6650652	POPPET	charge relief		1
12	6669411	BEARING			2
13	6660814	O-RING			2
14	6657068	COVER			2
15	6650668	BOLT			4
16	6685344	SWASHPLATE	W/threaded shaft hole - Was 6671513 [A]		1
17	6650627	PLATE			1
18		PISTON ASSY	NAP - Order Ref. 53		1
19		RETAINER	NAP - Order Ref. 53		1
20		RETAINER	NAP - guide - Order Ref. 53		1
21	6666338	WASHER			1
22	6650629	PIN			4
23	6650630	RETAINER			1
24		BLOCK	NAP - Order Ref. 53		1
25		WASHER	NAP - Order Ref. 53		1
26		SPRING	NAP - Order Ref. 53		1
27		WASHER	NAP - Order Ref. 53		1
28		WASHER	NAP - Order Ref. 53		1
29			See BTI361 NAP - For Models 4445070, 4445071, 4445096, 4445097, 4445132, 4445160 & 4445161 Pump - Was 6675340 [A]		1
29	6687774	PLATE, PUMP HYD	For Models 4445192 & 4445202 Pump		1
30	6650636	PIN			1
31	47K8	PLUG	W/Ref. 57		2
32	6675342	PIN			4
33		PLUG	NAP - Order Ref. 58 or 59		2
34	6657028	O-RING			2
35	79K8	O RING 10			2
36		SPRING	NAP - Order Ref. 58 or 59		2
37		RETAINER	NAP - Order Ref. 58 or 59		2
38		CHECK VALVE	NAP - poppet - Order Ref. 58		1
39	6669406	END PLATE			1
40	6650637	BOLT			4
41	6650635	BEARING			1
42	6650647	O-RING			1
43	6645081	O-RING			1
44	6650675	COUPLER			1
45	6650646	O-RING			1
46	6678226	SEAL, OIL	Was 6673881 [A]		1
47	6645086	PLUG	W/Ref. 60		2
48	6671518	BOLT			4
49	6650648	PLUG	charge relief		1
50	79K10	O RING 10			1
51	6669410	KIT, SHIM	charge relief		1
52	6658301	SPRING			1
53	6671512	GROUP, ROTARY	Was 6675341 [B,D]		1
54		RELIEF VALVE	NAP - 5000 PSI (345 bar) - Order Ref. 59		1
55	6657067	COVER	Was 6675338 [A]		1
56	6706096	MOUNT			1
57	79K12	O RING 10			2

Page 201 - OSS# 2071349 - All rights reserved by Bobcat Company - 12/01/2009 - 20:50:59 - Produced by Ken Cook Co. with mediaioff

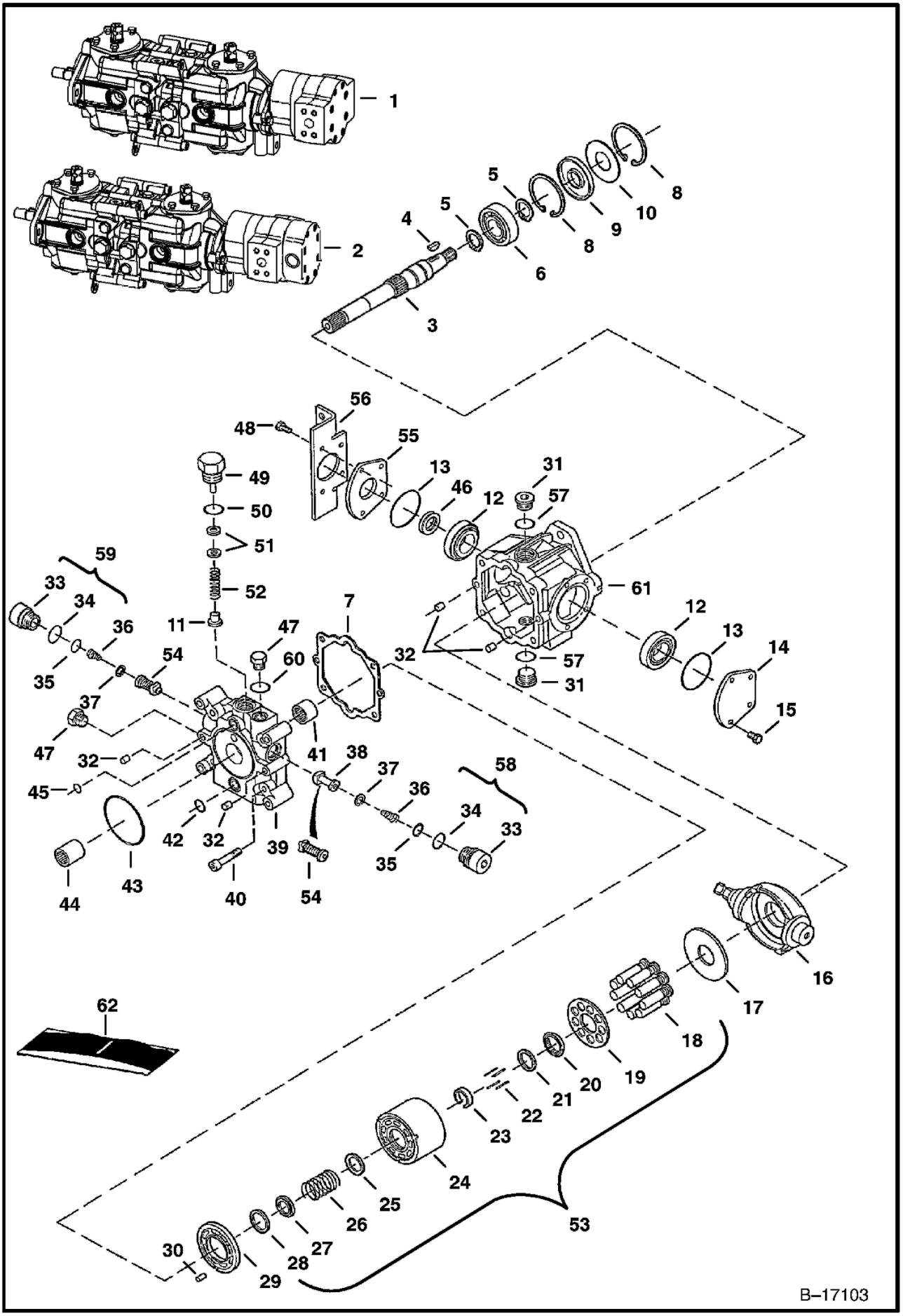

Page 202 - OSS# 2071349 - All rights reserved by Bobcat Company - 12/01/2009 - 20:50:59 - Produced by Ken Cook Co. with mediaIoff

Ref No	Part Number	Description	Remarks	Serial Number	Qty
58	6670684	CHECK VALVE			1
59	6671510	RELIEF VALVE			1
60	6661481	O-RING			2
61	6669402	HOUSING			1
62	6671516	KIT, SEAL	Ref. 7, 9, 13, 34, 35, 42, 43, 45 & 46 - Also includes Ref. 3, 12, 41 & 53 on next page		1

Page 203 - OSS# 2071349 - All rights reserved by Bobcat Company - 12/01/2009 - 20:50:59 - Produced by Ken Cook Co. with mediaioff

HYDROSTATIC PUMP

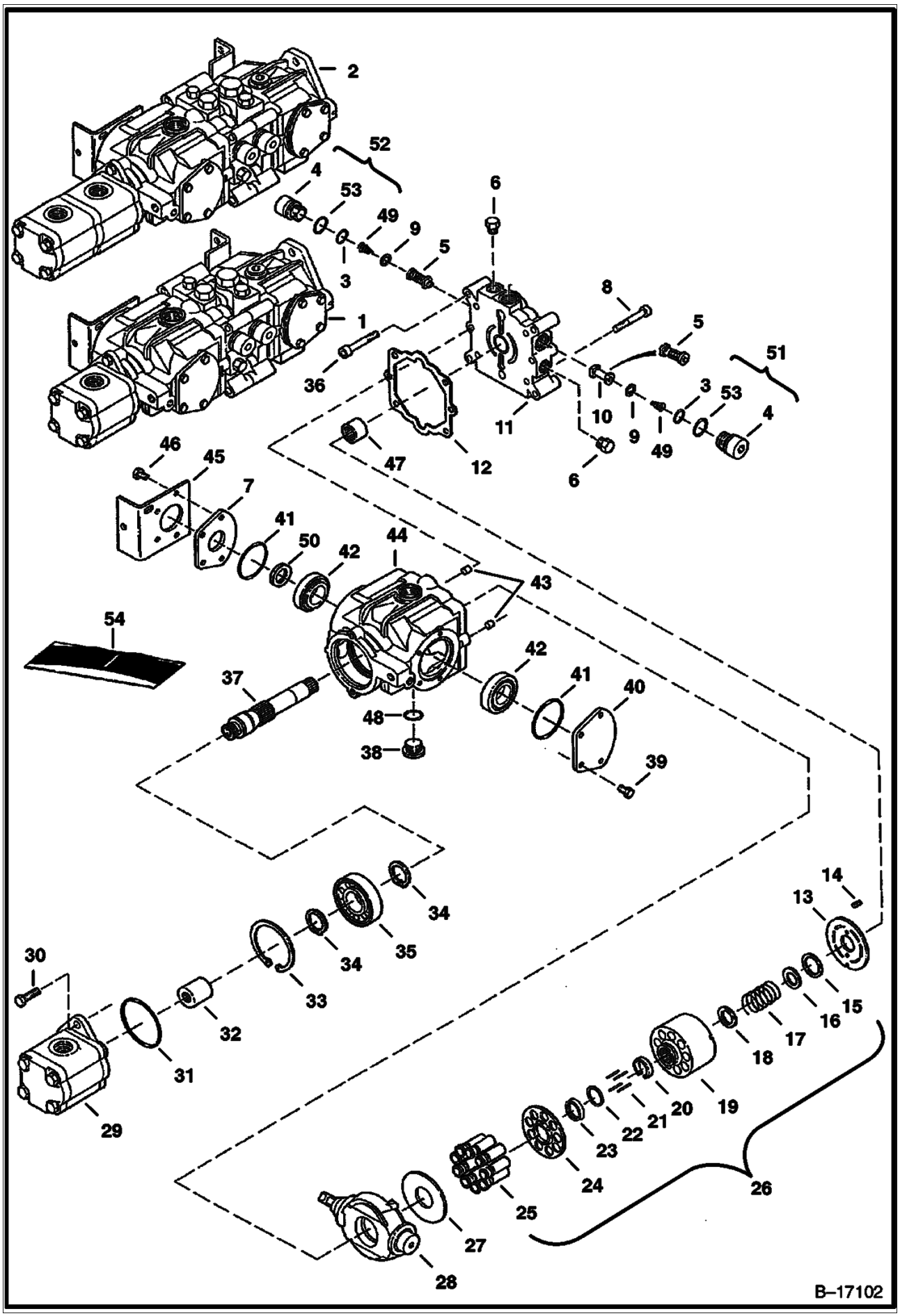

Page 204 - OSS# 2071349 - All rights reserved by Bobcat Company - 12/01/2009 - 20:50:59 - Produced by Ken Cook Co. with mediaIoff

Ref No	Part Number	Description	Remarks	Serial Number	Qty
1	6674378	PUMP, HYD TANDEM	Model 4445070 - W/aluminun gear pump - must use brackets 6576196 & 6706096 from old pump	500K 11563 & Bel	1
1	6674378	PUMP, HYD TANDEM	Model 4445070 - W/aluminun gear pump - must use brackets 6576196 & 6706096 from old pump	5181 12187 & Bel	1
1	6674378	PUMP, HYD TANDEM	Model 4445070 - W/aluminun gear pump - must use brackets 6576196 & 6706096 from old pump	5192 12217 & Bel	1
1	6674378	PUMP, HYD TANDEM	Model 4445070 - W/aluminun gear pump - must use brackets 6576196 & 6706096 from old pump	5190 20246 & Bel	1
1	6674378	PUMP, HYD TANDEM	Model 4445070 - W/aluminun gear pump - must use brackets 6576196 & 6706096 from old pump	5180 12335 & Bel	1
1	6674378	PUMP, HYD TANDEM	Model 4445070 - W/aluminun gear pump - must use brackets 6576196 & 6706096 from old pump	5176 19833 & Bel	1
1		PUMP	NAP - Model 4445096 - W/cast iron gear pump - Order 6686702 Pump - must use brackets 6576196 & 6706096 from old pump - Was 6677647 [A]		1
1		PUMP	NAP - Model 4445132 - W/cast iron gear pump - Order 6686702 Pump - must use brackets 6576196 & 6706096 from old pump - Was 6681635 [A]		1
1		PUMP	NAP - Model 4445160 - W/cast iron gear pump - Order 6686702 Pump - must use brackets 6576196 & 6706096 from old pump - Was 6685032 [A]		1
1		PUMP	NAP - Model 4445192 - Order 6686702 - must use brackets 6576196 & 6706096 from old pump - Was 6687632 [A]		1
1	6686702	PUMP, HYD TANDEM	Model 4445187 - must use brackets 6576196 & 6706096 from old pump		1
2	6674379	PUMP	Model 4445071 - W/double aluminum gear pump for High Flow Hydraulics - must use brackets 6576196 & 6706096 from old pump	500K 11563 & Bel	1
2	6674379	PUMP	Model 4445071 - W/double aluminum gear pump for High Flow Hydraulics - must use brackets 6576196 & 6706096 from old pump	5176 19833 & Bel	1
2	6674379	PUMP	Model 4445071 - W/double aluminum gear pump for High Flow Hydraulics - must use brackets 6576196 & 6706096 from old pump	5192 12217 & Bel	1
2	6674379	PUMP	Model 4445071 - W/double aluminum gear pump for High Flow Hydraulics - must use brackets 6576196 & 6706096 from old pump	5190 20246 & Bel	1
2	6674379	PUMP	Model 4445071 - W/double aluminum gear pump for High Flow Hydraulics - must use brackets 6576196 & 6706096 from old pump	5181 12187 & Bel	1
2	6674379	PUMP	Model 4445071 - W/double aluminum gear pump for High Flow Hydraulics - must use brackets 6576196 & 6706096 from old pump	5180 12335 & Bel	1
2		PUMP	NAP - Model 4445097 - W/double gear pump for high flow hydraulics - Order 6686704 Pump and replace new mounting brackets with brackets from old pump - Was 6681636 [A]		1
2		PUMP	NAP - Model 4445161 - W/double gear pump for high flow hydraulics - Order 6686704 Pump - Was 6685033 [A]		1
2		PUMP	NAP - Model 4445202 - W/double gear pump for High Flow Hydraulics - Order 6686704 - must use brackets 6576196 & 6706096 from old pump - Was 6687633 [A]		1
2	6686704	PUMP	Model 4445186 - W/double gear pump for High Flow Hydraulics - must use brackets 6576196 & 6706096		1

Page 205 - OSS# 2071349 - All rights reserved by Bobcat Company - 12/01/2009 - 20:50:59 - Produced by Ken Cook Co. with mediaioff

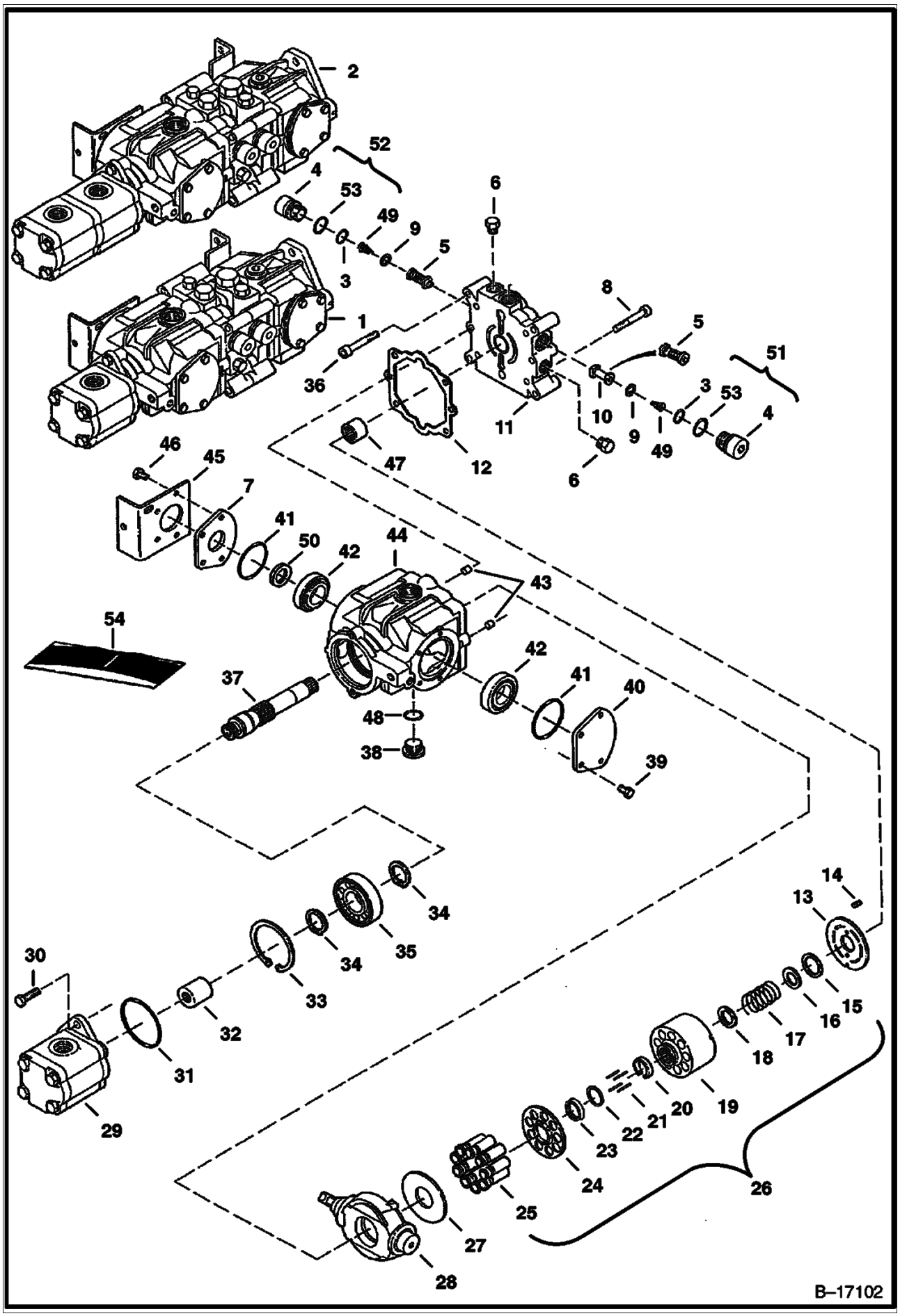

Page 206 - OSS# 2071349 - All rights reserved by Bobcat Company - 12/01/2009 - 20:50:59 - Produced by Ken Cook Co. with mediaIoff

Ref No	Part Number	Description	Remarks	Serial Number	Qty
			from old pump		
3	79K8	O RING 10			2
4		PLUG	NAP - Order Ref. 51 or 52		2
5		RELIEF VALVE	NAP - 5000 PSI (345 bar) - Order Ref. 52		1
6	6645086	PLUG			4
7	6657067	COVER	Was 6675338 [A]		1
8	6650637	BOLT			2
9		RETAINER	NAP - Order Ref. 51 or 52		4
10		CHECK VALVE	NAP - poppet - Order Ref. 51		1
11	6669405	END CAP			1
12	6650634	GASKET			1
13			See BTI361 NAP - For Models 4445070, 4445071, 4445096, 4445097, 4445132, 4445160 & 4445161 Pump - Was 6675339 [A]		1
13	6687773	PLATE, PUMP HYD	For Models 4445192 & 4445202 Pump		1
14	6650636	PIN			2
15		RETAINER	NAP - Order Ref. 26		1
16		WASHER	NAP - Order Ref. 26		1
17		SPRING	NAP - Order Ref. 26		1
18		WASHER	NAP - Order Ref. 26		1
19		BLOCK	NAP - Order Ref. 26		1
20	6650630	RETAINER			1
21	6650629	PIN			4
22	6666338	WASHER			1
23		RETAINER	NAP - Order Ref. 26		1
24		RETAINER	NAP - Order Ref. 26		1
25		PISTON ASSY	NAP - Order Ref. 26		1
26	6671512	GROUP, ROTARY	Was 6675341 [B,D]		1
27	6650627	PLATE			1
28	6685344	SWASHPLATE	W/threaded shaft hole - Was 6671513 [A]		1
29		GEAR PUMP	See Illustration GEAR PUMP/ TS1022 SINGLE - ALUMINUM - For Ref. 1 (6674378 PUMP)		1
29		GEAR PUMP	See Illustration GEAR PUMP/ TS1022 SINGLE - CAST IRON - For Ref. 1 (6677647 PUMP)		1
29		GEAR PUMP	See Illustration HIGH FLOW HYDRAULICS/ TS1078 DOUBLE - ALUMINUM - For Ref. 2 (6674379 PUMP)		1
29		GEAR PUMP	See Illustration HIGH FLOW HYDRAULICS/ TS1078 DOUBLE CAST IRON -For Ref. 2 (6677648 PUMP)		1
30	6666339	BOLT			2
31	6645080	O-RING	For Ref. 1		1
31	6660339	GASKET	For Ref. 2		1
32	6671509	COUPLER			1
33	669863	RING, SNAP			1
34	658128	RING, SNAP			2
35	654299	BEARING			1
36	6652018	BOLT			4
37	6669407	SHAFT			1
38	47K8	PLUG	W/Ref. 48		1
39	6650668	BOLT			4
40	6657068	COVER			1
41	6660814	O-RING			2
42	6669411	BEARING			2
43	6675342	PIN			2
44	6669403	HOUSING			1
45	6576196	MOUNT			1
46	6650668	BOLT			4

Page 207 - OSS# 2071349 - All rights reserved by Bobcat Company - 12/01/2009 - 20:50:59 - Produced by Ken Cook Co. with mediaioff

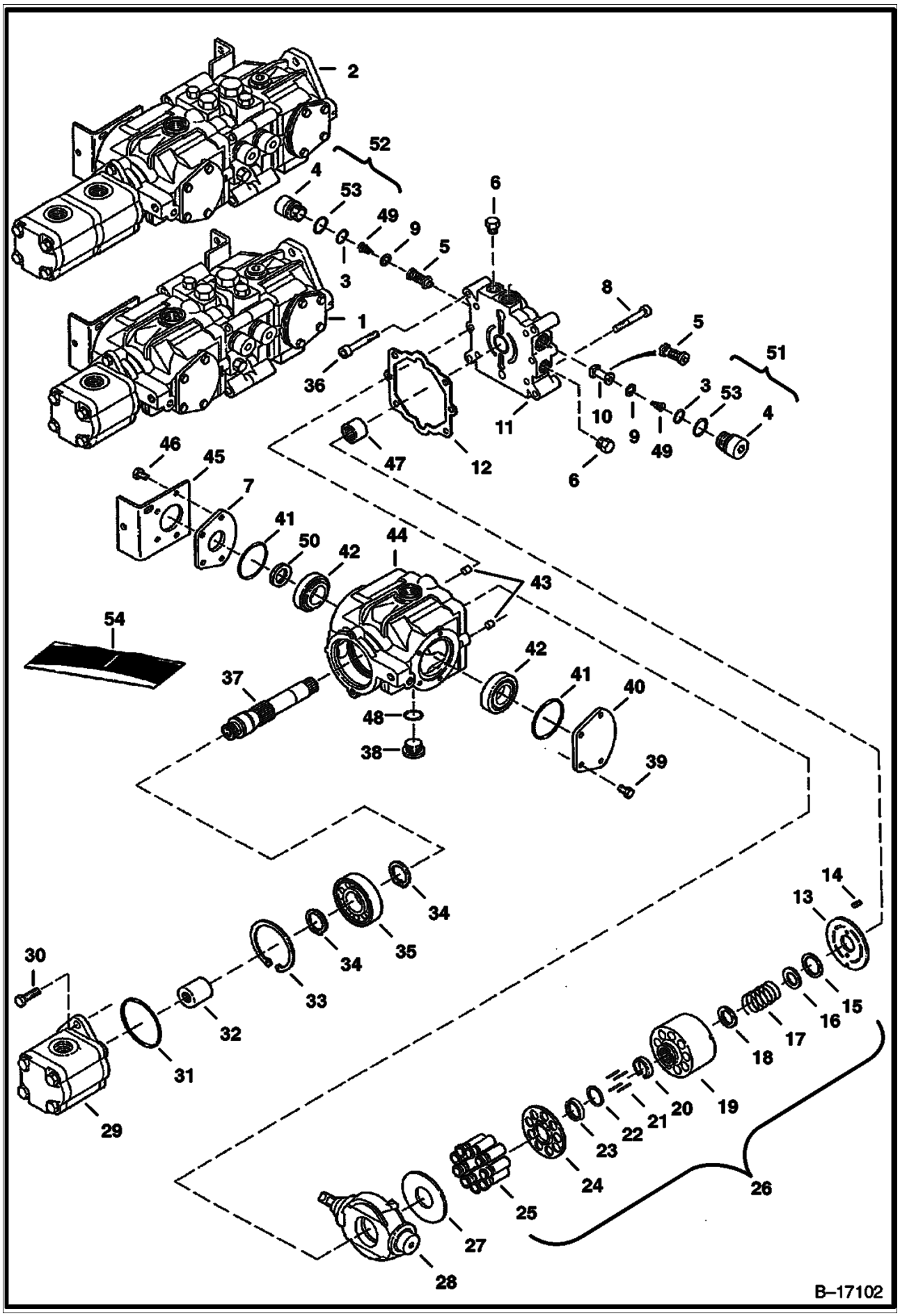

Page 208 - OSS# 2071349 - All rights reserved by Bobcat Company - 12/01/2009 - 20:50:59 - Produced by Ken Cook Co. with mediaIoff

Ref No	Part Number	Description	Remarks	Serial Number	Qty
47	6650635	BEARING			1
48	79K12	O RING 10			1
49		SPRING	NAP - Order Ref. 51 or 52		2
50	6678226	SEAL, OIL	Was 6673881 [A]		1
51	6670684	CHECK VALVE			1
52	6671510	RELIEF VALVE			1
53	6657028	O-RING			2
54	6671516	KIT, SEAL	Ref. 3, 12, 41 & 53 - Also includes Ref. 7, 9, 13, 34, 35, 42, 43, 45 & 46 on previous page		1

Page 209 - OSS# 2071349 - All rights reserved by Bobcat Company - 12/01/2009 - 20:50:59 - Produced by Ken Cook Co. with mediaioff

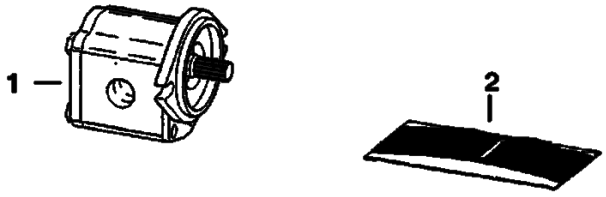

TS–1022

Page 210 - OSS# 2071349 - All rights reserved by Bobcat Company - 12/01/2009 - 20:50:59 - Produced by Ken Cook Co. with mediaioff

Ref No	Part Number	Description	Remarks	Serial Number	Qty
1	6675343	PUMP	See Illustration HYDROSTATIC PUMP/ B17103 ALUMINUM - MODEL B5501-37468 - USE W/6674378 PUMP		1
2	6674371	SEAL KIT			1

Page 211 - OSS# 2071349 - All rights reserved by Bobcat Company - 12/01/2009 - 20:50:59 - Produced by Ken Cook Co. with mediaioff

GEAR PUMP
(Cast Iron)

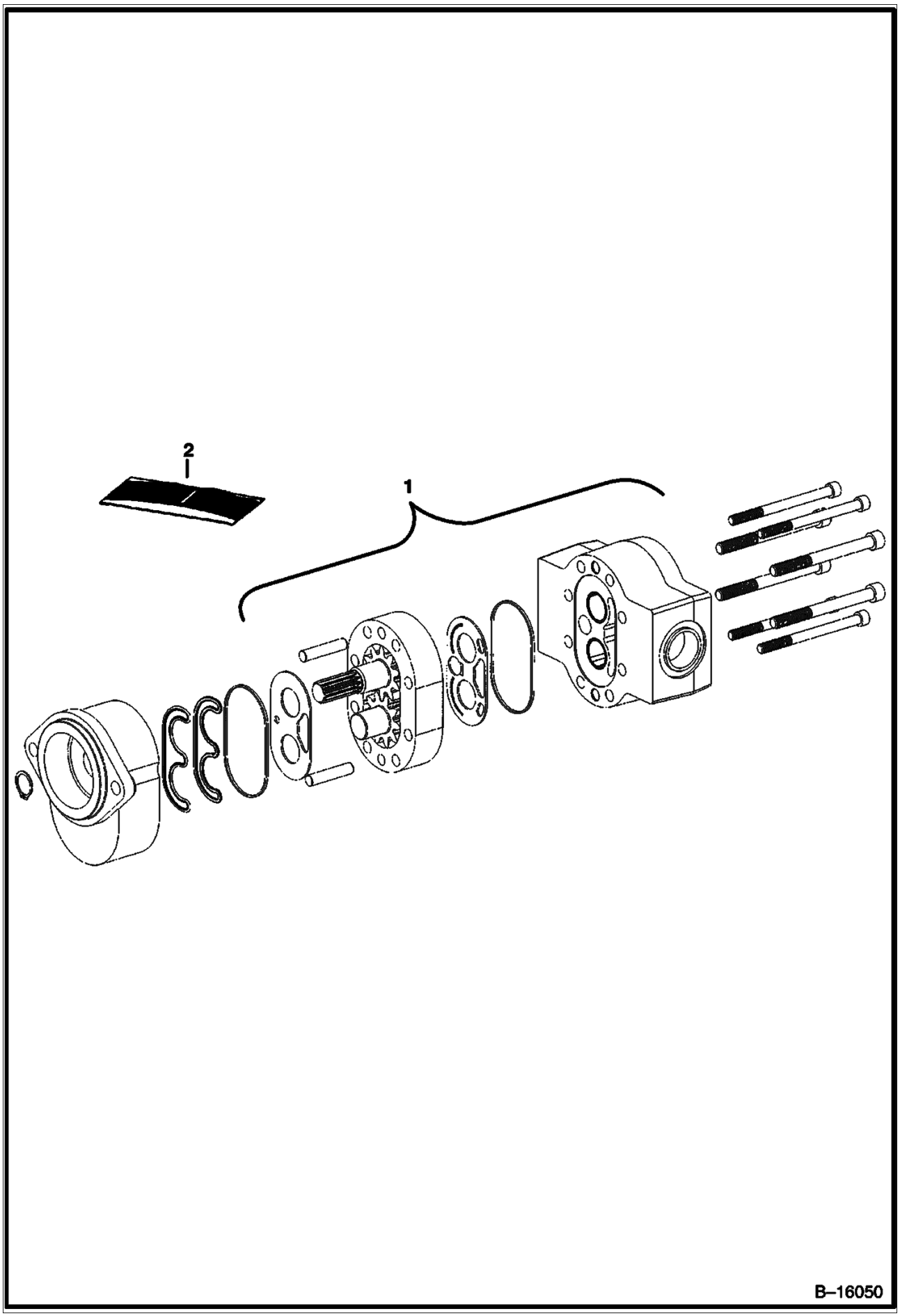

Page 212 - OSS# 2071349 - All rights reserved by Bobcat Company - 12/01/2009 - 20:50:59 - Produced by Ken Cook Co. with mediaioff

GEAR PUMP (Cont'd)
(Cast Iron)

Ref No	Part Number	Description	Remarks	Serial Number	Qty
1		PUMP	NAP - Model 163D-1184 - Use W/NAP/6677647 Pump - Was 6678042 [A]		1
1		PUMP	NAP - Model 163D-1306 - Use W/NAP/6677647 Pump - Order 6686703 Pump - Was 6681595 [A]		1
1		PUMP	NAP - Model 163D-1286 - Use W/6679993 Pump - Order 6686703 Pump - Was 6681580 [A]		1
1		PUMP	NAP - Model 163D-1309 - Use W/6679993 Pump - Order 6686703 Pump - Was 6681602 [A]		1
1	6686703	PUMP, GEAR	cast iron - Model 163D-1483		1
2	6678732	SEAL KIT	For Pump Model 163D-1184 & 163D-1306 - Was 6678550 [A]		1
2	6688325	KIT, SEAL	For Pump Model 163D-1286, 163D-1309 & 163D-1483 - Was 6681581 [A]		1

Page 213 - OSS# 2071349 - All rights reserved by Bobcat Company - 12/01/2009 - 20:50:59 - Produced by Ken Cook Co. with mediaioff

HYDROSTATIC OIL FILTER
(In-Line)

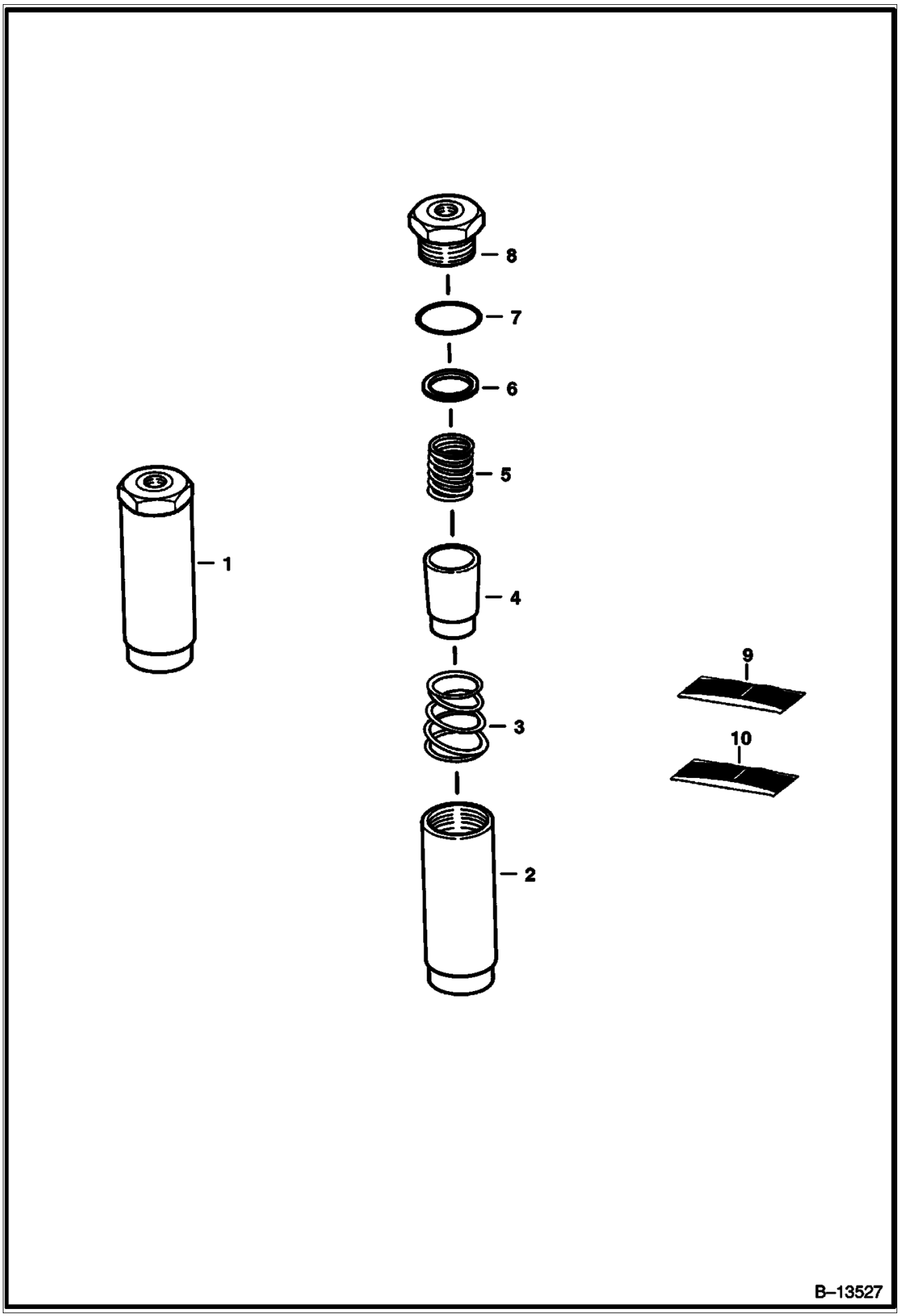

Page 214 - OSS# 2071349 - All rights reserved by Bobcat Company - 12/01/2009 - 20:50:59 - Produced by Ken Cook Co. with mediaioff

HYDROSTATIC OIL FILTER (Cont'd)
(In-Line)

Ref No	Part Number	Description	Remarks	Serial Number	Qty
1	6661022	FILTER	Ref. 2-8		1
2		HOUSING	NSS		1
3		SPRING	NSS		1
4		ELEMENT	NSS		1
5		SPRING	NSS		1
6		GASKET	NSS		1
7		O-RING	NSS		1
8		PLUG	NSS		1
9	6661807	FILTER, OIL HYD	element - Ref. 4, 6 & 7		1
10	6661808	KIT	spring - Ref. 3 & 5		1

Page 215 - OSS# 2071349 - All rights reserved by Bobcat Company - 12/01/2009 - 20:50:59 - Produced by Ken Cook Co. with mediaioff

HYDROSTATIC OIL FILTER

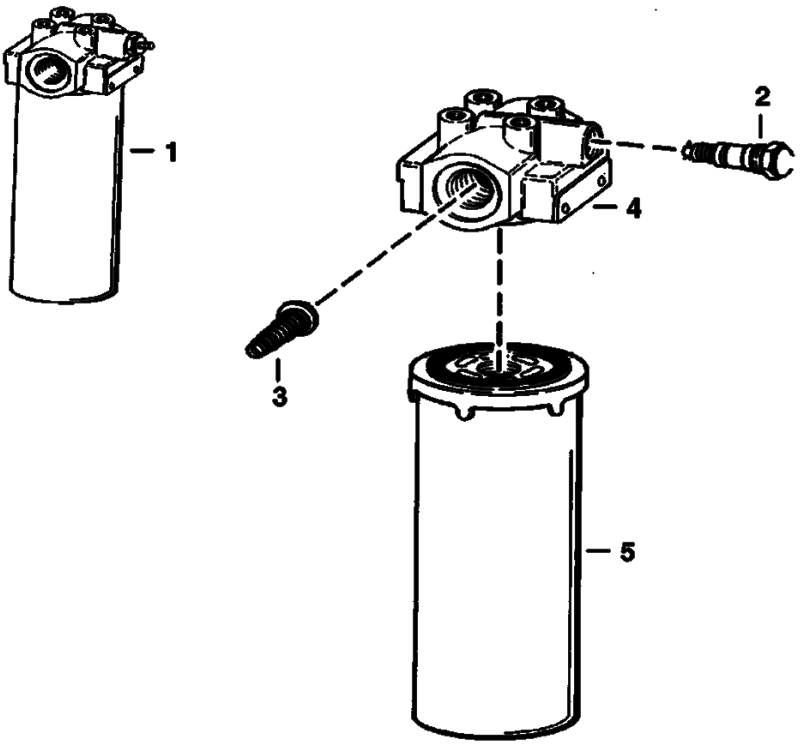

B–17469

Page 216 - OSS# 2071349 - All rights reserved by Bobcat Company - 12/01/2009 - 20:50:59 - Produced by Ken Cook Co. with mediaioff

HYDROSTATIC OIL FILTER (Cont'd)

Ref No	Part Number	Description	Remarks	Serial Number	Qty
1	6661247	FILTER	W/Ref. 2-5 (50 PSI by-pass & switch)	500K 11038 & Bel	1
1	6661247	FILTER	W/Ref. 2-5 (50 PSI by-pass & switch)	5181 11999 & Bel	1
1	6661247	FILTER	W/Ref. 2-5 (50 PSI by-pass & switch)	5192 11999 & Bel	1
1	6661247	FILTER	W/Ref. 2-5 (50 PSI by-pass & switch)	5190 15999 & Bel	1
1	6661247	FILTER	W/Ref. 2-5 (50 PSI by-pass & switch)	5180 11999 & Bel	1
1	6661247	FILTER	W/Ref. 2-5 (50 PSI by-pass & switch)	5176 17999 & Bel	1
1	6676969	FILTER	W/Ref. 2-5 (50 PSI by-pass & switch)	500K 11039 & Abv	1
1	6676969	FILTER	W/Ref. 2-5 (50 PSI by-pass & switch)	5176 18000 & Abv	1
1	6676969	FILTER	W/Ref. 2-5 (50 PSI by-pass & switch)	5180 12000 & Abv	1
1	6676969	FILTER	W/Ref. 2-5 (50 PSI by-pass & switch)	5190 16000 & Abv	1
1	6676969	FILTER	W/Ref. 2-5 (50 PSI by-pass & switch)	5192 12000 & Abv	1
1	6676969	FILTER	W/Ref. 2-5 (50 PSI by-pass & switch)	5181 12000 & Abv	1
2	6660260	SWITCH	pressure - normally closed		1
2	6599365	KIT	Nut, washer & o-rings		1
3		VALVE	NAP - by-pass (50 PSI - Order Ref.1)		1
4		HEAD	NSS - Order Ref. 1		1
5	6661248	FILTER, OIL HYD 12	6" (152,4mm) long		1

Page 217 - OSS# 2071349 - All rights reserved by Bobcat Company - 12/01/2009 - 20:50:59 - Produced by Ken Cook Co. with mediaioff

CAB ELECTRICAL CIRCUITRY
(S/N 500K10038 & Below, 517617999 & Below, 518019999 & Below, 518111999 & Below, 519015999 & Below, 519211999 & Below)

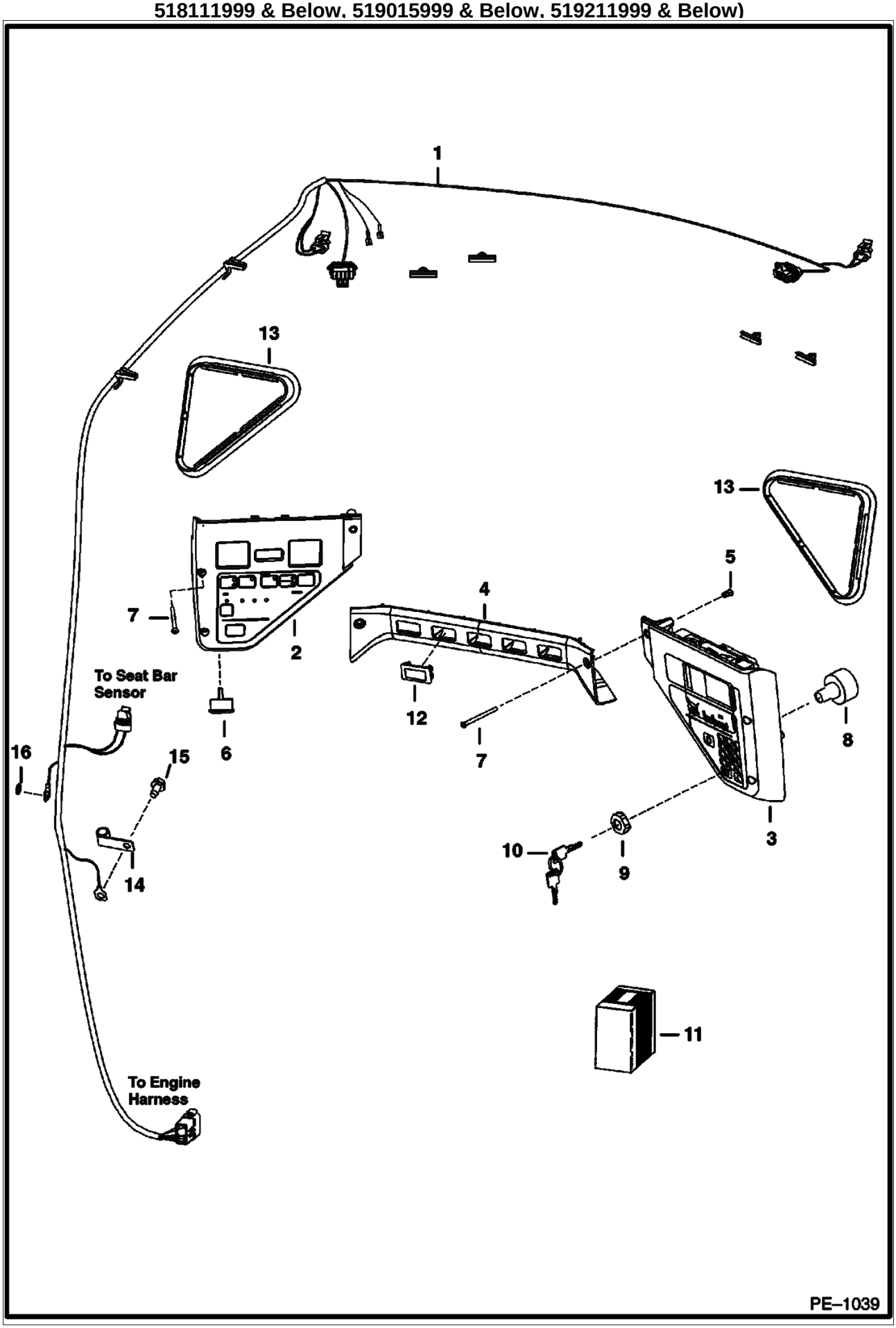

Page 218 - OSS# 2071349 - All rights reserved by Bobcat Company - 12/01/2009 - 20:50:59 - Produced by Ken Cook Co. with mediaioff

CAB ELECTRICAL CIRCUITRY (Cont'd)
(S/N 500K10038 & Below, 517617999 & Below, 518019999 & Below, 518111999 & Below, 519015999 & Below, 519211999 & Below)

Ref No	Part Number	Description	Remarks	Serial Number	Qty
1	6718870	HARNESS			1
2		PANEL	NAP - L.H. - W/Ref. 6 - gauges lit by bulbs - Order 6689754 panel - Was 6688405 [A]		1
2	6675982	PLUG	covers backlighting service hole		1
2	6679855	BULB	Was 6675337 [A]		2
2	6689754	PANEL INSTRUMENT LH	LH - W/Ref. 6 - lit guages		1
3	6688404	PANEL, KEY STANDARD	RH - W/Ref. 8 & 9 - Was 6678681 [A]		1
3	6688403	PANEL	deluxe - RH - keyless - Was 6686510 [A]		1
3	6675982	PLUG	covers backlighting service hole		1
3		INSTRUCTIONS	NAP - for deluxe panel - See Service Manual - Was 6900860 [A]		1
4		CROSSMEMBER	See Illustration CAB ELECTRICAL CIRCUITRY/ PE1103R NAP - Order 6679845 Crossmember - Was 6674317 [A]		1
5	6675033	INSERT	threaded		6
6	6679856	ALARM	W/nut - Was 6675390 [A]		1
7	7105983	BOLT	Was 6719084 [A]		6
8		SWITCH	NAP - W/Ref. 9 & 10 - Order 6693245 switch, 6693241 key, 7000329 adapter & 6697965 harness - Was 6679842 [A]		1
8	6693245	SWITCH, IGN	W/Ref. 9 (7009081 nut) - also order Ref. 10 (6693241 key)		1
8	7000329	ADAPTER, SWITCH IGN	for 6693245 switch		1
8	6697965	HARNESS	for 6693245 switch		1
9	6674202	NUT	for NAP 6679842 switch		1
9	7009081	NUT	for 6693245 switch		1
10		KEY	NAP - ignition - includes two keys W/ring - Order 6693241 - Was 6709527 [A]		1
10	6693241	KEY 10	single key W/O ring - use W/NAP 6679842 switch & 6693245 switch		x
11		KIT	NAP - keyless ign. - Order 6672348 Panel and 6900860 Instructions		1
12	6665314	PLUG	Was 6719038 [A]		5
13	6674403	COVER			2
14	6675171	CLAMP			1
15	84G3712	BOLT			1
16	6E5	WASHER			1

Page 219 - OSS# 2071349 - All rights reserved by Bobcat Company - 12/01/2009 - 20:50:59 - Produced by Ken Cook Co. with mediaioff

CAB ELECTRICAL CIRCUITRY
(S/N 500K11039 & Above, 517618000 & Above, 518012000 & Above, 518112000 & Above, 519016000 & Above, 519212000 & Above)

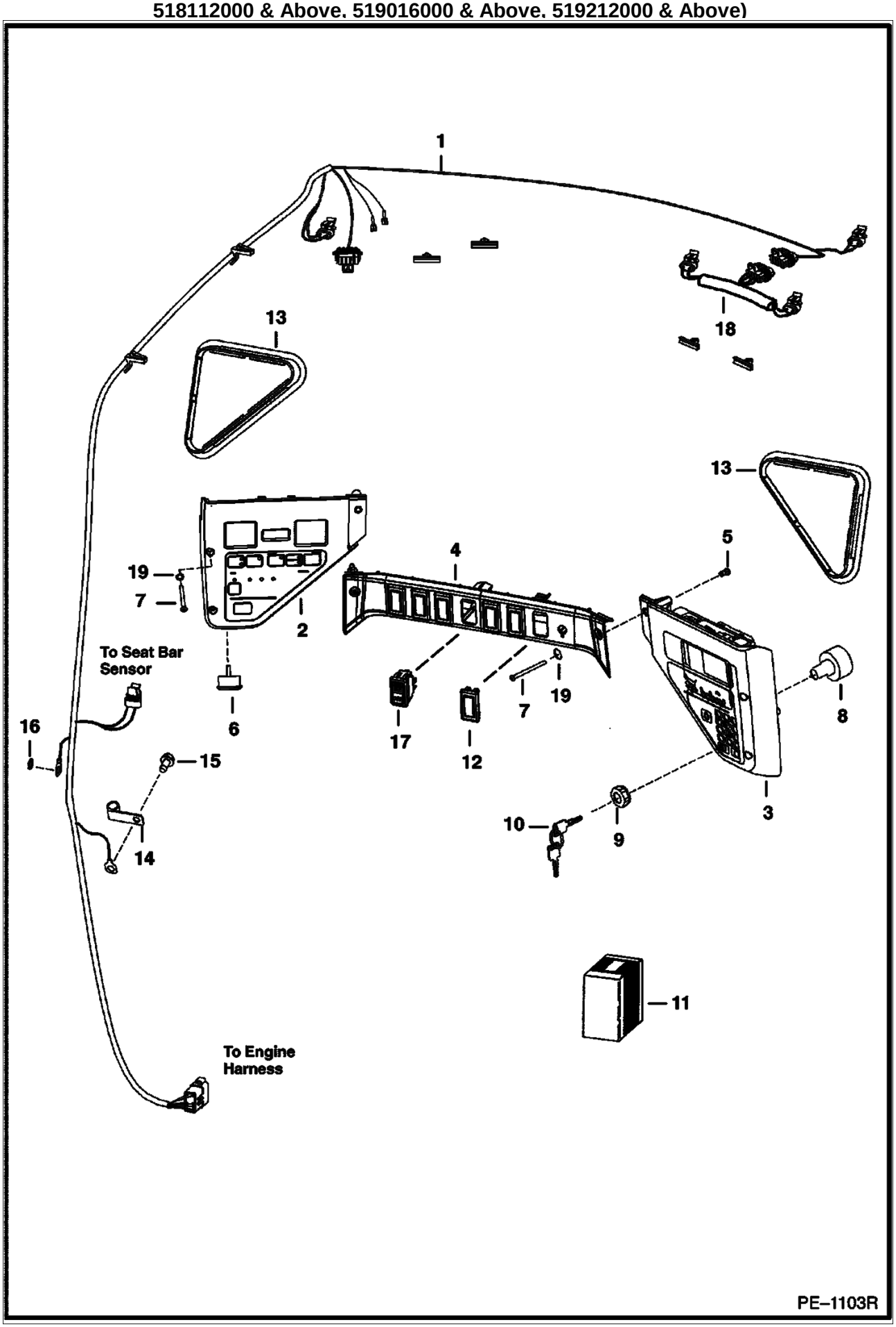

Page 220 - OSS# 2071349 - All rights reserved by Bobcat Company - 12/01/2009 - 20:50:59 - Produced by Ken Cook Co. with mediaioff

CAB ELECTRICAL CIRCUITRY (Cont'd)
(S/N 500K11039 & Above, 517618000 & Above, 518012000 & Above, 518112000 & Above, 519016000 & Above, 519212000 & Above)

Ref No	Part Number	Description	Remarks	Serial Number	Qty
1	6727178	HARNESS			1
2		PANEL	NAP - L.H. - W/Ref. 6 - gauges lit by bulbs - Order 6689754 panel - Was 6688405 [A]		1
2	6675982	PLUG	backlighting service hole		1
2		BULB	Was 6675337 [A]		2
2	6689754	PANEL INSTRUMENT LH	LH - W/Ref. 6 - lit guages		1
3	6688404	PANEL, KEY STANDARD	RH - W/Ref. 8 & 9 - Was 6678681 [A]		1
3	6688403	PANEL	deluxe - RH - keyless - not in kit - Was 6686510 [A]		1
3	6675982	PLUG	covers backlighting service hole		1
3		INSTRUCTIONS	NAP - for deluxe panel - See Service Manual - Was 6900860 [A]		1
4	6679845	CROSSMEMBER	Was 6676723 [A]		1
5	6675033	INSERT	threaded		6
6	6679856	ALARM	W/nut - Was 6675390 [A]		1
7	7105983	BOLT	Was 6719084 [A]		6
8		SWITCH	NAP - W/Ref. 9 & 10 - Order 6693245 switch, 6693241 key, 7000329 adapter & 6697965 harness - Was 6679842 [A]		1
8	6693245	SWITCH, IGN	W/Ref. 9 (7009081 nut) - also order Ref. 10 (6693241 key)		1
8	7000329	ADAPTER, SWITCH IGN	for 6693245 switch		1
8	6697965	HARNESS	for 6693245 switch		1
9	6674202	NUT	for NAP 6679842 switch		1
9	7009081	NUT	for 6693245 switch		1
10		KEY	NAP - ignition - includes two keys W/ring - Order 6693241 - Was 6709527 [A]		1
10	6693241	KEY 10	single key W/O ring - use W/NAP 6679842 switch & 6693245 switch		x
11		KIT	NAP - keyless ign. - Order 6672348 Panel - See Service Manual		1
12	6665314	PLUG	Was 6719038 [A]		x
13	6674403	COVER			2
14	6675171	CLAMP			1
15	84G3712	BOLT			1
16	6E5	WASHER			1
17	6676536	SWITCH	park brake		1
18	6683171	CONTROLLER	boost - for Ref. 3 (6678682 panel)	5176 21148 & Abv	1
18	6683171	CONTROLLER	boost - for Ref. 3 (6678682 panel)	5190 24027 & Abv	1
18	6683171	CONTROLLER	boost - for Ref. 3 (6678682 panel)	5181 12466 & Abv	1
18	6683171	CONTROLLER	boost - for Ref. 3 (6678682 panel)	5180 12550 & Abv	1
18	6683171	CONTROLLER	boost - for Ref. 3 (6678682 panel)	5192 24169 & Abv	1
19	25E10	WASHER			2

Page 221 - OSS# 2071349 - All rights reserved by Bobcat Company - 12/01/2009 - 20:50:59 - Produced by Ken Cook Co. with mediaioff

ENGINE ELECTRICAL CIRCUITRY
(S/N 500K10038 & Below, 517617999 & Below, 518019999 & Below, 518111999 & Below, 519015999 & Below, 519211999 & Below)

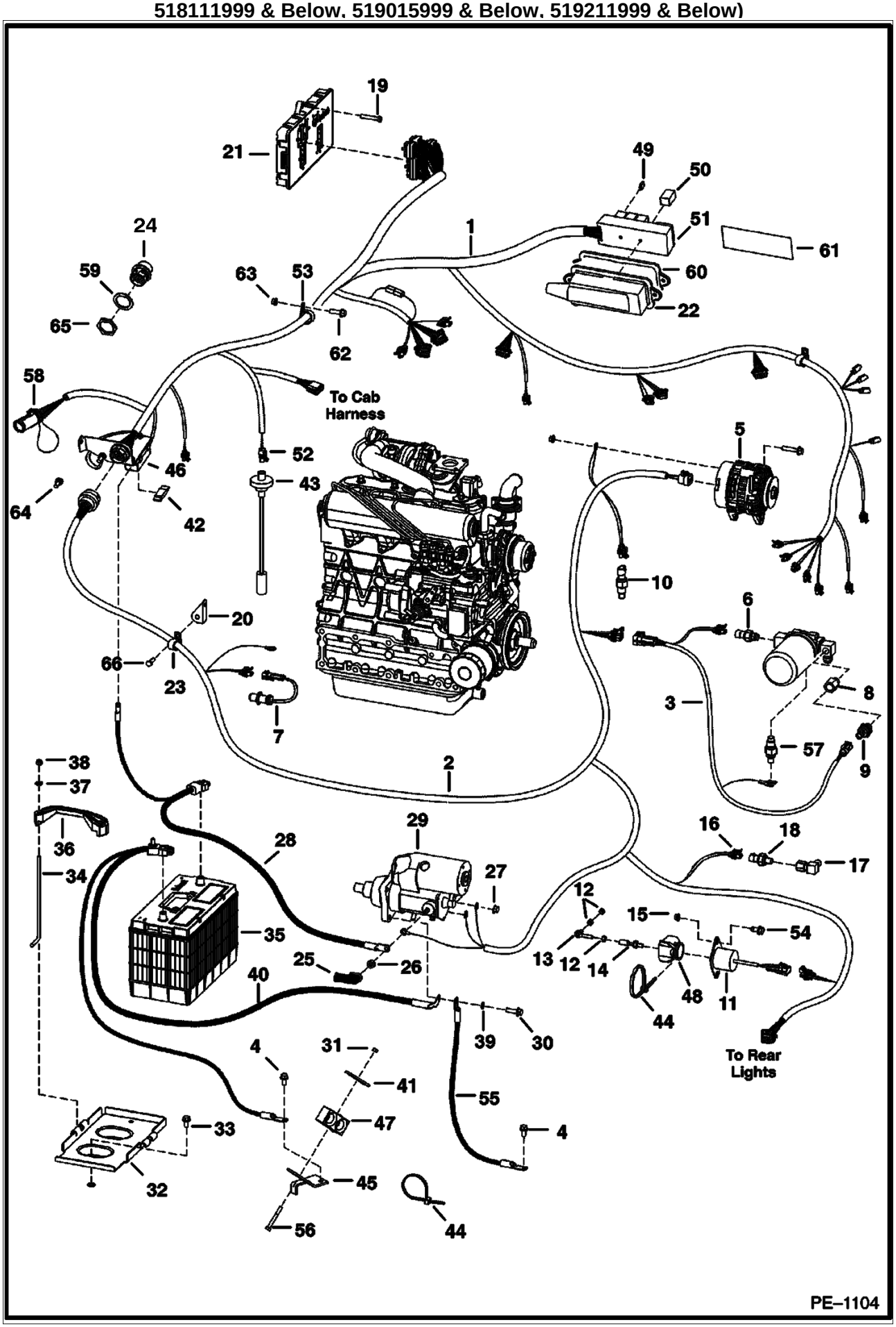

Page 222 - OSS# 2071349 - All rights reserved by Bobcat Company - 12/01/2009 - 20:50:59 - Produced by Ken Cook Co. with mediaIoff

Ref No	Part Number	Description	Remarks	Serial Number	Qty
1	6718912	HARNESS	See Illustration CONTROLS ELECTRICAL/ PE1041 MAIN FRAME - W/Ref. 49-51 & 53		1
1	6718913	HARNESS	See Illustration CONTROLS ELECTRICAL/ PE1042 MAIN FRAME - AHC - W/Ref. 49-51 & 53		1
2	6718871	HARNESS	engine - W/Ref. 20 & 66		1
3	6715975	HARNESS	filter		1
4	84G3712	BOLT			3
5		ALTERNATOR	See Illustration ALTERNATOR/ C3312		1
6	6718417	SENDER	hyd. temp. - Was 6727869 [D]		1
7	6684037	SENSOR	rpm - Was 6658260 [B]		1
8	6718948	SNUBBER	W/filter		1
8	6675278	FILTER			1
9	6674316	SWITCH, PRESS OIL HYD	3-pin molded connector		1
10	6718415	SWITCH	eng. temp.		1
11	6681513	SOLENOID	fuel shut off - Was 6667993 [A]		1
12	62D4	NUT			3
13	6578363	ROD END	swivel		1
14	6578366	BALL JOINT			1
15	61D4	NUT 5			2
16	6672750	CONNECTOR	3-pin		1
17	6707040	ELBOW			1
18	6674315	SENSOR	eng oil pressure		1
19	43C616	BOLT	Was 35C000616B [B]		3
20	6714979	BRACKET			2
21		CONTROLLER	NAP - See BTI 339 - Bobcat - Was 6678068 [A]		1
21		CONTROLLER	NAP - 4 connectors - w/o boost - Order 6682421 - Was 6678673 [A]		1
21	6682421	CONTROLLER, BOBCAT	4 connecters - w/ boost		1
22	6718659	HOUSING	fuse block		1
23	6675171	CLAMP			1
24	6664584	CONNECTOR	21-pin		1
25	6560172	COVER			1
26	4DM10	NUT			1
27	4DM5	NUT			1
28	6719060	CABLE	pos. - 29"(736,6 mm) long		1
28	6727528	CABLE	pos. - 33"(838,2 mm) long		1
29		STARTER	See Illustration STARTER/ D2297		1
30	35C620	BOLT 5			1
31	91D5	NUT 5			1
32	6718260	BATTERY PAN			1
33	84G3716	SCREW 5			2
34	6576280	BOLT			2
35	6674687	BATTERY, DRY 600 AMP			1
36	6569203	CLAMP			1
37	25E15	WASHER			2
38	59D5	NUT 5			2
39	6E6	WASHER			1
40	6719059	CABLE	ground - 19"(482,6 mm) long		1
40	6727527	CABLE	ground - 23"(584,2 mm) long		1
41	6715132	RETAINER			1
42	6675155	FUSE	100 amp		1
42	6675154	HOLDER	high amp fuse		1
43	6680436	SENSOR	fuel - W/gasket - Was 7000004 [A]		1
43	6717579	GASKET			1

Page 223 - OS6# 2071349 - All rights reserved by Bobcat Company - 12/01/2009 - 20:50:59 - Produced by Ken Cook Co. with mediaioff

ENGINE ELECTRICAL CIRCUITRY (Cont'd)
(S/N 500K10038 & Below, 517617999 & Below, 518019999 & Below, 518111999 & Below, 519015999 & Below, 519211999 & Below)

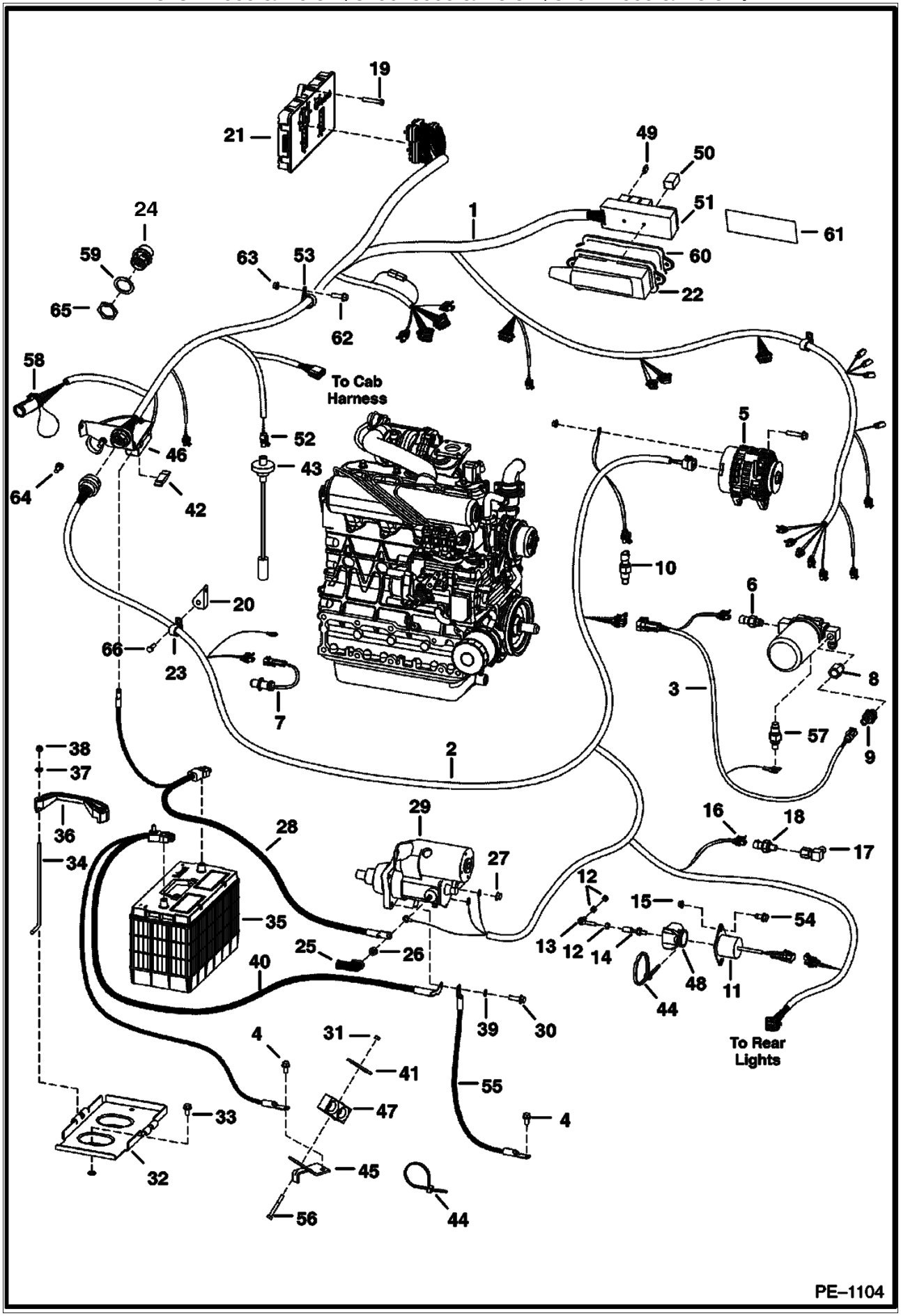

Page 224 - OSS# 2071349 - All rights reserved by Bobcat Company - 12/01/2009 - 20:50:59 - Produced by Ken Cook Co. with mediaIoff

Ref No	Part Number	Description	Remarks	Serial Number	Qty
44	6610510	TIE			3
45	6719230	BRACKET	Use W/Ref. 28 (6719060 Cable) & Ref. 40 (6719059 Cable)		1
45	6715131	BRACKET	Use W/Ref. 28 (6727528 Cable) & Ref. 40 (6727527 Cable) - Was 6727508 [A]		1
46	6726503	BRACKET	Was 6718970 [A]		1
47	6715197	CLAMP			1
48	6664286	BOOT	Also Order Ref. 44		1
49	6654806	FUSE, 15A			2
49	6702444	FUSE 25A 5			6
49	6718034	FUSE, 30A			2
50	6679820	RELAY	switch - Was 6674376 [A]		7
51	6673200	FUSE BLOCK			1
52	6646383	CONNECTOR	fuel sender		1
52	6648330	TERMINAL	female - Was 6632946 [A]		2
53	6674673	CLAMP			1
54	17C410	BOLT 10			2
55	6565170	CABLE	Was 6713821 [B,D]		1
56	17C540	BOLT	Was 6716744 [A]		1
57	6660260	SWITCH	See Illustration HYDROSTATIC OIL FILTER/ B17469 - hyd. chg. pressure		1
58	6667533	COVER	diagnostics		1
59	6664971	WASHER			1
60	6725302	GASKET	See Illustration PANELS/ PE1018		1
61		DECAL	See Illustration PANELS/ PE1018 - NAP - fuse/relay - 2.10" X 9.40" (53,3 mm X 238,8 mm) - Order 6718774 decal		1
61	6718774	DECAL	See Illustration PANELS/ PE1018 - 2" X 7" (50,8 mm X 177,8 mm)		1
62	35C616	BOLT 5			1
63	95D6	NUT	Was 91D000006B [A]		1
64	57D6	NUT 5	Was 59D000006B [B]		1
65	6664972	NUT			1
66	17C512	BOLT 5			2

Page 225 - OSS# 2071349 - All rights reserved by Bobcat Company - 12/01/2009 - 20:50:59 - Produced by Ken Cook Co. with mediaioff

ENGINE ELECTRICAL CIRCUITRY
(S/N 500K11039 & Above, 517618000 & Above, 518012000 & Above, 518112000 & Above, 519016000 & Above, 519212000 & Above)

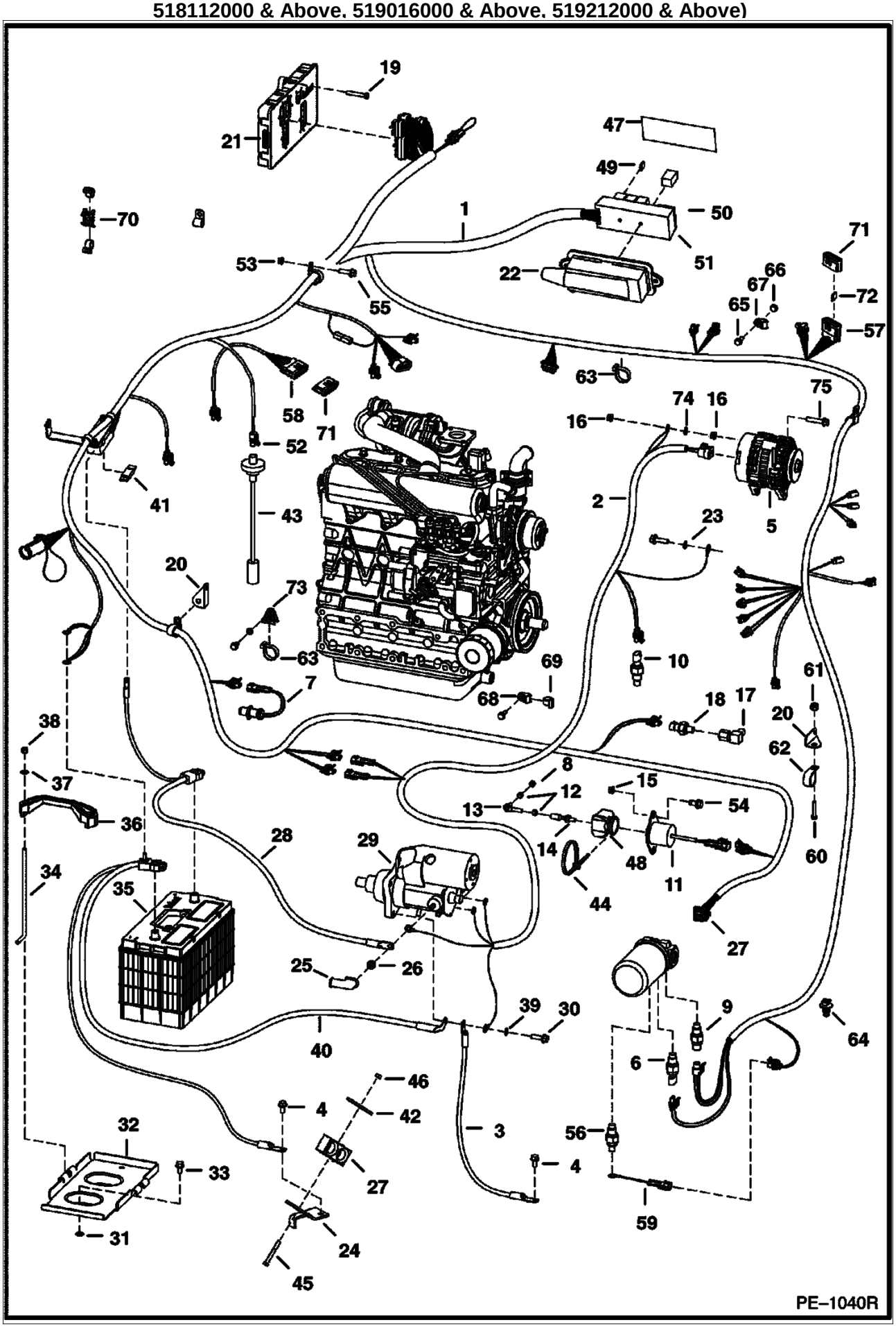

Page 226 - OSS# 2071349 - All rights reserved by Bobcat Company - 12/01/2009 - 20:50:59 - Produced by Ken Cook Co. with mediaioff

Ref No	Part Number	Description	Remarks	Serial Number	Qty
1	6729056	HARNESS, MFR	loader	500K 11039 & Above	1
1	6729056	HARNESS, MFR	loader	5176 18000-21147	1
1	6729056	HARNESS, MFR	loader	5181 12000-12465	1
1	6729056	HARNESS, MFR	loader	5180 12000-12549	1
1	6729056	HARNESS, MFR	loader	5190 16000-24026	1
1	6729056	HARNESS, MFR	loader	5192 12000-24168	1
1	6729974	HARNESS	loader	5180 12550 & Abv	1
1	6729974	HARNESS	loader	5190 24027 & Abv	1
1	6729974	HARNESS	loader	5192 24169 & Abv	1
1	6729974	HARNESS	loader	5181 12466 & Abv	1
1	6729974	HARNESS	loader	5176 21148 & Abv	1
2	6726601	HARNESS	See Illustration STARTER/ D2297 - use W/starter		1
2	7101311	HARNESS	See Illustration STARTER/ B16488R - use W/starter - Was 6729973 [A]	5176 21148 & Abv	1
2	7101311	HARNESS	See Illustration STARTER/ B16488R - use W/starter - Was 6729973 [A]	5190 24027 & Abv	1
2	7101311	HARNESS	See Illustration STARTER/ B16488R - use W/starter - Was 6729973 [A]	5192 24169 & Abv	1
2	7101311	HARNESS	See Illustration STARTER/ B16488R - use W/starter - Was 6729973 [A]	5181 12466 & Abv	1
2	7101311	HARNESS	See Illustration STARTER/ B16488R - use W/starter - Was 6729973 [A]	5180 12550 & Abv	1
3	6565170	CABLE	neg		1
4	84G3712	BOLT			4
5		ALTERNATOR	See Illustration ALTERNATOR/ C3312		1
6	6727869	SENDER,HYD TEMP			1
7	6684037	SENSOR	rpm - Was 6658260 [B]		1
8	66D4	NUT			1
9	6674316	SWITCH, PRESS OIL HYD	3-pin molded connector		1
10	6718415	SWITCH	eng. temp.		1
11	6681513	SOLENOID	fuel shut off - Was 6658260 [A]		1
12	62D4	NUT			2
13	6578363	ROD END	swivel		1
14	6578366	BALL JOINT			1
15	61D4	NUT 5			2
16	43DM8	NUT			2
17	6707040	ELBOW			1
18	6674315	SENSOR	eng oil pressure		1
19	43C616	BOLT			3
20	6714979	BRACKET			2
21		CONTROLLER	See BTI339 - NAP - Bobcat - Was 6678068 [A]		1
21		CONTROLLER	NAP - Bobcat - 4 pin connector - W/ O Boost - Order 6682421 - Was 6678673 [A]		1
21	6682421	CONTROLLER, BOBCAT	Bobcat - 4 pin connector - W/ Boost		1
22	6718659	HOUSING	fuse - boot		1
23	6E5	WASHER			1
24	6715131	BRACKET	Was 6727508 [A]		1
25	6560172	COVER			1
26	4DM10	NUT			1
27	6715197	CLAMP			1
28	6727528	CABLE	See Illustration STARTER/ D2297 - pos - Use W/starter		1
28	6731256	CABLE	See Illustration STARTER/ B16488R - pos - Use		1

Page 227 - OSS# 2071349 - All rights reserved by Bobcat Company - 12/01/2009 - 20:50:59 - Produced by Ken Cook Co. with mediaioff

ENGINE ELECTRICAL CIRCUITRY (Cont'd)
(S/N 500K11039 & Above, 517618000 & Above, 518012000 & Above, 518112000 & Above, 519016000 & Above, 519212000 & Above)

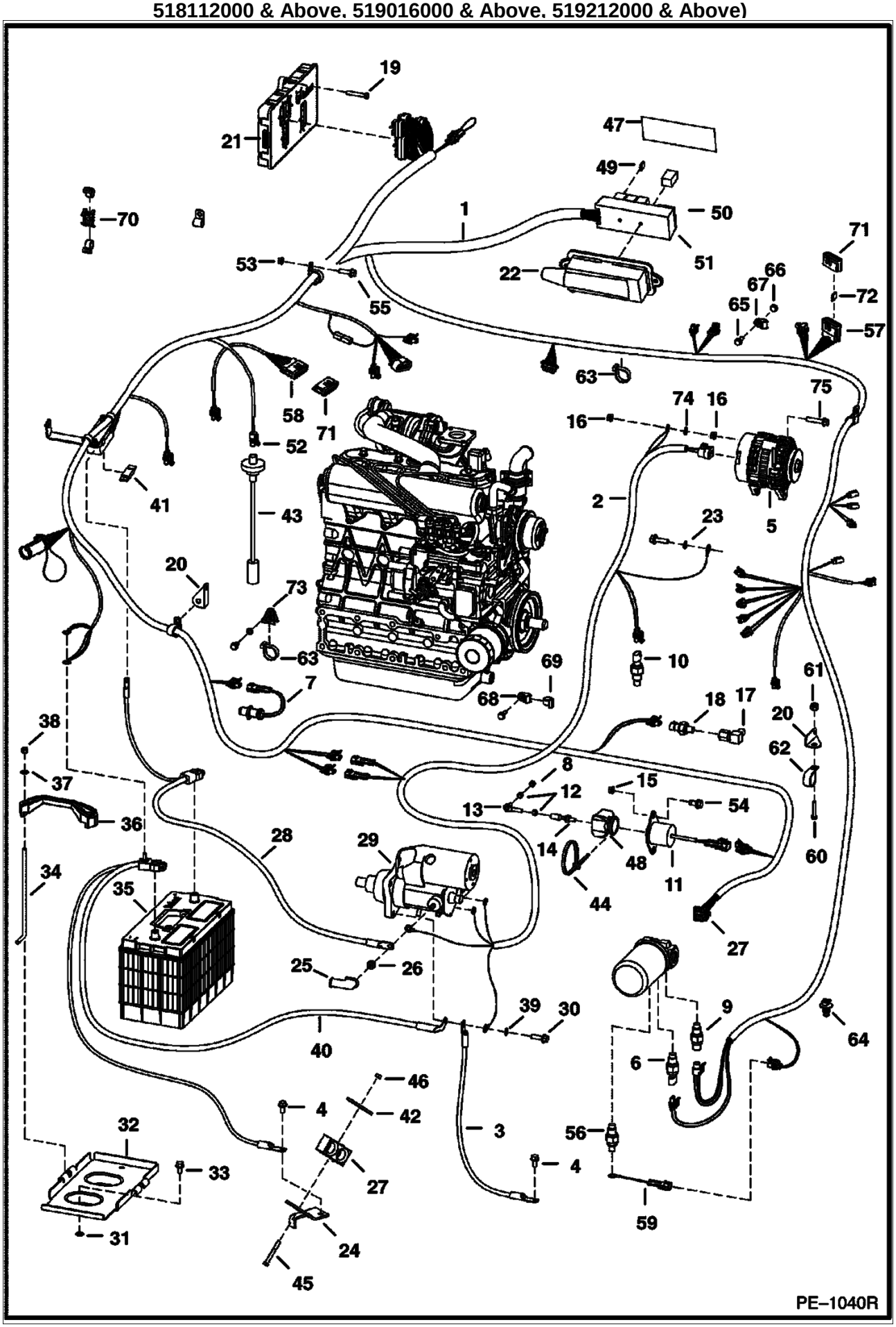

Page 228 - OSS# 2071349 - All rights reserved by Bobcat Company - 12/01/2009 - 20:50:59 - Produced by Ken Cook Co. with mediaioff

Ref No	Part Number	Description	Remarks	Serial Number	Qty
			W/starter		
29		STARTER	See Illustration STARTER/ D2297		1
30	35C620	BOLT 5			3
31	616783	WASHER			2
32	6718260	BATTERY PAN			1
33	84G3716	SCREW 5			2
34	6576280	BOLT			2
35	6674687	BATTERY, DRY 600 AMP			1
36	6569203	CLAMP			1
37	25E15	WASHER			2
38	59D5	NUT 5			2
39	6E6	WASHER			1
40	6729008	CABLE	ground		1
41	6675155	FUSE	100 amp		1
41	6675154	HOLDER	high amp fuse		1
42	6715132	RETAINER			1
43	6680436	SENSOR	fuel - W/gasket - Was 7000004 [A]		1
43	6717579	GASKET			1
44	6610510	TIE			3
45	17C540	BOLT			2
46	95D5	NUT			1
47	6718774	DECAL	See Illustration PANELS/ PE1018 - 2" X 7" (50,8 mm X 177,8 mm)		1
48	6664286	BOOT	Also Order Ref. 44		1
49	6654806	FUSE, 15A			2
49	6702444	FUSE 25A 5			6
49	6718034	FUSE, 30A			2
50	6679820	RELAY	switch - Was 6674376 [A]		7
51	6673200	FUSE BLOCK	See Illustration PANELS/ PE1018		1
52	6646383	CONNECTOR	fuel sender		1
52	6648330	TERMINAL	female - Was 6632946 [A]		2
53	95D6	NUT	Was 91D000006B [A]		2
54	17C410	BOLT 10			2
55	35C616	BOLT 5			1
56	6660260	SWITCH	See Illustration HYDROSTATIC OIL FILTER/ B17469		1
57	6676400	CONNECTOR			x
58	6677216	CONNECTOR			x
59	6728626	HARNESS			1
60	17C512	BOLT 5			3
61	85D5	NUT 5			2
62	6675171	CLAMP			1
63	6624289	STRAP 10			21
64	6678666	TREE MOUNT	push in - Use W/tie strap		1
65	17C412	BOLT 5			1
66	83D4	NUT 10			1
67	6678667	MOUNT			4
68	6679034	MOUNT			1
69	6678669	STRAP			1
70	6678668	STRAP, DUAL TIE			1
71	6684126	COVER			2
72	6684415	BUSS BAR			1
73	6678818	MOUNT			1
74	7106764	SPACER	alt.		1
75	29CM820	SCREW			2

Page 229 - OSS# 2071349 - All rights reserved by Bobcat Company - 12/01/2009 - 20:50:59 - Produced by Ken Cook Co. with mediaioff

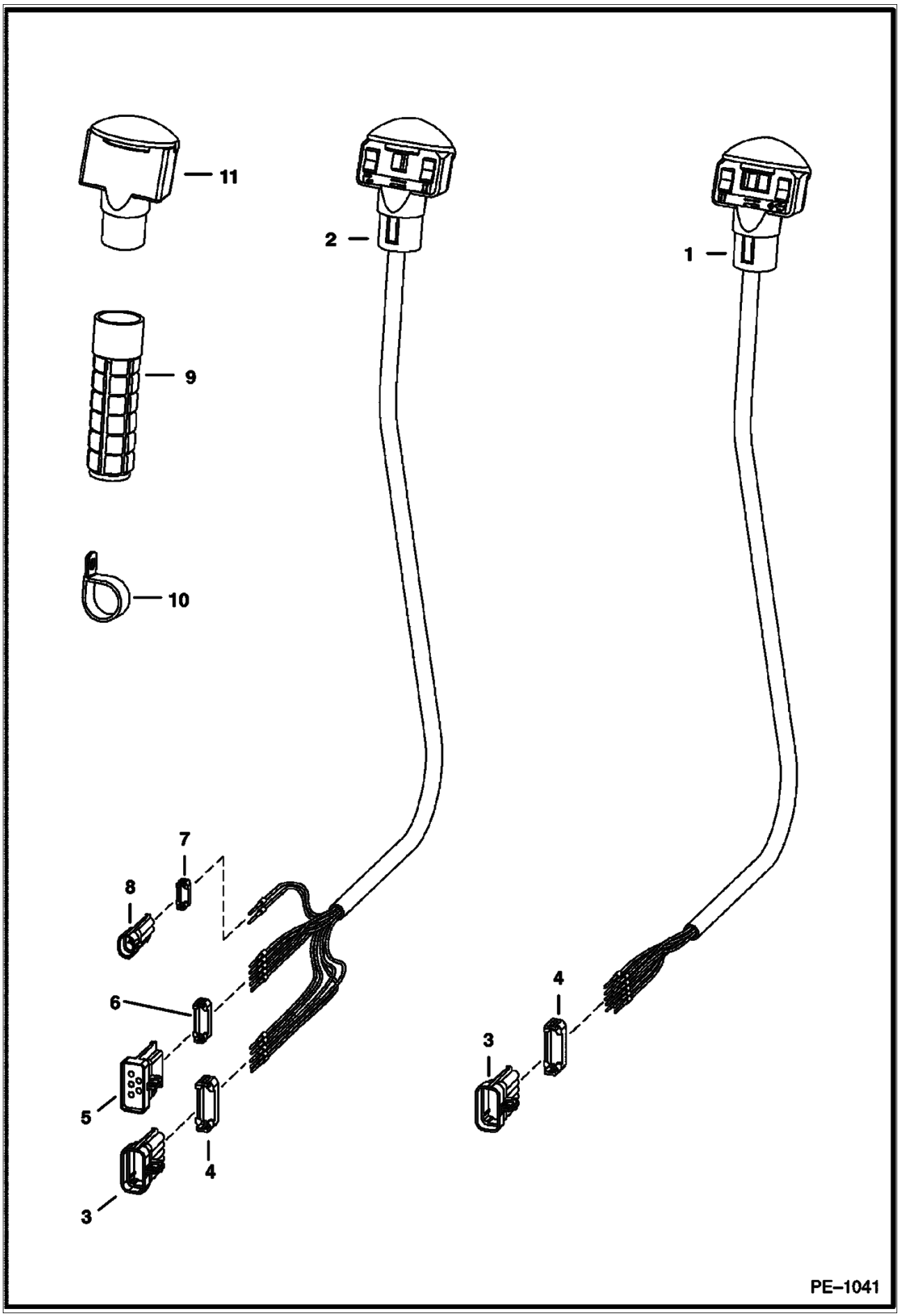

Page 230 - OSS# 2071349 - All rights reserved by Bobcat Company - 12/01/2009 - 20:50:59 - Produced by Ken Cook Co. with mediaioff

Ref No	Part Number	Description	Remarks	Serial Number	Qty
1	6680418	HANDLE ASSY.	RH - Also Order Ref. 3 & 4 - Was 6675468 [A]		1
1	6640690	PIN			9
1	6641176	SEAL			9
2	6680419	HANDLE ASSY.	LH - Also Order Ref. 3-8 - Was 6674450 [A]		1
2	6640690	PIN			10
2	6641176	SEAL			10
2	6680447	DECAL	Was 6677370 [A]		1
3	6640692	CONNECTOR	10-pin		1
4	6640694	LOCK	Use W/ 10-pin connector		1
5	6667144	CONNECTOR	5-pin		1
6	6667145	LOCK	Use W/ 5-pin connector		1
7	6641180	LOCK	Use W/ 2-pin connector		1
8	6641179	CONNECTOR	2-pin		2
9	6702621	GRIP			2
10	6674000	CLAMP			2
11	6680415	HANDLE	LH blank - Was 6705920 [A]		2

Page 231 - OSS# 2071349 - All rights reserved by Bobcat Company - 12/01/2009 - 20:50:59 - Produced by Ken Cook Co. with mediaioff

CONTROLS ELECTRICAL
(AHC) (W/O Push Button Float) (S/N 517611001 - 517615809, 518011001 - 518111504, 519011001 - 519013962, 519211001 - 519215809

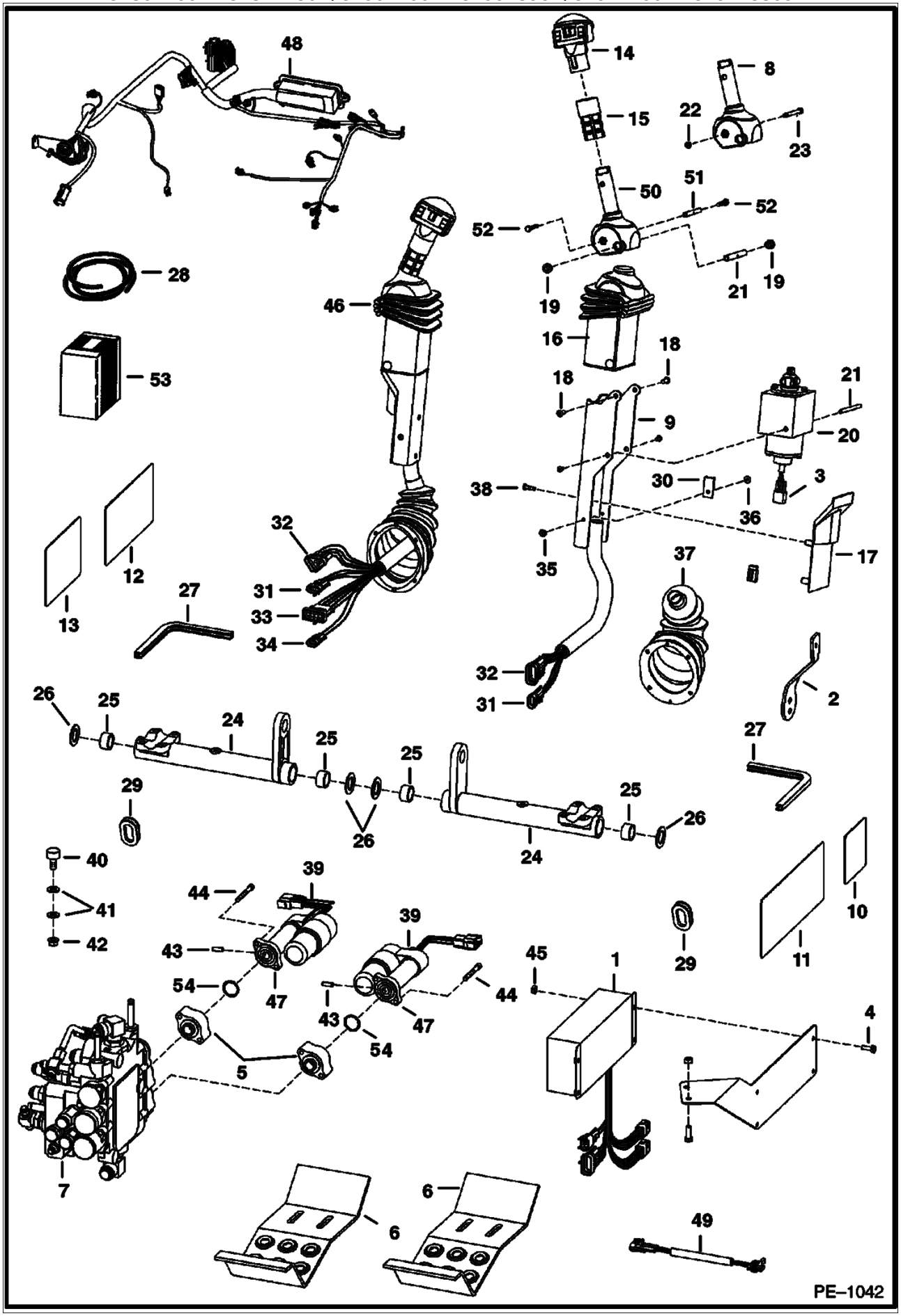

Page 232 - OSS# 2071349 - All rights reserved by Bobcat Company - 12/01/2009 - 20:50:59 - Produced by Ken Cook Co. with mediaioff

CONTROLS ELECTRICAL (Cont'd)
(AHC) (W/O Push Button Float) (S/N 517611001 - 517615809, 518011001 - 518111504, 519011001 - 519013962, 519211001 - 519215809

Ref No	Part Number	Description	Remarks	Serial Number	Qty
1	6674804	CONTROLLER, AHC METAL	metal		1
2	6717393	LEVER	throttle		1
3	6670707	CONNECTOR	3-way		2
3	6670710	LOCK	3-way		2
4	17C412	BOLT 5			4
5	6725128	ADAPTER	actuator - W/ O-ring groove - Use W/Ref. 39 (NAP/ 6678775 actuator) - Was 6718801 [A]		2
5	7101705	ADAPTER, ACTUATOR	W/O O-ring groove - Use W/Ref. 39 (NAP/ 7103129 actuator & 7104842 actuator)		2
6	6712365	STEP			2
7		VALVE	See Illustration HYDRAULIC CONTROL VALVE/ B17177 - AHC		1
8		HANDLE	NAP - R.H. - tilt - Order Ref. 50, 51 & (2) of Ref. 52 - Was 6597774 [A]		1
8		HANDLE	NAP - L.H. - lift - Order Ref. 50, 51 & (2) of Ref. 52 - Was 6717163 [A]		1
9		LEVER	NAP - R.H. - tilt - "L" shaped - Order 6597775 Lever - Was 6717055 [A]		1
9	6597775	LEVER	"S" shaped		1
9		LEVER	NAP - L.H. - lift - "L" shaped - Order 6597776 Lever - Was 6717056 [A]		1
9	6597776	LEVER	"S" shaped		1
10	6718706	DECAL	warning		1
11	6728539	DECAL	Was 6718699 [A]		1
12	6718702	DECAL	operation		1
13	6718704	DECAL	opeation		1
14		HANDLE	See BTI335 - NAP - R.H. - tilt - Was 6675249 [A]		1
14	6640690	PIN			11
14	6670715	PIN			3
14	6641176	SEAL			11
14	6680455	HANDLE ASSY	LH - lift - Also Order Ref. 31 & 32 - Was 6675250 [A]		1
14	6640690	PIN			13
14	6670715	PIN			3
14	6641176	SEAL			13
14	6680447	DECAL	Was 6677370 [A]		1
15	6713349	GRIP			2
16	6680471	COVER	Was 6713898 [A]		2
17	6715957	COVER			2
18	25GT410	SCREW			8
19	6702990	BUSHING			4
20		CONTROL	See Illustration HAND CONTROL KIT/ PE1586 - NAP - R.H. - TILT -ORDER 6727298 AHC KIT -WAS 6712398 [A]		1
20		CONTROL	See Illustration HAND CONTROL KIT/ PE1586 - NAP - L.H. - LIFT -ORDER 6727298 AHC KIT -WAS 6712397 [A]		1
21	6713043	SPACER			4
22	12D10	NUT	Use W/Ref. 23		2
23	6716826	BOLT	Use W/Ref. 8		2
24	6716977	BELLCRANK			2
25	6673710	BEARING, NEEDLE	needle		4
26	6716916	WASHER	plastic		4
27	6654139	MOULDING	bulk - sold per foot		x
28		MOULDING	NAP - 10.5"(266mm) long - Order Ref. 27		2
29	6714726	GROMMET			2

Page 233 - OS6# 2071349 - All rights reserved by Bobcat Company - 12/01/2009 - 20:50:59 - Produced by Ken Cook Co. with mediaioff

CONTROLS ELECTRICAL (Cont'd)
(AHC) (W/O Push Button Float) (S/N 517611001 - 517615809, 518011001 - 518111504, 519011001 - 519013962, 519211001 - 519215809

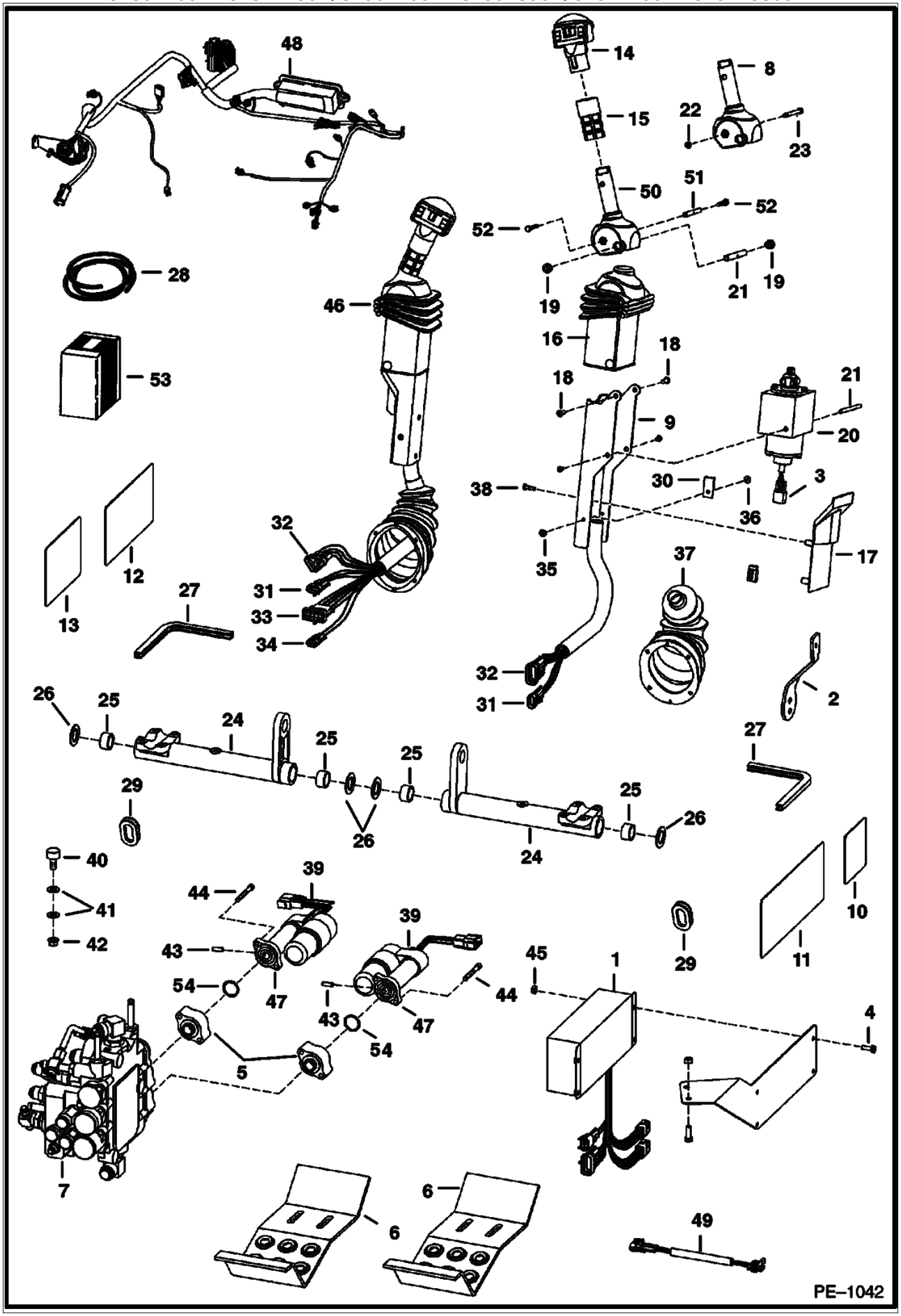

Page 234 - OSS# 2071349 - All rights reserved by Bobcat Company - 12/01/2009 - 20:50:59 - Produced by Ken Cook Co. with mediaioff

CONTROLS ELECTRICAL (Cont'd)
(AHC) (W/O Push Button Float) (S/N 517611001 - 517615809, 518011001 - 518111504, 519011001 - 519013962, 519211001 - 519215809

Ref No	Part Number	Description	Remarks	Serial Number	Qty
30	6665000	CLIP			2
31	6640699	CONNECTOR			1
31	6640700	LOCK			1
32	6640692	CONNECTOR			2
32	6640694	LOCK	Use W/ 10-pin connector		2
33	6667144	CONNECTOR	5-pin		1
33	6667145	LOCK	Use W/ 5-pin connector		1
34	6641179	CONNECTOR	2-pin		1
34	6641180	LOCK	Use W/ 2-pin connector		1
35	6665322	RIVET	female		2
36	6665321	RIVET	male		2
37	6532127	BOOT			2
38	6669224	BOLT			4
39		ACTUATOR	NAP - Use W/Ref. 5 (6725128 adapter) & Ref. 54 (58K120 O-ring) - Order 7104842 actuator & Ref. 5 (7101705 adapter) - Was 6678775 [A]		2
39		ACTUATOR	NAP - W/Ref. 54 (6686220 O-ring) - Use W/Ref. 5 (7101705 adapter) - Was 7103129 [A]		2
39	7104842	ACTUATOR	W/Ref. 54 (58K120 O-ring) - Use W/Ref. 5 (7101705 adapter)		2
40	6673789	BEARING			4
41	25E17	WASHER 5			8
42	98D6	NUT			4
43	7108236	PIN	Was 6718506 [A]		2
44	69G436	BOLT			4
45	61D4	NUT 5			5
46		LEVER ASSY	See Illustration HAND CONTROL KIT/ PE1586 - NAP - R.H. - TILT - "L" SHAPED - ORDER 6727298 AHC KIT - WAS 6718195 [A]		1
46		LEVER ASSY	See Illustration HAND CONTROL KIT/ PE1586 - NAP - "S" SHAPED - ORDER 6727298 AHC KIT - WAS 6718201 [A]		1
46		LEVER ASSY	See Illustration HAND CONTROL KIT/ PE1586 - NAP - L.H. - LIFT - "L" SHAPED - ORDER 6727298 AHC KIT - WAS 6718194 [A]		1
46		LEVER ASSY	See Illustration HAND CONTROL KIT/ PE1586 - NAP - "S" SHAPED - ORDER 6727298 AHC KIT - WAS 6718202 [A]		1
47		FLANGE	NAP - Was 6674879 [A]		4
48	6718913	HARNESS	AHC		1
48	6670707	CONNECTOR	3-way		2
48	6670711	LOCK	3-way		2
49	6728742	HARNESS	jumper - enhance boom lift		1
50	6729594	HANDLE	RH		1
50	6729595	HANDLE	LH		1
51	6680469	SPACER	2.285" threaded at both ends - Use W/Ref. 50 - Was 6729600 [A]		1
52	6727065	BOLT	button head - 24UNC		2
53	6727298	KIT	See Illustration HAND CONTROL KIT/ PE1586 - AHC		1
54	58K120	O-RING	Use W/Ref. 39 (NAP/ 6678775 actuator & 7104842 actuator)		2
54	6686220	O-RING	Use W/Ref. 39 (NAP/ 7103129 actuator)		2

Page 235 - OSS# 2071349 - All rights reserved by Bobcat Company - 12/01/2009 - 20:50:59 - Produced by Ken Cook Co. with mediaioff

CONTROLS ELECTRICAL
(AHC) (W/Push Button Float) (S/N 500K11007 & Below, 517615810 - 19167, 518011505 - 12188, 518112000 - 12086, 519013963 - 18754, 519211118 - 12116)

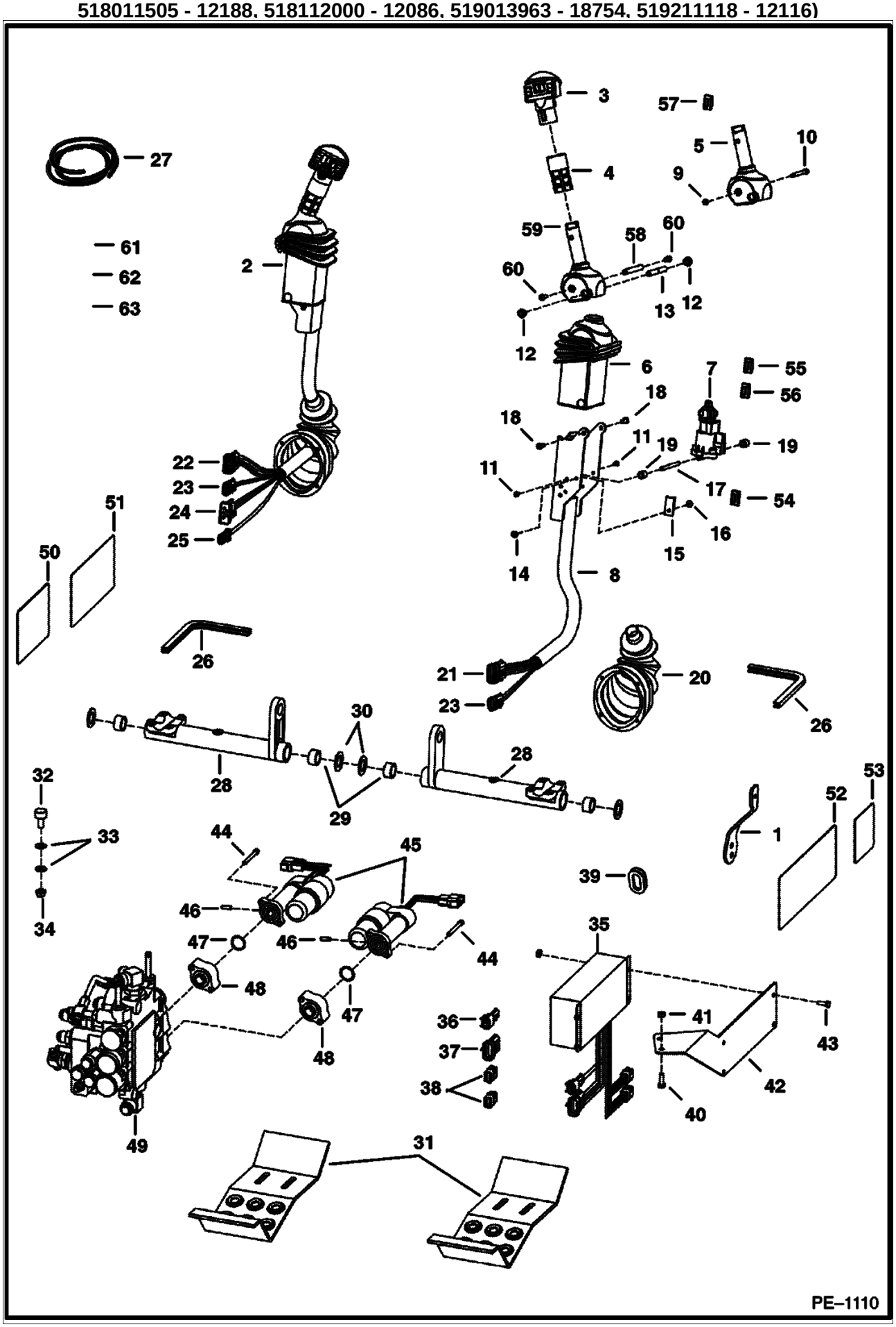

Page 236 - OSS# 2071349 - All rights reserved by Bobcat Company - 12/01/2009 - 20:50:59 - Produced by Ken Cook Co. with mediaioff

CONTROLS ELECTRICAL (Cont'd)
(AHC) (W/Push Button Float) (S/N 500K11007 & Below, 517615810 - 19167, 518011505 - 12188, 518112000 - 12086, 519013963 - 18754, 519211118 - 12116)

Ref No	Part Number	Description	Remarks	Serial Number	Qty
1	6717393	LEVER	throttle		1
2	6684913	LEVER	tilt - RH - Was 6675742 [A]		1
2	6684914	LEVER	lift - LH - Was 6675750 [A]		1
3		HANDLE	See BTI335 - NAP - lift - R.H. - Was 6675469 [A]		1
3	6680417	HANDLE	lift - LH - Was 6675749 [A]		1
4		GRIP	NAP - Order 6702621 grip & cut to 2.8 inches long - Was 6713349		2
5		HANDLE	NAP - R.H. - Order Ref. 58, 59 & (2) of Ref. 60 - Was 6597774 [A]		1
5		HANDLE	NAP - L.H. - OrderRef. 58, 59 & (2) of Ref. 60 - Was 6717163 [A]		1
6	6680471	COVER	Was 6713898 [A]		2
7	6684910	SENSOR, ELEC AHC	Was 6675741 [A]		2
7	6670706	CONNECTOR			1
7	6670715	PIN			3
7	6670710	LOCK			1
8	6680481	CHANNEL	RH - Was 6719712 [A]		1
8	6680480	CHANNEL	LH - Was 6719711 [A]		1
9	12D10	NUT	Use W/Ref. 10		2
10	6716826	BOLT	Used W/Ref 5		2
11	25GT410	SCREW			8
12	6702990	BUSHING			4
13	6713043	SPACER			4
14	6665321	RIVET	male		2
15	6665000	CLIP			2
16	6665322	RIVET	female		2
17	6719834	SPACER	threaded		2
18	6727065	BOLT			4
19	6719835	SLEEVE			4
20	6532127	BOOT			2
21	6640692	CONNECTOR	10-pin		1
21	6640690	PIN			8
21	6640694	LOCK	Use W/ 10-pin connector		1
21	6641176	SEAL			8
21	6646582	PLUG	cavity		1
22	6640692	CONNECTOR	10-pin		1
22	6640690	PIN			6
22	6640694	LOCK	Use W/ 10-pin connector		1
22	6641176	SEAL			6
22	6646582	PLUG	cavity		4
23	6640699	CONNECTOR	3-pin		2
23	6640690	PIN			3
23	6641176	SEAL			3
23	6640700	LOCK			3
24	6667144	CONNECTOR	5-pin		2
24	6640690	PIN			3
24	6641176	SEAL			3
24	6646582	PLUG	cavity		1
24	6667145	LOCK	Use W/ 5-pin connector		1
25	6641179	CONNECTOR	2-pin		1
25	6640690	PIN			2
25	6641176	SEAL			2
25	6641180	LOCK	Use W/ 2-pin connector		1
26		MOULDING	NAP - 10.5"(266,7 mm)long - Order Ref. 27		1
27	6654139	MOULDING	bulk - sold per foot		x
28	6716977	BELLCRANK			2

Page 237 - OSS# 2071349 - All rights reserved by Bobcat Company - 12/01/2009 - 20:50:59 - Produced by Ken Cook Co. with mediaioff

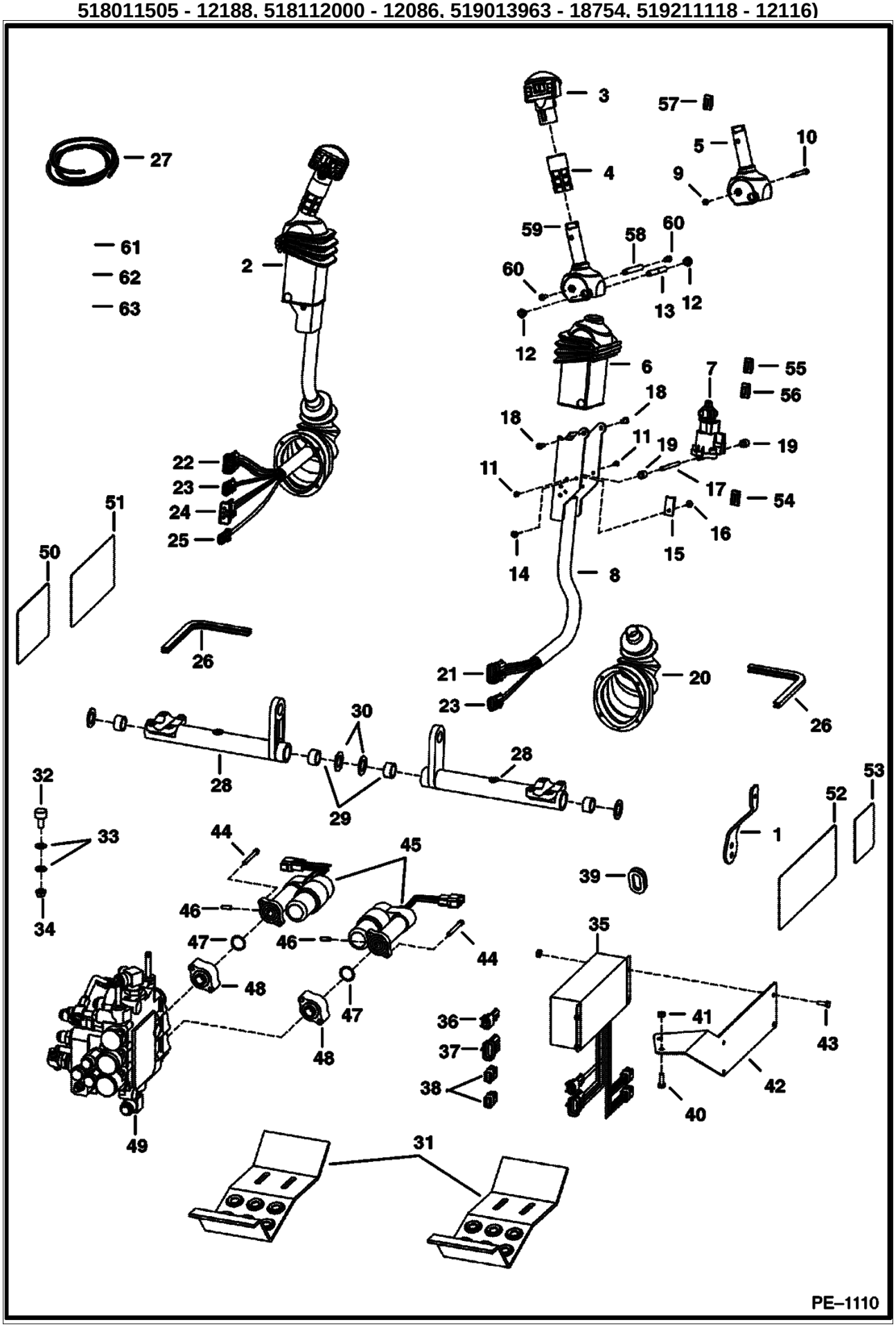

Page 238 - OSS# 2071349 - All rights reserved by Bobcat Company - 12/01/2009 - 20:50:59 - Produced by Ken Cook Co. with mediaioff

Ref No	Part Number	Description	Remarks	Serial Number	Qty
29	6673710	BEARING, NEEDLE			4
30	6716916	WASHER	plastic		4
31	6712365	STEP			2
32	6673789	BEARING			4
33	25E17	WASHER 5			8
34	98D6	NUT			4
35	6676153	CONTROLLER	metal	5176 15810-18625	1
35	6676153	CONTROLLER	metal	5181 12000-12059	1
35	6676153	CONTROLLER	metal	5190 13963-17501	1
35	6676153	CONTROLLER	metal	5180 11505-12099	1
35	6676153	CONTROLLER	metal	5192 11118-12068	1
35	6680410	CONTROLLER	plastic - W/ 3 connector plug - Was 6676337 [A]	500K 11007 & Bel	1
35	6680410	CONTROLLER	plastic - W/ 3 connector plug - Was 6676337 [A]	5176 18626-19167	1
35	6680410	CONTROLLER	plastic - W/ 3 connector plug - Was 6676337 [A]	5180 12100-12188	1
35	6680410	CONTROLLER	plastic - W/ 3 connector plug - Was 6676337 [A]	5190 17502 18754	1
35	6680410	CONTROLLER	plastic - W/ 3 connector plug - Was 6676337 [A]	5192 12069-12116	1
35	6680410	CONTROLLER	plastic - W/ 3 connector plug - Was 6676337 [A]	5181 12060-12086	1
36	6640692	CONNECTOR	10-pin		1
36	6640690	PIN			9
36	6640694	LOCK	Use W/ 10-pin connector		1
36	6641176	SEAL			9
36	6646582	PLUG	cavity		1
37	6648307	CONNECTOR	2-pin		1
38	6670709	CONNECTOR	8-pin		2
39	6714726	GROMMET			1
40	17C612	BOLT 5			2
41	61D6	NUT 5			2
42	6725165	MOUNT			1
43	17C412	BOLT 5			4
44	69G436	BOLT			4
45		ACTUATOR	NAP - Use W/Ref. 47 (58K120 O-ring) & Ref. 48 (6725128 adapter) - Order 7104842 actuator & Ref. 48 (7101705 adapter) - Was 6678775 [A]		2
45		ACTUATOR	NAP - W/Ref. 47 (6686220 O-ring) - Use W/Ref. 48 (7101705 adapter) - Was 7103129 [A]		2
45	7104842	ACTUATOR	W/Ref. 47 (58K120 O-ring) - Use W/Ref. 48 (7101705 adapter)	5176 15810-18625	1
45	7104842	ACTUATOR	W/Ref. 47 (58K120 O-ring) - Use W/Ref. 48 (7101705 adapter)	5180 11505-12099	1
45	7104842	ACTUATOR	W/Ref. 47 (58K120 O-ring) - Use W/Ref. 48 (7101705 adapter)	5192 11118-12068	1
45	7104842	ACTUATOR	W/Ref. 47 (58K120 O-ring) - Use W/Ref. 48 (7101705 adapter)	5190 13963-17501	1
45	7104842	ACTUATOR	W/Ref. 47 (58K120 O-ring) - Use W/Ref. 48 (7101705 adapter)	5181 12000-12059	1
45	7101672	ACTUATOR	W/Ref. 47 (58K120 O-ring) - Use W/Ref. 48 (7101705 adapter)	500K 11007 & Bel	1
45	7101672	ACTUATOR	W/Ref. 47 (58K120 O-ring) - Use W/Ref. 48 (7101705 adapter)	5176 18626-19167	1
45	7101672	ACTUATOR	W/Ref. 47 (58K120 O-ring) - Use W/Ref. 48 (7101705 adapter)	5180 12100-12188	1
45	7101672	ACTUATOR	W/Ref. 47 (58K120 O-ring) - Use W/Ref. 48 (7101705 adapter)	5192 12069-12116	1
45	7101672	ACTUATOR	W/Ref. 47 (58K120 O-ring) - Use W/Ref. 48 (7101705 adapter)	5190 17502-18754	1
45	7101672	ACTUATOR	W/Ref. 47 (58K120 O-ring) - Use W/Ref. 48 (7101705	5181 12060-12086	1

Page 239 - OSS# 2071349 - All rights reserved by Bobcat Company - 12/01/2009 - 20:50:59 - Produced by Ken Cook Co. with mediaioff

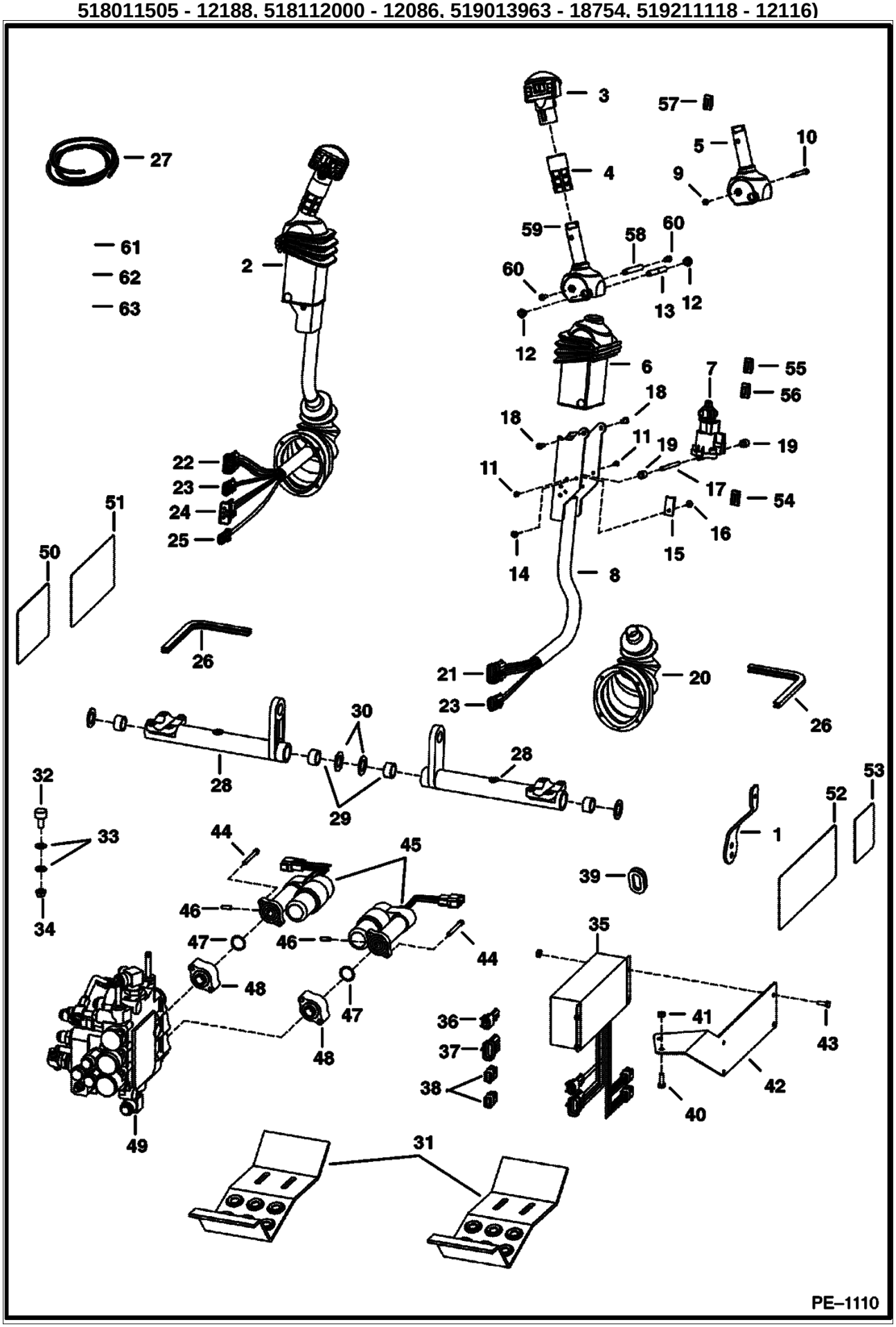

Page 240 - OSS# 2071349 - All rights reserved by Bobcat Company - 12/01/2009 - 20:50:59 - Produced by Ken Cook Co. with mediaioff

Ref No	Part Number	Description	Remarks	Serial Number	Qty
			adapter)		
46	7108236	PIN	Was 6718506 [A]		2
47	58K120	O-RING	Use W/Ref. 45 (NAP/ 6678775 actuator, 7104842 actuator & 7101672 actuator)		2
47	6682660	SPACER	Use W/Ref. 45 (NAP/ 7103129 actuator)		1
48	6725128	ADAPTER	actuator - W/ O-ring groove - Use W/Ref. 45 (NAP/ 6678775 actuator)		2
48	7101705	ADAPTER, ACTUATOR	W/O O-ring groove - Use W/Ref. 45 (NAP/ 7103129 actuator, 7104842 actuator & 7101672 actuator)		2
49		VALVE	See Illustration HYDRAULIC CONTROL VALVE/ B17177		1
50	6718704	DECAL			1
51	6727155	DECAL		517615810 - 517618625	1
51	6727155	DECAL		518112000 - 518112059	1
51	6727155	DECAL		519211118 - 519212068	1
51	6727155	DECAL		519013963 - 519017501	1
51	6727155	DECAL		518011505 - 518012099	1
51	6728328	DECAL		500K 11007 & Bel	1
51	6728328	DECAL		517618626 - 517619167	1
51	6728328	DECAL		518112060 - 518112086	1
51	6728328	DECAL		518012100 - 518012188	1
51	6728328	DECAL		519017502 - 519018754	1
51	6728328	DECAL		519212069 - 519212116	1
52	6728539	DECAL	Was 6718699 [A]		1
53	6718706	DECAL			1
54	6670707	CONNECTOR	3-pin		1
54	6670715	PIN			3
54	6670711	LOCK			1
55	6677364	CONNECTOR	3-pin		1
55	6676640	SEAL			3
56	6676870	CONNECTOR	3-pin		1
56	6676640	SEAL			1
56	6670715	PIN			1
56	6670711	LOCK			1
57	6676537	SWITCH	ACS		1
58		SPACER	2.285" thread on both ends		1
59	6729594	HANDLE	RH		1
59	6729595	HANDLE	LH		1
60	6727065	BOLT	button head - 24UNC		2
61	6728742	HARNESS	jumper - W/capacitor		1
62	6727130	HARNESS		517615810 - 517618625	1
62	6727130	HARNESS		518112000 - 518112059	1
62	6727130	HARNESS		518011505 - 518012099	1
62	6727130	HARNESS		519013963 -	1

Page 241 - OSS# 2071349 - All rights reserved by Bobcat Company - 12/01/2009 - 20:50:59 - Produced by Ken Cook Co. with mediaioff

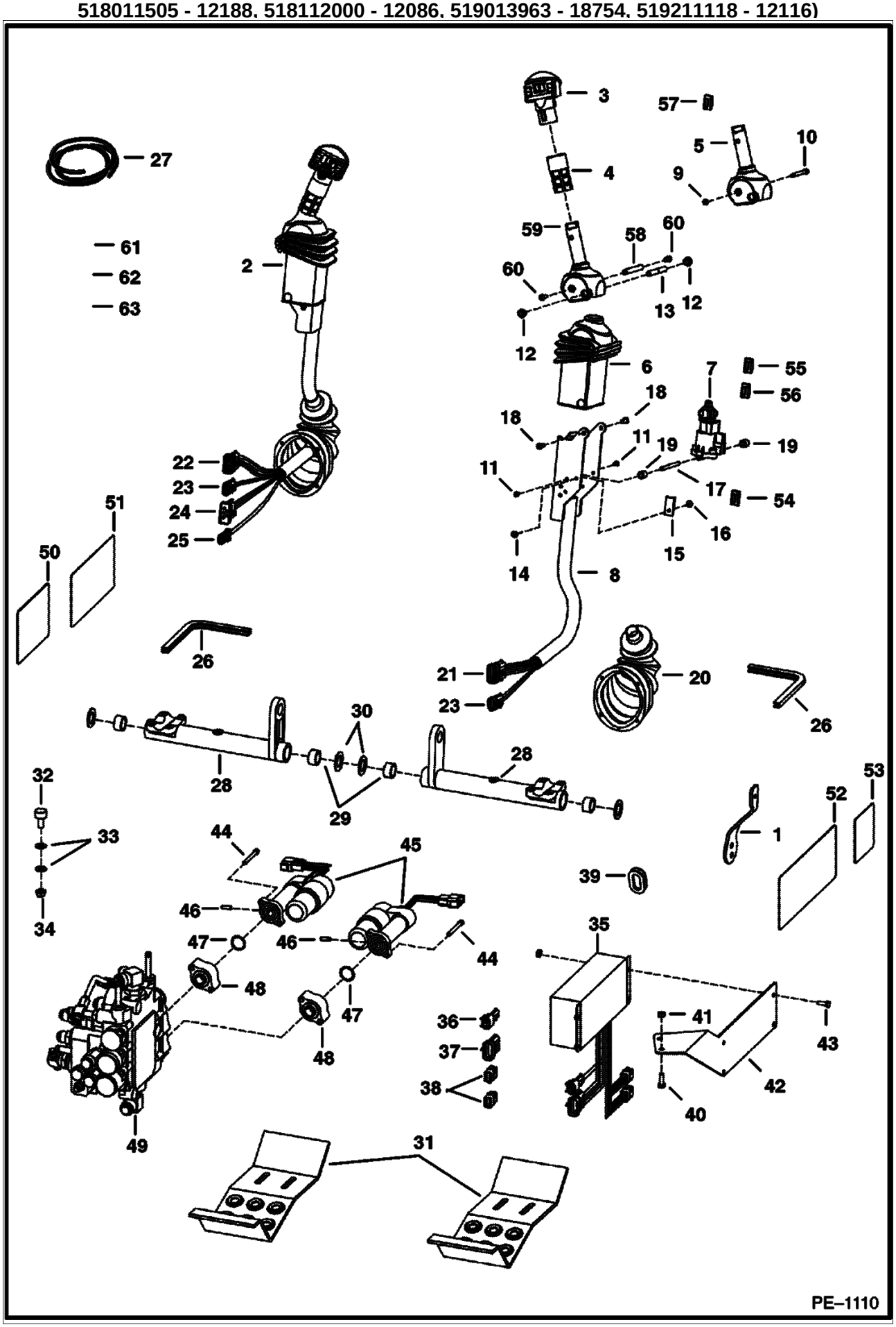

Page 242 - OSS# 2071349 - All rights reserved by Bobcat Company - 12/01/2009 - 20:50:59 - Produced by Ken Cook Co. with mediaioff

Ref No	Part Number	Description	Remarks	Serial Number	Qty
				519017501	
62	6727130	HARNESS		519211118 - 519212068	1
62	6733292	HARNESS, ACS	Was 6729023 [A]	500K11007 & Below	1
62	6733292	HARNESS, ACS	Was 6729023 [A]	517618626 - 517619167	1
62	6733292	HARNESS, ACS	Was 6729023 [A]	518112060 - 518112086	1
62	6733292	HARNESS, ACS	Was 6729023 [A]	519212069 - 519212116	1
62	6733292	HARNESS, ACS	Was 6729023 [A]	519017502 - 519018754	1
62	6733292	HARNESS, ACS	Was 6729023 [A]	518012100 - 518012188	1
63	6729054	HARNESS	Use W/Ref. 35 - W/capacitor (6676153 Controller)	517615810 - 517618625	1
63	6729054	HARNESS	Use W/Ref. 35 - W/capacitor (6676153 Controller)	518011505 - 518012099	1
63	6729054	HARNESS	Use W/Ref. 35 - W/capacitor (6676153 Controller)	518112000 - 518112059	1
63	6729054	HARNESS	Use W/Ref. 35 - W/capacitor (6676153 Controller)	519013963 - 519017501	1
63	6729054	HARNESS	Use W/Ref. 35 - W/capacitor (6676153 Controller)	519211118 - 519212068	1

Page 243 - OSS# 2071349 - All rights reserved by Bobcat Company - 12/01/2009 - 20:50:59 - Produced by Ken Cook Co. with mediaioff

CONTROLS ELECTRICAL
(ACS) (S/N 500K11008 & Above, 517619168 & Above, 518012189 & Above)
518112087 & Above, 519018755 & Above, 519111001 & Above, 519212117 & Above)

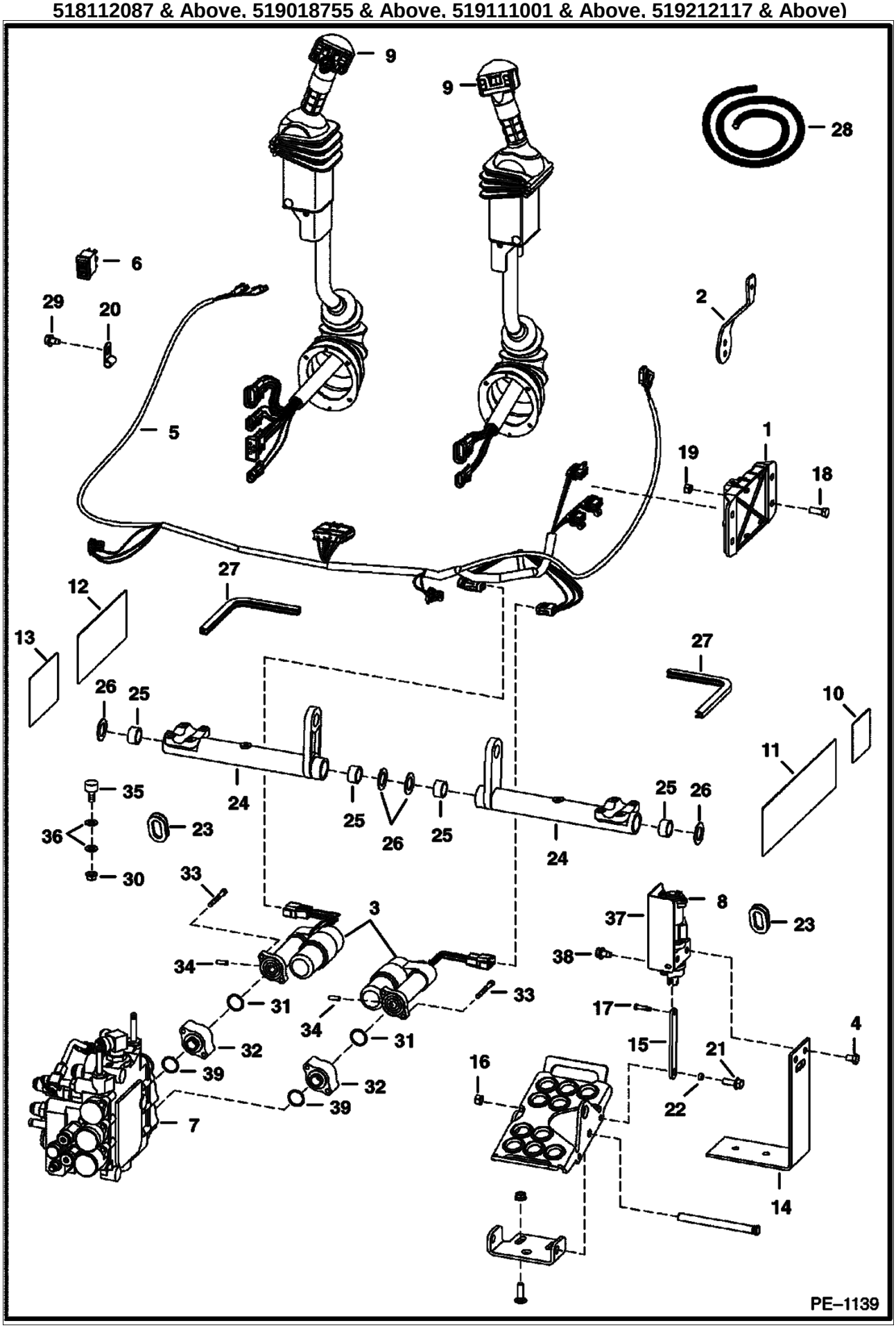

Page 244 - OSS# 2071349 - All rights reserved by Bobcat Company - 12/01/2009 - 20:50:59 - Produced by Ken Cook Co. with mediaIoff

Ref No	Part Number	Description	Remarks	Serial Number	Qty
1	6680410	CONTROLLER	plastic - W/ 3 connector plug - Was 6676337 [A]		1
2	6717393	LEVER	throttle		1
3		ACTUATOR	NAP - Use W/Ref. 31 (58K120 O-ring) & Ref. 32 (6725128 adapter) - Order 7101672 actuator & Ref. 32 (7101705 adapter) - Was 6678775 [A]		2
3		ACTUATOR	NAP - W/Ref. 31 (6686220 O-ring) - Use W/Ref. 32 (7101705 adapter) - Was 7103129 [A]		2
3	7101672	ACTUATOR	W/Ref. 31 (58K120 O-ring) - Use W/Ref. 32 (7101705 adapter)		2
4	17C608	BOLT			4
5	6733292	HARNESS, ACS	Was 6726925 [B]		1
6	6676537	SWITCH			1
7		VALVE	See Illustration HYDRAULIC CONTROL VALVE/ B17178		1
8	6684912	SENSOR, FOOT RH	See Illustration CONTROLS ELECTRICAL/ PE1553 - Was 6676493 [A]		1
8	6676029	SOLENOID			1
8	6684911	SENSOR, FOOT LH	See Illustration CONTROLS ELECTRICAL/ PE1553 - Was 6676492 [A]		1
8	6676029	SOLENOID			1
9	6684915	LEVER, ACS RH	See Illustration CONTROLS ELECTRICAL/ PE1365 - tilt - RH - Was 6676333 [A]		1
9	6684916	LEVER, ACS LH	See Illustration CONTROLS ELECTRICAL/ PE1365 - lift - LH - Was 6676497 [A]		1
10	6718706	DECAL			1
11	6728539	DECAL			1
12	6727926	DECAL			1
13	6727926	DECAL	Was 6727941 [A]		1
14	7126869	BRACKET	Was 6726573 [A]		2
15	6726681	LINK			2
16	95D5	NUT			2
17	6727496	PIN			2
18	17C616	BOLT 5			2
19	95D6	NUT			6
20	30H62	CLIP			2
21	17C514	BOLT			2
22	6729467	SPACER			2
23	6714726	GROMMET			2
24	6716977	BELLCRANK			2
25	6673710	BEARING, NEEDLE			4
26	6716916	WASHER	plastic		4
27		MOULDING	NAP - Order Ref. 28 - 10.5"(266,7 mm) long		1
28	6654139	MOULDING	bulk - sold per foot		x
29	84G3710	SCREW			2
30	98D6	NUT			2
31	58K120	O-RING	Use W/Ref. 3 (NAP/ 6678775 actuator & 7101672 actuator)		2
31	6686220	O-RING	Use W/Ref. 3 (NAP/ 7103129 actuator)		2
32	6725128	ADAPTER	actuator - W/ O-ring groove - Use W/Ref. 3 (NAP/ 6678775 actuator)		2
32	7101705	ADAPTER, ACTUATOR	W/O O-ring groove - Use W/Ref. 3 (NAP/ 7103129 actuator & 7101672 actuator)		2
33	69G436	BOLT			4
34	7108236	PIN	Was 6718506 [A]		2
35	6673789	BEARING			4
36	25E17	WASHER 5			8

Page 245 - OSS# 2071349 - All rights reserved by Bobcat Company - 12/01/2009 - 20:50:59 - Produced by Ken Cook Co. with mediaioff

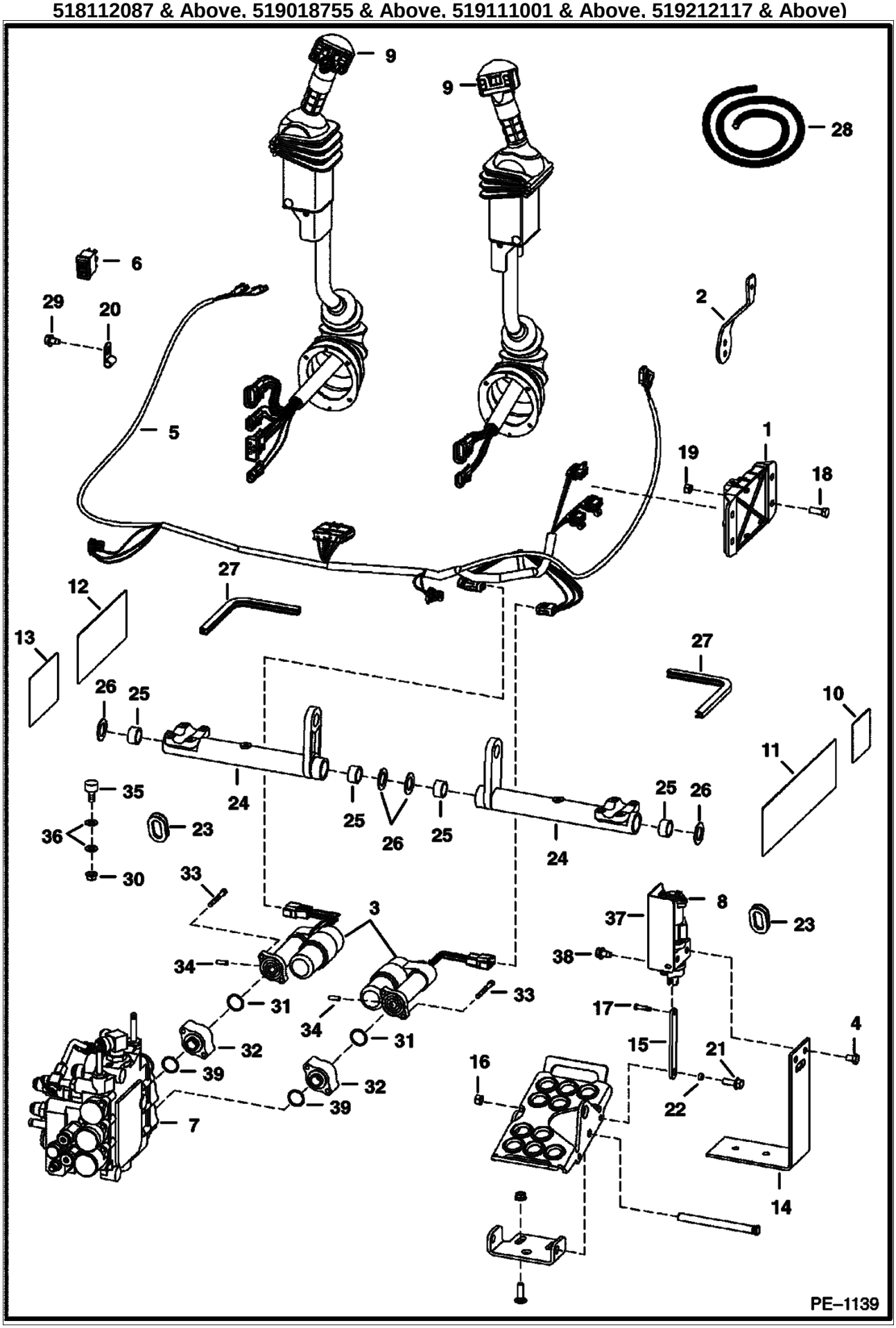

Page 246 - OSS# 2071349 - All rights reserved by Bobcat Company - 12/01/2009 - 20:50:59 - Produced by Ken Cook Co. with mediaioff

Ref No	Part Number	Description	Remarks	Serial Number	Qty
37	6680478	SHIELD	RH - Was 6727231 [A]		1
37		SHIELD	NAP - L.H. - Was 6727284 [A]		1
38	43C408	BOLT			4
39	1K127	O-RING 10	Was 93K127 [A]		x

Page 247 - OSS# 2071349 - All rights reserved by Bobcat Company - 12/01/2009 - 20:50:59 - Produced by Ken Cook Co. with mediaioff

CONTROLS ELECTRICAL
(AHC) (ACS) (Handle Assembly)

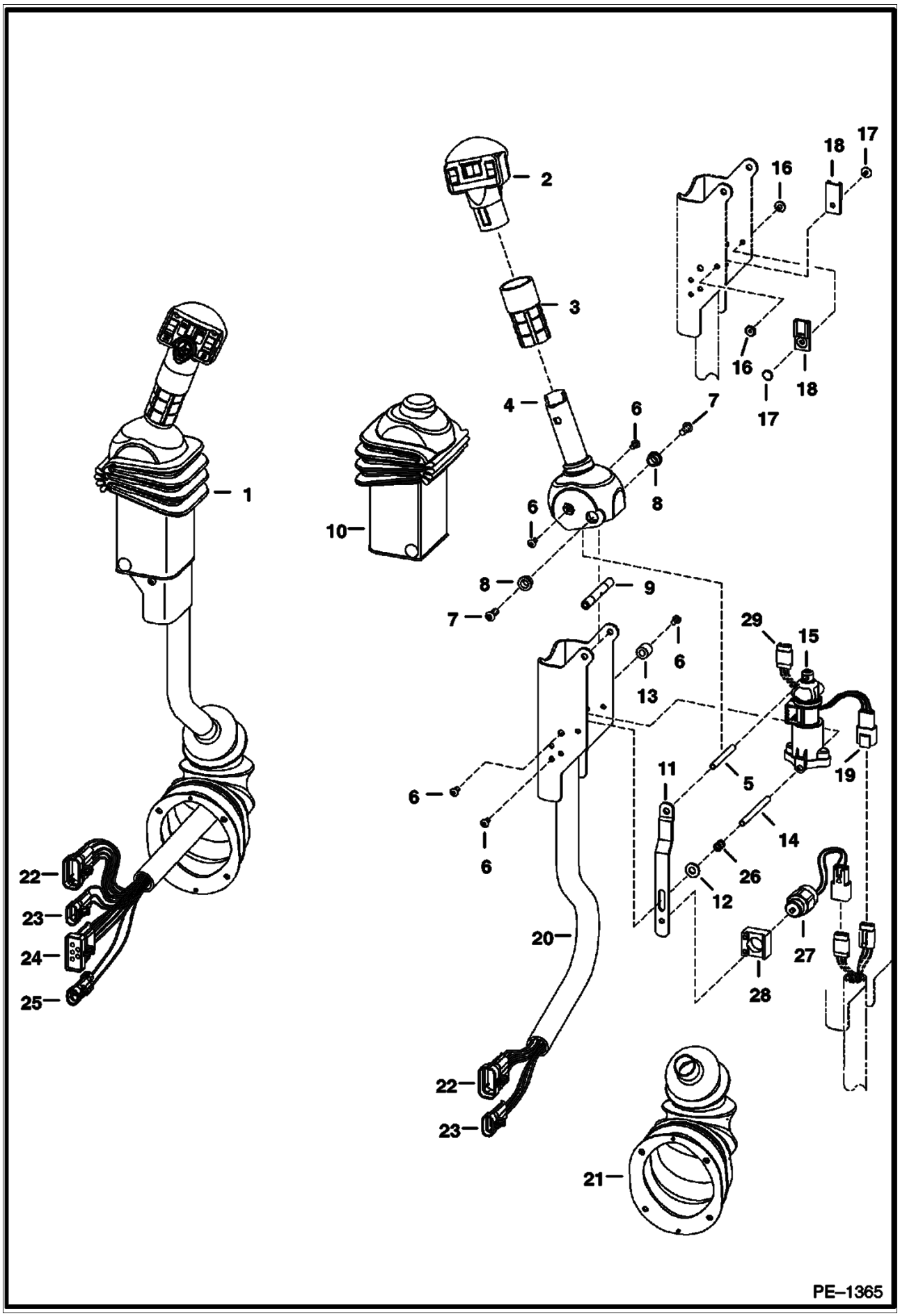

Page 248 - OSS# 2071349 - All rights reserved by Bobcat Company - 12/01/2009 - 20:50:59 - Produced by Ken Cook Co. with mediaioff

Ref No	Part Number	Description	Remarks	Serial Number	Qty
1	6684915	LEVER, ACS RH	tilt - RH - Was 6680424 [A]		1
1	6684916	LEVER, ACS LH	lift - LH - Was 6680423 [A]		1
2	6680462	HANDLE, ACS RH	tilt - RH - Was 6677536 [A]		1
2	6680417	HANDLE	lift - LH - Was 6675749 [A]		1
3		GRIP	Order 6702621 Grip and Cut to 2.8 inches long - Was 6713349 [A]		1
4	6729594	HANDLE	RH		1
4	6729595	HANDLE	LH		1
5	6680469	SPACER	threaded - Was 6729600 [A]		1
6	6727065	BOLT			6
7	25GT410	SCREW			8
8	6702990	BUSHING			4
9	6713043	SPACER			4
10	6680471	COVER	Was 6713898 [A]		2
11	6680477	STRAP	stop - Was 6719715 [A]		1
12	25E13	WASHER 5			1
13	6719835	SLEEVE			4
14	6719834	SPACER	threaded		2
15	6684910	SENSOR, ELEC AHC	Was 6675741 [A]		2
15	6670706	CONNECTOR			1
15	6670715	PIN			3
15	6670710	LOCK			1
16	6665322	RIVET	female		2
17	6665321	RIVET	male		2
18	6665000	CLIP			2
19	6670707	CONNECTOR			1
19	6670715	PIN			3
19	6670711	LOCK			1
20	6680481	CHANNEL	RH - Was 6719712 [A]		1
20	6680480	CHANNEL	LH - Was 6719711 [A]		1
21	6532127	BOOT			2
22	6640692	CONNECTOR	10-pin		1
22	6640690	PIN			8
22	6640694	LOCK	Use W/ 10-pin connector		1
22	6641176	SEAL			8
22	6646582	PLUG	cavity		1
23	6640699	CONNECTOR	3-pin		2
23	6640690	PIN			3
23	6641176	SEAL			3
23	6640700	LOCK			3
24	6667144	CONNECTOR	5-pin		2
24	6640690	PIN			3
24	6641176	SEAL			3
24	6646582	PLUG	cavity		1
24	6641180	LOCK	Use W/ 2-pin connector		1
25	6641179	CONNECTOR	2-pin		1
25	6640690	PIN			2
25	6641176	SEAL			2
25	6641180	LOCK	Use W/ 2-pin connector		1
26	6680470	SPRING	Was 6675745 [A]		1
27	6676029	SOLENOID			1
28	6680468	MOUNT	Was 6719716 [A]		1
29	6676870	CONNECTOR	3-pin		1
29	6670711	LOCK			1
29	6670715	PIN			1

Page 249 - OSS# 2071349 - All rights reserved by Bobcat Company - 12/01/2009 - 20:50:59 - Produced by Ken Cook Co. with mediaioff

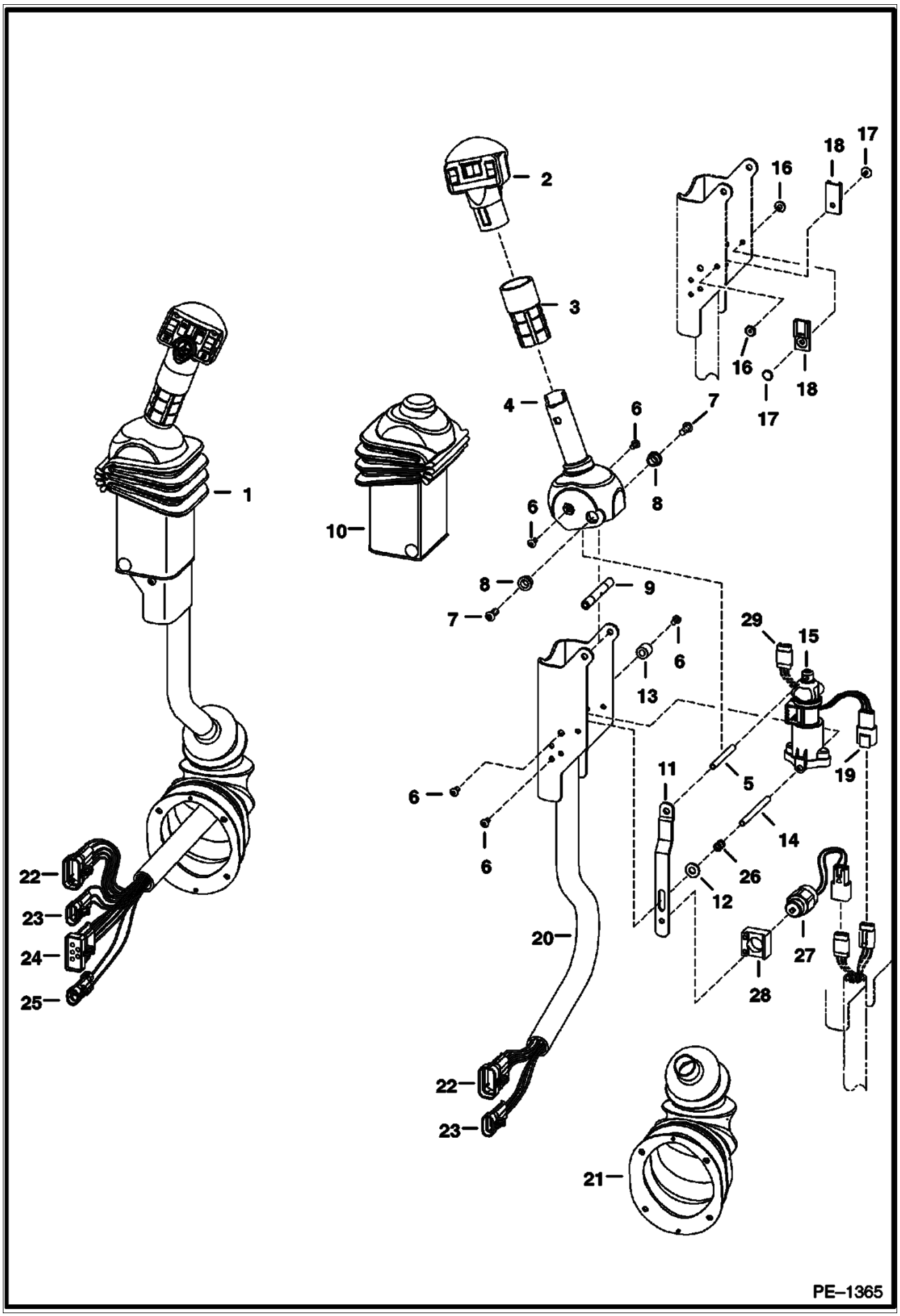

Page 250 - OSS# 2071349 - All rights reserved by Bobcat Company - 12/01/2009 - 20:50:59 - Produced by Ken Cook Co. with mediaioff

Ref No	Part Number	Description	Remarks	Serial Number	Qty
29	6676640	SEAL			5

Page 251 - OSS# 2071349 - All rights reserved by Bobcat Company - 12/01/2009 - 20:50:59 - Produced by Ken Cook Co. with mediaioff

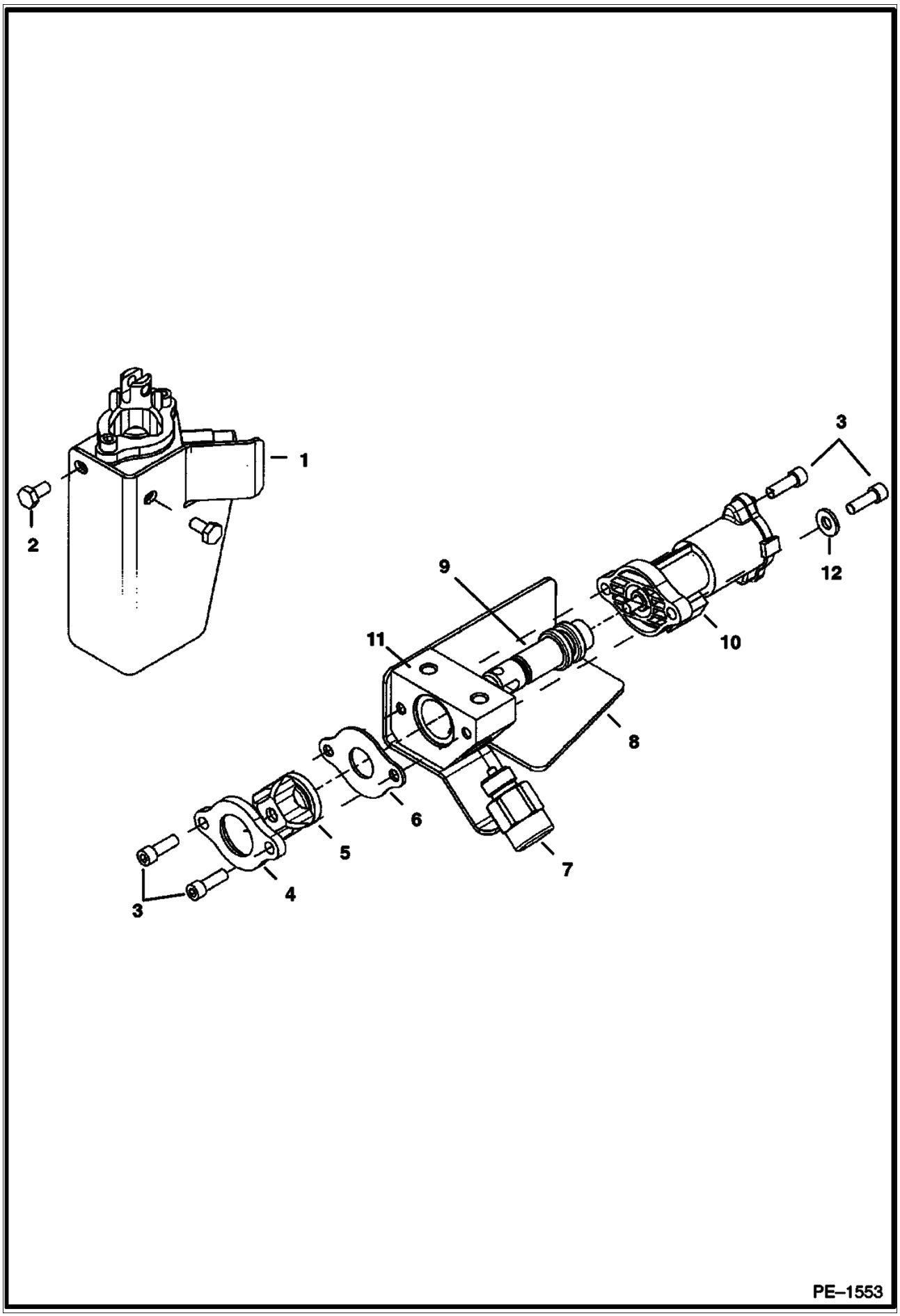

Page 252 - OSS# 2071349 - All rights reserved by Bobcat Company - 12/01/2009 - 20:50:59 - Produced by Ken Cook Co. with mediaioff

Ref No	Part Number	Description	Remarks	Serial Number	Qty
1	6684912	SENSOR, FOOT RH	Was 6676493 [A]		1
1	6684911	SENSOR, FOOT LH	Was 6676492 [A]		1
2	43C408	BOLT			2
3	98G412	BOLT			4
4		RETAINER	NAP - boot - Was 6726574 [A]		1
5	6587763	BOOT			1
6		STOP PLATE	NAP - Was 6726695 [A]		1
7	6676029	SOLENOID			1
8	6680478	SHIELD	RH - Was 6727231 [A]		1
8	6680479	SHIELD	LH - Was 6727284 [A]		1
9		SPOOL	NSS		1
10		SENSOR	NSS		1
11		BLOCK	NSS		1
12	25E13	WASHER 5			2

Page 253 - OSS# 2071349 - All rights reserved by Bobcat Company - 12/01/2009 - 20:50:59 - Produced by Ken Cook Co. with mediaioff

ALTERNATOR
(Bobcat) (S/N 517617999 & Below, 518011999 & Below, 518111999 & Below, 519015999 & Below, 519211999 & Below)

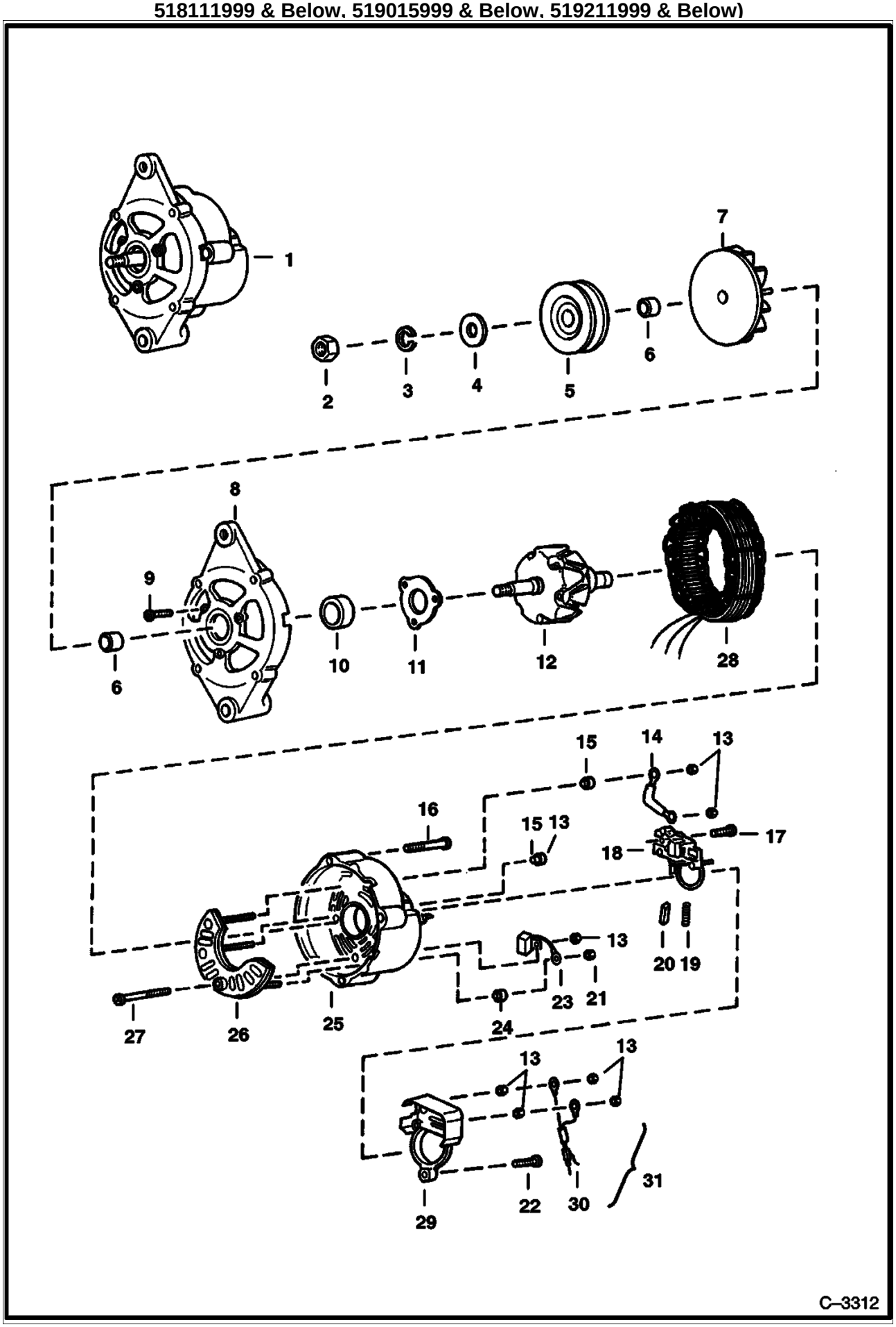

Page 254 - OSS# 2071349 - All rights reserved by Bobcat Company - 12/01/2009 - 20:50:59 - Produced by Ken Cook Co. with mediaioff

ALTERNATOR (Cont'd)
(Bobcat) (S/N 517617999 & Below, 518011999 & Below, 518111999 & Below, 519015999 & Below, 519211999 & Below)

Ref No	Part Number	Description	Remarks	Serial Number	Qty
1	6661611	ALTERNATOR	Less Fan & Pulley		1
1	6661611REM	ALTERNATOR, 55 AMP			1
2	6659371	NUT			1
3	6659372	WASHER			1
4	6632323	WASHER			1
5	6571536	PULLEY			1
6	6659374	SPACER			2
7	6659375	FAN			1
8	6659376	BRACKET	W/Ref. 9-11		1
9	6659378	BOLT			3
10	6659379	BEARING			1
11		RETAINER	NAP - Was 6632228 [A]		1
12	6659380	ROTOR			1
13	6659387	NUT			7
14	6659397	TERMINAL			1
15	6659386	HOLDER			2
16	6659392	BOLT			3
17	6659396	SCREW			2
18	6659393	REGULATOR	W.Ref. 19 & 20		1
19	6659395	SPRING			2
20	6659394	BRUSH			2
21	6659391	NUT			1
22	6659399	SCREW			1
23	6659388	CONDENSER			1
24	6659390	HOLDER			1
25	6659382	BRACKET	rear - W/Ref. 13, 15, 21 & 23 - 27		1
26	6659384	RECTIFIER			1
27	6659385	SCREW			1
28	6659381	STATOR			1
29	6659398	COVER			1
30	6659400	CONNECTOR	assy.		1
31	6577456	KIT	Weather-Pak Connector - Includes both male & female parts		1

Page 255 - OSS# 2071349 - All rights reserved by Bobcat Company - 12/01/2009 - 20:50:59 - Produced by Ken Cook Co. with mediaioff

ALTERNATOR
(S/N 500K11001 & Above, 517618000 & Above, 518012000 & Above, 518112000 & Above, 519016000 & Above, 519212000 & Above)

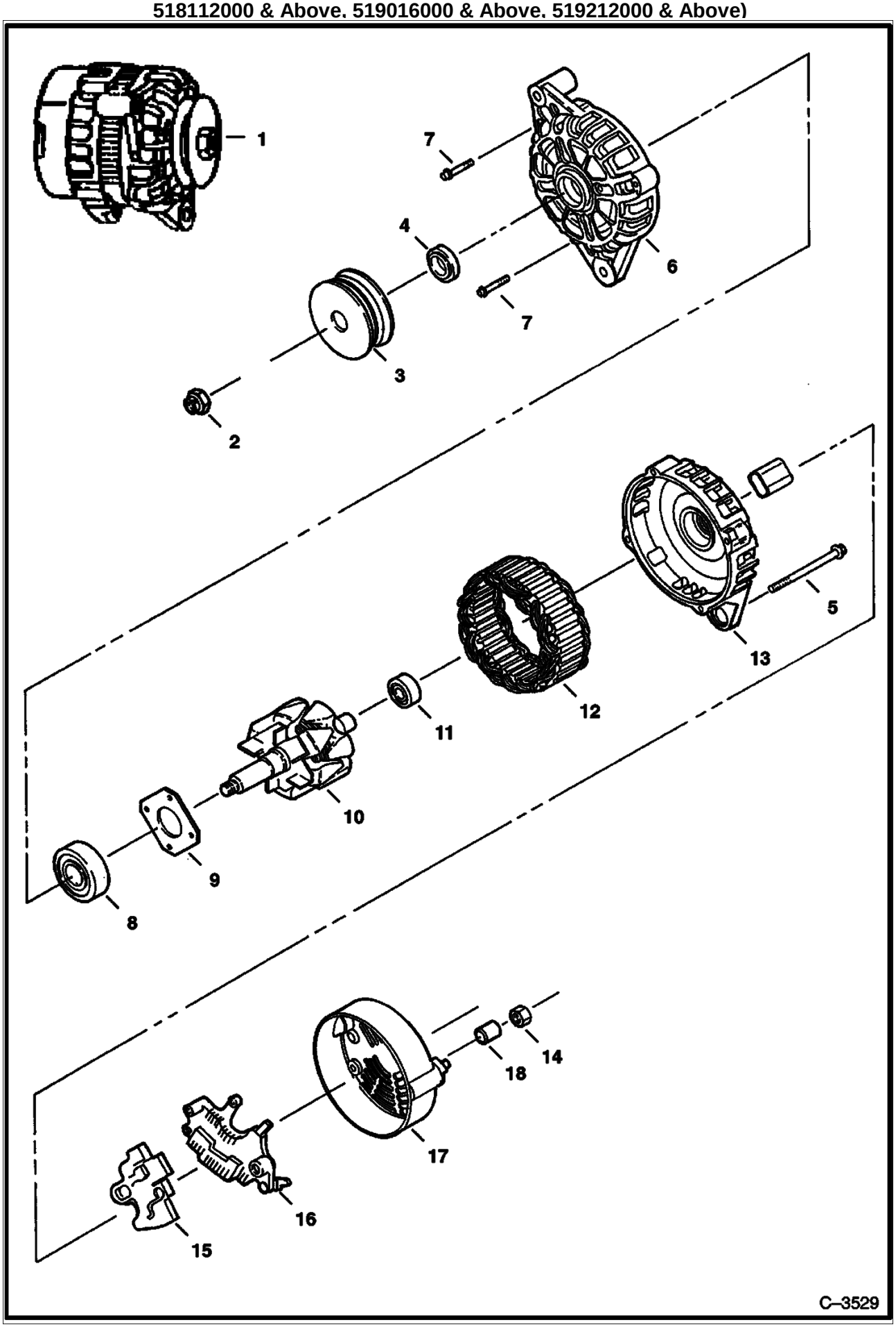

Page 256 - OSS# 2071349 - All rights reserved by Bobcat Company - 12/01/2009 - 20:50:59 - Produced by Ken Cook Co. with mediaioff

ALTERNATOR (Cont'd)
(S/N 500K11001 & Above, 517618000 & Above, 518012000 & Above, 518112000 & Above, 519016000 & Above, 519212000 & Above)

Ref No	Part Number	Description	Remarks	Serial Number	Qty
1	6678205	ALTERNATOR, 90 AMP	90 amp - Was 6675292 [A]		1
1	6678205REM	ALTERNATOR, 90 AMP	90 amp - Ref. 2-18		1
2	6677497	NUT			1
3	6677496	PULLEY			1
4	6677495	SPACER	front		1
5	6677494	BOLT			4
6	6677491	BRACKET	rear		1
7	6677817	BOLT			4
8	6677818	BEARING			1
9	6677819	RETAINER			1
10	6677492	ROTOR			1
11	6677820	BEARING			1
12	6677493	STATOR			1
13	6677490	BRACKET			1
14	6677486	NUT			1
15	6677489	REGULATOR ASSY			1
16	6677488	RECTIFIER			1
17	6677487	COVER			1
18	6677485	SPACER	rear		1

Page 257 - OSS# 2071349 - All rights reserved by Bobcat Company - 12/01/2009 - 20:50:59 - Produced by Ken Cook Co. with mediaioff

STARTER
(Nippondenso)

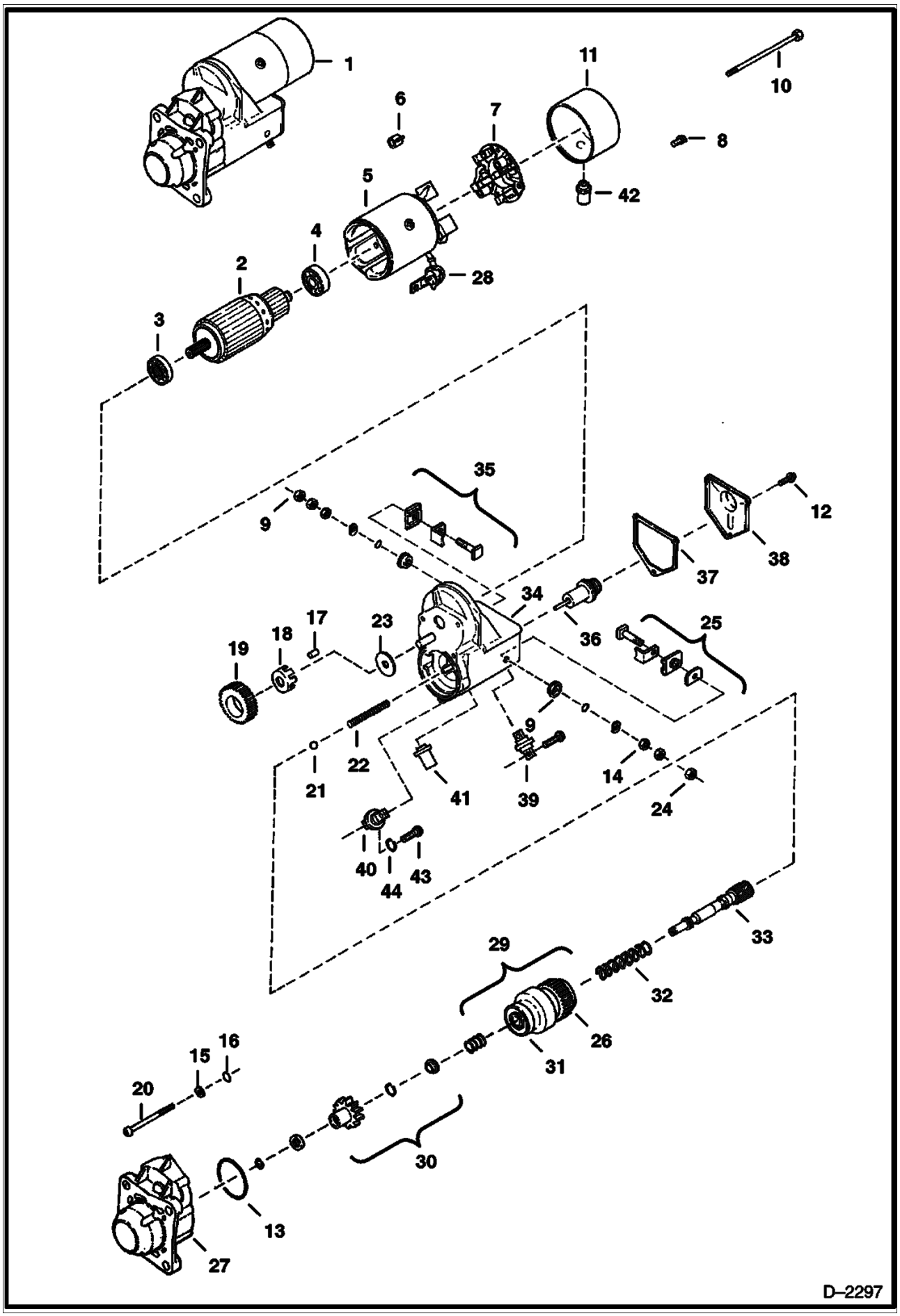

Page 258 - OSS# 2071349 - All rights reserved by Bobcat Company - 12/01/2009 - 20:50:59 - Produced by Ken Cook Co. with mediaIoff

STARTER (Cont'd)
(Nippondenso)

Ref No	Part Number	Description	Remarks	Serial Number	Qty
1		STARTER	See BTI342 NAP - Was 6667587 [A]		1
1	6667587REM	STARTER			1
2	6666621	ARMATURE	W/Ref. 3 & 4		1
3	6632417	BEARING			1
4	6632418	BEARING			1
4	6671128	BEARING			1
4	6671129	BEARING			1
5	6632419	HOUSING ASSY.			1
6	6632421	SPRING			4
7	6632420	BRUSH HOLDER	W/Ref. 6		1
8	6666634	BOLT	5mm x 9,4 mm		2
9	6666637	NUT			1
10	6666636	BOLT	6mm x 181mm		2
11	6671121	COVER			1
12	6666635	BOLT	5mm x 8mm		1
13	6666632	O-RING			1
14	6666630	WASHER	10mm		1
15	6666629	WASHER			3
16	6666631	WASHER			3
17	6632430	ROLLER			5
18	6632429	RETAINER			1
19	6632428	PINION			1
20	6666633	BOLT	6mm x 50mm		3
21	6671122	BALL			3
22	6632436	SPRING			1
23	6662437	WASHER			1
24	6666628	NUT	10mm		1
25	6671117	TERMINALS			1
26	6666622	DRIVE			1
27	6671124	HOUSING			1
28	6669365	BOOT			1
29	6671119	CLUTCH ASSY.	Ref. 26 & 30-33		1
30	6671118	PINION			1
31	6671127	BEARING			1
32	6632441	SPRING			1
33	6669354	SHAFT			1
34	6671123	HOUSING			1
35	6671116	TERMINALS			1
36	6632432	PLUNGER			1
37	6632433	GASKET			1
38	6632434	COVER			1
39	6669359	TERMINAL			1
40	6671120	TERMINAL			1
41	6669360	BUSHING			1
42	6669372	COVER			1
43	6671126	SCREW			1
44	6671125	WASHER			1

Page 259 - OSS# 2071349 - All rights reserved by Bobcat Company - 12/01/2009 - 20:50:59 - Produced by Ken Cook Co. with mediaioff

STARTER
(Valeo)

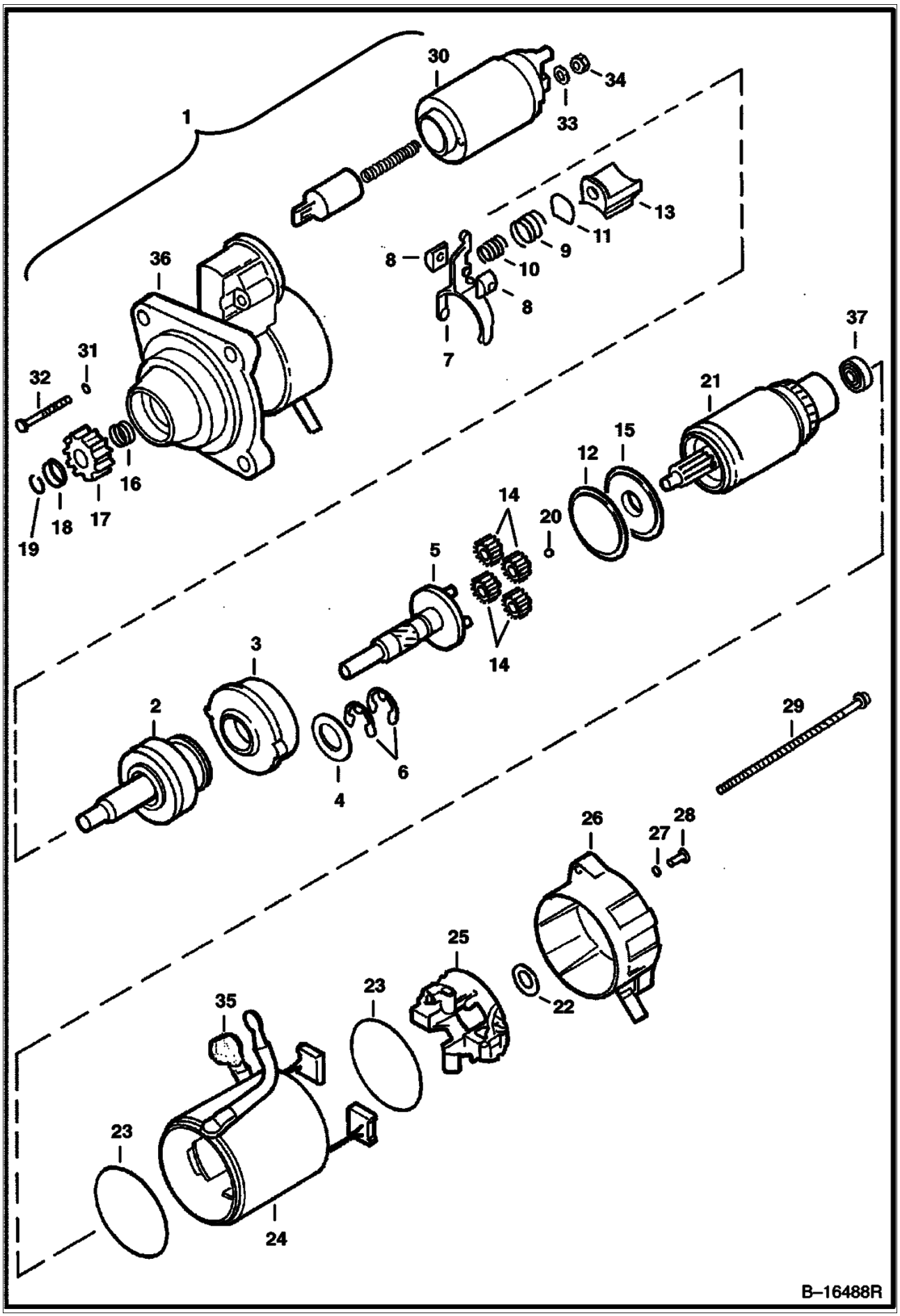

Page 260 - OSS# 2071349 - All rights reserved by Bobcat Company - 12/01/2009 - 20:50:59 - Produced by Ken Cook Co. with mediaioff

STARTER (Cont'd)
(Valeo)

Ref No	Part Number	Description	Remarks	Serial Number	Qty
1	6685190	STARTER	See BTI342 Was 6676958 [A]		1
1	6685190REM	STARTER			1
2	6680375	SHAFT	ORC assy		1
3	6680367	GEAR			1
4	6680378	WASHER			1
5	6680365	SHAFT			1
6	6680368	STOP RING			2
7	6680364	LEVER			1
8	6680357	HOLDER			2
9	6680381	SPRING			1
10	6680382	SPRING			1
11	6680370	PLATE			1
12	6680369	SEAL			1
13	6680371	LEVER			1
14	6680366	GEAR			4
15	6680372	BRACKET			1
16	6680361	SPRING			1
17	6680390	GEAR			1
18	6680360	STOP			1
19	6680359	STOP RING			1
20	6680362	BALL			1
21	6680374	ARMATURE	W/Ref. 37		1
22	6680363	WASHER			1
23	6680380	SEAL			2
24	6680373	YOKE			1
25	6680377	HOLDER			1
26	6680389	BRACKET			1
27	6680358	RING	rubber		2
28	6680384	BOLT			2
29	6680356	BOLT			2
30	6680376	SWITCH			1
31	6680379	SEAL			2
32	6680383	BOLT			2
33	6EM80	WASHER, SPRING			1
34	4DM8	NUT			1
35	6680355	BOOT			1
36	6680385	BRACKET	W/Ref. 7-11		1
37		BEARING	NAP - Order 6680374 - Was 6687631 [A]		1

Page 261 - OSS# 2071349 - All rights reserved by Bobcat Company - 12/01/2009 - 20:50:59 - Produced by Ken Cook Co. with mediaioff

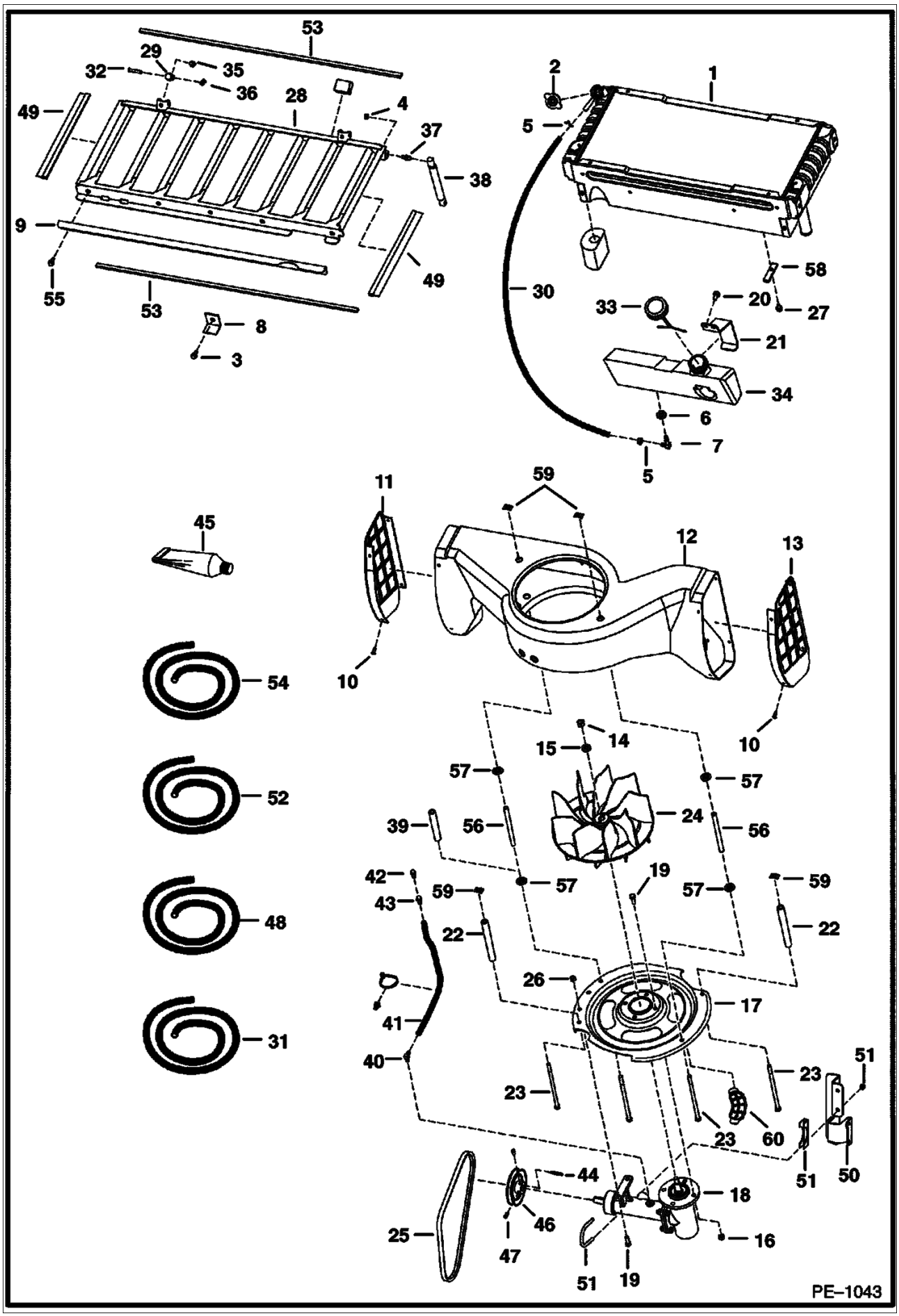

Page 262 - OSS# 2071349 - All rights reserved by Bobcat Company - 12/01/2009 - 20:50:59 - Produced by Ken Cook Co. with mediaioff

Ref No	Part Number	Description	Remarks	Serial Number	Qty
1	6675266	RADIATOR		517611001 - 517615367	1
1	6675266	RADIATOR		518011001 - 518011448	1
1	6685733	EXCHANGER, WATER RADIATOR	Was 6718648 [A]	500K11001 & Above	1
1	6685733	EXCHANGER, WATER RADIATOR	Was 6718648 [A]	519211001 & Above	1
1	6685733	EXCHANGER, WATER RADIATOR	Was 6718648 [A]	518011449 & Above	1
1	6685733	EXCHANGER, WATER RADIATOR	Was 6718648 [A]	518111001 & Above	1
1	6685733	EXCHANGER, WATER RADIATOR	Was 6718648 [A]	517615368 & Above	1
1	6685733	EXCHANGER, WATER RADIATOR	Was 6718648 [A]	519011001 & Above	1
2	6646678	CAP	14 PSI	517611001 - 517615367	1
2	6646678	CAP	14 PSI	518011001 - 518011448	1
2	6672491	CAP	14 PSI	500K11001 & Above	1
2	6672491	CAP	14 PSI	519211001 & Above	1
2	6672491	CAP	14 PSI	518011449 & Above	1
2	6672491	CAP	14 PSI	518111001 & Above	1
2	6672491	CAP	14 PSI	517615368 & Above	1
2	6672491	CAP	14 PSI	519011001 & Above	1
3	84G3712	BOLT			1
4	61D5	NUT			1
5	42HS4	CLAMP	Was 6515575 [B]		2
6	6553411	BUSHING			1
7	7126672	ELBOW	barbed - Was 6666302 [A]		1
8	6718672	BRACKET	W/Ref. 1 (6675266 Radiator)	517611001 - 517615367	1
8	6718672	BRACKET	W/Ref. 1 (6675266 Radiator)	518011001 - 518011448	1
9	6703471	BRACKET			1
10	6706517	SCREW	plastic louvers		8
11	6716571	LOUVER, PLASTIC LH	plastic - LH		1
12	7153544	HOUSING, FAN	Was 7104117 [A]		1
13	6716573	LOUVER, PLASTIC RH	plastic - RH		1
14	96D8	NUT			1
15	6701097	WASHER			1
16	7D6	NUT			4

Page 263 - OSS# 2071349 - All rights reserved by Bobcat Company - 12/01/2009 - 20:50:59 - Produced by Ken Cook Co. with mediaioff

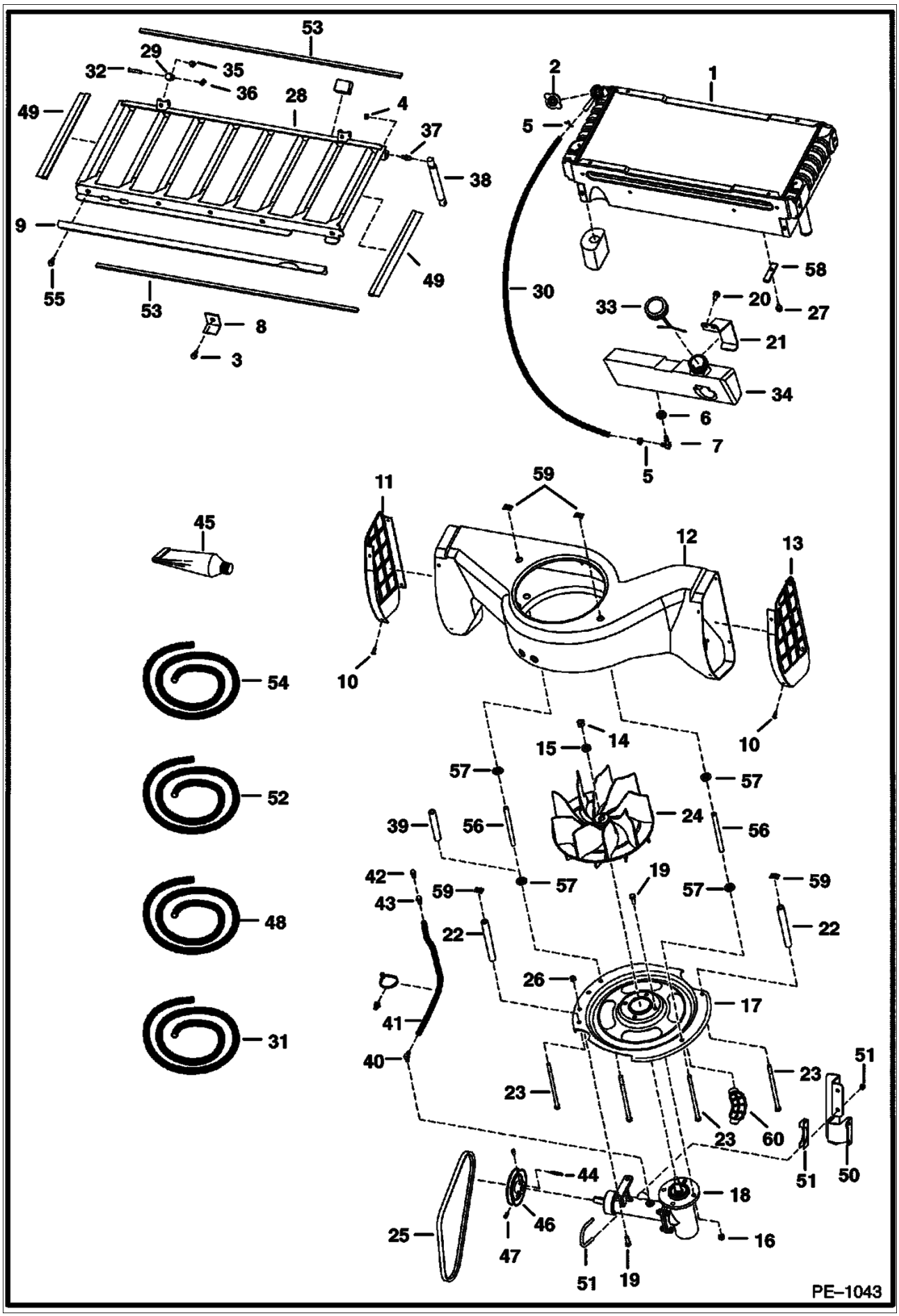

Page 264 - OSS# 2071349 - All rights reserved by Bobcat Company - 12/01/2009 - 20:50:59 - Produced by Ken Cook Co. with mediaioff

Ref No	Part Number	Description	Remarks	Serial Number	Qty
17	7107175	INLET	4 slot - Was 6717478 [A]		1
18	6734104	HOUSING ASSY.	See Illustration COOLING FAN DRIVE ASSY./ TS1002 Was 6702138 [A]		1
19	17C616	BOLT 5			6
20	84G3710	SCREW			2
21	6717650	MOUNT			1
22	6577382	SPACER			2
23	17C6116	BOLT			4
24	6715142	FAN			1
25	6718730	BELT, FAN	fan - 42"(1066,8 mm) long - Use W/ Ref. 46 (6715924 Pulley)		1
25	6732416	BELT	fan - 41" (104,4 mm) long - Use W/Ref. 46 (6703483 Pulley)		1
26	61D6	NUT 5			6
27	35C508	BOLT			2
28	6718291	GRILL			1
29	6579326	MOUNT			2
30		HOSE	NAP - 36''(914,4 mm)long - Order Ref. 52		1
31	6577822	HOSE	bulk - sold per foot		x
32	6567743	PIN			2
33	6675551	CAP			1
34	6717637	TANK			1
35	17C608	BOLT			2
36	6631418	PIN	ring		2
37	6649244	STUD			1
38	6674285	GAS SPRING			1
39		SPACER	NAP - Order Ref. 56 & (2) of Ref. 57		2
40	6657376	ELBOW			1
41		HOSE	NAP - 19.5 (495,3 mm) long - 16.5" (419,1 mm) - Order Ref. 31		1
42	6680970	BREATHER	Was 6670627 [A]		1
43	6610510	TIE			1
44	7J2108	KEY			1
45	6650407	ADHESIVE	tube - 1 oz		x
46	6715924	PULLEY	4.5"(114,3 mm) O.D. - Use W/Ref. 25 (6718730 bolt)		1
46	6703483	PULLEY, FAN DRIVE IDLER	5.25" (133,35 mm) O.D. - Use W/Ref. 25 (6732416 Belt)		1
47	6715143	SET SCREW	bond - W/Ref. 45		2
48	6646705	SEAL	bulk - sold per foot		x
49		MOULDING	NAP - 14.65"(372 mm) long - Order Ref. 48		2
50	7102200	SHIELD	belt - Was 6719851 [A]		1
51	6626631	CLAMP			1
52	6667189	HOSE	bulk - Sold Per Foot		x
53		FOAM STRIP	NAP - 34.5"(876,3mm) long - Order Ref. 54		2
54	6511855	SEAL	self adhesive - bulk - sold per foot		x
55	84G3112	BOLT 5			3
56	6732318	SPACER			2
57	6732457	WASHER	step		4
58	6679991	SEAL	washer		1
59	6674894	NUT	spring		2
60	6684474	INSERT FAN INLET			4

Page 265 - OSS# 2071349 - All rights reserved by Bobcat Company - 12/01/2009 - 20:50:59 - Produced by Ken Cook Co. with mediaioff

ENGINE & ATTACHING PARTS
(S/N 517611001 & Above, 518011001 & Above)

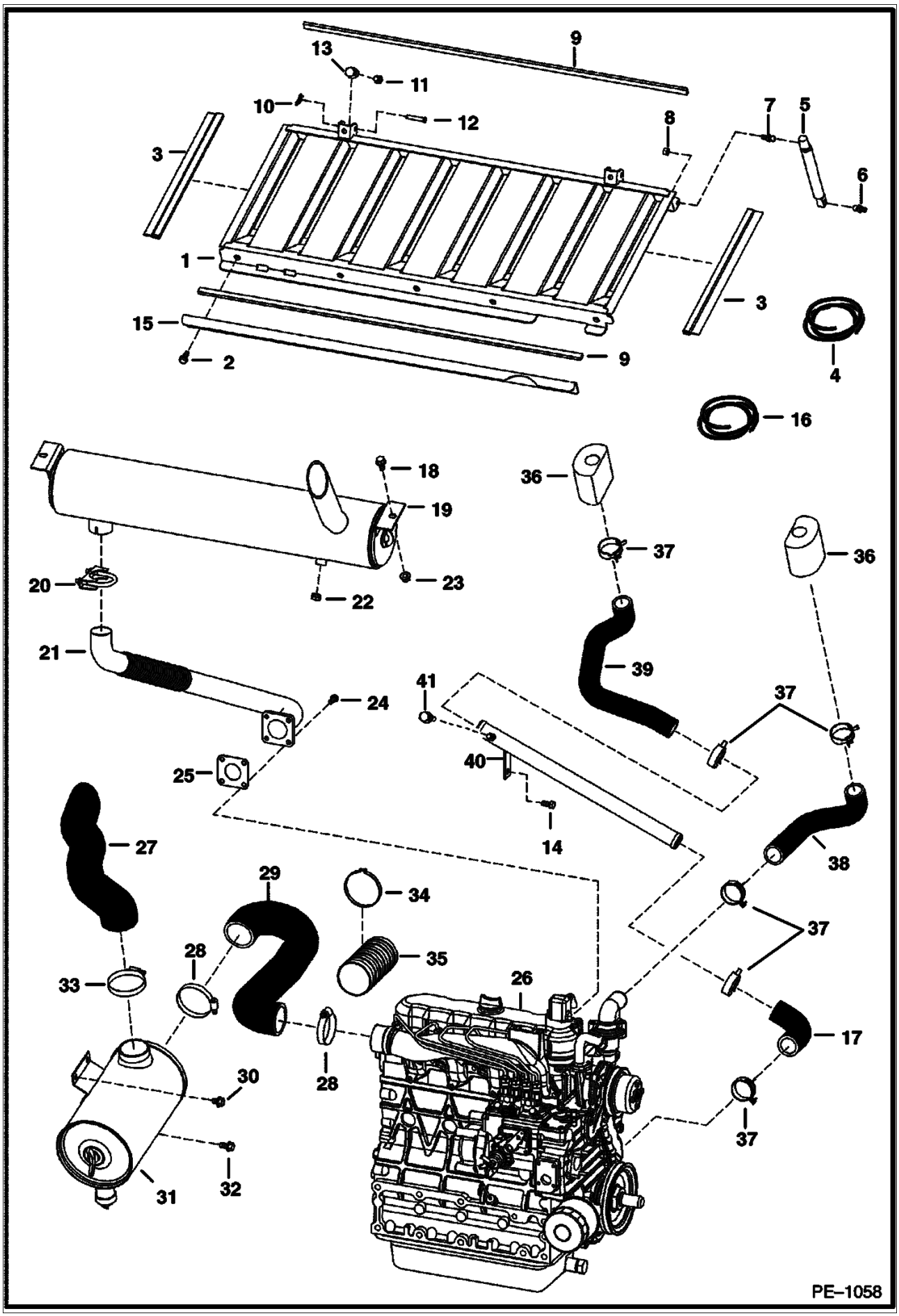

Page 266 - OSS# 2071349 - All rights reserved by Bobcat Company - 12/01/2009 - 20:50:59 - Produced by Ken Cook Co. with mediaioff

Ref No	Part Number	Description	Remarks	Serial Number	Qty
1	6718291	GRILL	Was 6705131 [A]		1
2	84G3112	BOLT 5			3
3		MOULDING	NAP - 14.65" (372,1 mm) long - Order Ref. 4		2
4	6646705	SEAL	bulk - sold per foot		x
5	6674285	GAS SPRING			1
6	6674285	GAS SPRING			1
7	6649244	STUD			1
8	61D5	NUT			1
9		FOAM STRIP	NAP - Order Ref. 16		2
10	6631418	PIN	ring		2
11	17C608	BOLT			2
12	6567743	PIN			2
13	6579326	MOUNT			2
14	17C612	BOLT 5			1
15	6703471	BRACKET	Was 6708981 [A]		1
16	6511855	SEAL	self adhesive - bulk - sold per foot		x
17	6576028	HOSE			1
18	35C612	BOLT			2
19	7100840	MUFFLER, EXHAUST	31.5" - Was 6671667 [A]		1
20	6677363	CLAMP, FULL CIRCLE	Was 657904B [B]		1
21	6701151	PIPE			1
22	6661062	PLUG	brass 3/8" (9,5 mm)		1
23	61D6	NUT 5			2
24	6701123	SCREW			4
25	6727752	GASKET	Was 6575580 [B]		1
26		ENGINE	See Illustration ENGINE & GASKET KITS/ B16450		1
27	6717674	HOSE			1
28	42HL300	CLAMP	Was 6598799		2
28	42H52	CLAMP			2
29		HOSE	NAP - W/Ref. 34 & 35 (6706393 sheild) - Was 6714889 [A]		1
29	7100573	HOSE	W/ (2) of Ref. 34 & (1) of Ref. 35 (6706394 shield)		1
30	84G3708	SCREW			2
31		AIR CLEANER	See Illustration AIR CLEANER/ B16478		1
32	84G3712	BOLT			1
33	42HL325	CLAMP	Was 42H000032B [B]		1
34	6664004	CLAMP	Use W/Ref. 35 (6706393 shield)		1
34	6664004	CLAMP	Use W/Ref. 35 (6706394 shield)		2
35	6706393	SHIELD	5" (127 mm) long		1
35	6706394	SHIELD	8" (203,2 mm) long		1
36	6726433	SPACER			2
37	5HM42	HOSECLAMP			6
38	6717591	HOSE			1
39	6717592	HOSE			1
40	6730999	TUBE ASSY	Was 6576029 [A]		1
41	40K6	PLUG			1

Page 267 - OSS# 2071349 - All rights reserved by Bobcat Company - 12/01/2009 - 20:50:59 - Produced by Ken Cook Co. with mediaioff

ENGINE & ATTACHING PARTS
(S/N 500K1001 & Above, 519011001 & Above, 518111001 & Above, 519211001 & Above)

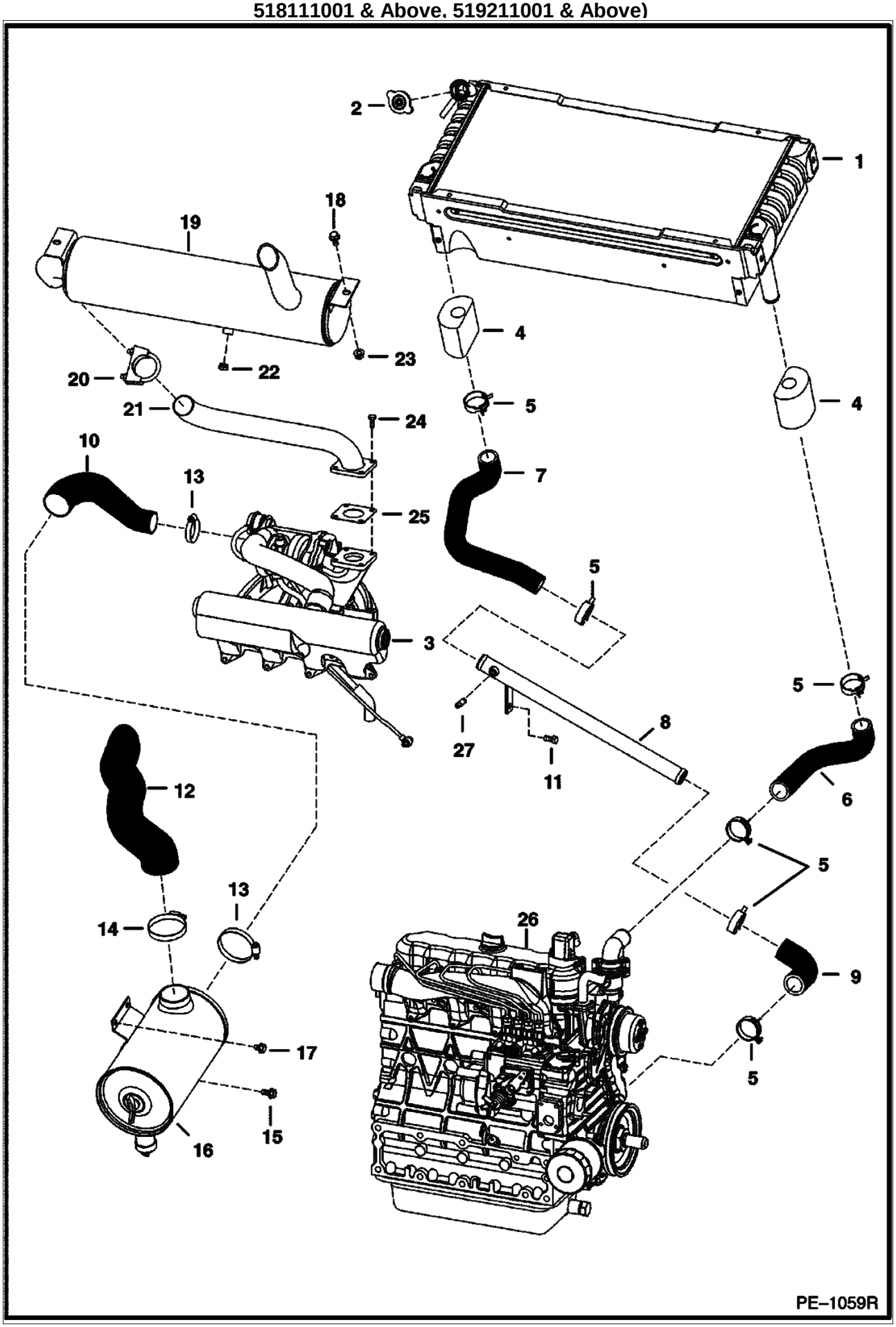

Page 268 - OSS# 2071349 - All rights reserved by Bobcat Company - 12/01/2009 - 20:50:59 - Produced by Ken Cook Co. with mediaioff

Ref No	Part Number	Description	Remarks	Serial Number	Qty
1	6685733	EXCHANGER, WATER RADIATOR	Was 6718648 [A]		1
2	6672491	CAP	14 PSI - Was 6646678 [B,D]		1
3		TURBO	See Illustration TURBO CHARGER/ B16456		1
4	6726433	SPACER			2
5	5HM42	HOSECLAMP			6
6	6717591	HOSE			1
7	6717592	HOSE			1
8	6730999	TUBE ASSY	Was 6576029 [A]		1
9	6576028	HOSE			1
10	6719565	HOSE			1
11	17C612	BOLT 5			1
12	6717674	HOSE			1
13	42HL300	CLAMP	Was 6598799 [A]		2
13	42H52	CLAMP			2
14	42H32	HS CLAMP5			1
15	84G3712	BOLT			1
16		AIR CLEANER	See Illustration AIR CLEANER/ B16478		1
17	84G3708	SCREW			2
18	35C612	BOLT			2
19	6676728	MUFFLER, EXHAUST	Was 6718564 [A]		1
20	6677363	CLAMP, FULL CIRCLE	Was 657904B [B]		1
21	6677371	PIPE, TUBE EXHAUST	Was 6719566 [A]		1
22	6661062	PLUG	brass 3/8" (9,5 mm)		1
23	61D6	NUT 5			2
24	6701123	SCREW			4
25	6727753	GASKET	Was 6666816 [A]		1
26		ENGINE, V2003-T-EB-BOBCAT-1	See Illustration ENGINE & GASKET KITS/ B16451		1
27	40K6	PLUG			1

Page 269 - OSS# 2071349 - All rights reserved by Bobcat Company - 12/01/2009 - 20:50:59 - Produced by Ken Cook Co. with mediaioff

ENGINE & ATTACHING PARTS
(Belt Drive System)

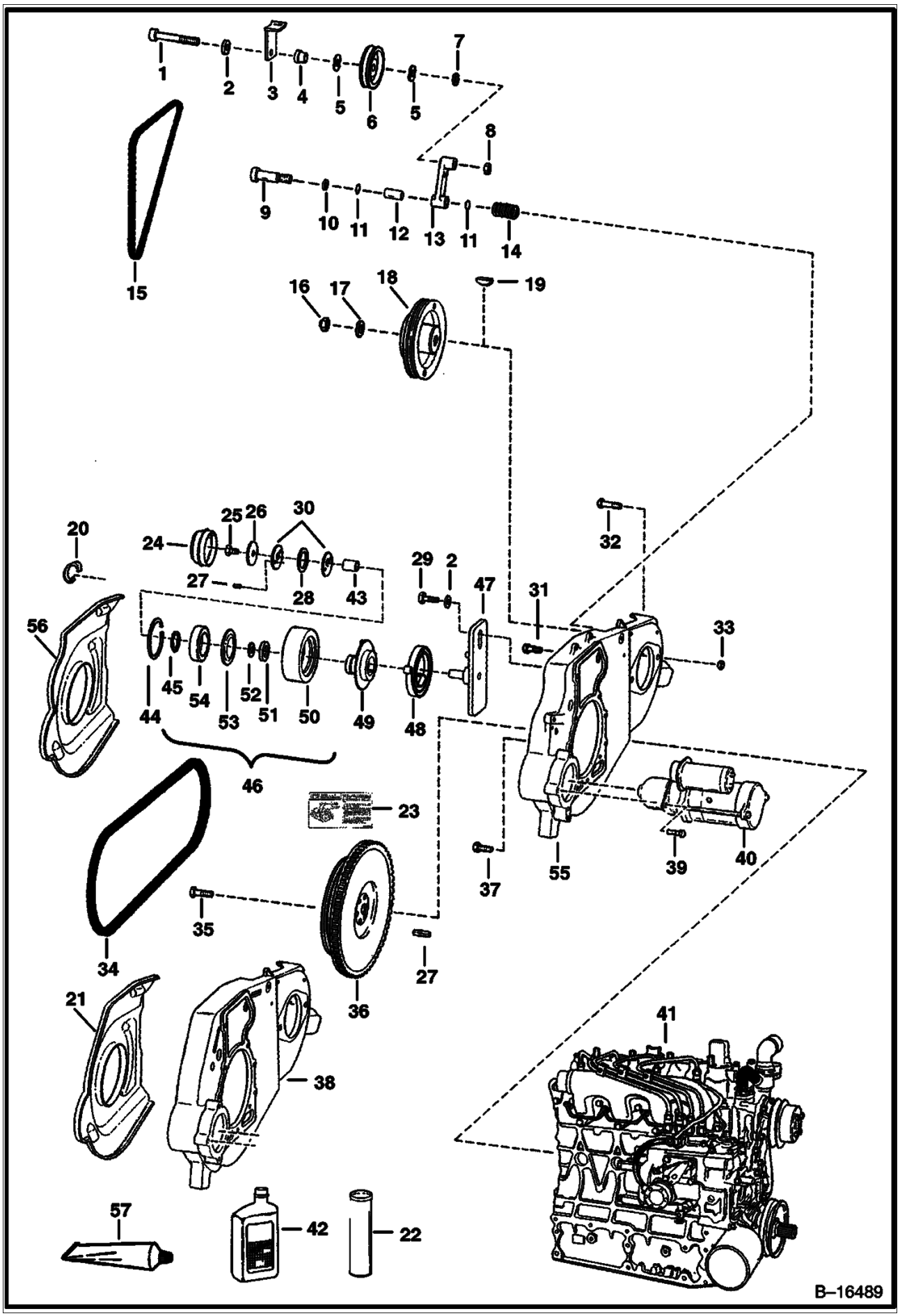

Page 270 - OSS# 2071349 - All rights reserved by Bobcat Company - 12/01/2009 - 20:50:59 - Produced by Ken Cook Co. with mediaIoff

Ref No	Part Number	Description	Remarks	Serial Number	Qty
1	73G656	SCREW			1
2	6704484	WASHER	thrust		3
3	6702474	RETAINER	fan drive idler belt		1
4	6704443	BUSHING	spacer		1
5	6660995	GREASE RING	grease		2
6	6662997	PULLEY, FAN DRIVE IDLER	fan drive idler		1
7	6704444	WASHER			1
8	61D6	NUT 5			1
9	38C820	SCREW	shoulder		1
10	6655781	BEARING			1
11	6704820	O-RING			2
12	6670682	BEARING	nylon		1
13	6725212	ARM	W/Ref. 12 - Was 6703507 [A]		1
14	6700115	SPRING, TORSION			1
15		BELT	See Illustration COOLING SYSTEM/ PE1043 - Ref. 25 - fan drive		1
16	92D12	NUT			1
17	6576033	WASHER			1
18	6704424	PULLEY, PUMP HYD	to hyd. pump - 3 groove - 7.4" (188 mm) dia.	5176 16547 & Bel	1
18	6704424	PULLEY, PUMP HYD	to hyd. pump - 3 groove - 7.4" (188 mm) dia.	5180 11614 & Bel	1
18	6704424	PULLEY, PUMP HYD	to hyd. pump - 3 groove - 7.4" (188 mm) dia.	5190 15163 & Bel	1
18	6704424	PULLEY, PUMP HYD	to hyd. pump - 3 groove - 7.4" (188 mm) dia.	5192 11131 & Bel	1
18	6726539	PULLEY	to hyd. pump - 3 groove - 7.95" (202 mm) dia.	500K 11001 & Abv	1
18	6726539	PULLEY	to hyd. pump - 3 groove - 7.95" (202 mm) dia.	5190 15164 & Abv	1
18	6726539	PULLEY	to hyd. pump - 3 groove - 7.95" (202 mm) dia.	5192 11132 & Abv	1
18	6726539	PULLEY	to hyd. pump - 3 groove - 7.95" (202 mm) dia.	5180 11615 & Abv	1
18	6726539	PULLEY	to hyd. pump - 3 groove - 7.95" (202 mm) dia.	5176 16548 & Abv	1
19	6J807	KEY, WOODRUFF			1
19	6682261	KEY	square key		1
20	6703022	CLIP			3
21	6704450	SHIELD	Use W/Ref. 18 (6704424 Pulley)	5176 16547 & Bel	1
21	6704450	SHIELD	Use W/Ref. 18 (6704424 Pulley)	5192 11131 & Bel	1
21	6704450	SHIELD	Use W/Ref. 18 (6704424 Pulley)	5190 15163 & Bel	1
21	6704450	SHIELD	Use W/Ref. 18 (6704424 Pulley)	5180 11614 & Bel	1
22	6903122	GREASE, MULTI PURPOSE #2 - 10	W/Ref. 39 - Was 6599719 [A]		x
23	6709030	DECAL	belt tension spring loaded idler		1
24	6708770	CAP	dust		1
25	43C610	BOLT	pre-applied thread locker - Was 17C610 [B]		1
26	6705232	WASHER			1
27	6713370	PIN			2
28	6710585	WASHER	wave spring		1
29	17C620	BOLT			1
30	6705231	WASHER			2
31	6719828	BOLT	Was 6CM01230B [B]		2
32	17C828	BOLT	hyd pump mount		2
33	85D8	NUT, 5			2
34	6672021	BELT, DRIVE	pump drive - USe W/Ref. 18 (6704424 Pulley)	5176 16547 & Bel	1
34	6672021	BELT, DRIVE	pump drive - USe W/Ref. 18 (6704424 Pulley)	5180 11614 & Bel	1
34	6672021	BELT, DRIVE	pump drive - USe W/Ref. 18 (6704424 Pulley)	5190 15163 & Bel	1

Page 271 - OSS# 2071349 - All rights reserved by Bobcat Company - 12/01/2009 - 20:50:59 - Produced by Ken Cook Co. with mediaioff

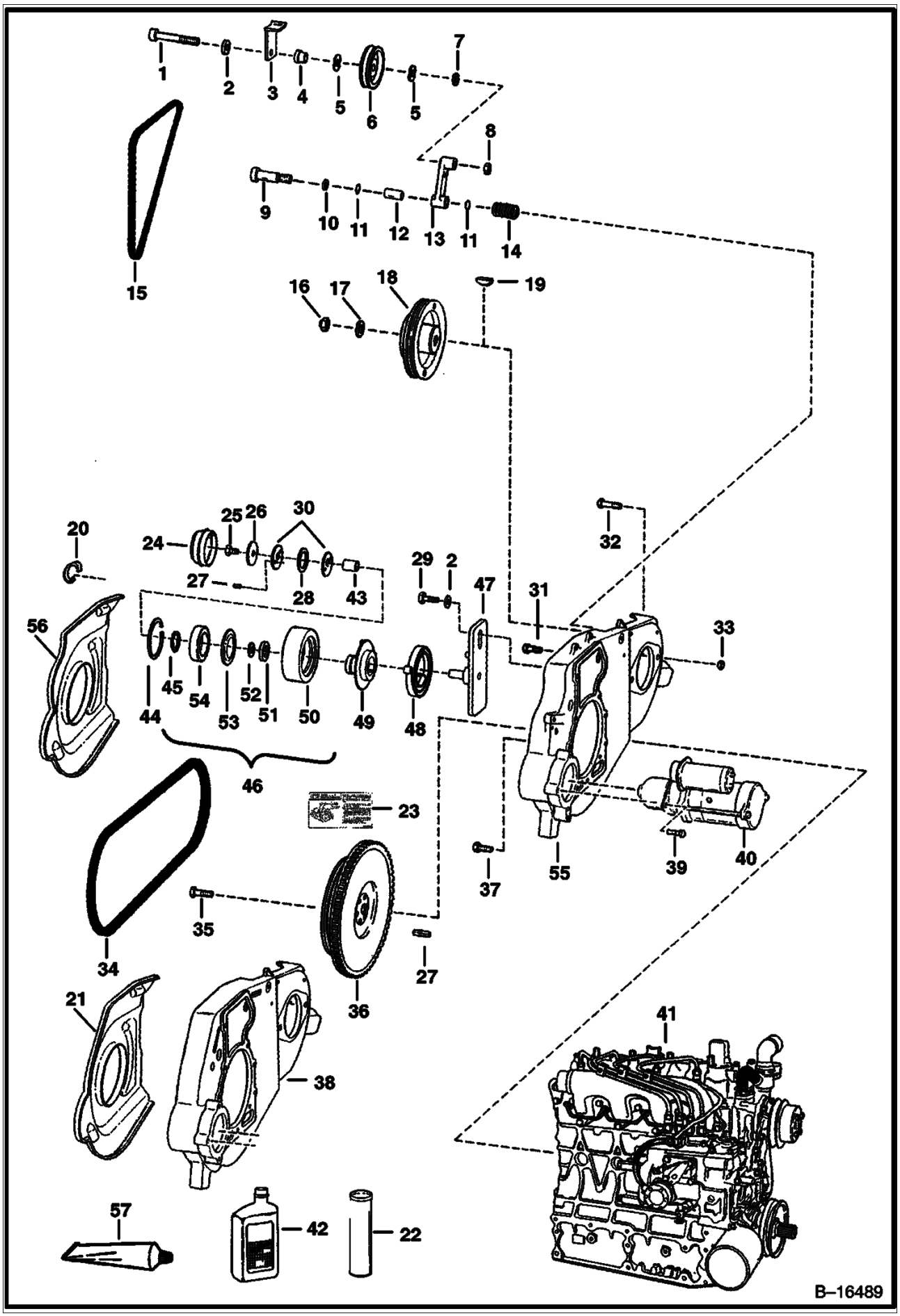

Page 272 - OSS# 2071349 - All rights reserved by Bobcat Company - 12/01/2009 - 20:50:59 - Produced by Ken Cook Co. with mediaIoff

Ref No	Part Number	Description	Remarks	Serial Number	Qty
34	6672021	BELT, DRIVE	pump drive - USe W/Ref. 18 (6704424 Pulley)	5192 11131 & Bel	1
34	6726898	BELT	pump drive - Use W/Ref. 18 (6726539 Pulley)	500K 11001 & Abv	1
34	6726898	BELT	pump drive - Use W/Ref. 18 (6726539 Pulley)	5176 16548 & Abv	1
34	6726898	BELT	pump drive - Use W/Ref. 18 (6726539 Pulley)	5192 11132 & Abv	1
34	6726898	BELT	pump drive - Use W/Ref. 18 (6726539 Pulley)	5190 15164 & Abv	1
34	6726898	BELT	pump drive - Use W/Ref. 18 (6726539 Pulley)	5180 11615 & Abv	1
35	6598275	BOLT	Was 6652487 [A]		6
36	6715165	FLYWHEEL	W/Ring Gear - Use W/Ref. 18 (6704424 Pulley)	5176 16547 & Bel	1
36	6715165	FLYWHEEL	W/Ring Gear - Use W/Ref. 18 (6704424 Pulley)	5190 15163 & Bel	1
36	6715165	FLYWHEEL	W/Ring Gear - Use W/Ref. 18 (6704424 Pulley)	5192 11131 & Bel	1
36	6715165	FLYWHEEL	W/Ring Gear - Use W/Ref. 18 (6704424 Pulley)	5180 11614 & Bel	1
36	6510470	RING GEAR			1
36	6726933	FLYWHEEL ASSY	W/Ring Gear - Use W/Ref. 18 (6726539 Pulley)	500K 11001 & Abv	1
36	6726933	FLYWHEEL ASSY	W/Ring Gear - Use W/Ref. 18 (6726539 Pulley)	5180 11615 & Abv	1
36	6726933	FLYWHEEL ASSY	W/Ring Gear - Use W/Ref. 18 (6726539 Pulley)	5176 16548 & Abv	1
36	6726933	FLYWHEEL ASSY	W/Ring Gear - Use W/Ref. 18 (6726539 Pulley)	5190 15164 & Abv	1
36	6726933	FLYWHEEL ASSY	W/Ring Gear - Use W/Ref. 18 (6726539 Pulley)	5192 11132 & Abv	1
36	6510470	RING GEAR			1
37	6719825	BOLT	Was 5CM01025B [B]		7
38		MOUNT	NAP - Order Ref. 55 & 56 - It may be necessary to reposition the battery & battery pan - Was 6700541 [A]		1
39	35C620	BOLT 5			3
40		STARTER	See Illustration STARTER/ D2297		1
41		ENGINE	See Illustration ENGINE & GASKET KITS/ B16451 See Illustration ENGINE & GASKET KITS/ B16450		1
42	6661405	OIL			x
43	6682442	SLEEVE	bronze sleeve - Was 6704393 [A]		1
44	6658847	RING			1
45	6658536	RING			1
46	6735884	IDLER ASSY.	SPRING LOADED - REF. 24 - 29 & 43 - 53 - Also Order Ref. 23 - Was 6711698 [A]		1
46	6714212	PULLEY ASSY.	Ref. 43-46 & 49 - 43		1
47	6735883	BRACKET	Was 6708767 [A]		1
48	6705491	SPRING	torsion		1
49	6711699	HUB ASSY.			1
50	6704391	PULLEY	idler		1
51	6685735	SEAL	Was 6661112 [A]		1
52	6703168	BEARING	thrust		1
53	6664209	SEAL			1
54	6668114	BEARING	ball		1
55	6728062	MOUNT		500K 11001 & Abv	1
55	6728062	MOUNT		5192 11132 & Abv	1
55	6728062	MOUNT		5190 15164 & Abv	1
56	6726938	SHIELD	Use W/Ref. 18 (6726539 Pulley)	500K 11001 & Abv	1
56	6726938	SHIELD	Use W/Ref. 18 (6726539 Pulley)	5192 11132 & Abv	1
56	6726938	SHIELD	Use W/Ref. 18 (6726539 Pulley)	5190 15164 & Abv	1
56	6726938	SHIELD	Use W/Ref. 18 (6726539 Pulley)	5176 16548 & Abv	1
56	6726938	SHIELD	Use W/Ref. 18 (6726539 Pulley)	5180 11615 & Abv	1
56	7109712	SHIELD	Use W/ref. 18 (6726539 Pulley) - Use W/ A/C Option only - Was 6726937 [A]	500K 11001 & Abv	1
56	7109712	SHIELD	Use W/ref. 18 (6726539 Pulley) - Use W/ A/C Option	5176 16548 & Abv	1

Page 273 - OSS# 2071349 - All rights reserved by Bobcat Company - 12/01/2009 - 20:50:59 - Produced by Ken Cook Co. with mediaioff

ENGINE & ATTACHING PARTS (Cont'd)
(Belt Drive System)

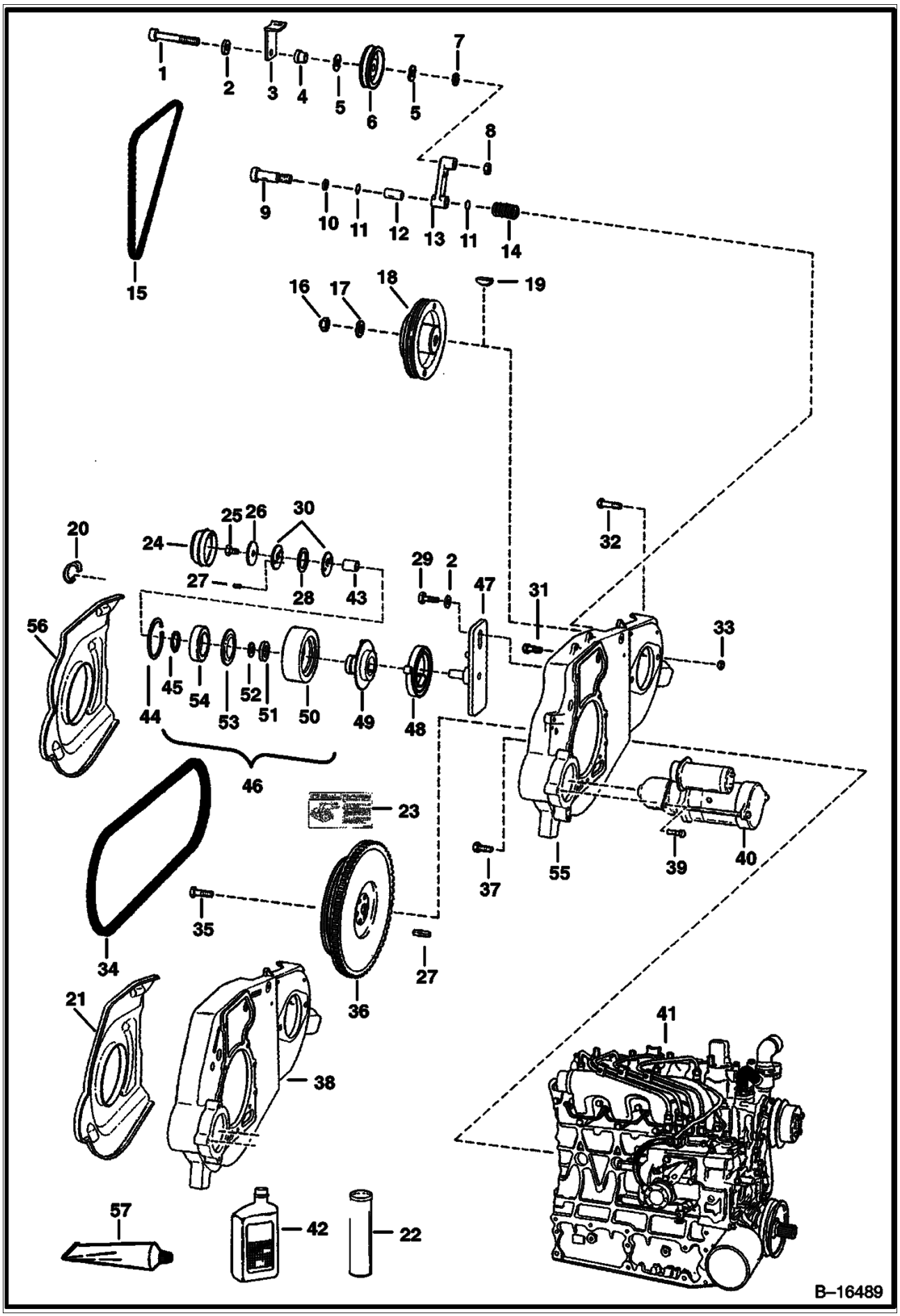

Page 274 - OSS# 2071349 - All rights reserved by Bobcat Company - 12/01/2009 - 20:50:59 - Produced by Ken Cook Co. with mediaioff

Ref No	Part Number	Description	Remarks	Serial Number	Qty
			only - Was 6726937 [A]		
56	7109712	SHIELD	Use W/ref. 18 (6726539 Pulley) - Use W/ A/C Option only - Was 6726937 [A]	5192 11132 & Abv	1
56	7109712	SHIELD	Use W/ref. 18 (6726539 Pulley) - Use W/ A/C Option only - Was 6726937 [A]	5190 15164 & Abv	1
56	7109712	SHIELD	Use W/ref. 18 (6726539 Pulley) - Use W/ A/C Option only - Was 6726937 [A]	5180 11615 & Abv	1
57	6633583	SEALANT			x

Page 275 - OSS# 2071349 - All rights reserved by Bobcat Company - 12/01/2009 - 20:50:59 - Produced by Ken Cook Co. with mediaioff

ENGINE & ATTACHING PARTS
(Engine Mounts)

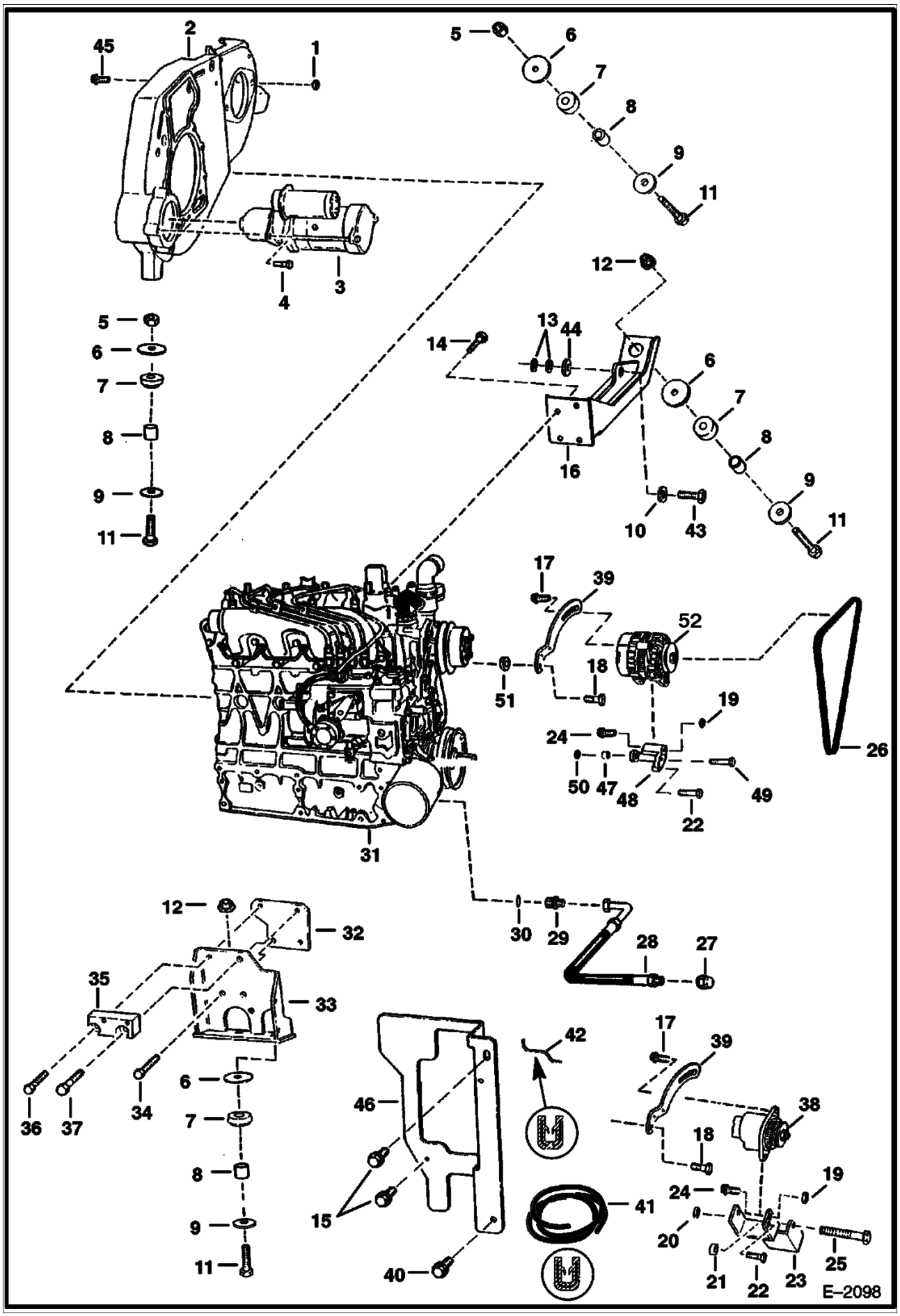

Page 276 - OSS# 2071349 - All rights reserved by Bobcat Company - 12/01/2009 - 20:50:59 - Produced by Ken Cook Co. with mediaioff

Ref No	Part Number	Description	Remarks	Serial Number	Qty
1	85D8	NUT, 5			2
2		MOUNT	See Illustration ENGINE & ATTACHING PARTS/ B16489		1
3		STARTER	See Illustration STARTER/ D2297		1
4	35C620	BOLT 5			3
5	6652918	NUT			2
6	6705106	WASHER			4
7	6661785	MOUNT, ENG			4
8	6706043	SPACER			4
9	6661787	WASHER			4
10	742640	WASHER	.25" thick - (17C-830 Bolt) - Use W/Ref. 43		1
10	6716408	SPACER	.40" thick - (47C-832 Bolt) - Use W/Ref. 43		1
10	6728337	SPACER	.58" thick - (6675221 Bolt) - Use W/Ref. 43		1
10	6734432	SPACER	1.0" thick - Use W/Ref. 43		1
11	43C852	BOLT	Was 43C000848B [B]		4
12	83D8	NUT 5			2
13	25E21	WASHER 5	use 2 max.		x
14	6719827	BOLT	Was 6CM01225B [B]		4
15	84G3712	BOLT			2
16	7104568	MOUNT	engine & hyd. pump - for horizontal hardware mounting of hydrostatic pump - Was 6712161 [A]		1
17	35C516	BOLT 10			3
18	1CM870	BOLT	Use W/Ref. 38		1
18	29CM820	SCREW	Use W/Ref. 52		1
19	57D5	NUT			1
20	85D6	LOCK NUT			1
21	6568877	WASHER			1
22	1CM890	BOLT			1
23	6562257	MOUNT			1
24	17C556	BOLT			1
25	17C648	BOLT 5			1
26	6704720	BELT, ALT	alternator - Use W/Ref. 38		1
26	6675837	BELT	alternator - Used W/Ref. 52		1
27	36K6	CAP			1
28	6704012	HOSE			1
29	15KB808	CONNECTOR	W/Ref. 30 - Was 15KN00006B [A]		1
29	97K8	O-RING	flared end		1
30	99K8	O-RING			x
31		ENGINE	See Illustration ENGINE & GASKET KITS/ B16451 See Illustration ENGINE & GASKET KITS/ B16450		1
32	6700535	SPACER			1
33	6703981	MOUNT	W/Ref. 32		1
34	6719828	BOLT	Was 6CM01230B [B]		2
35	6704322	MOUNT	fuel filter		1
36	6719826	BOLT	Was 5CM01035B [B]		1
37	6719829	BOLT	Was 6CM01235B [B]		1
38		ALTERNATOR	See Illustration ALTERNATOR/ C3312		1
39	6705711	BRACKET	Used W/Ref. 38		1
39	6727084	BRACKET	Used W/Ref. 52		1
40	84G3716	SCREW 5			2
41	6654139	MOULDING	bulk - sold per foot		x
42		MOULDING	NAP - 5.5"(139,7 mm) long - Order Ref. 41		1
43	17C830	BOLT	hyd. pump mount - 1.875" long		1
43	47C832	BOLT	hyd. pump mount - 2" long		1
43	6675221	BOLT	hyd. pump mount - 2.25" long		1
44	6703140	WASHER			1
45	17C828	BOLT	hyd pump mount		2

Page 277 - OS$# 2071349 - All rights reserved by Bobcat Company - 12/01/2009 - 20:50:59 - Produced by Ken Cook Co. with mediaioff

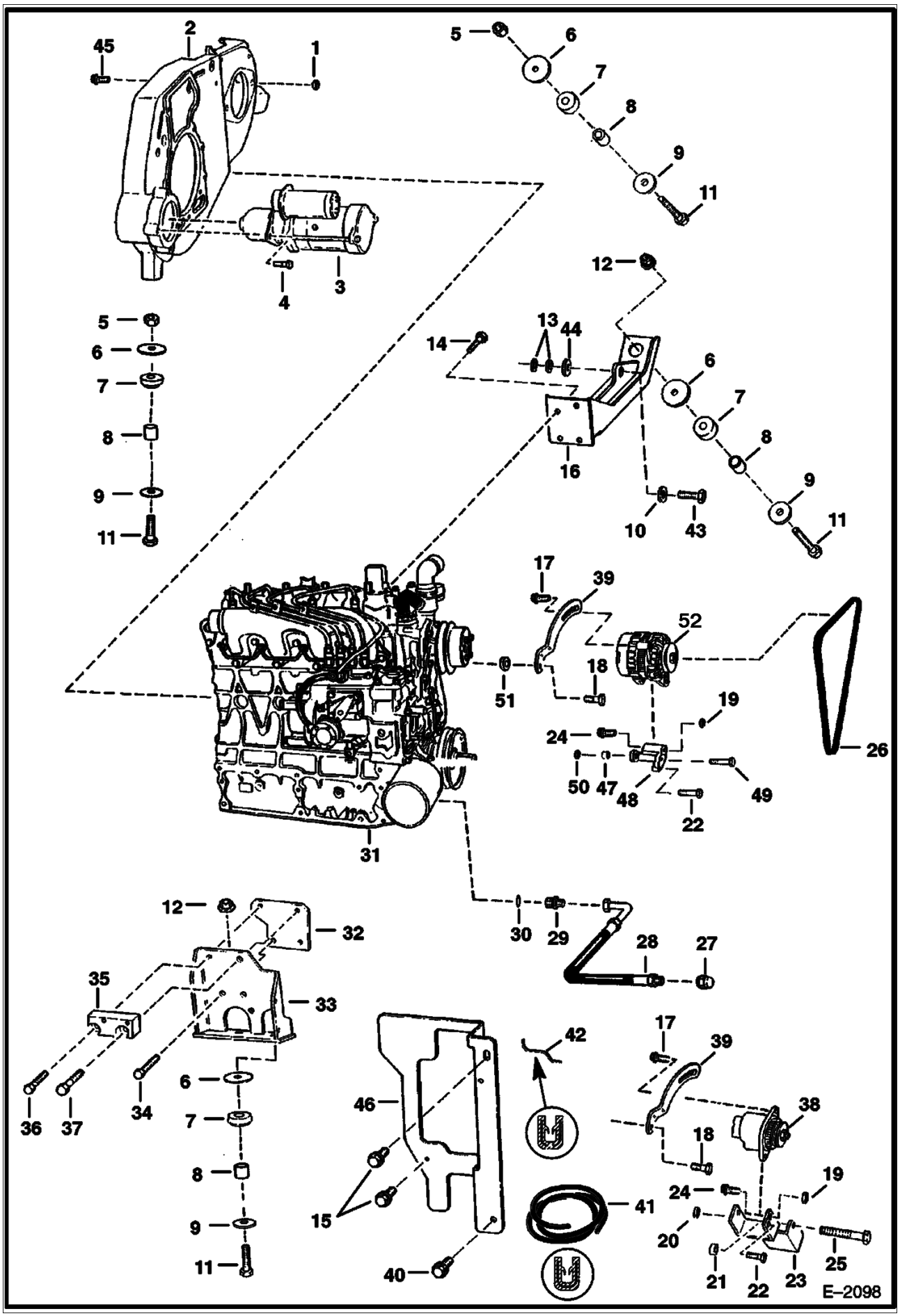

Page 278 - OSS# 2071349 - All rights reserved by Bobcat Company - 12/01/2009 - 20:50:59 - Produced by Ken Cook Co. with mediaIoff

Ref No	Part Number	Description	Remarks	Serial Number	Qty
46	6731060	SHIELD	bolts to upright - Was 6717812 [A]		1
47	6675838	BUSHING	Used W/Ref. 52		1
48	6725427	BRACKET	Used W/Ref. 52		1
49	1CM8100	SCREW	Used W/Ref. 52		2
50	53DM8	NUT	Used W/Ref. 52		2
51	6E5	WASHER			1
52		ALTERNATOR	See Illustration ALTERNATOR/ C3529 90 AMP.		1

Page 279 - OSS# 2071349 - All rights reserved by Bobcat Company - 12/01/2009 - 20:50:59 - Produced by Ken Cook Co. with mediaioff

THROTTLE

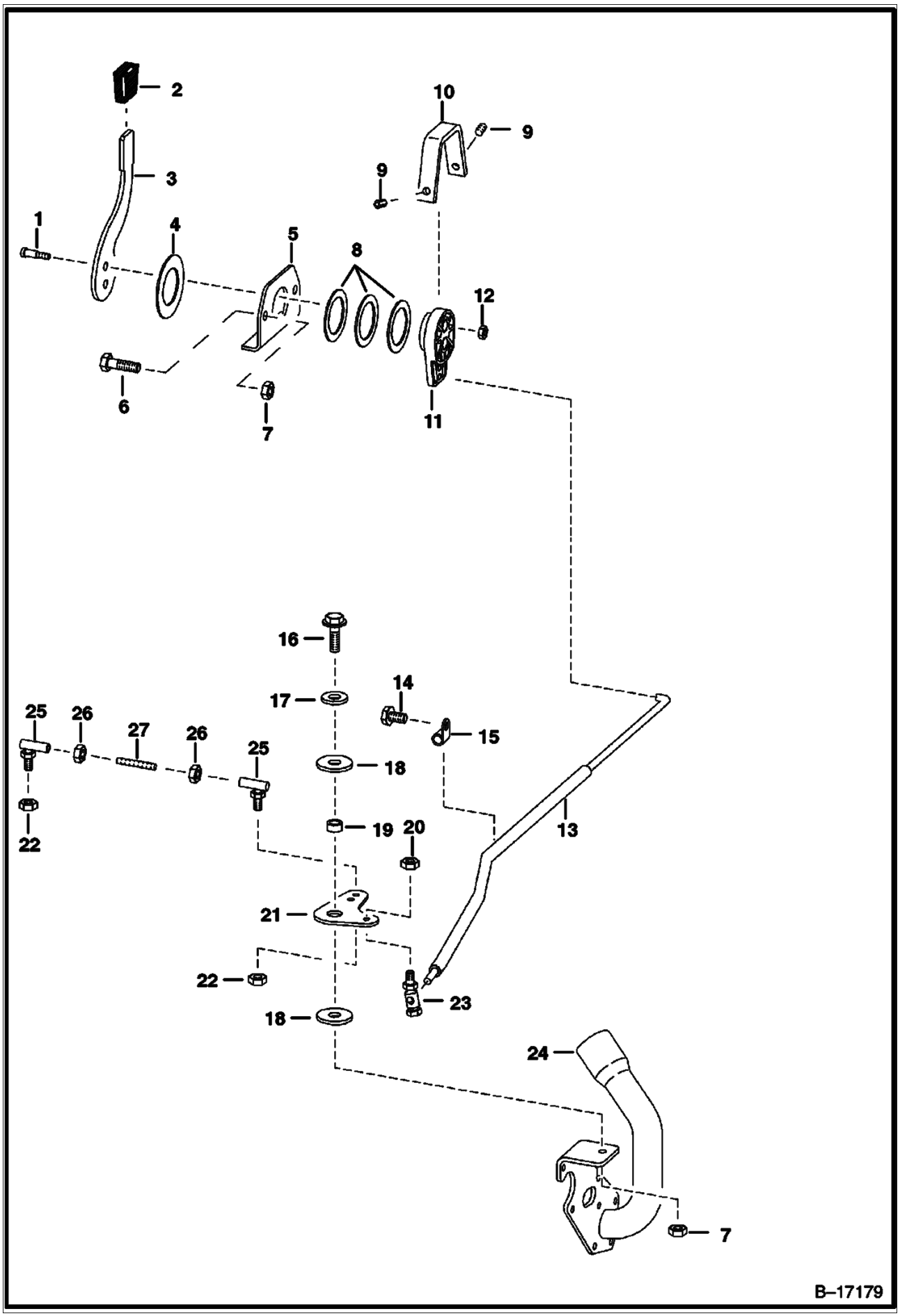

Page 280 - OSS# 2071349 - All rights reserved by Bobcat Company - 12/01/2009 - 20:50:59 - Produced by Ken Cook Co. with mediaioff

Ref No	Part Number	Description	Remarks	Serial Number	Qty
1	38C610	BOLT	shoulder		2
2	6564452	GRIP			1
3	6705452	LEVER			1
4	6567962	WASHER			1
5	6576262	MOUNT			1
6	17C626	BOLT			2
7	95D6	NUT	Was 91D000006B [A]		2
8	6630945	WASHER			3
9	6706572	SET SCREW			2
10	6576261	COVER	Was 6734520 [A]		1
11		LEVER	NAP - 2-hole rod attachment - Order 6734416 lever - Was 6709022 [A]		1
11	6734416	LEVER	3-hole rod attachment		1
12	85D5	NUT 5			2
13	6717566	ROD			1
14	84G3712	BOLT			1
15	31H38	CLAMP			1
16	84G3716	SCREW 5			1
17	25E18	WASHER			1
18	6700170	WASHER	plastic		2
19	6564343	SPACER			1
20	59D4	NUT 5	Was 85D000004B [B]		1
21	6578268	BELLCRANK			1
22	66D4	NUT	Was 86D000004B [B]		2
23	6557291	BALL JOINT			1
24	6719048	MOUNT	See Illustration GEARCASE/ B13160 FUEL SHUTOFF SOLENOID & OIL FILL		1
25	6554858	BALL JOINT			2
26	62D4	NUT			2
27	6576252	ROD			1

Page 281 - OSS# 2071349 - All rights reserved by Bobcat Company - 12/01/2009 - 20:50:59 - Produced by Ken Cook Co. with mediaioff

COOLING FAN DRIVE ASSY.

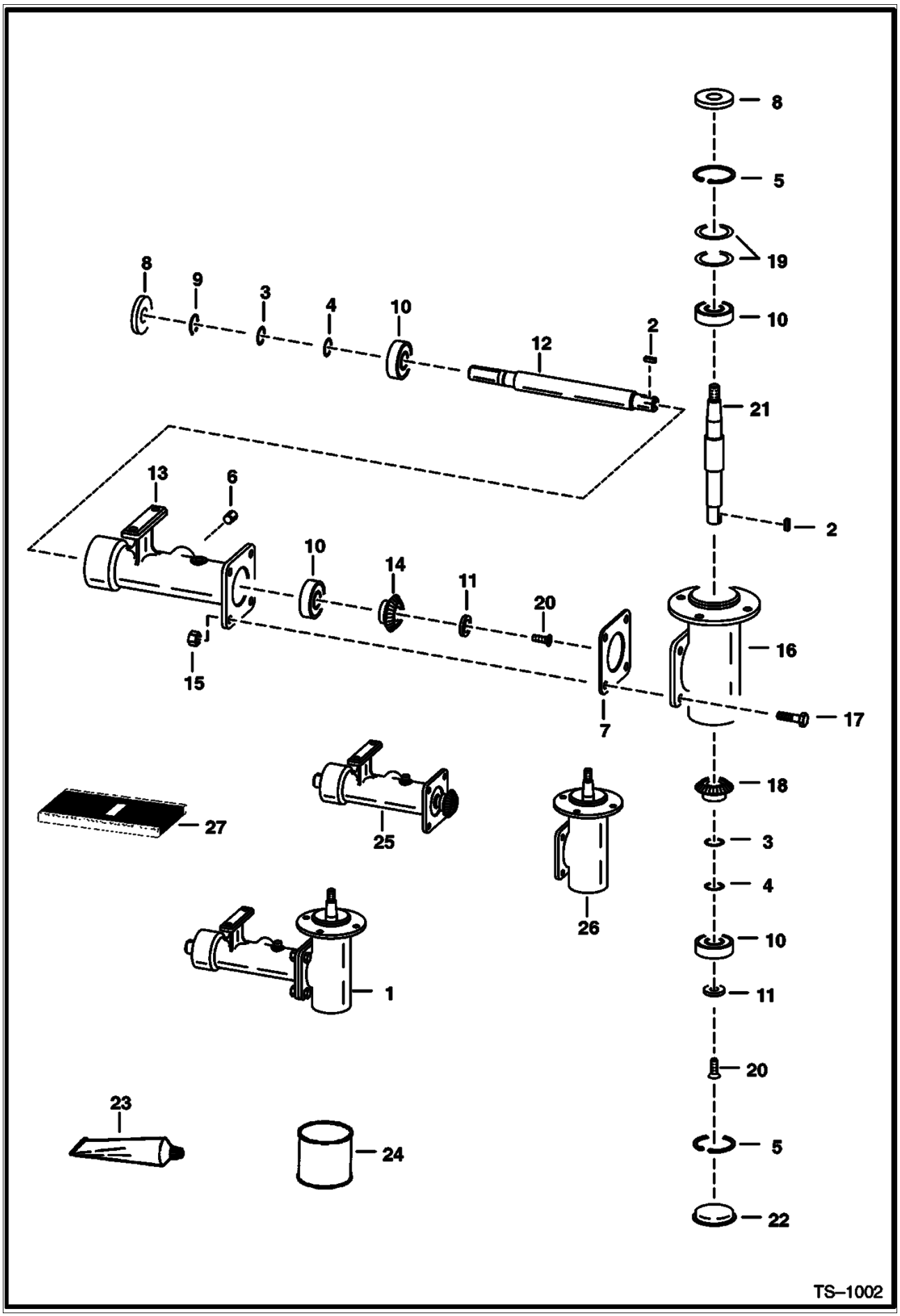

Page 282 - OSS# 2071349 - All rights reserved by Bobcat Company - 12/01/2009 - 20:50:59 - Produced by Ken Cook Co. with mediaioff

Ref No	Part Number	Description	Remarks	Serial Number	Qty
1		HOUSING ASSY.	See Illustration COOLING FAN DRIVE ASSY./ PE2349 - NAP - Ref. 2-22 - Order 6734104 housing assy - Was 6702138 [A]		1
2	7J2010	KEY			2
3	6702165	SHIM	.002" (0,05mm) thickness - 1" (25,4mm) OD		x
4	6701159	SHIM	.005" (0,13mm) thickness - 1" (25,4mm) OD		x
5	6653758	SNAP RING			2
6	16F8	PLUG			1
7	6578284	SHIM	.003" (0,08 mm) thickness		x
8	6653702	SEAL, OIL			2
9	6653757	SNAP RING			1
10	6646627	BEARING			4
11		WASHER	NAP - countersink - Was 6702140 [A]		2
12	6702137	SHAFT	keyed		1
13	6579641	HOUSING			1
14	6702103	GEAR, PINION	keyed		1
15	95D6	NUT			4
16		HOUSING	NSS - Order 6702138 Housing or Ref. 26		1
17	17C620	BOLT			4
18	6702102	GEAR	keyed		1
19	6702166	SHIM	.0002" (0,05mm) thickness - 2" (50,8mm) OD		x
19	6702144	SHIM	.005" (0,13mm) thickness - 2" (50,8mm) OD		x
20	9G512	SCREW			2
21	6702135	SHAFT	keyed		1
22	6700782	CAP	grease		1
23	6672486	SEALANT	polyurethane - Use W/Ref. 7 & 22		x
24	6903121	LUBE, GEAR 12	Was 6634393 [A]		x
25		HOUSING ASSY.	NAP - half - Order Ref. 1 - Was 6707078 [A]		1
26		HOUSING ASSY.	NAP - half - Order Ref. 1 - Was 6707077 [A]		1
27	6669384	SPEEDI SLEEVE	for .785" - .789" (19,94 mm - 20,04 mm) dia. shaft		1
27	6692357	SPEEDI SLEEVE	for .780" - .784" (19,81 mm - 19,91 mm) dia. shaft		1

Page 283 - OSS# 2071349 - All rights reserved by Bobcat Company - 12/01/2009 - 20:50:59 - Produced by Ken Cook Co. with mediaioff

COOLING FAN DRIVE ASSY.

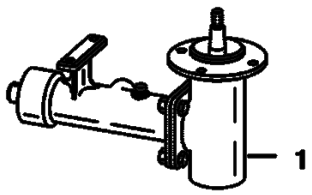

PE–2349

Page 284 - OSS# 2071349 - All rights reserved by Bobcat Company - 12/01/2009 - 20:50:59 - Produced by Ken Cook Co. with mediaioff

Ref No	Part Number	Description	Remarks	Serial Number	Qty
1	6734104	HOUSING ASSY.			1
1	6692357	SPEEDI SLEEVE	for .780" - .784" (18,81 mm - 19,91 mm) dia. shaft		1

Page 285 - OSS# 2071349 - All rights reserved by Bobcat Company - 12/01/2009 - 20:50:59 - Produced by Ken Cook Co. with mediaioff

ENGINE & GASKET KITS
(Kubota - V2203) (1G608-41000)

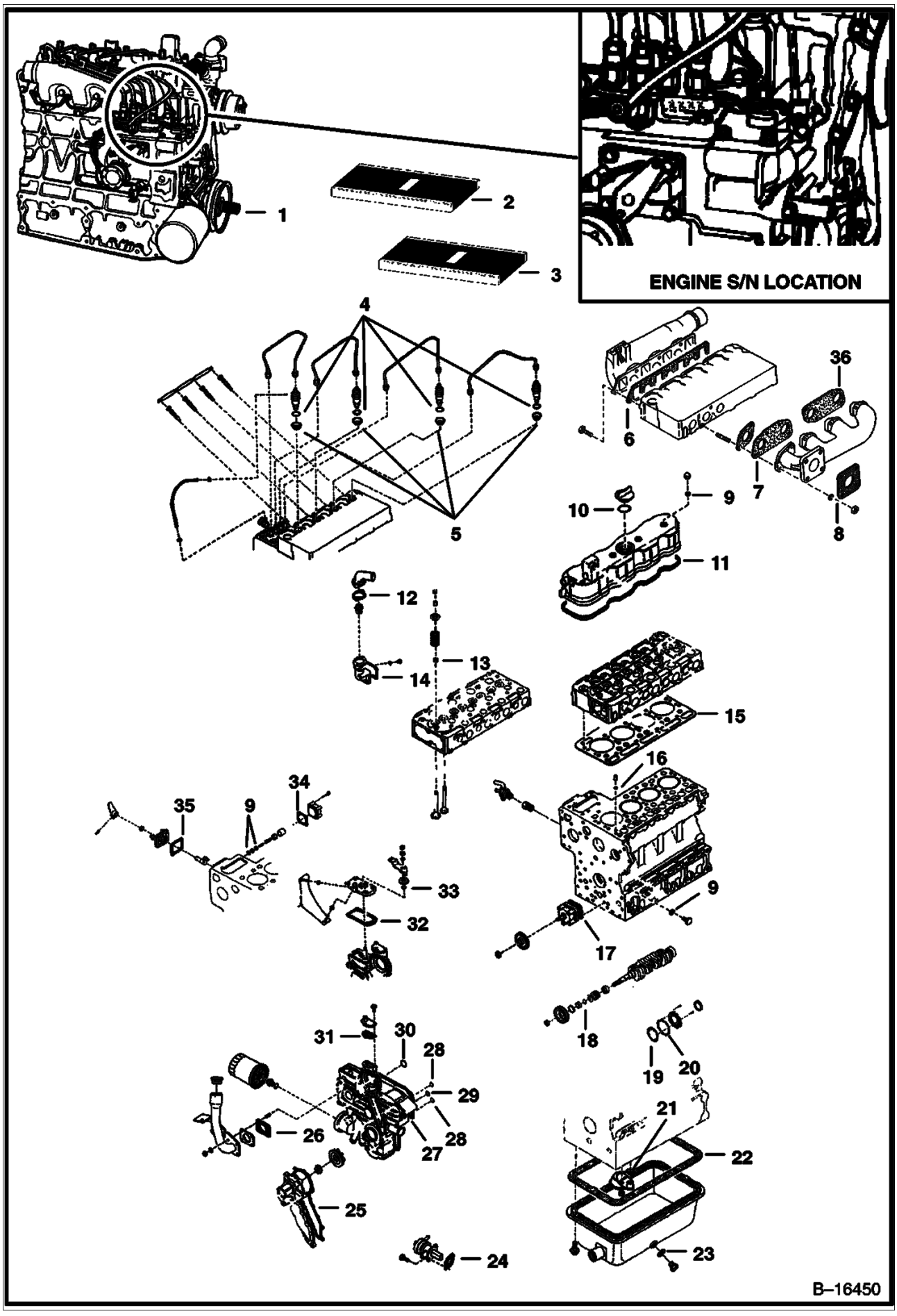

Page 286 - OSS# 2071349 - All rights reserved by Bobcat Company - 12/01/2009 - 20:50:59 - Produced by Ken Cook Co. with mediaIoff

Ref No	Part Number	Description	Remarks	Serial Number	Qty
1		ENGINE	NAP - Does not include starter, alternator, flywheel, & flywheel housing - Order 6685981 - Was 6704441 [A]	5180 11001 & Abv	1
1		ENGINE	NAP - Does not include starter, alternator, flywheel, & flywheel housing - Order 6685981 - Was 6704441 [A]	5176 11001 & Abv	1
1		ENGINE	NAP - Does not include starter, alternator, flywheel, & flywheel housing - Order 6685981 - Was 6704441 [A]	5181 11001 & Abv	1
1		SHORT BLOCK	NAP		1
1	6704441REM	ENGINE, KUBOTA V2203		5176 11001 & Abv	1
1	6704441REM	ENGINE, KUBOTA V2203		5181 11001 & Abv	1
1	6704441REM	ENGINE, KUBOTA V2203		5180 11001 & Abv	1
2	6657401	GASKET KIT	Upper - Ref. 6-16 & 36		1
3	7003006	GASKET	Lower - Does not include rear oil seal - Ref. 17-35 - Was 6657402 [A]		1
4	6655218	GASKET	See Illustration INJECTOR NOZZLES/ B13155		4
5	6655872	HEAT SEAL	See Illustration INJECTOR NOZZLES/ B13155		4
6	6666811	GASKET	See Illustration MANIFOLDS/ B13140		1
7	6666781	GASKET	See Illustration MANIFOLDS/ B13140		1
8	6727752	GASKET	See Illustration MANIFOLDS/ B13140 muffler - Was 6575580 [B]		1
9	3974095	MET-GASK	See Illustration CRANKCASE/ B13159		7
10	6684782	O-RING	See Illustration ROCKER ARM COVER/ B13158 - oil fill plug - Was 3966602 [A]		1
11	6598136	GASKET, COVER VALVE	See Illustration ROCKER ARM COVER/ B13158		1
12	6732199	GASKET	See Illustration WATER FLANGE & THERMOSTAT/ B13141 THERMOSTAT COVER - Was 6666790 [A]		1
13	6653830	SEAL, STEM VALVE	See Illustration VALVE ROCKER ARM/ B17305		8
14	6666802	GASKET	See Illustration WATER FLANGE & THERMOSTAT/ B13141 - water flange		1
15	6655159	GASKET	See Illustration CYLINDER HEAD/ B13153 CYLINDER HEAD		1
16	3974038	O RING	See Illustration CRANKCASE/ B13159		1
17	6666782	GASKET	See Illustration CRANKCASE/ B13159 WAS 3974456B [A]		1
18	3974577	O RING	See Illustration PISTON & CRANKSHAFT/ B13145 - crankshaft frt		1
19	6684788	GASKET	See Illustration PISTON & CRANKSHAFT/ B13145 Was 6655165 [A]		1
20	6666814	GASKET	See Illustration PISTON & CRANKSHAFT/ B13145 WAS 6655167 [A]		1
21	3966516	O RING	See Illustration OIL PAN/ B13148		1
22	6666817	GASKET	See Illustration OIL PAN/ B13148 OIL PAN - WAS 3975449B [A]		1
23	6680484	GASKET	See Illustration OIL PAN/ B13148 Was 3974403 [B]		1
24	3974502	GASKET	See Illustration FUEL & INJECTION PUMPS/ B13157 FUEL PUMP		1
25	6666804	GASKET	See Illustration WATER PUMP/ B13142 WAS 3974995B [A]		1
26	6714543	GASKET	See Illustration GEARCASE/ B13160		1
27	6666800	GASKET	See Illustration GEARCASE/ B13160 GEARCASE -		1

Page 287 - OS&H 2071349 - All rights reserved by Bobcat Company - 12/01/2009 - 20:50:59 - Produced by Ken Cook Co. with mediaioff

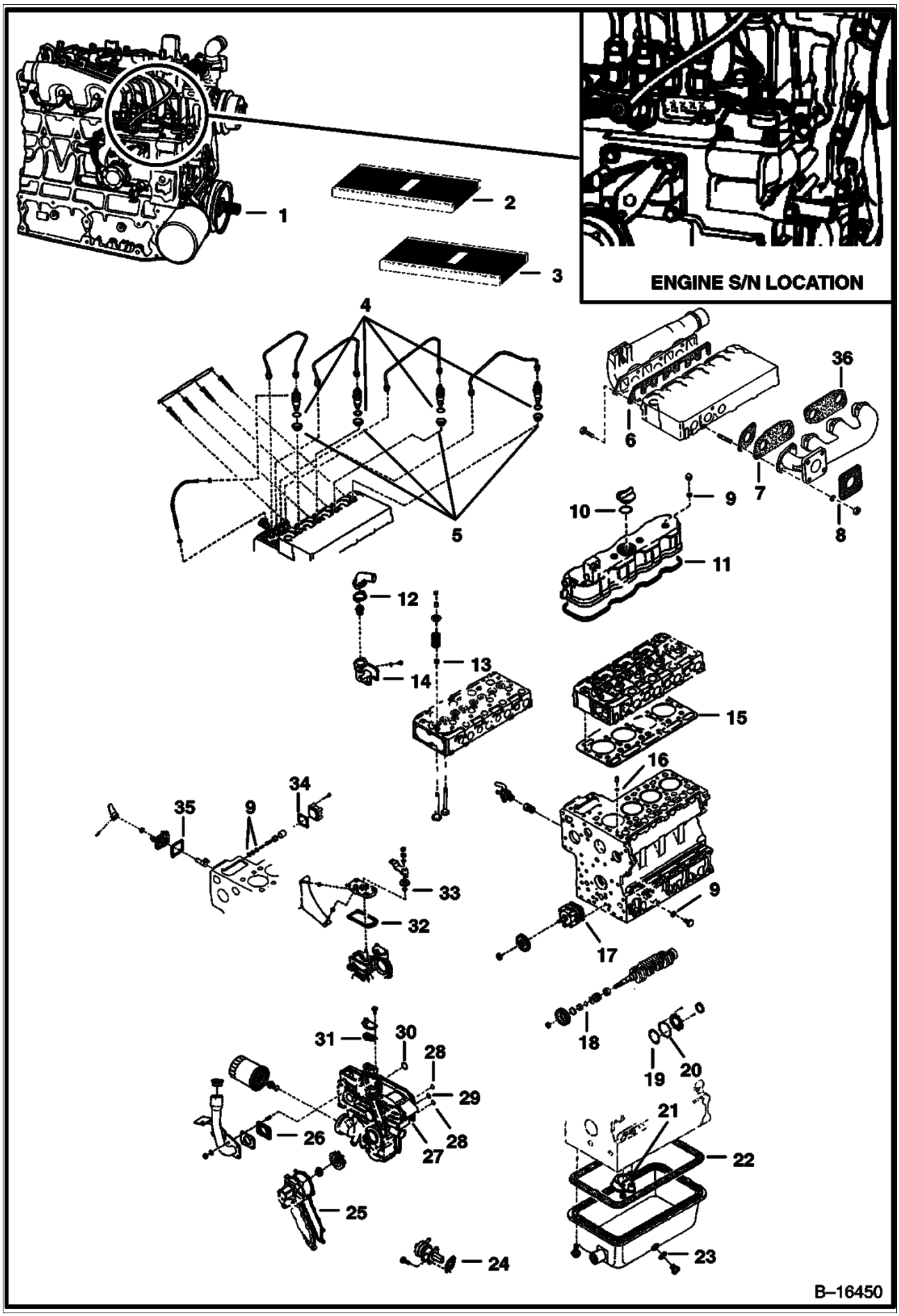

Page 288 - OSS# 2071349 - All rights reserved by Bobcat Company - 12/01/2009 - 20:50:59 - Produced by Ken Cook Co. with mediaIoff

Ref No	Part Number	Description	Remarks	Serial Number	Qty
			WAS 6653806 [A]		
28	3966515	O RING	See Illustration GEARCASE/ B13160		2
29	6655162	O-RING	See Illustration GEARCASE/ B13160		1
30	3966530	O RING	See Illustration GEARCASE/ B13160		1
31	6666803	GASKET	See Illustration GEARCASE/ B13160 WATER RETURN FLANGE - WAS 3974895B [A]		1
32	6666792	GASKET	See Illustration SPEED CONTROL PLATE/ B13137 WAS 6635392 [A]		1
33	3966512	O RING	See Illustration SPEED CONTROL PLATE/ B13137		1
34	6666827	GASKET	See Illustration FUEL CAMSHAFT/ B13144 WAS 3974630B [A]		1
35	6666783	GASKET	See Illustration ENGINE STOP LEVER/ B13139 PUMP COVER - WAS 3974601B [A]		1
36	6666791	GASKET	See Illustration MANIFOLDS/ B13140		1

Page 289 - OSS# 2071349 - All rights reserved by Bobcat Company - 12/01/2009 - 20:50:59 - Produced by Ken Cook Co. with mediaioff

GEARCASE
(Kubota - V2203) (1G608-41000)

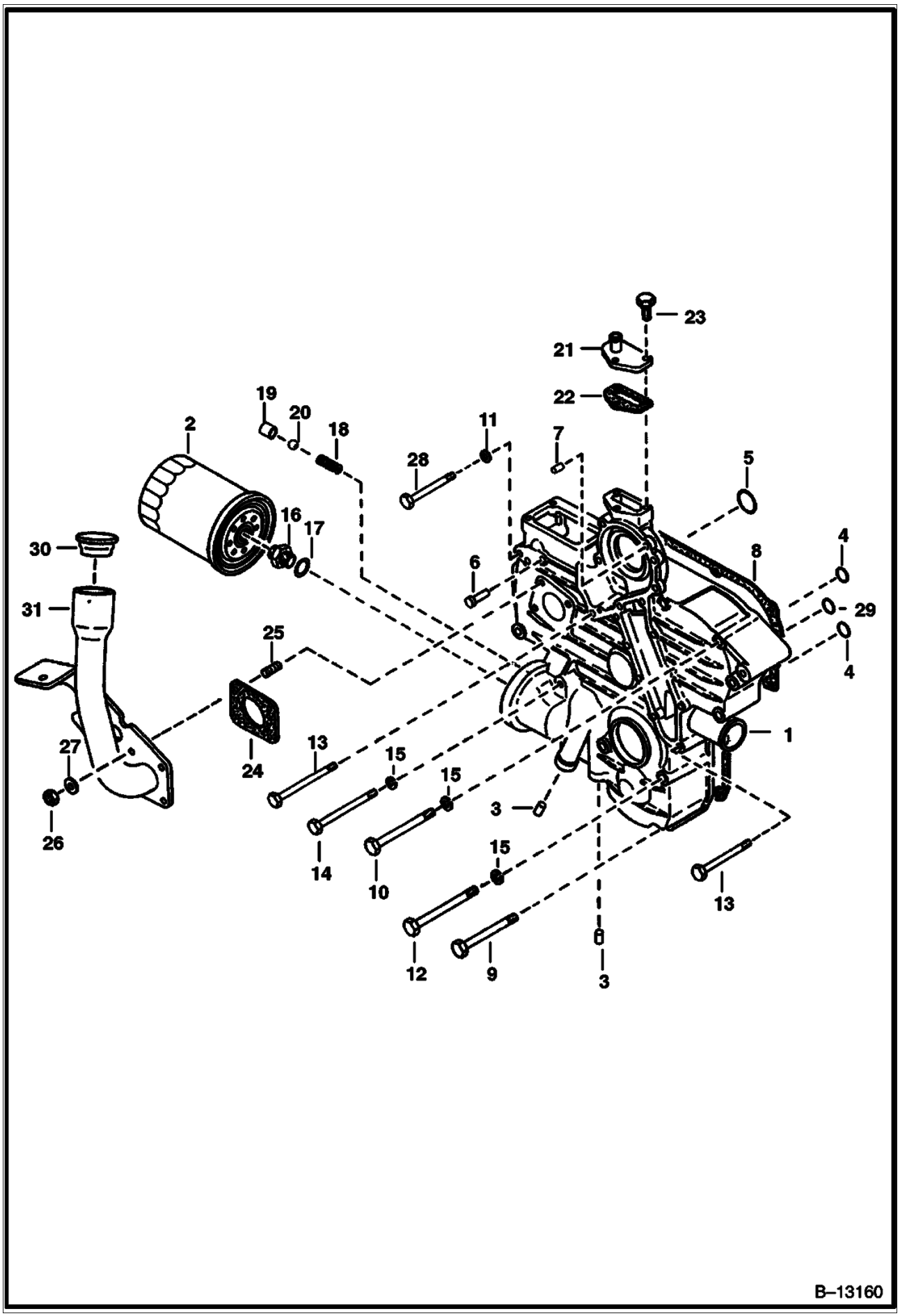

Page 290 - OSS# 2071349 - All rights reserved by Bobcat Company - 12/01/2009 - 20:50:59 - Produced by Ken Cook Co. with mediaioff

GEARCASE (Cont'd)
(Kubota - V2203) (1G608-41000)

Ref No	Part Number	Description	Remarks	Serial Number	Qty
1		CASE ASSY.	NAP - W/Ref. 3-7 & 29 - Order 6688640 & Ref. 4-7 & 29 - Was 6674164 [A]		1
1	6688640	GEAR HOUSING	W/Ref. 3		1
2	6675517	FILTER, OIL ENG	Was 3974896B [A]		1
3	6667425	PLUG	pin		2
4	3966515	O RING			2
5	3966530	O RING			1
6	6652592	PIN	start spring		1
7	3974395	PIN	straight		2
8	6666800	GASKET	gearcase - Was 6653806 [A]		1
9	3974888	BOLT			2
10	1CM870	BOLT			5
11	2EM8	WASHER, PLAIN			1
12	1CM880	BOLT			2
13	6653808	BOLT			3
14	1CM895	BOLT			2
15	6EM80	WASHER, SPRING			9
16	6653809	CONNECTOR			1
17	15EM180	WASHER		E/ YW4276 & Bel	1
17	6685501	WASHER		E/ YY0001 & Abv	1
18	6652652	SPRING			1
19	3974893	SEAT	valve		1
20	10J13	BALL			1
21	3974894	FLANGE	water return		1
22	6666803	GASKET	water return flange - Was 3974895B [A]		1
23	4CM620	BOLT			3
24	6714543	GASKET			1
25	6652764	STUD			4
26	1DM6	NUT			4
27	6EM60	WASHER, SPRING	spring		4
28	6653807	BOLT			1
29	6655162	O-RING			1
30	6703736	CAP			1
31	6719048	MOUNT			1

Page 291 - OSS# 2071349 - All rights reserved by Bobcat Company - 12/01/2009 - 20:50:59 - Produced by Ken Cook Co. with mediaioff

CRANKCASE
(Kubota - V2203) (1G608-41000)

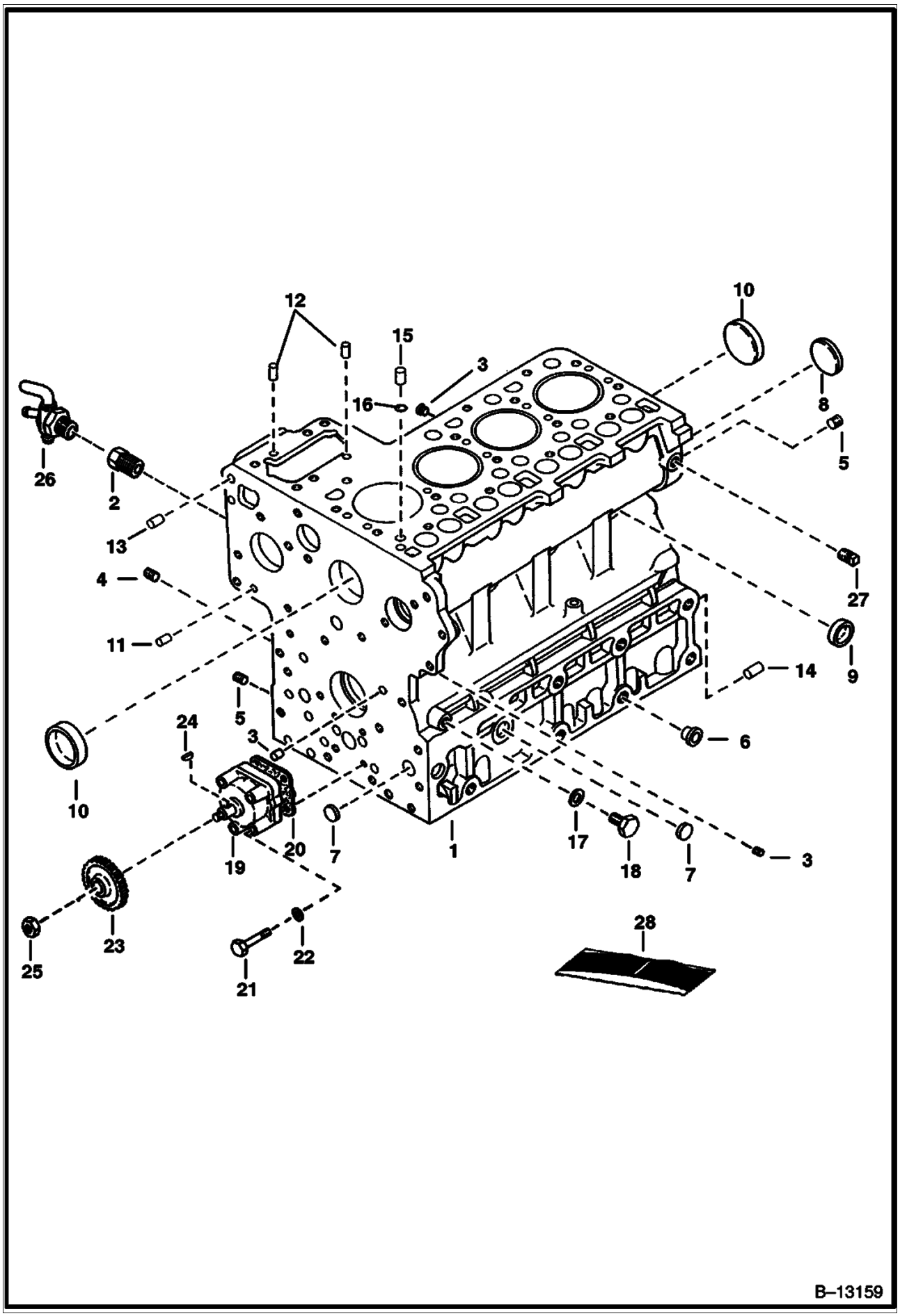

Page 292 - OSS# 2071349 - All rights reserved by Bobcat Company - 12/01/2009 - 20:50:59 - Produced by Ken Cook Co. with mediaIoff

Ref No	Part Number	Description	Remarks	Serial Number	Qty
1		CRANKCASE	NAP - assy - W/Ref. 2-15 - for 2.044" (51,94mm) crankshaft journals - use (1) each of 6689503, 6685483, 6685484, 6685486, (4) 6685487 & (2) 6685488 - Was 6655149 [A]		1
2	3974871	CONNECTOR			1
3	6652574	PLUG			6
4	6655869	PLUG			12
5	6652575	PLUG			2
6	6598187	PLUG			21
7	4FM18	PLUG	expansion		3
8	4FM45	PLUG	expansion		1
9	3974389	CAP, SEALING	sealing		6
10	3974390	PLUG	sealing		2
11	3974393	PIN	straight		2
12	3974394	PIN	straight		2
13	3974395	PIN	straight		2
14	3974868	PIN	straight		1
15	3974037	PIN	pipe		1
16	3974038	O RING			1
17	3974095	MET-GASK			1
18	6655884	PLUG			1
19	6689441	PUMP, OIL ENG	Was 3975426 [A]		1
20	6666782	GASKET	Was 3974456B [A]		1
21	6655195	BOLT			4
22	6EM60	WASHER, SPRING			4
23	3975441	GEAR			1
24	6969805	KEY,FEATHER	Was 15JM00410B [A]		1
25	3DM12	NUT			1
26	6672190	DRAINCOCK			1
27	16F2	PLUG			1
28	7003006	GASKET	Lower - Does not include rear oil seal - Was 6657402 [A]		1

Page 293 - OSS# 2071349 - All rights reserved by Bobcat Company - 12/01/2009 - 20:50:59 - Produced by Ken Cook Co. with mediaioff

ROCKER ARM COVER
(Kubota - V2203) (1G608-41000)

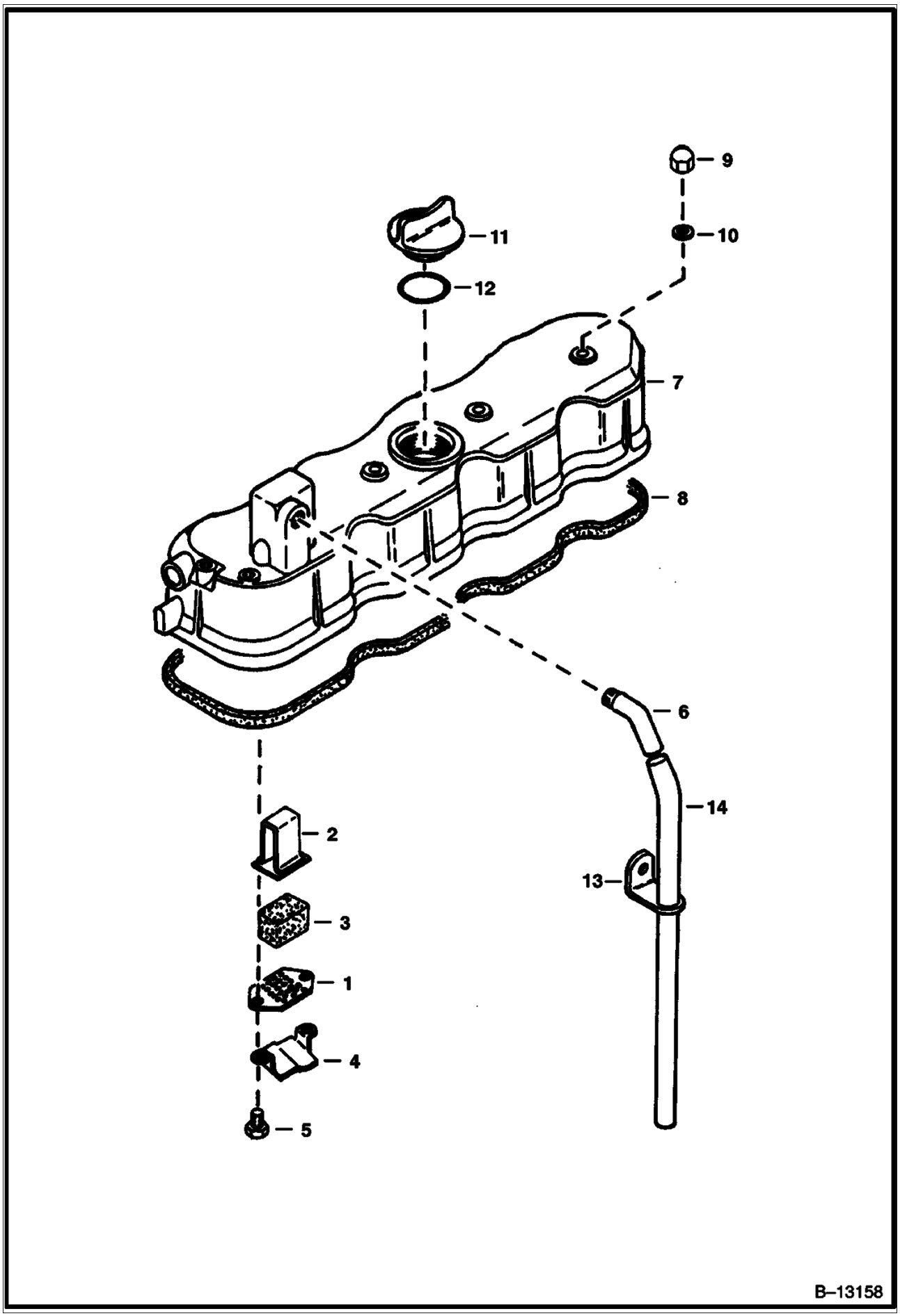

Page 294 - OSS# 2071349 - All rights reserved by Bobcat Company - 12/01/2009 - 20:50:59 - Produced by Ken Cook Co. with mediaioff

ROCKER ARM COVER (Cont'd)
(Kubota - V2203) (1G608-41000)

Ref No	Part Number	Description	Remarks	Serial Number	Qty
1	3974924	PLATE	element		1
2	3974925	PLATE	element		1
3	3974926	BREATHER	breather		1
4	3974927	SHIELD	breather		1
5	3975436	SCREW	W/Washer		2
6	6652624	JOINT	breather pipe		1
7	6655175	COVER	valve		1
8	6598136	GASKET, COVER VALVE			1
9	3974923	NUT	cap		4
10	3974095	MET-GASK			4
11	6652653	PLUG	oil filler		1
12	3966602	O RING	oil fill plug		1
13	3974931	CLAMP	pipe		1
14	3974930	PIPE	breather		1

Page 295 - OSS# 2071349 - All rights reserved by Bobcat Company - 12/01/2009 - 20:50:59 - Produced by Ken Cook Co. with mediaioff

VALVE ROCKER ARM
(Kubota - V2203) (1G608-41000)

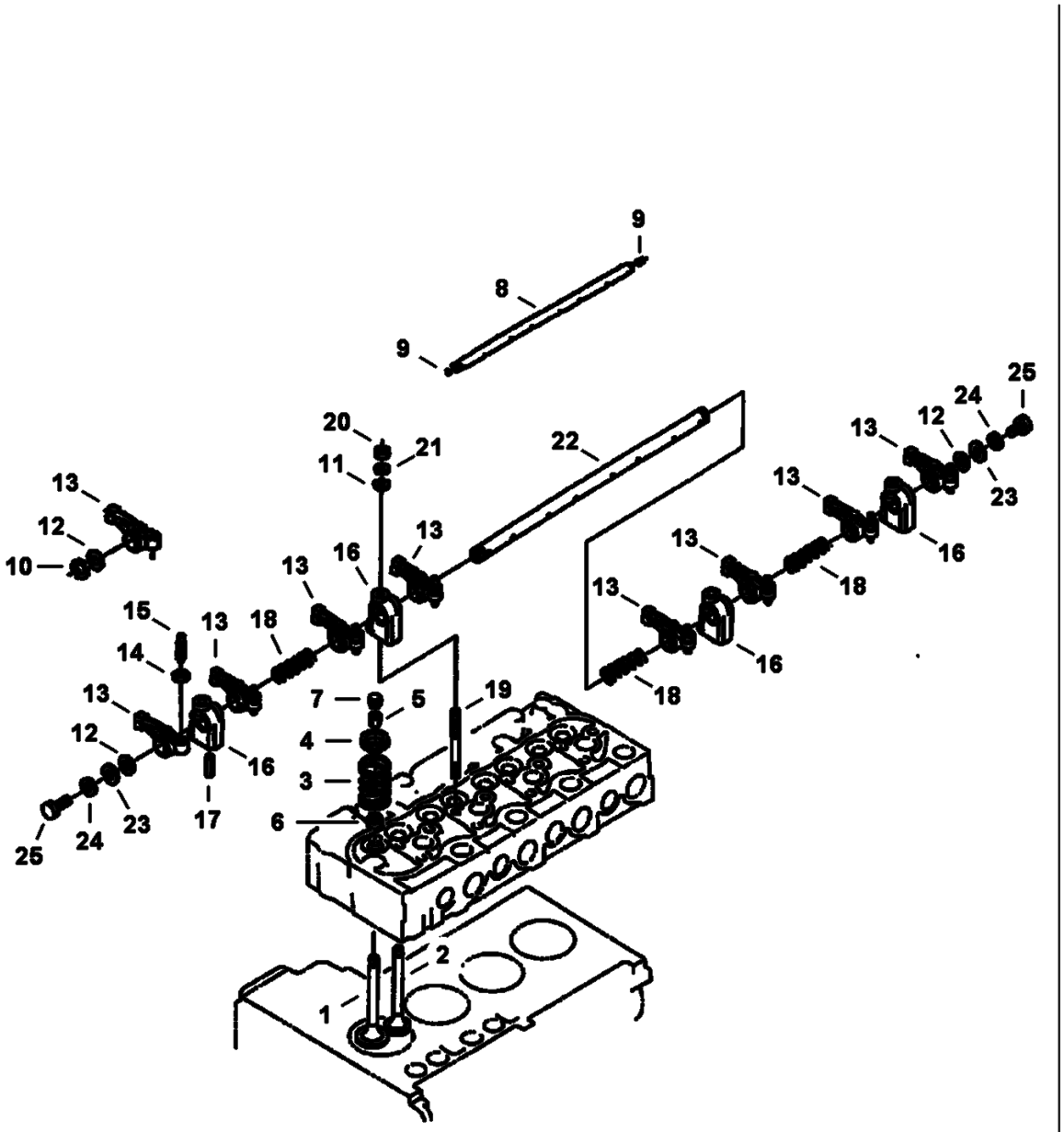

B-17305

Page 296 - OSS# 2071349 - All rights reserved by Bobcat Company - 12/01/2009 - 20:50:59 - Produced by Ken Cook Co. with mediaIoff

VALVE ROCKER ARM (Cont'd)
(Kubota - V2203) (1G608-41000)

Ref No	Part Number	Description	Remarks	Serial Number	Qty
1	6655173	VALVE	inlet		4
2	6655174	VALVE	exhaust		4
3	3974514	SPRING 5	valve		8
4	3974515	RETAINER	valve spring		8
5	6684874	COLLAR	valve spring - set of 2 - Was 3974516B [A]		8
6	6653830	SEAL, STEM VALVE			8
7	3974518	CAP	valve		8
8		SHAFT	NAP - rocker arm - W/Ref. 9 - Order Ref. 22-25 - Was 6682545 [A]	E/ 1Y1240 & Bel	1
9	25GM8010	SCREW		E/ 1Y1240 & Bel	2
10	5JM14	SNAP RING	external	E/ 1Y1240 & Bel	2
11	2EM8	WASHER, PLAIN	plain		4
12	3974524	WASHER			2
13	6655870	ROCKER ARM	rocker - W/Ref. 14 & 15		8
14	2DM8	NUT			8
15	3974920	SCREW	adjusting		8
16	3974521	MOUNT	rocker arm		4
17	6667461	PIN			4
18	6653833	SPRING	rocker arm		3
19	6653832	STUD			4
20	6652792	NUT			4
21	6EM80	WASHER, SPRING			4
22	6684875	SHAFT		E/ 2A0001 & Abv	2
23	6667451	WASHER	plain	E/ 2A0001 & Abv	2
24	6667422	WASHER	spring	E/ 2A0001 & Abv	2
25	5CM812	BOLT		E/ 2A0001 & Abv	2

Page 297 - OSS# 2071349 - All rights reserved by Bobcat Company - 12/01/2009 - 20:50:59 - Produced by Ken Cook Co. with mediaioff

CYLINDER HEAD
(Kubota - V2203) (1G608-41000)

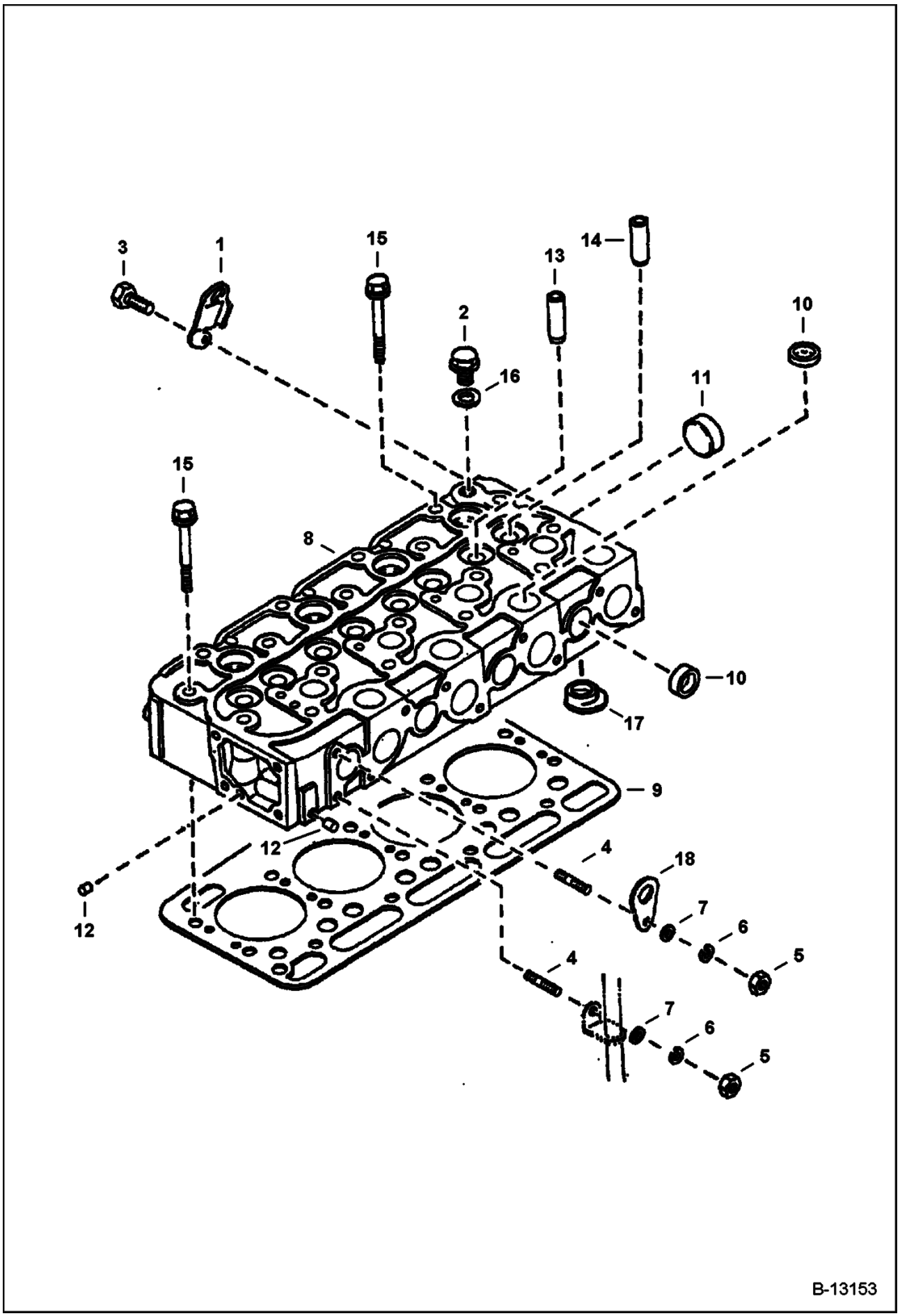

Page 298 - OSS# 2071349 - All rights reserved by Bobcat Company - 12/01/2009 - 20:50:59 - Produced by Ken Cook Co. with mediaioff

CYLINDER HEAD (Cont'd)
(Kubota - V2203) (1G608-41000)

Ref No	Part Number	Description	Remarks	Serial Number	Qty
1	6655152	HOOK	engine		1
2	6655160	PLUG			1
3	4CM816	BOLT			1
4	6652670	STUD			2
5	6652792	NUT			2
6	6EM80	WASHER, SPRING			2
7	2EM8	WASHER, PLAIN	plain		2
8	6655153	HEAD	cylinder - W/Ref. 10-14 & 17		1
9	6655159	GASKET	cylinder head		1
10	3974432	PLUG	sealing		12
11	3974433	PLUG	sealing		1
12	6598116	PLUG	Was 6652797 [A]		2
13	6655154	GUIDE	intake valve		4
14	6969990	GUIDE	exhaust valve - Was 6653803 [A]		4
15	6655158	BOLT			18
16	6655161	WASHER	W/rubber		1
17	6667480	CHAMBER	combustion		4
18	3974882	HOOK			1

Page 299 - OSS# 2071349 - All rights reserved by Bobcat Company - 12/01/2009 - 20:50:59 - Produced by Ken Cook Co. with mediaioff

OIL PAN
(Kubota - V2203) (1G608-41000)

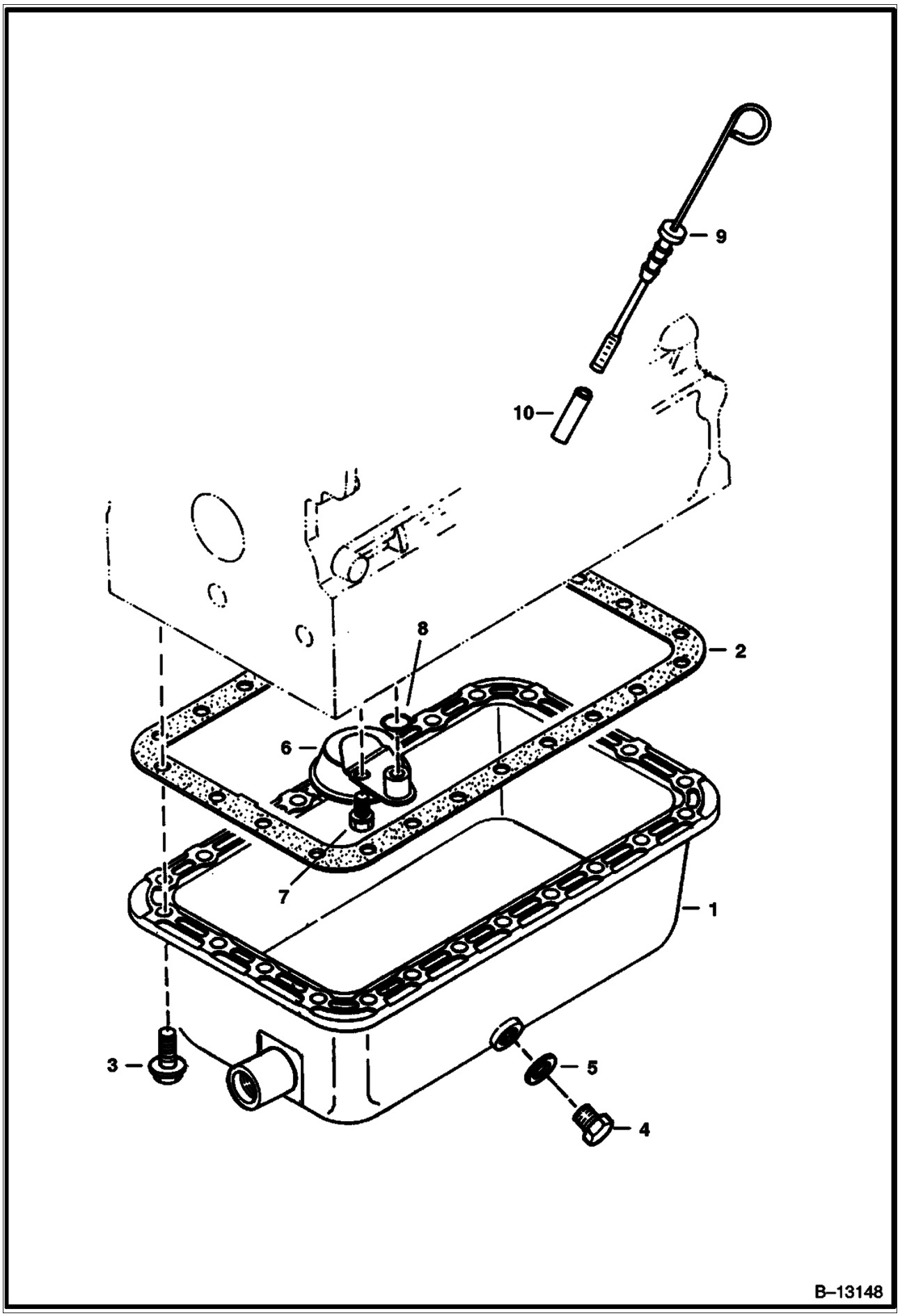

Page 300 - OSS# 2071349 - All rights reserved by Bobcat Company - 12/01/2009 - 20:50:59 - Produced by Ken Cook Co. with mediaioff

OIL PAN (Cont'd)
(Kubota - V2203) (1G608-41000)

Ref No	Part Number	Description	Remarks	Serial Number	Qty
1	6655151	PAN, OIL			1
2	6666817	GASKET	oil pan - Was 3975449B [A]		1
3	6653798	BOLT			24
4	3974402	PLUG	drain		1
5	6680484	GASKET	Was 3974403 [B]		1
6	6655194	SCREEN, OIL			1
7	4CM816	BOLT			1
8	3966516	O RING			1
9		DIPSTICK	NAP - oil - Order 6677202 Dipstick - Was 6658245 [A]		1
9	6677202	DIPSTICK, OIL ENG	oil - long		1
10	6677203	GUIDE	for long dipstick		1

Page 301 - OSS# 2071349 - All rights reserved by Bobcat Company - 12/01/2009 - 20:50:59 - Produced by Ken Cook Co. with mediaioff

PISTON & CRANKSHAFT
(Kubota - V2203) (1G608-41000)

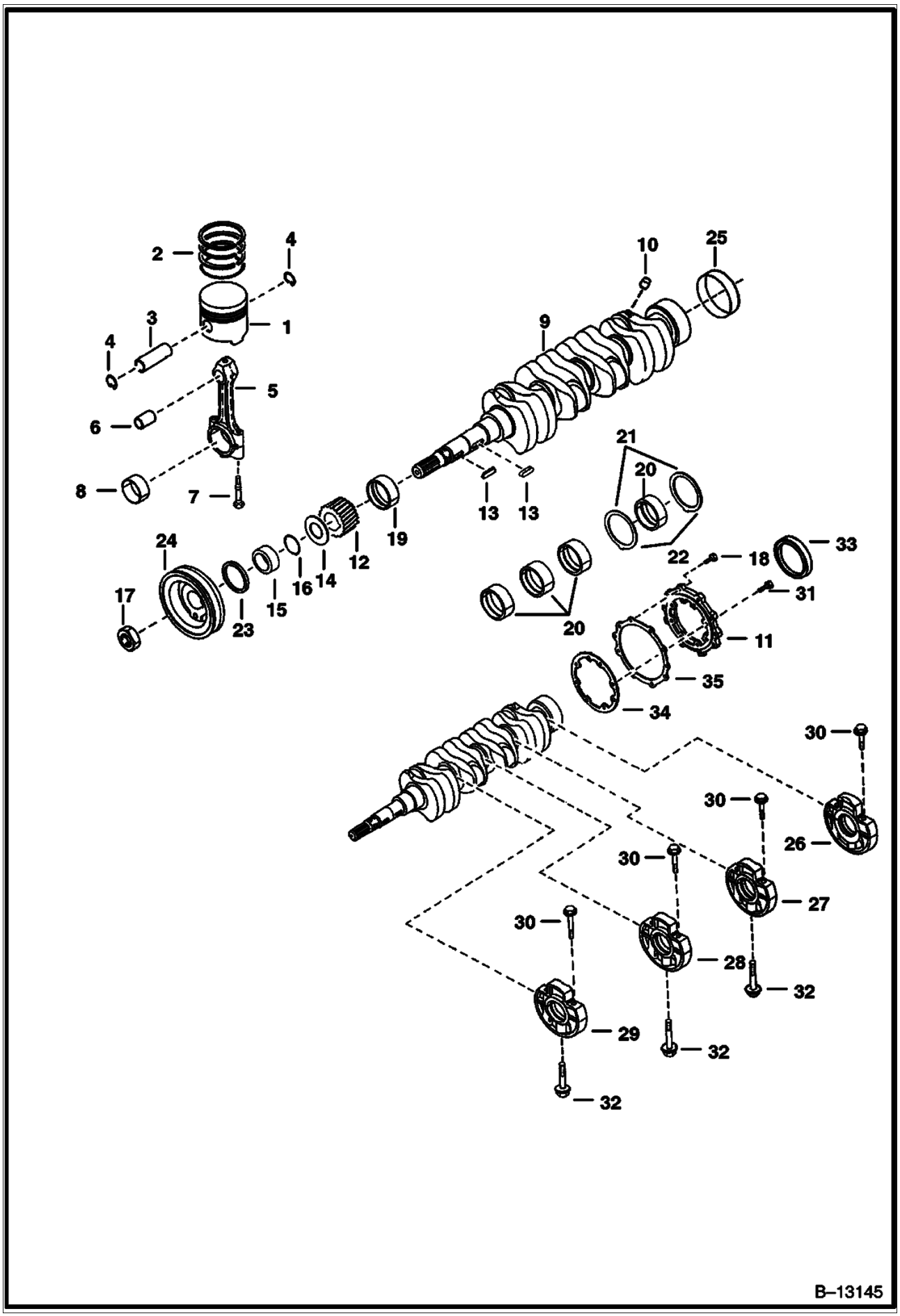

Page 302 - OSS# 2071349 - All rights reserved by Bobcat Company - 12/01/2009 - 20:50:59 - Produced by Ken Cook Co. with mediaioff

Ref No	Part Number	Description	Remarks	Serial Number	Qty
1		PISTON	NAP - Std. - Order 6689595 piston and 2 of 6686997 cir-clip - Was 6655177 [A]		4
1		PISTON	NAP - (0,5 mm - .0197) - Order 6689744 piston and 2 of 6686997 cir-clip - Was 6657695 [A]		4
2	6678075	RINGS	piston - Std. - Was 6655178 [A]		4
2	6657696	RINGS	piston - (0,5 mm - .0197)		4
3	6655179	PIN, PISTON ENG			4
4	6655180	CIR-CLIP			8
5	6655181	ROD, CONNECTING	connecting - W/Ref. 6, 7 & 8		4
6	6655243	BUSHING			4
7	6655498	BOLT			8
8	6655183	BEARING	rod - std.		4
8	6655236	BEARING	rod (-0,20 mm)		4
8	6655237	BEARING	rod (-0,40 mm)		4
9	6655184	CRANKSHAFT	Ref. 10 & 25 - install Ref. 10 before installation - See S/L dated 3 Jan. 85		1
10	6652633	BALL	Must be installed before using Ref. 9 crankshaft		4
11	6655166	COVER			1
12	6598142	GEAR			1
13	3974546	KEY			1
14	6653861	SLINGER, OIL	oil		1
15	3975337	COLLAR			1
16	3974577	O RING			1
17	3974671	NUT			1
18	4CM825	BOLT			8
19	6655185	BEARING	main - Std.		4
19	6655238	BEARING	main (0,2 mm-.0079)		1
19	6655239	BEARING	main (0,4 mm-.0157)		1
20	6655186	BEARING	main - Std.		4
20	6655240	BEARING	main (0,2 mm-.0079)		4
20	6655241	BEARING	main (0,4 mm-.0157)		4
21	3974945	WASHER, THRUST	thrust - Std.		2
21	3975021	WASHER	thrust (0,2 mm-.0079)		2
21	3975022	WASHER, THRUST	thrust (0,4 mm-.0157)		2
22	6653865	WASHER, THRUST	thrust - Std.		2
22	6654002	WASHER, THRUST	thrust (0,2 mm-.0079)		2
22	6654003	WASHER, THRUST	thrust (0,4 mm-.0157)		2
23	6631664	SEAL	oil		1
24	6655235	PULLEY			1
25	6653859	SLEEVE			1
26	6655163	CASE	main bearing - W/Ref. 30		1
27	6655170	CASE	main bearing - W/Ref. 30		1
28	6655169	CASE	main bearing - W/Ref. 30		1
29	6655168	CASE	main bearing - W/Ref. 30		1
30	6655164	BOLT			8
31	4CM828	BOLT			8
32	6653821	BOLT			3
33	6649300	SEAL	oil		1
34	6684788	GASKET	Was 6655165 [A]		1
35	6666814	GASKET			1

Page 303 - OSS# 2071349 - All rights reserved by Bobcat Company - 12/01/2009 - 20:50:59 - Produced by Ken Cook Co. with mediaioff

FUEL CAMSHAFT
(Kubota - V2203) (1G608-41000)

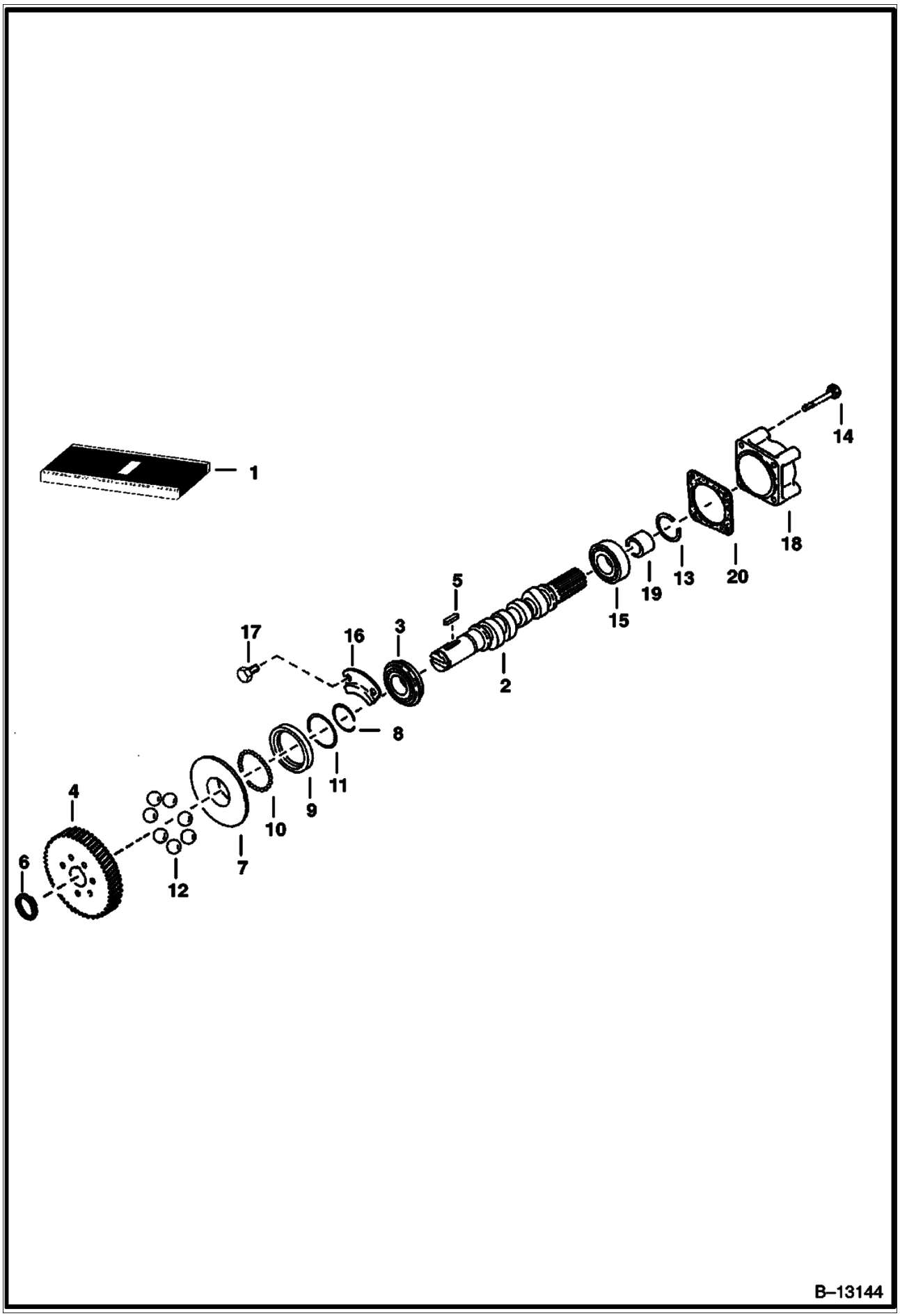

Page 304 - OSS# 2071349 - All rights reserved by Bobcat Company - 12/01/2009 - 20:50:59 - Produced by Ken Cook Co. with mediaioff

FUEL CAMSHAFT (Cont'd)
(Kubota - V2203) (1G608-41000)

Ref No	Part Number	Description	Remarks	Serial Number	Qty
1	6655211	CAMSHAFT	assy. - Ref. 2-14		1
2	6655875	CAMSHAFT	fuel		1
3	851242	BEARING			1
4	6655212	GEAR	injection pump		1
5	6598099	KEY			1
6	5JM24	CIRCLIP	external		1
7	6655213	SLEEVE	governor		1
8	3974618	CIR-CLIP	sleeve		1
9	6655214	CASE	governor ball		1
10	10J5	BALL			39
11	3974620	CIR-CLIP	ball case		1
12	6655215	BALL			7
13	6598158	CIRCLIP	external - Was 3975432B [A]		1
14	6651934	BOLT			7
15	6598101	BALL BEARING			1
16	3974624	STOPPER			1
17	4CM814	BOLT			2
18	3974996	COVER	fuel camshaft		1
19	6598179	COLLAR	Was 6655523 [A]		1
20	6666827	GASKET	Was 3974630B [A]		1

Page 305 - OSS# 2071349 - All rights reserved by Bobcat Company - 12/01/2009 - 20:50:59 - Produced by Ken Cook Co. with mediaioff

CAMSHAFT
(Kubota - V2203) (1G608-41000)

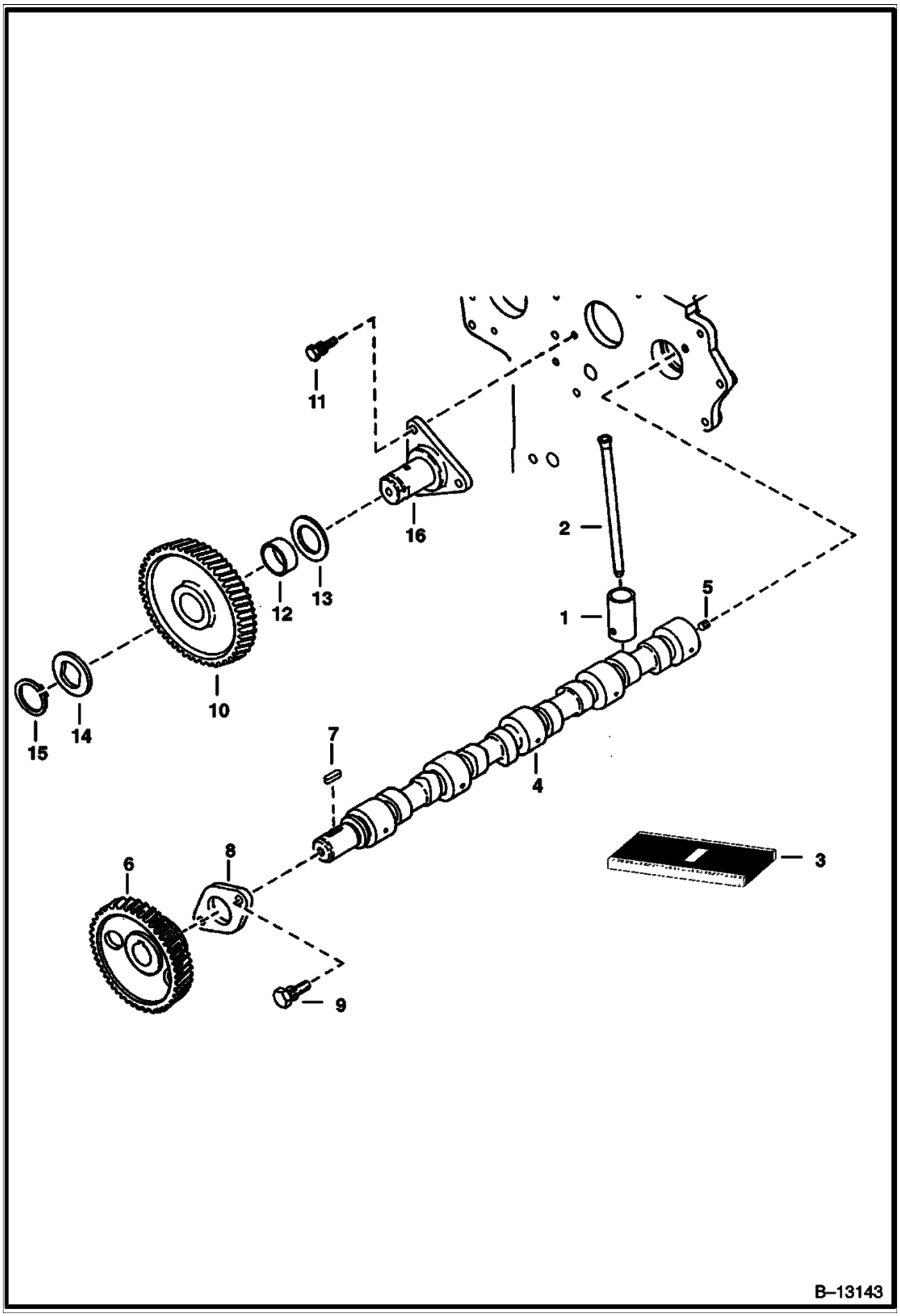

Page 306 - OSS# 2071349 - All rights reserved by Bobcat Company - 12/01/2009 - 20:50:59 - Produced by Ken Cook Co. with mediaioff

CAMSHAFT (Cont'd)
(Kubota - V2203) (1G608-41000)

Ref No	Part Number	Description	Remarks	Serial Number	Qty
1	6667428	TAPPET			8
2	6655176	PUSHROD			8
3	6655427	CAMSHAFT	assy. - Ref. 4-8		1
4		CAMSHAFT	NAP - Order Ref. 3 - Was 6655384 [A]		1
5	6653839	SCREW	seat		1
6	6692387	GEAR	camshaft - Was 6653840 [A]		1
7	3974546	KEY			1
8	3974547	STOPPER	camshaft - Was 6653843 [A]		1
9	1CM818	BOLT	Was 4CM818 [A]		2
10		GEAR ASSY.	NAP - idle - W/Ref. 12 - Order 6684793 gear, 6684795 collar, 6667433 cir-clip & 6684796 shaft - Was 6655187 [A]	E/ 1W1377 & Bel	1
10	6684793	GEAR	idle - W/Ref. 12	E/ 1Y0001 & Abv	1
11	4CM816	BOLT			3
12	6655242	BUSHING	idle gear	E/ 1W1377 & Bel	1
12	6684794	BUSHING	idle gear	E/ 1Y0001 & Abv	1
13	6655190	COLLAR		E/ 1W1377 & Bel	1
14	6655191	COLLAR		E/ 1W1377 & Bel	1
14	6684795	COLLAR		E/ 1Y0001 & Abv	1
15	6655192	CIR-CLIP	external	E/ 1W1377 & Bel	1
15	6667433	CIRCLIP	external	E/ 1Y0001 & Abv	1
16	6655193	SHAFT	idle gear	E/ 1W1377 & Bel	1
16	6684796	SHAFT	idle gear	E/ 1Y0001 & Abv	1

Page 307 - OSS# 2071349 - All rights reserved by Bobcat Company - 12/01/2009 - 20:50:59 - Produced by Ken Cook Co. with mediaioff

WATER PUMP
(Kubota - V2203) (1G608-41000)

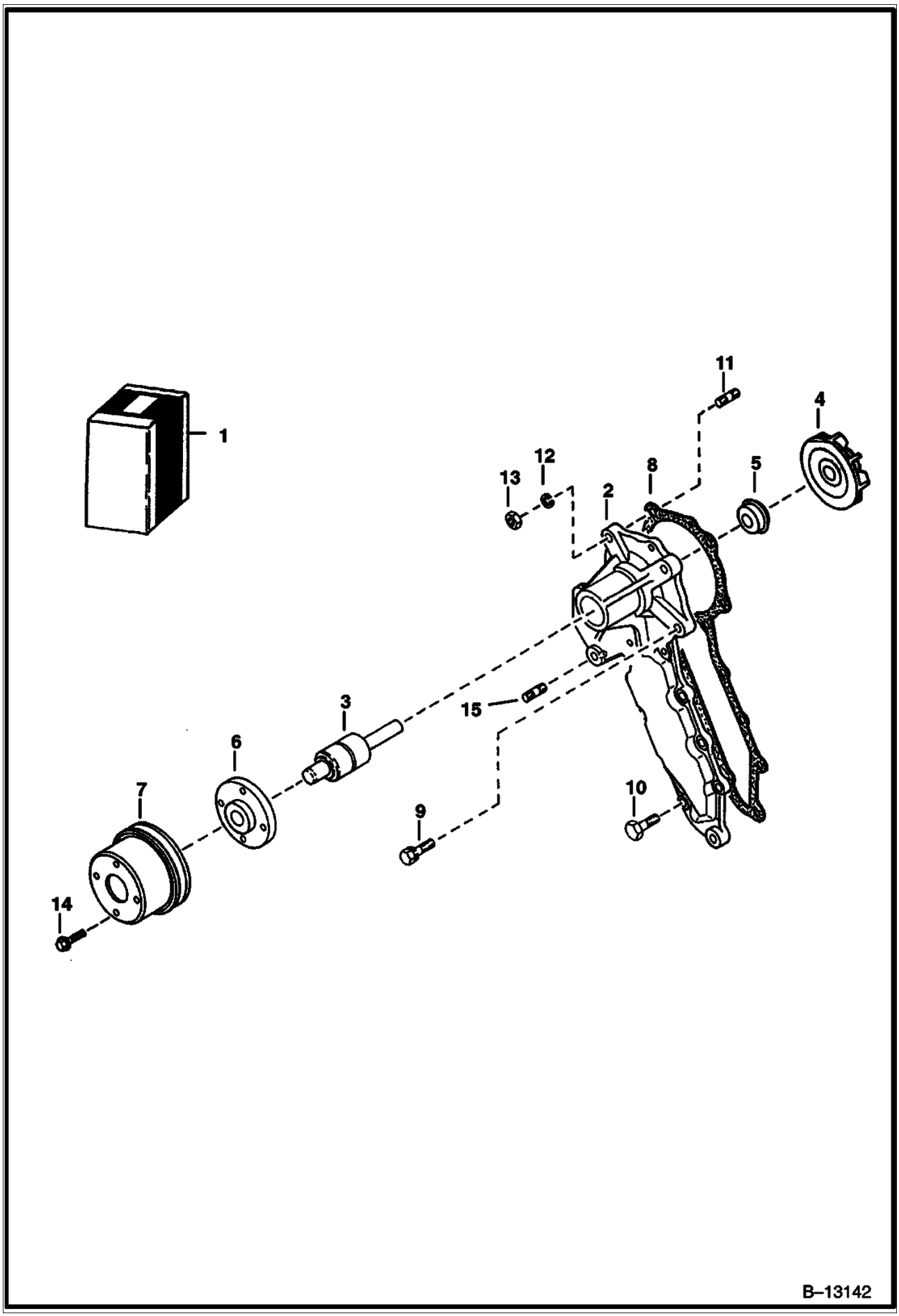

Page 308 - OSS# 2071349 - All rights reserved by Bobcat Company - 12/01/2009 - 20:50:59 - Produced by Ken Cook Co. with mediaioff

WATER PUMP (Cont'd)
(Kubota - V2203) (1G608-41000)

Ref No	Part Number	Description	Remarks	Serial Number	Qty
1	6684225	WATER PUMP	Ref. 2-6 - Was 6653941 [A]		1
2		BODY	NAP		1
3	3974991	BEARING			1
4	6653944	IMPELLER			1
4	6667460	IMPELLER	for one piece seal Ref. 5		1
5	6653945	SET SEAL			1
5	6667465	SEAL	one piece		1
6	3974992	FLANGE			1
7	6598155	PULLEY	fan		1
8	6666804	GASKET	Was 3974995B [A]		1
9	4CM828	BOLT			2
10	6652580	BOLT			6
11	3974267	STUD	Was 6653946 [A]		2
12	6EM80	WASHER, SPRING			2
13	6652792	NUT			2
14	6652762	BOLT			4
15	6683174	ROLL PIN			1

Page 309 - OSS# 2071349 - All rights reserved by Bobcat Company - 12/01/2009 - 20:50:59 - Produced by Ken Cook Co. with mediaioff

WATER FLANGE & THERMOSTAT
(Kubota - V2203) (1G608-41000)

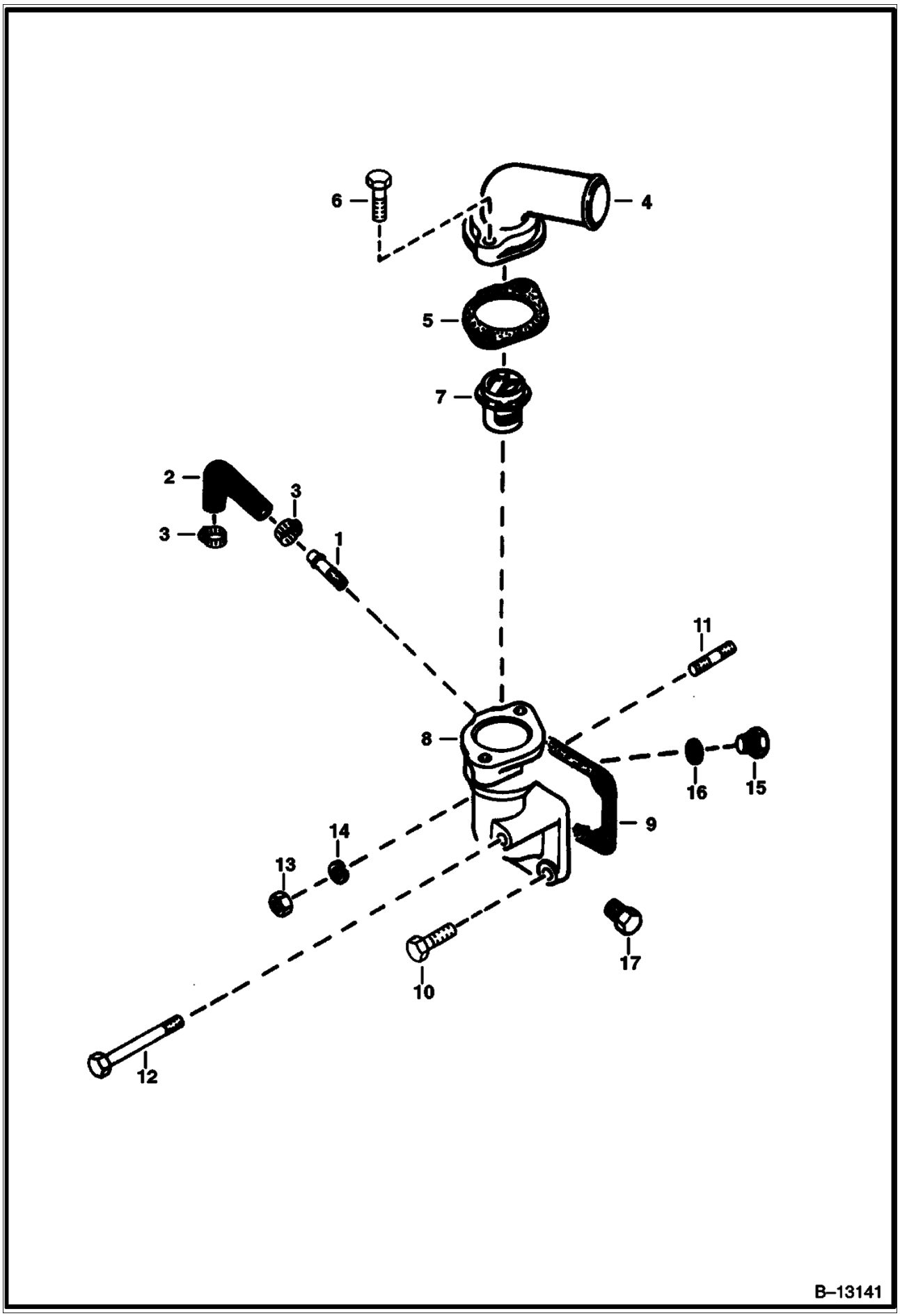

Page 310 - OSS# 2071349 - All rights reserved by Bobcat Company - 12/01/2009 - 20:50:59 - Produced by Ken Cook Co. with mediaioff

WATER FLANGE & THERMOSTAT (Cont'd)
(Kubota - V2203) (1G608-41000)

Ref No	Part Number	Description	Remarks	Serial Number	Qty
1	6655880	PIPE	water return		1
2	3974988	PIPE	water return		1
3	3974679	BAND	pipe		2
4	6651489	COVER	thermostat		1
5	6732199	GASKET	THERMOSTAT COVER - Was 6666790 [A]		1
6	1CM835	BOLT			2
7	6653948	THERMOSTAT			1
7	6630184	THERMOSTAT	179.6 degrees F (82 degeees C) - Used W/cab heater		1
8	6655966	FLANGE	W/Ref. 1		1
9	6666802	GASKET	water flange		1
10	4CM822	BOLT			2
11	3974627	STUD			1
12	1CM865	SCREW			1
13	6652792	NUT			1
14	6EM80	WASHER, SPRING			1
15	6649536	PLUG			1
16	6653562	GASKET			1
17	40K2	PLUG			1

Page 311 - OSS# 2071349 - All rights reserved by Bobcat Company - 12/01/2009 - 20:50:59 - Produced by Ken Cook Co. with mediaioff

MANIFOLDS
(Kubota - V2203) (1G608-41000)

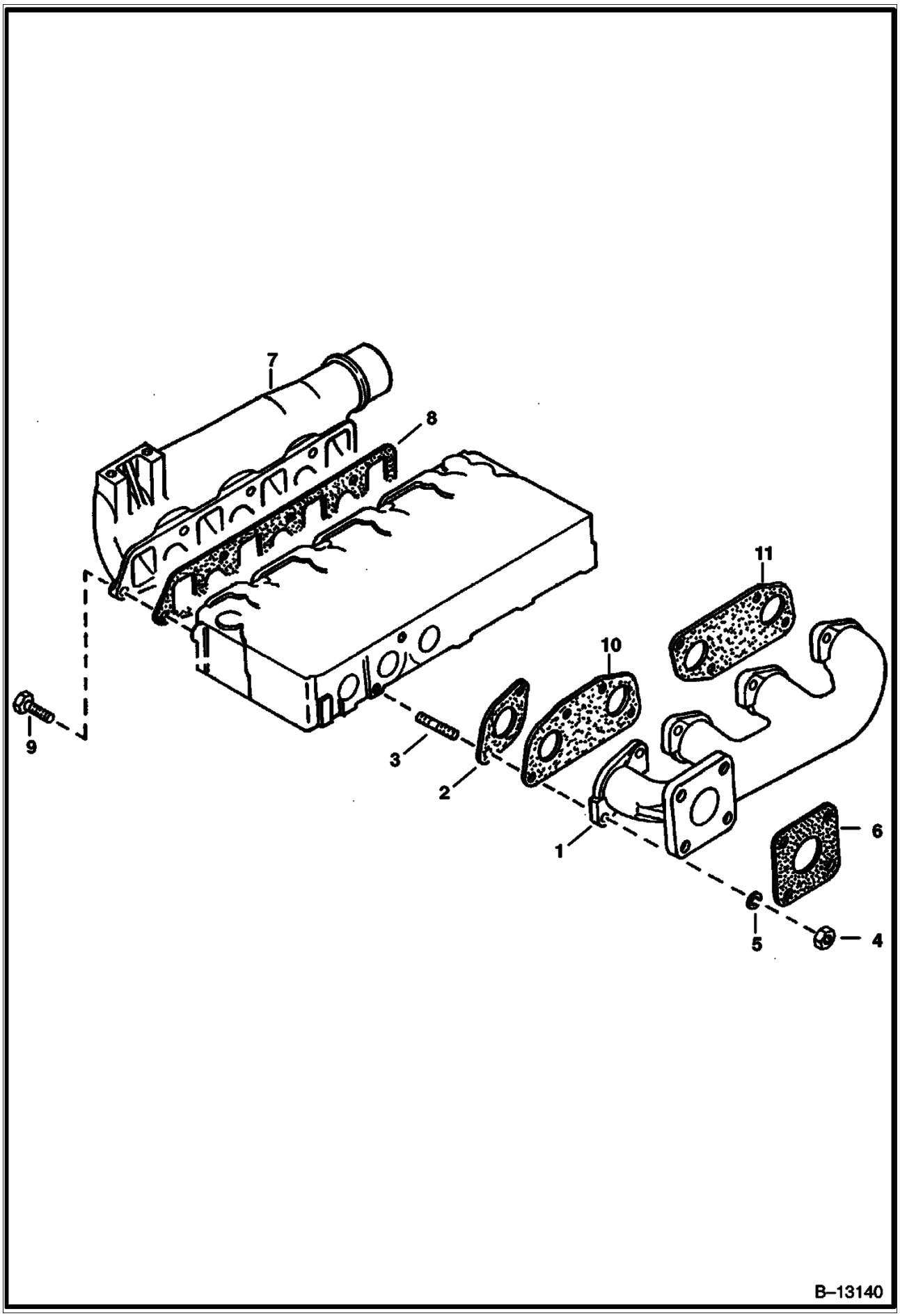

Page 312 - OSS# 2071349 - All rights reserved by Bobcat Company - 12/01/2009 - 20:50:59 - Produced by Ken Cook Co. with mediaioff

MANIFOLDS (Cont'd)
(Kubota - V2203) (1G608-41000)

Ref No	Part Number	Description	Remarks	Serial Number	Qty
1	6651482	MANIFOLD, EXHAUST	exhaust		1
2		GASKET	NAP - Order 10 & 11		4
3	6652670	STUD			8
4	6652792	NUT			8
5	6EM80	WASHER, SPRING			12
6	6727752	GASKET	muffler - Was 6575580 [B]		1
7	6655171	MANIFOLD	intake		1
8	6666811	GASKET			1
9	4CM822	BOLT			7
10	6666781	GASKET			1
11	6666791	GASKET			1

Page 313 - OSS# 2071349 - All rights reserved by Bobcat Company - 12/01/2009 - 20:50:59 - Produced by Ken Cook Co. with mediaioff

ENGINE STOP LEVER
(Kubota - V2203) (1G608-41000)

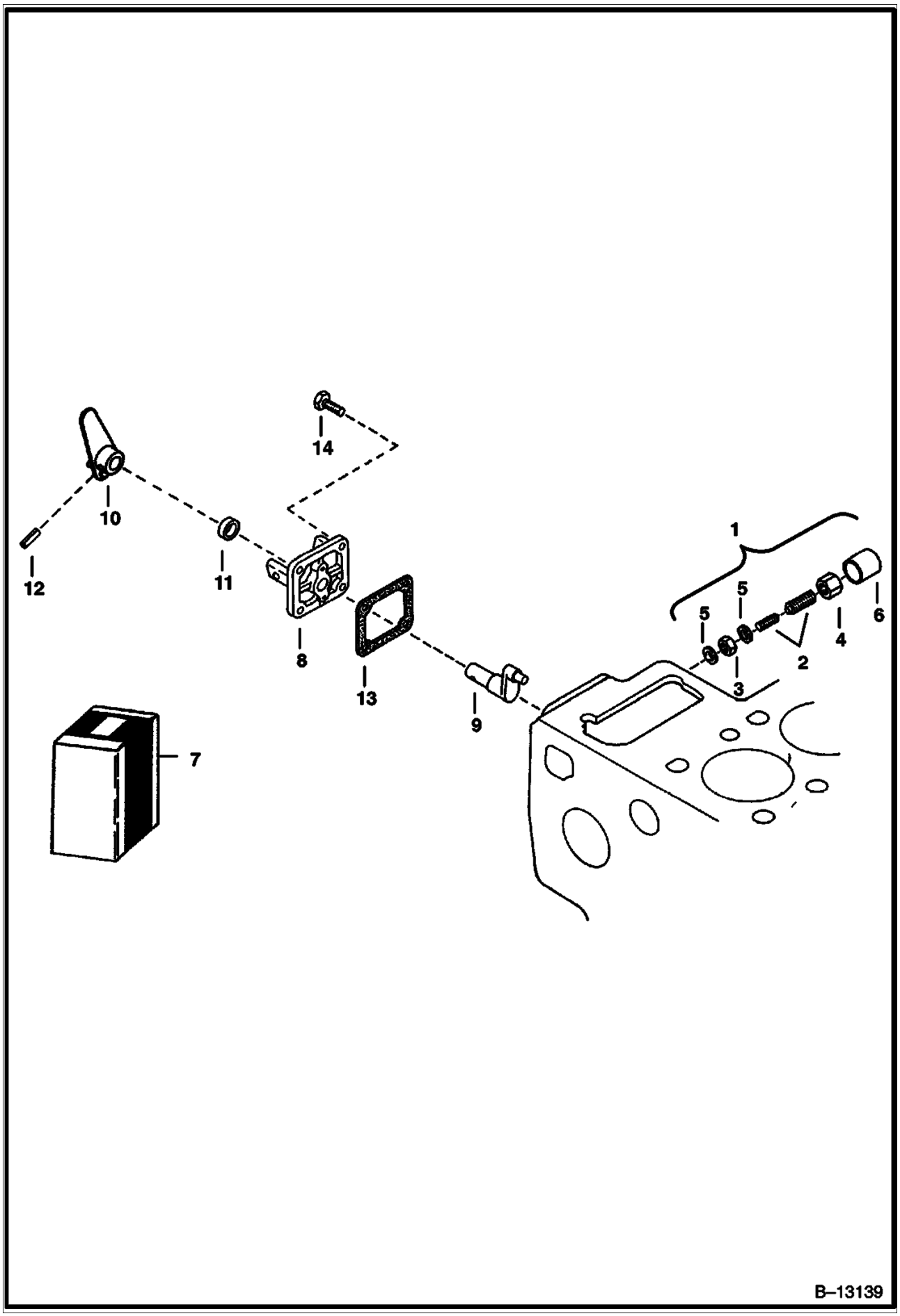

Page 314 - OSS# 2071349 - All rights reserved by Bobcat Company - 12/01/2009 - 20:50:59 - Produced by Ken Cook Co. with mediaioff

ENGINE STOP LEVER (Cont'd)
(Kubota - V2203) (1G608-41000)

Ref No	Part Number	Description	Remarks	Serial Number	Qty
1	3974975	IDLER	assy., idle - Ref. 2-6		1
2	6653906	BOLT ASSY.	adjusting		1
3	2DM8	NUT	adjusting		1
4	3974978	NUT			1
5	3974095	MET-GASK			2
6	3974979	CAP			1
7	6676060	LEVER ASSY.	eng. stop - Ref. 8-12 - Was 6655879		1
8	6655230	COVER	injection pump		1
9	6655231	SHAFT	lever		1
10	6655232	LEVER	engine stop		1
11	6685476	SEAL	oil - Was 6598703 [B]		1
12	6598098	PIN	spring		1
13	6666783	GASKET	pump cover - Was 3974601B [A]		1
14	6652580	BOLT			3

Page 315 - OSS# 2071349 - All rights reserved by Bobcat Company - 12/01/2009 - 20:50:59 - Produced by Ken Cook Co. with mediaioff

GOVERNOR
(Kubota - V2203) (1G608-41000)

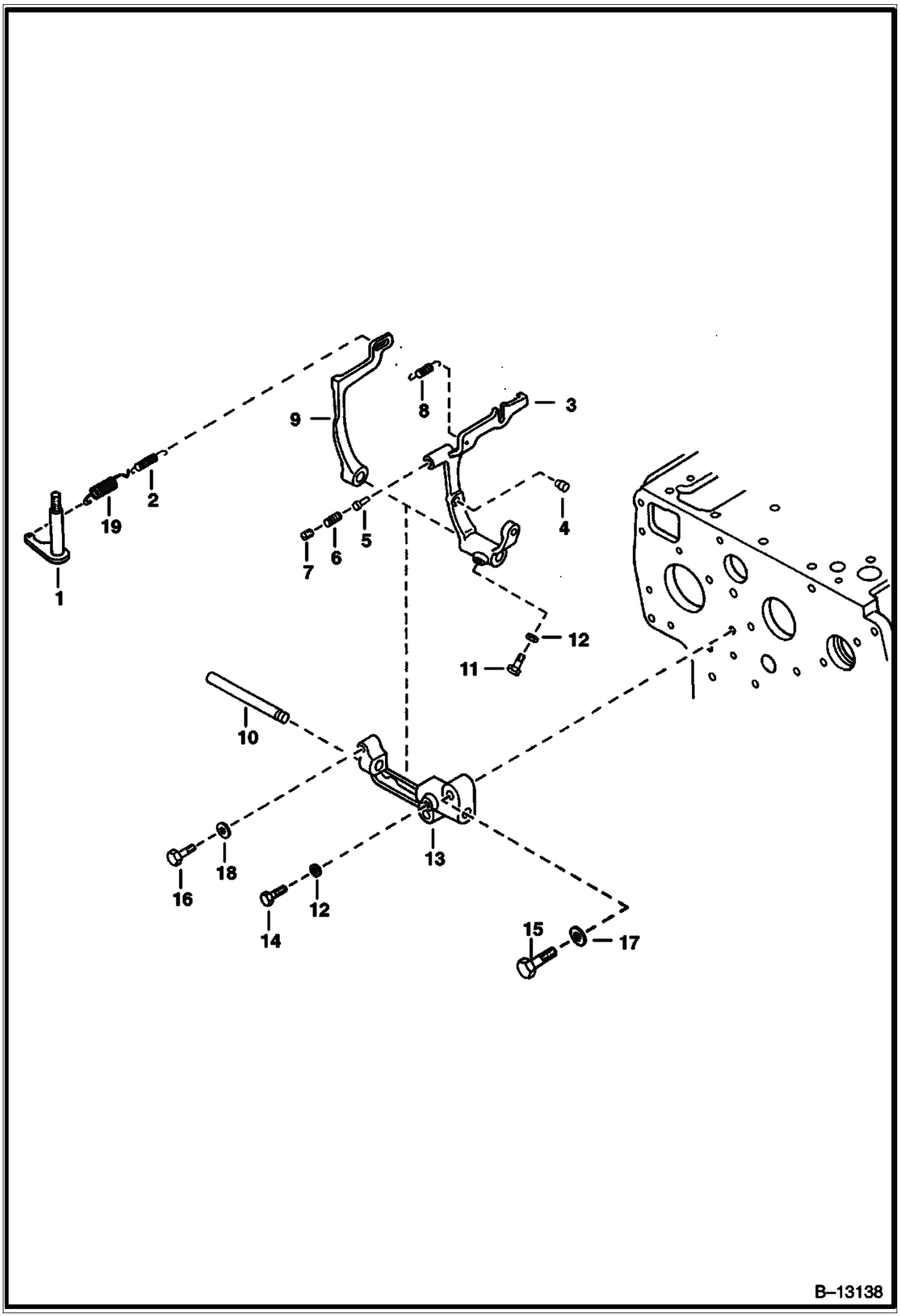

Page 316 - OSS# 2071349 - All rights reserved by Bobcat Company - 12/01/2009 - 20:50:59 - Produced by Ken Cook Co. with mediaIoff

GOVERNOR (Cont'd)
(Kubota - V2203) (1G608-41000)

Ref No	Part Number	Description	Remarks	Serial Number	Qty
1	6598174	LEVER	governor		1
2	6655227	SPRING			1
3	6655876	LEVER	fork - W/Ref. 4-7		1
4		PIN	NSS		2
5		PIN	NSS		1
6		SPRING	NSS		1
7		SCREW	NSS		1
8	6655225	SPRING			1
9	6655877	LEVER			1
10	3974658	SHAFT			1
11	3974659	BOLT			1
12	6EM60	WASHER, SPRING			2
13	6653916	HOLDER	Was 3974661B [A]		1
14	3974192	BOLT			1
15	6598355	BOLT			2
16	4CM628	BOLT			1
17	2EM8	WASHER, PLAIN			2
18	1EM60	WASHER			1
19	6655878	SPRING	governor		1

Page 317 - OSS# 2071349 - All rights reserved by Bobcat Company - 12/01/2009 - 20:50:59 - Produced by Ken Cook Co. with mediaioff

SPEED CONTROL PLATE
(Kubota - V2203) (1G608-41000)

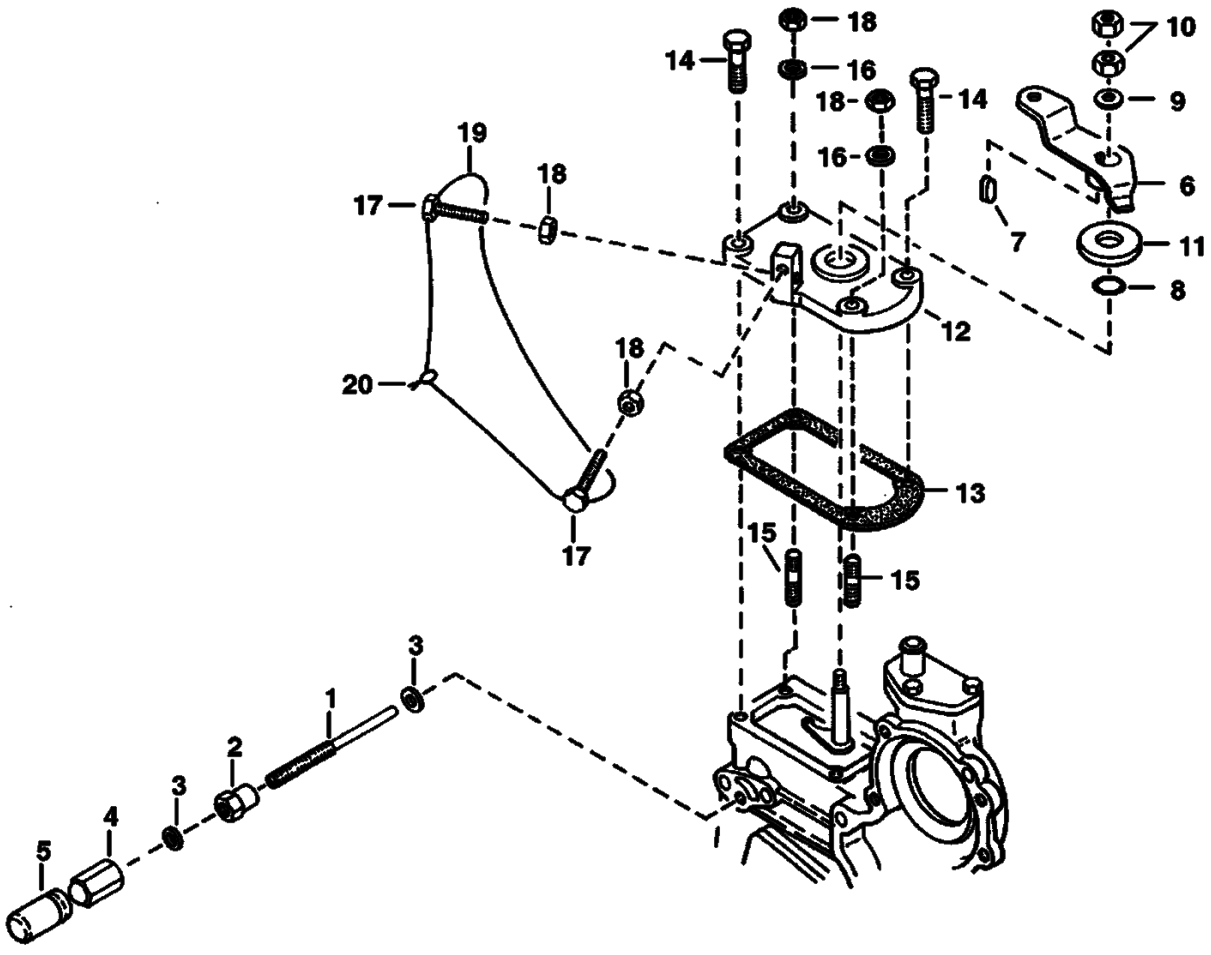

Page 318 - OSS# 2071349 - All rights reserved by Bobcat Company - 12/01/2009 - 20:50:59 - Produced by Ken Cook Co. with mediaioff

SPEED CONTROL PLATE (Cont'd)
(Kubota - V2203) (1G608-41000)

Ref No	Part Number	Description	Remarks	Serial Number	Qty
1	3974970	BOLT	adjusting		1
2	3974971	NUT			1
3	3974972	GASKET			2
4	6655223	NUT	cap		1
5	6653905	CAP			1
6	6598176	LEVER	speed control		1
7	15JM48	KEY	feather		1
8	3966512	O RING			1
9	1EM80	WASHER	plain		1
10	1DM8	NUT			2
11	3974644	COLLAR	friction		1
12	6641231	PLATE, CONTROL SPEED	speed control		1
13	6666792	GASKET	Was 6635392 [A]		1
14	4CM620	BOLT			2
15	6652764	STUD			2
16	6EM60	WASHER, SPRING	spring		2
17	6655228	STOPPER			2
18	1DM6	NUT			4
19		WIRE	NAP		1
20		LEAD	NAP - sealing		1

Page 319 - OSS# 2071349 - All rights reserved by Bobcat Company - 12/01/2009 - 20:50:59 - Produced by Ken Cook Co. with mediaioff

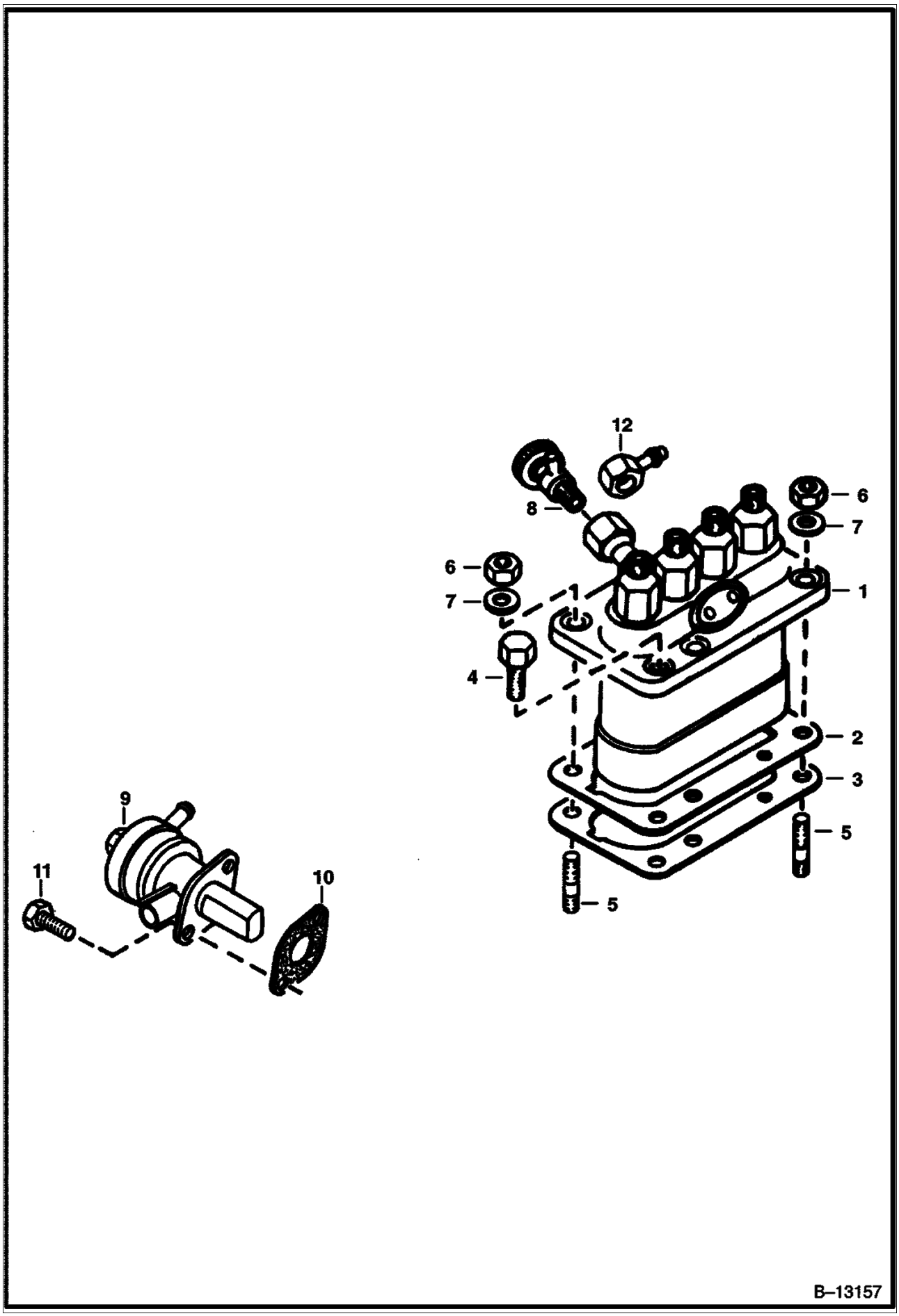

Page 320 - OSS# 2071349 - All rights reserved by Bobcat Company - 12/01/2009 - 20:50:59 - Produced by Ken Cook Co. with mediaioff

FUEL & INJECTION PUMPS (Cont'd)
(Kubota - V2203) (1G608-41000)

Ref No	Part Number	Description	Remarks	Serial Number	Qty
1	6674676	PUMP	See Illustration INJECTION PUMP/ B13156		1
2	3974626	SHIM	0,20 mm - injection pump		2
3	6655210	SHIM	0,30 mm - injection pump		1
4	4CM822	BOLT			4
5	6652670	STUD			2
6	6652792	NUT			2
7	6EM80	WASHER, SPRING			2
8	6598102	VALVE	jet start		1
9	6655216	FUEL PUMP			1
10	3974502	GASKET	fuel pump		1
11	4CM616	BOLT			2
12	6655515	JOINT	See Illustration FUEL SYSTEM/ PE1627 EYE - CONNECTS TO REF. 25		1

Page 321 - OSS# 2071349 - All rights reserved by Bobcat Company - 12/01/2009 - 20:50:59 - Produced by Ken Cook Co. with mediaioff

INJECTION PUMP
(Kubota - V2203) (1G608-41000)

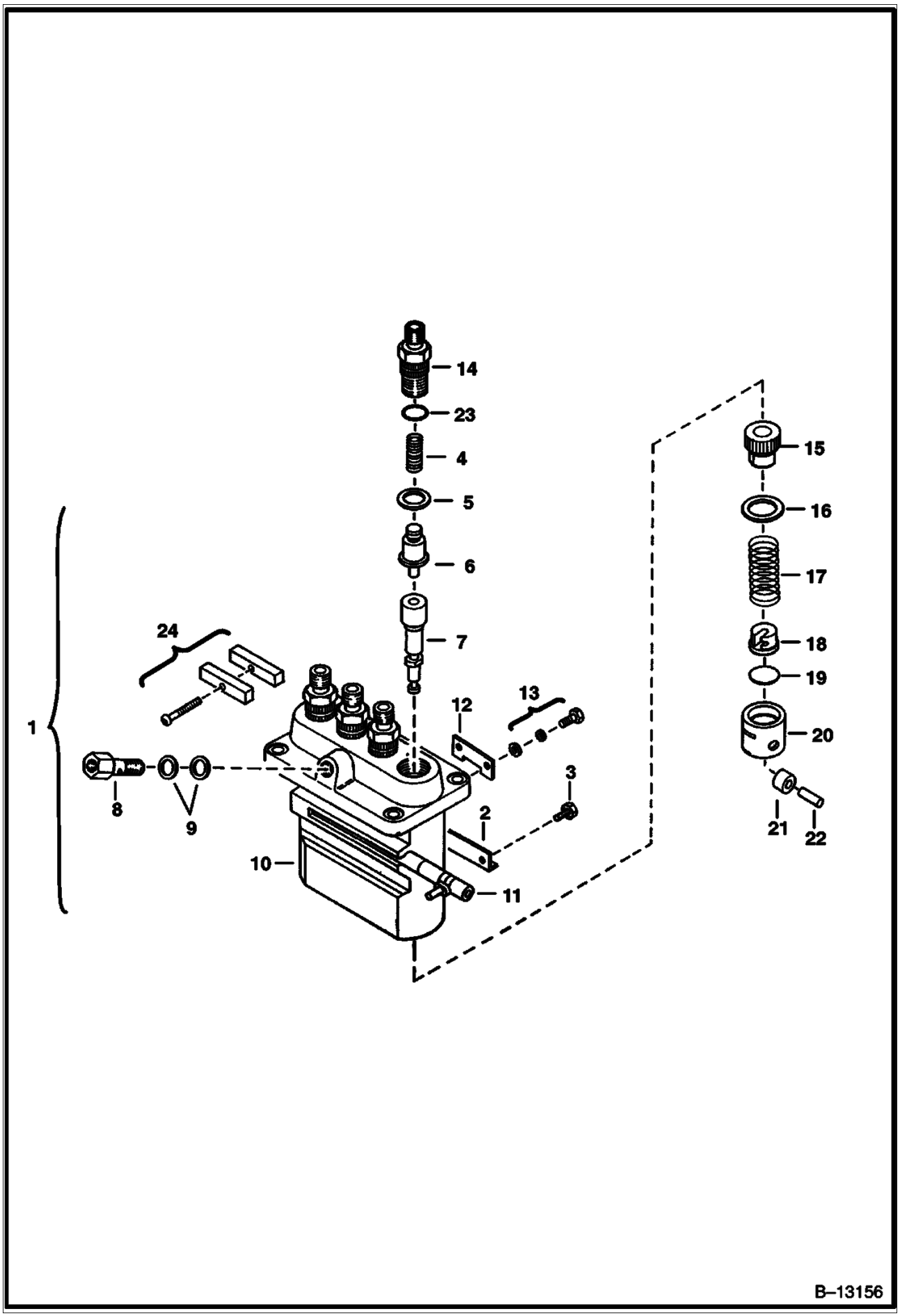

Page 322 - OSS# 2071349 - All rights reserved by Bobcat Company - 12/01/2009 - 20:50:59 - Produced by Ken Cook Co. with mediaioff

INJECTION PUMP (Cont'd)
(Kubota - V2203) (1G608-41000)

Ref No	Part Number	Description	Remarks	Serial Number	Qty
1	6674676	PUMP	injection - No service parts available - Take to injection pump specialist		1
2	6655207	PLATE	adjust		3
3	6655206	BOLT			3
4	6655203	SPRING	delivery valve		4
5	3974368	GASKET	delivery valve		4
6	6655202	VALVE	delivery		4
7	6655201	ELEMENT	pump		4
8	3975428	SCREW			1
9	6698120	GASKET	Was 3975389 [A]		2
10		HOUSING	NSS - pump		1
11	3974787	RACK	control		1
12	6655209	PLATE	adjusting		3
13	3974366	BOLT			3
14	6655204	HOLDER	delivery valve		4
15	6653894	SLEEVE	control		4
16	3974381	SEAT	spring - Upper		4
17	3974382	SPRING	plunger		4
18	3974383	SEAT	spring - Under		4
19	3974384	SHIM			4
20	3974385	TAPPETASY	W/Ref. 21 & 22		4
21		ROLLER	NSS		4
22		PIN	NSS		4
23	6655518	O-RING			4
24	6655205	PLATE ASSY.			2

Page 323 - OSS# 2071349 - All rights reserved by Bobcat Company - 12/01/2009 - 20:50:59 - Produced by Ken Cook Co. with mediaioff

INJECTOR NOZZLES
(Kubota - V2203) (1G608-41000)

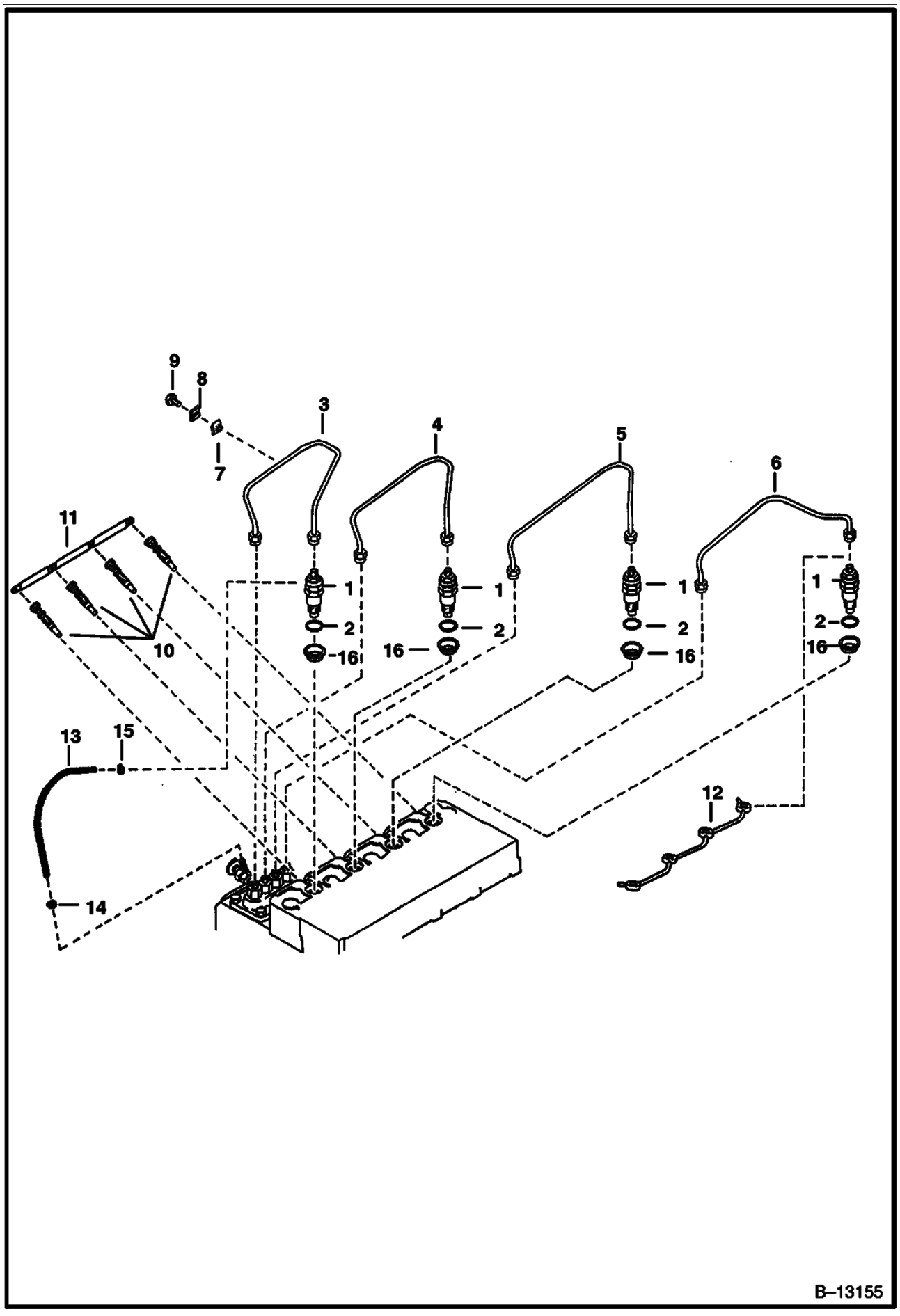

Page 324 - OSS# 2071349 - All rights reserved by Bobcat Company - 12/01/2009 - 20:50:59 - Produced by Ken Cook Co. with mediaioff

INJECTOR NOZZLES (Cont'd)
(Kubota - V2203) (1G608-41000)

Ref No	Part Number	Description	Remarks	Serial Number	Qty
1		HOLDER KIT	See Illustration INJECTOR HOLDER/ B13154 - nozzle - W/Ref. 2 & 16 - Was 6722147		4
2	6655218	GASKET			4
3	6655219	PIPE	injection (1)		1
4	6655220	PIPE	injection (2)		1
5	6655221	PIPE	injection (3)		1
6	6655222	PIPE	injection (4)		1
7	6652688	CLAMP	pipe (1)		3
8	6652689	CLAMP	pipe (2)		3
9	3974260	SCREW	with washer		3
10	6655233	GLOW PLUG			4
11	6655234	CORD	glow plug - Was 6686987 [A]		3
12	6655198	PIPE	fuel over flow		3
13	6598146	PIPE	fuel over flow (2)		1
14	6654718	CLAMP	pipe - Was 6680795 [A]		1
15	6654718	CLAMP	pipe		1
16	6655872	HEAT SEAL			4

Page 325 - OSS# 2071349 - All rights reserved by Bobcat Company - 12/01/2009 - 20:50:59 - Produced by Ken Cook Co. with mediaioff

INJECTOR HOLDER
(Kubota - V2203) (1G608-41000)

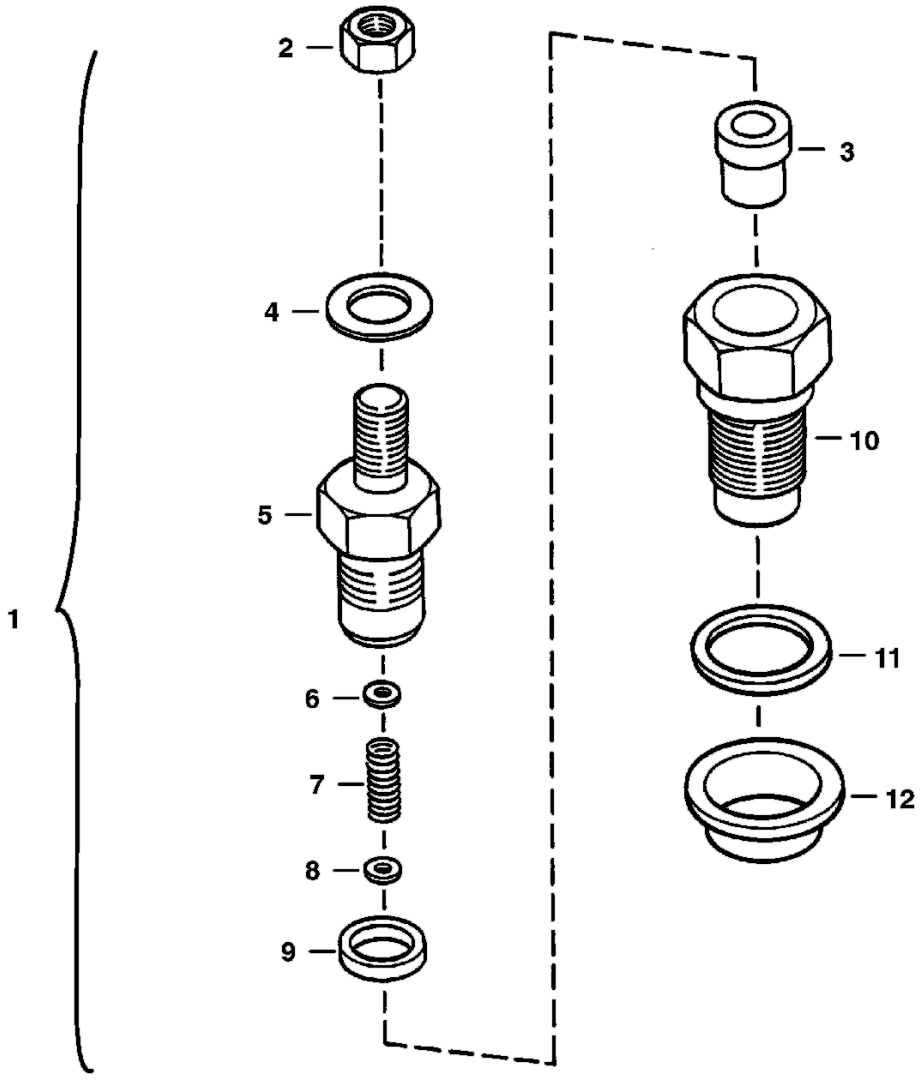

B–13154

Page 326 - OSS# 2071349 - All rights reserved by Bobcat Company - 12/01/2009 - 20:50:59 - Produced by Ken Cook Co. with mediaioff

INJECTOR HOLDER (Cont'd)
(Kubota - V2203) (1G608-41000)

Ref No	Part Number	Description	Remarks	Serial Number	Qty
1	6722147	HOLDER KIT	nozzle - Ref. 2-12		4
1	6722147REM	NOZZLE, FUEL INJ. KUBOTA V2203	nozzle - Ref. 2-12		4
2	6657460	NUT			1
3	6655873	NOZZLE	nozzle		1
4	6657463	WASHER	W/(2) bleeder holes		1
5		BODY	NSS - nozzle holder		1
6	6657742	KIT	washer - (.900mm thru 1.950mm)		x
6	6656126	WASHER	adjusting (1,000 mm)		x
6	6656127	WASHER	adjusting (1,050 mm)		x
6	6656128	WASHER	adjusting (1,100 mm)		x
6	6656129	WASHER	adjusting (1,150 mm)		x
6	6656130	WASHER	adjusting (1,200 mm)		x
6	6656131	WASHER	adjusting (1,250 mm)		x
6	6656132	WASHER	adjusting (1,300 mm)		x
7		SPRING	NSS - nozzle		1
8		PIECE	NSS - distance		1
9		PUSH ROD	NSS		1
10		NUT	NSS - nozzle		1
11	6655218	GASKET			1
12	6655872	HEAT SEAL			1

Page 327 - OSS# 2071349 - All rights reserved by Bobcat Company - 12/01/2009 - 20:50:59 - Produced by Ken Cook Co. with mediaioff

ENGINE & GASKET KITS
(Kubota - V2003T) (1G622-00000)

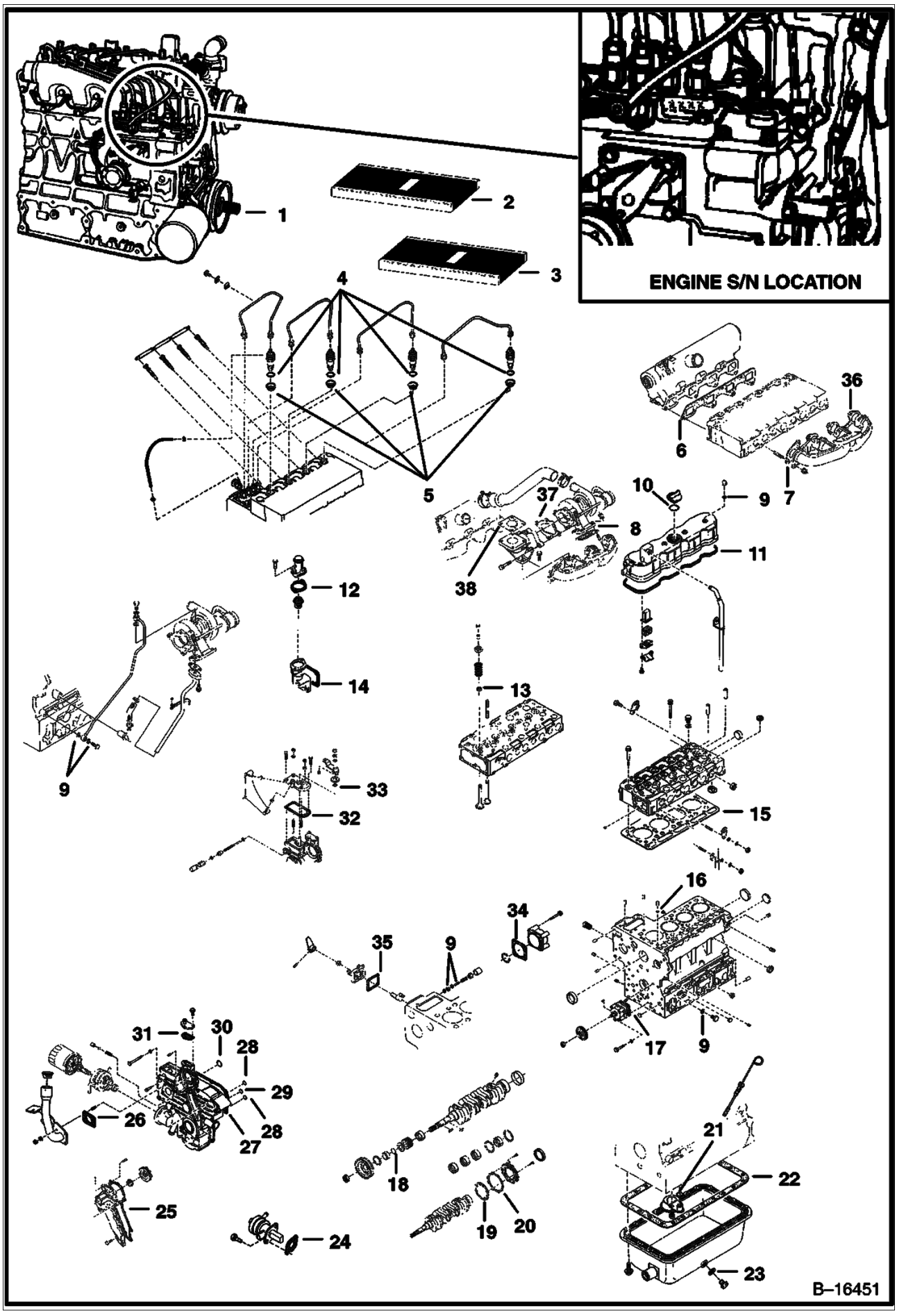

Page 328 - OSS# 2071349 - All rights reserved by Bobcat Company - 12/01/2009 - 20:50:59 - Produced by Ken Cook Co. with mediaioff

Ref No	Part Number	Description	Remarks	Serial Number	Qty
1		ENGINE	NAP - Does not include starter, alternator, flywheel, & flywheel housing - for new engine order 6685982 Engine - Was 6718628 [A]	500K 11001 & Abv	1
1		ENGINE	NAP - Does not include starter, alternator, flywheel, & flywheel housing - for new engine order 6685982 Engine - Was 6718628 [A]	5192 11001 & Abv	1
1		ENGINE	NAP - Does not include starter, alternator, flywheel, & flywheel housing - for new engine order 6685982 Engine - Was 6718628 [A]	5191 11001 & Abv	1
1		ENGINE	NAP - Does not include starter, alternator, flywheel, & flywheel housing - for new engine order 6685982 Engine - Was 6718628 [A]	5190 11001 & Abv	1
1		SHORT BLOCK	NAP		1
1	6718628REM	ENGINE, KUBOTA V2003T-EB TIER 1	does not include turbo	500K11001 & Above	1
1	6718628REM	ENGINE, KUBOTA V2003T-EB TIER 1	does not include turbo	5190 11001 & Abv	1
1	6718628REM	ENGINE, KUBOTA V2003T-EB TIER 1	does not include turbo	5191 11001 & Abv	1
1	6718628REM	ENGINE, KUBOTA V2003T-EB TIER 1	does not include turbo	5192 11001 & Abv	1
2	6676059	GASKET KIT	Upper - Ref. 6-16 & 36-37		1
3	7003006	GASKET	Lower - Does not include rear oil seal - Ref. 17-35 - Was 6657402 [A]		1
4	6655218	GASKET	See Illustration INJECTOR NOZZLES/ B13155A		4
5	6655872	HEAT SEAL	See Illustration INJECTOR NOZZLES/ B13155A		4
6	6666811	GASKET	See Illustration MANIFOLDS/ B16455		1
7	6666781	GASKET	See Illustration MANIFOLDS/ B16455		1
8	6675636	GASKET	See Illustration TURBO CHARGER/ B16456 turbo - Was 6575580 [B,D]		1
9	3974095	MET-GASK	See Illustration CRANKCASE/ B16452 See Illustration ENGINE STOP LEVER/ B13139A See Illustration ROCKER ARM COVER/ B13158A		7
10	6684782	O-RING	See Illustration CRANKCASE/ B16452 - oil fill plug - Was 3966602 [A]		1
11	6598136	GASKET, COVER VALVE	See Illustration CRANKCASE/ B16452		1
12	6684863	GASKET	See Illustration WATER FLANGE & THERMOSTAT/ B16454 thermostat cover - Was 6732199 [B]		1
13	6653830	SEAL, STEM VALVE	See Illustration VALVE ROCKER ARM/ B17305A		8
14	6666802	GASKET	See Illustration WATER FLANGE & THERMOSTAT/ B16454 - water flange		1
15	6675643	GASKET	See Illustration CYLINDER HEAD/ B13153A CYLINDER HEAD		1
16	3974038	O RING	See Illustration CRANKCASE/ B16452		1
17	6666782	GASKET	See Illustration CRANKCASE/ B16452 WAS 3974456B [A]		1
18	3974577	O RING	See Illustration PISTON & CRANKSHAFT/ B13145A - crankshaft frt		1
19	6684788	GASKET	See Illustration PISTON & CRANKSHAFT/ B13145A Was 6655165 [A]		1
20	6666814	GASKET	See Illustration PISTON & CRANKSHAFT/ B13145A		1

Page 329 - OSS# 2071349 - All rights reserved by Bobcat Company - 12/01/2009 - 20:50:59 - Produced by Ken Cook Co. with mediaioff

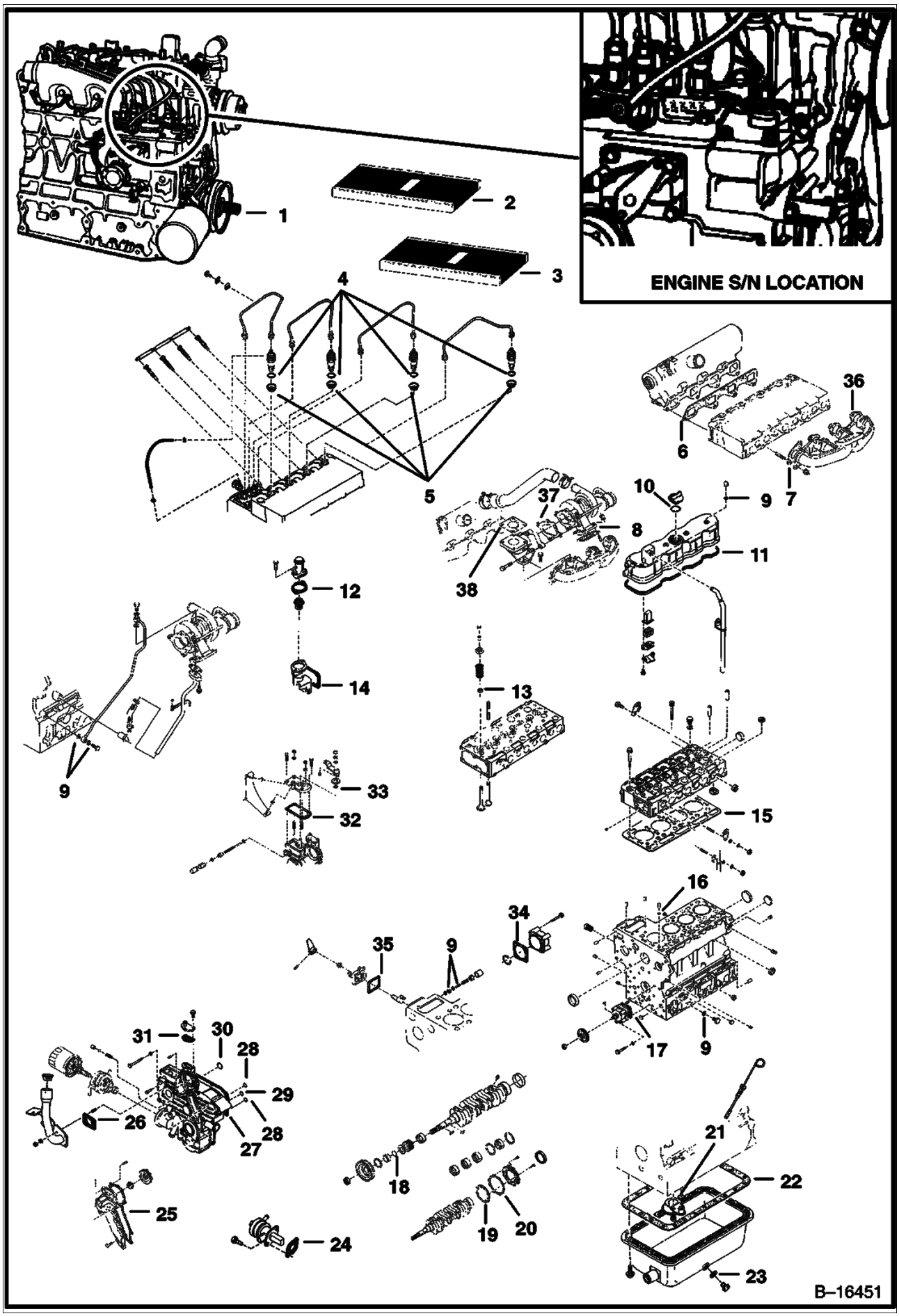

Page 330 - OSS# 2071349 - All rights reserved by Bobcat Company - 12/01/2009 - 20:50:59 - Produced by Ken Cook Co. with mediaioff

Ref No	Part Number	Description	Remarks	Serial Number	Qty
			WAS 6655167 [A]		
21	3966516	O RING	See Illustration OIL PAN/ B16453		1
22	6666817	GASKET	See Illustration OIL PAN/ B16453 OIL PAN - WAS 3975449B [A]		1
23	6680484	GASKET	See Illustration OIL PAN/ B16453 Was 3974403 [B]		1
24	3974502	GASKET	See Illustration FUEL & INJECTION PUMPS/ B13157A FUEL PUMP		1
25	6666804	GASKET	See Illustration WATER PUMP/ B13142A WAS 3974995B [A]		1
26	6666785	GASKET	See Illustration GEARCASE/ B17146 Was 6714543 [B,D]		1
27	6666800	GASKET	See Illustration GEARCASE/ B17146 GEARCASE - WAS 6653806 [A]		1
28	3966515	O RING	See Illustration GEARCASE/ B17146		2
29	6655162	O-RING	See Illustration GEARCASE/ B17146		1
30	3966530	O RING	See Illustration GEARCASE/ B17146		1
31	6666803	GASKET	See Illustration GEARCASE/ B17146 WATER RETURN FLANGE - WAS 3974895B [A]		1
32	6666792	GASKET	See Illustration SPEED CONTROL PLATE/ B13137A WAS 6635392 [A]		1
33	3966512	O RING	See Illustration PISTON & CRANKSHAFT/ B13145A		1
34	6666827	GASKET	See Illustration PISTON & CRANKSHAFT/ B13145A WAS 3974630B [A]		1
35	6666783	GASKET	See Illustration ENGINE STOP LEVER/ B13139A PUMP COVER - WAS 3974601B [A]		1
36	6666791	GASKET	See Illustration MANIFOLDS/ B16455		1
37	6675637	GASKET	See Illustration TURBO CHARGER/ B16456		1
38	6727753	GASKET	See Illustration TURBO CHARGER/ B16456 MUFFLER - WAS 6666816 [A]		1

Page 331 - OSS# 2071349 - All rights reserved by Bobcat Company - 12/01/2009 - 20:50:59 - Produced by Ken Cook Co. with mediaioff

GEARCASE
(Kubota - V2003T) (1G622-00000)

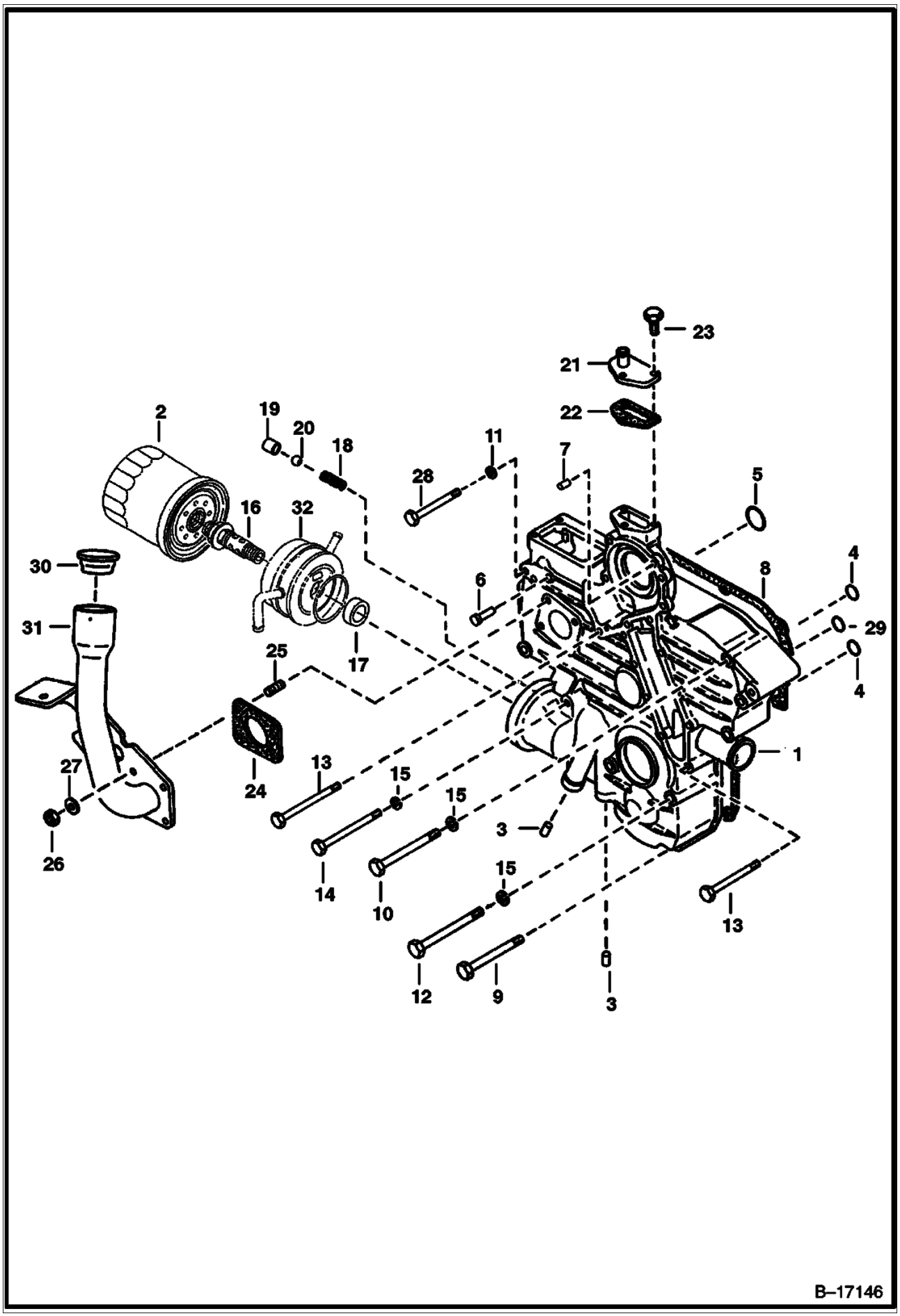

Page 332 - OSS# 2071349 - All rights reserved by Bobcat Company - 12/01/2009 - 20:50:59 - Produced by Ken Cook Co. with mediaIoff

Ref No	Part Number	Description	Remarks	Serial Number	Qty
1		CASE ASSY.	NAP - W/Ref. 3-7 & 29 - Order 6688640 & Ref. 4-7 & 29 - Was 6655479 [A]		1
1	6688640	GEAR HOUSING	W/Ref. 3		1
2	6675517	FILTER, OIL ENG	Was 3974896B [A]		1
3	6667425	PLUG	pin		2
4	3966515	O RING			2
5	3966530	O RING			1
6	6652592	PIN	start spring		1
7	3974395	PIN	straight		2
8	6666800	GASKET	gearcase - Was 6653806 [A]		1
9	3974888	BOLT			2
10	1CM870	BOLT			5
11	2EM8	WASHER, PLAIN			1
12	1CM880	BOLT			2
13	6653808	BOLT			3
14	1CM895	BOLT			2
15	6EM80	WASHER, SPRING			9
16	6675681	ADAPTER	Was 6653809 [B,D]		1
17	6675671	COLLAR	Was 15EM00180B [B,D]		1
18	6652652	SPRING			1
19	3974893	SEAT	valve		1
20	10J13	BALL			1
21	3974894	FLANGE	water return		1
22	6666803	GASKET	water return flange - Was 3974895B [A]		1
23	4CM620	BOLT			3
24	6666785	GASKET	Was 6714543 [B,D]		1
25	6652764	STUD			4
26	1DM6	NUT			4
27	6EM60	WASHER, SPRING	spring		4
28	6653807	BOLT			1
29	6655162	O-RING			1
30	6703736	CAP			1
31	6719048	MOUNT			1
32		OIL COOLER	See Illustration OIL COOLER/ B17147		1

Page 333 - OSS# 2071349 - All rights reserved by Bobcat Company - 12/01/2009 - 20:50:59 - Produced by Ken Cook Co. with mediaioff

OIL COOLER
(Kubota - V2003T) (1G622-00000)
S/N 500K12421 & Below, 519022517 & Below, 519212422 & Below

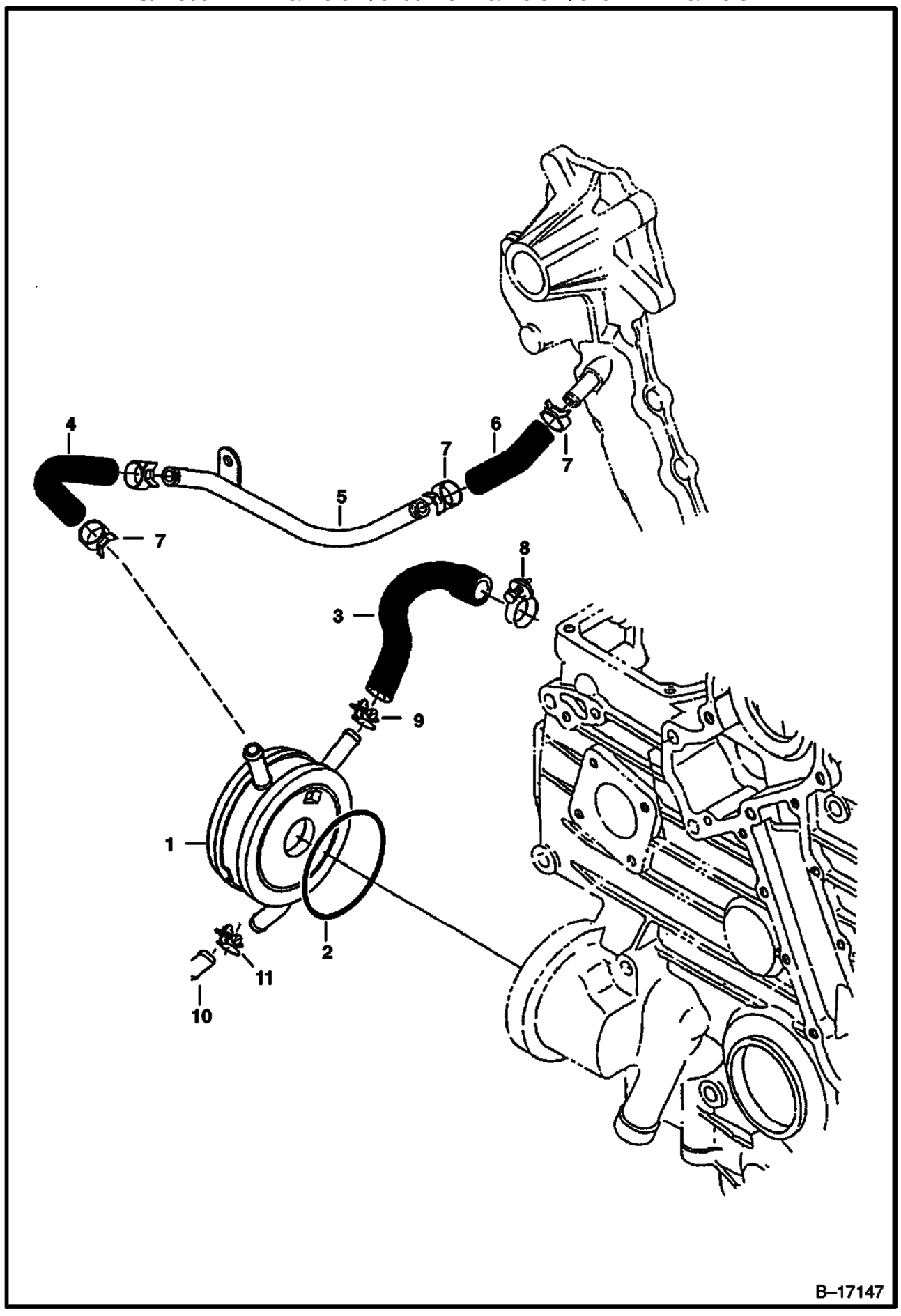

Page 334 - OSS# 2071349 - All rights reserved by Bobcat Company - 12/01/2009 - 20:50:59 - Produced by Ken Cook Co. with mediaioff

OIL COOLER (Cont'd)
(Kubota - V2003T) (1G622-00000)
S/N 500K12421 & Below, 519022517 & Below, 519212422 & Below

Ref No	Part Number	Description	Remarks	Serial Number	Qty
1		OIL COOLER	See Illustration OIL COOLER/ PE1455R NAP - W/Ref. 2 - ORDER 6731956 OIL COOLER KIT - WAS 6675680 [A]		1
2	6698244	ORING	Was 6657422 [B,D]		1
3	6675670	HOSE			1
4	6675653	PIPE, OIL COVER			1
5	6675682	TUBE			1
6	6675651	PIPE, WATER			1
7	6680580	CLAMP	Was 6652748 [A]		4
8	3974679	BAND			1
9	6599040	BAND, PIPE			1
10	6677123	CAP	Was 6725443 [A]		1
11	5HM15	CLAMP			1

Page 335 - OSS# 2071349 - All rights reserved by Bobcat Company - 12/01/2009 - 20:50:59 - Produced by Ken Cook Co. with mediaioff

OIL COOLER
(Kubota - V2003T) (1G622-00000)
(S/N 500K12422 & Above, 519022518 & Above, 519212423 & Above)

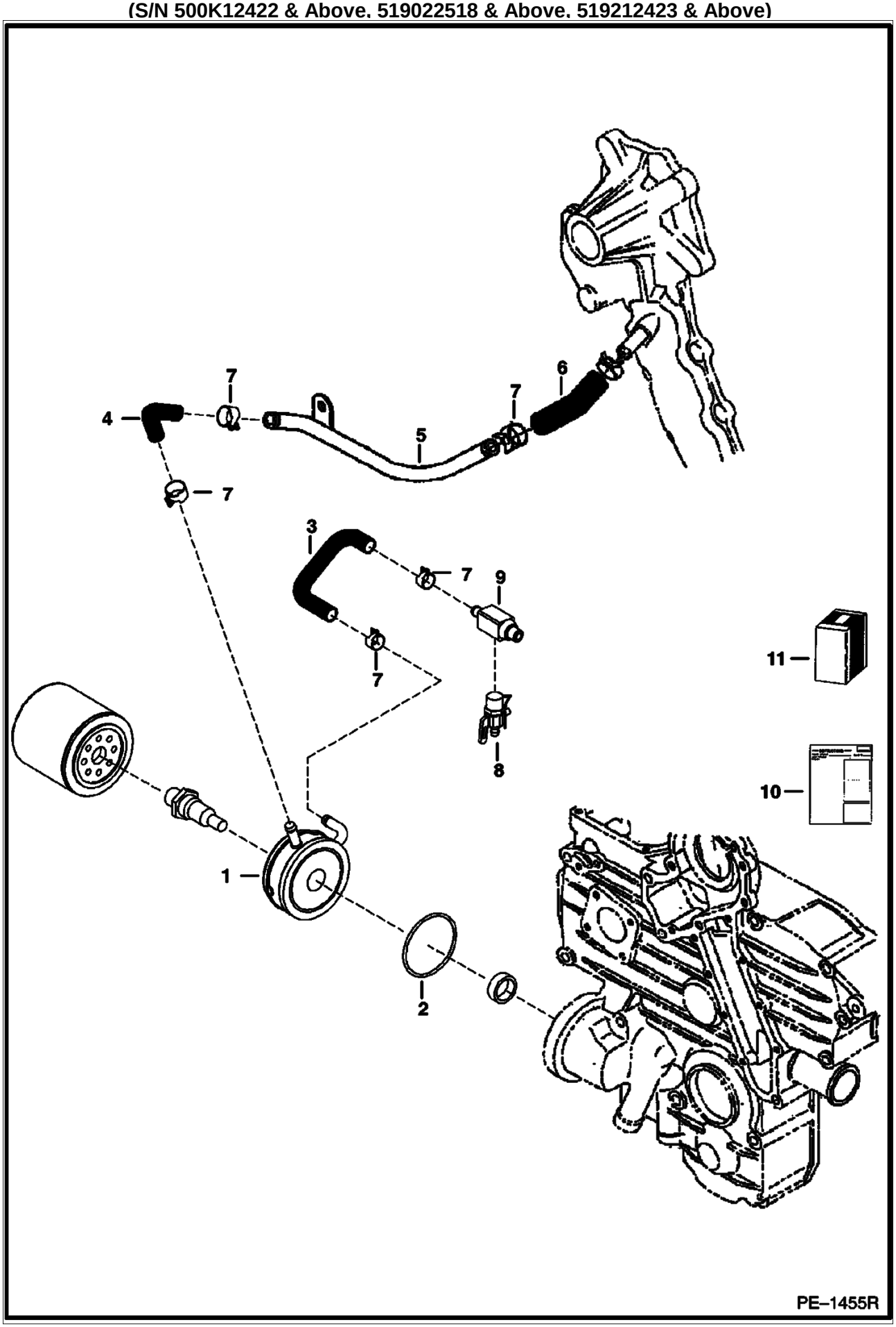

Page 336 - OSS# 2071349 - All rights reserved by Bobcat Company - 12/01/2009 - 20:50:59 - Produced by Ken Cook Co. with mediaioff

OIL COOLER (Cont'd)
(Kubota - V2003T) (1G622-00000)
(S/N 500K12422 & Above, 519022518 & Above, 519212423 & Above)

Ref No	Part Number	Description	Remarks	Serial Number	Qty
1		OIL COOLER	See Illustration OIL COOLER/ B17147 NAP - W/Ref. 2 - SOME LATER BUILT S/N LOADERS MAY NOT HAVE THIS OIL COOLER DESIGN - FOR ALTERNATE DESIGN - Was 6685641 [A]		1
2	6698244	ORING	Was 6657422 [B,D]		1
3	6678945	HOSE			1
4	6675653	PIPE, OIL COVER			1
5	6675682	TUBE			1
6	6675651	PIPE, WATER			1
7	6680580	CLAMP	Was 6652748 [A]		6
8	6678943	VALVE			1
9	6678946	ADAPTER			1
10	6901701	INSTRUCTIONS			1
11	6731956	KIT	oil cooler - Ref. 1, 3 & 7 - 10		1

Page 337 - OSS# 2071349 - All rights reserved by Bobcat Company - 12/01/2009 - 20:50:59 - Produced by Ken Cook Co. with mediaioff

CRANKCASE
(Kubota - V2003T) (1G622-00000)

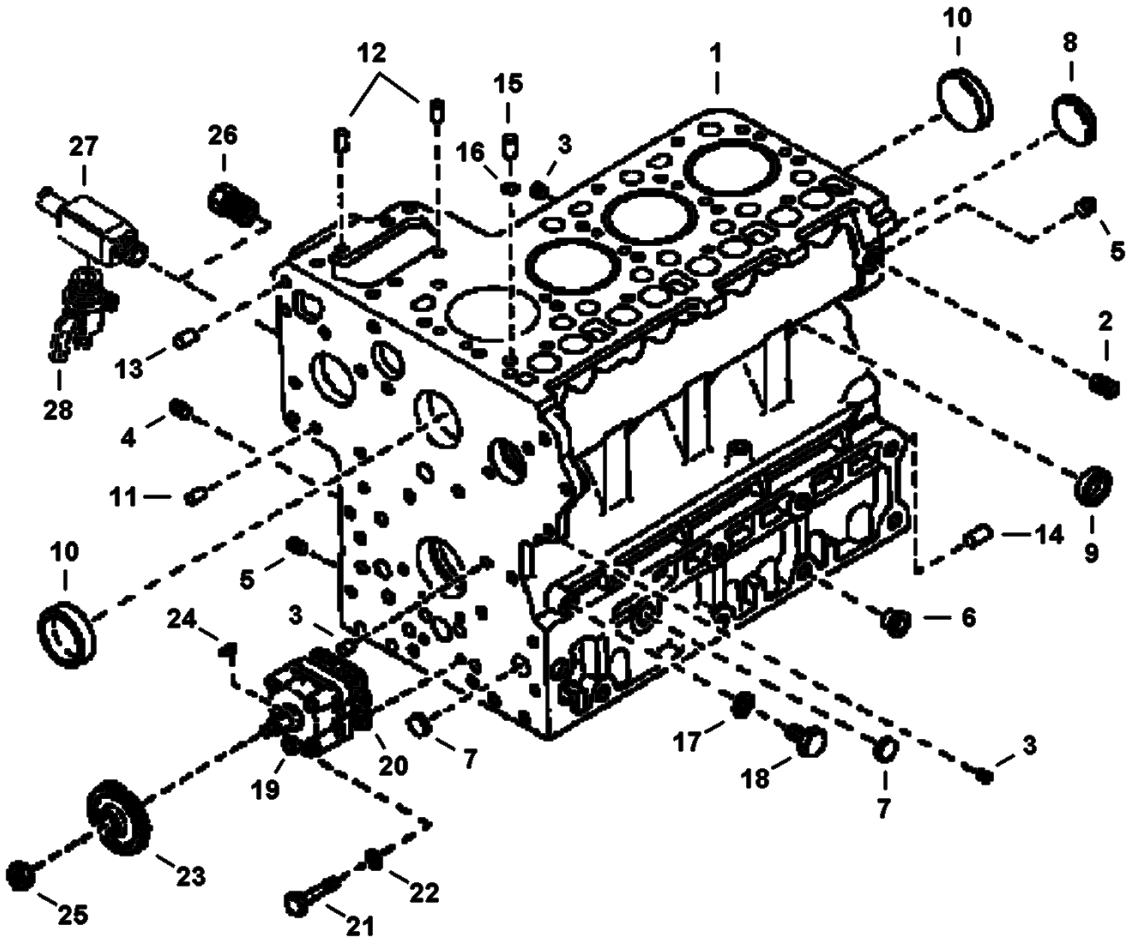

B-16452

Page 338 - OSS# 2071349 - All rights reserved by Bobcat Company - 12/01/2009 - 20:50:59 - Produced by Ken Cook Co. with mediaioff

Ref No	Part Number	Description	Remarks	Serial Number	Qty
1	6675654	CRANKCASE	assy. - W/Ref. 2-15		1
2	16F2	PLUG			1
3	6652574	PLUG			6
4	6655869	PLUG			12
5	6652575	PLUG			2
6	6598187	PLUG			21
7	4FM18	PLUG	expansion		3
8	4FM45	PLUG	expansion		1
9	3974389	CAP, SEALING	sealing		6
10	3974390	PLUG	sealing		2
11	3974393	PIN	straight		2
12	3974394	PIN	straight		2
13	3974395	PIN	straight		2
14	3974868	PIN	straight		1
15	3974037	PIN	pipe		1
16	3974038	O RING			1
17	3974095	MET-GASK			1
18	6655884	PLUG			1
19	6689441	PUMP, OIL ENG	Was 3975426 [A]		1
20	6666782	GASKET	Was 3974456B [A]		1
21	6655195	BOLT			4
22	6EM60	WASHER, SPRING			4
23	3975441	GEAR			1
24	6969805	KEY,FEATHER	Was 15JM00410B [A]		1
25	3DM12	NUT			1
26	3974677	PIPE	water return - Was 3974871 [B,D]	E/ 1Q1216 & Bel	1
27	6678946	ADAPTER		E/ 1S0001 & Abv	1
28	6672190	DRAINCOCK		E/ 1S0001 & Abv	1

Page 339 - OSS# 2071349 - All rights reserved by Bobcat Company - 12/01/2009 - 20:50:59 - Produced by Ken Cook Co. with mediaioff

ROCKER ARM COVER
(Kubota - V2003T) (1G622-00000)

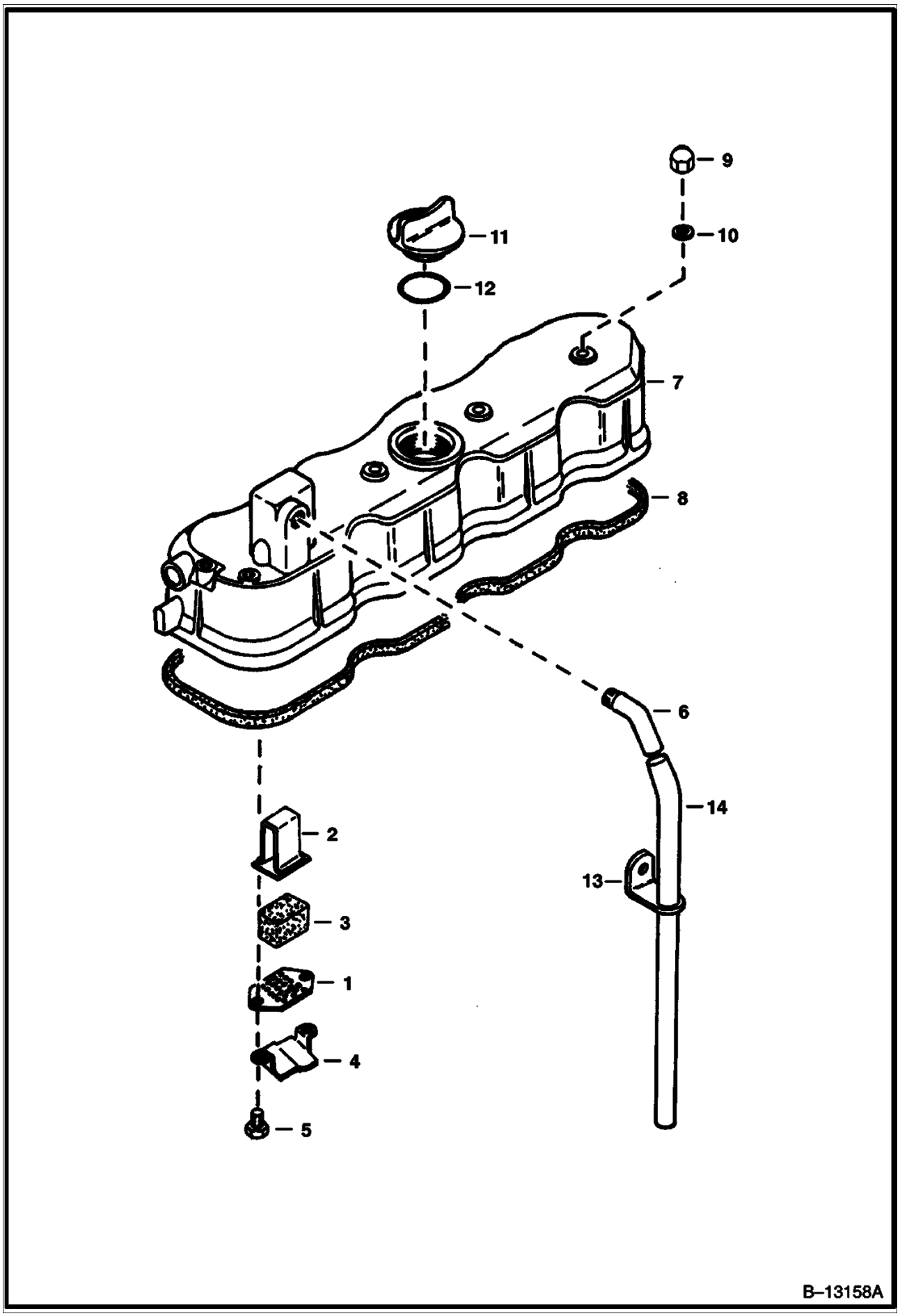

Page 340 - OSS# 2071349 - All rights reserved by Bobcat Company - 12/01/2009 - 20:50:59 - Produced by Ken Cook Co. with mediaioff

ROCKER ARM COVER (Cont'd)
(Kubota - V2003T) (1G622-00000)

Ref No	Part Number	Description	Remarks	Serial Number	Qty
1	3974924	PLATE	element		1
2	3974925	PLATE	element		1
3	3974926	BREATHER	breather		1
4	3974927	SHIELD	breather		1
5	3975436	SCREW	W/Washer		2
6	6652624	JOINT	breather pipe		1
7	6655175	COVER	valve		1
8	6598136	GASKET, COVER VALVE			1
9	3974923	NUT	cap		4
10	3974095	MET-GASK			4
11	6652653	PLUG	oil filter		1
12	3966602	O RING	oil fill plug		1
13	3974931	CLAMP	pipe		1
14	3974930	PIPE	breather		1

Page 341 - OSS# 2071349 - All rights reserved by Bobcat Company - 12/01/2009 - 20:50:59 - Produced by Ken Cook Co. with mediaioff

VALVE ROCKER ARM
(Kubota - V2003T) (1G622-00000)

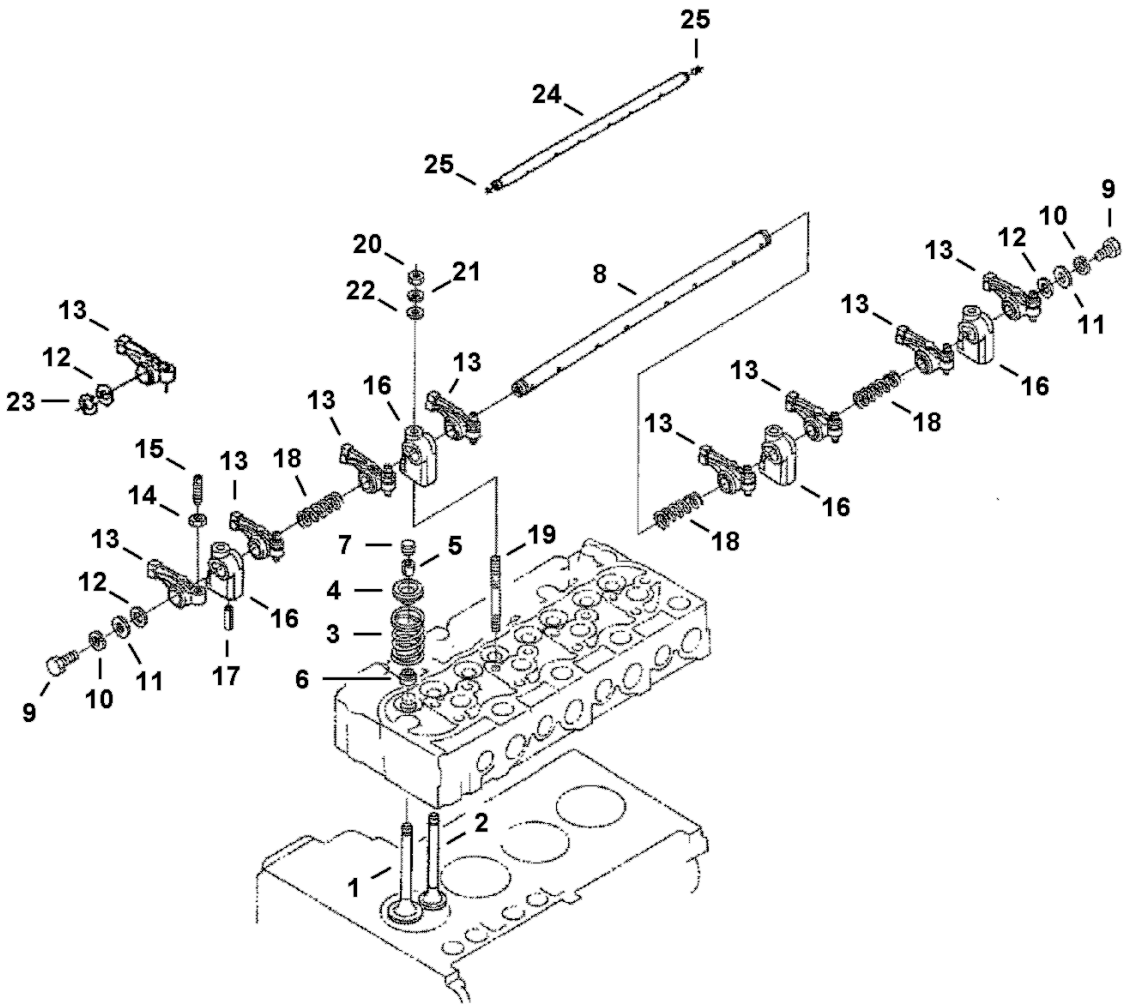

Page 342 - OSS# 2071349 - All rights reserved by Bobcat Company - 12/01/2009 - 20:50:59 - Produced by Ken Cook Co. with mediaioff

VALVE ROCKER ARM (Cont'd)
(Kubota - V2003T) (1G622-00000)

Ref No	Part Number	Description	Remarks	Serial Number	Qty
1	6655173	VALVE	inlet		4
2	6675629	VALVE, EXHAUST	exhaust		4
3	3974514	SPRING 5	valve		8
4	3974515	RETAINER	valve spring		8
5	6684874	COLLAR	valve spring - set of 2 - Was 3974516B [A]		8
6	6653830	SEAL, STEM VALVE			8
7	3974518	CAP	valve		8
8		SHAFT	NAP - rocker arm - W/Ref. 9 - Order Ref. 22-25 - Was 6682545 [A]	E/ 1Y1240 & Bel	1
9	25GM8010	SCREW		E/ 1Y1240 & Bel	2
10	5JM14	SNAP RING	external	E/ 1Y1240 & Bel	2
11	2EM8	WASHER, PLAIN	plain		4
12	3974524	WASHER			2
13	6655870	ROCKER ARM	rocker - W/Ref. 14 & 15		8
14	2DM8	NUT			8
15	3974920	SCREW	adjusting		8
16	3974521	MOUNT	rocker arm		4
17	6667461	PIN			4
18	6653833	SPRING	rocker arm		3
19	6653832	STUD			4
20	6652792	NUT			4
21	6EM80	WASHER, SPRING			4
22	6684875	SHAFT		E/ 2A0001 & Abv	2
23	6667451	WASHER	plain	E/ 2A0001 & Abv	2
24	6667422	WASHER	spring	E/ 2A0001 & Abv	2
25	5CM812	BOLT		E/ 2A0001 & Abv	2

Page 343 - OSS# 2071349 - All rights reserved by Bobcat Company - 12/01/2009 - 20:50:59 - Produced by Ken Cook Co. with mediaioff

CYLINDER HEAD
(Kubota - V2003T) (1G622-00000)

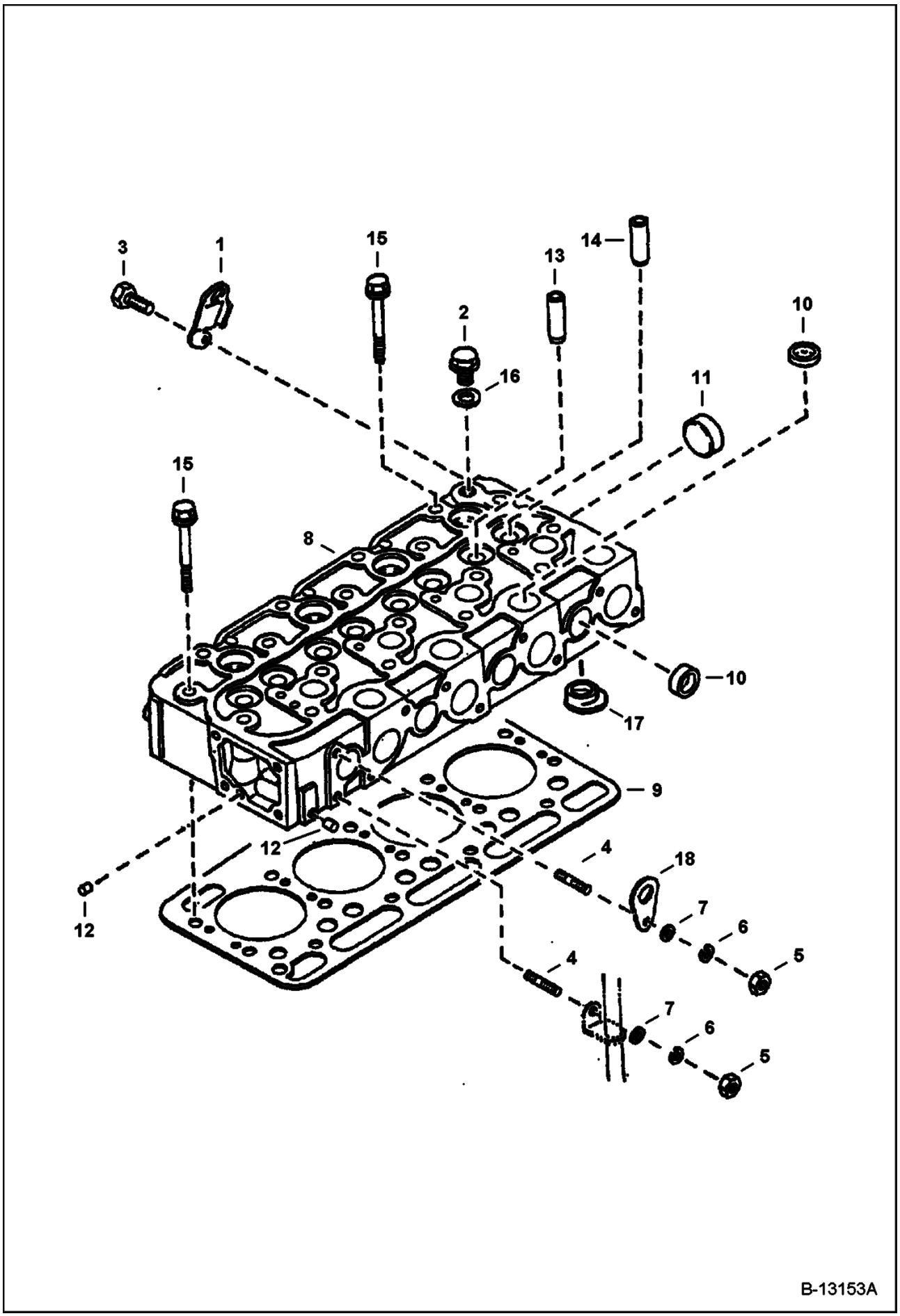

Page 344 - OSS# 2071349 - All rights reserved by Bobcat Company - 12/01/2009 - 20:50:59 - Produced by Ken Cook Co. with mediaioff

CYLINDER HEAD (Cont'd)
(Kubota - V2003T) (1G622-00000)

Ref No	Part Number	Description	Remarks	Serial Number	Qty
1	6655152	HOOK	engine		1
2	6655160	PLUG			1
3	4CM816	BOLT			1
4	6652670	STUD			2
5	6652792	NUT			2
6	6EM80	WASHER, SPRING			2
7	2EM8	WASHER, PLAIN	plain		2
8	6675642	HEAD	cylinder - W/Ref. 10-14		1
9	6675643	GASKET	cylinder head		1
10	3974432	PLUG	sealing		12
11	3974433	PLUG	sealing		1
12	6598116	PLUG	Was 6652797 [A]		2
13	6655154	GUIDE	intake valve		4
14	6969990	GUIDE	exhaust valve - Was 6653803 [A]		4
15	6655158	BOLT			18
16	6655161	WASHER	W/rubber		1
17	6667480	CHAMBER	combustion		4
18	3974882	HOOK			1

Page 345 - OSS# 2071349 - All rights reserved by Bobcat Company - 12/01/2009 - 20:50:59 - Produced by Ken Cook Co. with mediaioff

OIL PAN
(Kubota - V2003T) (1G622-00000)

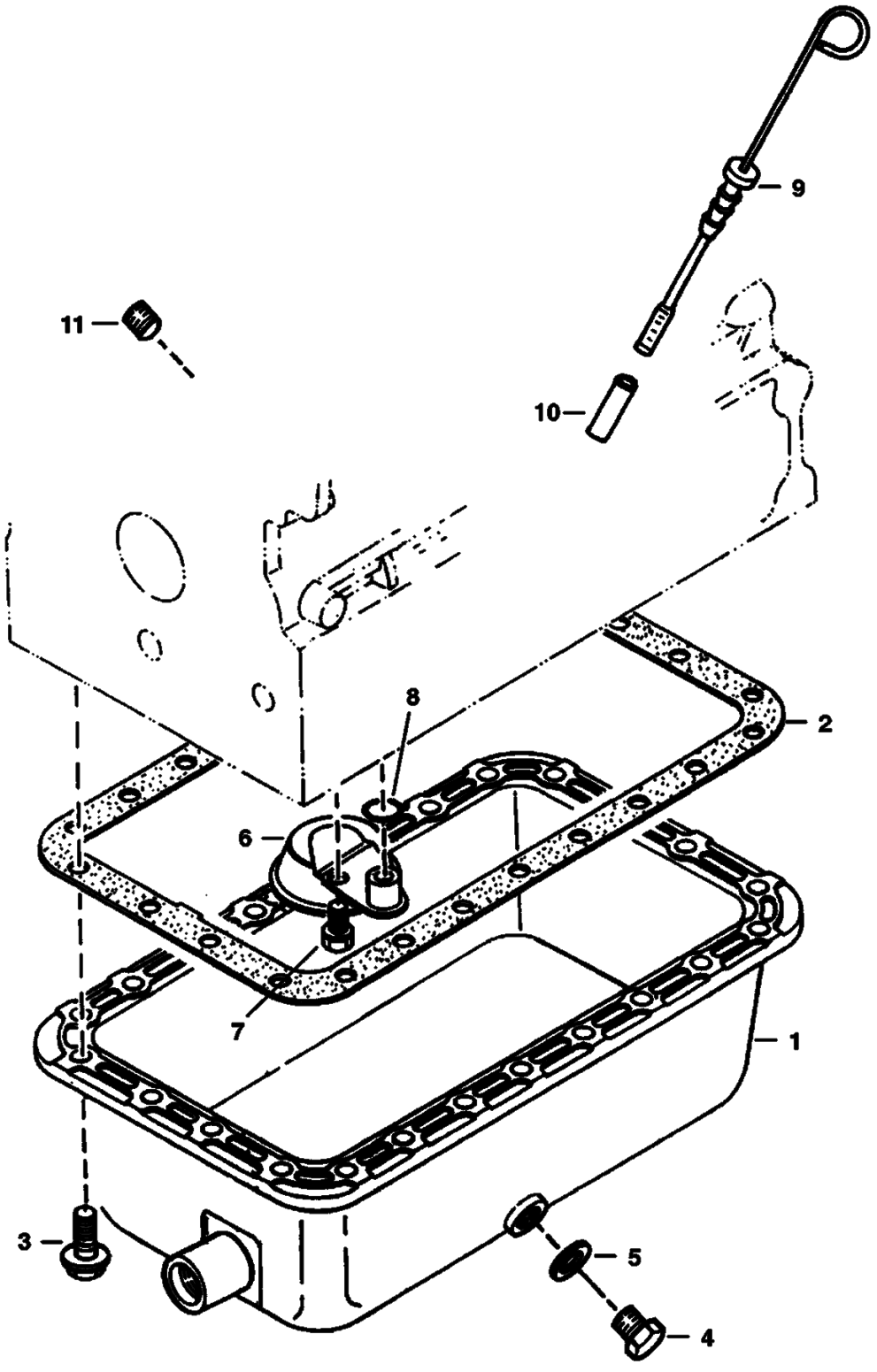

Page 346 - OSS# 2071349 - All rights reserved by Bobcat Company - 12/01/2009 - 20:50:59 - Produced by Ken Cook Co. with mediaIoff

OIL PAN (Cont'd)
(Kubota - V2003T) (1G622-00000)

Ref No	Part Number	Description	Remarks	Serial Number	Qty
1	6655151	PAN, OIL			1
2	6666817	GASKET	oil pan - Was 3975449B [A]		1
3	6653798	BOLT			24
4	3974402	PLUG	drain		1
5	6680484	GASKET	Was 3974403 [B]		1
6	6655194	SCREEN, OIL			1
7	4CM816	BOLT			1
8	3966516	O RING			1
9		DIPSTICK	NAP - oil - Order 6677202 Dipstick - Was 6658245 [A]		1
9	6677202	DIPSTICK, OIL ENG	oil - long		1
10	6677203	GUIDE	for long dipstick		1
11	6675641	PLUG	dipstick		1

Page 347 - OSS# 2071349 - All rights reserved by Bobcat Company - 12/01/2009 - 20:50:59 - Produced by Ken Cook Co. with mediaioff

PISTON & CRANKSHAFT
(Kubota - V2003T) (1G622-00000)

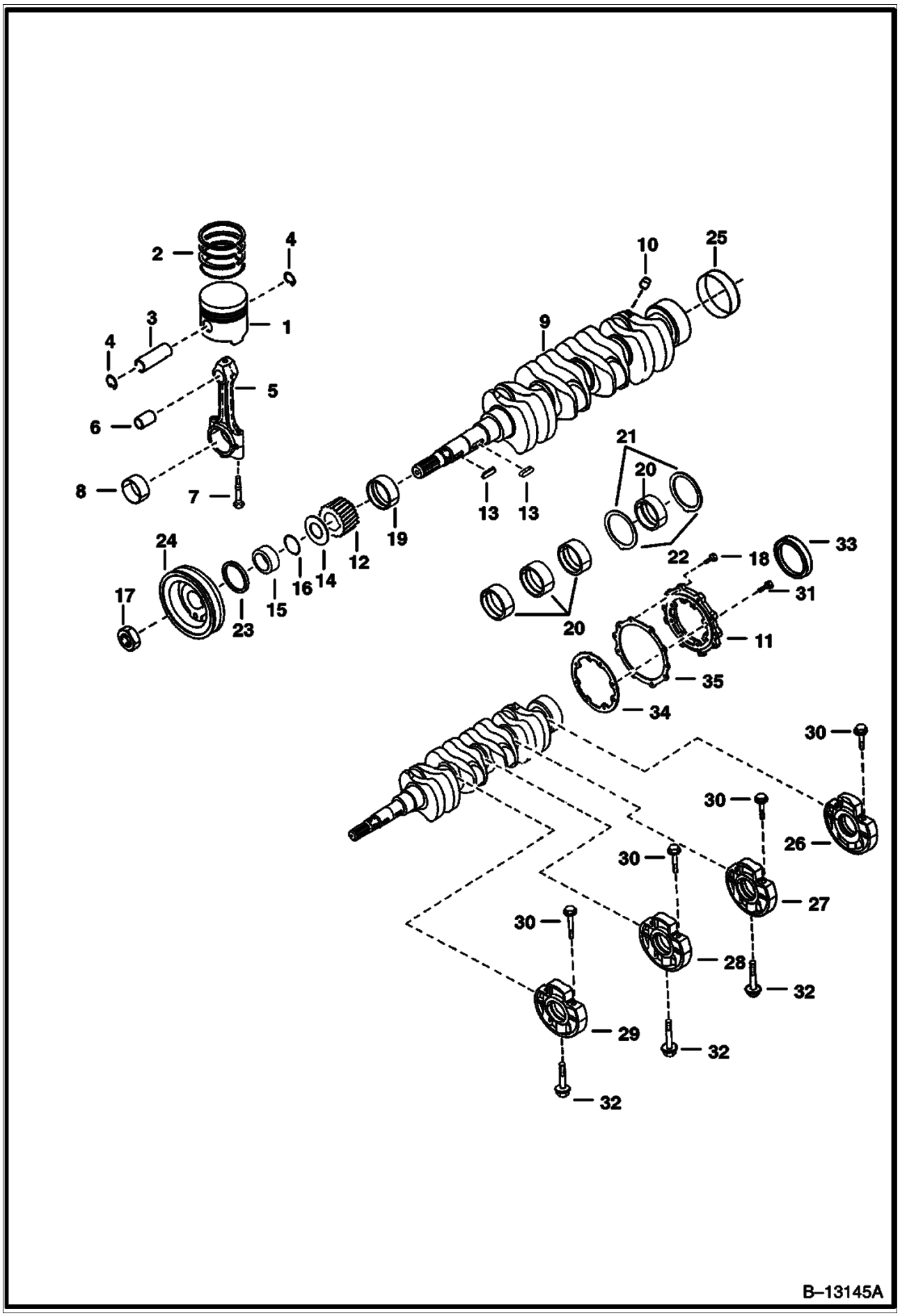

Page 348 - OSS# 2071349 - All rights reserved by Bobcat Company - 12/01/2009 - 20:50:59 - Produced by Ken Cook Co. with mediaioff

Ref No	Part Number	Description	Remarks	Serial Number	Qty
1		PISTON	Std. - Order 6689939 piston & (2) 6686997 cir-clip - Was 6675638 [A]		4
1		PISTON	NAP - (0,5 mm - .0197) - Was 6676057 [A]		4
2	6675655	RING, PISTON	piston - Std.		4
2	6676058	RINGS	piston - (0,5 mm - .0197)		4
3	6655179	PIN, PISTON ENG			4
4	6655180	CIR-CLIP			8
5	6655181	ROD, CONNECTING	connecting - W/Ref. 6, 7 & 8		4
6	6655243	BUSHING			4
7	6655498	BOLT			8
8	6655183	BEARING	rod - std.		4
8	6655236	BEARING	rod (-0,20 mm)		4
8	6655237	BEARING	rod (-0,40 mm)		4
9	6655184	CRANKSHAFT	Ref. 10 & 25 - Ref. 10 must be installed before using		1
10	6652633	BALL	Must be installed before using Ref. 9 crankshaft - See S/L dated 3 Jan 85		1
11	6655166	COVER			1
12	6598142	GEAR			1
13	3974546	KEY			1
14	6653861	SLINGER, OIL	oil		1
15	3975337	COLLAR			1
16	3974577	O RING			1
17	3974671	NUT			1
18	4CM825	BOLT			8
19	6655185	BEARING	main - Std.		4
19	6655238	BEARING	main (0,2 mm-.0079)		1
19	6655239	BEARING	main (0,4 mm-.0157)		1
20	6655186	BEARING	main - Std.		4
20	6655240	BEARING	main (0,2 mm-.0079)		4
20	6655241	BEARING	main (0,4 mm-.0157)		4
21	3974945	WASHER, THRUST	thrust - Std.		2
21	3975021	WASHER	thrust (0,2 mm-.0079)		2
21	3975022	WASHER, THRUST	thrust (0,4 mm-.0157)		2
22	6653865	WASHER, THRUST	thrust - Std.		2
22	6654002	WASHER, THRUST	thrust (0,2 mm-.0079)		2
22	6654003	WASHER, THRUST	thrust (0,4 mm-.0157)		2
23	6631664	SEAL	oil		1
24	6655235	PULLEY			1
25	6653859	SLEEVE			1
26	6675628	CASE	main bearing - W/Ref. 30		1
27	6675634	CASE	main bearing - W/Ref. 30		1
28	6675639	CASE	main bearing - W/Ref. 30		1
29	6675627	CASE	main bearing - W/Ref. 30		1
30	6655164	BOLT			8
31	4CM828	BOLT			8
32	6653821	BOLT			3
33	6649300	SEAL	oil		1
34	6684788	GASKET	Was 6655165 [A]		1
35	6666814	GASKET			1

Page 349 - OSS# 2071349 - All rights reserved by Bobcat Company - 12/01/2009 - 20:50:59 - Produced by Ken Cook Co. with mediaioff

FUEL CAMSHAFT
(Kubota - V2003T) (1G622-00000)

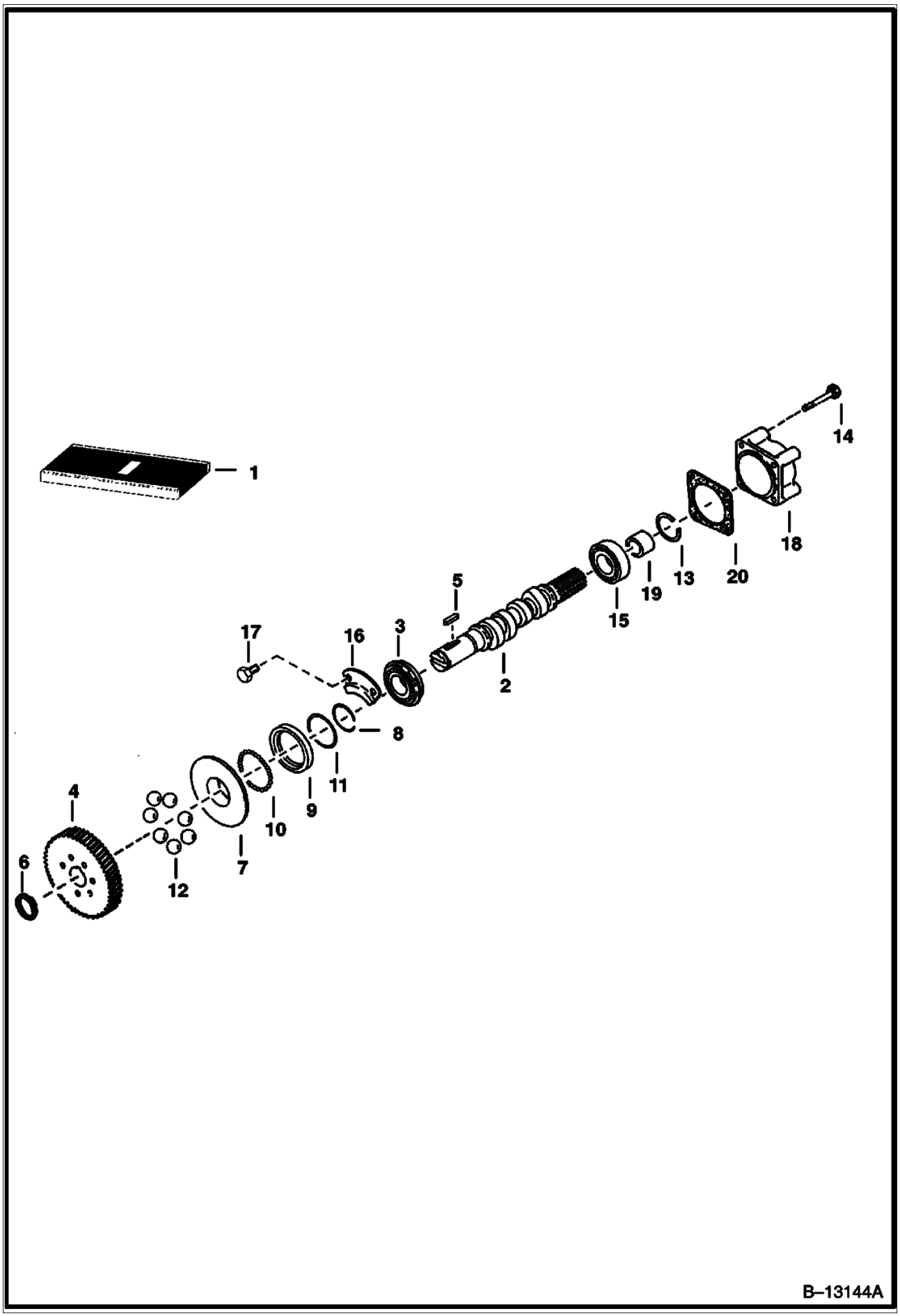

Page 350 - OSS# 2071349 - All rights reserved by Bobcat Company - 12/01/2009 - 20:50:59 - Produced by Ken Cook Co. with mediaioff

FUEL CAMSHAFT (Cont'd)
(Kubota - V2003T) (1G622-00000)

Ref No	Part Number	Description	Remarks	Serial Number	Qty
1	6655211	CAMSHAFT	assy. - Ref. 2-14		1
2	6655875	CAMSHAFT	fuel		1
3	851242	BEARING			1
4	6655212	GEAR	injection pump		1
5	6598099	KEY			1
6	5JM24	CIRCLIP	external		1
7	6655213	SLEEVE	governor		1
8	3974618	CIR-CLIP	sleeve		1
9	6655214	CASE	governor ball		1
10	10J5	BALL			39
11	3974620	CIR-CLIP	ball case		1
12	6655215	BALL			7
13	6598158	CIRCLIP	external - Was 3975432B [A]		1
14	6651934	BOLT			7
15	6598101	BALL BEARING			1
16	3974624	STOPPER			1
17	4CM814	BOLT			2
18	3974996	COVER	fuel camshaft		1
19	6598179	COLLAR	Was 6655523 [A]		1
20	6666827	GASKET	Was 3974630B [A]		1

Page 351 - OSS# 2071349 - All rights reserved by Bobcat Company - 12/01/2009 - 20:50:59 - Produced by Ken Cook Co. with mediaioff

CAMSHAFT
(Kubota - V2003T) (1G622-00000)

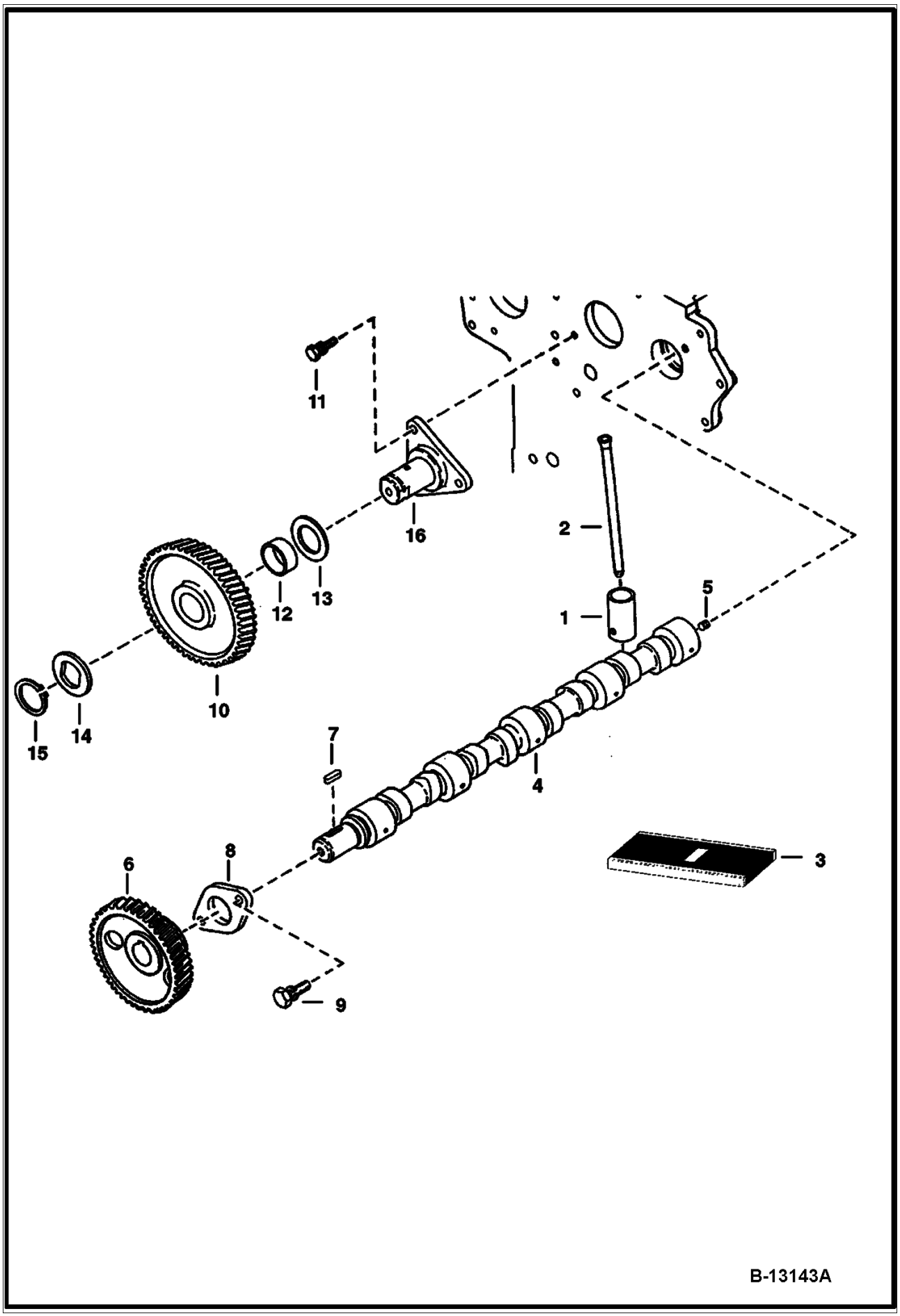

Page 352 - OSS# 2071349 - All rights reserved by Bobcat Company - 12/01/2009 - 20:50:59 - Produced by Ken Cook Co. with mediaioff

CAMSHAFT (Cont'd)
(Kubota - V2003T) (1G622-00000)

Ref No	Part Number	Description	Remarks	Serial Number	Qty
1	6667428	TAPPET			8
2	6655176	PUSHROD			8
3	6675645	CAMSHAFT	assy. - Ref. 4-8		1
4	6675646	CAMSHAFT			1
5	6653839	SCREW	seat		1
6	6692387	GEAR	camshaft - Was 6653840 [A]		1
7	3974546	KEY			1
8	3974547	STOPPER	camshaft - Was 6653843 [A]		1
9	1CM818	BOLT	Was 4CM818 [A]		2
10		GEAR ASSY.	NAP - idle - W/Ref. 12 - Order 6684793 gear, 6684795 collar, 6667433 cir-clip & 6684796 shaft - Was 6655187 [A]	E/ 1W1377 & Bel	1
10	6684793	GEAR	idle - W/Ref. 12	E/ 1Y0001 & Abv	1
11	4CM816	BOLT			3
12	6655242	BUSHING	idle gear	E/ 1W1377 & Bel	1
12	6684794	BUSHING	idle gear	E/ 1Y0001 & Abv	1
13	6655190	COLLAR		E/ 1W1377 & Bel	1
14	6655191	COLLAR		E/ 1W1377 & Bel	1
14	6684795	COLLAR		E/ 1Y0001 & Abv	1
15	6655192	CIR-CLIP	external	E/ 1W1377 & Bel	1
15	6667433	CIRCLIP	external	E/ 1Y0001 & Abv	1
16	6655193	SHAFT	idle gear	E/ 1W1377 & Bel	1
16	6684796	SHAFT	idle gear	E/ 1Y0001 & Abv	1

Page 353 - OSS# 2071349 - All rights reserved by Bobcat Company - 12/01/2009 - 20:50:59 - Produced by Ken Cook Co. with mediaioff

WATER PUMP
(Kubota - V2003T) (1G622-00000)

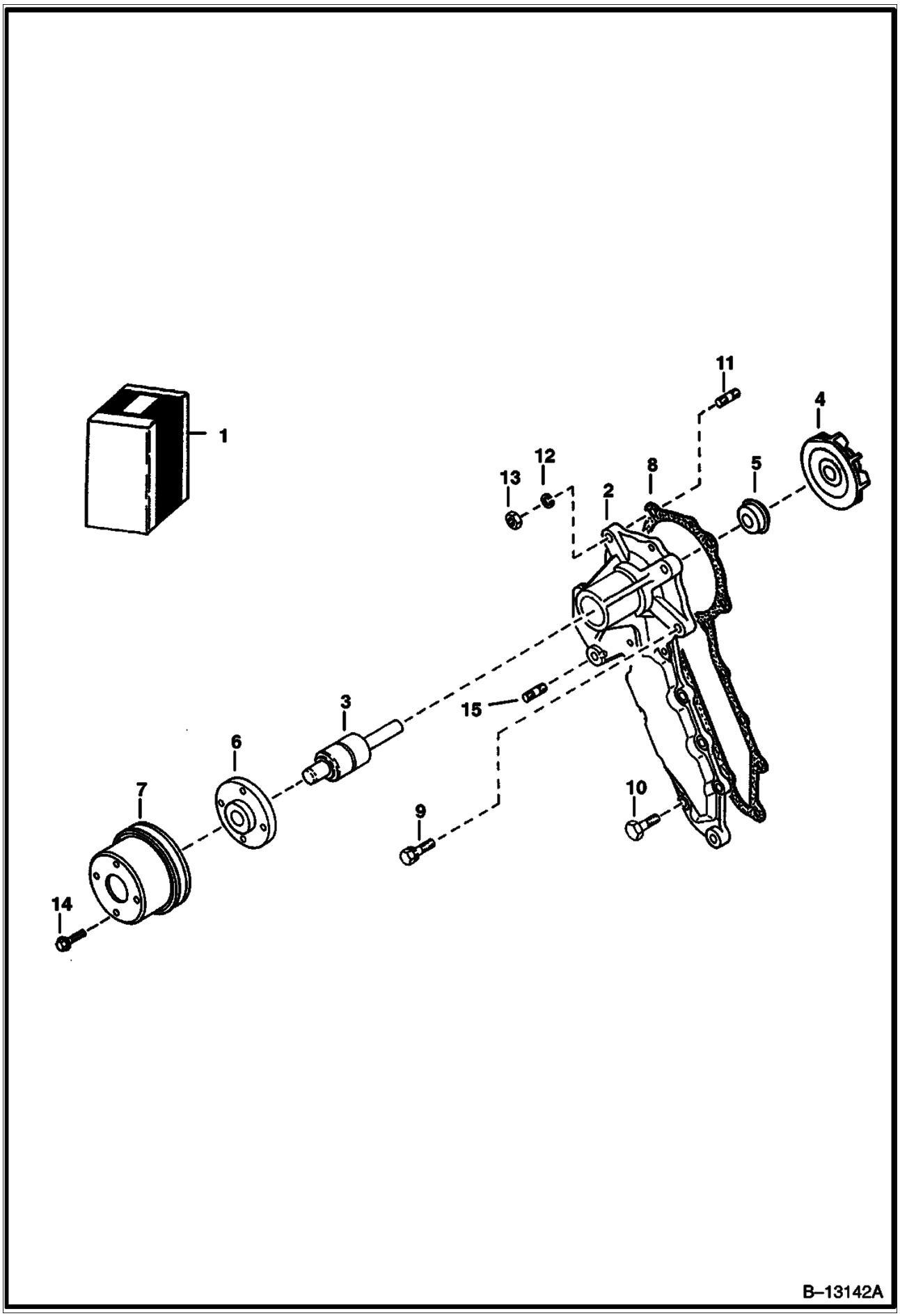

Page 354 - OSS# 2071349 - All rights reserved by Bobcat Company - 12/01/2009 - 20:50:59 - Produced by Ken Cook Co. with mediaioff

WATER PUMP (Cont'd)
(Kubota - V2003T) (1G622-00000)

Ref No	Part Number	Description	Remarks	Serial Number	Qty
1		PUMP	NAP - Ref. 2-6 - Order 6681879 Water Pump & 6686081 Hose - Was 6675652 [A]		1
2		BODY	NAP		1
3	3974991	BEARING			1
4	6653944	IMPELLER			1
4	6667460	IMPELLER	for one piece seal Ref. 5		1
5	6653945	SET SEAL			1
5	6667465	SEAL	one piece		1
6	3974992	FLANGE			1
7	6598155	PULLEY	fan		1
8	6666804	GASKET	Was 3974995B [A]		1
9	4CM828	BOLT			2
10	6652580	BOLT			6
11	3974267	STUD	Was 6653946 [A]		2
12	6EM80	WASHER, SPRING			2
13	6652792	NUT			2
14	6652762	BOLT			4
15	6683174	ROLL PIN			1

Page 355 - OSS# 2071349 - All rights reserved by Bobcat Company - 12/01/2009 - 20:50:59 - Produced by Ken Cook Co. with mediaioff

WATER FLANGE & THERMOSTAT
(Kubota - V2003T) (1G622-00000)

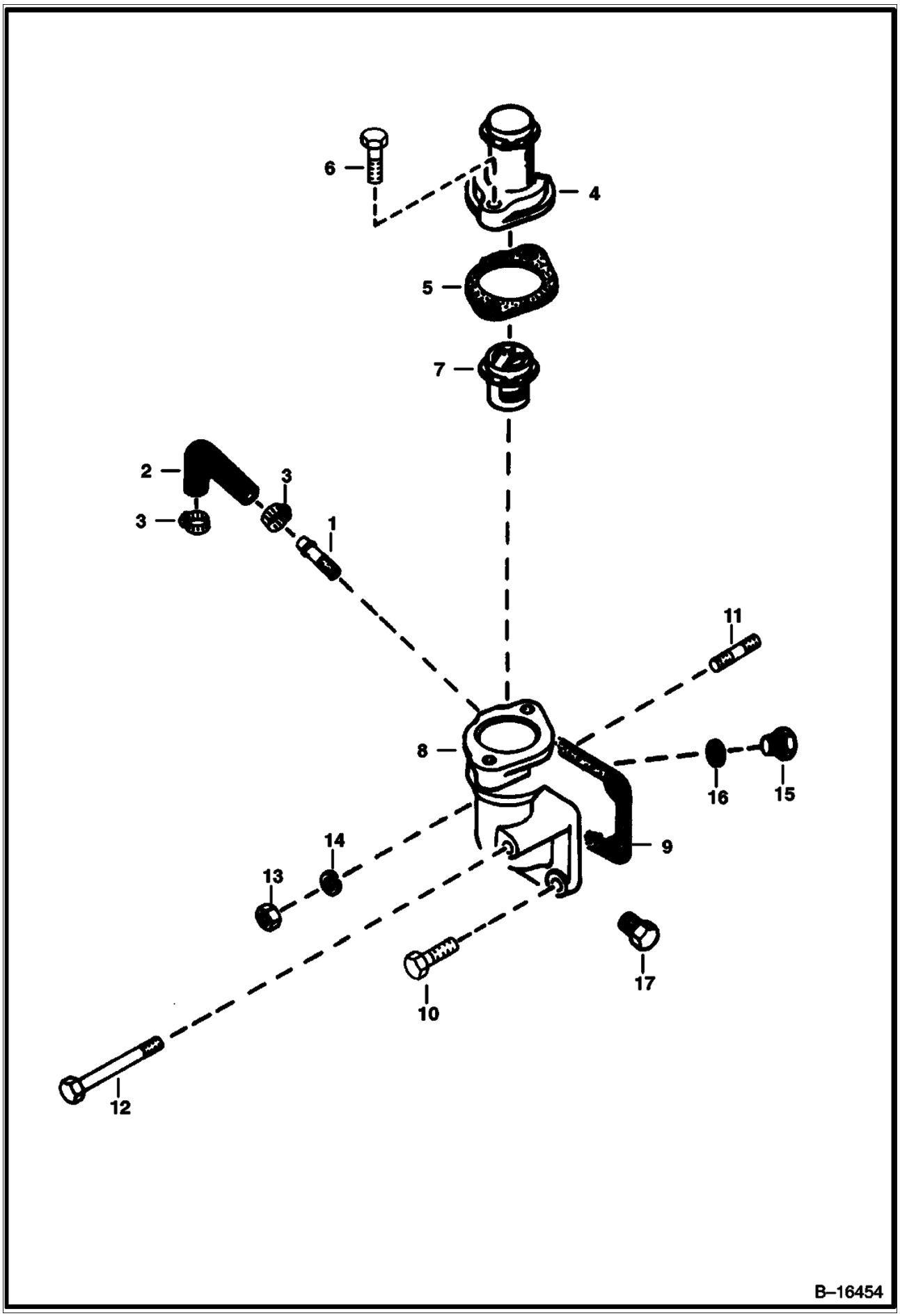

Page 356 - OSS# 2071349 - All rights reserved by Bobcat Company - 12/01/2009 - 20:50:59 - Produced by Ken Cook Co. with mediaioff

WATER FLANGE & THERMOSTAT (Cont'd)
(Kubota - V2003T) (1G622-00000)

Ref No	Part Number	Description	Remarks	Serial Number	Qty
1	6655880	PIPE	water return		1
2	3974988	PIPE	water return		1
3	3974679	BAND	pipe		2
4	6651489	COVER	thermostat		1
5	6732199	GASKET	THERMOSTAT COVER - Was 6666790 [A]		1
6	1CM835	BOLT			2
7	6653948	THERMOSTAT			1
7	6630184	THERMOSTAT	179.6 degrees F (82 degeees C) - Used W/cab heater		1
8	6655966	FLANGE	W/Ref. 1		1
9	6666802	GASKET	water flange		1
10	4CM822	BOLT			2
11	3974627	STUD			1
12	1CM865	SCREW			1
13	6652792	NUT			1
14	6EM80	WASHER, SPRING			1
15	6649536	PLUG			1
16	6653562	GASKET			1
17	40K2	PLUG			1

Page 357 - OSS# 2071349 - All rights reserved by Bobcat Company - 12/01/2009 - 20:50:59 - Produced by Ken Cook Co. with mediaioff

MANIFOLDS
(Kubota - V2003T) (1G622-00000)

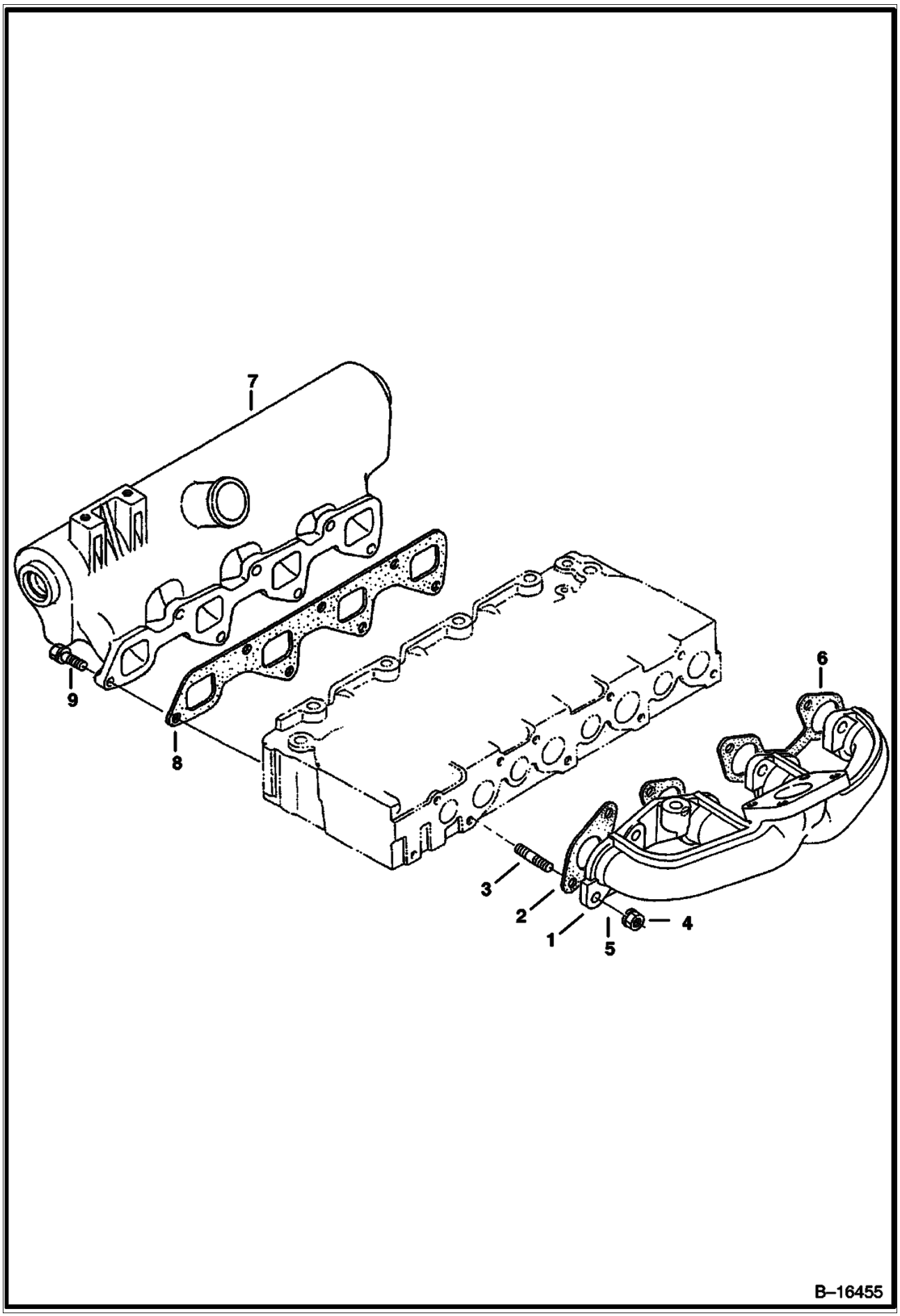

Page 358 - OSS# 2071349 - All rights reserved by Bobcat Company - 12/01/2009 - 20:50:59 - Produced by Ken Cook Co. with mediaioff

MANIFOLDS (Cont'd)
(Kubota - V2003T) (1G622-00000)

Ref No	Part Number	Description	Remarks	Serial Number	Qty
1	6675674	MANIFOLD	exhaust - Was 6651482 [B,D]		1
2	6666781	GASKET			1
3	6652670	STUD			8
4	6652792	NUT			8
5	6EM80	WASHER, SPRING			12
6	6666791	GASKET			1
7	6675644	MANIFOLD, INLET	intake		1
8	6666811	GASKET			1
9	4CM822	BOLT			7

Page 359 - OSS# 2071349 - All rights reserved by Bobcat Company - 12/01/2009 - 20:50:59 - Produced by Ken Cook Co. with mediaioff

TURBO CHARGER
(Kubota - V2003T) (1G622-00000)

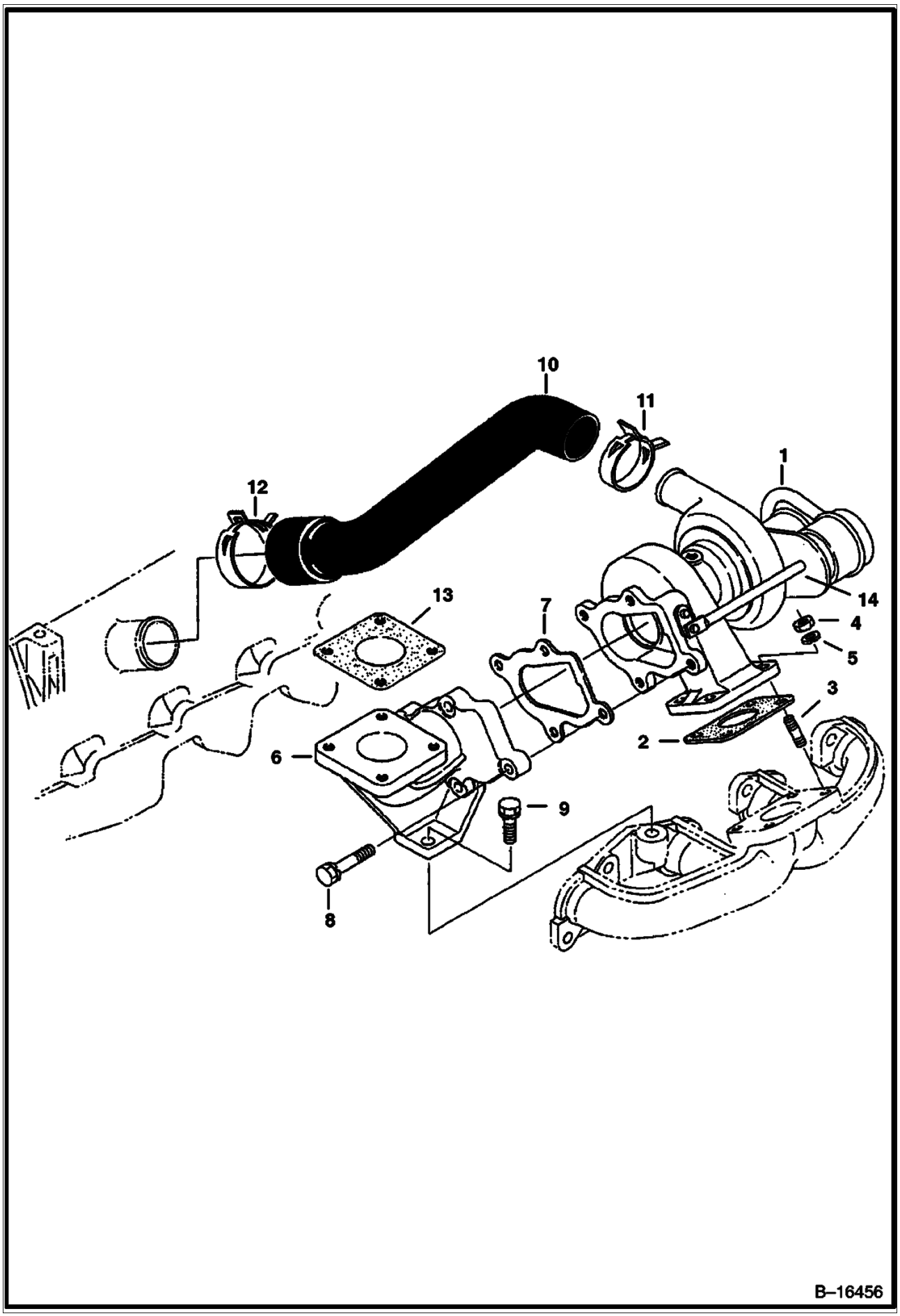

Page 360 - OSS# 2071349 - All rights reserved by Bobcat Company - 12/01/2009 - 20:50:59 - Produced by Ken Cook Co. with mediaioff

TURBO CHARGER (Cont'd)
(Kubota - V2003T) (1G622-00000)

Ref No	Part Number	Description	Remarks	Serial Number	Qty
1	6675676	TURBO			1
2	6675636	GASKET			1
3	6675617	STUD			4
4	6652792	NUT			4
5	6EM80	WASHER, SPRING			4
6	6675675	FLANGE			1
7	6675637	GASKET			1
8	6657416	BOLT			4
9	6640728	BOLT			1
10	6675673	HOSE			1
11	6675635	BAND			1
12	6675624	CLAMP			1
13	6727753	GASKET	Was 6666816 [A]		1
14	6680991	HOSE	W/ clamps		1

Page 361 - OSS# 2071349 - All rights reserved by Bobcat Company - 12/01/2009 - 20:50:59 - Produced by Ken Cook Co. with mediaioff

OIL PIPE
(Kubota - V2003T) (1G622-00000) (Turbo Charger)

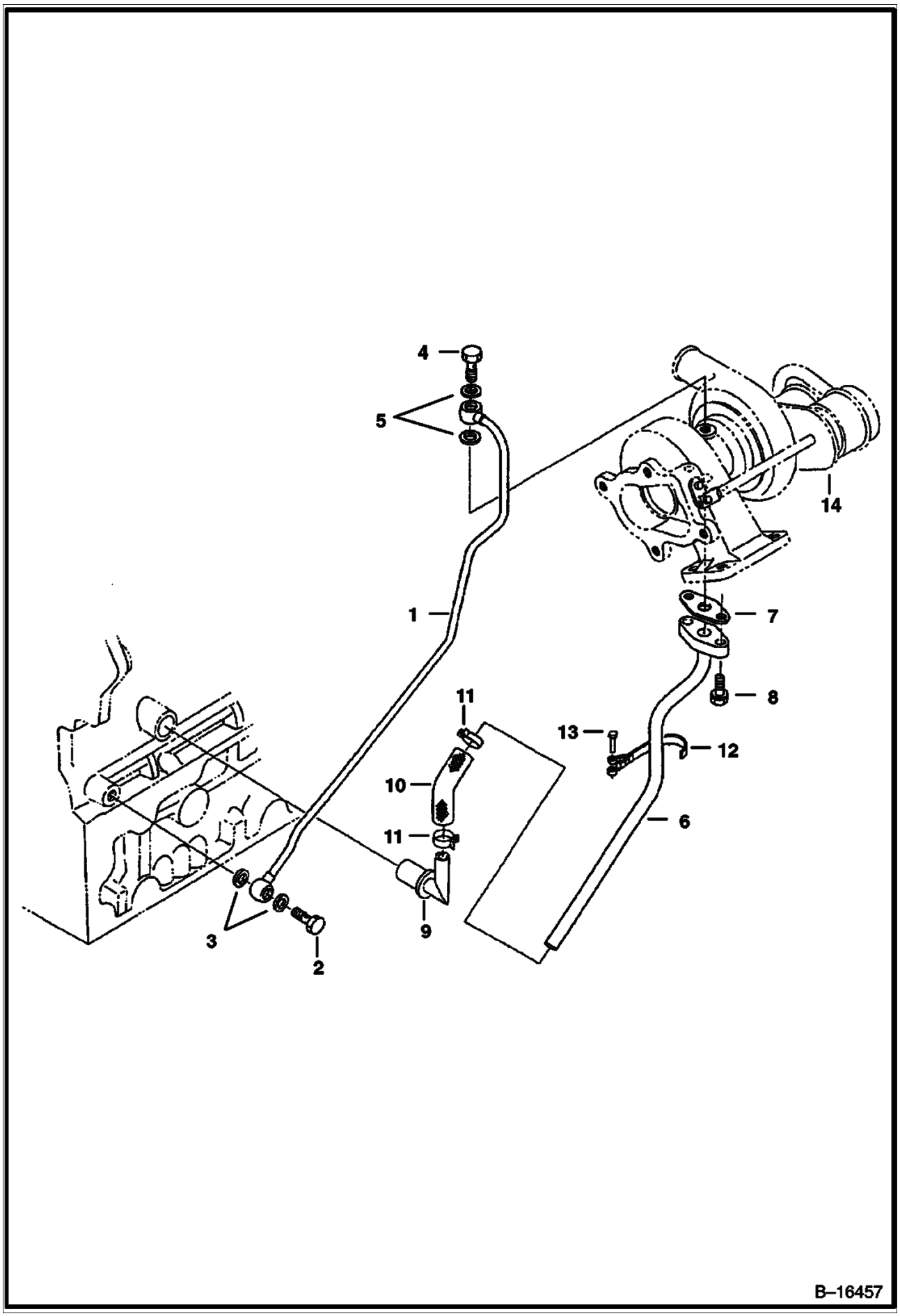

Page 362 - OSS# 2071349 - All rights reserved by Bobcat Company - 12/01/2009 - 20:50:59 - Produced by Ken Cook Co. with mediaioff

OIL PIPE (Cont'd)
(Kubota - V2003T) (1G622-00000) (Turbo Charger)

Ref No	Part Number	Description	Remarks	Serial Number	Qty
1	6675677	PIPE			1
2	6680791	BOLT	eye - Was 6675622 [A]		1
3	3974095	MET-GASK			2
4	6675625	BOLT, EYE JOINT	eye		1
5	6685962	GASKET	consists of 2 gaskets attached by a tab - Was 6675623 [A]		x
6	6675678	PIPE			1
7	6680570	GASKET	oil return tube - Was 6675626 [A]		1
8	4CM620	BOLT		E/ 2G1576 & Bel	2
8	6652580	BOLT		E/ 2J0001 & Abv	2
9	6675630	PIPE ASSY, OIL		E/ YW0740 & Bel	1
9	6684884	PIPE	oil	E/ YY0001 & Abv	1
10	6675679	PIPE			1
11	6675618	CLAMP			2
12	6685601	CLAMP	pipe - Was 6675621 [A]		1
13	6675683	PIN, BAND			1
14	6675676	TURBO	See Illustration TURBO CHARGER/ B16456		1

Page 363 - OSS# 2071349 - All rights reserved by Bobcat Company - 12/01/2009 - 20:50:59 - Produced by Ken Cook Co. with mediaioff

ENGINE STOP LEVER
(Kubota - V2003T) (1G622-00000)

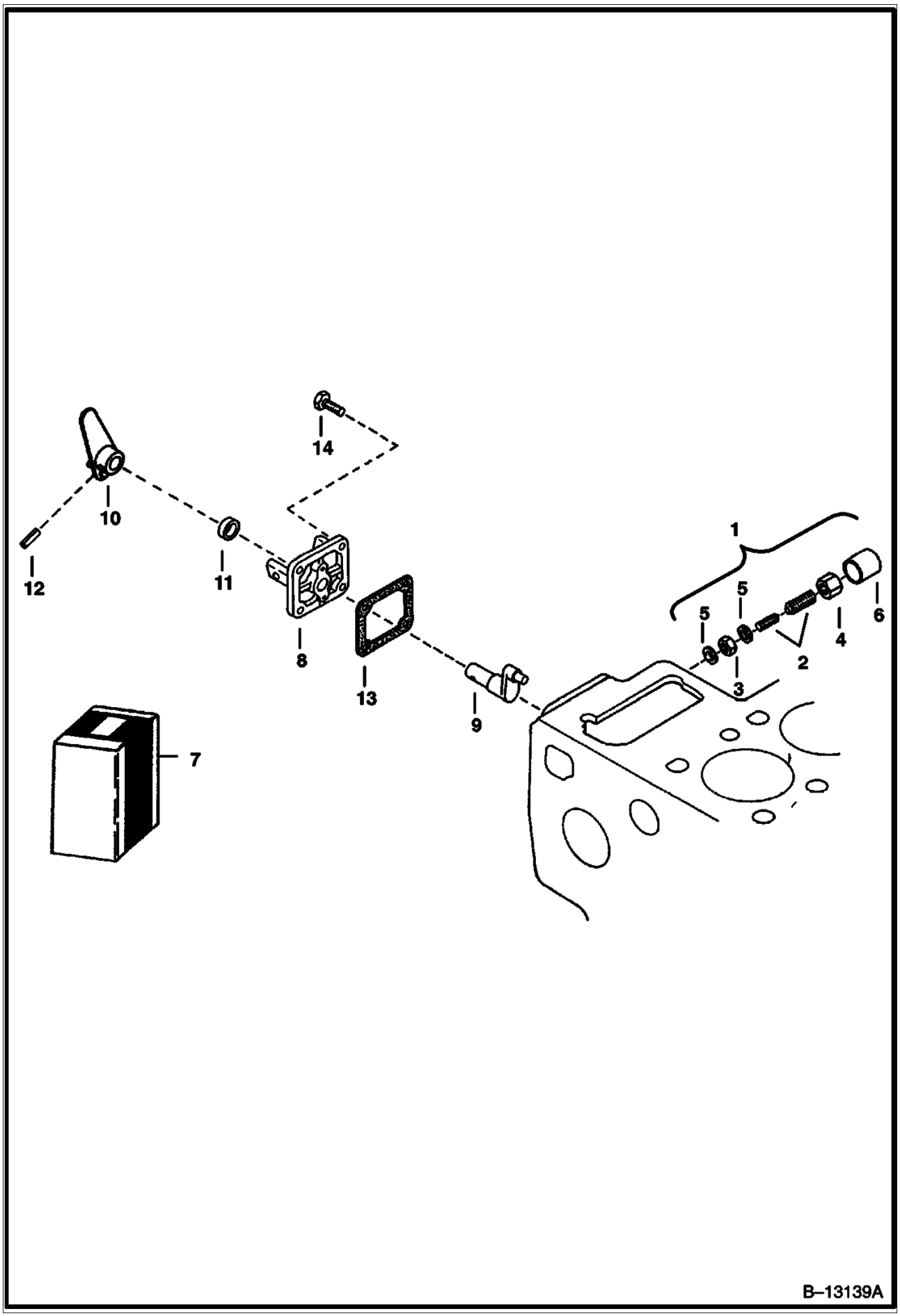

Page 364 - OSS# 2071349 - All rights reserved by Bobcat Company - 12/01/2009 - 20:50:59 - Produced by Ken Cook Co. with mediaIoff

ENGINE STOP LEVER (Cont'd)
(Kubota - V2003T) (1G622-00000)

Ref No	Part Number	Description	Remarks	Serial Number	Qty
1	3974975	IDLER	assy., idle - Ref. 2-6		1
2	6653906	BOLT ASSY.	adjusting		1
3	2DM8	NUT	adjusting		1
4	3974978	NUT			1
5	3974095	MET-GASK			2
6	3974979	CAP			1
7	6676060	LEVER ASSY.	eng. stop - Ref. 8-12 - Was 6655879 [A]		1
8	6655230	COVER	injection pump		1
9	6655231	SHAFT	lever		1
10	6655232	LEVER	engine stop		1
11	6685476	SEAL	oil - Was 6598703 [B]		1
12	6598098	PIN	spring		1
13	6666783	GASKET	pump cover - Was 3974601B [A]		1
14	6652580	BOLT			3

Page 365 - OSS# 2071349 - All rights reserved by Bobcat Company - 12/01/2009 - 20:50:59 - Produced by Ken Cook Co. with mediaioff

GOVERNOR
(Kubota - V2003T) (1G622-00000)

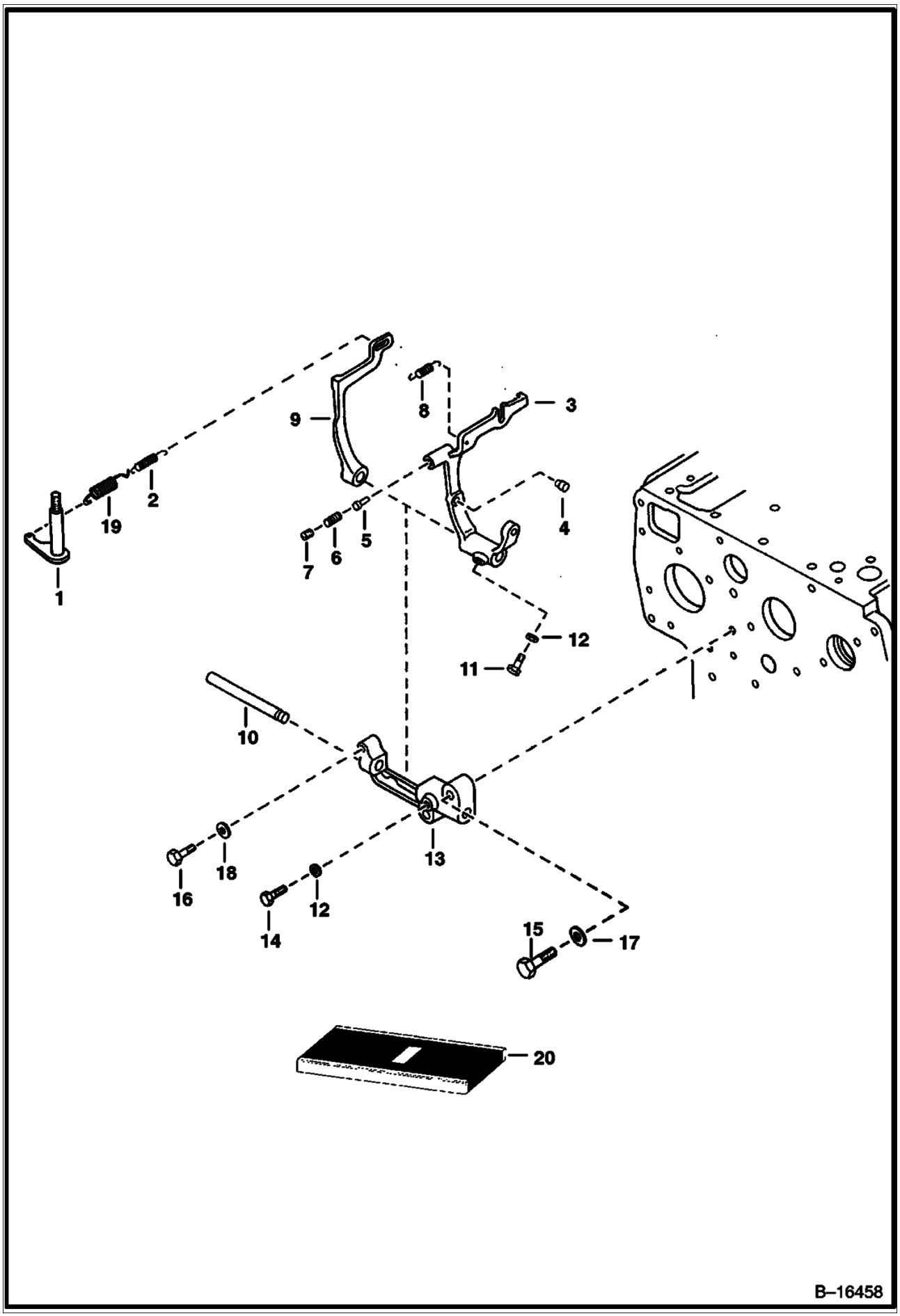

Page 366 - OSS# 2071349 - All rights reserved by Bobcat Company - 12/01/2009 - 20:50:59 - Produced by Ken Cook Co. with mediaIoff

GOVERNOR (Cont'd)
(Kubota - V2003T) (1G622-00000)

Ref No	Part Number	Description	Remarks	Serial Number	Qty
1	6598174	LEVER	governor		1
2	6655227	SPRING			1
3	6675672	LEVER	fork - W/Ref. 4-7 - Was 6675657 [A]		1
4		PIN	NSS		2
5		PIN	NSS		1
6		SPRING	NSS		1
7		SCREW	NSS		1
8	6655225	SPRING			1
9	6655877	LEVER			1
10	3974658	SHAFT			1
11	3974659	BOLT			1
12	6EM60	WASHER, SPRING			2
13	6653916	HOLDER	Was 3974661B [A]		1
14	3974192	BOLT			1
15	6598355	BOLT			2
16	4CM628	BOLT			1
17	2EM8	WASHER, PLAIN			2
18	1EM60	WASHER			1
19	6675640	SPRING	governor		1
20	6675672	LEVER	fork - Ref. 3 & 9 - 14		1

Page 367 - OSS# 2071349 - All rights reserved by Bobcat Company - 12/01/2009 - 20:50:59 - Produced by Ken Cook Co. with mediaioff

SPEED CONTROL PLATE
(Kubota - V2003T) (1G622-00000)

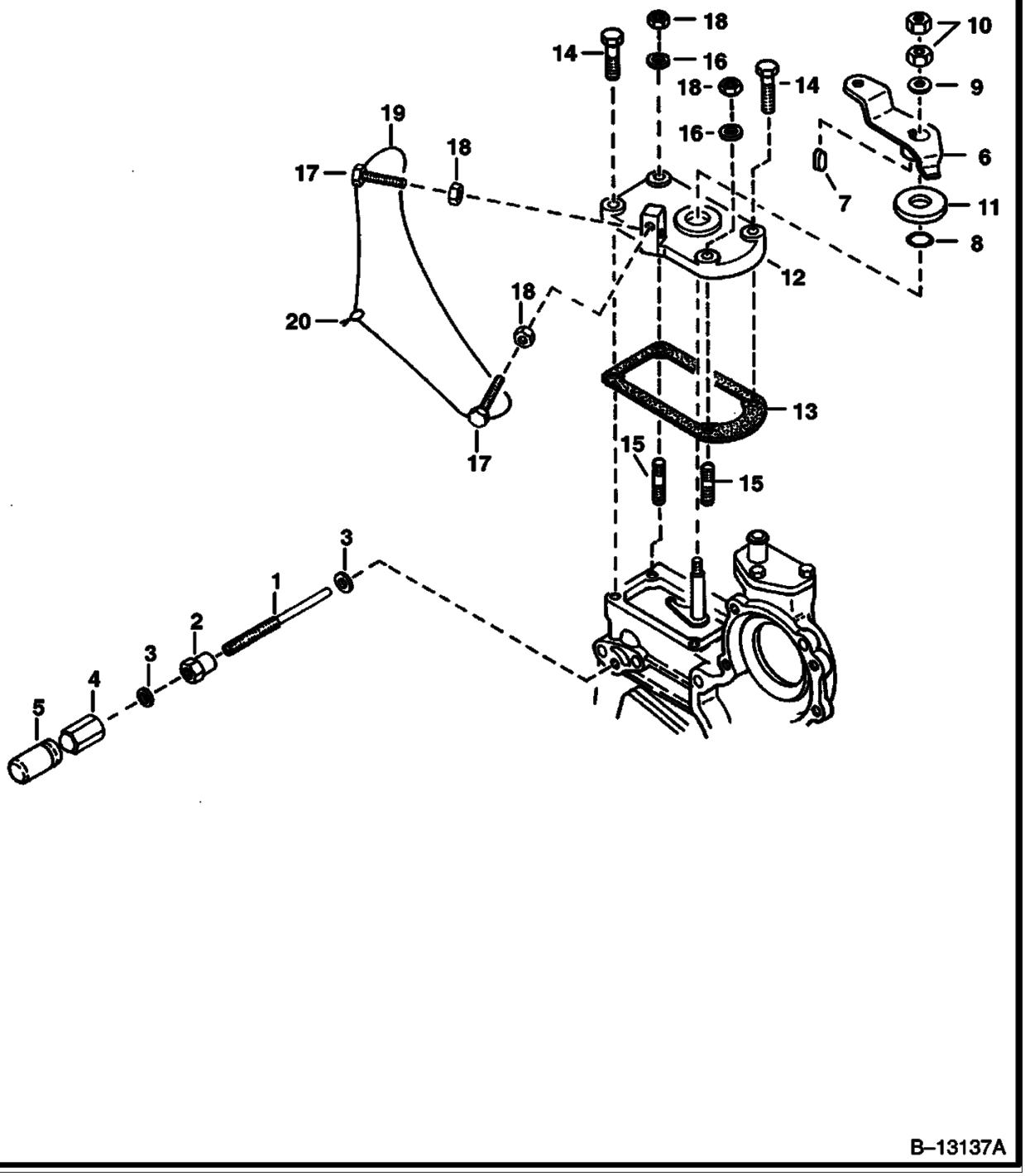

Page 368 - OSS# 2071349 - All rights reserved by Bobcat Company - 12/01/2009 - 20:50:59 - Produced by Ken Cook Co. with mediaioff

SPEED CONTROL PLATE (Cont'd)
(Kubota - V2003T) (1G622-00000)

Ref No	Part Number	Description	Remarks	Serial Number	Qty
1	3974970	BOLT	adjusting		1
2	3974971	NUT			1
3	3974972	GASKET			2
4	6655223	NUT	cap		1
5	6653905	CAP			1
6	6598176	LEVER	speed control		1
7	15JM48	KEY	feather		1
8	3966512	O RING			1
9	1EM80	WASHER	plain		1
10	1DM8	NUT			2
11	3974644	COLLAR	friction		1
12	6641231	PLATE, CONTROL SPEED	speed control		1
13	6666792	GASKET	Was 6635392 [A]		1
14	4CM620	BOLT			2
15	6652764	STUD			2
16	6EM60	WASHER, SPRING	spring		2
17	6655228	STOPPER			2
18	1DM6	NUT			4
19		WIRE	NAP		1
20		LEAD	NAP - sealing		1

Page 369 - OSS# 2071349 - All rights reserved by Bobcat Company - 12/01/2009 - 20:50:59 - Produced by Ken Cook Co. with mediaioff

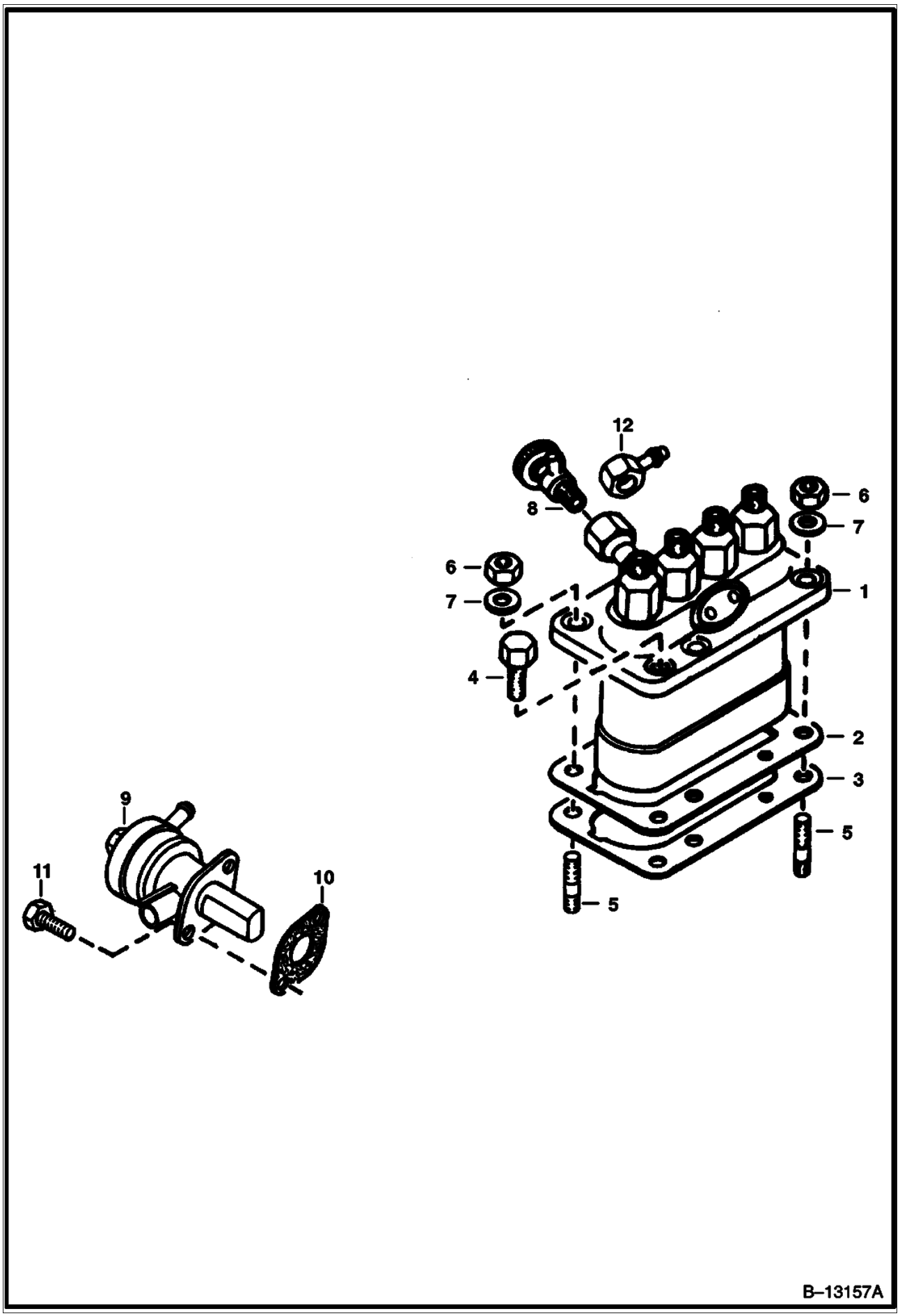

Page 370 - OSS# 2071349 - All rights reserved by Bobcat Company - 12/01/2009 - 20:50:59 - Produced by Ken Cook Co. with mediaioff

FUEL & INJECTION PUMPS (Cont'd)
(Kubota - V2003T) (1G622-00000)

Ref No	Part Number	Description	Remarks	Serial Number	Qty
1		PUMP	See Illustration INJECTION PUMP/ B13156A		1
2	3974626	SHIM	0,20 mm - injection pump		2
3	6655210	SHIM	0,30 mm - injection pump		1
4	4CM822	BOLT			4
5	6652670	STUD			2
6	6652792	NUT			2
7	6EM80	WASHER, SPRING			2
8	6598102	VALVE	jet start		1
9	6655216	FUEL PUMP			1
10	3974502	GASKET	fuel pump		1
11	4CM616	BOLT			2
12	6655515	JOINT	See Illustration FUEL SYSTEM/ PE1627 EYE - CONNECTS TO REF. 25		1

Page 371 - OSS# 2071349 - All rights reserved by Bobcat Company - 12/01/2009 - 20:50:59 - Produced by Ken Cook Co. with mediaioff

INJECTION PUMP
(Kubota - V2003T) (1G622-00000)

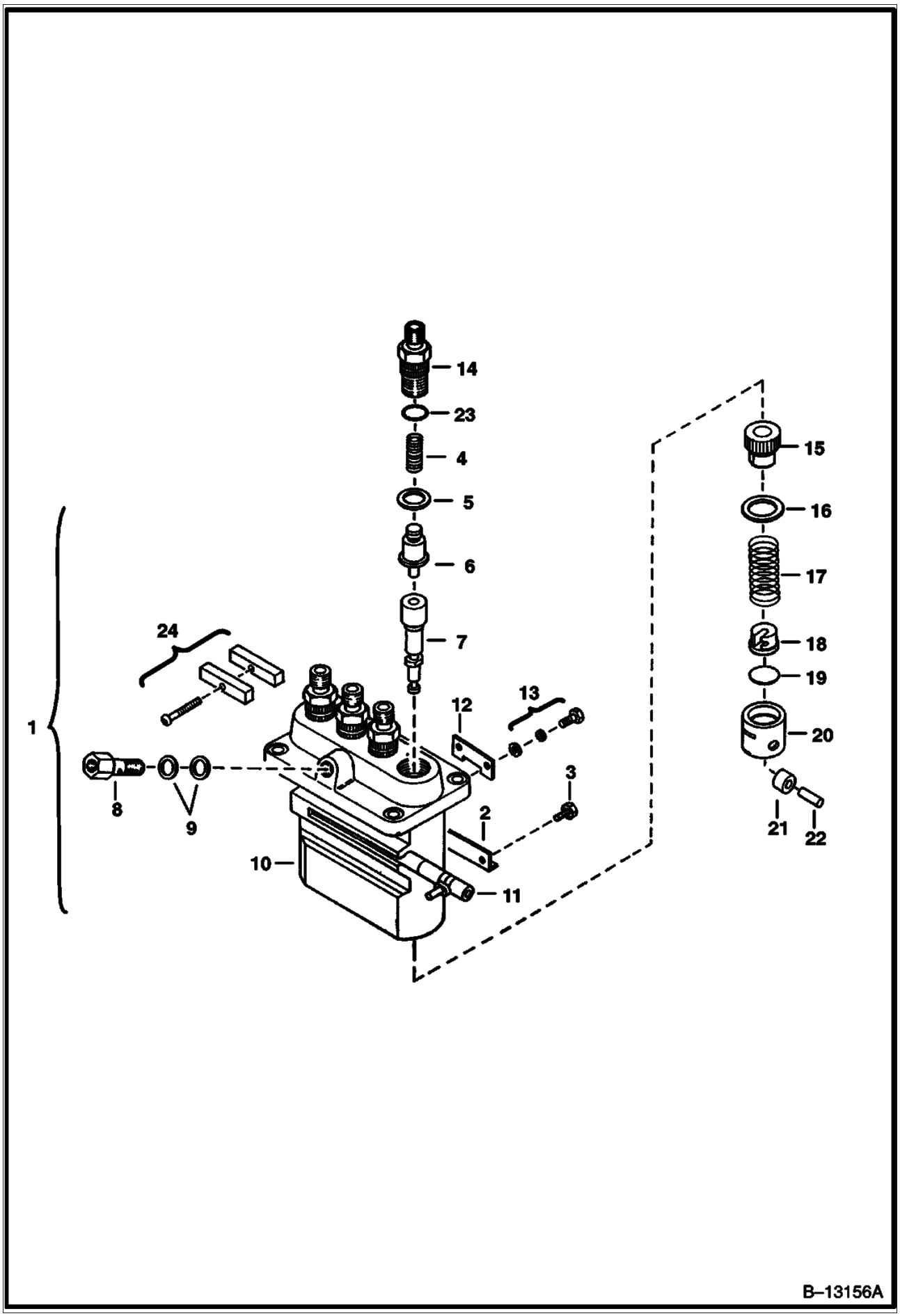

Page 372 - OSS# 2071349 - All rights reserved by Bobcat Company - 12/01/2009 - 20:50:59 - Produced by Ken Cook Co. with mediaioff

INJECTION PUMP (Cont'd)
(Kubota - V2003T) (1G622-00000)

Ref No	Part Number	Description	Remarks	Serial Number	Qty
1	6675656	PUMP	injection - No service parts available - Take to injection pump specialist		1
2	6655207	PLATE	adjust		3
3	6655206	BOLT			3
4	6655203	SPRING	delivery valve		4
5	3974368	GASKET	delivery valve		4
6	6655202	VALVE	delivery		4
7	6655201	ELEMENT	pump		4
8	3975428	SCREW			1
9	6698120	GASKET	Was 3975389 [A]		2
10		HOUSING	NSS - pump		1
11	3974787	RACK	control		1
12	6655209	PLATE	adjusting		3
13	3974366	BOLT			3
14	6655204	HOLDER	delivery valve		4
15	6653894	SLEEVE	control		4
16	3974381	SEAT	spring - Upper		4
17	3974382	SPRING	plunger		4
18	3974383	SEAT	spring - Under		4
19	3974384	SHIM			4
20	3974385	TAPPETASY	W/Ref. 21 & 22		4
21		ROLLER	NSS		4
22		PIN	NSS		4
23	6655518	O-RING			4
24	6655205	PLATE ASSY.			2

Page 373 - OSS# 2071349 - All rights reserved by Bobcat Company - 12/01/2009 - 20:50:59 - Produced by Ken Cook Co. with mediaioff

INJECTOR NOZZLES
(Kubota - V2003T) (1G622-00000)

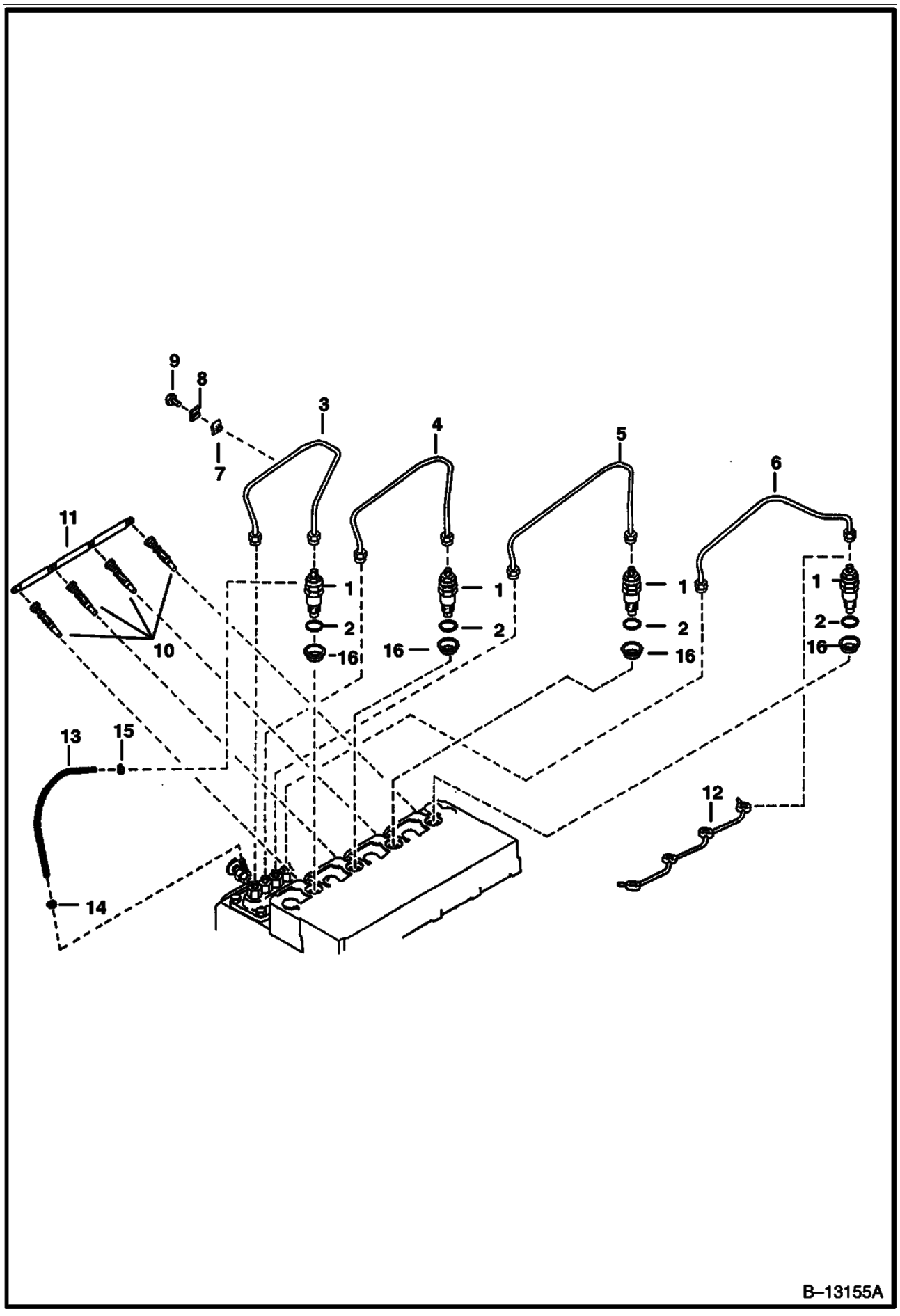

Page 374 - OSS# 2071349 - All rights reserved by Bobcat Company - 12/01/2009 - 20:50:59 - Produced by Ken Cook Co. with mediaioff

INJECTOR NOZZLES (Cont'd)
(Kubota - V2003T) (1G622-00000)

Ref No	Part Number	Description	Remarks	Serial Number	Qty
1		HOLDER KIT	See Illustration INJECTOR HOLDER/ B13154A - nozzle - W/Ref. 2 & 16 - Was 6722147		4
2	6655218	GASKET			4
3	6675647	PIPE	injection (1)		1
4	6675648	PIPE	injection (2)		1
5	6675649	PIPE	injection (3)		1
6	6675650	PIPE	injection (4)		1
7	6652688	CLAMP	pipe (1)		3
8	6652689	CLAMP	pipe (2)		3
9	3974260	SCREW	with washer		3
10	6655233	GLOW PLUG			4
11	6655234	CORD	glow plug - Was 6686987 [A]		3
12	6655198	PIPE	fuel over flow		3
13	6598146	PIPE	fuel over flow (2)		1
14	6654718	CLAMP	pipe - Was 6680795 [A]		1
15	6654718	CLAMP	pipe		1
16	6655872	HEAT SEAL			4

Page 375 - OSS# 2071349 - All rights reserved by Bobcat Company - 12/01/2009 - 20:50:59 - Produced by Ken Cook Co. with mediaioff

INJECTOR HOLDER
(Kubota - V2003T) (1G622-00000)

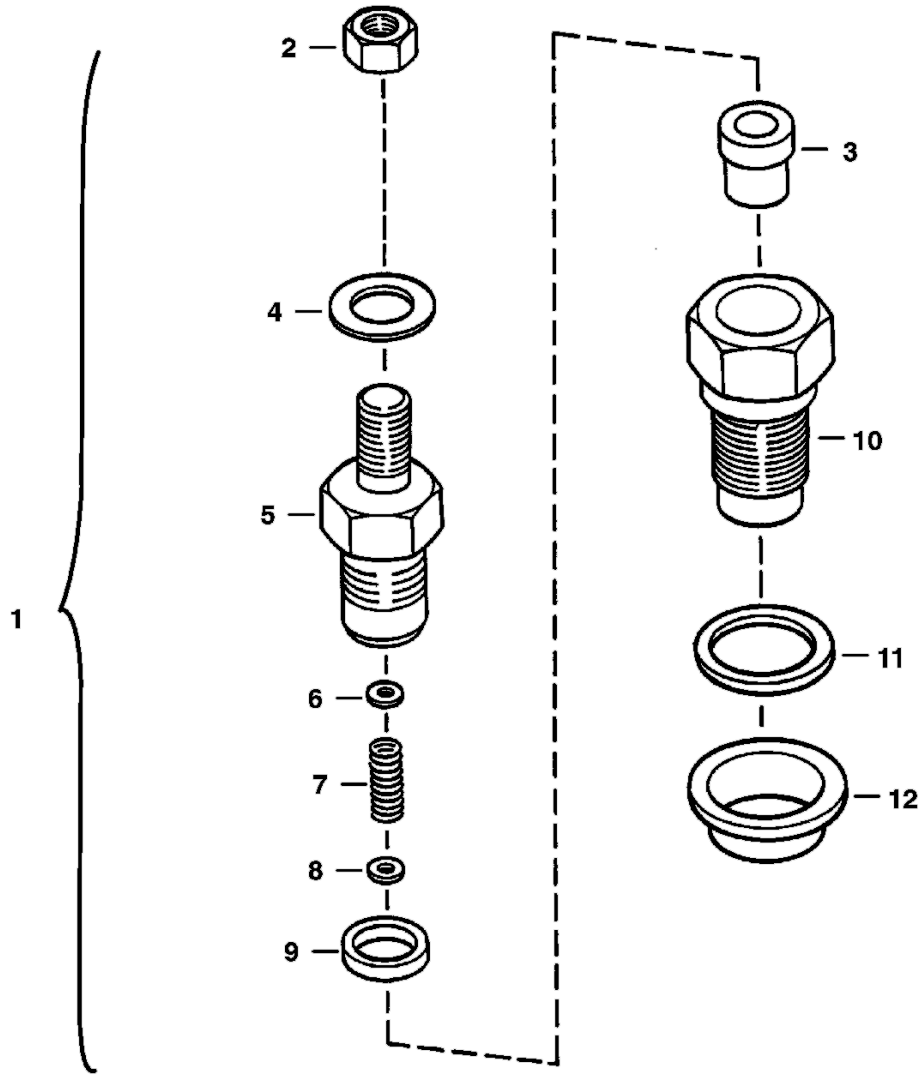

Page 376 - OSS# 2071349 - All rights reserved by Bobcat Company - 12/01/2009 - 20:50:59 - Produced by Ken Cook Co. with mediaioff

INJECTOR HOLDER (Cont'd)
(Kubota - V2003T) (1G622-00000)

Ref No	Part Number	Description	Remarks	Serial Number	Qty
1	6722147	HOLDER KIT	nozzle - Ref. 2-12		4
1	6722147REM	NOZZLE, FUEL INJ. KUBOTA V2203	nozzle - Ref. 2-12		4
2	6657460	NUT			1
3	6655873	NOZZLE	nozzle		1
4	6657463	WASHER	W/(2) bleeder holes		1
5		BODY	NSS - nozzle holder		1
6	6657742	KIT	washer - (.900mm thru 1.950mm)		x
6	6656126	WASHER	adjusting (1,000 mm)		x
6	6656127	WASHER	adjusting (1,050 mm)		x
6	6656128	WASHER	adjusting (1,100 mm)		x
6	6656129	WASHER	adjusting (1,150 mm)		x
6	6656130	WASHER	adjusting (1,200 mm)		x
6	6656131	WASHER	adjusting (1,250 mm)		x
6	6656132	WASHER	adjusting (1,300 mm)		x
7		SPRING	NSS - nozzle		1
8		PIECE	NSS - distance		1
9		PUSH ROD	NSS		1
10		NUT	NSS - nozzle		1
11	6655218	GASKET			1
12	6655872	HEAT SEAL			1

Page 377 - OSS# 2071349 - All rights reserved by Bobcat Company - 12/01/2009 - 20:50:59 - Produced by Ken Cook Co. with mediaioff

AIR CLEANER
(Kubota Engine - V2203 & V2003T)

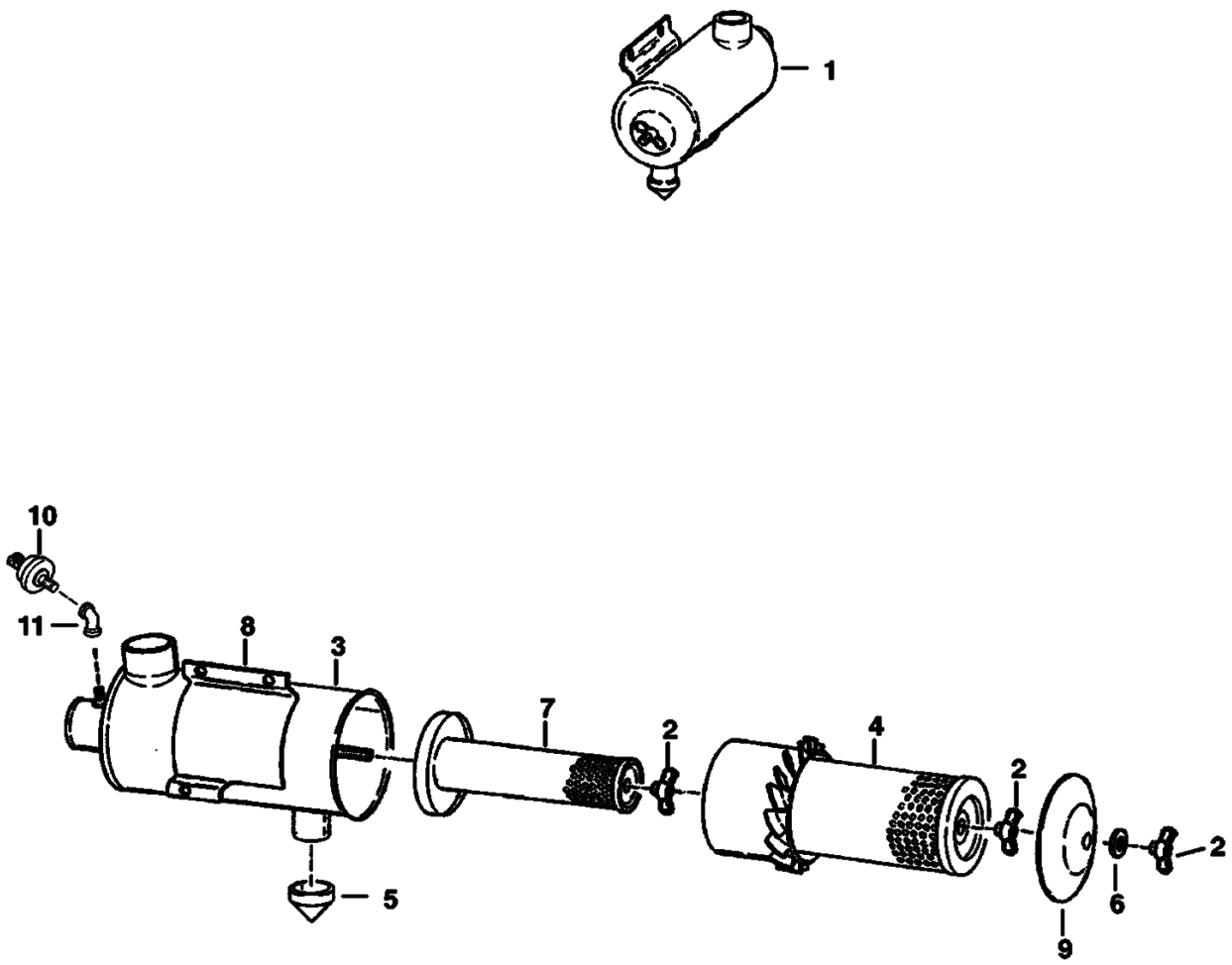

Page 378 - OSS# 2071349 - All rights reserved by Bobcat Company - 12/01/2009 - 20:50:59 - Produced by Ken Cook Co. with mediaioff

AIR CLEANER (Cont'd)
(Kubota Engine - V2203 & V2003T)

Ref No	Part Number	Description	Remarks	Serial Number	Qty
1	6700711	AIR CLEANER	W/ 1.5" Evacuator Valve - Was 6661400 [A]		1
1	6735285	AIR CLEANER	European		1
2	6661243	WING NUT			3
3		TANK	NAP		1
4	6598492	ELEMENT	outer		1
5	6655938	VALVE, EVACUATOR	1.5" (38,1 mm) ID		1
6	6661244	WASHER			1
7	6598362	ELEMENT	inner		1
8	866028	CLAMP			1
9	6661242	COVER			1
10	6665371	SWITCH	condition indicator		1
11	6725502	ELBOW	Was 23F000001B [A]		1

Page 379 - OSS# 2071349 - All rights reserved by Bobcat Company - 12/01/2009 - 20:50:59 - Produced by Ken Cook Co. with mediaioff

ENGINE & GASKET KITS
(Kubota - V2203 2EB - Tier II Replacement)
(1G975-41000)

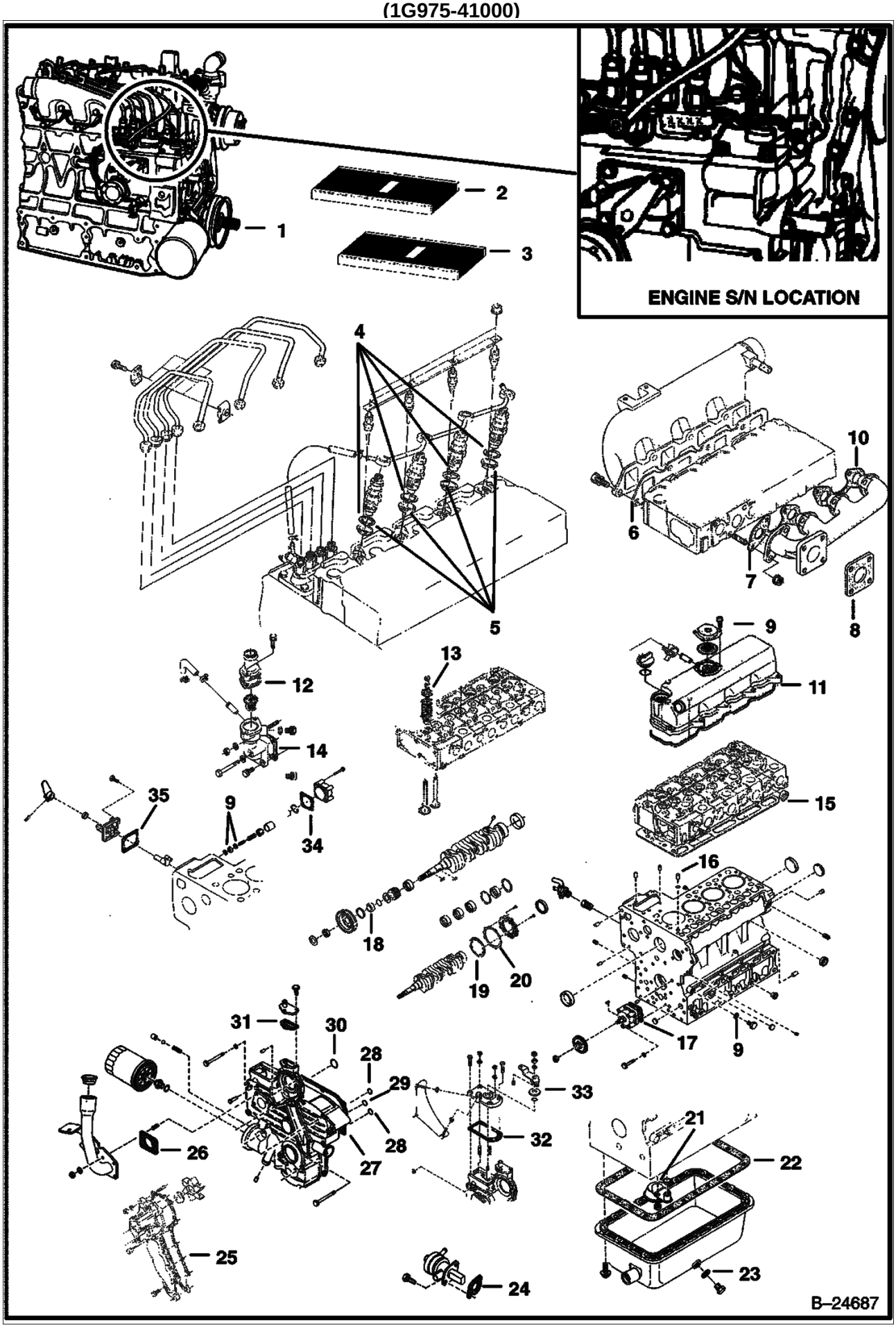

Page 380 - OSS# 2071349 - All rights reserved by Bobcat Company - 12/01/2009 - 20:50:59 - Produced by Ken Cook Co. with mediaioff

ENGINE & GASKET KITS (Cont'd)
(Kubota - V2203 2EB - Tier II Replacement)
(1G975-41000)

Ref No	Part Number	Description	Remarks	Serial Number	Qty
1	6685981	ENGINE, V2203-E2B-BOBCAT-3	See BTI388 - Does not include starter, alternator, flywheel, & flywheel housing		1
1		SHORT BLOCK	NAP		1
1	6685981REM	ENGINE, KUBOTA V2203 TIER 2	See BTI388 must have Tier 2 engine for exchange		1
2		KIT, UPPER GASKET	NAP - upper - Order individual components - Was 6689014 [B,D]		1
3		LOWER GASKET KIT TIER II ENGINE	NAP - lower - Order individual components - Was 6689018 [B,D]		1
4	6655218	GASKET			4
5	6655872	HEAT SEAL			4
6	6684877	GASKET	Was 6685876 [B,D]		1
7	6666781	GASKET	exhaust manifold - front - Was 6685878 [B,D]		1
8	6727752	GASKET	muffler - Was 6666791 [B,D]		1
9	3974095	MET-GASK			7
10	6666791	GASKET	exhaust manifold - rear - Was 6684782 [B,D]		1
11	6684780	GASKET			1
12	6684863	GASKET	thermostat cover		1
13	6653830	SEAL, STEM VALVE			8
14	6666802	GASKET	water flange - Was 6684860 [A]		1
15	6655159	GASKET	cylinder head		1
16	3974038	O RING			1
17	6666782	GASKET	oil pump - Was 6684786 [A]		1
18	3974577	O RING	- crankshaft frt		1
19	6684788	GASKET			1
20	6666814	GASKET			1
21	6684754	O-RING			1
22	6666817	GASKET	oil pan - Was 6684753		1
23	6680484	GASKET			1
24	6686037	GASKET	fuel pump		1
25	6666804	GASKET			1
26	6714543	GASKET			1
27	6666800	GASKET	gearcase		1
28	6685466	O-RING	- gear case		2
29	6686981	O-RING			1
30	6685468	O-RING	- gear case		1
31	6666803	GASKET	water return flange - Was 6684774 [A]		1
32	6666792	GASKET			1
33	3966512	O RING	Was 6686986 [A]		1
34	6692386	GASKET	Was 6684813 [A]		1
35	6666783	GASKET	pump cover		1

Page 381 - OSS# 2071349 - All rights reserved by Bobcat Company - 12/01/2009 - 20:50:59 - Produced by Ken Cook Co. with mediaioff

GEARCASE
(Kubota - V2203 2EB - Tier II Replacement)
(1G975-41000)

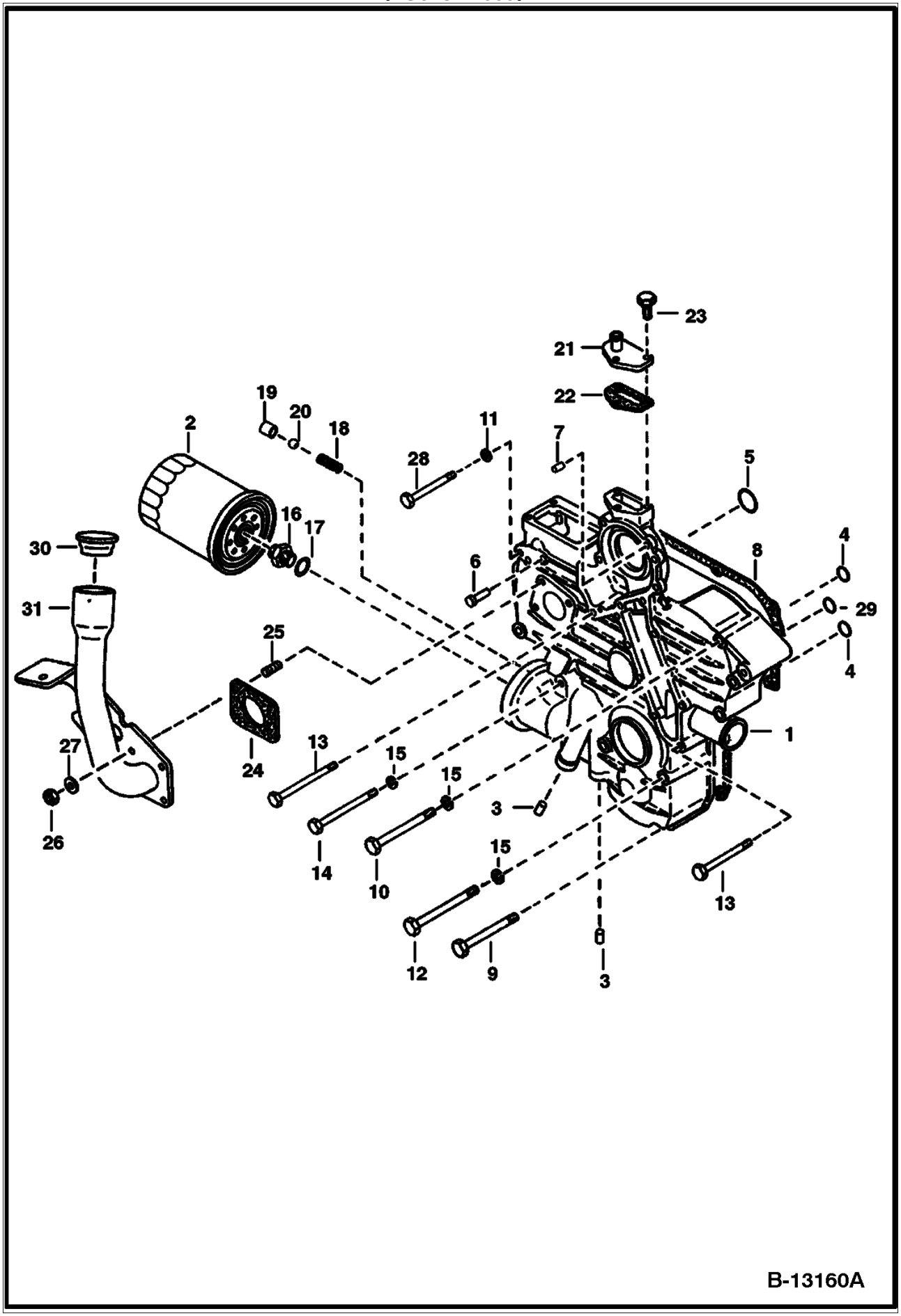

Page 382 - OSS# 2071349 - All rights reserved by Bobcat Company - 12/01/2009 - 20:50:59 - Produced by Ken Cook Co. with mediaioff

GEARCASE (Cont'd)
(Kubota - V2203 2EB - Tier II Replacement)
(1G975-41000)

Ref No	Part Number	Description	Remarks	Serial Number	Qty
1		CASE ASSY.	NAP - W/Ref. 3-7 & 29 - Order 6688640 & Ref. 4-7 & 29 - Was 6674164 [A]		1
1	6688640	GEAR HOUSING	W/Ref. 3		1
2	6675517	FILTER, OIL ENG			1
3	6667425	PLUG	pin		2
4	6685466	O-RING			2
5	6685468	O-RING			1
6	6652592	PIN	start spring		1
7	3974395	PIN	straight		2
8	6666800	GASKET	gearcase		1
9	3974888	BOLT		E/ 5V9999 & Bel	2
9	7001903	BOLT	flange	E/ 5W0001 & Abv	2
10	1CM870	BOLT		E/ 5V9999 & Bel	5
10	6692375	BOLT	flange	E/ 5W0001 & Abv	5
11	2EM8	WASHER, PLAIN		E/ 5V9999 & Bel	1
12	1CM880	BOLT		E/ 5V9999 & Bel	2
12	7001904	BOLT	flange	E/ 5W0001 & Abv	2
13	6653808	BOLT		E/ 5V9999 & Bel	3
13	6692377	BOLT	flange	E/ 5W0001 & Abv	3
14	1CM895	BOLT		E/ 5V9999 & Bel	2
14	7001905	BOLT	flange	E/ 5W0001 & Abv	2
15	6667422	WASHER		E/ 5V9999 & Bel	9
16	6653809	CONNECTOR			1
17	6685501	WASHER			1
18	6652652	SPRING			1
19	3974893	SEAT	valve		1
20	10J13	BALL			1
21	3974894	FLANGE	water return		1
22	6666803	GASKET	water return flange - Was 6684774 [A]		1
23	4CM620	BOLT			3
24	6714543	GASKET			1
25	6652764	STUD			4
26	1DM6	NUT			4
27	6EM60	WASHER, SPRING	spring		4
28	6653807	BOLT		E/ 5V9999 & Bel	1
28	6680686	BOLT	flange	E/ 5W0001 & Abv	1
29	6686981	O-RING			1
30	6703736	CAP			1
31	6719048	MOUNT			1

Page 383 - OSS# 2071349 - All rights reserved by Bobcat Company - 12/01/2009 - 20:50:59 - Produced by Ken Cook Co. with mediaioff

OIL PAN
(Kubota - V2203 2EB - Tier II Replacement)
(1G975-41000)

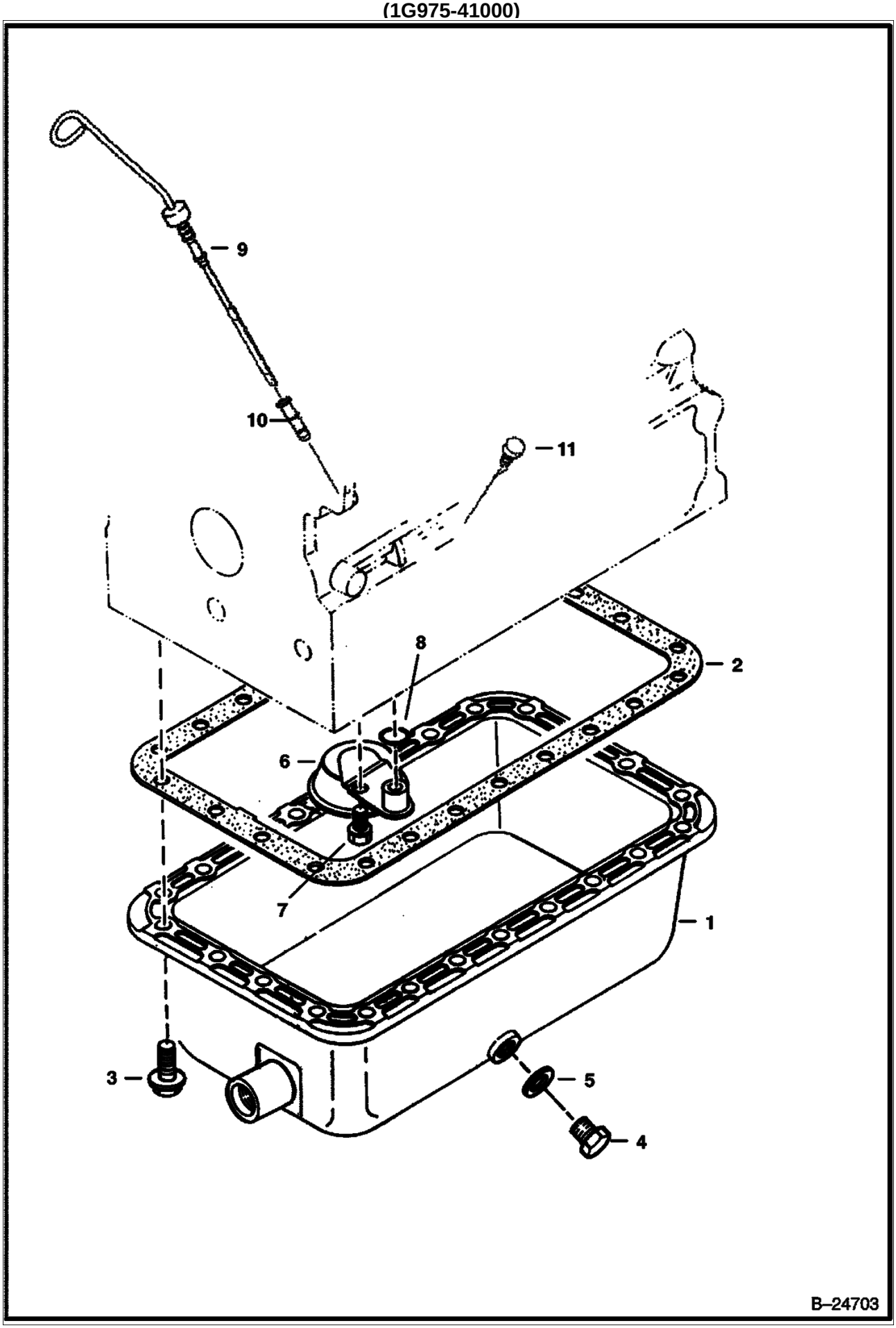

Page 384 - OSS# 2071349 - All rights reserved by Bobcat Company - 12/01/2009 - 20:50:59 - Produced by Ken Cook Co. with mediaioff

OIL PAN (Cont'd)
(Kubota - V2203 2EB - Tier II Replacement)
(1G975-41000)

Ref No	Part Number	Description	Remarks	Serial Number	Qty
1	6655151	PAN, OIL			1
2	6666817	GASKET	oil pan - Was 6684753		1
3	7001922	BOLT	Was 6653798 [B,D]	E/ 5R9999 & Bel	24
3	7001922	BOLT	Was 6698100 [A]	E/ 5S0001 & Abv	24
4	6686979	PLUG	drain		1
5	6680484	GASKET			1
6	6655194	SCREEN, OIL	Was 6653568 [A]		1
7	6667421	BOLT			1
8	6684754	O-RING			1
9	6677202	DIPSTICK, OIL ENG	oil - Was 6684784 [A]		1
10	6677203	GUIDE	for long dipstick		1
11	6969804	PLUG,OIL GAUGE	Was 6684785 [A]		1

Page 385 - OSS# 2071349 - All rights reserved by Bobcat Company - 12/01/2009 - 20:50:59 - Produced by Ken Cook Co. with mediaioff

CRANKCASE
(Kubota - V2203 2EB - Tier II Replacement)
(1G975-41000)

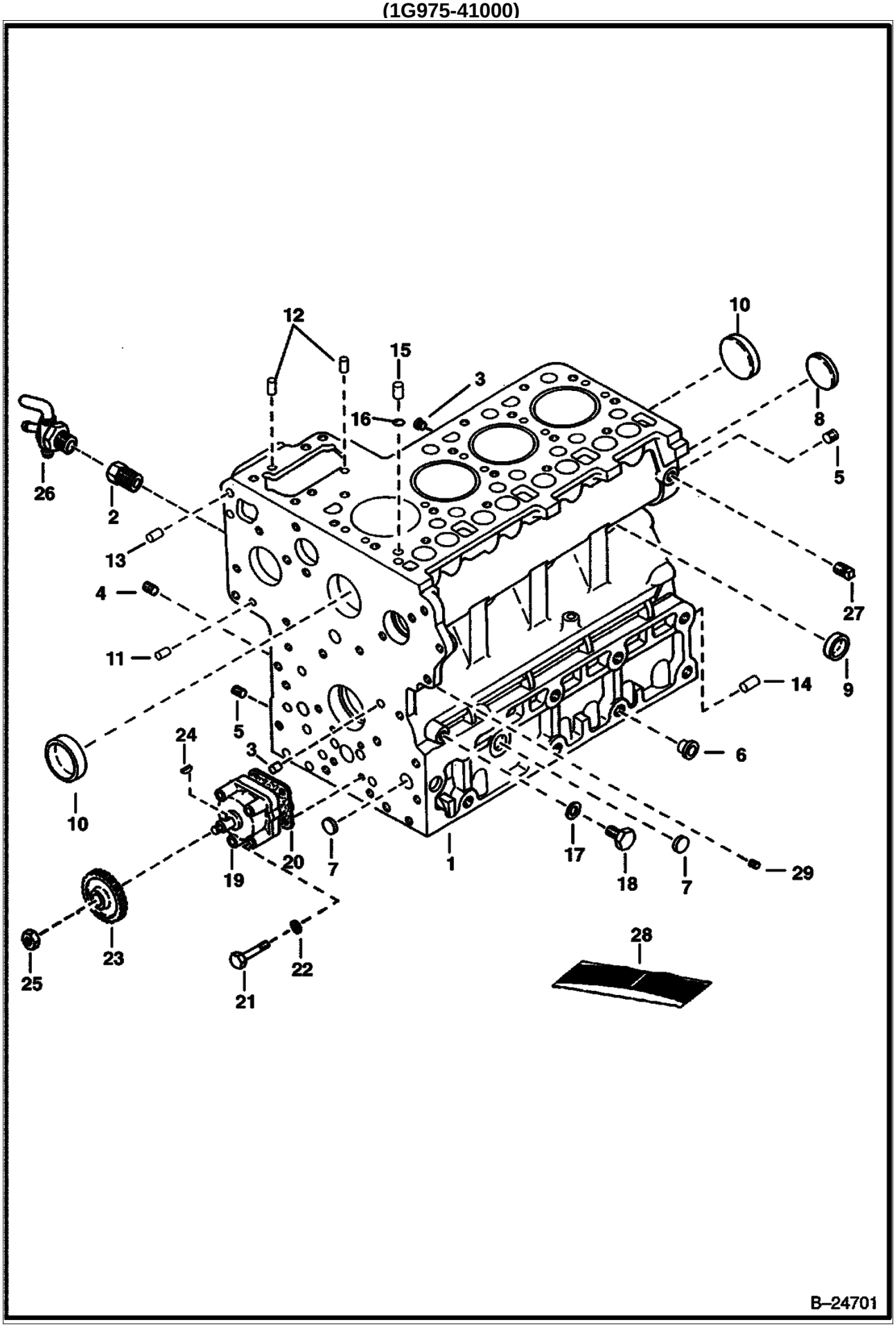

Page 386 - OSS# 2071349 - All rights reserved by Bobcat Company - 12/01/2009 - 20:50:59 - Produced by Ken Cook Co. with mediaIoff

CRANKCASE (Cont'd)
(Kubota - V2203 2EB - Tier II Replacement)
(1G975-41000)

Ref No	Part Number	Description	Remarks	Serial Number	Qty
1		CRANKCASE	NAP - assy - W/Ref. 2-15 - Use (1) each of 6689503, 6685483, 6685484, 6685486, 6655166, 6655184, 6685485, 6693412 and (2) each of 6685488 & 6685489, (4) of 6685487 - Was 6655149 [A]		1
2	3974871	CONNECTOR			1
3	6652574	PLUG			5
4	6655869	PLUG			12
5	6652575	PLUG			2
6	6598187	PLUG			21
7	6667418	PLUG	expansion		3
8	6657663	PLUG	expansion		1
9	3974389	CAP, SEALING	sealing		6
10	3974390	PLUG	sealing - Was 6680639 [A]		2
11	3974393	PIN	straight		2
12	3974394	PIN	straight		2
13	3974395	PIN	straight		2
14	3974868	PIN	straight		1
15	3974037	PIN	pipe		1
16	3974038	O RING			1
17	3974095	MET-GASK			1
18	6683104	PLUG			1
19	6689441	PUMP, OIL ENG	Was 3975426 [A]		1
20	6666782	GASKET	oil pump - Was 6684786 [A]		1
21	6655195	BOLT			4
22	6667419	WASHER			4
23	3975441	GEAR			1
24	6969805	KEY,FEATHER	Was 15JM00410B [A]		1
25	6653888	NUT			1
26	6672190	DRAINCOCK	Was 6630177 [A]		1
27	16F2	PLUG			1
28		GASKET KIT	Lower - Does not include rear oil seal		1
29	6685477	PLUG			1

Page 387 - OSS# 2071349 - All rights reserved by Bobcat Company - 12/01/2009 - 20:50:59 - Produced by Ken Cook Co. with mediaioff

ROCKER ARM COVER
(Kubota - V2203 2EB - Tier II Replacement)
(1G975-41000)

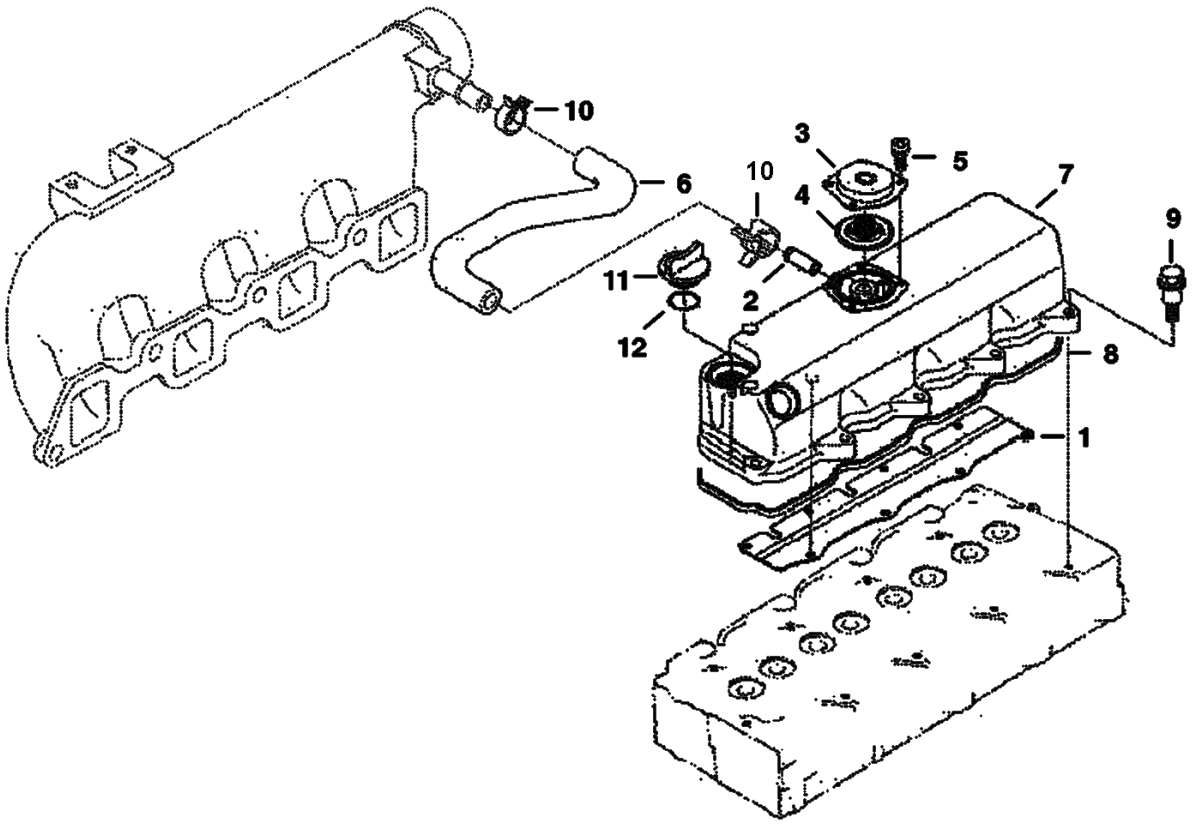

Page 388 - OSS# 2071349 - All rights reserved by Bobcat Company - 12/01/2009 - 20:50:59 - Produced by Ken Cook Co. with mediaioff

ROCKER ARM COVER (Cont'd)
(Kubota - V2203 2EB - Tier II Replacement)
(1G975-41000)

Ref No	Part Number	Description	Remarks	Serial Number	Qty
1		SHIELD	NAP - breather - Order Ref. 7 - Was 6684779 [A]		1
2	6655880	PIPE			1
3	6969803	COVER, BREATHER	Was 6685086 [A]		1
4	6685087	VALVE			1
5	3975436	SCREW	W/Washer - Was 3974928B [A]		4
6	6685524	PIPE	breather		1
7	6685085	COVER	valve		1
8	6684780	GASKET			1
9	6684781	BOLT			10
10	3974679	BAND	pipe		2
11	6652653	PLUG	oil filler		1
12	6684782	O-RING			1

Page 389 - OSS# 2071349 - All rights reserved by Bobcat Company - 12/01/2009 - 20:50:59 - Produced by Ken Cook Co. with mediaioff

VALVE ROCKER ARM
(Kubota - V2203 2EB - Tier II Replacement)
(1G975-41000)

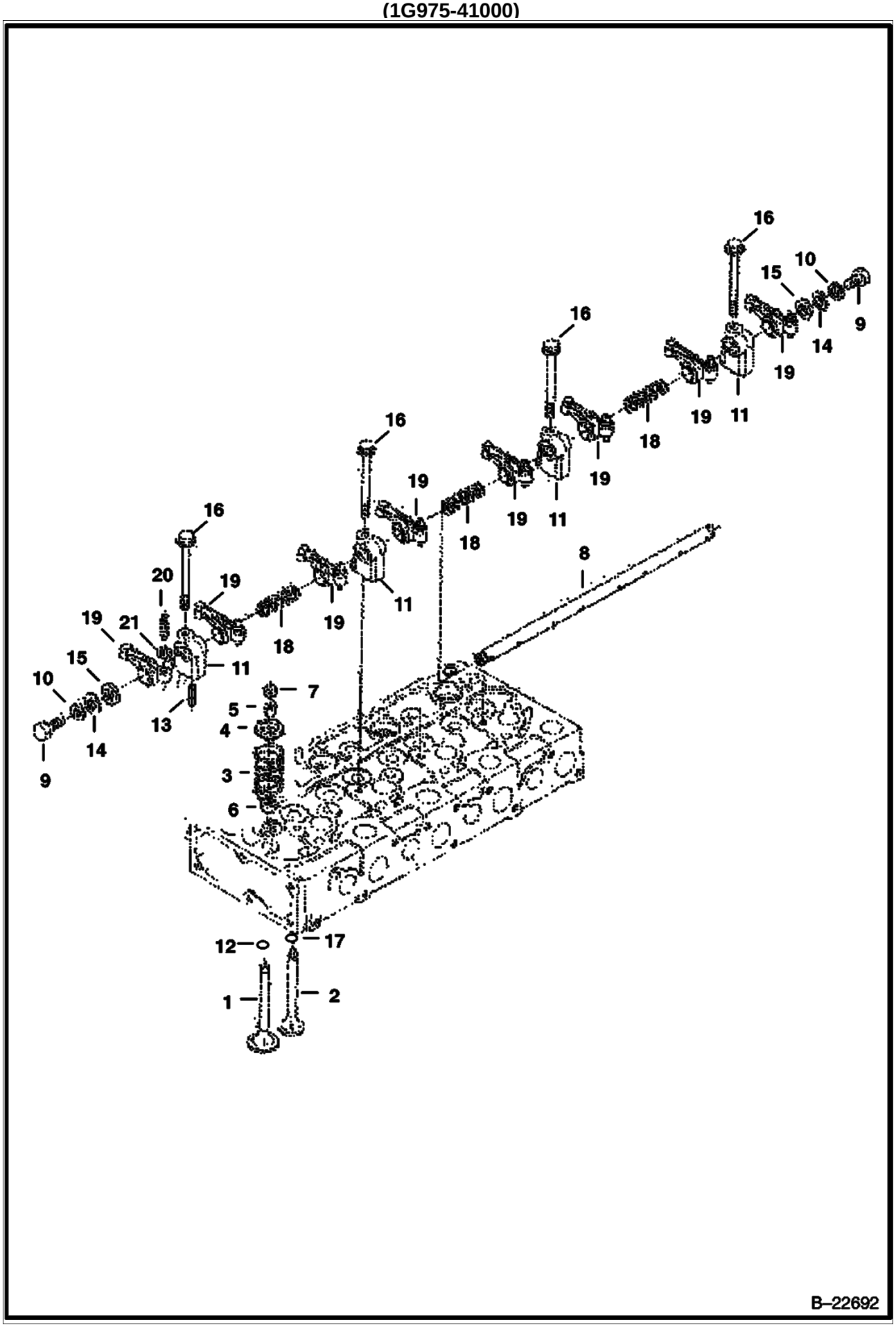

Page 390 - OSS# 2071349 - All rights reserved by Bobcat Company - 12/01/2009 - 20:50:59 - Produced by Ken Cook Co. with mediaioff

VALVE ROCKER ARM (Cont'd)
(Kubota - V2203 2EB - Tier II Replacement)
(1G975-41000)

Ref No	Part Number	Description	Remarks	Serial Number	Qty
1	6655173	VALVE	inlet	E/ 6H9999 & Bel	4
1	6698634	VALVE, INLET		E/ 6J0001 & Abv	4
2	6655174	VALVE	exhaust	E/ 6H9999 & Bel	4
2	6698635	VALVE, EXHAUST		E/ 6J0001 & Abv	4
3	3974514	SPRING 5	valve		8
4	3974515	RETAINER	valve spring		8
5	6684874	COLLAR	valve spring - set of 2		8
6	6653830	SEAL, STEM VALVE			8
7	3974518	CAP	valve		8
8	6684875	SHAFT	rocker arm		1
9	5CM812	BOLT			2
10	6667422	WASHER	external		2
11	3974521	MOUNT	rocker arm		4
12	6655155	SEAT	valve inlet		4
13	6667461	PIN	spring		4
14	6667451	WASHER	plain		4
15	3974524	WASHER			2
16	6680685	BOLT			1
17	6655156	SEAT	valve exhaust		4
18	6653833	SPRING	rocker arm		3
19	6655870	ROCKER ARM	rocker - W/Ref. 20 & 21		8
20	3974920	SCREW	adjusting		8
21	2DM8	NUT	Was 6680874 [A]		8

Page 391 - OSS# 2071349 - All rights reserved by Bobcat Company - 12/01/2009 - 20:50:59 - Produced by Ken Cook Co. with mediaioff

CYLINDER HEAD
(Kubota - V2203 2EB - Tier II Replacement)
(1G975-41000)

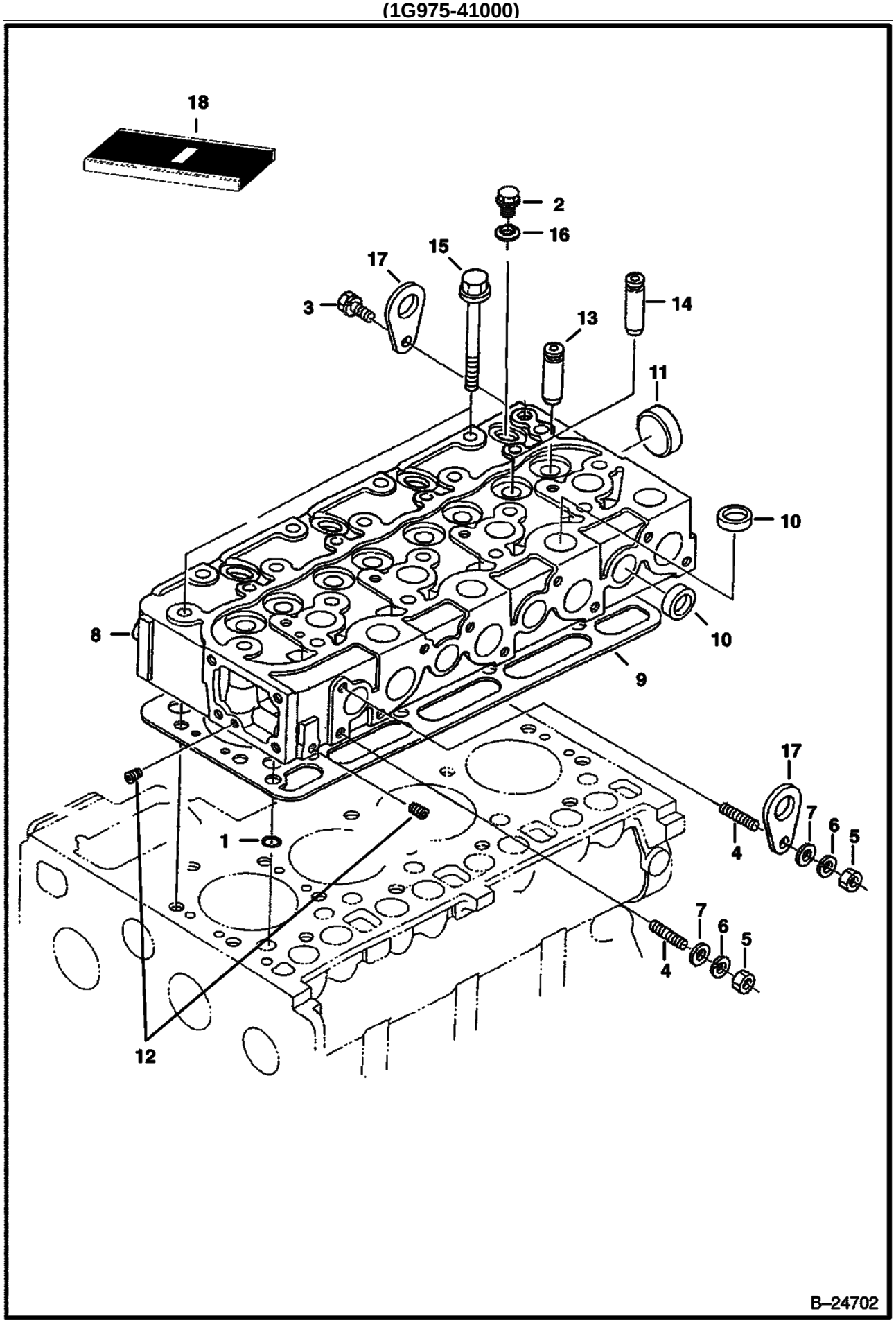

Page 392 - OSS# 2071349 - All rights reserved by Bobcat Company - 12/01/2009 - 20:50:59 - Produced by Ken Cook Co. with mediaioff

CYLINDER HEAD (Cont'd)
(Kubota - V2203 2EB - Tier II Replacement)
(1G975-41000)

Ref No	Part Number	Description	Remarks	Serial Number	Qty
1	3974038	O RING			1
2	6655160	PLUG			1
3	6667421	BOLT			1
4	6652670	STUD			2
5	6652792	NUT			2
6	6667422	WASHER	spring		2
7	2EM8	WASHER, PLAIN	plain		2
8	6686996	HEAD	cylinder - W/Ref. 10 - 13		1
8	6686996REM	HEAD, KUBOTA V2203			1
9	6655159	GASKET	cylinder head		1
10	3974432	PLUG	sealing - Was 6680665 [A]		12
11	6680666	PLUG	sealing		1
12	6598116	PLUG			2
13	6969990	GUIDE	exhaust valve - Was 6653803 [A]		4
14	6655154	GUIDE	intake valve		4
15	6655158	BOLT			18
16	6655161	WASHER	W/rubber		1
17	3974882	HOOK			1
18		GASKET KIT	upper		1

Page 393 - OSS# 2071349 - All rights reserved by Bobcat Company - 12/01/2009 - 20:50:59 - Produced by Ken Cook Co. with mediaioff

PISTON & CRANKSHAFT
(Kubota - V2203 2EB - Tier II Replacement)
(1G975-41000)

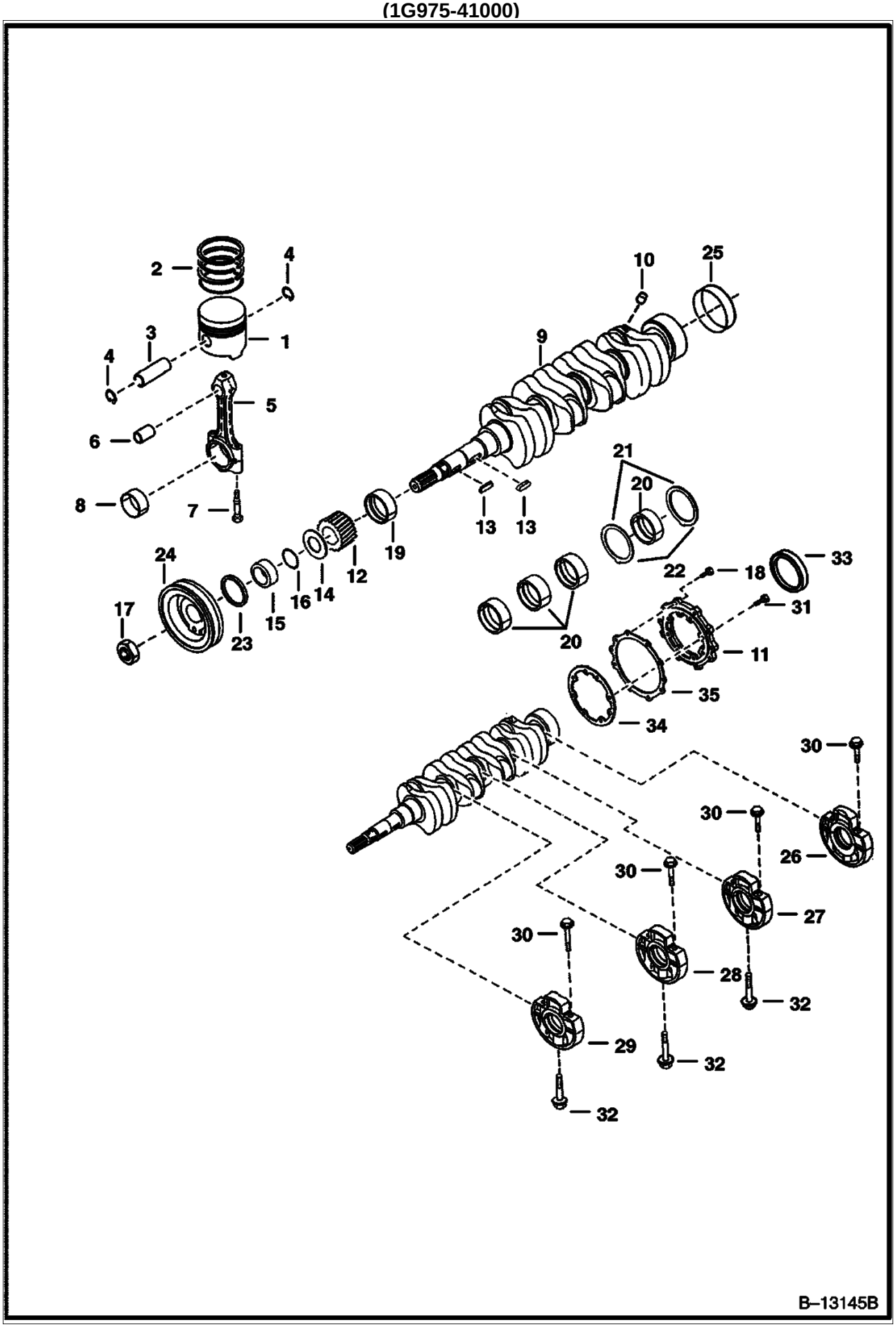

Page 394 - OSS# 2071349 - All rights reserved by Bobcat Company - 12/01/2009 - 20:50:59 - Produced by Ken Cook Co. with mediaioff

PISTON & CRANKSHAFT (Cont'd)
(Kubota - V2203 2EB - Tier II Replacement)
(1G975-41000)

Ref No	Part Number	Description	Remarks	Serial Number	Qty
1		PISTON	NAP - std - Order 6688379 piston & (2) 6686997 circlip - Was 6667435 [A]		4
1		PISTON	NAP - (0,5 mm - .0197) - Order 6688533 piston & (2) 6686997 circlips - Was 6667436 [A]		4
2	6678075	RINGS	piston - Std.		4
2	6657696	RINGS	piston - (0,5 mm - .0197)		4
3	6655179	PIN, PISTON ENG			4
4	6686997	CIR-CLIP			8
5	6655181	ROD, CONNECTING	connecting - W/Ref. 6, 7 & 8		4
6	6655243	BUSHING			4
7	6655498	BOLT			8
8	6655183	BEARING	rod - std.		4
8	6655236	BEARING	rod (-0,20 mm)		4
8	6655237	BEARING	rod (-0,40 mm)		4
9	6691495	CRANKSHAFT	Ref. 10 & 25 - Ref. 10 must be installted before using - Was 6667437 [B,D]	E/ 6P9999 & Bel	1
9	7010623	CRANKSHAFT, ENG	W/Ref. 25	E/ 6Q0001 & Abv	1
10	6652633	BALL	Must be installed before using Ref. 9 crankshaft - See S/L dated 3 Jan 85		4
11	6655166	COVER	Was 6685515 [A]		1
12	6598142	GEAR			1
13	3974546	KEY			1
14	6653861	SLINGER, OIL	oil		1
15	3975337	COLLAR			1
16	3974577	O RING			1
17	3974671	NUT			1
18	4CM825	BOLT			8
19	6685486	BEARING	main - Std.		1
19	6685490	BEARING	main (0,2 mm-.0079)		1
19	6685491	BEARING	main (0,4 mm-.0157)		1
20	6685487	BEARING	main - Std.		4
20	6685492	BEARING	main (0,2 mm-.0079)		4
20	6685493	BEARING	main (0,4 mm-.0157)		4
21	6685488	WASHER	thrust - Std.		2
21	6685494	WASHER	thrust (0,2 mm-.0079)		2
21	6685495	WASHER	thrust (0,4 mm-.0157)		2
22	6685489	WASHER	thrust - Std.		2
22	6685496	WASHER	thrust (0,2 mm-.0079)		2
22	6685497	WASHER	thrust (0,4 mm-.0157)		2
23	6631664	SEAL	oil		1
24	6655235	PULLEY			1
25	6653859	SLEEVE	Was 6684807 [A]		1
26	6689503	CASE MAIN BRG	main bearing - W/Ref. 30 - Was 6685480 [A]		1
27	6685485	CASE	main bearing - W/Ref. 30		1
28	6685484	CASE, MAIN BRG.	main bearing - W/Ref. 30		1
29	6685483	CASE, MAIN BRG.	main bearing - W/Ref. 30		1
30	6685482	BOLT			8
31	4CM828	BOLT			8
32	6653821	BOLT			3
33	6684789	SEAL	oil		1
34	6684788	GASKET			1
35	6666814	GASKET			1

Page 395 - OSS# 2071349 - All rights reserved by Bobcat Company - 12/01/2009 - 20:50:59 - Produced by Ken Cook Co. with mediaioff

FUEL CAMSHAFT
(Kubota - V2203 2EB - Tier II Replacement)
(1G975-41000)

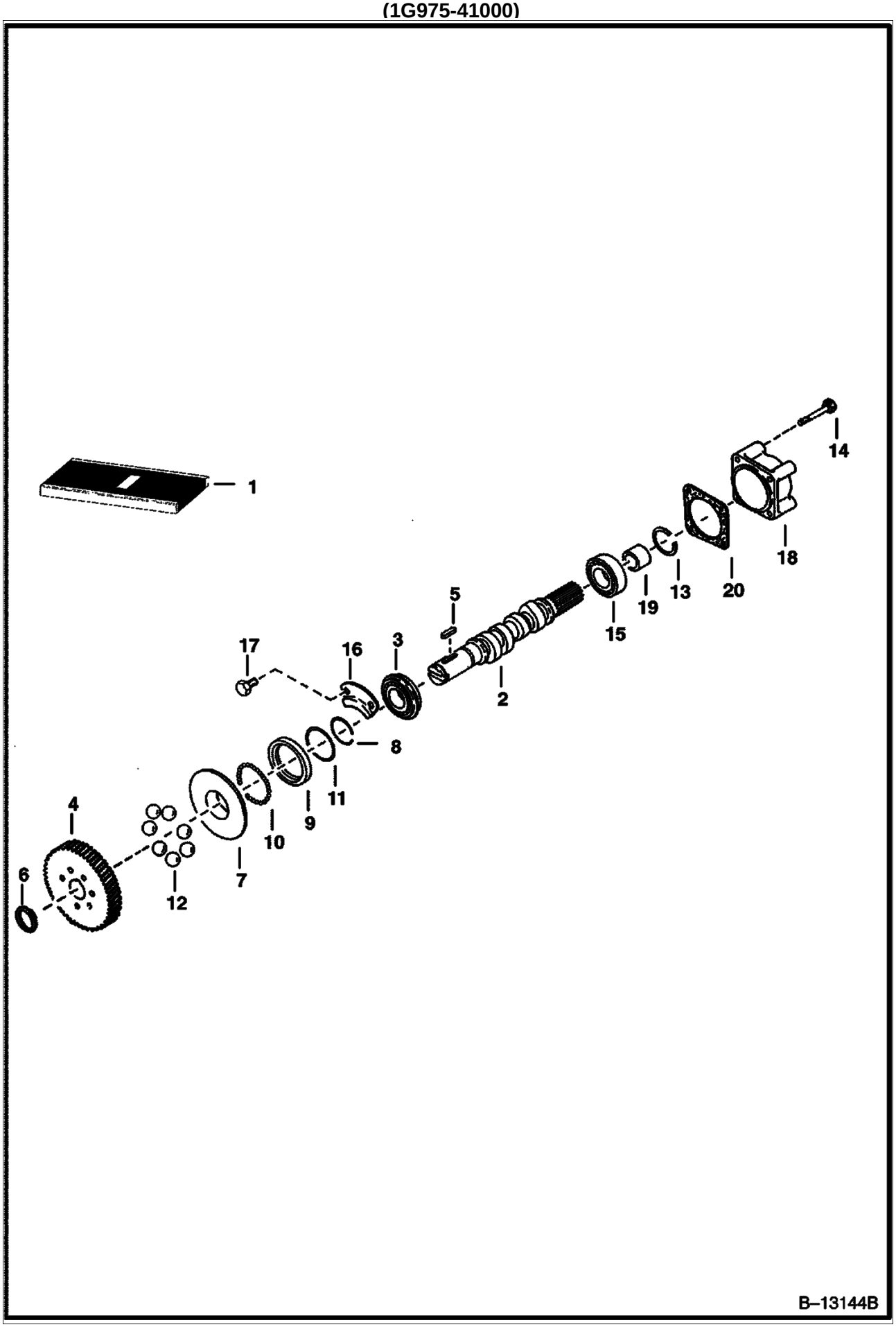

Page 396 - OSS# 2071349 - All rights reserved by Bobcat Company - 12/01/2009 - 20:50:59 - Produced by Ken Cook Co. with mediaioff

FUEL CAMSHAFT (Cont'd)
(Kubota - V2203 2EB - Tier II Replacement)
(1G975-41000)

Ref No	Part Number	Description	Remarks	Serial Number	Qty
1	6655211	CAMSHAFT	assy. - Ref. 2-14		1
2	6655875	CAMSHAFT	fuel		1
3	851242	BEARING			1
4	6655212	GEAR	injection pump		1
5	6598099	KEY			1
6	5JM24	CIRCLIP	external		1
7	6655213	SLEEVE	governor		1
8	3974618	CIR-CLIP	sleeve		1
9	6655214	CASE	governor ball		1
10	10J5	BALL			39
11	3974620	CIR-CLIP	ball case		1
12	6655215	BALL			7
13	6598158	CIRCLIP	external		1
14	6651934	BOLT			7
15	6684812	BALL BEARING			1
16	3974624	STOPPER			1
17	6667420	BOLT			2
18	6666804	GASKET	fuel camshaft		1
19	6598179	COLLAR			1
20	6692386	GASKET	Was 6684813 [A]		1

Page 397 - OSS# 2071349 - All rights reserved by Bobcat Company - 12/01/2009 - 20:50:59 - Produced by Ken Cook Co. with mediaioff

CAMSHAFT
(Kubota - V2203 2EB - Tier II Replacement)
(1G975-41000)

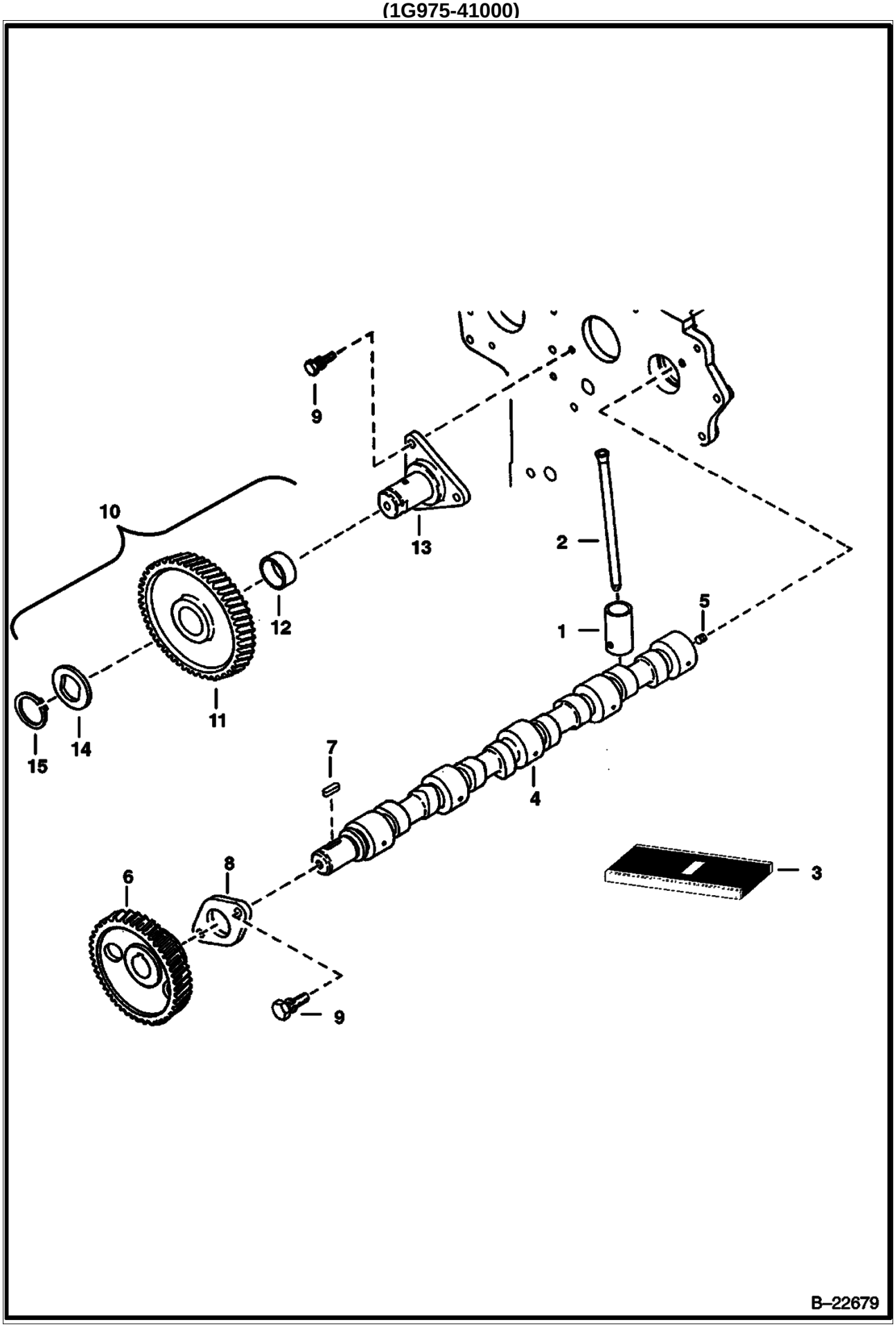

Page 398 - OSS# 2071349 - All rights reserved by Bobcat Company - 12/01/2009 - 20:50:59 - Produced by Ken Cook Co. with mediaioff

CAMSHAFT (Cont'd)
(Kubota - V2203 2EB - Tier II Replacement)
(1G975-41000)

Ref No	Part Number	Description	Remarks	Serial Number	Qty
1	6667428	TAPPET	Was 6680707 [A]		8
2	6655176	PUSHROD			8
3	6655427	CAMSHAFT	assy. - Ref. 4-8		1
4		CAMSHAFT	NAP - Was 6655384 [A]		1
5	6652633	BALL			1
6	6653840	GEAR	camshaft		1
7	3974546	KEY			1
8	3974547	STOPPER	camshaft		1
9	1CM818	BOLT			2
10	6684793	GEAR	idle - W/Ref. 11 & 12		1
11		GEAR	NSS - idle - Order Ref. 10		2
12	6655242	BUSHING	idle gear		1
13	6684796	SHAFT			1
14	6684795	COLLAR			1
15	6667433	CIRCLIP	external		1

Page 399 - OSS# 2071349 - All rights reserved by Bobcat Company - 12/01/2009 - 20:50:59 - Produced by Ken Cook Co. with mediaioff

WATER PUMP
(Kubota - V2203 2EB - Tier II Replacement)
(1G975-41000)

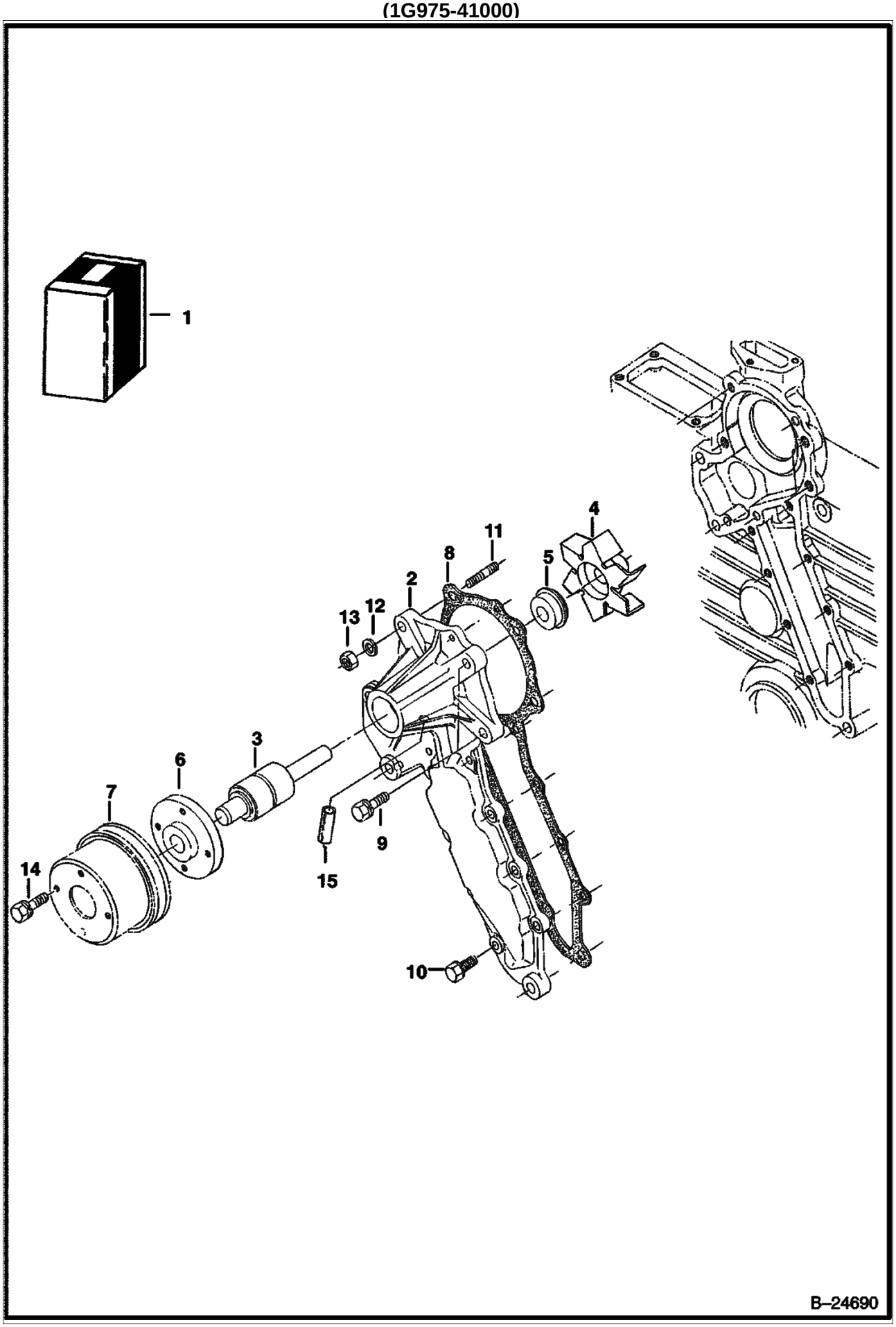

Page 400 - OSS# 2071349 - All rights reserved by Bobcat Company - 12/01/2009 - 20:50:59 - Produced by Ken Cook Co. with mediaioff

WATER PUMP (Cont'd)
(Kubota - V2203 2EB - Tier II Replacement)
(1G975-41000)

Ref No	Part Number	Description	Remarks	Serial Number	Qty
1	6686989	WATER PUMP	Ref. 2-6		1
2		BODY	NAP		1
3	6685474	BEARING			1
4	6667460	IMPELLER	Was 6684867 [A]		1
5	6684868	SEAL			1
6	6684869	FLANGE			1
7	6674169	PULLEY	fan		1
8	6666804	GASKET			1
9	4CM828	BOLT			2
10	6652580	BOLT			6
11	3974267	STUD			2
12	6667422	WASHER	spring		2
13	6652792	NUT			2
14	29CM612	BOLT			4
15	6683174	ROLL PIN			1

Page 401 - OSS# 2071349 - All rights reserved by Bobcat Company - 12/01/2009 - 20:50:59 - Produced by Ken Cook Co. with mediaioff

WATER FLANGE & THERMOSTAT
(Kubota - V2203 2EB - Tier II Replacement)
(1G975-41000)

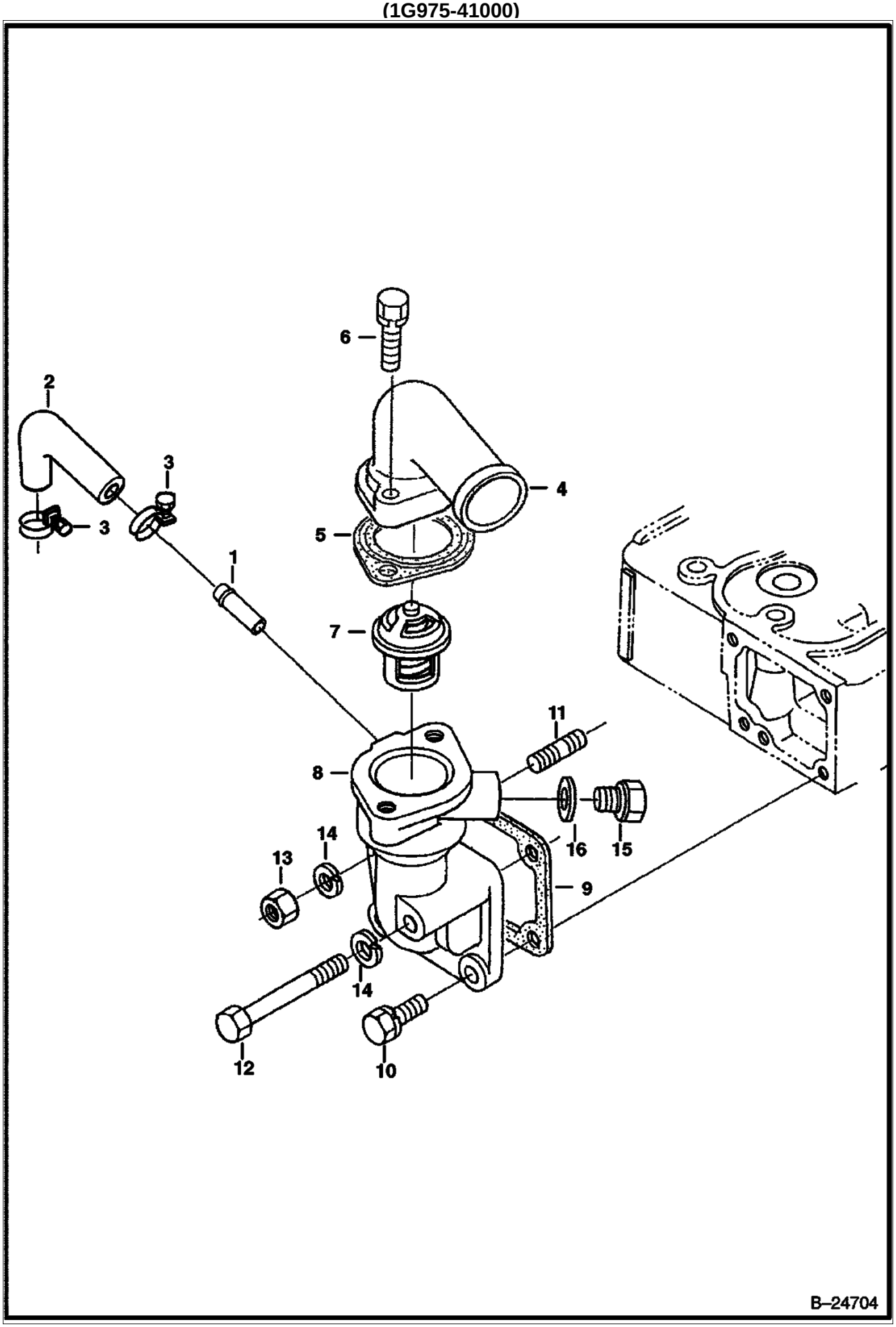

Page 402 - OSS# 2071349 - All rights reserved by Bobcat Company - 12/01/2009 - 20:50:59 - Produced by Ken Cook Co. with mediaIoff

WATER FLANGE & THERMOSTAT (Cont'd)
(Kubota - V2203 2EB - Tier II Replacement)
(1G975-41000)

Ref No	Part Number	Description	Remarks	Serial Number	Qty
1	6655880	PIPE	water return		1
2	6686988	PIPE	water return		1
3	3974679	BAND	pipe		2
4	6651489	COVER	thermostat		1
5	6684863	GASKET	thermostat cover		1
6	1CM835	BOLT			2
7	6674172	THERMOSTAT			1
8	6674167	FLANGE	W/Ref. 1		1
9	6666802	GASKET	water flange - Was 6684860 [A]		1
10	4CM822	BOLT			2
11	6652670	STUD			1
12	1CM865	SCREW			1
13	6652792	NUT			1
14	6667422	WASHER			1
15	6649536	PLUG			1
16	6653562	GASKET			1

Page 403 - OSS# 2071349 - All rights reserved by Bobcat Company - 12/01/2009 - 20:50:59 - Produced by Ken Cook Co. with mediaioff

MANIFOLDS
(Kubota - V2203 2EB - Tier II Replacement)
(1G975-41000)

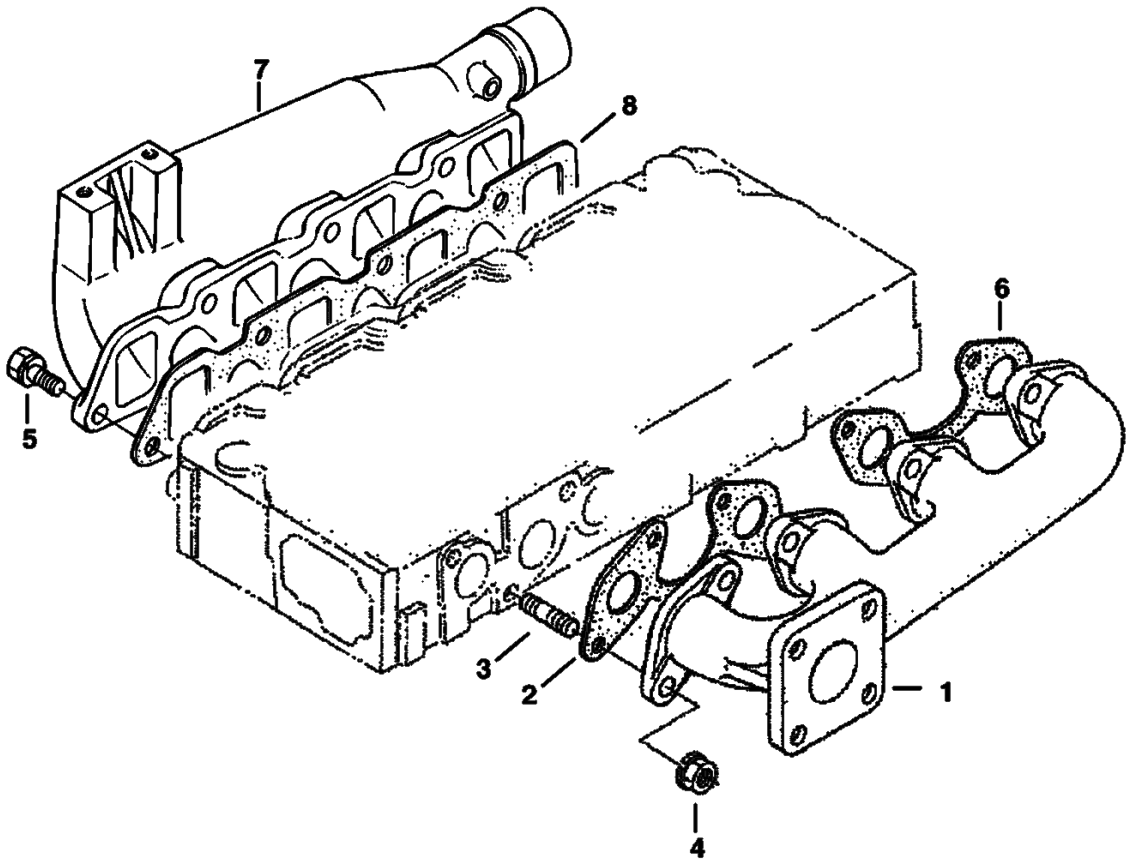

Page 404 - OSS# 2071349 - All rights reserved by Bobcat Company - 12/01/2009 - 20:50:59 - Produced by Ken Cook Co. with mediaioff

MANIFOLDS (Cont'd)
(Kubota - V2203 2EB - Tier II Replacement)
(1G975-41000)

Ref No	Part Number	Description	Remarks	Serial Number	Qty
1	6685475	MANIFOLD	exhaust		1
2	6666781	GASKET	Was 6685878 [B,D]		1
3	6652670	STUD			8
4	6682532	NUT			8
5	4CM822	BOLT			7
6	6666791	GASKET	muffler - Was 6684879 [A]		1
7	6686990	MANIFOLD	intake		1
8	6684877	GASKET	Was 6685876 [B,D]		1

Page 405 - OSS# 2071349 - All rights reserved by Bobcat Company - 12/01/2009 - 20:50:59 - Produced by Ken Cook Co. with mediaioff

ENGINE STOP LEVER
(Kubota - V2203 2EB - Tier II Replacement)
(1G975-41000)

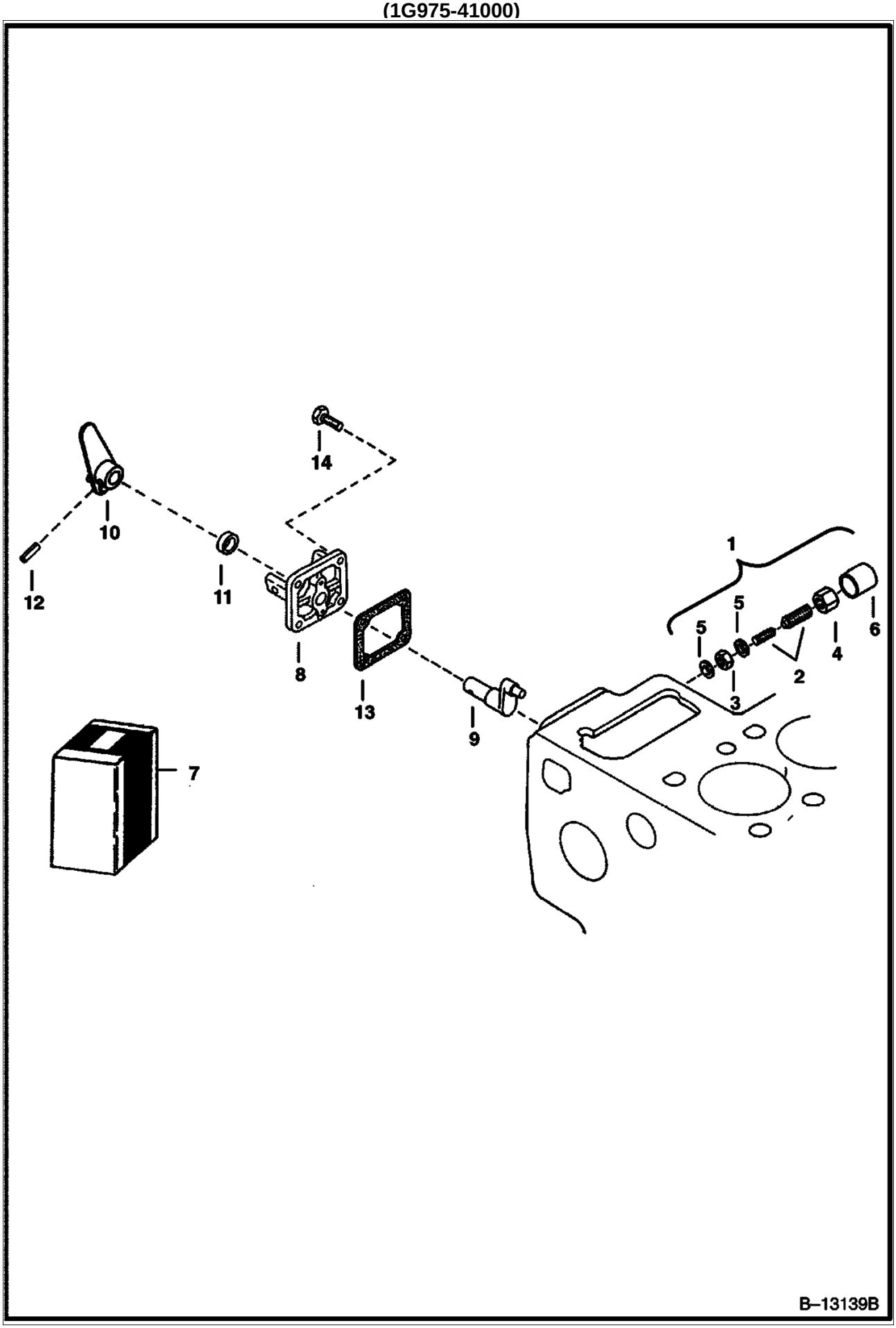

Page 406 - OSS# 2071349 - All rights reserved by Bobcat Company - 12/01/2009 - 20:50:59 - Produced by Ken Cook Co. with mediaIoff

ENGINE STOP LEVER (Cont'd)
(Kubota - V2203 2EB - Tier II Replacement)
(1G975-41000)

Ref No	Part Number	Description	Remarks	Serial Number	Qty
1	3974975	IDLER	assy., idle - Ref. 2-6		1
2	6653906	BOLT ASSY.	adjusting		1
3	3974425	NUT	adjusting		1
4	3974978	NUT			1
5	3974095	MET-GASK			2
6	3974979	CAP			1
7	6676060	LEVER ASSY.	eng. stop - Ref. 8-12		1
8	6655540	COVER	injection pump		1
9	6655231	SHAFT	lever		1
10	6655232	LEVER	engine stop		1
11	6685476	SEAL	oil		1
12	6598098	PIN	spring		1
13	6666783	GASKET	pump cover		1
14	6652580	BOLT			3

Page 407 - OSS# 2071349 - All rights reserved by Bobcat Company - 12/01/2009 - 20:50:59 - Produced by Ken Cook Co. with mediaioff

GOVERNOR
(Kubota - V2203 2EB - Tier II Replacement)
(1G975-41000)

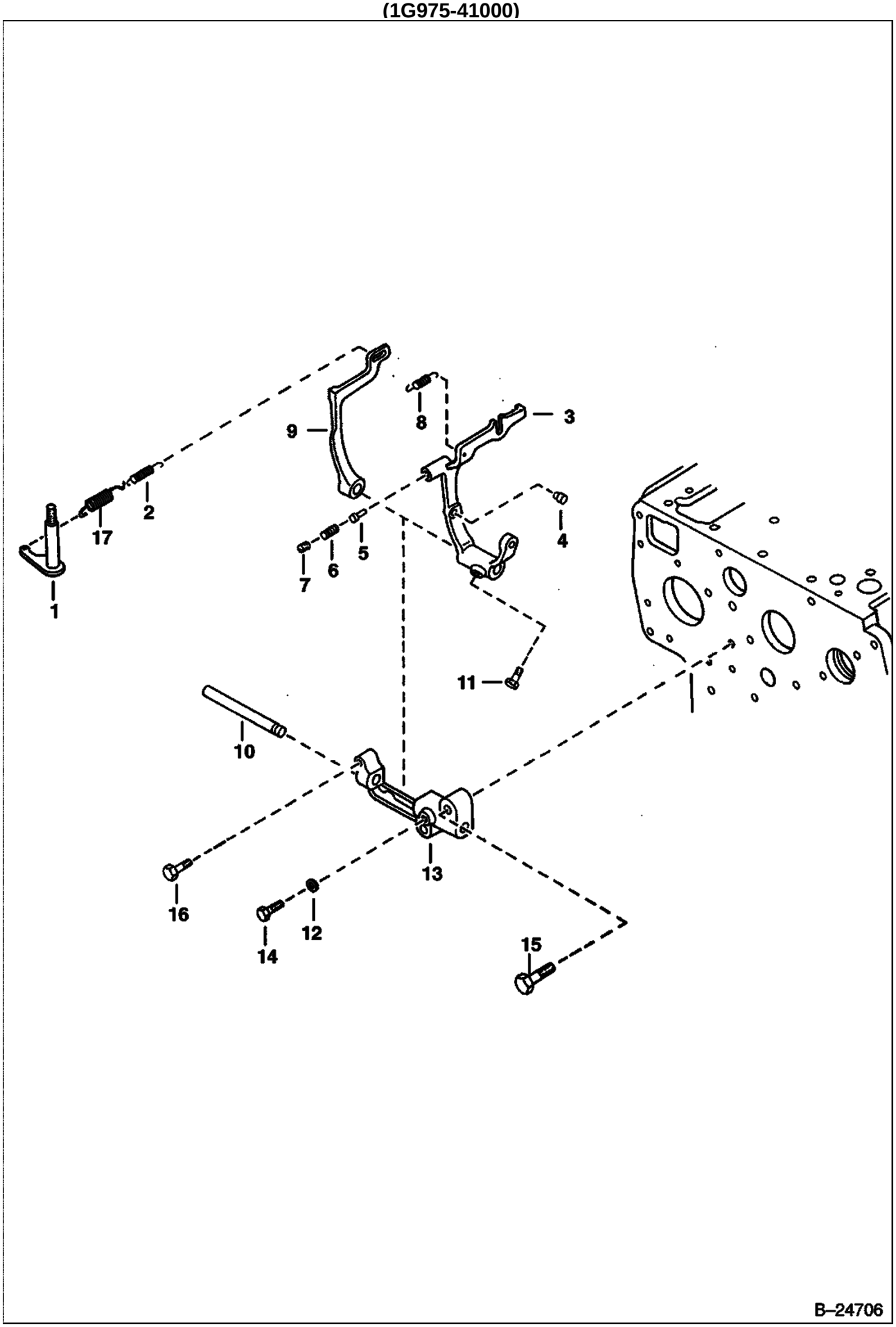

Page 408 - OSS# 2071349 - All rights reserved by Bobcat Company - 12/01/2009 - 20:50:59 - Produced by Ken Cook Co. with mediaioff

GOVERNOR (Cont'd)
(Kubota - V2203 2EB - Tier II Replacement)
(1G975-41000)

Ref No	Part Number	Description	Remarks	Serial Number	Qty
1	6598174	LEVER	governor		1
2	6655227	SPRING			1
3	6655224	LEVER	fork - W/Ref. 4-7		1
4		PIN	NSS		2
5		PIN	NSS		1
6		SPRING	NSS		1
7		SCREW	NSS		1
8	6655225	SPRING			1
9	6655877	LEVER			1
10	6684833	SHAFT			1
11	6680830	BOLT			1
12	6667419	WASHER			2
13	6653916	HOLDER	Was 6684834 [A]		1
14	3974192	BOLT			1
15	6680706	BOLT			2
16	6685464	BOLT			1
17	6655878	SPRING	governor		1

Page 409 - OSS# 2071349 - All rights reserved by Bobcat Company - 12/01/2009 - 20:50:59 - Produced by Ken Cook Co. with mediaioff

SPEED CONTROL PLATE
(Kubota - V2203 2EB - Tier II Replacement)
(1G975-41000)

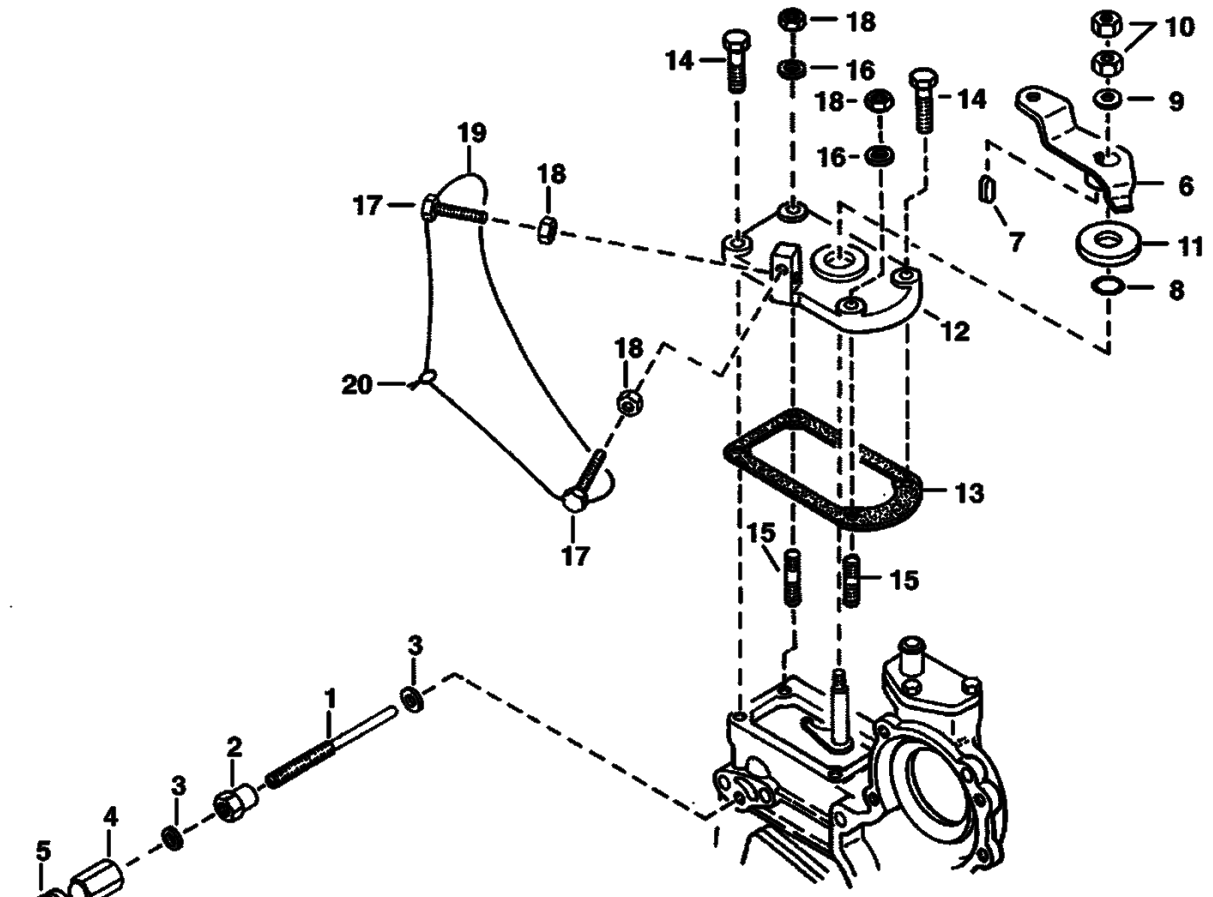

Page 410 - OSS# 2071349 - All rights reserved by Bobcat Company - 12/01/2009 - 20:50:59 - Produced by Ken Cook Co. with mediaioff

SPEED CONTROL PLATE (Cont'd)
(Kubota - V2203 2EB - Tier II Replacement)
(1G975-41000)

Ref No	Part Number	Description	Remarks	Serial Number	Qty
1	6684836	BOLT, ADJUSTING	adjusting		1
2	3974971	NUT			1
3	3974972	GASKET			2
4	6655223	NUT	cap		1
5	6653905	CAP			1
6	6598176	LEVER	speed control		1
7	15JM48	KEY	feather		1
8	3966512	O RING	Was 6686986 [A]		1
9	6667451	WASHER	plain		1
10	1DM8	NUT			2
11	3974644	COLLAR	friction		1
12	6641231	PLATE, CONTROL SPEED	speed control		1
13	6666792	GASKET			1
14	4CM620	BOLT			2
15	6652764	STUD			2
16	6667419	WASHER	spring		2
17	6655228	STOPPER			2
18	1DM6	NUT			4
19		WIRE	NAP		1
20		LEAD	NAP - sealing		1

Page 411 - OSS# 2071349 - All rights reserved by Bobcat Company - 12/01/2009 - 20:50:59 - Produced by Ken Cook Co. with mediaioff

FUEL & INJECTION PUMP
(Kubota - V2203 2EB - Tier II Replacement)
(1G975-41000)

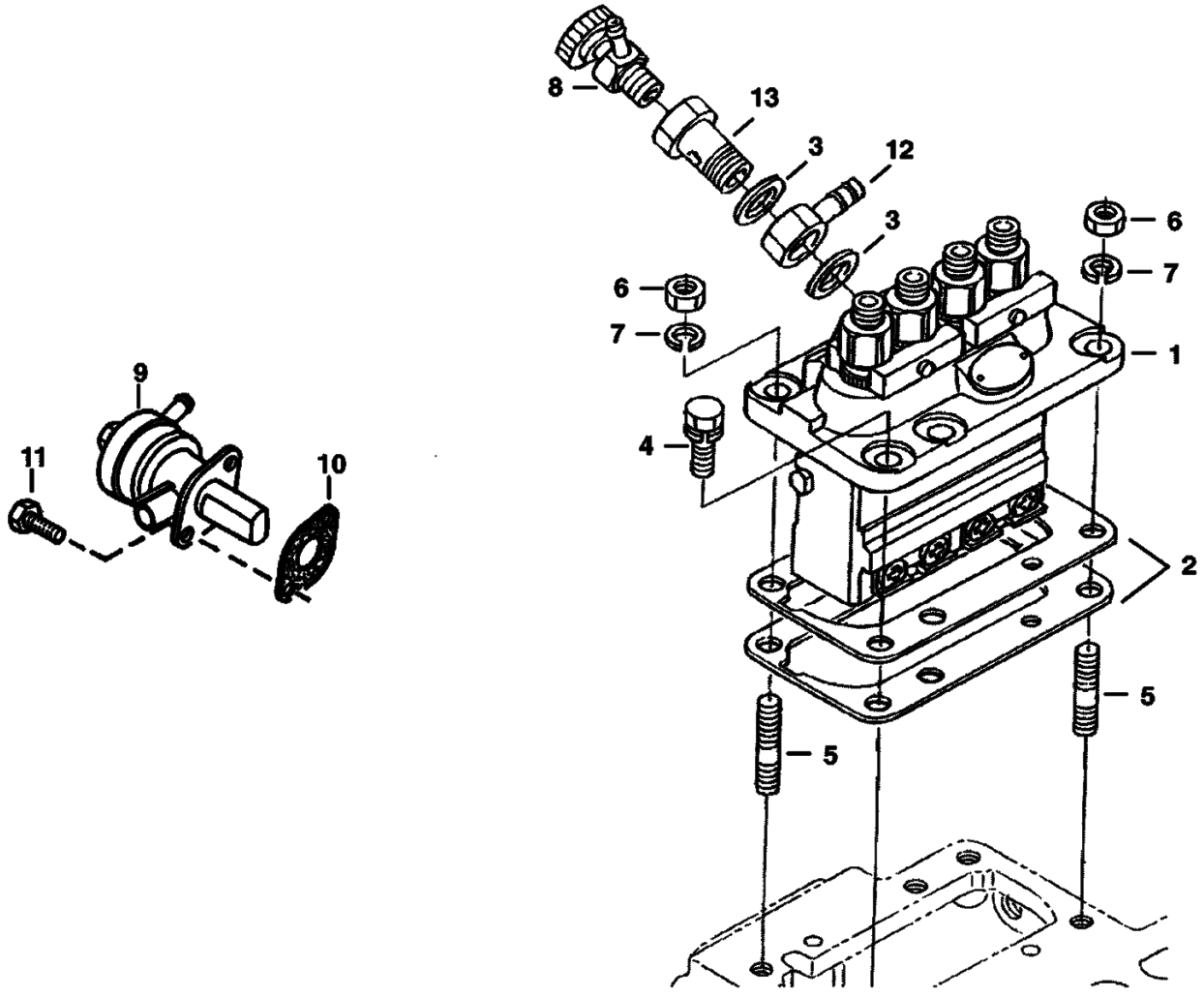

Page 412 - OSS# 2071349 - All rights reserved by Bobcat Company - 12/01/2009 - 20:50:59 - Produced by Ken Cook Co. with mediaioff

FUEL & INJECTION PUMP (Cont'd)
(Kubota - V2203 2EB - Tier II Replacement)
(1G975-41000)

Ref No	Part Number	Description	Remarks	Serial Number	Qty
1	6674676	PUMP			1
2	3974626	SHIM	0.20mm - Was 6682514 [A]		x
2	6682515	SHIM	0,25 mm - injection pump		x
2	6655210	SHIM	0,30 mm - injection pump		x
3	6698120	GASKET	Was 3975389 [A]		2
4	4CM822	BOLT			4
5	6652670	STUD			2
6	6652792	NUT			2
7	6667422	WASHER	spring		2
8	6598102	VALVE	jet start		1
9	6655216	FUEL PUMP			1
10	6686037	GASKET	fuel pump		1
11	4CM615	BOLT			2
12	6655515	JOINT	eye		1
13	3975428	SCREW	hollow		1

Page 413 - OSS# 2071349 - All rights reserved by Bobcat Company - 12/01/2009 - 20:50:59 - Produced by Ken Cook Co. with mediaioff

INJECTOR NOZZLES
(Kubota - V2203 2EB - Tier II Replacement)
(1G975-41000)

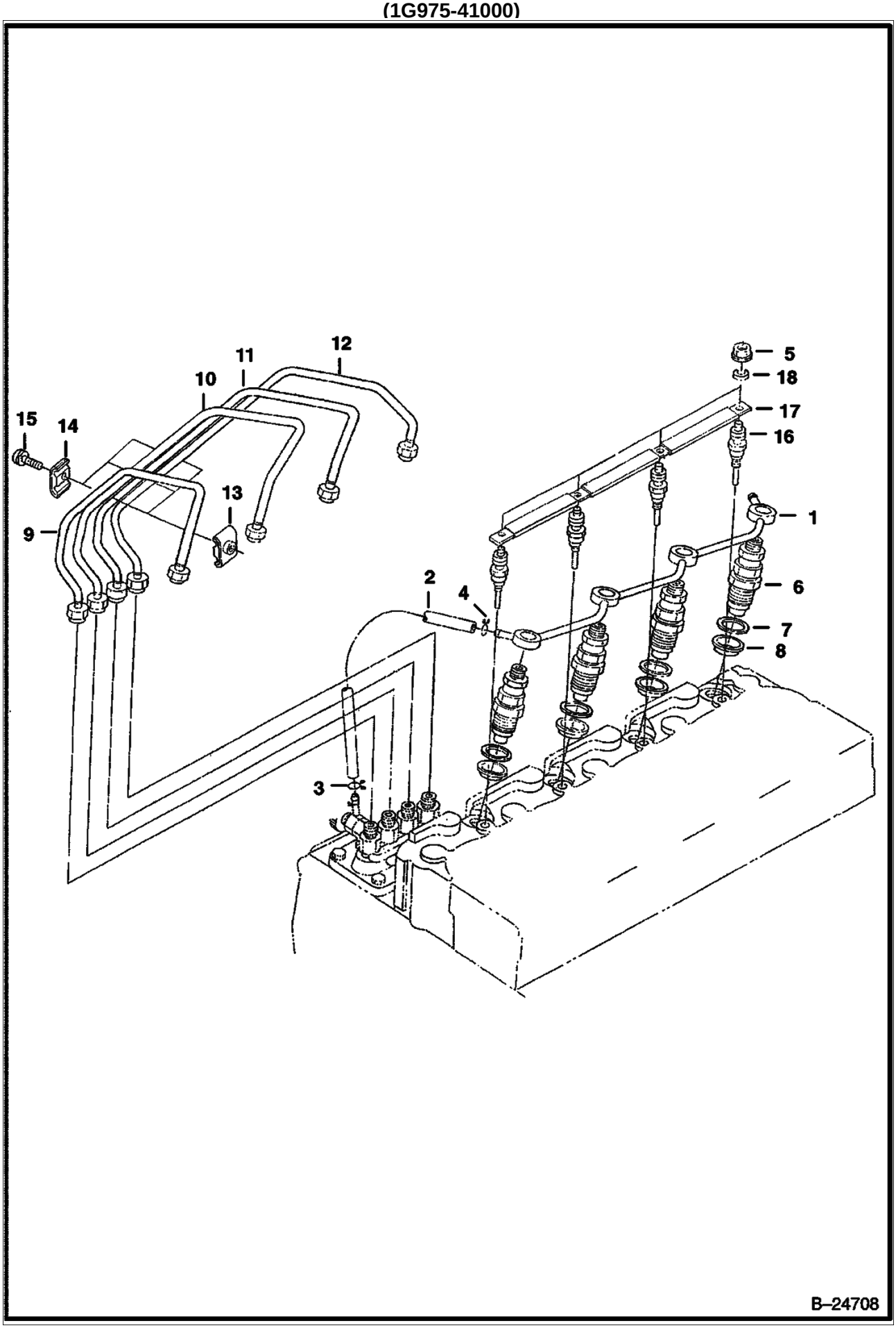

Page 414 - OSS# 2071349 - All rights reserved by Bobcat Company - 12/01/2009 - 20:50:59 - Produced by Ken Cook Co. with mediaioff

INJECTOR NOZZLES (Cont'd)
(Kubota - V2203 2EB - Tier II Replacement)
(1G975-41000)

Ref No	Part Number	Description	Remarks	Serial Number	Qty
1	6682521	PIPE			1
2	6974656	TUBE ASSY, OVERFLOW	fuel over flow - Was 6681931 [A]		1
3	6654718	CLAMP	pipe - Was 6680795 [A]		1
4	6654718	CLAMP	pipe		1
5	6670472	NUT			4
6	6722147	HOLDER KIT	nozzle		4
6	6722147REM	NOZZLE, FUEL INJ. KUBOTA V2203	nozzle		4
7	6655218	GASKET			4
8	6655872	HEAT SEAL			4
9	6655219	PIPE	injection		1
10	6655220	PIPE	injection		1
11	6655221	PIPE	injection		1
12	6655222	PIPE	injection		1
13	6652688	CLAMP	pipe		3
14	6680786	CLAMP	pipe		3
15	3974260	SCREW			3
16	6655233	GLOW PLUG			4
17	6655234	CORD	glow plug - Was 6686987 [A]		3
18	6670473	WASHER			1

Page 415 - OSS# 2071349 - All rights reserved by Bobcat Company - 12/01/2009 - 20:50:59 - Produced by Ken Cook Co. with mediaioff

ENGINE & GASKET KITS
(Kubota - V2003-T-2EB - Tier II Replacement)
(1G970-41000)

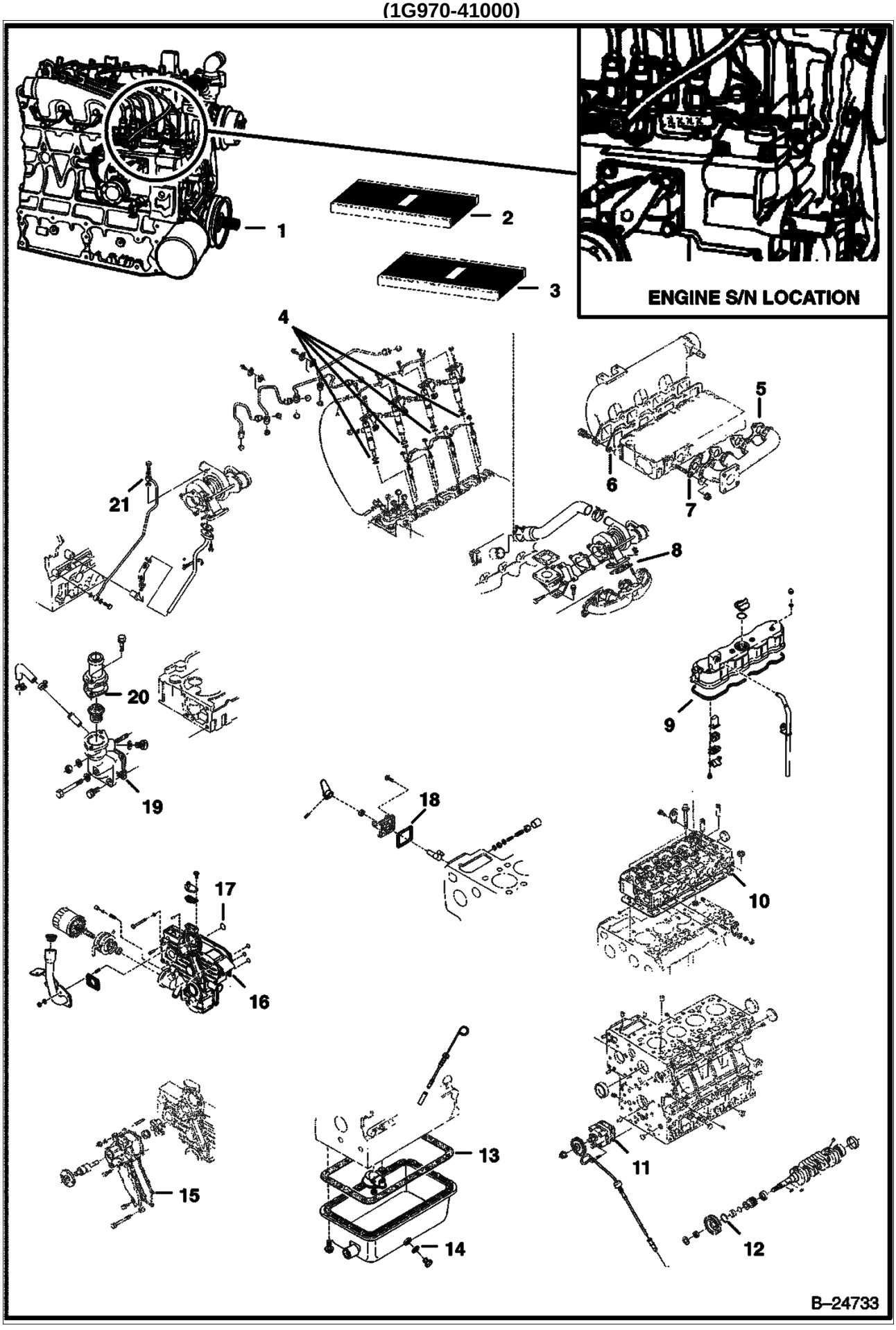

Page 416 - OSS# 2071349 - All rights reserved by Bobcat Company - 12/01/2009 - 20:50:59 - Produced by Ken Cook Co. with mediaioff

ENGINE & GASKET KITS (Cont'd)
(Kubota - V2003-T-2EB - Tier II Replacement)
(1G970-41000)

Ref No	Part Number	Description	Remarks	Serial Number	Qty
1	6685982	ENGINE, V2003-T-E2B-BOBCAT-1	See BTI388 - does not include starter, alternator, flywheel, & flywheel housing		1
1	6685982REM	ENGINE, KUBOTA V2003T E2B TIER 2	See BTI388 - does not include turbo, starter, alternator, flywheel & flywheel housing - must have Tier 2 engine for exchange		1
2		KIT, UPPER GASKET	NAP - Order individual gaskets - Was 6689014 [D]		1
3		LOWER GASKET KIT TIER II ENGINE	NAP - Order individual gaskets - Was 6689018 [D]		1
4	6655218	GASKET			4
5	6666791	GASKET	exhaust manifold - rear - Was 6684879 [A]		1
6	6666811	GASKET	Was 6686991 [A]		1
7	6666781	GASKET	exhaust manifold - front - Was 6685878 [B,D]		1
8	6675636	GASKET			1
9	6598136	GASKET, COVER VALVE			1
10	6675643	GASKET	cylinder head		x
11	6666782	GASKET	oil pump - Was 6684786 [A]		7
12	6631664	SEAL			1
13	6666817	GASKET	oil pan - Was 6684753		1
14	6680484	GASKET			1
15	6666804	GASKET			1
16	6666800	GASKET	gearcase		1
17	6685468	O-RING	- gear case		1
18	6666783	GASKET	speed control plate		1
19	6666802	GASKET	water flange - Was 6684860 [A]		1
20	6684863	GASKET	thermostat cover		1
21	6685962	GASKET	consists of 2 gaskets attached by a tab		x

Page 417 - OSS# 2071349 - All rights reserved by Bobcat Company - 12/01/2009 - 20:50:59 - Produced by Ken Cook Co. with mediaioff

GEARCASE
(Kubota - V2003-T-2EB - Tier II Replacement)
(1G970-41000)

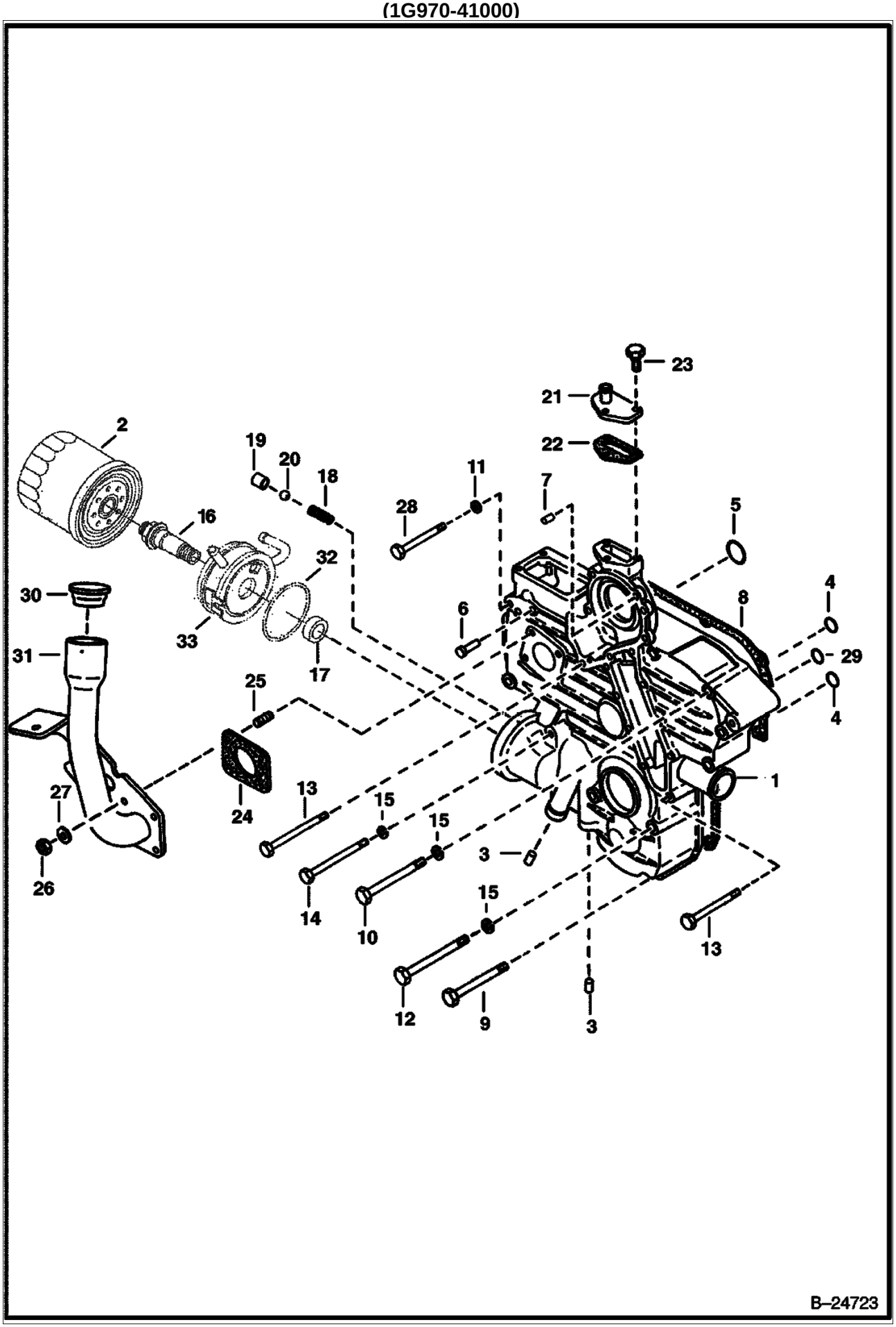

Page 418 - OSS# 2071349 - All rights reserved by Bobcat Company - 12/01/2009 - 20:50:59 - Produced by Ken Cook Co. with mediaIoff

GEARCASE (Cont'd)
(Kubota - V2003-T-2EB - Tier II Replacement)
(1G970-41000)

Ref No	Part Number	Description	Remarks	Serial Number	Qty
1		CASE ASSY.	NAP - W/Ref. 3-7 & 29 - Order 6688640 & Ref. 4-7 & 29 - Was 6674164 [A]		1
1	6688640	GEAR HOUSING	W/Ref. 3		1
2	6675517	FILTER, OIL ENG			1
3	6667425	PLUG	pin		2
4	6685466	O-RING			2
5	6685468	O-RING			1
6	6652592	PIN	start spring - Was 6680774 [D]		1
7	3974395	PIN	straight		2
8	6666800	GASKET	gearcase		1
9	3974888	BOLT		E/ 5V9999 & Bel	2
9	7001903	BOLT	flange	E/ 5W0001 & Abv	2
10	1CM870	BOLT		E/ 5V9999 & Bel	5
10	6692375	BOLT	flange	E/ 5W0001 & Abv	5
11	2EM8	WASHER, PLAIN		E/ 5V9999 & Bel	1
12	1CM880	BOLT		E/ 5V9999 & Bel	2
12	7001904	BOLT	flange	E/ 5W0001 & Abv	2
13	6653808	BOLT		E/ 5V9999 & Bel	3
13	6692377	BOLT	flange	E/ 5W0001 & Abv	3
14	1CM895	BOLT		E/ 5V9999 & Bel	2
14	7001905	BOLT	flange	E/ 5W0001 & Abv	2
15	6667422	WASHER		E/ 5V9999 & Bel	9
16	6675681	ADAPTER			1
17	6675671	COLLAR			1
18	6652652	SPRING			1
19	3974893	SEAT	valve		1
20	10J13	BALL			1
21	3974894	FLANGE	water return		1
22	6666803	GASKET	water return flange - Was 6684774 [A]		1
23	4CM620	BOLT			3
24	6714543	GASKET			1
25	6652764	STUD			4
26	1DM6	NUT			4
27	6EM60	WASHER, SPRING	spring		4
28	6653807	BOLT		E/ 5V9999 & Bel	1
28	6680686	BOLT	flange	E/ 5W0001 & Abv	1
29	6686981	O-RING			1
30	6703736	CAP			1
31	6719048	MOUNT			1
32	6698244	ORING	Was 6657422 [B,D]		1
33		OIL COOLER	NAP - W/Ref. 32 - Was 6685641 [A]		1

Page 419 - OSS# 2071349 - All rights reserved by Bobcat Company - 12/01/2009 - 20:50:59 - Produced by Ken Cook Co. with mediaioff

OIL COOLER
(Kubota - V2003-T-2EB - Tier II Replacement)
(1G970-41000)

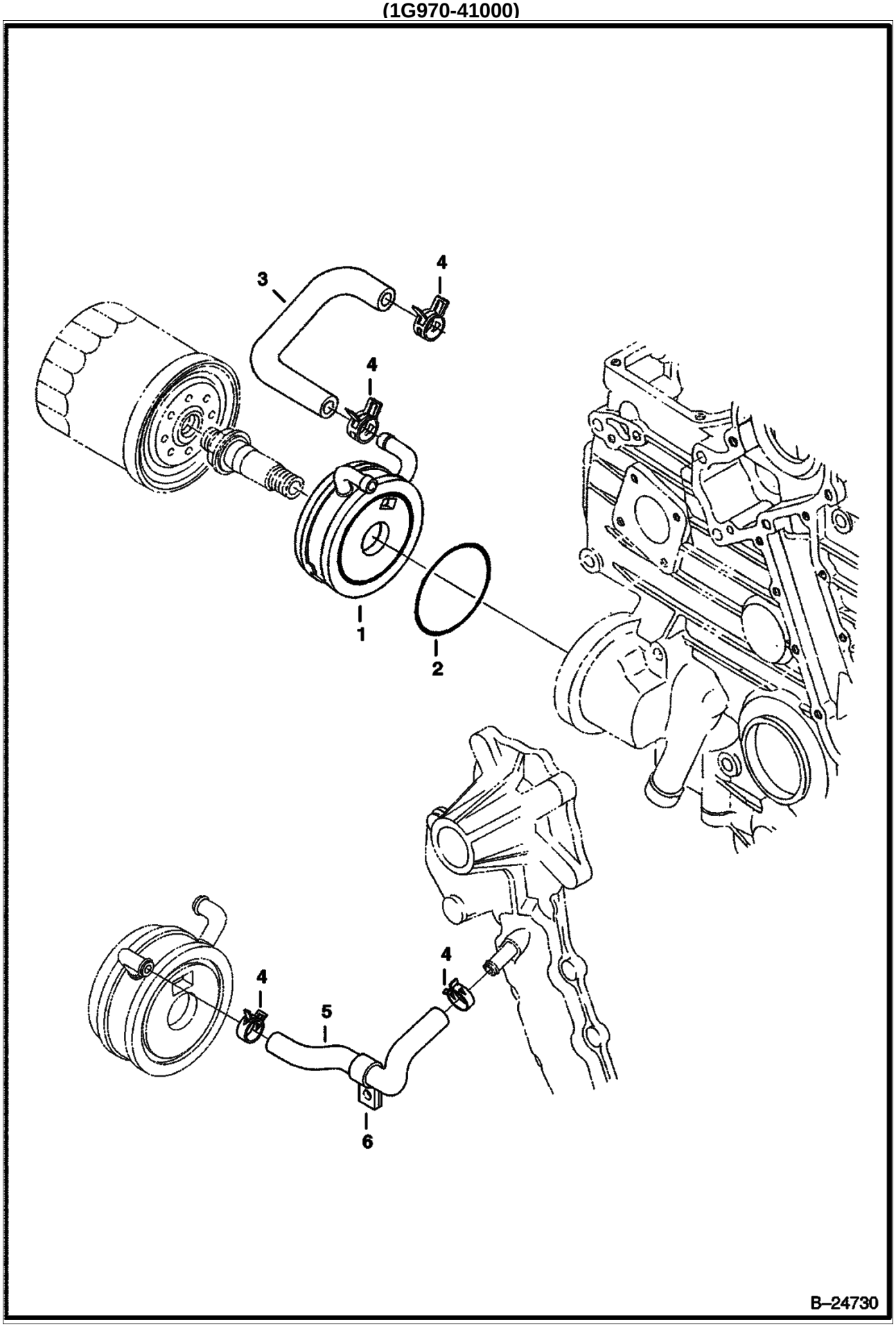

Page 420 - OSS# 2071349 - All rights reserved by Bobcat Company - 12/01/2009 - 20:50:59 - Produced by Ken Cook Co. with mediaioff

OIL COOLER (Cont'd)
(Kubota - V2003-T-2EB - Tier II Replacement)
(1G970-41000)

Ref No	Part Number	Description	Remarks	Serial Number	Qty
1		OIL COOLER	NAP - W/Ref. 2 - Was 6685641 [A]		1
2	6698244	ORING	Was 6657422 [B,D]		1
3	6678945	HOSE			1
4	6680580	CLAMP			4
5	6683173	PIPE	Was 6686082 [A]		1
6	6684479	CLAMP			1

Page 421 - OSS# 2071349 - All rights reserved by Bobcat Company - 12/01/2009 - 20:50:59 - Produced by Ken Cook Co. with mediaioff

CRANKCASE
(Kubota - V2003-T-2EB - Tier II Replacement)
(1G970-41000)

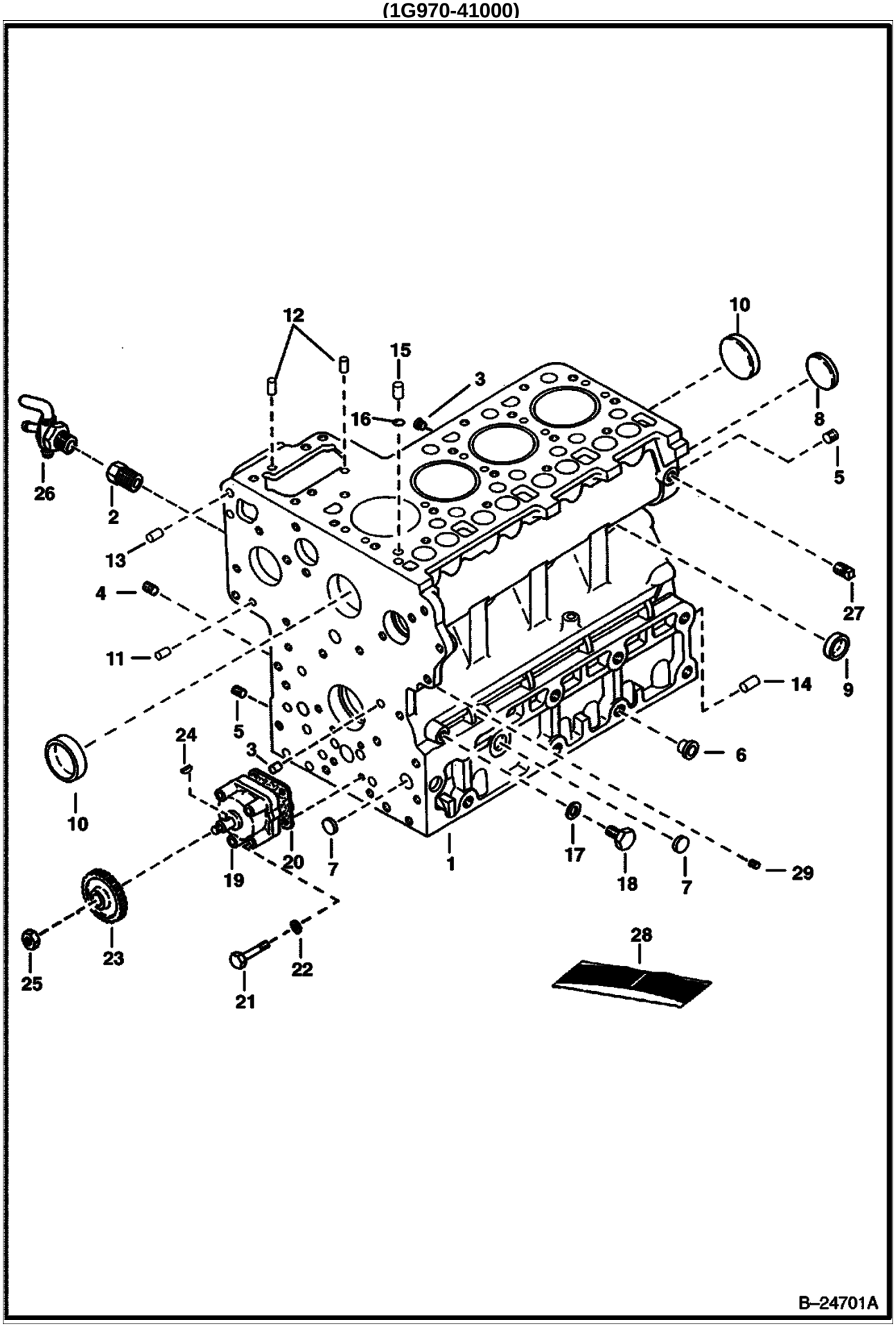

Page 422 - OSS# 2071349 - All rights reserved by Bobcat Company - 12/01/2009 - 20:50:59 - Produced by Ken Cook Co. with mediaIoff

CRANKCASE (Cont'd)
(Kubota - V2003-T-2EB - Tier II Replacement)
(1G970-41000)

Ref No	Part Number	Description	Remarks	Serial Number	Qty
1	6686993	CRANKCASE	assy. - W/Ref. 2 - 15		1
2	6678946	ADAPTER			1
3	6652574	PLUG			5
4	6655869	PLUG			12
5	6652575	PLUG			2
6	6598187	PLUG			21
7	6667418	PLUG	expansion		3
8	6657663	PLUG	expansion		1
9	3974389	CAP, SEALING	sealing		6
10	3974390	PLUG	sealing - Was 6680639 [A]		2
11	3974393	PIN	straight		2
12	3974394	PIN	straight		2
13	3974395	PIN	straight		2
14	3974868	PIN	straight		1
15	3974037	PIN	pipe		1
16	3974038	O RING			1
17	3974095	MET-GASK			1
18	6683104	PLUG			1
19	6692380	OIL PUMP	Was 6682498 [D]		1
20	6666782	GASKET	oil pump - Was 6684786 [A]		1
21	6655195	BOLT			4
22	6667419	WASHER			4
23	3975441	GEAR			1
24	6969805	KEY,FEATHER	Was 15JM00410B [A]		1
25	6653888	NUT			1
26	6672190	DRAINCOCK	Was 6630177 [A]		1
27	16F2	PLUG			1
28		GASKET KIT	Lower - Does not include rear oil seal		1
29	6685477	PLUG			1

Page 423 - OSS# 2071349 - All rights reserved by Bobcat Company - 12/01/2009 - 20:50:59 - Produced by Ken Cook Co. with mediaioff

ROCKER ARM COVER
(Kubota - V2003-T-2EB - Tier II Replacement)
(1G970-41000)

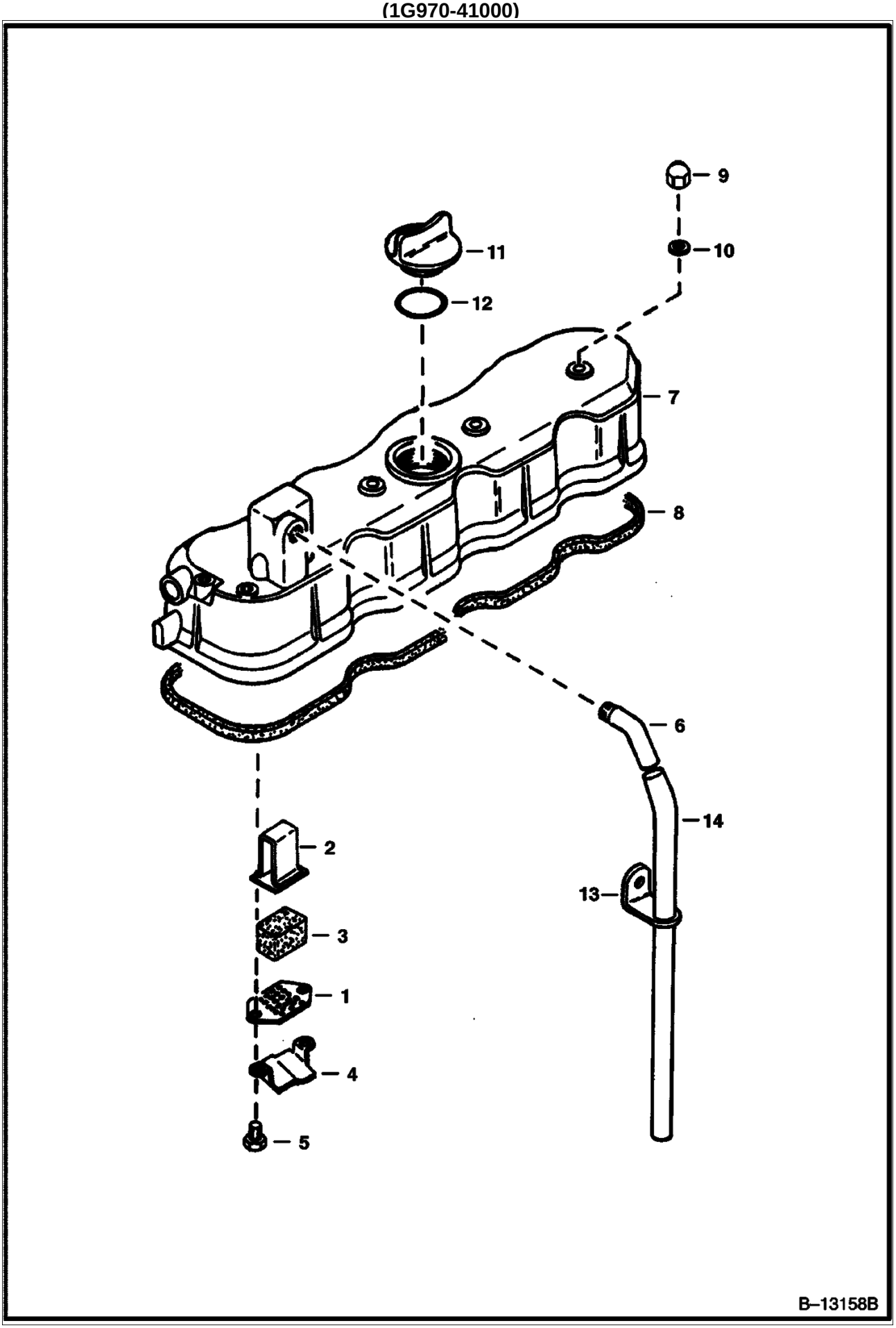

Page 424 - OSS# 2071349 - All rights reserved by Bobcat Company - 12/01/2009 - 20:50:59 - Produced by Ken Cook Co. with mediaioff

ROCKER ARM COVER (Cont'd)
(Kubota - V2003-T-2EB - Tier II Replacement)
(1G970-41000)

Ref No	Part Number	Description	Remarks	Serial Number	Qty
1	3974924	PLATE	element		1
2	3974925	PLATE	element		1
3	3974926	BREATHER	breather		1
4	3974927	SHIELD	breather		1
5	6667426	SCREW	W/Washer		2
6	6652624	JOINT	breather pipe		1
7	6655175	COVER	valve		1
8	6598136	GASKET, COVER VALVE			1
9	3974923	NUT	cap		4
10	3974095	MET-GASK			4
11	6652653	PLUG	oil filler		1
12	6684782	O-RING			1
13	3974931	CLAMP	pipe		1
14	6686994	PIPE	breather		1

Page 425 - OSS# 2071349 - All rights reserved by Bobcat Company - 12/01/2009 - 20:50:59 - Produced by Ken Cook Co. with mediaioff

VALVE ROCKER ARM
(Kubota - V2003-T-2EB - Tier II Replacement)
(1G970-41000)

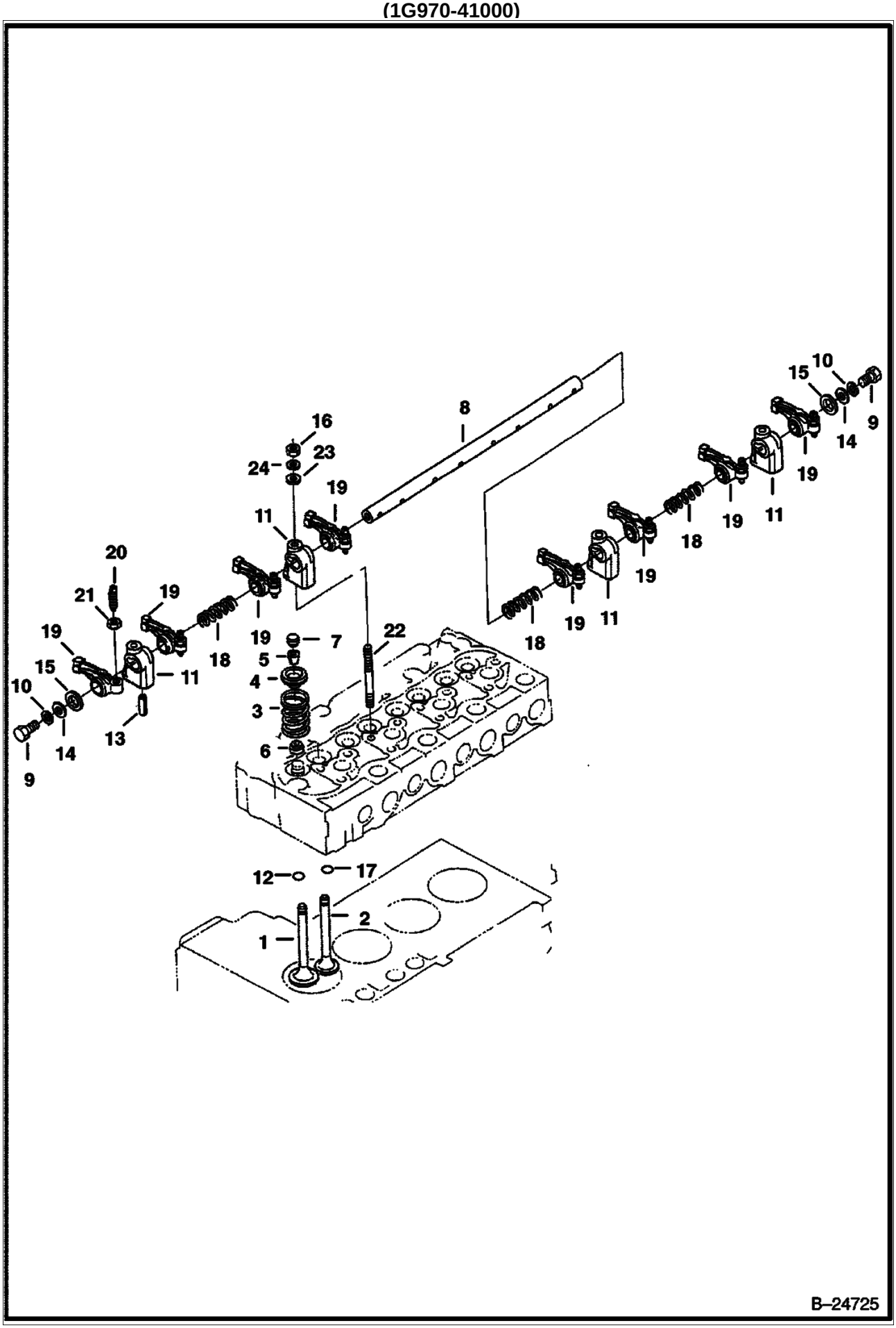

Page 426 - OSS# 2071349 - All rights reserved by Bobcat Company - 12/01/2009 - 20:50:59 - Produced by Ken Cook Co. with mediaioff

VALVE ROCKER ARM (Cont'd)
(Kubota - V2003-T-2EB - Tier II Replacement)
(1G970-41000)

Ref No	Part Number	Description	Remarks	Serial Number	Qty
1	6655173	VALVE	inlet		4
2	6655174	VALVE	exhaust		4
3	3974514	SPRING 5	valve		8
4	3974515	RETAINER	valve spring		8
5	6684874	COLLAR	valve spring - set of 2		8
6	6653830	SEAL, STEM VALVE			8
7	3974518	CAP	valve		8
8	6684875	SHAFT	rocker arm		1
9	5CM812	BOLT			2
10	6667422	WASHER	external		2
11	3974521	MOUNT	rocker arm		4
12	6655155	SEAT	valve inlet		4
13	6667461	PIN	spring		4
14	6667451	WASHER	plain		4
15	3974524	WASHER			2
16	6652792	NUT			4
17	6655156	SEAT	valve exhaust		4
18	6653833	SPRING	rocker arm		3
19	6655870	ROCKER ARM	rocker - W/Ref. 20 & 21		8
20	3974920	SCREW	adjusting		8
21	2DM8	NUT	Was 6680874 [A]		8
22	6653832	STUD			4
23	2EM8	WASHER, PLAIN			4
24	6667422	WASHER			4

Page 427 - OSS# 2071349 - All rights reserved by Bobcat Company - 12/01/2009 - 20:50:59 - Produced by Ken Cook Co. with mediaioff

CYLINDER HEAD
(Kubota - V2003-T-2EB - Tier II Replacement)
(1G970-41000)

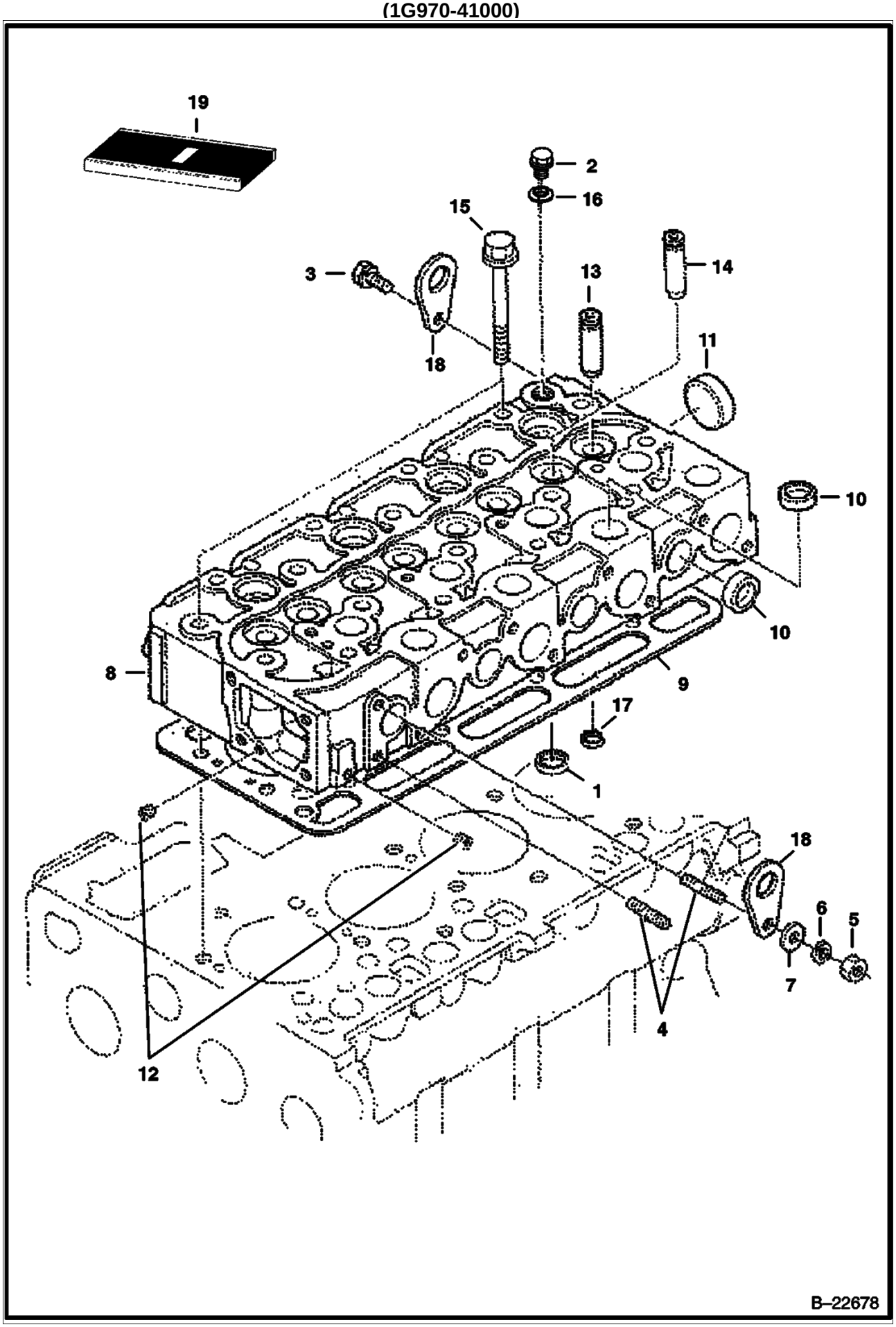

Page 428 - OSS# 2071349 - All rights reserved by Bobcat Company - 12/01/2009 - 20:50:59 - Produced by Ken Cook Co. with mediaioff

CYLINDER HEAD (Cont'd)
(Kubota - V2003-T-2EB - Tier II Replacement)
(1G970-41000)

Ref No	Part Number	Description	Remarks	Serial Number	Qty
1	6655155	SEAT	inlet valve		1
2	6655160	PLUG			1
3	6667421	BOLT			1
4	6652670	STUD			2
5	6652792	NUT			2
6	6667422	WASHER	spring		2
7	2EM8	WASHER, PLAIN	plain		2
8	6675642	HEAD	cylinder - W/Ref. 10 - 13		1
9	6675643	GASKET	cylinder head		1
10	3974432	PLUG	sealing - Was 6680665 [A]		12
11	6680666	PLUG	sealing		1
12	6598116	PLUG			2
13	6969990	GUIDE	exhaust valve - Was 6653803 [A]		4
14	6655154	GUIDE	intake valve		4
15	6655158	BOLT			18
16	6655161	WASHER	W/rubber		1
17	6655156	SEAT	exhaust valve		4
18	3974882	HOOK			2
19		GASKET KIT	upper		1

Page 429 - OSS# 2071349 - All rights reserved by Bobcat Company - 12/01/2009 - 20:50:59 - Produced by Ken Cook Co. with mediaioff

OIL PAN
(Kubota - V2003-T-2EB - Tier II Replacement)
(1G970-41000)

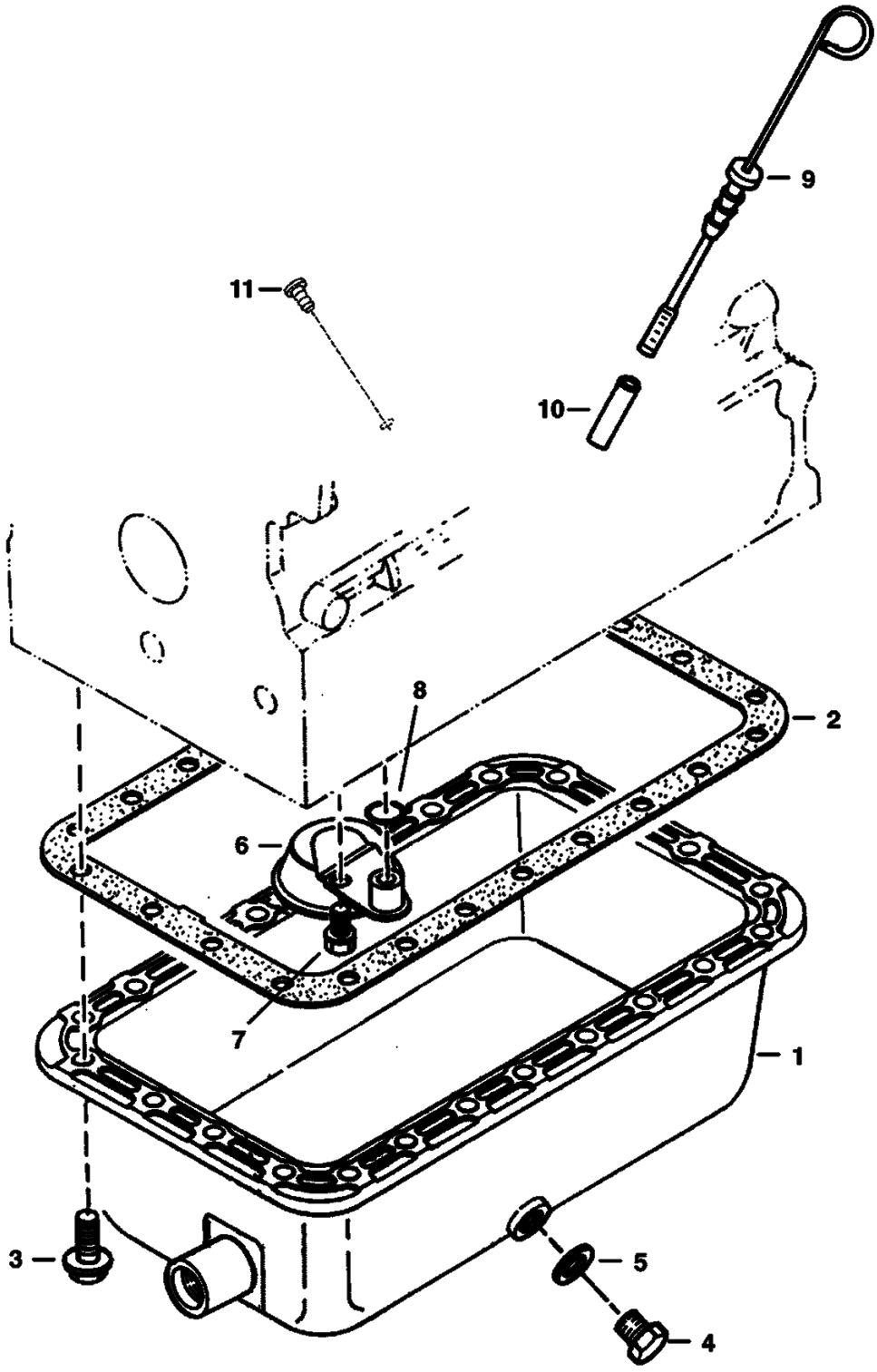

Page 430 - OSS# 2071349 - All rights reserved by Bobcat Company - 12/01/2009 - 20:50:59 - Produced by Ken Cook Co. with mediaioff

OIL PAN (Cont'd)
(Kubota - V2003-T-2EB - Tier II Replacement)
(1G970-41000)

Ref No	Part Number	Description	Remarks	Serial Number	Qty
1	6655151	PAN, OIL			1
2	6666817	GASKET	oil pan - Was 6684753		1
3	7001922	BOLT	Was 6653798 [B,D]	E/ 5R9999 & Bel	24
3	7001922	BOLT	Was 6698100 [A]	E/ 5S0001 & Abv	24
4	6686979	PLUG	drain		1
5	6680484	GASKET			1
6	6655194	SCREEN, OIL	Was 6653568 [A]		1
7	6667421	BOLT			1
8	6684754	O-RING			1
9	6677202	DIPSTICK, OIL ENG	oil - Was 6684784 [A]		1
10	6677203	GUIDE	for long dipstick		1
11	6969804	PLUG,OIL GAUGE	Was 6684785 [A]		1

Page 431 - OSS# 2071349 - All rights reserved by Bobcat Company - 12/01/2009 - 20:50:59 - Produced by Ken Cook Co. with mediaioff

PISTON & CRANKSHAFT
(Kubota - V2003-T-2EB - Tier II Replacement)
(1G970-41000)

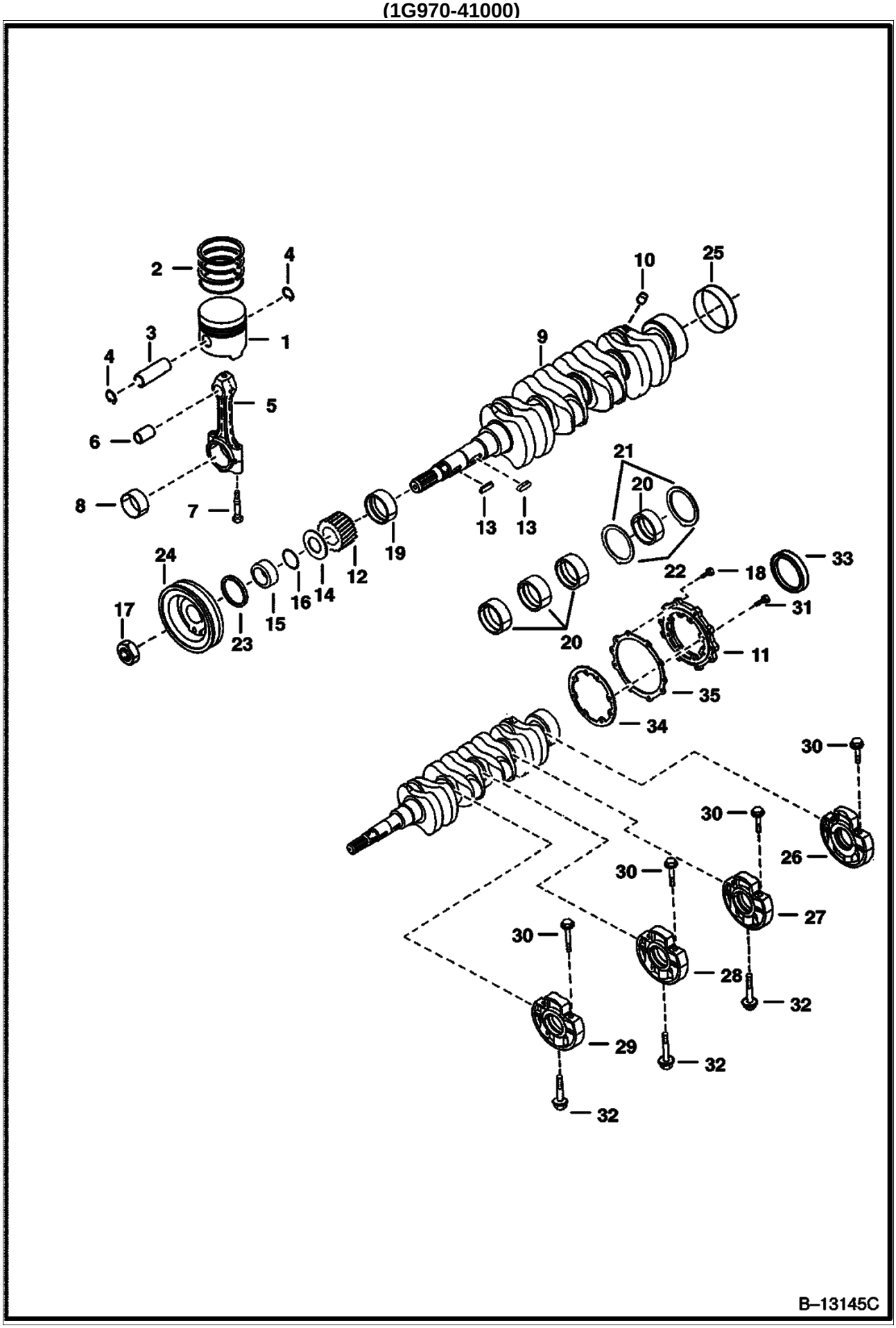

Page 432 - OSS# 2071349 - All rights reserved by Bobcat Company - 12/01/2009 - 20:50:59 - Produced by Ken Cook Co. with mediaioff

PISTON & CRANKSHAFT (Cont'd)
(Kubota - V2003-T-2EB - Tier II Replacement)
(1G970-41000)

Ref No	Part Number	Description	Remarks	Serial Number	Qty
1		PISTON	Std. - Order 6689939 piston & (2) 6686997 cir-clip - Was 6675638 [A]		4
1		PISTON	NAP - (0,5 mm - .0197) - Was 6676057 [A]		4
2	6675655	RING, PISTON	piston - Std.		4
2	6676058	RINGS	piston - (0,5 mm - .0197)		4
3	6655179	PIN, PISTON ENG			4
4	6655180	CIR-CLIP	Was 6684805 [A]		8
5	6655181	ROD, CONNECTING	connecting - W/Ref. 6, 7 & 8		4
6	6655243	BUSHING			4
7	6655498	BOLT			8
8	6655183	BEARING	rod - std.		4
8	6655236	BEARING	rod (-0,20 mm)		4
8	6655237	BEARING	rod (-0,40 mm)		4
9	6691495	CRANKSHAFT	Ref. 10 & 25 - Ref. 10 must be installted before using - Was 6667437 [B,D]	E/ 6P9999 & Bel	1
9	7010623	CRANKSHAFT, ENG	W/Ref. 25	E/ 6Q0001 & Abv	1
10	6652633	BALL	Must be installed before using Ref. 9 crankshaft - See S/L dated 3 Jan 85		4
11	6655166	COVER	Was 6685515 [A]		1
12	6598142	GEAR			1
13	3974546	KEY			1
14	6653861	SLINGER, OIL	oil		1
15	3975337	COLLAR			1
16	3974577	O RING			1
17	3974671	NUT			1
18	4CM825	BOLT			8
19	6685486	BEARING	main - Std.		1
19	6685490	BEARING	main (0,2 mm-.0079)		1
19	6685491	BEARING	main (0,4 mm-.0157)		1
20	6685487	BEARING	main - Std.		4
20	6685492	BEARING	main (0,2 mm-.0079)		4
20	6685493	BEARING	main (0,4 mm-.0157)		4
21	6685488	WASHER	thrust - Std.		2
21	6685494	WASHER	thrust (0,2 mm-.0079)		2
21	6685495	WASHER	thrust (0,4 mm-.0157)		2
22	6685489	WASHER	thrust - Std.		2
22	6685496	WASHER	thrust (0,2 mm-.0079)		2
22	6685497	WASHER	thrust (0,4 mm-.0157)		2
23	6631664	SEAL	oil		1
24	6655235	PULLEY			1
25	6653859	SLEEVE	Was 6684807 [A]		1
26	6689503	CASE MAIN BRG	main bearing - W/Ref. 30 - Was 6685480 [A]		1
27	6685486	BEARING	main bearing - W/Ref. 30		1
28	6685485	CASE	main bearing - W/Ref. 30		1
29	6685484	CASE, MAIN BRG.	main bearing - W/Ref. 30		1
30	6685482	BOLT			8
31	4CM828	BOLT			8
32	6653821	BOLT			3
33	6684789	SEAL	oil		1
34	6684788	GASKET			1
35	6666814	GASKET			1

Page 433 - OSS# 2071349 - All rights reserved by Bobcat Company - 12/01/2009 - 20:50:59 - Produced by Ken Cook Co. with mediaioff

FUEL CAMSHAFT
(Kubota - V2003-T-2EB - Tier II Replacement)
(1G970-41000)

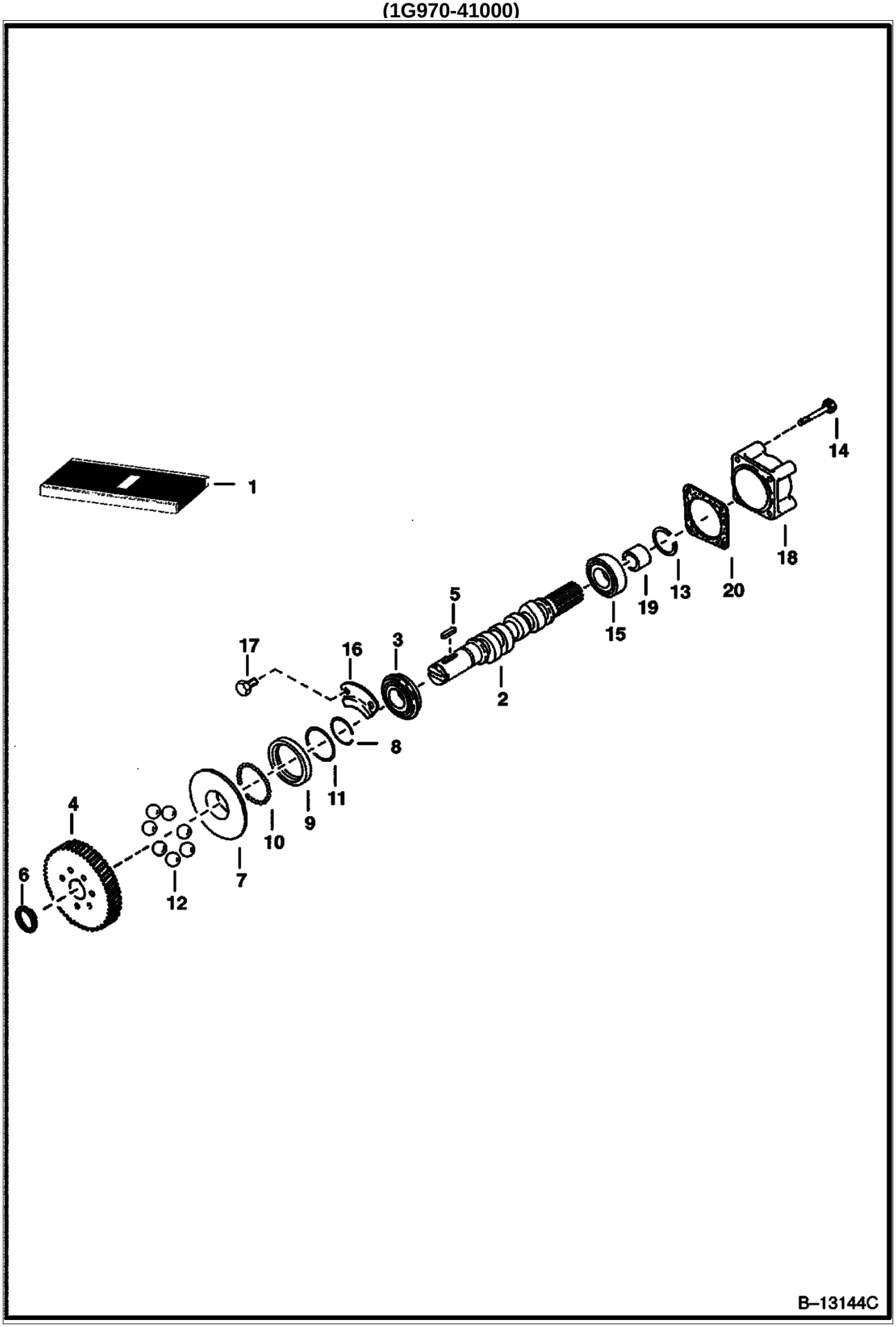

Page 434 - OSS# 2071349 - All rights reserved by Bobcat Company - 12/01/2009 - 20:50:59 - Produced by Ken Cook Co. with mediaioff

FUEL CAMSHAFT (Cont'd)
(Kubota - V2003-T-2EB - Tier II Replacement)
(1G970-41000)

Ref No	Part Number	Description	Remarks	Serial Number	Qty
1	6655211	CAMSHAFT	assy. - Ref. 2-14		1
2	6655875	CAMSHAFT	fuel		1
3	851242	BEARING			1
4	6655212	GEAR	injection pump		1
5	6598099	KEY			1
6	5JM24	CIRCLIP	external		1
7	6655213	SLEEVE	governor		1
8	3974618	CIR-CLIP	sleeve		1
9	6655214	CASE	governor ball		1
10	10J5	BALL			39
11	3974620	CIR-CLIP	ball case		1
12	6655215	BALL			7
13	6598158	CIRCLIP	external		1
14	6651934	BOLT			7
15	6684812	BALL BEARING			1
16	3974624	STOPPER			1
17	6667420	BOLT			2
18	6666804	GASKET	fuel camshaft		1
19	6598179	COLLAR			1
20	6692386	GASKET	Was 6684813 [A]		1

Page 435 - OSS# 2071349 - All rights reserved by Bobcat Company - 12/01/2009 - 20:50:59 - Produced by Ken Cook Co. with mediaioff

CAMSHAFT
(Kubota - V2003-T-2EB - Tier II Replacement)
(1G970-41000)

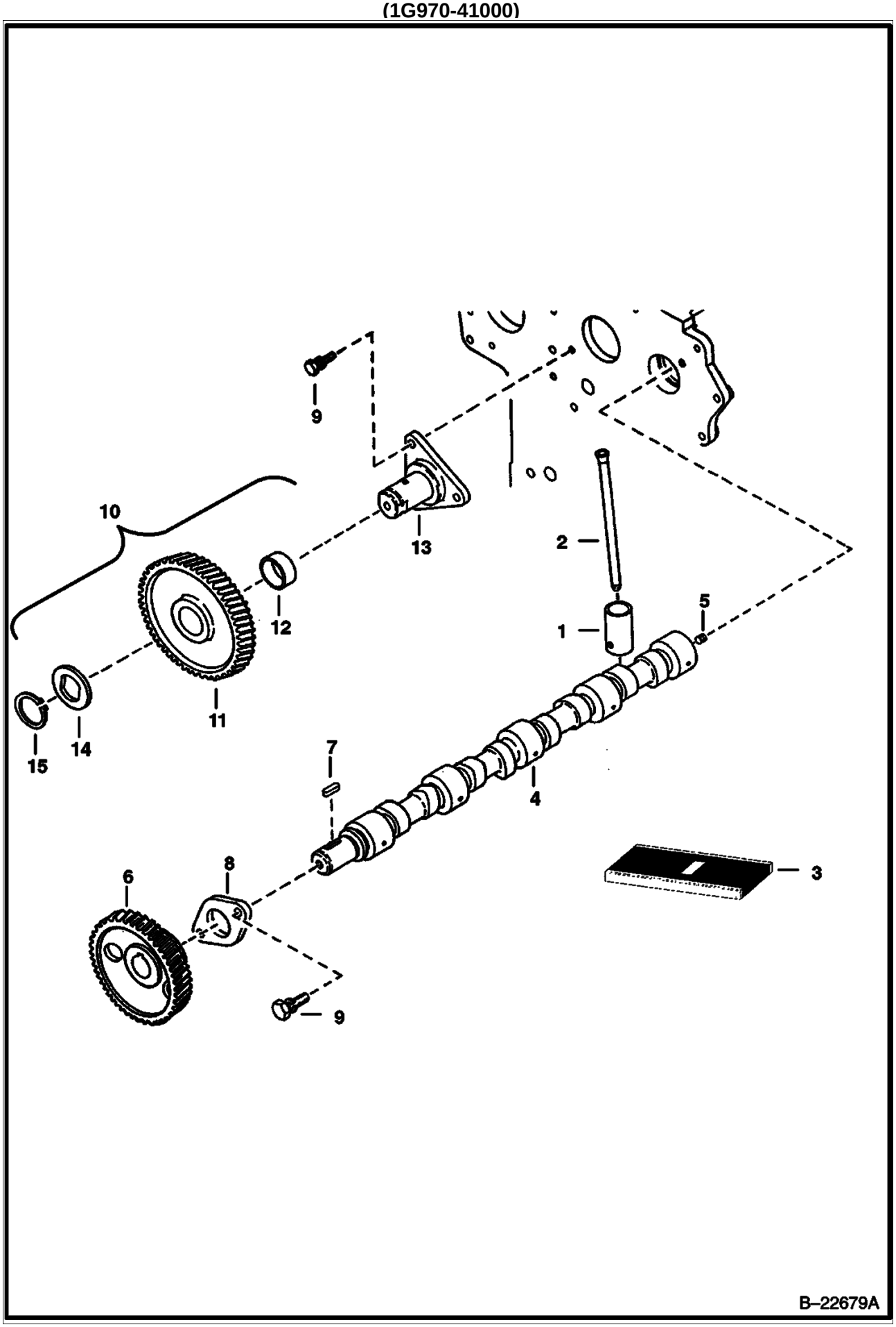

Page 436 - OSS# 2071349 - All rights reserved by Bobcat Company - 12/01/2009 - 20:50:59 - Produced by Ken Cook Co. with mediaioff

CAMSHAFT (Cont'd)
(Kubota - V2003-T-2EB - Tier II Replacement)
(1G970-41000)

Ref No	Part Number	Description	Remarks	Serial Number	Qty
1	6667428	TAPPET	Was 6680707 [A]		8
2	6655176	PUSHROD			8
3	6675645	CAMSHAFT	assy. - Ref. 4-8		1
4	6675646	CAMSHAFT			1
5	6652633	BALL			1
6	6653840	GEAR	camshaft		1
7	3974546	KEY			1
8	3974547	STOPPER	camshaft		1
9	1CM818	BOLT			5
10	6684793	GEAR	idle - W/Ref. 11 & 12		1
11		GEAR	NSS - idle - Order Ref. 10		2
12	6655242	BUSHING	idle gear		1
13	6684796	SHAFT			1
14	6684795	COLLAR			1
15	6667433	CIRCLIP	external		1

Page 437 - OSS# 2071349 - All rights reserved by Bobcat Company - 12/01/2009 - 20:50:59 - Produced by Ken Cook Co. with mediaioff

WATER PUMP
(Kubota - V2003-T-2EB - Tier II Replacement)
(1G970-41000)

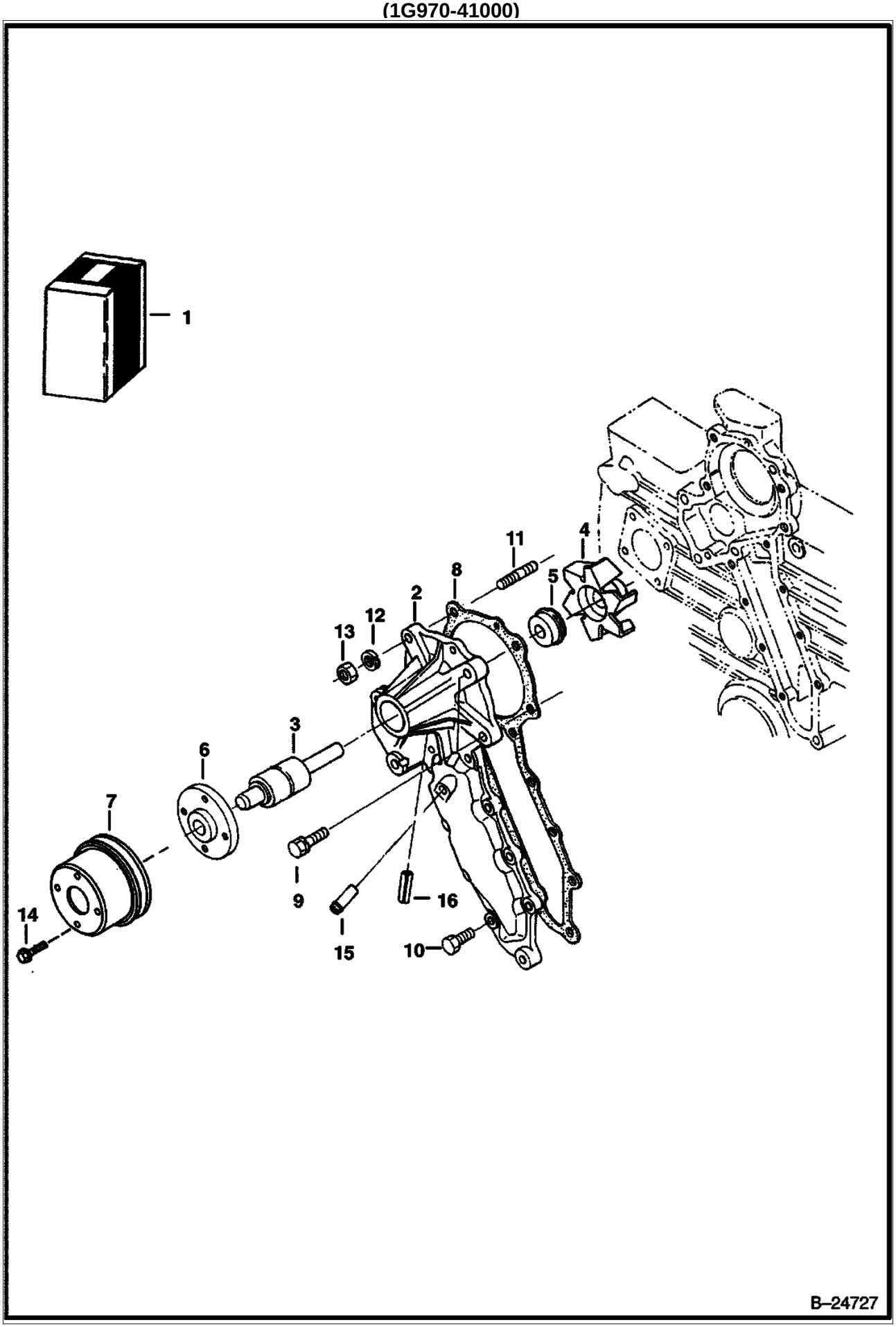

Page 438 - OSS# 2071349 - All rights reserved by Bobcat Company - 12/01/2009 - 20:50:59 - Produced by Ken Cook Co. with mediaioff

WATER PUMP (Cont'd)
(Kubota - V2003-T-2EB - Tier II Replacement)
(1G970-41000)

Ref No	Part Number	Description	Remarks	Serial Number	Qty
1	6681879	WATER PUMP	Ref. 2-6		1
2		BODY	NAP		1
3	3974991	BEARING			1
4	6667460	IMPELLER	Was 6684867 [A]		1
5	6684868	SEAL			1
6	6684869	FLANGE			1
7	6674169	PULLEY	fan		1
8	6666804	GASKET			1
9	4CM828	BOLT			2
10	6652580	BOLT			6
11	3974267	STUD			2
12	6667422	WASHER	spring		2
13	6652792	NUT			2
14	29CM612	BOLT			4
15	6670785	PIPE			1
16	6683174	ROLL PIN			1

Page 439 - OSS# 2071349 - All rights reserved by Bobcat Company - 12/01/2009 - 20:50:59 - Produced by Ken Cook Co. with mediaioff

WATER FLANGE & THERMOSTAT
(Kubota - V2003-T-2EB - Tier II Replacement)
(1G970-41000)

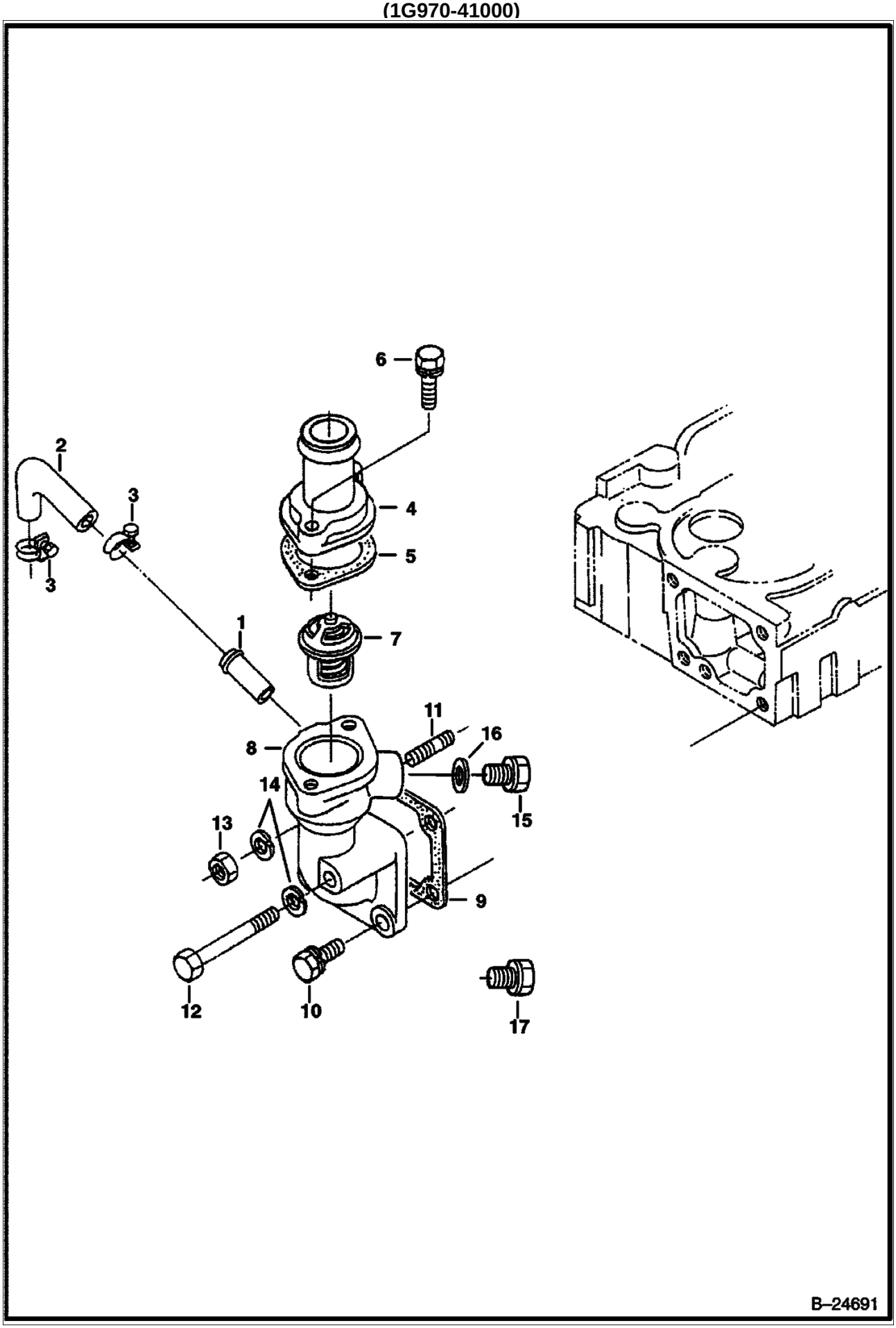

Page 440 - OSS# 2071349 - All rights reserved by Bobcat Company - 12/01/2009 - 20:50:59 - Produced by Ken Cook Co. with mediaIoff

WATER FLANGE & THERMOSTAT (Cont'd)
(Kubota - V2003-T-2EB - Tier II Replacement)
(1G970-41000)

Ref No	Part Number	Description	Remarks	Serial Number	Qty
1	6655880	PIPE	water return		1
2	6686988	PIPE	water return		1
3	3974679	BAND	pipe		2
4	6651489	COVER	thermostat		1
5	6684863	GASKET	thermostat cover		1
6	1CM835	BOLT			2
7	6674172	THERMOSTAT			1
8	6674167	FLANGE	W/Ref. 1		1
9	6666802	GASKET	water flange - Was 6684860 [A]		1
10	4CM822	BOLT			2
11	6652670	STUD			1
12	1CM865	SCREW			1
13	6652792	NUT			1
14	6667422	WASHER			1
15	6649536	PLUG			1
16	6653562	GASKET			1
17	40K2	PLUG			1

Page 441 - OSS# 2071349 - All rights reserved by Bobcat Company - 12/01/2009 - 20:50:59 - Produced by Ken Cook Co. with mediaioff

MANIFOLDS
(Kubota - V2003-T-2EB - Tier II Replacement)
(1G970-41000)

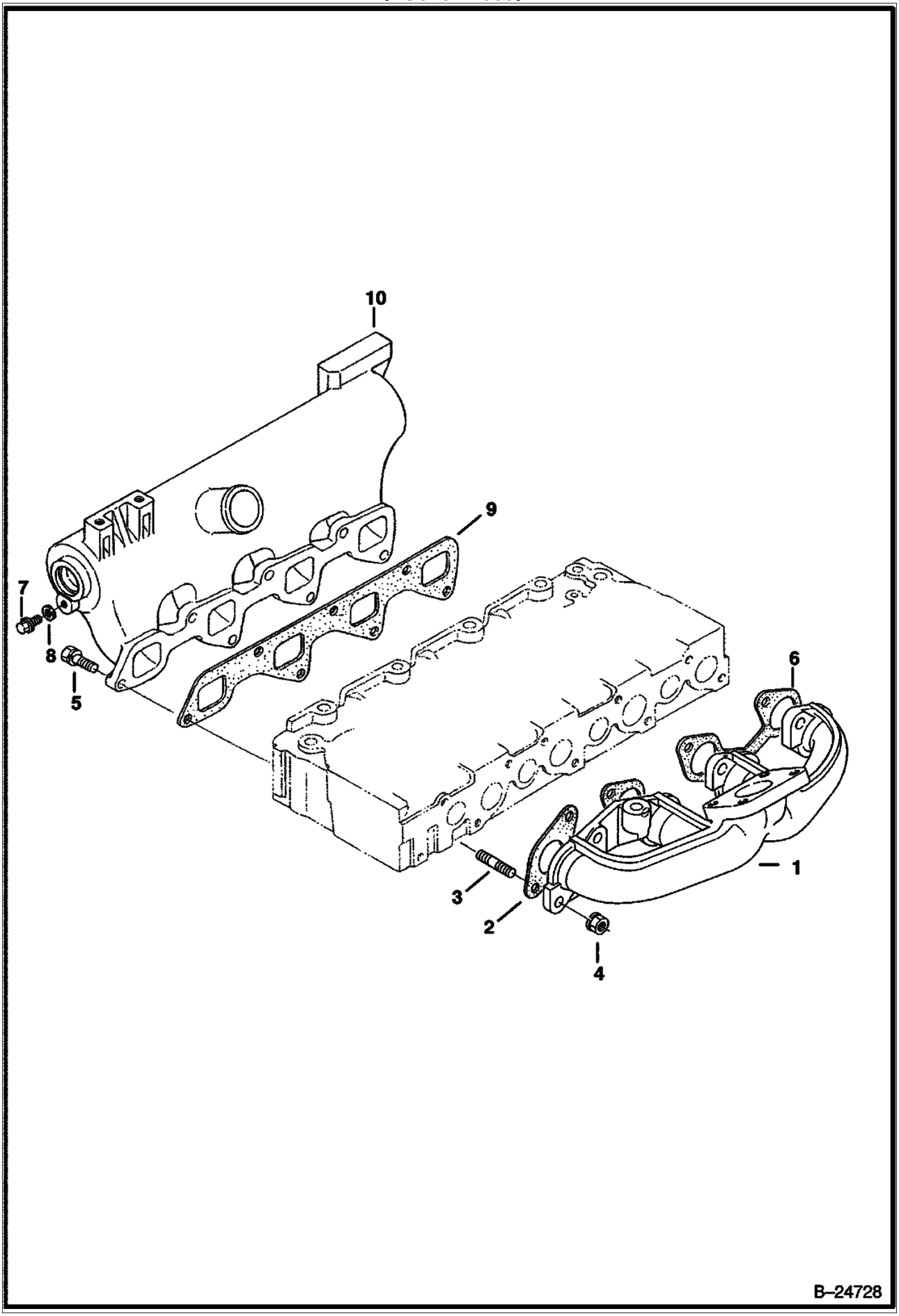

Page 442 - OSS# 2071349 - All rights reserved by Bobcat Company - 12/01/2009 - 20:50:59 - Produced by Ken Cook Co. with mediaioff

MANIFOLDS (Cont'd)
(Kubota - V2003-T-2EB - Tier II Replacement)
(1G970-41000)

Ref No	Part Number	Description	Remarks	Serial Number	Qty
1	6687093	MANIFOLD	exhaust		1
2	6666781	GASKET	Was 6685878 [B,D]		1
3	6652670	STUD			8
4	6682532	NUT			8
5	4CM822	BOLT			7
6	6666791	GASKET	muffler - Was 6684879 [A]		1
7	29CM612	BOLT			1
8	3974972	GASKET			1
9	6666811	GASKET	Was 6686991 [A]		1
10	6686995	MANIFOLD	intake		1

Page 443 - OSS# 2071349 - All rights reserved by Bobcat Company - 12/01/2009 - 20:50:59 - Produced by Ken Cook Co. with mediaioff

TURBO CHARGER
(Kubota - V2003-T-2EB - Tier II Replacement)
(1G970-41000)

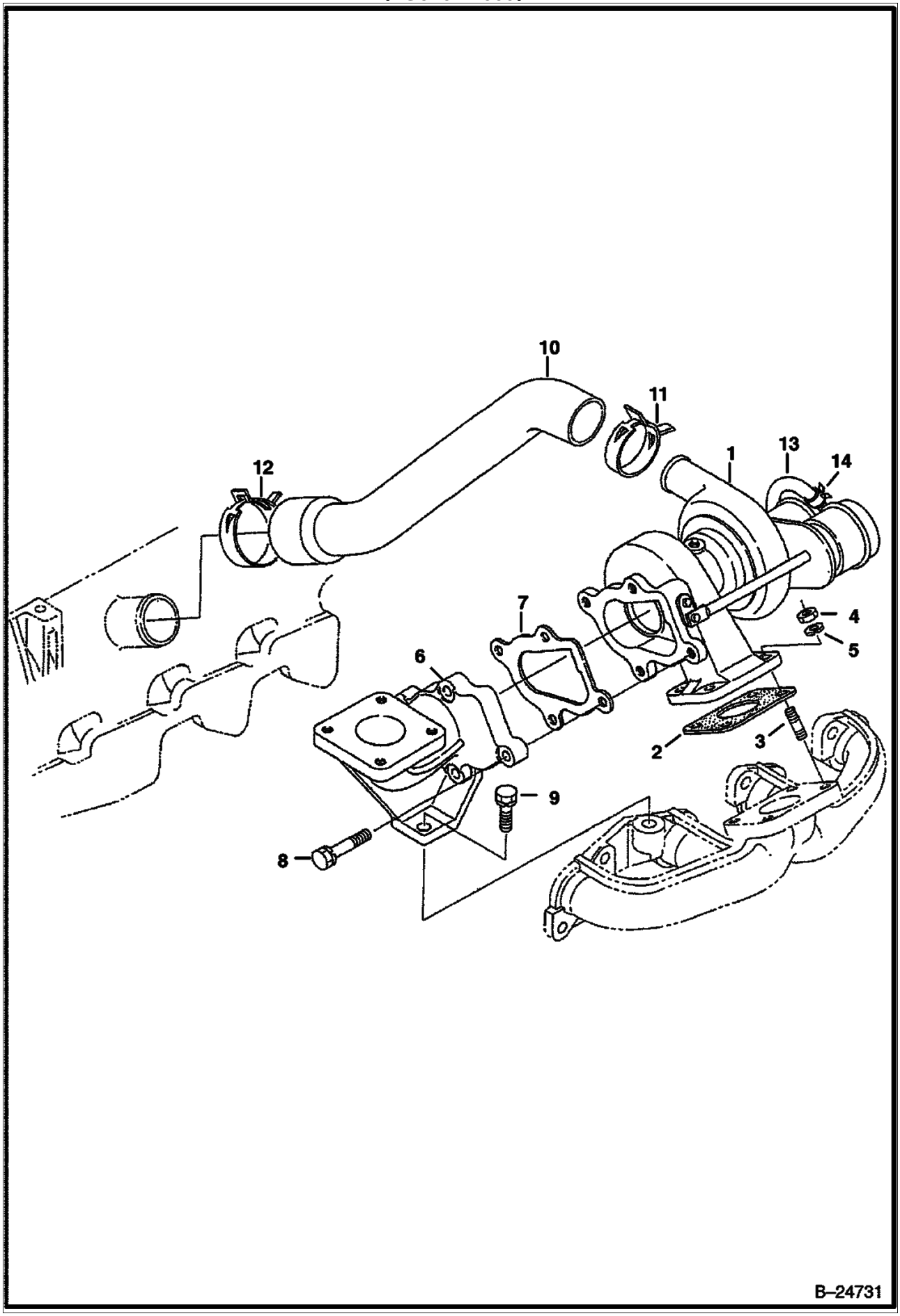

Page 444 - OSS# 2071349 - All rights reserved by Bobcat Company - 12/01/2009 - 20:50:59 - Produced by Ken Cook Co. with mediaIoff

TURBO CHARGER (Cont'd)
(Kubota - V2003-T-2EB - Tier II Replacement)
(1G970-41000)

Ref No	Part Number	Description	Remarks	Serial Number	Qty
1	6675676	TURBO	W/Ref. 13		1
2	6675636	GASKET			1
3	6680564	STUD			4
4	6652792	NUT			4
5	6667422	WASHER			4
6	6675675	FLANGE			1
7	6675637	GASKET			1
8	6657416	BOLT			4
9	6686043	BOLT			1
10	6675673	HOSE			1
11	6675635	BAND			1
12	6675624	CLAMP			1
13	6680991	HOSE	W/Ref. 14		1
14	6680555	CLAMP			2

Page 445 - OSS# 2071349 - All rights reserved by Bobcat Company - 12/01/2009 - 20:50:59 - Produced by Ken Cook Co. with mediaioff

OIL PIPE
(Turbo Charger) (Kubota - V2003-T-2EB - Tier II Replacement)
(1G970-41000)

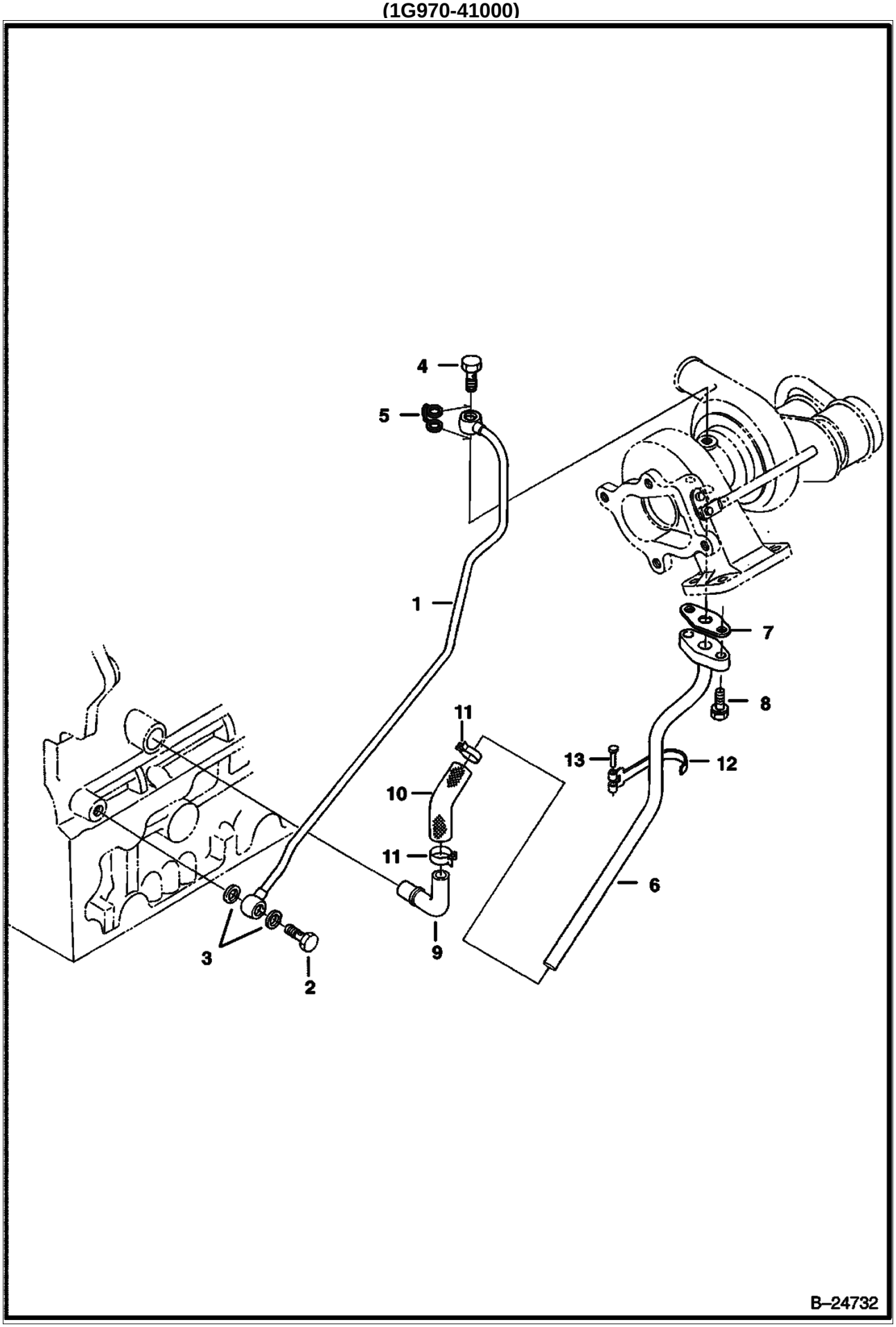

Page 446 - OSS# 2071349 - All rights reserved by Bobcat Company - 12/01/2009 - 20:50:59 - Produced by Ken Cook Co. with mediaioff

OIL PIPE (Cont'd)
(Turbo Charger) (Kubota - V2003-T-2EB - Tier II Replacement)
(1G970-41000)

Ref No	Part Number	Description	Remarks	Serial Number	Qty
1	6675677	PIPE			1
2	6680791	BOLT	eye		1
3	3974095	MET-GASK			2
4	6675625	BOLT, EYE JOINT	eye - Was 6680566 [A]		1
5	6685962	GASKET	consists of 2 gaskets attached by a tab		x
6	6675678	PIPE		E/ 8HZ999 & Bel	1
6	7010622	PIPE, OIL		E/ 8J0001 & Abv	1
7	6680570	GASKET	Was 6685964 [A]		1
8	6652580	BOLT		E/ 8HZ999 & Bel	2
8	4CM614	BOLT		E/ 8J0001 & Abv	2
9	6684884	PIPE			1
10	6675679	PIPE			1
11	6675618	CLAMP			2
12	6685601	CLAMP			1
13	6680576	PIN			1

Page 447 - OSS# 2071349 - All rights reserved by Bobcat Company - 12/01/2009 - 20:50:59 - Produced by Ken Cook Co. with mediaioff

ENGINE STOP LEVER
(Kubota - V2003-T-2EB - Tier II Replacement)
(1G970-41000)

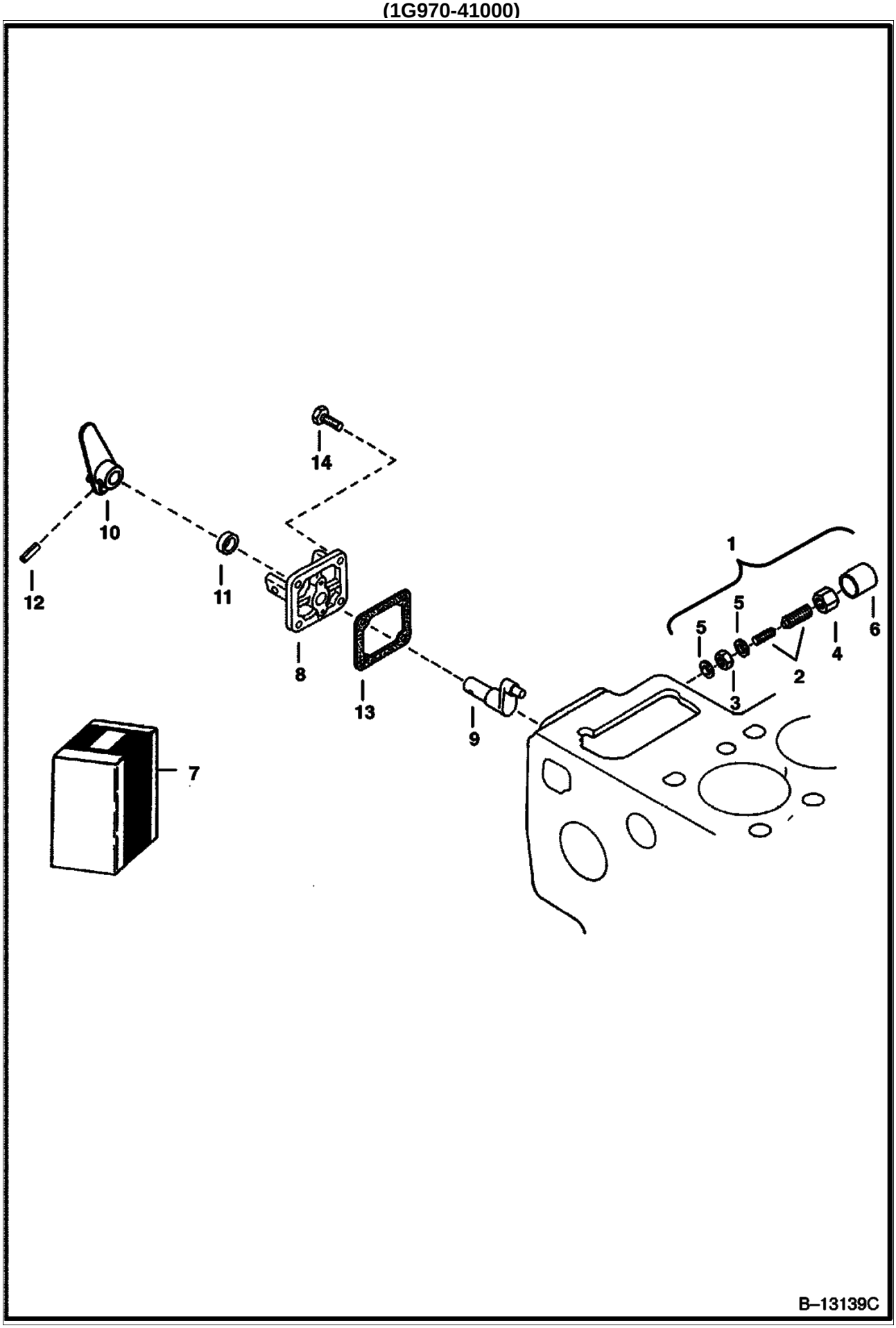

Page 448 - OSS# 2071349 - All rights reserved by Bobcat Company - 12/01/2009 - 20:50:59 - Produced by Ken Cook Co. with mediaIoff

ENGINE STOP LEVER (Cont'd)
(Kubota - V2003-T-2EB - Tier II Replacement)
(1G970-41000)

Ref No	Part Number	Description	Remarks	Serial Number	Qty
1	3974975	IDLER	assy., idle - Ref. 2-6		1
2	6653906	BOLT ASSY.	adjusting		1
3	3974425	NUT	adjusting		1
4	3974978	NUT			1
5	3974095	MET-GASK			2
6	3974979	CAP			1
7	6676060	LEVER ASSY.	eng. stop - Ref. 8-12		1
8	6655540	COVER	injection pump		1
9	6655231	SHAFT	lever		1
10	6655232	LEVER	engine stop		1
11	6685476	SEAL	oil		1
12	6598098	PIN	spring		1
13	6666783	GASKET	pump cover		1
14	6652580	BOLT			3

Page 449 - OSS# 2071349 - All rights reserved by Bobcat Company - 12/01/2009 - 20:50:59 - Produced by Ken Cook Co. with mediaioff

GOVERNOR
(Kubota - V2003-T-2EB - Tier II Replacement)
(1G970-41000)

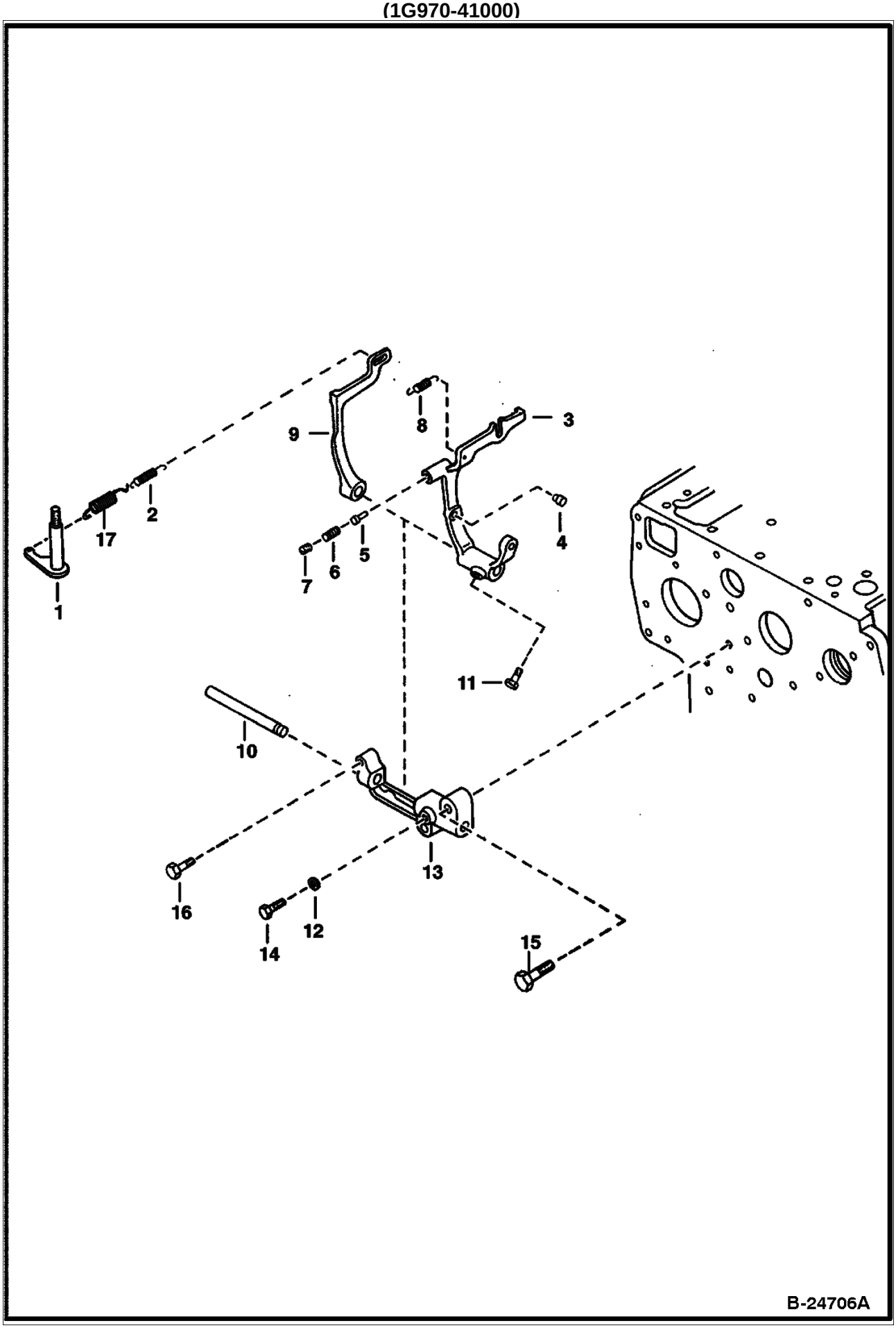

Page 450 - OSS# 2071349 - All rights reserved by Bobcat Company - 12/01/2009 - 20:50:59 - Produced by Ken Cook Co. with mediaioff

GOVERNOR (Cont'd)
(Kubota - V2003-T-2EB - Tier II Replacement)
(1G970-41000)

Ref No	Part Number	Description	Remarks	Serial Number	Qty
1	6598174	LEVER	governor		1
2	6655227	SPRING			1
3	6675672	LEVER	fork - W/Ref. 4-7		1
4		PIN	NSS		2
5		PIN	NSS		1
6		SPRING	NSS		1
7		SCREW	NSS		1
8	6655225	SPRING			1
9	6655877	LEVER			1
10	6684833	SHAFT			1
11	6680830	BOLT			1
12	6667419	WASHER			2
13	6653916	HOLDER	Was 6684834 [A]		1
14	3974192	BOLT			1
15	6680706	BOLT			2
16	6685464	BOLT			1
17	6675640	SPRING	governor		1

Page 451 - OSS# 2071349 - All rights reserved by Bobcat Company - 12/01/2009 - 20:50:59 - Produced by Ken Cook Co. with mediaioff

SPEED CONTROL PLATE
(Kubota - V2003-T-2EB - Tier II Replacement)
(1G970-41000)

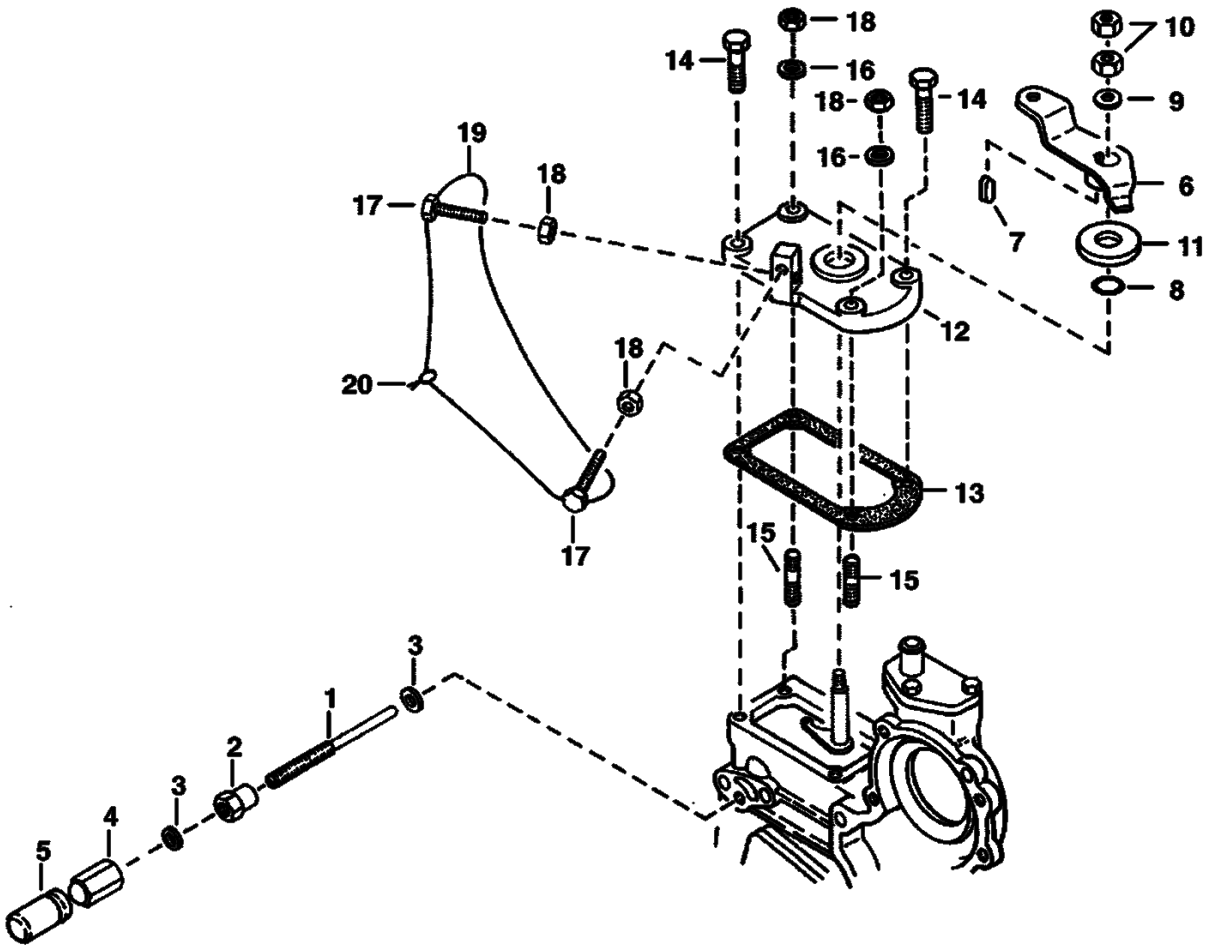

Page 452 - OSS# 2071349 - All rights reserved by Bobcat Company - 12/01/2009 - 20:50:59 - Produced by Ken Cook Co. with mediaioff

SPEED CONTROL PLATE (Cont'd)
(Kubota - V2003-T-2EB - Tier II Replacement)
(1G970-41000)

Ref No	Part Number	Description	Remarks	Serial Number	Qty
1	6686985	BOLT, ADJUSTING	adjusting		1
2	3974971	NUT			1
3	3974972	GASKET			2
4	6655223	NUT	cap		1
5	6653905	CAP			1
6	6598176	LEVER	speed control		1
7	15JM48	KEY	feather		1
8	3966512	O RING	Was 6686986 [A]		1
9	6667451	WASHER	plain		1
10	1DM8	NUT			2
11	3974644	COLLAR	friction		1
12	6641231	PLATE, CONTROL SPEED	speed control		1
13	6666792	GASKET			1
14	4CM620	BOLT			2
15	6652764	STUD			2
16	6667419	WASHER	spring		2
17	6655228	STOPPER			2
18	1DM6	NUT			4
19		WIRE	NAP		1
20		LEAD	NAP - sealing		1

Page 453 - OSS# 2071349 - All rights reserved by Bobcat Company - 12/01/2009 - 20:50:59 - Produced by Ken Cook Co. with mediaioff

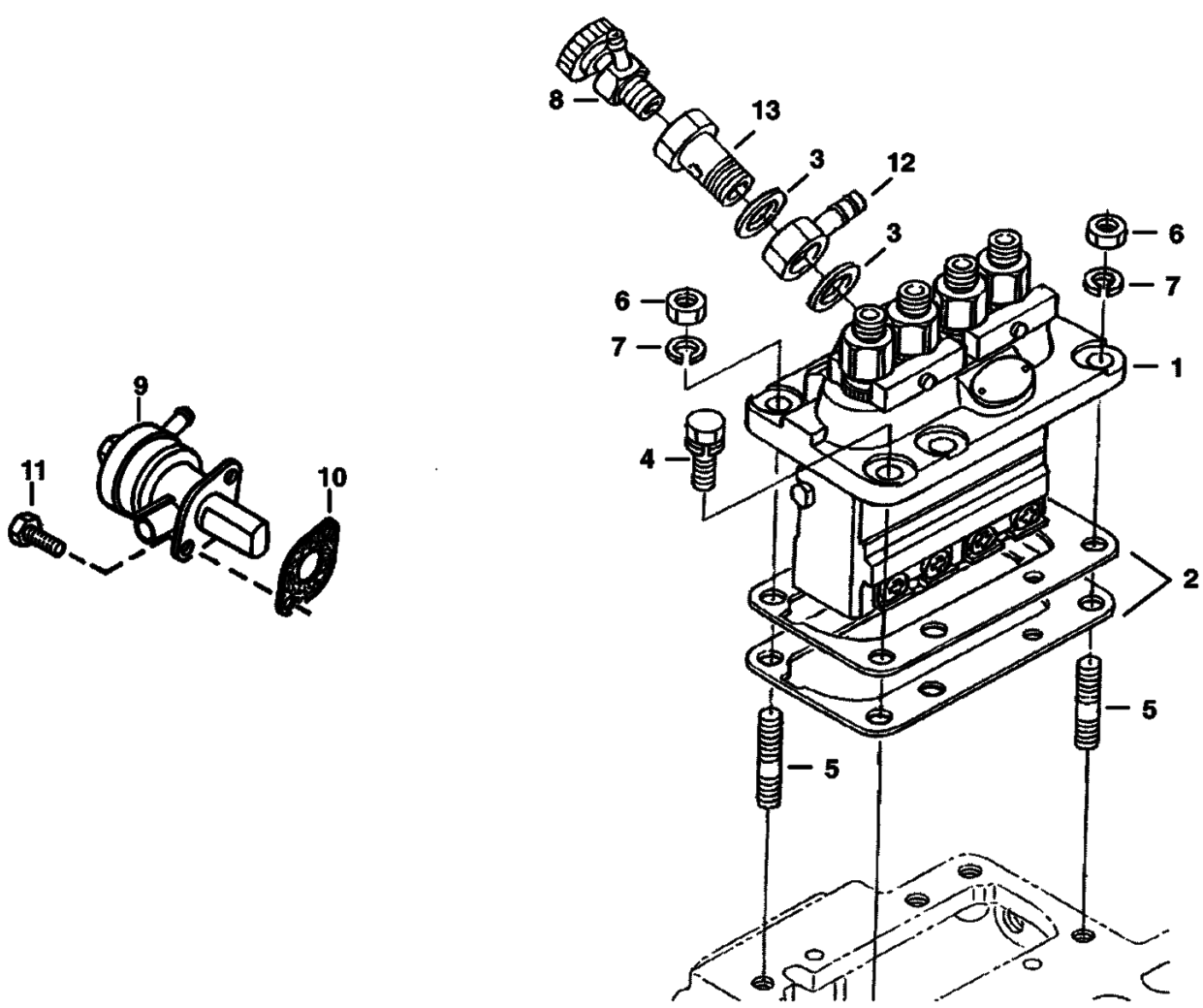

Page 454 - OSS# 2071349 - All rights reserved by Bobcat Company - 12/01/2009 - 20:50:59 - Produced by Ken Cook Co. with mediaioff

FUEL & INJECTION PUMPS (Cont'd)
(Kubota - V2003-T-2EB - Tier II Replacement)
(1G970-41000)

Ref No	Part Number	Description	Remarks	Serial Number	Qty
1	6675656	PUMP			1
2	3974626	SHIM	0.20mm - Was 6682514 [A]		x
2	6682515	SHIM	0,25 mm - injection pump		x
2	6655210	SHIM	0,30 mm - injection pump		x
3	6698120	GASKET	Was 3975389 [A]		2
4	4CM822	BOLT			4
5	6652670	STUD			2
6	6652792	NUT			2
7	6667422	WASHER	spring		2
8	6598102	VALVE	jet start		1
9	6655216	FUEL PUMP			1
10	6686037	GASKET	fuel pump		1
11	4CM615	BOLT			2
12	6655515	JOINT	eye		1
13	3975428	SCREW	hollow		1

Page 455 - OSS# 2071349 - All rights reserved by Bobcat Company - 12/01/2009 - 20:50:59 - Produced by Ken Cook Co. with mediaioff

INJECTOR NOZZLES
(Kubota - V2003-T-2EB - Tier II Replacement)
(1G970-41000)

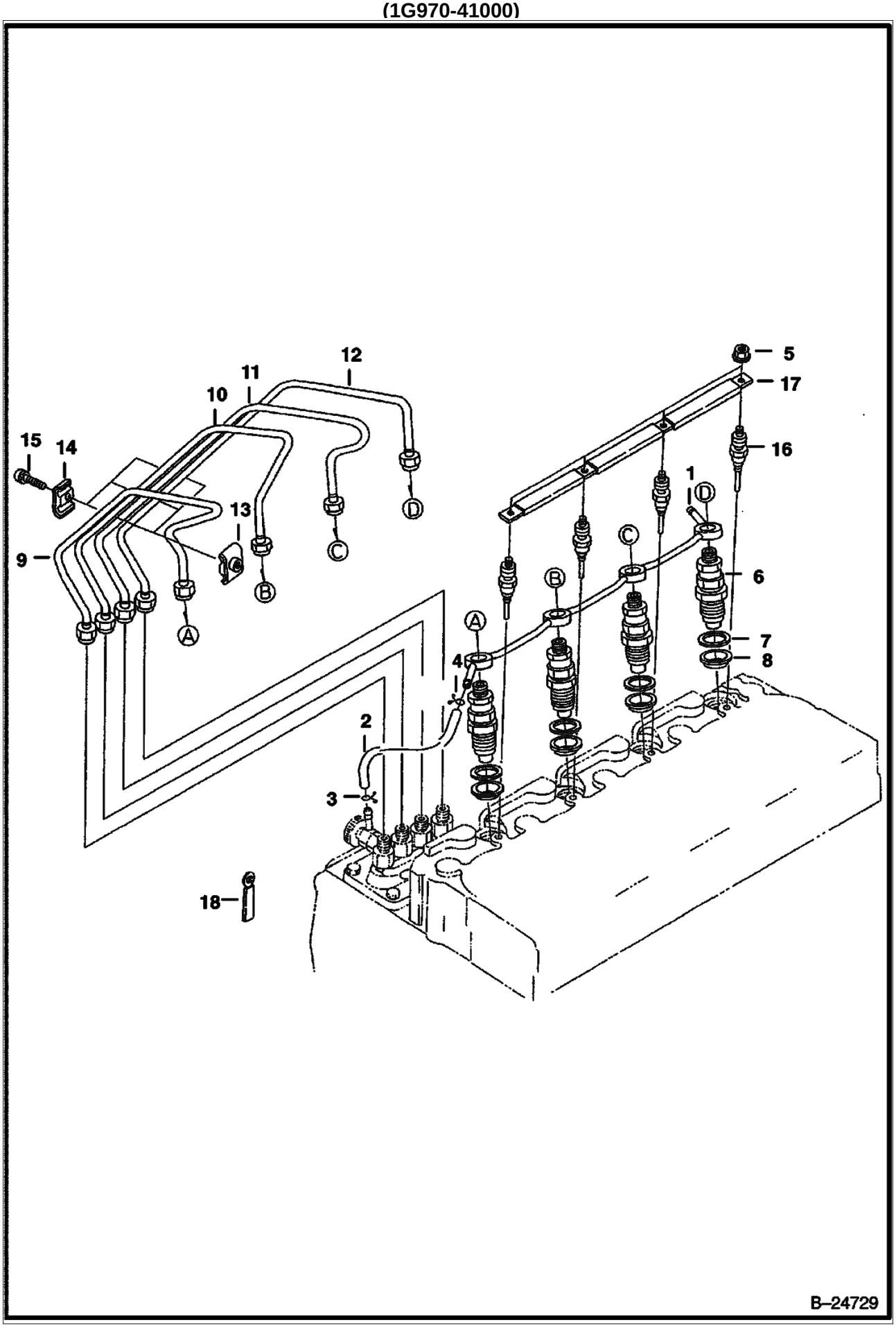

Page 456 - OSS# 2071349 - All rights reserved by Bobcat Company - 12/01/2009 - 20:50:59 - Produced by Ken Cook Co. with mediaioff

INJECTOR NOZZLES (Cont'd)
(Kubota - V2003-T-2EB - Tier II Replacement)
(1G970-41000)

Ref No	Part Number	Description	Remarks	Serial Number	Qty
1	6682521	PIPE			1
2	6974656	TUBE ASSY, OVERFLOW	fuel over flow - Was 6681931 [A]		1
3	6654718	CLAMP	pipe - Was 6680795 [A]		1
4	6654718	CLAMP	pipe		1
5	6670472	NUT			4
6	6682522	HOLDER KIT	nozzle		4
7	6655218	GASKET			4
8	6655872	HEAT SEAL			4
9	6675647	PIPE	injection		1
10	6675648	PIPE	injection		1
11	6682523	PIPE			1
12	6675650	PIPE	injection		1
13	6652688	CLAMP	pipe		3
14	6680786	CLAMP	pipe		3
15	3974260	SCREW			3
16	6655233	GLOW PLUG			4
17	6655234	CORD	glow plug - Was 6686987 [A]		3
18	6667457	CLAMP			1

Page 457 - OSS# 2071349 - All rights reserved by Bobcat Company - 12/01/2009 - 20:50:59 - Produced by Ken Cook Co. with mediaioff

ACCESS COVER
(Cleanout - Lower Front of Chaincase)

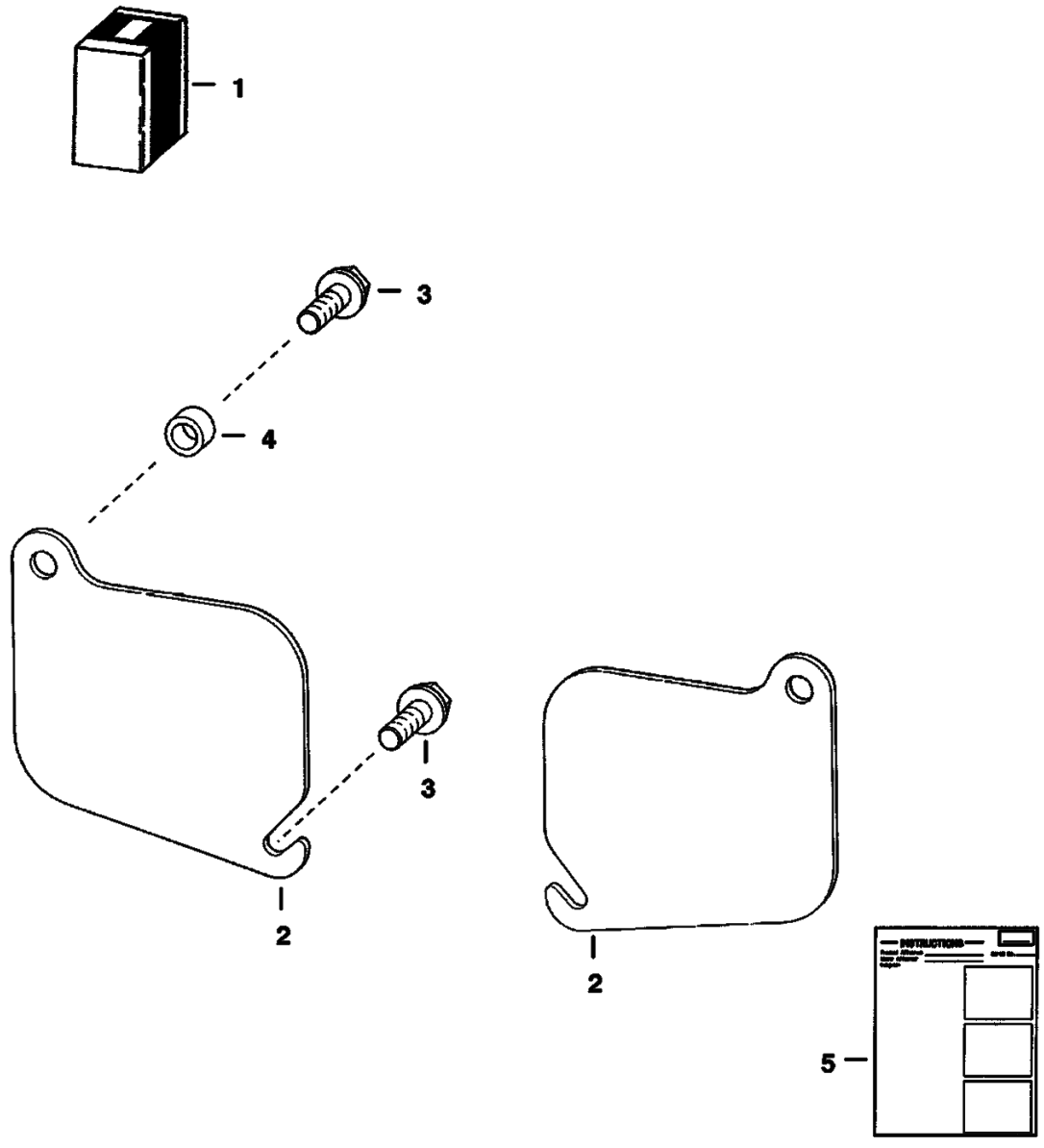

Page 458 - OSS# 2071349 - All rights reserved by Bobcat Company - 12/01/2009 - 20:50:59 - Produced by Ken Cook Co. with mediaioff

ACCESS COVER (Cont'd)
(Cleanout - Lower Front of Chaincase)

Ref No	Part Number	Description	Remarks	Serial Number	Qty
1	6577880	KIT	Ref. 2-5		1
2		COVER	NAP - Use W/Ref. 4 - Was 6577812 [A]		2
2	6737088	COVER, FRONT ACCESS			2
3	84G3720	BOLT			4
4	6562619	BUSHING	not in kit		2
5	6570931	INSTRUCTIONS			1

Page 459 - OSS# 2071349 - All rights reserved by Bobcat Company - 12/01/2009 - 20:50:59 - Produced by Ken Cook Co. with mediaioff

ACCESSORIES HARNESS
(Standard - Non Deluxe Cab)

NOTE: If loader is not equipped with Deluxe Cab Option, this harness must be used to run Flasher Lights, Turn Indicators, Hazard Lights, Rotating Beacon and/or Strobe Lights.

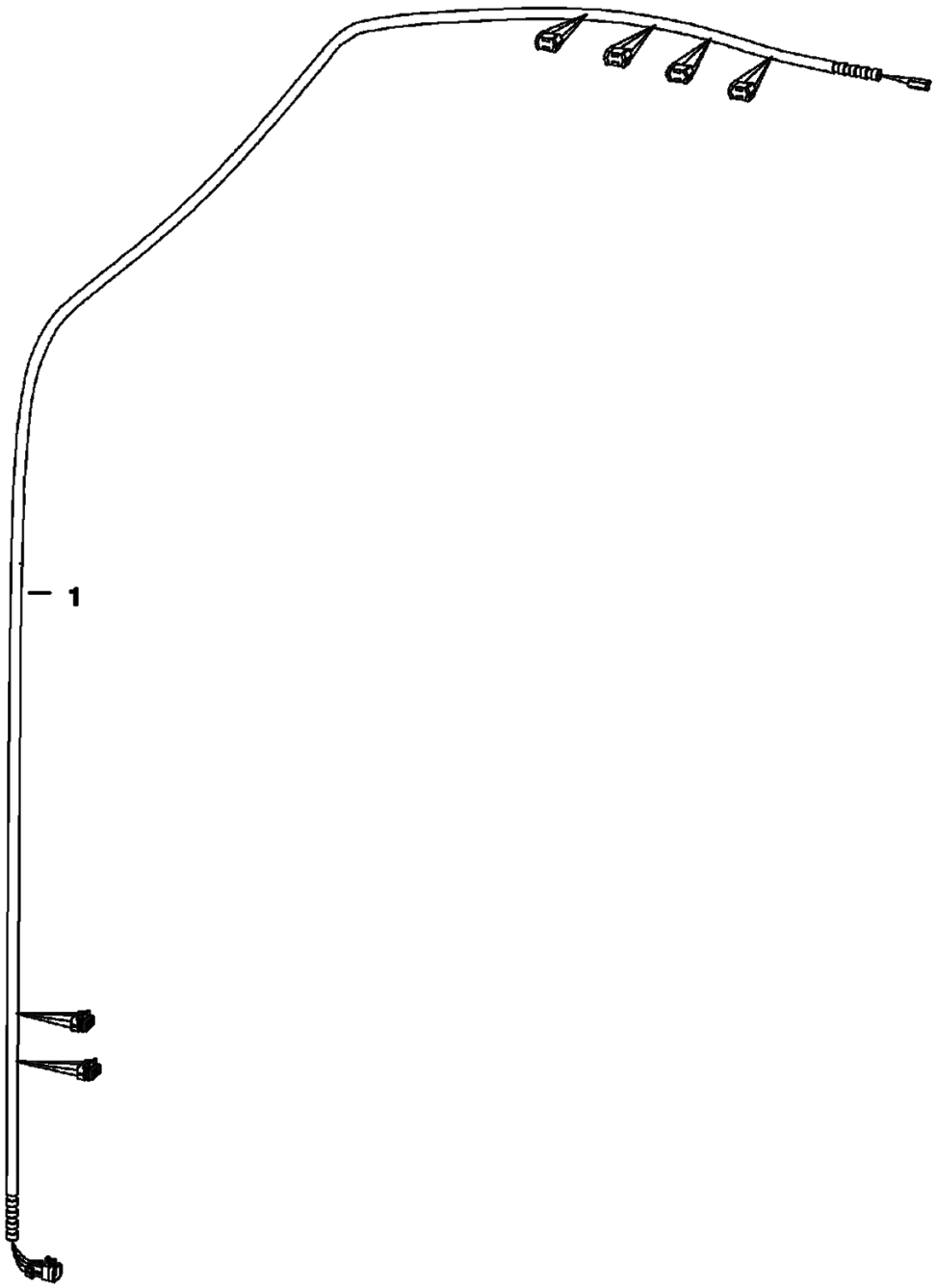

PE–1557

Page 460 - OSS# 2071349 - All rights reserved by Bobcat Company - 12/01/2009 - 20:50:59 - Produced by Ken Cook Co. with mediaioff

ACCESSORIES HARNESS (Cont'd)
(Standard - Non Deluxe Cab)

Ref No	Part Number	Description	Remarks	Serial Number	Qty
1	6727468	HARN.STD ACCESS	SEE NOTE - W/ pin connectors to loader harness	500K 11001 & Abv	1
1	6727468	HARN.STD ACCESS	SEE NOTE - W/ pin connectors to loader harness	5181 12000 & Abv	1
1	6727468	HARN.STD ACCESS	SEE NOTE - W/ pin connectors to loader harness	5192 12000 & Abv	1
1	6727468	HARN.STD ACCESS	SEE NOTE - W/ pin connectors to loader harness	5191 12000 & Abv	1
1	6727468	HARN.STD ACCESS	SEE NOTE - W/ pin connectors to loader harness	5190 16000 & Abv	1
1	6727468	HARN.STD ACCESS	SEE NOTE - W/ pin connectors to loader harness	5180 12000 & Abv	1
1	6727468	HARN.STD ACCESS	SEE NOTE - W/ pin connectors to loader harness	5176 18000 & Abv	1
1	6715365	HARNESS	w/ 8 pin connector to loader harness	5176 17999 & Bel.	1
1	6715365	HARNESS	w/ 8 pin connector to loader harness	5181 11999 & Bel	1
1	6715365	HARNESS	w/ 8 pin connector to loader harness	5191 11999 & Bel	1
1	6715365	HARNESS	w/ 8 pin connector to loader harness	5192 11999 & Bel.	1
1	6715365	HARNESS	w/ 8 pin connector to loader harness	5190 15999 & Bel.	1
1	6715365	HARNESS	w/ 8 pin connector to loader harness	5180 11999 & Bel	1

Page 461 - OSS# 2071349 - All rights reserved by Bobcat Company - 12/01/2009 - 20:50:59 - Produced by Ken Cook Co. with mediaioff

ACS CONVERSION KIT
(S/N 500K11001 & Above, 517618626 & Above, 518012100 & Above, 518112060 & Above, 519017502 & Above, 519212069 & Above)

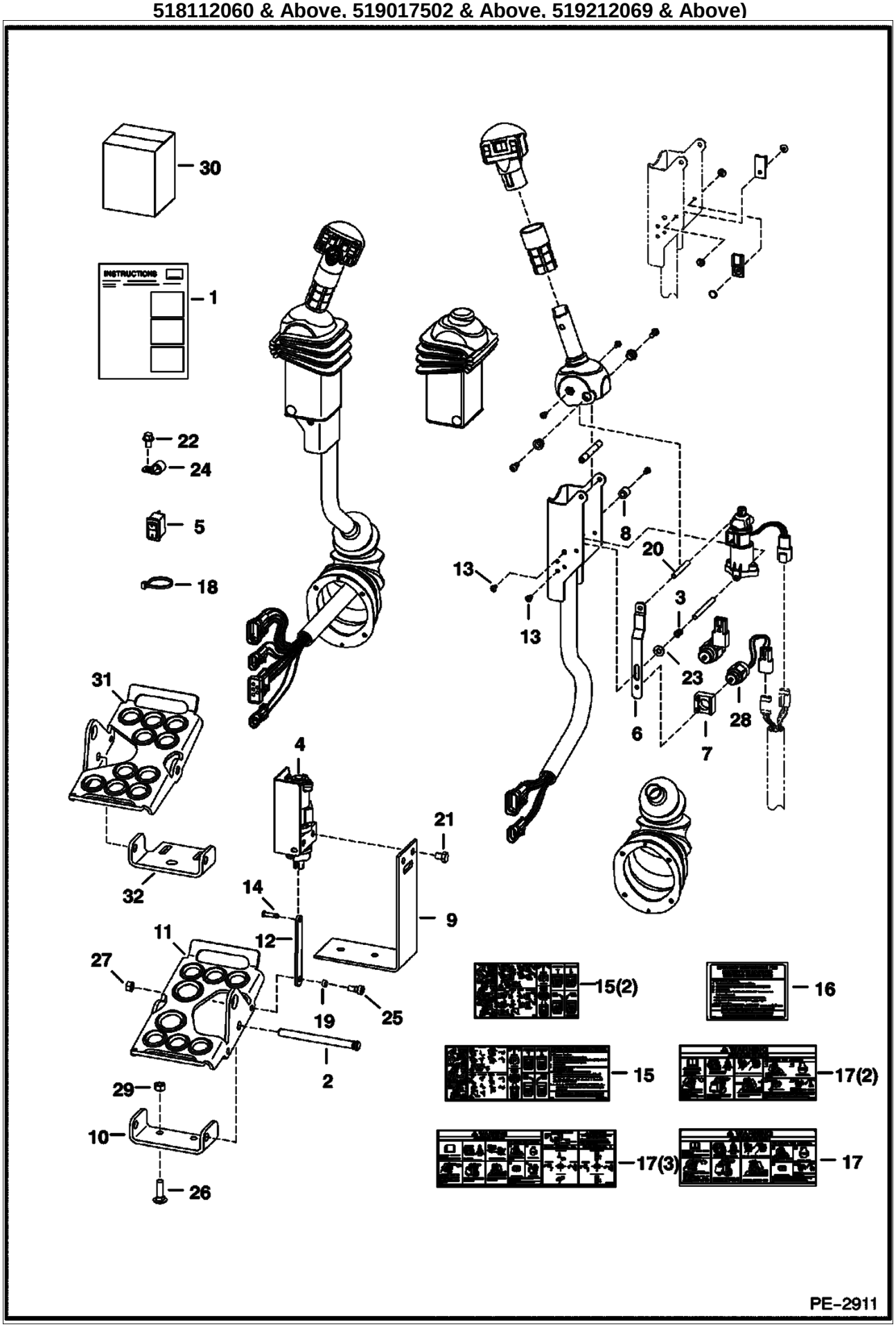

Page 462 - OSS# 2071349 - All rights reserved by Bobcat Company - 12/01/2009 - 20:50:59 - Produced by Ken Cook Co. with mediaioff

ACS CONVERSION KIT (Cont'd)
(S/N 500K11001 & Above, 517618626 & Above, 518012100 & Above, 518112060 & Above, 519017502 & Above, 519212069 & Above)

Ref No	Part Number	Description	Remarks	Serial Number	Qty
1	6731151	KIT	foot control - Ref. 2-14 & 17-30 - loader must be equipped W/advanced hand control option		1
2	6564657	PIN			2
3	6680470	SPRING	Was 6675745 [A]		2
4	6684912	SENSOR, FOOT RH	Was 6680420 [A]		1
4	6676029	SOLENOID			1
4	6684911	SENSOR, FOOT LH	Was 6680421 [A]		1
4	6676029	SOLENOID			1
5	6676537	SWITCH			2
6	6680477	STRAP	Was 6719715 [A]		2
7	6680468	MOUNT	solenoid - Was 6719716 [A]		2
8		SPACER	NAP - Was 6719835 [A]		2
8	6719834	SPACER			2
9	7126869	BRACKET	Was 6726573 [A]		2
10	7115220	MOUNT	W/round hole [B]		2
11	7115219	PEDAL			2
12	6726681	LINK			2
13	6727065	BOLT			12
14	6727496	PIN			2
15	6727926	DECAL	operations - 773G, 863G, 873G, 883, 963G		1
15	6728045	DECAL	operations - T190, T200		1
16		DECAL	NAP - ACS operations - Order Ref. 15 (6727926 Decal) - Was 6727941 [A]		1
17	6728539	DECAL	warning - 773G, 863G, 873G, 883, 963G		1
17	6728540	DECAL	warning - T190, T200		1
18	6624289	STRAP 10			2
19	6729467	SPACER			2
20	6680469	SPACER	threaded - Was 6729600 [A]		2
21	17C608	BOLT			4
22	84G3710	SCREW			2
23	25E13	WASHER 5			2
24	30H62	CLIP			2
25	35C514	BOLT	Was 17C514 [B]		2
26	37C620	BOLT			4
27	95D5	NUT			2
28	6676029	SOLENOID			2
29	61D6	NUT 5	Was 57D6 [B]		4
30	6901492	INSTRUCTIONS	INSTRUCTIONS Was 6901493 [B]		1
31		PEDAL	NAP - Order Ref. 11 - Was 6726680 [B]		2
32		MOUNT	NAP - W/slotted holes - Order Ref. 10 - Was 6726679 [B]		2

Page 463 - OSS# 2071349 - All rights reserved by Bobcat Company - 12/01/2009 - 20:50:59 - Produced by Ken Cook Co. with mediaioff

AXLE SEAL KIT

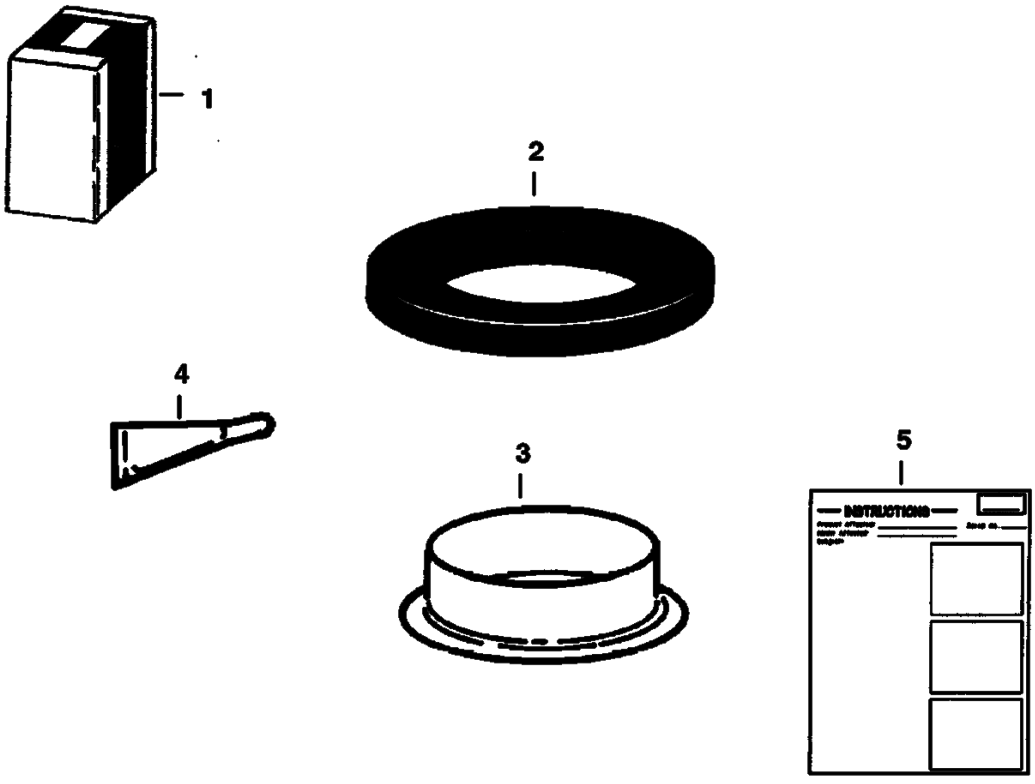

Page 464 - OSS# 2071349 - All rights reserved by Bobcat Company - 12/01/2009 - 20:50:59 - Produced by Ken Cook Co. with mediaioff

Ref No	Part Number	Description	Remarks	Serial Number	Qty
1	6722907	KIT	Ref. 2-5		1
2	6658228	SEAL, OIL			1
3	6662306	RING			1
4	6987915	THREADLOCKER 271 - HEAVY DUTY RED - 0.5ML AMPULE 1	Was 6598485 [A]		1
5	6722908	INSTRUCTIONS			1

Page 465 - OSS# 2071349 - All rights reserved by Bobcat Company - 12/01/2009 - 20:50:59 - Produced by Ken Cook Co. with mediaioff

BACK-UP ALARM

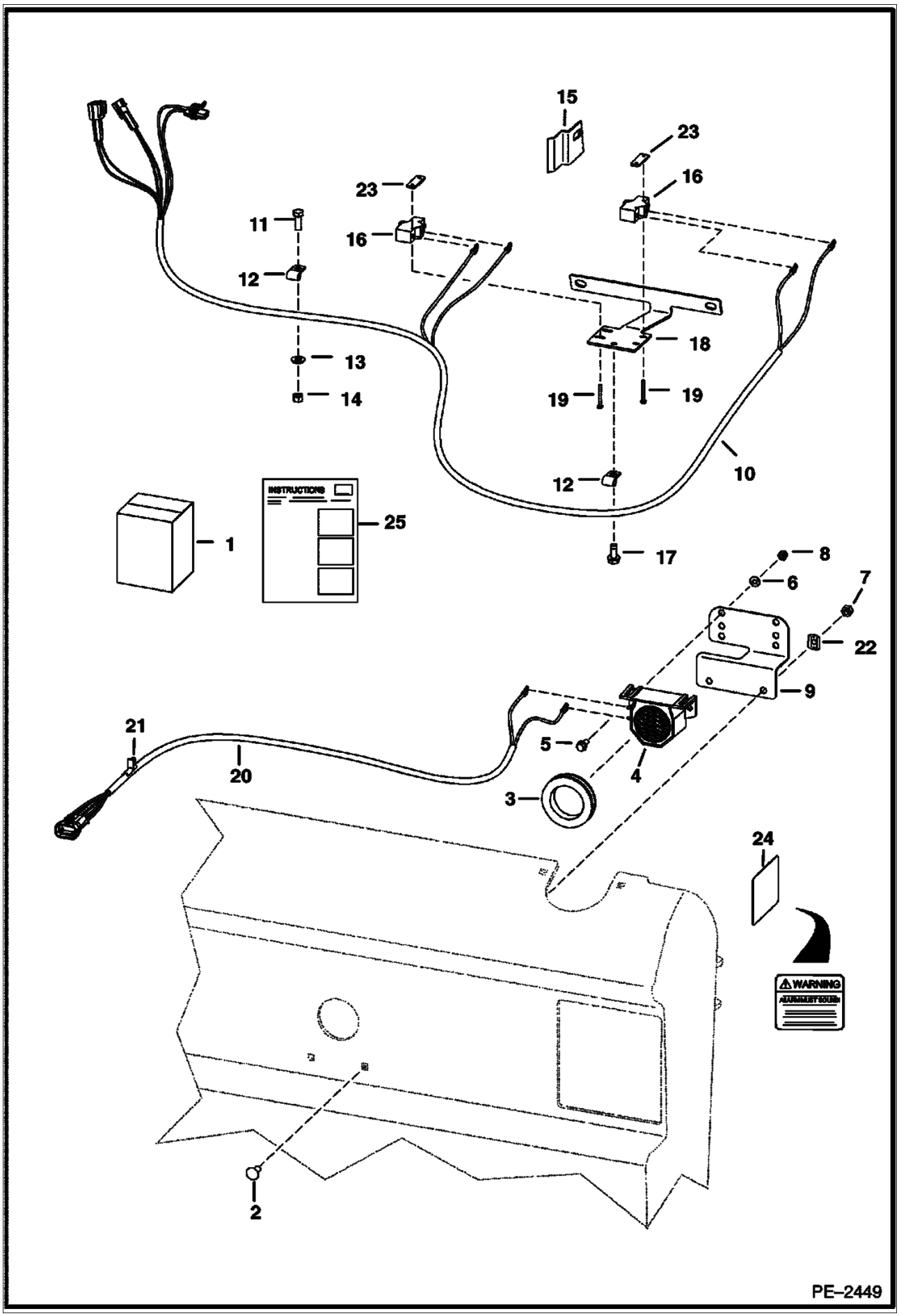

Page 466 - OSS# 2071349 - All rights reserved by Bobcat Company - 12/01/2009 - 20:50:59 - Produced by Ken Cook Co. with mediaioff

Ref No	Part Number	Description	Remarks	Serial Number	Qty
1	6718822	KIT	backup alarm - Ref. 2 - 24		1
2	10C512	BOLT	Was 37C000512B [B]		2
3	6577545	GROMMET			1
4	6599931	ALARM	backup		1
4	6668879	DECAL			1
5	17C410	BOLT 10	5/8 x 1/4 - grade 8		2
5	35C410	BOLT 5	5/8 x 1/4 - grade 5		2
6	25E13	WASHER 5	Not in Kit - flat		2
7	57D5	NUT	Was 61D000005B [B]		2
8	83D4	NUT 10	locknut W/ washer - grade 8		2
8	97D4	NUT	flanged locknut - grade 5		2
9	6733970	MOUNT	Was 6707726 [A]		1
10	6718820	HARNESS			1
11	17C412	BOLT 5			1
12	30H19	CLIP	insulated - Was 30H000019B [B]		2
13	6E4	WASHER 10			1
14	61D4	NUT 5			1
15	6713793	BRACKET	switch		2
16	6646781	SWITCH	alarm		2
17	84G3112	BOLT 5			1
18	7100153	MOUNT	switch - Was 6713792 [A]		1
19	59G616	SCREW 10			4
20	6715659	HARNESS	Used on loaders W/O rear lights - comes W/Ref. 21		1
21	6672492	RETAINER			1
22	774220	NUT			2
23	6702593	SPACER			2
24	6737189	DECAL			1
25	6900857	INSTRUCTIONS	INSTRUCTIONS Warning		1

Page 467 - OSS# 2071349 - All rights reserved by Bobcat Company - 12/01/2009 - 20:50:59 - Produced by Ken Cook Co. with mediaioff

BEACON

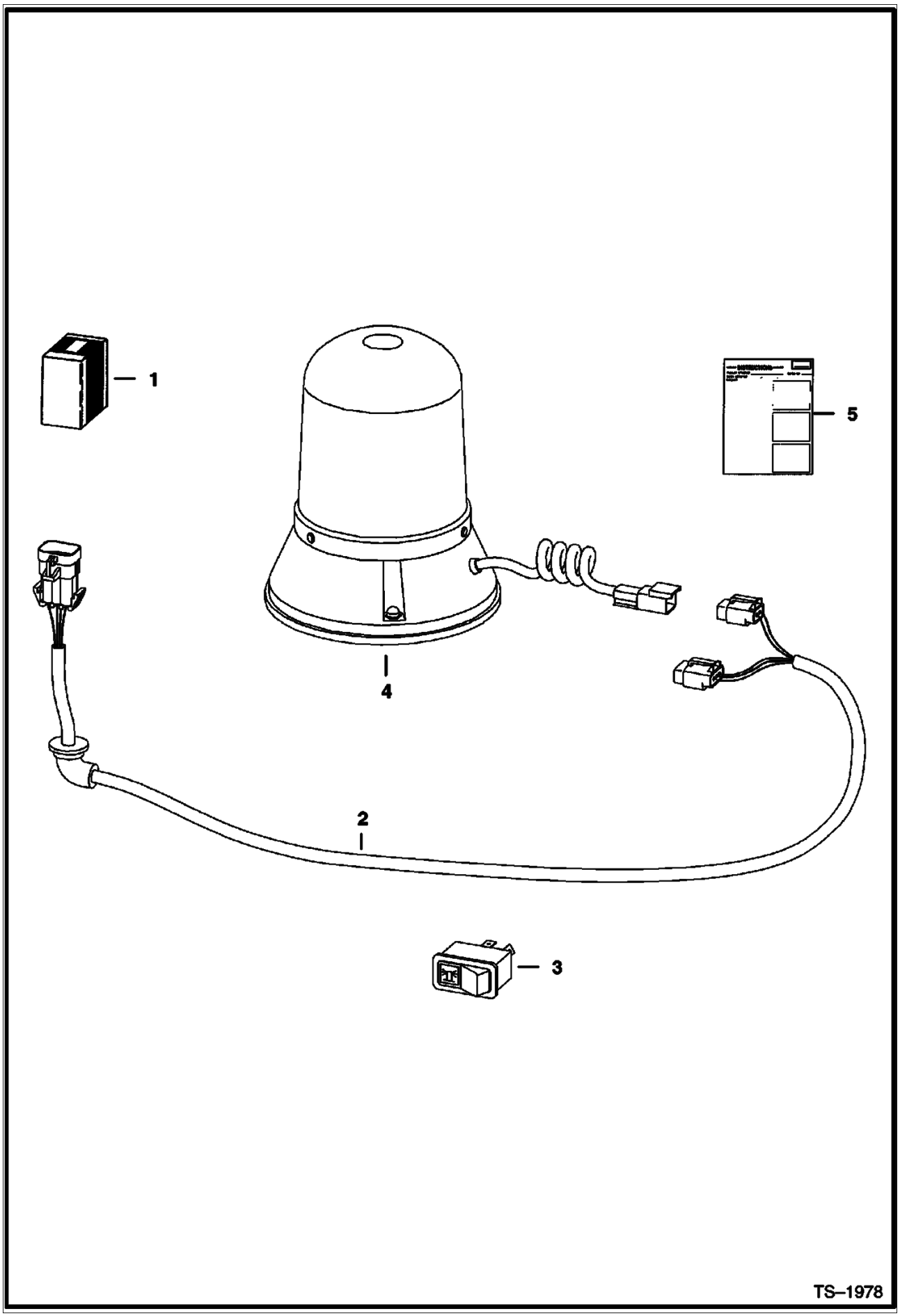

Page 468 - OSS# 2071349 - All rights reserved by Bobcat Company - 12/01/2009 - 20:50:59 - Produced by Ken Cook Co. with mediaioff

Ref No	Part Number	Description	Remarks	Serial Number	Qty
1	6719854	KIT	See Illustration ACCESSORIES HARNESS/ PE1557 - rotating beacon - if loader is not equipped W/deluxe cab option Also Order 6727468 harness		1
2	6718872	HARNESS			1
3	6665317	SWITCH	horizontal - not in kit		1
3	6668816	SWITCH	vertical		1
4	6675523	BEACON			1
4	6666571	BULB			1
5	6900991	INSTRUCTIONS			1

Page 469 - OSS# 2071349 - All rights reserved by Bobcat Company - 12/01/2009 - 20:50:59 - Produced by Ken Cook Co. with mediaioff

BLOCK HEATER
(Engine)

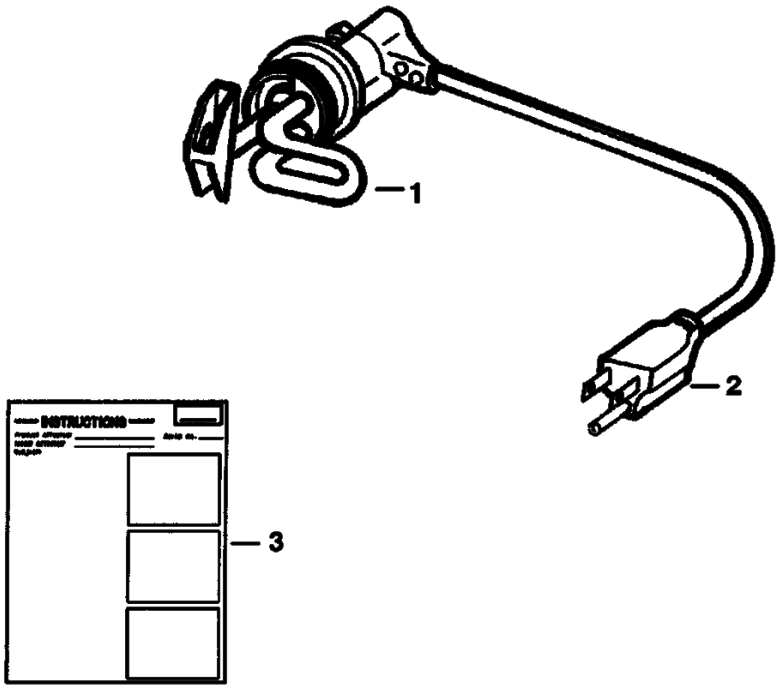

B–12299

Page 470 - OSS# 2071349 - All rights reserved by Bobcat Company - 12/01/2009 - 20:50:59 - Produced by Ken Cook Co. with mediaioff

Ref No	Part Number	Description	Remarks	Serial Number	Qty
1	6720736	PLUG	W/Ref. 2		1
2	6668881	CORD			1
3	6720038	INSTRUCTIONS			1

Page 471 - OSS# 2071349 - All rights reserved by Bobcat Company - 12/01/2009 - 20:50:59 - Produced by Ken Cook Co. with mediaioff

BOB-TACH LEVERS
(For Use W/Industrial Grapple Fork)

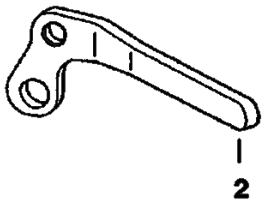

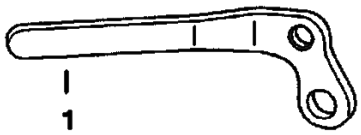

TS–1019

Page 472 - OSS# 2071349 - All rights reserved by Bobcat Company - 12/01/2009 - 20:50:59 - Produced by Ken Cook Co. with mediaioff

BOB-TACH LEVERS (Cont'd)
(For Use W/Industrial Grapple Fork)

Ref No	Part Number	Description	Remarks	Serial Number	Qty
1	6578139	LEVER	RH		1
2	6578140	LEVER	LH		1

Page 473 - OSS# 2071349 - All rights reserved by Bobcat Company - 12/01/2009 - 20:50:59 - Produced by Ken Cook Co. with mediaioff

BUCKET POSITIONING VALVE KIT
(S/N 500K11038 & Below, 517619258 & Below, 518012218 & Below, 518012218 & Below, 518112089 & Below, 519018909 & Below, 519212154 & Below)

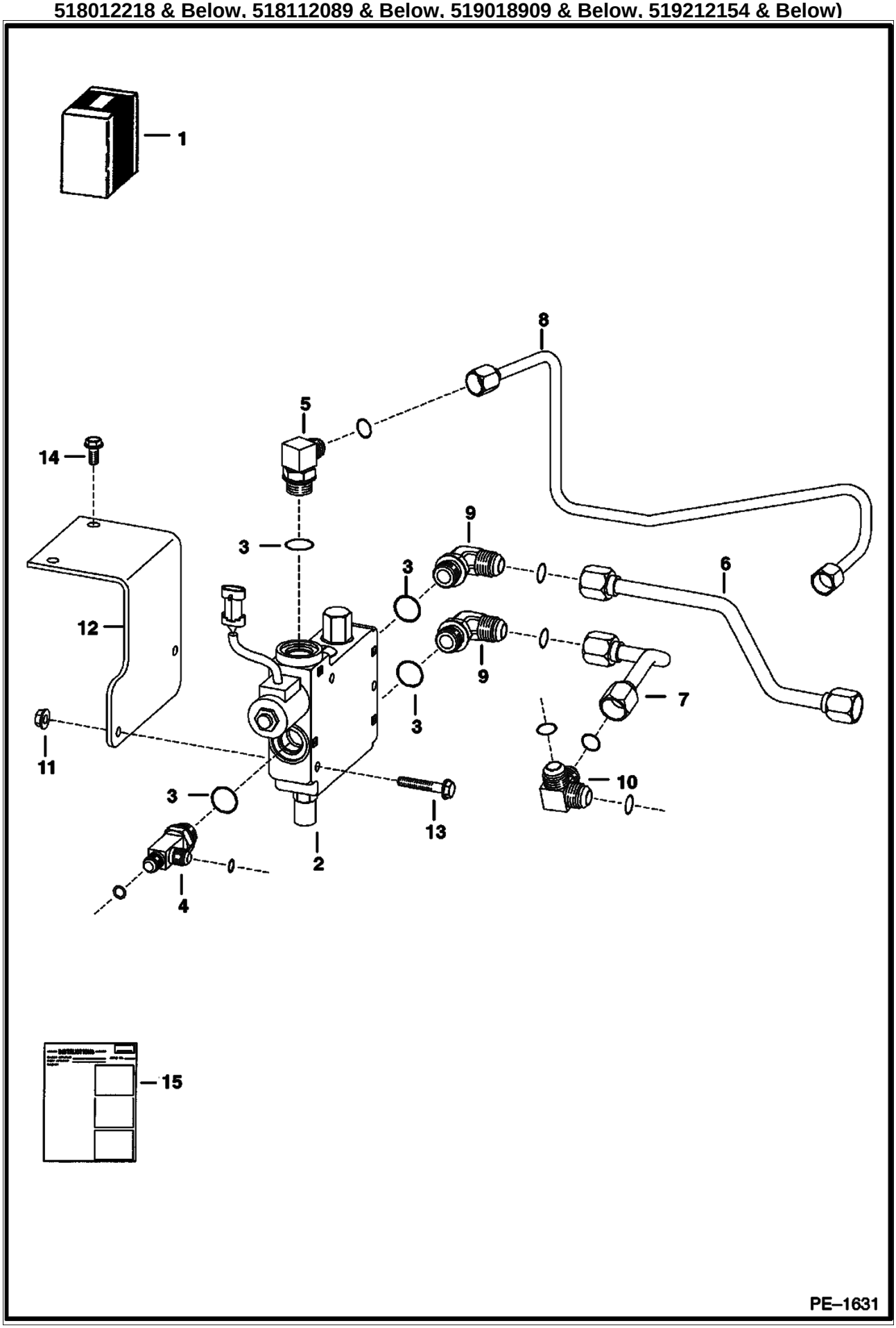

Page 474 - OSS# 2071349 - All rights reserved by Bobcat Company - 12/01/2009 - 20:50:59 - Produced by Ken Cook Co. with mediaioff

BUCKET POSITIONING VALVE KIT (Cont'd)
(S/N 500K11038 & Below, 517619258 & Below, 518012218 & Below, 518012218 & Below, 518112089 & Below, 519018909 & Below, 519212154 & Below)

Ref No	Part Number	Description	Remarks	Serial Number	Qty
1	6718142	KIT	Ref. 2 - 16		1
2		VALVE	See Illustration BUCKET POSITIONING VALVE/ MS1943 NAP - order 6673959 valve - Was 6666341 [A]		1
3	99K10	O'RING	tapered boss face		x
3	79K10	O RING 10	flat boss face		x
4		TEE	NAP - W/Ref. 3 - tapered boss face - Was 6717503 [A]		1
4	97K6	O'RING	flared end		2
4	21KB610	FITTING	W/Ref. 3 - flat boss face		1
5		ELBOW	NAP - W/Ref. 3 - flat boss face - Was 6715716 [A]		1
5	97K8	O-RING	flared end		2
5	17KB810	ELBOW	W/Ref. 3 - flat boss face		1
6	6717434	TUBE			1
7	6717435	TUBE			1
8	6717436	TUBE			1
9		ELBOW	NAP - W/Ref. 3 - tapered boss face - Was 17KV00007B [A]		2
9	97K10	O-RING 10	flared end		2
9	17KB1010	ELBOW	W/Ref. 3 - flat boss face		2
10	6705070	TEE			1
11	57D5	NUT			2
12	6717142	BRACKET			1
13	35C536	BOLT			2
14	84G3712	BOLT			2
15	6900838	INSTRUCTIONS			1

Page 475 - OSS# 2071349 - All rights reserved by Bobcat Company - 12/01/2009 - 20:50:59 - Produced by Ken Cook Co. with mediaioff

BUCKET POSITIONING VALVE KIT
(S/N 500K11039-11977, 517619259-20140, 518012219-12386, 518112090-12245, 519018910-21020, 519212155-12363)

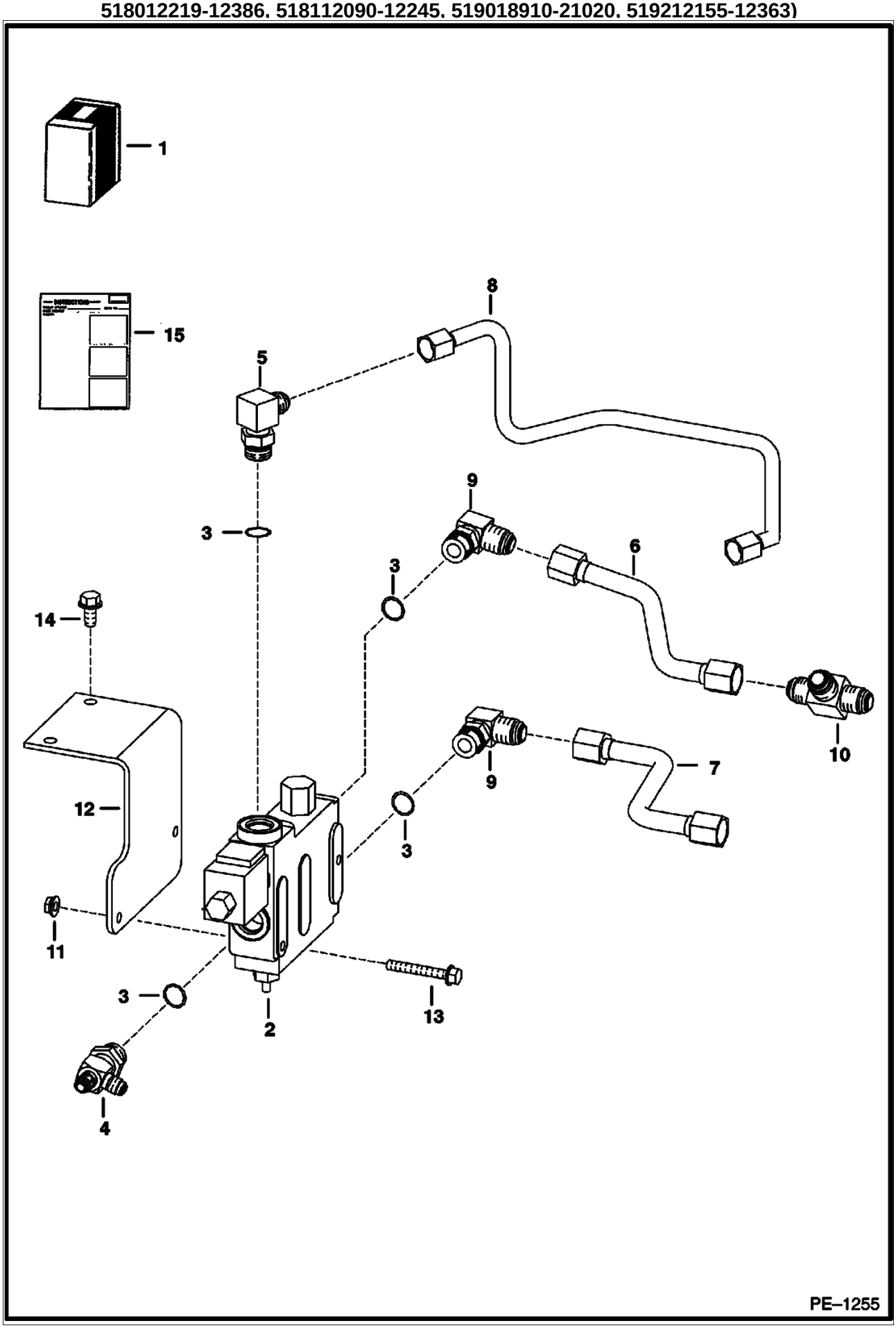

Page 476 - OSS# 2071349 - All rights reserved by Bobcat Company - 12/01/2009 - 20:50:59 - Produced by Ken Cook Co. with mediaioff

BUCKET POSITIONING VALVE KIT (Cont'd)
(S/N 500K11039-11977, 517619259-20140, 518012219-12386, 518112090-12245, 519018910-21020, 519212155-12363)

Ref No	Part Number	Description	Remarks	Serial Number	Qty
1	6726178	KIT	Ref. 2 - 16		1
2		VALVE	See Illustration BUCKET POSITIONING VALVE/ MS1943 NAP - order 6673959 valve - Was 6666341 [A]		1
3	99K10	O'RING	tapered boss face		x
3	79K10	O RING 10	flat boss face		x
4		TEE	NAP - W/Ref. 3 - tapered boss face - Was 6717503 [A]		1
4	97K6	O'RING	flared end		2
4	21KB610	FITTING	W/Ref. 3 - flat boss face		1
5		ELBOW	NAP - W/Ref. 3 - flat boss face - Was 6715716 [A]		1
5	97K8	O-RING	flared end		2
5	17KB810	ELBOW	W/Ref. 3 - flat boss face		1
6	6717434	TUBE			1
7	6726182	TUBE			1
8	6726180	TUBE			1
9		ELBOW	NAP - W/Ref. 3 - tapered boss face - Was 17KV00007B [A]		2
9	97K10	O-RING 10	flared end		2
9	17KB1010	ELBOW	W/Ref. 3 - flat boss face		2
10	10K7	TEE	Was 10KN00007B [A]		1
11	57D5	NUT			2
12	6727646	BRACKET			1
13	35C536	BOLT			2
14	84G3712	BOLT			2
15	6900838	INSTRUCTIONS			1

Page 477 - OSS# 2071349 - All rights reserved by Bobcat Company - 12/01/2009 - 20:50:59 - Produced by Ken Cook Co. with mediaioff

BUCKET POSITIONING VALVE KIT
(S/N 500K11978 & Above, 517620141 & Above,
518012387 & Above, 518112246 & Above, 519021021 & Above, 519212364 & Above)

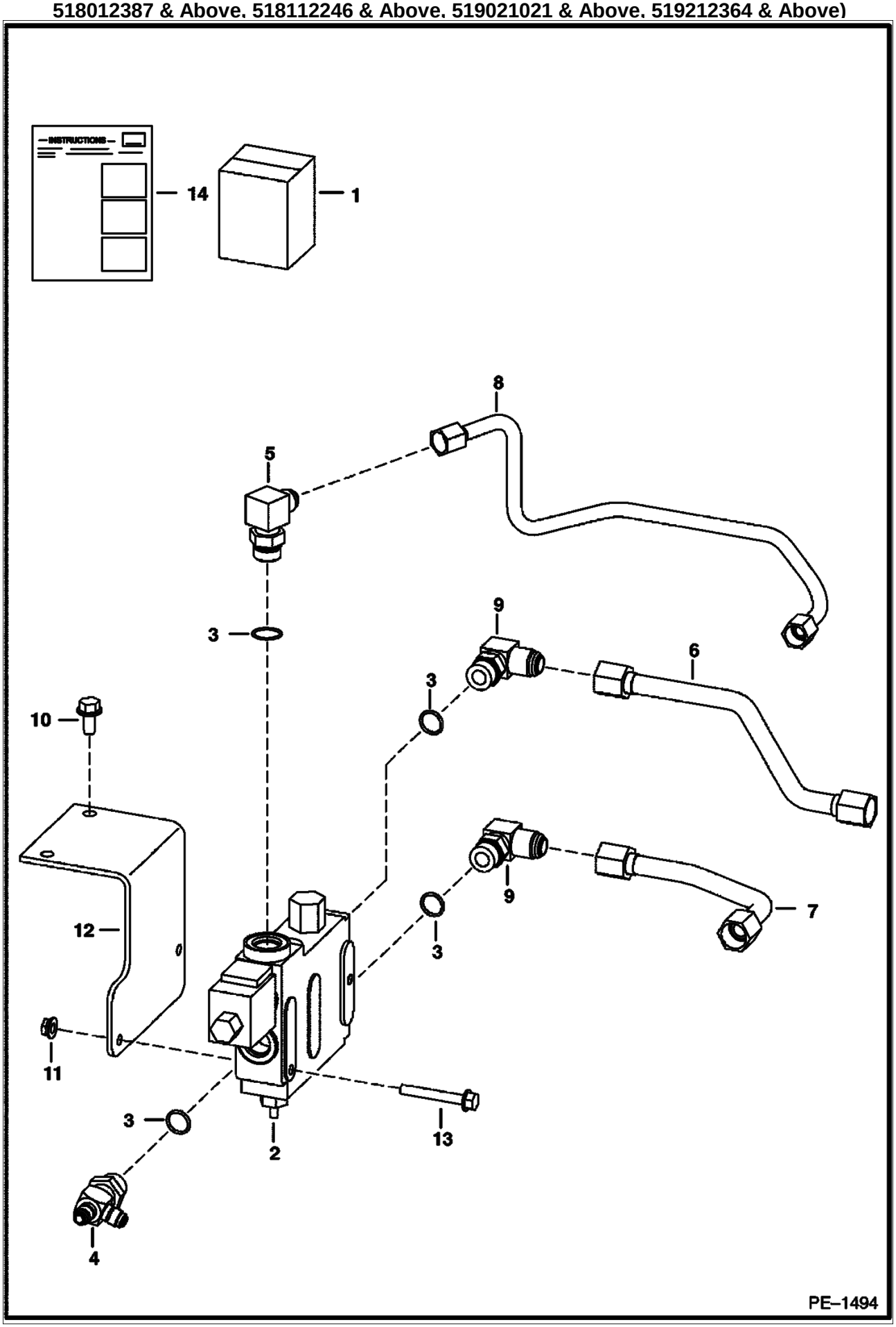

Page 478 - OSS# 2071349 - All rights reserved by Bobcat Company - 12/01/2009 - 20:50:59 - Produced by Ken Cook Co. with mediaioff

BUCKET POSITIONING VALVE KIT (Cont'd)
(S/N 500K11978 & Above, 517620141 & Above,
518012387 & Above, 518112246 & Above, 519021021 & Above, 519212364 & Above)

Ref No	Part Number	Description	Remarks	Serial Number	Qty
1	6730886	KIT	Ref. 2 - 16		1
2		VALVE	See Illustration BUCKET POSITIONING VALVE/ MS1943 - NAP - Order 6673959 valve - if loader is not equipped with an on/off switch, Also Order 6647784 plug, 79K8 O-ring, 6647785 spring & 6647783 load check - Was 6666341 [A]		1
3	99K10	O'RING	tapered boss face		x
3	79K10	O RING 10	flat boss face		x
4		TEE	NAP - W/Ref. 3 - tapered boss face - Was 6717503 [A]		1
4	97K6	O'RING	flared end		2
4	21KB610	FITTING	W/Ref. 3 - flat boss face		1
5		ELBOW	NAP - W/Ref. 3 - flat boss face - Was 6715716 [A]		1
5	97K8	O-RING	flared end		2
5	17KB810	ELBOW	W/Ref. 3 - flat boss face		1
6	6733684	TUBE	Was 6730285 [A]		1
7	6730209	TUBE			1
8	6726180	TUBE			1
9		ELBOW	NAP - W/Ref. 3 - tapered boss face - Was 17KV00007B [A]		2
9	97K10	O-RING 10	flared end		2
9	17KB1010	ELBOW	W/Ref. 3 - flat boss face		2
10	84G3712	BOLT			2
11	57D5	NUT			2
12	6727646	BRACKET			1
13	35C536	BOLT			2
14	6900838	INSTRUCTIONS			1

Page 479 - OSS# 2071349 - All rights reserved by Bobcat Company - 12/01/2009 - 20:50:59 - Produced by Ken Cook Co. with mediaioff

BUCKET POSITIONING VALVE

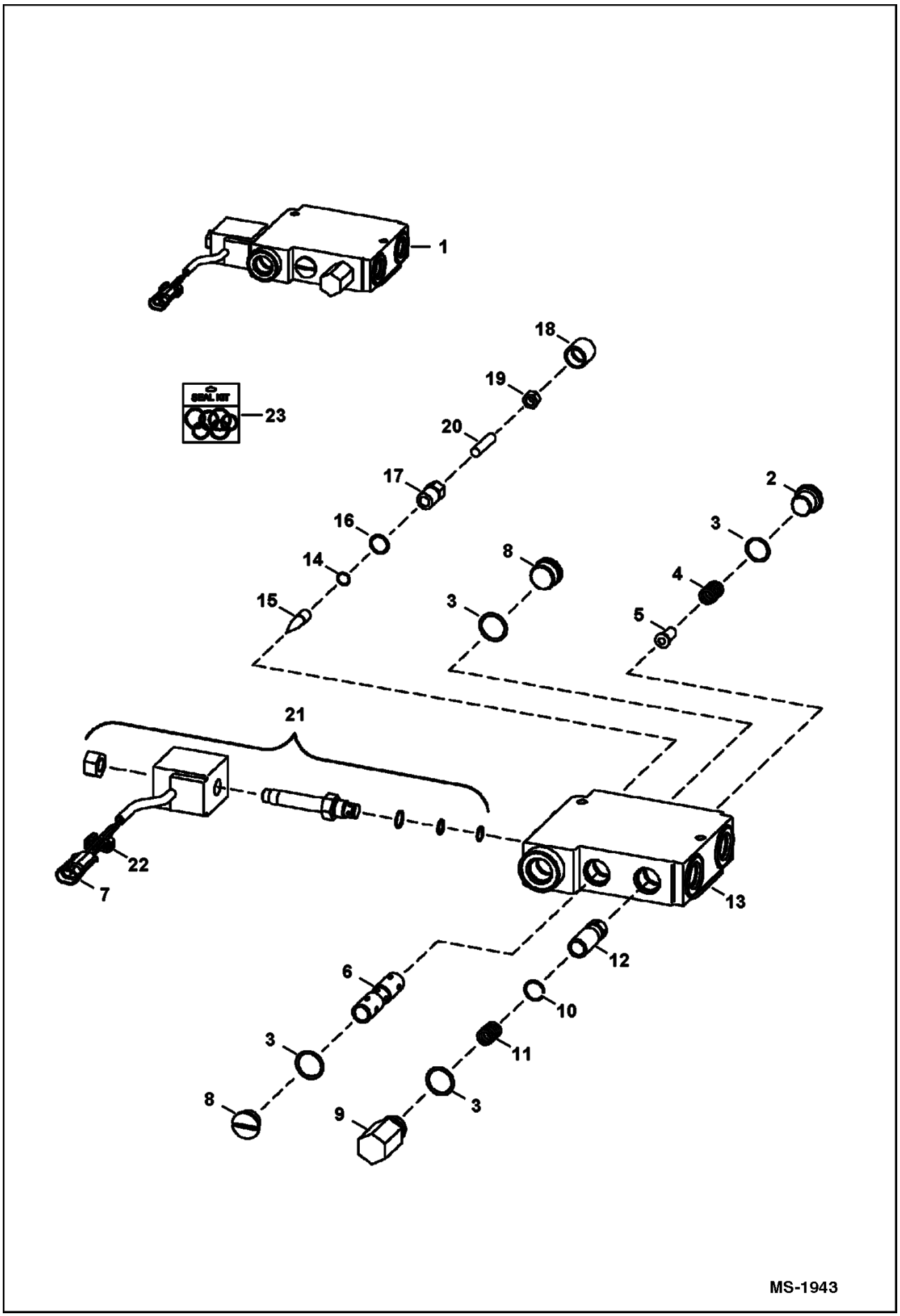

Page 480 - OSS# 2071349 - All rights reserved by Bobcat Company - 12/01/2009 - 20:50:59 - Produced by Ken Cook Co. with mediaioff

BUCKET POSITIONING VALVE (Cont'd)

Ref No	Part Number	Description	Remarks	Serial Number	Qty
1		VALVE	NAP - W/O solenoid - Order 6673959 valve - If loader is not equipped with an on/off switch also order 6647784 plug, 79K10 O-ring, 6647785 spring, & 6647783 load check - Was 6666341 [A]		1
1	6673959	VALVE, BPV	white - W/solenoid - Ref. 2-23		1
2	6647784	PLUG	W/Ref. 3		1
3	79K10	O RING 10	Was 79K8 [B,D]		4
4	6647785	SPRING			1
5	6647783	LOAD CHECK			1
6		SPOOL	NSS		1
7	6641179	CONNECTOR	2-pin		1
8	6676543	PLUG	W/Ref. 3 - Was 6647780 [A]		2
9	6667176	PLUG	W/Ref. 3		1
10	6667680	SNAP RING			1
11	6648294	SPRING			1
12		SPOOL	NSS		1
13		BODY	NSS		1
14	6667677	O-RING			1
15	6647777	PIN			1
16	79K6	O RING 10	Was 6634874 [B,D]		1
17	6647778	CAP			1
18	6667676	COVER			1
19	8D4	NUT	Was 6631561 [A]		1
20	6648293	SCREW			1
21	6672863	VALVE, SOLENOID			1
21	6671527	NUT			1
21	6670634	SEAL KIT			1
21	6675781	COIL	W/Ref. 7 & 22 - Was 6674331 [A]		1
21	6675780	CARTRIDGE	Was 6676545 [A]		1
22	6641180	LOCK	Use W/ 2-pin connector		1
23	6647786	SEAL KIT	Ref. 3, 14, 16, & 18		1

Page 481 - OSS# 2071349 - All rights reserved by Bobcat Company - 12/01/2009 - 20:50:59 - Produced by Ken Cook Co. with mediaioff

CAB DOOR

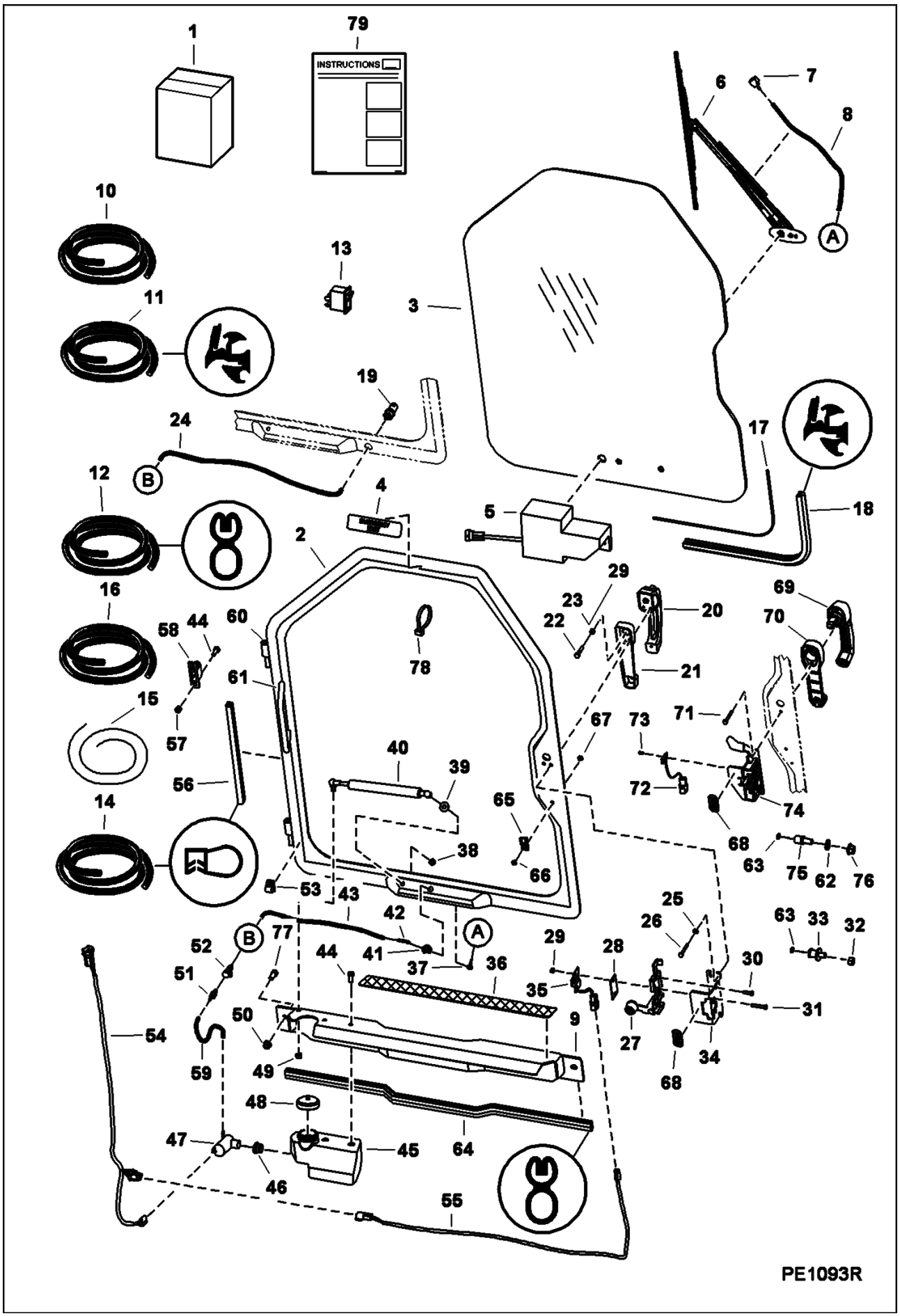

Page 482 - OSS# 2071349 - All rights reserved by Bobcat Company - 12/01/2009 - 20:50:59 - Produced by Ken Cook Co. with mediaIoff

Ref No	Part Number	Description	Remarks	Serial Number	Qty
1	6718807	KIT	door - Ref. 2-18 & 36-78 - For loaders W/standard cab, Also Order Deluxe Cab Kit	500K 12290 & Bel	1
1	6718807	KIT	door - Ref. 2-18 & 36-78 - For loaders W/standard cab, Also Order Deluxe Cab Kit	5181 12312 & Bel	1
1	6718807	KIT	door - Ref. 2-18 & 36-78 - For loaders W/standard cab, Also Order Deluxe Cab Kit	5192 12397 & Bel	1
1	6718807	KIT	door - Ref. 2-18 & 36-78 - For loaders W/standard cab, Also Order Deluxe Cab Kit	5190 21566 & Bel	1
1	6718807	KIT	door - Ref. 2-18 & 36-78 - For loaders W/standard cab, Also Order Deluxe Cab Kit	5180 12473 & Bel	1
1	6718807	KIT	door - Ref. 2-18 & 36-78 - For loaders W/standard cab, Also Order Deluxe Cab Kit	5176 20338 & Bel	1
1	6730822	KIT	door - Ref. 2-18 & 36-78 - For loaders W/standard cab, Also Order Deluxe Cab Kit	500K 12291 & Abv	1
1	6730822	KIT	door - Ref. 2-18 & 36-78 - For loaders W/standard cab, Also Order Deluxe Cab Kit	5176 20338 & Abv	1
1	6730822	KIT	door - Ref. 2-18 & 36-78 - For loaders W/standard cab, Also Order Deluxe Cab Kit	5181 12312 & Abv	1
1	6730822	KIT	door - Ref. 2-18 & 36-78 - For loaders W/standard cab, Also Order Deluxe Cab Kit	5192 12397 & Abv	1
1	6730822	KIT	door - Ref. 2-18 & 36-78 - For loaders W/standard cab, Also Order Deluxe Cab Kit	5190 21566 & Abv	1
1	6730822	KIT	door - Ref. 2-18 & 36-78 - For loaders W/standard cab, Also Order Deluxe Cab Kit	5180 12473 & Abv	1
2		DOOR	See BTI369 NAP - W/Ref. 60 & 61 - uses 3 bolt mount handle - .5" longer than 6726435 door - See BTI 369 - Was 6717590 [A]		1
2		DOOR	See BTI369 NAP - W/Ref. 60 & 61 - uses 3 bolt mount handle - .5" shorter than NAP 6717590 door - See BTI 369 - Was 6726435 [A]		1
2	7109665	FRAME, DOOR CAB	Uses 2 bolt mount handle - W/Ref. 60 & 61 - Also Order Ref. 4		1
3		WINDOW	See Illustration CAB DOOR/ MS1205 - .25" thick glass		1
4	6707852	DECAL	exit		1
5		MOTOR	See Illustration CAB DOOR/ MS1205 - wiper		1
6		ARM ASSY	See Illustration CAB DOOR/ MS1205 - wiper		1
7		NOZZLE	See Illustration CAB DOOR/ MS1205 - wiper arm mounted		1
8		HOSE	See Illustration CAB DOOR/ MS1205		1
9	6725171	SHIELD		5176 20338 & Bel	1
9	6725171	SHIELD		5180 12473 & Bel	1
9	6725171	SHIELD		5190 21566 & Bel	1
9	6725171	SHIELD		5181 12312 & Bel	1
9	6725171	SHIELD		5192 12397 & Bel	1
9	6725171	SHIELD		500K 12290 & Bel	1
9	6730816	SHIELD		500K 12291 & Abv	1
9	6730816	SHIELD		5190 21566 & Abv	1
9	6730816	SHIELD		5192 12397 & Abv	1
9	6730816	SHIELD		5181 12312 & Abv	1
9	6730816	SHIELD		5176 20338 & Abv	1
9	6730816	SHIELD		5180 12473 & Abv	1
10	6708310	HOSE	clear - .154" (3,91 mm) ID - bulk - sold per foot		x
11	6665568	EXTRUSION	bulk - sold per foot		x
12	6513152	SEAL	bulk - sold per foot		x
13	6665707	SWITCH	front wiper		1
14	7011039	SEAL, BULK/FT	bulk - sold per foot bulk - sold per foot - Was		x

Page 483 - OSS# 2071349 - All rights reserved by Bobcat Company - 12/01/2009 - 20:50:59 - Produced by Ken Cook Co. with mediaioff

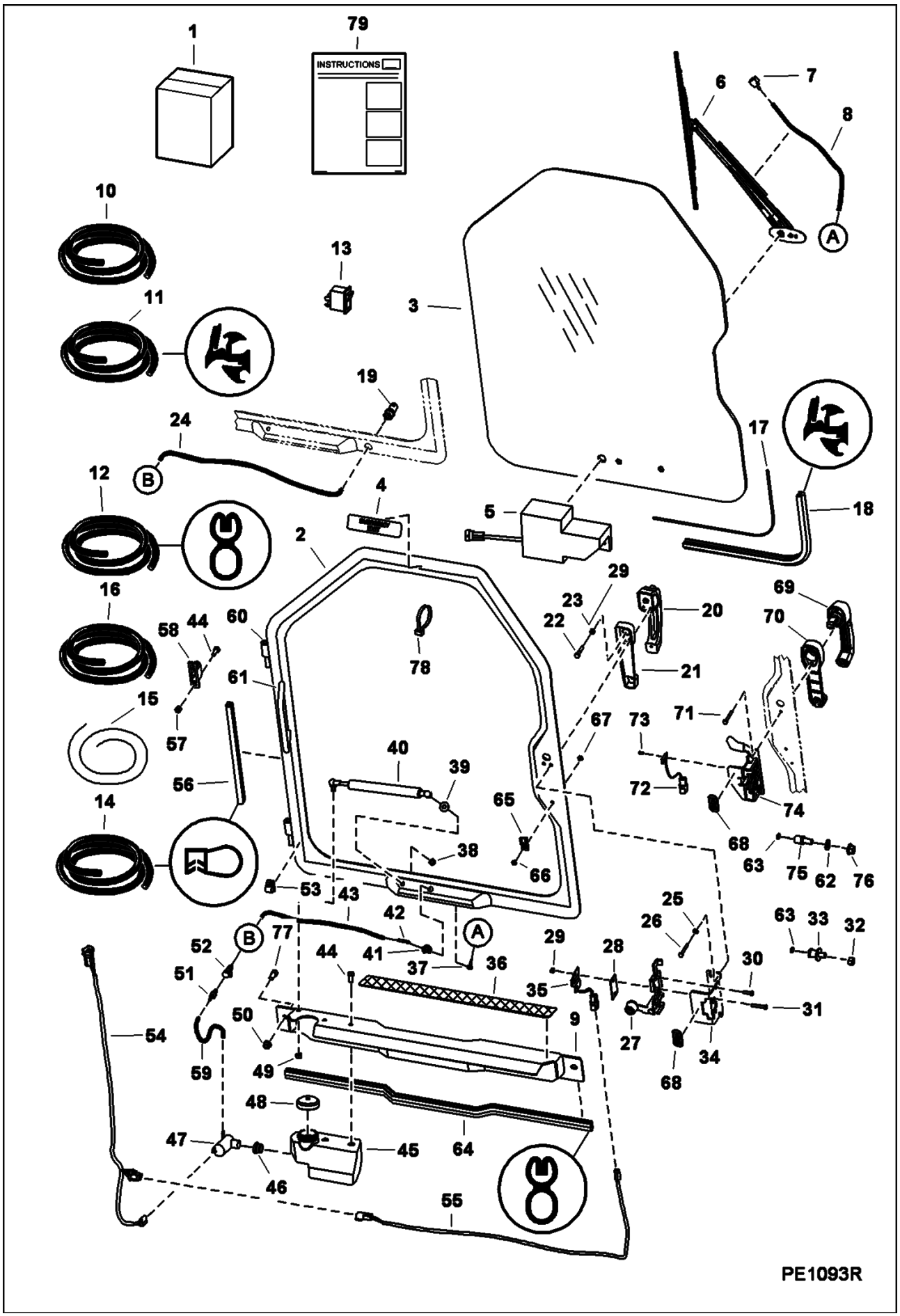

Page 484 - OSS# 2071349 - All rights reserved by Bobcat Company - 12/01/2009 - 20:50:59 - Produced by Ken Cook Co. with mediaIoff

Ref No	Part Number	Description	Remarks	Serial Number	Qty
		34	6675558 [A]		
15	6554149	CORD	bulk - sold per foot		x
16	6676003	HOSE	black - .109" (2,77 mm) ID - bulk - sold per foot - Was 6708310 [B]		x
17		CORD	NAP - window - 113.3" (2877,8 mm) long - Order Ref. 15 - Also Order Ref. 78		1
18		SEAL	NAP - window - 113.3" (2877,8 mm) - Order Ref. 11		1
19	6664555	NOZZLE	door mounted		1
20		HANDLE	NAP - 3 bolt mount - See BTI 370 - Was 6674667 [A]		1
20		KEY	NAP - ignition & rear door - includes two keys W/ring - Order 6693241 - Was 6709527 [A]		1
20	6693241	KEY 10	single key W/O ring		x
21		SPACER	NAP - 3 bolt mount - See BTI 370 - Was 6717146 [A]		1
22	17C420	CAPSCREW	for 3 bolt handle		1
22	1CM630	BOLT	for 3 bolt handle		1
23	61D4	NUT 5	Used W/Ref. 22 - grade 5		1
24		HOSE	NAP - washer - 25.25" (641,4 mm) long - Order Ref. 16		1
25	6EM60	WASHER, SPRING			3
26	1CM640	SCREW	For 3 bolt mount handle		3
27		LATCH	NAP - 3 bolt mount - See BTI 370 - Was 6674666 [A]		1
28	6718520	COVER	latch - Use W/Ref. 27		1
29	1DM6	NUT	for 3 bolt latch - Was 4DM6 [A]		2
29	1DM6	NUT	for 3 bolt latch - Was 4DM6 [A]		3
30	1CM620	BOLT	Used W/Ref. 27		2
31	4CM635	BOLT	Used W/Ref. 28 - Was 1CM00635B [A]		2
32	91D7	NUT	7/16" thread		1
33		BOLT	NAP - striker - 7/16" thread - Order Ref. 75 (7109664 striker), Ref. 76 (51DM12 nut) & Ref. 62 (18EM1224 washer) - Was 6677194 [A]		1
34	6717369	BRACKET	Used W/Ref. 27 latch		1
35	6731212	SENSOR	for Ref. 27 (NAP 6674666 latch)		1
36	6542731	SAFETY TREAD			1
37	6676500	ELBOW			1
38	46D5	NUT	acorn		1
39	25E16	WSHR			1
40	7157893	GAS SPRING	Was 6682586 [A]		1
40	6678548	SOCKET	ball		2
40	6649244	STUD	ball		2
40	6649245	RETAINER	spring		2
41	6676499	GROMMET	wiper		1
42	6676917	ELBOW			1
43		HOSE	NAP - 18.25" (463,6 mm) long - Order Ref. 16		1
44	17C512	BOLT 5	.3125" dia. - Use (2) W/Ref. 45 (NAP/ 6730830 tank) & (4) W/Ref. 58		6
44	35C408	BOLT	.25" dia - Use W/Ref. 45 (NAP/6736875 tank & 7133211 tank)		2
45		TANK	NAP - washer - Order 7133211 tank & (2) of Ref. 44 (35C-408 bolt) - Was 6730830 [A]		1
45	7133211	TANK, WASHER	Was 6736875 [A]		1
46	6666766	GROMMET			1
47	6664554	PUMP, WIPER WASHER			1
48	6674993	CAP	vented		1
49	61D5	NUT			1
50	61D6	NUT 5			2

Page 485 - OSS# 2071349 - All rights reserved by Bobcat Company - 12/01/2009 - 20:50:59 - Produced by Ken Cook Co. with mediaioff

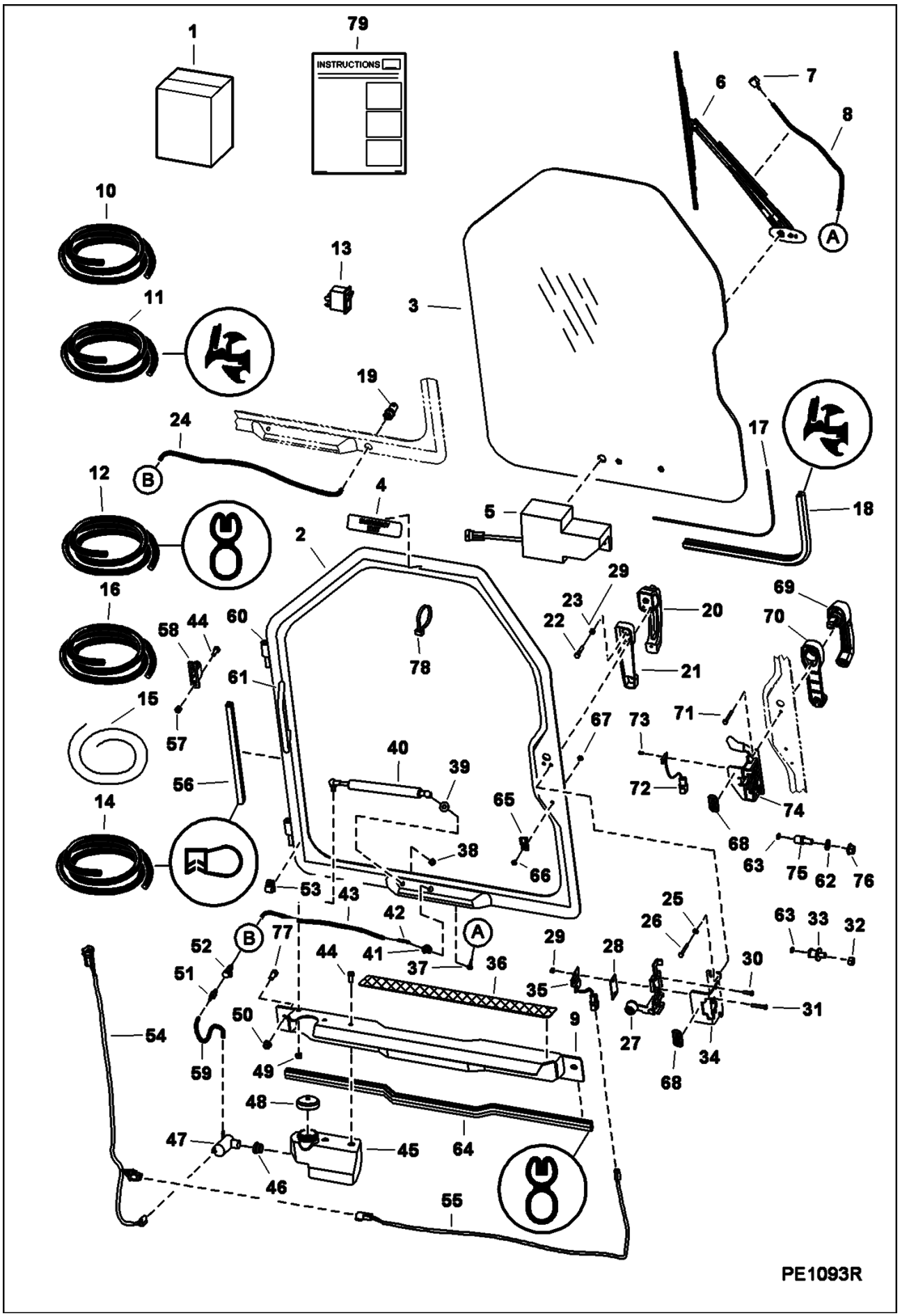

Page 486 - OSS# 2071349 - All rights reserved by Bobcat Company - 12/01/2009 - 20:50:59 - Produced by Ken Cook Co. with mediaIoff

Ref No	Part Number	Description	Remarks	Serial Number	Qty
51	6675299	COUPLER	insert		1
52	6675298	COUPLER, BODY	body		1
53	6675378	CLIP	wire - W/adhesive back - Use W/Ref. 19		2
53	6675378	CLIP	wire - W/adhesive back - Use W/doors W/O welded on retainers		3
54	6718295	HARNESS	wiper - W/ 18" (457,2 mm) long 3-pin connector extension - use W/Ref. 5 (NAP/6668137 Motor)		1
54		HARNESS	NAP - wiper - W/fuse - use W/Ref. 5 (NAP 6677835 motor) - Order 7106277 - Was 6729739 [A]		1
54		HARNESS	NAP - Order 7104465 harness & 7106277 harness - Was 6730885 [A]		1
54	7106277	WIPER HARNESS	wiper		1
55	7104465	DOOR SWITCH HARNESS	door sensor		1
56		SEAL	NAP - door - 127.3" (3233,4 mm) - Order Ref. 14		1
57	59D5	NUT 5			4
58	6717593	HINGE	base		2
59		HOSE	NAP - 4.25" (107,9 mm) long - Order Ref. 10		1
60	6718376	HINGE	door		2
61	7138347	HANDLE	grab - Was 6718521 [B]		1
62	18EM1224	WASHER	use W/Ref. 75 (7109664 striker bolt)		1
63	6677192	MAGNET			1
64		SEAL	NAP - threshold - 36" (914,4 mm) - used W/Ref. 9 (6725171 & 6730816 shield) - Order (3) ft. of Ref. 12		1
65	6665000	CLIP			1
66	6665321	RIVET	male plastic		1
67	6665322	RIVET	female plastic		1
68	7110316	DECAL	door switch - Was 6732975 [A]		1
69	7109662	HANDLE, LATCH DOOR	2 bolt mount		1
70	7109663	SPACER	2 bolt mount		1
71	1CM640	SCREW	For 2 bolt mount handle		2
72	6728459	DOOR SENSOR	for Ref. 74 (7109661 latch)		1
73	6677193	RIVET	plastic		2
74	7109661	LATCH, DOOR W/SENSOR	2 bolt mount - W/Ref. 72		1
75	7109664	BOLT	striker - 12 mm thread		1
76	51DM12	NUT	12 mm thread		1
77	17C612	BOLT 5			2
78	6610510	TIE			1
78	6624289	STRAP 10	Use W/doors W/welded-on retainers		3
79	6900854	INSTRUCTIONS	INSTRUCTIONS - Was 6901013 [B,D]		1

Page 487 - OSS# 2071349 - All rights reserved by Bobcat Company - 12/01/2009 - 20:50:59 - Produced by Ken Cook Co. with mediaioff

CAB DOOR
(Window & Wiper)

NOTE: It is necessary to identify the correct style of wiper motor before ordering wiper replacement parts. Components for wipers W/threaded shaft ends & built in fuse are shown on the upper half of this page. Components for wipers W/knurled shaft ends are shown on the lower half of this page.

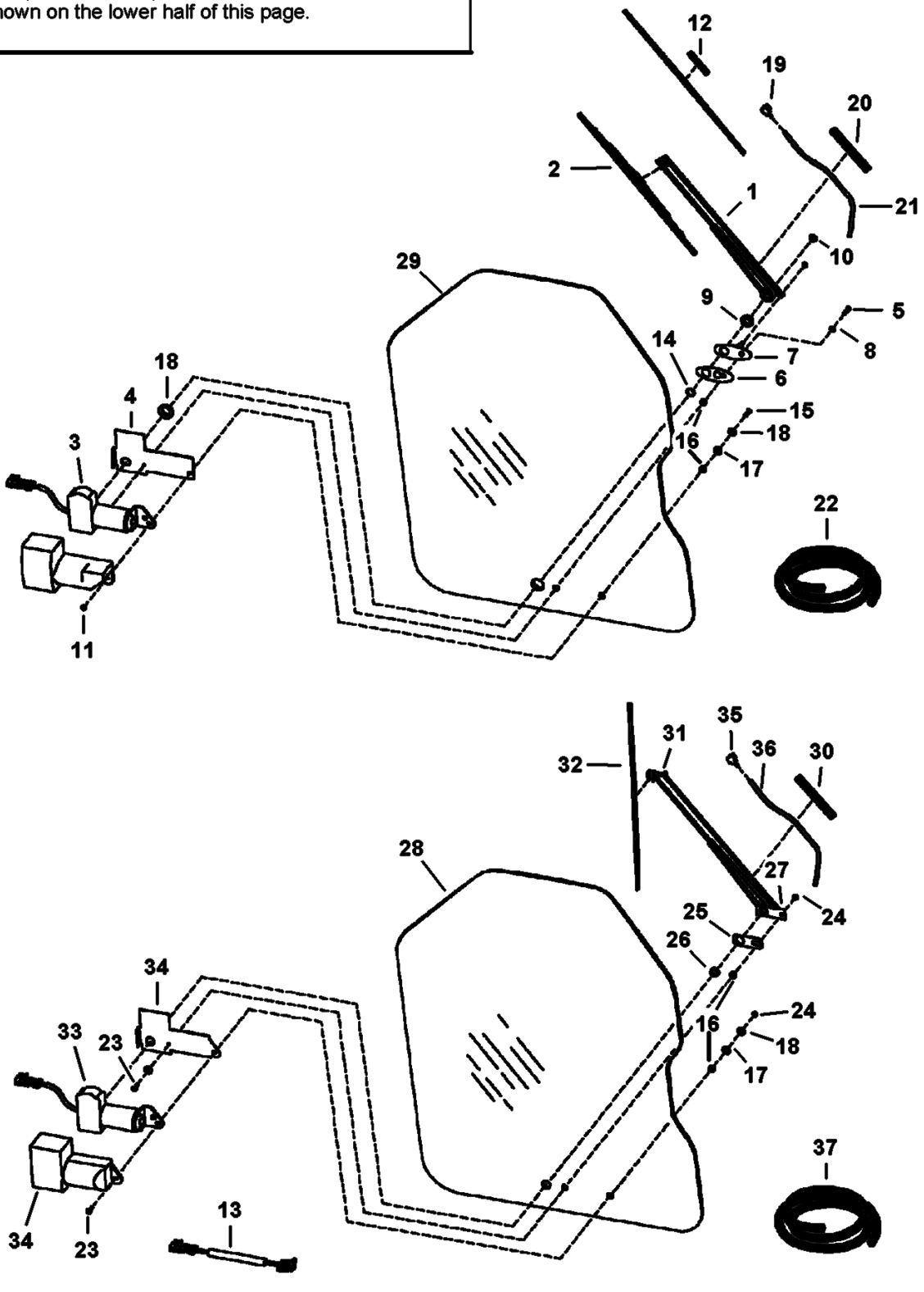

MS-1205

Page 488 - OSS# 2071349 - All rights reserved by Bobcat Company - 12/01/2009 - 20:50:59 - Produced by Ken Cook Co. with mediaioff

CAB DOOR (Cont'd)
(Window & Wiper)

Ref No	Part Number	Description	Remarks	Serial Number	Qty
1	6677833	ARM ASSY	W/Ref. 19-21		1
2	7147359	BLADE, WIPER WINDOW	one piece blade		1
2	6677834	BLADE	Also Order Ref. 12		1
3	6679476	MOTOR	W/threaded shaft end & built in fuse - SEE NOTE - Was 6677835 [A]		1
3	6640699	CONNECTOR	electrical connector		1
4	6677836	COVER			1
5	6677837	BOLT			1
6	6677839	GASKET			1
7	6677840	SWIVEL, PLATE ASSY			1
8	6677841	WASHER	tooth lock		1
9	6677842	NUT			1
10	6677843	NUT			1
11	6677844	NUT			2
12	6677845	ADAPTER	wiper blade - Use W/Ref. 2 (6677834 blade)		1
13	6730123	HARNESS	7"(177,8 mm) long wiper jumper - W/fuse - Use W/Ref. 33		1
14	6677848	SLEEVE	rubber - Use W/Ref. 3 & Ref. 28		1
14	6677847	GROMMET	rubber - Use W/Ref. 3 & Ref. 29		1
15	6678198	BOLT			1
16	6664085	BUSHING	nylon		2
17	6801059	WASHER	neoprene		1
18		WASHER	NAP - nylon - Was 6664065 [A]		1
18	6678739	WASHER	steel		2
19	6678920	NOZZLE	for Ref. 1		1
20	6678921	GUIDE	hose		1
21		HOSE	NAP - 18"(457,2 mm) long - Order Ref. 22		x
22	6676003	HOSE	black - .109" (2,77 mm) ID - bulk - sold per foot		x
23	6664566	BOLT			2
24	6664103	NUT	acorn		2
25	6664178	GASKET			1
26	6667201	SPACER	nylon - Use W/Ref. 28 & Ref. 33		1
27	6670288	END	plastic		2
28		WINDOW	NAP - .25" thick glass W/.77" dia. wiper motor shaft hole - Order Ref. 14(6677847 grommet) & Ref. 29 - Was 6717360 [A]		1
29	6729776	WINDOW, DOOR CURVED CAB	.25" thick glass W/1.00" dia. wiper motor shaft hole		1
30	6676501	CLIP			1
31	6664095	ARM, WIPER	W/Ref. 27 & 30		1
32	6664096	BLADE, WIPER WINDOW			1
33	6668137	WIPER MOTOR	See BTI337 wiper - W/knurled shaft end - Use W/Ref. 13 - SEE NOTE - Was NAP [D]		1
33	6631928	SHAFT			1
33		GEAR	NAP - Was 6631927 [A]		1
33	6670164	LINK			1
33	961528	PK PARTS			1
34	6664097	COVER			1
35	6676498	NOZZLE	For Ref. 31.		1
36		HOSE	NAP - 10.25"(260,4 mm) long - Order Ref. 37		1
37	6676918	HOSE	50' (15,240mm) long roll - .125" ID - black		x

Page 489 - OSS# 2071349 - All rights reserved by Bobcat Company - 12/01/2009 - 20:50:59 - Produced by Ken Cook Co. with mediaioff

CAB DOOR
(Special Applications)

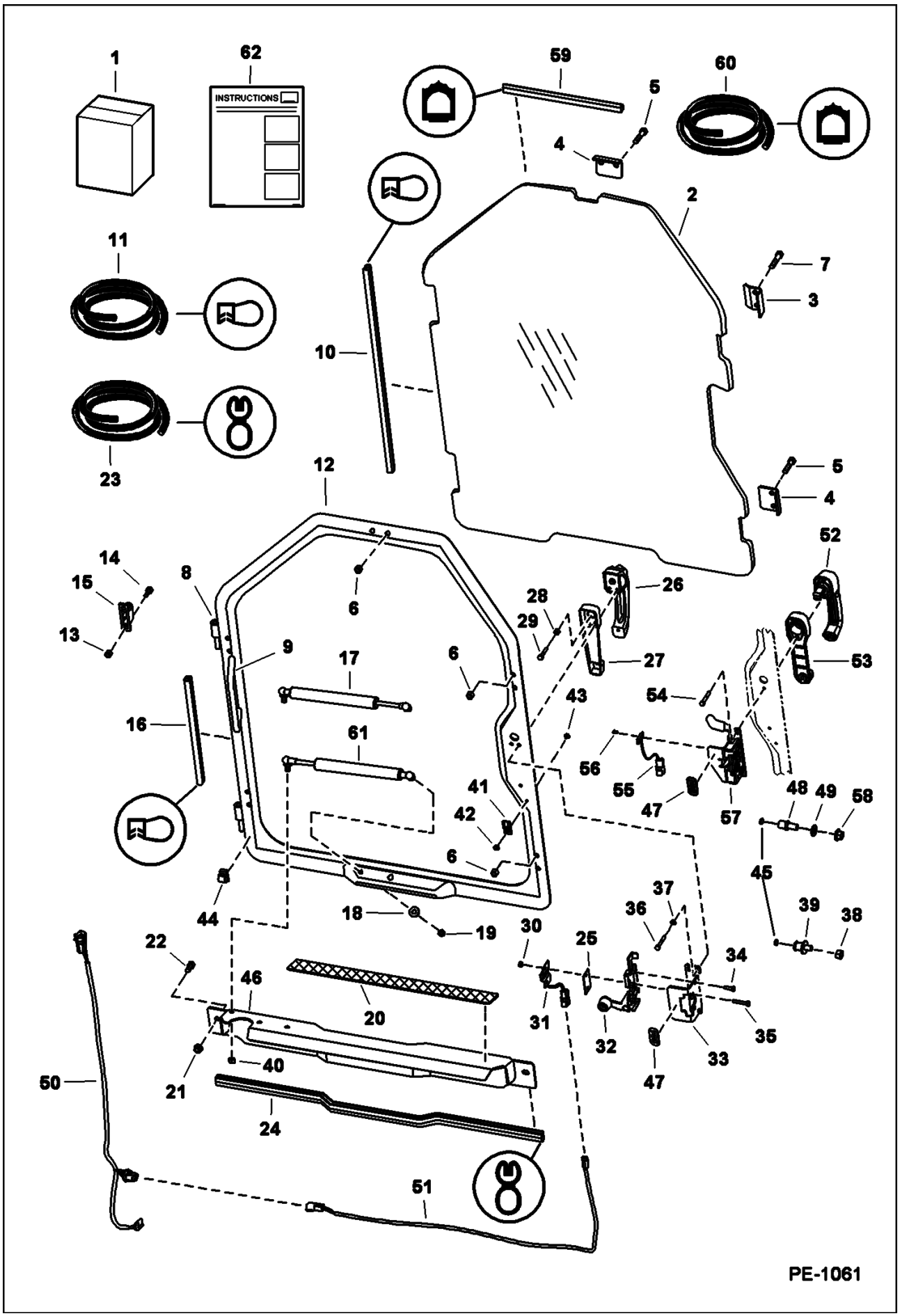

Page 490 - OSS# 2071349 - All rights reserved by Bobcat Company - 12/01/2009 - 20:50:59 - Produced by Ken Cook Co. with mediaIoff

CAB DOOR (Cont'd)
(Special Applications)

Ref No	Part Number	Description	Remarks	Serial Number	Qty
1	6726420	KIT	door - Ref. 2-24 & 40-62	500K 12290 & Bel	1
1	6726420	KIT	door - Ref. 2-24 & 40-62	5181 12312 & Bel	1
1	6726420	KIT	door - Ref. 2-24 & 40-62	5192 12397 & Bel	1
1	6726420	KIT	door - Ref. 2-24 & 40-62	5190 21566 & Bel	1
1	6726420	KIT	door - Ref. 2-24 & 40-62	5180 12473 & Bel	1
1	6726420	KIT	door - Ref. 2-24 & 40-62	5176 20338 & Bel	1
1	6730823	KIT	door - Ref. 2-24 & 40-62 - wiper is not included because it may scratch special applications window	500K 12291 & Abv	1
1	6730823	KIT	door - Ref. 2-24 & 40-62 - wiper is not included because it may scratch special applications window	5176 20339 & Abv	1
1	6730823	KIT	door - Ref. 2-24 & 40-62 - wiper is not included because it may scratch special applications window	5180 12474 & Abv	1
1	6730823	KIT	door - Ref. 2-24 & 40-62 - wiper is not included because it may scratch special applications window	5190 21567 & Abv	1
1	6730823	KIT	door - Ref. 2-24 & 40-62 - wiper is not included because it may scratch special applications window	5192 12398 & Abv	1
1	6730823	KIT	door - Ref. 2-24 & 40-62 - wiper is not included because it may scratch special applications window	5181 12313 & Abv	1
2		WINDOW	NAP - .5" thick polycarbonate W/O top notch - Order 6732351 window, Ref. 4 & (2) each of Ref. 5 & 6 - Was 6725935 [A]		1
2	6732351	WINDOW	.5" thick polycarbonate - W/ top notch		1
3	6725938	CLAMP			3
4	6725937	CLAMP			2
5	17C628	BOLT			6
6	95D6	NUT			10
7	17C624	BOLT 5			4
8	6718376	HINGE	door		2
9	7138347	HANDLE	grab - Was 6718521 [B]		1
10		SEAL	NAP - 115" (2921 mm) long - Order Ref. 11		1
11	7011039	SEAL, BULK/FT 34	bulk - sold per foot bulk - sold per foot - Was 6675558 [A]		x
12		DOOR	NAP - W/Ref. 8 & 9 - Uses 3 bolt mount handle - See BTI 369 - Was 6726932 [A]		1
12	7110430	SPECIAL APPS DOOR	Uses 2 bolt mount handle - W/Ref. 8 & 9		1
13	59D5	NUT 5			4
14	17C512	BOLT 5			4
15	6717593	HINGE	base		2
16		SEAL	NAP - 127.3" (3233,4 mm) long - Order Ref. 11		1
17		GAS SPRING	NAP - Order Ref. 61 - Was 6682586 [A]		1
17	6678548	SOCKET	ball		2
17	6649244	STUD	ball		2
17	6649245	RETAINER	spring		2
18	25E16	WSHR			1
19	46D5	NUT	acorn		1
20	6542731	SAFETY TREAD			1
21	55D6	NUT			2
22	17C612	BOLT 5			2
23	6513152	SEAL	bulk - sold per foot		x
24		SEAL	NAP - 36"(914,4 mm) long -Order Ref. 23		1
25	6718520	COVER	latch - Use W/Ref. 32		1
26		HANDLE	NAP - 3 bolt mount - See BTI 370 - Was 6674667 [A]		1
26		KEY	NAP - ignition & rear door - includes two keys W/ring - Order 6693241 key - Was 6709527 [A]		1
26	6693241	KEY 10	single key W/O ring		x
27		SPACER	NAP - 3 bolt mount - See BTI 370- Was 6717146 [A]		1

Page 491 - OS6# 2071349 - All rights reserved by Bobcat Company - 12/01/2009 - 20:50:59 - Produced by Ken Cook Co. with mediaioff

CAB DOOR (Cont'd)
(Special Applications)

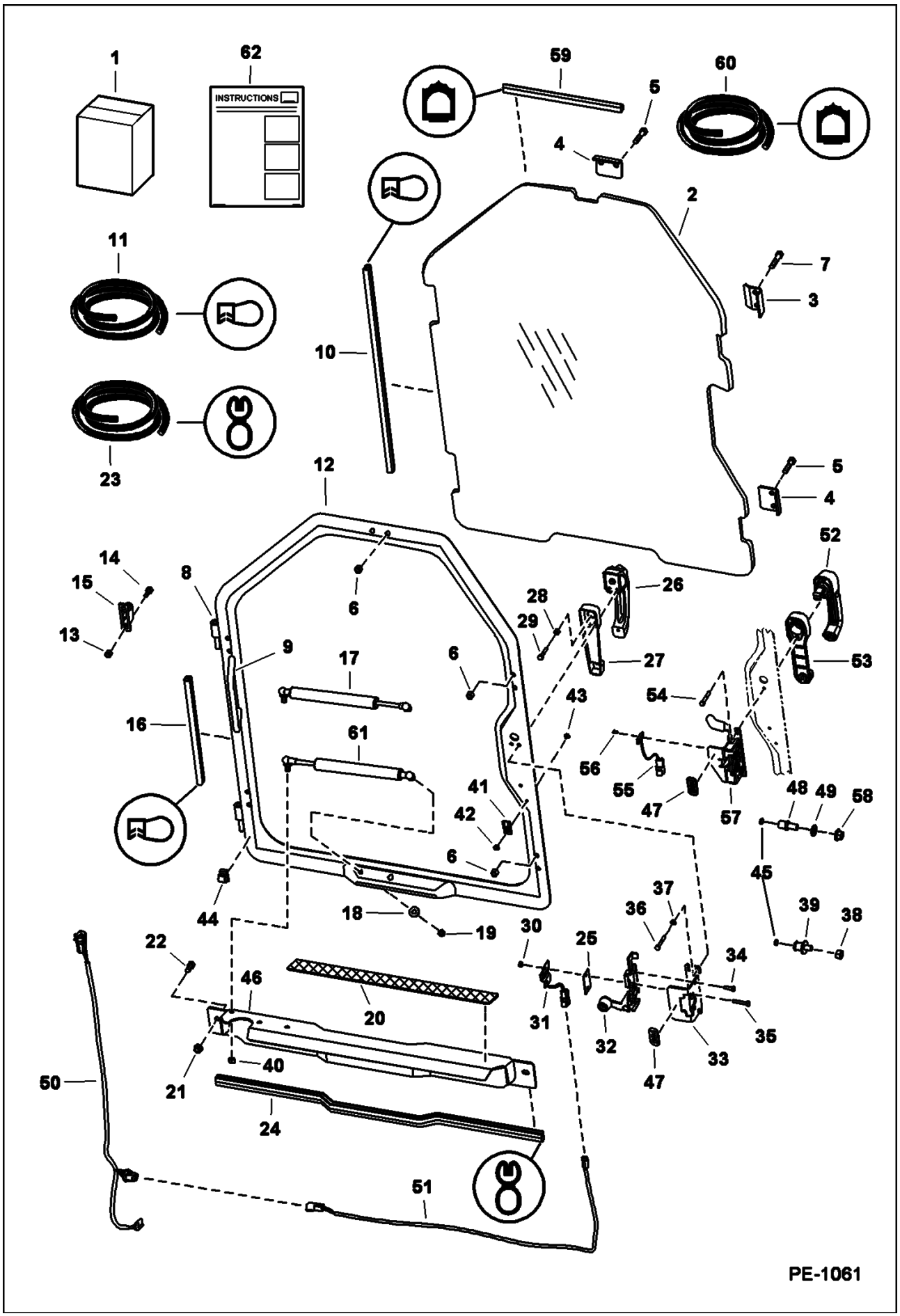

Page 492 - OSS# 2071349 - All rights reserved by Bobcat Company - 12/01/2009 - 20:50:59 - Produced by Ken Cook Co. with mediaIoff

Ref No	Part Number	Description	Remarks	Serial Number	Qty
28	61D4	NUT 5	For 3 bolt mount handle		1
29	17C420	CAPSCREW	For 3 bolt mount handle		1
29	1CM630	BOLT	For 3 bolt mount handle		1
30	1DM6	NUT	For 2 bolt mount handle - Was 4DM6 [A]		2
30	1DM6	NUT	For 2 bolt mount handle - Was 4DM6 [A]		3
31	6731212	SENSOR	Use W/Ref. 32		1
32		LATCH	NAP - 3 bolt mount - See BTI 370 - Was 6674666 [A]		1
33	6717369	BRACKET	Use W/Ref 32		1
34	1CM620	BOLT	For 3 bolt mount handle		2
35	1CM635	BOLT	For 3 bolt mount handle		2
36	1CM640	SCREW	For 3 bolt mount handle		3
37	6EM60	WASHER, SPRING	lock washer		3
38	91D7	NUT	7/16" thread - Use W/Ref. 39 (NAP 6677194 striker bolt)		1
39	6649483	STRIKER BOLT	7/16" thread - W/O sensor - Was 6654170		1
39		BOLT	NAP - striker - 7/16" thread - Use W/ latch W/sensor - Order Ref.'s 48,49 & 58- Was 6677194 [A]		1
40	61D5	NUT			1
41	6665000	CLIP			1
42	6665321	RIVET	male - plastic		1
43	6665322	RIVET	female - plastic		1
44	6624289	STRAP 10	Use W/doors W/welded-on retainers		3
45	6677192	MAGNET			1
46	6725171	SHIELD		500K 12290 & Bel	1
46	6725171	SHIELD		5180 12473 & Bel	1
46	6725171	SHIELD		5176 20338 & Bel	1
46	6725171	SHIELD		5192 12397 & Bel	1
46	6725171	SHIELD		5190 21566 & Bel	1
46	6725171	SHIELD		5181 12312 & Bel	1
46	6730816	SHIELD		500K 12291 & Abv	1
46	6730816	SHIELD		5180 12474 & Abv	1
46	6730816	SHIELD		5176 20339 & Abv	1
46	6730816	SHIELD		5181 12313 & Abv	1
46	6730816	SHIELD		5192 12398 & Abv	1
46	6730816	SHIELD		5190 21567 & Abv	1
47	7110316	DECAL	Was 6732975 [A]		1
48	7109664	BOLT	striker - 12 mm thread - Use W/ latch W/sensor		1
49	18EM1224	WASHER	Use W/Ref. 48		1
50		HARNESS	NAP - Order 7104465 harness & 7106277 harness - Was 6730885 [A]		1
50	7106277	WIPER HARNESS	wiper		1
51	7104465	DOOR SWITCH HARNESS	door sensor		1
52	7109662	HANDLE, LATCH DOOR	2 bolt mount		1
53	7109663	SPACER	2 bolt mount		1
54	1CM640	SCREW	For 2 bolt mount handle		2
55	6728459	DOOR SENSOR	Use W/Ref. 57		1
56	6677193	RIVET	plastic		2
57	7109661	LATCH, DOOR W/SENSOR	2 bolt mount - W/Ref. 55		1
58	51DM12	NUT	12 mm thread - Use W/Ref. 48		1
59		SEAL	NAP - 12" (304,8 mm) long - Order Ref. 60 - Use W/Ref. 2 (W/O notch)		1
60	6670759	SEAL	bulk - sold per foot		x
61	7157893	GAS SPRING			1

Page 493 - OSS# 2071349 - All rights reserved by Bobcat Company - 12/01/2009 - 20:50:59 - Produced by Ken Cook Co. with mediaioff

CAB DOOR (Cont'd)
(Special Applications)

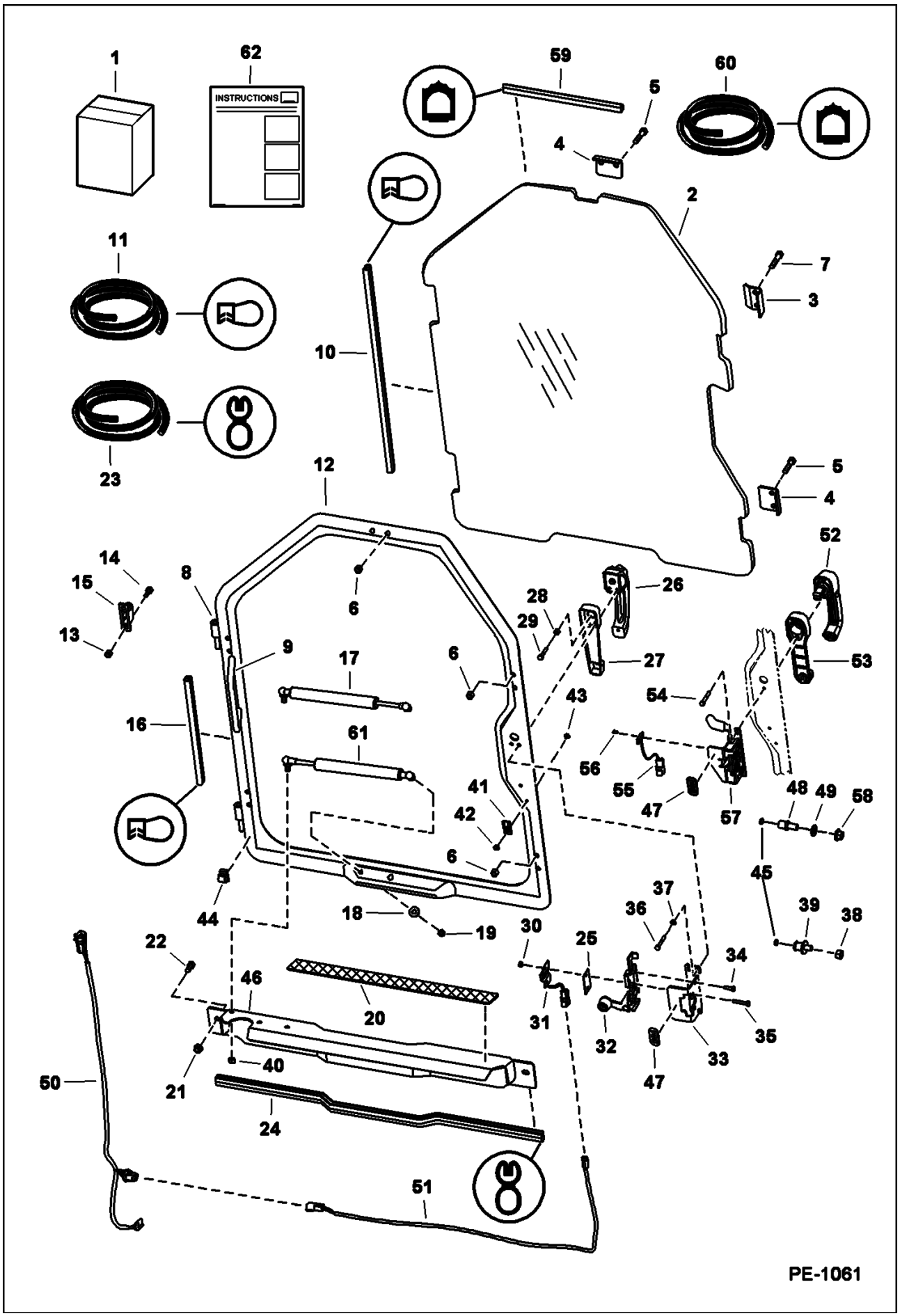

Page 494 - OSS# 2071349 - All rights reserved by Bobcat Company - 12/01/2009 - 20:50:59 - Produced by Ken Cook Co. with mediaIoff

Ref No	Part Number	Description	Remarks	Serial Number	Qty
62	6675378	CLIP	wire - W/adhesive back - Use W/doors W/O welded on retainers		3
63	6901013	INSTRUCTIONS			1

Page 495 - OSS# 2071349 - All rights reserved by Bobcat Company - 12/01/2009 - 20:50:59 - Produced by Ken Cook Co. with mediaioff

CAB DOOR
(Lexan Window)

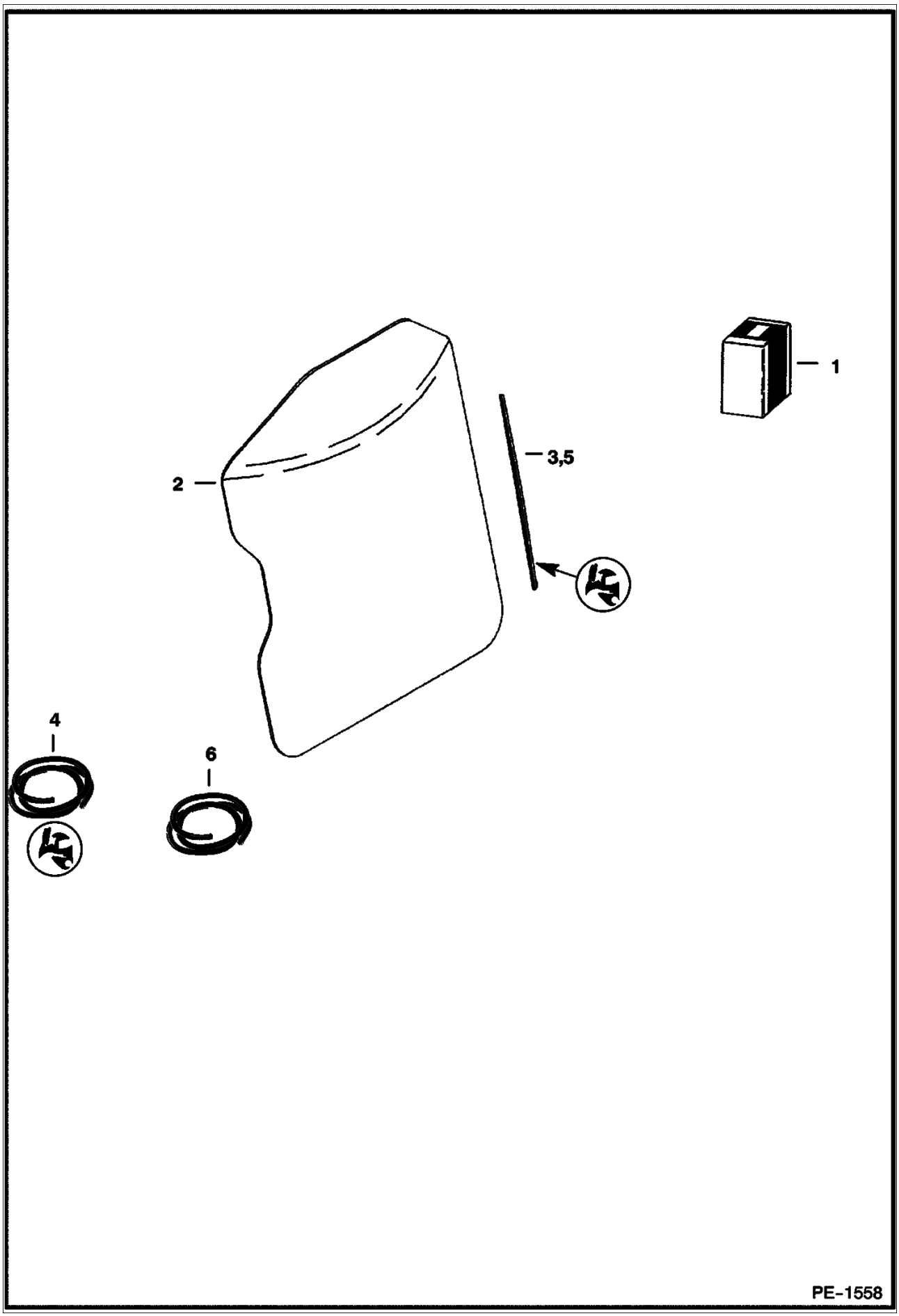

Page 496 - OSS# 2071349 - All rights reserved by Bobcat Company - 12/01/2009 - 20:50:59 - Produced by Ken Cook Co. with mediaioff

Ref No	Part Number	Description	Remarks	Serial Number	Qty
1		KIT	See Illustration CAB DOOR/ PE1061 NAP - **IMPORTANT** This Lexan window kit has been discontinued. Order KIT 6726420 SPECIAL APPLICATIONS if safety glass application is needed.	500K 12290 & Bel	1
1		KIT	See Illustration CAB DOOR/ PE1061 NAP - **IMPORTANT** This Lexan window kit has been discontinued. Order KIT 6726420 SPECIAL APPLICATIONS if safety glass application is needed.	5176 20338 & Bel	1
1		KIT	See Illustration CAB DOOR/ PE1061 NAP - **IMPORTANT** This Lexan window kit has been discontinued. Order KIT 6726420 SPECIAL APPLICATIONS if safety glass application is needed.	5192 12397 & Bel	1
1		KIT	See Illustration CAB DOOR/ PE1061 NAP - **IMPORTANT** This Lexan window kit has been discontinued. Order KIT 6726420 SPECIAL APPLICATIONS if safety glass application is needed.	5190 21566 & Bel	1
1		KIT	See Illustration CAB DOOR/ PE1061 NAP - **IMPORTANT** This Lexan window kit has been discontinued. Order KIT 6726420 SPECIAL APPLICATIONS if safety glass application is needed.	5181 12312 & Bel	1
1		KIT	See Illustration CAB DOOR/ PE1061 NAP - **IMPORTANT** This Lexan window kit has been discontinued. Order KIT 6726420 SPECIAL APPLICATIONS if safety glass application is needed.	5180 12473 & Bel	1
1		KIT	See Illustration CAB DOOR/ PE1061 NAP - **IMPORTANT** This Lexan window kit has been discontinued. Order KIT 6730823 SPECIAL APPLICATIONS if safety glass application is needed.	500K 12291 & Abv	1
1		KIT	See Illustration CAB DOOR/ PE1061 NAP - **IMPORTANT** This Lexan window kit has been discontinued. Order KIT 6730823 SPECIAL APPLICATIONS if safety glass application is needed.	5176 20339 & Abv	1
1		KIT	See Illustration CAB DOOR/ PE1061 NAP - **IMPORTANT** This Lexan window kit has been discontinued. Order KIT 6730823 SPECIAL APPLICATIONS if safety glass application is needed.	5180 12474 & Abv	1
1		KIT	See Illustration CAB DOOR/ PE1061 NAP - **IMPORTANT** This Lexan window kit has been discontinued. Order KIT 6730823 SPECIAL APPLICATIONS if safety glass application is needed.	5190 21567 & Abv	1
1		KIT	See Illustration CAB DOOR/ PE1061 NAP - **IMPORTANT** This Lexan window kit has been discontinued. Order KIT 6730823 SPECIAL APPLICATIONS if safety glass application is needed.	5192 12398 & Abv	1
1		KIT	See Illustration CAB DOOR/ PE1061 NAP - **IMPORTANT** This Lexan window kit has been	5181 12313 & Abv	1

Page 497 - OSS# 2071349 - All rights reserved by Bobcat Company - 12/01/2009 - 20:50:59 - Produced by Ken Cook Co. with mediaioff

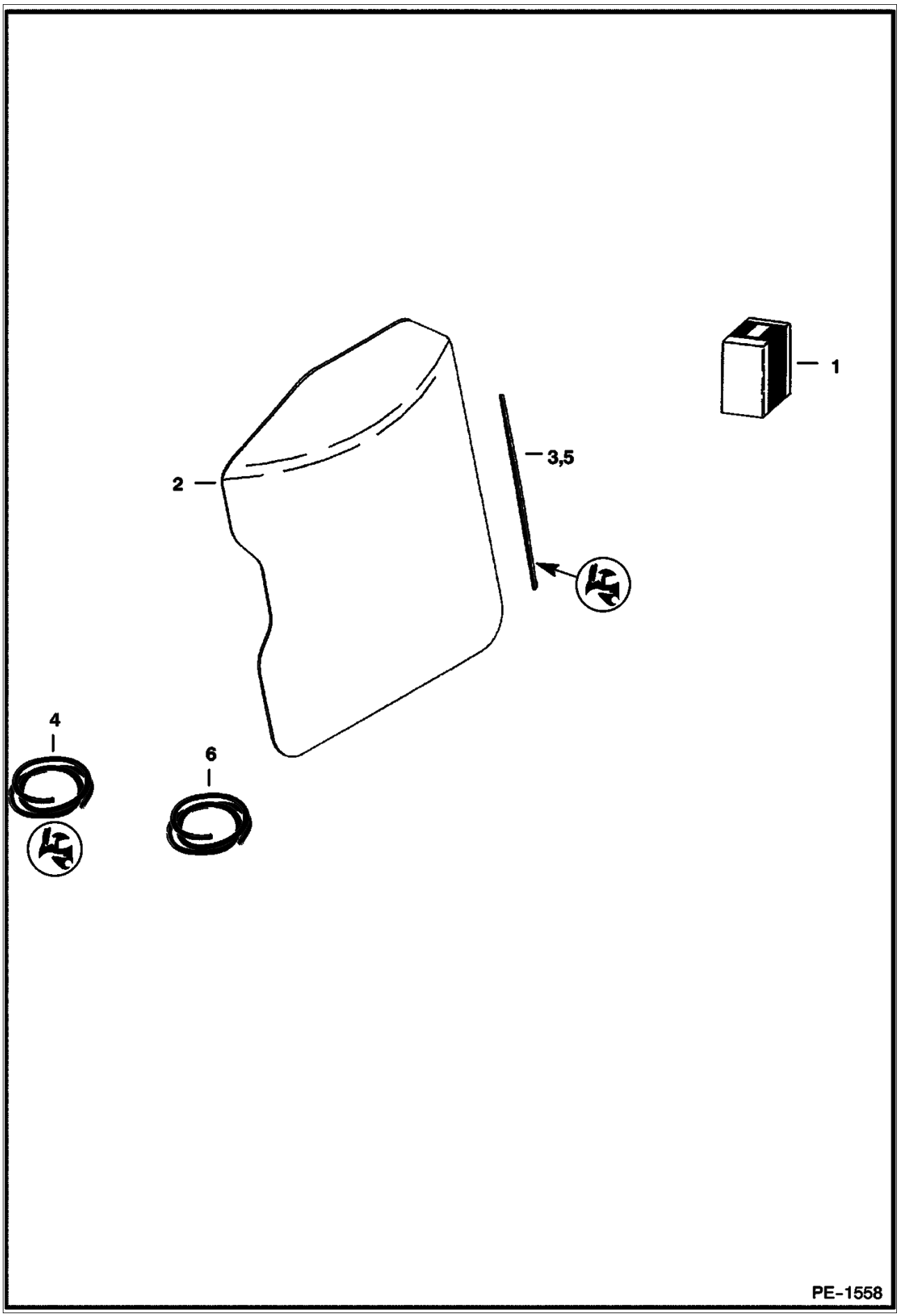

Page 498 - OSS# 2071349 - All rights reserved by Bobcat Company - 12/01/2009 - 20:50:59 - Produced by Ken Cook Co. with mediaioff

Ref No	Part Number	Description	Remarks	Serial Number	Qty
			discontinued. Order KIT 6730823 SPECIAL APPLICATIONS if safety glass application is needed.		
2		WINDOW	NAP - Order KIT 6726420 SPECIAL APPLICATIONS if safety glass application is needed - it contains 6732351 WINDOW - .5" thick polycarbonate safety glass.	500K 12290 & Bel	1
2		WINDOW	NAP - Order KIT 6726420 SPECIAL APPLICATIONS if safety glass application is needed - it contains 6732351 WINDOW - .5" thick polycarbonate safety glass.	5192 12397 & Bel	1
2		WINDOW	NAP - Order KIT 6726420 SPECIAL APPLICATIONS if safety glass application is needed - it contains 6732351 WINDOW - .5" thick polycarbonate safety glass.	5180 12473 & Bel	1
2		WINDOW	NAP - Order KIT 6726420 SPECIAL APPLICATIONS if safety glass application is needed - it contains 6732351 WINDOW - .5" thick polycarbonate safety glass.	5181 12312 & Bel	1
2		WINDOW	NAP - Order KIT 6726420 SPECIAL APPLICATIONS if safety glass application is needed - it contains 6732351 WINDOW - .5" thick polycarbonate safety glass.	5190 21566 & Bel	1
2		WINDOW	NAP - Order KIT 6726420 SPECIAL APPLICATIONS if safety glass application is needed - it contains 6732351 WINDOW - .5" thick polycarbonate safety glass.	5176 20338 & Bel	1
2		WINDOW	NAP - Order KIT 6730823 SPECIAL APPLICATIONS if safety glass application is needed - it contains 6732351 WINDOW - .5" thick polycarbonate safety glass.	500K 12291 & Abv	1
2		WINDOW	NAP - Order KIT 6730823 SPECIAL APPLICATIONS if safety glass application is needed - it contains 6732351 WINDOW - .5" thick polycarbonate safety glass.	5192 12398 & Abv	1
2		WINDOW	NAP - Order KIT 6730823 SPECIAL APPLICATIONS if safety glass application is needed - it contains 6732351 WINDOW - .5" thick polycarbonate safety glass.	5190 21567 & Abv	1
2		WINDOW	NAP - Order KIT 6730823 SPECIAL APPLICATIONS if safety glass application is needed - it contains 6732351 WINDOW - .5" thick polycarbonate safety glass.	5181 12313 & Abv	1
2		WINDOW	NAP - Order KIT 6730823 SPECIAL APPLICATIONS if safety glass application is needed - it contains 6732351 WINDOW - .5" thick polycarbonate safety glass.	5176 20339 & Abv	1
2		WINDOW	NAP - Order KIT 6730823 SPECIAL APPLICATIONS if safety glass application is needed - it contains 6732351 WINDOW - .5" thick polycarbonate safety glass.	5180 12474 & Abv	1
3		SEAL	NAP		x
4		EXTRUSION	NAP for this kit - bulk - Sold Per Foot		x
5		CORD	NAP		x
6		CORD	NAP for this kit - bulk - Sold Per Foot		x

Page 499 - OSS# 2071349 - All rights reserved by Bobcat Company - 12/01/2009 - 20:50:59 - Produced by Ken Cook Co. with mediaioff

CAB DOOR
(Sensor Kit)

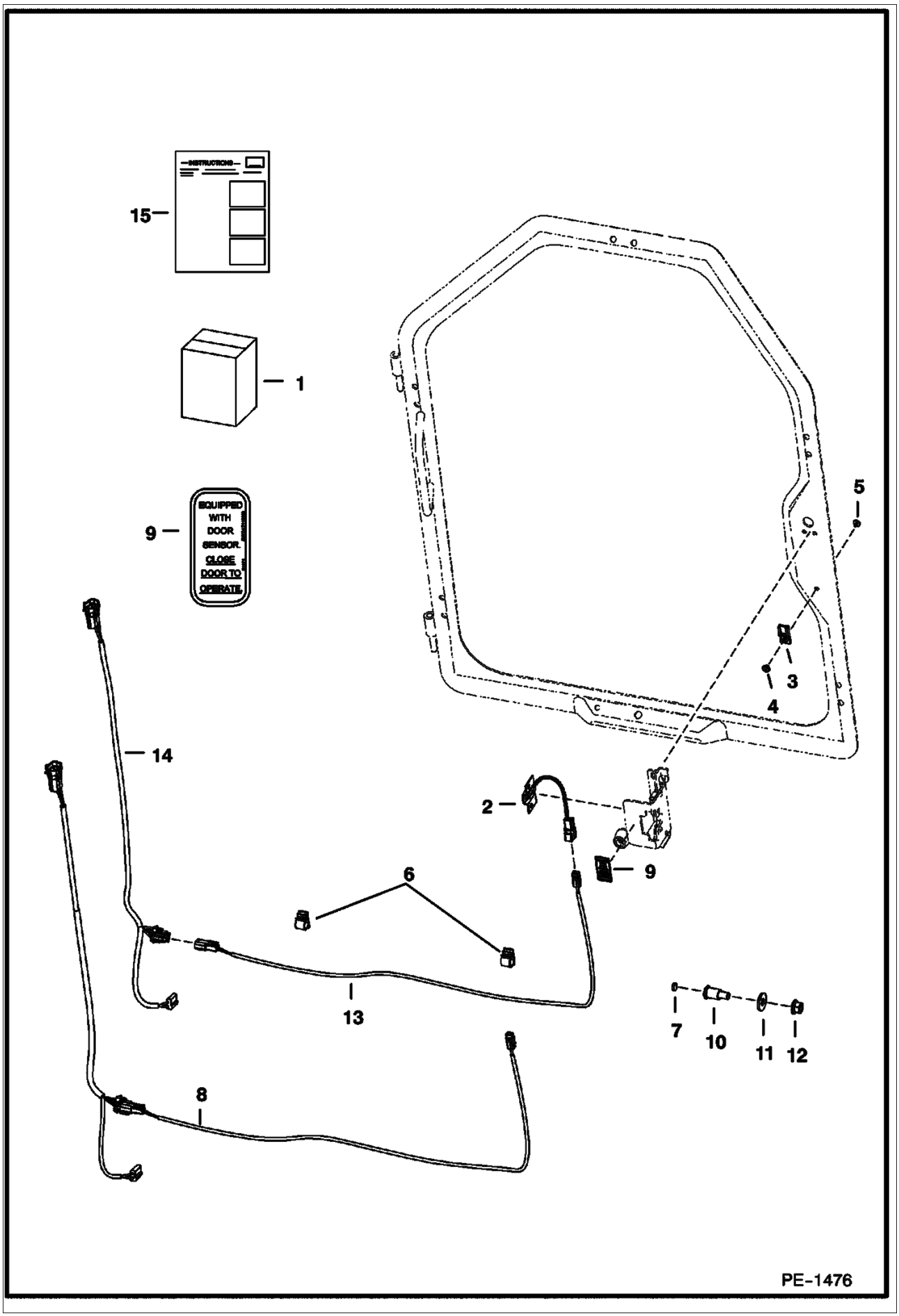

Page 500 - OSS# 2071349 - All rights reserved by Bobcat Company - 12/01/2009 - 20:50:59 - Produced by Ken Cook Co. with mediaioff

CAB DOOR (Cont'd)
(Sensor Kit)

Ref No	Part Number	Description	Remarks	Serial Number	Qty
1	6732451	KIT	door switch - Ref. 2-7 & 9-15		1
2	6731212	SENSOR	door assy.		1
2	6677193	RIVET	plastic		2
3	6665000	CLIP	mounting		1
4	6665322	RIVET	plastic - female		1
5	6665321	RIVET	plastic - male		1
6	6675378	CLIP	wire - W/adhesive back		2
7	6677192	MAGNET	door switch		1
8		HARNESS	NAP - Order 7104465 harness & 7106277 harness - Was 6730885 [A]	& Bel	1
9	7110316	DECAL	Was 6732975 [A]		1
10		BOLT	NAP - striker - 7/16" thread - Order 7109664 striker, Ref. 11 & Ref. 12 - Was 6677194		1
10	7109664	BOLT	striker - 12 mm thread - Was 6677194 [A]		1
11	18EM1224	WASHER	Use W/Ref. 10 (7109664 bolt)		1
12	91D7	NUT	7/16" thread - Use W/Ref. 10 (NAP 6677194 bolt)		1
12	51DM12	NUT	12 mm thread - Use W/Ref. 10 (7109664 bolt)		1
13	7104465	DOOR SWITCH HARNESS	door sensor		1
14	7106277	WIPER HARNESS	wiper		1
15	6901734	INSTRUCTION	INSTRUCTION		1

Page 501 - OSS# 2071349 - All rights reserved by Bobcat Company - 12/01/2009 - 20:50:59 - Produced by Ken Cook Co. with mediaioff

CAB ENCLOSURE
(Envelope)

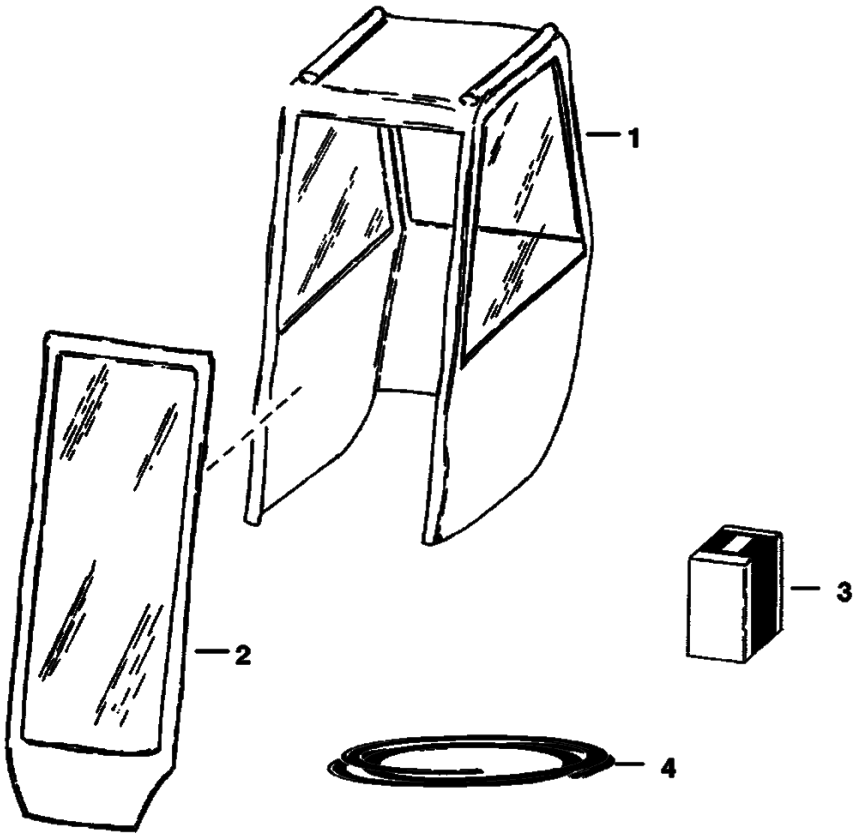

Page 502 - OSS# 2071349 - All rights reserved by Bobcat Company - 12/01/2009 - 20:50:59 - Produced by Ken Cook Co. with mediaioff

CAB ENCLOSURE (Cont'd)
(Envelope)

Ref No	Part Number	Description	Remarks	Serial Number	Qty
1	6675544	CANVAS CAB	W/Ref. 2-4 - fits over cab - Was 6660340 [B,D]		1
2	6675590	DOOR	vinyl - Was 6599721 [B,D]		1
3	6675591	HINGE KIT	Was 6662839 [B,D]		1
4	6722597	VELCRO	27 feet (8229,6 mm)		1

Page 503 - OSS# 2071349 - All rights reserved by Bobcat Company - 12/01/2009 - 20:50:59 - Produced by Ken Cook Co. with mediaioff

CAB ENCLOSURE
(Cab Enclosure Kit) (Special Applications Kit)



NOTE:

Ref. 1 - Cab Enclosure Kit

Ref. 2 - Special Applications Kit - To complete the Cab Enclosure Also Order Side Windows Kit, 3rd Gas Spring Kit & Access Cover Kit.

B–17100

Page 504 - OSS# 2071349 - All rights reserved by Bobcat Company - 12/01/2009 - 20:50:59 - Produced by Ken Cook Co. with mediaioff

Ref No	Part Number	Description	Remarks	Serial Number	Qty
1		KIT	SALES #6731938 - includes access cover kit, dual tilt door kit, 3rd gas spring kit & side window kit - if loader is not equipped W/deluxe cab accessories harness, heater, A/C, SJC, ACS, rotating beacon, rear wiper kit, power Bob-Tach, (non-power port plug-in) strobe light and/or 4-way flashers, Also Order deluxe harness		1
2		KIT	SALES #6731937 - special applications kit - special applications kit - includes dual door kit, lexan top window kit & lexan rear window kit - if loader is not equipped W/deluxe cab accessories harness, heater, A/C, SJC, ACS, rotating beacon, rear wiper kit, power Bob-Tach, (non-power port plug-in) strobe light and/or 4-way flashers, Also Order deluxe harness - SEE NOTE		1

Page 505 - OSS# 2071349 - All rights reserved by Bobcat Company - 12/01/2009 - 20:50:59 - Produced by Ken Cook Co. with mediaioff

CAB WINDOWS
(Top, Rear & Side)

NOTE: Order Side Window Kit from Gwinner Sales #6718806 .

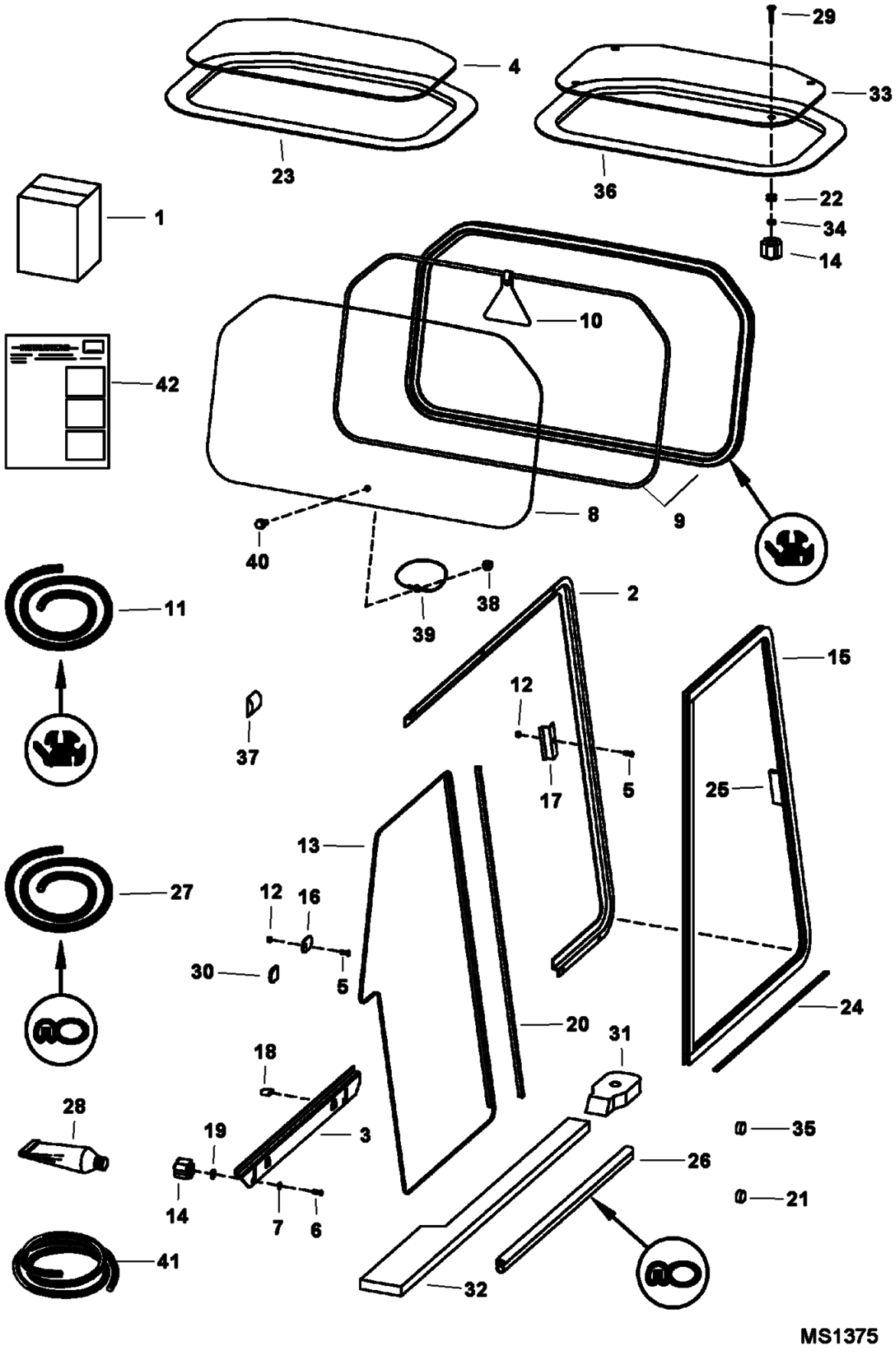

Page 506 - OSS# 2071349 - All rights reserved by Bobcat Company - 12/01/2009 - 20:50:59 - Produced by Ken Cook Co. with mediaioff

CAB WINDOWS (Cont'd)
(Top, Rear & Side)

Ref No	Part Number	Description	Remarks	Serial Number	Qty
1	6718805	KIT	top & rear window - Ref. 8-10, 14, 33 & 41 - Was SALES [A]		1
1		KIT	SALES - Side Window - SEE NOTE		1
2	6717870	FRAME	LH side		1
2	6717872	FRAME	RH side		1
3	6717871	FRAME	LH bottom		1
3	6717873	FRAME	RH bottom		1
4		WINDOW	NAP - top - Order Ref. 33 - Was 6725360 [A]		1
5	10C410	BOLT	carriage		14
6	10C416	BOLT	carriage		8
7	25E14	WSHR			4
8	6717874	WINDOW	rear		1
8	6719413	WINDOW	rear - polycarbonate		1
9		EXTRUSION	NAP - 75.75"(1924 mm) long - Order Ref. 11		x
9		CORD	NAP - 75.75"(1924 mm) long - Order Ref. 11 - Also Order Ref. 10 (6731478 exit tag)		x
10	6731478	EXIT TAG	Was 6559515 [A]		1
11	6675387	EXTRUSION	bulk - Sold Per Foot - Was 6674524 [A]		x
11	6554149	CORD	bulk - sold per foot		x
12	59D4	NUT 5			18
13	6691001	WINDOW	rear - LH - W/Ref. 20 - Was 6674520 [A]		1
13	6691003	WINDOW	rear - RH - W/Ref. 20 - Was 6674522 [A]		1
14		KNOB	NAP - 5/8" deep threads - Was 6674741 [A]		8
14	6681614	KNOB	11/16" deep thread		8
15	7003481	WINDOW, LEFT ASSY	sliding - W/Ref. 25- Was 6691000 [A]		1
15	7003482	WINDOW, RIGHT ASSY	sliding - W/Ref. 25 - Was 6691002 [A]		1
16	6719063	STOP			2
17	6719037	STRIKER			2
18	6719065	COVER TAB	tab		4
19	6675212	RETAINER	bolt		4
20	6675833	SEAL	rear window dual wiper W/tape		2
21	6657719	PLUG	for .75" (19,1 mm) dia hole		2
22	6675545	GROMMET			4
23		SEAL	NAP - Order Ref. 36 - Was 6675546 [A]		x
24		FELT STRIP	NAP - 20.38" (517,7 mm) long - Order Ref. 41		2
25	6678283	HANDLE	side window		2
26		SEAL	NAP - 24"(609,6 mm) long - Order Ref. 27		1
27	6555351	SEAL	bulk - sold per foot		x
28		ADHESIVE	NAP - 1 oz. - for top window seal Ref. 1 - Was 6675694 [B]		1
29	91G416	SCREW	Use W/Ref. 14 (NAP/ 6674741 knob)		4
29	91G420	SCREW	Use W/ 6681614 knob		4
30	6677198	TAB	tab		2
31	6729011	SEAL	cab mount		2
32	6729010	SEAL	foam - LH		1
32	6729009	SEAL	foam - RH		1
33	7105034	WINDOW TOP			1
34	6664085	BUSHING	nylon		4
35	6677973	PLUG	for .22" dia hole		2
36	7165265	SEAL, WINDOW			1
37	7103075	SEAL	side screen		2
38	83D5	NUT 5			1
39	6555331	WIRE ROPE			1
40	35C516	BOLT 10			1
41	6676927	FELT STRIP	bulk - sold per foot		x

Page 507 - OSS# 2071349 - All rights reserved by Bobcat Company - 12/01/2009 - 20:50:59 - Produced by Ken Cook Co. with mediaioff

NOTE: Order Side Window Kit from Gwinner Sales #6718806 .

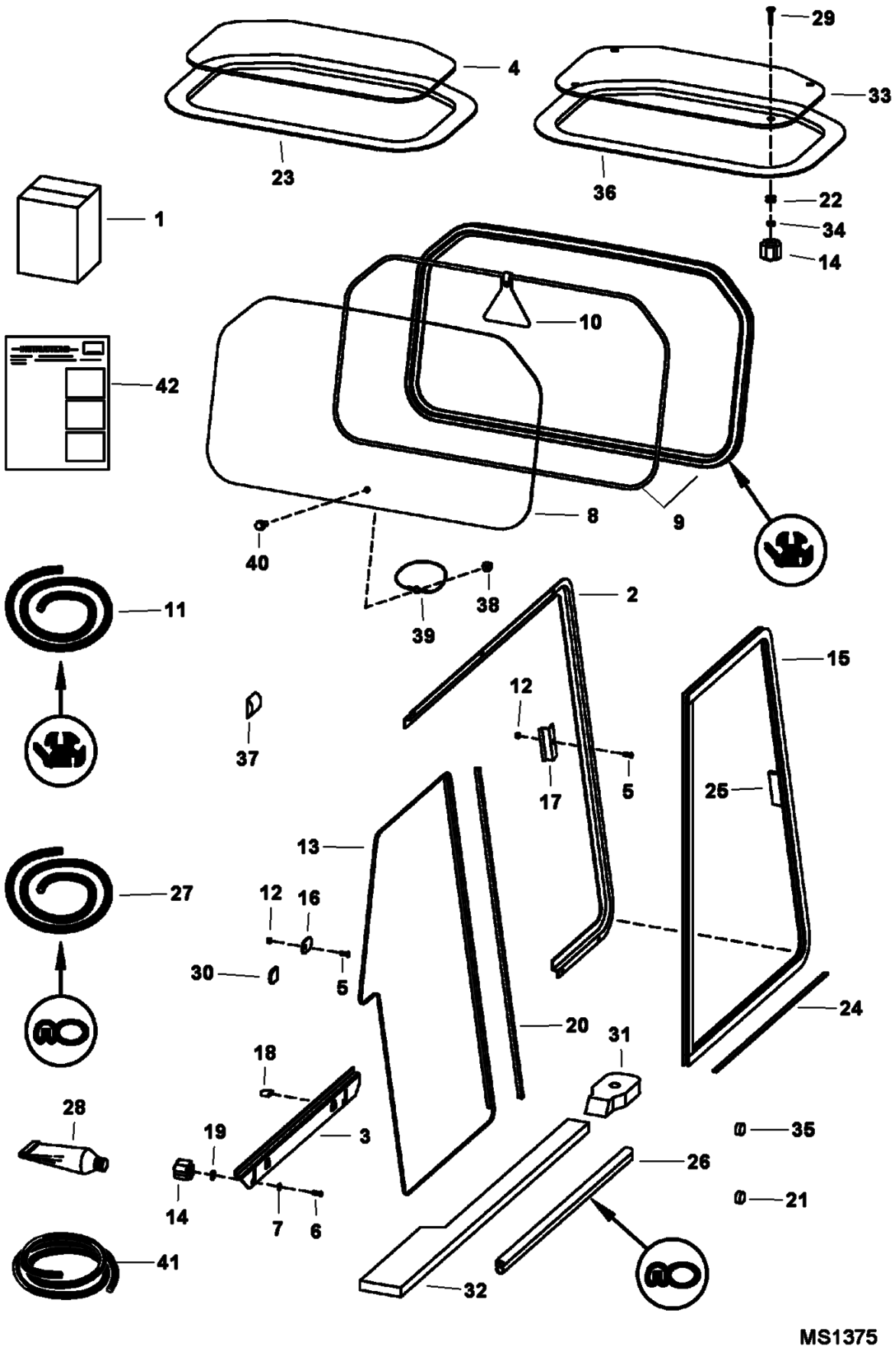

Page 508 - OSS# 2071349 - All rights reserved by Bobcat Company - 12/01/2009 - 20:50:59 - Produced by Ken Cook Co. with mediaioff

Ref No	Part Number	Description	Remarks	Serial Number	Qty
42	6900852	INSTRUCTIONS	INSTRUCTIONS top & rear		1
42	6900853	INSTRUCTIONS	INSTRUCTIONS side windows		1

Page 509 - OSS# 2071349 - All rights reserved by Bobcat Company - 12/01/2009 - 20:50:59 - Produced by Ken Cook Co. with mediaioff

CAB WINDOWS
(Window Rib Kit)

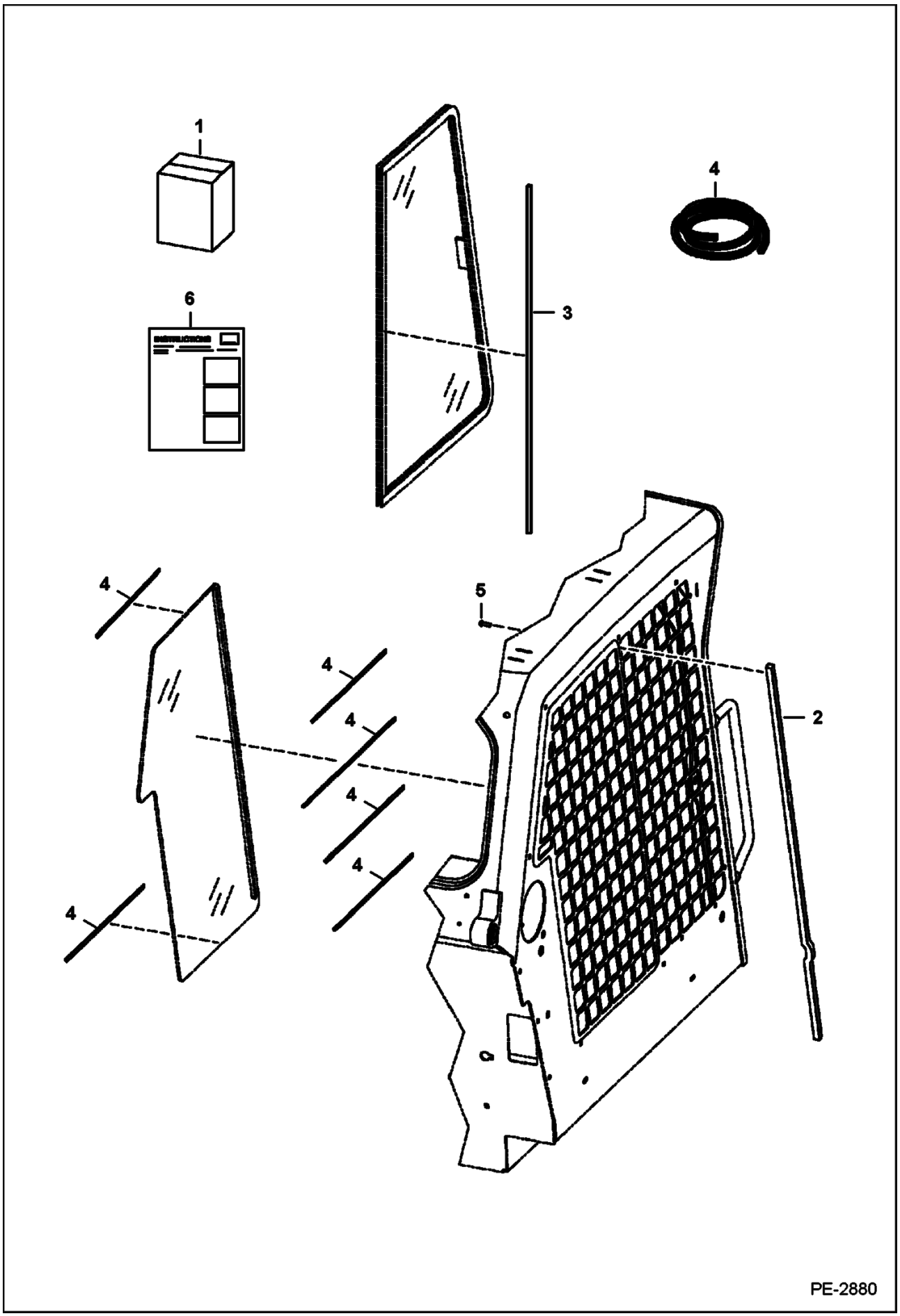

Page 510 - OSS# 2071349 - All rights reserved by Bobcat Company - 12/01/2009 - 20:50:59 - Produced by Ken Cook Co. with mediaioff

Ref No	Part Number	Description	Remarks	Serial Number	Qty
1	7122462	KIT, RIB WINDOW	Ref. 2-6 - can NOT use W/single point lift kits		1
2	7153099	BRACE, CAB	Was 7121556 [A]		2
3	7122487	2 SEAL, WIPER			2
4	7122488	SEAL, BULB	180" (4572 mm) long - cut to fit		1
5	7142024	SCREW	Was 25GT412 [B]		8
6	6904744	INSTRUCTIONS			1

Page 511 - OSS# 2071349 - All rights reserved by Bobcat Company - 12/01/2009 - 20:50:59 - Produced by Ken Cook Co. with mediaioff

CAB WINDOWS
(Rear Window Removal Kit)

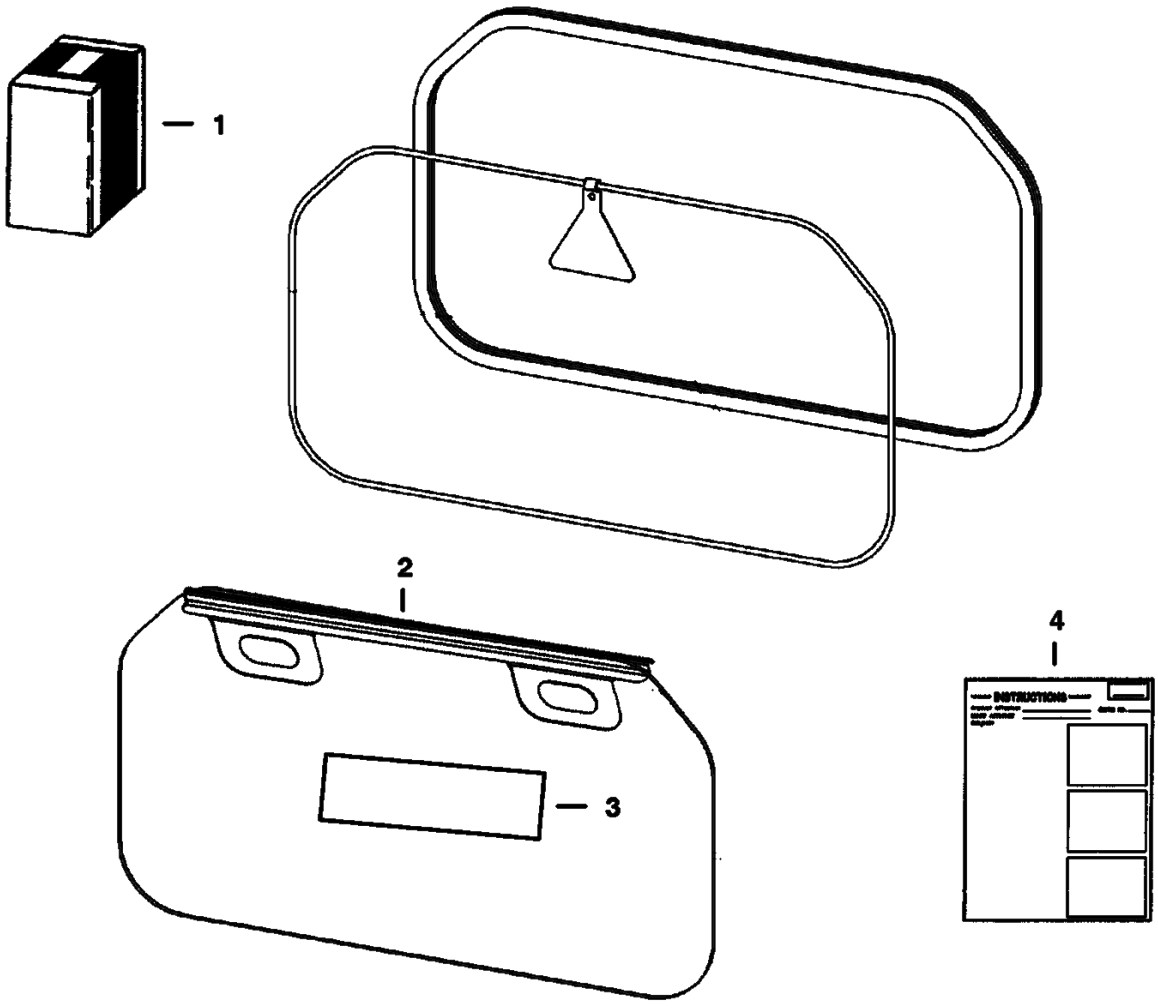

TS–2006

Page 512 - OSS# 2071349 - All rights reserved by Bobcat Company - 12/01/2009 - 20:50:59 - Produced by Ken Cook Co. with mediaioff

CAB WINDOWS (Cont'd)
(Rear Window Removal Kit)

Ref No	Part Number	Description	Remarks	Serial Number	Qty
1	6725946	KIT	Ref. 2-4		1
2	6725421	HANDLE			1
3	6726303	DECAL			1
4	6901029	INSTRUCTIONS			1

Page 513 - OSS# 2071349 - All rights reserved by Bobcat Company - 12/01/2009 - 20:50:59 - Produced by Ken Cook Co. with mediaioff

COUNTERWEIGHT KIT
(Front Axle)

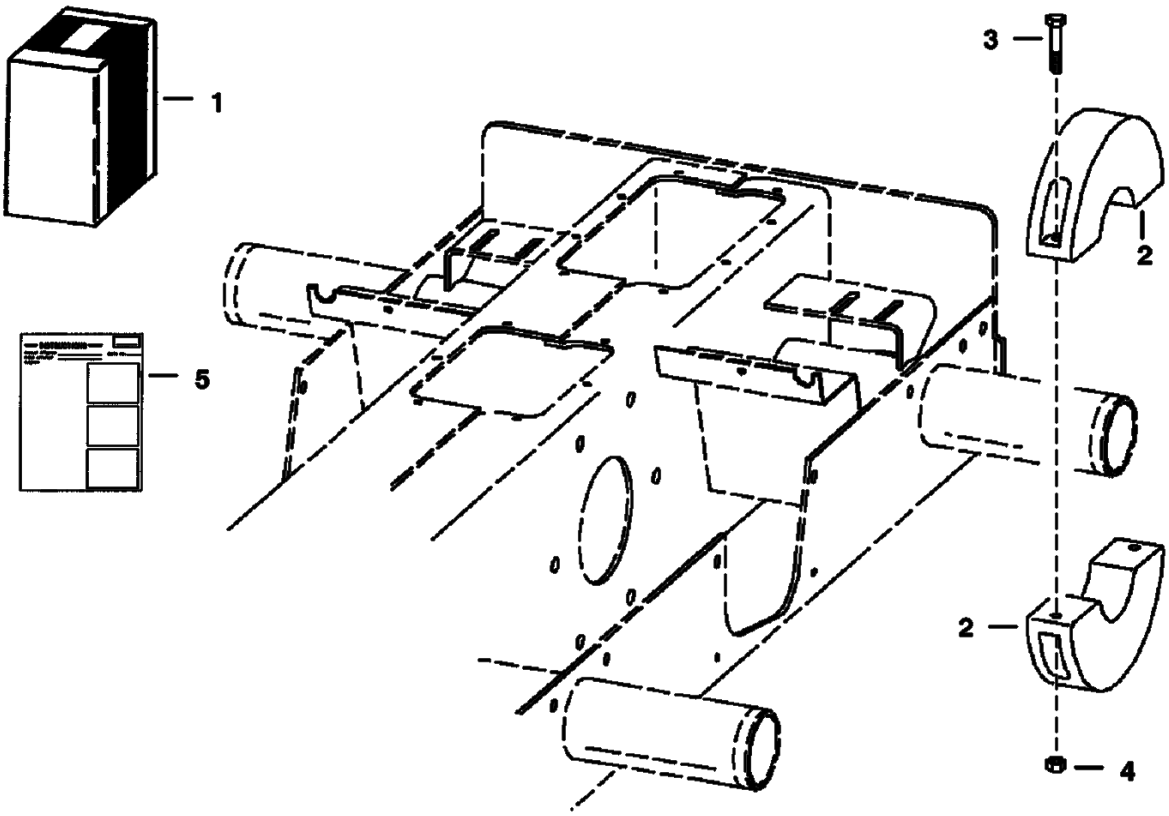

Page 514 - OSS# 2071349 - All rights reserved by Bobcat Company - 12/01/2009 - 20:50:59 - Produced by Ken Cook Co. with mediaioff

COUNTERWEIGHT KIT (Cont'd)
(Front Axle)

Ref No	Part Number	Description	Remarks	Serial Number	Qty
1	6704284	KIT, COUNTERWEIGHT	counterweight		1
2	6714361	WEIGHT	38.7 lbs (17,6 kg) - 4.5" (114,3 mm) wide		4
3	17C640	BOLT 5			8
4	61D6	NUT 5			8
5	6900366	INSTRUCTIONS			1

Page 515 - OSS# 2071349 - All rights reserved by Bobcat Company - 12/01/2009 - 20:50:59 - Produced by Ken Cook Co. with mediaioff

COUNTERWEIGHT KIT
(1850 lb) (839 kg)

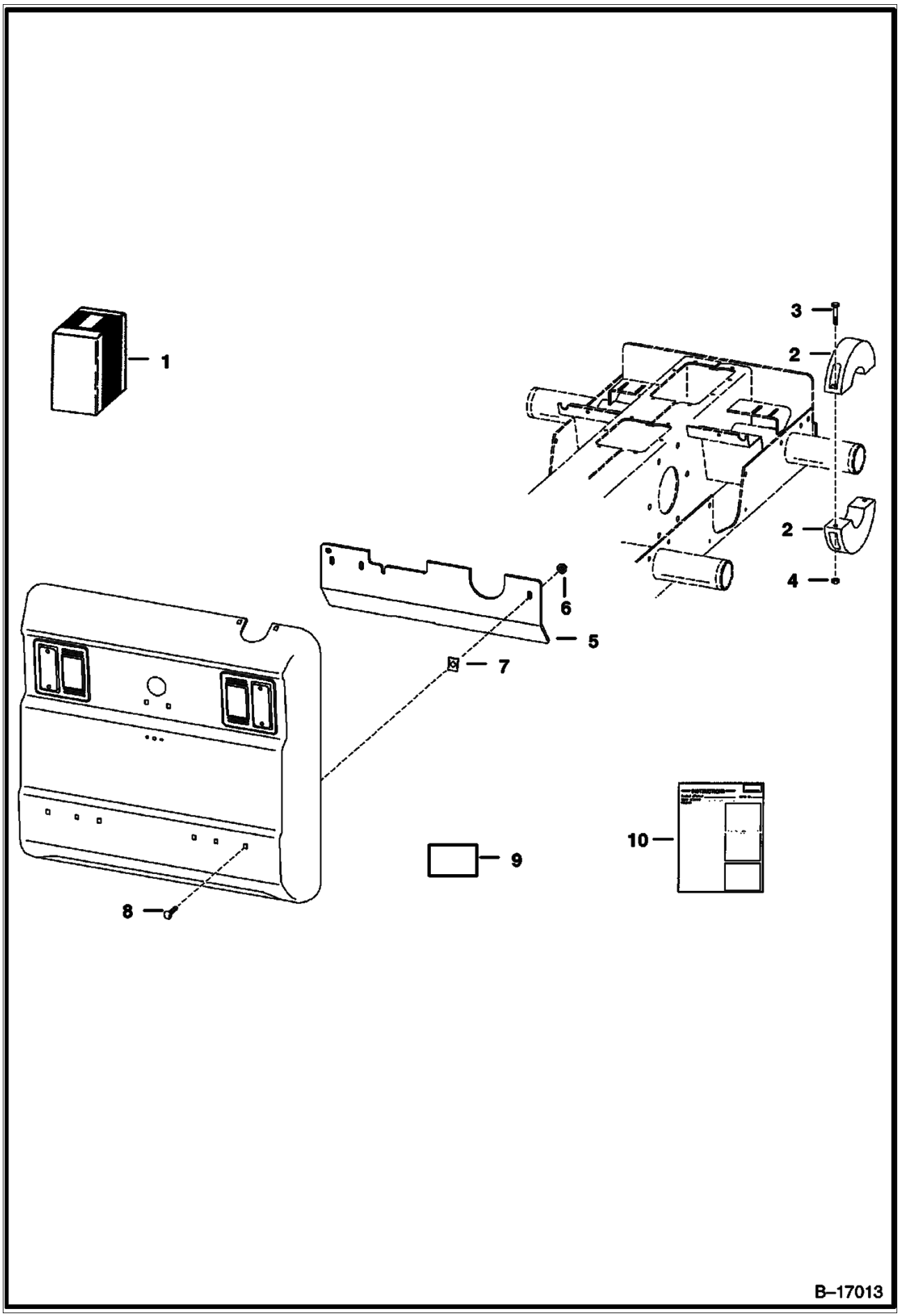

Page 516 - OSS# 2071349 - All rights reserved by Bobcat Company - 12/01/2009 - 20:50:59 - Produced by Ken Cook Co. with mediaIoff

COUNTERWEIGHT KIT (Cont'd)
(1850 lb) (839 kg)

Ref No	Part Number	Description	Remarks	Serial Number	Qty
1	6714932	KIT, COUNTERWEIGHT	counterweight		1
2	6714361	WEIGHT	front axle - 38.7 lbs (17,6 kg) - 4.5" (114,3 mm) wide		4
3	17C640	BOLT 5			4
4	61D6	NUT 5			4
5	6725256	COUNTERWEIGHT	Was 6714053 [A]		3
6	57D6	NUT 5			3
7	1612281	SPRINGNUT	spring - not in kit		3
8	37C632	BOLT			3
9	6725092	DECAL	1850 lb. - not in kit		1
10	6900410	INSTRUCTIONS			1

Page 517 - OSS# 2071349 - All rights reserved by Bobcat Company - 12/01/2009 - 20:50:59 - Produced by Ken Cook Co. with mediaioff

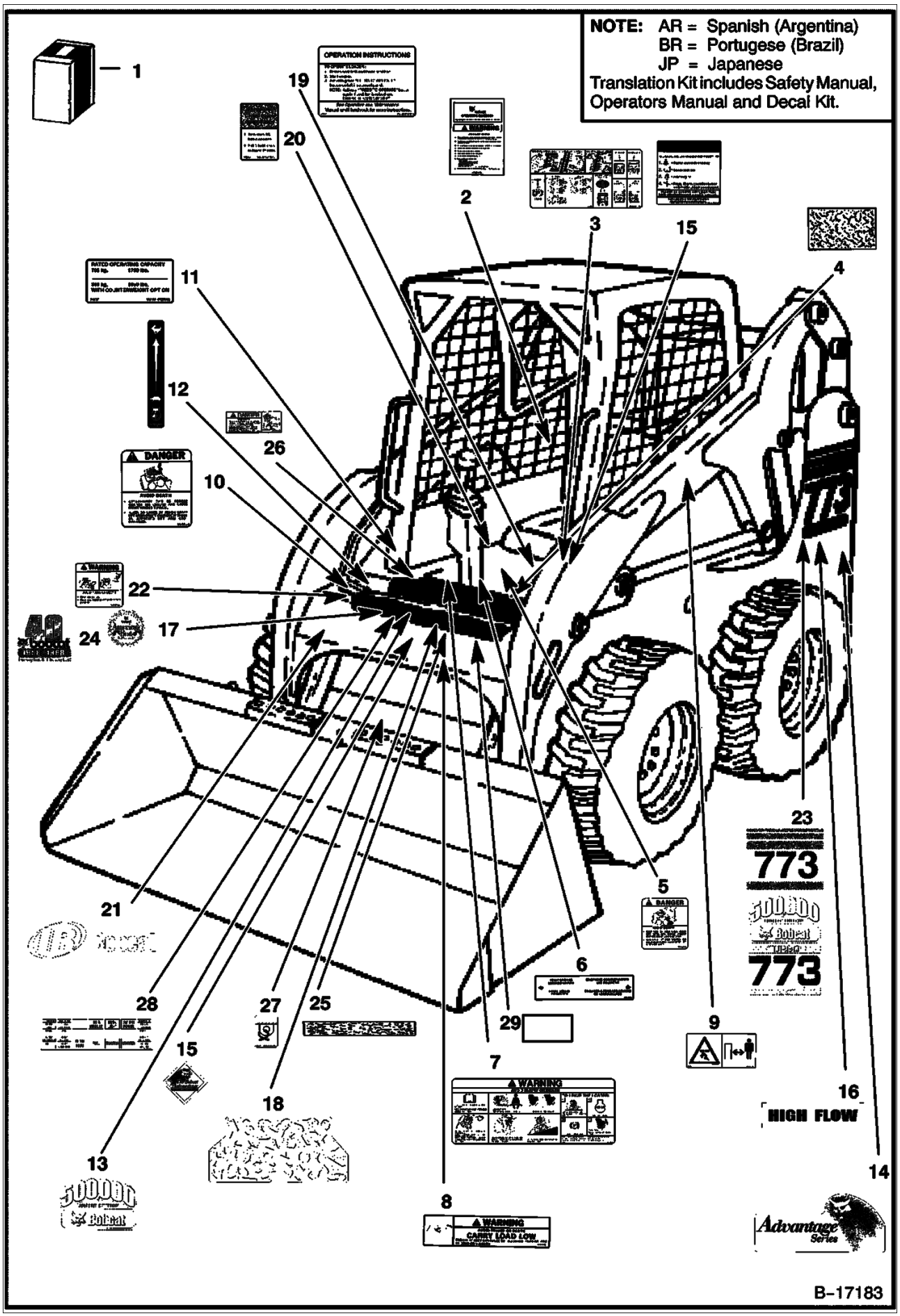

Page 518 - OSS# 2071349 - All rights reserved by Bobcat Company - 12/01/2009 - 20:50:59 - Produced by Ken Cook Co. with mediaioff

Ref No	Part Number	Description	Remarks	Serial Number	Qty
1	6901068	KIT	decal - Was 6719796 [D]		1
1	6719796AR	KIT	decal - SEE NOTE		1
1	6719796BR	KIT	decal - SEE NOTE		1
1	6719796JP	KIT	decal - SEE NOTE		1
1	6719795AR	KIT	translation - SEE NOTE		1
1	6719795BR	KIT	translation - SEE NOTE		1
2	6718719	HANDBOOK, OPERATOR'S	W/wire rope - not in kit - Was 6737783 [A]		1
2	6558309	WIRE ROPE	bulk - sold per foot - Also Order (2) of 6558310 sleeve		x
2	6558310	SLEEVE	wire rope		2
2	17C512	BOLT 5			1
2	61D5	NUT			1
2	84G3112	BOLT 5			1
3	6728327	DECAL	operating - foot pedal - Was 6718701 [A]		1
3	6727926	DECAL	operating - ACS		1
4	6554100	TREAD	3" x 6" (76,2 mm x 152,4 mm)		4
5	6579639	DECAL	danger		1
6	6561383	DECAL	Bob-tach		1
7	6728539	DECAL	warning - Was 6718698 [A]		1
8	6579528	DECAL	carry load low		1
9	6713507	DECAL	stay clear - European -Not in Kit		2
10	6579509	DECAL	danger		1
11	6725092	DECAL	capacity - Was 6561376 [A]		1
11	6725374	DECAL	capacity - limited edition - Not in Kit	500K 11001 & Abv	1
12	6735140	DECAL	throttle - Was 6557565 [A]		1
13	6729647	DECAL	limited edition - Not in Kit	500K 11001 & Abv	1
14	6718271	DECAL	advantage series - L.H. - Not in Kit		1
15	6718275	DECAL	Bobcat advantage		1
16	6727913	DECAL	high flow - Not in Kit - Was 6714534 [A]		1
17	6705088	DECAL	America's Best		1
18		SAFETY TREAD	NAP - 12" x 25.30" (304,8 mm x 642,6 mm) - Order 7108222 - Was 6712791 [A]		1
18	7108222	SAFETY TREAD	22.5" (571,5 mm) wide irregular shape		1
19	6727926	DECAL	operations - Was 6718703 [A]		1
19	6717639	DECAL	seat & seat bar operating - AHC - Not in Kit		1
19	6727926	DECAL	ACS operations - not in kit - Was 6727941 [A]		1
20	6711840	DECAL	lift lock		1
21	6727310	DECAL	Ingersoll Rand - black letters - Was 6711329 [A]		1
22	6710358	DECAL	warning		1
23	6714535	DECAL	model no.		2
23	6729646	DECAL	model - limited edition - Not in Kit	500K 11001 & Abv	1
23	6732532	DECAL	no. decal on S175		1
23	6732533	DECAL	no. decal on S185		1
24	6715912	DECAL	40th anniversary - Not in Kit		1
25	6710746	SAFETY TREAD	1.25" x 15"(31,8 mm x 381 mm)		2
26	6717343	DECAL	danger		2
27	6727595	DECAL	tie down - Was 6595014 [B]		1
28		DECAL	NAP - fuse/relay - Not in Kit - 2.10" x 9.40"(53,3 mm x 238,8 mm) - Order 6718774 Decal		1
28	6718774	DECAL	fuse/relay - 2" x 7" (50,8 mm x 177,8 mm)		1
29	6731757	DECAL	front aux. couple block - Not in kit		1

Page 519 - OSS# 2071349 - All rights reserved by Bobcat Company - 12/01/2009 - 20:50:59 - Produced by Ken Cook Co. with mediaioff

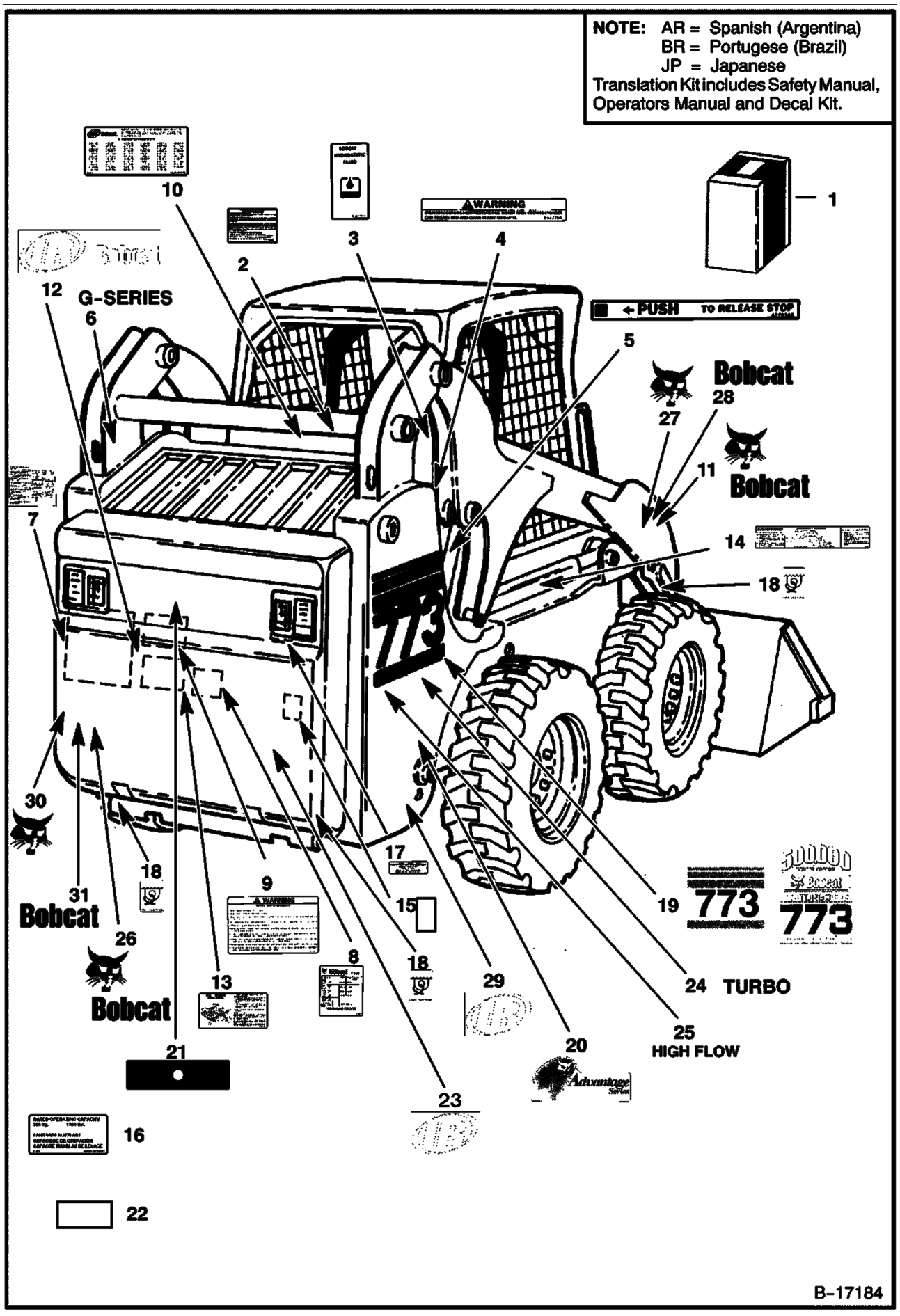

Page 520 - OSS# 2071349 - All rights reserved by Bobcat Company - 12/01/2009 - 20:50:59 - Produced by Ken Cook Co. with mediaioff

Ref No	Part Number	Description	Remarks	Serial Number	Qty
1	6901068	KIT	decal - Was 6719796 [D]		1
1	6719796AR	KIT	decal - SEE NOTE		1
1	6719796BR	KIT	decal - SEE NOTE		1
1	6719796JP	KIT	decal - SEE NOTE		1
1	6719795AR	KIT	translation - SEE NOTE		1
1	6719795BR	KIT	translation - SEE NOTE		1
2	6560573	DECAL	spark arrestor		1
3	6565990	DECAL	hydrostatic fluid fill		1
4	6577754	DECAL	warning		2
5	6578368	DECAL	push		1
6	6717907	DECAL	"G" Series - Not in kit		1
7	6734534	DECAL	service/warning/service parts - Was 6718398 [A]		1
8	6565200	DECAL	filters - Was 6709781 [A]		1
9	6579511	DECAL	warning - Not in Kit		1
10	6557224	DECAL	patent		1
11	6730909	DECAL	R.H. - Was 6727755 [A]		1
11	6730910	DECAL	L.H.		1
12	6727311	DECAL	IR Logo - Was 6714139 [A]		1
13	6709030	DECAL	belt tension - spring loaded idler		1
14	6719018	DECAL	boom stop		1
15	6719574	DECAL	coolant level		1
16		DECAL	NAP - load - Not in Kit - Was 6718200 [A]		1
16		DECAL	NAP - load - Not in Kit - Was 6717343 [B,D]	500K 11001 & Abv	1
17	6708929	DECAL	propylene glycol antifreeze		1
18	6727595	DECAL	tie down - Was 6595014 [A]		4
19	6714535	DECAL	model		1
19	6729646	DECAL	model - limited edition - Not in Kit	500K 11001 & Abv	1
20	6718272	DECAL	advantage series - R.H. - Not in Kit		1
21	6714242	DECAL	black - rear door		1
22	6725374	DECAL	load 1850 - Not in Kit - Was 6719017 [B]		1
23	6732423	DECAL	IR White		1
24	6727912	DECAL	turbo - Not in Kit - Was 6714526 [A]		2
25	6727913	DECAL	hi-flow - Not in Kit - Was 6714534 [A]		1
26	6735901	DECAL, BOBCAT	W/Bobcat head - white		1
27	6731507	DECAL	R.H. Bobcat head - black		1
27	6731508	DECAL	L.H. Bobcat head - black		1
28	6731509	DECAL	Bobcat - black		2
29	6735864	DECAL	I.R. - black		2
30		DECAL	NAP - Bobcat head - white - Order Ref. 26 - Was 6732420 [A]		1
31		DECAL	NAP - Bobcat - white - Order Ref. 26 - Was 6732419 [A]		1

Page 521 - OSS# 2071349 - All rights reserved by Bobcat Company - 12/01/2009 - 20:50:59 - Produced by Ken Cook Co. with mediaioff

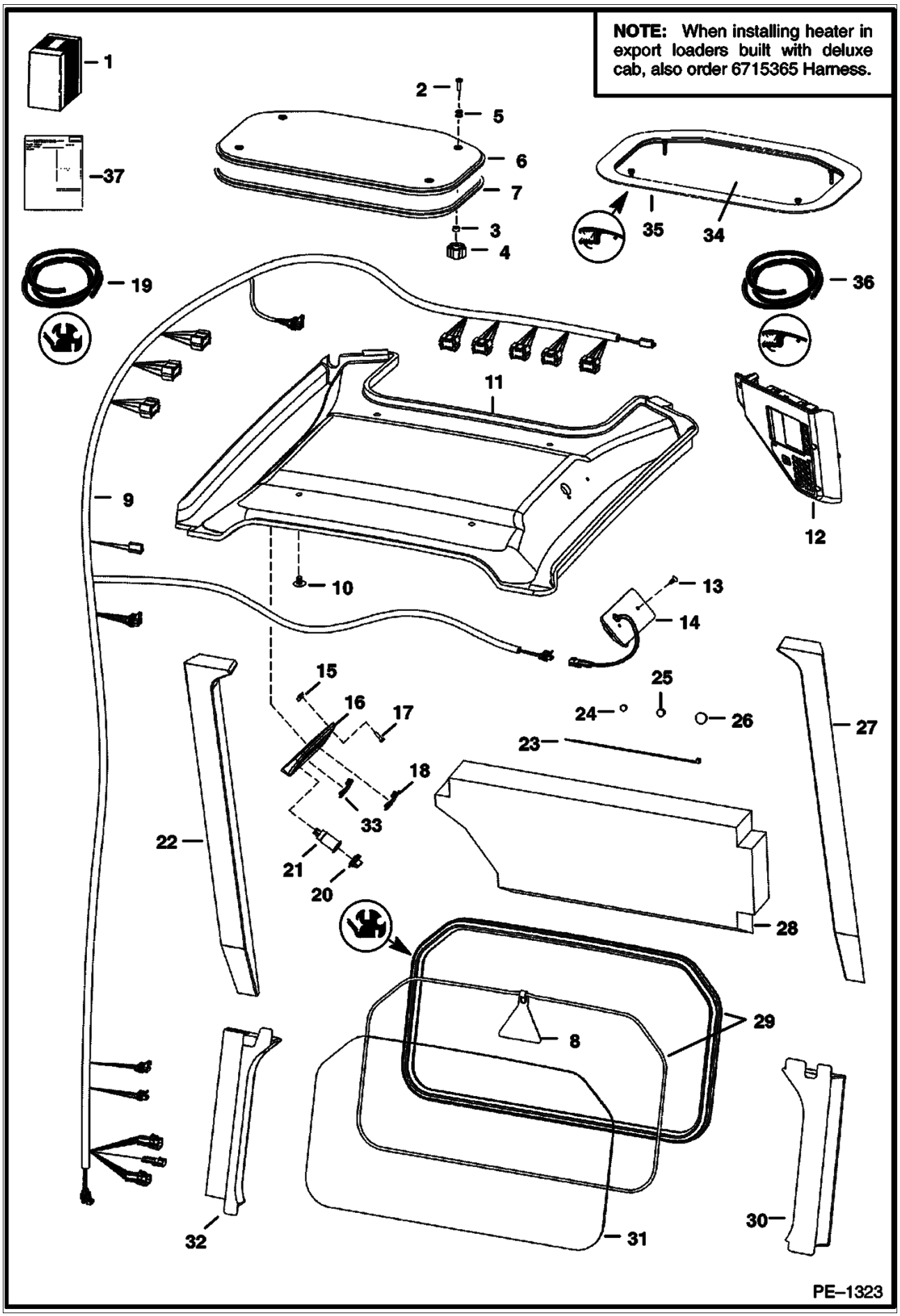

Page 522 - OSS# 2071349 - All rights reserved by Bobcat Company - 12/01/2009 - 20:50:59 - Produced by Ken Cook Co. with mediaioff

Ref No	Part Number	Description	Remarks	Serial Number	Qty
1	6718804	KIT	deluxe cab - SEE NOTE	517617999 & Below	1
1	6718804	KIT	deluxe cab - SEE NOTE	518011999 & Below	1
1	6718804	KIT	deluxe cab - SEE NOTE	518111999 & Below	1
1	6718804	KIT	deluxe cab - SEE NOTE	519015999 & Below	1
1	6718804	KIT	deluxe cab - SEE NOTE	519211999 & Below	1
1	6729233	KIT	deluxe cab - SEE NOTE	517618000 & Above	1
1	6729233	KIT	deluxe cab - SEE NOTE	500K11001 & Above	1
1	6729233	KIT	deluxe cab - SEE NOTE	519016000 & Above	1
1	6729233	KIT	deluxe cab - SEE NOTE	519212000 & Above	1
1	6729233	KIT	deluxe cab - SEE NOTE	518112000 & Above	1
1	6729233	KIT	deluxe cab - SEE NOTE	518012000 & Above	1
2	91G416	SCREW	Use W/Ref. 4 (NAP/ 6674741 knob) - Was 88G1216 [B]		4
2	91G420	SCREW	Use W/ 6681614 knob		4
3	6664085	BUSHING	nylon		4
4		KNOB	NAP - 5/8" deep thread - Was 6674741 [A]		4
4	6681614	KNOB	11/16" deep thread		4
5	6675545	GROMMET			4
6	7105034	WINDOW TOP	Was 7105035 [A]		1
7	7165265	SEAL, WINDOW			x
8	6731478	EXIT TAG	Was 6559515 [A]		1
9		HARNESS	NAP - Order 6725273 Harness & 6725275 Harness - Was 6715366 [A]		1
9	6725273	HARNESS	Part of Ref. 1 (6718804 Kit)	517617999 & Below	1
9	6725273	HARNESS	Part of Ref. 1 (6718804 Kit)	518111999 & Below	1
9	6725273	HARNESS	Part of Ref. 1 (6718804 Kit)	519211999 & Below	1
9	6725273	HARNESS	Part of Ref. 1 (6718804 Kit)	519015999 & Below	1
9	6725273	HARNESS	Part of Ref. 1 (6718804 Kit)	518011999 & Below	1
9	6727190	HARNESS	Part of Ref. 1 (6729233 Kit)	500K11001 & Above	1
9	6727190	HARNESS	Part of Ref. 1 (6729233 Kit)	517618000 & Above	1
9	6727190	HARNESS	Part of Ref. 1 (6729233 Kit)	518012000 & Above	1
9	6727190	HARNESS	Part of Ref. 1 (6729233 Kit)	518112000 & Above	1
9	6727190	HARNESS	Part of Ref. 1 (6729233 Kit)	519212000 & Above	1
9	6727190	HARNESS	Part of Ref. 1 (6729233 Kit)	519016000 & Above	1
9	6715365	HARNESS	accessories - Export - SEE NOTE - Not in Kits		1

Page 523 - OSS# 2071349 - All rights reserved by Bobcat Company - 12/01/2009 - 20:50:59 - Produced by Ken Cook Co. with mediaioff

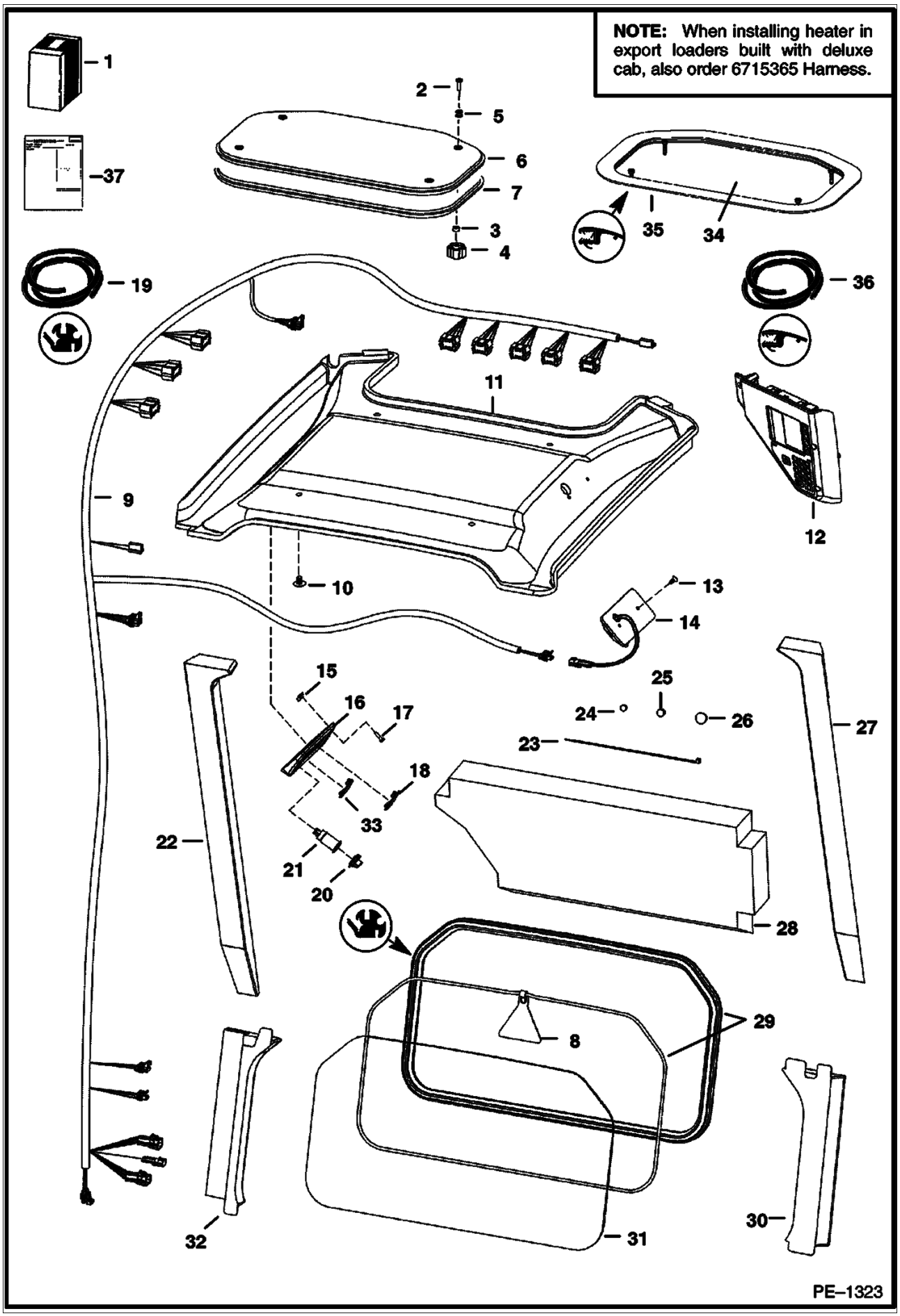

Page 524 - OSS# 2071349 - All rights reserved by Bobcat Company - 12/01/2009 - 20:50:59 - Produced by Ken Cook Co. with mediaioff

Ref No	Part Number	Description	Remarks	Serial Number	Qty
10	6674895	RETAINER	snap in		4
11		INSULATION	headliner - Use W/Ref. 30 (6717518 insulation) & Ref. 32 (6717517 insulation) - Order 7148195 insulation, Ref. 30 (7149198 insulation) & Ref. 32 (7149197 insulation) - Was 6737704 [A]		1
11	7148195	INSULATION HEADLINER	headliner - Use W/Ref. 30 (7148198 insulation) & Ref. 32 (7148197 insulation)		1
12	6688403	PANEL	deluxe - RH - keyless - not in kit - Was 6686510 [A]		1
12		INSTRUCTIONS	NAP - See Loader Was 6900860 [A]		1
13	6664221	RETAINER	snap in		2
14	6680326	LIGHT	dome - Was 6664368 [A]		1
14	6665367	BULB			1
15	6669091	CLIP			4
16	6718580	PANEL			1
17	6669224	BOLT			4
18	6665314	PLUG	switch - Was 6719038 [A]		5
19	6675387	EXTRUSION	bulk - Sold Per Foot - Was 6674524 [A]		x
19	6554149	CORD	bulk - sold per foot		x
20	6664224	CAP			1
21	6664223	OUTLET			1
22	7148199	INSULATION	Was 6717519 [A]		1
23	6610510	TIE			6
24	5289686	PLUG	black - plugs a .375" hole		1
25	6649949	PLUG	plugs a .50" hole		2
26	6657719	PLUG	for .75" (19,1 mm) dia hole		1
27	7148200	INSULATION	Was 6717520 [A]		1
28	6727299	INSULATION	cab back		1
29		EXTRUSION	NAP - 75.75"(1924 mm) long - Order Ref. 19		x
29		CORD	NAP - 75.75"(1924 mm) long - Order Ref. 19 - Also Order Ref. 8 (6731478 exit tag)		x
30	6717518	INSULATION	Use W/Ref. 11 (NAP/ 6737704 insulation)		1
30	7148198	INSULATION	Use W/Ref. 11 (7148195 insulation)		1
31	6717874	WINDOW	rear		1
32	6717517	INSULATION	Use W/Ref. 11 (NAP/ 6737704 insulation)		1
32	7148197	INSULATION	Use W/Ref. 11 (7148195 insulation)		1
33	6668742	SWITCH	travel control - Export		1
34		WINDOW	NAP - Order Ref. 6 - Was 6725360 [A]		1
35		SEAL	NAP - Order Ref. 7		x
36		SEAL	NAP - bulk - Sold Per Foot - Order Ref. 6 - Was 6675546 [A]		x
37	6900851	INSTRUCTIONS			1

Page 525 - OSS# 2071349 - All rights reserved by Bobcat Company - 12/01/2009 - 20:50:59 - Produced by Ken Cook Co. with mediaioff

DUAL BATTERY KIT
(W/ Starter) (S/N 500K12372 & Below, 519021916 & Below, 519212417 & Below)

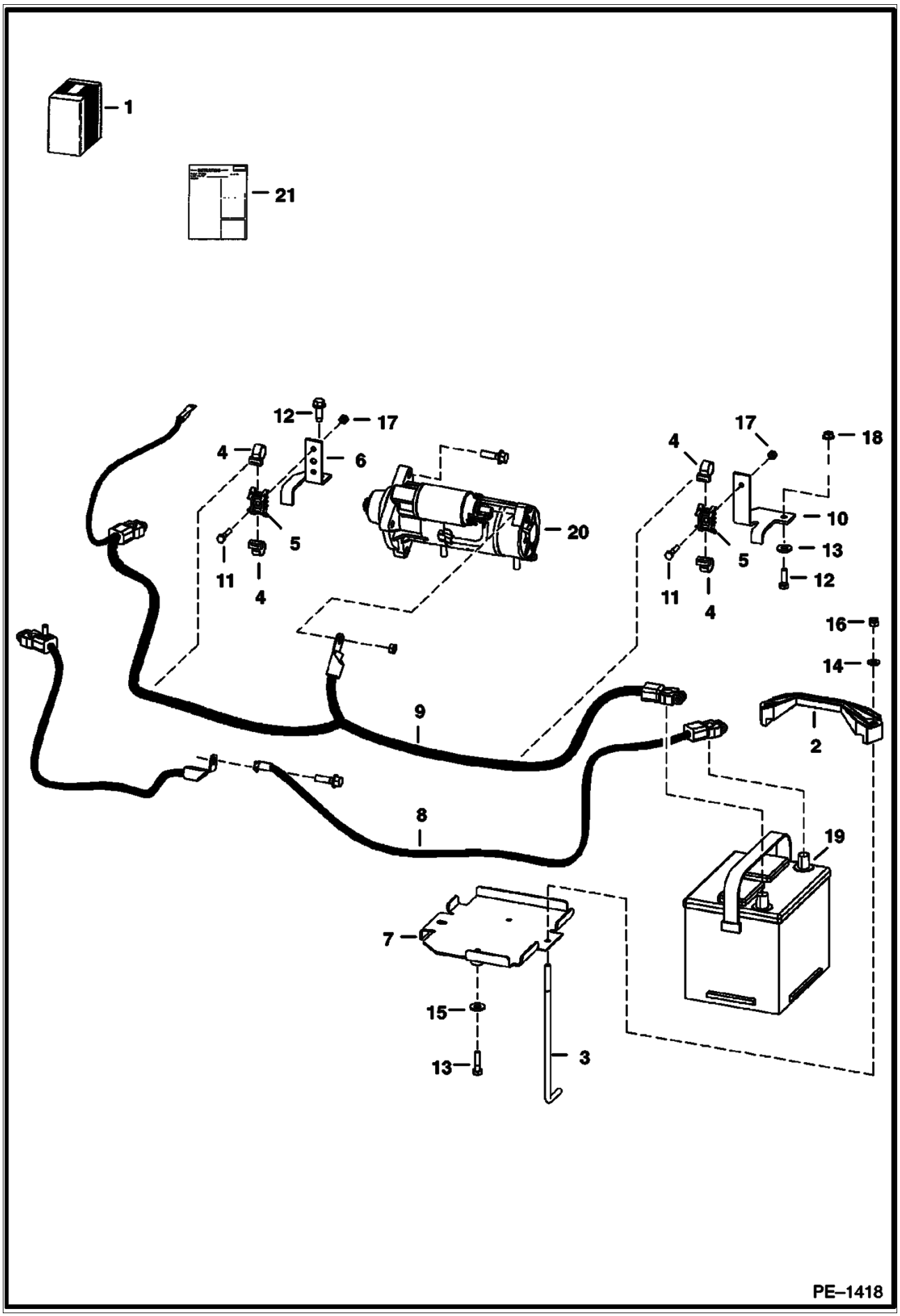

Page 526 - OSS# 2071349 - All rights reserved by Bobcat Company - 12/01/2009 - 20:50:59 - Produced by Ken Cook Co. with mediaioff

DUAL BATTERY KIT (Cont'd)
(W/ Starter) (S/N 500K12372 & Below, 519021916 & Below, 519212417 & Below)

Ref No	Part Number	Description	Remarks	Serial Number	Qty
1	6731695	KIT	See Illustration DUAL BATTERY KIT/ PE1417 See Illustration OIL COOLER/ PE1455R DUAL BATTERY - REF. 2-18, 20 & 21 - IF LOADER IS EQUIPPED W/VALEO STARTER ORDER 6731694 DUAL BATTERY KIT & 6731956 OIL COOLER KIT - Also order 6670251 battery		1
2	6569203	CLAMP			1
3	6576280	BOLT			2
4	6678669	STRAP			4
5	6678974	MOUNT			2
6	6715131	BRACKET	Was 6727508 [A]		1
7	6731617	PAN	battery		1
8	6731665	CABLE	negative		1
9	6731666	CABLE	positive		1
10	6731746	BRACKET			1
11	17C420	CAPSCREW			2
12	17C516	BOLT			1
13	17C520	BOLT 5			2
14	25E15	WASHER			2
15	25E16	WSHR			3
16	59D5	NUT 5			2
17	61D4	NUT 5			2
18	97D5	NUT			1
19	6670251	BATTERY, DRY 530 AMP	not in kit		1
20	6685190	STARTER	Was 6676957 [A]		1
21	6901603	INSTRUCTIONS			1

Page 527 - OSS# 2071349 - All rights reserved by Bobcat Company - 12/01/2009 - 20:50:59 - Produced by Ken Cook Co. with mediaioff

DUAL BATTERY KIT
(W/O Starter) (S/N 500K12373 & Above, 519021917 & Above, 519212418 & Above)

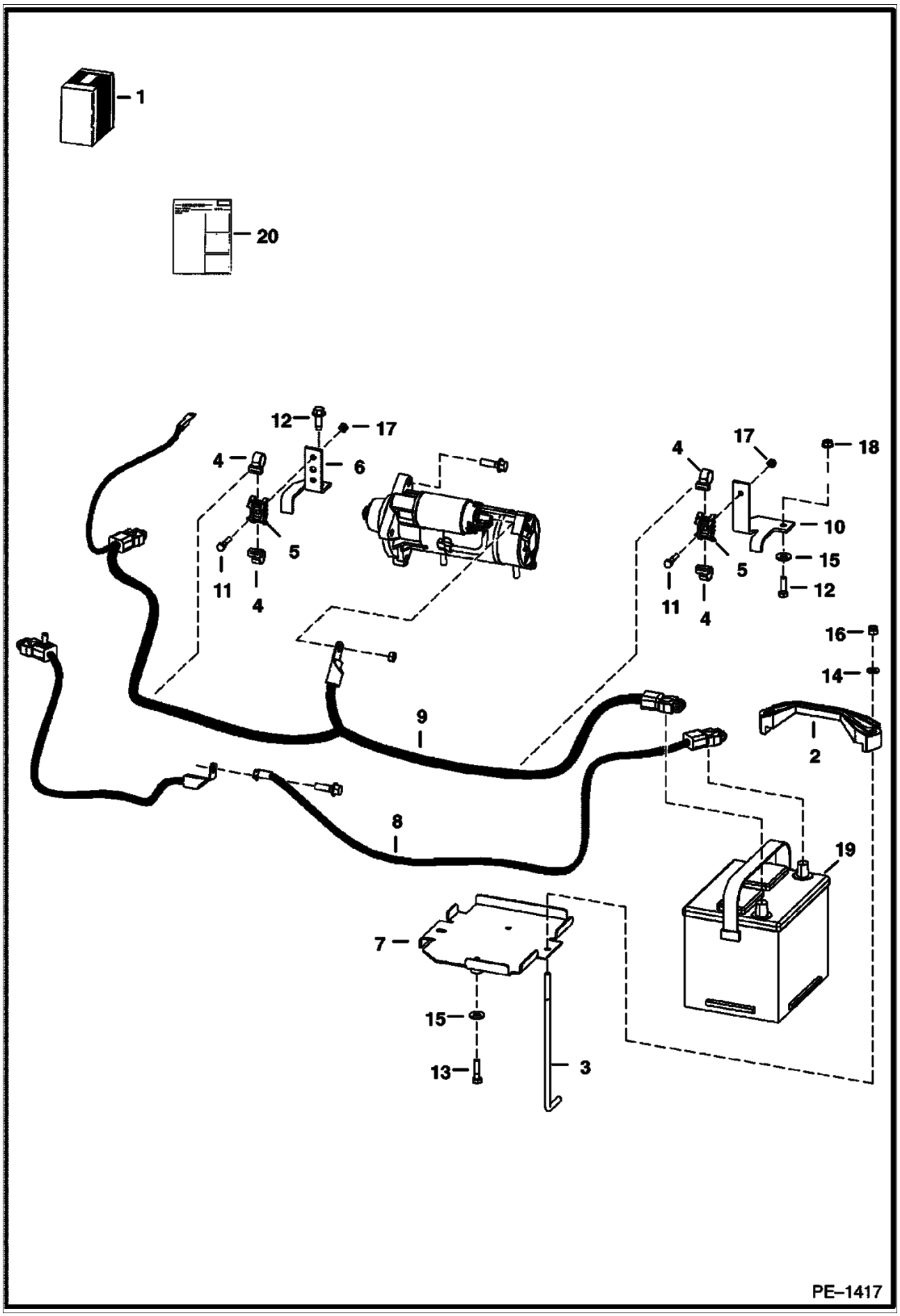

Page 528 - OSS# 2071349 - All rights reserved by Bobcat Company - 12/01/2009 - 20:50:59 - Produced by Ken Cook Co. with mediaioff

DUAL BATTERY KIT (Cont'd)
(W/O Starter) (S/N 500K12373 & Above, 519021917 & Above, 519212418 & Above)

Ref No	Part Number	Description	Remarks	Serial Number	Qty
1	6731694	KIT	See Illustration OIL COOLER/ PE1455R See Illustration OIL COOLER/ B17147 DUAL BATTERY - REF. 2-18 & 20 - FOR S/N 500K 12737-12421, 5190 21917-22517 & 5192 12418-12422 LOADERS, ALSO ORDER 6731956 OIL COOLER KIT SOME LATER S/N LOADERS MAY ALSO REQUIRE 6731956 OIL COOLER KIT DEPENDING ON THE OIL COOLER DESIGN - REF. TO IDENTIFY CORRECT OIL COOLER DESIGN		1
2	6569203	CLAMP			1
3	6576280	BOLT			2
4	6678669	STRAP			4
5	6678974	MOUNT			2
6	6715131	BRACKET	Was 6727508 [A]		1
7	6731617	PAN	battery		1
8	6731665	CABLE	negative		1
9	6731666	CABLE	positive		1
10	6731746	BRACKET			1
11	17C420	CAPSCREW			2
12	17C516	BOLT			1
13	17C520	BOLT 5			2
14	25E15	WASHER			2
15	25E16	WSHR			3
16	59D5	NUT 5			2
17	61D4	NUT 5			2
18	97D5	NUT			1
19	6670251	BATTERY, DRY 530 AMP	not in kit		1
20	6901602	INSTRUCTIONS			1

Page 529 - OSS# 2071349 - All rights reserved by Bobcat Company - 12/01/2009 - 20:50:59 - Produced by Ken Cook Co. with mediaioff

ELECTRICAL CONNECTOR KIT
(7-Pin)

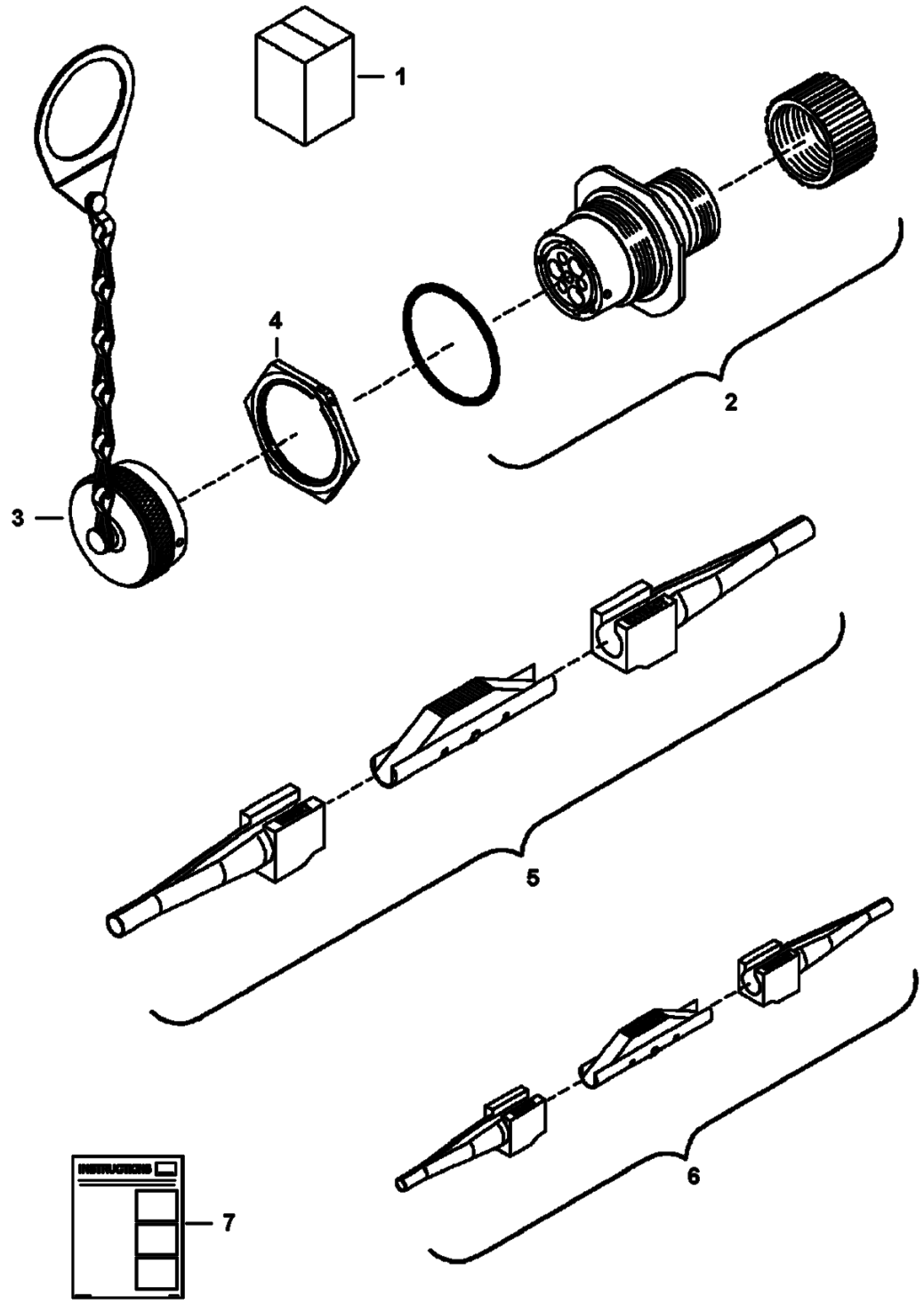

Page 530 - OSS# 2071349 - All rights reserved by Bobcat Company - 12/01/2009 - 20:50:59 - Produced by Ken Cook Co. with mediaioff

ELECTRICAL CONNECTOR KIT (Cont'd)
(7-Pin)

Ref No	Part Number	Description	Remarks	Serial Number	Qty
1	6727176	KIT	W/Ref. 2-4 & 7		1
2	6674802	CONNECTOR	7-pin does not include sockets		1
2	6669549	SOCKET	small		4
2	6677136	SOCKET	large - 12 ga		3
3	6675026	CAP			1
4	6688338	NUT			1
5	7000461	TOOL, DISCONNECT TERMINAL	yellow/white		1
6	7000460	TOOL, DISCONNECT TERMINAL	blue/white		1
7	6901076	INSTRUCTIONS			1

Page 531 - OSS# 2071349 - All rights reserved by Bobcat Company - 12/01/2009 - 20:50:59 - Produced by Ken Cook Co. with mediaioff

ELECTRICAL CONTROLS KIT
(7 Pin Attachments)

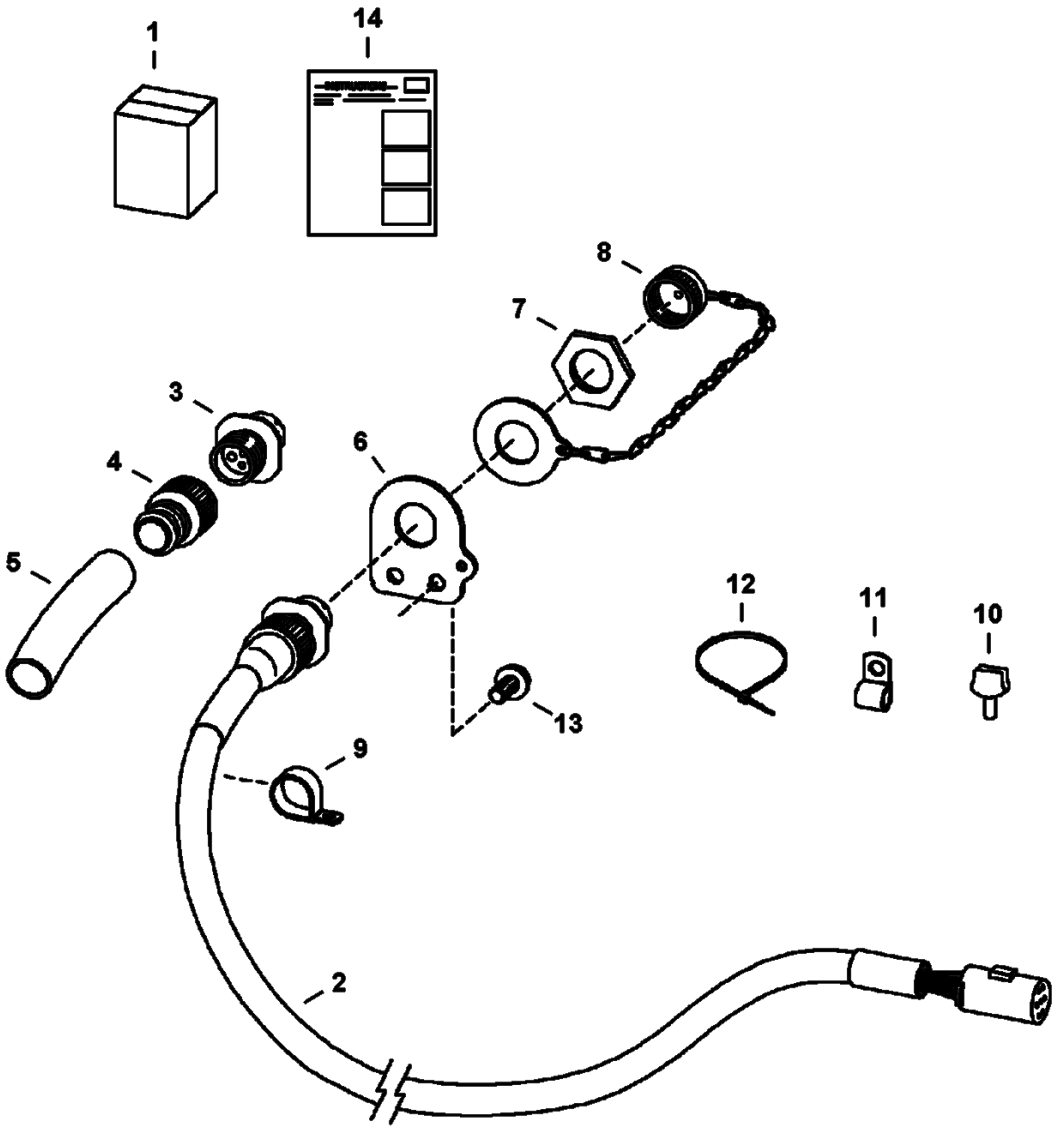

Page 532 - OSS# 2071349 - All rights reserved by Bobcat Company - 12/01/2009 - 20:50:59 - Produced by Ken Cook Co. with mediaioff

ELECTRICAL CONTROLS KIT (Cont'd)
(7 Pin Attachments)

Ref No	Part Number	Description	Remarks	Serial Number	Qty
1	6733142	KIT	Ref. 2-14		1
2	6718426	HARNESS, BOOM	W/Ref. 3-8		1
3	6674802	CONNECTOR	See Illustration ELECTRICAL CONNECTOR KIT/ MS2627 - 7-pin - W/Ref. 7 does not include sockets		1
3	6669549	SOCKET	small		4
3	6677136	SOCKET	large - 12 ga		3
4	6674799	ADAPTER	heat shrink		1
5		HEAT SHRINK	NSS - purchase locally		1
6	6718750	MOUNT			1
7	6688338	NUT	jam		1
8	6675026	CAP			1
9	30H35	CLAMP 10			1
10	6675281	MOUNT			1
11	30H27	CLAMP			6
12	6624289	STRAP 10			7
13	84G3112	BOLT 5			8
14	6901871	INSTRUCTIONS			1

Page 533 - OSS# 2071349 - All rights reserved by Bobcat Company - 12/01/2009 - 20:50:59 - Produced by Ken Cook Co. with mediaioff

ELECTRICAL CONTROLS KIT
(7 Pin Attachments)

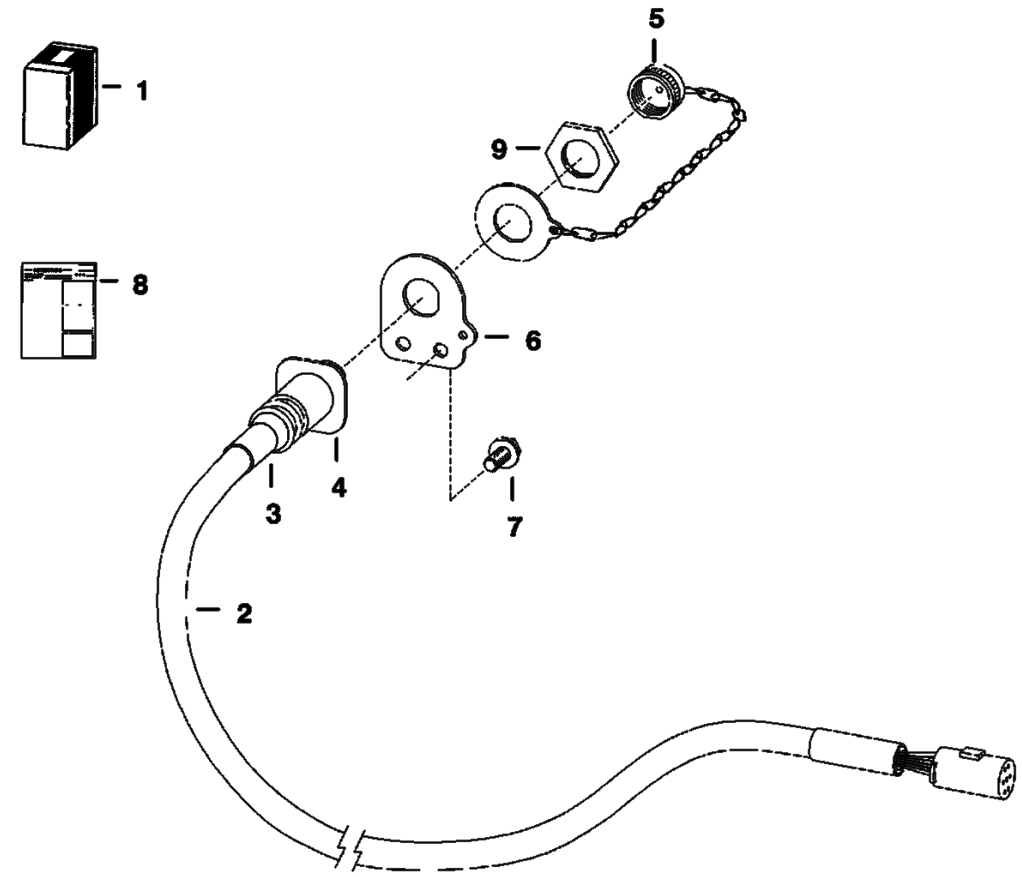

NOTE: This kit will be used for chipper and mixer attachments.

TS-1935

Page 534 - OSS# 2071349 - All rights reserved by Bobcat Company - 12/01/2009 - 20:50:59 - Produced by Ken Cook Co. with mediaioff

ELECTRICAL CONTROLS KIT (Cont'd)
(7 Pin Attachments)

Ref No	Part Number	Description	Remarks	Serial Number	Qty
1		KIT	NAP - Ref. 2 - 8 - Order 6733142 kit - Was 6718812 [A]		1
2	6718426	HARNESS, BOOM	W/Ref. 3-6 & 9		1
3	6674799	ADAPTER	heat shrink		1
4	6674802	CONNECTOR	See Illustration ELECTRICAL CONNECTOR KIT/ MS2627 - 7-pin - W/Ref. 7 does not include sockets		1
4	6669549	SOCKET	small		4
4	6677136	SOCKET	large - 12 ga		3
5	6675026	CAP			1
6	6718750	MOUNT			1
7	84G3112	BOLT 5			2
8		INSTRUCTIONS	INSTRUCTIONS NAP - Order 6901871 Instruction - Was 6900855 [A]		1
9	6688338	NUT			1

Page 535 - OSS# 2071349 - All rights reserved by Bobcat Company - 12/01/2009 - 20:50:59 - Produced by Ken Cook Co. with mediaioff

ELECTRICAL CONTROLS KIT
(To Run G-Series Attachments & Old Attachments)(W/ Toggle Switch)

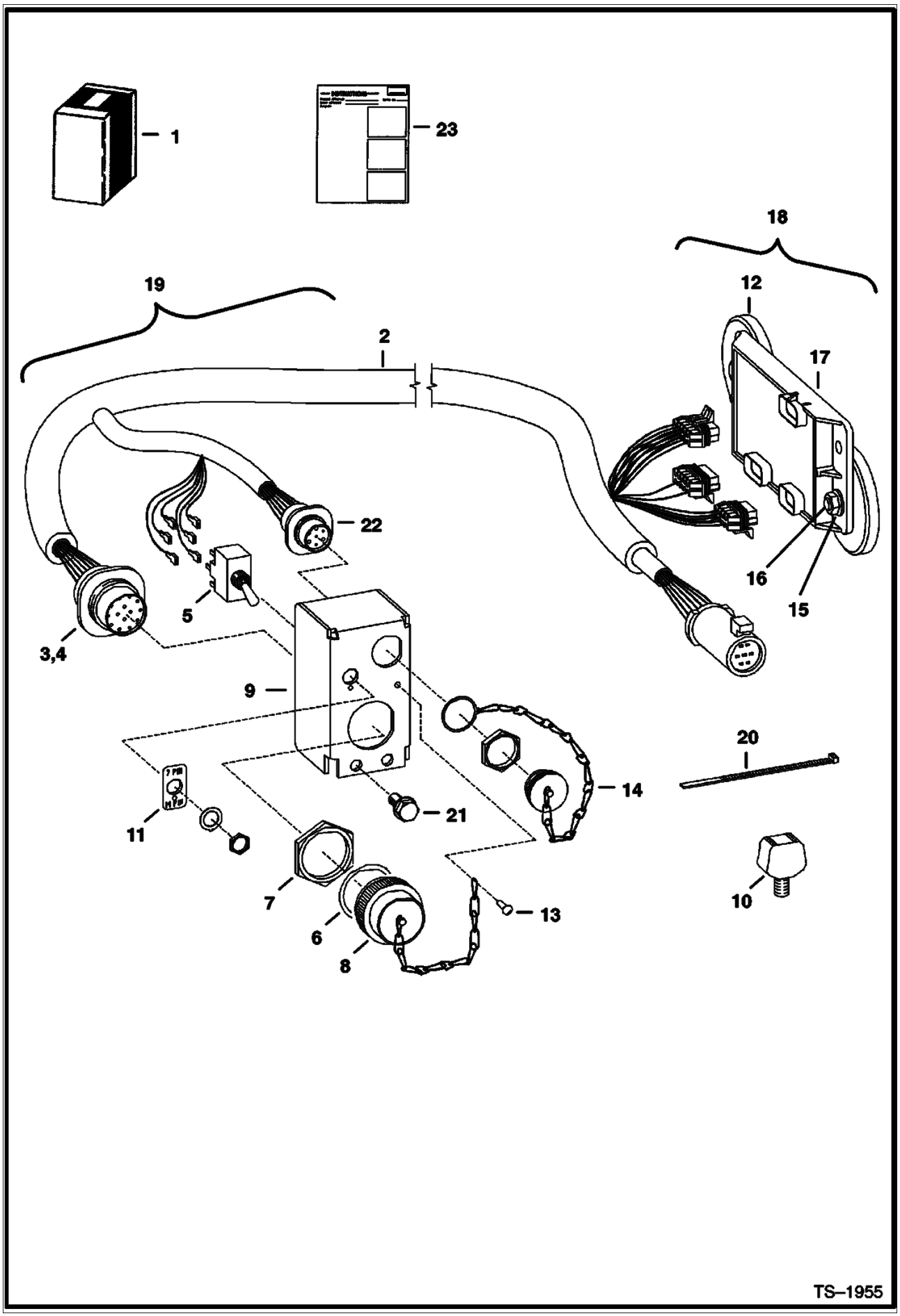

Page 536 - OSS# 2071349 - All rights reserved by Bobcat Company - 12/01/2009 - 20:50:59 - Produced by Ken Cook Co. with mediaioff

ELECTRICAL CONTROLS KIT (Cont'd)
(To Run G-Series Attachments & Old Attachments)(W/ Toggle Switch)

Ref No	Part Number	Description	Remarks	Serial Number	Qty
1		KIT	See Illustration ELECTRICAL CONTROLS KIT/ TS2118 NAP - ORDER 6727739 KIT - WAS 6719431 [A]		1
2	6719434	HARNESS	W/Ref. 3, 4, 6 - 8 & 14		1
3	6667569	CONNECTOR, RECEPTICAL	Also Order (14) of Ref. 4		1
4	6664040	PIN	male		x
5	6675389	SWITCH			1
6	6664037	WASHER			2
7	6664036	NUT			2
8	6664035	CAP			1
9	6719442	MOUNT			1
10	6675281	MOUNT	773G only		1
11	6719441	DECAL			1
12	6719448	MAGNET, CONTROL ATTACH	100 lbs (45,5 kg) force		4
13	6704892	RIVET	Was 84G001908B [B]		1
14	6675026	CAP			2
15	83D6	NUT 5			2
16	25G612	SCREW			2
17	6676514	CONTROLLER	Was 6674943 [A]		1
18		CONTROLLER	NAP - assy - Ref. 12 & 15 - 17 - Order Ref. 17 & (2) ea. of Ref. 12, 15 & 16 - Was 6675495 [A]		1
19		CONTROL	NAP - Order 2, 5, 9, 11 & 13 - assy - Was 6725269 [A]		1
20	6624289	STRAP 10	Was 6610510 [B]		8
21	84G3112	BOLT 5			2
22	6674802	CONNECTOR	See Illustration ELECTRICAL CONNECTOR KIT/ MS2627 - 7-pin - W/Ref. 7 does not include sockets		1
22	6669549	SOCKET	small		4
22	6677136	SOCKET	large - 12 ga		3
23	6900921	INSTRUCTIONS			1

Page 537 - OSS# 2071349 - All rights reserved by Bobcat Company - 12/01/2009 - 20:50:59 - Produced by Ken Cook Co. with mediaioff

ELECTRICAL CONTROLS KIT
(To Run G-Series Attachments & Old Attachments) (W/O Toggle Switch)

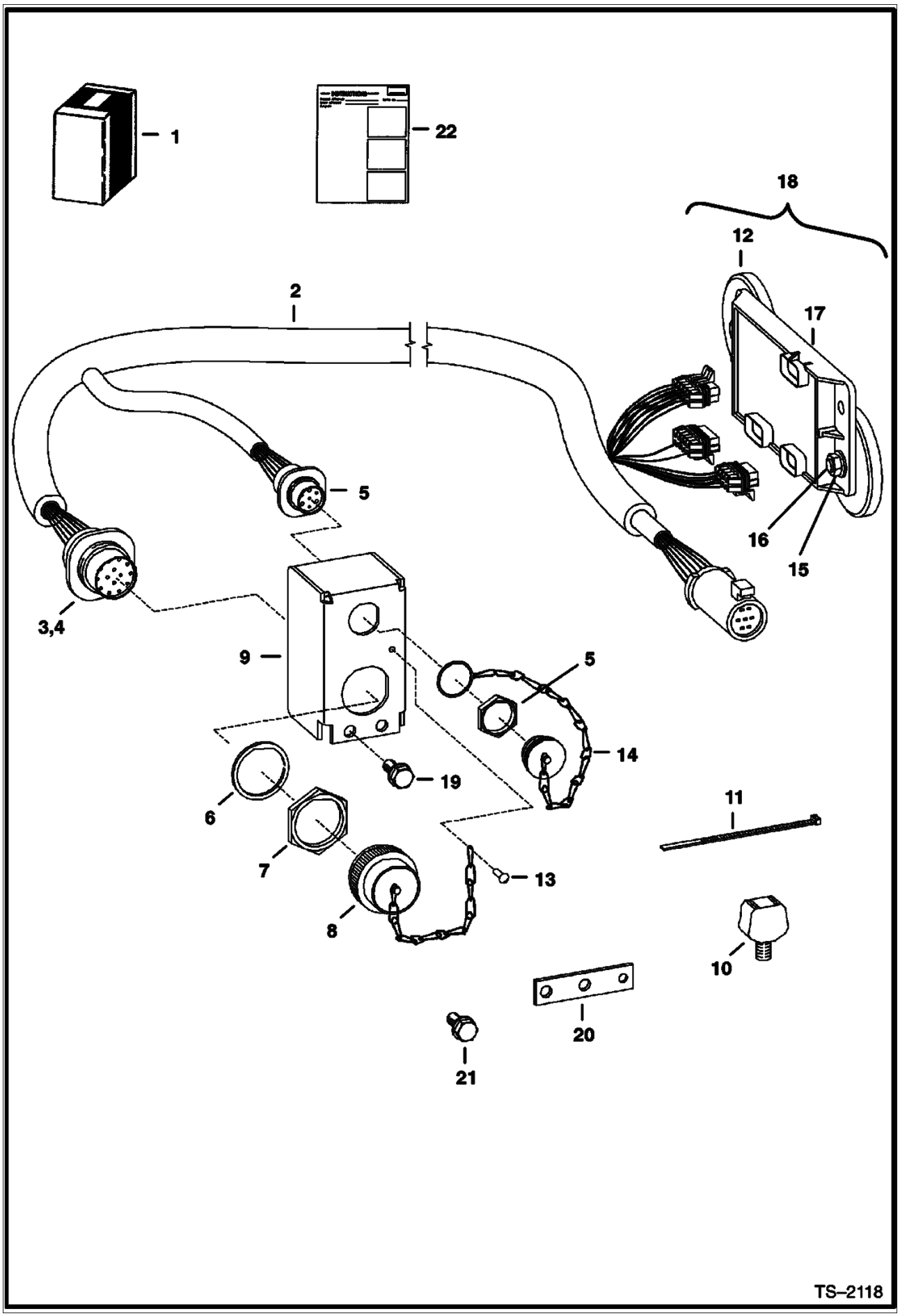

Page 538 - OSS# 2071349 - All rights reserved by Bobcat Company - 12/01/2009 - 20:50:59 - Produced by Ken Cook Co. with mediaioff

ELECTRICAL CONTROLS KIT (Cont'd)
(To Run G-Series Attachments & Old Attachments) (W/O Toggle Switch)

Ref No	Part Number	Description	Remarks	Serial Number	Qty
1	6727739	KIT			1
2	6729380	HARNESS, CONTROL ATTACH DLX	W/Ref. 3-8 & 14		1
3	6667569	CONNECTOR, RECEPTICAL	Also Order (14) of Ref. 4		1
4	6664040	PIN	male		x
5	6674802	CONNECTOR	See Illustration ELECTRICAL CONNECTOR KIT/ MS2627 - 7-pin - W/Ref. 7 does not include sockets		1
5	6669549	SOCKET	small		4
5	6677136	SOCKET	large - 12 ga		3
6	6664037	WASHER			2
7	6664036	NUT			2
8	6664035	CAP			1
9	6726945	MOUNT			1
10	6675281	MOUNT	773G only		1
11	6624289	STRAP 10			8
12	6719448	MAGNET, CONTROL ATTACH	100 lbs (45,5 kg) force		4
13	6704892	RIVET			1
14	6675026	CAP			2
15	83D6	NUT 5			2
16	25G612	SCREW			2
17	6678675	CONTROLLER, ACD DLX	Was 6676514 [A]		1
18		CONTROLLER	NAP - assy - Ref. 12 & 15-17 - Order Ref. 17 & (2) each of Ref. 12, 15 & 16 - Was 6676515 [A]		1
19	84G3112	BOLT 5			2
20	6730291	BRACKET	873G - 883 only		1
21	35C512	BOLT			2
22	6901116	INSTRUCTIONS			1

Page 539 - OSS# 2071349 - All rights reserved by Bobcat Company - 12/01/2009 - 20:50:59 - Produced by Ken Cook Co. with mediaioff

ENGINE MOUNT KIT
(For Rough Application)

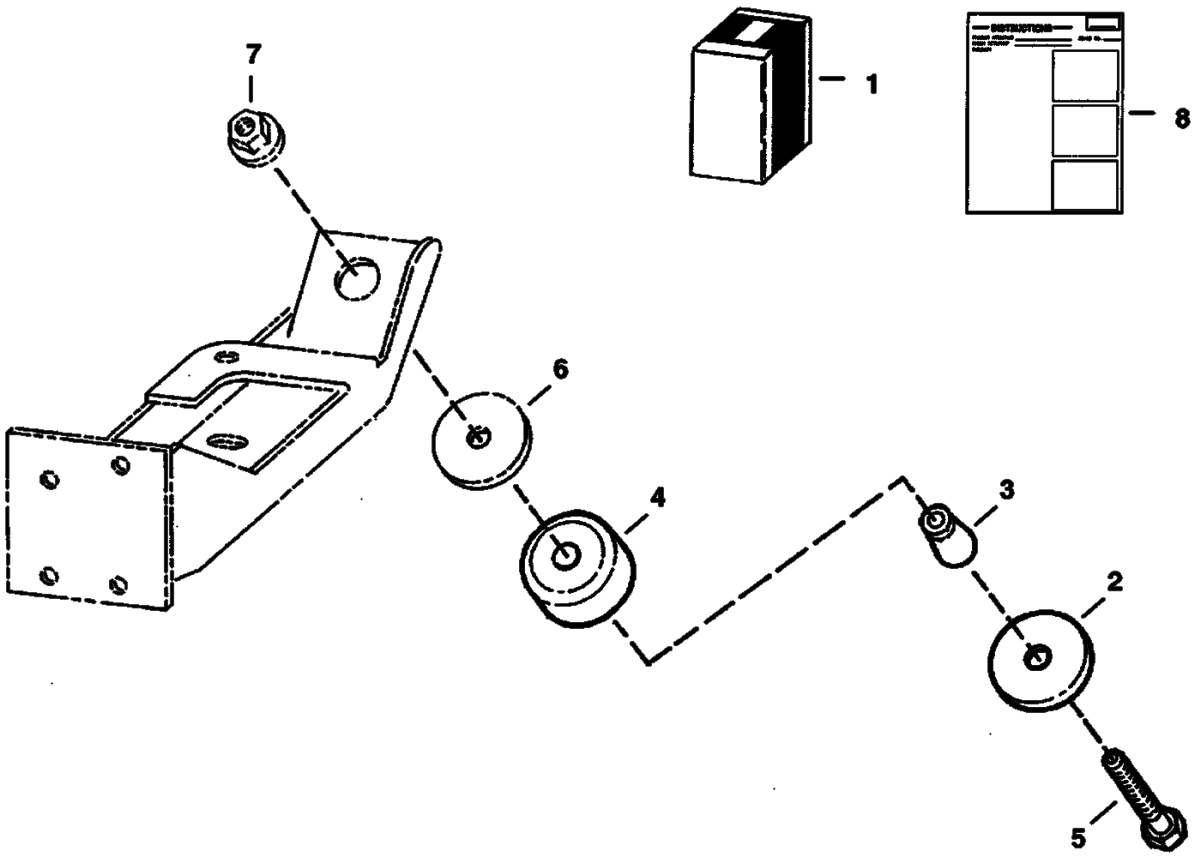

B–14623

Page 540 - OSS# 2071349 - All rights reserved by Bobcat Company - 12/01/2009 - 20:50:59 - Produced by Ken Cook Co. with mediaioff

ENGINE MOUNT KIT (Cont'd)
(For Rough Application)

Ref No	Part Number	Description	Remarks	Serial Number	Qty
1	6711632	MOUNTING KIT	Ref. 2-8		1
2	6661787	WASHER			4
3	7110276	SPACER, TAPERED	tapered - Was 6715287 [A]		4
4	6668104	MOUNT, ENG			4
5	43C852	BOLT			4
6	6705106	WASHER			4
7	6652918	NUT			4
8	6724482	INSTRUCTIONS			1

Page 541 - OSS# 2071349 - All rights reserved by Bobcat Company - 12/01/2009 - 20:50:59 - Produced by Ken Cook Co. with mediaioff

EUROPEAN ACCESSORIES
(Caliper Brake Kit)

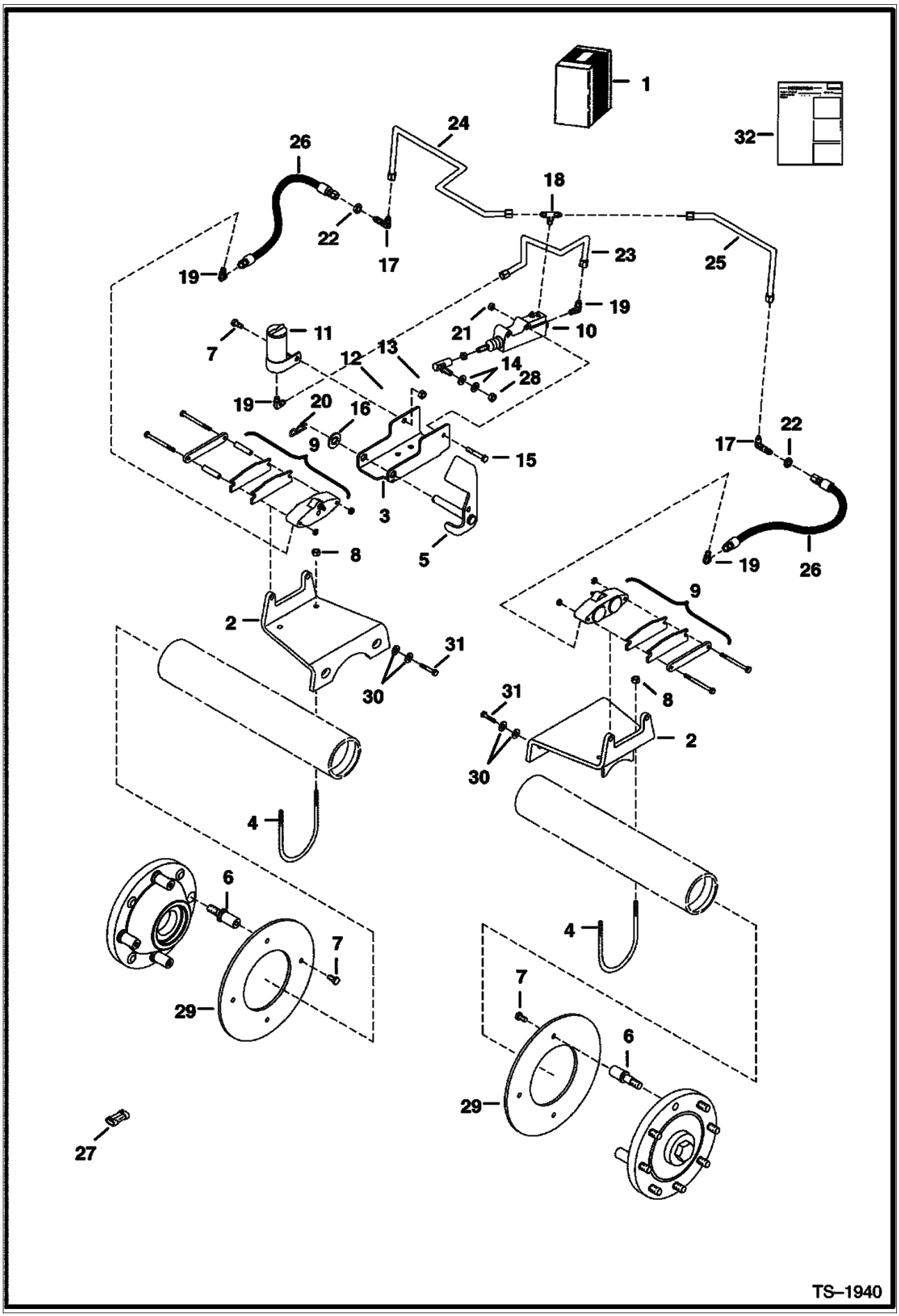

Page 542 - OSS# 2071349 - All rights reserved by Bobcat Company - 12/01/2009 - 20:50:59 - Produced by Ken Cook Co. with mediaioff

EUROPEAN ACCESSORIES (Cont'd)
(Caliper Brake Kit)

Ref No	Part Number	Description	Remarks	Serial Number	Qty
1	6719150	KIT	Ref. 2-32		1
2	6718728	MOUNT ASSY.	caliper - Was 6710469 [B,D]		2
3	6709236	MOUNT	pedal		1
4	6709237	CLAMP			2
5	6709239	PEDAL ASSY.	brake		1
6	6709229	BOLT	wheel		8
7	17C612	BOLT 5			9
8	95D6	NUT	Was 91D000006B [A]		5
9	6666932	BRAKE	See Illustration EUROPEAN ACCESSORIES/ B14851		2
10	6666933	CYLINDER	See Illustration EUROPEAN ACCESSORIES/ B14851		1
11	6661117	TANK			1
12	6599744	BALL JOINT			1
13	8D6	NUT 5			1
14	25E17	WASHER 5			2
15	17C532	BOLT 5			2
16	25E25	WASHER 10			1
17	45K3	FITTING	Was 45KV00003B [B]		2
17	97K4	O'RING	flared end		4
18		TEE	NAP - Was 98F000003B [A]		1
19	83F3	ELBOW 5			4
20	1318565	COTTER PIN			1
21	91D5	NUT 5			2
22	86F3	LOCKNUT			2
23	6709400	TUBE			1
24	6718205	TUBE	Was 6709409 [B,D]		1
25	6718206	TUBE	Was 6709410 [B,D]		1
26	6709547	HOSE	Was 6709545 [B]		2
27	6667139	CAP			1
28	62D6	NUT 5			1
29	6709234	DISC	brake		2
30	25E11	WASHER	Was 27E000008B [B,D]		8
31	31C824	BOLT 10			4
32	6900934	INSTRUCTIONS	INSTRUCTIONS Was 6724380 [B]		1

Page 543 - OSS# 2071349 - All rights reserved by Bobcat Company - 12/01/2009 - 20:50:59 - Produced by Ken Cook Co. with mediaioff

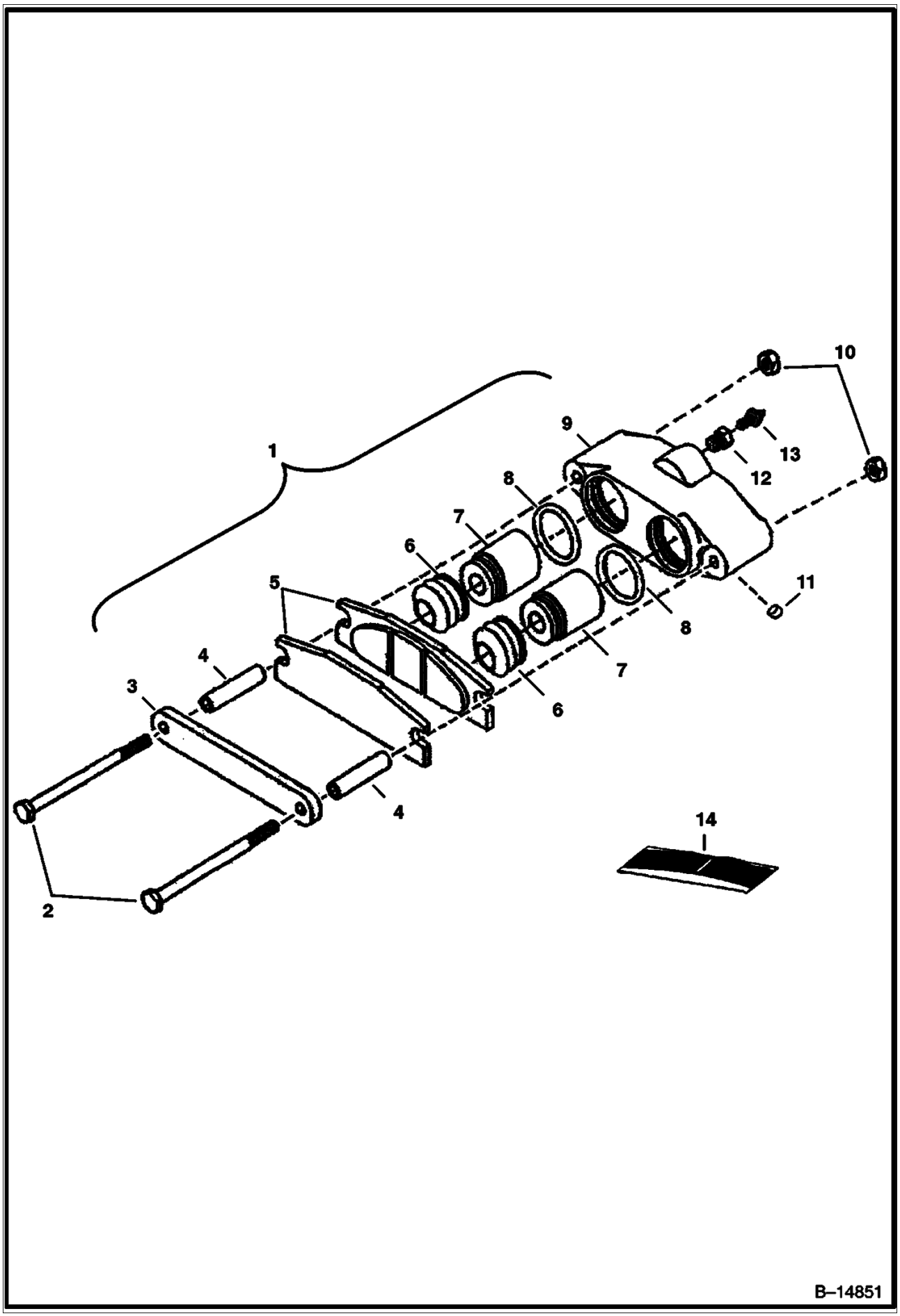

Page 544 - OSS# 2071349 - All rights reserved by Bobcat Company - 12/01/2009 - 20:50:59 - Produced by Ken Cook Co. with mediaioff

Ref No	Part Number	Description	Remarks	Serial Number	Qty
1	6666932	BRAKE	W/Ref. 2-12		1
2	6669154	BOLT			2
3	6669155	PLATE			1
4	6669156	SPACER			2
5	6669184	STATOR ASSY.			1
6		BOOT	NSS - Order Ref. 14		2
7	6669159	PISTON			2
8		O-RING	NSS - Order Ref. 14		2
9		HOUSING	NSS - Order Ref. 1		1
10	6669162	NUT			2
11	6669163	PLUG			1
12	6669164	ADAPTER			1
13	6669165	SCREW	bleeder		1
14	6669185	SEAL KIT	W/Ref. 6 & 8		1

Page 545 - OSS# 2071349 - All rights reserved by Bobcat Company - 12/01/2009 - 20:50:59 - Produced by Ken Cook Co. with mediaioff

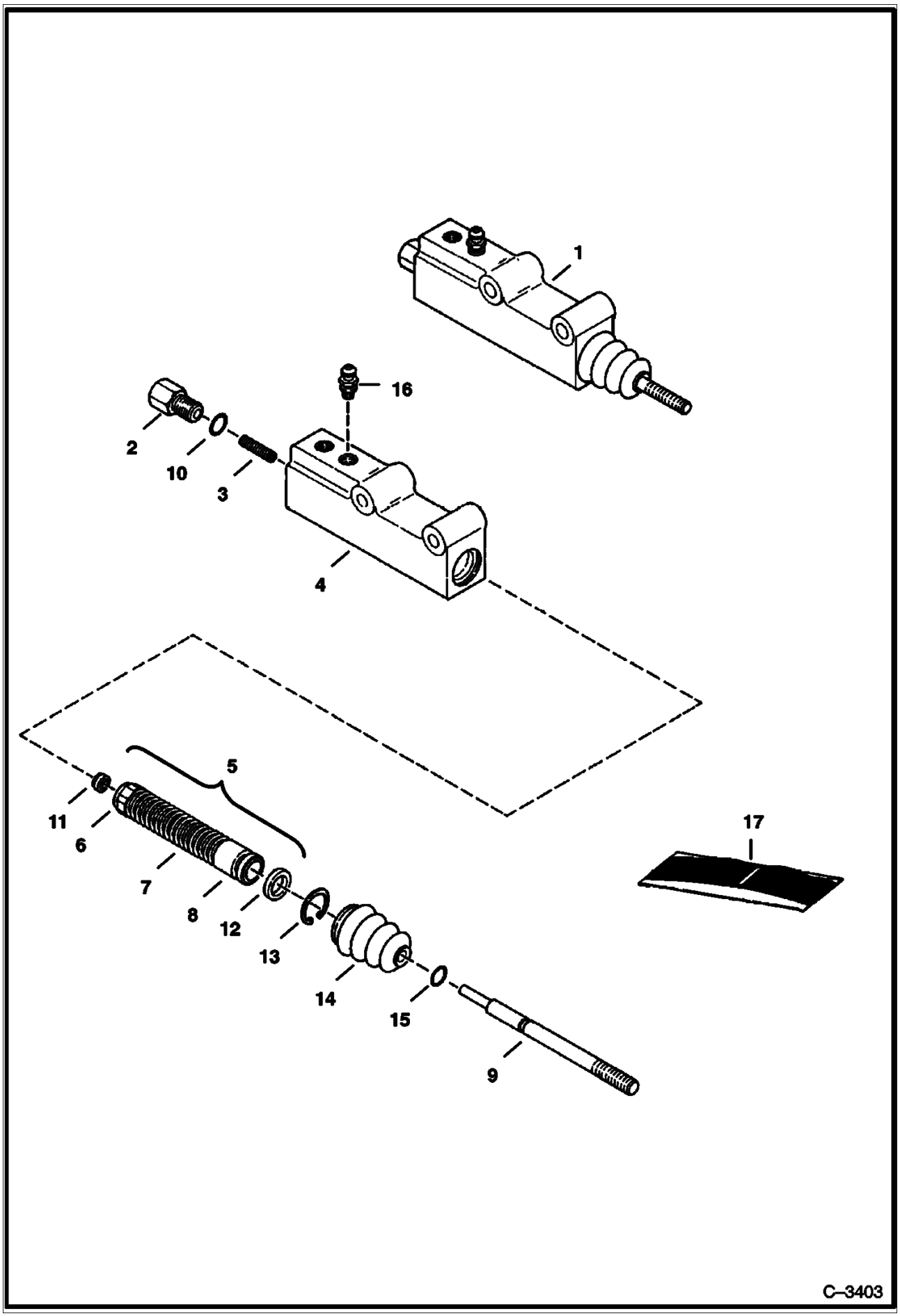

Page 546 - OSS# 2071349 - All rights reserved by Bobcat Company - 12/01/2009 - 20:50:59 - Produced by Ken Cook Co. with mediaioff

EUROPEAN ACCESSORIES (Cont'd)
(Caliper Brakes - Master Cylinder)

Ref No	Part Number	Description	Remarks	Serial Number	Qty
1	6666933	CYLINDER	master brake - Ref. 2-16		1
2		ADAPTER	NSS		1
3		SPRING	NSS		1
4		BODY	NSS		1
5		SPRING ASSY.	NSS - Ref. 6-8 & 11		1
6		RETAINER	NSS		1
7		SPRING	NSS		1
8		PISTON	NSS		1
9		PUSH ROD	NSS		1
10		O-RING	NSS		1
11		SEAT	NSS		1
12		CUP	NSS		1
13		SNAP RING	NSS		1
14		BOOT	NSS		1
15		O-RING	NSS		1
16	6668097	SCREW	bleeder		1
17	6661608	SEAL KIT	Ref. 10-15		1

Page 547 - OSS# 2071349 - All rights reserved by Bobcat Company - 12/01/2009 - 20:50:59 - Produced by Ken Cook Co. with mediaioff

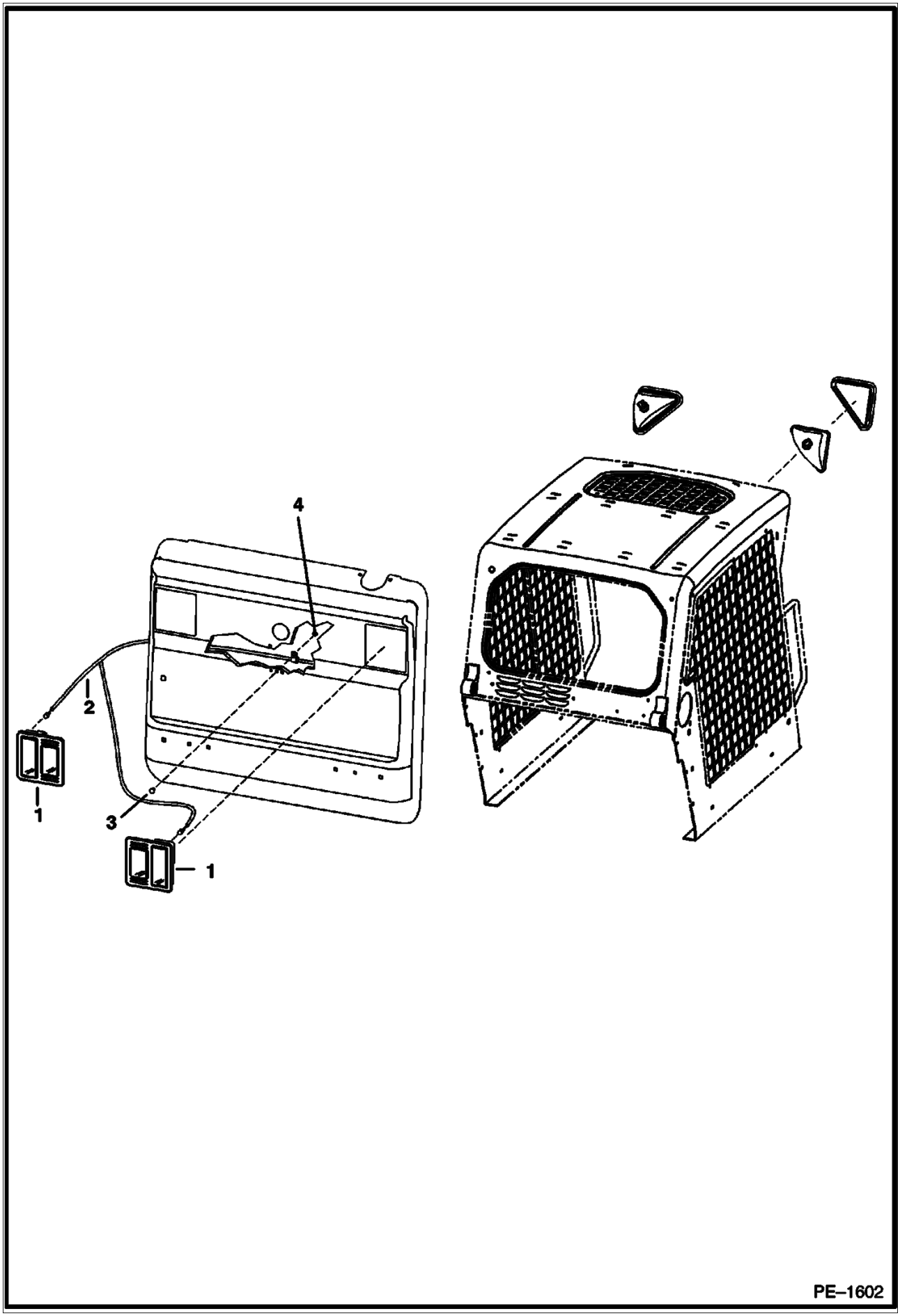

Page 548 - OSS# 2071349 - All rights reserved by Bobcat Company - 12/01/2009 - 20:50:59 - Produced by Ken Cook Co. with mediaioff

EUROPEAN ACCESSORIES (Cont'd)
(Rear Door Lights)

Ref No	Part Number	Description	Remarks	Serial Number	Qty
1	6707789	LIGHT	rear		2
1	6666568	BULB	21W		2
1	6667887	BULB	21/5W		2
1	6668007	SCREW			2
1	6668010	LENS			2
1	6671027	LIGHT			2
2		HARNESS	NAP - Order 6718198 Harness - Was 6714546 [A]		1
2	6718198	HARNESS	deluxe		1
3	37C512	BOLT			1
4	4DM5	NUT			1

Page 549 - OSS# 2071349 - All rights reserved by Bobcat Company - 12/01/2009 - 20:50:59 - Produced by Ken Cook Co. with mediaioff

EUROPEAN ACCESSORIES
(Sound Option)

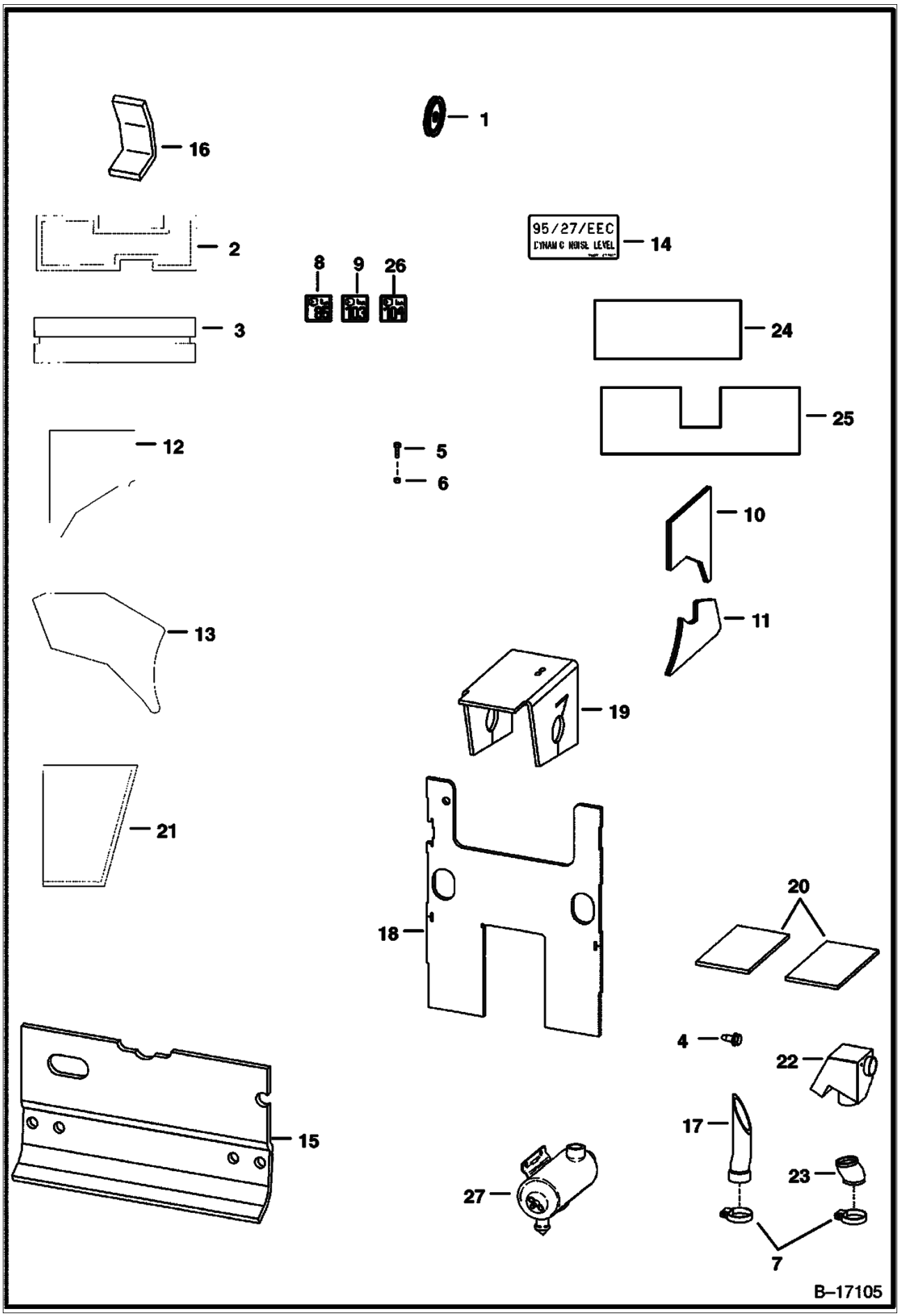

Page 550 - OSS# 2071349 - All rights reserved by Bobcat Company - 12/01/2009 - 20:50:59 - Produced by Ken Cook Co. with mediaioff

EUROPEAN ACCESSORIES (Cont'd)
(Sound Option)

Ref No	Part Number	Description	Remarks	Serial Number	Qty
1	6712970	PULLEY	fan drive - 4.75" (120,65 mm) O.D.		1
1	6712971	PULLEY	fan drive - 5.00" (127 mm) O.D.		1
1	6703483	PULLEY, FAN DRIVE IDLER	5.25" (133,4 mm) OD - trubo eng		1
2	6719327	INSULATION	fender - L.H.		1
3	6719328	INSULATION	fender - R.H.		1
4	84G3112	BOLT 5			1
5	84G3716	SCREW 5			2
6	6562619	BUSHING			4
7	42H44	HOSECLAM5			2
8	6579385	DECAL	sound level warning - 85 decibel		1
9	6579404	DECAL	sound level warning-104 decibel		1
10	6719332	INSULATION	blower housing		1
11	6704769	INSULATION	blower housing		1
12	6719333	INSULATION	blower housing		1
13	6719334	INSULATION	blower housing		1
14	6715428	DECAL	dynamic level		1
15	6715106	INSULATION	cab seal		1
16	6703331	INSULATION	air inlet		1
17		HOSE	NAP - intake - Order Ref. 27 - Was 6719886 [A]		1
18	6719372	INSULATION	steering panel		1
19	6719331	INSULATION	transmission top		2
20	6719330	INSULATION	pedal		1
21	6703968	INSULATION	transmission side - Was 6719329 [A]		1
22		MUFFLER	NAP - intake - Order Ref. 27 - Was 6719649 [A]		1
23		HOSE	NAP - air cleaner - Was 6728476 [A]		1
24	6725361	INSULATION	crossmember		1
25	6732724	INSULATION	crossmember - Was 6719409 [A]		1
26	6731994	DECAL	noise level - 104 decibel		1
27	6735285	AIR CLEANER			1

Page 551 - OSS# 2071349 - All rights reserved by Bobcat Company - 12/01/2009 - 20:50:59 - Produced by Ken Cook Co. with mediaioff

FIRE EXTINGUISHER

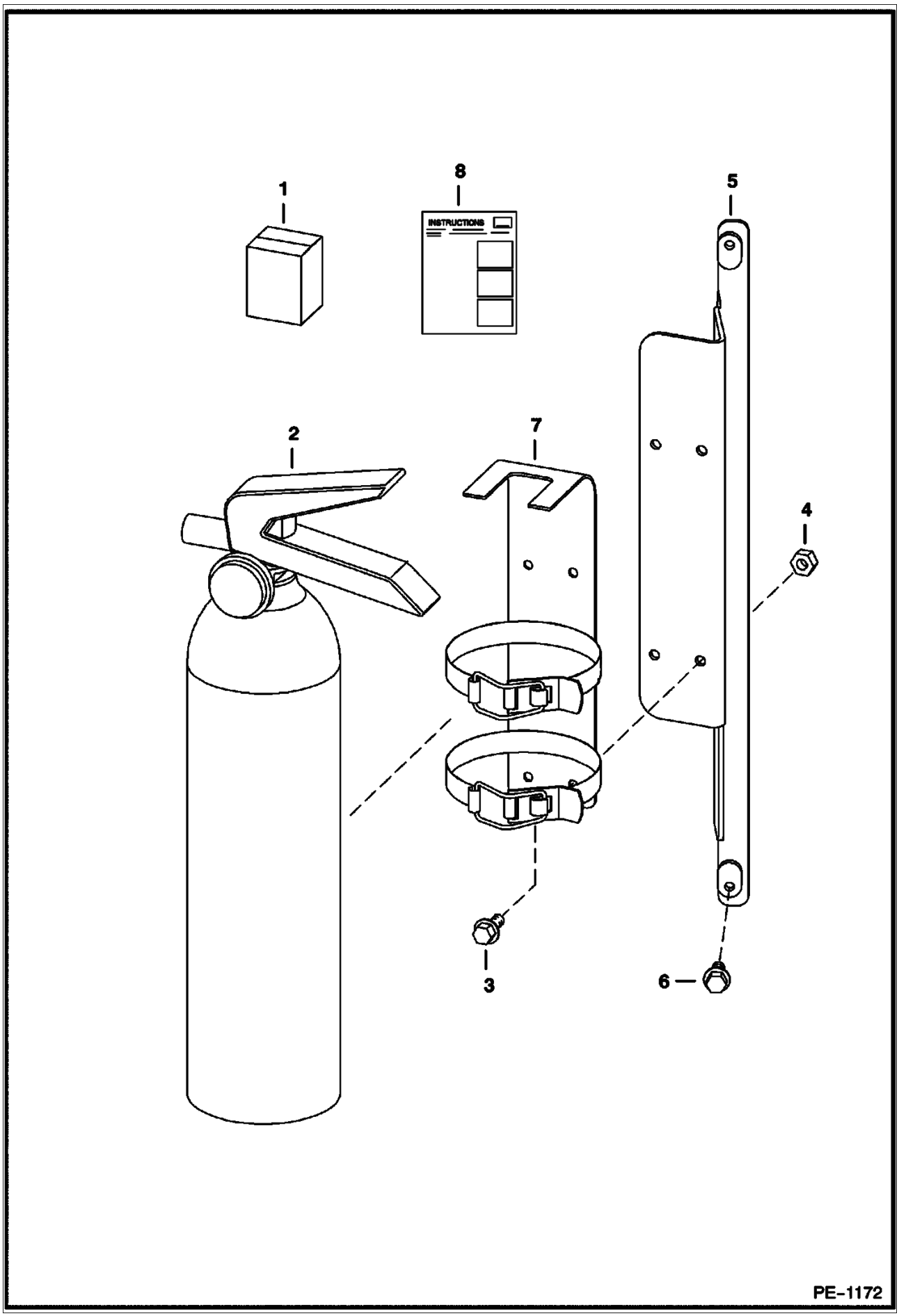

Page 552 - OSS# 2071349 - All rights reserved by Bobcat Company - 12/01/2009 - 20:50:59 - Produced by Ken Cook Co. with mediaioff

Ref No	Part Number	Description	Remarks	Serial Number	Qty
1	6725898	KIT	fire extinguisher - Ref. 2-8		1
2	7168164	EXTINQUISHER,FIRE	Was 6675581 [A]		1
3	45G1006	BOLT			4
4	12D10	NUT			4
5	6725906	BRACKET			1
6	31C410	BOLT			2
7	6691173	BRACKET			1
8	6901025	INSTRUCTIONS			1

Page 553 - OSS# 2071349 - All rights reserved by Bobcat Company - 12/01/2009 - 20:50:59 - Produced by Ken Cook Co. with mediaioff

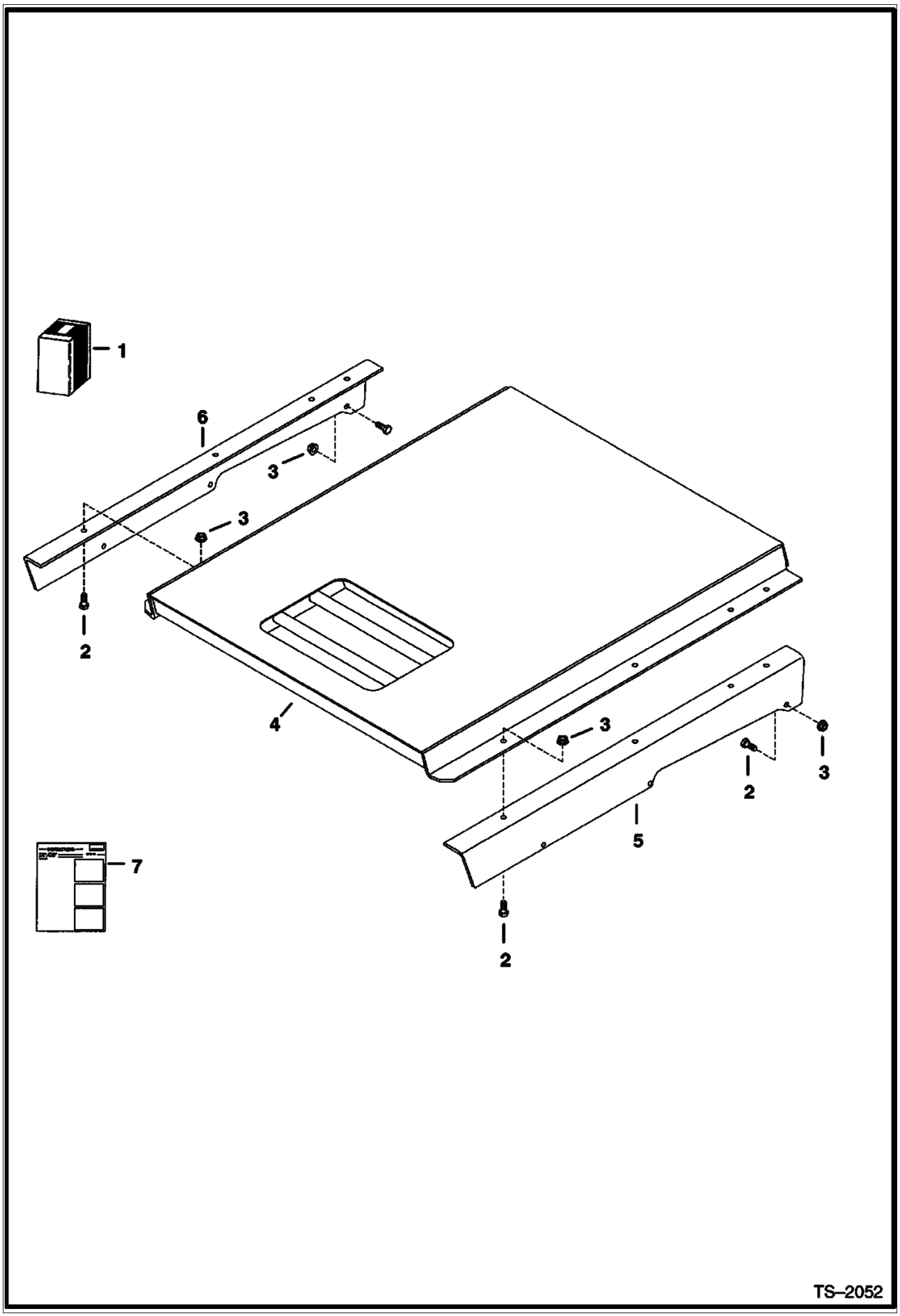

Page 554 - OSS# 2071349 - All rights reserved by Bobcat Company - 12/01/2009 - 20:50:59 - Produced by Ken Cook Co. with mediaioff

Ref No	Part Number	Description	Remarks	Serial Number	Qty
1	6718924	KIT	Ref. 2-7		1
2	17C616	BOLT 5	Was 17C000612B [B]		14
3	83D6	NUT 5			14
4	6702402	SHIELD			1
5	6718833	BRACKET	LH		1
6	6718834	BRACKET	RH		1
7	6720592	INSTRUCTIONS			1

Page 555 - OSS# 2071349 - All rights reserved by Bobcat Company - 12/01/2009 - 20:50:59 - Produced by Ken Cook Co. with mediaioff

FLASHER LIGHTS
(4-Way) (Turn Indicators)

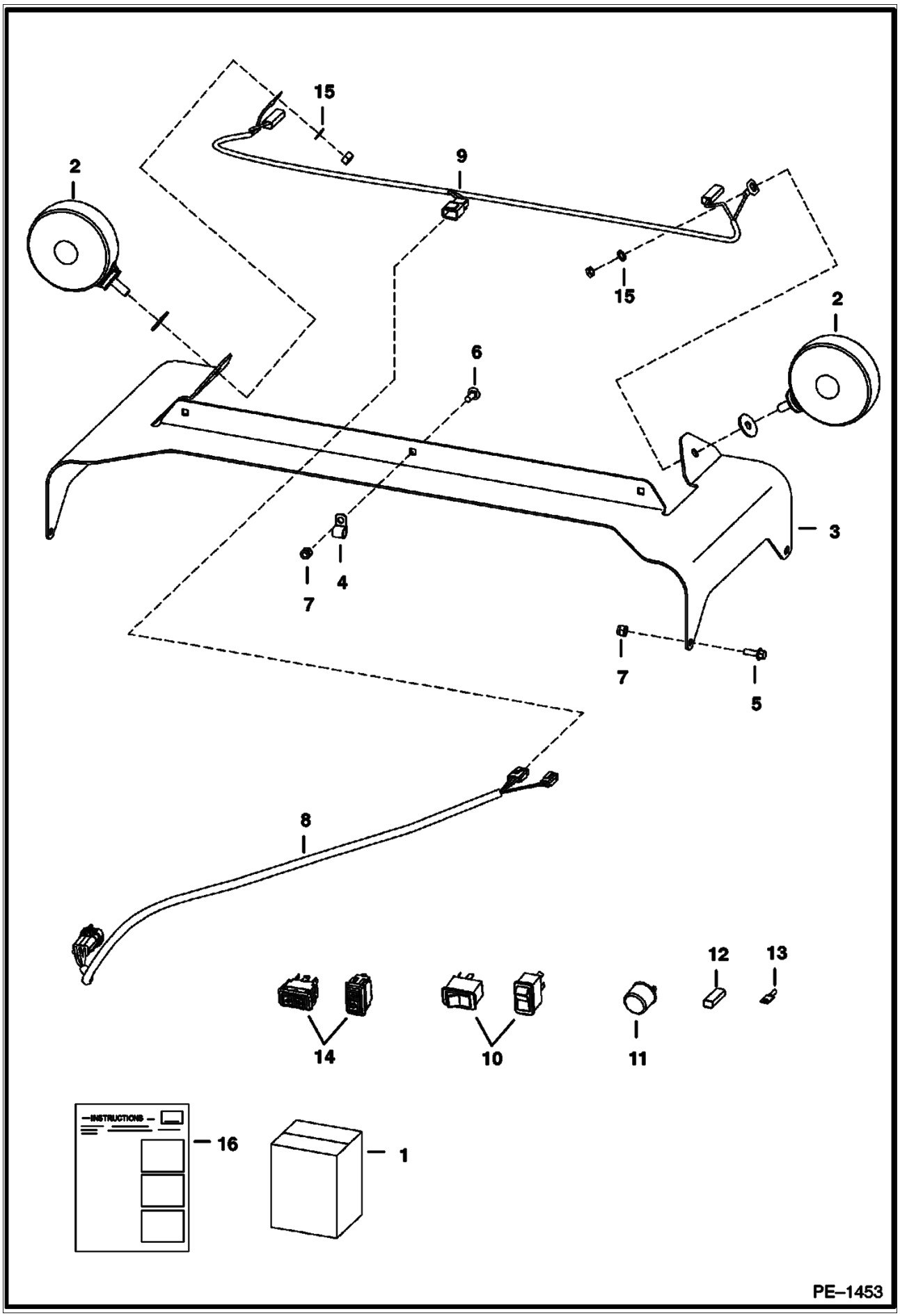

Page 556 - OSS# 2071349 - All rights reserved by Bobcat Company - 12/01/2009 - 20:50:59 - Produced by Ken Cook Co. with mediaioff

FLASHER LIGHTS (Cont'd)
(4-Way) (Turn Indicators)

Ref No	Part Number	Description	Remarks	Serial Number	Qty
1	6718411	KIT	See Illustration ACCESSORIES HARNESS/ PE1557 Ref. 2-16 - if loader is not equipped W/deluxe cab option Also Order 6727468 harness		1
2	6517516	LIGHT			2
3	6718326	MOUNT			1
4	30H21	CLAMP 10			3
5	35C412	BOLT			4
6	37C412	BOLT			3
7	59D4	NUT 5			7
8	6718872	HARNESS	cab exterior		1
9	6718873	HARNESS	4-way flasher		1
10	6665316	SWITCH	horizontal		1
10	6668815	SWITCH	vertical		1
11	6557904	FLASHER			1
12	614142	SLEEVE 10			2
13	6515131	TERMINAL			2
14	6675835	TURN SIGNAL	horizontal		1
14	6676872	TURN SIGNAL	vertical		1
15	6E5	WASHER	lock		2
16	6900848	INSTRUCTIONS			1

Page 557 - OSS# 2071349 - All rights reserved by Bobcat Company - 12/01/2009 - 20:50:59 - Produced by Ken Cook Co. with mediaioff

GAS SPRING KIT

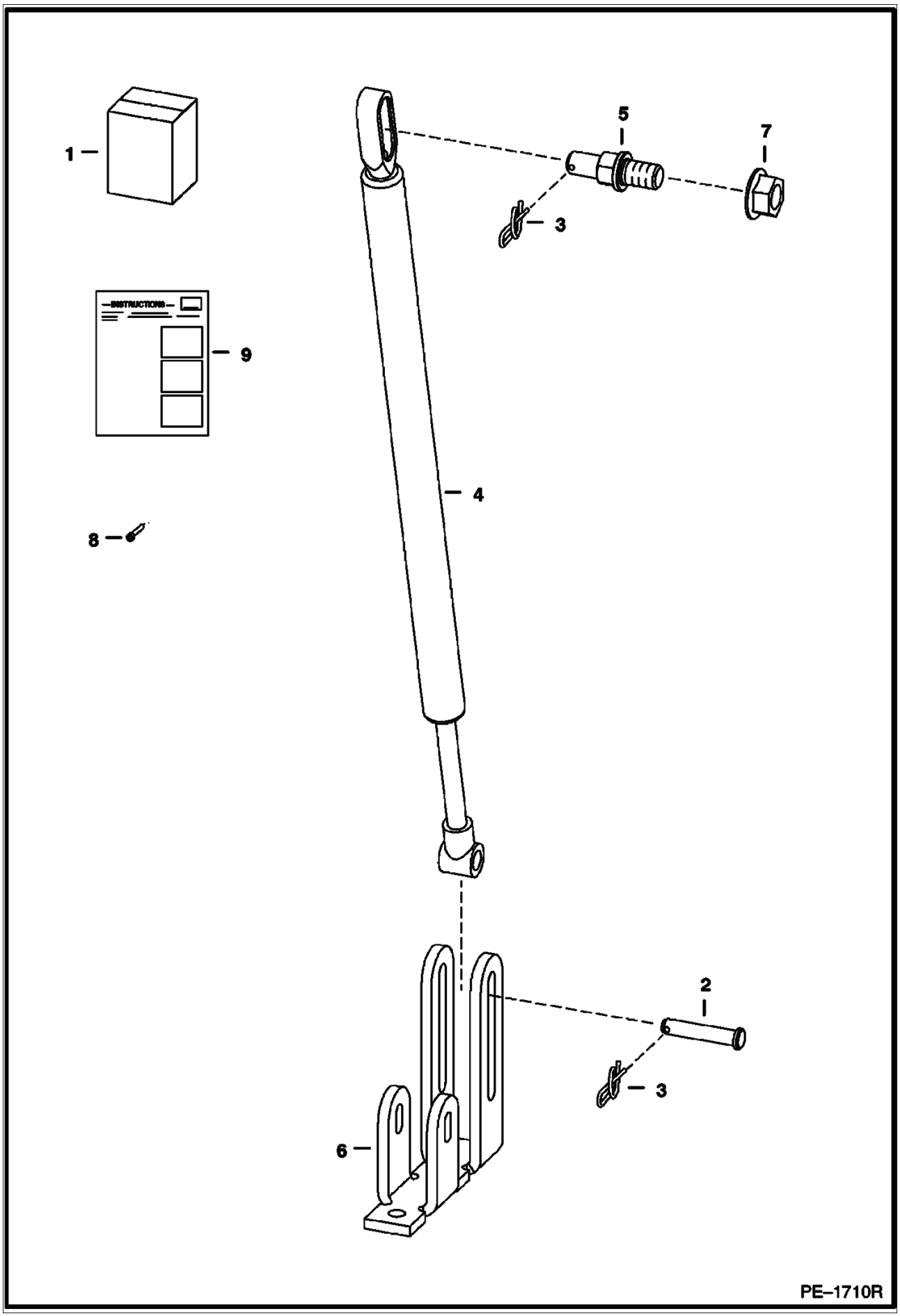

Page 558 - OSS# 2071349 - All rights reserved by Bobcat Company - 12/01/2009 - 20:50:59 - Produced by Ken Cook Co. with mediaioff

Ref No	Part Number	Description	Remarks	Serial Number	Qty
1	6732928	KIT			1
2	6567743	PIN			1
3	6631418	PIN			2
4	7157890	GAS SPRING	Was 6678292 [A]		1
5	6719064	MOUNT			1
6	6729141	MOUNT			1
7	97D8	NUT			1
8	21G804	BOLT			1
9	6901816	INSTRUCTIONS			1

Page 559 - OSS# 2071349 - All rights reserved by Bobcat Company - 12/01/2009 - 20:50:59 - Produced by Ken Cook Co. with mediaioff

FRONT AUXILIARY
(R.H. Kit) (S/N 517620248 & Above,
518112286 & Above, 519021333 & Above, 519212390 & Above, 500K12194 & Above)

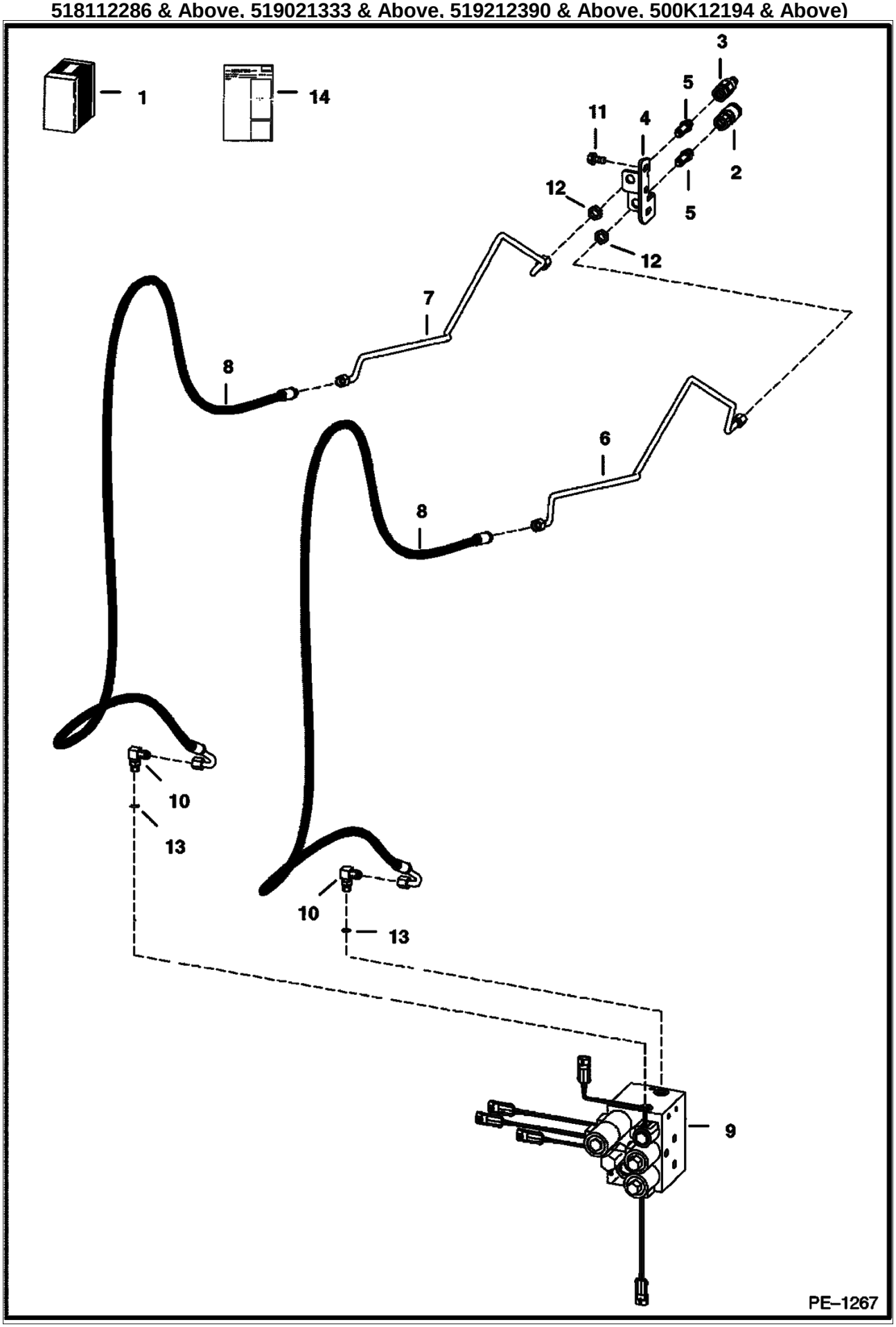

Page 560 - OSS# 2071349 - All rights reserved by Bobcat Company - 12/01/2009 - 20:50:59 - Produced by Ken Cook Co. with mediaioff

FRONT AUXILIARY (Cont'd)
(R.H. Kit) (S/N 517620248 & Above,
518112286 & Above, 519021333 & Above, 519212390 & Above, 500K12194 & Above)

Ref No	Part Number	Description	Remarks	Serial Number	Qty
1	6731524	KIT			1
2	6667803	COUPLER	female		1
3	6667804	COUPLER	male		1
3	6669657	SEAL KIT			1
4	6711674	MOUNT			1
5	6716089	CONNECTOR	W/ O-rings		2
6	6718244	TUBE			1
7	6718245	TUBE			1
8	6718454	HOSE			2
9		VALVE	See Illustration REAR AUXILIARY VALVE/ TS1362 select - Not in Kit - Was 6669203 [D]		1
10	17KB606	ELBOW	W/Ref. 13 - check boss face to determine correct replacement o-ring - Was 17KV00005B [B]		2
10	21KB606	TEE	W/Ref. 13 - flat boss face		2
10	97K6	O'RING	flared end		2
11	84G3712	BOLT			2
12	86F5	NUT			3
13	99K6	O'RING	tapered boss face - Was 99K000006B [B]		x
13	79K6	O RING 10	flat boss face		x
14	6901515	INSTRUCTIONS			1

Page 561 - OSS# 2071349 - All rights reserved by Bobcat Company - 12/01/2009 - 20:50:59 - Produced by Ken Cook Co. with mediaioff

HAND CONTROL KIT
(W/Push Button Float)

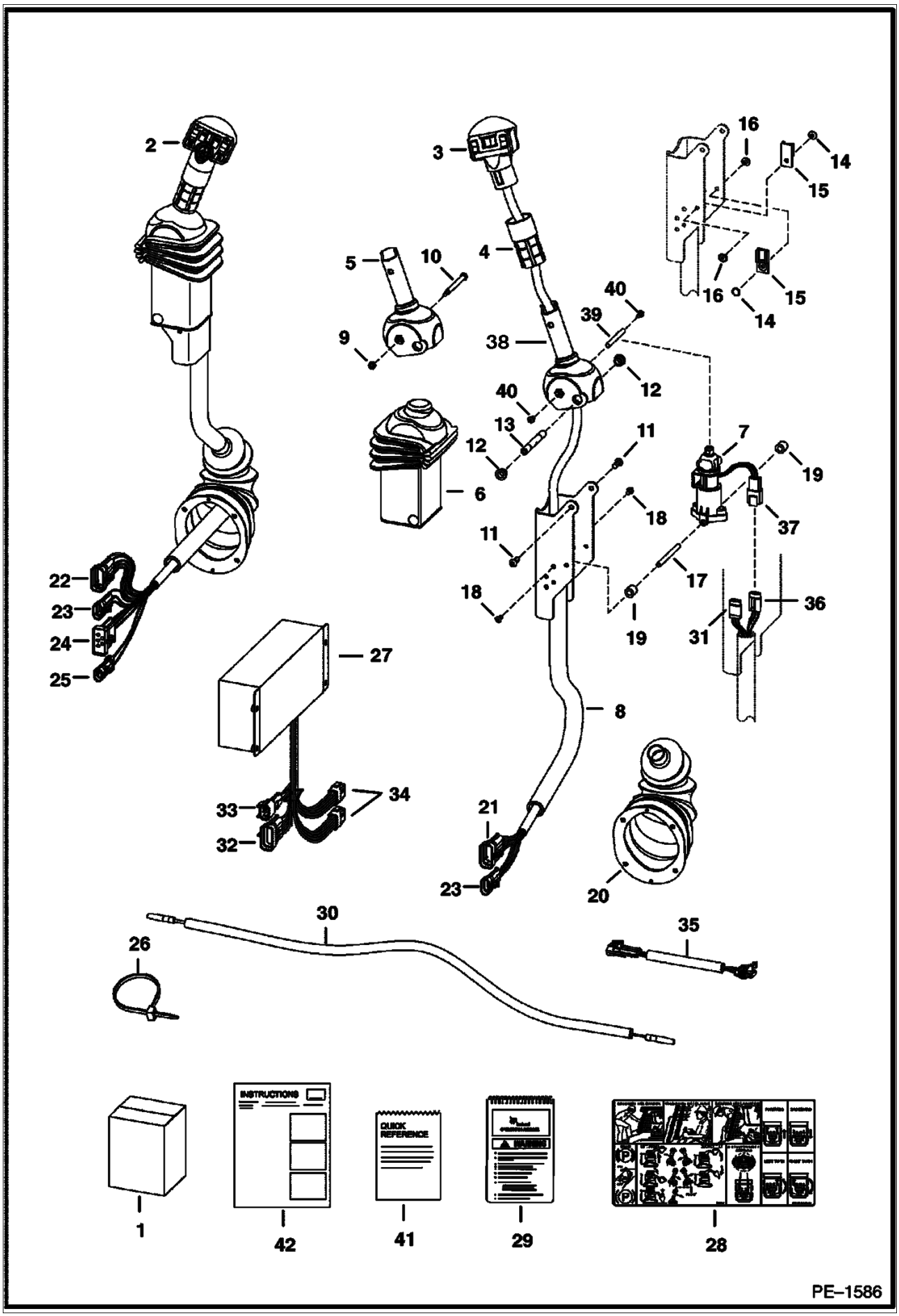

Page 562 - OSS# 2071349 - All rights reserved by Bobcat Company - 12/01/2009 - 20:50:59 - Produced by Ken Cook Co. with mediaioff

HAND CONTROL KIT (Cont'd)
(W/Push Button Float)

Ref No	Part Number	Description	Remarks	Serial Number	Qty
1	6727298	KIT	SEE NOTE		1
2	6684913	LEVER	tilt - RH - Was 6675742 [A]		1
2	6684914	LEVER	lift - LH - Was 6675750 [A]		1
3		HANDLE	See BTI335 NAP - tilt - R.H. - Was 6675469 [A]		1
3	6680417	HANDLE	lift - LH - Was 6675749 [A]		1
4		GRIP	NAP - Order 6702621 grip & cut to 2.8" long - Was 6713349 [A]		2
5		HANDLE	NAP - R.H. - Order Ref. 39, 40 & (2) of Ref. 41 - Was 6597774 [A]		1
5		HANDLE	NAP - L.H. - Order Ref. 39, 40 & (2) of Ref. 41 - Was 6717163 [A]		1
6	6680471	COVER	Was 6713898 [A]		2
7	6684910	SENSOR, ELEC AHC	Was 6675741 [A]		2
7	6670706	CONNECTOR	3-pin		1
7	6670714	PIN			3
7	6670710	LOCK			1
8	6680481	CHANNEL	RH - Was 6719712 [A]		1
8	6680480	CHANNEL	LH - Was 6719711 [A]		1
9	12D10	NUT			2
10	6716826	BOLT			2
11	25GT410	SCREW			8
12	6702990	BUSHING			4
13	6713043	SPACER			4
14	6665321	RIVET	male		2
15	6665000	CLIP			2
16	6665322	RIVET	female		2
17	6719834	SPACER	threaded		2
18	6727065	BOLT			4
19	6719835	SLEEVE			4
20	6532127	BOOT			2
21	6640692	CONNECTOR	10-pin		1
21	6640690	PIN			8
21	6640694	LOCK	Use W/ 10-pin connector		1
21	6641176	SEAL			8
21	6646582	PLUG	cavity		2
22	6640692	CONNECTOR	10-pin		1
22	6640690	PIN			6
22	6640694	LOCK	Use W/ 10-pin connector		1
22	6641176	SEAL			6
22	6646582	PLUG	cavity		4
23	6640699	CONNECTOR	3-pin		2
23	6640690	PIN			3
23	6641176	SEAL			3
23	6640700	LOCK			3
24	6667144	CONNECTOR	5-pin		1
24	6640690	PIN			3
24	6641176	SEAL			3
24	6646582	PLUG	cavity		1
24	6667145	LOCK	Use W/ 5-pin connector		1
25	6641179	CONNECTOR	2-pin		1
25	6640690	PIN			2
25	6641176	SEAL			2
25	6641180	LOCK	Use W/ 2-pin connector		1
26	6610510	TIE			11
27	6676153	CONTROLLER			1
28	6727155	DECAL			1

Page 563 - OSS# 2071349 - All rights reserved by Bobcat Company - 12/01/2009 - 20:50:59 - Produced by Ken Cook Co. with mediaioff

HAND CONTROL KIT (Cont'd)
(W/Push Button Float)

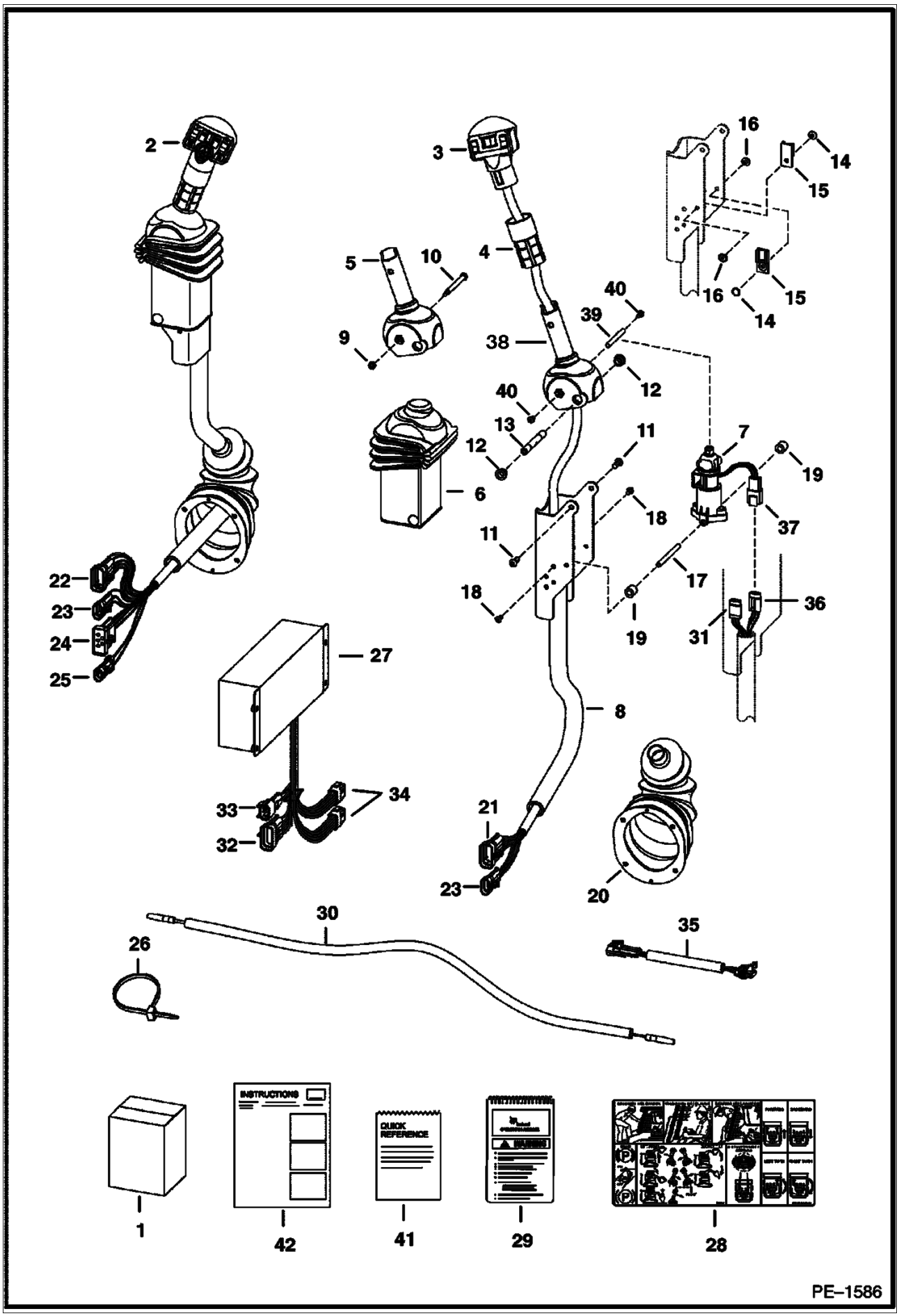

Page 564 - OSS# 2071349 - All rights reserved by Bobcat Company - 12/01/2009 - 20:50:59 - Produced by Ken Cook Co. with mediaioff

HAND CONTROL KIT (Cont'd)
(W/Push Button Float)

Ref No	Part Number	Description	Remarks	Serial Number	Qty
29	6718719	HANDBOOK, OPERATOR'S	W/wire rope [A]		1
30	6727328	HARNESS			1
31	6670707	CONNECTOR	3-pin		1
31	6670715	PIN			3
31	6670711	LOCK			1
32	6640692	CONNECTOR	10-pin		1
32	6640690	PIN			9
32	6640694	LOCK	Use W/ 10-pin connector		1
32	6641176	SEAL			9
32	6646582	PLUG	cavity		1
33	6648307	CONNECTOR	2-pin		1
34	6670709	CONNECTOR	8-pin		2
35	6728742	HARNESS	W/capacitor		1
36	6677364	CONNECTOR	3-pin		1
36	6676640	SEAL			3
37	6676870	CONNECTOR	3-pin		1
37	6676640	SEAL			3
37	6670715	PIN			1
37	6670711	LOCK			1
38	6729594	HANDLE	RH		1
38	6729595	HANDLE	LH		1
39	6680469	SPACER	Was 6729600 [A]		1
40	6727065	BOLT			2
41	6718719	HANDBOOK, OPERATOR'S	W/wire rope - Was 6902600 [B,D]		1
42	6901100	INSTRUCTIONS			1

Page 565 - OSS# 2071349 - All rights reserved by Bobcat Company - 12/01/2009 - 20:50:59 - Produced by Ken Cook Co. with mediaioff

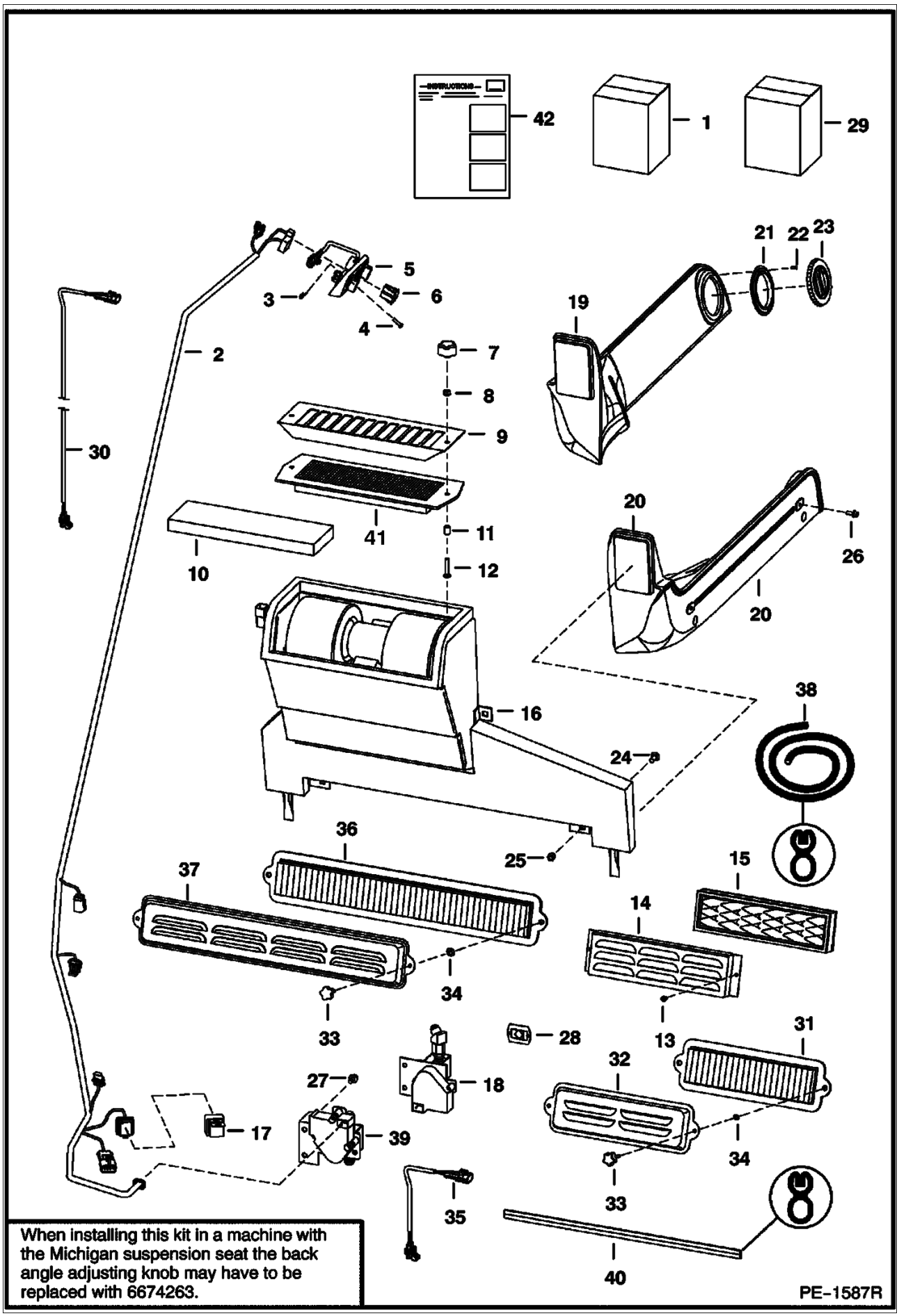

Page 566 - OSS# 2071349 - All rights reserved by Bobcat Company - 12/01/2009 - 20:50:59 - Produced by Ken Cook Co. with mediaioff

Ref No	Part Number	Description	Remarks	Serial Number	Qty
1		HEATER KIT	See Illustration OPERATOR CAB/ PE1050 See Illustration HEATER & A/C/ PE2465 See Illustration DELUXE CAB/ PE1323 NAP - Ref. 2-9, 11-13, 16, 17, 19-30, 33, 34, 36-39, 41 & 42 - Order 7108167 kit - if loader is not equipped W/deluxe cab headliner Also Order 6718804 or 6729233 deluxe cab kit - on earlier designer cabs it may be necessary to Also Order 6675033 insert - Was 6718803 [A]		1
2		HARNESS	NAP - hvac - Order 6725933 Harness - Was 6725275 [A]		1
2	6725933	HARNESS	hvac- W/Ref. 17 - Was 6717877 [A]		1
2	6725273	HARNESS	AHC - not in kit		1
3	6669091	CLIP	retainer		3
4	6669224	BOLT			3
5	6674228	PANEL	control		1
5	6640699	CONNECTOR			1
5	6718579	DECAL			1
5	6718887	PANEL	A/C		1
5	6675176	SWITCH	blower		1
5	6675177	KNOB			2
5	6675846	POTENTIOMETER	Was 6675178 [A]		1
6	6675181	PLUG	switch hole		1
7	6681614	KNOB	11/16 in. deep threads		2
8	83D4	NUT 10			2
9	6718175	SCREEN	filter		1
10		FILTER	NAP - foam - Order Ref. 41 - Was 6674229 [A]		1
11	6718837	SPACER			2
12	37C424	BOLT			2
13	87G1008	SCREW			2
14		COVER	NAP - filter - order Ref. 31, 32 and (2) ea of Ref.33 and 34 - Was 6674236 [A]		1
15		FILTER	NAP - order Ref. 31, 32 and (2) of ea of Ref.33 and 34 - Was 6674230 [A]		1
16		HEATER	See Illustration HEATER & A/C/ B17203		1
17	6670312	RELAY	relay		1
18		VALVE	NAP - order Ref. 39 - Was 6675684 [A]		1
18	6640699	CONNECTOR			1
18		DECAL KIT	NAP - Was 6675175 [A]		1
18	6675172	BRACKET			1
18	6675173	ACTUATOR	pigtail		1
18	6680054	ACTUATOR	square plug		1
18	6675174	BODY			1
18	6677628	SHAFT ADAPTER			1
19	6735246	DUCT	LH - W/Ref. 21-23 - Was 6717644 [A]		1
20	6735245	DUCT	RH - W/Ref. 21-23 - Was 6717643 [A]		1
21	6675179	FLANGE			4
22	57G608	SCREW			16
23	6674231	VENT, HEATER CAB ROUND	round		1
24	37C512	BOLT			4
25	59D5	NUT 5			4
26	35C410	BOLT 5			4
27	84G3110	SCREW			2
28	774220	NUT	spring		2
29	7121572	DECAL PACKAGE	decal - Was 6725513 [A]		1

Page 567 - OSS# 2071349 - All rights reserved by Bobcat Company - 12/01/2009 - 20:50:59 - Produced by Ken Cook Co. with mediaioff

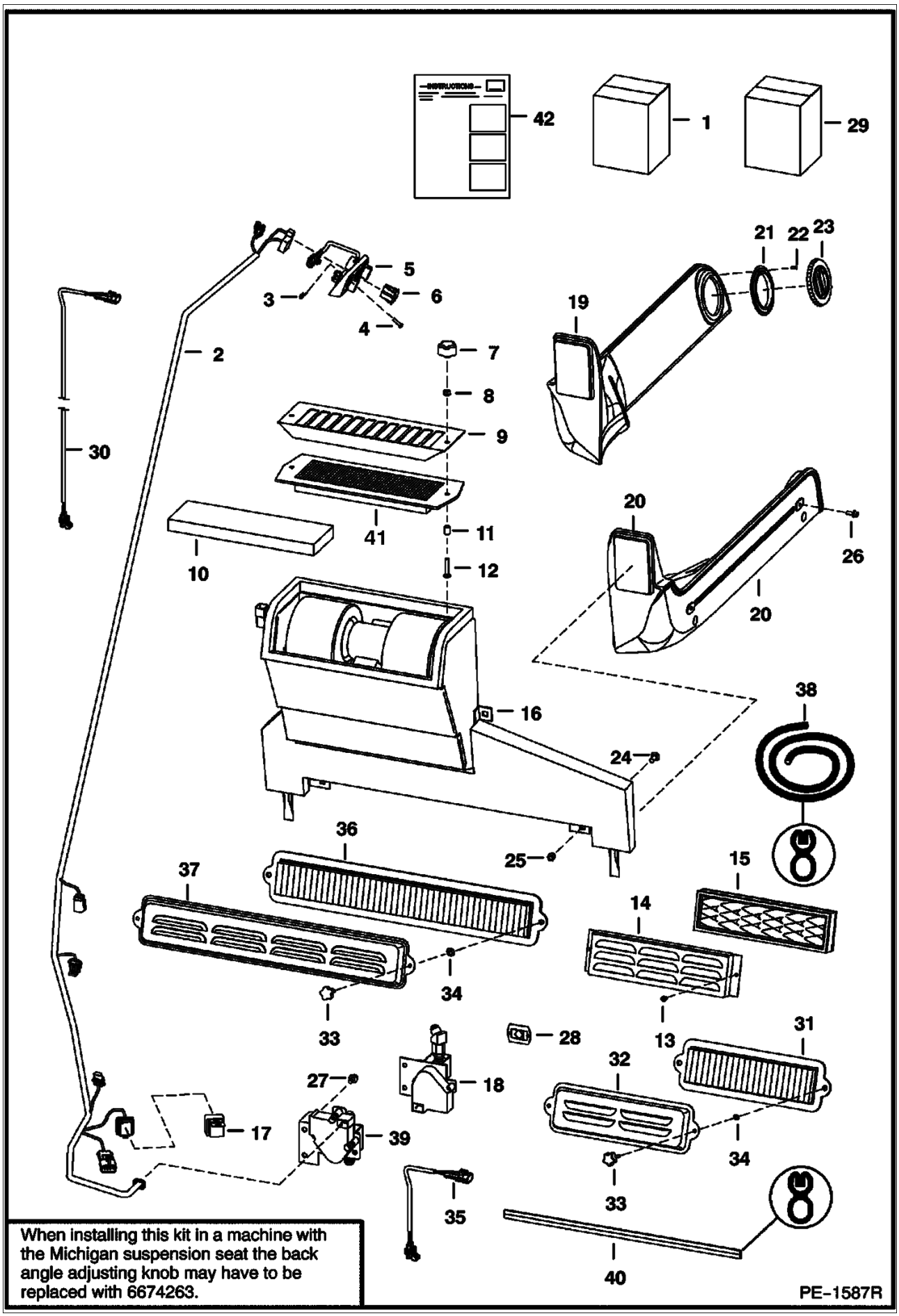

Page 568 - OSS# 2071349 - All rights reserved by Bobcat Company - 12/01/2009 - 20:50:59 - Produced by Ken Cook Co. with mediaioff

Ref No	Part Number	Description	Remarks	Serial Number	Qty
30	6725390	HARNESS	jumper - 72 in. (1828,8 mm) long - HVAC to accessory harness		1
31	6727140	FILTER, AIR HEATER CAB			1
32	6726608	COVER			1
33	6726386	KNOB			2
34	6676516	NUT	push		2
35	6725934	HARNESS	jumper - 4 in. (101,6 mm) long - connects (6725933 Harness) to Ref. 39		1
35	6725936	HARNESS	jumper - 8 in. (203,2 mm) long - connects (NAP/6725275 Harness or NAP/6717877 Harness) to Ref. 39		1
36	6677983	FILTER, AIR HEATER CAB			1
37	6727847	COVER			1
38	6513152	SEAL	bulk - sold per foot		x
39	7100019	VALVE	threaded hose connectors		1
40		SEAL	NAP - 16.25 in. (412,8mm) long - order Ref. 38 [A]		1
41	6678207	FILTER	recirulation		1
42	6900850	INSTRUCTIONS			1
42	6902356	INSTRUCTIONS	800 series W/ kabota engine		1

Page 569 - OSS# 2071349 - All rights reserved by Bobcat Company - 12/01/2009 - 20:50:59 - Produced by Ken Cook Co. with mediaioff

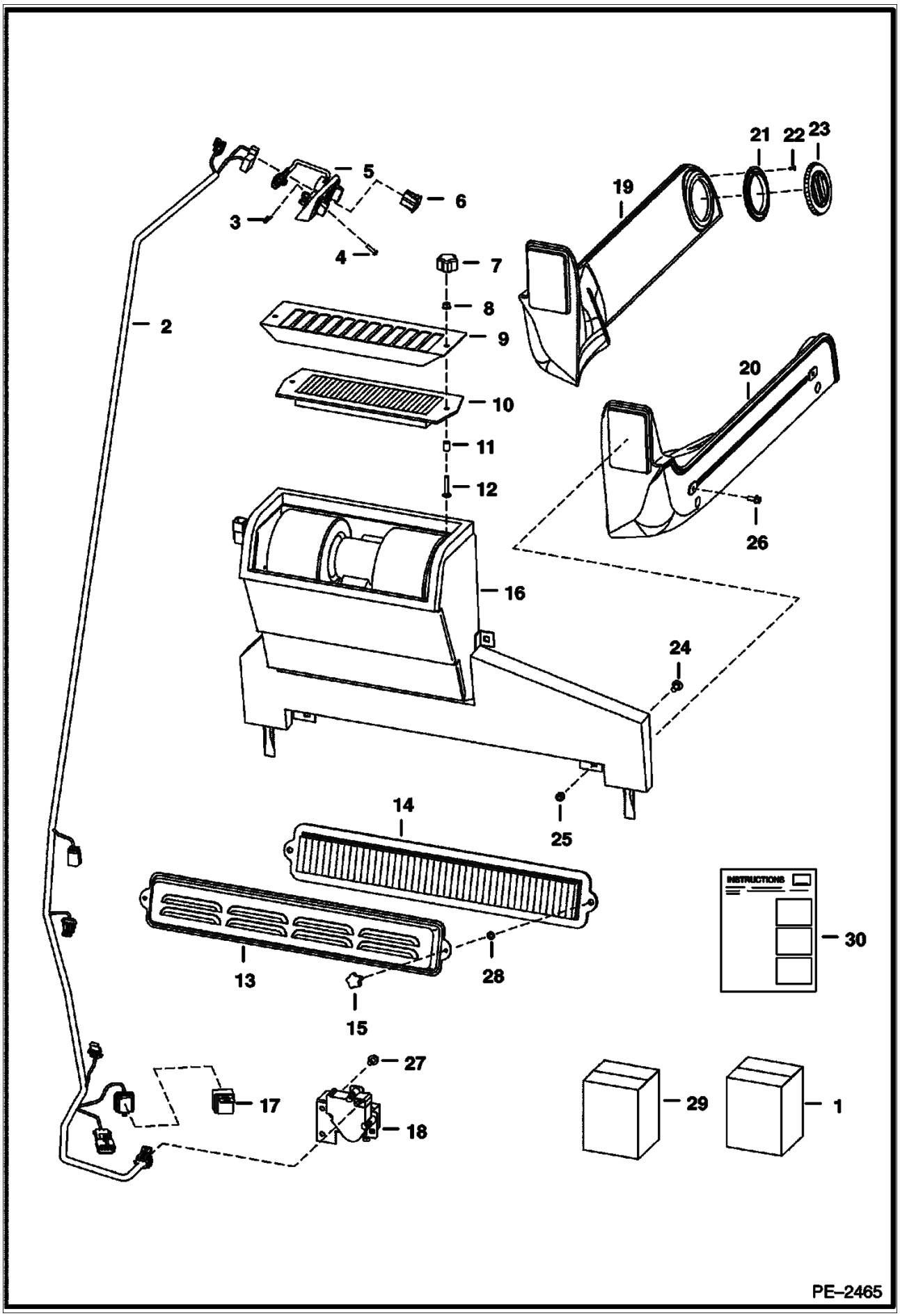

Page 570 - OSS# 2071349 - All rights reserved by Bobcat Company - 12/01/2009 - 20:50:59 - Produced by Ken Cook Co. with mediaioff

Ref No	Part Number	Description	Remarks	Serial Number	Qty
1	7108167	HEATER KIT			1
2	6725933	HARNESS	hvac-W/Ref. 17		1
2	6725273	HARNESS	AHC		1
3	6669091	CLIP	retainer		3
4	6669224	BOLT			3
5	6674228	PANEL	control		1
5	6640699	CONNECTOR			1
5	6718579	DECAL			1
5	6718887	PANEL	A/C		1
5	6675176	SWITCH	blower		1
5	6675177	KNOB			2
5	6675846	POTENTIOMETER			1
6	6675181	PLUG	switch hole		1
7	6681614	KNOB			2
8	83D4	NUT 10			2
9	6718175	SCREEN	filter		1
10	6678207	FILTER	recirculation		1
11	6718837	SPACER			2
12	37C424	BOLT			2
13	6727847	COVER			1
14	6677983	FILTER, AIR HEATER CAB			1
15	6726386	KNOB			2
16		HEATER	See Illustration HEATER & A/C/ PE1143		1
17	6670312	RELAY	relay		1
18	7101928	VALVE, HEATER CAB	barbed hose connectors		1
18	6640699	CONNECTOR			1
18		BRACKET	NAP - Was 6675175 NAP - Was 6675175 [A]		1
18	6675172	BRACKET			1
18	6675173	ACTUATOR	pig tail		1
18	6680054	ACTUATOR	square plug		1
18	6675174	BODY			1
19	6735246	DUCT	LH		1
20	6735245	DUCT	RH		1
21	6675179	FLANGE			4
22	57G608	SCREW			16
23	6674231	VENT, HEATER CAB ROUND	round		4
24	37C512	BOLT			4
25	59D5	NUT 5			4
26	35C410	BOLT 5			4
27	84G3110	SCREW			2
28	6676516	NUT	push		2
29	7121572	DECAL PACKAGE	decal - Was 6725513 [A]		1
30	6903305	INSTRUCTIONS			1

Page 571 - OSS# 2071349 - All rights reserved by Bobcat Company - 12/01/2009 - 20:50:59 - Produced by Ken Cook Co. with mediaioff

HEATER & A/C
(Heater) (S/N 517616547 & Below, 518011614 & Below, 519015163 & Below, 519211131 & Below)

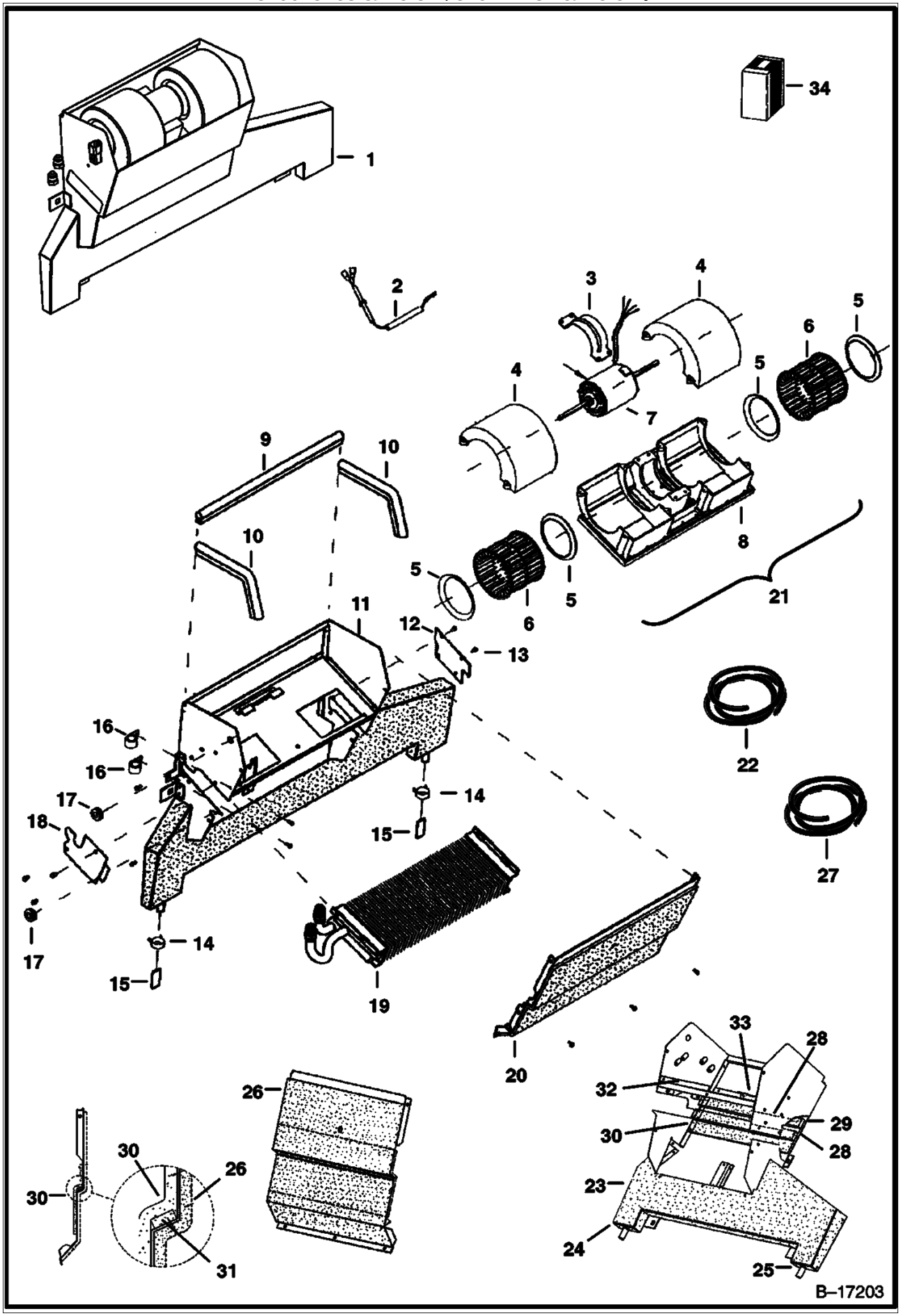

Page 572 - OSS# 2071349 - All rights reserved by Bobcat Company - 12/01/2009 - 20:50:59 - Produced by Ken Cook Co. with mediaioff

Ref No	Part Number	Description	Remarks	Serial Number	Qty
1		HEATER	NAP - Ref. 2-22 - Order 6676562 Heater - Was 6674933 [A]		1
1	6676562	HEATER			1
2	6675508	HARNESS			1
3	6675506	MOUNT			1
4	6675507	COVER			2
5	6675504	RING			4
6	6675505	BLOWER WHEEL			2
6	6676618	CLIP			2
7	6675509	MOTOR, HEATER CAB			1
8	6675503	HOUSING			1
9		SEAL	NAP - 14.75"(375 mm) long - Order Ref. 22		1
10		SEAL	NAP - 8.5"(215 mm) long - Order Ref. 22		2
11	6675499	HOUSING	W/Ref. 23 - 25 & 28 - 30		1
12	6675502	PLATE	cover		1
13		BOLT			x
14	6675510	CLAMP			2
15	6675511	DRAIN VALVE			2
16	6675512	CLAMP			2
17	6675513	GROMMET			2
18	6675501	PLATE	cover		1
19		COIL	See Illustration HEATER & A/C/ PE1143 NAP - Was 6675498 [A]		1
20	6675500	COVER	W/Ref. 26, 27, & 30		1
21	6675497	BLOWER, HEATER AND A/C	Ref. 2 - 8		1
22	6675514	SEAL - PER FOOT	bulk - Sold Per Foot		x
23	6688401	INSULATION	Was 6675607 [A]		1
24	6675608	INSULATION			1
25	6675609	INSULATION			1
26	6688400	INSULATION	Was 6675610 [A]		1
27	6675611	SEAL	bulk - Sold Per Foot		x
28	6675612	INSULATION			2
29	6675613	INSULATION			1
30	6675614	INSULATION			2
31	6728567	KIT	See Illustration HEATER & A/C/ PE1151 blower seal		1
32		SEAL	NAP - 15"(38,1 mm) long - Order Ref. 27		1
33		SEAL	NAP - 5.5"(140 mm) long - Order Ref. 27		1
34		SEAL	NAP - 4"(101,6 mm) long - Order Ref. 27		1

Page 573 - OSS# 2071349 - All rights reserved by Bobcat Company - 12/01/2009 - 20:50:59 - Produced by Ken Cook Co. with mediaioff

HEATER & A/C
(HVAC Assembly) (S/N 517616548 & Above., 500K11001 & Above, 518011615 & Above, 519015164 & Above, 519111001 & Above, 519211132 & Above)

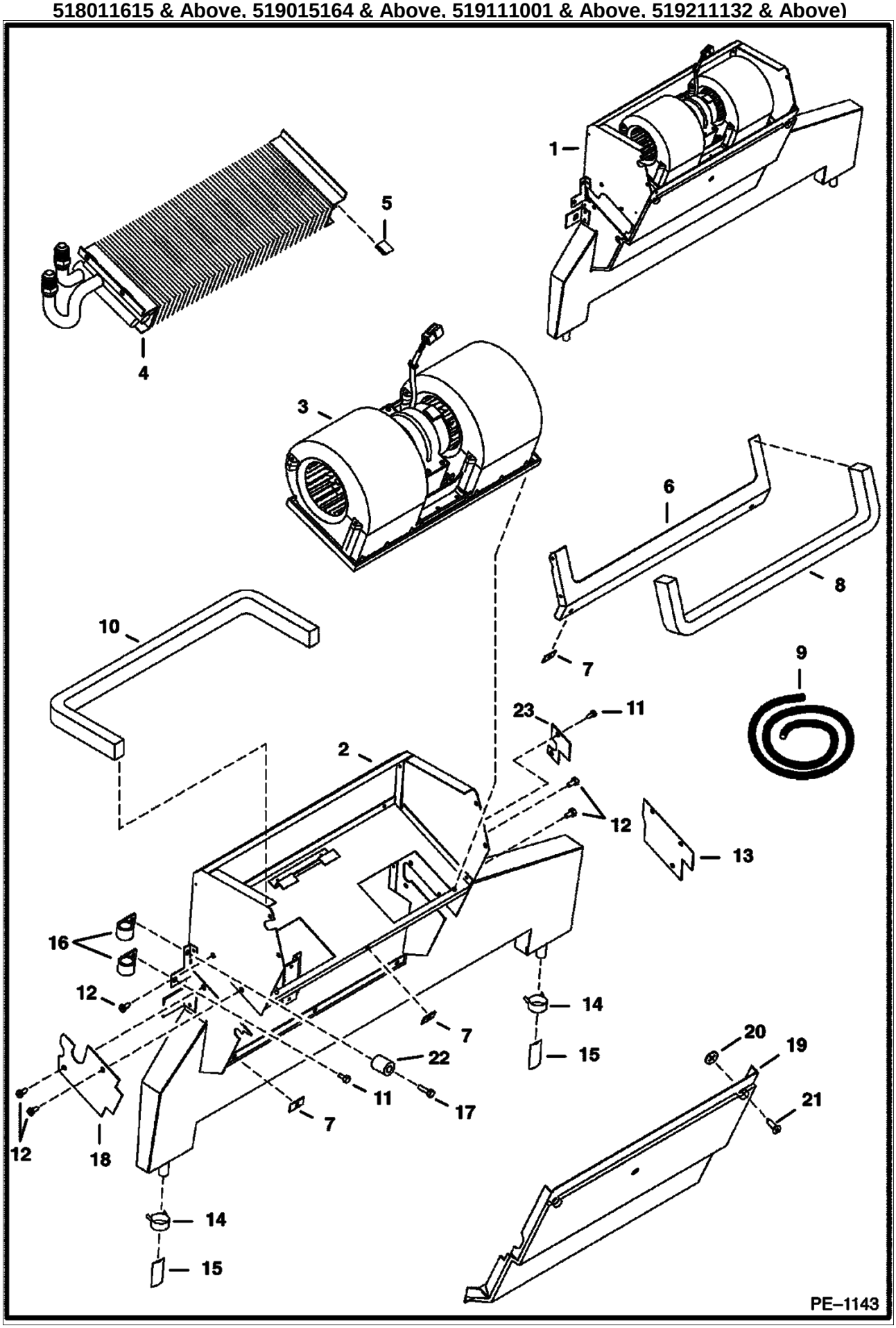

Page 574 - OSS# 2071349 - All rights reserved by Bobcat Company - 12/01/2009 - 20:50:59 - Produced by Ken Cook Co. with mediaioff

Ref No	Part Number	Description	Remarks	Serial Number	Qty
1	6676562	HEATER	Ref. 2-23 - W/threaded hose connectors		1
1	6688371	HEATER	Ref. 2-23 - W/barbed hose connectors - Was 7101926 [A]		1
2	6677108	HOUSING			1
3	6675497	BLOWER, HEATER AND A/C	See Illustration HEATER & A/C/ B17203 ASSY		1
4		COIL	See Illustration HEATER & A/C/ PE1228 NAP - heater - W/threaded hose connectors		1
4		COIL	See Illustration HEATER & A/C/ PE1228 NAP - heater - W/barbed hose connectors		1
5	6676539	CLIP			3
6		NAP	Order Ref. 19 (6678151 Cover) & 6678152 Seal - Was 6677114 [A]		1
6	6678152	SEAL FLANGE			1
7	6677115	RECEPTACLE			6
8		SEAL	NAP - 22.6" (575 mm) long - Order Ref. 9		1
9	6677111	SEAL	bulk - sold per foot		x
10		SEAL	NAP - 25" (635 mm) long - Order Ref. 9		1
11	6677118	SCREW	W/washer		3
12	6677119	SCREW	sheetmetal		7
13	6677120	COVER			1
14	6675510	CLAMP	drain hose		2
15	6675511	DRAIN VALVE			2
16	6675512	CLAMP	hose		2
17	6676653	SCREW			1
18	6677504	COVER	Was 6676604 [A]		1
19		NAP	Order Ref. 6 (6678152 Seal) & 6678151 Cover - Was 6677109 [A]		1
19	6678151	COVER			1
20	6677116	RETAINER			6
21	6677117	SCREW	captive		6
22	6676606	SPACER			1
23	6677105	COVER		& Above	1

Page 575 - OSS# 2071349 - All rights reserved by Bobcat Company - 12/01/2009 - 20:50:59 - Produced by Ken Cook Co. with mediaioff

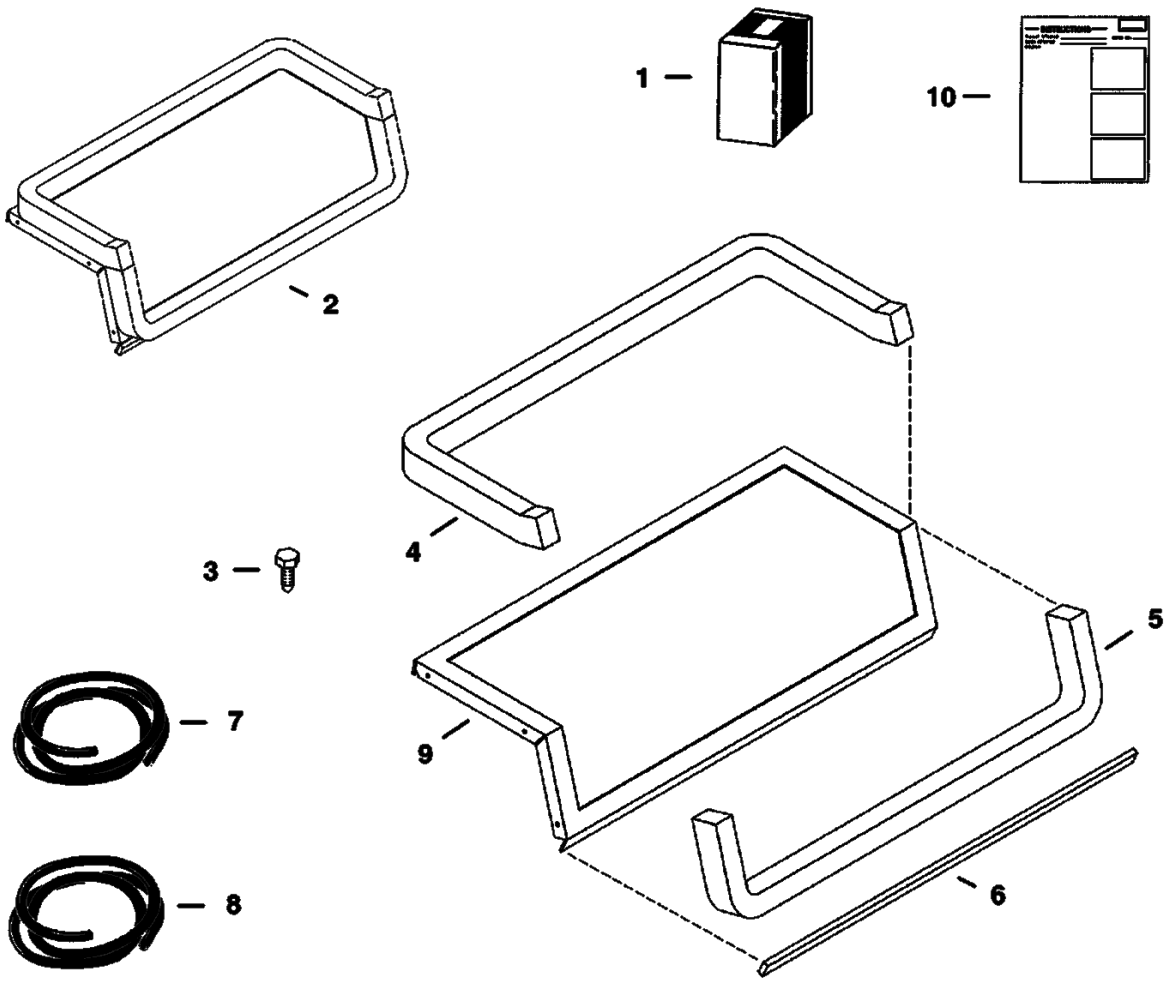

Page 576 - OSS# 2071349 - All rights reserved by Bobcat Company - 12/01/2009 - 20:50:59 - Produced by Ken Cook Co. with mediaioff

Ref No	Part Number	Description	Remarks	Serial Number	Qty
1	6728567	KIT	blower seal - W/Ref. 2, 3 & 10		1
2		FLANGE SEAL	NSS - assy - Ref. 4, 5, 6 & 9 - Order Ref. 1		1
3	6726621	SCREW			7
4		SEAL	NAP - 27"(686mm) long - Order Ref. 8		1
5		SEAL	NAP - 21"(534mm) long - Order Ref. 8		1
6		SEAL	NAP - 15"(384mm) long - Order Ref. 8		1
7	6675611	SEAL	bulk - Sold Per Foot		x
8	6677111	SEAL	bulk - sold per foot		x
9		FLANGE	NSS - Order Ref. 1		1
10	6901213	INSTRUCTIONS			1

Page 577 - OSS# 2071349 - All rights reserved by Bobcat Company - 12/01/2009 - 20:50:59 - Produced by Ken Cook Co. with mediaioff

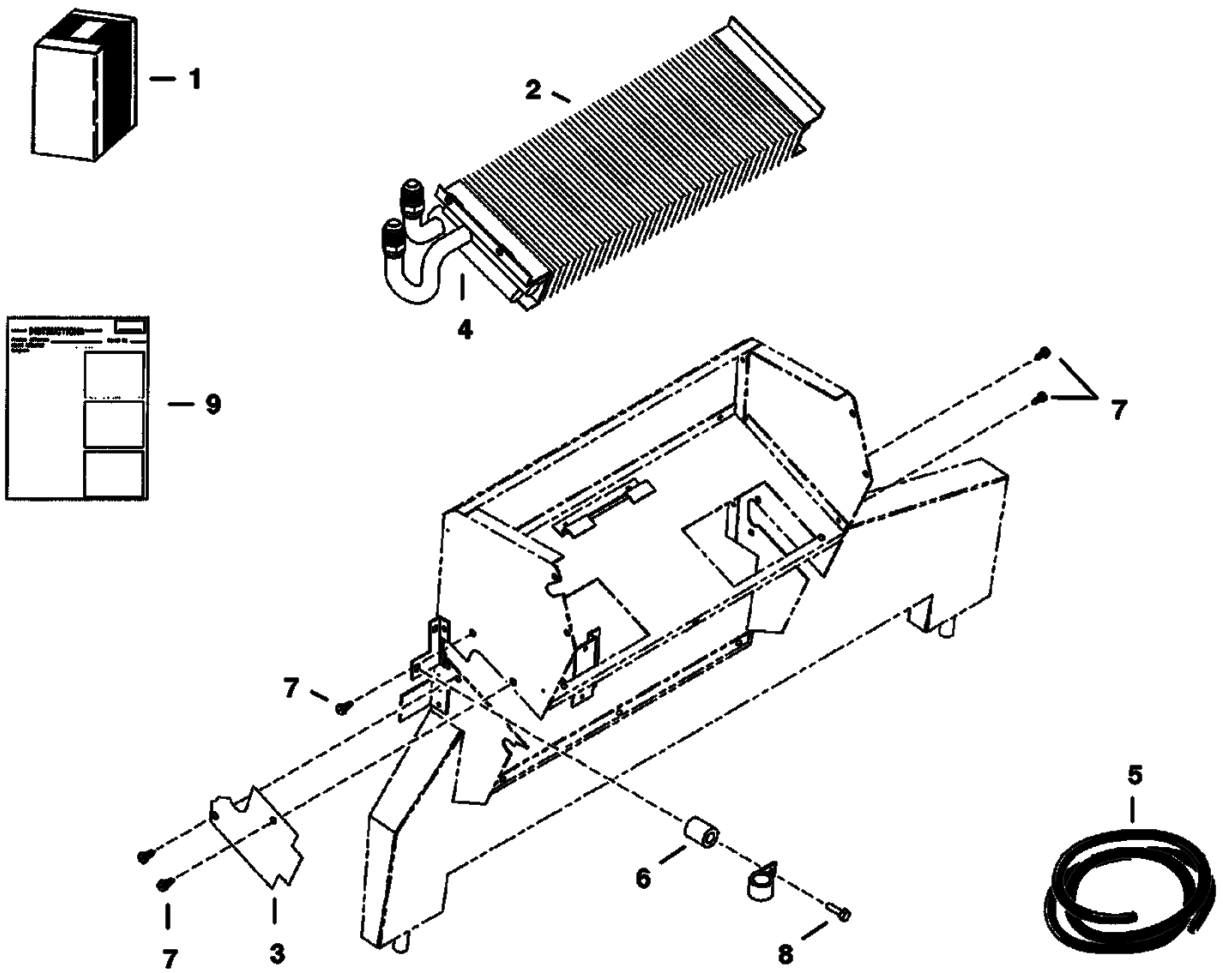

Page 578 - OSS# 2071349 - All rights reserved by Bobcat Company - 12/01/2009 - 20:50:59 - Produced by Ken Cook Co. with mediaioff

Ref No	Part Number	Description	Remarks	Serial Number	Qty
1	6727786	KIT	heater coil - threaded hose connectors - Ref. 2-9 - Was 6728990 [A]		1
1	7132549	HEATER COIL KIT	heater coil - barbed hose connectors - Ref. 2, 4 & 9 - Was 6691065 [A]		1
2		HEATER COIL	NSS - threaded hose connectors - Order Ref. 1 (6727786 Kit)		1
2		HEATER COIL	NSS - barbed hose connectors - Order Ref. 1 (7132549 kit)		1
3	6677504	COVER	.279" (7,1 mm) thick		1
4		INSULATION	NAP - 6"(152.4mm) long - Order Ref. 5		1
5	6676538	INSULATION	bulk - sold per foot		x
6	6676606	SPACER			1
7	6726621	SCREW			2
8	6676653	SCREW			1
9	6901120	INSTRUCTIONS			1

Page 579 - OSS# 2071349 - All rights reserved by Bobcat Company - 12/01/2009 - 20:50:59 - Produced by Ken Cook Co. with mediaioff

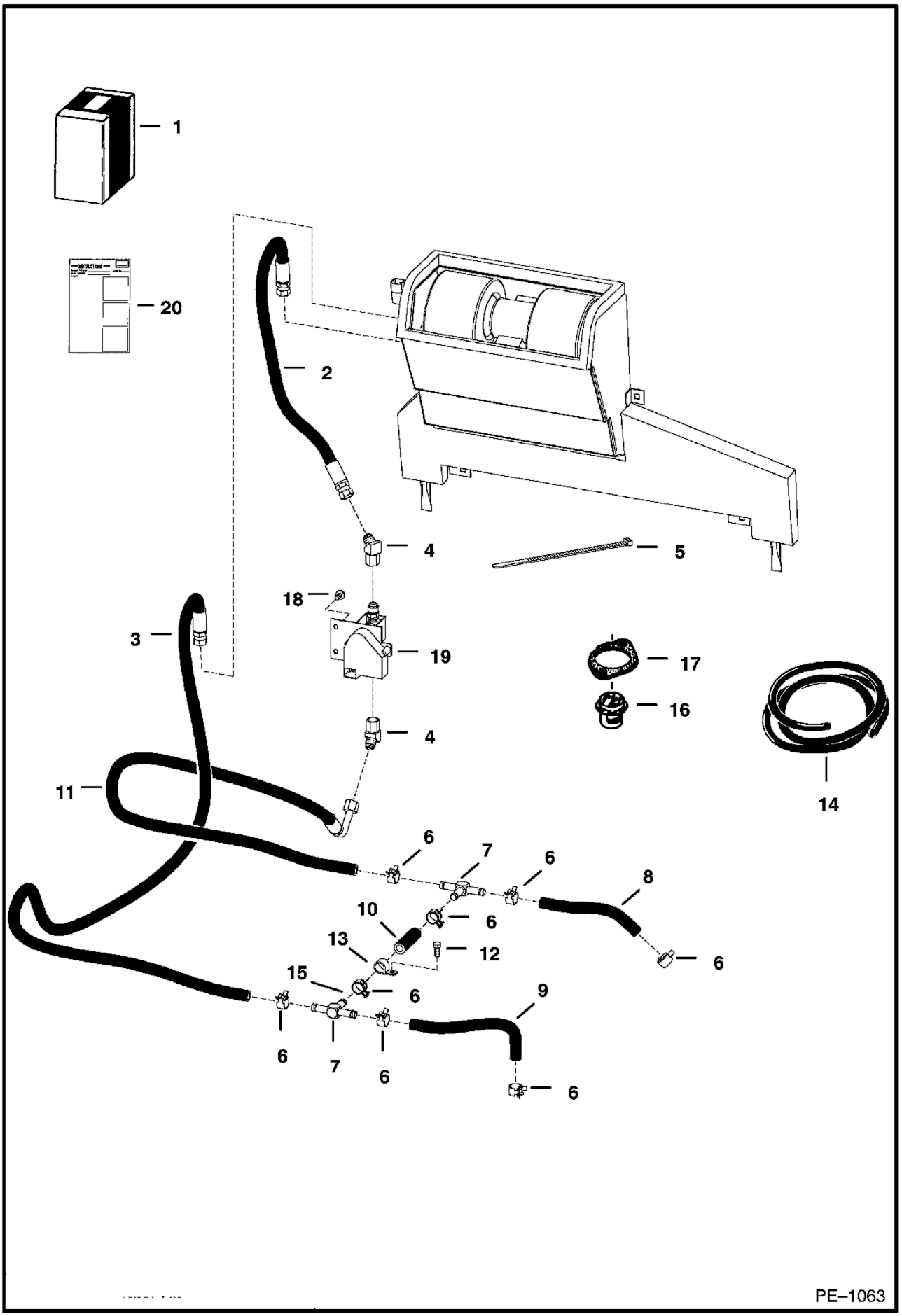

Page 580 - OSS# 2071349 - All rights reserved by Bobcat Company - 12/01/2009 - 20:50:59 - Produced by Ken Cook Co. with mediaioff

Ref No	Part Number	Description	Remarks	Serial Number	Qty
1		KIT	See Illustration HEATER & A/C/ PE1414 See Illustration ENGINE & ATTACHING PARTS/ PE1059R See Illustration ENGINE & ATTACHING PARTS/ PE1058 NAP - REF. 2 - 17 - ORDER COMPONENTS & 6730999 TUBE - Was 6718809 [A]		1
2		HOSE	NAP - 40"(1016 mm) long - Order 6719144 Hose & relocate Ref. 19 - Was 6717986 [A]		1
2	6719144	HOSE	34"(863,6 mm) long - W/spring guard		1
3	6719080	HOSE	W/spring guard - Was 6717876 [A]		1
4	12K6	UNION	Was 12KN00006B [A]		2
5	6624289	STRAP 10			4
6	5HM20	CLAMP	hose		8
7	6718578	TEE			2
8		HOSE	NAP - 8.3"(210,8 mm) long - Order Ref. 14		x
9		HOSE	NAP - 10.5"(266,7 mm) long - Order Ref. 14		1
10		HOSE	NAP - 3"(76,2 mm) long - Order Ref. 14		1
11	6717987	HOSE			1
12	1CM820	BOLT			1
13	30H64	CLAMP	insulated		1
14	6674905	HOSE	bulk - Sold Per Foot		x
15	6592852	ORIFICE			1
16	6630184	THERMOSTAT			1
17	6732199	GASKET	thermostat - Was 6666790 [A]		1
18	17C512	BOLT 5	Not in Kit		2
18	95D5	NUT	Not in Kit		2
19		VALVE	See Illustration HEATER & A/C/ PE1587R NOT IN KIT		1
20	6900850	INSTRUCTIONS	See Illustration HEATER & A/C/ PE1587R INSTRUCTIONS NOT IN KIT		1

Page 581 - OSS# 2071349 - All rights reserved by Bobcat Company - 12/01/2009 - 20:50:59 - Produced by Ken Cook Co. with mediaioff

HEATER & A/C

(Heater Plumbing Kit) (S/N 500K12373 & Above, 517620467 & Above, 518012482 & Above, 518112361 & Above, 519021915 & Above, 519212418 & Above)

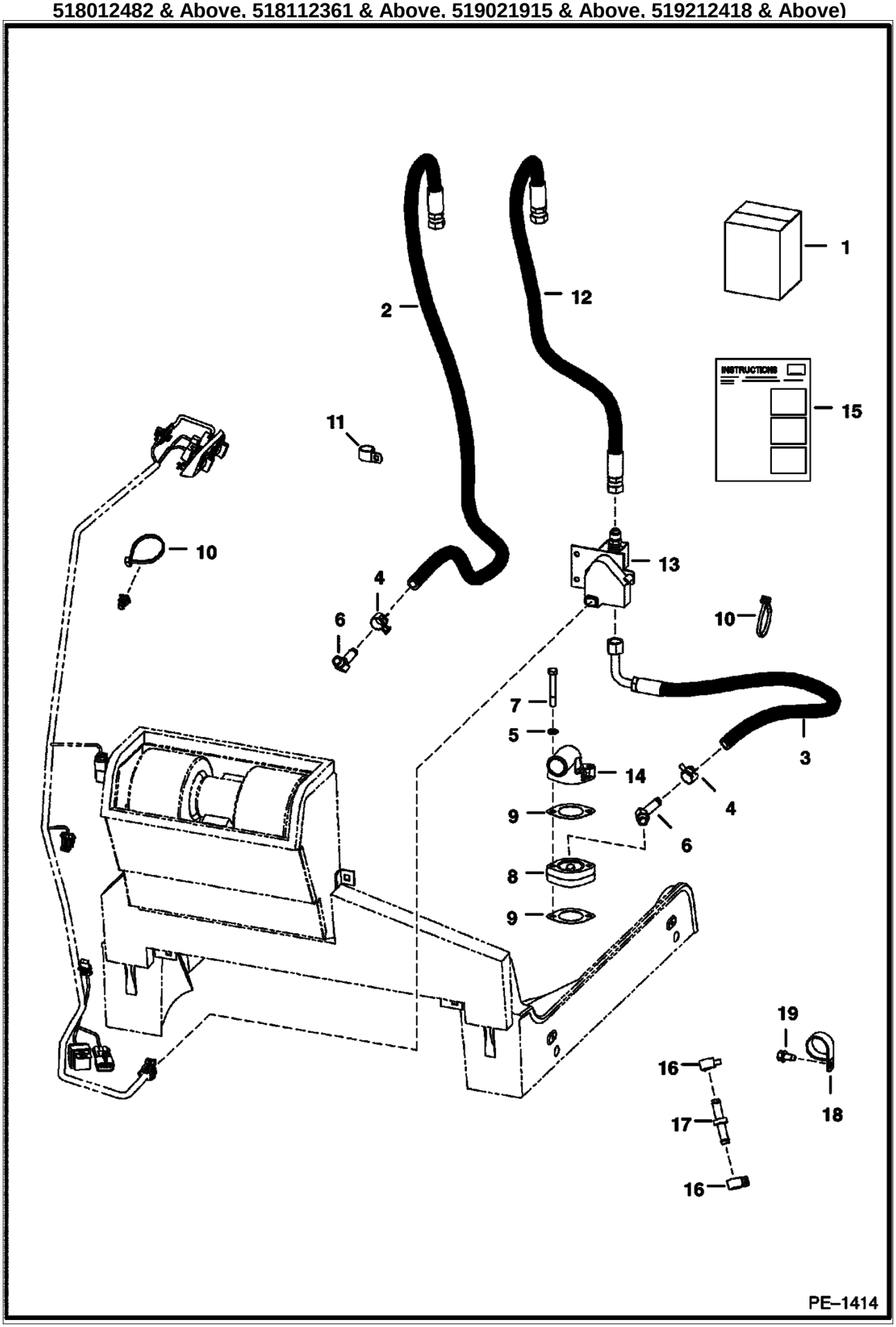

Page 582 - OSS# 2071349 - All rights reserved by Bobcat Company - 12/01/2009 - 20:50:59 - Produced by Ken Cook Co. with mediaioff

HEATER & A/C (Cont'd)
(Heater Plumbing Kit) (S/N 500K12373 & Above, 517620467 & Above, 518012482 & Above, 518112361 & Above, 519021915 & Above, 519212418 & Above)

Ref No	Part Number	Description	Remarks	Serial Number	Qty
1		KIT	See Illustration HEATER & A/C/ PE1587R NAP - REF. 2 - 12 - FOR HEATER KIT w/ threaded hose connectors - Order 7108169 kit - Was 6731158 [A]		1
2	6730996	HOSE	W/10" spring guard		1
3	6730998	HOSE			1
4	5HM20	CLAMP	hose		2
5	6EM80	WASHER, SPRING			2
6	6731085	ELBOW			2
7	1CM860	BOLT	Was 1CM00870B [B]		2
8	6731049	ADAPTER			1
9	6732199	GASKET	thermostat - Was 6666790 [A]		2
10	6624289	STRAP 10			3
11	30H45	CLIP	insulated		1
12	6719144	HOSE	34"(863,6 mm) long - W/spring guard		1
13		VALVE	See Illustration HEATER & A/C/ PE1587R NOT IN KIT		1
14		HOUSING	See Illustration WATER FLANGE & THERMOSTAT/ B16454 THERMOSTAT - NOT IN KIT		1
15	6900850	INSTRUCTIONS	INSTRUCTIONS Not in Kit		1
16	30H60	CLIP	insolated - not in kit - SEE NOTE		1
17	6732023	CONNECTOR	Not in Kit - Used in factory option only		1
18	5HM20	CLAMP	Not in Kit - Used in factory option only		2
19	84G3712	BOLT	not in kit - Used in factory option only		1

Page 583 - OSS# 2071349 - All rights reserved by Bobcat Company - 12/01/2009 - 20:50:59 - Produced by Ken Cook Co. with mediaioff

HEATER
(Heater Plumbing Kit)

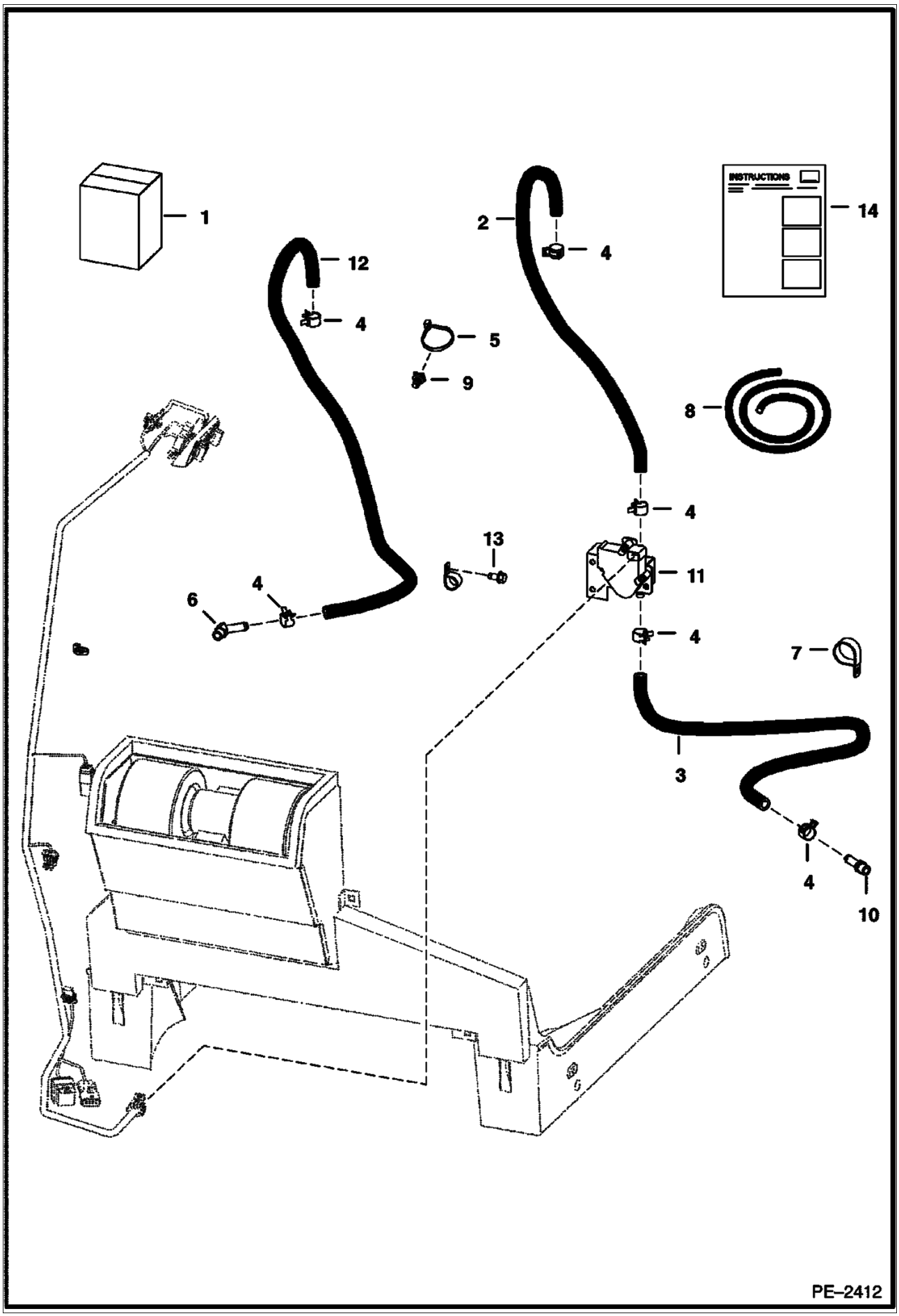

Page 584 - OSS# 2071349 - All rights reserved by Bobcat Company - 12/01/2009 - 20:50:59 - Produced by Ken Cook Co. with mediaioff

Ref No	Part Number	Description	Remarks	Serial Number	Qty
1	7108169	KIT,HTR PLUMBING	See Illustration HEATER & A/C/ PE2465 REF. 2 - 10 - for heater kit W/barbed hose connectors		1
2		HOSE	NAP - 32 in (812,8 mm) long - order Ref. 8		1
3		HOSE	NAP - 47 in (1193,8 mm) long - order Ref. 8		1
4	5HM20	CLAMP	hose		6
5	6624289	STRAP 10			3
6	6731085	ELBOW			2
7	30H60	CLIP	insulated		1
8	6565977	HOSE	bulk - sold per foot		x
9	6678666	TREE MOUNT	push in - Use W/tie strap		2
10	6731084	ADAPTER			1
11		VALVE	See Illustration HEATER & A/C/ PE2465 NOT IN KIT		1
12			NAP - 37 in. (939,8 mm) long - Order Ref. 8		1
13	84G3712	BOLT			1
14	6903305	INSTRUCTIONS	Not in Kit - part of heater kit - Was 6900850 [B]		1

Page 585 - OSS# 2071349 - All rights reserved by Bobcat Company - 12/01/2009 - 20:50:59 - Produced by Ken Cook Co. with mediaioff

HEATER & A/C
(A/C Kit) (S/N 519015064 & Above)

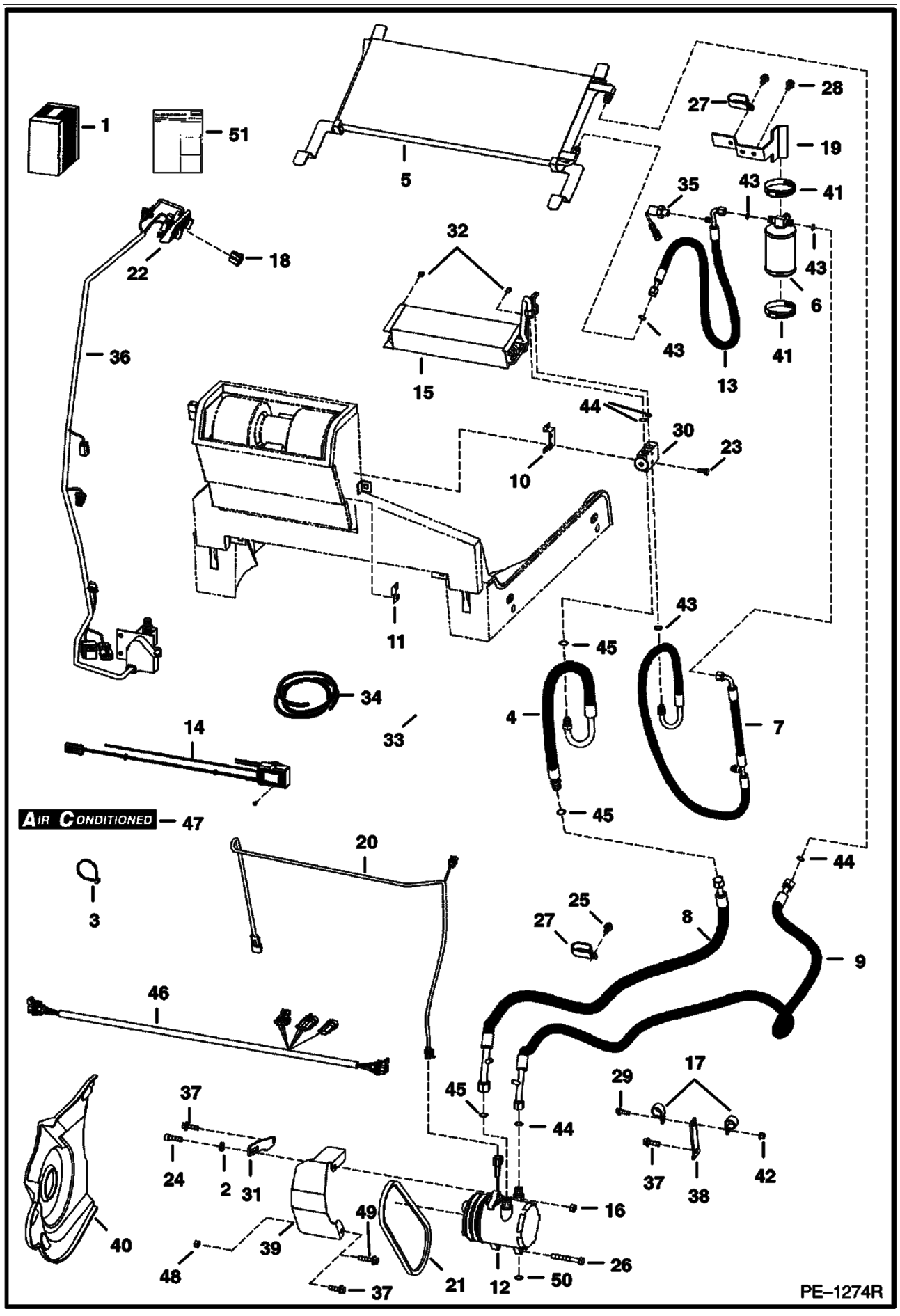

Page 586 - OSS# 2071349 - All rights reserved by Bobcat Company - 12/01/2009 - 20:50:59 - Produced by Ken Cook Co. with mediaioff

Ref No	Part Number	Description	Remarks	Serial Number	Qty
1	6729004	KIT	If loader is equipped with Heater and utilizes HVAC Harness 6717877 or 6725275 , Also Order Ref. 46.		1
2	6557831	WASHER			1
3	6624289	STRAP 10			5
4	6726623	HOSE			1
5	6732486	CONDENSER	A/C - Was 6726983 [A]		1
6	6674235	RECEIVER DRIER			1
6	6676062	VALVE	relief		1
7	6698442	HOSE	Was 6675075 [A]		1
7	6677122	CAP			1
8	6726656	HOSE			1
8	6685199	CAP			1
9	6726661	HOSE, A/C ASSY			1
9		CAP	NAP - Was 6685198 [A]		1
10	6676984	MOUNT	valve		1
11	6677105	COVER	plate		1
12		COMPRESSOR	NAP - Order 6733655 compressor - Was 6675667 [A]		1
12	6733655	COMPRESSOR	W/Ref. 50		1
12	6679145	CLUTCH	Was 6675828 [D]		1
12	6648307	CONNECTOR	2-pin		1
12	6648308	CONNECTOR			1
13	6727414	HOSE			1
14	6683004	THERMOSTAT	Was 6675790 [A]		1
15	6683003	COIL	evaporator - Was 6675533 [A]		1
16	53DM10	NUT	Was 2DM00010B [B]		1
17	30H50	CLIP			3
18	6719176	SWITCH ROCKER			1
19	6726620	BRACKET	receiver drier		1
20	6726888	HARNESS			1
21	6726988	BELT	compressor		1
22	6726621	SCREW			2
23	1CM635	BOLT			2
24	2GM1035	BOLT			1
25	84G3716	SCREW 5			1
26	5CM1080	SCREW			1
27	31H46	CLAMP			2
28	84G3710	SCREW			3
29	35C516	BOLT 10			2
30	6675534	BLOCK, A/C VALVE	expansion valve		1
31	6726648	BRACKET	swing		1
32	6676539	CLIP			2
33		INSULATION	NAP - tape - 6"(152,4 mm) long - Order Ref. 34		1
34	6676538	INSULATION	bulk - sold per foot		x
35	6675779	SWITCH, PRESS	pressure		1
36	6725933	HARNESS	Not in Kit		1
37	35C620	BOLT 5	Used W/Ref. 39 (6731495 shield)		3
38	6728011	BRACKET			1
39		SHIELD	NAP - belt - Order 6731495 Shield & Ref. 48 & 49 - Was 6727581 [A]		1
39	6731495	SHIELD	belt		1
40	7109712	SHIELD	Was 6726937 [A]		1
41	44H48	CLAMP			2
42	83D5	NUT 5			2
43	6675824	O-RING	#6		x

Page 587 - OSS# 2071349 - All rights reserved by Bobcat Company - 12/01/2009 - 20:50:59 - Produced by Ken Cook Co. with mediaioff

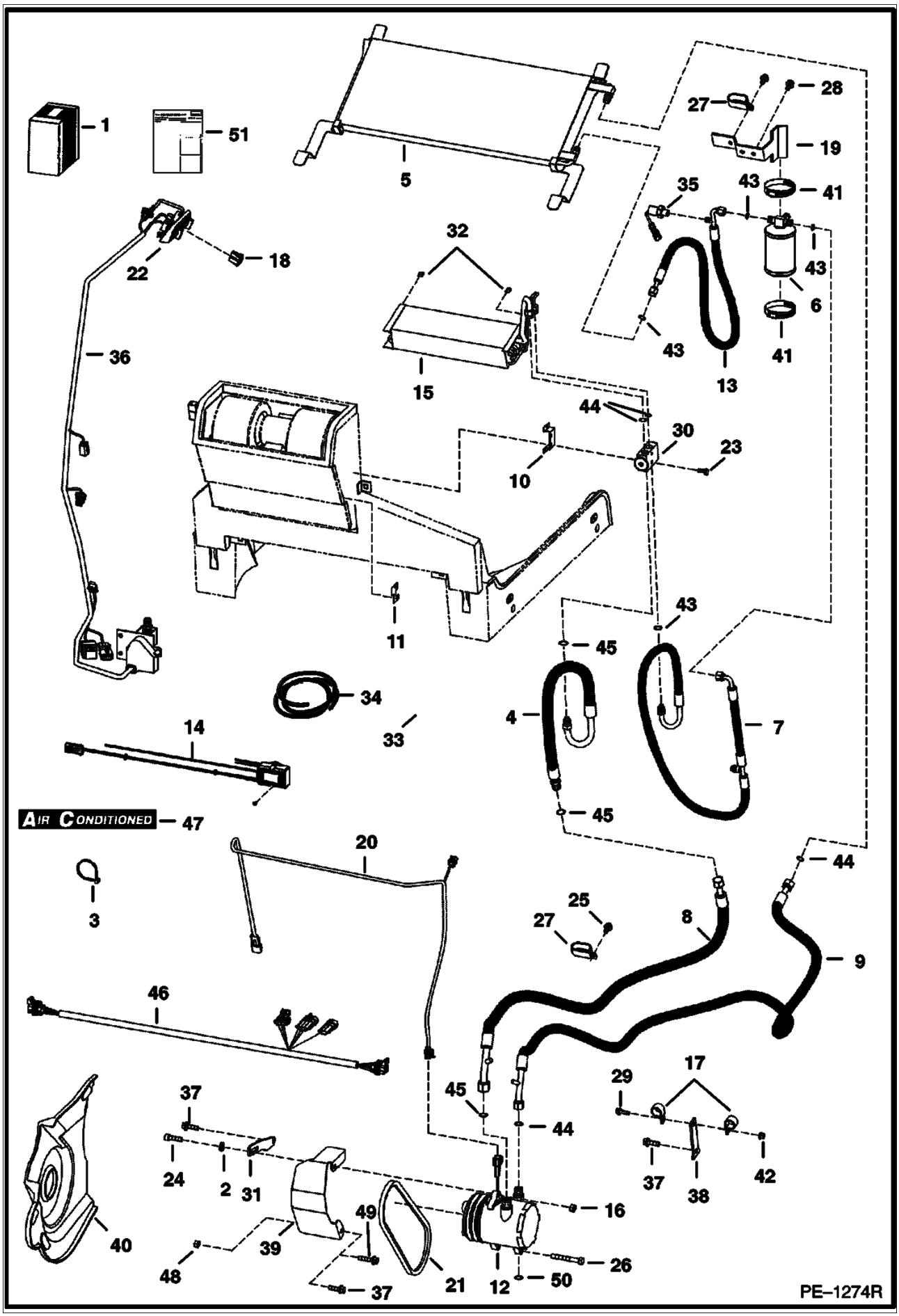

Page 588 - OSS# 2071349 - All rights reserved by Bobcat Company - 12/01/2009 - 20:50:59 - Produced by Ken Cook Co. with mediaioff

Ref No	Part Number	Description	Remarks	Serial Number	Qty
44	6675538	O-RING	#8		x
45	6675825	O-RING	#10		x
46	6726357	HARNESS	jumper - not in kit		1
47	6729077	DECAL	air conditioned		2
48	97D6	NUT 10	flanged locknut - grade 5		1
49	35C624	BOLT	3/8 x 1.5" - grade 5		1
50	6732732	BUSHING			1
51	6901224	INSTRUCTIONS			1

Page 589 - OSS# 2071349 - All rights reserved by Bobcat Company - 12/01/2009 - 20:50:59 - Produced by Ken Cook Co. with mediaioff

HEATER & A/C
(HVAC Assembly)

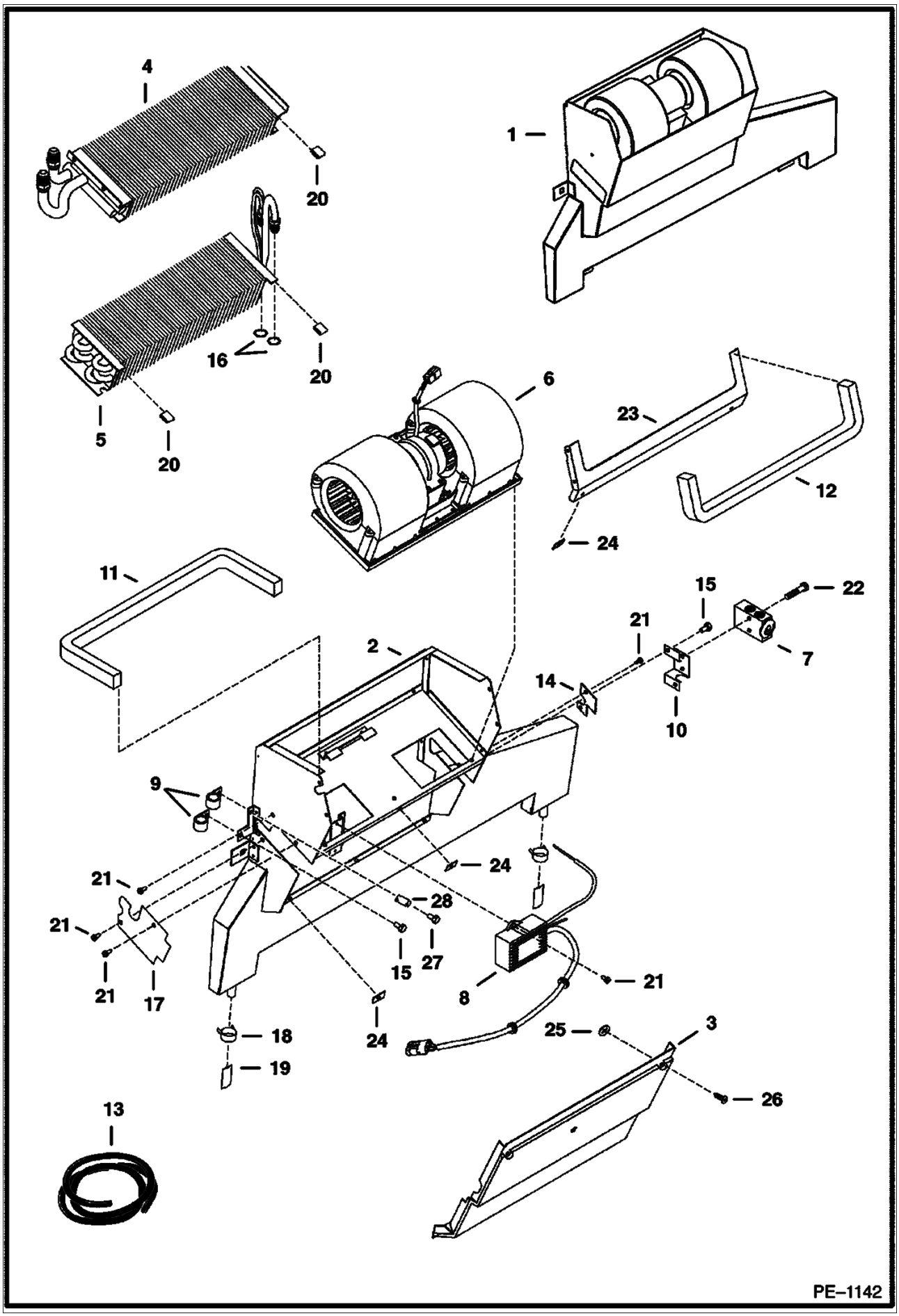

Page 590 - OSS# 2071349 - All rights reserved by Bobcat Company - 12/01/2009 - 20:50:59 - Produced by Ken Cook Co. with mediaIoff

Ref No	Part Number	Description	Remarks	Serial Number	Qty
1	6683001	HVAC	Ref. 2-28 - Was 6676561 [A]		1
2	6677108	HOUSING			1
3		COVER	NAP - Order 6678151 Cover & Ref. 23 (6678152 Seal) -Was 6677109 [A]		1
3	6678151	COVER			1
4		COIL	See Illustration HEATER & A/C/ PE1228 NSS - HEATER - ORDER 6727786 HEATER COIL KIT - Was 6676603 [A]		1
5	6683003	COIL	evaporator - Was 6675533 [A]		1
6	6675497	BLOWER, HEATER AND A/C	See Illustration HEATER & A/C/ B17203 ASSY		1
7	6675534	BLOCK, A/C VALVE			1
8	6683004	THERMOSTAT	Was 6675790 [A]		1
9	6675512	CLAMP	hose		2
10	6676984	MOUNT	valve		1
11		SEAL	NAP - 25"(635mm) long - Order Ref. 13		1
12		SEAL	NAP - 22.6"(575mm) long - Order Ref. 13		1
13	6677111	SEAL	bulk - sold per foot		x
14	6677105	COVER			1
15	6677118	SCREW	W/washer		3
16	6675538	O-RING			2
17	6677504	COVER	Was 6676604 [A]		1
18	6675510	CLAMP	drain hose		2
19	6675511	DRAIN VALVE			2
20	6676539	CLIP			2
21	6677119	SCREW	sheetmetal		7
22	1CM635	BOLT			2
23		SEAL	NAP - Order 6678152 Seal & Ref. 3 (6678151 Cover) - Was 6677114 [A]		1
23	6678152	SEAL FLANGE			1
24	6677115	RECEPTACLE			6
25	6677116	RETAINER			6
26	6677117	SCREW	captive		6
27	6676653	SCREW			1
28	6676606	SPACER			1

Page 591 - OSS# 2071349 - All rights reserved by Bobcat Company - 12/01/2009 - 20:50:59 - Produced by Ken Cook Co. with mediaioff

HORN KIT

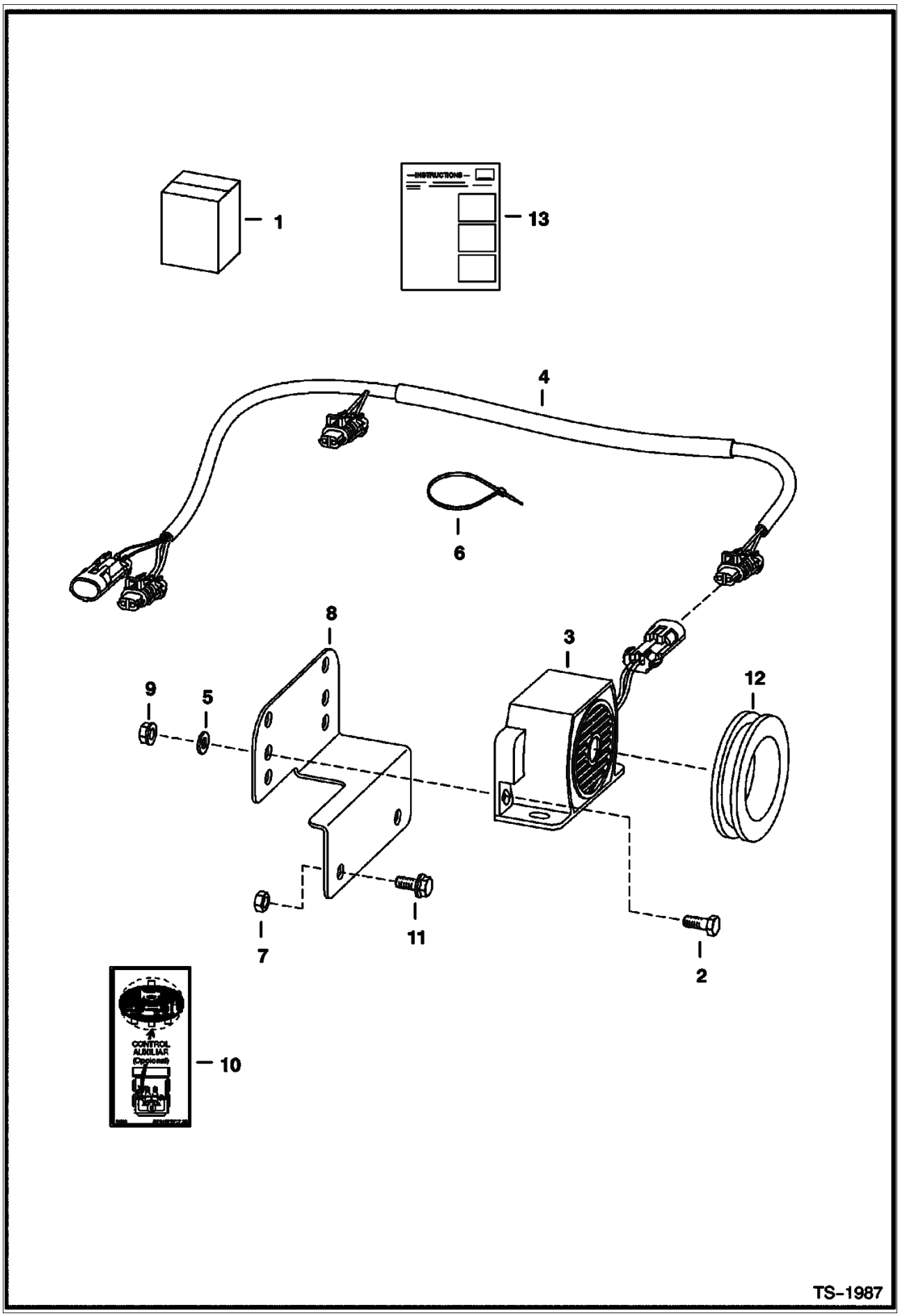

Page 592 - OSS# 2071349 - All rights reserved by Bobcat Company - 12/01/2009 - 20:50:59 - Produced by Ken Cook Co. with mediaioff

Ref No	Part Number	Description	Remarks	Serial Number	Qty
1	6727995	KIT, HORN	Ref. 2-12 & 16 - Requires multi-switch handle - Was 6719043 [B]		1
2	17C410	BOLT 10			2
3	7001044	HORN, ALARM	Was 6675099 [A]		1
4	6727498	HARNESS	56.5"(1435 mm) long - Was 6719151 [A]		1
5	25E13	WASHER 5			1
6	6610510	TIE	Was 30H23 [B]		1
7	83D5	NUT 5	Was 61D000005B [B]		2
8	6733970	MOUNT	Was 6707726 [A]		1
9	83D4	NUT 10			2
10	6703727	DECAL	horn/aux		1
11	35C512	BOLT			2
12	6577545	GROMMET			1
13	6901146	INSTRUCTIONS	INSTRUCTIONS Was 6900913 [B]		1

Page 593 - OSS# 2071349 - All rights reserved by Bobcat Company - 12/01/2009 - 20:50:59 - Produced by Ken Cook Co. with mediaioff

LIFT KIT
(Single Point)
(For Use W/O Window Rib Kit)

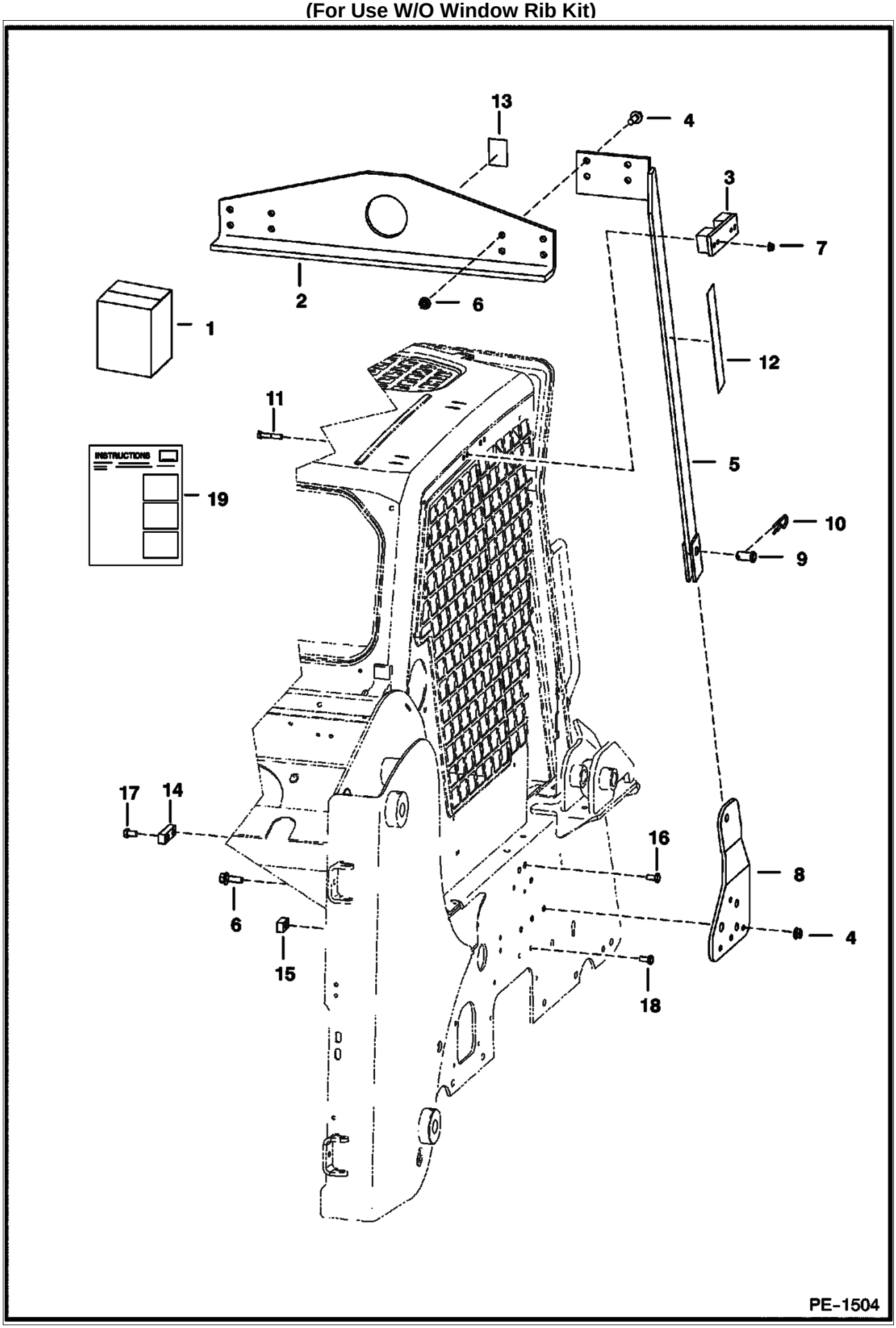

Page 594 - OSS# 2071349 - All rights reserved by Bobcat Company - 12/01/2009 - 20:50:59 - Produced by Ken Cook Co. with mediaioff

LIFT KIT (Cont'd)
(Single Point)
(For Use W/O Window Rib Kit)

Ref No	Part Number	Description	Remarks	Serial Number	Qty
1	6719264	KIT	Ref. 2-19 - NOT compatable W/ 7122462 window rib kit		1
2	6567827	ANGLE			1
3	6719184	MOUNT	LH		1
3	6719185	MOUNT	RH		1
4	31C824	BOLT 10			16
5	6704146	BRACKET	RH		1
5	6704147	BRACKET	LH - Was 6725300 [B,D]		1
6	57D8	NUT 10			16
7	57D6	NUT 5			8
8	6731658	BRACKET	RH - Was 6725031 [A]		1
8	6731657	BRACKET	LH - Was 6719843 [A]		1
9	6567838	PIN			2
10	1320075	COTTER PIN			2
11	17C632	BOLT 5			8
12	6704786	DECAL	warning		2
13	6533898	DECAL	hook		1
14	7124571	SPACER			1
15	7124572	SPACER			1
16	17C512	BOLT 5			1
17	17C612	BOLT 5			1
18	17C628	BOLT			1
19	6900888	INSTRUCTIONS			1

Page 595 - OSS# 2071349 - All rights reserved by Bobcat Company - 12/01/2009 - 20:50:59 - Produced by Ken Cook Co. with mediaioff

LIFT KIT
(Four Point - .75" Thick Lift Eye)

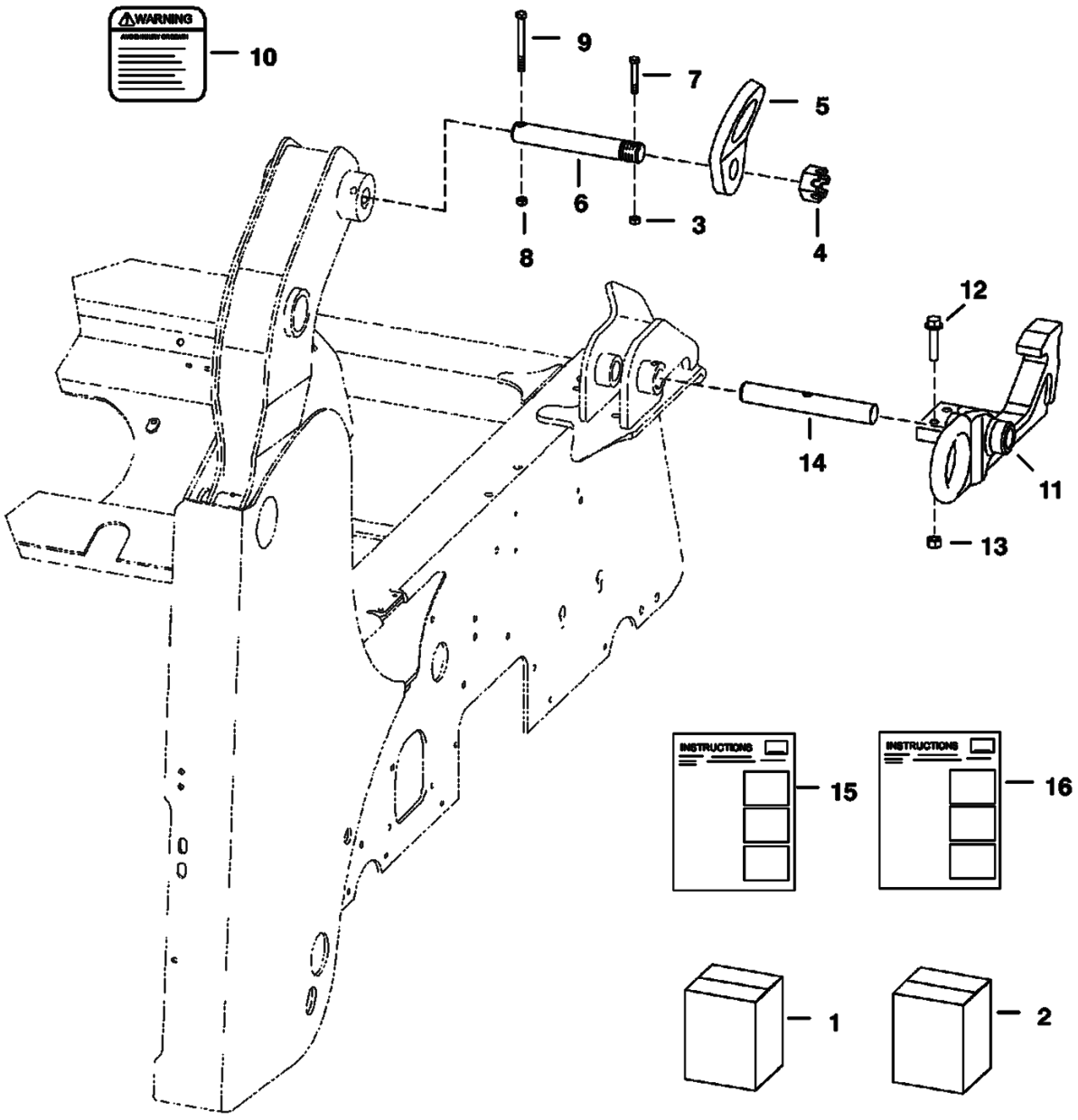

NOTE: The Four Point Lift Kit requires the Backhoe Mounting Kit, which is available from Gwinner Sales #6718155.

PE-1383

Page 596 - OSS# 2071349 - All rights reserved by Bobcat Company - 12/01/2009 - 20:50:59 - Produced by Ken Cook Co. with mediaioff

LIFT KIT (Cont'd)
(Four Point - .75" Thick Lift Eye)

Ref No	Part Number	Description	Remarks	Serial Number	Qty
1	6727993	KIT	lift - Ref. 3-10 & 16 - SEE NOTE		1
2		KIT	SALES - backhoe mounting - Ref. 11-15 - SEE NOTE		1
3	87D5	NUT			2
4	4D20	NUT			2
5	6706825	LIFT EYE	rear		2
6	6706807	PIN			2
7	17C540	BOLT			2
8	85D6	LOCK NUT	not in kit		2
9	17C640	BOLT 5	not in kit		2
10	6726423	DECAL			2
11	6718122	MOUNT	LH		1
11	6717293	MOUNT	RH		1
12	31C836	BOLT			4
13	63D8	NUT			4
14	6717707	PIN			1
15	6900827	INSTRUCTIONS	INSTRUCTIONS For Ref. 2		1
16	6901203	INSTRUCTIONS	INSTRUCTIONS For Ref. 1		1

Page 597 - OSS# 2071349 - All rights reserved by Bobcat Company - 12/01/2009 - 20:50:59 - Produced by Ken Cook Co. with mediaioff

LIGHT KIT

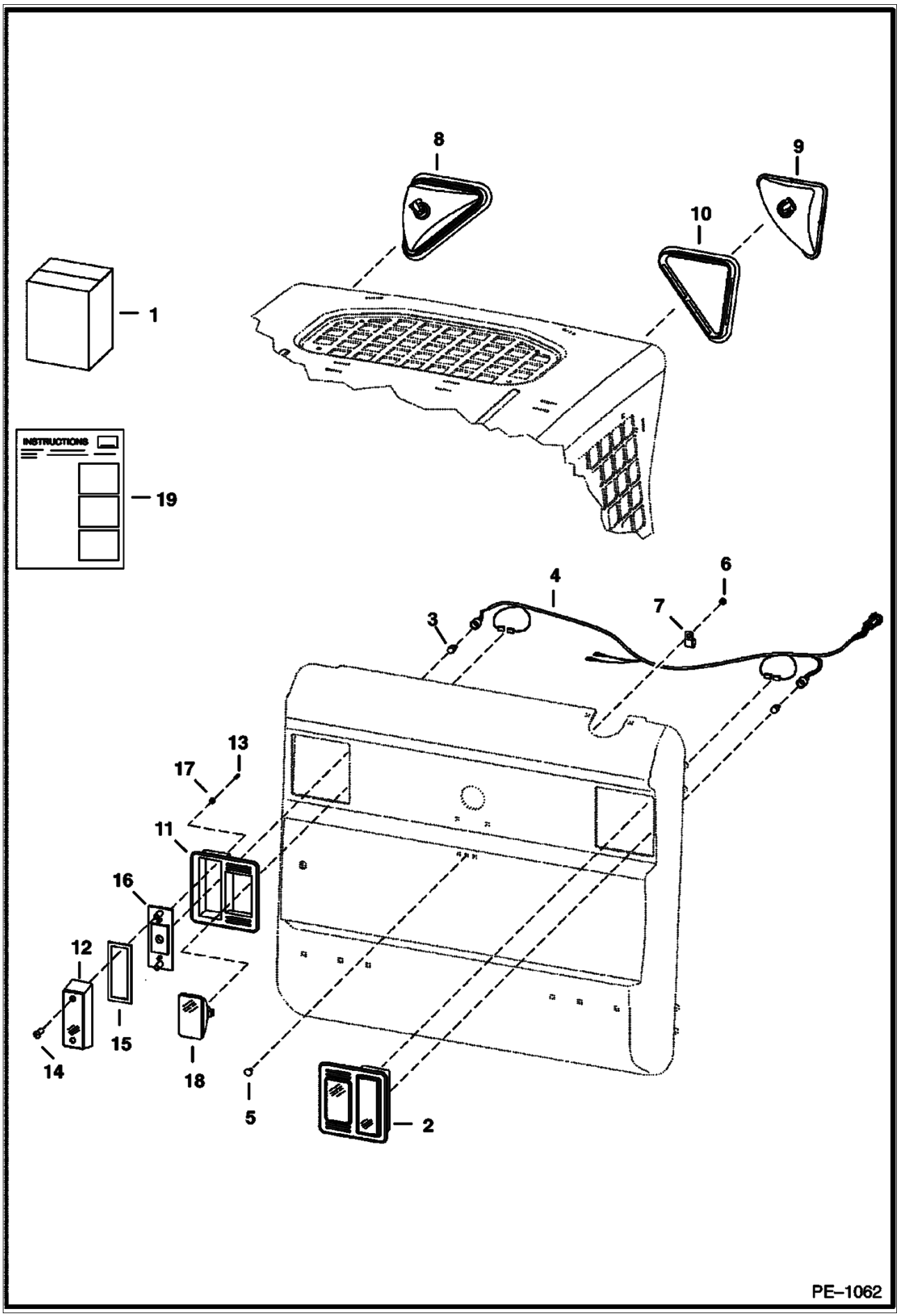

Page 598 - OSS# 2071349 - All rights reserved by Bobcat Company - 12/01/2009 - 20:50:59 - Produced by Ken Cook Co. with mediaioff

Ref No	Part Number	Description	Remarks	Serial Number	Qty
1		KIT	NAP - Order components		1
2	6670284	LIGHT ASSY	rear		2
3	6649481	LIGHT, WEDGE BASE			2
4	6716419	HARNESS, DOOR REAR			1
4	6701952	SOCKET			x
5	37C512	BOLT			1
6	85D5	NUT 5			1
7	30H42	CLAMP			1
8		LIGHT ASSY	NAP - R.H. - Ref. 9 & 10		1
8		LIGHT ASSY	NAP - L.H. - Ref. 9 & 10		1
9	6674401	HOUSING	RH		1
9	6675336	BULB	55 watt		1
9	6674400	HOUSING	LH		1
9	6675336	BULB	55 watt		1
10	6674402	MOUNT, LIGHT			1
11	6672279	MOUNT, LIGHT RUBBER	rubber		2
12	6672276	LENS, LIGHT RED	red		2
13	6672274	SCREW			4
14	6672273	SCREW			2
15	6672275	GASKET			2
16	6672277	BRACKET			2
17	6672272	WASHER			4
18	6661353	LIGHT ASSY	white work - W/bulb		2
18	898731	1156 BULB			2
19		INSTRUCTIONS	NAP		1

Page 599 - OSS# 2071349 - All rights reserved by Bobcat Company - 12/01/2009 - 20:50:59 - Produced by Ken Cook Co. with mediaioff

MUFFLER/PURIFIER KIT

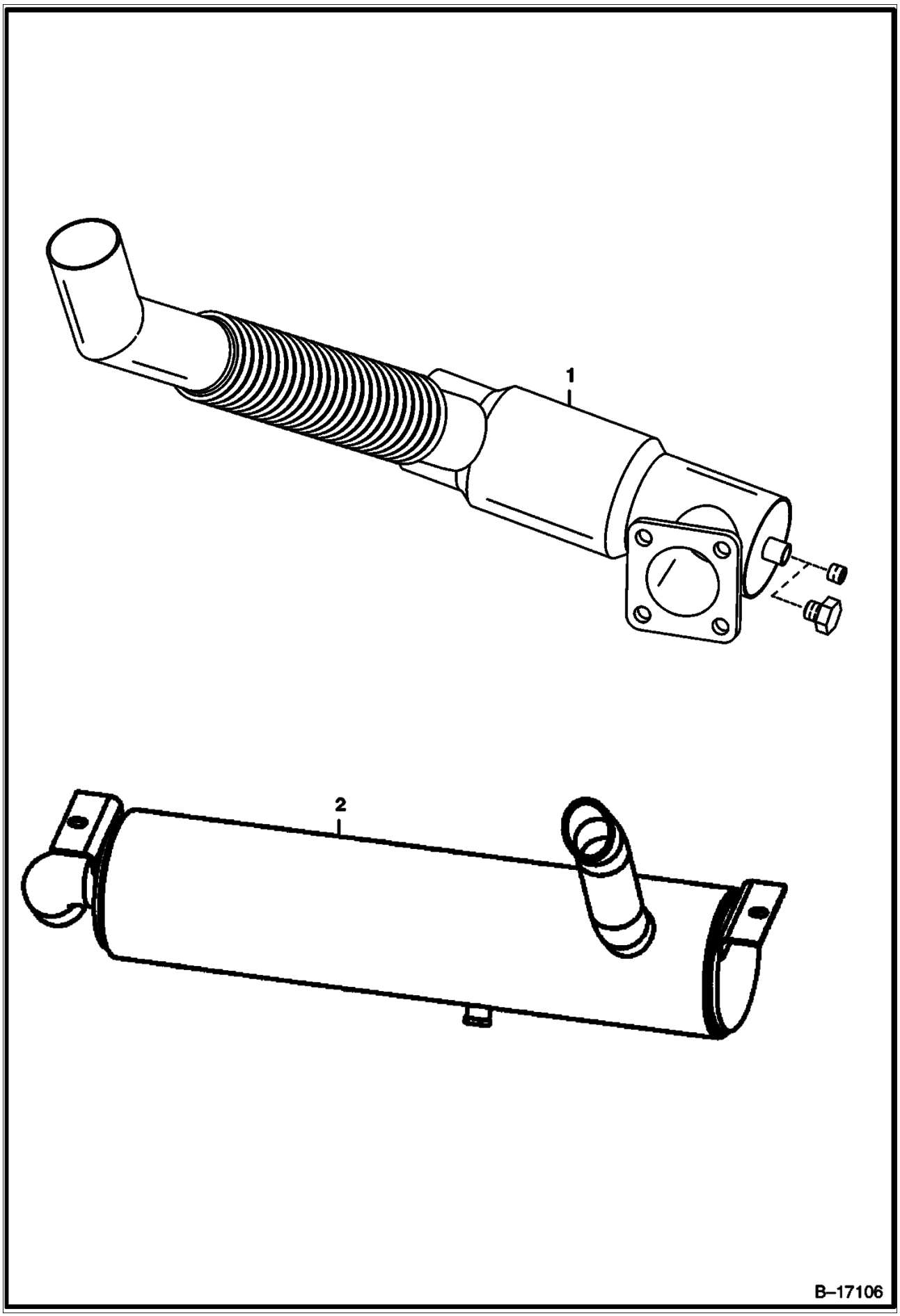

Page 600 - OSS# 2071349 - All rights reserved by Bobcat Company - 12/01/2009 - 20:50:59 - Produced by Ken Cook Co. with mediaioff

Ref No	Part Number	Description	Remarks	Serial Number	Qty
1	6675707	MUFFLER		517611001 & Above	1
1	6675707	MUFFLER		518011001 & Above	1
2	6726531	MUFFLER		518111004 & Above	1
2	6726531	MUFFLER		519211001 & Above	1
2	6726531	MUFFLER		500K11001 & Above	1
2	6726531	MUFFLER		519011001 & Above	1

Page 601 - OSS# 2071349 - All rights reserved by Bobcat Company - 12/01/2009 - 20:50:59 - Produced by Ken Cook Co. with mediaioff

PEDAL EXTENDERS

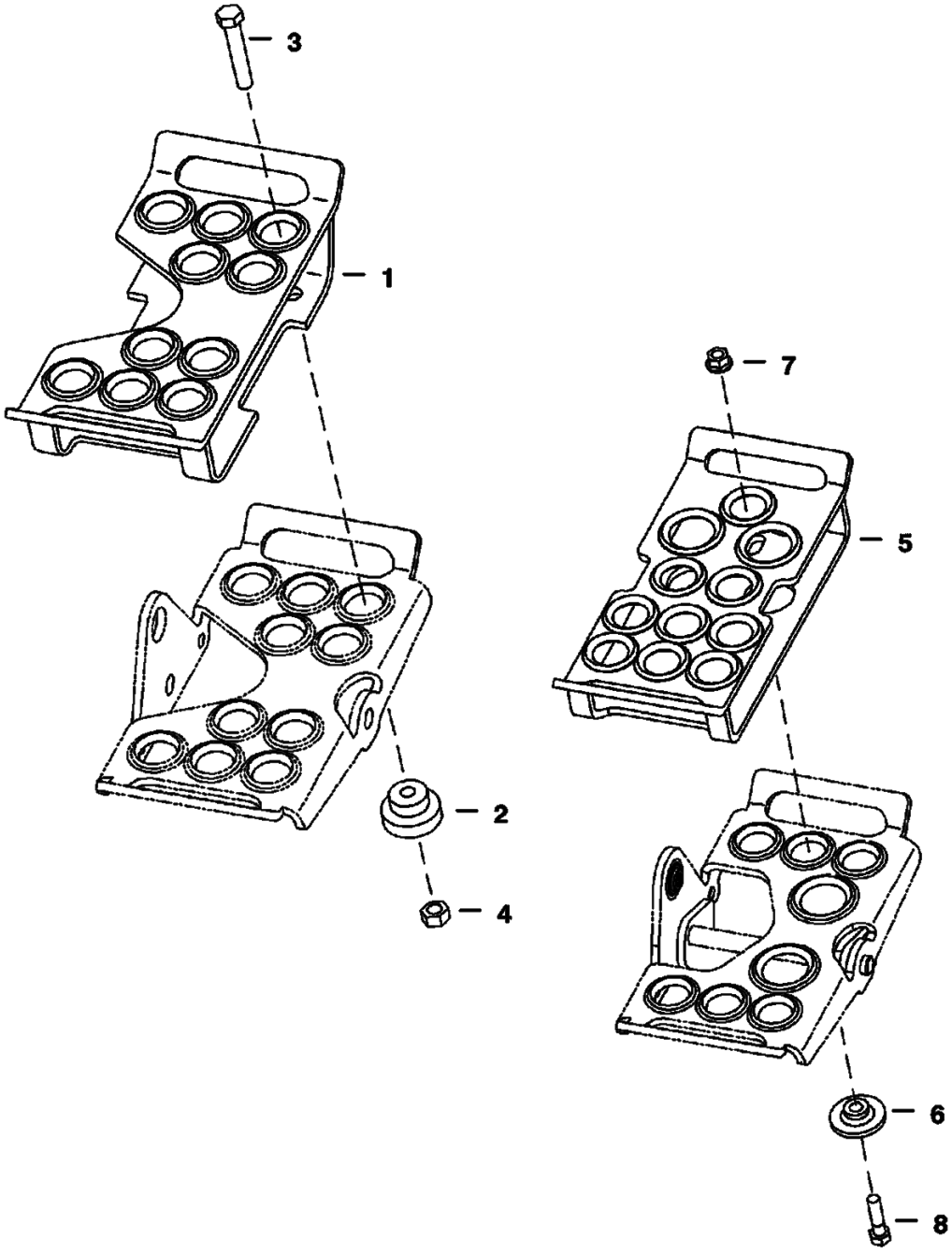

Page 602 - OSS# 2071349 - All rights reserved by Bobcat Company - 12/01/2009 - 20:50:59 - Produced by Ken Cook Co. with mediaioff

Ref No	Part Number	Description	Remarks	Serial Number	Qty
1		PEDAL	NAP - extender - Order Ref. 5 & (3) each of Ref. 6-8 - Was 6713115 [A]		2
2	6713116	BUSHING			8
3	17C516	BOLT			8
4	85D5	NUT 5			8
5	7131233	PEDAL			2
6	7131236	BUSHING			6
7	89D5	NUT			6
8	17C520	BOLT 5			6

Page 603 - OSS# 2071349 - All rights reserved by Bobcat Company - 12/01/2009 - 20:50:59 - Produced by Ken Cook Co. with mediaioff

POWER BOB-TACH KIT
(S/N 500K11563 & Bel, 517619833 & Below, 518012335 & Below, 518112187 & Below, 519020246 & Below, 519212217 & Below)

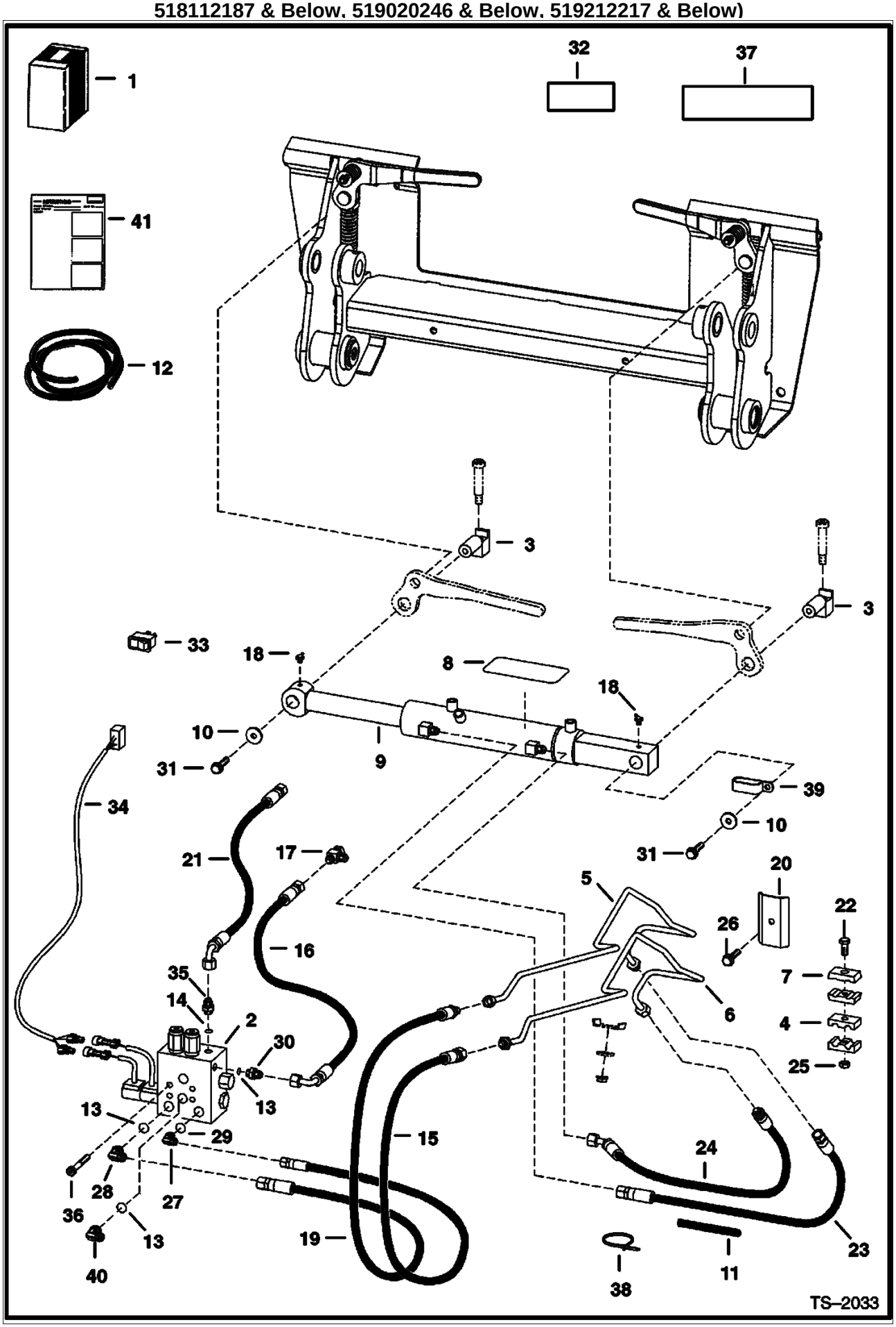

Page 604 - OSS# 2071349 - All rights reserved by Bobcat Company - 12/01/2009 - 20:50:59 - Produced by Ken Cook Co. with mediaioff

POWER BOB-TACH KIT (Cont'd)
(S/N 500K11563 & Bel, 517619833 & Below, 518012335 & Below, 518112187 & Below, 519020246 & Below, 519212217 & Below)

Ref No	Part Number	Description	Remarks	Serial Number	Qty
1	6719840	KIT	power Bob-Tach		1
2		VALVE	See Illustration POWER BOB-TACH/ TS2051		1
3	6731119	PIVOT, WEDGE	Not in kit - handle pivots - Was 6714576 [A]		2
4	6701892	CLAMP			2
5	6719883	TUBE	Not in Kit		1
5	6725552	TUBE	"L" shaped end - Was 6718246 [B,D]		1
6	6719882	TUBE	Not in Kit		1
6	6725553	TUBE	"L" shaped end - Was 6718247 [B,D]		1
7	6592506	CLAMP			2
8	6554100	TREAD	3" x 6" (76,2 mm x 152,4 mm)		1
9	6554100	TREAD	See Illustration POWER BOB-TACH/ PE1064 3" x 6" (76,2 mm x 152,4 mm)		1
10	619021	WASHER, 5			2
11		COVER	NAP - 32" (813 mm) long - Order Ref. 12		1
12	6656155	HOSE COVER	bulk - sold per foot - 1.25" (31,8mm) ID		x
13	99K6	O'RING	tapered boss face		x
13	79K6	O RING 10	flat boss face		x
14	99K12	O'RING	tapered boss face		x
14	79K12	O RING 10	flat boss face		x
15	6719451	HOSE	Was 6718276 [A]		1
16	6729162	HOSE	Was 6718847 [A]		1
17	13K5	TEE	Was 13KN00005B [A]		1
17	97K6	O'RING	flared end		3
18	11H15	GREASE FITTING	45 degree - Was 10H000035B [B]		2
18	10H35	GREASE ZERK	straight		2
19	6718358	HOSE			1
20	6719884	BRACKET			1
21	6718848	HOSE			1
22	17C648	BOLT 5			1
23	6729202	HOSE	Was 6719603 [A]		1
24	6729203	HOSE	Was 6719604 [A]		1
25	85D6	LOCK NUT			1
26	84G3716	SCREW 5	Was 84G003714B [A]		1
27	17KB404	ELBOW	W/Ref. 29 - check boss face to determine correct replacement o-ring - Was 17KV00003B [A]		1
27	97K4	O'RING	flared end		1
28	17KB606	ELBOW	W/Ref. 13 - check boss face to determine correct replacement o-ring - Was 17KV00005B [A]		1
28	97K6	O'RING	flared end		1
29	99K4	O'RING	tapered boss face		x
29	79K4	O RING 10	flat boss face		x
30	15KB606	ADAPTER	W/Ref. 13 - check boss face to determine correct replacement o-ring - Was 15KV00005B [A]		1
30	97K6	O'RING	flared end		1
31	35C616	BOLT 5			2
32	6725907	DECAL	Was 6717842 [B]		1
33	6674585	SWITCH	horizontal		1
33	6676732	SWITCH	vertical		1
34	6718652	HARNESS			1
35	15KB1212	ADAPTER	W/Ref. 14 - check boss face to determine correct replacement o-ring - Was 15KV00008B [A]		1
35	97K12	O'RING	flared end		3
36	73G656	SCREW			4
37	6719888	DECAL			1
38	6624289	STRAP 10			3
39	30H85	CLAMP	Was 31H000042B [B]		1
40	17KB606	ELBOW	W/Ref. 13 - check boss face to determine correct		2

Page 605 - OS6# 2071349 - All rights reserved by Bobcat Company - 12/01/2009 - 20:50:59 - Produced by Ken Cook Co. with mediaioff

POWER BOB-TACH KIT (Cont'd)
(S/N 500K11563 & Bel, 517619833 & Below, 518012335 & Below, 518112187 & Below, 519020246 & Below, 519212217 & Below)

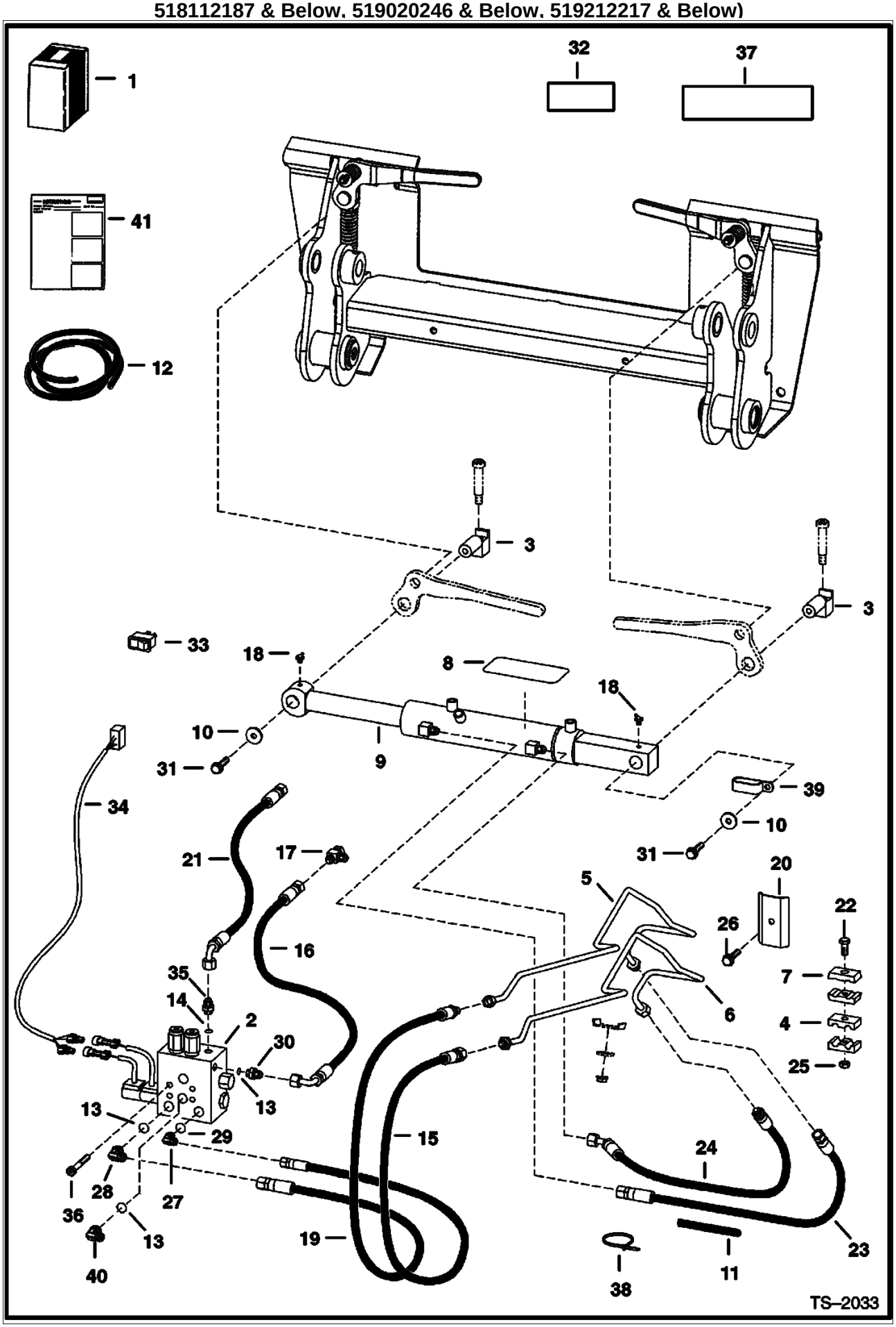

Page 606 - OSS# 2071349 - All rights reserved by Bobcat Company - 12/01/2009 - 20:50:59 - Produced by Ken Cook Co. with mediaioff

Ref No	Part Number	Description	Remarks	Serial Number	Qty
			replacement o-ring - existing if loader is equipped W/rear aux. - Was 17KV00005B [A]		
40	97K6	O'RING	flared end		1
41	6900950	INSTRUCTIONS			1

Page 607 - OSS# 2071349 - All rights reserved by Bobcat Company - 12/01/2009 - 20:50:59 - Produced by Ken Cook Co. with mediaioff

POWER BOB-TACH KIT
(S/N 500K11564 & Above, 517619834 & Above, 518012336 & Above, 518112188 & Above, 519020247 & Above, 519212218 & Above)

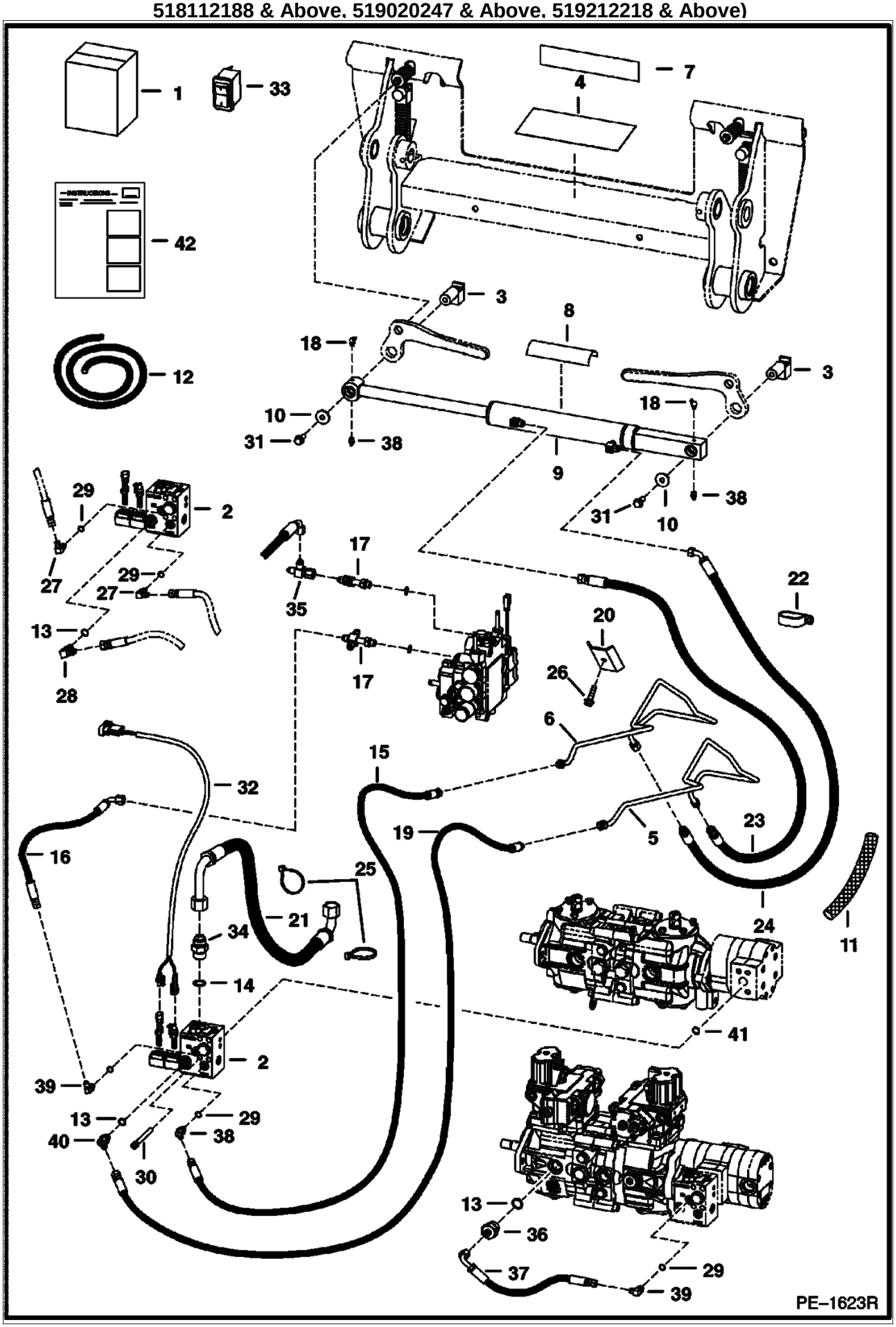

Page 608 - OSS# 2071349 - All rights reserved by Bobcat Company - 12/01/2009 - 20:50:59 - Produced by Ken Cook Co. with mediaIoff

POWER BOB-TACH KIT (Cont'd)
(S/N 500K11564 & Above, 517619834 & Above, 518012336 & Above, 518112188 & Above, 519020247 & Above, 519212218 & Above)

Ref No	Part Number	Description	Remarks	Serial Number	Qty
1		KIT	NAP - power Bob-Tach - Order 6735465 kit - Was 6727654 [A]		1
1	6735465	KIT			1
2		VALVE	See Illustration POWER BOB-TACH/ MS1835		1
3	6731119	PIVOT, WEDGE	handle pivot - Not in kit - Was 6714576 [A]		2
4	6719888	DECAL			1
5	6725552	TUBE			1
6	6725553	TUBE			1
7	6725907	DECAL			1
8	6555341	SAFETY TREAD	Was 6554100 [B]		1
9		CYLINDER	See Illustration POWER BOB-TACH/ PE1064		1
10	619021	WASHER, 5			2
11		COVER	NAP - 32"(813 mm) long - Order Ref. 12		1
12	6656155	HOSE COVER	bulk - sold per foot - 1.25" (31,8mm) ID		x
13	99K6	O'RING	tapered boss face		x
13	79K6	O RING 10	flat		x
14	99K12	O'RING	tapered boss face		x
14	79K12	O RING 10	flat		x
15	6719451	HOSE			1
16	6535882	HOSE			1
16	6731662	HOSE			1
17		CROSS	See Illustration HYDRAULIC CONTROL VALVE/ B17144 Not in Kit - See Ill B-17144 Ref. 54		1
17	97K6	O'RING	flared end		3
18	11H25	FITTING10	45 degree		2
18	10H35	GREASE ZERK	straight		2
19	6718358	HOSE			1
20	6719884	BRACKET			1
21	6737503	HOSE	Was 6727656 [B]		1
22	30H85	CLAMP	Was 31H000042B [B]		1
23	6729202	HOSE			1
24	6729203	HOSE			1
25	6624289	STRAP 10			4
26	84G3716	SCREW 5	Was 84G003714B [A]		1
27		ELBOW	NAP - W/Ref. 29 - tapered boss face - Was 17KV00003B [A]		2
27	97K4	O'RING	flared end		2
27	17KB404	ELBOW	W/Ref. 29 - flat boss face		1
28		ELBOW	NAP - W/Ref. 13 - tapered boss face - Was 17KV00005B [A]		1
28	97K6	O'RING	flared end		1
28	17KB606	ELBOW	W/Ref. 13 - flat boss face		1
29	99K4	O'RING	tapered		x
29	79K4	O RING 10	flat		x
30	73G656	SCREW			4
31	35C616	BOLT 5			2
32	6718652	HARNESS	two male connector	500K 12071 & Bel	1
32	6718652	HARNESS	two male connector	5192 12363 & Bel.	1
32	6718652	HARNESS	two male connector	5176 20174 & Bel.	1
32	6718652	HARNESS	two male connector	5180 12425 & Bel.	1
32	6718652	HARNESS	two male connector	5190 21146 & Bel.	1
32	6718652	HARNESS	two male connector	5181 12245 & Bel.	1
32	6730770	HARNESS	one male & one female connector	5176 20175 & Abv.	1
32	6730770	HARNESS	one male & one female connector	5192 12364 & Abv.	1
32	6730770	HARNESS	one male & one female connector	5190 21147 &	1

Page 609 - OSS# 2071349 - All rights reserved by Bobcat Company - 12/01/2009 - 20:50:59 - Produced by Ken Cook Co. with mediaioff

POWER BOB-TACH KIT (Cont'd)
(S/N 500K11564 & Above, 517619834 & Above, 518012336 & Above, 518112188 & Above, 519020247 & Above, 519212218 & Above)

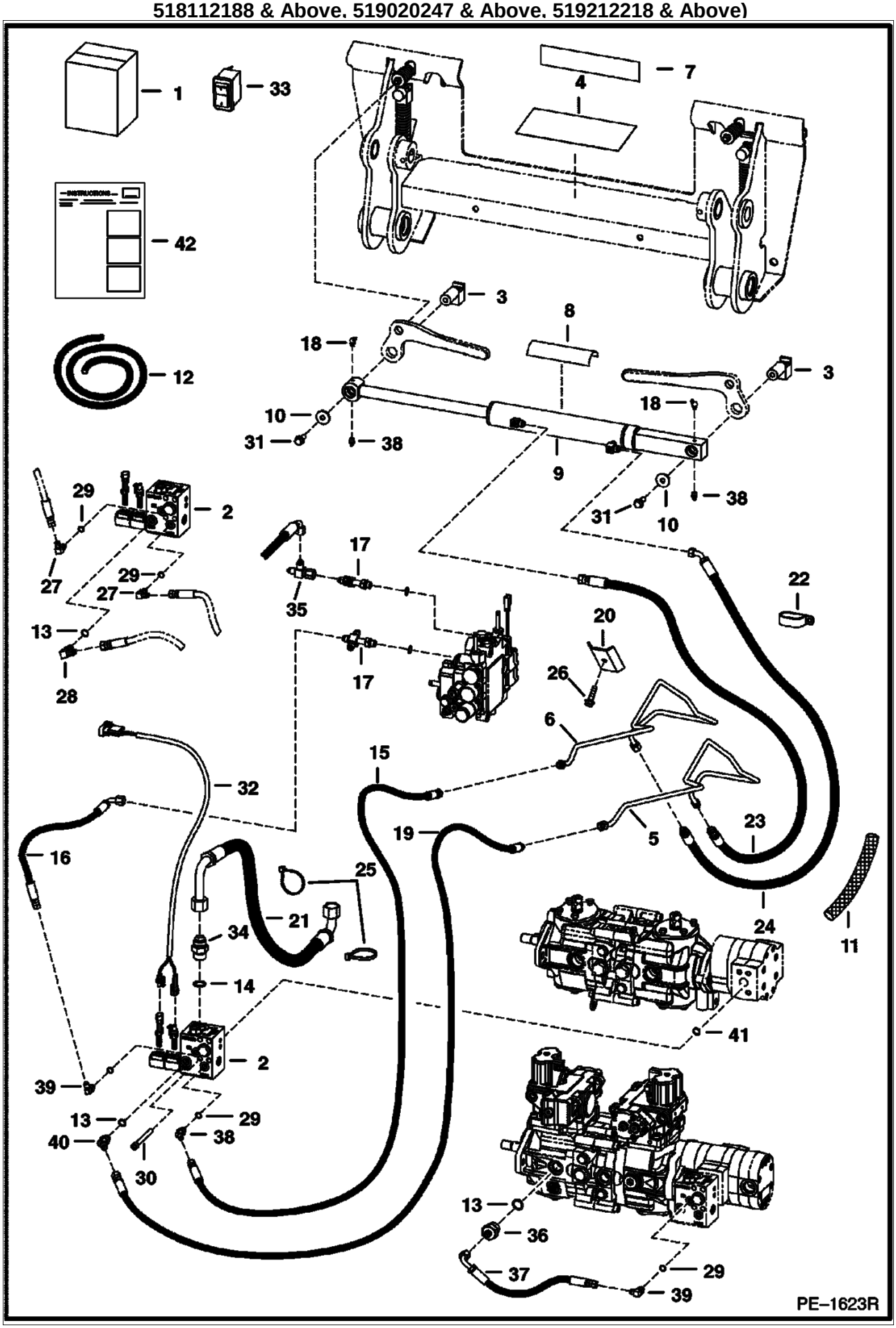

Page 610 - OSS# 2071349 - All rights reserved by Bobcat Company - 12/01/2009 - 20:50:59 - Produced by Ken Cook Co. with mediaIoff

POWER BOB-TACH KIT (Cont'd)
(S/N 500K11564 & Above, 517619834 & Above, 518012336 & Above, 518112188 & Above, 519020247 & Above, 519212218 & Above)

Ref No	Part Number	Description	Remarks	Serial Number	Qty
				Abv.	
32	6730770	HARNESS	one male & one female connector	5180 12426 & Abv.	1
32	6730770	HARNESS	one male & one female connector	500K 12072 & Abv	1
32	6730770	HARNESS	one male & one female connector	5181 12246 & Abv.	1
33	6676732	SWITCH	vertical		1
34		ADAPTER	NAP - W/Ref. 14 - tapered boss face - Was 15KV00008B [A]		1
34	97K12	O'RING	flared end		1
34	15KB1212	ADAPTER	W/Ref. 14 - flat boss face		1
35	13K5	TEE	Used W/Rear Aux. Option - Was 13KN00005B [A]		1
36	15KB612	ADAPTER	W/Ref. 13 - flat boss face		1
37	7100044	HOSE	17.75"(450,9mm) long - not in kit		1
37	6806403	HOSE	16" (406,4 mm) long - manual controls		1
37	7110367	HOSE	45" (1143 mm) long - selectable joystick controls		1
38		ELBOW	NAP - W/Ref. 29 - tapered boss face - Was 18KV-3 [A]		1
38	97K4	O'RING	flared end		1
38	18KB404	ELBOW	W/Ref. 29 - Was 7109882		1
39		ELBOW	NAP - W/Ref. 29 - tapered boss face - Was 17KV00003B [A]		1
39	97K4	O'RING	flared end		1
39	17KB404	ELBOW	W/Ref. 29 - flat boss face		1
40		ELBOW	NAP - W/Ref. 13 - tapered boss face - Was 18KV00005B [A]		1
40	97K6	O'RING	flared end		1
40	18KB606	ELBOW	W/Ref. 13 - flat boss face - Was 7109881		1
41	55K214	O-RING			1
42	6902421	INSTRUCTIONS	Was 6901439 [B,D]		1

Page 611 - OSS# 2071349 - All rights reserved by Bobcat Company - 12/01/2009 - 20:50:59 - Produced by Ken Cook Co. with mediaioff

POWER BOB-TACH
(Cylinder)

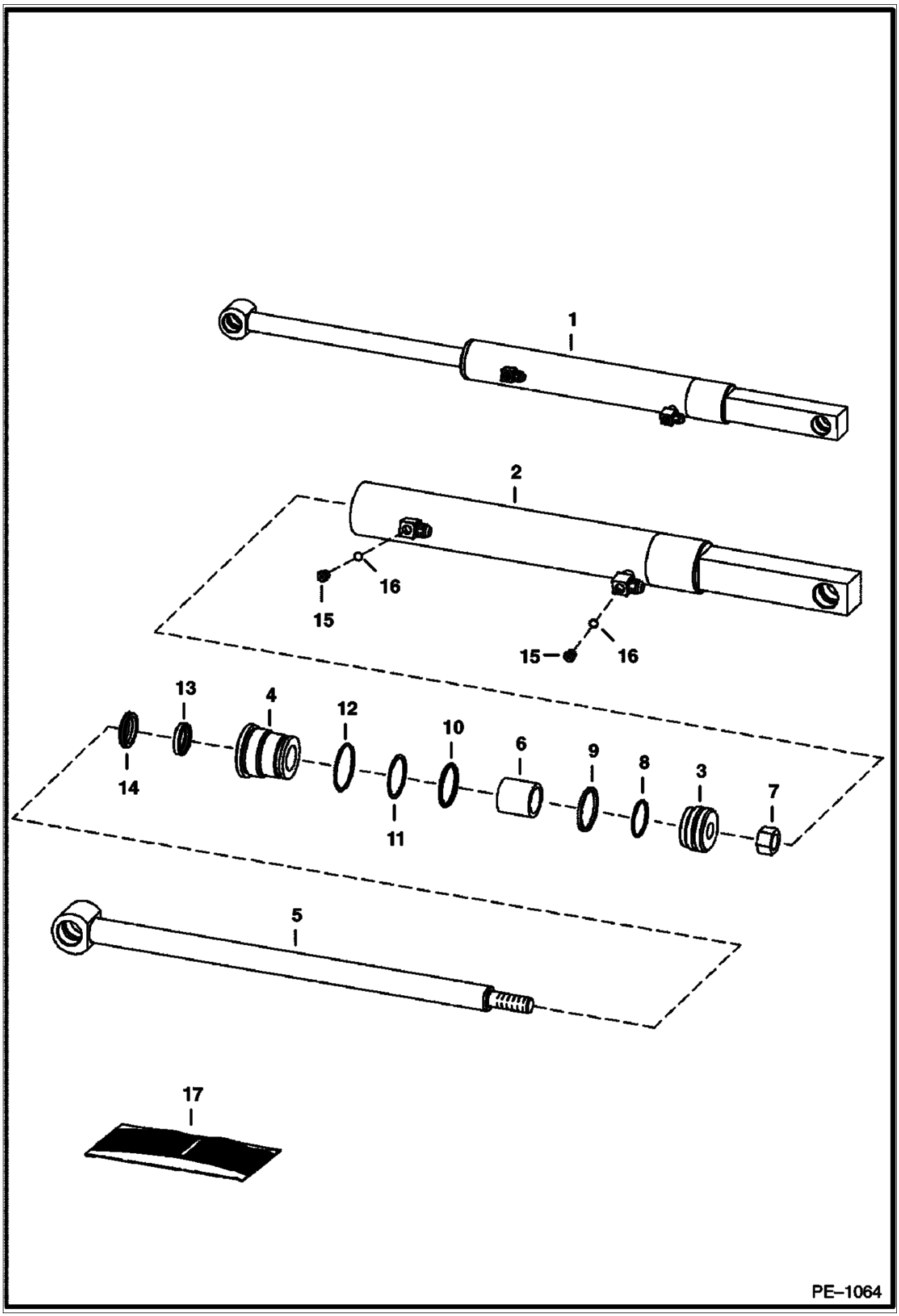

Page 612 - OSS# 2071349 - All rights reserved by Bobcat Company - 12/01/2009 - 20:50:59 - Produced by Ken Cook Co. with mediaioff

POWER BOB-TACH (Cont'd)
(Cylinder)

Ref No	Part Number	Description	Remarks	Serial Number	Qty
1		CYLINDER	See Illustration POWER BOB-TACH/ PE1064A NAP - REF. 2 - 16 - ORDER 6810611 CYL. & (2) 10H000035B GREASE ZERKS - WAS 6805158 [A]		1
1		CYLINDER	See Illustration POWER BOB-TACH/ PE1064A NAP - REF. 2 - 16 - ORDER 6810611 CYL. & (2) 10H000035B GREASE ZERKS - WAS 6810125 [A]		1
2	6805160	CASE	1.75"(45 mm) I.D. - Was 6803054 [A]		1
3	6586543	PISTON			1
4	6586542	HEAD			1
5	6810126	ROD	1"(25.4mm) O.D. - 19.7"(500,4 mm) long - Was 6807508 [A]		1
6	6807092	SPACER	Was 6805578 [A]		1
7	92D10	NUT			1
8	25K30110	O RING 10	Was 54K30110 [B]		1
9	6532453	RING			1
10	54K40116	O-RING			1
11	73K222	RING	back-up		1
12	58K132	O'RING			1
13	6667323	SEAL	rod		1
14	6666542	SEAL	wiper		1
15	90KV2	PLUG	W/Ref. 16 - allen socket head tapered boss face		2
16	95K3	O'RING	tapered boss face - Was 79K000003B [B]		2
17	7138014	SEAL KIT	Ref. 7-14 - Was 6803473 [A]		1

Page 613 - OSS# 2071349 - All rights reserved by Bobcat Company - 12/01/2009 - 20:50:59 - Produced by Ken Cook Co. with mediaioff

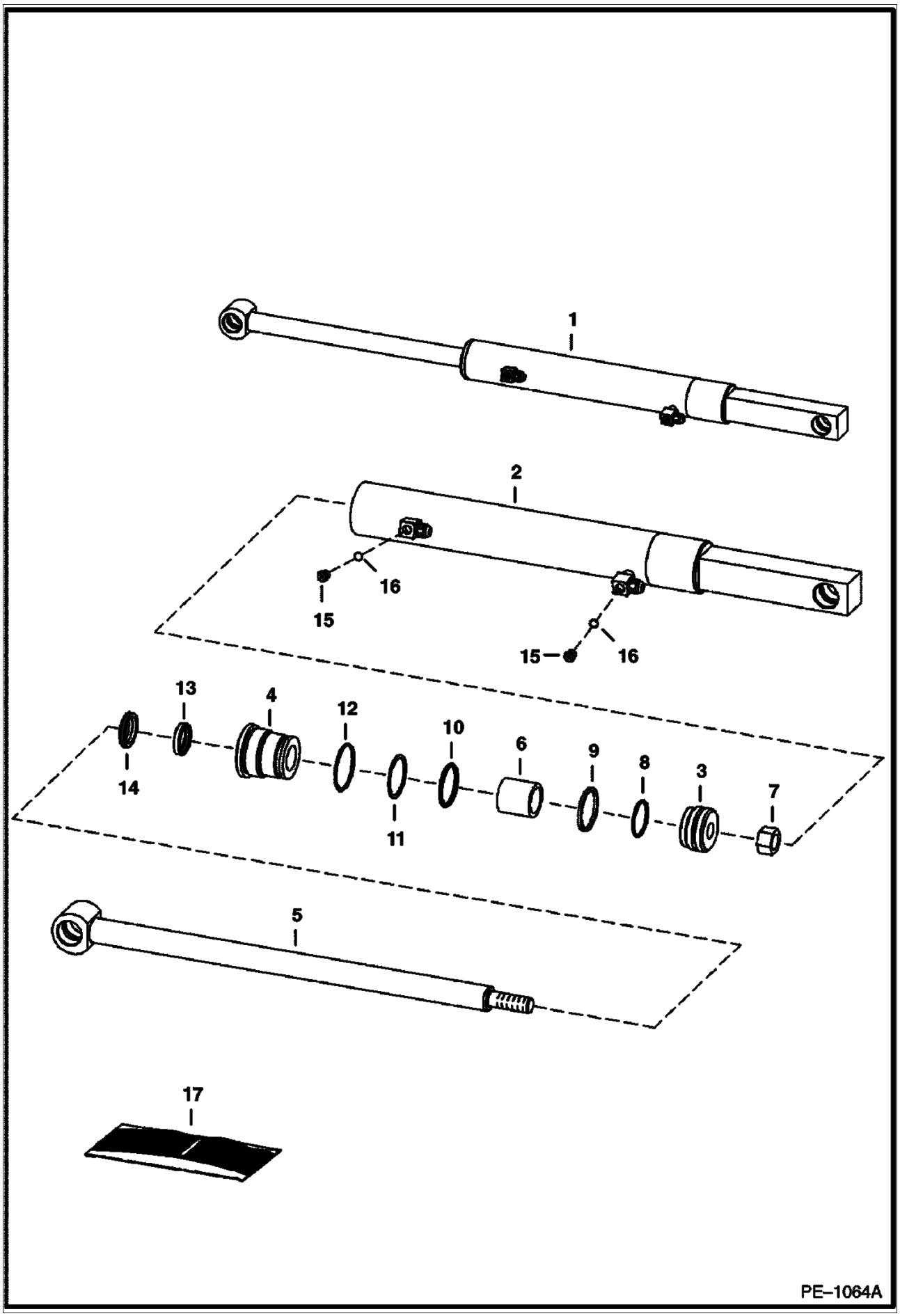

Page 614 - OSS# 2071349 - All rights reserved by Bobcat Company - 12/01/2009 - 20:50:59 - Produced by Ken Cook Co. with mediaioff

POWER BOB-TACH (Cont'd)
(Cylinder)

Ref No	Part Number	Description	Remarks	Serial Number	Qty
1		CYLINDER	NAP - Ref. 2 - 16 - Order 6810611 Cyl. & (2) 10H000035B Grease Zerks - Was 6810350 [A]		1
1	6810611	CYLINDER, POWER BOB-TACH	Ref. 2 - 16		1
2	6810349	CASE	1.75" (44,45 mm) ID		1
3	6586543	PISTON			1
4	6586542	HEAD			1
5		ROD	NAP - 1" (25.4mm) O.D. - 18.6"(422,4mm) long - Order 6810612 Rod & (2) 10H000035B Grease Zerks - Was 6810351 [A]		1
5	6810612	SHAFT, ROD CYL POWER BOB-TACH	1" (25,4 mm) OD - 18.6" (472,4 mm) long - W/.25" grease fitting hole		1
6	6810356	SPACER			1
7	92D10	NUT			1
8	25K30110	O RING 10	Was 54K30110 [B]		1
9	6532453	RING			1
10	54K40116	O-RING			1
11	73K222	RING	back-up		1
12	58K132	O'RING			1
13	6667323	SEAL	rod		1
14	6666542	SEAL	wiper		1
15	90KV2	PLUG	W/Ref. 16 (95K-3) - allen socket head tapered boss face		2
16	95K3	O'RING	tapered boss face - Was 79K000003B [B]		2
16	75K3	O-RING	flat boss face		2
17	7138014	SEAL KIT	Ref. 7-14 - Was 6803473 [A]		1

Page 615 - OSS# 2071349 - All rights reserved by Bobcat Company - 12/01/2009 - 20:50:59 - Produced by Ken Cook Co. with mediaioff

POWER BOB-TACH
(Valve Assembly)

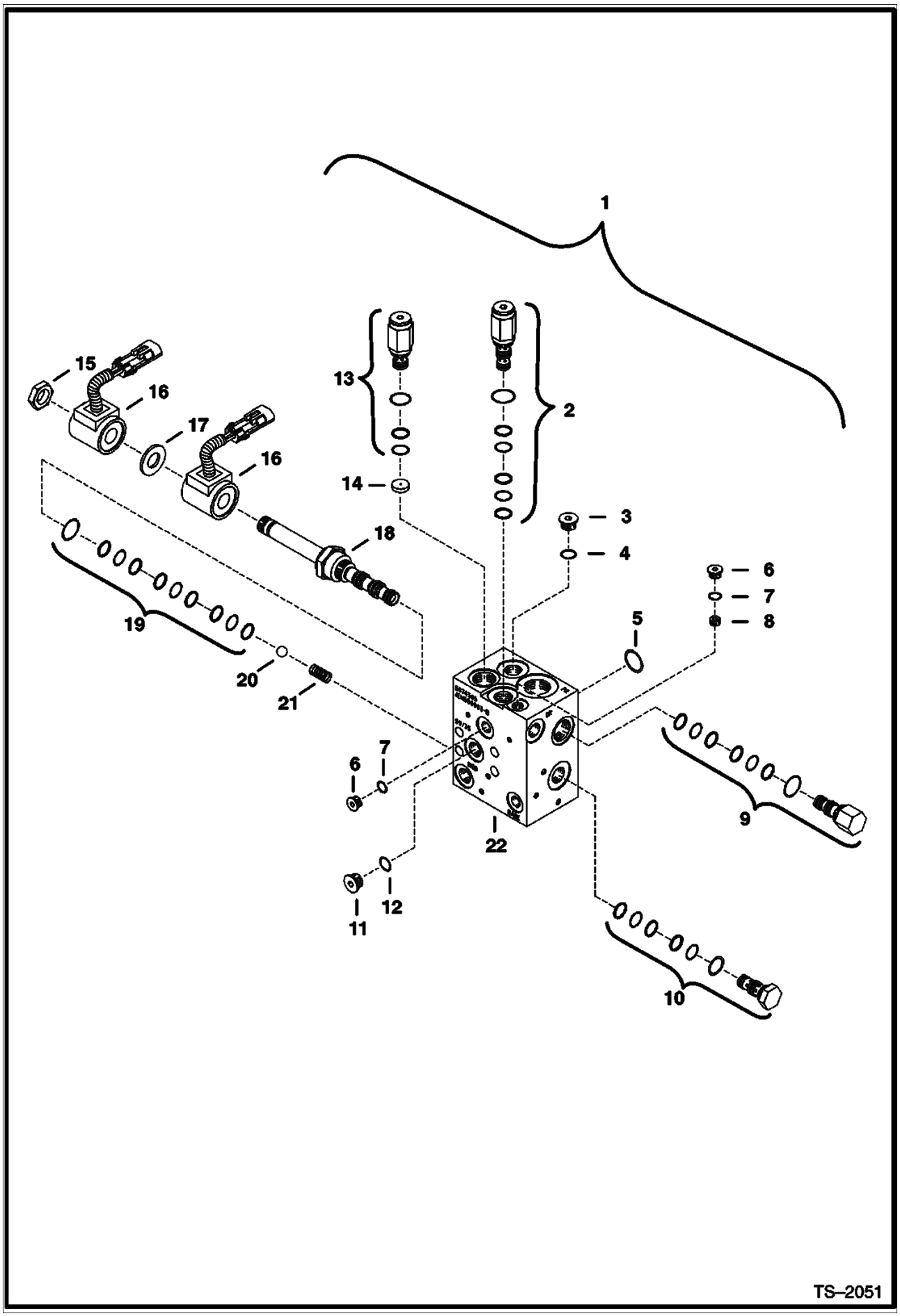

Page 616 - OSS# 2071349 - All rights reserved by Bobcat Company - 12/01/2009 - 20:50:59 - Produced by Ken Cook Co. with mediaioff

POWER BOB-TACH (Cont'd)
(Valve Assembly)

Ref No	Part Number	Description	Remarks	Serial Number	Qty
1		VALVE	See Illustration POWER BOB-TACH/ TS2051A NAP - REF. 2 - 21 - ORDER 6676547 VALVE -WAS 6674305 [A]		1
2	6676073	RELIEF VALVE			1
2	6676074	SEAL KIT			1
3	6674548	PLUG	W/Ref. 4		1
4	79K8	O RING 10			x
5	6676071	O-RING			1
6	6665719	PLUG	W/Ref. 7		2
7	99K5	O-RING			x
8	6676347	ORIFICE	screw in plug W/screen - Was 6669615 [A]		1
9	6676064	VALVE			1
9	6676065	SEAL KIT			1
10	6669616	CHECK VALVE			1
10	6669622	SEAL KIT			1
11	90KV5	PLUG	W/Ref. 12		1
12	95K6	O'RING			x
13	6676068	VALVE			1
13	6676069	SEAL KIT			1
14	6676070	ORIFICE			1
15	6671628	NUT	Was 7D000008B [D]		1
16	6671025	COIL			2
17	6678711	SPACER	Was 6674445 [A]		1
18	6677153	SOLENOID	W/Ref. 19 - Was 6661443 [B,D]		1
19	6667180	SEAL KIT			1
20	6676066	BALL			1
21	6676067	SPRING			1
22		BLOCK	NSS - Order Ref. 1		1

Page 617 - OSS# 2071349 - All rights reserved by Bobcat Company - 12/01/2009 - 20:50:59 - Produced by Ken Cook Co. with mediaioff

POWER BOB-TACH
(Valve Assembly)

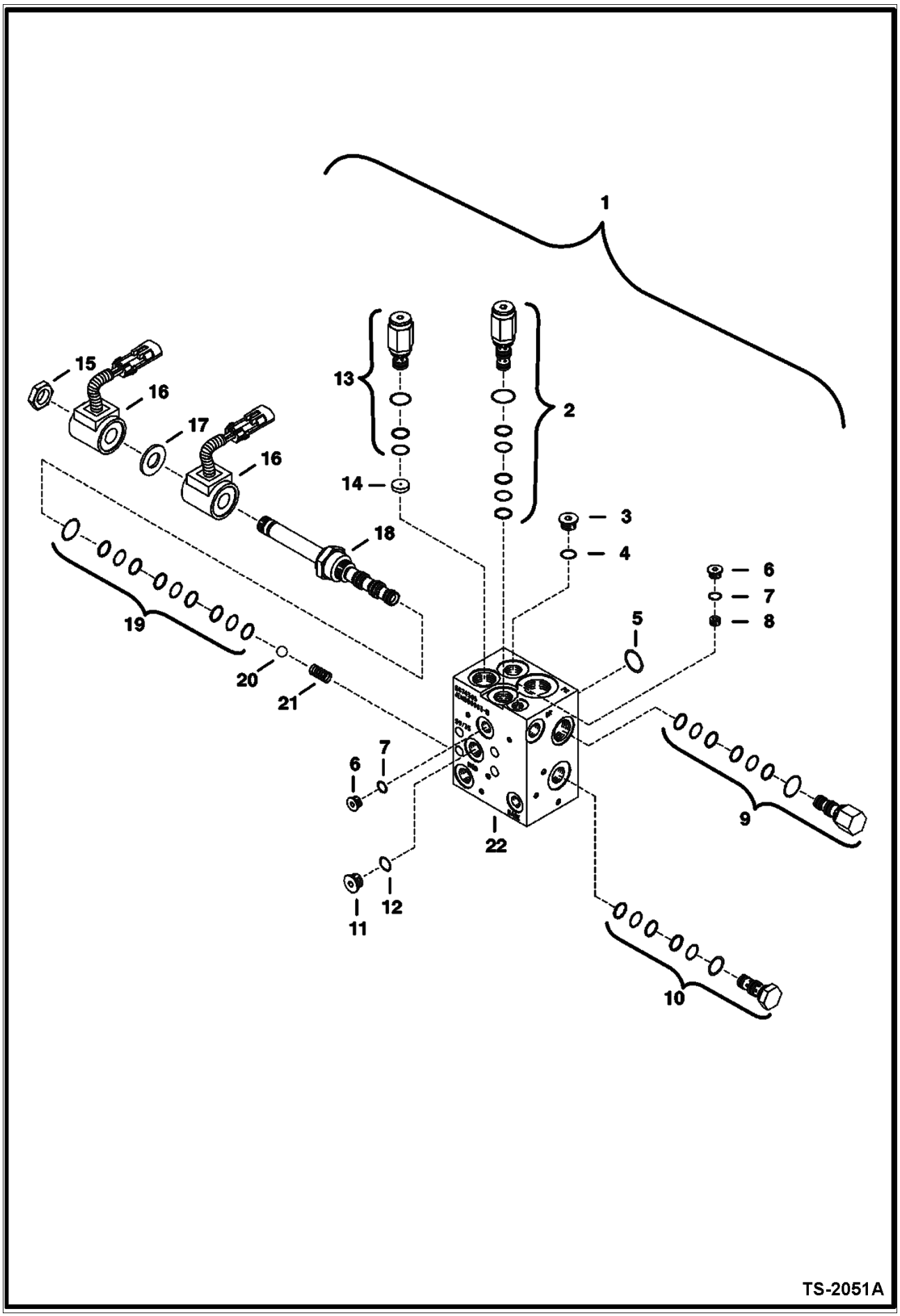

Page 618 - OSS# 2071349 - All rights reserved by Bobcat Company - 12/01/2009 - 20:50:59 - Produced by Ken Cook Co. with mediaioff

Ref No	Part Number	Description	Remarks	Serial Number	Qty
1	6676547	VALVE	Ref. 2 - 21		1
2	6677147	RELIEF VALVE			1
2	6677148	SEAL KIT			1
3	6677158	PLUG	W/Ref. 4		1
4	79K8	O RING 10			x
5	6677157	O-RING			1
6	6677159	PLUG	W/Ref. 7		2
7	99K5	O-RING			x
8	6676347	ORIFICE	screw in plug W/screen		1
9	6677155	VALVE			1
9	6677156	SEAL KIT			1
10	6677149	CHECK VALVE			1
10	6677150	SEAL KIT			1
11	90KV5	PLUG	W/Ref. 12		1
12	95K6	O'RING			x
13	6677151	VALVE			1
13	6677152	SEAL KIT			1
14	6676070	ORIFICE			1
15	6671628	NUT	Was 7D000008B [D]		1
16	6671025	COIL			2
17	6678711	SPACER	Was 6674445 [A]		1
18	6677153	SOLENOID	W/Ref. 19		1
19	6672756	KIT, SEAL			1
20	6676066	BALL			1
21	6676067	SPRING			1
22		BLOCK	NSS - Order Ref. 1		1

Page 619 - OSS# 2071349 - All rights reserved by Bobcat Company - 12/01/2009 - 20:50:59 - Produced by Ken Cook Co. with mediaioff

POWER BOB-TACH
(Valve Assembly)

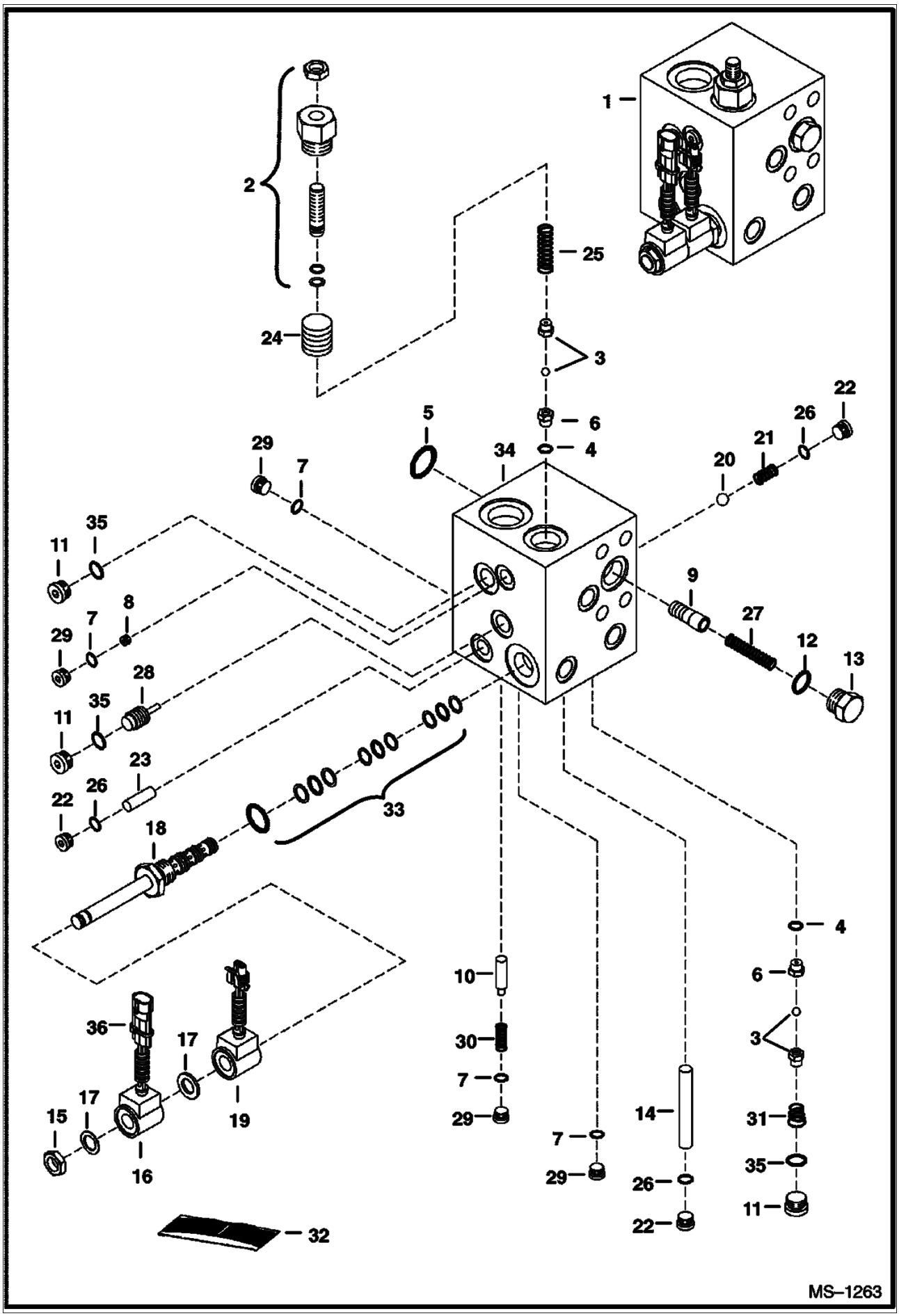

Page 620 - OSS# 2071349 - All rights reserved by Bobcat Company - 12/01/2009 - 20:50:59 - Produced by Ken Cook Co. with mediaIoff

Ref No	Part Number	Description	Remarks	Serial Number	Qty
1		VALVE	NAP - Order 6678554 Valve & 6730770 Harness - Was 6677646 [A]		1
1		VALVE	NAP - Order 6678554 Valve & 6730770 Harness - Was 6678206 [A]		1
1		VALVE	NAP - Order 6686949- Was 6678554 [A]		1
2	6679245	RELIEF VALVE			1
3	6679244	BALL ASSY			2
4	6678709	O-RING			x
5	6678695	O-RING			1
6		SEAT	NSS		2
7	95K2	O-RING			x
8	6678701	ORIFICE			1
9	6678708	COMPENSATOR			1
10	6678694	FLOW CONTROL			1
11	6678698	PLUG	W/Ref. 35		3
12	95K8	O-RING			x
13	6678706	PLUG	W/Ref. 12		1
14	6678702	ORIFICE			1
15	6671628	NUT			1
16	6671025	COIL	Was 6678696 [A]		1
17	6678711	SPACER			2
18	6678697	STEM			1
19		COIL	NSS - W/female connector & tie - Use W/Ref. 1 (NAP/6678206 Valve) - Order Ref. 16 & 36		1
19	6678712	COIL	W/Male connector - Use W/Ref. 1 (6678554 Valve)		1
20	6678705	BALL			1
21	6678704	SPRING			1
22	6677159	PLUG	W/Ref. 26		3
23	6678703	SHUTTLE			1
24	6678717	PISTON			1
25	6678718	SPRING			1
26	95K4	O-RING			x
27	6678707	SPRING			1
28	6678700	PISTON			1
29	6678699	PLUG	W/Ref. 7		4
30	6678692	SPRING			1
31	6678693	SPRING			1
32	6679246	SEAL KIT	complete		1
33	6672756	KIT, SEAL			1
34		BLOCK	NSS		1
35	95K6	O'RING			x
36	6678710	TIE			1

Page 621 - OSS# 2071349 - All rights reserved by Bobcat Company - 12/01/2009 - 20:50:59 - Produced by Ken Cook Co. with mediaioff

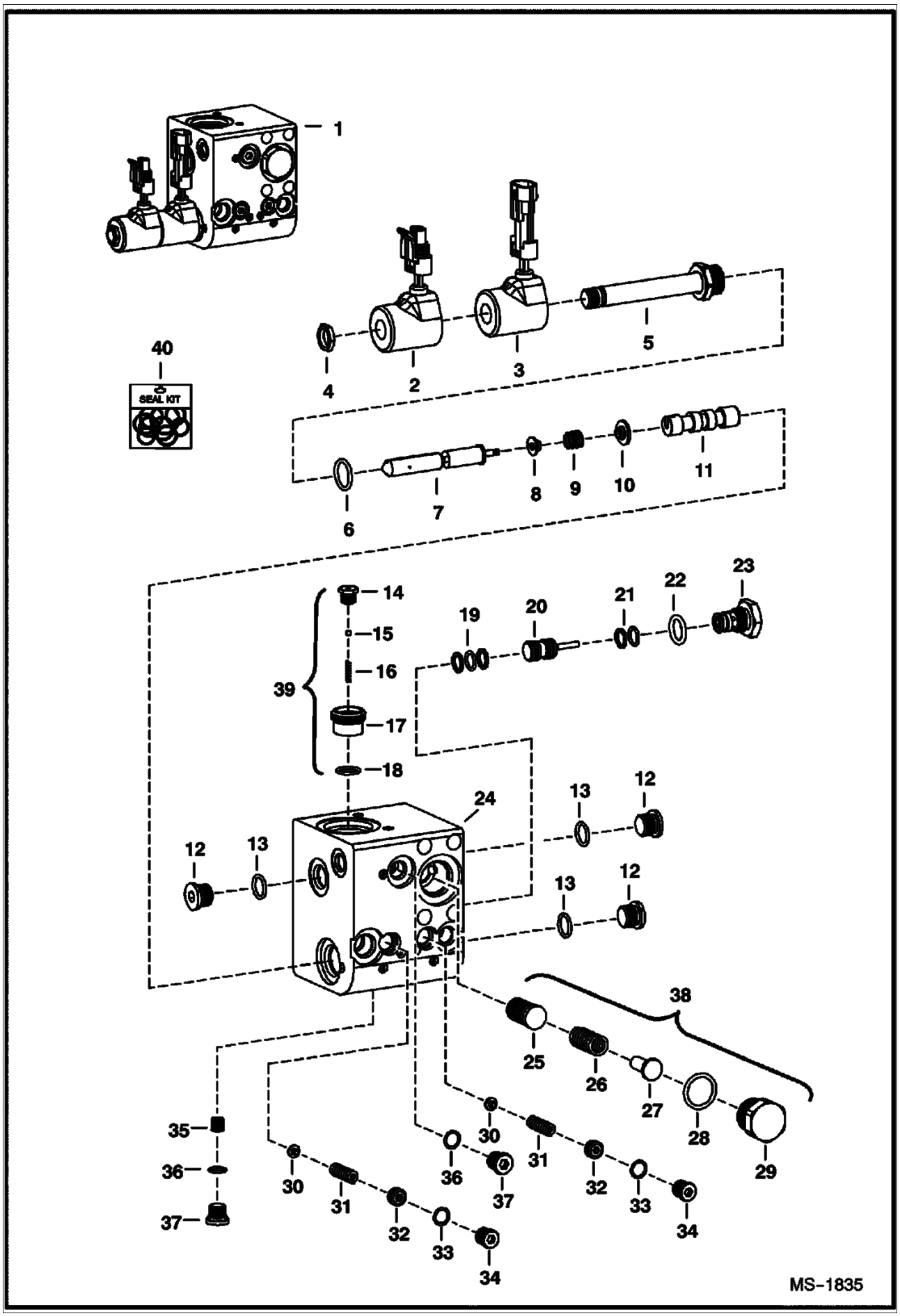

Page 622 - OSS# 2071349 - All rights reserved by Bobcat Company - 12/01/2009 - 20:50:59 - Produced by Ken Cook Co. with mediaioff

POWER BOB-TACH (Cont'd)
(Valve)

Ref No	Part Number	Description	Remarks	Serial Number	Qty
1		VALVE, POWER BOB-TACH	See Illustration POWER BOB-TACH/ MS2724 NAP - Order 7161786 valve - Valve has 2 drain ports marked DR. Can use either port that best fits plumbing application.- Was 6686949 [A]		1
2	6684743	SOLENOID	W/male connector		1
3	6684744	SOLENOID	W/female connector		1
4	6684742	NUT			1
5		STEM	NSS		x
6	79K8	O RING 10			x
7		STEM	NSS		x
8		RETAINER	NSS		x
9		SPRING	NSS		x
10		WASHER	NSS		x
11		PISTON	NAP - Was 6685540 [A]		x
12	6685545	PLUG	W/Ref. 13		x
13		O-RING	NSS		x
14		PLUG	NSS		x
15		BALL	NSS		x
16		SPRING	NSS		x
17		VALVE	NSS		x
18	6685542	O-RING			x
19		RINGS	NSS		x
20	6684745	PISTON			1
21		RINGS	NSS		x
22	79K7	O RING 10			x
23	6684746	CHECK VALVE	W/Ref. 22		1
24		BLOCK	NSS		x
25		STEM	NSS		x
26		SPRING	NSS		x
27		POPPET	NSS		x
28	79K10	O RING 10			x
29		PLUG	NSS		x
30		POPPET	NSS		x
31		SPRING	NSS		x
32		PLUG	NSS		x
33	79K4	O RING 10			x
34	24K3	PLUG	W/Ref. 33		x
35	6685541	POPPET			x
36		O-RING	NSS - Was 6685542 [B,D]		x
37	6685546	PLUG	W/Ref. 36		x
38	6685544	COMPENSATOR	Ref. 25-29		1
39	6685543	CHECK VALVE	Ref. 14-18		1
40	6684747	SEAL KIT	Ref. 6, 21, 22, 28 & 36		1

Page 623 - OSS# 2071349 - All rights reserved by Bobcat Company - 12/01/2009 - 20:50:59 - Produced by Ken Cook Co. with mediaioff

POWER BOB-TACH
(Valve)

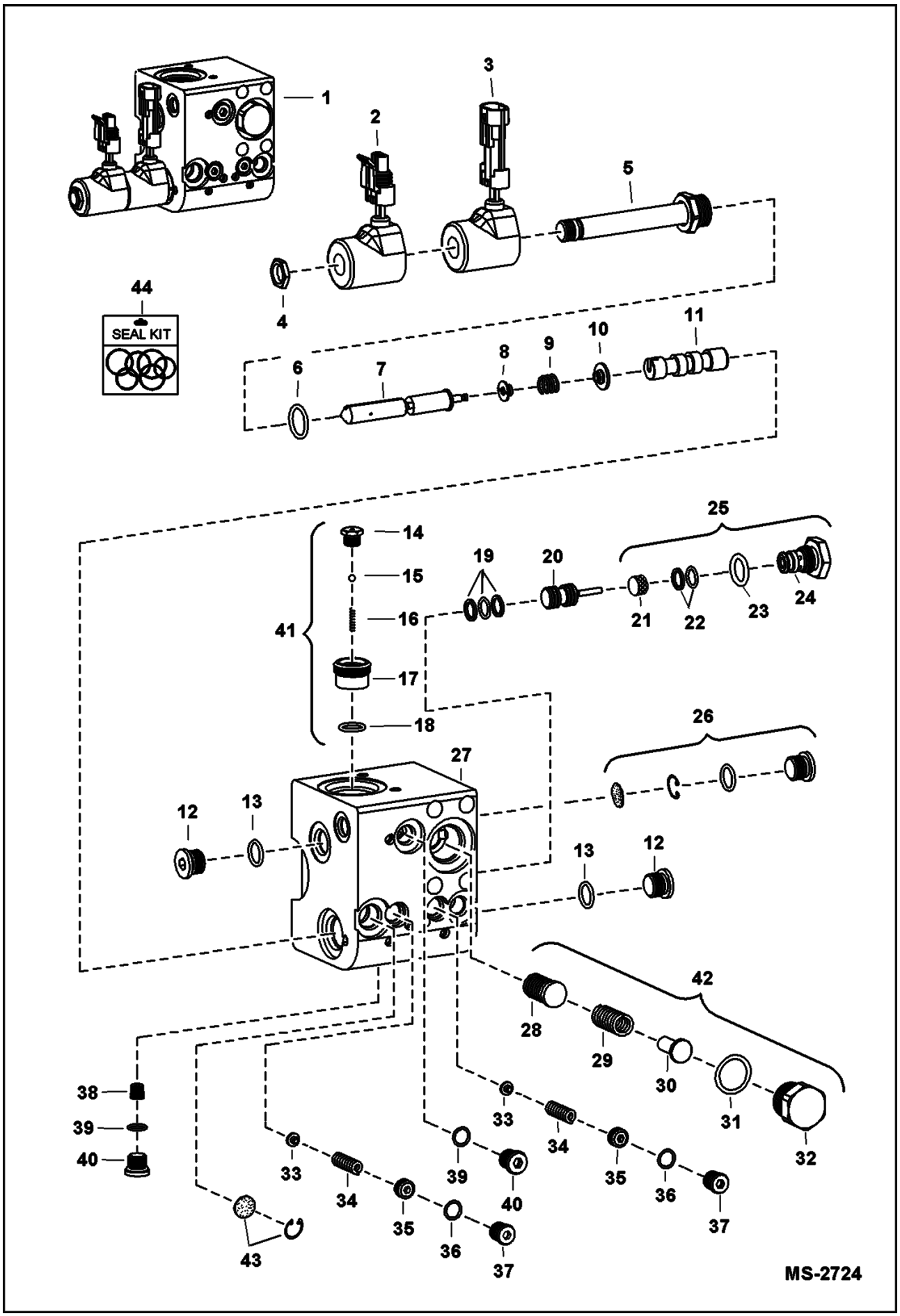

Page 624 - OSS# 2071349 - All rights reserved by Bobcat Company - 12/01/2009 - 20:50:59 - Produced by Ken Cook Co. with mediaioff

Ref No	Part Number	Description	Remarks	Serial Number	Qty
1	7161786	VALVE, POWER BOB-TACH	valve has (2) drain ports marked DR - Use which ever port best fits plumbing application		1
2	6684743	SOLENOID	W/male connector		1
3	6684744	SOLENOID	W/female connector		1
4	6684742	NUT			1
5		STEM	NSS		x
6	79K8	O RING 10			x
7		STEM	NSS		x
8		RETAINER	NSS		x
9		SPRING	NSS		x
10		WASHER	NSS		x
11		PISTON	NAP		x
12	6685545	PLUG	W/Ref. 13		x
13		ORING	NSS		x
14		PLUG	NSS		x
15		BALL	NSS		x
16		SPRING	NSS		x
17		VALVE	NSS		x
18	6685542	O-RING			x
19		RINGS	NSS		x
20	6684745	PISTON	W/Ref. 19		1
21		STEM			1
22		RINGS	NSS		x
23	79K7	O RING 10			x
24	6684746	CHECK VALVE	W/Ref. 23		1
25	7001678	VALVE, CHECK	W/Ref. 21-24		1
26	7001673	KIT, SCREEN FILTER			1
27		BLOCK	NSS		x
28		STEM	NSS		x
29		SPRING	NSS		x
30		POPPET	NSS		x
31	79K10	O RING 10			x
32		PLUG	NSS		1
33		POPPET	NSS		x
34		SPRING	NSS		x
35		PLUG	NSS		x
36	79K4	O RING 10			x
37	24K3	PLUG	W/Ref. 34		x
38	6685541	POPPET			1
39		O-RING	NSS - Was 6685542 [B,D]		x
40	6685546	PLUG	W/Ref. 39		2
41	6685543	CHECK VALVE	W/Ref. 14-18		1
42	6685544	COMPENSATOR	W/Ref. 28-32		1
43	6689983	FILTER KIT			1
44	6684747	SEAL KIT	Ref. 6, 22, 23, 31 & 39 - consists of (5) O-rings & (1) back-up washer		1

Page 625 - OSS# 2071349 - All rights reserved by Bobcat Company - 12/01/2009 - 20:50:59 - Produced by Ken Cook Co. with mediaioff

RADIATOR SCREEN KIT

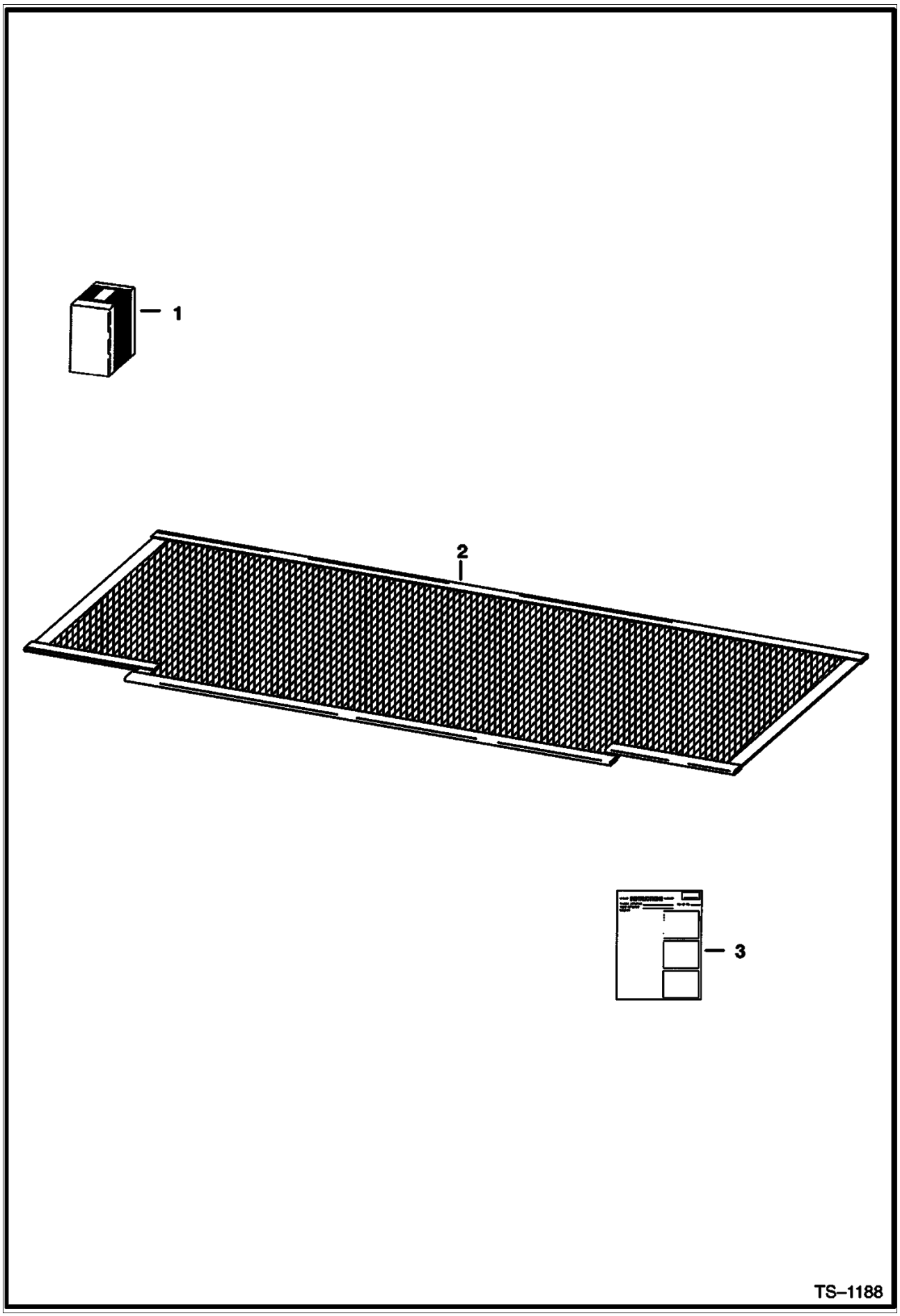

Page 626 - OSS# 2071349 - All rights reserved by Bobcat Company - 12/01/2009 - 20:50:59 - Produced by Ken Cook Co. with mediaioff

Ref No	Part Number	Description	Remarks	Serial Number	Qty
1	6706939	KIT	Ref. 2 & 3		1
2	6706285	SCREEN			1
3	6722861	INSTRUCTIONS			1

Page 627 - OSS# 2071349 - All rights reserved by Bobcat Company - 12/01/2009 - 20:50:59 - Produced by Ken Cook Co. with mediaioff

REAR AUXILIARY
(S/N 500K11038 & Below, 517619258 & Below, 518012218 & Below, 518112089 & Below, 519018909 & Below, 519212154 & Below)

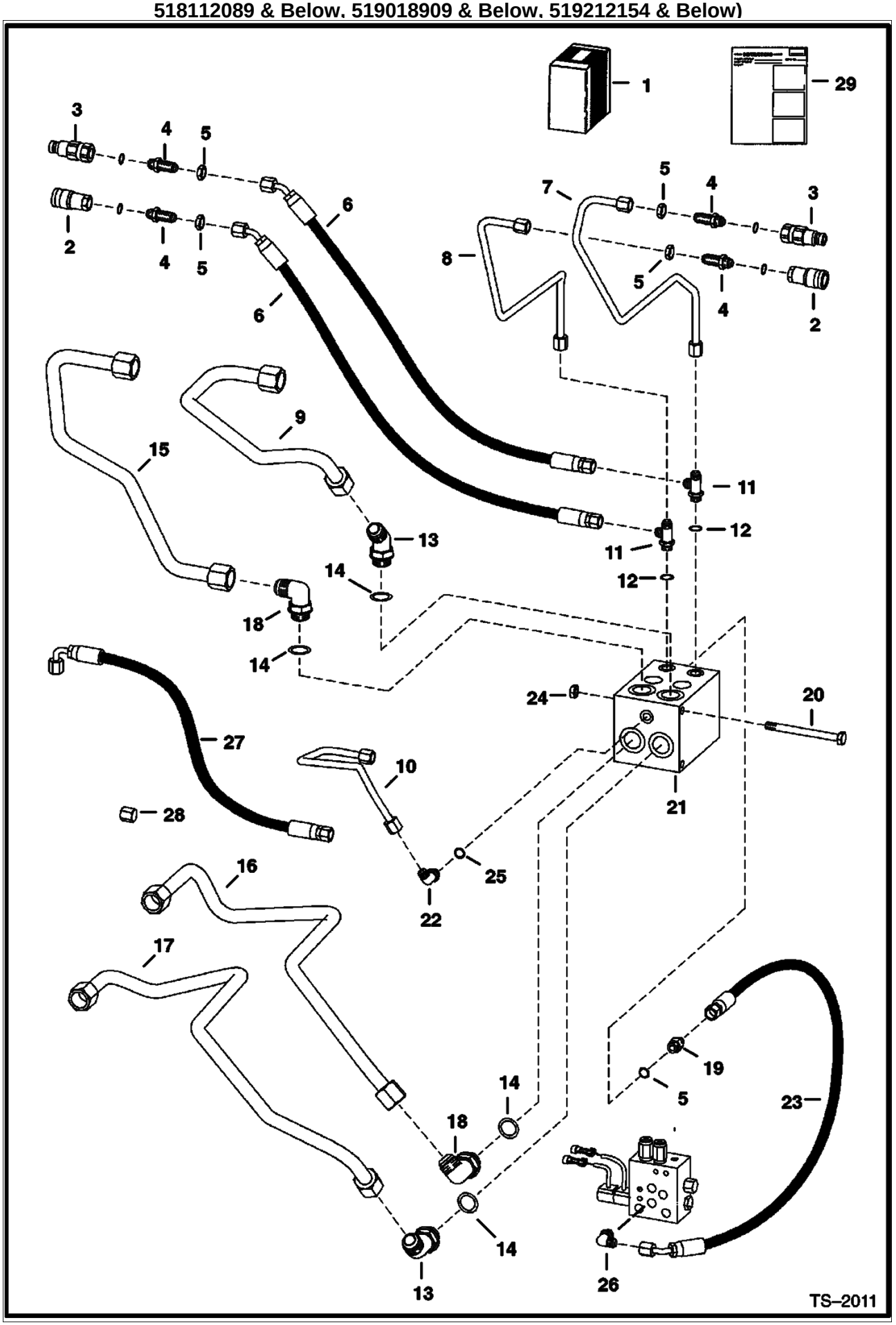

Page 628 - OSS# 2071349 - All rights reserved by Bobcat Company - 12/01/2009 - 20:50:59 - Produced by Ken Cook Co. with mediaioff

REAR AUXILIARY (Cont'd)
(S/N 500K11038 & Below, 517619258 & Below, 518012218 & Below, 518112089 & Below, 519018909 & Below, 519212154 & Below)

Ref No	Part Number	Description	Remarks	Serial Number	Qty
1		KIT	NAP - Ref. 2 - 29 - Order components - Was 6718289 [D]		1
2	6667803	COUPLER	female		2
3	6667804	COUPLER	male		2
3	6669657	SEAL KIT			x
4	6716089	CONNECTOR			4
5	86F5	NUT			4
6	6718286	HOSE			2
7	6718204	TUBE			1
8	6718203	TUBE			1
9	6718190	TUBE			1
10	6718207	TUBE			1
11		TEE	NAP - W/Ref. 12 - tapered boss face - Was 21KV00005B [A]		1
11	97K6	O'RING	flared end		1
11	21KB606	TEE	flat boss face - W/Ref. 12		1
12	99K6	O'RING	tapered boss face		x
12	79K6	O RING 10	flat boss face		x
13		ELBOW	NAP - W/Ref. 14 - tapered boss face - Was 18KV00008B [A]		3
13	97K12	O'RING	flared end		3
13	18KB1212	ELBOW	W/Ref. 14 - flat boss face		3
14	99K12	O'RING	tapered boss face		x
14	79K12	O RING 10	flat boss face		x
15	6718191	TUBE			1
16	6718192	TUBE			1
17	6718193	TUBE			1
18		ELBOW	NAP - W/Ref. 14 - tapered boss face - Was 17KV00008B [A]		2
18	97K12	O'RING	flared end		1
18	17KB1212	ELBOW	W/Ref. 14 - flat boss face		1
19		ADAPTER	NAP - W/Ref. 12 - tapered boss face - Was 15KV00005B [A]		1
19	97K6	O'RING	flared end		1
19	15KB606	ADAPTER	flat boss face		1
20	17C680	BOLT			2
21	6675073	VALVE, AUX REAR	See Illustration REAR AUXILIARY VALVE/ TS1362 WAS 6665572 [A]		1
22		ELBOW	NAP - W/Ref. 25 - tapered boss face - Was 6718182 [A]		1
22	97K6	O'RING	flared end		1
22	17KB604	ELBOW	W/Ref. 25 - flat boss face		1
23	6718208	HOSE			1
24	83D6	NUT 5			2
25	99K4	O'RING	tapered boss face		x
25	79K4	O RING 10	flat boss face		x
26		ELBOW	NAP - W/Ref. 12 - tapered boss face - Was 17KV00005B [A]		1
26	97K6	O'RING	flared end		1
26	17KB606	ELBOW	W/ Ref. 12 - flat boss face		1
27	6714808	HOSE			1
28	36K5	CAP			1
29	6900837	INSTRUCTIONS	INSTRUCTIONS Was 6900877 [B,D]		1

Page 629 - OSS# 2071349 - All rights reserved by Bobcat Company - 12/01/2009 - 20:50:59 - Produced by Ken Cook Co. with mediaioff

REAR AUXILIARY
(S/N 500K11039 & Above, 517619259-21198, 518012219-12551, 518112090-12468, 519018910-24161, 5192121551-12516)

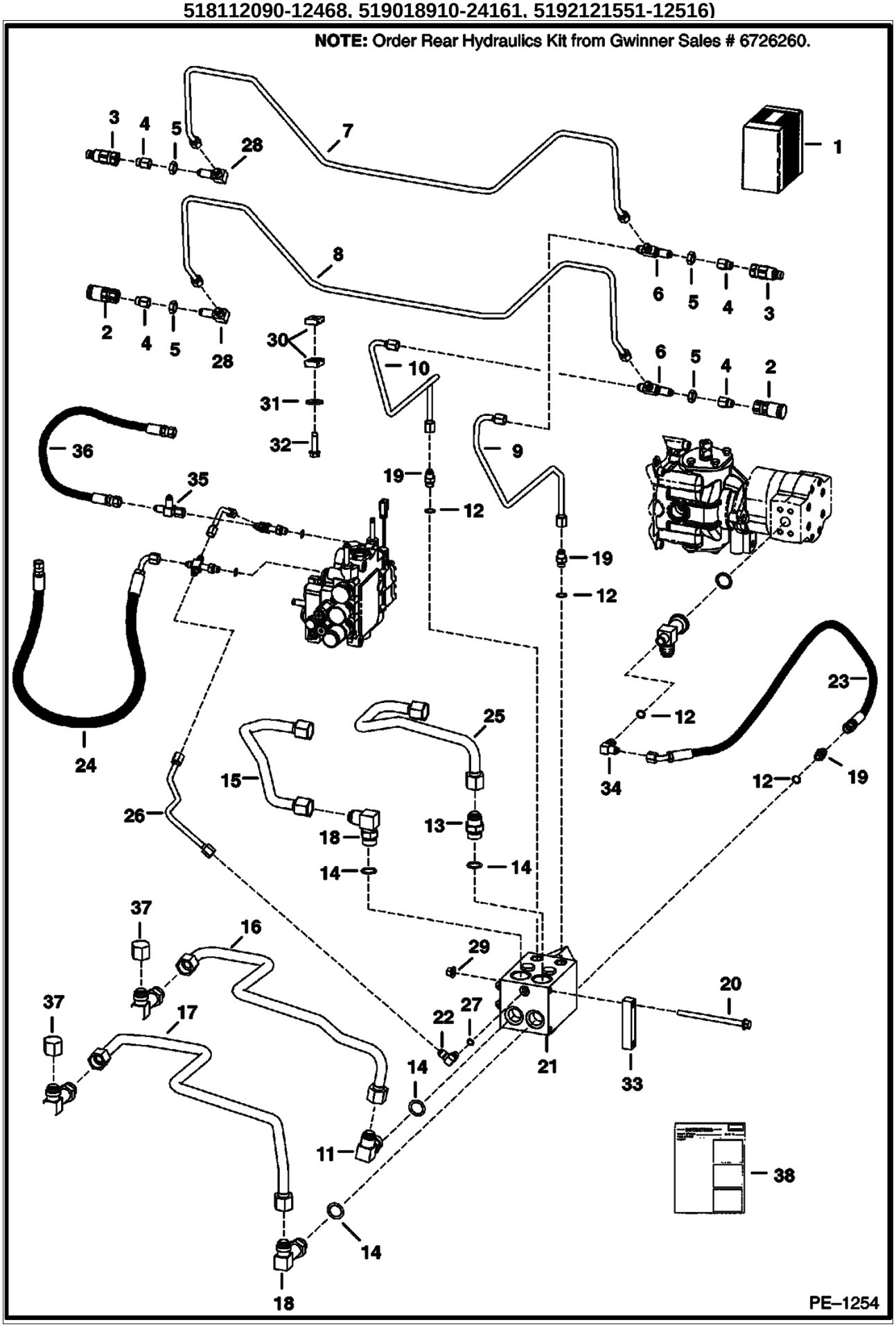

Page 630 - OSS# 2071349 - All rights reserved by Bobcat Company - 12/01/2009 - 20:50:59 - Produced by Ken Cook Co. with mediaioff

REAR AUXILIARY (Cont'd)
(S/N 500K11039 & Above, 517619259-21198, 518012219-12551, 518112090-12468, 519018910-24161, 5192121551-12516)

Ref No	Part Number	Description	Remarks	Serial Number	Qty
1	6726260	KIT	Ref. 2 - 34, 37 & 38 - If loader is equipped W/ Power Bob-Tach Option, also Order Ref. 35 & 36 - Was SALES [A]		1
2	6667803	COUPLER	female		2
3	6667804	COUPLER	male		2
3	6669657	SEAL KIT			x
4	6706633	ADAPTER			4
5	86F5	NUT			4
6		TEE	NAP - W/ flared end o-rings - Was 6719298 [A]		2
6	91K5	TEE	W/O flared end		2
7	6726273	TUBE			1
8	6726272	TUBE			1
9	6726268	TUBE			1
10	6726267	TUBE			1
11	6716443	ELBOW	W/Ref. 14 - check boss face to determine correct replacement o-ring		1
11	97K6	O'RING	flared end		1
12	99K6	O'RING			x
13		ADAPTER	NAP - W/Ref. 14 - tapered boss face - Was 15KV00008B [A]		1
13	97K12	O'RING	flared end		1
13	15KB1212	ADAPTER	W/Ref. 14 - flat boss face		1
14	99K12	O'RING	tapered boss face		x
14	79K12	O RING 10	flat boss face		x
15	6726264	TUBE			1
16	6726266	TUBE			1
17	6726265	TUBE			1
18		ELBOW	NAP - W/Ref. 14 - tapered boss face - Was 17KV00008B [A]		2
18	97K12	O'RING	flared end		1
18	17KB1212	ELBOW	flat boss face		2
19		ADAPTER	NAP - W/Ref. 12 - tapered boss face - Was 15KV00005B [A]		3
19	97K6	O'RING	flared end		3
19	15KB606	ADAPTER	W/Ref. 12 - flat boss face		x
20	35C688	BOLT			2
21	6675073	VALVE, AUX REAR	See Illustration REAR AUXILIARY VALVE/ TS1362		1
22		ELBOW	NAP - W/Ref. 27 - tapered boss face - Was 6718182 [A]		1
22	97K6	O'RING	flared end		1
22	17KB604	ELBOW	W/Ref. 27 - flat boss face		1
23	6718208	HOSE			1
24	6714808	HOSE			1
25	6726263	TUBE			1
26	6726269	TUBE			1
27	99K4	O'RING	tapered boss face		x
27	79K4	O RING 10	flat boss face		x
28	88F5	ELBOW	Was 88FN00005B [A]		2
29	83D6	NUT 5			2
30	6578870	CLAMP	Was 6726277 [A]		2
31	619021	WASHER, 5			1
32	84G3724	BOLT			1
33	6726293	SPACER BLOCK			1
34		ELBOW	NAP - W/Ref. 12 - tapered boss face - Was 17KV00005B [A]		1
34	99K6	O'RING	flared end		x

Page 631 - OSS# 2071349 - All rights reserved by Bobcat Company - 12/01/2009 - 20:50:59 - Produced by Ken Cook Co. with mediaioff

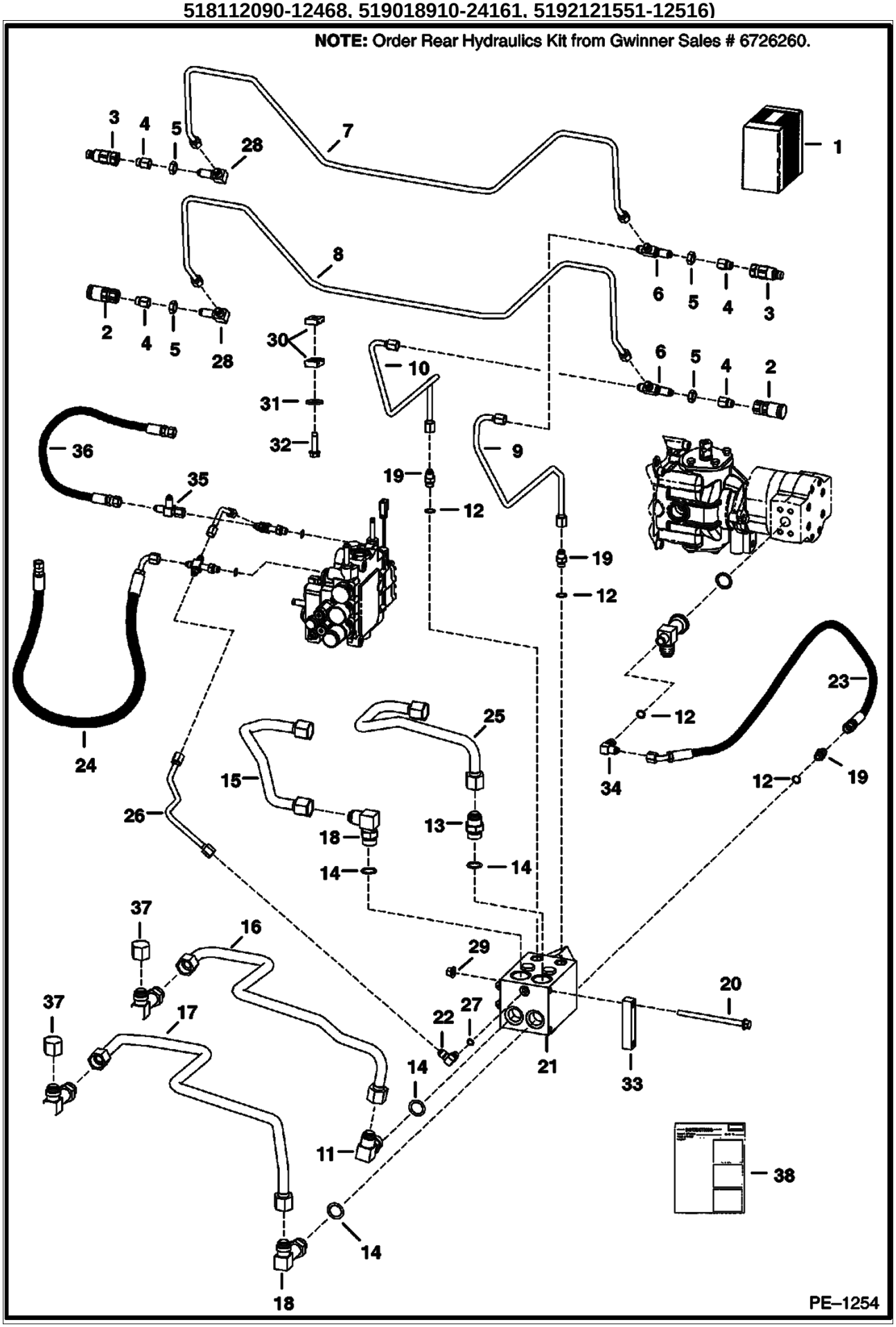

Page 632 - OSS# 2071349 - All rights reserved by Bobcat Company - 12/01/2009 - 20:50:59 - Produced by Ken Cook Co. with mediaioff

Ref No	Part Number	Description	Remarks	Serial Number	Qty
34	17KB606	ELBOW	W/Ref. 12 - flat boss face		x
35	13K5	TEE	Not in Kit - Used W/Power Bob-Tach Option - Was 13KN00005B [A]		1
36	6535451	HOSE	Not in Kit - Used W/Power Bob-Tach Option		1
37	36K5	CAP			2
38	6901098	INSTRUCTIONS			1

Page 633 - OSS# 2071349 - All rights reserved by Bobcat Company - 12/01/2009 - 20:50:59 - Produced by Ken Cook Co. with mediaioff

REAR AUXILIARY
(S/N 517621199 & Above, 518012552 & Above, 518112469 & Above, 519024162 & Above, 519212517 & Above)

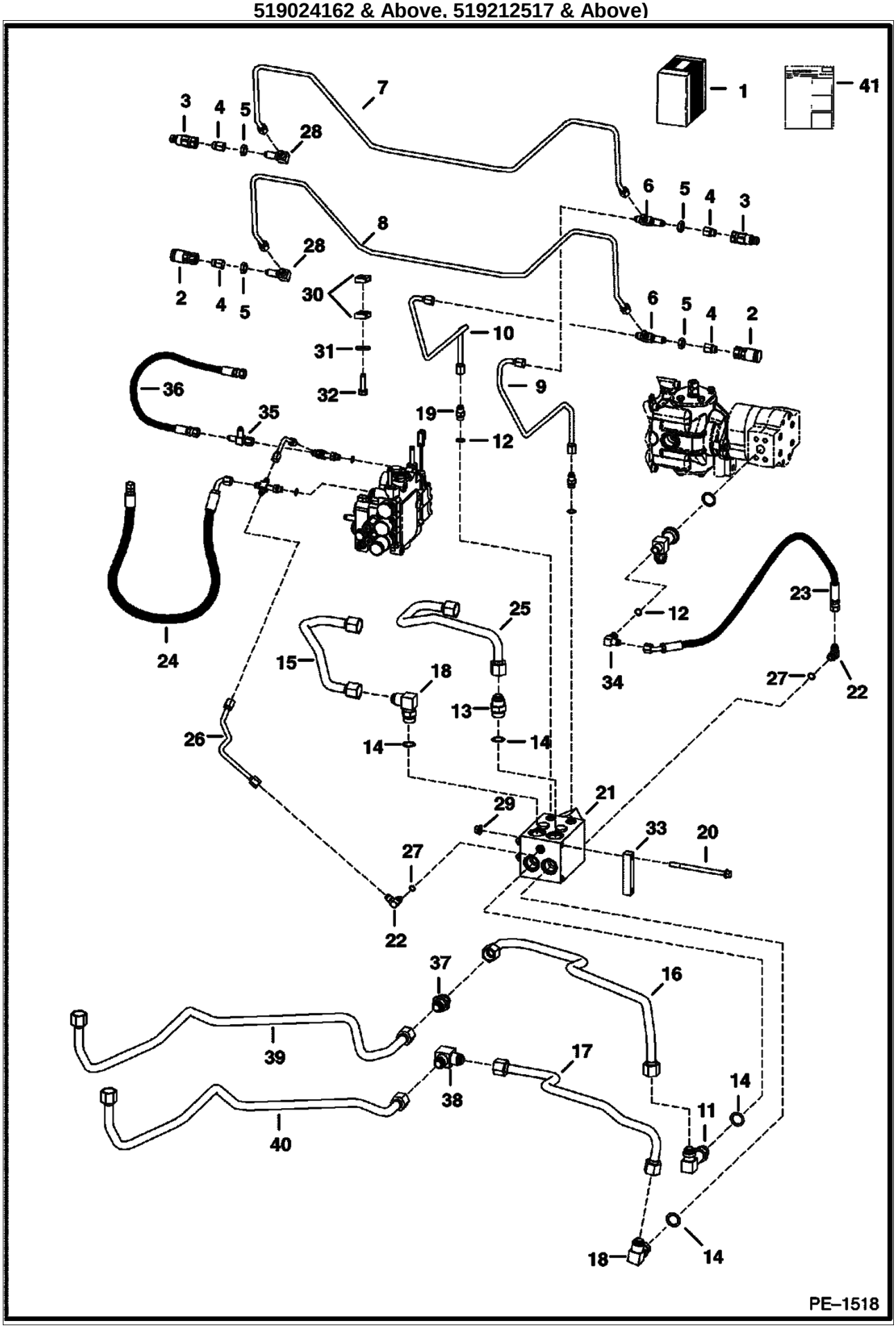

Page 634 - OSS# 2071349 - All rights reserved by Bobcat Company - 12/01/2009 - 20:50:59 - Produced by Ken Cook Co. with mediaIoff

REAR AUXILIARY (Cont'd)
(S/N 517621199 & Above, 518012552 & Above, 518112469 & Above, 519024162 & Above, 519212517 & Above)

Ref No	Part Number	Description	Remarks	Serial Number	Qty
1	6731235	KIT	Ref. 2 - 23, 25 - 34 & 41- If loader is equipped W/Power Bob-Tach Option, also Order Ref. 35 & 36 - Was SALES [D]		1
2	6667803	COUPLER	female		2
3	6667804	COUPLER	male		2
3	6669657	SEAL KIT			x
4	6706633	ADAPTER			4
5	86F5	NUT			4
6	91K5	TEE	Was 6719298 [A]		2
7	6726273	TUBE			1
8	6726272	TUBE			1
9	6726268	TUBE			1
10	6726267	TUBE			1
11	6716443	ELBOW	W/Ref. 14 - check boss face to determine correct replacement O-ring		1
11	97K6	O'RING	flared end		1
12	99K6	O'RING	tapered boss face		x
12	79K6	O RING 10	flat boss face		x
13		ADAPTER	NAP - W/Ref. 14 - tapered boss face - Was 15KV00008B [A]		1
13	97K12	O'RING	flared end		1
13	15KB1212	ADAPTER	flat boss face		1
14	99K12	O'RING	tapered boss face		x
14	79K12	O RING 10	flat boss face		x
15	6726264	TUBE			1
16	6731245	TUBE			1
17	6731246	TUBE			1
18		ELBOW	NAP - W/Ref. 14 - tapered boss face - Was 17KV00008B [A]		2
18	97K12	O'RING	flared end		2
18	17KB1212	ELBOW	W/Ref. 14 - flat boss face		2
19		ADAPTER	NAP - W/Ref. 12 - tapered boss face - Was 15KV00005B [A]		3
19	97K6	O'RING	flared end		3
19	15KB606	ADAPTER	flat boss face		3
20	35C688	BOLT			2
21		VALVE, AUX REAR	See Illustration REAR AUXILIARY VALVE/ TS1362		1
22		ELBOW	NAP - W/Ref. 27 - tapered boss face - Was 6718182 [A]		2
22	97K6	O'RING	flared end		x
22	17KB604	ELBOW	flat boss face		2
23	6718208	HOSE			1
24	6714808	HOSE			1
25	6726263	TUBE			1
26	6726269	TUBE			1
27	99K4	O'RING	tapered boss face		x
27	79K4	O RING 10	flat boss face		x
28	88F5	ELBOW			2
29	83D6	NUT 5			2
30	6578870	CLAMP	Was 6726277 [A]		2
31	619021	WASHER, 5			1
32	84G3724	BOLT			1
33	6726293	SPACER BLOCK			1
34		ELBOW	NAP - W/Ref. 12 - tapered boss face - Was 17KV00005B [A]		1
35		TEE	NAP - W/ flared end O-rings - Not in Kit - Used		1

Page 635 - OS6# 2071349 - All rights reserved by Bobcat Company - 12/01/2009 - 20:50:59 - Produced by Ken Cook Co. with mediaioff

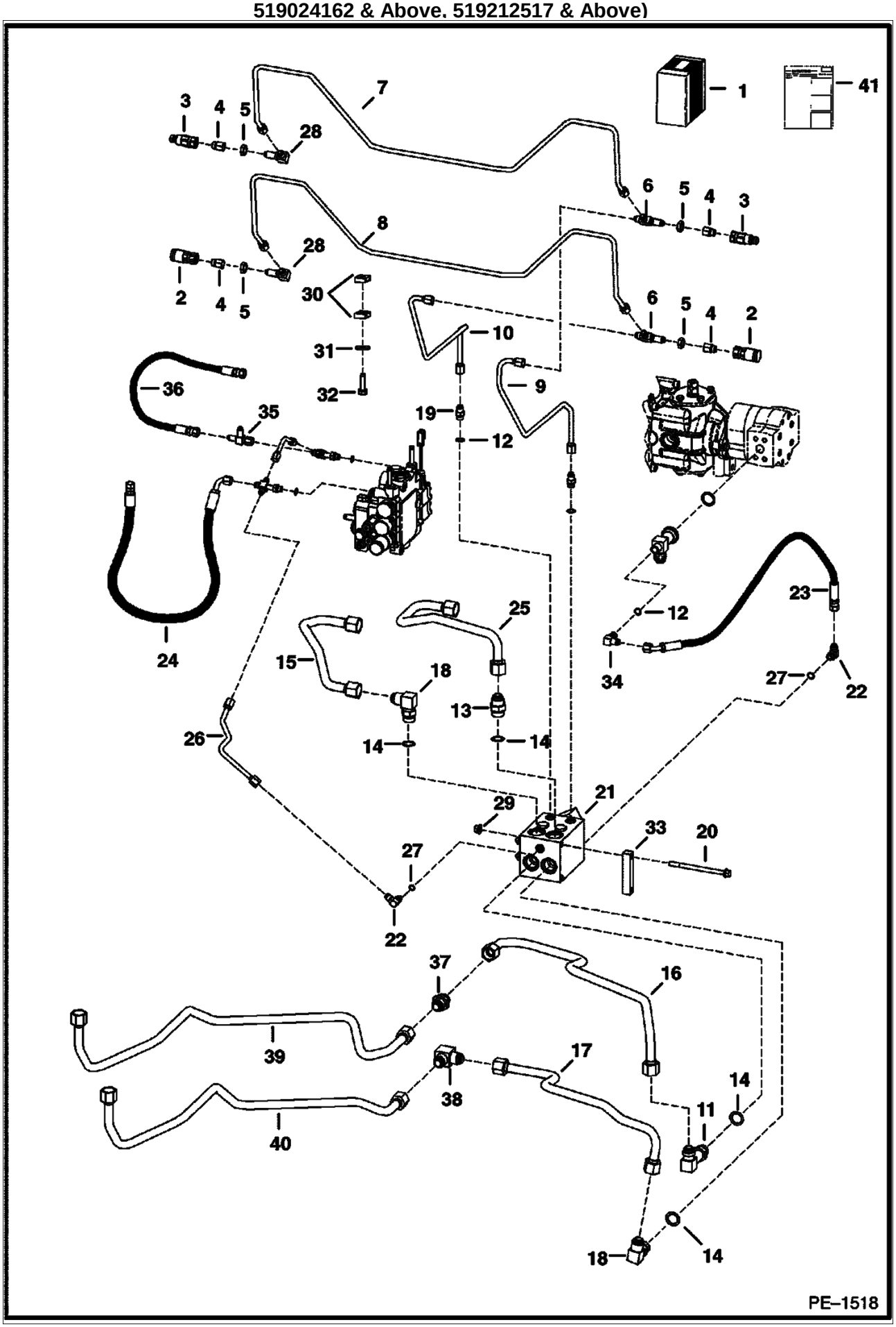

Page 636 - OSS# 2071349 - All rights reserved by Bobcat Company - 12/01/2009 - 20:50:59 - Produced by Ken Cook Co. with mediaIoff

Ref No	Part Number	Description	Remarks	Serial Number	Qty
			W/Power Bob-Tach Option - Was 13KN00005B [A]		
36	6535451	HOSE	Not in Kit - Used W/Power Bob-Tach Option		1
37		ADAPTER	NAP - W/ flared end O-rings - Was 87FN00008B [A]		1
37	97K8	O-RING			1
38	77F8	ELBOW			1
38	97K12	O'RING	flared end		1
39	6726185	TUBE			1
40	6726186	TUBE			1
41	6901514	INSTRUCTIONS	INSTRUCTIONS Was 6901098 [D]		1

Page 637 - OSS# 2071349 - All rights reserved by Bobcat Company - 12/01/2009 - 20:50:59 - Produced by Ken Cook Co. with mediaioff

REAR AUXILIARY
(High Flow Hyd.) (S/N 500K11038 & Belo, 517619258 & Below, 518012218 & Below, 518112089 & Below, 519018909 & Below, 519212154 & Below)

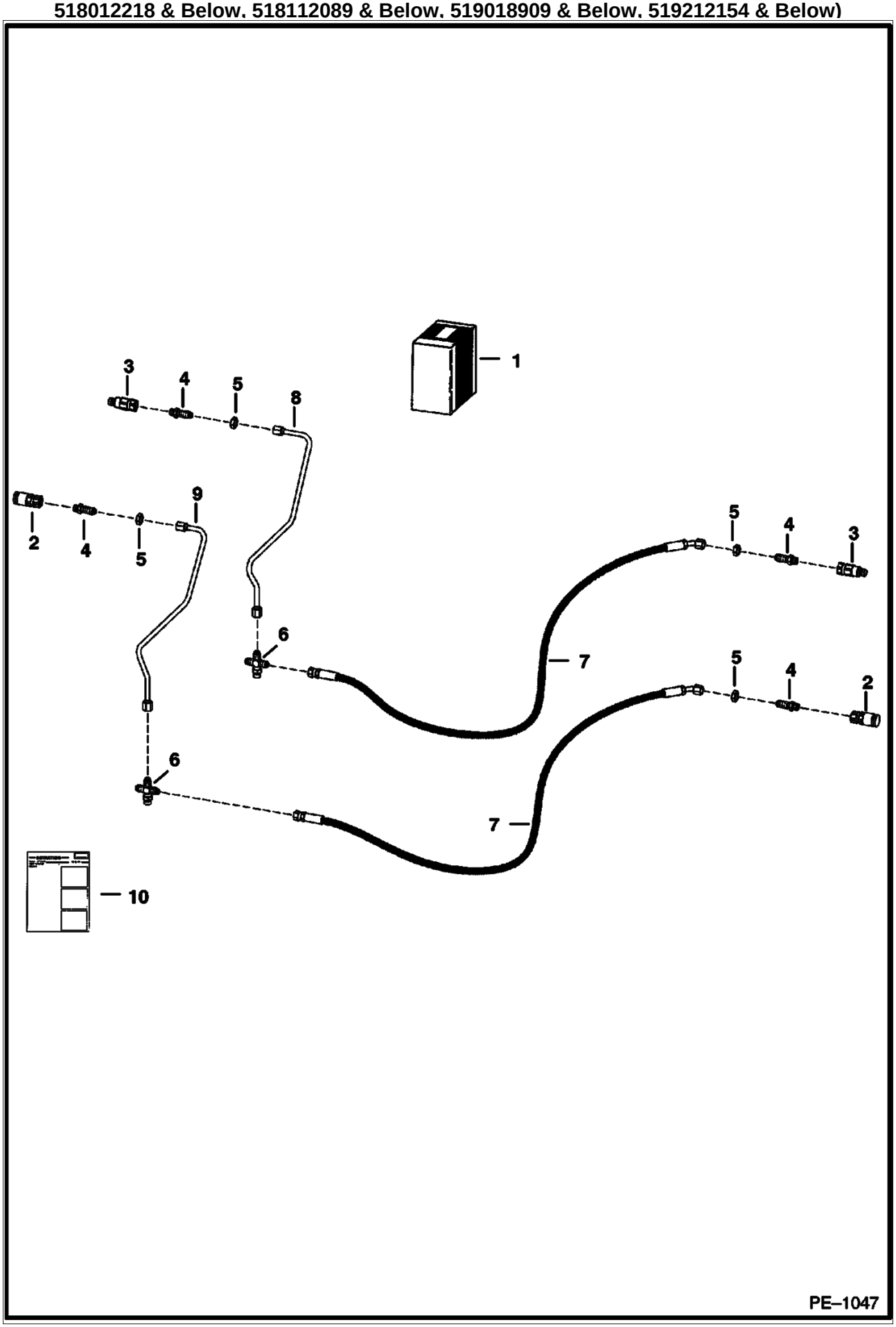

Page 638 - OSS# 2071349 - All rights reserved by Bobcat Company - 12/01/2009 - 20:50:59 - Produced by Ken Cook Co. with mediaioff

REAR AUXILIARY (Cont'd)
(High Flow Hyd.) (S/N 500K11038 & Belo, 517619258 & Below, 518012218 & Below, 518112089 & Below, 519018909 & Below, 519212154 & Below)

Ref No	Part Number	Description	Remarks	Serial Number	Qty
1		KIT	NAP - Ref. 2 - 9 - Order Components - Was 6719131 [D]		1
2	6667803	COUPLER	female		1
3	6667804	COUPLER	male		1
3	6669657	SEAL KIT			x
4	6716089	CONNECTOR			4
5	86F5	NUT			4
6	6578209	TEE	Was 6718250 [A]		2
7	6718286	HOSE			2
8	6718633	TUBE			1
9	6717844	TUBE			1
10	6900877	INSTRUCTIONS			1

Page 639 - OSS# 2071349 - All rights reserved by Bobcat Company - 12/01/2009 - 20:50:59 - Produced by Ken Cook Co. with mediaioff

REAR AUXILIARY
(High Flow Hyd) (S/N 500K11039 & Above, 517619259 & Above, 518012219 & Above, 518112090 & Above, 519018910 & Above, 519212155 & Above)

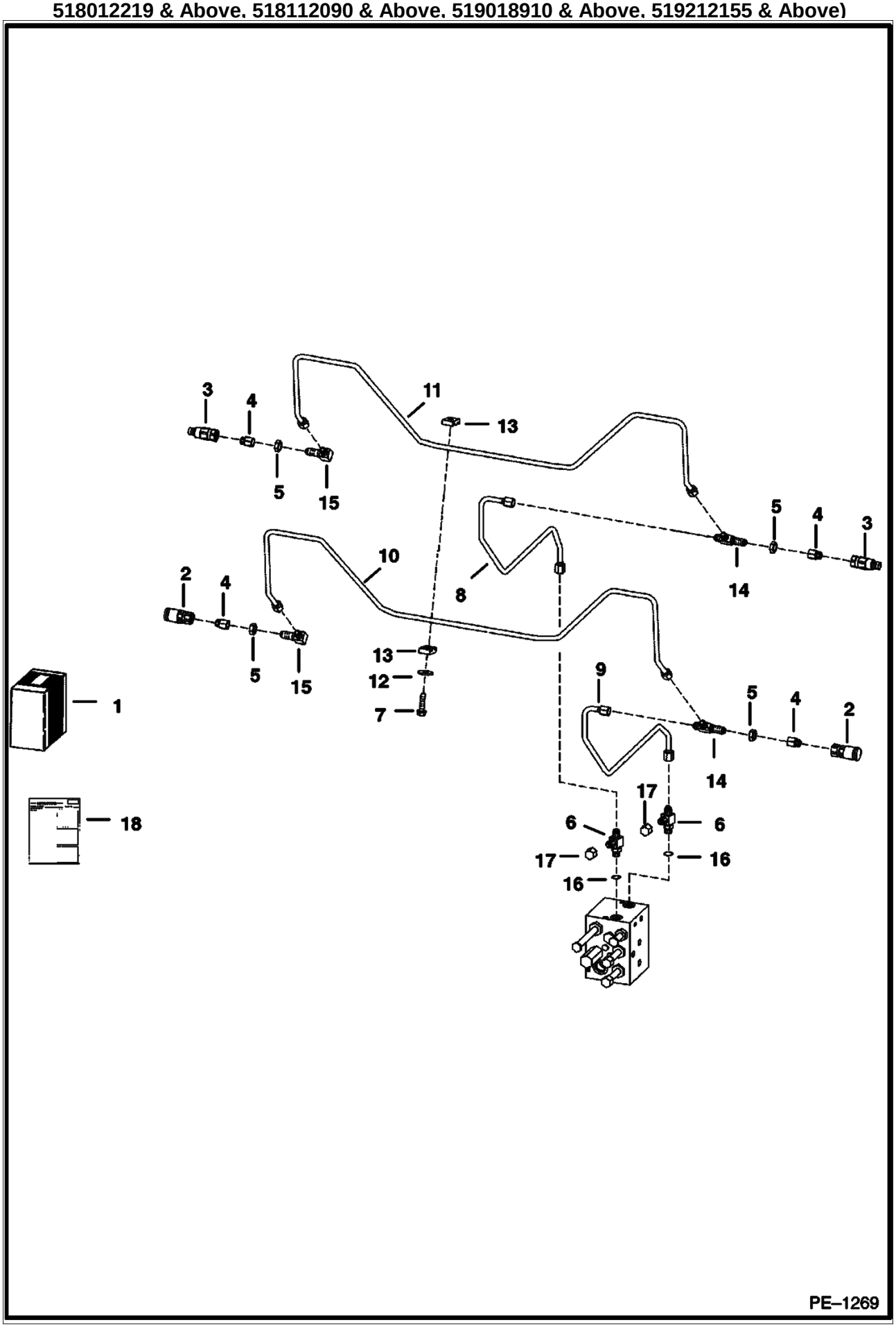

Page 640 - OSS# 2071349 - All rights reserved by Bobcat Company - 12/01/2009 - 20:50:59 - Produced by Ken Cook Co. with mediaIoff

REAR AUXILIARY (Cont'd)
(High Flow Hyd) (S/N 500K11039 & Above, 517619259 & Above, 518012219 & Above, 518112090 & Above, 519018910 & Above, 519212155 & Above)

Ref No	Part Number	Description	Remarks	Serial Number	Qty
1	6726288	KIT	Ref. 2 - 18 - Was SALES [A]		1
2	6667803	COUPLER	female		1
3	6667804	COUPLER	male		1
3	6669657	SEAL KIT			x
4	6706633	ADAPTER			4
5	86F5	NUT			4
6		TEE	NAP - tapered boss face - Was 21KV00005B [A]		2
6	97K6	O'RING	flared end		1
6	21KB606	TEE	W/Ref. 16 - flat boss face		x
7	84G3724	BOLT			1
8	6726275	TUBE			1
9	6726274	TUBE			1
10	6726273	TUBE			1
11	6726272	TUBE			1
12	619021	WASHER, 5			1
13	6578870	CLAMP	Was 6726277 [A]		2
14		TEE	NAP - W/Flared end o-ring - Was 6719298 [A]		2
14	91K5	TEE	W/O flared end o-ring		2
15	88F5	ELBOW	Was 88FN00005B [A]		2
16	99K10	O'RING			x
17	36K5	CAP	CAP	Not used if loader is equ	2
18	6901097	INSTRUCTIONS			1

Page 641 - OSS# 2071349 - All rights reserved by Bobcat Company - 12/01/2009 - 20:50:59 - Produced by Ken Cook Co. with mediaioff

REAR AUXILIARY VALVE

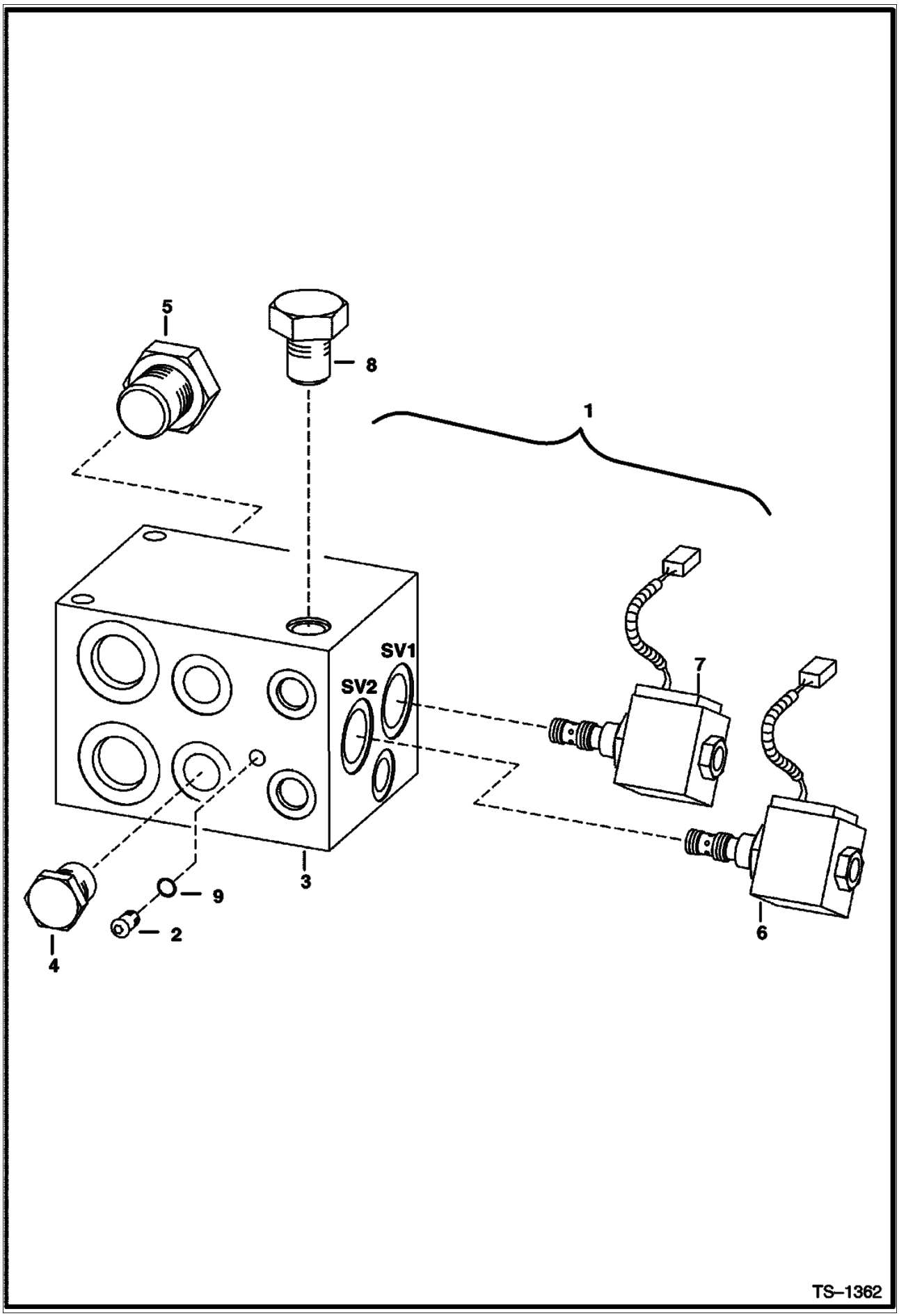

Page 642 - OSS# 2071349 - All rights reserved by Bobcat Company - 12/01/2009 - 20:50:59 - Produced by Ken Cook Co. with mediaioff

REAR AUXILIARY VALVE (Cont'd)

Ref No	Part Number	Description	Remarks	Serial Number	Qty
1	6665572	VALVE	diverter - silver - rear pressure release		1
1	6675073	VALVE, AUX REAR	diverter - gold - rear & front pressure release		1
2	6653490	PLUG	W/Ref. 9 - For Ref. 1 (NAP/6665572 Valve)		18
2	6676152	PLUG	W/Ref. 9 - For Ref. 1 (6675073 Valve)		27
3		BODY	NSS		1
4	6664212	CHECK VALVE			2
4	6653487	SEAL KIT			2
5	6653484	VALVE			2
5	6653485	SEAL KIT			2
6	6669218	VALVE	solenoid - W/Connector - SV2 Port		1
6	6669190	COIL	For Ref. 1 (NAP/6665572 Valve)		1
6	6676151	STEM	For Ref. 1 (6675073 Valve)		1
6	6669188	STEM			1
6	6669217	SEAL KIT			1
7	6669219	VALVE	solenoid - W/Connector - SV1 Port		1
7	6669190	COIL			1
7	6669189	STEM			1
7	6669216	SEAL KIT			1
8	6669187	VALVE			1
8	6653487	SEAL KIT			1
9	79K2	O RING 10			x

Page 643 - OSS# 2071349 - All rights reserved by Bobcat Company - 12/01/2009 - 20:50:59 - Produced by Ken Cook Co. with mediaioff

REAR DOOR LOCK

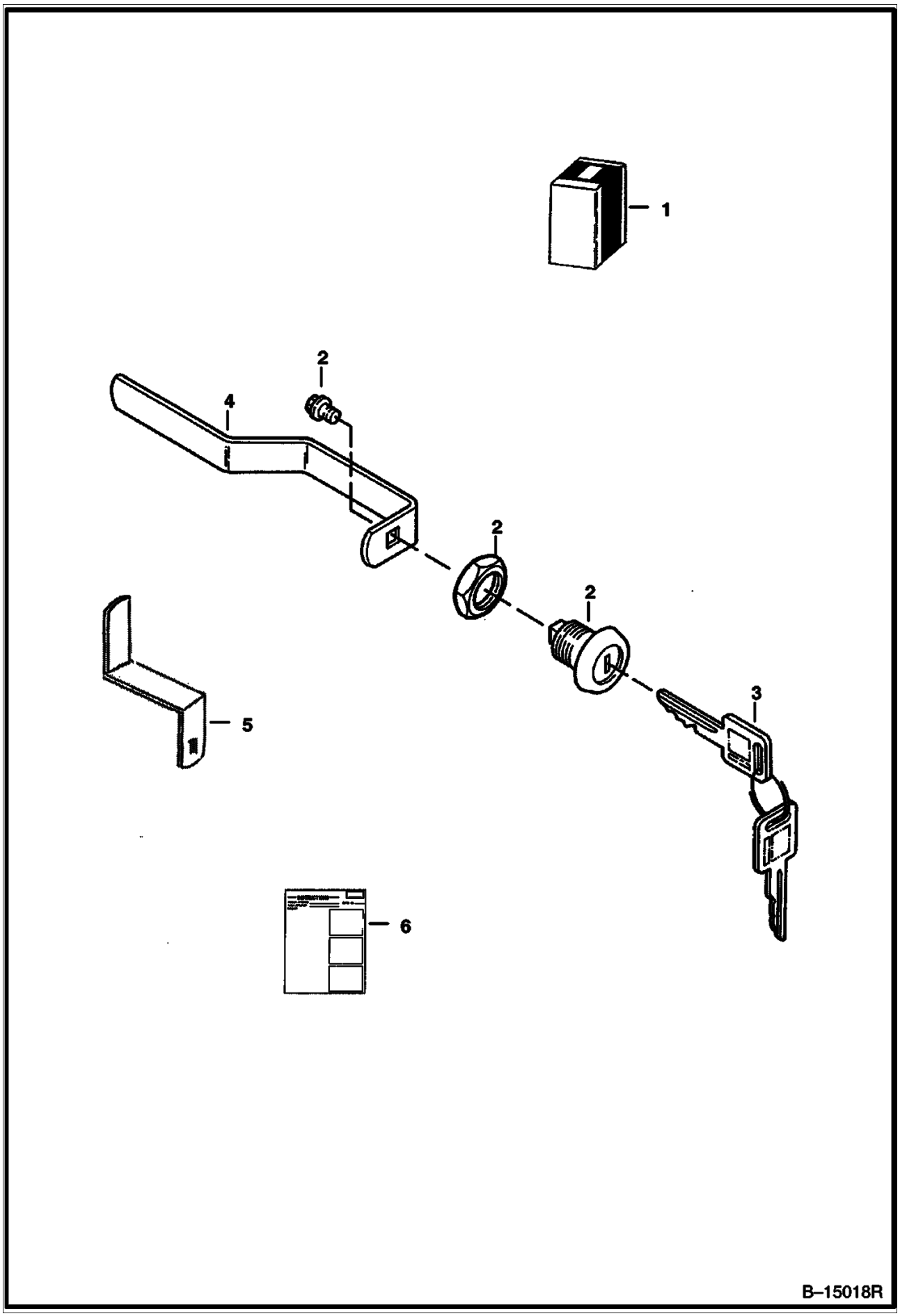

Page 644 - OSS# 2071349 - All rights reserved by Bobcat Company - 12/01/2009 - 20:50:59 - Produced by Ken Cook Co. with mediaioff

Ref No	Part Number	Description	Remarks	Serial Number	Qty
1	6732001	KIT	lock - Ref. 2-6 - Was 6714973 [A]		1
2	6670726	CYLINDER. LOCK			1
3		KEY	NAP - ignition & rear door - includes two keys W/ring - Order 6693241 - Was 6709527 [A]		1
3	6693241	KEY 10	single key W/O ring		x
4	6714037	LATCH	Use W/ 6711524 rear door		1
5	6729688	LATCH	Use W/ 6729991 rear door		1
6	6901656	INSTRUCTIONS	INSTRUCTIONS Was 6570762 [B]		1

Page 645 - OSS# 2071349 - All rights reserved by Bobcat Company - 12/01/2009 - 20:50:59 - Produced by Ken Cook Co. with mediaioff

SEAL ENCLOSURE KIT

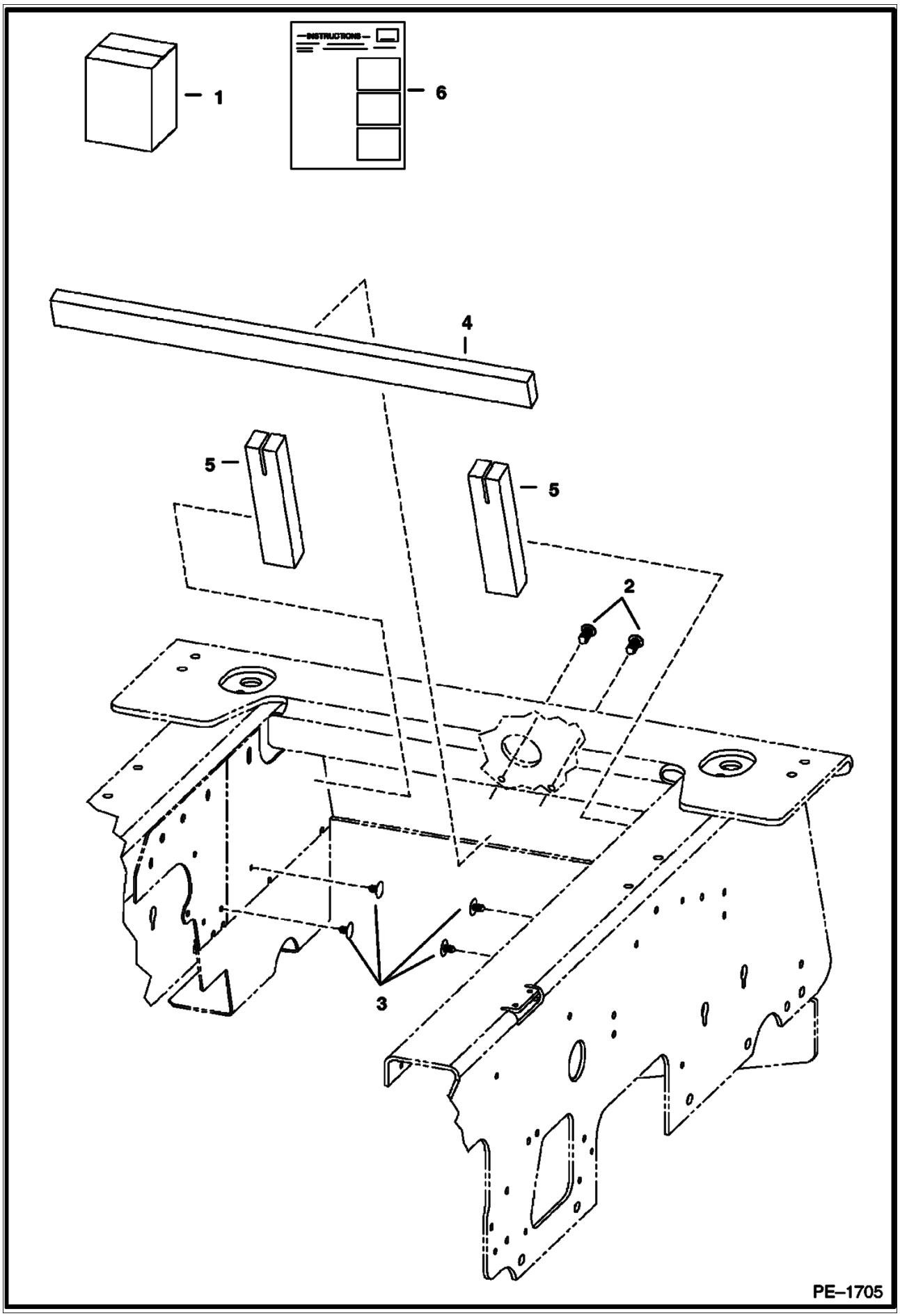

Page 646 - OSS# 2071349 - All rights reserved by Bobcat Company - 12/01/2009 - 20:50:59 - Produced by Ken Cook Co. with mediaioff

Ref No	Part Number	Description	Remarks	Serial Number	Qty
1	6732718	KIT	enclosure		1
2	6669308	RETAINER			2
3	6674895	RETAINER			4
4	6731108	SEAL	retainer		1
5	6732619	SEAL	panel		2
6	6901774	INSTRUCTIONS			1

Page 647 - OSS# 2071349 - All rights reserved by Bobcat Company - 12/01/2009 - 20:50:59 - Produced by Ken Cook Co. with mediaioff

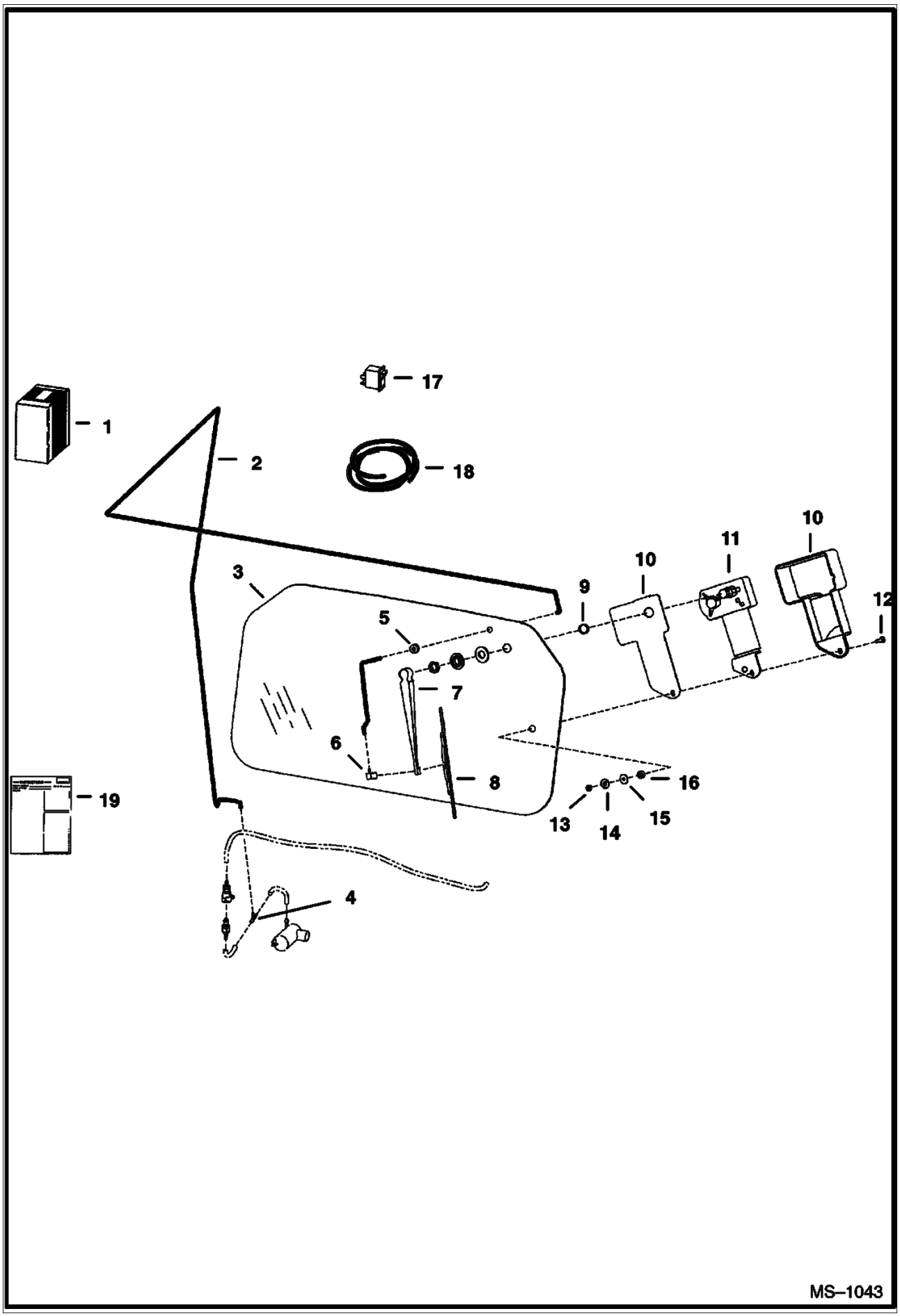

Page 648 - OSS# 2071349 - All rights reserved by Bobcat Company - 12/01/2009 - 20:50:59 - Produced by Ken Cook Co. with mediaioff

Ref No	Part Number	Description	Remarks	Serial Number	Qty
1	6726655	KIT	rear wiper		1
2		HOSE	NAP - 96"(2438,4 mm) long - Order Ref. 18		1
3	6719317	WINDOW			1
4	6676000	TEE			1
5	6557493	GROMMET			1
6	6676028	NOZZLE			1
7	6676001	ARM			1
8	6676002	BLADE			1
9	6667201	SPACER	nylon		1
10	6664097	COVER	wiper		1
11	6665602	MOTOR			1
12	6664566	BOLT			1
13	6664103	NUT			1
14	6664065	WASHER	nylon		1
15	6801059	WASHER	neoprene		1
16	6664085	BUSHING	nylon		1
17	6675999	SWITCH			1
18	6676003	HOSE	black - .109" (2,77 mm) ID - bulk - sold per foot		x
19	6901061	INSTRUCTIONS			1

Page 649 - OSS# 2071349 - All rights reserved by Bobcat Company - 12/01/2009 - 20:50:59 - Produced by Ken Cook Co. with mediaioff

SEAT
(Suspension - Sears)

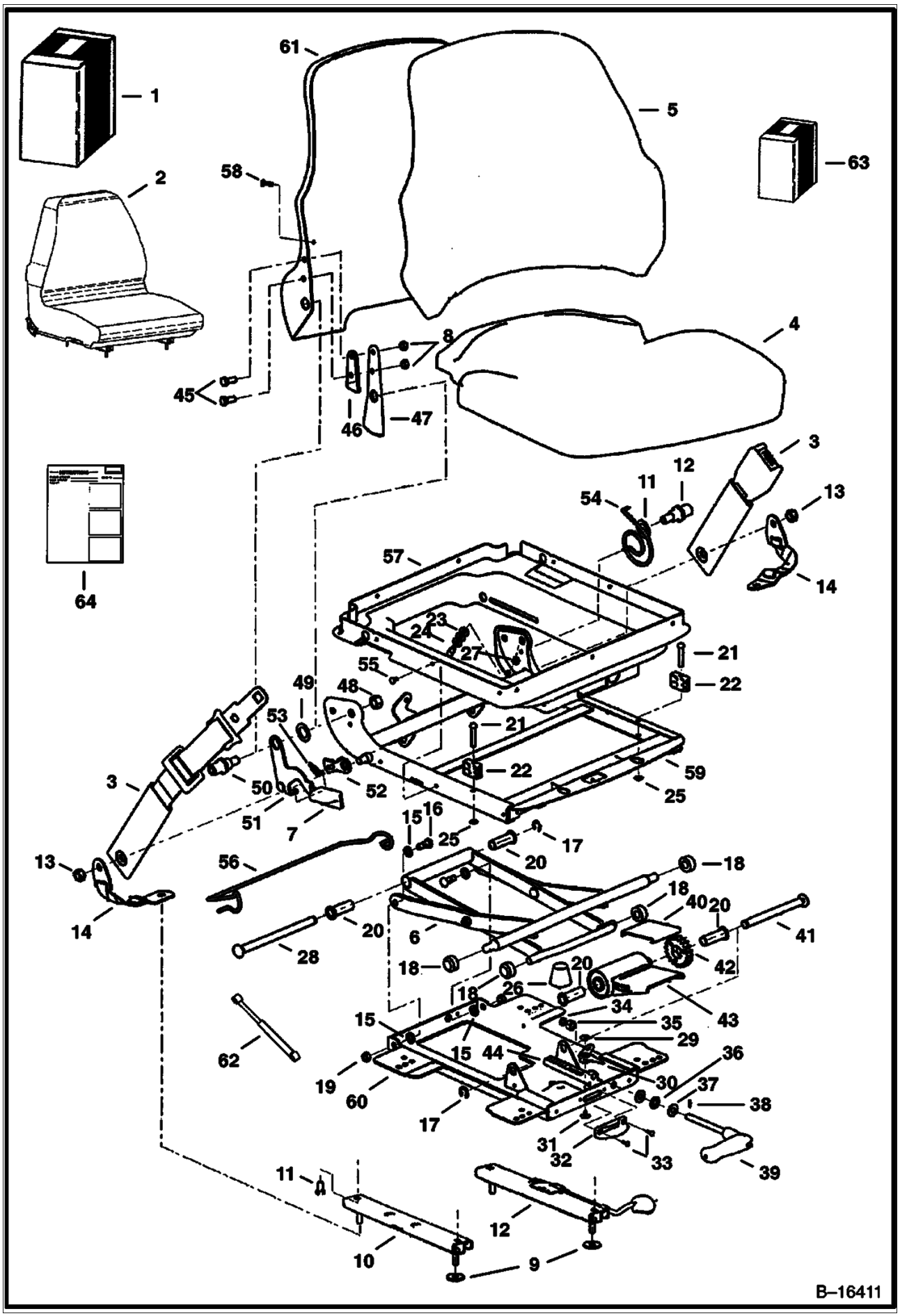

Page 650 - OSS# 2071349 - All rights reserved by Bobcat Company - 12/01/2009 - 20:50:59 - Produced by Ken Cook Co. with mediaIoff

Ref No	Part Number	Description	Remarks	Serial Number	Qty
1		KIT	NAP - vinyl seat - Order Ref. 2, 3 & 64 - Was 6718868 [A]		1
1		KIT	NAP - fabric seat - Order Ref. 2, 3 & 64 - Was 6718869 [A]		1
2		SEAT	NAP - vinyl - Ref. 4-61 - W/R.H. recliner lever - Order 6675595 Seat - Was 6674896 [A]		1
2	6675595	SEAT	vinyl - LH recliner lever		1
2		SEAT	NAP - fabric - W/R.H. recliner lever - Order 6675596 Seat - Was 6674404 [A]		1
2	6675596	SEAT	fabric - LH recliner lever		1
3	6675170	SEAT BELT	lap		1
4	6675320	SEAT			1
4	6675322	SEAT			1
5	6675319	SEAT	backrest - fabric - W/Ref. 58		1
5	6675321	SEAT	backrest - vinyl - W/Ref. 58		1
6	6675317	SCISSORS			1
7	6675323	KNOB	recliner		1
8		NUT	NSS		6
9	619021	WASHER, 5			4
10		SLIDE	NSS - slave		1
11		BOLT	NSS		4
12		SLIDE	NSS - locking		1
13		NUT	NSS		2
14		BELT	NSS - tether		2
15		WASHER	NSS - cross pivot		4
16		BOLT	NSS - pivot		2
17		RING	NSS - retaining		2
18		ROLLER	NSS		4
19		NUT	NSS		2
20		BUSHING	NSS - wt adjustment		4
21		RIVET	NSS		2
22		BLOCK	NSS - up stop		2
23		WASHER	NSS		3
24		STOP	NSS - armrest		1
25		PUSHNUT	NSS		2
26		BUMPER	NSS		1
27		NUT	NSS		1
28		SHAFT	NSS - bearing		1
29		RIVET	NSS - female snap		1
30		INDICATOR	NSS - weight		1
31		RIVET	NSS - male snap		1
32		DIAL	NSS - weight indicator		1
33		POP RIVET	NSS		2
34		SPACER	NSS		1
35		NUT	NSS		1
36		BEARING	NSS - thrust		1
37		RACE	NSS - thrust		2
38		SHEAR PIN	NSS		1
39		HANDLE	NSS - weight adjustment		1
40		PLATE	NSS - wear		1
41		SHAFT	NSS - torsion		1
42		DRIVE GEAR	NSS		1
43		BUSHING	NSS - torsion		1
44		RACK	NSS - wt adjustment		1
45		BOLT	NSS		2
46		SPACER	NSS - recliner		1
47		BRACKET	NSS - back tilt		1

Page 651 - OSS# 2071349 - All rights reserved by Bobcat Company - 12/01/2009 - 20:50:59 - Produced by Ken Cook Co. with mediaioff

SEAT (Cont'd)
(Suspension - Sears)

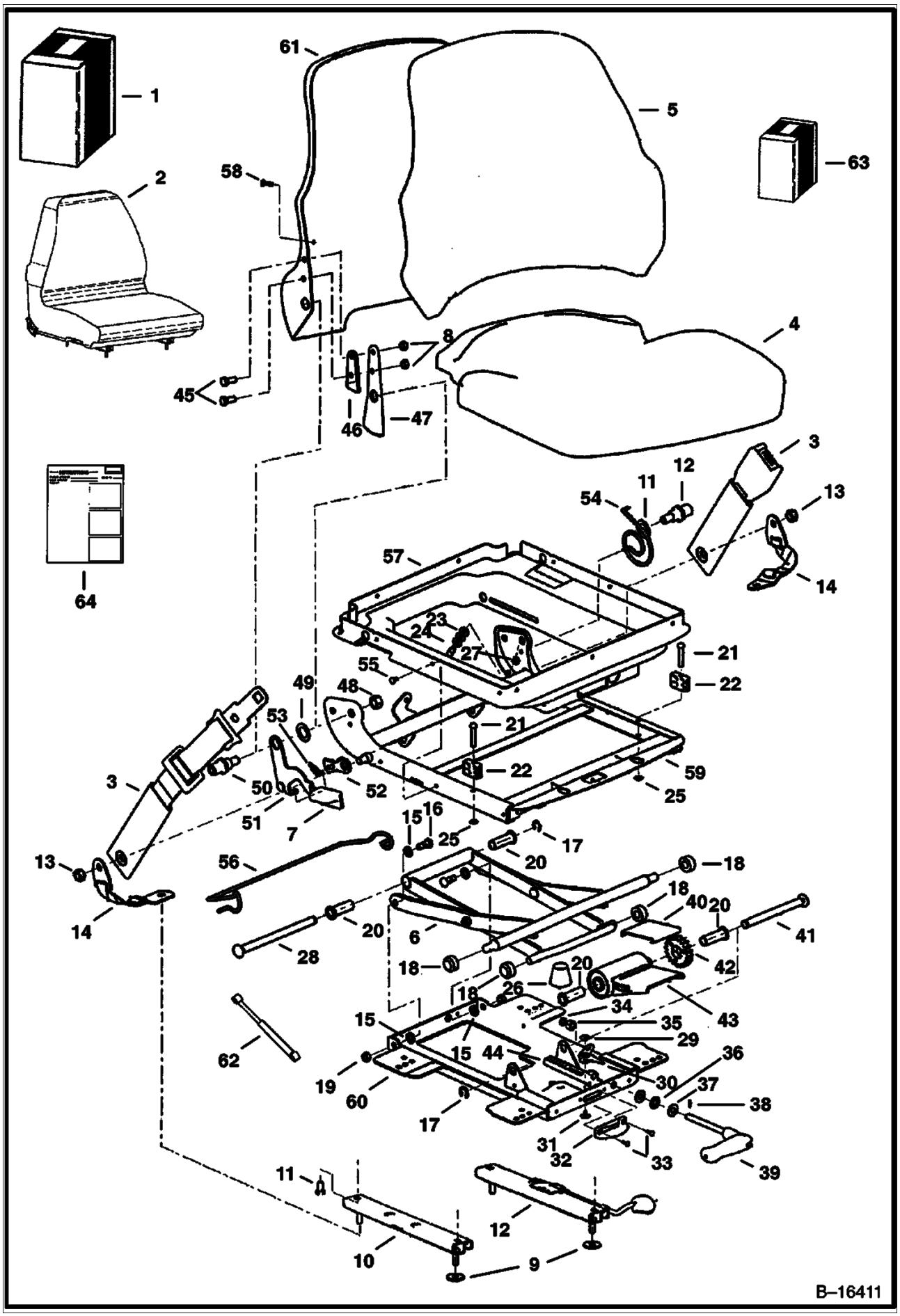

Page 652 - OSS# 2071349 - All rights reserved by Bobcat Company - 12/01/2009 - 20:50:59 - Produced by Ken Cook Co. with mediaIoff

Ref No	Part Number	Description	Remarks	Serial Number	Qty
48		NUT	NSS		2
49		WASHER	NSS - plastic		2
50		BOSS	NSS - back pan pivot		2
51		HANDLE	NSS - recliner (RH)		1
52		LATCH	NSS - recliner		1
53		SPRING	NSS - extension		1
54		SPRING	NSS - tilt latch		1
55		CLIP	NSS		6
56		WIRE	NSS - boot support		1
57		SUSPENSION	NSS - boot		1
58		SCREW	NSS		2
59		HOUSING	NSS - upper		1
60		HOUSING	NSS - lower		1
61		BACK PAN	NSS		1
62	6676338	GAS SPRING			1
63	6675309	KIT	slides - Ref. 8-12		1
63	6675310	KIT	tether belt - Ref. 9, 13 & 14		1
63	6675311	KIT	suspension rollers & bearing - Ref. 15-20		1
63	6675312	KIT	suspension bumpers & stops - Ref. 21-27		1
63	6675313	KIT	rear tube - Ref. 17, 20 & 28		1
63	6675314	KIT	weight adjustment indicator - Ref. 29-33		1
63	6675315	KIT	weight adjustment handle - Ref. 34-39		1
63	6675316	KIT	weight adjustment - Ref. 17, 20 & 40-44		1
63	6675318	KIT	RH recliner - Ref. 7, 8 & 45-54		1
63	6676034	KIT	LH recliner - Ref. 7, 8 & 45-54		1
63	6675308	KIT	suspension boot - Ref. 55-57		1
64	6900861	INSTRUCTIONS			1

Page 653 - OSS# 2071349 - All rights reserved by Bobcat Company - 12/01/2009 - 20:50:59 - Produced by Ken Cook Co. with mediaioff

SEAT BELT
(Three Point Retractable)

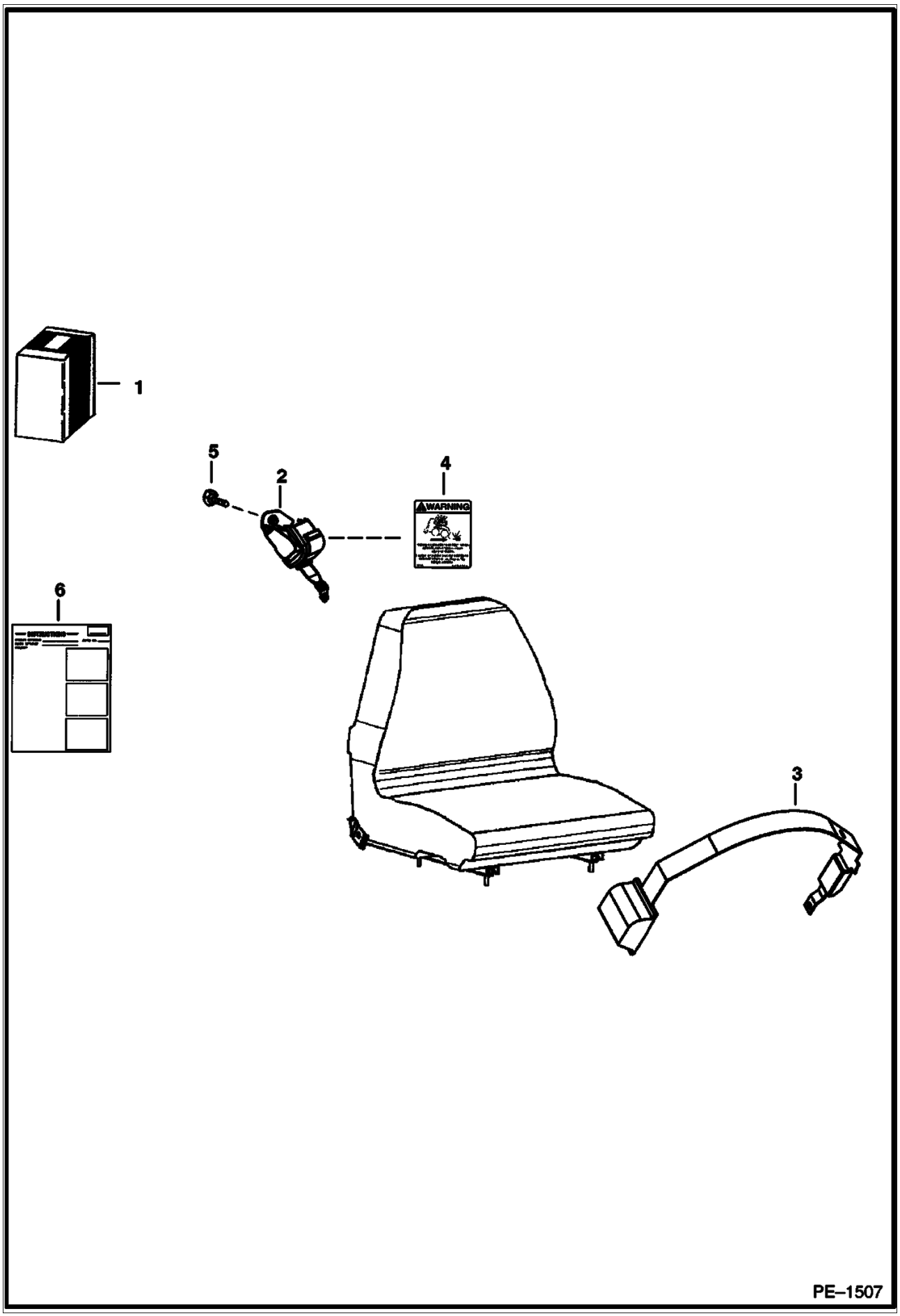

Page 654 - OSS# 2071349 - All rights reserved by Bobcat Company - 12/01/2009 - 20:50:59 - Produced by Ken Cook Co. with mediaioff

SEAT BELT (Cont'd)
(Three Point Retractable)

Ref No	Part Number	Description	Remarks	Serial Number	Qty
1	6732219	KIT	three point retractable seat belt - Use W/Sears brand suspension seats W/LH recliner lever - Was 6725168 [A]		1
2	6674407	SHOULDER BELT			1
3	6679308	SEAT BELT	Was 6674408 [A]		1
4	6725370	DECAL			1
5	53C612	BOLT	Was 35C612		1
6	6901010	INSTRUCTIONS			1

Page 655 - OSS# 2071349 - All rights reserved by Bobcat Company - 12/01/2009 - 20:50:59 - Produced by Ken Cook Co. with mediaioff

SEAT BELT
(3" Wide Retractable)

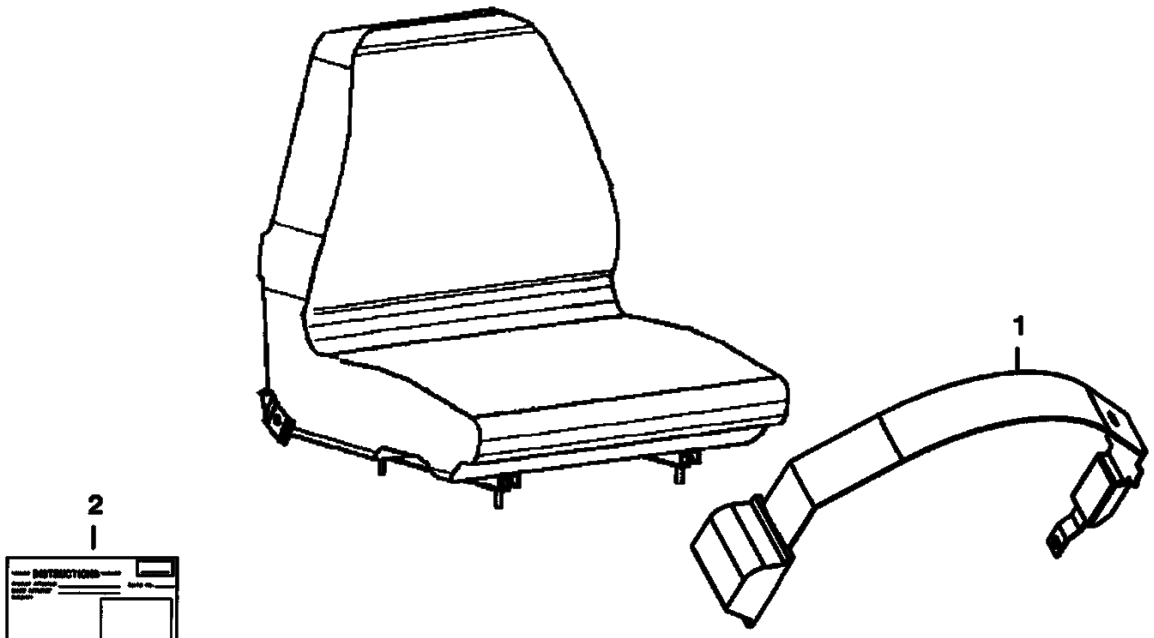

PE–1508

Page 656 - OSS# 2071349 - All rights reserved by Bobcat Company - 12/01/2009 - 20:50:59 - Produced by Ken Cook Co. with mediaioff

SEAT BELT (Cont'd)
(3" Wide Retractable)

Ref No	Part Number	Description	Remarks	Serial Number	Qty
1	6675562	SEAT BELT	3" wide retractable - Use W/Sears brand suspension seats W/LH recliner lever		1
2	6901011	INSTRUCTIONS			1

Page 657 - OSS# 2071349 - All rights reserved by Bobcat Company - 12/01/2009 - 20:50:59 - Produced by Ken Cook Co. with mediaioff

SEAT BELT
(3" Wide)

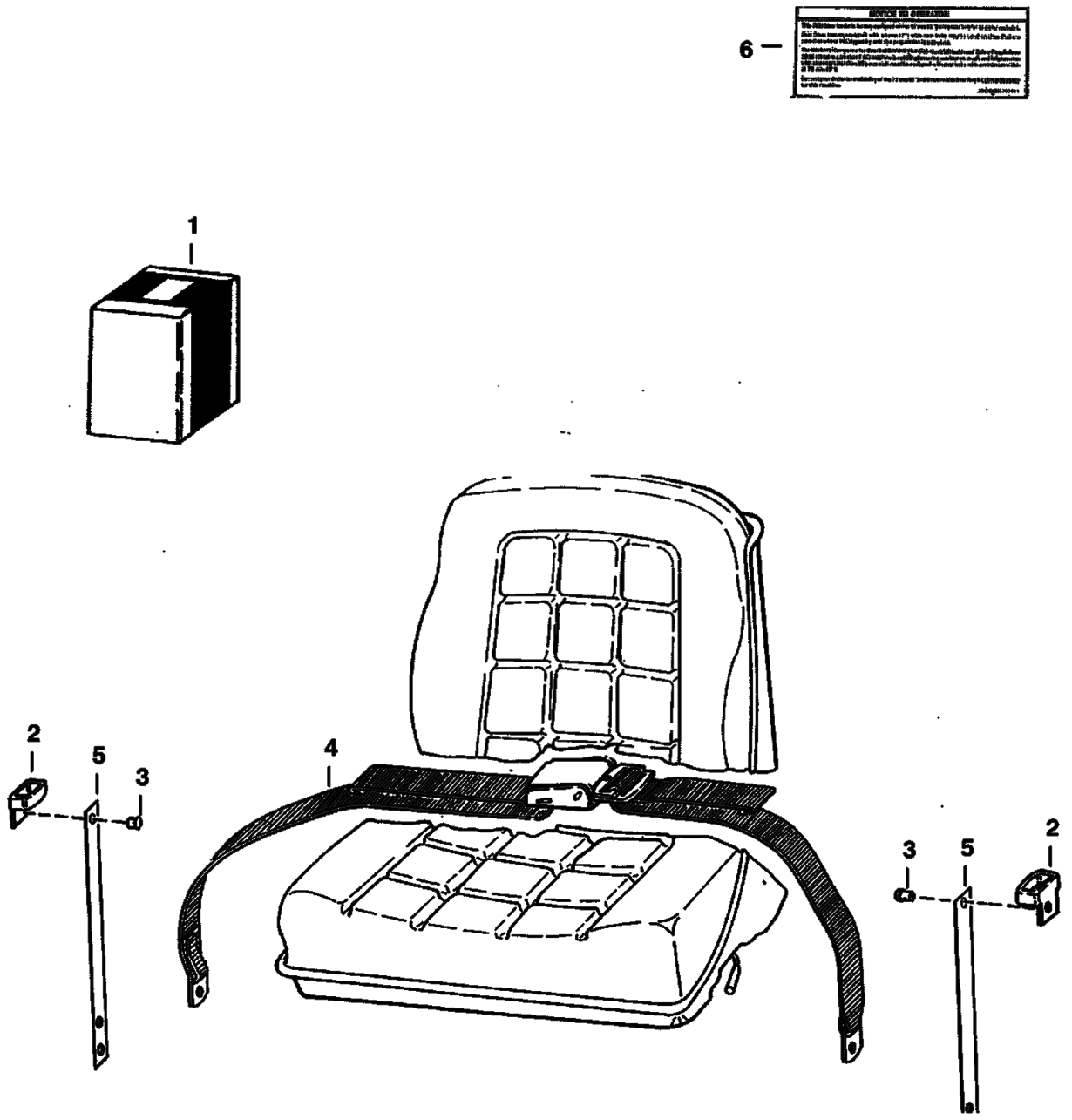

NOTE: Complies with British Columbia Industrial Health & Safety Regulations 26.16 (7) (a).

B-13601

Page 658 - OSS# 2071349 - All rights reserved by Bobcat Company - 12/01/2009 - 20:50:59 - Produced by Ken Cook Co. with mediaioff

SEAT BELT (Cont'd)
(3" Wide)

Ref No	Part Number	Description	Remarks	Serial Number	Qty
1	6703640	KIT	W/Ref. 2-6		1
2	6703703	GUIDE			2
3	6630207	RIVET	Was 6512797 [A]		4
4	6659999	BELT, SEAT			1
5	6711908	SPRING PLATE			2
6	6703641	DECAL			1

Page 659 - OSS# 2071349 - All rights reserved by Bobcat Company - 12/01/2009 - 20:50:59 - Produced by Ken Cook Co. with mediaioff

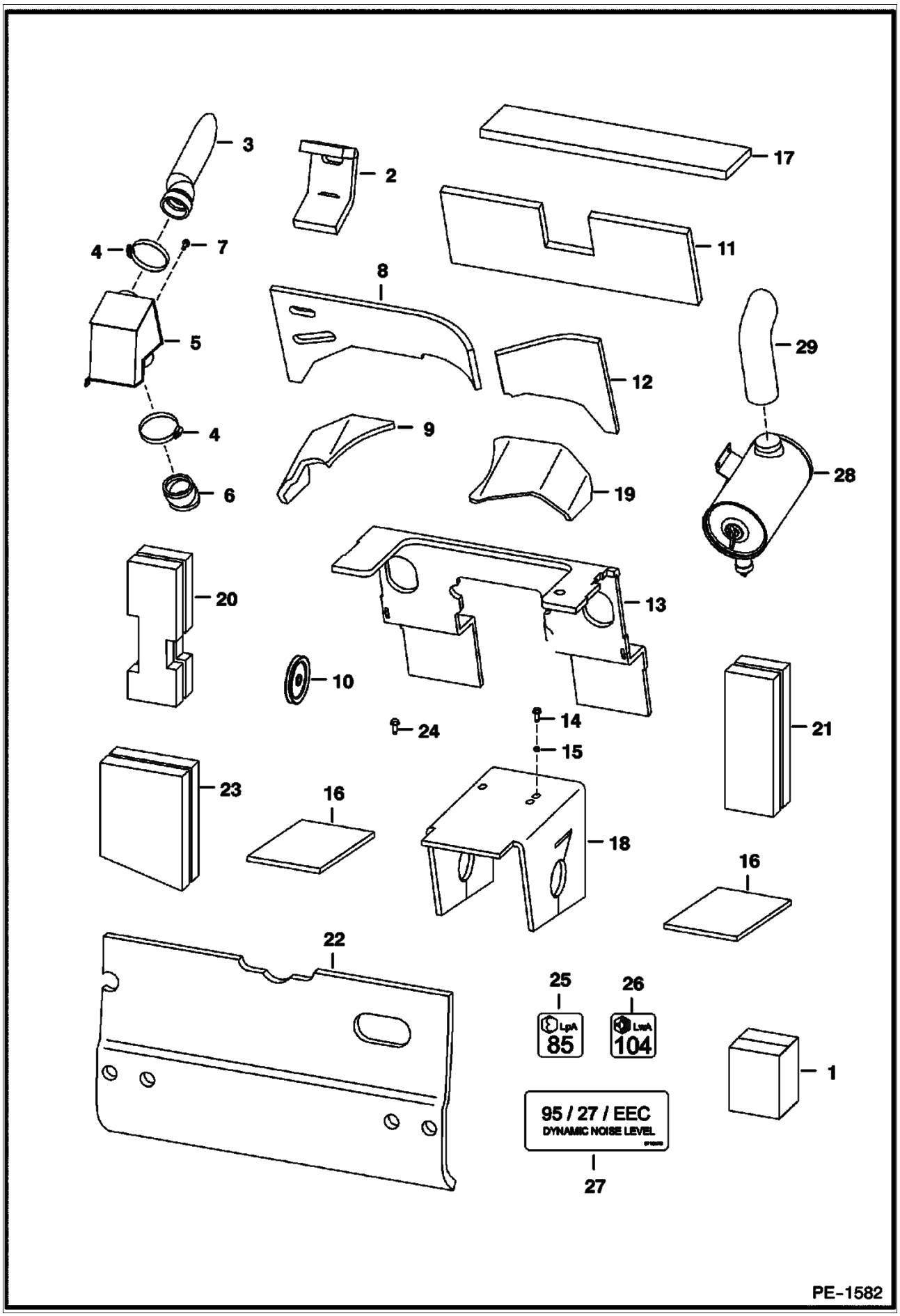

Page 660 - OSS# 2071349 - All rights reserved by Bobcat Company - 12/01/2009 - 20:50:59 - Produced by Ken Cook Co. with mediaioff

Ref No	Part Number	Description	Remarks	Serial Number	Qty
1	6725419	KIT			1
2	6703331	INSULATION	air inlet		1
3		HOSE	NAP - intake - Order Ref. 28 & 29 - Was 6719886 [A]		1
4	42H44	HOSECLAM5			2
5		MUFFLER	NAP - intake - Order 28 & 29 - Was 6719649 [A]		1
6		HOSE	NAP - air cleaner - Order Ref. 28 & 29 - Was 6728476 [A]		1
7	84G3112	BOLT 5			1
8	6719332	INSULATION	blower housing		1
9	6704769	INSULATION	blower housing		1
10	6712970	PULLEY	4.75" (120,7mm) O.D.		1
10	6712971	PULLEY	5.00" (127mm) O.D.		1
10	6703483	PULLEY, FAN DRIVE IDLER	5.25" (133,4 mm) OD - trubo eng		1
11	6732724	INSULATION	cross member - Was 6719409 [A]		1
12	6719333	INSULATION	blower housing		1
13	6719372	INSULATION	steering panel		1
14	84G3716	SCREW 5			2
15	6562619	BUSHING			2
16	6719330	INSULATION	pedal		2
17	6725361	INSULATION	cross member		1
18	6719331	INSULATION	transmission top		1
19	6719334	INSULATION	blower housing		1
20	6719327	INSULATION	fender - L.H.		1
21	6719328	INSULATION	fender - R.H.		1
22	6715106	INSULATION	rear door		1
23	6703968	INSULATION	transmission - Was 6719329 [A]		1
24	84G3712	BOLT			1
25	6579385	DECAL	noise level		1
26	6579404	DECAL	noise level		1
27	6715428	DECAL	dynamic level		1
28	6735285	AIR CLEANER			1
29	6735349	HOSE			1

Page 661 - OSS# 2071349 - All rights reserved by Bobcat Company - 12/01/2009 - 20:50:59 - Produced by Ken Cook Co. with mediaioff

SOUND OPTION

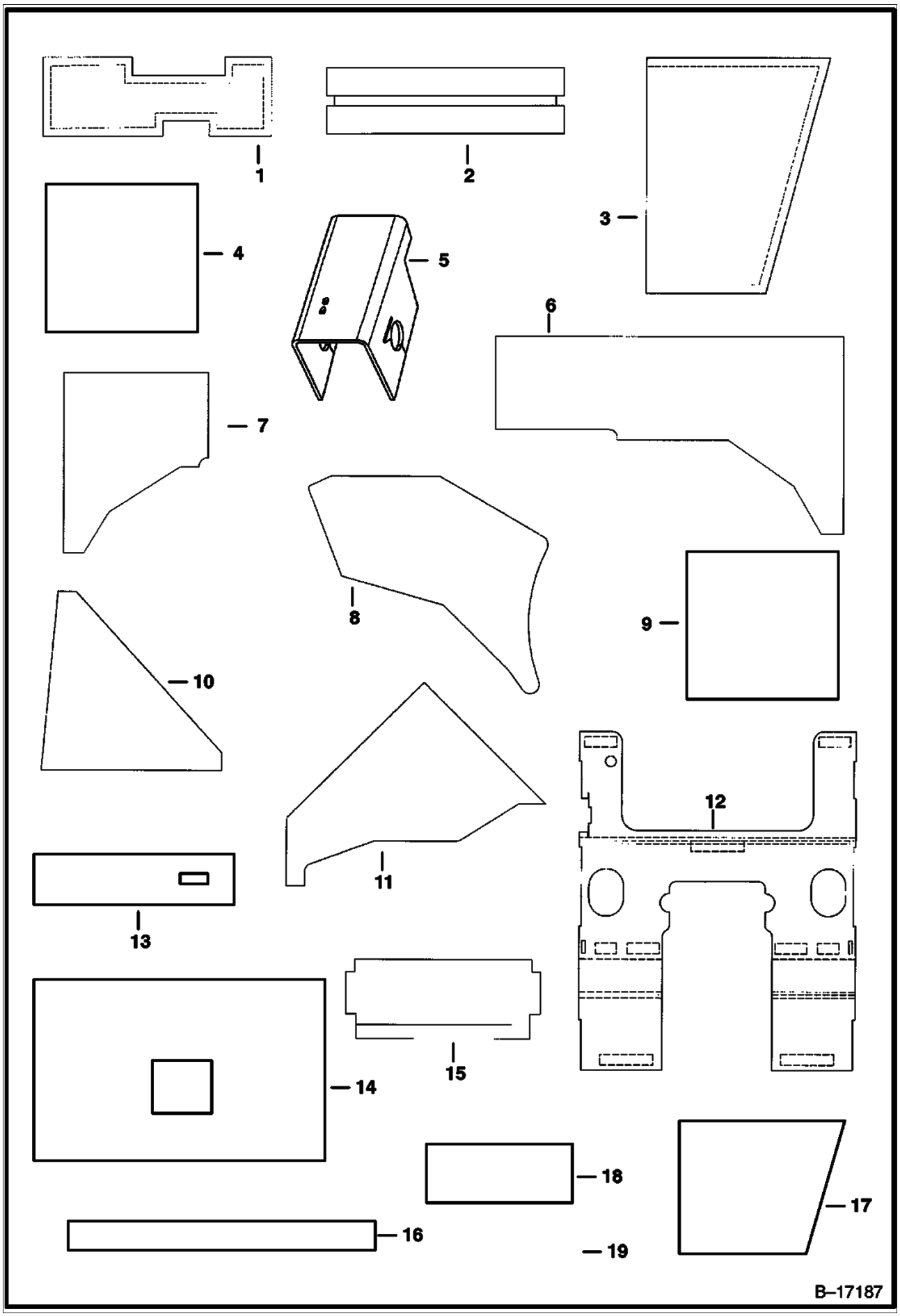

Page 662 - OSS# 2071349 - All rights reserved by Bobcat Company - 12/01/2009 - 20:50:59 - Produced by Ken Cook Co. with mediaioff

Ref No	Part Number	Description	Remarks	Serial Number	Qty
1	6719327	INSULATION	left fender		1
2	6719328	INSULATION	right fender		1
3	6703968	INSULATION	side transmission - Was 6719329 [A]		1
4	6719330	INSULATION	pedal		1
5	6719331	INSULATION	side transmission		1
6	6719332	INSULATION	blower housing		1
7	6719333	INSULATION	blower housing		1
8	6719334	INSULATION	blower housing		1
9		INSULATION	NAP - bottom right upright - Was 6719335 [A]		1
10		INSULATION	NAP - bottom left upright - Was 6719336 [A]		1
11		INSULATION	NAP - left rear tank - Was 6719337 [A]		1
12	6719372	INSULATION	steering panel		1
13	6719389	INSULATION	cab exchanger		1
14		INSULATION	NAP - crossmember - Order Ref. 18 & 19 - Was 6719409 [A]		1
15	6727299	INSULATION	cab back - Was 6719425 [A]		1
16		INSULATION	NAP - cab seal - Was 6719426 [A]		1
17		INSULATION	NAP - cab back right- Was 6719427 [A]		1
18	6725361	INSULATION	crossmember		1
19	6732724	INSULATION	crossmember - Was 6719409 [A]		1

Page 663 - OSS# 2071349 - All rights reserved by Bobcat Company - 12/01/2009 - 20:50:59 - Produced by Ken Cook Co. with mediaioff

SOUND REDUCTION HARDHAT

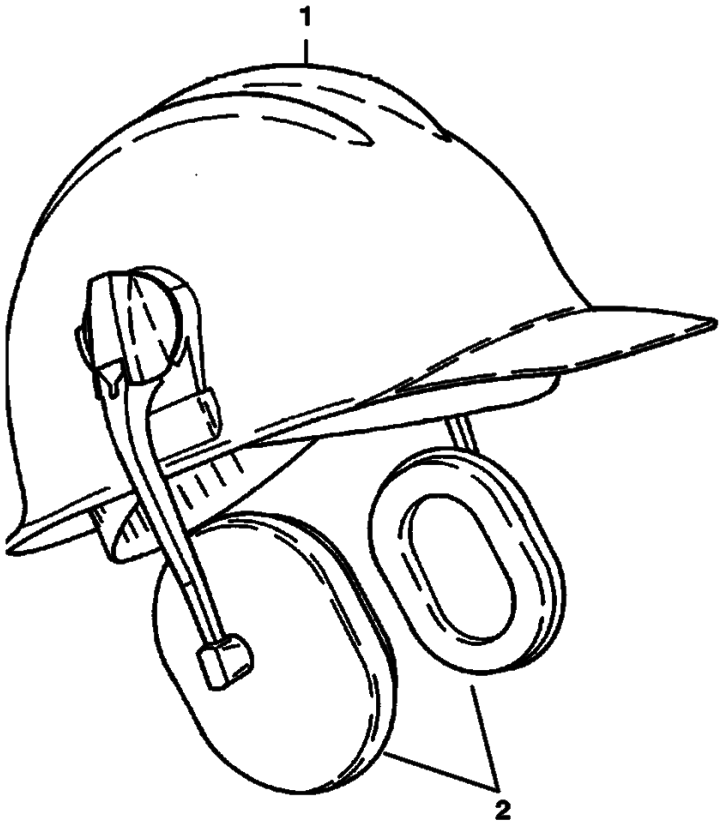

B–3111

Page 664 - OSS# 2071349 - All rights reserved by Bobcat Company - 12/01/2009 - 20:50:59 - Produced by Ken Cook Co. with mediaioff

Ref No	Part Number	Description	Remarks	Serial Number	Qty
1	6902390	HARD HAT WHITE	Was 6559552 [A]		1
2	6559775	EARMUFFS			1

Page 665 - OSS# 2071349 - All rights reserved by Bobcat Company - 12/01/2009 - 20:50:59 - Produced by Ken Cook Co. with mediaioff

STROBE LIGHT

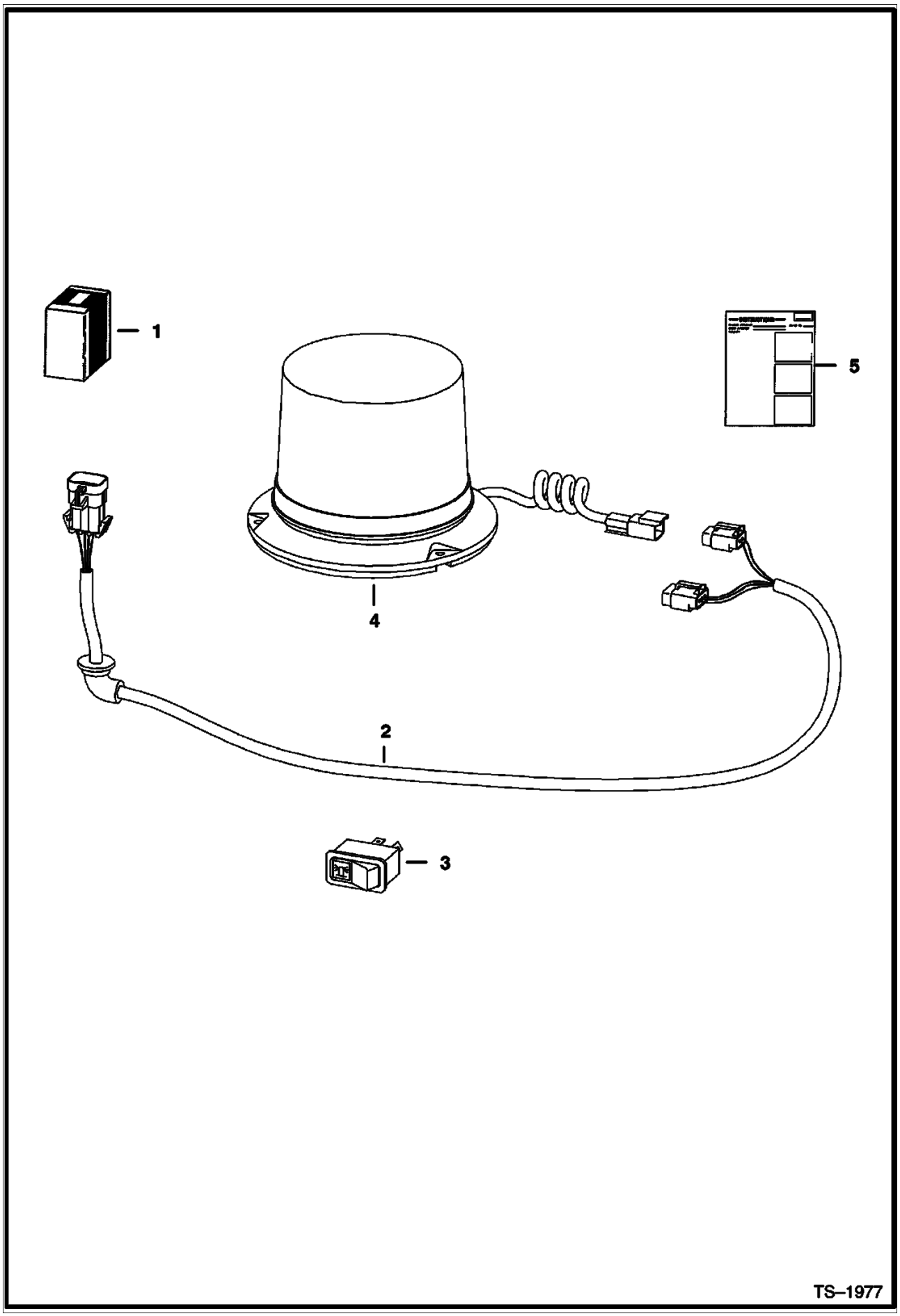

Page 666 - OSS# 2071349 - All rights reserved by Bobcat Company - 12/01/2009 - 20:50:59 - Produced by Ken Cook Co. with mediaioff

Ref No	Part Number	Description	Remarks	Serial Number	Qty
1	6719857	KIT	See Illustration ACCESSORIES HARNESS/ PE1557 - strobe light - if loader is not equipped W/deluxe cab option Also Order 6727468 harness		1
2	6718872	HARNESS			1
3	6665317	SWITCH	horizontal - not in kit		1
3	6668816	SWITCH	vertical		1
4	6675522	STROBE	4200 series light - Was 6697800 [A]		1
4	6675858	FLASH TUBES	round base bulb		1
4	6697796	FLASHTUBE	3 pin rectangular base bulb		1
4	6697797	AMBER LENS	Was 6665021 [A]		1
5	6900992	INSTRUCTIONS			1

Page 667 - OSS# 2071349 - All rights reserved by Bobcat Company - 12/01/2009 - 20:50:59 - Produced by Ken Cook Co. with mediaioff

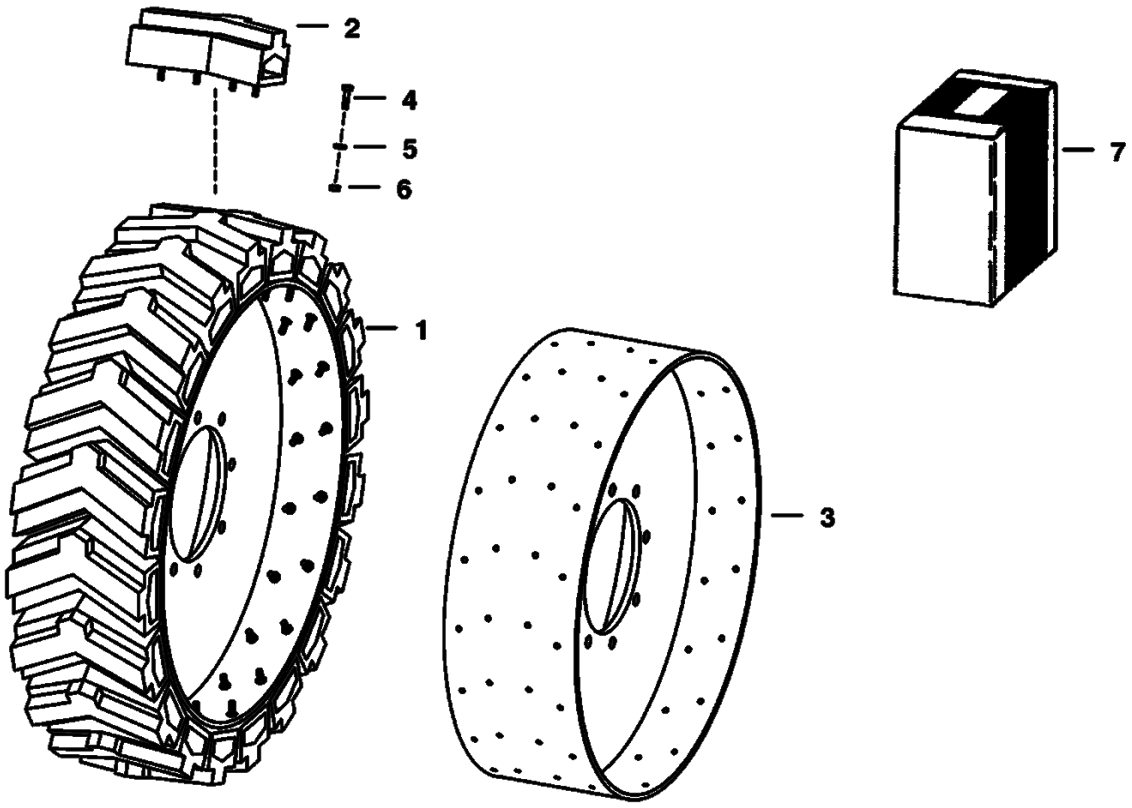

Page 668 - OSS# 2071349 - All rights reserved by Bobcat Company - 12/01/2009 - 20:50:59 - Produced by Ken Cook Co. with mediaioff

TIRES & RIMS (Cont'd)
(Solid Tire)

Ref No	Part Number	Description	Remarks	Serial Number	Qty
1		TIRE & RIM	NAP - Assy. - R.H. - 7.5 x 15 - Was 6664993 [A]		2
1		TIRE & RIM	NAP - Assy. - L.H. - 7.5 x 15 - Was 6664994 [A]		2
1	6674003	TIRE & RIM	Assy. - R.H. - 10 x 16.5		2
1	6674004	TIRE & RIM	Assy. - L.H. - 10 x 16.5		2
2		KIT	NAP - Box of (9) segments - 7.5 x 15 W/Ref. 4 - 6 (18) segments/tire - Was 6664995 [A]		x
2	6674007	KIT	Box of (10) segments - 10 x 16.5 W/Ref. 4 - 6 (20) segments/tire		x
3		RIM	NAP - R.H. - 7.5 x 15 - Order Ref. 1		2
3		RIM	NAP - L.H. - 7.5 x 15 - Order Ref. 1		2
3		RIM	NAP - R.H. - 10 x 16.5 - Order Ref. 1		2
3		RIM	NAP - L.H. - 10 x 16.5 - Order Ref. 1		2
4	1CM830	BOLT			x
5	25E15	WASHER			x
6	40DM8	NUT			x
7		KIT	NAP - wheel - Set of (4) 7.5 x 15 Tire & Rim Assys. - Ref. 1 - (2) R.H. & (2) L.H. - Was 6707172 [A]		1
7	6718298	KIT	wheel - Set of (4) 10 x 16.5 Tire & Rim Assys. - Ref. 1 - (2) R.H. & (2) L.H.		1

Page 669 - OSS# 2071349 - All rights reserved by Bobcat Company - 12/01/2009 - 20:50:59 - Produced by Ken Cook Co. with mediaioff

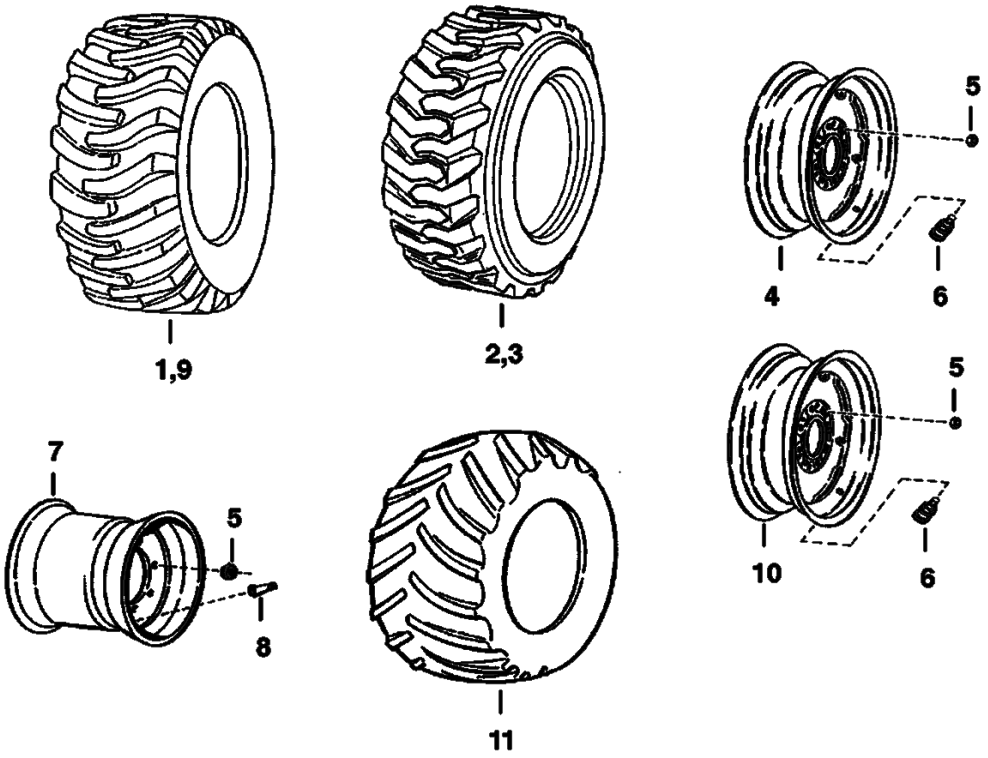

Page 670 - OSS# 2071349 - All rights reserved by Bobcat Company - 12/01/2009 - 20:50:59 - Produced by Ken Cook Co. with mediaioff

Ref No	Part Number	Description	Remarks	Serial Number	Qty
1	6550826	TIRE	10.00-16.5, 6 Ply Rating - General		4
1		TIRE	NAP - 10.00-16.5, 6 Ply Rating -Firestone - Order 6729896 - Was 6646601 [A]		4
1		TIRE	NAP - 10.00-16.5, 8 ply Rating - Dico Heavy Duty - Order 6667889		4
2		TIRE	NAP - 10.00 - 16.5 Galaxy - Order 6730106 Tire - Was 6677902 [A]	500K 11001 & Abv	4
2	6730106	TIRE	10.00 - 16.5 - 10 ply - Bobcat - severe duty		4
3		TIRE	NAP - Bobcat Brand - Was 6661287 [A]		4
3	7101734	TIRE, STANDARD DUTY - 10X16.5 - 8 PLY	Bobcat brand - Was 6729896 [A]		4
3	6729900	TIRE	Bobcat 10 x 16.5, 10 ply rating - heavy duty		4
3	7101735	TIRE, HEAVY DUTY - 10.00X16.5 - 10 PLY	Bobcat brand		4
4	6730771	RIM	See BTI197ldr Used W/Ref. 1, 3 & 12 - Was 6565239 [A]		4
4	6730772	RIM	See BTI197ldr Use W/Ref. 11 - Was 6565240 [A]		4
5	6564669	NUT	wheel		32
6	1614765	STEM	tubeless tire		4
7	6561095	RIM	See BTI197ldr Use W/Ref. 12 - Was 6658846 [A]		4
8	6591447	STEM	valve - Use W/Ref. 7		4
9		TIRE	NAP - 10 x 16.5 Bar Lug Flotation (Dico)		4
10	6730775	RIM	inverted - For 60" width - Use W/Ref. 3 - Was 6705109 [A]		4
11		TIRE	NAP - 31.5 -13 x 16.5 -10 ply - Galaxy - Order 6730107 Tire - Was 6729035 [A]	500K 11001 & Abv	4
11		TIRE	NAP - 31.5 - 13 - 16.5 - 10 ply - Bobcat brand - super float - Order 7105756 - 31.5 - 12 x 16.5 -10 ply - Bobcat brand - super float - Was 6730107 [A]		4
11		TIRE	NAP - 31-15, 8 Ply Rating - Terra Grip- Goodyear - Was 6513971 [A]		4
11		TIRE	NAP - 31-15.5, 8 Ply Rating - Ultra Tread Grip - Goodyear Brand - Was 6666668 [A]		4

Page 671 - OSS# 2071349 - All rights reserved by Bobcat Company - 12/01/2009 - 20:50:59 - Produced by Ken Cook Co. with mediaioff

WHITE DECAL KIT

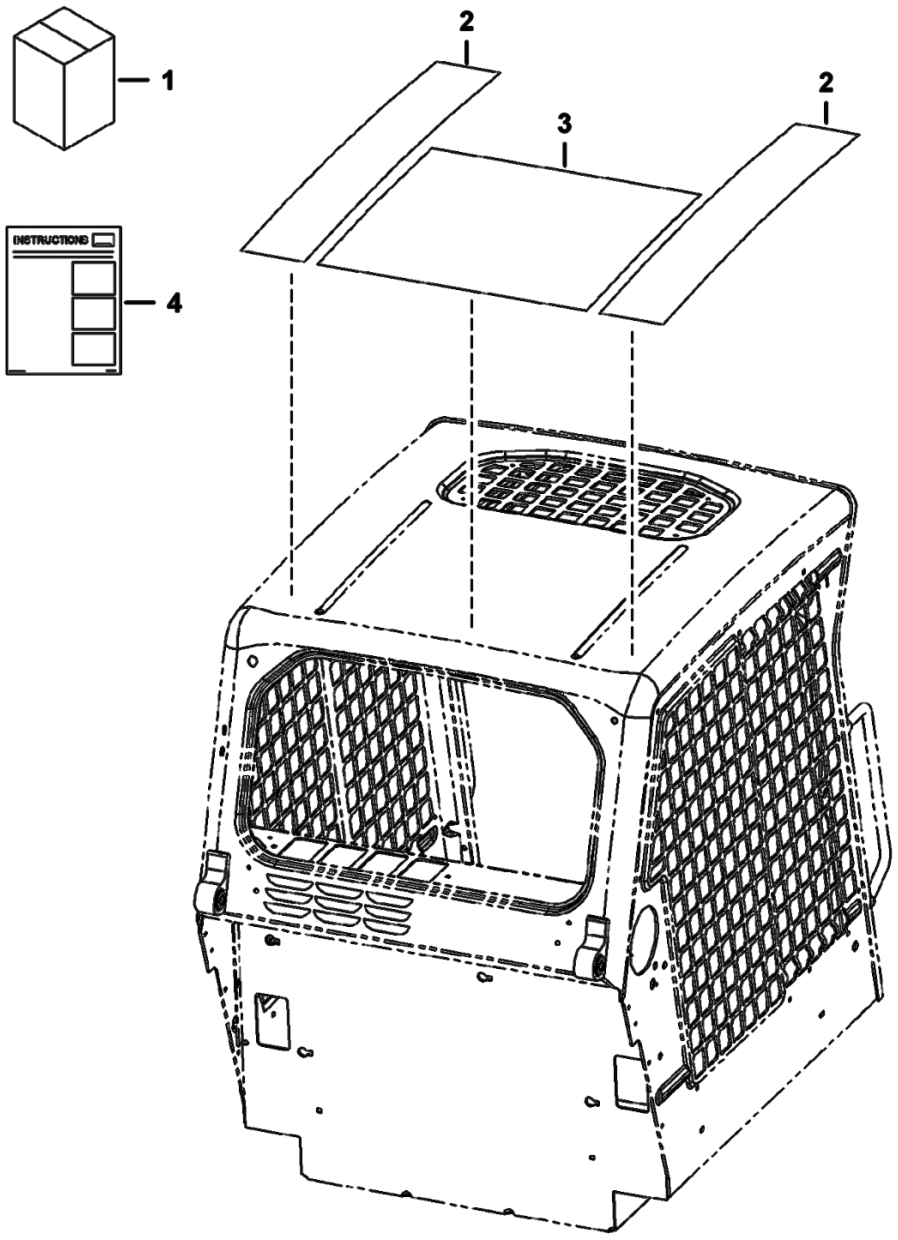

Page 672 - OSS# 2071349 - All rights reserved by Bobcat Company - 12/01/2009 - 20:50:59 - Produced by Ken Cook Co. with mediaioff

Ref No	Part Number	Description	Remarks	Serial Number	Qty
1	7140768	KIT	white decal - Ref. 2-4		1
2	7136678	DECAL	top side		2
3	7136679	DECAL	middle top		1
4	6986573	INSTRUCTIONS			1

Page 673 - OSS# 2071349 - All rights reserved by Bobcat Company - 12/01/2009 - 20:50:59 - Produced by Ken Cook Co. with mediaioff

BULK ITEMS
(SEE NOTE)

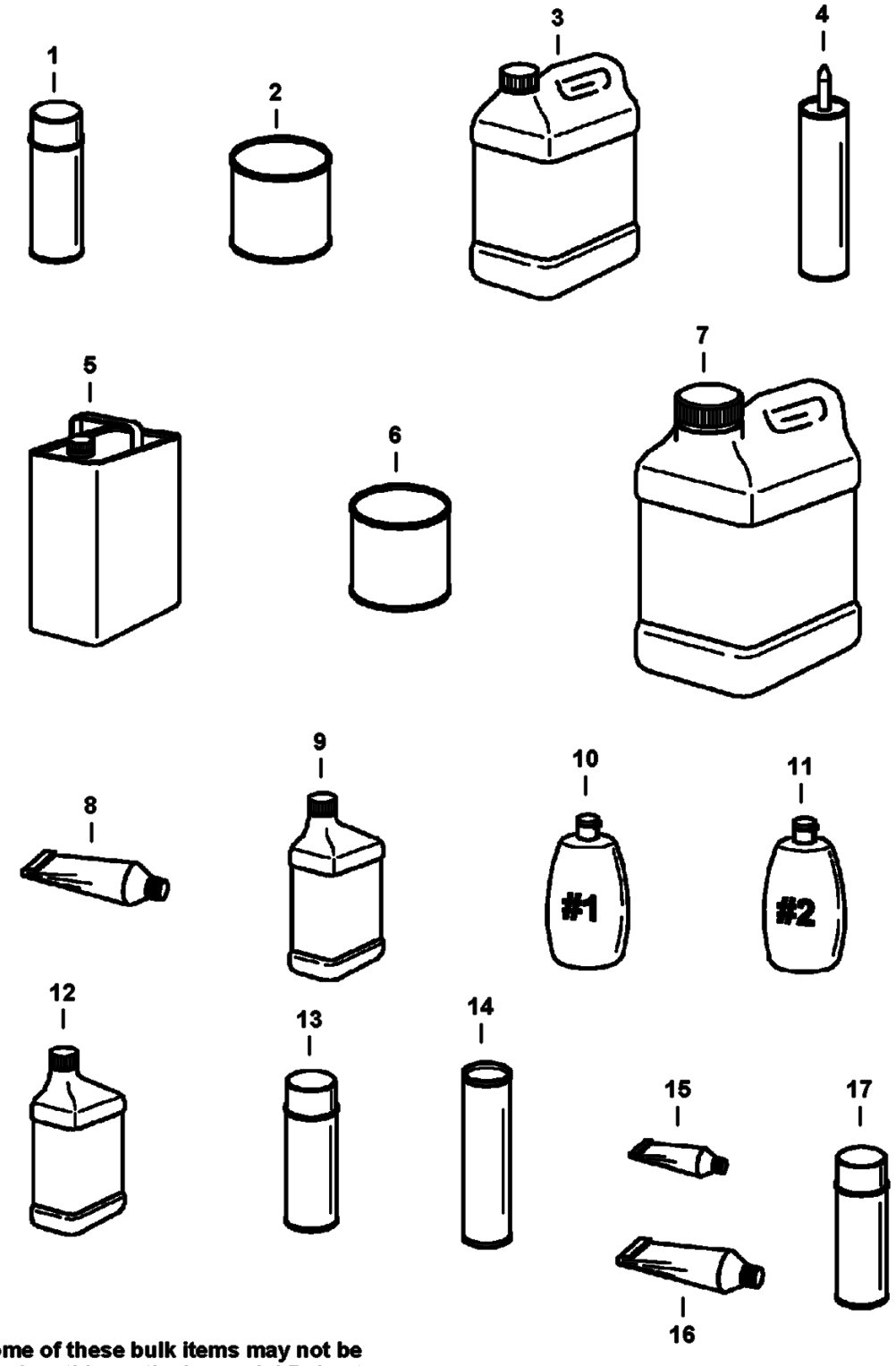

NOTE: Some of these bulk items may not be used on this particular model Bobcat.

NOTE: See Merchandising catalog for more products & information.

NOTE: Paint spray cans are packaged 6 per box.
Motor oil quarts are packaged 12 per box.
Motor oil 1 gal. jugs are packaged 6 per box.
Motor oil 2.5 gal. jugs are packaged 2 per box.

B-16415

Page 674 - OSS# 2071349 - All rights reserved by Bobcat Company - 12/01/2009 - 20:50:59 - Produced by Ken Cook Co. with mediaioff

BULK ITEMS (Cont'd)
(SEE NOTE)

Ref No	Part Number	Description	Remarks	Serial Number	Qty
1	6902228	PAINT, ORANGE SPRAY CAN 6	Was 6722783 [A]		x
1	6902229	PAINT, CHARCOAL SPRAY CAN 6	Was 6722786 [A]		x
1	6902230	PAINT, WHITE SPRAY CAN 6	Was 6722789 [A]		x
2		PAINT	NAP - orange - Gal. - Also order Ref. 5 - Was 6722781 [A]		x
2	6902233	PAINT, ORANGE QT 6	Was 6722782 [A]		x
2		PAINT	NAP - charcoal - Gal. - Also order Ref. 5 - Was 6722784 [A]		x
2	6902234	PAINT, CHARCOAL QT 6	Was 6722785 [A]		x
2		PAINT	NAP - white - Gal. - Also order Ref. 5 - Was 6722787 [A]		x
2	6902235	PAINT, WHITE QT 6	Was 6722788 [A]		x
3	6983128	ANTI-FREEZE PG 53/47 PREMIX GAL 6	Was 6724094 [A]		x
3	6983129	ANTI-FREEZE PG CONCENTRATE 6	Was 6724354 [A]		x
4	6633583	SEALANT	chaincase covers		x
5		REDUCER	NAP - Gal. - Was 6653517 [A]		x
6		PRIMER	NAP - Gal. - Was 6653518 [A]		x
6	6902232	PRIMER	spray can - 16 oz - Was 6657743 [A]		x
7	6903117	FLUID, OIL HYD 2.5 GAL 2	Was 6563328 [A]		x
7	6903118	FLUID, OIL HYD 5 GAL	Was 6722344 [A]		x
7	6903119	FLUID, OIL HYD 55 GAL	Was 6563330 [A]		x
8	6599360	SEALANT	electrical - tube - 3 oz		x
9	6903121	LUBE, GEAR 12	Was 6634393 [A]		x
10	6630188	POLISH	window - #1 - 8 oz		x
10		POLISH	NAP - window-1 (64 oz.) -Order 6630188 Polish - Was 6630190 [A]		x
11	6630189	POLISH	window - scratch remover - #2 - 8 oz		x
11		POLISH	NAP - window-2 (64 oz.) - scratch remover - Order 6630189 Polish - Was 6630191 [A]		x
12	6903109	OIL 30W QT. 12	Was 6657303 [A]		x
12	6903110	OIL, 30W GAL. 6	Was 6724559 [A]		x
12	6903111	OIL 30W 2.5 GAL 2	Was 6674206 [A]		x
12	6903107	OIL, 10W30 QT. 12	Was 6657301 [A]		x
12	6903108	OIL, 10W30 GAL. 6	Was 6724557 [A]		x
12	6903112	OIL, 10W30 2.5 GAL 2	Was 6674205 [A]		x
12	6903105	OIL, 15W40 QT. 12	Was 6657299 [A]		x
12	6903106	OIL, 15W40 GAL. 6	Was 6724558 [A]		x

Page 675 - OSS# 2071349 - All rights reserved by Bobcat Company - 12/01/2009 - 20:50:59 - Produced by Ken Cook Co. with mediaioff

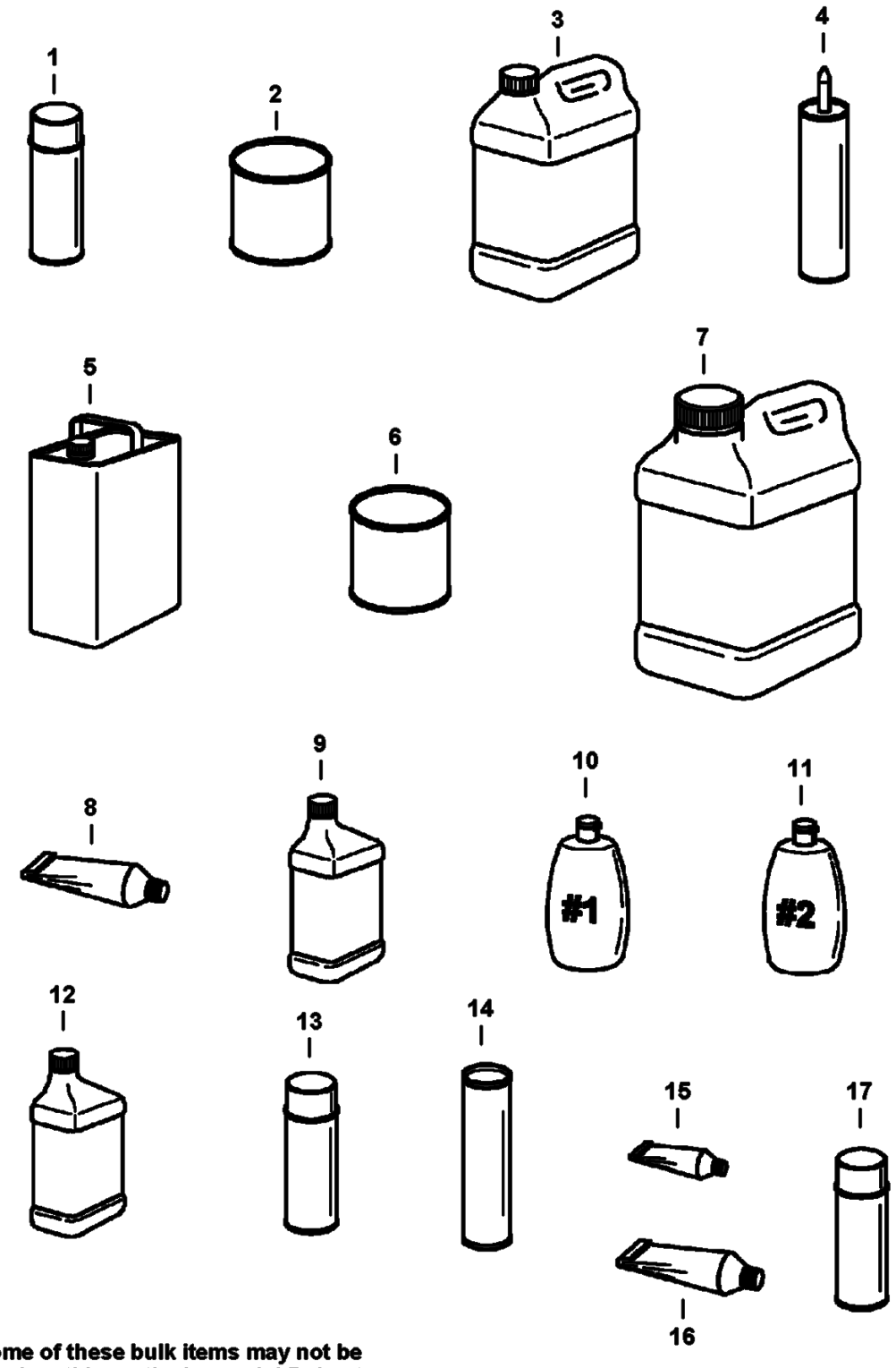

NOTE: Some of these bulk items may not be used on this particular model Bobcat.

NOTE: See Merchandising catalog for more products & information.

NOTE: Paint spray cans are packaged 6 per box.
Motor oil quarts are packaged 12 per box.
Motor oil 1 gal. jugs are packaged 6 per box.
Motor oil 2.5 gal. jugs are packaged 2 per box.

B-16415

Page 676 - OSS# 2071349 - All rights reserved by Bobcat Company - 12/01/2009 - 20:50:59 - Produced by Ken Cook Co. with mediaioff

BULK ITEMS (Cont'd)
(SEE NOTE)

Ref No	Part Number	Description	Remarks	Serial Number	Qty
12	6903113	OIL, 15W40 2.5 GAL. 2	Was 6674204 [A]		x
13	6652818	ADHESIVE	insulation - spray can		x
14	6903122	GREASE, MULTI PURPOSE #2 - 10	Was 6658266 [A]		x
14		GREASE	NAP - 14.5 oz. cartridge - For fan idler bearing & spring loaded drive idler - Was 6599719 [A]		x
15	6650407	ADHESIVE	tube - 1 oz		x
16	6650388	SEALANT	flange		x
17	6736644	PAINT	orange - spray can - .5 oz		x
17	6736641	PAINT	charcoal - spray can - .5 oz		x
17	6736642	PAINT	white - spray can - .5 oz		x
17	6736645	PAINT	red - spray can - .5 oz		x

Page 677 - OSS# 2071349 - All rights reserved by Bobcat Company - 12/01/2009 - 20:50:59 - Produced by Ken Cook Co. with mediaioff

Page 678 - OSS# 2071349 - All rights reserved by Bobcat Company - 12/01/2009 - 20:50:59 - Produced by Ken Cook Co. with mediaioff

Part No.	Description	Was	Code	Page
10C410	BOLT			496
10C416	BOLT			496
10C512	BOLT	37C000512B	B	456
10C616	BOLT 10			12
10H25	FITTING, GREASE 5			24, 28
10H35	GREASE ZERK			28, 180, 594, 598
10J13	BALL			280, 322, 372, 408
10J5	BALL			294, 340, 386, 424
10K7	TEE	10KN00007B	A	62, 466
10K8	TEE			156
11H15	GREASE FITTING			24, 90, 92, 594
11H15	GREASE FITTING	10H000035B	B	24, 90, 92, 594
11H25	FITTING10			598
12D10	NUT			222, 226, 542, 552
12D8	NUT			40
12H15	GREASE ZERK			26
12K6	UNION	12KN00006B	A	570
1306637	CLIP			94
1310706	FITTING HOSE			164
1313995	STUD			24
1316263	ADAPTER			150, 154, 156
1318565	COTTER PIN			532
1320075	COTTER PIN			584
13K5	TEE	13KN00005B	A	594, 600, 622
14J5032	PIN, STRAIGHT			28
1522534	SEAL			88, 90, 92
15EM180	WASHER			280
15JM48	KEY			308, 358, 400, 442
15KB1010	FITTING	15KV00007B	A	46, 50, 58, 62, 150, 151, 152, 156
15KB1212	ADAPTER			52, 56, 64, 68, 72, 76, 80, 170, 171, 172, 176, 594, 600, 620, 624
15KB1212	ADAPTER	6812646	A	52, 56, 64, 68, 72, 76, 80, 170, 171, 172, 176, 594, 600, 620, 624
15KB1212	ADAPTER	15KV00008B	A	52, 56, 64, 68, 72, 76, 80, 170, 171, 172, 176, 594, 600, 620, 624
15KB1212	ADAPTER	15KV00008B		52, 56, 64, 68, 72, 76, 80, 170, 171, 172, 176, 594, 600, 620, 624
15KB604	CONNECTOR			74, 78
15KB606	ADAPTER			70, 74, 78, 80, 166, 170, 594, 618, 620, 624
15KB606	ADAPTER	15KV00005B	A	70, 74, 78, 80, 166, 170, 594, 618, 620, 624
15KB612	ADAPTER			600
15KB808	CONNECTOR	15KN00006B	A	266
1612281	SPRINGNUT			506
1614765	STEM			660
16F2	PLUG			282, 328, 376, 412
16F8	PLUG			272
16KB1010	CONNECTOR	16KN00007B	A	150, 154
17C1016	SCREW			24
17C1056	BOLT			8
17C1080	SCREW			24
17C1272	BOLT			24
17C410	BOLT 10			214, 218, 456, 582
17C412	BOLT 5			39, 40, 41, 42, 43, 44, 218, 222, 228, 456
17C420	CAPSCREW			474, 482, 516, 518
17C428	BOLT			46, 58, 70

Code for disposition of old part number

A -- Use up
B -- Use on other application (See PNI)
C -- File PDR Report with Bobcat Parts Sales
D -- Part Number Error

Page 679 - OSS# 2071349 - All rights reserved by Bobcat Company - 12/01/2009 - 20:50:59 - Produced by Ken Cook Co. with mediaioff

Part No.	Description	Was	Code	Page
17C512	BOLT 5			30, 214, 218, 474, 480, 508, 570, 584
17C514	BOLT			234
17C516	BOLT			30, 516, 518, 592
17C520	BOLT 5			516, 518, 592
17C532	BOLT 5			532
17C540	BOLT	6716744	A	50, 54, 62, 66, 214, 218, 586
17C540	BOLT			50, 54, 62, 66, 214, 218, 586
17C556	BOLT			266
17C608	BOLT			234, 254, 256, 452
17C610	BOLT	17C000612B	B	30, 40, 176
17C610	BOLT			30, 40, 176
17C6116	BOLT			254
17C612	BOLT 5			10, 46, 70, 94, 180, 228, 256, 258, 476, 480, 532, 584
17C616	BOLT 5			46, 58, 148, 164, 170, 180, 234, 254, 544
17C616	BOLT 5	17C000612B	B	46, 58, 148, 164, 170, 180, 234, 254, 544
17C616	BOLT 5	8C616	B,D	46, 58, 148, 164, 170, 180, 234, 254, 544
17C620	BOLT			40, 50, 54, 58, 62, 66, 94, 166, 172, 182, 260, 272
17C620	BOLT	17C000612B	B	40, 50, 54, 58, 62, 66, 94, 166, 172, 182, 260, 272
17C624	BOLT 5			70, 94, 480
17C626	BOLT			180, 270
17C628	BOLT			46, 50, 54, 58, 62, 66, 480, 584
17C632	BOLT 5			584
17C636	BOLT			72, 76
17C640	BOLT 5			12, 24, 25, 26, 504, 506, 586
17C648	BOLT 5			24, 266, 594
17C656	BOLT			26
17C660	BOLT			24, 28
17C680	BOLT			180, 618
17C716	BOLT			10
17C816	BOLT			24
17C820	BOLT			18, 20, 40, 42
17C828	BOLT			260, 266
17C830	BOLT			266
17C832	BOLT			72
17KB1010	ELBOW			60, 64, 68, 148, 150, 154, 156, 158, 464, 466, 468
17KB1010	ELBOW	17KV00007B		60, 64, 68, 148, 150, 154, 156, 158, 464, 466, 468
17KB1010	ELBOW	17KV00007B	A	60, 64, 68, 148, 150, 154, 156, 158, 464, 466, 468
17KB1010	ELBOW	17KV-7	A	60, 64, 68, 148, 150, 154, 156, 158, 464, 466, 468
17KB1210	ELBOW	6714901	A	176
17KB1212	ELBOW	17KV00008B	A	166, 172, 174, 618, 620, 624
17KB1212	ELBOW			166, 172, 174, 618, 620, 624
17KB1212	ELBOW	17KV00008B		166, 172, 174, 618, 620, 624
17KB404	ELBOW			594, 598, 600
17KB404	ELBOW	17KV00003B	A	594, 598, 600
17KB604	ELBOW			74, 78, 618, 620, 624
17KB606	ELBOW			70, 74, 78, 148, 150, 154, 166, 170, 172, 550, 594, 595, 596, 598, 618, 620, 621, 622

Code for disposition of old part number

A -- Use up
B -- Use on other application (See PNI)
C -- File PDR Report with Bobcat Parts Sales
D -- Part Number Error

Page 680 - OSS# 2071349 - All rights reserved by Bobcat Company - 12/01/2009 - 20:50:59 - Produced by Ken Cook Co. with mediaioff

Part No.	Description	Was	Code	Page
17KB606	ELBOW	17KV00005B	B	70, 74, 78, 148, 150, 154, 166, 170, 172, 550, 594, 595, 596, 598, 618, 620, 621, 622
17KB606	ELBOW	17KV00005B		70, 74, 78, 148, 150, 154, 166, 170, 172, 550, 594, 595, 596, 598, 618, 620, 621, 622
17KB606	ELBOW	17KV00005B	A	70, 74, 78, 148, 150, 154, 166, 170, 172, 550, 594, 595, 596, 598, 618, 620, 621, 622
17KB810	ELBOW			46, 52, 56, 60, 64, 68, 464, 466, 468
18C1224	BOLT			35, 36
18C1636	BOLT			36
18EM1224	WASHER			476, 482, 490
18KB1212	ELBOW			618
18KB404	ELBOW	7109882		600
18KB606	ELBOW	7109881		600
19J12	CLAMP			166, 172
19KB604	TEE			74, 76
19KB606	TEE			74, 76
19KB610	TEE	19KB00610B	A	48, 60
19KB610	TEE			48, 60
1CM620	BOLT			474, 482
1CM630	BOLT			474, 482
1CM635	BOLT			482, 576, 580
1CM640	SCREW			474, 476, 482
1CM8100	SCREW			268
1CM818	BOLT	4CM818	A	296, 342, 388, 426
1CM818	BOLT			296, 342, 388, 426
1CM820	BOLT			180, 570
1CM830	BOLT			658
1CM835	BOLT			300, 346, 392, 430
1CM860	BOLT	1CM00870B	B	572
1CM865	SCREW			300, 346, 392, 430
1CM870	BOLT			266, 280, 322, 372, 408
1CM880	BOLT			280, 322, 372, 408
1CM890	BOLT			266
1CM895	BOLT			280, 322, 372, 408
1DM6	NUT			280, 308, 322, 358, 372, 400, 408, 442, 474, 482
1DM6	NUT	4DM6	A	280, 308, 322, 358, 372, 400, 408, 442, 474, 482
1DM8	NUT			308, 358, 400, 442
1EM60	WASHER			306, 356
1EM80	WASHER			308, 358
1K127	O-RING 10	93K127	A	98, 102, 108, 114, 118, 124, 130, 134, 138, 236
21G804	BOLT			548
21KB1010	TEE	21KN00007B	A	46, 50, 54, 58, 66
21KB606	TEE	21KV00005B	A	148, 150, 154, 166, 172, 550, 618, 630
21KB606	TEE			148, 150, 154, 166, 172, 550, 618, 630
21KB610	FITTING			58, 64, 68, 464, 466, 468
225855	SEAL, OIL			48, 52, 56, 60, 64, 68, 82, 84, 86
23G812	SCREW			40
24K3	PLUG			612, 614
25E10	WASHER			210
25E11	WASHER	27E000008B	B,D	532
25E13	WASHER 5			40, 42, 44, 130, 238, 242, 452, 456, 582
25E14	WSHR			496

Code for disposition of old part number
A -- Use up
B -- Use on other application (See PNI)
C -- File PDR Report with Bobcat Parts Sales
D -- Part Number Error

Page 681 - OSS# 2071349 - All rights reserved by Bobcat Company - 12/01/2009 - 20:50:59 - Produced by Ken Cook Co. with mediaioff

Part No.	Description	Was	Code	Page
25E15	WASHER			212, 218, 516, 518, 658
25E16	WSHR			474, 480, 516, 518
25E17	WASHER 5			182, 224, 228, 234, 532
25E18	WASHER			270
25E21	WASHER 5			266
25E25	WASHER 10			532
25E8	WSHR			40
25G512	SCREW	25G000510B	B	8, 14
25G512	SCREW			8, 14
25G520	SCREW			14
25G612	SCREW			526, 528
25GM8010	SCREW			286, 332
25GT410	SCREW			222, 226, 238, 552
25K20012	O RING 10			120, 136
25K20016	O RING 10			98, 102, 106, 114, 118, 122, 128, 134, 138
25K30110	O RING 10	54K30110	B	602, 604
25K30112	O-RING			28
25K30118	O RING 10			164, 170
25K30202	O RING 10			88, 90, 92
25K30210	O-RING	54K30210	B	82, 84, 86
25K30508	O-RING, 10			34
25K40108	O RING 10			28
25K40208	O RING 10	54K40208	B	88, 90, 92
25K40224	O RING 10	54K40224	B	82, 84, 86
25K60212	O RING 10	54K60212	B	82, 84, 86
27E10	WASHER			22
27E6	WASHER 5			46, 50, 54, 58, 62, 66
29CM612	BOLT			390, 428, 432
29CM820	SCREW			218, 266
29G412	BOLT			124, 128, 134, 138
29G416	BOLT			98, 102, 106, 112, 118, 122, 126, 127, 128, 134, 138
29G444	BOLT			98, 102, 106, 112, 118
2DM8	NUT	6680874	A	286, 304, 332, 354, 380, 416
2DM8	NUT			286, 304, 332, 354, 380, 416
2EM8	WASHER, PLAIN			280, 286, 288, 306, 322, 332, 334, 356, 372, 382, 408, 416, 418
2GM1035	BOLT			576
30G416	BOLT			98, 102, 108, 114, 124, 138
30H19	CLIP	30H000019B	B	456
30H21	CLAMP 10			546
30H22	CLIP			30
30H23	CLAMP			40
30H27	CLAMP			522
30H35	CLAMP 10			522
30H42	CLAMP			588
30H44	CLAMP			178
30H45	CLIP			56, 572
30H50	CLIP			576
30H60	CLIP			572, 574
30H62	CLIP			234, 452
30H64	CLAMP			570
30H85	CLAMP	31H000042B	B	594, 598
31C410	BOLT			542
31C420	BOLT 5			18

Code for disposition of old part number

A -- Use up
B -- Use on other application (See PNI)
C -- File PDR Report with Bobcat Parts Sales
D -- Part Number Error

Page 682 - OSS# 2071349 - All rights reserved by Bobcat Company - 12/01/2009 - 20:50:59 - Produced by Ken Cook Co. with mediaioff

Part No.	Description	Was	Code	Page
31C820	BOLT			6
31C824	BOLT 10			532, 584
31C836	BOLT			586
31H27	CLIP			32
31H38	CLAMP			270
31H46	CLAMP			576
35C1032	BOLT			34
35C408	BOLT			474
35C410	BOLT 5			456, 556, 560
35C412	BOLT			12, 546
35C508	BOLT			254
35C512	BOLT			528, 582
35C514	BOLT	17C514	B	452
35C516	BOLT 10			266, 496, 576
35C536	BOLT			60, 62, 66, 464, 466, 468
35C540	BOLT			72
35C612	BOLT			94, 180, 256, 258
35C616	BOLT 5			50, 54, 62, 66, 150, 154, 156, 214, 218, 594, 598
35C620	BOLT 5			212, 218, 262, 266, 576
35C624	BOLT			182, 578
35C688	BOLT			620, 624
36K5	CAP			50, 54, 62, 66, 166, 170, 178, 618, 622, 630
36K6	CAP			266
36K7	FITTING			46, 50, 54, 58
36K8	CAP			50, 54, 62, 66, 72
37C412	BOLT			546
37C424	BOLT			556, 560
37C512	BOLT			538, 556, 560, 588
37C612	BOLT			18
37C620	BOLT			94, 452
37C632	BOLT			506
37C644	BOLT			18
37C820	BOLT			18
37C888	BOLT			6
38C610	BOLT			269, 270
38C820	SCREW			260
38C824	SCREW			20
38C840	BOLT			19, 20
3966512	O RING			278, 308, 320, 358, 370, 400, 442
3966512	O RING	6686986	A	278, 308, 320, 358, 370, 400, 442
3966515	O RING			278, 280, 320, 322
3966516	O RING			276, 290, 320, 336
3966530	O RING			278, 280, 320, 322
3966602	O RING			284, 330
3974037	PIN			282, 328, 376, 412
3974038	O RING			276, 282, 318, 328, 370, 376, 381, 382, 412
3974095	MET-GASK			276, 282, 284, 304, 318, 328, 330, 352, 354, 370, 376, 396, 412, 414, 436, 438
3974192	BOLT			306, 356, 398, 440
3974260	SCREW			314, 364, 404, 446
3974267	STUD	6653946	A	298, 344, 390, 428
3974267	STUD			298, 344, 390, 428
3974366	BOLT			312, 362
3974368	GASKET			312, 362

Code for disposition of old part number

A -- Use up

B -- Use on other application (See PNI)

C -- File PDR Report with Bobcat Parts Sales

D -- Part Number Error

Page 683 - OSS# 2071349 - All rights reserved by Bobcat Company - 12/01/2009 - 20:50:59 - Produced by Ken Cook Co. with mediaioff

Part No.	Description	Was	Code	Page
3974381	SEAT			312, 362
3974382	SPRING			312, 362
3974383	SEAT			312, 362
3974384	SHIM			312, 362
3974385	TAPPETASY			312, 362
3974389	CAP, SEALING			282, 328, 376, 412
3974390	PLUG	6680639	A	282, 328, 376, 412
3974390	PLUG			282, 328, 376, 412
3974393	PIN			282, 328, 376, 412
3974394	PIN			282, 328, 376, 412
3974395	PIN			280, 282, 322, 328, 372, 376, 408, 412
3974402	PLUG			290, 336
3974425	NUT			396, 438
3974432	PLUG	6680665	A	288, 334, 382, 418
3974432	PLUG			288, 334, 382, 418
3974433	PLUG			288, 334
3974502	GASKET			276, 310, 320, 360
3974514	SPRING 5			286, 332, 380, 416
3974515	RETAINER			286, 332, 380, 416
3974518	CAP			286, 332, 380, 416
3974521	MOUNT			286, 332, 380, 416
3974524	WASHER			286, 332, 380, 416
3974546	KEY			292, 296, 338, 342, 384, 388, 422, 426
3974547	STOPPER			296, 342, 388, 426
3974547	STOPPER	6653843	A	296, 342, 388, 426
3974577	O RING			276, 292, 318, 338, 370, 384, 422
3974618	CIR-CLIP			294, 340, 386, 424
3974620	CIR-CLIP			294, 340, 386, 424
3974624	STOPPER			294, 340, 386, 424
3974626	SHIM	6682514	A	310, 360, 402, 444
3974626	SHIM			310, 360, 402, 444
3974627	STUD			300, 346
3974644	COLLAR			308, 358, 400, 442
3974658	SHAFT			306, 356
3974659	BOLT			306, 356
3974671	NUT			292, 338, 384, 422
3974677	PIPE	3974871	B,D	328
3974679	BAND			300, 324, 346, 378, 392, 430
3974787	RACK			312, 362
3974868	PIN			282, 328, 376, 412
3974871	CONNECTOR			282, 376
3974882	HOOK			288, 334, 382, 418
3974888	BOLT			280, 322, 372, 408
3974893	SEAT			280, 322, 372, 408
3974894	FLANGE			280, 322, 372, 408
3974920	SCREW			286, 332, 380, 416
3974923	NUT			284, 330, 414
3974924	PLATE			283, 284, 329, 330, 413, 414
3974925	PLATE			284, 330, 414
3974926	BREATHER			284, 330, 414
3974927	SHIELD			284, 330, 414
3974930	PIPE			284, 330
3974931	CLAMP			284, 330, 414
3974945	WASHER, THRUST			292, 338

Code for disposition of old part number

A -- Use up
B -- Use on other application (See PNI)
C -- File PDR Report with Bobcat Parts Sales
D -- Part Number Error

Page 684 - OSS# 2071349 - All rights reserved by Bobcat Company - 12/01/2009 - 20:50:59 - Produced by Ken Cook Co. with mediaioff

Part No.	Description	Was	Code	Page
3974970	BOLT			307, 308, 357, 358
3974971	NUT			308, 358, 400, 442
3974972	GASKET			308, 358, 400, 432, 442
3974975	IDLER			303, 304, 353, 354, 395, 396, 437, 438
3974978	NUT			304, 354, 396, 438
3974979	CAP			304, 354, 396, 438
3974988	PIPE			300, 346
3974991	BEARING			298, 344, 428
3974992	FLANGE			298, 344
3974996	COVER			294, 340
3975021	WASHER			292, 338
3975022	WASHER, THRUST			292, 338
3975337	COLLAR			292, 338, 384, 422
3975428	SCREW			312, 362, 402, 444
3975436	SCREW			284, 330, 378
3975436	SCREW	3974928B	A	284, 330, 378
3975441	GEAR			282, 328, 376, 412
3DM12	NUT			282, 328
40DM8	NUT			658
40K2	PLUG			300, 346, 430
40K6	PLUG			256, 258
42H10	HOSECLAM5			30
42H32	HS CLAMP5			30, 258
42H44	HOSECLAM5			540, 650
42H52	CLAMP			256, 258
42HL300	CLAMP	6598799		256, 258
42HL300	CLAMP	6598799	A	256, 258
42HL325	CLAMP	42H000032B	B	256
42HS4	CLAMP	6515575	B	30, 252
43C408	BOLT			236, 242
43C524	BOLT			142
43C532	BOLT			70, 142
43C610	BOLT	17C610	B	260
43C616	BOLT	35C000616B	B	212, 216
43C616	BOLT			212, 216
43C852	BOLT	43C000848B	B	266, 530
43C852	BOLT			266, 530
43DM8	NUT			216
44H48	CLAMP			576
45C620	BOLT			180
45G1006	BOLT			542
45K3	FITTING	45KV00003B	B	532
46D5	NUT			474, 480
47C1080	BOLT			26
47C1088	BOLT			26
47C820	BOLT			40, 42, 44
47C832	BOLT			266
47K10	PLUG			164, 170
47K8	PLUG			190, 196
4CM614	BOLT			436
4CM615	BOLT			402, 444
4CM616	BOLT			310, 360
4CM620	BOLT			280, 308, 322, 352, 358, 372, 400, 408, 442
4CM628	BOLT			306, 356

Code for disposition of old part number

A -- Use up
B -- Use on other application (See PNI)
C -- File PDR Report with Bobcat Parts Sales
D -- Part Number Error

Page 685 - OSS# 2071349 - All rights reserved by Bobcat Company - 12/01/2009 - 20:50:59 - Produced by Ken Cook Co. with mediaioff

Part No.	Description	Was	Code	Page
4CM635	BOLT	1CM00635B	A	474
4CM814	BOLT			294, 340
4CM816	BOLT			288, 290, 296, 334, 336, 342
4CM822	BOLT			300, 302, 310, 346, 348, 360, 392, 394, 402, 430, 432, 444
4CM825	BOLT			292, 338, 384, 422
4CM828	BOLT			292, 298, 338, 344, 384, 390, 422, 428
4D20	NUT			586
4DM10	NUT			212, 216
4DM5	NUT			212, 538
4DM8	NUT			250
4F6106	PIN			12
4FM18	PLUG			282, 328
4FM45	PLUG			282, 328
51DM12	NUT			476, 482, 490
5289686	PLUG			514
53C612	BOLT	35C612		644
53D10	NUT			8
53D6	NUT			8, 12
53DM10	NUT	2DM00010B	B	576
53DM8	NUT			268
54K20002	O'RING 10			100, 104, 108, 114, 120, 122, 128, 134, 138
54K20028	O RING 10			142
54K40116	O-RING			602, 604
55D6	NUT			18, 72, 76, 480
55K204	O RING 10			100, 104, 108, 114, 118, 124, 130, 134, 138, 142
55K212	O RING 10			100, 104, 108, 114, 120, 124, 130, 134, 138, 142
55K214	O-RING			600
57D5	NUT	61D000005B	B	60, 62, 66, 266, 456, 464, 466, 468
57D5	NUT			60, 62, 66, 266, 456, 464, 466, 468
57D6	NUT 5	59D000006B	B	94, 214, 506, 584
57D6	NUT 5			94, 214, 506, 584
57D8	NUT 10			18, 584
57G608	SCREW			556, 560
58K120	O-RING			224, 230, 234
58K124	O RING 10			98, 102, 108, 114, 118, 124, 130, 136, 140
58K132	O'RING			602, 604
58K14	O RING 10			98, 102, 106, 112, 118, 124, 128, 134, 138
58K17	O RING 10			98, 102, 106, 114, 118, 122, 128, 134, 138
58K214	O RING 10			166, 170
59D4	NUT 5	85D000004B	B	270, 496, 546
59D4	NUT 5			270, 496, 546
59D5	NUT 5			8, 50, 54, 62, 66, 212, 218, 476, 480, 516, 518, 556, 560
59D6	NUT			18, 20, 46, 50, 54, 58, 62, 66
59D8	NUT 5			8, 46, 50, 54, 58, 62, 66, 72, 76, 80
59G616	SCREW 10			456
5CM1080	SCREW			576
5CM812	BOLT			286, 332, 380, 416
5HM13	CLAMP			32
5HM14	CLAMP			32
5HM15	CLAMP			324
5HM20	CLAMP			164, 570, 572, 574

Code for disposition of old part number

A -- Use up
B -- Use on other application (See PNI)
C -- File PDR Report with Bobcat Parts Sales
D -- Part Number Error

Page 686 - OSS# 2071349 - All rights reserved by Bobcat Company - 12/01/2009 - 20:50:59 - Produced by Ken Cook Co. with mediaioff

Part No.	Description	Was	Code	Page
5HM24	CLAMP			30, 170
5HM29	HOSECLAMP	5HM00027B	A	148, 150, 154, 156
5HM42	HOSECLAMP			164, 170, 256, 258
5HM58	CLAMP			30
5JM14	SNAP RING			286, 332
5JM24	CIRCLIP			294, 340, 386, 424
614142	SLEEVE 10			546
616783	WASHER			218
619021	WASHER, 5			8, 28, 50, 54, 62, 66, 94, 180, 594, 598, 620, 624, 630, 640
61D4	NUT 5			212, 216, 224, 456, 474, 480, 481, 482, 516, 518
61D5	NUT			18, 20, 252, 256, 474, 482, 508
61D6	NUT 5			6, 18, 164, 170, 228, 254, 256, 258, 260, 452, 474, 504, 506
61D6	NUT 5	57D6	B	6, 18, 164, 170, 228, 254, 256, 258, 260, 452, 474, 504, 506
61D8	NUT 5			72
62D4	NUT			212, 216, 270
62D6	NUT 5			182, 532
63D8	NUT			586
6510171	LINK			34
6510470	RING GEAR			262
6511855	SEAL			254, 256
6512026	BUSHING			94
6513152	SEAL			472, 480, 558
6513495	COTTER PIN			94
6513532	POPPET			184, 186
6513533	SPRING			184, 186
6515131	TERMINAL			546
6515817	WASHER			8, 24
6516229	PISTON SEAL			82, 84, 86
6517516	LIGHT			546
6518200	GREASE ZERK			180
6519178	BUMPER			12
6531270	SLEEVE			98, 102, 108, 114, 118
6532127	BOOT			16, 224, 226, 238, 552
6532347	SPACER	6718816	A	22
6532453	RING			602, 604
6533898	DECAL			584
6534630	RESTRICTOR			134, 138
6535451	HOSE			70, 622, 626
6535882	HOSE			598
6536968	HEAD	6806332	A	82, 84, 86
6539645	SPACER			88
6542731	SAFETY TREAD			474, 480
654299	BEARING			190, 196
6544654	BUSHING			40, 42, 94
6550826	TIRE			659, 660
6552871	WASHER			36
6553411	BUSHING			30, 34, 40, 42, 44, 252
6553709	WASHER			8, 46, 50, 54, 58, 62, 66, 72, 76, 80
6554100	TREAD			508, 594
6554149	CORD			474, 496, 514
6554858	BALL JOINT			270

Code for disposition of old part number

A -- Use up

B -- Use on other application (See PNI)

C -- File PDR Report with Bobcat Parts Sales

D -- Part Number Error

Page 687 - OSS# 2071349 - All rights reserved by Bobcat Company - 12/01/2009 - 20:50:59 - Produced by Ken Cook Co. with mediaioff

Part No.	Description	Was	Code	Page
6555331	WIRE ROPE			496
6555341	SAFETY TREAD	6554100	B	598
6555351	SEAL			496
6557224	DECAL			510
6557291	BALL JOINT			270
6557493	GROMMET			638
6557831	WASHER			94, 180, 576
6557904	FLASHER			546
6558309	WIRE ROPE			508
6558310	SLEEVE			508
6559479	NUT			40
6559502	STUD			36
6559775	EARMUFFS			654
6560172	COVER			212, 216
6560573	DECAL			510
6560633	DAMPENER			8
6561095	RIM	6658846	A	660
6561218	SHUTTLE			184
6561383	DECAL			508
6562257	MOUNT			266
6562266	CLAMP			82
6562602	BUSHING			8
6562619	BUSHING			448, 540, 650
6563606	WASHER			36
6563914	WASHER			94, 180
6564343	SPACER			270
6564452	GRIP			20, 270
6564657	PIN			93, 94, 452
6564669	NUT			36, 660
6565170	CABLE			214, 216
6565170	CABLE	6713821	B,D	214, 216
6565200	DECAL	6709781	A	510
6565977	HOSE			574
6565990	DECAL			510
6567743	PIN			8, 254, 256, 548
6567827	ANGLE			584
6567838	PIN			584
6567962	WASHER			270
6568877	WASHER			266
6569203	CLAMP			212, 218, 516, 518
6569219	SCREEN			30
6570931	INSTRUCTIONS			448
6571536	PULLEY			244
6571851	SNAP RING			38
6571852	SNAP RING			38
6576028	HOSE			256, 258
6576033	WASHER			22, 260
6576195	LINK			180
6576196	MOUNT			180, 196
6576252	ROD			270
6576261	COVER	6734520	A	270
6576262	MOUNT			270
6576280	BOLT			212, 218, 516, 518
6576302	BAR			94

Code for disposition of old part number

A -- Use up
B -- Use on other application (See PNI)
C -- File PDR Report with Bobcat Parts Sales
D -- Part Number Error

Page 688 - OSS# 2071349 - All rights reserved by Bobcat Company - 12/01/2009 - 20:50:59 - Produced by Ken Cook Co. with mediaioff

Part No.	Description	Was	Code	Page
6577058	PIN			180
6577230	BRACKET			180
6577382	SPACER			254
6577456	KIT			244
6577545	GROMMET			456, 582
6577690	TUBE			100, 108, 114, 124, 130, 166, 167, 168, 170
6577754	DECAL			510
6577821	HOSE			32
6577822	HOSE			32, 254
6577880	KIT			447, 448
6577954	PIN			22
6577961	GROMMET			16, 94
6578139	LEVER			461, 462
6578140	LEVER			462
6578169	HOSE			32
6578172	HOSE			30, 170
6578209	TEE	6718250	A	166, 628
6578253	SPRING, COMPRESSION	6562018	A	28
6578268	BELLCRANK			270
6578278	PAD			30
6578284	SHIM			272
6578363	ROD END			212, 216
6578366	BALL JOINT			212, 216
6578368	DECAL			510
6578505	COVER			40
6578689	HUB			36
6578870	CLAMP	6726277	A	46, 58, 620, 624, 630
6578870	CLAMP			46, 58, 620, 624, 630
6579326	MOUNT			254, 256
6579385	DECAL			540, 650
6579404	DECAL			540, 650
6579509	DECAL			508
6579511	DECAL			510
6579528	DECAL			508
6579613	STOP			8
6579639	DECAL			508
6579641	HOUSING			272
658128	RING, SNAP			188, 189, 190, 196
6584978	CONDUIT			40, 42
6585860	SPRING			40
6586459	SEAL KIT			100, 108, 124, 130
6586542	HEAD			602, 604
6586543	PISTON			602, 604
6586918	SCREW			98, 102, 108, 114, 118
6587458	KEY			30
6587523	WASHER			98, 102, 108, 114, 118, 124, 134, 138
6587575	ADAPTER			98, 102, 108, 114, 118
6587580	SPRING			98, 102, 108, 114, 118, 124, 134, 138
6587763	BOOT			98, 102, 106, 112, 118, 122, 128, 134, 138, 242
6588074	SPOOL			98, 102, 106, 112, 118, 122, 128, 134, 138
6588781	END CAP			98, 102, 108, 114, 118, 124, 130, 136, 140
6589045	SPRING			138
6589226	BONNET			98, 102, 108, 114, 118

Code for disposition of old part number

A -- Use up

B -- Use on other application (See PNI)

C -- File PDR Report with Bobcat Parts Sales

D -- Part Number Error

Page 689 - OS$# 2071349 - All rights reserved by Bobcat Company - 12/01/2009 - 20:50:59 - Produced by Ken Cook Co. with mediaioff

Part No.	Description	Was	Code	Page
6589564	RETAINER			98, 102, 106, 112, 118, 122, 128, 134, 138
6589565	BUSHING			122, 128, 134, 138
6591447	STEM			660
6592098	WASHER			98, 102, 108, 114, 118
6592100	COLLAR			98, 102, 108, 114, 118, 124, 134, 138
6592105	BALL			98, 102, 108, 114, 118
6592107	SPRING			98, 102, 108, 114, 118
6592109	ADAPTER			98, 102, 108, 114, 118, 124, 134, 138
6592115	SEAT			98, 102, 106, 112, 118, 122, 128, 134, 138
6592116	NUT			98, 102, 106, 112, 118, 122, 128, 134, 138
6592117	SPRING			98, 102, 106, 112, 118, 122, 128, 134, 138
6592506	CLAMP			72, 76, 80, 594
6592720	PLUG			98, 102, 108, 114, 118, 124, 130, 136, 140
6592852	ORIFICE			570
6595663	BUSHING			98, 102, 108, 114, 118, 124, 130, 136, 140
6596332	SPRING			100, 104, 108, 114, 118, 124, 130, 134, 135, 136, 140
6596569	SEAT			100, 102, 108, 116, 124, 130, 138
6596807	PLUG			98, 102, 108, 114, 118
6597775	LEVER			222
6597776	LEVER			222
6598098	PIN			304, 354, 396, 438
6598099	KEY			294, 340, 386, 424
6598101	BALL BEARING			294, 340
6598102	VALVE			310, 360, 402, 444
6598116	PLUG	6652797	A	288, 334, 382, 418
6598116	PLUG			288, 334, 382, 418
6598136	GASKET, COVER VALVE			276, 284, 318, 330, 406, 414
6598142	GEAR			292, 338, 384, 422
6598146	PIPE			314, 364
6598155	PULLEY			298, 344
6598158	CIRCLIP	3975432B	A	294, 340, 386, 424
6598158	CIRCLIP			294, 340, 386, 424
6598174	LEVER			305, 306, 355, 356, 397, 398, 439, 440
6598176	LEVER			308, 358, 400, 442
6598179	COLLAR			294, 340, 386, 424
6598179	COLLAR	6655523	A	294, 340, 386, 424
6598187	PLUG			282, 328, 376, 412
6598275	BOLT	6652487	A	262
6598355	BOLT			306, 356
6598362	ELEMENT			2, 368
6598492	ELEMENT			2, 368
6598908	ELBOW	6681462	A	30
6599040	BAND, PIPE			324
6599360	SEALANT			664
6599365	KIT			206
6599645	PLUG, STEEL			34
6599741	WASHER			180
6599744	BALL JOINT			180, 532
6599931	ALARM			456
6610510	TIE			166, 170, 212, 213, 214, 218, 254, 476, 514, 552, 582
6610510	TIE	30H23	B	166, 170, 212, 213, 214, 218, 254, 476, 514, 552, 582

Code for disposition of old part number

A -- Use up

B -- Use on other application (See PNI)

C -- File PDR Report with Bobcat Parts Sales

D -- Part Number Error

Page 690 - OSS# 2071349 - All rights reserved by Bobcat Company - 12/01/2009 - 20:50:59 - Produced by Ken Cook Co. with mediaioff

Part No.	Description	Was	Code	Page
6624289	STRAP 10			46, 50, 54, 58, 62, 66, 72, 76, 80, 218, 452, 476, 482, 522, 526, 528, 570, 572, 574, 576, 594, 598
6624289	STRAP 10	6610510	B	46, 50, 54, 58, 62, 66, 72, 76, 80, 218, 452, 476, 482, 522, 526, 528, 570, 572, 574, 576, 594, 598
6626631	CLAMP			254
6628571	VALVE ASSY			70, 141, 142
6630184	THERMOSTAT			300, 346, 570
6630188	POLISH			664
6630189	POLISH			664
6630207	RIVET			10, 16, 648
6630207	RIVET	6512797	A	10, 16, 648
6630945	WASHER			270
6631067	SEAL, OIL			28
6631418	PIN			8, 12, 254, 256, 548
6631664	SEAL			292, 338, 384, 406, 422
6631928	SHAFT			478
6632218	CONE, BEARING			38
6632279	KIT, SEAL			100, 104, 108, 116, 120, 124, 130, 136, 140
6632323	WASHER			244
6632417	BEARING			248
6632418	BEARING			248
6632419	HOUSING ASSY.			248
6632420	BRUSH HOLDER			248
6632421	SPRING			248
6632428	PINION			248
6632429	RETAINER			248
6632430	ROLLER			248
6632432	PLUNGER			248
6632433	GASKET			248
6632434	COVER			248
6632436	SPRING			248
6632441	SPRING			248
6632541	RACE			38
6633583	SEALANT			264, 664
6640690	PIN			220, 222, 226, 228, 238, 552, 554
6640692	CONNECTOR			220, 224, 226, 228, 238, 552, 554
6640694	LOCK			220, 224, 226, 228, 238, 552, 554
6640699	CONNECTOR			224, 226, 238, 478, 552, 556, 560
6640700	LOCK			224, 226, 238, 552
6640728	BOLT			350
6641176	SEAL			220, 222, 226, 228, 238, 552, 554
6641179	CONNECTOR			220, 224, 226, 238, 470, 552
6641180	LOCK			220, 224, 226, 238, 470, 552
6641231	PLATE, CONTROL SPEED			308, 358, 400, 442
6645080	O-RING			196
6645081	O-RING			190
6645086	PLUG			190, 196
6646383	CONNECTOR			214, 218
6646582	PLUG			226, 228, 238, 552, 554
6646627	BEARING			272
6646678	CAP			252
6646705	SEAL			254, 256

Code for disposition of old part number

A -- Use up

B -- Use on other application (See PNI)

C -- File PDR Report with Bobcat Parts Sales

D -- Part Number Error

Page 691 - OSS# 2071349 - All rights reserved by Bobcat Company - 12/01/2009 - 20:50:59 - Produced by Ken Cook Co. with mediaioff

Part No.	Description	Was	Code	Page
6646781	SWITCH			456
6647777	PIN			470
6647778	CAP			470
6647783	LOAD CHECK			470
6647784	PLUG			470
6647785	SPRING			470
6647786	SEAL KIT			470
6648293	SCREW			470
6648294	SPRING			470
6648307	CONNECTOR			228, 554, 576
6648308	CONNECTOR			576
6648330	TERMINAL	6632946	A	214, 218
6648348	PLUG			16
6649244	STUD			254, 256, 474, 480
6649245	RETAINER			474, 480
6649300	SEAL			292, 338
6649481	LIGHT, WEDGE BASE			588
6649483	STRIKER BOLT	6654170		482
6649536	PLUG			300, 346, 392, 430
6649551	SHOCK			182
6649949	PLUG			514
6650239	SCREEN, FUEL PICKUP			30
6650388	SEALANT			666
6650407	ADHESIVE			254, 666
6650627	PLATE			190, 196
6650629	PIN			190, 196
6650630	RETAINER			190, 196
6650634	GASKET			190, 196
6650635	BEARING			190, 196, 197, 198
6650636	PIN			190, 196
6650637	BOLT			190, 196
6650646	O-RING			190
6650647	O-RING			190
6650648	PLUG			190
6650652	POPPET			190
6650668	BOLT			190, 196
6650675	COUPLER			190
6651482	MANIFOLD, EXHAUST			301, 302
6651489	COVER			300, 346, 392, 430
6651542	BALL			184, 186
6651709	SEAL			26, 28
6651934	BOLT			294, 340, 386, 424
6652018	BOLT			196
6652574	PLUG			282, 328, 376, 412
6652575	PLUG			282, 328, 376, 412
6652580	BOLT			298, 304, 344, 352, 354, 390, 396, 428, 436, 438
6652592	PIN	6680774	D	280, 322, 372, 408
6652592	PIN			280, 322, 372, 408
6652624	JOINT			284, 330, 414
6652633	BALL			292, 338, 384, 388, 422, 426
6652652	SPRING			280, 322, 372, 408

Code for disposition of old part number

A -- Use up
B -- Use on other application (See PNI)
C -- File PDR Report with Bobcat Parts Sales
D -- Part Number Error

Page 692 - OSS# 2071349 - All rights reserved by Bobcat Company - 12/01/2009 - 20:50:59 - Produced by Ken Cook Co. with mediaioff

Part No.	Description	Was	Code	Page
6652653	PLUG			284, 330, 378, 414
6652670	STUD			288, 302, 310, 334, 348, 360, 382, 392, 394, 402, 418, 430, 432, 444
6652688	CLAMP			314, 364, 404, 446
6652689	CLAMP			314, 364
6652762	BOLT			298, 344
6652764	STUD			280, 308, 322, 358, 372, 400, 408, 442
6652792	NUT			286, 288, 298, 300, 302, 310, 332, 334, 344, 346, 348, 350, 360, 382, 390, 392, 402, 416, 418, 428, 430, 434, 444
6652818	ADHESIVE			666
6652918	NUT			266, 530
6653484	VALVE			632
6653485	SEAL KIT			632
6653487	SEAL KIT			632
6653490	PLUG			632
6653562	GASKET			300, 346, 392, 430
6653702	SEAL, OIL			272
6653757	SNAP RING			272
6653758	SNAP RING			272
6653798	BOLT			290, 336
6653807	BOLT			280, 322, 372, 408
6653808	BOLT			280, 322, 372, 408
6653809	CONNECTOR			280, 372
6653821	BOLT			292, 338, 384, 422
6653830	SEAL, STEM VALVE			276, 286, 318, 332, 370, 380, 416
6653832	STUD			286, 332, 416
6653833	SPRING			286, 332, 380, 416
6653839	SCREW			296, 342
6653840	GEAR			388, 426
6653859	SLEEVE	6684807	A	292, 338, 384, 422
6653859	SLEEVE			292, 338, 384, 422
6653861	SLINGER, OIL			292, 338, 384, 422
6653865	WASHER, THRUST			292, 338
6653888	NUT			376, 412
6653894	SLEEVE			312, 362
6653905	CAP			308, 358, 400, 442
6653906	BOLT ASSY.			304, 354, 396, 438
6653916	HOLDER	3974661B	A	306, 356, 398, 440
6653916	HOLDER	6684834	A	306, 356, 398, 440
6653944	IMPELLER			298, 344
6653945	SET SEAL			298, 344
6653948	THERMOSTAT			300, 346
6654002	WASHER, THRUST			292, 338
6654003	WASHER, THRUST			292, 338
6654057	HOSE			164
6654117	SEAL, OIL			48, 52, 56, 60, 64, 68, 82, 84, 86
6654139	MOULDING			222, 226, 234, 266
6654374	KEY			30
6654718	CLAMP	6680795	A	314, 364, 404, 446
6654718	CLAMP			314, 364, 404, 446
6654806	FUSE, 15A			214, 218
6655151	PAN, OIL			289, 290, 335, 336, 373, 374, 419, 420
6655152	HOOK			287, 288, 333, 334
6655153	HEAD			288

Code for disposition of old part number

A -- Use up
B -- Use on other application (See PNI)
C -- File PDR Report with Bobcat Parts Sales
D -- Part Number Error

Page 693 - OSS# 2071349 - All rights reserved by Bobcat Company - 12/01/2009 - 20:50:59 - Produced by Ken Cook Co. with mediaioff

Part No.	Description	Was	Code	Page
6655154	GUIDE			288, 334, 382, 418
6655155	SEAT			380, 416, 417, 418
6655156	SEAT			380, 416, 418
6655158	BOLT			288, 334, 382, 418
6655159	GASKET			276, 288, 370, 382
6655160	PLUG			288, 334, 382, 418
6655161	WASHER			288, 334, 382, 418
6655162	O-RING			278, 280, 320, 322
6655163	CASE			292
6655164	BOLT			292, 338
6655166	COVER	6685515	A	292, 338, 384, 422
6655166	COVER			292, 338, 384, 422
6655168	CASE			292
6655169	CASE			292
6655170	CASE			292
6655171	MANIFOLD			302
6655173	VALVE			285, 286, 331, 332, 379, 380, 415, 416
6655174	VALVE			286, 380, 416
6655175	COVER			284, 330, 414
6655176	PUSHROD			296, 342, 388, 426
6655179	PIN, PISTON ENG			292, 338, 384, 422
6655180	CIR-CLIP	6684805	A	292, 338, 422
6655180	CIR-CLIP			292, 338, 422
6655181	ROD, CONNECTING			292, 338, 384, 422
6655183	BEARING			292, 338, 384, 422
6655184	CRANKSHAFT			292, 338
6655185	BEARING			292, 338
6655186	BEARING			292, 338
6655190	COLLAR			296, 342
6655191	COLLAR			296, 342
6655192	CIR-CLIP			296, 342
6655193	SHAFT			296, 342
6655194	SCREEN, OIL	6653568	A	290, 336, 374, 420
6655194	SCREEN, OIL			290, 336, 374, 420
6655195	BOLT			282, 328, 376, 412
6655198	PIPE			314, 364
6655201	ELEMENT			312, 362
6655202	VALVE			312, 362
6655203	SPRING			312, 362
6655204	HOLDER			312, 362
6655205	PLATE ASSY.			312, 362
6655206	BOLT			312, 362
6655207	PLATE			312, 362
6655209	PLATE			312, 362
6655210	SHIM			310, 360, 402, 444
6655211	CAMSHAFT			293, 294, 339, 340, 385, 386, 423, 424
6655212	GEAR			294, 340, 386, 424
6655213	SLEEVE			294, 340, 386, 424
6655214	CASE			294, 340, 386, 424
6655215	BALL			294, 340, 386, 424
6655216	FUEL PUMP			30, 310, 360, 402, 444
6655218	GASKET			276, 314, 316, 318, 364, 366, 370, 404, 406, 446
6655219	PIPE			314, 404
6655220	PIPE			314, 404

Code for disposition of old part number

A -- Use up
B -- Use on other application (See PNI)
C -- File PDR Report with Bobcat Parts Sales
D -- Part Number Error

Page 694 - OSS# 2071349 - All rights reserved by Bobcat Company - 12/01/2009 - 20:50:59 - Produced by Ken Cook Co. with mediaioff

Part No.	Description	Was	Code	Page
6655221	PIPE			314, 404
6655222	PIPE			314, 404
6655223	NUT			308, 358, 400, 442
6655224	LEVER			398
6655225	SPRING			306, 356, 398, 440
6655227	SPRING			306, 356, 398, 440
6655228	STOPPER			308, 358, 400, 442
6655230	COVER			304, 354
6655231	SHAFT			304, 354, 396, 438
6655232	LEVER			304, 354, 396, 438
6655233	GLOW PLUG			314, 364, 404, 446
6655234	CORD	6686987	A	314, 364, 404, 446
6655235	PULLEY			292, 338, 384, 422
6655236	BEARING			292, 338, 384, 422
6655237	BEARING			292, 338, 384, 422
6655238	BEARING			292, 338
6655239	BEARING			292, 338
6655240	BEARING			292, 338
6655241	BEARING			292, 338
6655242	BUSHING			296, 342, 388, 426
6655243	BUSHING			292, 338, 384, 422
6655399	BUMPER	6714454	B,D	18, 20
6655399	BUMPER			18, 20
6655427	CAMSHAFT			296, 388
6655498	BOLT			292, 338, 384, 422
6655515	JOINT			310, 360, 402, 444
6655518	O-RING			312, 362
6655540	COVER			396, 438
6655781	BEARING			260
6655869	PLUG			282, 328, 376, 412
6655870	ROCKER ARM			286, 332, 380, 416
6655872	HEAT SEAL			276, 314, 316, 318, 364, 366, 370, 404, 446
6655873	NOZZLE			316, 366
6655875	CAMSHAFT			294, 340, 386, 424
6655876	LEVER			306
6655877	LEVER			306, 356, 398, 440
6655878	SPRING			306, 398
6655880	PIPE			299, 300, 345, 346, 378, 391, 392, 429, 430
6655884	PLUG			282, 328
6655938	VALVE, EVACUATOR			368
6655966	FLANGE			300, 346
6656126	WASHER			316, 366
6656127	WASHER			316, 366
6656128	WASHER			316, 366
6656129	WASHER			316, 366
6656130	WASHER			316, 366
6656131	WASHER			316, 366
6656132	WASHER			316, 366
6656155	HOSE COVER			594, 598
6657028	O-RING			190, 198
6657067	COVER	6675338	A	190, 196
6657068	COVER			190, 196
6657376	ELBOW			254
6657401	GASKET KIT			276

Code for disposition of old part number
A -- Use up
B -- Use on other application (See PNI)
C -- File PDR Report with Bobcat Parts Sales
D -- Part Number Error

Page 695 - OSS# 2071349 - All rights reserved by Bobcat Company - 12/01/2009 - 20:50:59 - Produced by Ken Cook Co. with mediaioff

Part No.	Description	Was	Code	Page
6657409	SEAL KIT			146
6657416	BOLT			350, 434
6657460	NUT			316, 366
6657463	WASHER			316, 366
6657663	PLUG			376, 412
6657696	RINGS			292, 384
6657719	PLUG			16, 496, 514
6657734	PUMP			30
6657742	KIT			316, 366
6658180	PLUG, BLEED			32
6658228	SEAL, OIL			36, 454
6658301	SPRING			190
6658536	RING			262
6658672	SNAP RING			40, 42, 44
6658847	RING			262
6659371	NUT			244
6659372	WASHER			244
6659374	SPACER			244
6659375	FAN			244
6659376	BRACKET			244
6659378	BOLT			244
6659379	BEARING			244
6659380	ROTOR			244
6659381	STATOR			244
6659382	BRACKET			244
6659384	RECTIFIER			244
6659385	SCREW			244
6659386	HOLDER			244
6659387	NUT			244
6659388	CONDENSER			244
6659390	HOLDER			244
6659391	NUT			244
6659392	BOLT			244
6659393	REGULATOR			244
6659394	BRUSH			244
6659395	SPRING			244
6659396	SCREW			244
6659397	TERMINAL			244
6659398	COVER			244
6659399	SCREW			244
6659400	CONNECTOR			244
6659459	CHECK VALVE			148
6659999	BELT, SEAT			648
6660260	SWITCH			206, 214, 218
6660339	GASKET			160, 196
6660644	CAP			98, 102, 108, 114, 118
6660814	O-RING			190, 196
6660995	GREASE RING			260
6661022	FILTER			166, 170, 203, 204
6661062	PLUG			256, 258
6661114	CAP			30
6661117	TANK			532
6661213	RING, COMPRESSION			30
6661242	COVER			368

Code for disposition of old part number
A -- Use up
B -- Use on other application (See PNI)
C -- File PDR Report with Bobcat Parts Sales
D -- Part Number Error

Page 696 - OSS# 2071349 - All rights reserved by Bobcat Company - 12/01/2009 - 20:50:59 - Produced by Ken Cook Co. with mediaioff

Part No.	Description	Was	Code	Page
6661243	WING NUT			368
6661244	WASHER			368
6661247	FILTER			205, 206
6661248	FILTER, OIL HYD 12			2, 174, 176, 206
6661353	LIGHT ASSY			588
6661405	OIL			262
6661448	SEAL KIT			158
6661481	O-RING			192
6661608	SEAL KIT			536
6661611	ALTERNATOR			243, 244
6661611REM	ALTERNATOR, 55 AMP			244
6661696	CAP			30
6661785	MOUNT, ENG			266
6661787	WASHER			266, 530
6661807	FILTER, OIL HYD			2, 204
6661808	KIT			204
6662306	RING			36, 454
6662437	WASHER			248
6662848	CAP			100, 104, 108, 114, 120, 124, 136, 138
6662997	PULLEY, FAN DRIVE IDLER			260
6664004	CLAMP			256
6664024	STEM			158
6664025	STEM			158
6664032	SEAL KIT			158
6664032	SEAL KIT	6669737	A	158
6664035	CAP			526, 528
6664036	NUT			526, 528
6664037	WASHER			526, 528
6664040	PIN			526, 528
6664065	WASHER			638
6664085	BUSHING			478, 496, 512, 638
6664095	ARM, WIPER			478
6664096	BLADE, WIPER WINDOW			478
6664097	COVER			478, 638
6664103	NUT			478, 638
6664178	GASKET			478
6664209	SEAL			262
6664212	CHECK VALVE			632
6664221	RETAINER			514
6664223	OUTLET			514
6664224	CAP			514
6664286	BOOT			214, 218
6664554	PUMP, WIPER WASHER			474
6664555	NOZZLE			474
6664566	BOLT			478, 638
6664584	CONNECTOR			212
6664815	SEAL, OIL			34, 184, 186
6664971	WASHER			214
6664972	NUT			214
6665000	CLIP			222, 223, 224, 226, 238, 476, 482, 490, 552
6665084	SOLENOID	6653395	D	100, 108, 124, 130

Code for disposition of old part number

A -- Use up

B -- Use on other application (See PNI)

C -- File PDR Report with Bobcat Parts Sales

D -- Part Number Error

Page 697 - OSS# 2071349 - All rights reserved by Bobcat Company - 12/01/2009 - 20:50:59 - Produced by Ken Cook Co. with mediaioff

Part No.	Description	Was	Code	Page
6665084	SOLENOID			100, 108, 124, 130
6665314	PLUG	6719038	A	208, 210, 514
6665316	SWITCH			546
6665317	SWITCH			458, 656
6665321	RIVET			224, 226, 238, 476, 482, 490, 552
6665322	RIVET			224, 226, 238, 476, 482, 490, 552
6665367	BULB			514
6665371	SWITCH			368
6665568	EXTRUSION			472
6665569	WASHER			98, 102, 106, 114, 118, 122, 128, 134, 138
6665570	RING			98, 102, 106, 107, 108, 114, 118, 122, 128, 134, 138
6665572	VALVE			631, 632
6665602	MOTOR			638
6665701	BUSHING, PRESS FIT			94, 180
6665702	STEM			158
6665707	SWITCH			472
6665719	PLUG			158, 606
6665839	BOLT			94
6665915	GAUGE			164, 170
6666338	WASHER			190, 196
6666339	BOLT			196
6666542	SEAL			602, 604
6666543	SEAL			82, 84, 86
6666568	BULB			538
6666571	BULB			458
6666616	STEM			100, 108, 122, 128
6666621	ARMATURE			248
6666622	DRIVE			248
6666628	NUT			248
6666629	WASHER			248
6666630	WASHER			248
6666631	WASHER			248
6666632	O-RING			248
6666633	BOLT			248
6666634	BOLT			248
6666635	BOLT			248
6666636	BOLT			248
6666637	NUT			248
6666766	GROMMET			474
6666781	GASKET	6685878	B,D	276, 302, 318, 348, 370, 394, 406, 432
6666781	GASKET			276, 302, 318, 348, 370, 394, 406, 432
6666782	GASKET	3974456B	A	276, 282, 318, 328, 370, 376, 406, 412
6666782	GASKET	6684786	A	276, 282, 318, 328, 370, 376, 406, 412
6666783	GASKET	3974601B	A	278, 304, 320, 354, 370, 396, 406, 438
6666783	GASKET			278, 304, 320, 354, 370, 396, 406, 438
6666785	GASKET	6714543	B,D	320, 322
6666791	GASKET	6684782	B,D	278, 302, 320, 348, 370, 394, 406, 432
6666791	GASKET			278, 302, 320, 348, 370, 394, 406, 432
6666791	GASKET	6684879	A	278, 302, 320, 348, 370, 394, 406, 432
6666792	GASKET			278, 308, 320, 358, 370, 400, 442
6666792	GASKET	6635392	A	278, 308, 320, 358, 370, 400, 442
6666800	GASKET	6653806	A	276, 277, 278, 280, 320, 322, 370, 372, 406, 408

Code for disposition of old part number
A -- Use up
B -- Use on other application (See PNI)
C -- File PDR Report with Bobcat Parts Sales
D -- Part Number Error

Page 698 - OSS# 2071349 - All rights reserved by Bobcat Company - 12/01/2009 - 20:50:59 - Produced by Ken Cook Co. with mediaioff

Part No.	Description	Was	Code	Page
6666800	GASKET			276, 277, 278, 280, 320, 322, 370, 372, 406, 408
6666802	GASKET			276, 300, 318, 346, 370, 392, 406, 430
6666802	GASKET	6684860	A	276, 300, 318, 346, 370, 392, 406, 430
6666803	GASKET	3974895B	A	278, 280, 320, 322, 370, 372, 408
6666803	GASKET	6684774	A	278, 280, 320, 322, 370, 372, 408
6666804	GASKET	3974995B	A	276, 298, 320, 344, 370, 386, 390, 406, 424, 428
6666804	GASKET			276, 298, 320, 344, 370, 386, 390, 406, 424, 428
6666811	GASKET	6686991	A	276, 302, 318, 348, 406, 432
6666811	GASKET			276, 302, 318, 348, 406, 432
6666814	GASKET			276, 292, 318, 319, 320, 338, 370, 384, 422
6666814	GASKET	6655167	A	276, 292, 318, 319, 320, 338, 370, 384, 422
6666817	GASKET	6684753		276, 290, 320, 336, 370, 374, 406, 420
6666817	GASKET	3975449B	A	276, 290, 320, 336, 370, 374, 406, 420
6666827	GASKET	3974630B	A	278, 294, 320, 340
6666932	BRAKE			532, 533, 534
6666933	CYLINDER			532, 535, 536
6667139	CAP			532
6667144	CONNECTOR			220, 224, 226, 238, 552
6667145	LOCK			220, 224, 226, 552
6667176	PLUG			470
6667180	SEAL KIT			606
6667189	HOSE			254
6667201	SPACER			478, 638
6667323	SEAL			602, 604
6667325	SEAL			82, 84, 86
6667326	SEAL			88, 90, 92
6667352	FILTER, FUEL W/SEPERATOR 12			2, 30
6667353	FILTER ASSY			30
6667418	PLUG			376, 412
6667419	WASHER			376, 398, 400, 412, 440, 442
6667420	BOLT			386, 424
6667421	BOLT			374, 382, 418, 420
6667422	WASHER			286, 332, 372, 380, 382, 390, 392, 402, 408, 416, 418, 428, 430, 434, 444
6667425	PLUG			280, 322, 372, 408
6667426	SCREW			414
6667428	TAPPET			295, 296, 341, 342, 387, 388, 425, 426
6667428	TAPPET	6680707	A	295, 296, 341, 342, 387, 388, 425, 426
6667433	CIRCLIP			296, 342, 388, 426
6667451	WASHER			286, 332, 380, 400, 416, 442
6667457	CLAMP			446
6667460	IMPELLER	6684867	A	298, 344, 390, 428
6667460	IMPELLER			298, 344, 390, 428
6667461	PIN			286, 332, 380, 416
6667465	SEAL			298, 344
6667480	CHAMBER			288, 334
6667533	COVER			214
6667549	VALVE	6675230	A	98, 106, 112, 122, 128
6667549	VALVE	6675230	B	98, 106, 112, 122, 128
6667549	VALVE			98, 106, 112, 122, 128

Code for disposition of old part number
A -- Use up
B -- Use on other application (See PNI)
C -- File PDR Report with Bobcat Parts Sales
D -- Part Number Error

Page 699 - OS$# 2071349 - All rights reserved by Bobcat Company - 12/01/2009 - 20:50:59 - Produced by Ken Cook Co. with mediaioff

Part No.	Description	Was	Code	Page
6667569	CONNECTOR, RECEPTICAL			526, 528
6667587REM	STARTER			248
6667676	COVER			470
6667677	O-RING			470
6667680	SNAP RING			470
6667687	STEM	6665004	A	142
6667803	COUPLER			148, 150, 550, 618, 620, 624, 628, 630
6667804	COUPLER			148, 150, 550, 618, 620, 624, 628, 630
6667806	COUPLER			147, 148, 149, 150, 153, 154
6667844	VALVE, LIFT MANUAL			70, 143, 144
6667887	BULB			538
6668007	SCREW			538
6668010	LENS			538
6668079	PLUG			184, 186
6668080	SHIM			184, 186
6668082	POPPET	6685064	A	184, 186
6668082	POPPET			184, 186
6668088	PISTON			184, 186
6668088	PISTON	6685066	A	184, 186
6668089	PLUG			184, 186
6668097	SCREW			536
6668104	MOUNT, ENG			530
6668114	BEARING			262
6668137	WIPER MOTOR	NAP	D	478
6668742	SWITCH			514
6668791	ORIFICE			70, 102, 114, 115, 116, 118, 142
6668815	SWITCH			546
6668816	SWITCH			458, 656
6668820	NUT			142
6668879	DECAL			456
6668881	CORD			460
6668953	BRACKET			14
6669057	CHECK VALVE			142
6669087	SEAL KIT			144
6669089	TRACK			14
6669091	CLIP			514, 556, 560
6669135	SEAT			10, 11, 12, 13, 14
6669154	BOLT			534
6669155	PLATE			534
6669156	SPACER			534
6669159	PISTON			534
6669162	NUT			534
6669163	PLUG			534
6669164	ADAPTER			534
6669165	SCREW			534
6669184	STATOR ASSY.			534
6669185	SEAL KIT			534
6669187	VALVE			632
6669188	STEM			632
6669189	STEM			632
6669190	COIL			632
6669203	VALVE			148, 150, 154, 156, 157, 158
6669216	SEAL KIT			632

Code for disposition of old part number

A -- Use up

B -- Use on other application (See PNI)

C -- File PDR Report with Bobcat Parts Sales

D -- Part Number Error

Page 700 - OSS# 2071349 - All rights reserved by Bobcat Company - 12/01/2009 - 20:50:59 - Produced by Ken Cook Co. with mediaIoff

Part No.	Description	Was	Code	Page
6669217	SEAL KIT			632
6669218	VALVE			632
6669219	VALVE			632
6669224	BOLT			224, 514, 556, 560
6669308	RETAINER			636
6669354	SHAFT			248
6669359	TERMINAL			248
6669360	BUSHING			248
6669365	BOOT			248
6669372	COVER			248
6669384	SPEEDI SLEEVE			272
6669402	HOUSING			192
6669403	HOUSING			196
6669405	END CAP			196
6669406	END PLATE			190
6669407	SHAFT			196
6669409	WASHER			190
6669410	KIT, SHIM			190
6669411	BEARING			190, 196
6669442	HOUSING			184
6669444	SPRING			184
6669446	O-RING			184
6669447	PLATE			184
6669448	PLATE			184
6669449	O-RING			184
6669450	RING			184
6669451	FLANGE			184
6669452	O-RING			184, 186
6669453	SEAL			184
6669454	RING			184
6669455	KIT, SEAL			184
6669469	SHAFT			184
6669470	BOLT			184
6669549	SOCKET			520, 522, 524, 526, 528
6669615	ORIFICE			158
6669616	CHECK VALVE			606
6669622	SEAL KIT			606
6669657	SEAL KIT			148, 150, 550, 618, 620, 624, 628, 630
6669659	O-RING			148, 150, 154
6669728	CHECK VALVE			158
6669729	SHUTTLE VALVE			158
6669732	KIT, SEAL			142
6669733	SEAL KIT			142
6669734	KIT, SEAL			142
6669736	SEAL KIT			158
6670160	CUSHION			14
6670164	LINK			478
6670251	BATTERY, DRY 530 AMP			516, 518
6670284	LIGHT ASSY			588
6670287	COVER			17, 18, 20
6670288	END			478
6670312	RELAY			556, 560
6670472	NUT			404, 446
6670473	WASHER			404

Code for disposition of old part number
A -- Use up
B -- Use on other application (See PNI)
C -- File PDR Report with Bobcat Parts Sales
D -- Part Number Error

Page 701 - OSS# 2071349 - All rights reserved by Bobcat Company - 12/01/2009 - 20:50:59 - Produced by Ken Cook Co. with mediaioff

Part No.	Description	Was	Code	Page
6670634	SEAL KIT			470
6670682	BEARING			260
6670684	CHECK VALVE			191, 192, 198
6670706	CONNECTOR			226, 238, 552
6670707	CONNECTOR			222, 224, 230, 238, 554
6670709	CONNECTOR			228, 554
6670710	LOCK			222, 226, 238, 552
6670711	LOCK			224, 230, 238, 554
6670714	PIN			552
6670715	PIN			222, 226, 230, 238, 554
6670726	CYLINDER. LOCK			634
6670759	SEAL			482
6670785	PIPE			428
6670831	ELBOW			174
6670867	LATCH, REAR DOOR			18
6671025	COIL			142, 158, 606, 608, 610
6671025	COIL	6678696	A	142, 158, 606, 608, 610
6671026	COIL			158
6671027	LIGHT			538
6671116	TERMINALS			248
6671117	TERMINALS			248
6671118	PINION			248
6671119	CLUTCH ASSY.			248
6671120	TERMINAL			248
6671121	COVER			248
6671122	BALL			248
6671123	HOUSING			248
6671124	HOUSING			248
6671125	WASHER			248
6671126	SCREW			248
6671127	BEARING			248
6671128	BEARING			248
6671129	BEARING			248
6671509	COUPLER			196
6671510	RELIEF VALVE			192, 198
6671512	GROUP, ROTARY	6675341	B,D	190, 196
6671516	KIT, SEAL			192, 198
6671518	BOLT			190
6671527	NUT			470
6671628	NUT	7D000008B	D	158, 606, 608, 610
6671628	NUT			158, 606, 608, 610
6671629	NUT			158
6672021	BELT, DRIVE			260, 261, 262
6672190	DRAINCOCK	6630177	A	282, 328, 376, 412
6672190	DRAINCOCK			282, 328, 376, 412
6672272	WASHER			588
6672273	SCREW			588
6672274	SCREW			588
6672275	GASKET			588
6672276	LENS, LIGHT RED			588
6672277	BRACKET			588
6672279	MOUNT, LIGHT RUBBER			588
6672281	CLAMP			166

Code for disposition of old part number

A -- Use up
B -- Use on other application (See PNI)
C -- File PDR Report with Bobcat Parts Sales
D -- Part Number Error

Page 702 - OSS# 2071349 - All rights reserved by Bobcat Company - 12/01/2009 - 20:50:59 - Produced by Ken Cook Co. with mediaioff

Part No.	Description	Was	Code	Page
6672448	VALVE ASSY.			158
6672449	VALVE ASSY.			158
6672450	VALVE ASSY.			158
6672471	VALVE	6675559	B	142
6672486	SEALANT			272
6672491	CAP			252, 258
6672491	CAP	6646678	B,D	252, 258
6672492	RETAINER			456
6672515	KIT, SEAL	6664033	A	158
6672515	KIT, SEAL	6670635	A	158
6672715	SPACER	7000010	A	14
6672750	CONNECTOR			212
6672756	KIT, SEAL			608, 610
6672863	VALVE, SOLENOID			470
6672962	COIL			146
6673200	FUSE BLOCK			214, 218
6673710	BEARING, NEEDLE			180, 222, 226, 227, 228, 234
6673789	BEARING			182, 224, 228, 234
6673828	HOSE, HYD ASSY			174
6673959	VALVE, BPV			470
6673990	PISTON	6664028	A	158
6674000	CLAMP			220
6674003	TIRE & RIM			658
6674004	TIRE & RIM			658
6674007	KIT			658
6674013	TRACK			14
6674167	FLANGE			392, 430
6674169	PULLEY			390, 428
6674172	THERMOSTAT			392, 430
6674202	NUT			208, 210
6674228	PANEL			556, 560
6674231	VENT, HEATER CAB ROUND			556, 560
6674235	RECEIVER DRIER			576
6674285	GAS SPRING			254, 256
6674297	SPOOL	6674805	B,D	122
6674298	SPOOL	6674806	B,D	122
6674299	SPOOL	6674807	B,D	122
6674300	SPOOL	6674811	B,D	122
6674301	SPOOL	6674812	B,D	122
6674302	SPOOL	6674813	B,D	122
6674315	SENSOR			212, 216
6674316	SWITCH, PRESS OIL HYD			212, 216
6674371	SEAL KIT			200
6674378	PUMP, HYD TANDEM			187, 188, 193, 194
6674379	PUMP			188, 194
6674400	HOUSING			588
6674401	HOUSING			588
6674402	MOUNT, LIGHT			588
6674403	COVER			10, 208, 210
6674407	SHOULDER BELT			644
6674548	PLUG			606
6674585	SWITCH			594

Code for disposition of old part number

A -- Use up
B -- Use on other application (See PNI)
C -- File PDR Report with Bobcat Parts Sales
D -- Part Number Error

Page 703 - OS$# 2071349 - All rights reserved by Bobcat Company - 12/01/2009 - 20:50:59 - Produced by Ken Cook Co. with mediaioff

Part No.	Description	Was	Code	Page
6674673	CLAMP			214
6674676	PUMP			309, 310, 311, 312, 401, 402
6674687	BATTERY, DRY 600 AMP			2, 212, 218
6674798	REPAIR KIT			174
6674799	ADAPTER			522, 524
6674802	CONNECTOR			520, 522, 524, 526, 528
6674804	CONTROLLER, AHC METAL			221, 222
6674894	NUT			12, 254
6674895	RETAINER			512, 513, 514, 636
6674905	HOSE			570
6674993	CAP			474
6675026	CAP			520, 522, 524, 526, 528
6675033	INSERT			8, 10, 208, 210
6675073	VALVE, AUX REAR			618, 620, 632
6675073	VALVE, AUX REAR	6665572	A	618, 620, 632
6675074	SEAT BELT			10
6675134	GAS SPRING			8
6675135	GAS SPRING			8
6675136	GAS SPRING			8
6675140	SNAP RING			8
6675144	HOSE, HYD ASSY			166, 172
6675154	HOLDER			212, 218
6675155	FUSE			212, 218
6675170	SEAT BELT			640
6675171	CLAMP			208, 210, 212, 218
6675172	BRACKET			556, 560
6675173	ACTUATOR			556, 560
6675174	BODY			556, 560
6675176	SWITCH			556, 560
6675177	KNOB			556, 560
6675179	FLANGE			556, 560
6675181	PLUG			556, 560
6675212	RETAINER			496
6675221	BOLT			266
6675257	CLEVIS			8
6675266	RADIATOR			251, 252
6675273	WASHER			18, 20
6675273	WASHER	6675263	B,D	18, 20
6675278	FILTER			212
6675281	MOUNT			522, 526, 528
6675284	SHUTTLE VALVE			146
6675285	STEM			146
6675298	COUPLER, BODY			476
6675299	COUPLER			474, 475, 476
6675308	KIT			642
6675309	KIT			642
6675310	KIT			642
6675311	KIT			642
6675312	KIT			642
6675313	KIT			642
6675314	KIT			642
6675315	KIT			642
6675316	KIT			642

Code for disposition of old part number

A -- Use up

B -- Use on other application (See PNI)

C -- File PDR Report with Bobcat Parts Sales

D -- Part Number Error

Page 704 - OSS# 2071349 - All rights reserved by Bobcat Company - 12/01/2009 - 20:50:59 - Produced by Ken Cook Co. with mediaioff

Part No.	Description	Was	Code	Page
6675317	SCISSORS			640
6675318	KIT			642
6675319	SEAT			640
6675320	SEAT			640
6675321	SEAT			640
6675322	SEAT			640
6675323	KNOB			640
6675332	LINK			34
6675336	BULB			588
6675342	PIN			190, 196
6675343	PUMP			199, 200
6675344	PUMP			159, 160
6675378	CLIP			476, 482, 483, 484, 490
6675387	EXTRUSION	6674524	A	496, 514
6675389	SWITCH			526
6675405	OIL COOLER	6675130	A	173, 174
6675405	OIL COOLER			173, 174
6675497	BLOWER, HEATER AND A/C			562, 564, 580
6675499	HOUSING			562
6675500	COVER			562
6675501	PLATE			562
6675502	PLATE			562
6675503	HOUSING			562
6675504	RING			562
6675505	BLOWER WHEEL			562
6675506	MOUNT			562
6675507	COVER			562
6675508	HARNESS			562
6675509	MOTOR, HEATER CAB			562
6675510	CLAMP			562, 564, 580
6675511	DRAIN VALVE			562, 564, 580
6675512	CLAMP			562, 564, 580
6675513	GROMMET			562
6675514	SEAL - PER FOOT			562
6675517	FILTER, OIL ENG	3974896B	A	1, 2, 280, 322, 372, 408
6675517	FILTER, OIL ENG			1, 2, 280, 322, 372, 408
6675522	STROBE	6697800	A	656
6675523	BEACON			458
6675524	CLIP			10
6675534	BLOCK, A/C VALVE			576, 580
6675538	O-RING			576, 577, 578, 580
6675544	CANVAS CAB	6660340	B,D	491, 492
6675545	GROMMET			496, 512
6675551	CAP			254
6675562	SEAT BELT			645, 646
6675590	DOOR	6599721	B,D	492
6675591	HINGE KIT	6662839	B,D	492
6675595	SEAT			640
6675596	SEAT			640
6675608	INSULATION			562
6675609	INSULATION			562
6675611	SEAL			562, 566
6675612	INSULATION			562

Code for disposition of old part number

A -- Use up

B -- Use on other application (See PNI)

C -- File PDR Report with Bobcat Parts Sales

D -- Part Number Error

Page 705 - OSS# 2071349 - All rights reserved by Bobcat Company - 12/01/2009 - 20:50:59 - Produced by Ken Cook Co. with mediaioff

Part No.	Description	Was	Code	Page
6675613	INSULATION			562
6675614	INSULATION			562
6675617	STUD			350
6675618	CLAMP			352, 436
6675624	CLAMP			350, 434
6675625	BOLT, EYE JOINT			352, 436
6675625	BOLT, EYE JOINT	6680566	A	352, 436
6675627	CASE			338
6675628	CASE			338
6675629	VALVE, EXHAUST			332
6675630	PIPE ASSY, OIL			352
6675634	CASE			338
6675635	BAND			350, 434
6675636	GASKET	6575580	B,D	318, 350, 406, 434
6675636	GASKET			318, 350, 406, 434
6675637	GASKET			320, 350, 434
6675639	CASE			338
6675640	SPRING			356, 440
6675641	PLUG			336
6675642	HEAD			334, 418
6675643	GASKET			318, 334, 406, 418
6675644	MANIFOLD, INLET			348
6675645	CAMSHAFT			342, 426
6675646	CAMSHAFT			342, 426
6675647	PIPE			364, 446
6675648	PIPE			364, 446
6675649	PIPE			364
6675650	PIPE			364, 446
6675651	PIPE, WATER			324, 326
6675653	PIPE, OIL COVER			324, 326
6675654	CRANKCASE			327, 328
6675655	RING, PISTON			338, 422
6675656	PUMP			361, 362, 443, 444
6675670	HOSE			324
6675671	COLLAR	15EM00180B	B,D	322, 408
6675671	COLLAR			322, 408
6675672	LEVER			356, 440
6675672	LEVER	6675657	A	356, 440
6675673	HOSE			350, 434
6675674	MANIFOLD	6651482	B,D	347, 348
6675675	FLANGE			350, 434
6675676	TURBO			349, 350, 352, 433, 434
6675677	PIPE			351, 352, 435, 436
6675678	PIPE			352, 436
6675679	PIPE			352, 436
6675681	ADAPTER	6653809	B,D	322, 408
6675681	ADAPTER			322, 408
6675682	TUBE			324, 326
6675683	PIN, BAND			352
6675707	MUFFLER			589, 590
6675779	SWITCH, PRESS			576
6675780	CARTRIDGE	6676545	A	470
6675781	COIL	6674331	A	470
6675824	O-RING			576

Code for disposition of old part number
A -- Use up
B -- Use on other application (See PNI)
C -- File PDR Report with Bobcat Parts Sales
D -- Part Number Error

Page 706 - OSS# 2071349 - All rights reserved by Bobcat Company - 12/01/2009 - 20:50:59 - Produced by Ken Cook Co. with mediaioff

Part No.	Description	Was	Code	Page
6675825	O-RING			578
6675833	SEAL			496
6675835	TURN SIGNAL			546
6675837	BELT			266
6675838	BUSHING			268
6675846	POTENTIOMETER			556, 560
6675846	POTENTIOMETER	6675178	A	556, 560
6675858	FLASH TUBES			656
6675982	PLUG			208, 210
6675999	SWITCH			638
6676000	TEE			638
6676001	ARM			638
6676002	BLADE			638
6676003	HOSE			474, 478, 638
6676003	HOSE	6708310	B	474, 478, 638
6676028	NOZZLE			638
6676029	SOLENOID	6677383	A	100, 104, 108, 114, 120, 234, 238, 242, 452
6676029	SOLENOID			100, 104, 108, 114, 120, 234, 238, 242, 452
6676034	KIT			642
6676058	RINGS			338, 422
6676059	GASKET KIT			318
6676060	LEVER ASSY.	6655879	A	304, 354, 396, 438
6676060	LEVER ASSY.	6655879		304, 354, 396, 438
6676060	LEVER ASSY.			304, 354, 396, 438
6676062	VALVE			576
6676064	VALVE			606
6676065	SEAL KIT			606
6676066	BALL			606, 608
6676067	SPRING			606, 608
6676068	VALVE			606
6676069	SEAL KIT			606
6676070	ORIFICE			606, 608
6676071	O-RING			606
6676073	RELIEF VALVE			606
6676074	SEAL KIT			606
6676151	STEM			632
6676152	PLUG			632
6676153	CONTROLLER			228, 552
6676155	RELIEF VALVE			158
6676338	GAS SPRING			642
6676347	ORIFICE			606, 608
6676347	ORIFICE	6669615	A	606, 608
6676400	CONNECTOR			218
6676445	COUPLER			72, 76
6676447	COUPLER			72, 76
6676496	BONNET			128
6676498	NOZZLE			478
6676499	GROMMET			474
6676500	ELBOW			474
6676501	CLIP			478
6676514	CONTROLLER	6674943	A	526
6676516	NUT			558, 560
6676536	SWITCH			210
6676537	SWITCH			230, 234, 452

Code for disposition of old part number

A -- Use up
B -- Use on other application (See PNI)
C -- File PDR Report with Bobcat Parts Sales
D -- Part Number Error

Page 707 - OSS# 2071349 - All rights reserved by Bobcat Company - 12/01/2009 - 20:50:59 - Produced by Ken Cook Co. with mediaioff

Part No.	Description	Was	Code	Page
6676538	INSULATION			568, 576
6676539	CLIP			564, 576, 580
6676543	PLUG	6647780	A	470
6676547	VALVE			607, 608
6676562	HEATER			562, 563, 564
6676564	SEAL KIT			146
6676566	NUT			100, 108, 124, 130, 146
6676606	SPACER			564, 568, 580
6676618	CLIP			562
6676640	SEAL			230, 239, 240, 554
6676653	SCREW			564, 568, 580
6676728	MUFFLER, EXHAUST	6718564	A	258
6676732	SWITCH			594, 600
6676870	CONNECTOR			230, 238, 554
6676872	TURN SIGNAL			546
6676917	ELBOW			474
6676918	HOSE			478
6676927	FELT STRIP			496
6676944	VALVE			150, 154, 156
6676969	FILTER			206
6676984	MOUNT			576, 580
6677105	COVER			564, 576, 580
6677106	O-RING			134, 138
6677108	HOUSING			564, 580
6677111	SEAL			564, 566, 580
6677115	RECEPTACLE			564, 580
6677116	RETAINER			564, 580
6677117	SCREW			564, 580
6677118	SCREW			564, 580
6677119	SCREW			564, 580
6677120	COVER			564
6677122	CAP			576
6677123	CAP	6725443	A	324
6677136	SOCKET			520, 522, 524, 526, 528
6677147	RELIEF VALVE			608
6677148	SEAL KIT			608
6677149	CHECK VALVE			608
6677150	SEAL KIT			608
6677151	VALVE			608
6677152	SEAL KIT			608
6677153	SOLENOID			606, 608
6677153	SOLENOID	6661443	B,D	606, 608
6677155	VALVE			608
6677156	SEAL KIT			608
6677157	O-RING			608
6677158	PLUG			608
6677159	PLUG			608, 610
6677192	MAGNET			476, 482, 490
6677193	RIVET			476, 482, 490
6677198	TAB			496
6677202	DIPSTICK, OIL ENG	6684784	A	290, 336, 374, 420
6677202	DIPSTICK, OIL ENG			290, 336, 374, 420
6677203	GUIDE			290, 336, 374, 420
6677216	CONNECTOR			218

Code for disposition of old part number
A -- Use up
B -- Use on other application (See PNI)
C -- File PDR Report with Bobcat Parts Sales
D -- Part Number Error

Page 708 - OSS# 2071349 - All rights reserved by Bobcat Company - 12/01/2009 - 20:50:59 - Produced by Ken Cook Co. with mediaioff

Part No.	Description	Was	Code	Page
6677363	CLAMP, FULL CIRCLE	657904B	B	256, 258
6677364	CONNECTOR			230, 554
6677371	PIPE, TUBE EXHAUST	6719566	A	258
6677485	SPACER			246
6677486	NUT			246
6677487	COVER			246
6677488	RECTIFIER			246
6677489	REGULATOR ASSY			246
6677490	BRACKET			246
6677491	BRACKET			246
6677492	ROTOR			246
6677493	STATOR			246
6677494	BOLT			246
6677495	SPACER			246
6677496	PULLEY			246
6677497	NUT			246
6677504	COVER			564, 568, 580
6677504	COVER	6676604	A	564, 568, 580
6677628	SHAFT ADAPTER			556
6677817	BOLT			246
6677818	BEARING			246
6677819	RETAINER			246
6677820	BEARING			246
6677833	ARM ASSY			477, 478
6677834	BLADE			478
6677836	COVER			478
6677837	BOLT			478
6677839	GASKET			478
6677840	SWIVEL, PLATE ASSY			478
6677841	WASHER			478
6677842	NUT			478
6677843	NUT			478
6677844	NUT			478
6677845	ADAPTER			478
6677847	GROMMET			478
6677848	SLEEVE			478
6677973	PLUG			496
6677983	FILTER, AIR HEATER CAB			558, 560
6678000	SEAL			186
6678004	PLATE			186
6678006	BACK-UP RING			186
6678075	RINGS			292, 384
6678075	RINGS	6655178	A	292, 384
6678076	BLOCK			79, 80
6678150	VALVE			72, 76, 146
6678151	COVER			564, 580
6678152	SEAL FLANGE			564, 580
6678198	BOLT			478
6678205	ALTERNATOR, 90 AMP	6675292	A	245, 246

Code for disposition of old part number
A -- Use up
B -- Use on other application (See PNI)
C -- File PDR Report with Bobcat Parts Sales
D -- Part Number Error

Page 709 - OSS# 2071349 - All rights reserved by Bobcat Company - 12/01/2009 - 20:50:59 - Produced by Ken Cook Co. with mediaioff

Part No.	Description	Was	Code	Page
6678205REM	ALTERNATOR, 90 AMP			246
6678207	FILTER			558, 560
6678226	SEAL, OIL	6673881	A	190, 198
6678283	HANDLE			496
6678548	SOCKET			474, 480
6678552	VALVE	6671632	A	100, 108, 114, 124, 130
6678574	RELIEF VALVE	6673184	A	98, 106, 112, 113, 114, 122, 128
6678666	TREE MOUNT			218, 574
6678667	MOUNT			218
6678668	STRAP, DUAL TIE			218
6678669	STRAP			218, 516, 518
6678675	CONTROLLER, ACD DLX	6676514	A	528
6678692	SPRING			610
6678693	SPRING			610
6678694	FLOW CONTROL			610
6678695	O-RING			610
6678697	STEM			610
6678698	PLUG			610
6678699	PLUG			610
6678700	PISTON			610
6678701	ORIFICE			610
6678702	ORIFICE			610
6678703	SHUTTLE			610
6678704	SPRING			610
6678705	BALL			610
6678706	PLUG			610
6678707	SPRING			610
6678708	COMPENSATOR			610
6678709	O-RING			610
6678710	TIE			610
6678711	SPACER	6674445	A	606, 608, 610
6678711	SPACER			606, 608, 610
6678712	COIL			610
6678717	PISTON			610
6678718	SPRING			610
6678732	SEAL KIT	6678550	A	202
6678739	WASHER			478
6678818	MOUNT			218
6678853	SEAL KIT	6674370	A	160
6678891	COIL			114, 130
6678920	NOZZLE			478
6678921	GUIDE			478
6678931	PISTON			88, 90, 92
6678931	PISTON	6677197	A	88, 90, 92
6678943	VALVE			326
6678945	HOSE			326, 410
6678946	ADAPTER			326, 328, 412
6678974	MOUNT			516, 518
6679034	MOUNT			218
6679068	SPACER			158
6679145	CLUTCH	6675828	D	576
6679244	BALL ASSY			610
6679245	RELIEF VALVE			610

Code for disposition of old part number
A -- Use up
B -- Use on other application (See PNI)
C -- File PDR Report with Bobcat Parts Sales
D -- Part Number Error

Page 710 - OSS# 2071349 - All rights reserved by Bobcat Company - 12/01/2009 - 20:50:59 - Produced by Ken Cook Co. with mediaioff

Part No.	Description	Was	Code	Page
6679246	SEAL KIT			610
6679247	BOLT			36
6679308	SEAT BELT	6674408	A	644
6679476	MOTOR	6677835	A	478
6679820	RELAY	6674376	A	214, 218
6679836	ADAPTER			80
6679837	COUPLER			80
6679838	COUPLER			80
6679840	SEAL			80
6679841	SEAL	6672026	A	74, 80
6679841	SEAL			74, 80
6679845	CROSSMEMBER	6676723	A	210
6679855	BULB	6675337	A	208
6679856	ALARM	6675390	A	208, 210
6679990	CLIP			8
6679991	SEAL			254
6679994	SEAL			8
6680018	COUPLER, KIT			80
6680020	SEAL KIT			80
6680054	ACTUATOR			556, 560
6680326	LIGHT	6664368	A	514
6680355	BOOT			250
6680356	BOLT			250
6680357	HOLDER			250
6680358	RING			250
6680359	STOP RING			250
6680360	STOP			250
6680361	SPRING			250
6680362	BALL			250
6680363	WASHER			250
6680364	LEVER			250
6680365	SHAFT			250
6680366	GEAR			250
6680367	GEAR			250
6680368	STOP RING			250
6680369	SEAL			250
6680370	PLATE			250
6680371	LEVER			250
6680372	BRACKET			250
6680373	YOKE			250
6680374	ARMATURE			250
6680375	SHAFT			250
6680376	SWITCH			250
6680377	HOLDER			250
6680378	WASHER			250
6680379	SEAL			250
6680380	SEAL			250
6680381	SPRING			250
6680382	SPRING			250
6680383	BOLT			250
6680384	BOLT			250
6680385	BRACKET			250
6680389	BRACKET			250
6680390	GEAR			250

Code for disposition of old part number
A -- Use up
B -- Use on other application (See PNI)
C -- File PDR Report with Bobcat Parts Sales
D -- Part Number Error

Page 711 - OSS# 2071349 - All rights reserved by Bobcat Company - 12/01/2009 - 20:50:59 - Produced by Ken Cook Co. with mediaioff

Part No.	Description	Was	Code	Page
6680410	CONTROLLER	6676337	A	228, 233, 234
6680415	HANDLE	6705920	A	220
6680417	HANDLE	6675749	A	226, 238, 552
6680418	HANDLE ASSY.	6675468	A	219, 220
6680419	HANDLE ASSY.	6674450	A	220
6680429	SENSOR, SEAT BAR POSITION	6674406	A	12
6680436	SENSOR	7000004	A	32, 212, 218
6680441	BUSHING	6664882	A	12
6680443	BUSHING, MAGNET	6674405	A	12
6680447	DECAL	6677370	A	220, 222
6680455	HANDLE ASSY	6675250	A	222
6680462	HANDLE, ACS RH	6677536	A	238
6680468	MOUNT	6719716	A	238, 452
6680469	SPACER	6729600	A	224, 238, 452, 554
6680470	SPRING	6675745	A	238, 452
6680471	COVER	6713898	A	222, 226, 238, 552
6680477	STRAP	6719715	A	238, 452
6680478	SHIELD	6727231	A	234, 235, 236, 242
6680479	SHIELD	6727284	A	242
6680480	CHANNEL	6719711	A	226, 238, 552
6680481	CHANNEL	6719712	A	226, 238, 552
6680484	GASKET	3974403	B	276, 290, 320, 336, 370, 374, 406, 420
6680484	GASKET			276, 290, 320, 336, 370, 374, 406, 420
6680555	CLAMP			434
6680564	STUD			434
6680570	GASKET	6685964	A	352, 436
6680570	GASKET	6675626	A	352, 436
6680576	PIN			436
6680580	CLAMP	6652748	A	324, 326, 410
6680580	CLAMP			324, 326, 410
6680666	PLUG			382, 418
6680685	BOLT			380
6680686	BOLT			372, 408
6680706	BOLT			398, 440
6680786	CLAMP			404, 446
6680791	BOLT	6675622	A	352, 436
6680791	BOLT			352, 436
6680830	BOLT			398, 440
6680970	BREATHER			40, 42, 44, 254
6680970	BREATHER	6670627	A	40, 42, 44, 254
6680991	HOSE			350, 434
6681469	PLUG	6665697	A	16
6681512	SOLENOID			40, 42, 44
6681512	SOLENOID	6667992	A	40, 42, 44
6681513	SOLENOID	6658260	A	212, 216
6681513	SOLENOID	6667993	A	212, 216
6681614	KNOB			496, 512, 556, 560
6681879	WATER PUMP			427, 428
6682034	MOTOR			185, 186
6682260	SHAFT			188
6682261	KEY			188, 260
6682421	CONTROLLER, BOBCAT			212, 216
6682442	SLEEVE	6704393	A	262

Code for disposition of old part number

A -- Use up
B -- Use on other application (See PNI)
C -- File PDR Report with Bobcat Parts Sales
D -- Part Number Error

Page 712 - OSS# 2071349 - All rights reserved by Bobcat Company - 12/01/2009 - 20:50:59 - Produced by Ken Cook Co. with mediaioff

Part No.	Description	Was	Code	Page
6682515	SHIM			402, 444
6682521	PIPE			403, 404, 445, 446
6682522	HOLDER KIT			446
6682523	PIPE			446
6682532	NUT			394, 432
6682660	SPACER			230
6682860	O-RING			186
6682862	SHAFT, DRIVE			186
6682863	BOLT			186
6682897	SEAL			186
6683001	HVAC	6676561	A	579, 580
6683003	COIL	6675533	A	576, 580
6683004	THERMOSTAT	6675790	A	576, 580
6683104	PLUG			376, 412
6683171	CONTROLLER			210
6683173	PIPE	6686082	A	410
6683174	ROLL PIN			298, 344, 390, 428
6683274	SEAL, SPOOL			98, 102, 108, 114, 118, 124, 130, 134, 138
6683274	SEAL, SPOOL	6665846	A	98, 102, 108, 114, 118, 124, 130, 134, 138
6684037	SENSOR	6658260	B	212, 216
6684125	COUPLER			178
6684126	COVER			218
6684225	WATER PUMP	6653941	A	297, 298
6684415	BUSS BAR			218
6684474	INSERT FAN INLET			254
6684479	CLAMP			410
6684742	NUT			612, 614
6684743	SOLENOID			612, 614
6684744	SOLENOID			612, 614
6684745	PISTON			612, 614
6684746	CHECK VALVE			612, 614
6684747	SEAL KIT			612, 614
6684754	O-RING			370, 374, 420
6684780	GASKET			370, 378
6684781	BOLT			378
6684782	O-RING	3966602	A	276, 318, 378, 414
6684782	O-RING			276, 318, 378, 414
6684788	GASKET			276, 292, 318, 338, 370, 384, 422
6684788	GASKET	6655165	A	276, 292, 318, 338, 370, 384, 422
6684789	SEAL			384, 422
6684793	GEAR			296, 342, 388, 426
6684794	BUSHING			296, 342
6684795	COLLAR			296, 342, 388, 426
6684796	SHAFT			296, 342, 388, 426
6684812	BALL BEARING			386, 424
6684833	SHAFT			398, 440
6684836	BOLT, ADJUSTING			399, 400
6684863	GASKET	6732199	B	318, 370, 392, 406, 430
6684863	GASKET			318, 370, 392, 406, 430
6684868	SEAL			390, 428
6684869	FLANGE			390, 428
6684874	COLLAR	3974516B	A	286, 332, 380, 416
6684874	COLLAR			286, 332, 380, 416
6684875	SHAFT			286, 332, 380, 416

Code for disposition of old part number

A -- Use up

B -- Use on other application (See PNI)

C -- File PDR Report with Bobcat Parts Sales

D -- Part Number Error

Page 713 - OS&H 2071349 - All rights reserved by Bobcat Company - 12/01/2009 - 20:50:59 - Produced by Ken Cook Co. with mediaioff

Part No.	Description	Was	Code	Page
6684877	GASKET	6685876	B,D	370, 394
6684884	PIPE			352, 436
6684910	SENSOR, ELEC AHC	6675741	A	226, 238, 552
6684911	SENSOR, FOOT LH	6680421	A	234, 242, 452
6684911	SENSOR, FOOT LH	6676492	A	234, 242, 452
6684912	SENSOR, FOOT RH	6680420	A	234, 241, 242, 452
6684912	SENSOR, FOOT RH	6676493	A	234, 241, 242, 452
6684913	LEVER	6675742	A	226, 552
6684914	LEVER	6675750	A	226, 552
6684915	LEVER, ACS RH	6680424	A	234, 237, 238
6684915	LEVER, ACS RH	6676333	A	234, 237, 238
6684916	LEVER, ACS LH	6676497	A	234, 238
6684916	LEVER, ACS LH	6680423	A	234, 238
6684923	BREATHER	6648944	A	164, 170
6684932	KNOB	6675358	A	26
6685060	BUSHING, TORSION	6678067	A	94, 180
6685065	SHUTTLE			186
6685068	FLANGE			186
6685069	RING,BACK-UP			186
6685070	KIT, SEAL COMPLETE			186
6685085	COVER			378
6685087	VALVE			378
6685190	STARTER	6676958	A	249, 250, 516
6685190	STARTER	6676957	A	249, 250, 516
6685190REM	STARTER			250
6685199	CAP			576
6685344	SWASHPLATE	6671513	A	190, 196
6685372	SEALANT, GASKET LIQUID			44
6685464	BOLT			398, 440
6685466	O-RING			370, 372, 408
6685468	O-RING			370, 372, 406, 408
6685474	BEARING			390
6685475	MANIFOLD			393, 394
6685476	SEAL			304, 354, 396, 438
6685476	SEAL	6598703	B	304, 354, 396, 438
6685477	PLUG			376, 412
6685482	BOLT			384, 422
6685483	CASE, MAIN BRG.			384
6685484	CASE, MAIN BRG.			384, 422
6685485	CASE			384, 422
6685486	BEARING			384, 422
6685487	BEARING			384, 422
6685488	WASHER			384, 422
6685489	WASHER			384, 422
6685490	BEARING			384, 422
6685491	BEARING			384, 422
6685492	BEARING			384, 422
6685493	BEARING			384, 422
6685494	WASHER			384, 422
6685495	WASHER			384, 422
6685496	WASHER			384, 422
6685497	WASHER			384, 422
6685501	WASHER			280, 372

Code for disposition of old part number

A -- Use up

B -- Use on other application (See PNI)

C -- File PDR Report with Bobcat Parts Sales

D -- Part Number Error

Page 714 - OSS# 2071349 - All rights reserved by Bobcat Company - 12/01/2009 - 20:50:59 - Produced by Ken Cook Co. with mediaIoff

Part No.	Description	Was	Code	Page
6685524	PIPE			378
6685541	POPPET			612, 614
6685542	O-RING			612, 614
6685543	CHECK VALVE			612, 614
6685544	COMPENSATOR			612, 614
6685545	PLUG			612, 614
6685546	PLUG			612, 614
6685601	CLAMP	6675621	A	352, 436
6685601	CLAMP			352, 436
6685602	CAP			178
6685603	SEAL KIT			114
6685733	EXCHANGER, WATER RADIATOR	6718648	A	252, 257, 258
6685735	SEAL	6661112	A	262
6685962	GASKET	6675623	A	352, 406, 436
6685962	GASKET			352, 406, 436
6685981	ENGINE, V2203-E2B-BOBCAT-3			369, 370
6685981REM	ENGINE, KUBOTA V2203 TIER 2			370
6685982	ENGINE, V2003-T-E2B-BOBCAT-1			405, 406
6685982REM	ENGINE, KUBOTA V2003T E2B TIER 2			406
6686037	GASKET			370, 402, 444
6686043	BOLT			434
6686220	O-RING			224, 234
6686360	VALVE	6685017	A	98, 102, 106, 114, 118, 122, 128, 134, 138
6686360	VALVE			98, 102, 106, 114, 118, 122, 128, 134, 138
6686702	PUMP, HYD TANDEM			188, 194
6686703	PUMP, GEAR			202
6686704	PUMP			188, 194, 195, 196
6686705	PUMP, GEAR			162
6686979	PLUG			374, 420
6686981	O-RING			370, 372, 408
6686985	BOLT, ADJUSTING			441, 442
6686988	PIPE			392, 430
6686989	WATER PUMP			389, 390
6686990	MANIFOLD			394
6686993	CRANKCASE			411, 412
6686994	PIPE			414
6686995	MANIFOLD			432
6686996	HEAD			382
6686996REM	HEAD, KUBOTA V2203			382
6686997	CIR-CLIP			384
6687093	MANIFOLD			431, 432
6687191	SEAL, OIL	6645090	A	190
6687773	PLATE, PUMP HYD			196
6687774	PLATE, PUMP HYD			190
6688325	KIT, SEAL	6681581	A	202
6688326	SEAL KIT	6678733	A	162
6688338	NUT			520, 522, 524
6688371	HEATER	7101926	A	564

Code for disposition of old part number

A -- Use up
B -- Use on other application (See PNI)
C -- File PDR Report with Bobcat Parts Sales
D -- Part Number Error

Page 715 - OSS# 2071349 - All rights reserved by Bobcat Company - 12/01/2009 - 20:50:59 - Produced by Ken Cook Co. with mediaioff

Part No.	Description	Was	Code	Page
6688400	INSULATION	6675610	A	562
6688401	INSULATION	6675607	A	562
6688403	PANEL	6686510	A	208, 210, 514
6688404	PANEL, KEY STANDARD	6678681	A	208, 210
6688521	SPRING			186
6688640	GEAR HOUSING			280, 322, 372, 408
6688743	STEM, VALVE CONTROL	6678892		114, 128
6689441	PUMP, OIL ENG	3975426	A	282, 328, 376
6689503	CASE MAIN BRG	6685480	A	384, 422
6689638	CUP, BEARING	6634609	A	36
6689651	CHAIN, DRIVE			34
6689652	CHAIN, DRIVE			34
6689697	HOUSING	6685063	B,D	186
6689698	PLATE	6678001	B,D	186
6689700	PLATE	6678003	B,D	186
6689739	VALVE	6668765	A	142
6689754	PANEL INSTRUMENT LH			208, 210
6689775	BEARING, AXLE	6519925	A	36
6689983	FILTER KIT			614
6690707	SEAL	6665086	A	88, 90, 92
6690709	LINK			34
6690949	O-RING			174
6691001	WINDOW	6674520	A	496
6691003	WINDOW	6674522	A	496
6691022	NUT	6690705	A	114, 130
6691173	BRACKET			542
6691343	GEROLER	6685067	B,D	186
6691495	CRANKSHAFT	6667437	B,D	384, 422
6692357	SPEEDI SLEEVE			272, 274
6692375	BOLT			372, 408
6692377	BOLT			372, 408
6692380	OIL PUMP	6682498	D	412
6692386	GASKET	6684813	A	370, 386, 424
6692387	GEAR	6653840	A	296, 342
6693241	KEY 10			208, 210, 474, 480, 634
6693245	SWITCH, IGN			208, 210
6697796	FLASHTUBE			656
6697797	AMBER LENS	6665021	A	656
6697965	HARNESS			208, 210
6698120	GASKET	3975389	A	312, 362, 402, 444
6698244	ORING	6657422	B,D	324, 326, 408, 410
6698442	HOSE	6675075	A	576
669863	RING, SNAP			190, 196
6698634	VALVE, INLET			380
6698635	VALVE, EXHAUST			380
66D4	NUT			216, 270
66D4	NUT	86D000004B	B	216, 270
6700115	SPRING, TORSION			260
6700170	WASHER			40, 270
6700182	COVER, DRAIN			34
6700330	COVER			40, 42
6700535	SPACER			266

Code for disposition of old part number

A -- Use up
B -- Use on other application (See PNI)
C -- File PDR Report with Bobcat Parts Sales
D -- Part Number Error

Page 716 - OSS# 2071349 - All rights reserved by Bobcat Company - 12/01/2009 - 20:50:59 - Produced by Ken Cook Co. with mediaioff

Part No.	Description	Was	Code	Page
6700599	ELBOW			176
6700711	AIR CLEANER	6661400	A	367, 368
6700782	CAP			272
6701097	WASHER			252
6701123	SCREW			256, 258
6701151	PIPE			256
6701159	SHIM			272
6701174	WASHER			8, 46, 58
6701449	FILLER TUBE			30
6701535	SPRING			12, 180
6701892	CLAMP			594
6701893	CLAMP			46, 50, 54, 58, 62, 66
6701952	SOCKET			588
6702102	GEAR			272
6702103	GEAR, PINION			272
6702135	SHAFT			272
6702137	SHAFT			272
6702144	SHIM			272
6702165	SHIM			272
6702166	SHIM			272
6702402	SHIELD			544
6702444	FUSE 25A 5			214, 218
6702474	RETAINER			260
6702543	LEVER, STEERING			179, 180
6702593	SPACER			456
6702621	GRIP			220
6702669	HOSE			76
6702716	BLOCK			180
6702903	LEVER			28
6702904	LEVER			28
6702958	BUSHING, WELD-ON			28
6702971	BOLT			8
6702990	BUSHING			222, 226, 238, 552
6703022	CLIP			260
6703097	GASKET, TRANS COVER			40, 42
6703140	WASHER			266
6703168	BEARING			262
6703331	INSULATION			540, 650
6703471	BRACKET			252, 256
6703471	BRACKET	6708981	A	252, 256
6703483	PULLEY, FAN DRIVE IDLER			254, 540, 650
6703640	KIT			647, 648
6703641	DECAL			648
6703703	GUIDE			648
6703727	DECAL			582
6703736	CAP			280, 322, 372, 408
6703879	BUSHING, PLASTIC			180
6703968	INSULATION	6719329	A	540, 650, 652
6703981	MOUNT			266
6704012	HOSE			266
6704146	BRACKET			584
6704147	BRACKET	6725300	B,D	584
6704248	PIVOT			28

Code for disposition of old part number

A -- Use up

B -- Use on other application (See PNI)

C -- File PDR Report with Bobcat Parts Sales

D -- Part Number Error

Page 717 - OSS# 2071349 - All rights reserved by Bobcat Company - 12/01/2009 - 20:50:59 - Produced by Ken Cook Co. with mediaioff

Part No.	Description	Was	Code	Page
6704284	KIT, COUNTERWEIGHT			503, 504
6704322	MOUNT			266
6704391	PULLEY			262
6704424	PULLEY, PUMP HYD			260
6704441REM	ENGINE, KUBOTA V2203			276
6704443	BUSHING			260
6704444	WASHER			260
6704450	SHIELD			260
6704484	WASHER			260
6704492	HOUSING			38
6704631	HOSE			166, 170
6704720	BELT, ALT			266
6704769	INSULATION			540, 650
6704786	DECAL			584
6704820	O-RING			260
6704878	GASKET			34
6704892	RIVET	84G001908B	B	526, 528
6704892	RIVET			526, 528
6705070	TEE			60, 464
6705088	DECAL			508
6705106	WASHER			266, 530
6705231	WASHER			260
6705232	WASHER			260
6705452	LEVER			270
6705471	MOUNT			148
6705491	SPRING			262
6705497	HOSE			150, 156
6705711	BRACKET			266
6705847	SEAL, OIL			38
6706042	COVER			40, 42
6706043	SPACER			266
6706095	MOUNT			180
6706096	MOUNT			182, 190
6706098	GUIDE			180
6706104	RETAINING NUT			94
6706105	YOKE			94
6706106	MOUNT			180
6706285	SCREEN			616
6706349	MOUNT			8
6706393	SHIELD			256
6706394	SHIELD			256
6706427	AXLE			36
6706485	HOOK			34
6706517	SCREW			30, 252
6706572	SET SCREW			270
6706633	ADAPTER			620, 624, 630
6706718	MOUNT			40, 42, 44
6706737	GASKET			40, 42, 44
6706807	PIN			586
6706808	COVER			6
6706825	LIFT EYE			586
6706939	KIT			615, 616
6706968	GASKET			40, 42

Code for disposition of old part number

A -- Use up
B -- Use on other application (See PNI)
C -- File PDR Report with Bobcat Parts Sales
D -- Part Number Error

Page 718 - OSS# 2071349 - All rights reserved by Bobcat Company - 12/01/2009 - 20:50:59 - Produced by Ken Cook Co. with mediaioff

Part No.	Description	Was	Code	Page
6707040	ELBOW			212, 216
6707101	SEAL			70, 144
6707313	PEDAL MOUNT			40
6707314	PEDAL			40
6707315	ANGLE			40
6707337	SWITCH, LOCK TRACTION			40
6707647	BRACE			34
6707789	LIGHT			537, 538
6707852	DECAL			472
6708009	LINK			94
6708016	GASKET			40, 42, 44
6708018	SPRING			40, 42, 44
6708043	BUSHING			94
6708189	TUBE			8
6708267	BOLT			40, 42, 44
6708310	HOSE			472
6708770	CAP			260
6708929	DECAL			510
6708987	HINGE, WELD-ON			6
6709030	DECAL			260, 510
6709229	BOLT			532
6709234	DISC			532
6709236	MOUNT			532
6709237	CLAMP			532
6709239	PEDAL ASSY.			532
6709400	TUBE			532
6709547	HOSE	6709545	B	532
6710358	DECAL			508
6710573	TUBE			48, 60
6710585	WASHER			260
6710659	BUSHING			12
6710746	SAFETY TREAD			508
6711166	HOSE			74
6711524	REAR DOOR			4
6711527	LATCH PLATE			18
6711632	MOUNTING KIT			529, 530
6711643	CAM			180
6711664	GUIDE, LATCH			18
6711674	MOUNT			148, 150, 550
6711699	HUB ASSY.			262
6711840	DECAL			508
6711908	SPRING PLATE			10, 648
6711913	BRACKET			148, 150, 154
6712365	STEP			222, 228
6712402	MOUNT ASSY.			34
6712970	PULLEY			539, 540, 650
6712971	PULLEY			540, 650
6713040	SPRING			28
6713043	SPACER			222, 226, 238, 552
6713116	BUSHING			592
6713349	GRIP			222
6713370	PIN			260
6713456	SHAFT, TRANS			38, 40, 42
6713507	DECAL			508

Code for disposition of old part number

A -- Use up
B -- Use on other application (See PNI)
C -- File PDR Report with Bobcat Parts Sales
D -- Part Number Error

Page 719 - OSS# 2071349 - All rights reserved by Bobcat Company - 12/01/2009 - 20:50:59 - Produced by Ken Cook Co. with mediaioff

Part No.	Description	Was	Code	Page
6713589	CLEVIS			12
6713793	BRACKET			456
6713887	BOLT			12
6714037	LATCH			634
6714126	DOOR STOP			18, 20
6714210	SPRING			18
6714212	PULLEY ASSY.			262
6714242	DECAL			510
6714278	GUIDE			40, 42, 44
6714361	WEIGHT			504, 506
6714535	DECAL			508, 510
6714543	GASKET			276, 280, 370, 372, 408
6714665	MOUNT			71, 72, 75, 76
6714726	GROMMET			222, 228, 234
6714808	HOSE			166, 618, 620, 624
6714808	HOSE	6711166	B	166, 618, 620, 624
6714904	TEE			148, 150, 154, 156
6714932	KIT, COUNTERWEIGHT			505, 506
6714979	BRACKET			212, 216
6715106	INSULATION			540, 650
6715131	BRACKET	6727508	A	214, 216, 516, 518
6715132	RETAINER			212, 218
6715142	FAN			254
6715143	SET SCREW			254
6715163	BUSHING, PRESS FIT			180
6715164	SLEEVE, SPRING			182
6715165	FLYWHEEL			262
6715183	ELBOW			30
6715184	ADAPTER			48, 60
6715190	ELBOW			164, 165, 166, 170
6715191	ELBOW			166, 170
6715197	CLAMP			214, 216
6715318	TOOL HOLDER			18
6715365	HARNESS			450, 512
6715428	DECAL			540, 650
6715653	TEE			176
6715659	HARNESS			456
6715860	SEAT BAR			12
6715863	BRACKET			12
6715864	BUSHING			12
6715865	BUSHING			12
6715866	BUSHING			12
6715912	DECAL			508
6715924	PULLEY			254
6715957	COVER			222
6715975	HARNESS			212
6716061	TEE			46, 50, 54, 58, 62, 66
6716089	CONNECTOR			148, 150, 550, 618, 628
6716391	HOSE			166
6716408	SPACER			266
6716419	HARNESS, DOOR REAR			588
6716443	ELBOW			620, 624

Code for disposition of old part number
A -- Use up
B -- Use on other application (See PNI)
C -- File PDR Report with Bobcat Parts Sales
D -- Part Number Error

Page 720 - OSS# 2071349 - All rights reserved by Bobcat Company - 12/01/2009 - 20:50:59 - Produced by Ken Cook Co. with mediaioff

Part No.	Description	Was	Code	Page
6716449	PAD			164
6716545	ROD			180
6716571	LOUVER, PLASTIC LH			252
6716573	LOUVER, PLASTIC RH			252
6716621	COVER			16
6716826	BOLT			222, 226, 552
6716843	WASHER			36
6716916	WASHER			222, 228, 234
6716977	BELLCRANK			180, 222, 226, 234
6717015	ROD LINK			22
6717021	BUSHING			24
6717025	BUSHING			24
6717026	BUSHING			24
6717037	BUSHING			24
6717039	BUSHING			22
6717041	BUSHING			24
6717052	MAIN FRAME			3, 4
6717142	BRACKET			60, 464
6717143	MOUNT			46, 58
6717144	HOSE			166, 172
6717145	BRACKET			164
6717151	MOUNT			70
6717207	PANEL			16
6717239	LINK			180
6717246	BUSHING			22, 23, 24
6717259	BUSHING			28
6717260	BUSHING			28
6717277	BUSHING			4
6717278	BUSHING			4
6717293	MOUNT			586
6717313	PANEL			16
6717343	DECAL			508
6717356	BUSHING			4
6717357	BUSHING			4
6717358	BUSHING			6
6717359	BUSHING			4, 5, 6
6717369	BRACKET			474, 482
6717382	TUBE			46
6717384	BRACKET			72, 76
6717385	HOSE			74, 76, 166
6717386	HOSE			70
6717387	HOSE			74, 78
6717389	ADAPTER			164
6717393	LEVER			222, 225, 226, 234
6717401	PLUG			32
6717402	BUSHING			32
6717434	TUBE			60, 64, 464, 466
6717435	TUBE			60, 464
6717436	TUBE			58, 464
6717437	TUBE			46, 58
6717439	TUBE			72
6717440	TUBE			72
6717441	TUBE			46, 58

Code for disposition of old part number

A -- Use up
B -- Use on other application (See PNI)
C -- File PDR Report with Bobcat Parts Sales
D -- Part Number Error

Page 721 - OSS# 2071349 - All rights reserved by Bobcat Company - 12/01/2009 - 20:50:59 - Produced by Ken Cook Co. with mediaioff

Part No.	Description	Was	Code	Page
6717442	TUBE			46, 58
6717443	TUBE			46, 58
6717444	TUBE			46, 58
6717445	TUBE			46, 58
6717486	PIN			22
6717502	BOOM STEP			46, 50, 54, 58, 62, 66
6717504	BRACKET			32
6717517	INSULATION			514
6717518	INSULATION			514
6717536	PIN			22
6717560	PIN			21, 22
6717562	BUSHING			24
6717566	ROD			270
6717579	GASKET			32, 212, 218
6717591	HOSE			256, 258
6717592	HOSE			256, 258
6717593	HINGE			476, 480
6717637	TANK			254
6717639	DECAL			508
6717650	MOUNT			254
6717674	HOSE			256, 258
6717704	HOSE			30
6717706	COIL, 10 VOLT	6666547	A	100, 108, 124, 130
6717706	COIL, 10 VOLT	6665759	D	100, 108, 124, 130
6717706	COIL, 10 VOLT			100, 108, 124, 130
6717707	PIN			586
6717815	ADAPTER			168
6717820	BAR			94
6717827	CAP			163, 164, 169, 170
6717830	TUBE			164, 170
6717844	TUBE			628
6717859	GASKET			32
6717866	TUBE			72
6717867	TUBE			72
6717870	FRAME			496
6717871	FRAME			496
6717872	FRAME			496
6717873	FRAME			496
6717874	WINDOW			496, 514
6717885	ELBOW			148
6717886	HOSE			148
6717890	COVER			16
6717905	HOSE			166, 170
6717907	DECAL			510
6717908	HOSE			166, 170
6717909	TUBE			166
6717923	TEE			72, 76
6717933	CLAMP			46, 50, 54, 58, 62, 66
6717945	LEVER			94
6717951	CLAMP			72, 76, 80
6717961	GUSSET			26
6717987	HOSE			570
6718020	HOSE			164, 170
6718027	TUBE			72

Code for disposition of old part number

A -- Use up
B -- Use on other application (See PNI)
C -- File PDR Report with Bobcat Parts Sales
D -- Part Number Error

Page 722 - OSS# 2071349 - All rights reserved by Bobcat Company - 12/01/2009 - 20:50:59 - Produced by Ken Cook Co. with mediaioff

Part No.	Description	Was	Code	Page
6718028	TUBE			72
6718030	TUBE			46, 50, 54, 58, 62, 66
6718034	FUSE, 30A			214, 218
6718066	HOSE			46, 50, 54, 58, 62, 66
6718080	ELBOW			148
6718098	CONNECTOR			148, 150, 154
6718101	COVER			10
6718122	MOUNT			586
6718136	TUBE			148, 150, 154
6718142	KIT			463, 464
6718175	SCREEN			556, 560
6718190	TUBE			618
6718191	TUBE			618
6718192	TUBE			618
6718193	TUBE			618
6718198	HARNESS			538
6718203	TUBE			618
6718204	TUBE			618
6718205	TUBE	6709409	B,D	532
6718206	TUBE	6709410	B,D	532
6718207	TUBE			618
6718208	HOSE			618, 620, 624
6718238	BRACKET			46, 50, 54, 58, 62, 66
6718244	TUBE			148, 150, 550
6718245	TUBE			148, 150, 550
6718260	BATTERY PAN			212, 218
6718271	DECAL			508
6718272	DECAL			510
6718275	DECAL			508
6718286	HOSE			618, 628
6718291	GRILL	6705131	A	254, 255, 256
6718291	GRILL			254, 255, 256
6718295	HARNESS			476
6718298	KIT			658
6718311	HOSE			80
6718312	STOP			26
6718326	MOUNT			546
6718358	HOSE			594, 598
6718376	HINGE			476, 480
6718411	KIT			545, 546
6718415	SWITCH			212, 216
6718417	SENDER	6727869	D	212
6718426	HARNESS, BOOM			522, 524
6718454	HOSE			148, 150, 550
6718498	BRACKET			164
6718520	COVER			474, 480
6718578	TEE			570
6718579	DECAL			556, 560
6718580	PANEL			514
6718628REM	ENGINE, KUBOTA V2003T-EB TIER 1			318
6718633	TUBE			628
6718652	HARNESS			594, 598
6718657	CLAMP			72
6718659	HOUSING			212, 216

Code for disposition of old part number

A -- Use up

B -- Use on other application (See PNI)

C -- File PDR Report with Bobcat Parts Sales

D -- Part Number Error

Page 723 - OSS# 2071349 - All rights reserved by Bobcat Company - 12/01/2009 - 20:50:59 - Produced by Ken Cook Co. with mediaioff

Part No.	Description	Was	Code	Page
6718661	ELBOW			176
6718672	BRACKET			252
6718702	DECAL			222
6718704	DECAL			222, 230
6718706	DECAL			222, 230, 234
6718719	HANDBOOK, OPERATOR'S		A	2, 508, 552, 553, 554
6718719	HANDBOOK, OPERATOR'S	6737783	A	2, 508, 552, 553, 554
6718719	HANDBOOK, OPERATOR'S	6902600	B,D	2, 508, 552, 553, 554
6718723	WASHER			22
6718728	MOUNT ASSY.	6710469	B,D	532
6718730	BELT, FAN			254
6718750	MOUNT			522, 524
6718772	GASKET			164, 170
6718774	DECAL			16, 214, 218, 508
6718784	COVER			8
6718789	PIN			22
6718791	COVER			4
6718796	PLUG	6660646	A	6, 18, 20
6718796	PLUG			6, 18, 20
6718804	KIT			511, 512
6718805	KIT	SALES	A	495, 496
6718807	KIT			471, 472
6718820	HARNESS			456
6718822	KIT			455, 456
6718833	BRACKET			544
6718834	BRACKET			544
6718837	SPACER			556, 560
6718848	HOSE			594
6718870	HARNESS			207, 208
6718871	HARNESS			212
6718872	HARNESS			458, 546, 656
6718873	HARNESS			546
6718880	GUSSET			26
6718887	PANEL			556, 560
6718912	HARNESS			211, 212
6718913	HARNESS			212, 224
6718924	KIT			543, 544
6718942	NUT			24
6718948	SNUBBER			212
6718962	HOSE			74
6718994	MOUNT			6
6719018	DECAL			510
6719037	STRIKER			496
6719048	MOUNT			270, 280, 322, 372, 408
6719056	BLOCK			40, 42, 44
6719057	BLOCK			40, 42, 44
6719059	CABLE			212
6719060	CABLE			212
6719063	STOP			496
6719064	MOUNT			8, 548
6719064	MOUNT	6719005	A	8, 548
6719065	COVER TAB			496

Code for disposition of old part number
A -- Use up
B -- Use on other application (See PNI)
C -- File PDR Report with Bobcat Parts Sales
D -- Part Number Error

Page 724 - OSS# 2071349 - All rights reserved by Bobcat Company - 12/01/2009 - 20:50:59 - Produced by Ken Cook Co. with mediaioff

Part No.	Description	Was	Code	Page
6719080	HOSE	6717876	A	570
6719144	HOSE			570, 572
6719150	KIT			531, 532
6719176	SWITCH ROCKER			576
6719184	MOUNT			584
6719185	MOUNT			584
6719201	COVER			6
6719230	BRACKET			214
6719264	KIT			583, 584
6719317	WINDOW			638
6719327	INSULATION			540, 650, 651, 652
6719328	INSULATION			540, 650, 652
6719330	INSULATION			540, 650, 652
6719331	INSULATION			540, 650, 652
6719332	INSULATION			540, 650, 652
6719333	INSULATION			540, 650, 652
6719334	INSULATION			540, 650, 652
6719372	INSULATION			540, 650, 652
6719389	INSULATION			652
6719413	WINDOW			496
6719424	TEE			46, 50, 54
6719434	HARNESS			526
6719439	HOSE			46, 50, 54, 58, 62, 66
6719441	DECAL			526
6719442	MOUNT			526
6719448	MAGNET, CONTROL ATTACH			526, 528
6719451	HOSE			594, 598
6719451	HOSE	6718276	A	594, 598
6719504	INSULATION			10
6719510	PLUG			28
6719524	STRIKER			18
6719525	BAR			18, 20
6719550	TUBE			18
6719565	HOSE			258
6719574	DECAL			510
6719605	HOSE			172
6719766	STOP			18, 20
6719795AR	KIT			508, 510
6719795BR	KIT			508, 510
6719796AR	KIT			508, 510
6719796BR	KIT			508, 510
6719796JP	KIT			508, 510
6719825	BOLT	5CM01025B	B	262
6719826	BOLT	5CM01035B	B	266
6719827	BOLT	6CM01225B	B	266
6719828	BOLT	6CM01230B	B	260, 266
6719829	BOLT	6CM01235B	B	266
6719834	SPACER			226, 238, 452, 552
6719835	SLEEVE			226, 238, 552
6719840	KIT			593, 594
6719854	KIT			457, 458
6719857	KIT			655, 656
6719882	TUBE			594
6719883	TUBE			594

Code for disposition of old part number

A -- Use up
B -- Use on other application (See PNI)
C -- File PDR Report with Bobcat Parts Sales
D -- Part Number Error

Page 725 - OSS# 2071349 - All rights reserved by Bobcat Company - 12/01/2009 - 20:50:59 - Produced by Ken Cook Co. with mediaioff

Part No.	Description	Was	Code	Page
6719884	BRACKET			594, 598
6719888	DECAL			594, 598
6719992	TUBE	6717417	A	176
6720038	INSTRUCTIONS			460
6720592	INSTRUCTIONS			544
6720736	PLUG			459, 460
6722147	HOLDER KIT			315, 316, 365, 366, 404
6722147REM	NOZZLE, FUEL INJ. KUBOTA V2203			316, 366, 404
6722597	VELCRO			492
6722861	INSTRUCTIONS			616
6722907	KIT			36, 453, 454
6722908	INSTRUCTIONS			454
6724482	INSTRUCTIONS			530
6725092	DECAL			506, 508
6725092	DECAL	6561376	A	506, 508
6725128	ADAPTER	6718801	A	222, 230, 234
6725128	ADAPTER			222, 230, 234
6725165	MOUNT			228
6725171	SHIELD			472, 482
6725182	TEE			70, 172
6725212	ARM	6703507	A	260
6725256	COUNTERWEIGHT	6714053	A	506
6725273	HARNESS			512, 556, 560
6725291	BUSHING			26
6725293	PLUG			28
6725295	BUSHING			28
6725301	OP MANUAL COVER			10
6725302	GASKET			15, 16, 214
6725303	OP MANUAL PAN			10
6725318	KIT			28
6725337	TUBE			46, 50, 54, 58, 62, 66
6725361	INSULATION			540, 650, 652
6725370	DECAL			644
6725373	SPRING PLATE			10
6725374	DECAL			508, 510
6725374	DECAL	6719017	B	508, 510
6725390	HARNESS			556, 557, 558
6725419	KIT			649, 650
6725421	HANDLE			502
6725427	BRACKET			268
6725502	ELBOW	23F000001B	A	368
6725552	TUBE	6718246	B,D	594, 598
6725552	TUBE			594, 598
6725553	TUBE	6718247	B,D	594, 598
6725553	TUBE			594, 598
6725592	GUARD			48, 60
6725898	KIT			541, 542
6725906	BRACKET			542
6725907	DECAL			594, 598
6725907	DECAL	6717842	B	594, 598
6725933	HARNESS			556, 560, 576
6725933	HARNESS	6717877	A	556, 560, 576
6725934	HARNESS			558
6725936	HARNESS			558

Code for disposition of old part number
A -- Use up
B -- Use on other application (See PNI)
C -- File PDR Report with Bobcat Parts Sales
D -- Part Number Error

Page 726 - OSS# 2071349 - All rights reserved by Bobcat Company - 12/01/2009 - 20:50:59 - Produced by Ken Cook Co. with mediaioff

Part No.	Description	Was	Code	Page
6725937	CLAMP			480
6725938	CLAMP			480
6725946	KIT			501, 502
6725969	SPACER			48, 60
6726062	SHIELD			6
6726162	BRACKET			170
6726166	TUBE			50, 54
6726167	TUBE			52, 56, 64, 68
6726168	TUBE			50, 54, 62, 66
6726169	TUBE			50
6726171	TUBE			50, 62
6726172	TUBE			50, 62
6726178	KIT			465, 466
6726180	TUBE			64, 68, 466, 468
6726182	TUBE			64, 466
6726185	TUBE			76, 626
6726186	TUBE			76, 156, 626
6726187	TUBE			76
6726188	TUBE			76, 156
6726192	TUBE			150, 154, 155, 156
6726196	HOSE			150, 154, 156
6726251	HOSE			170
6726253	MOUNT			50, 54, 62, 66
6726254	BRACKET			170
6726255	PAD			170
6726258	SCREEN			164
6726260	KIT	SALES	A	619, 620
6726263	TUBE			620, 624
6726264	TUBE			620, 624
6726265	TUBE			620
6726266	TUBE			620
6726267	TUBE			620, 624
6726268	TUBE			620, 624
6726269	TUBE			620, 624
6726270	HOSE			76
6726272	TUBE			620, 624, 630
6726273	TUBE			620, 624, 630
6726274	TUBE			630
6726275	TUBE			630
6726277	CLAMP			56, 66
6726288	KIT	SALES	A	629, 630
6726293	SPACER BLOCK			620, 624
6726303	DECAL			502
6726357	HARNESS			578
6726386	KNOB			558, 560
6726420	KIT			479, 480
6726423	DECAL			586
6726433	SPACER			256, 258
6726479	ADAPTER	6711628	A	148, 150, 154
6726503	BRACKET	6718970	A	214
6726531	MUFFLER			590
6726539	PULLEY			260
6726601	HARNESS			216
6726608	COVER			558

Code for disposition of old part number

A -- Use up
B -- Use on other application (See PNI)
C -- File PDR Report with Bobcat Parts Sales
D -- Part Number Error

Page 727 - OSS# 2071349 - All rights reserved by Bobcat Company - 12/01/2009 - 20:50:59 - Produced by Ken Cook Co. with mediaioff

Part No.	Description	Was	Code	Page
6726620	BRACKET			576
6726621	SCREW			566, 568, 576
6726623	HOSE			576
6726648	BRACKET			576
6726649	TUBE			174
6726655	KIT			637, 638
6726656	HOSE			576
6726661	HOSE, A/C ASSY			576
6726679	MOUNT			94
6726681	LINK			234, 452
6726888	HARNESS			576
6726897	BUSHING			26
6726898	BELT			262
6726933	FLYWHEEL ASSY			262
6726938	SHIELD			262
6726945	MOUNT			528
6726988	BELT			576
6727065	BOLT			224, 226, 230, 238, 452, 552, 554
6727084	BRACKET			266
6727130	HARNESS			230, 231, 232
6727140	FILTER, AIR HEATER CAB			558
6727155	DECAL			230, 552
6727176	KIT			519, 520
6727178	HARNESS			209, 210
6727190	HARNESS			512
6727298	KIT			224, 551, 552
6727299	INSULATION	6719425	A	514, 652
6727299	INSULATION			514, 652
6727310	DECAL	6711329	A	508
6727311	DECAL	6714139	A	510
6727328	HARNESS			554
6727414	HOSE			576
6727468	HARN.STD ACCESS			449, 450
6727496	PIN			234, 452
6727498	HARNESS	6719151	A	582
6727527	CABLE			212
6727528	CABLE			212, 216
6727595	DECAL	6595014	A	508, 510
6727595	DECAL	6595014	B	508, 510
6727637	ELBOW			170
6727638	TEE			52, 56, 64, 68
6727640	TUBE			52, 56, 174
6727640	TUBE	6725369	A	52, 56, 174
6727644	TUBE			50, 62
6727645	TUBE			170
6727646	BRACKET			64, 68, 466, 468
6727647	TUBE			178
6727649	TUBE			76
6727657	HOSE			76, 80
6727658	TUBE			76
6727702	TUBE			50, 54, 62, 66, 70
6727703	HOSE			52, 64
6727705	HOSE			52, 56, 64, 68
6727707	CLAMP			52, 56, 64, 68

Code for disposition of old part number

A -- Use up
B -- Use on other application (See PNI)
C -- File PDR Report with Bobcat Parts Sales
D -- Part Number Error

Page 728 - OSS# 2071349 - All rights reserved by Bobcat Company - 12/01/2009 - 20:50:59 - Produced by Ken Cook Co. with mediaioff

Part No.	Description	Was	Code	Page
6727708	CLAMP			52, 56, 64, 68
6727739	KIT			527, 528
6727752	GASKET	6575580	B	256, 276, 302, 370
6727752	GASKET	6666791	B,D	256, 276, 302, 370
6727753	GASKET	6666816	A	258, 320, 350
6727786	KIT	6728990	A	567, 568
6727847	COVER			558, 560
6727863	ROD LINK			22
6727869	SENDER,HYD TEMP			216
6727912	DECAL	6714526	A	510
6727913	DECAL	6714534	A	508, 510
6727926	DECAL			234, 452, 508
6727926	DECAL	6718703	A	234, 452, 508
6727926	DECAL	6727941	A	234, 452, 508
6727993	KIT			585, 586
6727995	KIT, HORN	6719043	B	581, 582
6728011	BRACKET			576
6728045	DECAL			452
6728062	MOUNT			262
6728079	HOSE			166, 170
6728079	HOSE	6717332	A	166, 170
6728157	EXCHANGER, OIL COOLER			174
6728327	DECAL	6718701	A	508
6728328	DECAL			230
6728337	SPACER			266
6728459	DOOR SENSOR			476, 482
6728473	BOLT	38C001036B	A	28
6728539	DECAL	6718698	A	222, 230, 234, 452, 508
6728539	DECAL	6718699	A	222, 230, 234, 452, 508
6728539	DECAL			222, 230, 234, 452, 508
6728540	DECAL			452
6728567	KIT			562, 565, 566
6728613	HOSE	6718074	A	148
6728626	HARNESS			218
6728673	TANK			170
6728742	HARNESS			224, 230, 554
6729004	KIT			575, 576
6729008	CABLE			218
6729009	SEAL			496
6729010	SEAL			496
6729011	SEAL			496
6729012	INSULATION			8
6729013	INSULATION			8
6729054	HARNESS			232
6729056	HARNESS, MFR			215, 216
6729077	DECAL			578
6729082	MOUNT			176, 177, 178
6729083	MOUNT	6728140	A	176
6729094	HOSE			150, 154
6729141	MOUNT			548
6729146	HOSE	6712856	A	148
6729161	HOSE	6718069	A	72
6729162	HOSE	6718847	A	594
6729173	COVER			42

Code for disposition of old part number

A -- Use up

B -- Use on other application (See PNI)

C -- File PDR Report with Bobcat Parts Sales

D -- Part Number Error

Page 729 - OSS# 2071349 - All rights reserved by Bobcat Company - 12/01/2009 - 20:50:59 - Produced by Ken Cook Co. with mediaioff

Part No.	Description	Was	Code	Page
6729202	HOSE			594, 598
6729202	HOSE	6719603	A	594, 598
6729203	HOSE	6719604	A	594, 598
6729203	HOSE			594, 598
6729233	KIT			512
6729380	HARNESS, CONTROL ATTACH DLX			528
6729467	SPACER			234, 452
6729594	HANDLE			224, 230, 238, 554
6729595	HANDLE			224, 230, 238, 554
6729646	DECAL			508, 510
6729647	DECAL			508
6729688	LATCH			634
6729776	WINDOW, DOOR CURVED CAB			478
6729819	BUSHING			24
6729853	HOSE			30
6729854	TUBE			32
6729900	TIRE			660
6729909	TUBE			56, 70
6729939	LATCH PLATE			20
6729956	LEVER, PINTLE			180
6729974	HARNESS			216
6729991	REAR DOOR			20
6730078	COVER			34
6730106	TIRE			660
6730123	HARNESS			478
6730142	TEE			54, 66
6730201	TUBE			54, 62, 66
6730201	TUBE	6726169	C	54, 62, 66
6730202	TUBE			54, 66
6730203	TUBE			54, 66
6730209	TUBE			68, 468
6730290	BOLT			26
6730291	BRACKET			528
6730770	HARNESS			598, 599, 600
6730771	RIM	6565239	A	660
6730772	RIM	6565240	A	660
6730775	RIM	6705109	A	660
6730816	SHIELD			472, 482
6730822	KIT			472
6730823	KIT			480
6730886	KIT			467, 468
6730909	DECAL	6727755	A	510
6730910	DECAL			510
6730996	HOSE			572
6730997	BUSHING	711273B	A	28
6730998	HOSE			572
6730999	TUBE ASSY	6576029	A	256, 258
6731049	ADAPTER			572
6731059	INLET	6717705	A	32
6731060	SHIELD	6717812	A	267, 268
6731084	ADAPTER			574
6731085	ELBOW			572, 574

Code for disposition of old part number
A -- Use up
B -- Use on other application (See PNI)
C -- File PDR Report with Bobcat Parts Sales
D -- Part Number Error

Page 730 - OSS# 2071349 - All rights reserved by Bobcat Company - 12/01/2009 - 20:50:59 - Produced by Ken Cook Co. with mediaioff

Part No.	Description	Was	Code	Page
6731108	SEAL			636
6731119	PIVOT, WEDGE	6714576	A	28, 594, 598
6731119	PIVOT, WEDGE	6704240	B,D	28, 594, 598
6731121	PLUG	11F000012B	A	34
6731151	KIT			451, 452
6731160	WASHER			24
6731212	SENSOR			474, 482, 490
6731228	TUBE			80
6731229	TUBE			80
6731230	TUBE			80
6731231	TUBE			80
6731235	KIT	SALES	D	623, 624
6731245	TUBE			624
6731246	TUBE			624
6731256	CABLE			216, 217, 218
6731275	INSULATION			16
6731478	EXIT TAG	6559515	A	496, 512
6731495	SHIELD			576
6731507	DECAL			510
6731508	DECAL			510
6731509	DECAL			510
6731524	KIT			549, 550
6731578	BUSHING			4, 6
6731617	PAN			516, 518
6731657	BRACKET	6719843	A	584
6731658	BRACKET	6725031	A	584
6731662	HOSE			598
6731665	CABLE			516, 518
6731666	CABLE			516, 518
6731694	KIT			517, 518
6731695	KIT			515, 516
6731746	BRACKET			516, 518
6731757	DECAL			80, 508
6731956	KIT			326
6731979	BUSHING			28
6731994	DECAL			540
6732001	KIT	6714973	A	633, 634
6732023	CONNECTOR			572
6732199	GASKET	6666790	A	276, 300, 346, 570, 572
6732219	KIT	6725168	A	643, 644
6732225	SPACER			6
6732264	FRAME LINK			26
6732265	BUSHING			26
6732280	SHIM			26
6732318	SPACER			254
6732351	WINDOW			480
6732416	BELT			254
6732423	DECAL			510
6732443	CUP			24, 28
6732451	KIT			489, 490
6732457	WASHER			254
6732486	CONDENSER	6726983	A	576
6732532	DECAL			508
6732533	DECAL			508

Code for disposition of old part number
A -- Use up
B -- Use on other application (See PNI)
C -- File PDR Report with Bobcat Parts Sales
D -- Part Number Error

Page 731 - OSS# 2071349 - All rights reserved by Bobcat Company - 12/01/2009 - 20:50:59 - Produced by Ken Cook Co. with mediaioff

Part No.	Description	Was	Code	Page
6732619	SEAL			636
6732621	PANEL			16
6732715	LATCH	6729685	A	20
6732718	KIT			635, 636
6732724	INSULATION	6719409	A	540, 650, 652
6732732	BUSHING			578
6732928	KIT			547, 548
6732997	U-BOLT	6700768	A	180
6733002	MAIN FRAME			4
6733107	PLUG ASSY			8
6733142	KIT			521, 522
6733292	HARNESS, ACS	6726925	B	232, 234
6733292	HARNESS, ACS	6729023	A	232, 234
6733529	SEAL			16
6733575	HINGE, REAR DOOR	6711526	A	18, 20
6733616	BUMPER			20
6733655	COMPRESSOR			576
6733667	LATCH, REAR DOOR	6811910	A	20
6733683	TUBE			80
6733684	TUBE	6730285	A	68, 468
6733970	MOUNT	6707726	A	456, 582
6734104	HOUSING ASSY.			254, 273, 274
6734104	HOUSING ASSY.	6702138	A	254, 273, 274
6734416	LEVER			270
6734432	SPACER			266
6734534	DECAL	6718398	A	510
6734561	WASHER			164, 170
6734563	WASHER KIT			164, 170
6734660	BUSHING			24
6734662	PIN, PIVOT TAPERED			22
6735140	DECAL	6557565	A	508
6735245	DUCT	6717643	A	556, 560
6735245	DUCT			556, 560
6735246	DUCT	6717644	A	556, 560
6735246	DUCT			556, 560
6735285	AIR CLEANER			368, 540, 650
6735316	COVER			44
6735349	HOSE			650
6735465	KIT			598
6735505	SPACER			34
6735669	BOOM STEP			46, 50, 54, 58, 62, 66
6735864	DECAL			510
6735883	BRACKET	6708767	A	262
6735884	IDLER ASSY.	6711698	A	262
6735901	DECAL, BOBCAT			510
6736071	KIT			16
6736200	HOSE	6675143	A	166, 172
6736213	HOSE			70
6736641	PAINT			666
6736642	PAINT			666
6736644	PAINT			666
6736645	PAINT			666

Code for disposition of old part number
A -- Use up
B -- Use on other application (See PNI)
C -- File PDR Report with Bobcat Parts Sales
D -- Part Number Error

Page 732 - OSS# 2071349 - All rights reserved by Bobcat Company - 12/01/2009 - 20:50:59 - Produced by Ken Cook Co. with mediaioff

Part No.	Description	Was	Code	Page
6737088	COVER, FRONT ACCESS			448
6737189	DECAL			456
6737191	WEDGE	6704242	A	28
6737368	BRACKET			32
6737388	WASHER			94
6737453	ELBOW	6718181	A	166, 172
6737503	HOSE	6727656	B	598
6737524	KNOB	6668913	A	70, 144
6737648	HOSE	6725436	A	52, 56, 64, 68
6800124	ORIFICE			124, 130
6801059	WASHER			478, 638
6801167	PLUG			124, 130, 136, 138, 139, 140
6803092	BONNET			124, 136, 138
6805102	BUSHING			98, 99, 100, 102, 103, 104, 108, 114, 118, 119, 120
6805160	CASE	6803054	A	602
6805453	BUSHING			82, 84, 86
6806007	SPRING			98, 102, 108, 114, 120, 124, 130, 136
6806124	HEAD			88, 90, 92
6806315	PISTON			82, 84, 86
6806330	KIT, SEAL			82, 84, 86
6806403	HOSE			600
6806561	PLUG			120, 134
6807092	SPACER	6805578	A	602
6809425	SEAL KIT			100, 104, 108, 116, 120, 124, 130, 131, 132, 136, 140
6809425	SEAL KIT	6586461	A	100, 104, 108, 116, 120, 124, 130, 131, 132, 136, 140
6809511	DECAL			52, 56, 64, 68
6809593	SPACER			90, 92
6809726	ROLLER			20
6809727	CHANNEL			20
6809734	BUSHING			20
6809845	BOLT	38C000856B	B	18, 20
6809903	SHAFT, ROD CYL TILT	6806336	A	82, 84, 86
6809903	SHAFT, ROD CYL TILT			82, 84, 86
6810026	VALVE, CONTROL SERVICE			137, 138
6810126	ROD	6807508	A	602
6810132	SPRING			20
6810141	SPRING			20
6810349	CASE			604
6810356	SPACER			604
6810430	ROD	6805086	A	88
6810539	NUT			88, 90, 92
6810539	NUT	6804592	A	88, 90, 92
6810611	CYLINDER, POWER BOB-TACH			604
6810612	SHAFT, ROD CYL POWER BOB-TACH			604
6812031	BLOCK			98, 102, 106, 112, 118
6812031	BLOCK	6674808	A	98, 102, 106, 112, 118

Code for disposition of old part number

A -- Use up

B -- Use on other application (See PNI)

C -- File PDR Report with Bobcat Parts Sales

D -- Part Number Error

Page 733 - OSS# 2071349 - All rights reserved by Bobcat Company - 12/01/2009 - 20:50:59 - Produced by Ken Cook Co. with mediaioff

Part No.	Description	Was	Code	Page
6812031	BLOCK	6805657	A	98, 102, 106, 112, 118
6812170	PLUG			86, 88, 90, 92
6812823	ADAPTER			72
6812927	VALVE, CONTROL SERVICE			101, 102
6814511	SPOOL	6674808	A	98, 102, 112, 118
6814511	SPOOL			98, 102, 112, 118
6814531	ELBOW			50, 51, 52, 56, 62, 66
6815152	SPOOL	6674814	A	98, 102, 106, 112, 118
6815152	SPOOL	6814512	A	98, 102, 106, 112, 118
6815480	VALVE, CONTROL SERVICE			117, 118
6816250	KIT, SEAL	6803605	A	124, 130, 136, 140
6816252	SEAL KIT			100, 104, 108, 116, 120
6816252	SEAL KIT	6806941	A	100, 104, 108, 116, 120
6816253	KIT, SEAL	6809448	A	100, 104, 108, 109, 110, 116, 120, 124, 132, 136, 140
6816253	KIT, SEAL			100, 104, 108, 109, 110, 116, 120, 124, 132, 136, 140
6817553	CROSS	6817553	A	100, 108, 114, 124, 130, 164, 170
6817553	CROSS	6805241	A	100, 108, 114, 124, 130, 164, 170
6900366	INSTRUCTIONS			504
6900410	INSTRUCTIONS			506
6900827	INSTRUCTIONS			586
6900834	MANUAL SERVICE 773 LOADER			2
6900837	INSTRUCTIONS	6900877	B,D	618
6900838	INSTRUCTIONS			464, 466, 468
6900842	MANUAL OPERATION 773/773H LOADER			2
6900848	INSTRUCTIONS			546
6900850	INSTRUCTIONS			558, 570, 572
6900851	INSTRUCTIONS			514
6900852	INSTRUCTIONS			496, 497, 498
6900853	INSTRUCTIONS			498
6900854	INSTRUCTIONS	6901013	B,D	476
6900857	INSTRUCTIONS			456
6900861	INSTRUCTIONS			642
6900877	INSTRUCTIONS			628
6900888	INSTRUCTIONS			584
6900921	INSTRUCTIONS			526
6900934	INSTRUCTIONS	6724380	B	532
6900939	MANUAL PARTS 773 LOADER			2
6900939-CD	MANUAL PARTS 773 LOADER CD			2
6900950	INSTRUCTIONS			596
6900991	INSTRUCTIONS			458
6900992	INSTRUCTIONS			656
6900999	INSTRUCTIONS			28
6901010	INSTRUCTIONS			644
6901011	INSTRUCTIONS			646
6901013	INSTRUCTIONS			484
6901025	INSTRUCTIONS			542

Code for disposition of old part number

A -- Use up

B -- Use on other application (See PNI)

C -- File PDR Report with Bobcat Parts Sales

D -- Part Number Error

Page 734 - OSS# 2071349 - All rights reserved by Bobcat Company - 12/01/2009 - 20:50:59 - Produced by Ken Cook Co. with mediaioff

Part No.	Description	Was	Code	Page
6901029	INSTRUCTIONS			502
6901061	INSTRUCTIONS			638
6901068	KIT	6719796	D	507, 508, 509, 510
6901076	INSTRUCTIONS			520
6901097	INSTRUCTIONS			630
6901098	INSTRUCTIONS			622
6901100	INSTRUCTIONS			554
6901116	INSTRUCTIONS			528
6901120	INSTRUCTIONS			568
6901146	INSTRUCTIONS	6900913	B	582
6901203	INSTRUCTIONS			586
6901213	INSTRUCTIONS			566
6901224	INSTRUCTIONS			578
6901492	INSTRUCTIONS	6901493	B	452
6901514	INSTRUCTIONS	6901098	D	626
6901515	INSTRUCTIONS			550
6901602	INSTRUCTIONS			518
6901603	INSTRUCTIONS			516
6901656	INSTRUCTIONS	6570762	B	634
6901701	INSTRUCTIONS			326
6901734	INSTRUCTION			490
6901774	INSTRUCTIONS			636
6901816	INSTRUCTIONS			548
6901871	INSTRUCTIONS			522
6902228	PAINT, ORANGE SPRAY CAN 6	6722783	A	663, 664
6902229	PAINT, CHARCOAL SPRAY CAN 6	6722786	A	664
6902230	PAINT, WHITE SPRAY CAN 6	6722789	A	664
6902232	PRIMER	6657743	A	664
6902233	PAINT, ORANGE QT 6	6722782	A	664
6902234	PAINT, CHARCOAL QT 6	6722785	A	664
6902235	PAINT, WHITE QT 6	6722788	A	664
6902356	INSTRUCTIONS			558
6902390	HARD HAT WHITE	6559552	A	653, 654
6902421	INSTRUCTIONS	6901439	B,D	600
6903105	OIL, 15W40 QT. 12	6657299	A	2, 664
6903106	OIL, 15W40 GAL. 6	6724558	A	2, 664
6903107	OIL, 10W30 QT. 12	6657301	A	2, 664
6903108	OIL, 10W30 GAL. 6	6724557	A	2, 664
6903109	OIL 30W QT. 12	6657303	A	2, 664
6903110	OIL, 30W GAL. 6	6724559	A	2, 664
6903111	OIL 30W 2.5 GAL 2	6674206	A	2, 664
6903112	OIL, 10W30 2.5 GAL 2	6674205	A	2, 664
6903113	OIL, 15W40 2.5 GAL. 2	6674204	A	2, 664, 665, 666
6903117	FLUID, OIL HYD 2.5 GAL 2	6563328	A	2, 664
6903118	FLUID, OIL HYD 5 GAL	6722344	A	2, 664

Code for disposition of old part number

A -- Use up
B -- Use on other application (See PNI)
C -- File PDR Report with Bobcat Parts Sales
D -- Part Number Error

Page 735 - OS&H 2071349 - All rights reserved by Bobcat Company - 12/01/2009 - 20:50:59 - Produced by Ken Cook Co. with mediaioff

Part No.	Description	Was	Code	Page
6903119	FLUID, OIL HYD 55 GAL	6563330	A	2, 664
6903121	LUBE, GEAR 12	6634393	A	272, 664
6903122	GREASE, MULTI PURPOSE #2 - 10	6658266	A	260, 666
6903122	GREASE, MULTI PURPOSE #2 - 10	6599719	A	260, 666
6903305	INSTRUCTIONS	6900850	B	560, 574
6903305	INSTRUCTIONS			560, 574
6904744	INSTRUCTIONS			500
6969803	COVER, BREATHER	6685086	A	378
6969804	PLUG,OIL GAUGE	6684785	A	374, 420
6969805	KEY,FEATHER	15JM00410B	A	282, 328, 376, 412
6969990	GUIDE	6653803	A	288, 334, 382, 418
6974656	TUBE ASSY, OVERFLOW	6681931	A	404, 446
6983128	ANTI-FREEZE PG 53/47 PREMIX GAL 6	6724094	A	664
6983129	ANTI-FREEZE PG CONCENTRATE 6	6724354	A	664
6986573	INSTRUCTIONS			662
6987915	THREADLOCKER 271 - HEAVY DUTY RED - 0.5ML AMPULE 1	6598485	A	454
69G436	BOLT			224, 228, 234
6E4	WASHER 10			456
6E5	WASHER			208, 210, 216, 268, 546
6E6	WASHER			26, 212, 218
6EM60	WASHER, SPRING			280, 282, 306, 308, 322, 328, 356, 358, 372, 408, 474, 482
6EM80	WASHER, SPRING			250, 280, 286, 288, 298, 300, 302, 310, 322, 332, 334, 344, 346, 348, 350, 360, 572
6J1664	KEY			36
6J807	KEY, WOODRUFF			188, 260
7000329	ADAPTER, SWITCH IGN			208, 210
7000460	TOOL, DISCONNECT TERMINAL			520
7000461	TOOL, DISCONNECT TERMINAL			520
7001044	HORN, ALARM	6675099	A	582
7001673	KIT, SCREEN FILTER			614
7001678	VALVE, CHECK			614
7001903	BOLT			372, 408
7001904	BOLT			372, 408
7001905	BOLT			372, 408
7001922	BOLT	6653798	B,D	374, 420
7001922	BOLT	6698100	A	374, 420
7003006	GASKET	6657402	A	276, 282, 318
7003481	WINDOW, LEFT ASSY	6691000	A	496
7003482	WINDOW, RIGHT ASSY	6691002	A	496

Code for disposition of old part number

A -- Use up
B -- Use on other application (See PNI)
C -- File PDR Report with Bobcat Parts Sales
D -- Part Number Error

Page 736 - OSS# 2071349 - All rights reserved by Bobcat Company - 12/01/2009 - 20:50:59 - Produced by Ken Cook Co. with mediaioff

Part No.	Description	Was	Code	Page
7009081	NUT			208, 210
7010622	PIPE, OIL			436
7010623	CRANKSHAFT, ENG			384, 422
7011039	SEAL, BULK/FT 34	6675558	A	472, 473, 474, 480
7100019	VALVE			558
7100044	HOSE			600
7100153	MOUNT	6713792	A	456
7100573	HOSE			256
7100840	MUFFLER, EXHAUST	6671667	A	256
7101078	PIN, PIVOT TAPERED			22
7101291	ELBOW			30
7101311	HARNESS	6729973	A	216
7101345	BONNET, DETENT HYD VALVE	6587633	A	98, 102, 108, 114, 118, 124, 128, 129, 130, 134, 138
7101672	ACTUATOR			228, 229, 230, 234
7101705	ADAPTER, ACTUATOR			222, 230, 234
7101734	TIRE, STANDARD DUTY - 10X16.5 - 8 PLY	6729896	A	660
7101735	TIRE, HEAVY DUTY - 10.00X16.5 - 10 PLY			660
7101928	VALVE, HEATER CAB			560
7102200	SHIELD	6719851	A	254
7102652	SCREW	30G000416B	B	118, 134
7103075	SEAL			496
7103953	TEE	6717662	A	166, 172
7104465	DOOR SWITCH HARNESS			476, 482, 490
7104568	MOUNT	6712161	A	266
7104842	ACTUATOR			224, 228
7105034	WINDOW TOP	7105035	A	496, 512
7105034	WINDOW TOP			496, 512
7105983	BOLT	6719084	A	208, 210
7106212	HOSE	6537040	A	172
7106277	WIPER HARNESS			476, 482, 490
7106764	SPACER			218
7107175	INLET	6717478	A	252, 253, 254
7107782	HOSE			178
7107896	ROD			90, 92
7108167	HEATER KIT			559, 560
7108169	KIT,HTR PLUMBING			573, 574
7108222	SAFETY TREAD			508
7108236	PIN	6718506	A	224, 230, 234
7108242	TILT SPOOL			128, 134
7108251	SPOOL	7101151	A	128, 134, 138
7108408	LEVER	6733940	A	94
7108780	SLEEVE	6595951	A	98, 102, 108, 114, 118, 124, 130, 136, 140
7109661	LATCH, DOOR W/SENSOR			476, 482
7109662	HANDLE, LATCH DOOR			476, 482

Code for disposition of old part number

A -- Use up

B -- Use on other application (See PNI)

C -- File PDR Report with Bobcat Parts Sales

D -- Part Number Error

Page 737 - OS&H 2071349 - All rights reserved by Bobcat Company - 12/01/2009 - 20:50:59 - Produced by Ken Cook Co. with mediaioff

Part No.	Description	Was	Code	Page
7109663	SPACER			476, 482
7109664	BOLT			476, 482, 490
7109664	BOLT	6677194	A	476, 482, 490
7109665	FRAME, DOOR CAB			472
7109712	SHIELD	6726937	A	262, 263, 264, 576
7110276	SPACER, TAPERED	6715287	A	530
7110316	DECAL	6732975	A	476, 482, 490
7110367	HOSE			600
7110430	SPECIAL APPS DOOR			480
7110571	BELLCRANK, STEERING			180
7114121	HOSE	6734664	A	148, 150, 154
7114236	HOSE			48, 52, 56, 60, 64, 68
7114257	LIFT ARM			24
7115219	PEDAL			94, 452
7115219	PEDAL	6726680	A	94, 452
7115220	MOUNT			94, 452
7115220	MOUNT		B	94, 452
7116564	HOSE	7104132	A	46, 50, 54, 56, 58, 62, 66
7116565	HOSE	7104133	A	52, 64, 68
7117174	CYLINDER, TILT			86
7117175	TUBE, CASE CYL TILT			86
7117232	PANEL	6732620	A	16
7117667	CYLINDER, LIFT			91, 92
7117668	TUBE, CASE CYL LIFT			92
7120111	BRAKE, DISC	6716228	A	40, 42, 44
7120498	BUSHING			24
7121572	DECAL PACKAGE	6725513	A	556, 560
7121779	PAD			182
7122462	KIT, RIB WINDOW			499, 500
7122487	2 SEAL, WIPER			500
7122488	SEAL, BULB			500
7124571	SPACER			584
7124572	SPACER			584
7126672	ELBOW	6666302	A	252
7126869	BRACKET	6726573	A	234, 452
7128600	BRACKET			182
7128601	BRACKET			182
7129987	COVER	6733956	A	44
7131233	PEDAL			592
7131236	BUSHING			592
7132549	HEATER COIL KIT	6691065	A	568
7133211	TANK, WASHER	6736875	A	474
7134137	SPROCKET	6577204	A	33, 34, 36
7135559	SEAL KIT	6816537	A	88, 90, 92
7136678	DECAL			662
7136679	DECAL			662
7136696	COVER	6726069	A	4
7138014	SEAL KIT	6803473	A	602, 604
7138347	HANDLE	6718521	B	476, 480
7139183	SHIELD			16
7139184	INSULATION	6718489	A	10

Code for disposition of old part number
A -- Use up
B -- Use on other application (See PNI)
C -- File PDR Report with Bobcat Parts Sales
D -- Part Number Error

Page 738 - OSS# 2071349 - All rights reserved by Bobcat Company - 12/01/2009 - 20:50:59 - Produced by Ken Cook Co. with mediaioff

Part No.	Description	Was	Code	Page
7140768	KIT			661, 662
7142024	SCREW	25GT412	B	500
7143508	BOB-TACH	6732537	A	28
7147359	BLADE, WIPER WINDOW			478
7148195	INSULATION HEADLINER			514
7148197	INSULATION			514
7148198	INSULATION			514
7148199	INSULATION	6717519	A	514
7148200	INSULATION	6717520	A	514
7153099	BRACE, CAB	7121556	A	500
7153544	HOUSING, FAN	7104117	A	252
7156265	COVER			44
7157890	GAS SPRING	6678292	A	548
7157893	GAS SPRING			474, 482
7157893	GAS SPRING	6682586	A	474, 482
7160425	BUSHING, TAPERED			24
7161187	SHAFT, TRANS	6733621	A	44
7161786	VALVE, POWER BOB-TACH			613, 614
7165265	SEAL, WINDOW			496, 512
7168164	EXTINQUISHER,FIRE	6675581	A	542
7169850	HOSE			178
72F1	FITTING			30
73G656	SCREW			259, 260, 594, 598
73G828	BOLT			182
73K222	RING			602, 604
73K228	BACK-UP RING			88, 90, 92
742640	WASHER			266
743332	GREASE ZERK 5			28
75K3	O-RING			86, 88, 90, 92, 604
774220	NUT			456, 556
77F7	ELBOW			48, 52, 60, 64
77F7	ELBOW	77FN00007B	A	48, 52, 60, 64
77F8	ELBOW			626
799119	RING			98, 102, 108, 114, 118
79K10	O RING 10	79K8	B,D	46, 50, 54, 58, 62, 66, 98, 102, 106, 112, 118, 122, 128, 134, 138, 148, 150, 154, 156, 158, 176, 190, 464, 466, 468, 470, 612, 614
79K10	O RING 10			46, 50, 54, 58, 62, 66, 98, 102, 106, 112, 118, 122, 128, 134, 138, 148, 150, 154, 156, 158, 176, 190, 464, 466, 468, 470, 612, 614
79K12	O RING 10			52, 56, 68, 72, 76, 80, 148, 152, 154, 156, 164, 166, 170, 172, 174, 190, 198, 594, 598, 618, 620, 624
79K12	O RING 10	58K000018B	B,D	52, 56, 68, 72, 76, 80, 148, 152, 154, 156, 164, 166, 170, 172, 174, 190, 198, 594, 598, 618, 620, 624
79K12	O RING 10	58K000018B	B	52, 56, 68, 72, 76, 80, 148, 152, 154, 156, 164, 166, 170, 172, 174, 190, 198, 594, 598, 618, 620, 624
79K14	O RING 10			32
79K16	O RING 10			148, 150, 154, 156, 164, 170

Code for disposition of old part number

A -- Use up

B -- Use on other application (See PNI)

C -- File PDR Report with Bobcat Parts Sales

D -- Part Number Error

Page 739 - OS6# 2071349 - All rights reserved by Bobcat Company - 12/01/2009 - 20:50:59 - Produced by Ken Cook Co. with mediaioff

Part No.	Description	Was	Code	Page
79K2	O RING 10			632
79K4	O RING 10			72, 76, 594, 598, 612, 614, 618, 620, 624
79K5	O RING 10			184, 186
79K6	O RING 10			70, 74, 76, 80, 100, 108, 114, 124, 130, 148, 152, 154, 156, 166, 170, 184, 186, 470, 550, 594, 598, 618, 624
79K6	O RING 10	6634874	B,D	70, 74, 76, 80, 100, 108, 114, 124, 130, 148, 152, 154, 156, 166, 170, 184, 186, 470, 550, 594, 598, 618, 624
79K7	O RING 10			100, 108, 114, 134, 612, 614
79K7	O RING 10	79K7	B,D	100, 108, 114, 134, 612, 614
79K7	O RING 10	75K-12	D	100, 108, 114, 134, 612, 614
79K8	O RING 10			30, 52, 56, 64, 68, 98, 102, 106, 112, 118, 122, 128, 134, 138, 148, 150, 154, 158, 190, 196, 606, 608, 612, 614
7D4	NUT			70, 144
7D6	NUT			252
7J2010	KEY			272
7J2108	KEY			254
7JM38	SNAP RING	7JM00038B	A	28
7JM40	SNAP RING			28
80K14	BACK-UP WASHER	73K000014B		98, 102, 106, 112, 118, 122, 123, 124, 128, 134, 138
80K332	WASHER			82, 84, 86
82K230	SEAL			88, 90, 92
82K230	SEAL	58K000230B	A	88, 90, 92
83D4	NUT 10			12, 46, 58, 70, 218, 456, 556, 560, 582
83D5	NUT 5	61D000005B	B	496, 576, 582
83D5	NUT 5			496, 576, 582
83D6	NUT 5			46, 50, 54, 58, 62, 66, 70, 94, 180, 526, 528, 544, 618, 620, 624
83D8	NUT 5			4, 266
83F3	ELBOW 5			532
84G3110	SCREW			556, 560
84G3112	BOLT 5			8, 16, 30, 254, 256, 456, 508, 522, 524, 526, 528, 540, 650
84G3116	SCREW			32
84G3708	SCREW			178, 256, 258
84G3710	SCREW			164, 170, 234, 254, 452, 576
84G3712	BOLT			4, 16, 32, 34, 40, 42, 46, 50, 54, 58, 62, 66, 72, 76, 148, 150, 174, 175, 176, 208, 210, 212, 216, 252, 256, 258, 266, 270, 464, 466, 468, 550, 572, 574, 650
84G3716	SCREW 5			32, 40, 42, 44, 46, 58, 72, 76, 164, 170, 212, 218, 266, 270, 540, 576, 594, 598, 650
84G3716	SCREW 5	84G003714B	A	32, 40, 42, 44, 46, 58, 72, 76, 164, 170, 212, 218, 266, 270, 540, 576, 594, 598, 650
84G3720	BOLT			40, 42, 44, 54, 62, 66, 448
84G3724	BOLT			50, 54, 62, 66, 620, 624, 630
84G3728	BOLT			52, 56, 64, 68
84G3732	BOLT			46, 58
84G3736	BOLT			76, 80
84G3740	BOLT			80
851242	BEARING			294, 340, 386, 424
85D5	NUT 5			30, 74, 218, 270, 588, 592

Code for disposition of old part number

A -- Use up

B -- Use on other application (See PNI)

C -- File PDR Report with Bobcat Parts Sales

D -- Part Number Error

Page 740 - OSS# 2071349 - All rights reserved by Bobcat Company - 12/01/2009 - 20:50:59 - Produced by Ken Cook Co. with mediaioff

Part No.	Description	Was	Code	Page
85D6	LOCK NUT			10, 20, 24, 28, 82, 266, 586, 594
85D7	NUT			10
85D8	NUT, 5			8, 260, 265, 266
866028	CLAMP			368
86F3	LOCKNUT			532
86F5	NUT			148, 150, 154, 550, 618, 620, 624, 628, 630
86F8	NUT 5			72, 76, 174
872229	WASHER			46, 50, 54, 58, 62, 66, 76, 80
87D5	NUT			586
87G1008	SCREW			556
88F10	FITTING			174
88F5	ELBOW	88FN00005B	A	620, 624, 630
88F5	ELBOW			620, 624, 630
898731	1156 BULB			588
89D5	NUT			592
8D4	NUT	6631561	A	470
8D6	NUT 5			180, 181, 182, 532
90K5	PLUG	90KV00008B	D	156, 176
90K5	PLUG			156, 176
90K8	PLUG			100, 104, 108, 114, 124, 130, 138
90K8	PLUG	90KV00008B	A	100, 104, 108, 114, 124, 130, 138
90KV2	PLUG	90KV00005B	A	82, 84, 86, 88, 602, 604
90KV2	PLUG			82, 84, 86, 88, 602, 604
90KV5	PLUG			166, 172, 606, 608
91D5	NUT 5			212, 532
91D7	NUT			474, 482, 490
91G416	SCREW	88G1216	B	496, 512
91G416	SCREW			496, 512
91G420	SCREW			496, 512
91K5	TEE			620, 624, 630
91K5	TEE	6719298	A	620, 624, 630
92D10	NUT			602, 604
92D12	NUT			260
92D16	NUT			82, 84, 86
93G824	BOLT	73G824	A	34, 182
95D5	NUT			8, 218, 234, 452, 570
95D6	NUT			40, 94, 180, 214, 218, 234, 270, 272, 480, 532
95D6	NUT	91D000006B	A	40, 94, 180, 214, 218, 234, 270, 272, 480, 532
95D6	NUT	91D6	A	40, 94, 180, 214, 218, 234, 270, 272, 480, 532
95D8	NUT	83D000008B	B	8
95K12	O-RING	99K000012B	B,D	100, 104, 108, 114, 120, 124, 130, 138
95K12	O-RING			100, 104, 108, 114, 120, 124, 130, 138
95K12	O-RING	99K000012B	B	100, 104, 108, 114, 120, 124, 130, 138
95K2	O-RING			610
95K3	O'RING	79K000003B	B	82, 84, 86, 88, 602, 604
95K3	O'RING			82, 84, 86, 88, 602, 604
95K4	O-RING			158, 610
95K4	O-RING	79K5	D	158, 610
95K6	O'RING			168, 170, 606, 608, 610
95K8	O-RING			610
961528	PK PARTS			478
96D8	NUT			252
97D4	NUT			456
97D5	NUT			516, 518

Code for disposition of old part number

A -- Use up
B -- Use on other application (See PNI)
C -- File PDR Report with Bobcat Parts Sales
D -- Part Number Error

Page 741 - OSS# 2071349 - All rights reserved by Bobcat Company - 12/01/2009 - 20:50:59 - Produced by Ken Cook Co. with mediaioff

Part No.	Description	Was	Code	Page
97D6	NUT 10			578
97D8	NUT			548
97K10	O-RING 10			46, 50, 54, 58, 60, 62, 64, 68, 148, 150, 154, 156, 158, 464, 466, 468
97K12	O'RING			52, 56, 64, 68, 72, 76, 166, 172, 174, 176, 594, 600, 618, 620, 624, 626
97K4	O'RING			532, 594, 598, 600
97K6	O'RING			48, 50, 52, 54, 56, 58, 62, 64, 66, 68, 70, 74, 76, 78, 100, 108, 114, 124, 130, 148, 150, 154, 164, 166, 170, 172, 464, 466, 468, 550, 594, 596, 598, 600, 618, 620, 624, 630
97K8	O-RING			46, 50, 52, 54, 56, 60, 62, 64, 68, 266, 464, 466, 468, 626
98D6	NUT			182, 224, 228, 234
98G412	BOLT			242
99K10	O'RING			46, 50, 54, 58, 62, 66, 148, 150, 154, 156, 158, 464, 466, 468, 630
99K12	O'RING			52, 56, 64, 72, 76, 148, 152, 154, 156, 164, 166, 170, 172, 174, 594, 598, 618, 620, 624
99K16	O-RING			148, 164, 170
99K4	O'RING			76, 594, 598, 618, 620, 624
99K5	O-RING			30, 606, 608
99K6	O'RING	79K6	A	70, 72, 73, 74, 76, 77, 78, 100, 108, 114, 124, 148, 152, 154, 166, 170, 550, 594, 598, 618, 620, 624
99K6	O'RING			70, 72, 73, 74, 76, 77, 78, 100, 108, 114, 124, 148, 152, 154, 166, 170, 550, 594, 598, 618, 620, 624
99K6	O'RING	99K000006B	B	70, 72, 73, 74, 76, 77, 78, 100, 108, 114, 124, 148, 152, 154, 166, 170, 550, 594, 598, 618, 620, 624
99K6	O'RING		B	70, 72, 73, 74, 76, 77, 78, 100, 108, 114, 124, 148, 152, 154, 166, 170, 550, 594, 598, 618, 620, 624
99K8	O-RING			148, 150, 154, 266
9G512	SCREW			272

Code for disposition of old part number

A -- Use up
B -- Use on other application (See PNI)
C -- File PDR Report with Bobcat Parts Sales
D -- Part Number Error

Page 742 - OSS# 2071349 - All rights reserved by Bobcat Company - 12/01/2009 - 20:50:59 - Produced by Ken Cook Co. with mediaoff