8014/8015/8016/8017/8018

Hydrapower Ltd

MINI EXCAVATORS

RUTHZIL TRATOR COMERCIAL DE PEÇAS LTDA 11 97083-6812 ROLANDO

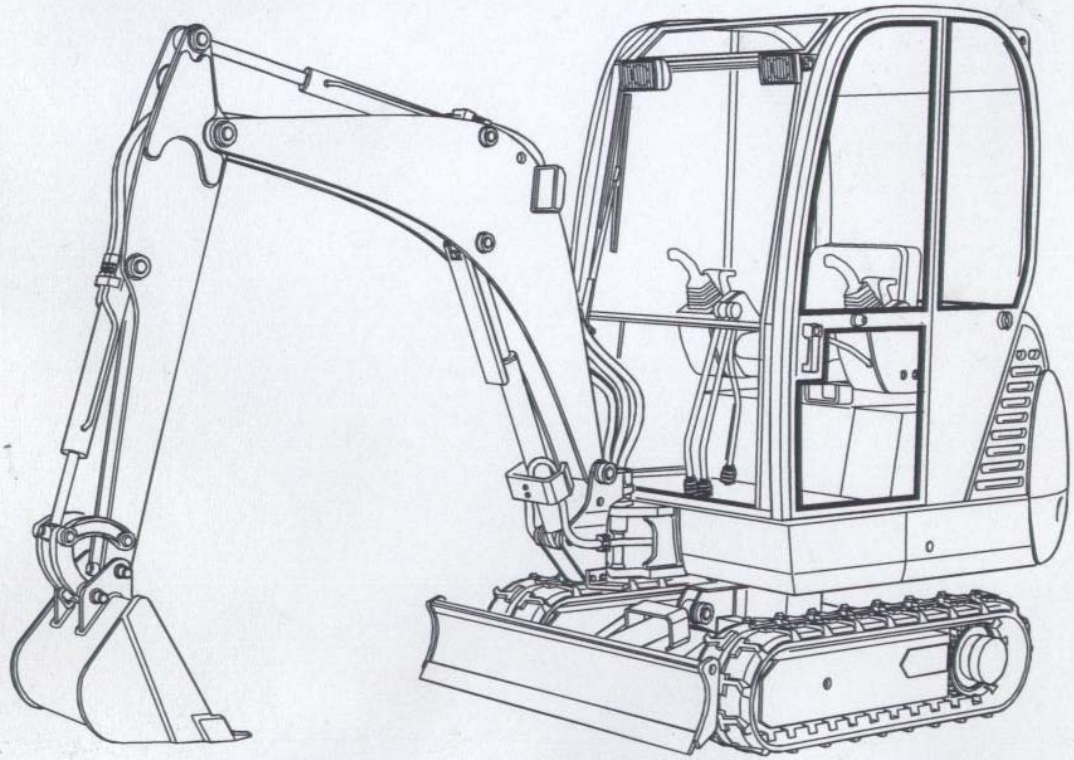

OPERATOR PARTS CATALOGUE

Serial Nos.
8014 M791000 on
8015 M730800 on
8016 M728750 on
8017 M800000 on
8018 M801000 on

JCB Hydrapower Ltd
Riverside
Rugeley
Staffordshire
WS15 2WA
England
Tel: 01889 572700. Fax: 01889 572710

Publication No. 9802/5407 Issue 2

HYDRAPOWER

CONTENTS

A ATTACHMENTS

B BODY & FRAMEWORK

C ELECTRICS

D CONTROLS

E HYDRAULICS

F GEARBOXES

J TRACK & RUNNING GEAR

L ENGINE

HYDRAPOWER

1 MAIN INDEX

9802/5407

SECTION A - ATTACHMENTS

BUCKETS	**A2**
General Purpose Bucket	A2-1-1
Ditching Bucket	A2-2-1
Dual Position Bucket	A2-3-1
Grave Digging Bucket	A2-4-1
Trapezoidal Bucket	A2-5-1
ATTACHMENTS	
Quickhitch	A3-1-1
Quickhitch	A3-1-2
Hammermaster 70	A3-2-1
Hammermaster 100	A3-2-2
Hammermaster 100 Breaker assembly	A3-2-3
Flail Mower & Attachments	A3-3-1
Flail Mower Chassis	A3-3-2
Rotor & Motor Assemblies	A3-3-3
Auger Motor	A3-4-1
Auger Gearbox	A3-4-2
Auger Extensions	A3-4-3
DOZER	**A4**
Dozer	A4-1-1 & A4-1-2
SECTION B - BODY AND FRAMEWORK	**B1**
Mainframe	B1-1-1
Counterweights & Mountings	B1-1-2

SECTION B - BODY AND FRAMEWORK	**B1**
Fuel Tank	B1-2-1 & B1-2-2
Hydraulic Tank	B1-3-1 & B1-3-2
Floorplates	B1-4-1
Bulkhead	B1-5-1 & B1-5-4
Soundproofing	B1-5-2 & B1-5-3
Engine Cover	B1-6-1
Toolbox	B1-7-1
CAB & CANOPY	**B2**
Canopy Assembly	B2-1-1
Canopy Mountings	B2-1-2
Cab Assembly & Mountings	B2-2-1
Cab Assembly	B2-2-2
Cab Door	B2-3-1
Cab Glazing	B2-4-1
Windscreen	B2-4-2
Direct Glazing Replacement Material	B2-4-3
Side Opening Window	B2-4-4
Basic Seat	B2-5-1
Seat, Suspension	B2-5-2
Seat Belt, Suspension seat	B2-6-1
EXCAVATOR END	**B4**
King Post	B4-1-1
Boom	B4-2-1
Dipper	B4-3-1
Dipper Kit	B4-3-2

2 MAIN INDEX

SECTION B - BODY AND FRAMEWORK	**B1**
REFURBISHMENTS	**B5**
Machine Labels & Handbooks	B5-2-1
Safety & Warning Labels	B5-2-2
Operation & Control Labels	B5-2-3
USA Transfers & Labels	B5-2-4
Tool Kit	B5-3-1
Oils & Greases	B5-3-2
SECTION C - ELECTRICAL SYSTEMS	
MAIN MACHINE ELECTRICS	**C1**
Main Electrics	C1-1-1
Left Hand Control Pod	C1-1-2
Right Hand Control Pod	C1-1-3
Working Lights	C1-2-1
Main Harness	C1-3-1
ENGINE ELECTRICS	**C2**
Battery & Battery Tray	C2-1-1
Engine Electrics	C2-2-1
Alternator	C2-3-1
Alternator Mountings	C2-4-1
Starter Motor	C2-5-1 & C2-5-2
Engine Autostop	C2-6-1
CAB ELECTRICS	**C3**
Cab Electrics	C3-1-1
Canopy Electrics	C3-1-2
Heater installation	C3-2-1
Wiper Motor	C3-3-1
Cab Working Lights	C3-4-1
Beacon	C3-5-1
Immobiliser Kit - Cable	C3-7-1
Immobiliser Kit - Servo	C3-7-2
SECTION D - CONTROLS	**D1**
Track Controls	D1-1-1
Controls	D1-2-1
Control cables	D1-2-2
Controls	D1-2-3
Dozer Control	D1-3-1 & D1-3-2
Servo Control Mountings	D1-4-1
Swing Control	D1-5-1
Slew Lock	D1-7-1
Auxiliary Control	D1-8-1
ENGINE CONTROLS	**D2**
Throttle Control	D2-1-1

HYDRAPOWER

3 MAIN INDEX

9802/5407

SECTION E - HYDRAULIC SYSTEMS

HOSE & PIPEWORK	**E1**
Neutral circuit	E1-1-1
Neutral circuit - Servo	E1-1-2
Servo Circuit - ISO	E1-2-1
Servo Circuit - 3CX	E1-2-2
Slew / Swing Circuit	E1-3-1
Excavator Circuit - Main frame	E1-4-1
Track & Dozer Circuit	E1-5-1
Excavator End Hoses & Pipework	E1-6-1
Auxiliary Pipes & Hoses	E1-8-1
Single Acting Auxiliary Circuit	E1-8-2
Double Acting Auxiliary Circuit	E1-8-3
Hand Held Tools H.P.T.O.	E1-9-1
PUMPS & MOTORS	**E2**
Hydraulic Pump	E2-1-1
Pump Drive	E2-2-1
Slew Motor assembly	E2-3-1
Slew Motor	E2-3-2
Track Motor	E2-4-1
VALVES & FILTER	**E3**
Valve Block - 9 Spool	E3-1-1
Valve Block - 9 Spool	E3-1-2
Valve Section - MRV	E3-2-1
Valve Section - MRV	E3-2-2
Valve Section - Dozer	E3-3-1
Valve Section - Track	E3-4-1
Valve Section - Slew, 8014	E3-4-2
Valve Section - Slew, Servo	E3-4-3
VALVES & FILTER	**E3**
Valve Section - Swing	E3-5-1
Valve Section - Boom & Dipper	E3-6-1
Valve Section - Boom/Dipper - Servo	E3-6-2
Valve Section - Auxilliary	E3-7-1
Valve Section - Bucket, 8014	E3-7-2
Valve Section - Bucket, Servo	E3-7-3
Servo Joystic - R.H.	E3-8-1
Servo Joystic - L.H.	E3-8-2
Pressure Maintenance Valve	E3-9-1
Two speed tracking - Pressure Maintenance Valve	E3-9-2
Rotary Joint	E3-10-1 & E3-10-3
Two speed tracking - Rotary joint	E3-10-2
Hydraulic Filter	E3-11-1
Flow Regulator Valve	E3-12-1
Track Modulating Valve	E3-13-1
Accumulator	E3-15-1
RAMS	**E4**
Ram Locations	E4-0-0
Swing Ram 8014 / 8015	E4-1-1
Swing Ram 8016	E4-1-2
Dozer Ram	E4-2-1
Boom Ram 8014 / 8015	E4-3-1
Boom Ram 8016	E4-3-2
Dipper Ram 8014 / 8015	E4-4-1
Dipper Ram 8016	E4-4-2
Bucket Ram 8014 / 8015	E4-5-1
Bucket Ram 8016	E4-5-2
Boom Ram Protection Plates	E4-6-1
Extending undercarriage ram	E4-7-1

4 MAIN INDEX

SECTION F

SLEW & TRACK GEARBOXES **F4**
- Track Gearbox Assembly F4-2-1
- Two speed tracking - Track Gearbox Assembly F4-2-2
- Track Gearbox F4-3-1

SECTION J - UNDERCARRIAGE/TRACK & RUNNING GEAR

UNDERCARRIAGE/TRACK & RUNNING GEAR **J1**
- Undercarriage J1-1-1
- Undercarriage - Extending J1-1-2
- Idler / Recoil Unit J1-2-1
- Track Roller Assembly J1-3-1
- Track Assembly J1-4-1

SECTION L - ENGINE

ENGINE BLOCK **L1**
- Complete Engine L1-1-1
- Short Engine L1-2-1
- Block Assembly L1-3-1
- Crankshaft Assembly L1-4-1
- Fan Belt & Pulleys L1-5-1
- Timing & Camshaft L1-6-1
- Timing Levers L1-6-2
- Flywheel & Housing L1-7-1
- Engine Mounts L1-8-1

CYLINDER HEAD **L2**
- Cylinder Head L2-1-1

CYLINDER HEAD **L2**
- Rocker Assembly L2-2-1
- Rocker Cover L2-3-1

INDUCTION & EXHAUST **L3**
- Manifolds L3-1-1
- Air Filter L3-2-1
- Exhaust System L3-3-1

COOLING SYSTEM **L4**
- Water Pump & Thermostat L4-1-1
- Radiator Mounts & Fittings L4-3-1
- Radiator & Hoses L4-4-1
- Radiator Sound proofing L4-5-1

LUBRICATION SYSTEM **L5**
- Oil Sump L5-1-1
- Oil Pump L5-2-1
- Oil Filter L5-3-1

FUEL SYSTEM **L6**
- Injection Pump L6-1-1
- Injectors & Pipes L6-2-1
- Fuel System L6-3-1
- Fuel Filter L6-4-1
- Fuel Lift Pump L6-5-1
- Fuel Sediment Filter L6-6-1

GASKET SETS **L8**
- Complete Gasket Set L8-1-1



A2

A2 BUCKETS
A3 ATTACHMENTS
A4 DOZER

A2-1-1 GENERAL PURPOSE BUCKET

	on	to	on	to
8014	M791000			
8015	M730800			
8016	M728750			
8017	M800000			
8018	M801000			

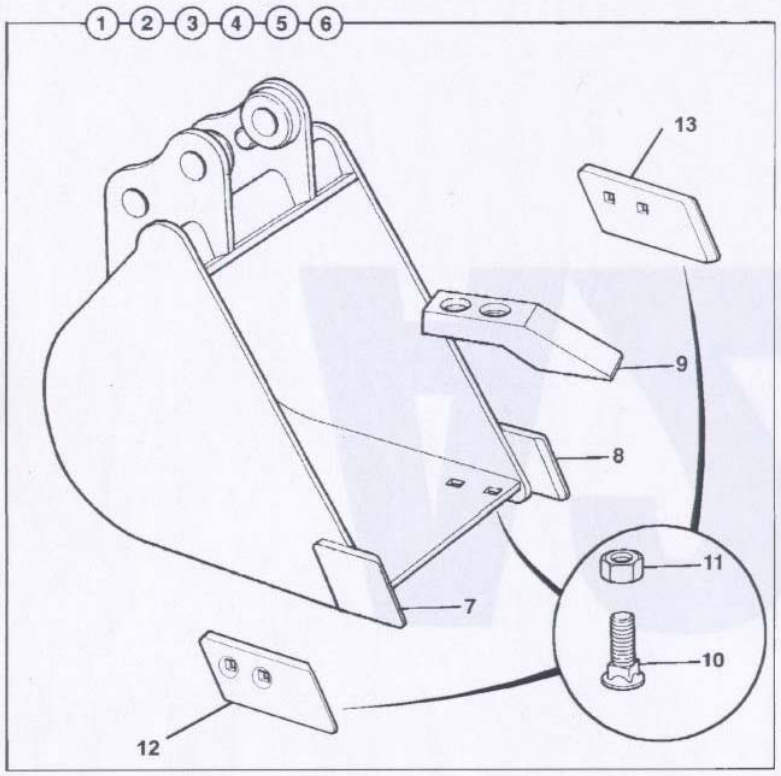

Item	Part No	Qty	A	Description	Remarks	M/C No change
1	522/00100	1		Bucket assembly, 230mm		
2	522/01500	1		Bucket assembly, 160mm	Superseded	
					See page B4-3-1	
					for pivot pin	
3	522/00300	1		Bucket assembly, 300mm		
4	522/00500	1		Bucket assembly, 400mm		
5	522/01100	1		Bucket assembly, 460mm		
6	522/00700	1		Bucket assembly, 600mm		
7	522/00208	1	:	Sidecutter, RH		
8	522/00209	1	:	Sidecutter, LH		
9	522/00102	A/R	:	Tooth	x1 = 160mm	
					x2 = 230/300mm	
					x3 = 400/460mm	
					x4 = 600mm	
10	826/01112	A/R	:	Plough bolt	x2 = 160mm	
					x4 = 230/300mm	
					x6 = 400/460mm	
					x8 = 600mm	
11	1340/0401Z	A/R	:	Nut, ¼in. UNF	x2 = 160mm	
					x4 = 230/300mm	
					x6 = 400/460mm	
					x8 = 600mm	

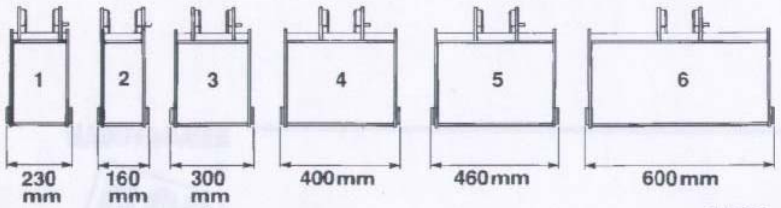

H15210

A2-1-1 GENERAL PURPOSE BUCKET

A2-2-1 DITCHING BUCKET

	on	to	on	to
8014	M791000			
8015	M730800			
8016	M728750			
8017	M800000			
8018	M801000			

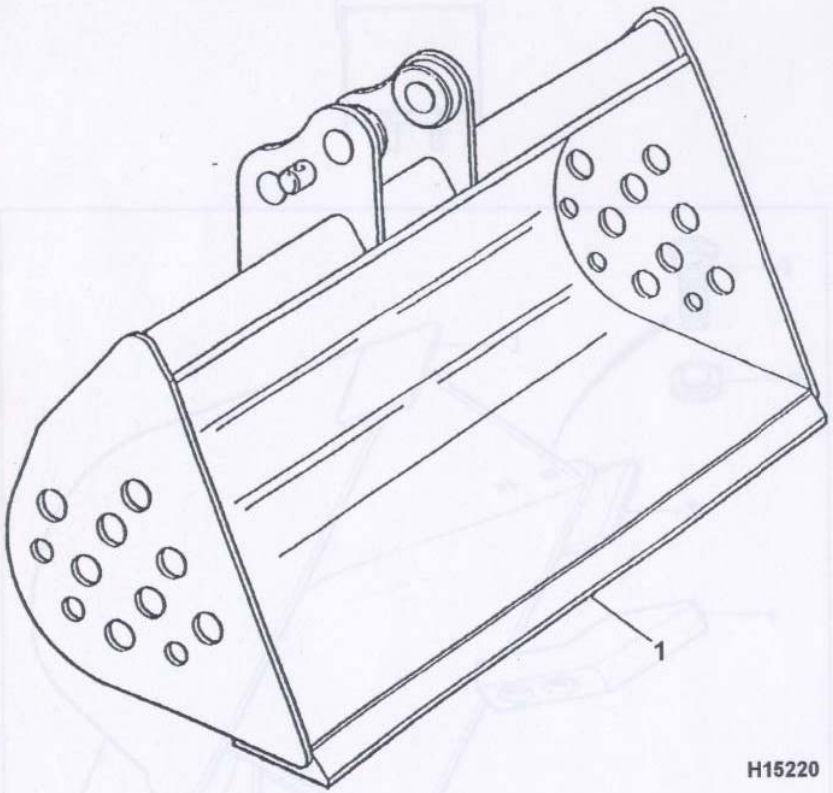

H15220

Item	Part No	Qty	A	Description	Remarks	M/C No change
1	522/00900	1		Bucket, 900mm ditching		
	522/06400	1		Bucket, 760mm ditching		
	522/01600	1		Bucket, 1000mm ditching		

A2-3-1 DUAL POSITION BUCKET

	on	to	on	to
8014	M791000			
8015	M730800			
8016	M728750			
8017	M800000			
8018	M801000			

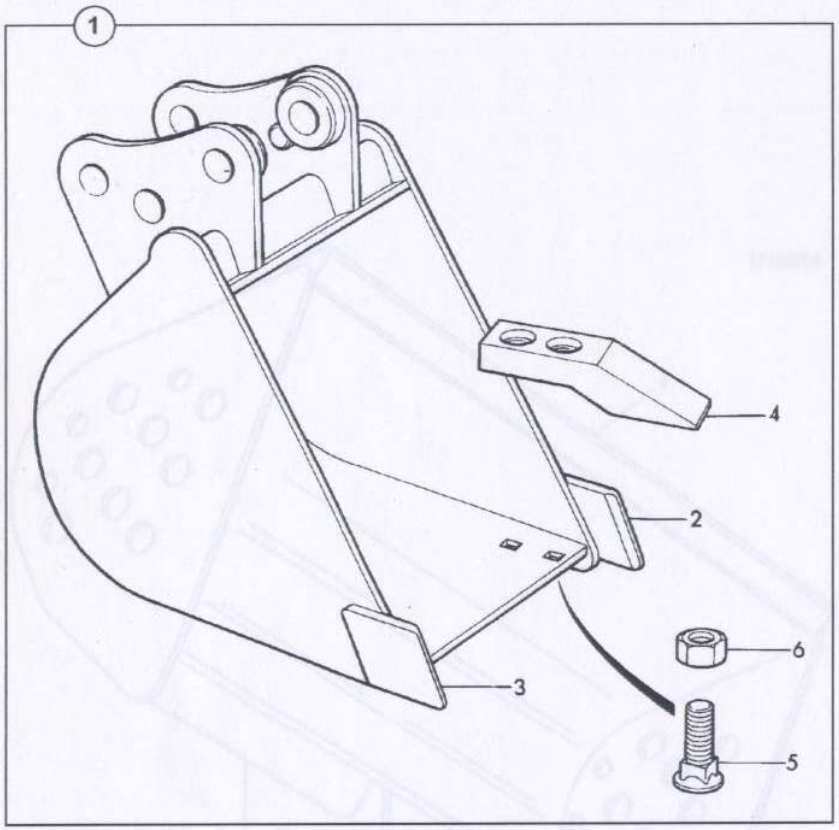

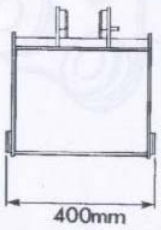

H15230

Item	Part No	Qty	A	Description	Remarks	M/C No change
1	522/01300	1		Bucket assembly, 400mm	400mm	
2	522/00208	1	:	Sidecutter, RH		
3	522/00209	1	:	Sidecutter, LH		
4	522/00102	3	:	Tooth		
5	826/01112	6	:	Plough bolt		
6	1340/0401Z	6	:	Nut, ¼in. UNF		

A2-3-1 DUAL POSITION BUCKET

A2-4-1 GRAVE DIGGING BUCKET

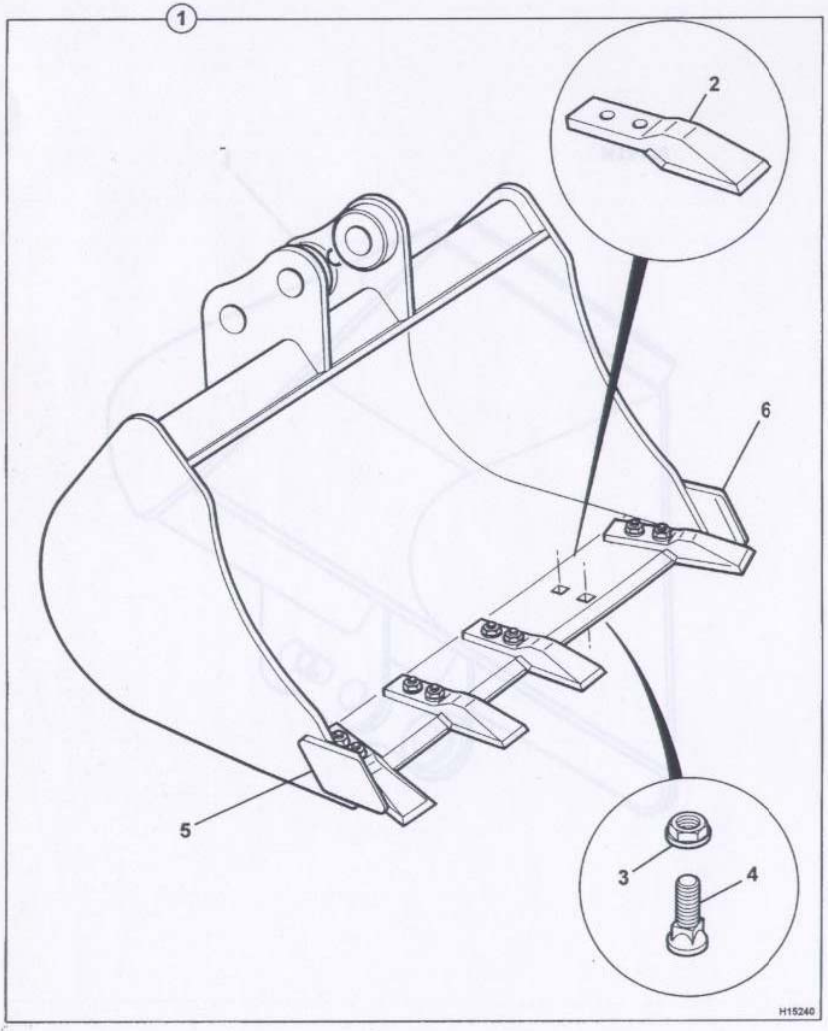

	on	to	on	to
8014	M791000			
8015	M730800			
8016	M728750			
8017	M800000			
8018	M801000			

Item	Part No	Qty	A	Description	Remarks	M/C No change
1	522/01800	1		Bucket assembly		
2	826/00102	5	:	Tooth, bucket		
3	1340/0401Z	10	:	Nut, ¼in. UNF		
4	826/01112	10	:	Plough bolt		
5	522/00208	1	:	Sidecutter, RH		
6	522/00209	1	:	Sidecutter, LH		

A2-4-1 GRAVE DIGGING BUCKET

A2-5-1 TRAPEZOIDAL BUCKET

	on	to	on	to
8014	M791000			
8015	M730800			
8016	M728750			
8017	M800000			
8018	M801000			

Item	Part No	Qty	A	Description	Remarks	M/C No change
1	522/01700	1		Bucket, trapezoidal		

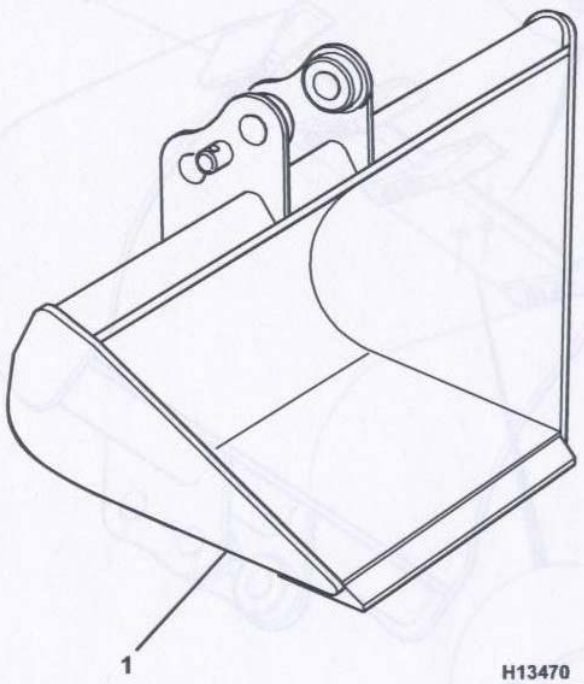

A2-5-1 TRAPEZOIDAL BUCKET

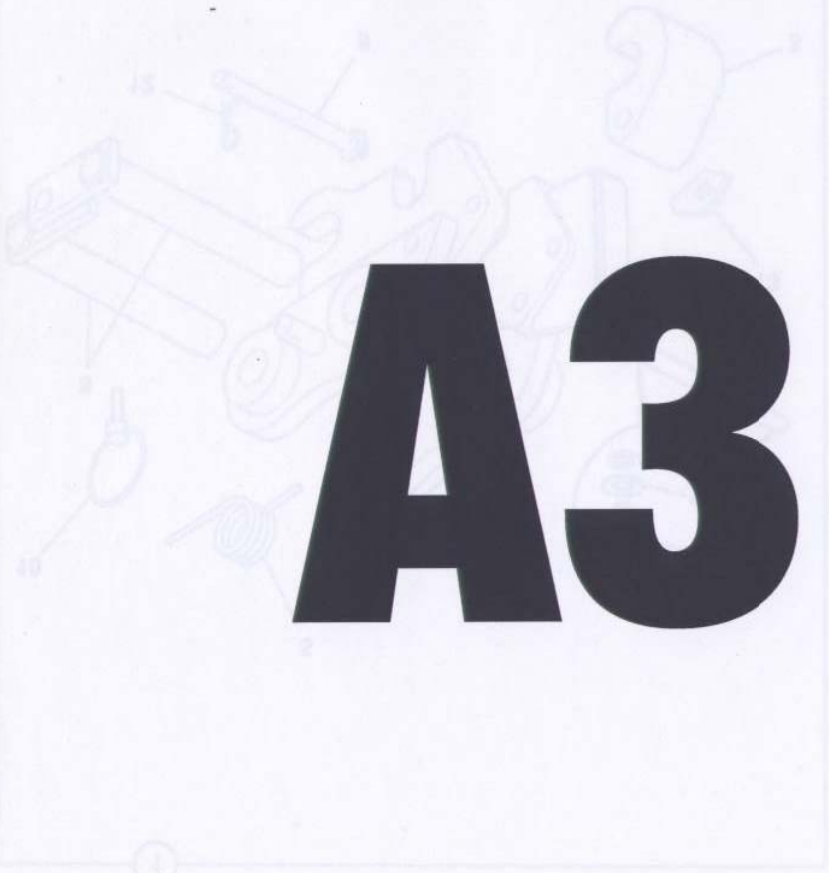

A3

A2 BUCKETS

A3 ATTACHMENTS

A4 DOZER

A3-1-1 QUICKHITCH

	on	to	on	to
8014	M791000			
8015	M730800			
8016	M728750			
8017	M800000			
8018	M801000			

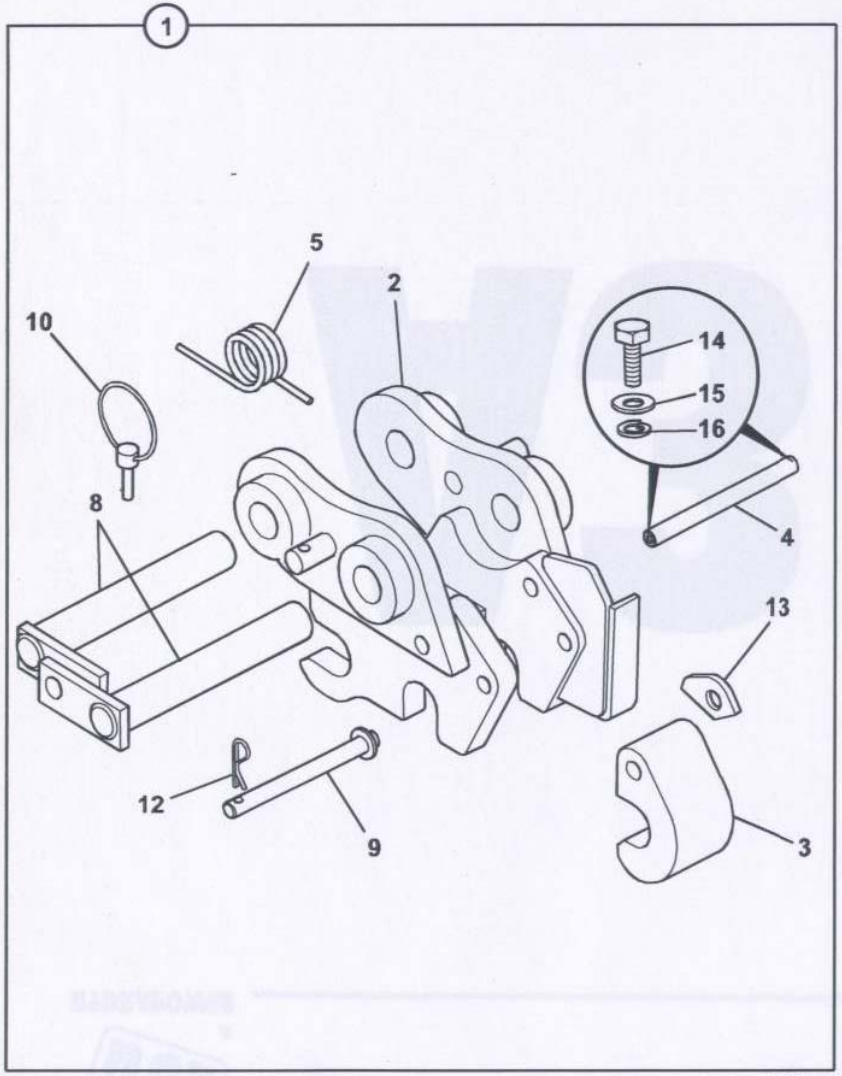

H17330

Item	Part No	Qty	A	Description	Remarks	M/C No change
1	980/88044	1		Quickhitch assembly		
2	980/86000	1	:	Body, quickhitch		
3	980/84031	1	:	Latch		
4	980/84032	1	:	Pin		
5	814/00409	1	:	Spring		
7	4003/1312	A/R	:	Grease	Not illustrated	
8	911/23900	2	:	Pin, pivot		
9	980/86101	1	:	Pin, safety		
10	826/00600	1	:	Pin, lynch		
11	980/84055	1	:	Tommy bar	Not illustrated	
12	826/00479	2	:	Clip, grip		
13	980/84272	1	:	Stop, spring		
14	1315/0305Z	2	:	Screw, hex head, M8 x 20		
15	1412/0002Z	2	:	Washer, large, 5/16in.		
16	1425/0007Z	2	:	Washer, spring, M8		

A3-1-1 QUICKHITCH

A3-1-2 QUICKHITCH

	on	to	on	to
8014	M791000			
8015	M730800			
8016	M728750			
8017	M800000			
8018	M801000			

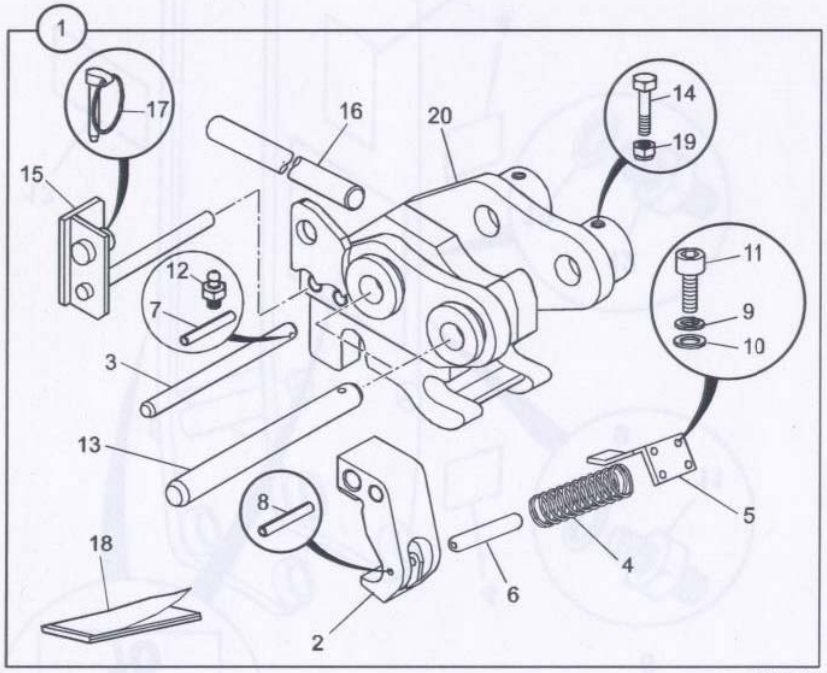

H19960

Item	Part No	Qty	A	Description	Remarks	M/C No change
1	980/88424	1		Quickhitch assembly		
2	980/84537	1	:	Latch		
3	980/84538	1	:	Pin, latch pivot		
4	814/00426	1	:	Spring		
5	980/84539	1	:	Plate, cover		
6	980/84540	1	:	Guide, spring		
7	2102/0813	1	:	Pin, roll ¼in x 25mm		
8	2102/0621	1	:	Pin, roll 3/16" x 50mm		
9	1425/0006Z	4	:	Washer, spring, M6		
10	1420/0006Z	4	:	Washer, plain, M6		
11	1391/3207	4	:	Cap screw M6 x 25mm		
12	816/60056	1	:	Grease nipple		
13	811/50566	2	:	Pin, pivot		
14	1315/3415Z	2	:	Bolt, hex head, M10 x 65		
15	980/86106	1	:	Pin, safety		
16	980/84541	1	:	Bar, Tommy		
17	826/01775	1	:	Pin, lynch safety		
18	9814/0027	1	:	Instructions, fitting		
19	1370/0303Z	2	:	Nut, self lock, M10		
20	980/86109	1	:	Body, Quickhitch		

A3-1-2 QUICKHITCH

A3-2-1 HAMMERMASTER 70

	on	to	on	to
8014	M791000			
8015	M730800			
8016	M728750			
8017	M800000			
8018	M801000			

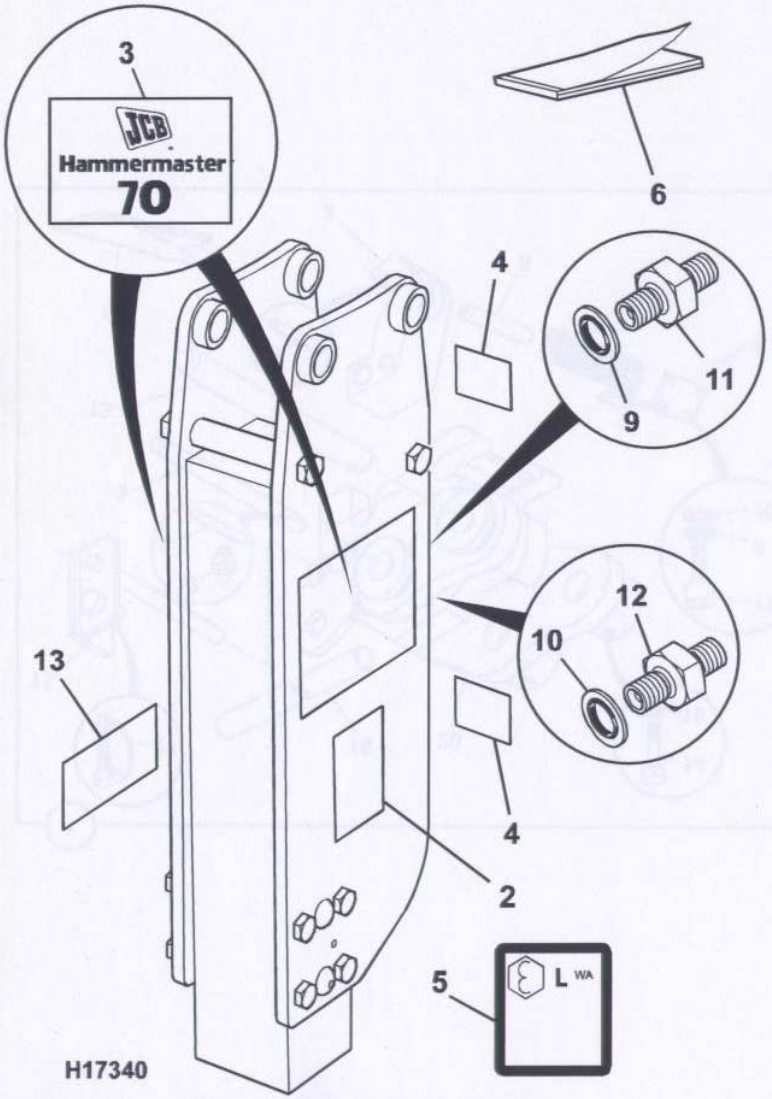

Item	Part No	Qty	A	Description	Remarks	M/C No change
1	980/88217	1		Hammermaster 70		
2	817/04361	1		Decal, greasing		
3	817/04348	2		Decal, hammermaster 70		
4	817/02727	2		Decal, warning, HP		
5	817/00592	1		Decal, noise		
6	9801/0160	1		Manual, owners		
7	992/11300	1		Grease gun	Not illustrated	
8	4003/1109	1		Cartridge, grease	Not illustrated	
9	1406/0018	1		Seal, bonded, ½in. BSP		
10	1406/0021	1		Seal, bonded, ¾in. BSP		
11	1606/0006	1		Adaptor, 3/4in. - 12in.		
12	1604/0004	1		Adaptor, ½in BSP		
13	817/04017	1		CE data plate		

A3-2-1 HAMMERMASTER 70

A3-2-2 HAMMERMASTER 100

	on	to	on	to
8014	M791000			
8015	M730800			
8016	M728750			
8017	M800000			
8018	M801000			

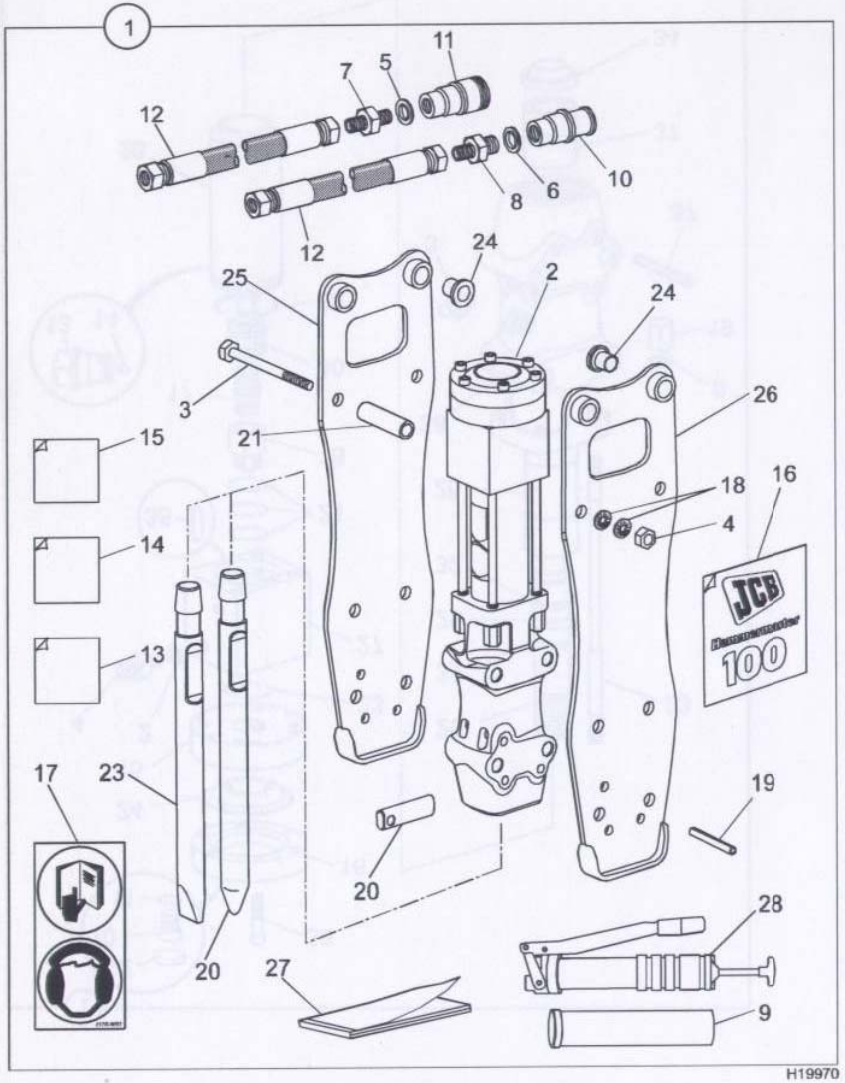

H19970

Item	Part No	Qty	A	Description	Remarks	M/C No change
1	980/88200	1		Hammermaster 100		
2	929/07500	1	:	Body	See page A3-2-3	
3	1315/3826Z	6	:	Bolt, hex hd, M20 x 160mm		
4	1370/0701Z	6	:	Nut, hex, M20		
5	1406/0018	1	:	Seal, bonded, ½in. BSP		
6	1406/0021	1	:	Seal, bonded, ¾in. BSP		
7	1604/0004	1	:	Adaptor, ½in BSP		
8	1606/0008	1	:	Adaptor ¾ x ½in BSP		
9	4003/1109	1	:	Cartridge, grease		
10	45/910300	1	:	Coupling, male, ¾in BSP		
11	45/910400	1	:	Coupling, female, ½in BSP		
12	613/04700	2	:	Hose, ½in x 1600mm BSP		
13	817/00592	1	:	Decal, noise		
14	817/02727	1	:	Decal, warning, HP		
15	817/04361	1	:	Decal, greasing		
16	817/04582	2	:	Decal, Hammermaster 100		
17	817/04657	1	:	Decal, safety		
18	823/00366	12	:	Washer, locking M20		
19	929/07540	1	:	Pin, tension		
20	929/07549	1	:	Tool moil point		
21	929/07568	2	:	Spacer		
22	929/07585	2	:	Bar, retaining		
23	929/07586	1	:	Tool chisel point		
24	980/84170	4	:	Bush, flanged		
25	980/86046	1	:	Plate, side LH		
26	980/86047	1	:	Plate, side RH		
27	9801/0081	1	:	Manual, owners		
28	922/11300	1	:	Gun, grease		

A3-2-3 HAMMERMASTER 100 BREAKER ASSY

	on	to	on	to
8014	M791000			
8015	M730800			
8016	M728750			
8017	M800000			
8018	M801000			

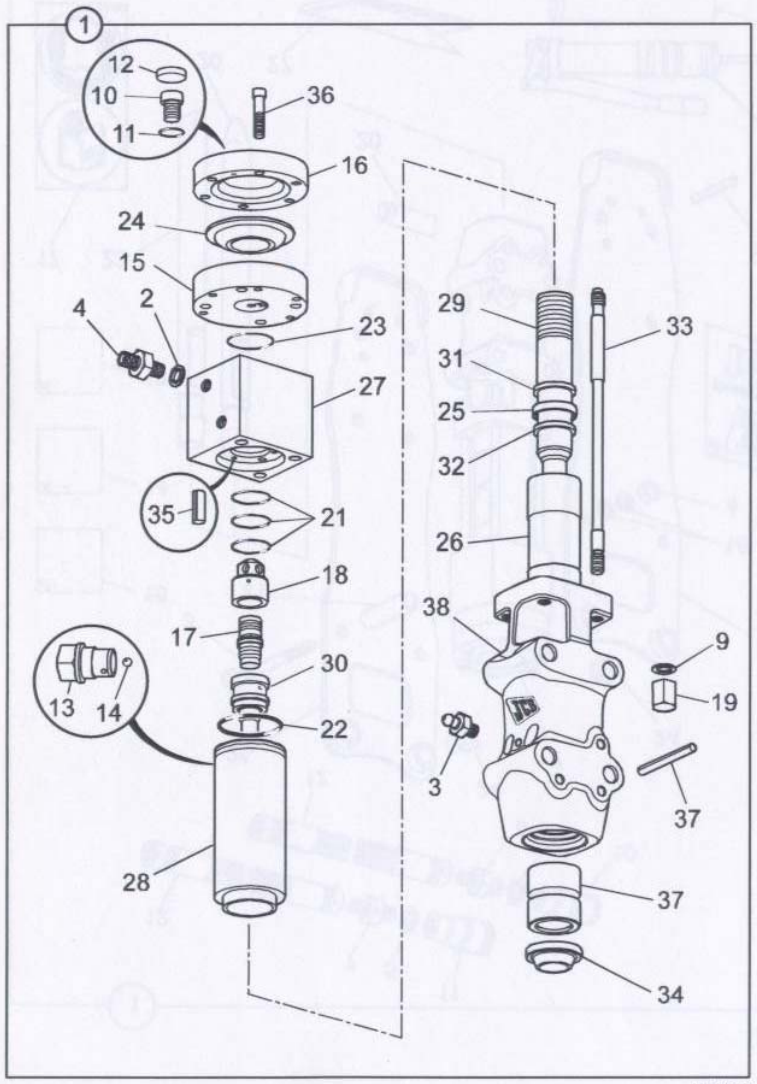

H19980

Item	Part No	Qty	A	Description	Remarks	M/C No change
1	929/07500	1		Body		
2	1406/0018	2	:	Seal, bonded, ½in. BSP		
3	1450/0001	1	:	Nipple, grease, 1/8in.		
4	1604/0004	2	:	Adaptor, ½in BSP		
5	4101/0102	A/R	:	Locktite 270-stud lock	Not illustrated	
6	4101/0202	A/R	:	Sealant, locking	Not illustrated	
7	4102/2039	A/R	:	Locktite 518-gasket seal	Not illustrated	
8	4201/0302	A/R	:	Locktite 542-Thread seal	Not illustrated	
9	823/00352	4	:	Washer, hardened M12		
10	929/05308	1	:	Screw, charging		
11	929/05309	1	:	Seal, washer		
12	929/05310	1	:	Screw		
13	929/05314	1	:	Valve, check		
14	929/05315	1	:	Ball, check valve		
15	929/07531	1	:	Plate,accumulator,bottom		
16	929/07532	1	:	Plate,accumulator,top		
17	929/07534	1	:	Spool		
18	929/07536	1	:	Housing, spool		
19	929/07537	4	:	Nut		
20	929/07540	2	:	Pin, tension		
27	929/07553	1	:	Head		
28	929/07554	1	:	Barrel		
29	929/07556	1	:	Piston		
31	929/07564	1	:	Seal, main		
32	929/07565	1	:	Seal		
33	929/07575	4	:	Rod, tie		
34	929/07576	1	:	Seal, lower tool bush		
35	929/07581	1	:	Pin, locating		
36	929/07582	6	:	Capscrew, M12 x 60mm		
37	929/07588	1	:	Bush, bottom nose		
38	929/07595	1	:	Nose casting		

A3-2-3 HAMMERMASTER 100 BREAKER ASSY

A3-2-3 HAMMERMASTER 100 BREAKER ASSY

	on	to	on	to
8014	M791000			
8015	M730800			
8016	M728750			
8017	M800000			
8018	M801000			

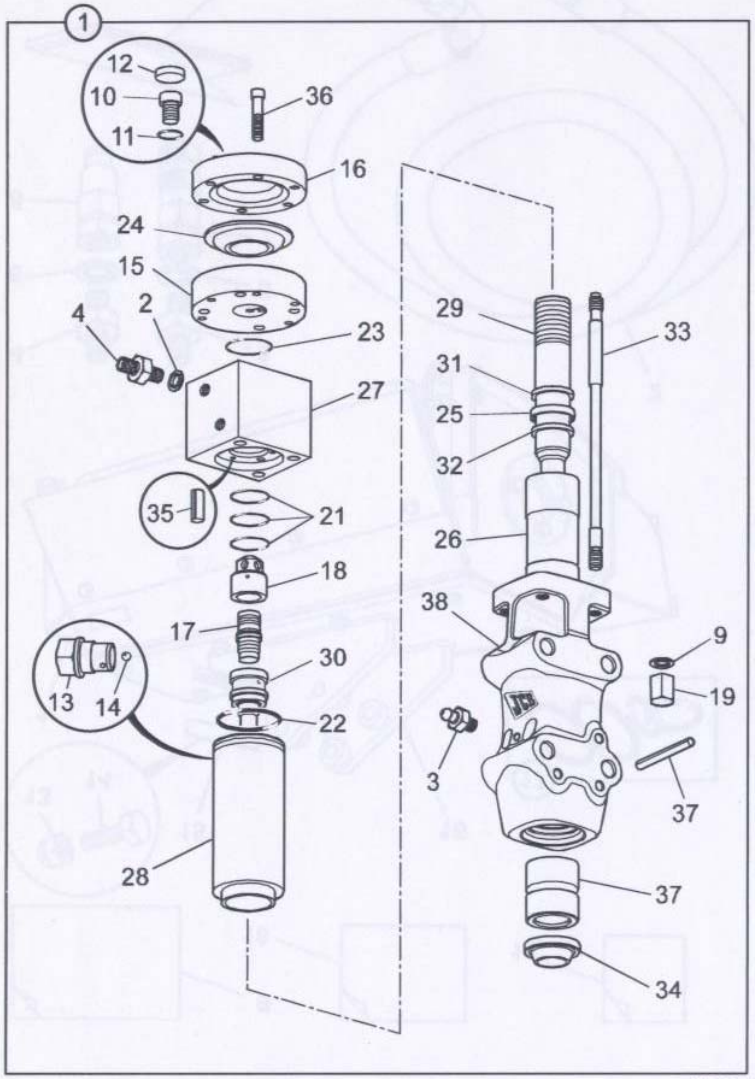

H19980

Item	Part No	Qty	A	Description	Remarks	M/C No change
21	929/07541	3	:	O Ring		
22	929/07542	1	:	O Ring		
23	929/07543	1	:	O Ring		
24	929/07544	1	:	Diaphragm		
25	929/07551	1	:	Housing, seal		
26	929/07552	1	:	Bush, top nose		
30	929/07559	1	:	Feeder		

A3-2-3 HAMMERMASTER 100 BREAKER ASSY

A3-3-1 FLAIL MOWER & ATTACHMENTS

	on	to	on	to
8014	M791000			
8015	M730800			
8016	M728750			
8017	M800000			
8018	M801000			

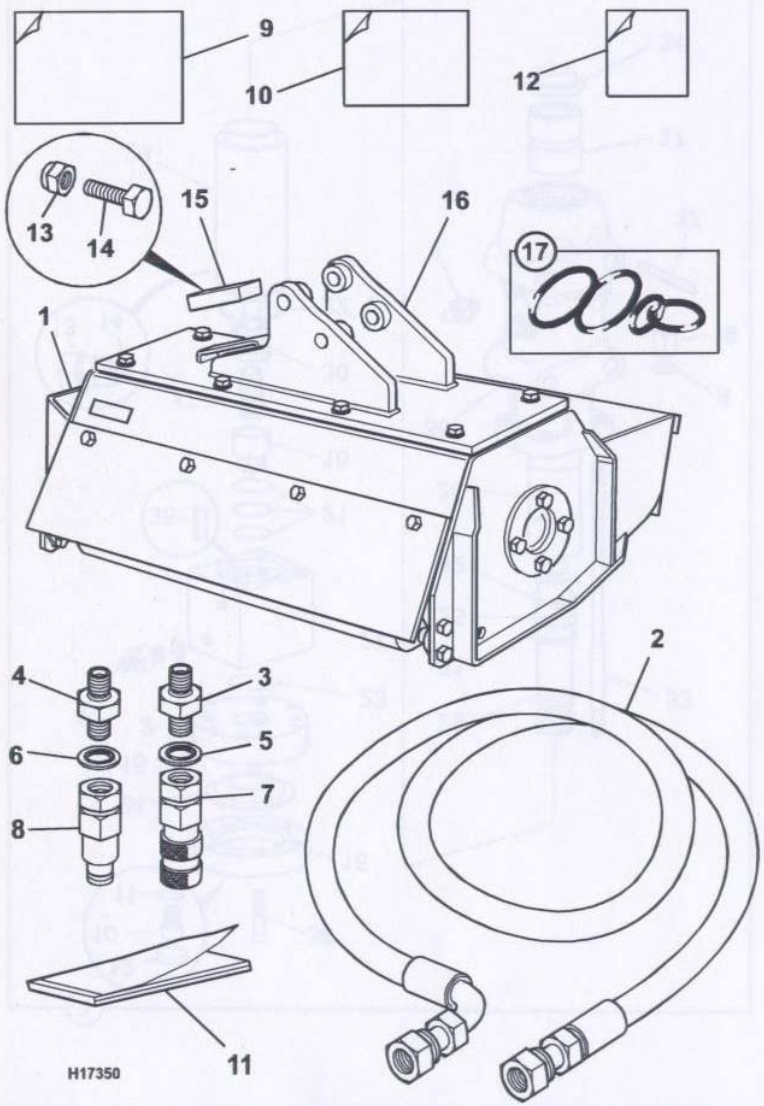

Item	Part No	Qty	A	Description	Remarks	M/C No change
1*	980/88208	1		Flail mower		
2*	613/21300	1		Hose, ½in. BSP		
3	1604/0004	1		Adaptor, ½in BSP		
4	1606/0009	1		Adaptor, ½in x ¾in BSP		
5	1406/0018	1		Seal, bonded, ½in. BSP		
6	1406/0021	1		Seal, bonded, ¾in. BSP		
7	45/910400	1		Coupling, female, ½in BSP		
8	45/910300	1		Coupling, male, ¾in BSP		
9	817/04684	2		Decal, flail mower		
10	817/03902	1		Plate, CE data		
11	9801/0162	1		Manual, owners		
12	817/02742	1		Decal, warning		
13	1370/0203Z	2		Nut, self lock, M8		
14	1315/0309Z	2		Screw, hex head, M8 x 35		
15	980/84383	1		Block, rubber		
16		1		Bracket, hanger	See A3-3-2	
17	983/00330	1		Seal kit, motor		

A3-3-1 FLAIL MOWER & ATTACHMENTS

A3-3-2 FLAIL MOWER CHASSIS

	on	to	on	to
8014	M791000			
8015	M730800			
8016	M728750			
8017	M800000			
8018	M801000			

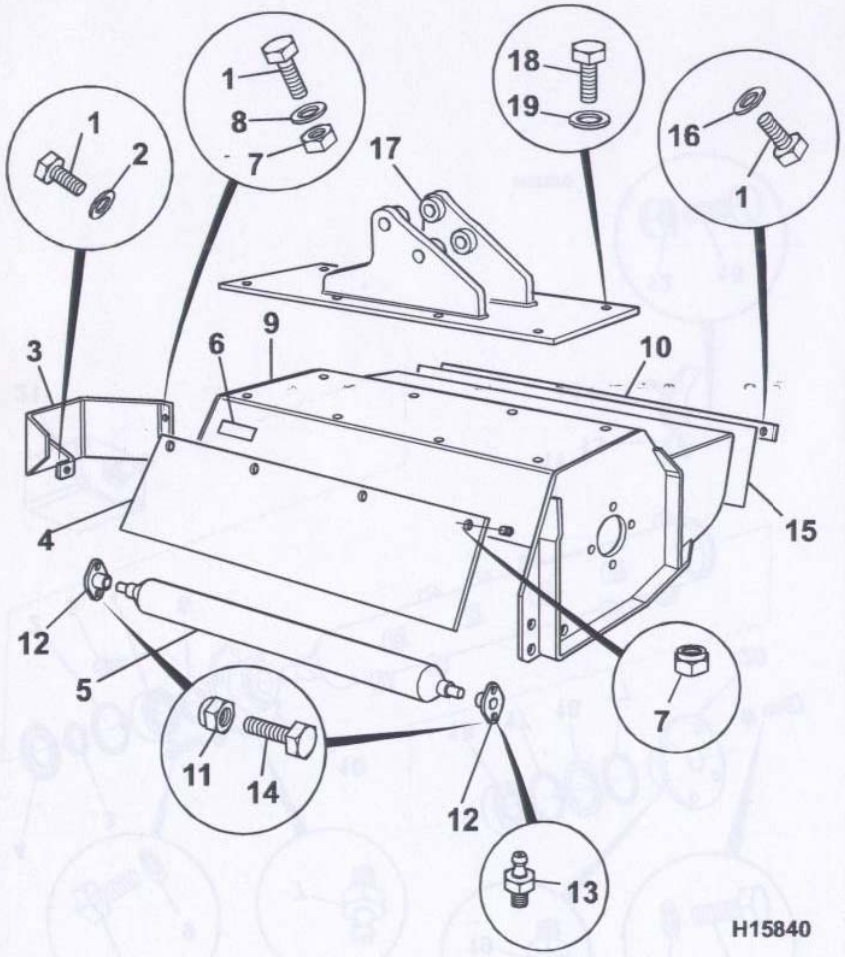

Item	Part No	Qty	A	Description	Remarks	M/C No change
1	1315/0405Z	7		Screw, hex head, M10 x 20		
2		1		Washer		
3	983/00220	1		Guard		
4	983/00221	1		Guard		
5	983/00222	1		Roller		
6	983/00223	1		Plate		
7	1370/0303Z	5		Nut, self lock, M10		
8	1420/0008Z	2		Washer, plain, M10		
9	983/00224	1		Frame		
10	983/00225	1		Rod		
11	1370/0503Z	4		Nut, self lock, M14		
12	983/00228	2		Bracket		
13	983/00226	2		Grease nipple		
14	1315/0610Z	4		Screw, hex head, M14 x 40		
15	983/00227	1		Guard		
16	1420/0008Z	4		Washer, plain, M10		
17	980/86055	1		Bracket, hanger		
18	1315/0510Z	8		Screw, hex head, M12 x 40		
19	1420/0009Z	8		Washer, plain, M12		

A3-3-3 ROTOR & MOTOR ASSEMBLIES

	on	to	on	to
8014	M791000			
8015	M730800			
8016	M728750			
8017	M800000			
8018	M801000			

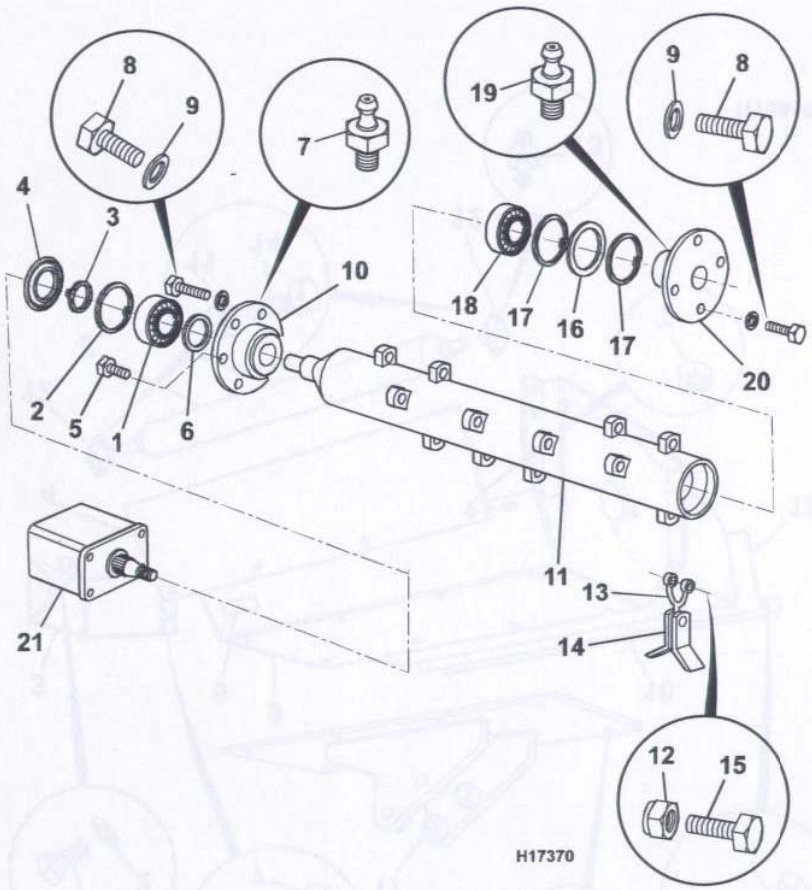

Item	Part No	Qty	A	Description	Remarks	M/C No change
1	983/00229	1		Bearing		
2	983/00230	1		Circlip, internal		
3	983/00231	1		Circlip, external		
4	983/00232	1		Ring		
5	1315/0507Z	1		Screw, hex head, M12 x 25		
6	983/00235	1		Seal		
7	983/00239	1		Grease nipple		
8	1315/0508Z	7		Screw, hex head, M12 x 30		
9	1420/0009Z	7		Washer, plain, M12		
10	983/00240	1		Bracket		
11	983/00242	1		Rotor		
12	1370/0203Z	16		Nut, self lock, M8		
13	983/00243	16		Bracket		
14	983/00244	32		Blade		
15	1315/3213Z	16		Bolt, hex head, M6 x 55		
16	983/00245	1		Seal		
17	983/00246	2		Circlip, internal		
18	983/00247	1		Bearing		
19	983/00248	1		Grease nipple		
20	983/00249	1		Bracket		
21	983/00253	1		Motor		

A3-3-3 ROTOR & MOTOR ASSEMBLIES

A3-4-1 AUGER MOTOR

	on	to	on	to
8014	M791000			
8015	M730800			
8016	M728750			
8017	M800000			
8018	M801000			

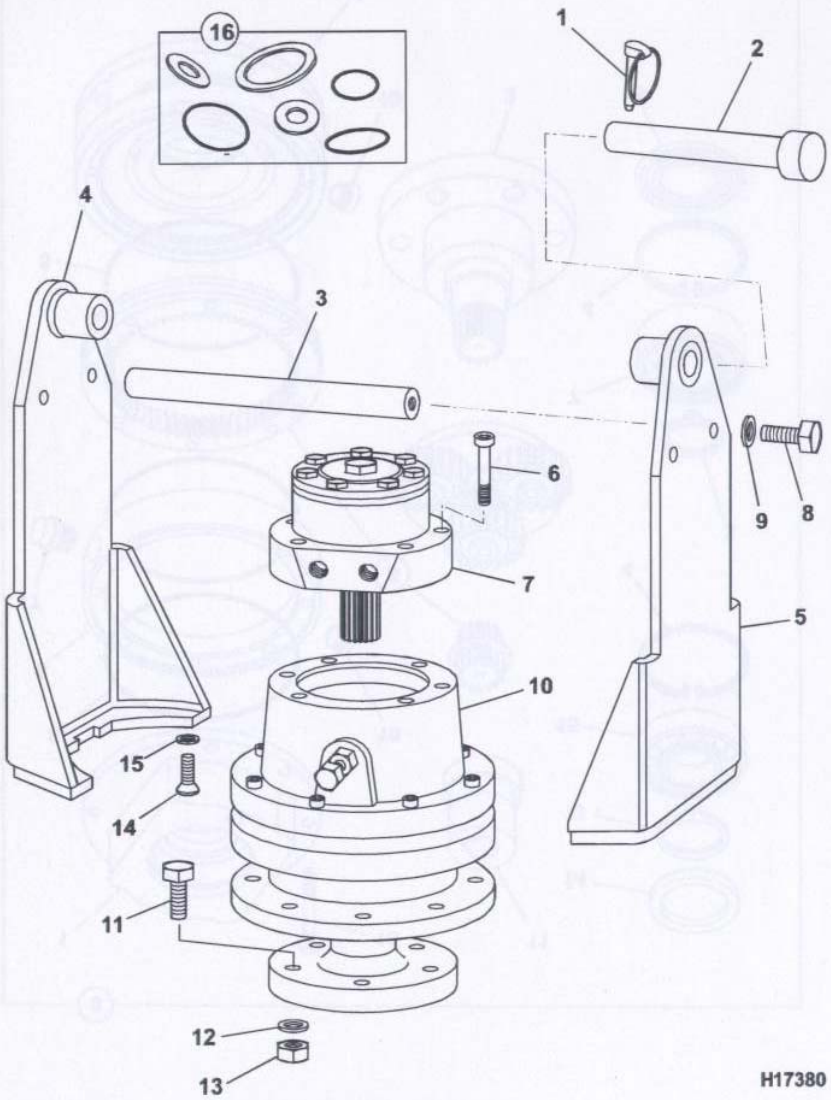

Item	Part No	Qty	A	Description	Remarks	M/C No change
1	980/14603	1		Pin, lynch		
2	980/14604	1		Pin		
3	980/14605	2		Spacer		
4	980/14606	1		Plate, side		
5	980/14606	1		Plate, side		
6	980/14608	6		Capscrew		
7	980/14601	1		Motor assembly		
8	980/14609	4		Bolt		
9	980/14610	4		Washer, plain		
10		1		Gearbox assembly		
11	980/14612	6		Bolt		
12	980/14610	6		Washer, plain		
13	980/14614	6		Nut, nyloc		
14	980/14615	8		Bolt		
15	980/14616	9		Washer, plain		
16	980/14602	1		Seal kit		

A3-4-1 AUGER MOTOR

A3-4-2 AUGER GEARBOX

	on	to	on	to
8014	M791000			
8015	M730800			
8016	M728750			
8017	M800000			
8018	M801000			

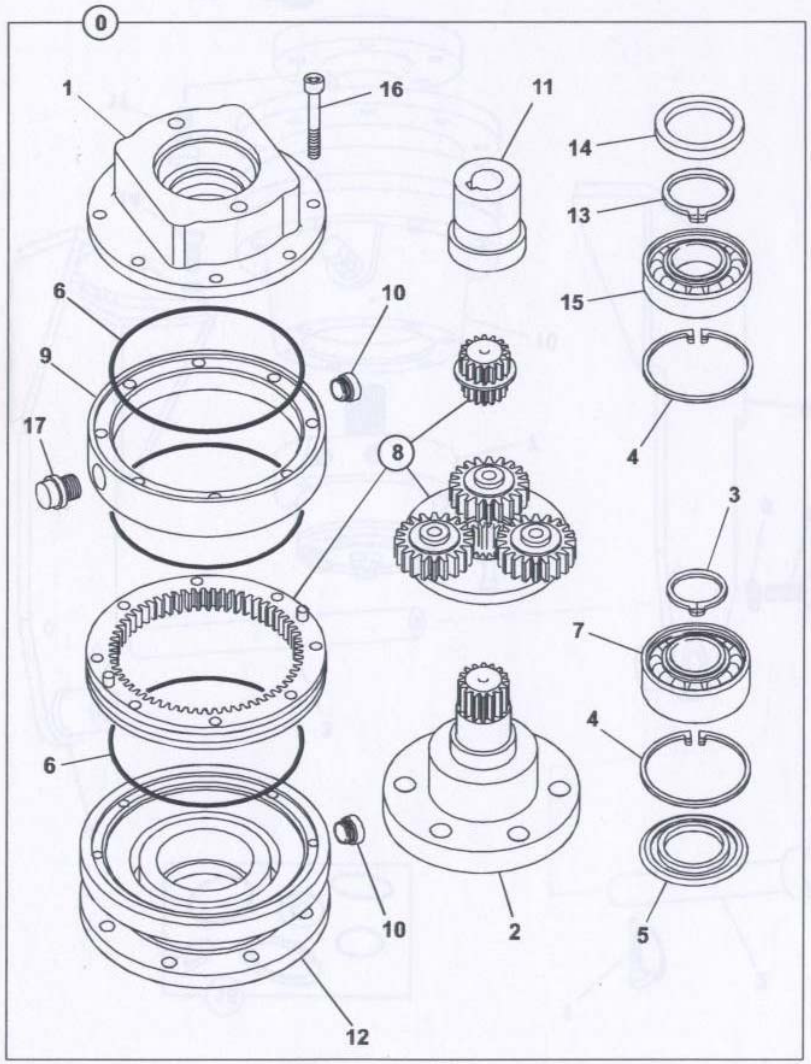

H17390

Item	Part No	Qty	A	Description	Remarks	M/C No change
0	980/14611	1		Gearbox assembly		
1	980/04201	1	:	Housing, output		
2	980/04202	1	:	Shaft, output		
3	980/06401	1	:	Circlip, external		
4	980/04123	2	:	Circlip, internal		
5	980/04124	1	:	Circlip, external		
6	980/04118	3	:	O Ring		
7	980/04125	1	:	Bearing		
8	980/14617	1	:	Planetary assembly		
9	980/14618	1	:	Housing, adaptor		
10	980/04115	2	:	Plug, cylinder		
11	980/04212	1	:	Coupling		
12	980/14619	1	:	Housing, flange		
13	980/04124	1	:	Circlip, external		
14	980/04128	1	:	Seal, oil		
15	980/04214	1	:	Bearing		
16	980/14620	8	:	Bolt, socket head		
17	980/04119	1	:	Plug, vent		

A3-4-2 AUGER GEARBOX

A3-4-3 AUGER EXTENSIONS

	on	to	on	to
8014	M791000			
8015	M730800			
8016	M728750			
8017	M800000			
8018	M801000			

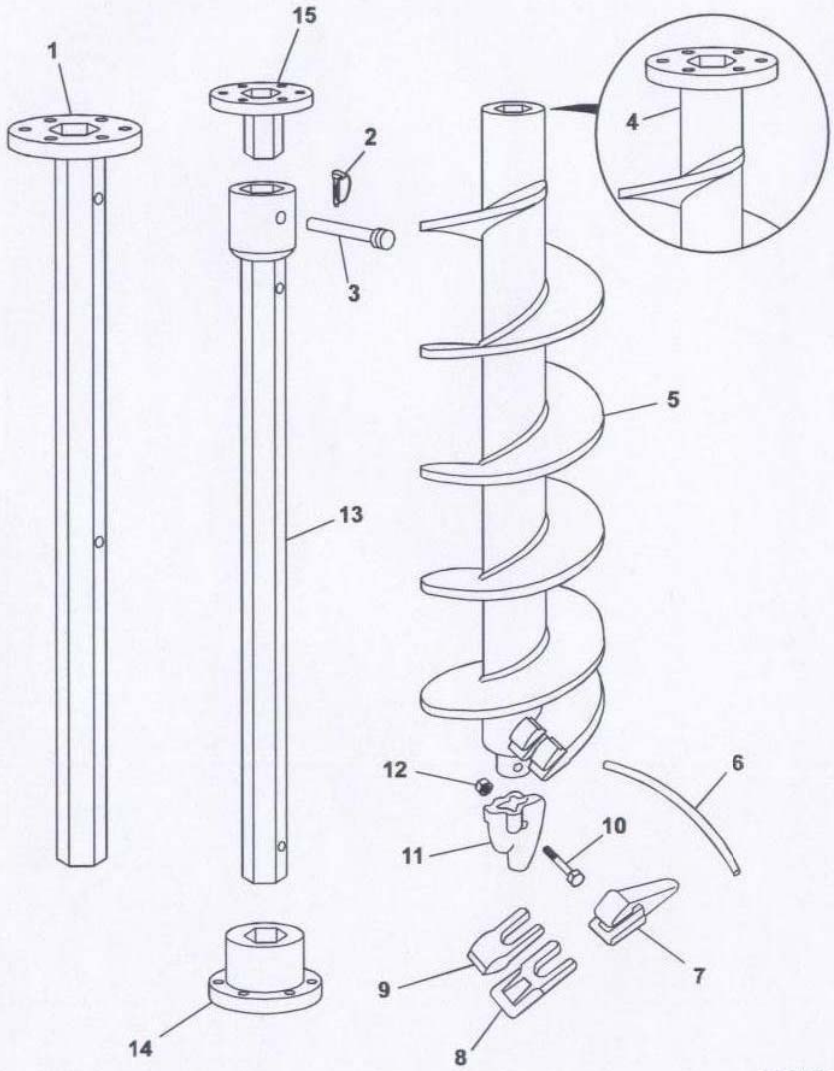

H17400

Item	Part No	Qty	A	Description	Remarks	M/C No change
1	980/06405	1		Extension, hex, 2in x 2m		
2	980/06406	2		Pin, lynch		
3	980/06407	2		Pin, lock		
4	980/06408	1		Auger, 6 bolt flange 12in		
	980/06409	1		Auger, 6 bolt flange 15in		
	980/06410	1		Auger, 6 bolt flange 18in		
	980/06411	1		Auger, 6 bolt flange 24in		
5	980/06412	1		Auger, hex socket, 12in.		
	980/06413	1		Auger, hex socket, 15in.		
	980/06414	1		Auger, hex socket, 18in.		
	980/06415	1		Auger, hex socket, 24in.		
6	980/06416	A/R		Lock, rubber		
7	980/06417	A/R		Tooth holder		
8	980/03511	A/R		Tooth, steel		
9	980/03511	A/R		Tooth, steel		
10	980/06418	1		Bolt, M8 x 50		
11	980/06419	1		Bit, pilot		
12	980/06420	1		Nut, nyloc, M8		
13	980/06421	1		Extension, 65mm x 1m		
14	980/06422	A/R		Adaptor, change	65mm hex/A8	
15	980/06423	1		Adaptor, male	6 bolt/65mm	

A3-4-3 AUGER EXTENSIONS

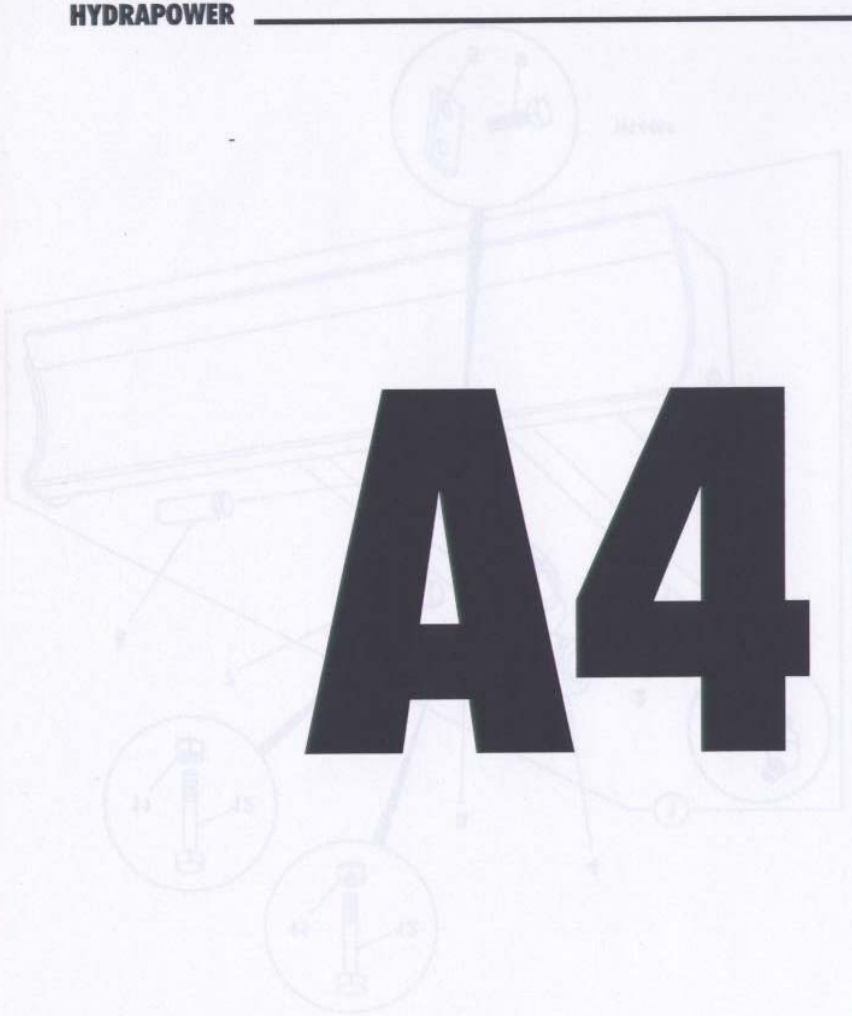

A4

A2 BUCKETS

A3 ATTACHMENTS

A4 DOZER

A4-1-1 DOZER

	on	to	on	to
8014	M791000			
8015	M730800			
8016	M728750			
8017	N/A			
8018	N/A			

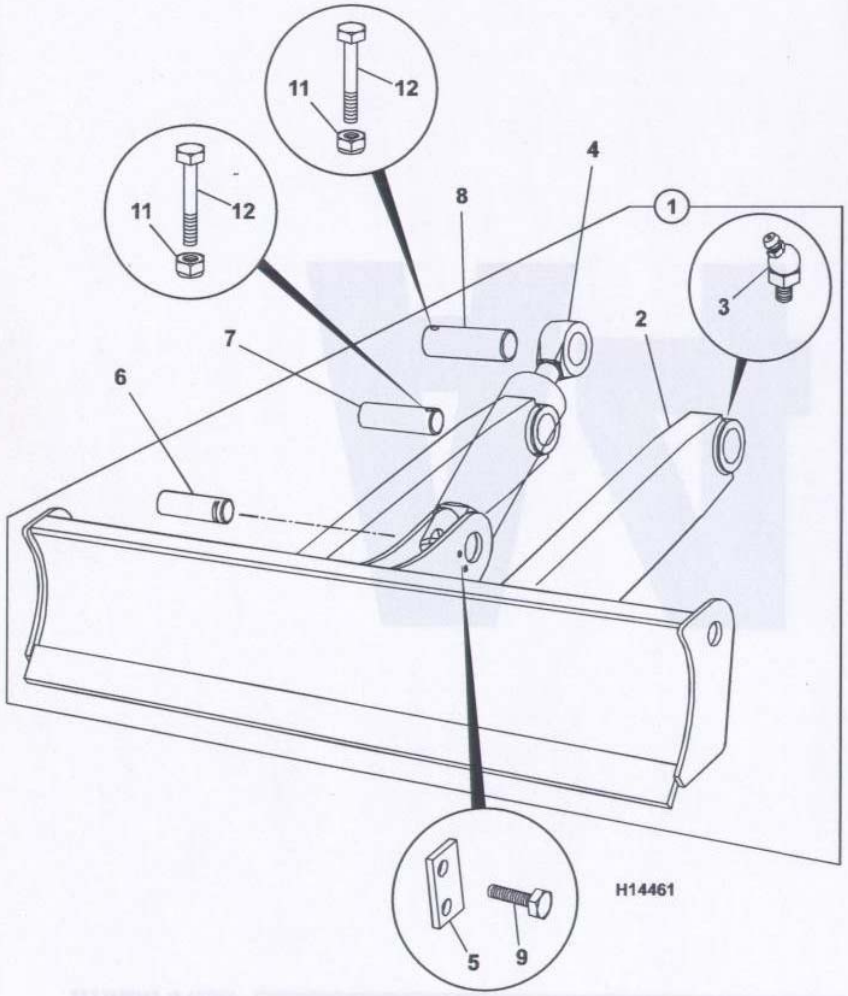

Item	Part No	Qty	A	Description	Remarks	M/C No change
1	236/07000	1		Dozer assembly	8014/8015	
	236/10300	1		Dozer assembly	8016	
2*	236/07100	1	:	Dozer	8014, grey	To M791122
					8014, black	M791123 on
					8015, grey	To M730930
					8015, black	M730931 on
	236/10400	1	:	Dozer	8016, grey	To M728787
					8016, black	M728788 on
3	1450/1007	2	:	Nipple, grease, 45°	1/8in. BSP	
4		1		Ram, dozer	See E4-2-1	
5	231/20002	1		Plate, keep		
6*	811/30090	1		Pin, pivot		
7*	811/10046	2		Pin, pivot	Was 236/06105	
8	236/08801	1		Pin, pivot		
9	1315/0405Z	2		Screw, hex head, M10 x 20		
11	1370/0303Z	3		Nut, self lock, M10		
12	1315/3416Z	3		Bolt, hex head, M10 x 70		

A4-1-2 DOZER

	on	to	on	to
8014	N/A			
8015	N/A			
8016	N/A			
8017	M800000			
8018	M801000			

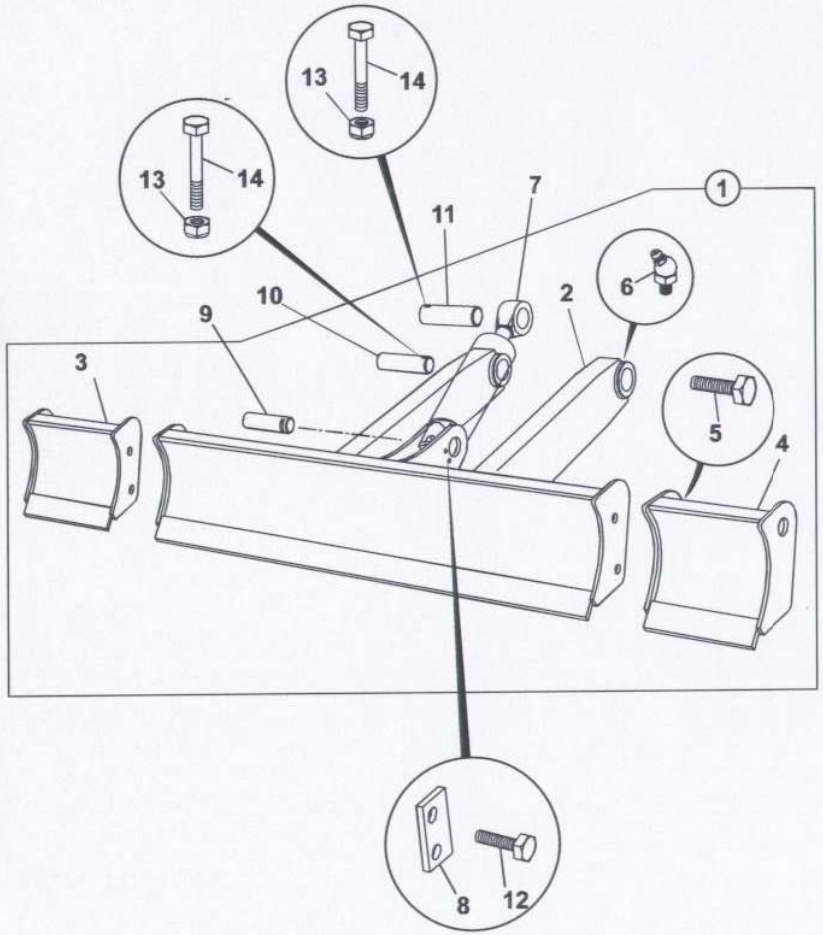

H21710

Item	Part No	Qty	A	Description	Remarks	M/C No change
1	236/22300	1		Dozer assembly		
2	236/45500	1	:	Dozer		
3	236/45600	1	:	Extension, RH		
4	236/46000	1	:	Extension, LH		
5	1315/0707Z	4	:	Bolt, hex head, M16 x 25		
6	1450/1007	2	:	Nipple, grease, 45°	1/8in. BSP	
7		1		Ram, dozer	See E4-2-1	
8	231/20002	1		Plate, keep		
9	811/30090	1		Pin, pivot		
10	811/10046	2		Pin, pivot		
11	236/08801	1		Pin, pivot		
12	1315/0405Z	2		Screw, hex head, M10 x 20		
13	1370/0303Z	3		Nut, self lock, M10		
14	1315/3416Z	3		Bolt, hex head, M10 x 70		

A4-1-2 DOZER

B1

B1 BODY & FRAMEWORK
B2 CAB
B4 EXCAVATOR COMPONENTS
B5 REFURBISHMENTS

B1-1-1 MAINFRAME

	on	to	on	to
8014	M791000			
8015	M730800			
8016	M728750			
8017	M800000			
8018	M801000			

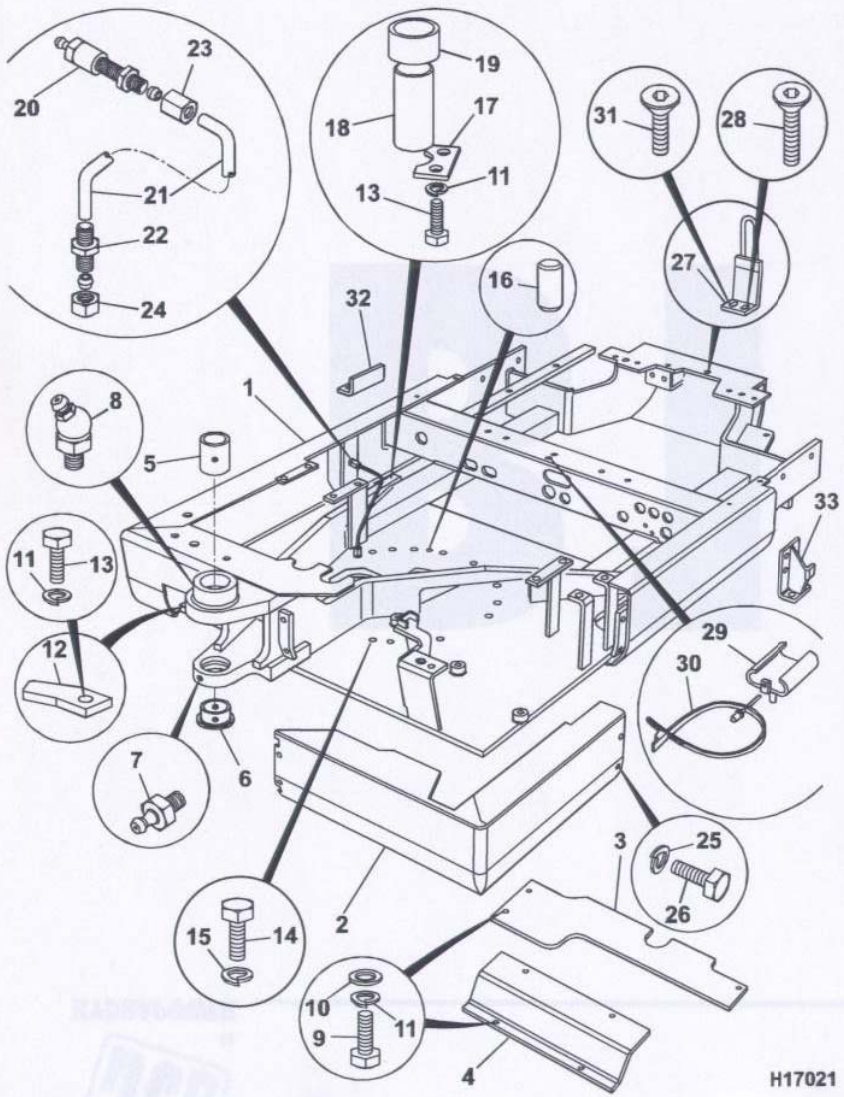

H17021

Item	Part No	Qty	A	Description	Remarks	M/C No change
1	236/01700	1		Mainframe		
2	236/14300	1		skirt, side		
3	236/02002	1		Guard, sump		
4	236/02003	1		Plate, baffle		
5	231/63002	1		Bush, top kingpost		
6	236/12910	1		Bush, bottom kingpost		
7	1450/0001	1		Nipple, grease, 1/8in.		
8	1450/1007	1		Nipple, grease, 45°		
9	1315/0405Z	7		Screw, hex head, M10 x 20		
10	1420/0008Z	7		Washer, plain, M10		
11	823/00416Z	11		Washer, spring, M10		
12*	236/41700	1		Plate, swing stop	Was 236/14201	
13	1315/0407Z	4		Screw, hex head, M10 x 25		
14	826/00998	15		Screw, hex head, M12 x 30		
15	823/00417Z	15		Washer, spring, M12		
16	2105/1609	2		Dowel		
17	231/20002	1		Plate, keep		
18	811/60015	1		Pin, pivot, swing ram		
19	231/63004	1		Spacer, swing ram		
20	816/60068	1		Adaptor, mainframe		
21	236/12904	1		Tube, bundy, 500mm L		
22	231/19001	1		Adaptor, slew ring		
23	231/19002	1		Sleeve		
24	231/19003	1		Nut		
25*	823/00415Z	4		Washer, spring, M8		
26*	1315/0305Z	4		Screw, hex head, M8 x 20		

B1-1-1 MAINFRAME

B1-1-1 MAINFRAME

	on	to	on	to
8014	M791000			
8015	M730800			
8016	M728750			
8017	M800000			
8018	M801000			

Item	Part No	Qty	A	Description	Remarks	M/C No change
27*	236/12913	1		Hook, Engine cover	Superseded	
	236/42300	1		Striker, catch		
28*	826/01558	1		Screw, csk, M6 x 15	Was 1370/0401Z	
29	236/12911	1		Clip, retainer, cable		
30	236/12912	1		Rivet fixing, drive		
31*	826/01557	1		Screw, csk, M6 x 20		
32*		1		Bracket, mounting	See B1-6-1	
33*		1		Bracket, SPMV mounting	See B1-6-1	

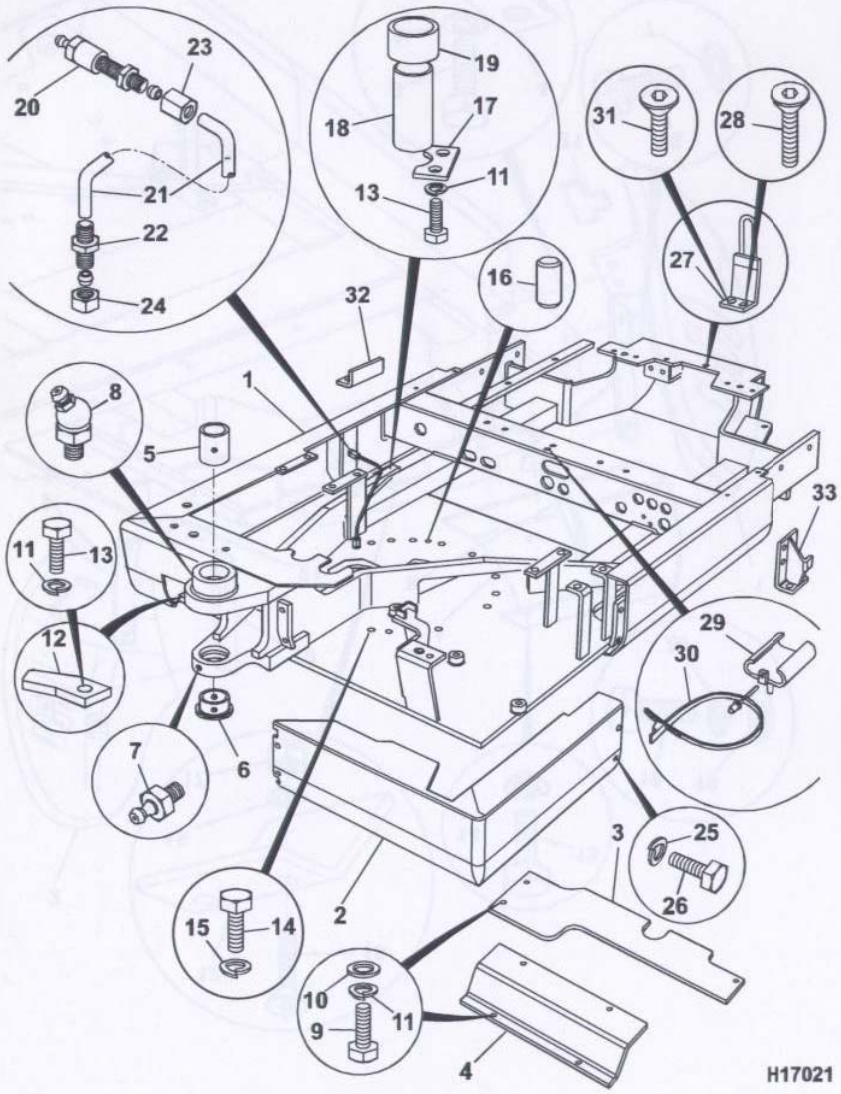

B1-1-1 MAINFRAME

B1-1-2 COUNTERWEIGHTS & MOUNTINGS

	on	to	on	to
8014	M791000			
8015	M730800			
8016	M728750			
8017	M800000			
8018	M801000			

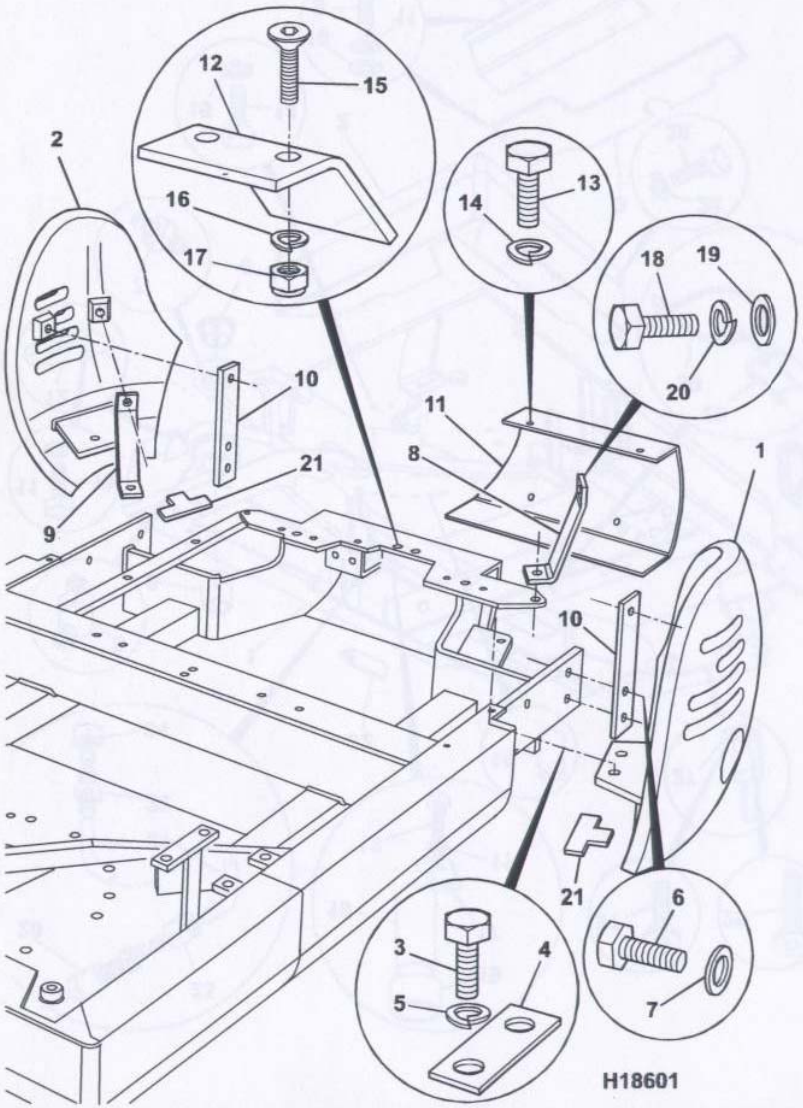

Item	Part No	Qty	A	Description	Remarks	M/C No change
1	236/12901	1		Counterweight, LH		
2	236/12902	1		Counterweight, RH		
3*	1315/0709Z	4		Screw, hex head, M16 x 35	Superseded	
	1315/0509Z	4		Screw, hex head, M12 x 35		
4*	1420/0011Z	4		Washer, plain, M16	Superseded	
	236/12918	2		Plate		
5*	1425/0011Z	4		Washer, spring, M16	Superseded	
	823/00417Z	4		Washer, spring, M12		
6*	1315/0505Z	6		Screw, hex head, M12 x 20	Superseded	
	1315/0507Z	6		Screw, hex head, M12 x 25		
7*	1420/0009Z	6		Washer, plain, M12		
8	236/34100	1		Mount, counterweight, LH		
9	236/34000	1		Mount, counterweight, RH		
10	236/12905	2		Bar, support		
11	236/01905	1		Skirt, rear		
12	236/12909	1		Plate, filter		
13	1315/0305Z	4		Screw, hex head, M8 x 20		
14	823/00415Z	4		Washer, spring, M8		
15	826/01557	2		Screw, csk, M6 x 20		
16	1425/0006Z	2		Washer, spring, M6		
17	1370/0101Z	2		Nut, M6		
18	1315/0407Z	4		Screw, hex head, M10 x 25		
19*	1420/0008Z	4		Washer, plain, M10		
20*	823/00416Z	4		Washer, spring, M10		
21*	236/41015	2		Spacer, counter weight		

B1-1-2 COUNTERWEIGHTS & MOUNTINGS

B1-2-1 TANK, FUEL

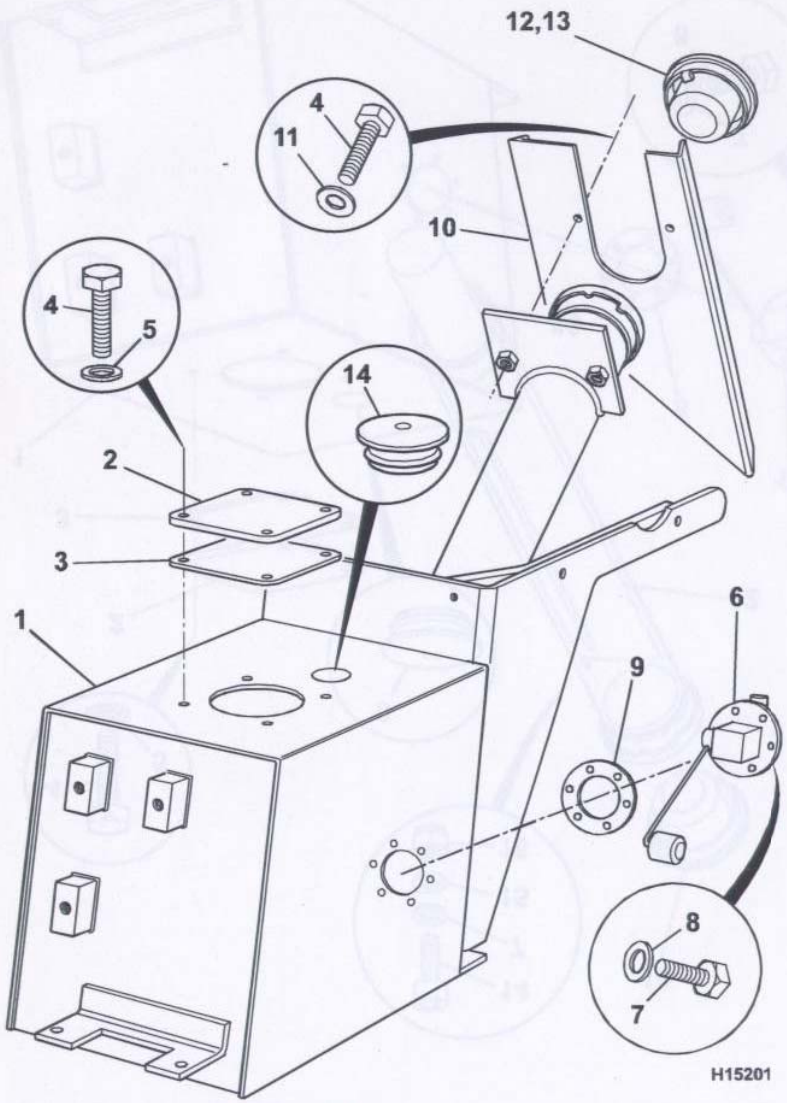

	on	to	on	to
8014	M791000	M791252		
8015	M730800	M731322		
8016	M728750	M728878		
8017	N/A			
8018	M801000	M801000		

Item	Part No	Qty	A	Description	Remarks	M/C No change
1	231/31900	1		Tank, fuel		
2	236/02401	1		Cover, tank		
3	231/49304	1		Gasket		
4*	1315/0203Z	4		Screw, hex head, M6 x 16	Superseded	
	1315/0303Z	6		Screw, hex head, M8 x 16		
5*	823/00198	4		Washer, nylon, M6	Superseded	
	823/00379	4		Washer, nylon, M8		
6*	233/13306	1		Plate, cover	Superseded	
	233/13307	1		Sender, fuel		
7	1315/0103Z	6		Screw, hex head, M5 x 16		
8	823/00590	6		Washer, nylon		
9	232/13313	1		Gasket, cork		
10*	236/41003	1		Guard, splash		
11*	1420/0007Z	2		Washer, plain, M8		
12*	122/62400	1		Cap, fuel		
13*	122/98439	1		Strainer	Not illustrated	
14*	236/02403	1		Plug, blanking		

B1-2-1 TANK, FUEL

B1-2-2 TANK, FUEL

	on	to	on	to
8014	M791253			
8015	M731323			
8016	M728879			
8017	M800000			
8018	M801001			

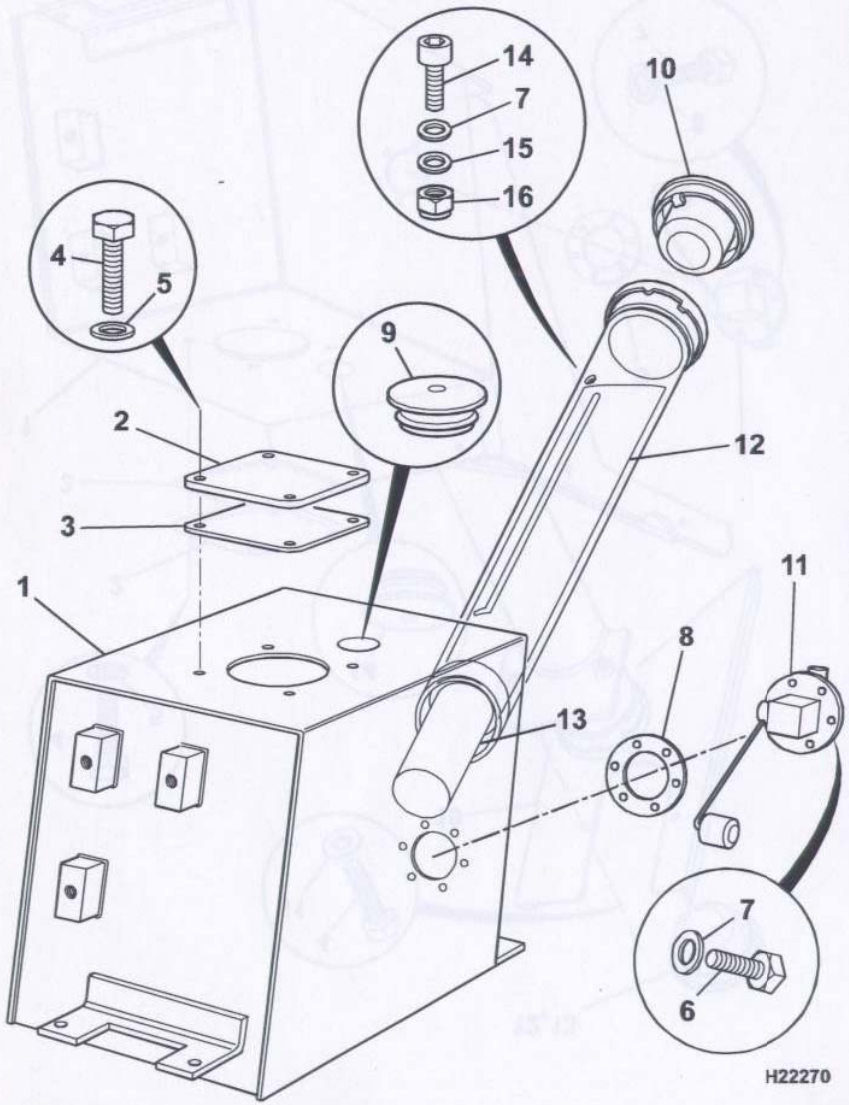

Item	Part No	Qty	A	Description	Remarks	M/C No change
1	236/44500	1		Tank, diesel		
2	236/02401	1		Cover, tank		
3	231/49304	1		Gasket		
4	1315/0303Z	4		Screw, hex head, M8 x 16		
5	823/00379	4		Washer, nylon, M8		
6	1315/0103Z	6		Screw, hex head, M5 x 16		
7	823/00590	7		Washer, nylon		
8	232/13313	1		Gasket, cork		
9	236/02403	1		Plug, blanking		
10	122/62400	1		Cap, fuel		
11	233/13307	1		Sender, fuel		
12	236/22200	1		Extension, fuel filler		
13	232/13302	1		Strainer		
14	1391/3105Z	1		Capscrew, M5 x 20		
15	1420/0005Z	1		Washer, plain, M5		
16	1370/0003Z	1		Nut, self lock, M5		

B1-2-2 TANK, FUEL

B1-3-1 HYDRAULIC TANK

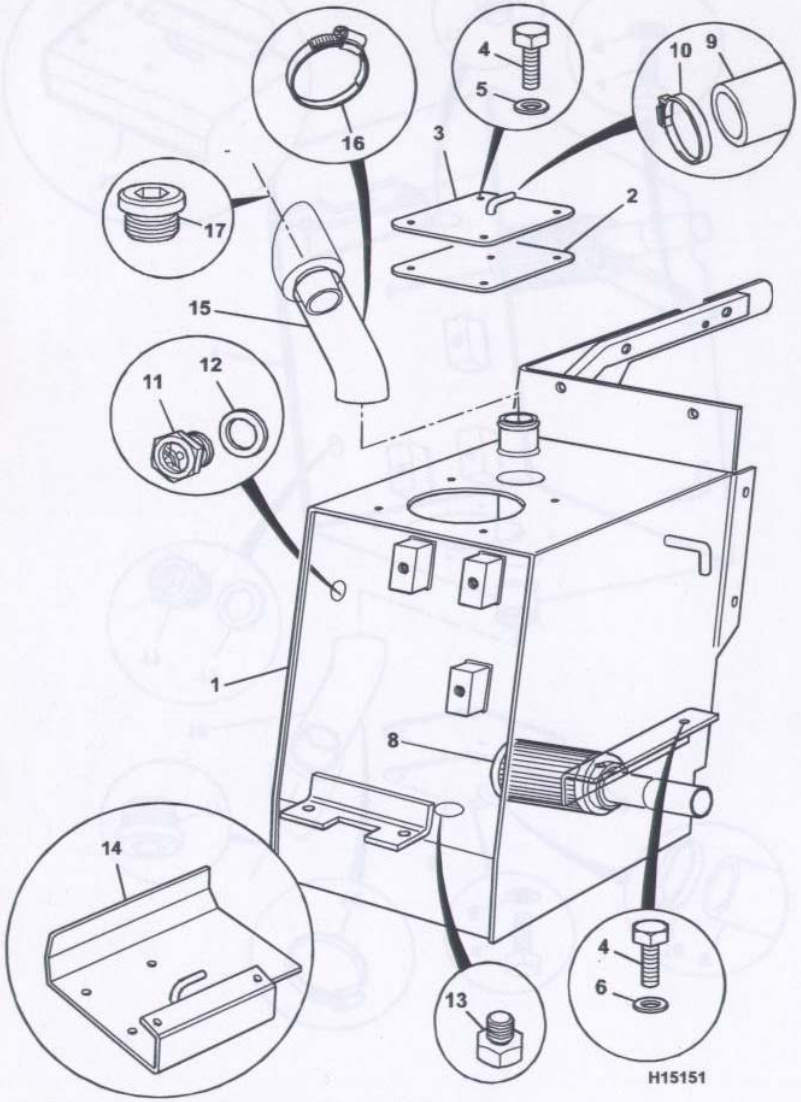

	on	to	on	to
8014	M791000	M791252		
8015	M730800	M731322		
8016	M728750	M728878		
8017	N/A			
8018	M801000	M801000		

Item	Part No	Qty	A	Description	Remarks	M/C No change
1	231/49400	1		Tank, hydraulic		
2	231/49304	1		Gasket		
3*	231/49500	1		Cover, tank	Servo only	
4	1315/0203Z	6		Screw, hex head, M6 x 16		
5	823/00198	4		Washer, nylon, M6		
6	1420/0006Z	2		Washer, plain, M6		
8	32/905100	1		Element, suction		
9	647/00304	1		Tube, 9.5 bore x 710		
10	231/10603	1		Clip, snapper		
11	231/65902	1		Sight glass		
12	1406/0026	1		Seal, bonded, 1in. BSP		
13	816/80035	1		Plug, blanking		
14		1		Plate, mounting	See C1-1-1	
15*	236/05137	1		Hose		
16*	2201/0009	2		Clip, worm drive, 32-50mm		
17*	236/05135	1		Plug, hydraulic filler		

B1-3-1 HYDRAULIC TANK

B1-3-2 HYDRAULIC TANK

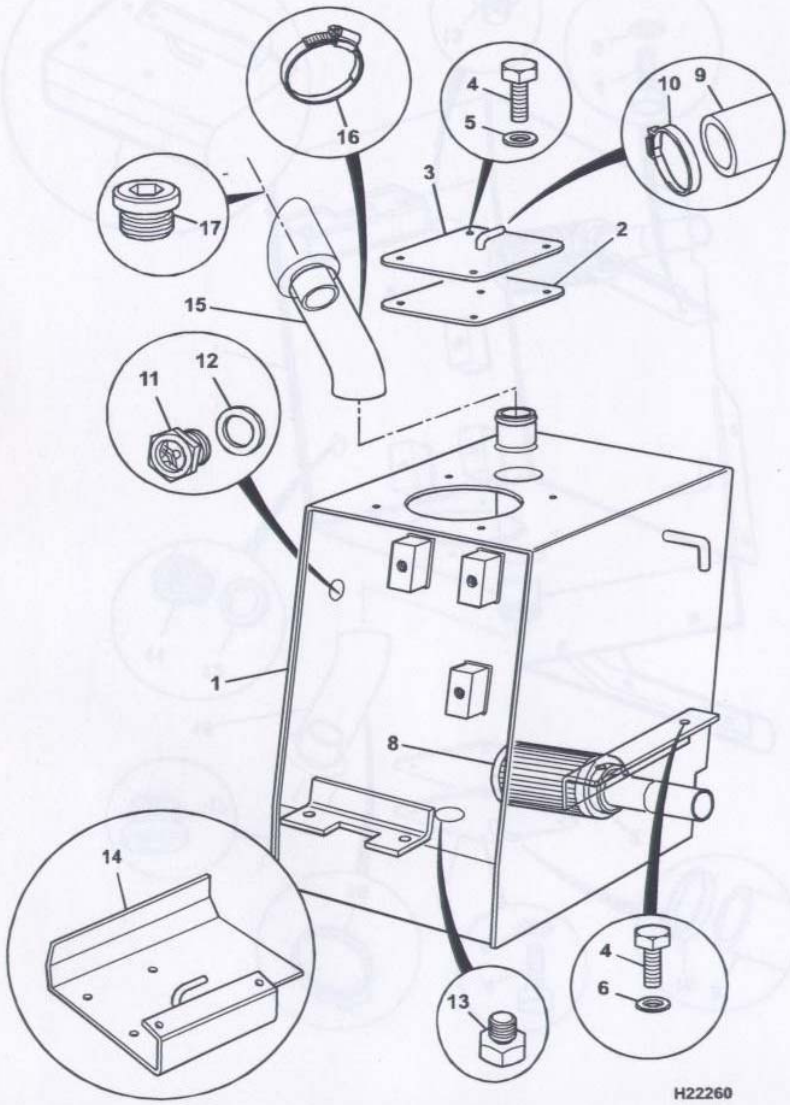

	on	to	on	to
8014	M791253			
8015	M731323			
8016	M728879			
8017	M791000			
8018	M801001			

Item	Part No	Qty	A	Description	Remarks	M/C No change
1	236/44600	1		Tank, hydraulic		
2	231/49304	1		Gasket		
3	231/49500	1		Cover, tank	Servo only	
4	1315/0203Z	6		Screw, hex head, M6 x 16		
5	823/00198	4		Washer, nylon, M6		
6	1420/0006Z	2		Washer, plain, M6		
8	32/905100	1		Element, suction		
9	647/00304	1		Tube, 9.5 bore x 710		
10	231/10603	1		Clip, snapper		
11	231/65902	1		Sight glass		
12	1406/0026	1		Seal, bonded, 1in. BSP		
13	816/80035	1		Plug, blanking		
14		1		Plate, mounting	See C1-1-1	
15	236/05137	1		Hose		
16	2201/0009	2		Clip, worm drive, 32-50mm		
17	236/05135	1		Plug, hydraulic filler		

B1-3-2 HYDRAULIC TANK

B1-4-1 FLOOR PLATES

	on	to	on	to
8014	M791000			
8015	M730800			
8016	M728750			
8017	M800000			
8018	M801000			

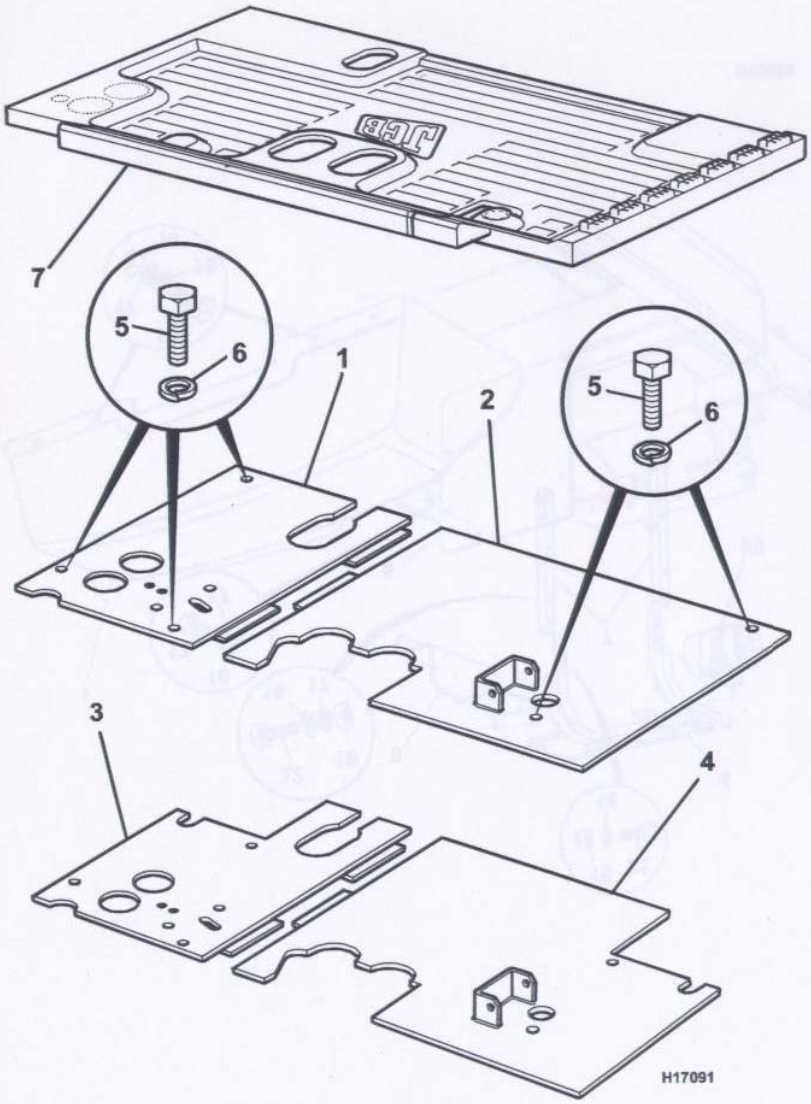

Item	Part No	Qty	A	Description	Remarks	M/C No change
1	236/13500	1		Floorplate, RH	Servo	
2	236/13200	1		Floorplate, LH	Servo	
3	236/13100	1		Floorplate, RH	Cable	
4	236/13600	1		Floorplate, LH	Cable	
5	1315/0405Z	5		Screw, hex head, M10 x 20		
6	823/00416Z	5		Washer, spring, M10	M10	
7	236/12914	1		Floormat		

B1-4-1 FLOOR PLATES

B1-5-1 BULKHEAD

	on	to	on	to
8014	M791000	M791252		
8015	M730800	M731322		
8016	M728750	M728878		
8017	N/A			
8018	M801000	M801000		

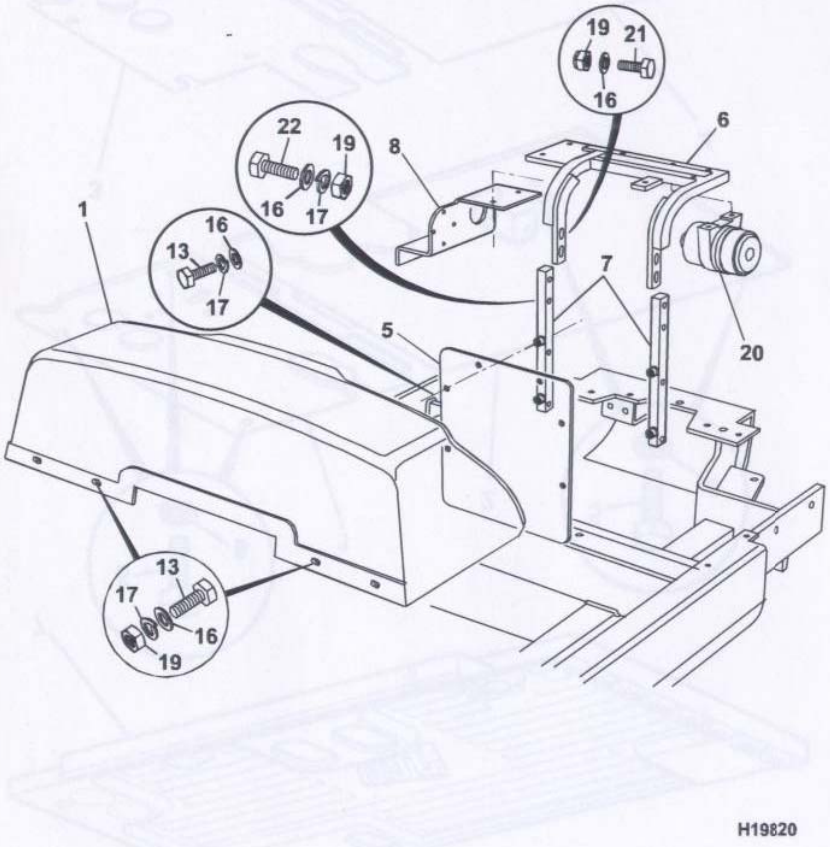

H19820

Item	Part No	Qty	A	Description	Remarks	M/C No change
1	236/41001	1		Bulkhead		
5	236/39000	1		Plate, cover, bulkhead		
6*	236/42900	1		Bracket, hinge mounting		
7*	236/43000	2		Bracket, support		
8*		1		Bracket, oil cooler	See L4-3-1	
13*	826/01554	6		Screw, button head, M8x25		
14*		1		Support, Engine cover	See B1-6-1	
15*	1370/0201Z	4		Nut, M8		
16*	1420/0007Z	18		Washer, plain, M8		
17*	1425/0007Z	14		Washer, spring, M8		
19*	1370/0203Z	12		Nut, self lock, M8		
20*				Filter assembly, Air	See L3-2-1	
21*	1315/0310Z	4		Screw, hex head, M8 x 40		
22*	1315/0309Z	4		Screw, hex head, M8 x 35		

B1-5-1 BULKHEAD

B1-5-2 SOUNDPROOFING

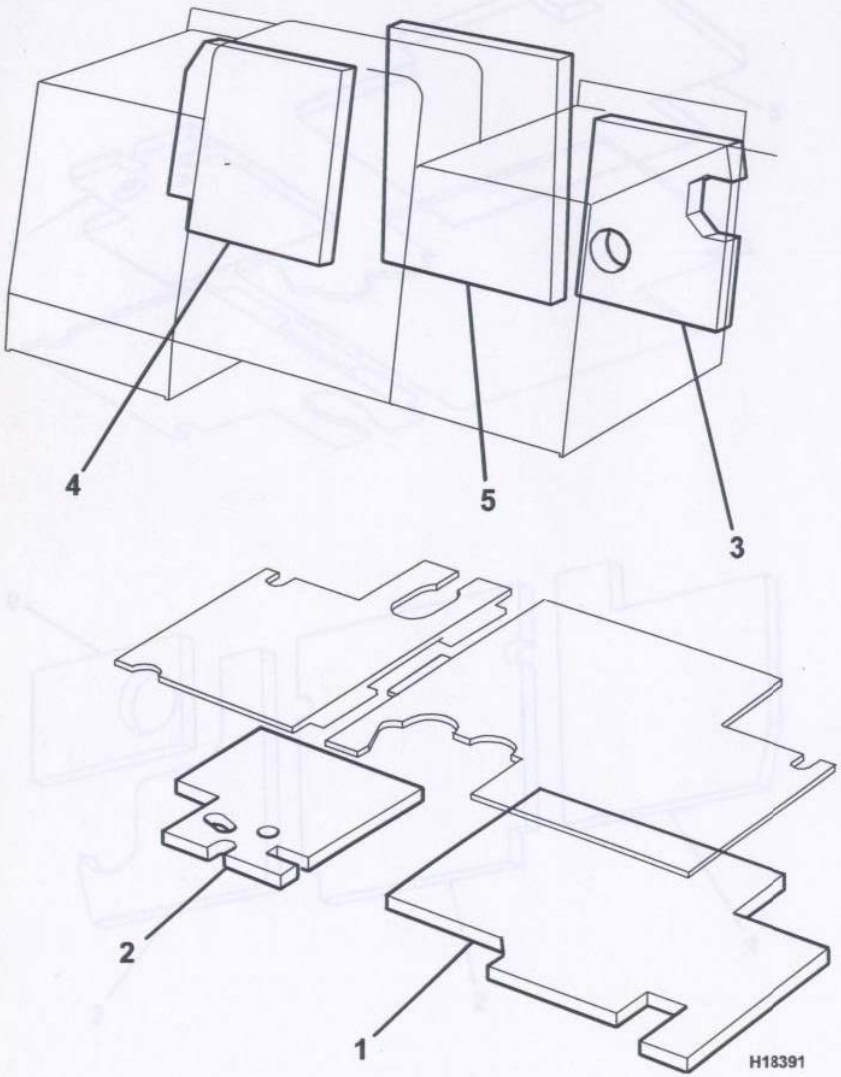

	on	to	on	to
8014	M791000	M791252		
8015	M730800	M731322		
8016	M728750	M728878		
8017	N/A			
8018	M801000	M801000		

Item	Part No	Qty	A	Description	Remarks	M/C No change
1	236/38801	1		Soundproofing, LH floor		
2	236/38802	1		Soundproofing, RH floor		
3	236/38803	1		Soundproofing, fuel tank		
4	236/38804	1		Soundproofing, hyd. Tank		
5*	236/38813	1		Soundproofing, bulkhead	Was 236/38805	

B1-5-2 SOUNDPROOFING

B1-5-3 SOUNDPROOFING

	on	to	on	to
8014	M791253			
8015	M731323			
8016	M728879			
8017	M800000			
8018	M801001			

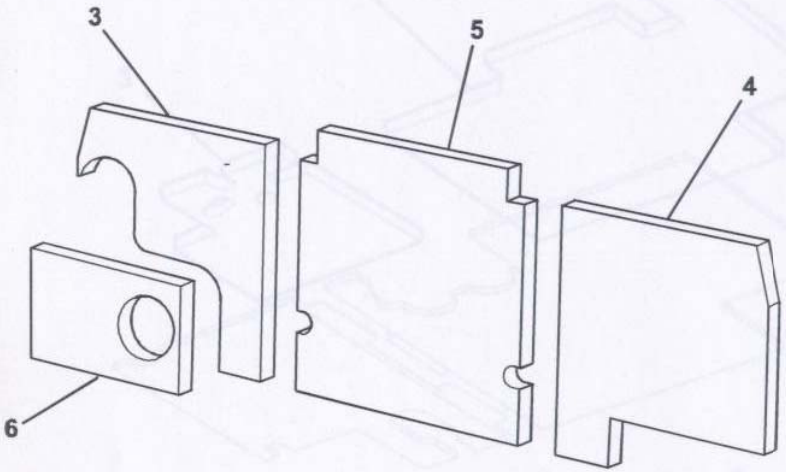

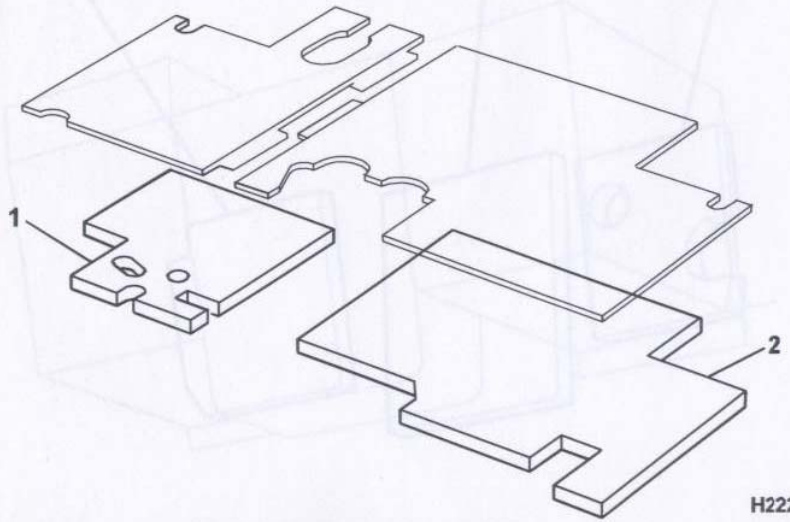

H22280

Item	Part No	Qty	A	Description	Remarks	M/C No change
1	236/38801	1		Soundproofing, LH floor		
2	236/38802	1		Soundproofing, RH floor		
3	236/38816	1		Soundproofing, foam		
4	236/38815	1		Soundproofing, foam		
5	236/38817	1		Soundproofing, foam		
6	236/38818	1		Soundproofing, foam		

B1-5-3 SOUNDPROOFING

B1-5-4 BULKHEAD

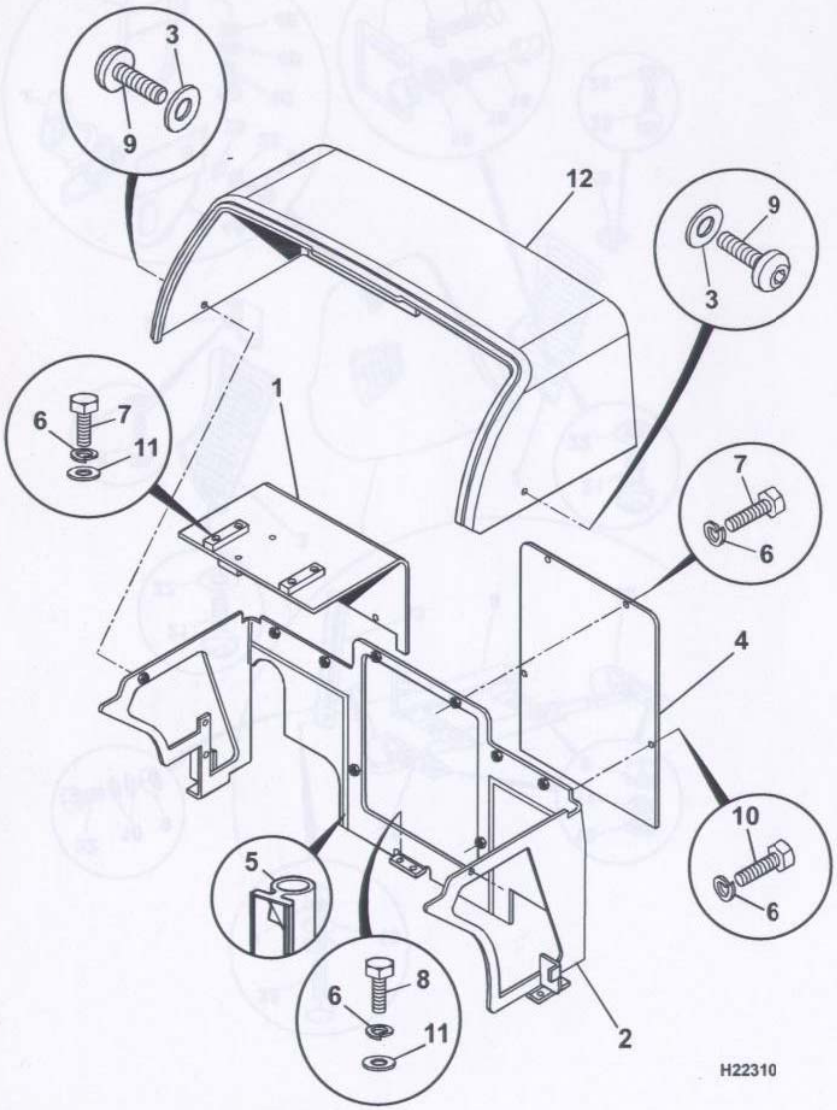

	on	to	on	to
8014	M791253			
8015	M731323			
8016	M728879			
8017	M800000			
8018	M801001			

Item	Part No	Qty	A	Description	Remarks	M/C No change
1	236/21700	1		Plate, hinge support		
2	236/45900	1		Bulkhead		
3	826/01554	2		Screw, button head, M8x25		
4	236/39000	1		Plate, cover, bulkhead		
5	926/17000	A/R		Strip, edging		
6	1425/0007Z	8		Washer, spring, M8		
7	1315/0307Z	6		Screw, hex head, M8 x 25		
8	1315/0305Z	6		Screw, hex head, M8 x 20		
9	1413/0002Z	4		Washer, plain, 5/16in.		
10	1315/0303Z	2		Screw, hex head, M8 x 16		
11	1420/0007Z	2		Washer, plain, M8		
12	236/41001	1		Bulkhead		

B1-5-4 BULKHEAD

B1-6-1 ENGINE COVER

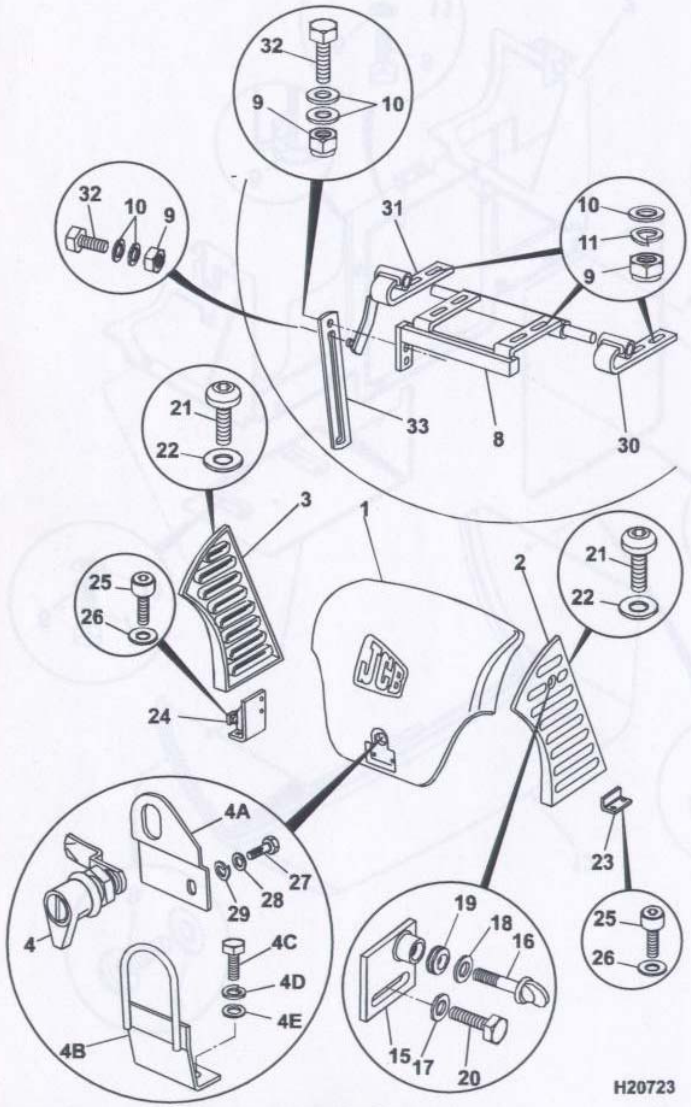

	on	to	on	to
8014	M791000			
8015	M730800			
8016	M728750			
8017	M800000			
8018	M801000			

Item	Part No	Qty	A	Description	Remarks	M/C No change
1*	236/11807	1		Engine cover, yellow		
	236/42504	1		Engine cover, grey		
2*	236/11805	1		Panel, yellow, RH	S/S, see T.I. 146	
	236/42503	1		Panel, grey, RH	S/S, see T.I. 146	
	236/11809	1		Panel, yellow, RH	See T.I. 146	
	236/42505	1		Panel, grey, RH	See T.I. 146	
3	236/11806	1		Panel, yellow, LH		
	236/42502	1		Panel, grey, LH		
4	236/41016	1		Lock barrel		
4A*	236/41012	1		Plate,lock		
4B*	236/42300	1		Striker, catch		
4C*	1315/0305Z	2		Screw, hex head, M8 x 20		
4D*	823/00415Z	2		Washer, spring, M8		
4E*	1420/0007Z	2		Washer, plain, M8		
8*	236/43200	1		Hinge, engine cover		
9*	1370/0203Z	9		Nut, self lock, M8	Was 1370/0201Z	
10	1420/0007Z	10		Washer, plain, M8		
11	1425/0007Z	8		Washer, spring, M8		
15*	236/43500	1	:	Plate, lock	See note	
16*	826/00649	1	:	Bolt, thumbscrew, M10x25	See note	
17*	1420/0008Z	1	:	Washer, plain, M10	See note	
18*	823/00480	1	:	Washer, retaining, M10	See note	
19*	231/83302	1	:	Grommet	See note	
20*	1315/0301Z	1	:	Screw, hex head, M8 x 12	See note	
21*	826/01674	4		Screw, button head, M6x25		
21A*		2		Screw, button head, M6x12		
22*	1411/0001Z	12		Washer, medium, ¼in.		
23*	236/12916	1		Bracket, mounting	S/S, see T.I. 146	
	236/45700	1		Bracket, mounting		
24	236/42100	1		Bracket, SPMV mounting		
25*	1391/3405Z	4		Capscrew, M10 x 20		

Note: Use items 15,16,17,18,19 & 20 with 236/11805 & 236/42503

B1-6-1 ENGINE COVER

B1-6-1 ENGINE COVER

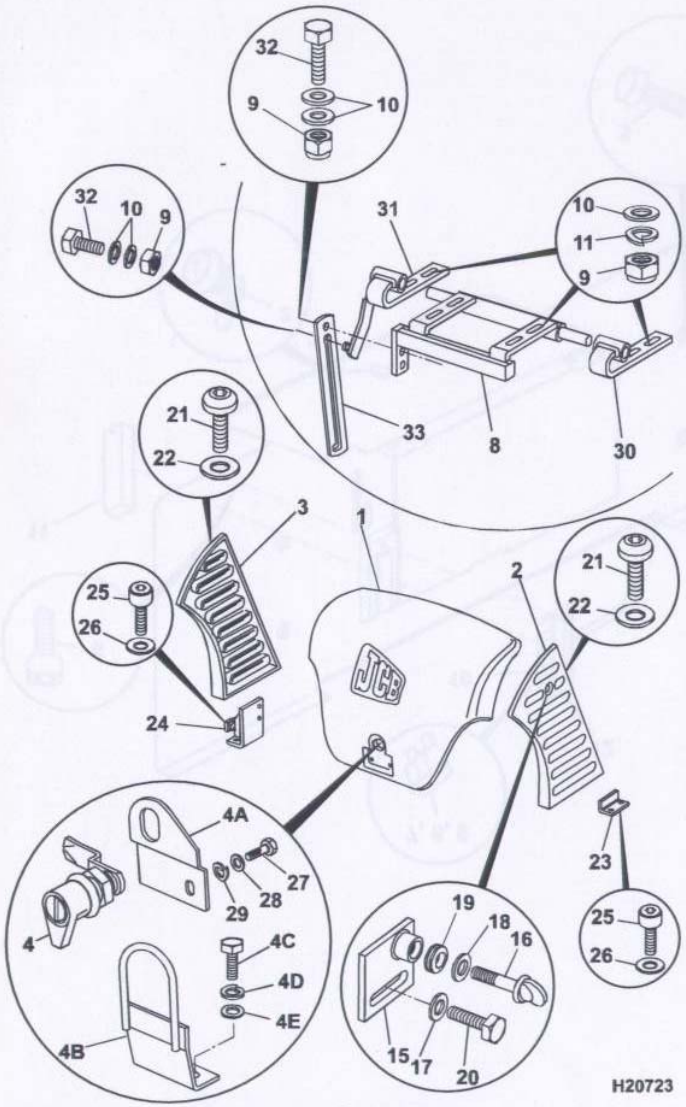

	on	to	on	to
8014	M791000			
8015	M730800			
8016	M728750			
8017	M800000			
8018	M801000			

Item	Part No	Qty	A	Description	Remarks	M/C No change
26	1420/0008Z	4		Washer, plain, M10		
27*	1315/0203Z	1		Screw, hex head, M6 x 16		
28*	823/00414Z	1		Washer, spring, M6		
29*	1411/0001Z	1		Washer, medium, ¼in.		
30*	236/43400	1		Bracket, hinge, RH		
31*	236/43300	1		Bracket, hinge, LH		
32*	1315/0307Z	2		Screw, hex head, M8 x 25		
33*	236/43101	1		Support, Engine cover		
34*	1370/0103Z	4		Nut, self lock, M6		

Note: Use items 15,16,17,18,19 & 20 with 236/11805 & 236/42503

B1-6-1 ENGINE COVER

B1-7-1 TOOLBOX

	on	to	on	to
8014	M791000			
8015	M730800			
8016	M728750			
8017	M800000			
8018	M801000			

Item	Part No	Qty	A	Description	Remarks	M/C No change
1	236/02900	1		Toolbox		
2	232/15701	1		Barrel, lock		
3	1315/0405Z	4		Screw, hex head, M10 x 20		
4	1420/0008Z	4		Washer, plain, M10		
5	823/00416Z	4		Washer, spring, M10		
6	1391/3105Z	1		Capscrew, M5 x 20		
7		3		Fuse, 5 amp	See C1-3-1	
8		2		Fuse, 15 amp	See C1-3-1	
9		1		Fuse, 10 amp	See C1-3-1	
10	716/08700	1		Box, fuse		
11	716/05600	1		Cover, fuse box		
12	231/69003	1		Plate, fuse box		

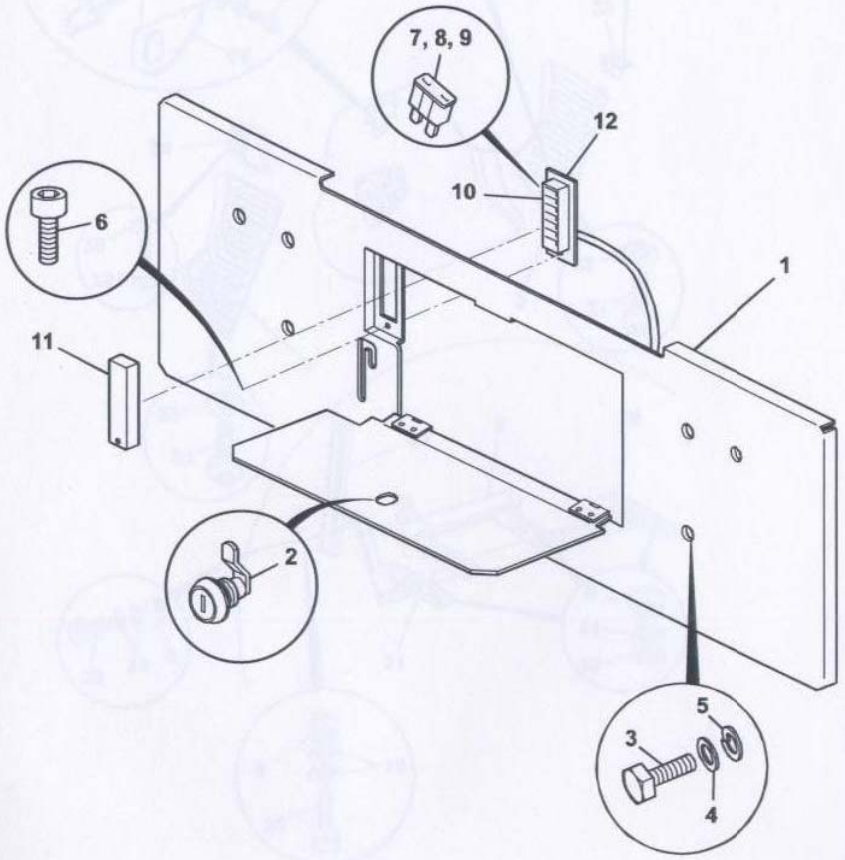

B1-7-1 TOOLBOX

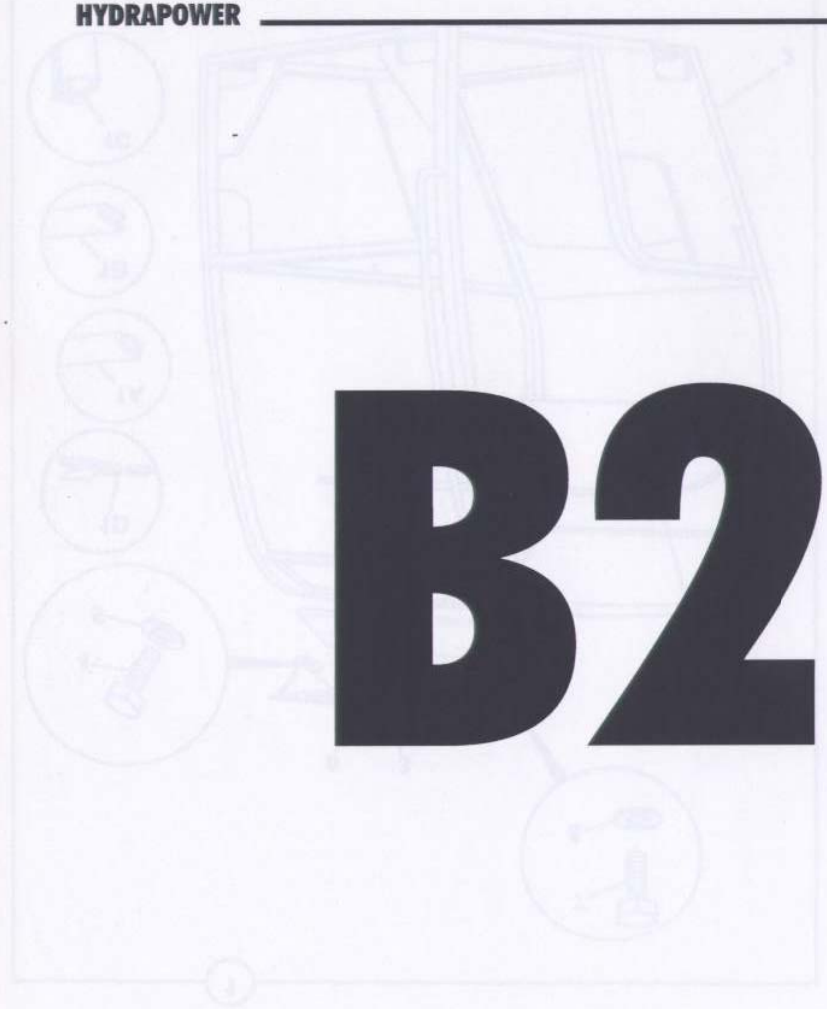

B2

B1 BODY & FRAMEWORK
B2 CAB
B4 EXCAVATOR COMPONENTS
B5 REFURBISHMENTS

B2-1-1 CANOPY - ROPS, TOPS & FOGS

	on	to	on	to
8014	M791000			
8015	M730800			
8016	M728750			
8017	M800000			
8018	M801000			

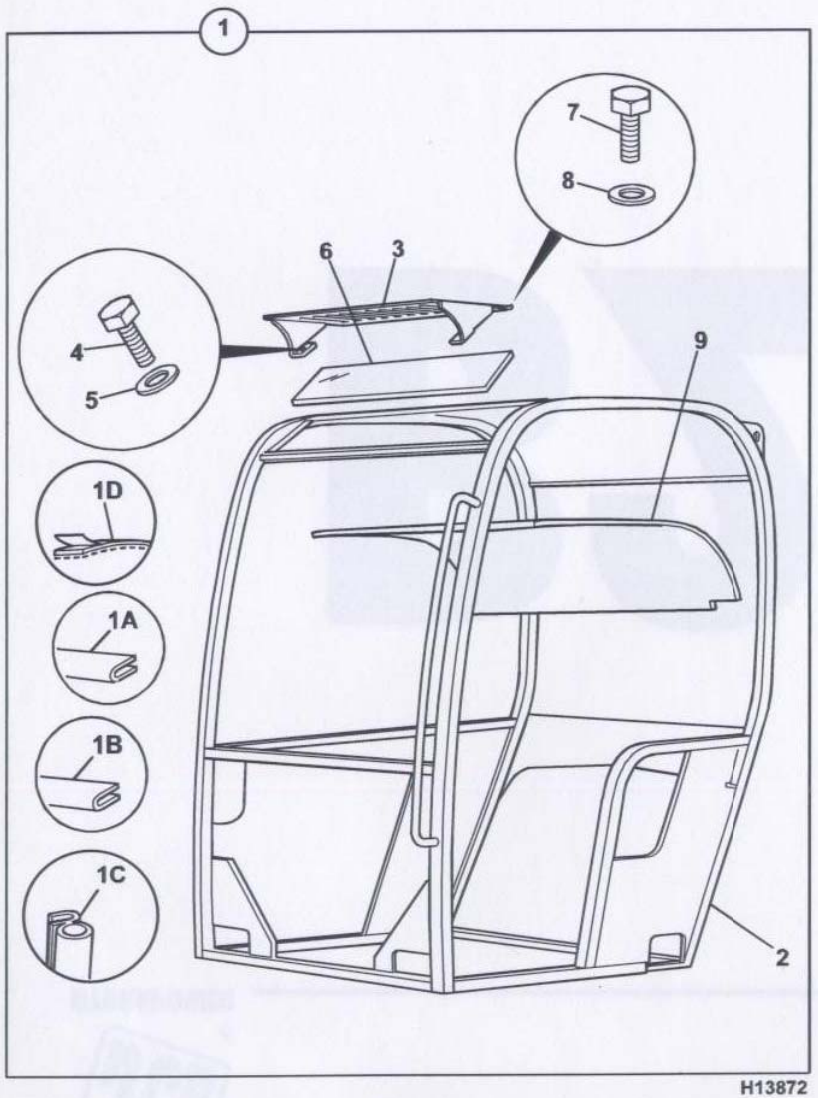

H13872

Item	Part No	Qty	A	Description	Remarks	M/C No change
1	236/07400	1		Canopy assembly		
1A*	926/04800	A/R	:	Strip, edging	2400mm	
1B*	926/19700	A/R	:	Seal	2000mm	
1C*	926/09800	A/R	:	Seal, strip	275mm	
1D*	236/05132	5	:	Strip, velcro, 3m x 50mm		
2	236/07500	1	:	Canopy		
3*	236/05101C	1	:	Guard, FOGS		
4	1315/0303Z	2	:	Screw, hex head, M8 x 16		
5*	1420/0007Z	2	:	Washer, plain, M8	Was 1425/0007Z	
6	236/07305	1	:	Glass, top		
7	1315/0401Z	2	:	Screw, hex head, M10 x 12		
8	1420/0008Z	2	:	Washer, plain, M10		
9	236/05104	1	:	Lining, roof		

B2-1-1 CANOPY - ROPS, TOPS & FOGS

B2-1-2 CANOPY MOUNTINGS

	on	to	on	to
8014	M791000			
8015	M730800			
8016	M728750			
8017	M800000			
8018	M801000			

Item	Part No	Qty	A	Description	Remarks	M/C No change
1		1		Canopy assembly	See B2-1-1	
2	236/19700	2		Bolt, mount, M16		
3	231/69601	2		Spacer		
4	1420/0011Z	4		Washer, plain, M16	Was 232/25101	
5	1370/0603Z	4		Nut, self lock, M16		
6	1412/0007Z	1		Washer, large, 5/8in.	Front LH mtg only	
7	1315/0408Z	2		Screw, hex head, M10 x 30		
8	1370/0303Z	1		Nut, self lock, M10		
9	237/21404	2		Spacer, front		
10	1315/0717Z	2		Screw, hex head, M16 x 75	Was 236/19601	
11	236/21403	1		Plate, spacer, LH		
12	1315/3414Z	1		Bolt, hex head, M10 x 60		
13	1420/0008Z	3		Washer, plain, M10		
14	1425/0008Z	2		Washer, spring, M10		
15	236/21405	1		Block, clamp		
16	1315/0305Z	2		Screw, hex head, M8 x 20		
17	236/21402	1		Plate, spacer, RH		
18	1315/3414Z	1		Bolt, hex head, M10 x 60		
19	823/00418Z	2		Washer, spring, M16		

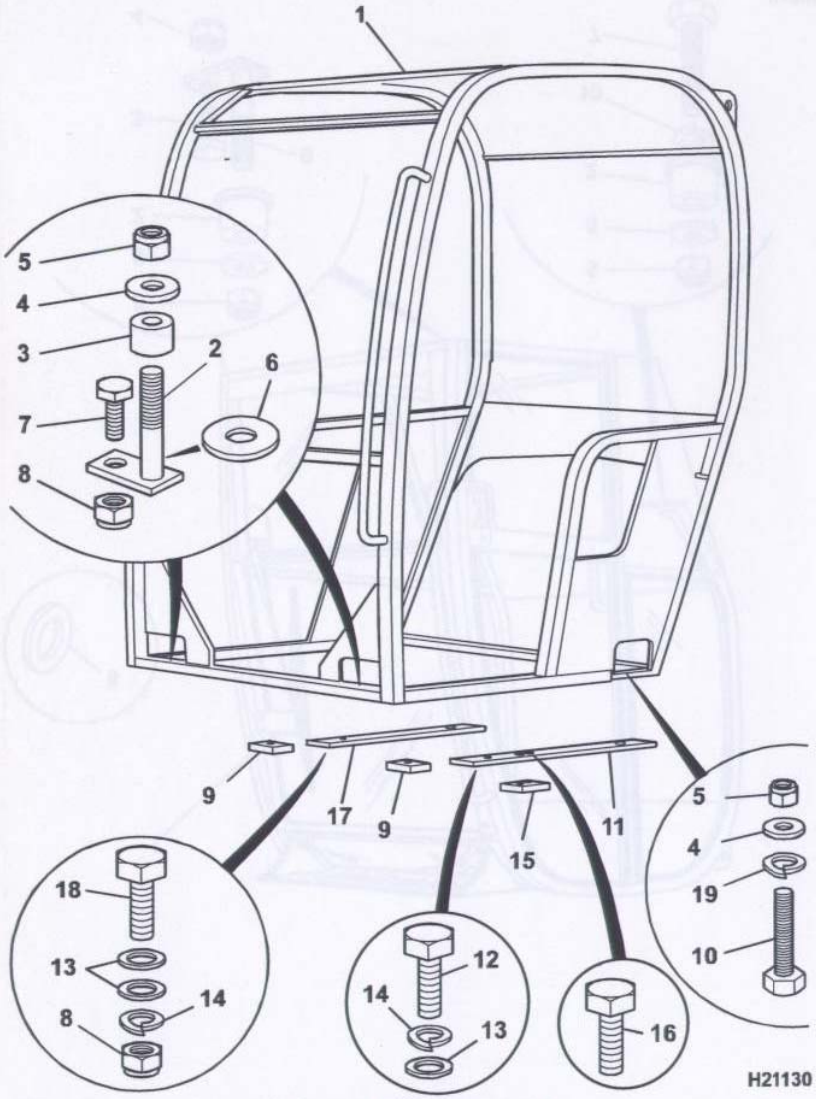

B2-1-2 CANOPY MOUNTINGS

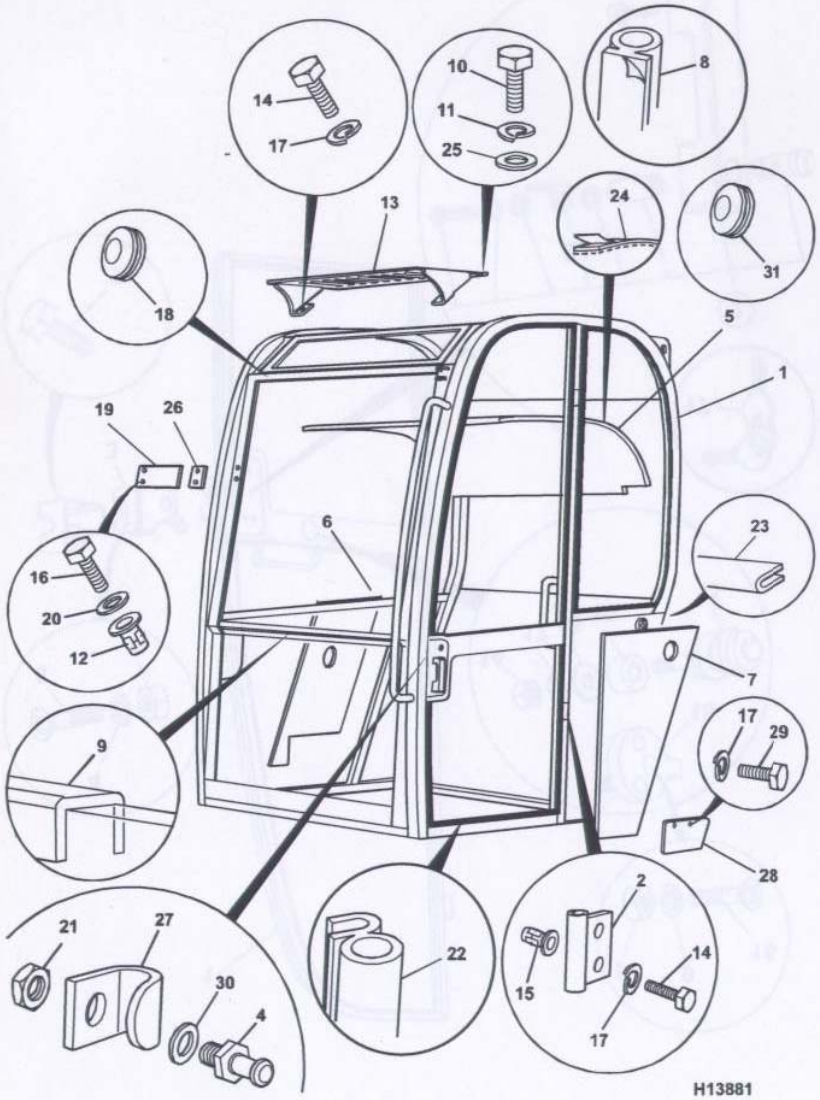

	on	to	on	to
8014	M791000			
8015	M730800			
8016	M728750			
8017	M800000			
8018	M801000			

Item	Part No	Qty	A	Description	Remarks	M/C No change
1	236/05200	1		Cab frame		
2	236/05600	2		Hinge		
3		1		Window assembly, front	See B2-4-2	
4*	120/77505	1		Bolt, closing	Was 231/24016	
5*	236/05140	1		Lining, roof	Was 236/05104	
6	236/05105	1		Panel, vinyl, RH		
7	236/05106	1		Panel, vinyl, LH		
8	926/17000	A/R		Strip, edging		
9	232/46607	1		Seal, plastic, clear		
10	1315/0405Z	2		Screw, hex head, M10 x 20		
11	1425/0008Z	2		Washer, spring, M10		
12	826/00686	2		Nutsert, M6		
13*	236/05101C	1		Guard, FOGS		
14	1315/0303Z	6		Screw, hex head, M8 x 16		
15*	826/01178	4		Nutsert, M8		
16*	1315/0207Z	2		Screw, hex head, M6 x 25		
17*	1425/0007Z	10		Washer, spring, M8		
18	2410/1105	4		Grommet, blind, 12.7mm		
19	232/24012	1		Plate, wiper		
20	1425/0006Z	2		Washer, spring, M6		
21*	826/01529	1		Nut, thin, M12 x 1		
22	926/09800	A/R		Seal, strip		
23	926/19700	1		Seal		
24*	236/05132	5		Strip, velcro, 3m x 50mm		
25*	1420/0008Z	2		Washer, plain, M10	Was 1420/0006Z	
26	232/24013	1		Plate, spacer		
27	140/00618	1		Guard, coat	German M/c's	
28*	236/01536	2		Plate, cover		
29*	1315/0305Z	4		Screw, hex head, M8 x 20		
30*	1420/0009Z	1		Washer, plain, M12		
31*	828/00136	2		Grommet, blind		

B2-3-1 CAB DOOR

	on	to	on	to
8014	M791000			
8015	M730800			
8016	M728750			
8017	M800000			
8018	M801000			

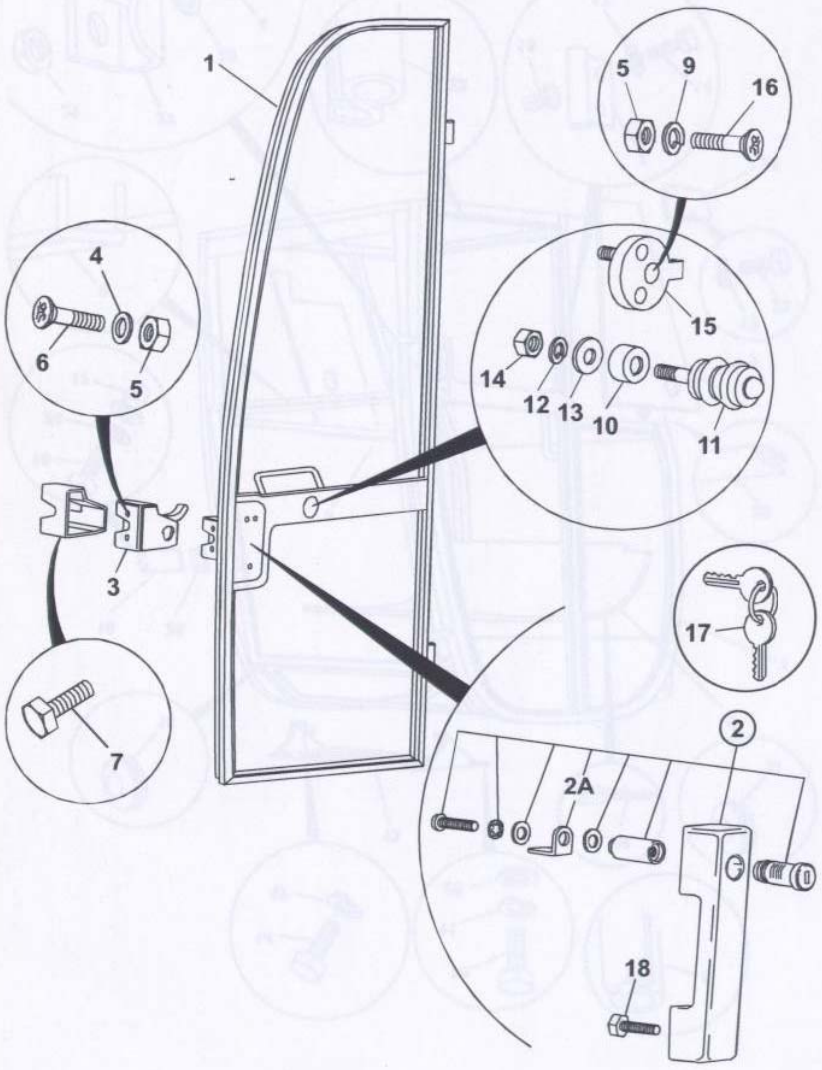

H18233

Item	Part No	Qty	A	Description	Remarks	M/C No change
1	236/05500	1		Door, cab		
2*	236/05119	1		Handle, locking assembly		
2A*	236/05120	1	:	Cam, locking		
3	236/06600	1		Lock assembly, door		
4	1420/0006Z	2		Washer, plain, M6		
5*	1370/0101Z	4		Nut, M6		
6*	826/01811	2		Screw, pozidrive, M6 x 25	Was 236/05120	
7	1315/0310Z	2		Screw, hex head, M8 x 40		
9	1425/0006Z	5		Washer, spring, M6		
10	236/05130	2		Plunger, male		
11	236/05131	1		Plunger, rubber		
12*	1425/0007Z	1		Washer, spring, M8		
13	1412/0003Z	1		Washer, large, 3/8in		
14	1370/0201Z	1		Nut, M8		
15	236/05129	1		Retainer, catch		
16	826/01042Z	1		Screw, csk, M6 x 30		
17*	231/81404	1		Key, FT111		
18*	1391/3207Z	3		Capscrew, M6 x 25		

B2-4-1 CAB GLAZING

	on	to	on	to
8014	M791000			
8015	M730800			
8016	M728750			
8017	M800000			
8018	M801000			

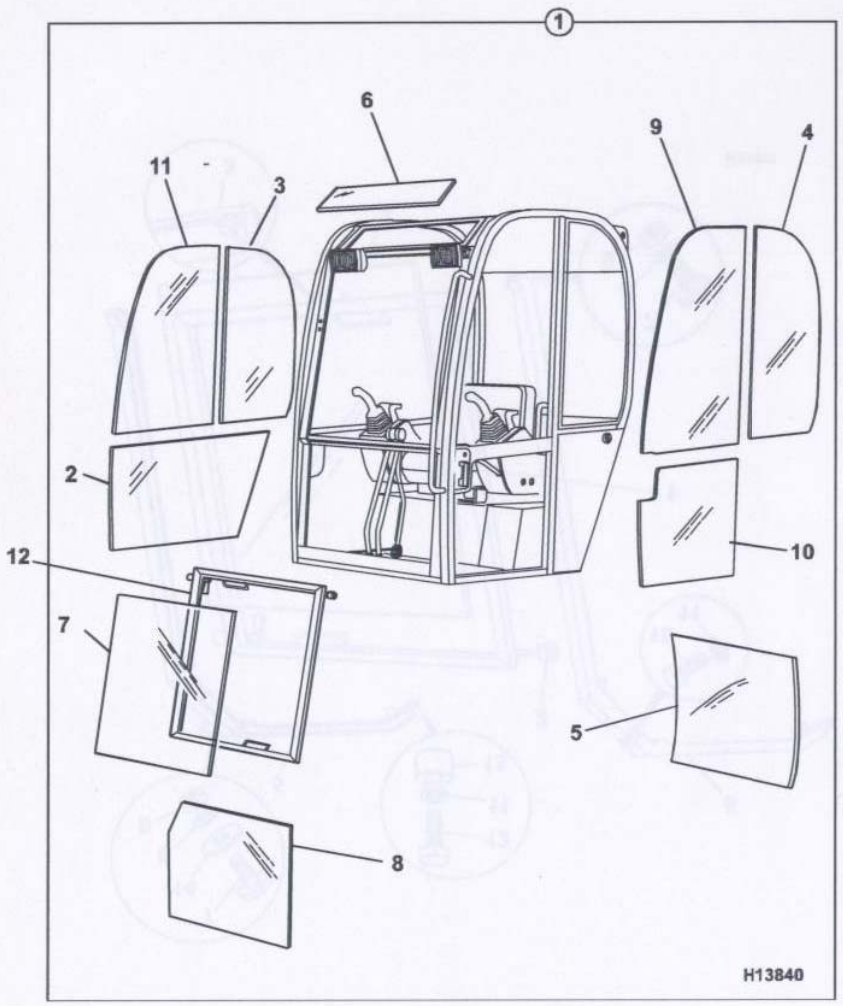

Item	Part No	Qty	A	Description	Remarks	M/C No change
1	236/07300	1		Pack, glass		
2	236/07301	1	:	Glass, bottom right		
3		1	:	Glass, rear right	See B2-4-4	
4	236/07303	1	:	Glass, rear left		
5	236/07304	1	:	Window, rear		
6	236/07305	1	:	Glass, top		
7	236/07306	1	:	Glass, top front		
8	236/07307	1	:	Glass, bottom front		
9	236/07308	1	:	Glass, door, top		
10	236/07309	1	:	Glass, door, bottom		
11		1	:	Glass, top right	See B2-4-4	
12		1		Windscreen	See B2-4-2	

B2-4-1 CAB GLAZING

B2-4-2 WINDSCREEN ASSEMBLY

	on	to	on	to
8014	M791000			
8015	M730800			
8016	M728750			
8017	M800000			
8018	M801000			

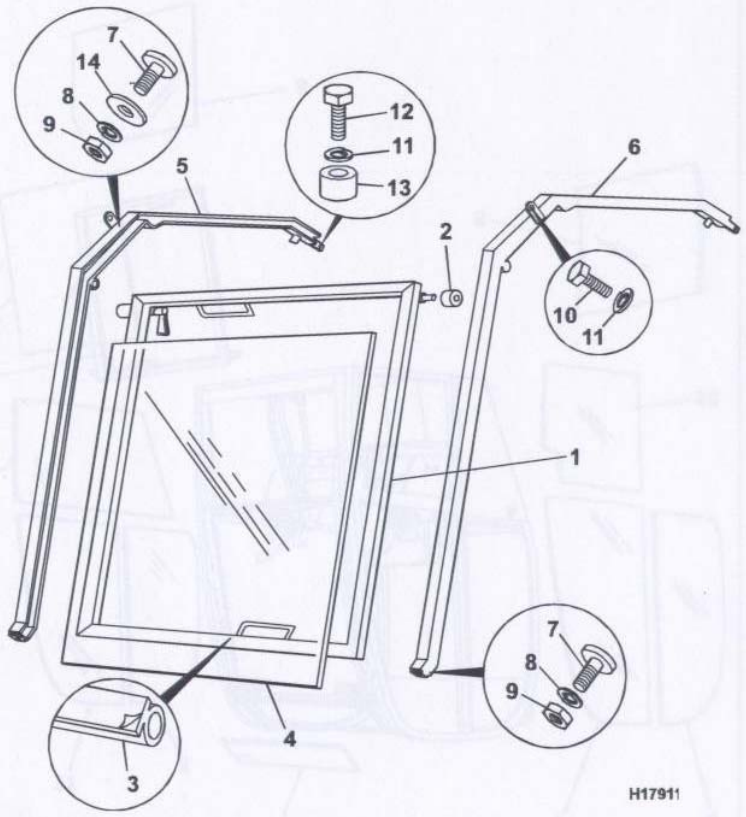

Item	Part No	Qty	A	Description	Remarks	M/C No change
1	236/07200	1		Frame, windscreen		
2	236/05109	4		Roller, nylon		
3	926/17000	1		Strip, edging		
4				Glass, top front	See B2-4-1	
5	236/33400	1		Runner, RH		
6	236/33300	1		Runner, LH		
7*	236/05133	4		Stop, window		
8*	1425/0006Z	4		Washer, spring, M6		
9*	1370/0101Z	4		Nut, M6		
10	1315/0303Z	2		Screw, hex head, M8 x 16		
11	1425/0007Z	4		Washer, spring, M8		
12	1315/0310Z	2		Screw, hex head, M8 x 40		
13	236/05109	2		Roller, nylon		
14*	1411/0001Z	2		Washer, medium, ¼in.		

B2-4-2 WINDSCREEN ASSEMBLY

B2-4-3 DIRECT GLAZING

	on	to	on	to
8014	M791000			
8015	M730800			
8016	M728750			
8017	M800000			
8018	M801000			

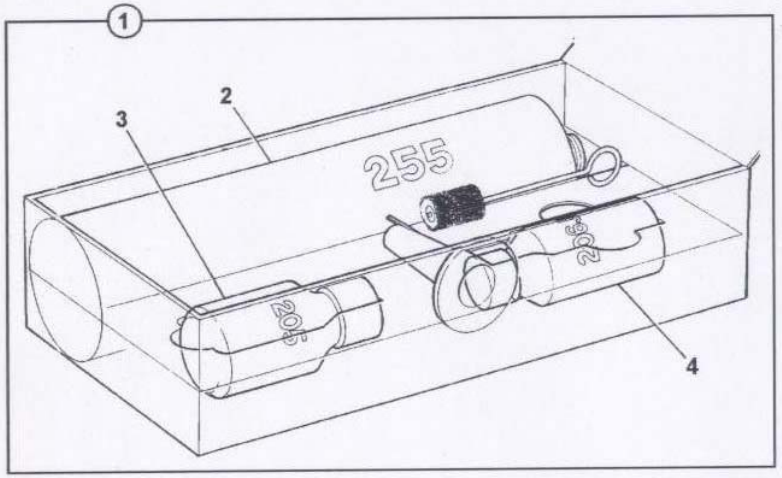

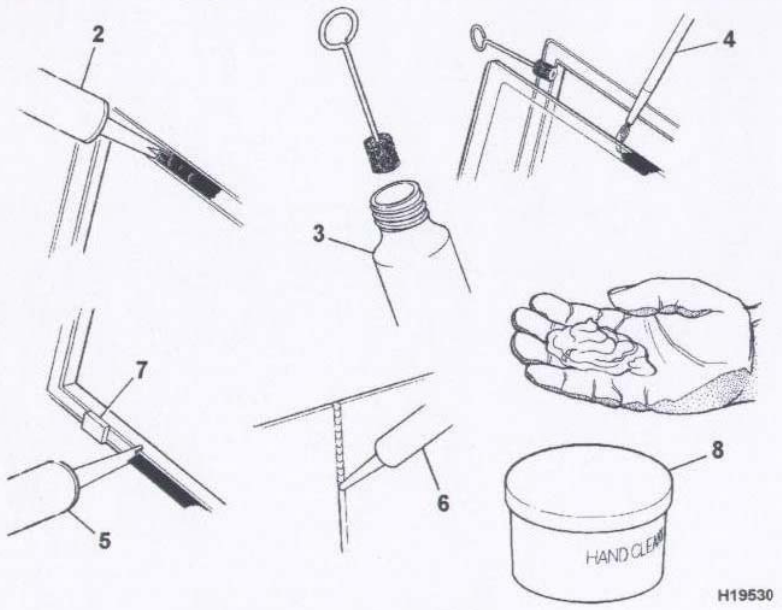

H19530

Item	Part No	Qty	A	Description	Remarks	M/C No change
1	993/55700	1		Adhesive kit, JCB	See note 1	
				Ultrafast glazing		
2	4103/2109	A/R	:	Adhesive, JCB ultrafast		
				310ml cartridge	See note 1	
3	4104/1206	A/R	:	Cleaner, active wiper 205		
				205, 30ml bottle		
	4104/1203	A/R	:	Cleaner, active wiper 205		
				250gm		
4	4201/4906	A/R	:	Paint, black primer 206J	See note 2, black	
				206J, 30ml bottle	ceramic ink band	
					around glass edge	
	4201/4911	A/R	:	Paint, black primer 206J		
				206J, 200gm		
5	4102//2309	A/R		Sealant, black acrylic	See note 3	
				221, 310ml cartridge		
6	4102/0933	A/R		Sealant, DP2205 clear	See note 4	
				silicon		
7	926/15500	A/R		Spacer block		
8	4104/1310	A/R		Cleaner, hand		
				polyurethane, 454gm/1lb		

Note1:Adhesive requires preheating prior to use. See service manual. Note2:This is a UV screen which must be used on plain glass or to repair damaged border
Note3:For sealing laminated glass edge to frame. Note4:For sealing butt jointed glass and general purpose sealant.

B2-4-3 DIRECT GLAZING

B2-4-4 SIDE OPENING WINDOW

	on	to	on	to
8014	M791000			
8015	M730800			
8016	M728750			
8017	M800000			
8018	M801000			

Item	Part No	Qty	A	Description	Remarks	M/C No change
1	236/20500	1		Window assy, side opening		
2*		1	:	Glass assembly, sliding		
3*	927/16303	1	:	Catch assembly		
4*	927/16901	1	:	Slide, LH		
5*	927/16902	1	:	Slide, RH		
6*		1	:	Glass, fixed		
7*		1	:	Frame, window		
8*		1	:	Runner,nylon, RH		
9*		1	:	Cross section, window		
10*		1	:	Glazing sectin		

B2-4-4 SIDE OPENING WINDOW

B2-5-1 BASIC SEAT

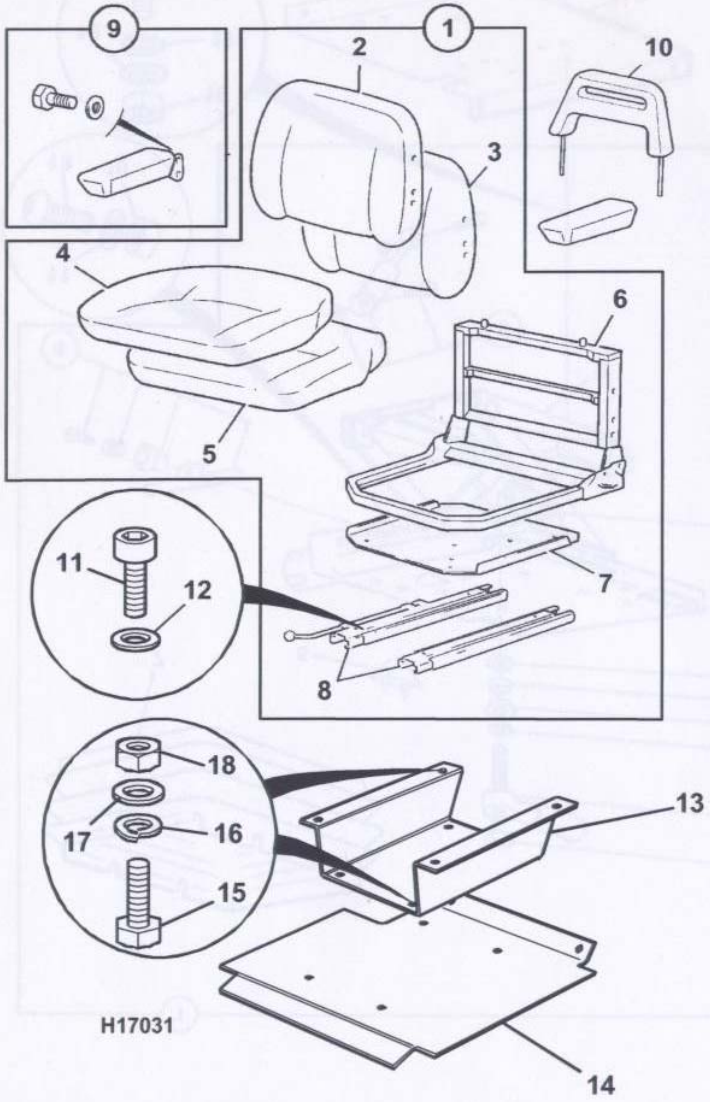

	on	to	on	to
8014	M791000			
8015	M730800			
8016	M728750			
8017	M800000			
8018	M801000			

Item	Part No	Qty	A	Description	Remarks	M/C No change
1	40/204700	1		Seat, 'U1' cloth trim		
	40/204600	1		Seat, 'U1' PVC trim		
2	40/204701	1	:	Cover, back-cloth trim		
3	40/204602	1	:	Seat foam, back		
4	40/204703	1	:	Cover, seat-cloth trim		
5	40/204604	1	:	Seat foam, base		
6	40/204605	1	:	Seat frame assembly		
7	40/204606	1	:	Plate, adaptor		
8	40/204607	1	:	Slide rail assembly		
9	40/209500	1		Arm rest assembly		
10	40/210300	1		Headrest, trimmed		
	40/210200	1		Headrest, untrimmed		
11	1391/3207Z	4		Capscrew, M6 x 25		
12	1411/0001Z	4		Washer, medium, ¼in.		
13	236/03802	1		Seat base		
14	236/03805	1		Seat base		
15*	1315/0305Z	8		Screw, hex head, M8 x 20		
16*	823/00415Z	8		Washer, spring, M8		
17*	1420/0007Z	8		Washer, plain, M8		
18*	1370/0201Z	8		Nut, M8		

B2-5-1 BASIC SEAT

B2-5-2 SUSPENSION SEAT

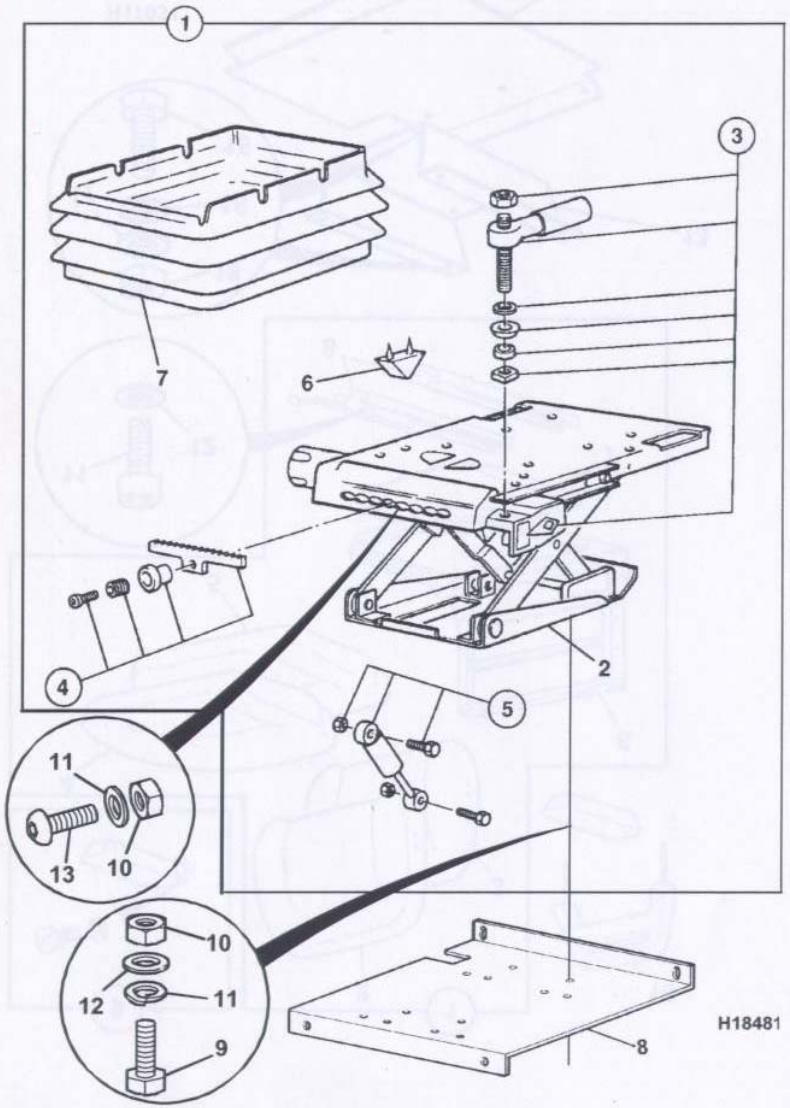

	on	to	on	to
8014	M791000			
8015	M730800			
8016	M728750			
8017	M800000			
8018	M801000			

Item	Part No	Qty	A	Description	Remarks	M/C No change
1	191/21400	1		Suspension assembly		
2	191/21401	1	:	Unit, suspension		
3	191/21402	1	::	Weight adjuster assembly		
4	191/21403	1	::	Height adjuster assembly		
5	191/21404	1	::	Damper assembly		
6	191/21405	1	::	Stop, bump		
7	191/21406	1	:	Suspension cover assembly		
8	236/03803	1		Plate, seat base	Suspension seat	
9*	1315/0305Z	4		Screw, hex head, M8 x 20		
10*	1370/0201Z	5		Nut, M8		
11*	1420/0007Z	5		Washer, plain, M8		
12*	823/00415Z	4		Washer, spring, M8		
13*	826/01790	1		Screw, button head, M8x12		

B2-5-2 SUSPENSION SEAT

B2-6-1 SEAT BELT, SUSPENSION SEAT

	on	to	on	to
8014	M791000			
8015	M730800			
8016	M728750			
8017	M800000			
8018	M801000			

Item	Part No	Qty	A	Description	Remarks	M/C No change
1	40/204800	1		Seat belt assembly		

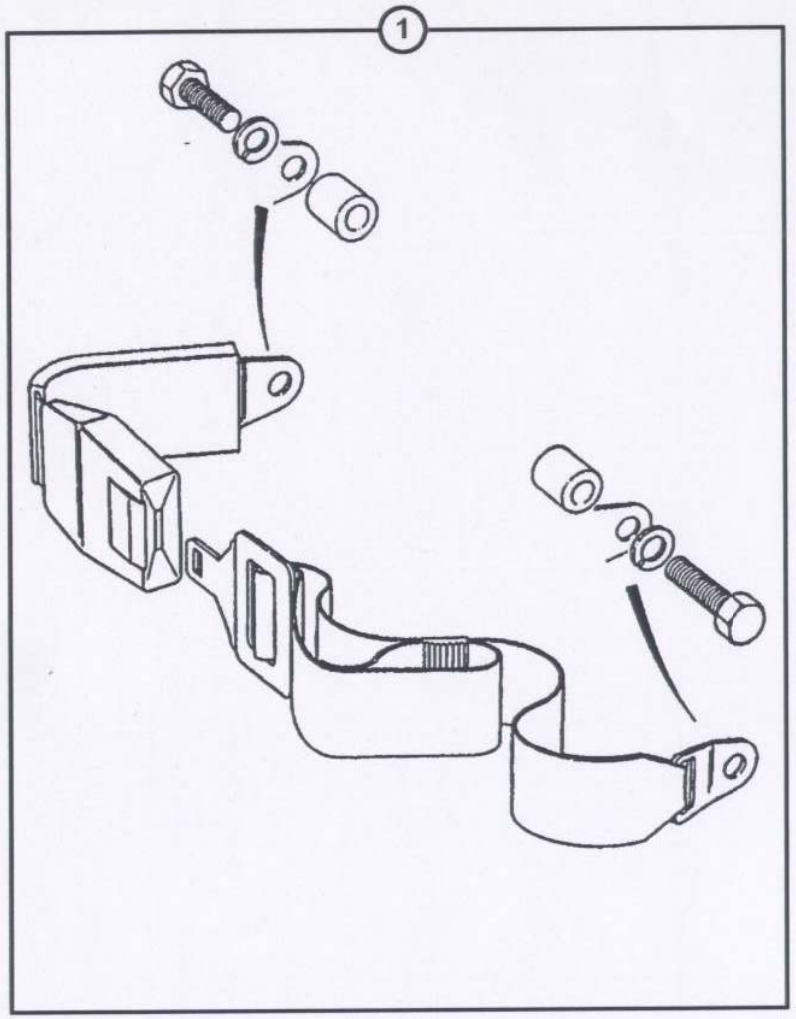

H18490

B2-6-1 SEAT BELT, SUSPENSION SEAT

HYDRAPOWER

EXCAVATOR COMPONENTS

B4

B1 BODY & FRAMEWORK

B2 CAB

B4 EXCAVATOR COMPONENTS

B5 REFURBISHMENTS

B4-1-1 KINGPOST

	on	to	on	to
8014	M791000			
8015	M730800			
8016	M728750			
8017	M800000			
8018	M801000			

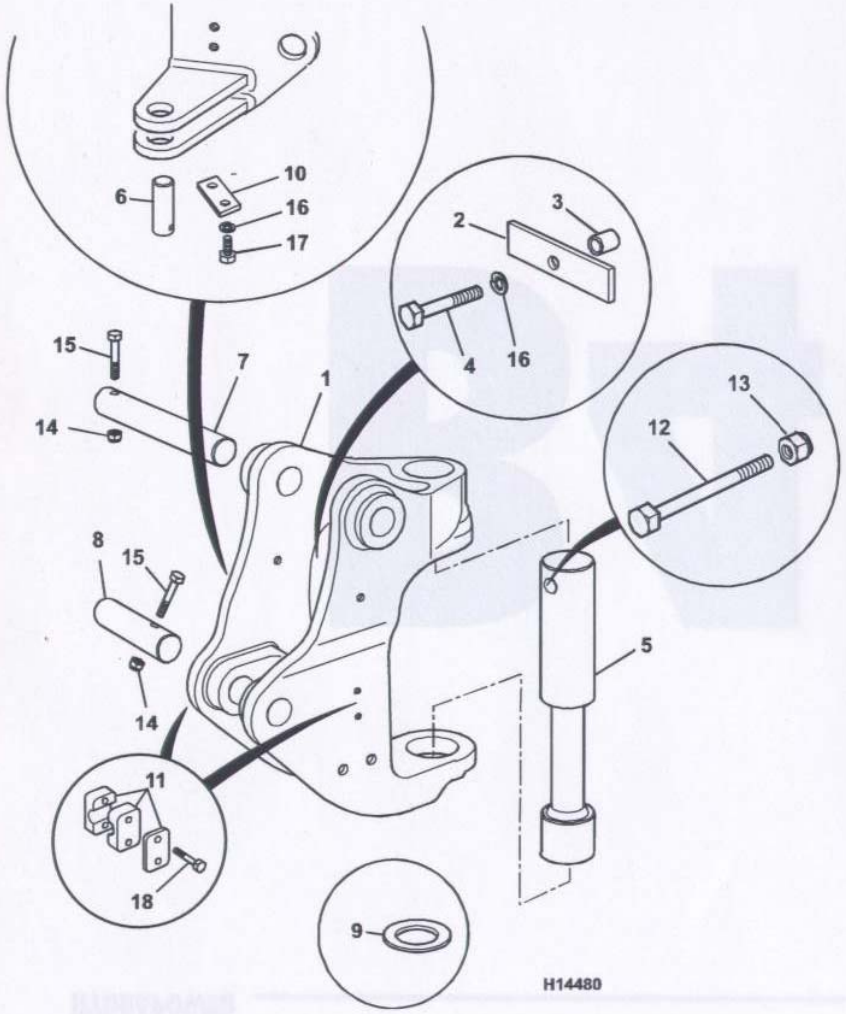

Item	Part No	Qty	A	Description	Remarks	M/C No change
1	236/11101	1		Kingpost		
2	236/11102	1		Hose clamp		
3	236/11103	1		Spacer		
4	1315/0410Z	1		Screw, hex head, M10 x 40		
5	231/54702	1		Kingpin		
6	231/80609	1		Pivot pin	Swing ram	
7	811/50176	1		Pivot pin	Boom	
8	231/80603	1		Pivot pin	Boom, ram	
9	823/00406	1		Washer, thrust, 1.5		
10	231/20002	1		Plate, keep		
11	232/32507	2		Clamp, hose		
12	1315/3520Z	1		Bolt, hex head, M12 x 100		
13	1370/0403Z	1		Nut, self lock, M12		
14	1370/0303Z	2		Nut, self lock, M10		
15	1315/3416Z	2		Bolt, hex head, M10 x 70		
16	823/00416Z	3		Washer, spring, M10		
17	1315/0405Z	4		Screw, hex head, M10 x 20		
18	1315/3212Z	4		Bolt, hex head, M6 x 50		
19	1420/0008Z	3		Washer, plain, M10		

B4-2-1 BOOM

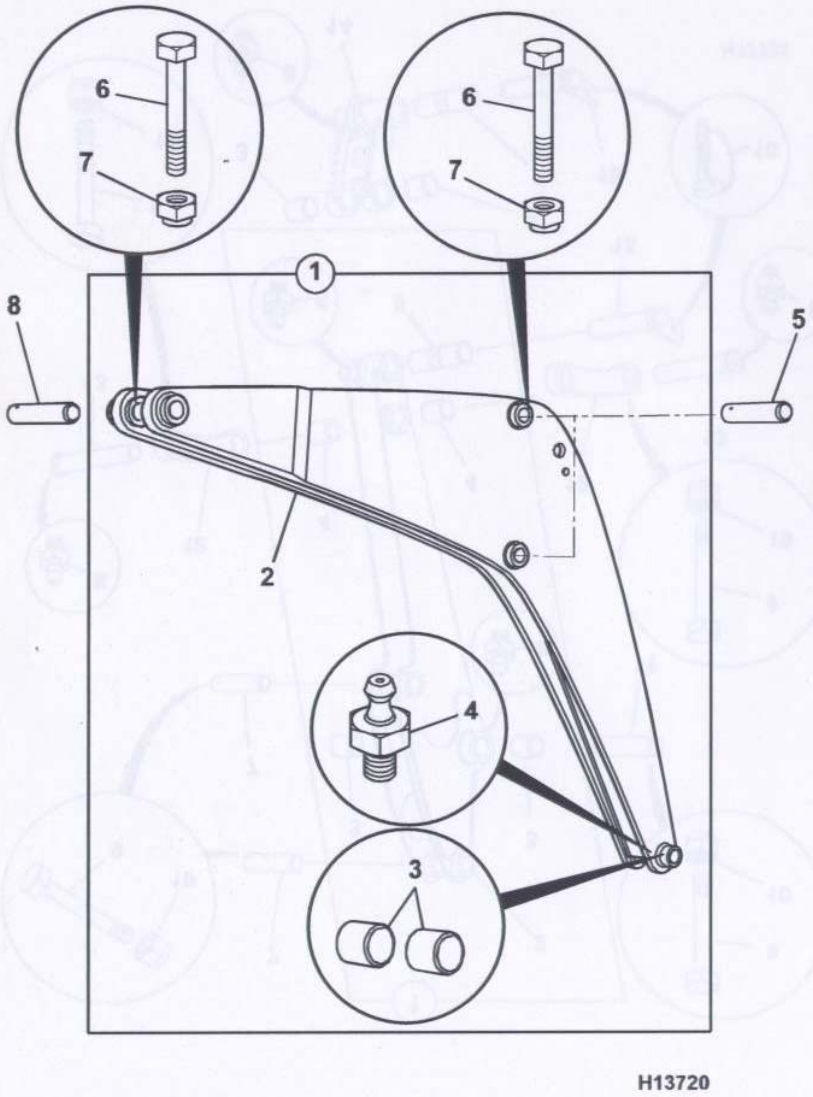

H13720

	on	to	on	to
8014	M791000			
8015	M730800			
8016	M728750			
8017	M800000			
8018	M801000			

Item	Part No	Qty	A	Description	Remarks	M/C No change
1	236/17600	1		Boom assembly, standard		
	236/18700	1		Boom assembly, long		
2	231/34800	1	:	Boom, Standard		
	236/12200	1	:	Boom, long		
3	831/00108	2	:	Bush		
4	1450/0001	1	:	Nipple, grease, 1/8in.	B.S.P.	
5	811/50185	1		Pivot pin		
6	1315/3415Z	3		Bolt, hex head, M10 x 65		
7	1370/0303Z	3		Nut, self lock, M10		
8	811/50178	1		Pivot pin		

B4-3-1 DIPPER

	on	to	on	to
8014	M791000			
8015	M730800			
8016	M728750			
8017	M800000			
8018	M801000			

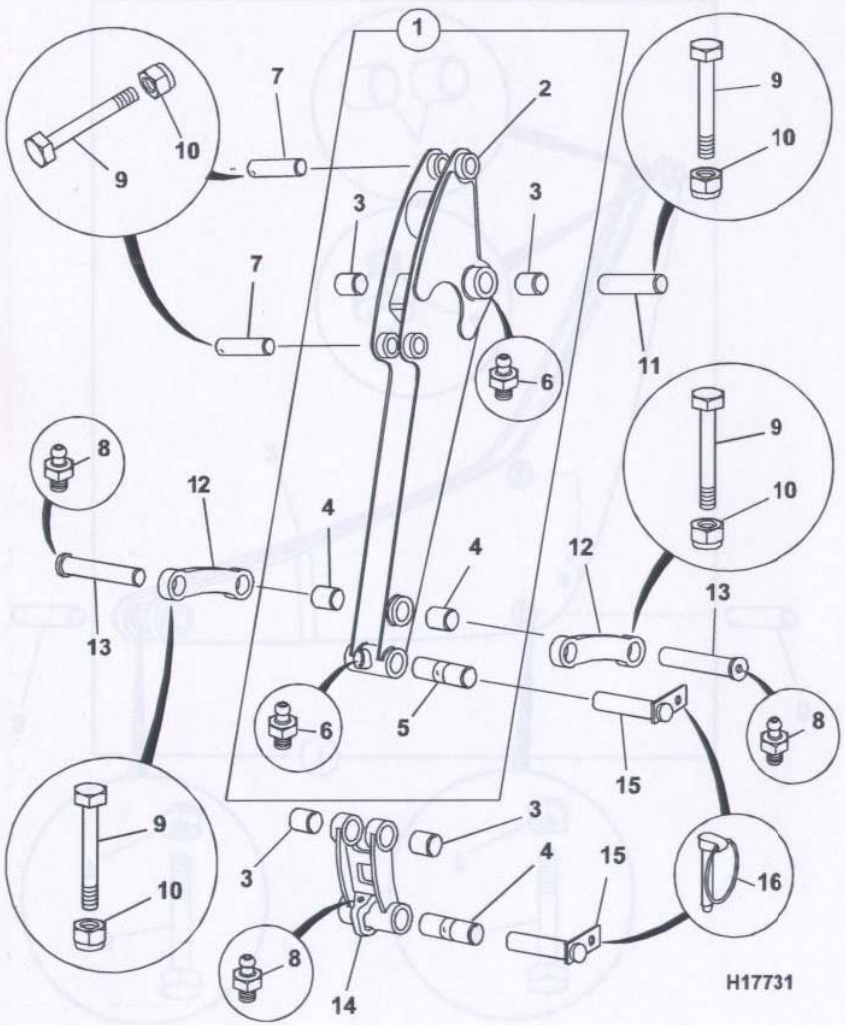

Item	Part No	Qty	A	Description	Remarks	M/C No change
1*	236/31000	1		Dipper assembly, short	950mm	
	236/17700	1		Dipper assembly, long	1150mm	
	236/18800	1		Dipper assy, extra long	1250mm	
		1		Dipper assy, X extra long	See note	
2*	236/38900	1	:	Dipper, short		
	236/07900	1	:	Dipper. Long		
	236/12300	1	:	Dipper, extra long		
		1	:	Dipper, X extra long	See note	
3	831/00108	2	:	Bush		
4	809/10038	2	:	Bush		
5	808/10006	1	:	Bush		
6	1450/0001	2	:	Nipple, grease, 1/8in.		
7	811/50177	2		Pin, pivot		
8	1450/0001	3		Nipple, grease, 1/8in.		
9*	1315/3416Z	4		Bolt, hex head, M10 x 70		
10*	1370/0303Z	4		Nut, self lock, M10		
11	811/50178	1		Pivot pin		
12	236/07801	1		Link, tipping		
13	811/50175	2		Pin, pivot		
14	231/03900	1		Link, bucket		
15	911/23900	2		Pin, pivot		
16	826/00512	2		Pin, lynch		

Note: 801 Gravemaster m/c's only. Refer to JCB Hydrapower Ltd

B4-3-2 DIPPER KIT

	on	to	on	to
8014	M791000			
8015	M730800			
8016	M728750			
8017	M800000			
8018	M801000			

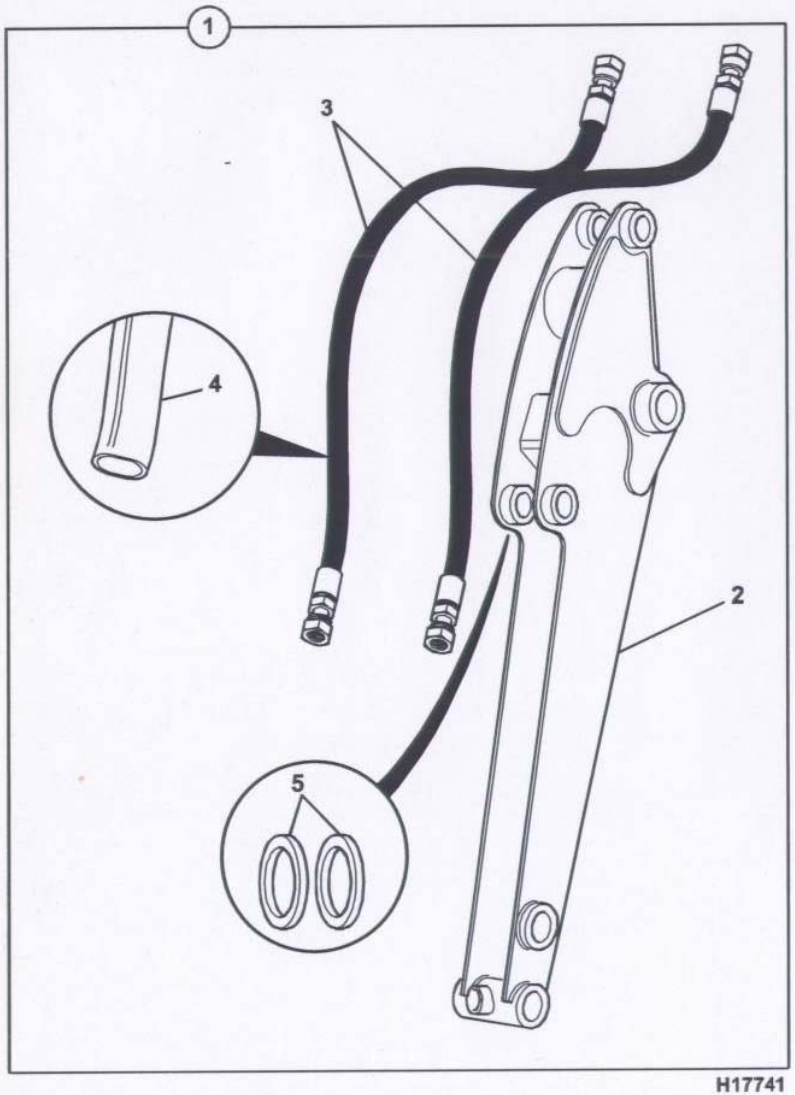

H17741

Item	Part No	Qty	A	Description	Remarks	M/C No change
1*	236/30900	1		Dipper kit, short,	8014 & 8015	
	236/18600	1		Dipper kit, long,	8014 & 8015	
	236/19100	1		Dipper kit,extra long,	8016/8017/8018	
		1		Dipper kit, X extra long	See note	
2*		1	:	Dipper assembly	See B4-3-1	
3*	612/09300	2	:	Hose, 3/8in. HP	Short dipper	
	612/09100	2	:	Hose, 3/8in. HP	Long dipper	
	612/09000	2	:	Hose, 3/8in. HP	Extra long dipper	
	612/06300	2	:	Hose, 3/8in. HP	Gravemaster only	
4*	236/21803	1	:	Sleeve, polyurethane	Gravemaster only	
5*	823/00385	2	:	Washer	Gravemaster only	

Note: 801 Gravemaster m/c's only. Refer to JCB Hydrapower Ltd

B4-3-2 DIPPER KIT

REFURBISHMENTS

B5

B1 BODY & FRAMEWORK
B2 CAB
B4 EXCAVATOR COMPONENTS
B5 REFURBISHMENTS

	on	to	on	to
8014	M791000			
8015	M730800			
8016	M728750			
8017	M800000			
8018	M801000			

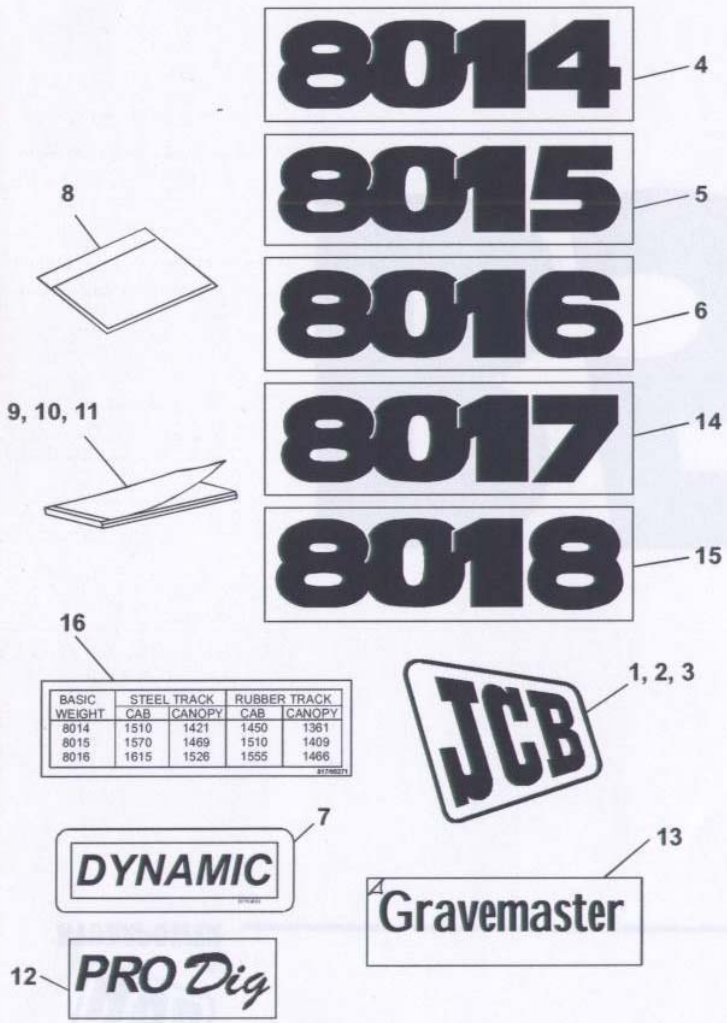

H18302

Item	Part No	Qty	A	Description	Remarks	M/C No change
1*	817/04189	2		JCB - Black	Boom	
2*	817/04635	2		JCB insignia, yellow	Cab	
		1		JCB insignia, yellow	Canopy	
3	817/05024	1		JCB logo, large	Engine cover	
4	817/05025	2		Label, 8014	Slewframe	
5	817/05026	2		Label, 8015	Slewframe	
6	817/05027	2		Label, 8016	Slewframe	
7	817/04881	1		Label, dynamic		
8	231/38001	1		Wallet		
9	9801/6280	1		Handbook, operators	English	
	9801/6280U	1		Handbook, operators	USA	
	9801/6281	1		Handbook, operators	French	
	9801/6282	1		Handbook, operators	German	
	9801/6283	1		Handbook, operators	Spanish	
	9801/6284	1		Handbook, operators	Italian	
	9801/6285	1		Handbook, operators	Norwegian	
	9801/6286	1		Handbook, operators	Danish	
	9801/6287	1		Handbook, operators	Portuguese	
	9801/6288	1		Handbook, operators	Dutch	
	9801/6289	1		Handbook, operators	Swedish	
10*	9802/5407P	1		Parts book		
11*	929/92041	1		Book, merkhoft	Germany only	
12*	817/04645	2		Pro dig decal	Italy only	
13*	817/05283	4		Label, Gravemaster	801	
14	817/05280	2		Label, 8017	Slewframe	
15*	817/05281	2		Label, 8018	Slewframe	
16*	817/05271	1		Label, basic weight		

B5-2-2 SAFETY AND WARNING LABELS

	on	to	on	to
8014	M791000			
8015	M730800			
8016	M728750			
8017	M800000			
8018	M801000			

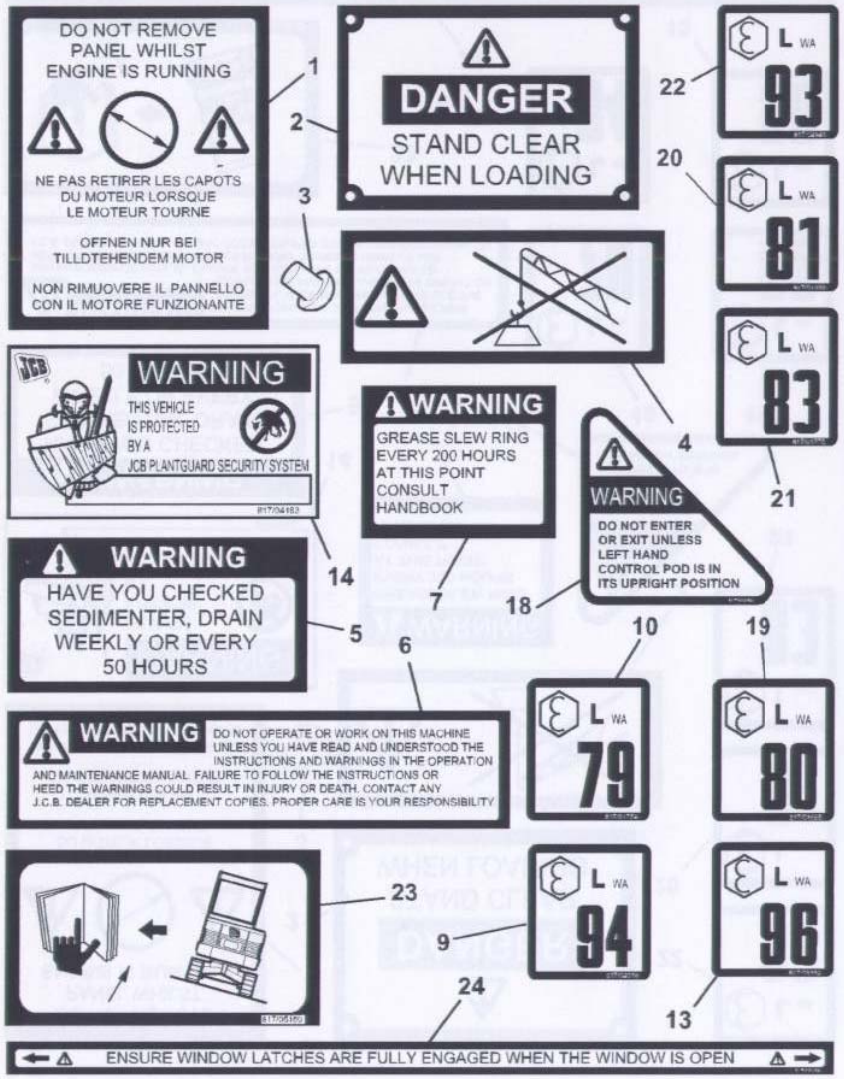

H18341

Item	Part No	Qty	A	Description	Remarks	M/C No change
1	817/02144	1		Label, engine	English, French	
					German, Italian	
	817/02393	1		Label, engine	English, Swedish	
					Dutch, Spanish	
	817/02434	1		Label, engine	English, Hebrew	
					Danish, Norwegian	
	817/02527	1		Label, engine	English, Portugues	
					Finnish, Greek	
	817/04404	1		Label, engine	English, Polish	
2	817/02309	1		Label, DANGER, swing		
	817/02375	1		Label, DANGER, swing	German	
	817/02376	1		Label, DANGER, swing	French	
	817/02377	1		Label, DANGER, swing	Dutch	
	817/02378	1		Label, DANGER, swing	Spanish	
	817/02379	1		Label, DANGER, swing	Swedish	
	817/02380	1		Label, DANGER, swing	Italian	
	817/02428	1		Label, DANGER, swing	Hebrew	
	817/02430	1		Label, DANGER, swing	Norwegian	
	817/02521	1		Label, DANGER, swing	Portuguese	
	817/04403	1		Label, DANGER, swing	Polish	
	817/02429	2		Label, DANGER, swing	Danish	
3	G46/0	8		Rivet		
4	817/01931	1		Label, WARNING crane		
5	817/02310	1		Label, WARNING,sedimenter		
	817/02394	1		Label, WARNING,sedimenter	German	
	817/02395	1		Label, WARNING,sedimenter	French	
	817/02396	1		Label, WARNING,sedimenter	Dutch	
	817/02397	1		Label, WARNING,sedimenter	Spanish	
	817/02412	1		Label, WARNING,sedimenter	Italian	

B5-2-2 SAFETY AND WARNING LABELS

B5-2-2 SAFETY AND WARNING LABELS

	on	to	on	to
8014	M791000			
8015	M730800			
8016	M728750			
8017	M800000			
8018	M801000			

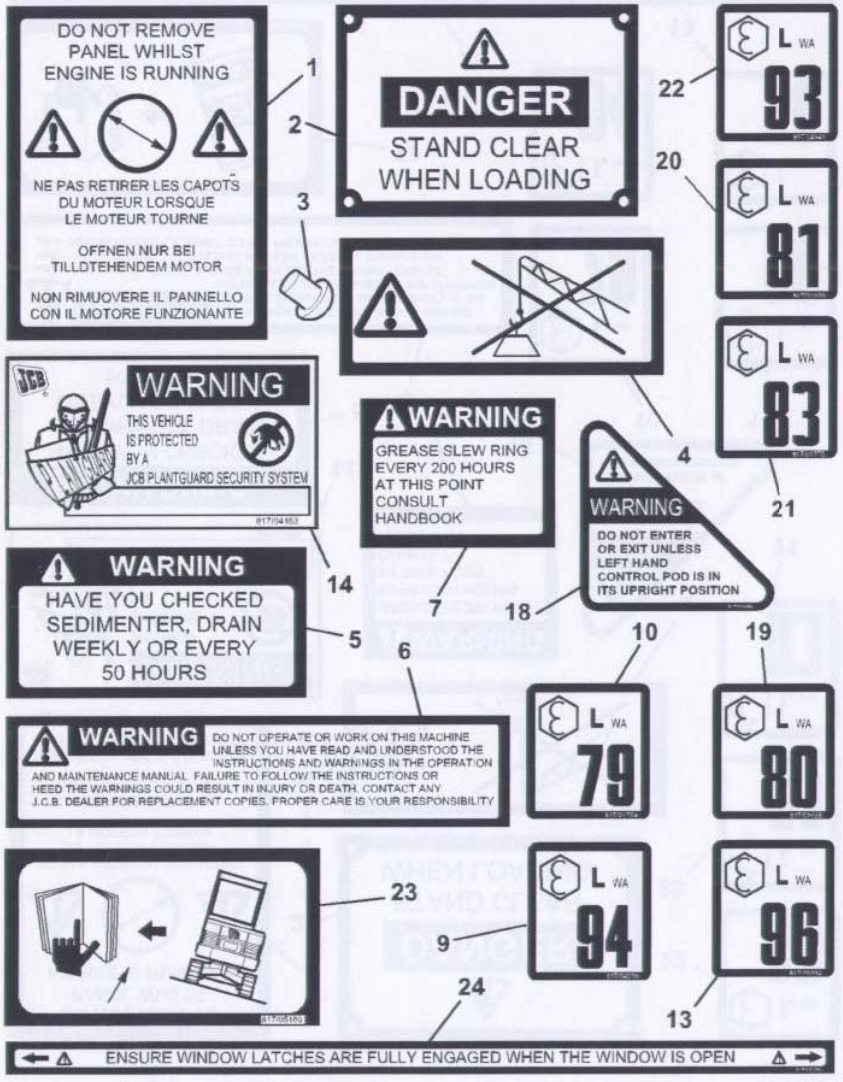

H18341

Item	Part No	Qty	A	Description	Remarks	M/C No change
	817/02431	1		Label, WARNING,sedimenter	Hebrew	
	817/02433	1		Label, WARNING,sedimenter	Norwegian	
	817/04342	1		Label, WARNING,sedimenter	Swedish	
	817/02525	1		Label, WARNING,sedimenter	Portuguese	
	817/04405	1		Label, WARNING,sedimenter	Polish	
	817/02432	1		Label, WARNING,sedimenter	Danish	
6	817/01932	1		Label, WARNING, manual		
	817/01934	1		Label, WARNING, manual	Dutch	
	817/01936	1		Label, WARNING, manual	French	
	817/01937	1		Label, WARNING, manual	German	
	817/01939	1		Label, WARNING, manual	Italian	
	817/01940	1		Label, WARNING, manual	Portuguese	
	817/01941	1		Label, WARNING, manual	Spanish	
	817/01943	1		Label, WARNING, manual	Norwegian	
	817/01945	1		Label, WARNING, manual	Hebrew	
	817/04343	1		Label, WARNING, manual	Swedish	
	817/04402	1		Label, WARNING, manual	Polish	
	817/01933	1		Label, WARNING, manual	Danish	
7	817/01924	1		Label, slew grease		
	817/02387	1		Label, slew grease	German	
	817/02388	1		Label, slew grease	French	
	817/02389	1		Label, slew grease	Dutch	
	817/02390	1		Label, slew grease	Spanish	
	817/02391	1		Label, slew grease	Swedish	
	817/02392	1		Label, slew grease	Italian	
	817/02422	1		Label, slew grease	Hebrew	
	817/02423	1		Label, slew grease	Danish	
	817/02424	1		Label, slew grease	Norwegian	
	817/04400	1		Label, slew grease	Polish	
	817/02513	1		Label, slew grease	Portuguese	

B5-2-2 SAFETY AND WARNING LABELS

B5-2-2 SAFETY AND WARNING LABELS

	on	to	on	to
8014	M791000			
8015	M730800			
8016	M728750			
8017	M800000			
8018	M801000			

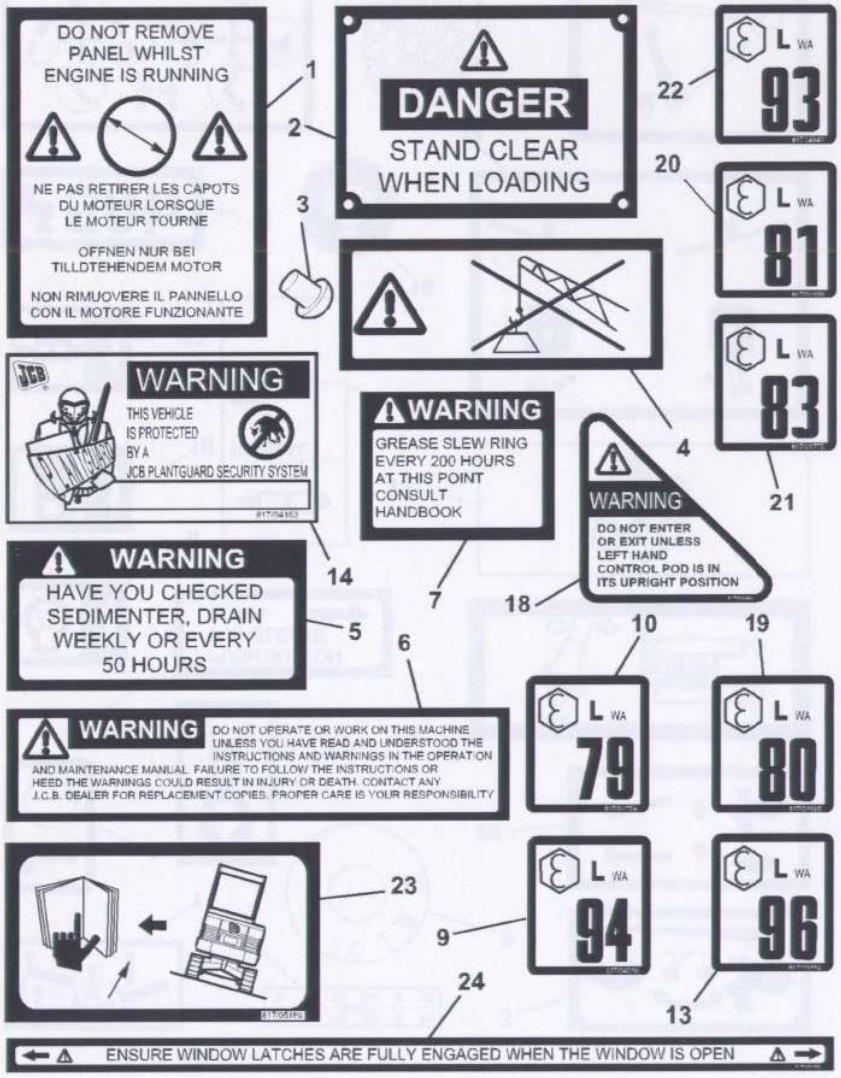

H18341

Item	Part No	Qty	A	Description	Remarks	M/C No change
9*	817/04016	1		Label, noise, 94dB	8014 canopy	
10*	817/01754	1		Label, noise, 79dB	8014/8015 canopy	
13*	817/03332	1		Label, noise, 96dB	8015/8016 canopy	
		1		Label, noise, 96dB	8015/8016 cab	
14	817/04163	1		Label, plantguard		
18*	817/03056	1		Label, WARNING, armrest		
	817/03058	1		Label, WARNING, armrest	German	
	817/03057	1		Label, WARNING, armrest	French	
	817/03059	1		Label, WARNING, armrest	Dutch	
	817/04392	1		Label, WARNING, armrest	Spanish	
	817/04393	1		Label, WARNING, armrest	Italian	
	817/03061	1		Label, WARNING, armrest	Danish	
	817/03060	1		Label, WARNING, armrest	Portuguese	
	817/04394	1		Label, WARNING, armrest	Norwegian	
	817/04345	1		Label, WARNING, armrest	Swedish	
19*	817/01665	1		Label, noise, 80dB	8016 canopy	
		1		Label, noise, 80dB	8015 cab	
20*	817/01666	1		Label, noise, 81dB	8016 cab	
21*	817/01755	1		Label, noise, 83dB	8014 cab	
22*	817/04941	1		Label, noise, 93dB	8014 cab	
23*	817/05160	1		Label, stability		
24*	817/05180	1		Label, window latches		
	817/05202	1		Label, window latches	German	
	817/05203	1		Label, window latches	French, Belgian	
	817/05204	1		Label, window latches	Dutch, Belgian	
	817/05205	1		Label, window latches	Spanish	
	817/05206	1		Label, window latches	Italian	
	817/05207	1		Label, window latches	Danish	
	817/05208	1		Label, window latches	Norwegian	
	817/05209	1		Label, window latches	Portuguese	

B5-2-2 SAFETY AND WARNING LABELS

B5-2-3 OPERATION & CONTROL LABELS

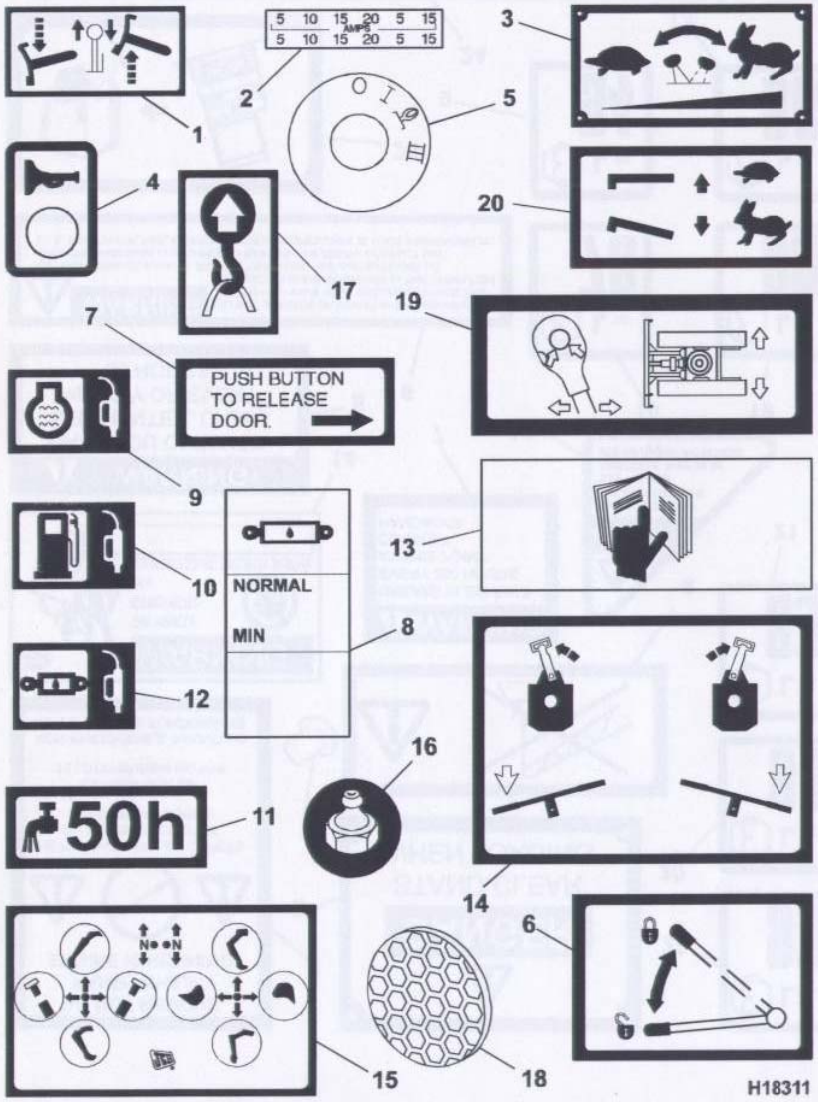

	on	to	on	to
8014	M791000			
8015	M730800			
8016	M728750			
8017	M800000			
8018	M801000			

Item	Part No	Qty	A	Description	Remarks	M/C No change
1	817/01925	1		Label, dozer		
2	817/01926	1		Label, fuse box		
3	817/02946	1		Label, throttle		
4*	817/04020	1		Label, horn button	Superseded	
	817/02945	1		Label, horn button		
5	817/03310	1		Label, ignition switch		
6	817/03306	1		Label, lever lock		
7	817/02947	1		Label, door release		
	817/02964	1		Label, door release		
	817/02965	1		Label, door release		
	817/02966	1		Label, door release		
	817/02967	1		Label, door release		
	817/02975	1		Label, door release		
	817/02976	1		Label, door release		
	817/03066	1		Label, door release		
	817/04341	1		Label, door release		
	817/04401	1		Label, door release		
8	817/01169	1		Label, hydraulic level		
9	817/00824	1		Label, radiator water		
10	817/00155	1		Label, diesel filler		
11	817/00380	1		Label, water drain		
12	817/00156	1		Label, hydraulic filler		
13	817/01577	1		Label, read manual		
14	817/03305	1		Label, swing		
15	817/01923	1		Label, dig controls	ISO pattern	
	817/04232	1		Label, dig controls, 3CX	3CX patern	
16	817/02937	23		Label, grease point	German	
17	817/01803	6		Label, lifting point		
18	817/05051	2		Reflector, self adhesive		
19*	817/05282	1		Label, extendending u/c	8017 & 8018	
20*	817/03786	1		Label, 2 speed tracking	8017 & 8018	

B5-2-3 OPERATION & CONTROL LABELS

B5-2-4 USA TRANSFERS & LABELS

	on	to	on	to
8014	M791000			
8015	M730800			
8016	M728750			
8017	M800000			
8018	M801000			

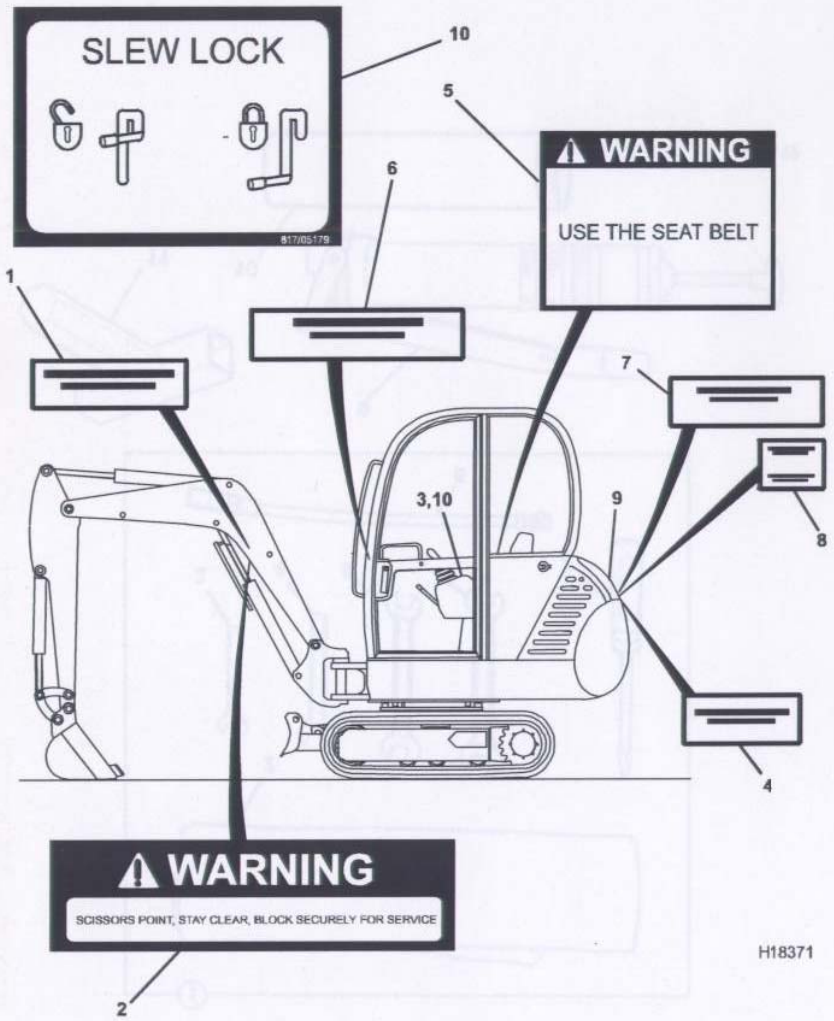

Item	Part No	Qty	A	Description	Remarks	M/C No change
1	817/04204	2		Warning, dig end		
2	817/00492	2		Warning, scissors point		
3	817/04205	1		Caution, exit & entrance		
4	817/04206	1		Caution hot exhaust		
5	817/03239	1		Label, WARNING, Seat belt		
6	817/04207	1		Caution,damaged structure		
7	817/04208	1		Caution, radiator cap		
8	817/04209	1		Warning, starting engine		
9	817/03150	1		Warning, rotating fan		
10*	817/05179	1		Label, swing lock		

B5-2-4 USA TRANSFERS & LABELS

B5-3-1 TOOL KIT

	on	to	on	to
8014	M791000			
8015	M730800			
8016	M728750			
8017	M800000			
8018	M801000			

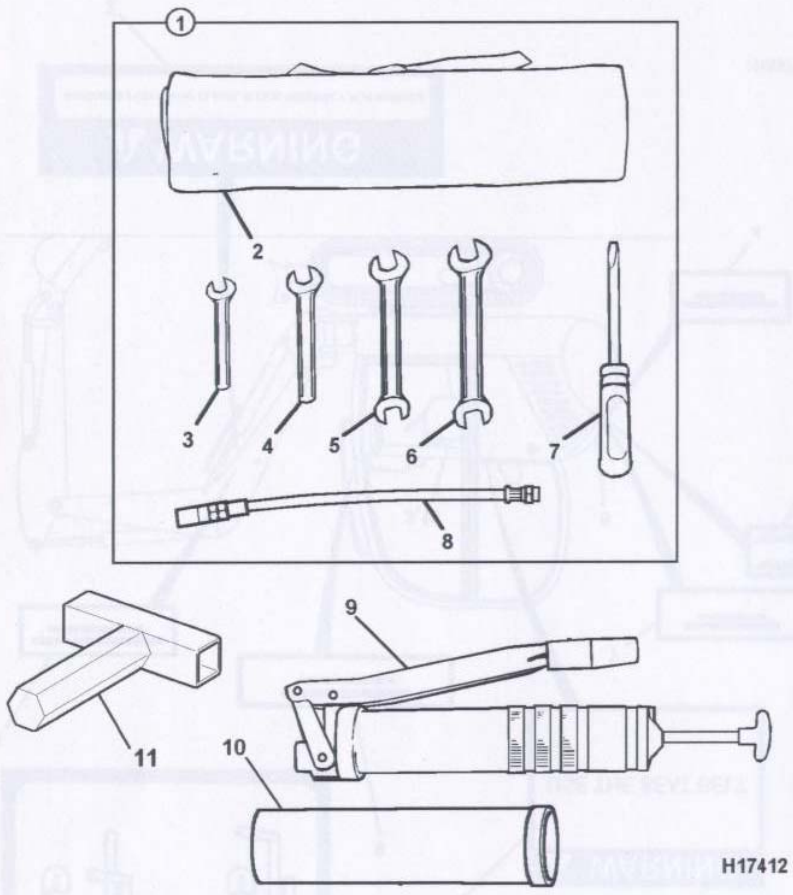

Item	Part No	Qty	A	Description	Remarks	M/C No change
1	231/85400	1		Tool kit		
2	270/48800	1	:	Tool bag		
3	825/00113	1	:	Spanner, 13mm A/F		
4	825/00114	1	:	Spanner, 19mm A/F		
5	825/00035	1	:	Spanner, 17 x 21mm A/F		
6	825/00036	1	:	Spanner, 24 x 29mm A/F		
7	825/99808	1	:	Screwdriver		
8	915/07301	1	:	Connection, flexible		
9	915/07300	1		Grease gun		
10	4003/1212	1		Cartridge, grease		
11*	236/45100	1		Key, ' T ' bar	Hydraulic tank and auxiliary circuit	

B5-3-2 OILS & GREASES

	on	to	on	to
8014	M791000			
8015	M730800			
8016	M728750			
8017	M800000			
8018	M801000			

Item	Part No	Qty	A	Description	Remarks	M/C No change
1	4001/0302	1		Oil, SAE30 , 5 litres		
	4001/0301	1		Oil, SAE30 , 200 litres		
2	4001/0801	1		15W40 multigrade,5 litres		
3	4002/0801	1		Hydraulic fluid, 5 litres		
4	4002/0802	1		Hydraulic fluid,25 litres		
5	4002/0803	1		Hydraulic fluid,200 litre		
6		1		Grease, gun	See B5-3-1	
7	4003/1601	1		Grease, canister	Supplied in canist	
					for gun applicator	
8	4201/0546	1		Paint, storm grey	Aerosol	
9	231/98038	1		Paint, yellow, 1 litre		
10	4201/5201	1		Paint, storm grey,1 litre		

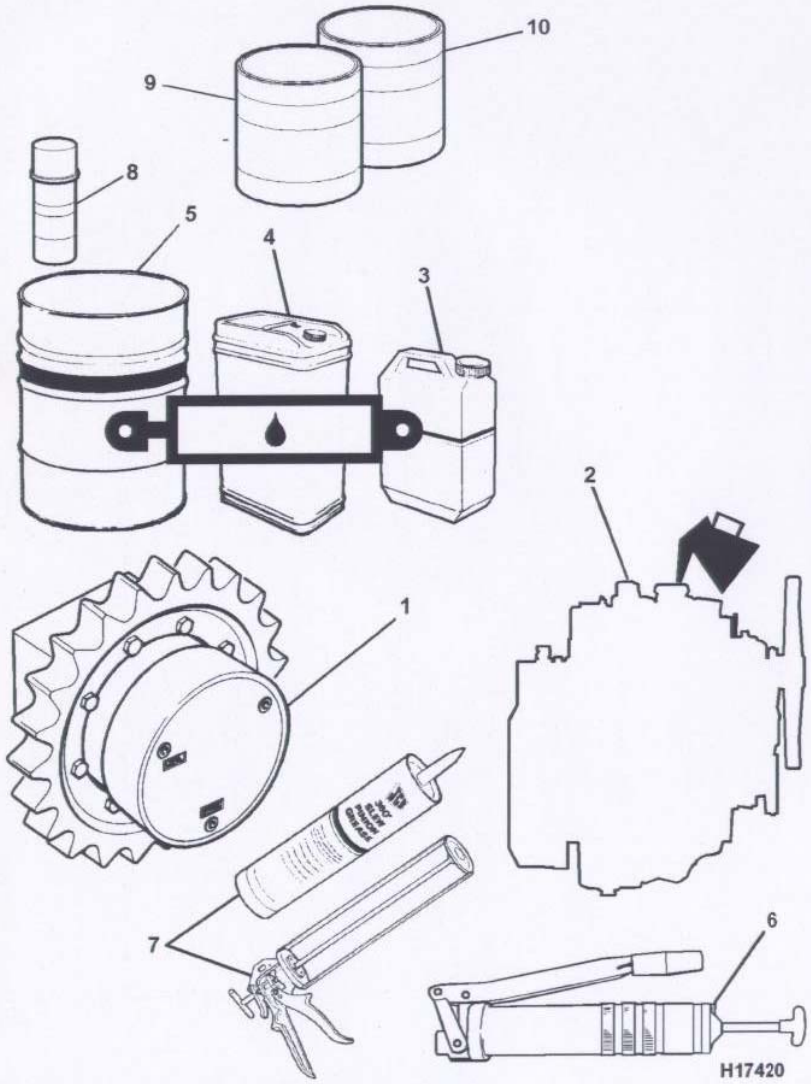

B5-3-2 OILS & GREASES

HYDRAPOWER

MAIN MACHINE ELECTRICS



C1

C1 MAIN MACHINE ELECTRICS

C2 ENGINE ELECTRICS

C3 CAB ELECTRICS

C1-1-1 MAIN ELECTRICS - CABLE MACHINE

	on	to	on	to
8014	M791000			
8015	N/A			
8016	N/A			
8017	N/A			
8018	N/A			

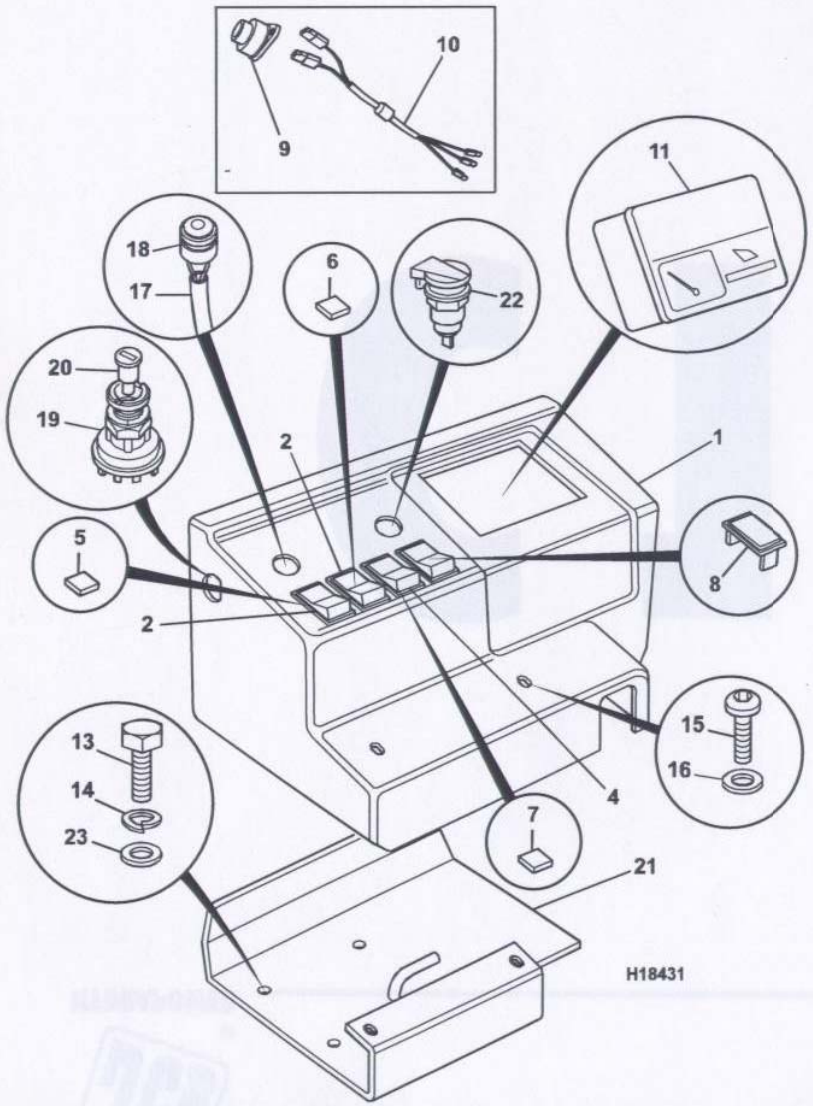

Item	Part No	Qty	A	Description	Remarks	M/C No change
1	236/18901	1		Panel, instrument		
2*	701/11401	2		Switch, light / heater		
4*	701/60055	1		Switch, wiper		
5	701/11402	1		Insert, wiper switch		
6	701/10900	1		Insert, fan switch		
7	701/11002	1		Insert, light switch		
8	701/09800	1		Cover, blanking		
9	704/00700	1		Buzzer		
10	718/45800	1		Harness, buzzer/diode		
11*	704/29400	1		Cluster, instruments	Was 704/35900	
13	1315/0305Z	4		Screw, hex head, M8 x 20		
14	823/00415Z	4		Washer, spring, M8		
15	826/01674	2		Screw, button head, M6x25		
16	1411/0001Z	2		Washer, medium, ¼in.		
17	721/00649	1		Harness, horn		
18	701/51900	1		Button, horn		
19	701/03400	1		Switch, ignition		
20	701/45300	1		Barrel		
21	236/38700	1		Plate, mounting		
22*	715/04300	1		Socket		
23*	1420/0007Z	4		Washer, plain, M8		

C1-1-1 MAIN ELECTRICS - CABLE MACHINE

C1-1-2 L.H. CONTROL POD

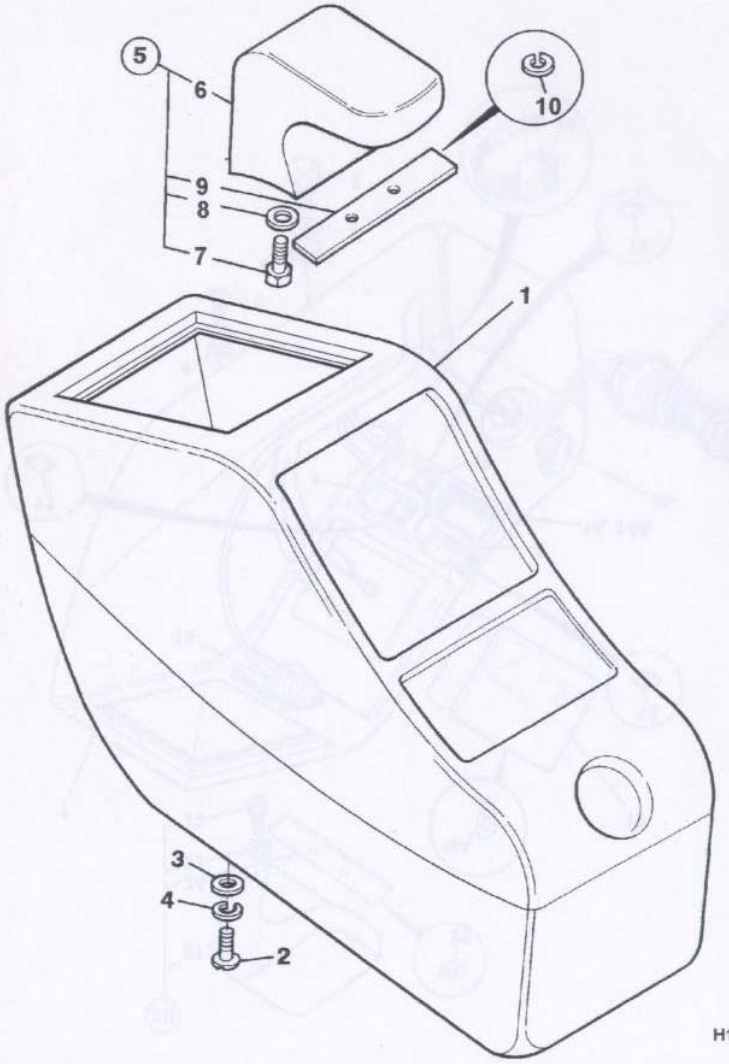

	on	to	on	to
8014	N/A			
8015	M730800			
8016	M728750			
8017	M800000			
8018	M801000			

Item	Part No	Qty	A	Description	Remarks	M/C No change
1*	236/03201	1		Cover, pod		
	236/40701	1		Cover, pod	Immobiliser only	
2	826/01672	4		Screw, button head, M6x15		
3	1420/0006Z	4		Washer, plain, M6		
4	823/00414	4		Washer, spring, M6		
5	NSP	1		Armrest kit		
6	233/09703	1	:	Armrest		
7	1315/0305Z	2	:	Screw, hex head, M8 x 20		
8	1412/0002Z	2	:	Washer, large, 5/16in.		
9	233/09304	1	:	Plate, support		
10	823/00415Z	2	:	Washer, spring, M8		

C1-1-2 L.H. CONTROL POD

C1-1-3 R.H. CONTROL POD & ELECTRICS

	on	to	on	to
8014	N/A			
8015	M730800			
8016	M728750			
8017	M800000			
8018	M801000			

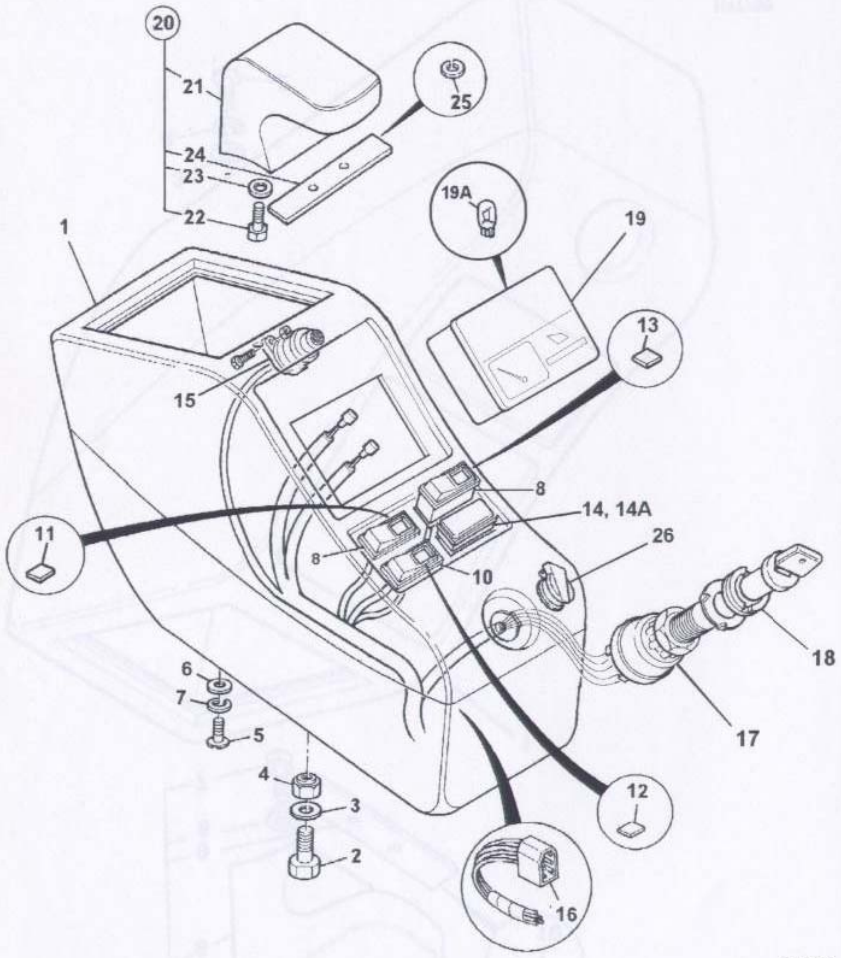

H17873

Item	Part No	Qty	A	Description	Remarks	M/C No change
1	233/11501	1		Cover, pod, RH		
2	1315/0407Z	1		Screw, hex head, M10 x 25		
3	1420/0008Z	1		Washer, plain, M10		
4	1370/0303Z	1		Nut, self lock, M10		
5	826/01672	4		Screw, button head, M6x15		
6	1420/0006Z	4		Washer, plain, M6		
7	823/00414	4		Washer, spring, M6		
8*	701/11401	2		Switch, light / heater		
10	701/60055	1		Switch, wiper		
11*	701/10900	1		Insert, fan switch		
12*	701/11402	1		Insert, wiper switch		
13	701/11002	1		Insert, light switch		
14	701/09800	1		Cover, blanking		
14A*		1		Switch	See C3-5-1	
15*	704/00700	1		Buzzer		
16	718/45800	1		Harness, buzzer/diode		
17	701/03400	1		Switch, ignition		
18	701/45300	1		Barrel		
19	704/29400	1		Cluster, instruments		
19A	704/19713	6	:	Bulb 12V 1.7 watt		
20	NSP	1		Armrest kit		
21	233/09703	1	:	Armrest		
22	1315/0305Z	2	:	Screw, hex head, M8 x 20		
23	1412/0002Z	2	:	Washer, large, 5/16in.		
24	233/09304	1	:	Plate, support		
25	823/00415Z	2	:	Washer, spring, M8		
26	715/04300	1		Socket		

C1-1-3 R.H. CONTROL POD & ELECTRICS

C1-2-1 WORKING LIGHT

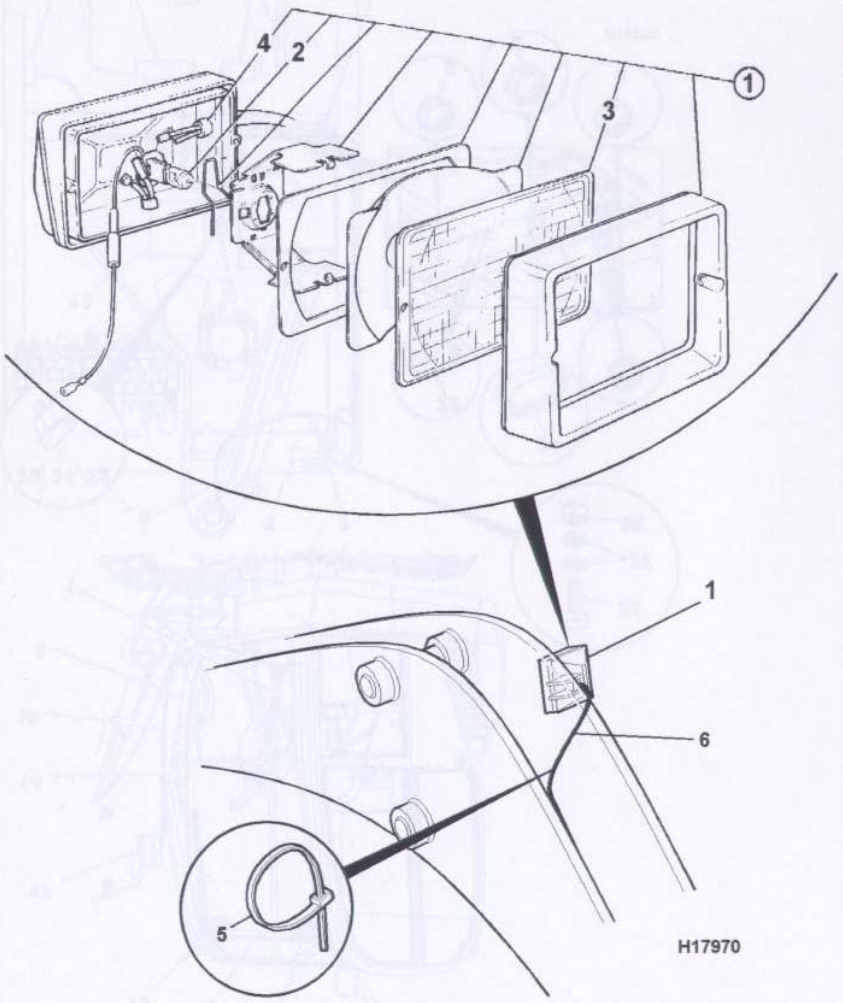

	on	to	on	to
8014	M791000			
8015	M730800			
8016	M728750			
8017	M800000			
8018	M801000			

Item	Part No	Qty	A	Description	Remarks	M/C No change
1	700/37900	1		Light, working		
2	720/10061	1		Bulb, halogen, 12v 55W H3		
3	700/37901	1		Lens, glass		
4	700/15002	1		Harness, light		
5	204/07006	3		Cable tie		
6	718/45300	1		Harness, boom working		

C1-2-1 WORKING LIGHT

C1-3-1 MAIN HARNESS

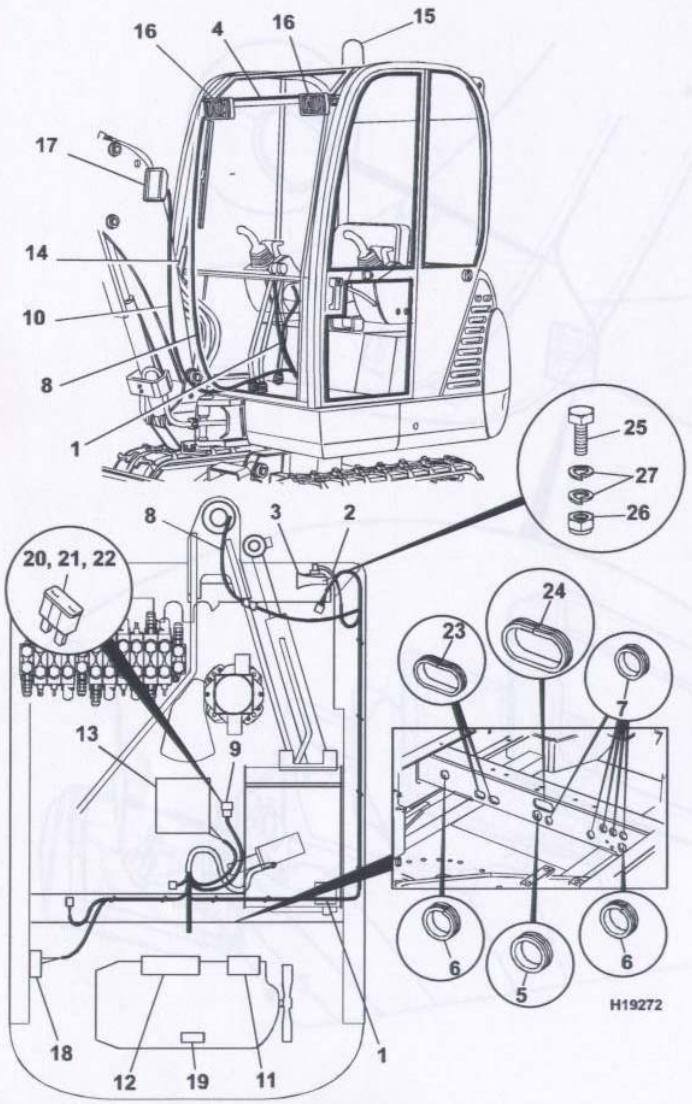

	on	to	on	to
8014	M791000			
8015	M730800			
8016	M728750			
8017	M800000			
8018	M801000			

Item	Part No	Qty	A	Description	Remarks	M/C No change
1	721/00337	1		Harness, main		
2	721/00649	1		Harness, horn		
3*	704/34500	1		Horn	Was 704/13900	
4*		1		Harness, lights	See C3-1-1/C3-1-2	
5	236/12906	2		Grommet, 52mm diameter		
6*	926/22501	3		Strip, grommet	Was 2410/0215	
7	236/12907	5		Grommet, 38 - 32mm bore		
8		1		Harness, cab	See C3-1-1/C3-1-2	
9		1		Box, fuse	See B1-7-1	
10		1		Harness, boom working	See C1-2-1	
11		1		Alternator	See C2-3-1	
12		1		Motor, starter	See C2-5-1	
13		1		Heater assembly	See C3-2-1	
14		1		Motor assembly, wiper	See C3-3-1	
15		1		Beacon, magnetic amber	See C3-5-1	
16		2		Light cab working	See C3-5-1	
17		1		Light, working	See C1-2-1	
18		1		Valve, pressure maint.	See E3-9-1	
19		1		Solenoid, fuel shut off	See L6-1-1	
20	716/05703	3		Fuse, 5 amp		
21	716/05706	2		Fuse, 15 amp		
22	716/05705	1		Fuse, 10 amp		
23*	926/22502	2		Strip, grommet	Was 828/00364	
24*	926/22502	1		Strip, grommet	Was 828/00328	
25*	1315/0303Z	1		Screw, hex head, M8 x 16		
26*	1370/0201Z	1		Nut, M8		
27*	823/00415Z	2		Washer, spring, M8		

C1-3-1 MAIN HARNESS

HYDRAPOWER

ENGINE ELECTRICS

C2

C1 MAIN MACHINE ELECTRICS

C2 ENGINE ELECTRICS

C3 CAB ELECTRICS

C2-1-1 BATTERY & BATTERY TRAY

	on	to	on	to
8014	M791000			
8015	M730800			
8016	M728750			
8017	M800000			
8018	M801000			

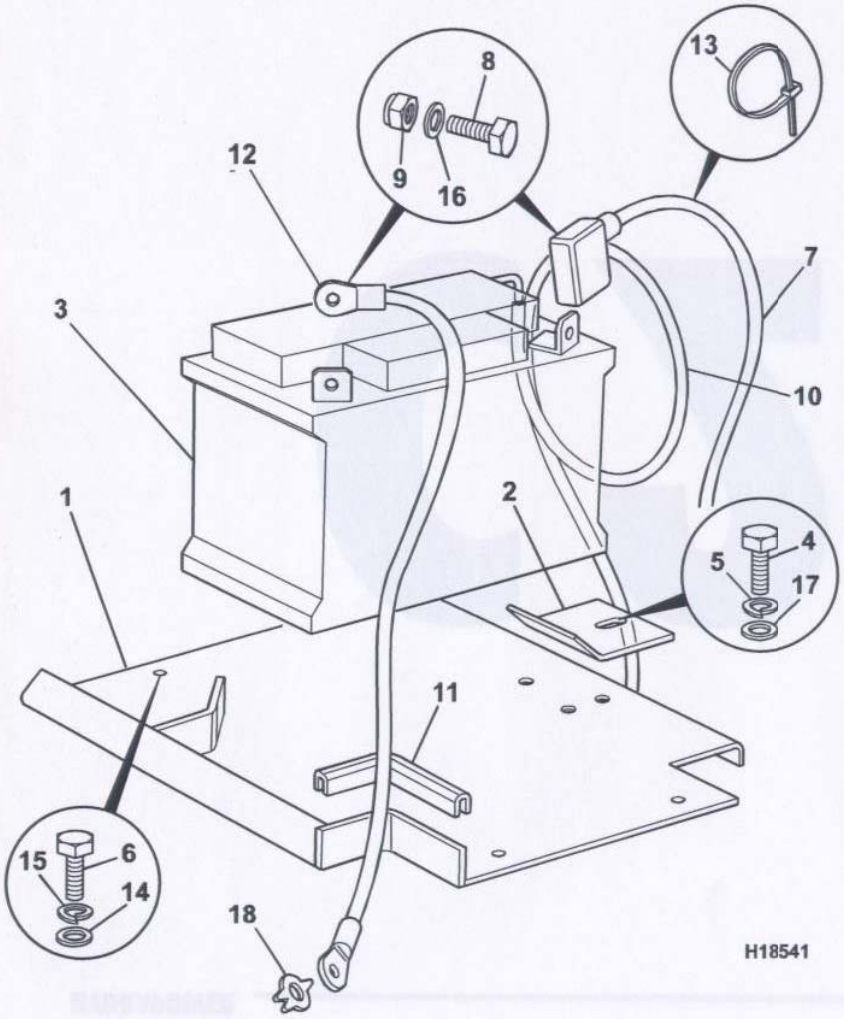

Item	Part No	Qty	A	Description	Remarks	M/C No change
1	236/03800	1		Tray, battery		
2	233/11401	1		Clamp, plate		
3*	729/10058	1		Battery, type 058	Wet charged	
	729/20058	1		Battery, type 058	Short case	
4*	1315/0401Z	1		Screw, hex head, M10 x 12	Superseded	
	1315/0407Z	1		Screw, hex head, M10 x 25		
5	1425/0008Z	1		Washer, spring, M10		
6*	1315/0201Z	4		Screw, hex head, M6 x 12	Superseded	
	1315/0305Z	4		Screw, hex head, M8 x 20		
7	718/04700	1		Lead, battery positive		
8	1315/0203Z	2		Screw, hex head, M6 x 16		
9	1370/0103Z	2		Nut, self lock, M6		
10*	647/07901	1		Tube, PVC, 300mm L	Superseded	
	647/07902	1		Tube, PVC, 800mm L		
11	926/09500	1		Strip, edging		
12	718/04800	1		Lead, battery negative		
13*	121/77603	1		Cable tie		
14*	1420/0007Z	4		Washer, plain, M8		
15*	1425/0007Z	4		Washer, spring, M8		
16*	1420/0006Z	2		Washer, plain, M6		
17*	1420/0008Z	1		Washer, plain, M10		
18*	823/00532	1		Washer, external lock		

C2-1-1 BATTERY & BATTERY TRAY

C2-2-1 ENGINE ELECTRICS

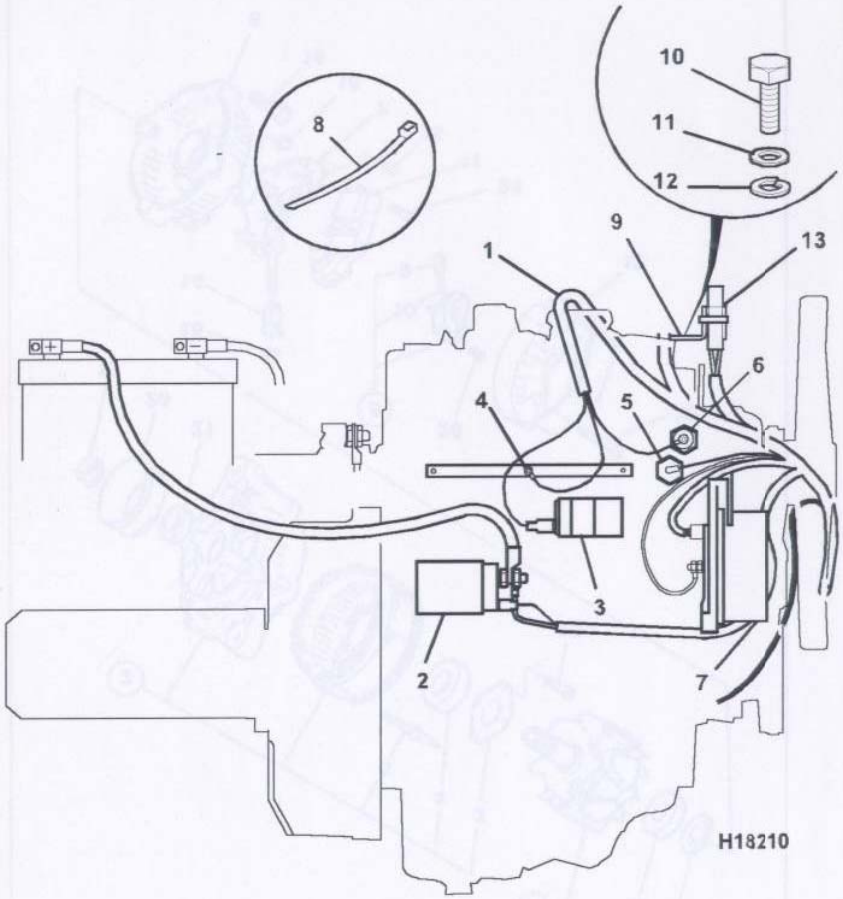

	on	to	on	to
8014	M791000			
8015	M730800			
8016	M728750			
8017	M800000			
8018	M801000			

Item	Part No	Qty	A	Description	Remarks	M/C No change
1		1		Harness, main	See C1-3-1	
2		1		Motor, starter	See C2-5-1	
3		1		Solenoid, fuel shut off	See L6-1-1	
4		3		Glowplug	See L2-1-1	
5		1		Switch oil pressure	See L2-1-1	
6		1		Sender, temperature, 105°	See L2-1-1	
7		1		Alternator	See C2-3-1	
8	121/77603	15		Cable tie		
9	231/82504	1		Bracket		
10	1315/0305Z	1		Screw, hex head, M8 x 20		
11	1420/0007Z	1		Washer, plain, M8		
12	1425/0007Z	1		Washer, spring, M8		
13	716/24400	1		Fuse, 50 amp		

C2-2-1 ENGINE ELECTRICS

C2-3-1 ALTERNATOR

	on	to	on	to
8014	M791000			
8015	M730800			
8016	M728750			
8017	M800000			
8018	M801000			

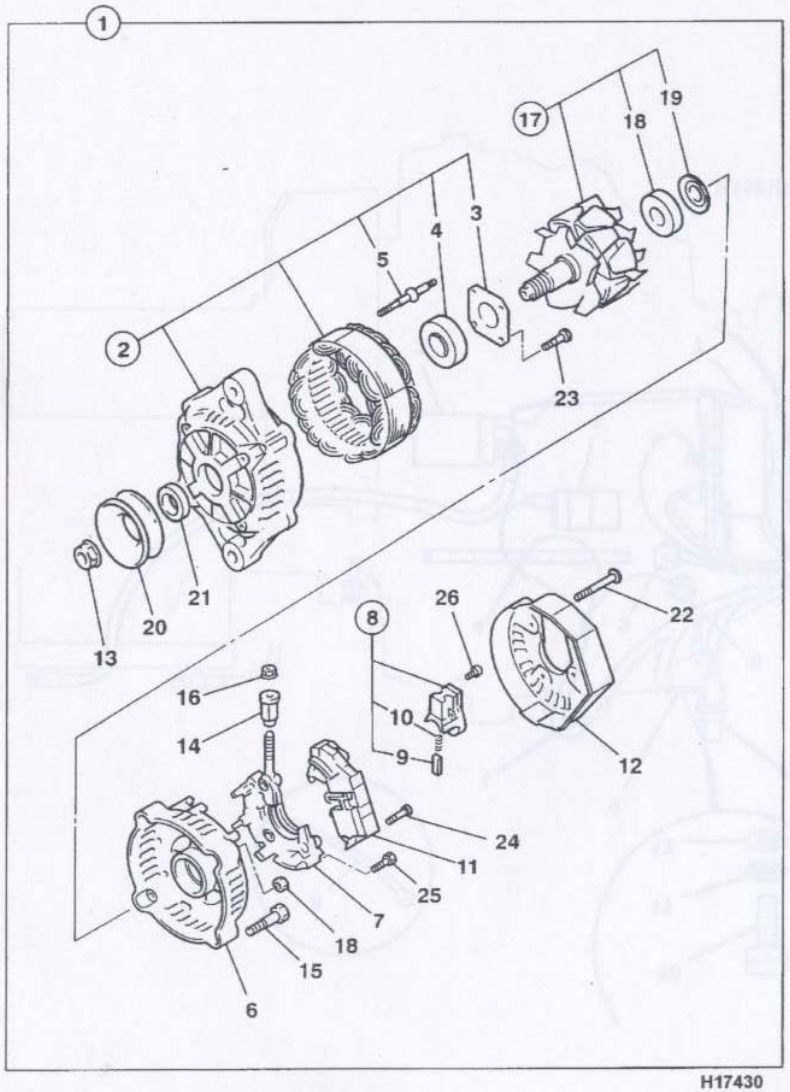

H17430

Item	Part No	Qty	A	Description	Remarks	M/C No change
1	02/631200	1		Alternator		
2	02/631201	1	:	Frame		
3	02/631202	1	::	Plate, retainer		
4	02/631203	1	::	Bearing		
5	02/631204	2	::	Bolt, stud		
6	02/631205	1	:	Frame, rear		
7	02/631206	1	:	Holder, rectifier		
8	02/631207	1	:	Holder, brush		
9	02/631208	2	::	Brush		
10	02/631209	2	::	Spring		
11	02/631210	1	:	Regulator, assembly		
12	02/631211	1	:	Cover, rear		
13	02/631212	1	:	Nut		
14	02/631213	1	:	Bush, insulation		
15	02/631214	2	:	Bolt		
16	02/631215	1	:	Nut		
17	02/631216	1	:	Rotor assembly		
18	02/631217	1	::	Bearing		
19	02/631218	1	::	Cover, bearing		
20	02/631219	1	:	Pulley		
21	02/631220	1	:	Collar		
22	02/631221	3	:	Bolt		
23	02/631222	4	:	Screw		
24	02/631223	2	:	Screw		
25	02/631224	6	:	Screw		
26	02/631225	1	:	Screw		

C2-3-1 ALTERNATOR

C2-4-1 ALTERNATOR MOUNTINGS

	on	to	on	to
8014	M791000			
8015	M730800			
8016	M728750			
8017	M800000			
8018	M801000			

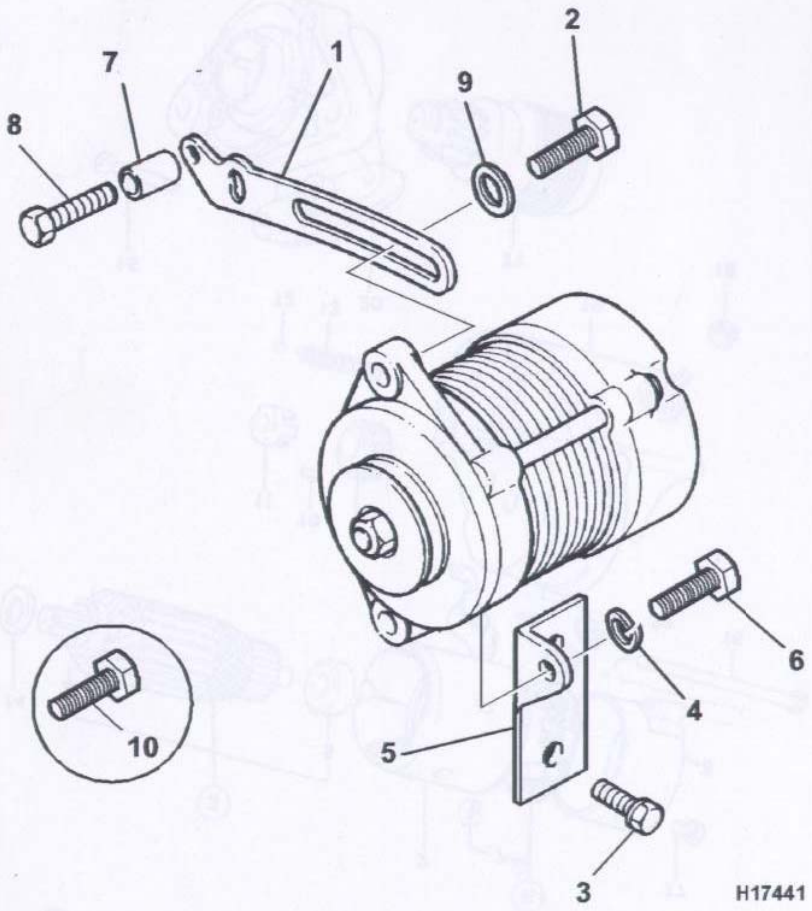

Item	Part No	Qty	A	Description	Remarks	M/C No change
1	02/631250	1		Lever, adjusting		
2	02/631251	1		Bolt		
3	02/631252	2		Bolt		
4	02/630108	1		Washer		
5	02/631254	1		Bracket, mounting		
6	02/631255	1		Screw		
7	02/631256	1		Spacer		
8	02/630347	2		Screw		
9	02/630126	1		Washer		
10	02/630348	2		Screw		

C2-4-1 ALTERNATOR MOUNTINGS

C2-5-1 STARTER MOTOR

	on	to	on	to
8014	M791000			
8015	M730800			
8016	M728750			
8017	M800000			
8018	M801000			

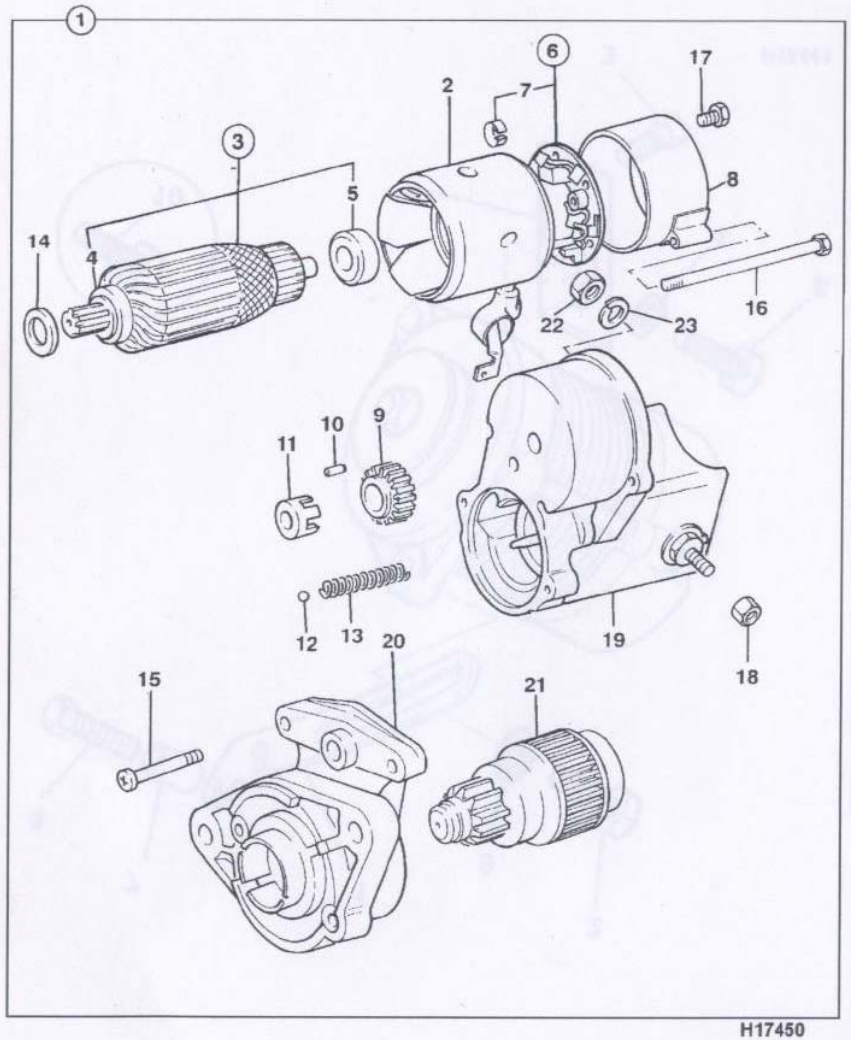

H17450

Item	Part No	Qty	A	Description	Remarks	M/C No change
1	02/631150	1		Motor, starter	S/S see c2-5-2	
2	02/631151	1	:	Yoke, assembly		
3	02/631152	1	:	Armature assembly		
4	02/630916	1	::	Bearing		
5	02/631154	1	::	Bearing		
6	02/631155	1	:	Holder, assembly		
7	02/631156	4	::	Spring		
8	02/631157	1	:	Frame		
9	02/631158	1	:	Pinion		
10	02/631159	5	:	Roller		
11	02/631160	1	:	Retainer		
12	02/631161	1	:	Ball, steel		
13	02/631162	1	:	Spring		
14	02/631163	1	:	Washer		
15	02/631164	2	:	Screw		
16	02/631165	2	:	Bolt		
17	02/631166	2	:	Screw		
18	02/631167	1	:	Nut		
19	02/631168	1	:	Switch, assembly		
20	02/631169	1	:	Housing, assembly		
21	02/631170	1	:	Clutch, assembly		
22	02/630343	1	:	Nut		
23	02/630344	1	:	Washer		

C2-5-1 STARTER MOTOR

C2-5-2 STARTER MOTOR

	on	to	on	to
8014	M791000			
8015	M730800			
8016	M728750			
8017	M800000			
8018	M801000			

Item	Part No	Qty	A	Description	Remarks	M/C No change
1	714/36700	1		Motor, starter		

C2-5-2 STARTER MOTOR

C2-6-1 AUTOSTOP, ENGINE

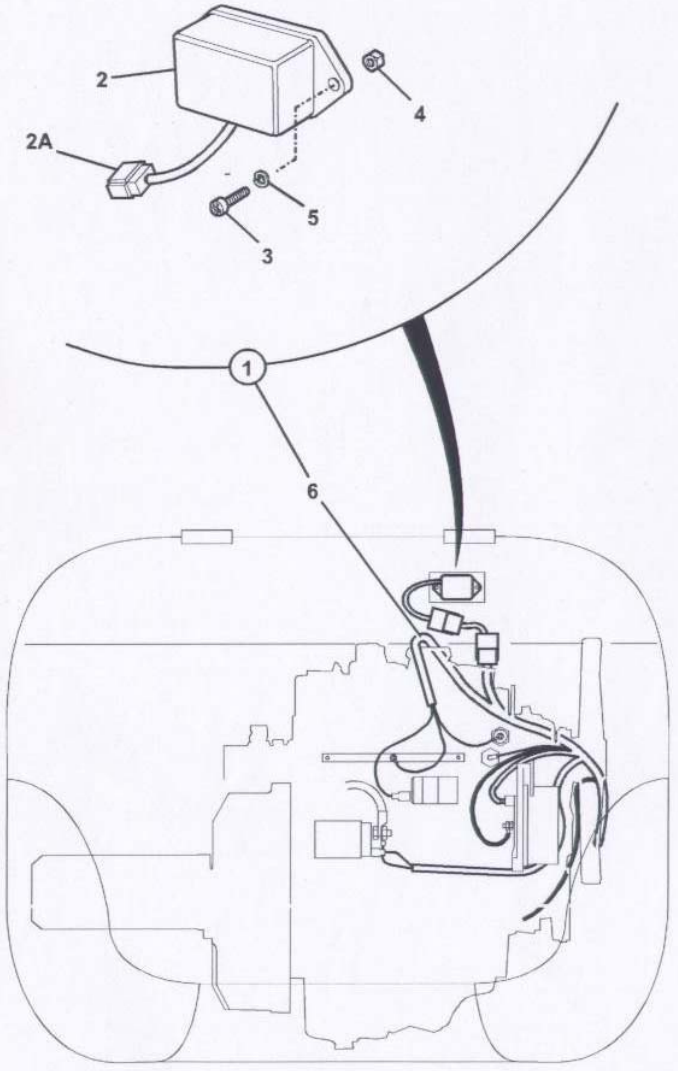

H17460

	on	to	on	to
8014	M791000			
8015	M730800			
8016	M728750			
8017	M800000			
8018	M801000			

Item	Part No	Qty	A	Description	Remarks	M/C No change
1	NSP	1		Engine autostop assembly		
2	02/632138	1	:	Box, control		
2A	02/632139	1	:	Connector		
3	826/01050	2	:	Screw		
4	826/00461	2	:	Nut		
5	1425/0004Z	2	:	Washer, spring, M4		
6	719/66300	1	:	Harness, autostop		

C2-6-1 AUTOSTOP, ENGINE

HYDRAPOWER

CAB ELECTRICS



C3

C1 MAIN MACHINE ELECTRICS

C2 ENGINE ELECTRICS

C3 CAB ELECTRICS

C3-1-1 CAB ELECTRICS

	on	to	on	to
8014	M791000			
8015	M730800			
8016	M728750			
8017	M800000			
8018	M801000			

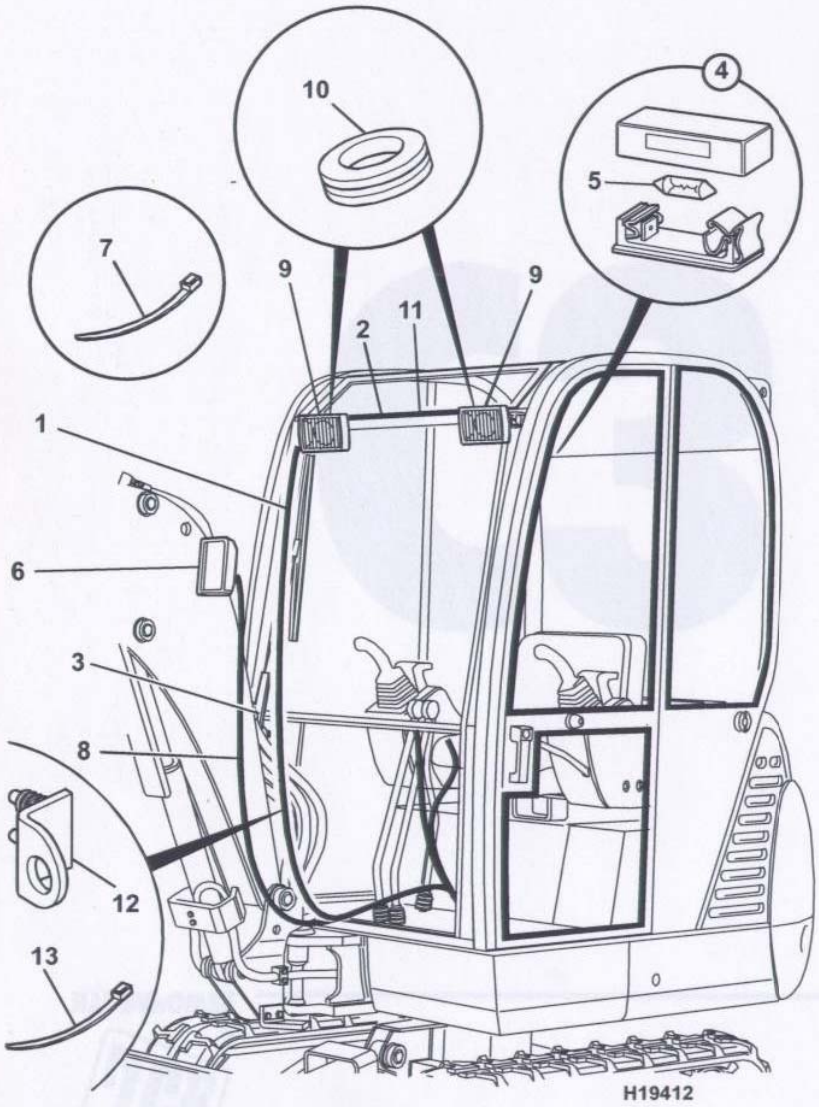

H19412

Item	Part No	Qty	A	Description	Remarks	M/C No change
1*	236/05116	1		Harness, cab	Superseded	
	721/00685	1		Harness, cab		
2	721/00661	1		Harness, lights		
3		1		Motor, wiper	See C3-3-1	
4	700/12402	1		Light interior		
5*	720/10054	1	:	Bulb, interior light		
6*		1		Working light, boom	See C1-2-1	
7*	826/01162	1		Cable tie		
8*		1		Harness, boom	See C1-2-1	
9*		2		Light, working	See C3-4-1	
10*	2410/0104	2		Grommet, 11 - 8mm bore		
11*	926/19700	1		Seal	Was 235/30005	
12*	236/12911	1		Clip, retainer, cable		
13*	826/01711	1		Cable tie, 330L x 2.8		

C3-1-1 CAB ELECTRICS

	on	to	on	to
8014	M791000			
8015	M730800			
8016	M728750			
8017	M800000			
8018	M801000			

Item	Part No	Qty	A	Description	Remarks	M/C No change
1		1		Light cab working	See C3-4-1	
2*	721/00686	1		Harness, canopy		
3*	926/19700	1		Seal	Was 235/30005	
4	2410/0104	2		Grommet, 11 - 8mm bore		
5*	721/00661	1		Harness, lights		

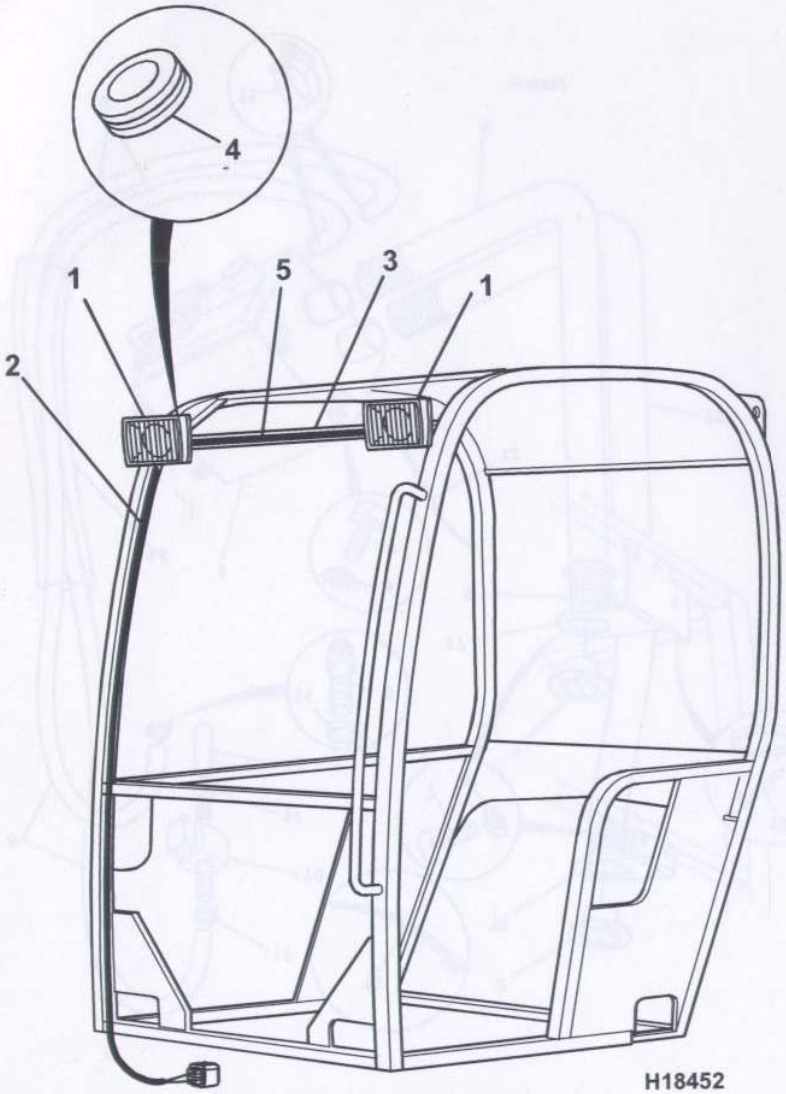

C3-2-1 HEATER INSTALLATION

	on	to	on	to
8014	M791000			
8015	M730800			
8016	M728750			
8017	M800000			
8018	M801000			

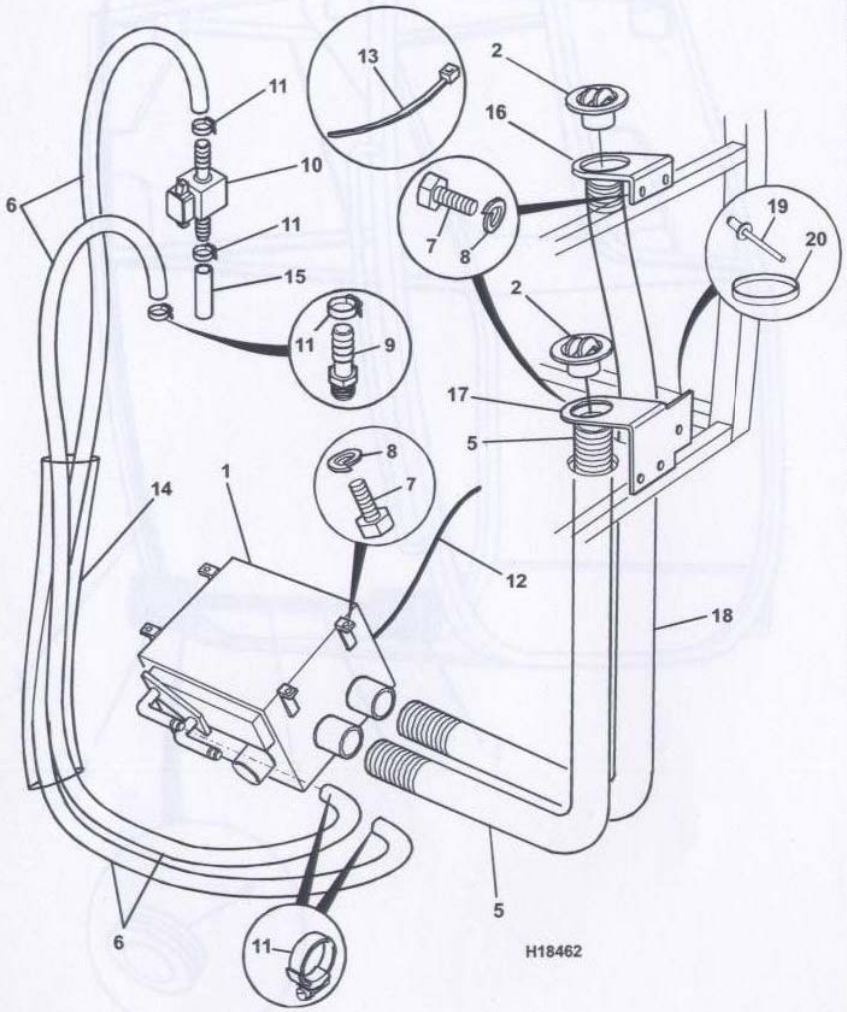

Item	Part No	Qty	A	Description	Remarks	M/C No change
1	30/919500	1		Heater assembly		
2*	231/24007	1		Nozzle, demister	Superseded	
	233/26003	2		Nozzle, demister		
5*	648/20710	1		Hose, convoluted, 930L		
6*	648/21210	2		Hose, heater, 1350mm	Heater, 1350 long	
7*	1315/0201Z	8		Screw, hex head, M6 x 12		
8*	823/00414	8		Washer, spring, M6		
9	816/60295	2		Adaptor		
10	816/60284	1		Tap, heater		
11	2201/0002	6		Clip worm drive		
12	718/31400	1		Diode wire		
13	121/77603	4		Cable tie		
14	232/37001	1		Sleeve, polyurethane		
15	648/21209	1		Hose, heater, 13mm		
16*	236/05138	1		Bracket, nozzel mounting	Upper	
17*	236/05139	1		Bracket, nozzel mounting	Lower	
18*	648/20711	1		Hose, convoluted, 1445L		
19*	826/01036	1		Pop rivet		
20*	821/00367	1		Clip, harness		

C3-2-1 HEATER INSTALLATION

C3-3-1 WIPER MOTOR

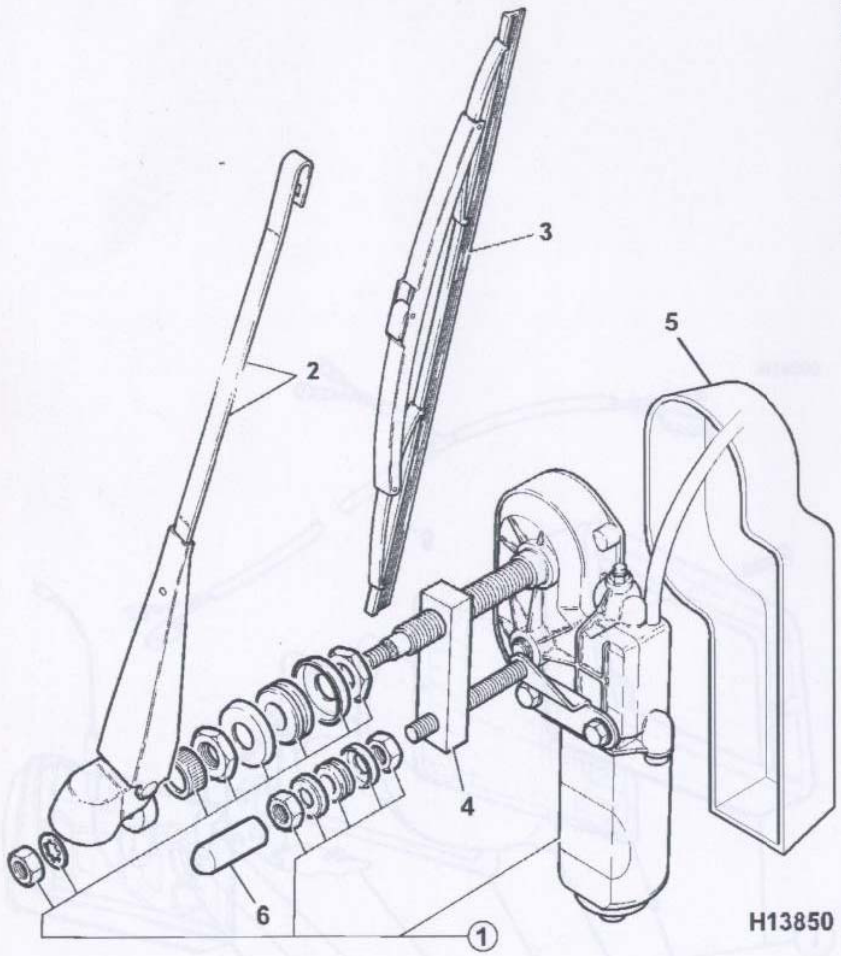

	on	to	on	to
8014	M791000			
8015	M730800			
8016	M728750			
8017	M800000			
8018	M801000			

Item	Part No	Qty	A	Description	Remarks	M/C No change
1	236/05115	1		Motor assembly, wiper		
2	714/21100	1		Arm, wiper		
3	714/18900	1		Blade, wiper		
4	232/24014	1		Washer, wiper		
5	714/09500	1		Cover, wiper motor		
6	233/24010	1		Cap		

C3-4-1 CAB WORKING LIGHTS

	on	to	on	to
8014	M791000			
8015	M730800			
8016	M728750			
8017	M800000			
8018	M801000			

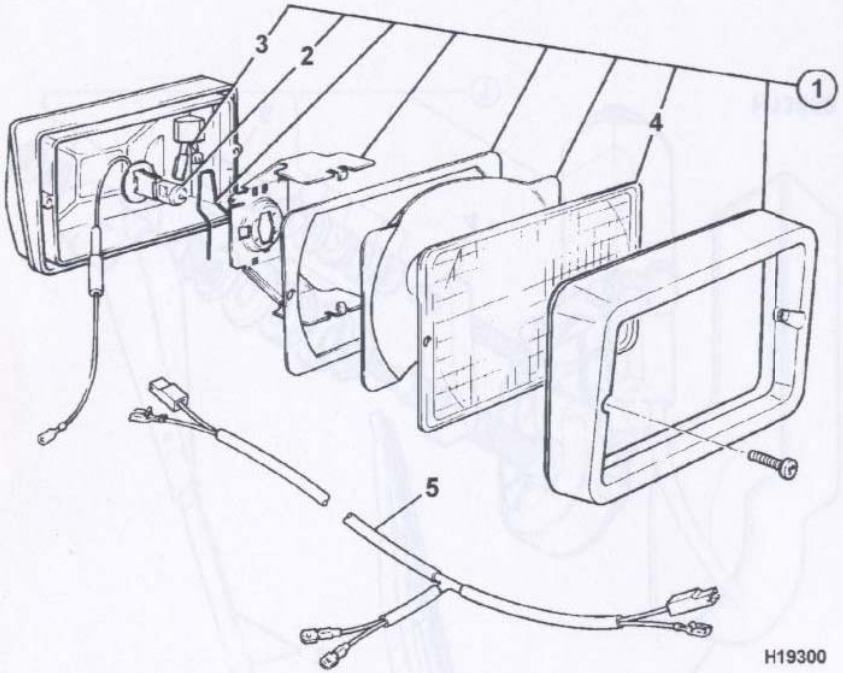

Item	Part No	Qty	A	Description	Remarks	M/C No change
1*	700/37900	1		Light, working	Was 700/37800	
2	720/10061	1	:	Bulb, halogen, 12v 55W H3		
3	700/15002	1	:	Harness, light		
4*	700/37901	1	:	Lens, glass	Was 700/37801	
5		1	:	Harness, working lights	See C3-1-1	

C3-4-1 CAB WORKING LIGHTS

C3-5-1 BEACON

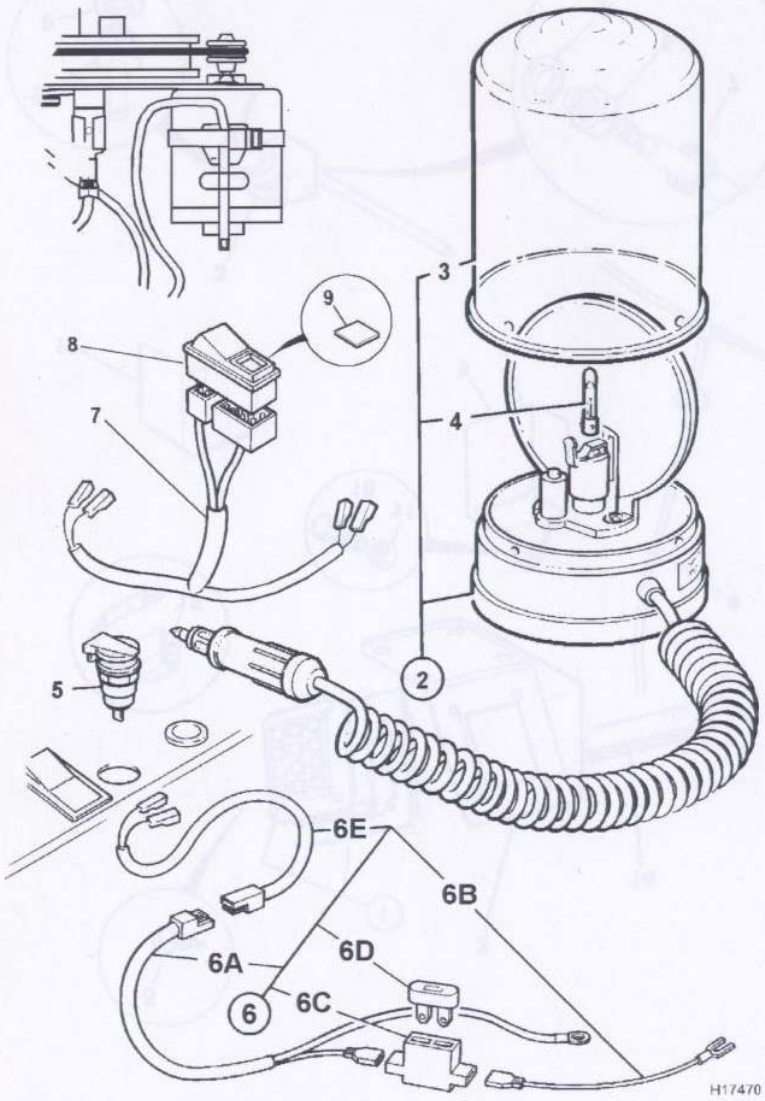

	on	to	on	to
8014	M791000			
8015	M730800			
8016	M728750			
8017	M800000			
8018	M801000			

Item	Part No	Qty	A	Description	Remarks	M/C No change
1	NSP	1		Beacon kit		
2*	700/27800	1		Beacon, magnetic amber	Superseded	
	700/36800	1		Beacon, magnetic amber		
3	700/13601	1	:	Lens, amber		
4	700/09101	1	:	Bulb,12v 55watt		
5*	715/04300	1		Socket	See C1-1-1	
6	718/33500	1		Harness assembly		
6A	718/33501	1	:	Harness		
6B	718/33502	1	:	Harness		
6C	716/08400	1	:	Holder, in line fuse		
6D	716/05705	1	:	Fuse, 10 amp		
6E	718/33503	1	:	Socket, main		
7	719/89300	1		Harness		
8	701/10100	1		Switch		
9	701/00037	1		Symbol, beacon		

Note: Make sure the drive motor is fitted with the pulley (coloured red) as shown.

This ensures correct operation with the machines 12 volt system.

C3-5-1 BEACON

C3-7-1 IMMOBILISER KIT - CABLE

	on	to	on	to
8014	M791000			
8015	N/A			
8016	N/A			
8017	N/A			
8018	N/A			

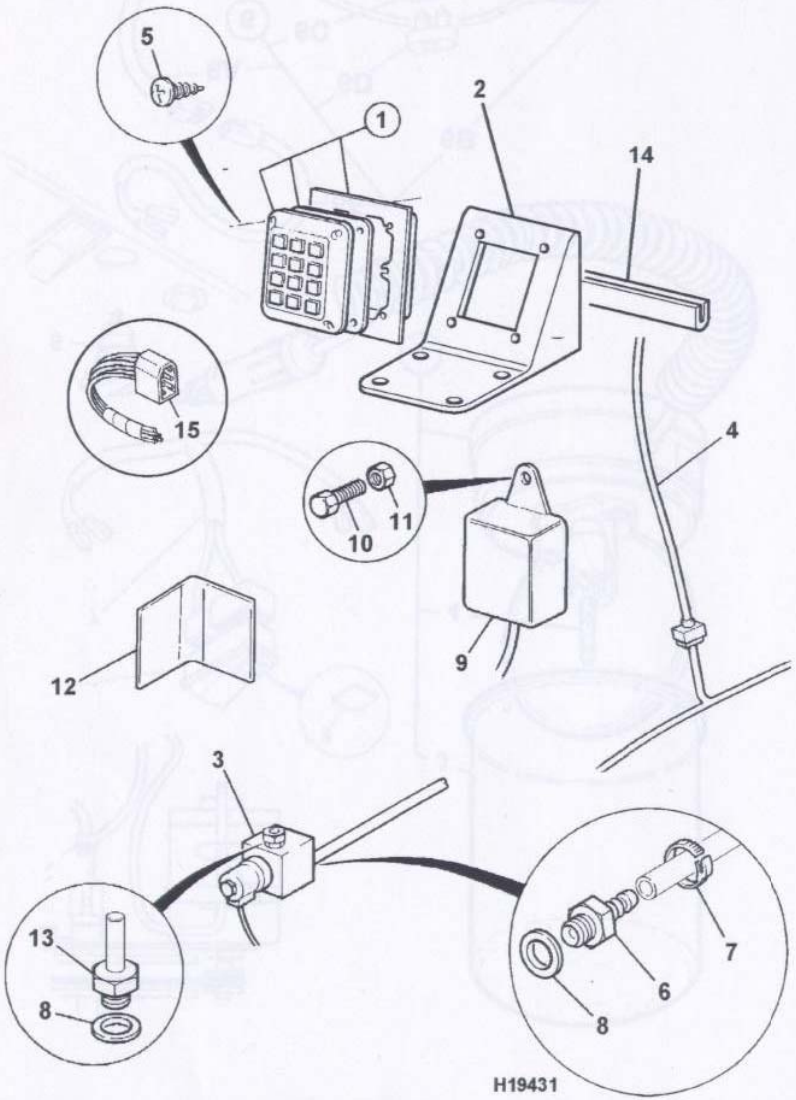

Item	Part No	Qty	A	Description	Remarks	M/C No change
1	231/94500	1		Keypad assembly		
2	236/40601	1		Mounting bracket, keypad		
3	231/94400	1		Fuel solenoid assembly		
4	721/00677	1		Harness, immobiliser		
5	1430/1204Z	4		Screw, self tap no 8 x ¾		
6	929/10607	1		Adaptor, hose, ¼in BSP		
7	2201/0001	1		Clip, worm drive		
8	1406/0011	2		Seal, bonded, ¼in. BSP		
9	716/21000	1		Relay		
10	1315/0103Z	1		Screw, hex head, M5 x 16		
11	1370/0001Z	1		Nut, M5		
12	9804/1320	1		Handbook, supervisor		
13	231/94207	1		Standpipe, tank		
14	926/04800	1		Strip, edging		
15*	716/14100	1		Diode		
16*	718/56031	1		Wire, earth	Not illustrated	

C3-7-1 IMMOBILISER KIT - CABLE

C3-7-2 IMMOBILISER KIT - SERVO

	on	to	on	to
8014	N/A			
8015	M730800			
8016	M728750			
8017	M800000			
8018	M801000			

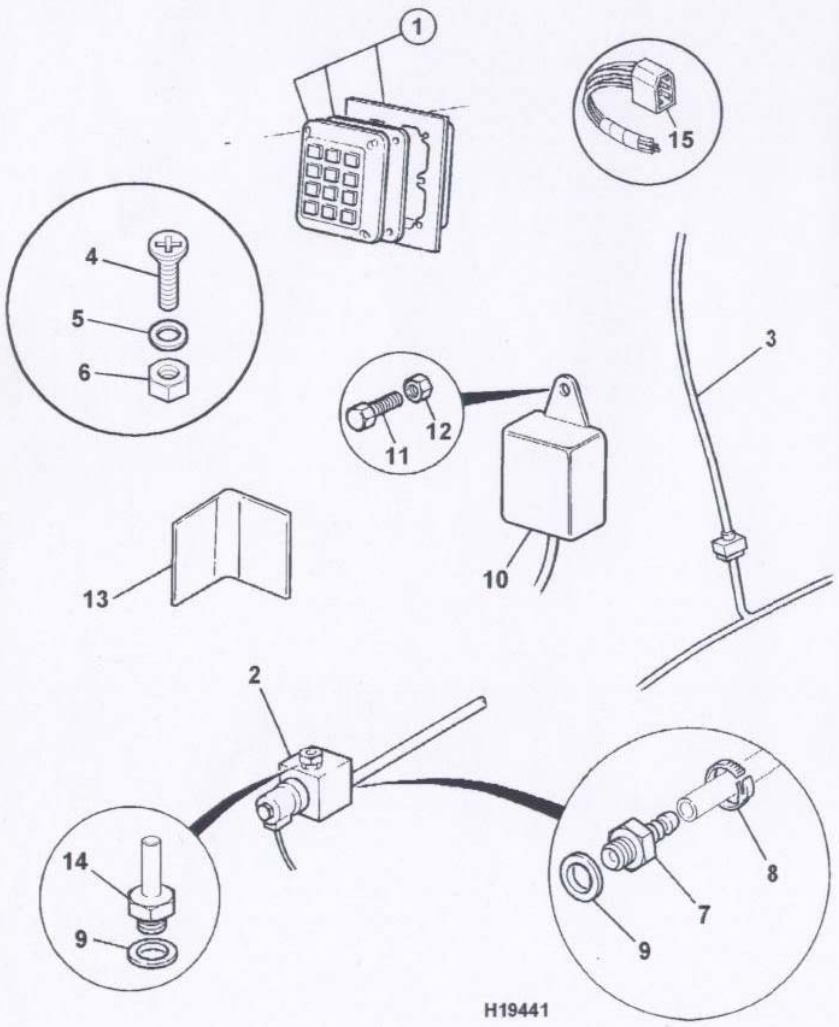

Item	Part No	Qty	A	Description	Remarks	M/C No change
1	231/94500	1		Keypad assembly		
2	231/94400	1		Fuel solenoid assembly		
3	721/00677	1		Harness, immobiliser		
4	826/00260	4		Screw, csk, 2BA x ¾in.		
5	1414/0011Z	4		Washer, plain, 2BA		
6	1358/0201Z	4		Nut, 2BA		
7	929/10607	1		Adaptor, hose, ¼in BSP		
8	2201/0001	1		Clip, worm drive		
9	1406/0011	2		Seal, bonded, ¼in. BSP		
10	716/21000	1		Relay		
11	1315/0103Z	1		Screw, hex head, M5 x 16		
12	1370/0001Z	1		Nut, M5		
13	9804/1320	1		Handbook, supervisor		
14	231/94207	1		Standpipe, tank		
15*	716/14100	1		Diode		
16*	718/56031	1		Wire, earth	Not illustrated	

D1

D1 MACHINE CONTROLS

D2 ENGINE CONTROLS

D1-1-1 TRACK CONTROLS

	on	to	on	to
8014	M791000			
8015	M730800			
8016	M728750			
8017	M800000			
8018	M801000			

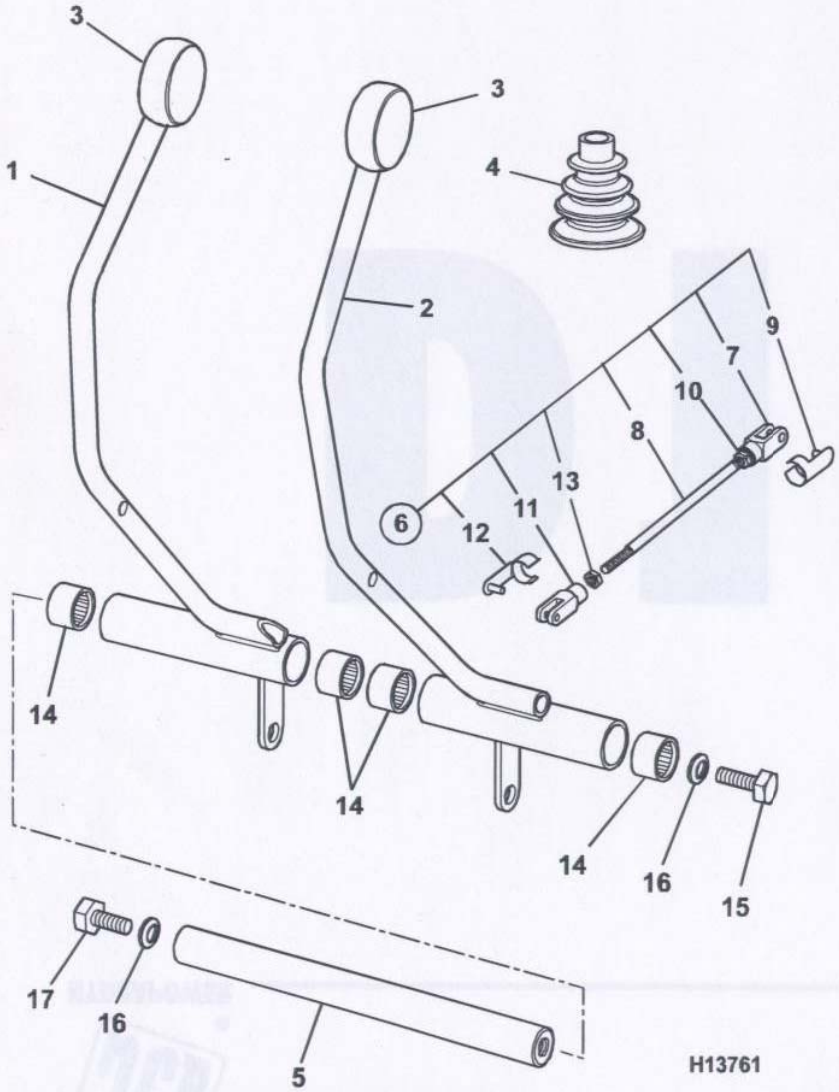

Item	Part No	Qty	A	Description	Remarks	M/C No change
1	231/30800	1		Lever track RH		
2	231/30900	1		Lever track LH		
3	231/05220	2		Knob		
4	232/34006	2		Gaitor, lever		
5	231/30702	1		Shaft		
6*	231/31700	2		Rod assembly		
7	913/02903	1	:	Clevis, M6		
8	231/31701	1	:	Rod, track		
9	913/00031	1	:	Pin, spring, M6		
10	826/01108	1	:	Locknut, LH thread		
11	913/01801	1	:	Clevis, M8		
12	913/02401	1	:	Pin, spring, M8		
13	1370/0202Z	1	:	Nut, thin, M8		
14	809/10065	4	:	Bush		
15	1315/0407Z	2		Screw, hex head, M10 x 25		
16	823/00463	2		Disc, spring, M10		
17	1315/0409Z	1		Screw, hex head, M10 x 35		

D1-1-1 TRACK CONTROLS

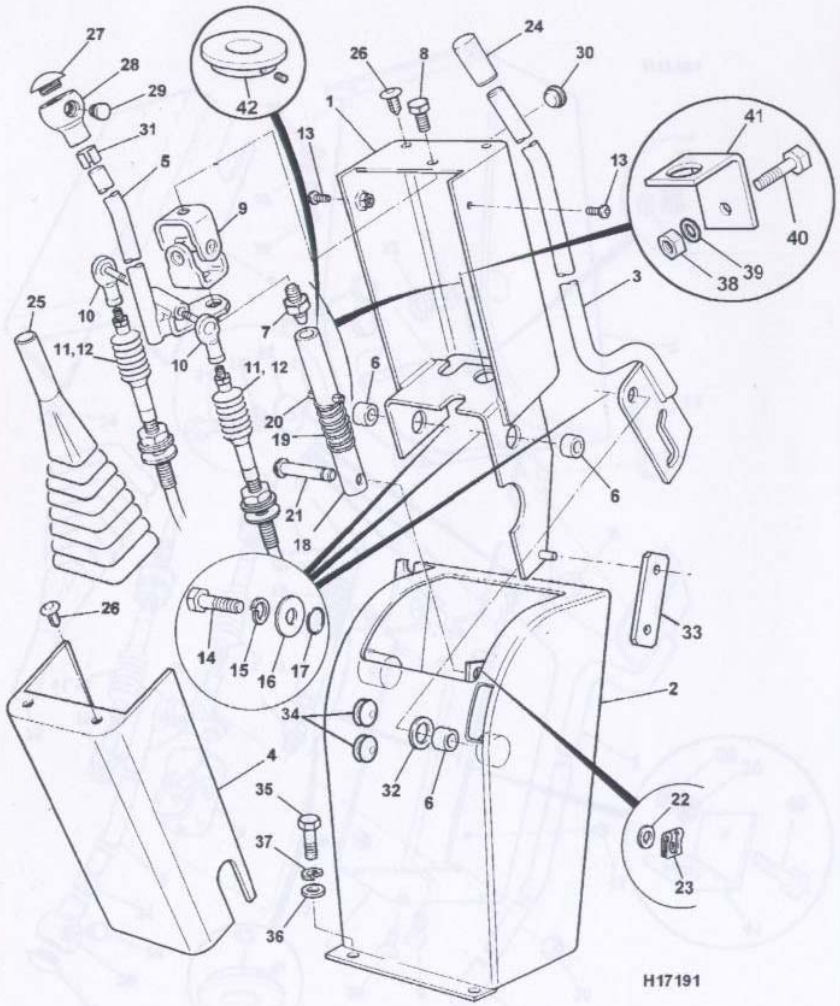

	on	to	on	to
8014	M791000	M791186		
8015	N/A			
8016	N/A			
8017	N/A			
8018	N/A			

Item	Part No	Qty	A	Description	Remarks	M/C No change
1	231/47300	1		Pod, LH		
	231/47800	1		Pod, RH		
2*	236/03300	1		Tower, LH	Was 236/12500	
	236/03100	1		Tower, RH	Was 236/12500	
3*	231/50700	1		Lever, lock, LH	Was 231/47500	
	231/48000	1		Lever, lock, RH	Canopy only	
4	231/47600	1		Cover, pod		
5*	236/43900	1		Lever, RH	Was 231/37000	To M TBA
	236/43800	1		Lever, LH	Was 231/37100	To M TBA
6	231/72101	3		Spacer		
7	231/72103	1		Pin, joint		
8	1305/0404Z	1		Screw, hex head, ½ x ¾in.		
9	116/00416	1		Joint, universal		
10*	922/02200	2		Rod end, M6 x M8, M/F	Was 922/01600	
11		2		Cable assembly, 930mm	See D1-2-2	
12		2		Cable assembly, 1235mm	See D1-2-2	
13	826/01673	2		Screw, button head, M6x10		
14*	1315/0408Z	3		Screw, hex head, M10 x 30	Was 1315/0407Z	
15*	823/00416Z	3		Washer, spring, M10		
16	1412/0003Z	3		Washer, large, 3/8in		
17	2401/0202	3		O Ring	R.H. 2off	
18*	231/47204	1		Tube, locking		
19	231/47202	1		Spring		
20	826/01013	1		Pin, tension		
21	231/05226	1		Pin, clevis, special		
22	1413/0002Z	1		Washer, plain, 5/16in.		
23	913/01102	1		Fastener		
24	231/08004	1		Knob, lever lock	L.H. only	
25	123/03067	1		Gaitor		
26	826/00847	4		Fastener, drive		
27	123/00317	1		Knob, top half		

	on	to	on	to
8014	M791000	M791186		
8015	N/A			
8016	N/A			
8017	N/A			
8018	N/A			

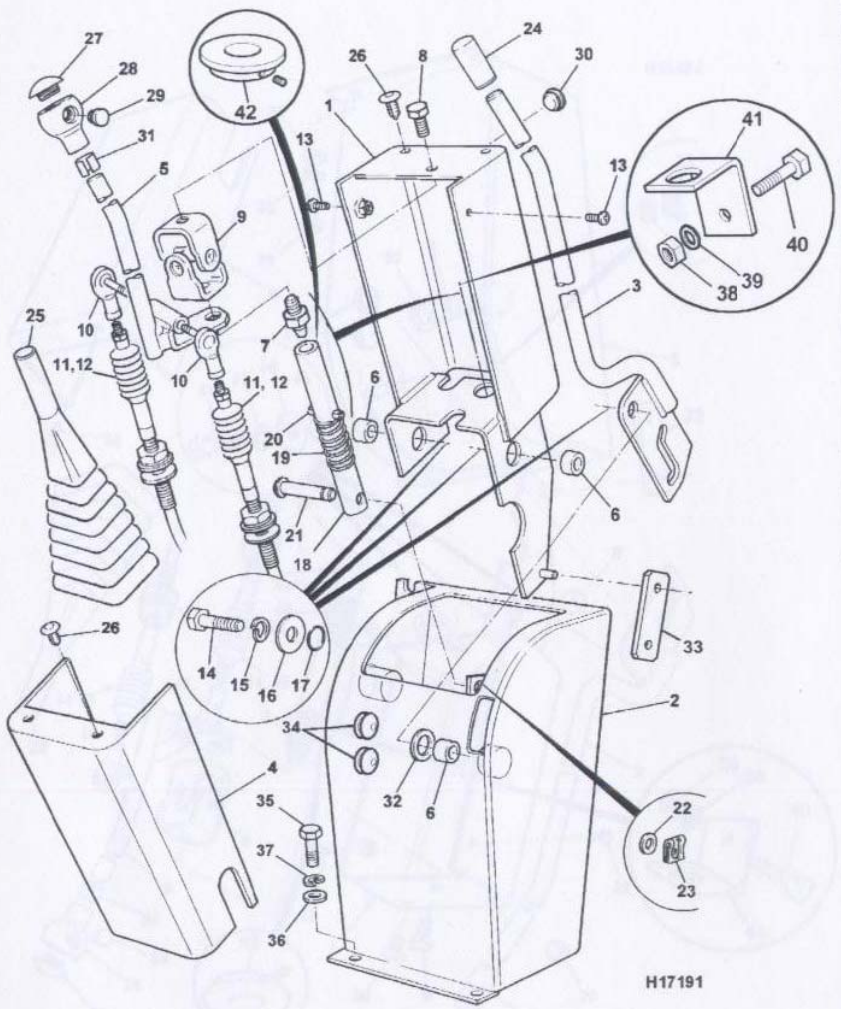

Item	Part No	Qty	A	Description	Remarks	M/C No change
28	123/00316	1		Knob, bottom half		
29	231/05223	1		Blank	L.H. only	
30	2410/0107	2		Grommet, 17.5 - 12.7 bore		
31	122/67459	1		Ring, tolerance		
32*	231/47203	1		Washer	Was 1410/0012Z	
33	231/47701	1		Pod lock	R.H. only, cab	
34	2410/1105	2		Grommet, blind, 12.7mm		
35	1315/0405Z	2		Screw, hex head, M10 x 20		
36	1420/0008Z	2		Washer, plain, M10		
37*	823/00416Z	2		Washer, spring, M10		
38*	1370/0203Z	1		Nut, self lock, M8		
39*	1420/0007Z	1		Washer, plain, M8		
40*	1315/0305Z	1		Screw, hex head, M8 x 20		
41*	236/17301	1		Bracket		
42*	231/97004	1		Collar, pod lock		

D1-2-2 CONTROL CABLES

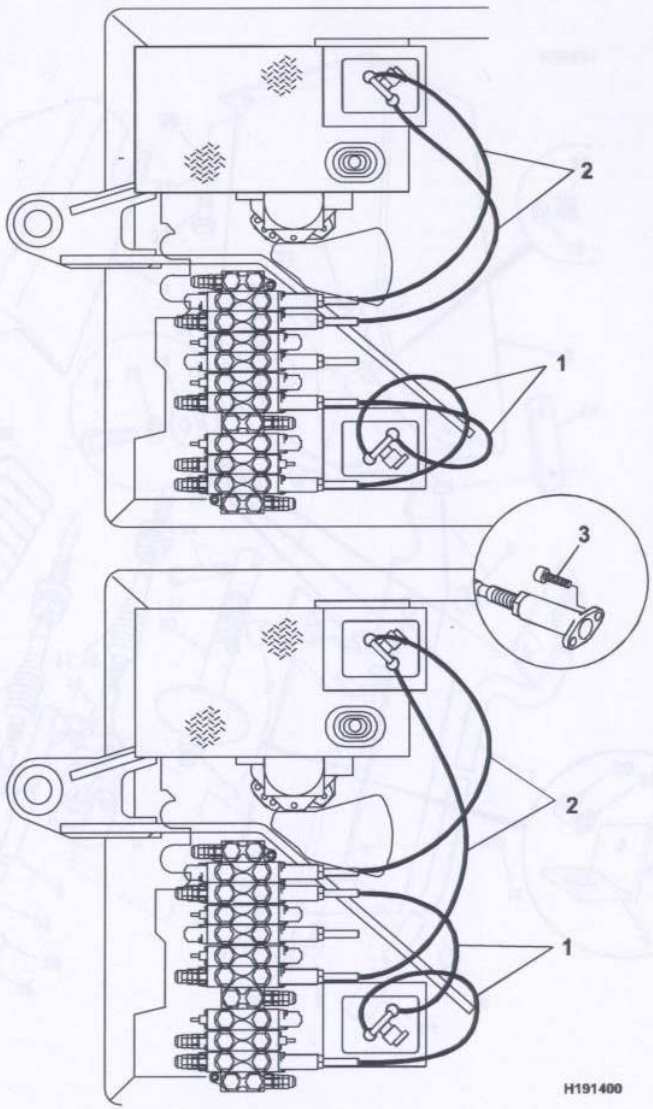

	on	to	on	to
8014	M791000			
8015	N/A			
8016	N/A			
8017	N/A			
8018	N/A			

Item	Part No	Qty	A	Description	Remarks	M/C No change
1	910/51100	2		Cable assembly, 930mm		
2	910/51200	2		Cable assembly, 1235mm		
3	826/01651	8		Capscrew, ¼in.UNC x ¾in.		

D1-2-2 CONTROL CABLES

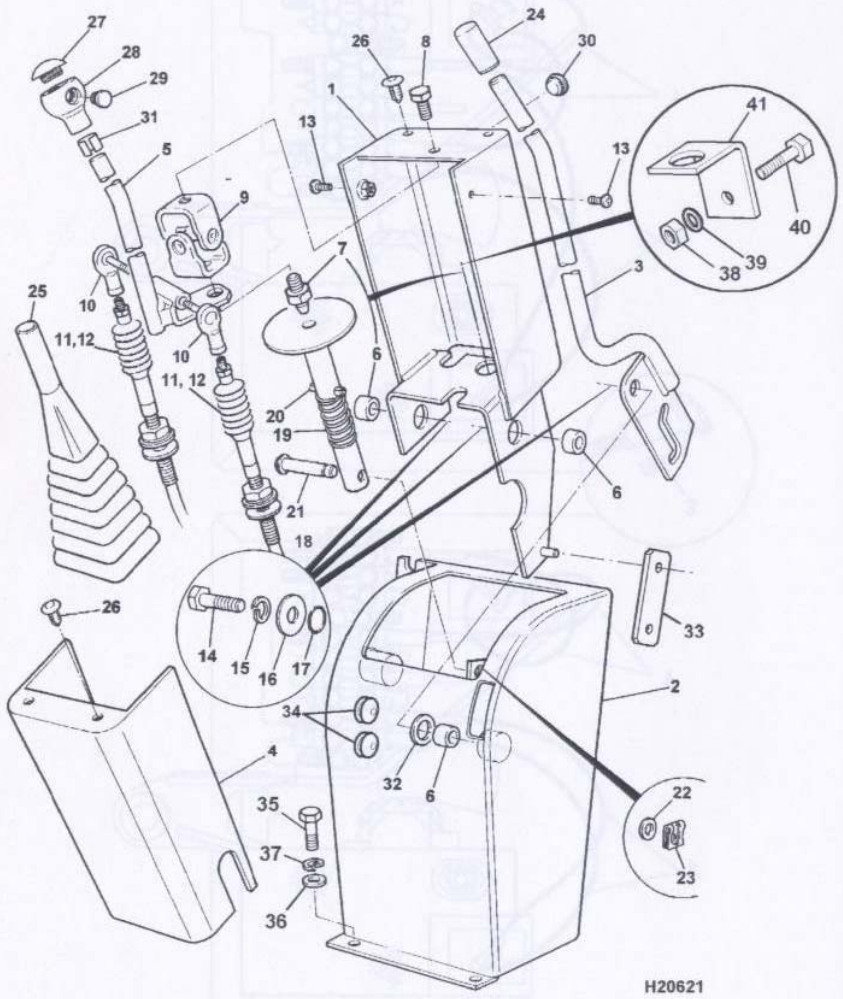

	on	to	on	to
8014	M791187			
8015	N/A			
8016	N/A			
8017	N/A			
8018	N/A			

Item	Part No	Qty	A	Description	Remarks	M/C No change
1	236/17200	1		Pod, LH		
	231/47800	1		Pod, RH		
2	236/03300	1		Tower, LH		
	236/03100	1		Tower, RH		
3	231/50700	1		Lever, lock, LH		
	231/48000	1		Lever, lock, RH	Canopy only	
4	231/47600	1		Cover, pod		
5	236/43900	1		Lever, RH		
	236/43800	1		Lever, LH		
6	231/72101	3		Spacer		
7	231/72103	1		Pin, joint		
8	1305/0404Z	1		Screw, hex head, ½ x ¾in.		
9	116/00416	1		Joint, universal		
10	922/02200	2		Rod end, M6 x M8, M/F		
11		2		Cable assembly, 930mm	See D1-2-2	
12		2		Cable assembly, 1235mm	See D1-2-2	
13	826/01673	2		Screw, button head, M6x10		
14	1315/0408Z	3		Screw, hex head, M10 x 30		
15	823/00416Z	3		Washer, spring, M10		
16	1412/0003Z	3		Washer, large, 3/8in		
17	2401/0202	3		O Ring	R.H. 2 off	
18	236/17100	1		Tube, locking		
19	231/47202	1		Spring		
20	826/01013	1		Pin, tension		
21	231/05226	1		Pin, clevis, special		
22	1413/0002Z	1		Washer, plain, 5/16in.		
23	913/01102	1		Fastener		
24	231/08004	1		Knob, lever lock	L.H. only	
25	123/03067	1		Gaitor		
26	826/00847	4		Fastener, drive		
27	123/00317	1		Knob, top half		

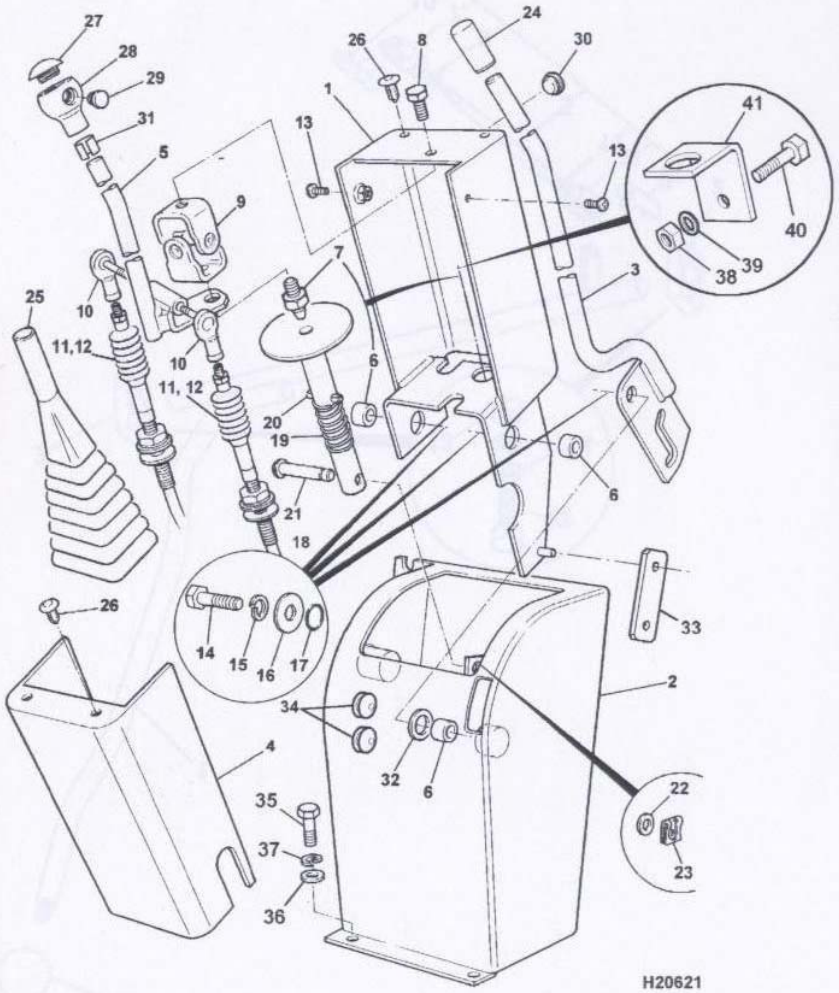

	on	to	on	to
8014	M791187			
8015	N/A			
8016	N/A			
8017	N/A			
8018	N/A			

Item	Part No	Qty	A	Description	Remarks	M/C No change
28	123/00316	1		Knob, bottom half		
29	231/05223	1		Blank	L.H. only	
30	2410/0107	2		Grommet, 17.5 - 12.7 bore		
31	122/67459	1		Ring, tolerance		
32	231/47203	1		Washer		
33	231/47701	1		Pod lock	R.H. only, cab	
34	2410/1105	2		Grommet, blind, 12.7mm		
35	1315/0405Z	2		Screw, hex head, M10 x 20		
36	1420/0008Z	2		Washer, plain, M10		
37	823/00416	2		Washer, spring, M10		
38	1370/0203Z	1		Nut, self lock, M8		
39	1420/0007Z	1		Washer, plain, M8		
40	1315/0305Z	1		Screw, hex head, M8 x 20		
41	236/17301	1		Bracket		

D1-3-1 DOZER CONTROL

	on	to	on	to
8014	M791000			
8015	M730800			
8016	M728750			
8017	N/A			
8018	N/A			

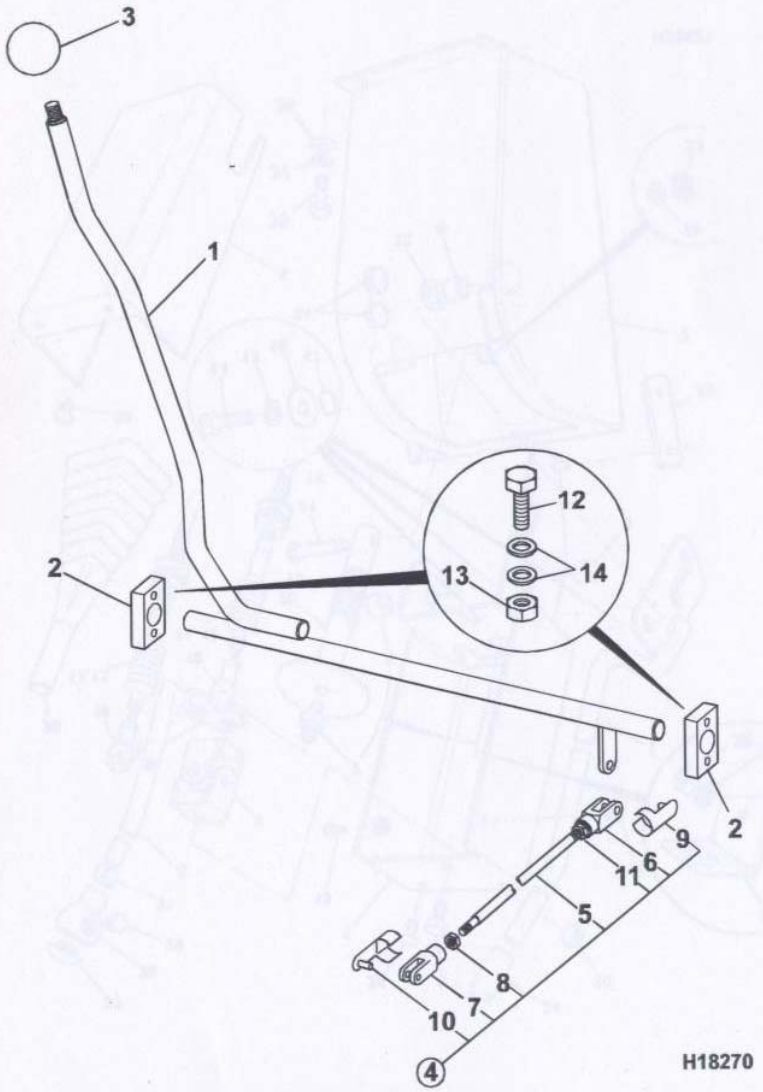

Item	Part No	Qty	A	Description	Remarks	M/C No change
1	231/31500	1		Lever, dozer		
2	231/31402	2		Block, bearing		
3	231/05220	1		Knob		
4	231/31600	1		Rod assembly, 182mm L		
5	231/31601	1	:	Rod, track		
6	913/02903	1	:	Clevis, M6		
7	913/01801	1	:	Clevis, M8		
8	1370/0202Z	1	:	Nut, thin, M8		
9	913/00031	1	:	Pin, spring, M6		
10	913/02401	1	:	Pin, spring, M8		
11	826/01108	1	:	Locknut, LH thread		
12	1315/3209Z	4		Bolt, hex head, M6 x 35		
13	1370/0103Z	4		Nut, self lock, M6		
14	1420/0006Z	8		Washer, plain, M6		

D1-3-1 DOZER CONTROL

D1-3-2 DOZER CONTROL

	on	to	on	to
8014	N/A			
8015	N/A			
8016	M728868			
8017	M800000			
8018	M801000			

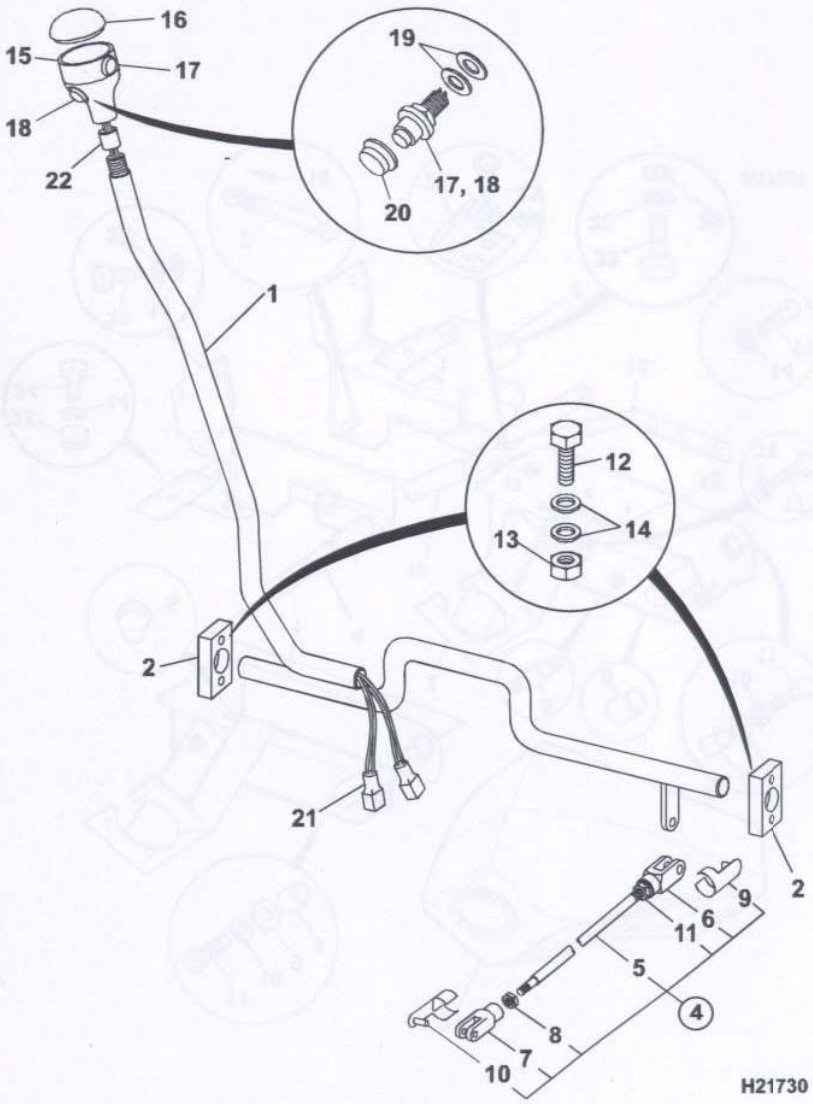

Item	Part No	Qty	A	Description	Remarks	M/C No change
1	236/22500	1		Lever, dozer		
2	231/31402	2		Block, bearing		
4	231/31600	1		Rod assembly, 182mm L		
5	231/31601	1	:	Rod, track		
6	913/02903	1	:	Clevis, M6		
7	913/01801	1	:	Clevis, M8		
8	1370/0202Z	1	:	Nut, thin, M8		
9	913/00031	1	:	Pin, spring, M6		
10	913/02401	1	:	Pin, spring, M8		
11	826/01108	1	:	Locknut, LH thread		
12	1315/3209Z	4		Bolt, hex head, M6 x 35		
13	1370/0103Z	4		Nut, self lock, M6		
14	1420/0006Z	8		Washer, plain, M6		
15	123/02755	1		Knob base		
16	123/03461	1		Knob, top		
17	701/48200	1		Button, 2 speed tracking		
18	701/60074	1		Button, extending u/c	8017 / 8018 only	
19	823/00500	4		Washer, special		
20	256/05709	2		Boot, rubber		
21	718/45600	1		Harness		
22	122/67459	1		Ring, tolerance		

D1-3-2 DOZER CONTROL

D1-4-1 SERVO CONTROL MOUNTINGS

	on	to	on	to
8014	M791000			
8015	M730800			
8016	M728750			
8017	M800000			
8018	M801000			

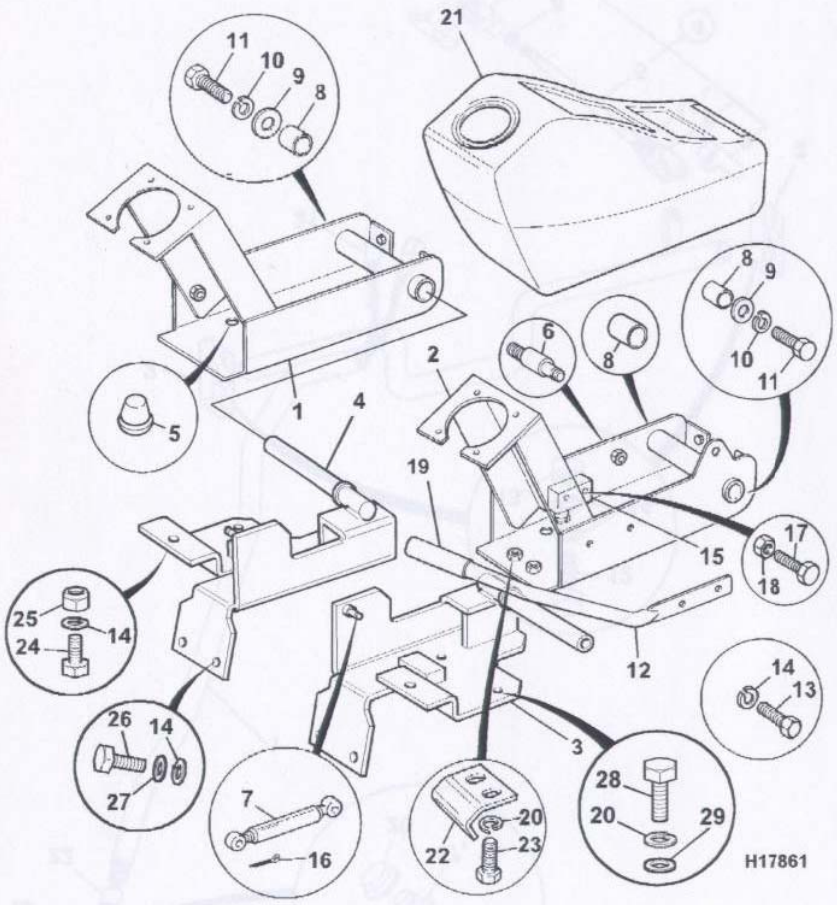

Item	Part No	Qty	A	Description	Remarks	M/C No change
1	233/09400	1		Pod mounting, RH		
2	233/09900	1		Pod mounting, LH		
3	236/33500	1		Mount, pod, LH		
4	236/33600	1		Mount, pod, RH		
5	828/00134	4		Grommet, blind		
6	233/08801	1		Mount, strut		
7	233/08809	1		Strut, gas		
8	809/10065	4		Bush		
9	1411/0005Z	2		Washer, medium, ½in.		
10	823/00417	2		Washer, spring, M12		
11	1315/0507Z	2		Screw, hex head, M12 x 25		
12	233/08803	1		Lever, pod, LH		
13	1315/0409Z	2		Screw, hex head, M10 x 35		
14	823/00416	2		Washer, spring, M10		
15	701/38400	1		Microswitch		
16	913/01102	2		Fastener		
17	826/01086	2		Screw, machine, 4BAx1¼in		
18	1358/0403Z	2		Nut, self lock, 4BA		
19	231/08004	1		Knob, lever lock		
20*	823/00415Z	6		Washer, spring, M8		
21		1		Cover, pod, LH	See C1-1-2	
22	233/08808	1		Bracket, locking		
23	1315/0305Z	2		Screw, hex head, M8 x 20		
24	1315/0407Z	1		Screw, hex head, M10 x 25		
25	1370/0303Z	1		Nut, self lock, M10		
26	1315/0405Z	2		Screw, hex head, M10 x 20		
27	1420/0008Z	2		Washer, plain, M10		
28*	1315/0307Z	4		Screw, hex head, M8 x 25		
29*	1420/0007Z	4		Washer, plain, M8		

D1-4-1 SERVO CONTROL MOUNTINGS

D1-5-1 SWING CONTROL

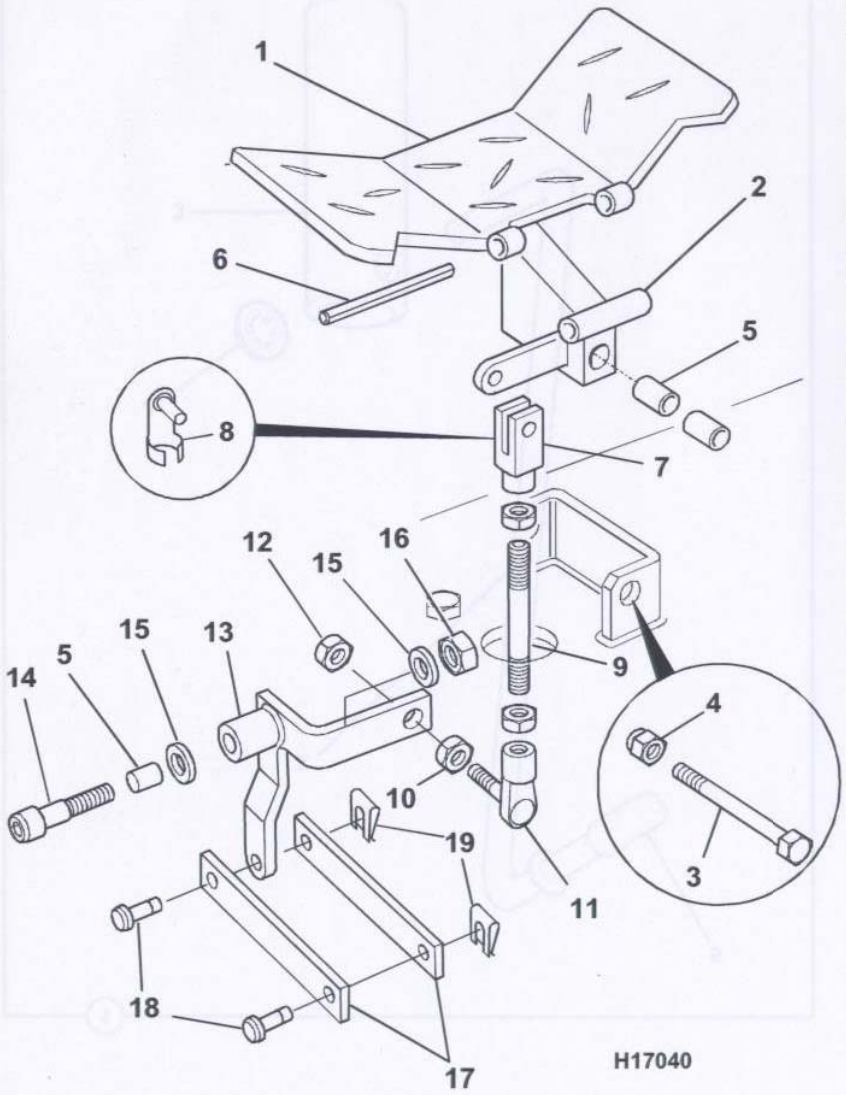

	on	to	on	to
8014	M791000			
8015	M730800			
8016	M728750			
8017	M800000			
8018	M801000			

Item	Part No	Qty	A	Description	Remarks	M/C No change
1	231/65600	1		Pedal		
2	236/02600	1		Mount, pedal		
3	1315/3416Z	1		Bolt, hex head, M10 x 70		
4	1370/0303Z	3		Nut, self lock, M10		
5	809/10066	3		Bush		
6	826/00997	1		Pin, tension, 8mm x 60mm		
7	231/18308	1		Clevis		
8	913/00031	1		Pin, spring, M6		
9	231/18306	1		Rod, link, 110mm Long		
10	826/01107	1		Nut, thin		
11	231/18307	1		Rod end		
12	1370/0103Z	1		Nut, self lock, M6		
13	236/02700	1		Bar, swing		
14	826/01398	1		Capscrew, shoulder		
15	823/00344	2		Washer, nylon, M10 x 2		
16	1370/0203Z	1		Nut, self lock, M8		
17	231/18303	2		Arm, link		
18	913/00702	2		Pin, clevis		
19	913/00703	2		Fastener, safety		

D1-5-1 SWING CONTROL

D1-7-1 SLEW LOCK

	on	to	on	to
8014	M791000			
8015	M730800			
8016	M728750			
8017	M800000			
8018	M801000			

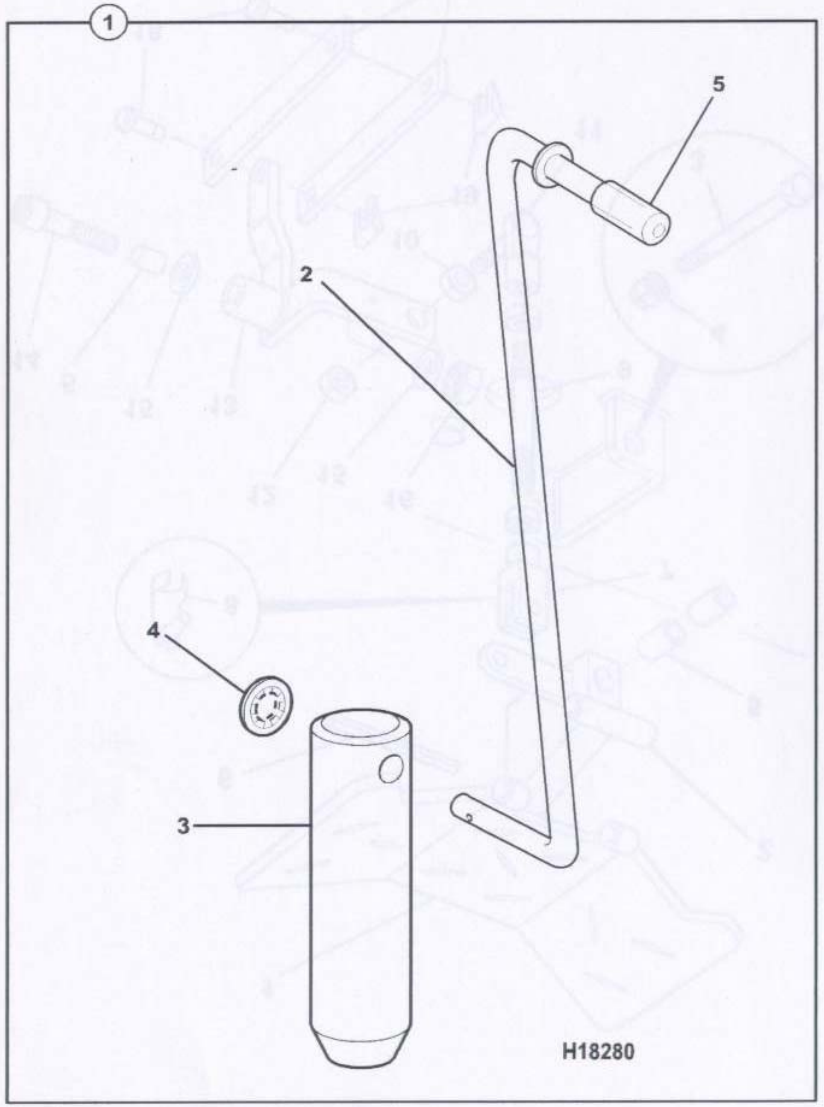

Item	Part No	Qty	A	Description	Remarks	M/C No change
1	236/02800	1		Slew lock assembly		
2	236/34900	1	:	Handle, slew lock		
3	231/65402	1	:	Pin, slew lock		
4	232/61411	1	:	Star fastener		
5	236/02803	1	:	Sleeve, plastic, 8mm I/D		

D1-7-1 SLEW LOCK

D1-8-1 AUXILIARY CONTROL

	on	to	on	to
8014	M791000			
8015	M730800			
8016	M728750			
8017	M800000			
8018	M801000			

Item	Part No	Qty	A	Description	Remarks	M/C No change
1	231/65600	1		Pedal		
2	231/65500	1		Mount pedal		
3	232/33400	1		Bracket, pedal		
4	910/52200	1		Cable, 1850		
5	826/01651	2		Capscrew, ¼in.UNC x ¾in.		
6	913/00701	1		Clevis, M6		
7	913/00031	1		Pin, spring, M6		
8	809/10066	2		Bush		
9	1315/3416Z	1		Bolt, hex head, M10 x 70		
10	1370/0303Z	3		Nut, self lock, M10		
11	1315/0405Z	2		Screw, hex head, M10 x 20		
12	826/00997	1		Pin, tension, 8mm x 60mm		
13	236/11103	1		Spacer		

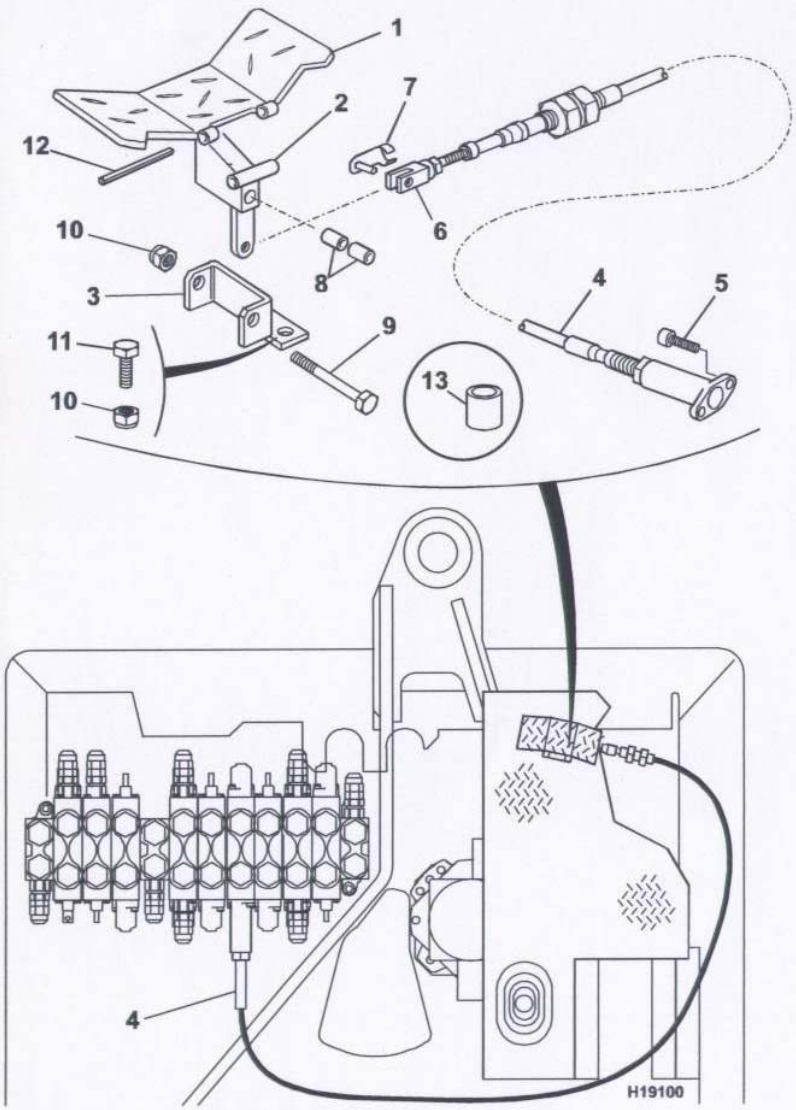

D1-8-1 AUXILIARY CONTROL

Note: Not available for 801 Gravemaster machines

HYDRAPOWER

ENGINE CONTROLS

D2

D1 MACHINE CONTROLS

D2 ENGINE CONTROLS

D2-1-1 THROTTLE CONTROL

	on	to	on	to
8014	M791000			
8015	M730800			
8016	M728750			
8017	M800000			
8018	M801000			

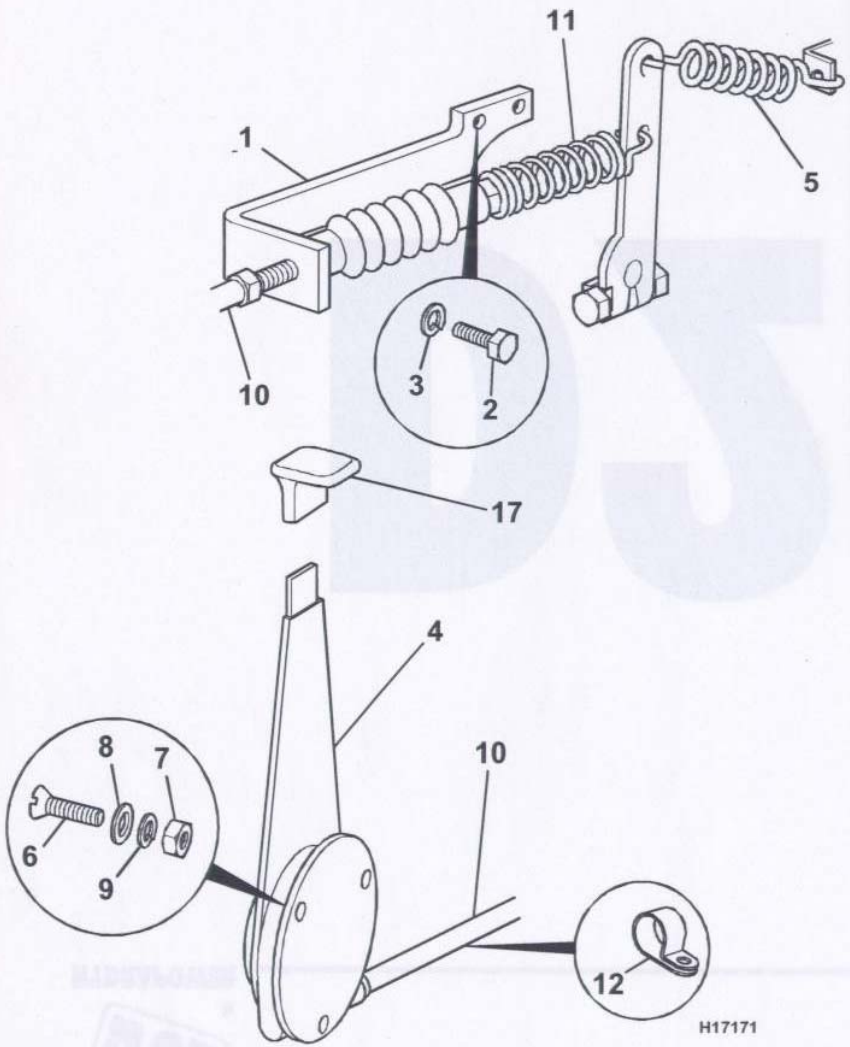

Item	Part No	Qty	A	Description	Remarks	M/C No change
1*	236/14401	1		Bracket, throttle	Superseded	
	246/01108	1		Bracket, throttle		
2	1315/0203Z	2		Screw, hex head, M6 x 16		
3	1425/0006Z	2		Washer, spring, M6		
4	910/51500	1		Throttle assembly		
5	814/00301	1		Spring		
6*	826/00260	2		Screw, csk, 2BA x ¾in.	Superseded	
	1391/3105Z	4		Capscrew, M5 x 20		
7*	1358/0201Z	2		Nut, 2BA	Superseded	
	1370/0003Z	4		Nut, self lock, M5		
8	1414/0011Z	2		Washer, plain, 2BA		
9	1425/0005Z	2		Washer, spring, M5		
10*	910/52000	1		Cable assembly, throttle		
11*	814/00289	1		Spring, overload		
12*	821/00410	1		P Clip, 10dia x M6		
13*	122/38502	1		Knob		

D2-1-1 THROTTLE CONTROL

HYDRAPOWER

HOSE AND PIPEWORK

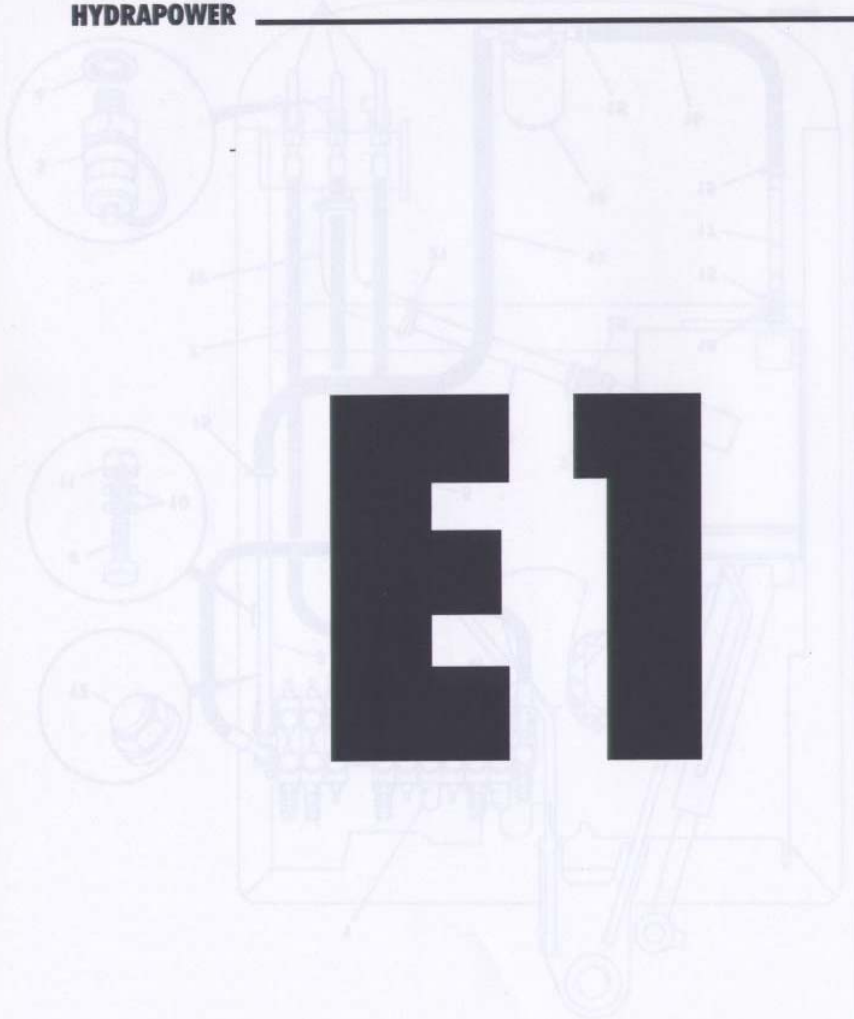

E1

E1 HOSE & PIPEWORK

E2 PUMPS, PUMP DRIVE & MOTORS

E3 VALVES & HYDRAULIC FILTER

E4 RAMS

E1-1-1 NEUTRAL CIRCUIT

	on	to	on	to
8014	M791000			
8015	N/A			
8016	N/A			
8017	N/A			
8018	N/A			

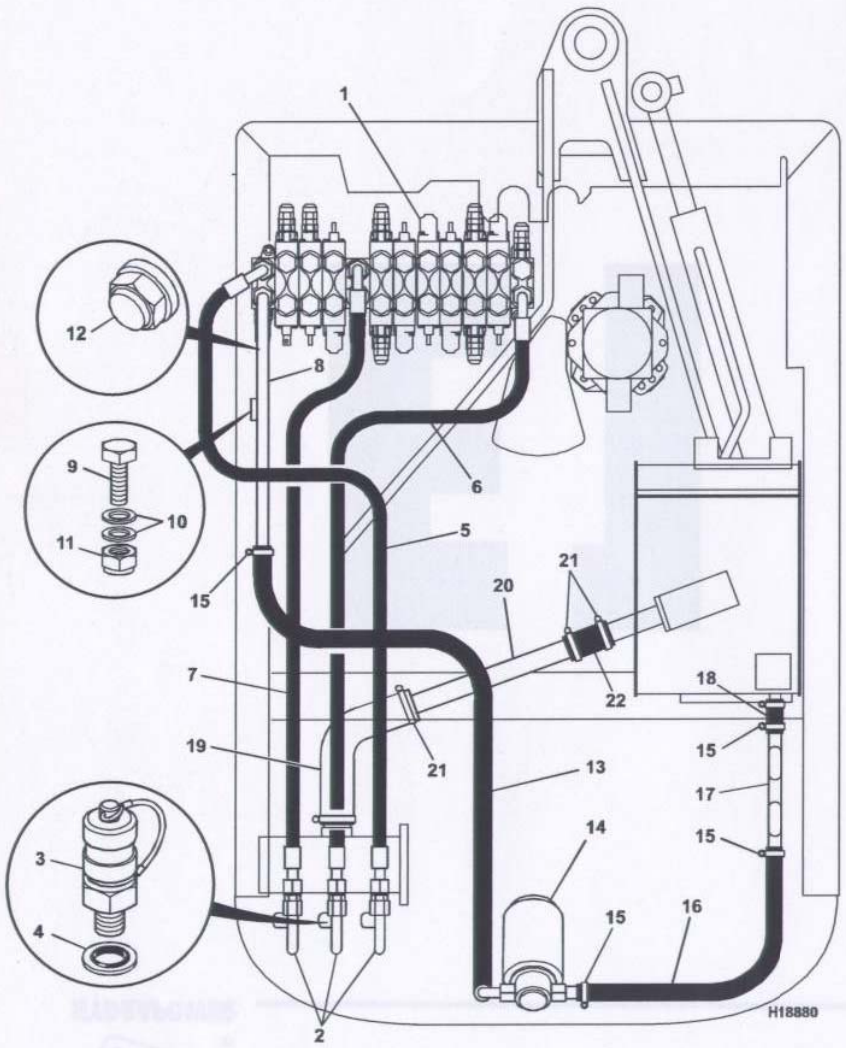

Item	Part No	Qty	A	Description	Remarks	M/C No change
1*		1		Valve assembly, 9 spool	See E3-1-1	
2	236/30400	3		Pipe, pump		
3	45/905000	3		Adaptor, pressure test		
4	1406/0011	3		Seal, bonded, ¼in. BSP		
5*	612/36800	1		Hose, 3/8in. HP	Superseded	
	612/37012	1		Hose, 3/8in. HP	Cable, pump-V/b	
	612/26300	1		Hose, 3/8in. HP	Superseded	
	612/37009	1		Hose, 3/8in. HP	Servo, pump-V/b	
6*	612/30600	1		Hose, 3/8in. HP	Superseded	
	612/37010	1		Hose, 3/8in. HP	Pump-V/b	
7*	612/28800	1		Hose, 3/8in. HP	Superseded	
	612/37011	1		Hose, 3/8in. HP	Pump-V/b	
8	236/33200	1		Pipe, return	Valve block	
9	1315/0307Z	1		Screw, hex head, M8 x 25		
10	1420/0007Z	2		Washer, plain, M8		
11	1370/0203Z	1		Nut, self lock, M8		
12	816/00197	1		Cap, blanking, 5/8in.BSP		
13	649/49300	1		Hose, ¾in. LP	Pipe-filter	
14				Filter assembly	See E3-11-1	
15	2201/0006	8		Clip, worm drive, 20-32mm		
16	649/49400	1		Hose, ¾in. LP	Filter-cooler	
17		1		Oil cooler, hydraulic	See L4-3-1	
18	648/04301	1		Hose, ¾in. LP x 80 L	Cooler-tank	
19	236/13001	1		Hose, suction	Pump-pipe	
20	236/13002	1		Pipe, suction		
21	2201/0009	8		Clip, worm drive, 32-50mm		
22	236/13003	1		Hose, suction	Tank, pipe	

E1-1-1 NEUTRAL CIRCUIT

E1-1-2 NEUTRAL CIRCUIT - SERVO

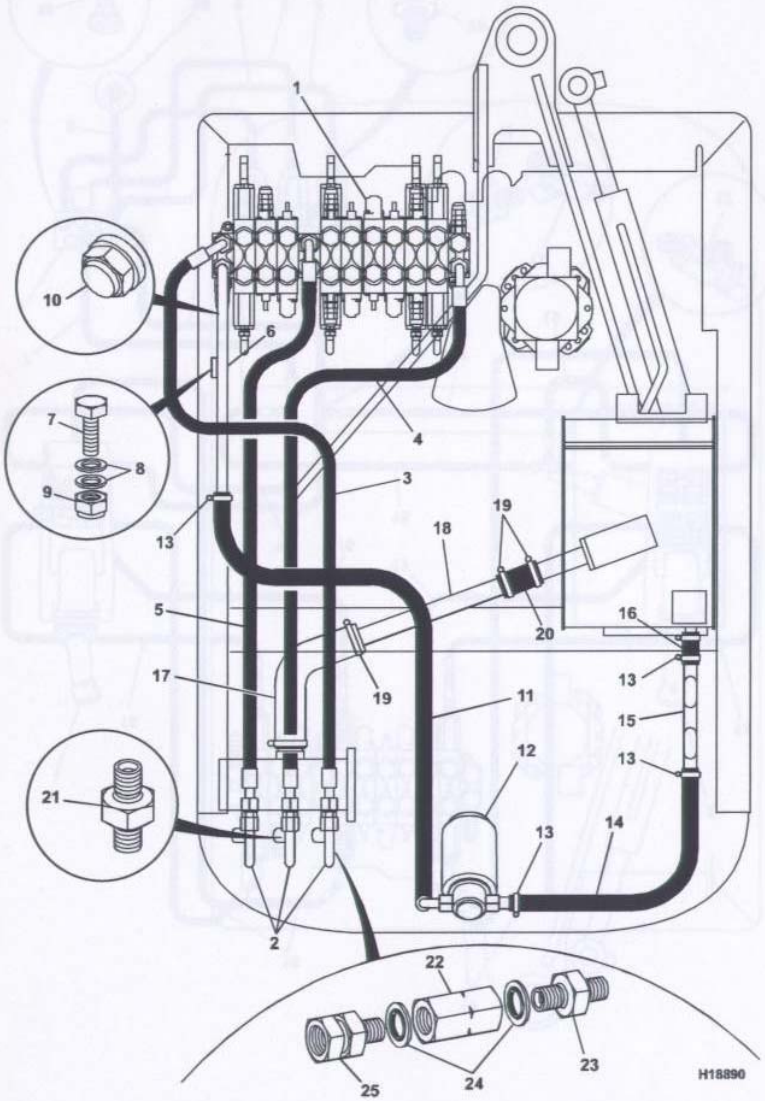

	on	to	on	to
8014	N/A			
8015	M730800			
8016	M728750			
8017	M800000			
8018	M801000			

Item	Part No	Qty	A	Description	Remarks	M/C No change
1*		1		Valve assembly, 9 spool	See E3-1-2	
2	236/30400	3		Pipe, pump		
3*	612/36800	1		Hose, 3/8in. HP	Superseded	
	612/37012	1		Hose, 3/8in. HP	Cable, pump-V/b	
	612/26300	1		Hose, 3/8in. HP	Superseded	
	612/37009	1		Hose, 3/8in. HP	Servo, pump-V/b	
4*	612/30600	1		Hose, 3/8in. HP	Superseded	
	612/37010	1		Hose, 3/8in. HP	Pump-V/b	
5*	612/28800	1		Hose, 3/8in. HP	Superseded	
	612/37011	1		Hose, 3/8in. HP	Pump-V/b	
6	236/33200	1		Pipe, return	Valve block	
7	1315/0307Z	1		Screw, hex head, M8 x 25		
8	1420/0007Z	2		Washer, plain, M8		
9	1370/0203Z	1		Nut, self lock, M8		
10	816/00197	1		Cap, blanking, 5/8in.BSP		
11	649/49300	1		Hose, ¾in. LP	Pipe-filter	
12				Filter assembly	See E3-11-1	
13	2201/0006	8		Clip, worm drive, 20-32mm		
14	649/49400	1		Hose, ¾in. LP	Filter-cooler	
15		1		Oil cooler, hydraulic	See L4-3-1	
16	648/04301	1		Hose, ¾in. LP x 80 L	Cooler-tank	
17	236/13001	1		Hose, suction	Pump-pipe	
18	236/13002	1		Pipe, suction		
19	2201/0009	8		Clip, worm drive, 32-50mm		
20	236/13003	1		Hose, suction	Tank, pipe	
21	816/10168	3		Adaptor, filter, ¼in. BSP		
22*	25/206600	1		Valve, check, 10 bar		
23*	1606/0007	1		Adaptor, ½in. x 3/8in.BSP		
24	1406/0018	2		Seal, bonded, ½in. BSP		
25	816/20018	1		Adaptor, ½in. x 3/8in.M/F		

E1-1-2 NEUTRAL CIRCUIT - SERVO

E1-2-1 SERVO HYDRAULIC CIRCUIT - ISO

	on	to	on	to
8014	N/A			
8015	M730800			
8016	M728750			
8017	M800000			
8018	M801000			

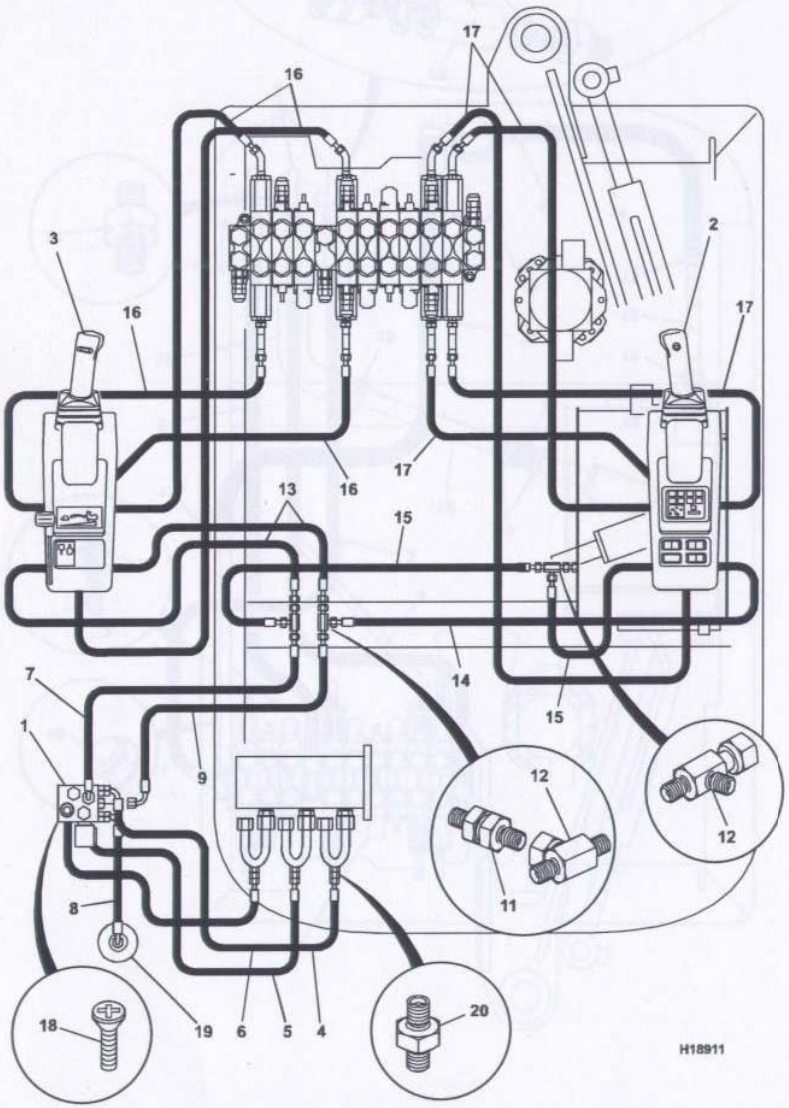

Item	Part No	Qty	A	Description	Remarks	M/C No change
1		1		Valve, pressure maint.	See E3-9-1	
2		1		Joystick, RH	See E3-8-1	
3		1		Joystick, LH	See E3-8-2	
4	611/31500	1		Hose, ¼in. HP	P1-SPMV	
5	611/52700	1		Hose, ¼in. HP	P2-SPMV	
6	611/52800	1		Hose, ¼in. HP	P3-SPMV	
7	631/52000	1		Hose, servo, ¼in.	SPMV-Tee	
8	631/52100	1		Hose, servo, ¼in. BSP	SPMV-Accumulator	
9*	477/00349	1		Hose, servo, ¼in. BSP	SPMV-Tee	
	649/50014	1		Hose, servo, ¼in. BSP	SPMV-Tee	
11	816/10143	2		Fitting, bulkhead		
12*	816/50031	3		Tee, ¼in.BSP, F/M/M	Tank return	
13	629/95089	2		Hose, servo, ¼in. BSP	LH controller	
14	214/14400	1		Hose, servo, ¼in. BSP	RH controller	
15	631/32600	2		Hose, servo, ¼in. BSP		
16	629/95092	4		Hose, servo, ¼in. BSP		
17	629/95093	4		Hose, servo, ¼in. BSP		
18*		2		Screw, csk, M10 x 20	See E3-9-1	
19		1		Accumulator	See E3-15-1	
20	816/10168	3		Adaptor, filter, ¼in. BSP		

E1-2-1 SERVO HYDRAULIC CIRCUIT - ISO

E1-2-2 SERVO HYDRAULIC CIRCUIT - 3CX

	on	to	on	to
8014	N/A			
8015	M730800			
8016	M728750			
8017	M800000			
8018	M801000			

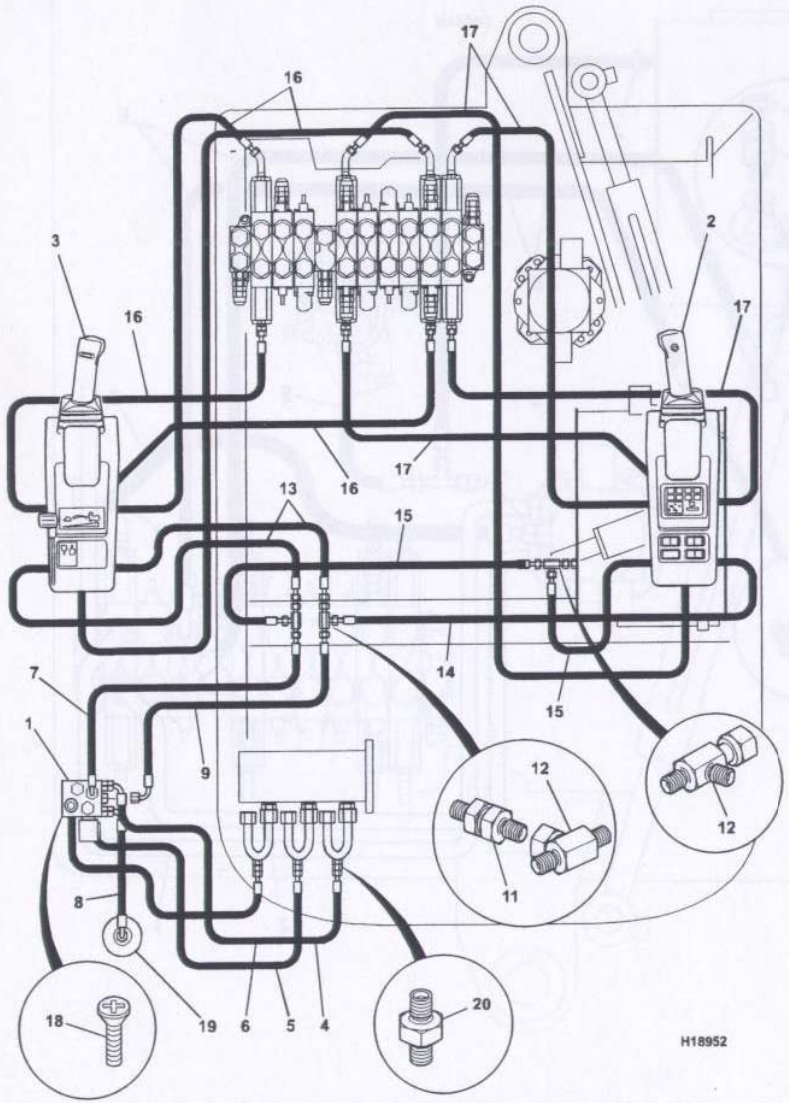

Item	Part No	Qty	A	Description	Remarks	M/C No change
1		1		Valve, pressure maint.	See E3-9-1	
2		1		Joystick, RH	See E3-8-1	
3		1		Joystick, LH	See E3-8-2	
4	611/31500	1		Hose, ¼in. HP	P1-SPMV	
5	611/52700	1		Hose, ¼in. HP	P2-SPMV	
6	611/52800	1		Hose, ¼in. HP	P3-SPMV	
7	631/52000	1		Hose, servo, ¼in.	SPMV-Tee	
8	631/52100	1		Hose, servo, ¼in. BSP	SPMV-Accumulator	
9*	477/00349	1		Hose, servo, ¼in. BSP	Superseded	
	649/50014	1		Hose, servo, ¼in. BSP	SPMV-Tee	
11	816/10143	2		Fitting, bulkhead		
12*	816/50031	3		Tee, ¼in.BSP, F/M/M	Tank return	
13	629/95089	2		Hose, servo, ¼in. BSP	LH controller	
14	214/14400	1		Hose, servo, ¼in. BSP	RH controller	
15	631/32600	2		Hose, servo, ¼in. BSP		
16	629/95092	4		Hose, servo, ¼in. BSP		
17	629/95093	4		Hose, servo, ¼in. BSP		
18*		2		Screw, csk, M10 x 20	See E1-9-1	
19		1		Accumulator	See E3-15-1	
20	816/10168	3		Adaptor, filter, ¼in. BSP		

E1-2-2 SERVO HYDRAULIC CIRCUIT - 3CX

E1-3-1 SLEW / SWING CIRCUIT

	on	to	on	to
8014	M791000			
8015	M730800			
8016	M728750			
8017	M800000			
8018	M801000			

Item	Part No	Qty	A	Description	Remarks	M/C No change
1	236/20800	1		Pipe, slew motor	Position A - V/b	
2	236/20900	1		Pipe, slew motor	Position B - V/b	
3	649/49500	1		Hose, ½in. LP	Slew - pipe (tank)	
4	2201/0005	1		Clip, worm drive, 16-25mm		
5	631/11700	1		Hose, ¼in. LP	Dr. 2-rotary joint	
6	649/49600	1		Hose, ¼in. LP	Dr. 1-Tank	
7	2201/0003	1		Clip, worm drive		
8	816/00464	1		Elbow, 90°, ¼in. BSP	M / F	
9	477/00442	2		Hose, ¼in. HP	Swing ram-Vb	
10	1606/0003	1		Adaptor, 3/8in. x ¼in.		
11	816/20065	1		Adaptor, 3/8in. x ¼in.		
12	1406/0015	1		Seal, bonded, 3/8 in. BSP		

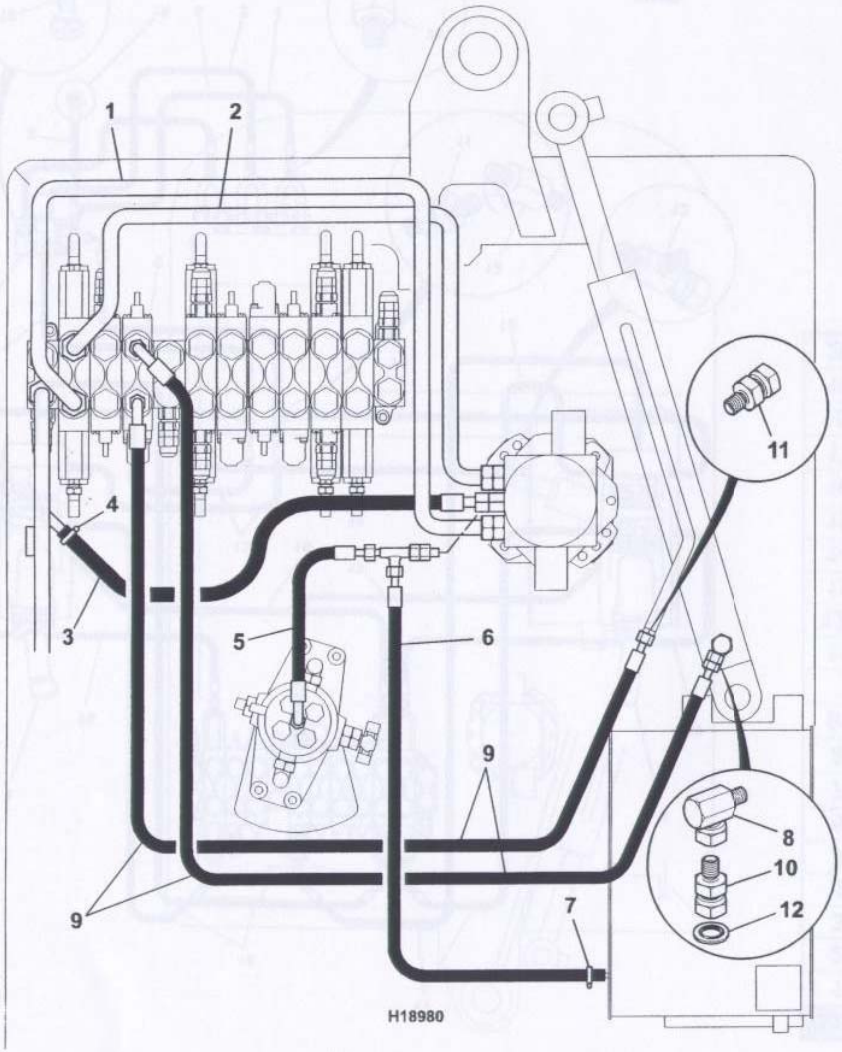

E1-3-1 SLEW / SWING CIRCUIT

E1-4-1 EXCAVATOR CIRCUIT MAINFRAME

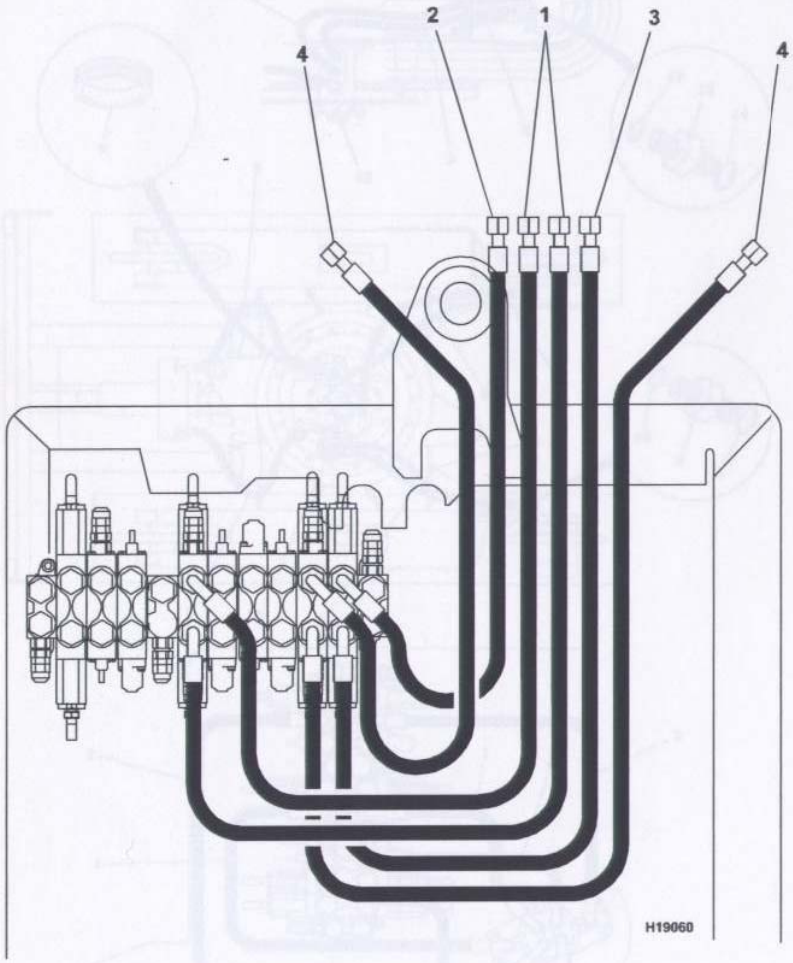

	on	to	on	to
8014	M791000			
8015	M730800			
8016	M728750			
8017	M800000			
8018	M801000			

Item	Part No	Qty	A	Description	Remarks	M/C No change
1	612/36900	2		Hose, 3/8in. HP	Dipper pipe-V/b	
2	612/37001	1		Hose, 3/8in. HP	Bucket pipe-V/b	
3	612/37000	1		Hose, 3/8in. HP	Bucket pipe-V/b	
4	612/37002	2		Hose, 3/8in. HP	Boom ram-V/b	

E1-4-1 EXCAVATOR CIRCUIT MAINFRAME

E1-5-1 TRACK & DOZER CIRCUIT

	on	to	on	to
8014	M791000			
8015	M730800			
8016	M728750			
8017	N/A			
8018	N/A			

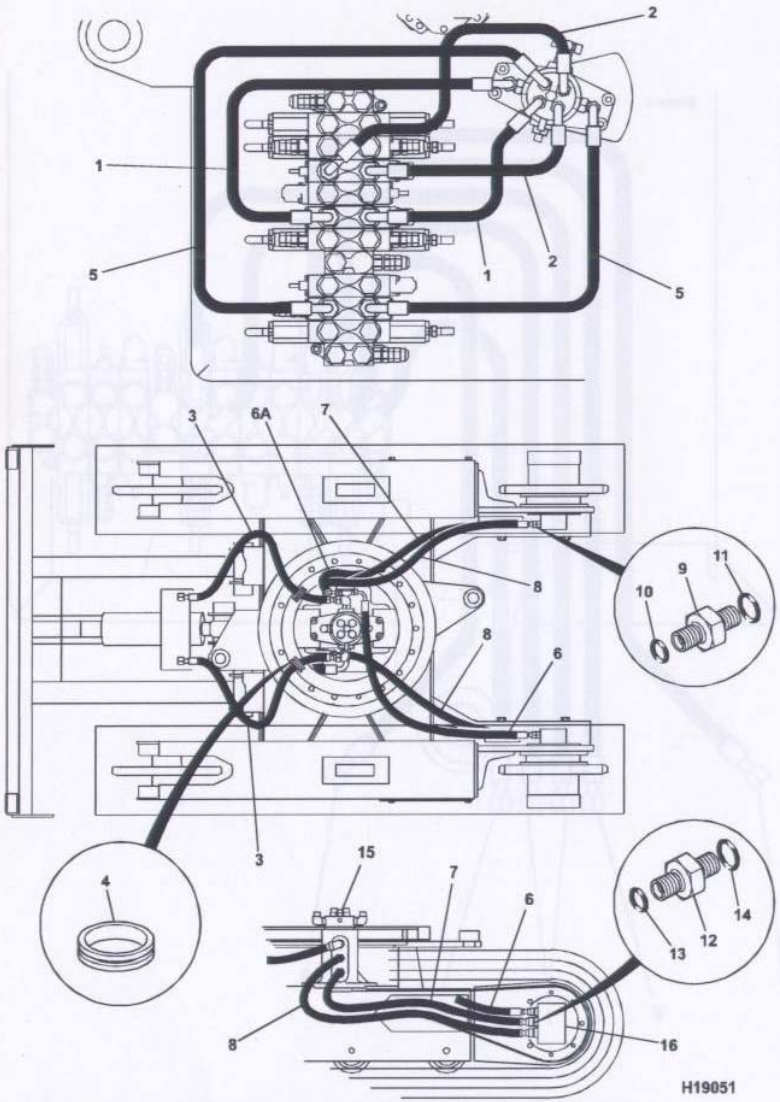

Item	Part No	Qty	A	Description	Remarks	M/C No change
1	612/37003	2		Hose, 3/8in. HP		
2	612/37004	2		Hose, 3/8in. HP		
3	629/30007	2		Hose, ¼in. LP - BSP	8014/8015	
4	828/00229	2		Grommet, 30 dia hole		
5	611/31200	2		Hose, ¼in. LP		
6*	631/11600	1		Hose, ¼in. LP - BSP	Superseded	
	631/32700	1		Hose, ¼in. LP - BSP	8014/8015	
	629/95008	2		Hose	Superseded	
	631/32300	1		Hose, ¼in. LP - BSP	8016	
6A*	631/11800	1		Hose, ¼in. LP - BSP	8016	
	631/11600	1		Hose, ¼in. LP - BSP	8014/8015	
7*	631/32200	2		Hose, ¼in. LP - BSP	Superseded	
	612/36600	2		Hose, 3/8in. LP	8014/8015	
	742/23400	2		Hose	Superseded	
	612/37005	2		Hose, 3/8in. HP	8016	
8*	612/36600	4		Hose, 3/8in. LP	8014/8015	
	742/23100	2		Hose	Superseded	
	612/26600	2		Hose, 3/8in. HP	8016	
9	816/17043	2		Adaptor, 9/16in x 9/16in.		
10	2401/0603	2		O Ring, 9/16in. ORFS		
11	2401/0505	2		O Ring, 9/16in. SAE - UNF		
12	816/16020	4		Adaptor		
13	2401/0605	4		O Ring, 11/16in. - ORFS		
14	2401/0505	4		O Ring, 9/16in. SAE - UNF		
15		1		Joint, rotary	See E3-10-1	
16		2		Track motor	See E2-4-1	

E1-5-1 TRACK & DOZER CIRCUIT

E1-6-1 EXCAVATOR END HOSES & PIPEWORK

	on	to	on	to
8014	M791000			
8015	M730800			
8016	M728750			
8017	M800000			
8018	M801000			

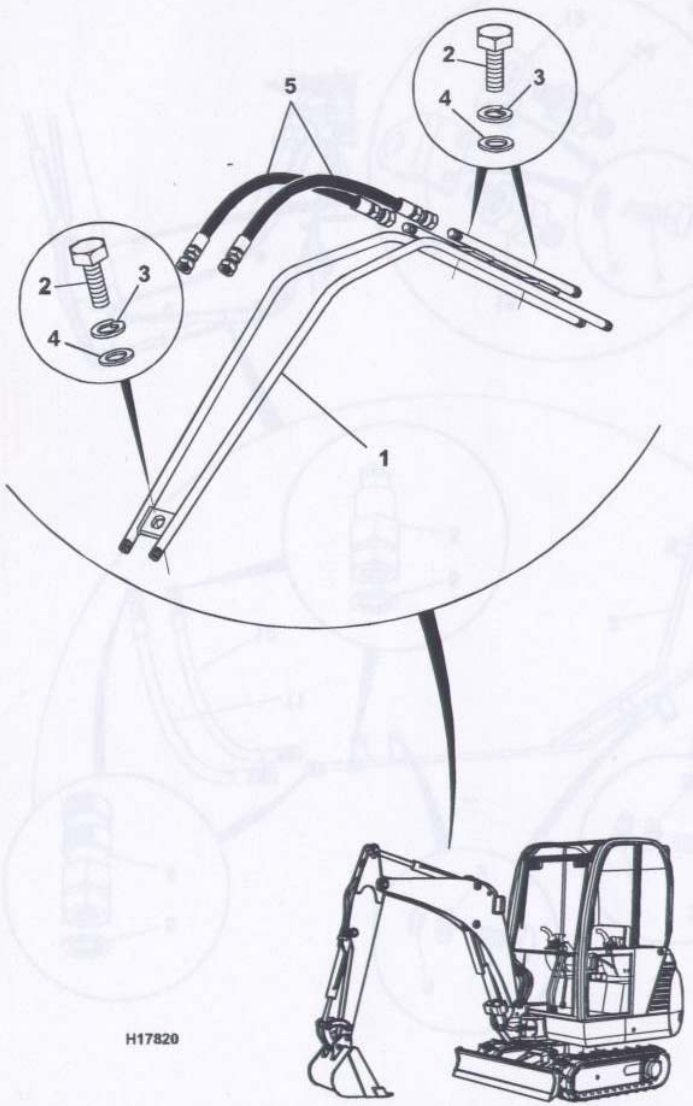

Item	Part No	Qty	A	Description	Remarks	M/C No change
1	236/18100	1		Pipework, boom	8014/8015/8017	
	236/18500	1		Pipework, boom	8016/8018	
2	1315/0405Z	3		Screw, hex head, M10 x 20	8016/8018	
	1391/3407Z	3		Capscrew, M10 x 25	8014/8015/8017	
3	823/00416Z	3		Washer, spring, M10	8014/8015/8017	
4	1420/0008Z	3		Washer, plain, M10		
5*	612/02800	2		Hose, 3/8in. HP	Superseded	
	612/0008Z	2		Hose, 3/8in. HP		

E1-6-1 EXCAVATOR END HOSES & PIPEWORK

E1-8-1 AUXILIARY PIPES & HOSES

	on	to	on	to
8014	M791000			
8015	M730800			
8016	M728750			
8017	M800000			
8018	M801000			

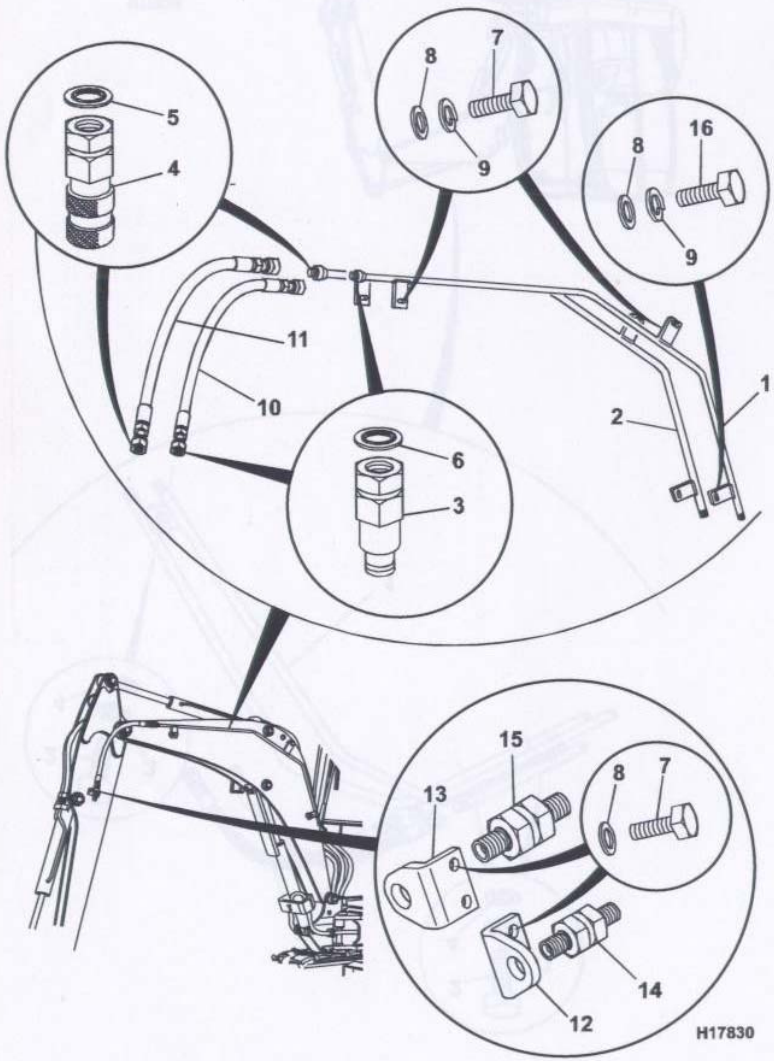

Item	Part No	Qty	A	Description	Remarks	M/C No change
1	236/30000	1		Aux feed pipe, boom		
2	236/30100	1		Aux return pipe, boom		
3	45/904800	1		Coupling, male, ½in BSP		
4	45/904300	1		Coupling, female, ¾in BSP		
5	1406/0021	1		Seal, bonded, ¾in. BSP		
6	1406/0018	1		Seal, bonded, ½in. BSP		
7	1315/0405Z	8		Screw, hex head, M10 x 20		
8	1420/0008Z	10		Washer, plain, M10		
9	1425/0008Z	6		Washer, spring, M10		
10	613/07100	1		Hose, ½in. HP		
11	615/04400	1		Hose, ¾in. HP		
12	236/18201	1		Bracket, auxiliary feed		
13	236/18202	1		Bracket, auxiliary return		
14	816/10031	1		Fitting, bulkhead		
15	816/10034	1		Fitting, bulkhead		
16	1318/3414Z	2		Bolt, M10 x 60		

Note: Not available for 801 Gravemaster machines

E1-8-1 AUXILIARY PIPES & HOSES

E1-8-2 SINGLE ACTING AUX CIRCUIT

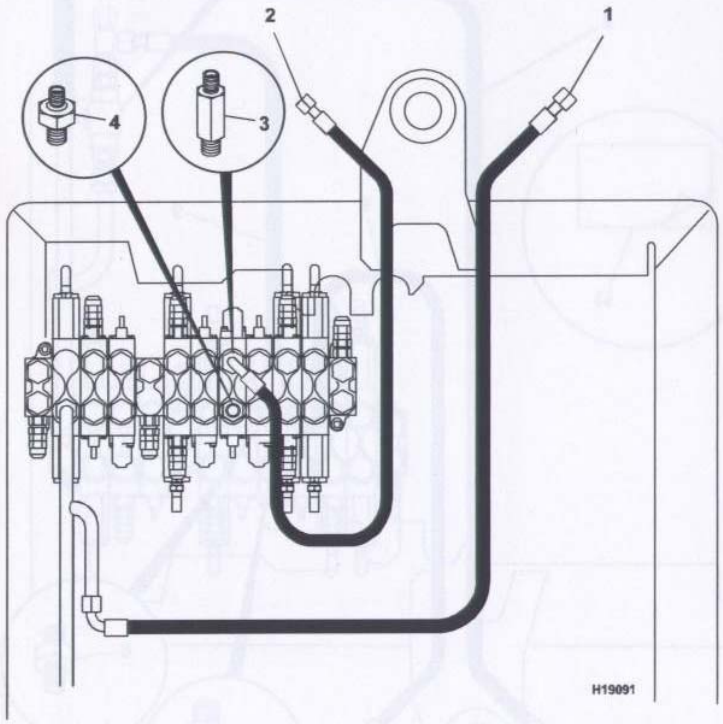

	on	to	on	to
8014	M791000			
8015	M730800			
8016	M728750			
8017	M800000			
8018	M801000			

Item	Part No	Qty	A	Description	Remarks	M/C No change
1	614/27300	1		Hose, 5/8in. HP		
2	613/35200	1		Hose, ½in. HP		
3	816/17112	1		Adaptor, ¾in. x ½in.		
4	816/17066	1		Adaptor, ¾in. x 5/8in.		
5		1		Aux pedal	See D1-8-1	

E1-8-2 SINGLE ACTING AUX CIRCUIT

E1-8-3 DOUBLE ACTING AUX CIRCUIT

	on	to	on	to
8014	M791000			
8015	M730800			
8016	M728750			
8017	M800000			
8018	M801000			

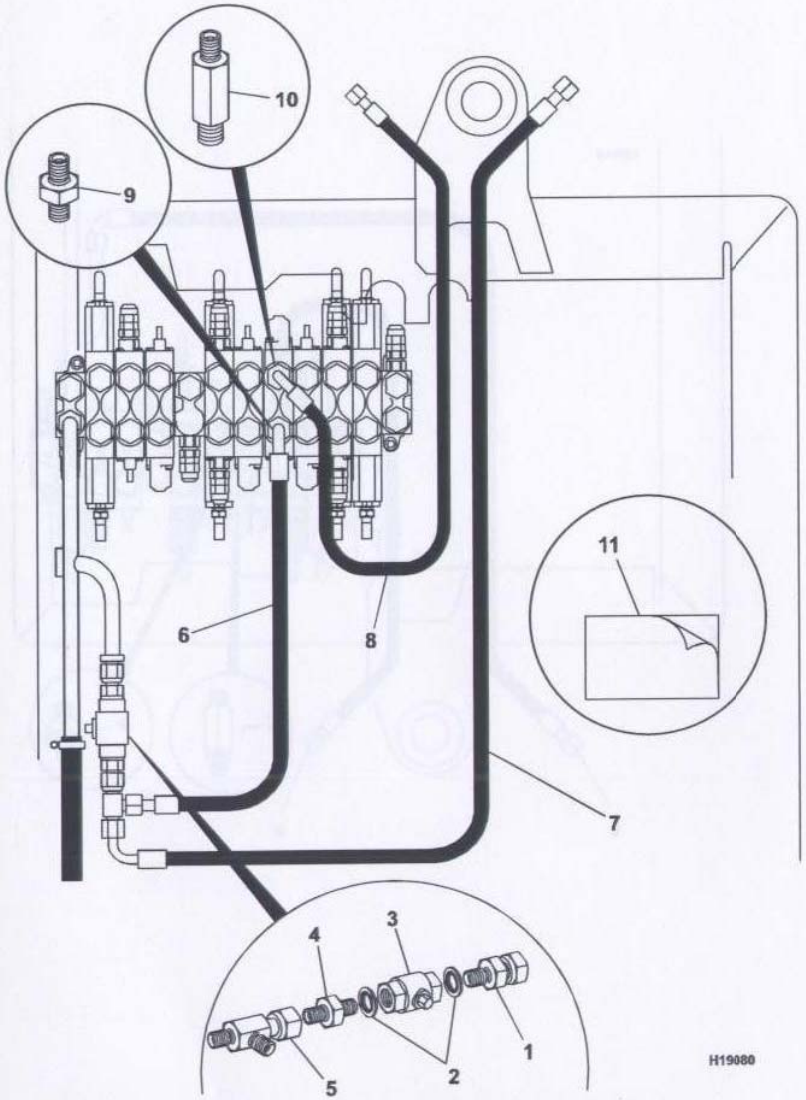

Item	Part No	Qty	A	Description	Remarks	M/C No change
1	816/20001	1		Adaptor, ½in. x 5/8in.BSP	Male/Female	
2	1406/0018	2		Seal, bonded, ½in. BSP		
3	25/997600	1		Valve, ball		
4	1606/0017	1		Adaptor, ½in. x 5/8in.BSP		
5	816/50011	1		Tee, 5/8in. BSP M/F/M		
6	614/27400	1		Hose, 5/8in. HP		
7	614/27300	1		Hose, 5/8in. HP	Sleeved	
8	613/35200	1		Hose, ½in. HP	Sleeved	
9	816/17066	1		Adaptor, ¾in. x 5/8in.	SAE / BSP	
10	816/17112	1		Adaptor, ¾in. x ½in.	SAE / BSP	
11	817/03505	1		Decal		

E1-8-3 DOUBLE ACTING AUX CIRCUIT

E1-9-1 HAND HELD TOOLS H.P.T.O.

	on	to	on	to
8014	M791000			
8015	M730800			
8016	M728750			
8017	M800000			
8018	M801000			

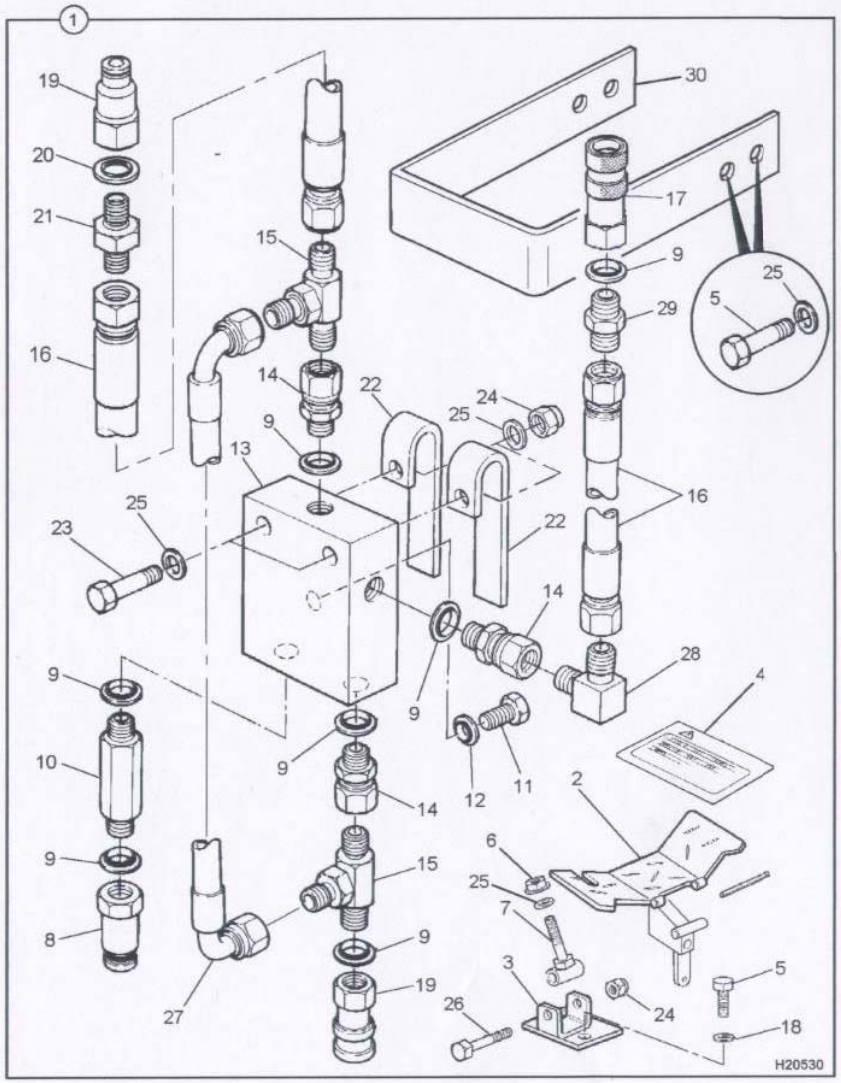

Item	Part No	Qty	A	Description	Remarks	M/C No change
1	236/45200	1		Handheld kit		
2	231/95400	1	:	Pedal		
3	231/95500	1	:	Bracket		
4	817/02441	1	:	Decal		
5	1315/0407Z	6	:	Screw, hex head, M10 x 25		
6	1370/0301Z	1	:	Nut, M10		
7	232/01400	1	:	Bolt, banjo		
8	45/904800	1	:	Coupling, male, ½in BSP		
9	1406/0018	7	:	Seal, bonded, ½in. BSP		
10	1605/0023	1	:	Adaptor, extended, ½ BSP		
11	892/00055	1	:	Plug, blanking, ¼in. BSP		
12	1406/0011	1	:	Seal, bonded, ¼in. BSP		
13			:	Valve	See E3-12-1	
14	1612/0004	3	:	Adaptor, ½ BSP		
15	816/00027	2	:	Adaptor, tee, ½ BSP		
16	613/03000	2	:	Hose, ½in. BSP, 800mm L		
17	45/904700	2	:	Coupling, female		
18	1425/0008Z	2	:	Washer, spring, M10		
19	45/904400	1	:	Coupling, male, ¾in BSP		
20	1406/0021	1	:	Seal, bonded, ¾in. BSP		
21	1606/0009	1	:	Adaptor, ½in x ¾in BSP		
22	231/98012	2	:	Bracket		
23	1315/3414Z	2	:	Bolt, hex head, M10 x 60		
24	1370/0303Z	3	:	Nut, self lock, M10		
25	1420/0008Z	9	:	Washer, plain, M10		
26	1315/3412Z	1	:	Bolt, hex head, M10 x 50		
27	613/47000	1	:	Hose, ½in. BSP		
28	816/00289	1	:	Elbow, male/male, ½in.		
29	1604/0004	1	:	Adaptor, ½in BSP		
30	236/45201	1	:	Bracket, support		

E1-9-1 HAND HELD TOOLS H.P.T.O.

HYDRAPOWER

PUMPS, PUMP DRIVE AND MOTORS

E2

E1 HOSE & PIPEWORK

E2 PUMPS, PUMP DRIVE & MOTORS

E3 VALVES & HYDRAULIC FILTER

E4 RAMS

E2-1-1 HYDRAULIC PUMP

	on	to	on	to
8014	M791000			
8015	M730800			
8016	M728750			
8017	M800000			
8018	M801000			

Item	Part No	Qty	A	Description	Remarks	M/C No change
1*	20/914600	1		Hydraulic pump	8014	
	20/917000	1		Pump	8015/8017	
	20/917100	1		Pump	8016/8018	
2	232/40401	1		Adaptor, 1 1/16in		
3	816/27038	3		Adaptor, 9/16 x 3/8, M/F	SAE/BSP	
4	2401/0508	1		O Ring, 1- 1/16in.SAE-UNF		
5	2401/0505	3		O Ring, 9/16in. SAE - UNF		
6	2301/0006	3		O Ring, 3/8 BSP.		
7	20/903508	4		Rod, tie		
8	20/903501	1		Seal kit		

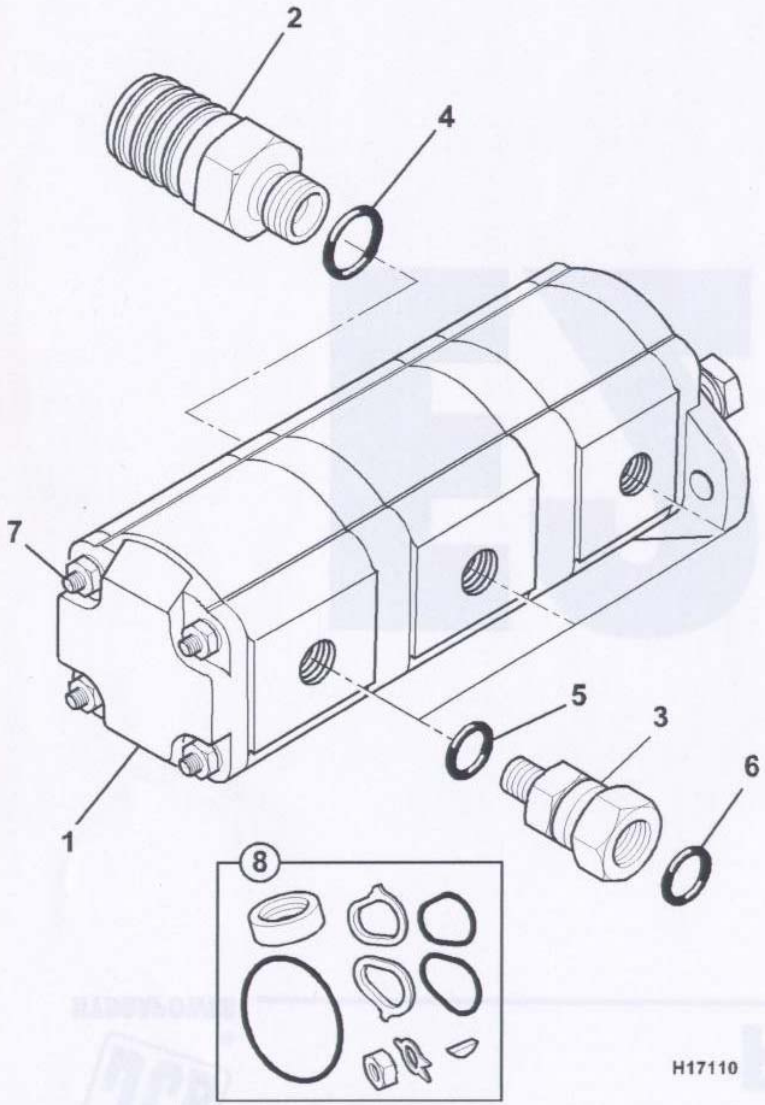

H17110

E2-1-1 HYDRAULIC PUMP

E2-2-1 PUMP DRIVE

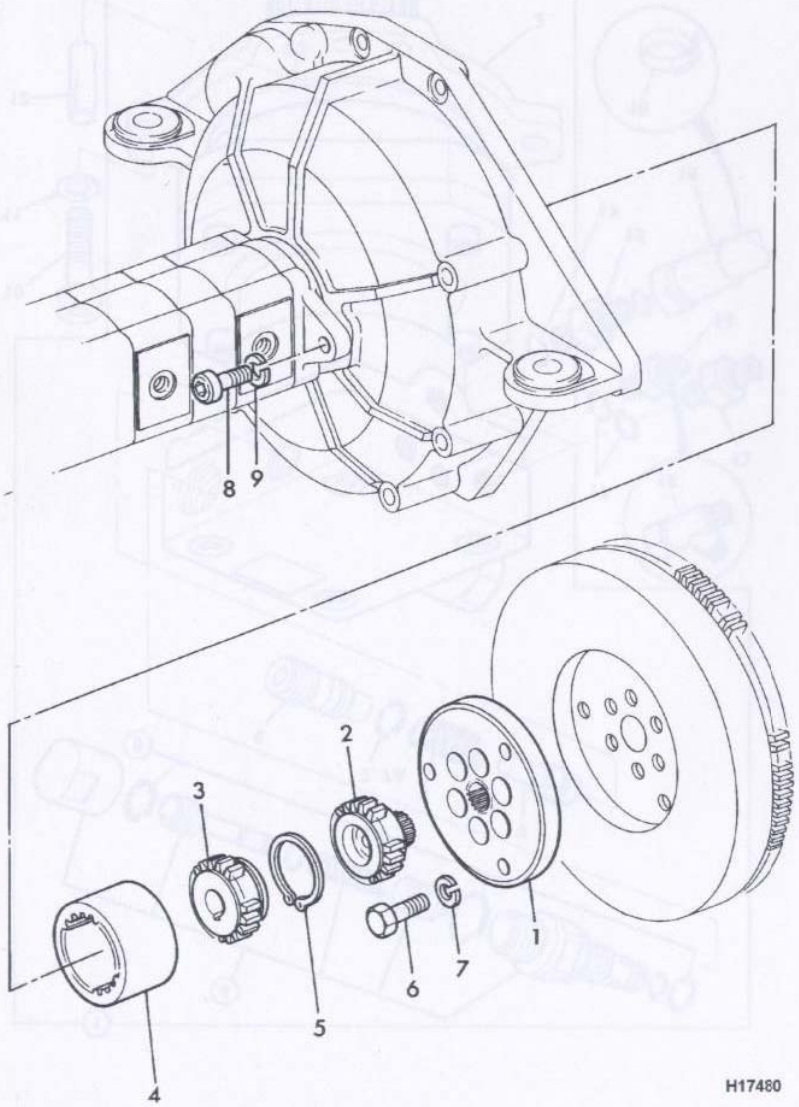

H17480

	on	to	on	to
8014	M791000			
8015	M730800			
8016	M728750			
8017	M800000			
8018	M801000			

Item	Part No	Qty	A	Description	Remarks	M/C No change
1*	231/96601	1		Plate, drive	See note	
2*	231/40202	1	:	Gear, drive	See note	
3*	231/96602	1		Gear, pump		
4	231/40204	1		Coupling, sleeve		
5	NSP	1		Retainer		
6	1315/0408Z	3		Screw, hex head, M10 x 30		
7	1425/0008Z	3		Washer, spring, M10		
8	1391/3407Z	2		Capscrew, M10 x 25		
9	1425/0008Z	2		Washer, spring, M10		

E2-2-1 PUMP DRIVE

Note: Items 1 & 2 must be supplied together.

E2-3-1 SLEW MOTOR

	on	to	on	to
8014	M791000			
8015	M730800			
8016	M728750			
8017	M800000			
8018	M801000			

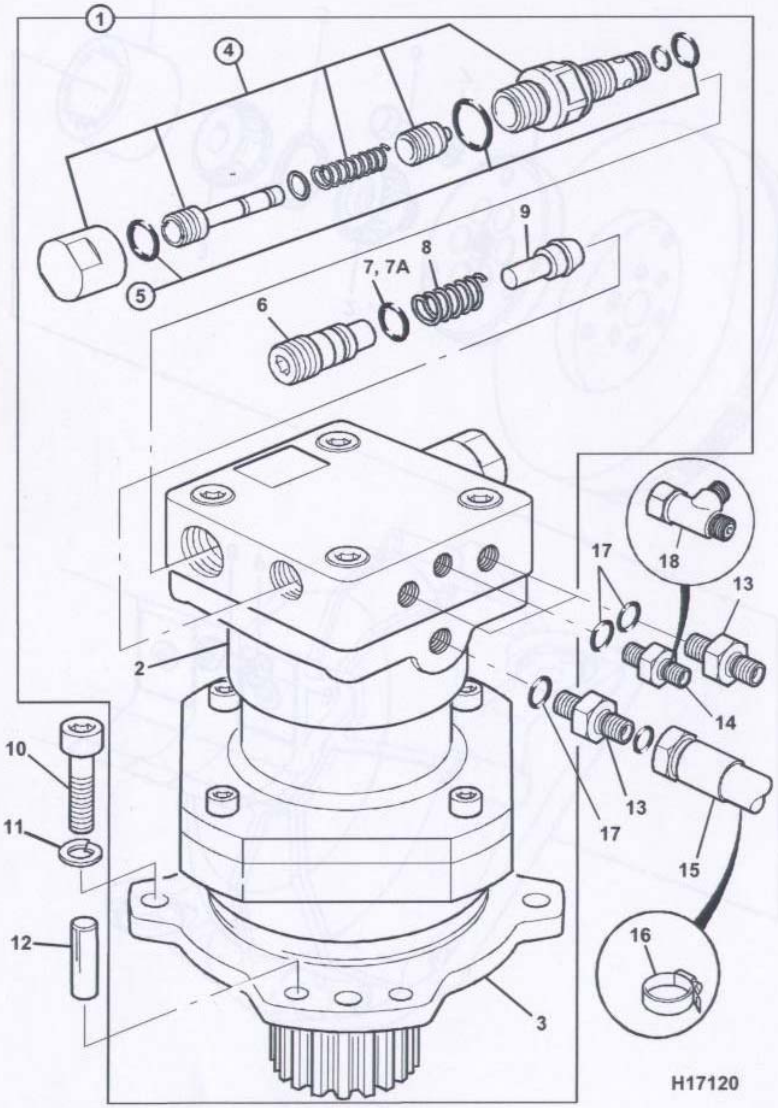

Item	Part No	Qty	A	Description	Remarks	M/C No change
1	20/903600	1		Slew motor assembly		
2		1	:	Motor, slew	See E2-3-2	
3		1	:	Gearbox, slew	See F4-1-1	
4	20/903601	2	:	Valve, cross line relief		
5	20/903602	1	:	Seal kit		
6	20/903603	2	:	Plug		
7*	20/903604	1	:	Seal kit	See note	
7A*	20/901873	2	:	O Ring		
8	20/903605	2	:	Spring		
9	20/903606	2	:	Poppet		
10	1391/3509Z	4		Capscrew, M12 x 35		
11	823/00417Z	4		Washer, spring, M12		
12	2105/1507	2		Dowel, M10 x 30		
13*	1620/0003	3		Adaptor, 9/16 x 3/8in.	SAE/B.S.P.	
14*	1620/0002	1		Adaptor, 9/16 x ¼in.	SAE/B.S.P.	
15	759/00800	1		Hose, ¼ NB LP 1250LG		
16	2201/0002	1		Clip worm drive		
17	2401/0505	4		O Ring, 9/16in. SAE - UNF		
18	816/50031	1		Tee, ¼in.BSP, F/M/M	B.S.P.	

Note: Seal kit contains items 7A, and 10A from page E2-3-2.

E2-3-1 SLEW MOTOR

E2-3-2 SLEW MOTOR

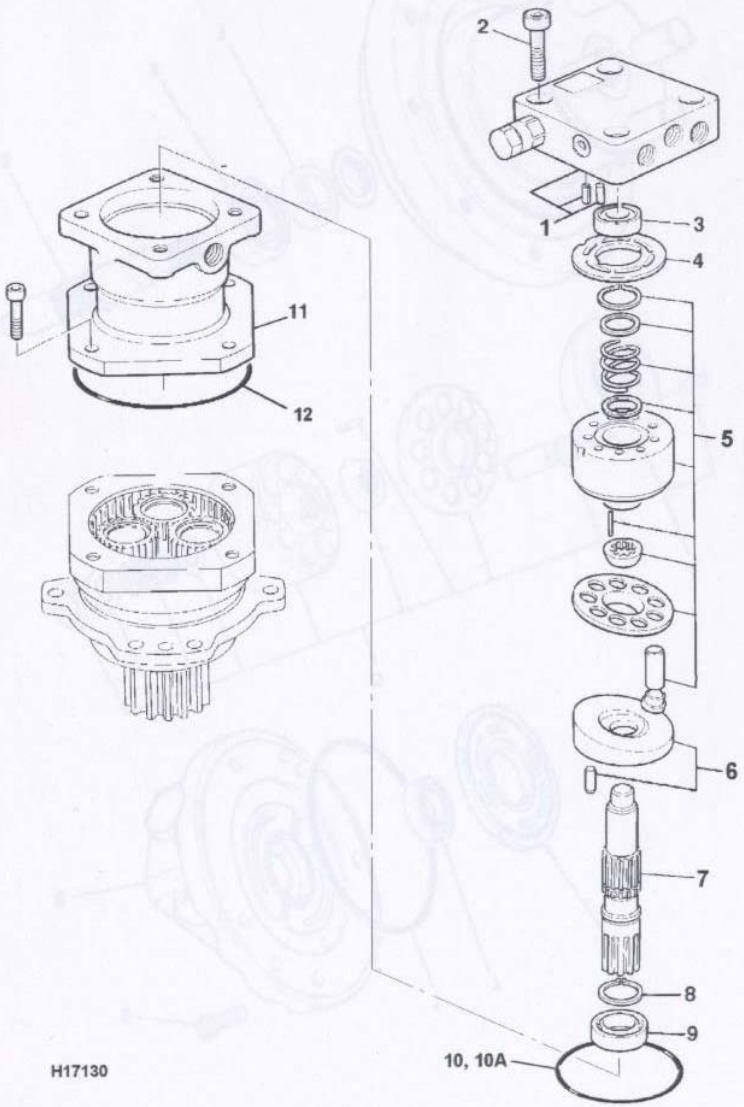

	on	to	on	to
8014	M791000			
8015	M730800			
8016	M728750			
8017	M800000			
8018	M801000			

Item	Part No	Qty	A	Description	Remarks	M/C No change
1	20/903611	1		Cover, motor		
2	1391/3411Z	4		Capscrew, M10 x 45		
3	20/902536	1		Bearing		
4	20/903608	1		Plate, valve		
5	20/903607	1		Barrel assembly		
6	20/903610	1		Swash plate assembly	8014/8015/8017	
6	20/904110	1		Swash plate assembly	8016/8018	
7	20/903612	1		Shaft		
8	20/903614	1		Circlip		
9	20/903613	1		Bearing		
10*	20/903604	1		Seal kit	See note	
10A*	20/903633	1	:	O Ring		
11	20/903624	1		Casing		
12		1		Seal kit, gearbox	See F4-1-1	

Note: Seal kit contains items 10A, and 7A from page E2-3-1.

E2-4-1 TRACK MOTOR

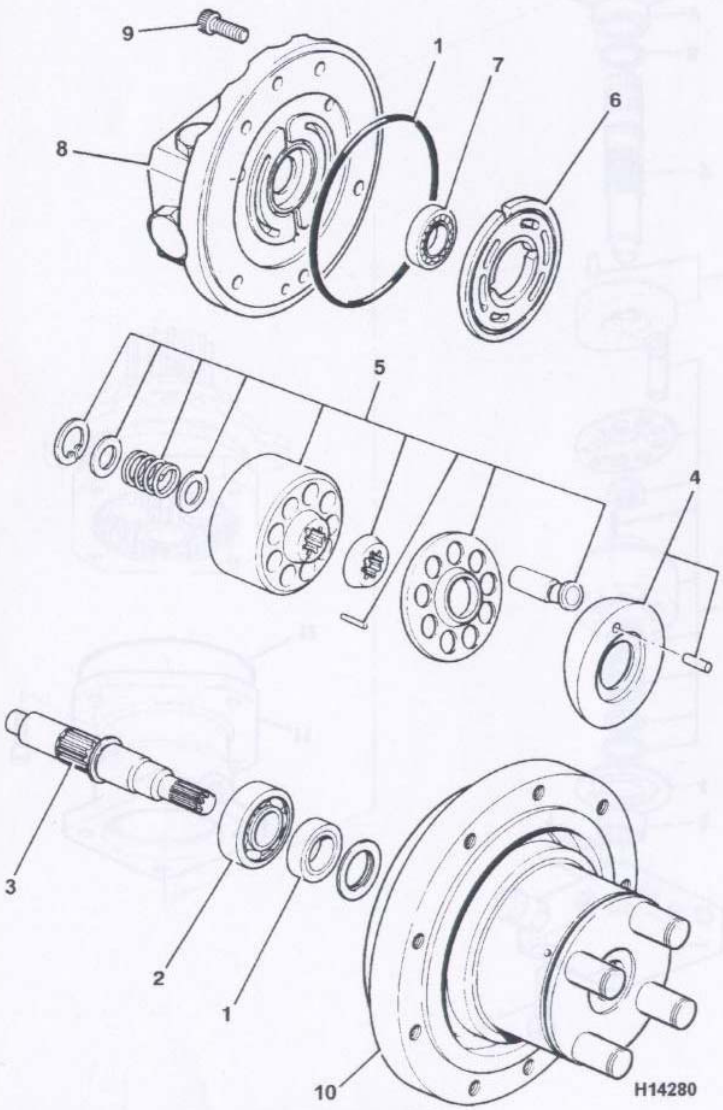

	on	to	on	to
8014	M791000			
8015	M730800			
8016	M728750			
8017	M800000			
8018	M801000			

Item	Part No	Qty	A	Description	Remarks	M/C No change
1	20/902534	1		Seal kit		
2	20/902533	1		Bearing		
3	20/904518	1		Shaft		
4	20/904519	1		Swash plate assembly		
5	20/902530	1		Barrel assembly		
6	20/902531	1		Plate, valve		
7	20/902536	1		Bearing		
8*		1		Valve assembly	See E3-13-1	
9	20/902537	6		Capscrew		
10	N.S.P.	1		Housing		

E2-4-1 TRACK MOTOR

HYDRAPOWER

VALVES AND HYDRAULIC FILTER

E3

E1 HOSE & PIPEWORK

E2 PUMPS, PUMP DRIVE & MOTORS

E3 VALVES & HYDRAULIC FILTER

E4 RAMS

E3-1-1 VALVE BLOCK - 9 SPOOL

	on	to	on	to
8014	M791000			
8015	N/A			
8016	N/A			
8017	N/A			
8018	N/A			

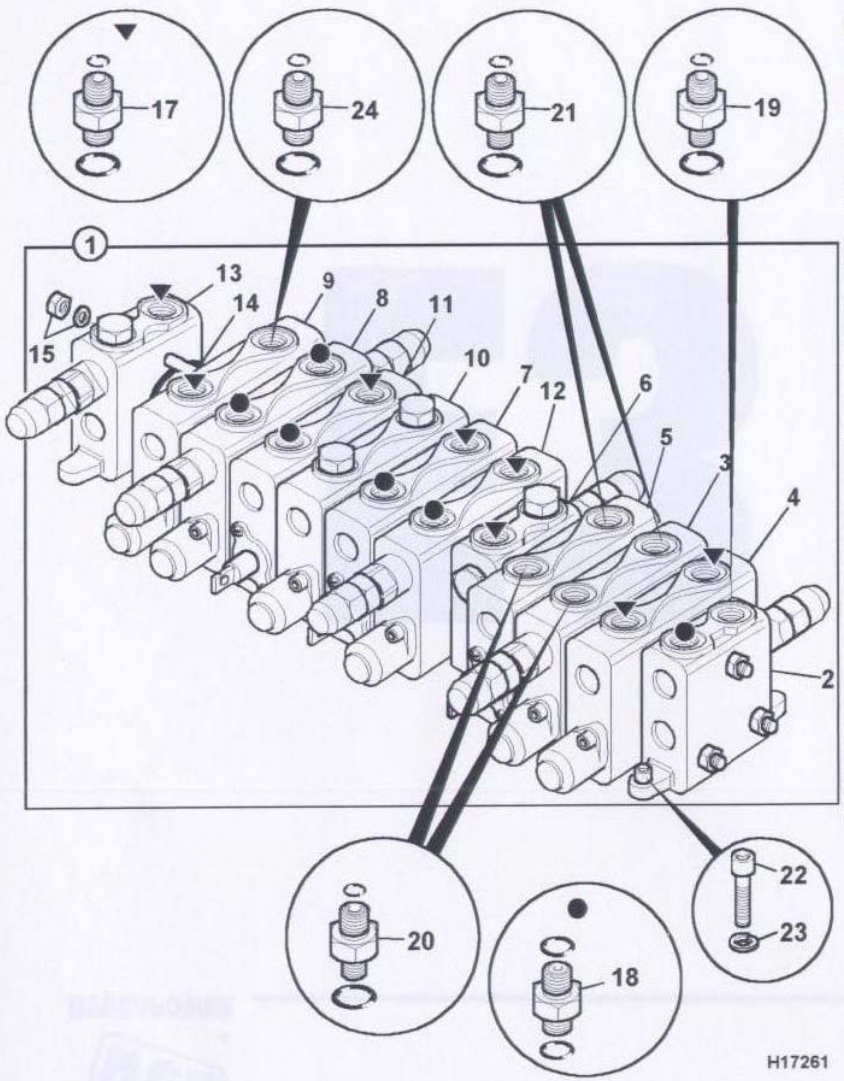

Item	Part No	Qty	A	Description	Remarks	M/C No change
1*	25/620300	1		Valve assembly, 9 spool	8014	
2*		1	:	Valve section, inlet	MRV, see E3-2-1	
3		1	:	Valve section assembly	Dozer, see E3-3-1	
4		1	:	Valve section assembly	Slew, see E3-4-2	
5		1	:	Valve section assembly	Swing, see E3-5-1	
6		1	:	Valve section, mid inlet	MRV, see E3-2-2	
7		1	:	Valve section assembly	Track, LH - E3-4-1	
8		1	:	Valve section assembly	Boom, See E3-6-1	
9		1	:	Valve section assembly	Bucket, see E3-7-2	
10		1	:	Valve section assembly	Aux, see E3-7-1	
11		1	:	Valve section assembly	Track, RH - E3-4-1	
12		1	:	Valve section assembly	Dipper, see E3-6-1	
13*		1	:	Valve section, inlet	MRV, see E3-2-2	
14	25/606812	8	:	O Ring		
15*	25/620310	1	:	Tie rod kit		
17	1620/0004	8		Adaptor		
18	816/17056	6		Adaptor, ¾in. x 3/8in.	SAE / BSP	
19	816/17065	1		Adaptor, ¾in. x ¾in.	SAE / BSP	
20	816/17160	2		Adaptor, ¾in. x ¼in.	SAE / BSP	
21	816/17058	2		Adaptor, ¾in. x ¼in.	SAE / BSP	
22	1391/3408Z	2		Capscrew, M10 x 30		
23	823/00416Z	2		Washer, spring, M10		
24	816/17118	1		Restrictor, ¾in. x 3/8in.	SAE / BSP	

E3-1-1 VALVE BLOCK - 9 SPOOL

E3-1-2 VALVE BLOCK - 9 SPOOL, SERVO

	on	to	on	to
8014	N/A			
8015	M730800			
8016	M728750			
8017	M800000			
8018	M801000			

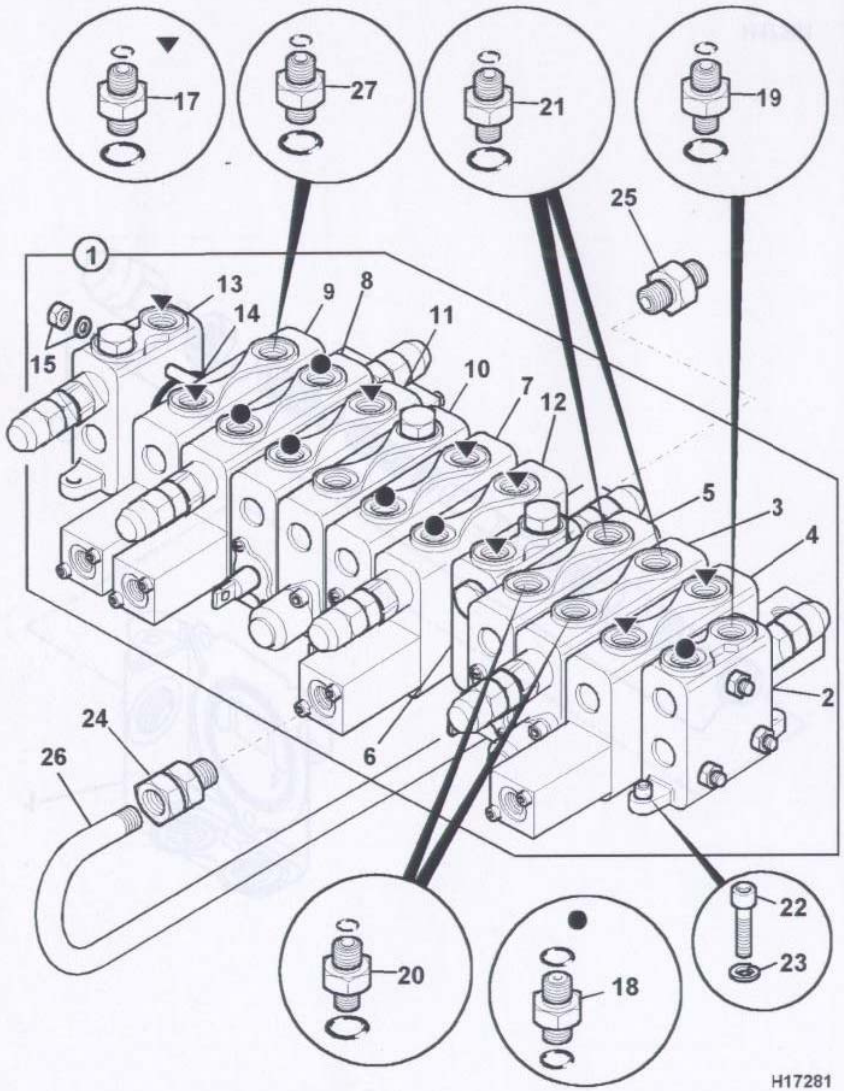

Item	Part No	Qty	A	Description	Remarks	M/C No change
1*	25/621300	1		Valve assembly, 9 spool	8015	
	25/620400	1		Valve assembly, 9 spool	8016	
2*		1	:	Valve section, inlet	MRV, see E3-2-1	
3		1	:	Valve section assembly	Dozer, see E3-3-1	
4		1	:	Valve section assembly	Slew, see E3-4-3	
5		1	:	Valve section assembly	Swing, see E3-5-1	
6		1	:	Valve section, mid inlet	MRV, see E3-2-2	
7		1	:	Valve section assembly	Track, see E3-4-1	
8		1	:	Valve section assembly	Boom, see E3-6-2	
9		1	:	Valve section assembly	Bucket, see E3-7-3	
10		1	:	Valve section assembly	Aux, see E3-7-1	
11		1	:	Valve section assembly	Track, see E3-4-2	
12		1	:	Valve section assembly	Dipper, see E3-6-2	
13*		1	:	Valve section, inlet	MRV, see E3-2-2	
14	25/606812	8	:	O Ring		
15*	25/620310	1	:	Tie rod kit		
17	1620/0004	9		Adaptor		
18	816/17056	6		Adaptor, ¾in. x 3/8in.	SAE / BSP	
19	816/17065	1		Adaptor, ¾in. x ¾in.	SAE / BSP	
20	816/17160	2		Adaptor, ¾in. x ¼in.	SAE / BSP	
21	816/17058	2		Adaptor, ¾in. x ¼in.	SAE / BSP	
22	1391/3408Z	2		Capscrew, M10 x 30		
23	823/00416Z	2		Washer, spring, M10		
24	816/27010	4		Adaptor, 9/16 x ¼in.	SAE/BSP M/F Swivel	
25	1620/0002	4		Adaptor, 9/16 x ¼in.		
26	236/16701	4		Pipe, servo		
27	816/17118	1		Restrictor, ¾in. x 3/8in.		

E3-1-2 VALVE BLOCK - 9 SPOOL, SERVO

E3-2-1 VALVE SECTION, MRV

	on	to	on	to
8014	M791000			
8015	M730800			
8016	M728750			
8017	M800000			
8018	M801000			

Item	Part No	Qty	A	Description	Remarks	M/C No change
1	25/611004	1		Valve section, inlet		
2	25/620323	1		Valve, relief,2030lbf/in²	140bar	
3	25/606819	1	:	Seal kit		

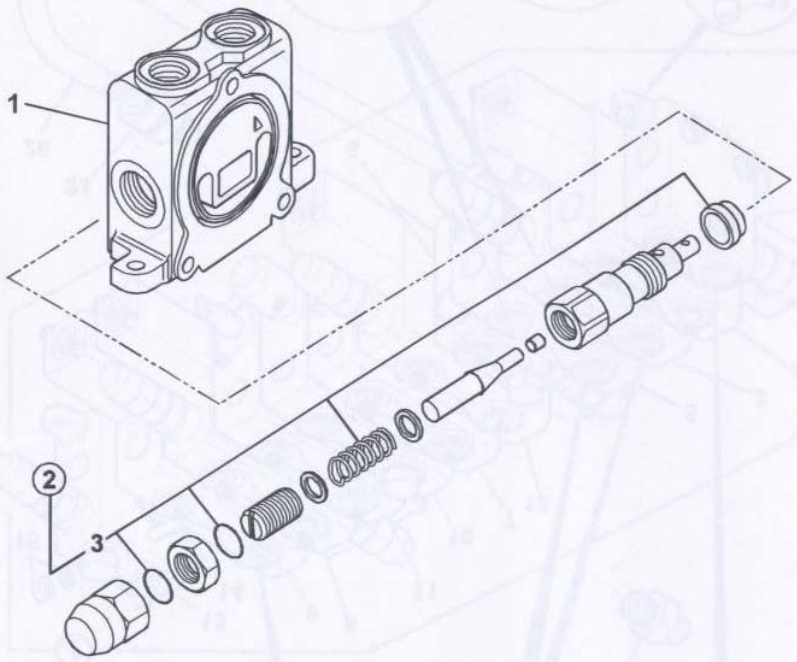

H17201

E3-2-1 VALVE SECTION, MRV

E3-2-2 VALVE SECTION, M.R.V.

	on	to	on	to
8014	M791000			
8015	M730800			
8016	M728750			
8017	M800000			
8018	M801000			

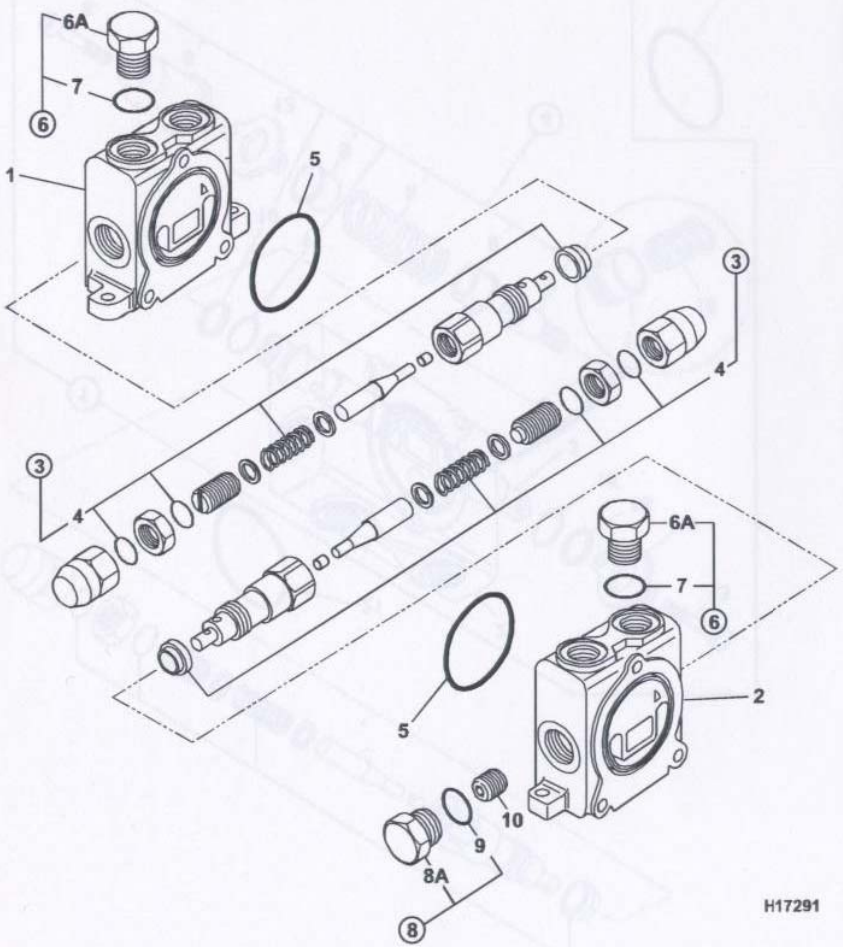

Item	Part No	Qty	A	Description	Remarks	M/C No change
1	25/611004	1		Valve section, inlet	Incl. O Ring	
2	25/606809	1		Valve section, mid inlet		
3	25/606818	1		Valve,relief, 3000lbf/in²	207bar ,8014	
	25/620332	1		Valve,relief, 3350lbf/in²	230bar, 8015	
	25/620321	1		Valve, relief,3200lbf/in²	220bar, 8016	
4	25/606819	1	:	Seal kit		
5	25/606812	A/R		O Ring	Interface	
6	25/606823	1		Plug assembly		
6A		1	:	Plug,¾ x 16 UNF - SAE		
7	25/606824	1	:	O Ring		
8	25/606822	1		Plug assembly		
8A		1	:	Plug 7/8 x 14 UNF - SAE		
9	25/606116	1	:	O Ring		
10	25/606821	1		Plug, 3/8in.NPTF		

E3-2-2 VALVE SECTION, M.R.V.

E3-3-1 VALVE SECTION, DOZER

	on	to	on	to
8014	M791000			
8015	M730800			
8016	M728750			
8017	M800000			
8018	M801000			

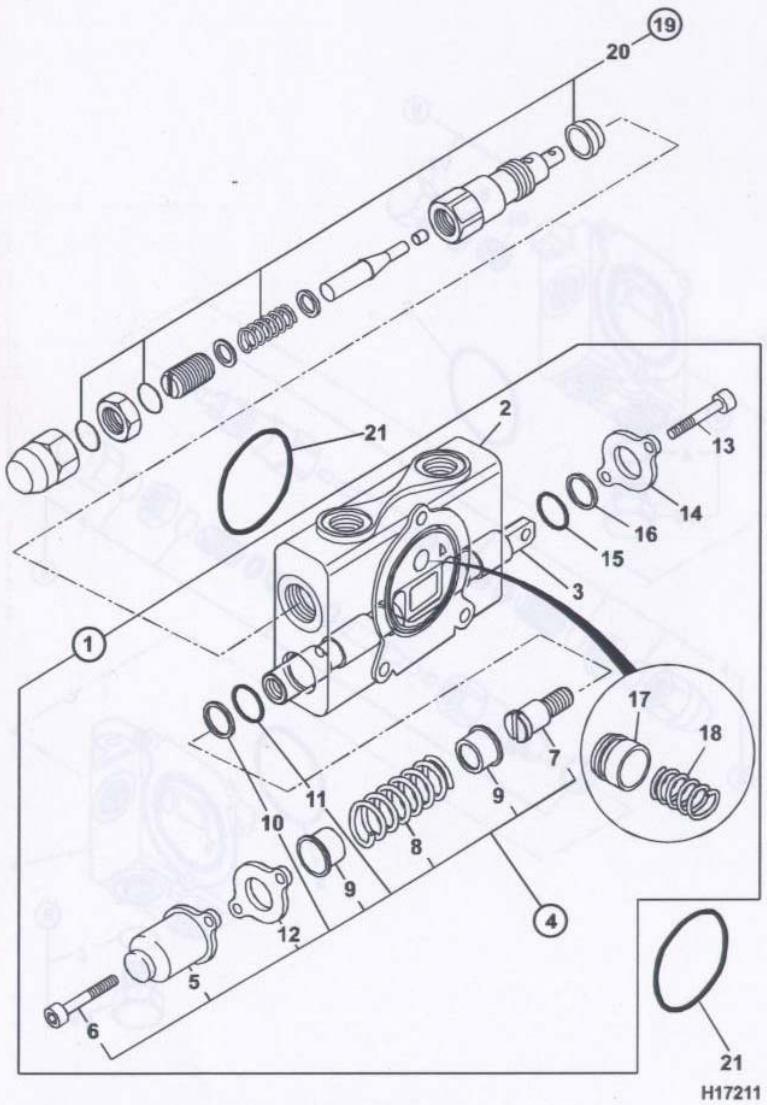

Item	Part No	Qty	A	Description	Remarks	M/C No change
1	25/620311	1		Valve section assembly		
2	NSP	1	:	Valve section		
3	NSP	1	:	Spool		
4	25/611515	1	:	Spool centering assembly		
5	25/606846	1	::	Cap		
6	25/606827	2	::	Screw		
7	25/606828	1	::	Spool end		
8	25/606833	1	::	Spring		
9	25/606834	2	::	Seat, spring		
10	25/606835	1	::	Seal, wiper		
11	25/606836	1	::	O Ring		
12	25/606826	1	::	Plate, seal		
13	25/606503	2	:	Screw		
14	25/606826	1	:	Plate, seal		
15	25/606836	1	:	O Ring		
16	25/606835	1	:	Seal, wiper		
17	25/606843	1	:	Poppet		
18	25/606844	1	:	Spring		
19	25/607103	1		Valve,relief, 3300lbf/in²	220bar	
20	25/606819	1	:	Seal kit		
21	25/606812	A/R		O Ring	Interface	

E3-3-1 VALVE SECTION, DOZER

E3-4-1 VALVE SECTION,TRACK

	on	to	on	to
8014	M791000			
8015	M730800			
8016	M728750			
8017	M800000			
8018	M801000			

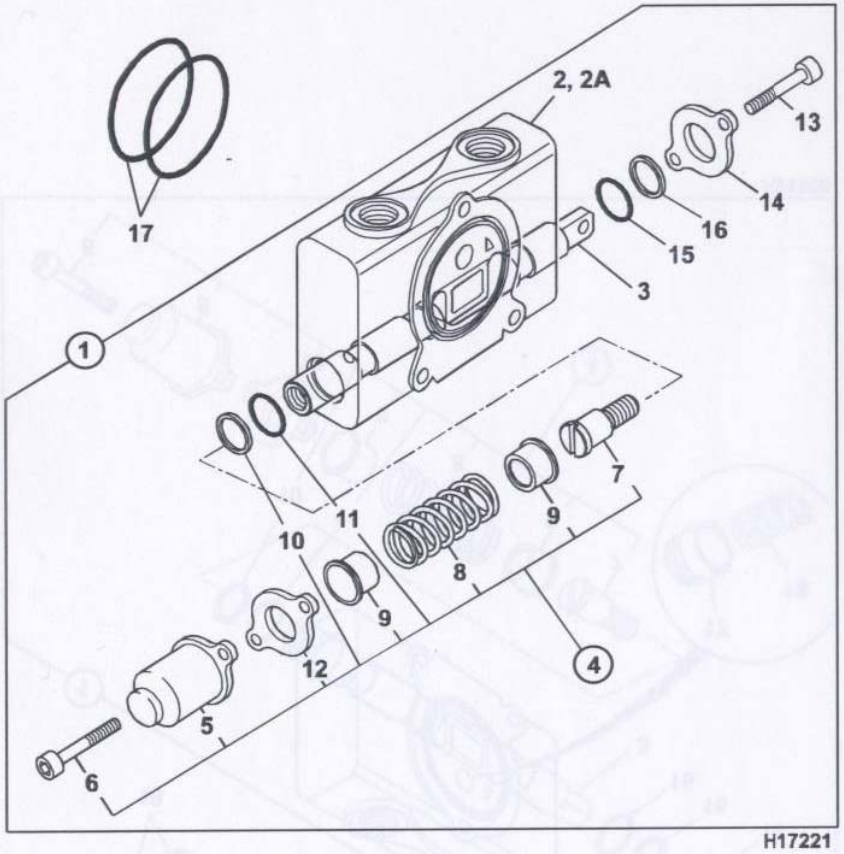

H17221

Item	Part No	Qty	A	Description	Remarks	M/C No change
1	25/611603	1		Valve section assembly	Track, LH	
	25/611504	1		Valve section assembly	Track, RH	
2	NSP	1	:	Valve section	Track, RH	
2A	NSP	1	:	Valve section	Track, LH	
3	NSP	1	:	Spool	Track, LH & RH	
4	25/611611	1	:	Spool centering assembly		
5	25/606846	1	::	Cap		
6	25/606827	1	::	Screw		
7	25/606828	1	::	Spool end		
8	25/606847	1	::	Spring		
9	25/606834	2	::	Seat, spring		
10	25/606835	1	::	Seal, wiper		
11	25/606836	1	::	O Ring		
12	25/606826	1	::	Plate, seal		
13	25/606503	2	:	Screw		
14	25/606826	1	:	Plate, seal		
15	25/606836	1	:	O Ring		
16	25/606835	1	:	Seal, wiper		
17	25/606812	A/R		O Ring	Interface	

E3-4-1 VALVE SECTION,TRACK

E3-4-2 VALVE SECTION, SLEW 8014

	on	to	on	to
8014	M791000			
8015	N/A			
8016	N/A			
8017	N/A			
8018	N/A			

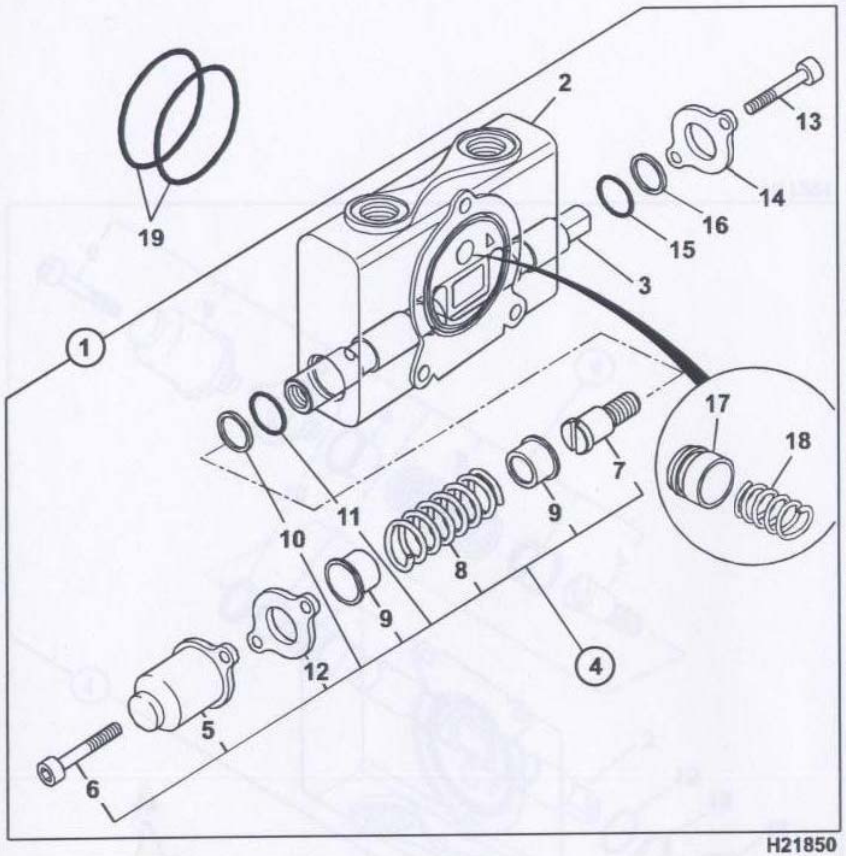

H21850

Item	Part No	Qty	A	Description	Remarks	M/C No change
1	25/620312	1		Valve section assembly		
2	NSP	1	:	Valve section		
3	NSP	1	:	Spool		
4	25/611611	1	:	Spool centering assembly		
5	25/606846	1	::	Cap		
6	25/606827	1	::	Screw		
7	25/606828	1	::	Spool end		
8	25/606847	1	::	Spring		
9	25/606834	2	::	Seat, spring		
10	25/606835	1	::	Seal, wiper		
11	25/606836	1	::	O Ring		
12	25/606826	1	::	Plate, seal		
13	25/606503	2	:	Screw		
14	25/606826	1	:	Plate, seal		
15	25/606836	1	:	O Ring		
16	25/606835	1	:	Seal, wiper		
17	25/606843	1	:	Poppet		
18	25/606844	1	:	Spring		
19	25/606812	A/R		O Ring	Interface	

E3-4-3 VALVE SECTION, SLEW - SERVO

	on	to	on	to
8014	N/A			
8015	M730800			
8016	M728750			
8017	M800000			
8018	M801000			

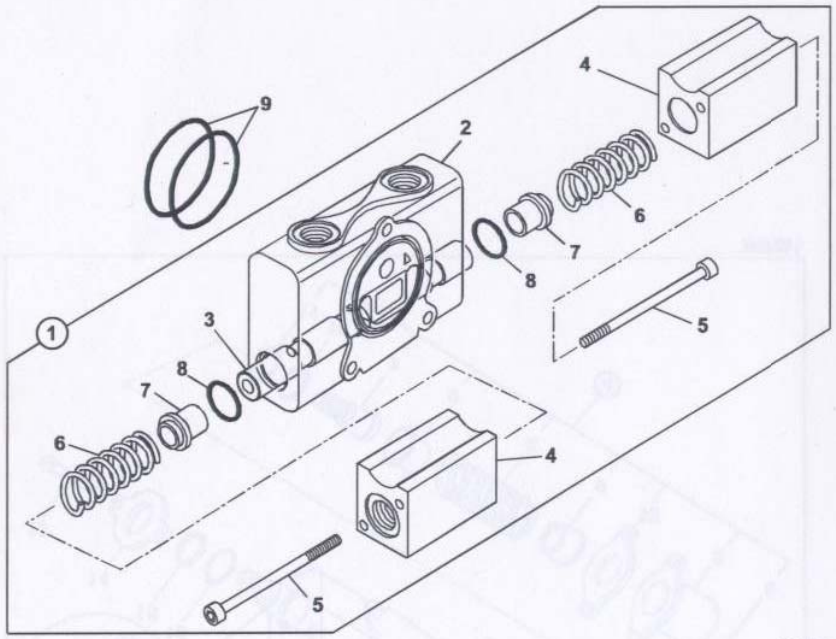

H17321

Item	Part No	Qty	A	Description	Remarks	M/C No change
1	25/614310	1		Valve section assembly		
2	NSP	1	:	Valve body		
3	NSP	1	:	Spool		
4	25/608608	2	:	Cap, servo		
5	25/608607	4	:	Capscrew		
6	25/611408	2	:	Spring		
7	25/608609	2	:	Seat, spring		
8	25/608606	2	:	O Ring		
9	25/606812	A/R		O Ring	Intersection	

E3-5-1 VALVE SECTION, SWING

	on	to	on	to
8014	M791000			
8015	M730800			
8016	M728750			
8017	M800000			
8018	M801000			

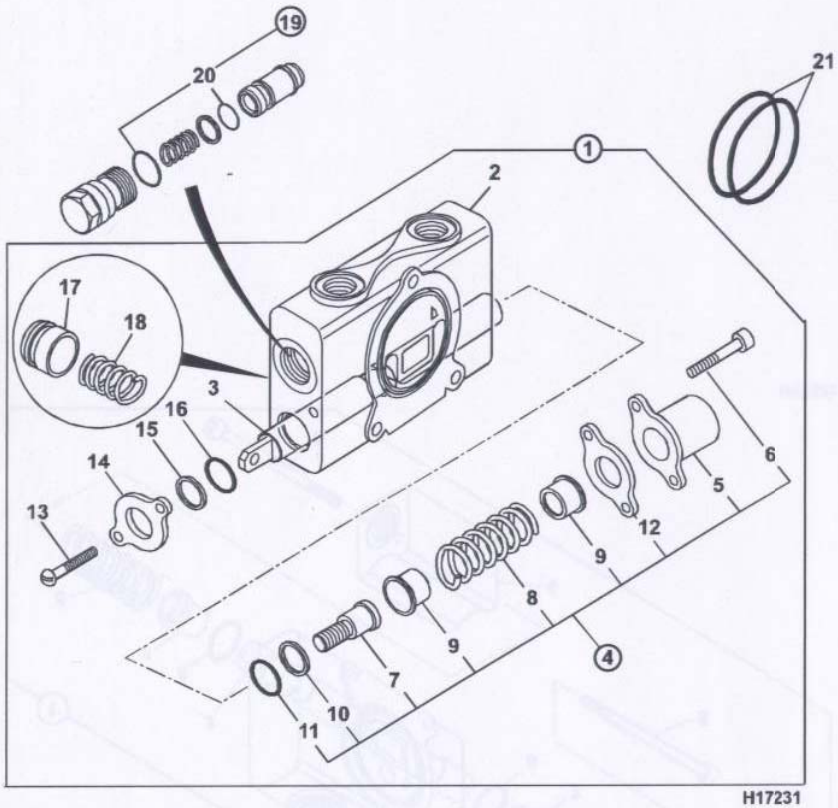

H17231

Item	Part No	Qty	A	Description	Remarks	M/C No change
1	25/620313	1	:	Valve section assembly		
2	NSP	1		Valve body		
3	NSP	1		Spool		
4	25/611515	1	:	Spool centering assembly		
5	25/606846	1	::	Cap		
6	25/606827	1	::	Screw		
7	25/606828	1	::	Spool end		
8	25/606833	1	::	Spring		
9	25/606834	2	::	Seat, spring		
10	25/606835	1	::	Seal, wiper		
11	25/606836	1	::	O Ring		
12	25/606826	1	::	Plate, seal		
13	25/606503	2	:	Screw		
14	25/606826	1	:	Plate, seal		
15	25/606835	1	:	Seal, wiper		
16	25/606836	1	:	O Ring		
17	25/606843	1	:	Poppet		
18	25/606844	1	:	Spring		
19	25/606840	1		Valve, anti-cavitation		
20	25/606841	1	:	Seal kit		
21	25/606812	A/R		O Ring		

E3-5-1 VALVE SECTION, SWING

E3-6-1 VALVE SECTION, BOOM & DIPPER

	on	to	on	to
8014	M791000			
8015	N/A			
8016	N/A			
8017	N/A			
8018	N/A			

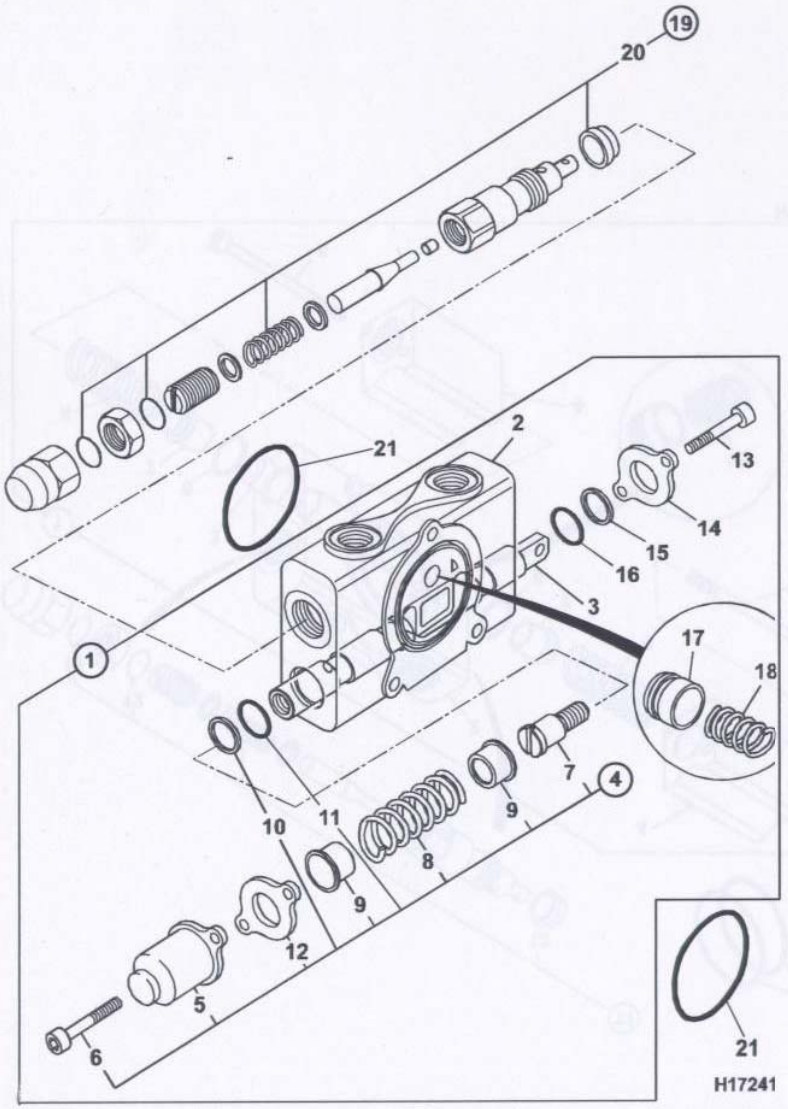

Item	Part No	Qty	A	Description	Remarks	M/C No change
1	25/620314	1		Valve section assembly		
	25/620315	1		Valve section assembly		
2	NSP	1	:	Valve body	Dipper/Boom	
3	NSP	1	:	Spool	Dipper	
	NSP	1	:	Spool	Boom	
4	25/611611	1	:	Spool centering assembly		
5	25/606846	1	::	Cap		
6	25/606827	2	::	Screw		
7	25/606828	1	::	Spool end		
8	25/606847	1	::	Spring		
9	25/606834	2	::	Seat, spring		
10	25/606835	1	::	Seal, wiper		
11	25/606836	1	::	O Ring		
12	25/606826	1	::	Plate, seal		
13	25/606503	2	:	Screw		
14	25/606826	1	:	Plate, seal		
15	25/606835	1	:	Seal, wiper		
16	25/606836	1	:	O Ring		
17	25/606843	1	:	Poppet		
18	25/606844	1	:	Spring		
19	25/620324	1		Valve,relief, 3555lbf/in²	245bar	
20	25/606819	1	:	Seal kit		
21	25/606812	A/R		O Ring		

E3-6-1 VALVE SECTION, BOOM & DIPPER

E3-6-2 VALVE, BOOM/DIPPER- SERVO

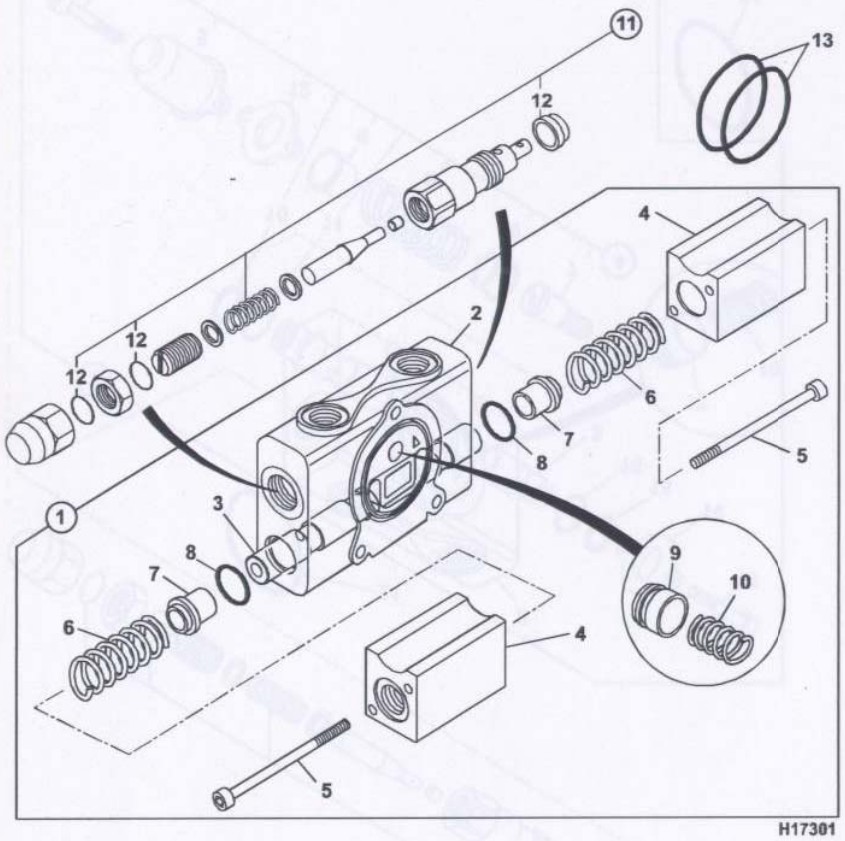

	on	to	on	to
8014	N/A			
8015	M730800			
8016	M728750			
8017	M800000			
8018	M801000			

Item	Part No	Qty	A	Description	Remarks	M/C No change
1	25/620410	1		Valve section assembly		
2	NSP	1	:	Valve body		
3	NSP	1	:	Spool		
4	25/608608	2	:	Cap, servo		
5	25/608607	4	:	Capscrew		
6	25/611408	2	:	Spring		
7	25/608609	2	:	Seat, spring		
8	25/608606	2	:	O Ring		
9	25/606843	1	:	Poppet		
10	25/606844	1	:	Spring		
11	25/620326	2		Valve,relief, 3990lbf/in²	275bar	
12	25/606819	1	:	Seal kit	Relief valve	
13	25/606812	A/R		O Ring		

E3-7-1 VALVE SECTION, AUXILLIARY

	on	to	on	to
8014	M791000			
8015	M730800			
8016	M728750			
8017	M800000			
8018	M801000			

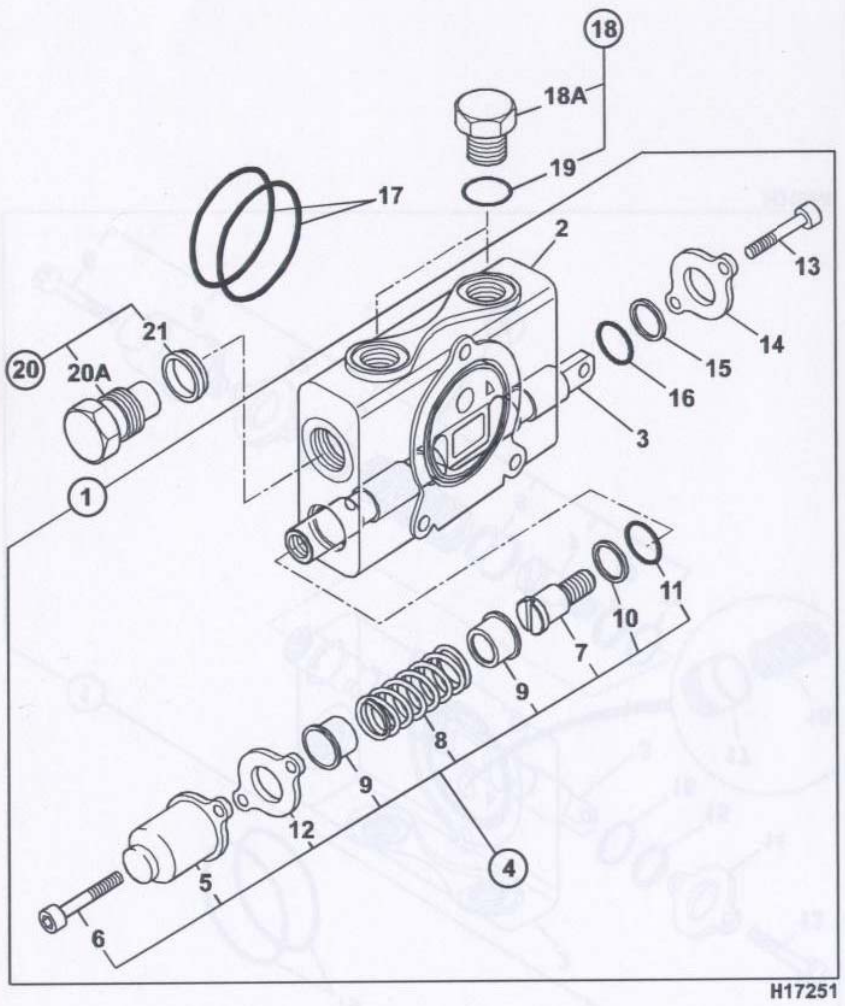

Item	Part No	Qty	A	Description	Remarks	M/C No change
1	25/620316	1		Valve section assembly		
2	NSP	1	:	Valve body		
3	NSP	1	:	Spool		
4	25/611515	1	::	Spool centering assembly		
5	25/606846	1	::	Cap		
6	25/606827	1	::	Screw		
7	25/606828	1	::	Spool end		
8	25/606833	1	::	Spring		
9	25/606834	2	::	Seat, spring		
10	25/606835	1	::	Seal, wiper		
11	25/606836	1	::	O Ring		
12	25/606826	1	::	Plate, seal		
13	25/606503	2	:	Screw		
14	25/606826	1	:	Plate, seal		
15	25/606835	1	:	Seal, wiper		
16	25/606836	1	:	O Ring		
17	25/606812	A/R		O Ring		
18	25/606823	2		Plug assembly		
18A		2	:	Plug,¾ x 16 UNF - SAE		
19	25/606824	2	:	O Ring		
20	25/607234	2		Plug assy, shut off		
20A	25/620318	1	:	Plug, shut off		
21	25/607235	1	:	Seal		

E3-7-1 VALVE SECTION, AUXILLIARY

E3-7-2 VALVE SECTION, BUCKET - 8014

	on	to	on	to
8014	M791000			
8015	N/A			
8016	N/A			
8017	N/A			
8018	N/A			

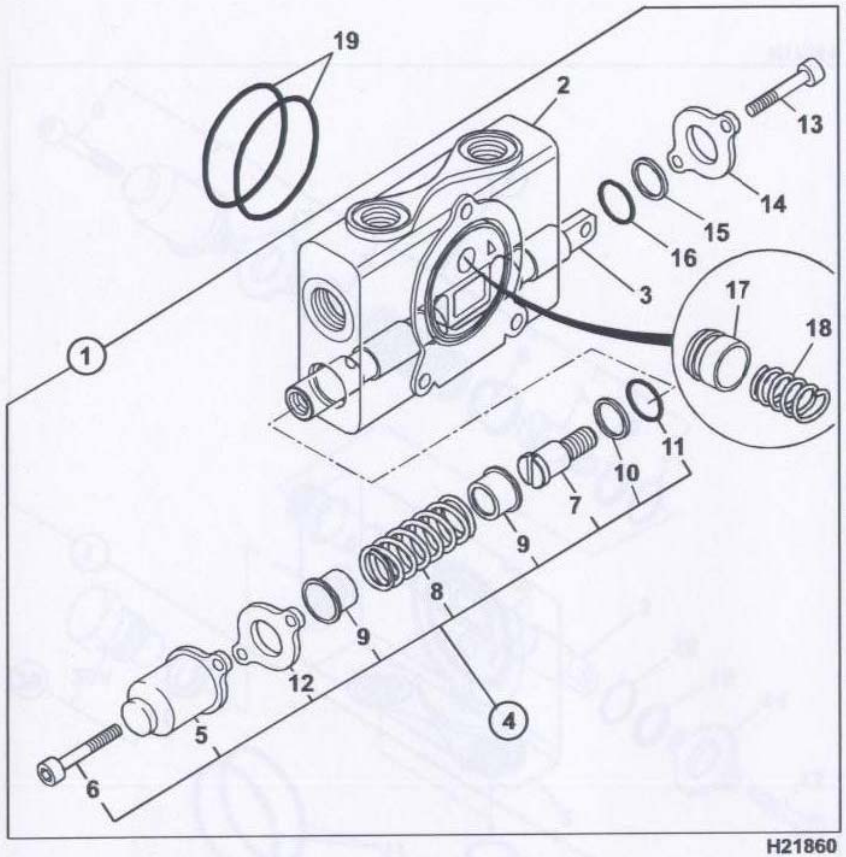

H21860

Item	Part No	Qty	A	Description	Remarks	M/C No change
1	25/611502	1		Valve section assembly		
2	NSP	1	:	Valve section		
3	NSP	1	:	Spool		
4	25/611611	1	:	Spool centering assembly		
5	25/606846	1	::	Cap		
6	25/606827	1	::	Screw		
7	25/606828	1	::	Spool end		
8	25/606847	1	::	Spring		
9	25/606834	2	::	Seat, spring		
10	25/606835	1	::	Seal, wiper		
11	25/606836	1	::	O Ring		
12	25/606826	1	::	Plate, seal		
13	25/606503	2	:	Screw		
14	25/606826	1	:	Plate, seal		
15	25/606835	1	:	Seal, wiper		
16	25/606836	1	:	O Ring		
17	25/606843	1	:	Poppet		
18	25/606844	1	:	Spring		
19	25/606812	A/R		O Ring		

E3-7-2 VALVE SECTION, BUCKET - 8014

E3-7-3 VALVE SECTION, BUCKET - SERVO

	on	to	on	to
8014	N/A			
8015	M730800			
8016	M728750			
8017	M800000			
8018	M801000			

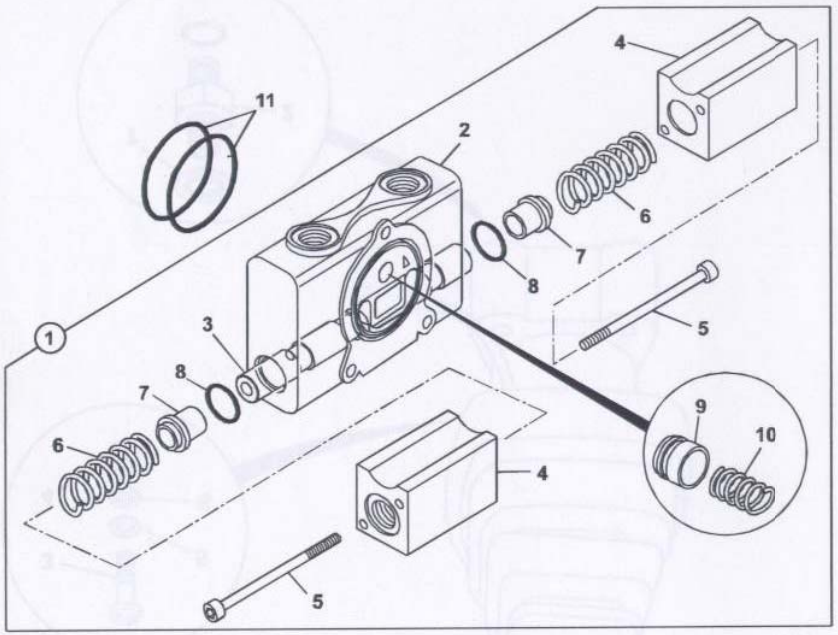

H17311

Item	Part No	Qty	A	Description	Remarks	M/C No change
1	25/612506	1		Valve, section, assembly	Bucket	
2	NSP	1	:	Valve section		
3	NSP	1	:	Spool		
4	25/608608	2	:	Cap, servo		
5	25/608607	4	:	Capscrew		
6	25/611408	2	:	Spring		
7	25/608609	2	:	Seat, spring		
8	25/608606	2	:	O Ring		
9	25/606843	1	:	Poppet		
10	25/606844	1	:	Spring		
11	25/606812	A/R		O Ring		

E3-8-1 JOYSTICK, SERVO, R.H.

	on	to	on	to
8014	N/A			
8015	M730800			
8016	M728750			
8017	M800000			
8018	M801000			

Item	Part No	Qty	A	Description	Remarks	M/C No change
1	25/208100	1		Joystick, RH		
2	1604/0002	6		Adaptor		
3	826/01674	4		Screw, button head, M6x25		
4	1370/0103Z	4		Nut, self lock, M6		
5	1420/0006Z	4		Washer, plain, M6		
6	823/00198	8		Washer, nylon, M6		
7	1406/0011	6		Seal, bonded, ¼in. BSP		

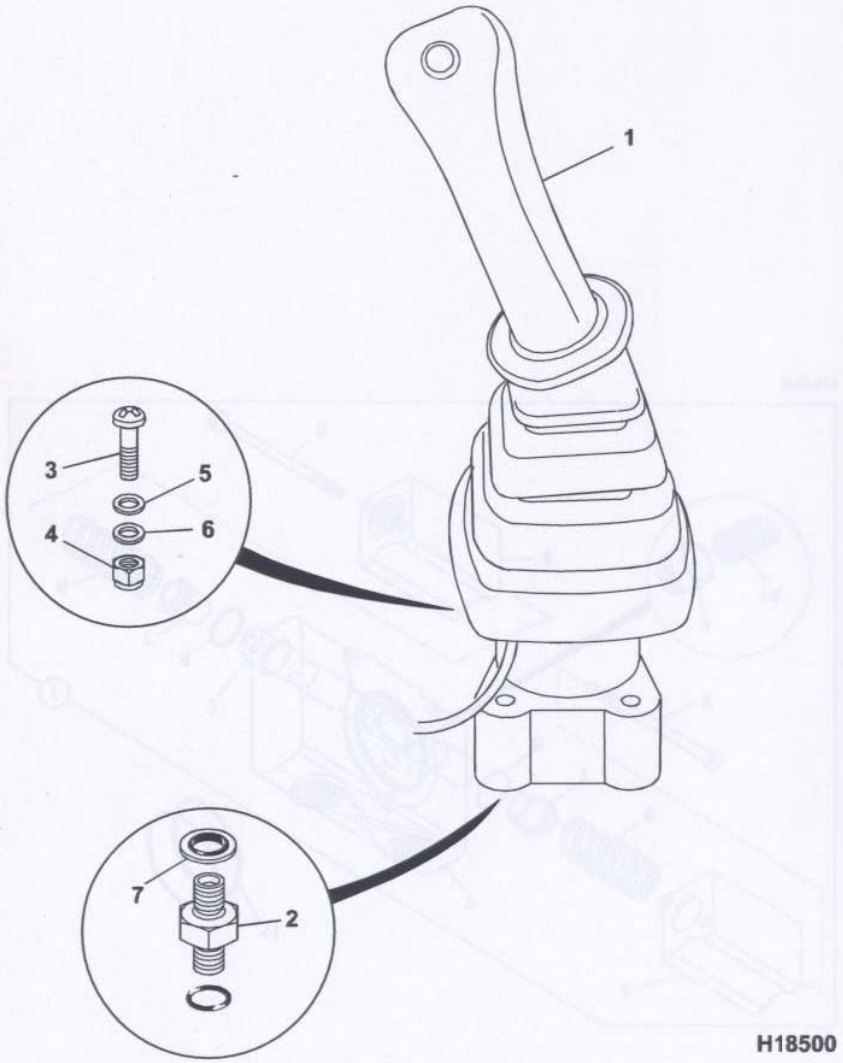

H18500

E3-8-1 JOYSTICK, SERVO, R.H.

E3-8-2 JOYSTICK, SERVO, L.H.

	on	to	on	to
8014	N/A			
8015	M730800			
8016	M728750			
8017	M800000			
8018	M801000			

Item	Part No	Qty	A	Description	Remarks	M/C No change
1	25/208000	1		Joystick, LH		
2	1604/0002	6		Adaptor		
3	826/01674	4		Screw, button head, M6x25		
4	1370/0103Z	4		Nut, self lock, M6		
5	1420/0006Z	4		Washer, plain, M6		
6	823/00198	8		Washer, nylon, M6		
7	1406/0011	6		Seal, bonded, ¼in. BSP		

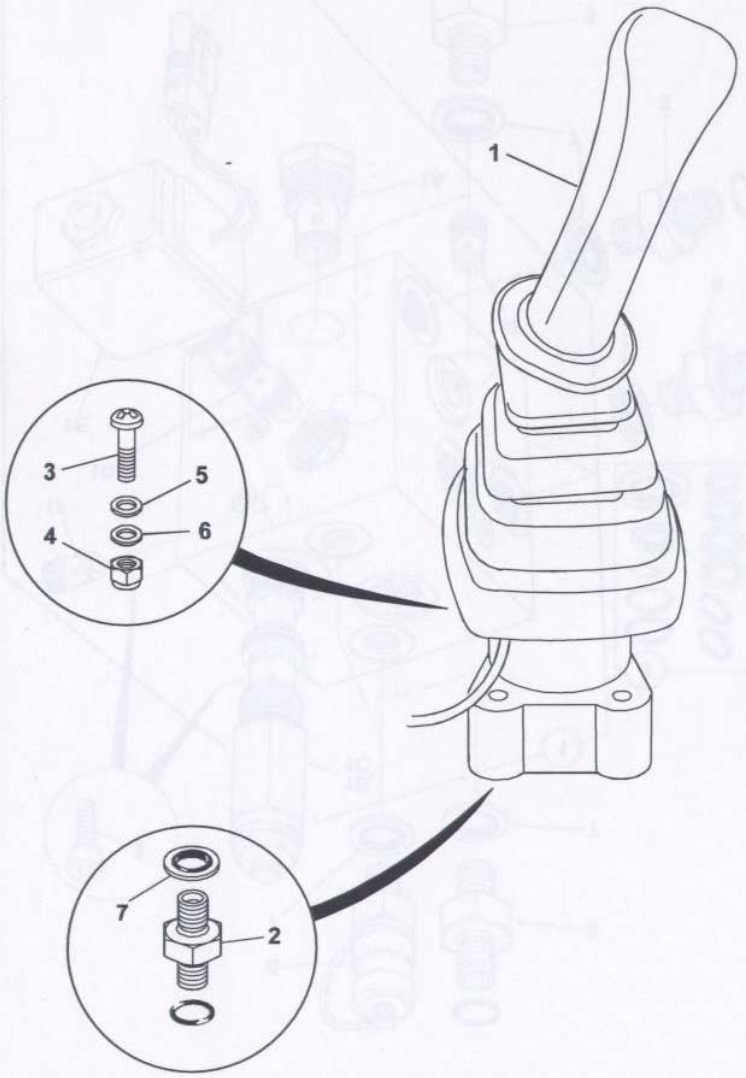

H18510

E3-8-2 JOYSTICK, SERVO, L.H.

E3-9-1 PRESSURE MAINTENANCE VALVE

	on	to	on	to
8014	M791000			
8015	M730800			
8016	M728750	M728867		
8017	N/A			
8018	N/A			

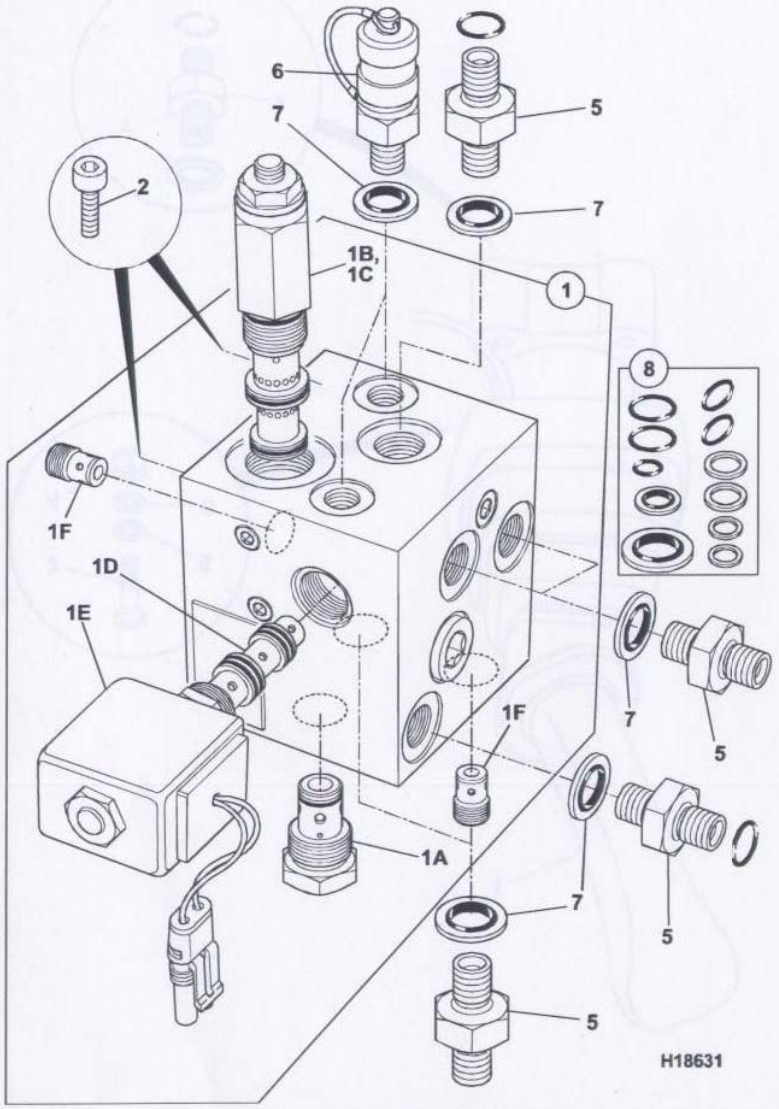

Item	Part No	Qty	A	Description	Remarks	M/C No change
1	25/208200	1		Valve, pressure maint.		
1A*	25/208210	1	:	Valve, check		
1B*	25/202201	1	:	Cartridge, pressure	17Bar	
1C*	25/208212	1	::	Seal kit		
1D*	25/205810	1	:	Cartridge, solenoid		
1E*	25/964902	1	:	Coil, 12V		
1F*	25/208213	2	:	Valve, shuttle		
2*	1391/3405Z	2		Capscrew, M10 x 20	Was 826/01399	
5	1604/0002	6		Adaptor		
6	45/905000	2		Adaptor, pressure test		
7	1406/0011	8		Seal, bonded, ¼in. BSP		
8*	25/208214	1		Seal kit		

E3-9-1 PRESSURE MAINTENANCE VALVE

E3-9-2 TWO SPEED TRACKING - PRESSURE MAINTENANCE VALVE

	on	to	on	to
8014	N/A			
8015	N/A			
8016	M728868			
8017	M800000			
8018	M801000			

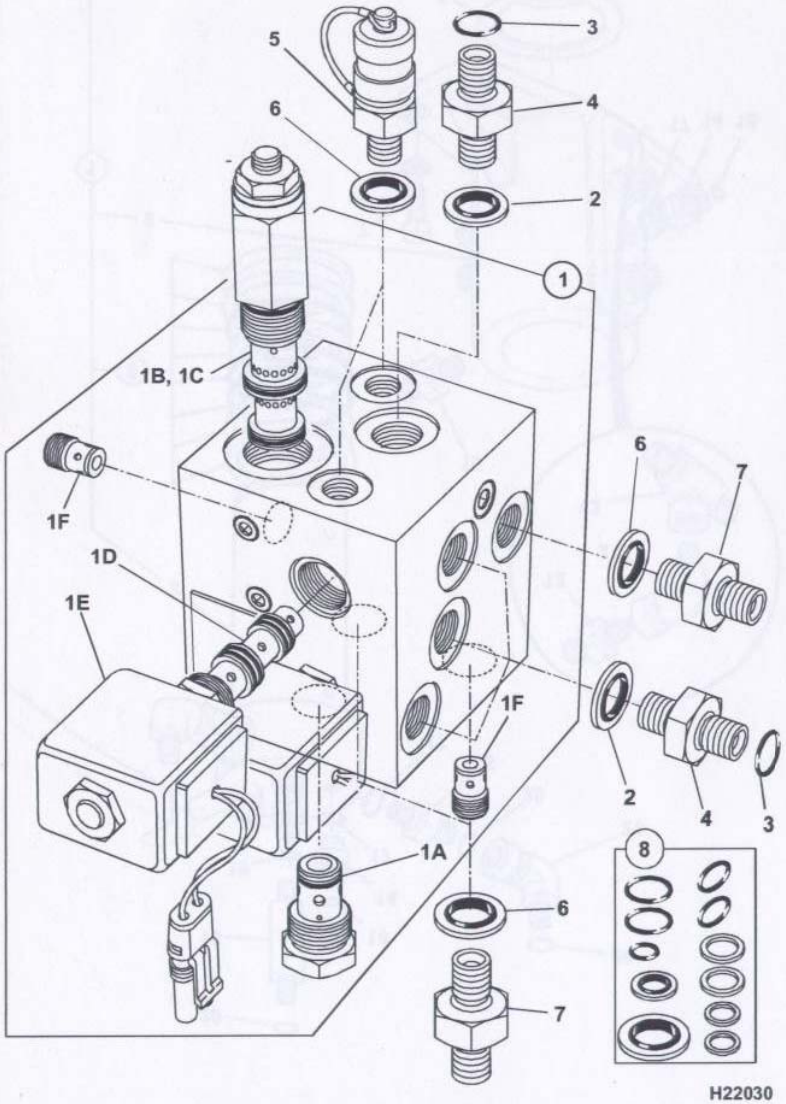

H22030

Item	Part No	Qty	A	Description	Remarks	M/C No change
1	25/205300	1		Pressure maint valve		
1A	25/208210	1	:	Valve, check		
1B	25/202201	1	:	Cartridge, pressure	17 Bar	
1C	25/208212	1	::	Seal kit		
1D	25/205810	2	:	Cartridge, solenoid		
1E	25/964902	2	:	Coil, 12V		
1F	25/208213	2	:	Valve, shuttle		
2	1406/0015	4		Seal, bonded, 3/8 in. BSP		
3	2401/0505	4		O Ring, 9/16in. SAE - UNF		
4	1620/0002	4		Adaptor, 9/16 x ¼in.		
5	45/905000	2		Adaptor, pressure test		
6	1406/0011	5		Seal, bonded, ¼in. BSP		
7	816/10168	3		Adaptor, filter, ¼in. BSP		
8	25/205310	1		Seal kit		

E3-9-2 TWO SPEED TRACKING - PRESSURE MAINTENANCE VALVE

Note : This page also applies to 8015 machines, when two speed tracking option is fitted.

E3-10-1 ROTARY JOINT

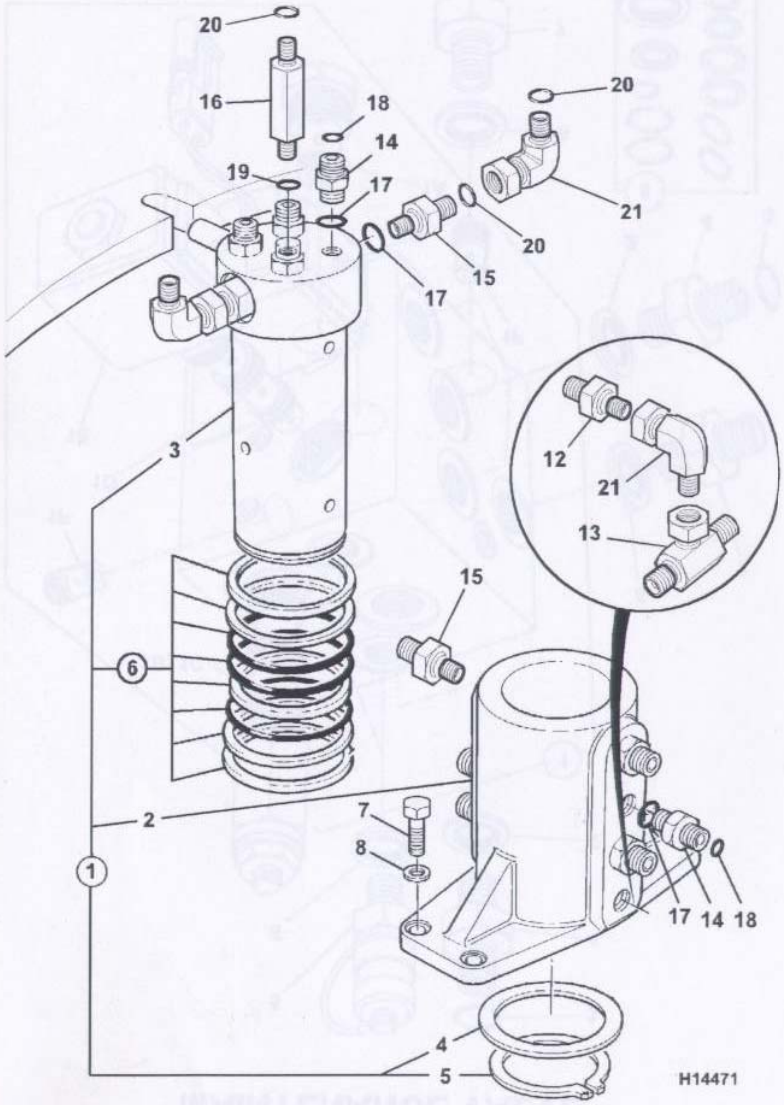

	on	to	on	to
8014	M791000			
8015	M730800			
8016	M728750	M728867		
8017	N/A			
8018	N/A			

Item	Part No	Qty	A	Description	Remarks	M/C No change
1	45/908500	1		Rotary joint		
2	45/908501	1	:	Shell, rotary joint		
3	45/908502	1	:	Core, rotary joint		
4	45/908503	1	:	Ring		
5	45/908504	1	:	Circlip		
6	45/908530	1	:	Seal kit, core seals		
7	1315/0303Z	4		Screw, hex head, M8 x 16		
8	823/00415Z	4		Washer, spring, M8		
12	1620/0001	1		Adaptor, 7/16 x ¼in.	SAE / BSP	
13	816/00367	1		Tee, ¼in.	BSP	
14*	1620/0003	8		Adaptor, 9/16 x 3/8in.	SAE / BSP	
15*	1620/0002	4		Adaptor, 9/16 x ¼in.	SAE / BSP	
16*	816/17161	1		Adaptor, 9/16 x ¼in	Superseded	
	816/17152	1		Adaptor, 9/16 x ¼in	SAE / BSP, 80mm L	
17	2401/0505	12		O Ring, 9/16in. SAE - UNF		
18*	T.B.A.	8		O Ring, 3/8in. BSP		
19	2401/0503	2		O Ring, 7/16in. SAE, UNF		
20*	T.B.A.	10		O Ring, ¼in.		
21*	816/00464	3		Elbow, 90°, ¼in. BSP		

E3-10-1 ROTARY JOINT

E3-10-2 TWO SPEED TRACKING - ROTARY JOINT

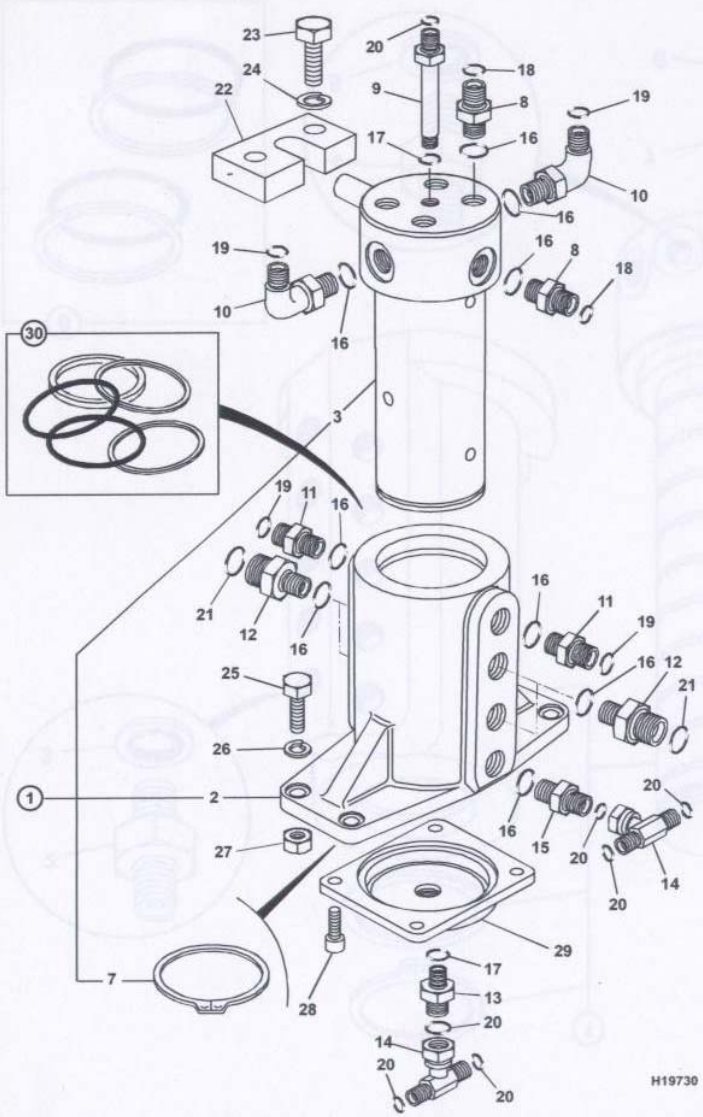

	on	to	on	to
8014	N/A			
8015	N/A			
8016	M728868			
8017	N/A			
8018	N/A			

Item	Part No	Qty	A	Description	Remarks	M/C No change
1	45/914500	1		Rotary joint		
2	45/914510	1	:	Shell		
3	45/914511	1	:	Core		
7	45/908504	1	:	Circlip		
8	816/16021	4		Adaptor, 9/16 x 3/16in.		
9	233/16201	1		Adaptor, 9/16 x 7/16in.	Long	
10	816/41008	2		Elbow, 9/16 x 11/16in.		
11	816/17005	2		Adaptor, 9/16 x 11/16in.		
12	816/16036	4		Adaptor, 9/16 x 1in.		
13	816/11006	1		Adaptor, 7/16in. x 9/16in		
14	816/56003	2		Tee, 9/16in.		
15	816/17043	2		Adaptor, 9/16in x 9/16in.		
16	2401/0505	14		O Ring, 9/16in. SAE - UNF		
17	2401/0503	2		O Ring, 7/16in. SAE, UNF		
18	2401/0606	5		O Ring, 13/16in. ORFS		
19	2401/0605	4		O Ring, 11/16in. - ORFS		
20	2401/0603	7		O Ring, 9/16in. ORFS		
21	2401/0607	4		O Ring, 1in. ORFS		
22	231/63001	1		Stop, joint		
23	1315/0407Z	2		Screw, hex head, M10 x 25		
24	823/00416	2		Washer, spring, M10		
25	1315/0310Z	4		Screw, hex head, M8 x 40		
26	823/00415	4		Washer, spring, M8		
27	1370/0201	4		Nut, M8		
28	45/914513	4		Capscrew M8 x 20		
29	45/914514	1		Plate, base		
30	45/914515	1		Seal kit		

E3-10-2 TWO SPEED TRACKING - ROTARY JOINT

E3-10-3 ROTARY JOINT

	on	to	on	to
8014	N/A			
8015	N/A			
8016	N/A			
8017	M800000			
8018	M801000			

Item	Part No	Qty	A	Description	Remarks	M/C No change
1	45/915900	1		Rotary joint		
2	1604/0003	14		Adaptor, ¾in.BSP		
3	1406/0015	14		Seal, bonded, 3/8 in. BSP		
4	1604/0002	4		Adaptor		
5	1406/0011	4		Seal, bonded, ¼in. BSP		
6	1315/0405Z	4		Screw, hex head, M10 x 20		
7	1420/0008Z	4		Washer, plain, M10		
8	45/915910	1		Seal kit		

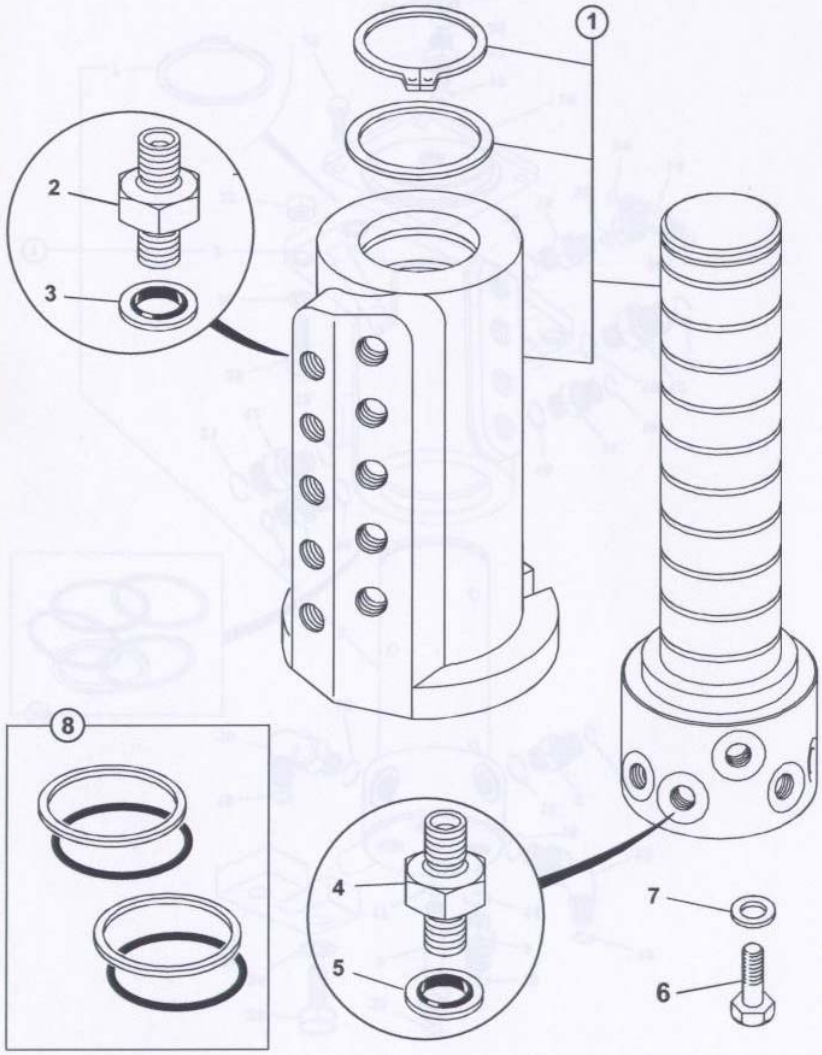

H21830

E3-10-3 ROTARY JOINT

E3-11-1 HYDRAULIC FILTER

	on	to	on	to
8014	M791000			
8015	M730800			
8016	M728750			
8017	M800000			
8018	M801000			

Item	Part No	Qty	A	Description	Remarks	M/C No change
1	32/920000	1		Filter assembly		
1A*	32/920001	1	:	Filter head, return line		
1B*	32/920002	1	:	Filter, spin-on service		
2*	1604/0006	2		Adaptor, ¾in.BSP		
4	1406/0021	2		Seal, bonded, ¾in. BSP		
5	1315/0201Z	2		Screw, hex head, M6 x 12		
6	1420/0006Z	2		Washer, plain, M6		

E3-11-1 HYDRAULIC FILTER

E3-12-1 FLOW REGULATOR VALVE

	on	to	on	to
8014	M791000			
8015	M730800			
8016	M728750			
8017	M800000			
8018	M801000			

Item	Part No	Qty	A	Description	Remarks	M/C No change
1	25/957600	1		Valve, flow regulator		
2	25/957601	1	:	Cartridge		
3	25/957602	1	:	Cartridge		
4	25/914403	1		Seal kit, flow regulator		
5	928/06008	1		Seal kit, cartridge		
6	892/00055	1		Plug, blanking, ¼in. BSP		
7	1406/0011	1		Seal, bonded, ¼in. BSP		

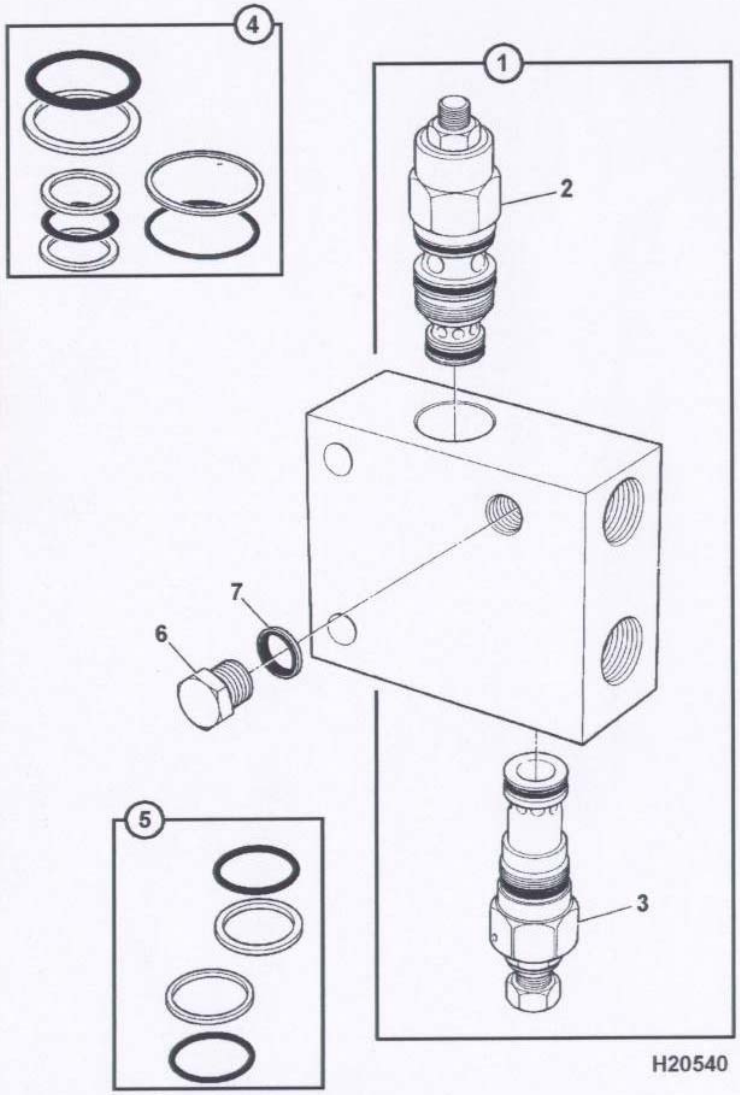

E3-12-1 FLOW REGULATOR VALVE

E3-13-1 TRACK MODULATING VALVE

	on	to	on	to
8014	M791000			
8015	M730800			
8016	M728750			
8017	M800000			
8018	M801000			

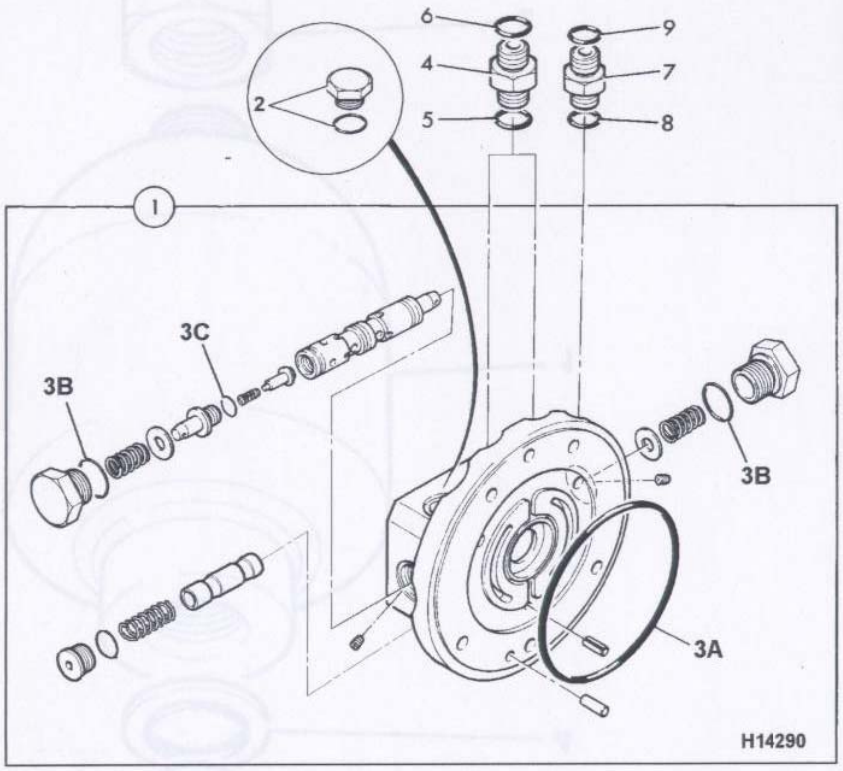

Item	Part No	Qty	A	Description	Remarks	M/C No change
1	20/904517	1		Valve assembly		
2	20/901869	1		Plug & seal		
3	20/902534	1		Seal kit		
3A	20/902541	1	:	O Ring		
3B	20/902542	1	:	O Ring		
3C	20/902543	1	:	O Ring		
3D	20/902544	1	:	Seal, oil	See E2-4-1	
4	1620/0004	2		Adaptor		
5	2401/0506	2		O Ring, ¾in. SAE - UNF		
6	2401/0605	2		O Ring, 11/16in. - ORFS		
7	1620/0002	1		Adaptor, 9/16 x ¼in.	9/16 SAE x 1/4in	
8	2401/0505	1		O Ring, 9/16in. SAE - UNF		
9	2401/0603	1		O Ring, 9/16in. ORFS		

E3-13-1 TRACK MODULATING VALVE

E3-15-1 ACCUMULATOR

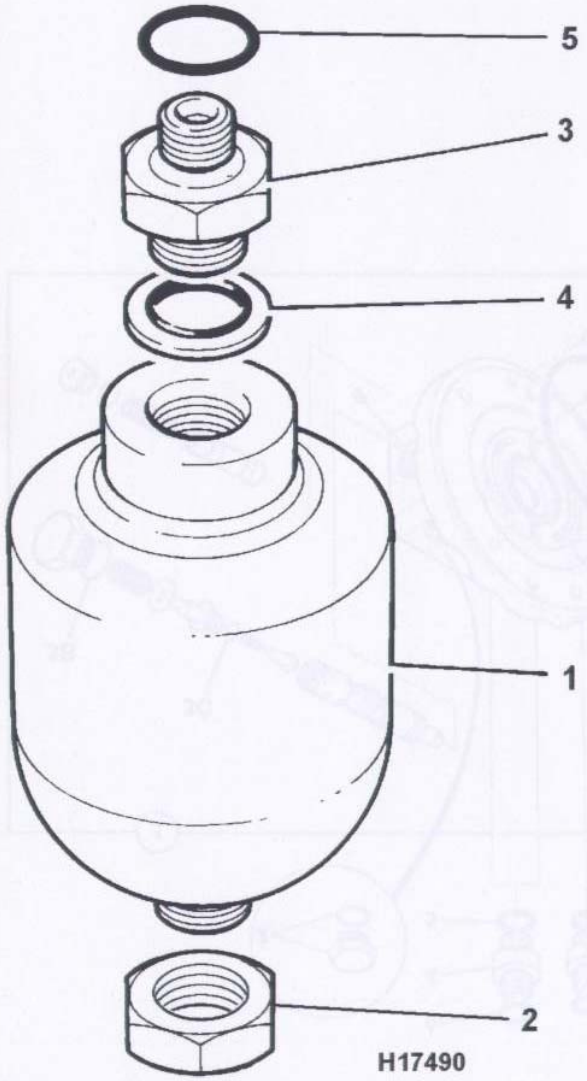

	on	to	on	to
8014	M791000			
8015	M730800			
8016	M728750			
8017	M800000			
8018	M801000			

Item	Part No	Qty	A	Description	Remarks	M/C No change
1	232/04401	1		Accumulator		
2	826/01329	1		Nut, M28		
3	816/15106	1		Adaptor, M18 x ¼in.BSP		
4	1406/0016	1		Seal, bonded, M18		
5	TBA	1		O Ring		

E3-15-1 ACCUMULATOR

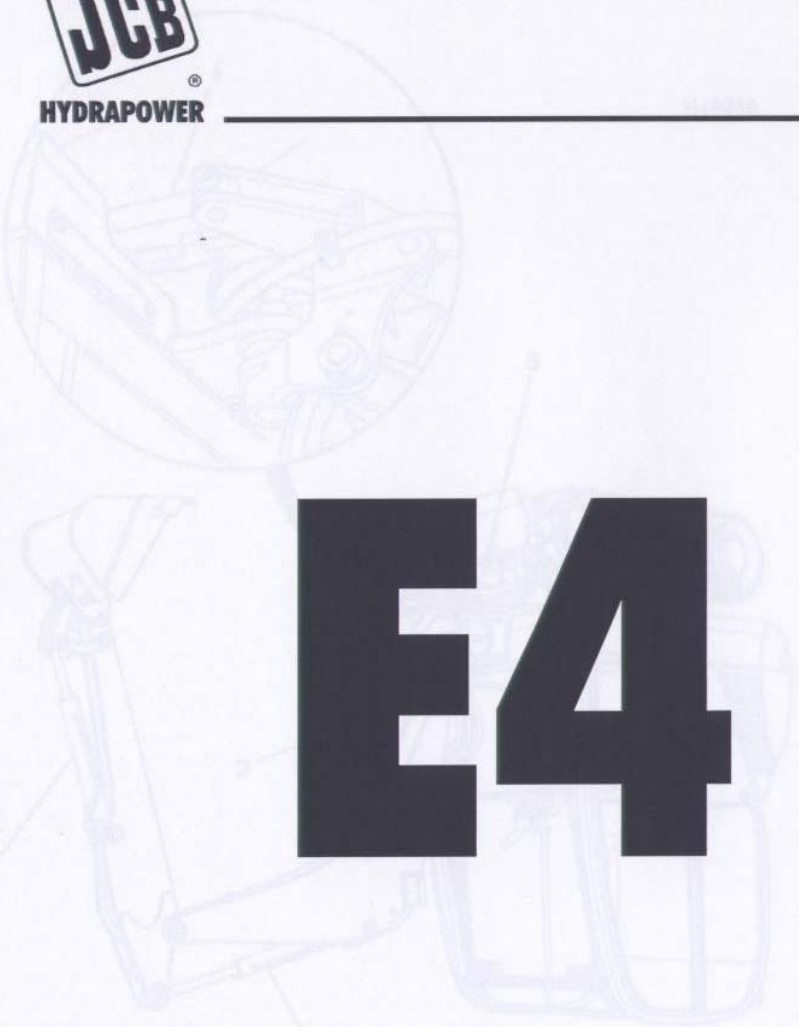

E4

E1 HOSE & PIPEWORK

E2 PUMPS, PUMP DRIVE & MOTORS

E3 VALVES & HYDRAULIC FILTER

E4 RAMS

E4-0-0 RAM LOCATIONS

	on	to	on	to
8014	M791000			
8015	M730800			
8016	M728750			
8017	M800000			
8018	M801000			

Item	Part No	Qty	A	Description	Remarks	M/C No change
1		1		Swing ram	See E4-1-1/E4-1-2	
2		1		Dozer ram	See E4-2-1/E4-2-2	
3		1		Boom ram	See E4-3-1/E4-3-2	
4		1		Dipper ram	See E4-4-1/E4-4-2	
5		1		Bucket ram	See E4-5-1/E4-5-2	

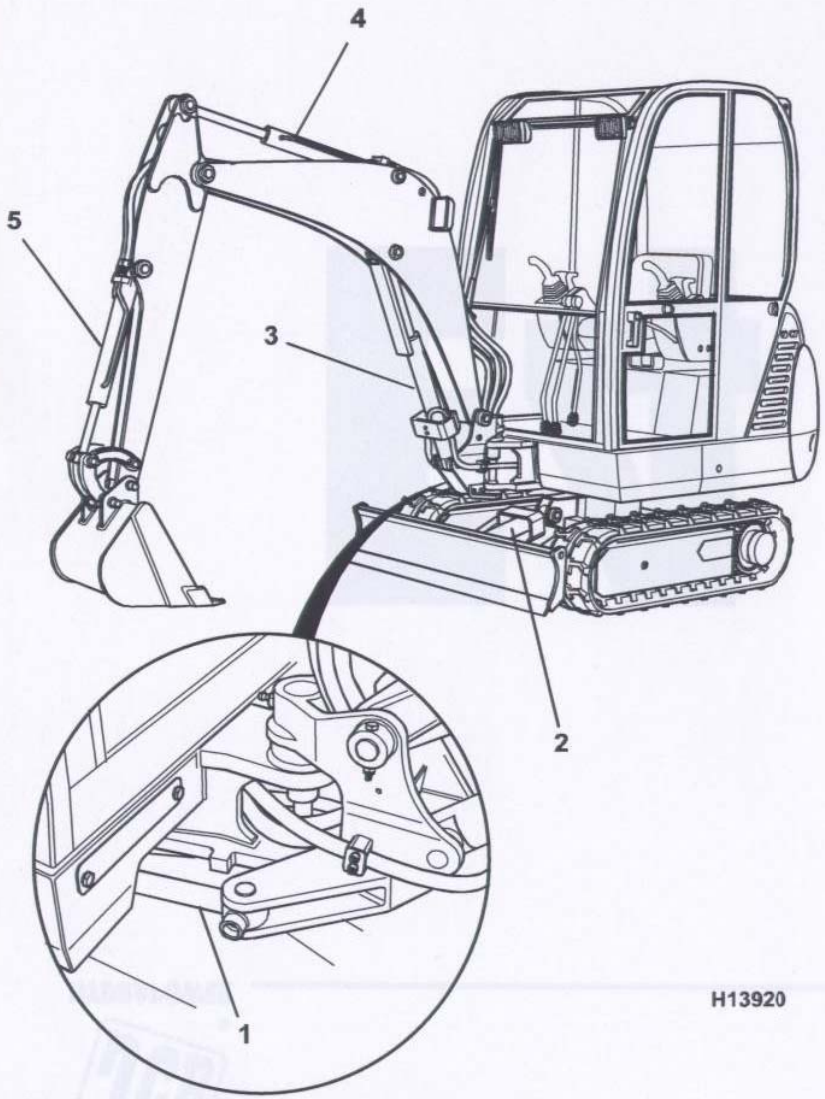

H13920

E4-0-0 RAM LOCATIONS

E4-1-1 SWING RAM

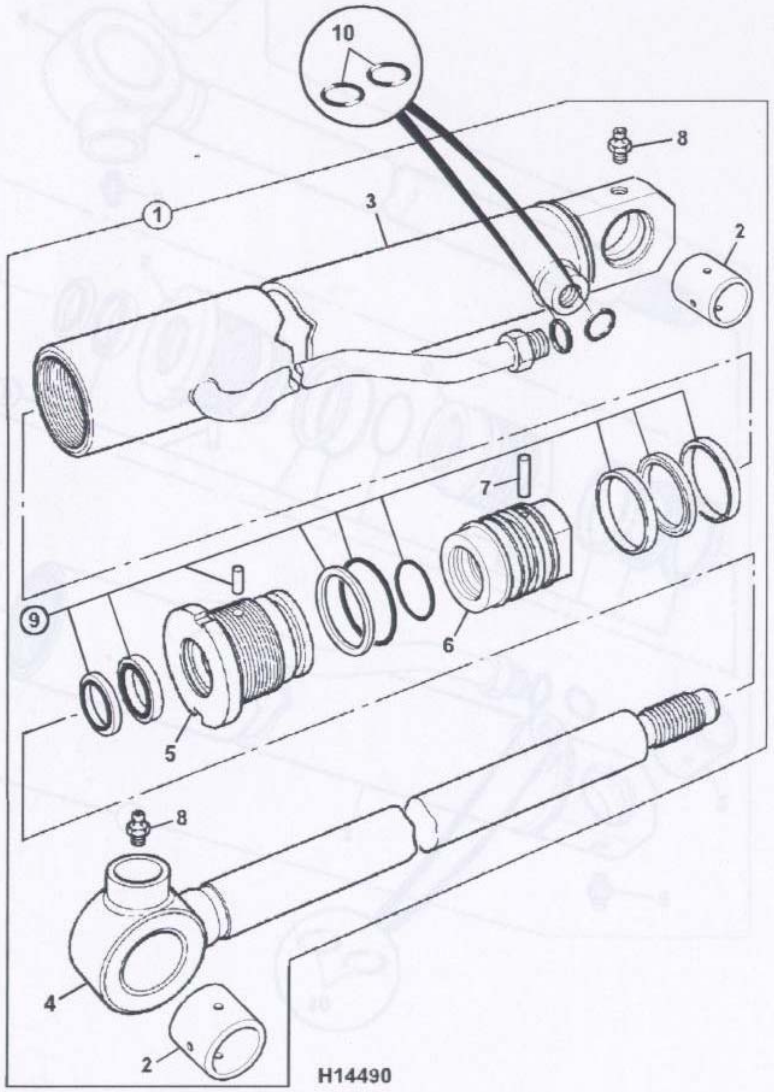

	on	to	on	to
8014	M791000			
8015	M730800			
8016	N/A			
8017	M800000			
8018	M801000			

Item	Part No	Qty	A	Description	Remarks	M/C No change
1	236/11600	1		Ram assembly	Swing	
2*	236/11610	2	:	Bush, wrapped	Was 831/00124	
3*	236/11611	1	:	Cylinder		
4*	236/11612	1	:	Rod, piston		
5*	236/11613	1	:	Bearing, gland	Was 231/32252	
6*	236/11614	1	:	Head, piston	Was 231/32253	
7*	231/34315	1	:	Dowel	Was 231/32254	
8	1450/0001	2	:	Nipple, grease, 1/8in.		
9*	236/11616	1	:	Seal kit	Was 231/32652	
10	2401/0605	2		O Ring, 11/16in. - ORFS		

E4-1-1 SWING RAM

E4-1-2 SWING RAM

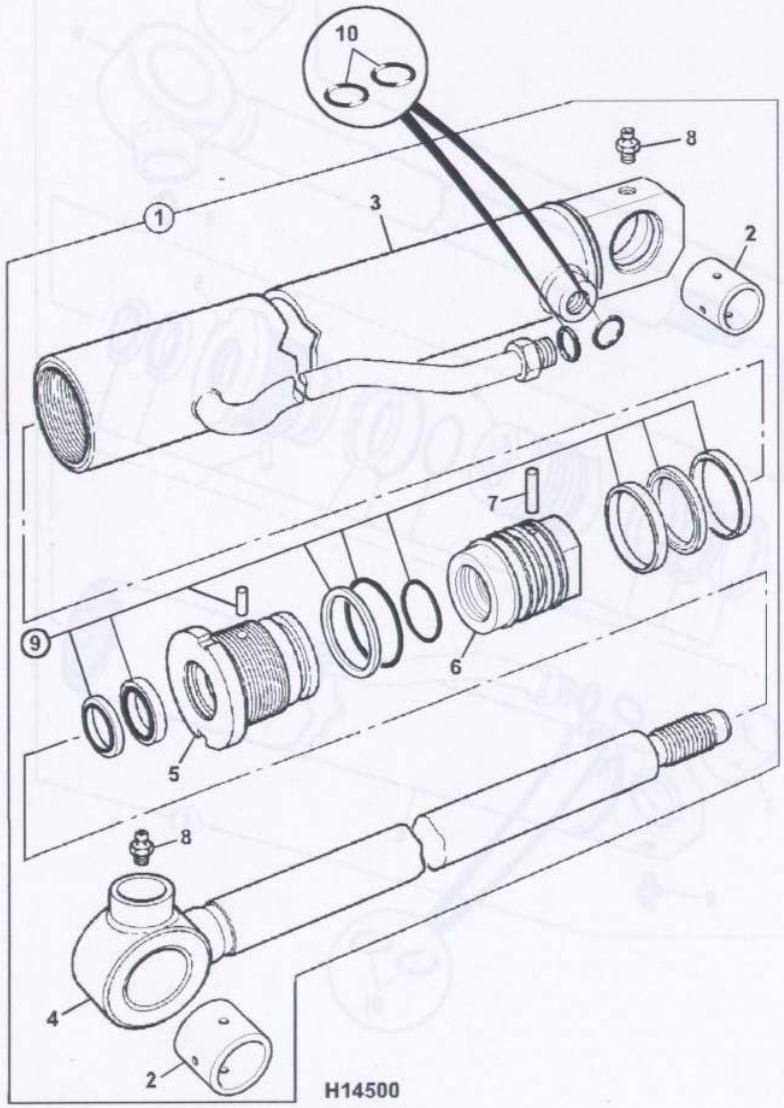

	on	to	on	to
8014	N/A			
8015	N/A			
8016	M728750			
8017	M800000			
8018	M801000			

Item	Part No	Qty	A	Description	Remarks	M/C No change
1	236/11700	1		Ram assembly	Swing	
2*	236/11610	2	:	Bush, wrapped	Was 831/00124	
3*	236/11711	1	:	Cylinder		
4*	236/11712	1	:	Rod, piston		
5*	236/11713	1	:	Bearing, gland	Was 231/33251	
6*	236/11714	1	:	Head, piston	Was 231/33252	
7*	231/33253	1	:	Dowel	Was 233/03354	
8	1450/0001	2	:	Nipple, grease, 1/8in.		
9*	236/11715	1	:	Seal kit, ram	Was 231/33607	
10	2401/0605	2		O Ring, 11/16in. - ORFS		

E4-1-2 SWING RAM

E4-2-1 DOZER RAM

	on	to	on	to
8014	M791000			
8015	M730800			
8016	M728750			
8017	M800000			
8018	M801000			

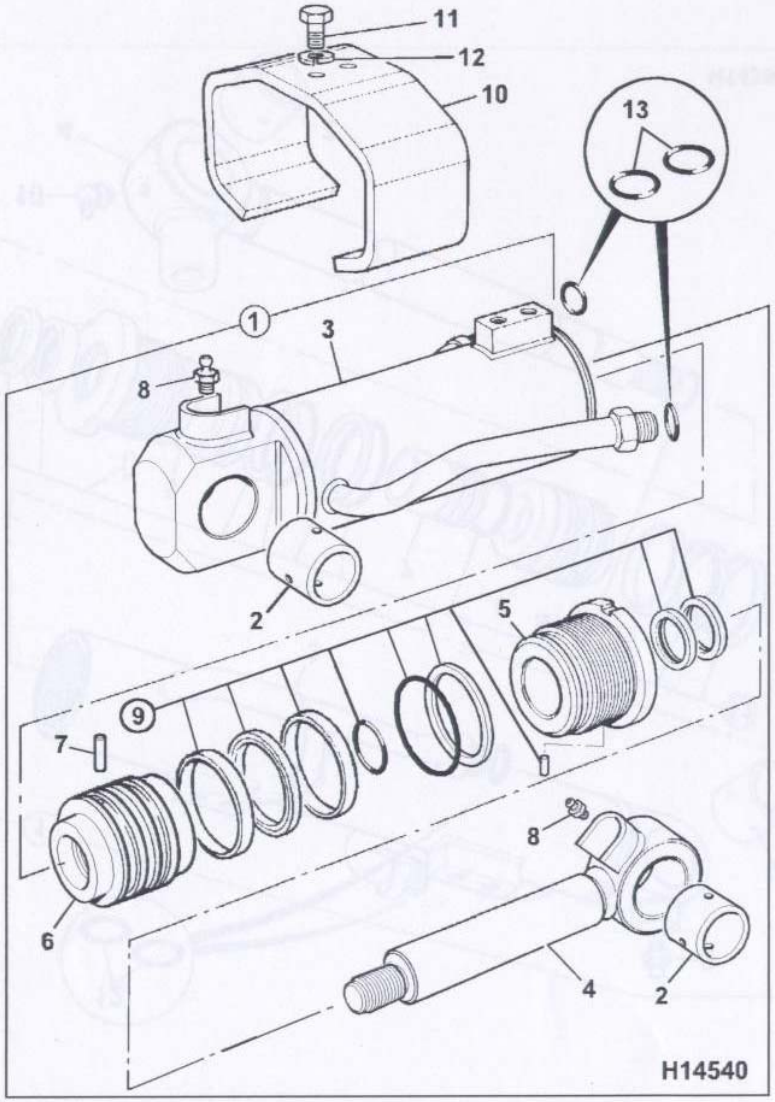

Item	Part No	Qty	A	Description	Remarks	M/C No change
1	236/11500	1		Ram assembly	Dozer	
2	808/00350	2	:	Bush, wrapped		
3*	236/11511	1	:	Cylinder		
4*	236/11512	1	:	Rod, piston		
5*	236/11513	1	:	Bearing, gland	Was 231/32803	
6*	236/11514	1	:	Head, piston	Was 231/32804	
7*	236/11515	1	:	Dowel	Was 233/11954	
8	1450/0001	2	:	Nipple, grease, 1/8in.	Was 231/32806	
9*	236/11516	1	:	Seal kit	Was 231/32807	
10	231/20003	1		Plate, protection		
11	1315/0405Z	2		Screw, hex head, M10 x 20		
12	823/00416Z	2		Washer, spring, M10		
13	2401/0605	2		O Ring, 11/16in. - ORFS		

E4-2-1 DOZER RAM

E4-3-1 BOOM RAM

	on	to	on	to
8014	M791000			
8015	M730800			
8016	N/A			
8017	M800000			
8018	M801000			

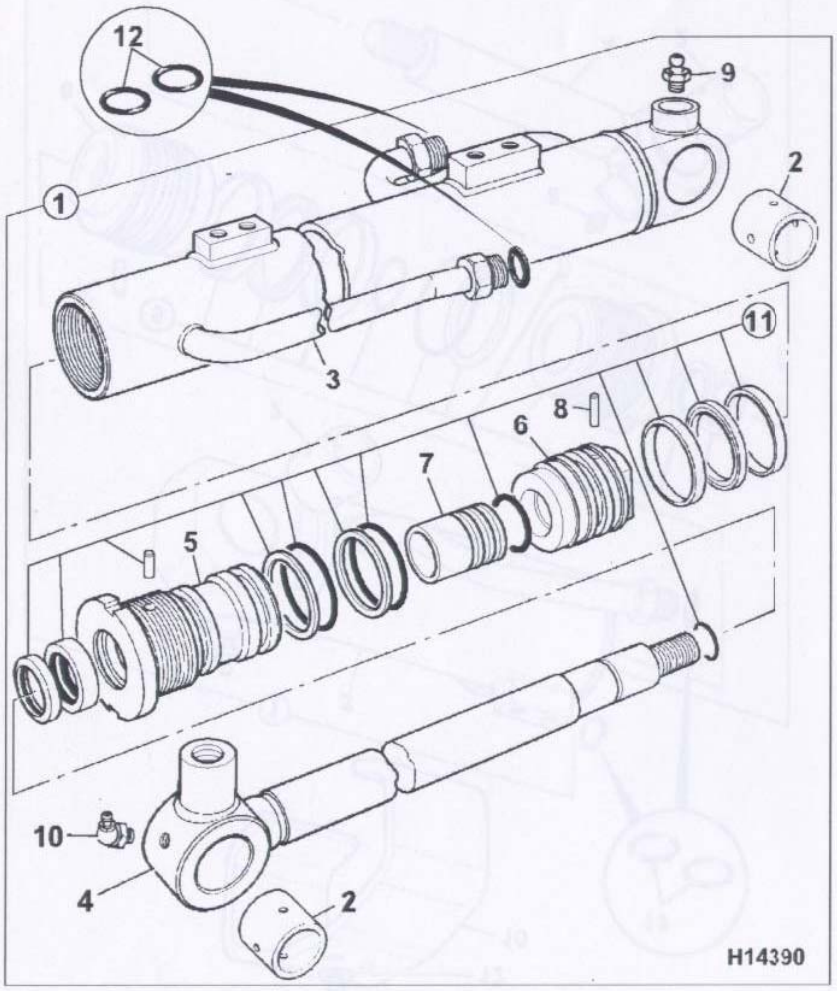

Item	Part No	Qty	A	Description	Remarks	M/C No change
1	231/34300	1		Ram assembly	Boom	
2*	236/11610	2	:	Bush, wrapped	Was 831/00124	
3*	231/34310	1	:	Cylinder		
4*	231/34311	1	:	Rod, piston		
5*	231/34312	1	:	Bearing, gland	Was 231/32052	
6*	231/34313	1	:	Head, piston	Was 231/32053	
7*	231/34314	1	:	Bush, cushion	Was 231/32054	
8*	231/34315	1	:	Dowel	Was 233/03354	
9	1450/0001	1	:	Nipple, grease, 1/8in.		
10	816/60166	1	:	Nipple, grease, 135°		
11*	231/34316	1	:	Seal kit	Was 231/32056	
12	2401/0605	2		O Ring, 11/16in. - ORFS		

E4-3-1 BOOM RAM

E4-3-2 BOOM RAM - 8016

	on	to	on	to
8014	N/A			
8015	N/A			
8016	M728750			
8017	M800000			
8018	M801000			

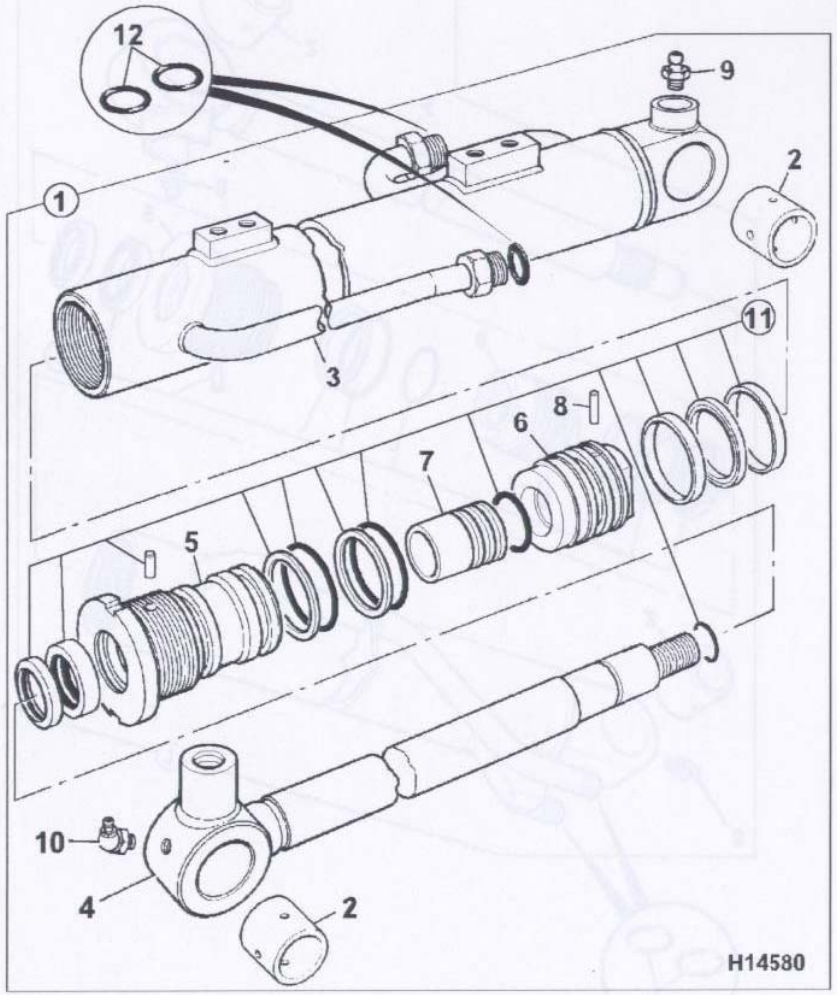

Item	Part No	Qty	A	Description	Remarks	M/C No change
1	236/12800	1		Ram assembly	Boom	
2*	236/11610	2	:	Bush, wrapped	Was 831/00124	
3*	236/12810	1	:	Cylinder		
4*	236/12811	1	:	Rod, piston		
5*	236/12812	1	:	Bearing, gland	Was 231/33003	
6*	236/12813	1	:	Head, piston	Was 231/33004	
7*	231/34314	1	:	Bush, cushion	Was 231/32054	
8*	231/33253	1	:	Dowel	Was 233/03354	
9	1450/0001	1	:	Nipple, grease, 1/8in.		
10	816/60166	1	:	Nipple, grease, 135°		
11*	236/12815	1	:	Seal kit	Was 231/33009	
12	2401/0606	2		O Ring, 13/16in. ORFS		

E4-3-2 BOOM RAM - 8016

E4-4-1 DIPPER RAM

	on	to	on	to
8014	M791000			
8015	M730800			
8016	N/A			
8017	M800000			
8018	M801000			

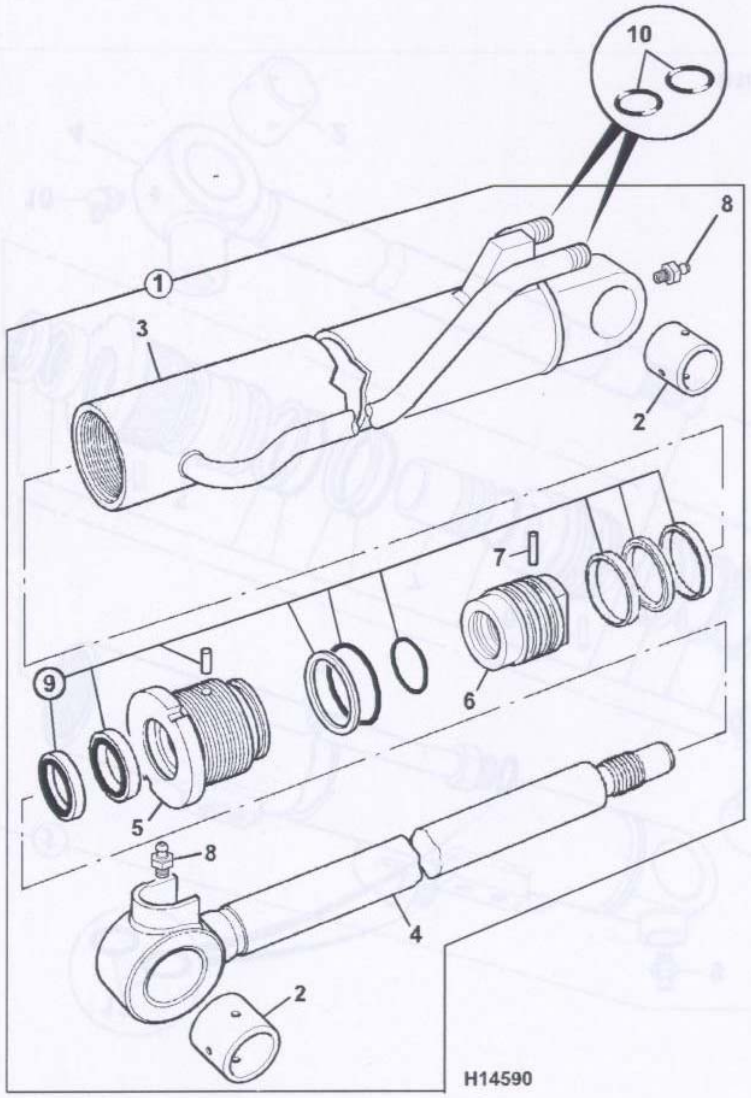

Item	Part No	Qty	A	Description	Remarks	M/C No change
1	231/35300	1		Ram assembly	Dipper	
2*	236/11610	2	:	Bush, wrapped	Was 831/00124	
3*	231/35310	1	:	Cylinder		
4*	231/35311	1	:	Rod, piston		
5*	231/35312	1	:	Bearing, gland	Was 231/32252	
6*	236/11614	1	:	Head, piston	Was 231/32253	
7*	231/34315	1	:	Dowel	Was 233/03354	
8	1450/0001	2	:	Nipple, grease, 1/8in.		
9*	231/35313	1	:	Seal kit, ram	Was 231/32254	
10	2401/0605	2		O Ring, 11/16in. - ORFS		

E4-4-1 DIPPER RAM

E4-4-2 DIPPER RAM

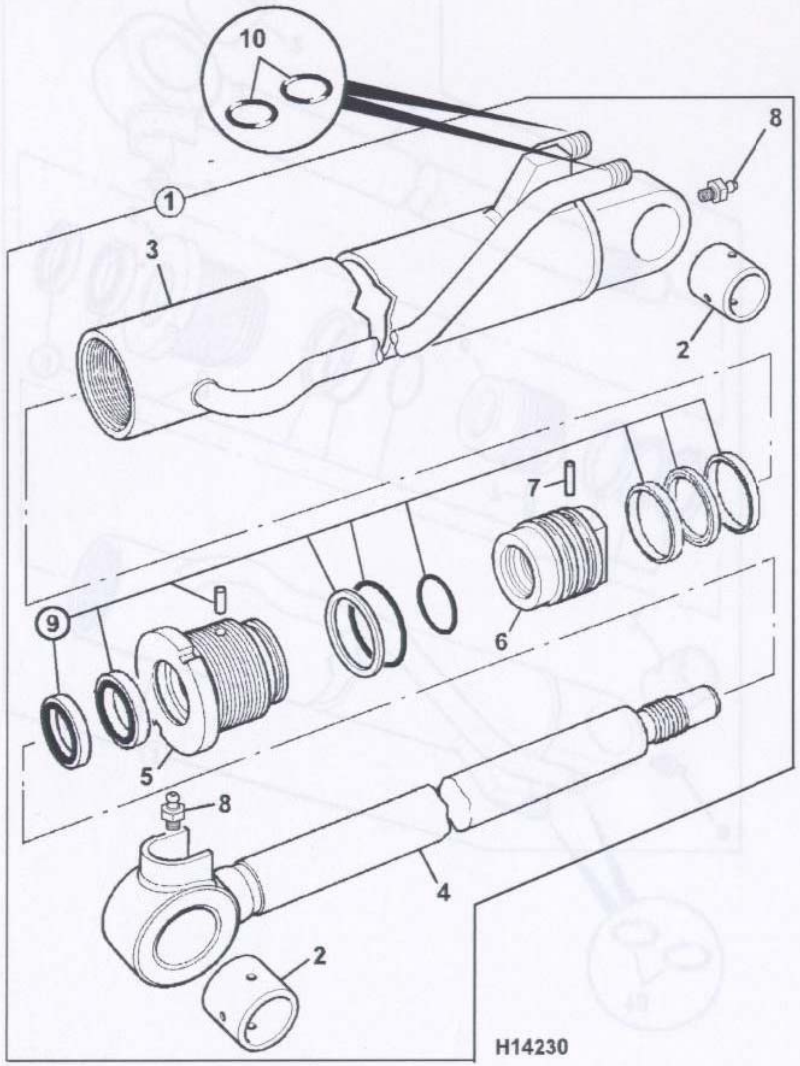

	on	to	on	to
8014	N/A			
8015	N/A			
8016	M728750			
8017	M800000			
8018	M801000			

Item	Part No	Qty	A	Description	Remarks	M/C No change
1*	236/12700	1		Ram assembly	Dipper	
2*	236/11610	2	:	Bush, wrapped	Was 831/00124	
3*	236/12710	1	:	Cylinder		
4*	236/12711	1	:	Rod, piston		
5*	236/11713	1	:	Bearing, gland	Was 231/33251	
6*	236/11714	1	:	Head, piston	Was 231/33252	
7*	231/33253	1	:	Dowel	Was 231/33253	
8	1450/0001	2	:	Nipple, grease, 1/8in.		
9*	236/12712	1	:	Seal kit, ram	Was 231/33254	
10	2401/0606	2		O Ring, 13/16in. ORFS		

E4-4-2 DIPPER RAM

E4-5-1 BUCKET RAM

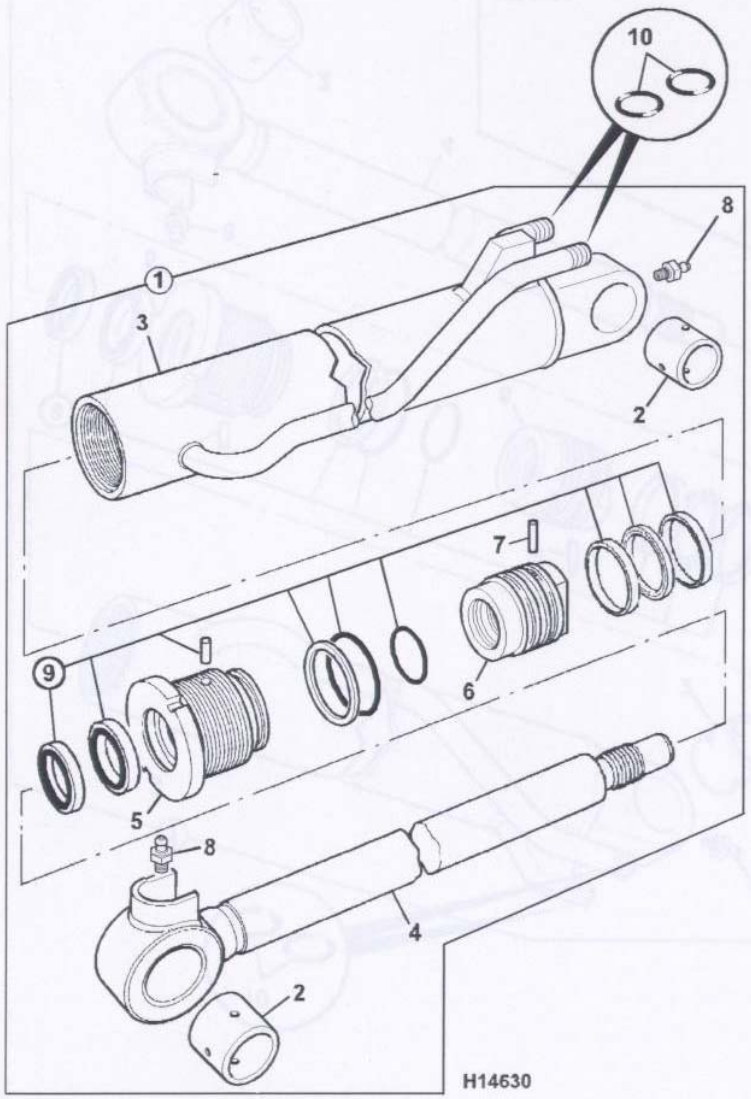

	on	to	on	to
8014	M791000			
8015	M730800			
8016	N/A			
8017	M800000			
8018	M801000			

Item	Part No	Qty	A	Description	Remarks	M/C No change
1	231/35400	1		Ram assembly	Bucket	
2*	236/11610	2	:	Bush, wrapped	Was 831/00124	
3*	231/35410	1	:	Cylinder		
4*	231/35411	1	:	Rod, piston		
5*	231/35412	1	:	Bearing, gland	Was 231/32252	
6*	236/11614	1	:	Head, piston	Was 231/32253	
7*	231/34315	1	:	Dowel	Was 233/03354	
8	1450/0001	2	:	Nipple, grease, 1/8in.		
9*	231/35413	1	:	Seal kit, ram	Was 231/32452	
10	2401/0605	2		O Ring, 11/16in. - ORFS		

E4-5-1 BUCKET RAM

E4-5-2 BUCKET RAM

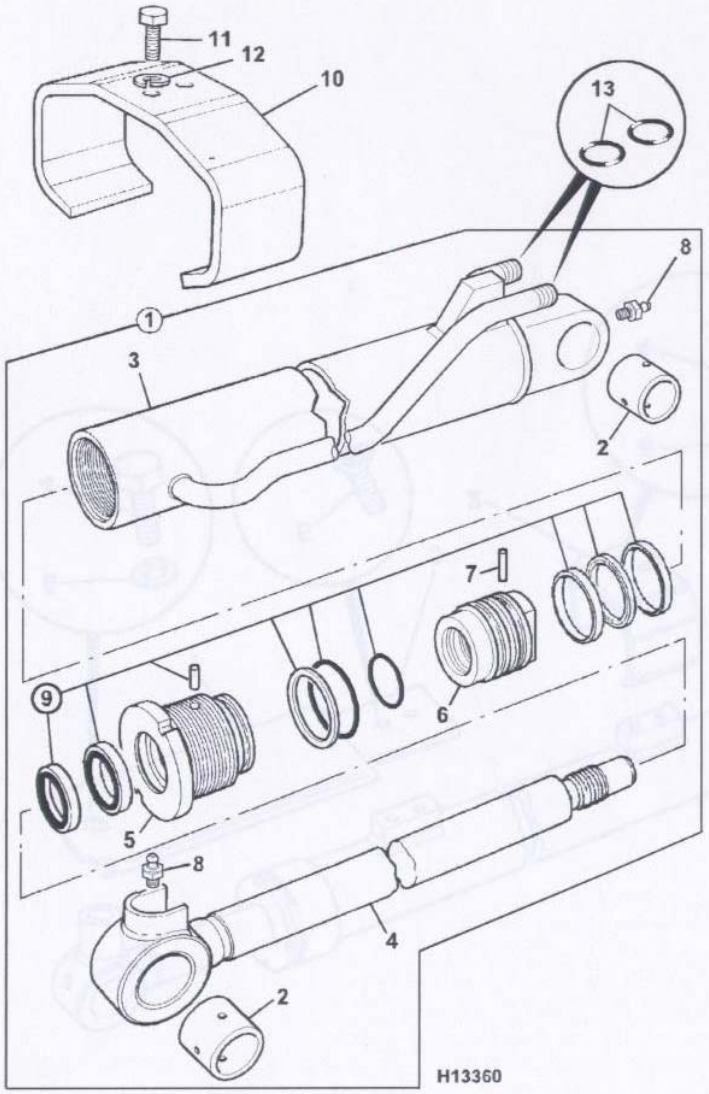

	on	to	on	to
8014	N/A			
8015	N/A			
8016	M728750			
8017	M800000			
8018	M801000			

Item	Part No	Qty	A	Description	Remarks	M/C No change
1	236/12600	1		Ram assembly	Bucket	
2*	236/11610	2	:	Bush, wrapped	Was 831/00124	
3*	236/12610	1	:	Cylinder		
4*	236/12611	1	:	Rod, piston		
5*	236/11713	1	:	Bearing, gland		
6*	236/11714	1	:	Head, piston		
7*	231/33253	1	:	Dowel		
8	1450/0001	2	:	Nipple, grease, 1/8in.		
9*	236/12612	1	:	Seal kit, ram		
10	231/20003	1		Plate, protection		
11	1315/0407Z	2		Screw, hex head, M10 x 25		
12	823/00416Z	2		Washer, spring, M10		
13	2401/0605	2		O Ring, 11/16in. - ORFS		

E4-5-2 BUCKET RAM

E4-6-1 BOOM RAM PROTECTION PLATES

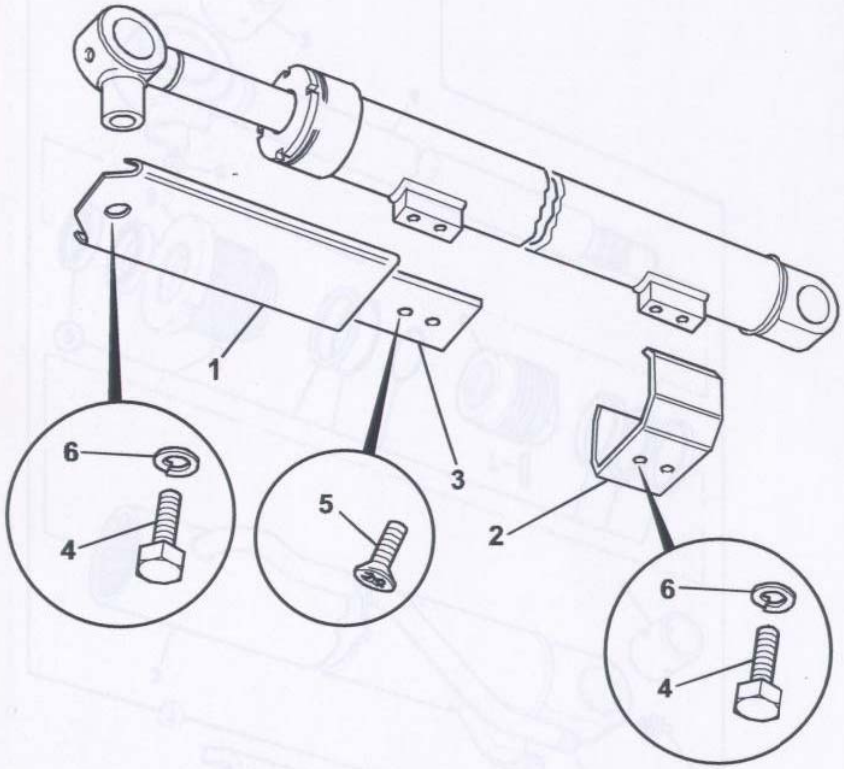

H17850

	on	to	on	to
8014	M791000			
8015	M730800			
8016	M728750			
8017	M800000			
8018	M801000			

Item	Part No	Qty	A	Description	Remarks	M/C No change
1	231/33901	1		Plate, protection		
2	231/20003	1		Plate, protection		
3	231/33802	1		Bracket, support		
4	1315/0405Z	3		Screw, hex head, M10 x 20		
5	826/01512	2		Screw, csk, M10 x 25		
6	1420/0008Z	3		Washer, plain, M10		

E4-6-1 BOOM RAM PROTECTION PLATES

E4-7-1 EXTENDING UNDERCARRIAGE RAM

	on	to	on	to
8014	N/A			
8015	N/A			
8016	N/A			
8017	M800000			
8018	M801000			

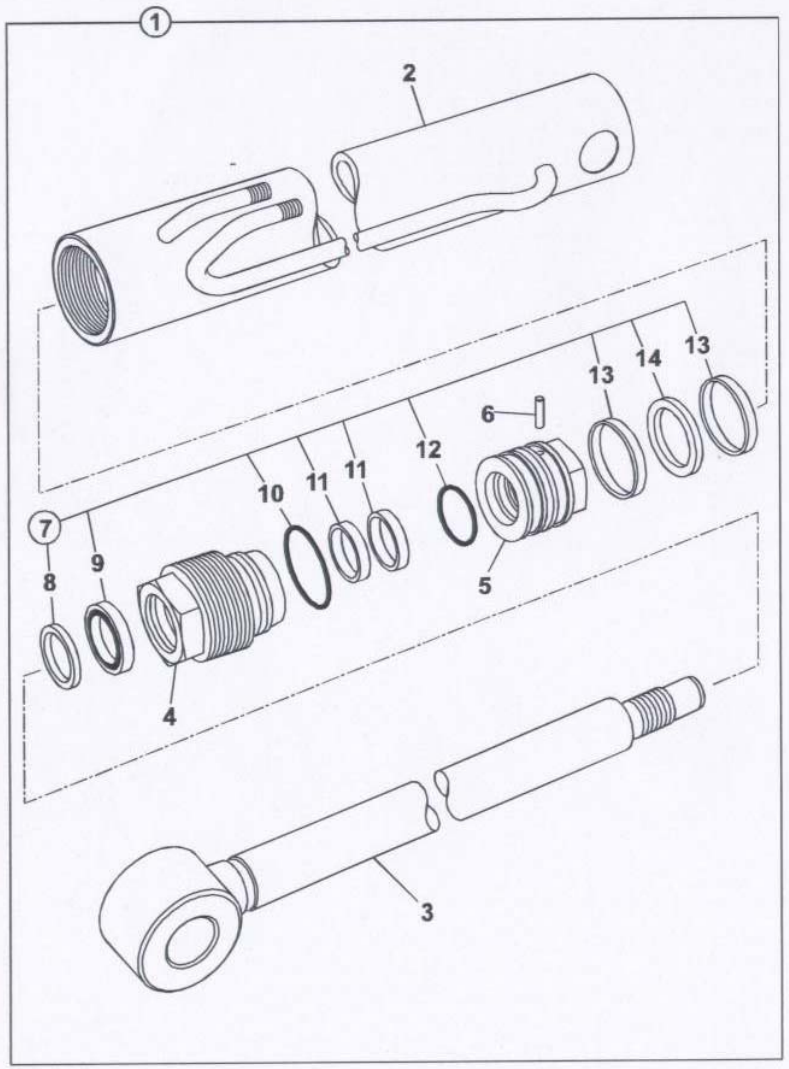

H22020

Item	Part No	Qty	A	Description	Remarks	M/C No change
1	236/41800	1		Ram, undercarriage		
2	236/41801	1	:	Ram cylinder		
3	236/41802	1	:	Piston rod		
4	236/11713	1	:	Bearing, gland		
5	236/11714	1	:	Head, piston		
6	231/33253	1	:	Dowel		
7	236/41803	1		Seal kit		
8	NSP	1	::	Seal, wiper		
9	NSP	1	::	Rod seal		
10	NSP	1	::	O Ring		
11	NSP	2	::	Bearing		
12	NSP	1	::	O ring		
13	NSP	2	::	Ring, wear		
14	NSP	1	::	Seal, piston		

E4-7-1 EXTENDING UNDERCARRIAGE RAM



F4

F4 SLEW AND TRACK GEARBOXES

F4-2-1 TRACK GEARBOX ASSEMBLY

	on	to	on	to
8014	M791000			
8015	M730800			
8016	M728750	M728867		
8017	N/A			
8018	N/A			

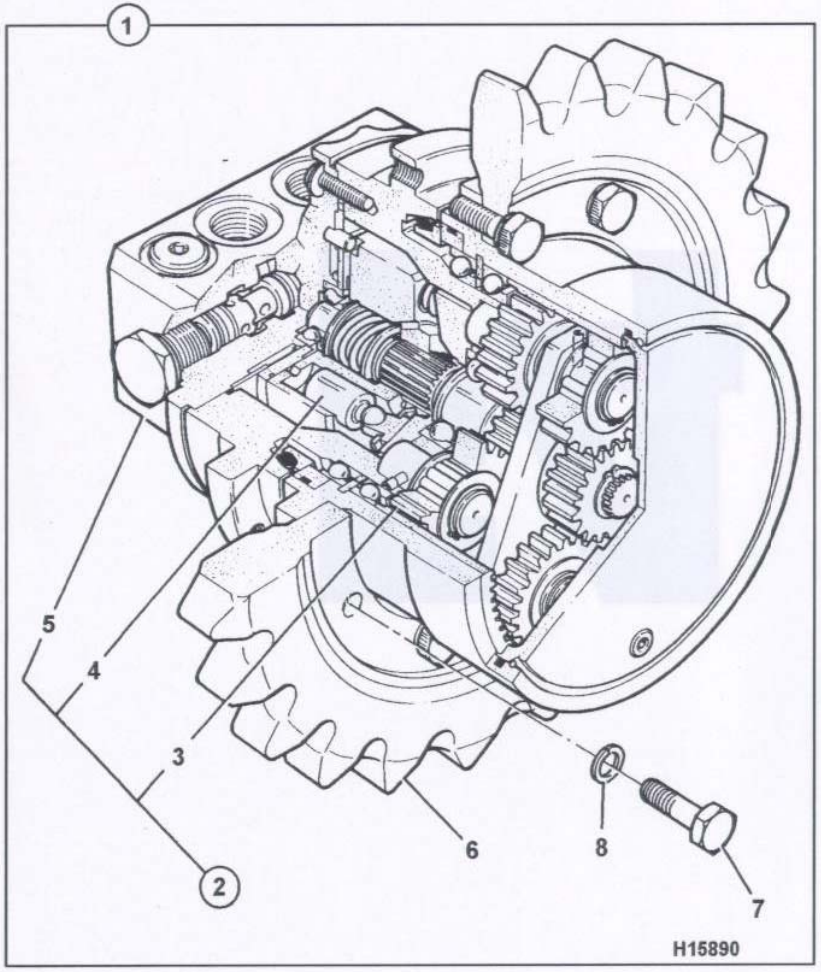

Item	Part No	Qty	A	Description	Remarks	M/C No change
1	231/80800	2		Track gearbox assembly		
2	20/904500	1	:	Track gearbox assembly		
3		1	::	Gearbox, track	See F4-3-1	
4		1	::	Motor, track	See E2-4-1	
5		1	::	Valve, modulating	See E3-13-1	
6	231/80801	1	:	Sprocket		
7	1391/3407Z	9	:	Capscrew, M10 x 25		
8	823/00416Z	9	:	Washer, spring, M10		

F4-2-1 TRACK GEARBOX ASSEMBLY

F4-2-2 TWO SPEED - TRACK GEARBOX ASSEMBLY

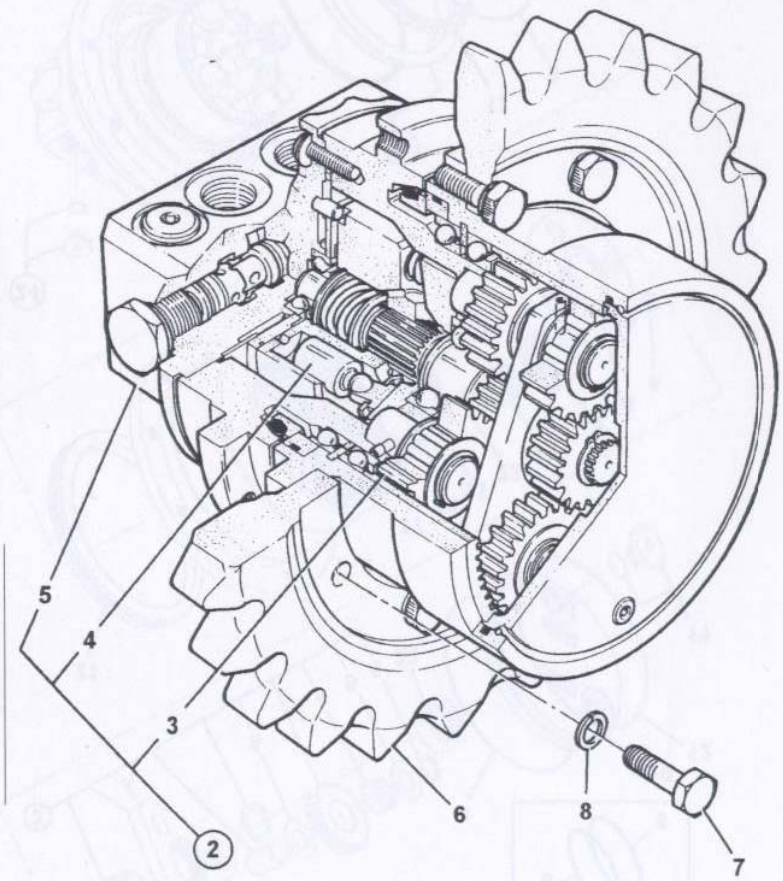

H21750

	on	to	on	to
8014	N/A			
8015	N/A			
8016	M728868			
8017	M800000			
8018	M801000			

Item	Part No	Qty	A	Description	Remarks	M/C No change
2	20/918400	1		Track motor assembly	2 speed tracking	
3		1	:	Gearbox, track		
4		1	:	Motor, track		
5		1	:	Valve, modulating		
6	231/80801	1		Sprocket		
7	1391/3407Z	9		Capscrew, M10 x 25		
8	823/00416Z	9		Washer, spring, M10		

Note : This page also applies to 8015 machines, when two speed tracking option is fitted.

F4-2-2 TWO SPEED - TRACK GEARBOX ASSEMBLY

F4-3-1 TRACK GEARBOX

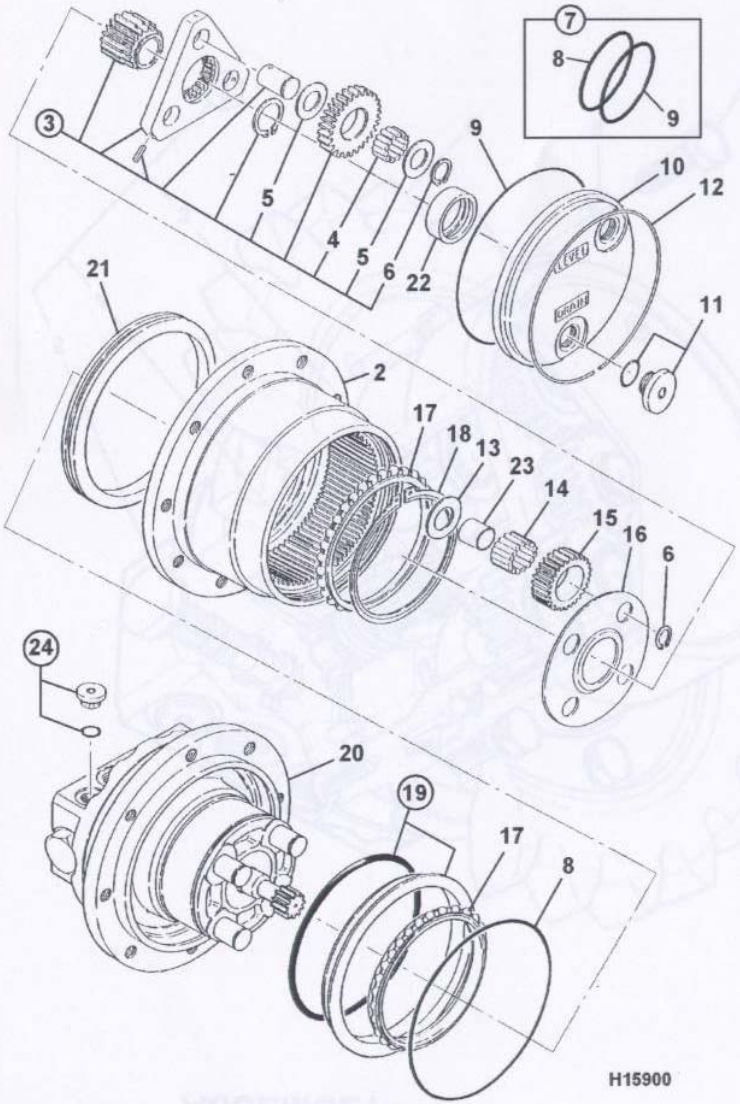

	on	to	on	to
8014	M791000			
8015	M730800			
8016	M728750			
8017	M800000			
8018	M801000			

Item	Part No	Qty	A	Description	Remarks	M/C No change
1		1		Gearbox assembly	See F4-2-1	
2	20/904501	1		Housing, gearbox		
3	20/904503	1		Carrier, assembly		
4	20/904404	39	:	Needle		
5	20/904504	6	:	Thrust washer		
6	20/902504	7	:	Ring, snap		
7	20/902521	1		Seal kit		
8	20/904515	1	:	O Ring		
9	20/904516	1	:	O Ring		
10	20/902502	1		Cover		
11	20/904505	2		Plug		
12	20/902509	1		Ring, snap		
13	20/904506	4		Washer, thrust		
14	20/902511	60		Needle		
15	20/904509	4		Gear		
16	20/904508	1		Plate, thrust		
17	20/904507	2		Bearing, roller		
18	20/904510	1		Ring, snap		
19	20/904511	1		Seal kit, floating		
20	N.S.P.	1		Housing		
21	20/904512	1		Ring, seal		
22	20/904513	1		Ring, sliding		
23	20/904514	4		Ring		
24	20/906642	2		Plug		

J1

J1 UNDERCARRIAGE, TRACK & RUNNING GEAR

J1-1-1 UNDERCARRIAGE

	on	to	on	to
8014	M791000			
8015	M730800			
8016	M728750			
8017	N/A			
8018	N/A			

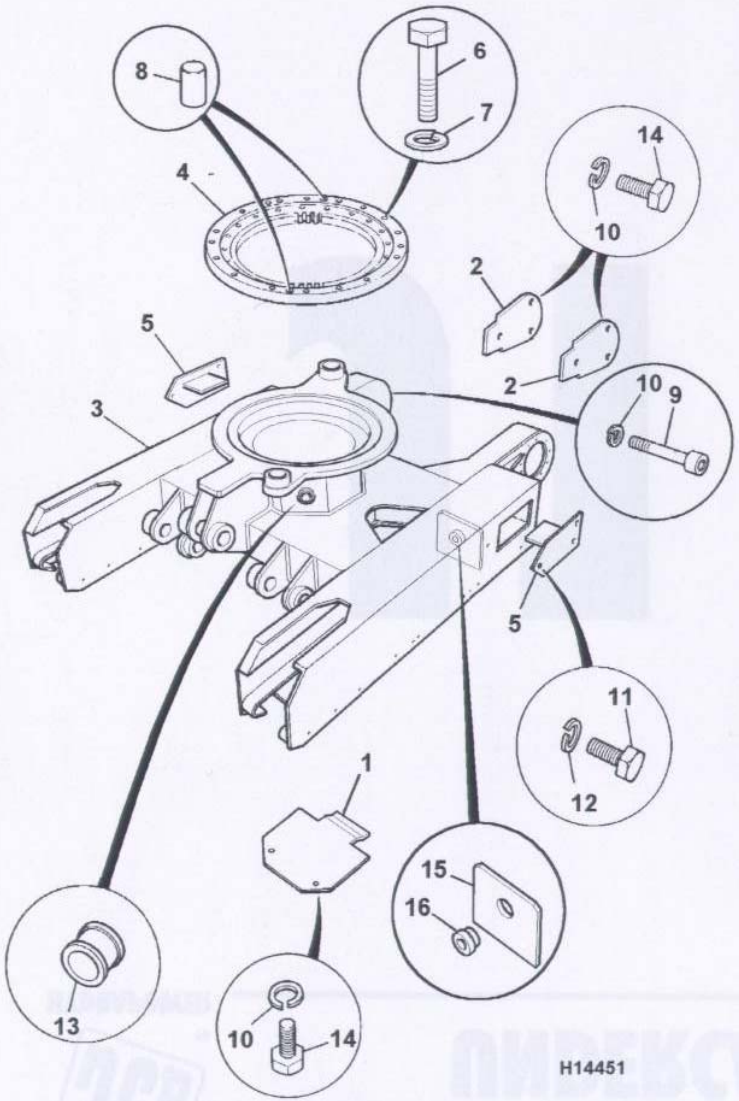

Item	Part No	Qty	A	Description	Remarks	M/C No change
1	236/06102	1		Cover, bottom		
2	236/06103	2		Cover, track motor		
3*	236/06200	1		Undercarriage	8014, grey	To M791122
				Undercarriage	8014, black	M791123 on
				Undercarriage	8015, grey	To M730930
				Undercarriage	8015, black	M730931 on
	236/10000	1		Undercarriage	8016, grey	To M728787
				Undercarriage	8016, black	M728788 on
4	231/23500	1		Slew ring		
5	236/07700	2		Cover plate		
6	826/00998	17		Screw, hex head, M12 x 30		
7	823/00417Z	17		Washer, spring, M12		
8	2105/1609	2		Dowel		
9	1391/3407	16		Capscrew, M10 x 25		
10*	823/00416	24		Washer, spring, M10		
11	1315/0303Z	6		Screw, hex head, M8 x 16		
12	823/00415	6		Washer, spring, M8		
13	828/00229	2		Grommet, 30 dia hole	See E1-4-1	
14*	1315/0405Z	8		Screw, hex head, M10 x 20		
15*	231/61007	2		Rib, tension		
16*	231/61008	2		Boss, tension		

J1-1-1 UNDERCARRIAGE

J1-1-2 UNDERCARRIAGE - EXTENDING

	on	to	on	to
8014	N/A			
8015	N/A			
8016	N/A			
8017	M800000			
8018	M801000			

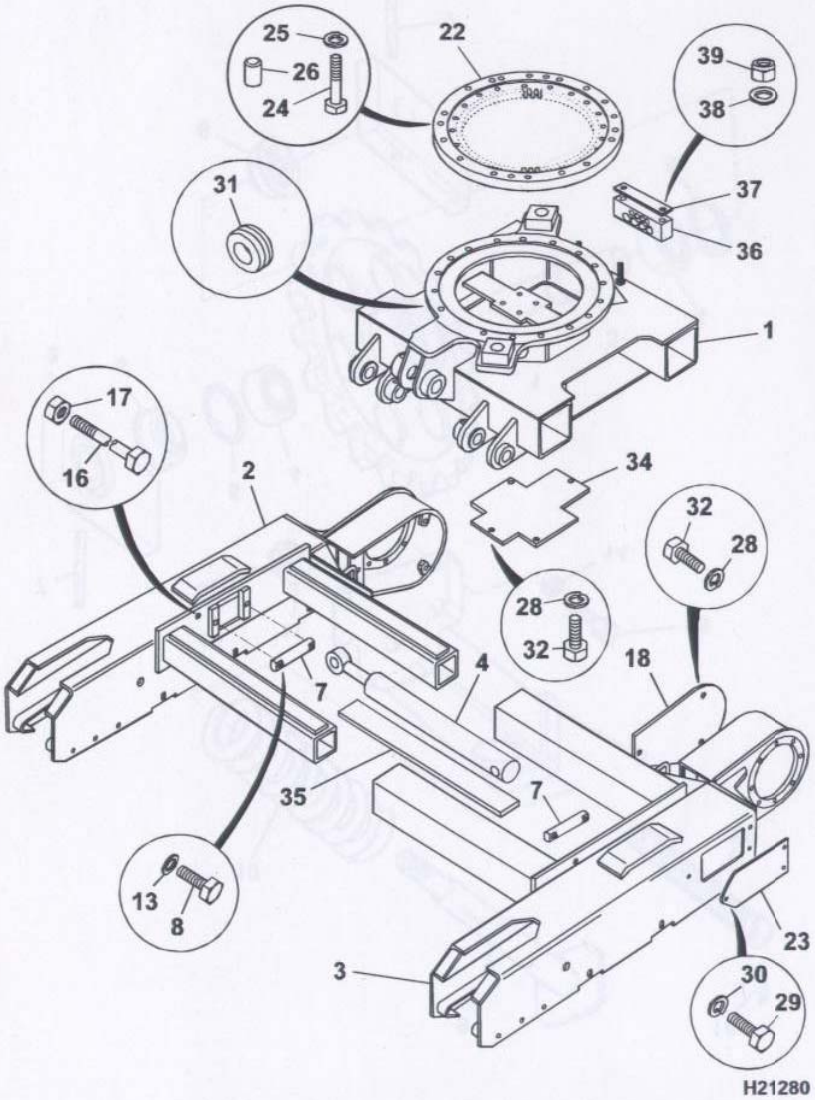

H21280

Item	Part No	Qty	A	Description	Remarks	M/C No change
1	236/40100	1		Turret		
2	236/40200	1		Track leg, RH		
3	236/40300	1		Track leg, LH		
4		1		Ram, undercarriage	See E4-7-1	
7	236/40001	2		Pin, ram		
8	1315/0407Z	4		Screw, hex head, M10 x 25		
13	1420/0008Z	4		Washer, plain, M10		
16	1315/3734Z	2		Bolt, hex head, M16 x 280		
17	1370/0601Z	2		Nut, M16		
18	236/06103	2		Cover, track motor		
22	231/23500	1		Slew ring		
23	236/07700	2		Cover plate		
24	826/00998	17		Screw, hex head, M12 x 30		
25	823/00417	17		Washer, spring, M12		
26	2105/1609	2		Dowel		
28	823/00417	10		Washer, spring, M12		
29	1315/0303Z	6		Screw, hex head, M8 x 16		
30	823/00415	6		Washer, spring, M8		
31	828/00229	2		Grommet, 30 dia hole		
32	1315/0405Z	10		Screw, hex head, M10 x 20		
34	236/40005	1		Plate, cover		
35	236/40004	1		Ram protection		
36	236/40002	1		Block, hose		
37	231/63007	1		Plate, hose		
38	1420/0007Z	2		Washer, plain, M8		
39	1370/0203Z	2		Nut, self lock, M8		

J1-1-2 UNDERCARRIAGE - EXTENDING

J1-2-1 IDLER/RECOIL UNIT

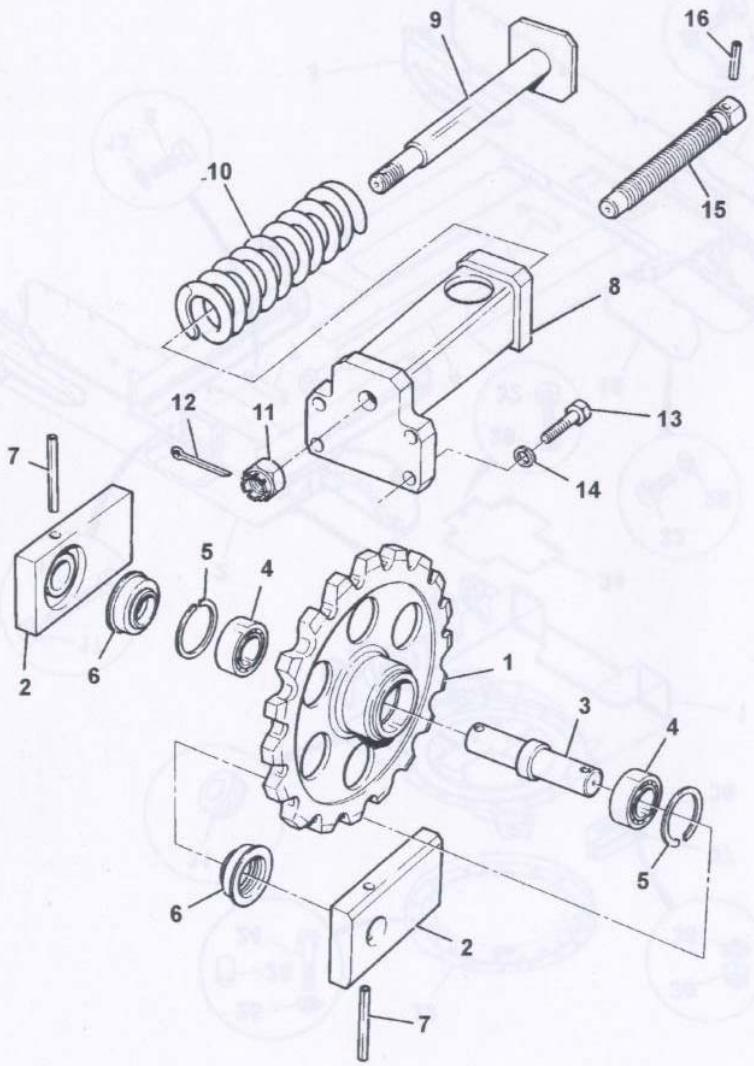

H15530

	on	to	on	to
8014	M791000			
8015	M730800			
8016	M728750			
8017	M800000			
8018	M801000			

Item	Part No	Qty	A	Description	Remarks	M/C No change
1	231/61701	1		Wheel, idler sprocket		
2	231/97401	2		Bracket support		
3	231/60303	1		Shaft		
4	916/04800	2		Bearing		
5	2203/1060	2		Circlip		
6	904/13600	2		Seal, lip		
7*	826/01251	2		Pin, tension, 8mm x 70mm		
8*	236/07600	1		Yoke		
9*	231/61500	1		Shaft spring support		
10*	231/21601	1		Spring		
11*	826/01017	1		Nut		
12*	2103/0911	1		Split pin		
13*	1315/0509Z	4		Screw, hex head, M12 x 35		
14*	823/00417Z	4		Washer, spring, M12		
15*	231/61600	1		Screw adjusting		
16*	826/01251	1		Pin, tension, 8mm x 70mm	Was 826/00997	

J1-2-1 IDLER/RECOIL UNIT

J1-3-1 TRACK ROLLER ASSEMBLY

	on	to	on	to
8014	M791000			
8015	M730800			
8016	M728750			
8017	M800000			
8018	M801000			

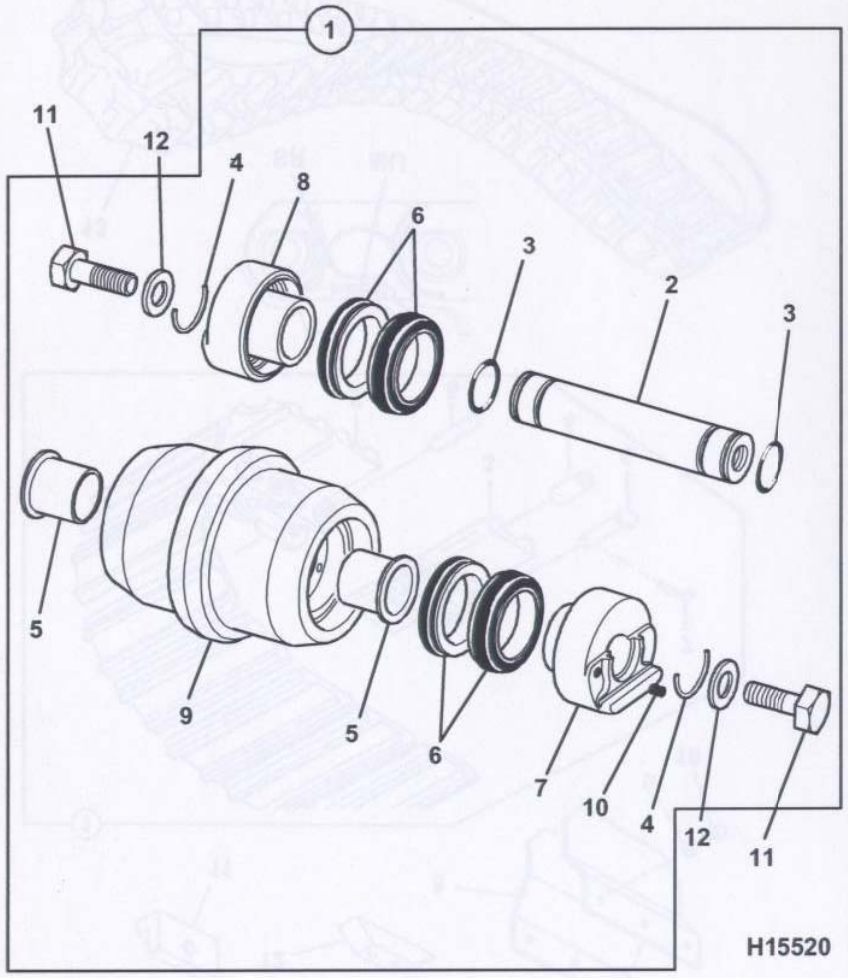

Item	Part No	Qty	A	Description	Remarks	M/C No change
1	231/98000	6		Roller assembly		
2	231/98050	1	:	Shaft		
3	231/98051	2	:	Seal		
4	231/98052	2	:	Clip, shaft		
5	231/98053	2	:	Bush, roller		
6	231/98054	4	:	Seal		
7	231/98055	1	:	Bracket, support outer		
8	231/98056	1	:	Bracket, support inner		
9	231/98057	1	:	Roller		
10	231/98058	1	:	Plug		
11	1315/0507Z	2		Screw, hex head, M12 x 25		
12	823/00394	2		Washer, special, M12		

J1-3-1 TRACK ROLLER ASSEMBLY

J1-4-1 TRACK ASSEMBLY

	on	to	on	to
8014	M791000			
8015	M730800			
8016	M728750			
8017	M800000			
8018	M801000			

Item	Part No	Qty	A	Description	Remarks	M/C No change
1	231/94800	2		Track chain assembly		
2	231/98391	32	:	Plate & link assembly	MU1500	
	231/98402	31	:	Plate & link assembly	SR 2005	
3	231/98397	1	:	Master link assembly	SR 2005	
4	231/98400	32	:	Bush	SR 2005	
5	231/98393	32	:	Pin, standard	MU1500	
	231/98401	32	:	Pin, standard	SR 2005	
6	231/98392	1	:	Pin, master	MU1500	
	231/98398	1	:	Pin, master	SR 2005	
7	231/98399	1	:	Pin, split	SR 2005	
8	231/30006	4		Guide, track		
9	823/00416Z	16		Washer, spring, M10		
10	1315/0405Z	16		Screw, hex head, M10 x 20		
11	231/62301	12		Spacer, roller		
12	231/30004	2		Plate, skid		
13	231/62401	2		Track, rubber		

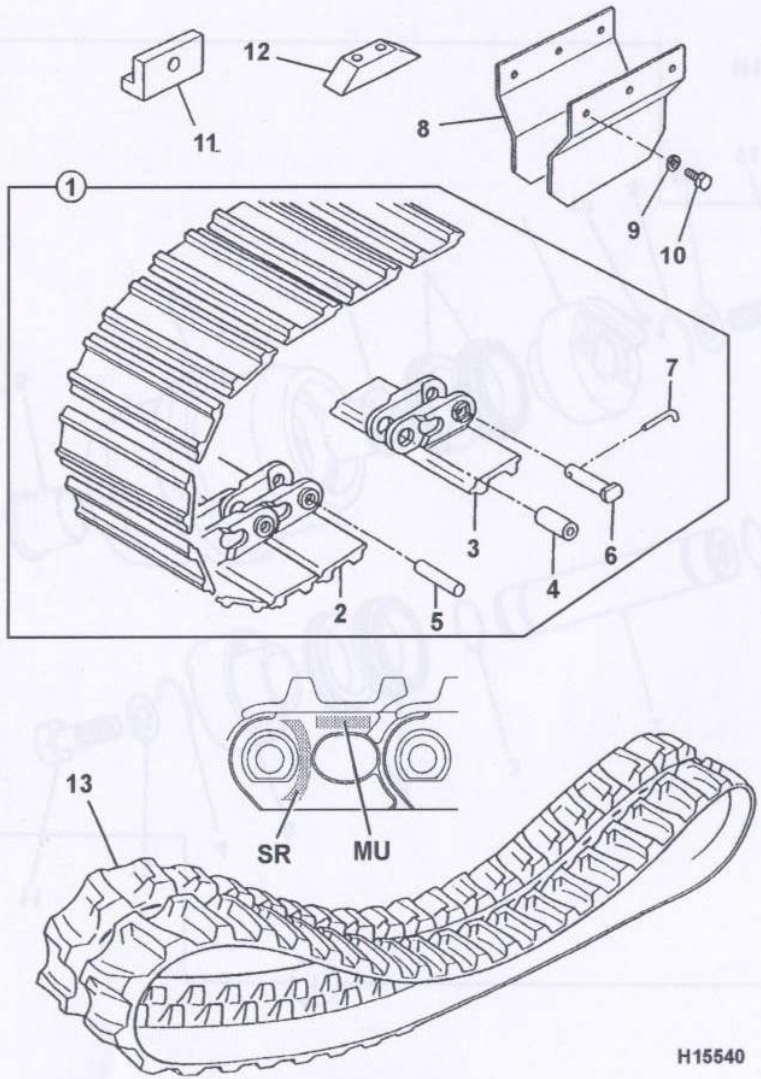

J1-4-1 TRACK ASSEMBLY

HYDRAPOWER

ENGINE, CYLINDER BLOCK & SUB-ASSEMBLIES

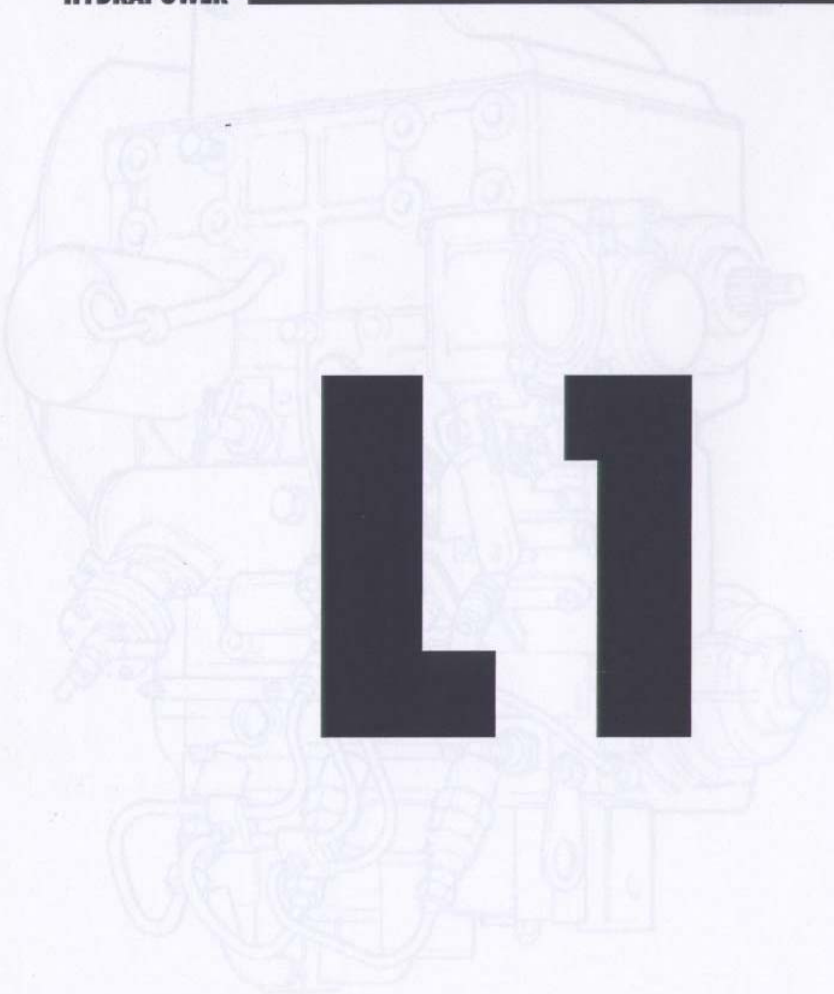

L1

L1 ENGINE, CYLINDER BLOCK & SUB-ASSEMBLIES

L2 CYLINDER HEAD & SUB ASSEMBLIES

L3 INDUCTION AND EXHAUST SYSTEMS

L4 COOLING SYSTEM

L5 LUBRICATION SYSTEM

L6 FUEL SYSTEM

L8 GASKET SETS

L1-1-1 COMPLETE ENGINE

	on	to	on	to
8014	M791000			
8015	M730800			
8016	M728750			
8017	M800000			
8018	M801000			

Item	Part No	Qty	A	Description	Remarks	M/C No change
1	231/86500	1		Engine, full	KD50316 Build	

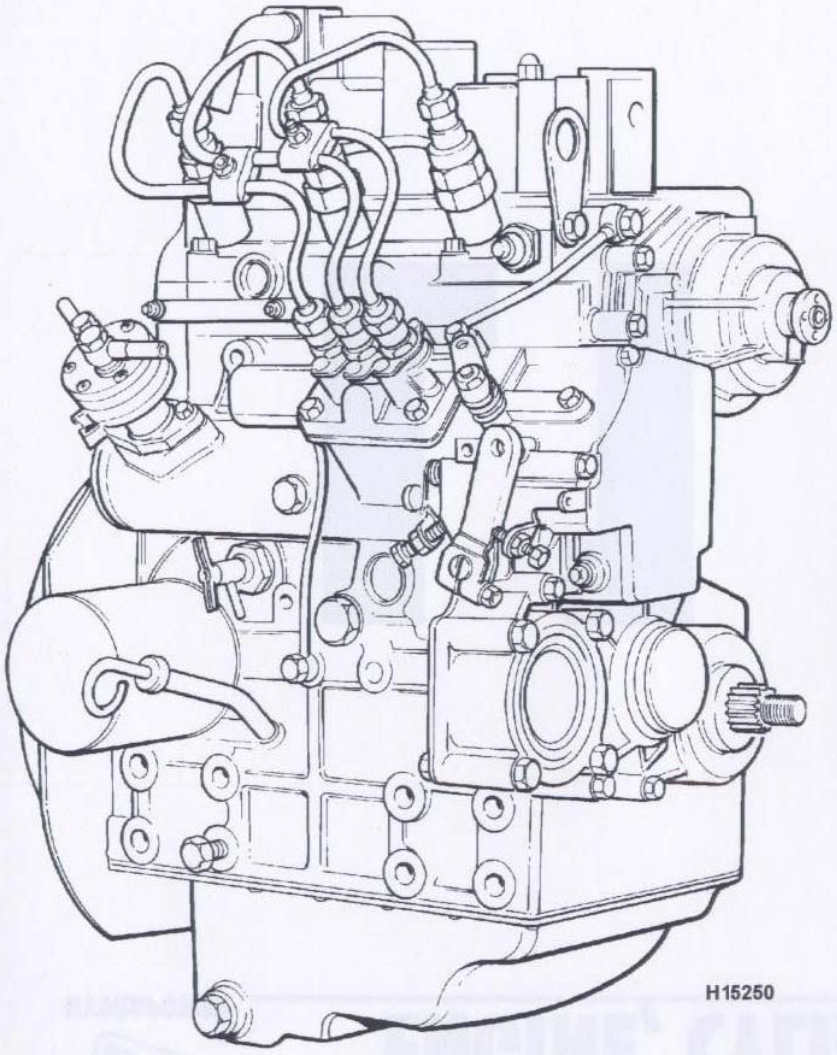

L1-1-1 COMPLETE ENGINE

L1-2-1 SHORT ENGINE

	on	to	on	to
8014	M791000			
8015	M730800			
8016	M728750			
8017	M800000			
8018	M801000			

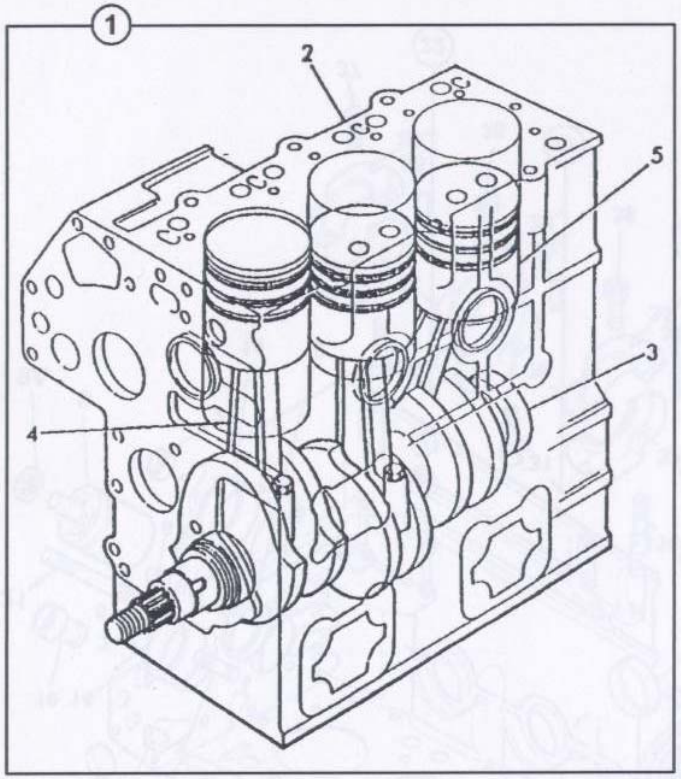

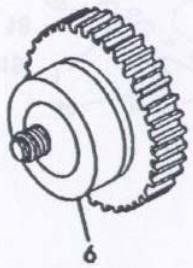

H15270

Item	Part No	Qty	A	Description	Remarks	M/C No change
1	02/630600	1		Engine, short		
2		1	:	Block assembly	See L1-3-1	
3		1	:	Crankshaft assembly	See L1-4-1	
4		1	:	Con-rod assembly	See L1-4-1	
5		1	:	Piston assembly	See L1-4-1	
6		1	:	Oil pump assembly	See L5-2-1	

L1-3-1 BLOCK ASSEMBLY

	on	to	on	to
8014	M791000			
8015	M730800			
8016	M728750			
8017	M800000			
8018	M801000			

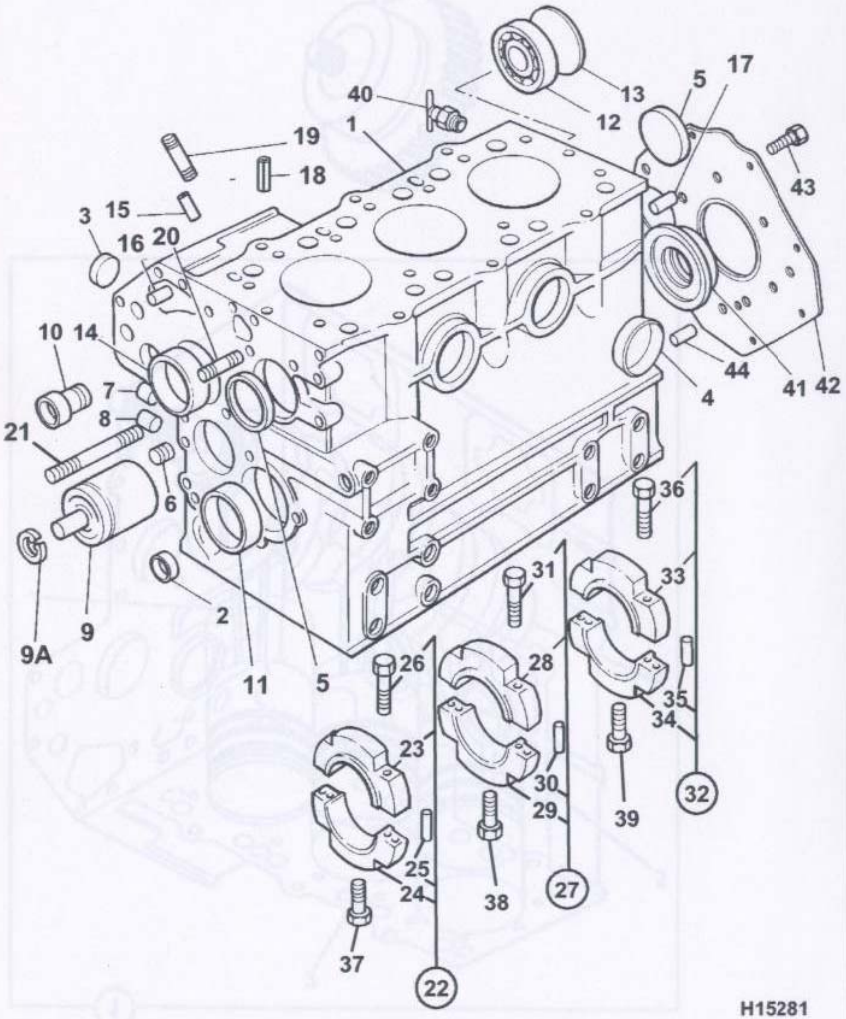

H15281

Item	Part No	Qty	A	Description	Remarks	M/C No change
1	02/630000	1		Cylinder block assembly		
2	02/630001	1	:	Plug		
3	02/630002	1	:	Plug		
4	02/630003	2	:	Plug		
5	02/630004	2	:	Plug		
6	02/630005	1	:	Plug		
7	02/630006	4	:	Plug		
8	02/630007	4	:	Plug		
9	02/630008	1	:	Hub		
9A	02/630030	1	:	Circlip		
10	02/630009	1	:	Bush		
11	02/630010	1	:	Bush, std		
	02/630011	A/R		Bush, -0.25mm		
	02/630012	A/R		Bush, -0.50mm		
12	02/630013	1	:	Bearing		
13	02/630014	1	:	Plug		
14	02/630015	1	:	Needle bearing		
15	02/630016	2	:	Dowel		
16	02/630017	2	:	Dowel		
17	02/630018	2	:	Dowel		
18	02/630019	2	:	Pin		
19	02/630020	2	:	Stud		
20	02/630021	1	:	Stud		
21	02/630022	1	:	Stud		
22	02/630023	1	:	Cap, bearing assembly		
23	NSP	1	:	Cap, top		
24	NSP	1	::	Cap, bottom		
25	02/630024	2	::	Dowel		
26	02/630025	2	::	Screw		

L1-3-1 BLOCK ASSEMBLY

	on	to	on	to
8014	M791000			
8015	M730800			
8016	M728750			
8017	M800000			
8018	M801000			

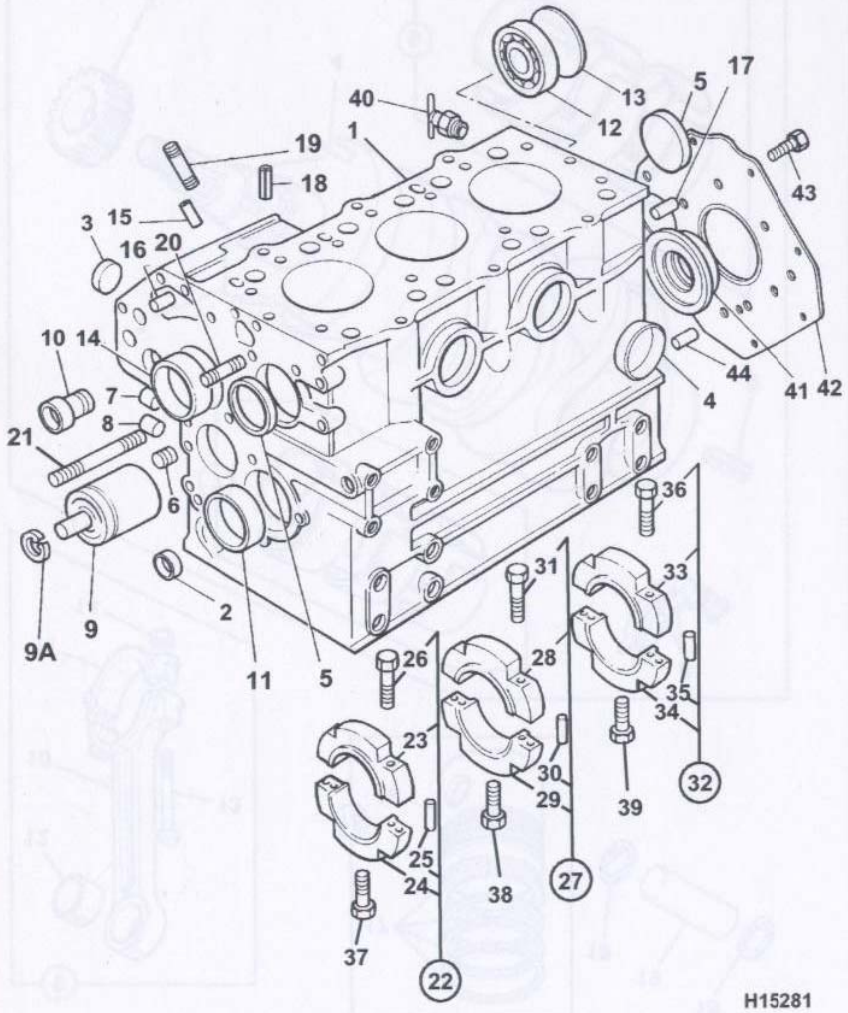

H15281

Item	Part No	Qty	A	Description	Remarks	M/C No change
27	02/630026	1	:	Cap, bearing assembly		
28	NSP	1	::	Cap, top		
29	NSP	1	::	Cap, bottom		
30	02/630024	1	::	Dowel		
31	02/630025	2	::	Screw		
32	02/630027	1	:	Cap, bearing assembly		
33	NSP	1	::	Cap, top		
34	NSP	1	::	Cap, bottom		
35	02/630024	2	::	Dowel		
36	02/630025	2	::	Screw		
37	02/630028	1	:	Screw		
38	02/630028	1	:	Screw		
39	02/630029	2	:	Screw		
40	02/630031	1		Tap, drain		
41	02/630032	1		Seal, oil rear		
42	02/630033	1		Plate		
43	02/630034	8		Screw		
44	02/630018	2		Dowel		

L1-4-1 CRANKSHAFT ASSEMBLY

	on	to	on	to
8014	M791000			
8015	M730800			
8016	M728750			
8017	M800000			
8018	M801000			

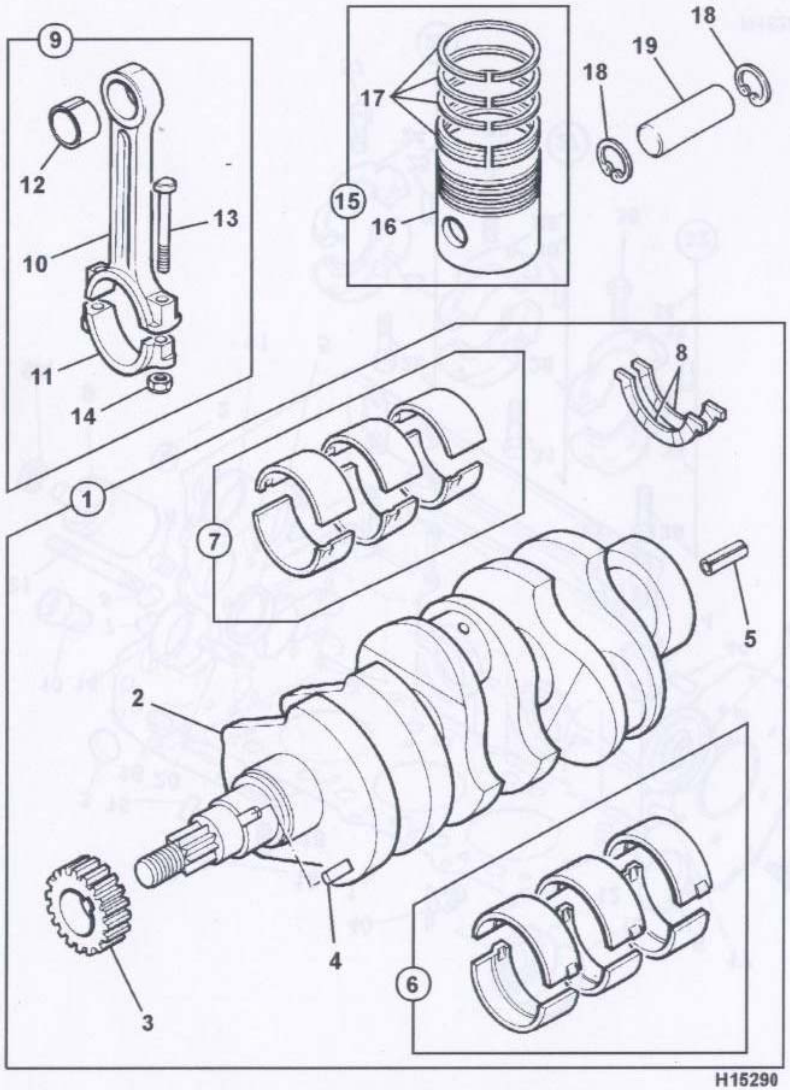

H15290

Item	Part No	Qty	A	Description	Remarks	M/C No change
1	02/630040	1		Crankshaft assembly		
2	NSP	1	:	Crankshaft		
3	02/630041	1	:	Gear		
4	02/630042	1	:	Key		
5	02/630043	1	:	Pin		
6*	02/630044	1	:	Main bearings, std		
	02/630045	A/R	:	Main bearings, -0.25mm		
	02/630046	A/R	:	Main bearings, 0.5mm		
7	02/630047	1	:	Bearings, big end - std		
	02/630048	A/R	:	Bearings, big end, -0.25m		
	02/630049	A/R	:	Bearings, big end, -0.5mm		
8	02/630050	2	:	Washer, thrust		
9	02/630051	3		Conrod assembly		
10	NSP	1	:	Rod		
11	NSP	1	:	Cap		
12	02/630052	1	:	Bush, small end		
13	02/630053	2	:	Bolt		
14	02/630054	2	:	Nut		
15	02/630055	3		Piston assy, standard		
	02/630056	A/R		Piston assembly, +0.5mm		
	02/630057	A/R		Piston assembly, +1.0mm		
16	NSP	1	:	Piston		
17	02/630060	1	:	Piston rings, standard		
	02/630061	1	:	Piston rings, +0.5mm		
	02/630062	1	:	Piston rings, +1.0mm		
18	02/630059	2		Circlip		
19	02/630058	1		Pin, gudgeon		

L1-5-1 FAN BELT & PULLEYS

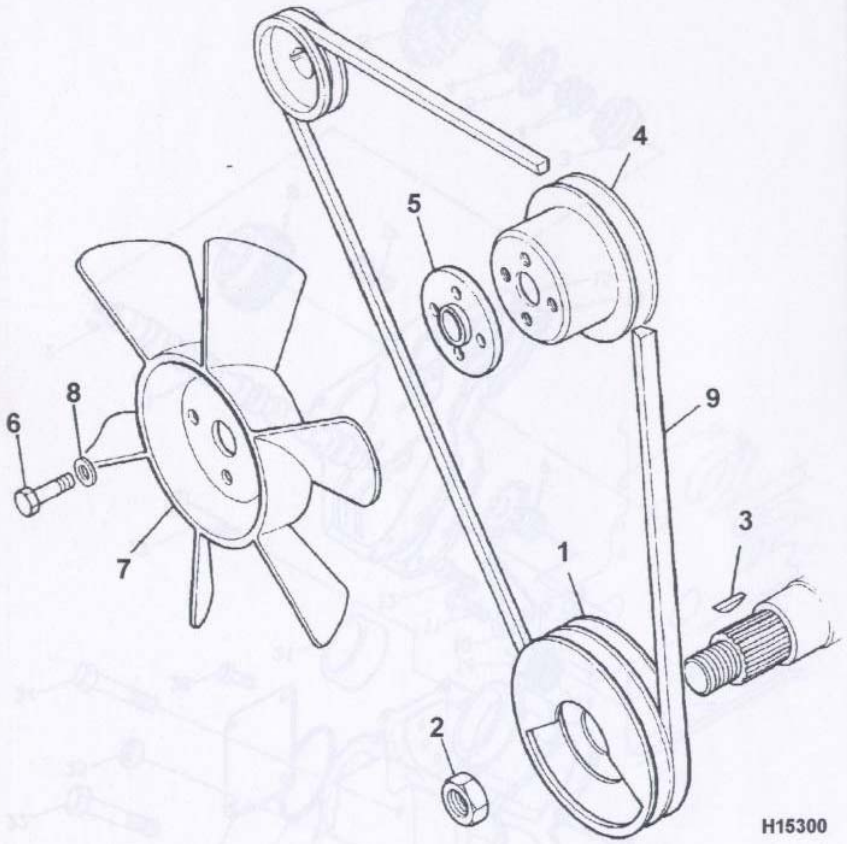

	on	to	on	to
8014	M791000			
8015	M730800			
8016	M728750			
8017	M800000			
8018	M801000			

Item	Part No	Qty	A	Description	Remarks	M/C No change
1	02/630066	1		Pulley, crankshaft		
2	02/630067	1		Nut		
3	02/630068	1		Key		
4	02/630070	1		Pulley, water pump		
5	02/630069	1		Spacer, fan	Cable m/c's	
	231/86501	1		Spacer, fan	Servo m/c's	
6	02/630071	4		Screw	Cable m/c's	
	1315/0205Z	4		Screw, hex head, M6 x 20	M6 x 20	
7	02/630830	1		Fan, 7 blade, 340mm		
8	1425/0006Z	4		Washer, spring, M6	Servo m/c's	
9	02/631260	1		Belt, fan		

L1-5-1 FAN BELT & PULLEYS

L1-6-1 TIMING & CAMSHAFT

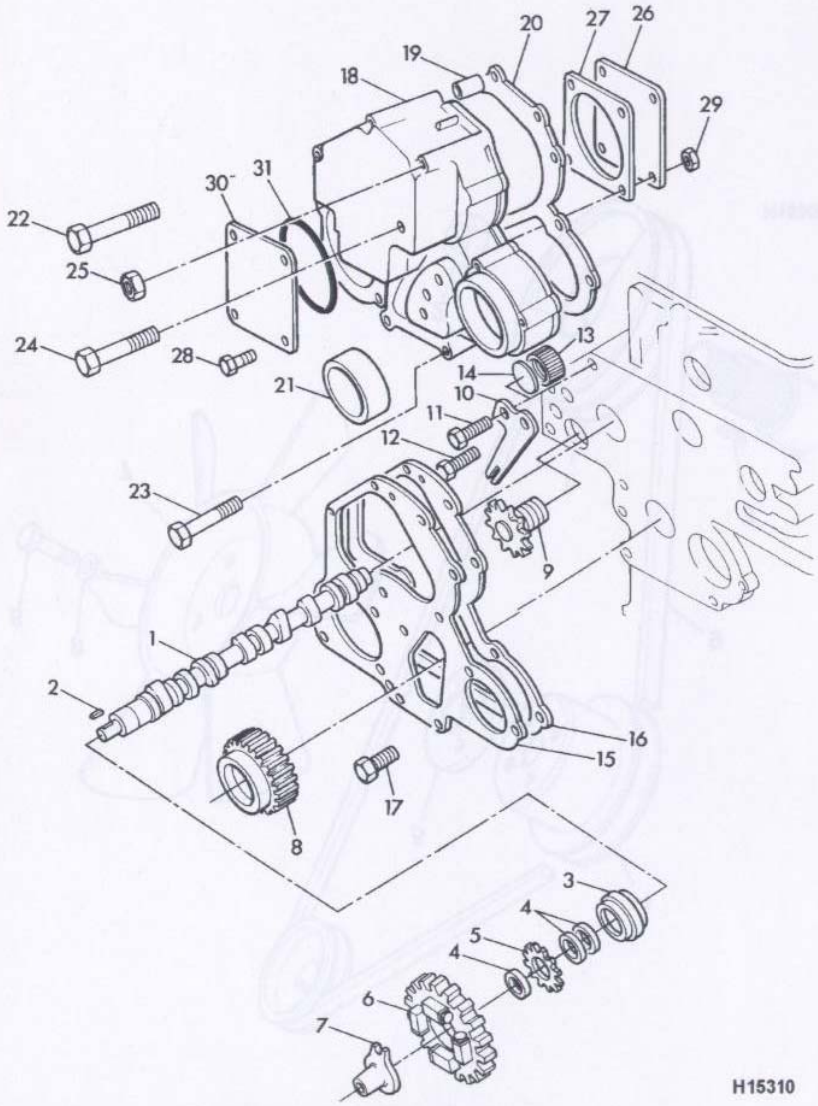

H15310

	on	to	on	to
8014	M791000			
8015	M730800			
8016	M728750			
8017	M800000			
8018	M801000			

Item	Part No	Qty	A	Description	Remarks	M/C No change
1	02/630080	1		Camshaft		
2	02/630068	1	:	Key		
3	02/630081	1	:	Bearing		
4	02/630082	3	:	Spacer		
5	02/630083	1	:	Gear		
6	02/630084	1	:	Gear		
7	02/630085	1	:	Tappet		
8		1		Gear	See L5-2-1	
9	02/630100	1		Shaft		
10	02/630101	1		Plate		
11	02/630102	1		Screw		
12	02/630103	1		Screw		
13	02/630104	1		Cap		
14	02/630105	1		Seal		
15	02/630086	1		Plate		
16	02/630087	1		Gasket		
17	02/630088	3		Screw		
18	02/630090	1		Casing, timing		
19	02/630089	1	:	Pin		
20	02/630091	1		Gasket		
21	02/630092	1		Seal, front oil		
22	02/630093	2		Screw		
23	02/630094	5		Screw		
24	02/630095	4		Screw		
25	02/630096	1		Nut		
26	02/630097	1		Plate		
27	02/630098	1		Gasket		
28	02/630099	1		Screw		
29	02/630078	4		Nut		
30	02/630097	1		Plate		
31	02/630079	1		O Ring		

L1-6-1 TIMING & CAMSHAFT

L1-6-2 TIMING LEVERS

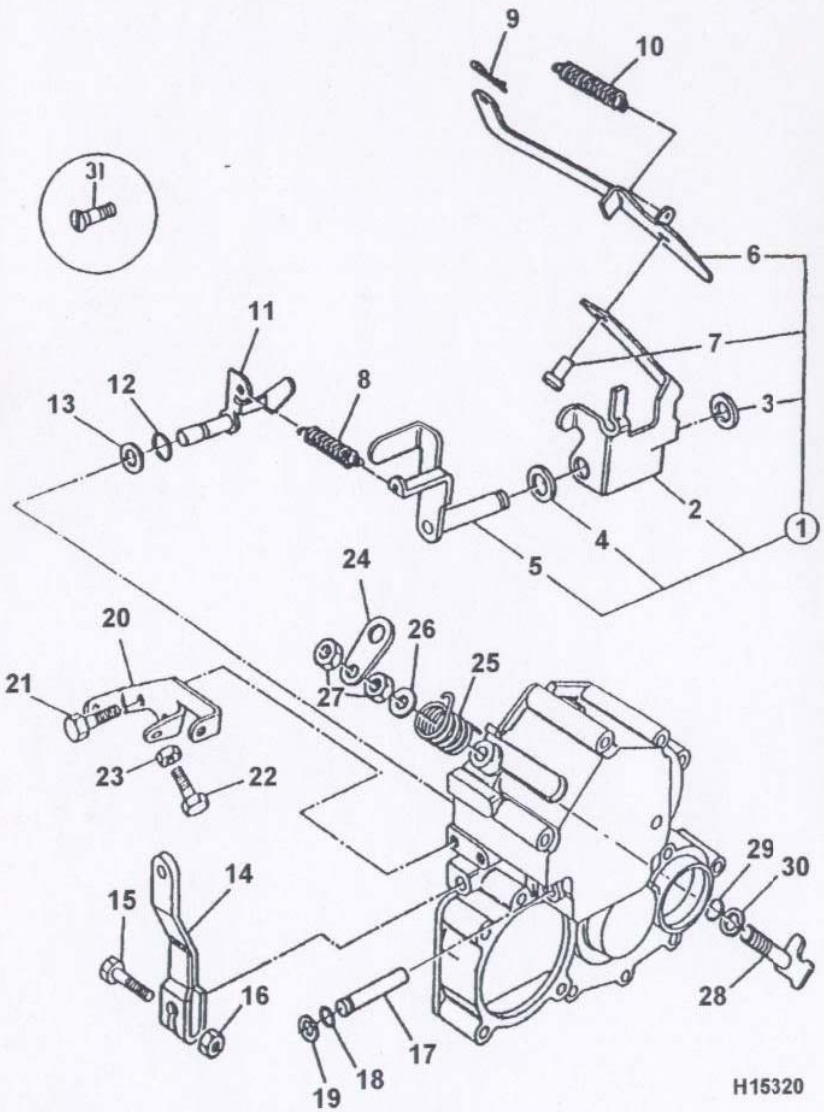

	on	to	on	to
8014	M791000			
8015	M730800			
8016	M728750			
8017	M800000			
8018	M801000			

Item	Part No	Qty	A	Description	Remarks	M/C No change
1	02/630106	1		Lever		
2	NSP	1	:	Link		
3	02/630107	1	:	Circlip		
4	02/630108	1	:	Washer		
5	02/630109	1	:	Lever		
6	NSP	1	:	Link		
7	NSP	1	:	Pin		
8	02/630138	1		Spring		
9	02/630111	1		Pin		
10	02/630112	1		Spring		
11	02/630113	1		Arm		
12	02/630114	1		O Ring		
13	02/630107	1		Circlip		
14	02/630115	1		Lever		
15	02/630116	1		Screw		
16	02/630117	1		Nut		
17	02/630118	1		Shaft		
18	02/630119	1		O Ring		
19	02/630120	1		Circlip		
20	02/630121	1		Stay		
21	02/630122	2		Screw		
22	02/630123	1		Screw		
23	02/630096	2		Nut		
24	02/630124	1		Lever		
25	02/630125	1		Spring		
26	02/630126	1		Washer		
27	02/630127	2		Nut		
28	02/630128	1		Arm		
29	02/630129	1		O Ring		
30	02/630130	1		Circlip		
31	02/630131	1		Screw	Governor lever	

L1-6-2 TIMING LEVERS

L1-6-2 TIMING LEVERS

	on	to	on	to
8014	M791000			
8015	M730800			
8016	M728750			
8017	M800000			
8018	M801000			

Item	Part No	Qty	A	Description	Remarks	M/C No change
					setting	

L1-6-2 TIMING LEVERS

L1-7-1 FLYWHEEL & HOUSING

	on	to	on	to
8014	M791000			
8015	M730800			
8016	M728750			
8017	M800000			
8018	M801000			

Item	Part No	Qty	A	Description	Remarks	M/C No change
1	231/82502	1		Housing, flywheel		
2	1315/0309Z	2		Screw, hex head, M8 x 35		
3*	1425/0007Z	2		Washer, spring, M8		
4	1315/3319Z	5		Bolt, hex head, M8 x 90		
5	1425/0008Z	6		Washer, spring, M10		
6	1370/0203Z	5		Nut, self lock, M8		
7	02/630135	1		Flywheel assembly		
8*	02/630136	1	:	Ring, starter		
9	02/630137	6		Screw		
10*	1391/3414	2		Capscrew, M10 x 60	Was 826/01471	
11	1425/0008Z	2		Washer, spring, M10		

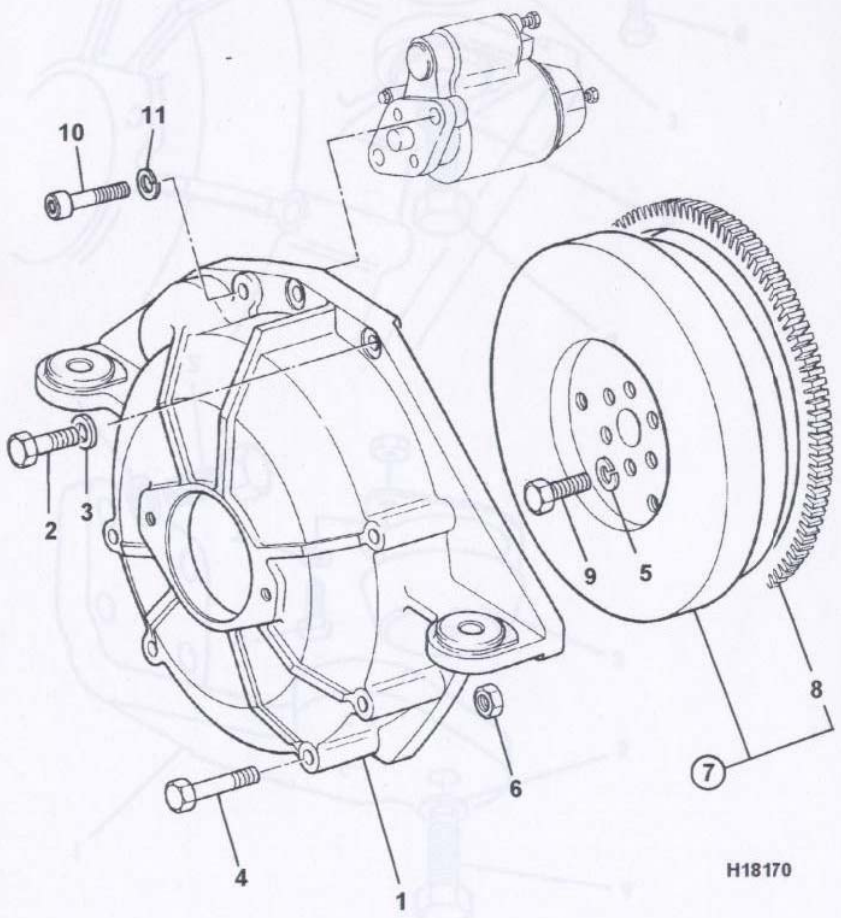

L1-7-1 FLYWHEEL & HOUSING

L1-8-1 ENGINE MOUNTS

	on	to	on	to
8014	M791000			
8015	M730800			
8016	M728750			
8017	M800000			
8018	M801000			

Item	Part No	Qty	A	Description	Remarks	M/C No change
1	231/40002	2		Bracket, mounting		
2	826/00998	8		Screw, hex head, M12 x 30		
3	231/40004	4		Mount, engine, Metalastik		
4	1315/0509Z	4		Screw, hex head, M12 x 35		
5	1425/0009Z	10		Washer, spring, M12		
6	1315/0305Z	8		Screw, hex head, M8 x 20		
7	823/00415Z	8		Washer, spring, M8		
8	1420/0008Z	2		Washer, plain, M10		

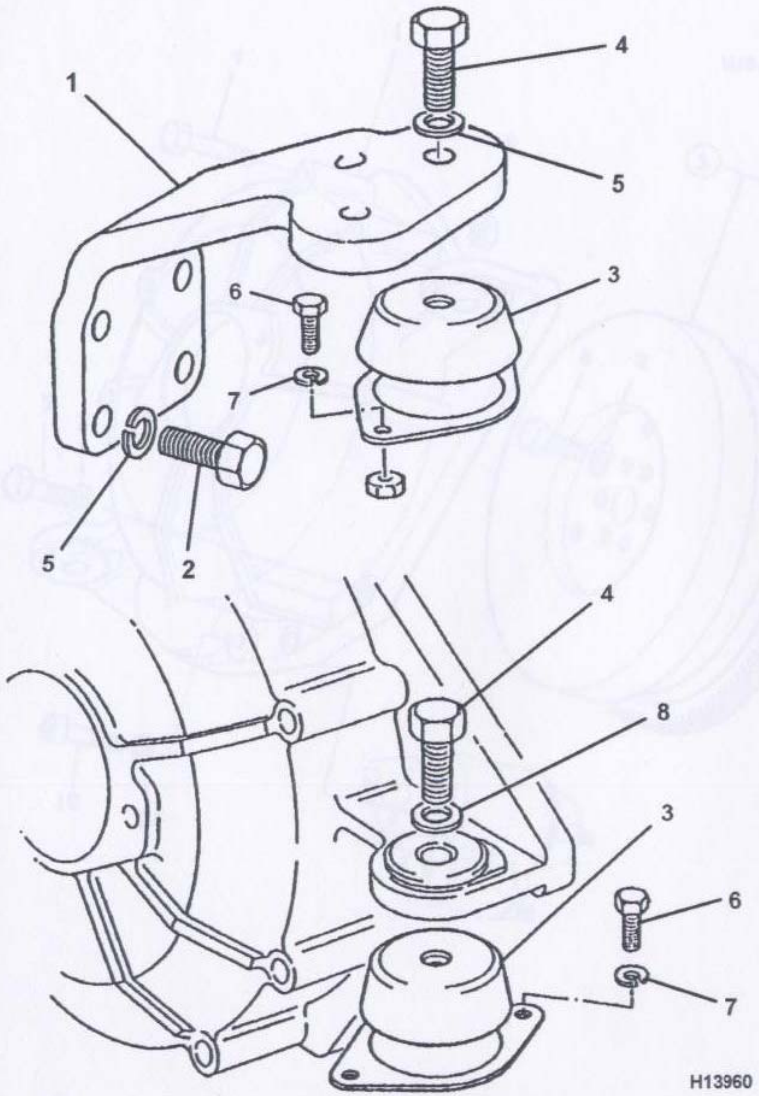

L1-8-1 ENGINE MOUNTS

HYDRAPOWER

CYLINDER HEAD & SUB-ASSEMBLIES



L2

L1 ENGINE, CYLINDER BLOCK & SUB-ASSEMBLIES

L2 CYLINDER HEAD & SUB ASSEMBLIES

L3 INDUCTION AND EXHAUST SYSTEMS

L4 COOLING SYSTEM

L5 LUBRICATION SYSTEM

L6 FUEL SYSTEM

L8 GASKET SETS

L2-1-1 CYLINDER HEAD

	on	to	on	to
8014	M791000			
8015	M730800			
8016	M728750			
8017	M800000			
8018	M801000			

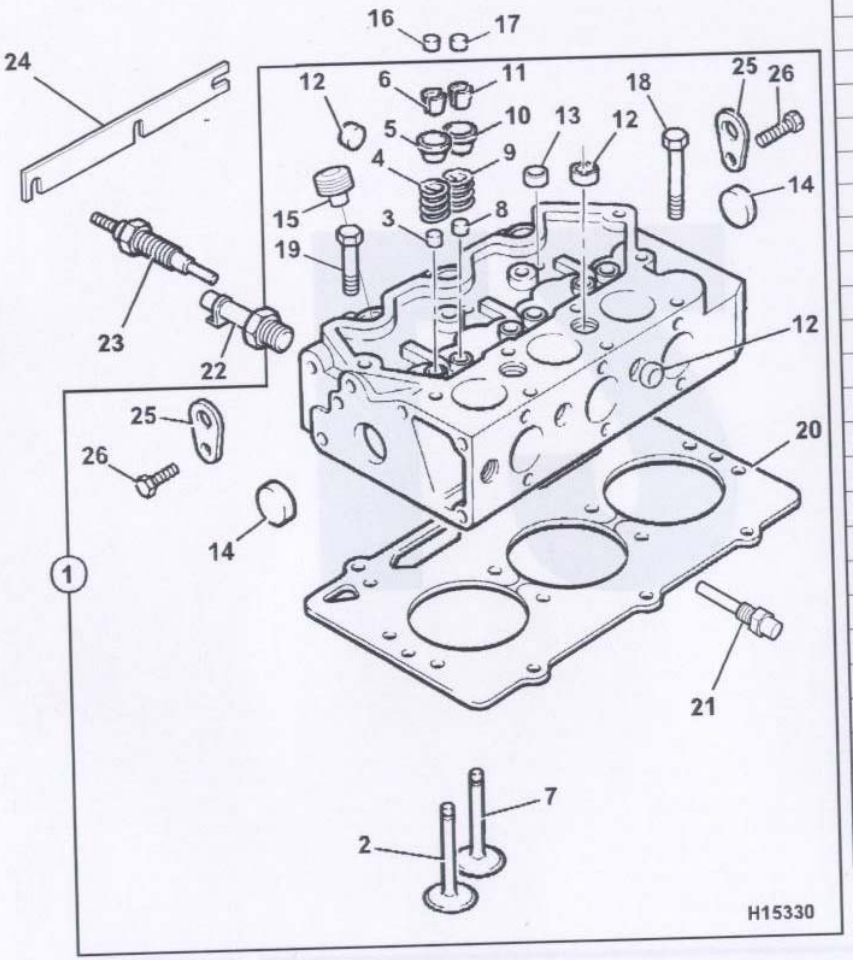

Item	Part No	Qty	A	Description	Remarks	M/C No change
1	02/630140	1		Cylinder head assembly		
2	02/630141	3	:	Inlet valve		
3	02/630142	3	:	Seal		
4	02/630143	3	:	Valve spring		
5	02/630144	3	:	Cap		
6	02/630145	6	:	Collet		
7	02/630146	3	:	Exhaust valve		
8	02/630147	3	:	Seal		
9	02/630143	3	:	Valve spring		
10	02/630144	3	:	Cap		
11	02/630145	6	:	Collet		
12	02/630148	6	:	Plug		
13	02/630001	2	:	Plug		
14	02/630149	2	:	Plug		
15	NSP	3	:	Insert		
16		3		Cap, valve tip	See L2-2-1	
17		3		Cap, valve tip	See L2-2-1	
18	02/630152	11	:	Screw		
19	02/630153	3	:	Screw		
20	02/630154	1	:	Gasket, cylinder head		
21	02/632137	1	:	Sender, temperature, 105°	105 deg. C	
22	02/630156	1		Switch oil pressure		
23	02/630157	3		Glowplug		
24	02/630158	1		Bar		
25	02/630186	2	:	Plate lifting		
26	02/630187	2	:	Screw		

L2-2-1 ROCKER ASSEMBLY

	on	to	on	to
8014	M791000			
8015	M730800			
8016	M728750			
8017	M800000			
8018	M801000			

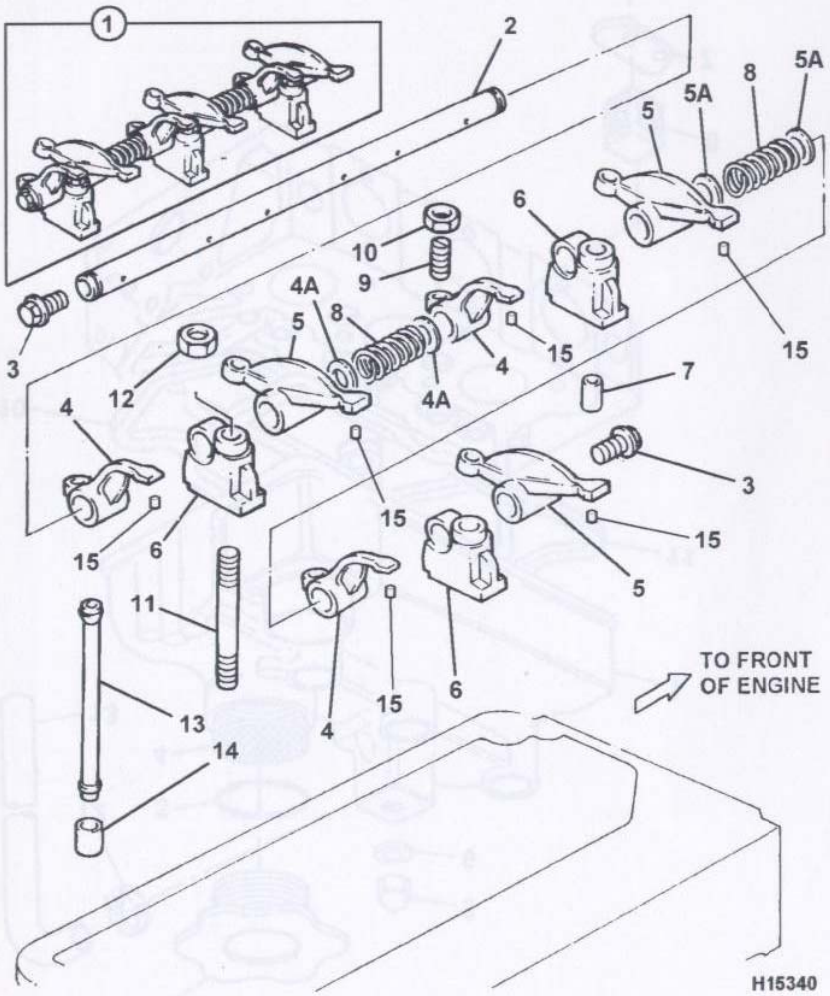

Item	Part No	Qty	A	Description	Remarks	M/C No change
1	02/631190	1		Rocker shaft assembly		
2	02/630159	1	:	Rocker shaft		
3	02/630161	2	:	Plug		
4	02/630752	3	:	Lever, rocker, exhaust	L.H.	
4A	02/630756	2	:	Washer, spacer	L.H.	
5	02/630751	3	:	Lever, rocker, inlet	R.H.	
5A	02/630756	2	:	Washer, spacer	R.H.	
6	02/630164	3	:	Bracket		
7	02/630165	1	:	Pin		
8	02/630166	2	:	Spring		
9	02/630167	6	:	Screw, adjusting		
10	02/630168	6	:	Nut		
11	02/630169	3	:	Stud		
12	02/630078	3	:	Nut		
13	02/630170	6	:	Rod, push		
14	02/630171	6	:	Tappet		
15	02/630151	6	:	Cap, valve tip		

L2-3-1 ROCKER COVER

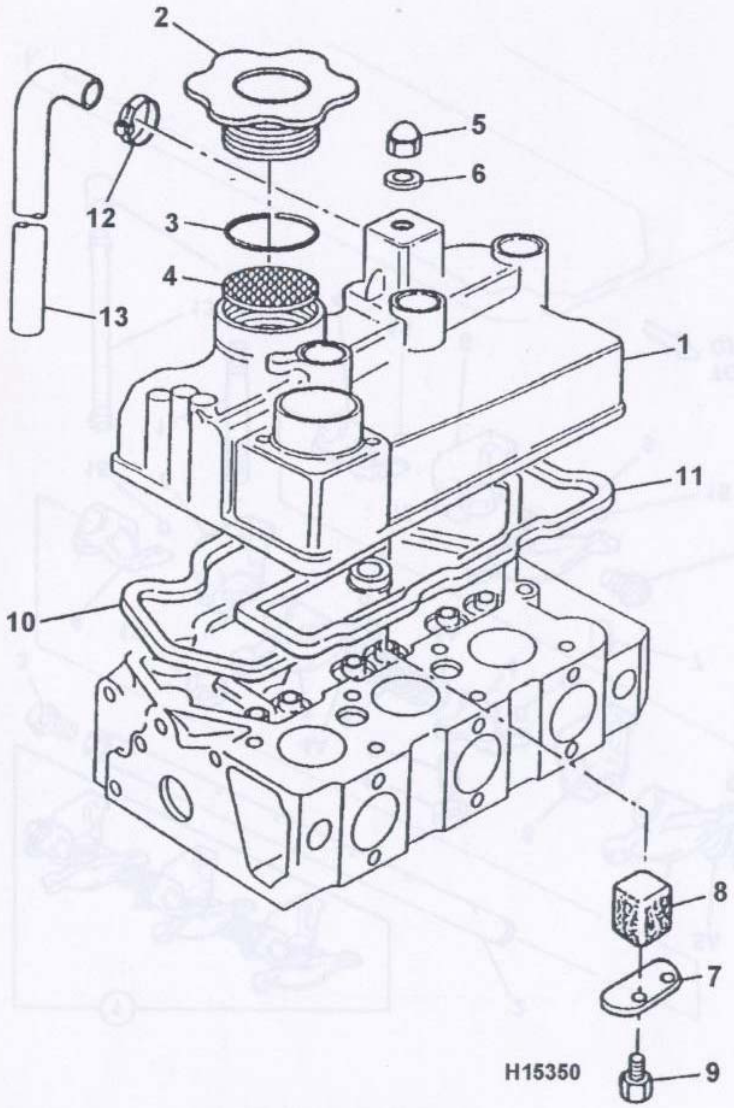

	on	to	on	to
8014	M791000			
8015	M730800			
8016	M728750			
8017	M800000			
8018	M801000			

Item	Part No	Qty	A	Description	Remarks	M/C No change
1	02/630390	1		Cover, rocker/manifold		
				manifold		
2	02/630179	1		Cap, filler		
3	02/630178	1		Seal		
4	NSP	1		Element, filter		
5	02/630176	3		Nut, cap		
6	02/630175	3		Washer		
7	02/630174	1		Plate		
8	02/630794	1		Breather, gauze		
9	02/630172	2		Screw		
10	02/630181	1		Gasket, rocker		
11	02/630182	1		Gasket, induction		
				manifold		
12	02/630183	1		Clip		
13	02/630184	1		Hose, oil breather		

L2-3-1 ROCKER COVER

HYDRAPOWER

INDUCTION AND EXHAUST SYSTEMS

L3

L1 ENGINE, CYLINDER BLOCK & SUB-ASSEMBLIES
L2 CYLINDER HEAD & SUB ASSEMBLIES
L3 INDUCTION AND EXHAUST SYSTEMS
L4 COOLING SYSTEM
L5 LUBRICATION SYSTEM
L6 FUEL SYSTEM
L8 GASKET SETS

L3-1-1 MANIFOLDS

	on	to	on	to
8014	M791000			
8015	M730800			
8016	M728750			
8017	M800000			
8018	M801000			

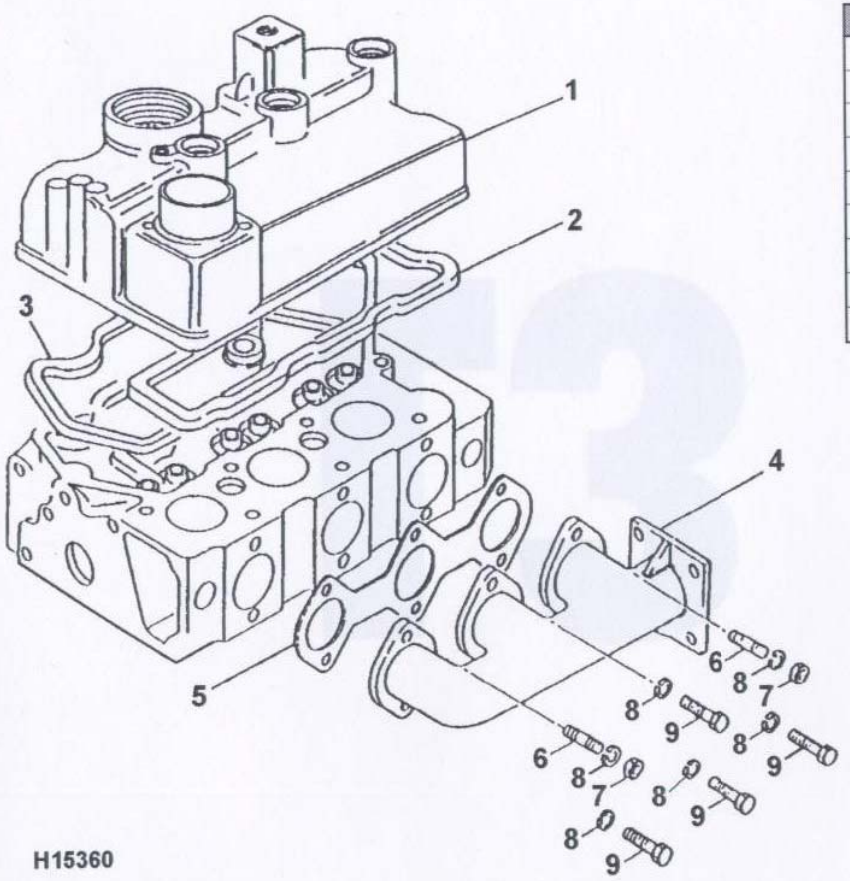

Item	Part No	Qty	A	Description	Remarks	M/C No change
1		1		Manifold, induction	See L2-3-1	
2		1		Gasket, induction	See L2-3-1	
3		1		Gasket, rocker	See L2-3-1	
4	231/40009	1		Manifold, exhaust		
5	02/630339	1		Gasket		
6	02/630185	2		Stud		
7	1370/0101Z	2		Nut, M6		
8	823/00414	6		Washer, spring, M6		
9	1315/0207Z	4		Screw, hex head, M6 x 25		

L3-2-1 AIR FILTER

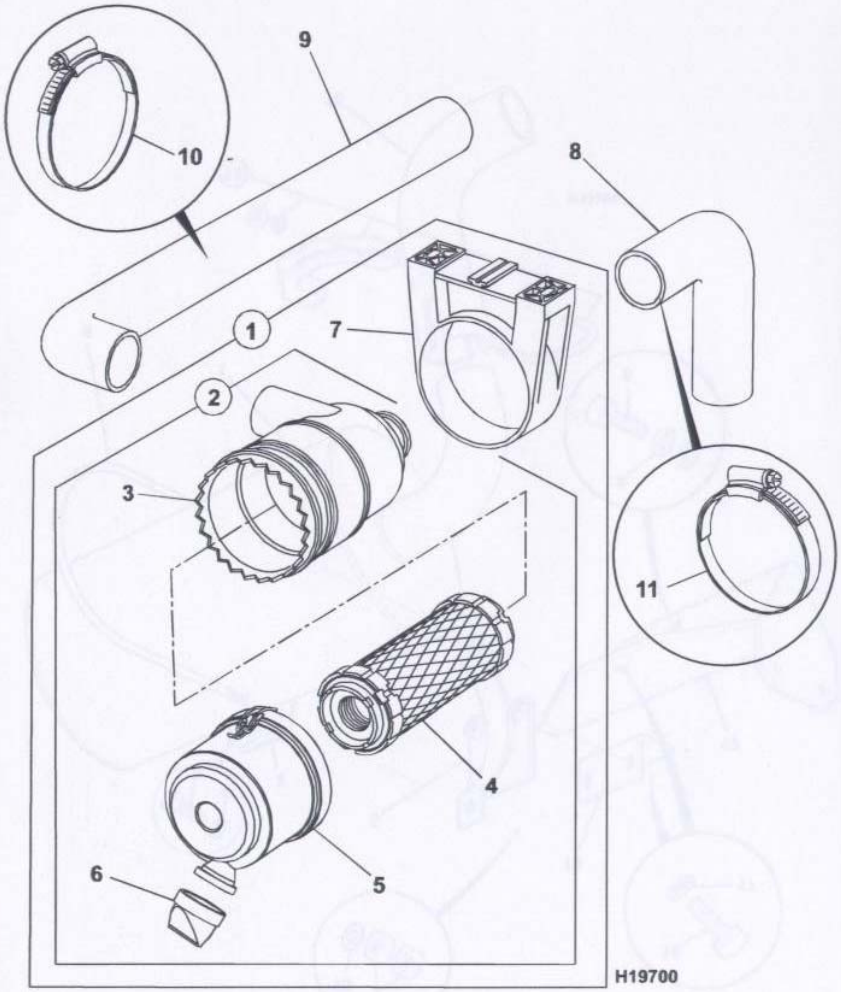

	on	to	on	to
8014	M791000			
8015	M730800			
8016	M728750			
8017	M800000			
8018	M801000			

Item	Part No	Qty	A	Description	Remarks	M/C No change
1	32/919900	1		Filter assembly, Air		
2*	32/919901	1	:	Filter, air		
3	32/919910	1	::	Body		
4*	32/919902	1	::	Element, air		
5	32/919911	1	::	Cap		
6*	32/915704	1	::	Dust valve		
7*	32/919903	1	:	Bracket		
8	834/00777	1		Hose, filter		
9	834/00778	1		Hose, inlet		
10	2201/0011	1		Clip, worm drive, 40-60mm		
11	2201/0012	2		Clip, worm drive, 50-70mm		

L3-2-1 AIR FILTER

L3-3-1 EXHAUST SYSTEM

	on	to	on	to
8014	M791000			
8015	M730800			
8016	M728750			
8017	M800000			
8018	M801000			

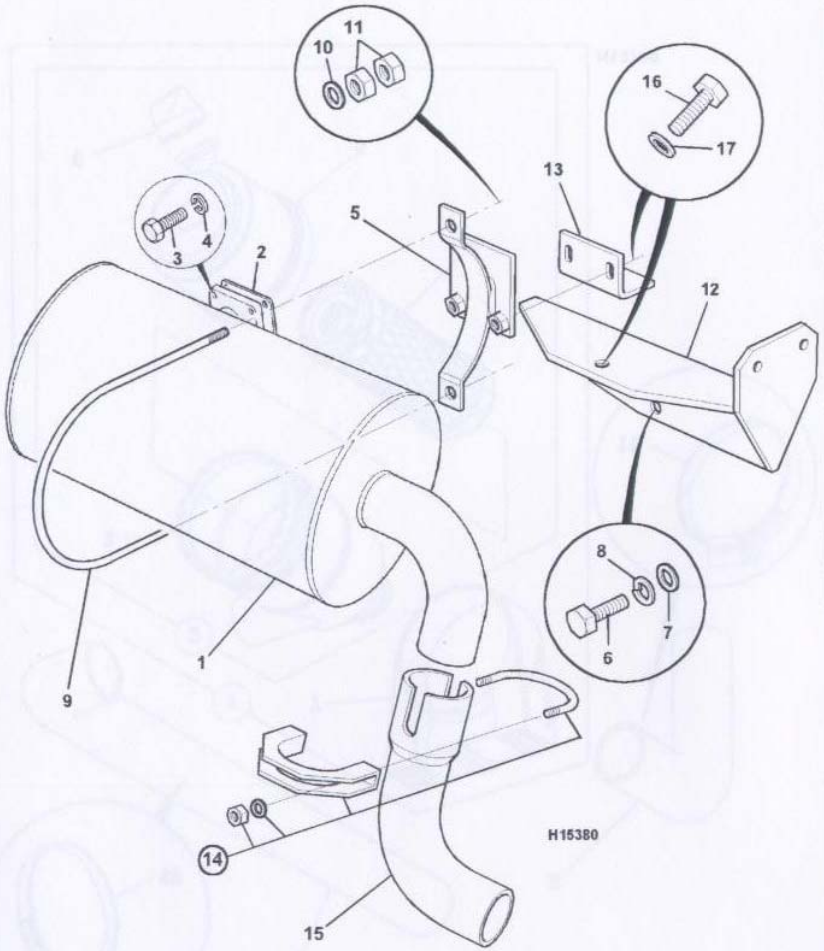

Item	Part No	Qty	A	Description	Remarks	M/C No change
1	236/15906	1		Silencer		
2	02/630338	1		Gasket		
3	1315/0307Z	4		Screw, hex head, M8 x 25		
4	1425/0007Z	4		Washer, spring, M8		
5	236/15500	1		Bracket, mounting		
6	1315/0305Z	3		Screw, hex head, M8 x 20		
7	1420/0007Z	3		Washer, plain, M8		
8	1425/0007Z	3		Washer, spring, M8		
9	231/44001	1		Clamp, U bolt		
10	1420/0007Z	2		Washer, plain, M8		
11	1370/0201Z	4		Nut, M8		
12	236/19900	1		Bracket, exhaust, filter		
13	236/15902	1		Bracket, angle		
14	821/00521	1		Clamp, exhaust		
15	236/15907	1		Pipe, exhaust		
16	1315/0408Z	1		Screw, hex head, M10 x 30		
17	1413/0003Z	1		Washer, plain, 3/8in.		

HYDRAPOWER

COOLING SYSTEM

L4

L1 ENGINE, CYLINDER BLOCK & SUB-ASSEMBLIES

L2 CYLINDER HEAD & SUB ASSEMBLIES

L3 INDUCTION AND EXHAUST SYSTEMS

L4 COOLING SYSTEM

L5 LUBRICATION SYSTEM

L6 FUEL SYSTEM

L8 GASKET SETS

L4-1-1 PUMP & THERMOSTAT

	on	to	on	to
8014	M791000			
8015	M730800			
8016	M728750			
8017	M800000			
8018	M801000			

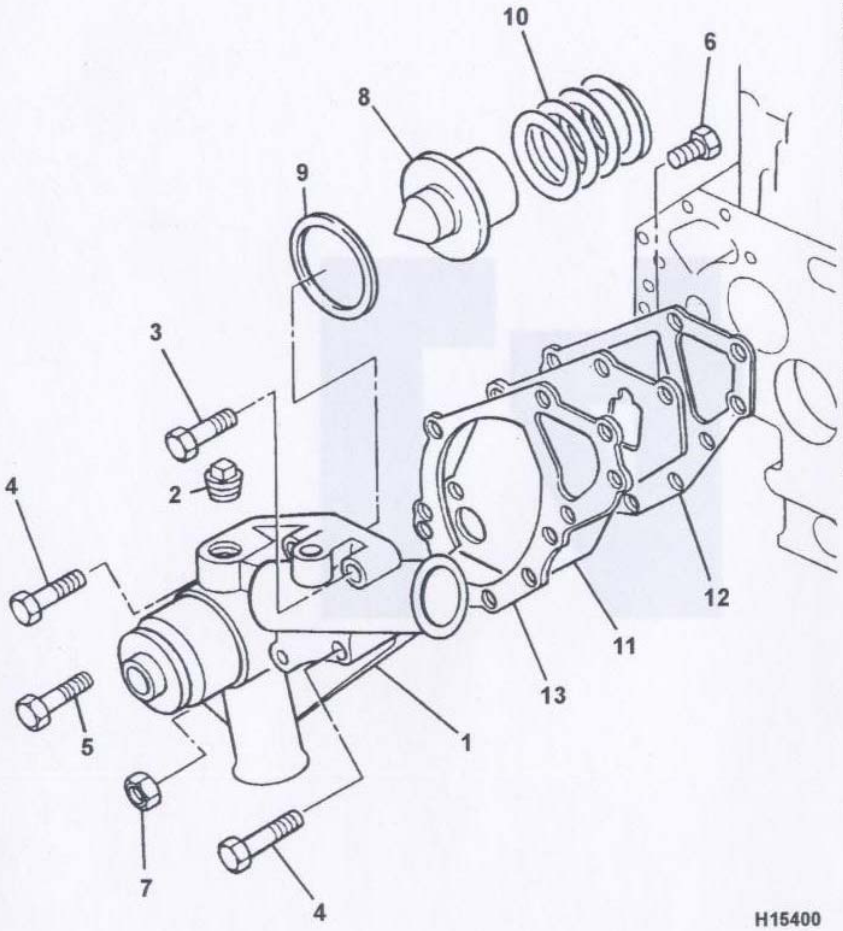

H15400

Item	Part No	Qty	A	Description	Remarks	M/C No change
1	02/630380	1		Water pump		
2	02/630189	2		Plug		
3	02/630095	1		Screw		
4	02/630188	4		Screw		
5	02/630071	2		Screw		
6	02/630122	1		Screw		
7	02/630096	1		Nut		
8	02/630381	1		Thermostat		
9	02/630382	1		Seal		
10	02/630192	1		Spring		
11	02/630193	1		Plate		
12	02/630194	1		Gasket		
13	02/630195	1		Gasket		

L4-3-1 RADIATOR MOUNTS & FITTINGS

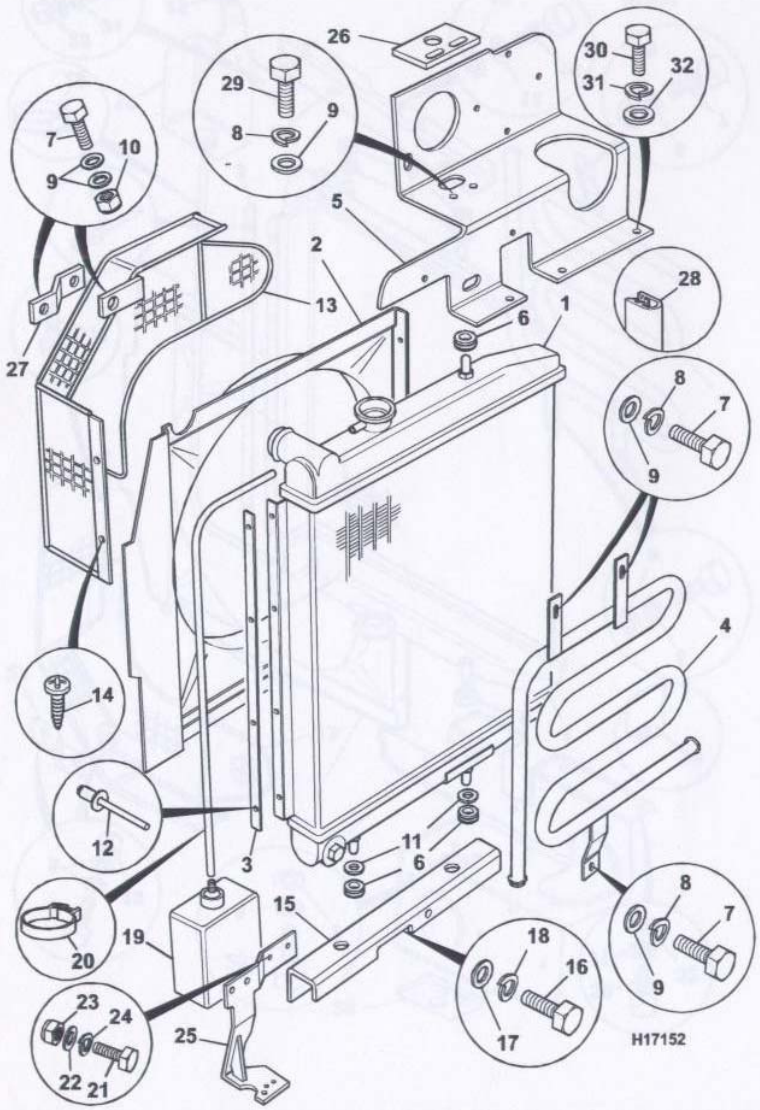

	on	to	on	to
8014	M791000			
8015	M730800			
8016	M728750			
8017	M800000			
8018	M801000			

Item	Part No	Qty	A	Description	Remarks	M/C No change
1*	30/204400	1		Radiator, twin row	Superseded	
	30/920300	1		Radiator, twin row		
2*	236/16302	1		Cowl, radiator	Was 231/83304	
3	231/83306	1		Spacer, cowl		
4*	236/14100	1		Oil cooler, hydraulic	Superseded	
	236/42800	1		Oil cooler, hydraulic		
5*	233/06702	1		Support, radiator		To M TBA
	236/39500	1		Bracket, oil cooler	Fitted to steel	
					bulkhead machines	
6	231/83302	3		Grommet		
7*	1315/0205Z	7		Screw, hex head, M6 x 20		
8*	823/00414Z	5		Washer, spring, M6		
9*	1411/0001Z	11		Washer, medium, ¼in.		
10*	1370/0103Z	4		Nut, self lock, M6		
11	823/00521	2		Washer, rubber		
12	826/01036	8		Pop rivet		
13	231/84302	1		Guard, fan	French, Norwegian	
					USA	
14	1430/0204	2		Screw, pan head, 8 x 3/4		
15	236/39600	1		Rail, radiator		
16	1315/0405Z	2		Screw, hex head, M10 x 20		
17	1420/0008Z	2		Washer, plain, M10		
18	823/00416Z	2		Washer, spring, M10		
19*	236/16301	1		Bottle, overflow		
20*	232/98373	1		Clip, snapper		
21*	1315/0103Z	2		Screw, hex head, M5 x 16		
22*	1420/0005Z	2		Washer, plain, M5		
23*	1370/0003Z	2		Nut, self lock, M5		
24*	1425/0005Z	2		Washer, spring, M5		
25*		1		Bracket, sedimentor	See L6-6-1	
26*	236/41002	1		Bracket, radiator mount		

L4-3-1 RADIATOR MOUNTS & FITTINGS

L4-3-1 RADIATOR MOUNTS & FITTINGS

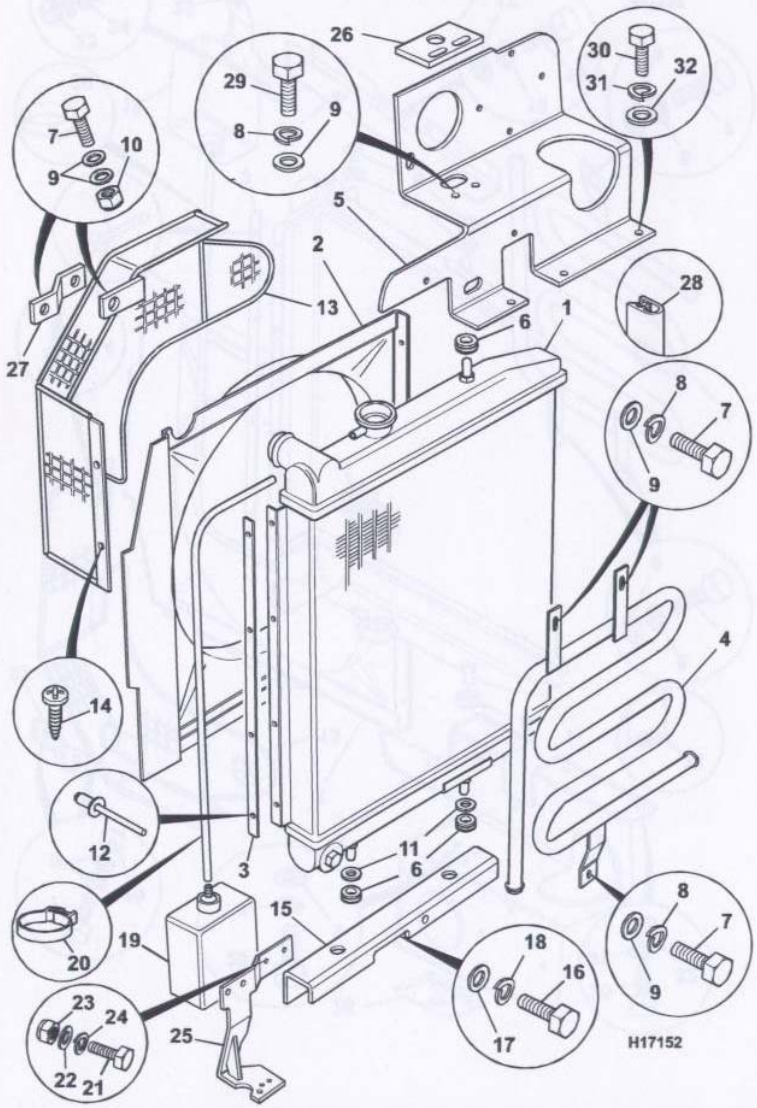

	on	to	on	to
8014	M791000			
8015	M730800			
8016	M728750			
8017	M800000			
8018	M801000			

Item	Part No	Qty	A	Description	Remarks	M/C No change
27*	231/84304	1		Mount, fan guard		
28*	926/16503	1		Seal, leaf, 95mm long		
29*	1315/0203Z	2		Screw, hex head, M6 x 16		
30*	1315/0305Z	3		Screw, hex head, M8 x 20		
31*	1425/0007Z	3		Washer, spring, M8		
32*	1420/0007Z	3		Washer, plain, M8		

L4-3-1 RADIATOR MOUNTS & FITTINGS

L4-4-1 RADIATOR & HOSES

	on	to	on	to
8014	M791000			
8015	M730800			
8016	M728750			
8017	M800000			
8018	M801000			

Item	Part No	Qty	A	Description	Remarks	M/C No change
1	30/906400	1		Radiator, single row	801.4 cable m/c's	M721072 on
2	30/903601	1	:	Cap, radiator		
3	30/906402	1	:	Plug, drain & washer		
4	30/903304	1	:	Tube, overflow		
5	834/00507	1		Hose, upper		
6	2201/0008	2		Clip, worm drive		
7	231/83305	1		Hose, lower		
8	2201/0008	2		Clip, worm drive		

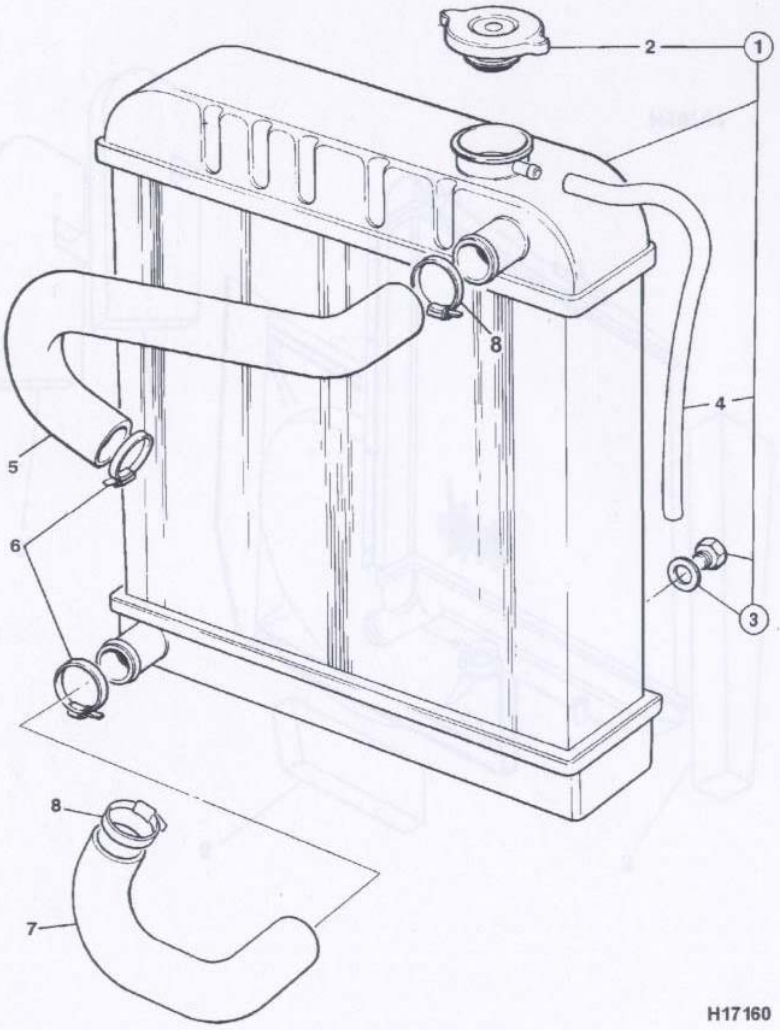

H17160

L4-4-1 RADIATOR & HOSES

L4-5-1 RADIATOR SOUNDPROOFING

	on	to	on	to
8014	M791000			
8015	M730800			
8016	M728750			
8017	M800000			
8018	M801000			

Item	Part No	Qty	A	Description	Remarks	M/C No change
1*	236/38811	1		Foam, anti recirculation	Was 236/38806	
2*	236/38812	1		Foam, anti recirculation	Was 236/38807	
3	236/38808	1		Foam, anti recirculation		
6*	236/33814	1		Foam, anti recirculation		

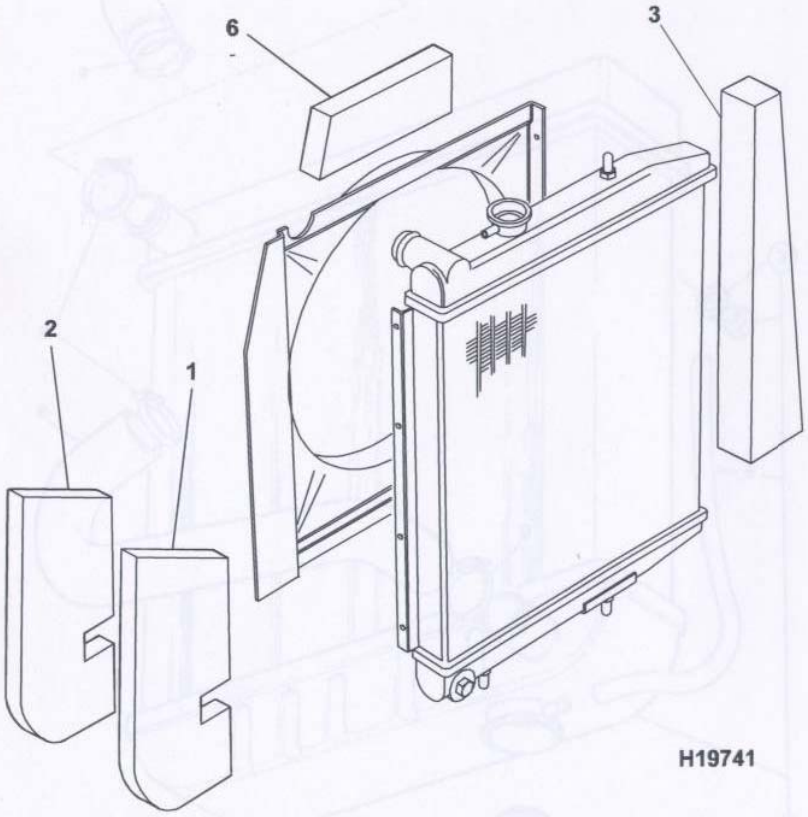

L4-5-1 RADIATOR SOUNDPROOFING

HYDRAPOWER

LUBRICATION SYSTEM

L5

L1 ENGINE, CYLINDER BLOCK & SUB-ASSEMBLIES
L2 CYLINDER HEAD & SUB ASSEMBLIES
L3 INDUCTION AND EXHAUST SYSTEMS
L4 COOLING SYSTEM
L5 LUBRICATION SYSTEM
L6 FUEL SYSTEM
L8 GASKET SETS

L5-1-1 OIL SUMP

	on	to	on	to
8014	M791000			
8015	M730800			
8016	M728750			
8017	M800000			
8018	M801000			

Item	Part No	Qty	A	Description	Remarks	M/C No change
1	02/630200	1		Sump, oil		
2	02/630199	1		Plug, oil drain		
3	02/630198	1		Washer		
4	02/630197	20		Screw		
5	02/630196	1		Gasket		
6	02/630201	1		Pipe, oil suction		
7	02/630203	1		Strainer, suction		
8	02/630172	1		Screw		
9	02/630202	1		O Ring		
10	02/630204	1		Tube, dipstick		
11	02/630172	1		Screw		
12	02/630206	2		O Ring		
13	02/630205	1		Dipstick		
14	231/56500	1		Kit, oil drain		
15	231/56501	1	:	Plug assembly		
16	231/56502	1	:	Hose oil drain		

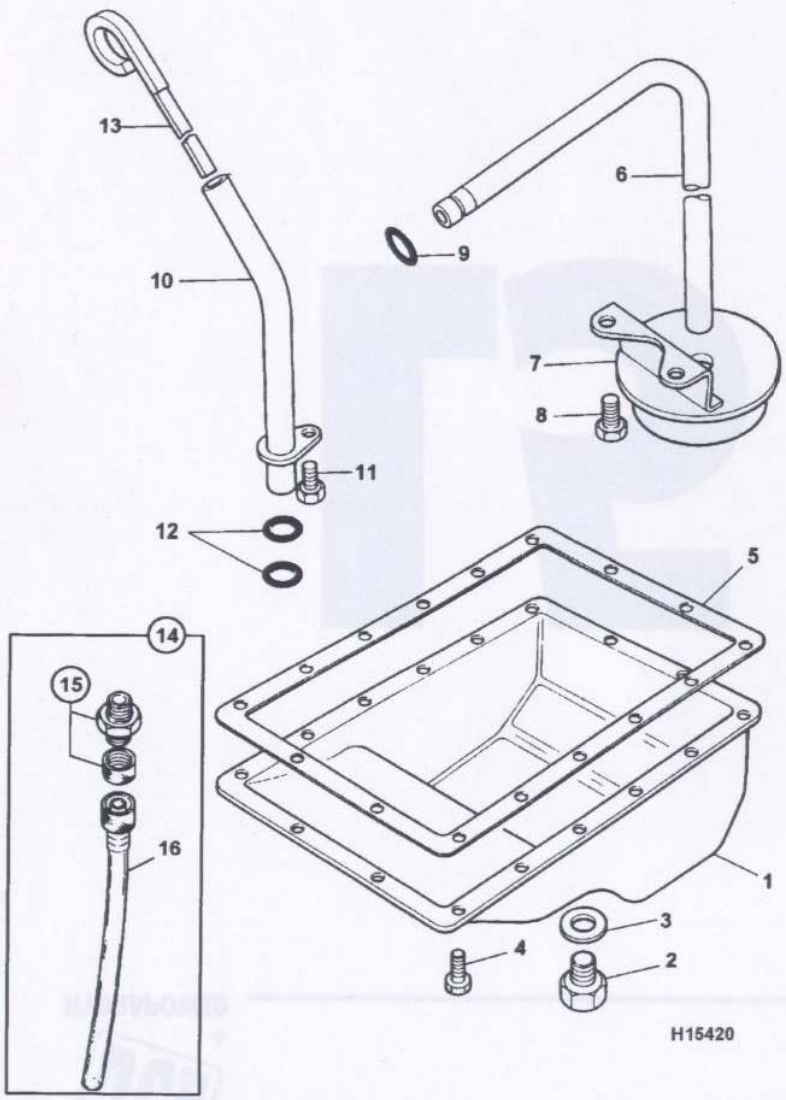

L5-1-1 OIL SUMP

L5-2-1 OIL PUMP

	on	to	on	to
8014	M791000			
8015	M730800			
8016	M728750			
8017	M800000			
8018	M801000			

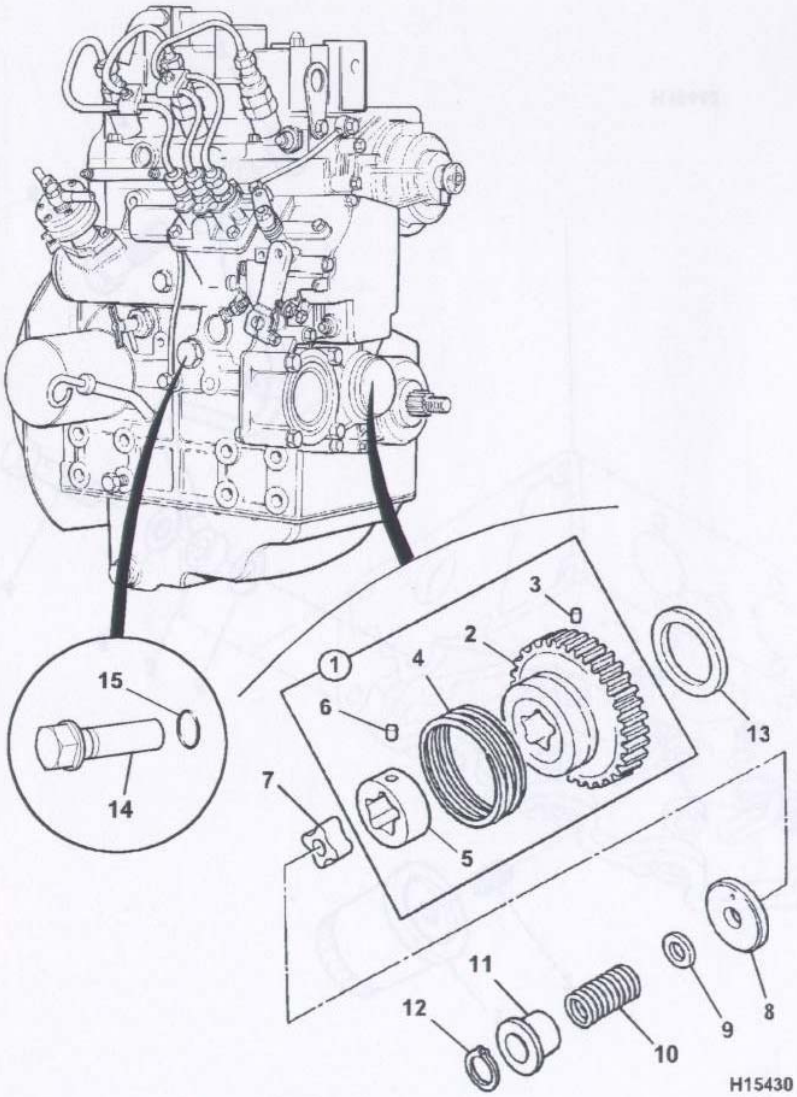

Item	Part No	Qty	A	Description	Remarks	M/C No change
1	02/630210	1		Oil pump & gear assembly		
2	02/630209	1	:	Gear		
3	02/630208	1	:	Dowel		
4	02/630207	1	:	Spring		
5	02/630211	1	:	Housing		
6	02/630212	1	:	Bush		
7	02/630213	1		Rotor		
8	02/630214	1		Cover		
9	02/630215	A/R		Shim oversize, +0.10mm		
	02/630216	A/R		Shim oversize, +0.15mm		
	02/630217	A/R		Shim oversize, +0.20mm		
	02/630218	A/R		Shim oversize, +0.50mm		
10	02/630219	1		Spring		
11	02/630220	1		Collar		
12	02/630221	1		Circlip		
13	02/630222	1		Washer		
14	02/630223	1		Valve, relief		
15	02/630224	1		O Ring		

L5-2-1 OIL PUMP

L5-3-1 OIL FILTER

	on	to	on	to
8014	M791000			
8015	M730800			
8016	M728750			
8017	M800000			
8018	M801000			

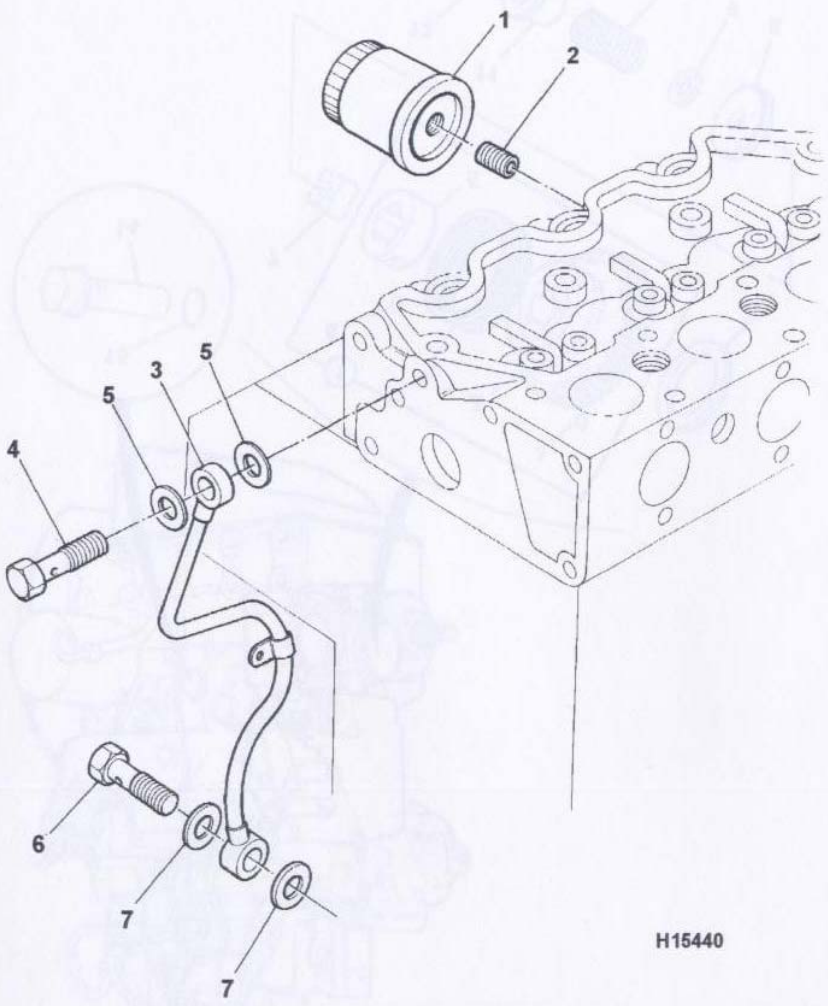

H15440

Item	Part No	Qty	A	Description	Remarks	M/C No change
1	02/630225	1		Canister, oil filter		
2	02/630226	1		Connector		
3	02/630227	1		Pipe, oil delivery		
4	02/630228	1		Bolt, banjo		
5	02/630175	2		Washer		
6	02/630228	1		Bolt, banjo		
7	02/630175	2		Washer		

L5-3-1 OIL FILTER

HYDRAPOWER

FUEL SYSTEM



L6

L1 ENGINE, CYLINDER BLOCK & SUB-ASSEMBLIES

L2 CYLINDER HEAD & SUB ASSEMBLIES

L3 INDUCTION AND EXHAUST SYSTEMS

L4 COOLING SYSTEM

L5 LUBRICATION SYSTEM

L6 FUEL SYSTEM

L8 GASKET SETS

L6-1-1 INJECTION PUMP

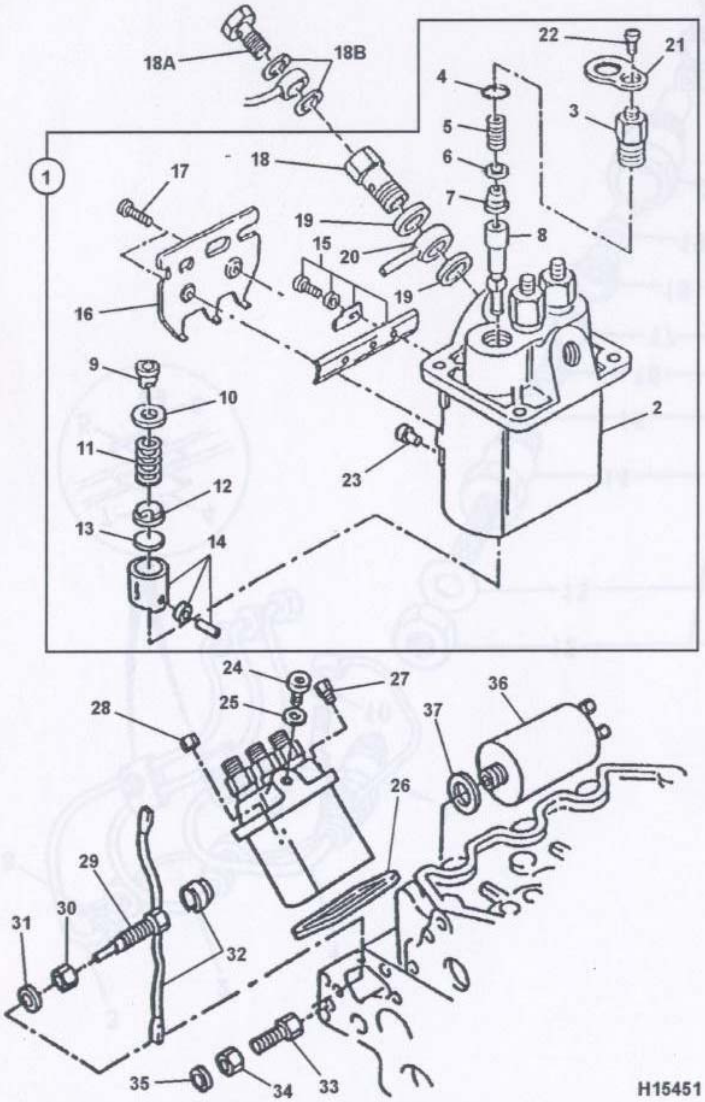

	on	to	on	to
8014	M791000			
8015	M730800			
8016	M728750			
8017	M800000			
8018	M801000			

Item	Part No	Qty	A	Description	Remarks	M/C No change
18	02/630259	1	:	Bolt		
19	02/630260	2	:	Washer		
20	02/630261	1	:	Nipple		
21	02/630262	3	:	Plate		
22	02/630263	3	:	Screw		
23	02/630264	3	:	Pin		
24	02/630265	1		Screw		
25	02/630266	1		Washer		
26	02/632140	A/R		Shim kit		
27	02/630267	2		Screw		
28	02/630096	2		Nut		
29	02/630306	1		Screw		
30	02/630307	1		Nut		
31	02/630308	1		Washer		
32	02/630309	1		Wire		
33	02/630310	1		Screw		
34	02/630307	1		Nut		
35	02/630308	1		Washer		
36	02/630300	1		Solenoid, fuel shut off		
37	02/630301	1		Washer		

L6-1-1 INJECTION PUMP

L6-2-1 INJECTORS & PIPES

	on	to	on	to
8014	M791000			
8015	M730800			
8016	M728750			
8017	M800000			
8018	M801000			

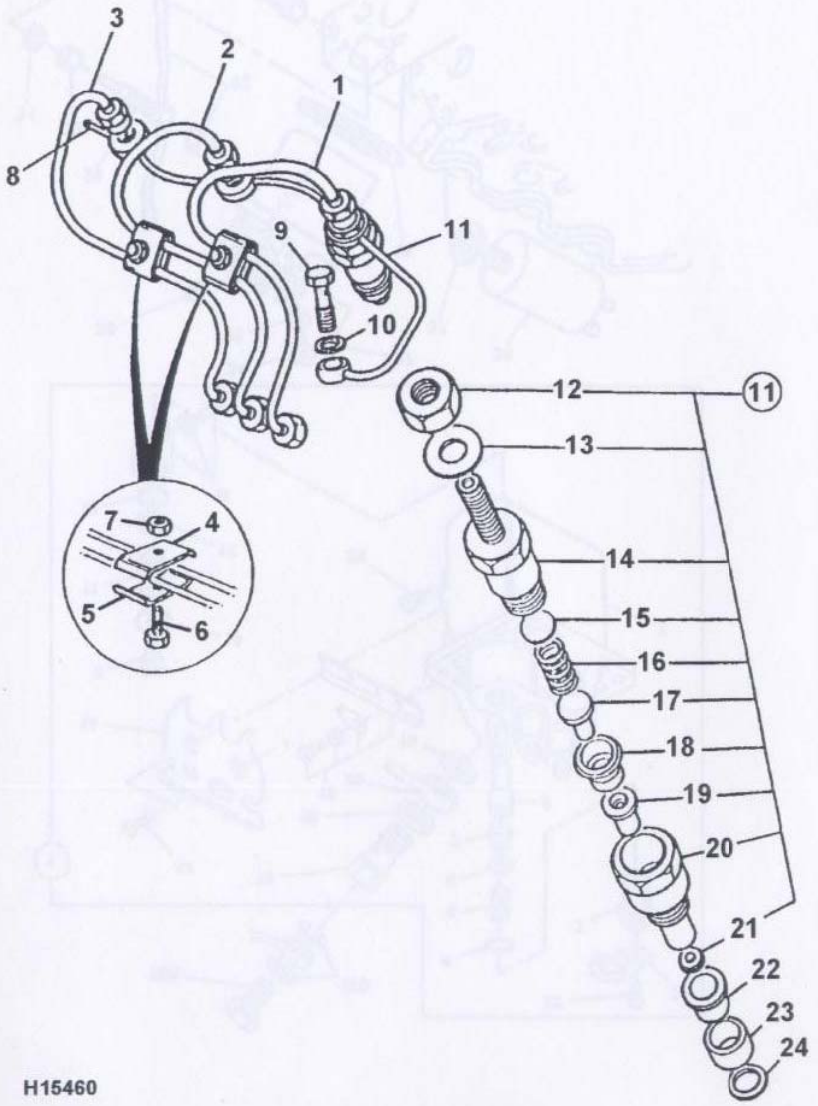

H15460

Item	Part No	Qty	A	Description	Remarks	M/C No change
1	02/630311	1		Pipe, no 1 cylinder		
2	02/630312	1		Pipe, no 2 cylinder		
3	02/630313	1		Pipe, no 3 cylinder		
4	02/630314	2		Damper		
5	02/630314	2		Damper		
6	02/630315	3		Screw		
7	02/630096	2		Nut		
8	02/630318	1		Pipe, leak off		
9	02/630319	1		Bolt		
10	02/630266	2		Washer		
11	02/630270	1		Injector assembly		
12	02/630271	1	:	Nut		
13	02/630272	1	:	Washer		
14	02/630273	1	:	Body		

L6-2-1 INJECTORS & PIPES

L6-2-1 INJECTORS & PIPES

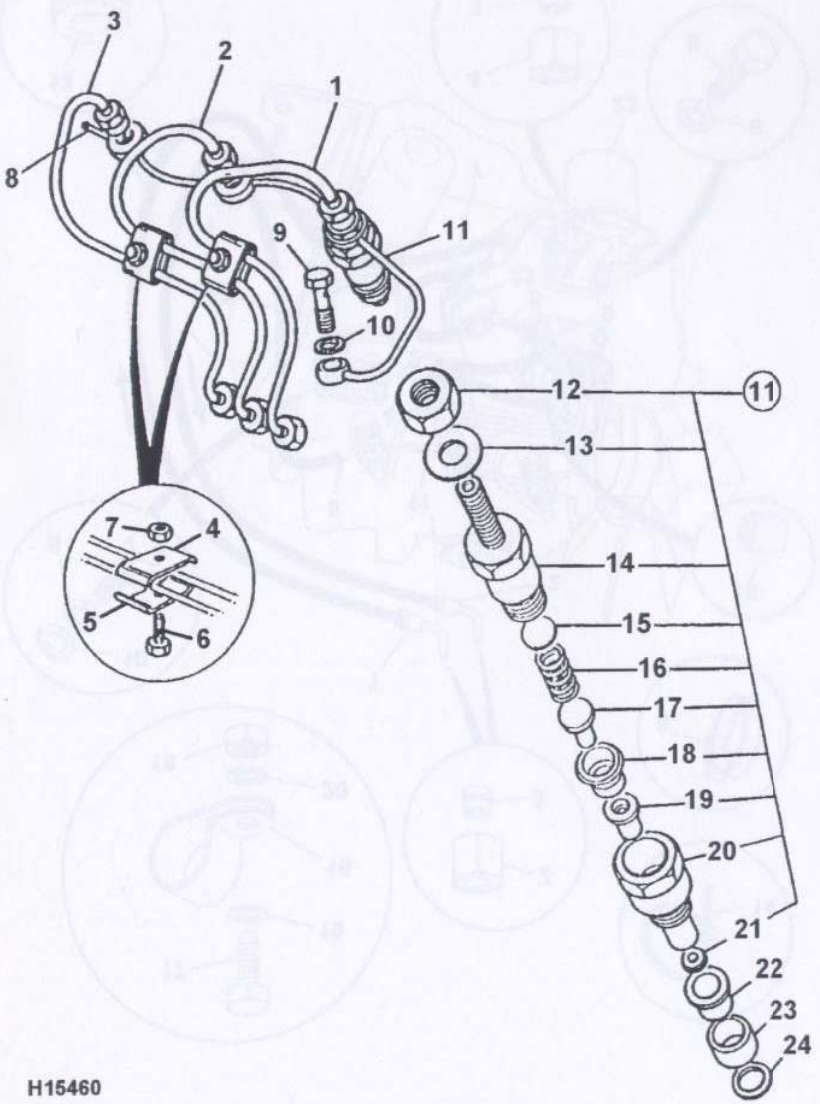

H15460

	on	to	on	to
8014	M791000			
8015	M730800			
8016	M728750			
8017	M800000			
8018	M801000			

Item	Part No	Qty	A	Description	Remarks	M/C No change
15	02/630280	A/R	:	Shim oversize, +1.00mm		
	02/630281	A/R	:	Shim oversize, +1.05mm		
	02/630282	A/R	:	Shim oversize, +1.10mm		
	02/630283	A/R	:	Shim oversize, +1.15mm		
	02/630284	A/R	:	Shim oversize, +1.20mm		
	02/630285	A/R	:	Shim oversize, +1.25mm		
	02/630286	A/R	:	Shim oversize, +1.30mm		
	02/630287	A/R	:	Shim oversize, +1.35mm		
	02/630288	A/R	:	Shim oversize, +1.40mm		
	02/630289	A/R	:	Shim oversize, +1.45mm		
	02/630290	A/R	:	Shim oversize, +1.50mm		
	02/630291	A/R	:	Shim oversize, +1.55mm		
	02/630292	A/R	:	Shim oversize, +1.60mm		
	02/630293	A/R	:	Shim oversize, +1.65mm		
	02/630294	A/R	:	Shim oversize, +1.70mm		
	02/630295	A/R	:	Shim oversize, +1.75mm		
	02/630296	A/R	:	Shim oversize, +1.80mm		
	02/630297	A/R	:	Shim oversize, +1.85mm		
	02/630297	A/R	:	Shim oversize, +1.85mm		
	02/630298	A/R	:	Shim oversize, +1.90mm		
	02/630299	A/R	:	Shim oversize, +1.95mm		
16	02/630274	1	:	Spring		
17	02/630275	1	:	Pin		
18	02/630276	1	:	Spacer		
19	02/630277	1	:	Nozzle		
20	02/630278	1	:	Nut		
21	02/630279	1		Gasket		
22	02/630316	3		Cap		
23	02/630351	3		Insert		
24	02/630317	3		Seal		

L6-3-1 FUEL SYSTEM

	on	to	on	to
8014	M791000			
8015	M730800			
8016	M728750			
8017	M800000			
8018	M801000			

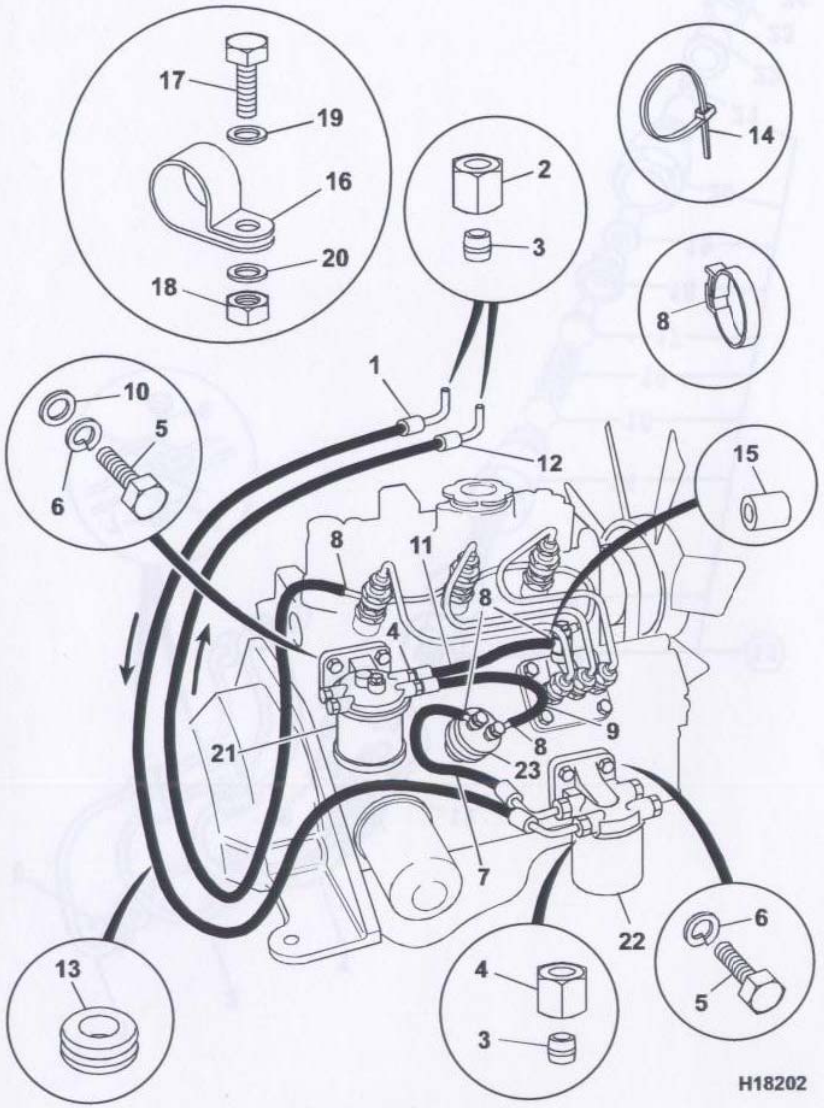

H18202

Item	Part No	Qty	A	Description	Remarks	M/C No change
1*	649/09100	1		Hose, fuel	Was 649/16900	
					Tank - sedimenter	
2	236/15901	2		Nut, tubing		
3	816/60085	6		Olive		
4	816/60084	4		Nut, tubing		
5	1315/0408Z	4		Screw, hex head, M10 x 30		
6	1425/0008Z	4		Washer, spring, M10		
7*	649/50019	1		Hose, fuel	Was 649/32000	
					Filter - pump	
8	231/40014	4		Clip, snapper		
9	649/48200	1		Hose, fuel	Pump - Filter	
10	823/00344	2		Washer, nylon, M10 x 2		
11	649/48100	1		Hose, fuel	Filter - Injectors	
12*	649/48000	1		Hose, fuel	Was 649/46300	
					Injectors - tank	
13*	2410/0209	2		Grommet, 16 - 20.6mm bore	Was 2410/0107	
14	121/77603	5		Cable tie	Was 204/07006	
15	647/03307	1		Hose, 15mm Long		
16*	821/00412	1		P Clip, 27dia x M8	Was 236/15908	
17*	1315/3320Z	1		Bolt, hex head, M8 x 100		
18*	1370/0203Z	1		Nut, self lock, M8		
19*	823/00055	1		Washer		
20*	1420/0007Z	1		Washer, plain, M8		
21*		1		Filter, fuel, ½in.x20 UNF	See L6-4-1	
22*		1		Fuel sedimenter assembly	See L6-6-1	
23*		1		Pump, fuel lift	See L6-5-1	

L6-3-1 FUEL SYSTEM

L6-4-1 FUEL FILTER

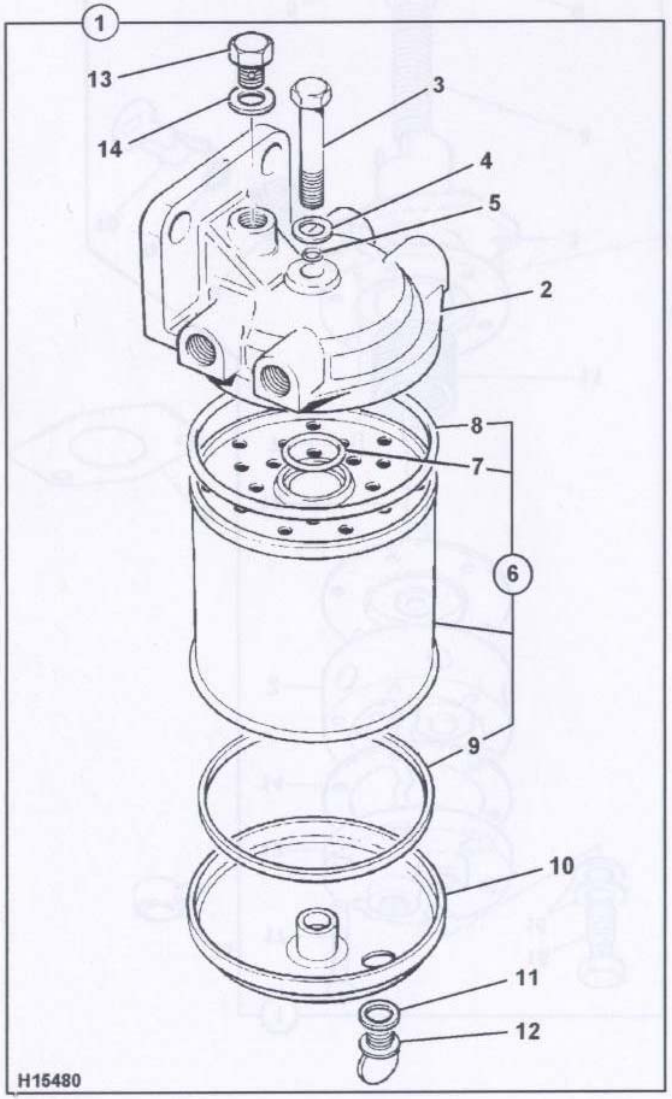

	on	to	on	to
8014	M791000			
8015	M730800			
8016	M728750			
8017	M800000			
8018	M801000			

Item	Part No	Qty	A	Description	Remarks	M/C No change
1	988/00005	1		Filter, fuel, ½in.x20 UNF		
2	32/400101	1	:	Head, fuel filter		
3	200/44607	1	:	Bolt, centre		
4	32/400508	1	:	Washer		
5	2401/0006	1	:	O Ring		
6	32/400701	1	:	Fuel element assembly		
7	828/00085	1	::	O Ring		
8	200/44626	1	::	Seal		
9	828/00086	1	::	Seal		
10	32/400402	1	:	Base filter, short		
11	32/400506	1	:	Washer		
12	32/400505	1	:	Plug, drain		
13	200/44613	1	:	Plug, vent		
14	823/00299	1	:	Washer		

L6-4-1 FUEL FILTER

L6-5-1 FUEL LIFT PUMP

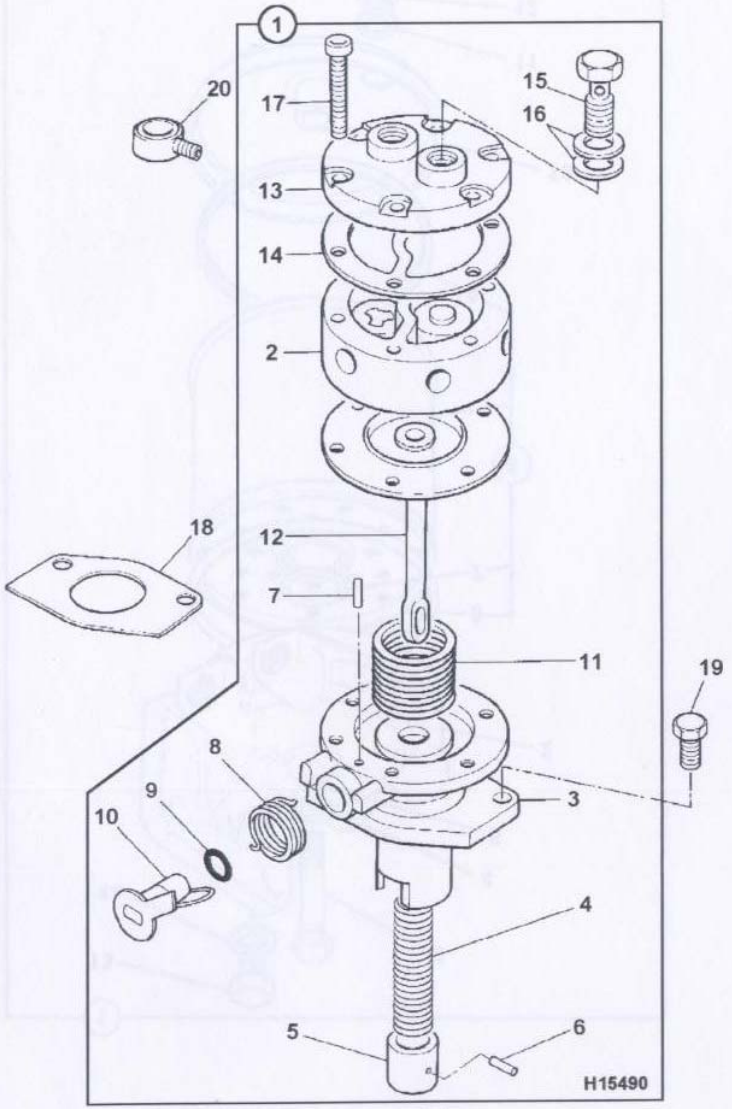

	on	to	on	to
8014	M791000			
8015	M730800			
8016	M728750			
8017	M800000			
8018	M801000			

Item	Part No	Qty	A	Description	Remarks	M/C No change
1	02/630320	1		Pump, fuel lift		
2	NSP	1	:	Upper body		
3	02/630321	1	:	Body, lower		
4	02/630322	1	:	Spring		
5	02/630323	1	:	Plunger		
6	02/630324	1	:	Pin		
7	02/630325	1	:	Pin		
8	02/630326	1	:	Spring		
9	02/630327	1	:	O Ring		
10	02/630328	1	:	Lever		
11	02/630329	1	:	Spring		
12	02/630330	1	:	Diaphragm		
13	02/630331	1	:	Cap		
14	02/630332	1	:	Gasket		
15	02/630333	2	:	Bolt, banjo		
16	02/630334	4	:	Washer		
17	02/630335	6	:	Capscrew		
18*	02/630336	1		Gasket		
19	02/630122	2		Screw		
20	02/630337	2		Banjo		

L6-5-1 FUEL LIFT PUMP

L6-6-1 FUEL SEDIMENT FILTER

	on	to	on	to
8014	M791000			
8015	M730800			
8016	M728750			
8017	M800000			
8018	M801000			

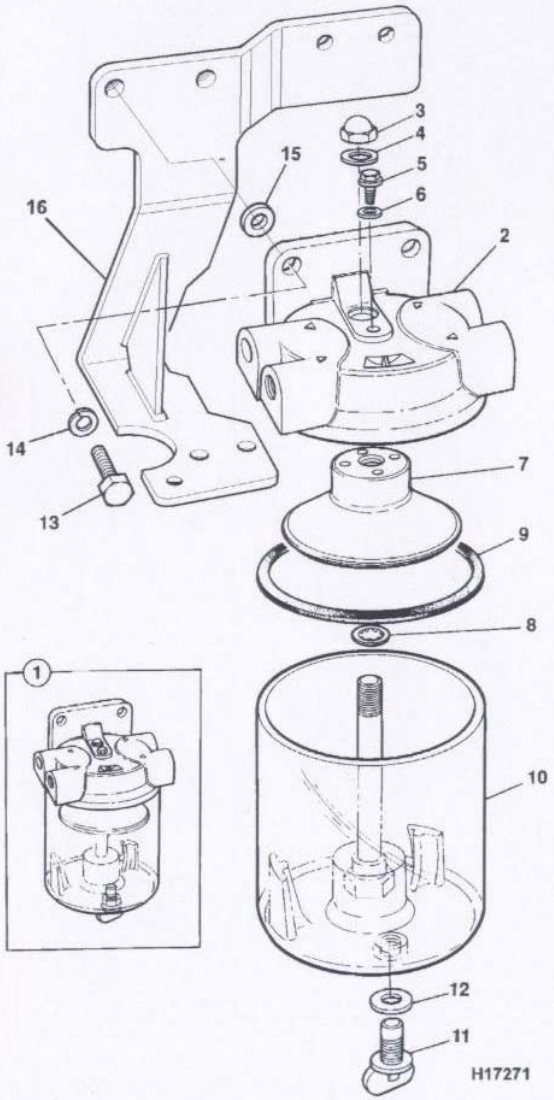

Item	Part No	Qty	A	Description	Remarks	M/C No change
1	32/908400	1		Fuel sedimenter assembly		
2	32/905801	1	:	Head, filter		
3	32/904702	1	:	Capnut		
4	32/904703	1	:	Washer, seal		
5	32/904713	1	:	Bleed screw, 5mm		
6	32/904714	1	:	O Ring		
7	32/904706	1	:	Filter,swirl cone		
8	32/904707	1	:	Washer, locking		
9	32/904708	1	:	Seal		
10	32/904709	1	:	Bowl assembly		
11	32/905802	1	:	Drain plug		
12	32/908402	1	:	Seal		
13	1315/0408Z	2	:	Screw, hex head, M10 x 30		
14	823/00416Z	2	:	Washer, spring, M10		
15	823/00344	2	:	Washer, nylon, M10 x 2		
16	236/17500	1		Bracket, sedimentor		

L6-6-1 FUEL SEDIMENT FILTER

HYDRAPOWER

GASKET SETS



L8

L1 ENGINE, CYLINDER BLOCK & SUB-ASSEMBLIES

L2 CYLINDER HEAD & SUB ASSEMBLIES

L3 INDUCTION AND EXHAUST SYSTEMS

L4 COOLING SYSTEM

L5 LUBRICATION SYSTEM

L6 FUEL SYSTEM

L8 GASKET SETS

L8-1-1 GASKET SETS

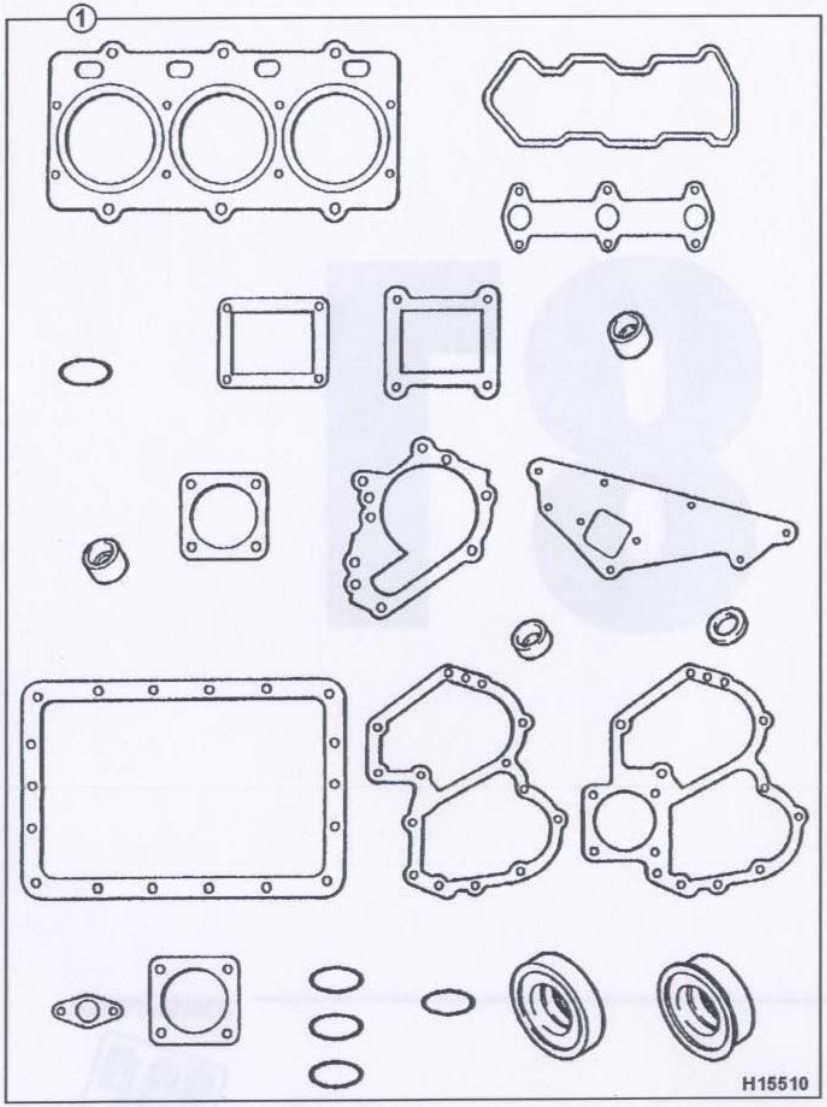

	on	to	on	to
8014	M791000			
8015	M730800			
8016	M728750			
8017	M800000			
8018	M801000			

Item	Part No	Qty	A	Description	Remarks	M/C No change
1	02/630340	1		Gasket set		
	02/630391	1		Gasket set, asbestos free		

L8-1-1 GASKET SETS