SKYTRAK®

Illustrated Parts Manual
Service and Maintenance Manual

RUTHZIL TRATOR COMERCIAL DE PEÇAS LTDA 11 97083-6812 ROLANDO

Model
8042
10042
10054

8990187-003
FEBRUARY 2000

ANSI

NQA ISO9001 REGISTERED COMPANY
UKAS QUALITY MANAGEMENT 015

JLG®

Table of Contents

Page

SECTION 1 – MAIN FRAME AND GUARDS

Main Frame 2
Hoods and Guards 4

SECTION 2 – OPERATOR'S CAB AND CONTROLS

Operator's Cab - Open 6
Operator's Cab - Closed (Optional) 8
Cab Door 10
Operator's Seat 12
Control Console 14
Transmission Shift Controls (S/N 9908 & Before) 16
Transmission Shift Controls (S/N 9909 & After) 18
Boom Raise/Lower & Extend/Retract Control 20
Frame Level & Attachment Tilt Control 22
Throttle Pedal Control 24
Service Brake Pedal Control 26
Front Windshield Wiper 28
Cab Heater (Optional) 30
Aux. Hydraulic Control (Optional) 32
Mirrors 34
Skylight Windshield Wiper (Optional) 36
Soft Cab Enclosure (Optional) 38

SECTION 3 – DRIVE TRAIN

Converter and Transmission Housings (S/N 9908 & Before) 40
Converter Group (S/N 9908 & Before) 42
Forward, Reverse, Low and 2nd (S/N 9908 & Before) 44
Output, Idler and Third (S/N 9908 & Before) 46
Transmission Clutch Groups (S/N 9908 & Before) 48
Control Valve Assembly (S/N 9908 & Before) 50
Emergency Brake (S/N 9908 & Before) 52
Transmission Mounting (S/N 9908 & Before) 54
Engine Connect (S/N 9909 & After) 56
Converter and Layshaft (S/N 9909 & After) 58
Oil Pressure Pump (S/N 9909 & After) 60
Input Shaft (S/N 9909 & After) 62
Gearbox Housing (S/N 9909 & After) 64
Clutch Pack 1st Gear - 1 of 2 (S/N 9909 & After) 66
Clutch Pack 1st Gear - 2 of 2 (S/N 9909 & After) 68
Clutch Pack 2nd Gear - 1 of 2 (S/N 9909 & After) 70
Clutch Pack 2nd Gear - 2 of 2 (S/N 9909 & After) 72
Clutch Pack 3rd Gear - 1 of 2 (S/N 9909 & After) 74
Clutch Pack 3rd Gear - 2 of 2 (S/N 9909 & After) 76
Output Shaft (S/N 9909 & After) 78
Parking Brake (S/N 9909 & After) 80
Power Take-Off Shaft (S/N 9909 & After) 82
Gearshift System (S/N 9909 & After) 84
Control Valve (S/N 9909 & After) 86
Transmission Filter & Dipstick (S/N 9909 & After) 88
Oil Tubes (S/N 9909 & After) 90
Transmission Mounting (S/N 9909 & After) 92
Drive Shaft - Engine to Transmission (S/N 9908 & Before) 94
Drive Shaft - Engine to Transmission (S/N 9909 & After) 96
Drive Shaft - Front and Rear (S/N 9908 & Before) 98
Drive Shaft - Front and Rear (S/N 9909 & After) 100
Differential Carrier Assembly 102
Axle Steering Joints 104
Axle Wheel Ends (S/N 0460 & Before) 106
Axle Wheel Ends (S/N 0461 & After) 108
Tie Rod and Steering Cylinder Mounting 110
Wheels and Tires - 8042 112
Wheels and Tires - 10042/10054 114

SECTION 4 – POWER PLANT

Engine, Radiator and Oil Cooler Mounting (S/N 0118 & Before) 116
Engine, Radiator and Oil Cooler Mounting (S/N 0119 thru 1598) 118
Engine, Radiator and Oil Cooler Mounting (EPA) (S/N 1599 & After) 120
Torsion Coupler (S/N 9909 & After) 122
Exhaust System 124
Air Cleaner 126
Fuel System (S/N 1598 & Before) 128
Fuel System (EPA) (S/N 1599 & After) 130

SECTION 5 – HYDRAULIC CIRCUITS

Power Steering Circuit (S/N 9908 & Before) 132
Power Steering Circuit (S/N 9909 & After) 134
Control Valves Circuit (S/N 9908 & Before) 136
Control Valves Circuit (S/N 9909 & After) 138
Boom Raise/Lower & Extend/Retract Circuit (S/N 9908 & Before) 140
Boom Raise/Lower & Extend/Retract Circuit (S/N 9909 & After) 142
Attachment Tilt and Slave Circuit 144
Frame Tilt and Stabilizer Circuit 146
Service Brake and De-Clutch Circuit 148
Valve Plate Assembly (Without Outriggers 8042 Only) 150
Valve Plate Assembly (With Outriggers 10042/10054 Only) 152
Transmission Cooling Circuit (S/N 9908 & Before) 154
Transmission Cooling Circuit (S/N 9909 & After) 156
Auxiliary Hydraulic Circuit (Optional) 158
Outrigger Hydraulic Circuit (10042/10054 Only) 160

© 2000 JLG Industries, Inc.

Page

Page

SECTION 6 – HYDRAULIC COMPONENTS

Hydraulic Reservoir 162
Main Pump (S/N 9908 & Before) 164
Main Pump (S/N 9909 & After) 166
Boom Extend Cylinder (Early Production) 168
Boom Extend Cylinder (Current Production) 170
Boom Hoist Cylinder (S/N 5818 & Before) 172
Boom Hoist Cylinder (S/N 5819 & After) 174
Frame Tilt Cylinder 176
Stabilizer Cylinder 178
Slave Cylinder (Early Production) 180
Slave Cylinder (Current Production) 182
Attachment Tilt Cylinder 184
Outrigger Cylinder (S/N 10881 & Before) 186
Outrigger Cylinder (S/N 10882 & After) 188
Swing Carriage Cylinder 190
Side Tilt Carriage Cylinder 192
Steering Cylinder (S/N 1167 & Before) 194
Steering Cylinder (S/N 1168 & After) 196
Main Control Valve 198
Secondary Control Valve 200
Directional Control Valves 1 of 2 202
Directional Control Valves 2 of 2 204

SECTION 7 – ELECTRICAL

Electrical System - Cab Harness (S/N 0291 & Before) 206
Electrical System - Cab Harness (S/N 0292 thru 9908) 208
Electrical System - Cab Harness (S/N 9909 and After) 210
Electrical System - Engine Harness (S/N 8042-0206 & Before and 10042-0211 & Before) 212
Electrical System - Engine Harness (S/N 8042-0207 thru 1598, 10042-0212 thru 1598, 10054-1598 & Before) 214
Electrical System - Engine Harness (S/N 8042-1599 to 5234, 10042-1599 to 5250, 10054-1599 to 5274) 216
Electrical System - Engine Harness (EPA) (S/N 8042-5235, 10042-5251, 10054-5275 thru 9908) 218
Electrical System - Engine Harness (EPA) (S/N 9909 and After) 220
Lighting System 222
Outrigger Electrical Harness (10042/10054 Only) 224

SECTION 8 – DECALS AND PAINT

Decals and Paint 226

SECTION 9 – BOOM AND ATTACHMENTS

Outer Boom 228
Intermediate Boom - 8042 and 10042 230
Inner Boom - 8042 and 10042 232
Quick Attach 234
Carriage 48" 236
Carriage 60" (Optional) 238
Carriage 72" (Optional) 240
Side Tilt Carriage - Early Production (Optional) 242
Side Tilt Carriage - Current Production (Optional) ... 244
Outriggers (10042/10054 Only) 246
Swing Carriage (Optional) 248
Sheet Material Handler (Optional) 250
Utility Bucket (Optional) 252
Primary Intermediate Boom - 10054 254
Secondary Intermediate Boom - 10054 256
Inner Boom - 10054 258
Boom Extend Chains - 8042 and 10042 260
Boom Retract Chain - 8042 and 10042 (S/N 1084 & Before) 262
Boom Retract Chain - 8042 and 10042 (S/N 1085 & After) 264
Boom Extend Chains - 10054 266
Boom Retract Chains - 10054 (S/N 0884 & Before) 268
Boom Retract Chains - 10054 (S/N 0885 thru 1084) 270
Boom Retract Chains - 10054 (S/N 1085 & After) ... 272
Truss Boom 12 and 15 Ft. (Optional) 274

PART NUMBER INDEX 277

SECTION 10 – GENERAL TROUBLESHOOTING . 287

© 2000JLG Industries, Inc.

The parts information in this publication is based on data available at the time it was printed. Because of continual improvement and advancing product design, your vehicle may not be identical to the parts information shown. Whenever there is a question, obtain the latest parts information available from your local dealer.

MAIN FRAME

Locate the fracture in bearing outer race at the clock position shown for each application (Items 5 & 7).

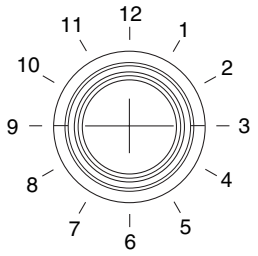

- Boom Pivot
- Frame Tilt Cylinder
- Stabilizer Cylinder
- Hoist Cylinder
- Slave Cylinder

MAIN FRAME

Item No.	Part Number	Qty.	Description
1	Consult Factory	1	Weldment, Frame
2	7092292	8	Pin, Hoist, Slave, Tilt, and Stabilizer Cylinders
3	8303782	8	HHCS, 1/2-13 x 4"
4	8305644	8	Nut, Hex Lock Elastic 1/2-13
5	8065640	8	Bearing, 2" I.D.
6	6620531	AR	Conduit, 1 x 5' - Cut to Fit
7	8065641	2	Bearing, 2-3/4" I.D.
8	7124331	AR	Conduit, 1/2 x 5' - Cut to Fit
9	7125861	AR	Conduit, 3/4 x 5' - Cut to Fit
10	8520013	8	Fitting, Grease
11	8520021	2	Fitting, Grease 90°
12	8303724	8	HHCS, 3/4-10 x 3-1/2"
13	8310111	8	Washer, Flat .81 x 2 x .15"
14	8310067	8	Nut, Hex Lock Elastic 3/4-10
15	7079442	2	Pin, Axle Pivot
16	8307913	AR	Spacer, Washer .12" Thick
17	8307912	AR	Spacer, Washer .06" Thick
18	8310259	AR	Spacer, Washer .09" Thick
19	8303655	2	HHCS, 5/8-11 x 4-1/2"
20	8305643	2	Nut, Hex Lock Elastic 5/8-11
21	7099312	2	Anchor, Cylinder
22	8040258	2	Axle
23	7098563	1	Counterweight
24	8305021	4	Nut, Hex 1"-8
25	5724302	2	Washer, Shim .06" Thick
26	8307012	4	Washer, Lock 1"
27	8310066	2	Washer, Flat .134" Thick
28	8310051	4	HHCS, 1-8 x 4"
			KITS
29	7138302	1	Kit, Cylinder Anchor (Includes 1 of Item 5, 1 of Item 10 and 1 of Item 21)
30	7129313	1	Kit, Hoist Cylinder Pivot Left Side (Includes 1 of Item 2, 1 of Item 5 and 1 of Item 10)
31	7129323	1	Kit, Hoist Cylinder Pivot Right Side (Includes 1 of Item 2, 1 of Item 5 and 1 of Item 10)

HOODS AND GUARDS

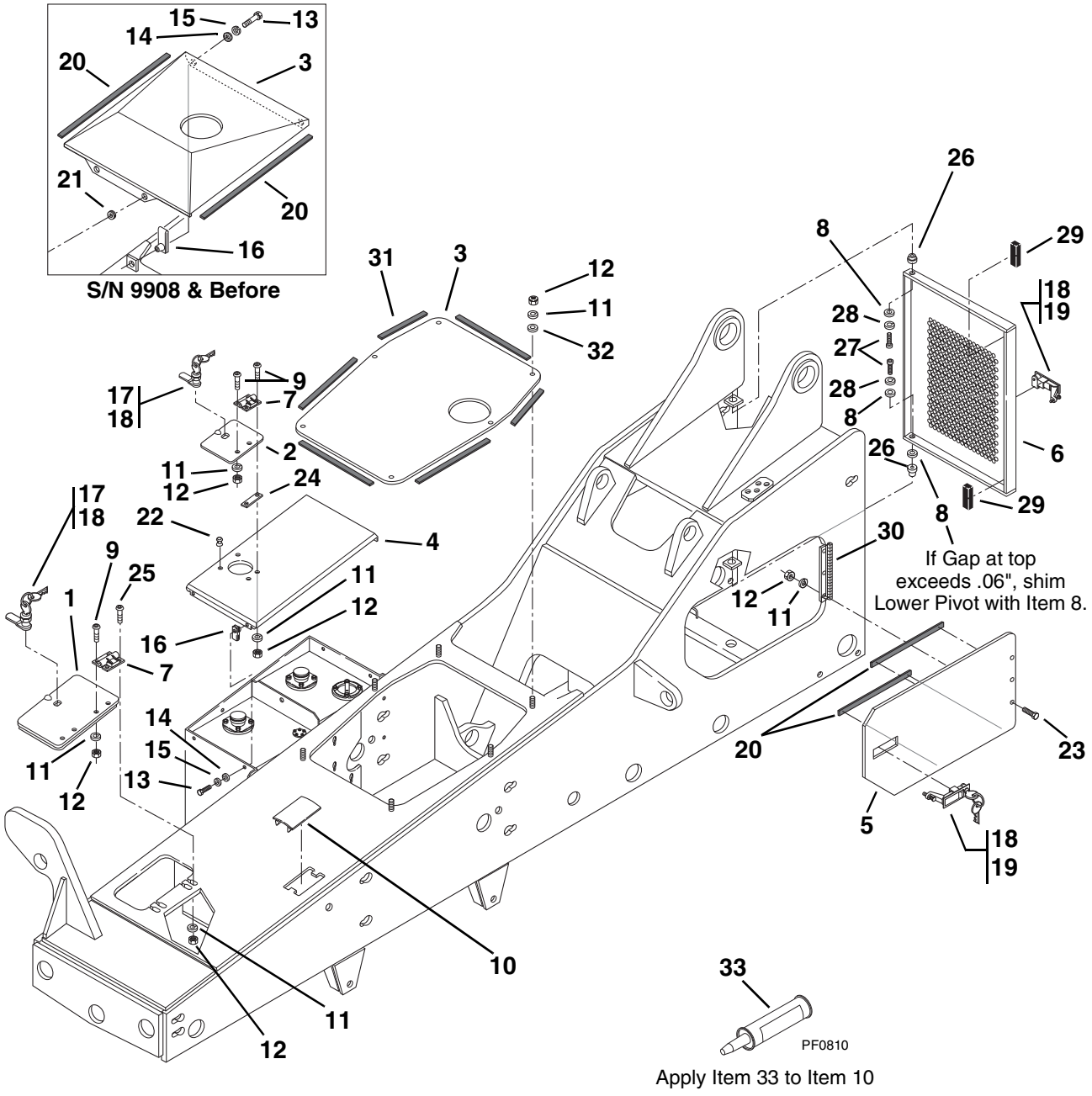

HOODS AND GUARDS

Item No.	Part Number	Qty.	Description
1	7098262	1	Cover, Tool Box
2	7084792	1	Cover, Fuel Tank
3	7111164	1	Cover, Transmission (S/N 9908 & Before)
	7150393	1	Cover, Transmission (S/N 9909 & After)
4	NLA	1	Cover, Fuel/Hydraulic Tank (S/N 11020 & Before) For Service, Order P/N 7138614
	7138614	1	Cover, Fuel/Hydraulic Tank (S/N 11021 & After)
5	7095452	2	Cover, Side Access
6	7097174	1	Cover, Radiator
7	8344010	3	Hinge
8	8307110	AR	Washer, Flat 3/8"
9	8303034	8	TRHDCS, 1/4-20 x 3/4"
10	7111473	1	Cover
11	8307002	18	Washer, Lock 1/4"
12	8305004	18	Nut, Hex 1/4-20
13	8303656	6	HHCS, 5/16-18 x 7/8"
14	8307203	6	Washer, Flat 5/16"
15	8307004	6	Washer, Lock 5/16"
16	8305906	6	Nut, Retaining 5/16"
17	8342807	2	Lock w/Key
18	8342808	AR	Key Set
19	8342416	3	Latch, w/Lock and Key
20	5746241	4	Tape, Foam - 38" (Cut to Fit)
21	8580213	2	Grommet
22	8582413	2	Plug, Bumper
23	8303729	6	HHCS, 1/4-20 x 5/8"
24	7084821	1	Shim
25	8310136	4	TRHDCS, 1/4-20 x 1-1/4"
26	7082311	2	Insert
27	8304660	2	SHCS, 3/8-16 x 3/4"
28	8307005	2	Washer, Lock 3/8"
29	5724742	2	Gasket
30	7094682	2	Hinge, Side Access Cover
31	8581007	AR	Tape, Foam - 170" (Cut to Fit)
32	8307202	6	Washer, Flat 1/4"
33	8526035	AR	Caulk, Clear RTV-08

OPERATOR'S CAB - OPEN

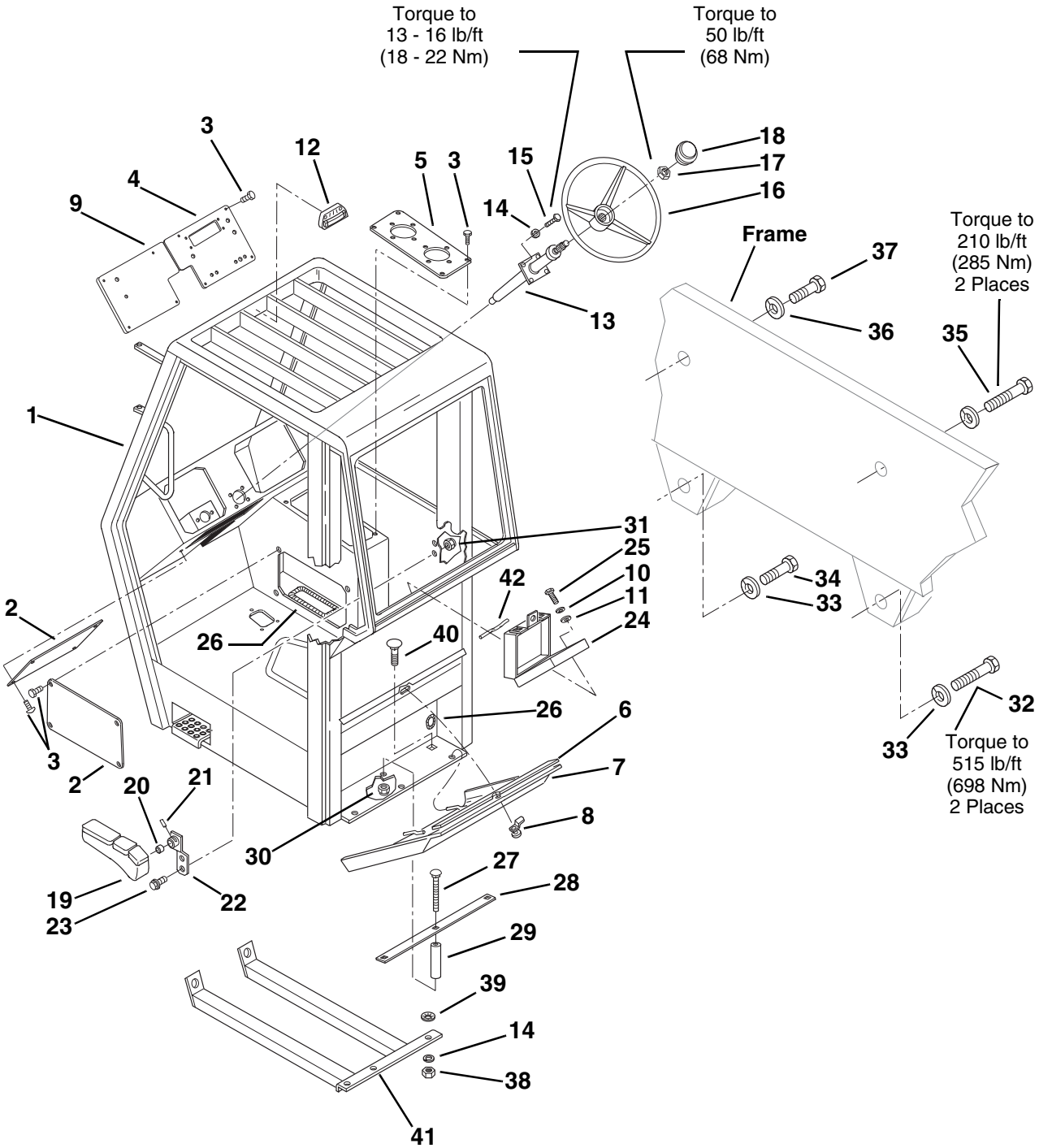

OPERATOR'S CAB - OPEN

Item No.	Part Number	Qty.	Description
1	7099742	1	Cab Assembly, Operator's Protective Structure Orange, Open - 10042/10054 (Right Rear Corner Post Reinforced)
	7112102	1	Cab Assembly, Operator's Protective Structure Orange, Open - 8042
2	8033050	2	Panel, Lower
3	8303034	20	THMS, Torx, 1/4-20 x 3/4"
4	8033052	1	Panel, Right Front Console
5	8033053	1	Panel, Side Console
6	8033031	1	Gasketing, Sponge Rubber, 25-1/4"
7	8033022	1	Cover, Battery
8	8342807	1	Lock, Cam
9	8033051	1	Panel, Left Front Console (S/N 9908 & Before)
	7150361	1	Panel, Left Front Console (S/N 9909 & After)
10	8307002	3	Washer, Lock 1/4"
11	8307109	3	Washer, Flat 1/4"
12	8466306	1	Gauge, Tilt Angle
13	8721023	1	Column, Steering (S/N 9908 & Before)
	7150382	1	Column, Steering (S/N 9909 & After)
14	8307005	8	Washer, Lock 3/8"
15	8303534	4	FHCS, 3/8-16 x 1-1/4"
16	8720014	1	Wheel, Steering
17	8305916	1	Nut, Steering Column
18	8720015	1	Cap, Steering Wheel
19	8864038	1	Arm Rest
20	8065639	1	Bushing, Sleeve
21	8302147	1	Pin, Roll
22	7098342	1	Bracket, Arm Rest
23	8303705	2	Scr. FLHDC 1/4-20 x 3/4"
24	8990147	1	Holder, Manual
25	8303729	2	HHCS, 1/4-20 x 5/8"
26	7124331	1	Conduit, 1/2 I.D. x 5' - Cut to Fit
27	8310344	AR	Bolt, Carriage 3/8-16 x 10"
28	7129261	1	Bar, Single Battery Hold Down (Current Production)
	7082971	1	Bar, Double Battery Hold Down (Early Production)
29	7125521	AR	Hose, 3/8 x 8.0"
30	8305645	2	Nut, Lock 3/8-16
31	8305624	2	Nut, Lock 1/4-20
32	8310050	1	HHCS, 1-8 x 6"
33	8307012	2	Washer, Lock 1"
34	8310049	1	HHCS, 1-8 x 2-3/4"
35	8310112	1	HHCS, 3/4-10 x 6"
36	8307010	2	Washer, Lock 3/4"
37	8303638	1	HHCS, 3/4-10 x 2-3/4"
38	8305008	4	Nut, Hex 3/8-16
39	8310070	4	Retainer - 3/8"
40	8310036	4	Bolt, Carriage 3/8-16 x 1-1/4"
41	7097233	1	Guard, Bottom
42	7125691	2	Rope Caulk, 0.2 Dia. x 3.0"

OPERATOR'S CAB - CLOSED
(Optional)

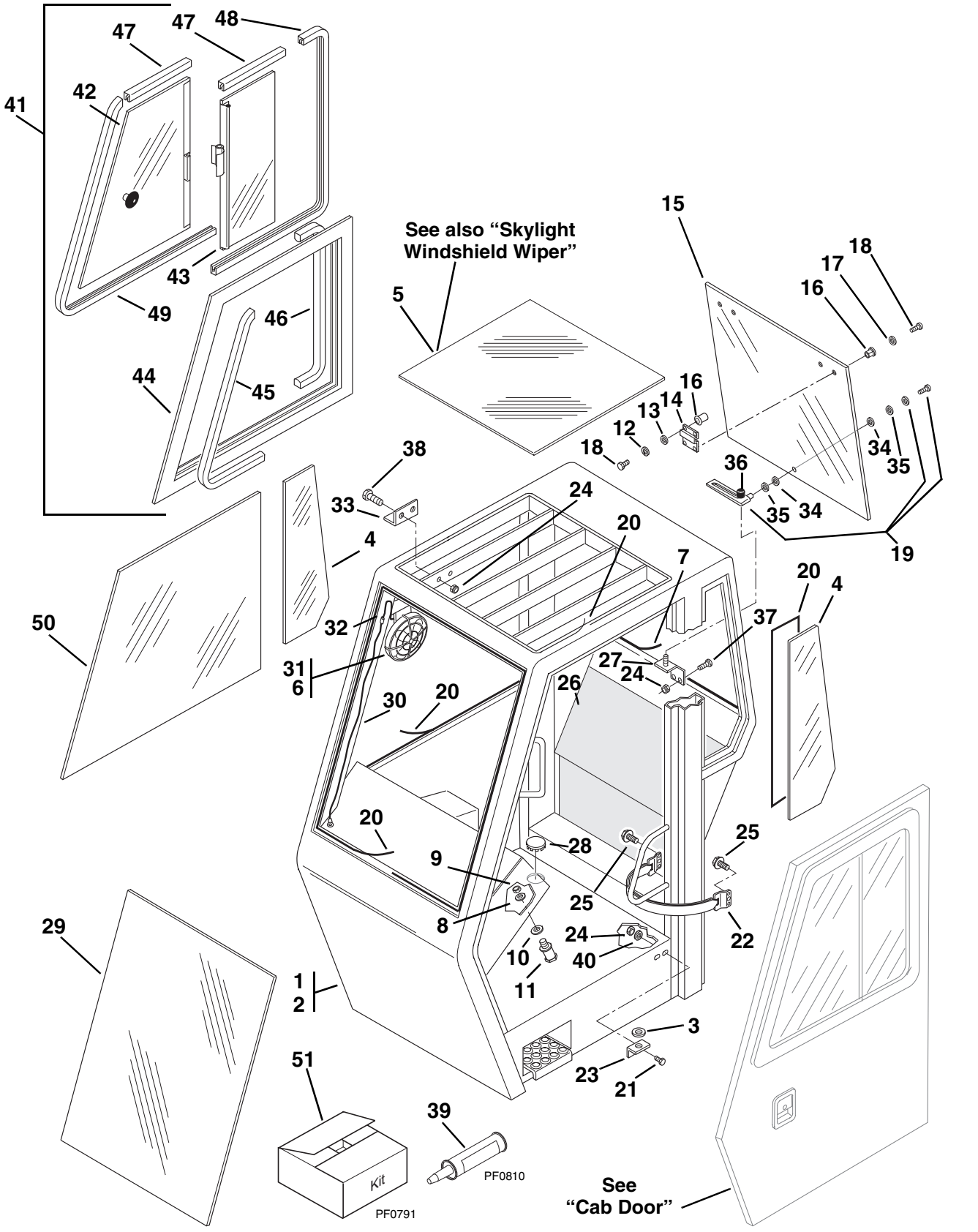

OPERATOR'S CAB - CLOSED
(Optional)

Item No.	Part Number	Qty.	Description
1	7112092	1	Cab, Enclosed - Complete (Includes Cab Door; 10042 & 10054 Reinforced, Orange)
	7099324	1	Cab, Enclosure Kit minus Cab Door (Includes Items 3 thru 49 on this page and all parts on pages 29 and 37)
	7127282	1	Cab Assembly, Operator's Protective Structure Enclosed Orange - Optional Includes: 7099324 - Cab Enclosure Kit 8346008 - Door Assembly 7112102 - Cab Assembly, Operator's Protective Structure Orange, Open
2	See page 7		Cab Assembly
3	8307207	1	Washer, Flat 5/8"
4	8033079	2	Window, Wing
5	8033081	1	Window, Skylight w/o Wiper Assembly
6	8033092	4	HHCS, #10-24 x 3/4"
7	8033072	1	Seal, Rubber, 120"
8	8307113	1	Washer, Flat 7/16"
9	8305647	1	Nut, Hex Lock 7/16-14
10	8307206	AR	Washer, Flat 1/2"
11	8346010	1	Bolt, Striker
12	8307003	4	Washer, Lock #10
13	8307201	4	Washer, Flat 3/16"
14	8033085	2	Hinge, Spring
15	8033084	1	Window, Rear
16	8033086	8	Nut, Well
17	8033087	4	Washer, Nylon
18	8033088	8	Screw, Phil. Hd, #10-32 x 3/4"
19	8033044	1	Window Hold Slide Assembly, w/Hardware
20	8585135	3	Tape, Butyl, 1/4" sq. x 15' Roll
21	8303540	2	HHCS, 1/4-20 x 1"
22	8342413	1	Strap
23	8033090	1	Bracket, Door Mounting
24	8305601	6	Nut, Hex Lock 1/4-20
25	8303982	4	Screw, Self Tap 1/4-20 x 3/4"
26	8346011	1	Panel, Rear Foam
27	8585138	1	Weldment, Latch Bracket
28	8580315	1	Plug, Hole
29	8033479	1	Window, Front
30	8033076	1	Wire Assembly, Fan
31	8033078	1	Fan, Defroster
32	8033077	2	Connector, Wire
33	8033094	1	Bracket, Circulation Fan
34	8585139	2	Washer, Flat Plastic 3/8"
35	8307204	2	Washer, Flat 3/8"
36	8580115	1	Knob
37	8303776	2	HHCS, 1/4-20 x 1/2"
38	8303540	2	HHCS, 1/4-20 x 1"
39	8585134	AR	Sealant, Urethene, 10 oz. Cartridge
40	8307002	2	Washer, Lock 1/4"
41	8346009	1	Window, Right Side Sliding (Includes Items 42 thru 49)
42	8033833	1	Glass Assembly - Front
43	8033834	1	Glass Assembly - Rear
44	8033835	1	Frame Assembly
45	8033836	1	Trim, Stop - Front
46	8033837	1	Trim, Stop - Rear
47	8033838	2	Rubber, Flkd
48	8033839	1	Rubber, Flkd
49	8033840	1	Rubber, Flkd
50	8033082	1	Window, Right Side (Optional)
51	8585133	1	Window Glue Kit (Includes Items 20, 39, four setting blocks and installation instructions)

CAB DOOR

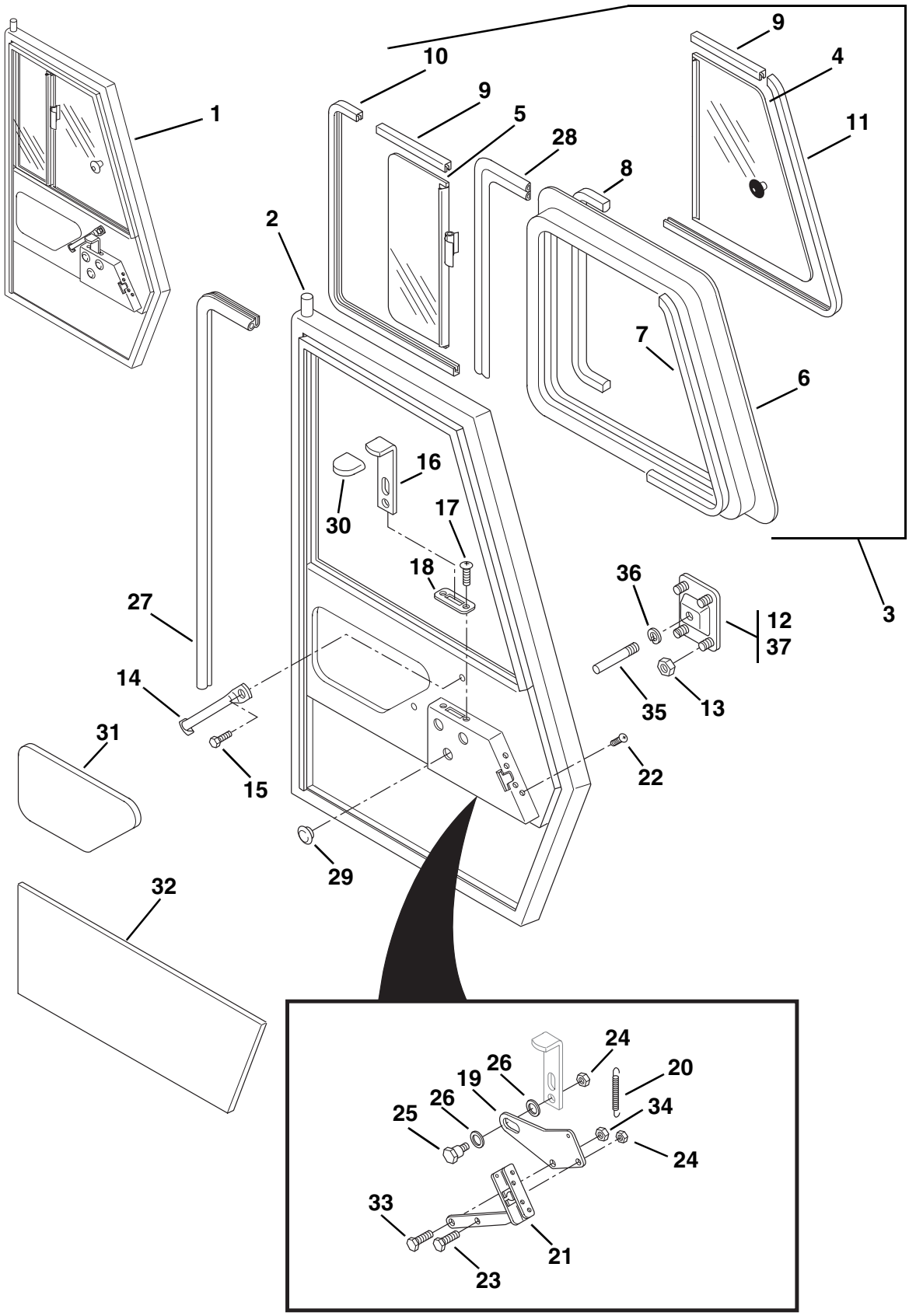
1
10
9
5
28
8
9
4
11
2
7
6
16
30
17
18
3
36
12
37
27
14
35
13
31
15
22
29
32
24
26
19
20
26
25
34
24
33
21
23
PH0552

CAB DOOR

Item No.	Part Number	Qty.	Description
1	8346008	1	Door Assembly (Includes Items 2 thru 36)
2	8033844	1	Door Weldment
3	8033845	1	Sliding Window Assembly (Includes Items 4 thru 11)
4	8033843	1	Glass Assembly - Front
5	8033842	1	Glass Assembly - Rear
6	8033841	1	Frame Assembly
7	8034544	1	Trim, Stop - Front
8	8034545	1	Trim, Stop - Rear
9	8034546	2	Rubber, Flkd
10	8034547	1	Rubber, Flkd
11	8034548	1	Rubber, Flkd
12	8033846	1	Paddle Latch
13	8033847	4	Nut, Hex Locking 1/4-20
14	8033848	1	Grab Handle
15	8033849	2	Screw, Self Tapping 1/4 x 3/4"
16	8033850	1	Door Release
17	8033851	2	Screw, Self Tapping #10-24 x 1/2"
18	8033852	1	Bezel
19	8033853	1	Latch Trip
20	8033854	1	Spring
21	8033855	1	Cam Latch - Right Side
22	8033856	4	Bolt, 1/4-20 x 3/4"
23	8033857	1	Bolt, Hex Hd. 5/16 x 3/4"
24	8033858	2	Nut, Hex Locking 5/16"
25	8033859	1	Shoulder Bolt
26	8033860	2	Washer, Nylon
27	8033861	1	Seal, Rubber (17')
28	8037206	1	Seal, Bulb "D" .216 x .354 (9.5')
29	8033862	3	Hole Plug
30	8033863	1	Rubber Grip
31	8033864	1	Soundproofing - Upper Door
32	8033865	1	Soundproofing - Lower Door
33	8033866	1	Bolt, Hex Hd. 3/8 x 3/4"
34	8033867	1	Nut, Hex Locking 3/8"
35	8033868	1	Striker Bolt
36	8033869	1	Washer, Lock 3/8"
37	8342808	1	Key Set (Not Shown)

OPERATOR'S SEAT

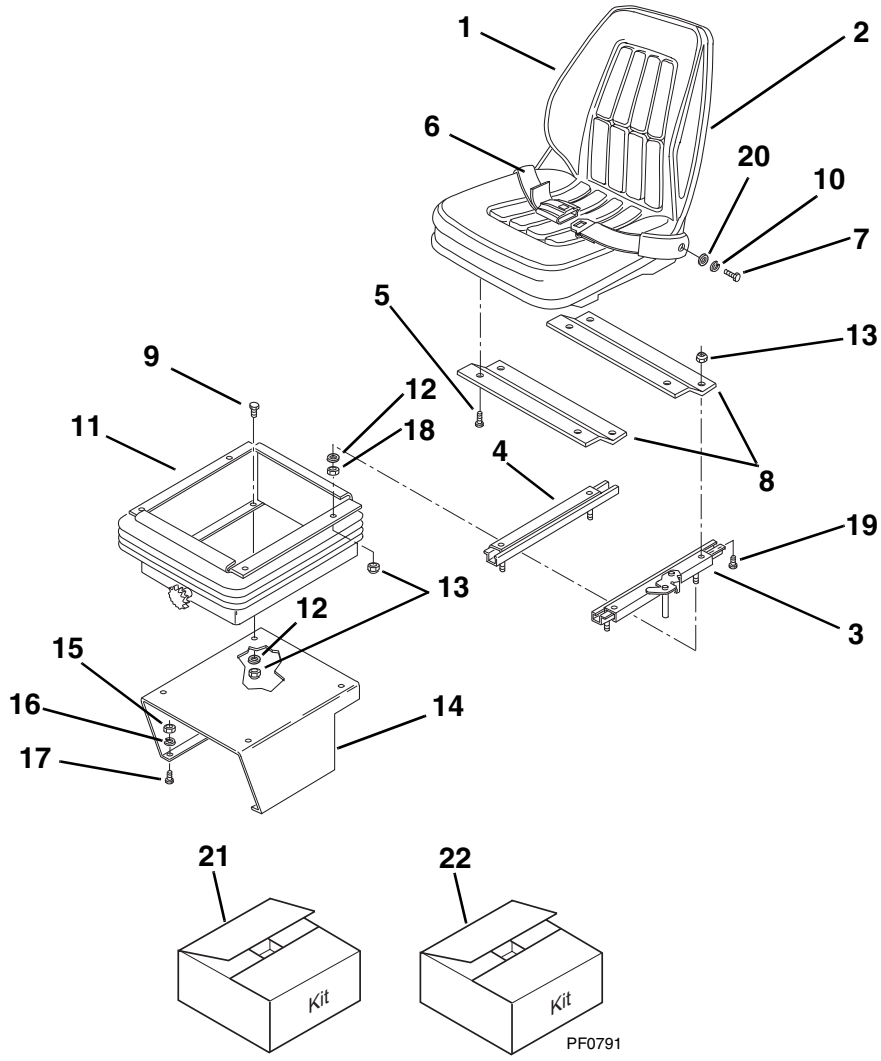

PA0064

OPERATOR'S SEAT

Item No.	Part Number	Qty.	Description
1	8864037	1	Seat Assembly - Vinyl (Includes Items 2 thru 5)
	8864044	1	Seat Assembly - Cloth 2 Piece (Includes Items 2 thru 5)
2	8864041	1	Cushion, Seat - Vinyl (one piece)
	8864045	1	Cushion, Seat - Cloth
	8864046	1	Seat Back - Cloth
3	8864039	1	Slide, w/Handle
4	8864040	1	Slide, w/o Handle
5	NSS	4	Screw
6	8864043	1	Belt, Seat
7	8303604	2	HHCS, 7/16-20 x 1-1/4"
8	7090751	2	Mount, Seat
9	8303697	4	HHCS, 5/16-18 x 3/4"
10	8307006	2	Washer, Lock 7/16"
11	8864036	1	Suspension
12	8307106	8	Washer, Flat 5/16"
13	8305626	12	Nut, Hex Lock Elastic 5/16-18
14	7083963	1	Support, Suspension
15	8305008	4	Nut, Hex 3/8-16
16	8307005	4	Washer, Lock 3/8"
17	8303534	4	FLHDCS 3/8-16 x 1-1/4"
18	8305006	4	Nut, Hex 5/16-18
19	8303745	4	HHCS, 5/16-18 x 5/8"
20	8307113	2	Washer, Flat 7/16"
			KITS
21	7143900	1	Kit, Seat Belt non-retractable 3"
22	7144000	1	Kit, Seat Belt retractable 3"

CONTROL CONSOLE

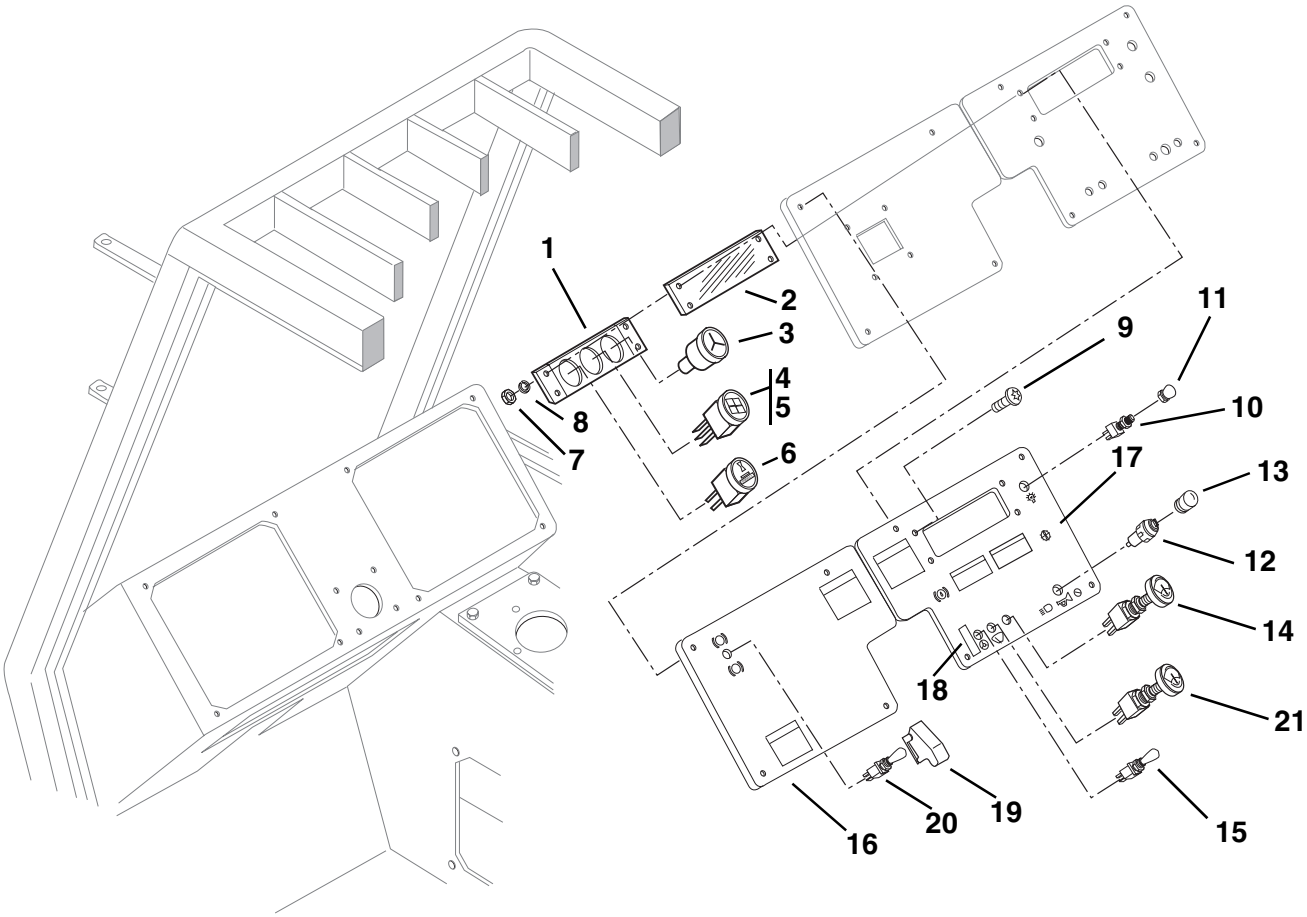

PH0543

CONTROL CONSOLE

Item No.	Part Number	Qty.	Description
1	7084902	1	Plate, Gauge Mounting
2	7082292	1	Cover
3	8464212	1	Gauge, Fuel
4	8466305	1	Gauge, Warning Lights (Includes Item 5)
5	8469030	4	Bulb (Not Shown)
6	8467014	1	Hourmeter
7	8305004	4	Nut, Hex, 1/4-20
8	8307002	4	Washer, Lock 1/4"
9	8303034	4	TRHCS, Torx 1/4-20 x 3/4"
10	8223442	1	Switch Test
11	8580312	1	Cap, Seal
12	8223405	1	Button, Horn
13	8580311	1	Cap, Seal
14	8033201	1	Switch, Washer/Wiper Front (Optional)
15	8223220	1	Switch, Steer Select
16	7099352	1	Overlay, Left Console - Domestic (S/N 9908 & Before)
	7150371	1	Overlay, Left Console - Domestic (S/N 9909 & After)
	7111842	1	Overlay, Left Console - Export (S/N 9908 & Before)
	7150472	1	Overlay, Left Console - Export (S/N 9909 & After)
17	7099332	1	Overlay, Right Console - Domestic
	7111832	1	Overlay, Right Console - Export
18	4107971	1	Decal, Outrigger Contact - Domestic (10054 Only)
	4107981	1	Decal, Outrigger Contact - Export (10054 Only)
19	8223445	1	Guard, Switch
20	8223444	1	Emergency Brake Switch
21	7135942	1	Switch, Skylight Wiper (Optional)

TRANSMISSION SHIFT CONTROLS

(S/N 9908 & Before)

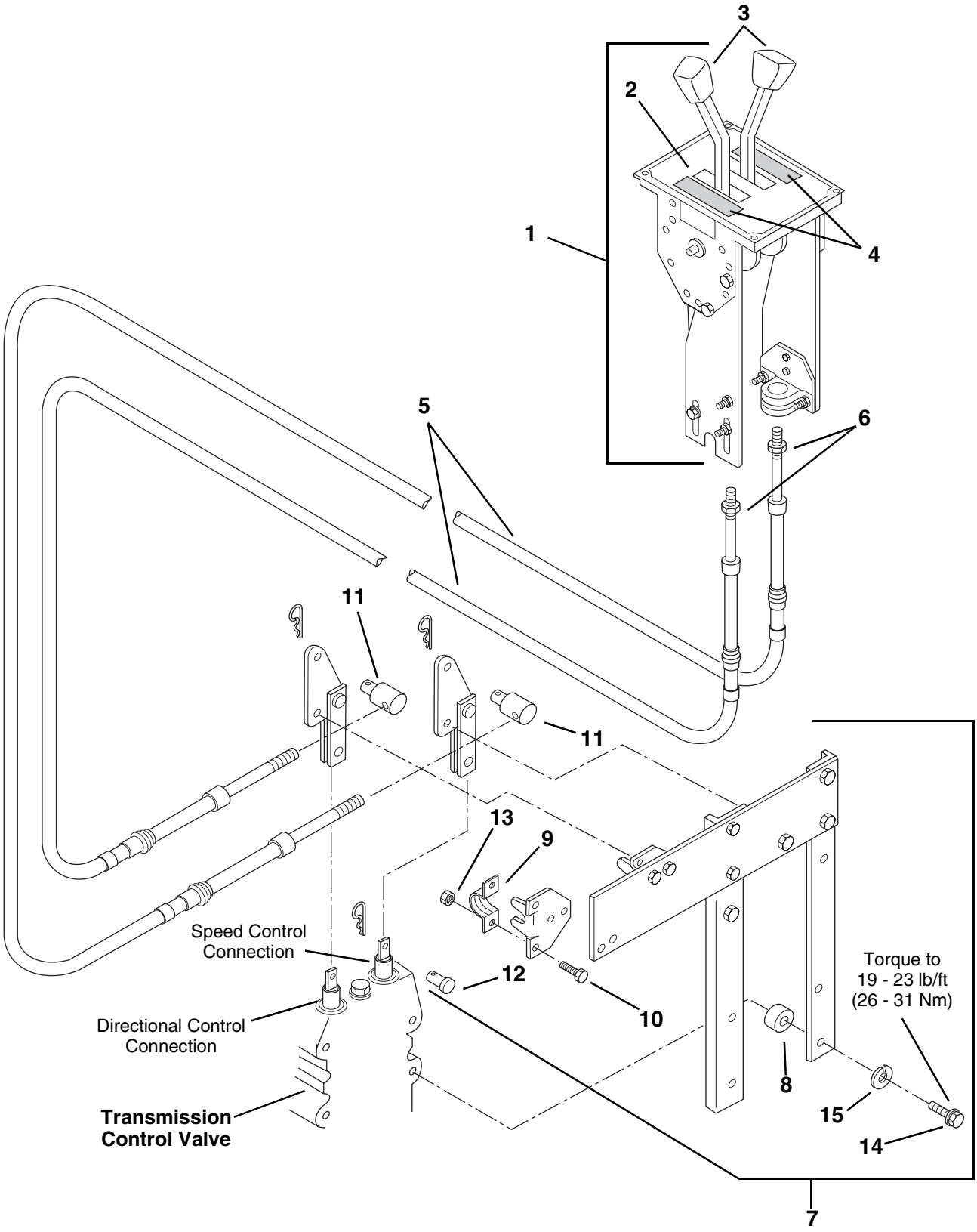

PA0085

TRANSMISSION SHIFT CONTROLS

(S/N 9908 & Before)

Item No.	Part Number	Qty.	Description
1	8160205	1	Shifter, Transmission (Includes Items 2 thru 4)
2	8034694	1	Gate Plate
3	8580111	2	Knob
4	8032753	1	Decal Kit (Contains F-N-R & 3-2-1 Decals)
5	8160042	2	Cable, Control
6	8305402	2	Nut, Hex Jam 1/4-28
7	8160417	1	Transmission Connector Kit (Includes Items 8 thru 15 plus all other parts not identified with an Item number)
8	8033240	4	Spacer
9	8033241	2	Clamp
10	8303540	4	HHCS, 1/4-20 x 1"
11	8033242	2	Swivel
12	8033243	2	Pin, Clevis
13	8305601	4	Nut, Lock
14	8303106	4	HHCS, 3/8-16 x 2-1/2"
15	8307005	4	Washer, Lock 3/8"

TRANSMISSION SHIFT CONTROLS

(S/N 9909 & After)

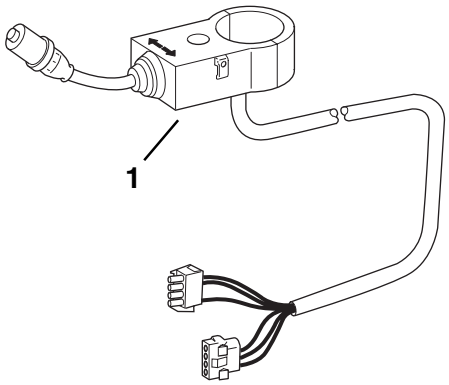

PH1201

TRANSMISSION SHIFT CONTROLS

(S/N 9909 & After)

Item No.	Part Number	Qty.	Description
1	1319283	1	Shifter, Transmission Range Selector

BOOM RAISE/LOWER & EXTEND/RETRACT CONTROL

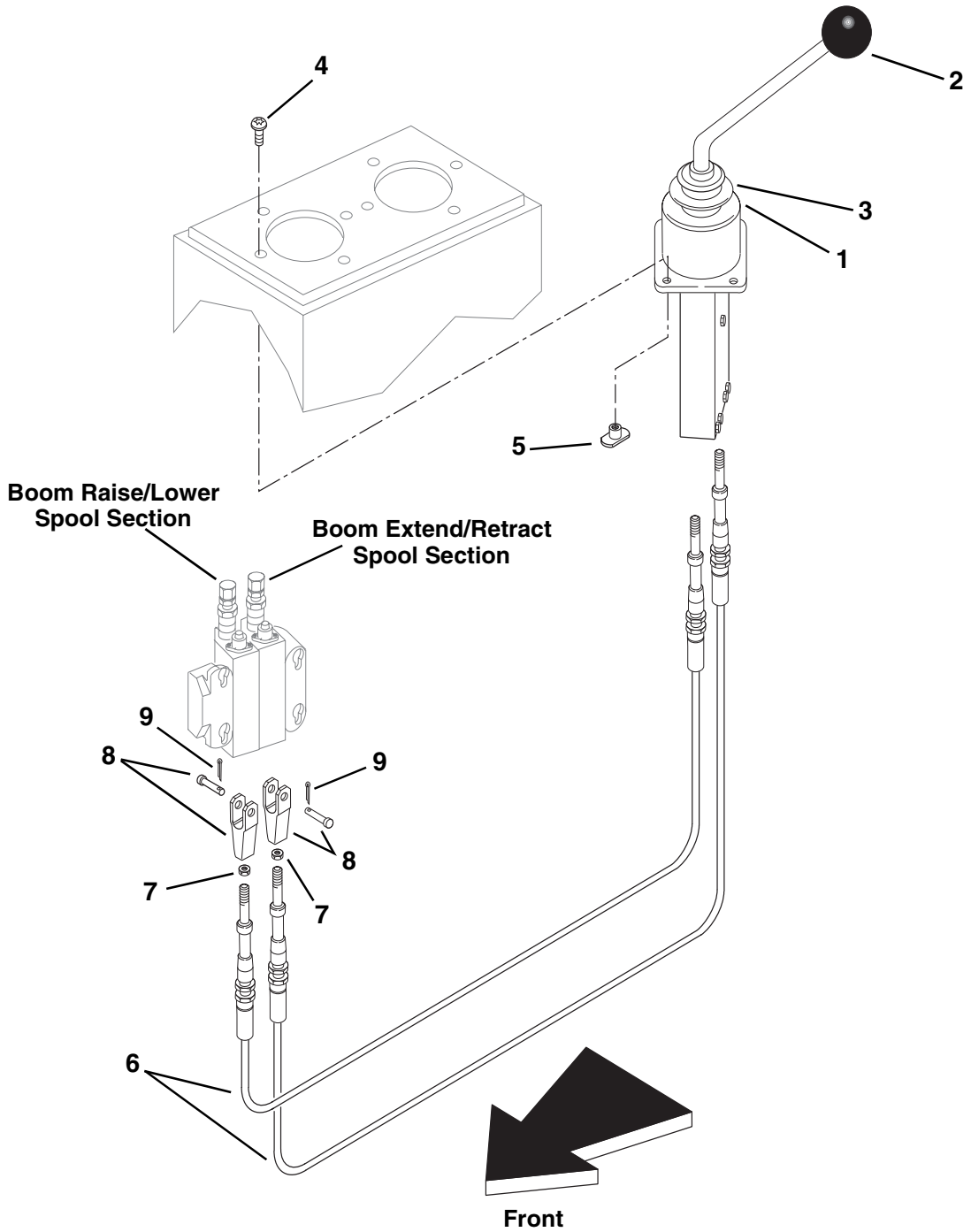

PH0522

BOOM RAISE/LOWER & EXTEND/RETRACT CONTROL

Item No.	Part Number	Qty.	Description
1	8224027	1	Joystick (Includes Items 2 and 3)
2	8580110	1	Knob
3	8160419	1	Boot
4	8310143	4	TRHCS #10-24
5	8310144	4	Nut, Prop. Tee #10-24
6	8160062	2	Cable, Control
7	8305402	4	Nut, Hex Jam 1/4-28
8	8301439	2	Clevis, with Pin and Cotter
9	8302470	2	Pin, Hair 1/16"

FRAME LEVEL & ATTACHMENT TILT CONTROL

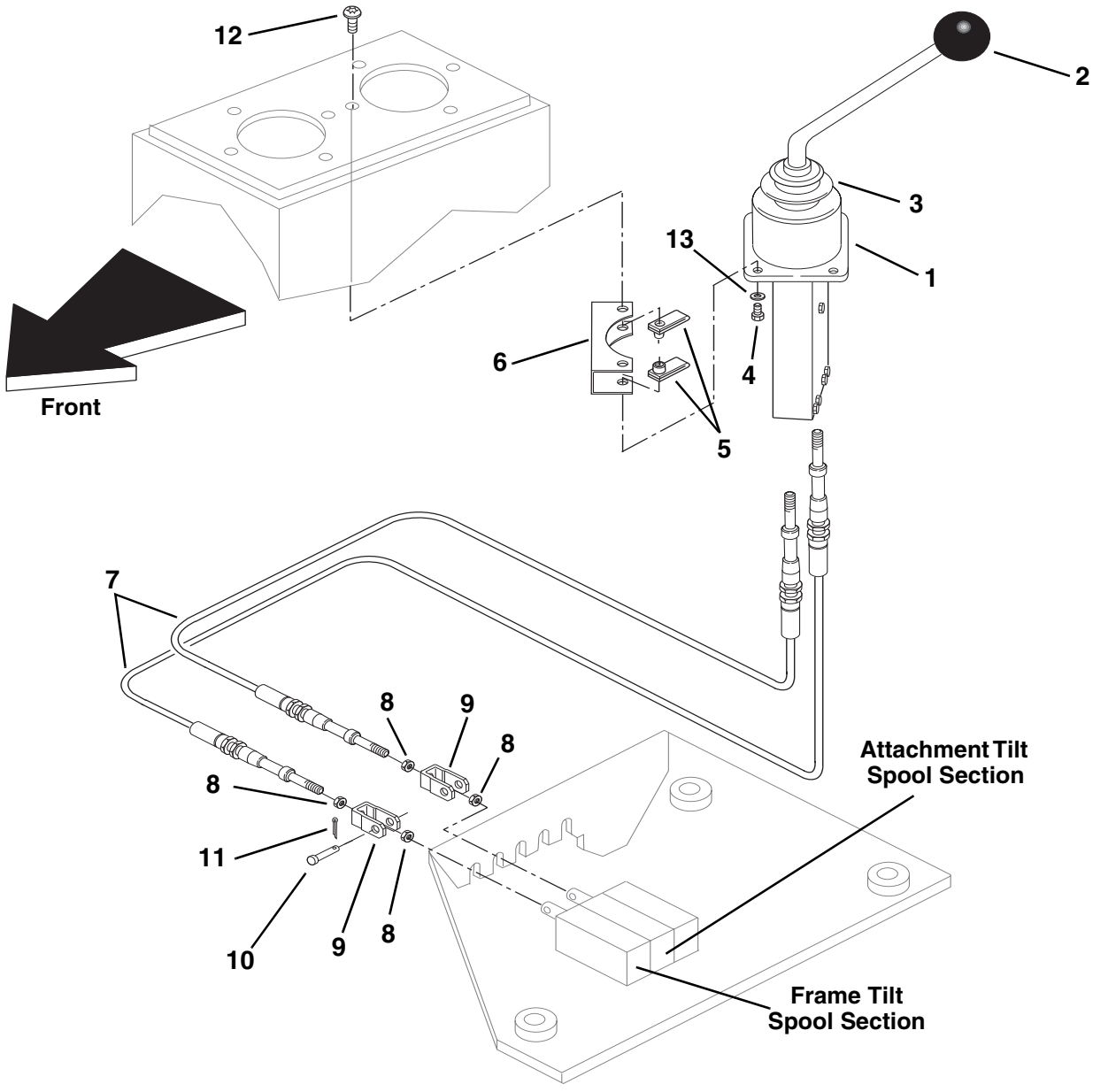

PH0512

FRAME LEVEL & ATTACHMENT TILT CONTROL

Item No.	Part Number	Qty.	Description
1	8224026	1	Joystick, With Gate (Includes Items 2 and 3)
2	8580110	1	Knob
3	8160419	1	Boot
4	8303540	4	HHCS, 1/4-20 x 1"
5	8310001	8	Nut, Retainer 1/4-20
6	7098142	2	Spacer
7	8160060	2	Cable, Control
8	8305005	4	Nut, Hex 1/4-28
9	8160617	2	Clevis, Cable
10	8301443	2	Pin, Clevis 3/16 x 1"
11	8302470	2	Pin, Hair 1/16"
12	8303034	4	TRHCS, Torx 1/4-20 x 3/4"
13	8307109	4	Washer, Flat 1/4"

THROTTLE PEDAL CONTROL

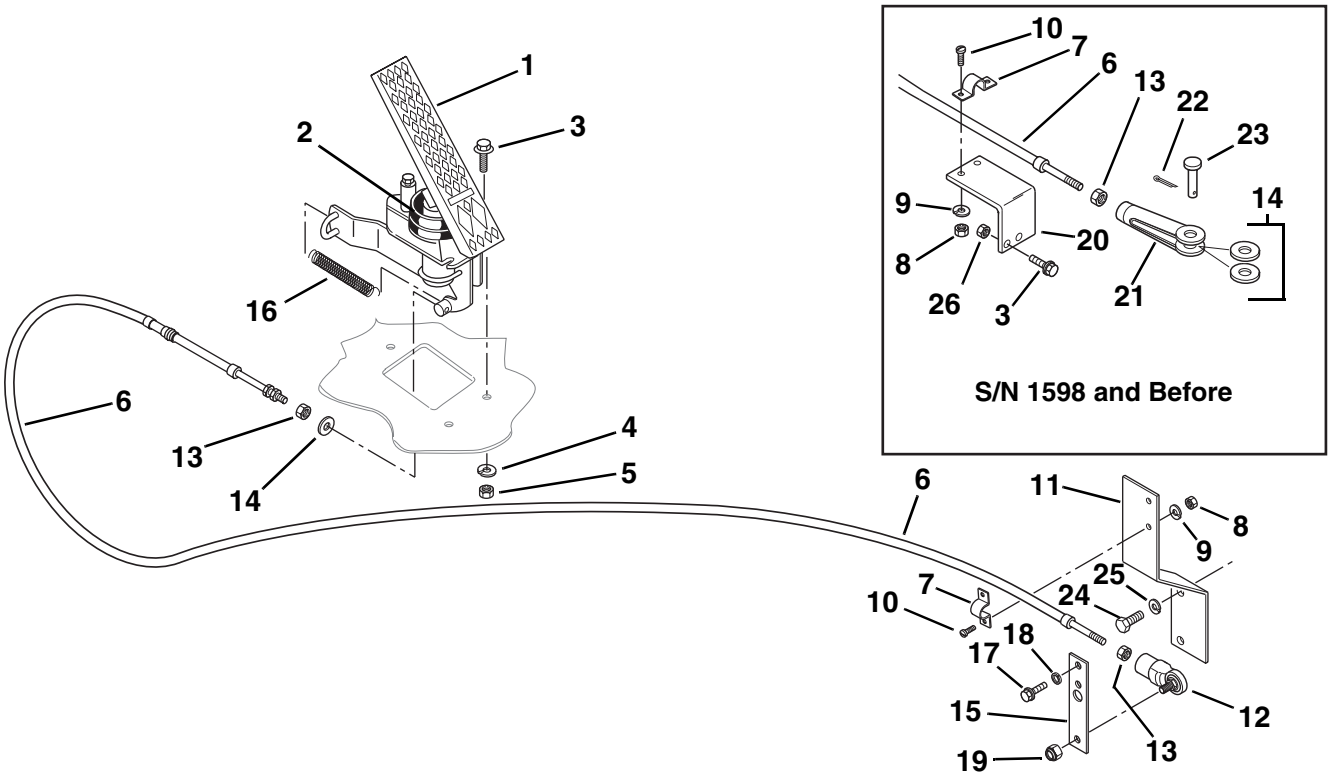

PH0592

THROTTLE PEDAL CONTROL

Item No.	Part Number	Qty.	Description
1	8162003	1	Pedal, Throttle (Includes Item 2)
2	8033178	1	Bellows, Throttle Pedal
3	8303742	3	FLHDCS 1/4-20 x 1" (Qty 3 for EPA Engines, Qty 5 for Pre-EPA Engines)
4	8307002	3	Washer, Lock 1/4"
5	8305004	3	Nut, Hex 1/4-20
6	8160046	1	Cable, Throttle
7	8160610	1	Clamp, Cable
8	8305002	2	Nut, Hex #10-24
9	8307003	2	Washer, Lock #10
10	8303837	2	Screw, Round Hd. #10-24 x 3/4"
11	7127102	1	Bracket, Throttle Cable (EPA Engines)
12	8340034	1	Rod End
13	8305402	2	Nut, Jam .25 NF
14	8307109	AR	Washer, Flat SAE 1/4"
15	7127091	1	Extension, Throttle Lever
16	8700116	1	Spring
17	8303799	2	HHCS, M6 x 14mm
18	8307024	2	Washer, Lock M6
19	8305650	1	Nut, Lock .25 NF
20	7088522	1	Bracket, Throttle Cable (Pre-EPA Engines)
21	8301002	1	Clevis
22	8302449	1	Pin, Cotter
23	8301402	1	Pin, Yoke
24	8303790	2	HHCS, M12 x 30mm
25	8307025	2	Washer, Lock M12
26	8305624	2	Nut, Hex Lock Elastic

SERVICE BRAKE PEDAL CONTROL

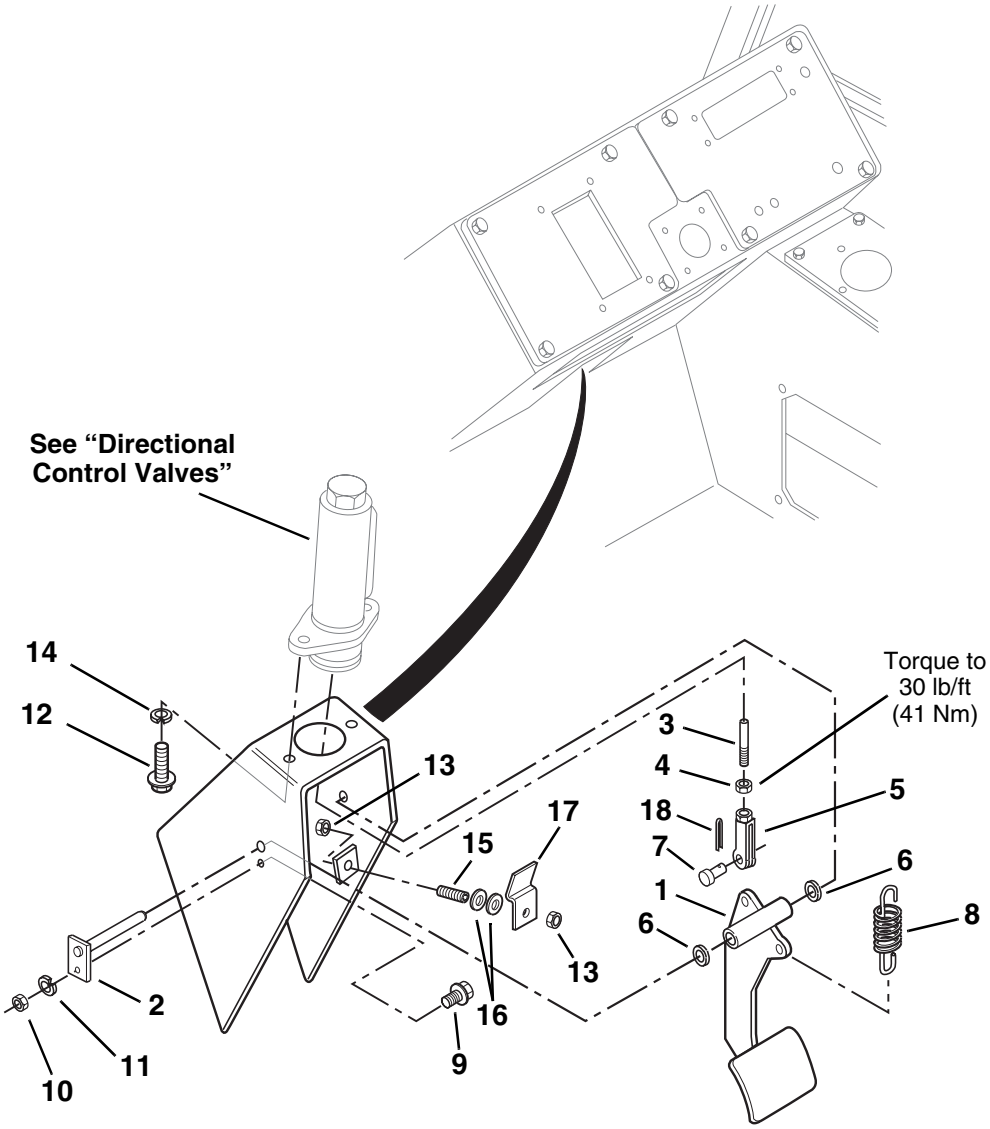

PG0531

SERVICE BRAKE PEDAL CONTROL

Item No.	Part Number	Qty.	Description
1	7111203	1	Pedal, Brake
2	7081031	1	Shaft
3	7080891	1	Rod, Push
4	8305410	1	Nut, Jam 1/2-20
5	8310257	1	Yoke
6	8307104	2	Washer, Flat 3/4"
7	8310258	1	Pin, Clevis
8	8700120	1	Spring
9	8303742	1	FLHDCS, 1/4-20 x 1-1/4"
10	8305004	1	Nut, Hex 1/4-20
11	8307002	1	Washer, Lock 1/4"
12	8303534	2	FLHDCS, 3/8-16 x 1-1/4"
13	8305405	2	Nut, Jam 3/8-16
14	8307005	2	Washer, Lock 3/8"
15	8310170	1	Screw, Set 3/8-16 x 1-3/4"
16	8307110	2	Washer, Flat 3/8"
17	7111191	1	Plate, Actuator
18	8302406	1	Cotter Pin, 1/8" x 1"

FRONT WINDSHIELD WIPER

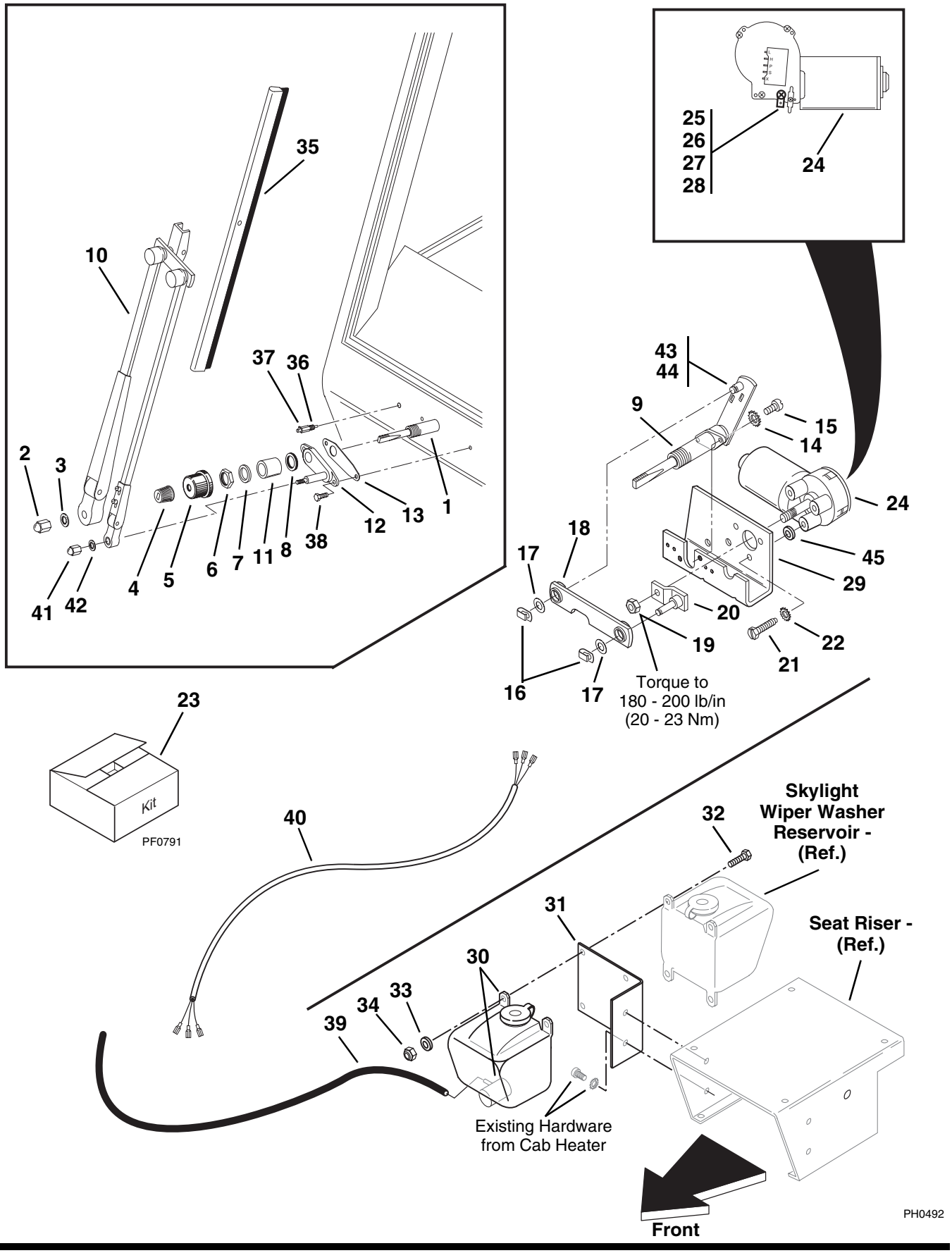

FRONT WINDSHIELD WIPER

Item No.	Part Number	Qty.	Description
1	8866492	1	Pivot Arm and Shaft Assembly (Includes Items 2 thru 9)
2	NSS	1	Nut, Acorn 3/8-24
3	NSS	1	Washer, Internal Tooth Lock 3/8"
4	NSS	1	Driver, Knurled
5	NSS	1	Cap, Rubber
6	NSS	1	Nut, Hex Jam 11/16-24
7	NSS	1	Washer, Metal
8	NSS	1	Washer, Cardboard
9	NSS	1	Shaft Assembly
10	8866382	1	Wiper Arm - 22"
11	8033105	1	Spacer
12	8034815	1	Panto Adapter Kit (Includes Items 13, 38, 41 & 42)
13	NSS	1	Gasket, Panto (Order P/N 8034815)
14	8307052	2	Washer, External Tooth Lock #10
15	8303839	2	Screw, Slotted Pan Head #10-32 x 1/2"
16	NSS	2	Clip, Spring (Order P/N 8033102)
17	NSS	2	Washer, Special Flat .5600 x .2510 x .015 (Order Item 24)
18	8033104	1	Link, Connecting
19	8305006	1	Nut, Hex Flanged 5/16-18
20	8866437	1	Drive Arm
21	NSS	3	Screw, Slotted Hex Head Cap 1/4-28 x 3/4" (Order Item 24)
22	8310002	3	Washer, External Tooth Lock 1/4"
23	7112511	1	Wiper Motor Kit (Includes Items 20, 24 thru 29)
24	8033102	1	Wiper Motor Assembly (Includes mounting bracket, motor, link and hardware)
25	8220073	1	Adapter, 1/4" Male Blade
26	8303835	1	Screw, Pan Head #10-24 x 1/2"
27	8305002	1	Nut, Hex #10-24
28	8307046	1	Washer, Internal Tooth Lock #10
29	NSS	1	Bracket, Wiper Motor (Order Item 24)
30	8033065	1	Washer Reservoir Assembly w/washer pump
31	7118941	1	Bracket, Washer Bottle Mounting
32	8303540	3	HHCS, 1/4-20 x 1"
33	8307109	3	Washer, Flat 1/4"
34	8305624	3	Nut, Lock 1/4-20
35	8866381	1	Wiper Blade - 22"
36	8034801	1	Spray Nozzle
37	8034802	1	Nozzle Tip
38	8033110	2	HHCS, 1/4-28 x 3/4"
39	8033075	1	Hose, Washer 120"
40	8033103	1	Cable, Wiper
41	NSS	1	Nut, Acorn 1/4-28 (Order Item 12)
42	8310029	1	Washer, Internal Tooth Lock 1/4"
43	NSS	1	Pin, Shoulder (Order Item 1)
44	8305005	1	Nut, Hex 1/4-28
45	8307203	3	Washer, Flat 5/16"

CAB HEATER
(Optional)

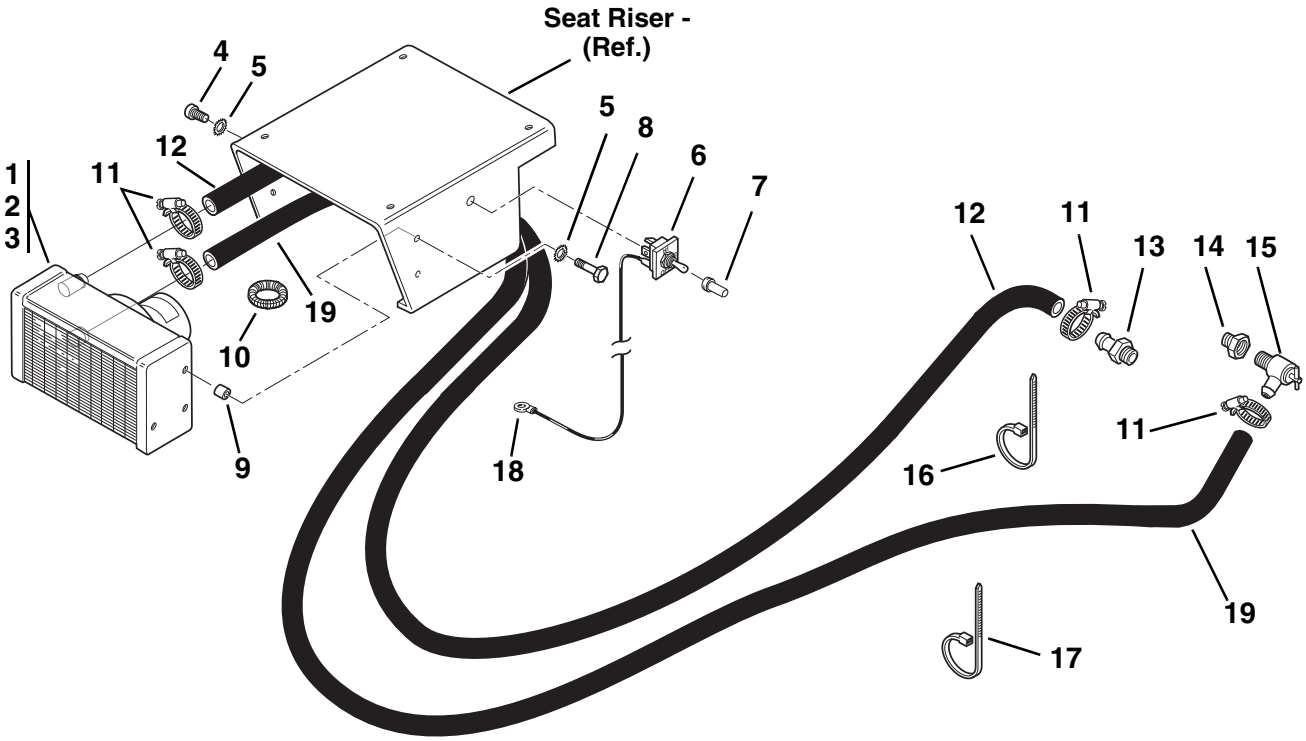

PG0561

CAB HEATER
(Optional)

Item No.	Part Number	Qty.	Description
1	8360008	1	Heater (Includes Items 2 and 3)
2	8032793	1	Motor, Heater - 12 VDC
3	8032794	1	Fan, Heater
4	8303776	2	HHCS, 1/4-20 x 1/2"
5	8307002	4	Washer, Lock 1/4"
6	8223024	1	Switch Kit
7	8580309	1	Cap
8	8303995	2	HHCS, #10-24 x 1-1/4"
9	7075191	2	Spacer, 3/4"
10	7124531	2	Conduit, 1/4 I.D. x 5"
11	8405007	4	Clamp
12	7125251	2	Hose, 5/8 I.D. x 120"
13	8430048	1	Hose Fitting, Beaded, SAE 10-8P - hose I.D. x male NPT
14	8540023	1	Reducer, 3/8" NPT x 1/2" NPT
15	8360005	1	Valve, Shut-off
16	8584001	1	Tie Wrap, .2 wide x 6.7"
17	8584003	6	Tie Wrap, .3 wide x 14.8"
18	8220008	1	Terminal, #10
19	7125271	1	Hose, 5/8 I.D. x 156"

AUX. HYDRAULIC CONTROL
(Optional)

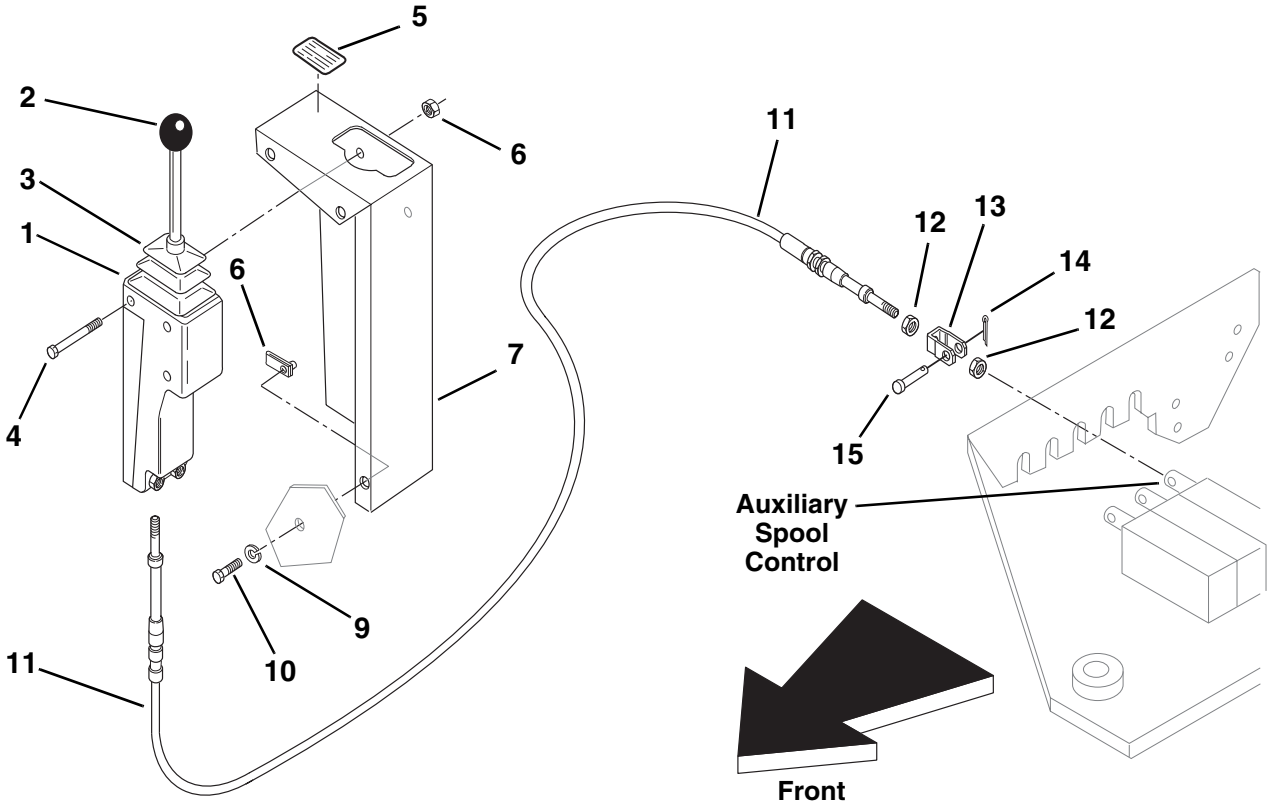

PH0501

AUX. HYDRAULIC CONTROL
(Optional)

Item No.	Part Number	Qty.	Description
1	8160406	1	Controller (Includes Items 2 and 3)
2	8580110	1	Knob
3	8160418	1	Boot
4	8303758	2	HHCS, 1/4-20 x 2"
5	4105621	1	Decal, Auxiliary Control
6	8305004	2	Nut, Hex 1/4-20
7	7091323	1	Support, Controller
8	8305906	3	Nut, Retaining 5/16-18
9	8307004	3	Washer, Lock 5/16"
10	8303697	3	HHCS, 5/16-18 x 3/4"
11	8160059	1	Cable, Control
12	8305402	2	Nut, Jam 1/4-28
13	8160617	1	Clevis
14	8302470	1	Pin, Cotter
15	8301443	1	Pin, Clevis

MIRRORS

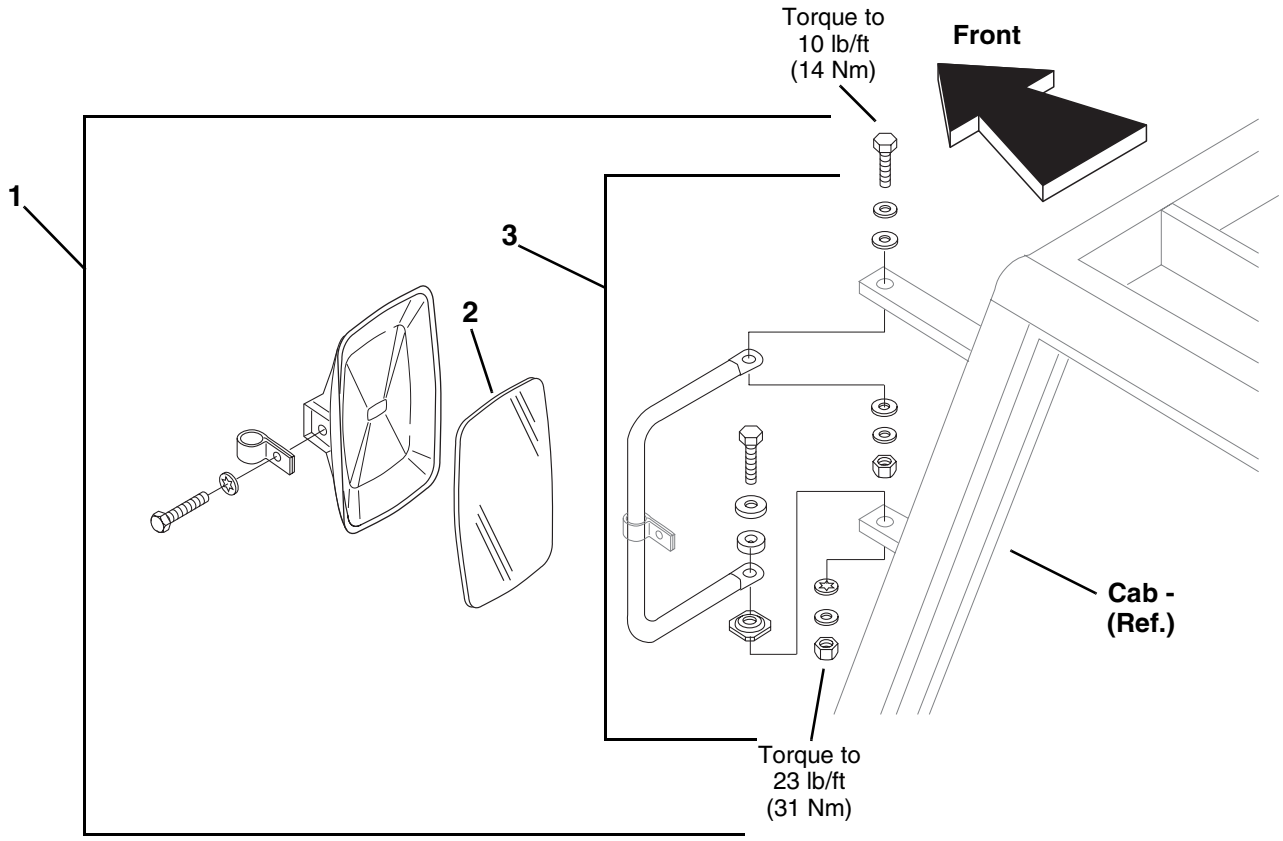
Torque to
10 lb/ft
(14 Nm)
Front
1
3
2
Cab -
(Ref.)
Torque to
23 lb/ft
(31 Nm)

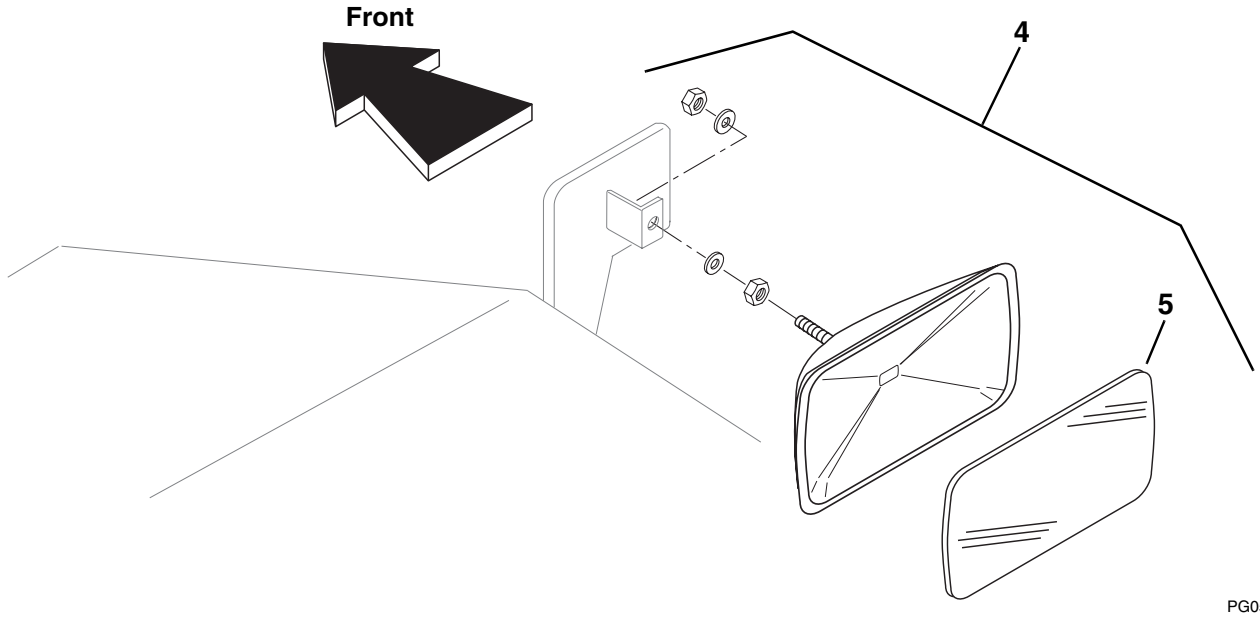
Front
4
5
PG0591

MIRRORS

Item No.	Part Number	Qty.	Description
1	8866347	1	Mirror Assembly, 6.5" x 10", Left Side Cab - Flat Glass (Includes Items 2 and 3)
2	8866350	1	Lens, 6.5" x 10" Flat Glass Replacement
3	8866364	1	Loop Assembly
4	8866348	1	Mirror Assembly, 6.5" x 10" Right Side - Convex Glass (Includes Item 5 and mounting hardware)
5	8866351	1	Lens, 6.5" x 10" Convex Glass Replacement

SKYLIGHT WINDSHIELD WIPER
(Optional)

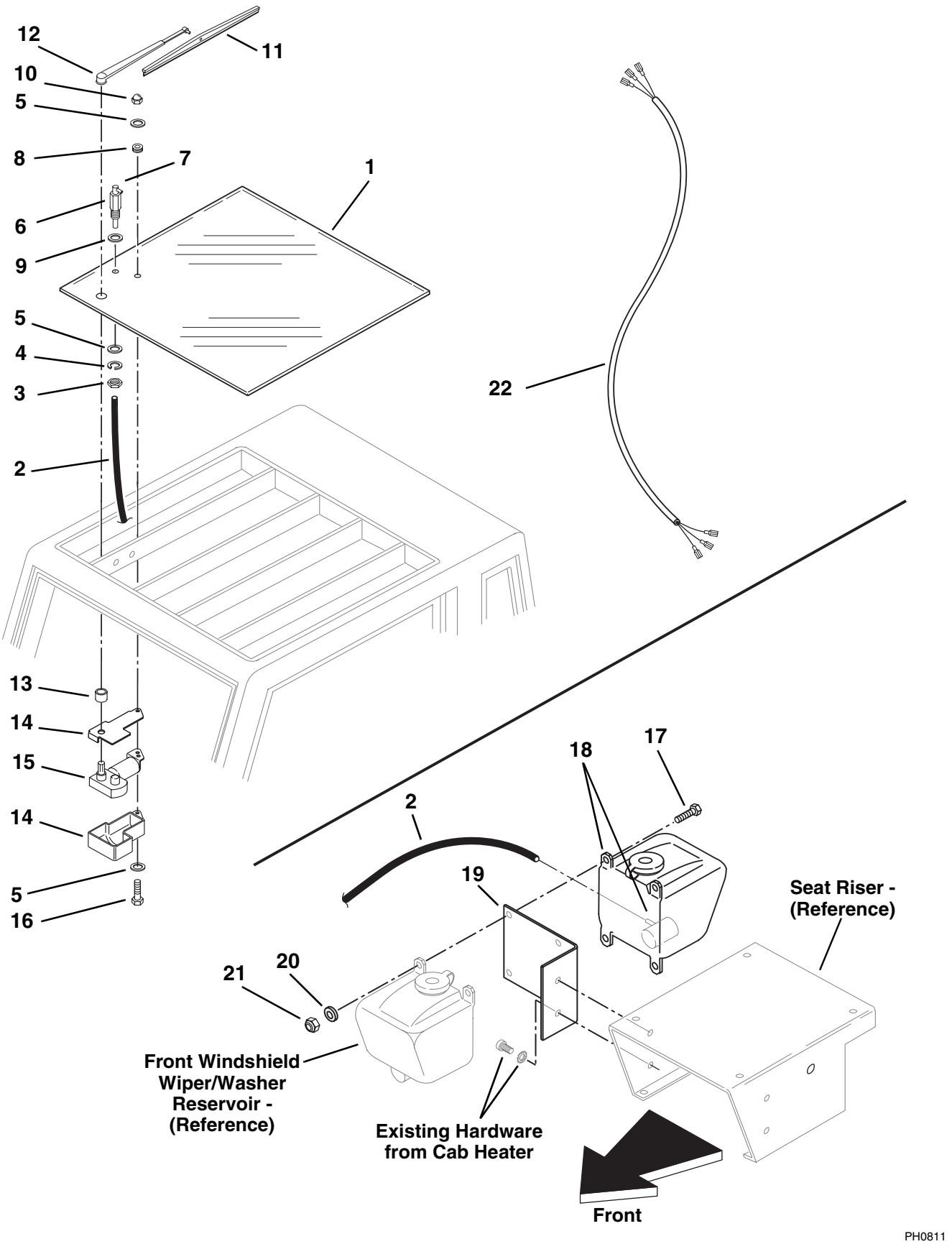

SKYLIGHT WINDSHIELD WIPER
(Optional)

Item No.	Part Number	Qty.	Description
1	8034797	1	Window, Skylight
2	8033075	1	Hose, Washer 120" (cut to length)
3	8034798	2	Nut, Hex 5/16-18
4	8034799	2	Washer, Lock 5/16"
5	8034800	3	Washer, Black Nylon 5/16"
6	8034801	1	Spray Nozzle
7	8034802	1	Nozzle Tip
8	8034803	1	Grommet, T-Style
9	8034804	1	Washer, Weather Tight
10	8034805	1	Nut, Acorn #10-24
11	8034806	1	Wiper Blade - 20"
12	8034807	1	Wiper Arm, 15-19" Adjustable
13	8034808	1	Spacer, Nylon
14	8034809	1	Wiper Cover Assembly
15	7137132	1	Kit, Wiper Motor and Switch w/Breaker (S/N P6931A - P8239B)
	8034810	1	Skylight Wiper Motor Kit, WWF Auto-SP (S/N P8239C & After)
16	8034811	1	Screw, #10-24 x 7/8"
17	8303540	3	HHCS, 1/4-20 x 1"
18	8033065	1	Washer Reservoir Assembly (Includes washer pump)
19	7118941	1	Bracket, Washer Bottle Mounting
20	8307109	3	Washer, Flat 1/4"
21	8305624	3	Nut, Lock 1/4-20
22	8034817	1	Wire Harness, Skylight Wiper

SOFT CAB ENCLOSURE
(Optional)

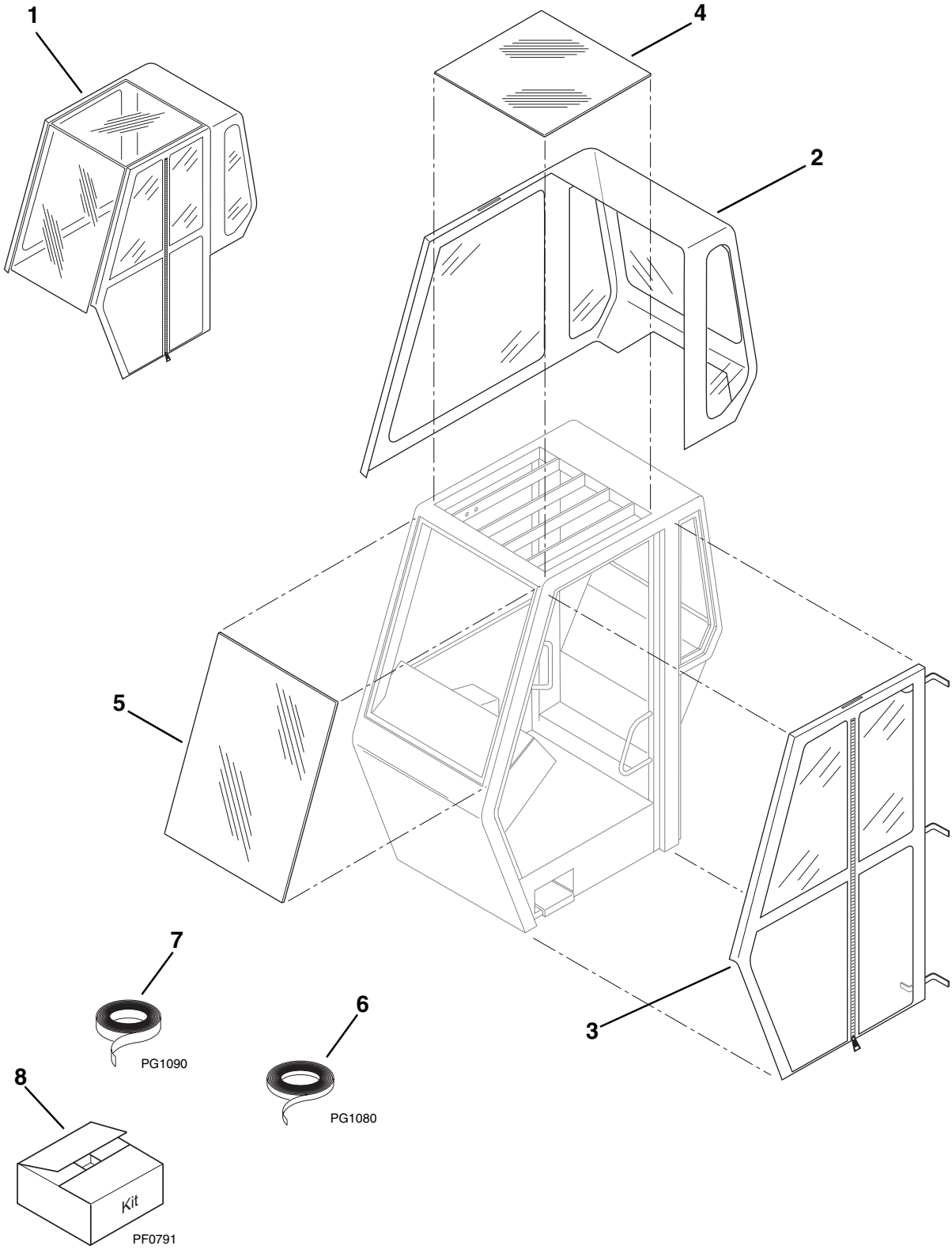

PH1400

SOFT CAB ENCLOSURE
(Optional)

Item No.	Part Number	Qty.	Description
1	8866525	1	Soft Cab Enclosure Kit - Complete (Includes Items 2 thru 7 plus Installation Instructions)
2	8866526	1	Rear Window Enclosure - Soft
3	8866527	1	Door Section - Soft
4	8033081	1	Glass - Top
5	8033479	1	Glass - Front
6	8585155	1	1" Hook Strip Material - 10 ft.
7	8585156	1	2" Hook Strip Material - 10 ft.
8	8585133	1	Window Glue Kit

CONVERTER AND TRANSMISSION HOUSINGS

(S/N 9908 & Before)

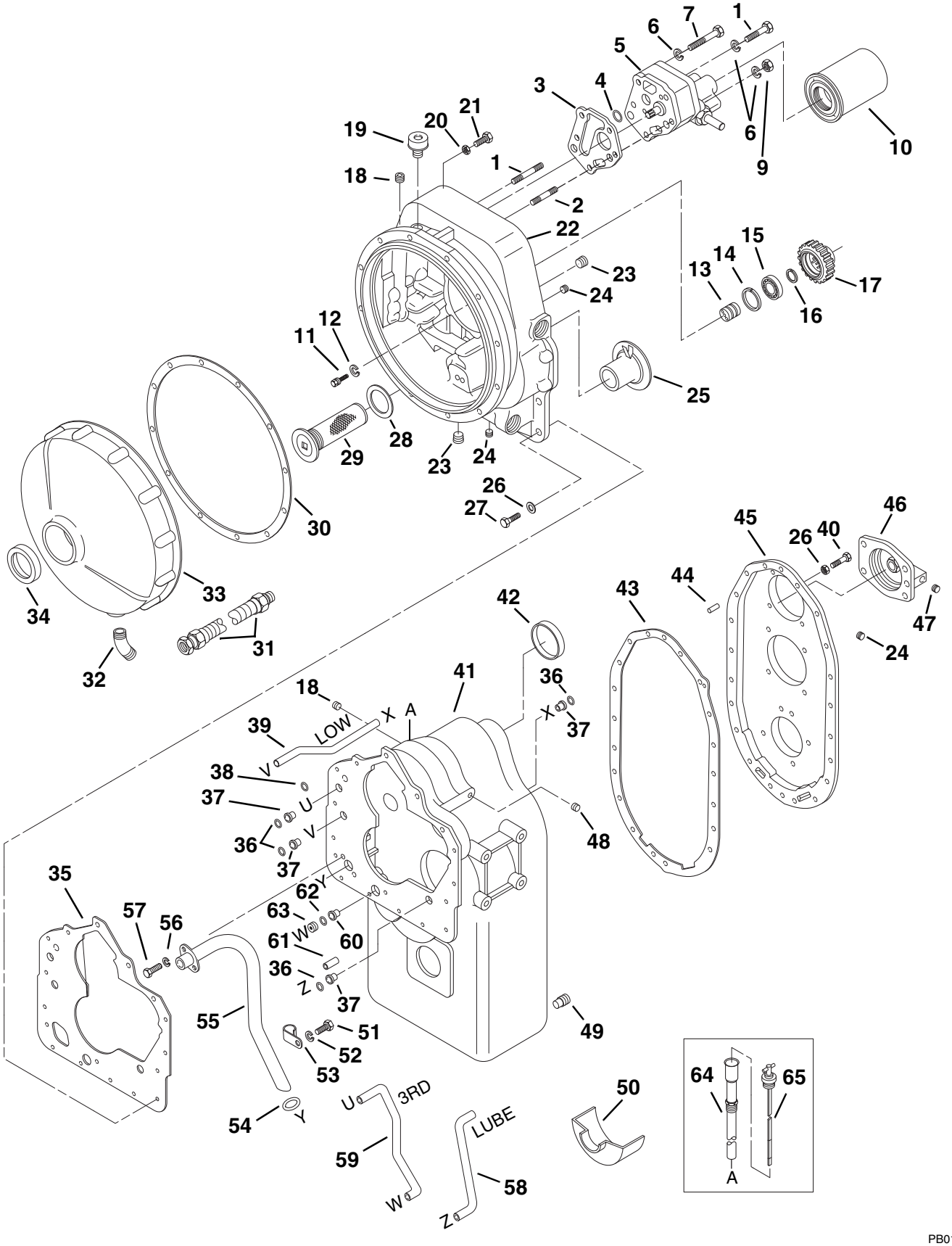

PB0183

CONVERTER AND TRANSMISSION HOUSINGS

(S/N 9908 & Before)

Item No.	Part Number	Qty.	Description
1	8032510	1	Pump Mounting Stud
2	8032511	1	Pump Mounting Stud
3	8032500	1	Gasket, Pump To Converter Housing
4	8032501	1	O-Ring
5	8032502	1	Charging Pump Assembly
6	8032503	5	Washer, Lock
7	8032504	1	Screw
8	8032505	2	Screw
9	8032506	2	Nut, Stud
10	8320254	1	Filter Assembly
11	8032541	2	Screw
12	8307005	2	Washer, Lock
13	8032542	1	Support, Bearing
14	8032543	1	Retaining Ring
15	8033199	1	Bearing, Pump Drive Gear
16	8032545	1	Ring, Locating
17	8032546	1	Gear, Drive
18	8033886	2	Pipe Plug
19	8032509	1	Air Breather
20	8307005	11	Washer, Lock
21	8032547	11	Screw
22	8032548	1	Housing, Converter
23	8032515	2	Pipe Plug
24	8032516	3	Pipe Plug
25	8032517	1	Sleeve, Converter Housing
26	8033887	36	Washer, Lock
27	8033888	16	Screw
28	8032519	1	Gasket, Screen Assembly
29	8032518	1	Screen Assembly
30	8032549	1	Gasket, Front Cover
31	8033188	1	Drain Hose Assembly
32	8033189	1	Hose Adaptor
33	8033193	1	Cover, Converter Housing Front
34	8033198	1	Oil Seal, Front Cover
35	8032537	1	Gasket, Housing To Case
36	8032523	4	O-Ring
37	8032522	4	Tube Sleeve
38	8032501	1	O-Ring
39	8032538	1	Tube, Low Speed Clutch Pressure
40	8033889	20	Screw
41	8033314	1	Transmission Case Assembly (Includes Items 37, 39, 54 thru 59, 60, 62 & 63)
42	8033303	1	Bore Plug
43	8033302	1	Gasket, Rear Cover To Case
44	8032521	2	Dowel Pin
45	8033349	1	Rear Cover & Plug Assembly (Includes one of Item 24)
46	8033299	1	Low Shaft Rear Bearing Cap Assembly (Includes Item 47)
47	8032526	1	Plug
48	8032539	1	Pipe Plug
49	8032528	2	Magnetic Drain Plug
50	8033311	1	Oil Baffle
51	8033312	1	Screw
52	8032503	1	Washer, Lock
53	8033313	1	Clip, Suction Tube
54	8032532	1	O-Ring
55	8033304	1	Suction Tube Assembly
56	8032535	2	Washer, Lock
57	8032536	2	Screw
58	8033305	1	Clutch Lube Tube
59	8033306	1	3rd Speed Tube
60	8033307	1	Tube Sleeve
61	8032521	1	Dowel Pin
62	8032532	1	O-Ring
63	8033308	1	Plug
64	8033309	1	Dipstick Tube Assembly
65	8033310	1	Dipstick

CONVERTER GROUP
(S/N 9908 & Before)

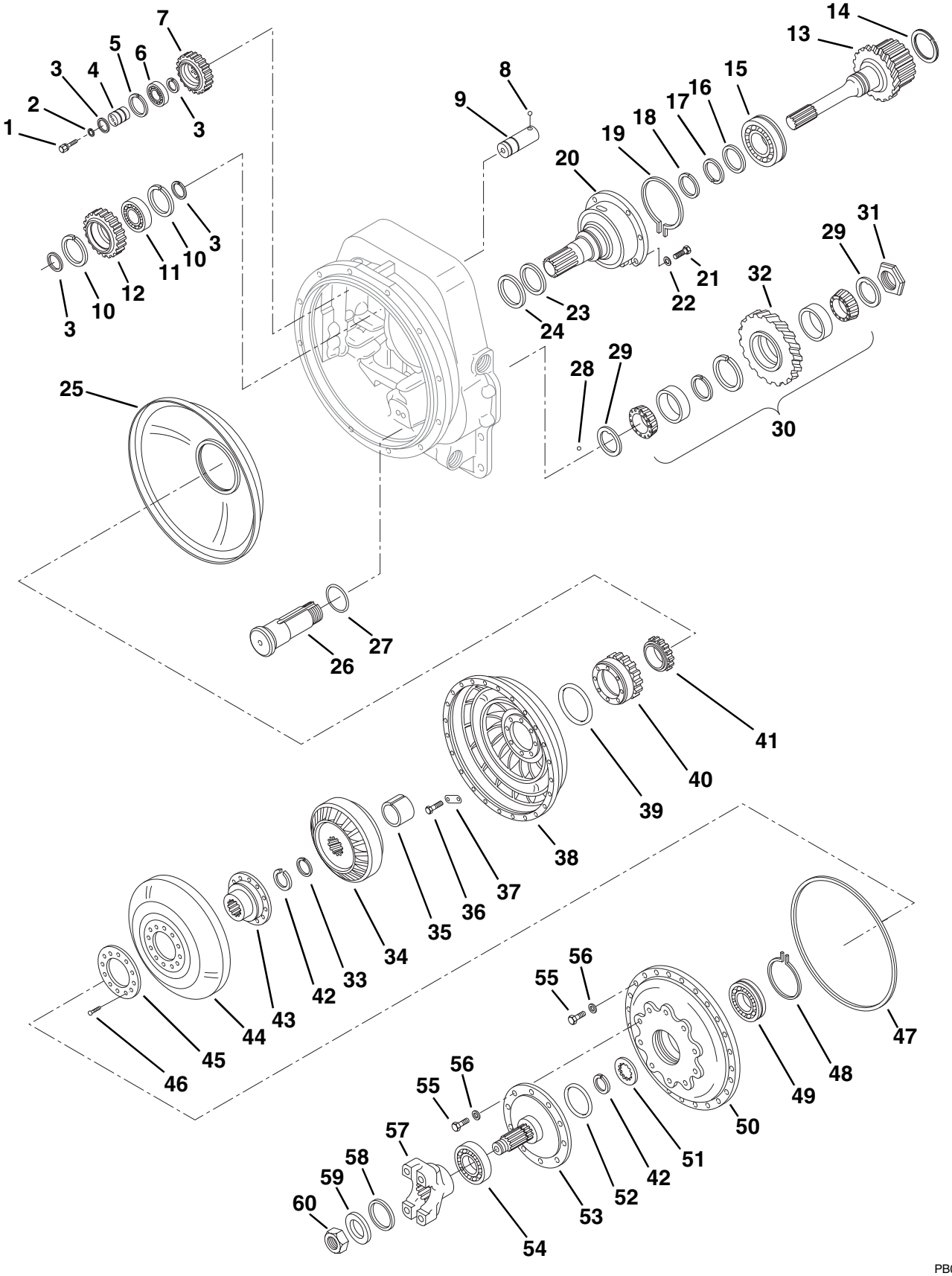

PB0192

CONVERTER GROUP
(S/N 9908 & Before)

Item No.	Part Number	Qty.	Description
1	8032541	2	Screw
2	8307005	2	Washer, Lock
3	8032545	4	Ring, Locating
4	8032542	1	Support, Pump Drive Bearing
5	8032550	1	Ring, Retaining
6	8032551	1	Bearing, Gear
7	8032552	1	Pump Drive Gear
8	8032554	1	Lockball, Stub Shaft
9	8032555	1	Shaft, Stub
10	8032543	2	Ring, Retaining
11	8033199	1	Bearing, Shaft
12	8032553	1	Pump Drive Idler Gear
13	8032568	1	Turbine Shaft Assembly (Includes Item 14)
14	8032620	1	Ring, Retaining
15	8032567	1	Bearing, Turbine Shaft
16	8032566	1	Washer, Locating
17	8032565	1	Ring, Retaining
18	8032564	1	Ring, Piston
19	8032563	1	Ring, Snap
20	8032560	1	Support, Stator
21	8303620	6	Screw
22	8307005	6	Washer, Lock
23	8032559	1	Spring, Expander
24	8032558	1	Ring, Piston
25	8032556	1	Oil Baffle Assembly
26	8033190	1	Shaft, Reverse Idler
27	8033191	1	O-Ring
28	8033192	1	Lockball
29	8033194	2	Plate, Thrust
30	8032574	1	Reverse Idler Gear Bearing Assembly
31	8033195	1	Nut, Bearing Retaining Plate
32	8032573	1	Gear, Reverse Idler
33	8032578	1	Ring, Retaining
34	8032579	1	Member, Reaction
35	8032580	1	Spacer
36	8032581	8	Screw
37	8032582	4	Lock Tab
38	8032583	1	Impeller
39	8032584	1	O-Ring
40	8032585	1	Gear, Impeller Hub
41	8032586	1	Bearing, Impeller Hub Gear
42	8032587	2	Ring, Retaining
43	8032588	1	Hub, Turbine
44	8032589	1	Turbine
45	8033196	1	Screw Ring, Turbine To Hub
46	8033197	12	Screw
47	8032595	1	O-Ring
48	8032592	1	Locating Ring, Turbine Hub Bearing
49	8032593	1	Bearing, Turbine Hub
50	8033384	1	Impeller Cover
51	8032594	1	Retaining Washer, Bearing
52	8033385	1	O-Ring
53	8033386	1	Input Shaft
54	8033373	1	Bearing, Input Shaft
55	8303620	34	Screw
56	8307005	34	Washer
57	8033885	1	Flange
58	8033318	1	O-Ring
59	8032612	1	Washer
60	8032613	1	Nut

FORWARD, REVERSE, LOW AND 2ND

(S/N 9908 & Before)

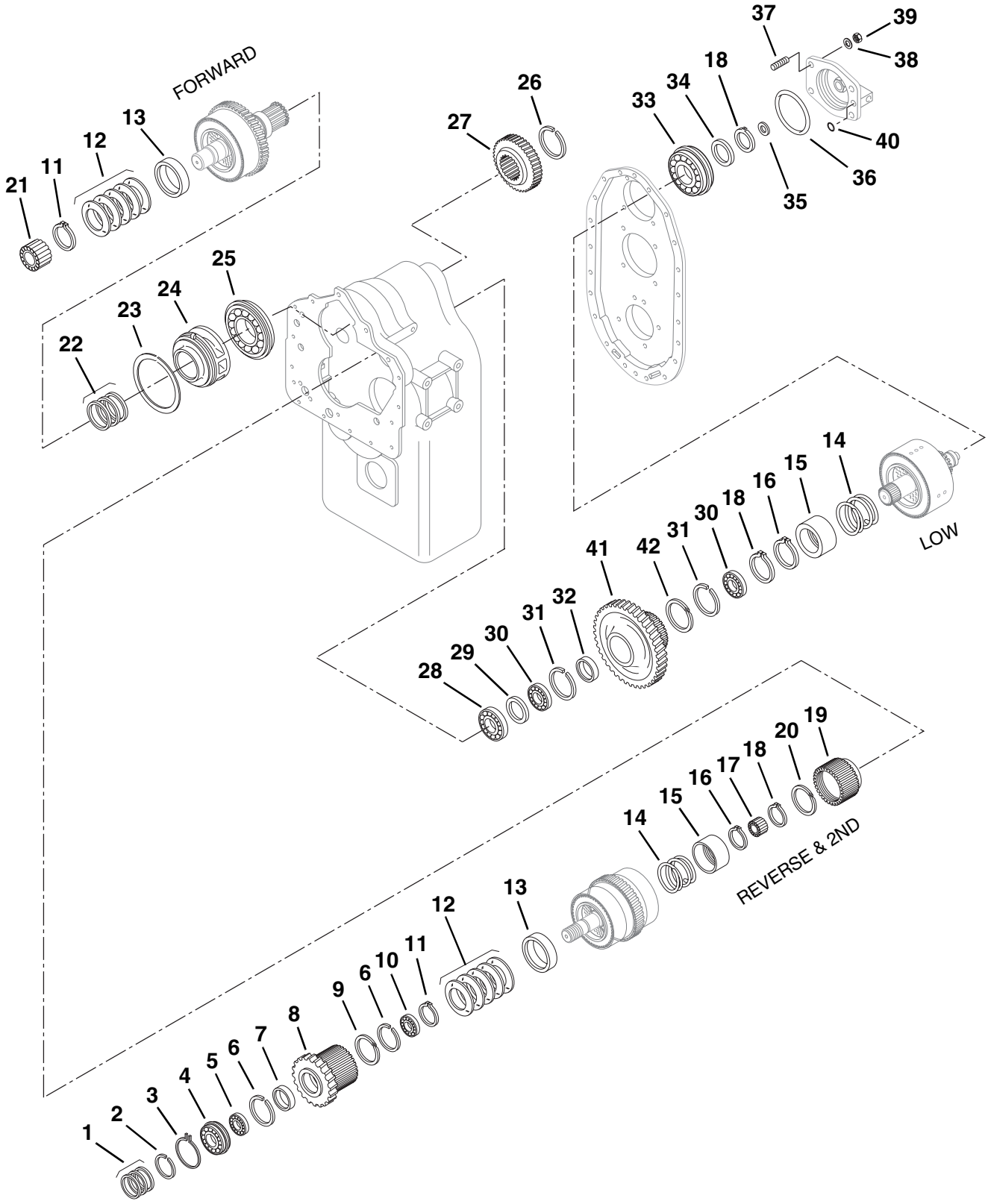

PB0201

FORWARD, REVERSE, LOW AND 2ND

(S/N 9908 & Before)

Item No.	Part Number	Qty.	Description
1	8032652	3	Ring, Piston
2	8032651	1	Ring, Retaining
3	8032650	1	Snap Ring
4	8032649	1	Bearing, Front
5	8032648	1	Bearing, Gear
6	8032645	2	Ring, Retaining
7	8032647	1	Spacer, Bearing
8	8032646	1	Reverse Clutch Gear & Retaining Ring Assembly (Includes Item 9)
9	8032620	1	Ring, Retaining
10	8032644	1	Bearing, Gear
11	8032640	2	Snap Ring
12	8033348	2	Disc Spring Assembly (Contains 5 Pcs.)
13	8032638	2	Spacer, Piston Return Spring
14	8032615	2	Piston Return Spring
15	8032616	2	Spring Retainer
16	8032617	2	Snap Ring
17	8032643	1	Bearing, Reverse & 2nd Shaft
18	8032623	3	Snap Ring
19	8032642	1	2nd Clutch Disc Hub & Retaining Ring Assembly (Includes Item 20)
20	8032620	1	Ring, Retaining
21	8032641	1	Pilot Bearing
22	8032637	3	Ring, Piston
23	8033355	1	Ring, Retaining
24	8032635	1	Sleeve, Piston Ring
25	8032634	1	Bearing, Forward Shaft
26	8033356	1	Ring, Retaining
27	8033357	1	Gear, Forward Shaft
28	8032633	1	Bearing, Low Speed Clutch
29	8032632	1	Spacer, Bearing
30	8032628	2	Bearing, Gear
31	8032629	2	Locating Ring
32	8032631	1	Spacer, Gear
33	8032622	1	Bearing, Low Speed Shaft
34	8032566	1	Washer, Rear Bearing Support
35	8032614	1	Ring, Piston
36	8032624	1	O-Ring
37	8032626	4	Stud, Cap
38	8032503	4	Washer, Lock
39	8032506	4	Nut, Stud
40	8032625	1	O-Ring
41	8033358	1	Low Shaft Gear, Hub & Retaining Ring Assembly (Includes Item 42)
42	8032620	1	Ring, Retaining

OUTPUT, IDLER AND THIRD

(S/N 9908 & Before)

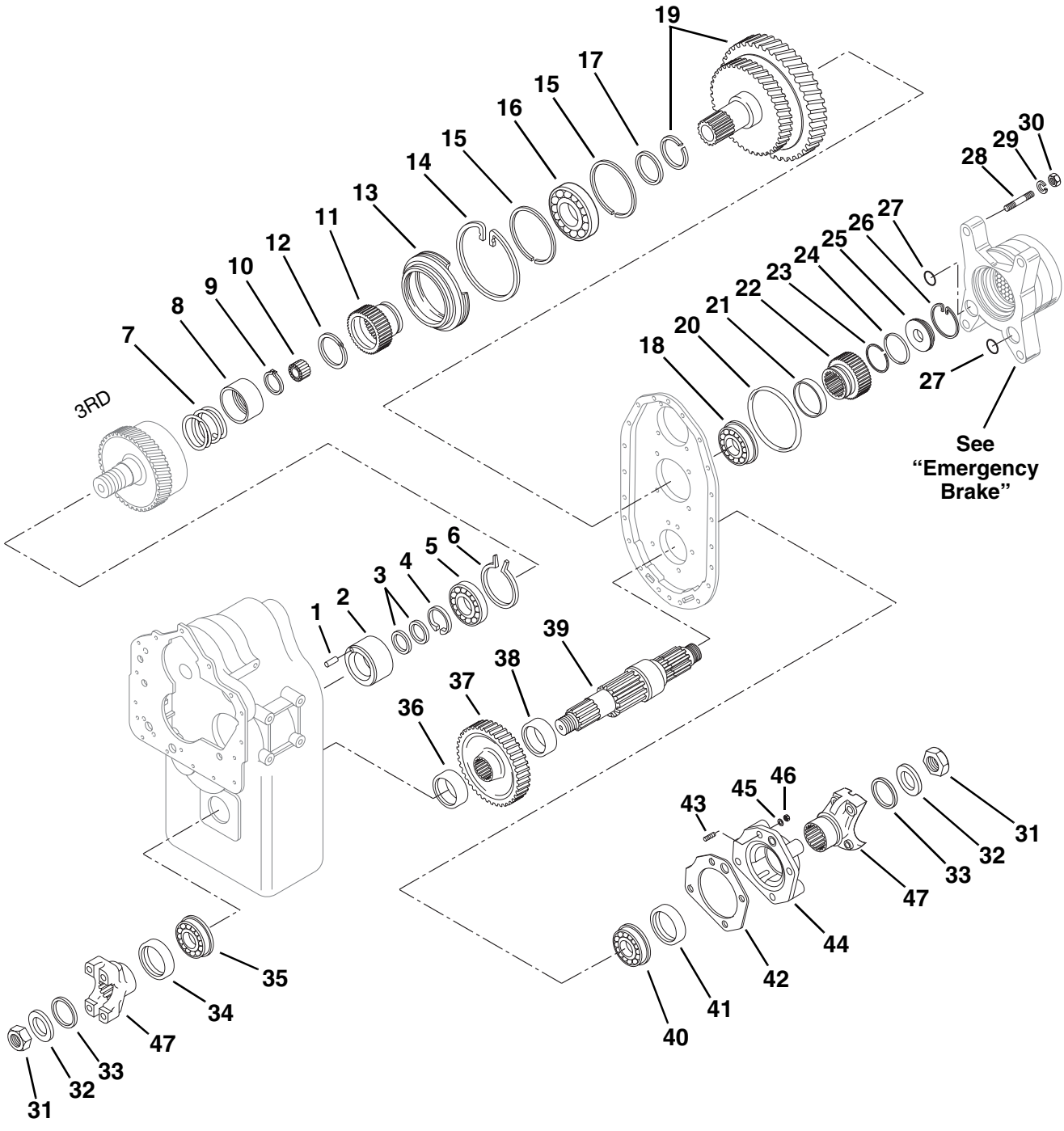

PH0250

OUTPUT, IDLER AND THIRD

(S/N 9908 & Before)

Item No.	Part Number	Qty.	Description
1	8033870	1	Roll Pin, Outer Race
2	8033871	1	Piston Ring Outer Race
3	8032652	2	Ring, Piston
4	8033872	1	Ring, Retaining
5	8032628	1	Bearing
6	8033351	1	Ring, Locating
7	8032615	1	Spring, Return
8	8032616	1	Retainer, Spring
9	8032617	1	Ring, Snap
10	8032643	1	Bearing, Pilot
11	8033359	1	3rd Clutch Disc Hub & Retaining Ring Assembly (Includes Item 12)
12	8032620	1	Ring, Retaining
13	8033360	1	Carrier, Bearing
14	8033361	1	Ring, Locating
15	8033362	2	Ring, Locating
16	8033363	1	Bearing, 3rd Clutch Disc Hub
17	8033364	1	Ring, Retaining
18	8033365	1	Bearing
19	8033873	1	Idler Shaft & Gear Assembly (46T)
20	8033368	1	O-Ring
21	8033874	1	Seal, Brake Housing To Brake Disc Hub
22	8033875	1	Hub, Brake Disc
23	8033876	1	Ring, Snap
24	8033877	1	O-Ring
25	8033878	1	Plug, Brake Disc Hub
26	8033879	1	Ring, Snap
27	8033880	2	O-Ring
28	8033881	4	Stud, Brake Housing To Rear Cover
29	8033882	4	Washer, Lock
30	8033883	4	Nut, Stud
31	8033372	2	Nut, Flange
32	8033371	2	Washer, Flange
33	8032611	2	O-Ring
34	8033198	1	Oil Seal, Output Shaft
35	8033373	1	Bearing
36	8033376	1	Spacer, Output Gear
37	8033375	1	Gear, Output Shaft (46T)
38	8033374	1	Spacer, Output Gear
39	8033884	1	Shaft, Output
40	8032604	1	Bearing
41	8032605	1	Oil Seal, Rear Bearing Cap
42	8032606	1	Gasket, Rear Bearing Cap
43	8032627	4	Stud, Bearing Cap
44	8032607	1	Bearing Cap
45	8032608	4	Washer, Lock
46	8032609	4	Nut, Stud
47	8033885	2	Flange, Output

TRANSMISSION CLUTCH GROUPS

(S/N 9908 & Before)

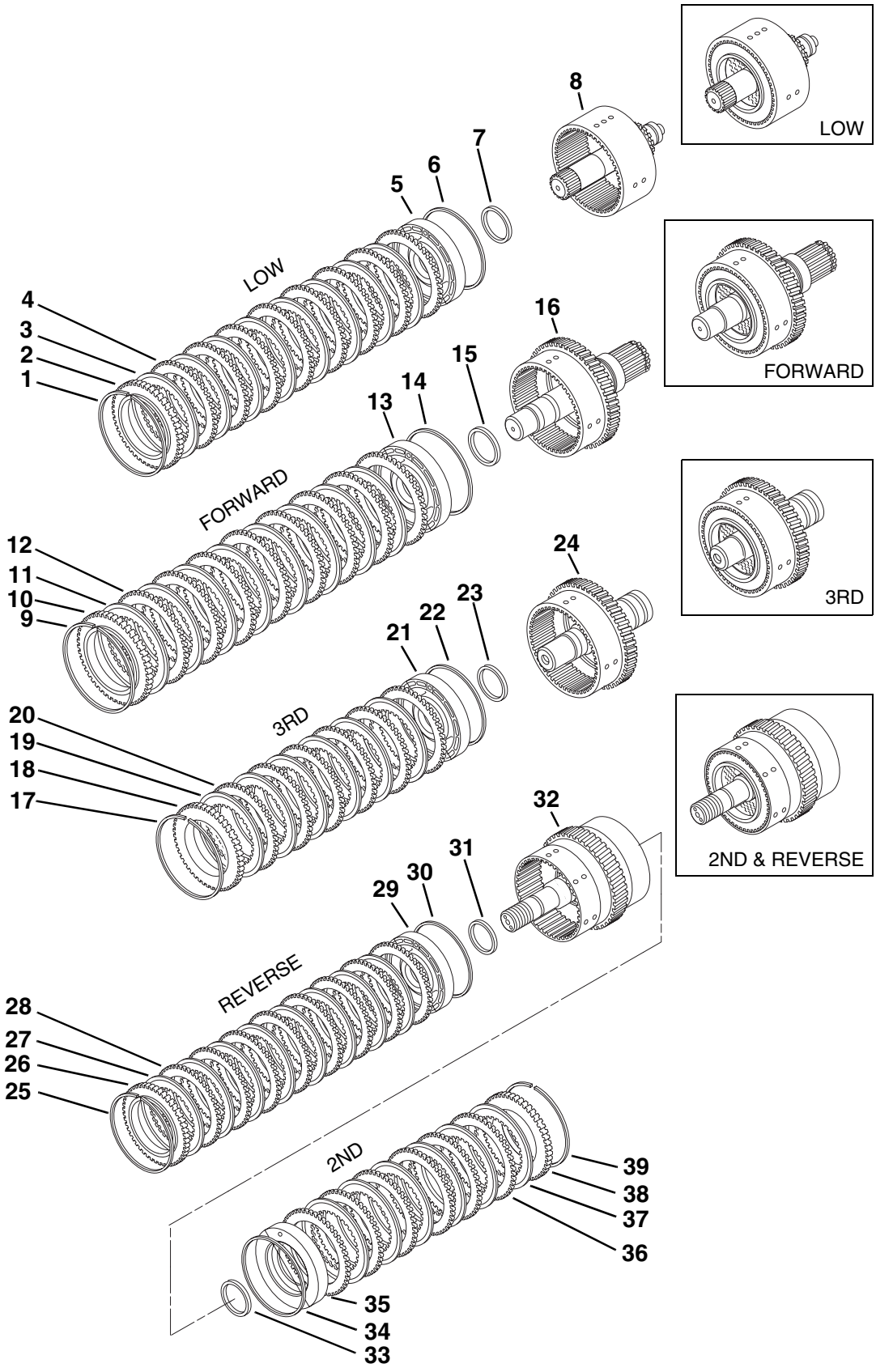

PH0630

TRANSMISSION CLUTCH GROUPS

(S/N 9908 & Before)

Item No.	Part Number	Qty.	Description
1	8032653	1	Ring, Snap
2	8032654	1	Backing Plate
3	8032655	8	Disc, Clutch Inner
4	8032656	8	Disc, Clutch Outer
5	8032657	1	Piston, Clutch
6	8032658	1	Ring, Outer Piston
7	8032659	1	Seal, Inner Piston
8	8033387	1	Low Clutch Shaft Drum & Bleed Valve Assembly
9	8032653	1	Ring, Snap
10	8032654	1	Backing Plate
11	8032661	8	Disc, Clutch Inner
12	8032656	8	Disc, Clutch Outer
13	8032657	1	Piston, Clutch
14	8032658	1	Ring, Outer Piston
15	8032659	1	Seal, Inner Piston
16	8033347	1	Forward Shaft, Drum & Plug Assembly
17	8032653	1	Ring, Snap
18	8032654	1	Backing Plate
19	8032661	6	Disc, Clutch Inner
20	8032656	6	Disc, Clutch Outer
21	8032663	1	Clutch Piston Assembly
22	8032658	1	Ring, Outer Piston
23	8032659	1	Seal, Inner Piston
24	8033344	1	3rd Clutch Shaft, Drum & Plug Assembly
25	8032653	1	Ring, Snap
26	8032654	1	Backing Plate
27	8032661	8	Disc, Clutch Inner
28	8032656	8	Disc, Clutch Outer
29	8032657	1	Piston, Clutch
30	8032658	1	Ring, Outer Piston
31	8032659	1	Seal, Inner Piston
32	8032665	1	Rev. & 2nd Shaft, Drum & Plug Assembly
33	8032659	1	Seal, Inner Piston
34	8032658	1	Ring, Outer Piston
35	8032663	1	Piston, Clutch
36	8032656	6	Disc, Clutch Outer
37	8032661	6	Disc, Clutch Inner
38	8032654	1	Backing Plate
39	8032653	1	Ring, Snap

CONTROL VALVE ASSEMBLY
(S/N 9908 & Before)

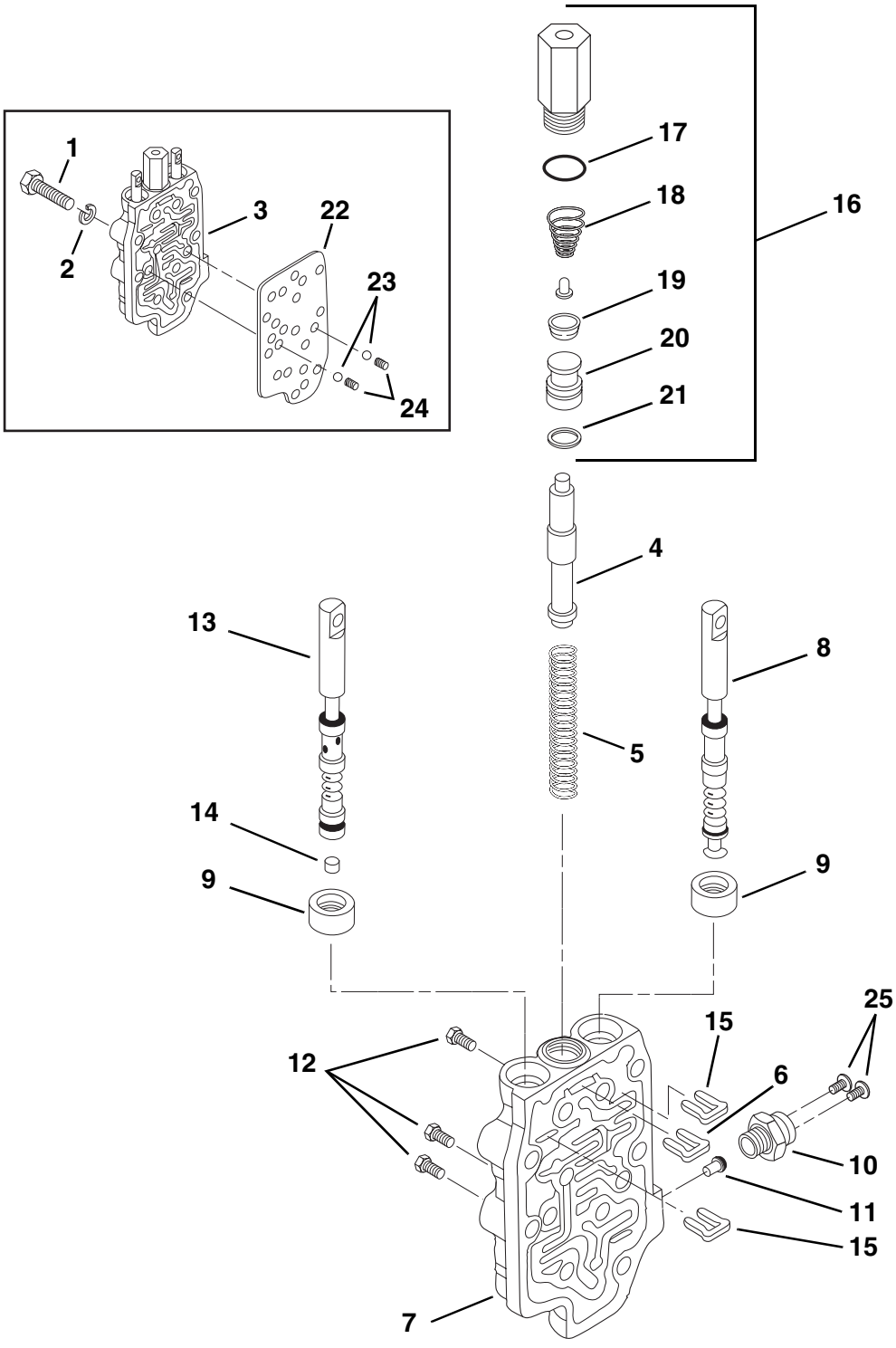

PB0232

CONTROL VALVE ASSEMBLY
(S/N 9908 & Before)

Item No.	Part Number	Qty.	Description
1	8032666	9	Screw
2	8307005	9	Washer, Lock
3	8033239	1	Control Valve Assembly (Includes Items 4 thru 7 and Item 16)
4	8032672	1	Valve Spool
5	8032673	1	Spring, Control Valve
6	8032676	1	Stop, Valve Spool
7	8032679	1	Control Valve Housing Assembly (Includes Items 8 thru 15)
8	8032674	1	Valve Spool, Forward & Reverse
9	8032675	2	Oil Seal
10	8825174	1	Switch, Neutral
11	8032678	1	Switch Actuating Pin
12	8032680	3	Pipe Plug
13	8032682	1	Speed Selector Spool & Plug Assembly (Includes Item 14)
14	8032681	1	Plug
15	8032676	2	Stop, Valve Spool
16	8841314	1	Hydraulic Actuator Assembly (Includes Items 17 thru 21)
17	8033202	1	O-Ring
18	8033203	1	Balance Spring & Pin Kit
19	8033204	1	Piston Seal
20	8033205	1	Piston
21	8033238	1	Glyd. Ring Assembly
22	8033890	1	Gasket, Control Valve
23	8032669	2	Detent Ball
24	8032670	2	Detent Spring
25	8303987	2	Screw, #8-32 x 1/4" Slotted Pan Hd.

EMERGENCY BRAKE
(S/N 9908 & Before)

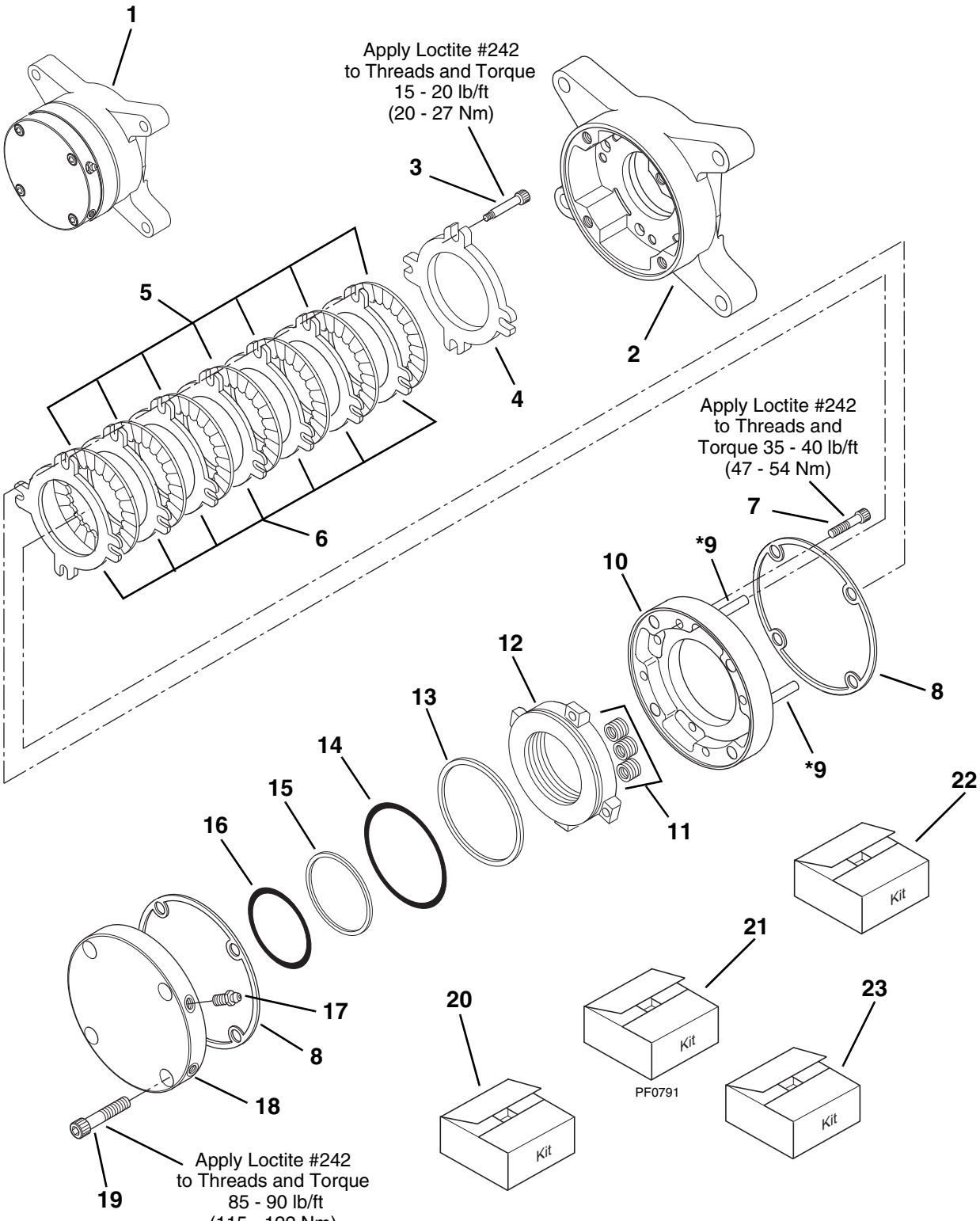

*** Earlier models did not include dowel pins (Item 9). For earlier models, all tabs on stator discs (Item 6) must line up over shoulder bolts (Item 3).**

PH0131

EMERGENCY BRAKE
(S/N 9908 & Before)

Item No.	Part Number	Qty.	Description
1	8033791	1	Emergency Brake Assembly (Includes Items 2 thru 19)
2	8033774	1	Cover
3	8033775	4	Shoulder Bolt
4	See Kits	1	Disc, Primary
5	See Kits	7	Disc, Rotor
6	See Kits	7	Disc, Stator
7	8033776	4	HHCS, Socket Head
8	See Kits	2	Case Gasket
9	8033777	4	Dowel Pin
10	8033778	1	Spring Plate
11	See Kits	12	Spring, Red
12	8033779	1	Piston
13	See Kits	1	Back-up Ring
14	See Kits	1	O-Ring
15	See Kits	1	Back-up Ring
16	See Kits	1	O-Ring
17	8033780	1	Bleeder Screw
18	8033781	1	Pressure Plate
19	8033782	4	HHCS, Socket Head
			KITS
20	7131852	1	Kit, Repair Park Brake (Includes Items 3, 21, 22 & 23)
21	8033771	1	Rotor and Stator Disc Kit (Includes Items 4 thru 6 & 8)
22	8033772	1	O-Ring and Back-up Ring Kit (Includes Items 8 & 13 thru 16)
23	8033773	1	Spring Kit (Includes Items 8 & 11)

TRANSMISSION MOUNTING
(S/N 9908 & Before)

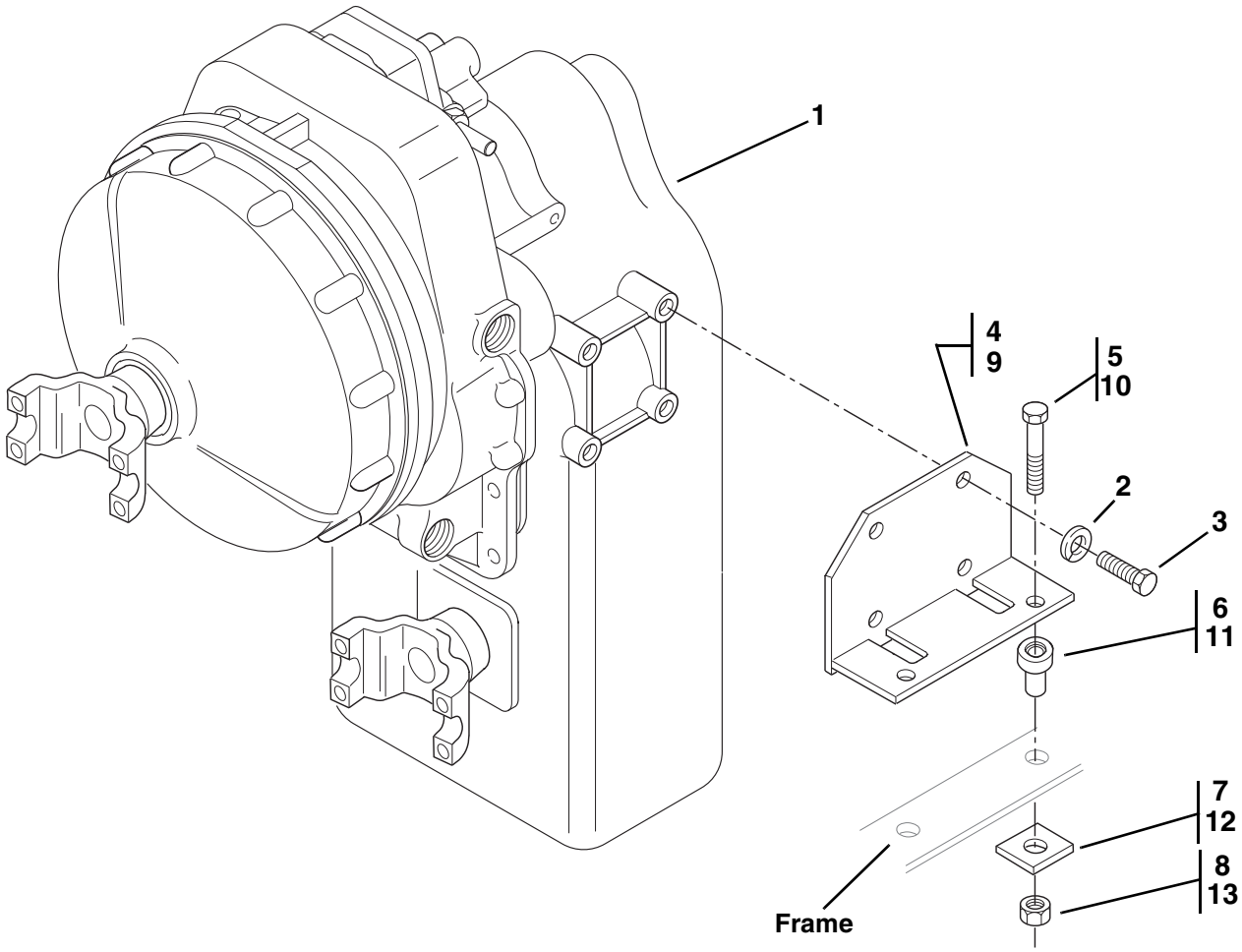

PH0241

TRANSMISSION MOUNTING
(S/N 9908 & Before)

Item No.	Part Number	Qty.	Description
1	8841025	1	Transmission
2	8307010	8	Washer, Lock 3/4"
3	8303664	8	HHCS, 3/4-10 x 1-1/2"
			Items 4 thru 8 for Machines Model 8042 S/N 8042-0058 & Before
			Items 4 thru 8 for Machines Model 10042 S/N 10042-0057 & Before
4	7095342	2	Mount, Transmission
5	8310051	4	HHCS, 1-8 x 4"
6	8278017	4	Isolator
7	7096471	4	Washer, Rebound
8	8310116	4	Nut, Hex Lock Elastic 1-8
			Items 9 thru 13 for Machines Model 8042 S/N 8042-0059 thru 9908
			Items 9 thru 13 for Machines Model 10042 S/N 10042-0058 thru 9908
			Items 9 thru 13 for Machines Model 10054
9	7111952	2	Mount, Transmission
10	8303724	4	HHCS, 3/4-10 x 3-1/2"
11	8278007	4	Isolator
12	7054351	4	Washer, Rebound
13	8310067	4	Nut, Hex Lock Elastic 3/4"

ENGINE CONNECT
(S/N 9909 & After)

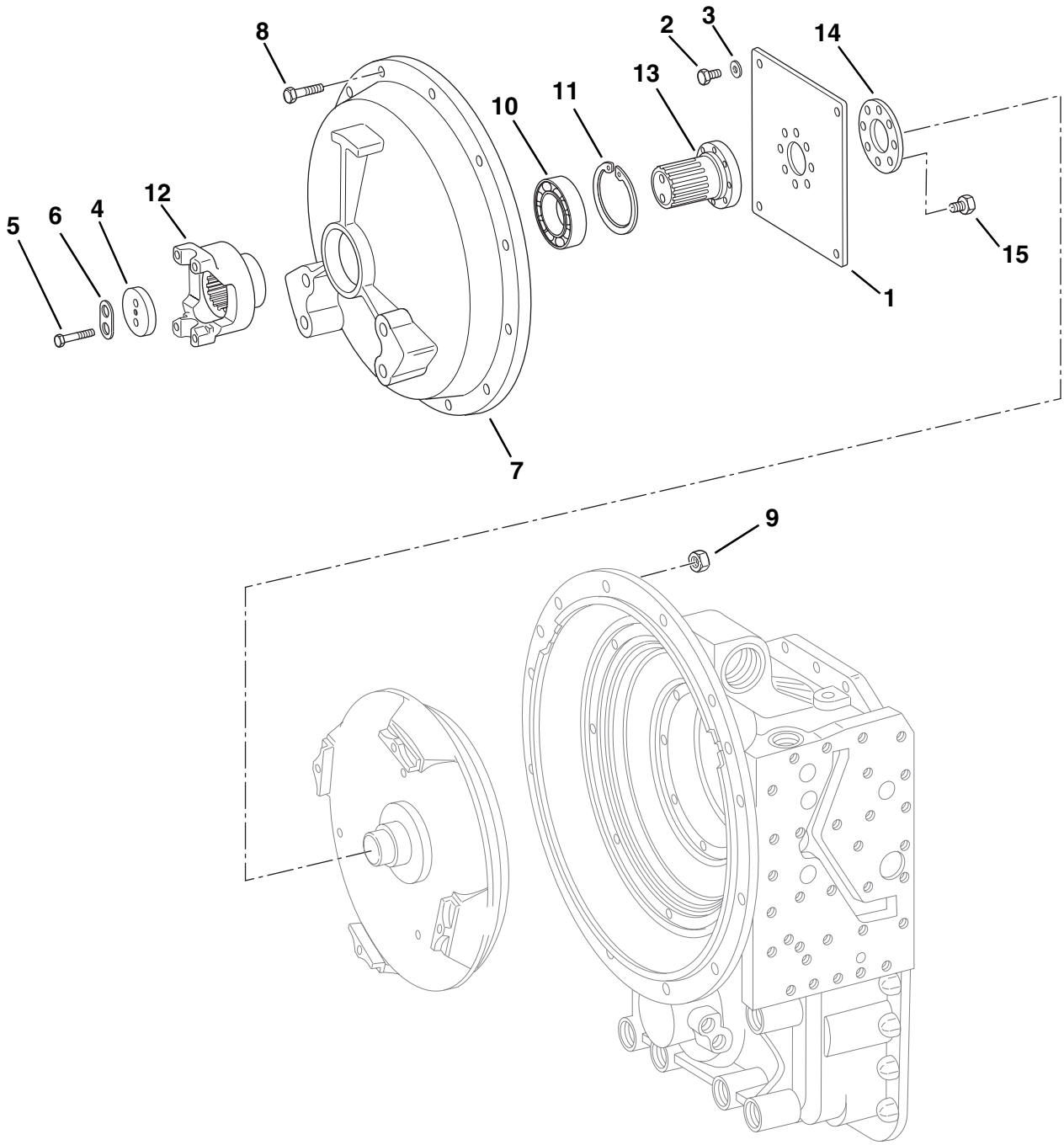

PH1040

ENGINE CONNECT
(S/N 9909 & After)

Item No.	Part Number	Qty.	Description
1	1319203	1	Diaphragm
2	1319204	4	HHCS, M10 x 18mm
3	10732095	4	Washer, 10,5
4	1319205	1	Washer
5	1319206	2	HHCS, M8 x 50mm
6	1319207	1	Washer
7	1319208	1	Cover
8	10731748	12	HHCS, M10 x 45mm
9	10731751	12	Nut, Hex M10
10	1319209	1	Bearing
11	1319210	1	Ring, Retaining 90 x 3
12	1319211	1	Flange, Input
13	1319212	1	Shaft, Input
14	1319213	1	Washer
15	10731702	8	HHCS, M10 x 16mm

CONVERTER AND LAYSHAFT
(S/N 9909 & After)

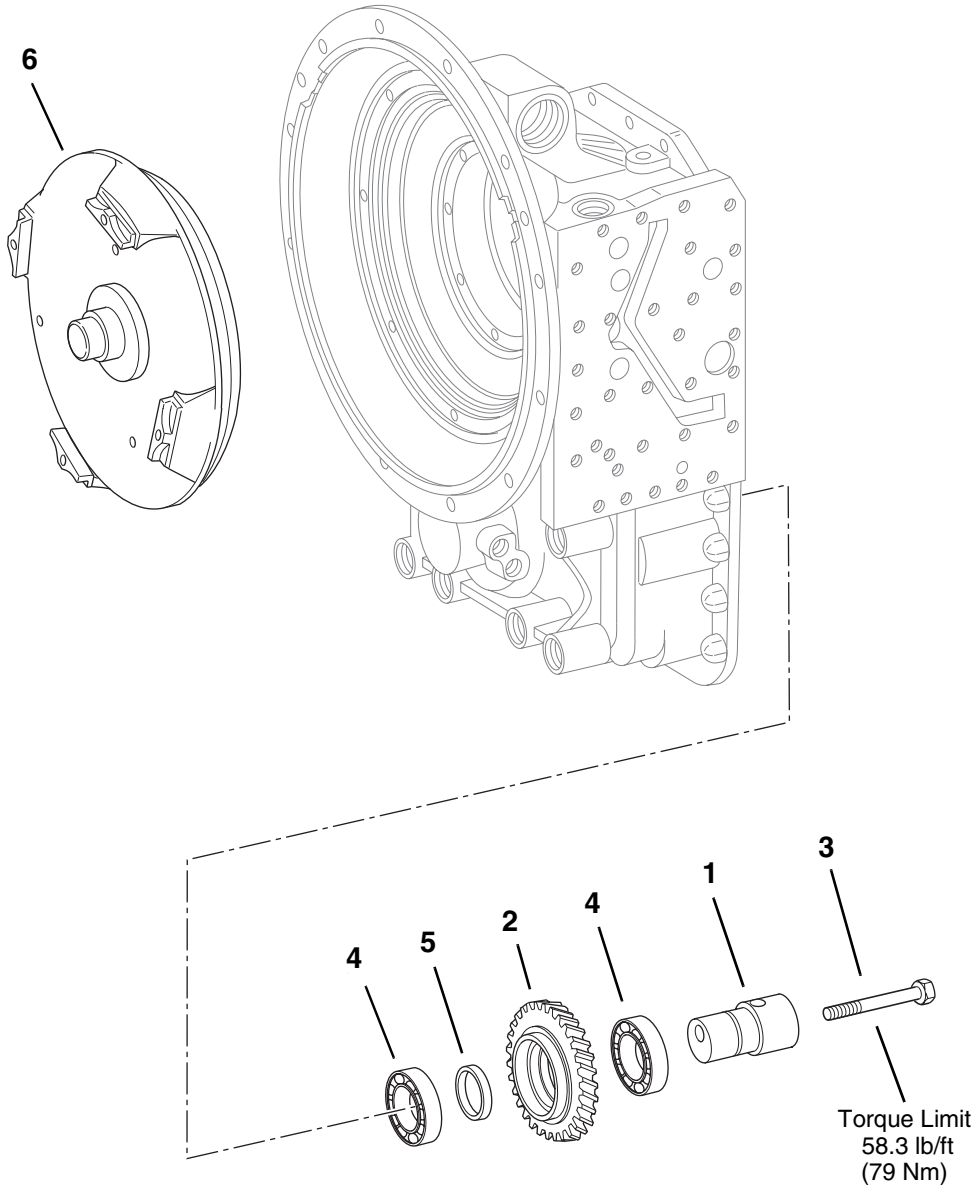

PH1050

CONVERTER AND LAYSHAFT

(S/N 9909 & After)

Item No.	Part Number	Qty.	Description
1	10732110	1	Axle
2	10732111	1	Gear, Idler
3	10732112	1	HHCS, M12 x 115mm
4	10732113	2	Bearing, Roller
5	10732114	1	Bushing, 7,20mm
	10732115	1	Bushing, 7,25mm
	10732116	1	Bushing, 7,30mm
	10732117	1	Bushing, 7,35mm
	10732118	1	Bushing, 7,40mm
	10732119	1	Bushing, 7,45mm
	10732120	1	Bushing, 7,50mm
	10732121	1	Bushing, 7,55mm
	10732122	1	Bushing, 7,60mm
6	10731704	1	Converter

OIL PRESSURE PUMP
(S/N 9909 & After)

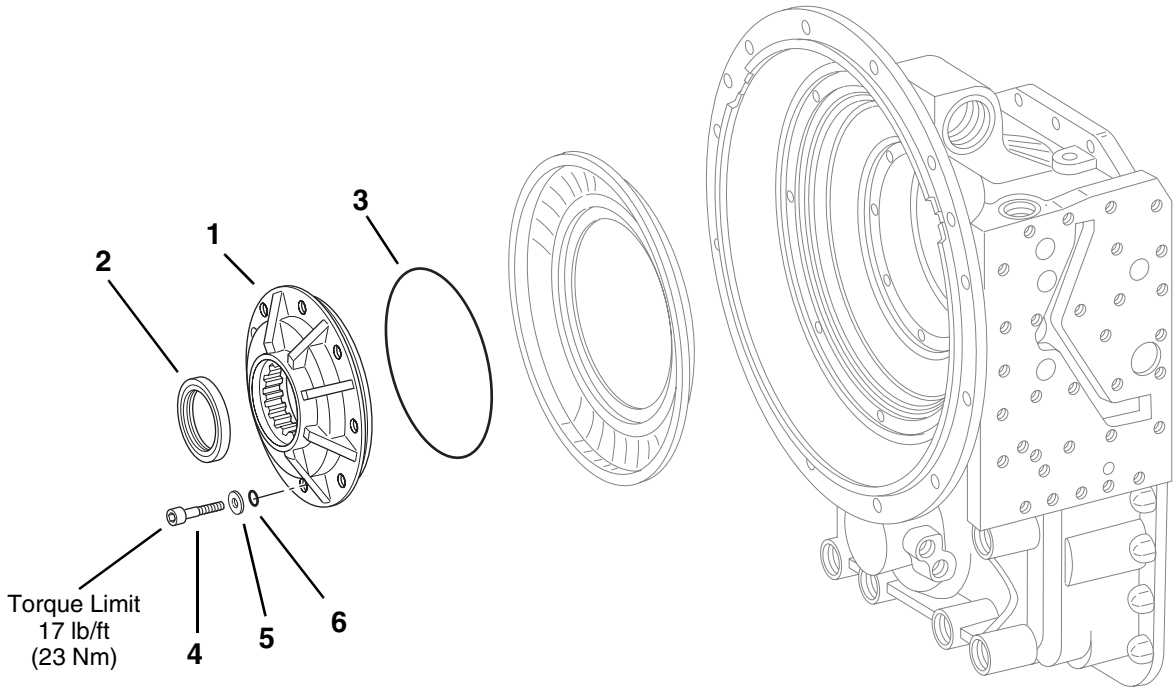

PH1060

OIL PRESSURE PUMP

(S/N 9909 & After)

Item No.	Part Number	Qty.	Description
1	10731705	1	Pump
2	10731706	1	Seal, Shaft
3	10731707	1	O-Ring, 192 x 3
4	1319214	8	SHCS, M8 x 40mm
5	10731710	8	Washer, 8,4
6	10731709	8	O-Ring, 8 x 1,5

INPUT SHAFT
(S/N 9909 & After)

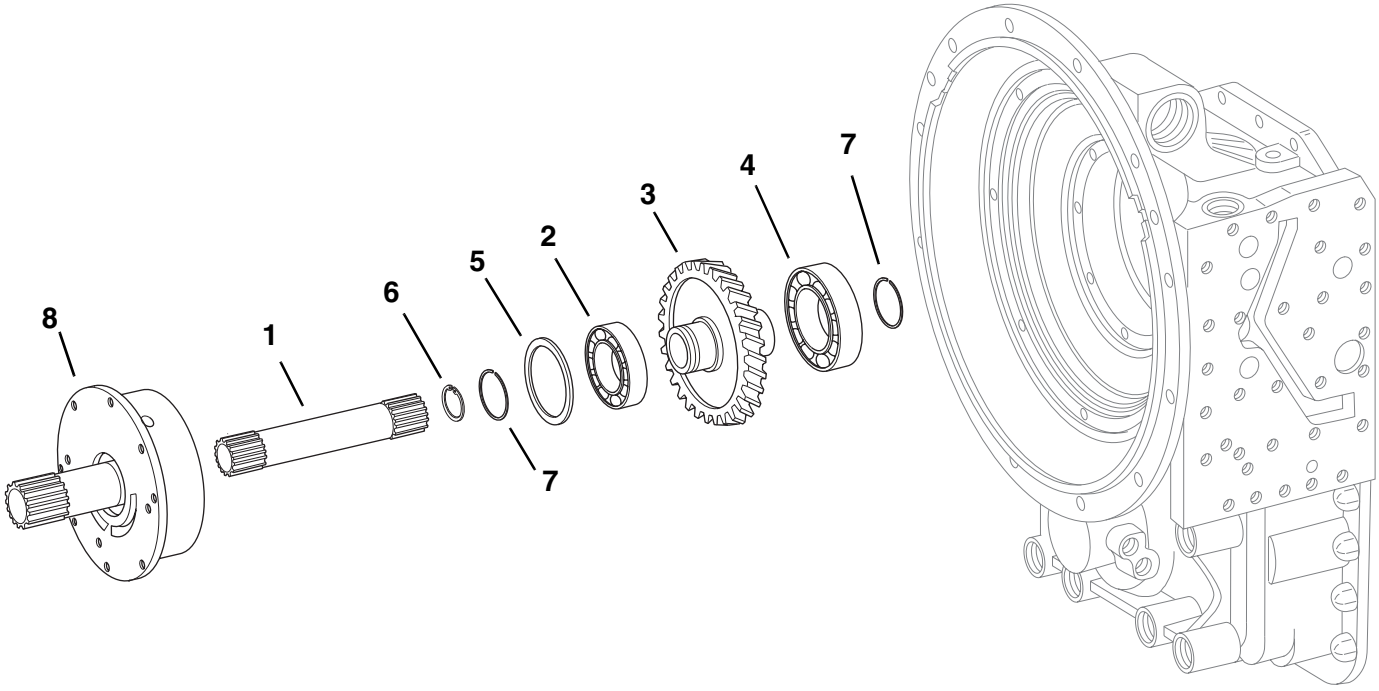

PH1070

INPUT SHAFT
(S/N 9909 & After)

Item No.	Part Number	Qty.	Description
1	10731711	1	Shaft, Turbine
2	10731712	1	Bearing, Roller
3	10731713	1	Gear, Input
4	1319215	1	Bearing, Roller
5	10731715	1	Washer, 1,2mm
	1319216	1	Washer, 1,25mm
	1319217	1	Washer, 1,35mm
	10731716	1	Washer, 0.5mm
	10731717	1	Washer, 0,6mm
	10731718	1	Washer, 0,7mm
	10731719	1	Washer, 0,8mm
	10731720	1	Washer, 0,9mm
	10731721	1	Washer, 1,0mm
	10731722	1	Washer, 1,1mm
	10731723	1	Washer, 1,3mm
	10731724	1	Washer, 1,4mm
	10731725	1	Washer, 1,5mm
	10731726	1	Washer, 0,65mm
	10731727	1	Washer, 0,75mm
	10731728	1	Washer, 0,85mm
	10731729	1	Washer, 0,95mm
	10731730	1	Washer, 1,05mm
	10731731	1	Washer, 1,15mm
6	10731732	1	Ring, Snap
7	1319218	2	Ring, Piston
8	10731734	1	Flange, Oil Feed

GEARBOX HOUSING
(S/N 9909 & After)

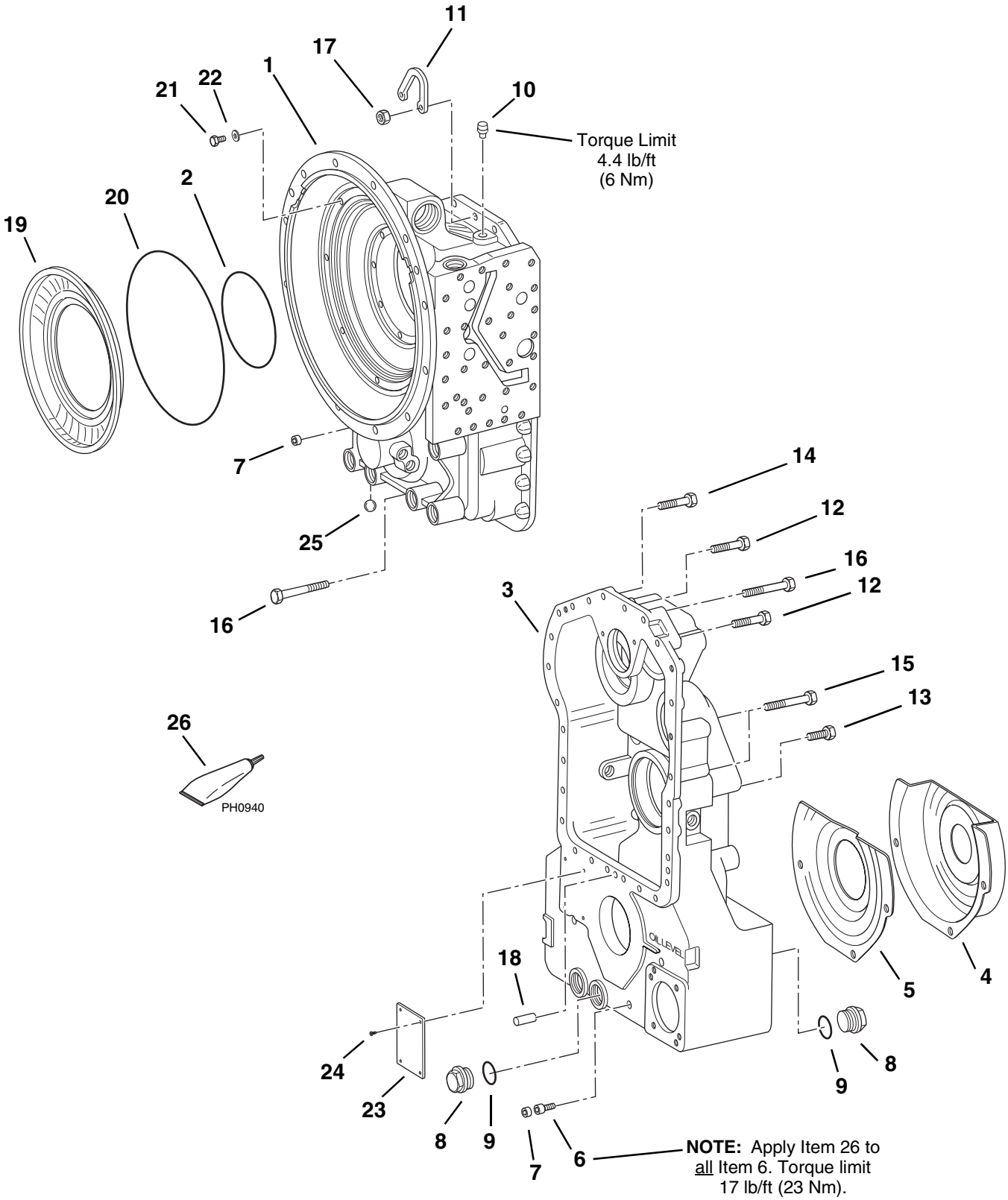

PH1080

GEARBOX HOUSING
(S/N 9909 & After)

Item No.	Part Number	Qty.	Description
1	1319219	1	Housing
2	10731736	1	O-Ring, 150 x 3
3	10731737	1	Housing, Gearbox
4	10731738	1	Sheet, Screen
5	10731739	1	Sheet, Screen
6	1319220	3	SHCS, M8 x 35mm
7	10731741	5	Cap, Sealing
8	10731742	2	Plug, M33 x 2
9	10731743	2	O-Ring, 30 x 2,5
10	10731744	1	Breather
11	10731745	1	Bracket
12	10731746	3	HHCS, M10 x 55mm
13	10731747	17	HHCS, M10 x 32mm
14	10731748	3	HHCS, M10 x 45mm
15	10731749	2	HHCS, M10 x 85mm
16	10731750	3	HHCS, M10 x 70mm
17	10731751	6	Nut, Hex M10
18	10731752	1	Pin, M6 x 35mm
19	10731753	1	Sheet, Cover
20	10731754	1	O-Ring, 294 x 3
21	1319221	8	HHCS, M8 x 20mm
22	10731756	8	Washer, M8
23	1319222	1	Plate, Type
24	10731758	4	Stud 3 x 5
25	10731759	1	Ball
26	8526052	AR	Threadlocker, High Strength

CLUTCH PACK 1ST GEAR - 1 OF 2

(S/N 9909 & After)

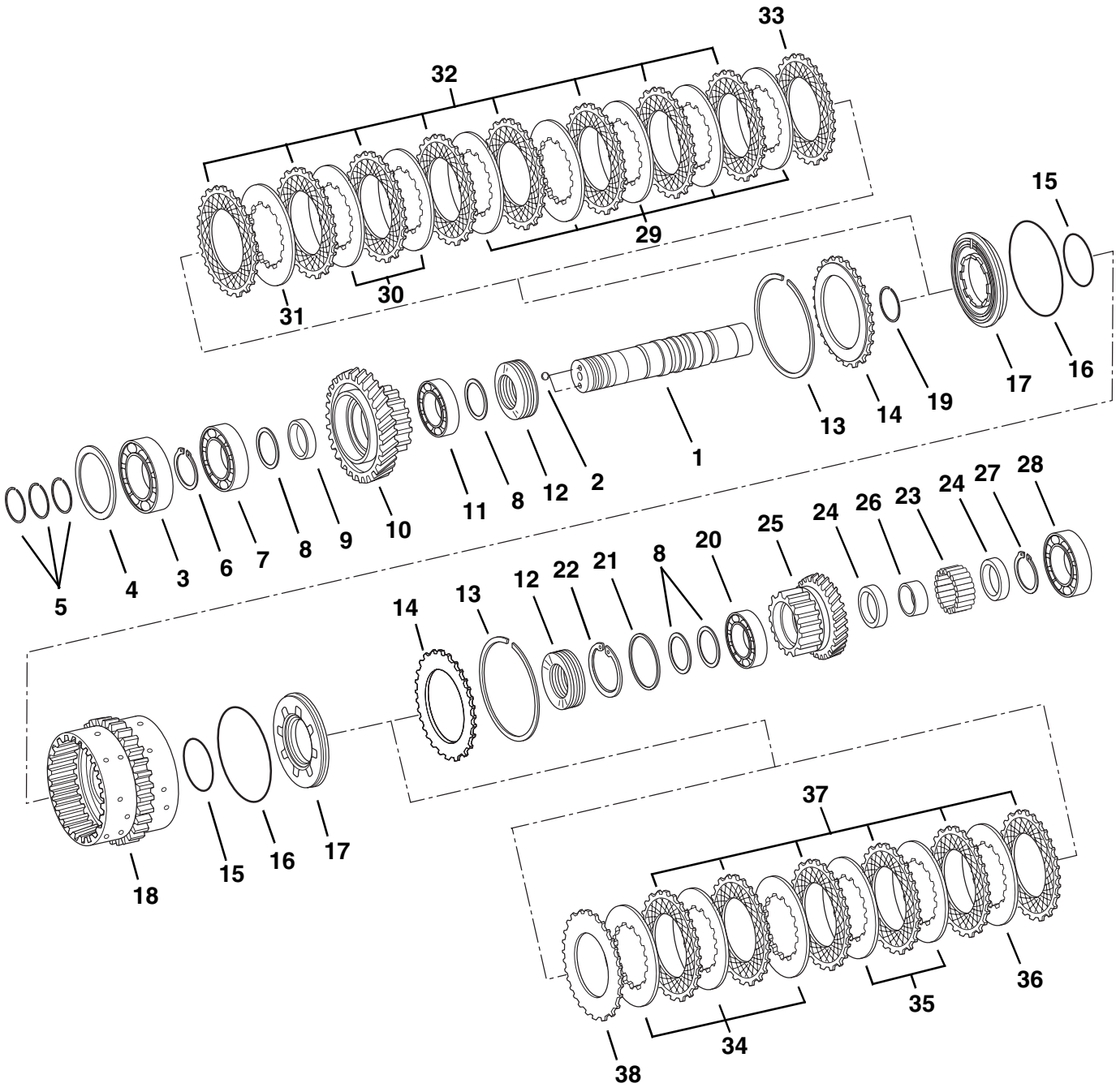

PH1100

CLUTCH PACK 1ST GEAR - 1 OF 2

(S/N 9909 & After)

Item No.	Part Number	Qty.	Description
1	1319223	1	Shaft
2	10731761	2	Ball
3	10731762	1	Bearing, Ball
4	10731763	1	Shim, 0,9mm
	10731764	1	Shim, 0,95mm
	10731765	1	Shim, 1,00mm
	10731766	1	Shim, 1,05mm
	10731767	1	Shim, 1,1mm
	10731768	1	Shim, 1,15mm
	10731769	1	Shim, 1,2mm
	10731770	1	Shim, 1,25mm
	10731771	1	Shim, 1,3mm
	10731772	1	Shim, 1,35mm
	10731773	1	Shim, 1,4mm
	10731774	1	Shim, 1,45mm
	10731775	1	Shim, 1,5mm
	10731776	1	Shim, 1,55mm
	10731777	1	Shim, 1,6mm
	10731778	1	Shim, 1,65mm
	10731779	1	Shim, 1,7mm
	10731780	1	Shim, 1,75mm
	10731781	1	Shim, 1,8mm
	10731782	1	Shim, 1,85mm
	10731783	1	Shim, 1,9mm
	10731784	1	Shim, 1,95mm
	10731785	1	Shim, 2,0mm
	10731786	1	Shim, 2,05mm
	10731787	1	Shim, 2,1mm
	1319285	1	Shim, 2,15mm
	1319286	1	Shim, 2,2mm
	1319287	1	Shim, 2,25mm
	1319288	1	Shim, 2,3mm
5	1319224	3	Ring, Piston 45 x 2,5
6	10731789	1	Ring, Retaining 45 x 1,75
7	10731790	1	Bearing, Ball
8	10731791	4	Shim, 1,3mm
	10731792	4	Shim, 1,35mm
	10731793	4	Shim, 1,4mm
	10731794	4	Shim, 1,45mm
	10731795	4	Shim, 1,5mm
	10731796	4	Shim, 1,55mm
	10731797	4	Shim, 1,6mm
	10731798	4	Shim, 1,65mm
	10731799	4	Shim, 1,7mm
	10731800	4	Shim, 1,75mm
	10731801	4	Shim, 1,8mm
	10731802	4	Shim, 1,85mm
	10731803	4	Shim, 1,9mm
	10731804	4	Shim, 1,95mm
	10731805	4	Shim, 2,0mm
	10731806	4	Shim, 2,05mm
	10731807	4	Shim, 2,1mm
	10731808	4	Shim, 2,15mm
	10731809	4	Shim, 2,2mm
	10731810	4	Shim, 2,25mm

continued on next parts list

CLUTCH PACK 1ST GEAR - 2 OF 2

(S/N 9909 & After)

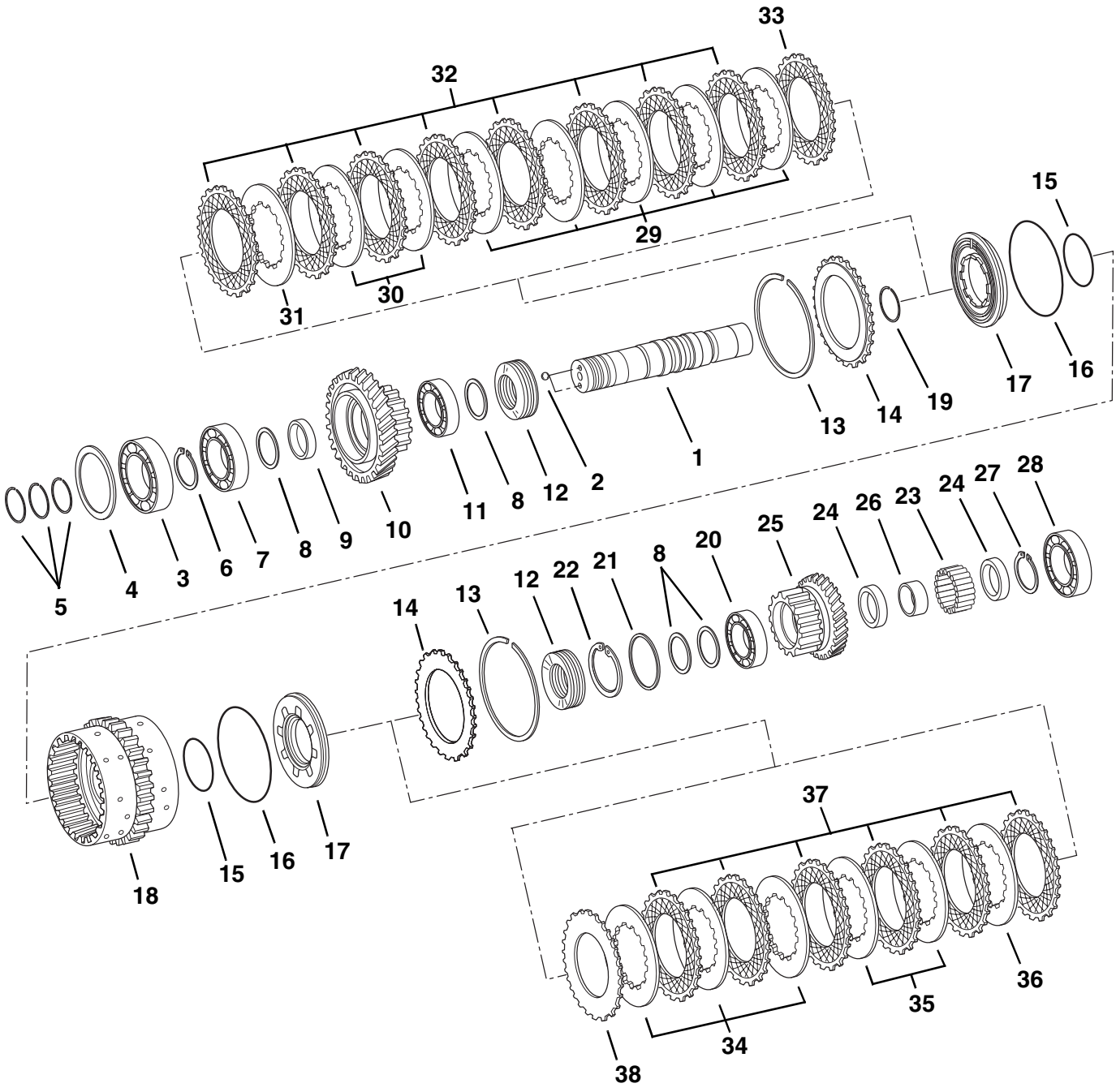

PH1100

CLUTCH PACK 1ST GEAR - 2 OF 2

(S/N 9909 & After)

Item No.	Part Number	Qty.	Description
8	10731811	4	Shim, 2,3mm
(cont.)	10731812	4	Shim, 2,35mm
	10731813	4	Shim, 2,4mm
	10731814	4	Shim, 2,45mm
	10731815	4	Shim, 2,5mm
	10731816	4	Shim, 2,55mm
	10731817	4	Shim, 2,6mm
	10731818	4	Shim, 2,65mm
	10731819	4	Shim, 2,7mm
	10731820	4	Shim, 2,75mm
	10731821	4	Shim, 2,8mm
9	10731822	1	Bush
10	10731823	1	Gear, Spur Z=44
11	10731824	1	Bearing, Ball
12	10731825	10	Spring, Cup
13	10731826	2	Ring, Snap
14	10731827	2	Shim, End
15	10731828	2	O-Ring, 60 x 3
16	10731829	2	O-Ring, 120 x 3
17	10731830	2	Piston
18	10731831	1	Carrier, Disc
19	10731832	1	Ring, Snap
20	10731833	1	Bearing, Snap
21	10731834	1	Shim, 0,8mm
	10731835	1	Shim, 0,9mm
	1319225	1	Shim, 0,95mm
	10731836	1	Shim, 1,0mm
	10731837	1	Shim, 1,1mm
	10731838	1	Shim, 1,2mm
	10731839	1	Shim, 1,3mm
22	10732107	1	Ring, Retaining 77 x 2,5
23	10731841	1	Cage, Needle
24	10731842	2	Bush
25	10731843	1	Gear, Spur Z=27
26	10731844	1	Ring, Internal
27	10731845	1	Ring, Retaining 40 x 1,75
28	10731846	1	Bearing, Ball
29	10731847	5	Disc, Inner Clutch
30	10731848	2	Disc, Inner Clutch
31	10731847	1	Disc, Inner Clutch 2,0mm
	10731848	1	Disc, Inner Clutch 1,5mm
	10731849	1	Disc, Inner Clutch 2,5mm
32	10731850	8	Disc, Outer Clutch
33	10731851	1	Disc, Outer Clutch
34	10731847	3	Disc, Inner Clutch
35	10731748	2	Disc, Inner Clutch
36	10731747	1	Disc, Inner Clutch 2,0mm
	10731748	1	Disc, Inner Clutch 1,5mm
	10731749	1	Disc, Inner Clutch 2,5mm
37	10731750	6	Disc, Outer Clutch
38	10731751	1	Disc, Outer Clutch

CLUTCH PACK 2ND GEAR - 1 OF 2

(S/N 9909 & After)

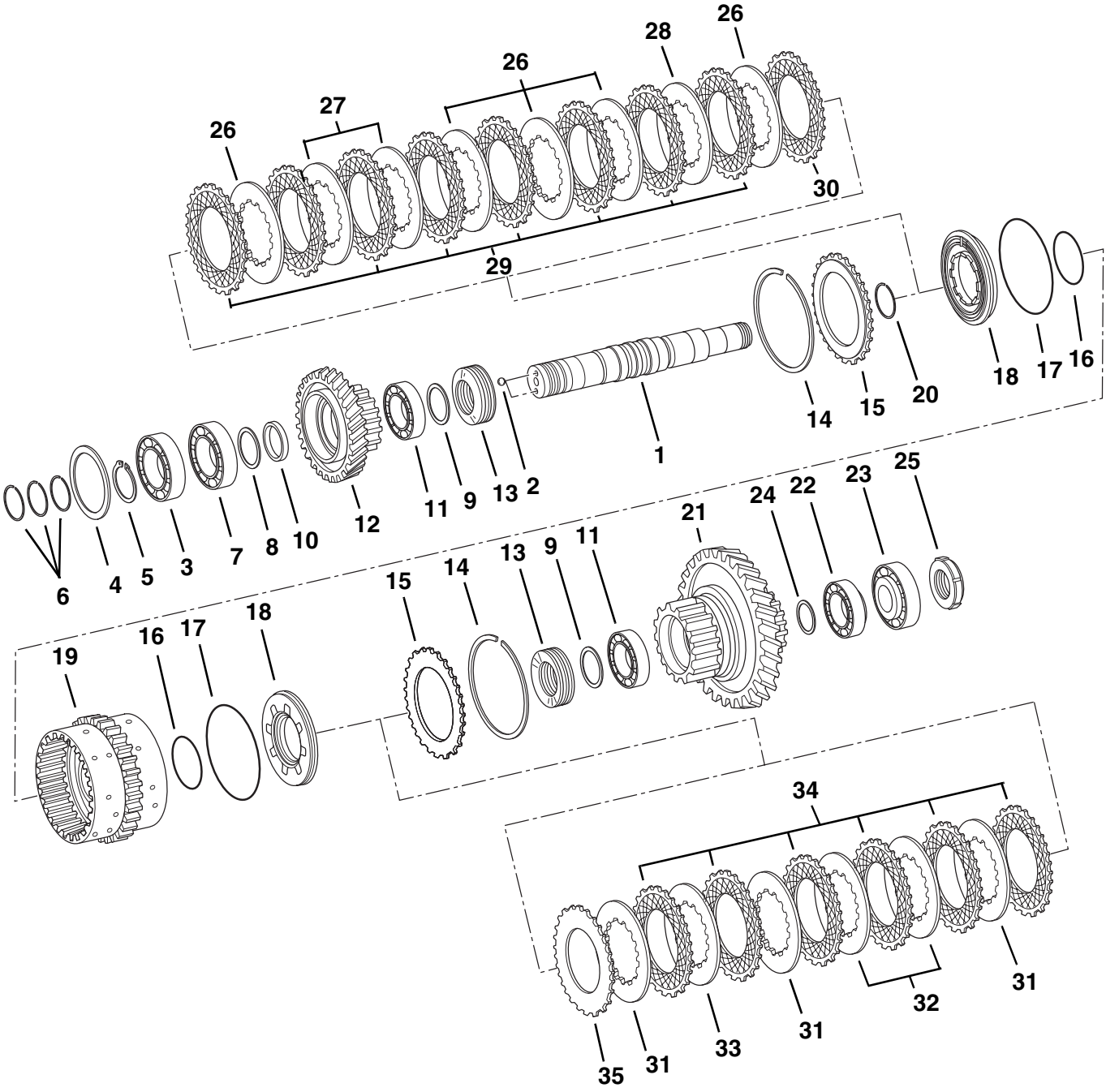

PH1110

CLUTCH PACK 2ND GEAR - 1 OF 2

(S/N 9909 & After)

Item No.	Part Number	Qty.	Description
1	1319226	1	Shaft
2	10731761	2	Ball
3	1319227	1	Bearing, Roller
4	10731854	1	Washer, 0,8mm
	10731855	1	Washer, 0,85mm
	10731856	1	Washer, 0,9mm
	10731857	1	Washer, 0,95mm
	10731858	1	Washer, 1,0mm
	10731859	1	Washer, 1,05mm
	10731860	1	Washer, 1,1mm
	10731861	1	Washer, 1,15mm
	10731862	1	Washer, 1,2mm
	10731863	1	Washer, 1,25mm
	10731864	1	Washer, 1,3mm
	10731865	1	Washer, 1,35mm
	10731866	1	Washer, 1,4mm
	10731867	1	Washer, 1,45mm
	10731868	1	Washer, 1,5mm
	10731869	1	Washer, 1,55mm
	10731870	1	Washer, 1,6mm
	10731871	1	Washer, 1,65mm
	10731872	1	Washer, 1,7mm
	10731873	1	Washer, 1,75mm
	10731874	1	Washer, 1,8mm
	10731875	1	Washer, 1,85mm
	10731876	1	Washer, 1,9mm
	10731877	1	Washer, 1,95mm
	10731878	1	Washer, 2,0mm
	10731879	1	Washer, 2,05mm
	10731880	1	Washer, 2,1mm
	10731881	1	Washer, 2,15mm
	10731882	1	Washer, 2,2mm
	10731883	1	Washer, 2,25mm
	10731884	1	Washer, 2,3mm
	10731885	1	Washer, 2,35mm
	10731886	1	Washer, 2,4mm
5	10731789	1	Ring, Retaining 45 x 1,75
6	1319224	3	Ring, Piston 45 x 2,5
7	1319215	1	Bearing, Roller
8	10731791	1	Shim, 1,3mm
	10731792	1	Shim, 1,35mm
	10731793	1	Shim, 1,4mm
	10731794	1	Shim, 1,45mm
	10731795	1	Shim, 1,5mm
	10731796	1	Shim, 1,55mm
	10731797	1	Shim, 1,6mm
	10731798	1	Shim, 1,65mm
	10731799	1	Shim, 1,7mm
	10731800	1	Shim, 1,75mm
	10731801	1	Shim, 1,8mm
	10731802	1	Shim, 1,85mm
	10731803	1	Shim, 1,9mm
	10731804	1	Shim, 1,95mm
	10731805	1	Shim, 2,0mm
	10731806	1	Shim, 2,05mm
	10731807	1	Shim, 2,1mm
	10731808	1	Shim, 2,15mm
	10731809	1	Shim, 2,2mm
	10731810	1	Shim, 2,25mm
	10731811	1	Shim, 2,3mm
	10731812	1	Shim, 2,35mm
	10731813	1	Shim, 2,4mm
	10731814	1	Shim, 2,45mm
	10731815	1	Shim, 2,5mm
	10731816	1	Shim, 2,55mm
	10731817	1	Shim, 2,6mm
	10731818	1	Shim, 2,65mm
	10731819	1	Shim, 2,7mm
	10731820	1	Shim, 2,75mm
	10731821	1	Shim, 2,8mm
9	10731805	2	Shim
10	10731887	1	Bush
11	10731888	2	Bearing, Roller

continued on next parts list

CLUTCH PACK 2ND GEAR - 2 OF 2

(S/N 9909 & After)

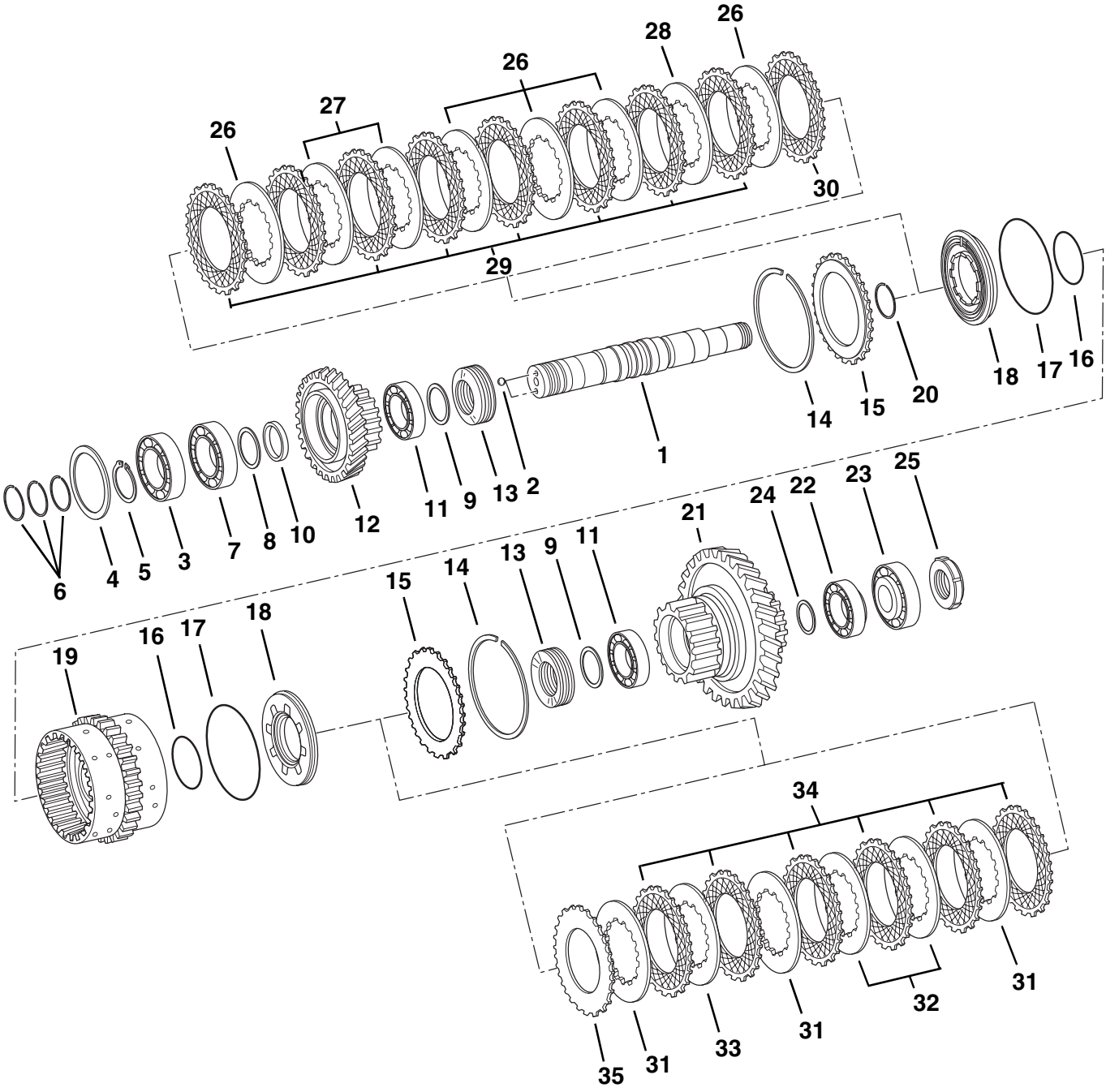

PH1110

CLUTCH PACK 2ND GEAR - 2 OF 2

(S/N 9909 & After)

Item No.	Part Number	Qty.	Description
12	10731889	1	Gear, Spur Z=44
13	10731825	10	Spring, Cup
14	10731826	2	Ring, Snap
15	10731827	2	Shim, End
16	10731828	2	O-Ring, 60 x 3
17	10731829	2	O-Ring, 120 x 3
18	10731830	2	Piston
19	10731831	1	Carrier, Disc
20	10731832	1	Ring, Snap 48
21	10731890	1	Gear, Spur
22	10731891	1	Bearing, Roller
23	10731892	1	Bearing, Roller
24	10731893	1	Shim, 1,0mm
	10731894	1	Shim, 1,05mm
	10731895	1	Shim, 1,1mm
	10731896	1	Shim, 1,15mm
	10731897	1	Shim, 1,2mm
	10731898	1	Shim, 1,25mm
	10731899	1	Shim, 1,3mm
	10731900	1	Shim, 1,35mm
	10731901	1	Shim, 1,4mm
	10731902	1	Shim, 1,45mm
	10731903	1	Shim, 1,5mm
	10731904	1	Shim, 1,55mm
	10731905	1	Shim, 1,6mm
	10731906	1	Shim, 1,65mm
	10731907	1	Shim, 1,7mm
	10731908	1	Shim, 1,75mm
	10731909	1	Shim, 1,8mm
25	10731910	1	Nut, Slotted
26	10731847	5	Disc, Inner Clutch
27	10731848	2	Disc, Inner Clutch
28	10731847	1	Disc, Inner Clutch 2,0mm
	10731848	1	Disc, Inner Clutch 1,5mm
	10731849	1	Disc, Inner Clutch 2,5mm
29	10731850	8	Disc, Outer Clutch
30	10731851	1	Disc, Outer Clutch
31	10731847	3	Disc, Inner Clutch
32	10731848	2	Disc, Inner Clutch
33	10731847	1	Disc, Inner Clutch 2,0mm
	10731848	1	Disc, Inner Clutch 1,5mm
	10731849	1	Disc, Inner Clutch 2,5mm
34	10731850	6	Disc, Outer Clutch
35	10731851	1	Disc, Outer Clutch

CLUTCH PACK 3RD GEAR - 1 OF 2

(S/N 9909 & After)

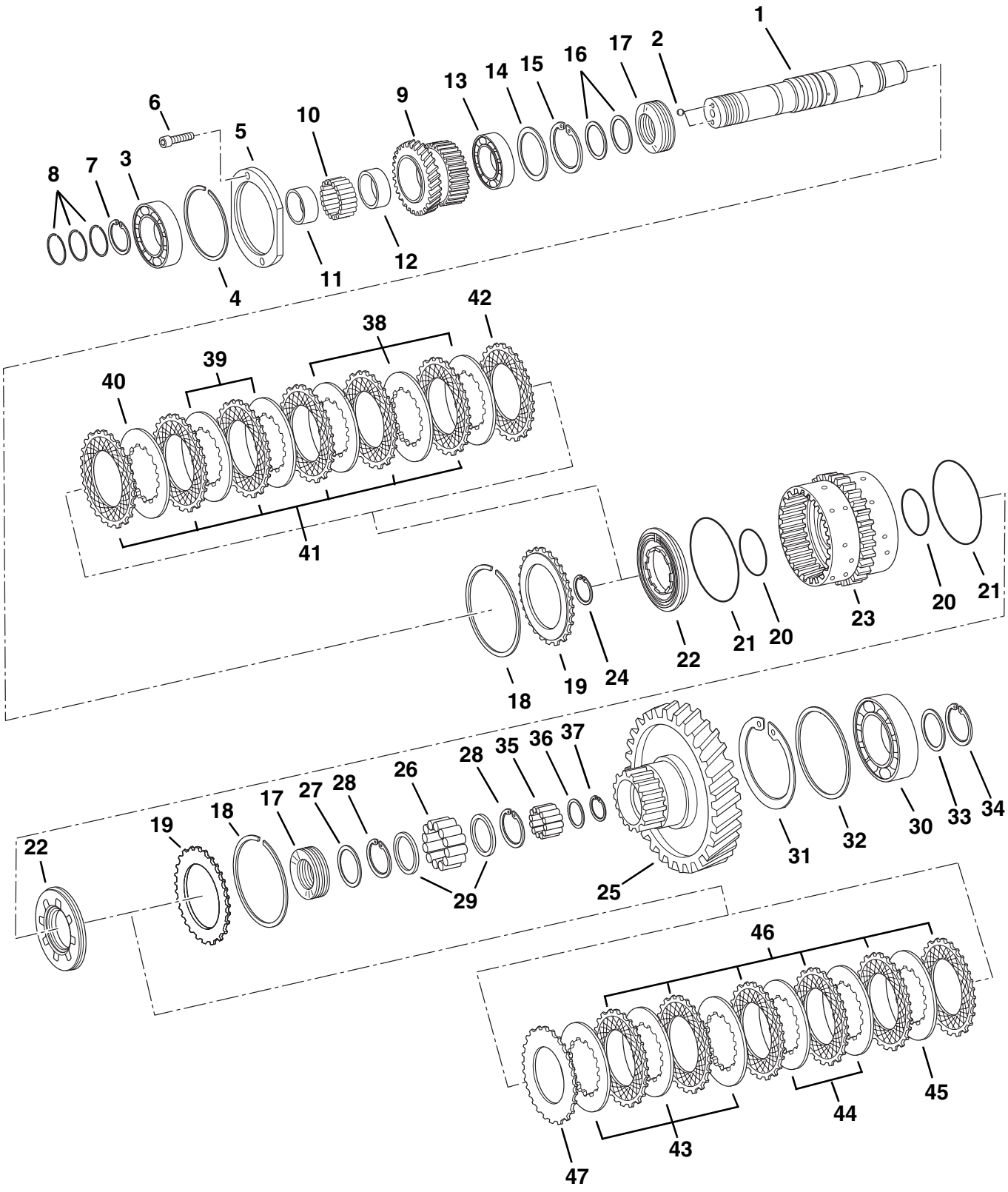

PH1120

CLUTCH PACK 3RD GEAR - 1 OF 2

(S/N 9909 & After)

Item No.	Part Number	Qty.	Description
1	10731911	1	Shaft
2	10731761	2	Ball
3	10731912	1	Bearing, Ball
4	10731913	1	Ring, Snap 100
5	1319230	1	Washer
6	1319220	2	HHCS, M8 x 35mm
7	10731789	1	Ring, Retaining 45 x 1,75
8	1319224	3	Ring, Piston 45 x 2,5
9	10732103	1	Gear, Spur Z=29
10	10732104	1	Cage, Needle
11	10732105	1	Ring, Internal
12	10732106	1	Bush
13	10731824	1	Bearing, Ball
14	10731834	1	Shim, 0,8mm
	10731835	1	Shim, 0,9mm
	1319225	1	Shim, 0,95mm
	10731836	1	Shim, 1,0mm
	10731837	1	Shim, 1,1mm
	10731838	1	Shim, 1,2mm
	10731839	1	Shim, 1,3mm
15	10732107	1	Ring, Retaining 77 x 2,5
16	10731791	2	Shim, 1,3mm
	10731792	2	Shim, 1,35mm
	10731793	2	Shim, 1,4mm
	10731794	2	Shim, 1,45mm
	10731795	2	Shim, 1,5mm
	10731796	2	Shim, 1,55mm
	10731797	2	Shim, 1,6mm
	10731798	2	Shim, 1,65mm
	10731799	2	Shim, 1,7mm
	10731800	2	Shim, 1,75mm
	10731801	2	Shim, 1,8mm
	10731802	2	Shim, 1,85mm
	10731803	2	Shim, 1,9mm
	10731804	2	Shim, 1,95mm
	10731805	2	Shim, 2,0mm
	10731806	2	Shim, 2,05mm
	10731807	2	Shim, 2,1mm
	10731808	2	Shim, 2,15mm
	10731809	2	Shim, 2,2mm
	10731810	2	Shim, 2,25mm
	10731811	2	Shim, 2,3mm
	10731812	2	Shim, 2,35mm
	10731813	2	Shim, 2,4mm
	10731814	2	Shim, 2,45mm
	10731815	2	Shim, 2,5mm
	10731816	2	Shim, 2,55mm
	10731817	2	Shim, 2,6mm
	10731818	2	Shim, 2,65mm
	10731819	2	Shim, 2,7mm
	10731820	2	Shim, 2,75mm
	10731821	2	Shim, 2,8mm
17	10731825	10	Spring, Cup
18	10731826	2	Ring, Snap
19	10731827	2	Shim, End

continued on next parts list

CLUTCH PACK 3RD GEAR - 2 OF 2

(S/N 9909 & After)

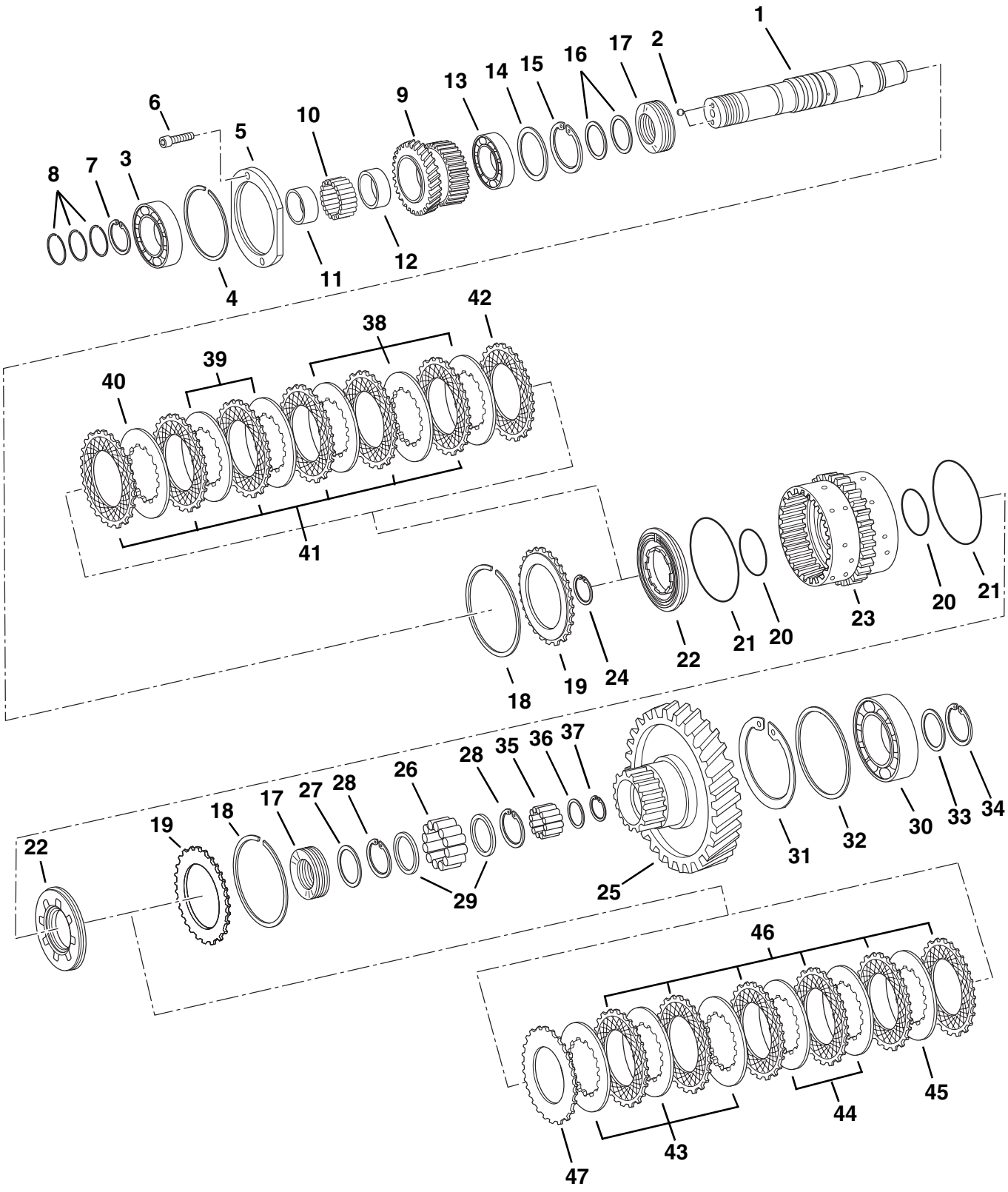

PH1120

CLUTCH PACK 3RD GEAR - 2 OF 2

(S/N 9909 & After)

Item No.	Part Number	Qty.	Description
20	10731828	2	O-Ring, 60 x 3
21	10731829	2	O-Ring, 120 x 3
22	10731830	2	Piston
23	10731916	1	Carrier, Disc
24	10731832	1	Ring, Snap 48
25	10731917	1	Gear, Spur Z=56
26	10731918	1	Cage, Roller
27	10731919	1	Shim, 3,4mm
	10731920	1	Shim, 1,6mm
28	10731921	2	Ring, Retaining 48 x 1,75
29	1319234	2	Washer, Thrust
30	1319235	1	Bearing, Roller
31	10731928	1	Ring, Retaining 120 x 4
32	10731929	1	Washer, 1,0mm
	10731930	1	Washer, 1,05mm
	10731931	1	Washer, 1,1mm
	10731932	1	Washer, 1,15mm
	10731933	1	Washer, 1,2mm
	10731934	1	Washer, 1,25mm
	10731935	1	Washer, 1,3mm
	10731936	1	Washer, 1,35mm
	10731937	1	Washer, 1,4mm
33	10731938	1	Shim, 0,8mm
	10731839	1	Shim, 0,85mm
	10731840	1	Shim, 0,9mm
	10731841	1	Shim, 0,95mm
	10731842	1	Shim, 1,0mm
	10731843	1	Shim, 1,05mm
	10731844	1	Shim, 1,1mm
	10731845	1	Shim, 1,15mm
	10731846	1	Shim, 1,2mm
	10731847	1	Shim, 1,25mm
	10731848	1	Shim, 1,3mm
34	10731849	1	Ring, Retaining 65 x 2,5
35	10731850	1	Cage, Needle
36	10731851	1	Shim
37	10731852	1	Ring, Retaining 30 x 1,5
38	10731847	3	Disc, Inner Clutch
39	10731848	2	Disc, Inner Clutch
40	10731847	1	Disc, Inner Clutch 2,0mm
	10731848	1	Disc, Inner Clutch 1,5mm
	10731849	1	Disc, Inner Clutch 2,5mm
41	10731850	6	Disc, Outer Clutch
42	10731851	1	Disc, Outer Clutch
43	10731847	3	Disc, Inner Clutch
44	10731848	2	Disc, Inner Clutch
45	10731847	1	Disc, Inner Clutch 2,0mm
	10731848	1	Disc, Inner Clutch 1,5mm
	10731849	1	Disc, Inner Clutch 2,5mm
46	10731850	6	Disc, Outer Clutch
47	10731851	1	Disc, Outer Clutch

OUTPUT SHAFT
(S/N 9909 & After)

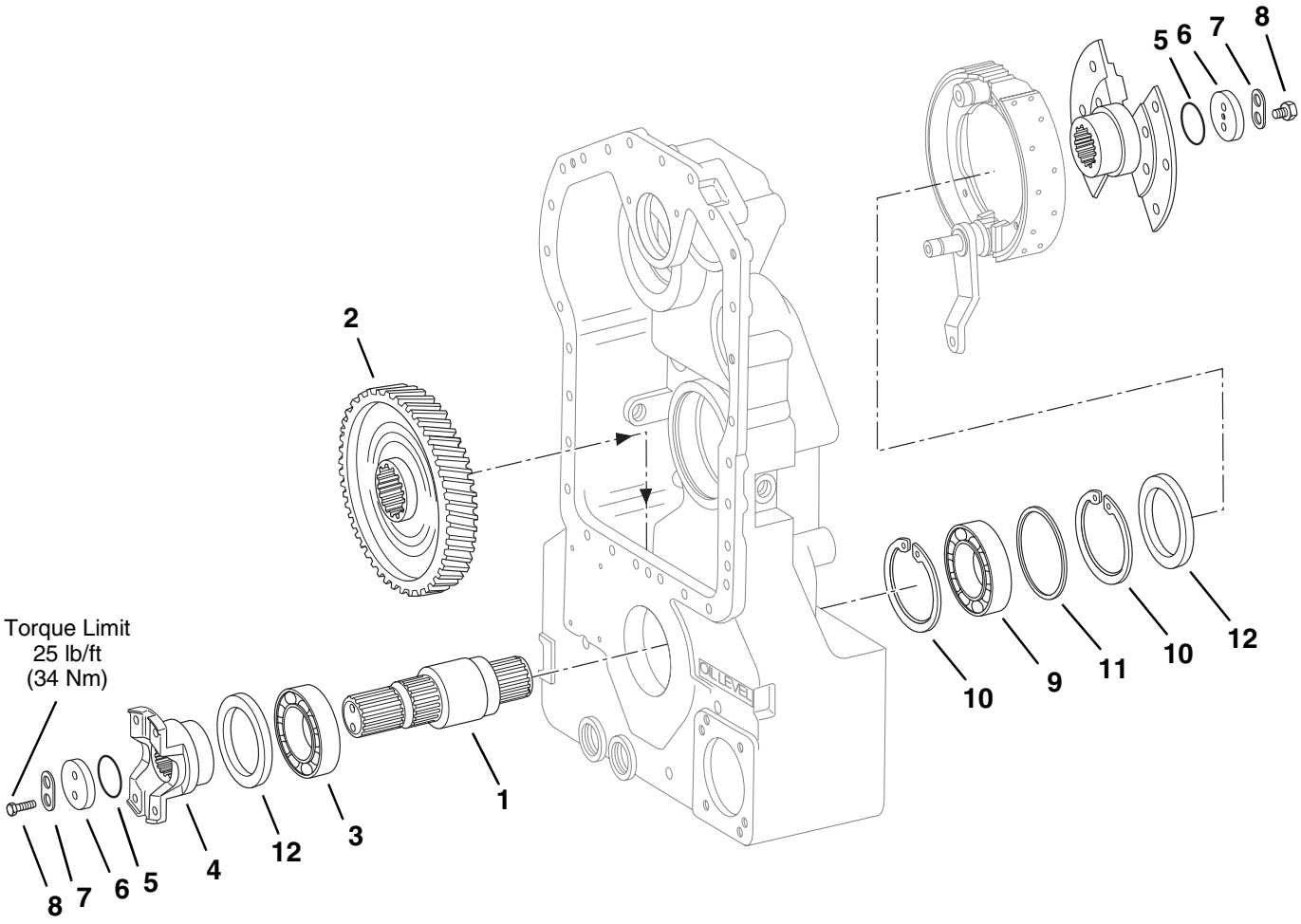

PH1130

OUTPUT SHAFT
(S/N 9909 & After)

Item No.	Part Number	Qty.	Description
1	10731953	1	Shaft, Output
2	10731954	1	Gear, Output
3	10731955	1	Bearing, Ball
4	10731956	1	Flange, Input
5	10839156	2	O-Ring, 38 x 4
6	10731957	2	Washer
7	10731958	2	Washer, Tab
8	10731959	4	HHCS, M8 x 25mm
9	10731960	1	Bearing, Ball
10	10731961	2	Ring, Retaining 100 x 3
11	10731962	1	Shim, 1,0mm
	10731963	1	Shim, 1,05mm
	10731964	1	Shim, 1,1mm
	10731965	1	Shim, 1,15mm
	10731966	1	Shim, 1,2mm
	10731967	1	Shim, 1,25mm
	10731968	1	Shim, 1,3mm
	10731969	1	Shim, 1,35mm
	10731970	1	Shim, 1,4mm
	10731971	1	Shim, 1,45mm
	10731972	1	Shim, 1,5mm
	10731973	1	Shim, 1,55mm
	10731974	1	Shim, 1,6mm
	10731975	1	Shim, 1,65mm
	10731976	1	Shim, 1,7mm
12	10731977	2	Seal, Shaft 70 x 100 x 10

PARKING BRAKE
(S/N 9909 & After)

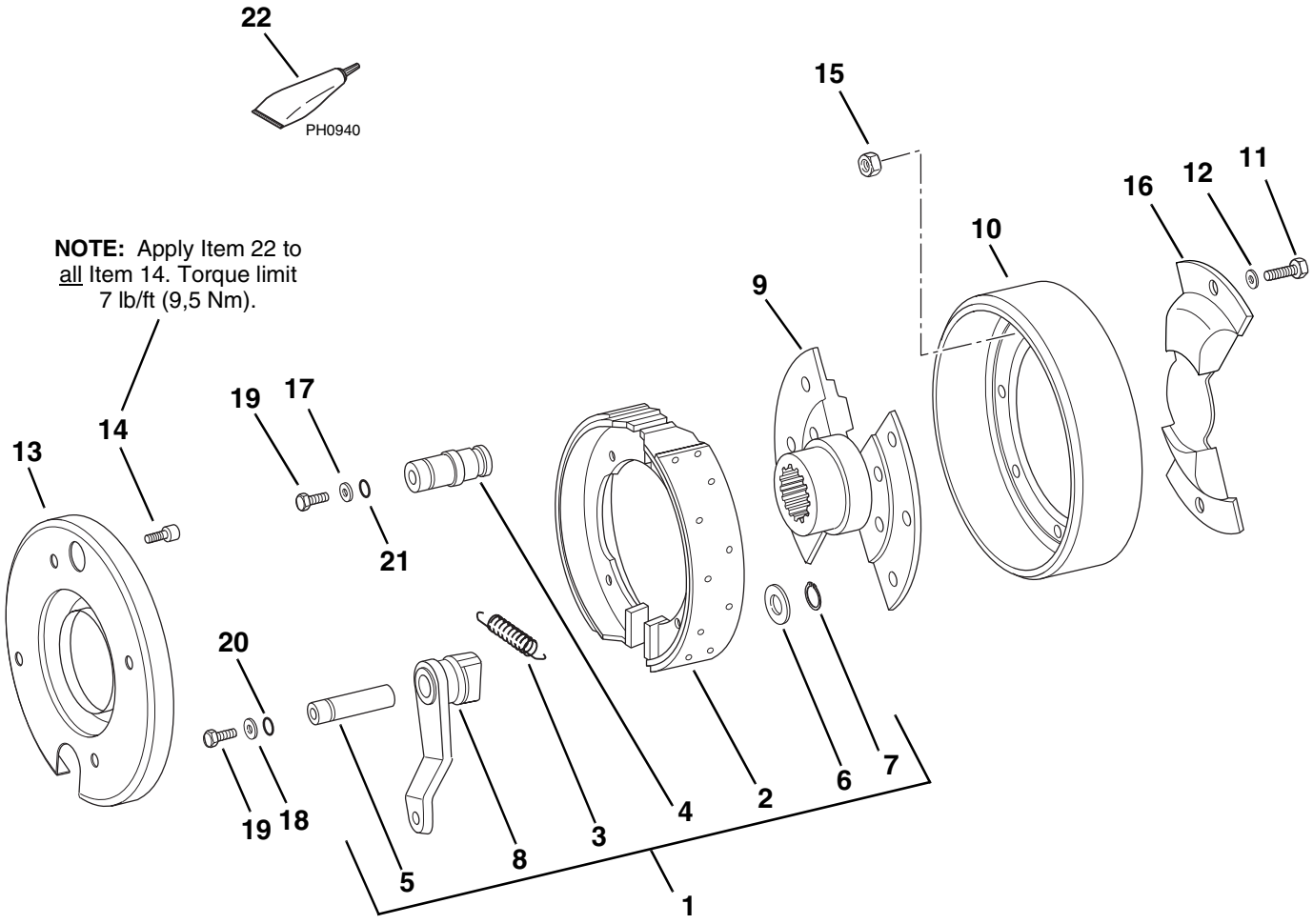

PH1140

PARKING BRAKE
(S/N 9909 & After)

Item No.	Part Number	Qty.	Description
1	10731981	1	Shoe, Brake (Includes Items 2 thru 8)
2	10731982	1	Shoe, Brake Without Asbestos
3	10731983	2	Spring, Tension
4	10731984	1	Bolt, Anchor
5	10731985	1	Pin
6	10731986	1	Washer
7	10731987	1	Ring, Retaining 22 x 1,2
8	10731988	1	Cam, Brake
9	10732097	1	Flange, Output
10	10732093	1	Drum, Brake
11	10732094	8	HHCS, M10 x 25mm
12	10732095	8	Washer, 10,5
13	1319237	1	Plate, Cover
14	10731980	4	SHCS, M6 x 10mm
15	10731751	2	Nut, Hex M10
16	10732098	1	Plate, Cover
17	10732099	1	Washer
18	10732099	1	Washer
19	10732101	2	HHCS, M10 x 22mm
20	10731978	1	O-Ring, 17,3 x 2,4
21	10731979	1	O-Ring, 25,3 x 2,4
22	8526052	AR	Threadlocker, High Strength

POWER TAKE-OFF SHAFT

(S/N 9909 & After)

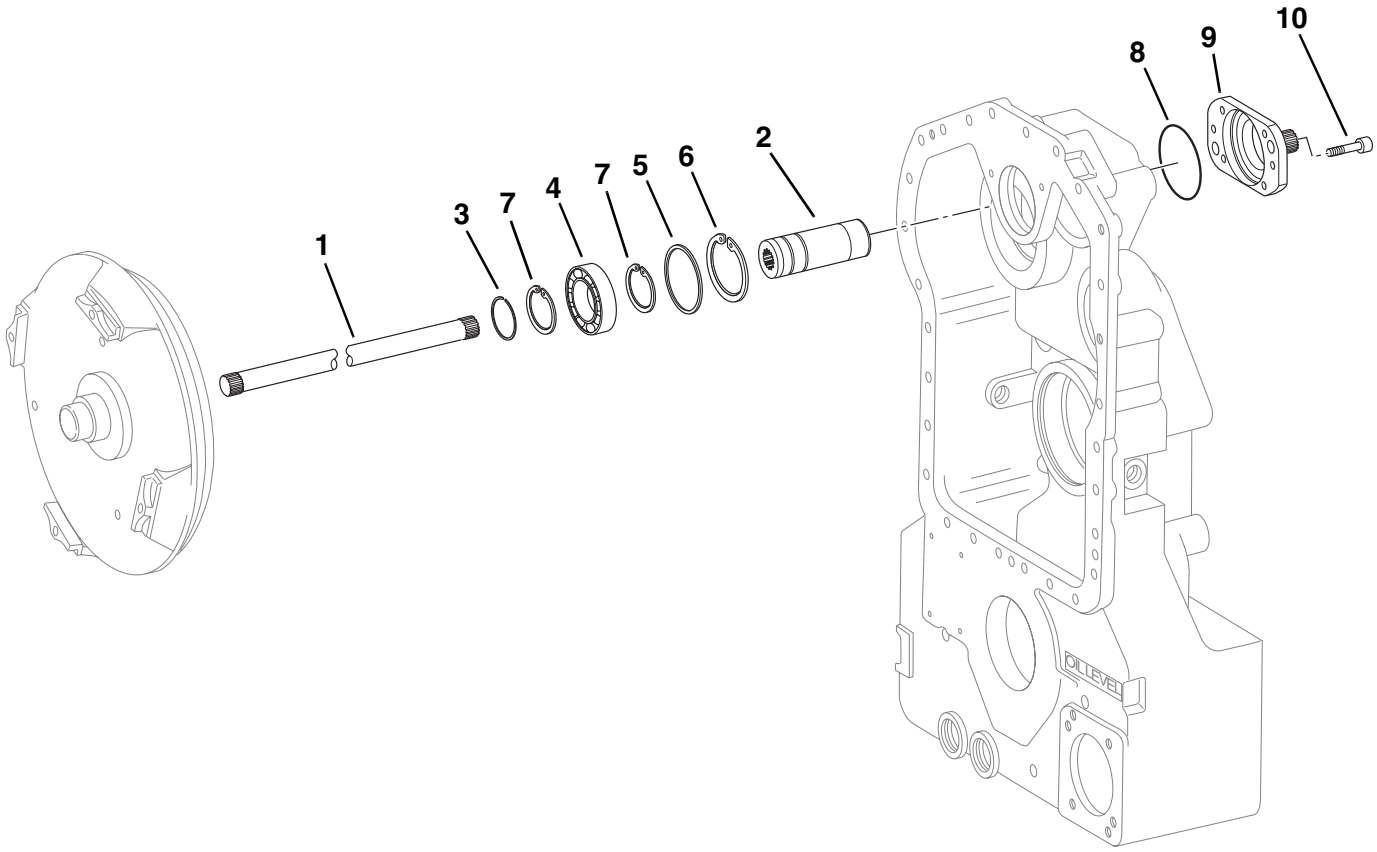

PH1150

POWER TAKE-OFF SHAFT

(S/N 9909 & After)

Item No.	Part Number	Qty.	Description
1	10731989	1	Shaft, Central
2	1319238	1	Bush
3	1319218	1	Ring, Piston
4	1319240	1	Bearing, Ball
5	10731992	1	Shim, 1,0mm
	10731993	1	Shim, 1,05mm
	10731994	1	Shim, 1,1mm
	10731995	1	Shim, 1,15mm
	10731996	1	Shim, 1,2mm
	10731997	1	Shim, 1,25mm
	10731998	1	Shim, 1,3mm
	10731999	1	Shim, 1,35mm
	10732000	1	Shim, 1,40mm
	10732001	1	Shim, 1,45mm
	10732002	1	Shim, 1,5mm
	10732003	1	Shim, 1,55mm
	10732004	1	Shim, 1,6mm
	1319241	1	Shim, 1,65mm
	1319242	1	Shim, 1,70mm
	1319243	1	Shim, 1,75mm
	1319244	1	Shim, 1,80mm
	1319245	1	Shim, 1,85mm
	1319246	1	Shim, 1,90mm
	1319247	1	Shim, 1,95mm
	1319248	1	Shim, 2,00mm
	1319249	1	Shim, 2,05mm
	1319250	1	Shim, 2,10mm
	1319251	1	Shim, 2,15mm
	1319252	1	Shim, 2,20mm
6	10732005	1	Ring, Retaining 68 x 2,5
7	10731845	2	Ring, Retaining 40 x 1,75
8	1319253	1	O-Ring, 104 x 3
9	1319254	1	Flange, Pump
10	1319255	2	SHCS, M14 x 35mm

GEARSHIFT SYSTEM
(S/N 9909 & After)

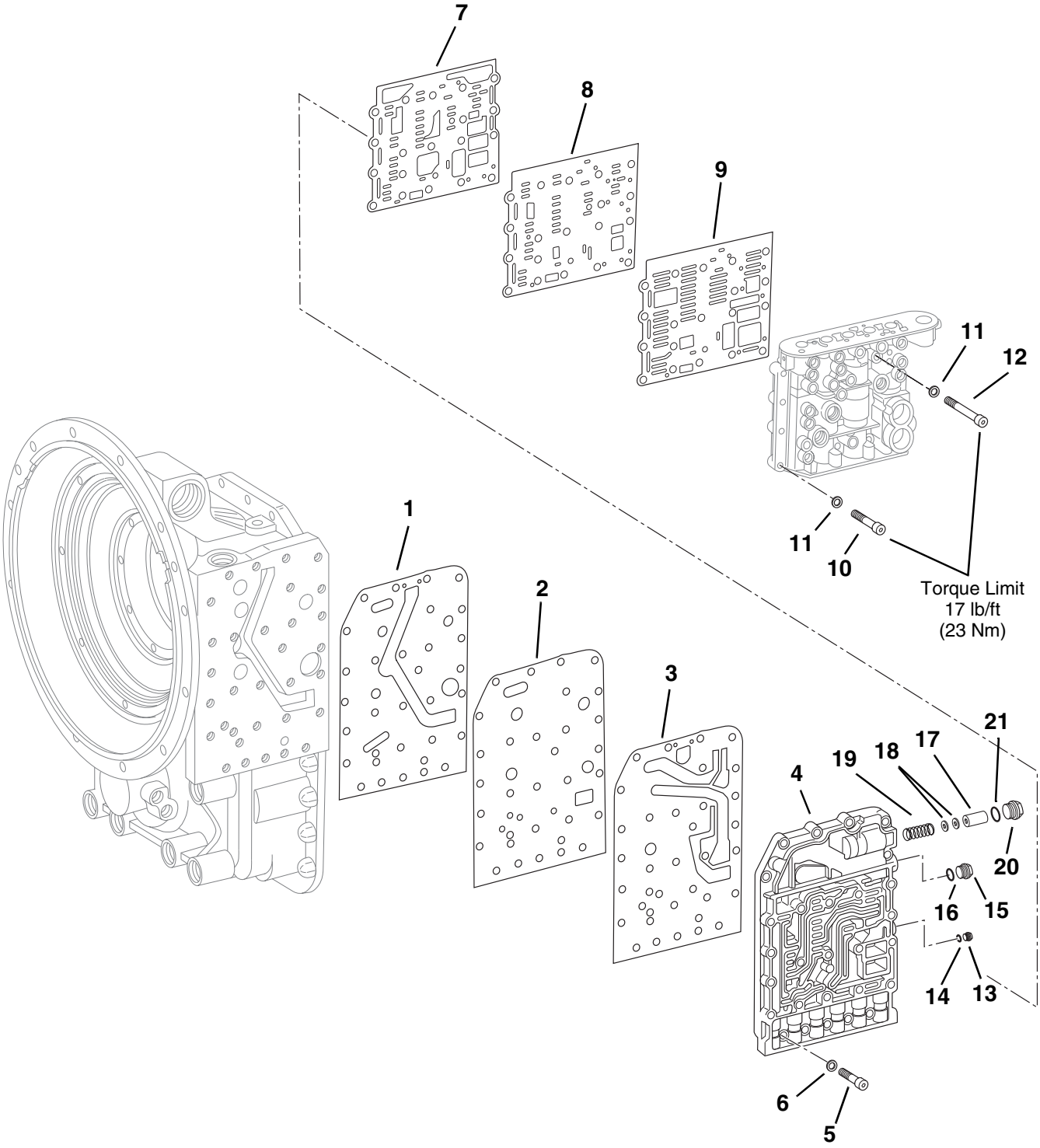

PH1160

GEARSHIFT SYSTEM
(S/N 9909 & After)

Item No.	Part Number	Qty.	Description
1	1319256	1	Gasket
2	10732007	1	Plate, Cover
3	1319257	1	Gasket
4	10732009	1	Plate, Duct
5	1319220	11	SHCS, M8 x 35mm
6	10731710	11	Washer, 8,4
7	10732011	1	Gasket
8	10732012	1	Plate, Cover
9	10732013	1	Gasket
10	1319259	16	SHCS, M8 x 65mm
11	10731710	17	Washer, 8,4
12	1319260	1	SHCS, M8 x 85mm
13	10732017	1	Plug, M10 x 1
14	10731709	1	O-Ring, 8 x 1,5
15	1319261	1	Plug, M14 x 1,5
16	10837660	1	O-Ring, 11 x 2
17	10732021	1	Spool, Valve
18	10732022	2	Washer, 6,4
19	10732023	1	Spring, Compression
20	10732024	1	Plug, M20 x 1,5
21	10732025	1	O-Ring, 17 x 2

CONTROL VALVE
(S/N 9909 & After)

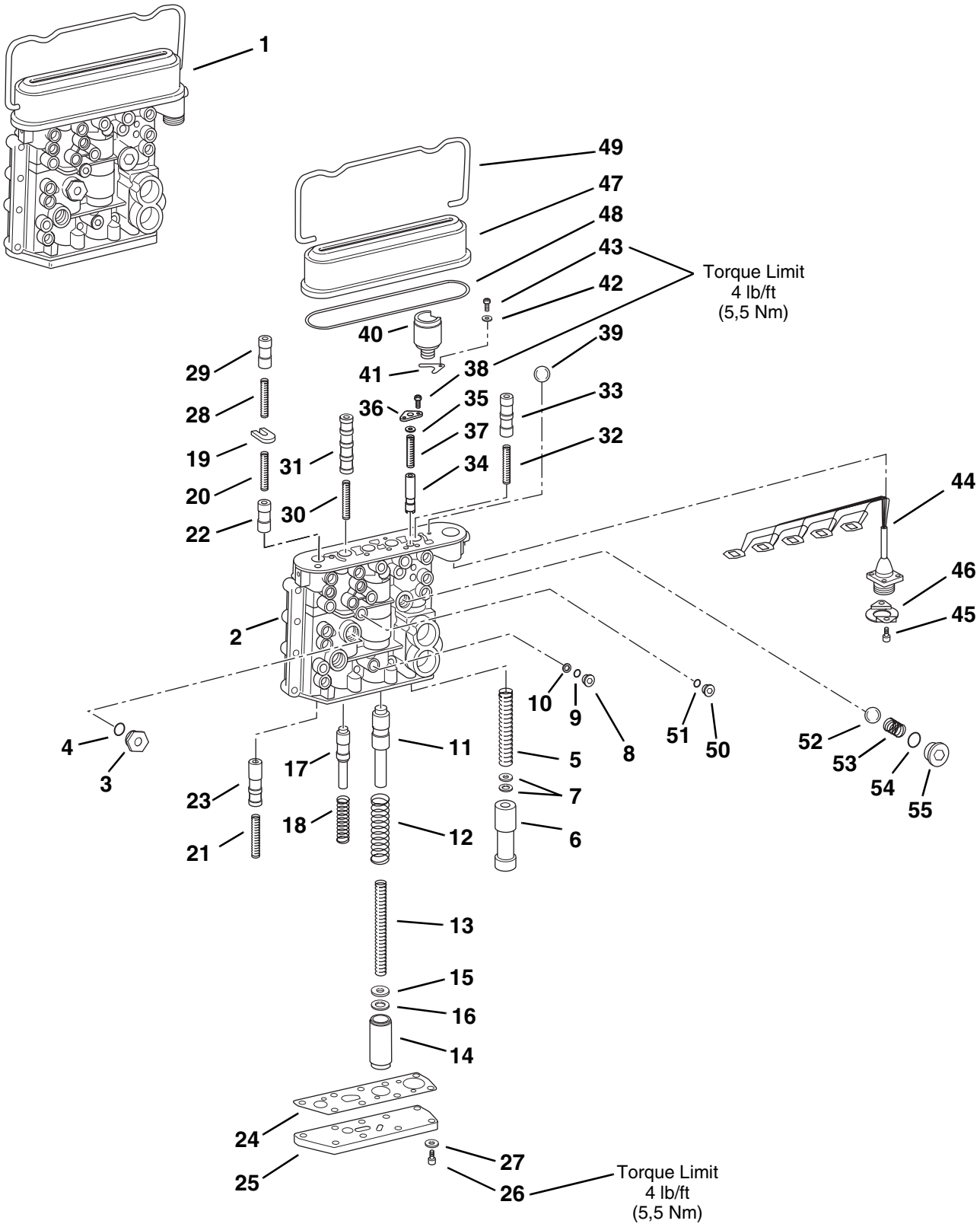

PH1170

CONTROL VALVE
(S/N 9909 & After)

Item No.	Part Number	Qty.	Description
1	10837728	1	Valve Assembly, Control (Includes Items 2 thru 55)
2	1319262	1	Housing, Valve
3	1319263	1	Sleeve, Screw-In
4	10732018	1	O-Ring, 15 x 2
5	10732027	1	Spring, Compression
6	10732028	1	Piston
7	10732029	2	Ring, Shim 10 x 16 x 1
8	10732030	1	Orifice, 0,6mm
	10732031	1	Orifice, 0,7mm
	10732032	1	Orifice, 0,8mm
	10732033	1	Orifice, 0,65mm
	10732034	1	Orifice, 0,75mm
	10732035	1	Orifice, 0,85mm
	10732036	1	Orifice, 0,90mm
	1319264	1	Orifice, 0,95mm
9	10731709	1	O-Ring, 8 x 1,5
10	10732037	1	O-Ring, 6 x 1,5
11	10732038	1	Piston
12	10732039	1	Spring, Compression
13	10732040	1	Spring, Compression
14	10732041	1	Piston
15	10732042	1	Washer
16	10732043	1	Ring, Shim 15 x 21 x 2
	10732044	1	Ring, Shim 15 x 21 x 1
	10732045	1	Ring, Shim 15 x 21 x 0,5
17	10732046	1	Piston
18	10732047	1	Spring, Compression
19	10732048	1	Plate, Stop
20	10732049	1	Spring, Compression
21	10732049	1	Spring, Compression
22	10732050	1	Piston
23	10732051	1	Piston
24	1319265	1	Gasket
25	10732053	1	Cover
26	10732054	9	SHCS, M6 x 20mm
27	10732015	9	Washer, M6
28	10732049	1	Spring, Compression
29	10732050	1	Piston
30	10732049	1	Spring, Compression
31	10732055	1	Piston
32	10732049	1	Spring, Compression
33	10732056	1	Piston
34	1319266	1	Valve, Reduction
35	1319267	1	Ring
36	1319268	1	Plate, Fixing
37	10732058	1	Spring, Compression
38	10732060	2	SHCS, M5 x 12mm
39	10732061	10	Ball
40	1319269	5	Valve, Solenoid
41	10732063	5	Plate, Fixing
42	10732064	5	Washer
43	10732060	5	SHCS, M5 x 12mm
44	10732065	1	Harness, Wiring
45	1319270	2	SHCS, M6 x 14mm
46	10732067	1	Plate, Fixing
47	10732068	1	Cover
48	10732069	1	O-Ring, 159,2 x 5,7
49	10732070	1	Bracket, Clamp
50	10732017	8	Plug, M10 x 1
51	10731709	8	O-Ring, 8 x 1,5
52	10732071	2	Ball
53	10732072	2	Spring, Compression
54	10732018	2	O-Ring, 15 x 2
55	10732076	2	Plug, M18 x 1,5

TRANSMISSION FILTER & DIPSTICK

(S/N 9909 & After)

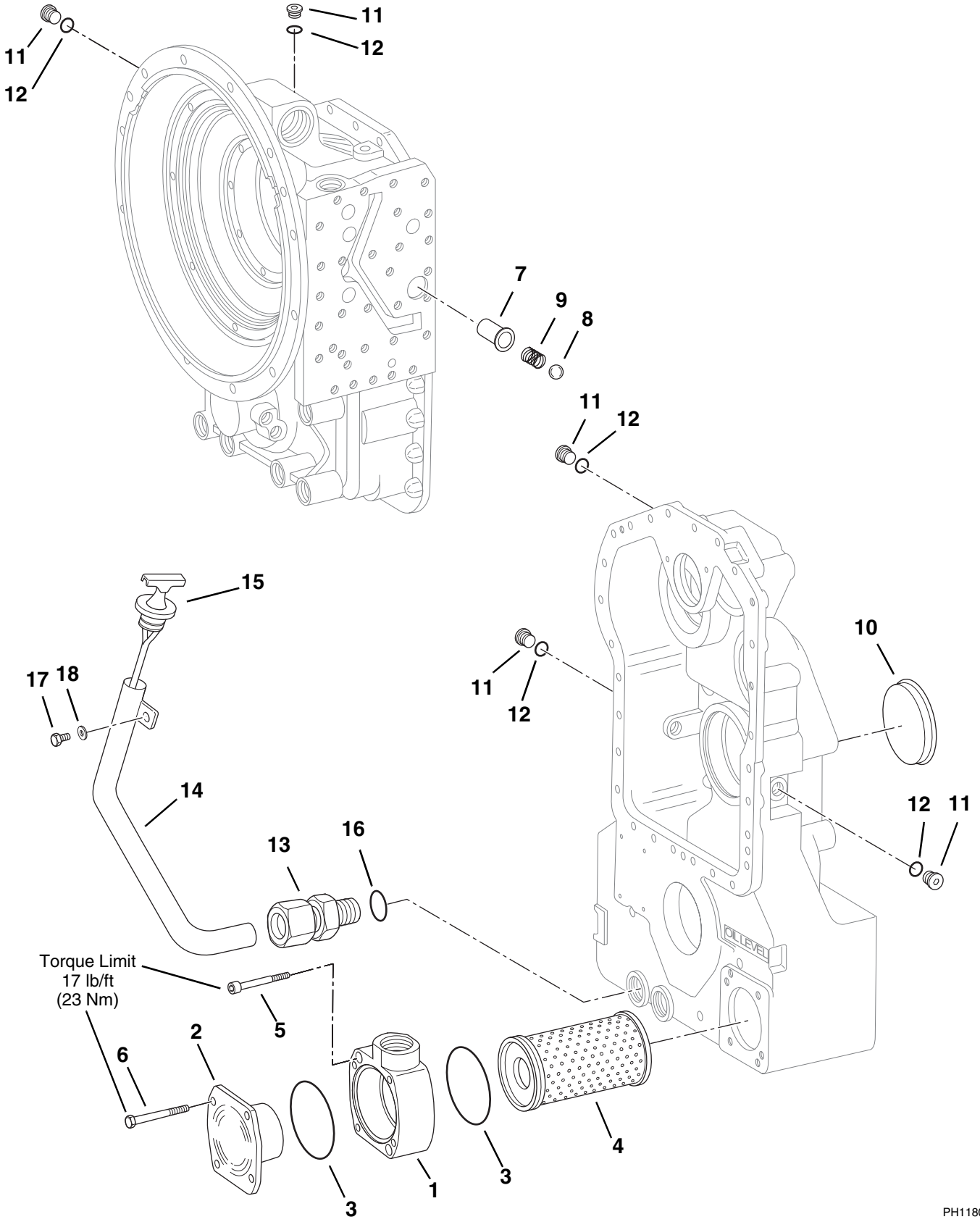

TRANSMISSION FILTER & DIPSTICK

(S/N 9909 & After)

Item No.	Part Number	Qty.	Description
1	10731923	1	Fixture, Holding
2	10731924	1	Cover
3	10731925	2	O-Ring, 98 x 4
4	10731926	1	Filter
5	1319271	2	SHCS, M8 x 60mm
6	1319272	4	HHCS, M8 x 75mm
7	1319273	1	Insert, Valve
8	10732071	1	Ball
9	1319274	1	Spring, Compression
10	10732083	1	Cap, Sealing
11	10732076	5	Plug, M18 x 1,5
12	10732018	5	O-Ring, 15 x 2
13	10732078	1	Union, Pipe
14	8035733	1	Tube, Oil Level
15	8035734	1	Dipstick, Oil
16	10731743	1	O-Ring, 30 x 2,5
17	10732081	1	HHCS, M20 x 20mm
18	10732082	1	Washer, M20

OIL TUBES
(S/N 9909 & After)

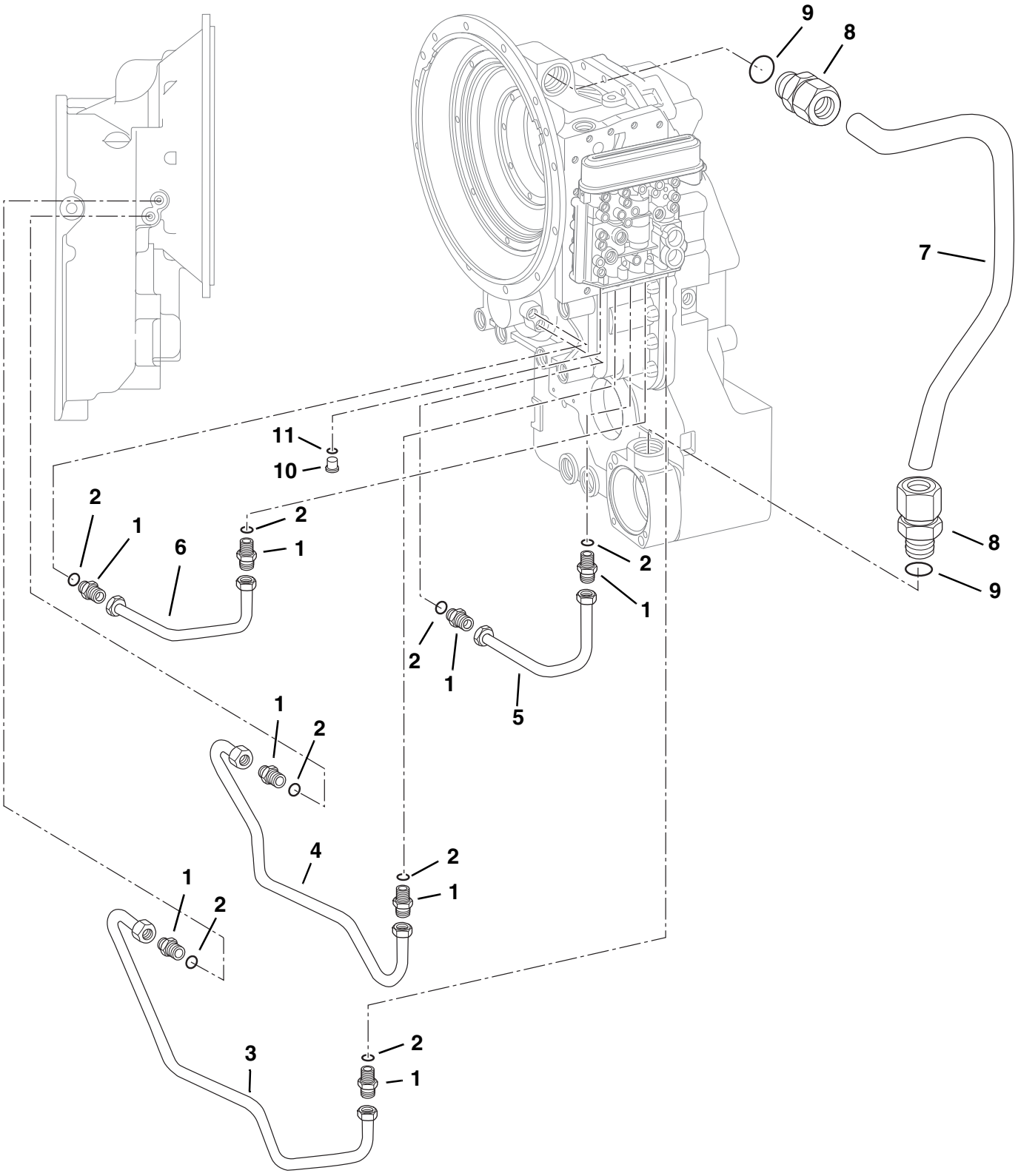

PH1210

OIL TUBES
(S/N 9909 & After)

Item No.	Part Number	Qty.	Description
1	1319275	8	Sleeve, Screw-In
2	10732085	8	O-Ring, 13 x 2
3	1319276	1	Pipe
4	1319277	1	Pipe
5	1319278	1	Pipe
6	1319279	1	Pipe
7	10732089	1	Tube, Suction
8	10732090	2	Union, Pipe
9	10732091	2	O-Ring, 38 x 2,5
10	10732092	2	Plug, M16 x 1,5
11	10732085	2	O-Ring, 13 x 2

TRANSMISSION MOUNTING
(S/N 9909 & After)

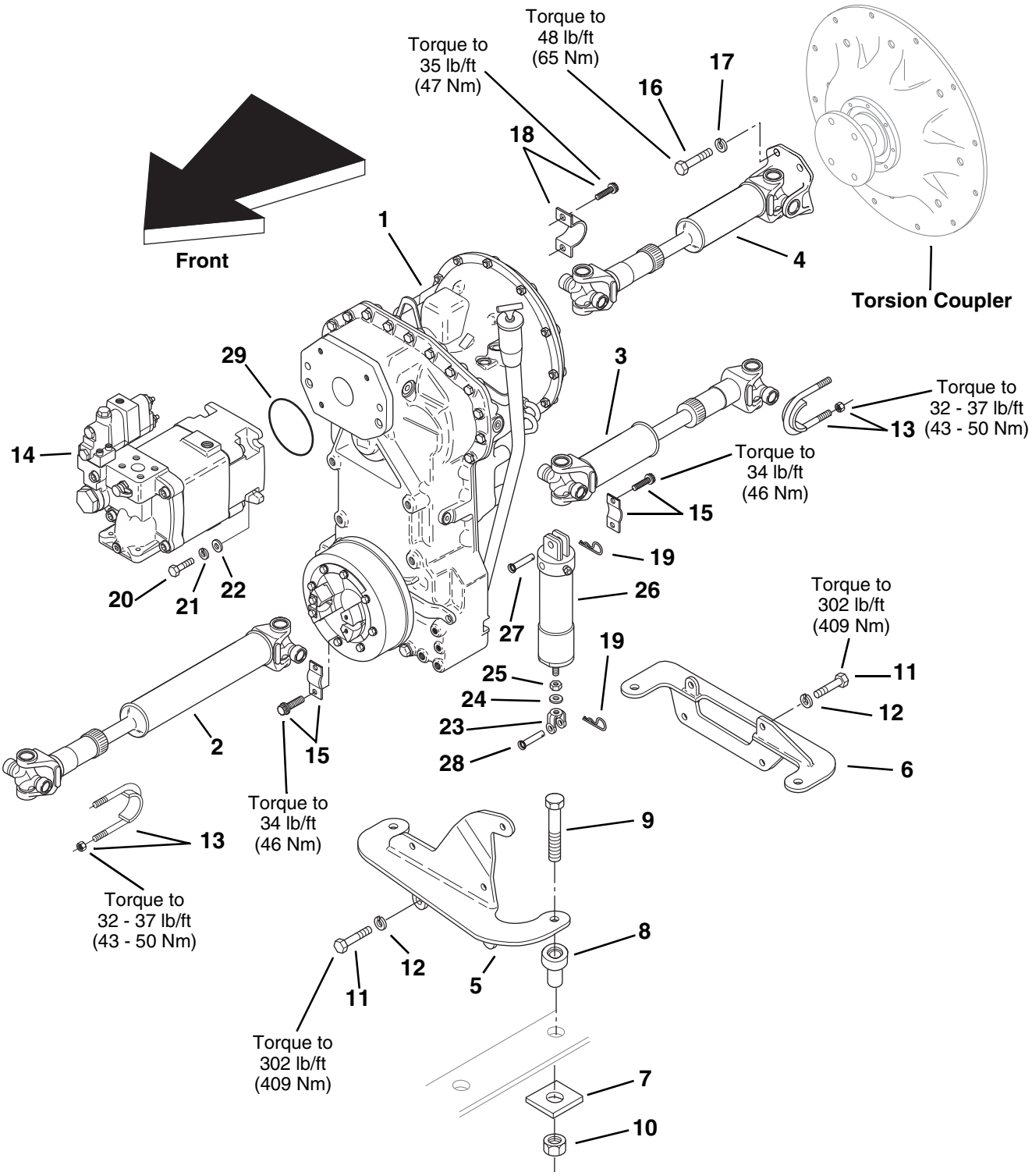

PH1240

TRANSMISSION MOUNTING
(S/N 9909 & After)

Item No.	Part Number	Qty.	Description
1	8841040	1	Transmission, ZF 4 WG100
2	7150192	1	Shaft, Drive (Front Axle)
3	7150182	1	Shaft, Drive (Rear Axle)
4	7150202	1	Shaft, Drive (Engine Input)
5	7138186	1	Front Mount, Transmission
6	7150082	1	Rear Mount, Transmission
7	7054351	4	Washer, Rebound
8	8278007	4	Mount, Isolation
9	8303724	4	HHCS, .75NC x 3.5
10	8310067	4	Nut, Lock .75NC ESNA
11	8310427	8	HHCS, M20 x 40mm Long (8.8)
12	8307047	8	Washer, Lock M20
13	8882009	4	Assembly, U-Bolt
14	7138208	1	Pump Assembly
15	8880218	2	Kit, Strap
16	8310425	4	HHCS, .438 - 20UNF x 1.25 GR8
17	8307006	4	Washer, Lock .438
18	8880219	2	Kit, Fixing 1410
19	8302470	2	Hair Pin
20	8303519	4	HHCS, M12 x 40mm Lg 8.8
21	8307025	4	Washer, Lock M12
22	8307220	4	Washer, Flat M12
23	10136599	1	Clevis
24	10701363	1	Washer, Star
25	10701562	1	Nut, Lock
26	10238805	1	Cylinder, Park Brake
27	10138907	1	Pin, Clevis
28	10715335	1	Pin, Clevis
29	8630016	1	O-Ring

DRIVE SHAFT - ENGINE TO TRANSMISSION

(S/N 9908 & Before)

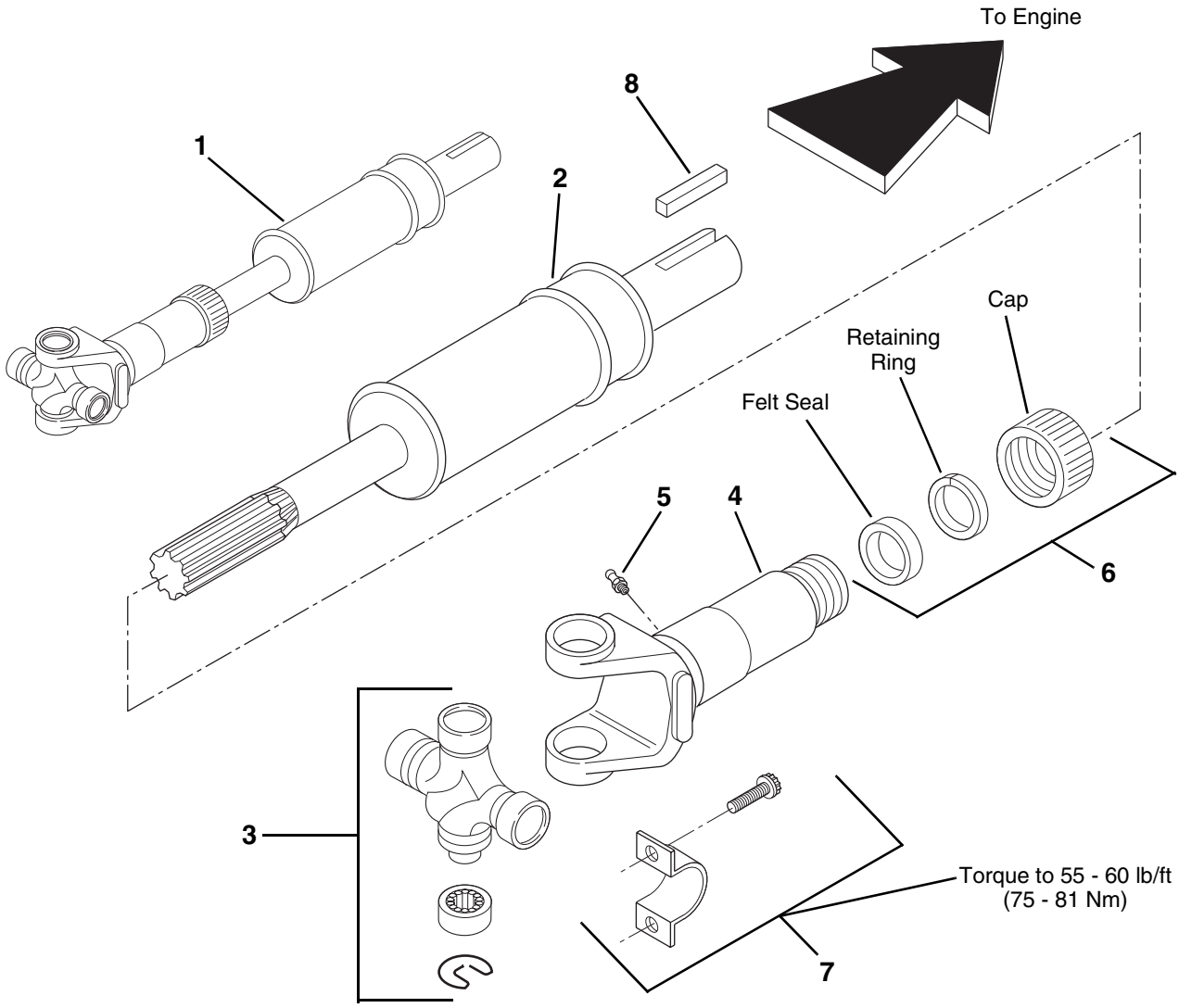

PH0452

DRIVE SHAFT - ENGINE TO TRANSMISSION

(S/N 9908 & Before)

Item No.	Part Number	Qty.	Description
1	7096592	1	Drive Shaft - Engine to Transmission (Inludes Items 2 thru 6)
2	8033798	1	Shaft Assembly
3	8033009	1	Cross and Bearing Assembly
4	8033797	1	Sleeve Assembly
5	8033007	1	Fitting, Grease
6	8033796	1	Package, Seal
7	8880218	2	Kit, Strap (Each Kit Includes 1 Strap and 2 Screws)
8	6619261	1	Key, Shaft to Engine

DRIVE SHAFT - ENGINE TO TRANSMISSION

(S/N 9909 & After)

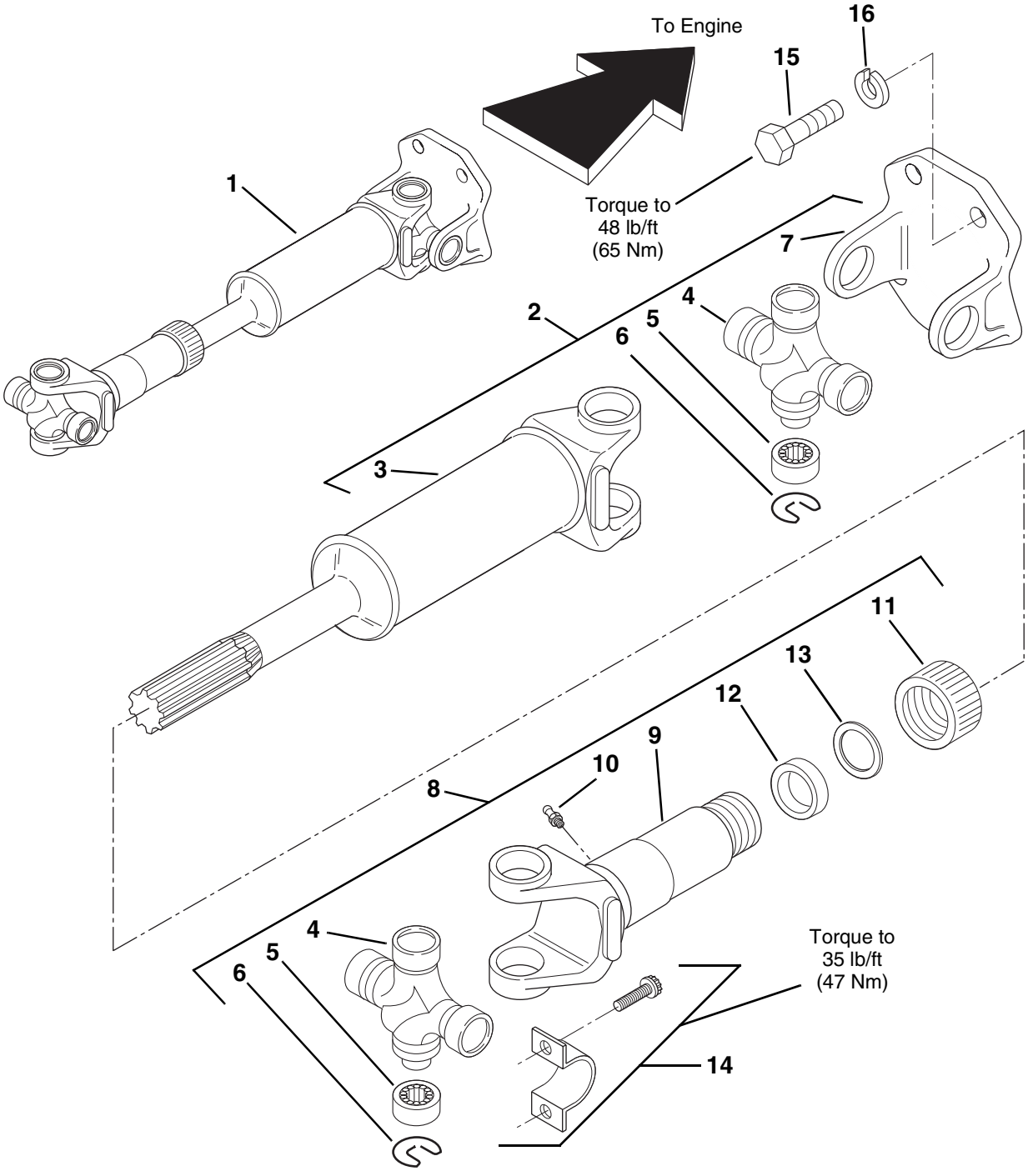

PH2040

DRIVE SHAFT - ENGINE TO TRANSMISSION

(S/N 9909 & After)

Item No.	Part Number	Qty.	Description
1	7150202	1	Drive Shaft - Engine to Transmission (Includes Items 2 thru 13)
2	8035618	1	Tight Joint Assembly (Includes Items 3 thru 7)
3	8034593	1	Shaft Assembly
4	8035620	2	Cross
5	8035628	8	Bearing
6	8035622	8	Snap Ring
7	8033652	1	Flange Yoke
8	8035617	1	Slip Joint Assembly (Includes Items 4 thru 6 and 9 thru 13)
9	8033003	1	Slip Yoke
10	8033004	1	Fitting, Grease
11	8035623	1	Cap, Dust
12	8035624	1	Seal
13	8035625	1	Washer
14	8880219	2	Kit, Strap (Each Kit Includes 1 Strap and 2 Screws)
15	8310425	4	HHCS, 7/16-20UNF x 1.25 Gr.8
16	8307006	4	Washer, Lock 7/16

DRIVE SHAFT - FRONT AND REAR

(S/N 9908 & Before)

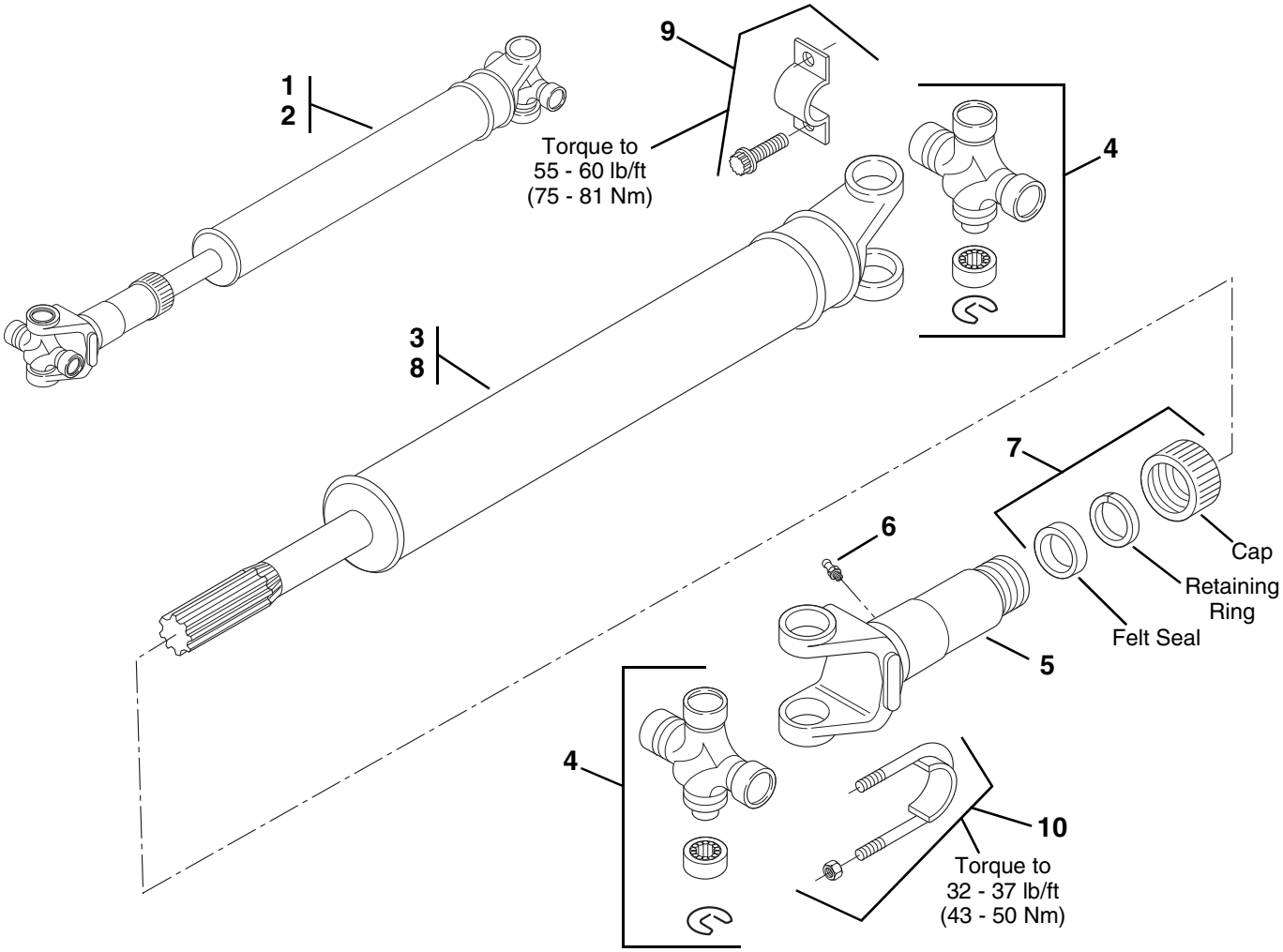

PH0421

DRIVE SHAFT - FRONT AND REAR

(S/N 9908 & Before)

Item No.	Part Number	Qty.	Description
1	7096632	1	Drive Shaft - Front Axle (Includes Items 3 thru 7)
2	7099832	1	Drive Shaft - Rear Axle (Includes Items 4 thru 8)
			NOTE: Quantities Listed Below Are For One Drive Shaft Assembly
3	8033097	1	Shaft Assembly - Front Axle
4	8033009	2	Cross and Bearing Assembly
5	8033006	1	Sleeve Assembly
6	8033007	1	Fitting, Grease
7	8033008	1	Seal Package
8	8033098	1	Shaft Assembly - Rear Axle
9	8880218	2	Kit, Strap (Each Kit Includes 1 Strap and 2 Screws)
10	8882009	2	U-Bolt Assembly

DRIVE SHAFT - FRONT AND REAR

(S/N 9909 & After)

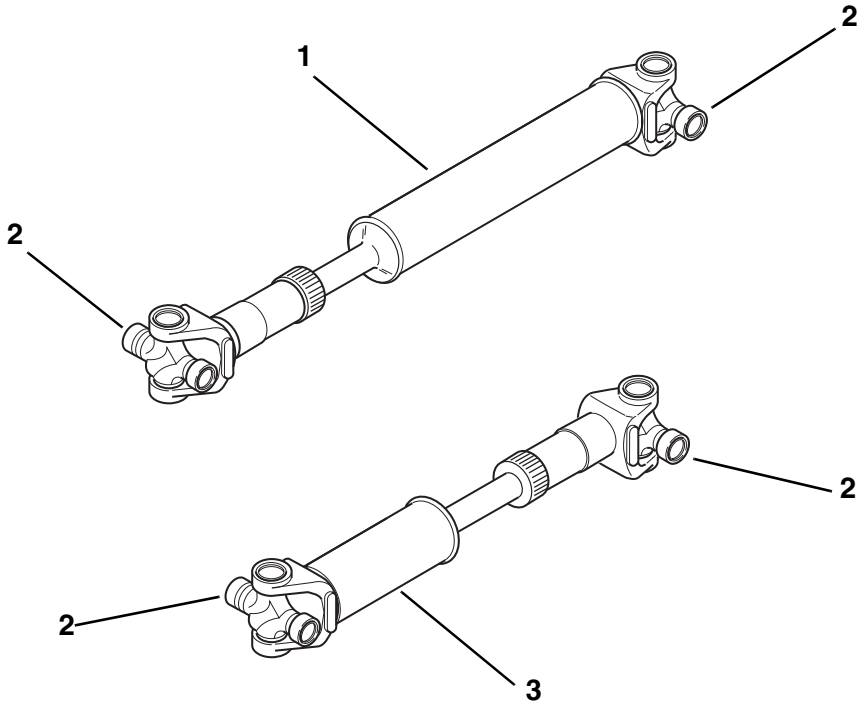

PH1340

DRIVE SHAFT - FRONT AND REAR

(S/N 9909 & After)

Item No.	Part Number	Qty.	Description
1	7150192	1	Drive Shaft - Front (Includes 2 of Item 2)
2	8035778	4	Cross and Bearing Kit
3	7150182	1	Drive Shaft - Rear (Includes 2 of Item 2)

DIFFERENTIAL CARRIER ASSEMBLY

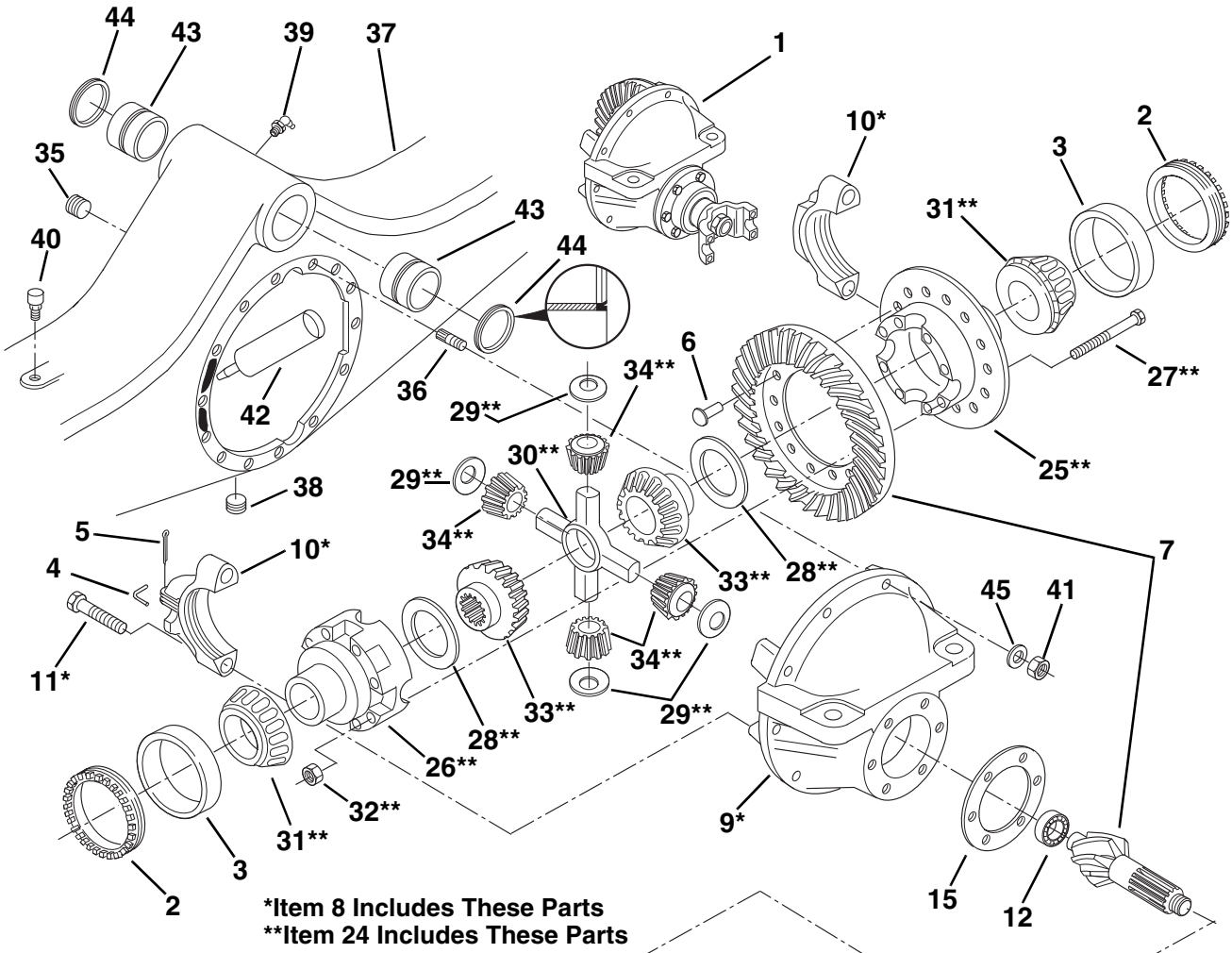

*Item 8 Includes These Parts
**Item 24 Includes These Parts

ITEM 14 SPACER, PINION BEARING CHART	
PART NO.	**THICKNESS**
8034506	.5135"
8034507	.5165"
8034508	.5195"
8034509	.5225"
8034510	.5245"
8034511	.5255"
8034512	.5265"
8034513	.5275"
8034514	.5285"
8034515	.5295"
8034516	.5305"
8034517	.5315"
8034518	.5325"
8034519	.5335"
8034520	.5345"
8034521	.5355"
8034522	.5375"
8034523	.5395"
8034524	.5405"
8034525	.5435"
8034526	.5485"

PH0261

DIFFERENTIAL CARRIER ASSEMBLY

Item No.	Part Number	Qty.	Description
1	8033966	1	Differential Carrier Assembly (Includes Items 2 thru 34)
2	8033967	2	Ring, Adjusting
3	8033968	2	Cup, Roller Bearing
4	8033969	2	Lock, Bearing Adjusting Ring
5	8033970	2	Pin, Cotter
6	8033971	14	Rivet (Solid)
7	8033972	1	Gear and Pinion Assembly (Matched Set)
8	8033973	1	Carrier Assembly (Includes Items 9 thru 11)
9	NSS	1	Carrier
10	NSS	2	Cap, Differential Bearing
11	8033974	4	Bolt, Hex
12	8033975	1	Bearing Assembly
13	8033810	1	Nut, Pinion (See Kits)
14	See Chart	1	Spacer, Pinion Bearing
15	8033976	AR	Shim, .010"
	8033977	AR	Shim, .030"
	8033978	AR	Shim, .005"
16	8033979	6	Bolt, Hex
17	8033806	1	Seal, Oil (See Kits)
18	8033980	1	Washer
19	8033981	1	End Yoke Assembly (Includes Item 20)
20	8033982	1	Slinger, Dust
21	8033983	1	Cap Assembly, Bearing Retainer (Includes Item 22)
22	8033984	2	Cup, Roller Bearing
23	8033985	2	Cone, Roller Bearing
24	8033986	1	Differential Case Assembly (Includes Items 25 thru 34)
25	8033987	1	Flange Half, Differential Case
26	8033988	1	Cap Half, Differential Case
27	8033989	8	Bolt
28	8033990	2	Washer, Thrust (Differential Gear)
29	8033991	4	Washer, Thrust (Differential Pinion)
30	8033992	1	Shaft, Differential Cross
31	8033993	2	Cone, Roller Bearing
32	8033994	8	Nut, Lock
33	8033995	2	Gear, Differential
34	8033996	4	Pinion, Differential
35	8033997	1	Plug, Pipe
36	8033998	6	Stud, Dowel (2" O.A.L.)
	8033999	2	Stud, Dowel (2.38" O.A.L.)
	8034500	2	Stud, Dowel (2.81" O.A.L.)
37	8034501	1	Housing, Axle
38	8032895	1	Plug, Magnetic Pipe
39	8034502	1	Grease Fitting
40	8033228	1	Breather
41	8034503	10	Nut, Flange Lock
42	8526044	1	Cartridge, Gasket Eliminator 10.15 fl. oz.
43	8034504	2	Bushing, Axle Pivot
44	8033809	2	Seal, Oil - Pivot Pin (See Kits)
45	8034505	10	Washer, Flat
			KITS
46	8033802	1	Seal Kit, Axle (Includes the following Items which contains enough seals to service one complete axle) Oil Seal - Pinion (Item 17, Page 103) Oil Seal - Pivot Pin (Item 44, Page 103) Nut, Pinion (Item 13, Page 103) Oil Seal - Axle Shaft (Item 7, Page 105) Oil Seal - King Pin (Item 18, Page 105) Oil Seal - Wheel Hub (Item 44, Page 107) Oil Seal - Spindle (Item 31, Page 107) Seal Kit - Wet Brake (See Kits Page 107)

AXLE STEERING JOINTS

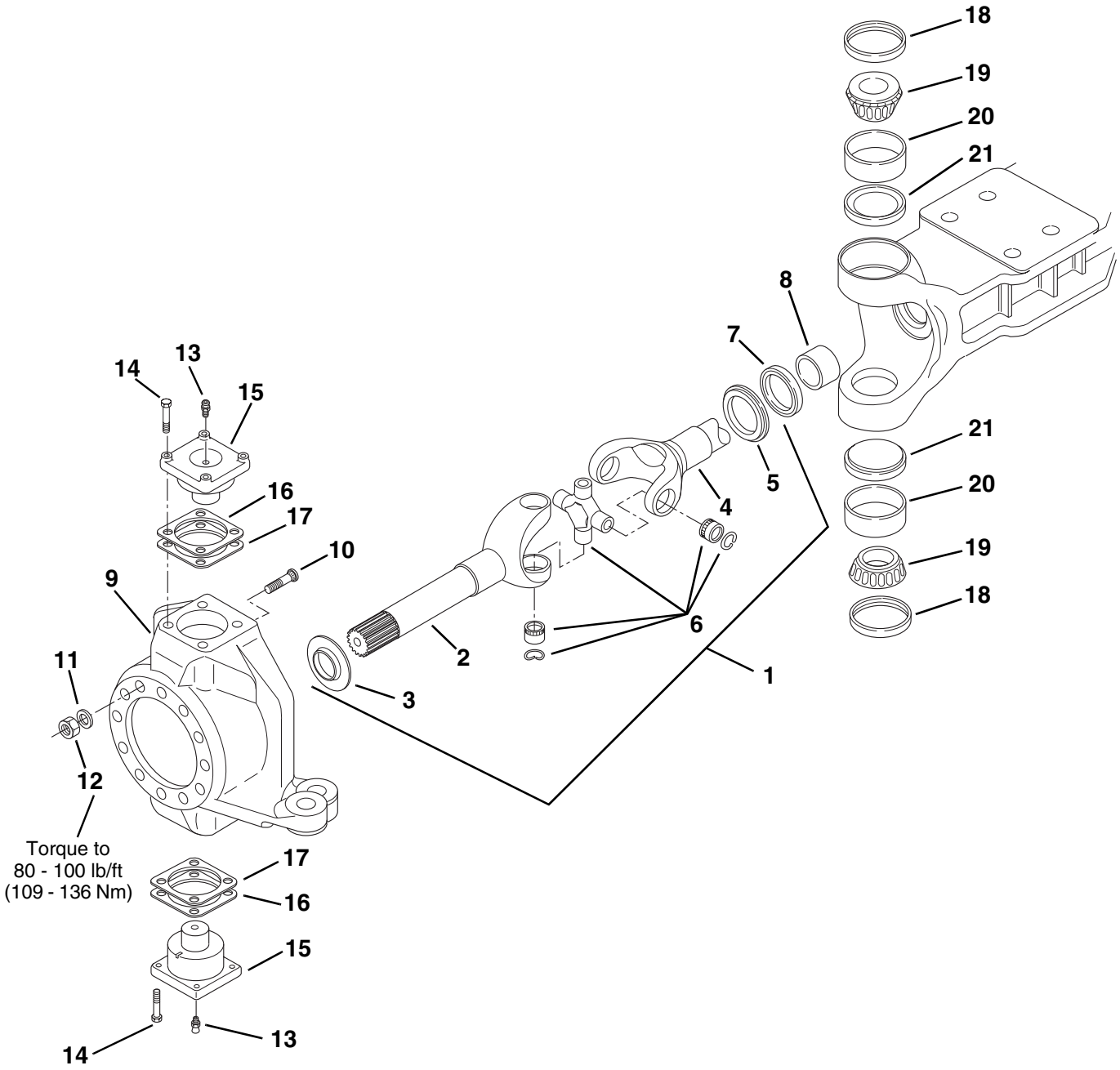

PH0270

AXLE STEERING JOINTS

Item No.	Part Number	Qty.	Description
			NOTE: Quantities are for one axle.
1	8033815	2	Shaft & Joint Assembly, Front & Rear Axles (Includes Items 2 thru 6)
2	8033816	1	Shaft, Outer
3	8033817	1	Slinger, Dust (Outer)
4	8033818	1	Shaft, Inner
5	8033805	1	Slinger, Dust (Inner)
6	8033009	1	Cross and Bearing Kit
7	8033804	2	Seal, Oil - Axle Shaft (See Kits Page 103)
8	8033820	2	Bushing
9	8033821	1	Knuckle Assembly, Left Front, Right Rear (Includes Item 10)
	8033822	1	Knuckle Assembly, Not Shown, Right Front, Left Rear (Includes Item 10)
10	8033823	24	Stud, Dowell
11	8032876	24	Washer, Flat
12	8032875	24	Nut, Lock
13	8032877	4	Grease Fitting
14	8033824	16	HHCS, Hex Head
15	8032880	4	Cap, King Pin
16	8032881	AR	Shim, Formed
17	8032882	AR	Shim, Formed
18	8032979	4	Seal, Oil - King Pin (See Kits Page 103)
19	8032883	4	Cone, Roller Bearing
20	8032885	4	Cup, Roller Bearing
21	8032886	4	Retainer, Grease

AXLE WHEEL ENDS
(S/N 0460 & Before)

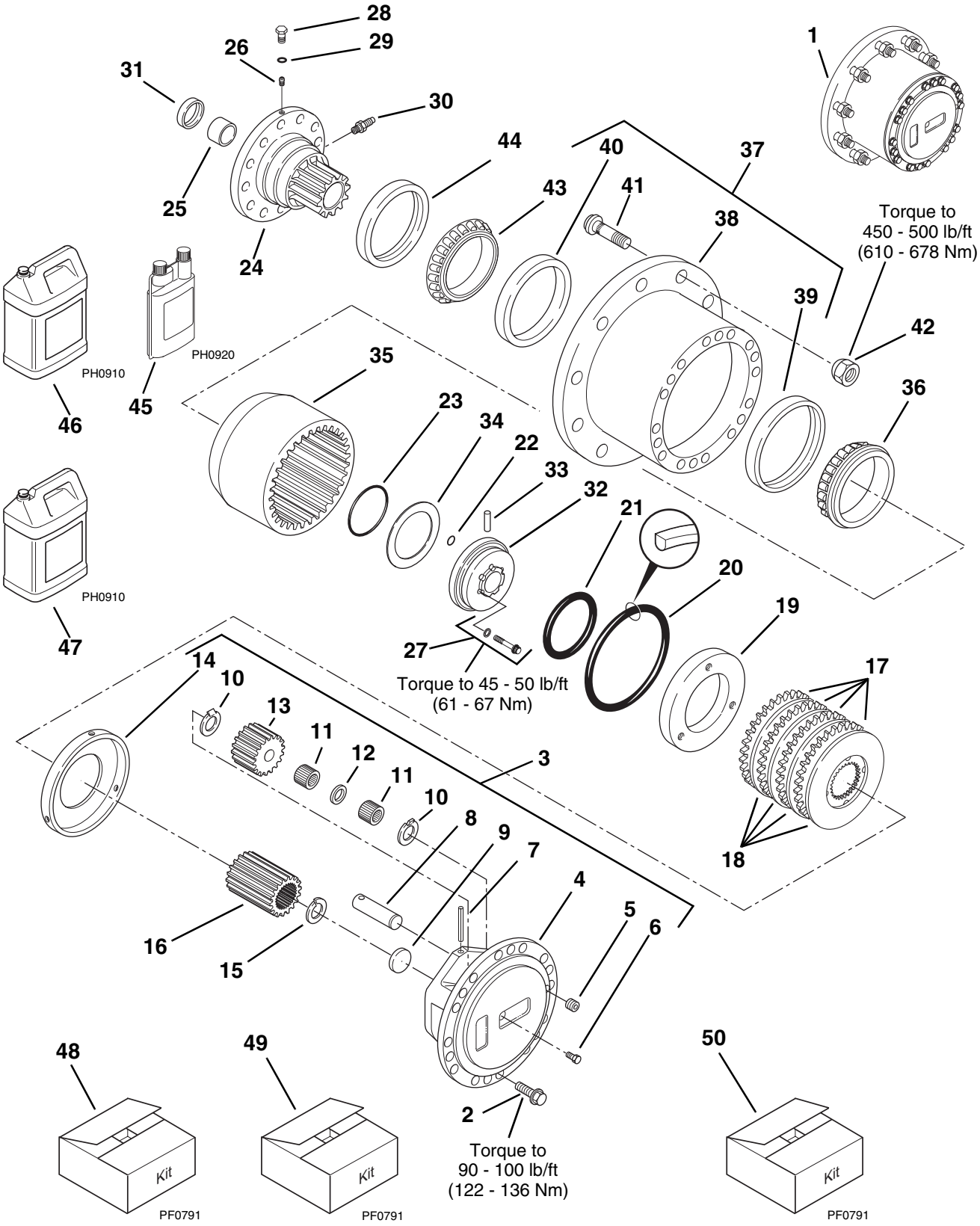

AXLE WHEEL ENDS
(S/N 0460 & Before)

Item No.	Part Number	Qty.	Description
			NOTE: Quantities are for one wheel end assembly unless otherwise specified.
1	8034814	1	Wheel End Assembly, Front & Rear (Includes Items 2 thru 44)
2	8032906	18	Screw, Hex Hd, Self Locking
3	8033012	1	Planetary Gear Assembly (Includes Items 4 thru 14)
4	8032903	1	Flange, Planetary Drive
5	8032895	1	Plug, Pipe
6	8032894	1	Plug, Hex Hd
7	8032900	3	Pin, Roll
8	8032899	3	Shaft, Planet Gear
9	8032896	1	Washer, Drive Flange
10	8032901	6	Washer, Keyed
11	8032898	150	Bearing, Single Roller
12	8032897	3	Washer, Planet Gear
13	8032902	3	Gear, Spur
14	8032904	1	Plate, Lining Stop
15	8033826	1	Ring, Snap
16	8033827	1	Gear, Spur
17	NSS	4	Plate, Lining Stop (See Kits)
18	NSS	4	Disc Assembly (See Kits)
19	8032912	1	Piston
20	8034692	1	O-Ring (See Kits)
21	8034693	1	O-Ring (See Kits)
22	8032922	2	O-Ring (See Kits)
23	8032923	1	O-Ring (See Kits)
24	Ⓐ See Kits	1	Spindle Assembly (Includes Items 25 & 26)
25	8033828	1	Bushing, Spindle
26	8032826	2	Seat, Insert
27	Ⓐ 8034581	1	Screw and Washer Kit (Includes six screws & six washers)
28	8032984	1	Plug, Bleeder
29	8032985	1	O-Ring, Bleeder Plug
30	8033829	1	Fitting, Brake
31	8033803	1	Seal, Oil - Spindle (See Kits Page 103)
32	Ⓐ 8032920	1	Retainer, Bearing Adjusting Ring (Includes Item 33)
33	8032949	1	Tubing, Brake
34	8032972	AR	Shim, Adjusting (.010")
	8035268	AR	Shim, Adjusting (.011")
	8035269	AR	Shim, Adjusting (.012")
	8035270	AR	Shim, Adjusting (.013")
	8035271	AR	Shim, Adjusting (.014")
	8035272	AR	Shim, Adjusting (.015")
	8032973	AR	Shim, Adjusting (.020")
	8032974	AR	Shim, Adjusting (.030")
35	8032910	1	Gear, Planetary Ring
36	8032913	1	Cone, Roller
37	8033831	1	Hub Assembly (Includes Items 38 thru 41)
38	8033832	1	Hub, Planetary
39	8032891	1	Cup, Roller Bearing
40	8032892	1	Cup, Roller Bearing
41	8032893	10	Bolt, Wheel, Right Side
42	8786516	10	Nut, Wheel
43	8032914	1	Cone, Roller Bearing
44	8032983	1	Seal, Oil - Wheel Hub (See Kits Page 103)
45	8522043	1	Friction Modifier Fluid (Low Odor) - 32 Oz. (enough to service 4 wheel ends)
46	8522045	1	Wheel End Oil 2-1/2 Gal. (enough to service 4 wheel ends)
47	8522048	1	Wheel End Oil 1 Gal.
			KITS
48	8034688	1	Brake Kit (Includes Items 17 thru 18) (this kit services one wheel end)
49	8034819	1	Wet Brake Seal Kit (Includes Items 20 thru 23)
50	Ⓐ 8033799	1	Spindle Kit (Includes Items 24 thru 27)

Ⓐ **Identify bolt size before ordering.**
If 3/8" order similar parts on this page.
If 1/2" order similar parts on page 109.

AXLE WHEEL ENDS
(S/N 0461 & After)

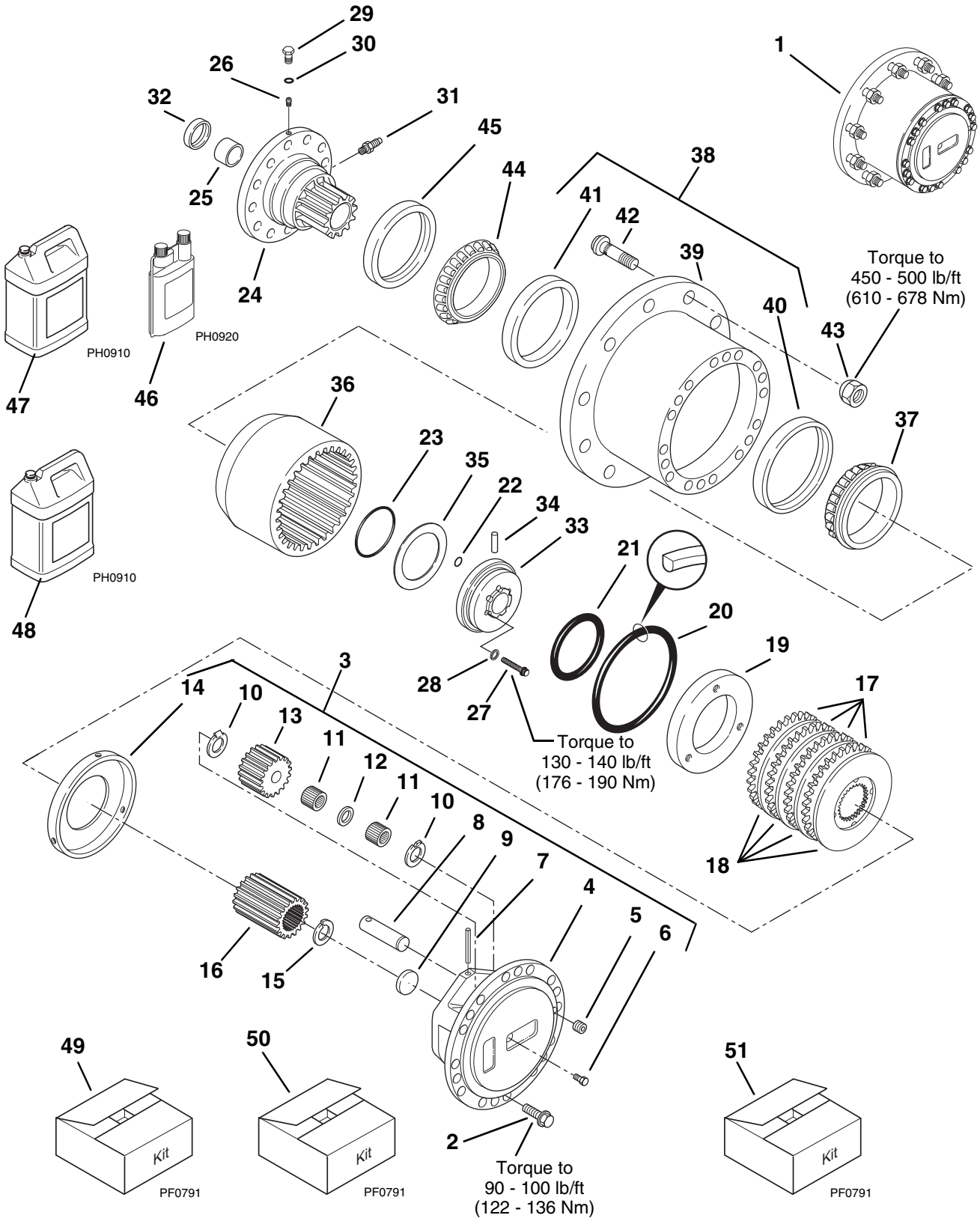

PH0643

AXLE WHEEL ENDS
(S/N 0461 & After)

Item No.	Part Number	Qty.	Description
			NOTE: Quantities are for one wheel end assembly unless otherwise specified.
1	8034814	1	Wheel End Assembly, Front & Rear (Includes Items 2 thru 45)
2	8032906	18	Screw, Hex Hd, Self Locking
3	8033012	1	Planetary Gear Assembly (Includes Items 4 thru 14)
4	8032903	1	Flange, Planetary Drive
5	8032895	1	Plug, Pipe
6	8032894	1	Plug, Hex Hd
7	8032900	3	Pin, Roll
8	8032899	3	Shaft, Planet Gear
9	8032896	1	Washer, Drive Flange
10	8032901	6	Washer, Keyed
11	8032898	150	Bearing, Single Roller
12	8032897	3	Washer, Planet Gear
13	8032902	3	Gear, Spur
14	8032904	1	Plate, Lining Stop
15	8033826	1	Ring, Snap
16	8033827	1	Gear, Spur
17	NSS	4	Plate, Lining Stop (See Kits)
18	NSS	4	Disc Assembly (See Kits)
19	8032912	1	Piston
20	8034692	1	O-Ring (See Kits)
21	8034693	1	O-Ring (See Kits)
22	8032922	2	O-Ring (See Kits)
23	8032923	1	O-Ring (See Kits)
24	See Kits	1	Spindle Assembly (Includes Items 25 & 26)
25	8033828	1	Bushing, Spindle
26	8032826	2	Seat, Insert
27	8034584	6	Screw, 12 Point Cap - 1/2"
28	8034585	6	Washer, Flat Hardened 1/2"
29	8032984	1	Plug, Bleeder
30	8032985	1	O-Ring, Bleeder Plug
31	8033829	1	Fitting, Brake
32	8033803	1	Seal, Oil - Spindle (See Kits Page 103)
33	8034586	1	Retainer, Bearing Adjusting Ring (Includes Item 34)
34	8032949	1	Tubing, Brake
35	8032972	AR	Shim, Adjusting (.010")
	8035268	AR	Shim, Adjusting (.011")
	8035269	AR	Shim, Adjusting (.012")
	8035270	AR	Shim, Adjusting (.013")
	8035271	AR	Shim, Adjusting (.014")
	8035272	AR	Shim, Adjusting (.015")
	8032973	AR	Shim, Adjusting (.020")
	8032974	AR	Shim, Adjusting (.030")
36	8032910	1	Gear, Planetary Ring
37	8032913	1	Cone, Roller
38	8033831	1	Hub Assembly (Includes Items 39 thru 42)
39	8033832	1	Hub, Planetary
40	8032891	1	Cup, Roller Bearing
41	8032892	1	Cup, Roller Bearing
42	8032893	10	Bolt, Wheel, Right Side
43	8786516	10	Nut, Wheel
44	8032914	1	Cone, Roller Bearing
45	8032983	1	Seal, Oil - Wheel Hub (See Kits Page 103)
46	8522043	1	Friction Modifier Fluid (Low Odor) 32 Oz. (enough to service 4 wheel ends)
47	8522045	1	Wheel End Oil 2-1/2 Gal. (enough to service 4 wheel ends)
48	8522048	1	Wheel End Oil 1 Gal.
			KITS
49	8034688	1	Brake Kit (Includes Items 17 & 18) (this kit services one wheel end)
50	8034819	1	Wet Brake Seal Kit (Includes Items 20 thru 23)
51	8034590	1	Service Kit, Spindle (Includes Items 24 thru 27)

TIE ROD AND STEERING CYLINDER MOUNTING

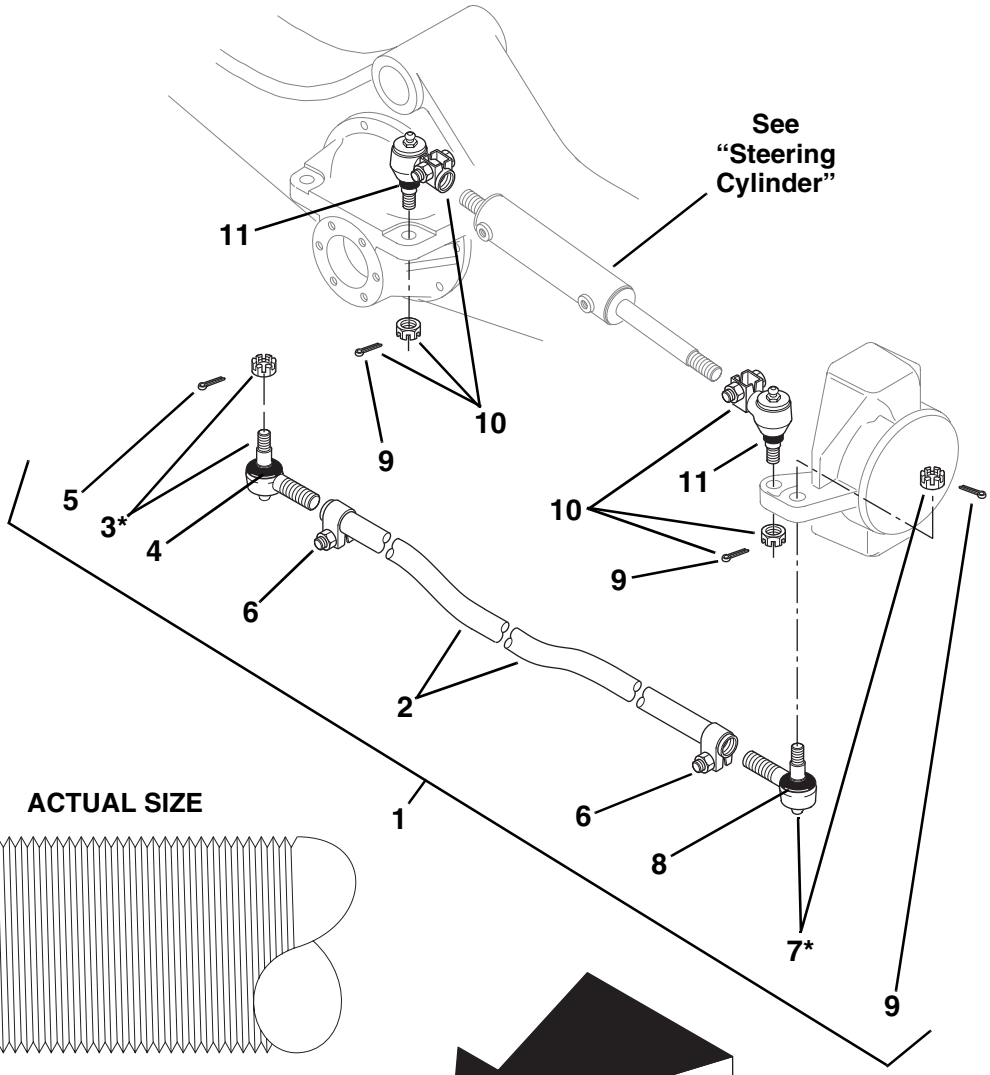

ACTUAL SIZE

1-1/8-16
Item #3
P/N 8033962

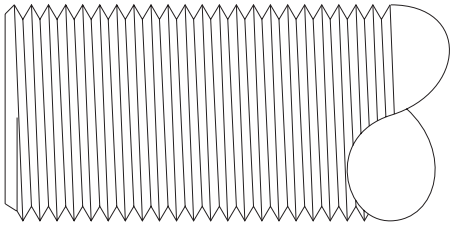

1-1/8-12
Item #7
P/N 8033964

***IMPORTANT:**
When replacing Socket Assembly (Items #3 or 7) measure the threads per inch to ensure ordering the correct socket. The tie rod is symetrical and could be assembled to the axle opposite as shown above.

PH0282

TIE ROD AND STEERING CYLINDER MOUNTING

Item No.	Part Number	Qty.	Description
			NOTE: Quantities listed are for one axle.
1	8033960	1	Tie Rod Assembly (Includes Items 2 thru 9)
2	8033961	1	Tube, Tie Rod
3	8033962	1	Socket Assembly, 1-1/8 - 16 RH Thread (Includes nut, cotter pin & boot) See **"IMPORTANT"** Note
4	8033963	1	Boot
5	8033965	1	Cotter Pin
6	8032930	2	Clamp Assembly
7	8033964	1	Socket Assembly, 1-1/8 - 12 RH Thread (Includes nut, cotter pin & boot) See **"IMPORTANT"** Note
8	8033963	1	Boot
9	8033965	3	Cotter Pin
10	8340025	2	Socket Assembly, Steer Cylinder (Includes nut, cotter pin & boot)
11	8032816	AR	Boot

WHEELS AND TIRES - 8042

⚠ Warning

Mis-Matched tire sizes or mixing of tire types (Radial and Bias ply) may compromise vehicle stability and may result in vehicle tipover.

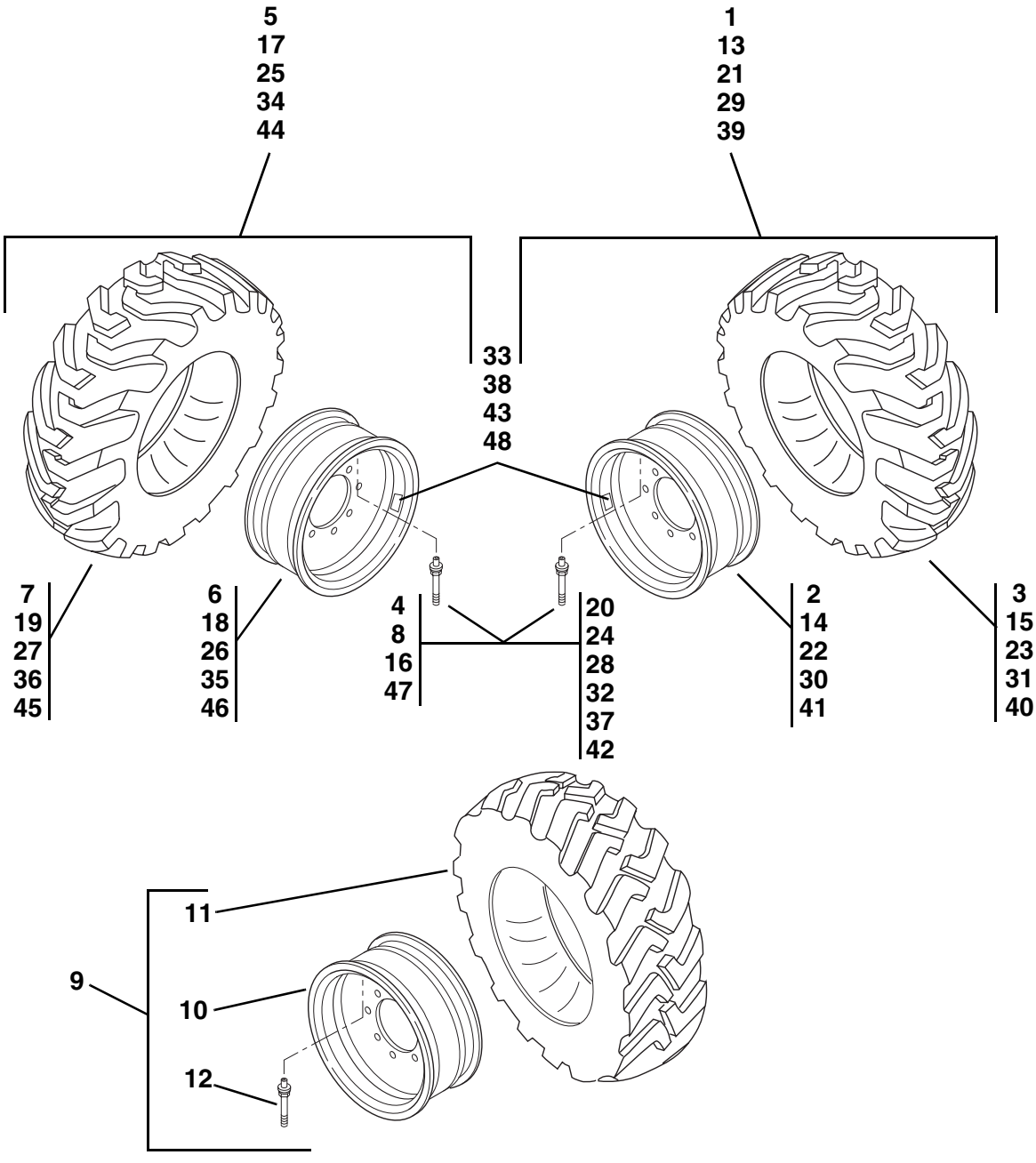

PH0461

WHEELS AND TIRES - 8042

Item No.	Part Number	Qty.	Description
1	7119642	2	Tire & Wheel Ass'y, Right Side - 13.00 x 24, 12 Ply (Includes Items 2 thru 4)
2	7092533	1	Wheel, 9024 GR
3	8780031	1	Tire, 13.00 x 24, 12 Ply
4	8786514	1	Stem, Valve
5	7119632	2	Tire & Wheel Ass'y, Left Side - 13.00 x 24, 12 Ply (Includes Items 6 thru 8)
6	7092533	1	Wheel, 9024 GR
7	8780031	1	Tire, 13.00 x 24, 12 Ply
8	8786514	1	Stem, Valve
9	7092612	4	Tire & Wheel Ass'y, Left or Right Side - 13.00 R24, 14 Ply (Includes Items 10 thru 12)
10	7092533	1	Wheel, 9024 GR
11	8780264	1	Tire, 13.00 R24 Radial
12	8786514	1	Stem, Valve
13	7110772	2	Tire & Wheel Ass'y, Right Side - 15.5 x 25, 12 Ply (Includes Items 14 thru 16)
14	7098733	1	Wheel, 1325LR x 1.5 Offset
15	8780036	1	Tire, 15.5 x 25, 12 Ply
16	8786514	1	Stem, Valve
17	7110762	2	Tire & Wheel Ass'y, Left Side - 15.5 x 25, 12 Ply (Includes Items 18 thru 20)
18	7098733	1	Wheel, 1325LR x 1.5 Offset
19	8780036	1	Tire, 15.5 x 25, 12 Ply
20	8786514	1	Stem, Valve
21	7099532	2	Tire & Wheel Ass'y, Right Side - 17.5 x 25, 12 Ply (Includes Items 22 thru 24)
22	7098733	1	Wheel, 1325LR x 1.5 Offset
23	8780037	1	Tire, 17.5 x 25, 12 Ply
24	8786514	1	Stem, Valve
25	7099522	2	Tire & Wheel Ass'y, Left Side - 17.5 x 25, 12 Ply (Includes Items 26 thru 28)
26	7098733	1	Wheel, 1325LR x 1.5 Offset
27	8780037	1	Tire, 17.5 x 25, 12 Ply
28	8786514	1	Stem, Valve
29	7119662	2	Tire & Wheel Ass'y, Right Side - 13.00 x 24, 12 Ply with Trak Seal (Includes Items 30 thru 32)
30	7092533	1	Wheel, 9024 GR
31	8780031	1	Tire, 13.00 x 24, 12 Ply
32	8786514	1	Stem, Valve
33	4108161	1	Label, Hydrofill
34	7119652	2	Tire & Wheel Ass'y, Left Side - 13.00 x 24, 12 Ply with Trak Seal (Includes Items 35 thru 38)
35	7092533	1	Wheel, 9024 GR
36	8780031	1	Tire, 13.00 x 24, 12 Ply
37	8786514	1	Stem, Valve
38	4108161	1	Label, Hydrofill
39	7138240	2	Tire & Wheel Ass'y, Right Side - 13.00 x 24, 12 Ply "Yokohama" (Includes Items 40 thru 43)
40	8780045	1	Tire, 13.00 x 24, 12 Ply
41	7092533	1	Wheel, 9024 GR
42	8786514	1	Stem, Valve
43	4108161	1	Label, Hydrofill
44	7138241	2	Tire & Wheel Ass'y, Left Side - 13.00 x 24, 12 Ply "Yokohama" (Includes Items 45 thru 48)
45	8780045	1	Tire, 13.00 x 24, 12 Ply
46	7092533	1	Wheel, 9024 GR
47	8786514	1	Stem, Valve
48	4108161	1	Label, Hydrofill

WHEELS AND TIRES - 10042/10054

⚠ Warning

Mis-Matched tire sizes or mixing of tire types (Radial and Bias ply) may compromise vehicle stability and may result in vehicle tipover.

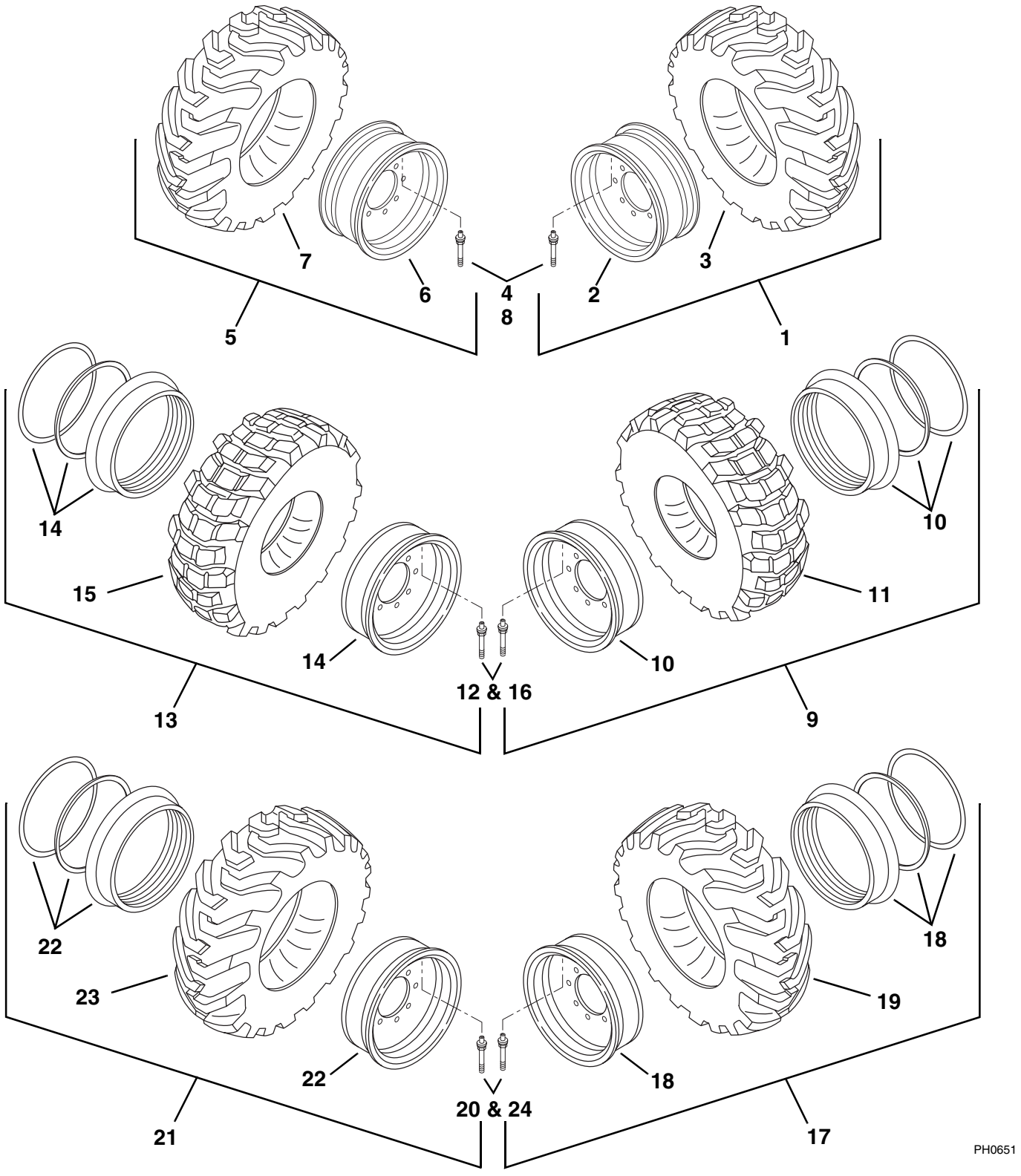

WHEELS AND TIRES - 10042/10054

Item No.	Part Number	Qty.	Description
1	7099532	2	Tire & Wheel Ass'y, Right Side - 17.5 x 25, 12 Ply (Includes Items 2 thru 4)
2	7098733	1	Wheel, 1325LR x 1.5 Offset
3	8780037	1	Tire, 17.5 x 25, 12 Ply
4	8786514	1	Stem, Valve
5	7099522	2	Tire & Wheel Ass'y, Left Side - 17.5 x 25, 12 Ply (Includes Items 6 thru 8)
6	7098733	1	Wheel, 1325LR x 1.5 Offset
7	8780037	1	Tire, 17.5 x 25, 12 Ply
8	8786514	1	Stem, Valve
9	7099702	2	Tire & Wheel Ass'y, Right Side - 17.5 R25, 2 Star (Includes Items 10 thru 12)
10	7110333	1	Wheel, 14.00 - 25
11	8780035	1	Tire, 17.5 R25, 2 Star, Radial
12	8786559	1	Stem, Valve
13	7099692	2	Tire & Wheel Ass'y, Left Side - 17.5 R25, 2 Star (Includes Items 14 thru 16)
14	7110333	1	Wheel, 14.00 - 25
15	8780035	1	Tire, 17.5 R25, 2 Star, Radial
16	8786559	1	Stem, Valve
17	7110352	2	Tire & Wheel Ass'y, Right Side - 17.5 x 25, 12 Ply (Includes Items 18 thru 20)
18	7110333	1	Wheel, 14.00 - 25
19	8780037	1	Tire, 17.5 x 25, 12 Ply
20	8786559	1	Stem, Valve
21	7110342	2	Tire & Wheel Ass'y, Left Side - 17.5 x 25, 12 Ply (Includes Items 22 thru 24)
22	7110333	1	Wheel, 14.00 - 25
23	8780037	1	Tire, 17.5 x 25, 12 Ply
24	8786559	1	Stem, Valve

ENGINE, RADIATOR AND OIL COOLER MOUNTING

(S/N 0118 & Before)

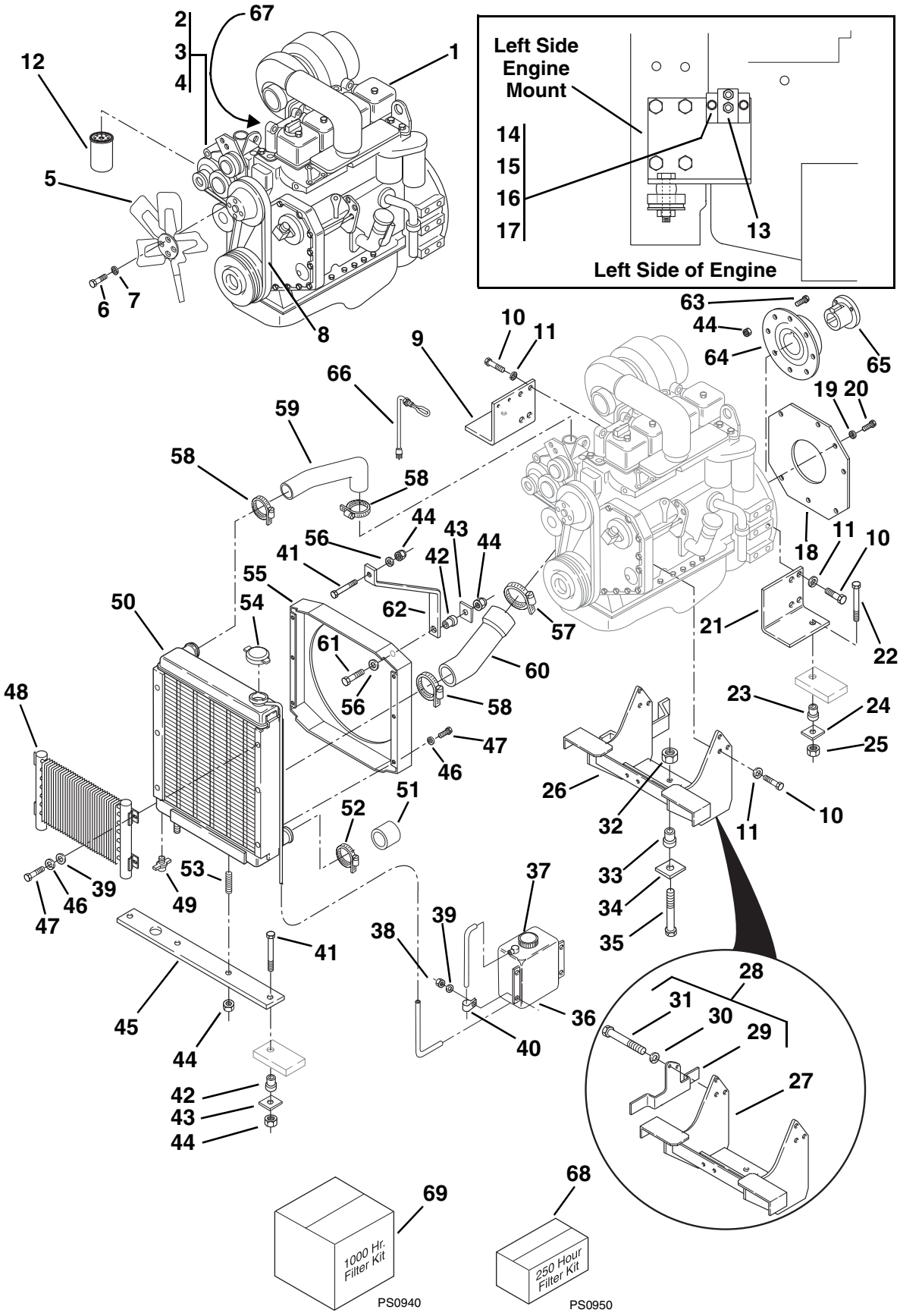

ENGINE, RADIATOR AND OIL COOLER MOUNTING

(S/N 0118 & Before)

Item No.	Part Number	Qty.	Description
1	7096692	1	Engine, Cummins 4BT 3.9 Turbo
	8262131	1	Engine, Cummins 4BTA 3.9 After Cooled Turbo
2	8270221	1	Alternator, Bosch
3	8270220	1	Fan, Alternator
4	8033342	1	Pulley, Alternator
5	8272009	1	Fan, Puller 17"
6	8310028	4	HHCS, M8 x 70mm
7	8307222	4	Washer, Flat M8
8	8080613	1	Belt, Engine Fan
9	7095272	1	Mount, Engine Left Side
10	8303790	14	HHCS, M12 x 30mm
11	8307025	14	Washer, Lock M12
12	8320262	1	Element, Engine Oil Filter (Also included in Filter Kits 68 and 69)
13	8277162	1	Solenoid, Relay for Starter, Sealed
14	8303742	2	FLHDCS, 1/4-20 x 1"
15	8310002	2	Washer, Lock 1/4" External Teeth
16	8307109	2	Washer, Flat 1/4"
17	8305624	2	Nut, Hex Lock Elastic 1/4-20
18	7054632	1	Cover, Flywheel
19	8307023	4	Washer, Lock M10
20	8303784	4	HHCS, M10 x 20mm
21	7095282	1	Mount, Engine Right Side
22	8303702	2	HHCS, 1/2-13 x 3"
23	8278012	2	Mount, Vibration
24	7095831	2	Washer, Rebound
25	8305644	2	Nut, Hex Lock Elastic 1/2-13
26	7133022	1	Kit, Engine Mount (Includes Items 27 & 28)
27	7127003	1	Mount, Engine
28	7132912	1	Kit, Muffler Strap (Includes Items 29 thru 31)
29	7127013	1	Bracket, Muffler
30	8307025	2	Washer, Lock M12
31	8303519	2	HHCS, M12 x 35mm
32	8310067	1	Nut, Hex Lock Elastic 3/4-10
33	8278007	1	Mount, Vibration
34	7054351	1	Washer, Rebound
35	8303724	1	HHCS, 3/4-10 x 3-1/2"
36	7085422	1	Tank, Radiator Overflow (Includes Item 37)
37	8866341	1	Cap w/ Tether
38	8305626	4	Nut, Hex Lock Elastic 5/16-18
39	8307106	8	Washer, Flat 5/16"
40	8406101	1	Support, Hose 5/8"
41	8303106	3	HHCS, 3/8-16 x 2-1/2"
42	8278008	3	Mount, Vibration
43	7057141	3	Washer, Rebound
44	8305645	14	Nut, Hex Lock Elastic 3/8-16
45	7094592	1	Bar, Radiator Mount
46	8307004	10	Washer, Lock 5/16"
47	8303744	10	HHCS, 5/16-18 x 1/2"
48	2712993	1	Oil Cooler
49	8904001	1	Cock, Drain 1/4"
50	5724284	1	Radiator (Includes Items 51 thru 54)
51	8403224	1	Cap, Connection
52	8405104	1	Clamp, Hose 2-1/4"
53	8180308	2	Stud, Radiator Mount
54	8180307	1	Cap, Radiator
55	7099943	1	Shroud, Radiator
56	8307110	2	Washer, Flat 3/8"
57	8405203	1	Clamp, Hose 3"
58	8405104	3	Clamp, Hose 2-1/4"
59	7093783	1	Hose, Upper Radiator
60	7093772	1	Hose, Lower Radiator
61	8303622	1	HHCS, 3/8-16 x 2"
62	7099912	1	Support, Upper Radiator
63	8303679	8	HHCS, 3/8-16 x 1-3/4"
64	7150523	1	Kit, Torsion Dampener Coupling (Includes Coupler, Shaft, Hardware & Instructions)
65	8140309	1	Bushing, Split Tapered
66	8277161	1	Heater, Coolant
	7088352	1	Freeze Plug
67	8033340	1	Starter, 12V (Includes Solenoid)
68	7138291	1	Kit, 250 Hour Filter (Includes 4 Filters; Engine Oil Filter & 3 Fuel Filters)
69	7138301	1	Kit, 1000 Hour Filter (Includes 7 Filters; Engine Oil Filter, 3 Fuel Filters, Primary Air Filter, Transmission Oil Filter & Hydraulic Oil Filter)

ENGINE, RADIATOR AND OIL COOLER MOUNTING

(S/N 0119 thru 1598)

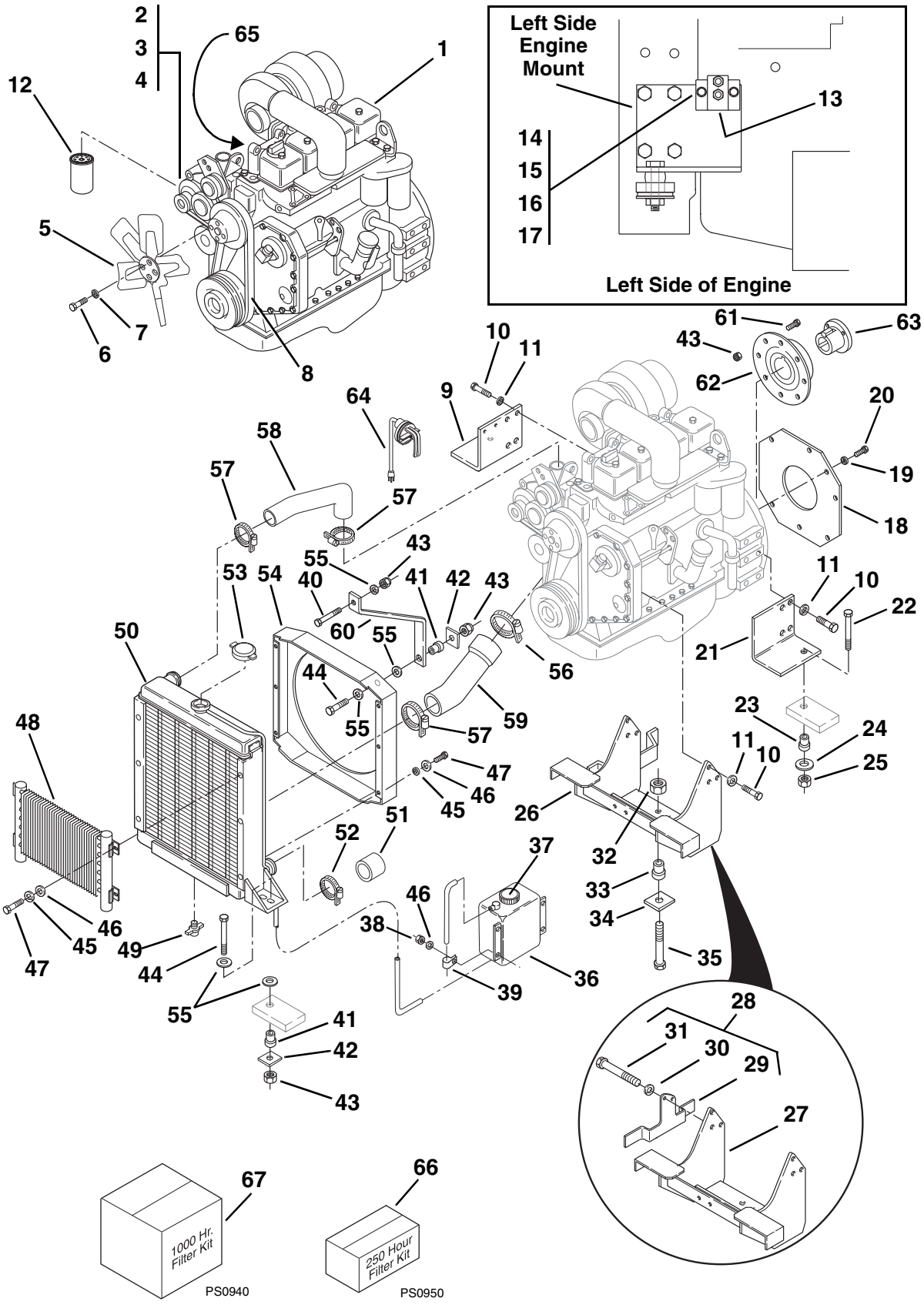

ENGINE, RADIATOR AND OIL COOLER MOUNTING

(S/N 0119 thru 1598)

Item No.	Part Number	Qty.	Description
1	8262137	1	Engine, Cummins 4BT 3.9 Turbo
	8262138	1	Engine, Cummins 4BTA 3.9 After Cooled Turbo
2	8270221	1	Alternator, Bosch
3	8270220	1	Fan, Alternator
4	8033342	1	Pulley, Alternator
5	8272009	1	Fan, Puller 17"
6	8310028	4	HHCS, M8 x 70mm
7	8307222	4	Washer, Flat M8
8	8080613	1	Belt, Engine Fan
9	7095272	1	Mount, Engine Left Side
10	8303790	14	HHCS, M12 x 30mm
11	8307025	14	Washer, Lock M12
12	8320262	1	Element, Engine Oil Filter (Also included in Filter Kits 66 and 67)
13	8277162	1	Solenoid, Relay for Starter
14	8303742	2	FLHDCS, 1/4-20 x 1"
15	8310002	2	Washer, Lock 1/4" External Teeth
16	8307109	5	Washer, Flat 1/4"
17	8305624	2	Nut, Hex Lock Elastic 1/4-20
18	7054632	1	Cover, Flywheel
19	8307023	4	Washer, Lock M10
20	8303784	4	HHCS, M10 x 20mm
21	7095282	1	Mount, Engine Right Side
22	8303702	2	HHCS, 1/2-13 x 3"
23	8278012	2	Mount, Vibration
24	7095831	2	Washer, Rebound
25	8305644	2	Nut, Hex Lock Elastic 1/2-13
26	7133022	1	Kit, Engine Mount (Includes Items 27 & 28)
27	7127003	1	Mount, Engine
28	7132912	1	Kit, Muffler Strap (Includes Items 29 thru 31)
29	7127013	1	Bracket, Muffler
30	8307025	2	Washer, Lock M12
31	8303519	2	HHCS, M12 x 35mm
32	8310067	1	Nut, Hex Lock Elastic 3/4-10
33	8278007	1	Mount, Vibration
34	7054351	1	Washer, Rebound
35	8303724	1	HHCS, 3/4-10 x 3-1/2"
36	7085422	1	Tank, Radiator Overflow (Includes Item 37)
37	8866341	1	Cap w/Tether
38	8305626	4	Nut, Hex Lock Elastic 5/16-18
39	8406101	1	Support, Hose 5/8"
40	8303106	1	HHCS, 3/8-16 x 2-1/2"
41	8278008	3	Mount, Vibration
42	7057141	3	Washer, Rebound
43	8305645	12	Nut, Hex Lock Elastic 3/8-16
44	8303622	3	HHCS, 3/8-16 x 2"
45	8307004	10	Washer, Lock 5/16"
46	8307203	10	Washer, Flat 0.31
47	8303697	10	HHCS, 0.31 x 0.75"
48	2712993	1	Oil Cooler
49	8904001	1	Cock, Drain 1/4"
50	7127034	1	Radiator (Includes Items 51 thru 53)
51	8403224	1	Cap, Connection
52	8405104	1	Clamp, Hose 2-1/4"
53	8180307	1	Cap, Radiator
54	7127043	1	Shroud, Radiator
55	8307204	7	Washer, Flat 3/8" Heavy
56	8405203	1	Clamp, Hose 3"
57	8405104	3	Clamp, Hose 2-1/4"
58	7093783	1	Hose, Upper Radiator
59	7093772	1	Hose, Lower Radiator
60	7099912	1	Support, Upper Radiator
61	8303679	8	HHCS, 3/8-16 x 1-3/4"
62	7150523	1	Kit, Torsion Dampener Coupling (Includes Coupler, Shaft, Hardware & Instructions)
63	8140309	1	Bushing, Split Tapered
64	8277161	1	Heater, Coolant
	7088352	1	Freeze Plug
65	8033340	1	Starter, 12V (Includes Solenoid)
66	7138291	1	Kit, 250 Hour Filter (Includes 4 Filters; Engine Oil Filter & 3 Fuel Filters)
67	7138301	1	Kit, 1000 Hour Filter (Includes 7 Filters; Engine Oil Filter, 3 Fuel Filters, Primary Air Filter, Transmission Oil Filter & Hydraulic Oil Filter)

ENGINE, RADIATOR AND OIL COOLER MOUNTING (EPA)

(S/N 1599 & After)

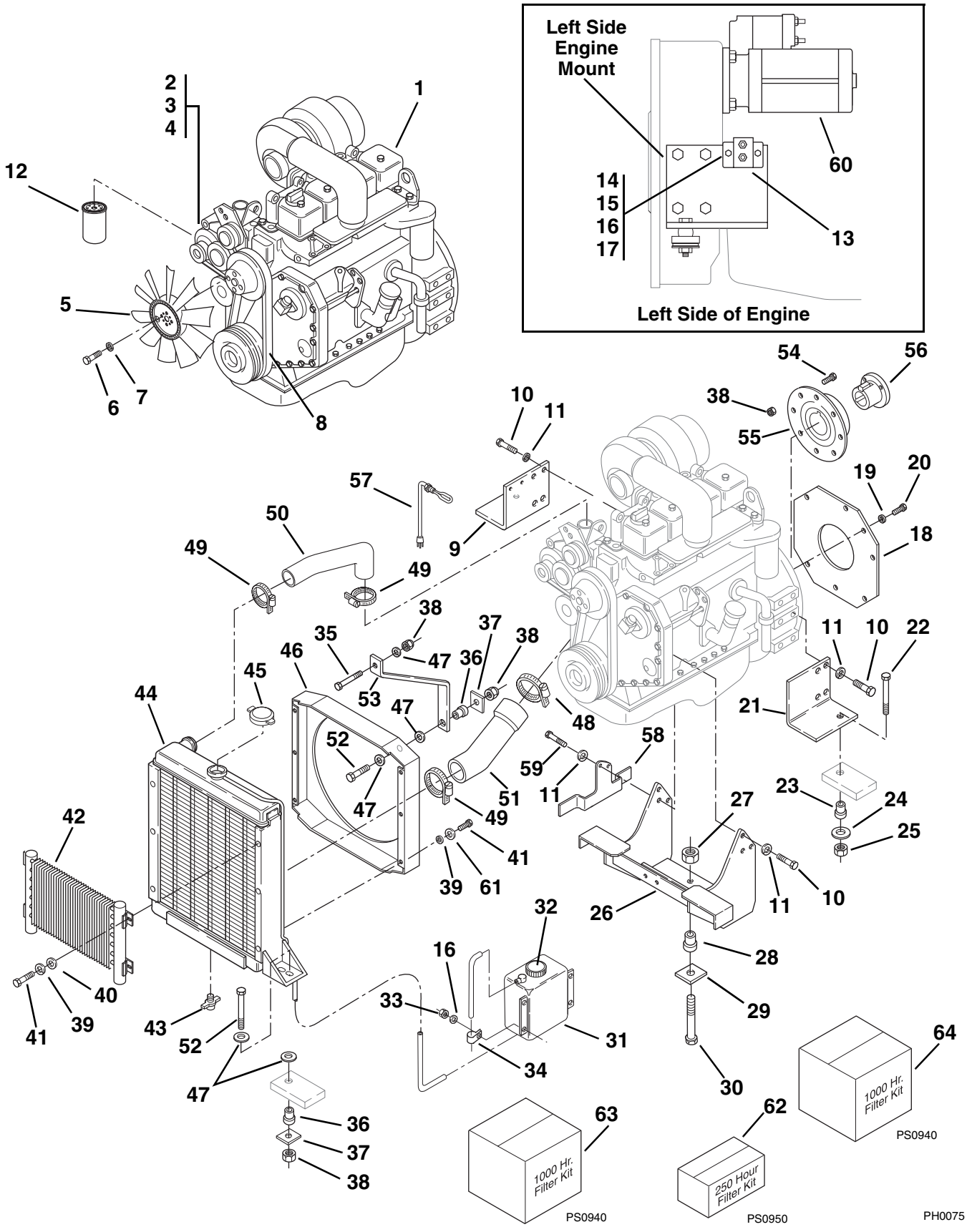

ENGINE, RADIATOR AND OIL COOLER MOUNTING (EPA)

(S/N 1599 & After)

Item No.	Part Number	Qty.	Description
1	8262142	1	Engine, Cummins 4BT 3.9 Turbo (8042)
	8262143	1	Engine, Cummins 4BTA 3.9 After Cooled Turbo (10042 & 10054)
2	8270221	1	Alternator, Bosch
3	8270220	1	Fan, Alternator
4	8033342	1	Pulley, Alternator
5	8272017	1	Fan
6	8303550	4	HHCS, M8 x 60mm
7	8307222	4	Washer, Flat M8
8	8080613	1	Belt, Engine Fan
9	7095272	1	Mount, Engine Left Side
10	8303790	14	HHCS, M12 x 30mm
11	8307025	14	Washer, Lock M12
12	8320262	1	Element, Engine Oil Filter (Also included in Filter Kits 62, 63 and 64)
13	8277162	1	Solenoid, Relay for Starter
14	8303742	2	FLHDCS, 1/4-20 x 1"
15	8310002	2	Washer, Lock 1/4" External Teeth
16	8307109	4	Washer, Flat 1/4"
17	8305624	2	Nut, Hex Lock Elastic 1/4-20
18	7054632	1	Cover, Flywheel
19	8307023	4	Washer, Lock M10
20	8303784	4	HHCS, M10 x 20mm
21	7095282	1	Mount, Engine Right Side
22	8303702	2	HHCS, 1/2-13 x 3"
23	8278012	2	Mount, Vibration
24	7095831	2	Washer, Rebound
25	8305644	2	Nut, Hex Lock Elastic 1/2-13
26	7127003	1	Mount, Engine
27	8310067	1	Nut, Hex Lock Elastic 3/4-10
28	8278007	1	Mount, Vibration
29	7054351	1	Washer, Rebound
30	8303724	1	HHCS, 3/4-10 x 3-1/2"
31	7085422	1	Tank, Radiator Overflow (Includes Item 32)
32	8866341	1	Cap w/Tether
33	8305626	4	Nut, Hex Lock Elastic 5/16-18
34	8406101	1	Support, Hose 5/8"
35	8303106	3	HHCS, 3/8-16 x 2-1/2"
36	8278008	3	Mount, Vibration
37	7057141	3	Washer, Rebound
38	8305645	14	Nut, Hex Lock Elastic 3/8-16
39	8307004	10	Washer, Lock 0.31
40	8307106	6	Washer, Flat 0.31
41	8303697	10	HHCS, 0.31 x 0.75"
42	2712993	1	Oil Cooler (S/N 1599 thru 9908)
	2713054	1	Oil Cooler (S/N 9909 & After)
43	8904001	1	Cock, Drain 1/4"
44	7127034	1	Radiator (Includes Item 45)
45	8180307	1	Cap, Radiator
46	7127043	1	Shroud, Radiator
47	8307110	5	Washer, Flat 3/8"
48	8405203	1	Clamp, Hose 3"
49	8405104	3	Clamp, Hose 2-1/4"
50	7093783	1	Hose, Upper Radiator
51	7093772	1	Hose, Lower Radiator
52	8303622	3	HHCS, 3/8-16 x 2"
53	7099912	1	Support, Upper Radiator
54	8303679	8	HHCS, 3/8-16 x 1-3/4"
55	7150523	1	Kit, Torsion Dampener Coupling (Includes Coupler, Shaft, Hardware & Instructions) (S/N 1599 thru 9908)
	7137643	1	Torsion Dampener Coupling (S/N 9909 & After)
56	8140309	1	Bushing, Split Tapered
57	8277161	1	Heater, Coolant
58	7127013	1	Bracket, Muffler
59	8303519	2	HHCS, M12 x 35mm
60	8033340	1	Starter, 12V (Includes Solenoid)
61	8307203	6	Washer, Flat
62	7138290	1	Kit, 250 Hour Filter (Includes 3 Filters; Engine Oil Filter & Both Fuel Filters)
63	7138297	1	Kit, 1000 Hour Filter (Includes 6 Filters; Engine Oil Filter, Both Fuel Filters, Primary Air Filter, Transmission Oil Filter & Hydraulic Oil Filter) (S/N 1599 thru 9908)
64	7138848	1	Kit, 1000 Hour Filter (Includes 6 Filters; Engine Oil Filter, Both Fuel Filters, Primary Air Filter, Transmission Oil Filter & Hydraulic Oil Filter) (S/N 9909 & After)

TORSION COUPLER
(S/N 9909 & After)

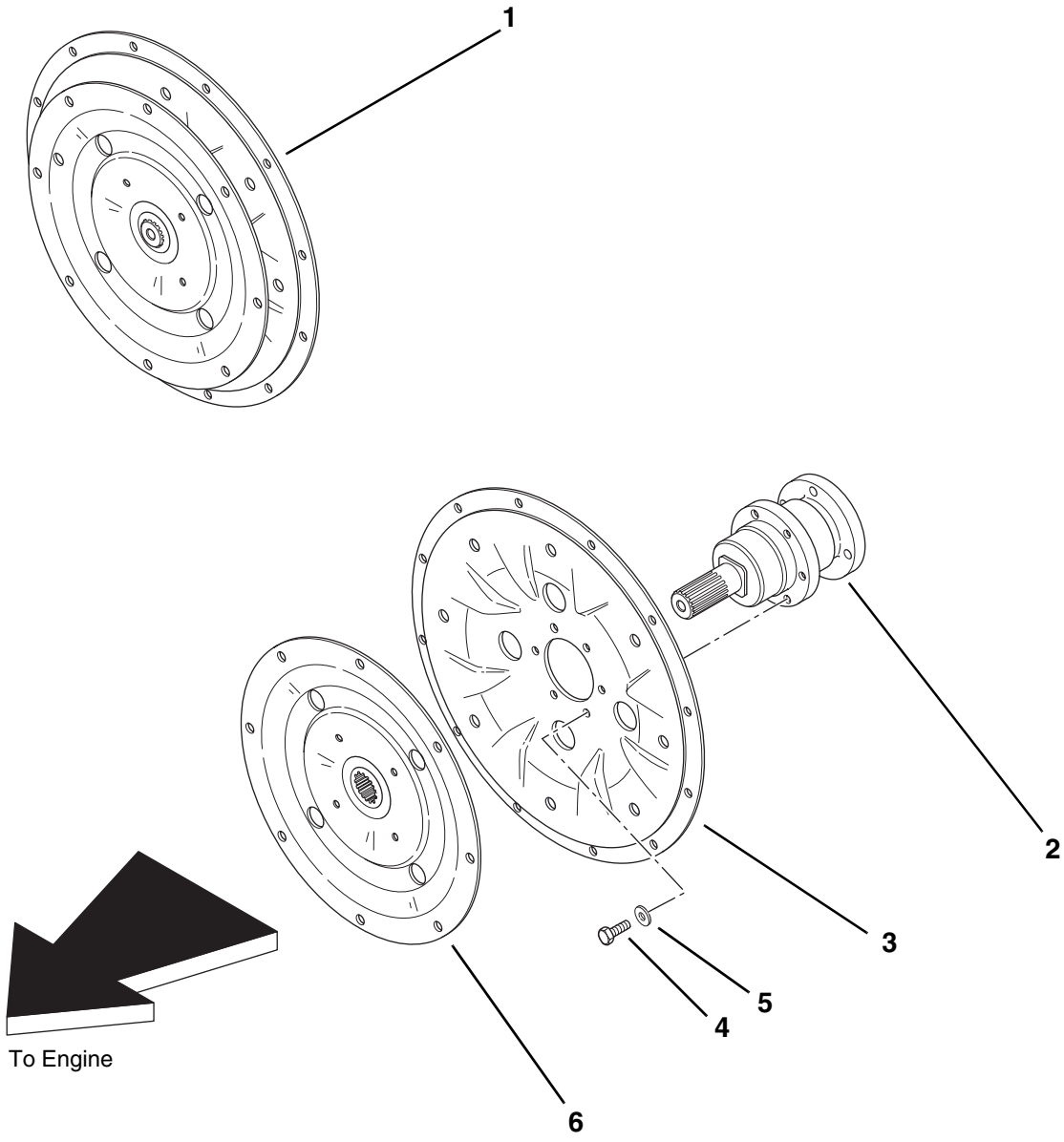

PH1230

TORSION COUPLER
(S/N 9909 & After)

Item No.	Part Number	Qty.	Description
1	7137643	1	Coupling Assembly, Torsion (Includes Items 2 thru 6)
2	8035555	1	Assembly, Shaft and Bearing
3	8035556	1	Housing, Protective
4	8035557	6	Bolt, Hex Hd. M10 x 25mm
5	8035558	6	Washer, Flat M10
6	8035559	1	Element, Torsion Coupling

EXHAUST SYSTEM

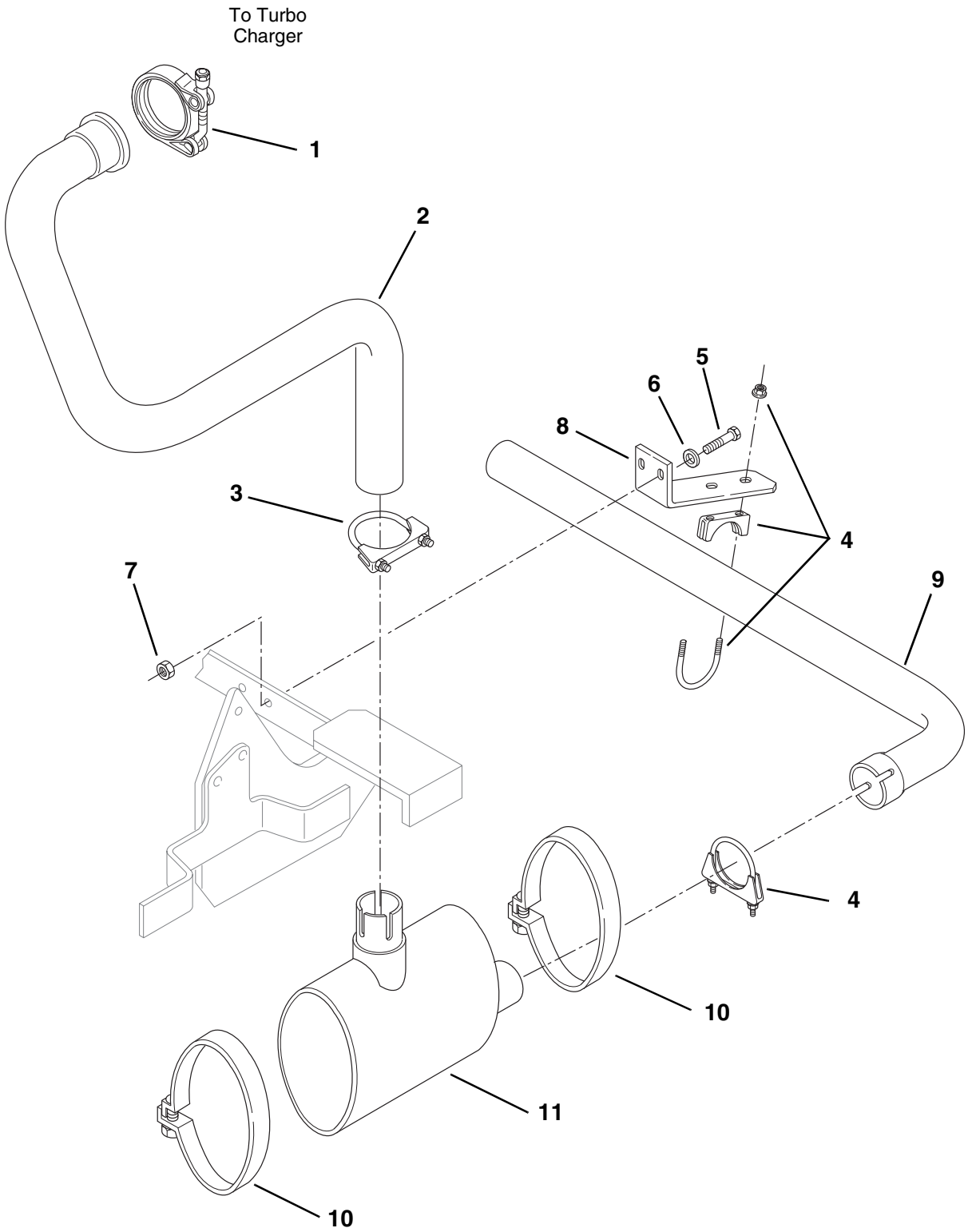

PH0091

EXHAUST SYSTEM

Item No.	Part Number	Qty.	Description
1	8275240	1	Clamp, V-Band
2	7126953	1	Pipe, Exhaust (S/N 1599 & After)
	7088283	1	Pipe, Exhaust (S/N 1598 & Before)
3	8275247	1	Clamp, Muffler 3.00" (S/N 1599 & After)
	8275212	1	Clamp, Muffler 2.50" (S/N 1598 & Before)
4	8275248	2	Clamp, Muffler 2.75" (S/N 1599 & After)
	8275212	2	Clamp, Muffler 2.50" (S/N 1598 & Before)
5	8303621	2	HHCS, 3/8-16 x 1-1/2"
6	8307204	2	Washer, Flat 3/8" Heavy
7	8305645	2	Nut, Hex Lock Elastic 3/8-16
8	7127022	1	Support, Exhaust Pipe (S/N 1599 & After)
	7110022	1	Support, Exhaust Pipe (S/N 1598 & Before)
9	7126962	1	Pipe, Tail (S/N 1599 & After)
	7086742	1	Pipe, Tail (S/N 1598 & Before)
10	7126992	2	Clamp, Band (S/N 1599 & After)
	7097452	2	Clamp, Band (S/N 1598 & Before)
11	7126922	1	Muffler (S/N 1599 & After)
	7079162	1	Muffler (S/N 1598 & Before)

AIR CLEANER

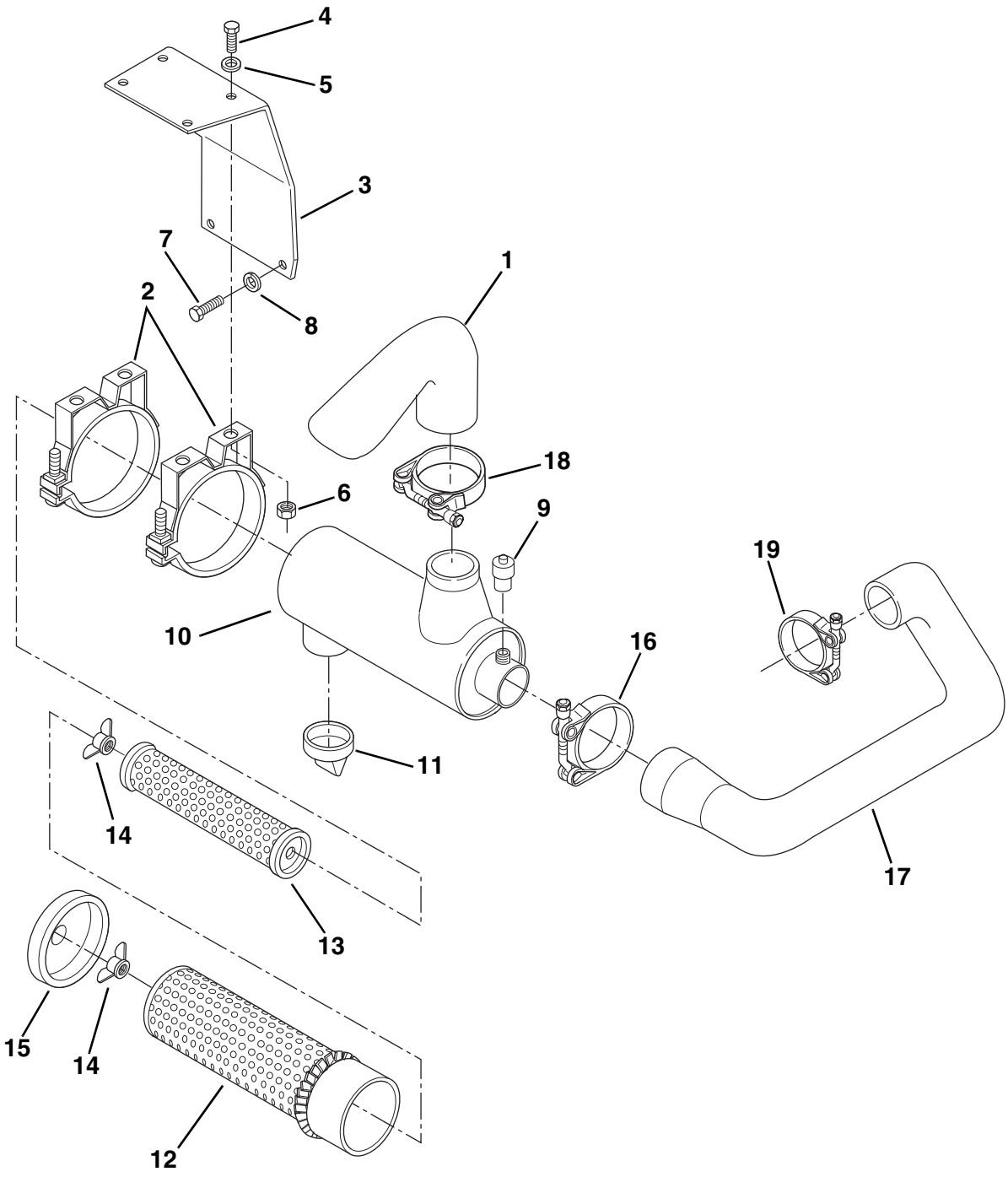

PH0081

AIR CLEANER

Item No.	Part Number	Qty.	Description
1	7097323	1	Scoop, Air Intake
2	8273240	2	Band, Air Cleaner Mounting
3	7095302	1	Bracket, Air Cleaner Mounting
4	8303697	4	HHCS, 0.31 x 0.75"
5	8307203	4	Washer, Flat 5/16"
6	8305626	4	Nut, Hex Lock Elastic 5/16"
7	8303618	2	HHCS, M12 x 25mm
8	8307025	2	Washer, Lock M12
9	8273241	1	Indicator, 25" Service
10	8273013	1	Air Cleaner Assembly (Includes Items 11 thru 15)
11	8032764	1	Valve, Vacuator
12	8273237	1	Element, Primary
13	8273238	1	Element, Safety
14	8273272	2	Nut, Assembly
15	8032762	1	Cover, End
16	8405307	1	Clamp, T-Bolt 3-13/16" I.D.
17	7095393	1	Hose, Air Intake
18	8405404	1	Clamp, T-Bolt Band 4.38" I.D.
19	8405305	1	Clamp, T-Bolt Band 3.38" I.D.

FUEL SYSTEM
(S/N 1598 & Before)

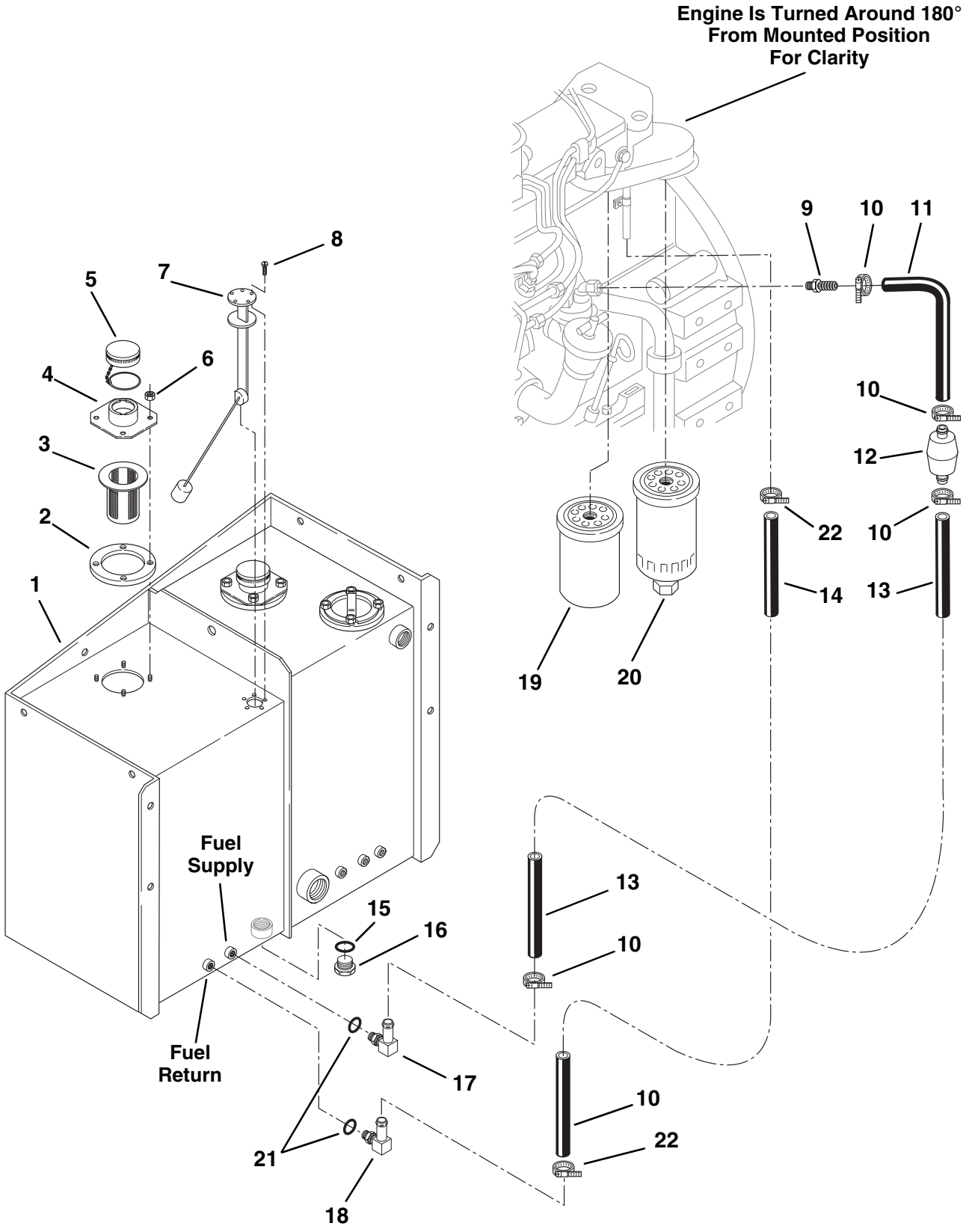

PH0031

FUEL SYSTEM
(S/N 1598 & Before)

Item No.	Part Number	Qty.	Description
1	7136034	1	Tank, Fuel and Hydraulic
2	7138209	1	Gasket
3	NLA	1	Screen, Fillneck (For Service, Order P/N 8322022)
4	7138714	1	Neck, Filler/Breather
5	NLA	1	Cap, Fill w/Chain (For Service, Order P/N 8322022)
6	8305626	4	Nut, Hex Lock Elastic 5/16-18
7	7118222	1	Sender, Fuel Level
8	8310163	5	THCS, #10 x 5/8"
9	8430007	1	Hose Fitting, Long, Barbed, SAE 6-4P - hose I.D. x male NPT, Fits 3/8" Hose
10	8410009	4	Clamp, Hose 1.06 Dia.
11	7127881	1	Hose, Fuel Supply .38 x 4"
12	8274022	1	Strainer, Fuel
13	7127871	1	Hose, Fuel Supply .38 x 100"
14	7125421	1	Hose, Fuel Return .25 x 105"
15	8640903	1	O-Ring
16	8541435	1	Plug, Magnetic, Hex Hd., 1" str. thd.
17	8430034	1	Hose Fitting, Elbow, 90°, Beaded, SAE 6-6 - hose I.D. x male str. thd. o-ring
18	8430035	1	Hose Fitting, Elbow, 90°, Beaded, SAE 4-4 - hose I.D. x male str. thd. o-ring, Fits 1/4" Hose
19	8320250	1	Element, Fuel Filter - Secondary
20	8320253	1	Element, Fuel Filter - Primary
21	8630012	2	O-Ring
22	8405009	2	Clamp, Hose .62

FUEL SYSTEM (EPA)
(S/N 1599 & After)

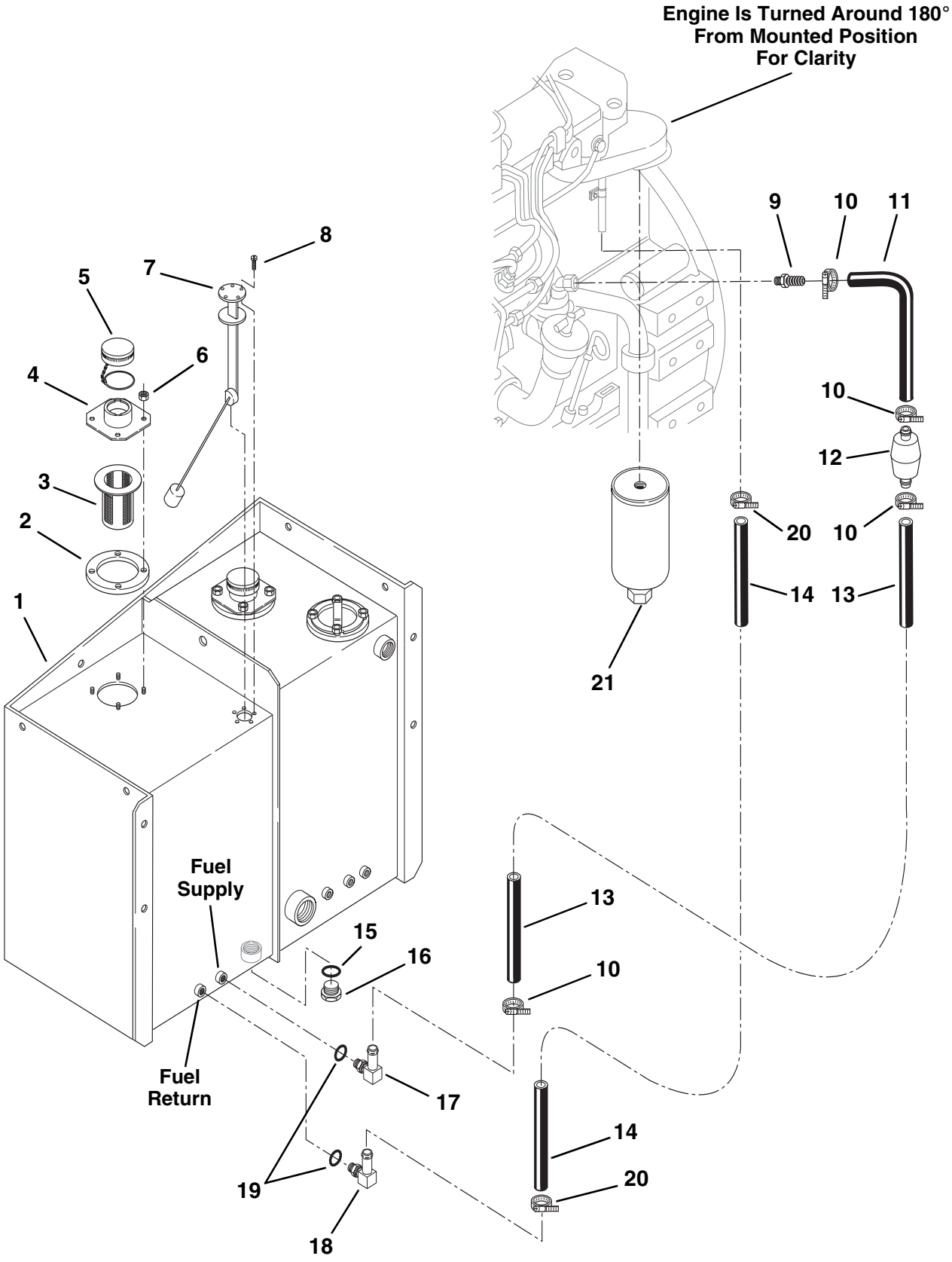

PH0032

FUEL SYSTEM (EPA)
(S/N 1599 & After)

Item No.	Part Number	Qty.	Description
1	7136034	1	Tank, Fuel and Hydraulic
2	7138209	1	Gasket
3	NLA	1	Screen, Fillneck (For Service, Order P/N 8322022)
4	7138714	1	Neck, Filler/Breather
5	NLA	1	Cap, Fill w/Chain (S/N 9499 & Before) (For Service, Order P/N 8322022)
	8322029	1	Cap, Fill w/Chain (S/N 9500 & After)
6	8305626	4	Nut, Hex Lock Elastic 5/16-18
7	7118222	1	Sender, Fuel Level
8	8310163	5	THCS, #10 x 5/8"
9	8430007	1	Hose Fitting, Long, Barbed, SAE 6-4P - hose I.D. x male NPT, Fits 3/8" Hose
10	8410009	4	Clamp, Hose 1.06 Dia.
11	7127881	1	Hose, Fuel Supply .38 x 4"
12	8274022	1	Strainer, Fuel
13	7127871	1	Hose, Fuel Supply .38 x 100"
14	7127081	1	Hose, Fuel Return .31 x 123"
15	8640903	1	O-Ring
16	8541435	1	Plug, Magnetic, Hex Hd., 1" str. thd.
17	8430034	1	Hose Fitting, Elbow, 90°, Beaded, SAE 6-6 - hose I.D. x male str. thd. o-ring
18	8430064	1	Hose Fitting, Elbow, 90°, Beaded, SAE 5-6 - hose I.D. x male str. thd. o-ring, Fits 5/16" Hose
19	8630012	2	O-Ring
20	8405009	2	Clamp, Hose .62
21	8320270	1	Element, Fuel Filter

POWER STEERING CIRCUIT

(S/N 9908 & Before)

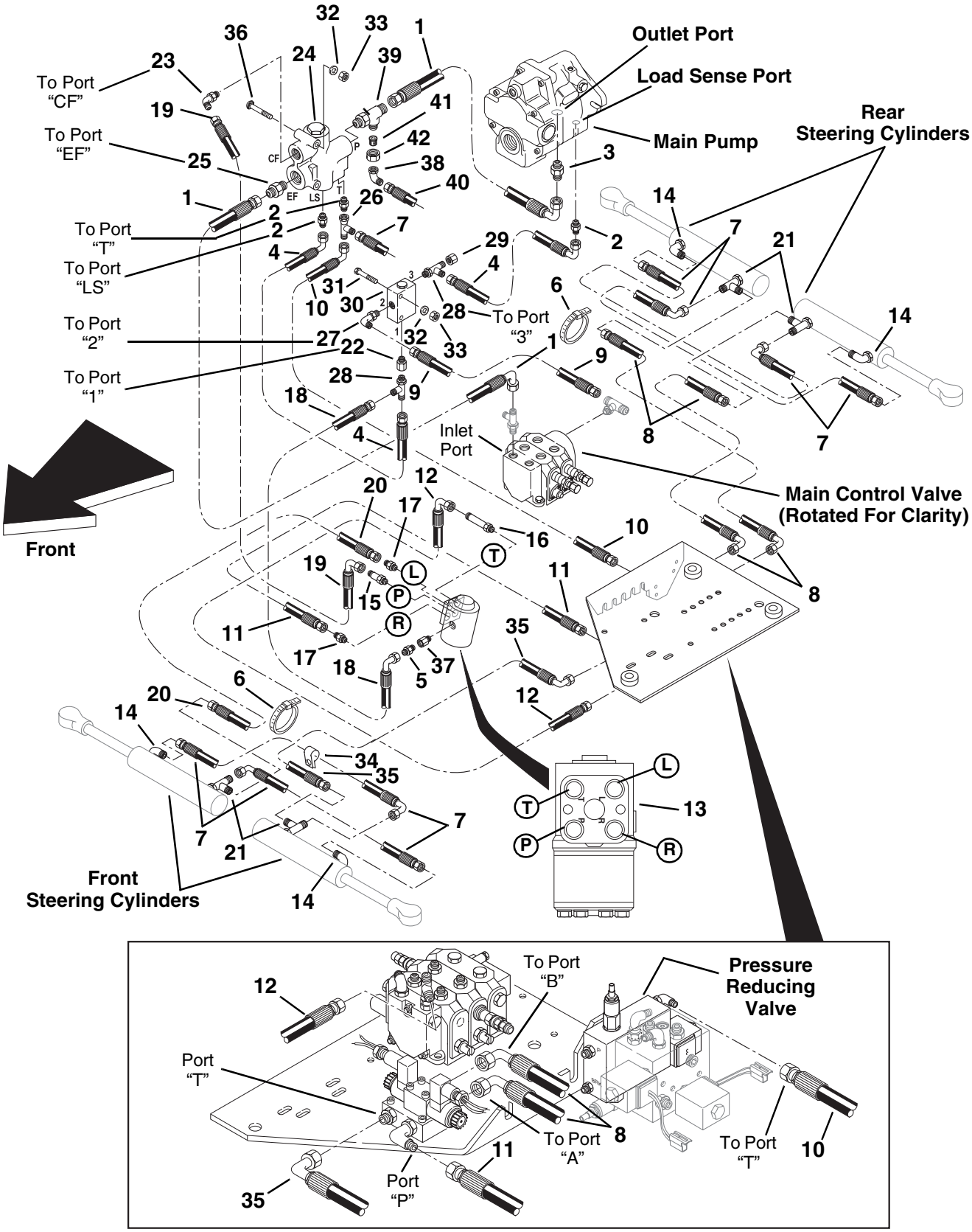

Underneath View of Valve Plate
See "Valve Plate Assembly"

PH0142

POWER STEERING CIRCUIT
(S/N 9908 & Before)

Item No.	Part Number	Qty.	Description
1	7150412	2	Hose, .75 I.D. x 18" Long
2	8760134	3	Connector, Straight, SAE 6-4 - male JIC 37° x male str. thd. o-ring
3	8760118	1	Connector, Straight, SAE 12-16 - male JIC 37° x male str. thd. o-ring
4	2713432	2	Hose, .38 I.D. x 18" Long
5	8760141	1	Connector, Male Tube End w/Outlet Check, 6-6
6	8584007	2	Tie Wrap 5"
7	2713242	5	Hose, .38 I.D. x 33" Long
8	2713332	2	Hose, .38 I.D. x 96" Long
9	2711992	1	Hose, .38 I.D. x 31" Long
10	2712942	1	Hose, .38 I.D. x 50" Long
11	2711972	1	Hose, .38 I.D. x 53" Long
12	2712122	1	Hose, .50 I.D. x 62" Long
13	8721029	1	Steering Unit
14	8760311	4	Elbow, 90° SAE 6 - male JIC 37° x male str. thd. o-ring
15	8760140	1	Connector, Male Tube End w/Inlet Check, 8-8
16	8760143	1	Connector, Long, SAE 8 - male JIC 37° x male str. thd. o-ring
17	8760110	2	Connector, Straight, SAE 6-8 - male JIC 37° x male str. thd. o-ring
18	2712142	1	Hose, .38 I.D. x 89" Long
19	2712112	1	Hose, .50 I.D. x 87" Long
20	2710802	1	Hose, .38 I.D. x 105" Long
21	8760449	4	Tee, Male Run, SAE 6 - male JIC 37° x male str. thd. o-ring
22	8760460	1	Reducer, SAE 8-6 - male str. thd. o-ring x female internal o-ring boss
23	8760303	1	Elbow, 90° SAE 8 - male JIC 37° x male str. thd. o-ring
24	8904047	1	Priority Valve
25	8760109	1	Connector, Straight, SAE 12 - male JIC 37° x male str. thd. o-ring
26	8760501	1	Tee, Female Run, SAE 6 - male JIC 37° x female JIC 37° swivel
27	8760313	1	Elbow, 90° SAE 6-8 - male JIC 37° x male str. thd. o-ring
28	8760449	2	Tee, Male Run, SAE 6 - male JIC 37° x male str. thd. o-ring
29	8760488	1	Cap, SAE 6 - JIC 37°
30	8902838	1	Valve, Shuttle
31	8310158	2	Bolt, Carriage 5/16-18 x 2-1/4"
32	8307004	4	Washer, Lock 5/16
33	8305006	4	Nut, Hex 5/16-18
34	8406105	1	Clamp
35	2712012	1	Hose, .38 I.D. x 75" Long
36	8310159	2	Bolt, Carriage 5/16-18 x 3-1/2"
37	8770016	1	Reducer, SAE 4-6 - male str. thd. o-ring x female internal o-ring boss
38	8765204	1	Elbow, 90°, SAE 8 - male JIC 37° x female JIC 37° swivel
39	8760474	1	Tee, Male Run, SAE 12 - male JIC 37° x male str. thd. o-ring
40	6604882	1	Hose, .50 I.D. x 62" Long
41	8760504	1	Reducer, Tube End, SAE 12-8 - JIC 37°
42	8760401	1	Nut, SAE 12 - JIC 37°

POWER STEERING CIRCUIT
(S/N 9909 & After)

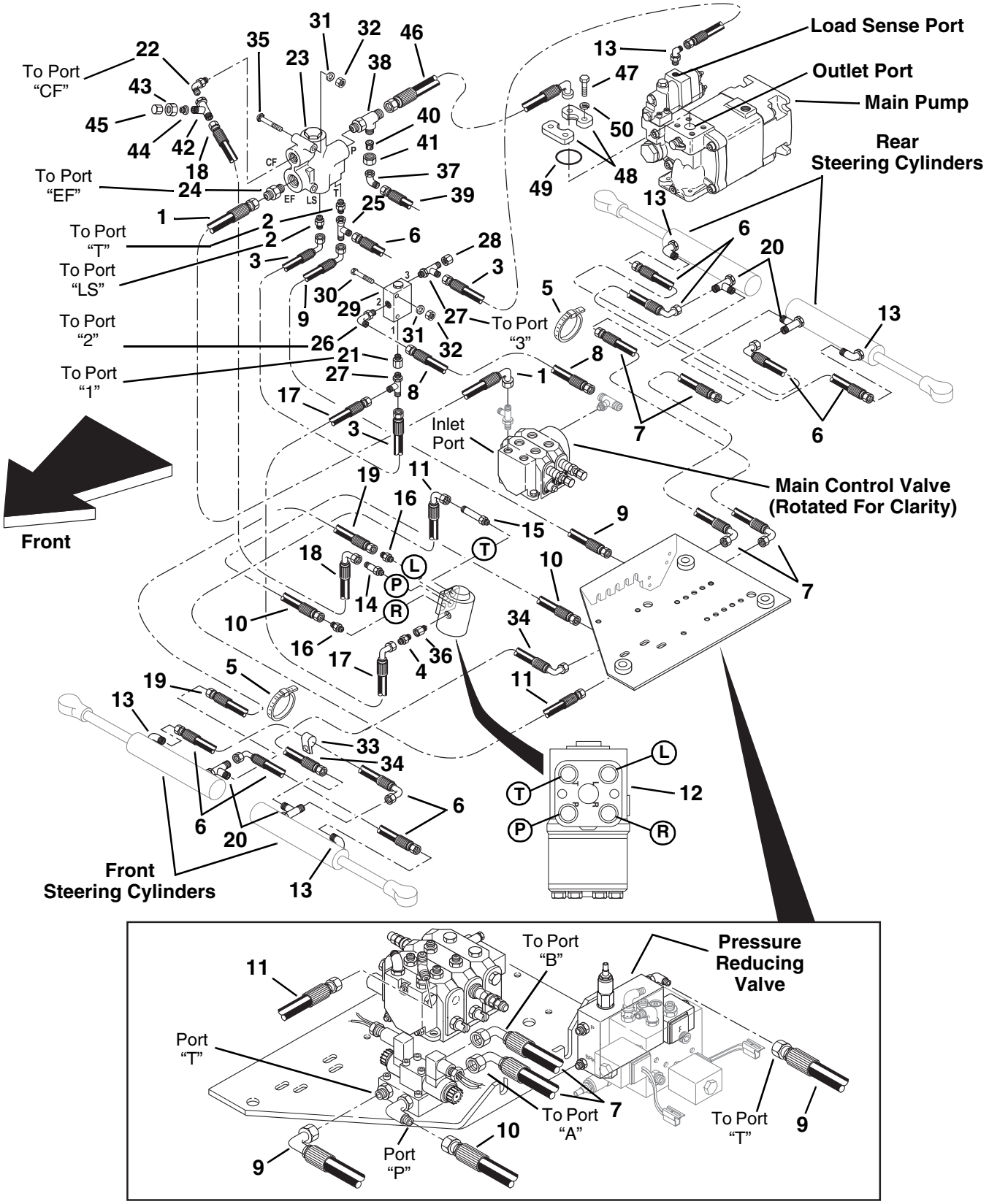

Underneath View of Valve Plate
See "Valve Plate Assembly"

PH1360

POWER STEERING CIRCUIT
(S/N 9909 & After)

Item No.	Part Number	Qty.	Description
1	7150412	1	Hose, .75 I.D. x 18" Long
2	8760134	2	Connector, Straight, SAE 6-4 - male JIC 37° x male str. thd. o-ring
3	2713432	2	Hose, .38 I.D. x 18" Long
4	8760141	1	Connector, Male Tube End w/Outlet Check, 6-6
5	8584007	2	Tie Wrap 5"
6	2713242	5	Hose, .38 I.D. x 33" Long
7	2713332	2	Hose, .38 I.D. x 96" Long
8	2711992	1	Hose, .38 I.D. x 31" Long
9	2712942	1	Hose, .38 I.D. x 50" Long
10	2711972	1	Hose, .38 I.D. x 53" Long
11	2712122	1	Hose, .50 I.D. x 62" Long
12	8721029	1	Steering Unit
13	8760311	5	Elbow, 90° SAE 6 - male JIC 37° x male str. thd. o-ring
14	8760140	1	Connector, Male Tube End w/Inlet Check, 8-8
15	8760143	1	Connector, Long, SAE 8 - male JIC 37° x male str. thd. o-ring
16	8760110	2	Connector, Straight, SAE 6-8 - male JIC 37° x male str. thd. o-ring
17	2712142	1	Hose, .38 I.D. x 89" Long
18	2712112	1	Hose, .50 I.D. x 87" Long
19	2710802	1	Hose, .38 I.D. x 105" Long
20	8760449	4	Tee, Male Run, SAE 6 - male JIC 37° x male str. thd. o-ring
21	8760460	1	Reducer, SAE 8-6 - male str. thd. o-ring x female internal o-ring boss
22	8760307	1	Elbow, 45° SAE 8 - male JIC 37° x male str. thd. o-ring
23	8904047	1	Priority Valve
24	8760109	1	Connector, Straight, SAE 12 - male JIC 37° x male str. thd. o-ring
25	8760501	1	Tee, Female Run, SAE 6 - male JIC 37° x female JIC 37° swivel
26	8760313	1	Elbow, 90° SAE 6-8 - male JIC 37° x male str. thd. o-ring
27	8760449	2	Tee, Male Run, SAE 6 - male JIC 37° x male str. thd. o-ring
28	8760488	1	Cap, SAE 6 - JIC 37°
29	8902838	1	Valve, Shuttle
30	8310158	2	Bolt, Carriage 5/16-18 x 2-1/4"
31	8307004	4	Washer, Lock 5/16
32	8305006	4	Nut, Hex 5/16-18
33	8406105	1	Clamp
34	2712012	1	Hose, .38 I.D. x 75" Long
35	8310159	2	Bolt, Carriage 5/16-18 x 3-1/2"
36	8770016	1	Reducer, SAE 4-6 - male str. thd. o-ring x female internal o-ring boss
37	8765204	1	Elbow, 90°, SAE 8 - male JIC 37° x female JIC 37° swivel
38	8760474	1	Tee, Male Run, SAE 12 - male JIC 37° x male str. thd. o-ring
39	6604882	1	Hose, .50 I.D. x 62" Long
40	8760504	1	Reducer, Tube End, SAE 12-8 - JIC 37°
41	8760401	1	Nut, SAE 12 - JIC 37°
42	8760493	1	Tee, Female Run, SAE 8 - male JIC 37° x female JIC 37° swivel
43	8760407	1	Nut, SAE 8 - JIC 37°
44	8430037	1	Nipple, Diagnostic
45	8430032	1	Plug, Dust
46	7150312	1	Hose, .75 I.D. x 25" Long
47	8303675	4	Capscrew
48	8530030	2	Flange Half, SAE 16
49	8640123	1	O-Ring
50	8307005	4	Washer, Lock 3/8

CONTROL VALVES CIRCUIT
(S/N 9908 & Before)

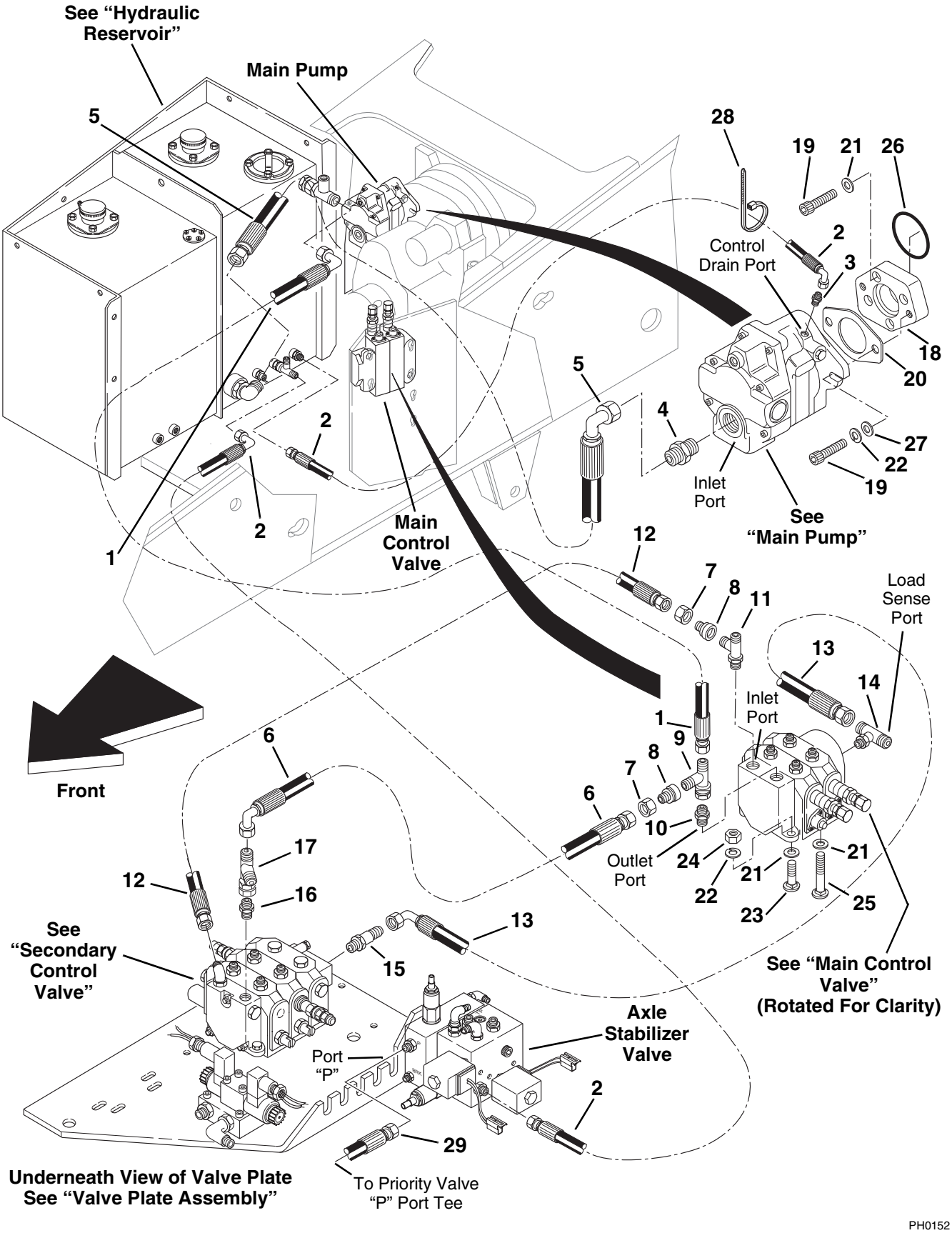

CONTROL VALVES CIRCUIT
(S/N 9908 & Before)

Item No.	Part Number	Qty.	Description
1	2713292	1	Hose, .75 I.D. x 31" Long
2	2712942	2	Hose, .38 I.D. x 50" Long
3	8760117	1	Connector, Straight, SAE 6 - male JIC 37° x male str. thd. o-ring
4	8770015	1	Connector, Straight, SAE 24 - male JIC 37° x male str. thd. o-ring
5	2713442	1	Hose, 1.50 I.D. x 29-1/2" Long
6	2711872	1	Hose, .50 I.D. x 71" Long
7	8760401	2	Nut, SAE 12 - JIC 37°
8	8760504	2	Reducer, Tube End, SAE 12-8 - JIC 37°
9	8760482	1	Tee, Female Run, SAE 12 - male JIC 37° x female JIC 37° swivel
10	8760118	1	Connector, Straight, SAE 12-16 - male JIC 37° x male str. thd. o-ring
11	8760474	1	Tee, Male Run, SAE 12 - male JIC 37° x male str. thd. o-ring
12	6605202	1	Hose, .50 I.D. x 44-1/2" Long
13	2711972	1	Hose, .38 I.D. x 53" Long
14	8760457	1	Tee, Male Branch, SAE 6 - male JIC 37° x male str. thd. o-ring
15	8760141	1	Connector, Male Tube End w/Outlet Check, 6-6
16	8760107	1	Connector, Straight, SAE 8 - male JIC 37° x male str. thd. o-ring
17	8760493	1	Tee, Female Run, SAE 8 - male JIC 37° x female JIC 37° swivel
18	7121013	1	Spacer, Pump
19	8304624	6	HHCS, 1/2-13 x 2"
20	7099072	1	Gasket
21	8307206	7	Washer, Flat 1/2"
22	8307007	5	Washer, Lock 1/2"
23	8310337	1	Bolt, Carriage 1/2-13 x 2-1/2"
24	8305012	3	Nut, Hex 1/2-13
25	8310178	2	Bolt, Carriage 1/2-13 x 4"
26	8640405	1	O-Ring
27	8307206	AR	Washer, Flat 1/2"
28	8584007	1	Tie Wrap, 5" - Oil Cooler Hose Support
29	6604882	1	Hose, .50 I.D. x 62" Long

CONTROL VALVES CIRCUIT
(S/N 9909 & After)

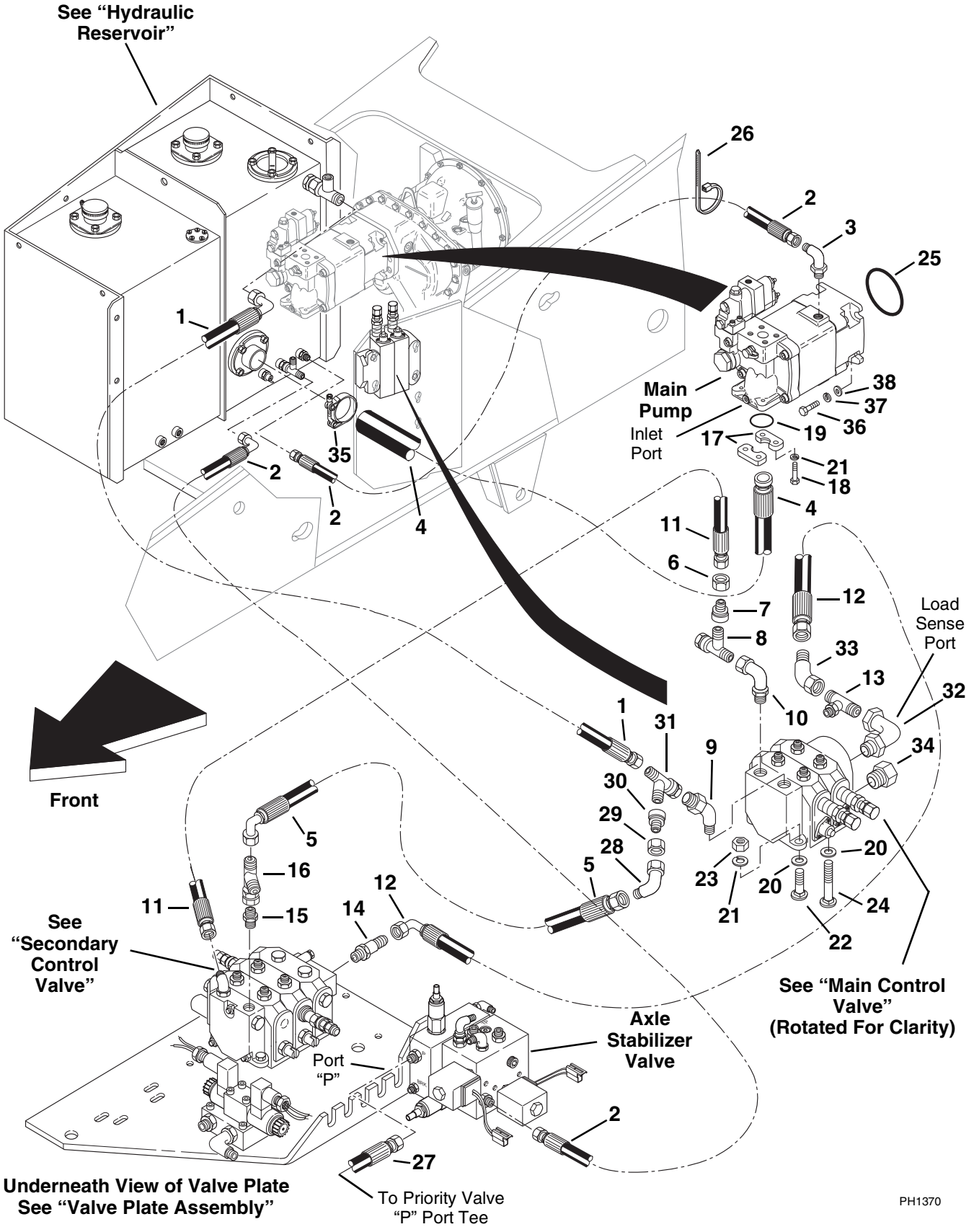

CONTROL VALVES CIRCUIT
(S/N 9909 & After)

Item No.	Part Number	Qty.	Description
1	7150492	1	Hose, 1 I.D. x 29" Long
2	7150502	2	Hose, .50 I.D. x 40" Long
3	8760308	1	Elbow, 90° SAE 8-10 - male JIC 37° x male str. thd. o-ring
4	7150302	1	Hose, 2" I.D. x 29" Long
5	2711872	1	Hose, .50 I.D. x 71" Long
6	8760401	1	Nut, SAE 12 - JIC 37°
7	8760504	1	Reducer, Tube End, SAE 12-8 - JIC 37°
8	8760482	1	Tee, Female Run, SAE 12 - male JIC 37° x female JIC 37° swivel
9	8760302	1	Elbow, 45° SAE 16 - male JIC 37° x male str. thd. o-ring
10	8760317	1	Elbow, 45° SAE 12 - male JIC 37° x male str. thd. o-ring
11	6604882	1	Hose, .50 I.D. x 62" Long
12	2711972	1	Hose, .38 I.D. x 53" Long
13	8760501	1	Tee, Female Run, SAE 6 - male JIC 37° x female JIC 37° swivel
14	8760141	1	Connector, Male Tube End w/Outlet Check, 6-6
15	8760107	1	Connector, Straight, SAE 8 - male JIC 37° x male str. thd. o-ring
16	8760493	1	Tee, Female Run, SAE 8 - male JIC 37° x female JIC 37° swivel
17	8546407	2	Flange
18	8303626	4	Capscrew
19	8640208	1	O-Ring
20	8307206	4	Washer, Flat 1/2"
21	8307007	7	Washer, Lock 1/2"
22	8310337	1	Bolt, Carriage 1/2-13 x 2-1/2"
23	8305012	3	Nut, Hex 1/2-13
24	8310178	2	Bolt, Carriage 1/2-13 x 4"
25	8630016	1	O-Ring
26	8584007	1	Tie Wrap, 5" - Oil Cooler Hose Support
27	6604882	1	Hose, .50 I.D. x 62" Long
28	8765204	1	Elbow, 90°, SAE 8 - male JIC 37° x female JIC 37° swivel (8042 & 10042)
	8760495	1	Tee, Female Branch, SAE 8 - male JIC 37° x female JIC 37° swivel (10054 Only)
29	8760415	1	Nut, SAE 16 - JIC 37°
30	8770159	1	Reducer, Tube End, SAE 16-8 - JIC 37°
31	8760529	1	Tee, Female Run, SAE 16 - male JIC 37° x female JIC 37° swivel
32	8760311	1	Elbow, 90° SAE 6 - male JIC 37° x male str. thd. o-ring
33	8760276	1	Elbow, 45°, SAE 6 - male JIC 37° x female JIC 37° swivel
34	8760451	1	Plug, Hex Hd., SAE 6 - male str. thd. o-ring
35	8405209	1	Clamp, T-Bolt Band
36	8303519	4	HHCS M12 x 40mm
37	8307025	4	Washer, Lock M12
38	8307220	4	Washer, Flat M12

BOOM RAISE/LOWER & EXTEND/RETRACT CIRCUIT

(S/N 9908 & Before)

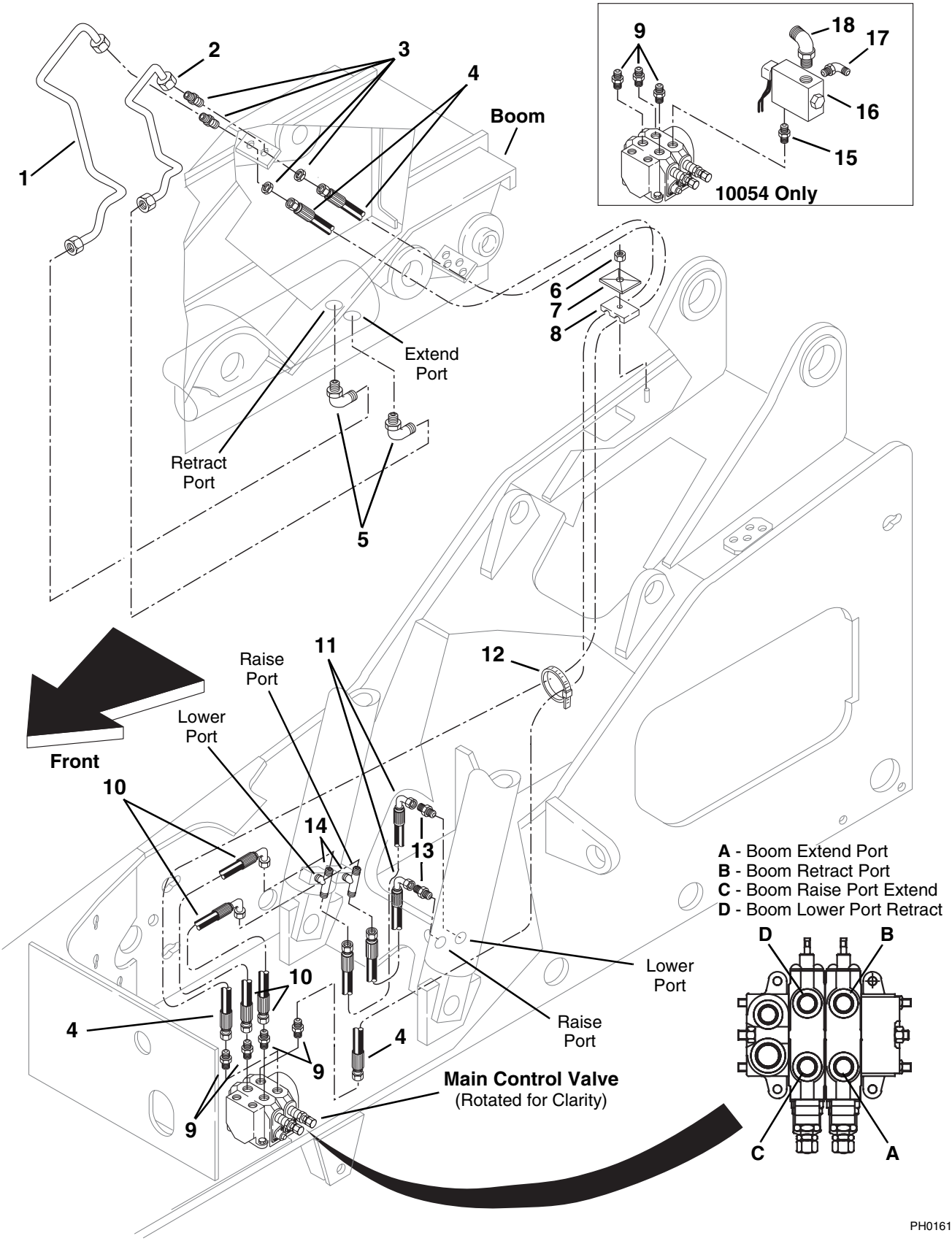

BOOM RAISE/LOWER & EXTEND/RETRACT CIRCUIT

(S/N 9908 & Before)

Item No.	Part Number	Qty.	Description
1	7133802	1	Tube, Boom Ext. Cyl.
2	7133812	1	Tube, Boom Ext. Cyl.
3	8760039	2	Union, Bulkhead, Straight, SAE 12 - male JIC 37°
4	2713262	2	Hose, .62 I.D. x 148" Long
5	8760305	2	Elbow, 90° SAE 12 - male JIC 37° x male str. thd. o-ring
6	8305626	1	Nut, Hex Lock Elastic 5/16-18
7	8769128	1	Cover, Clamp
8	8769127	1	Clamp, Twin (Only half used)
9	8760109	4	Connector, Straight, SAE 12 - male JIC 37° x male str. thd. o-ring (8042/10042 Only)
	8760109	3	Connector, Straight, SAE 12 - male JIC 37° x male str. thd. o-ring (10054 Only)
10	2713282	2	Hose, .62 I.D. x 52" Long
11	2711852	2	Hose, .50 I.D. x 21" Long
12	8584007	1	Tie Wrap, Heavy Duty 5"
13	8760111	2	Connector, Straight, SAE 8-12 - male JIC 37° x male str. thd. o-ring
14	8760483	2	Tee, Male Branch, SAE 12 - male JIC 37° x male str. thd. o-ring
15	8770030	1	Union, SAE 12 - male str. thd. o-ring
16	8902251	1	Valve, Boom Extend Lockout
17	8770012	1	Elbow, 90° SAE 6-4 - male JIC 37° x male str. thd. o-ring
18	8760317	1	Elbow, 45° SAE 12 - male JIC 37° x male str. thd. o-ring

BOOM RAISE/LOWER & EXTEND/RETRACT CIRCUIT

(S/N 9909 & After)

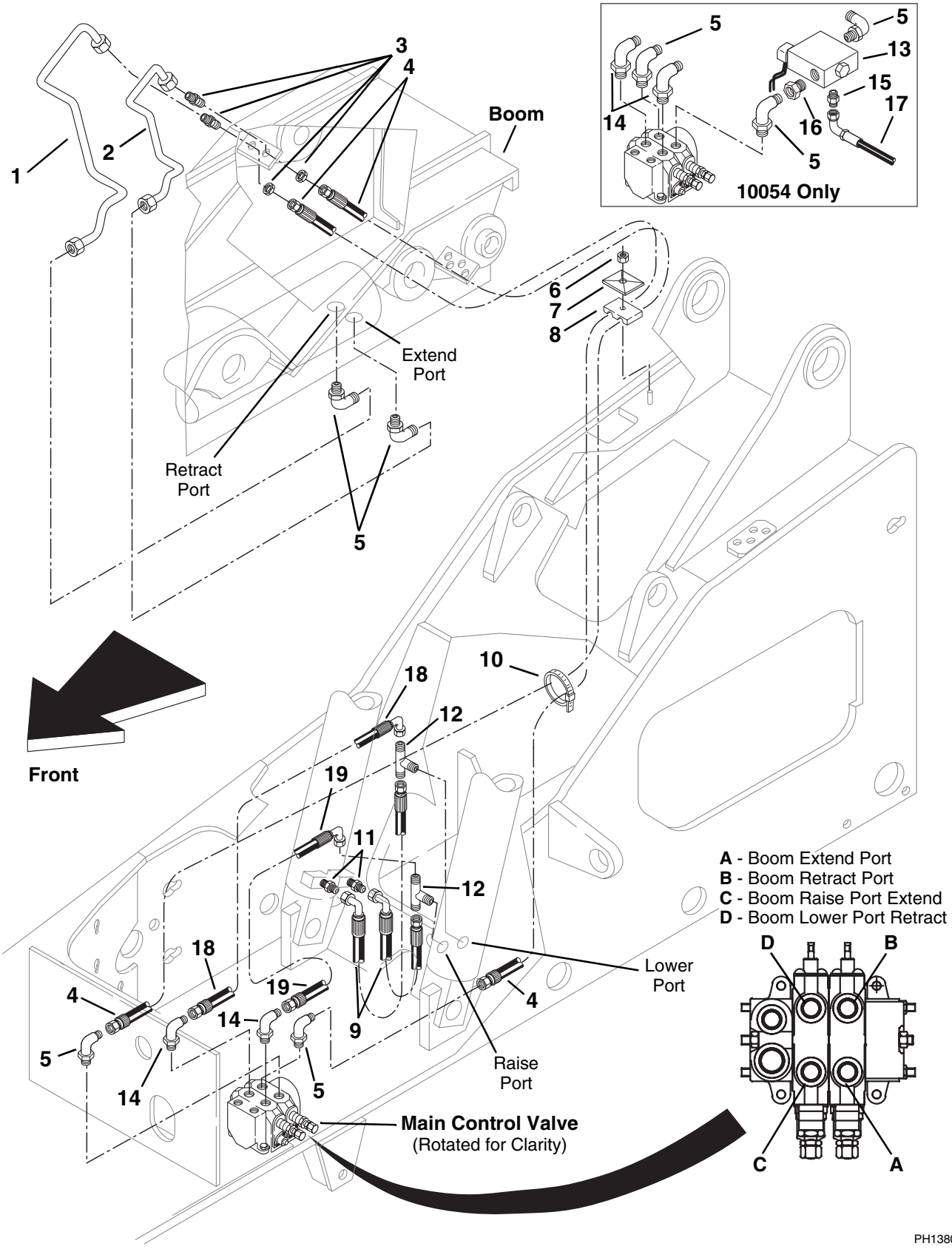

BOOM RAISE/LOWER & EXTEND/RETRACT CIRCUIT

(S/N 9909 & After)

Item No.	Part Number	Qty.	Description
1	7133802	1	Tube, Boom Ext. Cyl.
2	7133812	1	Tube, Boom Ext. Cyl.
3	8760039	2	Union, Bulkhead, Straight, SAE 12 - male JIC 37°
4	7150452	2	Hose, .62 I.D. x 148" Long
5	8760305	5	Elbow, 90° SAE 12 - male JIC 37° x male str. thd. o-ring
6	8305626	1	Nut, Hex Lock Elastic 5/16-18
7	8769128	1	Cover, Clamp
8	8769127	1	Clamp, Twin (Only half used)
9	2711852	2	Hose, .50 I.D. x 21" Long
10	8584007	1	Tie Wrap, Heavy Duty 5"
11	8760111	2	Connector, Straight, SAE 8-12 - male JIC 37° x male str. thd. o-ring
12	8760483	2	Tee, Male Branch, SAE 12 - male JIC 37° x male str. thd. o-ring
13	8902251	1	Valve, Boom Extend Lockout
14	8770157	2	Elbow, Long, 90° SAE 12-12 - male JIC 37° x male str. thd. o-ring
15	8760134	1	Connector, Straight, SAE 6-4 - male JIC 37° x male str. thd. o-ring
16	8760138	1	Connector, Straight, SAE 12-12 - male str. thd. o-ring x female JIC 37° swivel
17	2716516	1	Hose, .38 I.D. x 16" Long
18	7150442	1	Hose, .625 I.D. x 38" Long
19	7150432	1	Hose, .625 I.D. x 34.5" Long

ATTACHMENT TILT AND SLAVE CIRCUIT

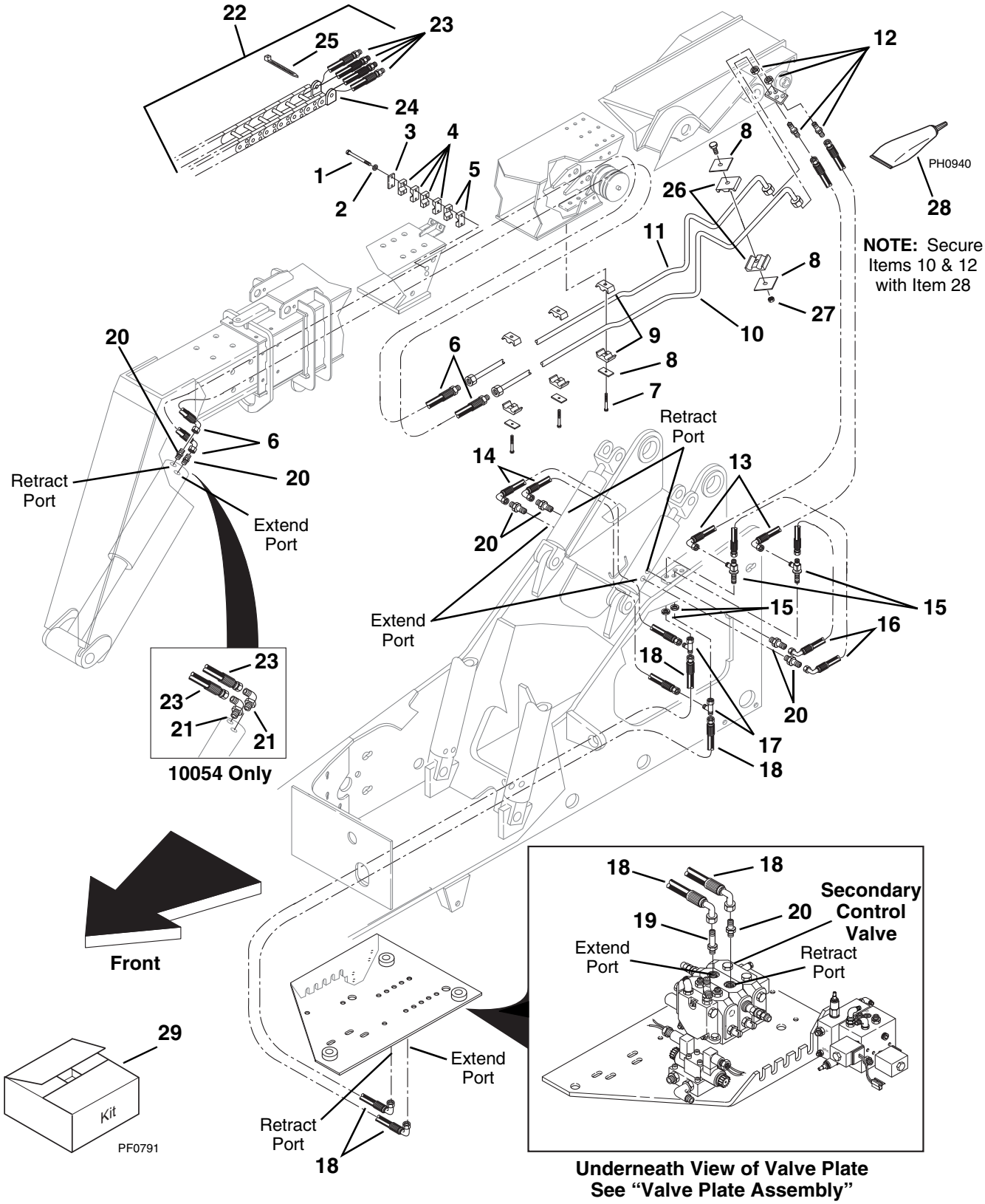

ATTACHMENT TILT AND SLAVE CIRCUIT

Item No.	Part Number	Qty.	Description
1	8303752	2	HHCS, 5/16-18 x 3-1/2"
2	8307004	2	Washer, Lock 5/16"
3	8769149	1	Cover Plate, Single Clamp
4	8750003	4	Clamp, .62 Dia. Single (8042/10042 Only)
	8750003	6	Clamp, .62 Dia. Single (10054 Only)
5	8769161	2	Clamp, .75 Dia. Single (8042/10042 Only)
6	2713452	2	Hose Assembly, Boom (8042/10042 Only)
7	8303739	3	HHCS, 5/16-18 x 1-1/4"
8	8769123	5	Cover Plate, Twin
9	8769122	3	Clamp, .62 Dia. Twin
10	7133823	1	Tube, Boom Attachment Tilt - Retract
11	7133833	1	Tube, Boom Attachment Tilt - Extend
12	8760037	2	Union, Bulkhead, Straight, SAE 10 - male JIC 37°
13	2713222	2	Hose, .50 I.D. x 34" Long
14	6605202	2	Hose, .50 I.D. x 44-1/2" Long
15	8760477	2	Tee, Bulkhead, Male Run, SAE 8 - male JIC 37°
16	6604982	2	Hose, .50 I.D. x 22" Long
17	8760493	2	Tee, Female Run, SAE 8 - male JIC 37° x female JIC 37° swivel
18	2712872	2	Hose, .50 I.D. x 153" Long
19	8760143	1	Connector, Long, SAE 8 - male JIC 37° x male str. thd. o-ring
20	8760107	7	Connector, Straight, SAE 8 - male JIC 37° x male str. thd. o-ring (8042/10042 Only)
	8760107	5	Connector, Straight, SAE 8 - male JIC 37° x male str. thd. o-ring (10054 Only)
21	8760307	2	Elbow, 45° SAE 8 - male JIC 37° x male str. thd. o-ring (10054 Only)
22	7112452	1	Hose and Carrier Assembly (Includes Items 23 thru 25)
23	2713642	4	Hose Assembly
24	NSS	1	Carrier, Hose (For Service, Order Item 22)
25	8584001	2	Tie Wrap
26	8769140	1	Clamp Set, .675 twin
27	8305626	1	Nut, Hex Lock 5/16-18
28	8526048	AR	Sealant
			KITS
29	7117812	1	Kit, Hose Carrier Update
			NOTE: Kit Purpose: To bring Early Production Hose Carrier (Item 24) up-to-date with solid bars in every other link instead of in every link, with poly rollers added to bars, and with adhesive patch coated screws instead of liquid sealant application.

FRAME TILT AND STABILIZER CIRCUIT

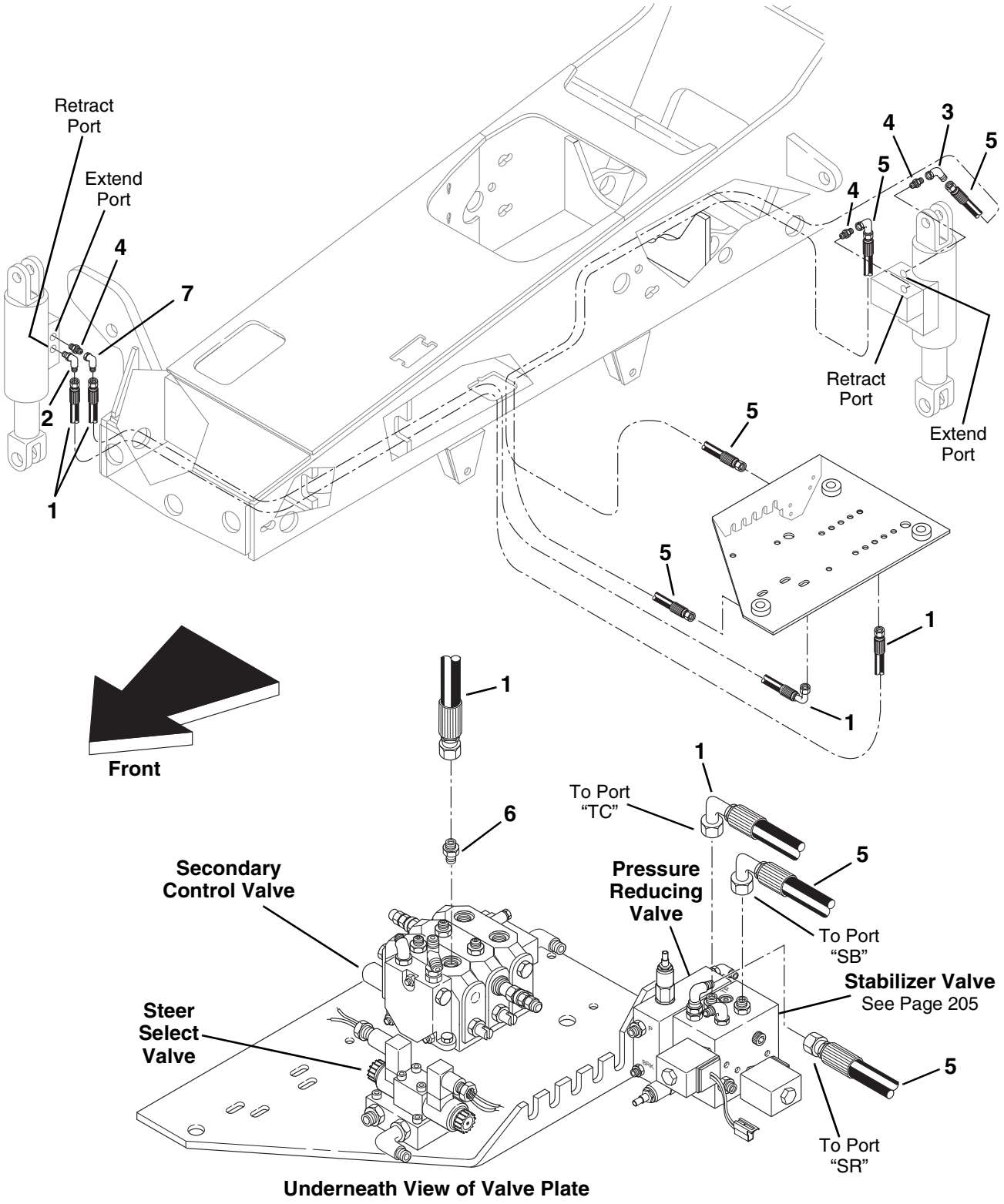

Underneath View of Valve Plate

PH0181

FRAME TILT AND STABILIZER CIRCUIT

Item No.	Part Number	Qty.	Description
1	2711892	2	Hose, .38 I.D. x 130" Long
2	8770012	1	Elbow, 90° SAE 6-4 - male JIC 37° x male str. thd. o-ring
3	8760276	1	Elbow, 45°, SAE 6 - male JIC 37° x female JIC 37° swivel
4	8760134	3	Connector, Straight, SAE 6-4 - male JIC 37° x male str. thd. o-ring
5	2713332	2	Hose, .38 I.D. x 96" Long
6	8760110	1	Connector, Straight, SAE 6-8 - male JIC 37° x male str. thd. o-ring
7	8760268	1	Elbow, 90°, SAE 6 - male JIC 37° x female JIC 37° swivel

SERVICE BRAKE AND DE-CLUTCH CIRCUIT

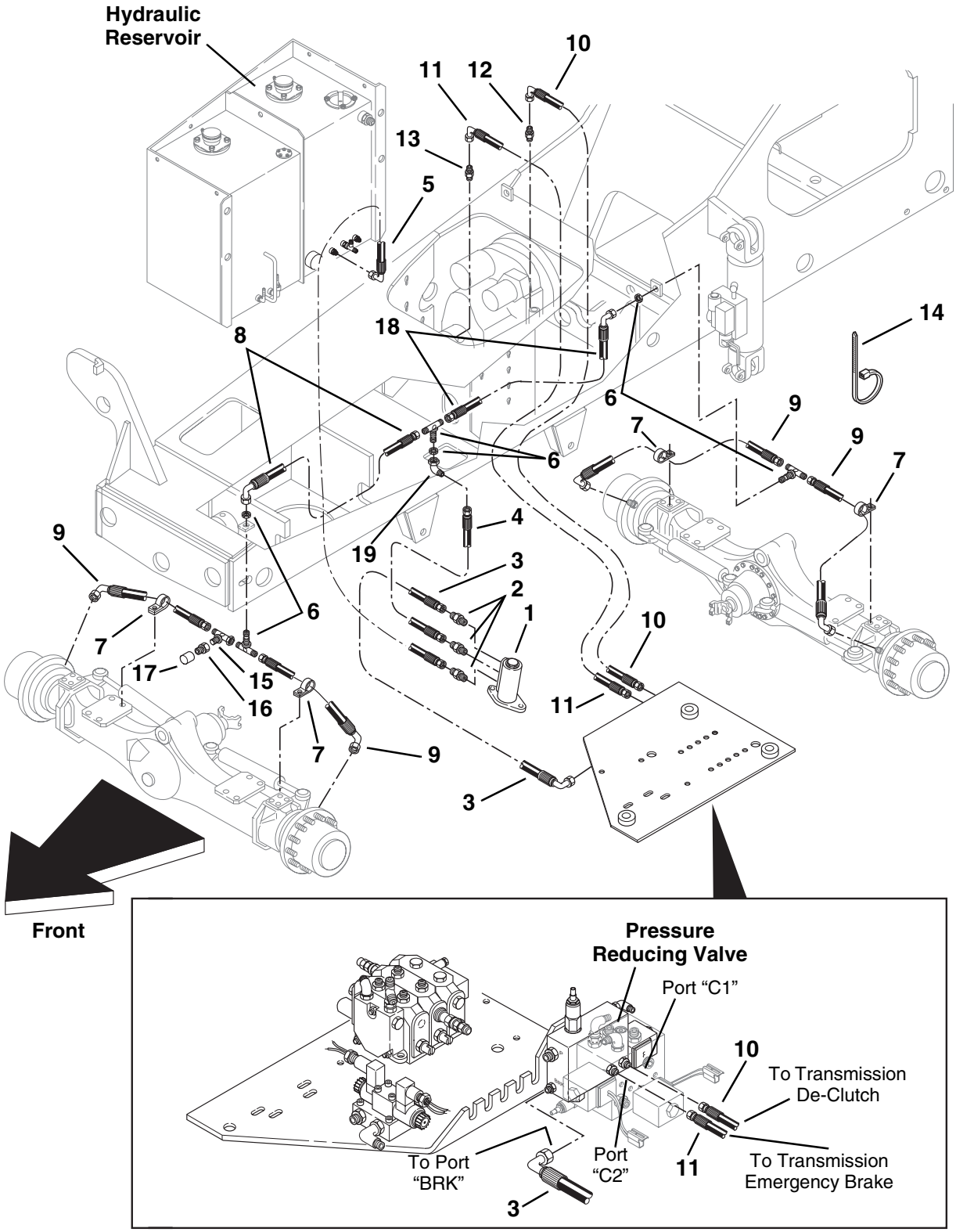

Underneath View of Valve Plate - See "Valve Plate Assembly"

PH0193

SERVICE BRAKE AND DE-CLUTCH CIRCUIT

Item No.	Part Number	Qty.	Description
1	NLA	1	Valve, Brake (S/N 0653 & Before) For Service, Order P/N 8902222
	7119813	1	Kit, Brake Valve (S/N 0654 thru 1167)
	8902222	1	Valve, Brake (S/N 1168 & After)
2	8760110	3	Connector, Straight, SAE 6-8 - male JIC 37° x male str. thd. o-ring
3	2712332	1	Hose, .38 I.D. x 50" Long
4	2705122	1	Hose, .38 I.D. x 50" Long
5	6604972	1	Hose, .38 I.D. x 90" Long
6	8760455	3	Tee, Bulkhead, Male Branch, SAE 6 - male JIC 37°
7	8406105	4	Clamp
8	6605772	1	Hose, .38 I.D. x 66" Long
9	2712092	4	Hose, .25 I.D. x 49" Long
10	6611752	1	Hose, .25 I.D. x 52" Long
11	6604712	1	Hose, .25 I.D. x 28" Long
12	8760011	1	Connector, Straight, SAE 4-2P - male JIC 37° x male NPT
13	8760113	1	Connector, Straight, SAE 4 - male JIC 37° x male str. thd. o-ring
14	8584007	1	Tie Wrap, 5" (Hose Support)
15	8760501	1	Tee, Female Run, SAE 6 - male JIC 37° x female JIC 37° swivel (S/N 9909 & After)
16	8430046	1	Nipple, Diagnostic (S/N 9909 & After)
17	8430032	1	Plug, Dust (S/N 9909 & After)
18	6605772	1	Hose, .38 I.D. x 66" Long (S/N 9908 & Before)
	2712012	1	Hose, .38 I.D. x 75" Long (S/N 9909 & After)
19	8760276	1	Elbow, 45°, SAE 6 - male JIC 37° x female JIC 37° swivel (S/N 9909 & After)

VALVE PLATE ASSEMBLY

(Without Outriggers 8042 Only)

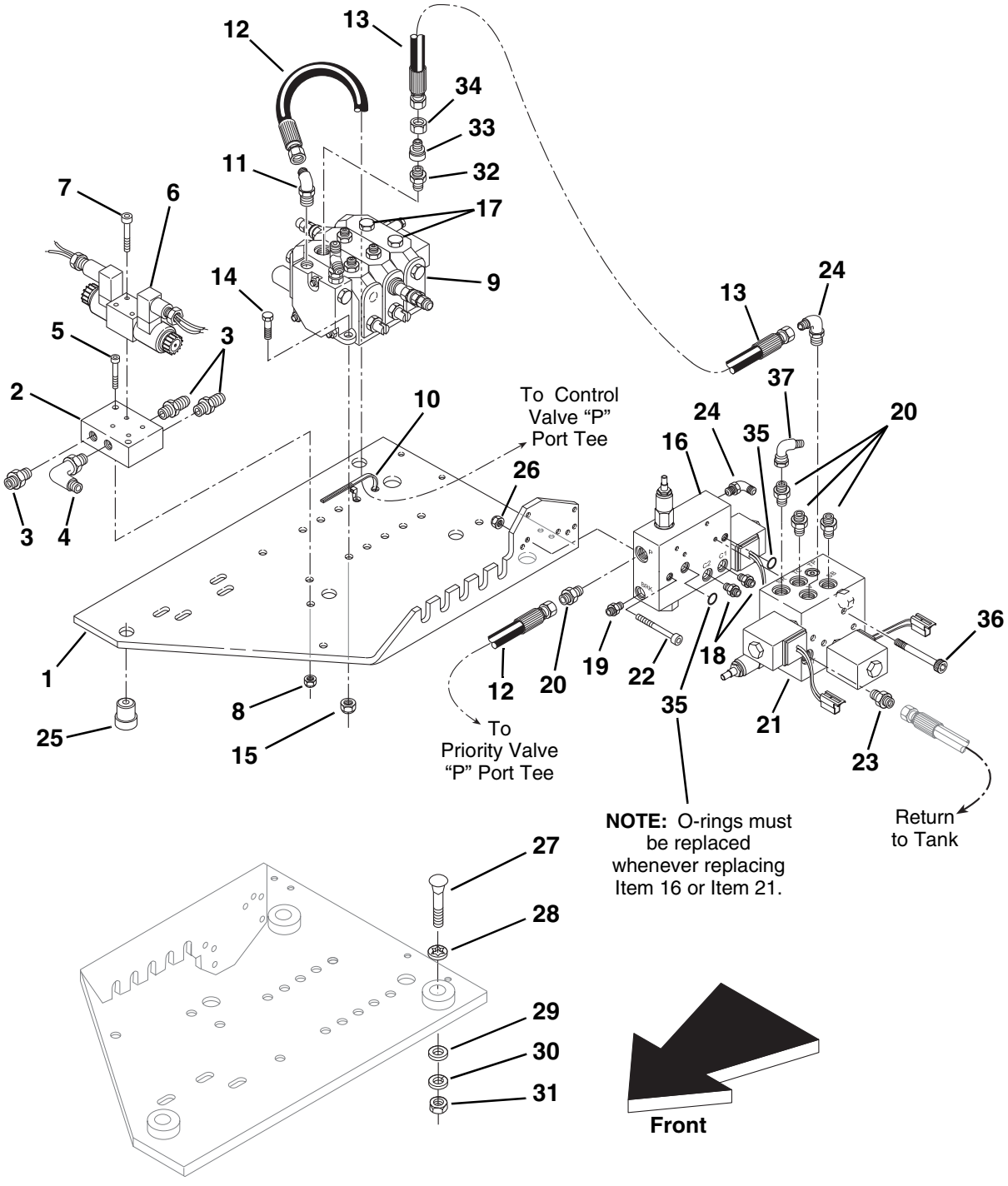

Valve Plate Shown as Mounted for Clarity

PH0122

VALVE PLATE ASSEMBLY

(Without Outriggers 8042 Only)

Item No.	Part Number	Qty.	Description
1	7098293	1	Plate, Valve Mounting
2	8902111	1	Body, Steer Select Valve
3	8760110	3	Connector, Straight, SAE 6-8 - male JIC 37° x male str. thd. o-ring
4	8760313	1	Elbow, 90° SAE 6-8 - male JIC 37° x male str. thd. o-ring
5	8304608	2	SHCS, 5/16-18 x 1-1/2"
6	8902137	1	Valve, Steer Select (See Page 203 For Parts Breakdown)
7	8304631	4	SCHS, #10-24 x 2"
8	8305626	2	Nut, Lock 5/16-18
9	7115712	1	Kit, Secondary Control Valve (Does Not Include Fittings) S/N 8042-0266 & Before (See Page 201 For Parts Breakdown)
	8902152	1	Secondary Control Valve (Does Not Include Fittings) S/N 8042-0267 & After (See Page 201 For Parts Breakdown)
10	8584001	1	Tie Wrap, 3/16" Wide x 6-11/16" Long
11	8760303	1	Elbow, 90° SAE 8 - male JIC 37° x male str. thd. o-ring
12	6604882	2	Hose, 1/2" I.D. x 62" Long
13	6605652	1	Hose, 3/8" I.D. x 19" Long
14	8303675	3	HHCS, 3/8-16 x 1-1/4"
15	8305645	3	Nut, Lock 3/8-16
16	8902255	1	Valve, Pressure Reducing (See Page 205 For Parts Breakdown) (S/N 0653 & Before)
	8902266	1	Valve, Pressure Reducing (See Page 205 For Parts Breakdown) (S/N 0654 & After)
17	8760419	2	Plug, Hex Hd., SAE 8 - male str. thd. o-ring
18	8760113	2	Connector, Straight, SAE 4 - male JIC 37° x male str. thd. o-ring
19	8760136	1	Connector, Straight, SAE 4-6 - male JIC 37° x male str. thd. o-ring
20	8760107	1	Connector, Straight, SAE 8 - male JIC 37° x male str. thd. o-ring
21	8902267	1	Valve, Axle Stabilizer (See Page 205 For Parts Breakdown)
22	8310137	2	SHCS, 1/4-20 x 2-1/2"
23	8760117	4	Connector, Straight, SAE 6 - male JIC 37° x male str. thd. o-ring
24	8760311	2	Elbow, 90° SAE 6 - male JIC 37° x male str. thd. o-ring
25	8278008	4	Isolator
26	8305624	2	Nut, Lock 1/4-20
27	8304042	4	Bolt, Carriage 3/8-16 x 2"
28	8310070	4	Bolt, Retainer 3/8"
29	7057141	4	Washer, Rebound
30	8307005	4	Washer, Lock 3/8"
31	8305008	4	Nut, Hex 3/8-16
32	8760107	1	Connector, Straight, SAE 8 - male JIC 37° x male str. thd. o-ring
33	8760458	1	Reducer, Tube End, SAE 8-6 - JIC 37°
34	8760407	1	Nut, SAE 8 - JIC 37°
35	8630000	2	O-Ring
36	8310153	4	SHCS, 1/4-20 x 3"
37	8760268	1	Elbow, 90°, SAE 6 - male JIC 37° x female JIC 37° swivel

VALVE PLATE ASSEMBLY

(With Outriggers 10042/10054 Only)

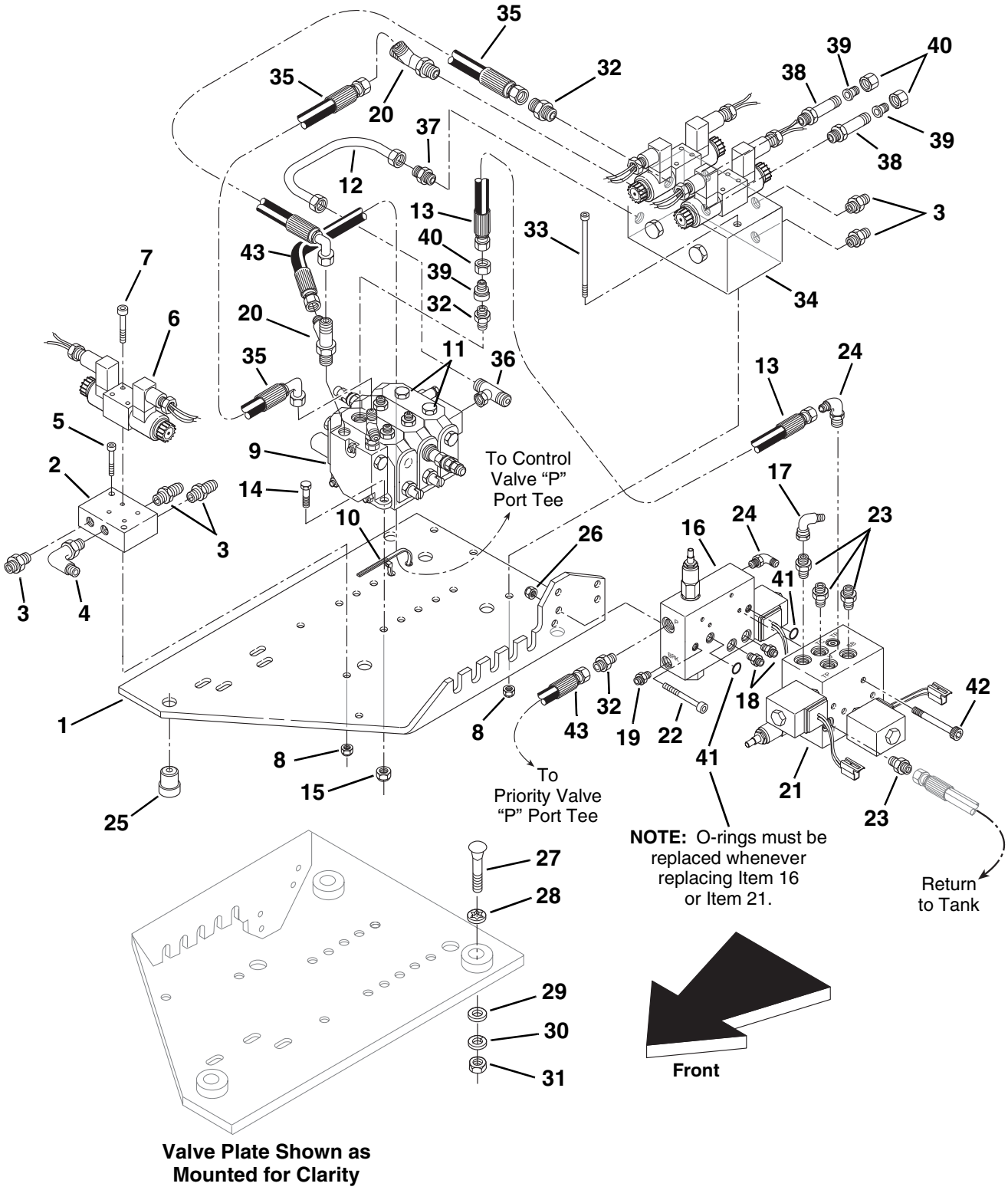

PH0112

VALVE PLATE ASSEMBLY

(With Outriggers 10042/10054 Only)

Item No.	Part Number	Qty.	Description
1	7098293	1	Plate, Valve Mounting
2	8902111	1	Body, Steer Select Valve
3	8760110	5	Connector, Straight, SAE 6-8 - male JIC 37° x male str. thd. o-ring
4	8760313	1	Elbow, 90° SAE 6-8 - male JIC 37° x male str. thd. o-ring
5	8304608	2	SHCS, 5/16-18 x 1-1/2"
6	8902137	1	Valve, Steer Select (See Page 203 For Parts Breakdown)
7	8304631	4	SCHS, #10-24 x 2"
8	8305626	4	Nut, Lock 5/16-18
9	7115712	1	Kit, Secondary Control Valve (Does Not Include Fittings) S/N 0266 & Before (See Page 201 For Parts Breakdown)
	8902152	1	Secondary Control Valve (Does Not Include Fittings) S/N 0267 & After (See Page 201 For Parts Breakdown)
10	8584001	1	Tie Wrap, 3/16" Wide x 6-11/16" Long
11	8760419	2	Plug, Hex Hd., SAE 8 - male str. thd. o-ring
12	7111122	1	Tube Assembly (S/N 10881 & Before)
	2716545	1	Hose, .38 x 17" (S/N 10882 & After)
13	6605652	1	Hose, 3/8" I.D. x 19" Long
14	8303675	3	HHCS, 3/8-16 x 1-1/4"
15	8305645	3	Nut, Lock 3/8-16
16	8902266	1	Valve, Pressure Reducing (See Page 205 For Parts Breakdown)
17	8760268	1	Elbow, 90°, SAE 6 - male JIC 37° x female JIC 37° swivel
18	8760113	2	Connector, Straight, SAE 4 - male JIC 37° x male str. thd. o-ring
19	8760136	1	Connector, Straight, SAE 4-6 - male JIC 37° x male str. thd. o-ring
20	8760510	2	Tee, Male Run, SAE 8 - male JIC 37° x male str. thd. o-ring
21	8902267	1	Valve, Stabilizer (See Page 205 For Parts Breakdown)
22	8310137	2	SHCS, 1/4-20 x 2-1/2"
23	8760117	4	Connector, Straight, SAE 6 - male JIC 37° x male str. thd. o-ring
24	8760311	2	Elbow, 90° SAE 6 - male JIC 37° x male str. thd. o-ring
25	8278008	4	Isolator
26	8305624	2	Nut, Lock 1/4-20
27	8304042	4	Bolt, Carriage 3/8-16 x 2"
28	8310070	4	Bolt, Retainer 3/8"
29	8307204	4	Washer, Flat 3/8"
30	8307005	4	Washer, Lock 3/8"
31	8305008	4	Nut, Hex 3/8-16
32	8760107	3	Connector, Straight, SAE 8 - male JIC 37° x male str. thd. o-ring
33	8310138	2	SHCS, 5/16-18 x 4" (S/N 10881 & Before)
	8310081	2	SHCS, 5/16-18 x 4" (S/N 10882 & After)
34	8902141	1	Valve, Outrigger (See Page 203 For Parts Breakdown) (S/N 10881 & Before)
	8902193	1	Valve, Outrigger (See Page 203 For Parts Breakdown) (S/N 10882 & After)
35	2713322	2	Hose, 1/2" I.D. x 35" Long
36	8760459	1	Tee, Female Branch, SAE 6-6 - male JIC 37° x female JIC 37° swivel
37	8760117	1	Connector, Straight, SAE 6 - male JIC 37° x male str. thd. o-ring (S/N 10881 & Before)
	8760141	1	Connector, Male Tube End w/Outlet Check, 6-6 (S/N 10882 & After)
38	8760143	2	Connector, Long, SAE 8 - male JIC 37° x male str. thd. o-ring (S/N 10881 & Before)
	8760117	2	Connector, Straight, SAE 6 - male JIC 37° x male str. thd. o-ring (S/N 10882 & After)
39	8760458	3	Reducer, Tube End, SAE 8-6 - JIC 37° (S/N 10881 & Before)
	8760460	2	Reducer, SAE 8-6 - male str. thd. o-ring x female internal o-ring boss (S/N 10882 & After)
40	8760407	3	Nut, SAE 8 - JIC 37° (S/N 10881 & Before)
41	8630000	2	O-Ring
42	8310153	4	SHCS, 1/4-20 x 3"
43	6604882	2	Hose, 1/2" I.D. x 62" Long

TRANSMISSION COOLING CIRCUIT
(S/N 9908 & Before)

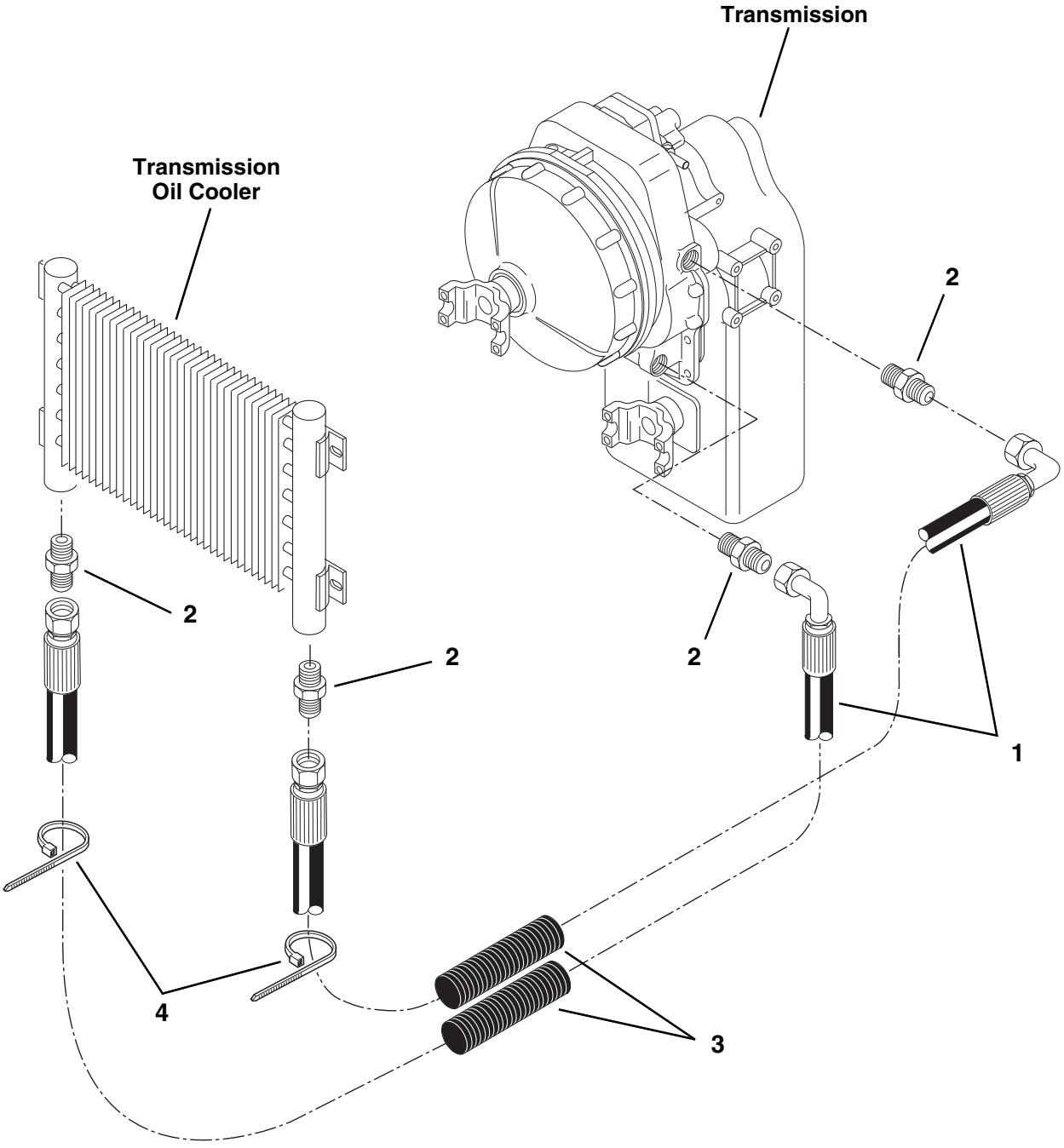

PH0202

TRANSMISSION COOLING CIRCUIT

(S/N 9908 & Before)

Item No.	Part Number	Qty.	Description
1	6604912	2	Hose, .75 I.D. x 113" Long
2	8760109	4	Connector, Straight, SAE 12 - male JIC 37° x male str. thd. o-ring
3	7124471	2	Conduit, 1 I.D. x 12.5"
4	8584007	2	Tie, plastic, .5 x 20.1"

TRANSMISSION COOLING CIRCUIT
(S/N 9909 & After)

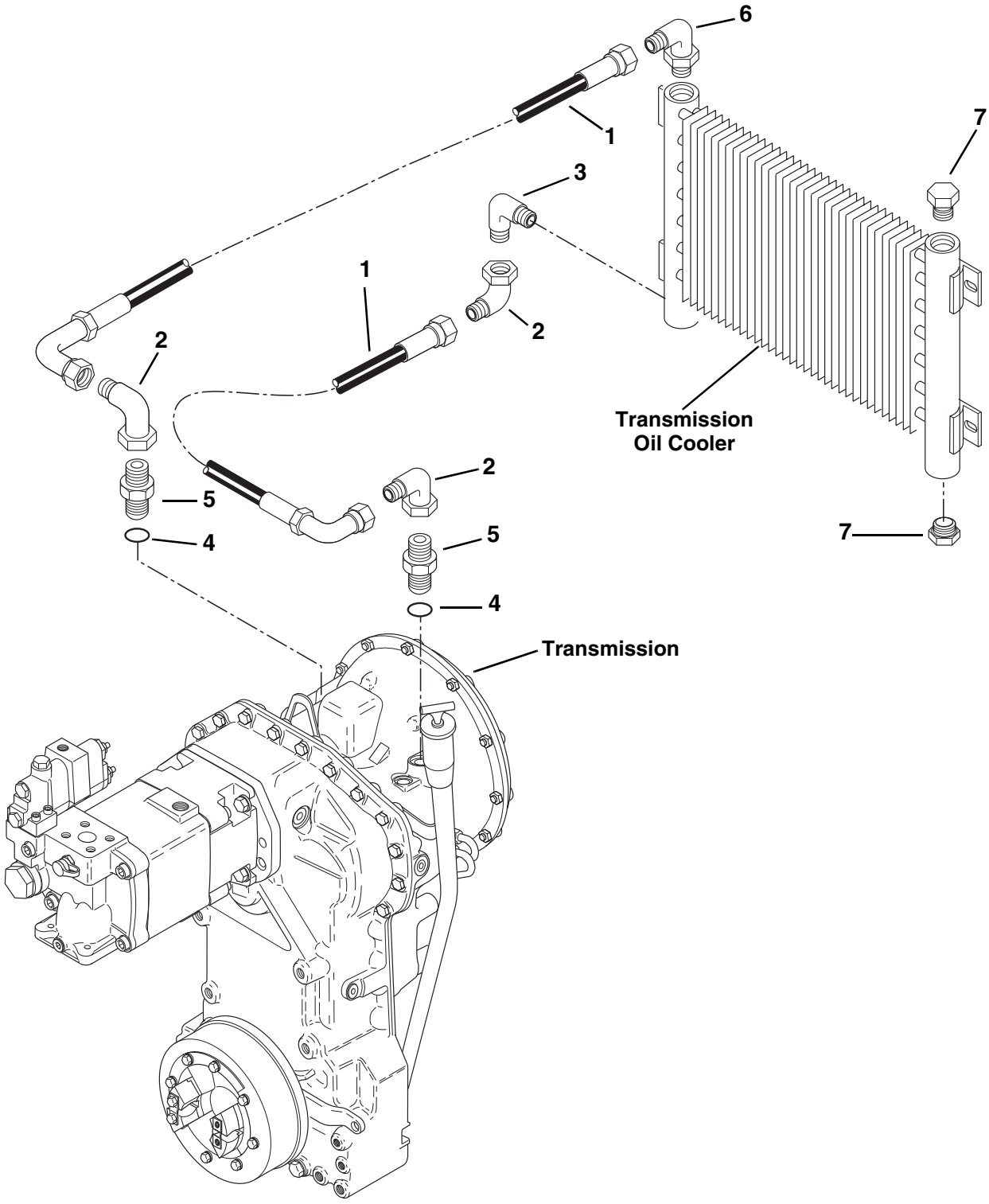

PH1390

TRANSMISSION COOLING CIRCUIT

(S/N 9909 & After)

Item No.	Part Number	Qty.	Description
1	7150282	2	Hose, .75 I.D. x 105" Long
2	8760254	3	Elbow, 90°, SAE 12 - male JIC 37° x female JIC 37° swivel
3	8760305	1	Elbow, 90° SAE 12 - male JIC 37° x male str. thd. o-ring
4	8630017	2	O-Ring, 23mm x 2mm
5	8770158	2	Connector, M26 x 12 - 37° Flare
6	8770157	1	Elbow, Long, 90° SAE 12-12 - male JIC 37° x male str. thd. o-ring
7	8760431	2	Plug, Hex Hd., SAE 12 - male str. thd. o-ring

AUXILIARY HYDRAULIC CIRCUIT

(Optional)

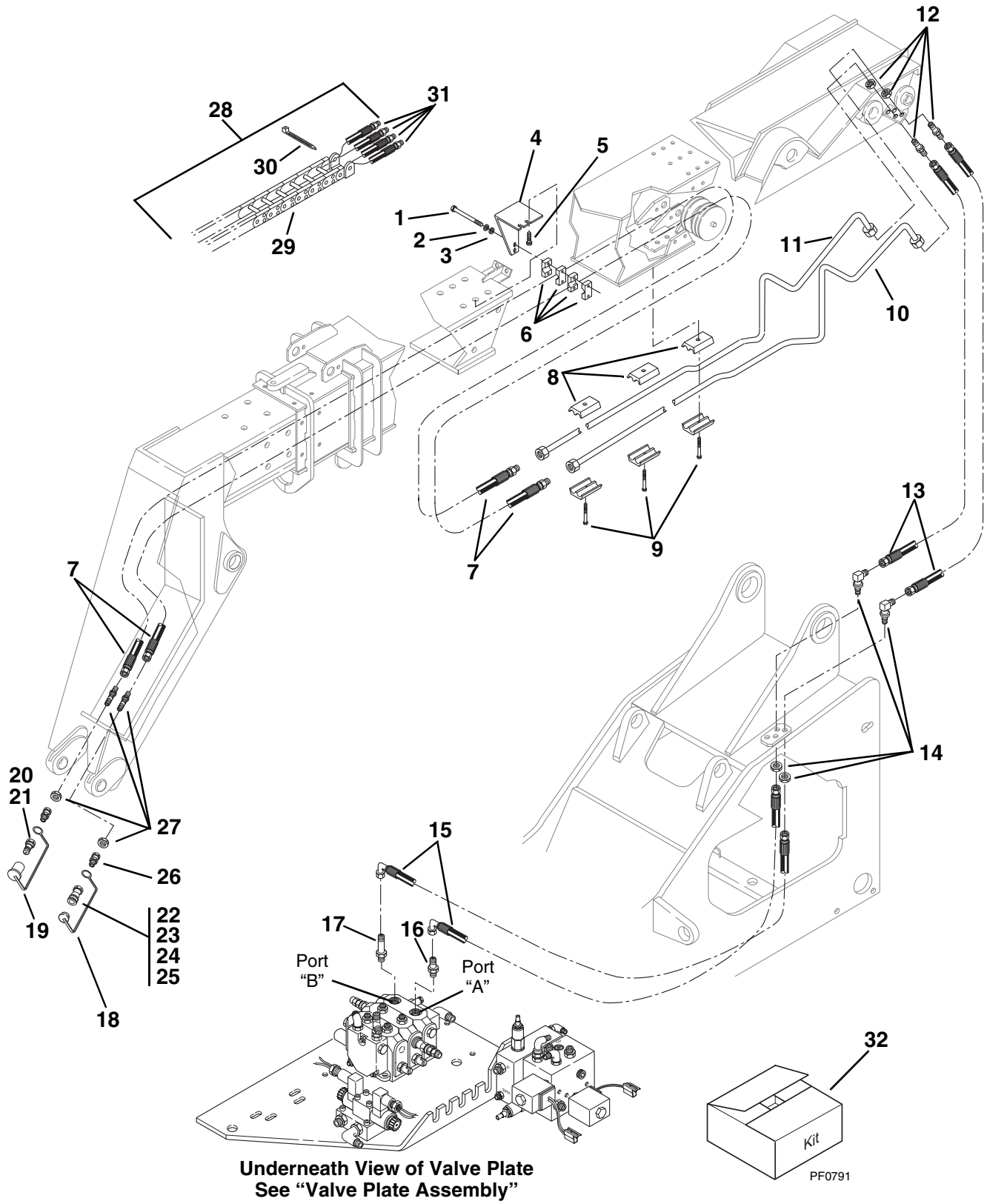

Underneath View of Valve Plate
See "Valve Plate Assembly"

PH0212

AUXILIARY HYDRAULIC CIRCUIT
(Optional)

Item No.	Part Number	Qty.	Description
1	8310081	2	HHCS, 5/16-18 x 5"
2	8307004	2	Washer, Lock .31"
3	8307203	2	Washer, Flat 5/16" Heavy
4	7111402	1	Support, Clamp
5	8303679	2	HHCS, 3/8-16 x 1-3/4" (8042/10042 Only)
	8303622	2	HHCS, 3/8-16 x 2" (10054 Only)
6	8769161	2	Clamp, Single .75 I.D. (8042/10042 Only)
	8750003	2	Clamp, Single .62 I.D. (10054 Only)
7	2713082	2	Hose, .50 I.D. x 426" Long (8042/10042 Only)
8	8769122	3	Clamp, Twin .62 I.D. (Two Halves)
9	8303757	3	HHCS, 5/16-18 x 2-1/2"
10	7133843	1	Tube Assembly
11	7133853	1	Tube Assembly
12	8760037	2	Union, Bulkhead, Straight, SAE 10 - male JIC 37°
13	2713212	2	Hose, .50 I.D. x 30" Long
14	8760264	2	Elbow, 90°, Bulkhead, SAE 8 - male JIC 37°
15	2712872	2	Hose, .50 I.D. x 153" Long
16	8760107	1	Connector, Straight, SAE 8 - male JIC 37° x male str. thd. o-ring
17	8760143	1	Connector, Long, SAE 8 - male JIC 37° x male str. thd. o-ring
18	8420055	1	Plug, Dust #8
19	8420053	1	Cap, Dust #8
20	8430006	1	Quick Disconnect, Male, SAE 8-8ORB - female internal (Includes Item 21)
21	8640029	1	Seal, Nose (Not Shown)
22	8430005	1	Quick Disconnect, Female, SAE 8-8ORB - female internal (Includes Items 23 thru 25)
23	8640029	1	Seal, Nose (Not Shown)
24	8640028	1	Seal, Coupler Body (Not Shown)
25	8640032	1	Back-Up Ring, Coupler Body Seal (Not Shown)
26	8760142	2	Connector, Straight, SAE 8-8 - male str. thd. o-ring x female JIC 37° swivel
27	8760045	2	Union, Bulkhead, Straight, SAE 8 - male JIC 37°
28	7112452	1	Hose and Carrier Assembly (Includes Items 29 thru 31)
29	NSS	1	Carrier, Hose (For Service, Order Item 28)
30	8584001	2	Tie Wrap
31	2713642	4	Hose Assembly
			KITS
32	7117812	1	Kit, Hose Carrier Update
			NOTE: Kit Purpose: To bring Early Production Hose Carrier (Item 29) up-to-date with solid bars in every other link instead of in every link, with poly rollers added to bars, and with adhesive patch coated screws instead of liquid sealant application.

OUTRIGGER HYDRAULIC CIRCUIT
(10042/10054 Only)

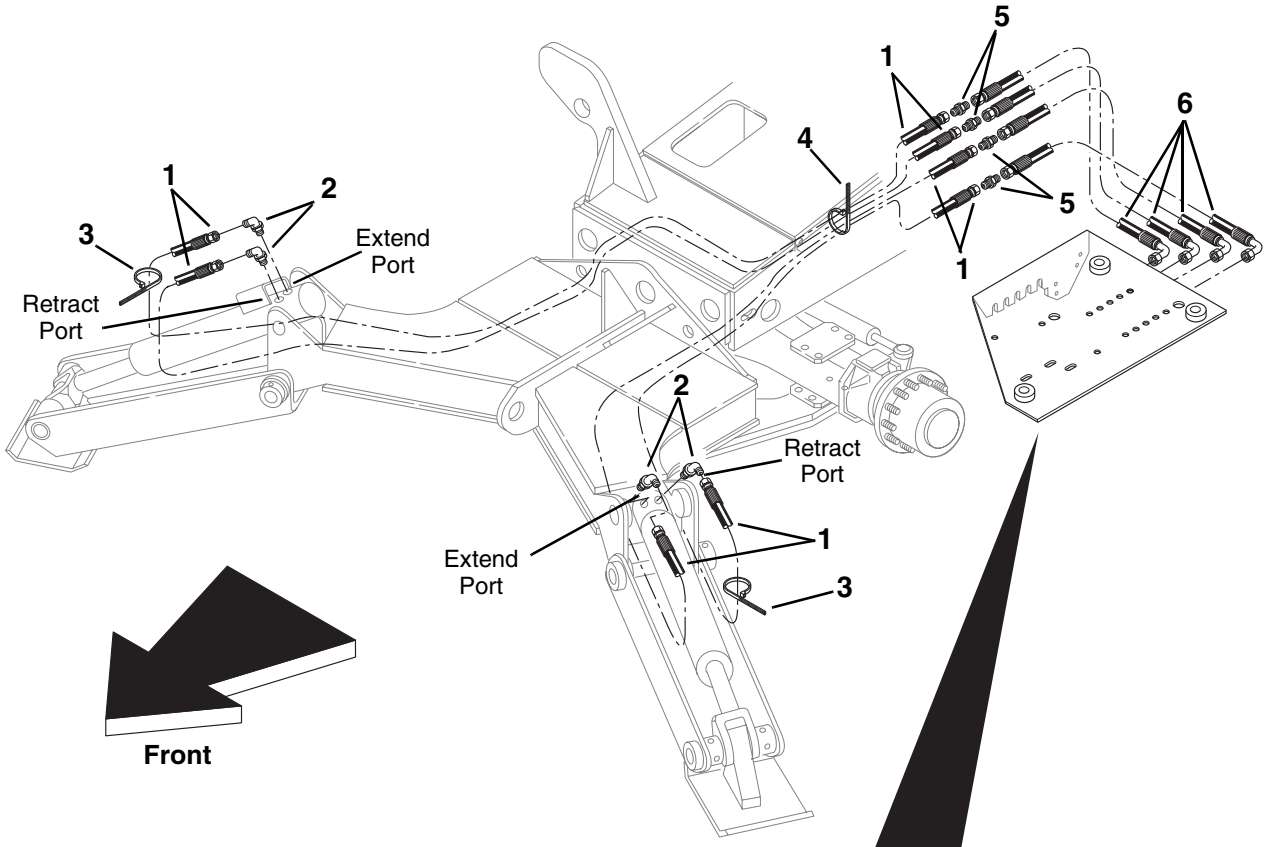

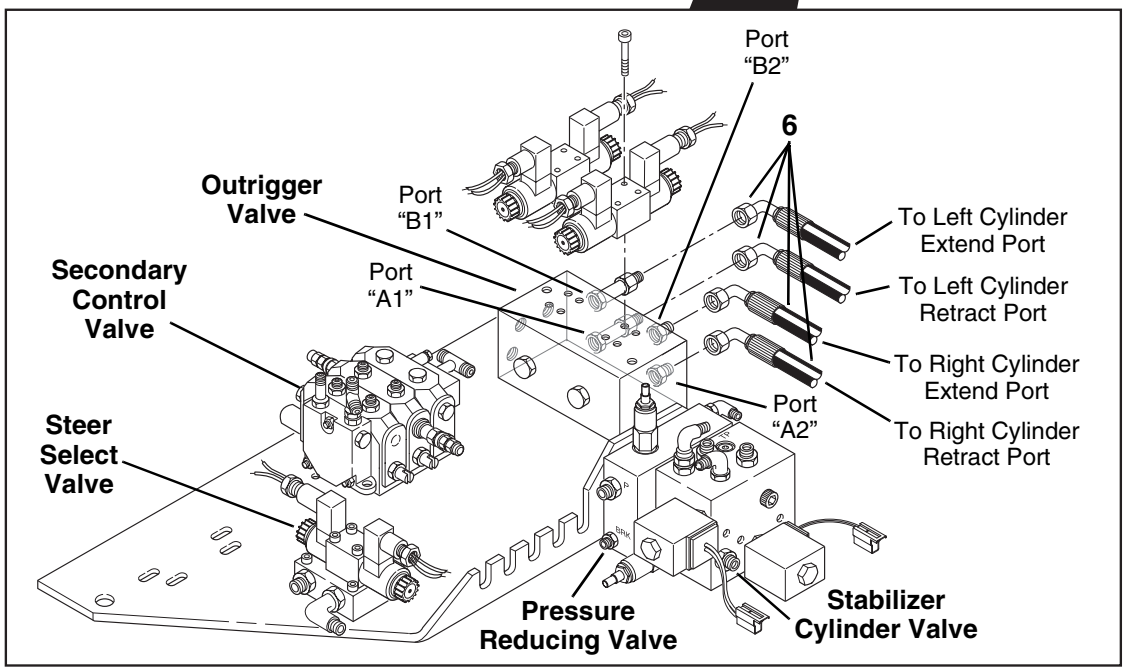

Underneath View of Valve Plate
See "Valve Plate Assembly"

PH0412

OUTRIGGER HYDRAULIC CIRCUIT

(10042/10054 Only)

Item No.	Part Number	Qty.	Description
1	2711982	4	Hose Assembly, 3/8" I.D.
2	8760311	4	Elbow, 90° SAE 6 - male JIC 37° x male str. thd. o-ring
3	8584001	2	Tie Wrap (10054 Only)
4	8584003	1	Tie Wrap
5	8760029	4	Union, SAE 6 - male JIC 37°
6	2712952	4	Hose Assembly, 3/8" I.D.

HYDRAULIC RESERVOIR

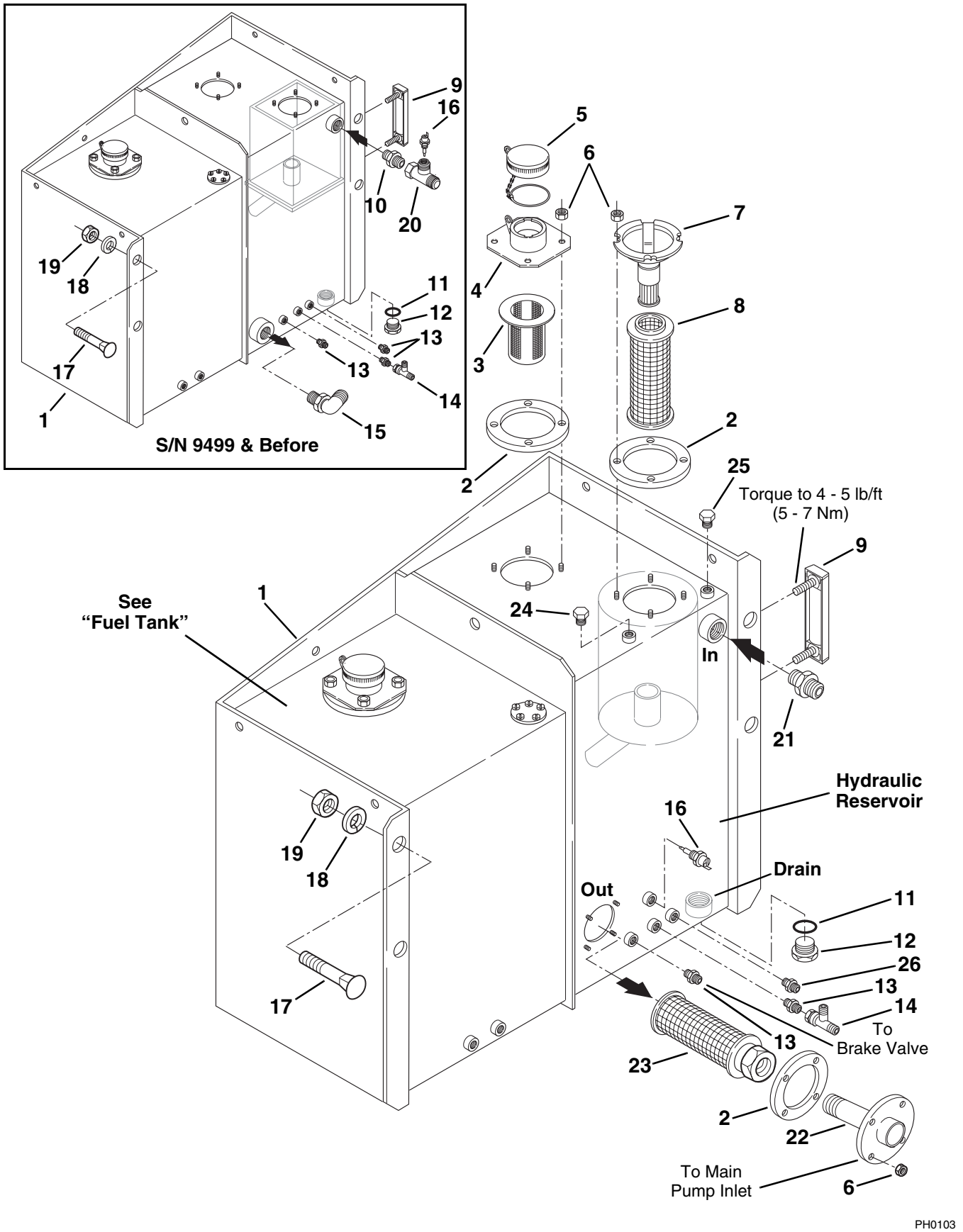

HYDRAULIC RESERVOIR

Item No.	Part Number	Qty.	Description
1	NLA	1	Tank, Fuel and Hydraulic (S/N 9499 & Before) (For Service, Order P/N 7136034)
	7136034	1	Tank, Fuel and Hydraulic (S/N 9500 & After)
2	NLA	2	Gasket (S/N 9499 & Before) (For Service, Order P/N 7138209)
	7138209	3	Gasket (S/N 9500 & After)
3	NLA	1	Screen, Fill Neck (For Service, Order P/N 8322022)
4	NLA	1	Neck, Filler/Breather (S/N 9499 & Before) (For Service, Order P/N 8322022 & 7138714)
	7138714	1	Neck, Filler/Breather (S/N 9500 & After)
5	NLA	1	Cap, Filler (S/N 9499 & Before) (For Service, Order P/N 8322022)
	8322029	1	Cap, Filler (S/N 9500 & After)
6	8305626	8	Nut, Hex Lock Elastic 5/16-18 (S/N 9499 & Before)
	8305626	12	Nut, Hex Lock Elastic 5/16-18 (S/N 9500 & After)
7	7094562	1	Head, Filter (with by-pass)
8	8320265	1	Element, Hydraulic Oil Filter
9	8464012	1	Gauge, Sight
10	8760118	1	Connector, Straight, SAE 12-16 - male JIC 37° x male str. thd. o-ring (S/N 9499 & Before)
11	8640903	1	O-Ring
12	8541435	1	Plug, Magnetic, Hex Hd., 1" str. thd.
13	8760110	3	Connector, Straight, SAE 6-8 - male JIC 37° x male str. thd. o-ring (S/N 9499 & Before)
	8760110	2	Connector, Straight, SAE 6-8 - male JIC 37° x male str. thd. o-ring (S/N 9500 & After)
14	8760501	1	Tee, Female Run, SAE 6 - male JIC 37° x female JIC 37° swivel
15	8760351	1	Elbow, 45° SAE 24 - male JIC 37° x male str. thd. o-ring (S/N 9499 & Before)
16	8223217	1	Switch, Hydraulic Temperature - 210°F (S/N 9499 & Before)
	8223226	1	Switch, Hydraulic Temperature - 195°F (S/N 9500 & After)
17	8310129	4	Bolt, Carriage 5/8-11 x 2-1/2"
18	8307009	4	Washer, Lock 5/8"
19	8305014	4	Nut, Hex 5/8-11
20	7098271	1	Tee, Swivel #12 Ported (S/N 9499 & Before)
21	8760102	1	Connector, Straight, SAE 16 - male JIC 37° x male str. thd. o-ring (S/N 9500 & After)
22	7138164	1	Tube Assembly (S/N 9500 & After)
23	8324029	1	Strainer (S/N 9500 & After)
24	8760419	1	Plug, Hex Hd., SAE 8 - male str. thd. o-ring (S/N 9500 & After)
25	8760451	1	Plug, Hex Hd., SAE 6 - male str. thd. o-ring (S/N 9500 & After)
26	8760107	1	Connector, Straight, SAE 8 - male JIC 37° x male str. thd. o-ring (S/N 9500 & After)

MAIN PUMP
(S/N 9908 & Before)

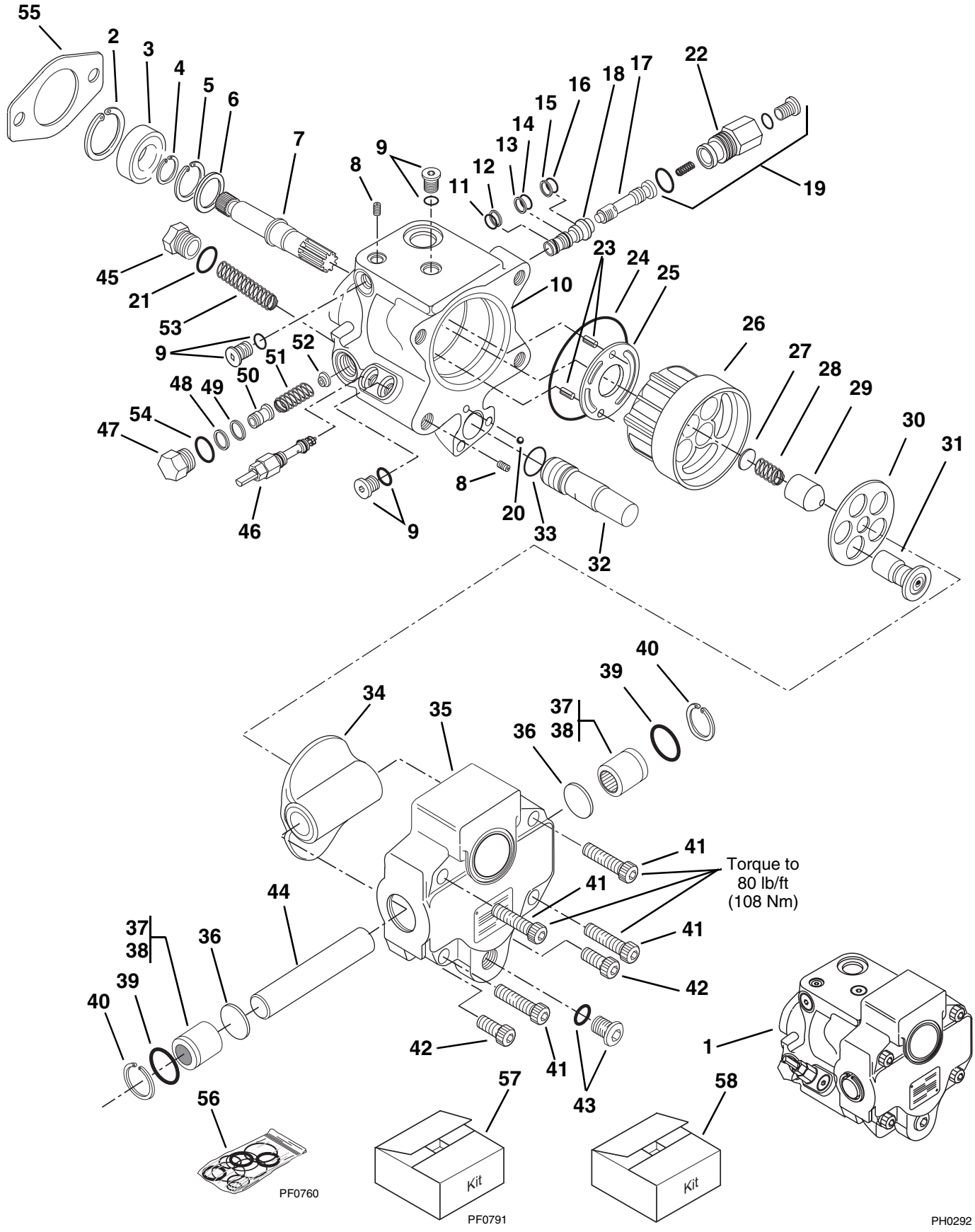

MAIN PUMP
(S/N 9908 & Before)

Item No.	Part Number	Qty.	Description
1	8444223	1	Pump, Complete (Includes Items 2 thru 54) (Also must order 7135391 Kit, Relief Valve Hoist/Extend)
2	8033896	1	Snap Ring
3	8033897	1	Ball Bearing
4	8033898	1	Snap Ring
5	8033899	1	Snap Ring
6	8033900	1	Shaft Seal
7	8033901	1	Shaft, Spline
8	8033902	2	Plug
9	8033903	3	Plug
10	8033904	1	Housing, Right Side
11	8033905	1	O-Ring
12	8033906	1	Back-up Ring
13	8033907	1	Back-up Ring
14	8033908	1	O-Ring
15	8033909	1	Back-up Ring
16	8033910	1	O-Ring
17	8033911	1	Spool
18	8033912	1	Sleeve
19	8034818	1	Cap & Plug Assembly
20	8033914	1	Ball
21	8033959	1	O-Ring
22	8033916	1	Cap Assembly, Airbleed
23	8033917	2	Roll Pin
24	8033918	1	O-Ring
25	8033919	1	Port Plate, CW
26	8033920	1	Barrel
27	8033921	2	Retainer
28	8033922	1	Spring, Barrel
29	8033923	1	Ball Seat
30	8033924	1	Retainer, Slipper
31	8033925	7	Piston Assembly
32	8033926	1	Piston, Servo
33	8033927	1	O-Ring
34	8033928	1	Swash Plate
35	8033929	1	Housing, Trunion
36	8033930	2	Thrust Washer
37	8033931	2	Trunion Cap
38	8033932	2	Needle Bearing
39	8033933	2	O-Ring
40	8033934	2	Snap Ring
41	8033935	4	HHCS
42	8033936	2	HHCS
43	8033937	1	Plug
44	8033938	1	Pin, Trunion
45	8033939	1	Plug, Servo
46	8034812	1	Screw Assembly, Adjusting
47	8033952	1	Cap, Differential
48	8033953	AR	Shim, Differential
49	8033954	AR	Shim, Differential
50	8033955	1	Piston
51	8033956	1	Spring, Modulator
52	8033957	1	Spring, Retaining
53	8033958	1	Spring, Servo
54	8033913	1	O-Ring
55	7099072	1	Gasket, Mounting
			KITS
56	8032752	1	Kit, Seal
57	7136374	1	Kit, Retrofits to a Current Production Pump (Includes Pump, Hoses, Hardware & Instructions) S/N 9499 & Before
58	7138340	1	Kit, Retrofits to a Current Production Pump (Includes Pump, Hoses, Hardware & Instructions) S/N 9500 thru 9908

MAIN PUMP
(S/N 9909 & After)

*Item	Torque values
2	13.3-17.8 lb/ft (18-24 Nm)
3	192.4-222 lb/ft (280-300 Nm)
7	21.5-23.7 lb/ft (29-32 Nm)
9	76.2-94 lb/ft (103-127 Nm)
10	76.2-94 lb/ft (103-127 Nm)
17	55.5-61.4 lb/ft (75-83 Nm)
47	2.7-3.3 lb/ft (3-4 Nm)
55	76.2-94 lb/ft (103-127 Nm)
56	23-27.4 lb/ft (31-37 Nm)
58	9.6-11 lb/ft (13-15 Nm)
60	11.1-11.8 lb/ft (15-16 Nm)

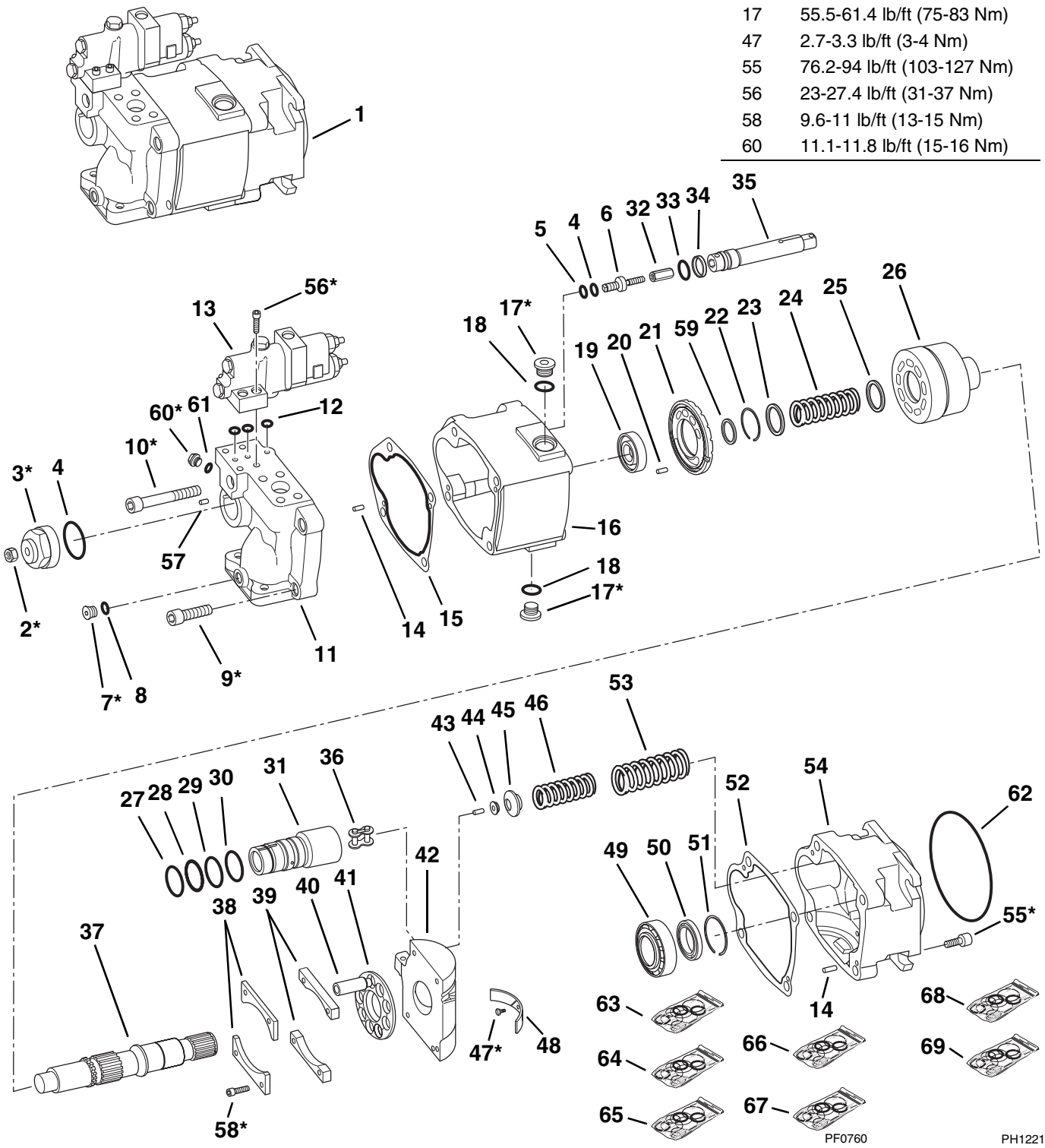

MAIN PUMP
(S/N 9909 & After)

Item No.	Part Number	Qty.	Description
1	8444227		Pump, Piston, Complete (Includes Items 2 thru 61)
2	8035567	1	Nut, Jam
3	8035568		Cap (S Stop)
	8035569		Cap (F Stop)
4	NSS	1	O-Ring (Order Item 64)
5	NSS	1	Ring, Backup (Order Item 64)
6	8035570	1	Screw, Adjustment
7	8035571	2	Plug, SAE Gage Port
	8035572	2	Plug, ISO Gage Port
8	NSS	2	O-Ring (Order Item 64)
9	8035573	3	Screw
10	8035574	1	Screw
11	8035575	1	Block, Valve
12	NSS	3	O-Ring (Order Item 64)
13	NSS	1	Subassembly, Control (Order Item 63)
14	8035577	4	Pin
15	NSS	1	Gasket (Order Item 64)
16	8035578	1	Housing
17	8035579	2	Plug, Drain
18	8035580	2	O-Ring
19	NSS	1	Bearing (Order Item 67)
20	8035581	1	Pin
21	8035582	1	Plate, Valve
22	NSS	1	Ring, Retaining (Order Item 65)
23	NSS	1	Guide, Spring (Order Item 65)
24	NSS	1	Spring (Order Item 65)
25	NSS	1	Guide, Spring (Order Item 65)
26	NSS	1	Block, Cylinder (Order Item 65)
27	NSS	1	Ring, Backup (Order Item 64)
28	NSS	1	O-Ring (Order Item 64)
29	NSS	1	O-Ring (Order Item 64)
30	NSS	1	Ring, Backup (Order Item 64)
31	8035583	1	Sleeve, Control
32	8035584	1	Nut, Hex
33	NSS	1	O-Ring (Order Item 64)
34	NSS	1	Ring, Glide (Order Item 64)
35	8035585	1	Piston, Control
36	8035586	1	Link, Chain
37	8035587	1	Shaft
38	NSS	2	Plate, Limiter (Order Item 65)
39	NSS	2	Spacer (Order Item 65)
40	NSS	9	Subassembly, Piston and Shoes (Order Item 65)
41	NSS	1	Cage, Shoe (Order Item 65)
42	NSS	1	Yoke (Order Item 66)
43	NSS	1	Pin (Order Item 66)
44	8035588	1	Button
45	NSS	1	Seat (Order Item 66)
46	8035589	1	Spring
47	NSS	2	Screw (Order Item 66)
48	NSS	2	Bearing, Saddle (Order Item 66)
49	NSS	1	Bearing (Order Item 67)
50	NSS	1	Seal, Shaft (Order Item 68)
51	NSS	1	Ring, Retaining (Order Item 68)
52	NSS	1	Gasket (Order Item 64)
53	8035590	1	Spring
54	8035591	1	Flange
55	8035592	4	Screw
56	8035593	4	Screw
57	8035595	1	Pin
58	8035596	4	Screw
59	NSS	1	Spacer, Shaft (Order Item 69)
60	8035597	2	Plug
61	8035598	2	O-Ring
62	8630016	1	O-Ring, 130mm x 3mm
			KITS
63	8035560	1	Kit, Control
64	8035561	1	Kit, Seal
65	8035562	1	Kit, Rotating Group
66	8035563	1	Kit, Yoke and Saddle Bearing
67	8035564	1	Kit, Shaft Bearing
68	8035565	1	Kit, Shaft Seal
69	8035566	1	Kit, Shaft Spacer

BOOM EXTEND CYLINDER
(Early Production)

IMPORTANT:

There are two similar but distinctly different Boom Extend Cylinders. Make sure you know which version you have before ordering replacement parts. On “Early Production” cylinders, the gland is installed flush with the cylinder tube and has “TJB” stamped on the gland. On the “Current Production” cylinders, the gland has a lip that bottoms out against the cylinder tube.

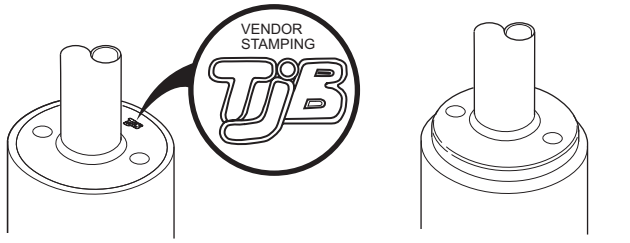

EARLY PRODUCTION **CURRENT PRODUCTION**

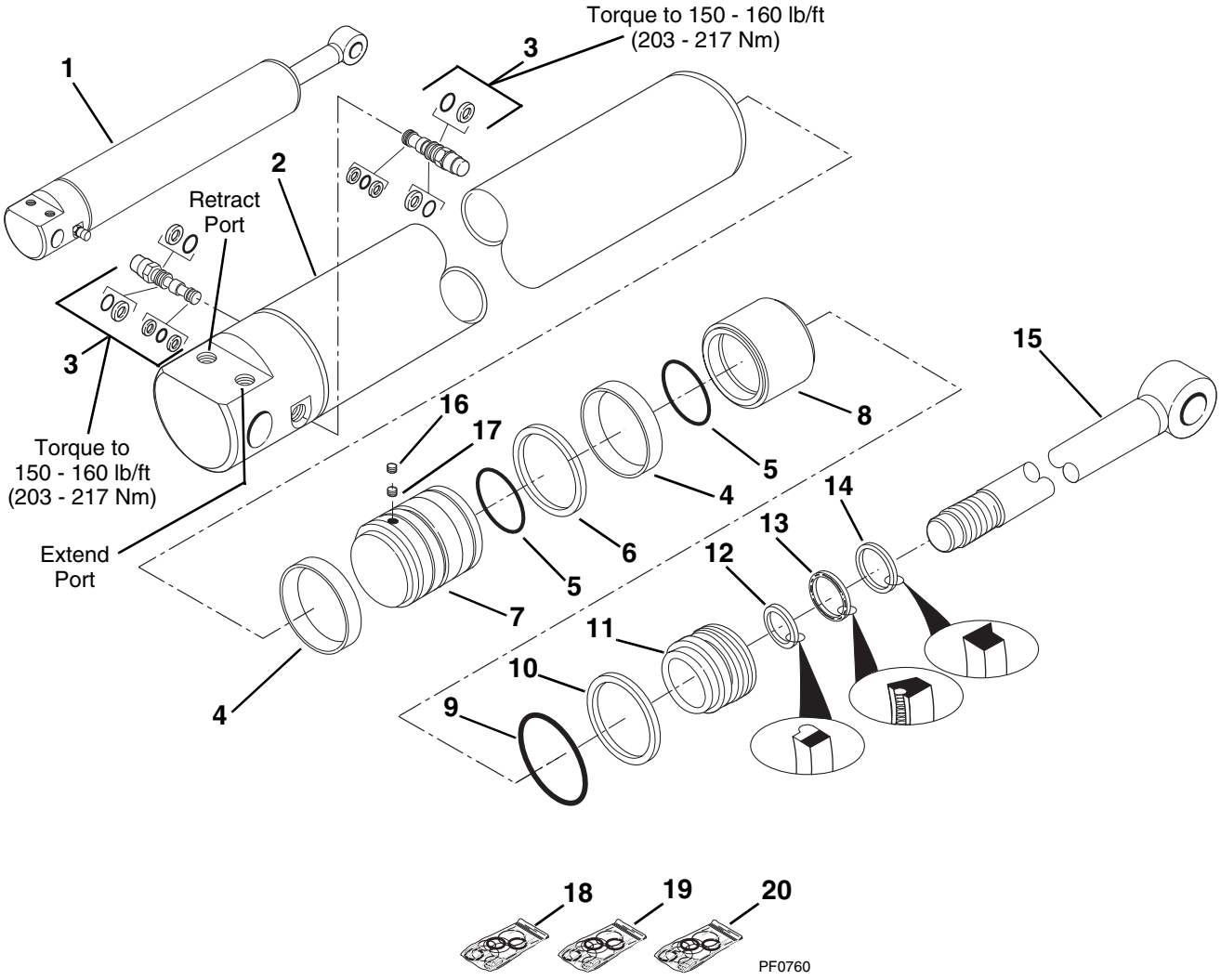

PH0342

BOOM EXTEND CYLINDER

(Early Production)

Item No.	Part Number	Qty.	Description
1	NLA	1	Cylinder, Boom Extend (Includes Items 2 thru 17) (For Service, Order P/N 2716173)
2	NSS	1	Tube, Cylinder (Serviced Only in Boom Extend Cylinder Item 1)
3	8902261	2	Valve, Counterbalance - preset to 3500 psi (See Kits)
4	See Kits	2	Wear Ring
5	See Kits	2	O-Ring
6	See Kits	1	Seal, Piston
7	8033734	1	Piston
8	8033735	1	Tube, Stop
9	See Kits	1	O-Ring
10	See Kits	1	Ring, Backup
11	8033732	1	Gland
12	See Kits	1	Seal, Rod
13	See Kits	1	Seal, Rod
14	See Kits	1	Wiper
15	8033733	1	Rod
16	8033737	1	Screw, Set
17	8033738	1	Screw, Cone Point Set
			KITS
18	8035513	1	Seal Kit, Services Both Early and Current Production Cylinders
19	8205657	1	Seal Kit, Counterbalance Valve (Includes 3 O-Rings & 4 Backup Rings)
20	8035247	1	Seal Kit, Gland Static Seal (Includes Items 5, 9 & 10)

BOOM EXTEND CYLINDER
(Current Production)

IMPORTANT:

There are two similar but distinctly different Boom Extend Cylinders. Make sure you know which version you have before ordering replacement parts. On “Early Production” cylinders, the gland is installed flush with the cylinder tube and has “TJB” stamped on the gland. On the “Current Production” cylinders, the gland has a lip that bottoms out against the cylinder tube.

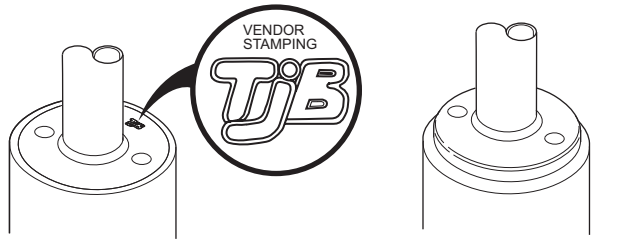

EARLY PRODUCTION **CURRENT PRODUCTION**

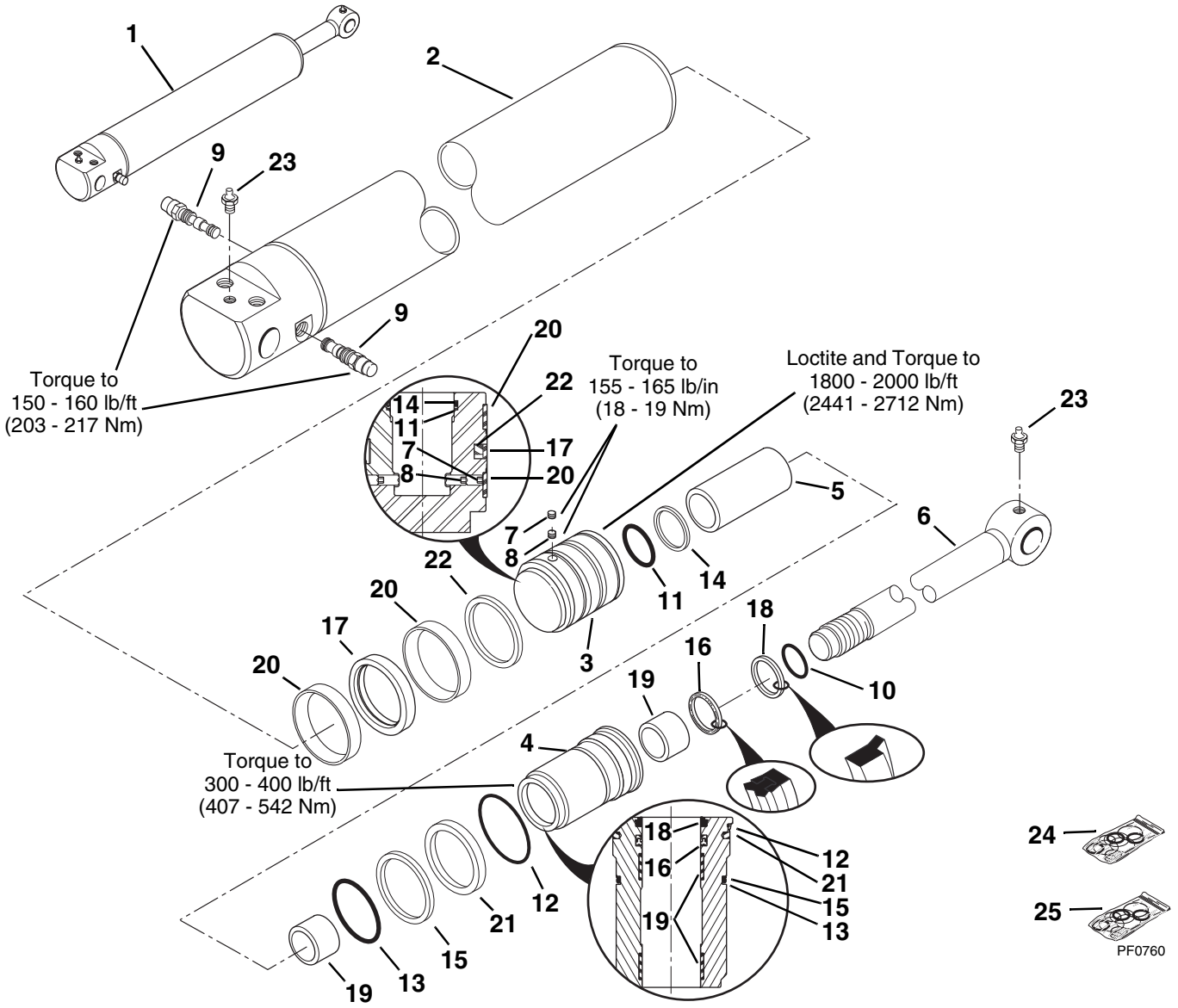

PH2031

BOOM EXTEND CYLINDER

(Current Production)

Item No.	Part Number	Qty.	Description
1	2716173	1	Cylinder, Boom Extend (Includes Items 2 thru 23)
2	NSS	1	Tube, Cylinder (Serviced Only in Boom Extend Cylinder Item 1)
3	8035800	1	Piston
4	8035539	1	Gland, Head
5	8035616	1	Spacer, Rod
6	8035615	1	Rod, Weldment
7	8035536	1	Screw, Set 5/16-18 UNC x .50 Lg.
8	8035315	1	Screw, Set 5/16-18 UNC x .63 Lg.
9	8035514	2	Valve, Counterbalance - preset to 3500 psi
10	See Kits	1	O-Ring
11	See Kits	1	O-Ring
12	See Kits	1	O-Ring
13	See Kits	1	O-Ring
14	See Kits	1	Ring, Backup
15	See Kits	1	Ring, Backup
16	See Kits	1	Seal, Rod
17	See Kits	1	Seal, Piston
18	See Kits	1	Wiper, HD Rod Sealed O.D.
19	See Kits	2	Wearband
20	See Kits	2	Wearband
21	See Kits	2	Insert, Locking
22	See Kits	1	Square Ring
23	8520013	2	Grease Fitting
			KITS
24	8035513	1	Seal Kit, Services Both Early and Current Production Cylinders
25	8205657	1	Seal Kit, Counterbalance Valve

BOOM HOIST CYLINDER
(S/N 5818 & Before)

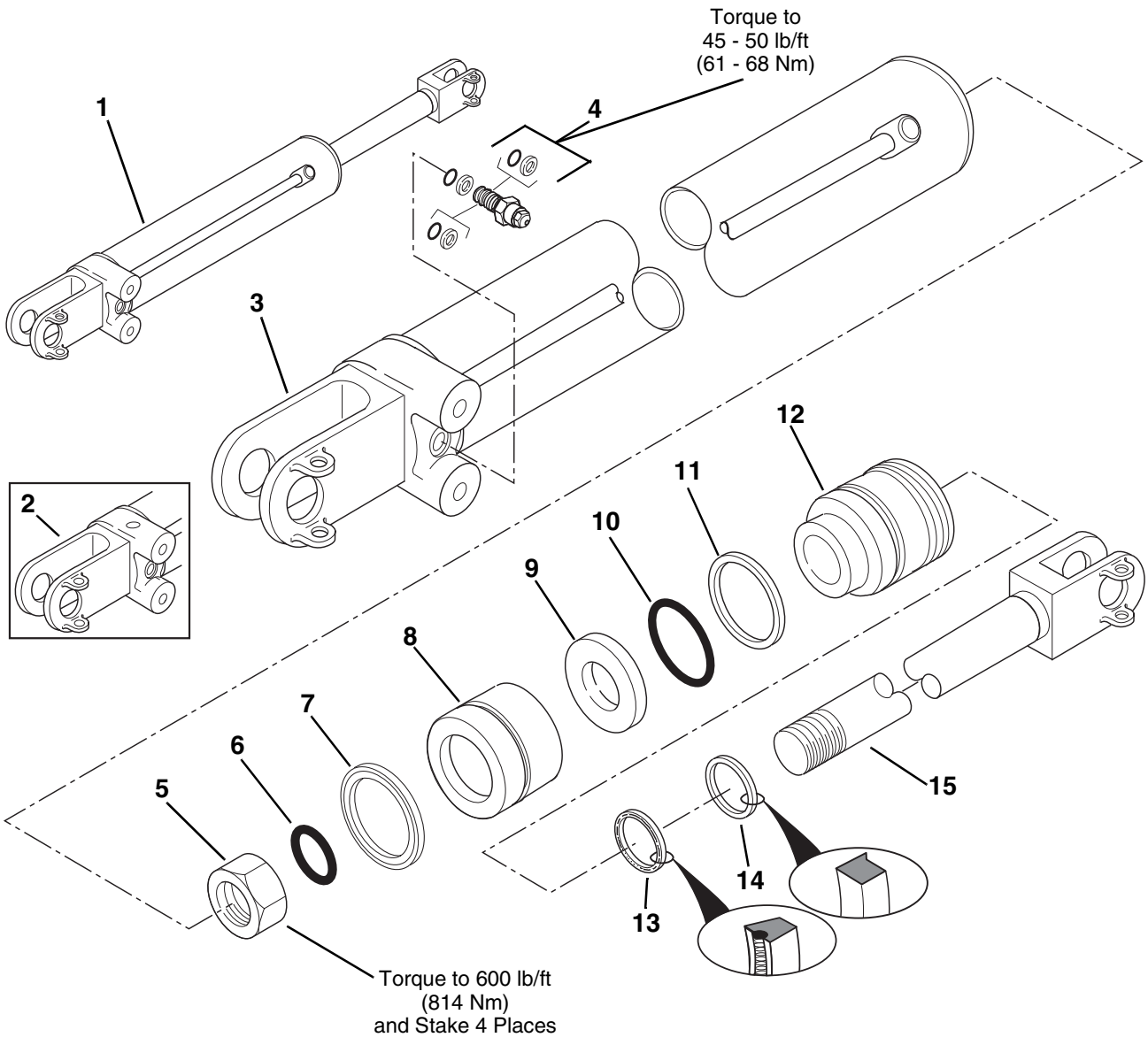

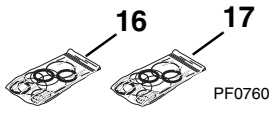

PH0231

BOOM HOIST CYLINDER
(S/N 5818 & Before)

Item No.	Part Number	Qty.	Description
1	NLA	2	Cylinder, Boom Hoist (Includes Items 3 thru 15) (For Service, Order P/N 2714993)
2	2713803	2	Cylinder, Boom Hoist w/Load Indicator Port (Includes Items 3 thru 15)
			NOTE: Quantities Listed Below Are For 1 Cylinder Only
3	NSS	1	Tube, Cylinder (Serviced Only in Item 1)
	NSS	1	Tube, Cylinder w/Load Indicator Port (Serviced Only in Item 2)
4	8205726	1	Valve, Counterbalance - preset to 4000 psi (See Kits)
5	8032714	1	Nut
6	See Kits	1	O-Ring
7	See Kits	1	Seal, Piston
8	8033729	1	Piston
9	8033730	1	Tube, Stop
10	See Kits	1	O-Ring
11	See Kits	1	Ring, Backup
12	8033727	1	Gland
13	See Kits	1	Seal, Rod
14	See Kits	1	Wiper
15	8033728	1	Rod
			KITS
16	8033731	1	Seal Kit, Boom Hoist Cylinder (Includes Items 6, 7, 10, 11, 13 and 14)
17	8205656	1	Seal Kit, Counterbalance Valve (Includes 3 O-Rings & 3 Backup Rings)

BOOM HOIST CYLINDER
(S/N 5819 & After)

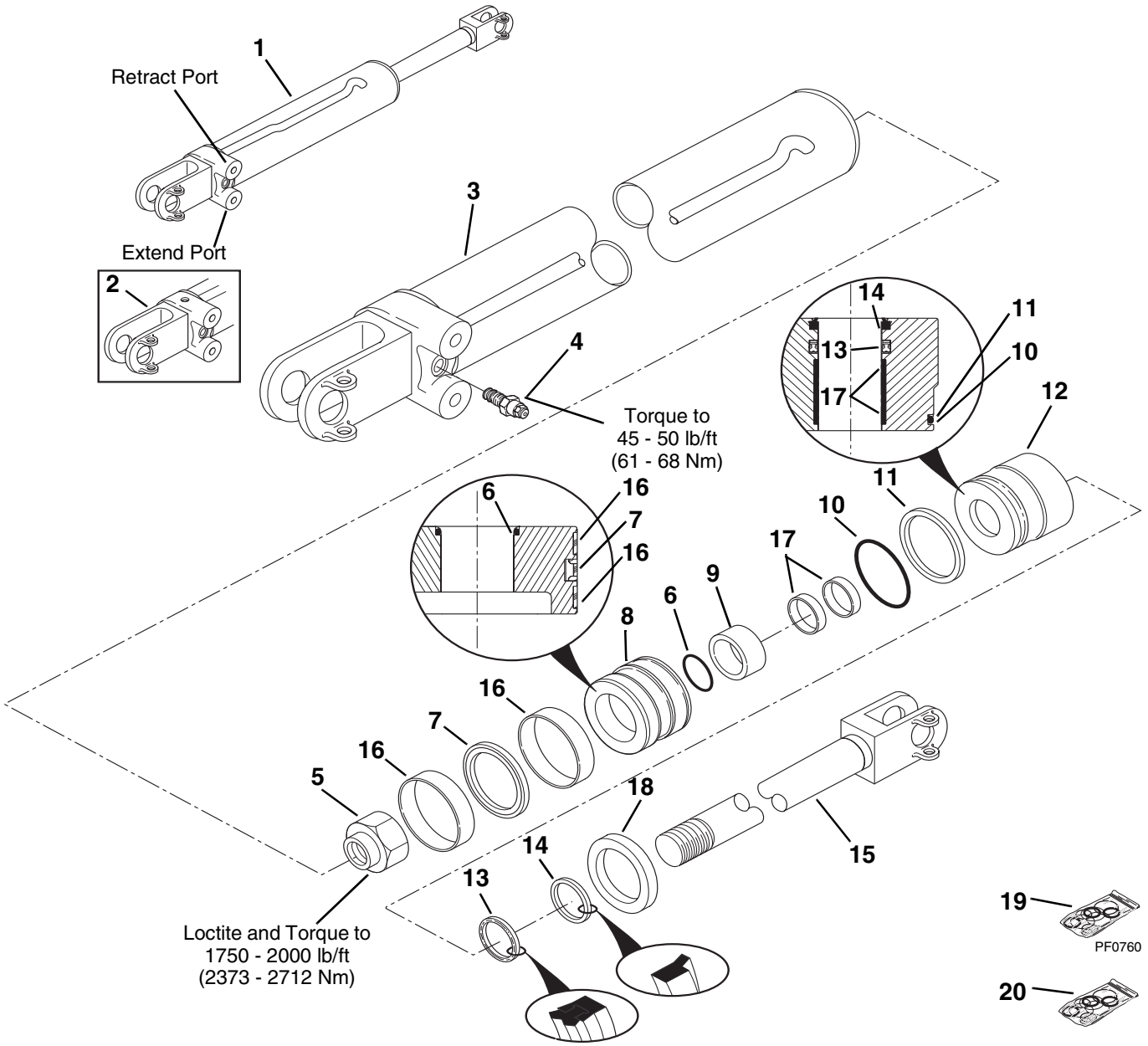

PH2010

BOOM HOIST CYLINDER
(S/N 5819 & After)

Item No.	Part Number	Qty.	Description
1	2714993	2	Cylinder, Boom Hoist (Includes Items 3 thru 18)
2	2713803	2	Cylinder, Boom Hoist w/Load Indicator Port (Includes Items 3 thru 18)
			NOTE: Quantities Listed Below Are For 1 Cylinder Only
3	NSS	1	Tube, Cylinder (Serviced Only in Item 1)
	NSS	1	Tube, Cylinder w/Load Indicator Port (Serviced Only in Item 2)
4	8035542	1	Valve, Counterbalance - present 4000 psi (See Kits)
5	8035308	1	Nut, Lock
6	See Kits	1	O-Ring
7	See Kits	1	Seal, Piston
8	8035545	1	Piston
9	8035608	1	Spacer, Rod
10	See Kits	1	O-Ring
11	See Kits	1	Ring, Backup
12	8035609	1	Gland
13	See Kits	1	Seal, Rod
14	See Kits	1	Wiper
15	8035607	1	Rod
16	See Kits	2	Wearband
17	See Kits	2	Wearband
18	8035610	1	Collar, Locking
			KITS
19	8035386	1	Seal Kit, Boom Hoist Cylinder (Includes Items 6, 7, 10, 11, 13, 14, 16 & 17)
20	8205656	1	Seal Kit, Counterbalance Valve (Includes 3 O-Rings & 3 Back-Up Rings)

FRAME TILT CYLINDER

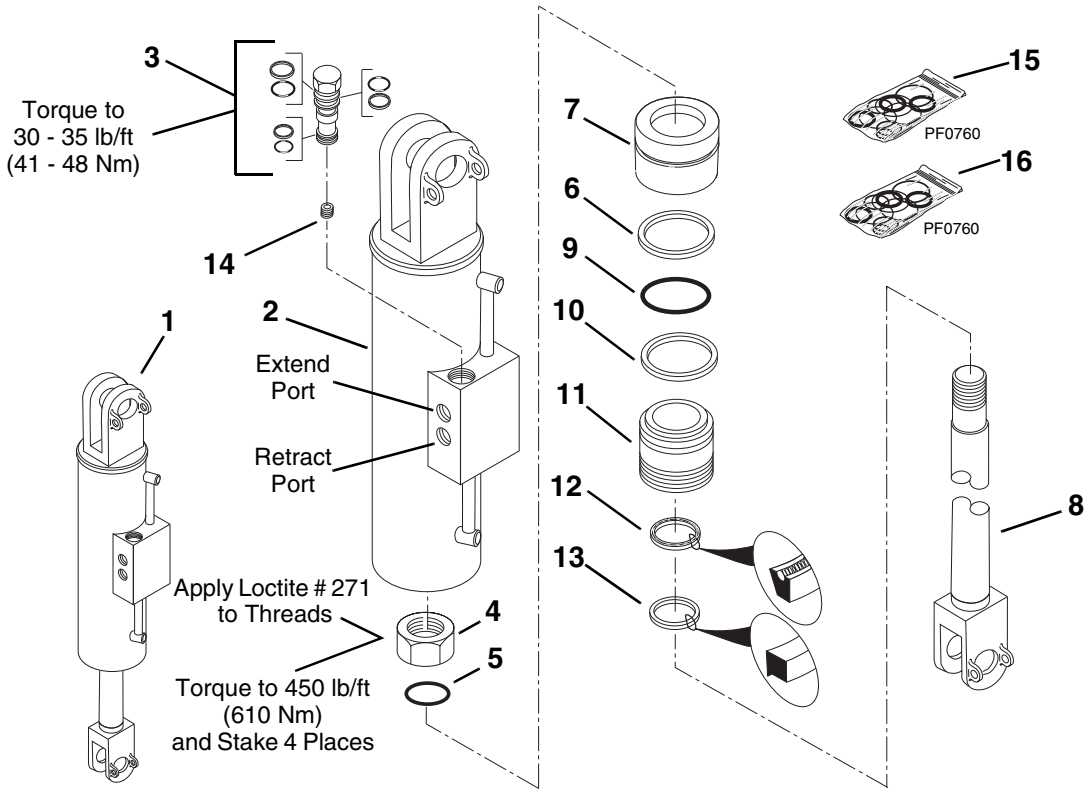

PH0362

FRAME TILT CYLINDER

Item No.	Part Number	Qty.	Description
1	7115662	1	Cylinder, Frame Tilt (Includes Items 2 thru 14) (S/N 0266 & Before)
	2713853	1	Cylinder, Frame Tilt (Includes Items 2 thru 13) (S/N 0267 & After)
2	NSS	1	Tube, Cylinder (Serviced Only in Item 1)
3	8902511	2	Valve, Pilot Check (See Kits)
4	8032726	1	Nut
5	See Kits	1	O-Ring
6	See Kits	1	Seal, Piston
7	8033745	1	Piston
8	8033744	1	Rod
9	See Kits	1	O-Ring
10	See Kits	1	Back-up Ring
11	8032728	1	Gland
12	See Kits	1	Seal, Rod
13	See Kits	1	Wiper
14	8033746	2	Orifice, .070 Dia. (S/N 0266 & Before)
			KITS
15	8033747	1	Seal Kit, Frame Tilt Cylinder (Includes Items 5, 6, 9, 10, 12 & 13)
16	8205655	1	Seal Kit, Pilot Check Valve (Includes 3 O-Rings & 3 Back-Up Rings)

STABILIZER CYLINDER

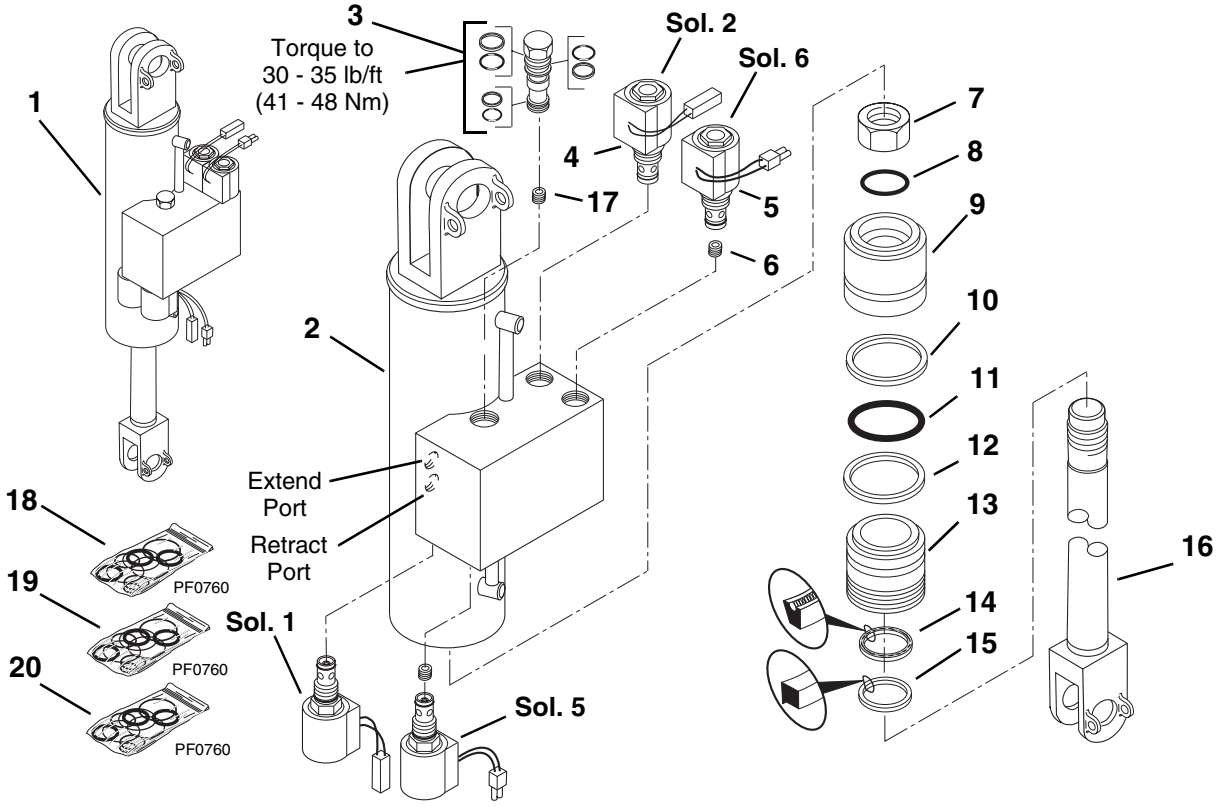

PH0351

STABILIZER CYLINDER

Item No.	Part Number	Qty.	Description
1	2713333	1	Cylinder, Stabilizer (Includes Items 2 thru 17)
2	NSS	1	Tube, Cylinder (Serviced Only in Item 1)
3	8902511	2	Valve, Pilot Check (See Kits)
4	8033755	2	Solenoid Valve (See Kits)
5	8033704	2	Solenoid Valve (See Kits)
6	8033715	2	Orifice, .060 Dia.
7	8032726	1	Nut
8	See Kits	1	O-Ring
9	8033745	1	Piston
10	See Kits	1	Seal, Piston
11	See Kits	1	O-Ring
12	See Kits	1	Back-up Ring
13	8032728	1	Gland
14	See Kits	1	Seal, Rod
15	See Kits	1	Wiper
16	8033744	1	Rod
17	8033721	2	Orifice, .029 Dia.
			KITS
18	8033747	1	Seal Kit, Stabilizer Cylinder (Includes Items 8, 10 thru 12, 14 & 15)
19	8205655	1	Seal Kit, Pilot Check Valve (Includes 3 O-Rings & 3 Back-Up Rings)
20	8033756	1	Seal Kit, Solenoid Valve

SLAVE CYLINDER
(Early Production)

IMPORTANT:

There are two similar but distinctly different Slave Cylinders. Make sure you know which version you have before ordering replacement parts. On “Early Production” cylinders, the gland is installed flush with the cylinder tube and has “TJB” stamped on the gland. On the “Current Production” cylinders, the gland has a lip that bottoms out against the cylinder tube.

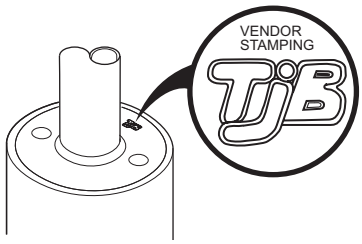

EARLY PRODUCTION

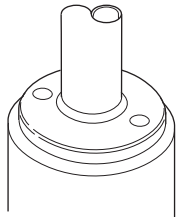

CURRENT PRODUCTION

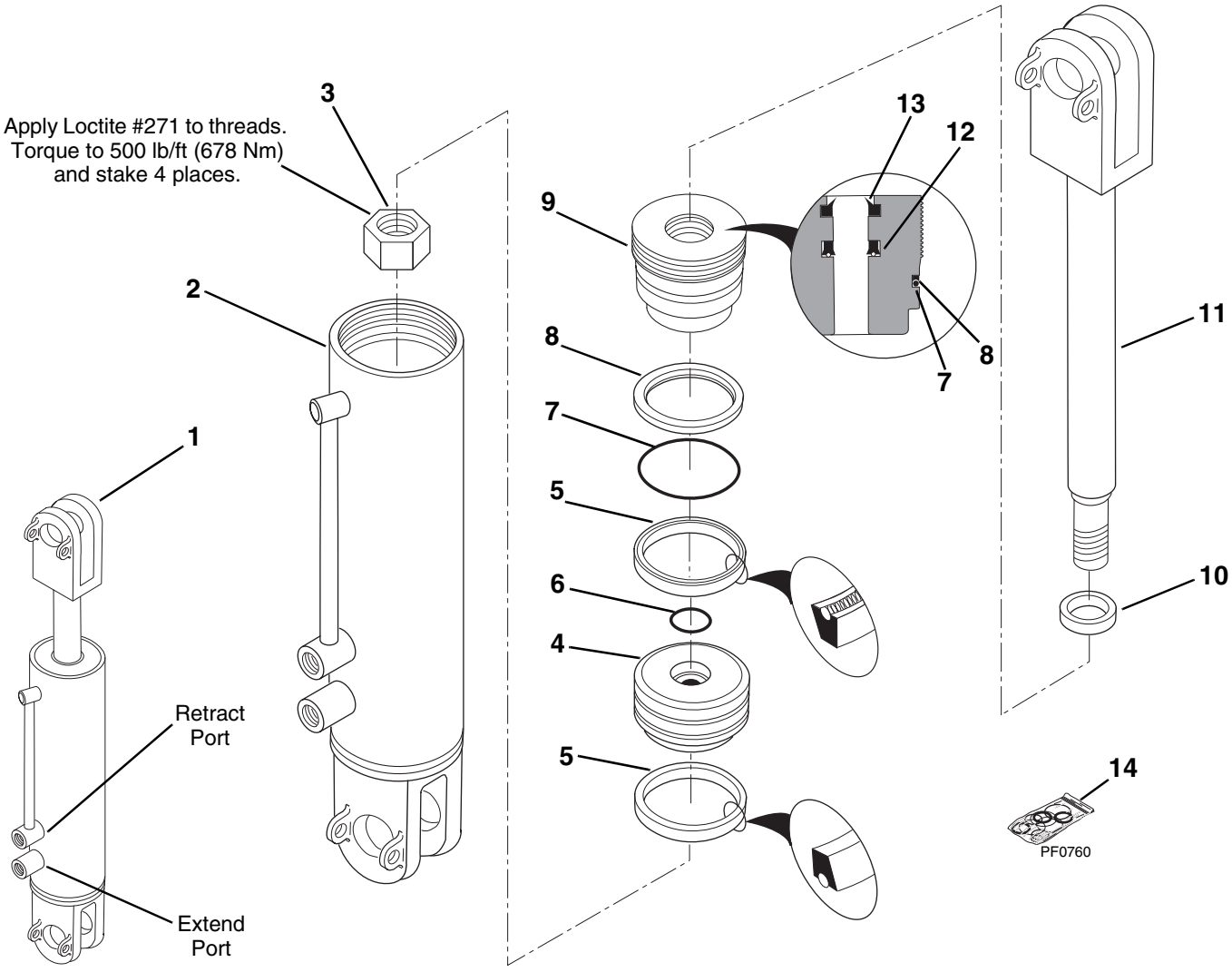

PH0372

SLAVE CYLINDER
(Early Production)

Item No.	Part Number	Qty.	Description
1	NLA	2	Cylinder, Slave (Includes Items 2 thru 13) (For Service, Order P/N 2714973) **NOTE:** Quantities Listed Below Are For 1 Cylinder Only
2	NSS	1	Tube, Cylinder (Serviced Only in Item 1)
3	8032726	1	Nut
4	8033741	1	Piston
5	See Kits	2	Seal, Piston
6	See Kits	1	O-Ring
7	See Kits	1	O-Ring
8	See Kits	1	Ring, Backup
9	8205506	1	Gland
10	8033742	1	Washer, Thrust
11	8033740	1	Rod
12	See Kits	1	Seal, Rod
13	See Kits	1	Wiper
			KITS
14	8034695	1	Seal Kit, Slave Cylinder (Includes Items 5 thru 8, 12 & 13) (Services Both Early and Current Production Cylinders)

SLAVE CYLINDER
(Current Production)

IMPORTANT:

There are two similar but distinctly different Slave Cylinders. Make sure you know which version you have before ordering replacement parts. On “Early Production” cylinders, the gland is installed flush with the cylinder tube and has “TJB” stamped on the gland. On the “Current Production” cylinders, the gland has a lip that bottoms out against the cylinder tube.

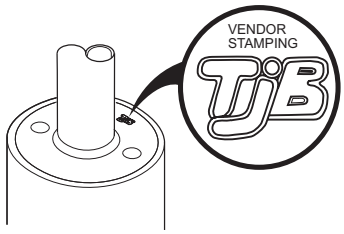

EARLY PRODUCTION

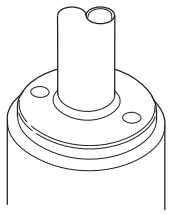

CURRENT PRODUCTION

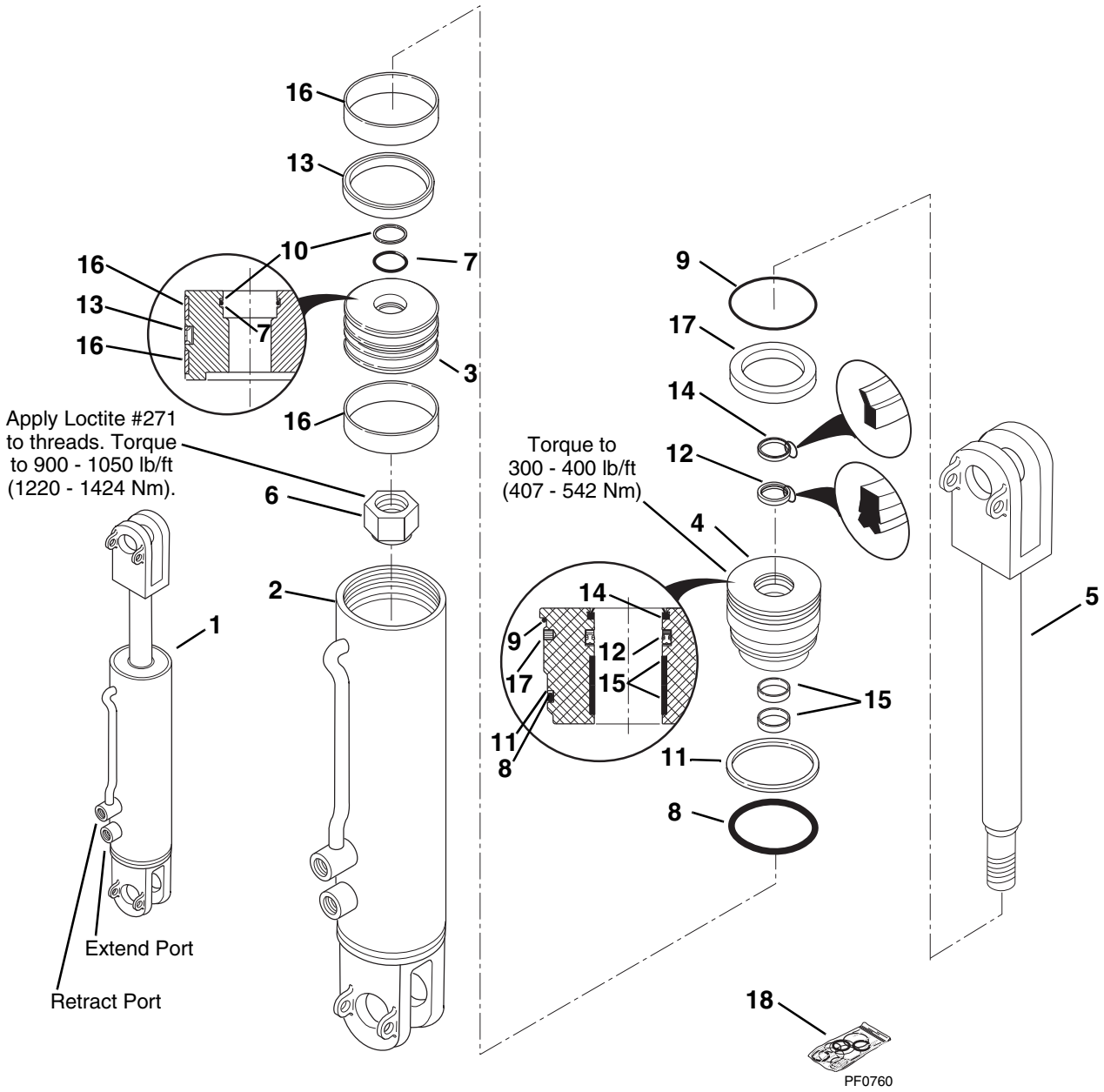

PH2020

SLAVE CYLINDER
(Current Production)

Item No.	Part Number	Qty.	Description
1	2714973	2	Cylinder, Slave (Includes Items 2 thru 17)
			NOTE: Quantities Listed Below Are For 1 Cylinder Only
2	NSS	1	Tube, Cylinder (Serviced Only in Item 1)
3	8035613	1	Piston
4	8035612	1	Gland, Head
5	8035611	1	Rod
6	8035547	1	Nut, Lock 1.375-12 UNF
7	See Kits	1	O-Ring
8	See Kits	1	O-Ring
9	See Kits	1	O-Ring
10	See Kits	2	Ring, Backup
11	See Kits	1	Ring, Backup
12	See Kits	1	Z-Seal, Deep
13	See Kits	1	T-Seal, Capped
14	See Kits	1	Wiper, HD Rod Sealed O.D.
15	See Kits	2	Wearband
16	See Kits	2	Wearband
17	See Kits	2	Insert, Locking
			KITS
18	8034695	1	Seal Kit, Slave Cylinder (Includes Items 7 thru 17) (Services Both Early and Current Production Cylinders)

ATTACHMENT TILT CYLINDER

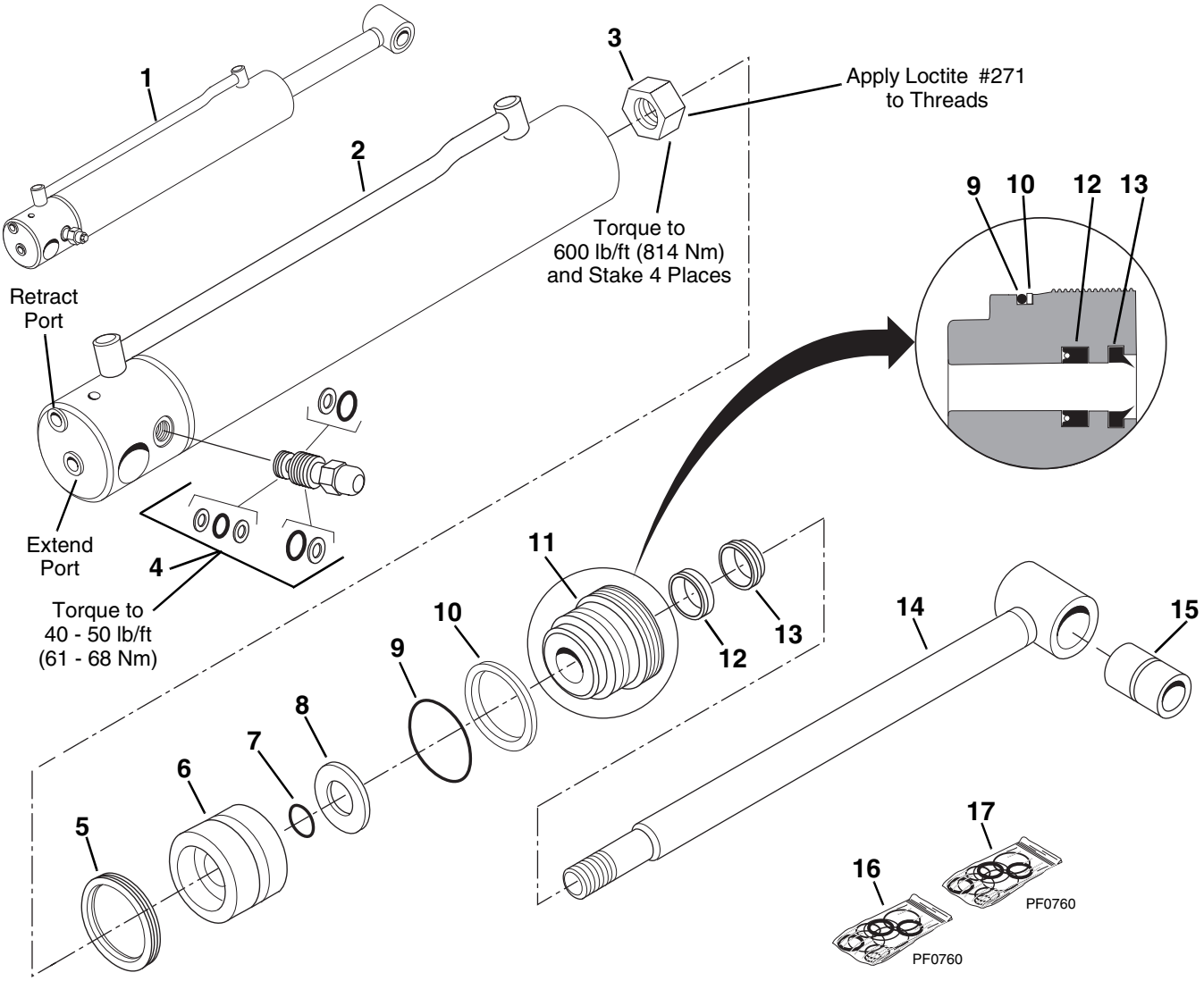

PH0221

ATTACHMENT TILT CYLINDER

Item No.	Part Number	Qty.	Description
1	2712973	1	Cylinder, Attachment Tilt (Includes Items 2 thru 15)
2	NSS	1	Tube, Cylinder (Serviced Only in Item 1)
3	8032714	1	Nut
4	8902260	1	Valve, Counterbalance - preset to 4000 psi (See Kits)
5	See Kits	1	Seal, Piston
6	8033724	1	Piston
7	See Kits	1	O-Ring
8	8033725	1	Washer, Thrust
9	See Kits	1	O-Ring
10	See Kits	1	Back-Up Ring
11	8033722	1	Gland
12	See Kits	1	Seal, Rod
13	See Kits	1	Wiper
14	8033723	1	Rod
15	7089722	2	Bushing
			KITS
16	8033726	1	Seal Kit, Attachment Tilt Cylinder (Includes Items 5, 7, 9, 10, 12 & 13)
17	8205656	1	Seal Kit, Counterbalance Valve (Includes 3 O-Rings & 4 Back-Up Rings)

OUTRIGGER CYLINDER
(S/N 10881 & Before)

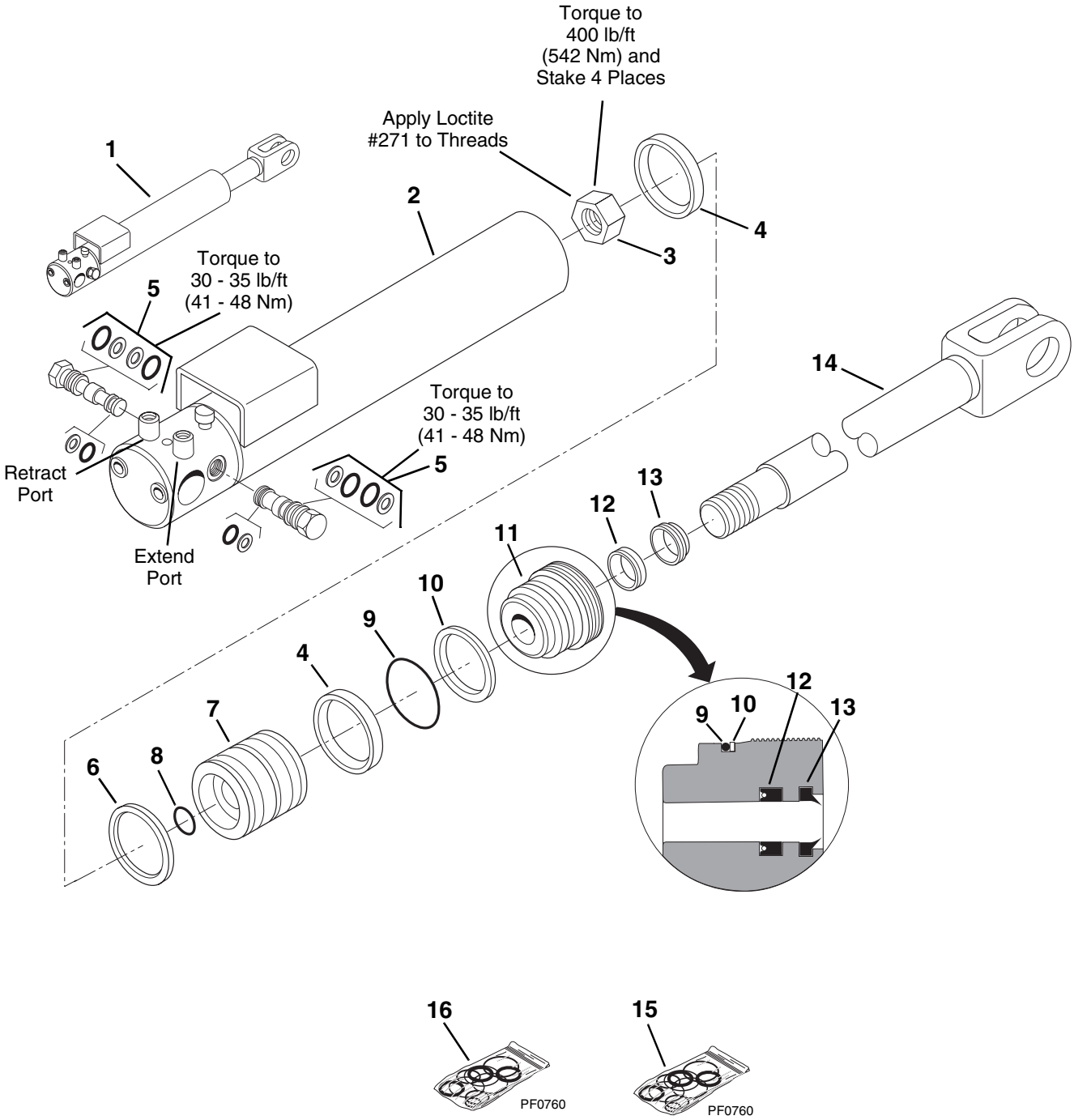

PH0382

OUTRIGGER CYLINDER
(S/N 10881 & Before)

Item No.	Part Number	Qty.	Description
1	NLA	1	Cylinder, Outrigger (Includes Items 2 thru 14) (For Service, Order P/N 2716163)
2	NSS	1	Tube, Cylinder (Serviced Only in Item 1)
3	8032702	1	Nut
4	See Kits	2	Wear Ring
5	8902511	2	Valve, Pilot Check (See Kits)
6	See Kits	1	Seal, Piston
7	8033750	1	Piston
8	See Kits	1	O-Ring
9	See Kits	1	O-Ring
10	See Kits	1	Back-Up Ring
11	8033748	1	Gland
12	See Kits	1	Seal, Rod
13	See Kits	1	Wiper
14	8033749	1	Rod
			KITS
15	8033751	1	Seal Kit, Outrigger Cylinder (Includes Items 4, 6, 8 thru 10, 12 & 13)
16	8205655	1	Seal Kit, Pilot Check Valve (Includes 3 O-Rings & 3 Back-Up Rings)

OUTRIGGER CYLINDER
(S/N 10882 & After)

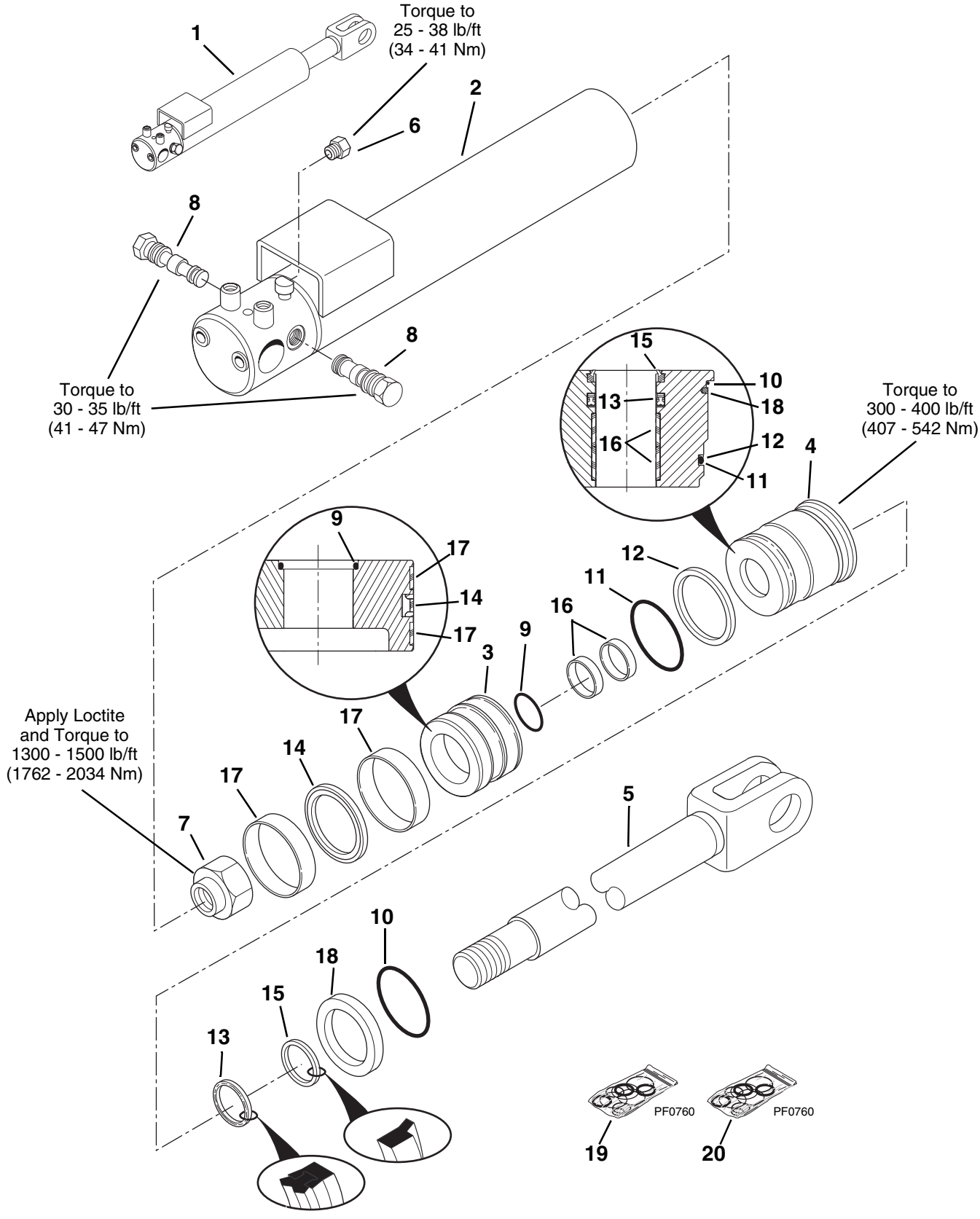

OUTRIGGER CYLINDER
(S/N 10882 & After)

Item No.	Part Number	Qty.	Description
1	2716163	1	Cylinder, Outrigger (Includes Items 2 thru 18)
2	NSS	1	Tube, Weldment (Serviced Only in Item 1)
3	8035727	1	Piston
4	8035728	1	Gland, Head
5	8035729	1	Rod, Weldment
6	8035730	1	Plug, SAE No. 4 Steel Hex Head
7	8035322	1	Nut, Lock UNF 1.5-12
8	8035731	2	Valve, PO Check, CKCB-XCN
9	See Kits	1	O-Ring
10	See Kits	1	O-Ring
11	See Kits	1	O-Ring
12	See Kits	1	Ring, Back-Up
13	See Kits	1	Z-Seal, Deep w/Rod Back-Up
14	See Kits	1	T-Seal, Capped
15	See Kits	1	Wiper, Hd Rod - Sealed O.D.
16	See Kits	2	Wearband, Precision
17	See Kits	2	Wearband, Precision
18	See Kits	2	Insert, Locking
			KITS
19	8035732	1	Seal Kit (Includes Items 9 thru 18)
20	8035519	1	Seal Kit (Includes P/N 8035732 and P/N 8033751)

SWING CARRIAGE CYLINDER

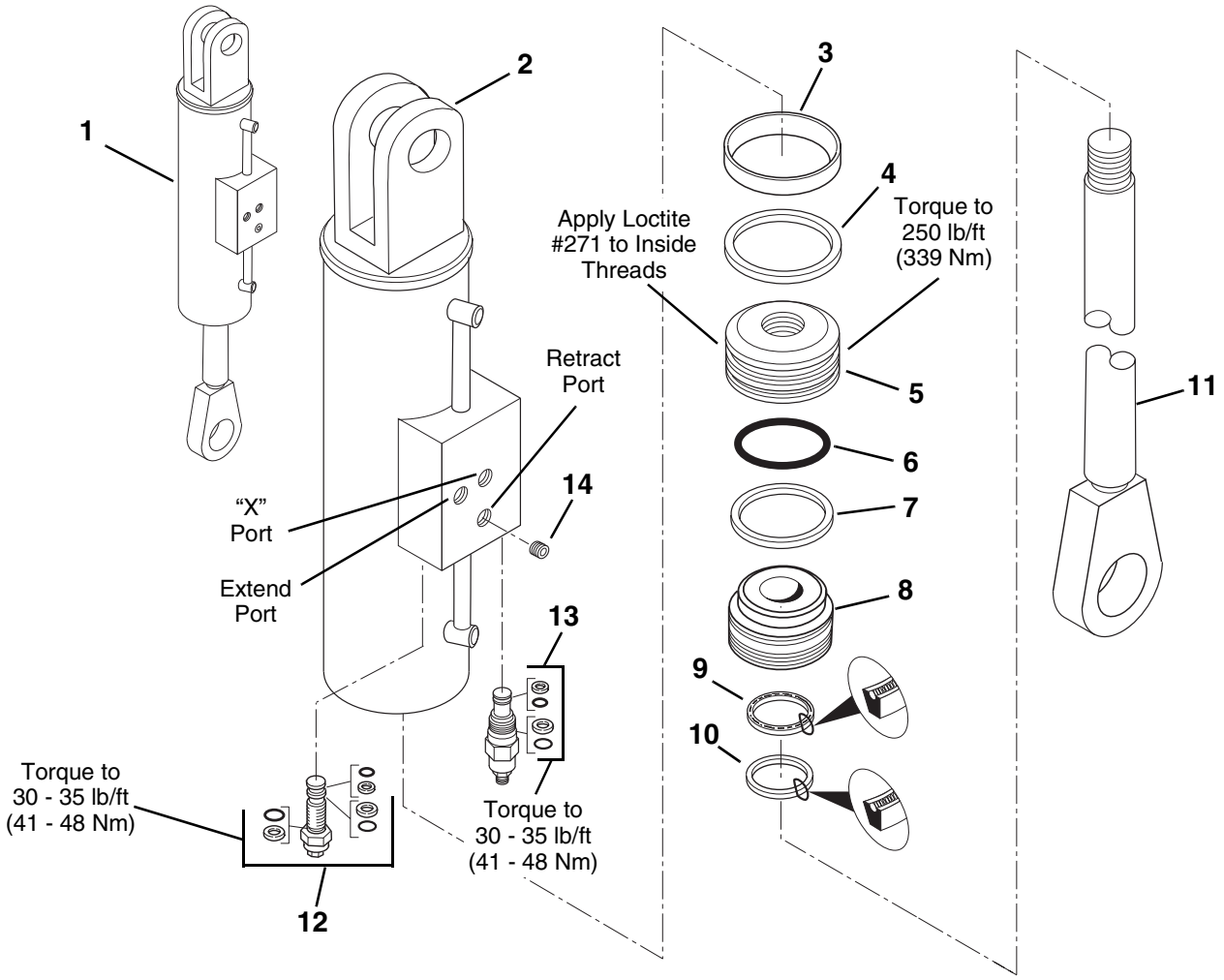

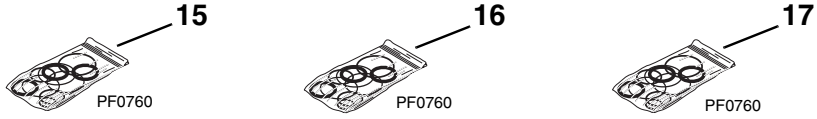

PH0441

SWING CARRIAGE CYLINDER

Item No.	Part Number	Qty.	Description
1	2713363	1	Cylinder, Swing Carriage (Includes Items 2 thru 14)
2	NSS	1	Tube, Cylinder (Serviced Only in Item 1)
3	See Kits	1	Wear Ring
4	See Kits	1	Seal, Piston
5	8033783	1	Piston
6	See Kits	1	O-Ring
7	See Kits	1	Back-Up Ring
8	8033784	1	Gland
9	See Kits	1	Seal, Rod
10	See Kits	1	Wiper
11	8033785	1	Rod
12	8033786	1	Valve, Counterbalance Cartridge - preset to 3000 psi (See Kits)
13	8902842	1	Valve, Direct Acting Relief - preset to 2000 psi (See Kits)
14	8033788	1	Orifice, .038 Dia.
			KITS
15	8033789	1	Seal Kit, Swing Carriage Cylinder (Includes Items 3, 4, 6, 7, 9, & 10)
16	8205655	1	Seal Kit, Valve Item 12 (Includes 3 O-Rings & 3 Back-Up Rings)
17	8033790	1	Seal Kit, Valve Item 13 (Includes 2 O-Rings, 1 Back-Up Ring & 1 Gland Ring)

SIDE TILT CARRIAGE CYLINDER

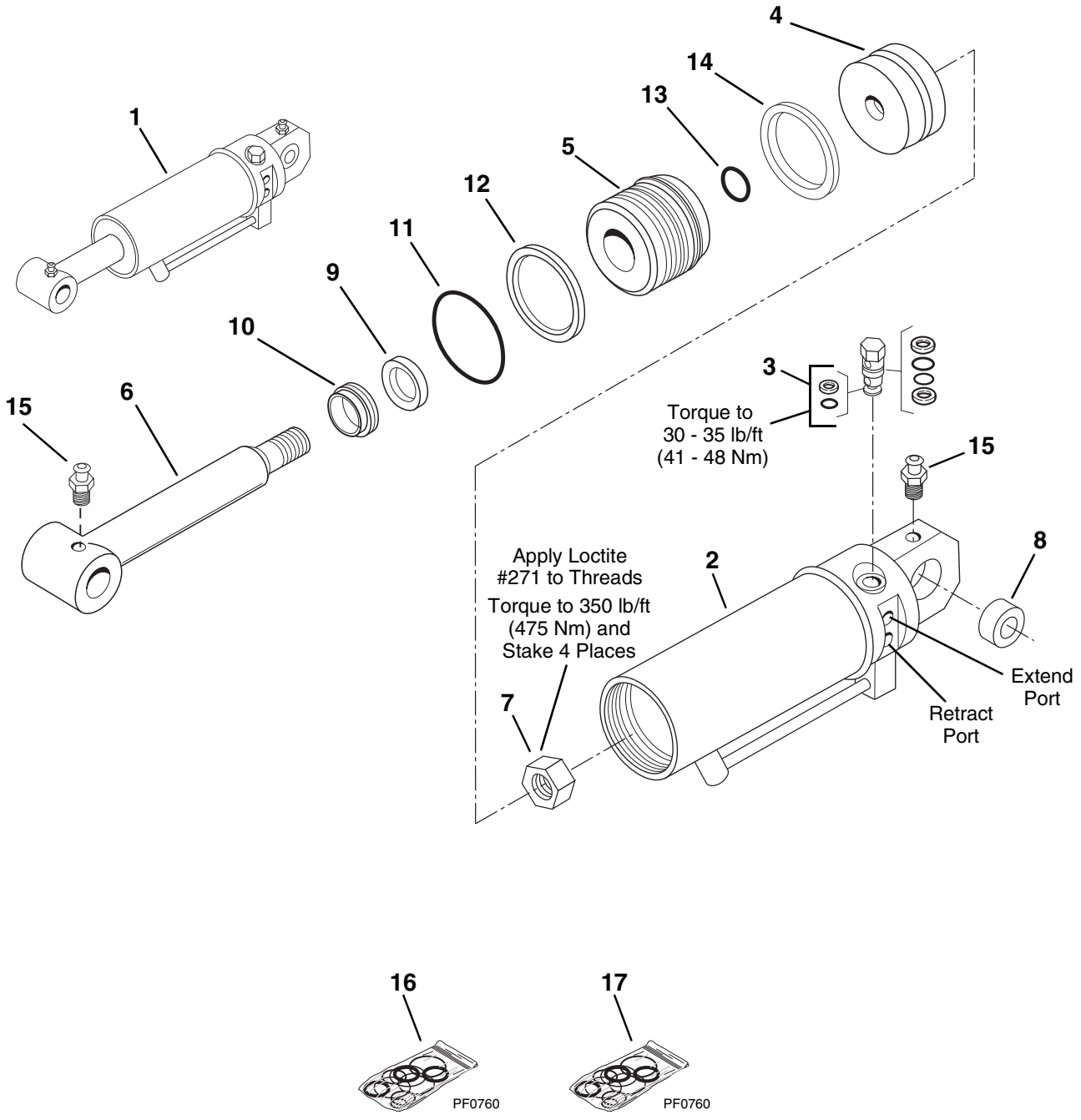

SIDE TILT CARRIAGE CYLINDER

Item No.	Part Number	Qty.	Description
1	2711613	1	Side Tilt Carriage Cylinder (Includes Items 2 thru 14)
2	NSS	1	Tube, Cylinder (Serviced Only in Item 1)
3	8902511	2	Valve, Pilot Check (See Kits)
4	8205545	1	Piston
5	8205546	1	Gland
6	8205547	1	Rod
7	8205548	1	Nut, Piston
8	8205514	1	Bearing, Self-Aligning
9	See Kits	1	Seal, Rod
10	See Kits	1	Wiper
11	See Kits	1	O-Ring
12	See Kits	1	Ring, Back-Up
13	See Kits	1	O-Ring
14	See Kits	1	Seal, Piston
15	8520013	2	Fitting, Grease
			KITS
16	8205661	1	Seal Kit, Side Tilt Carriage Cylinder (Includes Items 9 thru 14)
17	8205655	1	Seal Kit, Pilot Check Valve

STEERING CYLINDER
(S/N 1167 & Before)

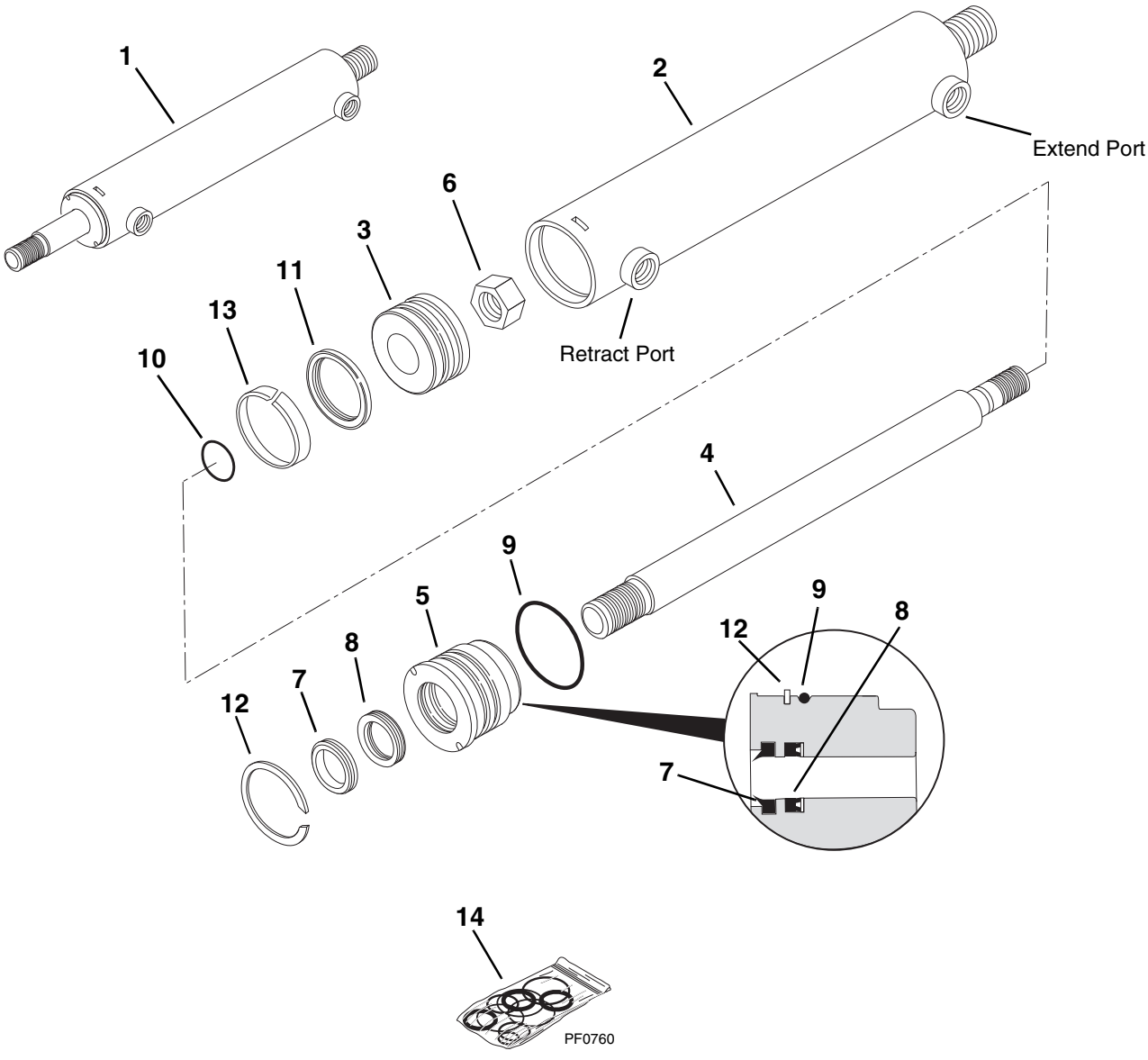

PH0621

STEERING CYLINDER
(S/N 1167 & Before)

Item No.	Part Number	Qty.	Description
1	NLA	4	Steering Cylinder (Includes Items 2 thru 13) (For Service, Order P/N 8034684)
			NOTE: Quantities Listed Below Are For 1 Cylinder Only
2	NSS	1	Barrel Assembly (Serviced Only in Item 1)
3	8033811	1	Piston
4	8033812	1	Rod
5	8033813	1	Gland
6	8033814	1	Nut, Hex Lock
7	See Kits	1	Wiper, Rod
8	See Kits	1	Seal, Rod
9	See Kits	1	O-Ring
10	See Kits	1	O-Ring
11	See Kits	1	Seal, Piston
12	See Kits	1	Lock Ring
13	See Kits	1	Wear Ring
			KITS
14	8033801	1	Seal Kit, Steering Cylinder (Includes Items 7 thru 13)

STEERING CYLINDER
(S/N 1168 & After)

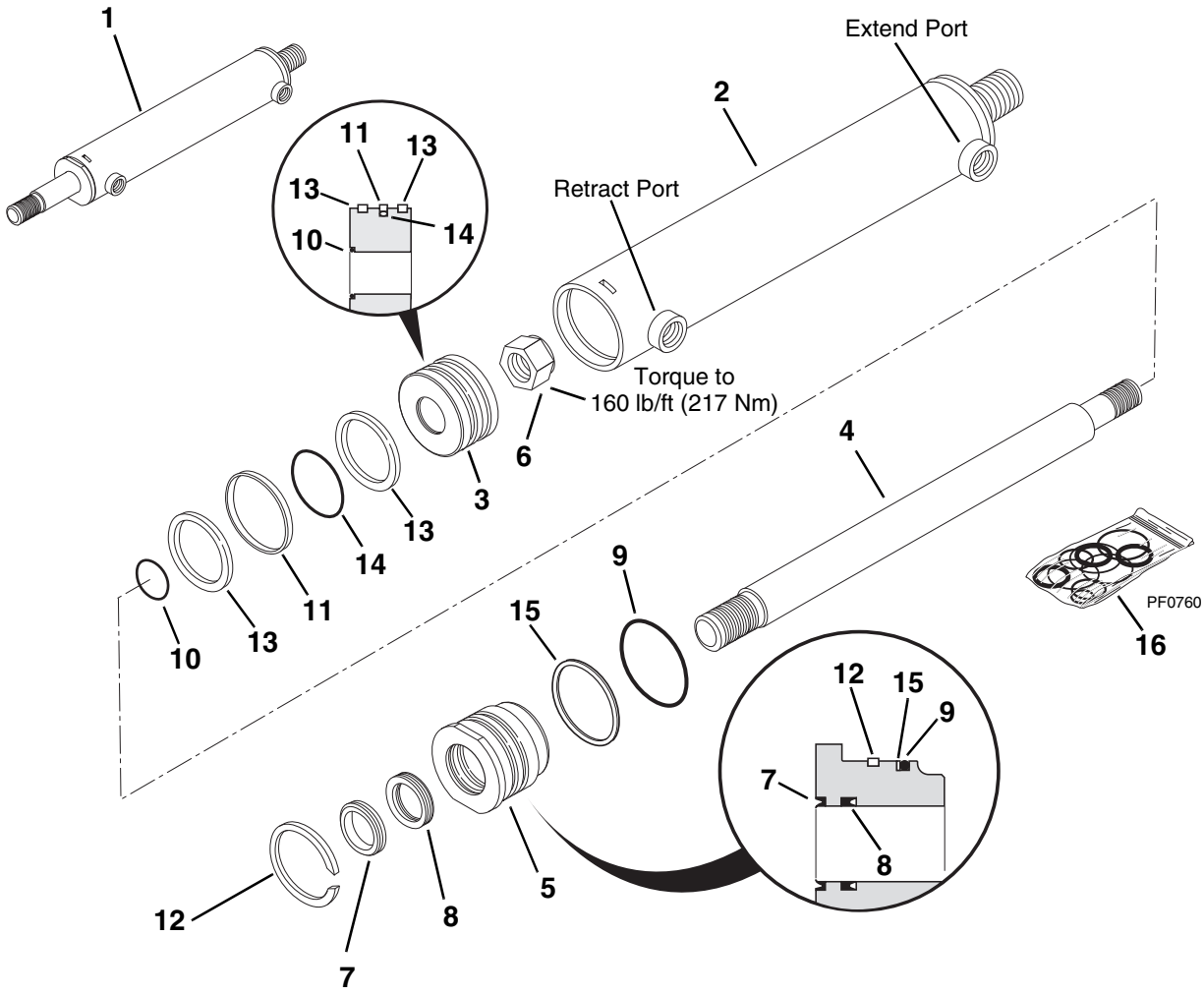

PH0900

STEERING CYLINDER
(S/N 1168 & After)

Item No.	Part Number	Qty.	Description
1	8034684	4	Steering Cylinder (Includes Items 2 thru 15)
			NOTE: Quantities Listed Below Are For 1 Cylinder Only
2	NSS	1	Barrel Assembly (Serviced Only in Item 1)
3	8034821	1	Piston
4	8034822	1	Rod - 17.06" Long
5	8034823	1	Gland
6	8034824	1	Nut, Hex Lock
7	See Kit	1	Wiper, Rod
8	See Kit	1	Seal, U-Cup
9	See Kit	1	O-Ring
10	See Kit	1	O-Ring
11	See Kit	1	Seal, Piston
12	See Kit	1	Wire Retainer
13	See Kit	2	Wear Ring
14	See Kit	1	Expander
15	See Kit	1	Back-up Ring
			KITS
16	8034691	1	Seal Kit, Steering Cylinder (Includes Items 7 thru 15)

MAIN CONTROL VALVE

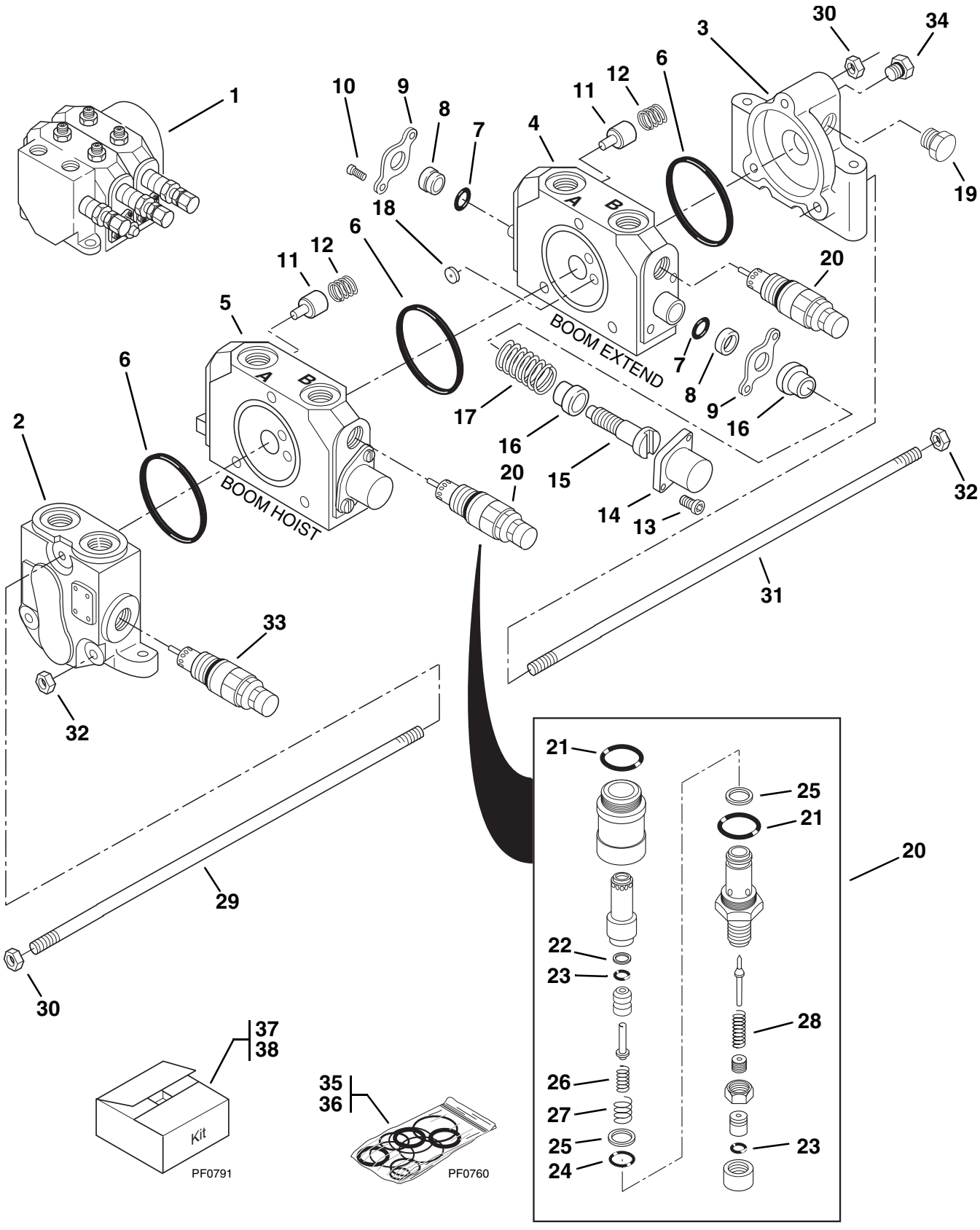

MAIN CONTROL VALVE

Item No.	Part Number	Qty.	Description
1	NLA	1	Main Control Valve (S/N 0224 & Before) For Service, Order Kit P/N 7115652
	NLA	1	Main Control Valve (S/N 0225 thru 8540) For Service, Order P/N 8902186
	8902186	1	Main Control Valve (Includes Items 2 thru 34) S/N 8541 & After
2	8034534	1	Section, Inlet (Includes 1 of Item 6)
3	7130912	1	Kit, Outlet Section (Includes Inlet & Outlet Sections and Mounting Hardware) (S/N 2199 & Before)
	8035267	1	Section - Outlet (S/N 2200 & After)
4	8034552	1	Section, Boom Extend (Includes Items 6 thru 18)
5	8034551	1	Section, Boom Hoist (Includes Items 6 thru 18)
6	8034697	1	O-Ring (See Kits)
7	See Kits	2	O-Ring
8	See Kits	2	Wiper
9	See Kits	2	Plate, Seal
10	See Kits	2	Screw, Rd. Hd. Mach.
11	See Kits	1	Poppet, C.V.
12	See Kits	1	Spring
13	See Kits	2	HHCS
14	See Kits	1	Cap, Spool
15	See Kits	1	End, Spool
16	See Kits	2	Seat, Spring
17	See Kits	1	Spring
18	See Kits	1	Shuttle
19	8034539	1	Plug, Shut-off
20	8034538	2	Relief Valve Assembly - Preset at 3200 ± 50 psi (Includes Items 21 thru 28)
21	See Kits	2	O-Ring
22	See Kits	1	Ring, Back-Up
23	See Kits	2	O-Ring
24	See Kits	1	O-Ring
25	See Kits	2	Ring, Back-Up
26	See Kits	1	Spring
27	See Kits	1	Spring
28	See Kits	1	Spring
29	See Kits	1	Tie Rod
30	See Kits	2	Nut, Special
31	See Kits	2	Tie Rod
32	See Kits	4	Nut, Special
33	8035387	1	Valve, Main Relief (Preset at 3500 ± 50 psi)
34	8760451	1	Plug, Hex Hd., SAE 6 - male str. thd. o-ring
			KITS
35	8034541	AR	Rebuild Kit for Items 4 & 5 (Includes 3 of Item 6 and listed quantities of Items 7 thru 18)
36	8034540	1	Seal & Spring Kit for Relief Valve - Item 20
37	8903011	1	Tie Rod Kit - 2 Section Valve (Includes Items 29 thru 32)
38	7115652	1	Kit, Main Control Valve (Includes Valve and Instructions)

SECONDARY CONTROL VALVE

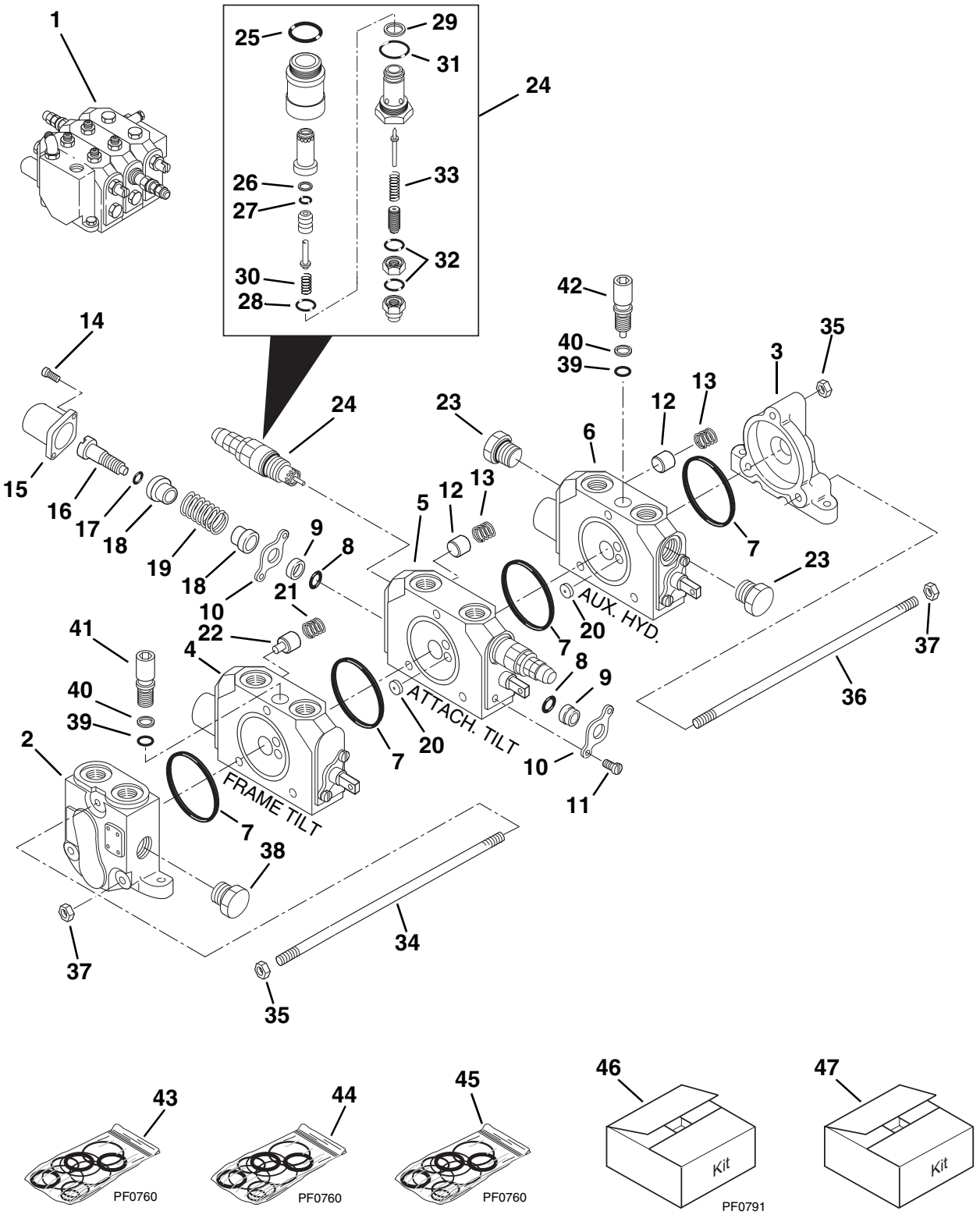

PH0472

SECONDARY CONTROL VALVE

Item No.	Part Number	Qty.	Description
1	NLA	1	Secondary Control Valve, Frame Tilt, Attachment Tilt & Auxiliary Hydraulics (S/N 0266 & Before) For Service, Order Kit P/N 7115712
	8902152	1	Secondary Control Valve, Frame Tilt, Attachment Tilt & Auxiliary Hydraulics (Includes Items 2 thru 42) (S/N 0267 & After)
2	8034527	1	Section, Inlet (Includes 1 of Item 7)
3	8034528	1	Section, Outlet
4	8034549	1	Section, Frame Tilt (Includes Items 7 thru 11 and 14 thru 22)
5	8034530	1	Section, Attachment Tilt (Includes Items 7 thru 20)
6	8034531	1	Section, Auxiliary Hydraulics (Includes Items 7 thru 20)
7	See Kits	1	O-Ring
8	See Kits	2	O-Ring
9	See Kits	2	Wiper
10	See Kits	2	Plate, Seal
11	See Kits	2	Screw, Rd. Hd. Mach.
12	See Kits	1	Poppet, C.V.
13	See Kits	1	Spring
14	See Kits	2	HHCS
15	See Kits	1	Cap, Spool
16	See Kits	1	End, Spool
17	See Kits	1	O-Ring
18	See Kits	2	Seat, Spring
19	See Kits	1	Spring
20	See Kits	2	Shuttle
21	See Kits	1	Spring
22	See Kits	1	Piston - Compensator, C.V.
23	8902512	2	Plug, Shut-off
24	8034532	2	Relief Valve Assembly - Preset at 3200 ± 50 psi (Includes Items 25 thru 33)
25	See Kits	1	O-Ring
26	See Kits	1	Ring, Back-Up
27	See Kits	1	O-Ring
28	See Kits	1	O-Ring
29	See Kits	1	Ring, Back-Up
30	See Kits	1	Spring
31	See Kits	1	O-Ring
32	See Kits	2	O-Ring
33	See Kits	1	Spring
34	See Kits	1	Tie Rod
35	See Kits	2	Nut, Special
36	See Kits	2	Tie Rod
37	See Kits	4	Nut, Special
38	8760420	1	Plug, Hex Hd., SAE 10 - male str. thd. o-ring
39	8034557	2	O-Ring
40	8034556	2	Ring, Back-Up
41	8034554	1	Screw, Flow Control
42	8034555	1	Screw, Flow Control
			KITS
43	8034542	AR	Rebuild Kit for Items 5 & 6 (Includes 4 of Item 7 & listed quantities of Items 8 thru 20)
44	8034550	1	Rebuild Kit for Item 4 (Includes 4 of Item 7 & listed quantities of Items 8 thru 11 and 14 thru 22)
45	8902495	1	Seal & Spring Kit for Relief Valve - Item 24
46	8902095	1	Tie Rod Kit - 3 Section Valve (Includes Items 34 thru 37)
47	7115712	1	Kit, Secondary Control Valve, Frame Tilt, Attachment Tilt & Auxiliary Hydraulics (Includes Valve & Instructions)

DIRECTIONAL CONTROL VALVES 1 OF 2

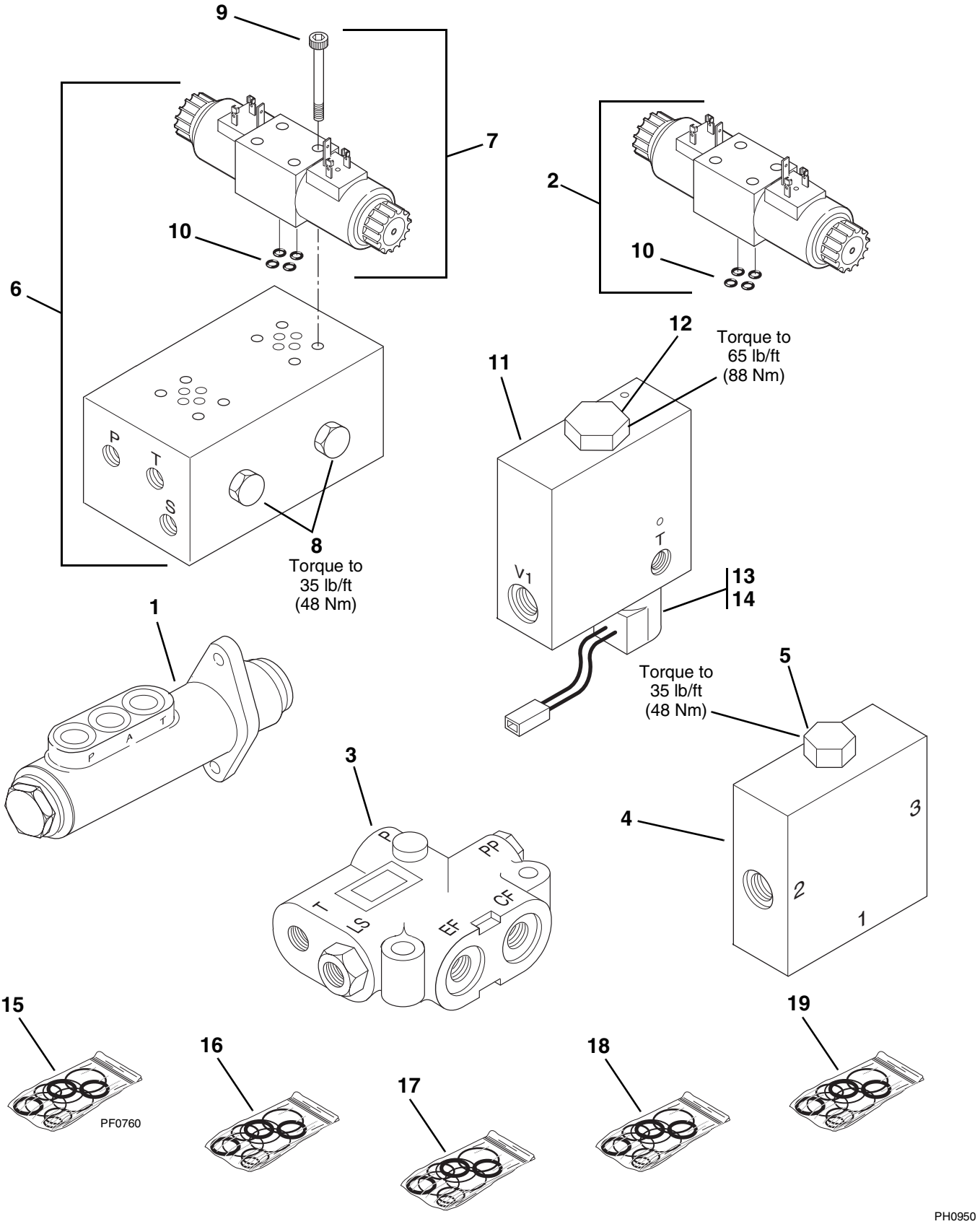

DIRECTIONAL CONTROL VALVES 1 OF 2

Item No.	Part Number	Qty.	Description
1	NLA	1	Brake Valve (S/N 0653 and Before) For Service, Order P/N 8902222
	7119813	1	Brake Valve Kit (S/N 0654 thru 1167)
	8902222	1	Brake Valve (S/N 1168 and After)
2	8902137	1	Valve, Steer Select
3	8904047	1	Valve, Priority
4	8902838	1	Valve, Shuttle (Includes Item 5)
5	8902846	1	Cartridge, Shuttle Valve (See Kits)
6	8902141	1	Valve, Outrigger (Includes Items 7 & 8) (S/N 10881 & Before)
	8902193	1	Valve, Outrigger (Includes Items 7 & 8) (S/N 10882 & After)
7	8902140	2	Solenoid Valve Assembly
8	8904049	2	Check Valve, Back to Back (See Kits)
9	8304631	8	SHCS, #10-24 x 2"
10	8640017	AR	O-Ring
11	8902251	1	Valve, Boom Extend Lockout (Includes Items 12 thru 14)
12	8034558	1	Cartridge, Poppet Type (See Kits)
13	8034559	1	Stem, Coil (See Kits)
14	8034560	1	Coil Assembly
			KITS
15	8033254	1	Repair Kit, Brake Valve (For Item 1)
16	8205655	1	Seal Kit, Pressure Reducing Valve (For Item 5)
17	8205655	1	Seal Kit, Check Valve, Back to Back (For Item 8)
18	8034561	1	Seal Kit, Stem, Coil (For Item 13)
19	8034562	1	Seal Kit, Cartridge, Poppet Type (For Item 12)

DIRECTIONAL CONTROL VALVES 2 OF 2

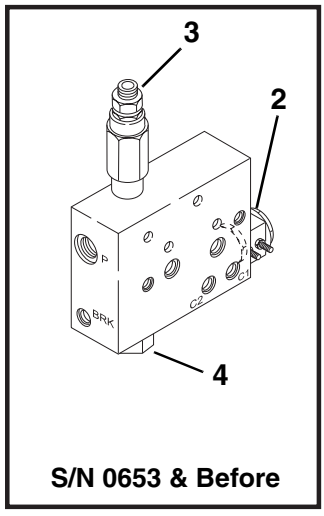

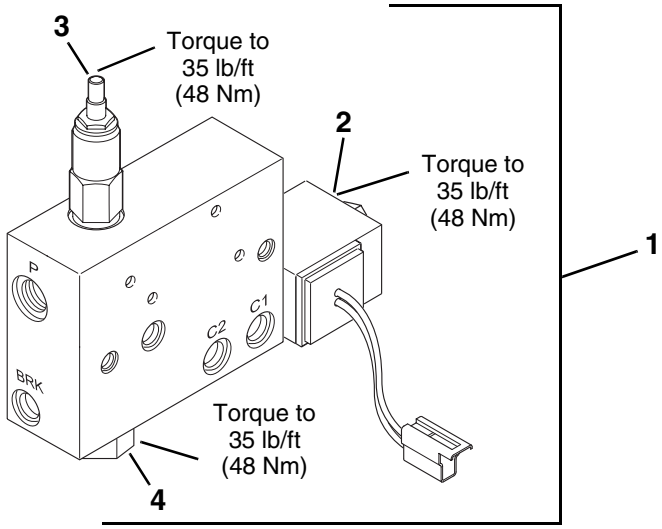

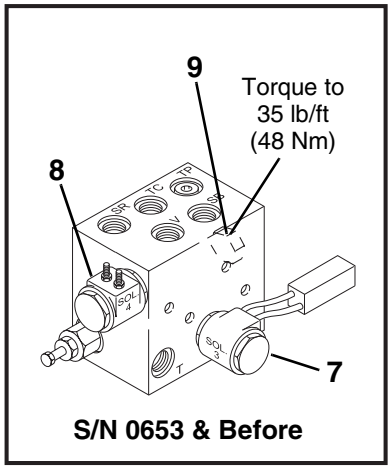

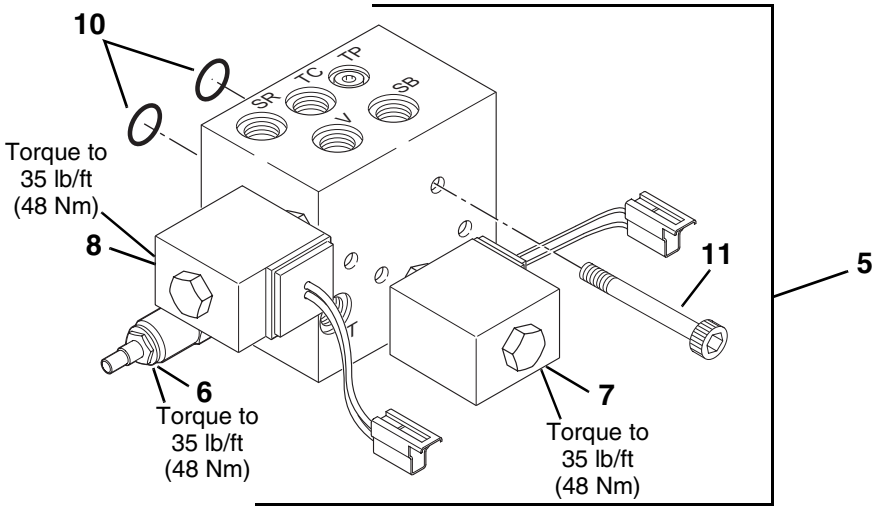

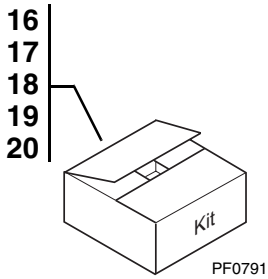

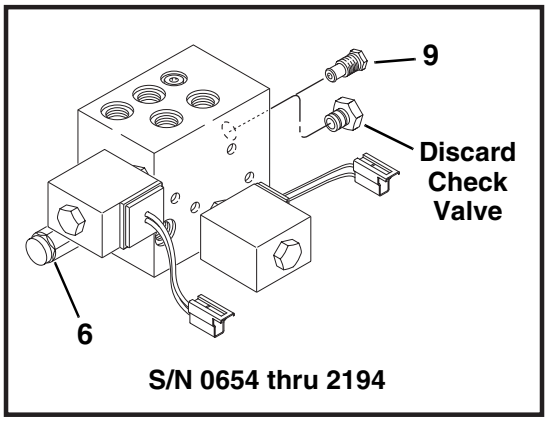

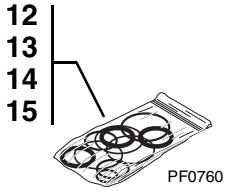

PH0960

DIRECTIONAL CONTROL VALVES 2 OF 2

Item No.	Part Number	Qty.	Description
1	NLA	1	Valve, Pressure Reducing (S/N 0653 and Before) (Includes Items 2 thru 4) (See Kits Item 16 or 17)
	8902266	1	Valve, Pressure Reducing (S/N 0654 and After) (Includes Items 2 thru 4)
2	8033760	1	Solenoid Valve (S/N 0653 and Before) (See Kits Item 12)
	8034575	1	Solenoid Valve (S/N 0654 and After) (See Kits Item 12)
3	NLA	1	Cartridge, Pressure Reducing (S/N 0653 & Before) (See Kits Item 13)
	8902689	1	Cartridge, Pressure Reducing (S/N 0654 and After) (See Kits Item 13)
4	8033769	1	Cartridge, Check Valve (S/N 0653 and Before) (See Kits Item 15)
	8034577	1	Cartridge, Check Valve (S/N 0654 and After) (See Kits Item 15)
5	NLA	1	Valve, Axle Stabilizer (S/N 0653 and Before) (Includes Items 6 thru 11) (See Kits Item 18)
	NLA	1	Valve, Axle Stabilizer (S/N 0654 thru 2194) (Includes Items 6 thru 11) (See Kits Item 19)
	8902267	1	Valve, Axle Stabilizer (S/N 2195 & After) (Includes Items 6 thru 11)
6	NLA	1	Pressure Reducing Valve - 60 psi (S/N 0653 and Before) (See Kits Item 20)
	NLA	1	Pressure Reducing Valve - 60 psi (S/N 0654 thru 2194) (See Kits Item 19)
	8902688	1	Pressure Reducing Valve - 200 psi (S/N 2195 and After) (See Kits Item 13)
7	8033770	1	Solenoid Valve (S/N 0653 and Before) (See Kits Item 15)
	8034578	1	Solenoid Valve (S/N 0654 and After) (See Kits Item 15)
8	8033760	1	Solenoid Valve (S/N 0653 and Before) (See Kits Item 12)
	8034575	1	Solenoid Valve (S/N 0654 and After) (See Kits Item 12)
9	8033753	1	Check Valve (S/N 0653 and Before) (See Kits Item 15)
	8902690	1	Plug (S/N 0654 thru 2194) (See Kits Item 15)
10	8640019	2	O-Ring
11	8310153	4	SHCS, 1/4-20 x 3"
			KITS
12	8033761	1	Seal Kit, Solenoid Valve (S/N 0653 and Before)
	8034571	1	Seal Kit, Solenoid Valve (S/N 0654 and After)
13	8033768	1	Seal Kit, Pressure Reducing Cartridge (S/N 0653 and Before)
	8034570	1	Seal Kit, Pressure Reducing Cartridge (S/N 0654 and After)
14	8205655	1	Seal Kit, Pressure Reducing Valve (S/N 0653 and Before)
	8034570	1	Seal Kit, Pressure Reducing Valve (S/N 0654 and After)
15	8033763	1	Seal Kit, Check Valve (S/N 0653 and Before)
	8034569	1	Seal Kit, Check Valve (S/N 0654 and After)
16	7117692	1	Rework Kit, Press. Red. Valve Models 8042 & 10042 (S/N 0653 and Before)
17	7117292	1	Rework Kit, Press. Red. Valve Model 10054 Only (S/N 0653 and Before)
18	7117282	1	Rework Kit, Stabilizer Valve (S/N 0653 and Before)
19	7130564	1	Rework Kit, Park Brake Valves (S/N 0654 thru 2194)
20	7131274	1	Rework Kit, Park Brake Valves (S/N 0653 and Before)

ELECTRICAL SYSTEM - CAB HARNESS

(S/N 0291 & Before)

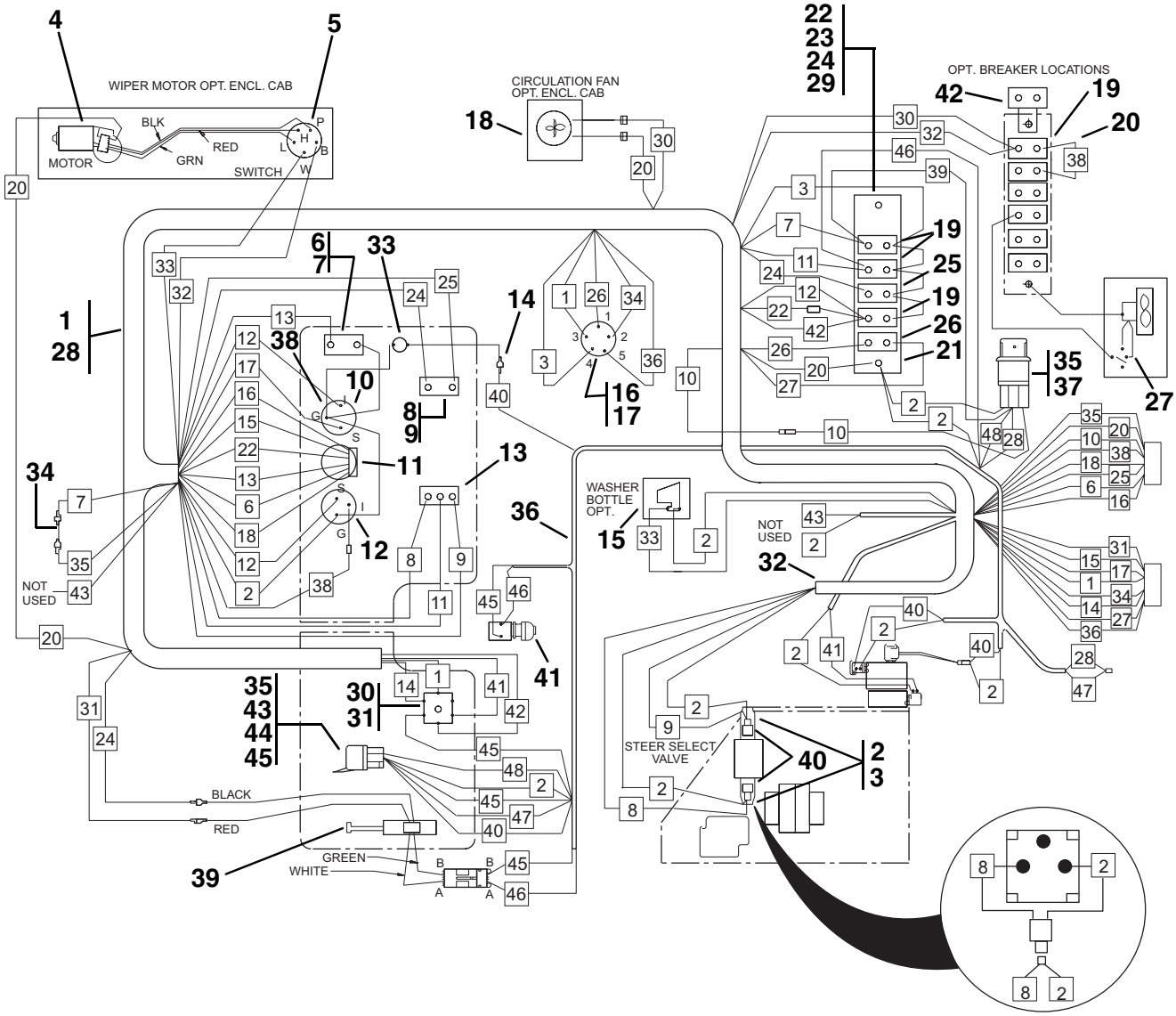

ELECTRICAL SYSTEM - CAB HARNESS

(S/N 0291 & Before)

Item No.	Part Number	Qty.	Description
1	7114763	1	Harness, Cab (Includes Items 2 & 3)
2	8220882	2	Connector, Solenoid (Includes Item 3)
3	8688026	1	Seal, Connector (Not Shown)
4	7112511	1	Motor Kit, Windshield Wiper
5	8033201	1	Switch, Windshield Washer/ Wiper
6	8223442	1	Switch, Test
7	8580312	1	Boot, Test Switch
8	8223405	1	Button, Horn
9	8580311	1	Boot, Horn Button
10	8464212	1	Gauge, Fuel
11	8466305	1	Gauge, Warning Lights
12	8467014	1	Hourmeter
13	8223220	1	Switch, Steer Select
14	8220050	1	Terminal - Male
15	8033065	1	Washer Reservoir Assembly
16	8223436	1	Switch, Ignition (w/Keys)
17	8223438	1	Key, Ignition (Not Shown)
18	8033078	1	Fan, Circulation
19	8229215	3	Circuit Breaker, 6 amp (4 req'd. on Closed Cab)
20	7047041	1	Wire Assembly (Enclosed Cab Only)
21	8229218	1	Bracket, Cricuit Breaker
22	8305004	2	Nut, Hex, 1/4-20
23	8307109	3	Washer, Flat 1/4"
24	8307026	2	Washer, Lock, Int. Tooth 3/8"
25	8229216	1	Circuit Breaker, 10 amp
26	8229226	1	Circuit Breaker, 40 amp
27	8223024	1	Switch Kit, Heater
28	8584001	AR	Wrap, Tie (Not Shown)
29	8307002	2	Washer, Lock 1/4"
30	8223444	1	Switch, Emergency Brake
31	8223445	1	Guard, Switch
32	8584003	1	Wrap, Tie
33	8469028	1	Warning Light
34	7112422	1	Wire Assembly
35	8223517	2	Relay
36	7115163	1	Harness, Stabilizer
37	8305003	1	Nut, Hex #10-32
38	8220008	1	Terminal, Ring #10
39	8160621	1	Switch, Reverse
40	8032756	2	Solenoid, Steer Select
41	8223025	1	Switch, Brake
42	8229232	1	Circuit Breaker 20 amp (optional)
43	8303835	1	SHCS #10 x 1/2"
44	8305002	1	Nut, Hex #10
45	8307003	1	Washer, Lock #10

ELECTRICAL SYSTEM - CAB HARNESS

(S/N 0292 thru 9908)

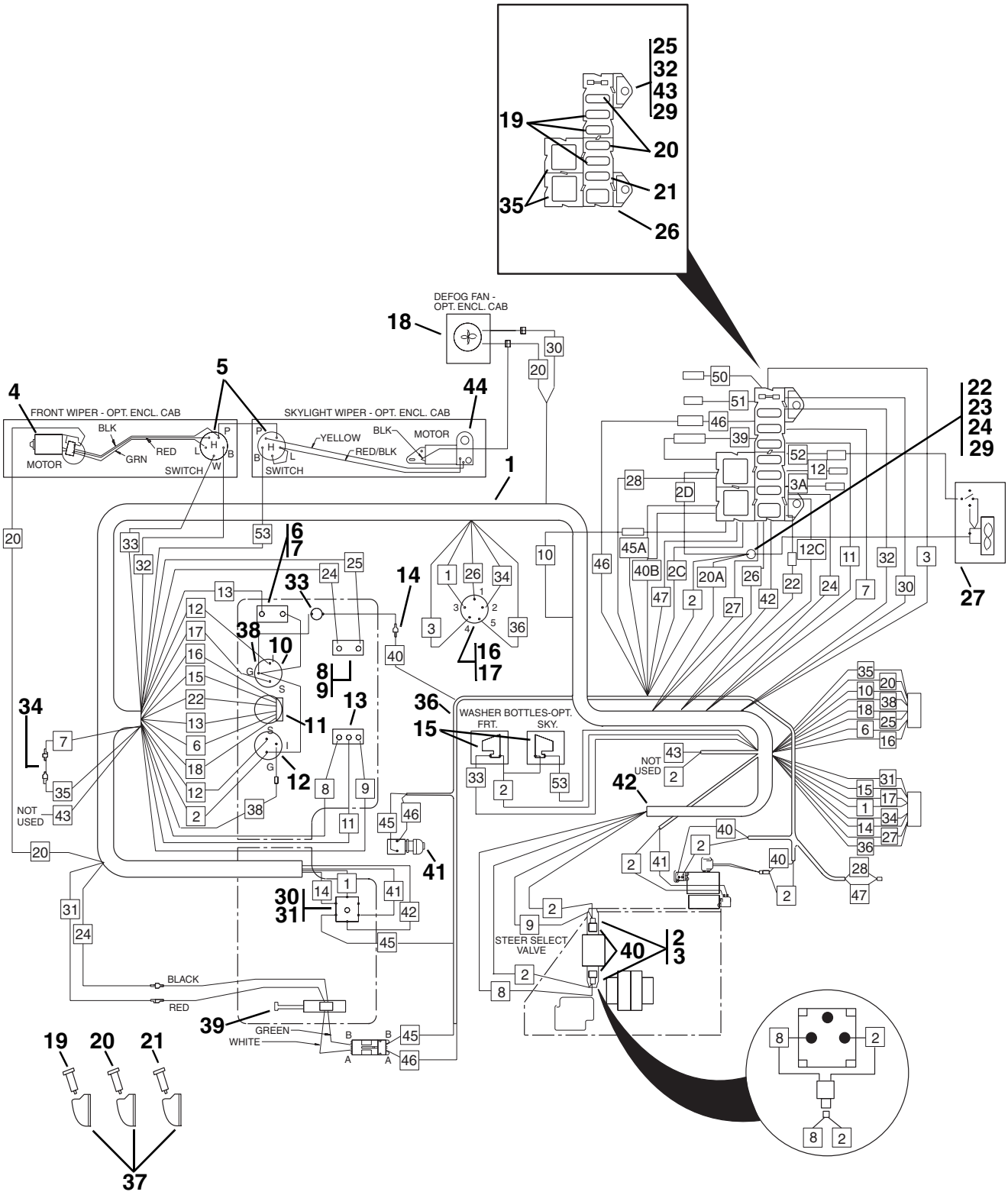

PH0701

ELECTRICAL SYSTEM - CAB HARNESS

(S/N 0292 thru 9908)

Item No.	Part Number	Qty.	Description
1	7114754	1	Harness, Cab (Includes Items 2 & 3)
2	8220882	2	Connector, Solenoid (Includes Item 3)
3	8688026	1	Seal, Connector - Not Shown
4	7112511	1	Motor Kit, Windshield Wiper
5	8033201	2	Switch, Windshield Washer/Wiper
6	8223442	1	Switch, Test
7	8580312	1	Boot, Test Switch
8	8223405	1	Button, Horn
9	8580311	1	Boot, Horn Button
10	8464212	1	Gauge, Fuel
11	8466305	1	Gauge, Warning Lights
12	8467014	1	Hourmeter
13	8223220	1	Switch, Steer Select
14	8220050	1	Terminal - Male
15	8033065	1	Washer Reservoir Assembly
16	8223436	1	Switch, Ignition (w/Keys)
17	8223438	1	Key, Ignition (Not Shown)
18	8033078	1	Fan, Defrost
19	8229233	2	Fuse, 7.5 amp (3 required on Closed Cab)
20	8229234	2	Fuse, 10 amp (3 required on Closed Cab)
21	8229235	1	Fuse, 20 amp (Opt. Light Package)
22	8305004	1	Nut, Hex, 1/4-20
23	8307109	2	Washer, Flat 1/4"
24	8307026	2	Washer, Lock, Int. Tooth 3/8"
25	8305002	4	Nut, Hex #10
26	8229238	2	Fuse, 40 Amps
27	8223024	1	Switch Kit, Heater
28	8584001	AR	Wrap, Tie (Not Shown)
29	8307106	3	Washer, Flat 5/16" LT
30	8223444	1	Switch, Emergency Brake
31	8223445	1	Guard, Switch
32	8307003	4	Washer, Lock #10
33	8469028	1	Warning Light
34	7112422	1	Wire Assembly
35	8225117	2	Relay
36	7114604	1	Harness, Stabilizer
37	8582007	3	Clip, Spare Fuse
38	8220008	1	Terminal, Ring #10
39	8307027	1	Washer, Lock Ext. Tooth 5/16"
40	8032756	2	Solenoid, Steer Select
41	8223025	1	Switch, Brake
42	8584003	1	Wrap, Tie (Not Shown)
43	8307111	4	Washer, Flat #10
44	8034810	1	Skylight Wiper Motor

ELECTRICAL SYSTEM - CAB HARNESS

(S/N 9909 and After)

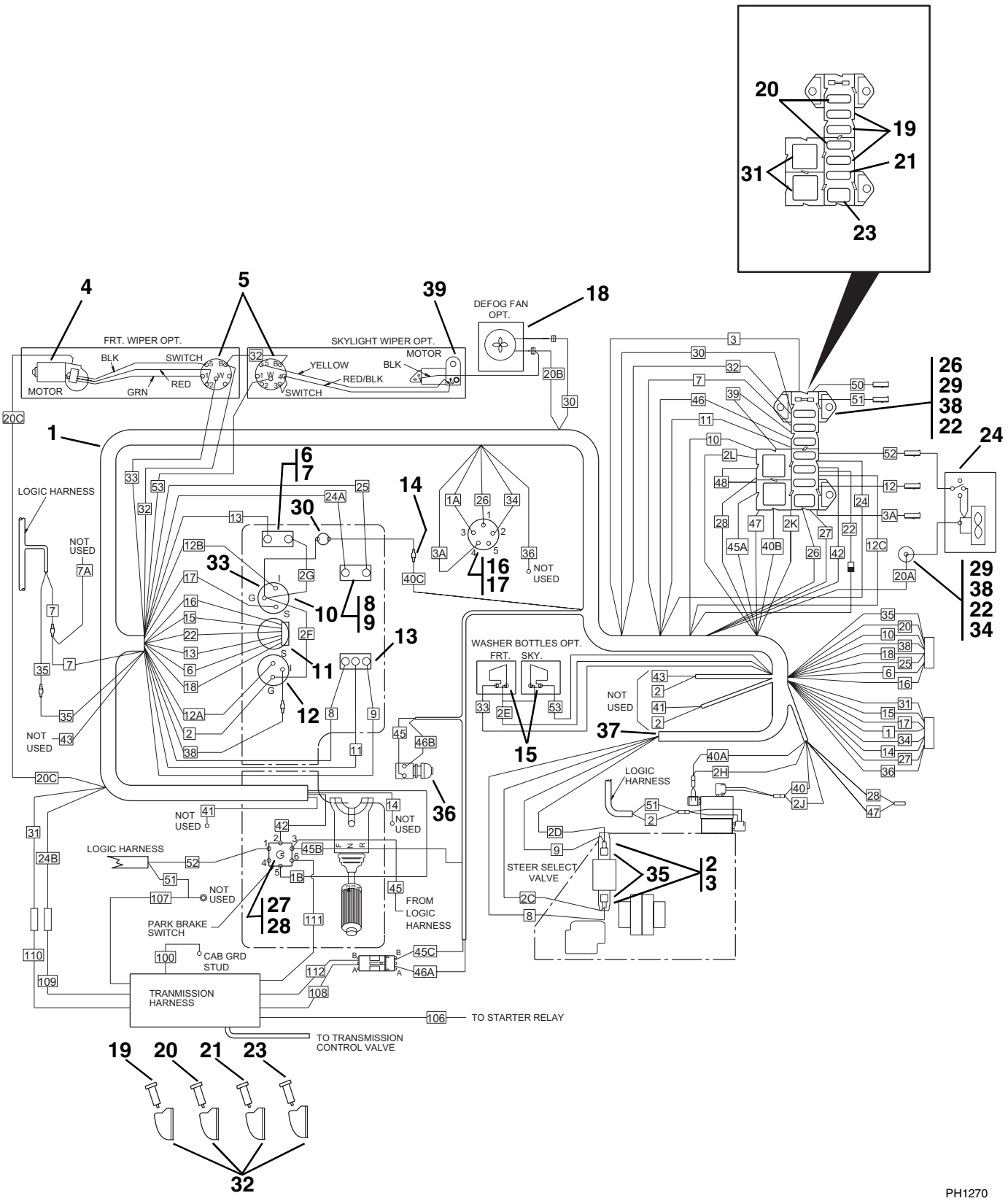

PH1270

ELECTRICAL SYSTEM - CAB HARNESS

(S/N 9909 and After)

Item No.	Part Number	Qty.	Description
1	7117704	1	Harness, Cab (Includes Item 2)
2	8220882	2	Connector, Solenoid
3	8526035	AR	Sealant
4	7112511	1	Motor Kit, Windshield Wiper
5	8033201	2	Switch, Windshield Washer/Wiper
6	8223442	1	Switch, Test
7	8580312	1	Boot, Test Switch
8	8223405	1	Button, Horn
9	8580311	1	Boot, Horn Button
10	8464212	1	Gauge, Fuel
11	8466305	1	Gauge, Warning Lights
12	8467014	1	Hourmeter
13	8223220	1	Switch, Steer Select
14	8220050	1	Terminal - Male
15	8033065	1	Washer Reservoir Assembly
16	8223436	1	Switch, Ignition (w/Keys)
17	8223438	1	Key, Ignition (Not Shown)
18	8033078	1	Fan, Defrost
19	8229233	2	Fuse, 7.5 amp (3 required on Closed Cab)
20	8229234	3	Fuse, 10 amp
21	8229235	1	Fuse, 20 amp (Opt. Light Package)
22	8305002	4	Nut, Hex #10
23	8229238	2	Fuse, 40 Amps
24	8223024	1	Switch Kit, Heater
25	8584001	AR	Wrap, Tie (Not Shown)
26	8307106	3	Washer, Flat 5/16" LT
27	8223444	1	Switch, Emergency Brake
28	8223445	1	Guard, Switch
29	8307003	4	Washer, Lock #10
30	8469028	1	Warning Light
31	8225117	2	Relay
32	8582007	4	Clip, Spare Fuse
33	8220008	1	Terminal, Ring #10
34	8307027	1	Washer, Lock Ext. Tooth 5/16"
35	8032756	2	Solenoid, Steer Select
36	8223025	1	Switch, Brake
37	8584003	1	Wrap, Tie (Not Shown)
38	8307111	4	Washer, Flat #10
39	8034810	1	Skylight Wiper Motor

ELECTRICAL SYSTEM - ENGINE HARNESS

(S/N 8042-0206 & Before and 10042-0211 & Before)

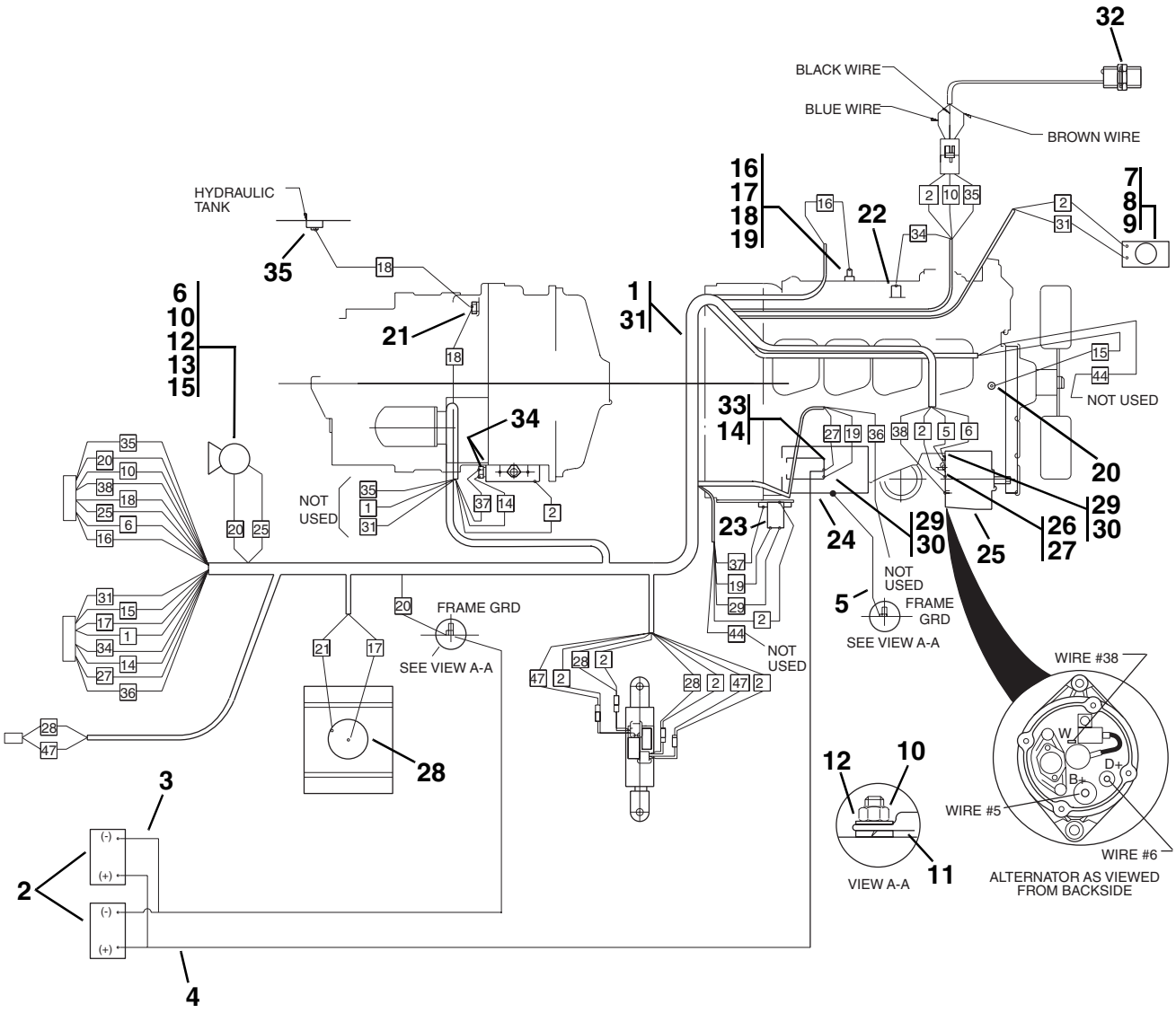

PH0610

ELECTRICAL SYSTEM - ENGINE HARNESS

(S/N 8042-0206 & Before and 10042-0211 & Before)

Item No.	Part Number	Qty.	Description
1	7098864	1	Harness, Engine
2	8270014	2	Battery, 12 Volt
3	7114612	1	Cable, Battery - Negative
4	7098762	1	Cable, Battery - Positive
5	7068651	1	Cable, Battery Ground
6	8270602	1	Horn
7	8270617	1	Alarm, Backup
8	8305004	2	Nut, Hex, 1/4-20
9	8307002	2	Washer, Lock 1/4"
10	8305006	4	Nut, Hex, 5/16-18
11	8307006	2	Washer, Lock 7/16"
12	8307106	4	Washer, Flat 5/16"
13	8307004	1	Washer, Lock 5/16"
14	8305438	1	Nut, Hex Jam M10
15	8303697	2	HHCS, 5/16-18 x 3/4"
16	8310041	1	Washer, Lock, Ext. Tooth #8
17	8305201	1	Nut, Hex, Brass #8-32
18	8220073	1	Terminal, Slip-On Male #10 SCR
19	8223510	1	Sender, Low Oil Pressure 1/8-27
20	8223217	1	Sender, Water Temperature
21	8223216	1	Switch, Transmission Temperature
22	8033406	1	Solenoid, Fuel Run (Used on CAV Injection Pumps)
	8034813	1	Solenoid, Fuel Run (Used on Bosch Injection Pumps)
23	8277162	1	Relay, Starter
24	8033340	1	Starter (Includes Starter Solenoid)
25	8270221	1	Alternator
26	8307022	1	Washer, Lock M8
27	8305043	1	Nut, Hex M8-1,25
28	7118222	1	Sender, Fuel Level
29	8310077	3	Nut, Hex Jam M5-0,8
30	8310078	3	Washer, Lock M5
31	8584001	AR	Tie Wrap (Not Shown)
32	7099882	1	Boom Sensor - Angle
33	8307023	1	Washer, Lock M10
34	8303987	2	Screw, Slotted #8
35	8223217	1	Switch, Hydraulic Oil Temperature

ELECTRICAL SYSTEM - ENGINE HARNESS

(S/N 8042-0207 thru 1598, 10042-0212 thru 1598, 10054-1598 & Before)

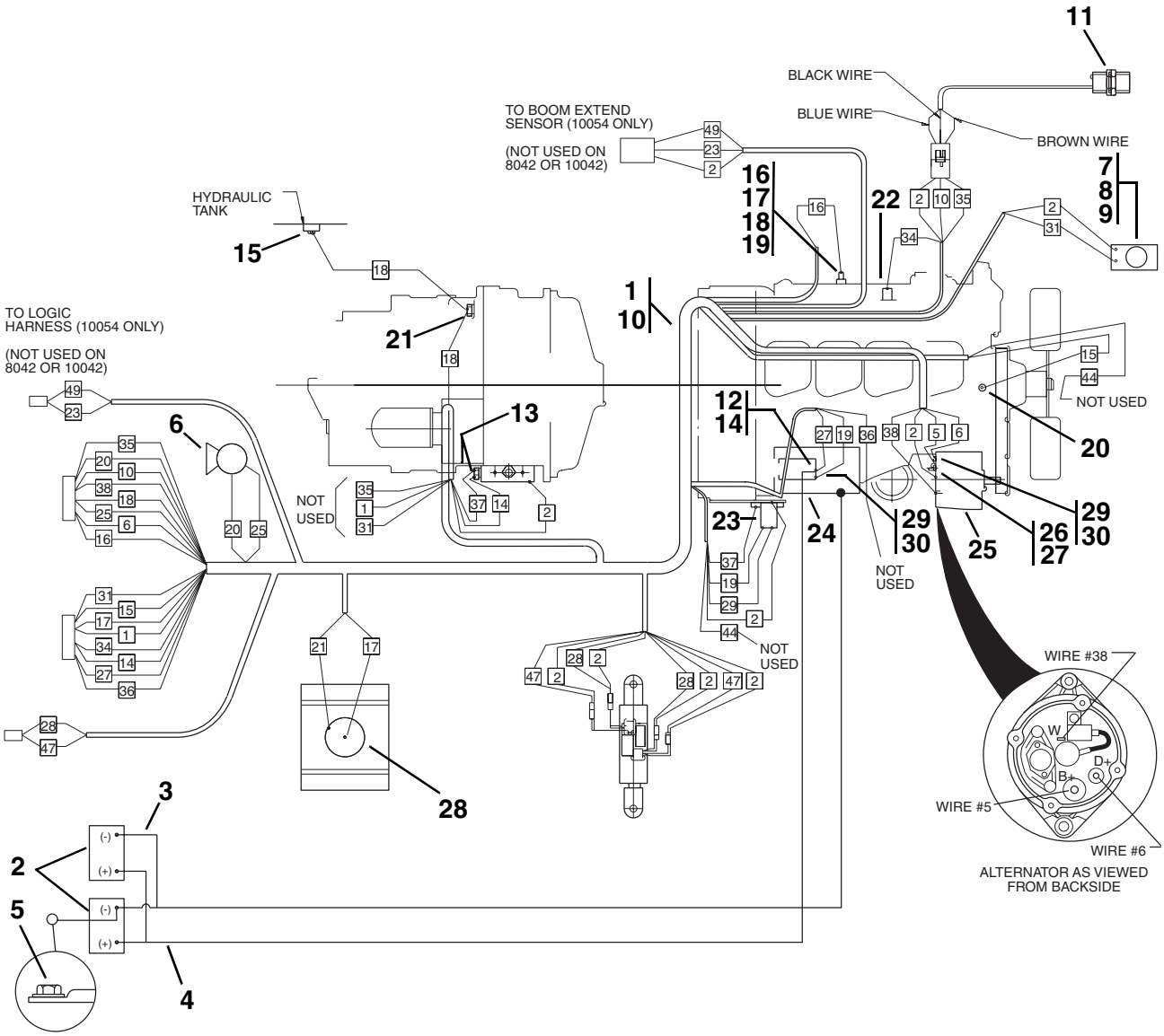

PH0611

ELECTRICAL SYSTEM - ENGINE HARNESS

(S/N 8042-0207 thru 1598, 10042-0212 thru 1598, 10054-1598 & Before)

Item No.	Part Number	Qty.	Description
1	7126684	1	Harness, Engine
2	8270014	2	Battery, 12 Volt
3	7114542	1	Cable, Dual Battery - Negative
4	7098762	1	Cable, Dual Battery - Positive
5	8310202	1	HHCS, 3/8 x 3/4"
6	8270602	1	Horn (Includes Mounting Hardware)
7	8270617	1	Alarm, Backup
8	8305004	2	Nut, Hex, 1/4-20
9	8307002	2	Washer, Lock 1/4"
10	8584001	AR	Tie Wrap (Not Shown)
11	7099882	1	Boom Sensor - Angle
12	8307023	1	Washer, Lock M10
13	8303987	2	Screw, Slotted #8
14	8305438	1	Nut, Hex Jam M10
15	8223217	1	Switch, Hydraulic Oil Temperature
16	8310041	1	Washer, Lock, Ext. Tooth #8
17	8305201	1	Nut, Hex, Brass #8-32
18	8220073	1	Terminal, Slip-On Male #10 SCR
19	8223510	1	Sender, Low Oil Pressure 1/8-27
20	8223217	1	Sender, Water Temperature
21	8223216	1	Switch, Transmission Temperature
22	8033406	1	Solenoid, Fuel Run (Used on CAV Injection Pumps)
	8034813	1	Solenoid, Fuel Run (Used on Bosch Injection Pumps)
23	8277162	1	Relay, Starter
24	8033340	1	Starter (Includes Starter Solenoid)
25	8270221	1	Alternator
26	8307022	1	Washer, Lock M8
27	8305043	1	Nut, Hex M8-1,25
28	7118222	1	Sender, Fuel Level
29	8310077	3	Nut, Hex Jam M5-0,8
30	8310078	3	Washer, Lock M5

ELECTRICAL SYSTEM - ENGINE HARNESS

(S/N 8042-1599 to 5234, 10042-1599 to 5250, 10054-1599 to 5274)

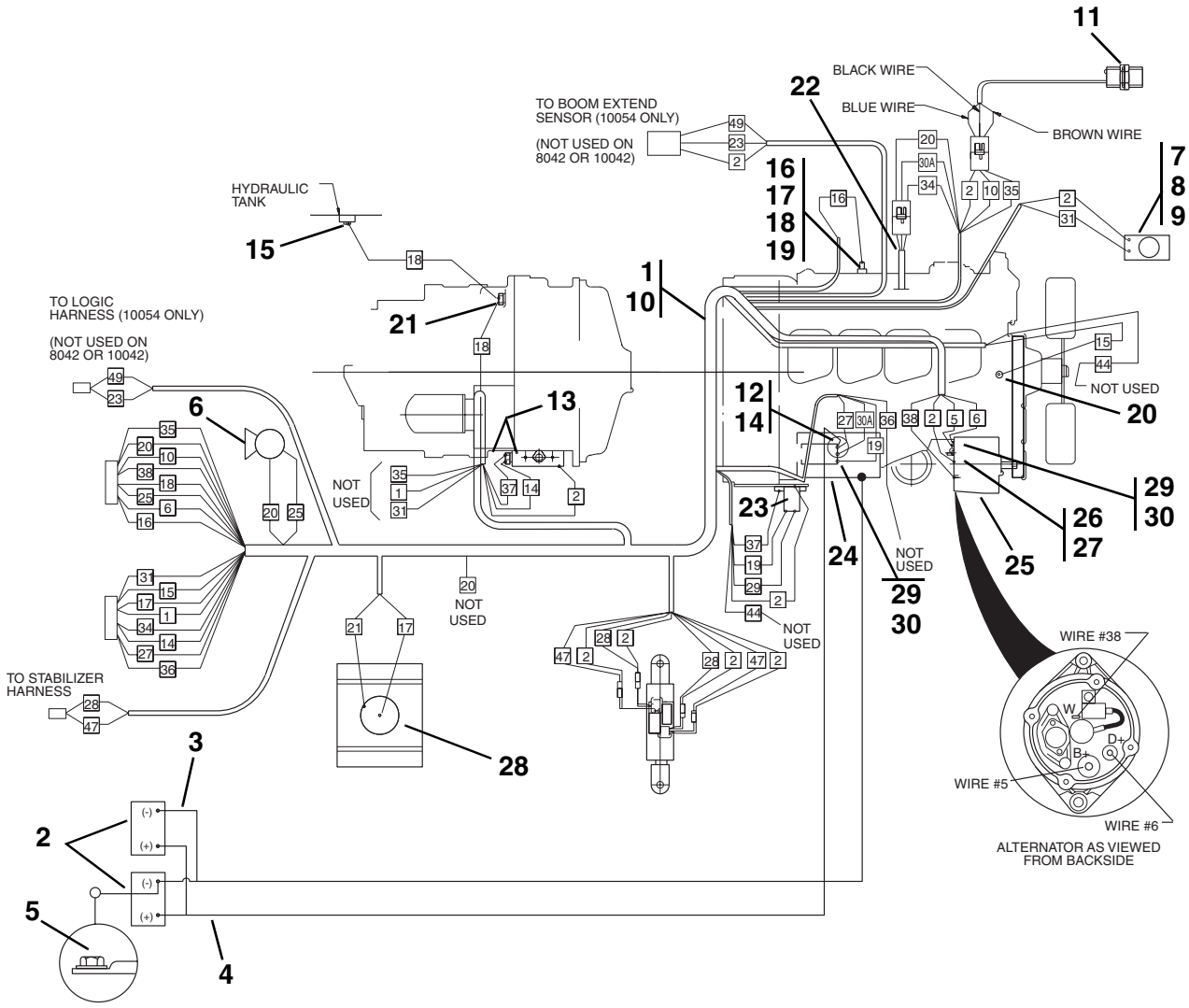

PH0613

ELECTRICAL SYSTEM - ENGINE HARNESS

(S/N 8042-1599 to 5234, 10042-1599 to 5250, 10054-1599 to 5274)

Item No.	Part Number	Qty.	Description
1	7126684	1	Harness, Engine
2	8270014	2	Battery, 12 Volt
3	7114542	1	Cable, Dual Battery - Negative
4	7098762	1	Cable, Dual Battery - Positive
5	8310202	1	HHCS, 3/8 x 3/4"
6	8270602	1	Horn (Includes Mounting Hardware)
7	8270617	1	Alarm, Backup
8	8305004	2	Nut, Hex, 1/4-20
9	8307002	2	Washer, Lock 1/4"
10	8584001	AR	Tie Wrap (Not Shown)
11	7099882	1	Boom Sensor - Angle
12	8307023	1	Washer, Lock M10
13	8303987	2	Screw, Slotted #8
14	8305438	1	Nut, Hex Jam M10
15	8223217	1	Switch, Hydraulic Oil Temperature
16	8310041	1	Washer, Lock, Ext. Tooth #8
17	8305201	1	Nut, Hex, Brass #8-32
18	8220073	1	Terminal, Slip-On Male #10 SCR
19	8223610	1	Sender, Low Oil Pressure M10
20	8223217	1	Sender, Water Temperature
21	8223216	1	Switch, Transmission Temperature
22	8033406	1	Solenoid, Fuel Run (Used on CAV Injection Pumps)
	8034813	1	Solenoid, Fuel Run (Used on Bosch Injection Pumps)
23	8277162	1	Relay, Starter
24	8033340	1	Starter (Includes Starter Solenoid)
25	8270221	1	Alternator
26	8307022	1	Washer, Lock M8
27	8305043	1	Nut, Hex M8-1,25
28	7118222	1	Sender, Fuel Level
29	8310077	3	Nut, Hex Jam M5-0,8
30	8310078	3	Washer, Lock M5

ELECTRICAL SYSTEM - ENGINE HARNESS (EPA)

(S/N 8042-5235, 10042-5251, 10054-5275 thru 9908)

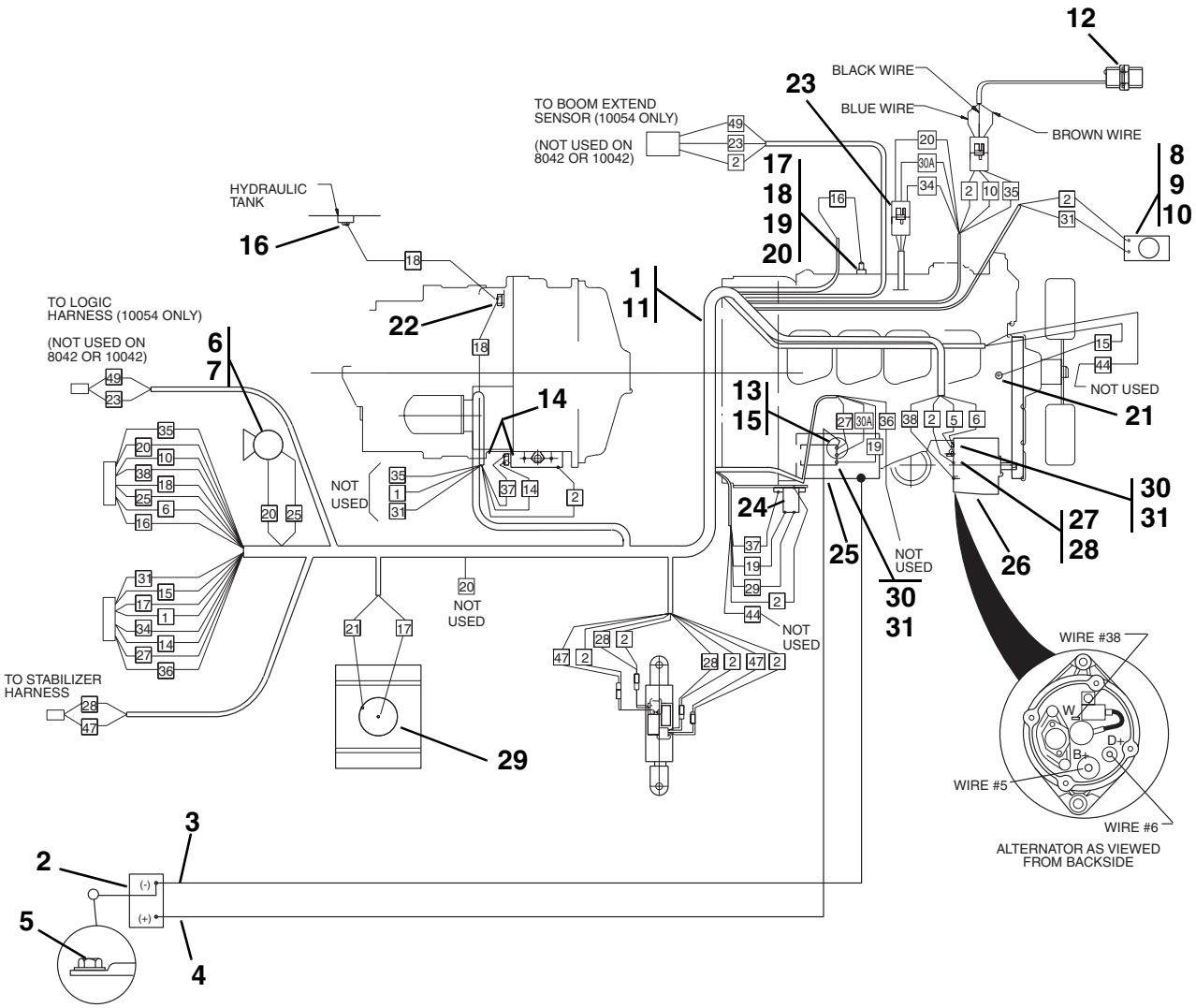

PH0612

ELECTRICAL SYSTEM - ENGINE HARNESS (EPA)

(S/N 8042-5235, 10042-5251, 10054-5275 thru 9908)

Item No.	Part Number	Qty.	Description
1	7126684	1	Harness, Engine
2	8270134	1	Battery, 12 Volt
3	7129392	1	Cable, Single Battery - Negative
4	7129382	1	Cable, Single Battery - Positive
5	8310202	1	HHCS, 3/8 x 3/4"
6	7134832	1	Kit, Horn (Includes Item 7 and female terminal to replace ring terminal on early production units)
7	8270625	1	Horn (Includes Mounting Hardware)
8	8270617	1	Alarm, Backup
9	8305004	2	Nut, Hex, 1/4-20
10	8307002	2	Washer, Lock 1/4"
11	8584001	AR	Tie Wrap (Not Shown)
12	7099882	1	Boom Sensor - Angle
13	8307023	1	Washer, Lock M10
14	8303987	2	Screw, Slotted #8
15	8305438	1	Nut, Hex Jam M10
16	8223217	1	Switch, Hydraulic Oil Temperature
17	8310041	1	Washer, Lock, Ext. Tooth #8
18	8305201	1	Nut, Hex, Brass #8-32
19	8220073	1	Terminal, Slip-On Male #10 SCR
20	8223610	1	Sender, Low Oil Pressure M10
21	8223217	1	Sender, Water Temperature
22	8223216	1	Switch, Transmission Temperature
23	8035276	1	Solenoid, Fuel Run
24	8277162	1	Relay, Starter
25	8033340	1	Starter (Includes Starter Solenoid)
26	8270221	1	Alternator
27	8307022	1	Washer, Lock M8
28	8305043	1	Nut, Hex M8-1,25
29	7118222	1	Sender, Fuel Level
30	8310077	3	Nut, Hex Jam M5-0,8
31	8310078	3	Washer, Lock M5

ELECTRICAL SYSTEM - ENGINE HARNESS (EPA)

(S/N 9909 and After)

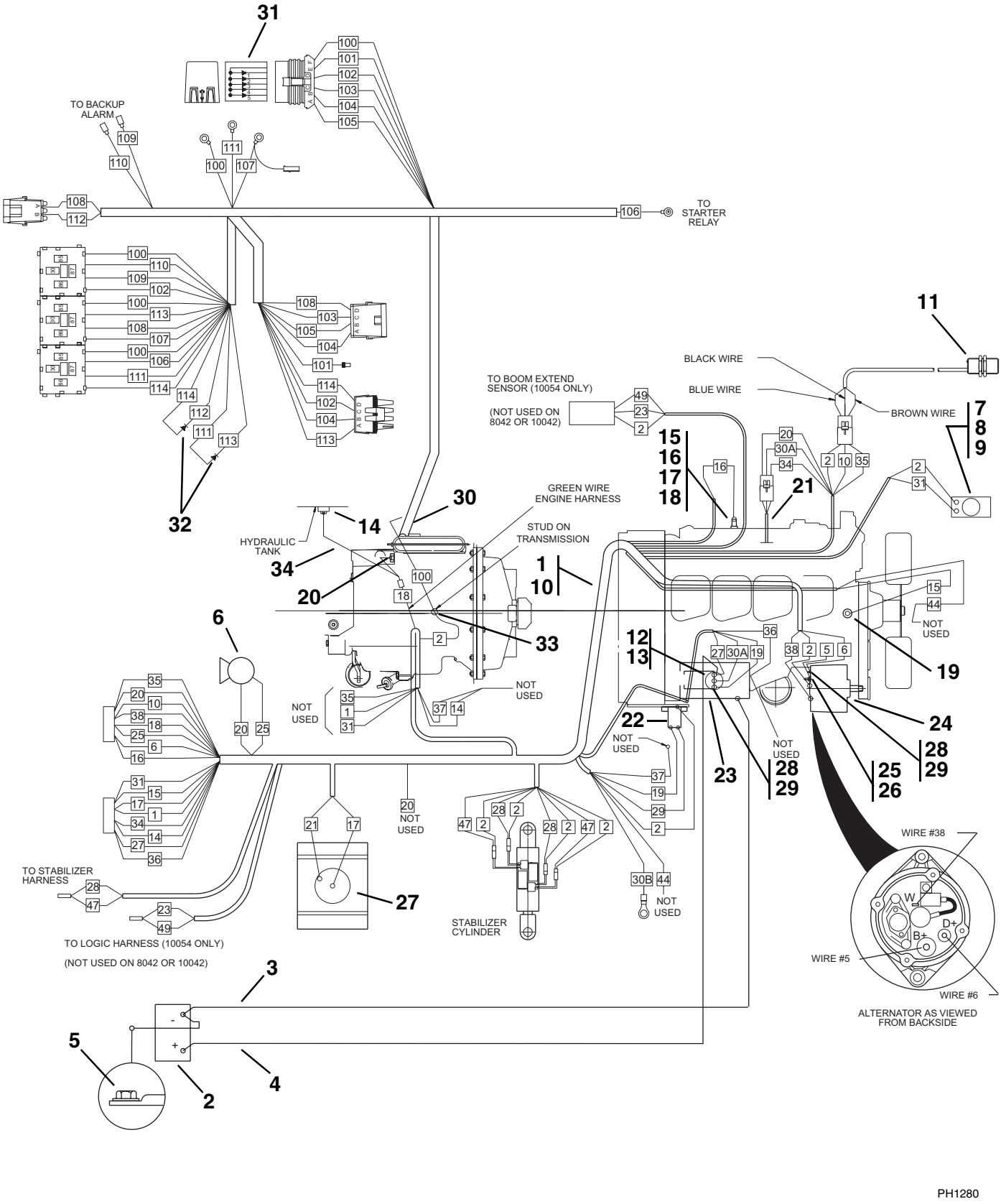

PH1280

ELECTRICAL SYSTEM - ENGINE HARNESS (EPA)

(S/N 9909 and After)

Item No.	Part Number	Qty.	Description
1	7134894	1	Harness, Engine
2	8270134	1	Battery, 12 Volt
3	7129392	1	Cable, Single Battery - Negative
4	7129382	1	Cable, Single Battery - Positive
5	8310202	1	HHCS, 3/8 x 3/4”
6	8270625	1	Horn (Includes Mounting Hardware)
7	8270617	1	Alarm, Backup
8	8305004	2	Nut, Hex, 1/4-20
9	8307002	2	Washer, Lock 1/4"
10	8584001	AR	Tie Wrap (Not Shown)
11	7099882	1	Boom Sensor - Angle
12	8307023	1	Washer, Lock M10
13	8305438	1	Nut, Hex Jam M10
14	8223217	1	Switch, Hydraulic Oil Temperature
15	8310041	1	Washer, Lock, Ext. Tooth #8
16	8305201	1	Nut, Hex, Brass #8-32
17	8220073	1	Terminal, Slip-On Male #10 SCR
18	8223610	1	Sender, Low Oil Pressure M10
19	8223217	1	Sender, Water Temperature
20	8223216	1	Switch, Transmission Temperature
21	8035276	1	Solenoid, Fuel Run
22	8277162	1	Relay, Starter
23	8033340	1	Starter (Includes Starter Solenoid)
24	8270221	1	Alternator
25	8307022	1	Washer, Lock M8
26	8305043	1	Nut, Hex M8-1,25
27	7118222	1	Sender, Fuel Level
28	8310077	3	Nut, Hex Jam M5-0,8
29	8310078	3	Washer, Lock M5
30	7150402	1	Transmission Harness
31	8035805	1	Diode Pac
32	8035806	2	Diode - 3 amp 1000 volt
33	8305038	2	Nut M10
34	7150521	1	Wire Assembly

LIGHTING SYSTEM

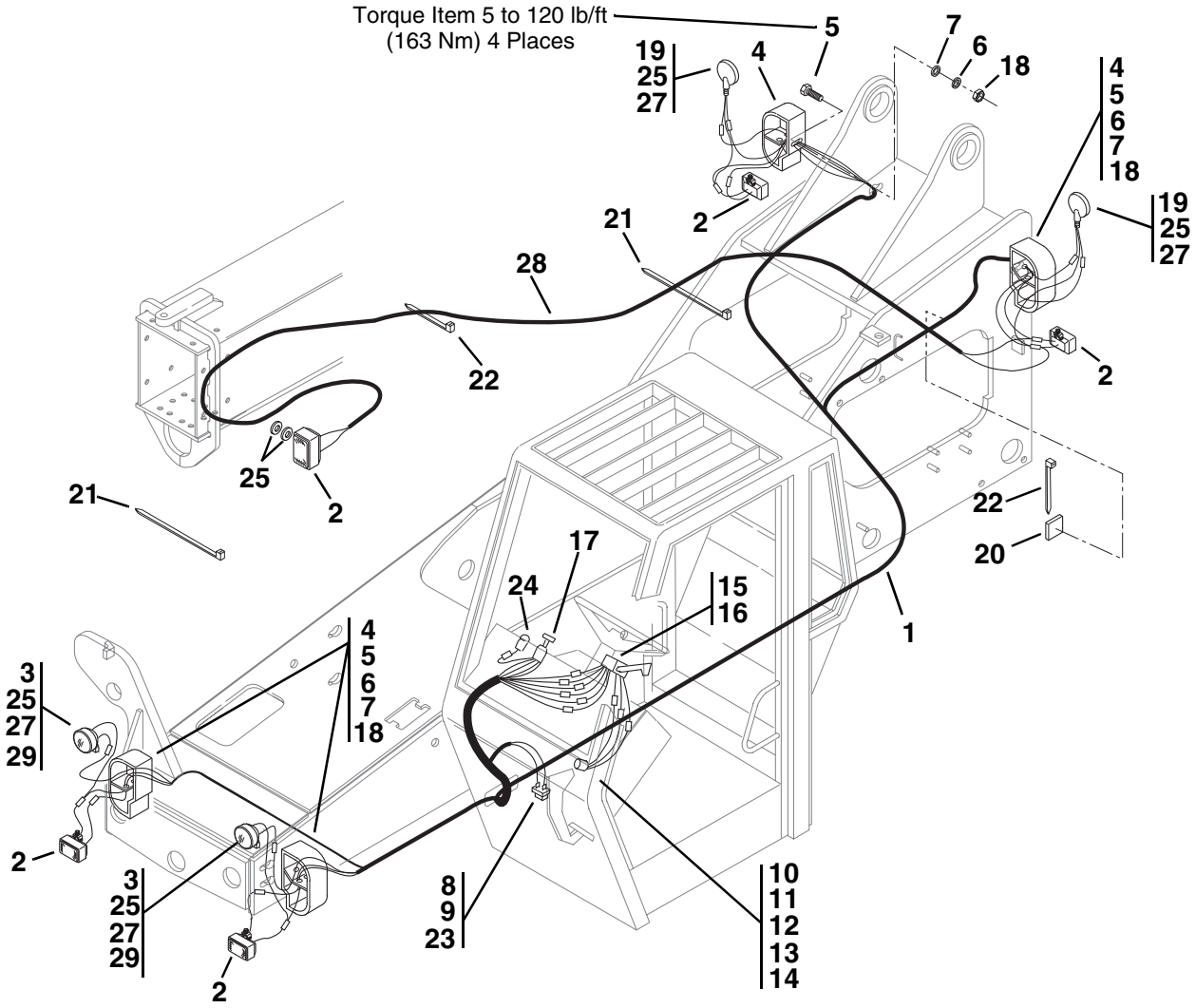

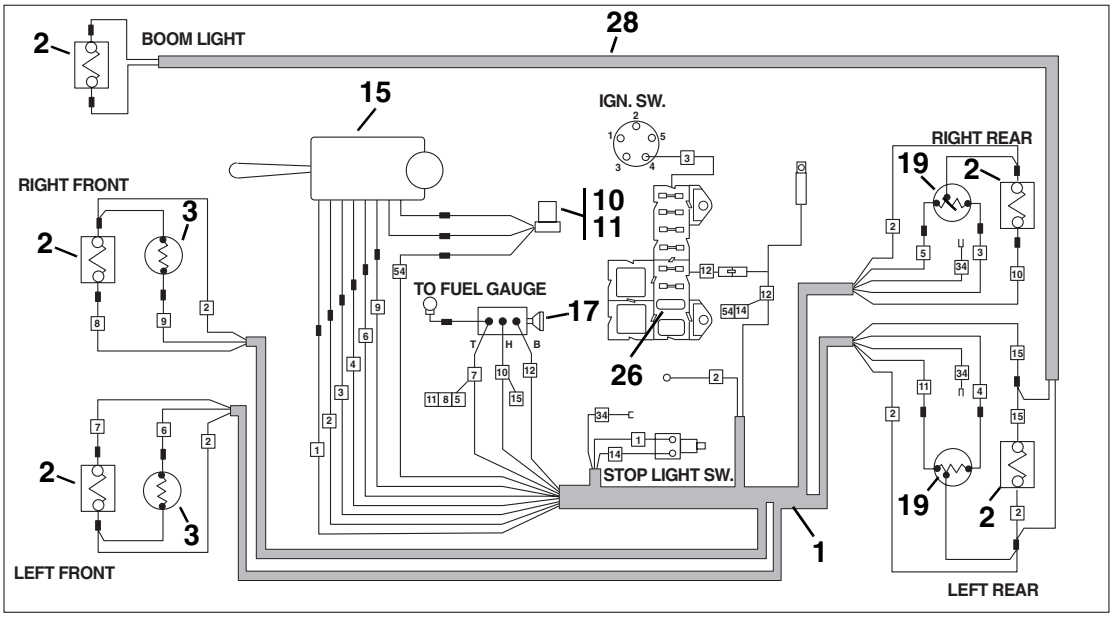

PH0432

LIGHTING SYSTEM

Item No.	Part Number	Qty.	Description
1	7098973	1	Harness, Wiring
2	5721202	5	Light, Head and Work
3	8500036	2	Light, Turn Signal
4	7112302	4	Bracket, Mounting
5	8303632	8	HHCS, 5/8-11 x 2-1/2"
6	8307009	8	Washer, Lock 5/8"
7	8307207	8	Washer, Flat 5/8" Heavy
8	8223025	1	Switch, Momentary Brake Light
9	7111191	1	Plate, Actuator
10	8223424	1	Mount, Flasher
11	8500201	1	Flasher
12	8303837	2	Screw, Rd. Hd. Mach., #10-24 x 3/4"
13	8305627	2	Nut, Hex Lock #10-24
14	8307111	2	Washer, Flat #10
15	8223419	1	Switch, Turn Signal
16	7124331	1	Conduit, 1/2 I.D. x 5' - Cut to Fit
17	8223016	1	Switch, Head and Tail Lights
18	8305014	8	Nut, Hex 5/8-11
19	8500009	2	Stop/Turn Signal Light
20	8584018	6	Mount, Tie
21	8584003	6	Tie, Plastic, 14.8"
22	8584001	27	Tie, Plastic, 6.7"
23	8305405	1	Nut, Hex Jam 3/8"
24	7058372	1	Fuel Gauge Light Assembly
25	8307206	AR	Washer, Flat 1/2" Heavy
26	8229235	1	Fuse, 20 amp
27	8220050	6	Terminal, Blade Male 1/4"
28	7110782	1	Cord, Boom Work Light
29	8310058	4	Washer, Flat 5/8 Hardened

OUTRIGGER ELECTRICAL HARNESS

(10042/10054 Only)

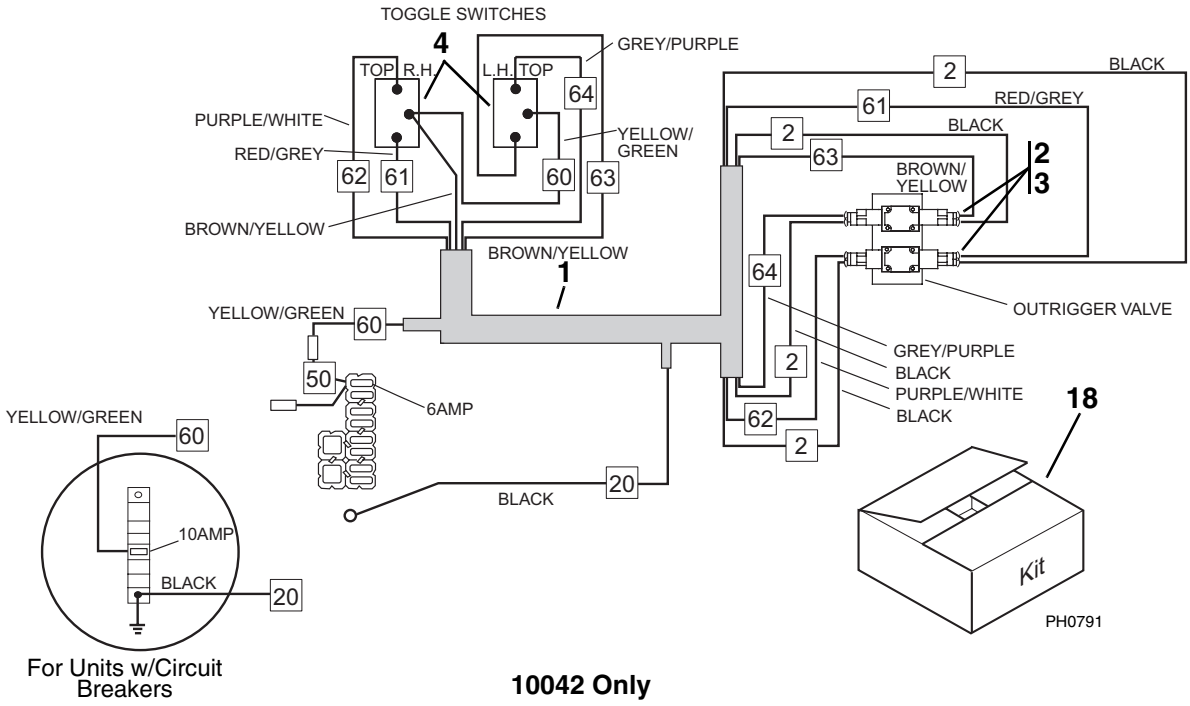

10042 Only

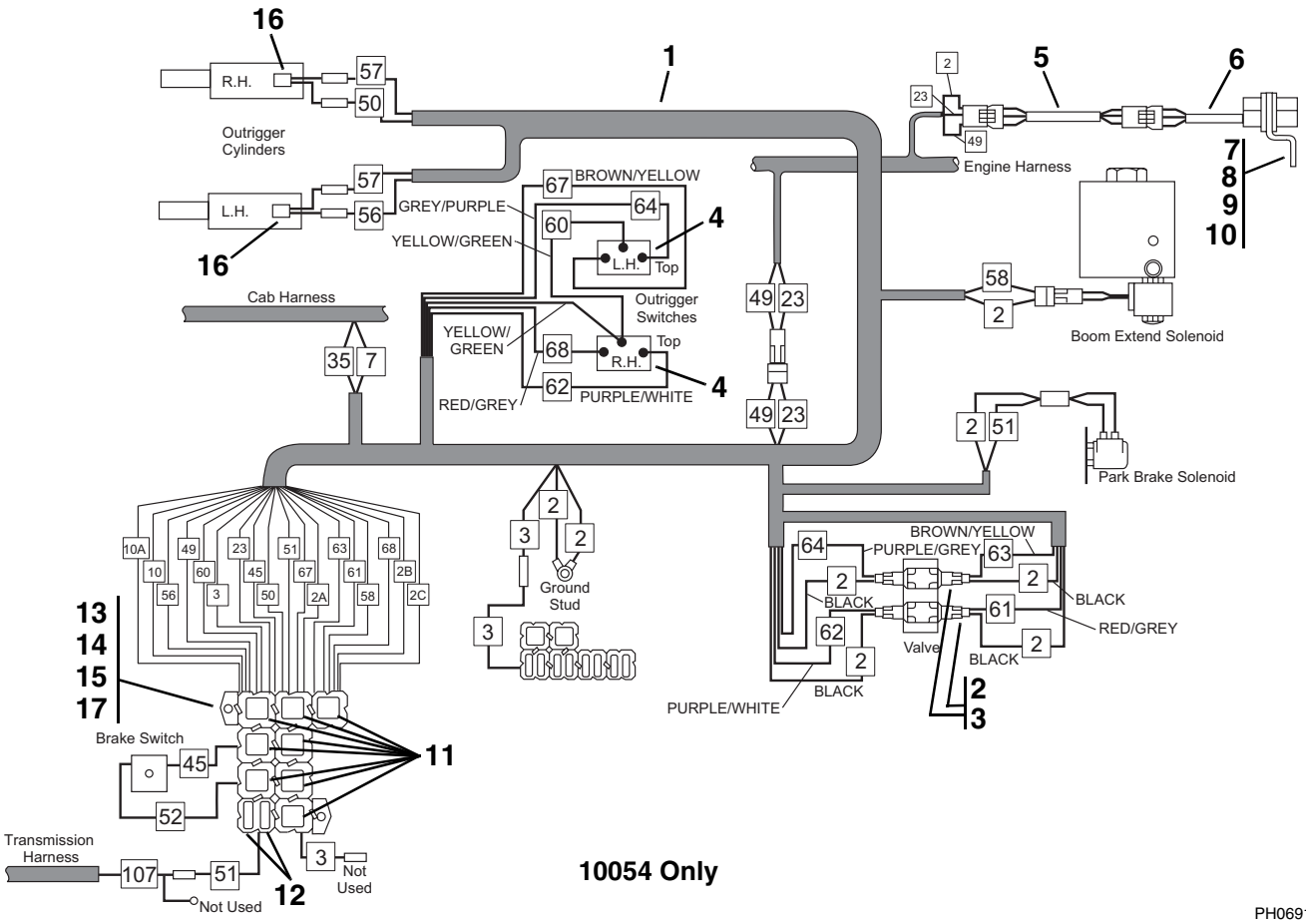

10054 Only

OUTRIGGER ELECTRICAL HARNESS

(10042/10054 Only)

Item No.	Part Number	Qty.	Description
1	7099923	1	Harness, Wiring (Includes Items 2 & 3) - (10042 Only)
	7115114	1	Harness, Logic (Includes Items 2 & 3) - (10054 Only)
2	8220882	4	Connector, Solenoid (Includes Item 3)
3	8688026	4	Seal, Connector (Not Shown)
4	8223221	2	Switch, Toggle
5	7112592	1	Wire Assembly
6	7138469	1	Kit, Boom Sensor (S/N 9915 & Before)
	7099882	1	Sensor, Boom (S/N 9916 & After)
7	7112582	1	Clip (S/N 9915 & Before)
	7138468	1	Clip (S/N 9916 & After)
8	8303738	2	HHCS, 3/8-16 x 7/8"
9	8307005	2	Washer, Lock 3/8"
10	8310113	2	Nut, Cage 3/8-16
11	8225117	8	Relay
12	8229233	2	Fuse, 7.5 amp
13	8307111	2	Washer, Flat #10
14	8305002	2	Nut, Hex #10
15	8307003	2	Washer, Lock #10
16	8223525	2	Switch, Pressure
17	8307106	2	Washer, Flat 5/16 LT
			KITS
18	7116632	1	Kit, Outrigger, Wire Harness This kit is available to convert 10042 wire harness for use with circuit breakers

DECALS AND PAINT

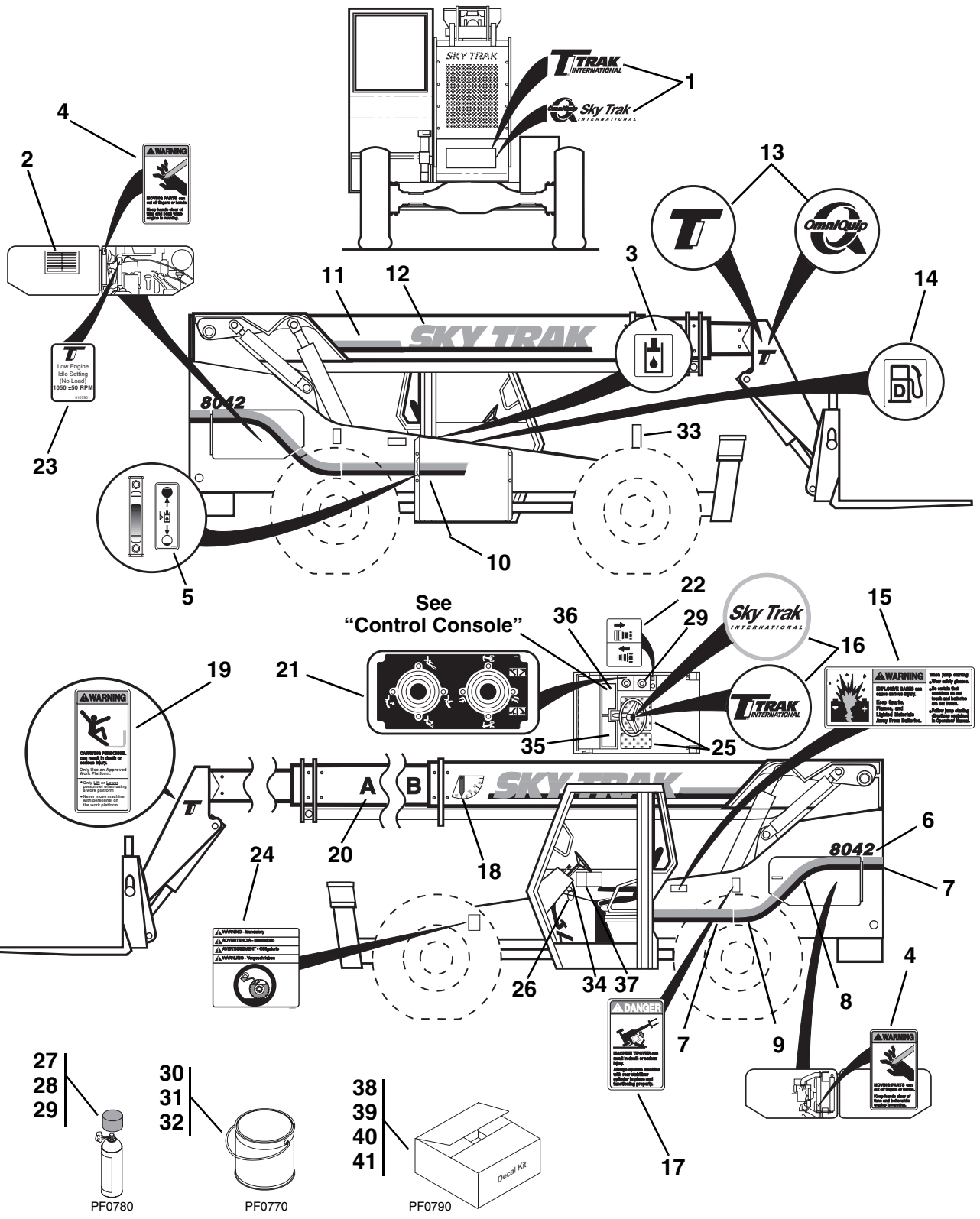

DECALS AND PAINT

Item No.	Part Number	Qty.	Description
1	4106872	1	Decal, TRAK INTERNATIONAL (Earlier Models)
	4110113	1	Decal, Omni Quip (Later Models)
2	4107352	1	Decal, Lubrication and Maintenance Chart
3	4100181	1	Decal, Hydraulic Oil
4	4107412	2	Decal, Moving Parts Warning - Domestic Only
	4108081	2	Decal, Moving Parts Warning - Export Only
5	4108302	1	Decal, Hydraulic Oil Level
6	4110123	2	Decal, 8042
	4110124	2	Decal, 10042
	4110125	2	Decal, 10054
7	4107232	2	Decal, Rear Stripe
8	4107243	2	Decal, Upper Curve Stripe
9	4107252	2	Decal, Lower Curve Stripe
10	4110119	1	Decal, Stripe
11	4107272	2	Decal, Boom Stripe
12	4107283	2	Decal, SKYTRAK
13	4106781	2	Decal, TI Logo (Earlier Models)
	4108441	2	Decal, “OmniQuip” (Later Models)
14	4105171	1	Decal, Diesel Fuel
15	4107402	1	Decal, Explosion Warning
	4108041	1	Decal, Explosion Warning - Export Only
16	4106681	1	Decal, TRAK INTERNATIONAL (Steering Wheel Center) (Earlier Models)
	4110120	1	Decal, SkyTrak International (Steering Wheel Center) (Later Models)
17	4107601	1	Decal, Stabilizer
18	4105262	1	Decal, Boom Angle
19	4107452	1	Decal, Carrying Personnel Warning - Domestic Only
	4106991	1	Decal, Carrying Personnel Warning - Export Only
20	4107442	1	Decal, Boom Extend Letters (Off White)
	4107482	1	Decal, Boom Extend Letters (Black)
21	4107462	1	Decal, Side Console
22	4105621	1	Decal, Optional Hydraulics
23	4107901	1	Decal, Low Engine Idle
24	4107001	1	Decal, Hydrofill - Export Only
25	7010491	1	Safety Walk, 6" x 12"
26	4108201	1	Ring, Key
27	8528074	1 gal	Paint, Orange, Acrylic Enamel (Service Repaint)
28	8528100	1 gal	Paint, Black, Acrylic Enamel (Service Repaint)
29	8528085	1 gal	Paint, Off White, Acrylic Enamel (Service Repaint)
30	8528071	1 can	Paint, Orange, Acrylic Enamel (16 oz. spray - touch-up)
31	8528101	1 can	Paint, Black, Acrylic Enamel (16 oz. spray - touch-up)
32	8528086	1 can	Paint, Off White, Acrylic Enamel (16 oz. spray - touch-up)
33	4108181	1	Decal, Made in USA
34	4106761	1	Decal, TI Logo - Closed Cab/Export Only
35	7111842	1	Decal, Overlay, Left Hand - Export Only (S/N 9908 & Before)
	7150472	1	Decal, Overlay, Left Hand - Export Only (S/N 9909 & After)
	7099352	1	Decal, Overlay, Left Hand - Domestic Only (S/N 9908 & Before)
	7150371	1	Decal, Overlay, Left Hand - Domestic Only (S/N 9909 & After)
36	7111832	1	Decal, Overlay, Right Hand - Export Only
	7099332	1	Decal, Overlay, Right Hand - Domestic Only
37	4107342	1	Capacity Charts, 8042 - Domestic Only
	4107632	1	Capacity Charts, 8042 - Export Only
	4107572	1	Capacity Charts, 10042 - Domestic Only
	4107992	1	Capacity Charts, 10042 - Export Only
	4107922	1	Capacity Charts, 10054 - Domestic Only
	4108002	1	Capacity Charts, 10054 - Export Only
			KITS
38	7099362	1	Kit, Decal Set, 8042/10042 - Domestic Only
39	7112391	1	Kit, Decal Set, 8042/10042 - Export Only
40	7116152	1	Kit, Decal Set, 10054 - Domestic Only
41	7116162	1	Kit, Decal Set, 10054 - Export Only

OUTER BOOM

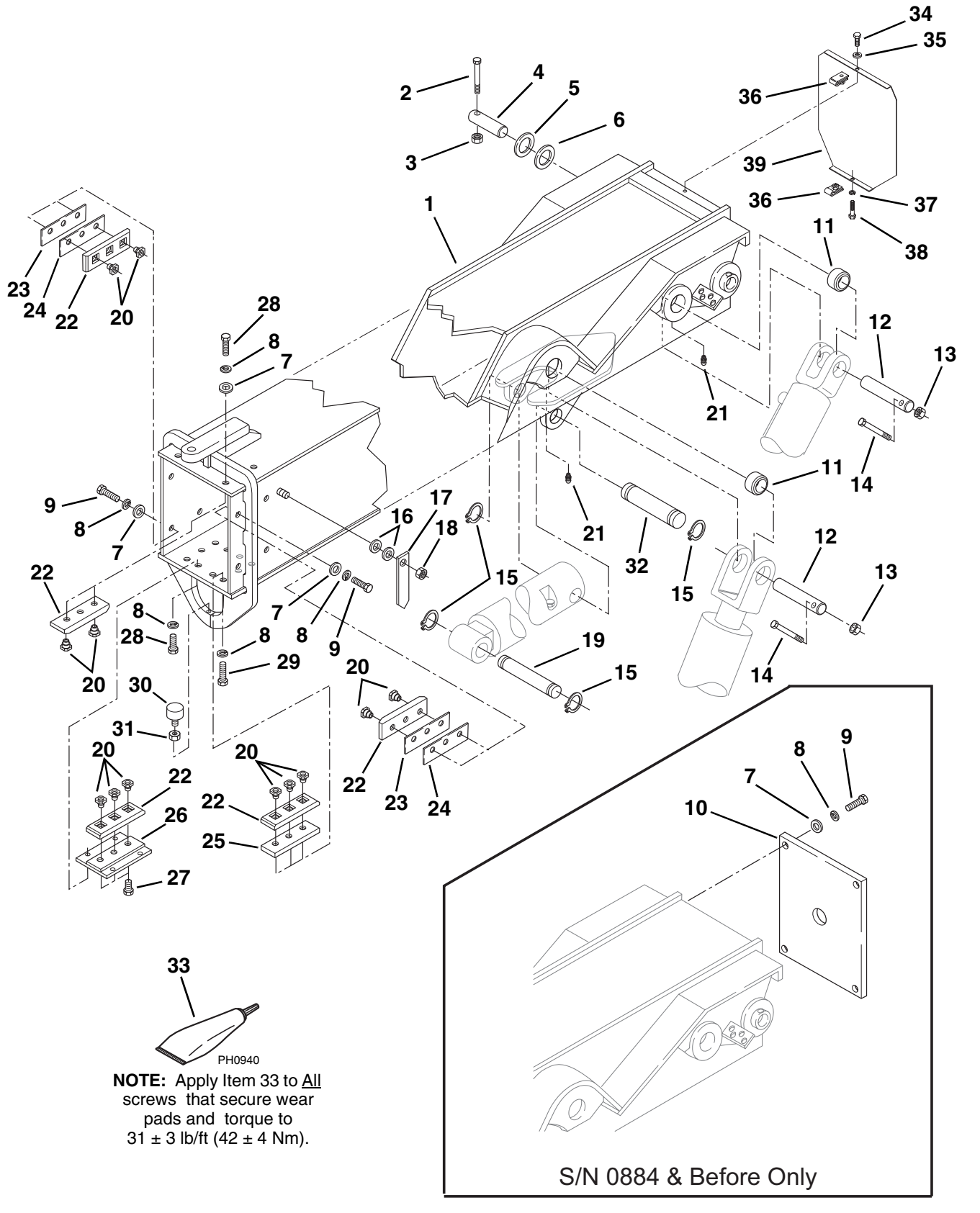

NOTE: Apply Item 33 to <u>All</u> screws that secure wear pads and torque to 31 ± 3 lb/ft (42 ± 4 Nm).

OUTER BOOM

Item No.	Part Number	Qty.	Description
1	7116854	1	Outer Boom (S/N 0885 and After)
	NLA	1	Outer Boom (S/N 0884 and Before) For Service, Order Kit 7116871 which includes Items 1, 34 thru 39
2	8303655	2	HHCS, 5/8-11 x 4.50"
3	8305643	2	Nut, Hex Lock Elastic 5/8-11
4	7097682	2	Pin, Boom Pivot
5	8307910	AR	Washer, Shim 2.75 Dia. x .075"
6	8307911	AR	Washer, Shim 2.75 Dia. x .135"
7	8307204	12	Washer, Flat 3/8"
8	8307005	22	Washer, Lock 3/8"
9	8303681	8	HHCS, 3/8-16 x 3/4"
10	7097382	1	Cover, Rear Boom (S/N 0884 and Before)
11	8065640	4	Bearing, Self-Aligning 2" Dia.
12	7092292	4	Pin, Hoist and Slave Cylinders
13	8305644	4	Nut, Hex Lock Elastic 1/2-13
14	8303782	4	HHCS, 1/2-13 x 4"
15	8642224	4	Ring, Retaining 2" Dia.
16	8307113	2	Washer, Flat 7/16"
17	7075611	1	Pointer
18	8305647	1	Nut, Hex Lock 7/16-14
19	7096562	1	Pin, Extend Cylinder (rod end)
20	7082311	21	Insert, Wear Pad
21	8520013	4	Fitting, Lube 1/8" Straight
22	7111572	9	Wear Pad
23	7082342	AR	Shim, Wear Pad (.07")
24	7082362	AR	Shim, Wear Pad (.13")
25	7096882	2	Spacer, Wear Pad (.62")
26	7096772	1	Spacer, Wear Pad (special)
27	8303041	3	HHCS, 3/8-16 x 1/2"
28	8303620	8	HHCS, 3/8-16 x 1"
29	8303621	6	HHCS, 3/8-16 x 1-1/2"
30	5724622	1	Bumper, Rubber
31	8305645	1	Nut, Hex Lock Elastic 3/8-16
32	7096552	1	Pin, Extend Cylinder (base end)
33	8526036	AR	Tube, Thread Locking Compound .5cc
34	8303697	1	HHCS, 5/16-18 x 3/4"
35	8307106	1	Washer, Flat 5/16"
36	8305906	2	Nut, Retainer 5/16-18
37	8307004	1	Washer, Lock 5/16"
38	8303715	1	HHCS, 5/16-18 x 1-1/2"
39	7116792	1	Cover, Rear Boom (S/N 0885 and After)

INTERMEDIATE BOOM - 8042 AND 10042

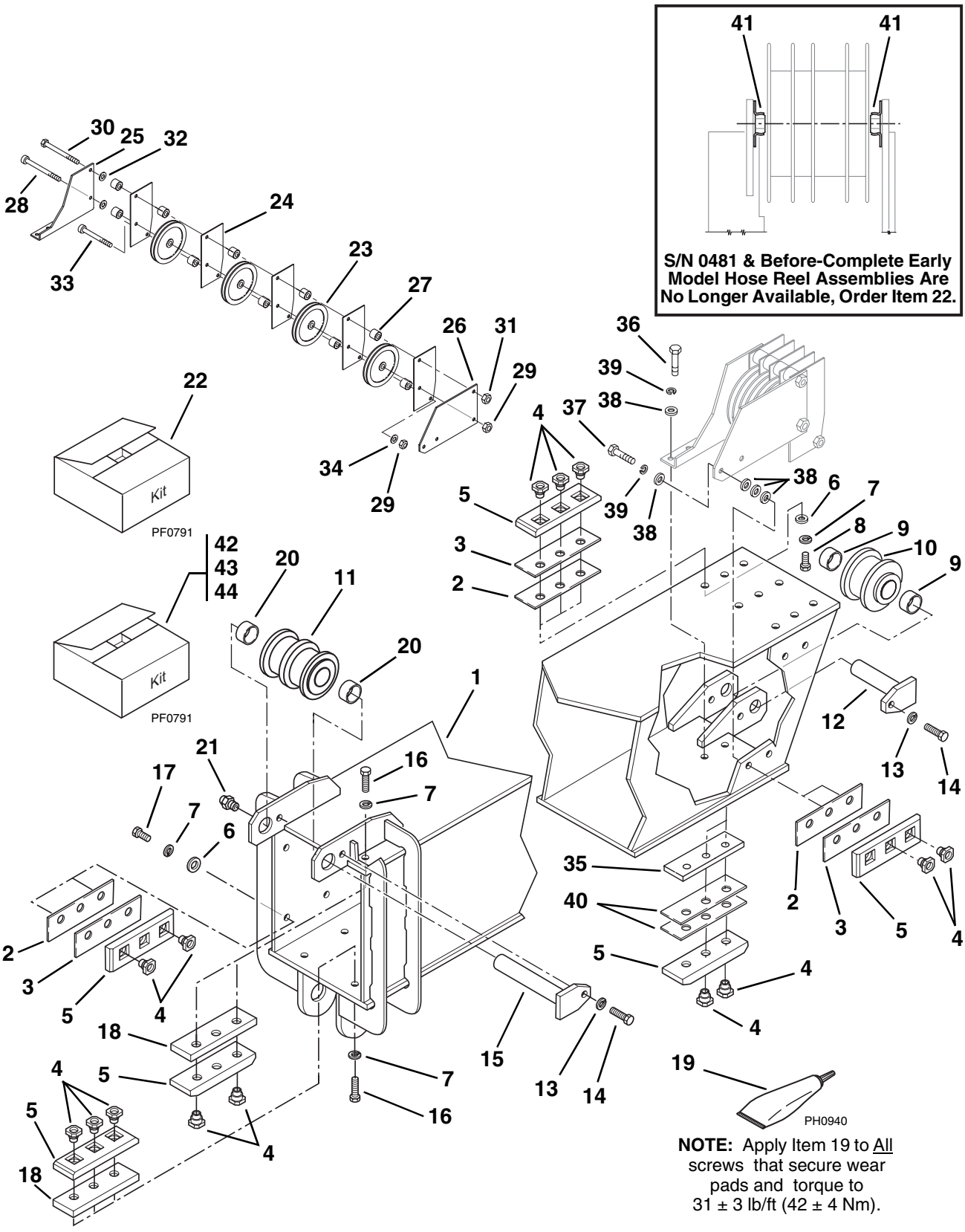

INTERMEDIATE BOOM - 8042 AND 10042

Item No.	Part Number	Qty.	Description
1	NLA	1	Intermediate Boom (S/N 0218 & Before) For Service, Order P/N 7116784, Kit P/N 7117513 and Kit P/N 7117072
	NLA	1	Intermediate Boom (S/N 0219 thru 0453) For Service, Order P/N 7116784, Kit P/N 7117523 and Kit P/N 7117072
	NLA	1	Intermediate Boom (S/N 0454 thru 0481) For Service, Order P/N 7116784 and Kit P/N 7117072
	7116784	1	Intermediate Boom (S/N 0482 & After)
2	7082362	AR	Shim, Wear Pad (.13" thick)
3	7082342	AR	Shim, Wear Pad (.07" thick)
4	7082311	37	Insert, Wear Pad
5	7111572	16	Wear Pad
6	8307204	25	Washer, Flat 3/8"
7	8307005	37	Washer, Lock 3/8"
8	8303620	9	HHCS, 3/8-16 x 1"
9	NLA	2	Bushing, Chain Sheave, For Service, Order Kit P/N 7138980
10	NLA	1	Sheave, Retract Chain, For Service, Order Kit P/N 7138980
11	NLA	1	Sheave Extend Chain (S/N 0218 & Before) For Service, Order Kit P/N 7117513
	NLA	1	Sheave, Extend Chain (S/N 0219 thru 0453) For Service, Order Kit P/N 7117523
	7114112	1	Sheave, Extend Chain (S/N 0454 & After)
12	NLA	1	Pin, Retract Chain Sheave, For Service, Order Kit P/N 7138980
13	8307007	2	Washer, Lock 1/2"
14	8303735	2	HHCS, 1/2-13 x 3/4"
15	NLA	1	Pin, Extend Chain Sheave (S/N 0218 & Before) For Service, Order Kit P/N 7117513
	NLA	1	Pin, Extend Chain Sheave (S/N 0219 thru 0453) For Service, Order Kit P/N 7117523
	7117572	1	Pin, Extend Chain Sheave (S/N 0454 & After)
16	8303621	10	HHCS, 3/8-16 x 1-1/2"
17	8303681	16	HHCS, 3/8-16 x 3/4"
18	7096882	4	Spacer, Wear Pad (0.62 thick)
19	8526036	AR	Tube, Thread Locking Compound .5cc
20	NLA	2	Bushing, Chain Sheave (S/N 0218 & Before) For Service, Order Kit P/N 7117513
	NLA	2	Bushing, Chain Sheave (S/N 0219 thru 0453) For Service, Order Kit P/N 7117523
	7117502	2	Bushing, Chain Sheave (S/N 0454 & After)
21	8520001	1	Fitting, Lube 1/8" Straight
22	7117072	1	Kit, Hose Pulley (Includes Items 23 thru 39)
23	7116812	4	Pulley, Roller
24	7116642	5	Divider
25	7116652	1	Bracket, Right Side
26	7116662	1	Bracket, Left Side
27	7116691	10	Spacer
28	8310235	1	Screw, Shoulder 1/2 x 5"
29	8305645	2	Nut, Lock 3/8-16 Elastic
30	8310209	1	HHCS, 1/2-13 x 6"
31	8305644	1	Nut, Lock 1/2-13 Elastic
32	8307206	2	Washer, Flat 1/2" Heavy (.109 thick)
33	8310245	1	Screw, Shoulder 1/2 x 4"
34	8307204	1	Washer, Flat 3/8" Heavy (.083 thick)
35	7096702	1	Spacer, Wear Pad (0.5" thick)
36	8303679	2	HHCS, 3/8-16 x 1-3/4"
37	8303675	2	HHCS, 3/8-16 x 1-1/4"
38	8307204	10	Washer, Flat 3/8"
39	8307005	4	Washer, Lock 3/8"
40	7082342	2	Shim, Wear Pad (.075 thick)
41	8065214	2	Bearing, Hose Pulley (S/N 0481 and Before)
			KITS
42	7117513	1	Kit, Extend Chain Sheave (S/N 0218 & Before) (Includes Items 11, 15 & 20)
43	7117523	1	Kit, Extend Chain Sheave (S/N 0219 thru 0453) (Includes Items 11, 15 & 20)
44	7138980	1	Kit, Retract Chain Sheave (Includes Items 9, 10, 12 and New Hardware for Rear Boom Cover and Instructions)

INNER BOOM - 8042 AND 10042

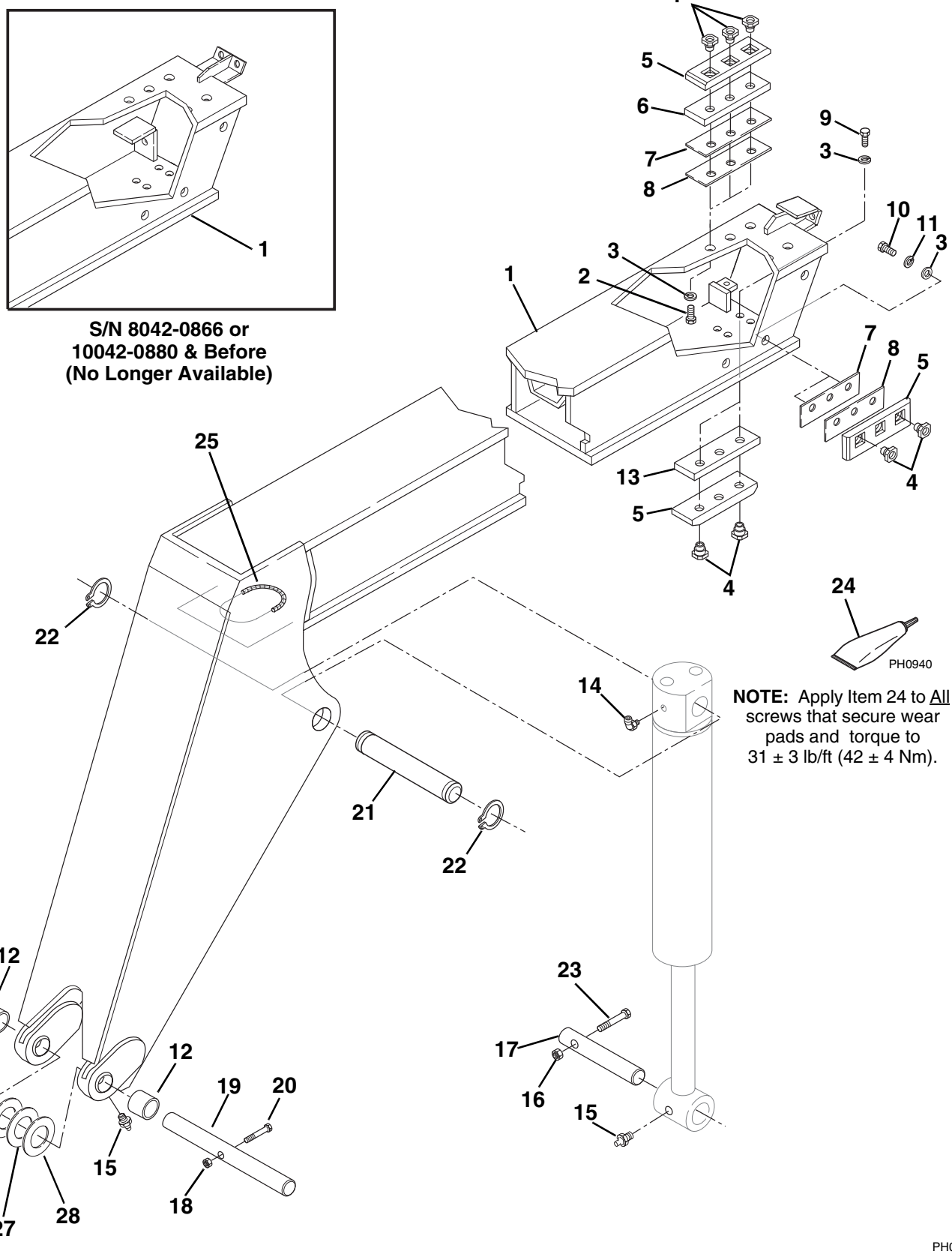

INNER BOOM - 8042 AND 10042

Item No.	Part Number	Qty.	Description
1	7118662	1	Kit, Inner Boom (S/N 8042-0866 or 10042-0880 and Before) Includes bushings, chain links, hardware and chain clevis
	7117113	1	Inner Boom (S/N 8042-0867 or 10042-0881 and After) Includes 2 of Item 12
2	8303679	6	HHCS, 3/8-16 x 1-1/2"
3	8307005	16	Washer, Lock 3/8"
4	7082311	16	Insert, Wear Pad
5	7111572	7	Wear Pad
6	7096882	2	Spacer, Wear Pad, .62"
7	7082362	AR	Shim, Wear Pad, .13"
8	7082342	AR	Shim, Wear Pad, .07"
9	8303675	2	HHCS, 3/8-16 x 1-1/4"
10	8303681	8	HHCS, 3/8-16 x 3/4"
11	8307204	8	Washer, Flat 3/8"
12	7095312	2	Bushing, Quick Attach Pivot
13	7096702	1	Spacer, Wear Pad, .50"
14	8520021	1	Fitting, Lube, 1/8" 90°
15	8520013	3	Fitting, Lube, 1/8" Straight
16	8305644	1	Nut, Hex Lock Elastic 1/2-13
17	7083992	1	Pin, Attachment Tilt Cylinder (rod end)
18	8305643	1	Nut, Hex Lock Elastic 5/8-11
19	7095352	1	Pin, Pivot, Quick Attach
20	8303666	1	HHCS, 5/8-11 x 5"
21	7095522	1	Pin, Attachment Tilt Cylinder (base end)
22	8642224	2	Ring, Retaining. 2" Dia.
23	8303772	1	HHCS, 1/2-13 x 5"
24	8526036	AR	Tube, Thread Locking Compound .5cc
25	7125811	1	Conduit, Plastic 3/4 x 8.00
26	8307918	2	Washer, Shim 2.00 x 3.50 x 0.134
27	8310093	AR	Washer, Shim 2.00 x 3.50 x 0.75
28	8307904	AR	Washer, Shim 2.00 x 3.50 x 0.048

QUICK ATTACH

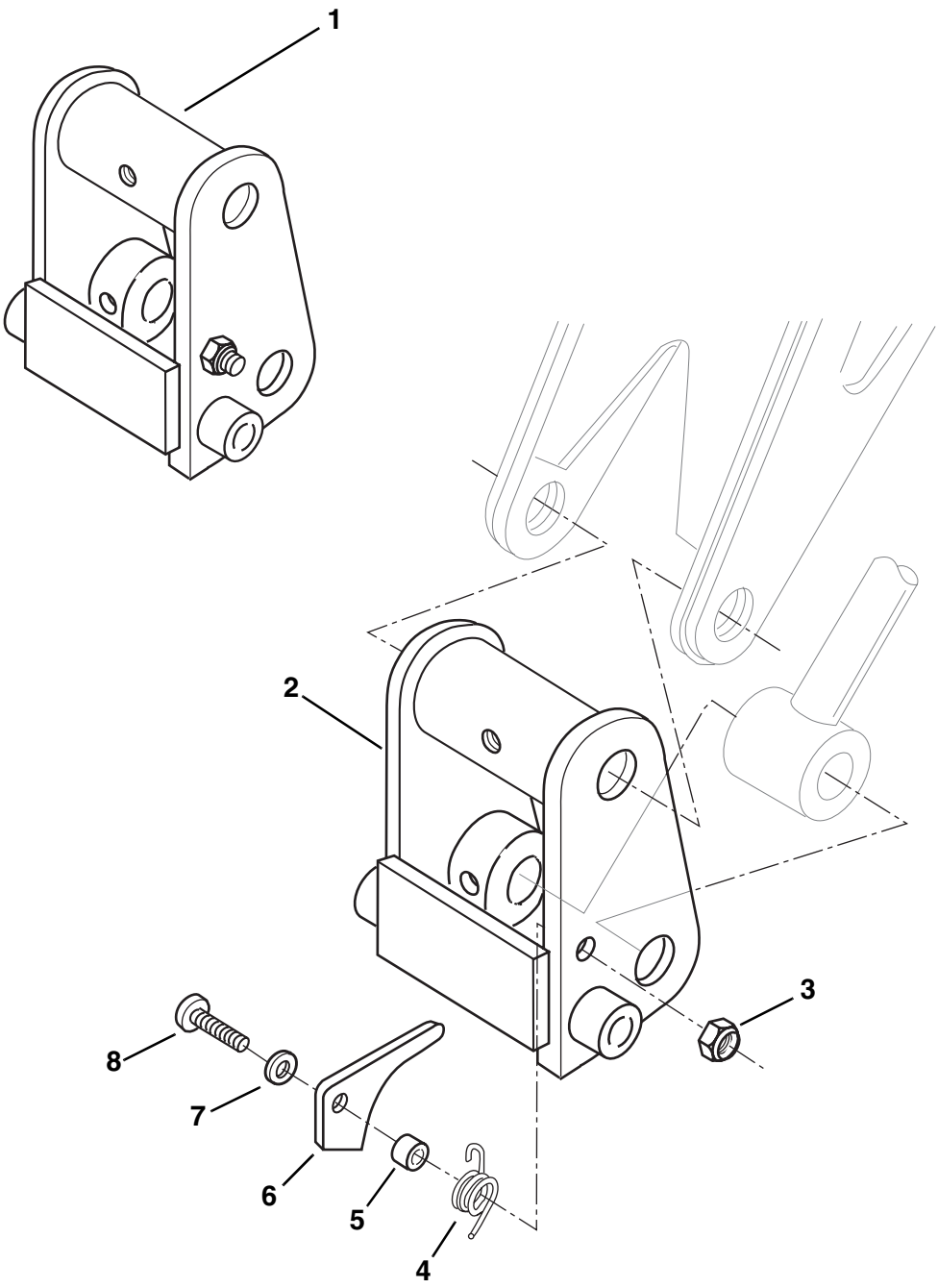

PA0746

QUICK ATTACH

Item No.	Part Number	Qty.	Description
1	7085102	1	Quick Attach Assembly (Includes Items 2 thru 8)
2	7120742	1	Quick Attach
3	8305619	1	Nut, Hex Lock 3/4-10
4	7085552	1	Spring, Torsion
5	7085571	1	Spacer
6	7085562	1	Latch
7	8307104	1	Washer, Flat 3/4"
8	8303638	1	HHCS, 3/4-10 x 2-3/4"

CARRIAGE 48"

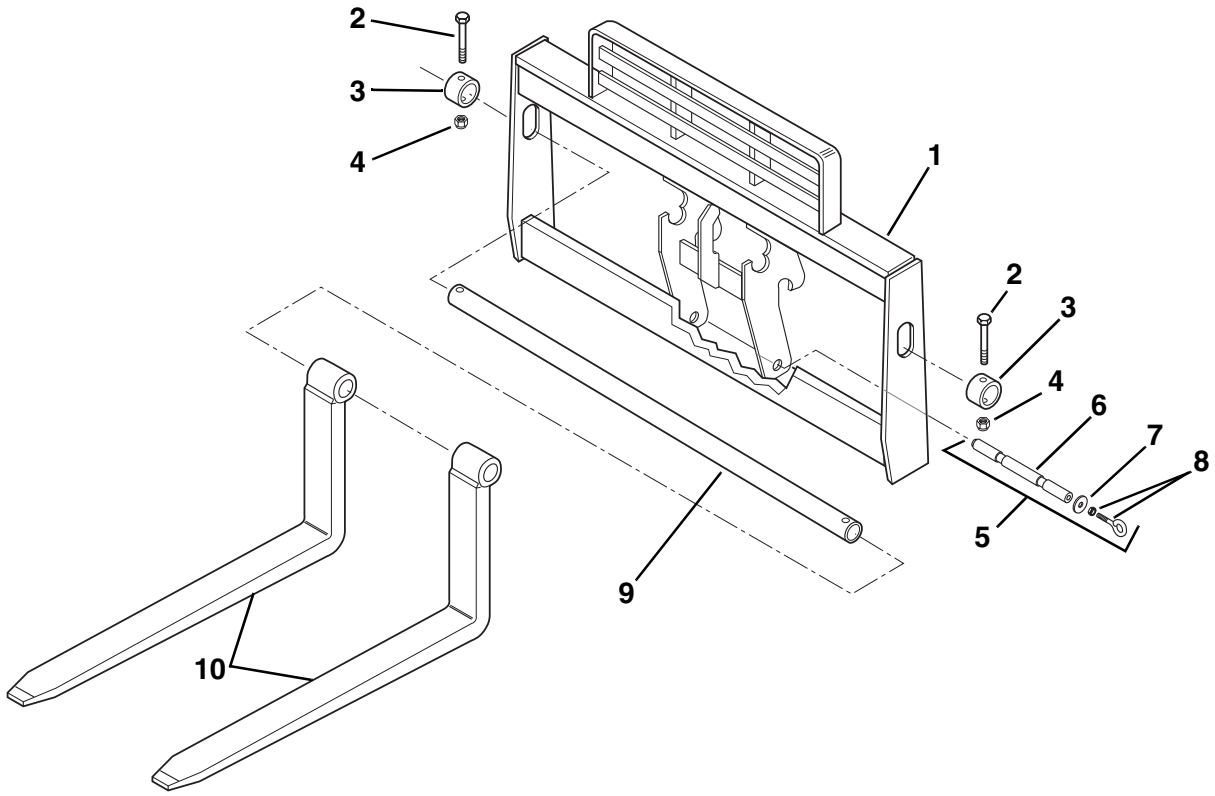

PA0744

CARRIAGE 48"

Item No.	Part Number	Qty.	Description
1	7083054	1	Carriage, 48"
2	8303634	2	HHCS, 5/8-11 x 4"
3	7086471	2	Collar
4	8305643	2	Nut, Hex Lock 5/8-11
5	7118892	1	Pin, Lock (Includes Items 6 thru 8)
6	7118882	1	Pin
7	8310276	1	Washer, .51 x 1.88 x 1.25"
8	8310266	1	Bolt, Eye 1/2 x 13 x 2" Length Shank
9	7128772	1	Shaft, 48"
10	7097523	2	Fork, Pallet 48" x 4" x 2" (4,000 lb. Rating) - 8042 Only
	7097543	2	Fork, Pallet 48" x 4" x 2.25" (5,000 lb. Rating) - 10042/10054 Only
	7097533	2	Fork, Lumber (Not Shown)
	7085073	6	Fork, Block (Not Shown)

CARRIAGE 60"
(Optional)

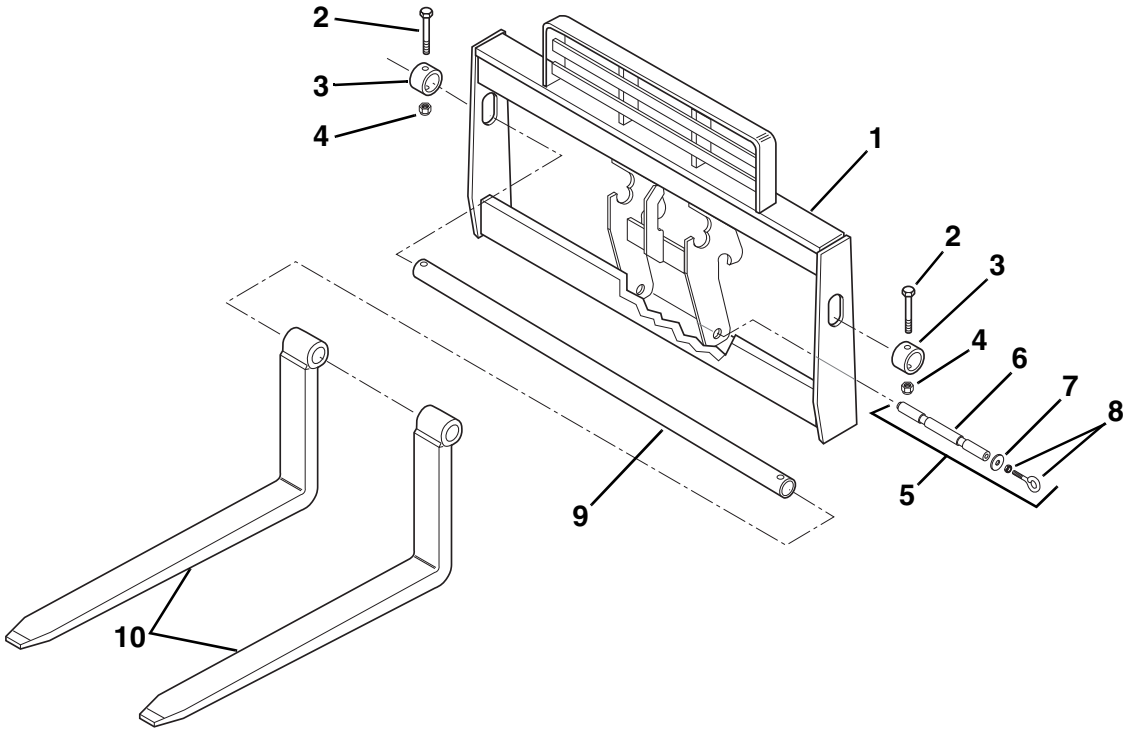

PA0744

CARRIAGE 60"
(Optional)

Item No.	Part Number	Qty.	Description
1	7086304	1	Carriage, 60"
2	8303634	2	HHCS, 5/8-11 x 4"
3	7086471	2	Collar
4	8305643	2	Nut, Hex Lock 5/8-11
5	7118892	1	Pin, Lock (Includes Items 6 thru 8)
6	7118882	1	Pin
7	8310276	1	Washer, .51 x 1.88 x 1.25"
8	8310266	1	Bolt, Eye 1/2 x 13 x 2" Length Shank
9	7128792	1	Shaft, 60"
10	7097523	2	Fork, Pallet 48" x 4" x 2" (4,000 lb. Rating) - 8042 Only
	7097543	2	Fork, Pallet 48" x 4" x 2.25" (5,000 lb. Rating) - 10042/10054 Only
	7097533	2	Fork, Lumber (Not Shown)
	7085073	6	Fork, Block (Not Shown)

CARRIAGE 72"
(Optional)

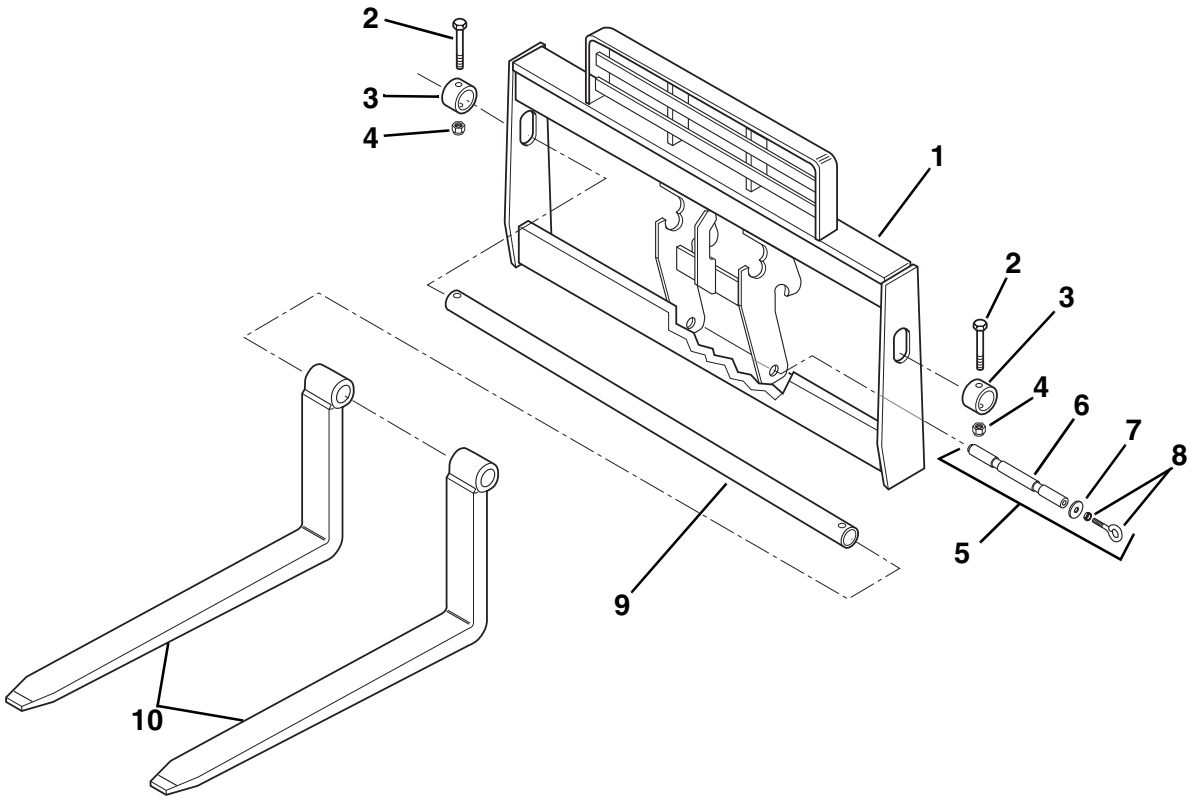

PA0744

CARRIAGE 72"
(Optional)

Item No.	Part Number	Qty.	Description
1	7090814	1	Carriage, 72"
2	8303634	2	HHCS, 5/8-11 x 4"
3	7086471	2	Collar
4	8305643	2	Nut, Hex Lock 5/8-11
5	7118892	1	Pin, Lock (Includes Items 6 thru 8)
6	7118882	1	Pin
7	8310276	1	Washer, .51 x 1.88 x 1.25"
8	8310266	1	Bolt, Eye 1/2 x 13 x 2" Length Shank
9	7128802	1	Shaft, 72"
10	7097523	2	Fork, Pallet 48" x 4" x 2" (4,000 lb. Rating) - 8042 Only
	7097543	2	Fork, Pallet 48" x 4" x 2.25" (5,000 lb. Rating) - 10042/10054 Only
	7097533	2	Fork, Lumber (Not Shown)
	7085073	6	Fork, Block (Not Shown)

SIDE TILT CARRIAGE - EARLY PRODUCTION

(Optional)

IMPORTANT:

There are two similar but distinctly different Side Tilt Carriages. Make sure you know which version you have before ordering replacement parts. All reference to the right or left side are given from the operator's seat looking forward. An "Early Production" Carriage has its hydraulic cylinder attached on the operator's left side. The "Current Production" Carriage has its hydraulic cylinder attached on the right side, out of the operator's line of sight.

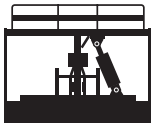

CURRENT PRODUCTION

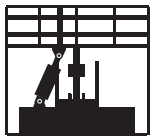

EARLY PRODUCTION

(VIEWED FROM OPERATOR'S SEAT LOOKING FORWARD)

PA1153

SIDE TILT CARRIAGE - EARLY PRODUCTION

(Optional)

Item No.	Part Number	Qty.	Description
1	7089044	1	Carriage, Side Tilt - 48"
	7089054	1	Carriage, Side Tilt - 60"
	7098354	1	Carriage, Side Tilt - 72"
2	7065482	2	Pad, Wear
3	8303739	2	HHCS, 5/16-18 x 1-1/4"
4	8305626	2	Nut, Hex Lock 5/16-18
5	Consult Factory	1	Base, Pivot
6	7077501	1	Pin, Cyl. Base
7	7077511	1	Pin, Cyl. Rod
8	7077481	2	Spacer
9	8065634	1	Bushing, Self Align
10	8642001	1	Ring, Snap
11	8642235	4	Ring, Snap
12	8760117	2	Connector, Straight, SAE 6 - male JIC 37° x male str. thd. o-ring
13	8584001	1	Tie Wrap
14	2711992	2	Hose Assembly
15	8760110	2	Connector, Straight, SAE 6-8 - male JIC 37° x male str. thd. o-ring
16	8430006	1	Quick Disconnect, Male, SAE 8-8ORB - female internal (Includes Item 17)
17	8640029	1	Seal, Nose (Not Shown)
18	8430005	1	Quick Disconnect, Female, SAE 8-8ORB - female internal (Includes Items 19, 20 & 21)
19	8640029	1	Seal, Nose (Not Shown)
20	8640028	1	Seal, Coupler Body (Not Shown)
21	8640032	1	Back-Up Ring, Coupler Body Seal (Not Shown)
22	8541433	1	Plug, Pipe, Skt. Hd. - 1/8" NPTF
23	8420053	1	Cap, Dust #8
24	8420055	1	Plug, Dust #8
25	7125741	1	Molding
26	7085411	1	Pin, Pivot
27	7085501	1	Collar, Pin Locking
28	8303770	1	HHCS, 3/8-16 x 2-3/4"
29	8305645	1	Nut, Hex Lock 3/8-16 ESNA
30	7128772	1	Shaft, Fork Pivot 48"
	7128792	1	Shaft, Fork Pivot 60"
	7128802	1	Shaft, Fork Pivot 72"
31	7086471	2	Hub, Lock
32	8303634	2	HHCS, 5/8-11 x 4"
33	8305643	2	Nut, Hex Lock 5/8-11
34	7097523	2	Fork, Pallet 48" x 4" x 2" (4,000 lb. Rating) - 8042 Only
	7097543	2	Fork, Pallet 48" x 4" x 2.25" (5,000 lb. Rating) - 10042/10054 Only
	7097533	2	Fork, Lumber (Not Shown)
	7085073	6	Fork, Blocking (Not Shown)

SIDE TILT CARRIAGE - CURRENT PRODUCTION

(Optional)

IMPORTANT:

There are two similar but distinctly different Side Tilt Carriages. Make sure you know which version you have before ordering replacement parts. All reference to the right or left side are given from the operator's seat looking forward. An "Early Production" Carriage has its hydraulic cylinder attached on the operator's left side. The "Current Production" Carriage has its hydraulic cylinder attached on the right side, out of the operator's line of sight.



CURRENT PRODUCTION

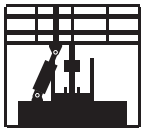

EARLY PRODUCTION

(VIEWED FROM OPERATOR'S SEAT LOOKING FORWARD)

PA1591

SIDE TILT CARRIAGE - CURRENT PRODUCTION

(Optional)

Item No.	Part Number	Qty.	Description
1	7117244	1	Carriage, Side Tilt - 48"
	7117254	1	Carriage, Side Tilt - 60"
	7117264	1	Carriage, Side Tilt - 72"
2	7065482	2	Pad, Wear
3	8303739	2	HHCS, 5/16-18 x 1-1/4"
4	8305626	2	Nut, Hex Lock 5/16-18
5	7117204	1	Base, Pivot
6	7077501	1	Pin, Cyl. Base
7	7077511	1	Pin, Cyl. Rod
8	7077481	2	Spacer
9	8065634	1	Bushing, Self Align
10	8642001	1	Ring, Snap
11	8642235	4	Ring, Snap
12	8760117	2	Connector, Straight, SAE 6 - male JIC 37° x male str. thd. o-ring
13	8584001	1	Tie Wrap
14	2711992	2	Hose Assembly
15	8760110	2	Connector, Straight, SAE 6-8 - male JIC 37° x male str. thd. o-ring
16	8430006	1	Quick Disconnect, Male, SAE 8-8ORB - female internal (Includes Item 17)
17	8640029	1	Seal, Nose (Not Shown)
18	8430005	1	Quick Disconnect, Female, SAE 8-8ORB - female internal (Includes Items 19, 20 & 21)
19	8640029	1	Seal, Nose (Not Shown)
20	8640028	1	Seal, Coupler Body (Not Shown)
21	8640032	1	Back-Up Ring, Coupler Body Seal (Not Shown)
22	8541433	1	Plug, Pipe, Skt. Hd. - 1/8" NPTF
23	8420053	1	Cap, Dust #8
24	8420055	1	Plug, Dust #8
25	7125741	1	Molding
26	7085411	1	Pin, Pivot
27	7085501	1	Collar, Pin Locking
28	8303770	1	HHCS, 3/8-16 x 2-3/4"
29	8305645	1	Nut, Hex Lock 3/8-16 ESNA
30	7128772	1	Shaft, Fork Pivot 48"
	7128792	1	Shaft, Fork Pivot 60"
	7128802	1	Shaft, Fork Pivot 72"
31	7086471	2	Hub, Lock
32	8303634	2	HHCS, 5/8-11 x 4"
33	8305643	2	Nut, Hex Lock 5/8-11
34	7097523	2	Fork, Pallet 48" x 4" x 2" (4,000 lb. Rating) - 8042 Only
	7097543	2	Fork, Pallet 48" x 4" x 2.25" (5,000 lb. Rating) - 10042/10054 Only
	7097533	2	Fork, Lumber (Not Shown)
	7085073	6	Fork, Blocking (Not Shown)
35	8307203	2	Washer, Flat Heavy
36	7070191	AR	Shim
37	4108232	1	Decal, Capacity Chart
38	7119341	1	Plate, Capacity

OUTRIGGERS
(10042/10054 Only)

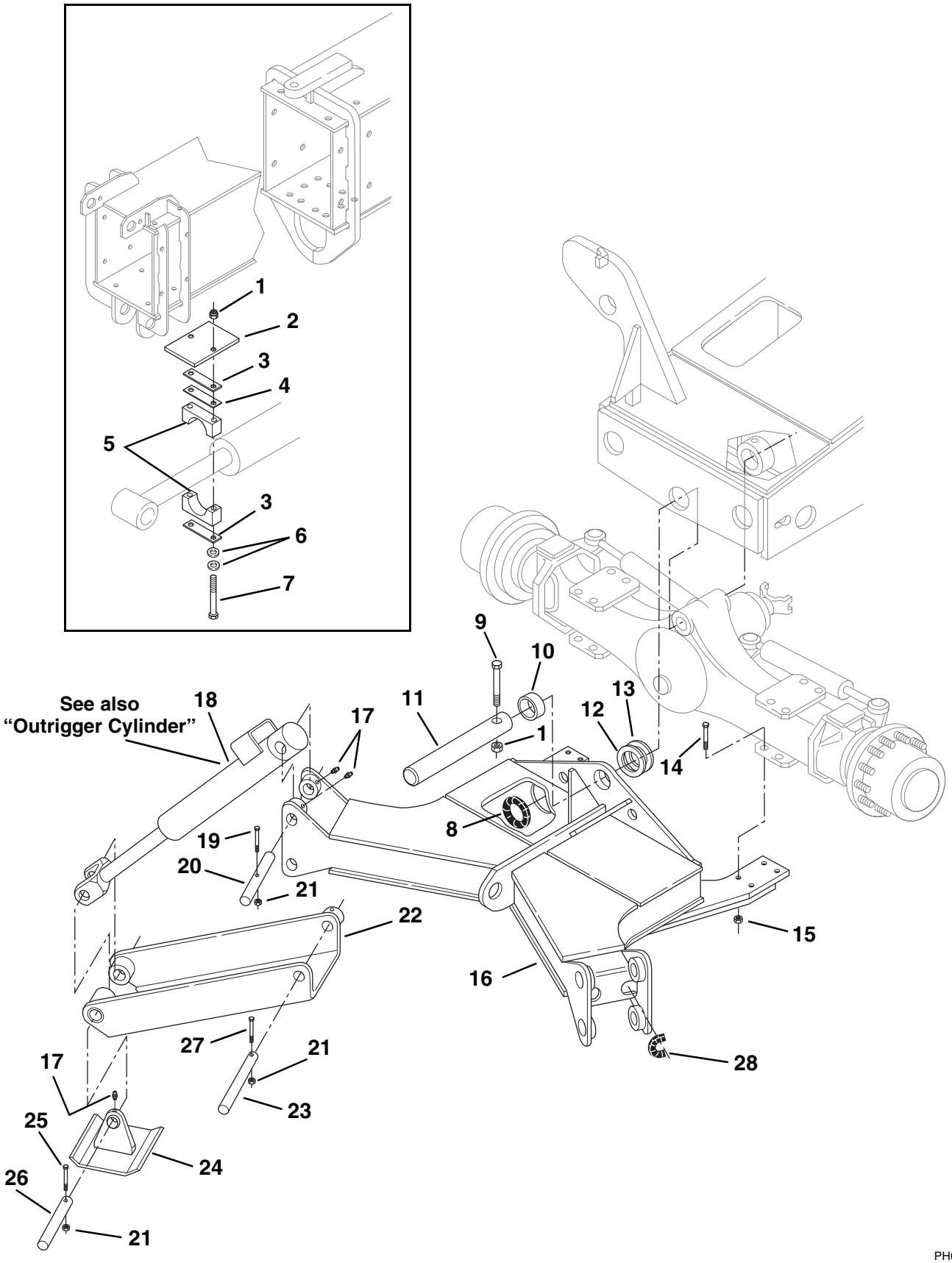

OUTRIGGERS
(10042/10054 Only)

Item No.	Part Number	Qty.	Description
1	8305643	3	Nut, Hex Lock Elastic 5/8-11
2	7115432	1	Plate, Boom Stop 5-1/4" Long (S/N 0807 & Before)
	7110002	1	Plate, Boom Stop 12-1/4" Long (S/N 0808 & After)
3	8769159	2	Cover Plate
4	8769160	1	Safety Plate
5	8769158	1	Clamp, Single 3" (2 Halves)
6	8307107	AR	Washer, Flat 5/8"
7	8303717	2	HHCS, 5/8-11 x 7-1/2" Grade 5
8	7124491	2	Conduit, 1.0 I.D. x 15.5"
9	8303655	1	HHCS, 5/8-11 x 4-1/2" Grade 5
10	8065063	1	Bushing, 3" I.D. x 2" Long
11	7090832	1	Pin, Axle Pivot
12	8307912	1	Shim, 3.06 I.D. x .06"
13	8307913	1	Shim, 3.06 I.D. x .12"
14	8303794	8	HHCS, 3/4-10 x 3-1/2" Grade 8
15	8310067	8	Nut, Hex Lock Elastic 3/4-10
16	7090634	1	Frame, Outrigger
17	8520013	10	Grease Fitting
18	2716163	2	Cylinder, Outrigger
19	8310151	2	HHCS, 1/2-13 x 7" Grade 5
20	7090871	2	Pin, Cylinder Pivot
21	8305644	6	Nut, Hex Lock Elastic 1/2-13
22	7091373	2	Leg, Outrigger
23	7090891	2	Pin, Leg Pivot
24	7090822	2	Pad, Outrigger
25	8303629	2	HHCS, 1/2-13 x 4-1/2" Grade 5
26	7090951	2	Pin, Pad Pivot
27	8303628	2	HHCS, 1/2-13 x 3-3/4" Grade 5
28	7125801	4	Conduit, .75 I.D. x 4.0"

SWING CARRIAGE
(Optional)

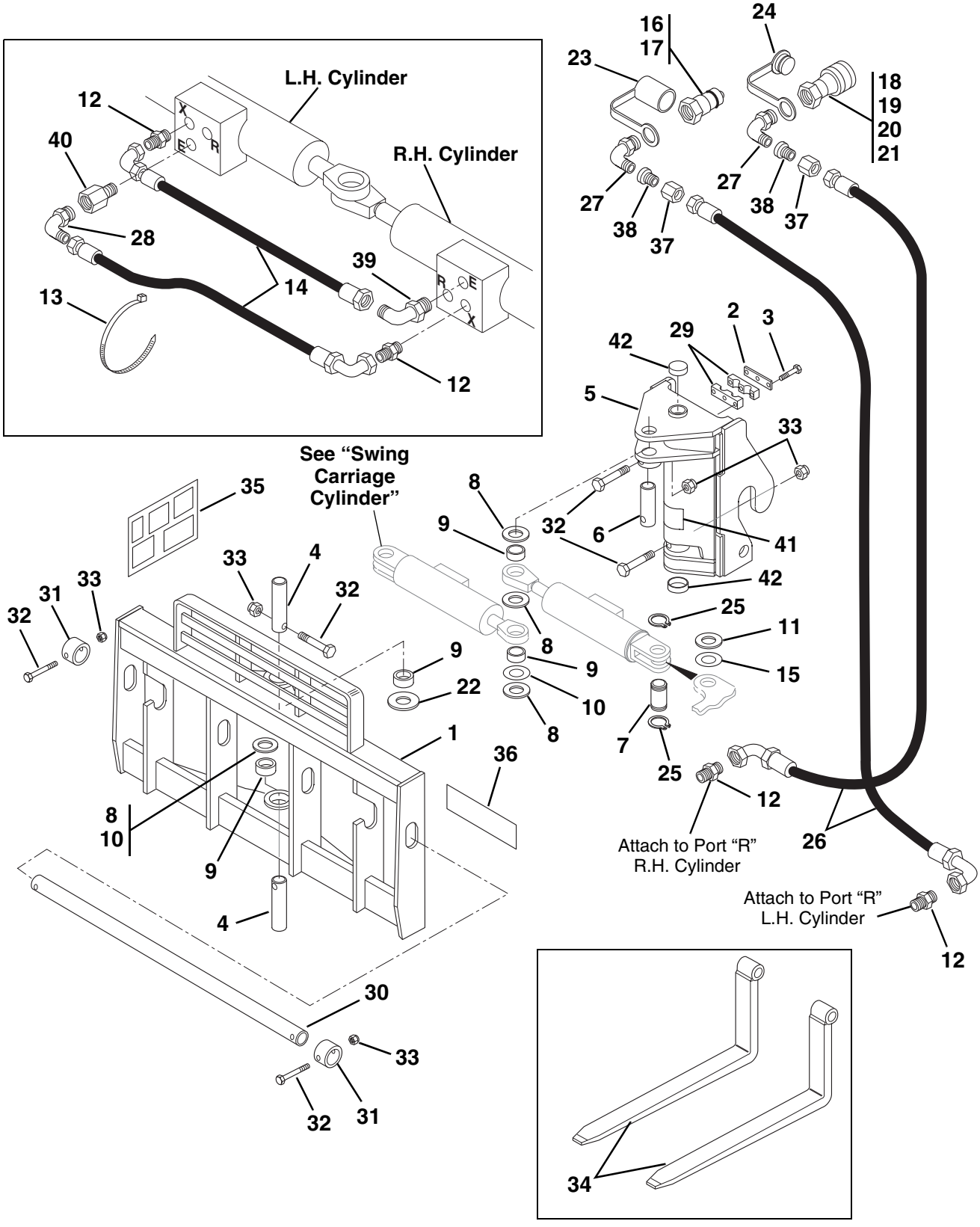

PH0560

SWING CARRIAGE
(Optional)

Item No.	Part Number	Qty.	Description
1	7111994	1	Carriage - 52"
	7110694	1	Carriage - 72"
2	6608621	1	Cover - Clamp
3	8303715	3	HHCS, 5/16-18 x 1-1/2"
4	7110702	2	Pin, Carriage Pivot
5	7110494	1	Base, Pivot
6	7110712	1	Pin, Cylinder Pivot (Rod End)
7	7110722	2	Pin, Cylinder Pivot (Base End)
8	8307918	AR	Shim, 2" I.D. x 10 Ga.
9	8065062	4	Bearing, Self Lube
10	8307904	AR	Shim, 2" I.D. x 18 Ga.
11	8310161	AR	Shim, 1-1/2" I.D. x 10 Ga.
12	8760113	4	Connector, Straight, SAE 4 - male JIC 37° x male str. thd. o-ring
13	8584001	4	Tie Wrap
14	6604662	2	Hose Assembly
15	8310160	AR	Shim, 1-1/2" I.D. x 18 Ga.
16	8430006	1	Quick Disconnect, Male, SAE 8-8ORB - female internal (Includes Item 17)
17	8640029	1	Seal, Nose (Not Shown)
18	8430005	1	Quick Disconnect, Female, SAE 8-8ORB - female internal (Includes Items 19, 20 & 21)
19	8640029	1	Seal, Nose (Not Shown)
20	8640028	1	Seal, Coupler Body (Not Shown)
21	8640032	1	Back-Up Ring, Coupler Body Seal (Not Shown)
22	7062922	1	Bearing, Thrust
23	8420053	1	Cap, Dust #8
24	8420055	1	Plug, Dust #8
25	8642207	4	Ring, Retaining
26	6611752	2	Hose Assembly
27	8760313	2	Elbow, 90° SAE 6-8 - male JIC 37° x male str. thd. o-ring
28	8760311	1	Elbow, 90° SAE 6 - male JIC 37° x male str. thd. o-ring
29	8769132	2	Clamp, Half
30	7128782	1	Shaft, Fork Pivot 52"
	7128802	1	Shaft, Fork Pivot 72"
31	7086471	2	Hub, Lock
32	8303634	5	HHCS, 5/8-11 x 4"
33	8305643	5	Nut, Hex Lock 5/8-11
34	7097523	2	Fork, Pallet 48" x 4" x 2" (4,000 lb. Rating) - 8042 Only
	7097543	2	Fork, Pallet 48" x 4" x 2.25" (5,000 lb. Rating) - 10042/10054 Only
	7097533	2	Fork, Lumber (Not Shown)
	7085073	6	Fork, Blocking (Not Shown)
35	4107692	2	Chart, Capacity
36	4107702	1	Decal, Danger - Tip Over Hazard
37	8760409	2	Nut, SAE 6 - JIC 37°
38	8760475	2	Reducer, Tube End, SAE 6-4 - JIC 37°
39	8770012	1	Elbow, 90° SAE 6-4 - male JIC 37° x male str. thd. o-ring
40	8770016	1	Reducer, SAE 4-6 - male str. thd. o-ring x female internal o-ring boss
41	4107712	1	Decal, Danger - No Truss Boom
42	8580315	2	Plug, Trim 2-1/2" Dia.

SHEET MATERIAL HANDLER
(Optional)

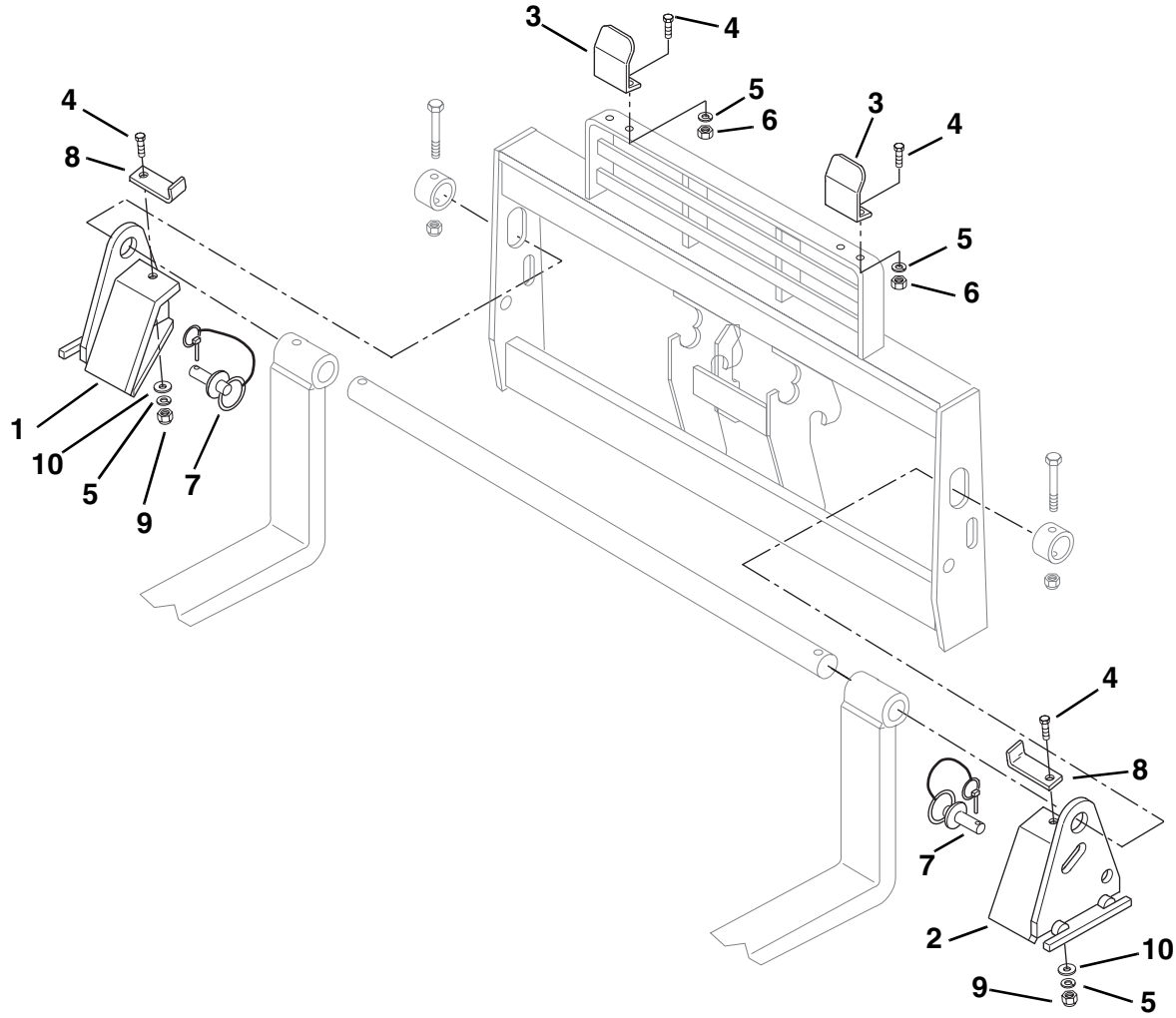

PK0042

SHEET MATERIAL HANDLER
(Optional)

Item No.	Part Number	Qty.	Description
1	7112533	1	Fork Support, Right Side
2	7112523	1	Fork Support, Left Side
3	7112642	2	Backrest Extension, Top
4	8303626	6	HHCS, 1/2-13 x 1-1/2"
5	8307007	6	Washer, Lock 1/2"
6	8305012	4	Nut, Hex 1/2-13
7	8301456	2	Hitch Pin
8	7114941	2	Lock Bar
9	8305644	2	Nut, Hex Lock Elastic 1/2-13
10	8307112	2	Washer, Flat 1/2" LT

UTILITY BUCKET
(Optional)

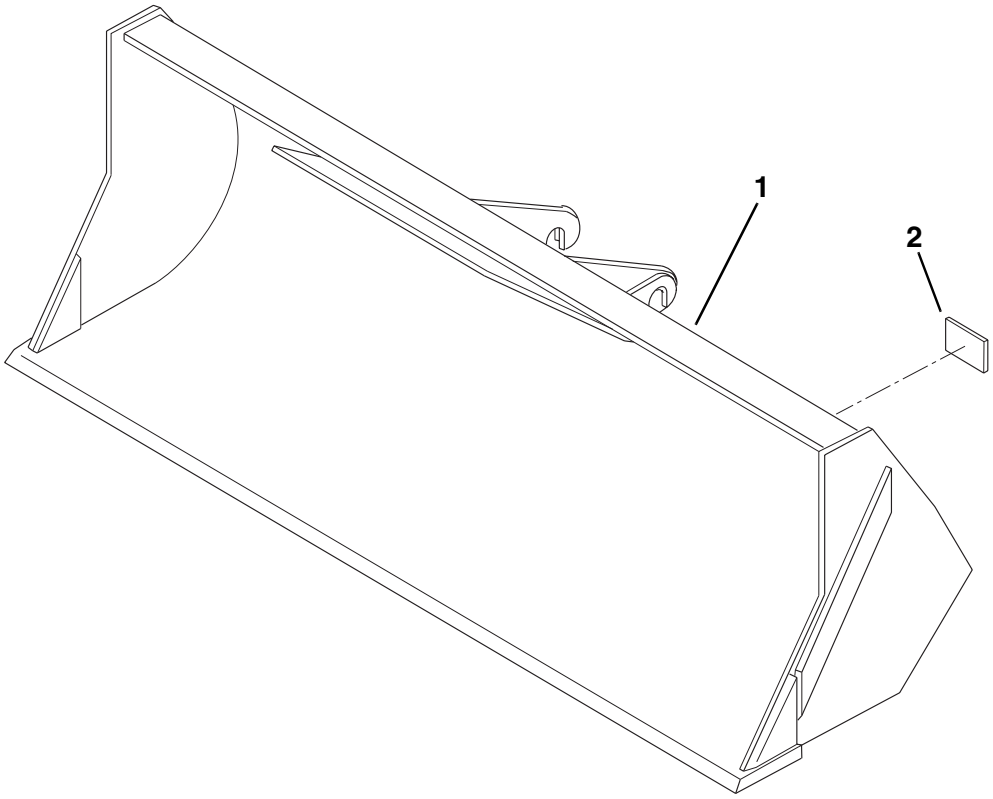

PA0782

UTILITY BUCKET
(Optional)

Item No.	Part Number	Qty.	Description
1	7110744	1	Bucket, Utility, 1-1/4 cu. yd. (Includes Item 2)
2	4106561	1	Plate, Capacity

PRIMARY INTERMEDIATE BOOM - 10054

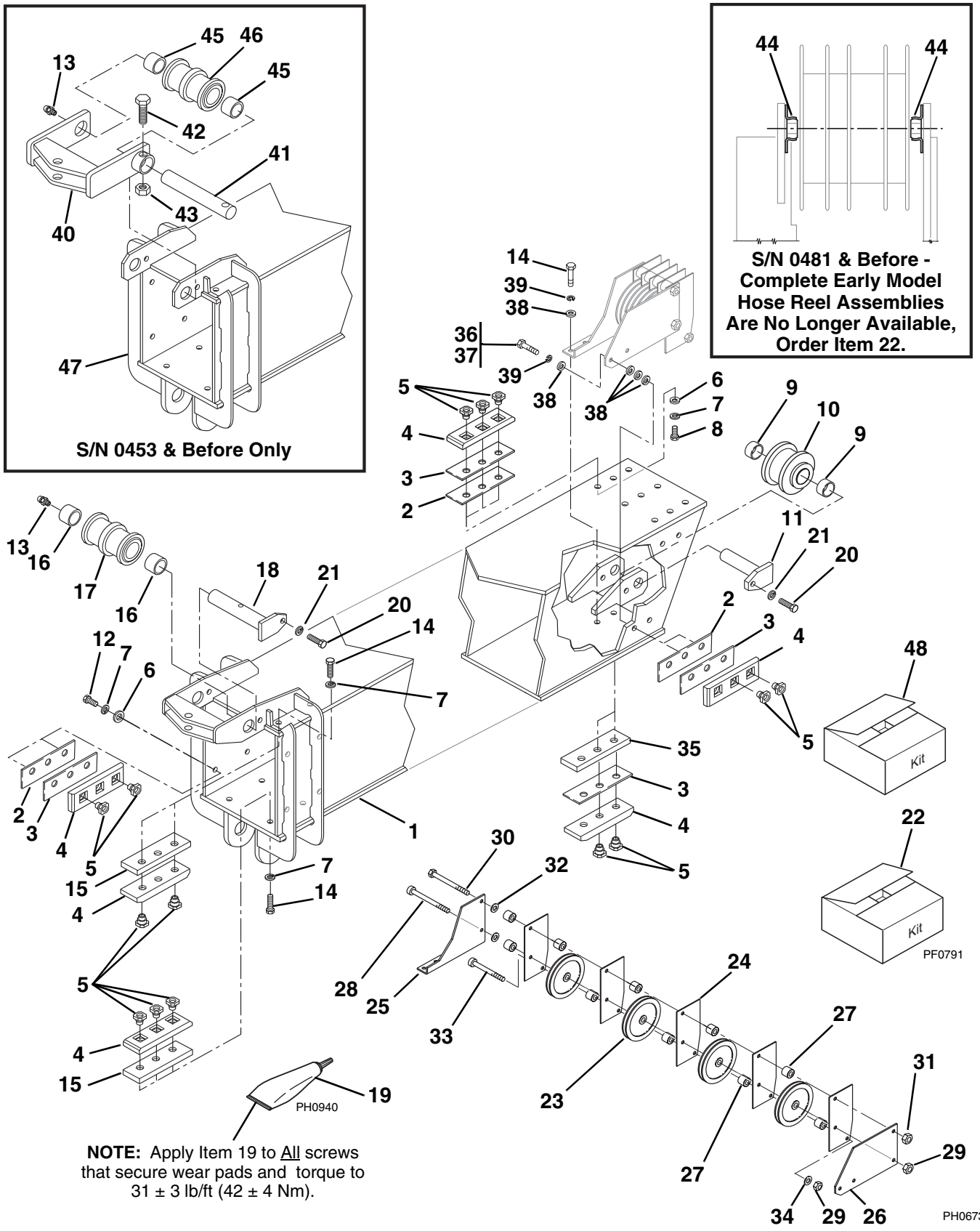

PRIMARY INTERMEDIATE BOOM - 10054

Item No.	Part Number	Qty.	Description
1	7118854	1	Primary Intermediate Boom (S/N 0454 & After)
2	7082362	AR	Shim, Wear Pad, (.13" thick)
3	7082342	AR	Shim, Wear Pad (.075" thick)
4	7111572	16	Wear Pad
5	7082311	37	Insert, Wear Pad
6	8307204	22	Washer, Flat 3/8"
7	8307005	37	Washer, Lock 3/8"
8	8303620	9	HHCS, 3/8-16 x 1"
9	NLA	2	Bushing, Chain Sheave, For Service, Order Kit P/N 7138980
10	NLA	1	Sheave, Retract Chain, For Service, Order Kit P/N 7138980
11	NLA	1	Pin, Retract Chain Sheave, For Service, Order Kit P/N 7138980
12	8303681	11	HHCS, 3/8-16 x 3/4"
13	8520001	1	Fitting, Lube 1/8" Straight
14	8303621	12	HHCS, 3/8-16 x 1-1/2"
15	7096882	2	Spacer, Wear Pad .62"
16	7126662	2	Bushing, Chain Sheave (S/N 0454 & After)
17	7114112	1	Sheave, Extend Chain (S/N 0454 & After)
18	7117572	1	Pin, Extend Chain Sheave (S/N 0454 & After)
19	8526036	AR	Tube, Thread Locking Compound .5cc
20	8303624	3	HHCS, 1/2-13 x 1"
21	8307007	2	Washer, Lock 1/2"
22	7117072	1	Kit, Hose Pulley (Includes Items 23 thru 39)
23	7116812	4	Roller Pulley
24	7116642	5	Divider
25	7116652	1	Bracket, Right Side
26	7116662	1	Bracket, Left Side
27	7116691	10	Spacer
28	8310235	1	Screw, Shoulder 1/2 x 5.00"
29	8305645	2	Nut, Lock 3/8-16 Elastic
30	8310209	1	HHCS, 1/2-13 x 6.00"
31	8305644	1	Nut, Lock 1/2-13 Elastic
32	8307206	2	Washer, Flat 1/2" Heavy (.109 thick)
33	8310245	1	Screw, Shoulder 1/2 x 4.00"
34	8307204	1	Washer, Flat 3/8" Heavy (.083 thick)
35	7096702	2	Spacer, Wear Pad (1/2" thick)
36	8303679	2	HHCS, 3/8 x 1.75"
37	8303675	2	HHCS, 3/8 x 1.25"
38	8307204	10	Washer, Flat 3/8"
39	8307005	4	Washer, Lock 3/8"
			ITEMS 40 thru 47 for S/N 0453 & Before
40	7110042	1	Yoke, Extend Chain
41	7117542	1	Pin, Extend Chain Sheave (Or: Order Kit 7117534 which includes greaseable sheave pins and bushings for both primary and secondary intermediate booms)
42	8303634	1	HHCS, 5/8-11 x 4"
43	8305643	1	Nut, Hex Lock ESNA 5/8-11
44	8065214	2	Bearing, Mini Side Flange Mount
45	7117502	2	Bushing, Extend Chain Sheave
46	7114112	1	Sheave, Extend Chain
47	NLA	1	Primary Intermediate Boom (Order Items 1, 16 thru 22)
			KITS
48	7138980	1	Kit, Retract Chain Sheave (Includes Items 9 thru 11, New Hardware for Rear Boom Cover and Instructions)

SECONDARY INTERMEDIATE BOOM - 10054

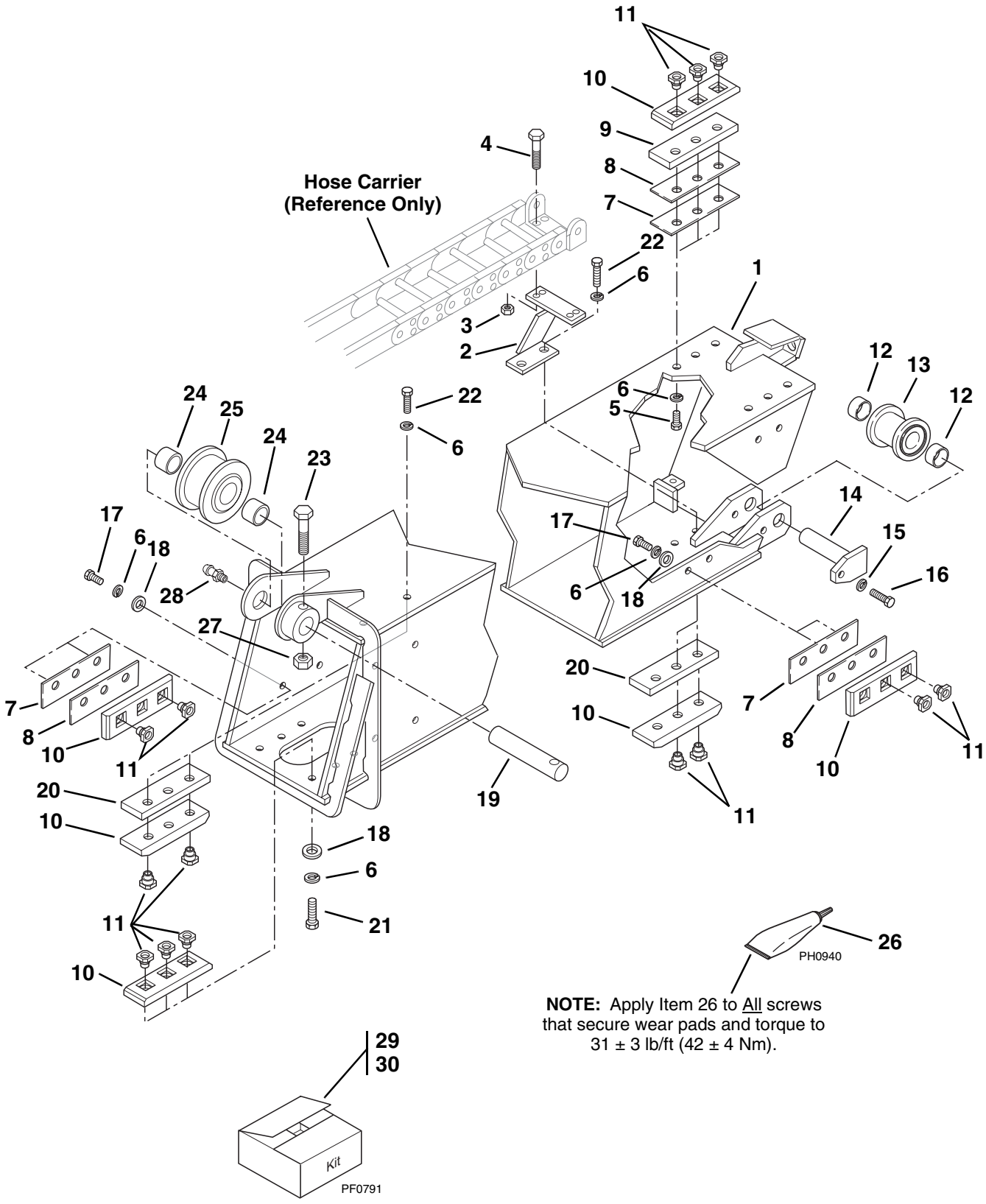

SECONDARY INTERMEDIATE BOOM - 10054

Item No.	Part Number	Qty.	Description
1	7117414	1	Secondary Intermediate Boom (S/N 0884 & Before)
	7118692	1	Kit, Secondary Intermediate Boom (S/N 0885 & After) includes clevis, link and hardware
2	7112732	1	Support, Hose Clamp
3	8305624	4	Nut, Hex Lock ESNA 1/4-20
4	8310026	4	HHCS, 1/4-20 x 3/4"
5	8303679	6	HHCS, 3/8-16 x 1-3/4"
6	8307005	34	Washer, Lock 3/8"
7	7082362	AR	Shim, Wear Pad, (.13" thick)
8	7082342	AR	Shim, Wear Pad, (.07" thick)
9	7096882	2	Spacer, Wear Pad, .62"
10	7111572	15	Wear Pad
11	7082311	34	Insert, Wear Pad
12	NLA	2	Bushing, Chain Sheave, For Service, Order Kit P/N 7138980
13	NLA	1	Sheave, Retract Chain, For Service, Order Kit P/N 7138980
14	NLA	1	Pin, Retract Chain Sheave, For Service, Order Kit P/N 7138980
15	8307007	1	Washer, Lock 1/2"
16	8303624	2	HHCS, 1/2-13 x 1"
17	8303681	11	HHCS, 3/8-16 x 3/4"
18	8307204	18	Washer, Flat 3/8"
19	NLA	1	Pin, Extend Chain Sheave (S/N 0453 & Before) For Service, Order Kit P/N 7117534
	7117582	1	Pin, Extend Chain Sheave (S/N 0454 & After)
20	7096702	3	Spacer, Wear Pad .50"
21	8303620	6	HHCS, 3/8-16 x 1"
22	8303621	6	HHCS, 3/8-16 x 1-1/2"
23	8303634	1	HHCS, 5/8-11 x 4"
24	NLA	2	Bushing, Chain Sheave (S/N 0453 & Before) For Service, Order Kit P/N 7117534
	7117502	2	Bushing, Chain Sheave (S/N 0454 & After)
25	7114032	1	Sheave, Extend Chain
26	8526036	AR	Tube, Thread Locking Compound .5cc
27	8305643	1	Nut, Hex Lock ESNA 5/8-11
28	8520001	1	Fitting, Lube 1/8" Straight
			KITS
29	7138980	1	Kit, Retract Chain Sheave (Includes Items 12 thru 14, New Hardware for Rear Boom Cover and Instructions)
30	7117534	1	Kit, Extend Chain Sheave (S/N 0453 & Before) includes greaseable sheave pins and bushings for both primary and secondary intermediate booms

INNER BOOM - 10054

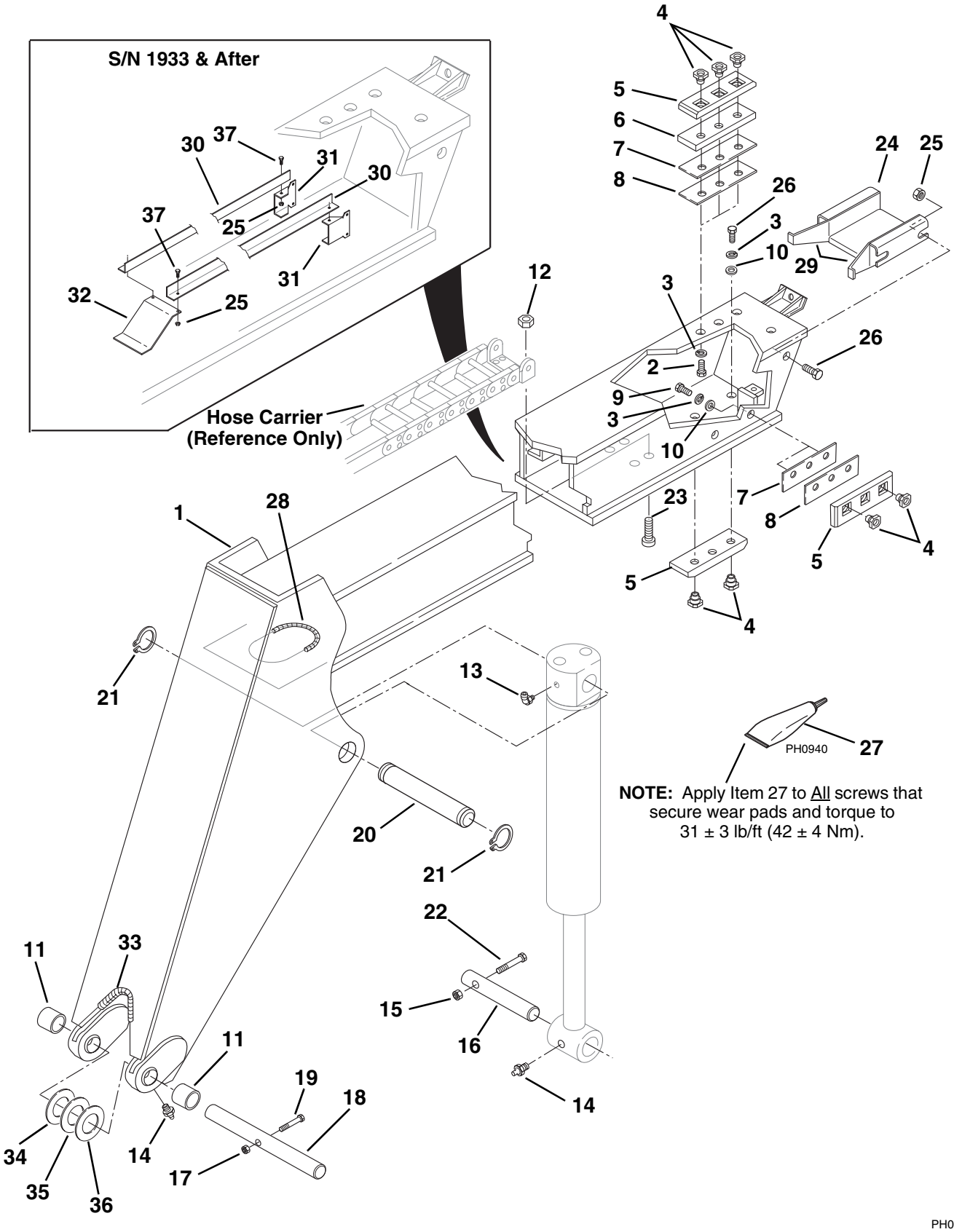

INNER BOOM - 10054

Item No.	Part Number	Qty.	Description
1	7118682	1	Kit, Inner Boom (S/N 0884 & Before) includes bushings, chain links, hardware and chain clevis
	7117133	1	Inner Boom (S/N 0885 & After)
2	8303621	6	HHCS, 3/8-16 x 1-1/2"
3	8307005	16	Washer, Lock 3/8"
4	7082311	16	Insert, Wear Pad
5	7111572	7	Wear Pad
6	7096702	2	Spacer, Wear Pad, .50"
7	7082362	AR	Shim, Wear Pad, (.13" thick)
8	7082342	AR	Shim, Wear Pad, (.07" thick)
9	8303681	10	HHCS, 3/8-16 x 3/4"
10	8307204	10	Washer, Flat 3/8"
11	7095312	2	Bushing, Quick Attach Pivot
12	8305624	4	Nut, Hex Lock ESNA 1/4-20
13	8520021	1	Fitting, Lube, 1/8" 90°
14	8520013	3	Fitting, Lube, 1/8" Straight
15	8305644	1	Nut, Hex Lock Elastic 1/2-13
16	7083992	1	Pin, Attachment Tilt Cylinder (rod end)
17	8305643	1	Nut, Hex Lock Elastic 5/8-11
18	7095352	1	Pin, Pivot, Quick Attach
19	8303666	1	HHCS, 5/8-11 x 5"
20	7095522	1	Pin, Attachment Tilt Cylinder (base end)
21	8642224	2	Ring, Retaining. 2" DIA.
22	8303772	1	HHCS, 1/2-13 x 5"
23	8303540	4	HHCS, 1/4-20 x 1"
24	7114922	1	Guide
25	8305645	6	Nut, Hex Lock ESNA 3/8-16
26	8303620	5	HHCS, 3/8-16 x 1"
27	8526036	AR	Tube, Thread Locking Compound .5cc
28	7125811	1	Conduit, Plastic 3/4 x 8.00
29	5746411	2	Molding, 3.0"
30	7110172	2	Hose Carrier, Guide (S/N 1933 & After)
31	7127862	2	Guide Support, Rear (S/N 1933 & After)
32	7127852	1	Guide Support, Front (S/N 1933 & After)
33	7125741	1	Molding, Edge Protector
34	8307918	2	Washer, Shim 2.00 x 3.50 x 0.134
35	8310093	AR	Washer, Shim 2.00 x 3.50 x 0.075
36	8307904	AR	Washer, Shim 2.00 x 3.50 x 0.048
37	8303679	4	HHCS, 3/8-16 x 1.75

BOOM EXTEND CHAINS - 8042 AND 10042

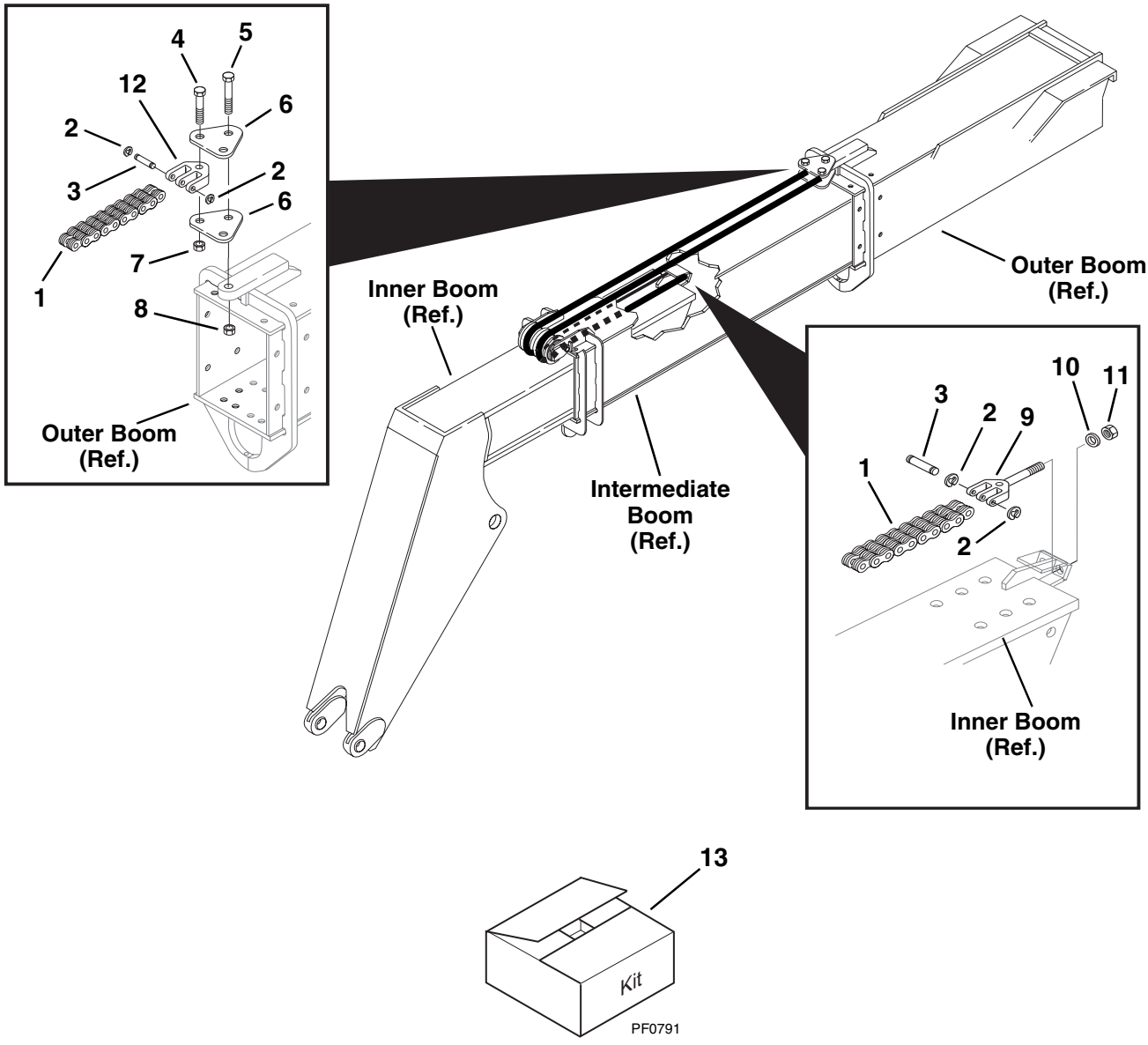

PH0821

BOOM EXTEND CHAINS - 8042 AND 10042

Item No.	Part Number	Qty.	Description
1	NLA	2	Chain, 4 x 6 Link - 194.25" Long (S/N 11144 & Before) (For Service, Order Kit P/N 7138738)
	8127014	2	Chain, 6 x 6 Link (S/N 11145 & After)
2	8642237	8	Retaining Ring, 1/4" Dia.
3	8124126	4	Pin, Chain Clevis
4	8310019	2	Bolt, Shoulder 3/8-16 x 1-1/2"
5	8310020	1	Bolt, Shoulder 1/2-13 x 1-1/2"
6	7089781	2	Yoke, Extend Chain
7	8305645	2	Nut, Hex Lock Elastic 3/8-16
8	8305644	1	Nut, Hex Lock Elastic 1/2-13
9	NLA	2	Clevis, 4 x 6 Chain (S/N 11144 & Before) (For Service, Order Kit P/N 7138738)
	7119362	2	Clevis, 6 x 6 Chain (S/N 11145 & After)
10	8307104	2	Washer, Flat 3/4"
11	8305646	2	Nut, Hex Lock Elastic 3/4-16
12	NLA	2	Clevis, 4 x 6 Chain (S/N 11144 & Before) (For Service, Order Kit P/N 7138738)
	7119372	2	Clevis, 6 x 6 Chain (S/N 11145 & After)
			KITS
13	7138738	1	Kit, Extend Chain (Replaces 4 x 6 Link Chain with 6 x 6 Link Chain)

BOOM RETRACT CHAIN - 8042 AND 10042

(S/N 1084 & Before)

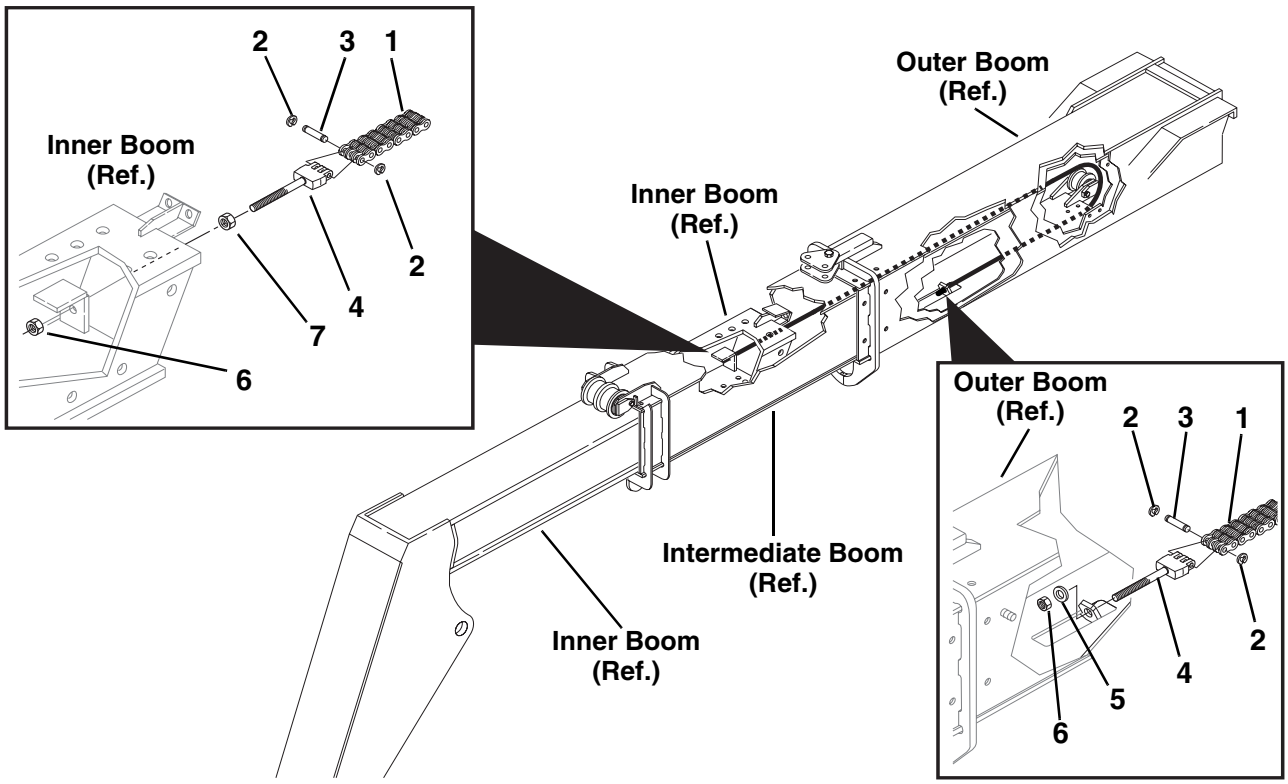

PH0851

BOOM RETRACT CHAIN - 8042 AND 10042

(S/N 1084 & Before)

Item No.	Part Number	Qty.	Description
1	7120191	1	Kit, 6 x 6 Retract Chain (Includes 6 x 6 chain, 4 of Item 2, 2 of Item 3 & 2 of Item 4)
2	8642237	4	Retaining Ring, 1/4" Dia.
3	8124126	2	Pin, Chain Clevis
4	7119362	2	Clevis, 6 x 6 Chain
5	8307104	1	Washer, Flat 3/4"
6	8305646	2	Nut, Hex Lock Elastic 3/4-16
7	8305018	1	Nut, Hex 3/4-16

BOOM RETRACT CHAIN - 8042 AND 10042

(S/N 1085 & After)

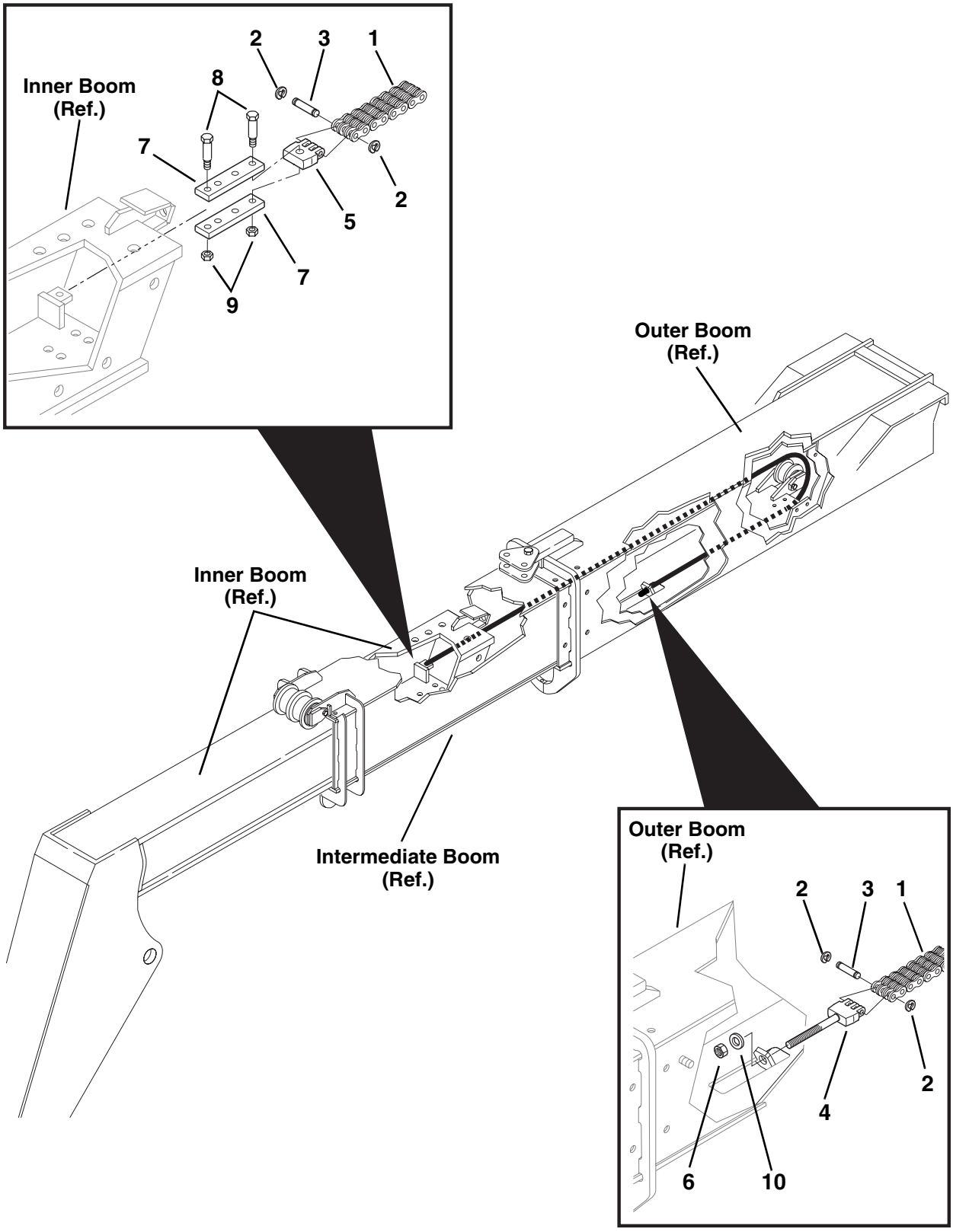

PH0831

BOOM RETRACT CHAIN - 8042 AND 10042

(S/N 1085 & After)

Item No.	Part Number	Qty.	Description
1	7119351	1	Kit, 6 x 6 Retract Chain (Includes 6 x 6 chain, 4 of Item 2, 2 of Item 3, 1 Item 4 & 1 Item 5)
2	8642237	4	Retaining Ring, 1/4" Dia.
3	8124126	2	Pin, Chain Clevis
4	7119362	1	Clevis, 6 x 6 Chain
5	7119372	1	Clevis, 6 x 6 Chain
6	8305646	1	Nut, Hex Lock Elastic 3/4-16
7	7117031	2	Link, Chain Anchor
8	8310019	2	Bolt, Shoulder 1/2 x 1-1/2"
9	8305645	2	Nut, Lock Elastic 3/8-16
10	8307104	1	Washer, Flat 3/4"

BOOM EXTEND CHAINS - 10054

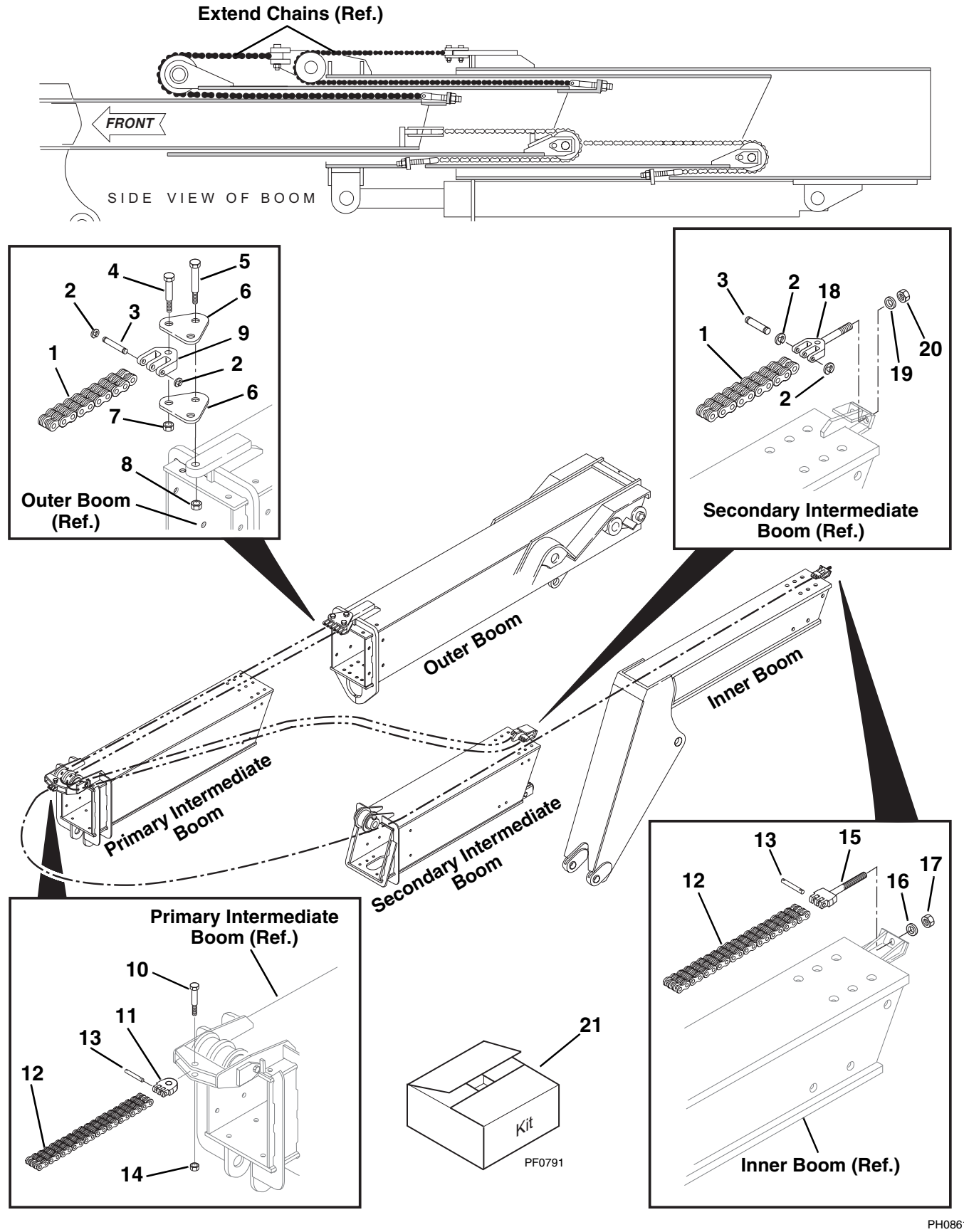

BOOM EXTEND CHAINS - 10054

Item No.	Part Number	Qty.	Description
1	NLA	2	Chain, 4 x 6 Link - 194.25" Long (S/N 11144 & Before) (For Service, Order Kit 7138738)
	8127014	2	Chain, 6 x 6 Link - 194.25" Long (S/N 11145 & After)
2	8642237	8	Retaining Ring, 1/4" Dia.
3	8124126	4	Pin, Chain Clevis
4	8310019	2	Bolt, Shoulder 3/8-16 x 1-1/2"
5	8310020	1	Bolt, Shoulder 1/2-13 x 1-1/2"
6	7089781	2	Yoke, Extend Chain
7	8305645	2	Nut, Hex Lock Elastic 3/8-16
8	8305644	1	Nut, Hex Lock Elastic 1/2-13
9	NLA	2	Clevis, 4 x 6 Chain (S/N 11144 & Before) (For Service, Order Kit P/N 7138738)
	7119372	2	Clevis, 6 x 6 Chain (S/N 11145 & After)
10	8310205	1	Bolt, Shoulder 5/8-11 x 2-1/2"
11	7113982	1	Clevis, 6 x 6 Chain
12	8127009	1	Chain, 6 x 6 Link - 193" Long
13	8124131	2	Pin, Chain Clevis (Includes two cotter pins)
14	8305643	1	Nut, Lock Elastic 5/8-11
15	7113952	1	Clevis, 6 x 6 Chain
16	8310066	1	Washer, Flat 1"
17	8310210	1	Nut, Lock Elastic 1" - 14
18	NLA	2	Clevis, 4 x 6 Chain (S/N 11144 & Before) (For Service, Order Kit P/N 7138738)
	7119362	2	Clevis, 6 x 6 Chain (S/N 11145 & After)
19	8307104	2	Washer, Flat 3/4"
20	8305646	2	Nut, Lock Elastic 3/4-16
			KITS
21	7138738	1	Kit, Extend Chain (Replaces 4 x 6 Link Chain with 6 x 6 Link Chain)

BOOM RETRACT CHAINS - 10054

(S/N 0884 & Before)

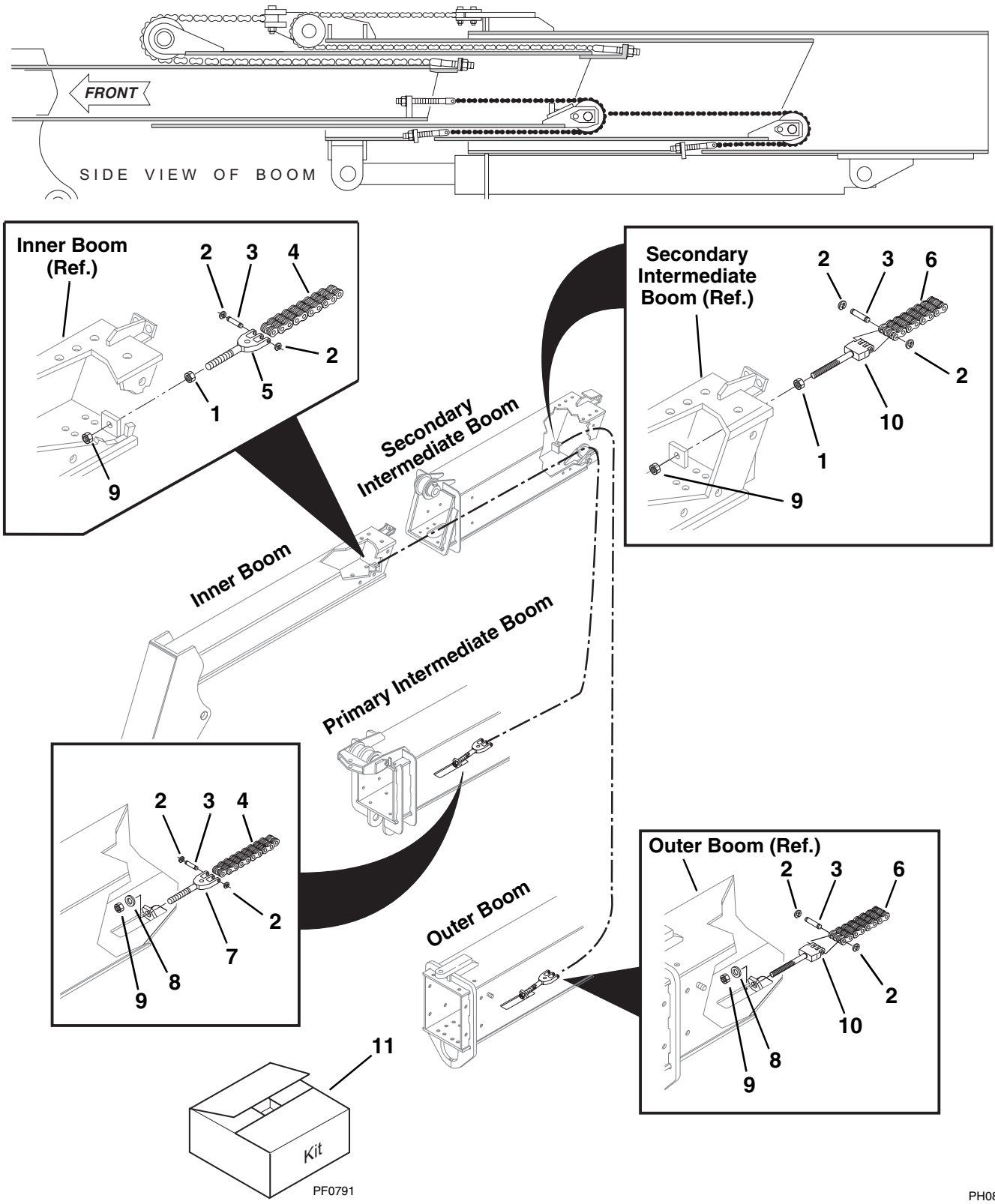

BOOM RETRACT CHAINS - 10054

(S/N 0884 & Before)

Item No.	Part Number	Qty.	Description
1	8305018	1	Nut, Hex Jam 3/4-16
2	8642237	8	Retaining Ring, 1/4"
3	8124126	4	Pin, Chain Clevis
4	NLA	1	Chain, 4 x 6 - 164.25" Long (For Service, Order Kit P/N 7120191)
5	NLA	2	Clevis, 4 x 6 Chain (For Service, Order Kit P/N 7120191)
6	8127008	1	Chain, 6 x 6 - 164.25" Long
7	NLA	1	Clevis, 4 x 6 Chain (For Service, Order Kit P/N 7120191)
8	8307104	2	Washer, Flat 3/4"
9	8305646	4	Nut, Hex Lock Elastic 3/4-16
10	7119362	2	Clevis, 6 x 6 Chain
			KITS
11	7120191	1	Kit, Retract Chain (Replaces 4 x 6 Link Chain with 6 x 6 Link Chain)

BOOM RETRACT CHAINS - 10054

(S/N 0885 thru 1084)

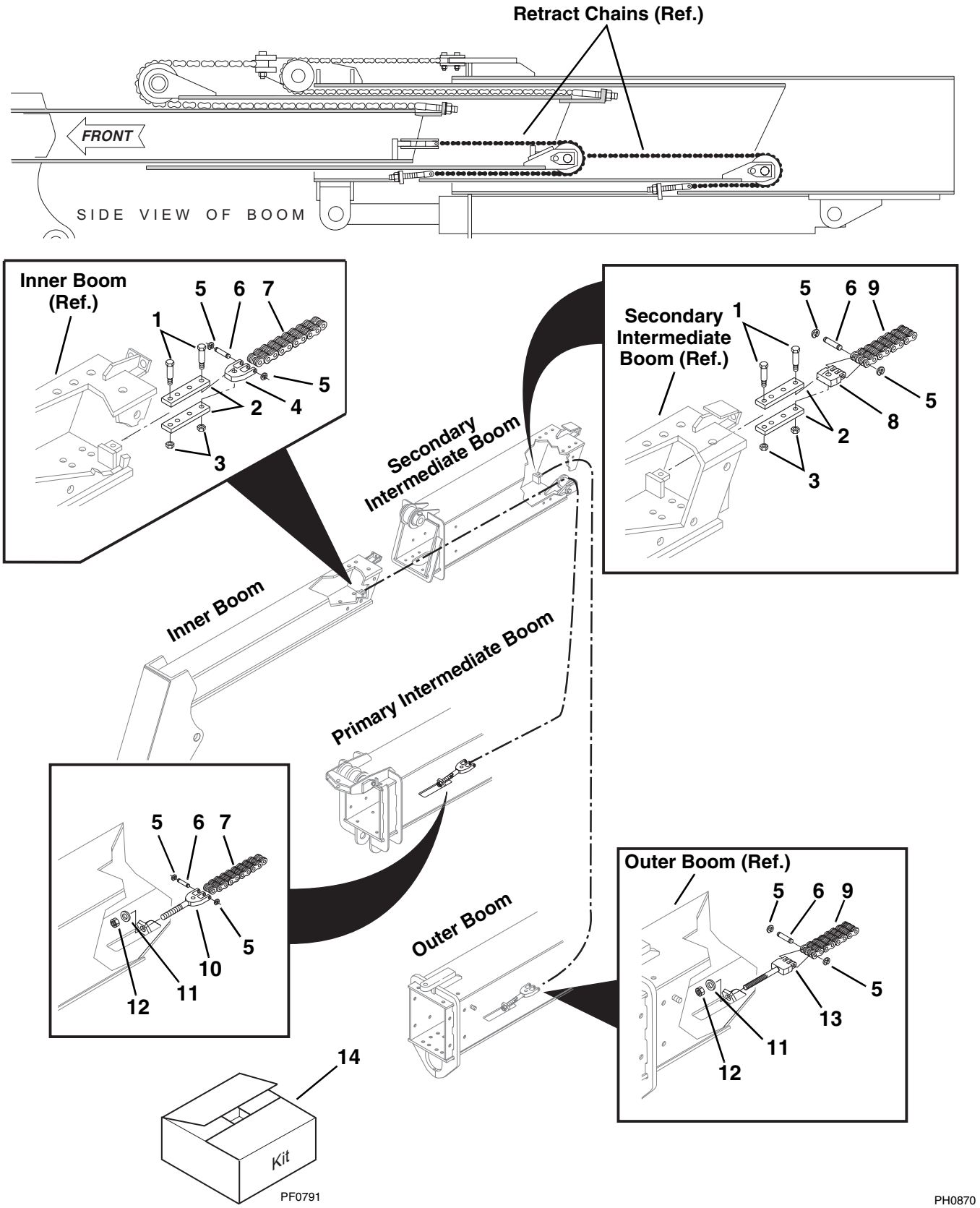

BOOM RETRACT CHAINS - 10054

(S/N 0885 thru 1084)

Item No.	Part Number	Qty.	Description
1	8310019	4	Bolt, Shoulder 3/8-16 x 1-1/2
2	7117031	4	Link
3	8305645	4	Nut, Hex Lock Elastic 3/8-16
4	NLA	1	Clevis, 4 x 6 Chain (For Service, Order Kit P/N 7119351)
5	8642237	8	Retaining Ring, 1/4"
6	8124126	4	Pin, Chain Clevis
7	NLA	1	Chain, 4 x 6 - 164.25" Long (For Service, Order Kit P/N 7119351)
8	7119372	1	Clevis, 6 x 6 Chain
9	8127008	1	Chain, 6 x 6 Link - 164.25" Long
10	NLA	1	Clevis, 4 x 6 Chain (For Service, Order Kit P/N 7119351)
11	8307104	2	Washer, Flat 3/4"
12	8305646	2	Nut, Hex Lock Elastic 3/4-16
13	7119362	1	Clevis, 6 x 6 Chain
			KITS
14	7119351	1	Kit, Retract Chain (Replaces 4 x 6 Link Chain with 6 x 6 Link Chain)

BOOM RETRACT CHAINS - 10054
(S/N 1085 & After)

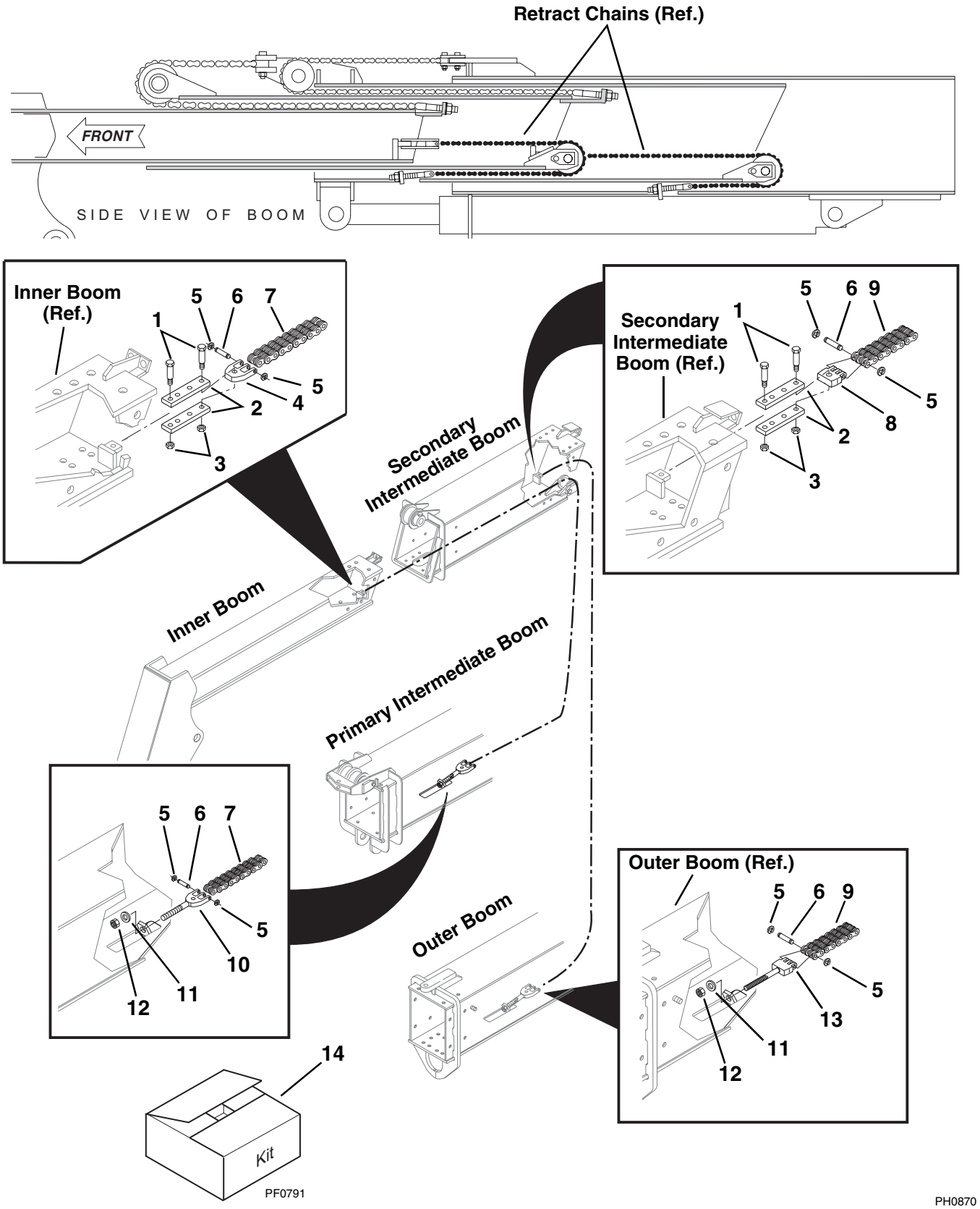

BOOM RETRACT CHAINS - 10054
(S/N 1085 & After)

Item No.	Part Number	Qty.	Description
1	8310019	4	Bolt, Shoulder 3/8-16 x 1-1/2"
2	7117031	4	Link
3	8305645	4	Nut, Hex Lock Elastic 3/8-16
4	NLA	1	Clevis, 4 x 6 Chain (S/N 11568 & Before) (For Service, Order Kit P/N 7119351)
	7119372	1	Clevis, 6 x 6 Chain (S/N 11569 & After)
5	8642237	8	Retaining Ring 1/4"
6	8124126	4	Pin, Chain Clevis
7	NLA	1	Chain, 4 x 6 Link - 164.25" Long (S/N 11568 & Before) (For Service, Order Kit P/N 7119351)
	8127008	1	Chain, 6 x 6 Link - 164.25" Long (S/N 11569 & After)
8	7119372	1	Clevis, 6 x 6 Chain
9	8127008	1	Chain, 6 x 6 Link - 164.25" Long
10	NLA	1	Clevis, 4 x 6 Chain (S/N 11568 & Before) (For Service, Order Kit P/N 7119351)
	7119362	1	Clevis, 6 x 6 Chain (S/N 11569 & After)
11	8307104	2	Washer, Flat 3/4"
12	8305646	2	Nut, Hex Lock Elastic 3/4-16
13	7119362	1	Clevis, 6 x 6 Chain
			KITS
14	7119351	1	Kit, Retract Chain (Replaces 4 x 6 Link Chain with 6 x 6 Link Chain)

TRUSS BOOM 12 AND 15 FT.
(Optional)

12 ft. Truss Boom
8042 Only

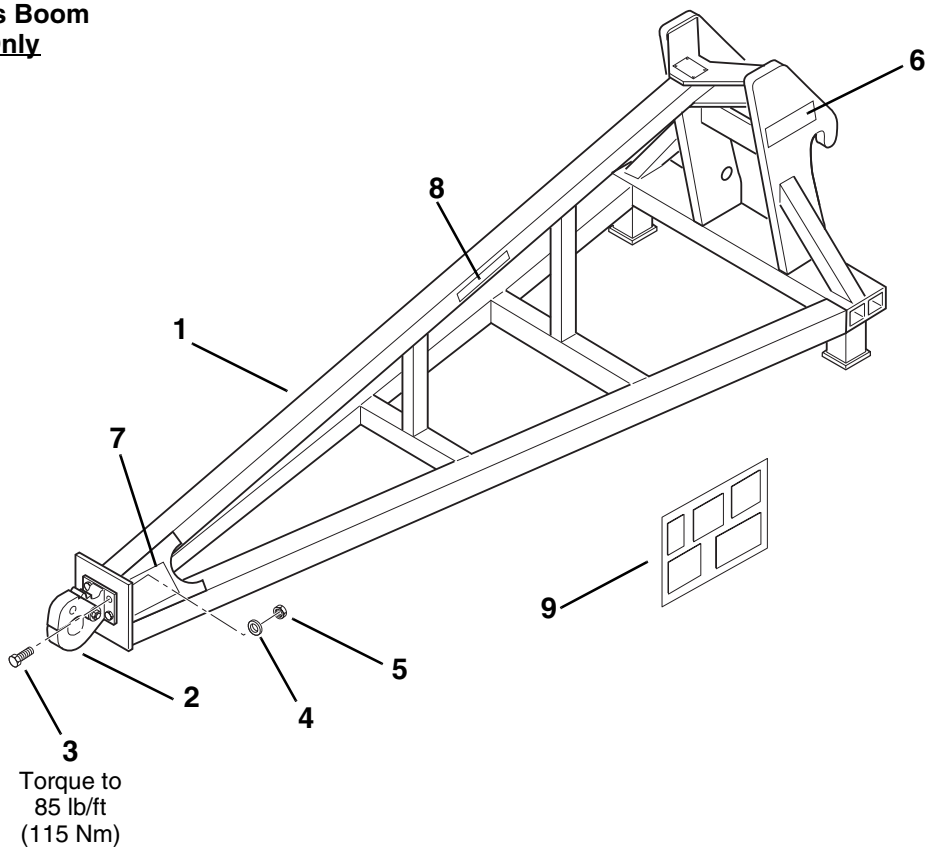

15 ft. Truss Boom
10042 & 10054 Only

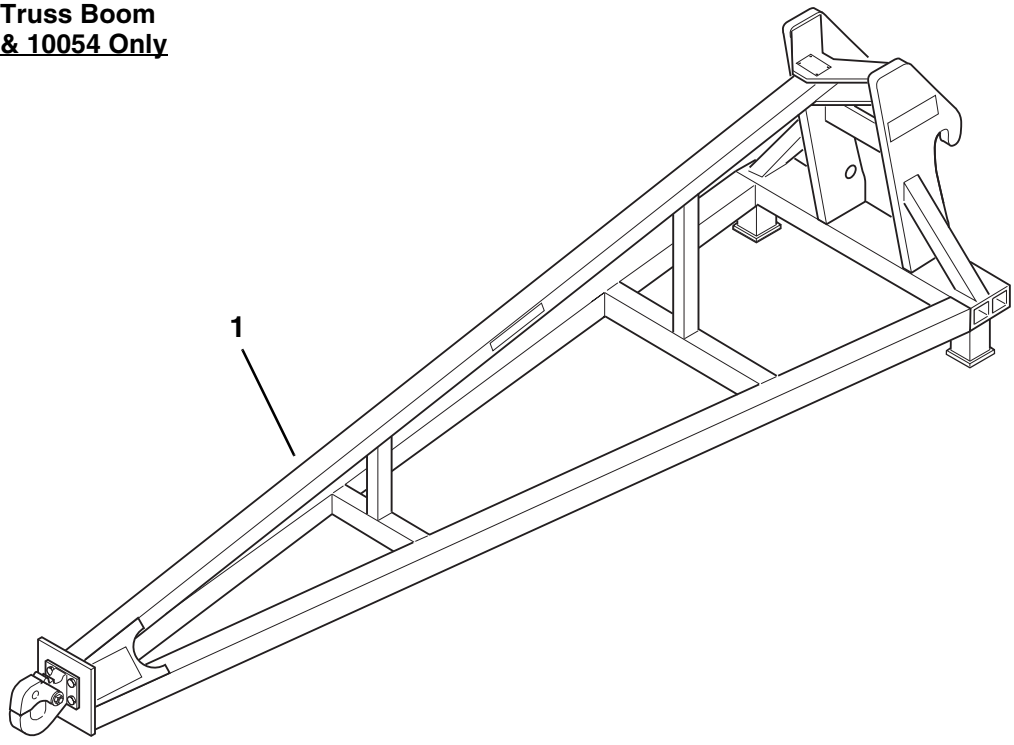

PH0970

TRUSS BOOM 12 AND 15 FT.

(Optional)

Item No.	Part Number	Qty.	Description
1	7113024	1	12' Truss Boom - 8042 (Includes Items 2 thru 9)
	7112804	1	15' Truss Boom - 10042 &10054 (Includes Items 2 thru 9)
2	8382017	1	Pintle Hook
3	8310195	4	HHCS, 1/2-13 x 1.75"
4	8307112	4	Washer, Plain 1/2 SAE
5	8305644	4	Nut, Hex Lock Elastic 1/2-13
6	4107182	2	Decal, Name
7	4107822	2	Decal, Swinging Load
8	4107832	2	Decal, Length/Capacity
9	4107812	2	Chart, Capacity

SECTION 10
GENERAL TROUBLESHOOTING

HYDRAULIC

Hydraulic Diagnostic Test Equipment 289
8042 Hydraulic Diagram & Testing (S/N 1167 & Before) . . . . . 290 - 291
8042 Hydraulic Diagram & Testing (S/N 1168 thru 2194) . . . . . 292 - 293
8042 Hydraulic Diagram & Testing (S/N 2195 thru 9908) . . . . . 294 - 295
8042 Hydraulic Diagram & Testing (S/N 9909 & After) . . . . . 296 - 297
10042 Hydraulic Diagram & Testing (S/N 1167 & Before) . . . . . 298 - 299
10042 Hydraulic Diagram & Testing (S/N 1168 thru 2194) . . . . . 300 - 301
10042 Hydraulic Diagram & Testing (S/N 2195 thru 9908) . . . . . 302 - 303
10042 Hydraulic Diagram & Testing (S/N 9909 & After) . . . . . 304 - 305
10054 Hydraulic Diagram & Testing (S/N 1167 & Before) . . . . . 306 - 307
10054 Hydraulic Diagram & Testing (S/N 1168 thru 2194) . . . . . 308 - 309
10054 Hydraulic Diagram & Testing (S/N 2195 thru 9908) . . . . . 310 - 311
10054 Hydraulic Diagram & Testing (S/N 9909 & After) . . . . . 312 - 313
8042/10042/10054 Variable Volume Load Sensing Pump Flow Meter Diagram (S/N 9908 & Before) . . . 314
8042/10042/10054 Variable Volume Load Sensing Pump Flow Meter Diagram (S/N 9909 & After) 315
8042/10042 Hoist and Extend Circuits (S/N 8540 & Before) 316
8042/10042 Hoist and Extend Schematic (S/N 8540 & Before) 317
8042/10042 Hoist and Extend Circuits (S/N 8541 thru 9908) 318
8042/10042 Hoist and Extend Schematic (S/N 8541 thru 9908) 319
8042/10042 Hoist and Extend Circuits (S/N 9909 & After) 320
8042/10042 Hoist and Extend Schematic (S/N 9909 & After) 321
10054 Hoist and Extend Circuits (S/N 8540 & Before) 322
10054 Hoist and Extend Schematic (S/N 8540 & Before) 323
10054 Hoist and Extend Circuits (S/N 8541 thru 9908) 324
10054 Hoist and Extend Schematic (S/N 8541 thru 9908) 325
10054 Hoist and Extend Circuits (S/N 9909 & After) 326
10054 Hoist and Extend Schematic (S/N 9909 & After) 327
8042/10042/10054 Frame Tilt, Attachment Tilt, Slave & Auxiliary Circuits (S/N 2194 & Before) 328
8042/10042/10054 Frame Tilt, Attachment Tilt, Slave & Auxiliary Schematic (S/N 2194 & Before) 329
8042/10042/10054 Frame Tilt, Attachment Tilt, Slave & Auxiliary Circuits (S/N 2195 thru 9908) 330
8042/10042/10054 Frame Tilt, Attachment Tilt, Slave & Auxiliary Schematic (S/N 2195 thru 9908) 331
8042/10042/10054 Frame Tilt, Attachment Tilt, Slave & Auxiliary Circuits (S/N 9909 & After) 332
8042/10042/10054 Frame Tilt, Attachment Tilt, Slave & Auxiliary Schematic (S/N 9909 & After) 333
8042/10042/10054 Steering Circuit (S/N 9908 & Before) 334
8042/10042/10054 Steering Schematic (S/N 9908 & Before) 335
8042/10042/10054 Steering Circuit (S/N 9909 & After) 336
8042/10042/10054 Steering Schematic (S/N 9909 & After) 337
8042/10042/10054 Service Brake & De-Clutch Circuits (S/N 9908 & Before) 338
8042/10042/10054 Service Brake & De-Clutch Schematic (S/N 9908 & Before) 339
8042/10042/10054 Service Brake Circuit (S/N 9909 & After) 340
8042/10042/10054 Service Brake Schematic (S/N 9909 & After) 341
10042/10054 Outrigger Schematic (S/N 10881 & Before) 342
10042/10054 Outrigger Schematic (S/N 10882 & After) 343

ELECTRICAL

8042/10042 Electrical Schematic (S/N 0291 & Before) 344
8042/10042 Electrical Schematic (S/N 0292 thru 9908) 345
8042/10042 Electrical Schematic (S/N 9909 & After) 346
10054 Electrical Schematic (S/N 9908 & Before) 347
10054 Electrical Schematic (S/N 9909 & After) 348
10042 Outrigger Logic Circuit 349
10054 Outrigger Logic Circuit (S/N 9908 & Before) 350
10054 Outrigger Logic Circuit (S/N 9909 & After) 351

8042/10042/10054 Lighting System Circuit (Optional) 352
8042/10042/10054 Charging Circuit 353
8042/10042/10054 Cranking Circuit (S/N 9908 & Before) 354
8042/10042/10054 Cranking Circuit (S/N 9909 & After) 355
8042/10042 Steer Select Circuit (S/N 0291 & Before) 356
8042/10042/10054 Steer Select Circuit (S/N 0292 & After) 357
8042/10042 Stabilizer Circuit (S/N 0291 & Before) 358
8042/10042 Stabilizer Circuit (S/N 0292 thru S/N 9908) 359
8042/10042 Stabilizer Circuit (S/N 9909 & After) 360
10054 Stabilizer Circuit (S/N 9908 & Before) 361
10054 Stabilizer Circuit (S/N 9909 & After) 362

STABIL-TRAK SYSTEM

Stabil-TRAK System . . . . . 364 - 367
8042/10042 Stabil-TRAK System Troubleshooting (S/N 9908 & Before) 368
8042/10042 Stabil-TRAK Electrical Circuit Ignition “OFF”(S/N 9908 & Before) 369
8042/10042 Stabil-TRAK Electrical Circuit Free Pivot Mode (S/N 9908 & Before) 370
8042/10042 Stabil-TRAK Hydraulic Circuit Free Pivot Mode (S/N 9908 & Before) 371
8042/10042 Stabil-TRAK Electrical Circuit Final Positioning Mode (S/N 9908 & Before) 372
8042/10042 Stabil-TRAK Hydraulic Circuit Final Positioning Mode (S/N 9908 & Before) 373
8042/10042 Stabil-TRAK Electrical Circuit Locked Mode (S/N 9908 & Before) 374
8042/10042 Stabil-TRAK Hydraulic Circuit Locked Mode (S/N 9908 & Before) 375
8042/10042 Stabil-TRAK System Troubleshooting (S/N 9909 & After) 376
8042/10042 Stabil-TRAK Electrical Circuit Ignition “OFF” (S/N 9909 & After) 377
8042/10042 Stabil-TRAK Electrical Circuit Free Pivot Mode (S/N 9909 & After) 378
8042/10042 Stabil-TRAK Hydraulic Circuit Free Pivot Mode (S/N 9909 & After) 379
8042/10042 Stabil-TRAK Electrical Circuit Final Positioning Mode (S/N 9909 & After) 380
8042/10042 Stabil-TRAK Hydraulic Circuit Final Positioning Mode (S/N 9909 & After) 381
8042/10042 Stabil-TRAK Electrical Circuit Locked Mode (S/N 9909 & After) 382
8042/10042 Stabil-TRAK Hydraulic Circuit Locked Mode (S/N 9909 & After) 383
10054 Stabil-TRAK System Troubleshooting (S/N 9908 & Before) . . . . . 384 - 385
10054 Stabil-TRAK Electrical Circuit Boom Extend Mode 1 (S/N 9908 & Before) 386
10054 Stabil-TRAK Electrical Circuit Boom Extend Mode 2 (S/N 9908 & Before) 387
10054 Stabil-TRAK Electrical Circuit Boom Extend Mode 3 (S/N 9908 & Before) 388
10054 Stabil-TRAK Electrical Circuit Boom Extend Mode 4 (S/N 9908 & Before) 389
10054 Stabil-TRAK Electrical Circuit Boom Extend Mode 5 (S/N 9908 & Before) 390
10054 Stabil-TRAK Electrical Circuit Boom Extend Mode 6 (S/N 9908 & Before) 391
10054 Stabil-TRAK Electrical Circuit Boom Extend Mode 7 (S/N 9908 & Before) 392
10054 Stabil-TRAK Electrical Circuit Boom Extend Mode 8 (S/N 9908 & Before) 393
10054 Stabil-TRAK Electrical Circuit Boom Extend Mode 9 (S/N 9908 & Before) 394
10054 Stabil-TRAK System Troubleshooting (S/N 9909 & After) . . . . . 396 - 397
10054 Stabil-TRAK Electrical Circuit Boom Extend Mode 1 (S/N 9909 & After) 398
10054 Stabil-TRAK Electrical Circuit Boom Extend Mode 2 (S/N 9909 & After) 399
10054 Stabil-TRAK Electrical Circuit Boom Extend Mode 3 (S/N 9909 & After) 400
10054 Stabil-TRAK Electrical Circuit Boom Extend Mode 4 (S/N 9909 & After) 401
10054 Stabil-TRAK Electrical Circuit Boom Extend Mode 5 (S/N 9909 & After) 402
10054 Stabil-TRAK Electrical Circuit Boom Extend Mode 6 (S/N 9909 & After) 403
10054 Stabil-TRAK Electrical Circuit Boom Extend Mode 7 (S/N 9909 & After) 404
10054 Stabil-TRAK Electrical Circuit Boom Extend Mode 8 (S/N 9909 & After) 405
10054 Stabil-TRAK Electrical Circuit Boom Extend Mode 9 (S/N 9909 & After) 406

Hydraulic Diagnostic Test Equipment

OmniQuip Parts Worldwide is pleased to announce the availability of two valuable diagnostic tools. The **Sky Trak** Pressure Test Kit and Flowmeter Kit. Both kits feature a durable polyethylene carrying case for demanding field service conditions. For price and availability, call OmniQuip Parts Worldwide at (888) 872-5123.

Pressure Test Kit

- Contains all the fittings and hoses required to test **Sky Trak** Telescopic Material Handlers
- 300, 1000 and 4000 psi gauges for accurate testing of high and low pressure circuits
- Includes laminated Test Diagrams and Testing Procedures for troubleshooting **Sky Trak** Telescopic Material Handlers
- 13" x 18" x 7" durable carrying case

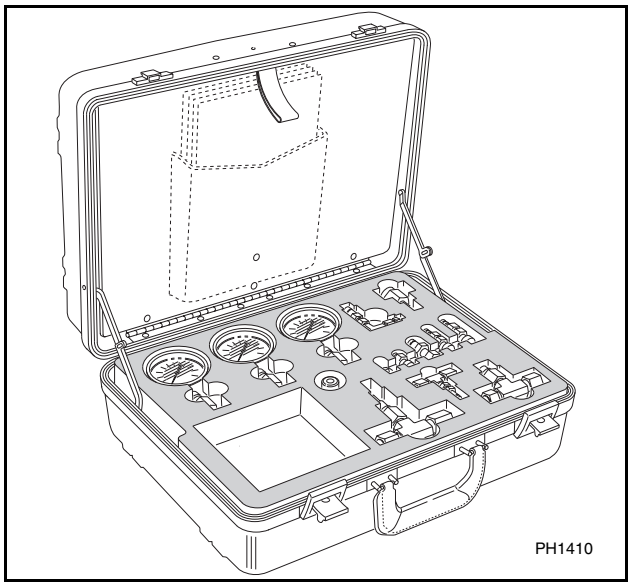

Flowmeter Kit

- Use Flowmeter Kit to pinpoint hydraulic system faults.
- Includes flowmeter with load valve, magnetic base, photo tachometer head and flex arm
- Measures up to 60 GPM and 6000 psi
- Bi-directional for unrestricted connection and simplified testing
- Internal by-pass protects system and tester from over-pressure
- 16" x 22" x 7" durable carrying case

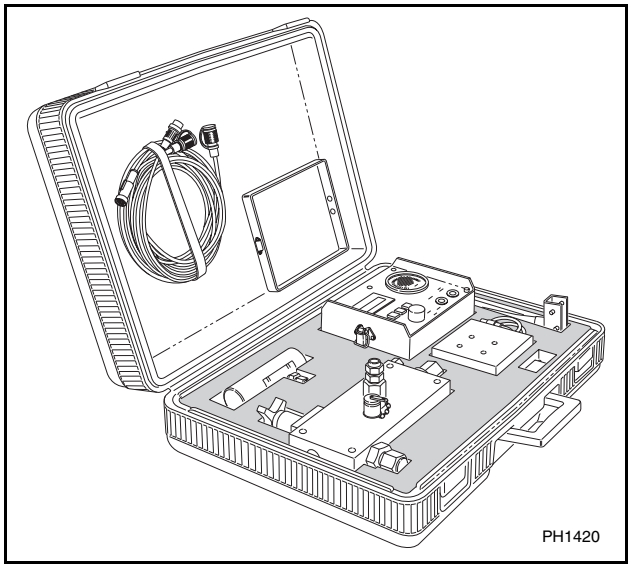

Ordering & Price Information

Part Number	Description	Approximate Weight	Price and Availability
7133413	Hydraulic Pressure Test Kit	16 lbs.	Consult Factory
1321107	Hydraulic Flowmeter Kit	28 lbs.	Consult Factory

8042 Hydraulic Diagram (S/N 1167 & Before)

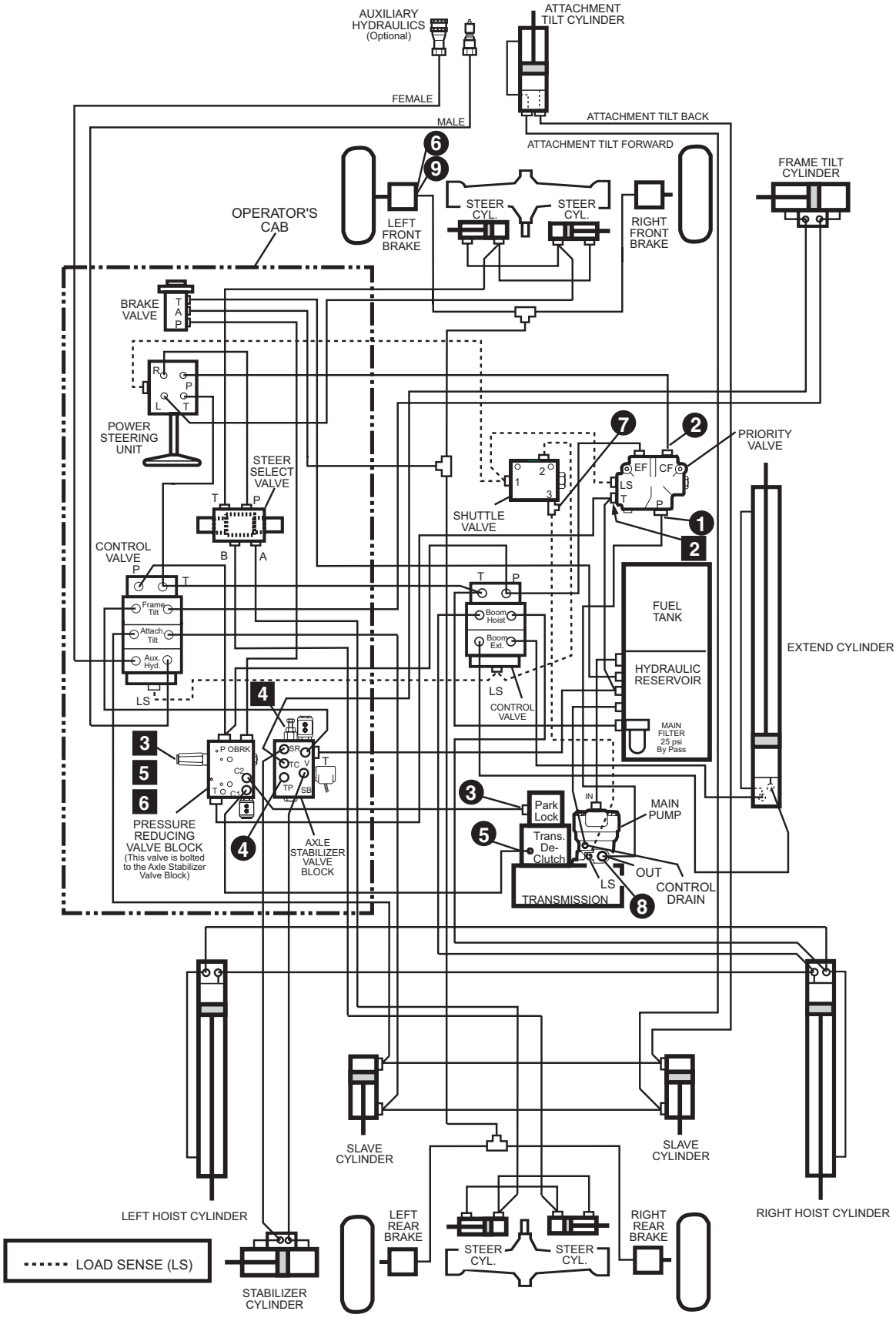

8990214-002
(MH0280)

8042 Hydraulic Testing (S/N 1167 & Before)

Engine Information

Idle . . . . . 1,050 ± 50 rpm
Full Speed . . . . . 2,730 ± 130 rpm

Hydraulic Oil Information

Oil Type - 10W, meets MIL-L-2104C or ISO Grade 46
Capacity - Reservoir . . . . . 30.3 gal. (114,7 liter)
Capacity - System . . . . . .47.3 gal. (179 liter)

Note 1: To adjust relief settings or pressure reducing settings, turn the adjustment screw clockwise to increase pressure or counterclockwise to decrease pressure.

***Note 2:** On units with S/N 0654 & Before. If the low brake pressure kit has been installed, as offered in Service Bulletin STB-2076, issued 5-29-95, refer to test location 9.

The hydraulic oil temperature for the pump flow test should be between 100° F (38° C) and 120° F (49° C) (tank hot to the touch) during testing.

Equipment Needed To Perform Tests From Kit P/N 7118782

Circuit	Gauge	Fittings
1	4,000 PSI Gauge (275,6 bar)	#12 Run Tee Swivel Nut End Reducer #12-8 PD38TX Test Nipple
2	4,000 PSI Gauge (275,6 bar)	#8 Run Tee Swivel Nut PD38TX Test Nipple
3 5	1,000 PSI Gauge (68,9 bar)	#4 Union PD34BTX Test Nipple
4	300 PSI Gauge (20,7 bar)	Connector STR. THD. #4 PD34BTX Test Nipple
6 9	1,000 PSI Gauge (68,9 bar)	#4 Run Tee Swivel Nut PD34BTX Test Nipple
7	4,000 PSI Gauge (275,6 bar)	#6 Elbow 90° Swivel Nut PD36BTX Test Nipple

TEST LOCATION	Hydraulic Pump Flow Test
8	**To check flow readings a flow meter capable of measuring 60 GPM (3,8 ltr/sec) and a load valve capable of 6,000 psi (413,4 bar) will be required (not included with kit P/N 7118782).** 2,000 psi (137,8 bar) load @ Engine Speed of 2,500 ± 25 rpm — Flow rate should be 39 to 43 GPM (2,5 to 2,7 ltr/sec)

TEST LOCATION	ADJUST. LOCATION	COMPONENT DESCRIPTION	PRESSURE READINGS	PRESSURE TEST PROCEDURES
1	N/A	Pump Standby Pressure	550 ± 50 psi (37,9 ± 3,4 bar)	Loosen load sense line at location 7 to bleed off pressure and then retighten line. With engine at idle and all hydraulic functions in neutral position, check pump standby pressure.
	N/A	Pump Pressure Compensator	2,950 ± 50 psi (203,3 ± 3,4 bar)	With engine at idle fully retract boom extend cylinder and hold. Check pump maximum pressure.
2	2	Priority Valve Steering Relief	2,500 ± 50 psi (172,3 ± 3,4 bar)	With engine at idle turn the steering wheel all the way to the left or right and hold while checking pressure. If pressure is not correct, adjust or replace the relief valve cartridge in the priority valve **(See Note 1)**.
N/A	N/A	Attachment Tilt Port Relief	3,150 ± 50 psi (217 ± 3,4 bar)	CONSULT FACTORY
3	3	Pressure Reducing Valve In Pressure Reducing Valve Block And Park Brake Release	425 ± 25 psi (29,3 ± 1,7 bar)	With engine at idle and park brake released check pressure. If pressure is not correct, adjust or replace the cartridge in the pressure reducing valve **(See Note 1)**.
4	4	Pressure Reducing Valve In Axle Stabilizer Valve Block	60 ± 10 psi (4,1 ± 0,7 bar)	With engine at idle and boom in the down position check pressure. If pressure is not correct, adjust or replace the cartridge in the axle stabilizer valve **(See Note 1)**.
	N/A	Relief Check Valve In Axle Stabilizer Valve Block	100 psi Minimum (6,9 bar)	With engine at idle and boom down, while frame tilting to the left check pressure.
5	5	Transmission De-Clutch	425 ± 25 psi (29,3 ± 1,7 bar)	With engine at idle and park brake engaged check pressure. If pressure is not correct, adjust or replace the cartridge in the pressure reducing valve **(See Note 1)**.
6	6	Service Brakes **(*See Note 2)** (S/N 0654 & Before)	425 ± 25 psi (29,3 ± 1,7 bar)	With engine at idle depress the service brakes and check pressure. If pressure is not correct, adjust or replace the cartridge in the pressure reducing valve **(See Note 1)**.
7	N/A	Load Sense	Variable 0 to 2,950 psi (0 to 203,3 bar)	With engine at idle operate a specific function (Boom, Frame Tilt, Attachment Tilt, Auxiliary or Steering) and check pressure.
9	N/A	Service Brakes (S/N 0655 thru 1167)	350 ± 25 psi (24,1 ± 1,7 bar)	With engine at idle depress the service brakes and check pressure. If pressure is not correct, recheck pressure reducing valve pressure.

8042 Hydraulic Diagram
(S/N 1168 thru 2194)

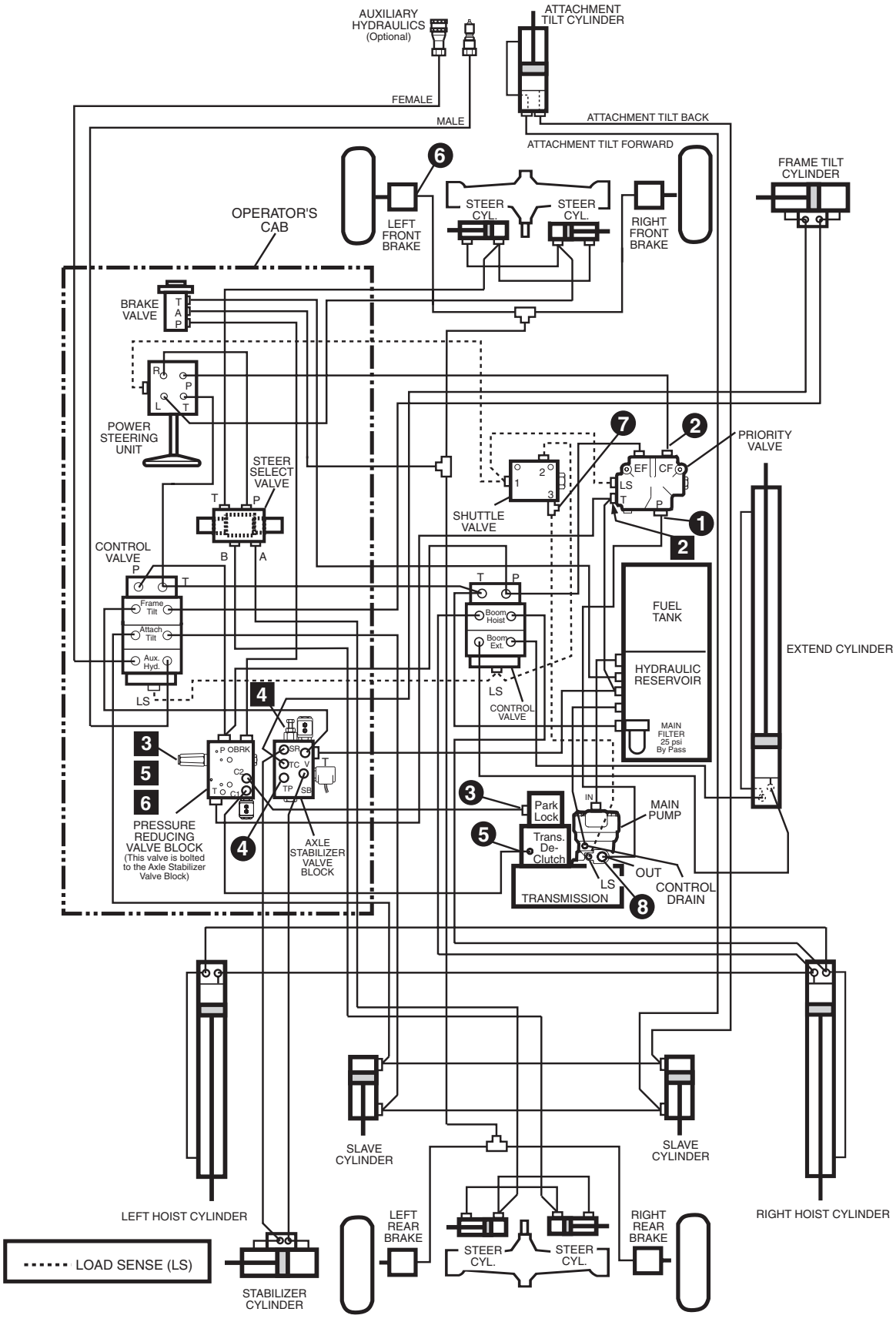

8990272-001
(PH0980)

8042 Hydraulic Testing (S/N 1168 thru 2194)

Engine Information

Idle . . . . . 1,050 ± 50 rpm
Full Speed . . . . . 2,730 ± 130 rpm

Hydraulic Oil Information

Oil Type - 10W, meets MIL-L-2104C or ISO Grade 46
Capacity - Reservoir . . . . . 30.3 gal. (114,7 liter)
Capacity - System . . . . . .47.3 gal. (179 liter)

Note: To adjust relief settings or pressure reducing settings, turn the adjustment screw clockwise to increase pressure or counterclockwise to decrease pressure.

The hydraulic oil temperature for the pump flow test should be between 100° F (38° C) and 120° F (49° C) (tank hot to the touch) during testing.

Equipment Needed To Perform Tests From Kit P/N 7118782

Circuit	Gauge	Fittings
1	4,000 PSI Gauge (275,6 bar)	#12 Run Tee Swivel Nut End Reducer #12-8 PD38TX Test Nipple
2	4,000 PSI Gauge (275,6 bar)	#8 Run Tee Swivel Nut PD38TX Test Nipple
3 5	1,000 PSI Gauge (68,9 bar)	#4 Union PD34BTX Test Nipple
4	300 PSI Gauge (20,7 bar)	Connector STR. THD. #4 PD34BTX Test Nipple
6	1,000 PSI Gauge (68,9 bar)	#4 Run Tee Swivel Nut PD34BTX Test Nipple
7	4,000 PSI Gauge (275,6 bar)	#6 Elbow 90° Swivel Nut PD36BTX Test Nipple

TEST LOCATION	Hydraulic Pump Flow Test
8	**To check flow readings a flow meter capable of measuring 60 GPM (3,8 ltr/sec) and a load valve capable of 6,000 psi (413,4 bar) will be required (not included with kit P/N 7118782).** 2,000 psi (137,8 bar) load @ Engine Speed of 2,500 ± 25 rpm — Flow rate should be 39 to 43 GPM (2,5 to 2,7 ltr/sec)

TEST LOCATION	ADJUST. LOCATION	COMPONENT DESCRIPTION	PRESSURE READINGS	PRESSURE TEST PROCEDURES
1	N/A	Pump Standby Pressure	550 ± 50 psi (37,9 ± 3,4 bar)	Loosen load sense line at location 7 to bleed off pressure and then retighten line. With engine at idle and all hydraulic functions in neutral position, check pump standby pressure.
	N/A	Pump Pressure Compensator	2,950 ± 50 psi (203,3 ± 3,4 bar)	With engine at idle fully retract boom extend cylinder and hold. Check pump maximum pressure.
2	2	Priority Valve Steering Relief	2,500 ± 50 psi (172,3 ± 3,4 bar)	With engine at idle turn the steering wheel all the way to the left or right and hold while checking pressure. If pressure is not correct, adjust (inside of "T" port) or replace the relief valve cartridge in the priority valve **(See Note)**.
N/A	N/A	Attachment Tilt Port Relief	3,150 ± 50 psi (217 ± 3,4 bar)	CONSULT FACTORY
3	3	Pressure Reducing Valve In Pressure Reducing Valve Block And Park Brake Release	500 +25/-0 psi (34,5 +1,7/-0 bar)	With engine at idle and park brake released check pressure. If pressure is not correct, adjust or replace the cartridge in the pressure reducing valve **(See Note)**.
4	4	Pressure Reducing Valve In Axle Stabilizer Valve Block	60 ± 10 psi (4,1 ± 0,7 bar)	With engine at idle and boom in the down position check pressure. If pressure is not correct, adjust or replace the cartridge in the axle stabilizer valve **(See Note)**.
	N/A	Relief Check Valve In Axle Stabilizer Valve Block	100 psi Minimum (6,9 bar)	With engine at idle and boom down, while frame tilting to the left check pressure.
5	5	Transmission De-Clutch	500 +25/-0 psi (34,5 +1,7/-0 bar)	With engine at idle and park brake engaged check pressure. If pressure is not correct, adjust or replace the cartridge in the pressure reducing valve **(See Note)**.
6	6	Service Brakes	500 +25/-0 psi (34,5 +1,7/-0 bar)	With engine at idle depress the service brakes and check pressure. If pressure is not correct, adjust or replace the cartridge in the pressure reducing valve **(See Note)**.
7	N/A	Load Sense	Variable 0 to 2,950 psi (0 to 203,3 bar)	With engine at idle operate a specific function (Boom, Frame Tilt, Attachment Tilt, Auxiliary or Steering) and check pressure.

8042 Hydraulic Diagram (S/N 2195 thru 9908)

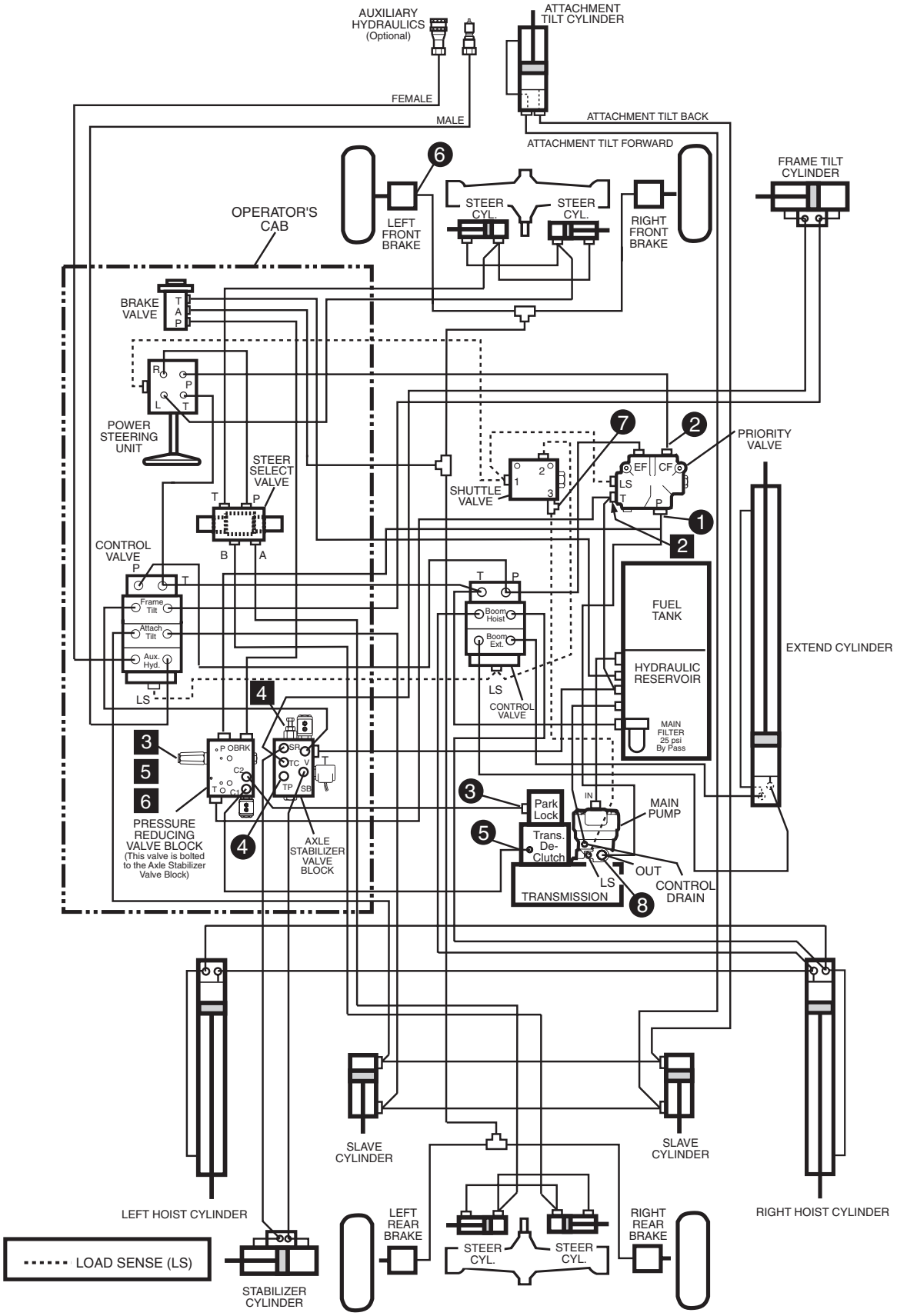

8990309
(PH0981)

8042 Hydraulic Testing (S/N 2195 thru 9908)

Engine Information

Idle . . . . . 1,050 ± 50 rpm
Full Speed . . . . . 2,730 ± 130 rpm

Hydraulic Oil Information

Oil Type - 10W, meets MIL-L-2104C or ISO Grade 46
Capacity - Reservoir . . . . . 30.3 gal. (114,7 liter)
Capacity - System . . . . . .47.3 gal. (179 liter)

Note: To adjust relief settings or pressure reducing settings, turn the adjustment screw clockwise to increase pressure or counterclockwise to decrease pressure.

The hydraulic oil temperature for the pump flow test should be between 100° F (38° C) and 120° F (49° C) (tank hot to the touch) during testing.

Equipment Needed To Perform Tests From Kit P/N 7118782

Circuit	Gauge	Fittings
1	4,000 PSI Gauge (275,6 bar)	#12 Run Tee Swivel Nut End Reducer #12-8 PD38TX Test Nipple
2	4,000 PSI Gauge (275,6 bar)	#8 Run Tee Swivel Nut PD38TX Test Nipple
3 5	1,000 PSI Gauge (68,9 bar)	#4 Union PD34BTX Test Nipple
4	1,000 PSI Gauge (68,9 bar)	Connector STR. THD. #4 PD34BTX Test Nipple
6	1,000 PSI Gauge (68,9 bar)	#4 Run Tee Swivel Nut PD34BTX Test Nipple
7	4,000 PSI Gauge (275,6 bar)	#6 Elbow 90° Swivel Nut PD36BTX Test Nipple

TEST LOCATION	Hydraulic Pump Flow Test
8	**To check flow readings a flow meter capable of measuring 60 GPM (3,8 ltr/sec) and a load valve capable of 6,000 psi (413,4 bar) will be required (not included with kit P/N 7118782).** 2,000 psi (137,8 bar) load @ Engine Speed of 2,500 ± 25 rpm — Flow rate should be 39 to 43 GPM (2,5 to 2,7 ltr/sec)

TEST LOCATION	ADJUST. LOCATION	COMPONENT DESCRIPTION	PRESSURE READINGS	PRESSURE TEST PROCEDURES
1	N/A	Pump Standby Pressure	550 ± 50 psi (37,9 ± 3,4 bar)	Loosen load sense line at location 7 to bleed off pressure and then retighten line. With engine at idle and all hydraulic functions in neutral position, check pump standby pressure.
	N/A	Pump Pressure Compensator	2,950 ± 50 psi (203,3 ± 3,4 bar)	With engine at idle fully retract boom extend cylinder and hold. Check pump maximum pressure.
2	2	Priority Valve Steering Relief	2,500 ± 50 psi (172,3 ± 3,4 bar)	With engine at idle turn the steering wheel all the way to the left or right and hold while checking pressure. If pressure is not correct, adjust (inside of "T" port) or replace the relief valve cartridge in the priority valve **(See Note)**.
N/A	N/A	Attachment Tilt Port Relief	3,150 ± 50 psi (217 ± 3,4 bar)	CONSULT FACTORY
3	3	Pressure Reducing Valve In Pressure Reducing Valve Block And Park Brake Release	500 +25/-0 psi (34,5 +1,7/-0 bar)	With engine at idle and park brake released check pressure. If pressure is not correct, adjust or replace the cartridge in the pressure reducing valve **(See Note)**.
4	4	Pressure Reducing Valve In Axle Stabilizer Valve Block	200 ± 25 psi (13,8 ± 1,7 bar)	With engine at idle and boom in the down position check pressure. If pressure is not correct, adjust or replace the cartridge in the axle stabilizer valve **(See Note)**.
	N/A	Pressure Reducing Valve In Axle Stabilizer Valve Block	275 psi Maximum (18,9 bar)	With engine at idle and boom down, while frame tilting to the left check pressure. If pressure is not correct, recheck adjustment location 4. If that pressure is correct, replace the cartridge in the axle stabilizer valve.
5	5	Transmission De-Clutch	500 +25/-0 psi (34,5 +1,7/-0 bar)	With engine at idle and park brake engaged check pressure. If pressure is not correct, adjust or replace the cartridge in the pressure reducing valve **(See Note)**.
6	6	Service Brakes	500 +25/-0 psi (34,5 +1,7/-0 bar)	With engine at idle depress the service brakes and check pressure. If pressure is not correct, adjust or replace the cartridge in the pressure reducing valve **(See Note)**.
7	N/A	Load Sense	Variable 0 to 2,950 psi (0 to 203,3 bar)	With engine at idle operate a specific function (Boom, Frame Tilt, Attachment Tilt, Auxiliary or Steering) and check pressure.

8042 Hydraulic Diagram (S/N 9909 & After)

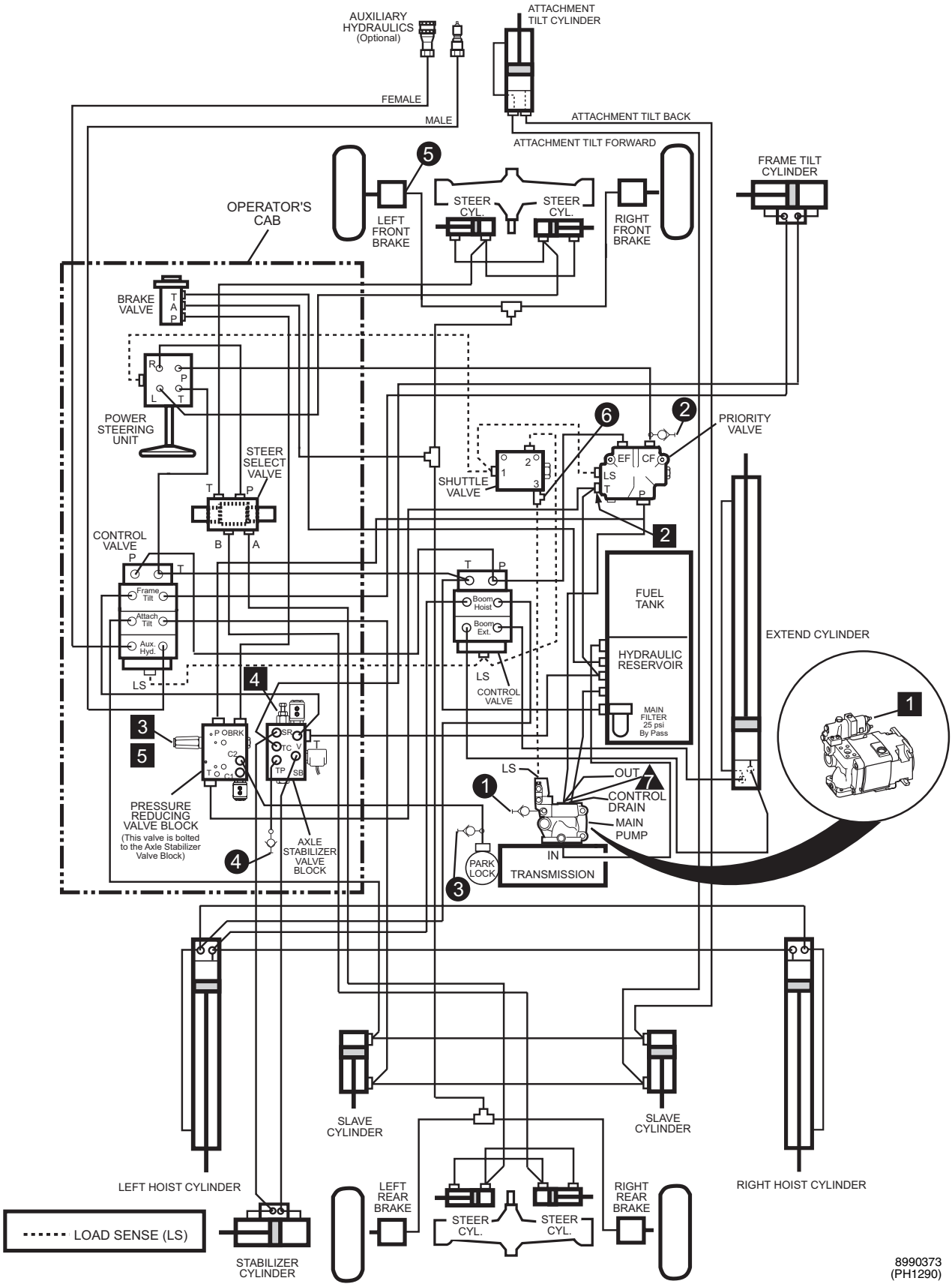

8042 Hydraulic Testing (S/N 9909 & After)

Engine Information

Idle . . . . . 1,050 ± 50 rpm
Full Speed . . . . . 2,730 ± 130 rpm

Hydraulic Oil Information

Oil Type - 10W, meets MIL-L-2104C or ISO Grade 46
Capacity - Reservoir . . . . . 30.3 gal. (114,7 liter)
Capacity - System . . . . . .47.3 gal. (179 liter)

Note: To adjust relief settings, pressure reducing settings or standby pressure, turn the adjustment screw clockwise to increase pressure or counterclockwise to decrease pressure.

The hydraulic oil temperature for the pump flow test should be between 100° F (38° C) and 120° F (49° C) (tank hot to the touch) during testing.

Equipment Needed To Perform Tests From Kit P/N 7133413

Circuit	Gauge	Fittings
1	4,000 PSI Gauge (275,6 bar)	PD38TX Test Nipple
2	4,000 PSI Gauge (275,6 bar)	#8 Run Tee Swivel Nut PD38TX Test Nipple
3	1,000 PSI Gauge (68,9 bar)	#4 Union PD34BTX Test Nipple
4	1,000 PSI Gauge (68,9 bar)	Connector STR. THD. #4 PD34BTX Test Nipple
5	1,000 PSI Gauge (68,9 bar)	#4 Run Tee Swivel Nut PD34BTX Test Nipple
6	4,000 PSI Gauge (275,6 bar)	#6 Elbow 90° Swivel Nut PD36BTX Test Nipple

TEST LOCATION	Hydraulic Pump Flow Test
7	**To check flow readings a flow meter capable of measuring 60 GPM (3,8 ltr/sec) and a load valve capable of 6,000 psi (413,4 bar) will be required (not included with kit P/N 7133413). A test nipple is supplied at location 7.** 2,000 psi (137,8 bar) load @ Engine Speed of 2,500 ± 25 rpm — Flow rate should be 39 to 43 GPM (2,5 to 2,7 ltr/sec)

TEST LOCATION	ADJUST. LOCATION	COMPONENT DESCRIPTION	PRESSURE READINGS	PRESSURE TEST PROCEDURES
1	1	Pump Standby Pressure	550 ± 50 psi (37,9 ± 3,4 bar)	Loosen load sense line at location 6 to bleed off pressure and then retighten line. With engine at idle and all hydraulic functions in neutral position, check pump standby pressure **(See Note).**
	N/A	Pump Pressure Compensator	2,950 ± 50 psi (203,3 ± 3,4 bar)	With engine at idle fully retract boom extend cylinder and hold. Check pump maximum pressure.
2	2	Priority Valve Steering Relief	2,500 ± 50 psi (172,3 ± 3,4 bar)	With engine at idle turn the steering wheel all the way to the left or right and hold while checking pressure. If pressure is not correct, adjust (inside of "T" port) or replace the relief valve cartridge in the priority valve.
N/A	N/A	Attachment Tilt Port Relief	3,150 ± 50 psi (217 ± 3,4 bar)	CONSULT FACTORY
3	3	Pressure Reducing Valve In Pressure Reducing Valve Block And Park Brake Release	500 +25/-0 psi (34,5 +1,7/-0 bar)	With engine at idle and park brake released check pressure. If pressure is not correct, adjust or replace the cartridge in the pressure reducing valve **(See Note)**.
4	4	Pressure Reducing Valve In Axle Stabilizer Valve Block	200 ± 25 psi (13,8 ± 1,7 bar)	With engine at idle and boom in the down position check pressure. If pressure is not correct, adjust or replace the cartridge in the axle stabilizer valve **(See Note)**.
	N/A	Pressure Reducing Valve In Axle Stabilizer Valve Block	275 psi Maximum (18,9 bar)	With engine at idle and boom down, while frame tilting to the left check pressure. If pressure is not correct, recheck adjustment location 4. If that pressure is correct, replace the cartridge in the axle stabilizer valve.
5	5	Service Brakes	500 +25/-0 psi (34,5 +1,7/-0 bar)	With engine at idle depress the service brakes and check pressure. If pressure is not correct, adjust or replace the cartridge in the pressure reducing valve **(See Note)**.
6	N/A	Load Sense	Variable 0 to 2,950 psi (0 to 203,3 bar)	With engine at idle operate a specific function (Boom, Frame Tilt, Attachment Tilt, Auxiliary or Steering) and check pressure.

10042 Hydraulic Diagram (S/N 1167 & Before)

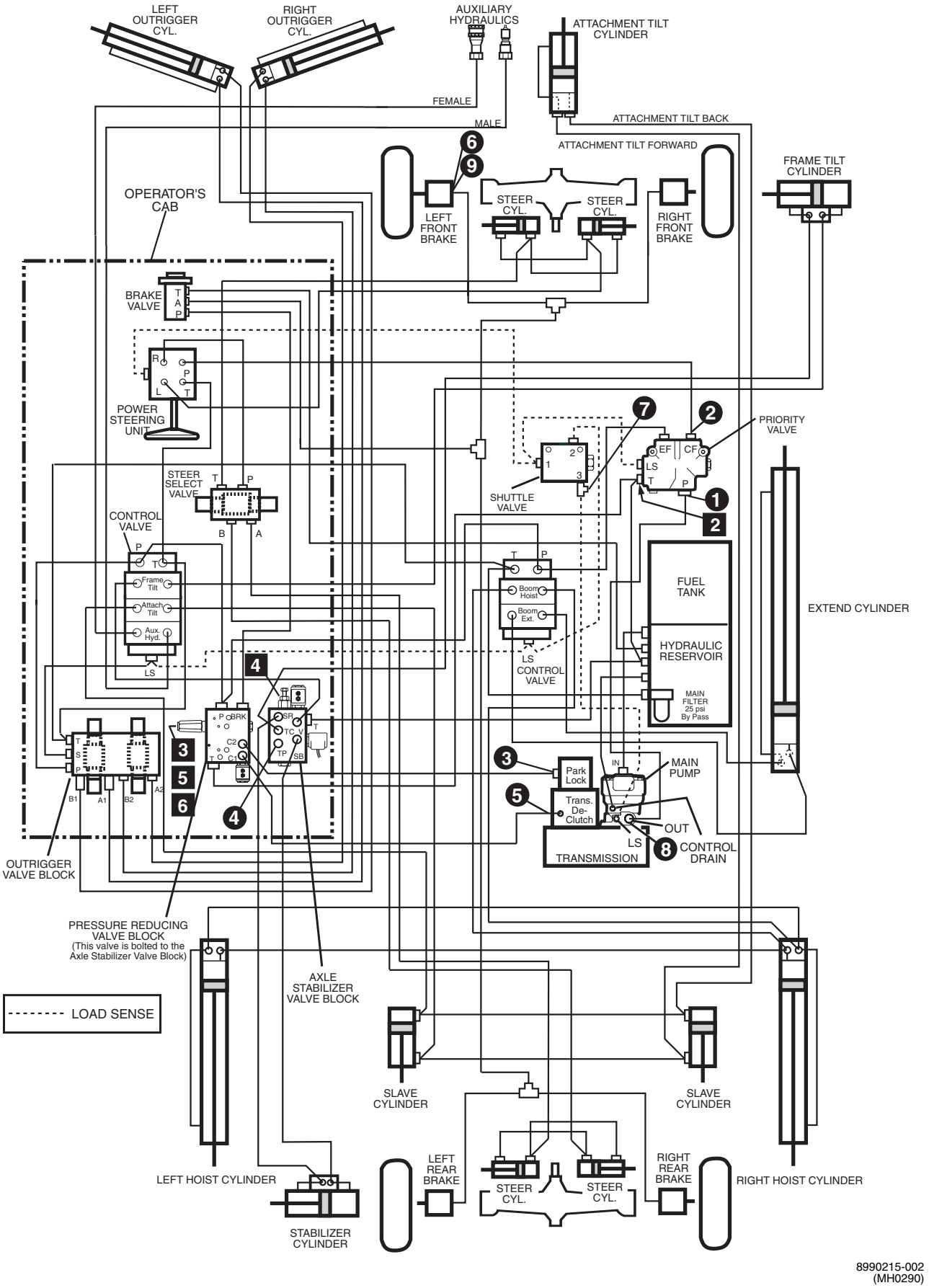

8990215-002
(MH0290)

10042 Hydraulic Testing (S/N 1167 & Before)

Engine Information

Idle . . . . . 1,050 ± 50 rpm
Full Speed . . . . . 2,730 ± 130 rpm

Hydraulic Oil Information

Oil Type - 10W, meets MIL-L-2104C or ISO Grade 46
Capacity - Reservoir . . . . . 30.3 gal. (114,7 liter)
Capacity - System . . . . . .47.3 gal. (179 liter)

Note 1: To adjust relief settings or pressure reducing settings, turn the adjustment screw clockwise to increase pressure or counterclockwise to decrease pressure.

***Note 2:** On units with S/N 0654 & Before. If the low brake pressure kit has been installed, as offered in Service Bulletin STB-2076, issued 5-29-95, refer to test location 9 .

The hydraulic oil temperature for the pump flow test should be between 100° F (38° C) and 120° F (49° C) (tank hot to the touch) during testing.

Equipment Needed To Perform Tests From Kit P/N 7118782

Circuit	Gauge	Fittings
1	4,000 PSI Gauge (275,6 bar)	#12 Run Tee Swivel Nut End Reducer #12-8 PD38TX Test Nipple
2	4,000 PSI Gauge (275,6 bar)	#8 Run Tee Swivel Nut PD38TX Test Nipple
3 5	1,000 PSI Gauge (68,9 bar)	#4 Union PD34BTX Test Nipple
4	300 PSI Gauge (20,7 bar)	Connector STR. THD. #4 PD34BTX Test Nipple
6 9	1,000 PSI Gauge (68,9 bar)	#4 Run Tee Swivel Nut PD34BTX Test Nipple
7	4,000 PSI Gauge (275,6 bar)	#6 Elbow 90° Swivel Nut PD36BTX Test Nipple

TEST LOCATION	Hydraulic Pump Flow Test
8	**To check flow readings a flow meter capable of measuring 60 GPM (3,8 ltr/sec) and a load valve capable of 6,000 psi (413,4 bar) will be required (not included with kit P/N 7118782).** 2,000 psi (137,8 bar) load @ Engine Speed of 2,500 ± 25 rpm — Flow rate should be 39 to 43 GPM (2,5 to 2,7 ltr/sec)

TEST LOCATION	ADJUST. LOCATION	COMPONENT DESCRIPTION	PRESSURE READINGS	PRESSURE TEST PROCEDURES
1	N/A	Pump Standby Pressure	550 ± 50 psi (37,9 ± 3,4 bar)	Loosen load sense line at location 7 to bleed off pressure and then retighten line. With engine at idle and all hydraulic functions in neutral position, check pump standby pressure.
	N/A	Pump Pressure Compensator	2,950 ± 50 psi (203,3 ± 3,4 bar)	With engine at idle fully retract boom extend cylinder and hold. Check pump maximum pressure.
2	2	Priority Valve Steering Relief	2,500 ± 50 psi (172,3 ± 3,4 bar)	With engine at idle turn the steering wheel all the way to the left or right and hold while checking pressure. If pressure is not correct, adjust or replace the relief valve cartridge in the priority valve **(See Note 1)**.
N/A	N/A	Attachment Tilt Port Relief	3,150 ± 50 psi (217 ± 3,4 bar)	CONSULT FACTORY
3	3	Pressure Reducing Valve In Pressure Reducing Valve Block And Park Brake Release	425 ± 25 psi (29,3 ± 1,7 bar)	With engine at idle and park brake released check pressure. If pressure is not correct, adjust or replace the cartridge in the pressure reducing valve **(See Note 1)**.
4	4	Pressure Reducing Valve In Axle Stabilizer Valve Block	60 ± 10 psi (4,1 ± 0,7 bar)	With engine at idle and boom in the down position check pressure. If pressure is not correct, adjust or replace the cartridge in the axle stabilizer valve **(See Note 1)**.
	N/A	Relief Check Valve In Axle Stabilizer Valve Block	100 psi Minimum (6,9 bar)	With engine at idle and boom down, while frame tilting to the left check pressure.
5	5	Transmission De-Clutch	425 ± 25 psi (29,3 ± 1,7 bar)	With engine at idle and park brake engaged check pressure. If pressure is not correct, adjust or replace the cartridge in the pressure reducing valve **(See Note 1)**.
6	6	Service Brakes **(*See Note 2)** (S/N 0654 & Before)	425 ± 25 psi (29,3 ± 1,7 bar)	With engine at idle depress the service brakes and check pressure. If pressure is not correct, adjust or replace the cartridge in the pressure reducing valve **(See Note 1)**.
7	N/A	Load Sense	Variable 0 to 2,950 psi (0 to 203,3 bar)	With engine at idle operate a specific function (Boom, Frame Tilt, Attachment Tilt, Auxiliary or Steering) and check pressure.
9	N/A	Service Brakes (S/N 0655 thru 1167)	350 ± 25 psi (24,1 ± 1,7 bar)	With engine at idle depress the service brakes and check pressure. If pressure is not correct, recheck pressure reducing valve pressure.

1004.2 Hydraulic Diagram (S/N 1168 thru 2194)

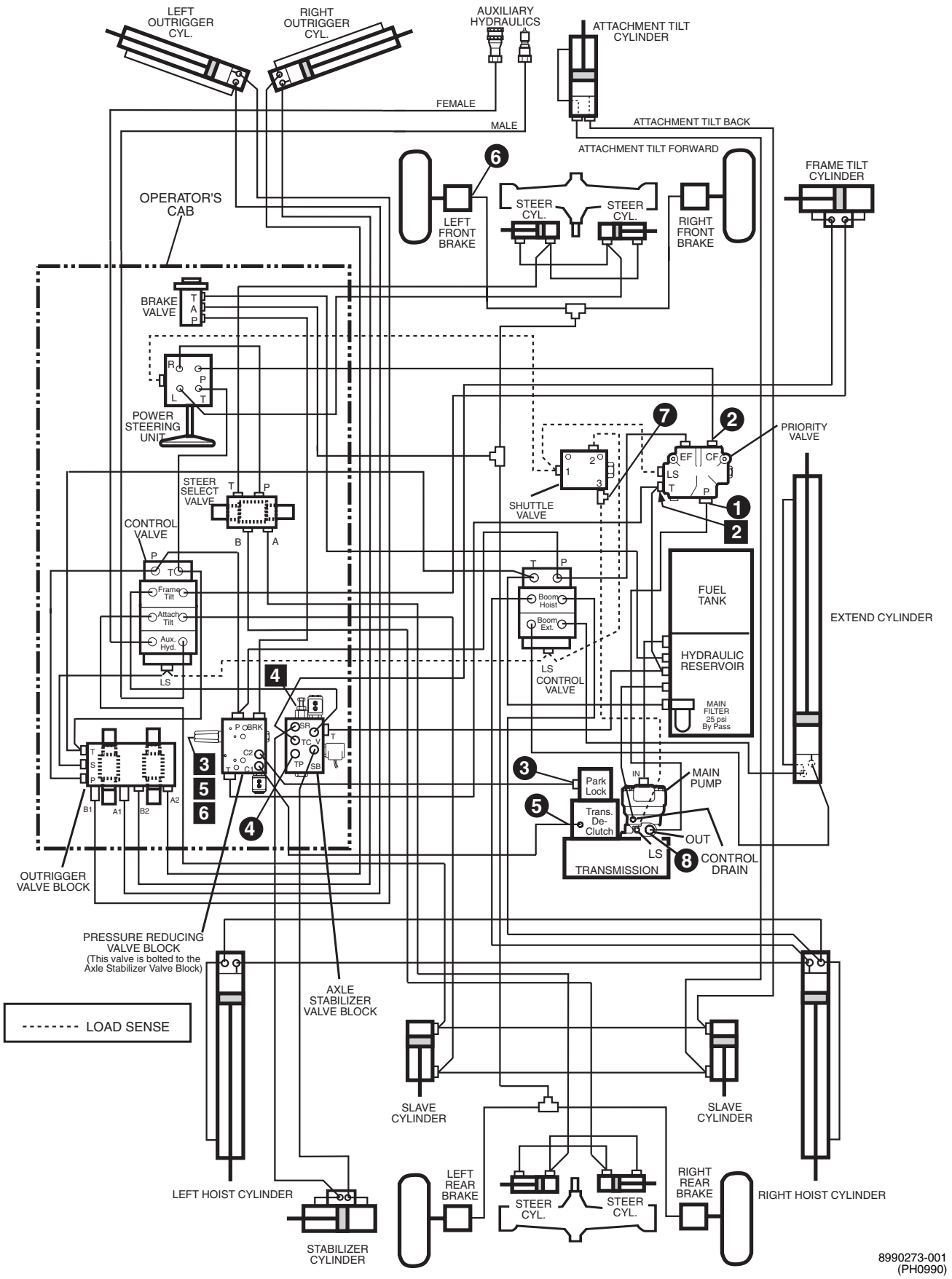

8990273-001
(PH0990)

10042 Hydraulic Testing (S/N 1168 thru 2194)

Engine Information

Idle . . . . . 1,050 ± 50 rpm
Full Speed . . . . . 2,730 ± 130 rpm

Hydraulic Oil Information

Oil Type - 10W, meets MIL-L-2104C or ISO Grade 46
Capacity - Reservoir . . . . . 30.3 gal. (114,7 liter)
Capacity - System . . . . . .47.3 gal. (179 liter)

Note: To adjust relief settings or pressure reducing settings, turn the adjustment screw clockwise to increase pressure or counterclockwise to decrease pressure.

Equipment Needed To Perform Tests From Kit P/N 7118782

Circuit	Gauge	Fittings
1	4,000 PSI Gauge (275,6 bar)	#12 Run Tee Swivel Nut End Reducer #12-8 PD38TX Test Nipple
2	4,000 PSI Gauge (275,6 bar)	#8 Run Tee Swivel Nut PD38TX Test Nipple
3 5	1,000 PSI Gauge (68,9 bar)	#4 Union PD34BTX Test Nipple
4	300 PSI Gauge (20,7 bar)	Connector STR. THD. #4 PD34BTX Test Nipple
6	1,000 PSI Gauge (68,9 bar)	#4 Run Tee Swivel Nut PD34BTX Test Nipple
7	4,000 PSI Gauge (275,6 bar)	#6 Elbow 90° Swivel Nut PD36BTX Test Nipple

TEST LOCATION	Hydraulic Pump Flow Test
8	**To check flow readings a flow meter capable of measuring 60 GPM (3,8 ltr/sec) and a load valve capable of 6,000 psi (413,4 bar) will be required (not included with kit P/N 7118782).** 2,000 psi (137,8 bar) load @ Engine Speed of 2,500 ± 25 rpm — Flow rate should be 39 to 43 GPM (2,5 to 2,7 ltr/sec)

TEST LOCATION	ADJUST. LOCATION	COMPONENT DESCRIPTION	PRESSURE READINGS	PRESSURE TEST PROCEDURES
1	N/A	Pump Standby Pressure	550 ± 50 psi (37,9 ± 3,4 bar)	Loosen load sense line at location 7 to bleed off pressure and then retighten line. With engine at idle and all hydraulic functions in neutral position, check pump standby pressure.
	N/A	Pump Pressure Compensator	2,950 ± 50 psi (203,3 ± 3,4 bar)	With engine at idle fully retract boom extend cylinder and hold. Check pump maximum pressure.
2	2	Priority Valve Steering Relief	2,500 ± 50 psi (172,3 ± 3,4 bar)	With engine at idle turn the steering wheel all the way to the left or right and hold while checking pressure. If pressure is not correct, adjust (inside of "T" port) or replace the relief valve cartridge in the priority valve **(See Note)**.
N/A	N/A	Attachment Tilt Port Relief	3,150 ± 50 psi (217 ± 3,4 bar)	CONSULT FACTORY
3	3	Pressure Reducing Valve In Pressure Reducing Valve Block And Park Brake Release	500 +25/-0 psi (34,5 +1,7/-0 bar)	With engine at idle and park brake released check pressure. If pressure is not correct, adjust or replace the cartridge in the pressure reducing valve **(See Note)**.
4	4	Pressure Reducing Valve In Axle Stabilizer Valve Block	60 ± 10 psi (4,1 ± 0,7 bar)	With engine at idle and boom in the down position check pressure. If pressure is not correct, adjust or replace the cartridge in the axle stabilizer valve **(See Note)**.
	N/A	Relief Check Valve In Axle Stabilizer Valve Block	100 psi Minimum (6,9 bar)	With engine at idle and boom down, while frame tilting to the left check pressure.
5	5	Transmission De-Clutch	500 +25/-0 psi (34,5 +1,7/-0 bar)	With engine at idle and park brake engaged check pressure. If pressure is not correct, adjust or replace the cartridge in the pressure reducing valve **(See Note)**.
6	6	Service Brakes	500 +25/-0 psi (34,5 +1,7/-0 bar)	With engine at idle depress the service brakes and check pressure. If pressure is not correct, adjust or replace the cartridge in the pressure reducing valve **(See Note)**.
7	N/A	Load Sense	Variable 0 to 2,950 psi (0 to 203,3 bar)	With engine at idle operate a specific function (Boom, Frame Tilt, Attachment Tilt, Auxiliary or Steering) and check pressure.

10042 Hydraulic Diagram (S/N 2195 thru 9908)

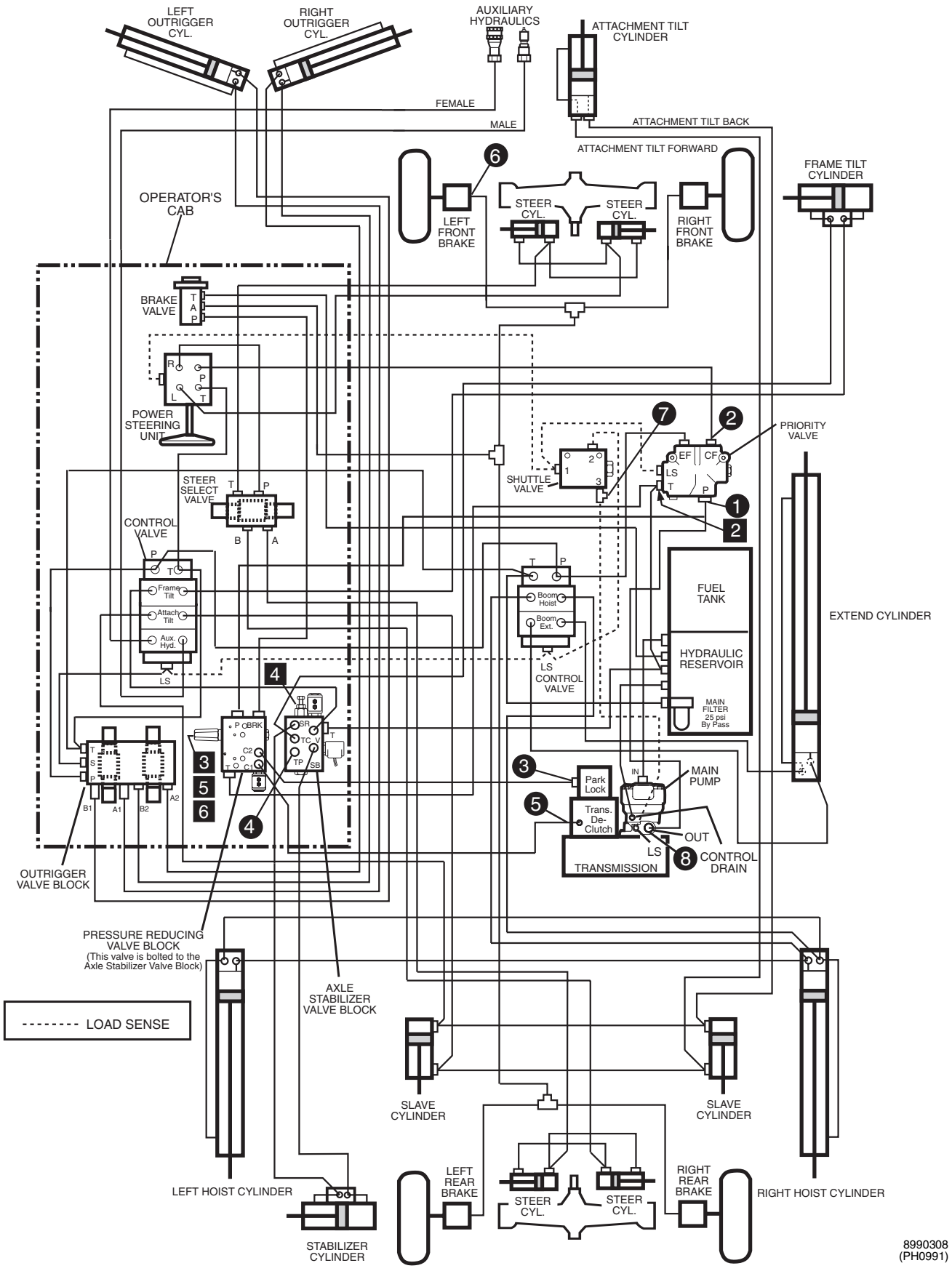

10042 Hydraulic Testing (S/N 2195 thru 9908)

Engine Information

Idle . . . . . 1,050 ± 50 rpm
Full Speed . . . . . 2,730 ± 130 rpm

Hydraulic Oil Information

Oil Type - 10W, meets MIL-L-2104C or ISO Grade 46
Capacity - Reservoir . . . . . 30.3 gal. (114,7 liter)
Capacity - System . . . . . .47.3 gal. (179 liter)

Note: To adjust relief settings or pressure reducing settings, turn the adjustment screw clockwise to increase pressure or counterclockwise to decrease pressure.

The hydraulic oil temperature for the pump flow test should be between 100° F (38° C) and 120° F (49° C) (tank hot to the touch) during testing.

Equipment Needed To Perform Tests From Kit P/N 7118782

Circuit	Gauge	Fittings
1	4,000 PSI Gauge (275,6 bar)	#12 Run Tee Swivel Nut End Reducer #12-8 PD38TX Test Nipple
2	4,000 PSI Gauge (275,6 bar)	#8 Run Tee Swivel Nut PD38TX Test Nipple
3 5	1,000 PSI Gauge (68,9 bar)	#4 Union PD34BTX Test Nipple
4	1,000 PSI Gauge (68,9 bar)	Connector STR. THD. #4 PD34BTX Test Nipple
6	1,000 PSI Gauge (68,9 bar)	#4 Run Tee Swivel Nut PD34BTX Test Nipple
7	4,000 PSI Gauge (275,6 bar)	#6 Elbow 90° Swivel Nut PD36BTX Test Nipple

TEST LOCATION	Hydraulic Pump Flow Test
8	**To check flow readings a flow meter capable of measuring 60 GPM (3,8 ltr/sec) and a load valve capable of 6,000 psi (413,4 bar) will be required (not included with kit P/N 7118782).** 2,000 psi (137,8 bar) load @ Engine Speed of 2,500 ± 25 rpm — Flow rate should be 39 to 43 GPM (2,5 to 2,7 ltr/sec)

TEST LOCATION	ADJUST. LOCATION	COMPONENT DESCRIPTION	PRESSURE READINGS	PRESSURE TEST PROCEDURES
1	N/A	Pump Standby Pressure	550 ± 50 psi (37,9 ± 3,4 bar)	Loosen load sense line at location 7 to bleed off pressure and then retighten line. With engine at idle and all hydraulic functions in neutral position, check pump standby pressure.
	N/A	Pump Pressure Compensator	2,950 ± 50 psi (203,3 ± 3,4 bar)	With engine at idle fully retract boom extend cylinder and hold. Check pump maximum pressure.
2	2	Priority Valve Steering Relief	2,500 ± 50 psi (172,3 ± 3,4 bar)	With engine at idle turn the steering wheel all the way to the left or right and hold while checking pressure. If pressure is not correct, adjust (inside of "T" port) or replace the relief valve cartridge in the priority valve **(See Note)**.
N/A	N/A	Attachment Tilt Port Relief	3,150 ± 50 psi (217 ± 3,4 bar)	CONSULT FACTORY
3	3	Pressure Reducing Valve In Pressure Reducing Valve Block And Park Brake Release	500 +25/-0 psi (34,5 +1,7/-0 bar)	With engine at idle and park brake released check pressure. If pressure is not correct, adjust or replace the cartridge in the pressure reducing valve **(See Note)**.
4	4	Pressure Reducing Valve In Axle Stabilizer Valve Block	200 ± 25 psi (13,8 ± 1,7 bar)	With engine at idle and boom in the down position check pressure. If pressure is not correct, adjust or replace the cartridge in the axle stabilizer valve **(See Note)**.
	N/A	Pressure Reducing Valve In Axle Stabilizer Valve Block	275 psi Maximum (18,9 bar)	With engine at idle and boom down, while frame tilting to the left check pressure. If pressure is not correct, recheck adjustment location 4. If that pressure is correct, replace the cartridge in the axle stabilizer valve.
5	5	Transmission De-Clutch	500 +25/-0 psi (34,5 +1,7/-0 bar)	With engine at idle and park brake engaged check pressure. If pressure is not correct, adjust or replace the cartridge in the pressure reducing valve **(See Note)**.
6	6	Service Brakes	500 +25/-0 psi (34,5 +1,7/-0 bar)	With engine at idle depress the service brakes and check pressure. If pressure is not correct, adjust or replace the cartridge in the pressure reducing valve **(See Note)**.
7	N/A	Load Sense	Variable 0 to 2,950 psi (0 to 203,3 bar)	With engine at idle operate a specific function (Boom, Frame Tilt, Attachment Tilt, Auxiliary or Steering) and check pressure.

10042 Hydraulic Diagram (S/N 9909 & After)

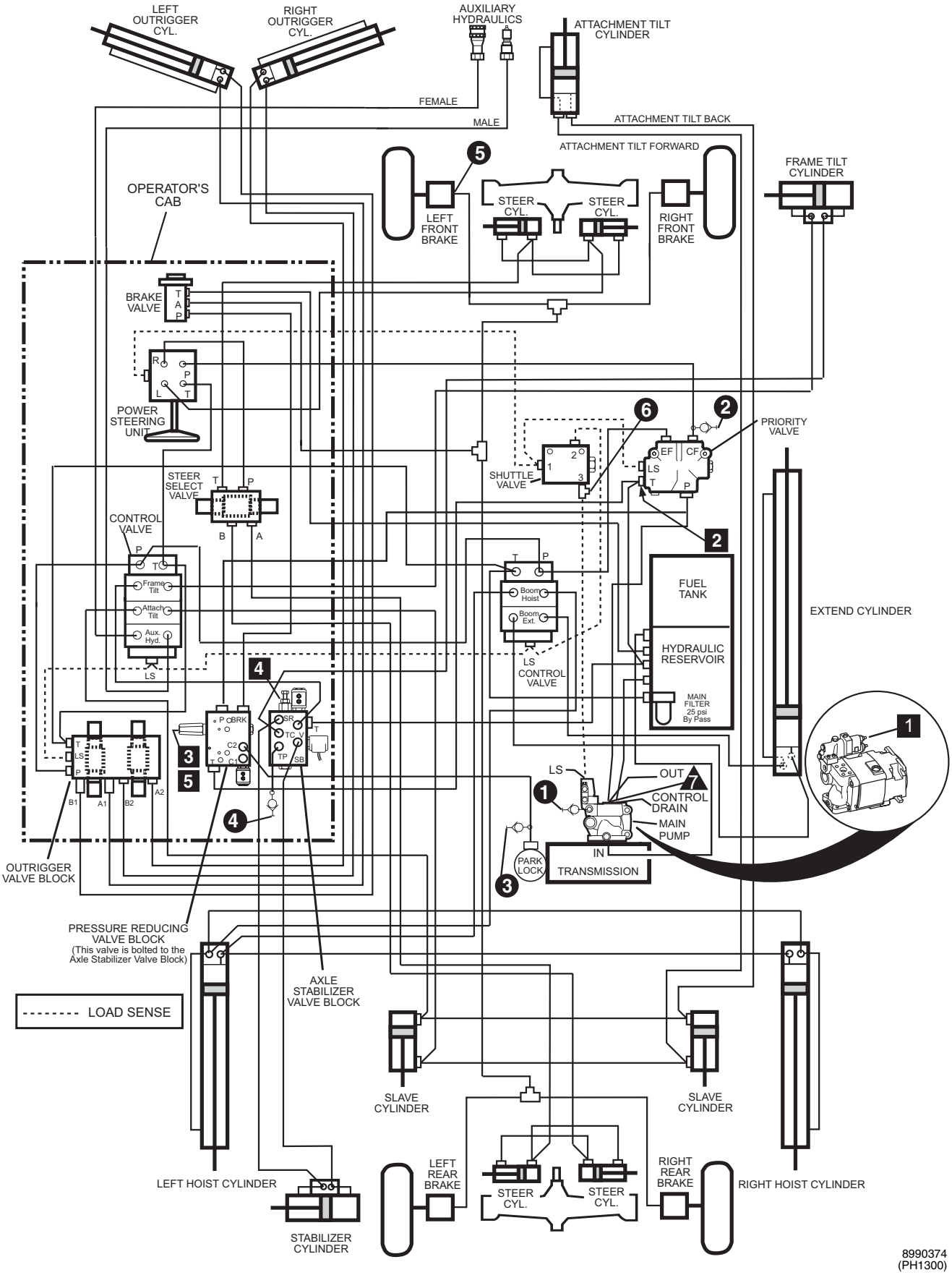

10042 Hydraulic Testing (S/N 9909 & After)

Engine Information

Idle . . . . . 1,050 ± 50 rpm
Full Speed . . . . . 2,730 ± 130 rpm

Hydraulic Oil Information

Oil Type - 10W, meets MIL-L-2104C or ISO Grade 46
Capacity - Reservoir . . . . . 30.3 gal. (114,7 liter)
Capacity - System . . . . . .47.3 gal. (179 liter)

Note: To adjust relief settings, pressure reducing settings or standby pressure, turn the adjustment screw clockwise to increase pressure or counterclockwise to decrease pressure.

The hydraulic oil temperature for the pump flow test should be between 100° F (38° C) and 120° F (49° C) (tank hot to the touch) during testing.

Equipment Needed To Perform Tests From Kit P/N 7133413

Circuit	Gauge	Fittings
1	4,000 PSI Gauge (275,6 bar)	PD38TX Test Nipple
2	4,000 PSI Gauge (275,6 bar)	#8 Run Tee Swivel Nut PD38TX Test Nipple
3	1,000 PSI Gauge (68,9 bar)	#4 Union PD34BTX Test Nipple
4	1,000 PSI Gauge (68,9 bar)	Connector STR. THD. #4 PD34BTX Test Nipple
5	1,000 PSI Gauge (68,9 bar)	#4 Run Tee Swivel Nut PD34BTX Test Nipple
6	4,000 PSI Gauge (275,6 bar)	#6 Elbow 90° Swivel Nut PD36BTX Test Nipple

TEST LOCATION	Hydraulic Pump Flow Test
7	**To check flow readings a flow meter capable of measuring 60 GPM (3,8 ltr/sec) and a load valve capable of 6,000 psi (413,4 bar) will be required (not included with kit P/N 7133413). A test nipple is supplied at location 7.** 2,000 psi (137,8 bar) load @ Engine Speed of 2,500 ± 25 rpm — Flow rate should be 39 to 43 GPM (2,5 to 2,7 ltr/sec)

TEST LOCATION	ADJUST. LOCATION	COMPONENT DESCRIPTION	PRESSURE READINGS	PRESSURE TEST PROCEDURES
1	1	Pump Standby Pressure	550 ± 50 psi (37,9 ± 3,4 bar)	Loosen load sense line at location 6 to bleed off pressure and then retighten line. With engine at idle and all hydraulic functions in neutral position, check pump standby pressure **(See Note)**.
	N/A	Pump Pressure Compensator	2,950 ± 50 psi (203,3 ± 3,4 bar)	With engine at idle fully retract boom extend cylinder and hold. Check pump maximum pressure.
2	2	Priority Valve Steering Relief	2,500 ± 50 psi (172,3 ± 3,4 bar)	With engine at idle turn the steering wheel all the way to the left or right and hold while checking pressure. If pressure is not correct, adjust (inside of "T" port) or replace the relief valve cartridge in the priority valve **(See Note)**.
N/A	N/A	Attachment Tilt Port Relief	3,150 ± 50 psi (217 ± 3,4 bar)	CONSULT FACTORY
3	3	Pressure Reducing Valve In Pressure Reducing Valve Block And Park Brake Release	500 +25/-0 psi (34,5 +1,7/-0 bar)	With engine at idle and park brake released check pressure. If pressure is not correct, adjust or replace the cartridge in the pressure reducing valve **(See Note)**.
4	4	Pressure Reducing Valve In Axle Stabilizer Valve Block	200 ± 25 psi (13,8 ± 1,7 bar)	With engine at idle and boom in the down position check pressure. If pressure is not correct, adjust or replace the cartridge in the axle stabilizer valve **(See Note)**.
	N/A	Pressure Reducing Valve In Axle Stabilizer Valve Block	275 psi Maximum (18,9 bar)	With engine at idle and boom down, while frame tilting to the left check pressure. If pressure is not correct, recheck adjustment location 4. If that pressure is correct, replace the cartridge in the axle stabilizer valve.
5	5	Service Brakes	500 +25/-0 psi (34,5 +1,7/-0 bar)	With engine at idle depress the service brakes and check pressure. If pressure is not correct, adjust or replace the cartridge in the pressure reducing valve **(See Note)**.
6	N/A	Load Sense	Variable 0 to 2,950 psi (0 to 203,3 bar)	With engine at idle operate a specific function (Boom, Frame Tilt, Attachment Tilt, Auxiliary or Steering) and check pressure.

10054 Hydraulic Diagram (S/N 1167 & Before)

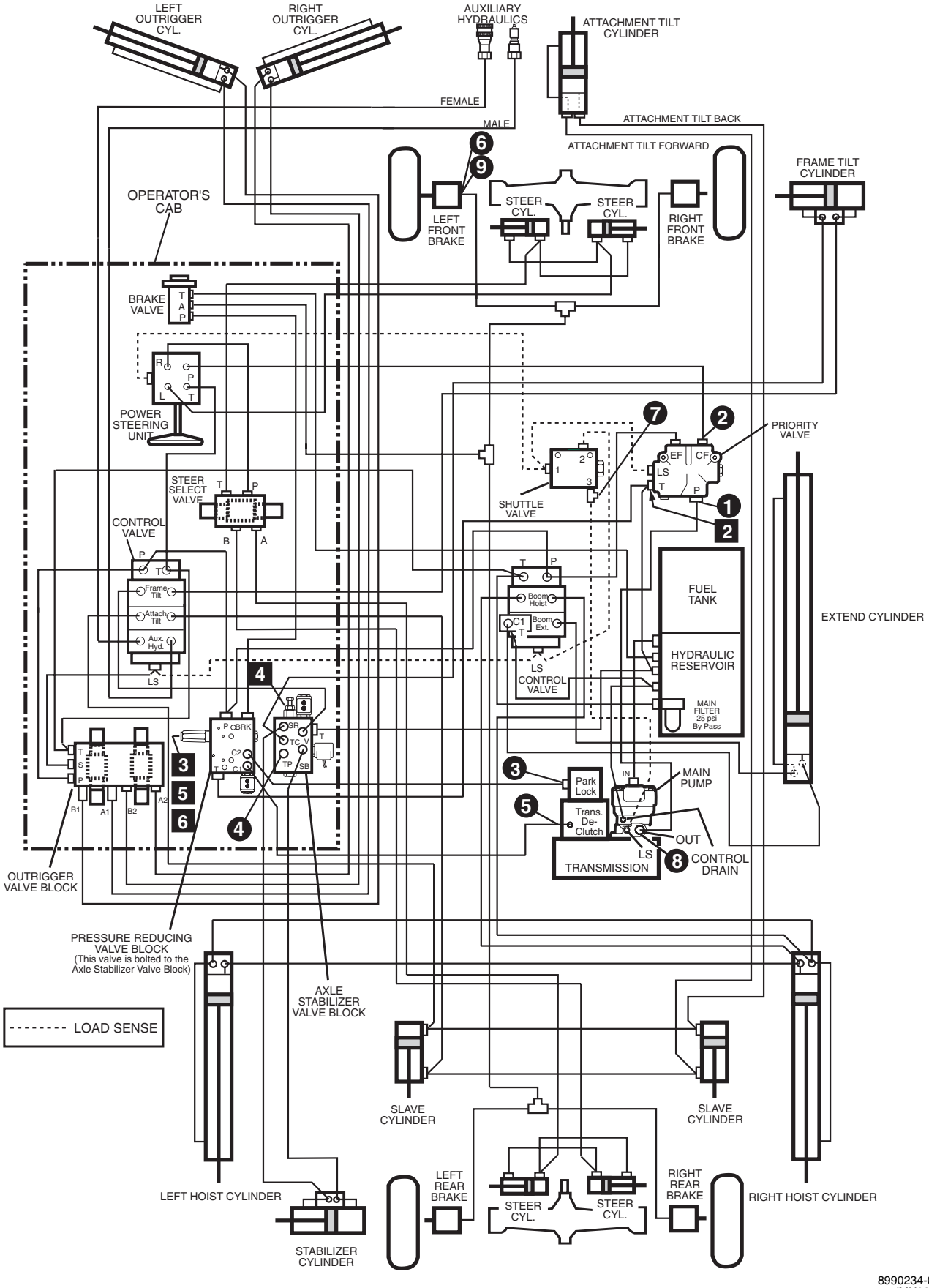

8990234-001
(MH0300)

10054 Hydraulic Testing (S/N 1167 & Before)

Engine Information

Idle . . . . . 1,050 ± 50 rpm
Full Speed . . . . . 2,730 ± 130 rpm

Hydraulic Oil Information

Oil Type - 10W, meets MIL-L-2104C or ISO Grade 46
Capacity - Reservoir . . . . . 30.3 gal. (114,7 liter)
Capacity - System . . . . . 59.5 gal. (225,2 liter)

Note 1: To adjust relief settings or pressure reducing settings, turn the adjustment screw clockwise to increase pressure or counterclockwise to decrease pressure.

***Note 2:** On units with S/N 0654 & Before. If the low brake pressure kit has been installed, as offered in Service Bulletin STB-2076, issued 5-29-95, refer to test location 9.

The hydraulic oil temperature for the pump flow test should be between 100° F (38° C) and 120° F (49° C) (tank hot to the touch) during testing.

Equipment Needed To Perform Tests From Kit P/N 7118782

Circuit	Gauge	Fittings
1	4,000 PSI Gauge (275,6 bar)	#12 Run Tee Swivel Nut End Reducer #12-8 PD38TX Test Nipple
2	4,000 PSI Gauge (275,6 bar)	#8 Run Tee Swivel Nut PD38TX Test Nipple
3 5	1,000 PSI Gauge (68,9 bar)	#4 Union PD34BTX Test Nipple
4	300 PSI Gauge (20,7 bar)	Connector STR. THD. #4 PD34BTX Test Nipple
6 9	1,000 PSI Gauge (68,9 bar)	#4 Run Tee Swivel Nut PD34BTX Test Nipple
7	4,000 PSI Gauge (275,6 bar)	#6 Elbow 90° Swivel Nut PD36BTX Test Nipple

TEST LOCATION	Hydraulic Pump Flow Test
8	**To check flow readings a flow meter capable of measuring 60 GPM (3,8 ltr/sec) and a load valve capable of 6,000 psi (413,4 bar) will be required (not included with kit P/N 7118782).** 2,000 psi (137,8 bar) load @ Engine Speed of 2,500 ± 25 rpm — Flow rate should be 39 to 43 GPM (2,5 to 2,7 ltr/sec)

TEST LOCATION	ADJUST. LOCATION	COMPONENT DESCRIPTION	PRESSURE READINGS	PRESSURE TEST PROCEDURES
1	N/A	Pump Standby Pressure	550 ± 50 psi (37,9 ± 3,4 bar)	Loosen load sense line at location 7 to bleed off pressure and then retighten line. With engine at idle and all hydraulic functions in neutral position, check pump standby pressure.
	N/A	Pump Pressure Compensator	2,950 ± 50 psi (203,3 ± 3,4 bar)	With engine at idle fully retract boom extend cylinder and hold. Check pump maximum pressure.
2	2	Priority Valve Steering Relief	2,500 ± 50 psi (172,3 ± 3,4 bar)	With engine at idle turn the steering wheel all the way to the left or right and hold while checking pressure. If pressure is not correct, adjust or replace the relief valve cartridge in the priority valve **(See Note 1)**.
N/A	N/A	Attachment Tilt Port Relief	3,150 ± 50 psi (217 ± 3,4 bar)	CONSULT FACTORY
3	3	Pressure Reducing Valve In Pressure Reducing Valve Block And Park Brake Release	425 ± 25 psi (29,3 ± 1,7 bar)	With engine at idle and park brake released check pressure. If pressure is not correct, adjust or replace the cartridge in the pressure reducing valve **(See Note 1)**.
4	4	Pressure Reducing Valve In Axle Stabilizer Valve Block	60 ± 10 psi (4,1 ± 0,7 bar)	With engine at idle and boom in the down position check pressure. If pressure is not correct, adjust or replace the cartridge in the axle stabilizer valve **(See Note 1)**.
	N/A	Relief Check Valve In Axle Stabilizer Valve Block	100 psi Minimum (6,9 bar)	With engine at idle and boom down, while frame tilting to the left check pressure.
5	5	Transmission De-Clutch	425 ± 25 psi (29,3 ± 1,7 bar)	With engine at idle and park brake engaged check pressure. If pressure is not correct, adjust or replace the cartridge in the pressure reducing valve **(See Note 1)**.
6	6	Service Brakes **(*See Note 2)** (S/N 0654 & Before)	425 ± 25 psi (29,3 ± 1,7 bar)	With engine at idle depress the service brakes and check pressure. If pressure is not correct, adjust or replace the cartridge in the pressure reducing valve **(See Note 1)**.
7	N/A	Load Sense	Variable 0 to 2,950 psi (0 to 203,3 bar)	With engine at idle operate a specific function (Boom, Frame Tilt, Attachment Tilt, Auxiliary or Steering) and check pressure.
9	N/A	Service Brakes (S/N 0655 thru 1167)	350 ± 25 psi (24,1 ± 1,7 bar)	With engine at idle depress the service brakes and check pressure. If pressure is not correct, recheck pressure reducing valve pressure.

10054 Hydraulic Diagram (S/N 1168 thru 2194)

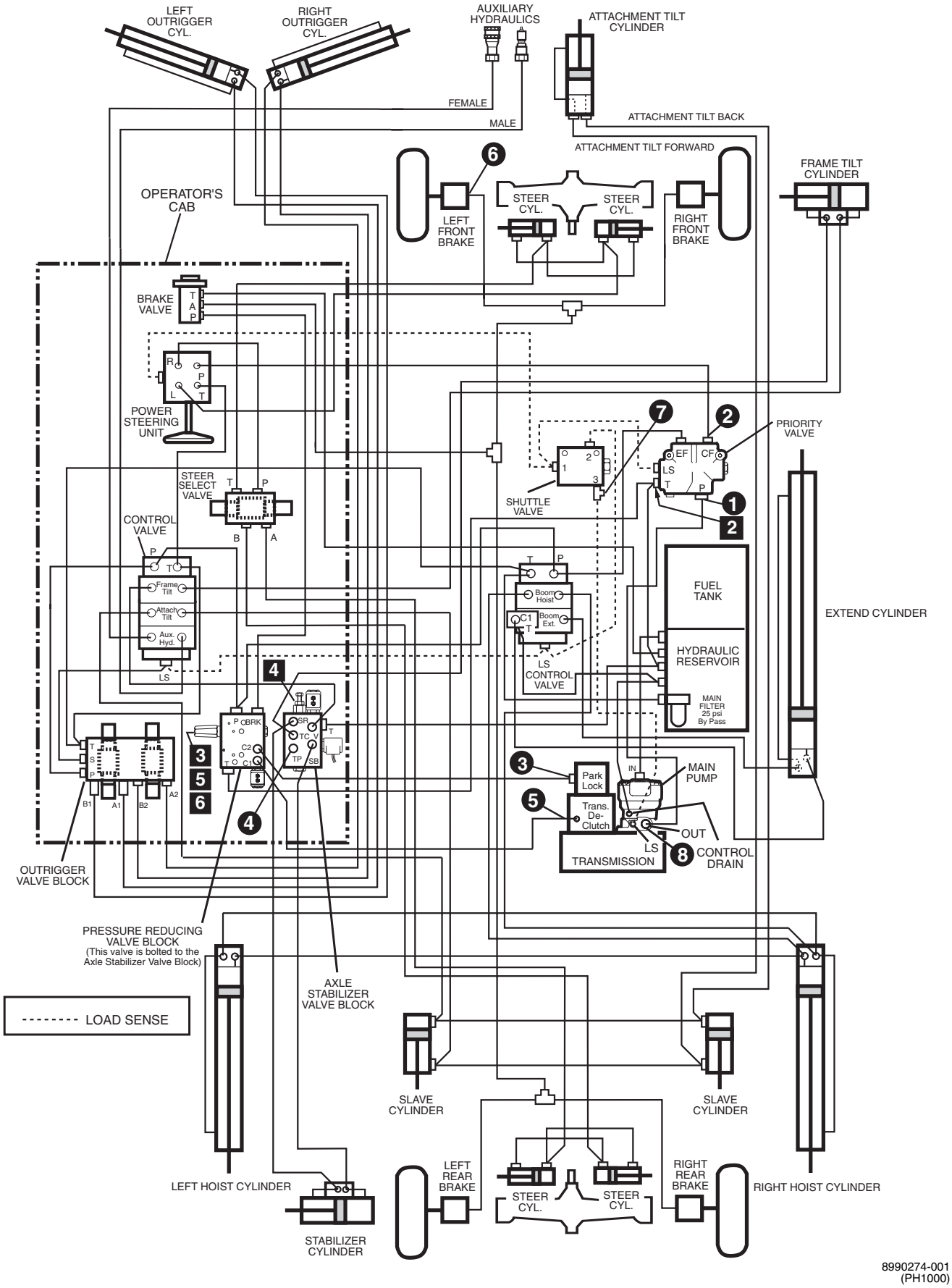

8990274-001
(PH1000)

10054 Hydraulic Testing (S/N 1168 thru 2194)

Engine Information

Idle . . . . . 1,050 ± 50 rpm
Full Speed . . . . . 2,730 ± 130 rpm

Hydraulic Oil Information

Oil Type - 10W, meets MIL-L-2104C or ISO Grade 46
Capacity - Reservoir . . . . . 30.3 gal. (114,7 liter)
Capacity - System . . . . . 59.5 gal. (225,2 liter)

Note: To adjust relief settings or pressure reducing settings, turn the adjustment screw clockwise to increase pressure or counterclockwise to decrease pressure.

The hydraulic oil temperature for the pump flow test should be between 100° F (38° C) and 120° F (49° C) (tank hot to the touch) during testing.

Equipment Needed To Perform Tests From Kit P/N 7118782

Circuit	Gauge	Fittings
1	4,000 PSI Gauge (275,6 bar)	#12 Run Tee Swivel Nut End Reducer #12-8 PD38TX Test Nipple
2	4,000 PSI Gauge (275,6 bar)	#8 Run Tee Swivel Nut PD38TX Test Nipple
3 5	1,000 PSI Gauge (68,9 bar)	#4 Union PD34BTX Test Nipple
4	300 PSI Gauge (20,7 bar)	Connector STR. THD. #4 PD34BTX Test Nipple
6	1,000 PSI Gauge (68,9 bar)	#4 Run Tee Swivel Nut PD34BTX Test Nipple
7	4,000 PSI Gauge (275,6 bar)	#6 Elbow 90° Swivel Nut PD36BTX Test Nipple

TEST LOCATION	Hydraulic Pump Flow Test
8	**To check flow readings a flow meter capable of measuring 60 GPM (3,8 ltr/sec) and a load valve capable of 6,000 psi (413,4 bar) will be required (not included with kit P/N 7118782).** 2,000 psi (137,8 bar) load @ Engine Speed of 2,500 ± 25 rpm — Flow rate should be 39 to 43 GPM (2,5 to 2,7 ltr/sec)

TEST LOCATION	ADJUST. LOCATION	COMPONENT DESCRIPTION	PRESSURE READINGS	PRESSURE TEST PROCEDURES
1	N/A	Pump Standby Pressure	550 ± 50 psi (37,9 ± 3,4 bar)	Loosen load sense line at location 7 to bleed off pressure and then retighten line. With engine at idle and all hydraulic functions in neutral position, check pump standby pressure.
	N/A	Pump Pressure Compensator	2,950 ± 50 psi (203,3 ± 3,4 bar)	With engine at idle fully retract boom extend cylinder and hold. Check pump maximum pressure.
2	2	Priority Valve Steering Relief	2,500 ± 50 psi (172,3 ± 3,4 bar)	With engine at idle turn the steering wheel all the way to the left or right and hold while checking pressure. If pressure is not correct, adjust (inside of "T" port) or replace the relief valve cartridge in the priority valve **(See Note)**.
N/A	N/A	Attachment Tilt Port Relief	3,150 ± 50 psi (217 ± 3,4 bar)	CONSULT FACTORY
3	3	Pressure Reducing Valve In Pressure Reducing Valve Block And Park Brake Release	500 +25/-0 psi (34,5 +1,7/-0 bar)	With engine at idle and park brake released check pressure. If pressure is not correct, adjust or replace the cartridge in the pressure reducing valve **(See Note)**.
4	4	Pressure Reducing Valve In Axle Stabilizer Valve Block	60 ± 10 psi (4,1 ± 0,7 bar)	With engine at idle and boom in the down position check pressure. If pressure is not correct, adjust or replace the cartridge in the axle stabilizer valve **(See Note)**.
	N/A	Relief Check Valve In Axle Stabilizer Valve Block	100 psi Minimum (6,9 bar)	With engine at idle and boom down, while frame tilting to the left check pressure.
5	5	Transmission De-Clutch	500 +25/-0 psi (34,5 +1,7/-0 bar)	With engine at idle and park brake engaged check pressure. If pressure is not correct, adjust or replace the cartridge in the pressure reducing valve **(See Note)**.
6	6	Service Brakes	500 +25/-0 psi (34,5 +1,7/-0 bar)	With engine at idle depress the service brakes and check pressure. If pressure is not correct, adjust or replace the cartridge in the pressure reducing valve **(See Note)**.
7	N/A	Load Sense	Variable 0 to 2,950 psi (0 to 203,3 bar)	With engine at idle operate a specific function (Boom, Frame Tilt, Attachment Tilt, Auxiliary or Steering) and check pressure.

10054 Hydraulic Diagram (S/N 2195 thru 9908)

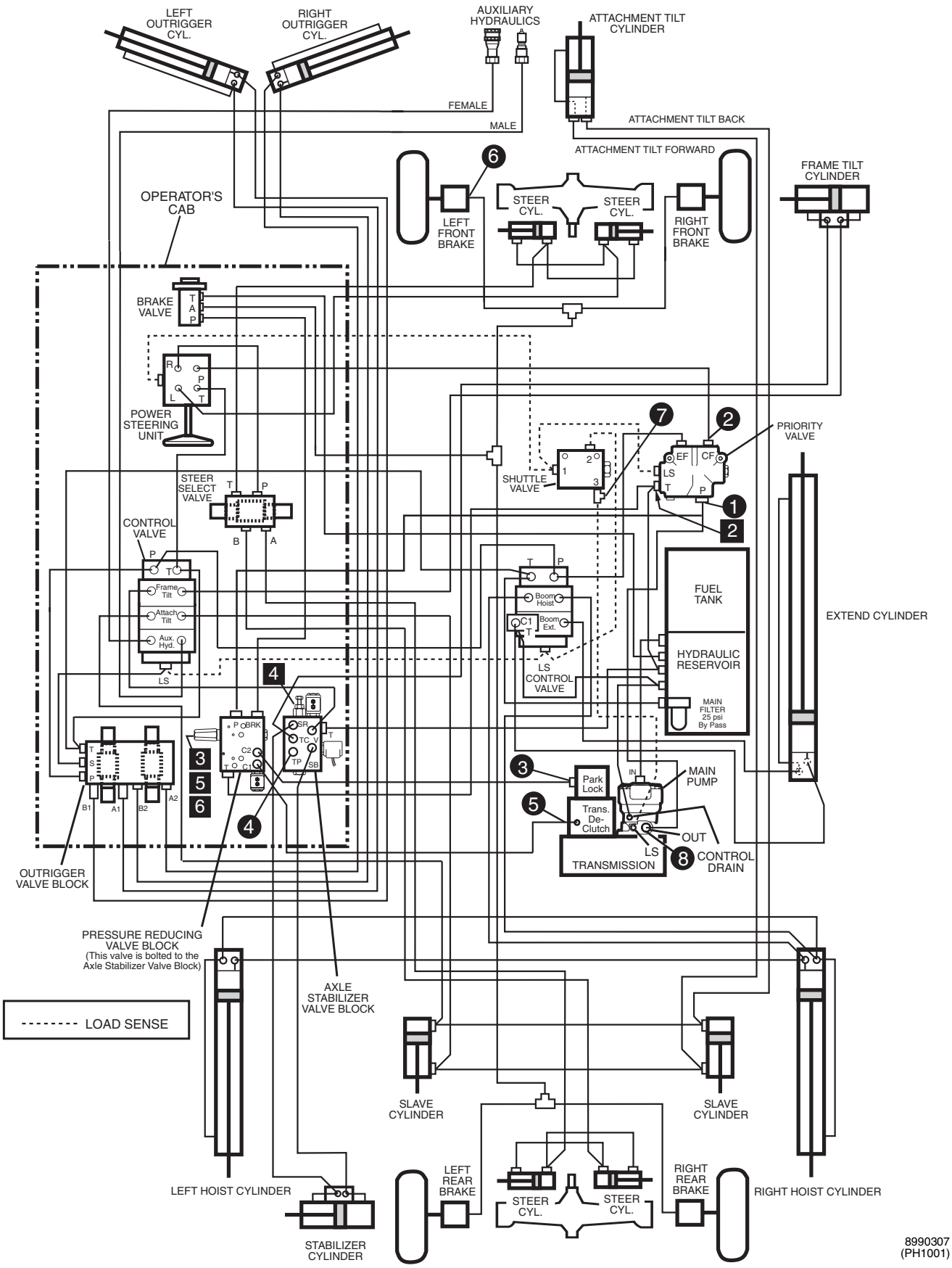

10054 Hydraulic Testing (S/N 2195 thru 9908)

Engine Information

Idle . . . . . 1,050 ± 50 rpm
Full Speed . . . . . 2,730 ± 130 rpm

Hydraulic Oil Information

Oil Type - 10W, meets MIL-L-2104C or ISO Grade 46
Capacity - Reservoir . . . . . 30.3 gal. (114,7 liter)
Capacity - System . . . . . 59.5 gal. (225,2 liter)

Note: To adjust relief settings or pressure reducing settings, turn the adjustment screw clockwise to increase pressure or counterclockwise to decrease pressure.

The hydraulic oil temperature for the pump flow test should be between 100° F (38° C) and 120° F (49° C) (tank hot to the touch) during testing.

Equipment Needed To Perform Tests From Kit P/N 7118782

Circuit	Gauge	Fittings
1	4,000 PSI Gauge (275,6 bar)	#12 Run Tee Swivel Nut End Reducer #12-8 PD38TX Test Nipple
2	4,000 PSI Gauge (275,6 bar)	#8 Run Tee Swivel Nut PD38TX Test Nipple
3 5	1,000 PSI Gauge (68,9 bar)	#4 Union PD34BTX Test Nipple
4	1,000 PSI Gauge (68,9 bar)	Connector STR. THD. #4 PD34BTX Test Nipple
6	1,000 PSI Gauge (68,9 bar)	#4 Run Tee Swivel Nut PD34BTX Test Nipple
7	4,000 PSI Gauge (275,6 bar)	#6 Elbow 90° Swivel Nut PD36BTX Test Nipple

TEST LOCATION	Hydraulic Pump Flow Test
8	**To check flow readings a flow meter capable of measuring 60 GPM (3,8 ltr/sec) and a load valve capable of 6,000 psi (413,4 bar) will be required (not included with kit P/N 7118782).** 2,000 psi (137,8 bar) load @ Engine Speed of 2,500 ± 25 rpm — Flow rate should be 39 to 43 GPM (2,5 to 2,7 ltr/sec)

TEST LOCATION	ADJUST. LOCATION	COMPONENT DESCRIPTION	PRESSURE READINGS	PRESSURE TEST PROCEDURES
1	N/A	Pump Standby Pressure	550 ± 50 psi (37,9 ± 3,4 bar)	Loosen load sense line at location 7 to bleed off pressure and then retighten line. With engine at idle and all hydraulic functions in neutral position, check pump standby pressure.
	N/A	Pump Pressure Compensator	2,950 ± 50 psi (203,3 ± 3,4 bar)	With engine at idle fully retract boom extend cylinder and hold. Check pump maximum pressure.
2	2	Priority Valve Steering Relief	2,500 ± 50 psi (172,3 ± 3,4 bar)	With engine at idle turn the steering wheel all the way to the left or right and hold while checking pressure. If pressure is not correct, adjust (inside of "T" port) or replace the relief valve cartridge in the priority valve **(See Note)**.
N/A	N/A	Attachment Tilt Port Relief	3,150 ± 50 psi (217 ± 3,4 bar)	CONSULT FACTORY
3	3	Pressure Reducing Valve In Pressure Reducing Valve Block And Park Brake Release	500 +25/-0 psi (34,5 +1,7/-0 bar)	With engine at idle and park brake released check pressure. If pressure is not correct, adjust or replace the cartridge in the pressure reducing valve **(See Note)**.
4	4	Pressure Reducing Valve In Axle Stabilizer Valve Block	200 ± 25 psi (13,8 ± 1,7 bar)	With engine at idle and boom in the down position check pressure. If pressure is not correct, adjust or replace the cartridge in the axle stabilizer valve **(See Note)**.
	N/A	Pressure Reducing Valve In Axle Stabilizer Valve Block	275 psi Maximum (18,9 bar)	With engine at idle and boom down, while frame tilting to the left check pressure. If pressure is not correct, recheck adjustment location 4. If that pressure is correct, replace the cartridge in the axle stabilizer valve.
5	5	Transmission De-Clutch	500 +25/-0 psi (34,5 +1,7/-0 bar)	With engine at idle and park brake engaged check pressure. If pressure is not correct, adjust or replace the cartridge in the pressure reducing valve **(See Note)**.
6	6	Service Brakes	500 +25/-0 psi (34,5 +1,7/-0 bar)	With engine at idle depress the service brakes and check pressure. If pressure is not correct, adjust or replace the cartridge in the pressure reducing valve **(See Note)**.
7	N/A	Load Sense	Variable 0 to 2,950 psi (0 to 203,3 bar)	With engine at idle operate a specific function (Boom, Frame Tilt, Attachment Tilt, Auxiliary or Steering) and check pressure.

10054 Hydraulic Diagram (S/N 9909 & After)

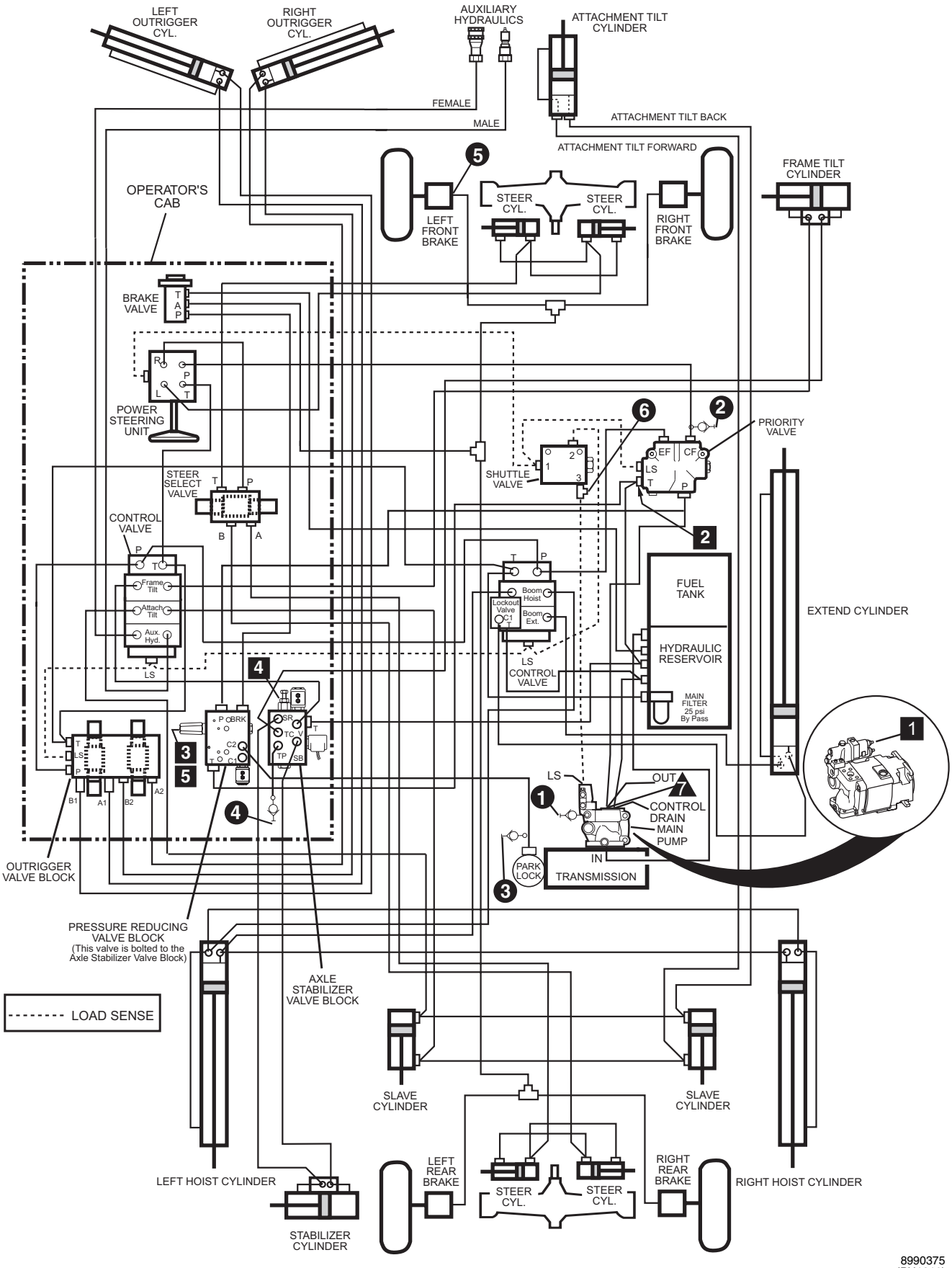

10054 Hydraulic Testing (S/N 9909 & After)

Engine Information

Idle . . . . . 1,050 ± 50 rpm
Full Speed . . . . . 2,730 ± 130 rpm

Hydraulic Oil Information

Oil Type - 10W, meets MIL-L-2104C or ISO Grade 46
Capacity - Reservoir . . . . . 30.3 gal. (114,7 liter)
Capacity - System . . . . . 59.5 gal. (225,2 liter)

Note: To adjust relief settings, pressure reducing settings or standby pressure, turn the adjustment screw clockwise to increase pressure or counterclockwise to decrease pressure.

The hydraulic oil temperature for the pump flow test should be between 100° F (38° C) and 120° F (49° C) (tank hot to the touch) during testing.

Equipment Needed To Perform Tests From Kit P/N 7133413

Circuit	Gauge	Fittings
1	4,000 PSI Gauge (275,6 bar)	PD38TX Test Nipple
2	4,000 PSI Gauge (275,6 bar)	#8 Run Tee Swivel Nut PD38TX Test Nipple
3	1,000 PSI Gauge (68,9 bar)	#4 Union PD34BTX Test Nipple
4	1,000 PSI Gauge (68,9 bar)	Connector STR. THD. #4 PD34BTX Test Nipple
5	1,000 PSI Gauge (68,9 bar)	#4 Run Tee Swivel Nut PD34BTX Test Nipple
6	4,000 PSI Gauge (275,6 bar)	#6 Elbow 90° Swivel Nut PD36BTX Test Nipple

TEST LOCATION	Hydraulic Pump Flow Test
7	**To check flow readings a flow meter capable of measuring 60 GPM (3,8 ltr/sec) and a load valve capable of 6,000 psi (413,4 bar) will be required (not included with kit P/N 7133413). A test nipple is supplied at location 7.** 2,000 psi (137,8 bar) load @ Engine Speed of 2,500 ± 25 rpm — Flow rate should be 39 to 43 GPM (2,5 to 2,7 ltr/sec)

TEST LOCATION	ADJUST. LOCATION	COMPONENT DESCRIPTION	PRESSURE READINGS	PRESSURE TEST PROCEDURES
1	1	Pump Standby Pressure	550 ± 50 psi (37,9 ± 3,4 bar)	Loosen load sense line at location 6 to bleed off pressure and then retighten line. With engine at idle and all hydraulic functions in neutral position, check pump standby pressure **(See Note)**.
	N/A	Pump Pressure Compensator	2,950 ± 50 psi (203,3 ± 3,4 bar)	With engine at idle fully retract boom extend cylinder and hold. Check pump maximum pressure.
2	2	Priority Valve Steering Relief	2,500 ± 50 psi (172,3 ± 3,4 bar)	With engine at idle turn the steering wheel all the way to the left or right and hold while checking pressure. If pressure is not correct, adjust (inside of "T" port) or replace the relief valve cartridge in the priority valve **(See Note)**.
N/A	N/A	Attachment Tilt Port Relief	3,150 ± 50 psi (217 ± 3,4 bar)	CONSULT FACTORY
3	3	Pressure Reducing Valve In Pressure Reducing Valve Block And Park Brake Release	500 +25/-0 psi (34,5 +1,7/-0 bar)	With engine at idle and park brake released check pressure. If pressure is not correct, adjust or replace the cartridge in the pressure reducing valve **(See Note)**.
4	4	Pressure Reducing Valve In Axle Stabilizer Valve Block	200 ± 25 psi (13,8 ± 1,7 bar)	With engine at idle and boom in the down position check pressure. If pressure is not correct, adjust or replace the cartridge in the axle stabilizer valve **(See Note)**.
	N/A	Pressure Reducing Valve In Axle Stabilizer Valve Block	275 psi Maximum (18,9 bar)	With engine at idle and boom down, while frame tilting to the left check pressure. If pressure is not correct, recheck adjustment location 4. If that pressure is correct, replace the cartridge in the axle stabilizer valve.
5	5	Service Brakes	500 +25/-0 psi (34,5 +1,7/-0 bar)	With engine at idle depress the service brakes and check pressure. If pressure is not correct, adjust or replace the cartridge in the pressure reducing valve **(See Note)**.
6	N/A	Load Sense	Variable 0 to 2,950 psi (0 to 203,3 bar)	With engine at idle operate a specific function (Boom, Frame Tilt, Attachment Tilt, Auxiliary or Steering) and check pressure.

8042/10042/10054 Variable Volume Load Sensing Pump Flow Meter Diagram (S/N 9908 & Before)

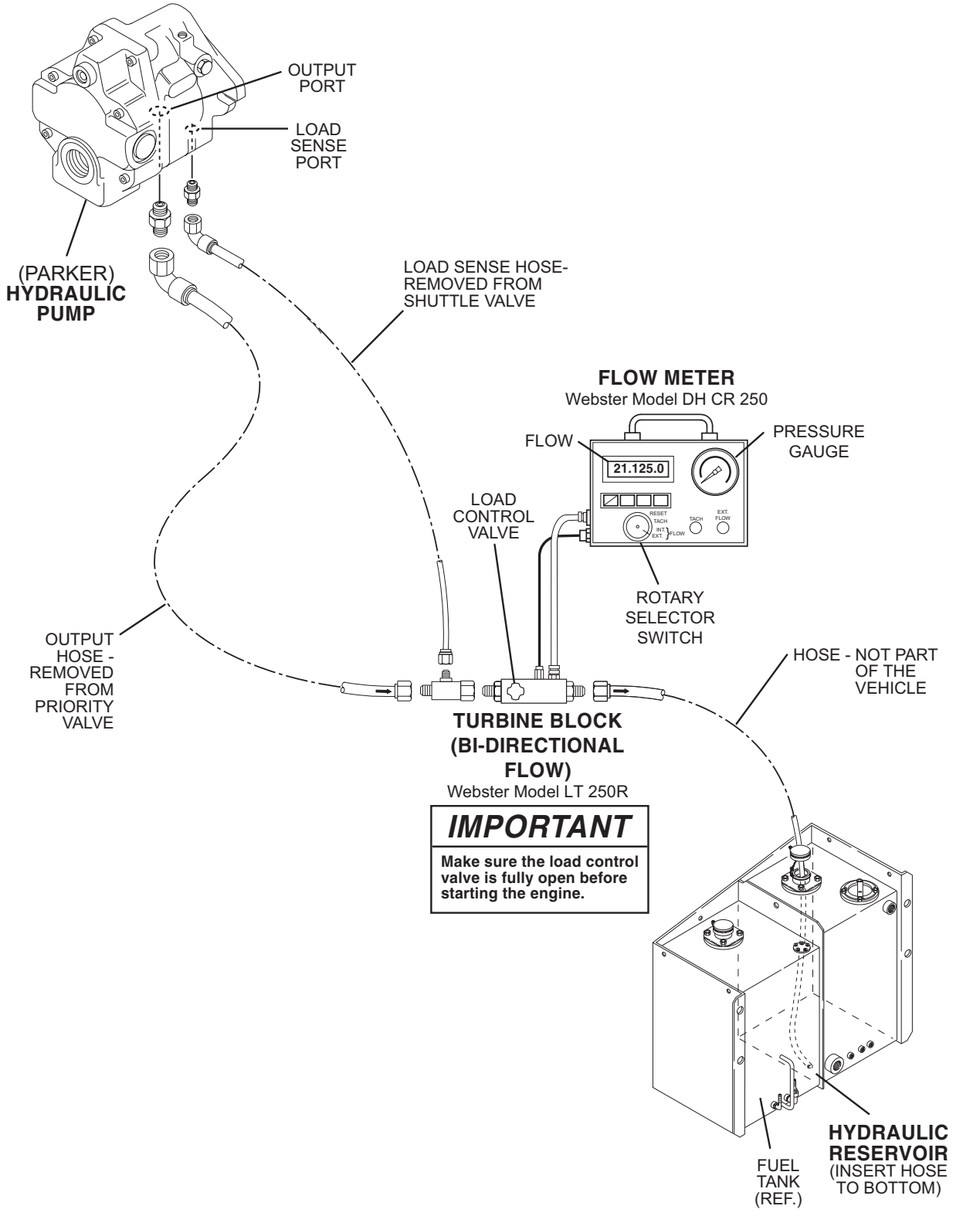

8042/10042/10054 Variable Volume Load Sensing Pump Flow Meter Diagram (S/N 9909 & After)

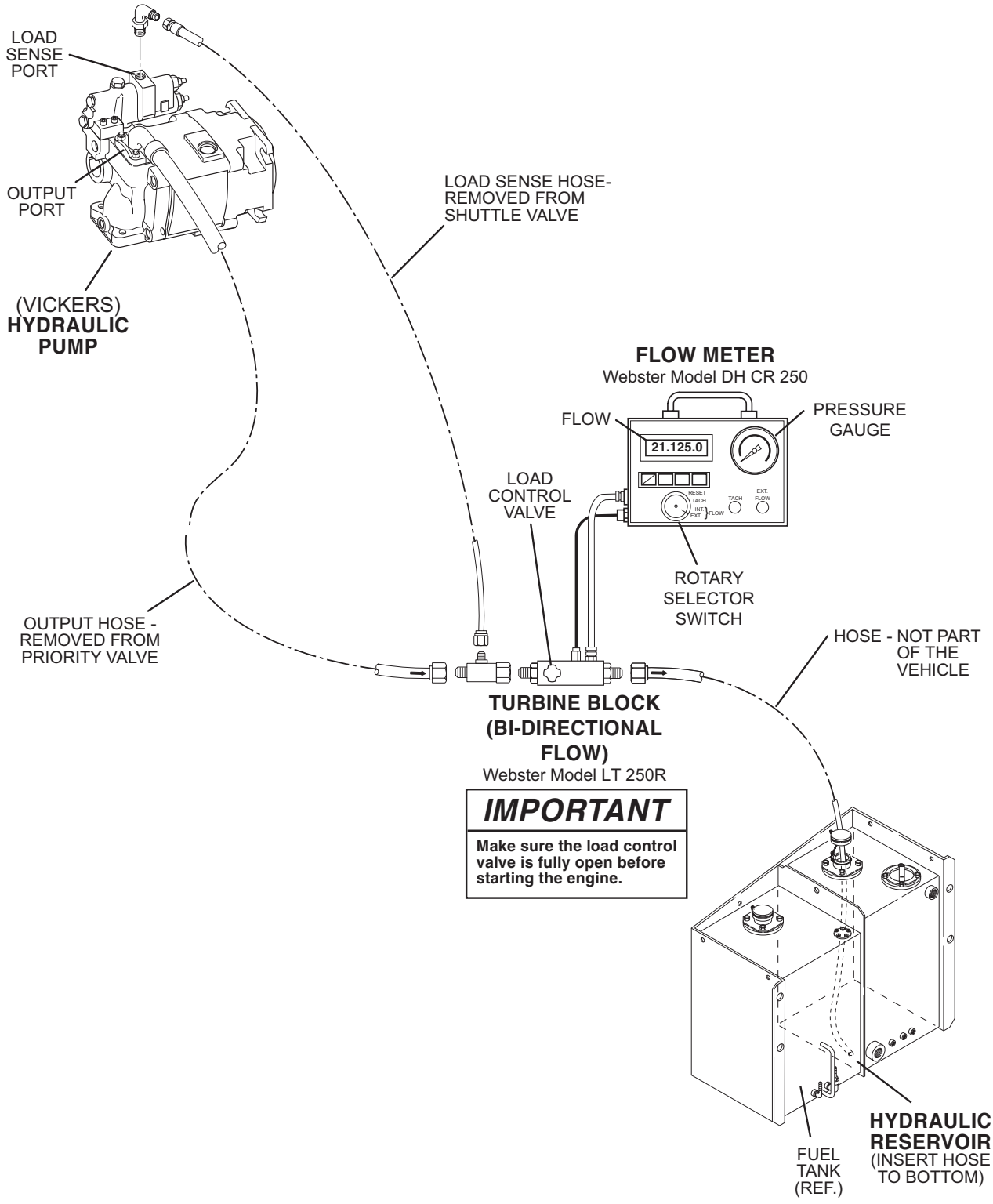

8042/10042 Hoist and Extend Circuits (S/N 8540 & Before)

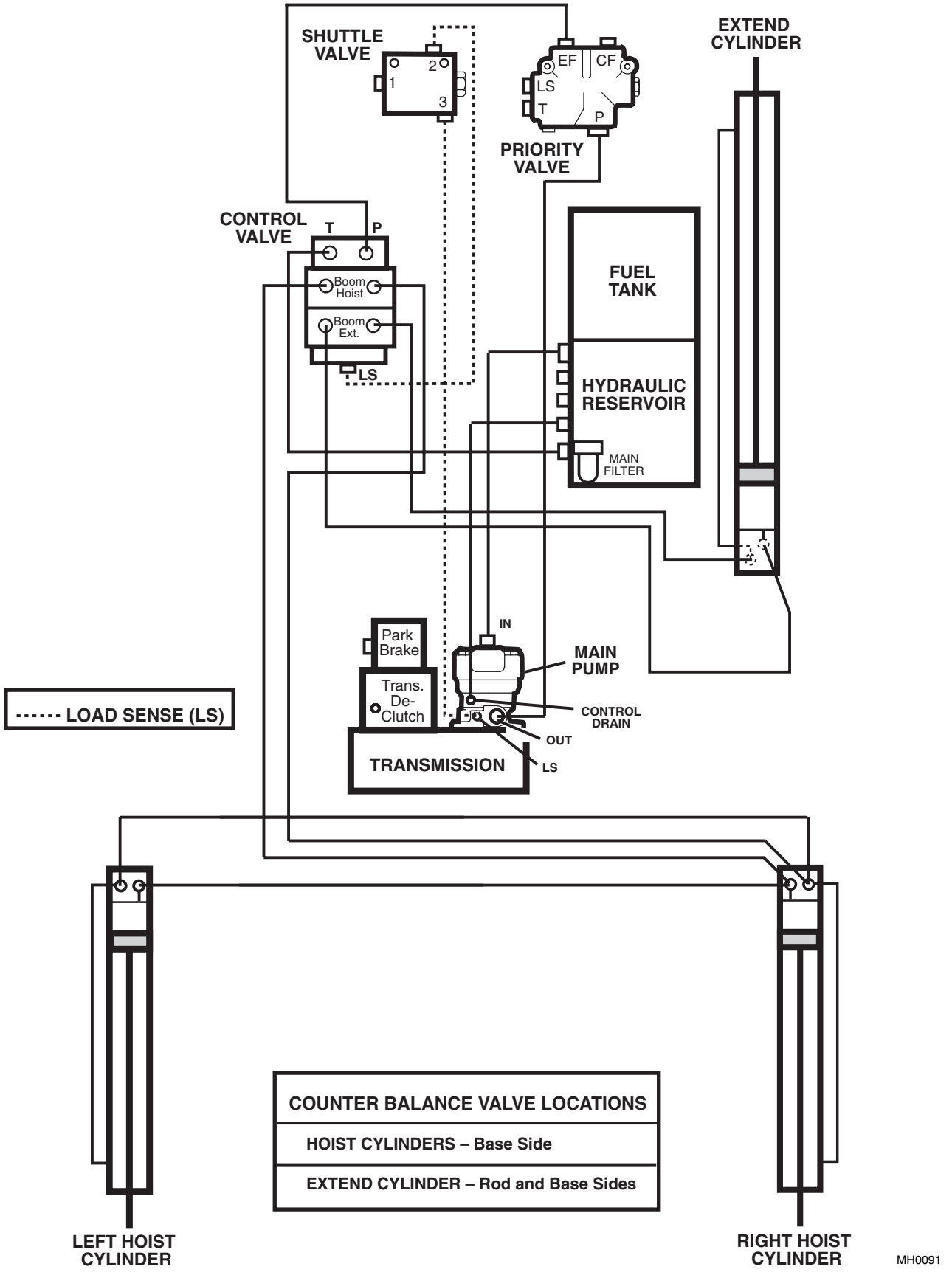

8042/10042 Hoist and Extend Schematic (S/N 8540 & Before)

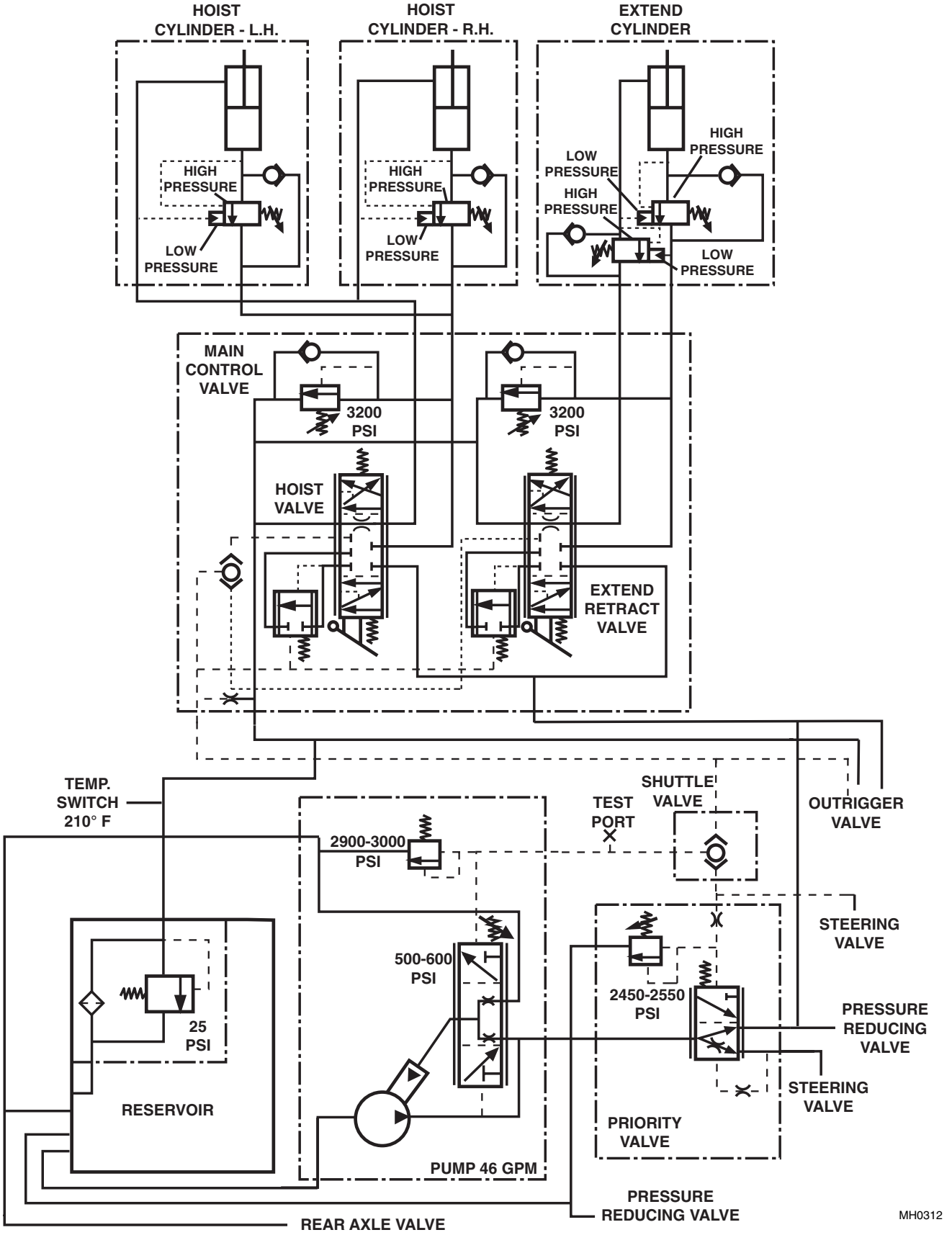

8042/10042 Hoist and Extend Circuits (S/N 8541 thru 9908)

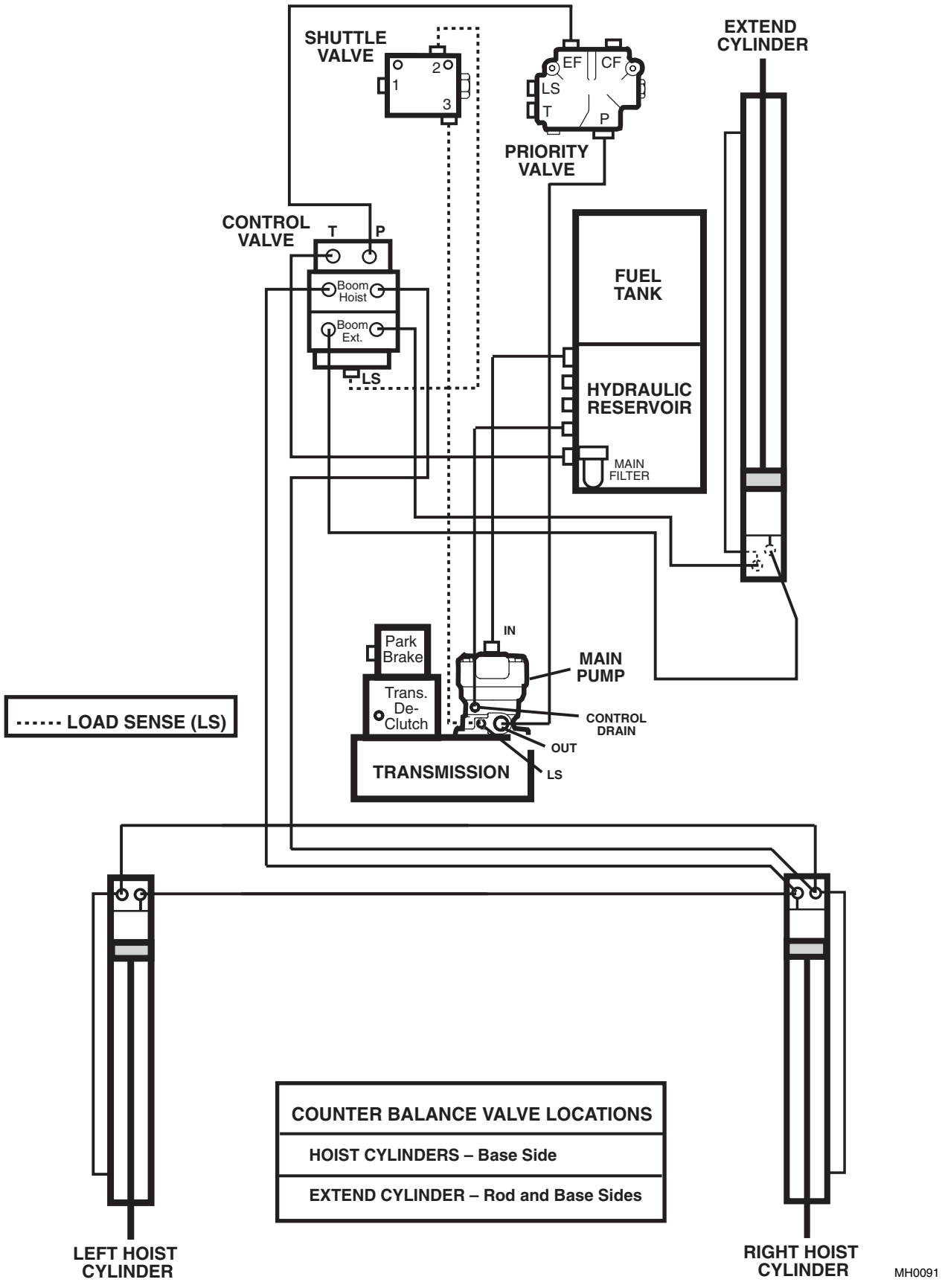

8042/10042 Hoist and Extend Schematic (S/N 8541 thru 9908)

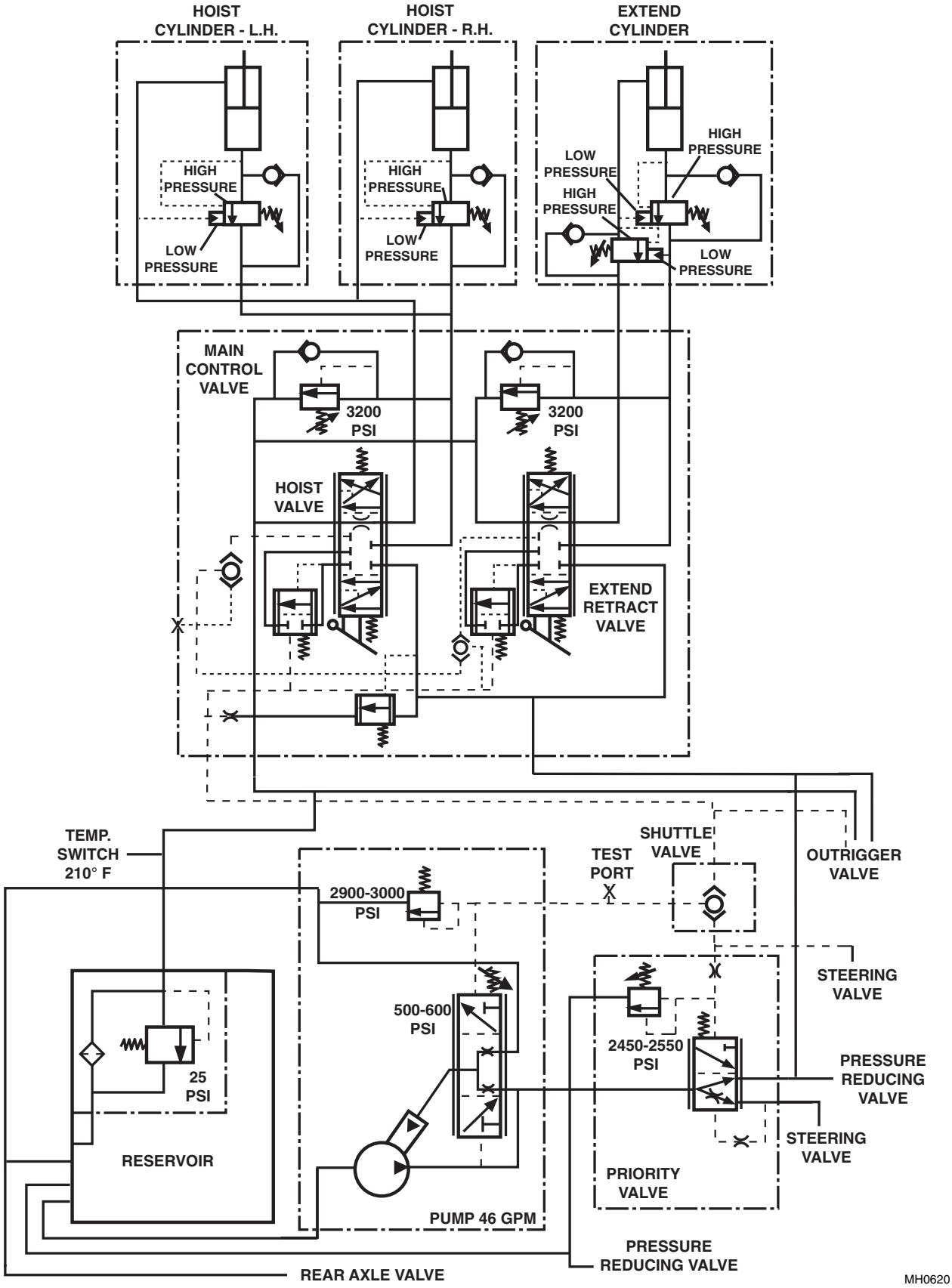

8042/10042 Hoist and Extend Circuits (S/N 9909 & After)

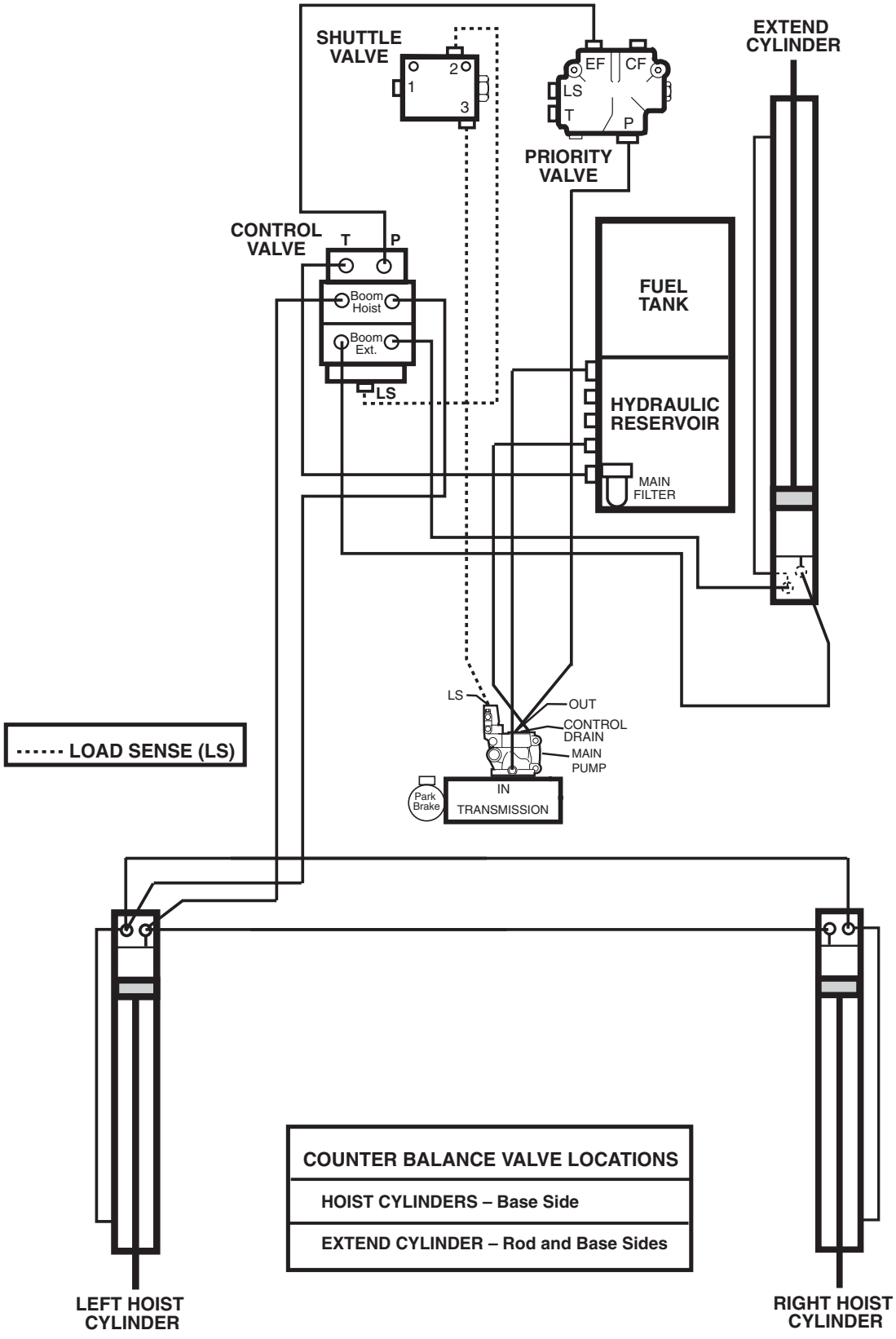

MH0560

8042/10042 Hoist and Extend Schematic (S/N 9909 & After)

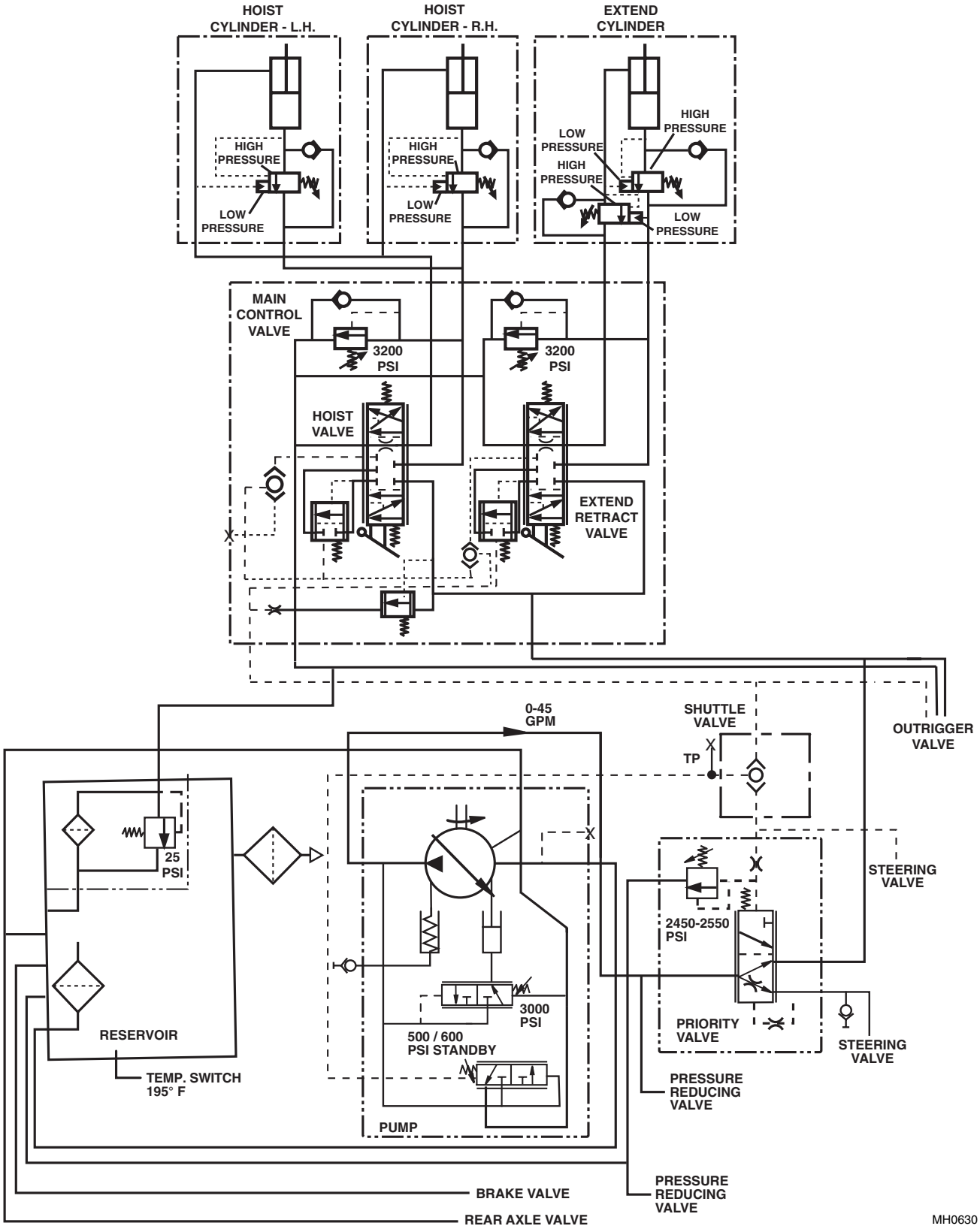

10054 Hoist and Extend Circuits (S/N 8540 & Before)

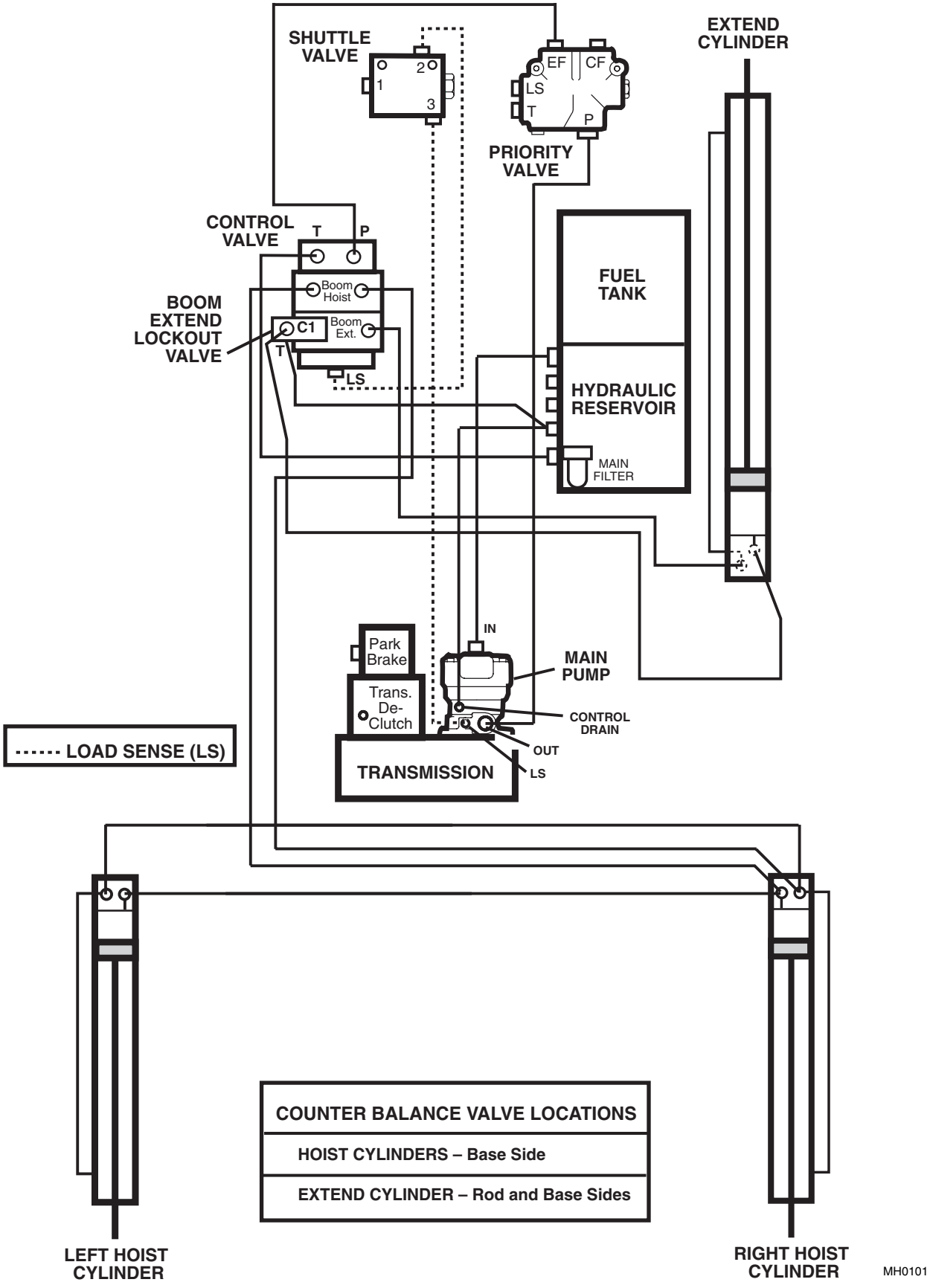

10054 Hoist and Extend Schematic (S/N 8540 & Before)

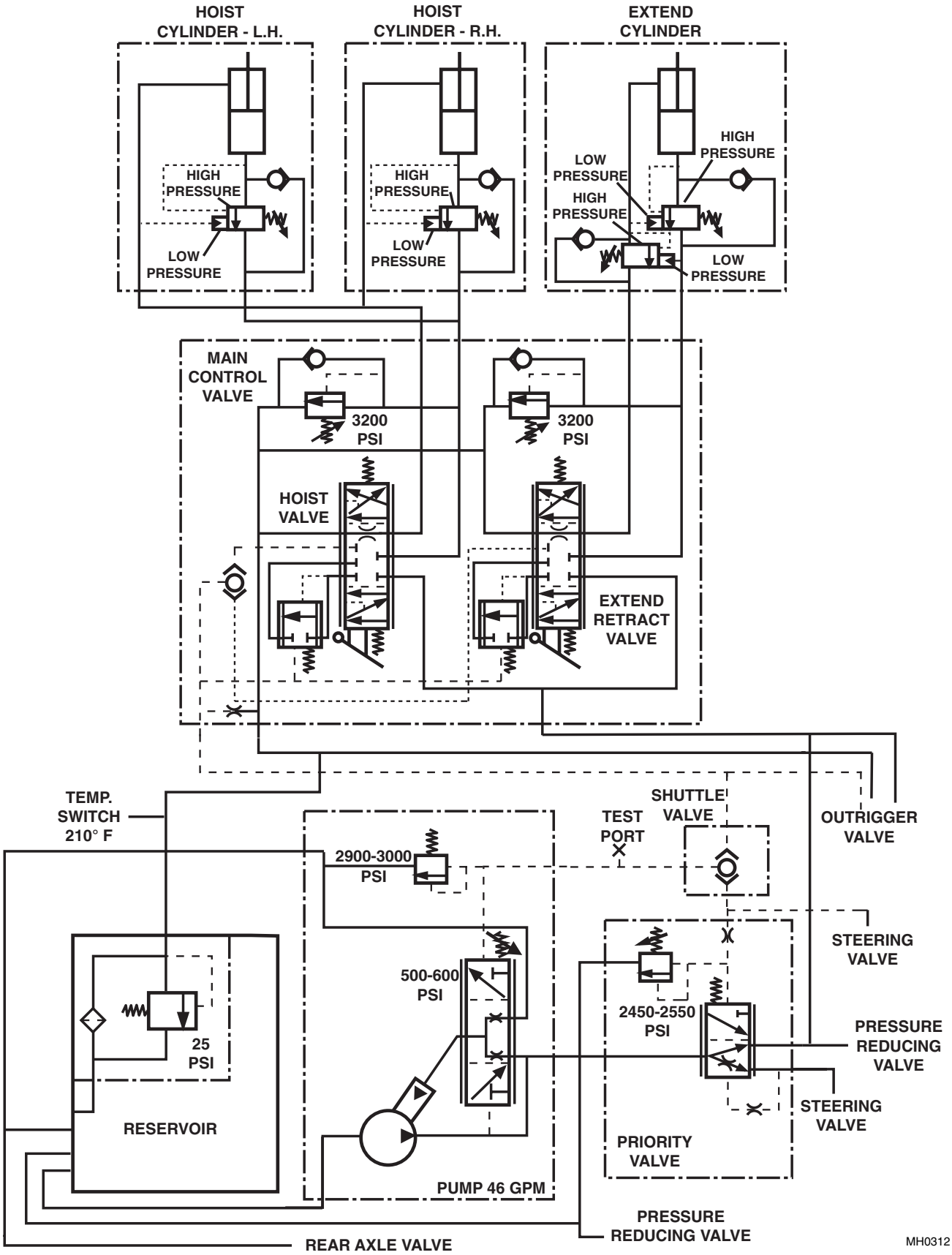

10054 Hoist and Extend Circuits (S/N 8541 thru 9908)

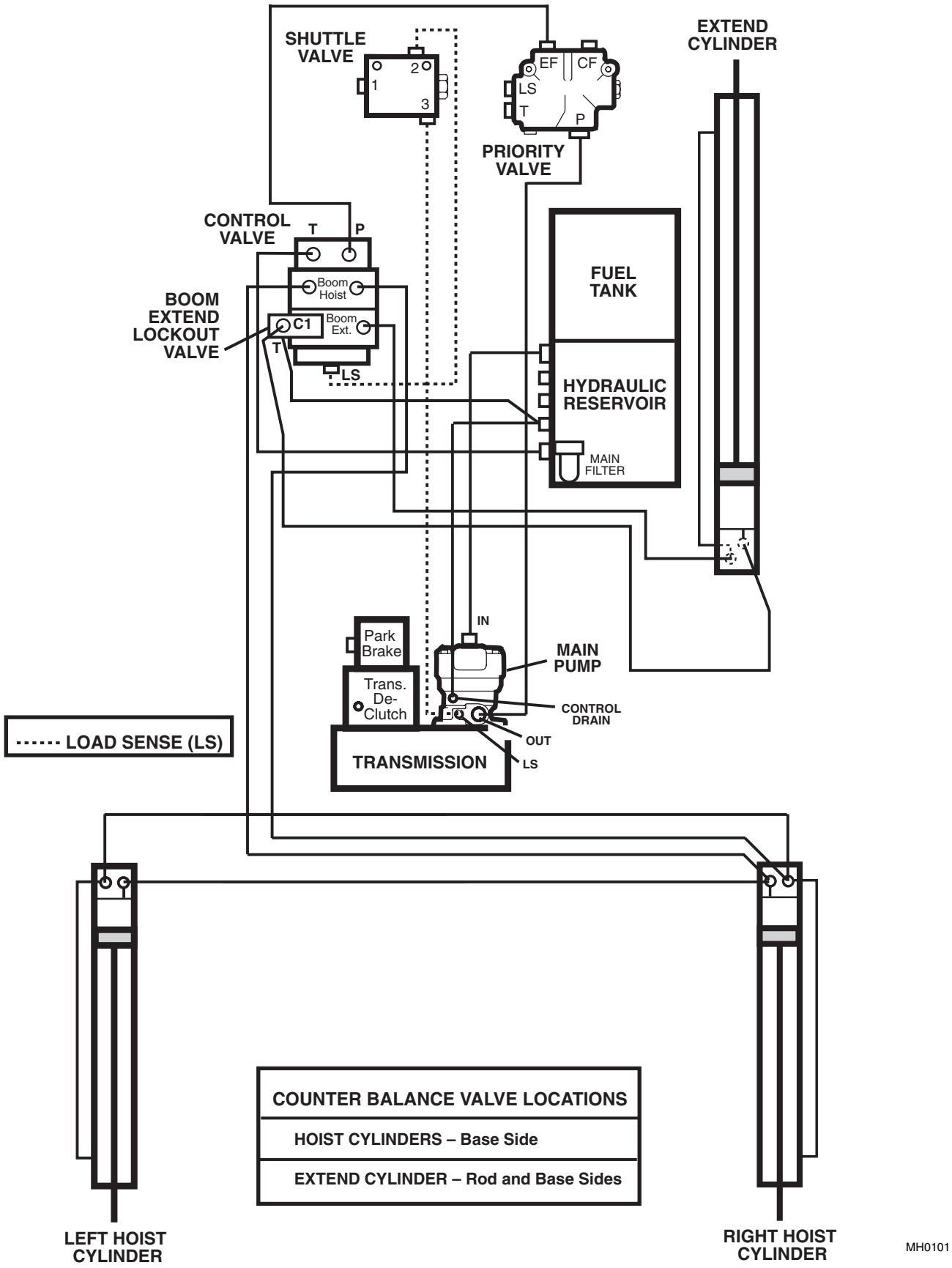

MH0101

10054 Hoist and Extend Schematic (S/N 8541 thru 9908)

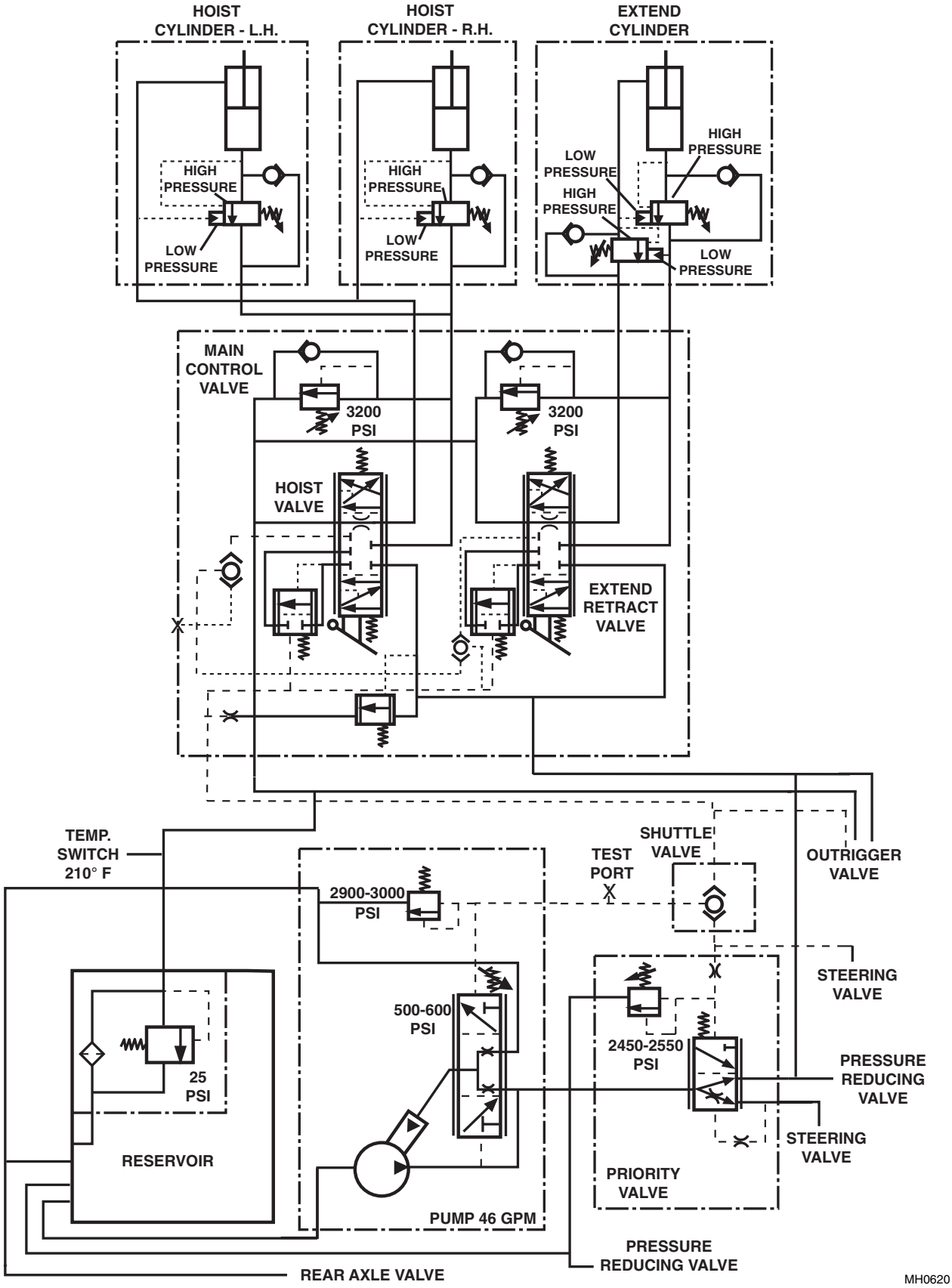

10054 Hoist and Extend Circuits (S/N 9909 & After)

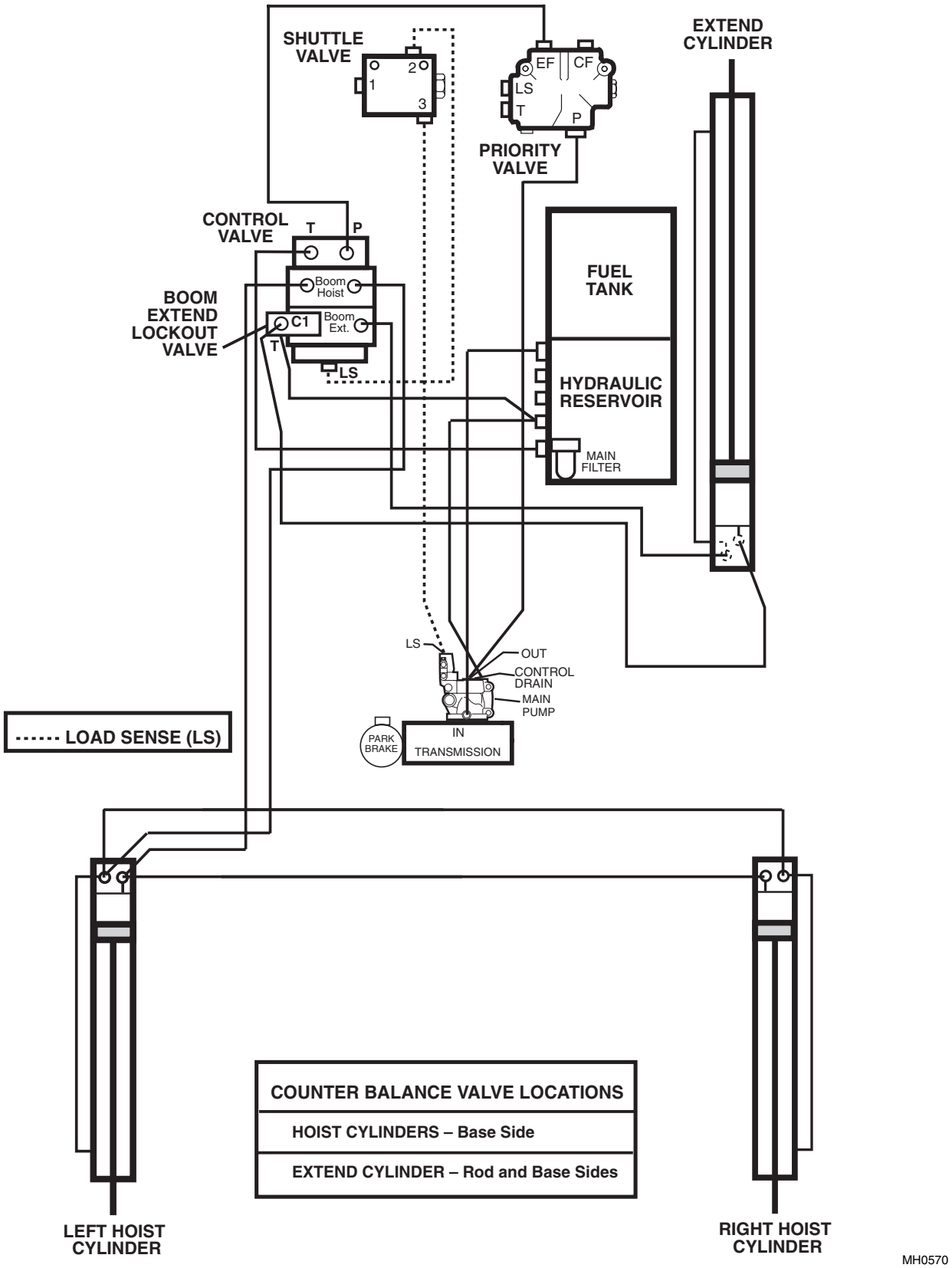

10054 Hoist and Extend Schematic (S/N 9909 & After)

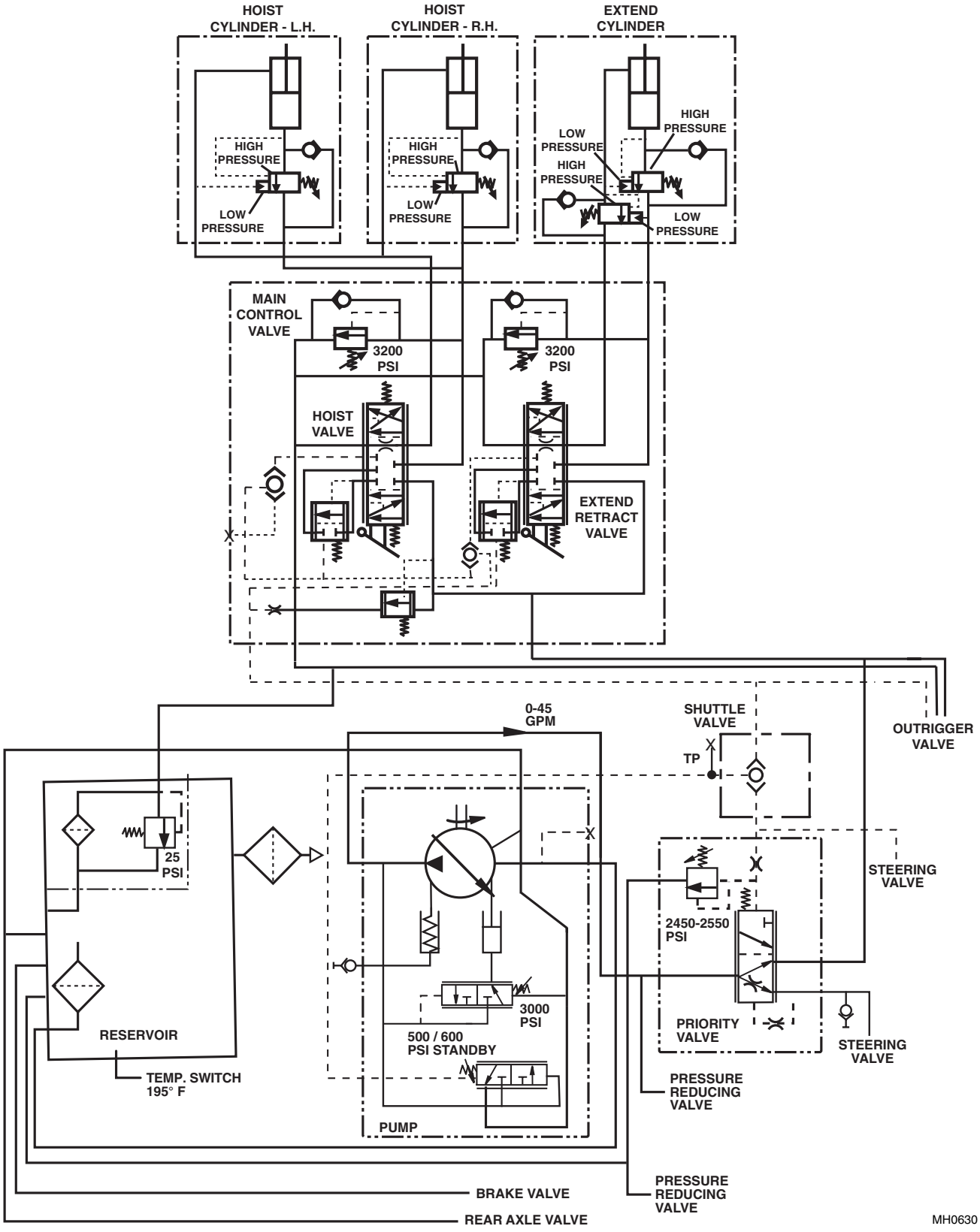

8042/10042/10054 Frame Tilt, Attachment Tilt, Slave & Auxiliary Circuits (S/N 2194 & Before)

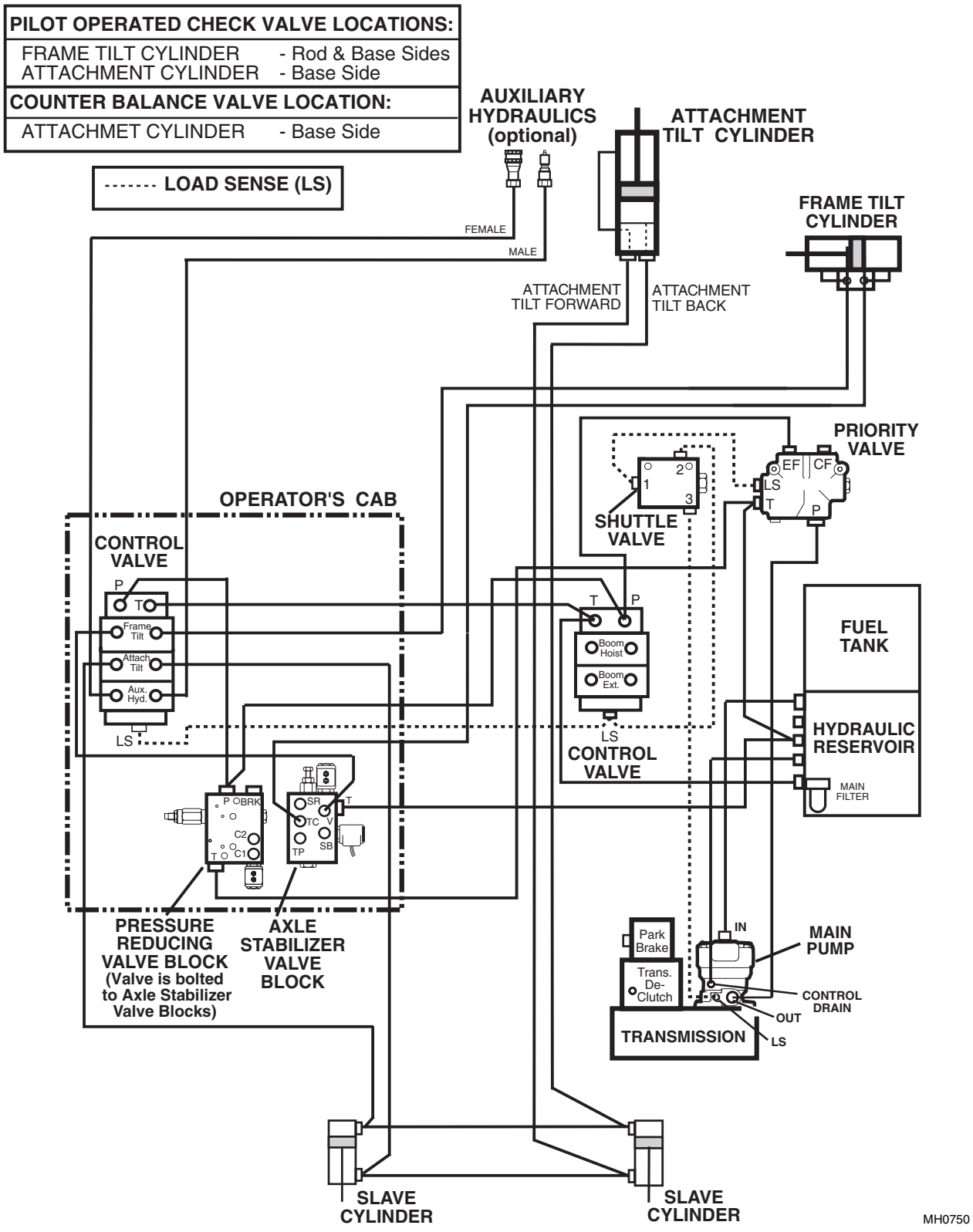

8042/10042/10054 Frame Tilt, Attachment Tilt, Slave & Auxiliary Schematic (S/N 2194 & Before)

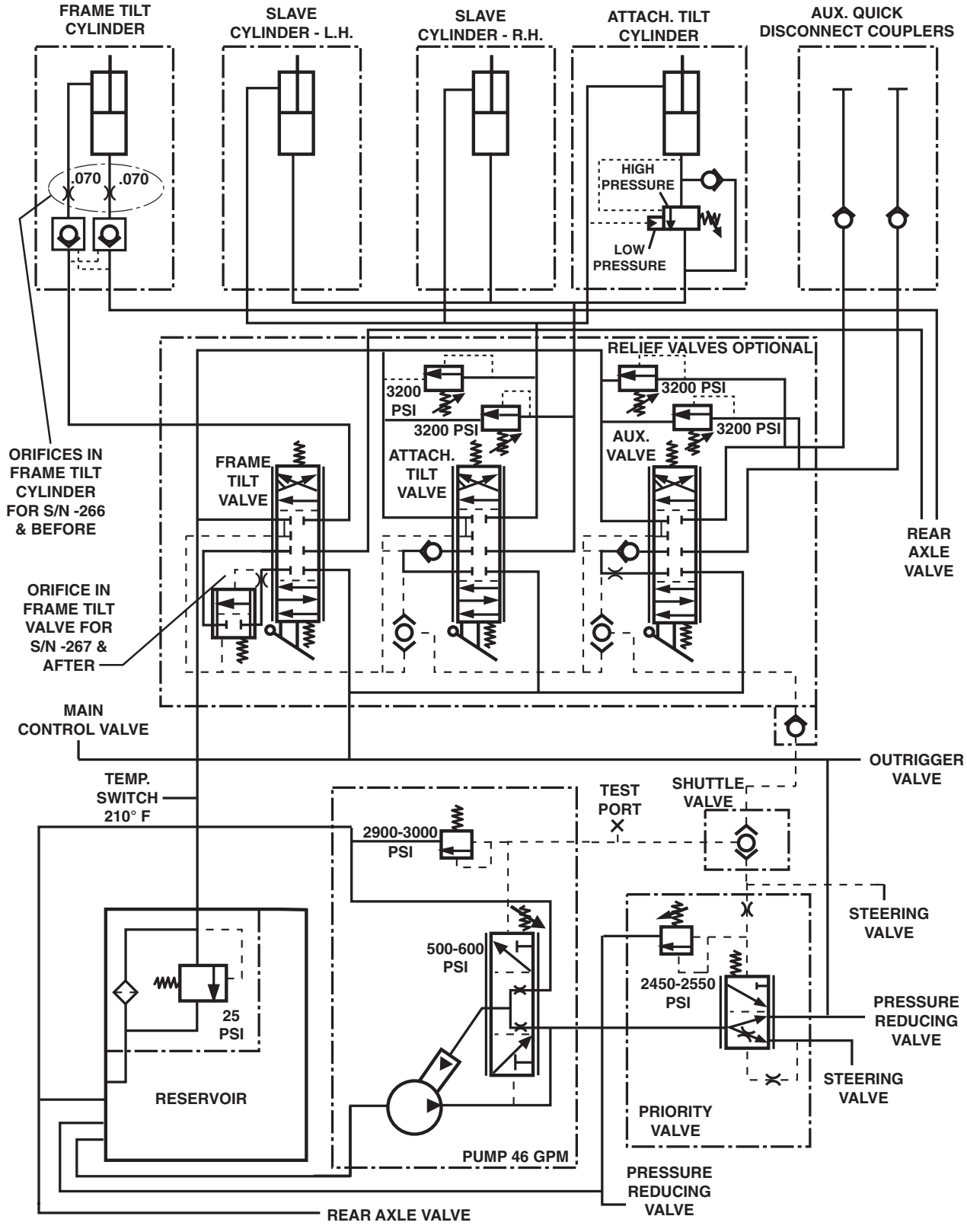

MH0321

8042/10042/10054 Frame Tilt, Attachment Tilt, Slave & Auxiliary Circuits (S/N 2195 thru 9908)

PILOT OPERATED CHECK VALVE LOCATIONS:	
FRAME TILT CYLINDER	- Rod & Base Sides
ATTACHMENT CYLINDER	- Base Side
COUNTER BALANCE VALVE LOCATION:	
ATTACHMET CYLINDER	- Base Side

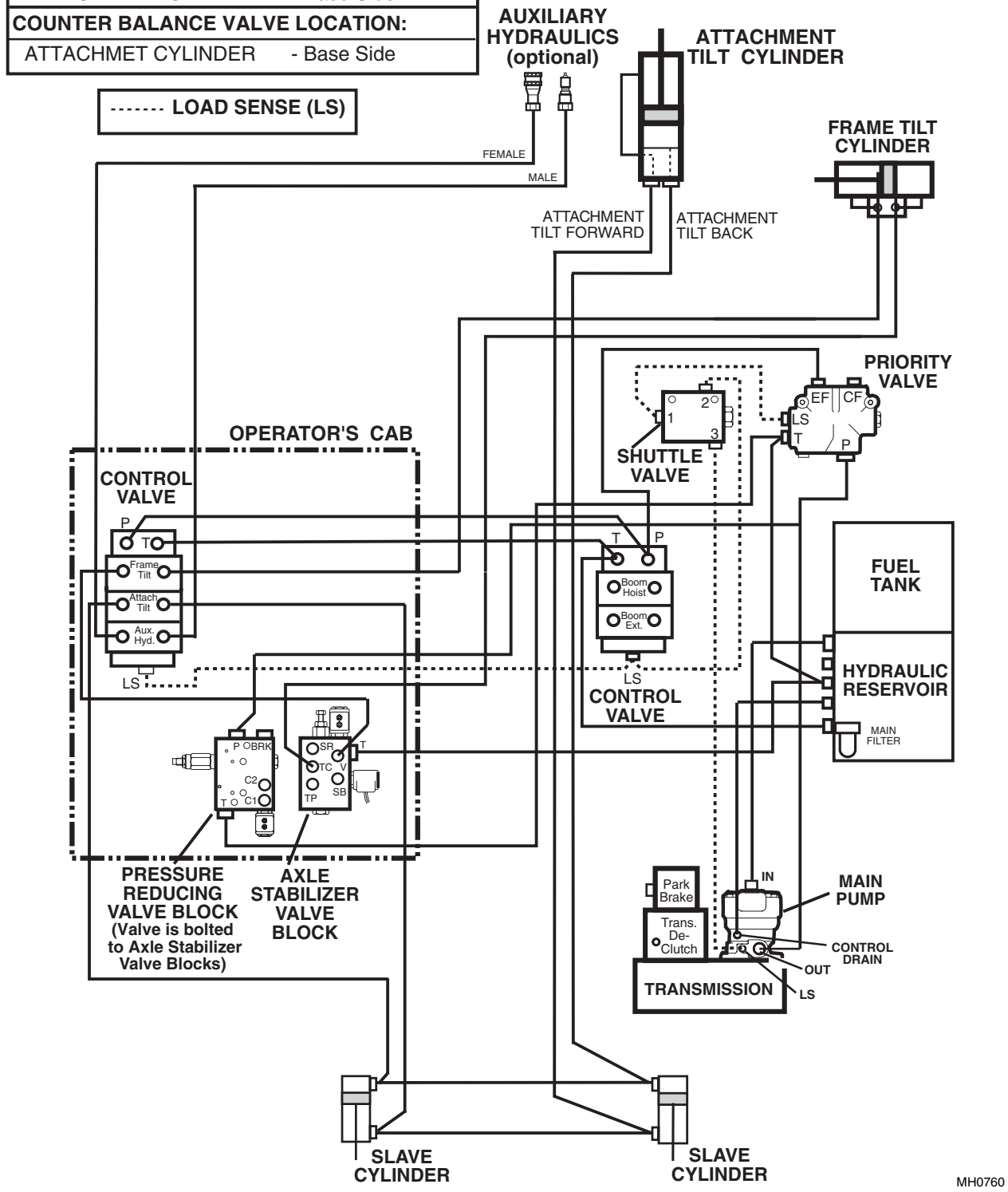

8042/10042/10054 Frame Tilt, Attachment Tilt, Slave & Auxiliary Schematic (S/N 2195 thru 9908)

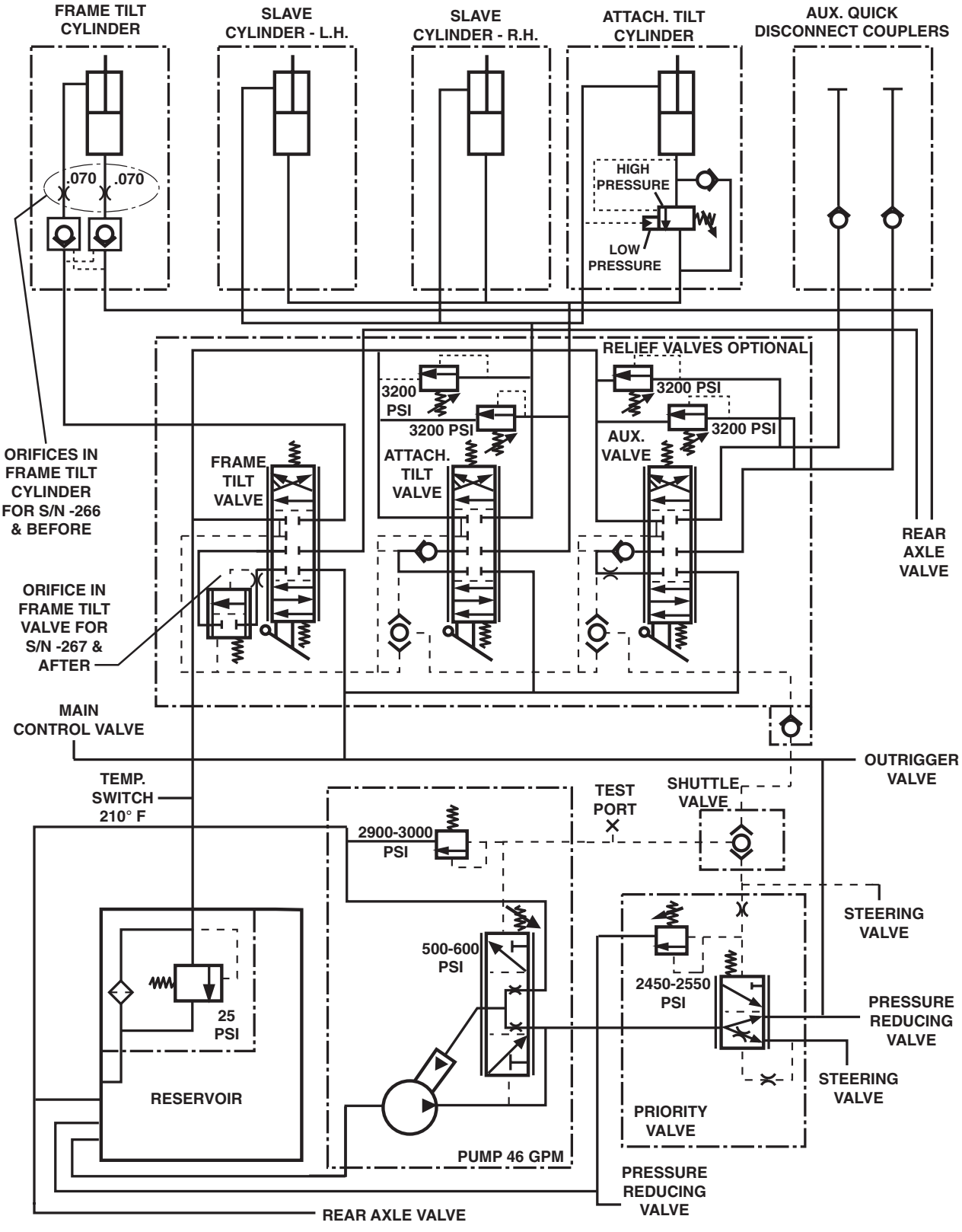

MH0321

8042/10042/10054 Frame Tilt, Attachment Tilt, Slave & Auxiliary Circuits (S/N 9909 & After)

PILOT OPERATED CHECK VALVE LOCATIONS:	
FRAME TILT CYLINDER	- Rod & Base Sides
ATTACHMENT CYLINDER	- Base Side
COUNTER BALANCE VALVE LOCATION:	
ATTACHMET CYLINDER	- Base Side

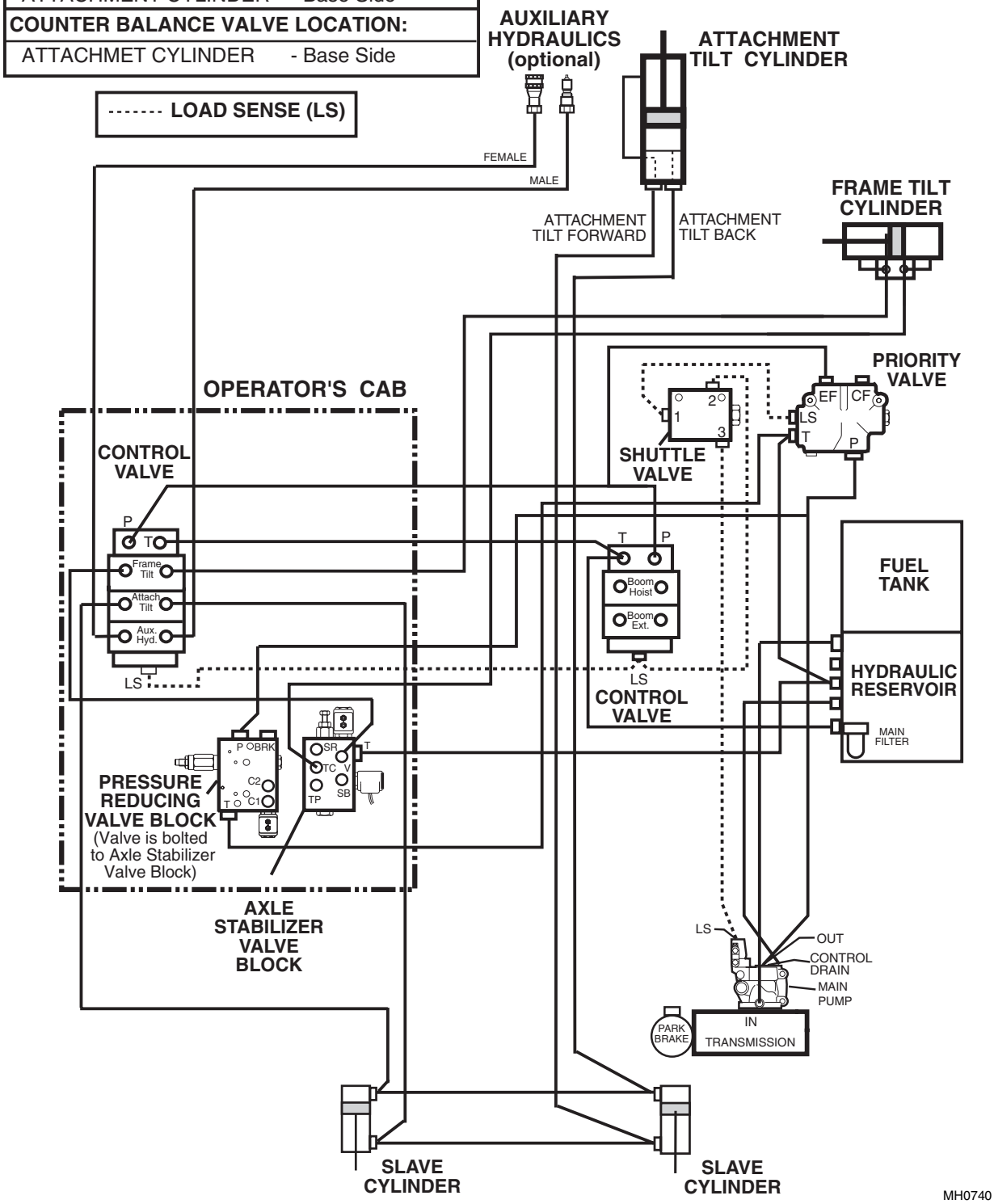

8042/10042/10054 Frame Tilt, Attachment Tilt, Slave & Auxiliary Schematic (S/N 9909 & After)

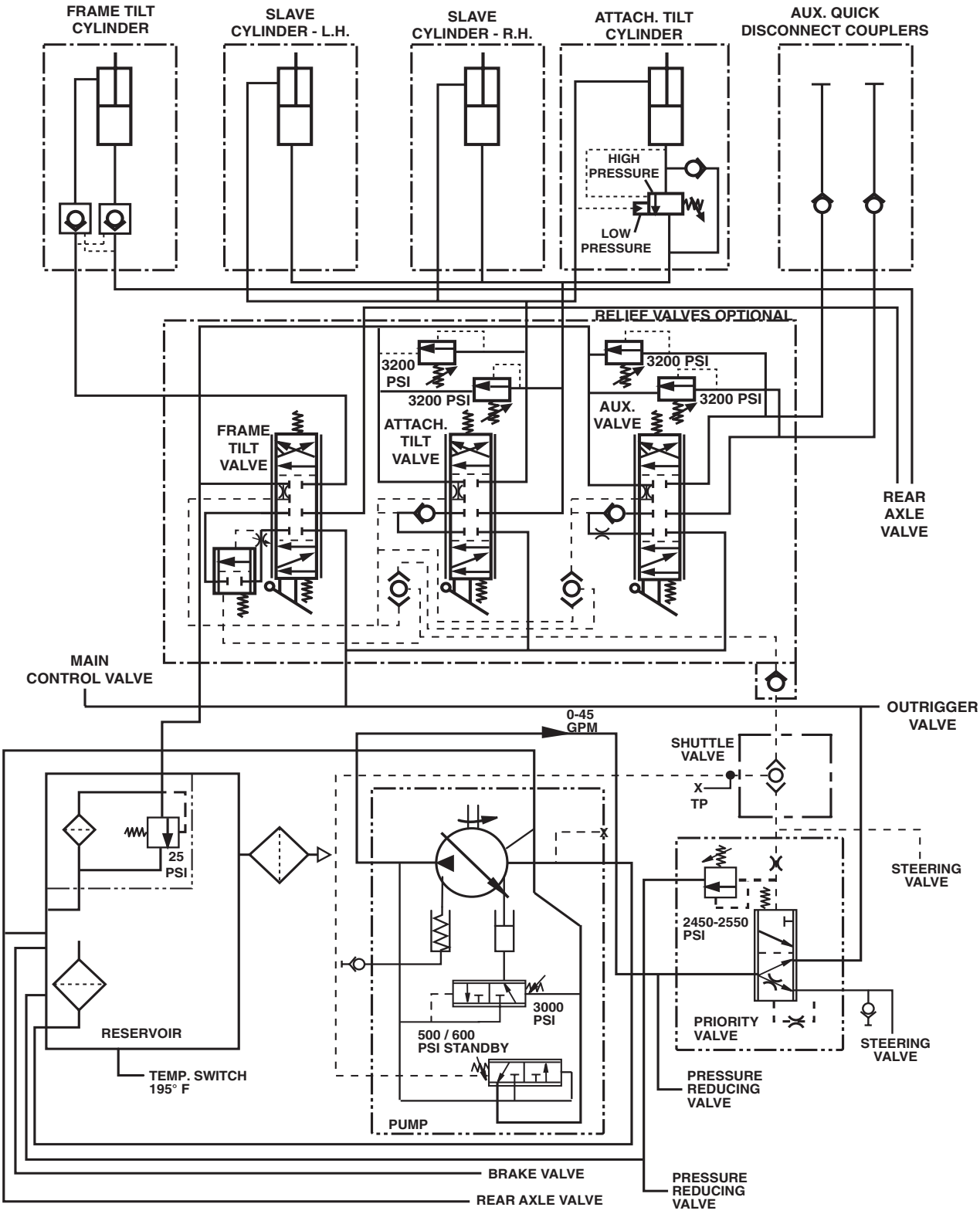

MH0640

8042/10042/10054 Steering Circuit (S/N 9908 & Before)

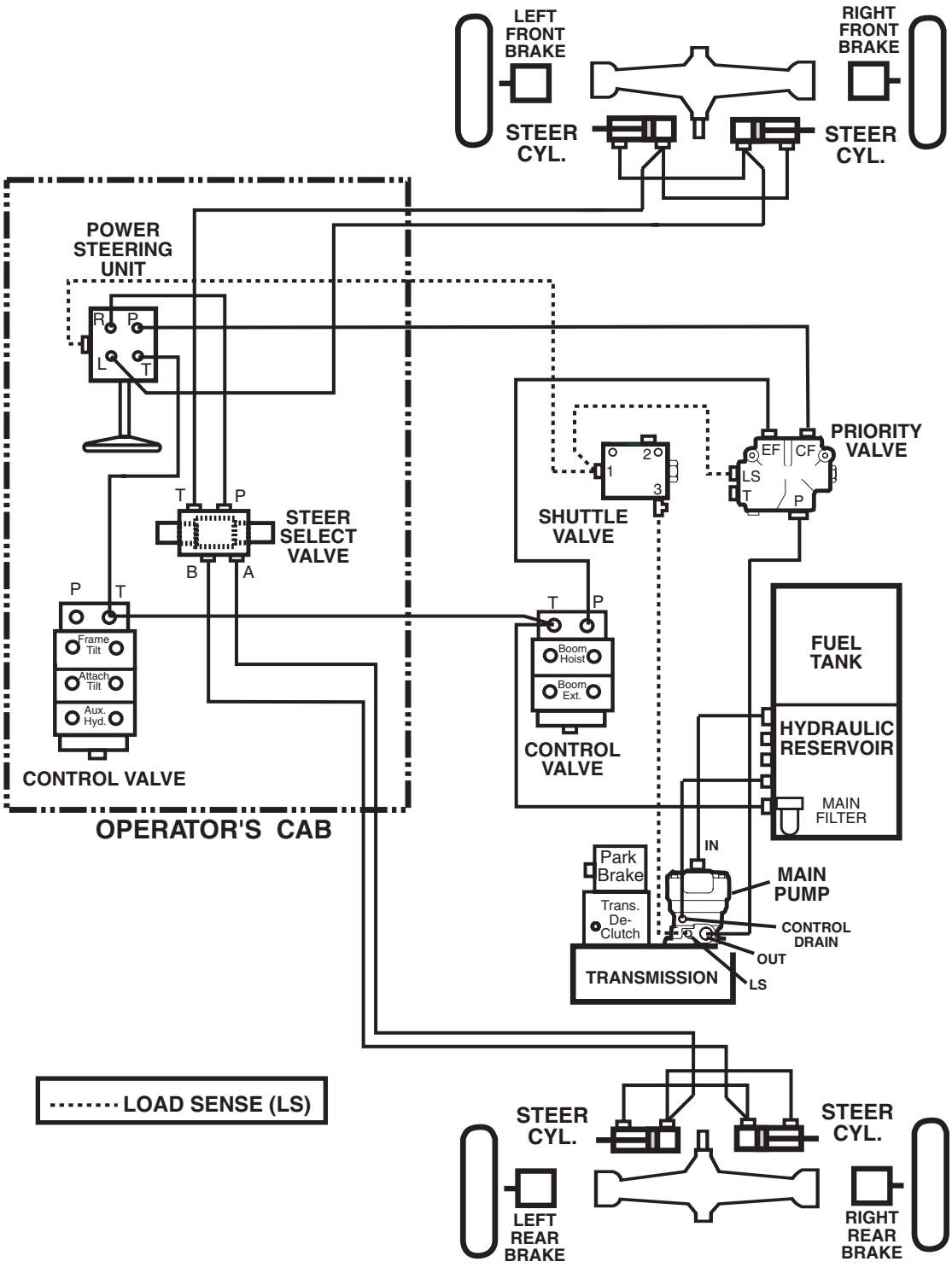

MH0132

8042/10042/10054 Steering Schematic (S/N 9908 & Before)

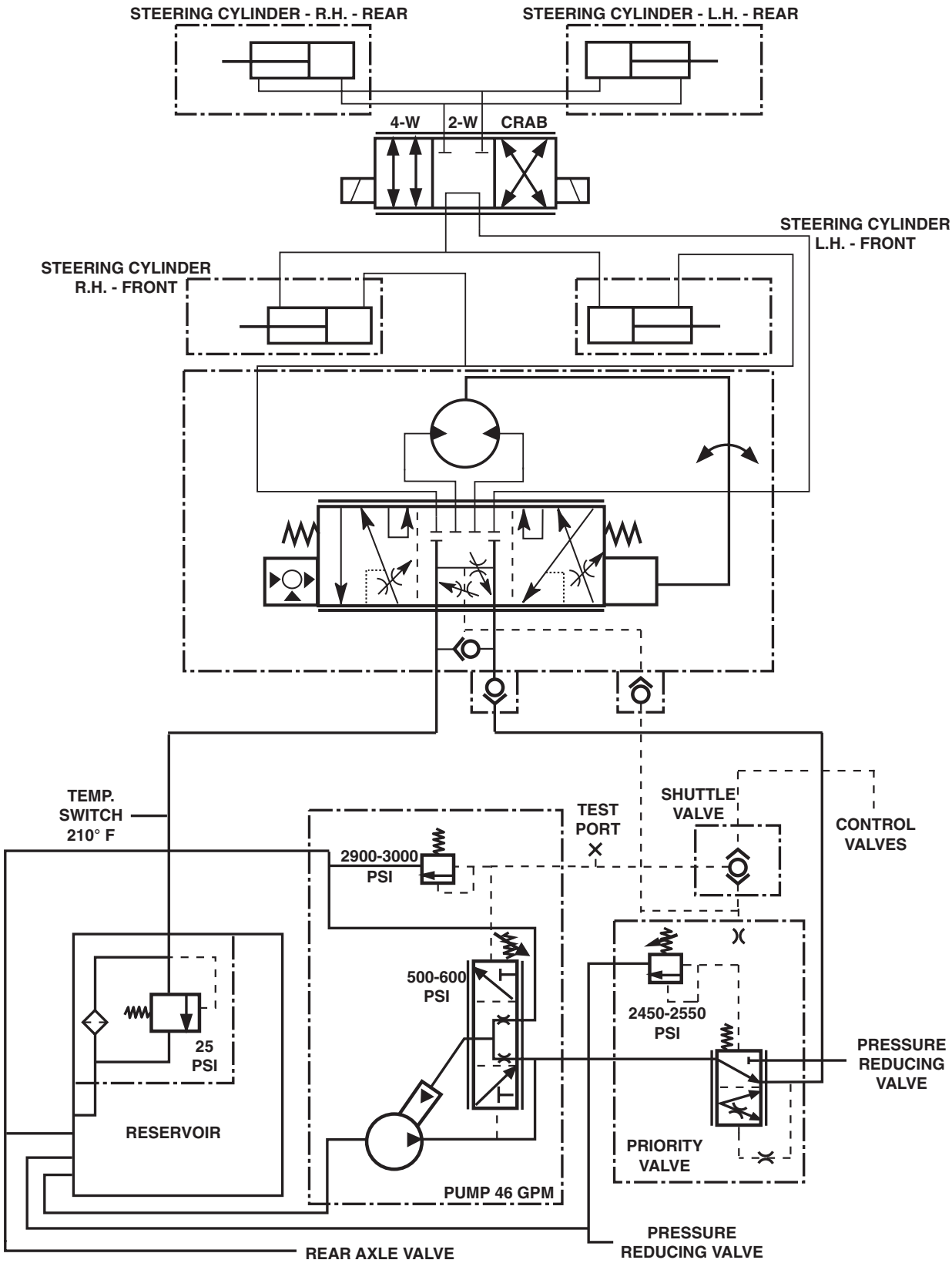

MH0331

8042/10042/10054 Steering Circuit (S/N 9909 & After)

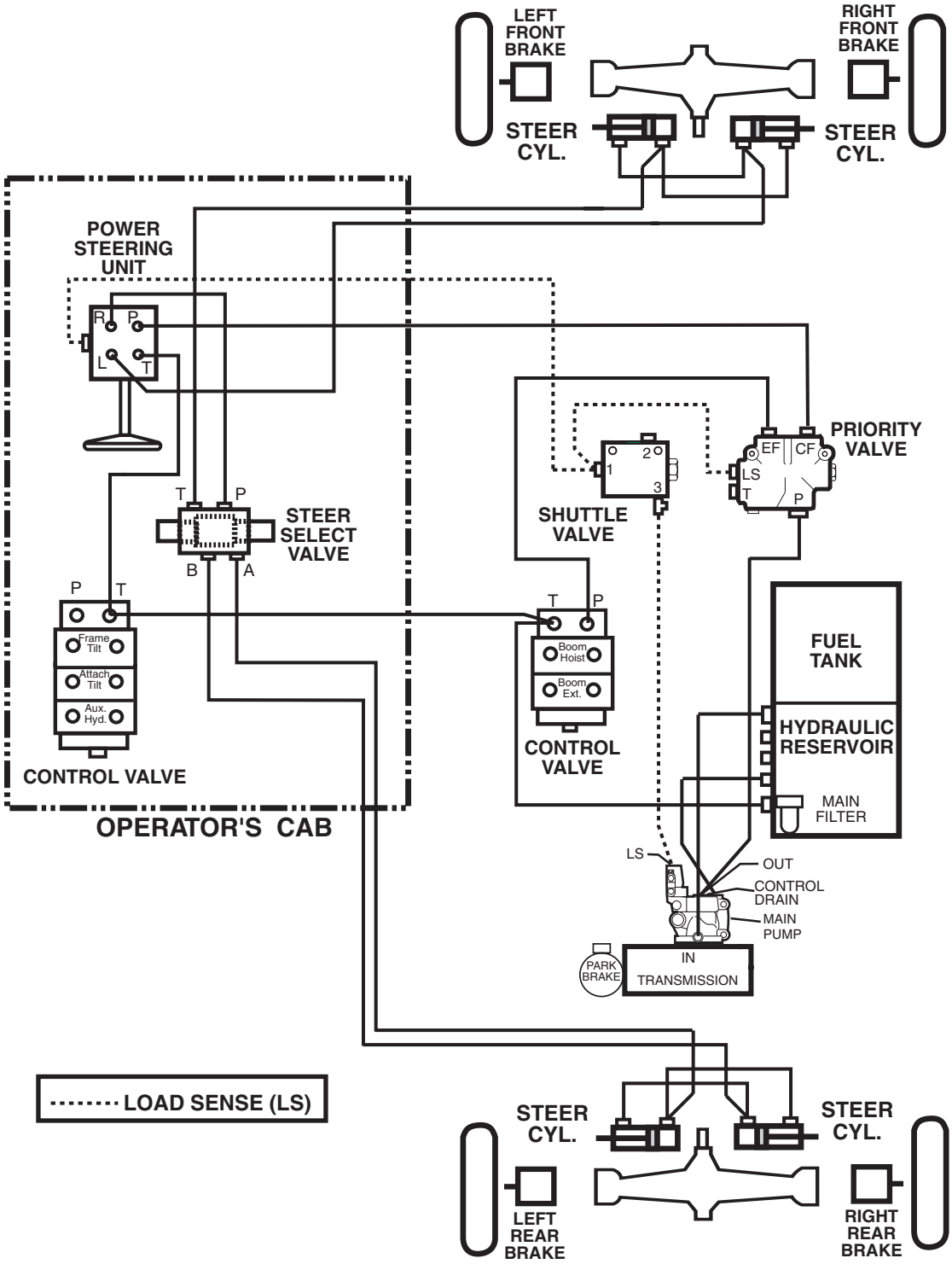

MH0600

8042/10042/10054 Steering Schematic (S/N 9909 & After)

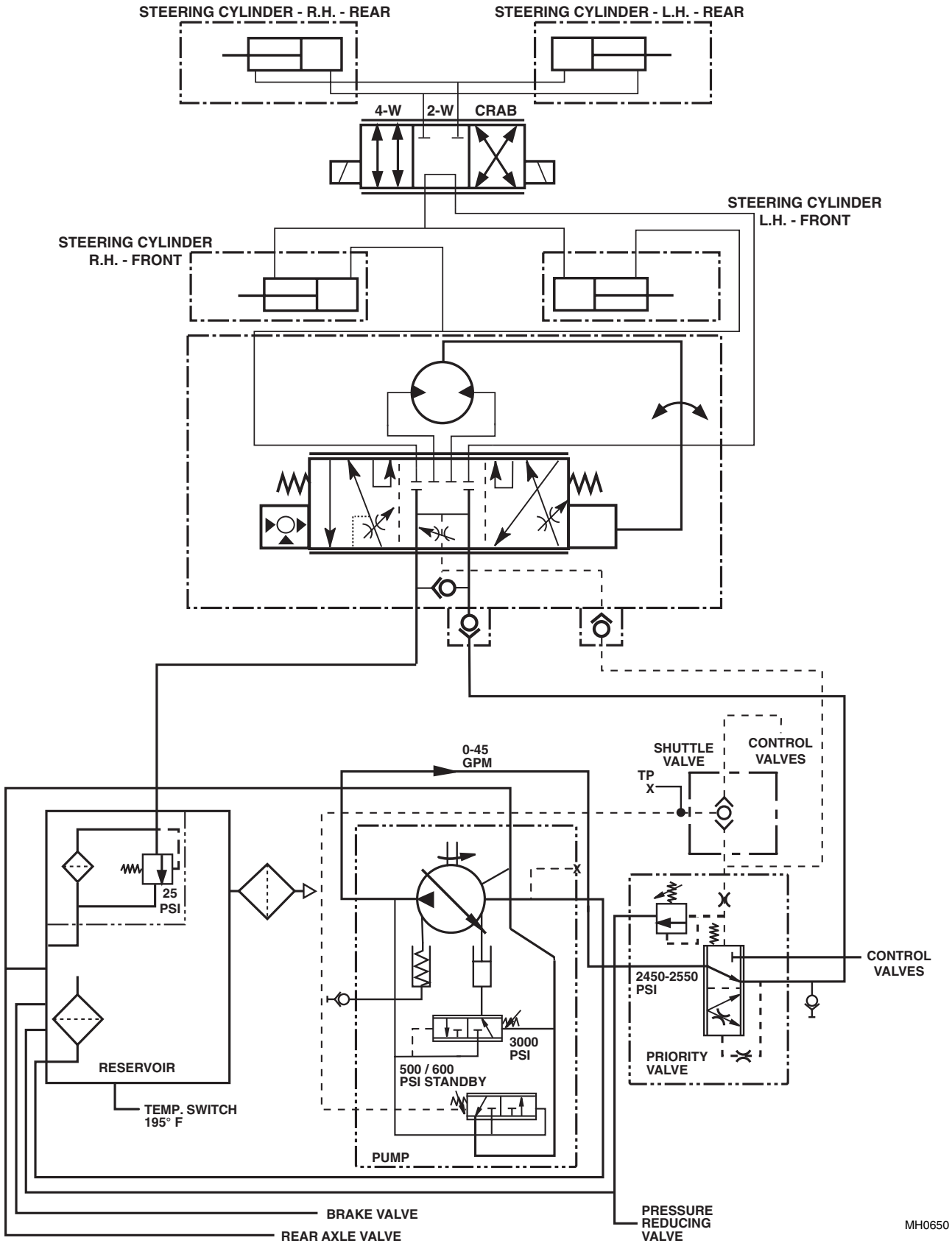

8042/10042/10054 Service Brake & De-Clutch Circuits (S/N 9908 & Before)

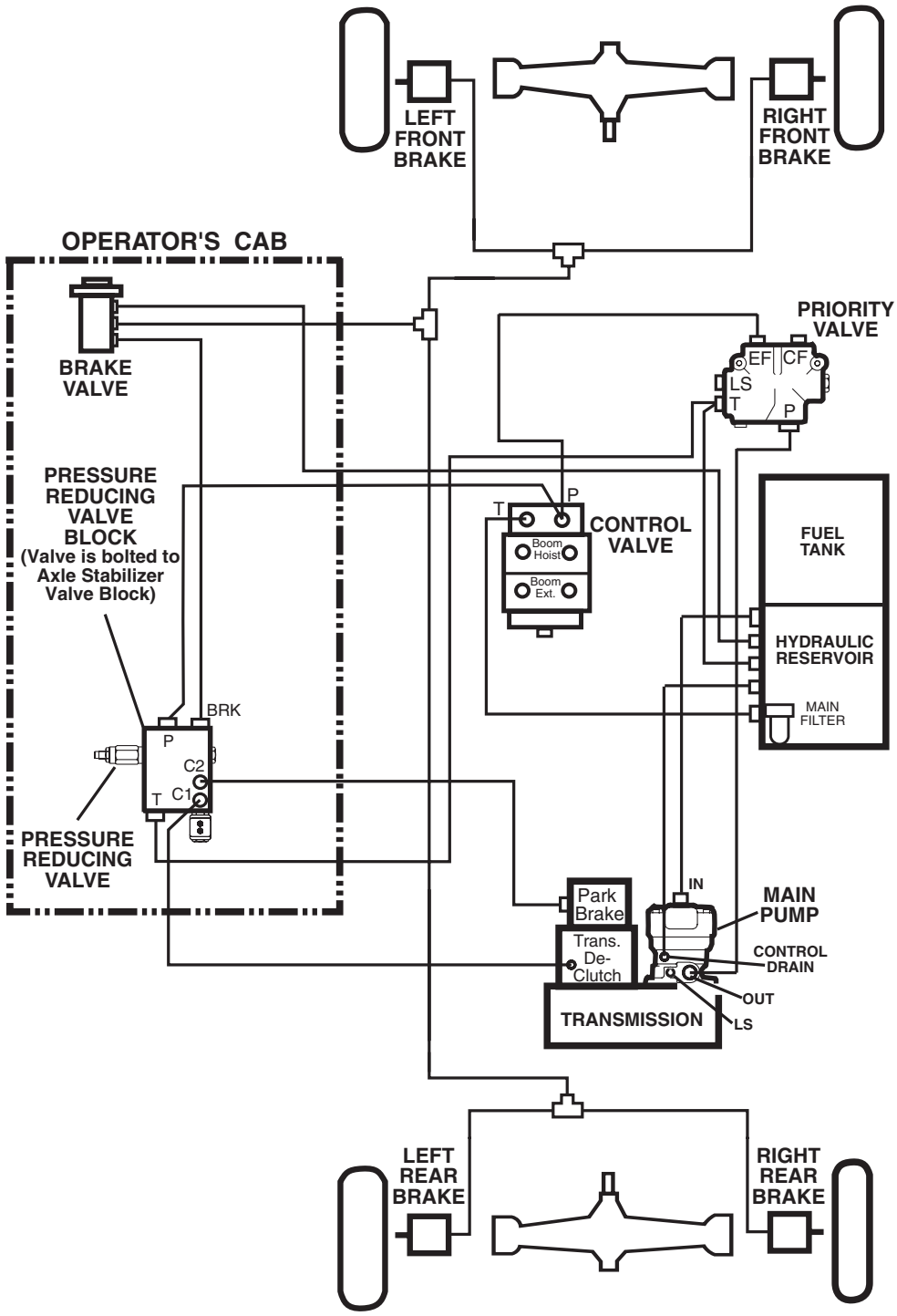

MH0141

8042/10042/10054 Service Brake & De-Clutch Schematic (S/N 9908 & Before)

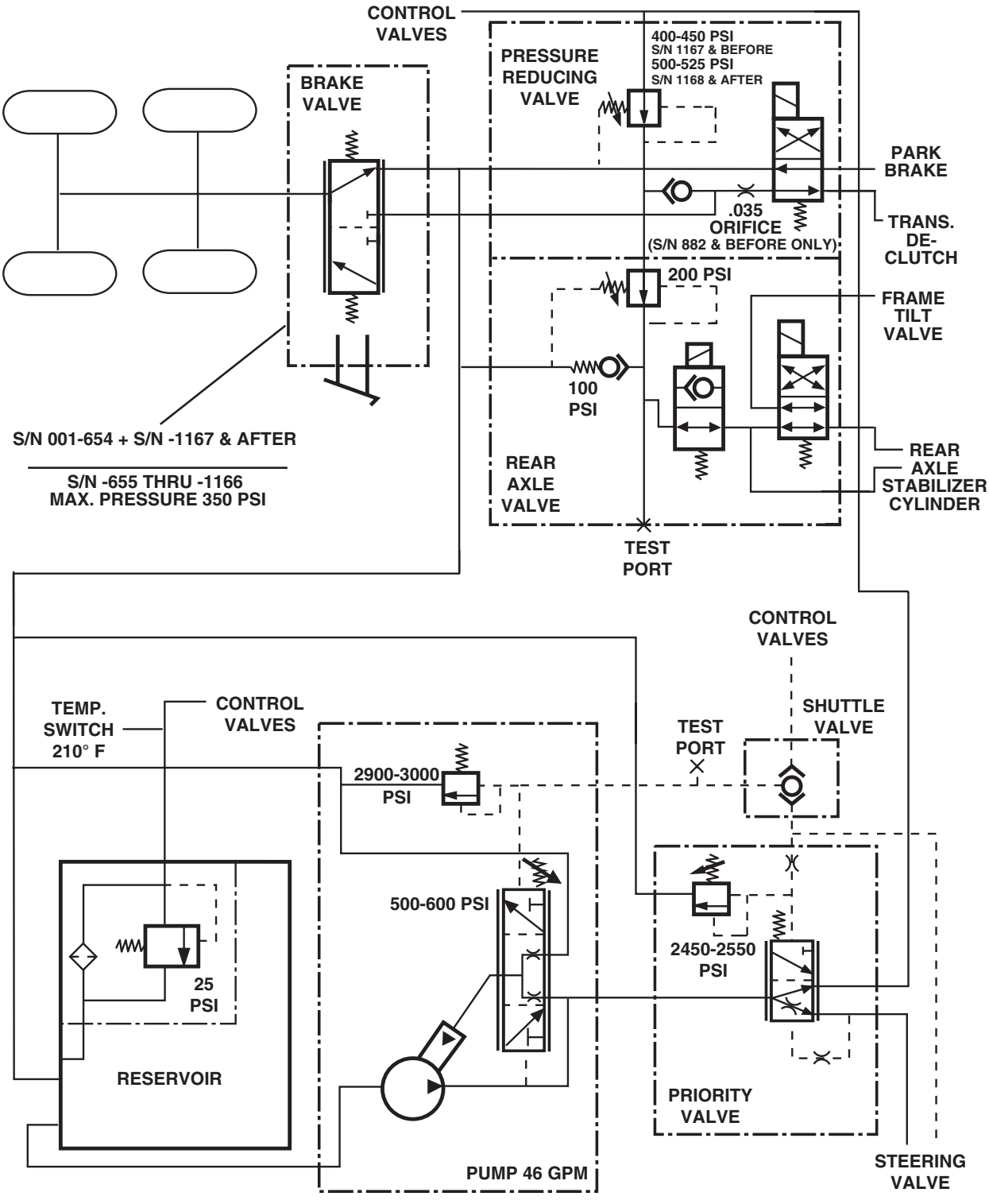

MH0341

8042/10042/10054 Service Brake Circuit (S/N 9909 & After)

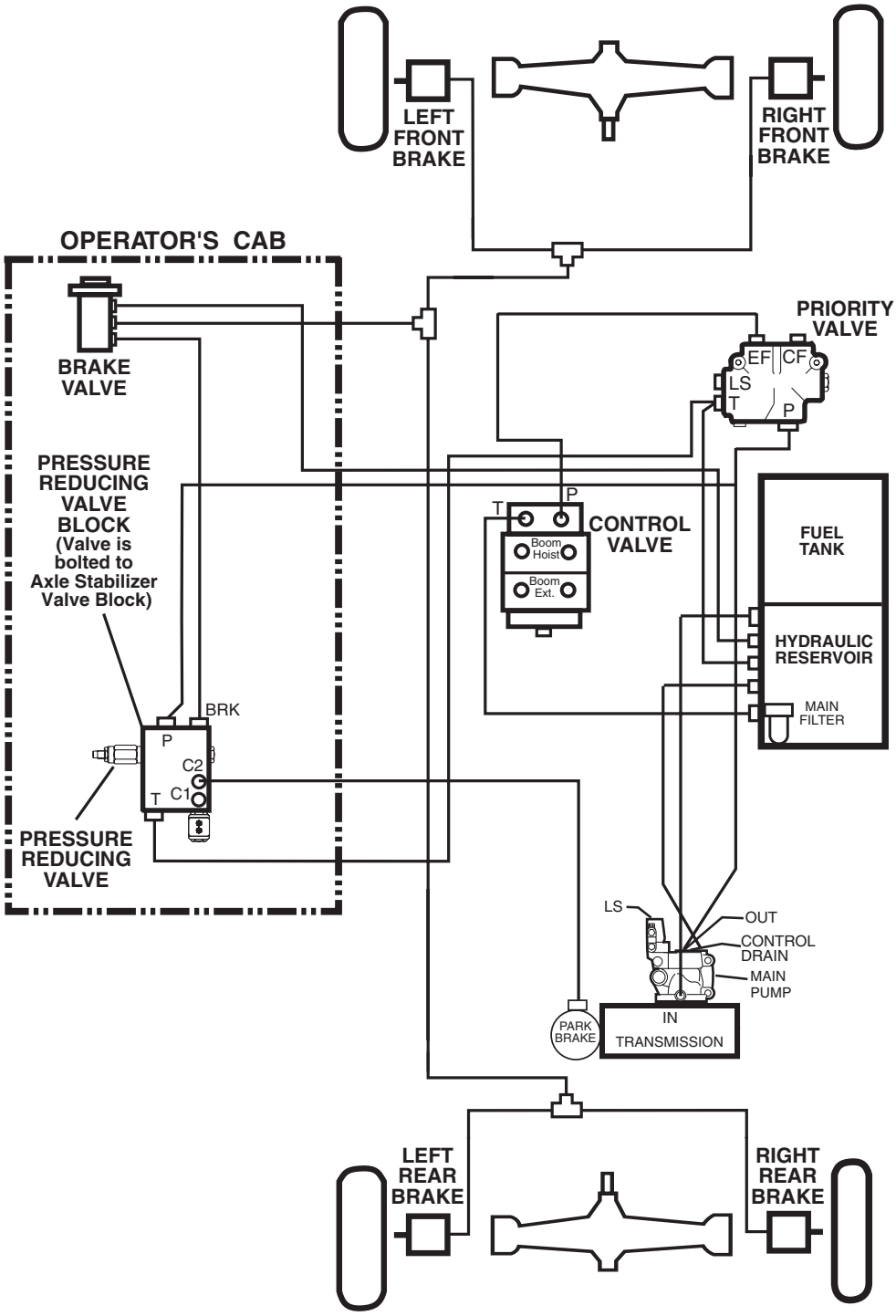

MH0610

8042/10042/10054 Service Brake Schematic (S/N 9909 & After)

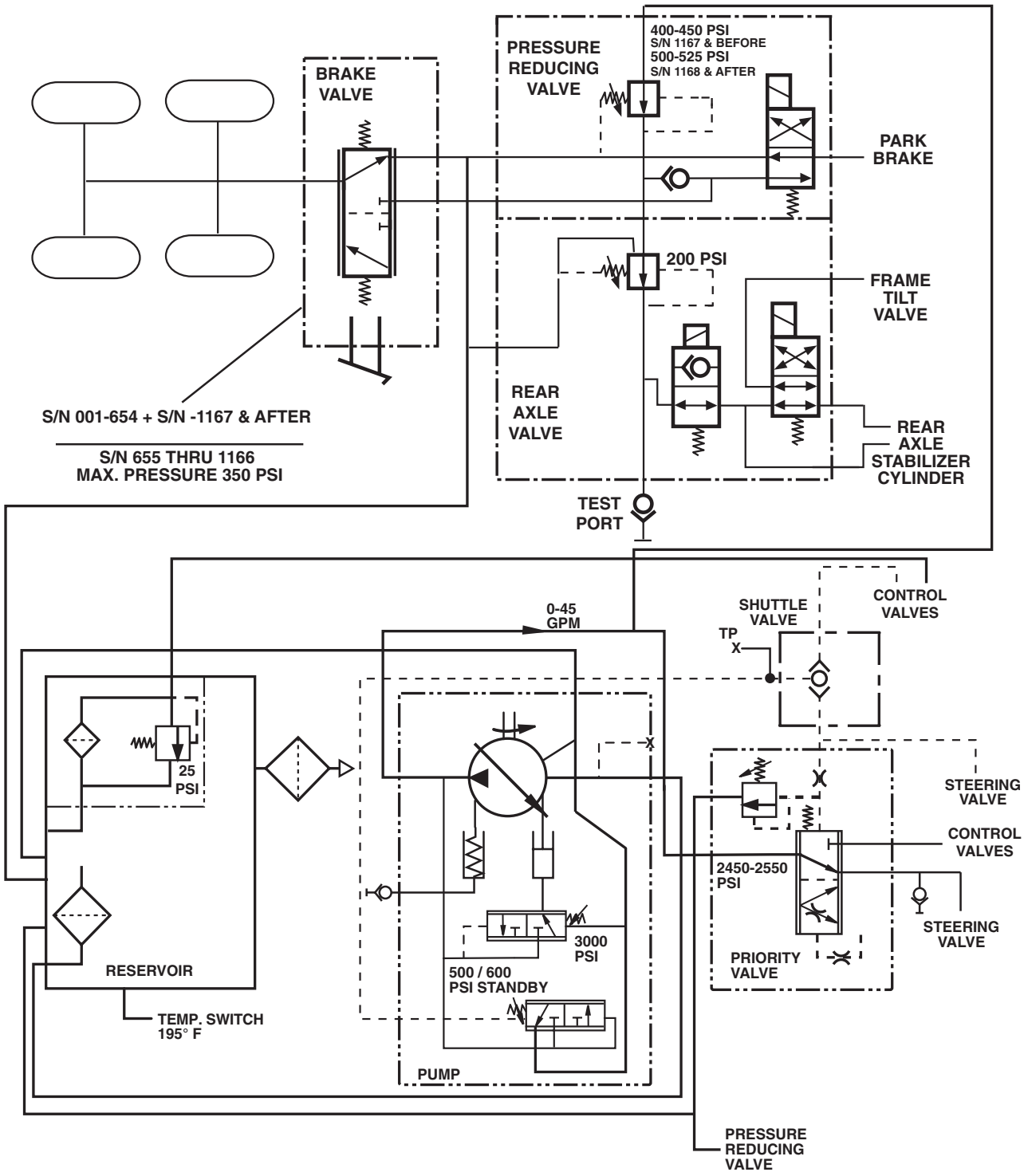

MH0660

10042/10054 Outrigger Schematic (S/N 10881 & Before)

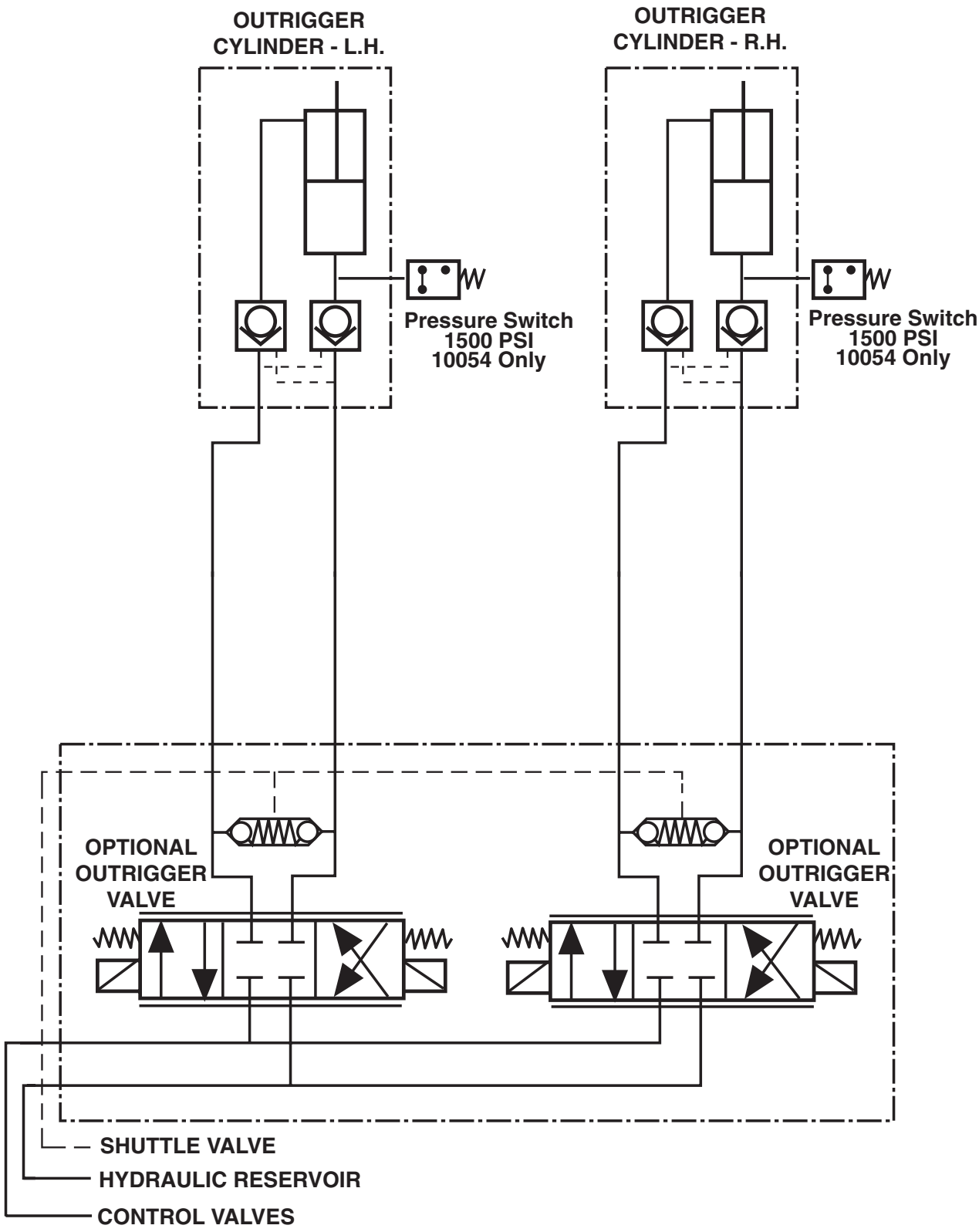

MH0351

10042/10054 Outrigger Schematic (S/N 10882 & After)

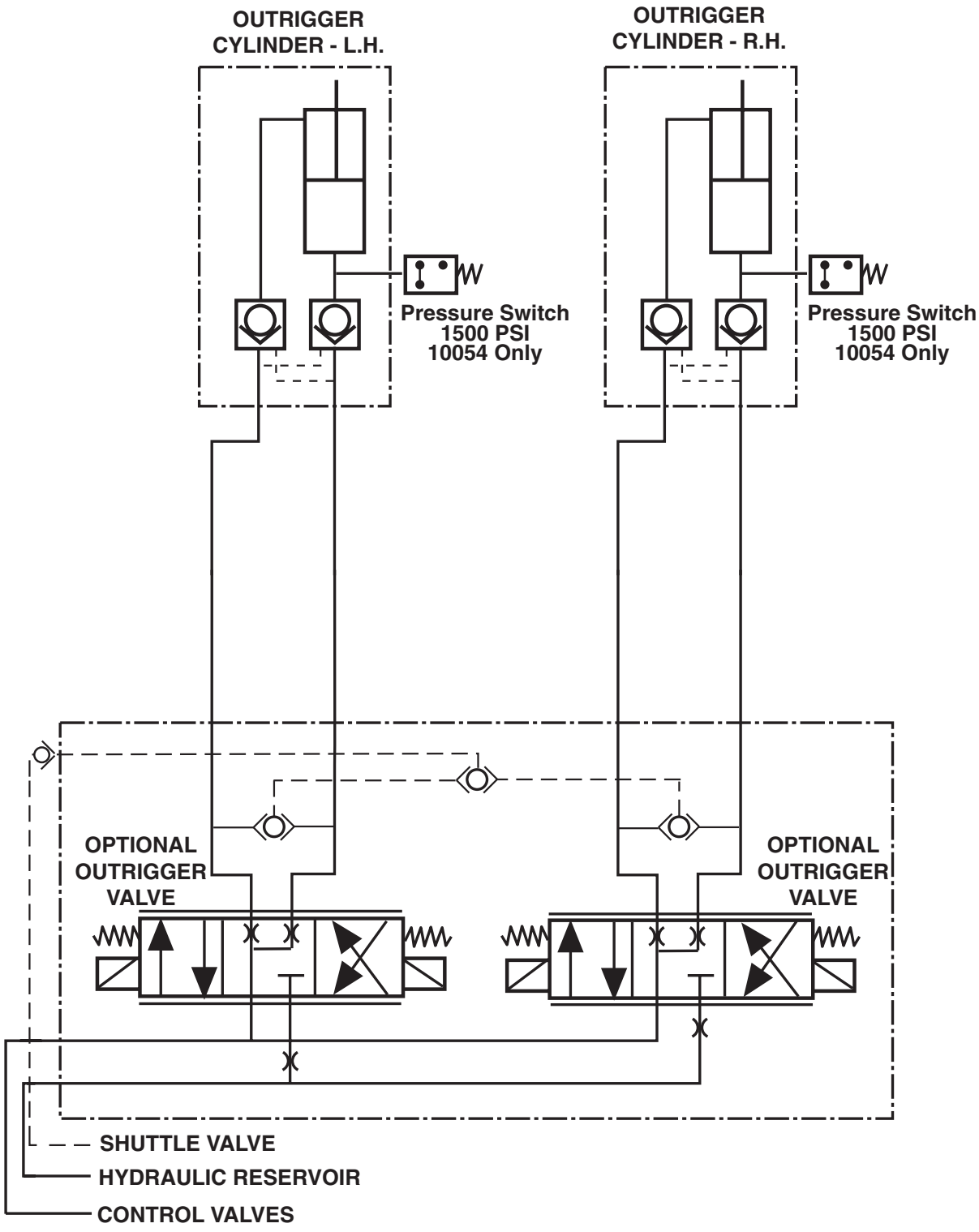

MH0670

8042/10042 Electrical Schematic (S/N 0291 & Before)

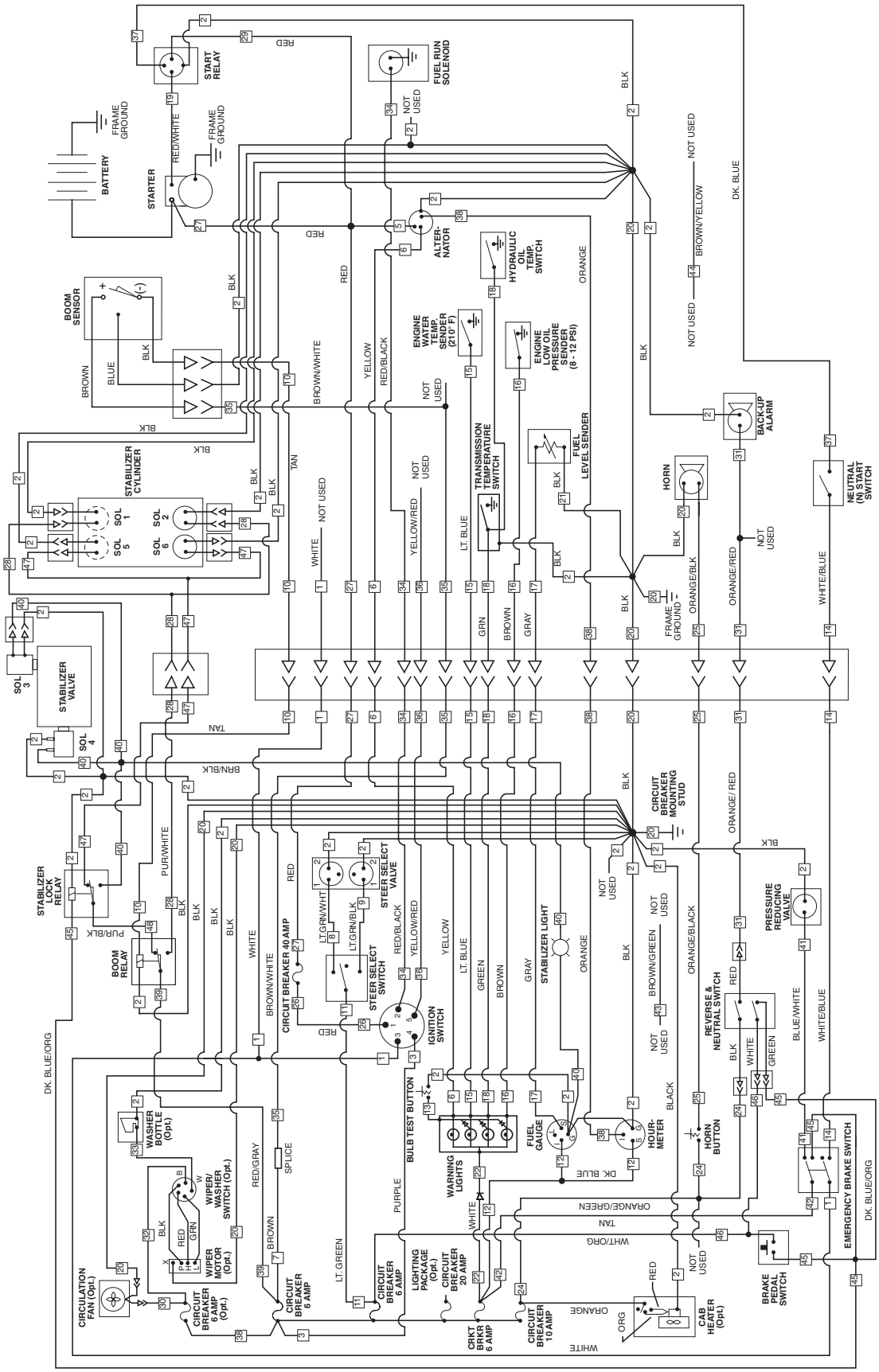

MH0150

8042/10042 Electrical Schematic (S/N 0292 thru 9908)

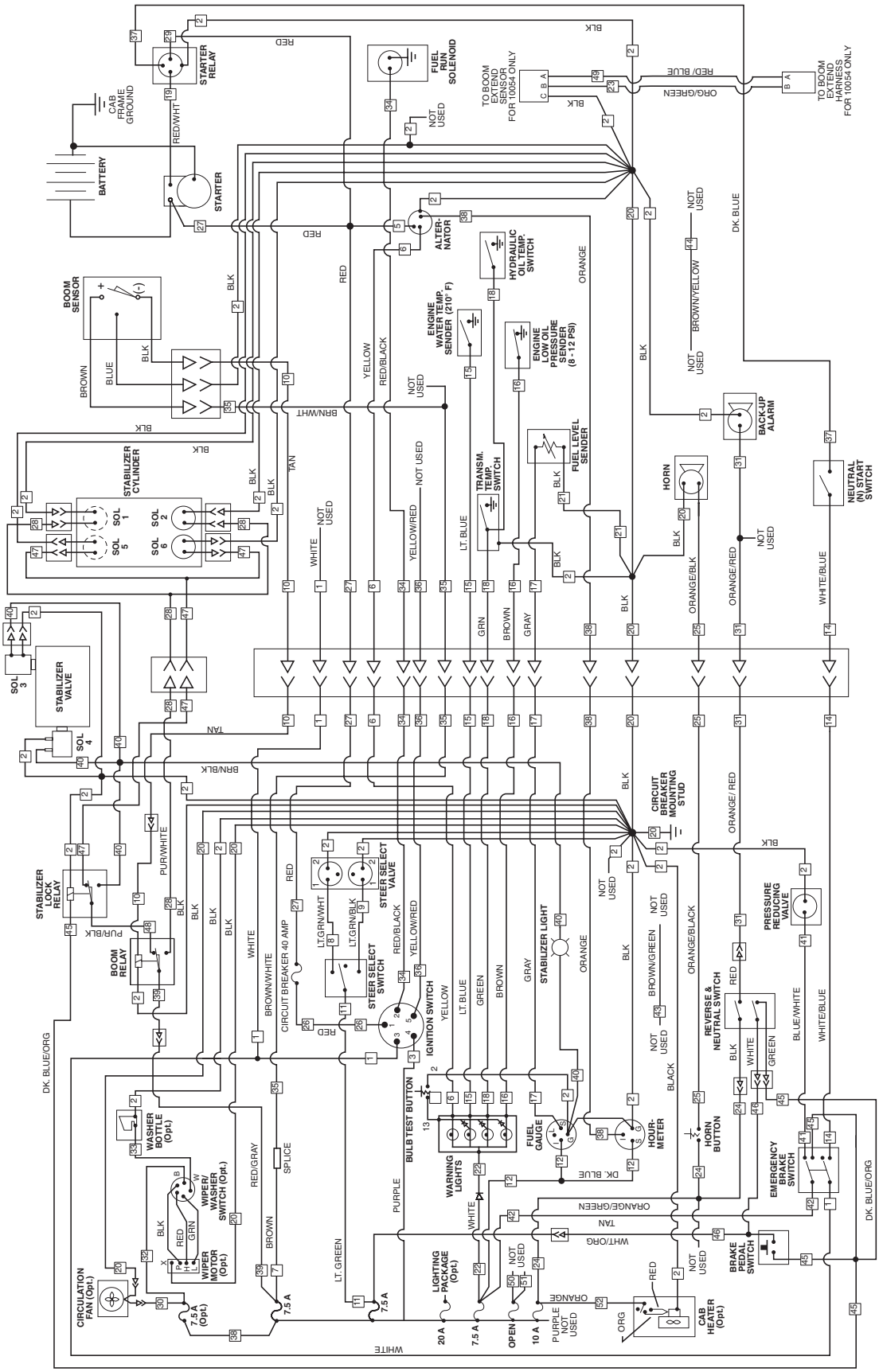

MH0160

8042/10042 Electrical Schematic (S/N 9909 & After)

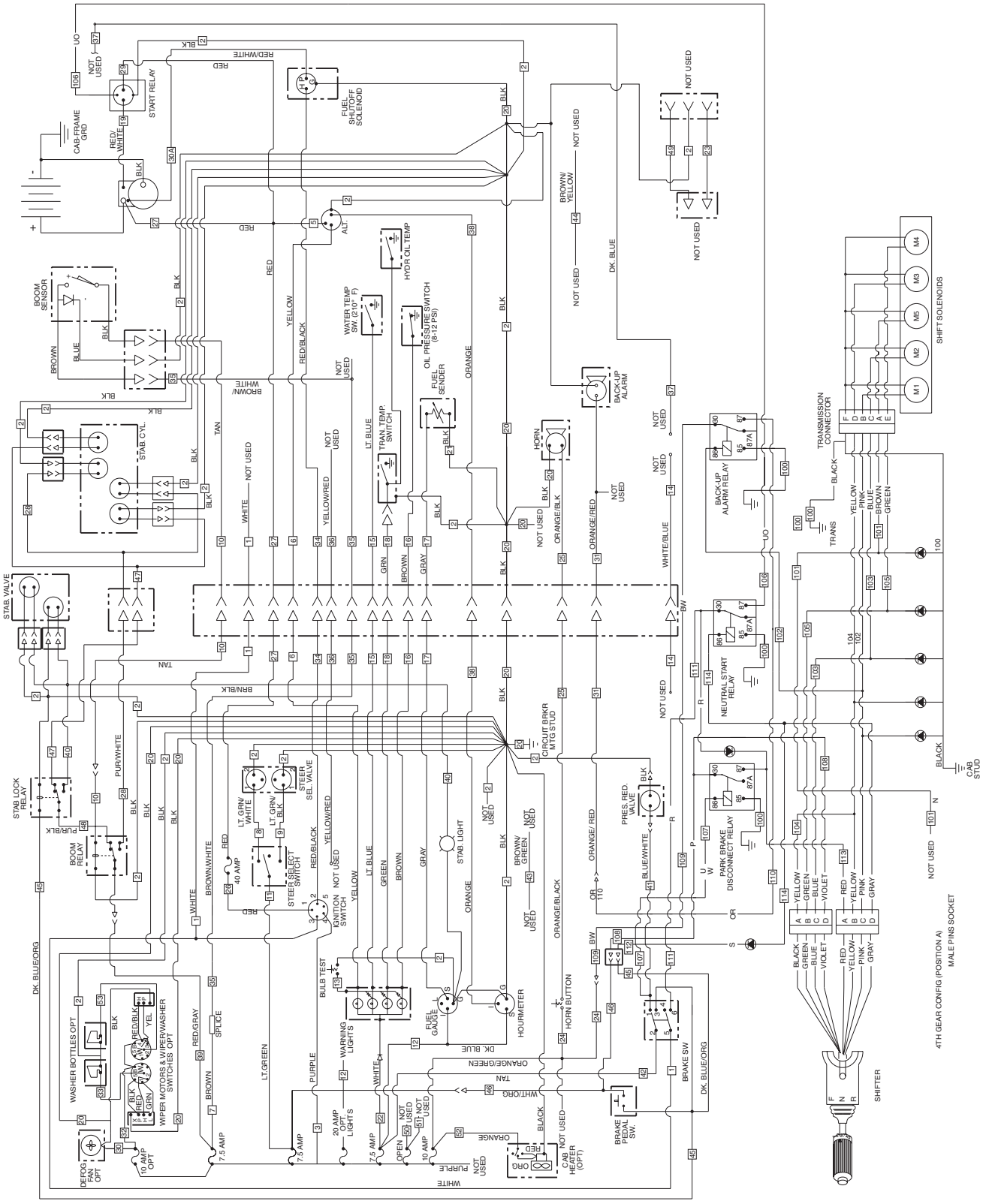
START RELAY
FUEL SHUTOFF SOLENOID
CAB FRAME GRD
ALT.
HYDR OIL TEMP
WATER TEMP SW. (210° F)
OIL PRESSURE SWITCH (8-12 PSI)
FUEL SENDER
BOOM SENSOR
STAB. CYL.
TRAN. TEMP. SWITCH
HORN
BACK-UP ALARM
BACK-UP ALARM RELAY
TRANSMISSION CONNECTOR
SHIFT SOLENOIDS
STAB. VALVE
STAB LOCK RELAY
BOOM RELAY
STEER SEL. VALVE
STEER SELECT SWITCH
IGNITION SWITCH
STAB. LIGHT
CIRCUIT BRKR MTG STUD
PRES. RED. VALVE
NEUTRAL START RELAY
PARK BRAKE DISCONNECT RELAY
CAB STUD
BULB TEST
FUEL GAUGE
HOURMETER
HORN BUTTON
WARNING LIGHTS
BRAKE PEDAL SW.
BRAKE SW
WASHER BOTTLES OPT
WIPER MOTORS & WIPER/WASHER SWITCHES OPT
DEFOG FAN OPT
CAB HEATER (OPT.)
SHIFTER
4TH GEAR CONFIG (POSITION A)
MALE PINS SOCKET
NOT USED
NOT USED
NOT USED

10054 Electrical Schematic (S/N 9908 & Before)

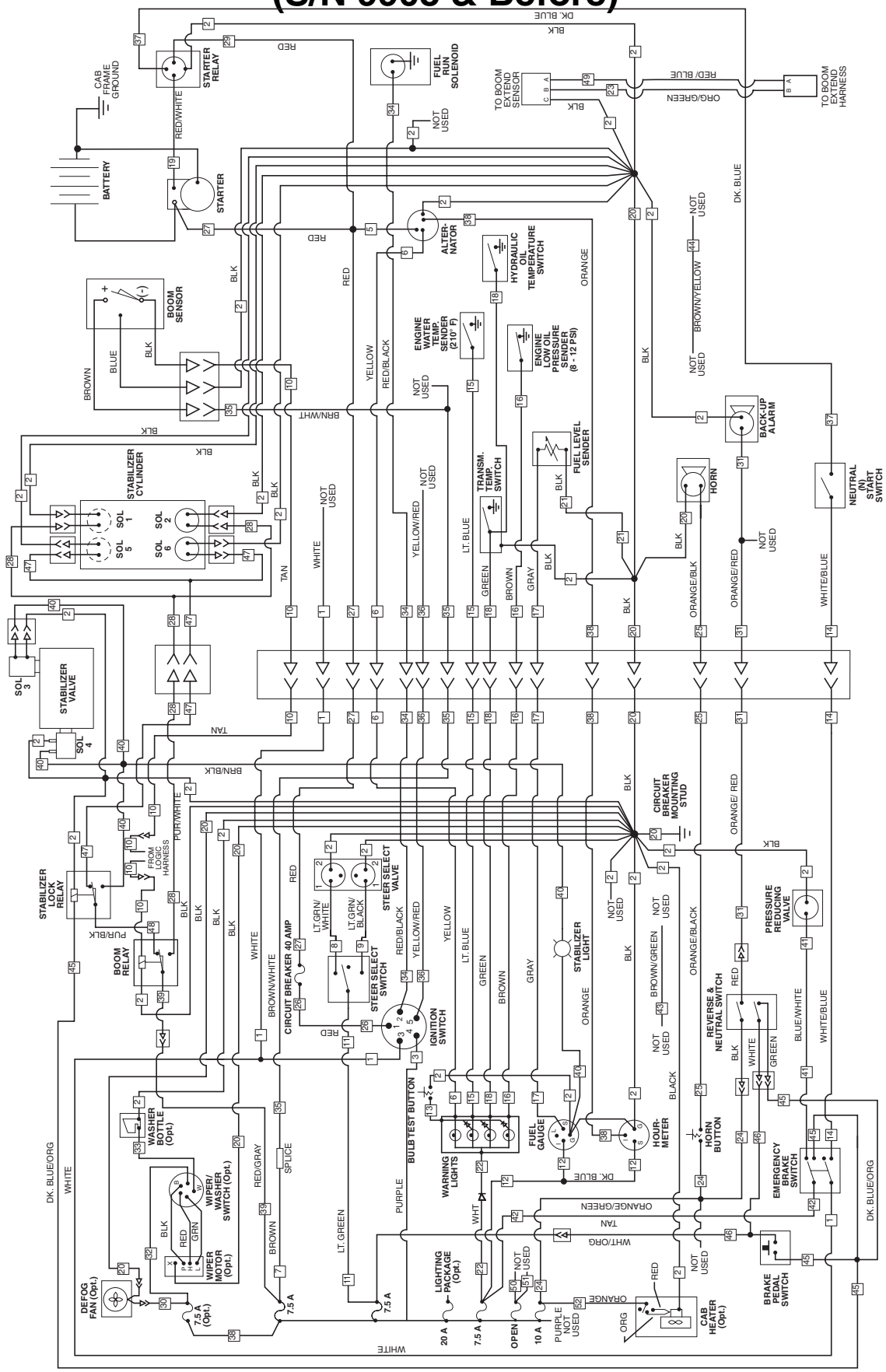

MH0170

10054 Electrical Schematic (S/N 9909 & After)

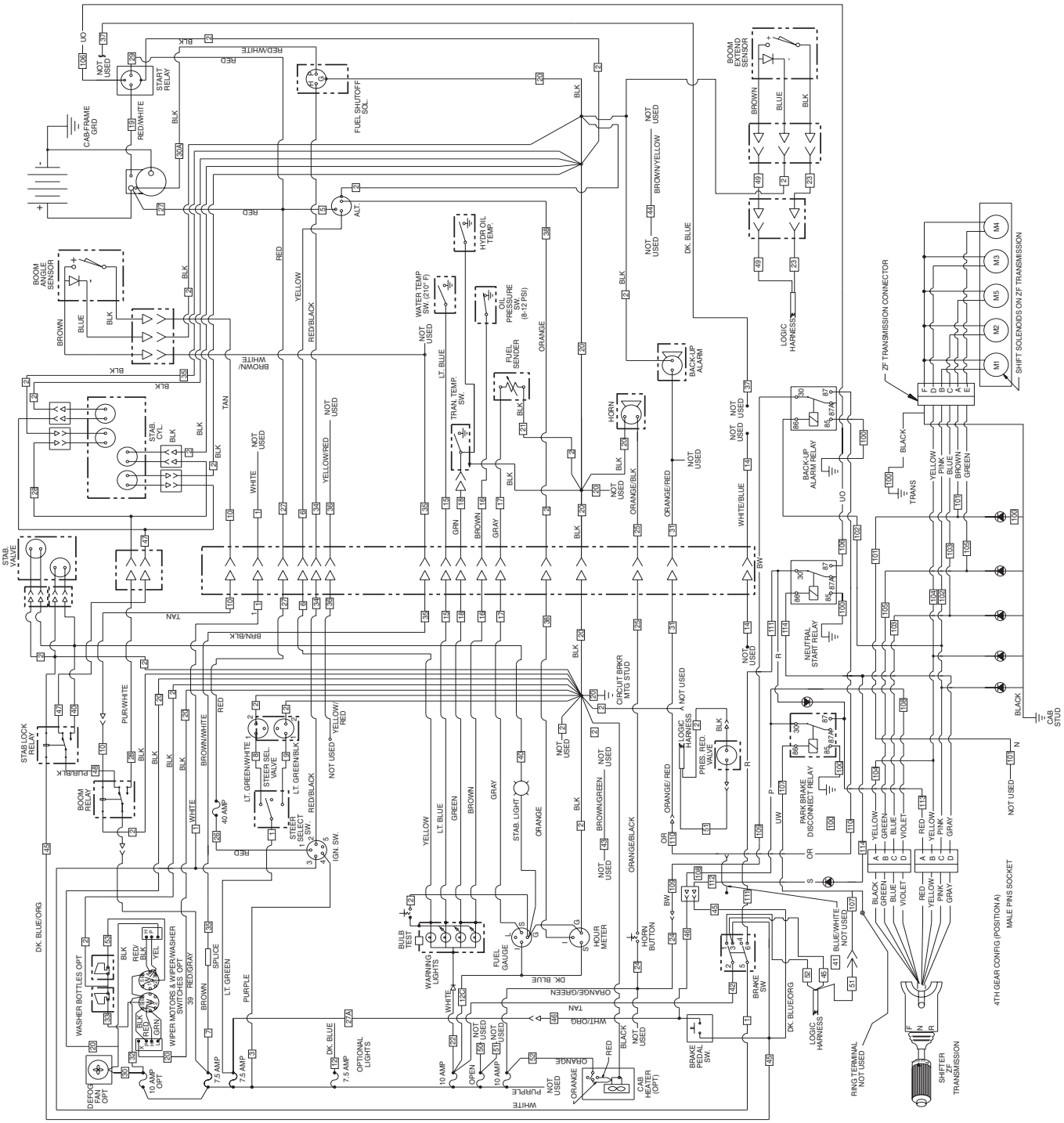

LETTER	COLOR	NUMBER
N	BROWN	101
G	GREEN	105
U	BLUE	103
P	VIOLET	108
R	RED	111
Y	YELLOW	104
K	PINK	102
S	GREY	112
B	BLACK	100
BW	BLACK/WHITE	109
OR	ORANGE/RED	110
UO	BLUE/ORANGE	106
UW	BLUE/WHITE	107
RED	RED	113
GRAY	GRAY	114

MH0690

10042 Outrigger Logic Circuit

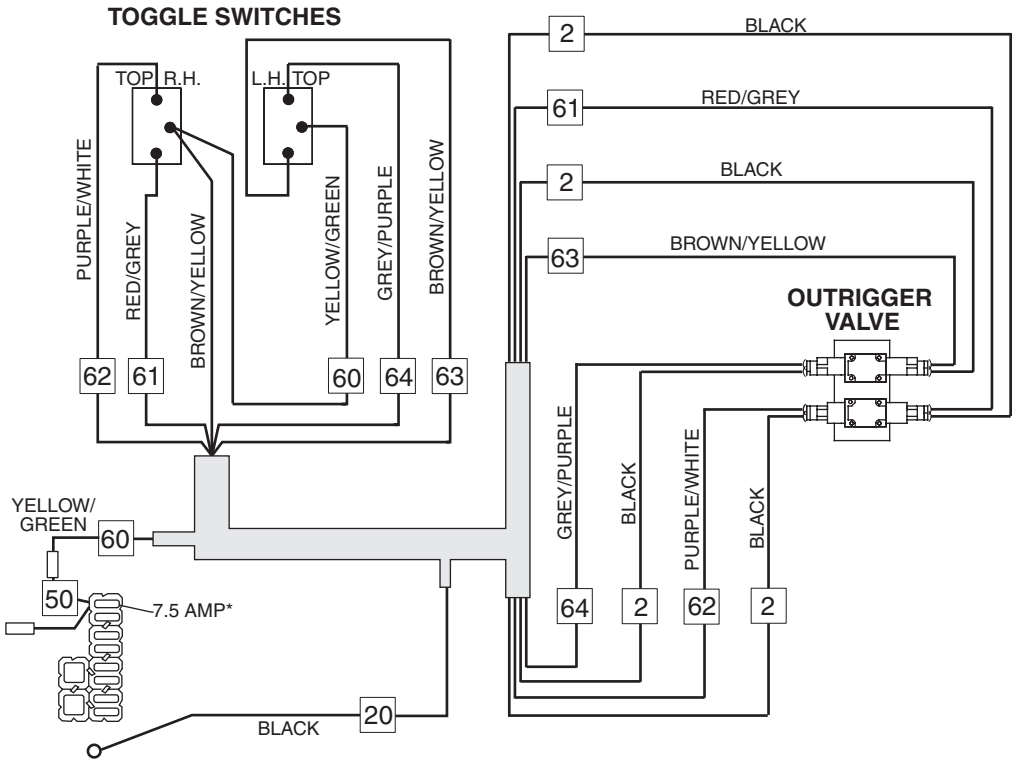

*7.5 AMP - S/N 0292 & After
6.0 AMP - S/N 0291 & Before

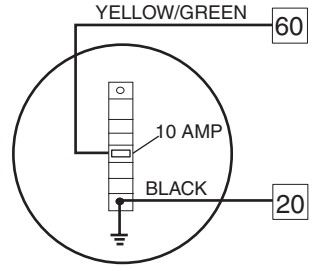

FOR UNITS WITH CIRCUIT BREAKERS

MH0181

10054 Outrigger Logic Circuit (S/N 9908 & Before)

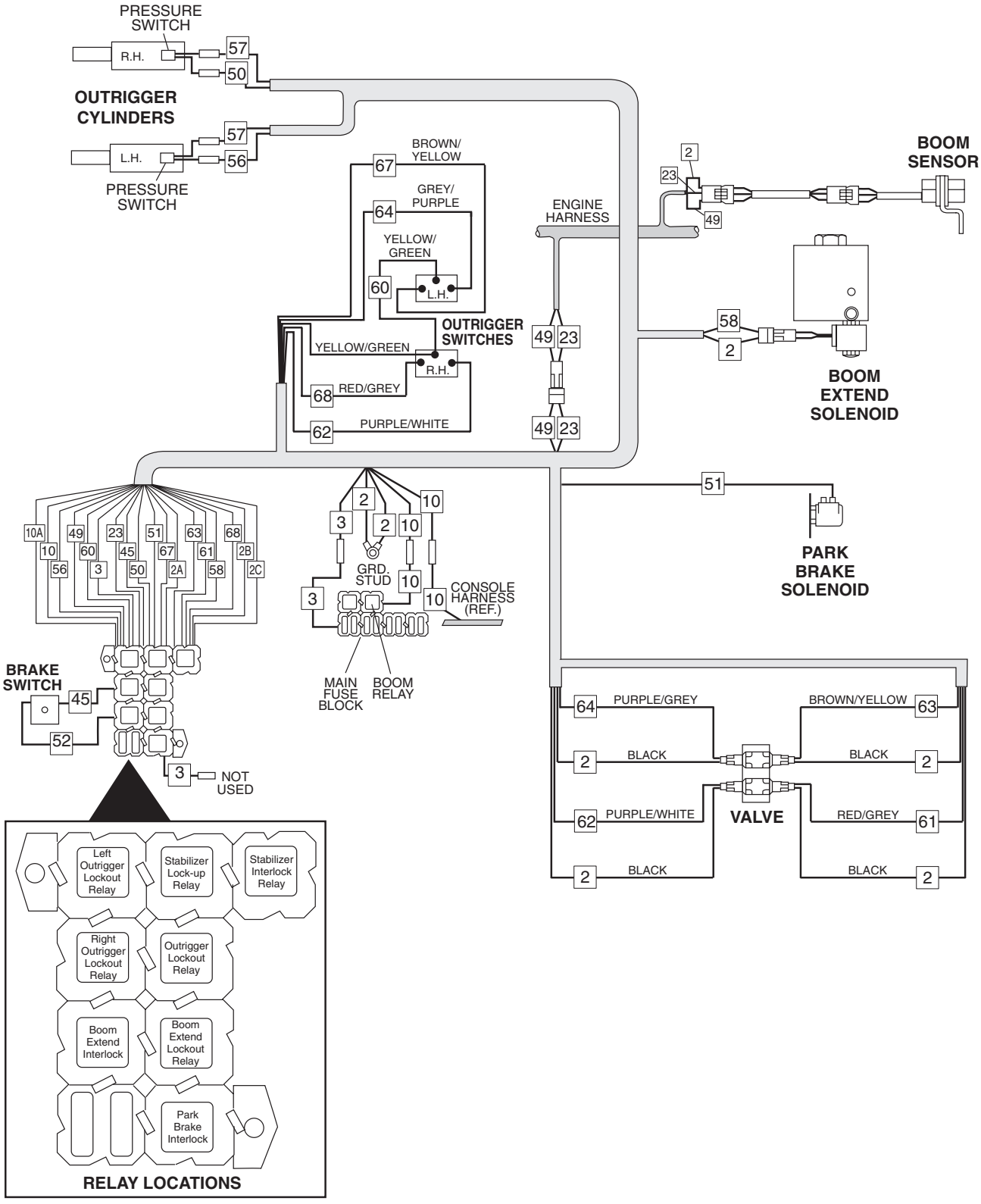

MH0190

10054 Outrigger Logic Circuit (S/N 9909 & After)

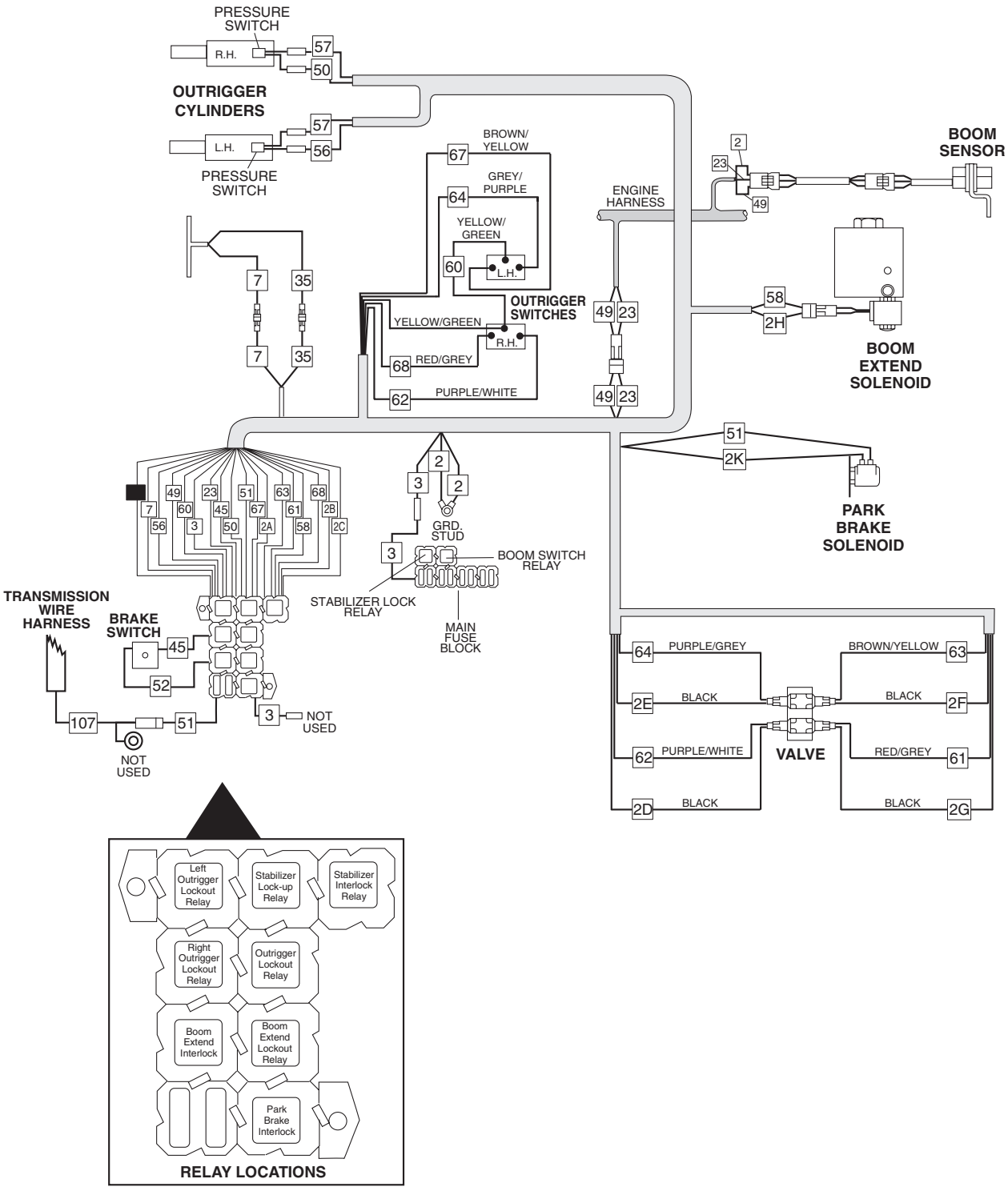

MH0710

8042/10042/10054 Lighting System Circuit (Optional)

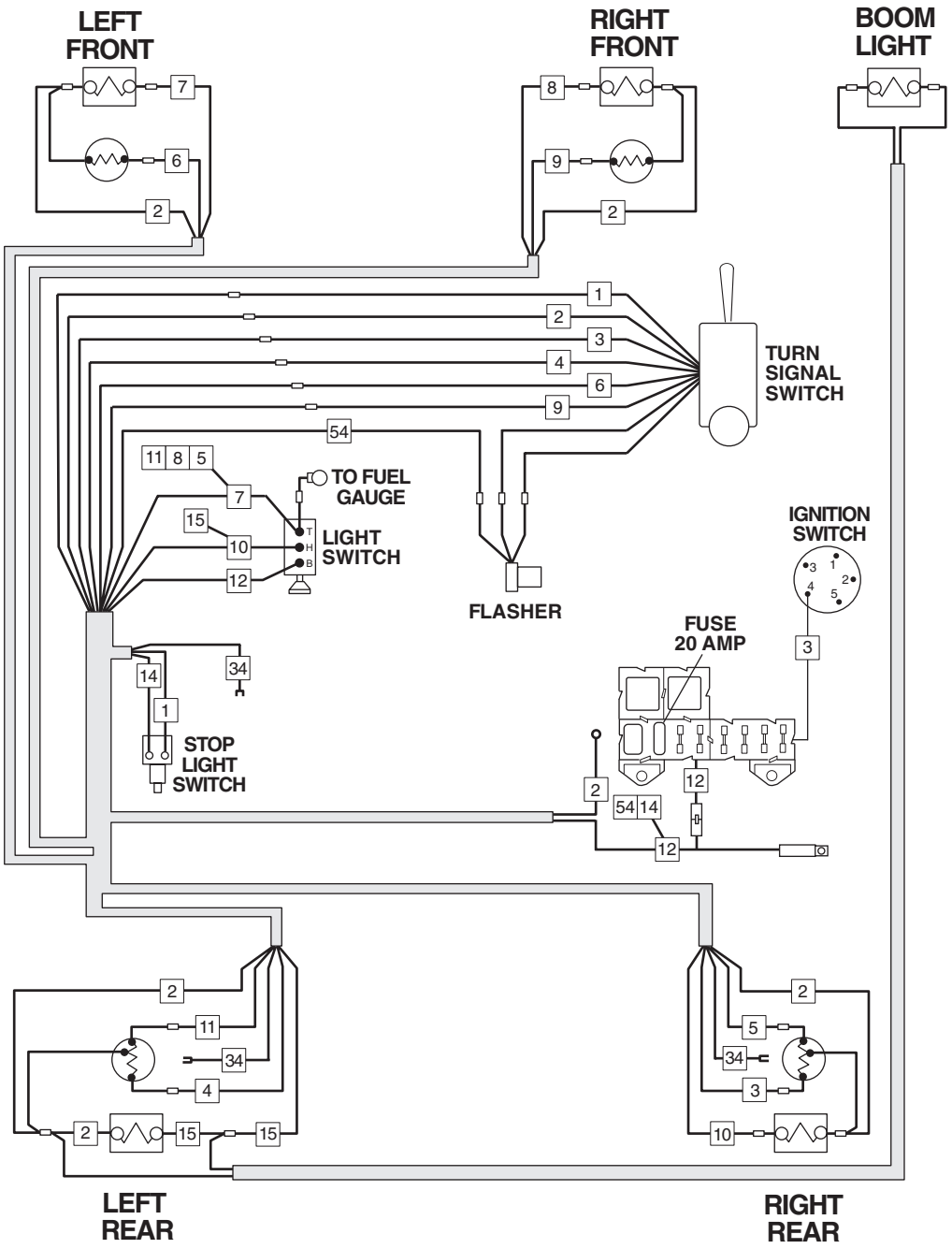

MH0201

8042/10042/10054 Charging Circuit

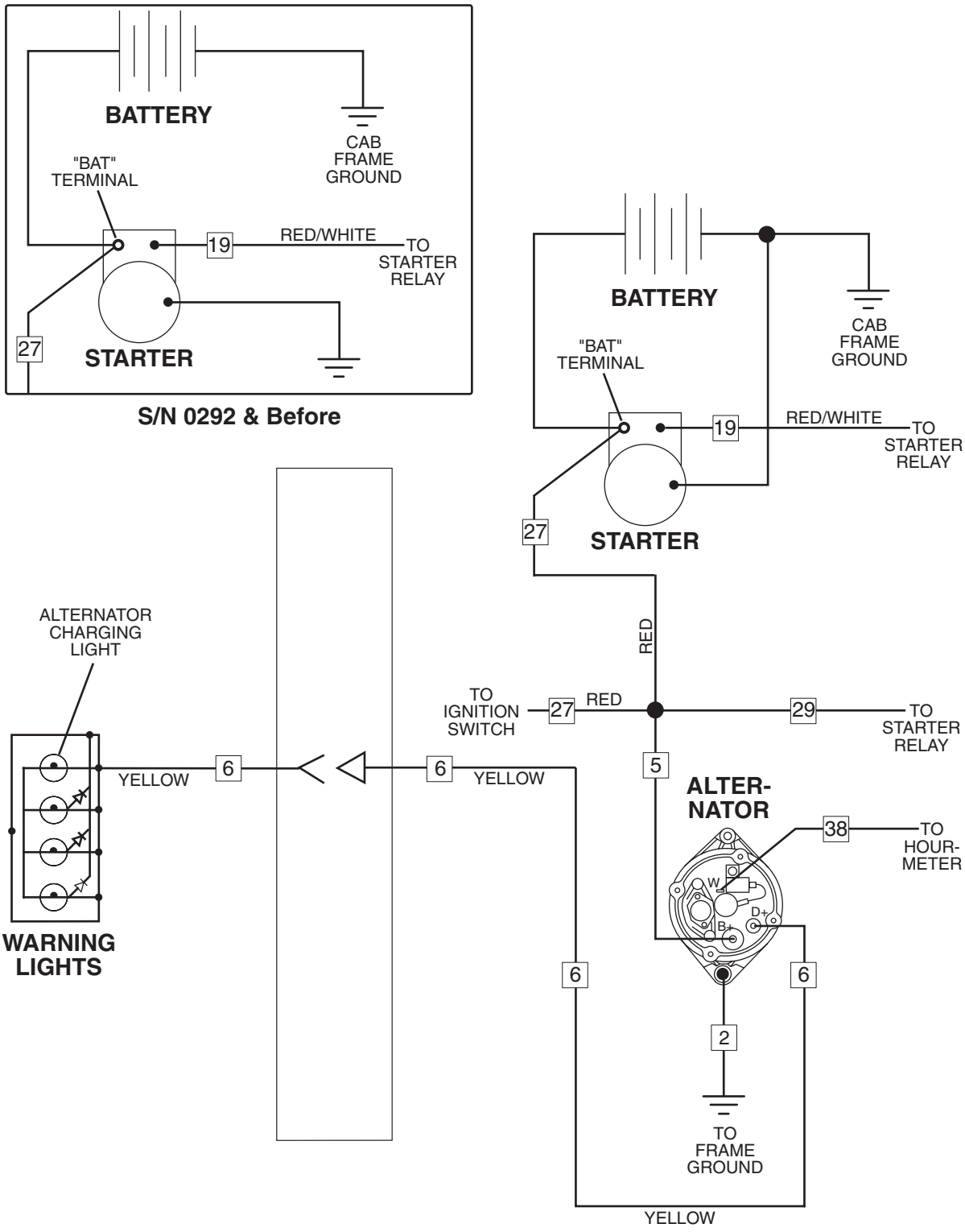

MH0211

8042/10042/10054 Cranking Circuit (S/N 9908 & Before)

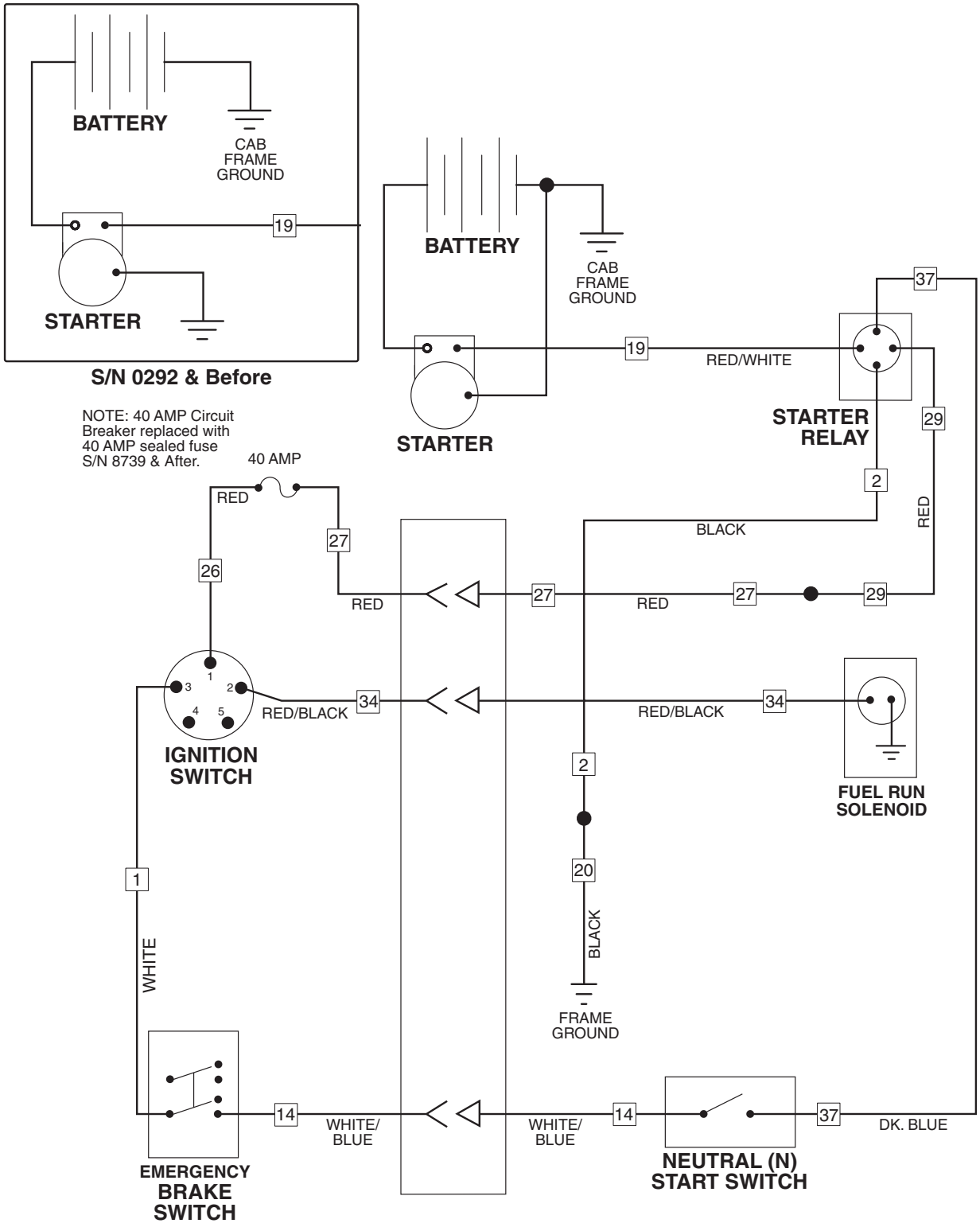

MH0221

8042/10042/10054 Cranking Circuit (S/N 9909 & After)

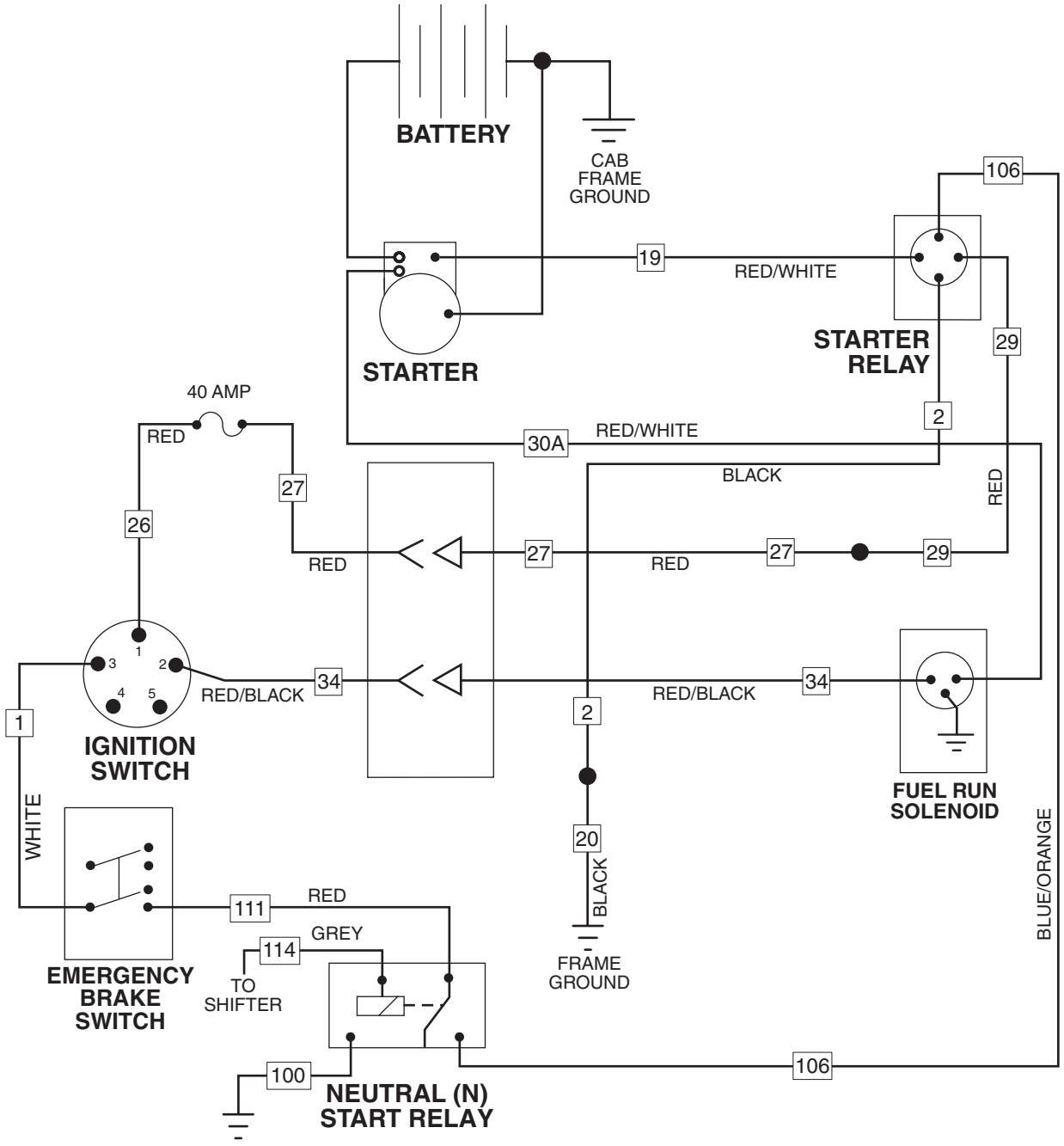

MH0700

8042/10042 Steer Select Circuit (S/N 0291 & Before)

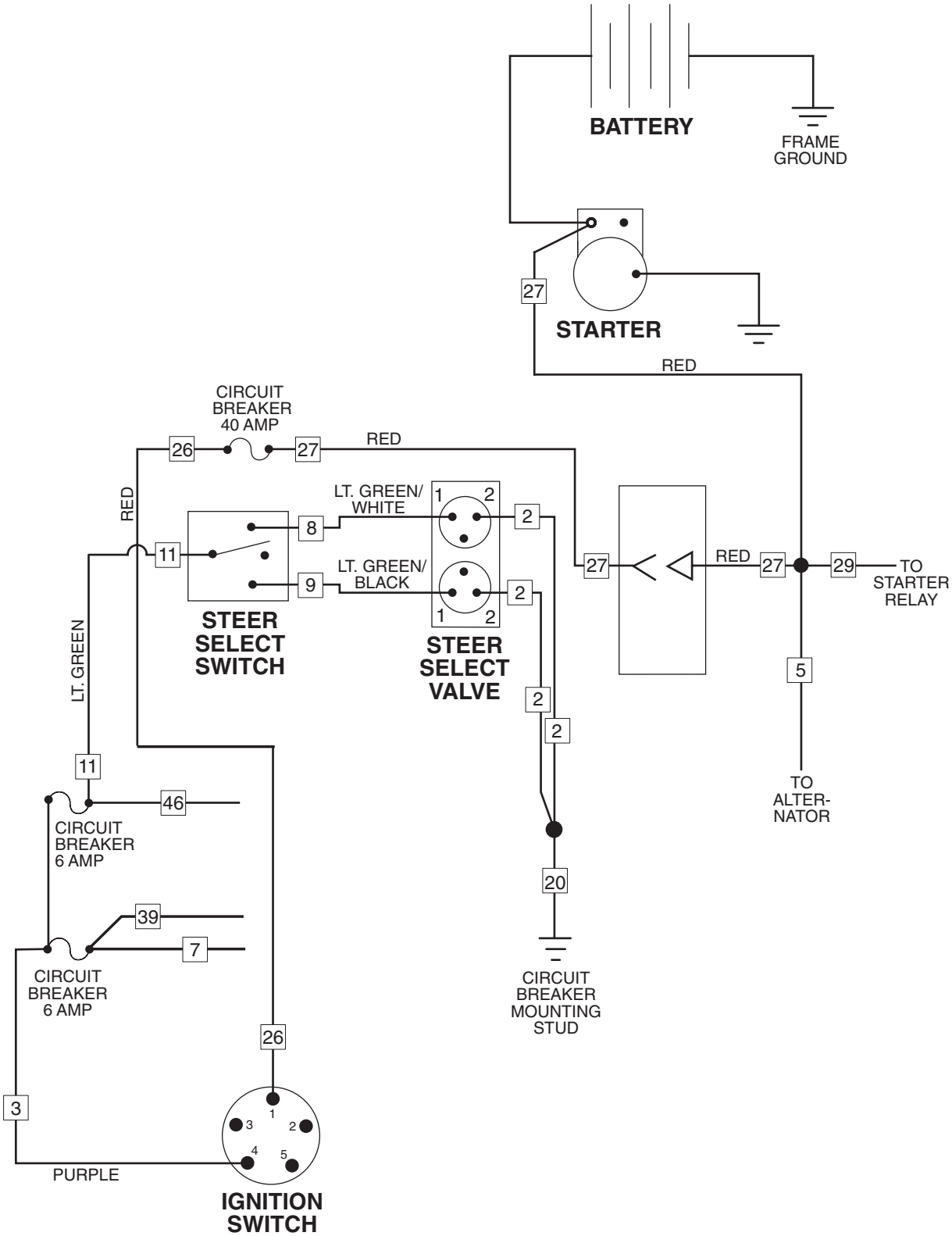

MH0231

8042/10042/10054 Steer Select Circuit (S/N 0292 & After)

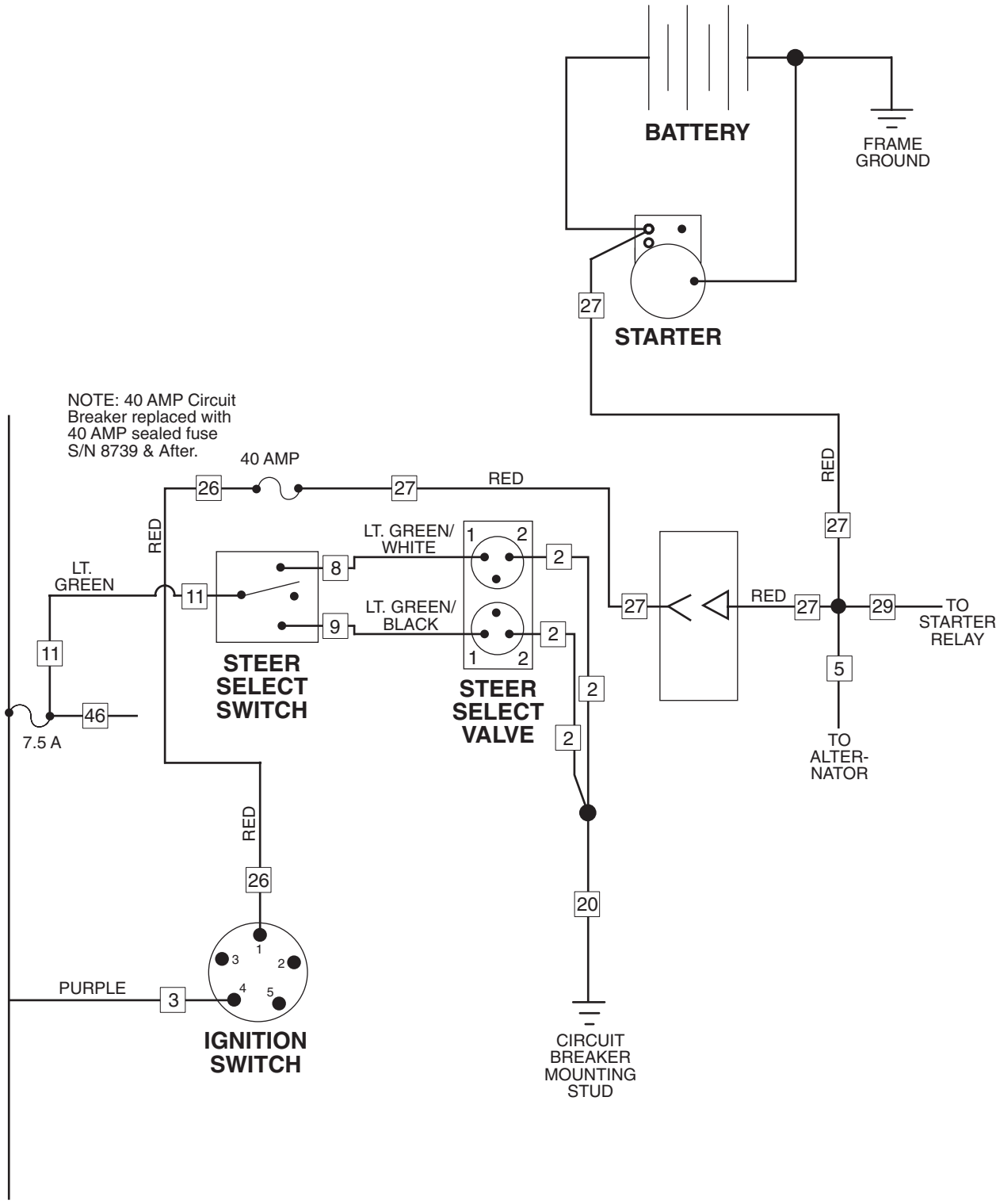

MH0241

8042/10042 Stabilizer Circuit (S/N 0291 & Before)

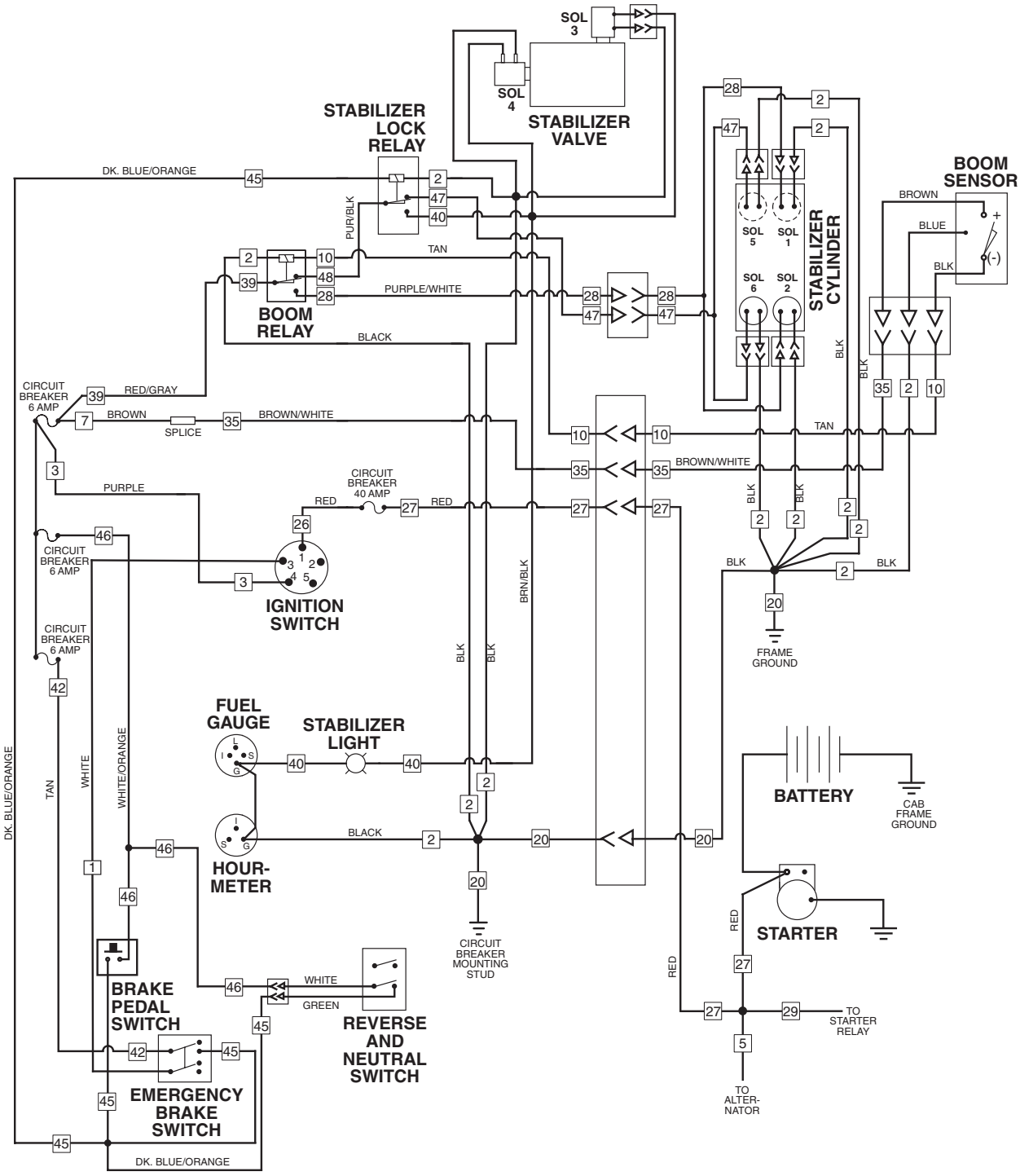

MH0251

8042/10042 Stabilizer Circuit (S/N 0292 thru S/N 9908)

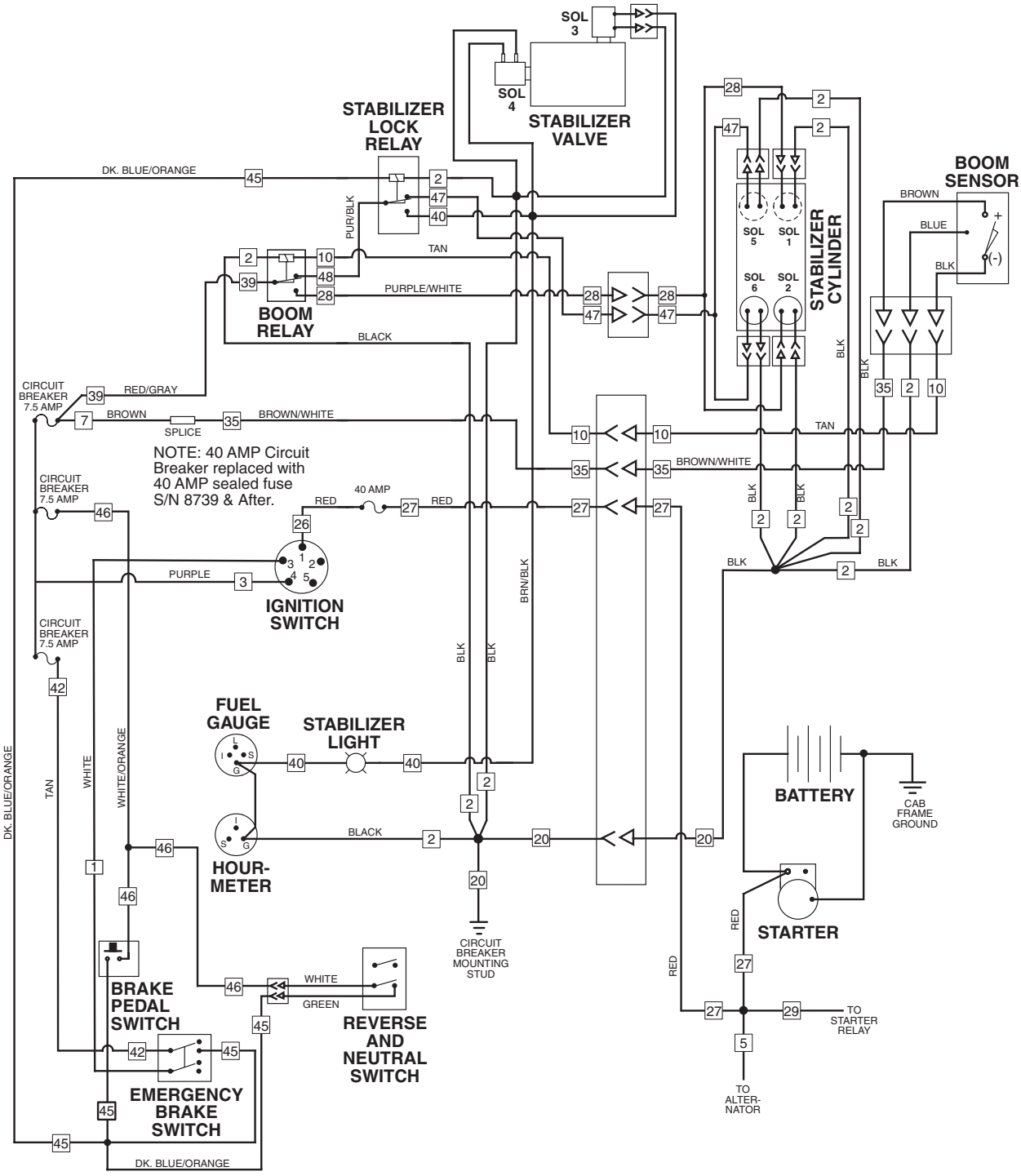

MH0261

8042/10042 Stabilizer Circuit (S/N 9909 & After)

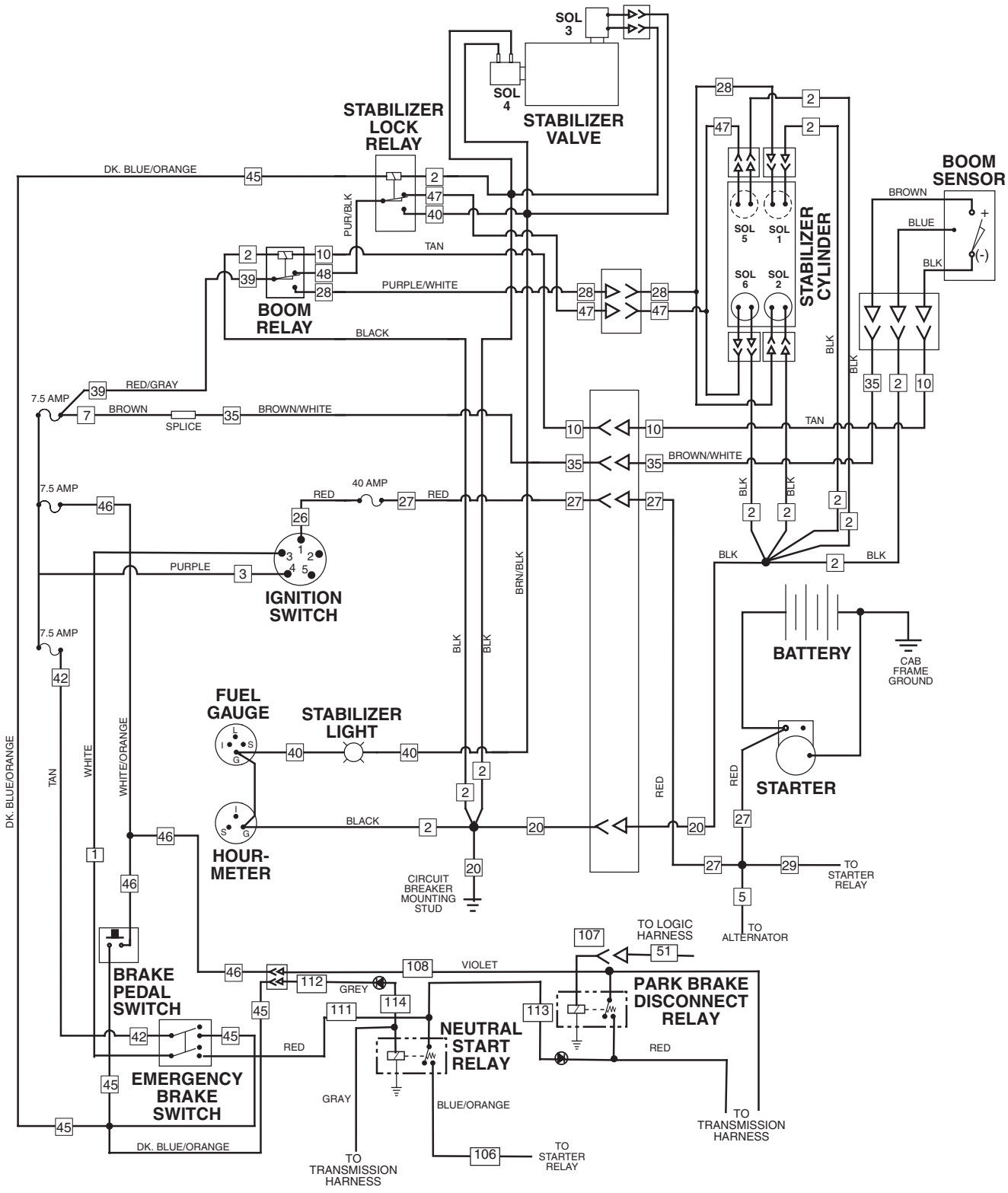

MH0720

10054 Stabilizer Circuit (S/N 9908 & Before)

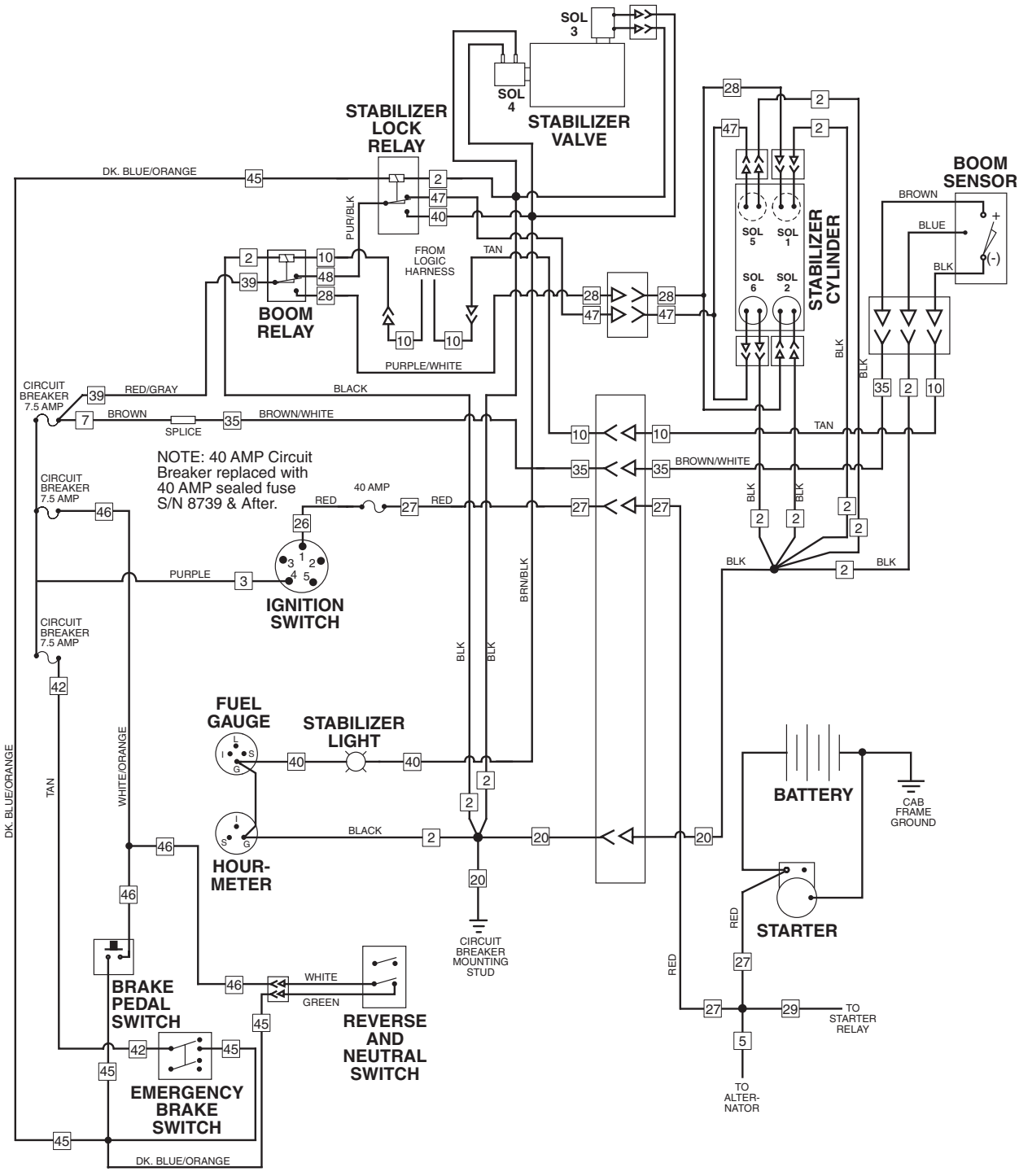

MH0271

10054 Stabilizer Circuit (S/N 9909 & After)

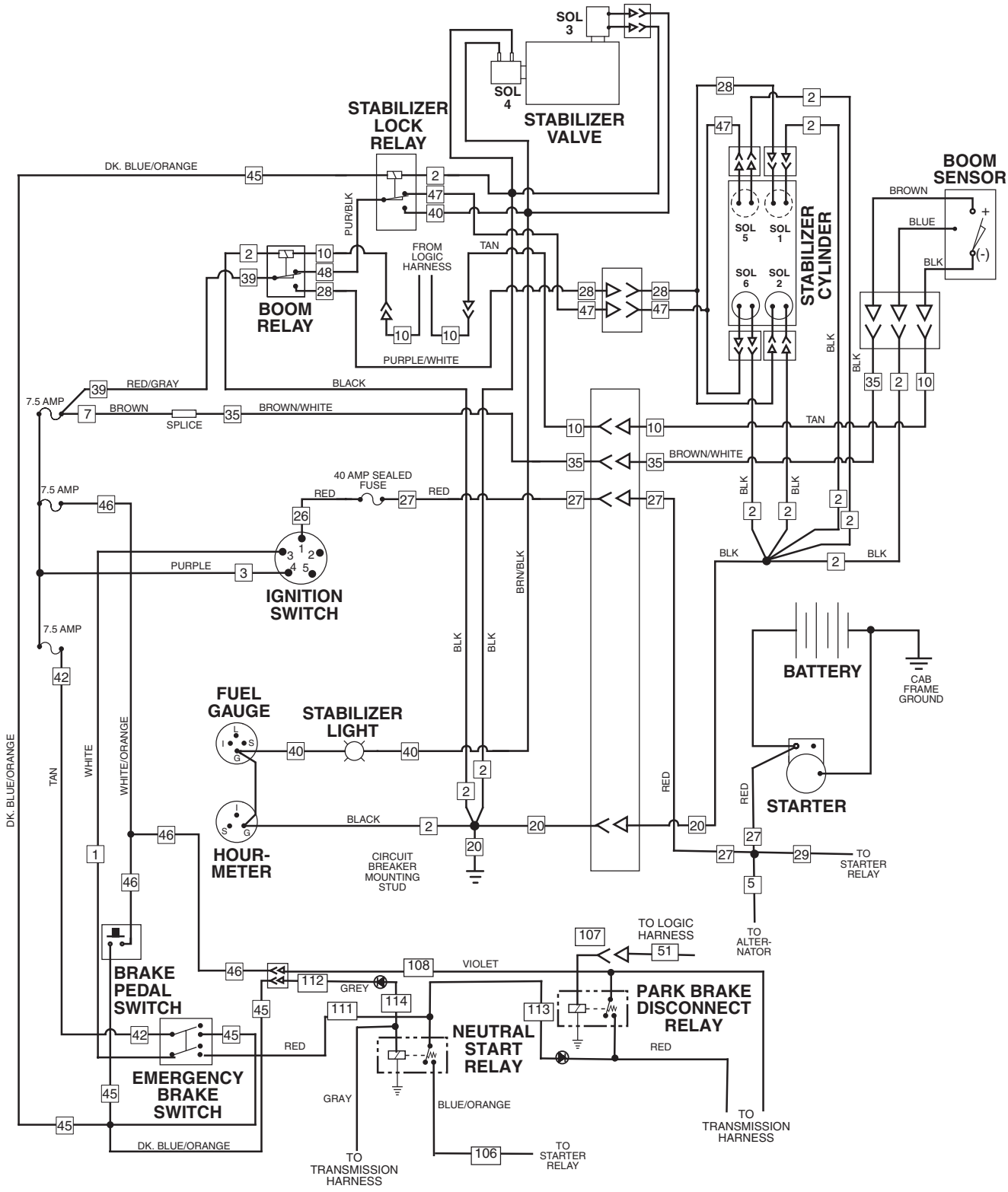

MH0730

NOTES

Stabil-TRAK System

The following information explains the difference between a typical telescopic handler and the benefits that the Stabil-TRAK System provides.

Most telescopic handlers operate within a 3 point stability triangle, as defined by points A, B, and C in the illustration to the right. Point 1 in the illustration represents the center of gravity of an unloaded vehicle. The load has its own center of gravity indicated by Point 3. When the vehicle is loaded, the vehicle and the load become one mass having a combined center of gravity represented by Point 2.

As the boom is lowered or extended, Point 2 will move forward in the 3 point stability triangle, or backward in the stability triangle as the boom is raised. Point 2 can also move left or right toward the edges of the stability triangle if the frame is tilted. As long as Point 2 remains within the boundaries of the 3 point stability triangle, the vehicle will remain stable. If Point 2 ever goes beyond the boundaries of the stability triangle, the vehicle can tip over.

In the locked mode, the exclusive Stabil-TRAK System provides a 4 point stability rectangle by positively locking the frame to the rear axle through the stabilizer cylinder. The vehicle is then supported at four points, A, B, D, and E. While in the locked mode, it is clear that Point 2 will remain within the entire boundary of the 4 point Stabil-TRAK stability rectangle, giving the operator more flexibility in positioning a load.

This illustration shows the increase in stability with the Stabil-TRAK System.

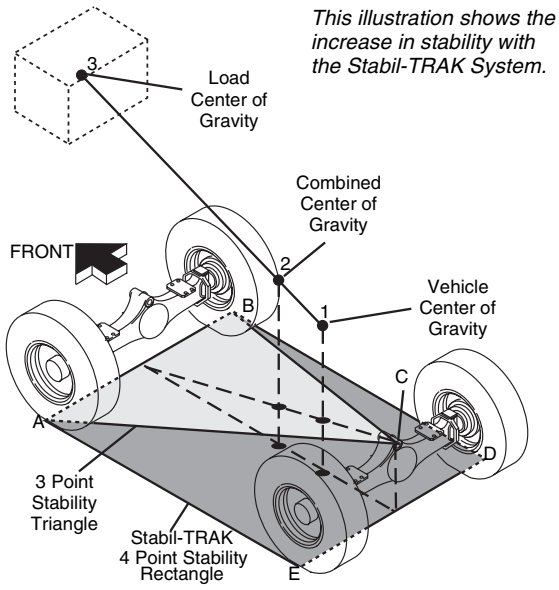

PH0712

The Stabil-TRAK System functions in the following three modes:

Free Pivot Mode

With the boom below 40°, the Stabil-TRAK System is in the free pivot mode and the rear axle is allowed to pivot freely.

The frame tilt functions normally, with or without the outriggers down.

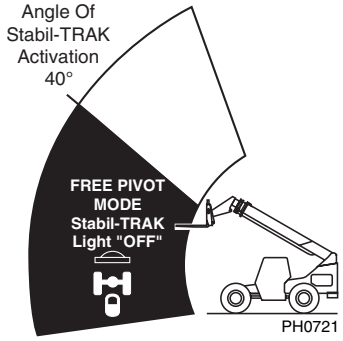

PH0721

3 Point Stability

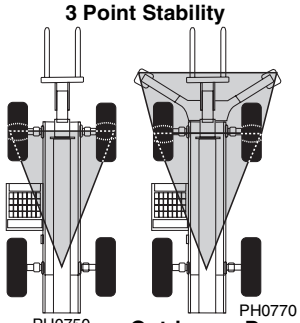

PH0750

PH0770

Outriggers Down

Final Positioning Mode

With the boom above 40°, and the vehicle traveling, the Stabil-TRAK System is in the final positioning mode. In this mode the rear axle is unlocked and is allowed to pivot, but will respond SLOWLY to changes in terrain.

The frame tilt functions normally in this mode.

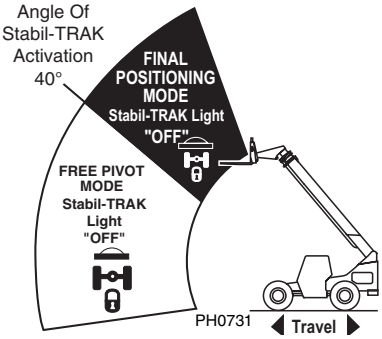

PH0731

3 Point Stability

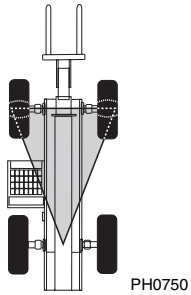

PH0750

Locked Mode

With the boom above 40°, and one or more of the following functions activated, the Stabil-TRAK System is in the locked mode and the rear axle is locked so it is rigid with the frame.

- Engaging the Emergency Brake Switch
- Placing the Travel Select Lever in NEUTRAL
- Depressing and holding the Service Brake Pedal

The frame tilt functions slower than normal in this mode, with or without the outriggers down.

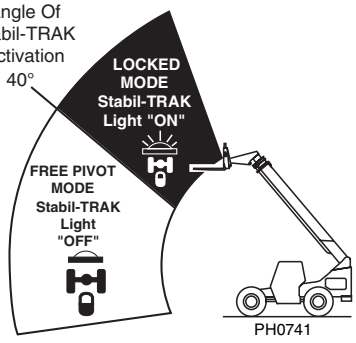

PH0741

4 Point Stability

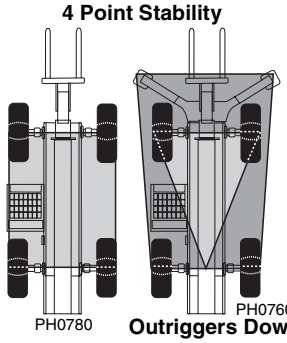

PH0780

PH0760

Outriggers Down

Stabil-TRAK System

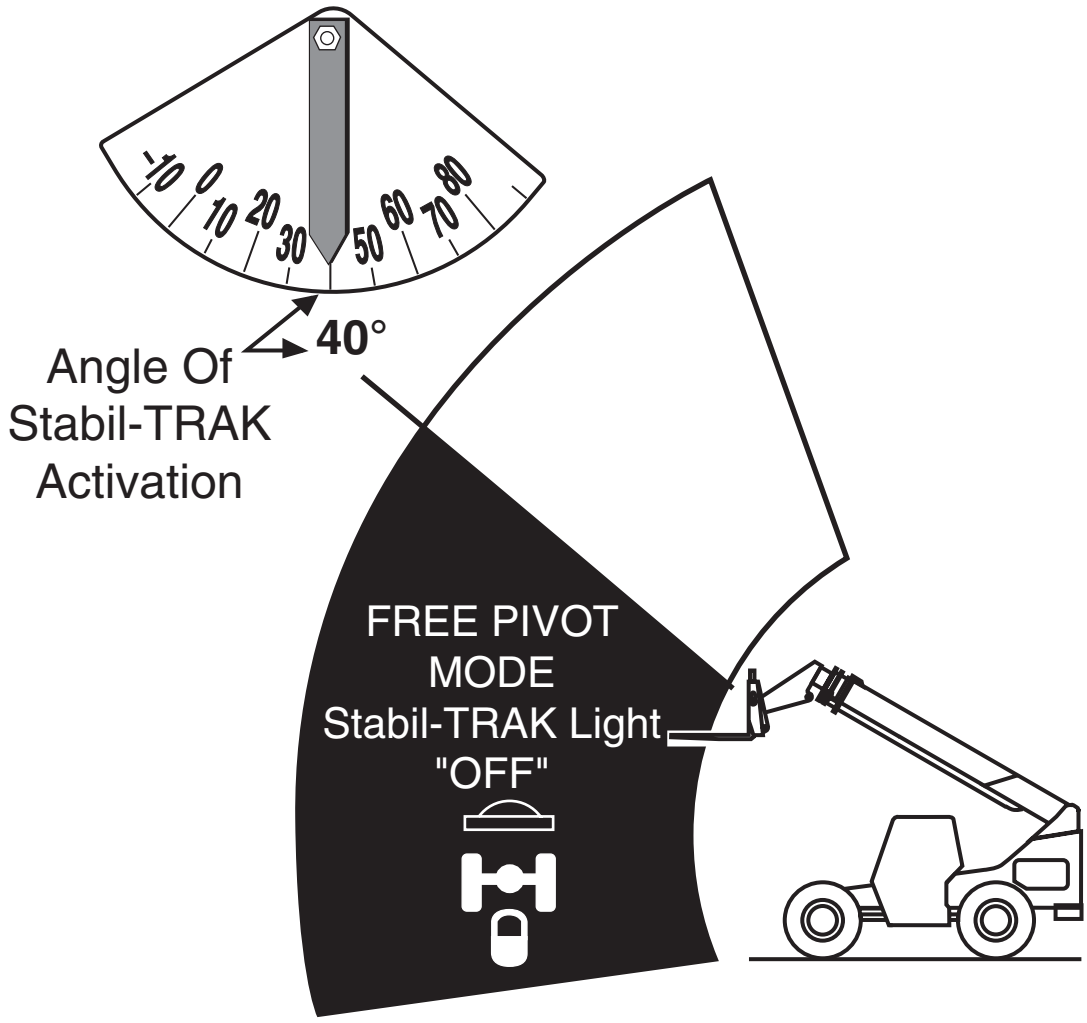

MH0362

Free Pivot Mode

Boom Angles are below 40°.
Rear Axle is allowed to pivot freely.

Stabil-TRAK System

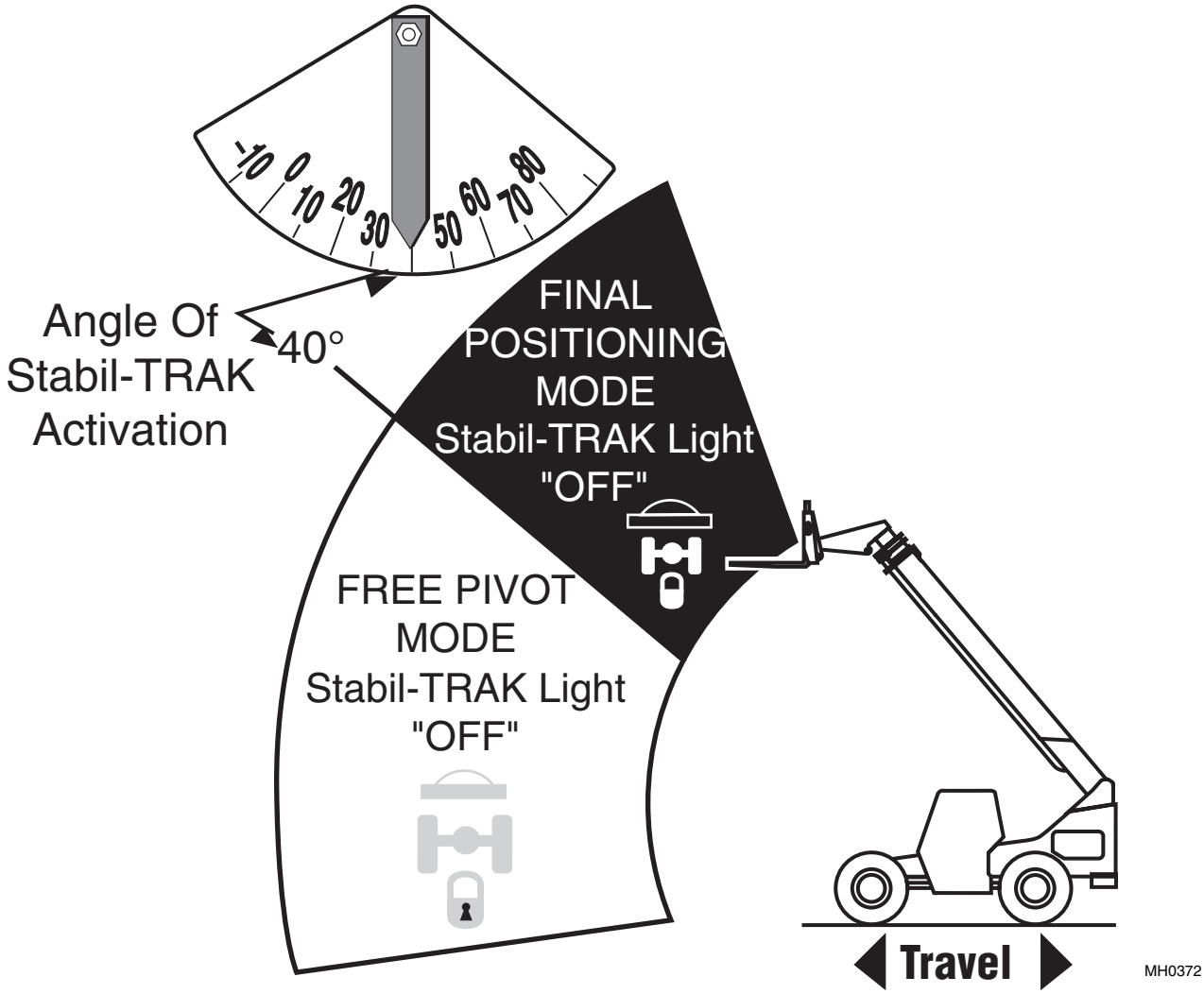

Final Positioning Mode

Boom Angles are above 40° with vehicle traveling.
Rear axle is unlocked and is allowed to pivot, but will respond SLOWLY to changes in terrain.

Stabil-TRAK System

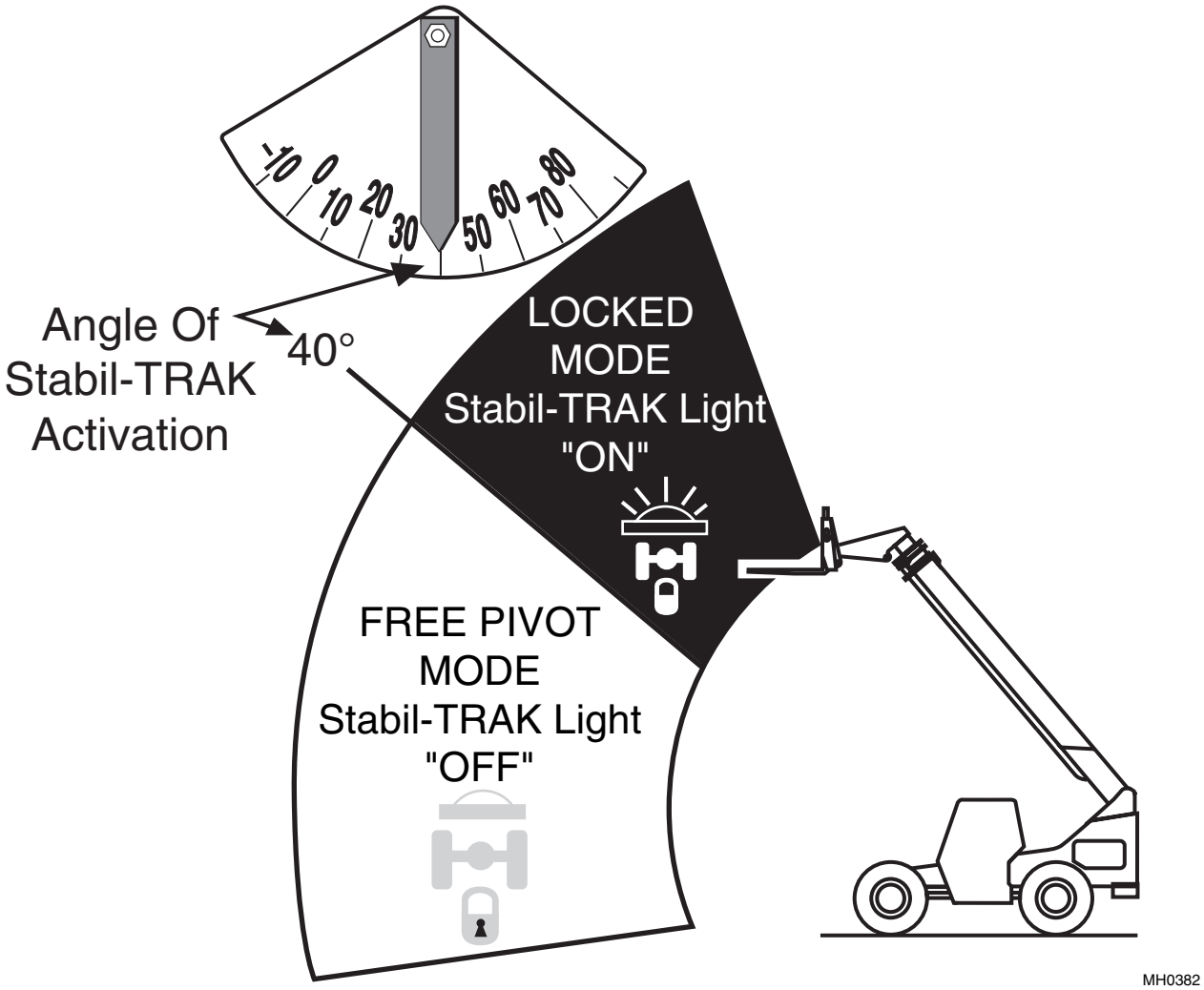

Locked Mode

Boom Angles are above 40°.
Rear axle is locked so it is rigid with the frame.
Activated by one or more of these functions:

- Engaging the Emergency Brake Switch
- Placing Travel Select Lever in NEUTRAL
- Depressing and holding the Service Brake Pedal

8042/10042
Stabil-TRAK System Troubleshooting
(S/N 9908 & Before)

	FREE PIVOT MODE	FINAL POSITIONING MODE	LOCKED MODE
	Reference page 370 & 371	Reference page 372 & 373	Reference page 374 & 375
Machine Conditions / **Switch/ Relay Solenoid**	Ignition On Boom Below 40° Trans. Fwd. or Rev.	Ignition On Boom Above 40° SB Released Trans. Fwd. or Rev.	Ignition On Boom Above 40° PB & SB Applied Trans. Neutral
Solenoid 1	E	DE	DE
Solenoid 2	E	DE	DE
Solenoid 3	DE	DE	E
Solenoid 4	DE	DE	E
Solenoid 5	DE	E	DE
Solenoid 6	DE	E	DE
Boom Angle Sensor	C	O	O
Boom Switch Relay	E	DE	DE
Stabilizer Lock Relay	DE	DE	E
Stabilizer Light	Off	Off	On

Definitions:

PB = Park Brake
SB = Service Brake
DE = De-energized
E = Energized
C = Closed
O = Open

8042/10042
Stabil-TRAK Electrical Circuit
Ignition "OFF"
(S/N 9908 & Before)

Ignition "OFF"		

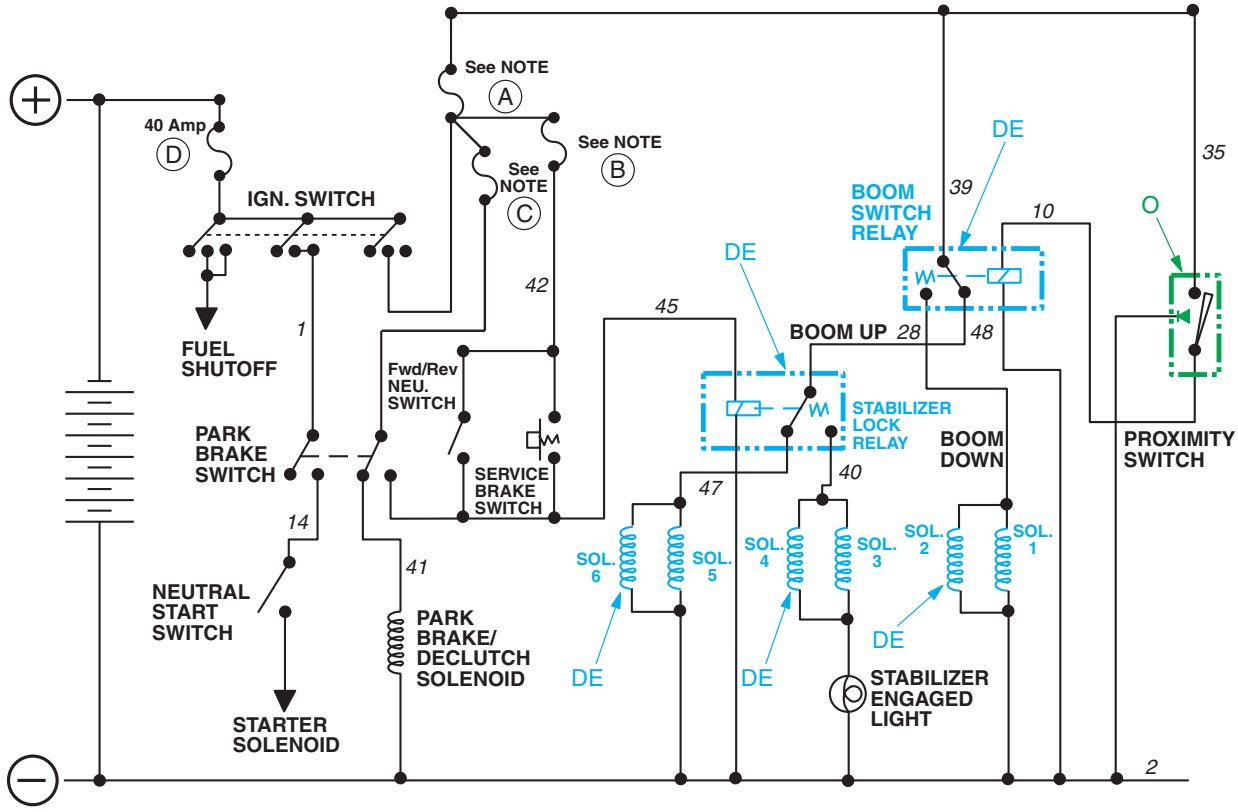

LEGEND

DE = De-energized
E = Energized
O = Open
PB = Park Brake
SB = Service Brake

NOTE:

7.5 Amp - S/N 292 & After
6.0 Amp - S/N 291 & Before

S/N 8042/10042-0292 & After
Boom Switch and Stabilizer Lock Relays located in Kick Panel

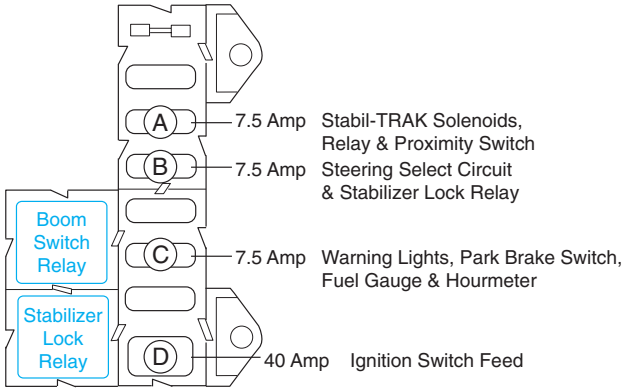

S/N 8042/10042-0291 & Before
Boom Switch Relay located in Kick Panel. Stabilizer Lock Relay located under Dash to the left side of the Steering Wheel

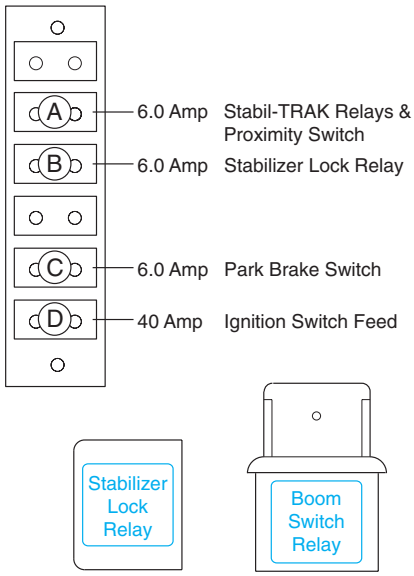

SH0402

8042/10042
Stabil-TRAK Electrical Circuit
Free Pivot Mode
(S/N 9908 & Before)

Free Pivot Mode				
Conditions	**1.**	Ignition "ON"	**4.**	SB & PB Released
	2.	Transmission in Fwd. or Rev.	**5.**	
	3.	Boom Below 40°	**6.**	

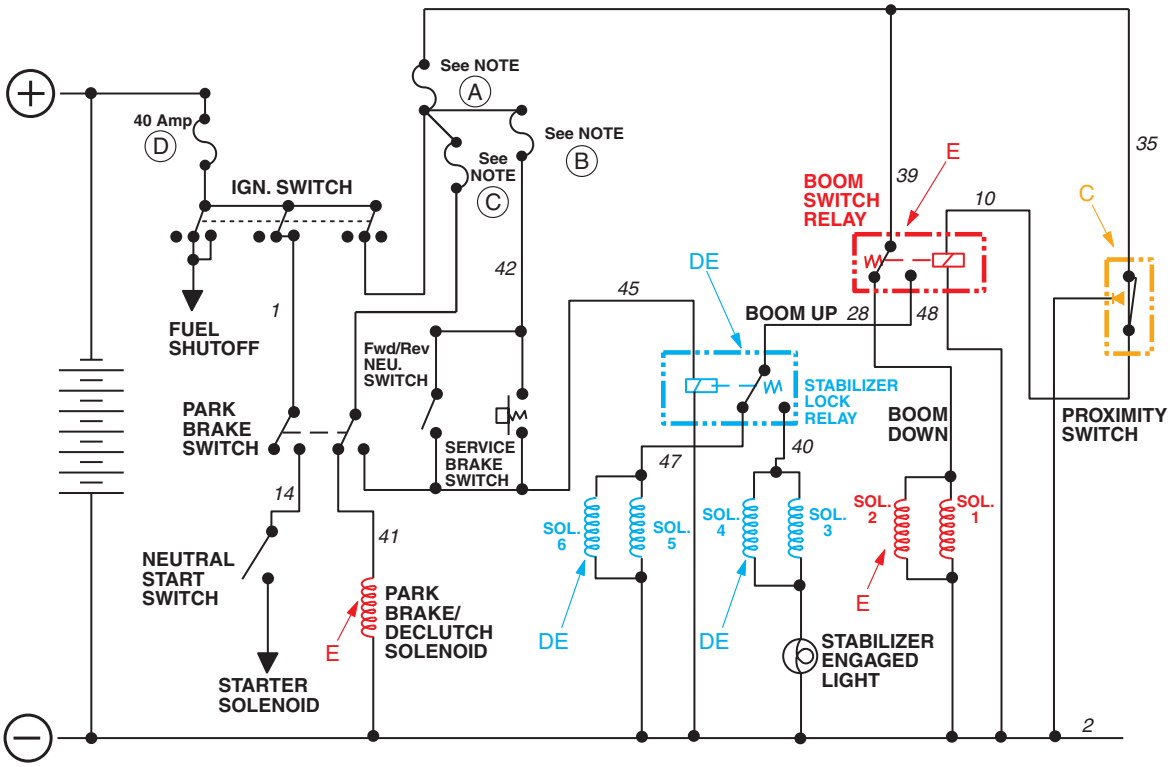

LEGEND

DE = De-energized
E = Energized
C = Closed
PB = Park Brake
SB = Service Brake

NOTE:

7.5 Amp - S/N 292 & After
6.0 Amp - S/N 291 & Before

S/N 8042/10042-0292 & After
Boom Switch and Stabilizer Lock Relays located in Kick Panel

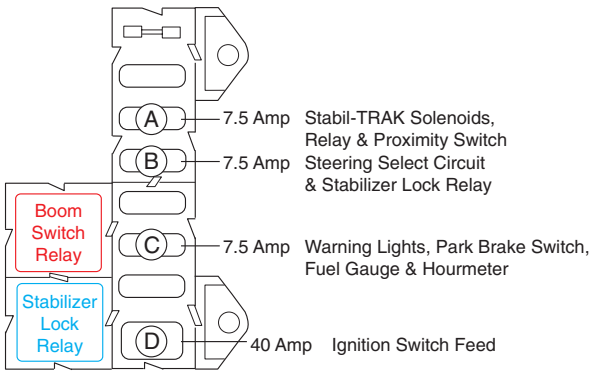

S/N 8042/10042-0291 & Before
Boom Switch Relay located in Kick Panel. Stabilizer Lock Relay located under Dash to the left side of the Steering Wheel

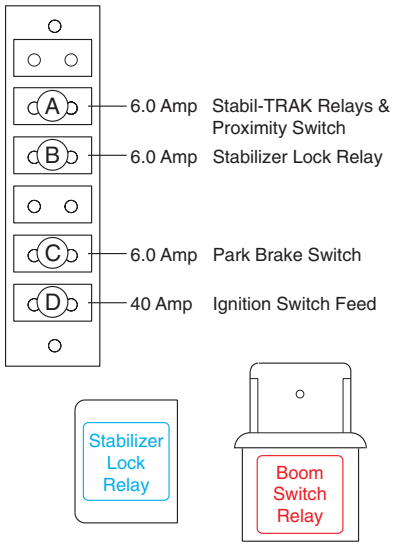

SH0581

8042/10042 Stabil-TRAK Hydraulic Circuit Free Pivot Mode (S/N 9908 & Before)

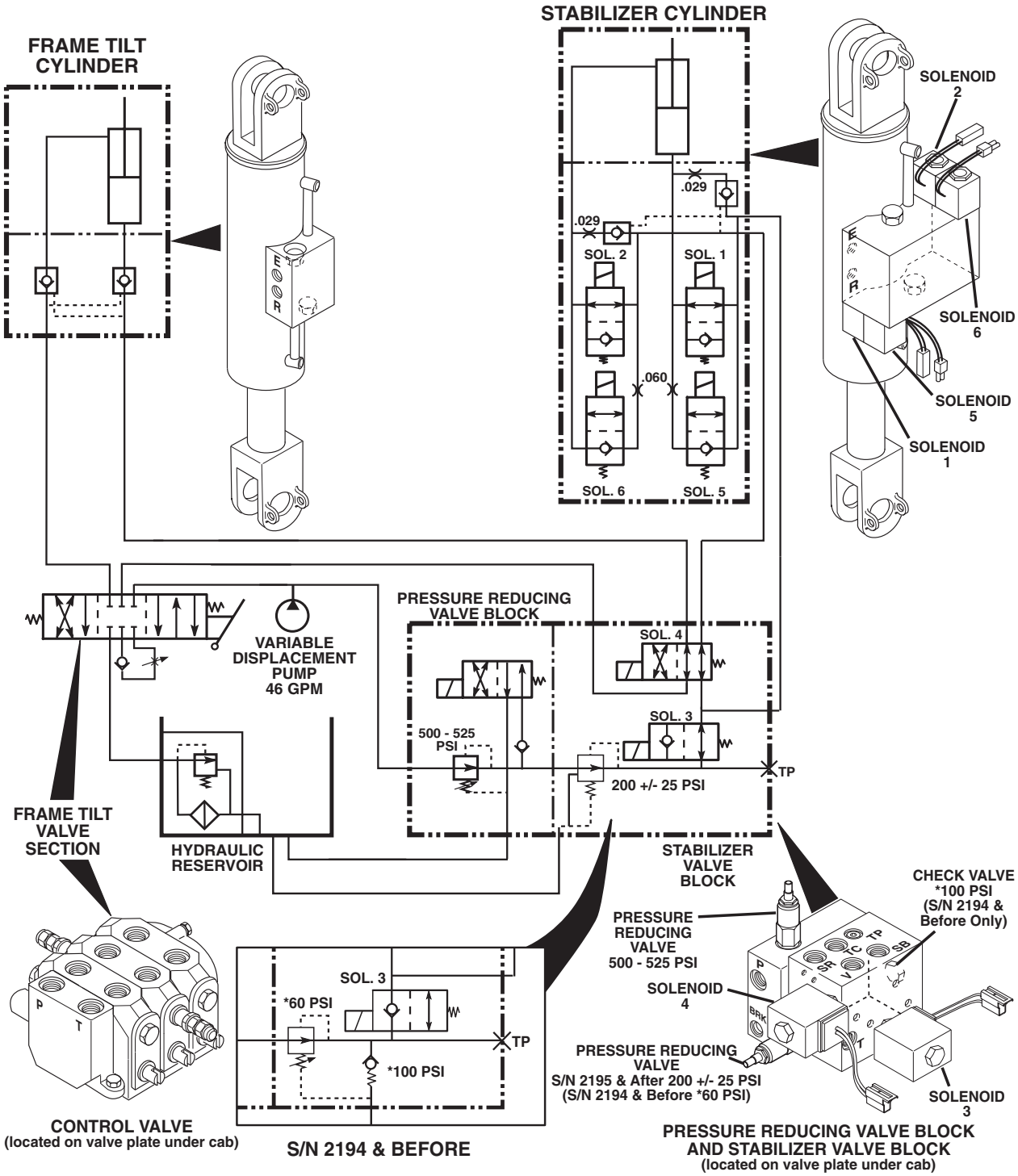

SH0570

CONDITIONS:

Boom below 40°, vehicle stopped, and transmission in forward or reverse.
Solenoids 1 and 2 are energized to permit flow of rear axle stabilizer cylinder oil to hydraulic reservoir and normal frame tilt.
Solenoids 3, 4, 5, and 6 are de-energized.

If vehicle is stopped by service brakes, or park brake switch, or transmission in neutral; the same conditions apply.

8042/10042 Stabil-TRAK Electrical Circuit Final Positioning Mode (S/N 9908 & Before)

Final Positioning Mode				
Conditions	1. Ignition "ON"	4. SB Released		
	2. Transmission in Fwd. or Rev.	5.		
	3. Boom Above 40°	6.		

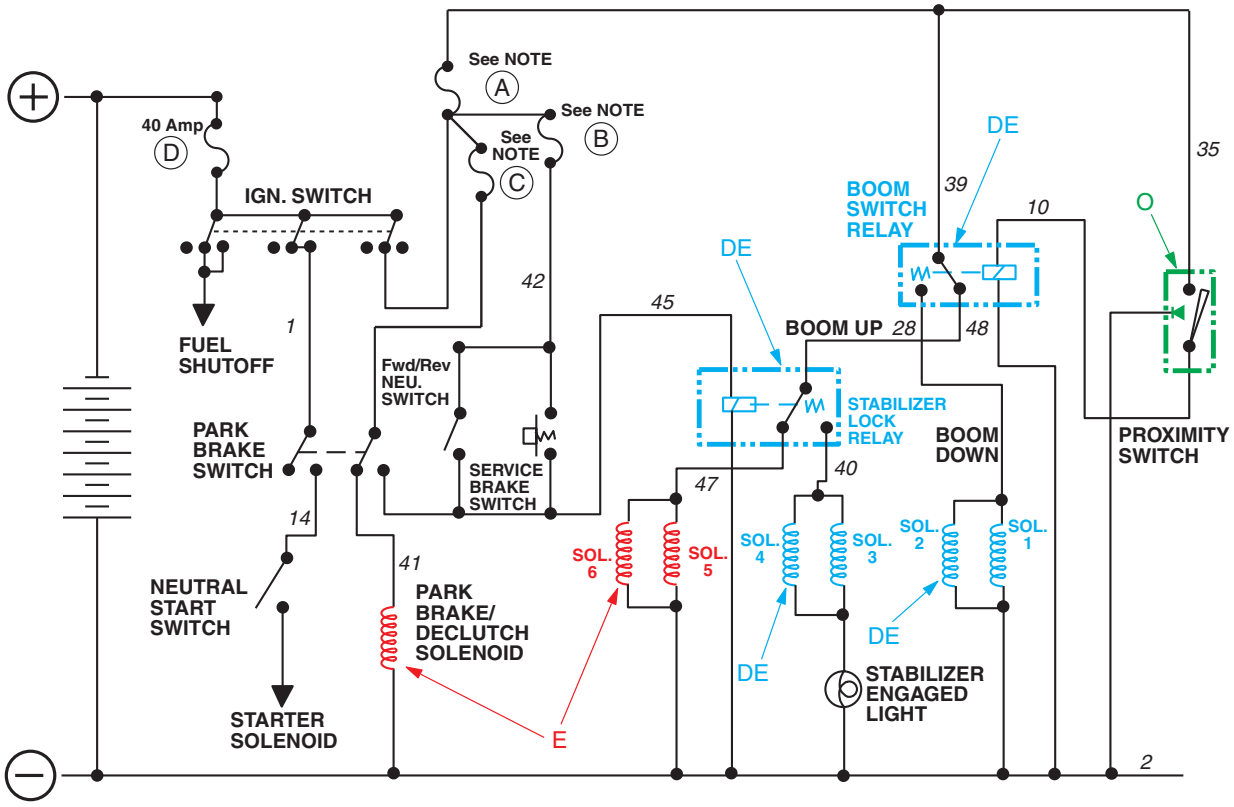

LEGEND

DE = De-energized
E = Energized
O = Open
PB = Park Brake
SB = Service Brake

NOTE:

7.5 Amp - S/N 292 & After
6.0 Amp - S/N 291 & Before

S/N 8042/10042-0292 & After
Boom Switch and Stabilizer Lock Relays located in Kick Panel

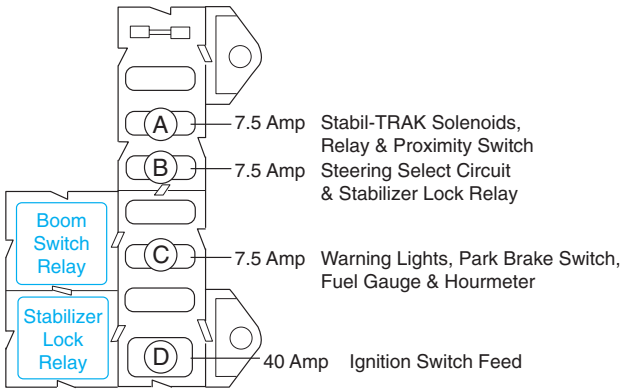

S/N 8042/10042-0291 & Before
Boom Switch Relay located in Kick Panel. Stabilizer Lock Relay located under Dash to the left side of the Steering Wheel

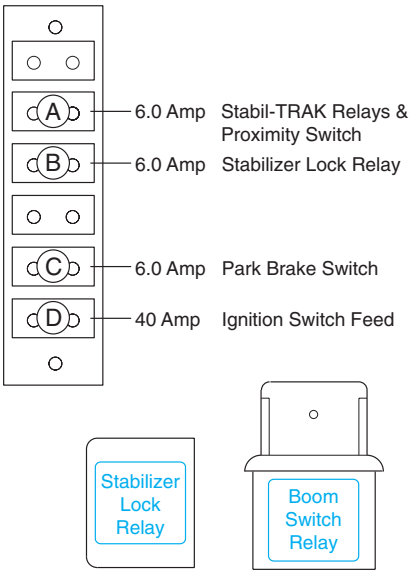

SH0561

8042/10042 Stabil-TRAK Hydraulic Circuit Final Positioning Mode (S/N 9908 & Before)

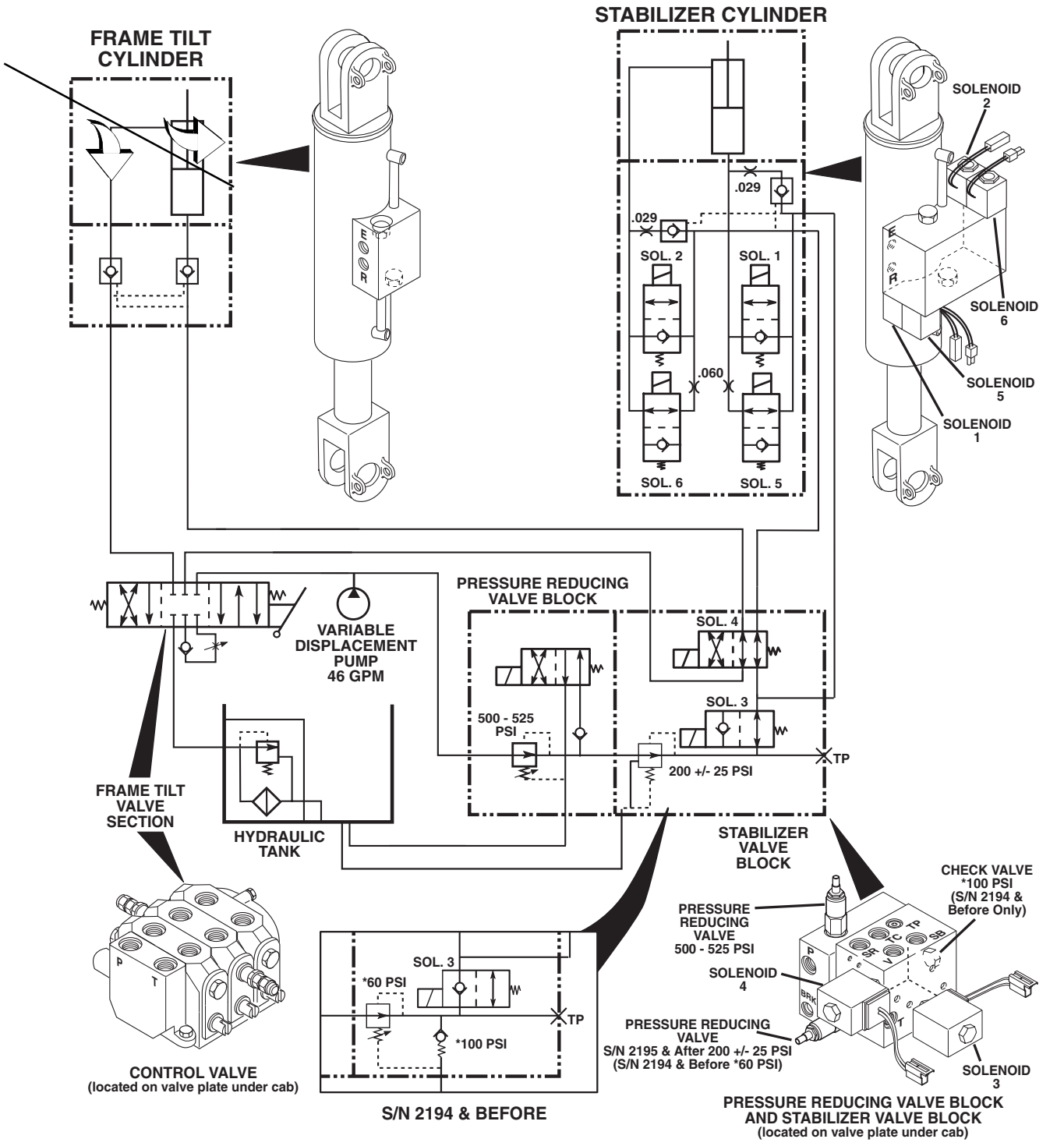

SH0550

CONDITIONS:

Boom raised above 40°, vehicle in forward or reverse; proximity switch relay energizes solenoids 5 and 6; solenoids 1, 2, 3, and 4 are de-energized.

Rear axle stabilizer cylinder oil flow is dampened to the hydraulic reservoir through the .060 orifices. The rear axle will react to terrain changes, however the reaction will be dampened by the orifices.

The operator controls speed of frame tilt of the front axle in response to the orifices rear axle.

8042/10042 Stabil-TRAK Electrical Circuit Locked Mode (S/N 9908 & Before)

Locked Mode	1.	Ignition "ON"	4.	SB & PB Applied
Conditions	2.	Transmission in Neutral	5.	
	3.	Boom Above 40°	6.	

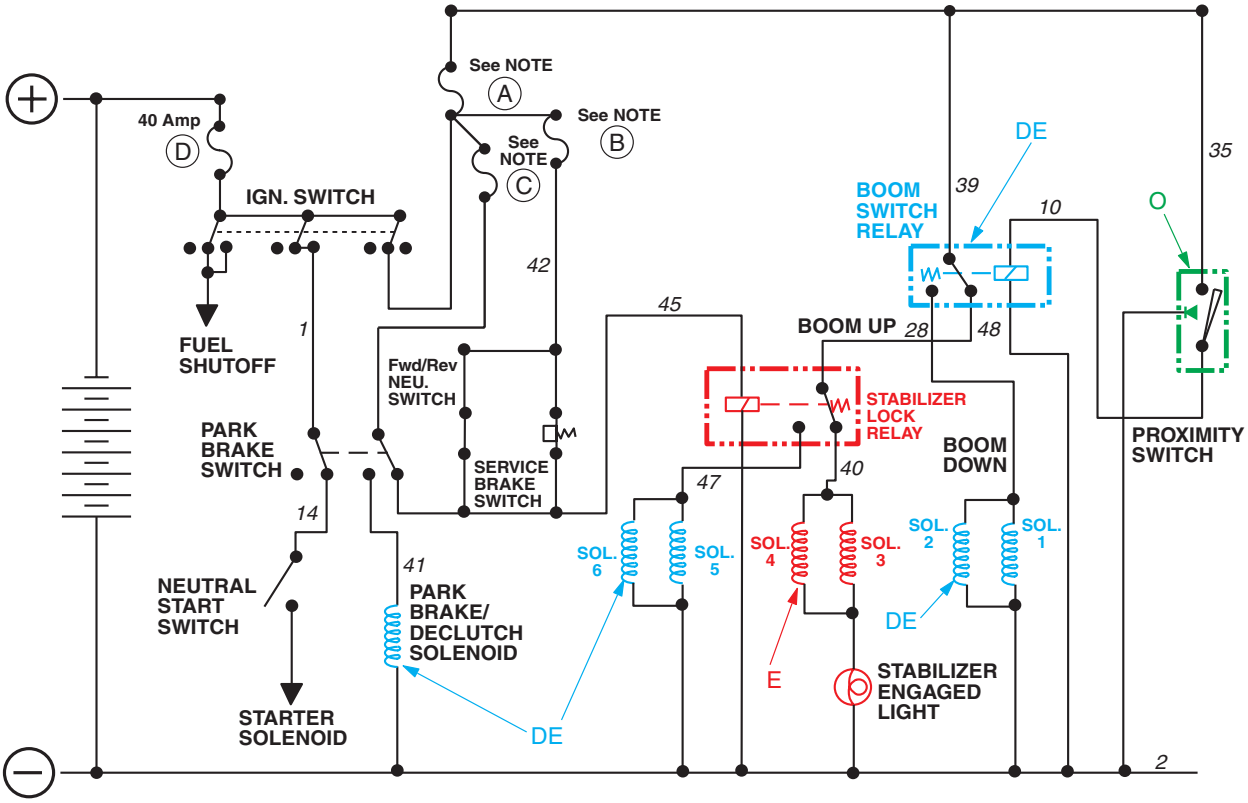

LEGEND

DE = De-energized
E = Energized
O = Open
PB = Park Brake
SB = Service Brake

NOTE:

7.5 Amp - S/N 292 & After
6.0 Amp - S/N 291 & Before

S/N 8042/10042-0292 & After
Boom Switch and Stabilizer Lock Relays located in Kick Panel

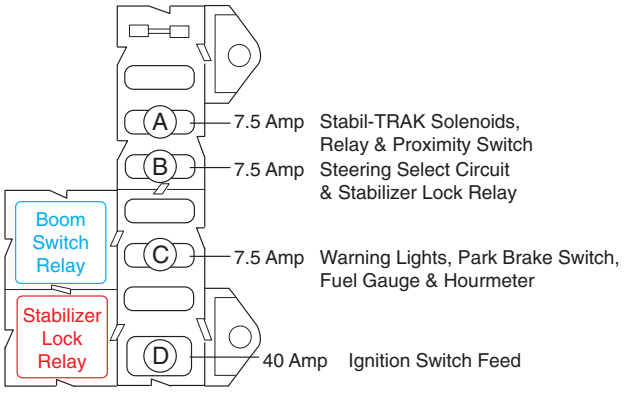

S/N 8042/10042-0291 & Before
Boom Switch Relay located in Kick Panel. Stabilizer Lock Relay located under Dash to the left side of the Steering Wheel

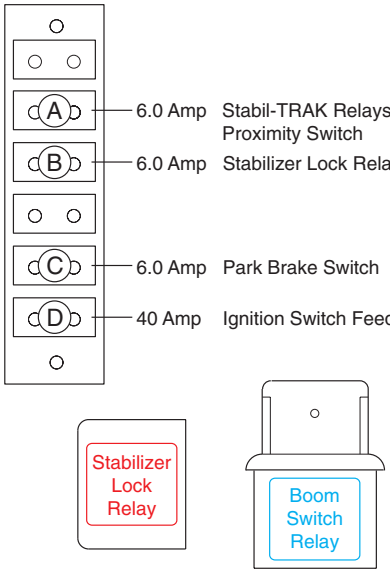

SH0541

8042/10042 Stabil-TRAK Hydraulic Circuit Locked Mode (S/N 9908 & Before)

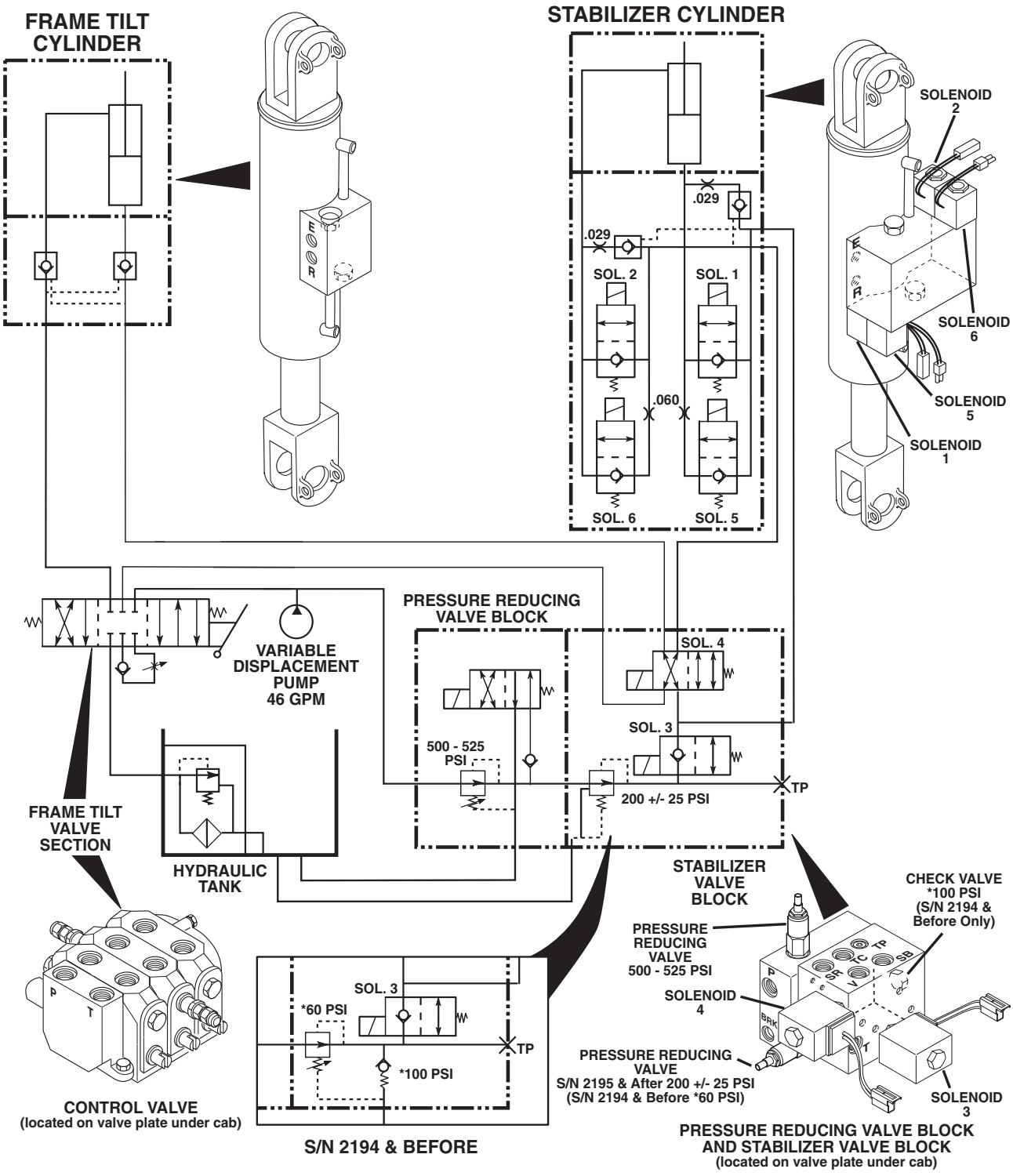

SH0530

CONDITIONS:

Boom raised above 40° and vehicle stopped with service brake on, or park brake switch engaged, or transmission in neutral.
Solenoids 1, 2, 5, and 6 de-energized and solenoids 3 and 4 energized.
Rear axle is locked. If the frame is tilted, the cylinders are slaved and tilt speed is slowed by .029 orifices.

8042/10042
Stabil-TRAK System Troubleshooting
(S/N 9909 & After)

	FREE PIVOT MODE	FINAL POSITIONING MODE	LOCKED MODE
	Reference page 378 & 379	Reference page 380 & 381	Reference page 382 & 383
Machine Conditions **Switch/ Relay Solenoid**	Ignition On Boom Below 40° Trans. Fwd. or Rev.	Ignition On Boom Above 40° SB Released Trans. Fwd. or Rev.	Ignition On Boom Above 40° PB & SB Applied Trans. Neutral
Solenoid 1	E	DE	DE
Solenoid 2	E	DE	DE
Solenoid 3	DE	DE	E
Solenoid 4	DE	DE	E
Solenoid 5	DE	E	DE
Solenoid 6	DE	E	DE
Boom Angle Sensor	C	O	O
Boom Switch Relay	E	DE	DE
Stabilizer Lock Relay	DE	DE	E
Stabilizer Light	Off	Off	On
Park Brake Disconnect Relay	E	E	DE
Neutral Start Relay	DE	DE	E

Definitions:

PB = Park Brake
SB = Service Brake
DE = De-energized
E = Energized
C = Closed
O = Open

8042/10042
Stabil-TRAK Electrical Circuit
Ignition "OFF"
(S/N 9909 & After)

Ignition "OFF"		

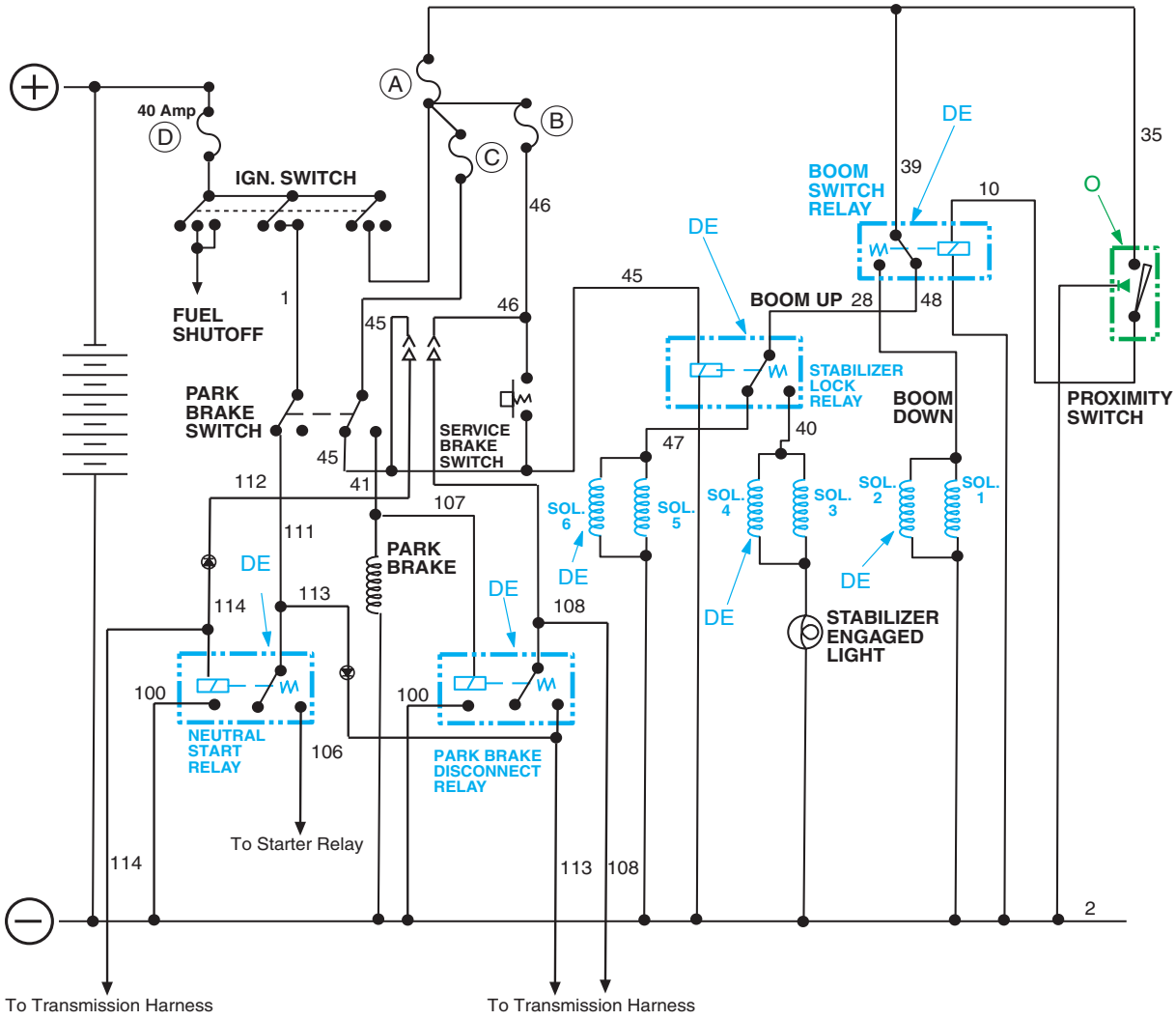

LEGEND

DE = De-energized
E = Energized
O = Open
PB = Park Brake
SB = Service Brake

RELAY LOCATIONS

Relay Block located under Dash attached to Back of Bulkhead with Velcro



Boom Switch and Stabilizer Lock Relays located in Kick Panel

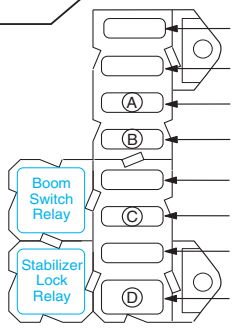

- 7.5 Amp Outrigger Switches (10042 Only)
- 10 Amp Optional Enclosed Cab Windshield Washer/Wiper Switch and Circulation Fan
- 7.5 Amp Stabil-TRAK Solenoids, Relay & Proximity Switch
- 7.5 Amp Steering Select Circuit & Stabilizer Lock Relay
- 10 Amp Horn and Back-Up Alarm (Optional-Cab Heater Fan)
- 7.5 Amp Warning Lights, Park Brake Switch, Fuel Gauge & Hourmeter
- 20 Amp Optional Lighting Kit
- 40 Amp Ignition Switch Feed

SH1290

8042/10042
Stabil-TRAK Electrical Circuit
Free Pivot Mode
(S/N 9909 & After)

Free Pivot Mode					
Conditions	1.	Ignition "ON"	4.	SB & PB Released
	2.	Transmission in Fwd. or Rev.	5.	
	3.	Boom Below 40°	6.	

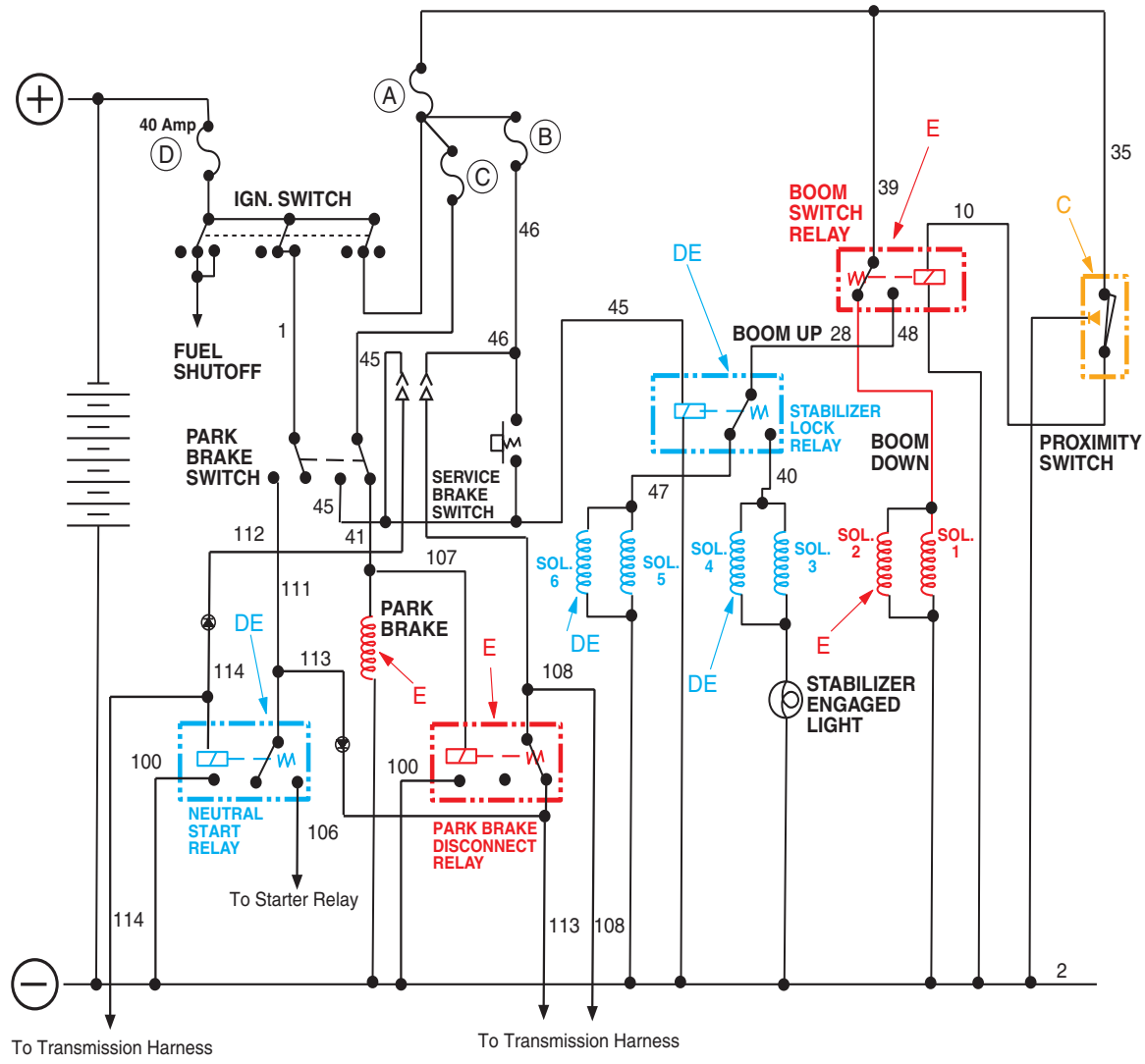

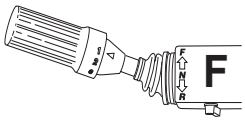

Shifter in Forward Position

LEGEND

DE = De-energized
E = Energized
O = Open
C = Closed
PB = Park Brake
SB = Service Brake

RELAY LOCATIONS

Relay Block located under Dash and attached to Back of Bulkhead with Velcro



Boom Switch and Stabilizer Lock Relays located in Kick Panel

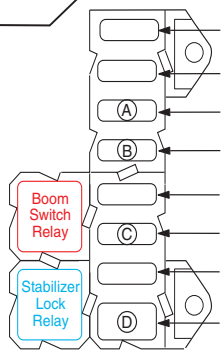

- 7.5 Amp Outrigger Switches (10042 Only)
- 10 Amp Optional Enclosed Cab Windshield Washer/Wiper Switch and Circulation Fan
- 7.5 Amp Stabil-TRAK Solenoids, Relay & Proximity Switch
- 7.5 Amp Steering Select Circuit & Stabilizer Lock Relay
- 10 Amp Horn and Back-Up Alarm (Optional-Cab Heater Fan)
- 7.5 Amp Warning Lights, Park Brake Switch, Fuel Gauge & Hourmeter
- 20 Amp Optional Lighting Kit
- 40 Amp Ignition Switch Feed

SH1300

8042/10042 Stabil-TRAK Hydraulic Circuit Free Pivot Mode (S/N 9909 & After)

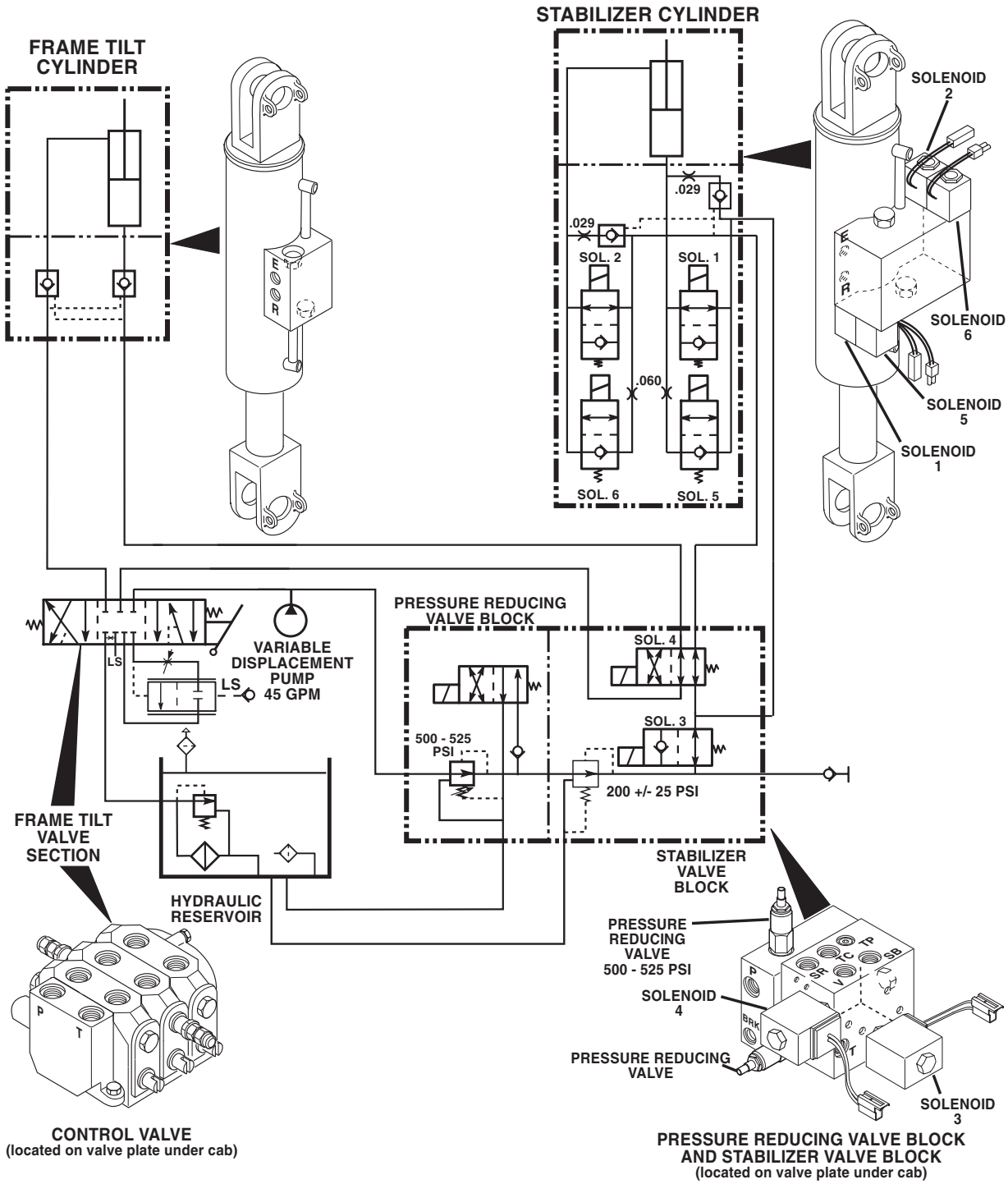

SH1170

CONDITIONS:

Boom below 40°, vehicle stopped, and transmission in forward or reverse.
Solenoids 1 and 2 are energized to permit flow of rear axle stabilizer cylinder oil to hydraulic reservoir and normal frame tilt.
Solenoids 3, 4, 5, and 6 are de-energized.

If vehicle is stopped by service brakes, or park brake switch, or transmission in neutral; the same conditions apply.

8042/10042
Stabil-TRAK Electrical Circuit
Final Positioning Mode
(S/N 9909 & After)

Final Positioning Mode				
Conditions	1.	Ignition "ON"	4.	SB & PB Released
	2.	Transmission in Fwd. or Rev.	5.	
	3.	Boom Above 40°	6.	

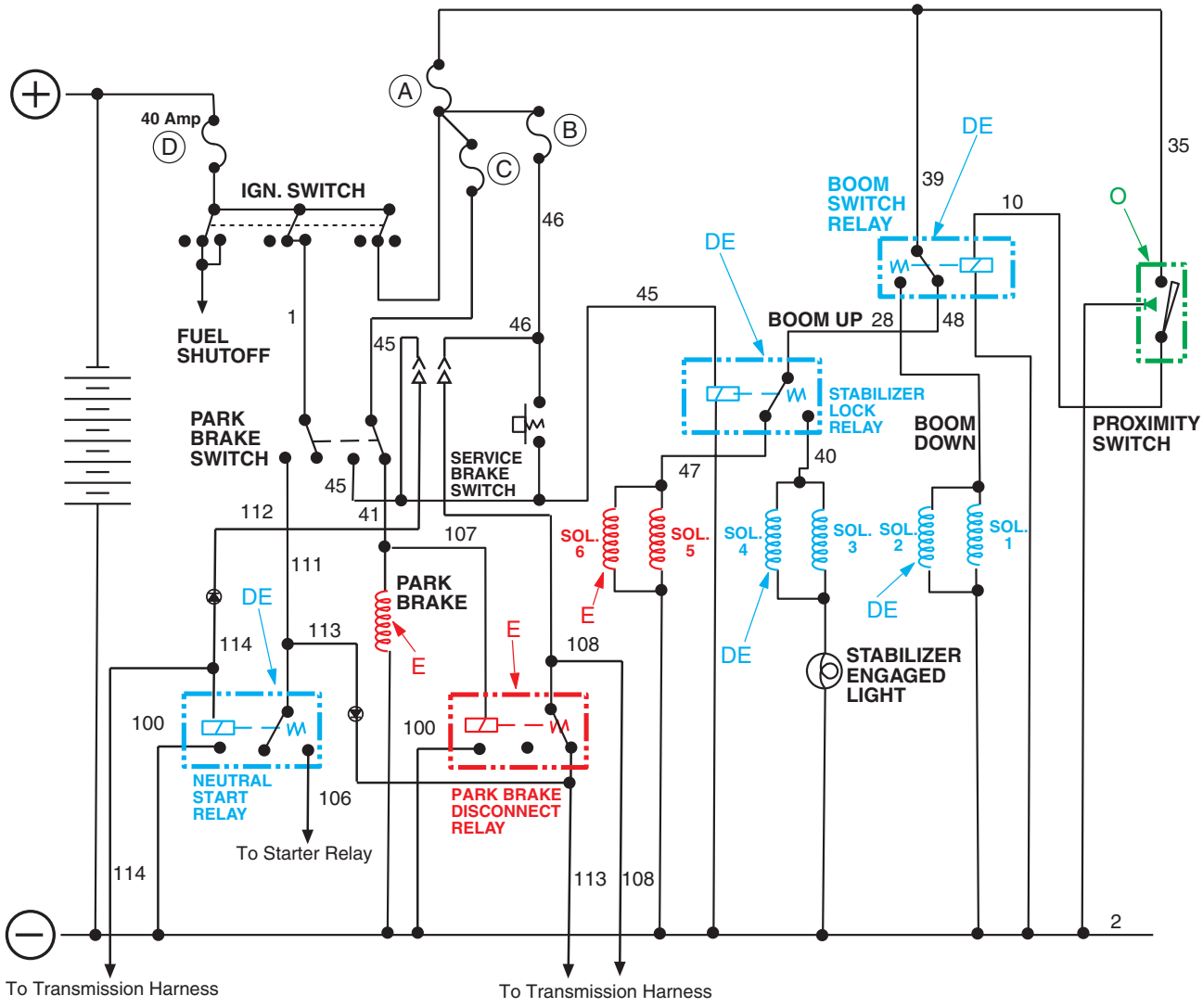

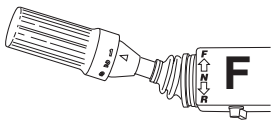

Shifter in Forward Position

RELAY LOCATIONS

Relay Block located under Dash attached to Back of Bulkhead with Velcro



Boom Switch and Stabilizer Lock Relays located in Kick Panel

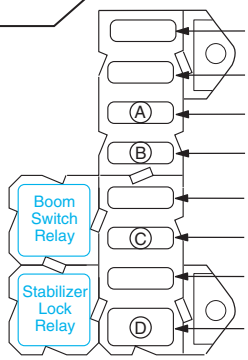

- 7.5 Amp Outrigger Switches (10042 Only)
- 10 Amp Optional Enclosed Cab Windshield Washer/Wiper Switch and Circulation Fan
- 7.5 Amp Stabil-TRAK Solenoids, Relay & Proximity Switch
- 7.5 Amp Steering Select Circuit & Stabilizer Lock Relay
- 10 Amp Horn and Back-Up Alarm (Optional-Cab Heater Fan)
- 7.5 Amp Warning Lights, Park Brake Switch, Fuel Gauge & Hourmeter
- 20 Amp Optional Lighting Kit
- 40 Amp Ignition Switch Feed

LEGEND

DE = De-energized
E = Energized
O = Open
PB = Park Brake
SB = Service Brake

SH1310

8042/10042 Stabil-TRAK Hydraulic Circuit Final Positioning Mode (S/N 9909 & After)

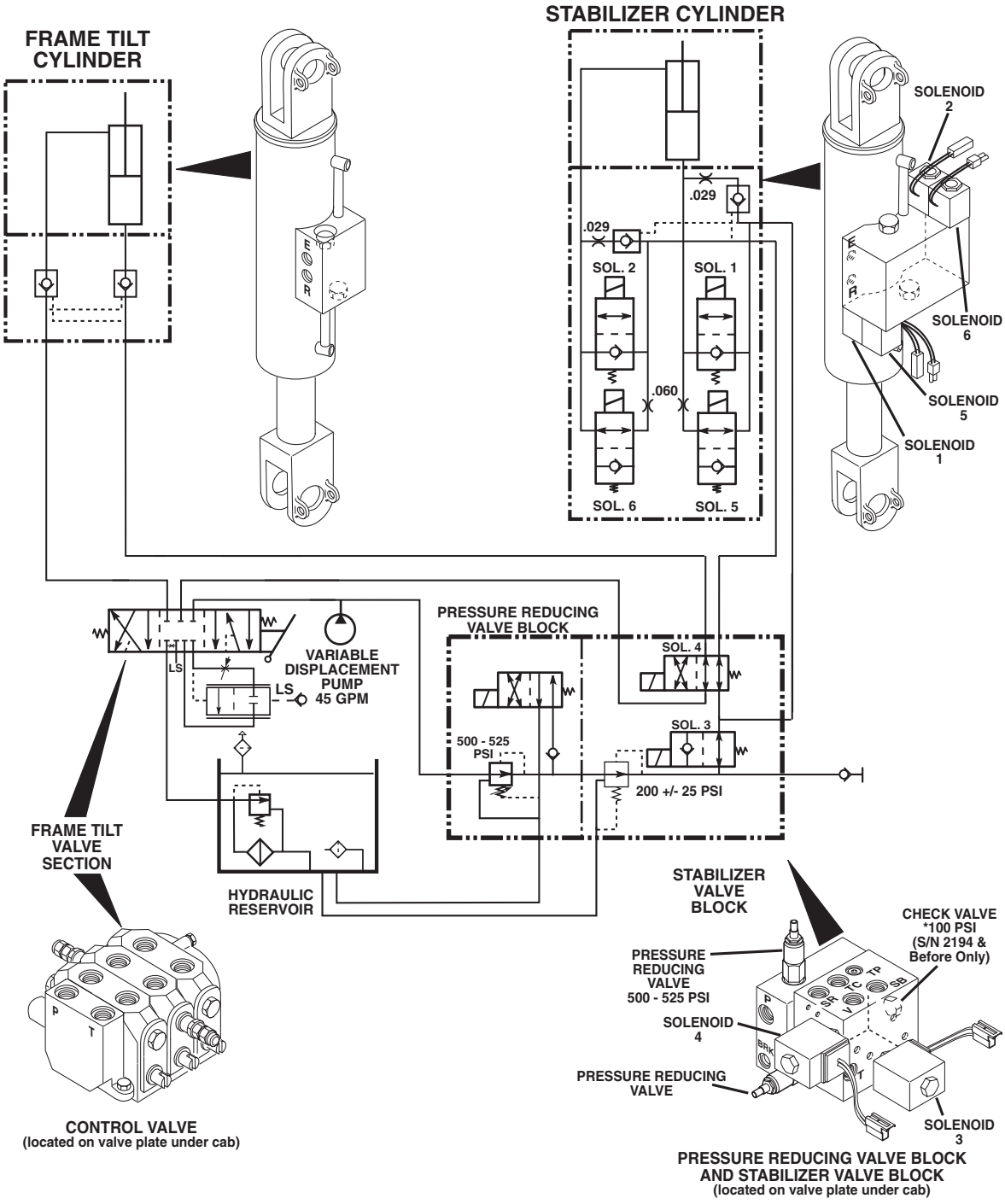

SH1180

CONDITIONS:

Boom raised above 40°, vehicle in forward or reverse; proximity switch relay energizes solenoids 5 and 6; solenoids 1, 2, 3, and 4 are de-energized.

Rear axle stabilizer cylinder oil flow is dampened to the hydraulic reservoir through the .060 orifices. The rear axle will react to terrain changes, however the reaction will be dampened by the orifices.

The operator controls speed of frame tilt of the front axle in response to the orifices rear axle.

8042/10042
Stabil-TRAK Electrical Circuit
Locked Mode
(S/N 9909 & After)

Locked Mode	**1.**	Ignition “ON”	**4.**	SB & PB Applied
Conditions	**2.**	Transmission in Neutral	**5.**	
	3.	Boom Above 40°	**6.**	

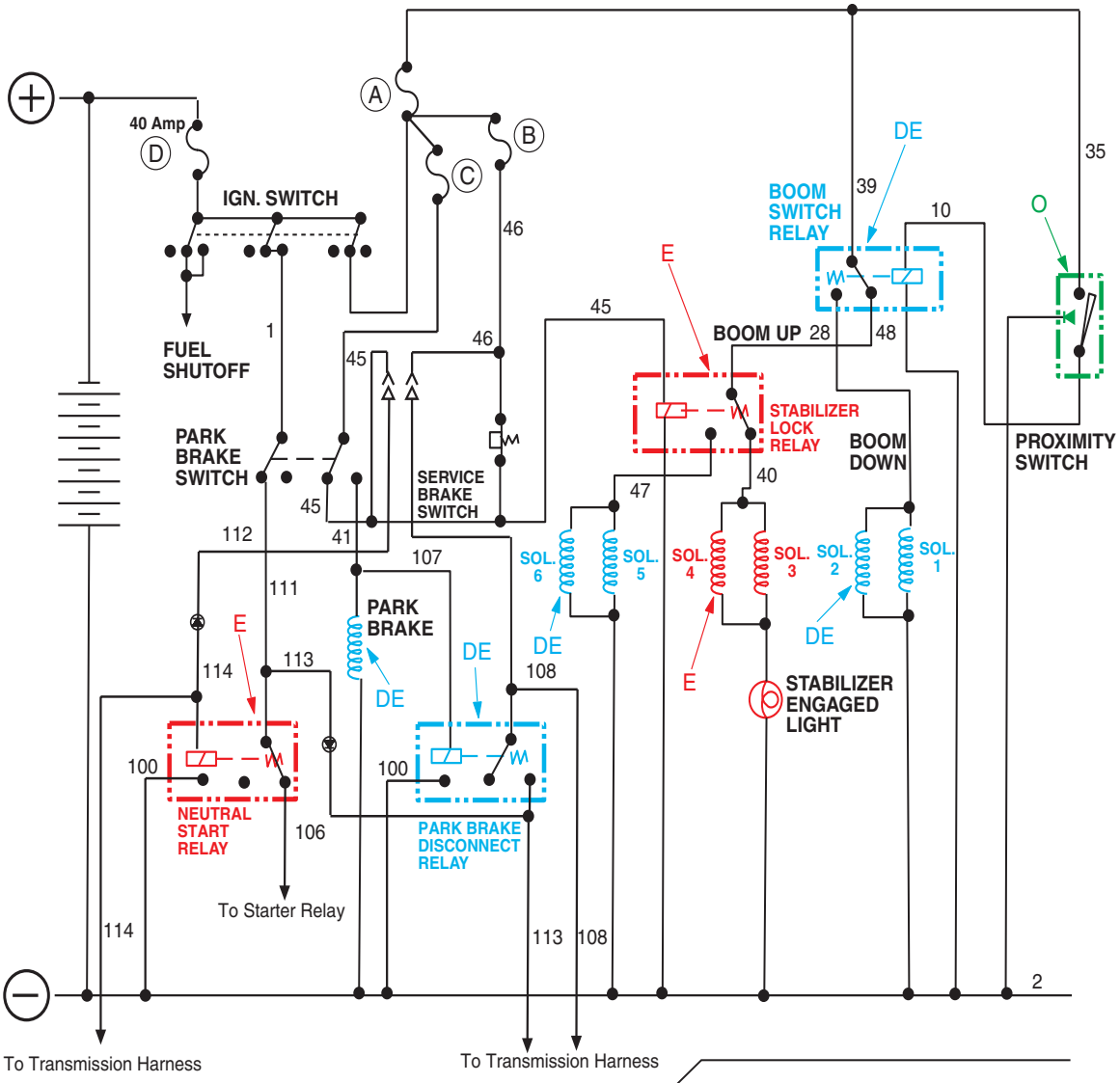

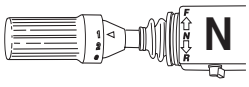

Shifter in Neutral Position

RELAY LOCATIONS

Relay Block located under Dash and attached to Back of Bulkhead with Velcro



Boom Switch and Stabilizer Lock Relays located in Kick Panel

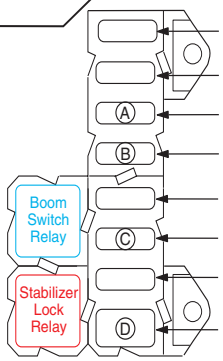

- 7.5 Amp Outrigger Switches (10042 Only)
- 10 Amp Optional Enclosed Cab Windshield Washer/Wiper Switch and Circulation Fan
- 7.5 Amp Stabil-TRAK Solenoids, Relay & Proximity Switch
- 7.5 Amp Steering Select Circuit & Stabilizer Lock Relay
- 10 Amp Horn and Back-Up Alarm (Optional-Cab Heater Fan)
- 7.5 Amp Warning Lights, Park Brake Switch, Fuel Gauge & Hourmeter
- 20 Amp Optional Lighting Kit
- 40 Amp Ignition Switch Feed

LEGEND

DE = De-energized
E = Energized
O = Open
PB = Park Brake
SB = Service Brake

SH1320

8042/10042 Stabil-TRAK Hydraulic Circuit Locked Mode (S/N 9909 & After)

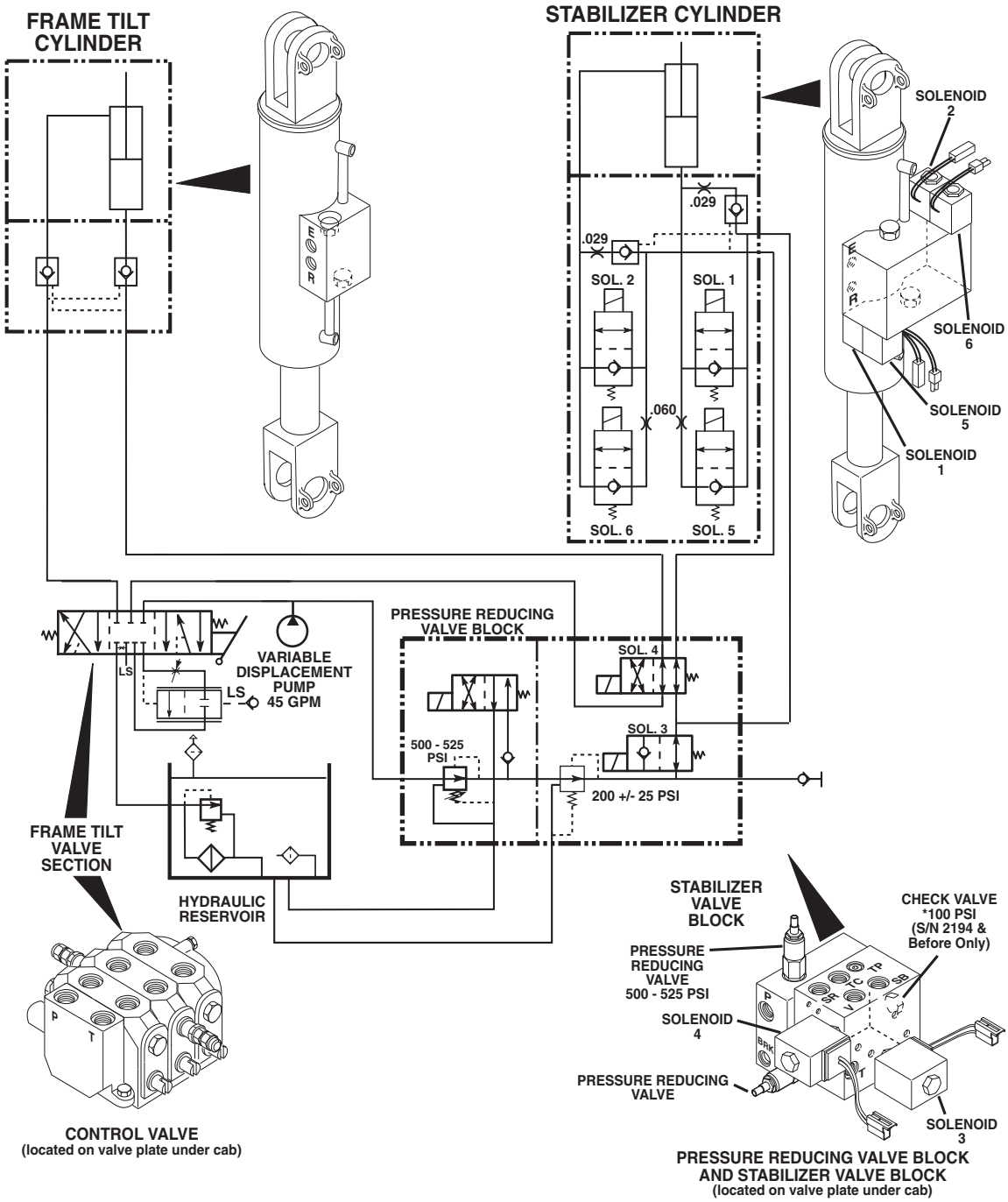

SH1190

CONDITIONS:

Boom raised above 40° and vehicle stopped with service brake on, or park brake switch engaged, or transmission in neutral.
Solenoids 1, 2, 5, and 6 de-energized and solenoids 3 and 4 energized.
Rear axle is locked. If the frame is tilted, the cylinders are slaved and tilt speed is slowed by .029 orifices.

10054 Stabil-TRAK System Troubleshooting (S/N 9908 & Before)					
	BOOM EXTEND MODE 1	BOOM EXTEND MODE 2	BOOM EXTEND MODE 3	BOOM EXTEND MODE 4	BOOM EXTEND MODE 5
	Reference page 386	Reference page 387	Reference page 388	Reference page 389	Reference page 390
Machine Conditions / Switch/ Relay Solenoid	Ignition On Boom Below 40° Boom Retracted PB & SB Released Trans. Fwd. or Rev. Outriggers Up	Ignition On Boom Below 40° Boom Extended PB & SB Released Trans. Fwd. or Rev. Outriggers Up	Ignition On Boom Below 40° Boom Extended PB & SB Applied Trans. Neutral Outriggers Down	Ignition On Boom Above 40° Boom Retracted PB & SB Released Trans. Fwd. or Rev. Outriggers Up	Ignition On Boom Above 40° Boom Retracted PB & SB Released Trans. Fwd. or Rev. Outriggers Down
Solenoid 1	E	E	E	DE	DE
Solenoid 2	E	E	E	DE	DE
Solenoid 3	DE	DE	DE	DE	DE
Solenoid 4	DE	DE	DE	DE	DE
Solenoid 5	DE	DE	DE	E	E
Solenoid 6	DE	DE	DE	E	E
Boom Angle Sensor	C	C	O	O	O
Boom Relay	E	E	E	DE	DE
Stabilizer Lock Relay	DE	DE	E	DE	DE
Stabilizer Light	Off	Off	On	Off	On
BOOM EXTEND INTERLOCK SYSTEM TROUBLESHOOTING					
Boom Extend Proximity Switch	C	O	O	C	C
Boom Extend Interlock Relay	E	DE	DE	E	E
Boom Extend Lockout Relay	E	DE	DE	E	E
Outrigger Lockout Relay	E	DE	DE	E	E
Outrigger Pressure Switches	O	O	C	O	C
Left Outrigger Lockout Relay	DE	DE	E	DE	DE
Right Outrigger Lockout Relay	DE	DE	E	DE	DE
Stabilizer Interlock Relay	DE	DE	E	DE	E
Stabilizer Lock-Up Relay	DE	DE	E	DE	DE
Extend Circuit Solenoid Valve	E	DE	E	E	E
Park Brake Solenoid Valve	E	E	DE	E	E
Park Brake Interlock Relay	DE	DE	E	DE	DE

NOTE: If an outrigger is up or a pressure switch is defective, boom on 10054 will not extend beyond 42 series extension limit.

Definitions:
Boom Retracted = Less than 42 series extension limit
Boom Extended = Boom at 42 series extension limit or greater (See Figure)
PB = Park Brake
SB = Service Brake
DE = De-energized
E = Energized
C = Closed
O = Open

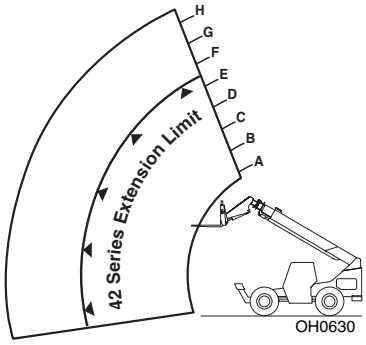

10054 Stabil-TRAK System Troubleshooting (S/N 9908 & Before)					
	BOOM EXTEND MODE 6	BOOM EXTEND MODE 7	BOOM EXTEND MODE 8	BOOM EXTEND MODE 9	
	Reference page 391	Reference page 392	Reference page 393	Reference page 394	
Machine Conditions / Switch/ Relay Solenoid	Ignition On Boom Above 40° Boom Retracted PB & SB Applied Trans. Neutral Outriggers Up	Ignition On Boom Above 40° Boom Retracted PB & SB Applied Trans. Neutral Outriggers Down	Ignition On Boom Above 40° Boom Extended PB & SB Applied Trans. Neutral Outriggers Up	Ignition On Boom Above 40° Boom Extended PB & SB Applied Trans. Neutral Outriggers Down	
Solenoid 1	DE	DE	DE	DE	
Solenoid 2	DE	DE	DE	DE	
Solenoid 3	E	E	E	E	
Solenoid 4	E	E	E	E	
Solenoid 5	DE	DE	DE	DE	
Solenoid 6	DE	DE	DE	DE	
Boom Angle Sensor	O	O	O	O	
Boom Relay	DE	DE	DE	DE	
Stabilizer Lock Relay	E	E	E	E	
Stabilizer Light	On	On	On	On	
BOOM EXTEND INTERLOCK SYSTEM TROUBLESHOOTING					
Boom Extend Proximity Switch	C	C	O	O	
Boom Extend Interlock Relay	E	E	DE	DE	
Boom Extend Lockout Relay	E	E	DE	DE	
Outrigger Lockout Relay	E	E	DE	DE	
Outrigger Pressure Switches	O	C	O	C	
Left Outrigger Lockout Relay	DE	DE	DE	E	
Right Outrigger Lockout Relay	DE	DE	DE	E	
Stabilizer Interlock Relay	DE	E	DE	E	
Stabilizer Lock-Up Relay	DE	DE	DE	E	
Extend Circuit Solenoid Valve	E	E	DE	E	
Park Brake Solenoid Valve	DE	DE	DE	DE	
Park Brake Interlock Relay	DE	DE	DE	E	

NOTE: If an outrigger is up or a pressure switch is defective, boom on 10054 will not extend beyond 42 series extension limit.

Definitions:
Boom Retracted = Less than 42 series extension limit
Boom Extended = Boom at 42 series extension limit or greater (See Figure)
PB = Park Brake
SB = Service Brake
DE = De-energized
E = Energized
C = Closed
O = Open

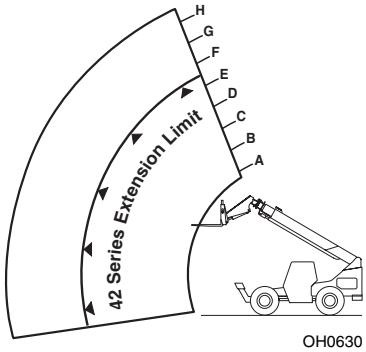

OH0630

10054 Stabil-TRAK Electrical Circuit Boom Extend Mode 1 (S/N 9908 & Before)

MODE 1				
Conditions	1.	Ignition "ON"	4.	Transmission in Fwd. or Rev.
	2.	Boom Below 40°	5.	PB & SB Released
	3.	Boom Retracted	6.	Outriggers Up

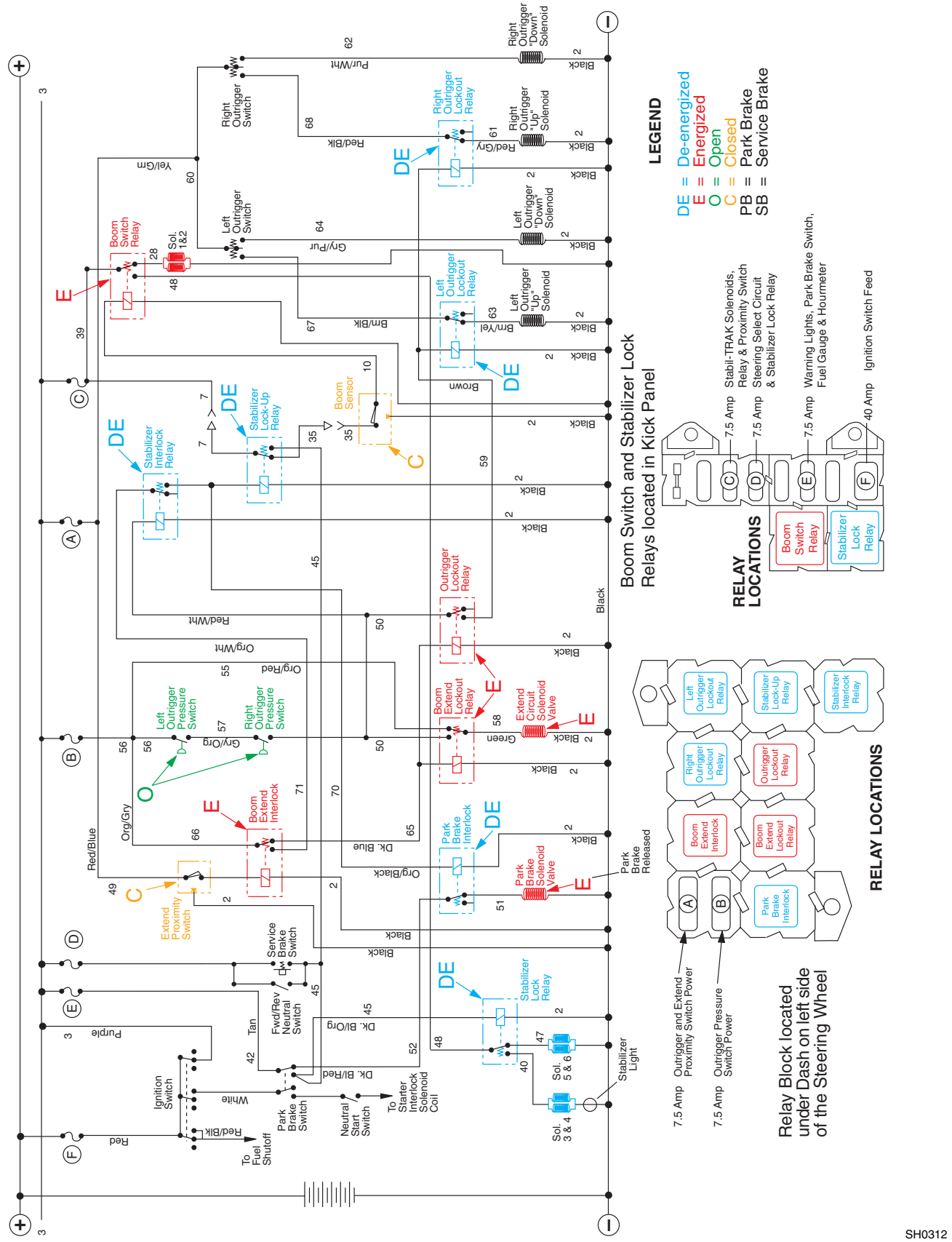

10054 Stabil-TRAK Electrical Circuit Boom Extend Mode 2 (S/N 9908 & Before)

MODE 2				
Conditions	1.	Ignition "ON"	4.	Transmission in Fwd. or Rev.
	2.	Boom Below 40°	5.	PB & SB Released
	3.	Boom Extended	6.	Outriggers Up

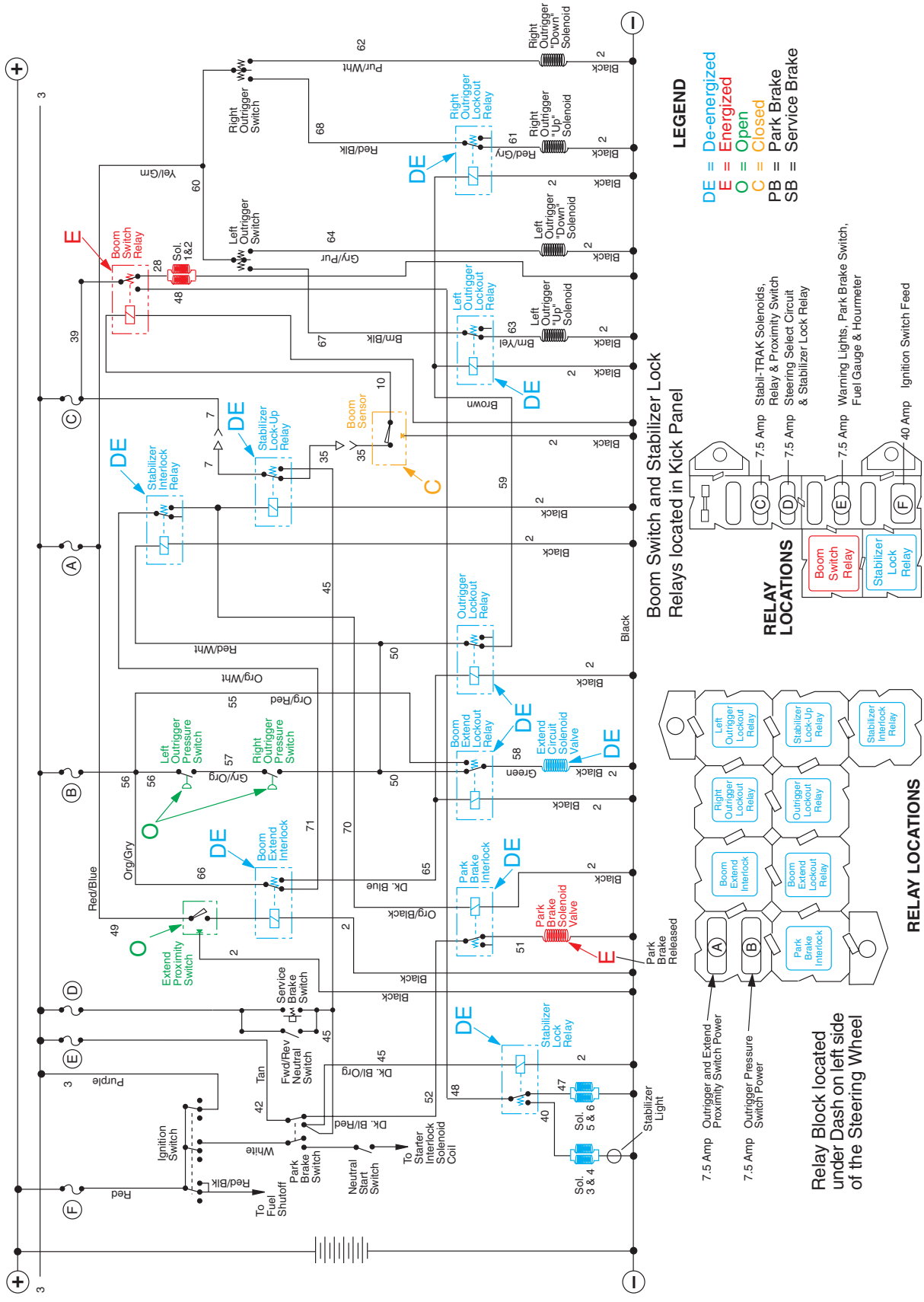

SH0323

10054 Stabil-TRAK Electrical Circuit Boom Extend Mode 3 (S/N 9908 & Before)

MODE 3				
Conditions	1.	Ignition "ON"	4.	Transmission in Neutral
	2.	Boom Below 40°	5.	PB & SB Applied
	3.	Boom Extended	6.	Outriggers Down

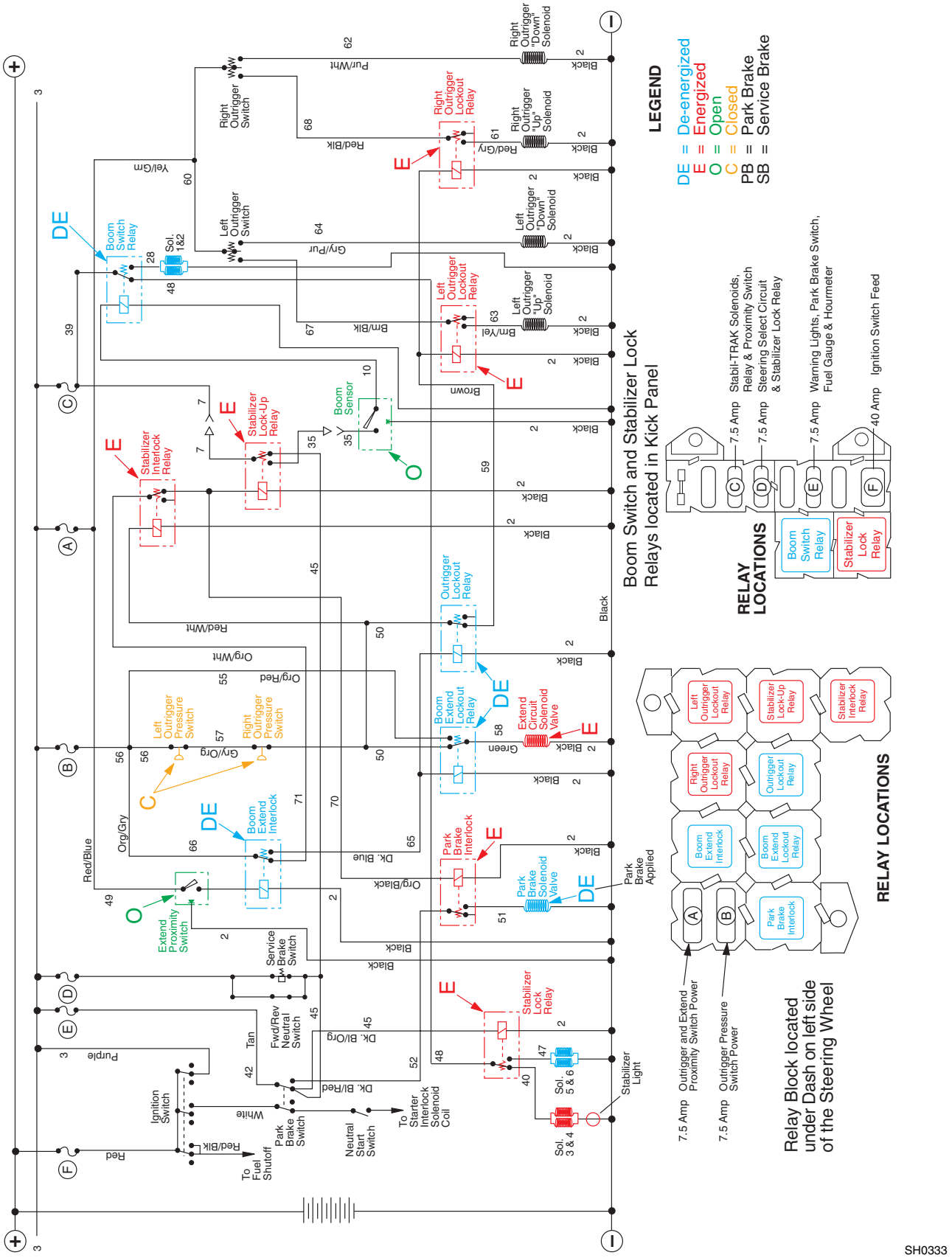

MODE 4				
Conditions	1.	Ignition “ON”	4.	Transmission in Fwd. or Rev.
	2.	Boom Above 40°	5.	PB & SB Released
	3.	Boom Retracted	6.	Outriggers Up

10054 Stabil-TRAK Electrical Circuit Boom Extend Mode 4 (S/N 9908 & Before)

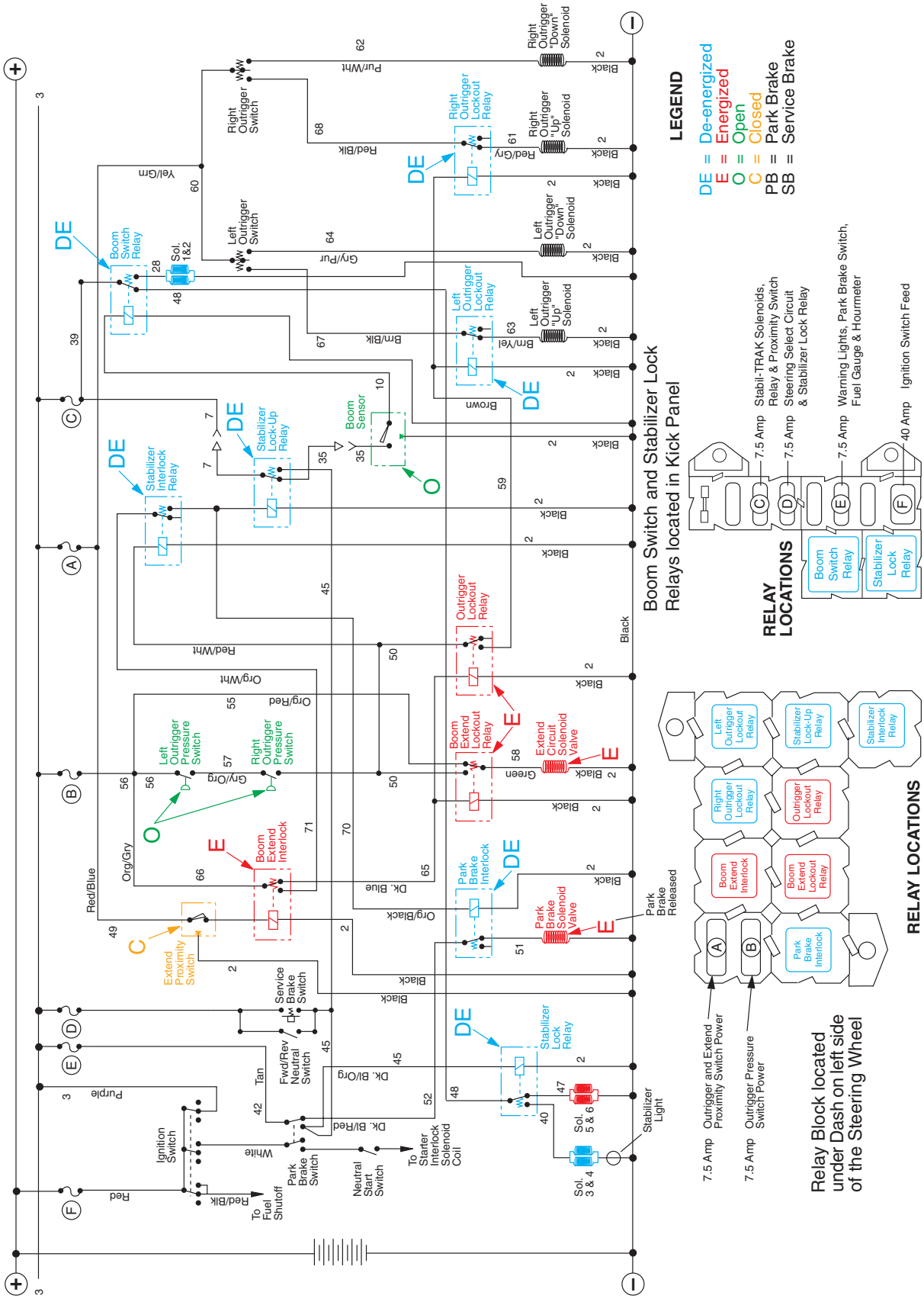

SH0342

10054 Stabil-TRAK Electrical Circuit Boom Extend Mode 5 (S/N 9908 & Before)

MODE 5				
Conditions	1.	Ignition "ON"	4.	Transmission in Fwd. or Rev.
	2.	Boom Above 40°	5.	PB & SB Released
	3.	Boom Retracted	6.	Outriggers Down

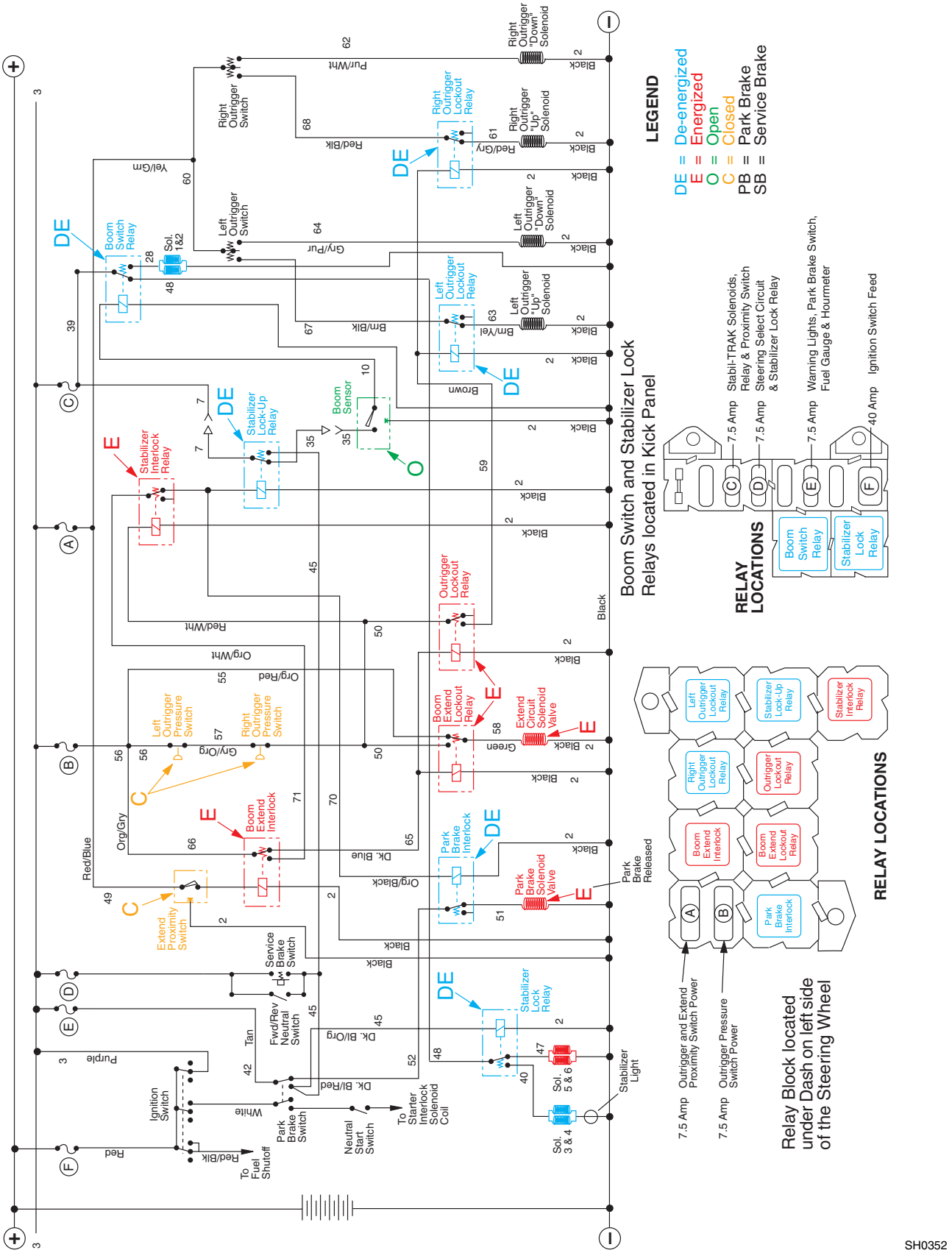

MODE 6	1.	Ignition “ON”	4.	Transmission in Neutral
Conditions	2.	Boom Above 40°	5.	PB & SB Applied
	3.	Boom Retracted	6.	Outriggers Up

10054 Stabil-TRAK Electrical Circuit Boom Extend Mode 6 (S/N 9908 & Before)

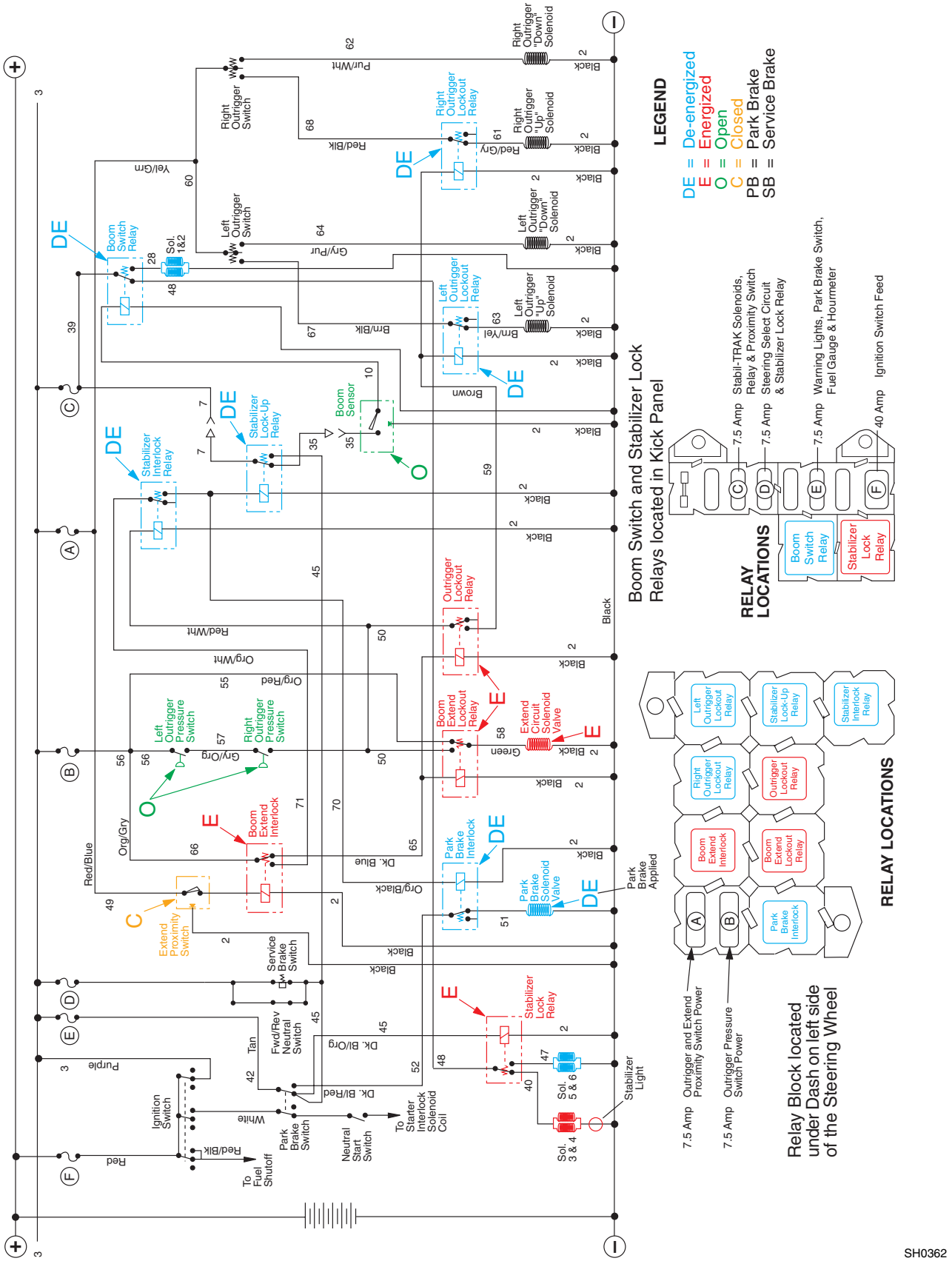

SH0362

10054 Stabil-TRAK Electrical Circuit Boom Extend Mode 7 (S/N 9908 & Before)

MODE 7				
Conditions	1.	Ignition "ON"	4.	Transmission in Neutral
	2.	Boom Above 40°	5.	PB & SB Applied
	3.	Boom Retracted	6.	Outriggers Down

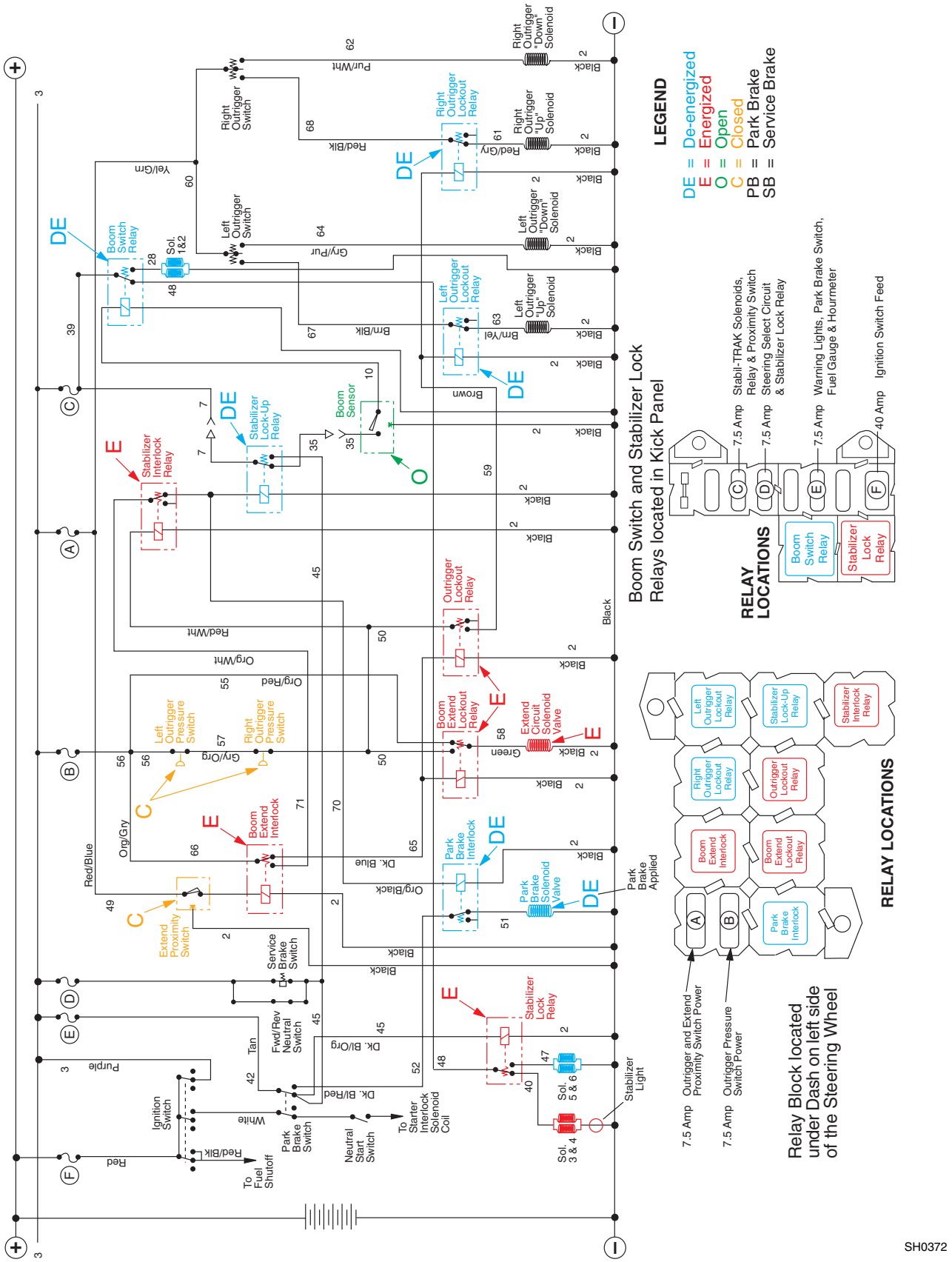

MODE 8				
Conditions	1.	Ignition “ON”	4.	Transmission in Neutral
	2.	Boom Above 40°	5.	PB & SB Applied
	3.	Boom Extended	6.	Outriggers Up

10054 Stabil-TRAK Electrical Circuit
Boom Extend Mode 8
(S/N 9908 & Before)

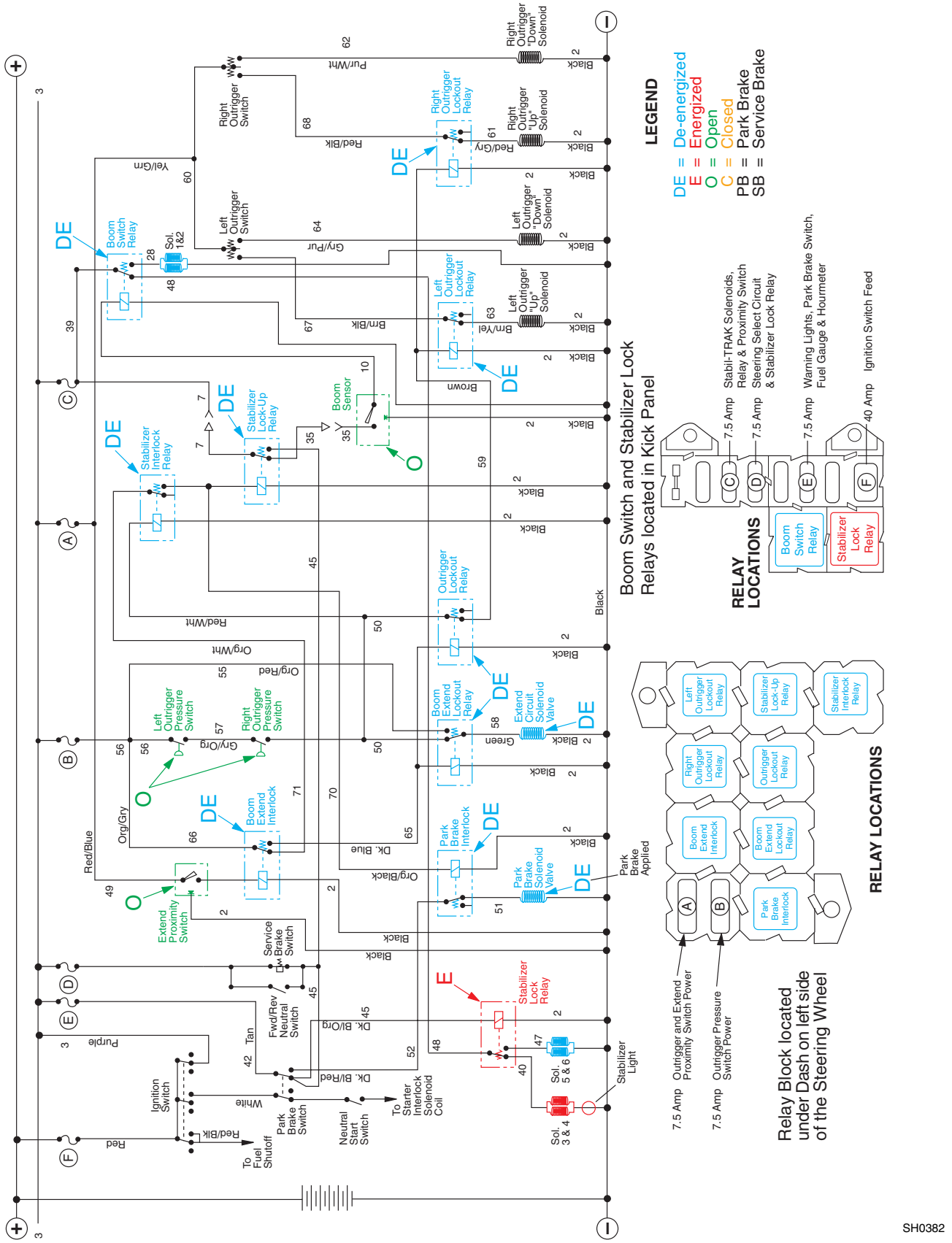

SH0382

10054 Stabil-TRAK Electrical Circuit Boom Extend Mode 9 (S/N 9908 & Before)

MODE 9				
Conditions	1.	Ignition "ON"	4.	Transmission in Neutral
	2.	Boom Above 40°	5.	PB & SB Applied
	3.	Boom Extended	6.	Outriggers Down

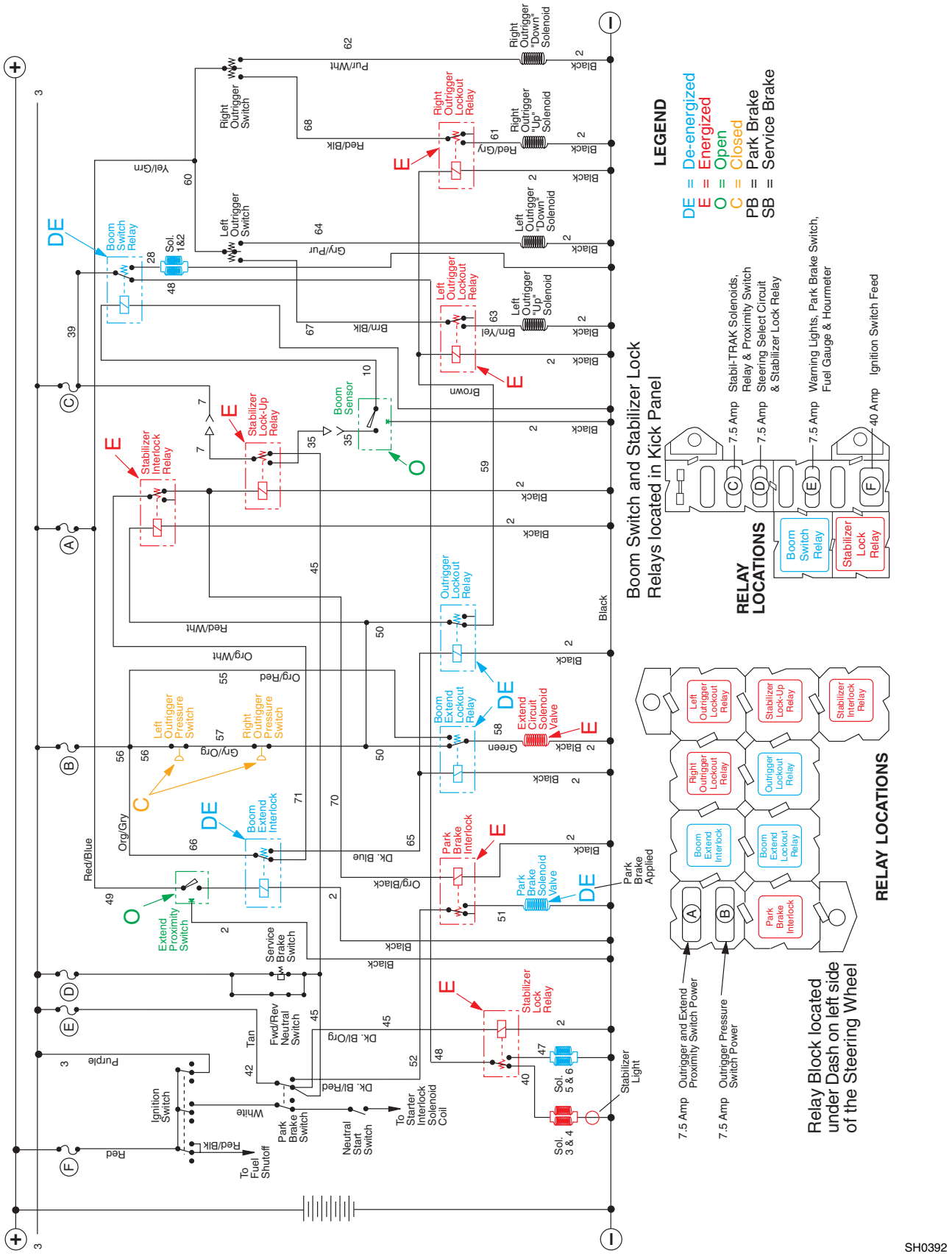

NOTES

10054 Stabil-TRAK System Troubleshooting (S/N 9909 & After)					
	BOOM EXTEND MODE 1	BOOM EXTEND MODE 2	BOOM EXTEND MODE 3	BOOM EXTEND MODE 4	BOOM EXTEND MODE 5
	Reference page 398	Reference page 399	Reference page 400	Reference page 401	Reference page 402
Machine Conditions / Switch/ Relay Solenoid	Ignition On Boom Below 40° Boom Retracted PB & SB Released Trans. Fwd. or Rev. Outriggers Up	Ignition On Boom Below 40° Boom Extended PB & SB Released Trans. Fwd. or Rev. Outriggers Up	Ignition On Boom Below 40° Boom Extended PB & SB Applied Trans. Neutral Outriggers Down	Ignition On Boom Above 40° Boom Retracted PB & SB Released Trans. Fwd. or Rev. Outriggers Up	Ignition On Boom Above 40° Boom Retracted PB & SB Released Trans. Fwd. or Rev. Outriggers Down
Solenoid 1	E	E	E	DE	DE
Solenoid 2	E	E	E	DE	DE
Solenoid 3	DE	DE	DE	DE	DE
Solenoid 4	DE	DE	DE	DE	DE
Solenoid 5	DE	DE	DE	E	E
Solenoid 6	DE	DE	DE	E	E
Boom Angle Sensor	C	C	O	O	O
Boom Relay	E	E	E	DE	DE
Stabilizer Lock Relay	DE	DE	E	DE	DE
Stabilizer Light	Off	Off	On	Off	On
BOOM EXTEND INTERLOCK SYSTEM TROUBLESHOOTING					
Boom Extend Proximity Switch	C	O	O	C	C
Boom Extend Interlock Relay	E	DE	DE	E	E
Boom Extend Lockout Relay	E	DE	DE	E	E
Outrigger Lockout Relay	E	DE	DE	E	E
Outrigger Pressure Switches	O	O	C	O	C
Left Outrigger Lockout Relay	DE	DE	E	DE	DE
Right Outrigger Lockout Relay	DE	DE	E	DE	DE
Stabilizer Interlock Relay	DE	DE	E	DE	E
Stabilizer Lock-Up Relay	DE	DE	E	DE	DE
Extend Circuit Solenoid Valve	E	DE	E	E	E
Park Brake Solenoid Valve	E	E	DE	E	E
Park Brake Interlock Relay	DE	DE	E	DE	DE
Park Brake Disconnect Relay	E	E	DE	E	E
Neutral Start Relay	DE	DE	E	DE	DE

NOTE: If an outrigger is up or a pressure switch is defective, boom on 10054 will not extend beyond 42 series extension limit.

Definitions:

Boom Retracted = Less than 42 series extension limit
Boom Extended = Boom at 42 series extension limit or greater (See Figure)
PB = Park Brake
SB = Service Brake
DE = De-energized
E = Energized
C = Closed
O = Open

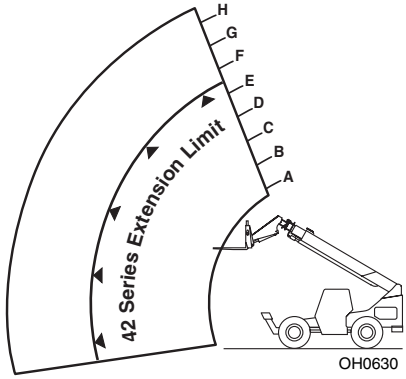

10054 Stabil-TRAK System Troubleshooting (S/N 9909 & After)					
	BOOM EXTEND MODE 6	BOOM EXTEND MODE 7	BOOM EXTEND MODE 8	BOOM EXTEND MODE 9	
	Reference page 403	Reference page 404	Reference page 405	Reference page 406	
Switch/ Relay Solenoid / Machine Conditions	Ignition On Boom Above 40° Boom Retracted PB & SB Applied Trans. Neutral Outriggers Up	Ignition On Boom Above 40° Boom Retracted PB & SB Applied Trans. Neutral Outriggers Down	Ignition On Boom Above 40° Boom Extended PB & SB Applied Trans. Neutral Outriggers Up	Ignition On Boom Above 40° Boom Extended PB & SB Applied Trans. Neutral Outriggers Down	
Solenoid 1	DE	DE	DE	DE	
Solenoid 2	DE	DE	DE	DE	
Solenoid 3	E	E	E	E	
Solenoid 4	E	E	E	E	
Solenoid 5	DE	DE	DE	DE	
Solenoid 6	DE	DE	DE	DE	
Boom Angle Sensor	O	O	O	O	
Boom Relay	DE	DE	DE	DE	
Stabilizer Lock Relay	E	E	E	E	
Stabilizer Light	On	On	On	On	
BOOM EXTEND INTERLOCK SYSTEM TROUBLESHOOTING					
Boom Extend Proximity Switch	C	C	O	O	
Boom Extend Interlock Relay	E	E	DE	DE	
Boom Extend Lockout Relay	E	E	DE	DE	
Outrigger Lockout Relay	E	E	DE	DE	
Outrigger Pressure Switches	O	C	O	C	
Left Outrigger Lockout Relay	DE	DE	DE	E	
Right Outrigger Lockout Relay	DE	DE	DE	E	
Stabilizer Interlock Relay	DE	E	DE	E	
Stabilizer Lock-Up Relay	DE	DE	DE	E	
Extend Circuit Solenoid Valve	E	E	DE	E	
Park Brake Solenoid Valve	DE	DE	DE	DE	
Park Brake Interlock Relay	DE	DE	DE	E	
Park Brake Disconnect Relay	DE	DE	DE	DE	
Neutral Start Relay	E	E	E	E	

NOTE: If an outrigger is up or a pressure switch is defective, boom on 10054 will not extend beyond 42 series extension limit.

Definitions:
Boom Retracted = Less than 42 series extension limit
Boom Extended = Boom at 42 series extension limit or greater (See Figure)
PB = Park Brake
SB = Service Brake
DE = De-energized
E = Energized
C = Closed
O = Open

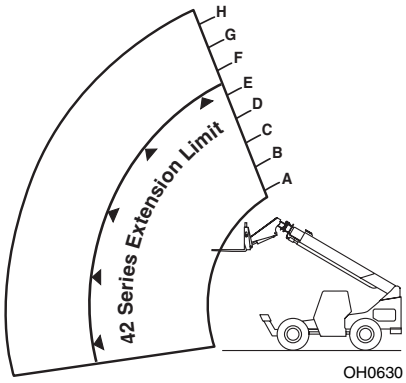

OH0630

10054 Stabil-TRAK Electrical Circuit Boom Extend Mode 1 (S/N 9909 & After)

MODE 1				
Conditions	1.	Ignition “ON”	4.	Transmission in Fwd. or Rev.
	2.	Boom Below 40°	5.	PB & SB Released
	3.	Boom Retracted	6.	Outriggers Up

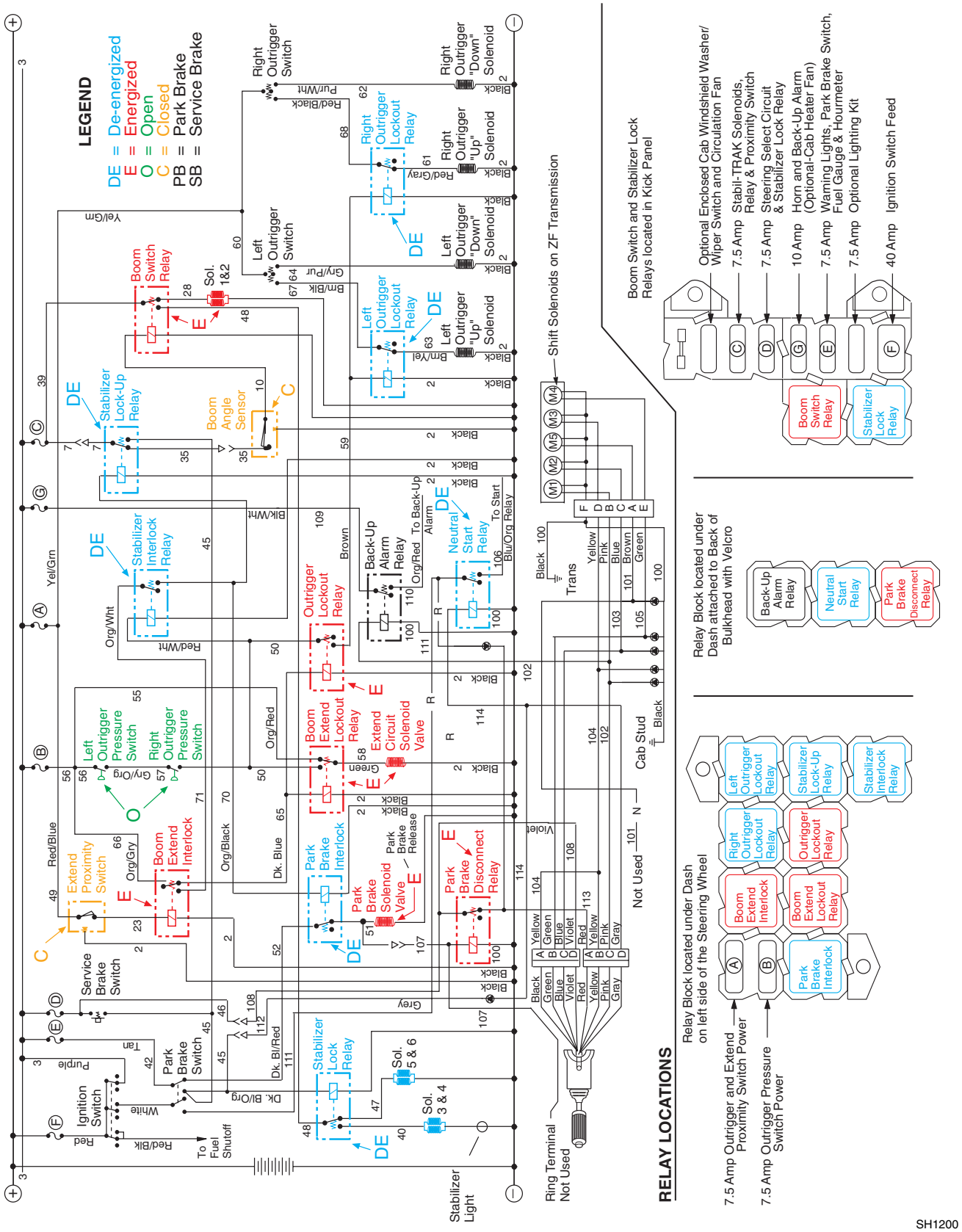

MODE 2	1.	Ignition "ON"	4.	Transmission in Fwd. or Rev.
Conditions	2.	Boom Below 40°	5.	PB & SB Released
	3.	Boom Extended	6.	Outriggers Up

10054 Stabil-TRAK Electrical Circuit
Boom Extend Mode 2
(S/N 9909 & After)

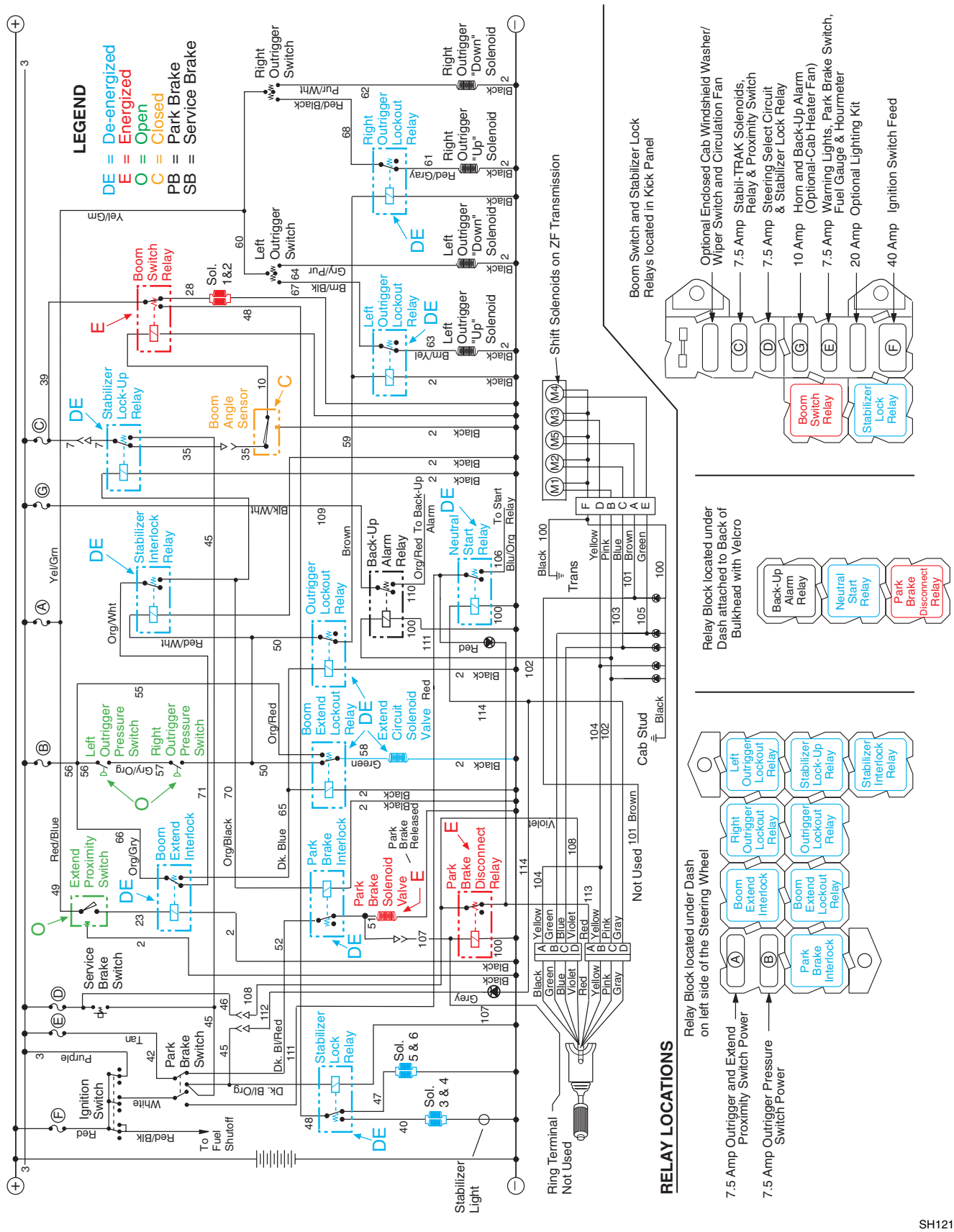

SH1210

10054 Stabil-TRAK Electrical Circuit Boom Extend Mode 3 (S/N 9909 & After)

MODE 3				
Conditions	1.	Ignition "ON"	4.	Transmission in Neutral
	2.	Boom Below 40°	5.	PB & SB Applied
	3.	Boom Extended	6.	Outriggers Down

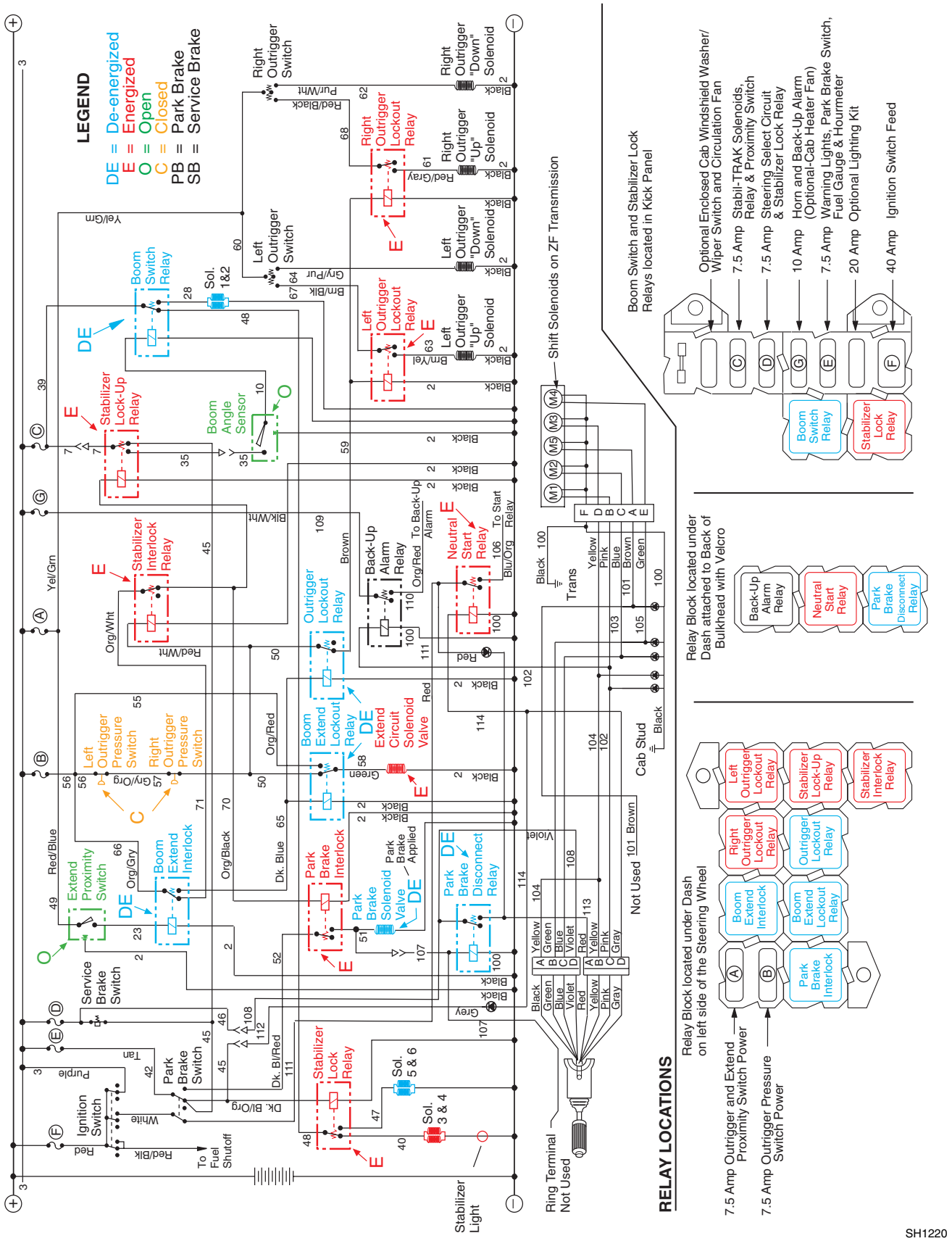

MODE 4				
Conditions	1.	Ignition “ON”	4.	Transmission in Fwd. or Rev.
	2.	Boom Above 40°	5.	PB & SB Released
	3.	Boom Retracted	6.	Outriggers Up

10054 Stabil-TRAK Electrical Circuit Boom Extend Mode 4 (S/N 9909 & After)

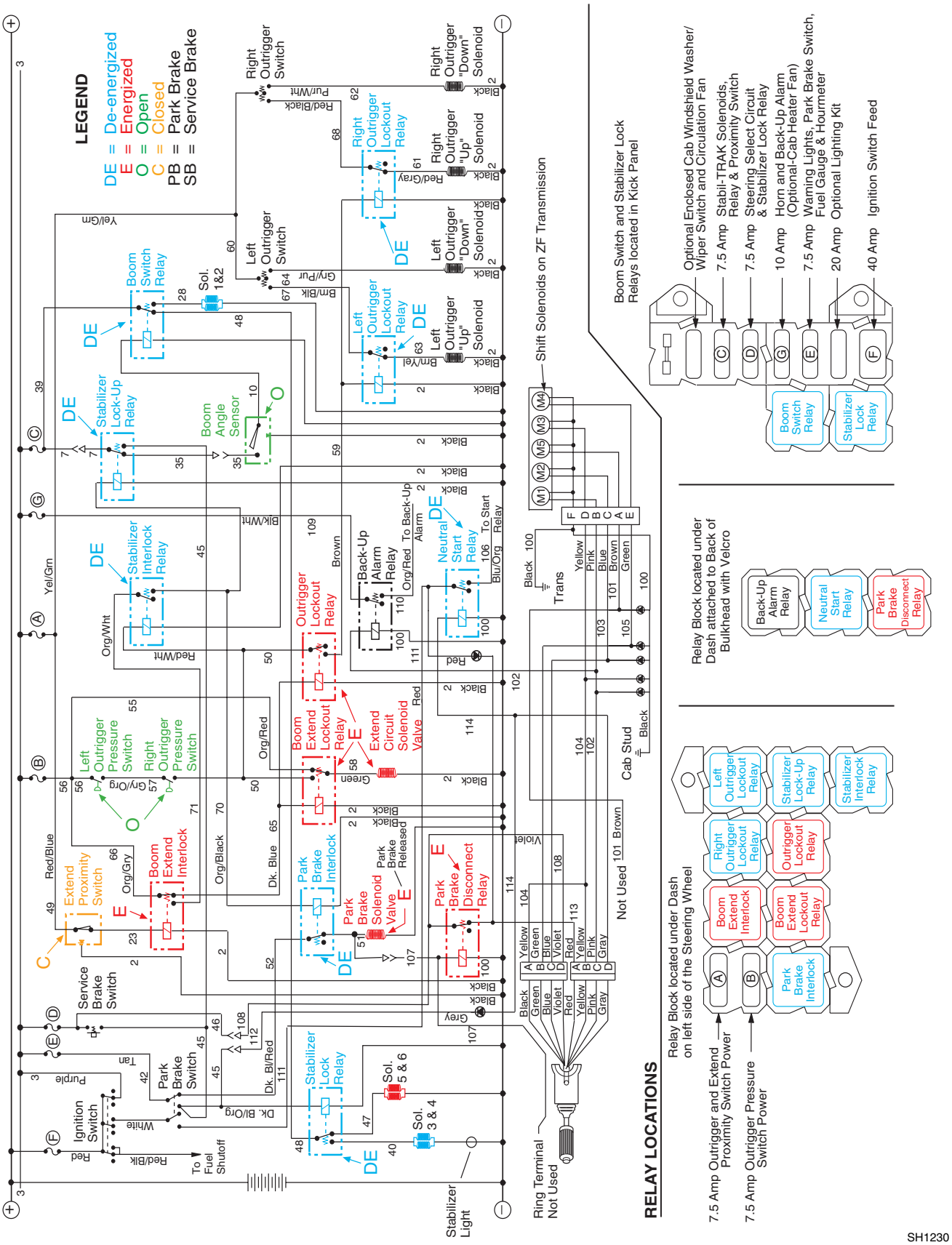

SH1230

10054 Stabil-TRAK Electrical Circuit Boom Extend Mode 5 (S/N 9909 & After)

MODE 5				
Conditions	1.	Ignition "ON"	4.	Transmission in Fwd. or Rev.
	2.	Boom Above 40°	5.	PB & SB Released
	3.	Boom Retracted	6.	Outriggers Down

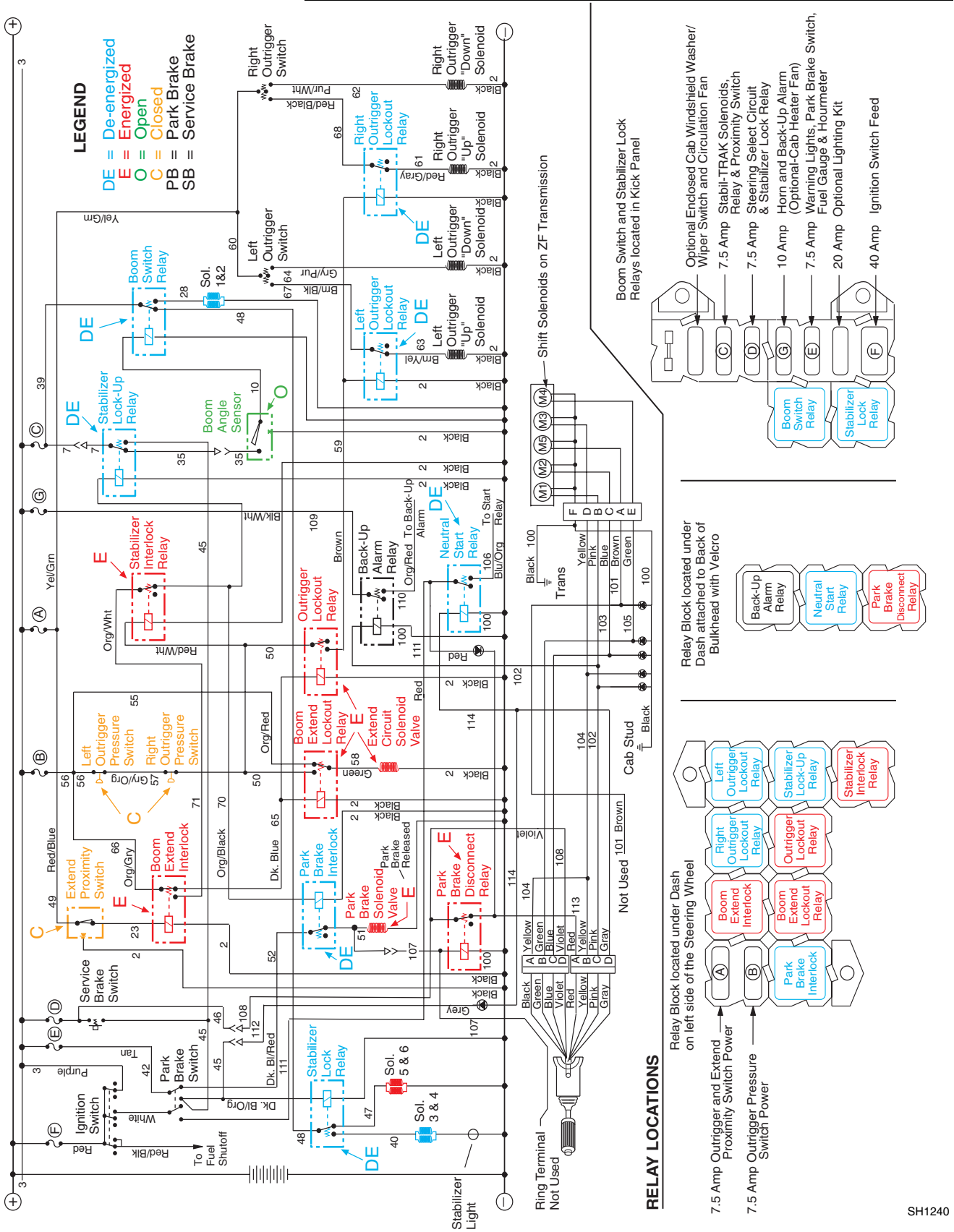

MODE 6				
Conditions	1.	Ignition “ON”	4.	Transmission in Neutral
	2.	Boom Above 40°	5.	PB & SB Applied
	3.	Boom Retracted	6.	Outriggers Up

10054 Stabil-TRAK Electrical Circuit Boom Extend Mode 6 (S/N 9909 & After)

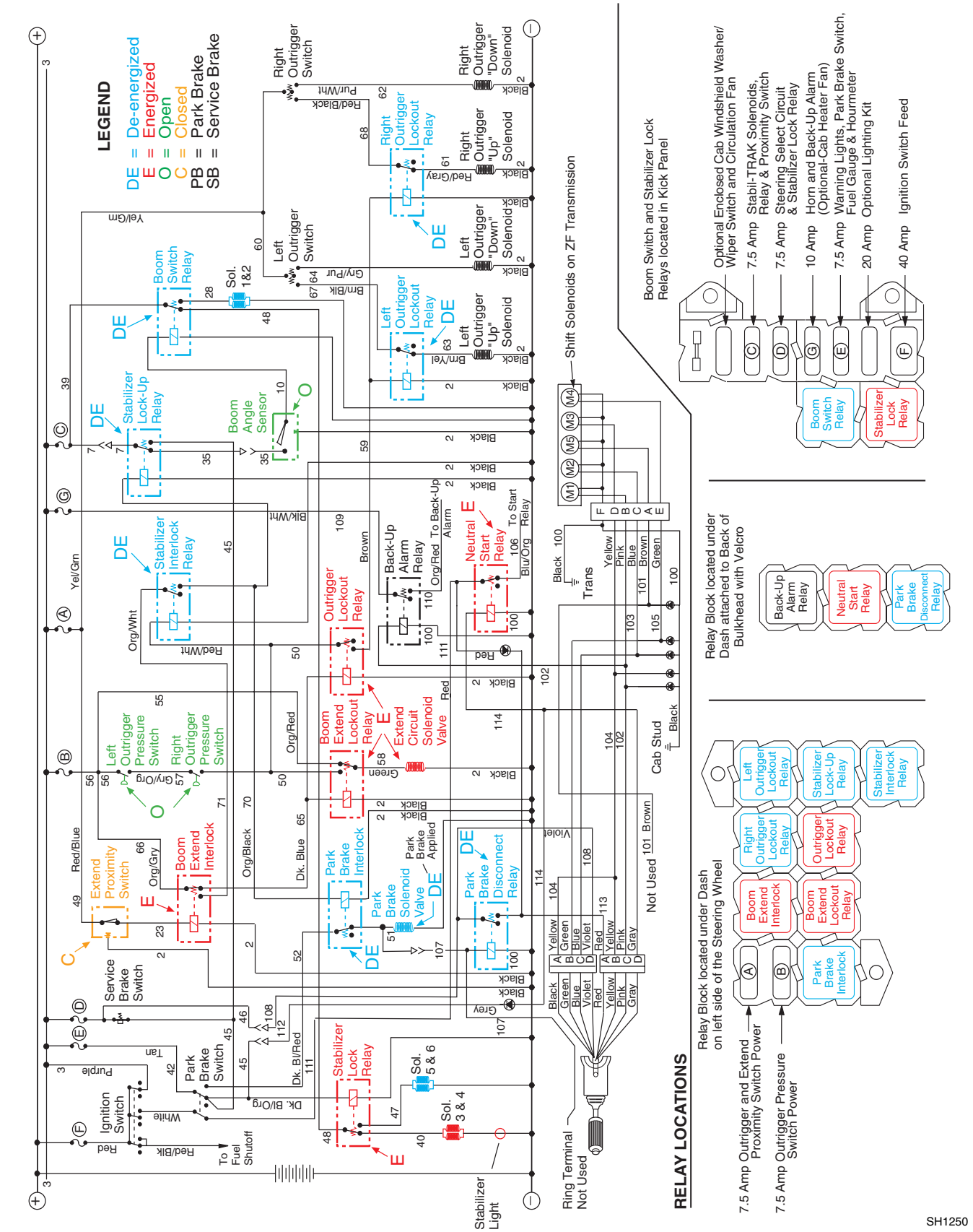

10054 Stabil-TRAK Electrical Circuit Boom Extend Mode 7 (S/N 9909 & After)

MODE 7				
Conditions	1.	Ignition "ON"	4.	Transmission in Neutral
	2.	Boom Above 40°	5.	PB & SB Applied
	3.	Boom Retracted	6.	Outriggers Down

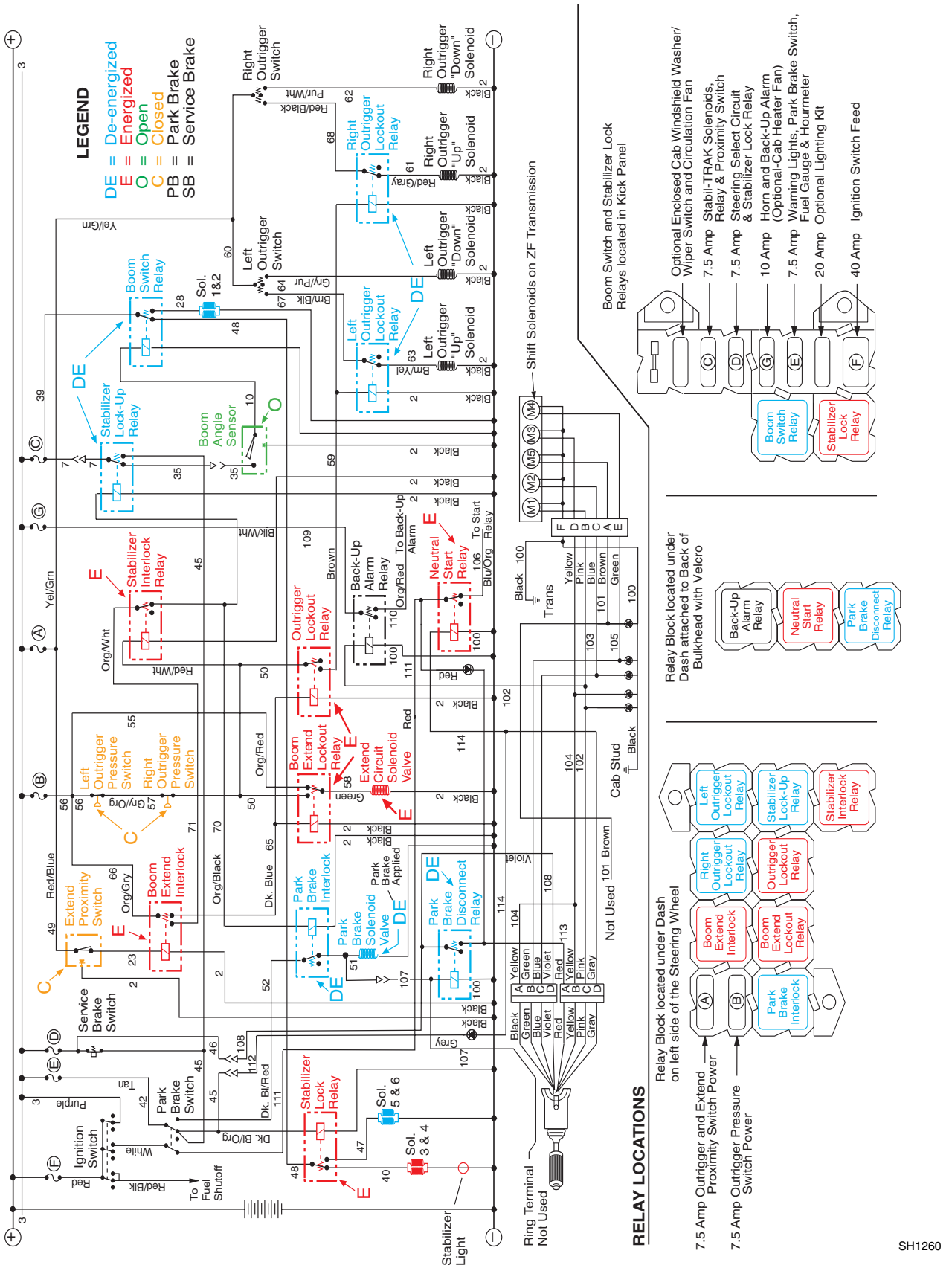

MODE 8				
Conditions	1.	Ignition “ON”	4.	Transmission in Neutral
	2.	Boom Above 40°	5.	PB & SB Applied
	3.	Boom Extended	6.	Outriggers Up

10054 Stabil-TRAK Electrical Circuit Boom Extend Mode 8 (S/N 9909 & After)

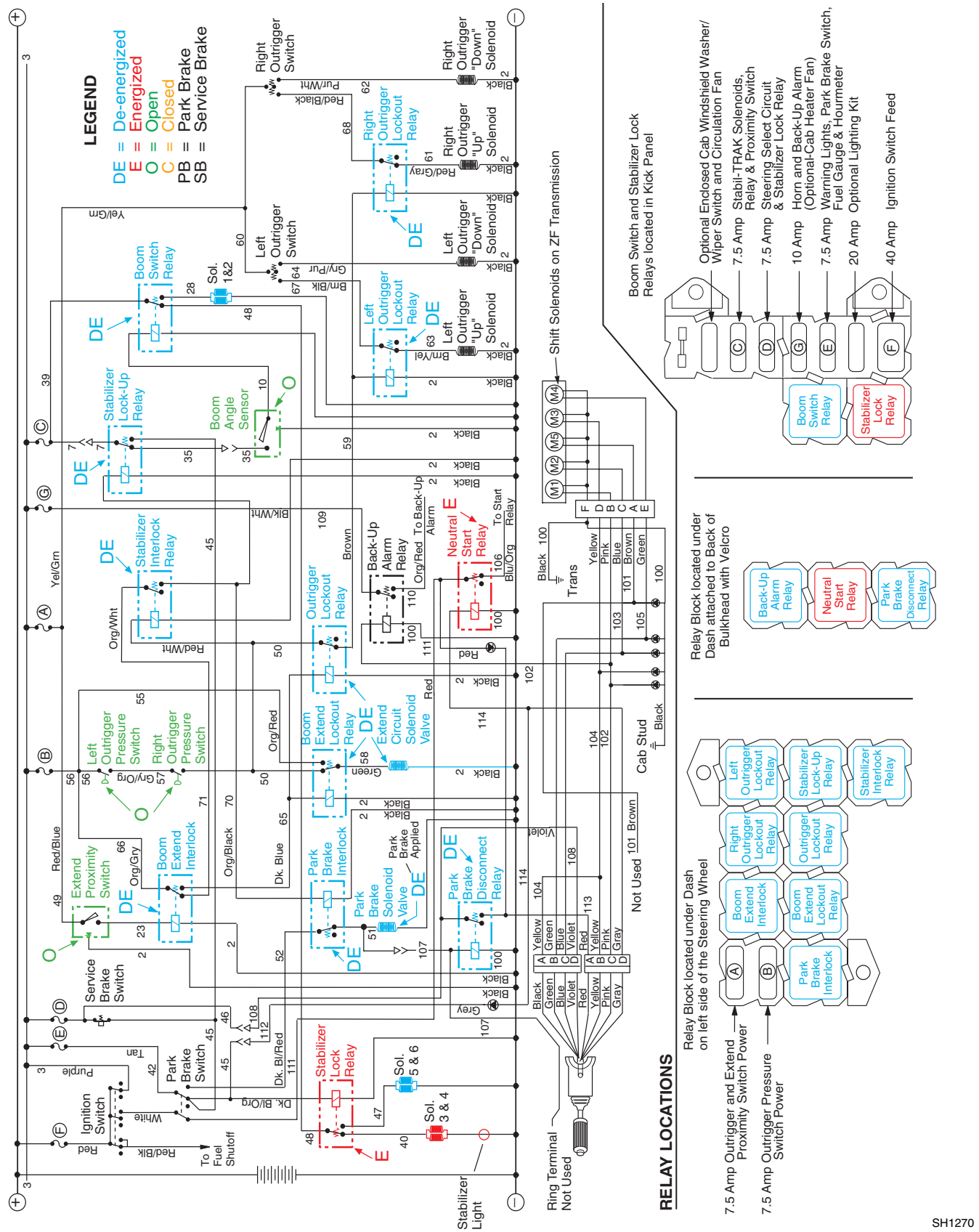

SH1270

10054 Stabil-TRAK Electrical Circuit Boom Extend Mode 9 (S/N 9909 & After)

MODE 9				
Conditions	1.	Ignition "ON"	4.	Transmission in Neutral
	2.	Boom Above 40°	5.	PB & SB Applied
	3.	Boom Extended	6.	Outriggers Down

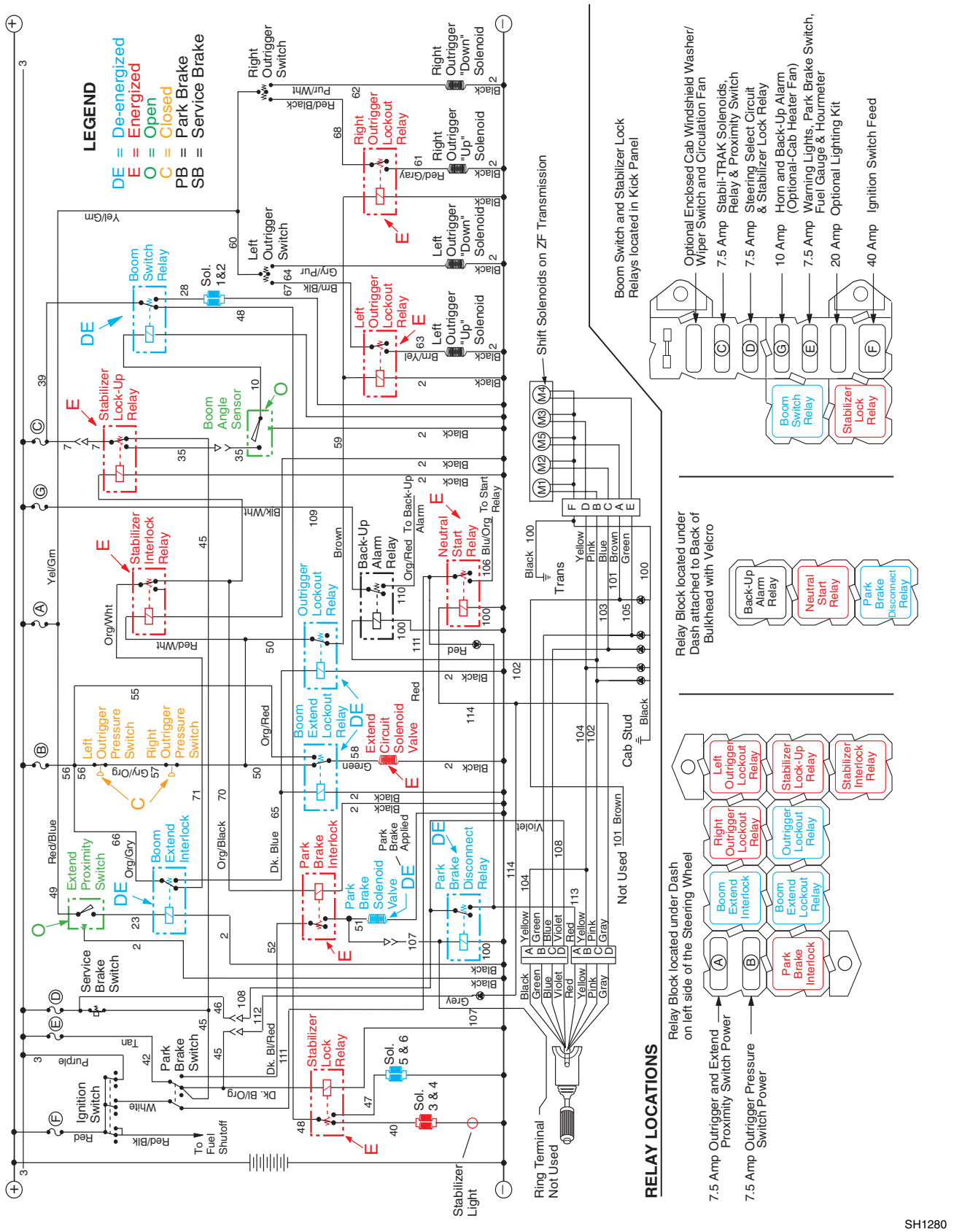

PART NUMBER INDEX

Part Number	Page
10136599	93
10138907	93
10238805	93
10701363	93
10701562	93
10715335	93
10731702	57
10731704	59
10731705	61
10731706	61
10731707	61
10731709	61, 85, 87
10731710	61, 85
10731711	63
10731712	63
10731713	63
10731715	63
10731716	63
10731717	63
10731718	63
10731719	63
10731720	63
10731721	63
10731722	63
10731723	63
10731724	63
10731725	63
10731726	63
10731727	63
10731728	63
10731729	63
10731730	63
10731731	63
10731732	63
10731734	63
10731736	65
10731737	65
10731738	65
10731739	65
10731741	65
10731742	65
10731743	65, 89
10731744	65
10731745	65
10731746	65
10731747	65, 69
10731748	57, 65, 69
10731749	65, 69
10731750	65, 69
10731751	57, 65, 69, 81
10731752	65
10731753	65
10731754	65
10731756	65
10731758	65
10731759	65
10731761	67, 71, 75
10731762	67
10731763	67
10731764	67
10731765	67
10731766	67
10731767	67
10731768	67
10731769	67
10731770	67
10731771	67
10731772	67
10731773	67
10731774	67
10731775	67
10731776	67
10731777	67
10731778	67
10731779	67
10731780	67
10731781	67
10731782	67
10731783	67
10731784	67
10731785	67
10731786	67
10731787	67
10731789	67, 71, 75
10731790	67
10731791	67, 71, 75
10731792	67, 71, 75
10731793	67, 71, 75
10731794	67, 71, 75
10731795	67, 71, 75
10731796	67, 71, 75
10731797	67, 71, 75
10731798	67, 71, 75
10731799	67, 71, 75
10731800	67, 71, 75
10731801	67, 71, 75
10731802	67, 71, 75
10731803	67, 71, 75
10731804	67, 71, 75
10731805	67, 71, 75
10731806	67, 71, 75
10731807	67, 71, 75
10731808	67, 71, 75
10731809	67, 71, 75
10731810	67, 71, 75
10731811	69, 71, 75
10731812	69, 71, 75
10731813	69, 71, 75
10731814	69, 71, 75
10731815	69, 71, 75
10731816	69, 71, 75
10731817	69, 71, 75
10731818	69, 71, 75
10731819	69, 71, 75
10731820	69, 71, 75
10731821	69, 71, 75
10731822	69
10731823	69
10731824	69, 75
10731825	69, 73, 75
10731826	69, 73, 75
10731827	69, 73, 75
10731828	69, 73, 77
10731829	69, 73, 77
10731830	69, 73, 77
10731831	69, 73
10731832	69, 73, 77
10731833	69
10731834	69, 75
10731835	69, 75
10731836	69, 75
10731837	69, 75
10731838	69, 75
10731839	69, 75, 77
10731840	77
10731841	69, 77
10731842	69, 77
10731843	69, 77
10731844	69, 77
10731845	69, 77, 83
10731846	69, 77
10731847	69, 73, 77
10731848	69, 73, 77
10731849	69, 73, 77
10731850	69, 73, 77
10731851	69, 73, 77
10731852	77
10731854	71
10731855	71
10731856	71
10731857	71
10731858	71
10731859	71
10731860	71
10731861	71
10731862	71
10731863	71
10731864	71
10731865	71
10731866	71
10731867	71
10731868	71
10731869	71
10731870	71
10731871	71
10731872	71
10731873	71
10731874	71
10731875	71
10731876	71
10731877	71
10731878	71
10731879	71
10731880	71
10731881	71
10731882	71
10731883	71
10731884	71
10731885	71
10731886	71
10731887	71
10731888	71
10731889	73
10731890	73
10731891	73
10731892	73
10731893	73
10731894	73
10731895	73
10731896	73
10731897	73
10731898	73
10731899	73
10731900	73
10731901	73
10731902	73
10731903	73
10731904	73
10731905	73
10731906	73
10731907	73
10731908	73
10731909	73
10731910	73
10731911	75
10731912	75
10731913	75
10731916	77
10731917	77
10731918	77
10731919	77
10731920	77
10731921	77
10731923	89
10731924	89
10731925	89
10731926	89
10731928	77
10731929	77
10731930	77
10731931	77
10731932	77
10731933	77
10731934	77
10731935	77
10731936	77
10731937	77
10731938	77
10731953	79
10731954	79
10731955	79
10731956	79

PART NUMBER INDEX

Part Number	Page
10731957	79
10731958	79
10731959	79
10731960	79
10731961	79
10731962	79
10731963	79
10731964	79
10731965	79
10731966	79
10731967	79
10731968	79
10731969	79
10731970	79
10731971	79
10731972	79
10731973	79
10731974	79
10731975	79
10731976	79
10731977	79
10731978	81
10731979	81
10731980	81
10731981	81
10731982	81
10731983	81
10731984	81
10731985	81
10731986	81
10731987	81
10731988	81
10731989	83
10731992	83
10731993	83
10731994	83
10731995	83
10731996	83
10731997	83
10731998	83
10731999	83
10732000	83
10732001	83
10732002	83
10732003	83
10732004	83
10732005	83
10732007	85
10732009	85
10732011	85
10732012	85
10732013	85
10732015	87
10732017	85, 87
10732018	87, 89
10732021	85
10732022	85
10732023	85
10732024	85
10732025	85
10732027	87
10732028	87
10732029	87
10732030	87
10732031	87
10732032	87
10732033	87
10732034	87
10732035	87
10732036	87
10732037	87
10732038	87
10732039	87
10732040	87
10732041	87
10732042	87
10732043	87
10732044	87
10732045	87
10732046	87
10732047	87
10732048	87
10732049	87
10732050	87
10732051	87
10732053	87
10732054	87
10732055	87
10732056	87
10732058	87
10732060	87
10732061	87
10732063	87
10732064	87
10732065	87
10732067	87
10732068	87
10732069	87
10732070	87
10732071	87, 89
10732072	87
10732076	87, 89
10732078	89
10732081	89
10732082	89
10732083	89
10732085	91
10732089	91
10732090	91
10732091	91
10732092	91
10732093	81
10732094	81
10732095	57, 81
10732096	81
10732097	81
10732098	81
10732099	81
10732101	81
10732103	75
10732104	75
10732105	75
10732106	75
10732107	69, 75
10732110	59
10732111	59
10732112	59
10732113	59
10732114	59
10732115	59
10732116	59
10732117	59
10732118	59
10732119	59
10732120	59
10732121	59
10732122	59
10837660	85
10837728	87
10839156	79
1319203	57
1319204	57
1319205	57
1319206	57
1319207	57
1319208	57
1319209	57
1319210	57
1319211	57
1319212	57
1319213	57
1319214	61
1319215	63, 71
1319216	63
1319217	63
1319218	63, 83
1319219	65
1319220	65, 75, 85
1319221	65
1319222	65
1319223	67
1319224	67, 71, 75
1319225	69, 75
1319226	71
1319227	71
1319230	75
1319234	77
1319235	77
1319237	81
1319238	83
1319240	83
1319241	83
1319242	83
1319243	83
1319244	83
1319245	83
1319246	83
1319247	83
1319248	83
1319249	83
1319250	83
1319251	83
1319252	83
1319253	83
1319254	83
1319255	83
1319256	85
1319257	85
1319259	85
1319260	85
1319261	85
1319262	87
1319263	87
1319264	87
1319265	87
1319266	87
1319267	87
1319268	87
1319269	87
1319270	87
1319271	89
1319272	89
1319273	89
1319274	89
1319275	91
1319276	91
1319277	91
1319278	91
1319279	91
1319283	19
1319285	67
1319286	67
1319287	67
1319288	67
2705122	149
2710802	133, 135
2711613	193
2711852	141, 143
2711872	137, 139
2711892	147
2711972	133, 135, 137, 139
2711992	133, 135, 243, 245
2712012	133, 135, 149
2712092	149
2712112	133, 135
2712122	133, 135
2712142	133, 135
2712332	149
2712872	145
2712942	133, 135, 137

PART NUMBER INDEX

Part Number	Page
2712973	185
2712993	117, 119, 121
2713054	121
2713222	145
2713242	133, 135
2713262	141
2713282	141
2713292	137
2713332	133, 135, 147
2713333	179
2713363	191
2713432	133, 135
2713442	137
2713452	145
2713642	145
2713803	175
2713853	177
2714973	183
2714993	173, 175
2716163	189, 247
2716173	171
2716516	143
2716545	153
4105621	33
4106561	253
4107182	275
4107232	227
4107692	249
4107702	249
4107712	249
4107812	275
4107822	275
4107832	275
4107971	15
4107981	15
4108161	113
4108232	245
4108302	227
4110123	227
4110124	227
4110125	227
5721202	223
5724284	117
5724302	3
5724622	229
5724742	5
5746241	5
5746411	259
6604662	249
6604712	149
6604882	133, 135, 137, 139
6604972	149
6604982	145
6605202	137, 145
6605772	149
6608621	249
6611752	149, 249
6619261	95
6620531	3
7047041	207
7054351	55, 93, 117, 119, 121
7054632	117, 119, 121
7057141	117, 119, 121
7058372	223
7062922	249
7065482	243, 245
7068651	213
7070191	245
7075191	31
7075611	229
7077481	243, 245
7077501	243, 245
7077511	243, 245
7079162	125
7079442	3
7080891	27
7081031	27
7082292	15
7082311	5, 229, 231, 233, 255, 257, 259
7082342	229, 231, 233, 255, 257, 259
7082362	229, 231, 233, 255, 257, 259
7082971	7
7083054	237
7083963	13
7083992	233, 259
7084792	5
7084821	5
7084902	15
7085073	237, 239, 241, 243, 245, 249
7085102	235
7085411	243, 245
7085422	117, 119, 121
7085501	243, 245
7085552	235
7085562	235
7085571	235
7086304	239
7086471	237, 239, 241, 243, 245, 249
7086742	125
7088283	125
7088352	117, 119
7088522	25
7089044	243
7089054	243
7089722	185
7089781	261, 267
7090634	247
7090751	13
7090814	241
7090822	247
7090832	247
7090871	247
7090891	247
7090951	247
7091323	33
7091373	247
7092292	3, 229
7092533	113
7092612	113
7093772	117, 119, 121
7093783	117, 119, 121
7094562	163
7094592	117
7094682	5
7095272	117, 119, 121
7095282	117, 119, 121
7095302	127
7095312	233, 259
7095342	55
7095352	233, 259
7095393	127
7095452	5
7095522	233, 259
7095831	117, 119, 121
7096471	55
7096552	229
7096562	229
7096592	95
7096632	99
7096692	117
7096702	231, 233, 255, 257, 259
7096772	229
7096882	229, 231, 233, 255, 257
7097174	5
7097233	7
7097323	127
7097382	229
7097452	125
7097523	237, 239, 241, 243, 245, 249
7097533	237, 239, 241, 243, 245, 249
7097543	237, 239, 241, 243, 245, 249
7097682	229
7098142	23
7098262	5
7098271	163
7098342	7
7098354	243
7098563	3
7098733	113, 115
7098762	213, 215, 217
7098864	213
7098973	223
7099072	137, 165
7099312	3
7099324	9
7099332	15
7099352	15
7099522	113, 115
7099532	113, 115
7099692	115
7099702	115
7099742	7
7099832	99
7099882	213, 215, 217, 219, 221, 225
7099912	117, 119, 121
7099923	225
7099943	117
7110002	247
7110022	125
7110042	255
7110172	259
7110333	115
7110342	115
7110352	115
7110494	249
7110582	231, 255, 257
7110642	231, 255, 257
7110694	249
7110702	249
7110712	249
7110722	249
7110744	253
7110762	113
7110772	113
7110782	223
7111164	5
7111191	27, 223
7111203	27
7111473	5
7111572	229, 231, 233, 255, 257, 259
7111832	15
7111842	15
7111952	55
7111994	249
7112092	9
7112102	7
7112302	223
7112422	207, 209
7112452	145
7112511	29, 207, 209, 211
7112523	251
7112533	251
7112582	225
7112592	225
7112642	251
7112732	257
7112804	275
7113024	275

PART NUMBER INDEX

Part Number	Page
7113952	267
7113982	267
7114032	257
7114112	231, 255
7114542	215, 217
7114604	209
7114612	213
7114754	209, 211
7114763	207
7114922	259
7114941	251
7115114	225
7115163	207
7115432	247
7115652	199
7115662	177
7115712	201
7116632	225
7116642	231, 255
7116652	231, 255
7116662	231, 255
7116691	231, 255
7116784	231
7116792	229
7116812	231, 255
7116854	229
7117031	265, 271, 273
7117072	231, 255
7117113	233
7117133	259
7117204	245
7117244	245
7117254	245
7117264	245
7117282	205
7117292	205
7117414	257
7117502	231, 255, 257
7117513	231
7117534	257
7117542	255
7117572	231, 255
7117582	257
7117692	205
7118222	129, 131, 213, 215, 217, 219, 221
7118662	233
7118682	259
7118692	257
7118854	255
7118882	237, 239, 241
7118892	237, 239, 241
7118941	29, 37
7119341	245
7119351	265, 271, 273
7119362	261, 263, 265, 267, 269, 271, 273
7119372	261, 265, 267, 271, 273
7119632	113
7119642	113
7119652	113
7119662	113
7119813	149, 203
7120191	263, 269
7120742	235
7121013	137
7124331	3, 7, 223
7124491	247
7124531	31
7125251	31
7125271	31
7125421	129
7125521	7
7125691	7
7125741	243, 245, 259
7125801	247
7125811	233, 259
7125861	3
7126662	255
7126684	215, 217, 219
7126922	125
7126953	125
7126962	125
7126992	125
7127003	119, 121
7127013	119, 121
7127022	125
7127034	119, 121
7127043	119, 121
7127081	131
7127091	25
7127102	25
7127282	9
7127852	259
7127862	259
7127871	129, 131
7127881	129, 131
7128772	237, 243, 245
7128782	249
7128792	239, 243, 245
7128802	241, 243, 245, 249
7129261	7
7129313	3
7129323	3
7129382	215, 219, 221
7129392	215, 219, 221
7130563	205
7130912	199
7131274	205
7131852	53
7132912	117
7133022	117
7133802	141, 143
7133812	141, 143
7133823	145
7133833	145
7134832	219
7134894	221
7135942	15
7136034	129, 131, 163
7137132	37
7137643	121, 123
7138164	163
7138186	93
7138208	93
7138209	129, 131, 163
7138240	113
7138241	113
7138290	121
7138291	117, 119
7138297	121
7138301	117, 119
7138302	3
7138468	225
7138469	225
7138614	5
7138714	129, 131, 163
7138738	261, 267
7138848	121
7143900	13
7144000	13
7150082	93
7150182	93, 101
7150192	93, 101
7150202	93, 97
7150282	157
7150302	139
7150312	135
7150361	7
7150371	15
7150382	7
7150393	5
7150402	221
7150412	133, 135
7150432	143
7150442	143
7150452	143
7150472	15
7150492	139
7150502	139
7150521	221
7150523	117, 119, 121
8032500	41
8032501	41
8032502	41
8032503	41, 45
8032504	41
8032505	41
8032506	41, 45
8032509	41
8032510	41
8032511	41
8032515	41
8032516	41
8032517	41
8032518	41
8032519	41
8032521	41
8032522	41
8032523	41
8032526	41
8032528	41
8032532	41
8032535	41
8032536	41
8032537	41
8032538	41
8032539	41
8032541	41, 43
8032542	41, 43
8032543	41, 43
8032545	41, 43
8032546	41
8032547	41
8032548	41
8032549	41
8032550	43
8032551	43
8032552	43
8032553	43
8032554	43
8032555	43
8032556	43
8032558	43
8032559	43
8032560	43
8032563	43
8032564	43
8032565	43
8032566	43, 45
8032567	43
8032568	43
8032573	43
8032574	43
8032578	43
8032579	43
8032580	43
8032581	43
8032582	43
8032583	43
8032584	43
8032585	43
8032586	43
8032587	43
8032588	43
8032589	43
8032592	43
8032593	43
8032594	43

PART NUMBER INDEX

Part Number	Page
8032595	43
8032604	47
8032605	47
8032606	47
8032607	47
8032608	47
8032609	47
8032611	47
8032612	43
8032613	43
8032614	45
8032615	45, 47
8032616	45, 47
8032617	45, 47
8032620	43, 45, 47
8032622	45
8032623	45
8032624	45
8032625	45
8032626	45
8032627	47
8032628	45, 47
8032629	45
8032631	45
8032632	45
8032633	45
8032634	45
8032635	45
8032637	45
8032638	45
8032640	45
8032641	45
8032642	45
8032643	45, 47
8032644	45
8032645	45
8032646	45
8032647	45
8032648	45
8032649	45
8032650	45
8032651	45
8032652	45, 47
8032653	49
8032654	49
8032655	49
8032656	49
8032657	49
8032658	49
8032659	49
8032661	49
8032663	49
8032665	49
8032666	51
8032669	51
8032670	51
8032672	51
8032673	51
8032674	51
8032675	51
8032676	51
8032678	51
8032679	51
8032680	51
8032681	51
8032682	51
8032702	187
8032714	173, 185
8032726	177, 179, 181
8032728	177, 179
8032752	165
8032753	17
8032756	207, 209, 211
8032762	127
8032764	127
8032793	31
8032794	31
8032816	111
8032826	107, 109
8032875	105
8032876	105
8032877	105
8032880	105
8032881	105
8032882	105
8032883	105
8032885	105
8032886	105
8032891	107, 109
8032892	107, 109
8032893	107, 109
8032894	107, 109
8032895	103, 107, 109
8032896	107, 109
8032897	107, 109
8032898	107, 109
8032899	107, 109
8032900	107, 109
8032901	107, 109
8032902	107, 109
8032903	107, 109
8032904	107, 109
8032906	107, 109
8032910	107, 109
8032912	107, 109
8032913	107, 109
8032914	107, 109
8032920	107
8032922	107, 109
8032923	107, 109
8032930	111
8032949	107, 109
8032972	107, 109
8032973	107, 109
8032974	107, 109
8032979	105
8032983	107, 109
8032984	107, 109
8032985	107, 109
8033003	97
8033004	97
8033006	99
8033007	95, 99
8033008	99
8033009	95, 99, 105
8033012	107, 109
8033022	7
8033031	7
8033044	9
8033050	7
8033051	7
8033052	7
8033053	7
8033065	29, 37, 207, 209, 211
8033072	9
8033075	29, 37
8033076	9
8033077	9
8033078	9, 207, 209, 211
8033079	9
8033081	9, 39
8033082	9
8033084	9
8033085	9
8033086	9
8033087	9
8033088	9
8033090	9
8033092	9
8033094	9
8033097	99
8033098	99
8033102	29
8033103	29
8033104	29
8033105	29
8033110	29
8033178	25
8033188	41
8033189	41
8033190	43
8033191	43
8033192	43
8033193	41
8033194	43
8033195	43
8033196	43
8033197	43
8033198	41, 47
8033199	41, 43
8033201	15, 207, 209, 211
8033202	51
8033203	51
8033204	51
8033205	51
8033228	103
8033238	51
8033239	51
8033240	17
8033241	17
8033242	17
8033243	17
8033254	203
8033299	41
8033302	41
8033303	41
8033304	41
8033305	41
8033306	41
8033307	41
8033308	41
8033309	41
8033310	41
8033311	41
8033312	41
8033313	41
8033314	41
8033318	43
8033340	117, 119, 121, 213, 215, 217, 219, 221
8033342	117, 119, 121
8033344	49
8033347	49
8033348	45
8033349	41
8033351	47
8033355	45
8033356	45
8033357	45
8033358	45
8033359	47
8033360	47
8033361	47
8033362	47
8033363	47
8033364	47
8033365	47
8033368	47
8033371	47
8033372	47
8033373	43, 47
8033374	47
8033375	47
8033376	47
8033384	43
8033385	43
8033386	43
8033387	49
8033406	213, 215, 217
8033479	9, 39
8033652	97

PART NUMBER INDEX

Part Number	Page
8033704	179
8033715	179
8033721	179
8033722	185
8033723	185
8033724	185
8033725	185
8033726	185
8033727	173
8033728	173
8033729	173
8033730	173
8033731	173
8033732	169
8033733	169
8033734	169
8033735	169
8033736	169
8033737	169
8033738	169
8033740	181
8033741	181
8033742	181
8033744	177, 179
8033745	177, 179
8033746	177
8033747	177, 179
8033748	187
8033749	187
8033750	187
8033751	187
8033753	205
8033755	179
8033756	179
8033760	205
8033761	205
8033763	205
8033768	205
8033769	205
8033770	205
8033771	53
8033772	53
8033773	53
8033774	53
8033775	53
8033776	53
8033777	53
8033778	53
8033779	53
8033780	53
8033781	53
8033782	53
8033783	191
8033784	191
8033785	191
8033786	191
8033788	191
8033789	191
8033790	191
8033791	53
8033796	95
8033797	95
8033798	95
8033799	107
8033801	195
8033802	103
8033803	107, 109
8033804	105
8033805	105
8033806	103
8033809	103
8033810	103
8033811	195
8033812	195
8033813	195
8033814	195
8033815	105
8033816	105
8033817	105
8033818	105
8033820	105
8033821	105
8033822	105
8033823	105
8033824	105
8033826	107, 109
8033827	107, 109
8033828	107, 109
8033829	107, 109
8033831	107, 109
8033832	107, 109
8033833	9
8033834	9
8033835	9
8033836	9
8033837	9
8033838	9
8033839	9
8033840	9
8033841	11
8033842	11
8033843	11
8033844	11
8033845	11
8033846	11
8033847	11
8033848	11
8033849	11
8033850	11
8033851	11
8033852	11
8033853	11
8033854	11
8033855	11
8033856	11
8033857	11
8033858	11
8033859	11
8033860	11
8033861	11
8033862	11
8033863	11
8033864	11
8033865	11
8033866	11
8033867	11
8033868	11
8033869	11
8033870	47
8033871	47
8033872	47
8033873	47
8033874	47
8033875	47
8033876	47
8033877	47
8033878	47
8033879	47
8033880	47
8033881	47
8033882	47
8033883	47
8033884	47
8033885	43, 47
8033886	41
8033887	41
8033888	41
8033889	41
8033890	51
8033896	165
8033897	165
8033898	165
8033899	165
8033900	165
8033901	165
8033902	165
8033903	165
8033904	165
8033905	165
8033906	165
8033907	165
8033908	165
8033909	165
8033910	165
8033911	165
8033912	165
8033913	165
8033914	165
8033916	165
8033917	165
8033918	165
8033919	165
8033920	165
8033921	165
8033922	165
8033923	165
8033924	165
8033925	165
8033926	165
8033927	165
8033928	165
8033929	165
8033930	165
8033931	165
8033932	165
8033933	165
8033934	165
8033935	165
8033936	165
8033937	165
8033938	165
8033939	165
8033952	165
8033953	165
8033954	165
8033955	165
8033956	165
8033957	165
8033958	165
8033959	165
8033960	111
8033961	111
8033962	111
8033963	111
8033964	111
8033965	111
8033966	103
8033967	103
8033968	103
8033969	103
8033970	103
8033971	103
8033972	103
8033973	103
8033974	103
8033975	103
8033976	103
8033977	103
8033978	103
8033979	103
8033980	103
8033981	103
8033982	103
8033983	103
8033984	103
8033985	103
8033986	103
8033987	103
8033988	103
8033989	103
8033990	103
8033991	103

PART NUMBER INDEX

Part Number	Page
8033992	103
8033993	103
8033994	103
8033995	103
8033996	103
8033997	103
8033998	103
8033999	103
8034500	103
8034501	103
8034502	103
8034503	103
8034504	103
8034505	103
8034527	201
8034528	201
8034530	201
8034531	201
8034532	201
8034534	199
8034538	199
8034539	199
8034540	199
8034541	199
8034542	201
8034543	199
8034544	11
8034545	11
8034546	11
8034547	11
8034548	11
8034549	201
8034550	201
8034551	199
8034552	199
8034554	201
8034555	201
8034556	201
8034557	201
8034558	203
8034559	203
8034560	203
8034561	203
8034562	203
8034569	205
8034570	205
8034571	205
8034575	205
8034577	205
8034578	205
8034580	205
8034581	107
8034584	109
8034585	109
8034586	109
8034590	109
8034593	97
8034684	197
8034688	107, 109
8034691	197
8034692	107, 109
8034693	107, 109
8034694	17
8034695	183
8034697	199
8034797	37
8034798	37
8034799	37
8034800	37
8034801	29, 37
8034802	29, 37
8034803	37
8034804	37
8034805	37
8034806	37
8034807	37
8034808	37
8034809	37
8034810	37, 209, 211
8034811	37
8034812	165
8034813	213, 215, 217
8034814	107, 109
8034815	29
8034817	37
8034818	165
8034819	107, 109
8034821	197
8034822	197
8034823	197
8034824	197
8035247	169
8035267	199
8035268	107, 109
8035269	107, 109
8035270	107, 109
8035271	107, 109
8035272	107, 109
8035276	219, 221
8035308	175
8035315	171
8035322	189
8035386	175
8035513	171
8035514	171
8035519	189
8035535	171
8035536	171
8035539	171
8035542	175
8035545	175
8035547	183
8035555	123
8035556	123
8035557	123
8035558	123
8035559	123
8035560	167
8035561	167
8035562	167
8035563	167
8035564	167
8035565	167
8035566	167
8035567	167
8035568	167
8035569	167
8035570	167
8035571	167
8035572	167
8035573	167
8035574	167
8035575	167
8035577	167
8035578	167
8035579	167
8035580	167
8035581	167
8035582	167
8035583	167
8035584	167
8035585	167
8035586	167
8035587	167
8035588	167
8035589	167
8035590	167
8035591	167
8035592	167
8035593	167
8035595	167
8035596	167
8035597	167
8035598	167
8035607	175
8035608	175
8035609	175
8035610	175
8035611	183
8035612	183
8035613	183
8035615	171
8035616	171
8035617	97
8035618	97
8035620	97
8035622	97
8035623	97
8035624	97
8035625	97
8035628	97
8035727	189
8035728	189
8035729	189
8035730	189
8035731	189
8035732	189
8035733	89
8035734	89
8035778	101
8035800	171
8037206	11
8040258	3
8065061	231, 255, 257
8065062	249
8065063	247
8065214	231, 255
8065634	243, 245
8065639	7
8065640	3, 229
8065641	3
8080613	117, 119, 121
8124126	261, 263, 265, 267, 269, 271, 273
8124131	267
8127008	269, 271, 273
8127009	267
8127014	261, 267
8140309	117, 119, 121
8160042	17
8160046	25
8160059	33
8160060	23
8160062	21
8160205	17
8160406	33
8160417	17
8160418	33
8160419	21, 23
8160610	25
8160617	23, 33
8160621	207
8162003	25
8180307	117, 119, 121
8180308	117
8205506	181
8205514	193
8205545	193
8205546	193
8205547	193
8205548	193
8205640	181
8205655	177, 179, 187, 191, 193, 203, 205
8205656	173, 175, 185
8205657	169, 171
8205661	193
8205726	173
8220001	225
8220008	31, 207, 209, 211
8220050	207, 209, 211, 223

PART NUMBER INDEX

Part Number	Page
8220073	29, 213, 215, 217, 219, 221
8220882	207, 209, 211, 225
8223016	223
8223024	31, 207, 209, 211
8223025	207, 209, 211, 223
8223216	213, 215, 217, 219, 221
8223217	163, 213, 215, 217, 219, 221
8223220	15, 207, 209, 211
8223221	225
8223226	163
8223405	15, 207, 209, 211
8223419	223
8223424	223
8223436	207, 209, 211
8223438	207, 209, 211
8223442	15, 207, 209, 211
8223444	15, 207, 209, 211
8223445	15, 207, 209, 211
8223510	213, 215
8223517	207
8223525	225
8223610	217, 219, 221
8224026	23
8224027	21
8225117	209, 211, 225
8229215	207
8229216	207
8229218	207
8229226	207
8229232	207
8229233	209, 211, 225
8229234	209, 211
8229235	209, 211, 223
8229238	209, 211
8262131	117
8262137	119
8262138	119
8262142	121
8262143	121
8270014	213, 215, 217
8270134	219, 221
8270220	117, 119, 121
8270221	117, 119, 121, 213, 215, 217, 219, 221
8270602	213, 215, 217
8270617	213, 215, 217, 219, 221
8270622	219, 221
8272009	117, 119
8272017	121
8273013	127
8273237	127
8273238	127
8273240	127
8273241	127
8273272	127
8274022	129, 131
8275212	125
8275240	125
8275247	125
8275248	125
8277161	117, 119, 121
8277162	117, 119, 121, 213, 215, 217, 219, 221
8278007	55, 93, 117, 119, 121
8278008	117, 119, 121
8278012	117, 119, 121
8278017	55
8301002	25
8301402	25
8301439	21
8301443	23, 33
8301456	251
8302147	7
8302406	27
8302449	25
8302470	21, 23, 33, 93
8303034	5, 7, 15, 23
8303041	229
8303106	17, 117, 119, 121
8303519	93, 119, 121, 139
8303534	7, 13, 27
8303540	9, 17, 23, 29, 37, 259
8303550	121
8303604	13
8303618	127
8303620	43, 229, 231, 255, 257, 259
8303621	125, 229, 231, 255, 257, 259
8303622	117, 119, 121
8303624	255, 257
8303626	139, 251
8303628	247
8303629	247
8303632	223
8303634	237, 239, 241, 243, 245, 249, 255, 257
8303638	7, 235
8303655	3, 229, 247
8303656	5
8303664	55
8303666	233, 259
8303675	135, 231, 233, 255
8303679	117, 119, 121, 231, 233, 255, 257, 259
8303681	229, 231, 233, 255, 257, 259
8303697	13, 33, 119, 121, 127, 213, 229
8303702	117, 119, 121
8303705	7
8303715	229, 249
8303717	247
8303724	3, 55, 93, 117, 119, 121
8303729	5, 7
8303735	231
8303738	225
8303739	145, 243, 245
8303742	25, 27, 117, 119, 121
8303744	117
8303745	13
8303752	145
8303758	33
8303770	243, 245
8303772	233, 259
8303776	9, 31
8303782	3, 229
8303784	117, 119, 121
8303790	25, 117, 119, 121
8303794	247
8303799	25
8303835	29, 207
8303837	25, 223
8303839	29
8303982	9
8303987	51, 213, 215, 217, 219
8303995	31
8304624	137
8304631	203
8304660	5
8305002	25, 29, 207, 209, 211, 225
8305003	207
8305004	5, 15, 25, 27, 33, 207, 209, 213, 215, 217, 219, 221
8305005	23, 29
8305006	13, 29, 133, 135, 213
8305008	7, 13
8305012	137, 139, 251
8305014	163, 223
8305018	263, 269
8305021	3
8305038	221
8305043	213, 215, 217, 219, 221
8305201	213, 215, 217, 219, 221
8305402	17, 21, 25, 33
8305405	27, 223
8305410	27
8305438	213, 215, 217, 219, 221
8305601	9, 17
8305619	235
8305624	7, 25, 29, 37, 117, 119, 121, 257, 259
8305626	13, 117, 119, 121, 127, 129, 131, 141, 143, 145, 163, 243, 245
8305627	223
8305643	3, 229, 233, 237, 239, 241, 243, 245, 247, 249, 255, 257, 259, 267
8305644	3, 117, 119, 121, 229, 231, 233, 247, 251, 255, 259, 261, 267, 275
8305645	7, 117, 119, 121, 125, 229, 231, 243, 245, 255, 259, 261, 265, 267, 271, 273
8305646	261, 263, 265, 267, 269, 271, 273
8305647	9, 229
8305650	25
8305906	5, 33, 229
8305916	7
8307002	5, 7, 9, 15, 25, 27, 31, 207, 213, 215, 217, 219, 221
8307003	9, 25, 207, 209, 211, 225
8307004	5, 33, 117, 119, 121, 133, 135, 145, 213, 229
8307005	5, 7, 13, 17, 27, 41, 43, 51, 135, 225, 229, 231, 233, 255, 257, 259
8307006	13, 93, 97, 213
8307007	137, 139, 231, 251, 255, 257
8307009	163, 223
8307010	7, 55
8307012	3, 7
8307022	213, 215, 217, 219, 221
8307023	117, 119, 121, 213, 215, 217, 219, 221
8307024	25
8307025	25, 93, 117, 119, 121, 127, 139
8307026	207, 209
8307027	209, 211
8307046	29
8307047	93
8307052	29
8307104	27, 235, 261, 263, 265, 267, 269, 271, 273
8307106	13, 117, 121, 209, 211, 213, 225, 229
8307107	247

PART NUMBER INDEX

Part Number	Page
8307109	7, 23, 25, 29, 37, 117, 119, 121, 207, 209
8307110	5, 27, 117, 121
8307111	209, 211, 223, 225
8307112	251, 275
8307113	9, 13, 229
8307201	9
8307202	5
8307203	5, 29, 119, 121, 127, 245
8307204	9, 119, 125, 229, 231, 233, 255, 257, 259
8307206	9, 137, 139, 223, 231, 255
8307207	9, 223
8307220	93, 139
8307222	117, 119, 121
8307904	233, 249, 259
8307910	229
8307911	229
8307912	3, 247
8307913	3, 247
8307918	233, 249, 259
8310001	23
8310002	29, 117, 119, 121
8310019	261, 265, 267, 271, 273
8310020	261, 267
8310026	257
8310028	117, 119
8310029	29
8310036	7
8310041	213, 215, 217, 219, 221
8310049	7
8310050	7
8310051	3, 55
8310058	223
8310066	3, 267
8310067	3, 55, 93, 117, 119, 121, 247
8310070	7
8310077	213, 215, 217, 219, 221
8310078	213, 215, 217, 219, 221
8310093	233, 259
8310111	3
8310112	7
8310113	225
8310116	55
8310129	163
8310136	5
8310138	153
8310143	21
8310144	21
8310151	247
8310153	205
8310158	133, 135
8310159	133, 135
8310160	249
8310161	249
8310163	129, 131
8310170	27
8310178	137, 139
8310195	275
8310202	215, 217, 219, 221
8310205	267
8310209	231, 255
8310210	267
8310235	231, 255
8310245	231, 255
8310257	27
8310258	27
8310259	3
8310266	237, 239, 241
8310276	237, 239, 241
8310337	137, 139
8310344	7
8310425	93, 97
8310427	93
8320250	129
8320253	129
8320254	41
8320262	117, 119, 121
8320265	163
8320270	131
8322029	131, 163
8324029	163
8340025	111
8340034	25
8342413	9
8342416	5
8342807	5, 7
8342808	5, 11
8344010	5
8346008	11
8346009	9
8346010	9
8346011	9
8360005	31
8360008	31
8382017	275
8403224	117, 119
8405007	31
8405009	129, 131
8405104	117, 119, 121
8405203	117, 119, 121
8405209	139
8405305	127
8405307	127
8405404	127
8406101	117, 119, 121
8406105	133, 135, 149
8410009	129, 131
8420053	243, 245, 249
8420055	243, 245, 249
8420201	31
8430005	243, 245, 249
8430006	243, 245, 249
8430007	129, 131
8430032	135, 149
8430034	129, 131
8430035	129
8430037	135
8430046	149
8430064	131
8444223	165
8444227	167
8464012	163
8464212	15, 207, 209, 211
8466305	15, 207, 209, 211
8466306	7
8467014	15, 207, 209, 211
8469028	207, 209, 211
8469030	15
8500009	223
8500036	223
8500201	223
8520001	231, 255, 257
8520013	3, 171, 193, 229, 233, 247, 259
8520021	3, 233, 259
8522043	107, 109
8522045	107, 109
8522048	107, 109
8526035	5
8526036	229, 231, 233, 255, 257, 259
8526044	103
8526048	145
8526052	65, 81
8530030	135
8540023	31
8541433	243, 245
8541435	129, 131, 163
8546407	139
8580110	21, 23, 33
8580111	17
8580115	9
8580213	5
8580309	31
8580311	15, 207, 209, 211
8580312	15, 207, 209, 211
8580315	9, 249
8581007	5
8582007	209, 211
8582413	5
8584001	31, 145, 207, 209, 211, 213, 215, 217, 219, 221, 223, 243, 245, 249
8584003	31, 207, 209, 211, 223
8584007	133, 135, 137, 139, 141, 143, 149
8584018	223
8585133	9, 39
8585134	9
8585135	9
8585138	9
8585139	9
8585155	39
8585156	39
8630012	129, 131
8630016	93, 139, 167
8630017	157
8640017	203
8640019	205
8640028	243, 245, 249
8640029	243, 245, 249
8640032	243, 245, 249
8640123	135
8640208	139
8640405	137
8640903	129, 131, 163
8642001	243, 245
8642207	249
8642224	229, 233, 259
8642235	243, 245
8642237	261, 263, 265, 267, 269, 271, 273
8688026	207, 209, 211, 225
8700116	25
8700120	27
8720014	7
8720015	7
8721023	7
8721029	133, 135
8750003	145
8760011	149
8760037	145
8760039	141, 143
8760102	163
8760107	137, 139, 145, 163
8760109	133, 135, 141
8760110	133, 135, 147, 149, 163, 243, 245
8760111	141, 143
8760113	149, 249
8760117	137, 153, 243, 245
8760118	133, 137, 163
8760134	133, 135, 143, 147
8760138	143
8760140	133, 135
8760141	133, 135, 137, 139, 153
8760143	133, 135, 145, 153

PART NUMBER INDEX

Part Number	Page
8760254	157
8760268	147
8760276	139, 147, 149
8760302	139
8760303	133
8760305	141, 143, 157
8760307	135, 145
8760308	139
8760311	133, 135, 139, 249
8760313	133, 135, 249
8760317	139, 141
8760351	163
8760401	133, 135, 137, 139
8760407	135
8760409	249
8760415	139
8760419	163
8760420	201
8760431	157
8760449	133, 135
8760451	139, 163, 199
8760455	149
8760457	137
8760458	153
8760460	133, 135, 153
8760474	133, 135, 137
8760475	249
8760477	145
8760482	137, 139
8760483	141, 143
8760488	133, 135
8760493	135, 137, 139, 145
8760495	139
8760501	133, 135, 139, 149, 163
8760504	133, 135, 137, 139
8760529	139
8765204	133, 135, 139
8769122	145
8769123	145
8769127	141, 143
8769128	141, 143
8769132	249
8769140	145
8769149	145
8769158	247
8769159	247
8769160	247
8769161	145
8770012	141, 147, 249
8770015	137
8770016	133, 135, 249
8770030	141
8770157	143, 157
8770158	157
8770159	139
8780031	113
8780035	115
8780036	113
8780037	113, 115
8780045	113
8780264	113
8786514	113, 115
8786516	107, 109
8786559	115
8825174	51
8841025	55
8841040	93
8841314	51
8864036	13
8864037	13
8864038	7
8864039	13
8864040	13
8864041	13
8864043	13
8864044	13
8864045	13
8864046	13
8866341	117, 119, 121
8866347	35
8866348	35
8866350	35
8866351	35
8866364	35
8866381	29
8866382	29
8866437	29
8866492	29
8866525	39
8866526	39
8866527	39
8880218	93, 95, 99
8880219	93, 97
8882009	93, 99
8902095	201
8902140	203
8902141	203
8902150	199
8902152	201
8902186	199
8902193	153
8902222	149, 203
8902251	141, 143, 203
8902260	185
8902261	169
8902266	205
8902267	205
8902495	201
8902511	177, 179, 187, 193
8902512	201
8902688	205
8902689	205
8902838	133, 135, 203
8902842	191
8902846	203
8903011	199
8904001	117, 119, 121
8904047	133, 135, 203
8904049	203
8990147	7



Corporate Office
JLG Industries, Inc.
1 JLG Drive
McConnellsburg PA. 17233-9533
USA
Phone: (717) 485-5161
Fax: (717) 485-6417

JLG Worldwide Locations

JLG Industries (Australia)
P.O. Box 5119
11 Bolwarra Road
Port Macquarie
N.S.W. 2444
Australia
Phone: (61) 2 65 811111
Fax: (61) 2 65 810122

JLG Industries (UK)
Unit 12, Southside
Bredbury Park Industrial Estate
Bredbury
Stockport
SK6 2sP
England
Phone: (44) 870 200 7700
Fax: (44) 870 200 7711

JLG Deutschland GmbH
Max Planck Strasse 21
D-27721 Ritterhude/lhlpohl
Bei Bremen
Germany
Phone: (49) 421 693 500
Fax: (49) 421 693 5035

JLG Industries (Italia)
Via Po. 22
20010 Pregnana Milanese - MI
Italy
Phone: (39) 02 9359 5210
Fax: (39) 02 9359 5845

JLG Latino Americana Ltda.
Rua Eng. Carlos Stevenson,
80-Suite 71
13092-310 Campinas-SP
Brazil
Phone: (55) 19 3295 0407
Fax: (55) 19 3295 1025

JLG Europe B.V.
Jupiterstraat 234
2132 HJ Foofddorp
The Netherlands
Phone: (31) 23 565 5665
Fax: (31) 23 557 2493

JLG Industries (Norge AS)
Sofeimyrveien 12
N-1412 Sofienyr
Norway
Phone: (47) 6682 2000
Fax: (47) 6682 2001

JLG Polska
Ul. Krolewska
00-060 Warsawa
Poland
Phone: (48) 91 4320 245
Fax: (48) 91 4358 200

JLG Industries (Europe)
Kilmartin Place,
Tannochside Park
Uddingston G71 5PH
Scotland
Phone: (44) 1 698 811005
Fax: (44) 1 698 811055

JLG Industries (Pty) Ltd.
Unit 1, 24 Industrial Complex
Herman Street
Meadowdale
Germiston
South Africa
Phone: (27) 11 453 1334
Fax: (27) 11 453 1342

Plataformas Elevadoras
JLG Iberica, S.L.
Trapadella, 2
P.I. Castellbisbal Sur
08755Castellbisbal
Spain
Phone: (34) 93 77 24700
Fax: (34) 93 77 11762

JLG Industries (Sweden)
Enkopingsvagen 150
Box 704
SE - 175 27 Jarfalla
Sweden
Phone: (46) 8 506 59500
Fax: (46) 8 506 59534