1A2

INTRODUCTION AND CUSTOMER INFORMATION

T166014B -UN-05MAR03

RUTHZIL TRATOR COMERCIAL DE PEÇAS LTDA 11 97083-6812 ROLANDO

ABRIL 2003



RIGHTHAND SIDE VIEW OF JOHN DEERE 80C EXCAVATOR
(MANUFACTURED 2002-)

TO THE CUSTOMER

THE PART NUMBERS IN THIS PARTS CATALOG WERE CORRECT AT THE TIME YOUR CATALOG WAS PUBLISHED. IT IS OUR POLICY TO CONSTANTLY IMPROVE OUR MACHINES AND, THEREFORE, PART NUMBERS MAY CHANGE. WHEN ORDERING PARTS, VERIFY PART NUMBERS THROUGH YOUR DEALER'S CATALOG WHICH IS UP-TO-DATE.

(SPECIFICATIONS AND DESIGN SUBJECT TO CHANGE WITHOUT NOTICE.)

COPYRIGHT © 2004 DEERE & COMPANY Moline, Illinois All rights reserved

SERIAL NUMBER LOCATIONS

EACH 80C EXCAVATOR HAS SIX SERIAL NUMBER PLATES:

A PRODUCT IDENTIFICATION NUMBER PLATE, AN ENGINE SERIAL NUMBER PLATE, A HYDRAULIC PUMP SERIAL NUMBER PLATE, A LEFT-HAND PROPEL MOTOR SERIAL NUMBER PLATE, A RIGHT-HAND PROPEL MOTOR SERIAL NUMBER PLATE AND A SWING MOTOR SERIAL NUMBER PLATE.

THE PRODUCT IDENTIFICATION PLATE IS LOCATED ON THE RIGHT-HAND FRONT CORNER OF THE CAB.

THE ENGINE SERIAL NUMBER PLATE IS LOCATED ON THE RIGHT SIDE OF THE CYLINDER BLOCK NEAR THE FUEL PUMP.

THE HYDRAULIC PUMP SERIAL NUMBER PLATE IS LOCATED NEAR THE FRONT OF THE HYDRAULIC PUMP.

THE SWING MOTOR SERIAL NUMBER PLATE IS LOCATED ON THE TOP OF THE SWING MOTOR.

THE PROPEL MOTOR SERIAL NUMBER PLATE IS LOCATED ON THE REAR OF THE PROPEL MOTOR.

LEFT SIDE, RIGHT SIDE, FRONT AND REAR OF THE EXCAVATOR ARE VIEWED BY FACING IN THE DIRECTION OF THE EXCAVATOR FORWARD TRAVEL.

IF PRODUCT IDENTIFICATION NUMBERS OR SERIAL NUMBERS ARE REQUIRED FOR WARRANTY CLAIMS OR CORRESPONDENCE PERTAINING TO THIS PRODUCT. IT IS EXTREMELY IMPORTANT THAT ALL CHARACTERS BE FURNISHED. THIS POINT CANNOT BE OVEREMPHASIZED.

PRODUCT IDENTIFICATION NUMBER

TP49457 -UN-28AUG96

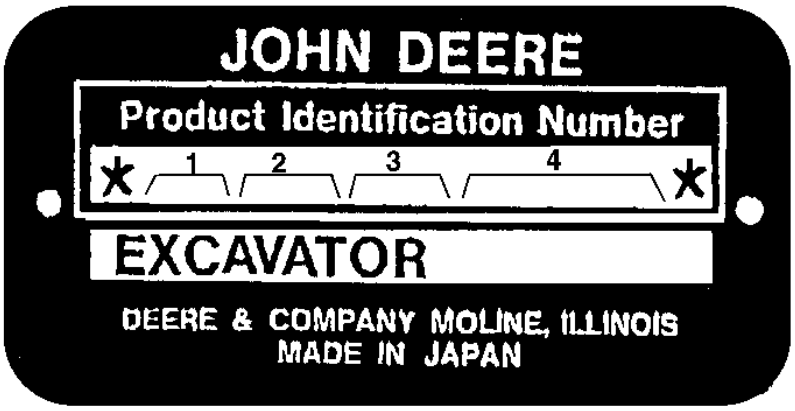

TP49457

1. DESIGNATES EXCAVATOR MANUFACTURER	FF - HITACHI
2. DESIGNATES EXCAVATOR MODEL	80C
3. DESIGNATES EXCAVATOR CONFIGURATION	X
4. DESIGNATES EXCAVATOR SERIAL NUMBER	000000
5. DESIGNATES UNIT TYPE	EXCAVATOR

ENGINE SERIAL NUMBER PLATE

TP66723 -UN-01OCT99

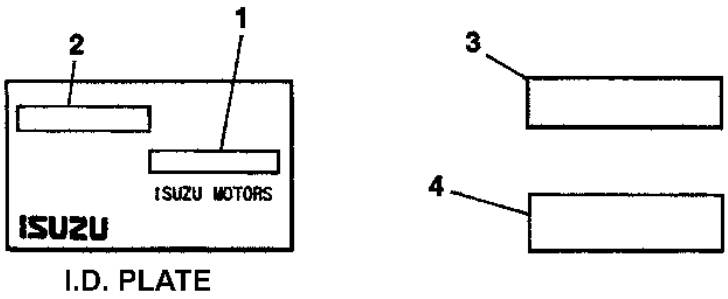

I.D. PLATE

TP66723

1. DESIGNATES ENGINE MANUFACTURER ISUZU, JAPAN
2. DESIGNATES NUMBER OF CYLINDERS AND CUBIC INCH DESPLACEMENT. 3.059L
3. DESIGNATES FUEL TYPE OR SPECIAL CONDITIOND-DIESEL
4. DESIGNATES ENGINE SERIAL NUMBER 123456
5. DESIGNATES THE ENGINE MODEL NUMBER ^4JG1PH02

SERIAL NUMBER LISTING INFORMATION

SERIAL NUMBER INFORMATION IS LISTED TO SHOW ON WHICH MACHINES EACH PART CAN BE USED; FOR EXAMPLE:

-	THE PART CAN BE USED ON ALL MACHINES.
000000-	THE PART CAN BE USED ON ALL MACHINES BEGINNING WITH THE SERIAL NUMBER LISTED.
-000000	THE PART CAN BE USED ON ALL MACHINES UP TO AND INCLUDING THE SERIAL NUMBER LISTED.
000000-000000	THE PART CAN BE USED ON ALL MACHINES BETWEEN AND INCLUDING THE SERIAL NUMBERS LISTED.

WHEN XXXXXX'S ARE LISTED IN PLACE OF A SERIAL NUMBER, A SERIAL NUMBER CHANGE WAS MADE BUT THE EXACT SERIAL NUMBER WAS NOT AVAILABLE WHEN THE CATALOG WAS PRODUCED.

DIRECTION ARROW

ARROWS ARE USED WITH ILLUSTRATIONS TO INDICATE THE FRONT OF THE UNIT. "RIGHT-HAND" AND "LEFT-HAND" SIDES ARE DETERMINED BY FACING IN THE DIRECTION OF MACHINE FORWARD TRAVEL.

BOX-ENCLOSED ILLUSTRATIONS

A KEY NUMBER, SHOWN IN THE PARTS LIST, IS ASSIGNED TO A BOX ENCLOSING ALL PARTS SOLD AS A SERVICE ASSEMBLY.

COMPLETE GOODS LISTINGS

COMPLETE GOODS ARE LISTED IN BOLD FACE TYPE. ORDER SEPARATELY. DO NOT INCLUDE ON REPLACEMENT PARTS ORDER.

CHANGE INDICATOR LINE

CHANGES AFFECTING THE ORDERING OF PARTS ARE IDENTIFIED BY VERTICAL LINES MARKED IN THE LEFT-HAND MARGIN OF REVISED PARTS LISTING IMAGES. A LINE IS ALSO AT THE LEFT-HAND EDGE OF THE SAME PART NUMBER IN THE NUMERICAL INDEX TO SHOW THE LOCATION OF REVISED INFORMATION.

ALPHABETICAL INDEX

GRID		PAGE
	A	
1H15	ACCESS COVER, SWING BEARING	1740 - 6
1A23	ADJUSTER, TRACK CHAIN TENSION	0130 - 4
1K11	AIR CIRCULATING FAN	1830 - 18
1F7	AIR CLEANER	0520 - 2
1F7	AIR CLEANER COVER	0520 - 2
1F9	AIR CLEANER INTAKE HOSE	0520 - 4
1F9	AIR CLEANER SUPPORT	0520 - 4
1J19	AIR CONDITIONER AND HEATER	1830 - 2
1K12	AIR CONDITIONER AND HEATER BLOWER MOTOR	1830 - 20
1K14	AIR CONDITIONER AND HEATER BLOWER MOTOR (CONTINUED)	1830 - 22
1K12	AIR CONDITIONER AND HEATER COMPONENTS	1830 - 20
1K14	AIR CONDITIONER AND HEATER COMPONENTS (CONTINUED)	1830 - 22
1K12	AIR CONDITIONER AND HEATER ELECTRIC MOTOR	1830 - 20
1K14	AIR CONDITIONER AND HEATER ELECTRIC MOTOR (CONTINUED)	1830 - 22
1K12	AIR CONDITIONER AND HEATER RELAY	1830 - 20
1K14	AIR CONDITIONER AND HEATER RELAY (CONTINUED)	1830 - 22
1K12	AIR CONDITIONER AND HEATER SWITCH	1830 - 20
1K14	AIR CONDITIONER AND HEATER SWITCH (CONTINUED)	1830 - 22
1K12	AIR CONDITIONER AND HEATER TRANSISTOR	1830 - 20
1K14	AIR CONDITIONER AND HEATER TRANSISTOR (CONTINUED)	1830 - 22
1K12	AIR CONDITIONER CASE	1830 - 20
1K14	AIR CONDITIONER CASE (CONTINUED)	1830 - 22
1J21	AIR CONDITIONER COMPRESSOR	1830 - 4
1J21	AIR CONDITIONER COMPRESSOR BELT	1830 - 4
1J21	AIR CONDITIONER DRYER	1830 - 4
1K7	AIR CONDITIONER DUCTS	1830 - 14
1K12	AIR CONDITIONER EVAPORATOR	1830 - 20
1K14	AIR CONDITIONER EVAPORATOR (CONTINUED)	1830 - 22
1J23	AIR CONDITIONER HOSES	1830 - 6
1J21	AIR CONDITIONER RECEIVER-DRYER	1830 - 4
1J21	AIR CONDITIONER VAPOR CONDENSOR	1830 - 4
1K7	AIR CONDITIONING AND HEATER FILTER	1830 - 14
1K16	AIR CONDITIONING COMPRESSOR BELT TENSIONER	1832 - 2
1K16	AIR CONDITIONING COMPRESSOR DRIVE BELT TENSIONER	1832 - 2
1J19	AIR CONDITIONING CONTROL UNIT	1830 - 2
1K1	AIR CONDITIONING SENSORS	1830 - 8
1J3	AIR CONDITIONING UNIT TRAY	1810 - 30
1J21	AIR CONDITONER CONDENSOR	1830 - 4
1K7	AIR DUCTS, AIR CONDITIONER	1830 - 14
1F7	AIR FILTER	0520 - 2
2C1	ALARM, PROPEL MOTION	2004 - 2
1G5	ALTERNATOR	1672 - 2
1E11	ALTERNATOR MOUNTING	0423 - 2
1G5	ALTERNATOR WIRING HARNESS	1672 - 2
2B22	AM/FM RADIO	2001 - 2
1K1	AMBIENT TEMPERATURE SENSOR	1830 - 8
1I1	ANTENNA	1810 - 6
2B22	ANTENNA CABLE	2001 - 2
2E19	ARM AUXILIARY HYDRAULIC LINES	3360 - 12
2K21	ARM CYLINDER (OFFSET BOOM)	3365 - 10
2K19	ARM CYLINDER (STANDARD BOOM)	3365 - 8
2K23	ARM CYLINDER COMPONENTS (OFFSET BOOM)	3365 - 12
2K19	ARM CYLINDER COMPONENTS (STANDARD BOOM)	3365 - 8
2E1	ARM CYLINDER PIN (STANDARD BOOM)	3344 - 2
2K11	ARM HYDRAULIC CYLINDER LINES ON BOOM (OFFSET BOOM)	3363 - 56
2K9	ARM HYDRAULIC CYLINDER LINES ON BOOM (STANDARD BOOM)	3363 - 54
2D23	ARM LINK (STANDARD ARM WITH OFFSET BOOM)	3340 - 6
2D19	ARM LINK (STANDARD BOOM)	3340 - 2
2D21	ARM LINK, (LONG ARM) 2.12M (FOR USE WITH STANDARD BOOM)	3340 - 4
2D19	ARM TO BOOM PIVOT PIN (STANDARD ARM AND BOOM)	3340 - 2
2E1	ARM TO BOOM PIVOT PIN (STANDARD BOOM)	3344 - 2
2D21	ARM, LONG, 2.12M (FOR USE WITH STANDARD BOOM)	3340 - 4
1C16	ARM, ROCKER	0402 - 2
2D23	ARM, STANDARD, 1.62M (FOR USE WITH OFFSET BOOM)	3340 - 6
2D19	ARM, STANDARD, 1.62M (STANDARD BOOM)	3340 - 2
1I1	ARM, WIPER	1810 - 6
1J11	ARMREST	1821 - 2
1I17	ASHTRAY	1810 - 20
1H24	ASSEMBLY, CAB	1810 - 4
2E13	AUXILIARY ELECTRIC FOOT SWITCH	3360 - 6
2E11	AUXILIARY ELECTRIC HAND CONTROLLER	3360 - 4
2E19	AUXILIARY HYDRAULIC BALL VALVE	3360 - 12
2E15	AUXILIARY HYDRAULIC HOSES (CONTROL VALVE TO BOOM BOTTOM)	3360 - 8
2E15	AUXILIARY HYDRAULIC LINE KIT	3360 - 8
2E17	AUXILIARY HYDRAULIC LINE KIT (CONTINUED)	3360 - 10
2E19	AUXILIARY HYDRAULIC LINE KIT (CONTINUED)	3360 - 12
2E19	AUXILIARY HYDRAULIC LINES (ARM)	3360 - 12
2E15	AUXILIARY HYDRAULIC LINES (CONTROL VALVE TO BOOM BOTTOM)	3360 - 8
2E17	AUXILIARY HYDRAULIC LINES (BOOM)	3360 - 10
2E19	AUXLIARY LINES, ARM	3360 - 12
1A21	AXLE, FRONT TRACK CHAIN IDLER	0130 - 2
	B	
2E19	BALL VALVE, AUXLIARY HYDRAULIC LINES	3360 - 12
1J15	BASE, SEAT	1821 - 6
1G3	BATTERIES	1671 - 2
1G3	BATTERIES AND BATTERY CABLES	1671 - 2
1G3	BATTERY CABLES	1671 - 2
1G3	BATTERY CLAMPS	1671 - 2
1G3	BATTERY RELAY	1671 - 2
1A21	BEARING, FRONT TRACK CHAIN IDLER	0130 - 2
2F7	BEARING, HYDRAULIC PUMP MAIN (PUMPS 1 AND 2)	3361 - 6
1H13	BEARING, SWING	1740 - 4
1C22	BEARINGS, CAMSHAFT	0404 - 2
1C20	BEARINGS, CONNECTING ROD	0403 - 2
1C14	BEARINGS, CRANKSHAFT MAIN	0401 - 2
1K16	BELT TENSIONER, AIR CONDITIONING COMPRESSOR	1832 - 2
1J21	BELT, AIR CONDITIONER	1830 - 4
1J21	BELT, AIR CONDITIONER COMPRESSOR	1830 - 4
1E13	BELT, FAN	0429 - 2
1J17	BELT, SEAT	1821 - 8
1J13	BELT, SEAT (3.00 INCH)	1821 - 4
2L10	BLADE	3401 - 2
2L10	BLADE COMPONENTS	3401 - 2
2L7	BLADE CYLINDER	3365 - 22
2L10	BLADE CYLINDER COVER	3401 - 2
2L12	BLADE HYDRAULIC CYLINDER HOSES	3401 - 4
2D5	BLADE PILOT CONTROL LEVER	3315 - 6
2H5	BLADE PILOT CONTROLLER	3362 - 30
2H5	BLADE PILOT CONTROLLER SUPPORT	3362 - 30

ALPHABETICAL INDEX - CONTINUED

GRID		PAGE
2K7	BLADE PILOT CONTROLLER TO PROPEL PILOT VALVE PILOT HOSES	3363 - 52
2H7	BLADE PILOT VALVE COMPONENTS	3362 - 32
1K11	BLADE, AIR CIRCULATING FAN	1830 - 18
1K11	BLADE, DEFROSTER FAN	1830 - 18
1I1	BLADE, WIPER	1810 - 6
1C22	BLOCK, CYLINDER	0404 - 2
1K12	BLOWER MOTOR, HEATER AND AIR CONDITIONER	1830 - 20
1K14	BLOWER MOTOR, HEATER AND AIR CONDITIONER (CONTINUED)	1830 - 22
1K11	BLOWER, AIR CIRCULATING FAN	1830 - 18
1K11	BLOWER, DEFROSTER FAN	1830 - 18
2E17	BOOM AUXILIARY HYDRAULIC LINES	3360 - 10
2E15	BOOM BOTTOM AUXILIARY HOSES	3360 - 8
2K17	BOOM CYLINDER	3365 - 4
1H11	BOOM CYLINDER BOTTOM PIN	1740 - 2
2K17	BOOM CYLINDER COMPONENTS	3365 - 4
2K17	BOOM CYLINDER REPAIR KIT	3365 - 4
2K17	BOOM CYLINDER SEAL KIT	3365 - 4
2I15	BOOM CYLINDER TO CONTROL VALVE MAIN HYDRAULIC LINES (STD. BOOM)	3363 - 12
2E1	BOOM CYLINDER UPPER PIN (STANDARD BOOM)	3344 - 2
1H11	BOOM FOOT PIN	1740 - 2
2K13	BOOM HYDRAULIC LINE COVER (OFFSET BOOM)	3363 - 58
2K9	BOOM HYDRAULIC LINES (STANDARD BOOM)	3363 - 54
2K11	BOOM HYDRAULIC LINES (OFFSET BOOM) (OFFSET BOOM)	3363 - 56
1G11	BOOM LIGHT (OFFSET BOOM)	1674 - 6
1G9	BOOM LIGHT (STANDARD BOOM)	1674 - 4
1G11	BOOM LIGHT HARNESS (OFFSET BOOM)	1674 - 6
1G9	BOOM LIGHT HARNESS (STD. BOOM)	1674 - 4
2E3	BOOM OFFSET CYLINDER	3344 - 4
2K11	BOOM OFFSET CYLINDER HYDRAULIC HOSES	3363 - 56
2K11	BOOM OFFSET HYDRAULIC HOSES	3363 - 56
2E3	BOOM, OFFSET	3344 - 4
2E1	BOOM, STANDARD, 3.72M	3344 - 2
2C23	BOOT, PILOT CONTROLLER (DIG AND SWING)	3315 - 2
2B19	BOTTOM COVERS	1910 - 24
2B17	BOX, TOOL	1910 - 22
1J15	BRACKET, SEAT BASE	1821 - 6
1J17	BRACKET, SEAT BELT	1821 - 8
2B22	BRACKETS, RADIO MOUNTING	2001 - 2
1C1	BRAKE VALVE, PROPEL MOTOR	0262 - 2
1J19	BREATHER, AIR CONDITIONER	1830 - 2
1D5	BREATHER, ENGINE	0408 - 2
2L5	BUCKET CYLINDET COMPONENTS	3365 - 20
2D23	BUCKET HYDRAULIC CYLINDER HOSES (STANDARD ARM WITH OFFSET BOOM)	3340 - 6
2D19	BUCKET HYDRAULIC CYLINDER HOSES (STANDARD BOOM AND ARM)	3340 - 2
2K11	BUCKET HYDRAULIC CYLINDER LINES ON BOOM (OFFSET BOOM)	3363 - 56
2K9	BUCKET HYDRAULIC CYLINDER LINES ON BOOM (STANDARD BOOM)	3363 - 54
2E5	BUCKET LINK	3345 - 2
2D19	BUCKET PIN (STANDARD BOOM)	3340 - 2
2C22	BUCKET PIN-UP DATA	3302 - 10
2D21	BUCKET PINS, LONG ARM 2.12M (FOR USE WITH STANDARD BOOM)	3340 - 4
2C18	BUCKET TOOTH ASSEMBLY	3302 - 6
2C14	BUCKET, DITCH CLEANING	3302 - 2
2C16	BUCKET, HEAVY DUTY	3302 - 4
2C18	BUCKET, HEAVY DUTY TEETH	3302 - 6
2K17	BUSHINGS, BOOM CYLINDER	3365 - 4
1A21	BUSHINGS, FRONT TRACK CHAIN IDLER	0130 - 2
1B1	BUSHINGS, UPPER TRACK CHAIN ROLLER	0130 - 6

C

GRID		PAGE
1H24	CAB ASSEMBLY	1810 - 4
1H24	CAB COMPLETE	1810 - 4
1I1	CAB COMPONENTS (WINDSHIELD WIPER SYSTEM)	1810 - 6
1I5	CAB COMPONENTS-CONTINUED (DOOR ASSEMBLY)	1810 - 10
1I11	CAB COMPONENTS-CONTINUED (DOOR RELEASE CABLE)	1810 - 16
1I7	CAB COMPONENTS-CONTINUED (FRONT WINDOW)	1810 - 12
1I9	CAB COMPONENTS-CONTINUED (RIGHT SIDE WINDOW)	1810 - 14
1I3	CAB COMPONENTS-CONTINUED (SIDE AND REAR WINDOWS)	1810 - 8
1I15	CAB CONSOLE	1810 - 18
1I17	CAB CONSOLE COMPONENTS	1810 - 20
1I17	CAB CONSOLE TOP COVERS	1810 - 20
1G17	CAB CONSOLE WIRING HARNESS	1674 - 12
1I21	CAB COVER, REAR	1810 - 24
1G13	CAB DISPLAY MONITOR	1674 - 8
1I5	CAB DOOR ASSEMBLY	1810 - 10
1J5	CAB FLOOR MAT	1810 - 32
1J1	CAB FLOOR PLATE	1810 - 28
1I7	CAB FRONT WINDOW	1810 - 12
1H22	CAB ISOLATORS	1810 - 2
1I15	CAB LEFT SIDE CONSOLE	1810 - 18
2B24	CAB MOUNTED REAR VIEW MIRROR	2002 - 2
1H22	CAB MOUNTING	1810 - 2
1I21	CAB REAR COVER	1810 - 24
1I23	CAB REAR ISOLATOR	1810 - 26
1K9	CAB REAR TRAY COMPONENTS	1830 - 16
1I15	CAB RIGHT SIDE CONSOLE	1810 - 18
1G17	CAB SWITCH PANEL	1674 - 12
1I13	CAB TOP HATCH	1810 - 17A
1I13	CAB TOP HATCH SEAL	1810 - 17A
1G19	CAB WIRING HARNESS	1674 - 14
1G23	CAB 12V POWER SUPPLY CONVERTER	1674 - 18
1G21	CAB 12V POWER SUPPLY HARNESS	1674 - 16
2B22	CABLE, ANTENNA	2001 - 2
1I11	CABLE, DOOR RELEASE	1810 - 16
1F3	CABLE, ENGINE SPEED CONTROL	0515 - 2
1F5	CABLE, ENGINE STOP	0515 - 4
1H8	CABLE, MIC	1674 - 33A
2D15	CABLE, PROPEL PILOT SHUTOFF	3315 - 16
1G3	CABLES, BATTERY	1671 - 2
1C16	CAMSHAFT	0402 - 2
1C22	CAMSHAFT BEARINGS	0404 - 2
1F1	CAP, COOLANT RESERVE TANK	0510 - 4
1F15	CAP, FUEL TANK	0560 - 2
1D7	CAP, ROCKER ARM COVER	0409 - 2
1K12	CASE, AIR CONDITIONER	1830 - 20
1K14	CASE, AIR CONDITIONER (CONTINUED)	1830 - 22
1C18	CASE, TIMING GEAR	0402 - 4
1B5	CHAIN ROLLER, TRACK LOWER	0130 - 8
1A23	CHAIN TENSION ADJUSTER, TRACK	0130 - 4
1B7	CHAIN, TRACK	0130 - 10
1G19	CIGAR LIGHTER	1674 - 14
1F11	CLAMP, MUFFLER SUPPORT	0530 - 2
1G3	CLAMPS, BATTERY	1671 - 2
2B5	COMPARTMENT DOOR, COOLING PACKAGE	1910 - 10
2B7	COMPARTMENT DOOR, COOLING PACKAGE (VENTED)	1910 - 12
2B9	COMPARTMENT DOOR, HYDRAULIC PUMP	1910 - 14
2B5	COMPARTMENT DOOR, RADIATOR	1910 - 10
2A22	COMPARTMENT FRONT PANELS, RADIATOR AND ENGINE COMPARTMENT	1910 - 2

ALPHABETICAL INDEX - CONTINUED

GRID		PAGE
2B1	COMPARTMENT PANEL, HYDRAULIC PUMP REAR	1910 - 6
1H24	COMPLETE CAB	1810 - 4
2L10	COMPONENTS, BLADE	3401 - 2
2H7	COMPONENTS, BLADE PILOT VALVE	3362 - 32
2K17	COMPONENTS, BOOM CYLINDER	3365 - 4
1I1	COMPONENTS, CAB (WINDSHIELD WIPER ASSEMBLY)	1810 - 6
1I5	COMPONENTS, CAB (CONTINUED) (DOOR ASSEMBLY)	1810 - 10
1I7	COMPONENTS, CAB (CONTINUED) (FRONT WINDOW)	1810 - 12
1I9	COMPONENTS, CAB (CONTINUED) (RIGHT SIDE WINDOW)	1810 - 14
1I3	COMPONENTS, CAB (CONTINUED) (SIDE AND REAR WINDOWS)	1810 - 8
1I17	COMPONENTS, CAB CONSOLE	1810 - 20
1K9	COMPONENTS, CAB REAR TRAY	1830 - 16
2D1	COMPONENTS, DIG AND SWING PILOT CONTROLLER	3315 - 3A
1B15	COMPONENTS, PROPEL GEARBOX	0260 - 4
1C7	COMPONENTS, PROPEL MOTOR	0267 - 2
1C1	COMPONENTS, PROPEL MOTOR BRAKE VALVE	0262 - 2
1C3	COMPONENTS, PROPEL MOTOR BRAKE VALVE RELIEF VALVE	0262 - 4
1C5	COMPONENTS, PROPEL PILOT VALVE	0262 - 6
1B19	COMPONENTS, ROTARY MANIFOLD	0260 - 8
2K19	COMPONENTS, STANDARD BOOM ARM CYLINDER	3365 - 8
2L15	COMPONENTS, SWING GEARBOX	4360 - 2
2L19	COMPONENTS, SWING MOTOR	4367 - 2
1J21	COMPRESSOR, AIR CONDITIONER	1830 - 4
1J21	CONDENSOR, AIR CONDITIONER	1830 - 4
1C20	CONNECTING ROD BEARINGS	0403 - 2
1C20	CONNECTING RODS AND PISTONS	0403 - 2
1I15	CONSOLE, CAB	1810 - 18
1I15	CONSOLE, CAB LEFT SIDE	1810 - 18
1I15	CONSOLE, CAB RIGHT SIDE	1810 - 18
1I15	CONSOLE, PILOT CONTROL	1810 - 18
2D5	CONTROL LEVER, PILOT, BLADE	3315 - 6
2C23	CONTROL LEVER, PILOT, DIG AND SWING	3315 - 2
2D3	CONTROL LEVER, PILOT, PROPEL	3315 - 4
2E21	CONTROL PATTERN SELECTOR KIT	3360 - 14
2I3	CONTROL PATTERN SELECTOR VALVE	3362 - 52
2D13	CONTROL PEDAL, PILOT, OFFSET BOOM	3315 - 14
2F15	CONTROL PISTON ASSEMBLY, HYDRAULIC PUMP (PUMPS 1 AND 2)	3361 - 16
2F13	CONTROL SPRING, HYDRAULIC PUMP (PUMPS 1 AND 2)	3361 - 14
1J19	CONTROL UNIT, AIR CONDITIONER	1830 - 2
2G1	CONTROL VALVE	3362 - 2
2J15	CONTROL VALVE FRONT TO CONTROL VALVE LEFT SIDE PILOT LINES	3363 - 36
2J17	CONTROL VALVE FRONT TO CONTROL VALVE REAR PILOT LINES	3363 - 38
2J11	CONTROL VALVE FRONT TO FLOW REGULATOR VALVE PILOT HOSES	3363 - 32
2J17	CONTROL VALVE LEFT SIDE PILOT HOSE	3363 - 38
2J15	CONTROL VALVE LEFT SIDE TO CONTROL VALVE FRONT PILOT LINES	3363 - 36
2J9	CONTROL VALVE REAR TO FLOW REGULATOR VALVE PILOT HOSES	3363 - 30
2H3	CONTROL VALVE RELIEF VALVES (OFFSET BOOM)	3362 - 26
2G17	CONTROL VALVE RELIEF VALVES (STD. BOOM)	3362 - 16
2G9	CONTROL VALVE SPRINGS, POPPETS AND PLUGS (STD. BOOM)	3362 - 8
2G19	CONTROL VALVE SPRINGS, POPPETS AND PLUGS (OFFSET BOOM)	3362 - 18
2G3	CONTROL VALVE SUPPORT	3362 - 4
2K7	CONTROL VALVE TO BLADE PILOT CONTROLLER PILOT HOSES	3363 - 52
2E15	CONTROL VALVE TO BOOM BOTTOM AUX. HYDRAULIC HOSES	3360 - 8
2I15	CONTROL VALVE TO BOOM CYLINDER MAIN HYDRAULIC LINES (STD. BOOM)	3363 - 12
2I9	CONTROL VALVE TO HYDRAULIC OIL COOLER LINE	3363 - 6
2I13	CONTROL VALVE TO HYDRAULIC OIL TANK DRAIN HOSES	3363 - 10
2J21	CONTROL VALVE TO OFFSET BOOM PILOT CONTROLLER PILOT HOSES	3363 - 42
2I17	CONTROL VALVE TO OFFSET HYDRAULIC CYLINDER LINES	3363 - 14
2D17	CONTROL VALVE TO PILOT CONTROL VALVE HOSE (FOOT PEDAL CONTROL KIT)	3315 - 18
2J23	CONTROL VALVE TO PROPEL PILOT CONTROLLER PILOT HOSES	3363 - 44
2J1	CONTROL VALVE TO ROTARY MANIFOLD LEFT PROPEL HOSES	3363 - 22
2J5	CONTROL VALVE TO ROTARY MANIFOLD BLADE LIFT HOSES	3363 - 26
2J3	CONTROL VALVE TO ROTARY MANIFOLD RIGHT PROPEL HOSES	3363 - 24
2I23	CONTROL VALVE TO SWING MOTOR HYDRAULIC HOSES	3363 - 20
2J13	CONTROL VALVE TO SWING MOTOR PILOT HOSES	3363 - 34
2H13	CONTROL VALVE, FLOW	3362 - 38
2G23	CONTROL VALVE, 3-SPOOL (OFFSET BOOM)	3362 - 22
2G13	CONTROL VALVE, 3-SPOOL (STD. BOOM)	3362 - 12
2G21	CONTROL VALVE, 5-SPOOL (OFFSET BOOM)	3362 - 20
2G11	CONTROL VALVE, 5-SPOOL (STD. BOOM)	3362 - 10
2H1	CONTROL VALVE, 6-SPOOL (OFFSET BOOM)	3362 - 24
2G15	CONTROL VALVE, 6-SPOOL (STD. BOOM)	3362 - 14
1F3	CONTROL, ENGINE SPEED	0515 - 2
1G19	CONTROLLER WIRING HARNESS	1674 - 14
2H5	CONTROLLER, BLADE PILOT	3362 - 30
1G15	CONTROLLER, MIC	1674 - 10
1H6	CONTROLLER, MIC	1674 - 32
2H9	CONTROLLER, OFFSET BOOM PILOT	3362 - 34
2D1	CONTROLLER, PILOT (COMPONENTS) (DIG AND SWING)	3315 - 3A
1G19	CONTROLLER, PUMP AND VALVE	1674 - 14
2C23	CONTROLLERS, PILOT (DIG AND SWING)	3315 - 2
1H5	CONVERTER (24-VOLT TO 12-VOLT)	1674 - 24
1G23	CONVERTER, 24V TO 12V	1674 - 18
1F1	COOLANT RESERVE TANK	0510 - 4
1F1	COOLANT RESERVE TANK CAP	0510 - 4
1G7	COOLANT TEMPERATURE SENSOR	1674 - 2
1E23	COOLER, OIL	0510 - 2
2B7	COOLING PACKAGE COMPARTMENT DOOR(VENTED)	1910 - 12
2B5	COOLING PACKAGE COMPARTMENT DOOR	1910 - 10
2B11	COOLING PACKAGE COMPARTMENT DOOR LATCH	1910 - 16
2A22	COOLING PACKAGE COMPARTMENT FRONT PANEL	1910 - 2
2A24	COOLING PACKAGE COMPARTMENT REAR PANEL	1910 - 4
1H17	COUNTERWEIGHT	1749 - 2
2F3	COUPLER, HYDRAULIC PUMP TO ENGINE	3361 - 2
2F23	COUPLER, PILOT PUMP	3361 - 28
1D17	COUPLING, FUEL INJECTION PUMP	0413 - 6
2F11	COVER COMPONENTS, HYDRAULIC PUMP REAR (PUMPS 1 AND 2)	3361 - 12
1F7	COVER, AIR CLEANER	0520 - 2
2L10	COVER, BLADE CYLINDER	3401 - 2

ALPHABETICAL INDEX - CONTINUED

GRID		PAGE
2K13	COVER, BOOM HYDRAULIC LINES (OFFSET BOOM)	3363 - 58
1I17	COVER, CAB CONSOLE	1810 - 20
1I21	COVER, CAB REAR	1810 - 24
2A24	COVER, COOLING PACKAGE COMPARTMENT TOP	1910 - 4
2B15	COVER, ENGINE COMPARTMENT TOP	1910 - 20
2B3	COVER, FUEL TANK COMPARTMENT	1910 - 8
2F15	COVER, HYDRAULIC PUMP CONTROL PISTON (PUMPS 1 AND 2)	3361 - 16
1B23	COVER, PROPEL MOTOR	0260 - 12
2A24	COVER, RADIATOR COMPARTMENT	1910 - 4
1I19	COVER, RIGHT, CAB	1810 - 22
1D7	COVER, ROCKER ARM	0409 - 2
1B13	COVER, ROTARY MANIFOLD	0260 - 2
1J7	COVER, WINDOW	1810 - 34
2B19	COVERS, BOTTOM	1910 - 24
1I17	COVERS, CAB CONSOLE SIDE	1810 - 20
1I17	COVERS, CAB CONSOLE TOP	1810 - 20
2B19	COVERS, MACHINE ACCESS (BOTTOM)	1910 - 24
1C14	CRANKSHAFT	0401 - 2
1C14	CRANKSHAFT MAIN BEARINGS	0401 - 2
1C14	CRANKSHAFT PULLEY	0401 - 2
2C16	CUTTING EDGE, HEAVY DUTY BUCKET	3302 - 4
2C20	CUTTING EDGES, ESCO	3302 - 8
1C20	CYLINDER AND PISTON KIT	0403 - 2
1C22	CYLINDER BLOCK	0404 - 2
1C22	CYLINDER BLOCK LINER	0404 - 2
1E1	CYLINDER BLOCK TO WATER PUMP WATER LINE	0418 - 4
2K23	CYLINDER COMPONENTS, ARM (OFFSET BOOM)	3365 - 12
2K19	CYLINDER COMPONENTS, ARM (STANDARD BOOM)	3365 - 8
2L5	CYLINDER COMPONENTS, BUCKET	3365 - 20
2L3	CYLINDER COMPONENTS, OFFSET (OFFSET BOOM)	3365 - 16
1D9	CYLINDER HEAD	0409 - 4
1D9	CYLINDER HEAD GASKET	0409 - 4
2K11	CYLINDER HYDRAULIC LINES ON BOOM (OFFSET BOOM)	3363 - 56
2K9	CYLINDER HYDRAULIC LINES ON BOOM (STANDARD BOOM)	3363 - 54
2K21	CYLINDER, ARM (OFFSET BOOM)	3365 - 10
2L7	CYLINDER, BLADE	3365 - 22
2K17	CYLINDER, BOOM, COMPONENTS	3365 - 4
2L1	CYLINDER, OFFSET BOOM	3365 - 14
2K19	CYLINDER, STANDARD BOOM ARM	3365 - 8
1A23	CYLINDER, TRACK CHAIN TENSION	0130 - 4

D

2E13	DECAL, AUXILIARY CONTROL	3360 - 6
2C4	DECAL, HYDRAULIC FILTER RESTRICTION INDICATOR	2160 - 2
1F22	DECALS	1322 - 2
1K11	DEFROSTER FAN	1830 - 18
2C23	DIG AND SWING PILOT CONTROL LEVER	3315 - 2
2D1	DIG AND SWING PILOT CONTROLLER COMPONENTS	3315 - 3A
1G7	DIG AND SWING PRESSURE SENSOR	1674 - 2
1C24	DIPSTICK	0407 - 2
1C24	DIPSTICK, ENGINE OIL	0407 - 2
2C14	DITCH CLEANING BUCKET	3302 - 2
1I5	DOOR ASSEMBLY, CAB	1810 - 10
2B11	DOOR LATCH (COOLING PACKAGE COMPARTMENT DOOR)	1910 - 16
2B13	DOOR LATCH (HYDRAULIC PUMP COMPARTMENT DOOR)	1910 - 18
2B11	DOOR LATCH, RADIATOR COMPARTMENT	1910 - 16
1I11	DOOR RELEASE CABLE	1810 - 16
2B5	DOOR, COOLING PACKAGE COMPARTMENT	1910 - 10
2B7	DOOR, COOLING PACKAGE COMPARTMENT (VENTED)	1910 - 12
2B15	DOOR, ENGINE COMPARTMENT	1910 - 20
2B9	DOOR, HYDRAULIC PUMP COMPARTMENT	1910 - 14
2B7	DOOR, RADIATOR (TROPICAL)	1910 - 12
2B5	DOOR, RADIATOR COMPARTMENT	1910 - 10
2I11	DRAIN HOSE, HYDRAULIC PUMP TO OIL TANK	3363 - 8
2I11	DRAIN HOSE, PILOT FILTER TO HYDRAULIC OIL TANK	3363 - 8
2I11	DRAIN HOSE, PILOT FITLER TO HYDRAULIC OIL RESERVOIR	3363 - 8
1B13	DRAIN HOSE, ROTARY MANIFOLD TO HYDRAULIC OIL RESERVOIR	0260 - 2
2I11	DRAIN HOSE, SWING MOTOR TO HYDRAULIC DRAIN LINE	3363 - 8
2I13	DRAIN HOSES, (CONTROL VALVE TO HYDRAULIC OIL TANK)	3363 - 10
1B15	DRIVE SPROCKET, TRACK	0260 - 4
1J21	DRYER, AIR CONDITIONER	1830 - 4
2E11	DUAL CONTROL HANDLE WITH WIRING	3360 - 4
1K7	DUCTS, AIR CONDITIONER	1830 - 14

E

2E9	ELECTRIC SOLENOID VALVE, 1WAY/2WAY (REPLACEMENT)	3360 - 3A
1F7	ELEMENT, AIR FILTER	0520 - 2
1F5	EMERGENCY ENGINE STOP CABLE	0515 - 4
1C12	ENGINE	0400 - 2
1F7	ENGINE AIR FILTER	0520 - 2
1F7	ENGINE AIR INTAKE HOSES	0520 - 2
2A22	ENGINE AND COOLING PACKAGE COMPARTMENT FRONT PANELS	1910 - 2
1D5	ENGINE BREATHER	0408 - 2
2A22	ENGINE COMPARTMENT FRONT PANELS	1910 - 2
2B15	ENGINE COMPARTMENT TOP COVER	1910 - 20
2B15	ENGINE COMPARTMENT TOP DOOR	1910 - 20
1D5	ENGINE CRANKCASE BREATHER	0408 - 2
1E19	ENGINE CYLINDER HEAD REMOVAL GASKET SET	0452 - 2
1E13	ENGINE FAN	0429 - 2
1E23	ENGINE FAN SHROUD	0510 - 2
1C18	ENGINE FRONT MAIN SEAL	0402 - 4
1E19	ENGINE GASKET SET	0452 - 2
1D9	ENGINE GLOW PLUG WIRING HARNESS	0409 - 4
1H3	ENGINE IGNITION SWITCH RELAY	1674 - 22
1F13	ENGINE MOUNTING	0540 - 4
1D3	ENGINE OIL AND VACUUM LINES	0407 - 6
1C24	ENGINE OIL DIPSTICK	0407 - 2
1E3	ENGINE OIL FILTER	0419 - 2
1E3	ENGINE OIL FILTER HEAD	0419 - 2
1D3	ENGINE OIL LINES	0407 - 6
1C24	ENGINE OIL PAN	0407 - 2
1C24	ENGINE OIL PAN GASKET	0407 - 2
1D1	ENGINE OIL PUMP	0407 - 4
1H1	ENGINE OVERHEAT WARNING SWITCH	1674 - 20
1E17	ENGINE REAR MAIN SEAL	0433 - 4
1F3	ENGINE SPEED CONTROL CABLE	0515 - 2
1F3	ENGINE SPEED CONTROL MOTOR	0515 - 2
1F3	ENGINE SPEED CONTROL MOTOR AND CABLE	0515 - 2
1E9	ENGINE STARTING MOTOR	0422 - 2
1F5	ENGINE STOP CABLE, EMERGENCY	0515 - 4
1C18	ENGINE TIMING GEAR CASE GASKET	0402 - 4
1K3	ENGINE TO HEATER WATER HOSE	1830 - 10

ALPHABETICAL INDEX - CONTINUED

GRID		PAGE
2F3	ENGINE TO HYDRAULIC PUMP COUPLER	3361 - 2
1D5	ENGINE VENTILATING SYSTEM	0408 - 2
1E1	ENGINE WATER LINES	0418 - 4
1D21	ENGINE WATER PUMP	0417 - 2
1D21	ENGINE WATER PUMP GASKET	0417 - 2
2C20	ESCO BUCKET CUTTING EDGES	3302 - 8
1K12	EVAPORATOR, AIR CONDITIONER	1830 - 20
1K14	EVAPORATOR, AIR CONDITIONER (CONTINUED)	1830 - 22
1F11	EXHAUST	0530 - 2
1C16	EXHAUST AND INTAKE VALVE SEAT	0402 - 2
1D11	EXHAUST MANIFOLD	0410 - 2
1D11	EXHAUST MANIFOLD GASKET	0410 - 2
1C16	EXHAUST VALVE	0402 - 2

F

1E13	FAN AND FAN BELT	0429 - 2
1E13	FAN BELT	0429 - 2
1E13	FAN BELT TENSIONER	0429 - 2
1K11	FAN BLADE, AIR CIRCULATING	1830 - 18
1K11	FAN BLADE, DEFROSTER FAN	1830 - 18
1K11	FAN, DEFROSTER	1830 - 18
1E13	FAN, ENGINE	0429 - 2
1F7	FILTER ELEMENT, AIR	0520 - 2
1E3	FILTER HEAD, ENGINE OIL	0419 - 2
1E5	FILTER HEAD, FINAL FUEL	0420 - 2
1E5	FILTER HEAD, PRIMARY FUEL	0420 - 2
2C4	FILTER RESTRICTION INDICATOR, HYDRAULIC	2160 - 2
1F7	FILTER, AIR	0520 - 2
1K7	FILTER, AIR CONDITIONING AND HEATER	1830 - 14
1E3	FILTER, ENGINE OIL	0419 - 2
1E5	FILTER, FINAL FUEL	0420 - 2
2K15	FILTER, HYDRAULIC OIL	3364 - 2
2J7	FILTER, PILOT	3363 - 28
2K5	FILTER, PILOT, TO FLOW REGULATING MANIFOLD VALVE PILOT HOSES	3363 - 50
2J7	FILTER, PILOT, TO HYDRAULIC PUMP PILOT HOSE	3363 - 28
1E5	FILTER, PRIMARY FUEL	0420 - 2
1E5	FINAL FUEL FILTER	0420 - 2
2E21	FITTINGS, CONTROL PATTERN SELECTOR KIT	3360 - 14
2E23	FITTINGS, MECHANICAL PATTERN CHANGER VALVE (SERIAL NO. -011047)	3360 - 15A
2F1	FITTINGS, MECHANICAL PATTERN CHANGER VALVE (SERIAL NO. 011048-)	3360 - 15C
2J19	FITTINGS, PILOT CONTROL SHUTOFF VALVE (STANDARD BOOM)	3363 - 40
2F19	FLANGE COMPONENTS, HYDRAULIC PUMP (PUMP 3)	3361 - 19A
2F3	FLEX COUPLING, ENGINE TO HYDRAULIC PUMP	3361 - 2
1J5	FLOOR MAT	1810 - 32
1J1	FLOOR PLATE	1810 - 28
2H13	FLOW CONTROL VALVE	3362 - 38
2K1	FLOW REGULATING MANIFOLD VALVE TO LEFT PILOT CONTROLLER PILOT HOSES	3363 - 46
2K5	FLOW REGULATING MANIFOLD VALVE TO PILOT FILTER PILOT HOSES	3363 - 50
2K3	FLOW REGULATING MANIFOLD VALVE TO RIGHT PILOT CONTROLLER PILOT HOSES	3363 - 48
2F17	FLOW REGULATING VALVE, HYDRAULIC PUMP (PUMP 3)	3361 - 18
2G5	FLOW REGULATOR VALVE MANIFOLD (SERIAL NUMBER -011047)	3362 - 6
2G7	FLOW REGULATOR VALVE MANIFOLD (SERIAL NUMBER 011048-)	3362 - 7A
2G5	FLOW REGULATOR VALVE MANIFOLD SUPPORT (SERIAL NUMBER -011047)	3362 - 6
2G7	FLOW REGULATOR VALVE MANIFOLD SUPPORT (SERIAL NUMBER 011048-)	3362 - 7A
1E15	FLYWHEEL	0433 - 2
1E17	FLYWHEEL HOUSING	0433 - 4
1E15	FLYWHEEL RING GEAR	0433 - 2
2D17	FOOT PEDAL CONTROL KIT	3315 - 18
2E13	FOOT SWITCH, AUXILIARY ELECTRIC	3360 - 6
1H11	FRAME, MAIN	1740 - 2
1B9	FRAME, TRACK	0131 - 2
2B3	FRONT COVER, FUEL TANK	1910 - 8
2B3	FRONT FUEL TANK COVER	1910 - 8
1A21	FRONT IDLER	0130 - 2
2A22	FRONT PANELS, COOLING PACKAGE COMPARTMENT	1910 - 2
2A22	FRONT PANELS, ENGINE AND COOLING PACKAGE COMPARTMENT	1910 - 2
1A21	FRONT TRACK CHAIN IDLER	0130 - 2
1A21	FRONT TRACK CHAIN IDLER AXLE	0130 - 2
1A21	FRONT TRACK CHAIN IDLER BEARING	0130 - 2
1A21	FRONT TRACK CHAIN IDLER BUSHINGS	0130 - 2
1A21	FRONT TRACK CHAIN IDLER YOKE	0130 - 2
1F15	FUEL GAUGE SENDING UNIT	0560 - 2
1D13	FUEL INJECTION LINES	0413 - 2
1D13	FUEL INJECTION NOZZLE	0413 - 2
1D13	FUEL INJECTION PUMP	0413 - 2
1D17	FUEL INJECTION PUMP COUPLING	0413 - 6
1D15	FUEL INJECTION PUMP MOUNTING	0413 - 4
1D13	FUEL INJECTION SYSTEM	0413 - 2
1F19	FUEL LINES AND HOSES	0563 - 2
1E7	FUEL LINES, FILTER TO PUMP	0421 - 2
1E7	FUEL LINES, FINAL FUEL FILTER TO FUEL INJECTION PUMP	0421 - 2
1E7	FUEL OVERFLOW VALVE	0421 - 2
1D15	FUEL PUMP MOUNTING, INJECTION SYSTEM	0413 - 4
1D13	FUEL PUMP, INJECTION SYSTEM	0413 - 2
1F15	FUEL TANK	0560 - 2
1F15	FUEL TANK CAP	0560 - 2
2B3	FUEL TANK COMPARTMENT COVER	1910 - 8
2B3	FUEL TANK FRONT COVER	1910 - 8
1F17	FUEL TANK MOUNTING	0560 - 4
1F19	FUEL TANK TO FUEL INJECTION PUMP HOSES	0563 - 2

G

1E19	GASKET SET, ENGINE	0452 - 2
1E19	GASKET SET, ENGINE CYLINDER HEAD REMOVAL	0452 - 2
1E19	GASKET SET, MAJOR ENGINE OVERHAUL	0452 - 2
1D9	GASKET, CYLINDER HEAD	0409 - 4
1C24	GASKET, ENGINE OIL PAN	0407 - 2
1C18	GASKET, ENGINE TIMING GEAR CASE	0402 - 4
1D21	GASKET, ENGINE WATER PUMP	0417 - 2
1D11	GASKET, EXHAUST MANIFOLD	0410 - 2
1D7	GASKET, ROCKER ARM COVER	0409 - 2
1D23	GASKET, THERMOSTAT HOUSING	0418 - 2
1C24	GAUGE, LEVEL	0407 - 2
1C18	GEAR CASE, TIMING	0402 - 4
1E15	GEAR, FLYWHEEL RING	0433 - 2
1B15	GEARBOX, PROPEL	0260 - 4
2L15	GEARBOX, SWING	4360 - 2
1D9	GLOW PLUG	0409 - 4
1G3	GLOW PLUG RELAY	1671 - 2
1B9	GREASE BATH SEAL	0131 - 2

ALPHABETICAL INDEX - CONTINUED

GRID		PAGE
2C23	GRIP, PILOT CONTROLLER (DIG AND SWING)	3315 - 2
1E9	GROUND CABLE, STARTER	0422 - 2
1J7	GUARD KIT, VANDAL	1810 - 34
1J7	GUARDS, WINDOW	1810 - 34

H

1I1	HAMMER	1810 - 6
2C23	HANDLE, PILOT CONTROLLER (DIG AND SWING)	3315 - 2
2E11	HANDLE, PILOT DUAL CONTROL	3360 - 4
2D15	HANDLE, PROPEL PILOT SHUTOFF LEVER	3315 - 16
1J9	HANDLE, SECONDARY EXIT	1810 - 36
1I3	HANDRAIL, CAB	1810 - 8
2B3	HANDRAIL, RIGHT SIDE	1910 - 8
2F9	HANGER COMPONENTS, HYDRAULIC PUMP (PUMPS 1 AND 2)	3361 - 8
1G11	HARNESS, BOOM LIGHT (OFFSET BOOM)	1674 - 6
1G9	HARNESS, BOOM LIGHT (STD. BOOM)	1674 - 4
1G17	HARNESS, CAB CONSOLE WIRING	1674 - 12
1G7	HARNESS, MACHINE WIRING	1674 - 2
2C1	HARNESS, PROPEL ALARM WIRING	2004 - 2
2E11	HARNESS, SOLENOID VALVE DUAL CONTROL	3360 - 4
1G21	HARNESS, TWELVE VOLT POWER SUPPLY	1674 - 16
1K11	HARNESS, WIRE, DEFROSTER FAN	1830 - 18
2E13	HARNESS, WIRE, FOOT SWITCH	3360 - 6
1G5	HARNESS, WIRING, ALTERNATOR	1672 - 2
1I13	HATCH, CAB TOP	1810 - 17A
1D9	HEAD, CYLINDER	0409 - 4
1E3	HEAD, ENGINE OIL FILTER	0419 - 2
1K12	HEATER	1830 - 20
1K14	HEATER (CONTINUED)	1830 - 22
1J19	HEATER AND AIR CONDITIONER	1830 - 2
1K12	HEATER AND AIR CONDITIONER BLOWER MOTOR	1830 - 20
1K14	HEATER AND AIR CONDITIONER BLOWER MOTOR (CONTINUED)	1830 - 22
1K12	HEATER AND AIR CONDITIONER ELECTRIC MOTOR	1830 - 20
1K14	HEATER AND AIR CONDITIONER ELECTRIC MOTOR (CONTINUED)	1830 - 22
1K12	HEATER AND AIR CONDITIONER RELAY	1830 - 20
1K14	HEATER AND AIR CONDITIONER RELAY (CONTINUED)	1830 - 22
1K12	HEATER AND AIR CONDITIONER SWITCH	1830 - 20
1K14	HEATER AND AIR CONDITIONER SWITCH (CONTINUED)	1830 - 22
1K12	HEATER AND AIR CONDITIONER TRANSISTOR	1830 - 20
1K14	HEATER AND AIR CONDITIONER TRANSISTOR (CONTINUED)	1830 - 22
1K7	HEATER DUCTS	1830 - 14
1K5	HEATER HOSE MOUNTING	1830 - 12
1K3	HEATER HOSES	1830 - 10
1K3	HEATER LINES	1830 - 10
1K3	HEATER TO ENGINE WATER HOSE	1830 - 10
2C16	HEAVY DUTY BUCKET	3302 - 4
2C18	HEAVY DUTY BUCKET TEETH	3302 - 6
2I7	HIGH PRESSURE HYDRAULIC HOSES (HYDRAULIC PUMP TO CONTROL VALVE)	3363 - 4
1G9	HORN	1674 - 4
1F9	HOSE, AIR CLEANER INTAKE	0520 - 4
1J23	HOSE, AIR CONDITIONING COMPRESSOR TO AIR CONDITIONER	1830 - 6
2E21	HOSE, CONTROL PATTERN SELECTOR KIT	3360 - 14
2D17	HOSE, CONTROL VALVE TO PILOT CONTROL VALVE (FOOT PEDAL CONTROL KIT)	3315 - 18
1B13	HOSE, DRAIN, ROTARY MANIFOLD TO HYDRAULIC OIL RESERVOIR	0260 - 2
1D5	HOSE, ENGINE VENTILATING SYSTEM	0408 - 2
1F19	HOSE, FUEL TANK TO PRIMARY FUEL FILTER	0563 - 2
1K3	HOSE, HEATER TO ENGINE	1830 - 10
2J23	HOSE, PILOT (PROPEL PILOT CONTROLLER TO PROPEL PILOT SHUTOFF VALVE)	3363 - 44
2D17	HOSE, PILOT CONTROL VALVE TO CONTROL VALVE (FOOT PEDAL CONTROL KIT)	3315 - 18
2I11	HOSE, PILOT FILTER TO SWING MOTOR	3363 - 8
2D17	HOSE, PILOT SHUT-OFF VALVE TO PILOT VALVE (FOOT PEDAL CONTROL KIT)	3315 - 18
2E21	HOSE, PILOT SIGNAL MANIFOLD TO SOLENOID VALVE	3360 - 14
2D17	HOSE, PILOT VALVE TO PILOT SHUT-OFF VALVE (FOOT PEDAL CONTROL KIT)	3315 - 18
1B13	HOSE, PILOT, ROTARY MANIFOLD TO PROPEL SPEED SOLENOID VALVE	0260 - 2
1F19	HOSE, PRIMARY FUEL FILTER TO FINAL FUEL FILTER	0563 - 2
1B13	HOSE, PROPEL SPEED SOLENOID TO ROTARY MANIFOLD	0260 - 2
1F1	HOSE, RADIATOR OVERFLOW TANK	0510 - 4
1E23	HOSE, RADIATOR, UPPER	0510 - 2
1J23	HOSE, REFRIGERANT, AIR CONDITIONING COMPRESSOR TO AIR CONDITIONER	1830 - 6
1B13	HOSE, ROTARY MANIFOLD TO HYDRAULIC OIL RESERVOIR	0260 - 2
1B13	HOSE, ROTARY MANIFOLD TO PROPEL SPEED SOLENOID	0260 - 2
2E21	HOSE, SOLENOID VALVE TO PILOT SIGNAL MANIFOLD	3360 - 14
1F19	HOSES AND LINES, FUEL	0563 - 2
1J21	HOSES, AIR CONDITIONER	1830 - 4
1J23	HOSES, AIR CONDITIONER	1830 - 6
2E15	HOSES, AUXILIARY HYDRAULIC (CONTROL VALVE TO BOOM BOTTOM)	3360 - 8
2E19	HOSES, BOOM AUX LINES TO BALL VALVE	3360 - 12
2I15	HOSES, BOOM CYLINDER TO CONTROL VALVE MAIN HYDRAULIC LINES (STD. BOOM)	3363 - 12
2K11	HOSES, BOOM OFFSET CYLINDER	3363 - 56
2D23	HOSES, BUCKET HYDRAULIC CYLINDER (STANDARD ARM WITH OFFSET BOOM)	3340 - 6
2D19	HOSES, BUCKET HYDRAULIC CYLINDER (STANDARD BOOM AND ARM)	3340 - 2
2I15	HOSES, CONTROL VALVE TO BOOM CYLINDER MAIN HYDRAULIC LINES (STD. BOOM)	3363 - 12
2I7	HOSES, DELIVERY HYDRAULIC	3363 - 4
2I11	HOSES, DRAIN HYDRAULIC (SWING MOTOR, OIL TANK, HYD. PUMP)	3363 - 8
1F7	HOSES, ENGINE AIR INTAKE	0520 - 2
1F19	HOSES, FUEL TANK TO FUEL INJECTION PUMP	0563 - 2
1K3	HOSES, HEATER	1830 - 10
2I7	HOSES, HIGH PRESSURE HYDRAULIC (HYDRAULIC PUMP TO CONTROL VALVE)	3363 - 4
2J5	HOSES, HYDRAULIC (CONTROL VALE TO ROTARY MANIFOLD-BLADE LIFT)	3363 - 26
2I21	HOSES, HYDRAULIC (CONTROL VALVE TO BUCKET HYDRAULIC LINES ON BOOM)	3363 - 18
2J1	HOSES, HYDRAULIC (CONTROL VALVE TO ROTARY MANIFOLD-LEFT PROPEL)	3363 - 22
2J3	HOSES, HYDRAULIC (CONTROL VALVE TO ROTARY MANIFOLD-RIGHT PROPEL)	3363 - 24
2I23	HOSES, HYDRAULIC (CONTROL VALVE TO SWING MOTOR)	3363 - 20
2I17	HOSES, HYDRAULIC, CONTROL VALVE TO OFFSET CYLINDER LINES	3363 - 14

ALPHABETICAL INDEX - CONTINUED

GRID		PAGE
2I19	HOSES, HYDRAULIC,(CONTROL VALVE TO ARM CYLINDER LINES ON BOOM)	3363 - 16
2I5	HOSES, LOW PRESSURE HYDRAULIC (HYDRAULIC OIL TANK TO PUMP)	3363 - 2
2E23	HOSES, MECHANICAL PATTERN CHANGER (SERIAL NO. -011047)	3360 - 15A
2F1	HOSES, MECHANICAL PATTERN CHANGER (SERIAL NO. 011048-)	3360 - 15C
2J9	HOSES, PILOT (CONTROL VALVE REAR TO FLOW REGULATOR VALVE MANIFOLD)	3363 - 30
2K7	HOSES, PILOT (CONTROL VALVE TO BLADE PILOT CONTROLLER)	3363 - 52
2J21	HOSES, PILOT (CONTROL VALVE TO OFFSET BOOM PILOT CONTROLLER)	3363 - 42
2J23	HOSES, PILOT (CONTROL VALVE TO PROPEL PILOT CONTROLLER)	3363 - 44
2J13	HOSES, PILOT (CONTROL VALVE TO SWING MOTOR)	3363 - 34
2K5	HOSES, PILOT (PILOT FILTER TO FLOW REGULATING MANIFOLD VALVE)	3363 - 50
2K1	HOSES, PILOT(LEFT PILOT CONTROLLER TO FLOW REGULATING MANIFOLD)	3363 - 46
2K3	HOSES, PILOT(RIGHT PILOT CONTROLLER TO FLOW REGULATING MANIFOLD)	3363 - 48
2J11	HOSES, PILOT, (CONTROL VALVE FRONT TO FLOW REGULATOR VALVE)	3363 - 32
1B21	HOSES, PROPEL (ROTARY MANIFOLD TO PROPEL MOTOR)	0260 - 10
2L12	HOSES, ROTARY MANIFOLD TO BLADE CYLINDER	3401 - 4
1E17	HOUSING, FLYWHEEL	0433 - 4
1D23	HOUSING, THERMOSTAT	0418 - 2
1K7	HVAC DUCTS AND FILTER	1830 - 14
2F5	HYDRAILIC PUMP REPAIR KIT (PUMPS 1 AND 2)	3361 - 4
2I9	HYDRAULIC CONTROL VALVE TO HYDRAULIC OIL COOLER LINE	3363 - 6
2J1	HYDRAULIC CONTROL VALVE TO ROTARY MANIFOLD LEFT PROPEL HOSES	3363 - 22
2J3	HYDRAULIC CONTROL VALVE TO ROTARY MANIFOLD-RIGHT PROPEL HOSES)	3363 - 24
2I13	HYDRAULIC DRAIN HOSES (CONTROL VALVE TO HYDRAULIC OIL TANK)	3363 - 10
2I11	HYDRAULIC DRAIN HOSES (HYDRAULIC OIL TANK TO SWING MOTOR)	3363 - 8
2I11	HYDRAULIC DRAIN HOSES (HYDRAULIC PUMP AND SWING MOTOR TO OIL TANK)	3363 - 8
2C4	HYDRAULIC FILTER RESTRICTION INDICATOR KIT	2160 - 2
2I19	HYDRAULIC HOSES (CONTROL VALVE TO ARM CYLINDER LINES ON BOOM)	3363 - 16
2I21	HYDRAULIC HOSES (CONTROL VALVE TO BUCKET HYDRAULIC LINES ON BOOM)	3363 - 18
2I17	HYDRAULIC HOSES (CONTROL VALVE TO OFFSET CYLINDER LINES)	3363 - 14
2J5	HYDRAULIC HOSES (CONTROL VALVE TO ROTARY MANIFOLD-BLADE LIFT)	3363 - 26
2J1	HYDRAULIC HOSES (CONTROL VALVE TO ROTARY MANIFOLD-LEFT PROPEL)	3363 - 22
2J3	HYDRAULIC HOSES (CONTROL VALVE TO ROTARY MANIFOLD-RIGHT PROPEL)	3363 - 24
2I23	HYDRAULIC HOSES (CONTROL VALVE TO SWING MOTOR)	3363 - 20
2K11	HYDRAULIC LINES ON BOOM TO CYLINDERS (OFFSET BOOM)	3363 - 56
2K9	HYDRAULIC LINES ON BOOM TO CYLINDERS (STANDARD BOOM)	3363 - 54
2K15	HYDRAULIC OIL FILTER	3364 - 2
2K15	HYDRAULIC OIL RESERVOIR	3364 - 2
2K15	HYDRAULIC OIL TANK	3364 - 2
2I5	HYDRAULIC OIL TANK TO PUMP LOW PRESSURE HOSES	3363 - 2
1B13	HYDRAULIC OIL TANK TO ROTARY MANIFOLD HOSE	0260 - 2
2I7	HYDRAULIC PRESSURE HOSES (HYDRAULIC PUMP TO CONTROL VALVE)	3363 - 4
2F17	HYDRAULIC PRESSURE REDUCING VALVE (PUMP 3)	3361 - 18
2F17	HYDRAULIC PUMP ASSEMBLY WITH REGULATING VALVES (PUMP 3)	3361 - 18
2B9	HYDRAULIC PUMP COMPARTMENT DOOR	1910 - 14
2B13	HYDRAULIC PUMP COMPARTMENT DOOR LATCH	1910 - 18
2B1	HYDRAULIC PUMP COMPARTMENT PANELS	1910 - 6
2F5	HYDRAULIC PUMP COMPONENTS (PUMPS 1 AND 2)	3361 - 4
2F21	HYDRAULIC PUMP COMPONENTS (PUMP 3)	3361 - 20
2F15	HYDRAULIC PUMP CONTROL PISTON ASSEMBLY (PUMPS 1 AND 2)	3361 - 16
2F15	HYDRAULIC PUMP CONTROL PISTON COVER (PUMPS 1 AND 2)	3361 - 16
2F13	HYDRAULIC PUMP CONTROL SPRING (PUMPS 1 AND 2)	3361 - 14
2F19	HYDRAULIC PUMP FLANGE COMPONENTS (PUMP 3)	3361 - 19A
2F17	HYDRAULIC PUMP FLOW REGULATING VALVE (PUMP 3)	3361 - 18
2F9	HYDRAULIC PUMP HANGER COMPONENTS (PUMPS 1 AND 2)	3361 - 8
2F7	HYDRAULIC PUMP MAIN BEARING (PUMPS 1 AND 2)	3361 - 6
2F3	HYDRAULIC PUMP MOUNTING	3361 - 2
2F11	HYDRAULIC PUMP REAR COVER COMPONENTS (PUMPS 1 AND 2)	3361 - 12
2F11	HYDRAULIC PUMP REAR COVER SEAL (PUMPS 1 AND 2)	3361 - 12
2F5	HYDRAULIC PUMP ROTARY KIT (PUMPS 1 AND 2)	3361 - 4
2F21	HYDRAULIC PUMP ROTARY KIT (PUMP 3)	3361 - 20
2F7	HYDRAULIC PUMP SHAFT (PUMPS 1 AND 2)	3361 - 6
2F7	HYDRAULIC PUMP SHAFT COMPONENTS (PUMPS 1 AND 2)	3361 - 6
2J7	HYDRAULIC PUMP TO CONTROL VALVE PILOT HOSE	3363 - 28
2I7	HYDRAULIC PUMP TO CONTROL VALVE PRESSURE HOSES	3363 - 4
2F3	HYDRAULIC PUMP TO ENGINE COUPLER	3361 - 2
2J7	HYDRAULIC PUMP TO PILOT FILTER PILOT HOSE	3363 - 28
1B13	HYDRAULIC RESERVOIR TO ROTARY MANIFOLD HOSE	0260 - 2
2I9	HYDRAULIC RETURN LINES (CONTROL VALVE TO RESERVOIR)	3363 - 6

I

1A21	IDLER, FRONT	0130 - 2
1A21	IDLER, FRONT TRACK CHAIN	0130 - 2
1G17	IGNITION KEY	1674 - 12
1G17	IGNITION SWITCH	1674 - 12
1H3	IGNITION SWITCH RELAY, ENGINE	1674 - 22
2C4	INDICATOR, HYDRAULIC FILTER	2160 - 2
1D15	INJECTION PUMP MOUNTING	0413 - 4

ALPHABETICAL INDEX - CONTINUED

GRID		PAGE
1D13	INJECTION PUMP, FUEL	0413 - 2
1D13	INJECTION SYSTEM, FUEL	0413 - 2
1D19	INTAKE MANIFOLD	0414 - 2
1C16	INTAKE VALVE	0402 - 2
1I23	ISOLATOR, CAB REAR	1810 - 26
1H22	ISOLATORS, CAB	1810 - 2
1F13	ISOLATORS, ENGINE MOUNTING	0540 - 4
2A22	ISOLATORS, RADIATOR AND ENGINE COMPARTMENT FRONT PANELS	1910 - 2

K

1G17	KEY, IGNITION	1674 - 12
1K11	KIT, AIR CIRCULATION FAN	1830 - 18
2E17	KIT, AUXILIARY HYDRAULIC LINES (CONTINUED)	3360 - 10
2E19	KIT, AUXILIARY HYDRAULIC LINES (CONTINUED)	3360 - 12
2K17	KIT, BOOM CYLINDER SEAL	3365 - 4
2E21	KIT, CONTROL PATTERN SELECTOR	3360 - 14
1C20	KIT, CYLINDER AND PISTON	0403 - 2
1K11	KIT, DEFROSTER FAN	1830 - 18
2D17	KIT, FOOT PEDAL CONTROL	3315 - 18
2C4	KIT, HYDRAULIC FILTER RESTRICTION INDICATOR	2160 - 2
2F5	KIT, HYDRAULIC PUMP REPAIR (PUMPS 1 AND 2)	3361 - 4
2F5	KIT, HYDRAULIC PUMP ROTARY (PUMPS 1 AND 2)	3361 - 4
2F21	KIT, HYDRAULIC PUMP ROTARY (PUMP 3)	3361 - 20
2E23	KIT, MECHANICAL PATTERN CHANGER (SERIAL NO. -011047)	3360 - 15A
2F1	KIT, MECHANICAL PATTERN CHANGER (SERIAL NO. 011048-)	3360 - 15C
1H8	KIT, MIC CUSTOMER	1674 - 33A
1F24	KIT, O-RING, METRIC	1369 - 2
1J11	KIT, SEAT FOAM	1821 - 2
1J11	KIT, SEAT LUMBAR	1821 - 2
1J15	KIT, SEAT SLIDE TRACK	1821 - 6
1J9	KIT, SECONDARY EXIT	1810 - 36
1J7	KIT, VANDAL PROTECTION	1810 - 34
1J7	KIT, WINDOW GUARDS	1810 - 34
1J13	KIT, 3.00 INCH SEAT BELT ,	1821 - 4
2E9	KIT,SOLENOID VALVE, 1WAY/2WAY (REPLACEMENT)	3360 - 3A
2E7	KIT,SOLENOID VALVE, 1WAY/2WAY, WITHOUT PRESSURE SWITCH	3360 - 2

L

2E13	LABEL, AUXILIARY CONTROL	3360 - 6
2C4	LABEL, HYDRAULIC FILTER RESTRICTION INDICATOR	2160 - 2
2E21	LABEL, PILOT CONTROL LEVER	3360 - 14
1J9	LABEL, SECONDARY EXIT	1810 - 36
1F22	LABELS	1322 - 2
1G9	LAMP, BOOM LIGHT (STD. BOOM)	1674 - 4
2B11	LATCH, COOLING PACKAGE COMPARTMENT DOOR	1910 - 16
2B13	LATCH, HYDRAULIC PUMP COMPARTMENT	1910 - 18
2B11	LATCH, RADIATOR COMPARTMENT DOOR	1910 - 16
2K1	LEFT PILOT CONTROLLER TO FLOW REGULATING MANIFOLD VALVE PILOT HOSES	3363 - 46
2D11	LEFT PROPEL PEDAL	3315 - 12
1I15	LEFT SIDE CAB CONSOLE	1810 - 18
1I3	LEFT SIDE CAB WINDOW	1810 - 8
2D5	LEVER, PILOT CONTROL, BLADE	3315 - 6
2C23	LEVER, PILOT CONTROL, DIG AND SWING	3315 - 2
2D3	LEVER, PILOT CONTROL, PROPEL	3315 - 4
1G11	LIGHT, BOOM (OFFSET BOOM)	1674 - 6
1G9	LIGHT, BOOM (STANDARD BOOM)	1674 - 4
1G19	LIGHTER, CIGAR	1674 - 14
2I9	LINE, HYDRAULIC, CONTROL VALVE TO HYDRAULIC OIL COOLER	3363 - 6
2I9	LINE, HYDRAULIC, OIL COOLER TO RESERVOIR	3363 - 6
1C22	LINER, CYLINDER BLOCK	0404 - 2
1F19	LINES AND HOSES, FUEL	0563 - 2
2E19	LINES, ARM AUXILIARY HYDRAULIC	3360 - 12
2E15	LINES, AUXILIARY HYDRAULIC (CONTROL VALVE TO BOOM BOTTOM)	3360 - 8
2E17	LINES, AUXILIARY HYDRAULIC (ON BOOM)	3360 - 10
2I15	LINES, BOOM CYLINDER TO CONTROL VALVE MAIN HYDRAULIC LINES (STD. BOOM)	3363 - 12
2I15	LINES, CONTROL VALVE TO BOOM CYLINDER MAIN HYDRAULIC LINES (STD. BOOM)	3363 - 12
1D3	LINES, ENGINE OIL	0407 - 6
1D3	LINES, ENGINE VACUUM	0407 - 6
1D13	LINES, FUEL INJECTION	0413 - 2
1E7	LINES, FUEL, FINAL FUEL FILTER TO FUEL INJECTION PUMP	0421 - 2
1K3	LINES, HEATER	1830 - 10
2K11	LINES, HYDRAULIC, ON BOOM (OFFSET BOOM)	3363 - 56
2K9	LINES, HYDRAULIC, ON BOOM (STANDARD BOOM)	3363 - 54
2I5	LINES, LOW PRESSURE HYDRAULIC (HYDRAULIC OIL TANK TO PUMP)	3363 - 2
2J15	LINES, PILOT (CONTROL VALVE FRONT TO CONTROL VALVE LEFT SIDE)	3363 - 36
2J21	LINES, PILOT HYDRAULIC, PILOT SHUTOFF VALVE TO OFFSET BOOM PILOT CONTROLLER	3363 - 42
2J17	LINES, PILOT, (CONTROL VALVE FRONT TO CONTROL VALVE REAR)	3363 - 38
1E1	LINES, WATER, ENGINE	0418 - 4
2D21	LINK, ARM (LONG ARM) 2.12M (FOR USE WITH STANDARD BOOM)	3340 - 4
2D19	LINK, ARM (STANDARD BOOM)	3340 - 2
2E5	LINK, BUCKET	3345 - 2
1B7	LINK, TRACK	0130 - 10
2D23	LINK,ARM (STANDARD ARM WITH OFFSET BOOM)	3340 - 6
2D21	LONG ARM (2.12M)(FOR USE WITH STANDARD BOOM)	3340 - 4
2I5	LOW PRESSURE HYDRAULIC LINES (HYDRAULIC OIL TANK TO HYDRAULIC PUMP)	3363 - 2
2I5	LOW PRESSURE HYDRAULIC LINES (HYDRAULIC RESERVOIR TO PUMP)	3363 - 2
1E23	LOWER RADIATOR HOSE	0510 - 2
1B5	LOWER ROLLER	0130 - 8
1B5	LOWER TRACK CHAIN ROLLER	0130 - 8

M

2B19	MACHINE BOTTOM ACCESS COVERS	1910 - 24
1H17	MACHINE COUNTERWEIGHT	1749 - 2
1G15	MACHINE INFORMATION CENTER	1674 - 10
1G7	MACHINE WIRING HARNESS	1674 - 2
1C14	MAIN BEARINGS, CRANKSHAFT	0401 - 2
1H11	MAIN FRAME	1740 - 2
2I15	MAIN HYDRAULIC LINES (STD. BOOM), CONTROL VALVE TO BOOM CYLINDER	3363 - 12
2I15	MAIN PIPING (STANDARD BOOM)	3363 - 12

ALPHABETICAL INDEX - CONTINUED

GRID		PAGE
1C18	MAIN SEAL, ENGINE FRONT	0402 - 4
1E17	MAIN SEAL, ENGINE REAR	0433 - 4
1H15	MAINTENANCE COVER, SWING BEARING	1740 - 6
1E19	MAJOR ENGINE OVERHAUL GASKET SET	0452 - 2
1D11	MANIFOLD, EXHAUST	0410 - 2
2J9	MANIFOLD, FLOW REGULATOR TO CONTROL VALVE PILOT HOSES	3363 - 30
2G5	MANIFOLD, FLOW REGULATOR VALVE (SERIAL NUMBER -011047)	3362 - 6
2G7	MANIFOLD, FLOW REGULATOR VALVE (SERIAL NUMBER 011048-)	3362 - 7A
2J11	MANIFOLD, FLOW REGULATOR VALVE TO CONTROL VALVE FRONT PILOT HOSES	3363 - 32
1D19	MANIFOLD, INTAKE	0414 - 2
1B19	MANIFOLD, ROTARY	0260 - 8
2L12	MANIFOLD, ROTARY TO BLADE CYLINDER HYDRAULIC HOSES	3401 - 4
1J5	MAT, FLOOR	1810 - 32
2E23	MECHANICAL PATTERN CHANGER KIT (SERIAL NO. -011047)	3360 - 15A
2F1	MECHANICAL PATTERN CHANGER KIT (SERIAL NO. 011048-)	3360 - 15C
2E23	MECHANICAL PATTERN CHANGER VALVE (SERIAL NO. -011047)	3360 - 15A
2F1	MECHANICAL PATTERN CHANGER VALVE (SERIAL NO. 011048-)	3360 - 15C
1F24	METRIC O-RING KIT	1369 - 2
1H8	MIC CABLE	1674 - 33A
1G15	MIC CONTROLLER	1674 - 10
1H6	MIC CONTROLLER	1674 - 32
1H8	MIC CUSTOMER KIT	1674 - 33A
2B24	MIRROR, CAB MOUNTED REAR VIEW	2002 - 2
2B24	MIRROR, REAR VIEW	2002 - 2
2B3	MIRROR, RIGHT SIDE VIEW	1910 - 8
2E11	MODUAL RELAY FOR DUAL AUXILIARY CONTROL	3360 - 4
2C16	MOLDBOARD, HEAVY DUTY BUCKET	3302 - 4
1G13	MONITOR	1674 - 8
1G13	MONITOR, CAB DISPLAY	1674 - 8
2C1	MOTION ALARM, PROPEL	2004 - 2
1B23	MOTOR COVER, PROPEL	0260 - 12
1K11	MOTOR, AIR CIRCULATING FAN	1830 - 18
1K11	MOTOR, DEFROSTER FAN	1830 - 18
1F3	MOTOR, ENGINE SPEED CONTROL	0515 - 2
1B15	MOTOR, PROPEL	0260 - 4
1C7	MOTOR, PROPEL, COMPONENTS	0267 - 2
2L15	MOTOR, SWING	4360 - 2
2L19	MOTOR, SWING	4367 - 2
2J13	MOTOR, SWING, TO CONTROL VALVE PILOT HOSES	3363 - 34
1I1	MOTOR, WIPER	1810 - 6
1G19	MOUNTING PANEL, CONTROLLER	1674 - 14
1E11	MOUNTING, ALTERNATOR	0423 - 2
1H22	MOUNTING, CAB	1810 - 2
1F13	MOUNTING, ENGINE	0540 - 4
1D15	MOUNTING, FUEL INJECTION PUMP	0413 - 4
1F17	MOUNTING, FUEL TANK	0560 - 4
1K5	MOUNTING, HEATER HOSE	1830 - 12
2F3	MOUNTING, HYDRAULIC PUMP	3361 - 2
1B17	MOUNTING, PROPEL GEARBOX	0260 - 6
1F11	MUFFLER	0530 - 2
1F11	MUFFLER SUPPORT	0530 - 2
1F11	MUFFLER SUPPORT CLAMP	0530 - 2

N

GRID		PAGE
1D13	NOZZLE, FUEL INJECTION	0413 - 2

O

GRID		PAGE
1F24	O-RING KIT, METRIC	1369 - 2
2E3	OFFSET BOOM	3344 - 4
2L1	OFFSET BOOM CYLINDER	3365 - 14
2K13	OFFSET BOOM HYDRAULIC LINE COVER	3363 - 58
1G11	OFFSET BOOM LIGHT WIRING HARNESS	1674 - 6
2H9	OFFSET BOOM PILOT CONTROLLER	3362 - 34
2E3	OFFSET BOOM PIVOT PINS	3344 - 4
2L3	OFFSET CYLINDER COMPONENTS (OFFSET BOOM)	3365 - 16
2E3	OFFSET CYLINDER, BOOM	3344 - 4
2I17	OFFSET HYDRAULIC CYLINDER HOSES	3363 - 14
1E23	OIL COOLER	0510 - 2
2I9	OIL COOLER HYDRAULIC OIL RESERVOIR LINE	3363 - 6
2I9	OIL COOLER TO HYDRAULIC CONTROL VALVE LINE	3363 - 6
2I9	OIL COOLER TO HYDRAULIC OIL TANK LINE	3363 - 6
2I9	OIL COOLER TO RESERVOIR LINE	3363 - 6
1D3	OIL LINES, ENGINE	0407 - 6
1C24	OIL PAN	0407 - 2
1D1	OIL PUMP, ENGINE	0407 - 4
2K15	OIL TANK, HYDRAULIC	3364 - 2
2I9	OIL TANK, HYDRAULIC, TO OIL COOLER LINE	3363 - 6
1B13	OIL TANK, HYDRAULIC, TO ROTARY MANIFOLD HOSE	0260 - 2
2E9	ONE/TWO WAY SOLENOID VALVE KIT (REPLACEMENT)	3360 - 3A
2E7	ONE/TWO WAY SOLENOID VALVE KIT, WITHOUT PRESSURE SWITCH	3360 - 2
1F1	OVERFLOW TANK, RADIATOR	0510 - 4
1H1	OVERHEAT WARNING SWITCH, ENGINE	1674 - 20

P

GRID		PAGE
1C24	PAN, OIL	0407 - 2
2A24	PANEL, COOLING PACKAGE COMPARTMENT REAR	1910 - 4
2B1	PANEL, HYDRAULIC PUMP COMPARTMENT REAR	1910 - 6
2A24	PANEL, RADIATOR COMPARTMENT REAR	1910 - 4
2A22	PANELS, ENGINE COMPARTMENT FRONT	1910 - 2
2A22	PANELS, FRONT, RADIATOR COMPARTMENT	1910 - 2
2B1	PANELS, HYDRAULIC PUMP COMPARTMENT	1910 - 6
2A22	PANELS,FRONT, COOLING PACKAGE COMPARTMENT	1910 - 2
2E23	PATTERN CHANGER VALVE, MECHANICAL (SERIAL NO. -011047)	3360 - 15A
2F1	PATTERN CHANGER VALVE, MECHANICAL (SERIAL NO. 011048-)	3360 - 15C
2E21	PATTERN SELECTOR CONTROL KIT	3360 - 14
2D13	PEDAL, PILOT CONTROL, OFFSET BOOM	3315 - 14
2D11	PEDAL, PROPEL, LEFT	3315 - 12
2D9	PEDAL, PROPEL, RIGHT, OFFSET BOOM	3315 - 10
2D7	PEDAL, PROPEL, RIGHT, STANDARD BOOM	3315 - 8
1I15	PILOT CONTROL CONSOLE	1810 - 18
2C23	PILOT CONTROL LEVER (DIG AND SWING)	3315 - 2
2E21	PILOT CONTROL LEVER LABEL	3360 - 14
2D5	PILOT CONTROL LEVER, BLADE	3315 - 6
2D3	PILOT CONTROL LEVER, PROPEL	3315 - 4
2D13	PILOT CONTROL PEDAL, OFFSET BOOM	3315 - 14
2J19	PILOT CONTROL SHUTOFF VALVE FITTINGS (STANDARD BOOM)	3363 - 40

ALPHABETICAL INDEX - CONTINUED

GRID		PAGE
2K5	PILOT CONTROL SHUTOFF VALVE TOFLOW REGULATING MANIFOLD VALVE PILOT HOSE	3363 - 50
2D17	PILOT CONTROL VALVE TO CONTROL VALVE HOSE (FOOT PEDAL CONTROL KIT)	3315 - 18
2D17	PILOT CONTROL VALVE, FOOT CONTROL (FOOT PEDAL CONTROL KIT)	3315 - 18
2H11	PILOT CONTROLLER (STANDARD BOOM)	3362 - 36
2C23	PILOT CONTROLLER BOOT (DIG AND SWING)	3315 - 2
2C23	PILOT CONTROLLER HANDLE (DIG AND SWING)	3315 - 2
2D1	PILOT CONTROLLER VALVE COMPONENTS (DIG AND SWING)	3315 - 3A
2H5	PILOT CONTROLLER, BLADE	3362 - 30
2H9	PILOT CONTROLLER, OFFSET BOOM	3362 - 34
2C23	PILOT CONTROLLERS (DIG AND SWING)	3315 - 2
2E11	PILOT DUAL CONTROL HANDLE	3360 - 4
2J7	PILOT FILTER	3363 - 28
2K5	PILOT FILTER TO FLOW REGULATING MANIFOLD VALVE PILOT HOSES	3363 - 50
2J23	PILOT HOSE (PROPEL PILOT CONTROLLER TO PROPEL PILOT SHUTOFF VALVE)	3363 - 44
2J17	PILOT HOSE, CONTROL VALVE LEFT SIDE	3363 - 38
2J11	PILOT HOSE, FLOW REGULATOR VALVE MANIFOLD TO HYDRAULIC OIL TANK	3363 - 32
1B13	PILOT HOSE, ROTARY MANIFOLD TO PROPEL SPEED SOLENOID VALVE	0260 - 2
2J11	PILOT HOSES (CONTROL VALVE FRONT TO FLOW REGULATOR VALVE)	3363 - 32
2J9	PILOT HOSES (CONTROL VALVE REAR TO FLOW REGULATOR VALVE)	3363 - 30
2K7	PILOT HOSES (CONTROL VALVE TO BLADE PILOT CONTROLLER)	3363 - 52
2J21	PILOT HOSES (CONTROL VALVE TO OFFSET BOOM PILOT CONTROLLER)	3363 - 42
2J23	PILOT HOSES (CONTROL VALVE TO PROPEL PILOT CONTROLLER)	3363 - 44
2J13	PILOT HOSES (CONTROL VALVE TO SWING MOTOR)	3363 - 34
2K5	PILOT HOSES (PILOT FILTER TO FLOW REGULATING MANIFOLD VALVE)	3363 - 50
2J7	PILOT HOSES(HYDRAULIC PUMP TO PILOT FILTER AND CONTROL VALVE)	3363 - 28
2K1	PILOT HOSES(LEFT PILOT CONTROLLER TO FLOW REGULATING MANIFOLD)	3363 - 46
2K3	PILOT HOSES(RIGHT PILOT CONTROLLER TO FLOW REGULATING MANIFOLD)	3363 - 48
2K1	PILOT HOSES, PILOT SHUTOFF VALVE TO LEFT PILOT CONTROLLER	3363 - 46
2K3	PILOT HOSES, PILOT SHUTOFF VALVE TO RIGHT PILOT CONTROLLER	3363 - 48
2J15	PILOT LINES (CONTROL VALVE FRONT TO CONTROL VALVE LEFT SIDE)	3363 - 36
2J17	PILOT LINES (CONTROL VALVE FRONT TO CONTROL VALVE REAR)	3363 - 38
2F23	PILOT PUMP COMPONENTS	3361 - 28
2F23	PILOT PUMP COUPLER	3361 - 28
2D17	PILOT SHUT-OFF VALVE TO PILOT VALVE HOSE (FOOT PEDAL CONTROL KIT)	3315 - 18
2H21	PILOT SHUTOFF VALVE	3362 - 46
2K1	PILOT SHUTOFF VALVE TO LEFT PILOT CONTROLLER PILOT HOSES	3363 - 46
2J23	PILOT SHUTOFF VALVE TO PROPEL PILOT CONTROLLER PILOT HOSE	3363 - 44
2K3	PILOT SHUTOFF VALVE TO RIGHT PILOT CONTROLLER PILOT HOSES	3363 - 48
2H7	PILOT VALVE COMPONENTS (BLADE)	3362 - 32
2D17	PILOT VALVE TO PILOT SHUT-OFF VALVE HOSE (FOOT PEDAL CONTROL KIT)	3315 - 18
1C5	PILOT VALVE, PROPEL	0262 - 6
2E21	PILOTSIGNAL MANIFOLD TO SOLENOID VALVE HOSE	3360 - 14
2C22	PIN-UP DATA, BUCKET	3302 - 10
1H11	PIN, BOOM CYLINDER BOTTOM	1740 - 2
1H11	PIN, BOOM FOOT	1740 - 2
2D19	PIN, BUCKET (STANDARD BOOM)	3340 - 2
2D23	PIN, BUCKET, (STANDARD ARM WITH OFFSET BOOM)	3340 - 6
2D21	PIN, BUCKET, LONG ARM 2.12M (FOR USE WITH STANDARD BOOM)	3340 - 4
2C18	PIN, HEAVY DUTY BUCKET	3302 - 6
1B7	PIN, TRACK CHAIN	0130 - 10
2D19	PINS, BUCKET CYLINDER (STANDARD ARM AND STANDARD BOOM)	3340 - 2
2D21	PINS, BUCKET CYLINDER, (LONG ARM)(FOR USE WITH STANDARD BOOM)	3340 - 4
2F15	PISTON ASSEMBLY, HYDRAULIC PUMP CONTROL (PUMPS 1 AND 2)	3361 - 16
1C20	PISTON RINGS	0403 - 2
1C22	PISTON, LINER, CONNECTING ROD, AND RING SET	0404 - 2
1C20	PISTONS AND CONNECTING RODS	0403 - 2
2D19	PIVOT PIN, ARM TO BOOM (STANDARD ARM AND BOOM)	3340 - 2
2E3	PIVOT PINS, OFFSET BOOM	3344 - 4
1J1	PLATE, CAB FLOOR	1810 - 28
1J1	PLATE, FLOOR	1810 - 28
1D9	PLUG, GLOW	0409 - 4
1G21	POWER SUPPLY HARNESS, 12V	1674 - 16
2F17	PRESSURE REDUCING VALVE, HYDRAULIC (PUMP 3)	3361 - 18
1G7	PRESSURE SENSOR, DIG AND SWING	1674 - 2
1G7	PRESSURE SENSOR, PROPEL	1674 - 2
1E5	PRIMARY FUEL FILTER HEAD	0420 - 2
2C1	PROPEL ALARM	2004 - 2
2C1	PROPEL ALARM WIRING HARNESS	2004 - 2
1B15	PROPEL GEARBOX COMPONENTS	0260 - 4
1B17	PROPEL GEARBOX MOUNTING	0260 - 6
1B21	PROPEL HOSES (ROTARY MANIFOLD TO PROPEL MOTOR)	0260 - 10
1B15	PROPEL MOTOR	0260 - 4
1C1	PROPEL MOTOR BRAKE VALVE	0262 - 2
1C3	PROPEL MOTOR BRAKE VALVE RELIEF VALVE COMPONENTS	0262 - 4
1C7	PROPEL MOTOR COMPONENTS	0267 - 2
1B23	PROPEL MOTOR COVER	0260 - 12
1B21	PROPEL MOTOR TO ROTARY MANIFOLD HOSES	0260 - 10
2D11	PROPEL PEDAL, LEFT	3315 - 12
2D9	PROPEL PEDAL, RIGHT, OFFSET BOOM	3315 - 10
2D7	PROPEL PEDAL, RIGHT, STANDARD BOOM	3315 - 8
2D3	PROPEL PILOT CONTROL LEVER	3315 - 4
2J23	PROPEL PILOT CONTROLLER TO PILOT SHUTOFF VALVE PILOT HOSE	3363 - 44
2D3	PROPEL PILOT CONTROLLER, LEVER, AND HANDLE	3315 - 4
2D15	PROPEL PILOT SHUTOFF LEVER HANDLE	3315 - 16
1C5	PROPEL PILOT VALVE	0262 - 6
1C5	PROPEL PILOT VALVE COMPONENTS	0262 - 6
2D15	PROPEL PILOT VALVE SHUTOFF CABLE	3315 - 16
2D15	PROPEL PILOT VALVE SHUTOFF LEVER	3315 - 16
1G7	PROPEL PRESSURE SENSOR	1674 - 2
2J7	PROPEL SPEED SOLENOID	3363 - 28
1B13	PROPEL SPEED SOLENOID TO ROTARY MANIFOLD HOSE	0260 - 2
2H15	PROPEL SPEED SOLENOID VALVE	3362 - 40
1C14	PULLEY, CRANKSHAFT	0401 - 2

ALPHABETICAL INDEX - CONTINUED

GRID		PAGE
1G19	PUMP AND VALVE CONTROLLER	1674 - 14
2F5	PUMP COMPONENTS, HYDRAULIC (PUMPS 1 AND 2)	3361 - 4
2F21	PUMP COMPONENTS, HYDRAULIC (PUMP 3)	3361 - 20
2F23	PUMP COMPONENTS, PILOT	3361 - 28
2F19	PUMP FLANGE COMPONENTS, HYDRAULIC (PUMP 3)	3361 - 19A
2F3	PUMP MOUNTING, HYDRAULIC	3361 - 2
1D1	PUMP, ENGINE OIL	0407 - 4
1D13	PUMP, FUEL INJECTION	0413 - 2
1D13	PUMP, FUEL, INJECTION SYSTEM	0413 - 2
2J7	PUMP, HYDRAULIC TO CONTROL VALVE PILOT HOSE	3363 - 28
1D21	PUMP, WATER	0417 - 2
1G3	PUMP, WINDSHIELD WASHER RESERVOIR	1671 - 2
1C16	PUSH RODS	0402 - 2

R

1E23	RADIATOR	0510 - 2
2A24	RADIATOR COMPARTMENT COVER	1910 - 4
2B5	RADIATOR COMPARTMENT DOOR	1910 - 10
2B11	RADIATOR COMPARTMENT DOOR LATCH	1910 - 16
2A22	RADIATOR COMPARTMENT FRONT PANELS	1910 - 2
2A24	RADIATOR COMPARTMENT REAR PANEL	1910 - 4
2B7	RADIATOR DOOR (TROPICAL)	1910 - 12
1E23	RADIATOR HOSE, LOWER	0510 - 2
1E23	RADIATOR HOSE, UPPER	0510 - 2
1F1	RADIATOR OVERFLOW TANK	0510 - 4
1F1	RADIATOR RESERVE TANK	0510 - 4
1E23	RADIATOR SUPPORT	0510 - 2
2B22	RADIO MOUNTING BRACKETS	2001 - 2
2B22	RADIO, AM/FM	2001 - 2
1I3	REAR CAB WINDOW	1810 - 8
2F11	REAR COVER COMPONENTS, HYDRAULIC PUMP (PUMPS 1 AND 2)	3361 - 12
1E17	REAR MAIN SEAL, ENGINE	0433 - 4
2B1	REAR PANEL, HYDRAULIC PUMP COMPARTMENT	1910 - 6
1K9	REAR TRAY COMPONENTS	1830 - 16
2B24	REAR VIEW MIRROR	2002 - 2
1J21	RECEIVER-DRYER, AIR CONDITIONER	1830 - 4
2F17	REDUCING VALVE, HYDRAULIC PRESSURE (PUMP 3)	3361 - 18
2F17	REGULATING VALVE, HYDRAULIC PUMP FLOW (PUMP 3)	3361 - 18
1G3	RELAY, BATTERY	1671 - 2
1H3	RELAY, ENGINE IGNITION SWITCH	1674 - 22
1G3	RELAY, GLOW PLUG	1671 - 2
1K12	RELAY, HEATER AND AIR CONDITIONER	1830 - 20
1K14	RELAY, HEATER AND AIR CONDITIONER (CONTINUED)	1830 - 22
2E11	RELAY, MODUAL FOR DUAL AUXILIARY CONTROL	3360 - 4
1G3	RELAY, STARTER	1671 - 2
1I11	RELEASE, DOOR, CABLE	1810 - 16
1C3	RELIEF VALVE COMPONENTS, PROPEL MOTOR BRAKE VALVE	0262 - 4
1C1	RELIEF VALVE, PROPEL MOTOR BRAKE VALVE	0262 - 2
2H3	RELIEF VALVES, CONTROL VALVE (OFFSET BOOM)	3362 - 26
2G17	RELIEF VALVES, CONTROL VALVE (STD. BOOM)	3362 - 16
2K17	REPAIR KIT, BOOM CYLINDER	3365 - 4
2F5	REPAIR KIT, HYDRAULIC PUMP (PUMPS 1 AND 2)	3361 - 4
2I5	RESERVOIR TO PUMP LOW PRESSURE HOSES	3363 - 2
2K15	RESERVOIR, HYDRAULIC OIL	3364 - 2
2I9	RESERVOIR, HYDRAULIC OIL, TO HYDRAULIC OIL COOLER LINE	3363 - 6
1G3	RESERVOIR, WINDSHIELD WASHER	1671 - 2
2I9	RETURN LINES, CONTROL VALVE TO RESERVOIR	3363 - 6
1I19	RIGHT COVER, CAB	1810 - 22
2K3	RIGHT PILOT CONTROLLER TO FLOW REGULATING MANIFOLD VALVE PILOT HOSES	3363 - 48
2D9	RIGHT PROPEL PEDAL (OFFSET BOOM)	3315 - 10
2D7	RIGHT PROPEL PEDAL (STANDARD BOOM)	3315 - 8
1I15	RIGHT SIDE CAB CONSOLE	1810 - 18
1I9	RIGHT SIDE CAB WINDOW	1810 - 14
2B3	RIGHT SIDE VIEW MIRROR	1910 - 8
1I9	RIGHT SIDE WINDOW	1810 - 14
1E15	RING GEAR, FLYWHEEL	0433 - 2
1C20	RINGS, PISTON	0403 - 2
1C16	ROCKER ARM	0402 - 2
1D7	ROCKER ARM COVER	0409 - 2
1D7	ROCKER ARM COVER GASKET	0409 - 2
1C20	RODS, CONNECTING	0403 - 2
1B5	ROLLER, LOWER	0130 - 8
1B5	ROLLER, LOWER TRACK CHAIN	0130 - 8
1B1	ROLLER, TRACK CARRIER	0130 - 6
1B3	ROLLER, TRACK CARRIER	0130 - 7A
1B1	ROLLER, UPPER TRACK CHAIN	0130 - 6
1B3	ROLLER, UPPPER TRACK CHAIN	0130 - 7A
2F5	ROTARY KIT, HYDRAULIC PUMP (PUMPS 1 AND 2)	3361 - 4
2F21	ROTARY KIT, HYDRAULIC PUMP (PUMP 3)	3361 - 20
1B19	ROTARY MANIFOLD	0260 - 8
1B19	ROTARY MANIFOLD COMPONENTS	0260 - 8
1B13	ROTARY MANIFOLD COVER AND MOUNTING	0260 - 2
2L12	ROTARY MANIFOLD TO BLADE CYLINDER HYDRAULIC HOSES	3401 - 4
2J5	ROTARY MANIFOLD TO CONTROL VALVE BLADE LIFT HOSES	3363 - 26
1B13	ROTARY MANIFOLD TO HYDRAULIC OIL RESERVOIR DRAIN LINE	0260 - 2
1B13	ROTARY MANIFOLD TO HYDRAULIC OIL RESERVOIR HOSE	0260 - 2
1B21	ROTARY MANIFOLD TO PROPEL MOTOR HOSES	0260 - 10
1B13	ROTARY MANIFOLD TO PROPEL SPEED SOLENOID VALVE PILOT HOSE	0260 - 2

S

2K17	SEAL KIT, BOOM CYLINDER	3365 - 4
1I13	SEAL, CAB TOP HATCH	1810 - 17A
1C18	SEAL, ENGINE FRONT MAIN	0402 - 4
1B9	SEAL, GREASE BATH	0131 - 2
2F11	SEAL, HYDRAULIC PUMP REAR COVER (PUMPS 1 AND 2)	3361 - 12
1E17	SEAL, REAR MAIN	0433 - 4
1J11	SEAT	1821 - 2
1J15	SEAT BASE	1821 - 6
1J15	SEAT BASE BRACKET	1821 - 6
1J17	SEAT BELT	1821 - 8
1J13	SEAT BELT (3.00 INCH)	1821 - 4
1J17	SEAT BELT BRACKET	1821 - 8
1J13	SEAT BELT KIT, (3.00 INCH)	1821 - 4
1J11	SEAT FOAM KIT	1821 - 2
1J11	SEAT LUMBAR KIT	1821 - 2
1J15	SEAT SLIDE TRACK KIT	1821 - 6
1J11	SEAT SUSPENSION	1821 - 2
1C16	SEAT, EXHAUST AND INTAKE VALVE	0402 - 2
1J9	SECONDARY EXIT HANDLE	1810 - 36

ALPHABETICAL INDEX - CONTINUED

GRID		PAGE
1J9	SECONDARY EXIT KIT	1810 - 36
1J9	SECONDARY EXIT LABEL	1810 - 36
2I3	SELECTOR VALVE, CONTROL PATTERN	3362 - 52
1F15	SENDING UNIT, FUEL GAUGE	0560 - 2
1K1	SENSOR, AMBIENT TEMPERATURE	1830 - 8
1G7	SENSOR, COOLANT TEMPERATURE	1674 - 2
1G7	SENSOR, DIG AND SWING PRESSURE	1674 - 2
1G7	SENSOR, PROPEL PRESSURE	1674 - 2
1K1	SENSOR, SOLAR	1830 - 8
1K1	SENSORS, AIR CONDITIONER	1830 - 8
1E19	SET, ENGINE GASKET	0452 - 2
2F7	SHAFT COMPONENTS, HYDRAULIC PUMP (PUMPS 1 AND 2)	3361 - 6
2F7	SHAFT, HYDRAULIC PUMP (PUMPS 1 AND 2)	3361 - 6
1B3	SHAFT, TRACK CARRIER ROLLER	0130 - 7A
1B1	SHAFT, UPPER TRACK CHAIN ROLLER	0130 - 6
2C18	SHANK, HEAVY DUTY BUCKET	3302 - 6
1B7	SHOES, TRACK	0130 - 10
1E23	SHROUD, ENGINE FAN	0510 - 2
2D15	SHUTOFF LEVER, PROPEL PILOT VALVE	3315 - 16
2J19	SHUTOFF VALVE FITTINGS, PILOT CONTROL (STANDARD BOOM)	3363 - 40
2H21	SHUTOFF VALVE, PILOT	3362 - 46
1I17	SIDE COVERS, CAB CONSOLE	1810 - 20
2C16	SIDE CUTTERS, HEAVY DUTY BUCKET	3302 - 4
2H23	SLOW-RETURN VALVE	3362 - 48
2I1	SLOW-RETURN VALVE	3362 - 50
1G21	SOCKET, 12V POWER SUPPLY	1674 - 16
1K1	SOLAR RADIATION SENSOR	1830 - 8
2H17	SOLENOID VALVE	3362 - 42
2H19	SOLENOID VALVE	3362 - 44
2E11	SOLENOID VALVE DUAL CONTROL HARNESS	3360 - 4
2E9	SOLENOID VALVE KIT, 1WAY/2WAY (REPLACEMENT)	3360 - 3A
2E7	SOLENOID VALVE KIT, 1WAY/2WAY, WITHOUT PRESSURE SWITCH	3360 - 2
2E21	SOLENOID VALVE TO PILOT SIGNAL MANIFOLD HOSE	3360 - 14
2E21	SOLENOID VALVE, CONTROL PATTERN SELECTOR KIT	3360 - 14
2H15	SOLENOID VALVE, PROPEL SPEED	3362 - 40
2J7	SOLENOID, PROPEL SPEED	3363 - 28
2B22	SPEAKERS	2001 - 2
1F3	SPEED CONTROL CABLE, ENGINE	0515 - 2
2F13	SPRING ASSEMBLY, HYDRAULIC PUMP CONTROL (PUMPS 1 AND 2)	3361 - 14
2F13	SPRING, HYDRAULIC PUMP CONTROL (PUMPS 1 AND 2)	3361 - 14
1A23	SPRING, TRACK CHAIN TENSION	0130 - 4
1C16	SPRING, VALVE	0402 - 2
2G19	SPRINGS, POPPETS AND PLUGS, CONTROL VALVE (OFFSET BOOM)	3362 - 18
2G9	SPRINGS, POPPETS AND PLUGS, CONTROL VALVE (STD. BOOM)	3362 - 8
1B15	SPROCKET, TRACK CHAIN DRIVE	0260 - 4
2D19	STANDARD ARM, 1.62M (FOR USE WITH STANDARD BOOM)	3340 - 2
2D23	STANDARD ARM, 1.62M (FOR USE WITH STANDARD BOOM)	3340 - 6
2D23	STANDARD ARM, 1.62M (FOR USE WITH OFFSET BOOM)	3340 - 6
2D19	STANDARD ARM, 1.62M (STANDARD BOOM)	3340 - 2
2K19	STANDARD BOOM ARM CYLINDER	3365 - 8
2H11	STANDARD BOOM PILOT CONTROLLER	3362 - 36
2E1	STANDARD BOOM, 3.72M	3344 - 2
2H11	STANDARD BOOM,(STANDARD BOOM)	3362 - 36
1E9	STARTER	0422 - 2
1E9	STARTER GROUND CABLE	0422 - 2
1G3	STARTER RELAY	1671 - 2
1G17	STARTER SWITCH	1674 - 12
1F5	STOP CABLE, ENGINE	0515 - 4
1I13	SUNSHADE, CAB TOP HATCH	1810 - 17A
1F9	SUPPORT, AIR CLEANER	0520 - 4
2H5	SUPPORT, BLADE PILOT CONTROLLER	3362 - 30
2G3	SUPPORT, CONTROL VALVE	3362 - 4
2G5	SUPPORT, FLOW REGULATOR VALVE MANIFOLD (SERIAL NUMBER -011047)	3362 - 6
2G7	SUPPORT, FLOW REGULATOR VALVE MANIFOLD (SERIAL NUMBER 011048-)	3362 - 7A
1F11	SUPPORT, MUFFLER	0530 - 2
1B17	SUPPORT, PROPEL GEARBOX	0260 - 6
1E23	SUPPORT, RADIATOR	0510 - 2
1H13	SUPPORT, SWING BEARING	1740 - 4
2L17	SUPPORT, SWING MOTOR	4360 - 4
1J11	SUSPENSION, SEAT	1821 - 2
1H13	SWING BEARING	1740 - 4
1H15	SWING BEARING MAINTENANCE COVER	1740 - 6
1H13	SWING BEARING SUPPORT	1740 - 4
2L15	SWING GEARBOX	4360 - 2
2L15	SWING GEARBOX COMPONENTS	4360 - 2
2L19	SWING MOTOR	4367 - 2
2L15	SWING MOTOR AND GEARBOX	4360 - 2
2L19	SWING MOTOR COMPONENTS	4367 - 2
2L17	SWING MOTOR SUPPORT	4360 - 4
2J13	SWING MOTOR TO CONTROL VALVE PILOT HOSES	3363 - 34
1G17	SWITCH PANEL, CAB	1674 - 12
1H3	SWITCH RELAY, ENGINE IGNITION	1674 - 22
1H1	SWITCH, ENGINE OVERHEAT WARNING	1674 - 20
2E13	SWITCH, FOOT, AUXILIARY ELECTRIC	3360 - 6
1K12	SWITCH, HEATER AND AIR CONDITIONER	1830 - 20
1K14	SWITCH, HEATER AND AIR CONDITIONER (CONTINUED)	1830 - 22
1G17	SWITCH, IGNITION	1674 - 12
1G17	SWITCH, STARTER	1674 - 12
1K11	SWITCH, TOGGLE, AIR CIRCULATING FAN	1830 - 18
1K11	SWITCH, TOGGLE, DEFROSTER FAN	1830 - 18

T

1F17	TANK MOUNTING, FUEL	0560 - 4
1F1	TANK, COOLANT RESERVE	0510 - 4
1F15	TANK, FUEL	0560 - 2
2K15	TANK, OIL, HYDRAULIC	3364 - 2
1F1	TANK, RADIATOR RESERVE	0510 - 4
1C16	TAPPET, VALVE	0402 - 2
2C20	TEETH, ESCO	3302 - 8
2C18	TEETH, HEAVY DUTY BUCKET	3302 - 6
1G7	TEMPERATURE SENSOR, COOLANT	1674 - 2
1A23	TENSION ADJUSTER, TRACK CHAIN	0130 - 4
1K16	TENSIONER, AIR CONDITIONING COMPRESSOR DRIVE BELT	1832 - 2
1E13	TENSIONER, FAN BELT	0429 - 2
1D23	THERMOSTAT AND HOUSING	0418 - 2
1D23	THERMOSTAT HOUSING GASKET	0418 - 2
1C18	TIMING GEAR CASE	0402 - 4
1K11	TOGGLE SWITCH, AIR CIRCULATING FAN	1830 - 18
1K11	TOGGLE SWITCH, DEFROSTER FAN	1830 - 18
2B17	TOOL BOX	1910 - 22
2C18	TOOTH, BUCKET, HEAVY DUTY	3302 - 6
2C20	TOOTH, ESCO	3302 - 8
2A24	TOP COVER, COOLING PACKAGE COMPARTMENT	1910 - 4

ALPHABETICAL INDEX - CONTINUED

GRID		PAGE
2B15	TOP COVER, ENGINE COMPARTMENT	1910 - 20
2A24	TOP COVER, RADIATOR COMPARTMENT	1910 - 4
1B1	TRACK CARRIER ROLLER	0130 - 6
1B3	TRACK CARRIER ROLLER	0130 - 7A
1B3	TRACK CARRIER ROLLER SHAFT	0130 - 7A
1B7	TRACK CHAIN	0130 - 10
1B15	TRACK CHAIN DRIVE SPROCKET	0260 - 4
1B7	TRACK CHAIN LINKS AND SHOES	0130 - 10
1B5	TRACK CHAIN LOWER ROLLER	0130 - 8
1B7	TRACK CHAIN PIN	0130 - 10
1A23	TRACK CHAIN TENSION ADJUSTER	0130 - 4
1A23	TRACK CHAIN TENSION CYLINDER	0130 - 4
1A23	TRACK CHAIN TENSION SPRING	0130 - 4
1B9	TRACK FRAME	0131 - 2
1B7	TRACK LINK	0130 - 10
1B7	TRACK SHOES	0130 - 10
1K12	TRANSISTOR, HEATER AND AIR CONDITIONER	1830 - 20
1K14	TRANSISTOR, HEATER AND AIR CONDITIONER (CONTINUED)	1830 - 22
1J3	TRAY, AIR CONDITIONING UNIT	1810 - 30
1G23	TWELVE VOLT CONVERTER	1674 - 18
1G23	TWELVE VOLT POWER SUPPLY CONVERTER	1674 - 18
1G21	TWELVE VOLT POWER SUPPLY SOCKET	1674 - 16

U

1E23	UPPER RADIATOR HOSE	0510 - 2
1B1	UPPER TRACK CHAIN ROLLER	0130 - 6
1B3	UPPER TRACK CHAIN ROLLER	0130 - 7A
1B1	UPPER TRACK CHAIN ROLLER BUSHINGS	0130 - 6
1B1	UPPER TRACK CHAIN ROLLER SHAFT	0130 - 6

V

1D3	VACUUM LINES, ENGINE	0407 - 6
1C16	VALVE ACTUATING SYSTEM	0402 - 2
2D1	VALVE COMPONENTS, PILOT CONTROLLER (DIG AND SWING)	3315 - 3A
1C3	VALVE COMPONENTS, RELIEF, PROPEL MOTORQQ BRAKE VALVE	0262 - 4
2E9	VALVE KIT,SOLENOID, 1WAY/2WAY (REPLACEMENT)	3360 - 3A
2E7	VALVE KIT,SOLENOID, 1WAY/2WAY, WITHOUT PRESSURE SWITCH	3360 - 2
2G5	VALVE MANIFOLD, FLOW REGULATOR (SERIAL NUMBER -011047)	3362 - 6
2G7	VALVE MANIFOLD, FLOW REGULATOR (SERIAL NUMBER 011048-)	3362 - 7A
2J9	VALVE REAR, CONTROL, TO FLOW REGULATOR VALVE PILOT HOSES	3363 - 30
2H17	VALVE SOLENOID	3362 - 42
1C16	VALVE SPRING	0402 - 2
1C16	VALVE TAPPET	0402 - 2
2E19	VALVE, AUXILARY HYDRAULIC BALL	3360 - 12
2G1	VALVE, CONTROL	3362 - 2
2K7	VALVE, CONTROL TO BLADE PILOT CONTROLLER PILOT HOSES	3363 - 52
2J17	VALVE, CONTROL, (PILOT LINES FRONT-REAR)	3363 - 38
2H3	VALVE, CONTROL, RELIEF VALVES (OFFSET BOOM)	3362 - 26
2G17	VALVE, CONTROL, RELIEF VALVES (STD. BOOM)	3362 - 16
2G19	VALVE, CONTROL, SPRINGS, POPPETS AND PLUGS (OFFSET BOOM)	3362 - 18
2G9	VALVE, CONTROL, SPRINGS, POPPETS AND PLUGS (STD. BOOM)	3362 - 8
2G3	VALVE, CONTROL, SUPPORT	3362 - 4
2J11	VALVE, CONTROL, TO FLOW REGULATOR VALVE PILOT HOSES	3363 - 32
2J7	VALVE, CONTROL, TO HYDRAULIC PUMP PILOT HOSE	3363 - 28
2J13	VALVE, CONTROL, TO SWING MOTOR PILOT HOSES	3363 - 34
2G23	VALVE, CONTROL, 3-SPOOL (OFFSET BOOM)	3362 - 22
2G13	VALVE, CONTROL, 3-SPOOL (STD. BOOM)	3362 - 12
2G21	VALVE, CONTROL, 5-SPOOL (OFFSET BOOM)	3362 - 20
2G11	VALVE, CONTROL, 5-SPOOL (STD. BOOM)	3362 - 10
2H1	VALVE, CONTROL, 6-SPOOL (OFFSET BOOM)	3362 - 24
2G15	VALVE, CONTROL, 6-SPOOL (STD. BOOM)	3362 - 14
1C16	VALVE, EXHAUST	0402 - 2
2H13	VALVE, FLOW CONTROL	3362 - 38
2J9	VALVE, FLOW REGULATOR MANIFOLD TO CONTROL VALVE PILOT HOSES	3363 - 30
2J11	VALVE, FLOW REGULATOR, TO CONTROL VALVE PILOT HOSES	3363 - 32
1E7	VALVE, FUEL OVERFLOW	0421 - 2
2F17	VALVE, HYDRAULIC PRESSURE REDUCING (PUMP 3)	3361 - 18
2F17	VALVE, HYDRAULIC PUMP FLOW REGULATING (PUMP 3)	3361 - 18
1C16	VALVE, INTAKE	0402 - 2
2E23	VALVE, MECHANICAL PATTERN CHANGER (SERIAL NO. -011047)	3360 - 15A
2F1	VALVE, MECHANICAL PATTERN CHANGER (SERIAL NO. 011048-)	3360 - 15C
2K5	VALVE, PILOT CONTROL SHUTOFF TO FLOW REGULATING MANIFOLD VALVE PILOT HOSE	3363 - 50
2D17	VALVE, PILOT CONTROL, FOOT CONTROL (FOOT PEDAL CONTROL KIT)	3315 - 18
2H21	VALVE, PILOT SHUTOFF	3362 - 46
2H7	VALVE, PILOT, COMPONENTS (BLADE)	3362 - 32
1C1	VALVE, PROPEL MOTOR BRAKE	0262 - 2
1C5	VALVE, PROPEL PILOT	0262 - 6
2D3	VALVE, PROPEL PILOT CONTROL	3315 - 4
2H15	VALVE, PROPEL SPEED SOLENOID	3362 - 40
1C1	VALVE, RELIEF, PROPEL MOTOR BRAKE VALVE	0262 - 2
2H23	VALVE, SLOW-RETURN	3362 - 48
2I1	VALVE, SLOW-RETURN	3362 - 50
2H19	VALVE, SOLENOID	3362 - 44
2E21	VALVE, SOLENOID (CONTROL PATTERN SELECTOR KIT)	3360 - 14
1J7	VANDAL COVER KIT	1810 - 34
1J7	VANDAL GUARD KIT	1810 - 34
1J21	VAPOR CONDENSOR	1830 - 4
1D5	VENTILATING SYSTEM, ENGINE	0408 - 2

W

1H1	WARNING SWITCH, ENGINE OVERHEAT	1674 - 20
1E1	WATER LINE, CYLINDER BLOCK TO ENGINE WATER PUMP	0418 - 4
1E1	WATER LINES, ENGINE	0418 - 4
1D21	WATER PUMP	0417 - 2
1I13	WEATHERSTRIP, CAB TOP HATCH	1810 - 17A
1H17	WEIGHT	1749 - 2
1J7	WINDOW GUARDS	1810 - 34
1I7	WINDOW, CAB FRONT	1810 - 12
1I13	WINDOW, CAB TOP HATCH	1810 - 17A
1I3	WINDOW, LEFT SIDE CAB	1810 - 8
1I3	WINDOW, REAR CAB	1810 - 8

ALPHABETICAL INDEX - CONTINUED

GRID		PAGE
1I9	WINDOW, RIGHT SIDE	1810 - 14
1I7	WINDSHIELD	1810 - 12
1G3	WINDSHIELD WASHER	1671 - 2
1I1	WINDSHIELD WIPER	1810 - 6
1I1	WIPER ARM	1810 - 6
1I1	WIPER BLADE	1810 - 6
1I1	WIPER MOTOR	1810 - 6
1K11	WIRE HARNESS, DEFROSTER FAN	1830 - 18
2E13	WIRE HARNESS, FOOT SWITCH	3360 - 6
1G5	WIRING HARNESS, ALTERNATOR	1672 - 2
1G11	WIRING HARNESS, BOOM LIGHT (OFFSET BOOM)	1674 - 6
1G9	WIRING HARNESS, BOOM LIGHT (STD. BOOM)	1674 - 4
1G17	WIRING HARNESS, CAB	1674 - 12
1G19	WIRING HARNESS, CAB	1674 - 14
1G19	WIRING HARNESS, CONTROLLER	1674 - 14
1D9	WIRING HARNESS, GLOW PLUG	0409 - 4
1G7	WIRING HARNESS, MACHINE	1674 - 2
2C1	WIRING HARNESS, PROPEL ALARM	2004 - 2
1G21	WIRING HARNESS, 12V POWER SUPPLY	1674 - 16

Y

1A21	YOKE, FRONT TRACK CHAIN IDLER	0130 - 2

MEMORANDA

FRONT TRACK CHAIN IDLER

TP61325 -UN-16OCT98

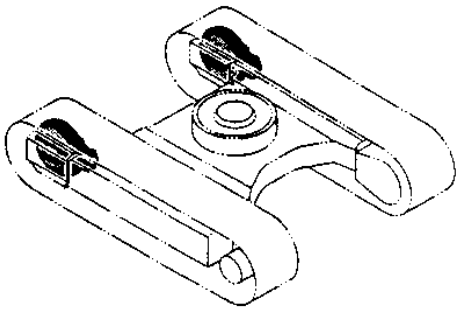

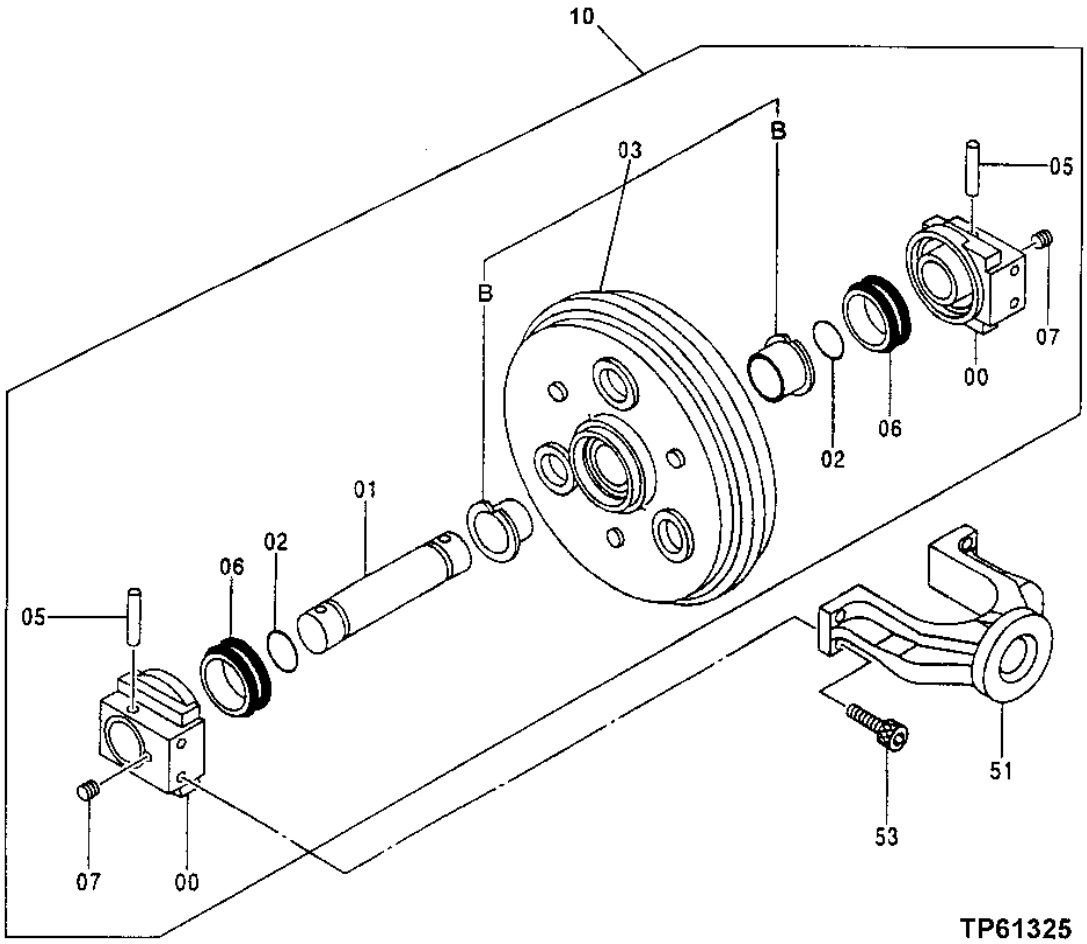

FRONT TRACK CHAIN IDLER

KEY	PART NO.	PART NAME	QTY	SERIAL NO.	REMARKS
0	2039920	PILLOW BLOCK	2		
1	3035828	AXLE	1		
2	CH11436	O-RING	2		
3	.....	IDLER SPROCKET	1		(9154167 NO LONGER AVAILABLE)
3B	3076985	BUSHING	2		
5	4135606	PIN	2		
6	TH110489	SEAL KIT	2		
7	94-2011	FITTING PLUG	2		
10	AT183365	TRACK IDLER	2		(9154166 NOT AVAILABLE FOR SERVICE)
51	2039919	YOKE	1		
53	19M8531	SCREW	4		M14 X 35

TRACK CHAIN TENSION ADJUSTER

TP61326 -UN-08OCT98

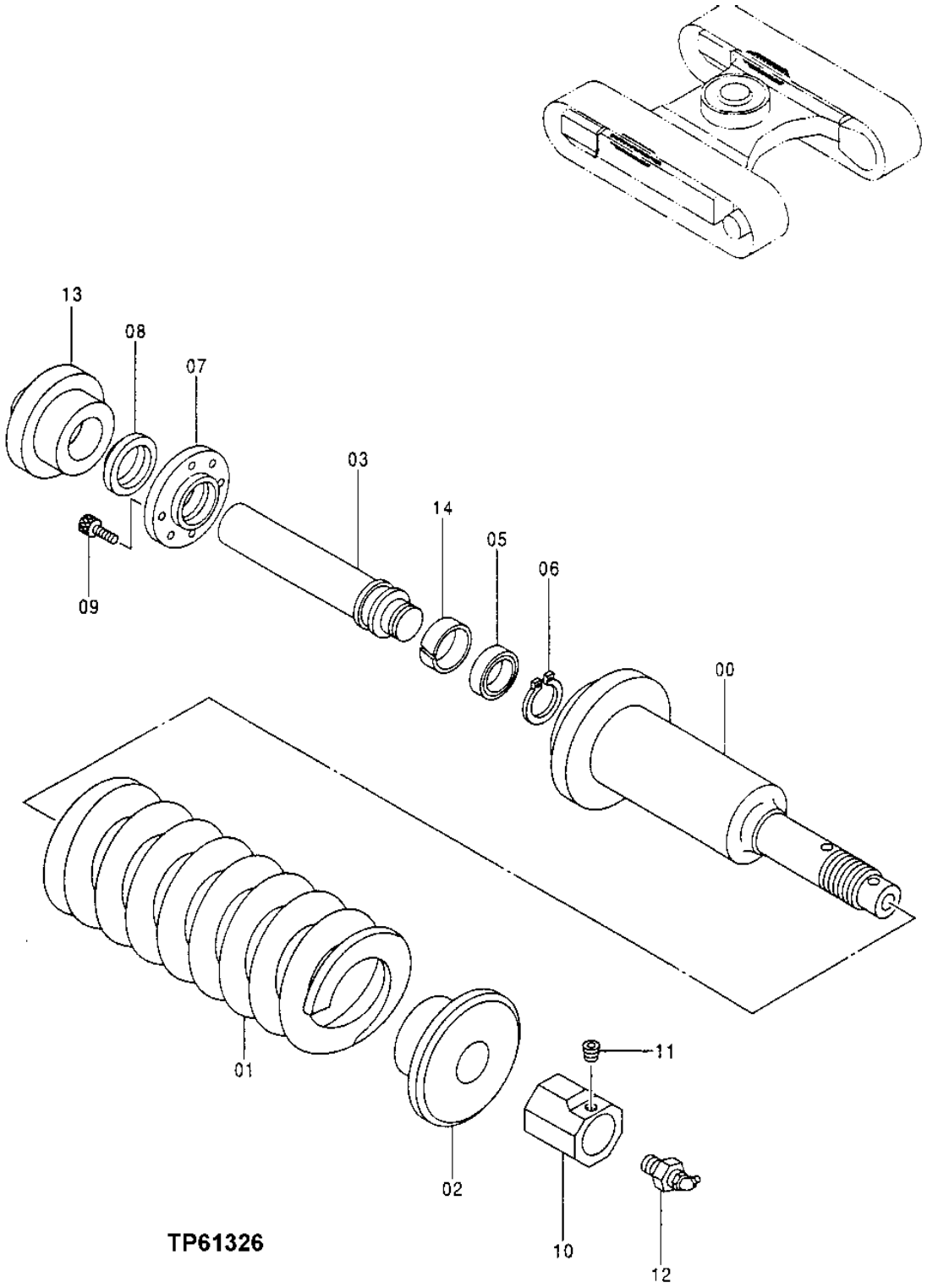

TRACK CHAIN TENSION ADJUSTER

KEY	PART NO.	PART NAME	QTY	SERIAL NO.	REMARKS
0	2041073	CYLINDER	1		
1	3083636	SPRING	1		
2	4361838	FLANGE	1		
3	3076332	ROD	1		
5	4112336	PACKING	1		
6	40M7046	SNAP RING	1		
7	3076340	FLANGE	1		
8	4371835	SEAL	1		
9	19M8446	SCREW	4		M8 X 20
10	4360252	NUT	1		
11	4248106	FITTING PLUG	1		
12	4293255	VALVE	1		
13	4372152	HOLDER	1		
14	4389125	RING	1		

UPPER TRACK CHAIN ROLLER

T157075 -UN-31OCT02

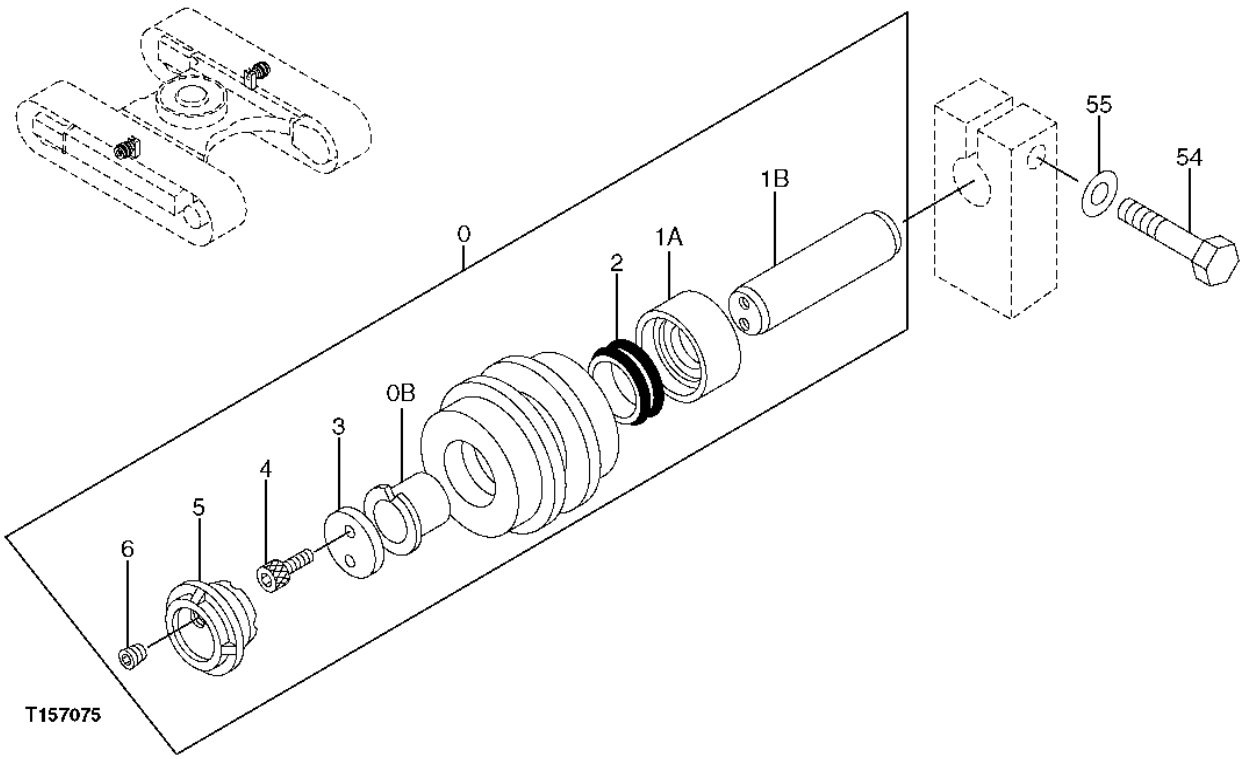

UPPER TRACK CHAIN ROLLER

KEY	PART NO.	PART NAME	QTY	SERIAL NO.	REMARKS
0	9153288	ROLLER	1		(SUB AP34340) (SUB FOR 9153329)
0B	4175763	BUSHING	1		
1A	4372840	BUSHING	1		
1B	4372847	SHAFT	1		
2	TH100452	SEAL	1		
3	4175765	CAP	1		
4	TH100454	SCREW	2		
5	3076620	COVER	1		
6	94-2010	FITTING PLUG	1		
54	THJ901470	BOLT	2		
55	J222014	WASHER	2		

REPLACEMENT UPPER TRACK CHAIN ROLLER

T138279 -UN-16FEB01

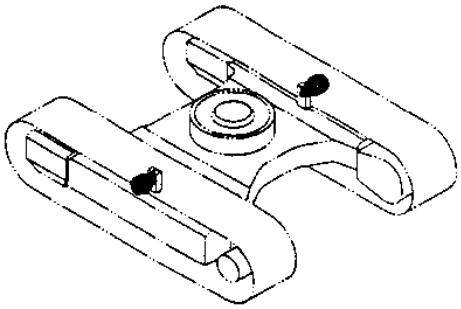

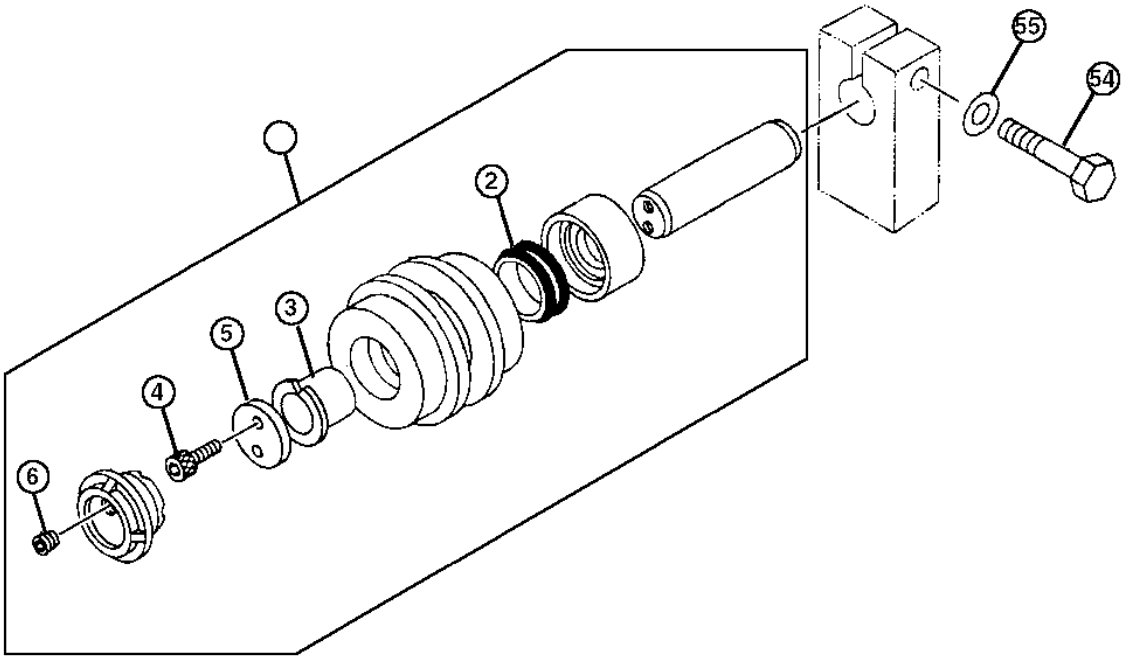

T138279

REPLACEMENT UPPER TRACK CHAIN ROLLER

KEY	PART NO.	PART NAME	QTY	SERIAL NO.	REMARKS
0	AP34340	ROLLER	2		(ONE EACH SIDE OF UNIT)
2	P66385	SEAL	1		
3	P66384	BUSHING	2		
4	P66387	BOLT	2		
5	P66386	WASHER	2		
6	P66388	PLUG	1		
54	P65872	BOLT	2		(ONE EACH SIDE OF UNIT)
55	J222014	WASHER	2		(SUB FOR AT200011) (ONE EACH SIDE OF UNIT)

LOWER ROLLER

T157076 -UN-31OCT02

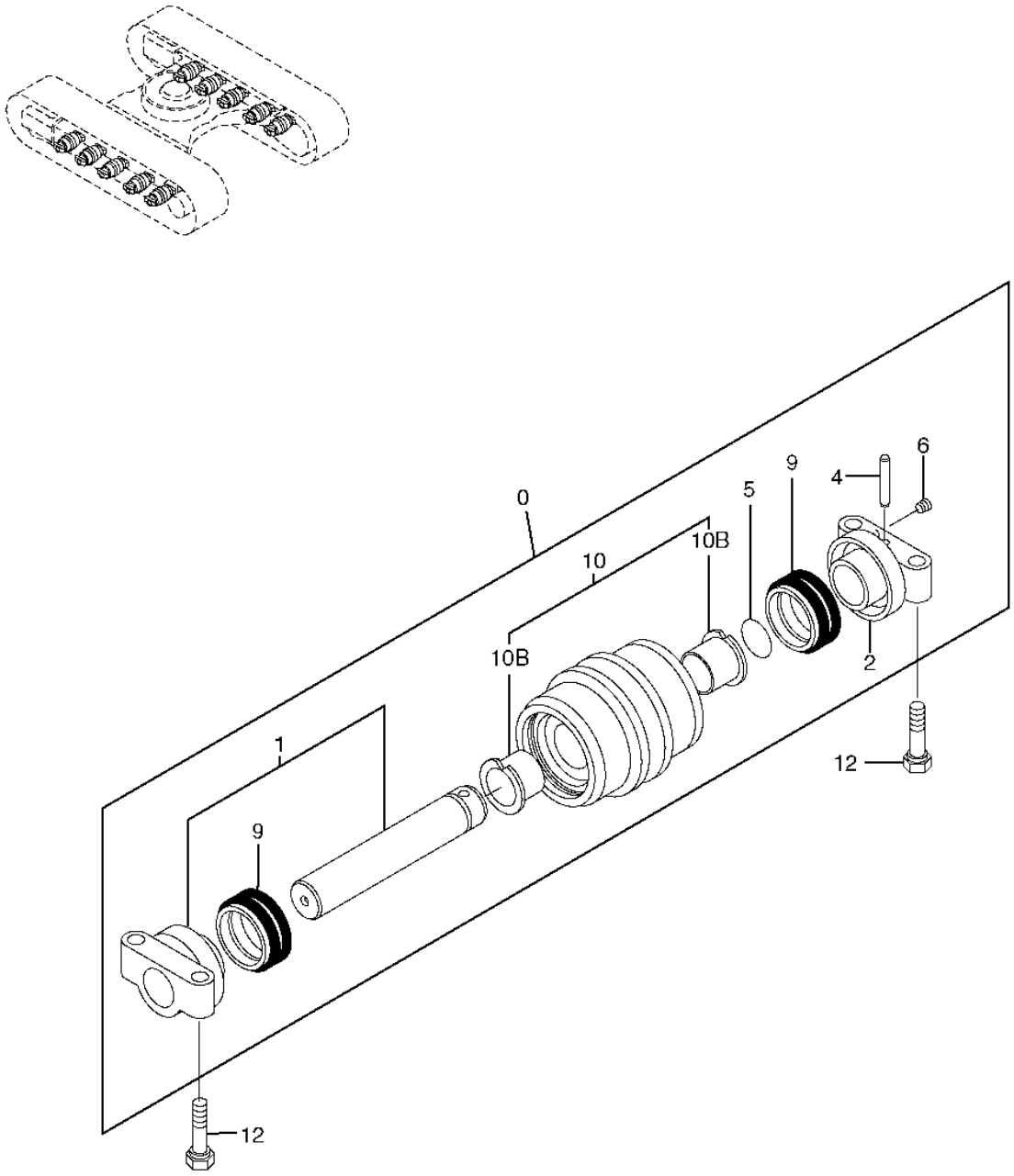

T157076

LOWER ROLLER

KEY	PART NO.	PART NAME	QTY	SERIAL NO.	REMARKS
0	9182805	ROLLER	1		
1	9182806	AXLE	1		(ALSO ORDER 2044179) (SUB FOR 9182806)
	2044179	LOCKING COLLAR	1		
2	2039689	BUSHING	1		
4	4197297	PIN	1		
5	T32587	O-RING	1		
6	94-2010	FITTING PLUG	1		
9	4177260	SEAL	2		
10	.....	ROLLER	1		(9153151 NO LONGER AVAILABLE)
10B	3079540	BUSHING	2		
12	4167785	BOLT	40		

TRACK CHAIN LINKS AND SHOES

T160750 -UN-31OCT02

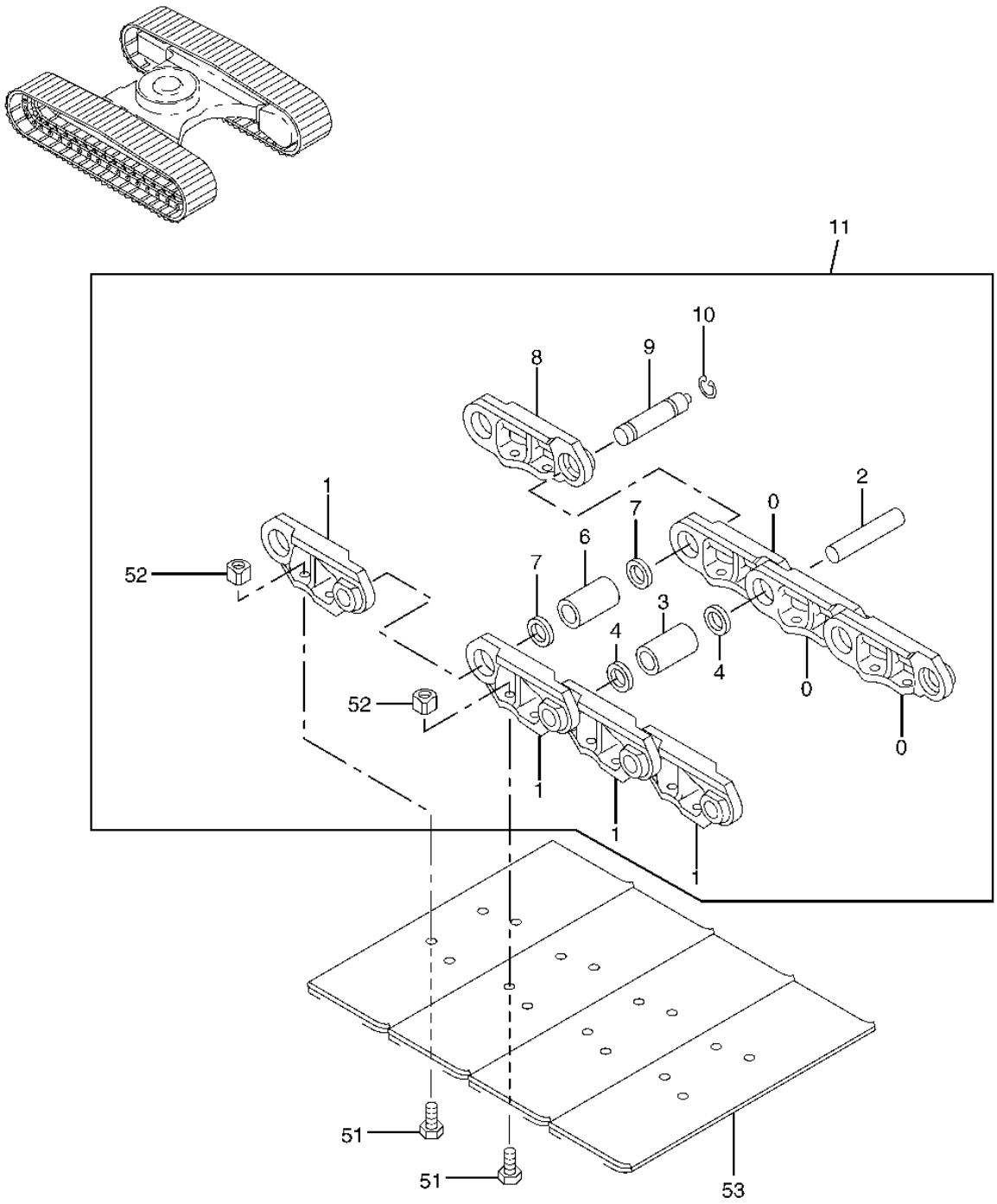

T160750

TRACK CHAIN LINKS AND SHOES

KEY	PART NO.	PART NAME	QTY	SERIAL NO.	REMARKS
0	1023762	STRUTTED LINK-RH	37		
1	1023763	STRUTTED LINK-LH	38		
2	4378885	PIN	37		
3	3077925	BUSHING	37		
4	4453704	SEAL	74		
6	3077926	BUSHING	1		
7	4378888	BUSHING	2		
8	4382097	MASTER TRACK LINK-RH	1		
9	4382098	PIN	1		
10	4382100	RING	1		
11	9156478	TRACK LINK	1		
51	4378884	BOLT	152		
52	4262587	NUT	152		
53	2041367	TRIPLE BAR SHOE	38		(GROUSER)
	4405320	SINGLE BAR SHOE	38		(RUBBER PAD)

TRACK FRAME (STANDARD TRACK WITH BLADE)

T197227 -UN-13JAN04

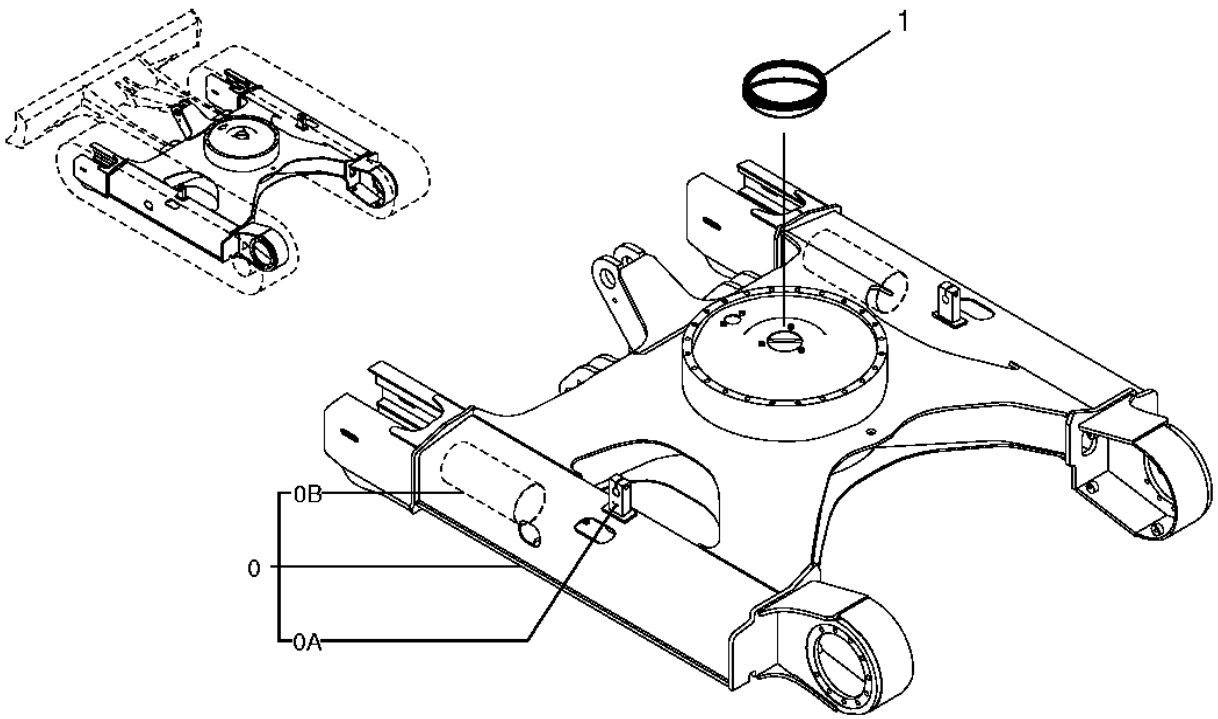

T197227

TRACK FRAME (STANDARD TRACK WITH BLADE)

KEY	PART NO.	PART NAME	QTY	SERIAL NO.	REMARKS
0	6019728	FRAME	1		
0A	4373800	BRACKET	2		
0B	4373810	PIPE	2		
1	4609649	SEAL	1		

ROTARY MANIFOLD COVER AND MOUNTING

T160680 -UN-31OCT02

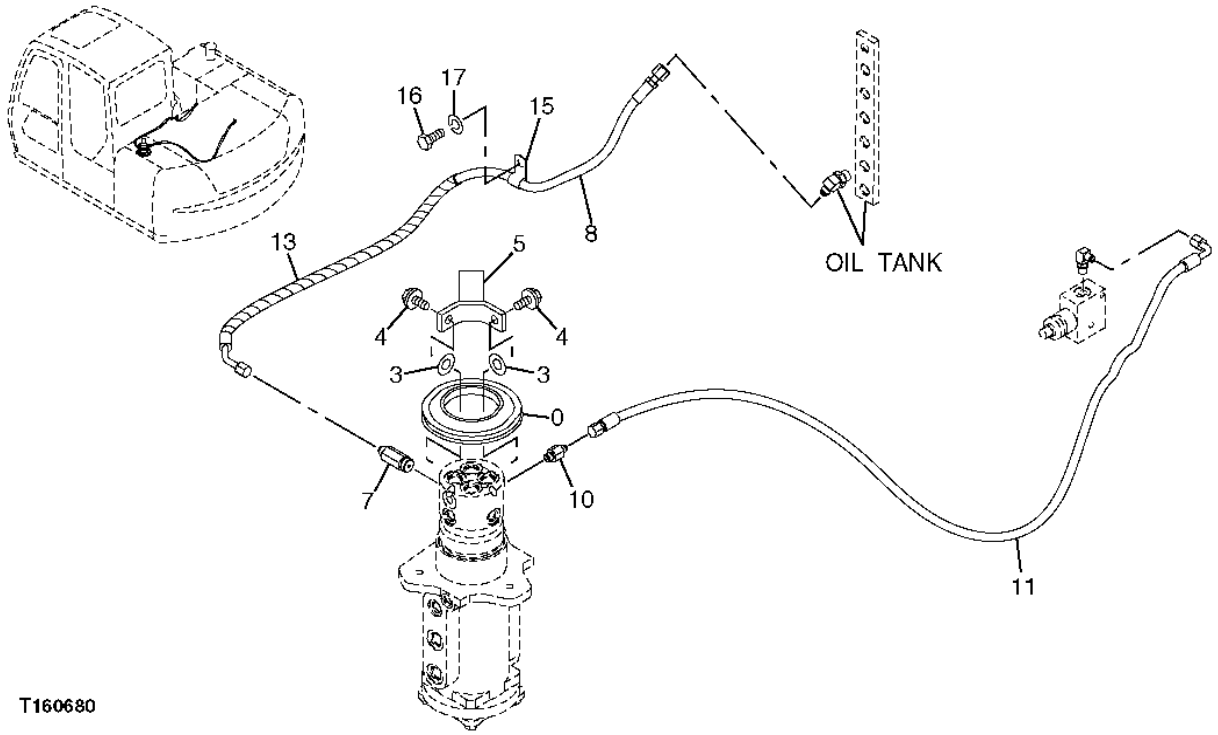

ROTARY MANIFOLD COVER AND MOUNTING

KEY	PART NO.	PART NAME	QTY	SERIAL NO.	REMARKS
0	4425270	COVER	1		
3	24M7345	WASHER	2		13.500 X 24 X 2.500 MM (0.531" X 0.945" X 0.098")
4	19M8011	CAP SCREW	2		M12 X 30
	12M7067	LOCK WASHER	2		12 MM (0.472")
5	9755255	STOP	1		
7	4231142	ADAPTER	1		
8	4459665	HYDRAULIC HOSE - FABRICATE	1		
10	4209776	ADAPTER	1		
	M800650	PACKING	1		
11	4450110	HYDRAULIC HOSE - FABRICATE	1		
13	4327293	HOSE GUARD	1		
15	4190253	CLIP	1		
16	19M7938	CAP SCREW	1		M10 X 20, (SUB FOR J901020)
17	12M7066	LOCK WASHER	1		10 MM (0.394")

PROPEL GEARBOX COMPONENTS

T157073 -UN-30OCT02

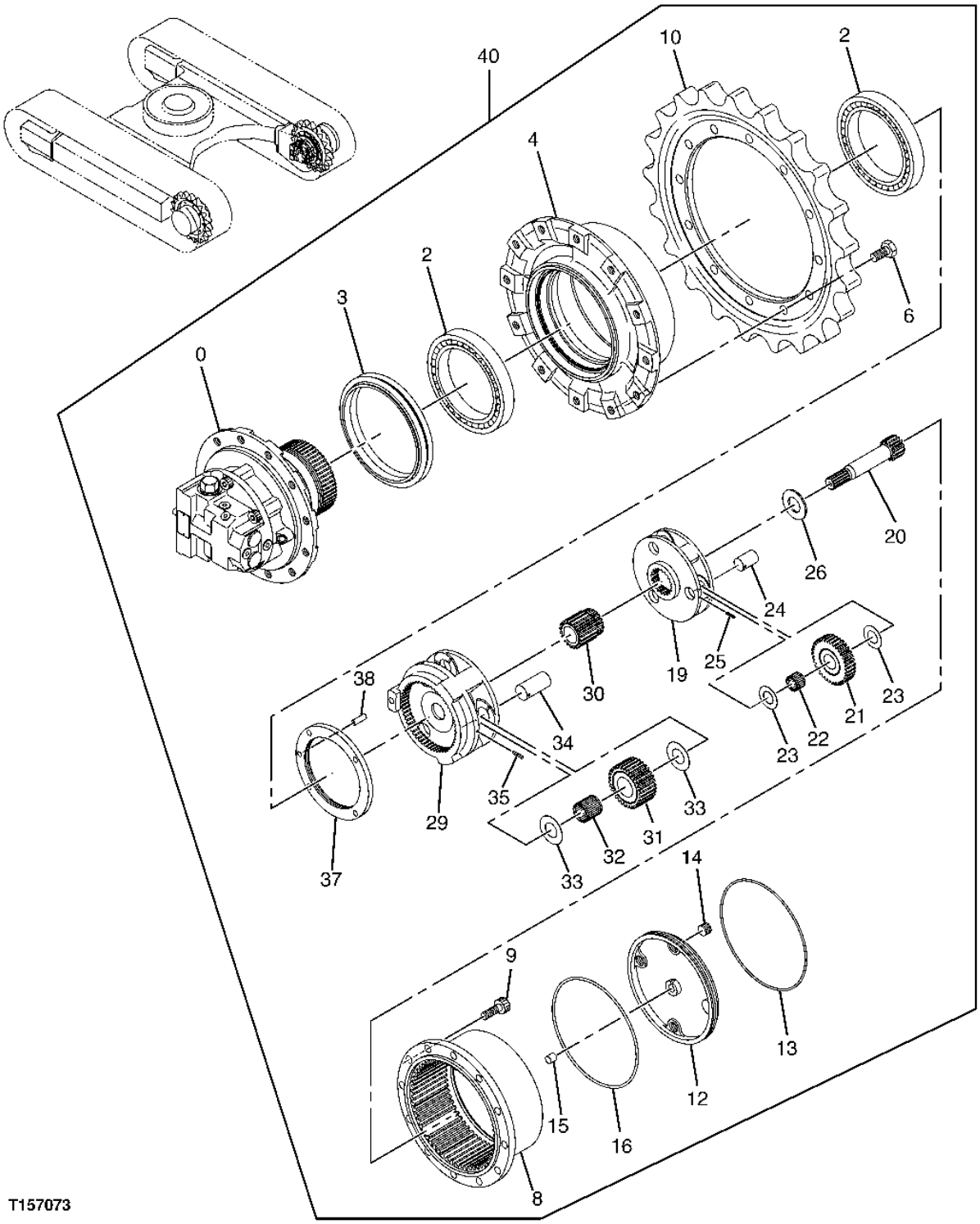

PROPEL GEARBOX COMPONENTS

KEY	PART NO.	PART NAME	QTY	SERIAL NO.	REMARKS
0	9204752	HYDRAULIC MOTOR	1		
2	4468674	BEARING	2		
3	4082631	SEAL	1		
4	4468675	DRUM	1		
6	19M8035	CAP SCREW	12		M16 X 35
8	4468676	GEAR	1		
9	M341440	SCREW	12		
10	1024217	CHAIN SPROCKET	1		
12	4468678	COVER	1		
13	4392320	RING	1		
14	94-2013	FITTING PLUG	3		
15	4468679	PIN FASTENER	1		
16	4407802	O-RING	1		
19	4468680	PLANET PINION CARRIER	1		
20	4468681	SHAFT	1		
21	4468682	GEAR	3		
22	4392321	NEEDLE BEARING	3		
23	4392322	WEAR PLATE	6		
24	4468683	PIN FASTENER	3		
25	34M7027	SPRING PIN	3		
26	4392324	WEAR PLATE	1		
29	4468684	PLANET PINION CARRIER	1		
30	4468685	GEAR	1		
31	4468686	GEAR	3		
32	4468687	BEARING	3		
33	4392326	WEAR PLATE	6		
34	4468688	PIN FASTENER	3		
35	34M7102	SPRING PIN	3		
37	3080619	NUT	1		
38	J401032	DOWEL PIN	1		
40	4448342	TRANSMISSION	1		

PROPEL GEARBOX MOUNTING

T157074 -UN-30OCT02

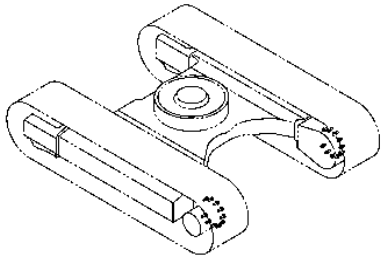

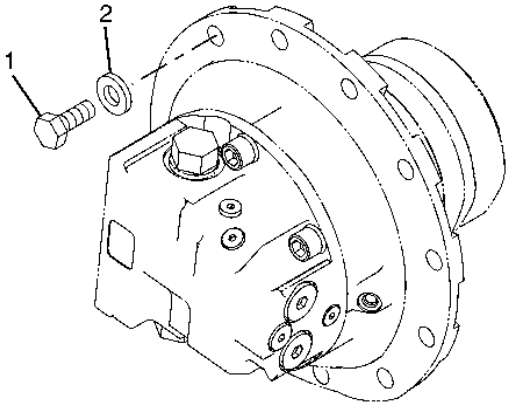

T157074

PROPEL GEARBOX MOUNTING

KEY	PART NO.	PART NAME	QTY	SERIAL NO.	REMARKS
1	24M7338	WASHER	10		17 X 30 X 3 MM (0.669" X 1.181" X 0.118")
2	19M8445	SCREW	10		M16 X 45

ROTARY MANIFOLD

T160692 -UN-05NOV02

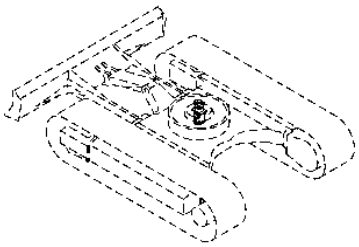

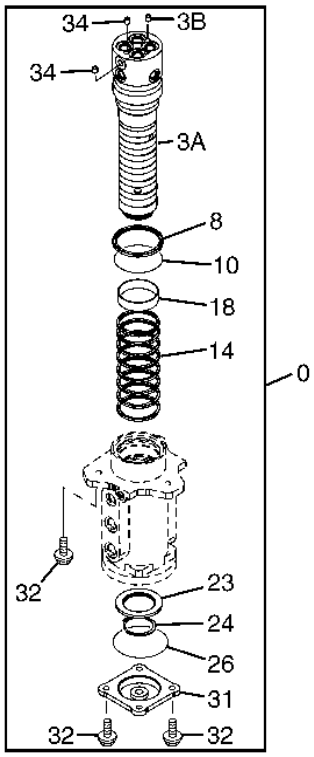

T160692

ROTARY MANIFOLD

KEY	PART NO.	PART NAME	QTY	SERIAL NO.	REMARKS
0	9196167	MANIFOLD	1		(SUB FOR 9193338)
3A	1026419	SPINDLE	1		
3B	4239611	PLUG	1		
8	4410445	SEAL	1		
10	4410446	O-RING	1		
14	4406165	SEAL	8		
18	4410066	BUSHING	1		
23	3070250	RING	1		
24	40M7048	SNAP RING	1		
26	CH16109	PACKING	1		
31	2034607	COVER	1		
32	19M7662	CAP SCREW	7		M10 X 30
	12M7066	LOCK WASHER	7		10 MM (0.394")
34	94-2011	FITTING PLUG	2		

PROPEL HOSES (ROTARY MANIFOLD TO PROPEL MOTOR)

T157079 -UN-05NOV02

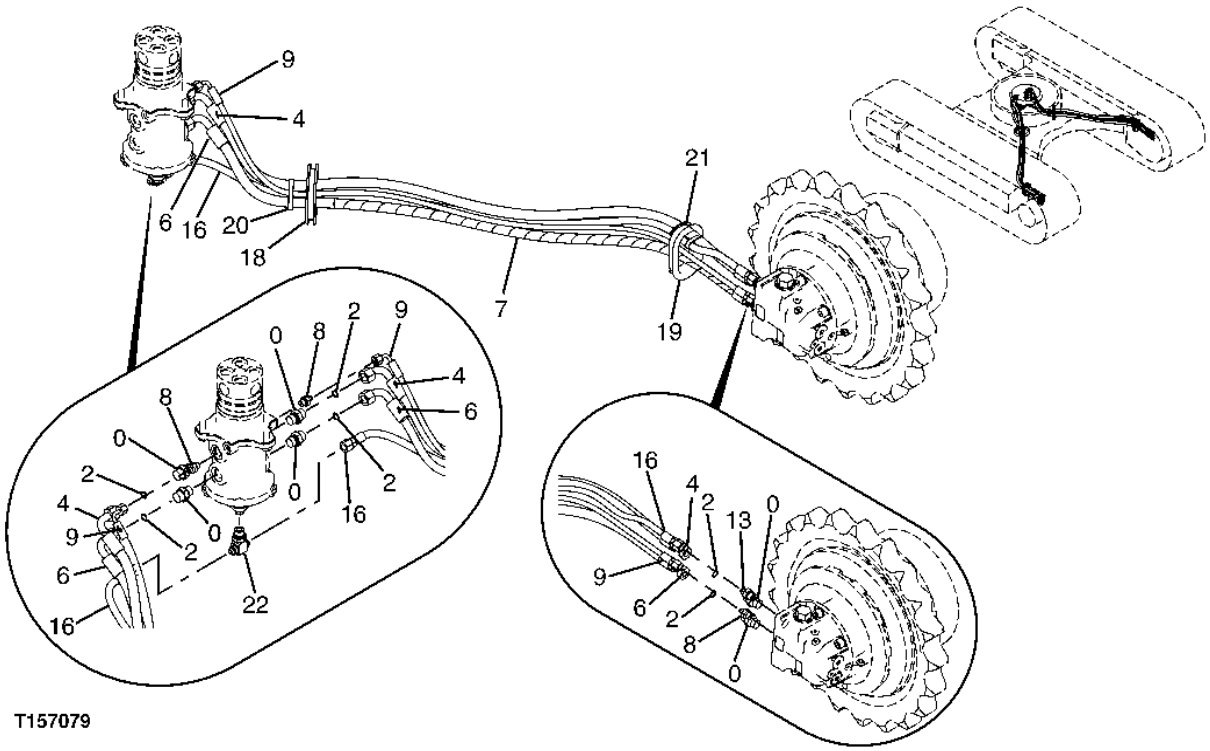

PROPEL HOSES (ROTARY MANIFOLD TO PROPEL MOTOR)

KEY	PART NO.	PART NAME	QTY	SERIAL NO.	REMARKS
0	A853144	ADAPTER	4		
	4506418	O-RING	1		
2	T77857	O-RING	4		
4	AP36078	HYDRAULIC HOSE - FABRICATE	1		
6	4463469	HYDRAULIC HOSE - FABRICATE	1		
7	4327294	HOSE GUARD	2		
8	A852122	ADAPTER	2		
	M800650	PACKING	1		
9	4455438	HYDRAULIC HOSE - FABRICATE	1		
13	A852133	ADAPTER	1		
	CH11570	O-RING	1		
16	4415081	HYDRAULIC HOSE - FABRICATE	1		
18	4275015	BUSHING	1		
19	4275016	BUSHING	1		
20	H77698	TIE BAND	1		
21	H77698	TIE BAND	1		
22	A852543	TEE FITTING	1		
	4506418	O-RING	1		

PROPEL MOTOR COVER

TP55969 -UN-04OCT99

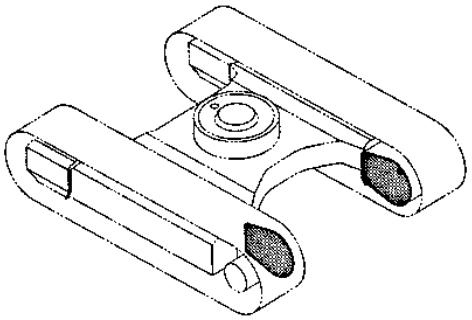

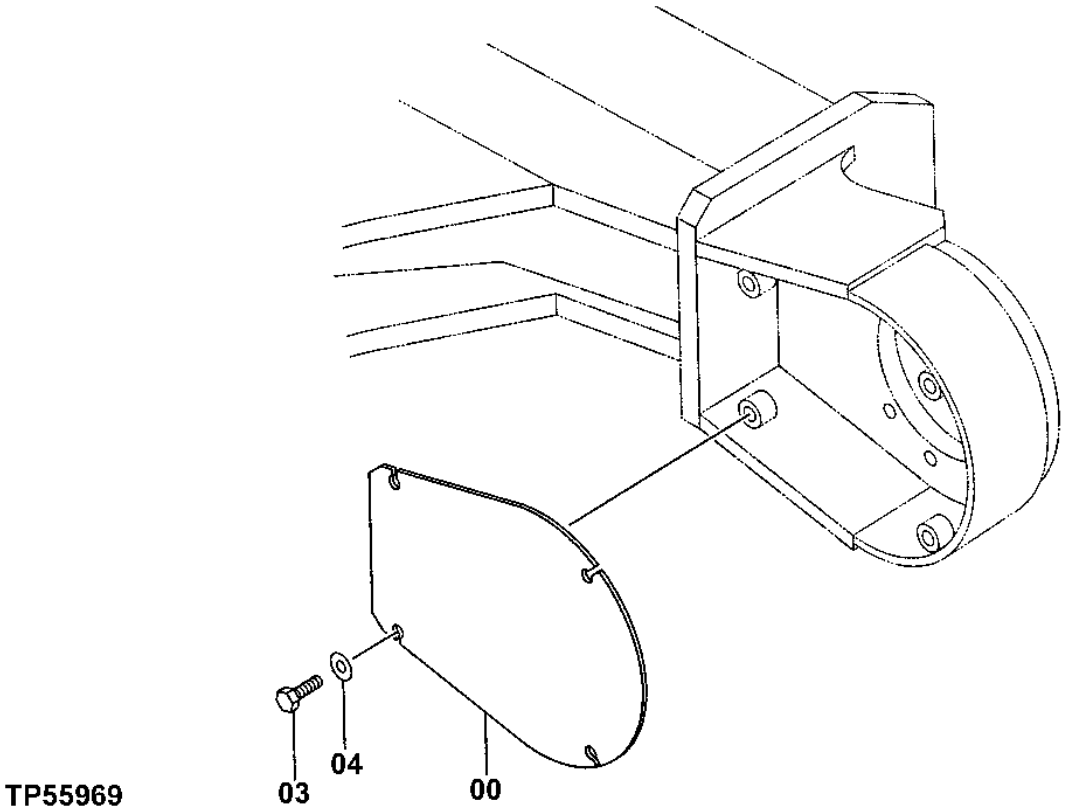

PROPEL MOTOR COVER

KEY	PART NO.	PART NAME	QTY	SERIAL NO.	REMARKS
0	4373812	COVER	2		
3	19M7877	CAP SCREW	8		M14 X 30
4	J222014	WASHER	8		

PROPEL MOTOR BRAKE VALVE

T157173 -UN-30OCT02

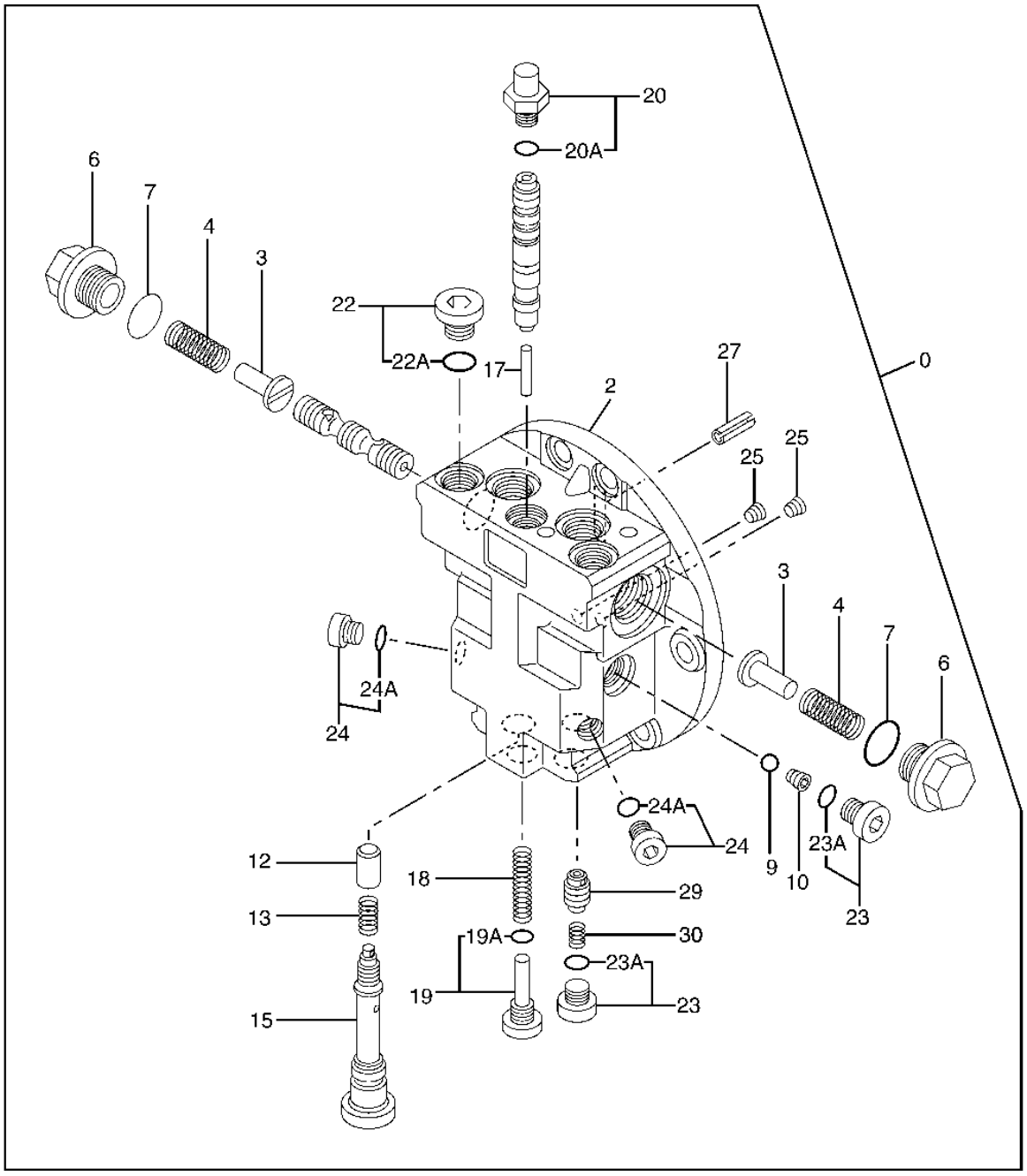

T157173

PROPEL MOTOR BRAKE VALVE

KEY	PART NO.	PART NAME	QTY	SERIAL NO.	REMARKS
0	9204704	FLOW CONTROL HYD. VALVE	1		
2	.....	CASE	1		(8079477 NOT AVAILABLE FOR SERVICE)
3	4434407	STOP	2		
4	4434408	SPRING	2		
6	4434406	PIPE PLUG	2		
7	4506424	O-RING	2		
9	4509493	BALL	1		
10	4193400	PLUG	1		
12	4443372	POPPET	2		
13	4434410	SPRING	2		
15	9192656	PRESSURE RELIEF VALVE	2		
17	4096496	NEEDLE	1		
18	4443685	SPRING	1		
19	9167977	PIPE PLUG	1		
19A	M800650	PACKING	1		(SUB FOR 957366)
20	4368621	ADAPTER	1		
20A	M800650	PACKING	1		(SUB FOR 957366)
22	9134111	PIPE PLUG	1		
22A	4509180	O-RING	1		
23	9134110	PIPE PLUG	2		
23A	M800650	PACKING	1		(SUB FOR 957366)
24	9134109	DRAIN PLUG	2		
24A	4506408	O-RING	1		
25	4050968	PIPE PLUG	2		
27	988975	SPRING PIN	1		
29	4446283	POPPET	1		
30	4398846	SPRING	1		

PROPEL MOTOR BRAKE VALVE RELIEF VALVE

T157174 -UN-30OCT02

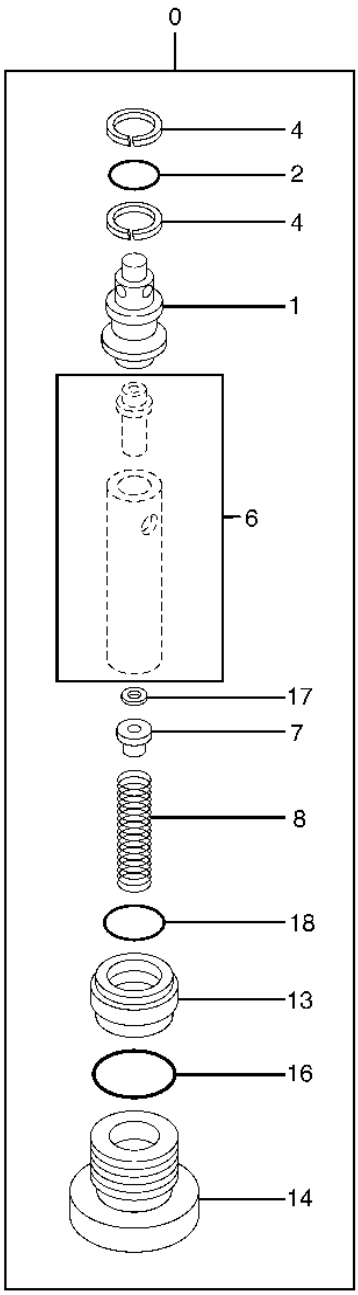

T157174

PROPEL MOTOR BRAKE VALVE RELIEF VALVE

KEY	PART NO.	PART NAME	QTY	SERIAL NO.	REMARKS
0	9192656	PRESSURE RELIEF VALVE	1		
1	3089975	SLEEVE	1		
2	CH17167	O-RING	1		(SUB FOR 4506320)
4	4036979	RING	2		
6	9755730	RELIEF VALVE	1		
7	4434423	GUIDE	1		
8	4439129	COMPRESSION SPRING	1		
13	4440873	PISTON	1		
14	4434424	PLUG	1		
16	4506418	O-RING	1		
17	A590102	WASHER	1		
18	4440620	O-RING	1		

PROPEL PILOT VALVE

T157144 -UN-30OCT02

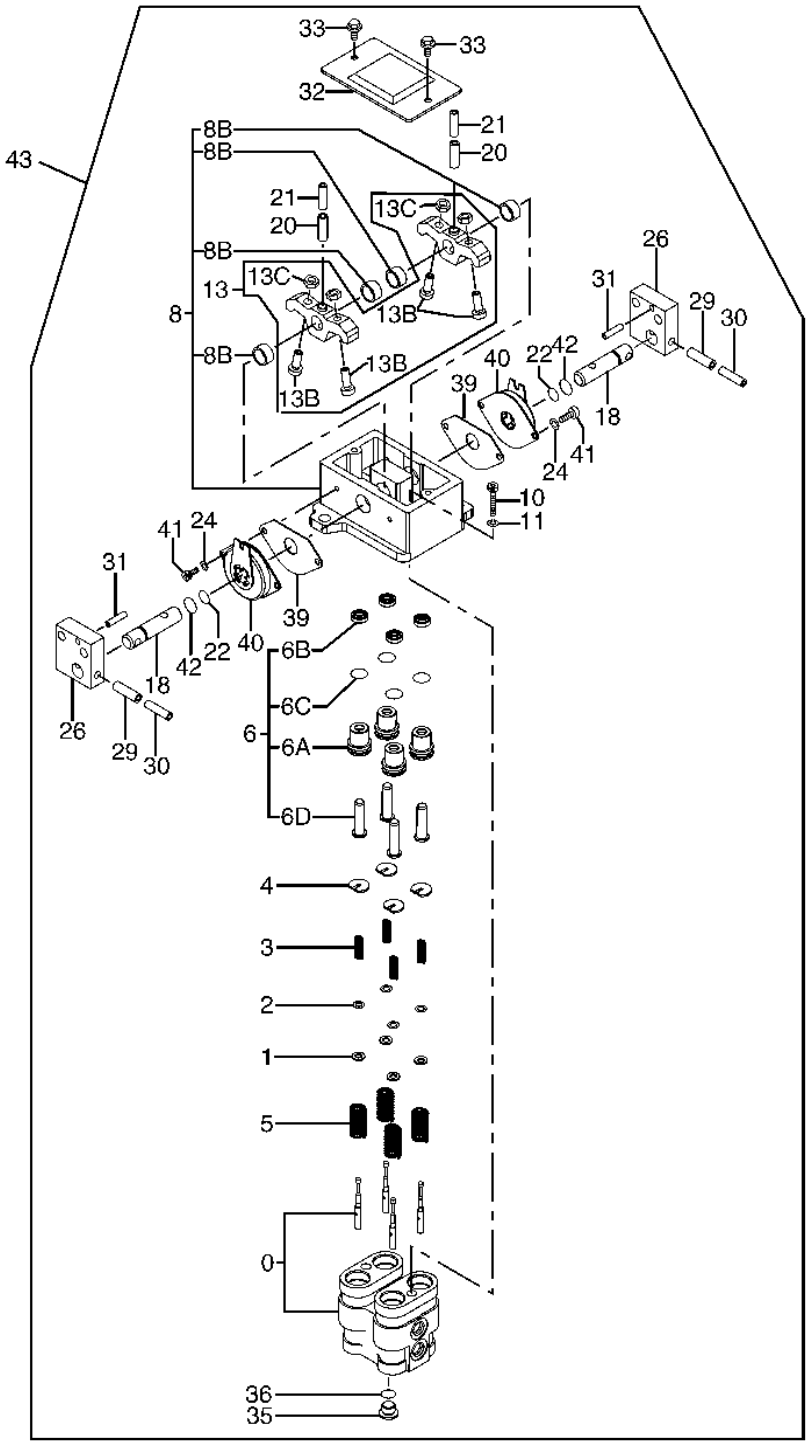

T157144

PROPEL PILOT VALVE

KEY	PART NO.	PART NAME	QTY	SERIAL NO.	REMARKS
0	8063718	HOUSING	1		
1	4319299	SPACER	4		
2	4203411	SHIM	12		
3	4368629	COMPRESSION SPRING	4		
4	4364970	GUIDE	4		
5	4368630	COMPRESSION SPRING	4		
6	9151724	PLUNGER	4		
6A	3065877	BUSHING	1		
6B	4447050	SEAL	1		
6C	984338	PACKING	1		
6D	3072517	PLUNGER	1		
8	9184275	HOLDER	1		
8B	4437433	BUSHING	4		
10	J781030	SCREW	2		
11	12M7066	LOCK WASHER	2		10 MM (0.394")
13	9199146	KIT	2		
13B	4425290	SCREW	2		
13C	4122395	NUT	2		
18	4425305	PIN FASTENER	2		
20	4027427	SPRING PIN	2		
21	4213419	SPRING PIN	2		
22	4185600	O-RING	2		
24	A590906	LOCK WASHER	4		
26	3087987	BRACKET	2		
29	4205318	SPRING PIN	2		
30	4205317	SPRING PIN	2		
31	4051262	SPRING PIN	2		
32	8077903	COVER	1		
33	J020614	BOLT	2		
35	4208977	DRAIN PLUG	1		
36	CH11561	PACKING	1		(SUB FOR 964255)
39	4437432	GASKET	2		
40	4428902	ABSORBER	2		
41	J780612	BOLT	4		
42	4447067	O-RING	2		
43	9195307	HYDR./PILOT CONTROL VALVE	1		

PROPEL MOTOR COMPONENTS

T157168 -UN-30OCT02

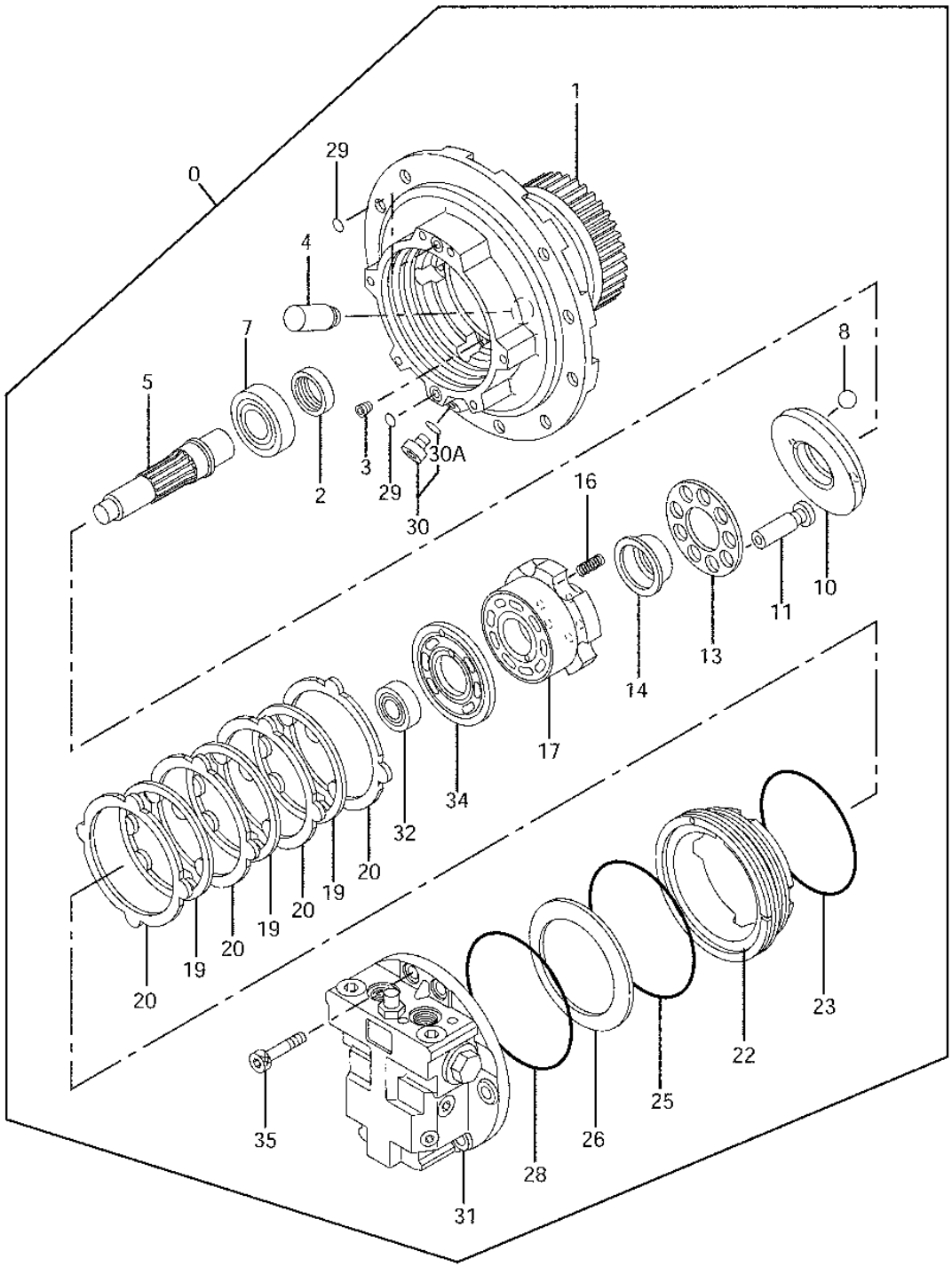

T157168

PROPEL MOTOR COMPONENTS

KEY	PART NO.	PART NAME	QTY	SERIAL NO.	REMARKS
0	9190694	HYDRAULIC MOTOR	1		
1	1028346	HOUSING	1		
2	4434402	SEAL	1		
3	4050968	PIPE PLUG	1		
4	4441707	PISTON	1		
5	3088756	SHAFT	1		
7	4434047	BEARING	1		
8	972658	BALL	2		
10	3089165	PLATE	1		
11	3088758	PISTON	9		
13	4434042	RETAINER	1		
14	4434041	BUSHING	1		
16	4312681	COMPRESSION SPRING	6		
17	2044951	HOUSING	1		
19	4434043	PLATE	3		
20	4434044	PLATE	4		
22	3088757	PISTON	1		
23	4434403	O-RING	1		
25	4434404	O-RING	1		
26	4434046	SPRING	1		
28	4434405	O-RING	1		
29	4506412	PACKING	2		
30	9134109	DRAIN PLUG	1		
30A	4506408	O-RING	1		
31	9204704	FLOW CONTROL HYD. VALVE	1		
32	4434048	BEARING	1		
34	3089171	PLATE	1		
35	M341432	SCREW	6		

ENGINE

T157127 -UN-31OCT02

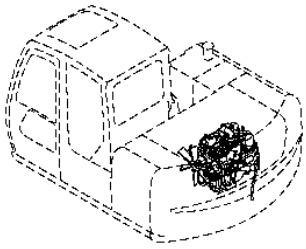

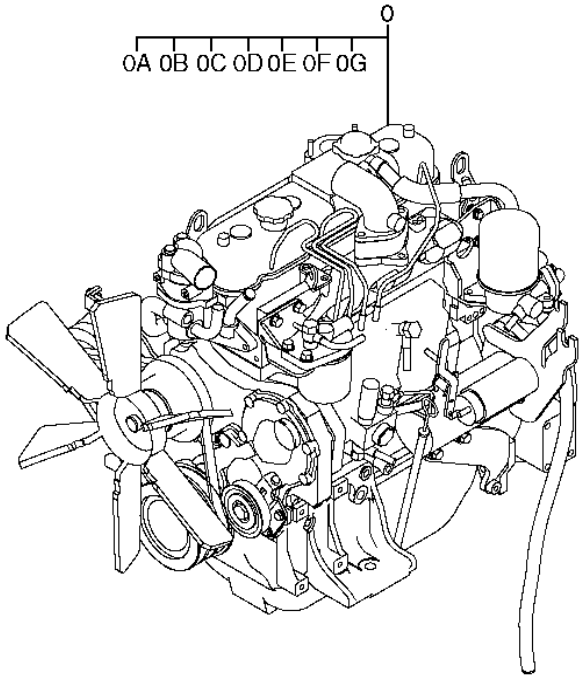

T157127

ENGINE

KEY	PART NO.	PART NAME	QTY	SERIAL NO.	REMARKS
0	4JG1PH02	DIESEL ENGINE	1		
0A	4467553	V-BELT	1		(FAN BELT)
0B	8970497081	OIL FILTER	1		(ENGINE OIL FILTER) (SUB FOR 4432663)
0C	4254047	FILTER	1		(FINAL FUEL FILTER)
0D	4443296	GASKET	1		
0E	4281720	SWITCH	1		(OIL PRESSURE)
0F	4367521	SWITCH	1		
0G	4467646	DC GENERATOR	1		

CRANKSHAFT

T159175 -UN-19SEP02

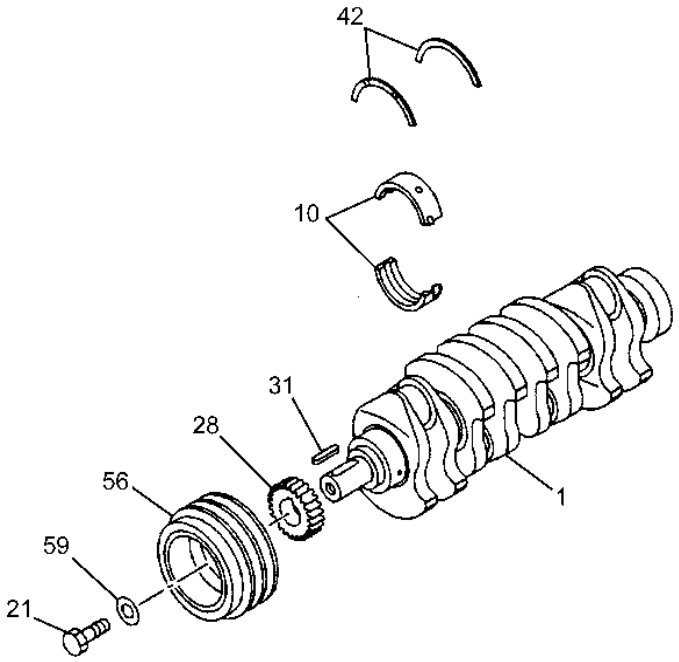

T159175

CRANKSHAFT

KEY	PART NO.	PART NAME	QTY	SERIAL NO.	REMARKS
1	8971909301	CRANKSHAFT	1		
10	8970632580	BEARING KIT	5		BLUE
	8970632590	BEARING KIT	5		BLACK
	8970632600	BEARING KIT	5		GREEN
21	5090002732	BOLT	1		M16X43
28	8943243350	GEAR	1		
31	8942016410	SHAFT KEY	1		(SUB FOR AT254850)
42	8944537620	SHIM	2		
56	8972481611	PULLEY	1		
59	5095031270	WASHER	1		

VALVE ACTUATING SYSTEM

T157387 -UN-27SEP02

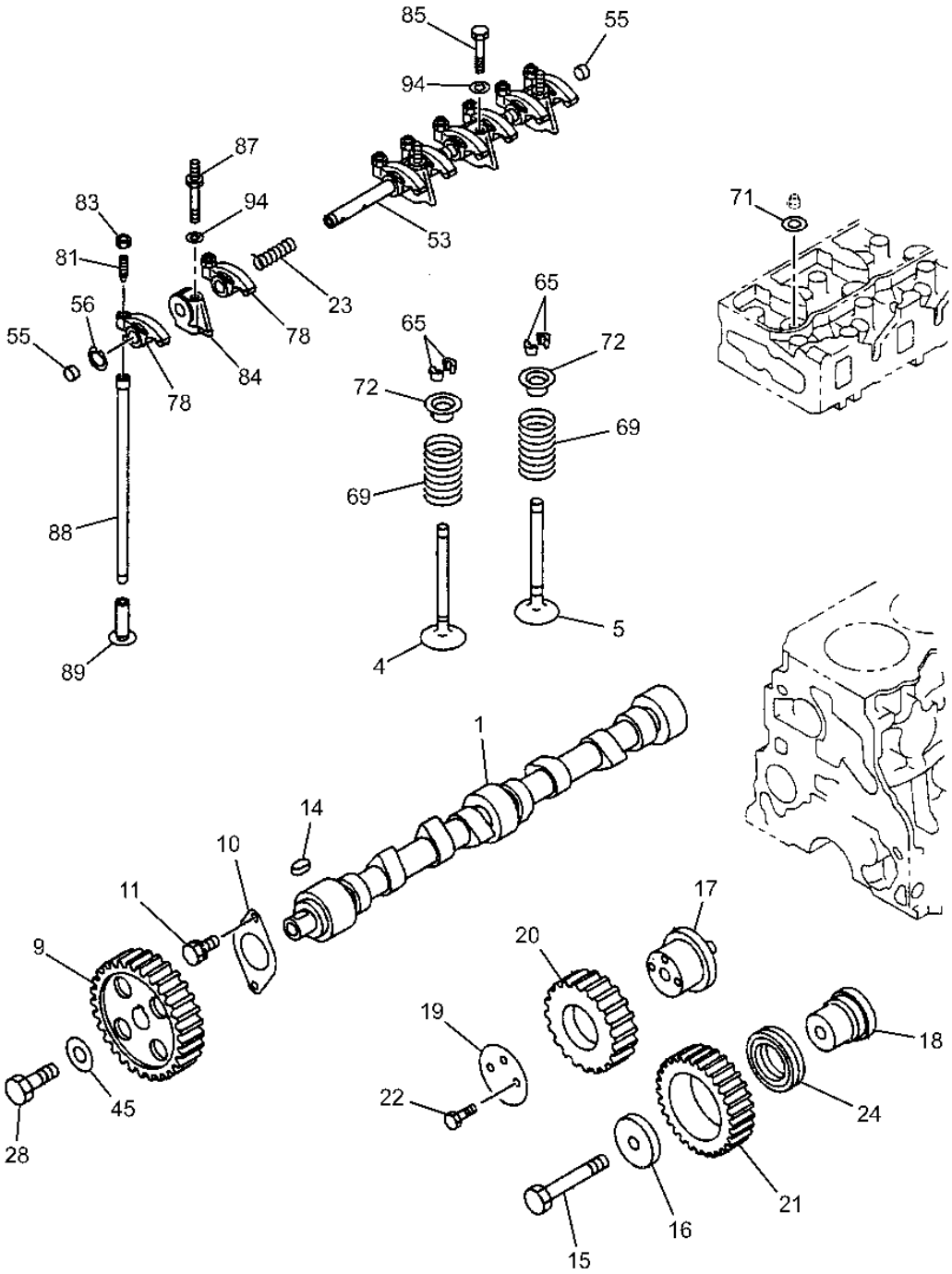

T157387

VALVE ACTUATING SYSTEM

KEY	PART NO.	PART NAME	QTY	SERIAL NO.	REMARKS
1	8972876750	CAMSHAFT	1		
4	8941332751	INTAKE VALVE	4		
5	8971187671	FLOW CONTROL HYD. VALVE	4		(SUB FOR 8971187670)
9	8943243361	GEAR	1		
10	8941104801	PLATE	1		
11	0500408160	BOLT	2		M8X16 W/LK WASHER
14	9080007180	SHAFT KEY	1		
15	8941097061	BOLT	1		
16	5125190021	WASHER	1		
17	8972189930	SHAFT	1		
18	8941099131	SHAFT	1		
19	8941419371	SHIFT COLLAR	1		
20	8943282170	GEAR	1		
21	8971473340	GEAR	1		
22	8941500451	BOLT	2		M8X55 W/LK WASHER
23	8944333030	SPRING	3		
24	8941102710	BEARING	1		
28	5090000690	BOLT	1		M12X47
45	5125190021	WASHER	1		
53	8970361970	SHAFT	1		
55	9126260050	PLUG	2		
56	9091800190	RING	2		
65	GV11353	RETAINER	16		
69	8942525361	SPRING	8		
71	5125630010	VALVE SEAT	8		OD=34
72	8941337312	VALVE SEAT	8		OD=32.8
78	8941523440	ROCKER ARM	8		
81	8941522831	SCREW	8		M8X30
83	14M7151	NUT	8		M8, (SUB FOR AT191643 OR 9091115080)
84	8941523451	BRACKET	4		
85	8944333020	BOLT	1		M10X60
87	8944333040	BOLT	3		M8X15 & M10X60 L=82
88	8970716730	PUSH ROD	8		
89	8944383051	VALVE	8		(SUB FOR 8944383050, 8941335203 OR 8941335202)
94	9091645100	WASHER	4		

TIMING GEAR CASE

T159176 -UN-19SEP02

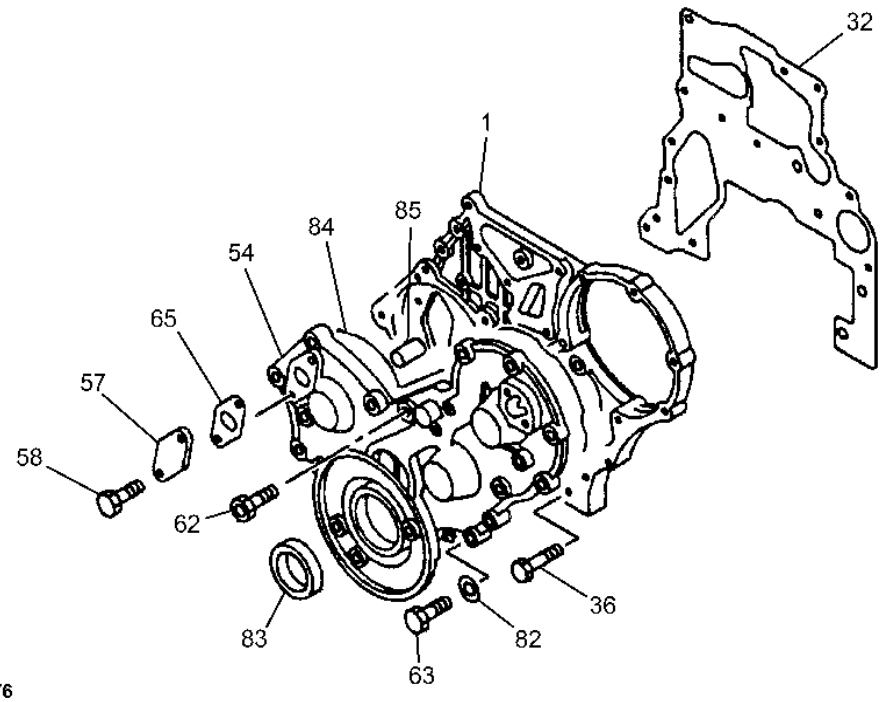

T159176

TIMING GEAR CASE

KEY	PART NO.	PART NAME	QTY	SERIAL NO.	REMARKS
1	8972190014	CASE	1		
32	8971172421	GASKET	1		(SUB FOR 8971172420) ALSO INCLUDED IN GASKET SET (ENGINE)
36	0500408450	BOLT	2		M8X45 W/LK WASHER
	0500408180	BOLT	3		M8X18 W/LK WASHER
	0500408200	BOLT	3		M8X20 W/LK WASHER
54	8972312141	COVER	1		
57	5113210090	COVER	2		
58	0280806120	BOLT	4		M6X12 FLANGE
62	9958212550	BOLT	1		M12X55 W/HEX-SOCKET
63	0280808300	BOLT	8		(SUB FOR AT259926) M8X30 FLANGE
64	AT263858	BOLT	7		M8X60 FLANGE (NOT ILLUSTRATED)
65	.....	GASKET	2		(8971186980 NO LONGER AVAILABLE)
82	9091607080	WASHER	1		
83	8970491450	SEAL	1		(SUB FOR AT254826) ALSO INCLUDED IN GASKET SET (ENGINE)
84	8972386310	GASKET	1		ALSO INCLUDED IN GASKET SET (ENGINE)
85	9081510200	PIN FASTENER	2		OD=10 L=20

CONNECTING RODS AND PISTONS

T159173 -UN-19SEP02

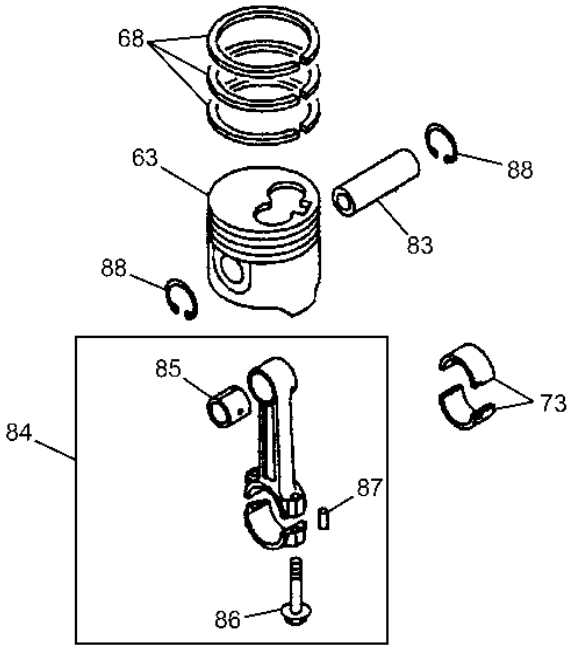

T159173

CONNECTING RODS AND PISTONS

KEY	PART NO.	PART NAME	QTY	SERIAL NO.	REMARKS
63	8972882500	PISTON	4		GRADE=AX ALSO INCL IN LINER SET
	8972882510	PISTON	4		GRADE=CX ALSO INCL IN LINER SET
68	8971479840	CYLINDER AND PISTON KIT	4		ALSO INCLUDED IN LINER SET
73	8973582340	KIT	4		(SUB FOR 8943721931)
83	8944570081	PIN FASTENER	4		ALSO INCLUDED IN LINER SET
84	8972892631	CONNECTING ROD	4		(SUB FOR 8972892630)
85	8972892640	BUSHING	4		ALSO INCLUDED IN LINER SET
86	8970620860	BOLT	8		M11X44.5
87	9081605080	PIN FASTENER	8		
88	8944606870	SNAP RING	8		ALSO INCLUDED IN LINER SET

CYLINDER BLOCK

T157384 -UN-27SEP02

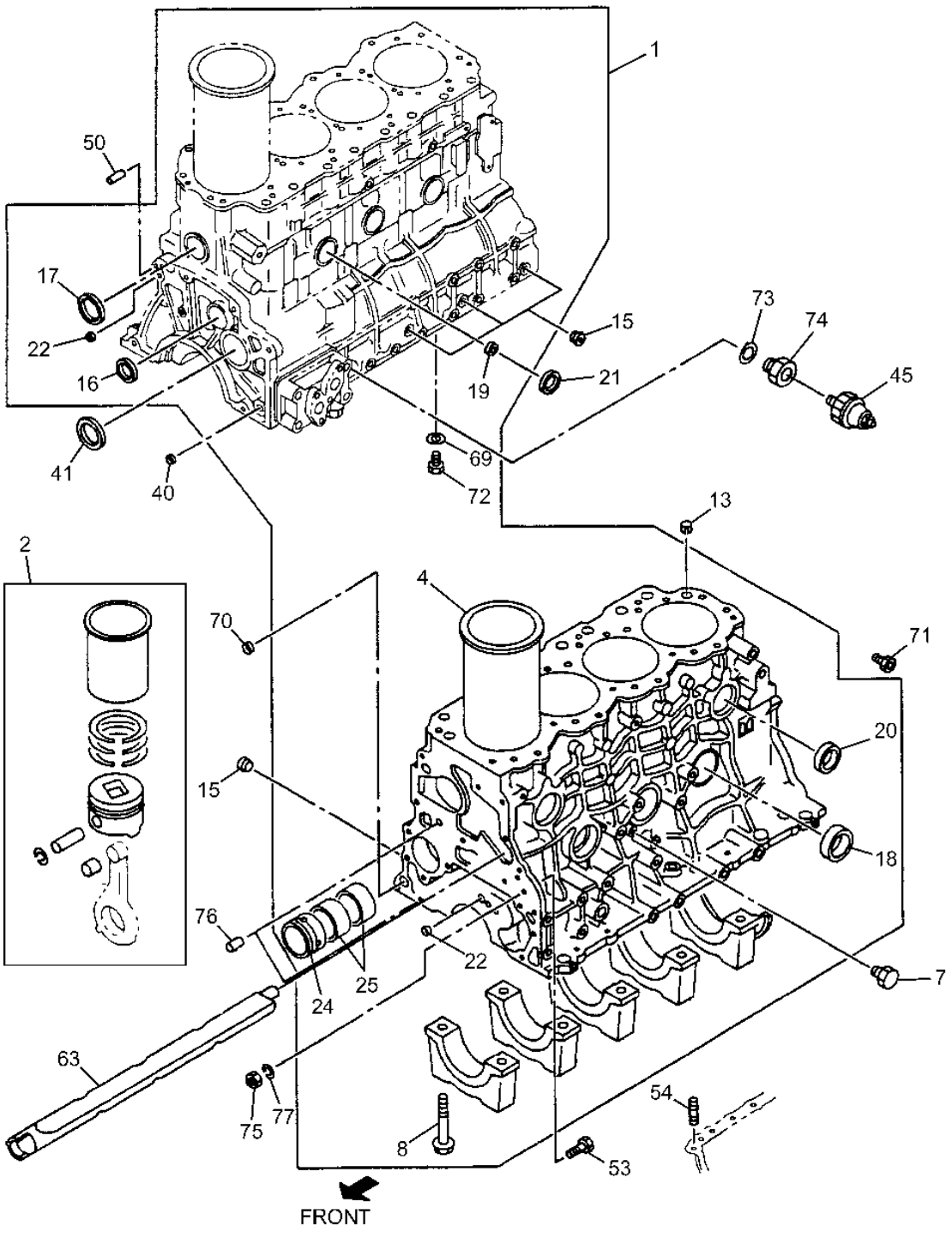

T157384

CYLINDER BLOCK

KEY	PART NO.	PART NAME	QTY	SERIAL NO.	REMARKS
1	8970951672	CYLINDER BLOCK	1		
2	5878140670	PISTON-LINER KIT	4		GRADE=1
	5878140680	PISTON-LINER KIT	4		GRADE=2
	5878140690	PISTON-LINER KIT	4		GRADE=3
	5878140700	CYLINDER LINER	4		GRADE=4
4	8971766990	CYLINDER LINER	4		OD GRD=1, ID GRD=AX ALSO INCL IN LINER SET
	8971767000	CYLINDER LINER	4		OD GRD=1, ID GRD=CX ALSO INCL IN LINER SET
	8971767010	CYLINDER LINER	4		OD GRD=2, ID GRD=AX ALSO INCL IN LINER SET
	8971767020	CYLINDER LINER	4		OD GRD=2, ID GRD=CX ALSO INCL IN LINER SET
	8971767030	CYLINDER LINER	4		OD GRD=3, ID GRD=AX ALSO INCL IN LINER SET
	8971767040	CYLINDER LINER	4		OD GRD=3, ID GRD=CX ALSO INCL IN LINER SET
	8971767050	CYLINDER LINER	4		OD GRD=4, ID GRD=AX ALSO INCL IN LINER SET
	8971767060	CYLINDER LINER	4		OD GRD=4, ID GRD=CX ALSO INCL IN LINER SET
7	9096640010	FITTING PLUG	1		(SUB FOR AT255028) PT1/4
8	8944326420	BOLT	10		M14X89 FLANGE
13	8944533440	PIN FASTENER	2		
15	5096050192	PIPE PLUG	3		(SUB FOR AT254812) PT1/8
16	5112190170	SEAL	1		OD=38
17	5112190180	BEARING CUP	1		OD=36
18	1096000580	BEARING CUP	3		(SUB FOR AT254808) OD=45
19	AT263794	PLUG	3		OD=18
20	1096000121	BEARING CUP	2		(SUB FOR AT254809) OD=32
21	5112190180	BEARING CUP	3		OD=36
22	5096000130	BEARING CUP	1		(SUB FOR AT254823) OD=12.3
24	8944272062	BEARING KIT	1		FRONT
25	8973781470	BEARING KIT	2		(SUB FOR 8944272012) CENTER
40	5111290060	BEARING CUP	2		(SUB FOR AT254831) OD=16
41	8942505141	PIPE PLUG	1		(SUB FOR 8942505140) OD=56
45	1824100330	MOUNTING PARTS	1		(SUB FOR AT254817)
50	9081610320	PIN FASTENER	1		OD=10 L=32
53	9096065350	BOLT	1		
54	8972539990	STUD	4		
63	8944567942	STRUCTURAL TUBING	1		
69	9095714160	GASKET	1		ID=16.2 OD=24.0
70	30H7	PLUG	1		(SUB FOR 5111290030) OD=15.6
71	8941300211	THREADED NIPPLE	1		
72	AT264169	PLUG	1		M16X12
73	9095714140	GASKET	1		(SUB FOR AT255025) ID=14.2 OD=20.0
74	8944254500	ELECTRICAL CONNECTOR ASSY	1		
75	9091115100	NUT	1		
76	9081510200	PIN FASTENER	1		OD=10 L=20
77	1099853450	WASHER	1		

ENGINE OIL PAN

T157386 -UN-19SEP02

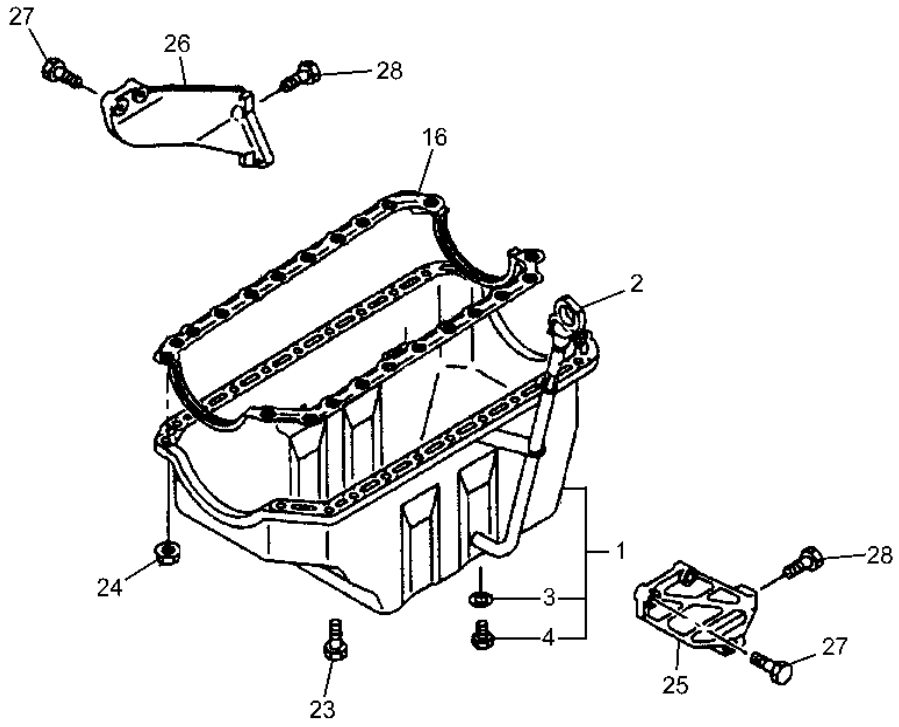

T157386

ENGINE OIL PAN

KEY	PART NO.	PART NAME	QTY	SERIAL NO.	REMARKS
1	8972539870	OIL PAN	1		
2	8973251740	DIPSTICK	1		
3	1096231830	GASKET	1		(SUB FOR AT254814) ALSO INCLUDED IN GASKET SET (ENGINE)
4	9096620120	PIPE PLUG	1		(SUB FOR AT255027) M20
16	8970801940	GASKET	1		ALSO INCLUDED IN GASKET SET (ENGINE)
23	8941339732	BOLT	10		
24	4447338	NUT	12		(SUB FOR AT259945)
25	8972300700	REINFORCEMENT	1		
26	8972300690	REINFORCEMENT	1		
27	0286810400	BOLT	4		M10X40 FLANGE
28	0286812300	BOLT	2		M12X30 FLANGE

ENGINE OIL PUMP

T159193 -UN-19SEP02

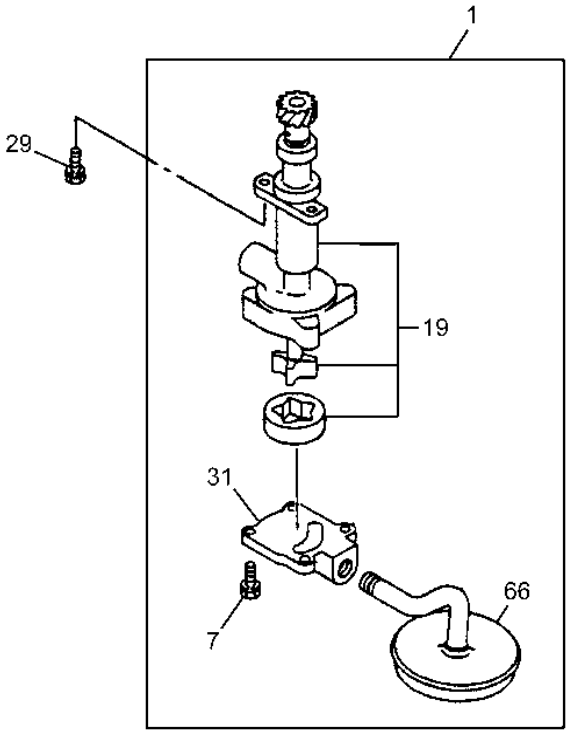

T159193

ENGINE OIL PUMP

KEY	PART NO.	PART NAME	QTY	SERIAL NO.	REMARKS
1	8973251570	OIL PUMP	1		
7	0500408250	BOLT	4		M8X25 W/LK WASHER
19	8970441120	GEAR	1		
29	0501408250	BOLT	2		M8X25 W/LK&PL WASHER
31	9131130771	COVER	1		
66	9131430100	STRAINER	1		

ENGINE OIL AND VACUUM LINES

T159194 -UN-19SEP02

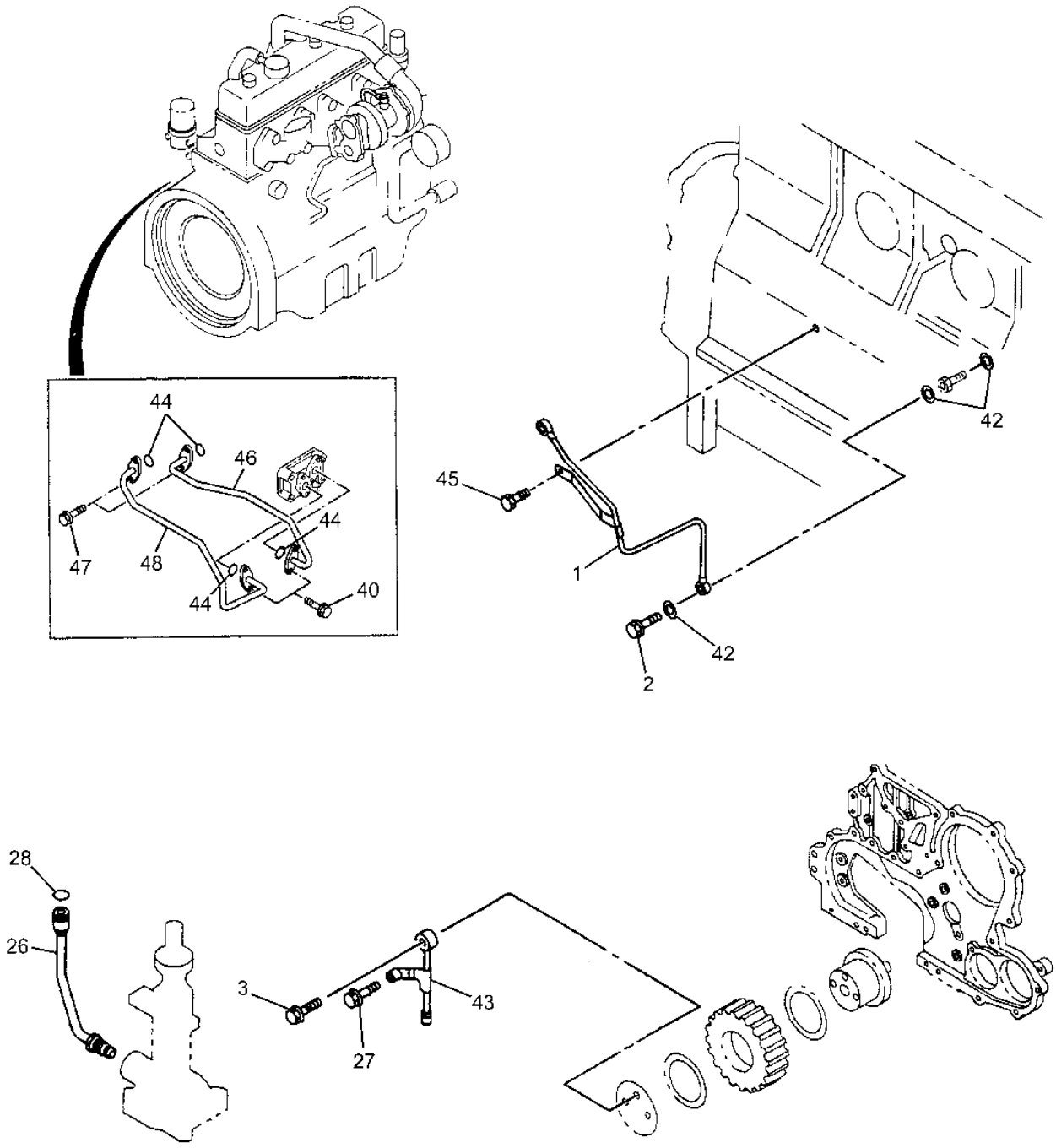

T159194

ENGINE OIL AND VACUUM LINES

KEY	PART NO.	PART NAME	QTY	SERIAL NO.	REMARKS
1	8972329570	PIPE	1		(SUB FOR 8941701231)
2	5096750181	BOLT	1		M8X20 FLANGE
3	5096750430	BOLT	1		M8X23
26	8944348271	PIPE	1		
27	0500408200	BOLT	1		M8X22 W/LK WASHER
28	5096230020	GASKET	1		ALSO INCLUDED IN GASKET SET (ENGINE)
40	19M7866	SCREW	4		(SUB FOR AT259925) M8X20 FLANGE
42	9095720080	GASKET	3		ID=8.2 OD=17 ALSO INCL IN GASKET SET (ENGINE)
43	8971607060	PIPE	1		
44	9095612220	GASKET	4		
45	0500406120	BOLT	1		M6X12 W/LK WASHER
46	8972153860	PIPE	1		
47	19M7866	SCREW	4		(SUB FOR AT259925) M8X20 FLANGE
48	8972153870	PIPE	1		

ENGINE VENTILATING SYSTEM

T159184 -UN-19SEP02

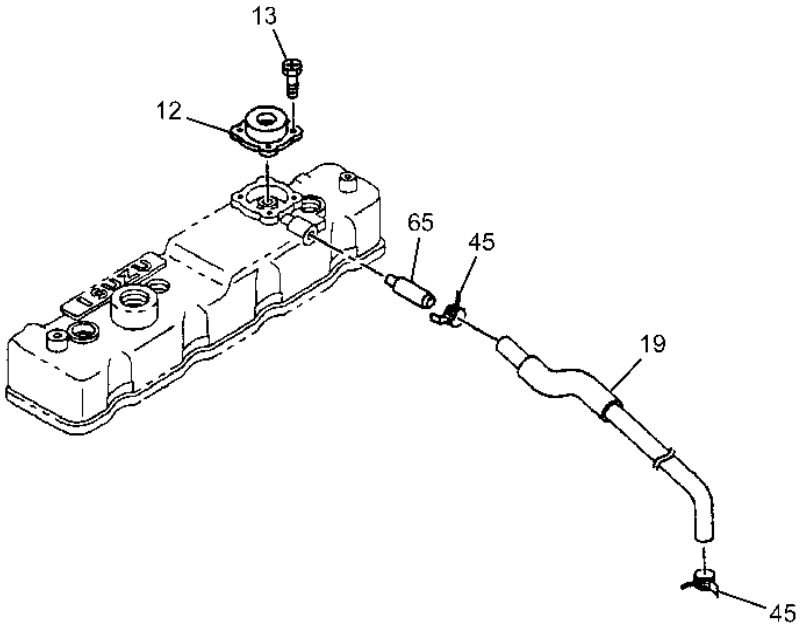

T159184

ENGINE VENTILATING SYSTEM

KEY	PART NO.	PART NAME	QTY	SERIAL NO.	REMARKS
12	8971198870	VENT	1		(SUB FOR 8942501720)
13	9039104080	SCREW	4		M4X8 W/PL WASHER
19	8973052250	HOSE	1		
45	8942420340	CLIP	1		ID=20.4
65	8942506151	PIPE	1		

ROCKER ARM COVER

T188434 -UN-14MAR03

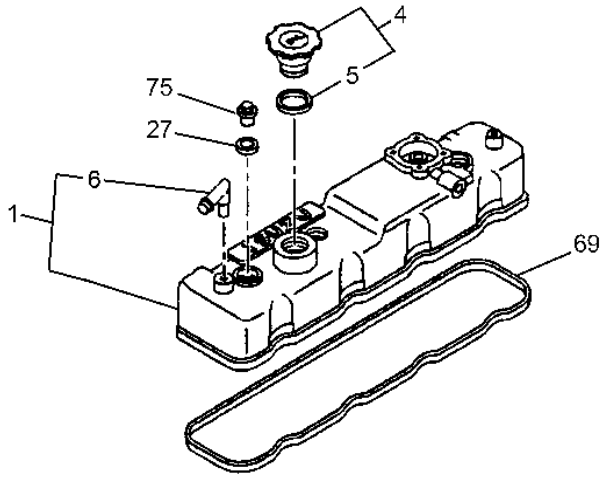

T188434

ROCKER ARM COVER

KEY	PART NO.	PART NAME	QTY	SERIAL NO.	REMARKS
1	8972326750	COVER	1		
4	8941332075	FILLER CAP	1		(SUB FOR AT254847)
5	8941236231	GASKET	1		(SUB FOR AT254844) ID=32 OD=40
6	8943862330	FUEL LINE	1		(SUB FOR AT259978)
27	8942024563	GASKET	3		ID=19.6 ALSO I NCL IN GASKET SET (ENGINE)
69	8973494160	GASKET	1		(SUB FOR 8971611310) ALSO INCLUDED IN GASKET SET (ENGINE)
75	8941734300	NUT	3		M8 OD=24

CYLINDER HEAD

T157380 -UN-27SEP02

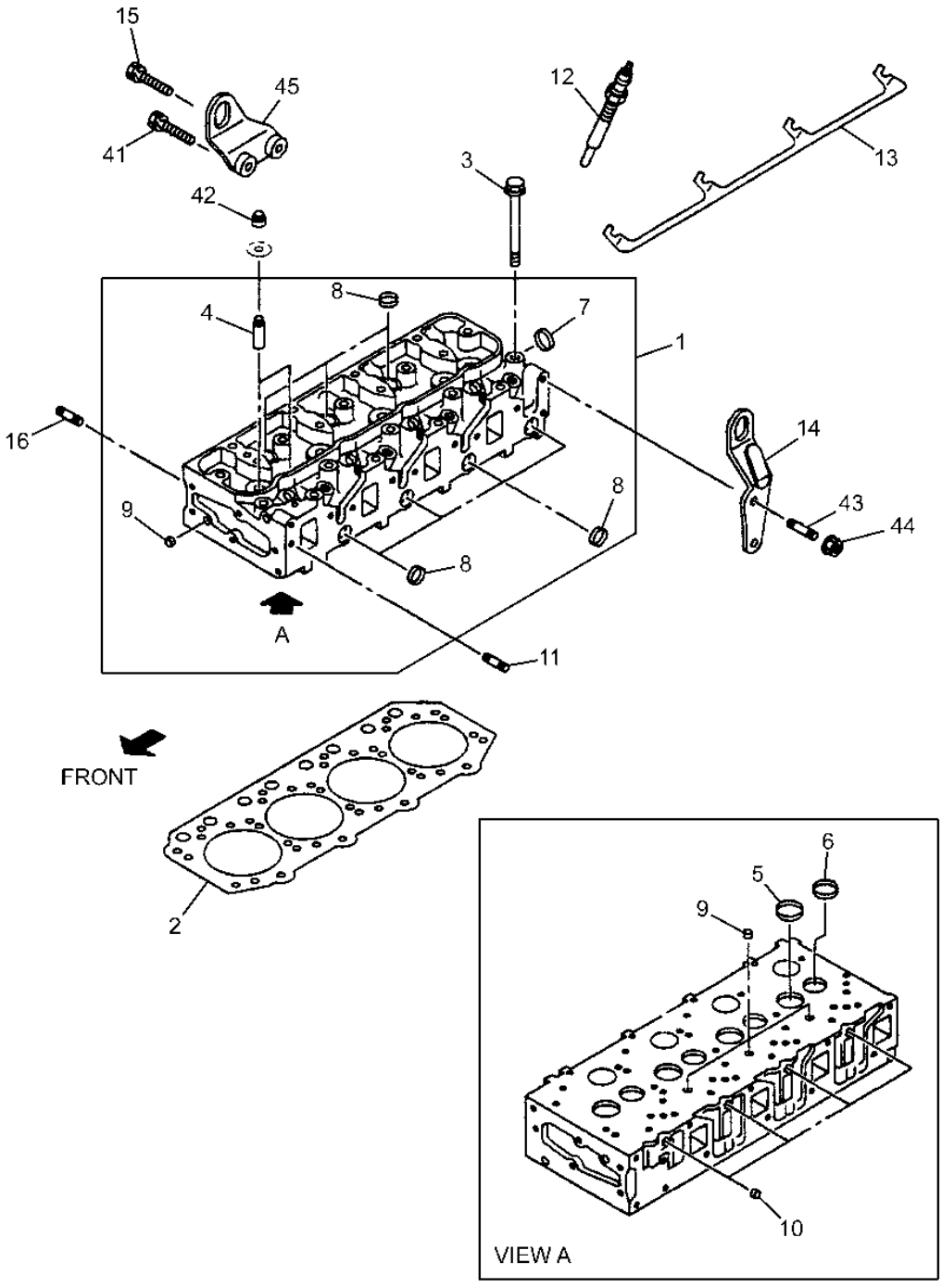

T157380

CYLINDER HEAD

KEY	PART NO.	PART NAME	QTY	SERIAL NO.	REMARKS
1	8971096423	CYLINDER HEAD	1		
2	8970661960	GASKET	1		T=1.60 1-HOLE ALSO INCL IN GASKET SET-ENGINE
	8970661970	GASKET	1		T=1.65 2-HOLE ALSO INCL IN GASKET SET -ENGINE
	8970661980	GASKET	1		T=1.70 3-HOLE ALSO INCL IN GASKET SET-ENGINE
3	8944556670	BOLT	18		M11X122
4	GV11597	GUIDE	8		
5	8972312280	VALVE SEAT	4		(SUB FOR 8972324250) INLET
6	8972312290	VALVE SEAT	4		(SUB FOR 8971483240 OR 8972324260) EXHAUST
7	1096000580	BEARING CUP	1		(SUB FOR AT254808) OD=45
8	8972096090	PACKING	7		(SUB FOR AT256018) OD=22
9	5111290060	BEARING CUP	3		(SUB FOR AT254831) OD=16
10	5096000130	BEARING CUP	5		(SUB FOR AT254823) OD=12.3
11	9096300341	STUD	1		M8X35 L=46
12	1825130442	GLOW PLUG	4		(SUB FOR 1825130441) SILVER
13	8941537232	ELECTRICAL CONNECTOR ASSY	1		(SUB FOR 8941537231)
14	8971077390	HANGER	1		
15	AT259939	BOLT	1		M8X25 FLANGE
16	9041108350	STUD	2		M8X35 L=47
41	AT263876	BOLT	1		M10X30 FLANGE
42	8971203070	SEAL	8		ALSO INCLUDED IN GASKET SET (ENGINE)
43	9096300341	STUD	2		M8X35 L=46
44	AT195658	NUT	2		
45	8944404921	HANGER	1		

EXHAUST MANIFOLD

T159182 -UN-19SEP02

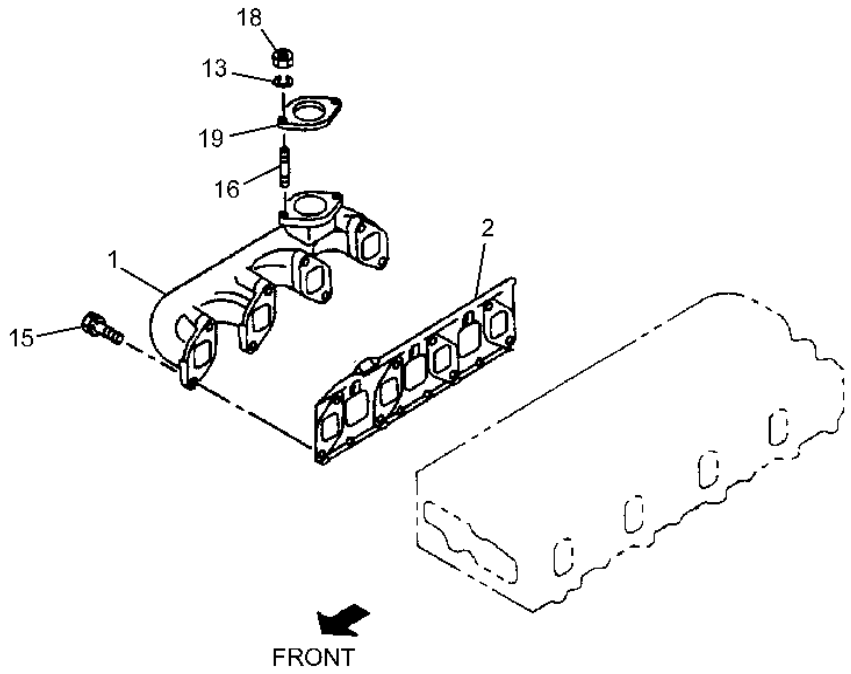

T159182

EXHAUST MANIFOLD

KEY	PART NO.	PART NAME	QTY	SERIAL NO.	REMARKS
1	8944519902	EXHAUST MANIFOLD	1		
2	.....	GASKET	1		(8973503170 NO LONGER AVAILABLE) (SUB FOR 8971092162) ALSO INCLUDED IN GASKET SET (ENGINE)
13	1099851770	WASHER	2		(SUB FOR AT255018)
15	0500408300	BOLT	6		M8X35 W/LK WASHER
16	9041108250	STUD	2		M8X25 L=37
18	9091105080	NUT	2		(SUB FOR AT260107)
19	8970161010	GASKET	1		

FUEL INJECTION SYSTEM

T159189 -UN-19SEP02

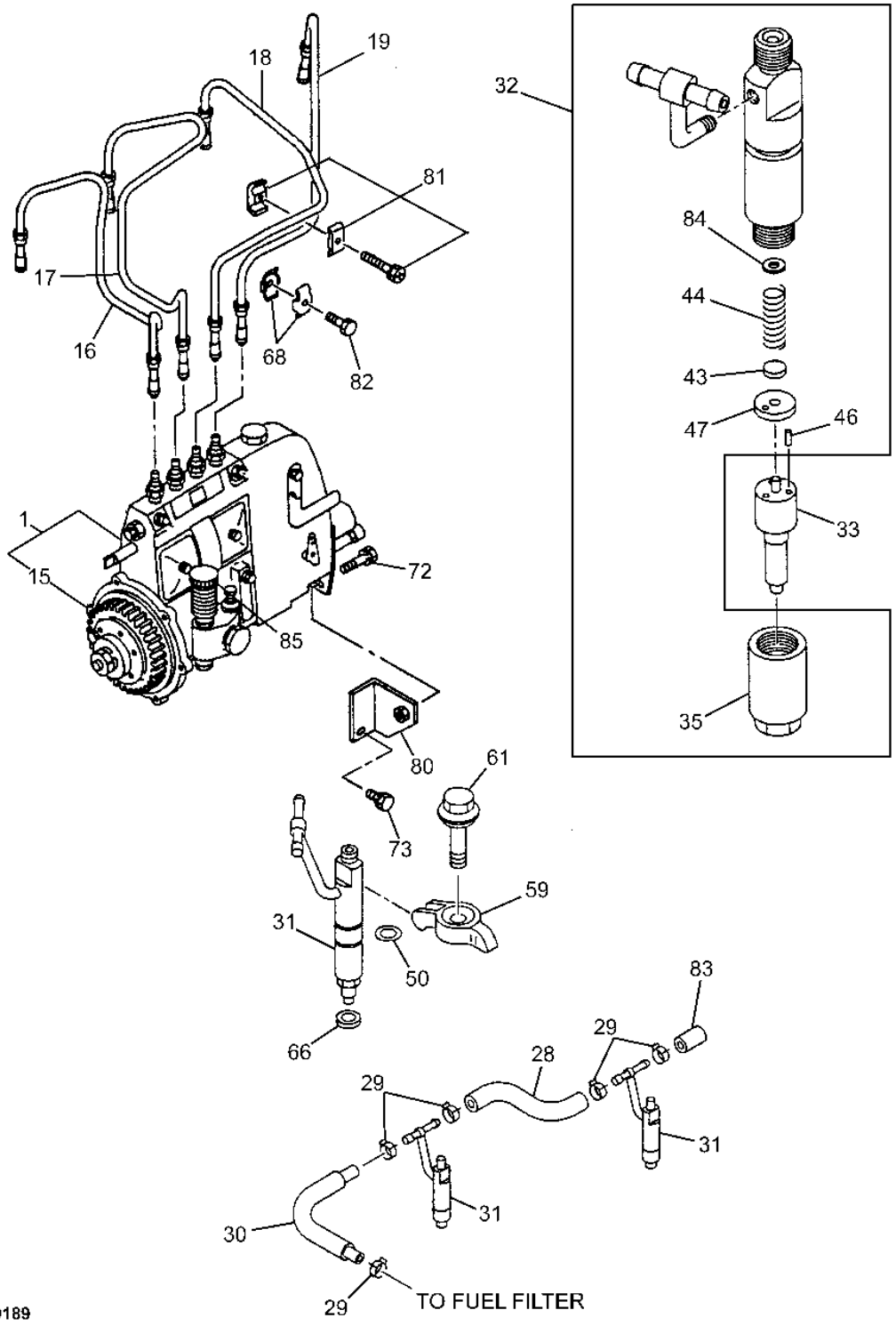

FUEL INJECTION SYSTEM

KEY	PART NO.	PART NAME	QTY	SERIAL NO.	REMARKS
1	8972633951	FUEL INJECTION PUMP	1		
15	8973059520	COUPLING	1		
16	8970177871	PIPE	1		
17	8970177881	PIPE	1		
18	8970177891	PIPE	1		
19	8970177901	PIPE	1		
28	8941523530	HOSE	3		
29	8942386100	CLIP	9		ID=12
30	8971294130	HOSE	1		L=320 W/INSULATOR
31	8972112800	NOZZLE	4		
32	8944422250	HOLDER	4		
33	8972193420	NOZZLE	4		
35	8941741840	NUT	4		
43	8943127230	VALVE SEAT	4		
44	8941741410	SPRING	4		
46	8941741390	PIN FASTENER	8		
47	8941741830	SPACER	4		
50	8943264390	GASKET	4		ALSO INCLUDED IN GASKET SET (ENGINE)
59	8944334270	CLAMP	4		
61	8944337171	BOLT	4		
66	8971713310	GASKET	4		ALSO INCLUDED IN GASKET SET (ENGINE)
68	8944300000	CLIP	1		ALSO ORDER 89443000010
	8944300010	CLIP	1		ALSO ORDER 89443000000
72	8941845731	BOLT	1		M10X25 W/WASHER
73	19M7866	SCREW	1		(SUB FOR AT259925) M8X20 FLANGE
80	8972473140	BRACKET	1		
81	9154190721	CLIP	3		
82	0501408180	BOLT	1		M8X18 W/WASHER
83	8944739670	CAP	1		
84	8971160290	SHIM	AR		T=0.100
	8971160320	SHIM	AR		T=0.200
	8971160330	SHIM	AR		T=0.300
	8971160340	SHIM	AR		T=0.400
	8971160350	SHIM	AR		T=0.500
	8971160360	SHIM	AR		T=0.510
	8971160370	SHIM	AR		T=0.520
	8971160380	SHIM	AR		T=0.530
	8971160390	SHIM	AR		T=0.540
	8971160400	SHIM	AR		T=0.550
	8971160410	SHIM	AR		T=0.560
	8971160420	SHIM	AR		T=0.570
	8971160430	SHIM	AR		T=0.580
	8971160440	SHIM	AR		T=0.590
85	8973674590	FUEL PUMP	1		(SUB FOR 8970162680)

FUEL INJECTION PUMP MOUNTING

T159200 -UN-19SEP02

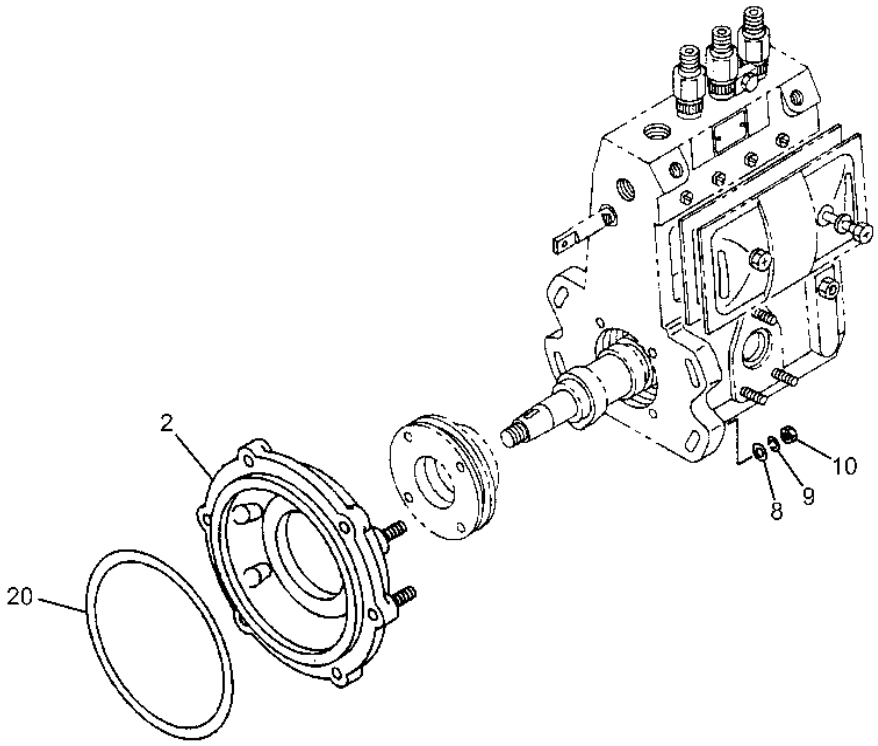

T159200

FUEL INJECTION PUMP MOUNTING

KEY	PART NO.	PART NAME	QTY	SERIAL NO.	REMARKS
2	8971815100	BRACKET	1		
8	9091645100	WASHER	4		
9	1099851850	WASHER	4		
10	5156390020	NUT	4		
20	.....	GASKET	1		(8941097070 NO LONGER AVAILABLE) ALSO INCLUDED IN GASKET SET (ENGINE)

FUEL INJECTION PUMP COUPLING

T159201 -UN-19SEP02

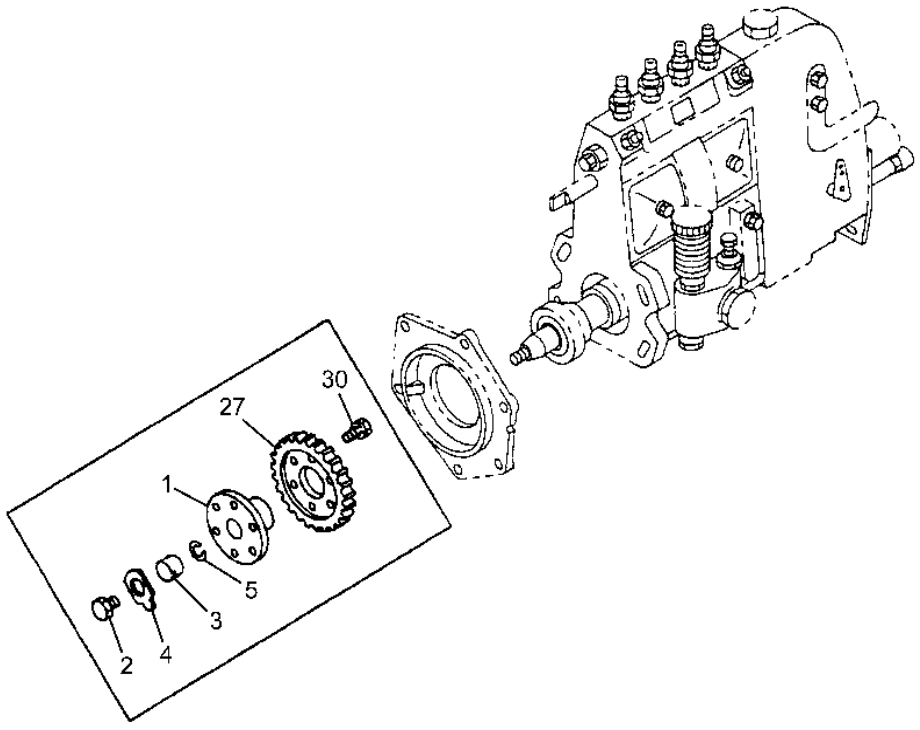

T159201

FUEL INJECTION PUMP COUPLING

KEY	PART NO.	PART NAME	QTY	SERIAL NO.	REMARKS
1	8972315210	COUPLING	1		
2	9096620070	BOLT	1		
3	1157890940	NUT	1		
4	5095390020	PLATE	1		
5	9884102640	WASHER	1		
27	8943243391	GEAR	1		
30	8944575170	BOLT	6		

INTAKE MANIFOLD

T159179 -UN-19SEP02

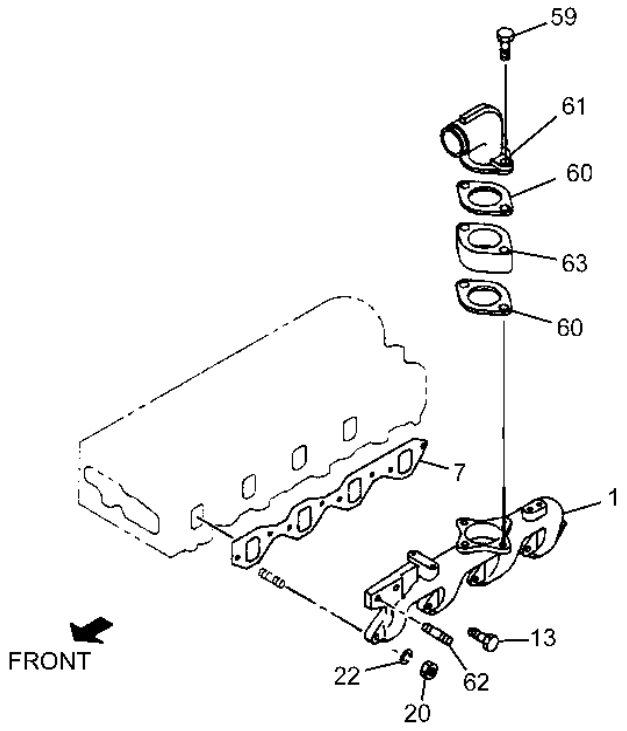

T159179

INTAKE MANIFOLD

KEY	PART NO.	PART NAME	QTY	SERIAL NO.	REMARKS
1	8970114882	INTAKE MANIFOLD	1		
7	8972125400	GASKET	1		ALSO INCLUDED IN GASKET SET (ENGINE)
13	0280808250	BOLT	6		M8X25 FLANGE
20	AT195658	NUT	2		
22	1099851770	WASHER	2		(SUB FOR AT255018)
59	AT263859	BOLT	2		
60	8970225710	PACKING	2		ALSO INCLUDED IN GASKET SET (ENGINE)
61	8970110740	PIPE	1		
62	8943427130	STUD	2		M10X24 L=41
63	8972579791	PLATE	1		(SUB FOR 8972579790)

WATER PUMP

T159185 -UN-27SEP02

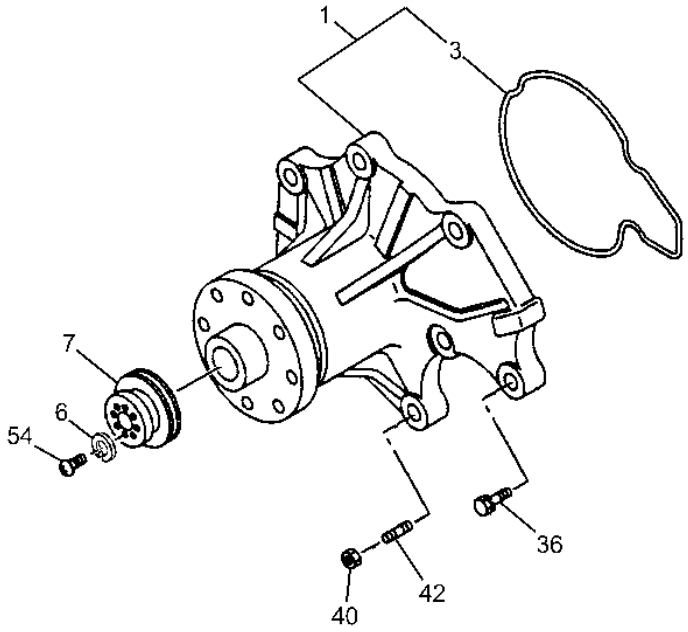

T159185

WATER PUMP

KEY	PART NO.	PART NAME	QTY	SERIAL NO.	REMARKS
1	8971050123	WATER PUMP	1		(SUB FOR 8971050121)
3	.....	GASKET	1		(8941780810 NO LONGER AVAILABLE) ALSO INCLUDED IN GASKET SET (ENGINE)
6	9091647060	WASHER	4		
7	8972413670	PULLEY	1		
36	1090440711	BOLT	5		M8X55 FLANGE
40	8942248290	NUT	2		
42	9041108220	STUD	2		M8X22 L=33
54	0208006120	BOLT	2		(SUB FOR AT259916) M6X12

THERMOSTAT AND HOUSING

T159186 -UN-19SEP02

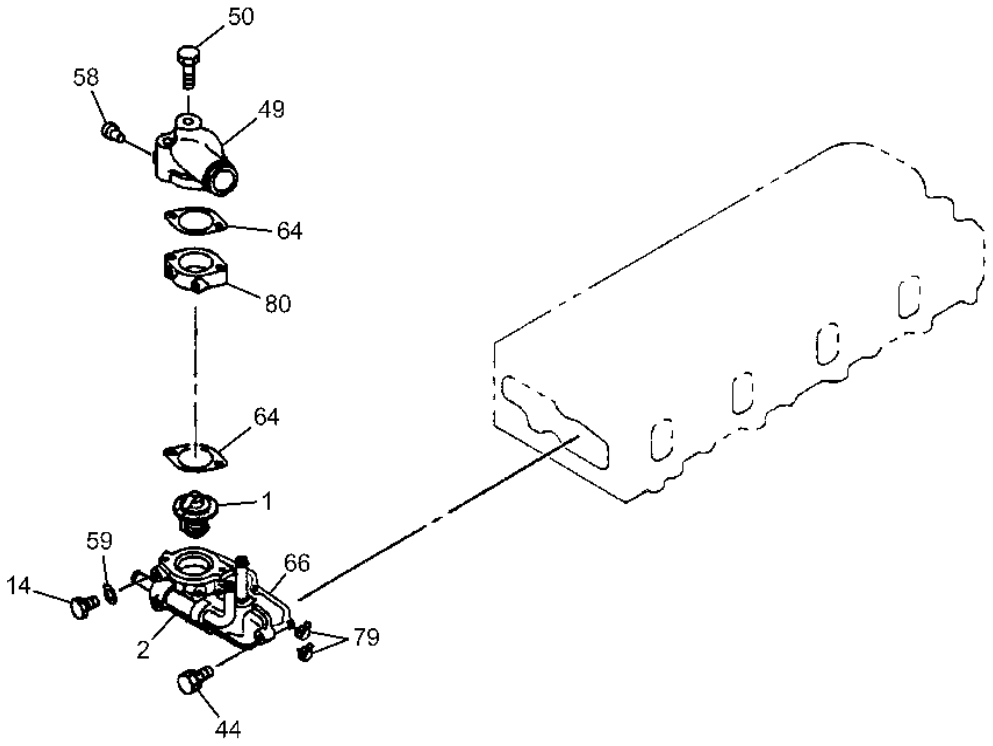

T159186

THERMOSTAT AND HOUSING

KEY	PART NO.	PART NAME	QTY	SERIAL NO.	REMARKS
1	8972112090	THERMOSTAT	1		82 DEGREES C
2	8972322410	HOUSING	1		
14	9096610050	PIPE PLUG	1		M16X8 PLUG
44	0286808300	BOLT	5		(SUB FOR AT259940) M8X30 FLANGE
49	8972072321	PIPE	1		
50	AT263858	BOLT	2		M8X30 FLANGE
58	5096050050	PIPE PLUG	2		(SUB FOR AT254825) PT3/8
59	9095713160	GASKET	1		
64	.....	GASKET	2		(8943656742 NO LONGER AVAILABLE) (SUB FOR AT254863) ALSO INCLUDED IN GASKET SET (ENGINE)
66	8972125370	GASKET	1		ALSO INCLUDED IN GASKET SET (ENGINE)
79	8941258621	CLIP	2		ID=20.8
80	8972222470	PLATE	1		

ENGINE WATER LINES

T159187 -UN-19SEP02

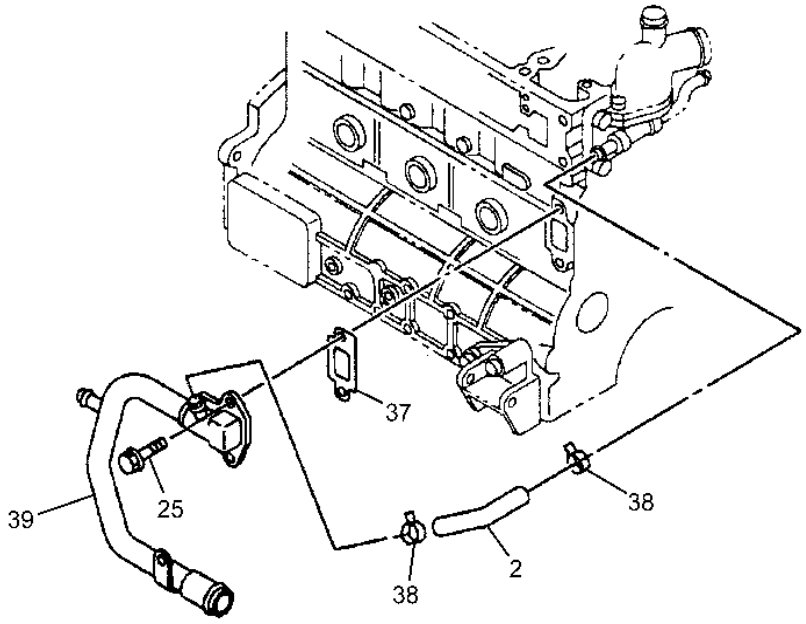

T159187

ENGINE WATER LINES

KEY	PART NO.	PART NAME	QTY	SERIAL NO.	REMARKS
2	8972872771	HOSE	1		
25	19M7866	SCREW	2		(SUB FOR AT259925) M8X45 FLANGE
37	.....	PACKING	1		(8943656763 NO LONGER AVAILABLE) (SUB FOR 8943656762)
38	8941258621	CLIP	2		ID=20.8
39	8972633980	PIPE	1		

OIL COOLER AND FILTER

T159192 -UN-19SEP02

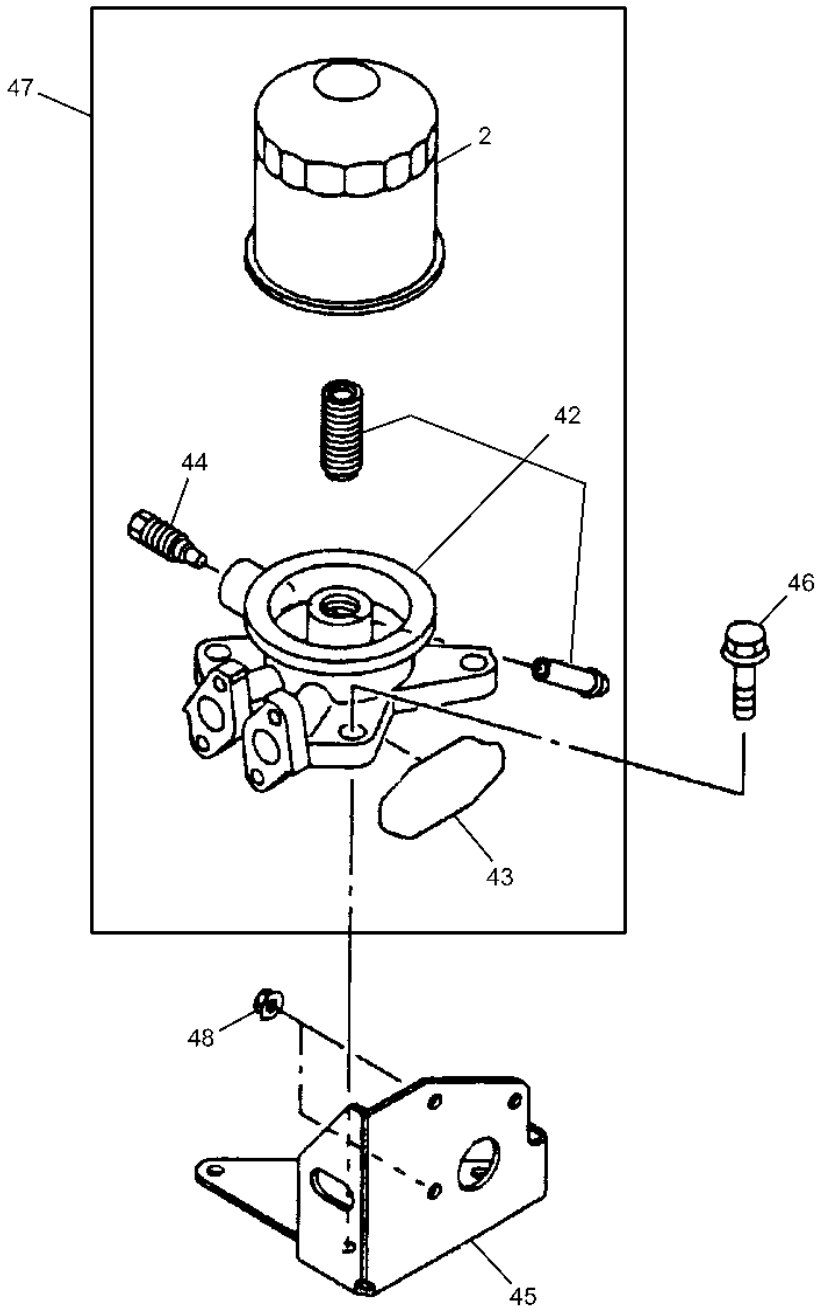

T159192

OIL COOLER AND FILTER

KEY	PART NO.	PART NAME	QTY	SERIAL NO.	REMARKS
2	8970497081	OIL FILTER	1		
42	8972291680	HOUSING	1		
43	8970659830	GASKET	1		ALSO INCLUDED IN GASKET SET (ENGINE)
44	1132193410	PLUG	1		
45	8972153880	BRACKET	1		
46	0286808300	BOLT	3		(SUB FOR AT259940) M8X30 FLANGE
47	8972193150	FILTER	1		
48	4447338	NUT	2		(SUB FOR AT259945)

PRIMARY AND FINAL FUEL FILTER

T159190 -UN-19SEP02

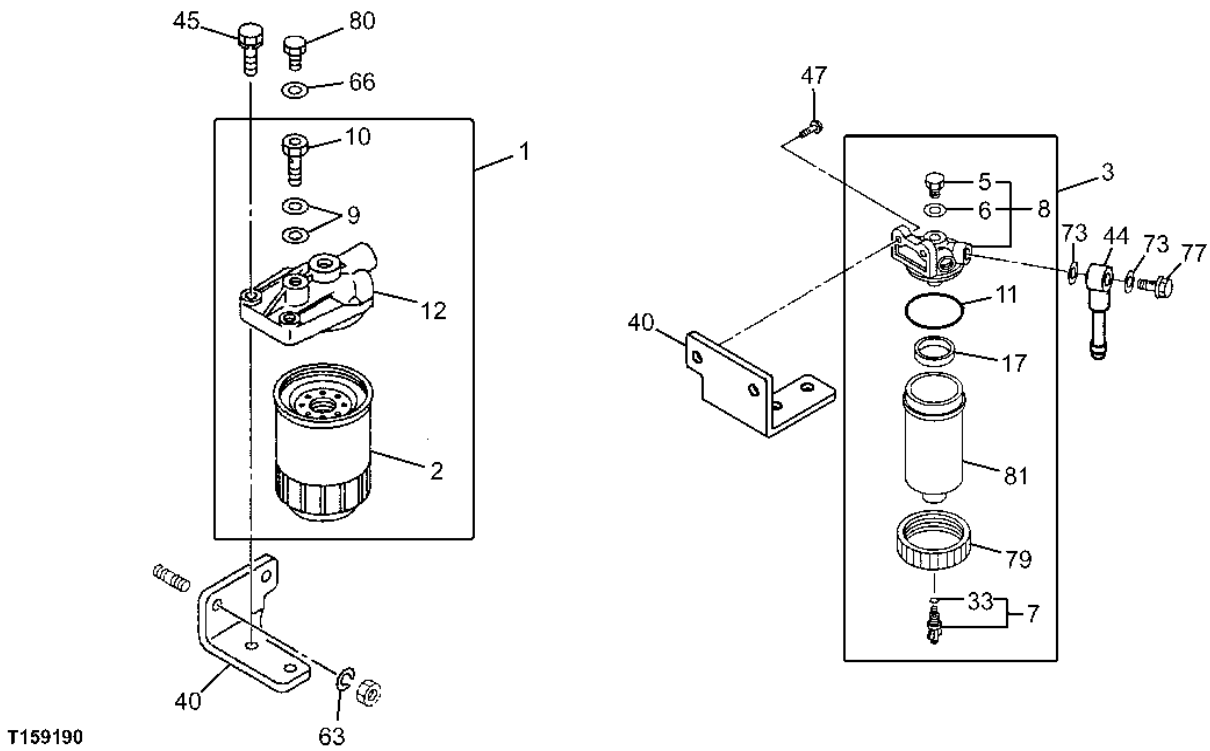

PRIMARY AND FINAL FUEL FILTER

KEY	PART NO.	PART NAME	QTY	SERIAL NO.	REMARKS
1	8971798541	FILTER	1		
2	4S00203	FILTER ELEMENT	1		(SUB FOR 8944147963, 4265247, 4285643)
3	4452161	SEPARATOR	1		
5	5132190200	BOLT	1		
6	5096300240	GASKET	1		
7	8944537460	PIPE PLUG	1		
8	1132121401	COVER	1		
9	AT263852	WASHER	4		
10	1132600360	FLOW CONTROL HYD. VALVE	1		
11	5096230700	O-RING	1		
12	8971798550	COVER	1		(SUB FOR 5132120751)
17	5132190210	FLOAT	1		
33	8941678860	O-RING	1		
40	8944104040	BRACKET	2		
44	4452162	PIPE	2		
45	0286810350	BOLT	2		
47	0280808120	BOLT	2		
63	1099853450	WASHER	2		
66	9095714080	GASKET	1		
73	AT255026	O-RING	4		
77	5157590270	BOLT	2		
79	5132190221	RING	1		
80	9092023080	PIPE PLUG	1		
81	1132112110	CASE	1		

FUEL PUMP PIPING

T159191 -UN-11OCT02

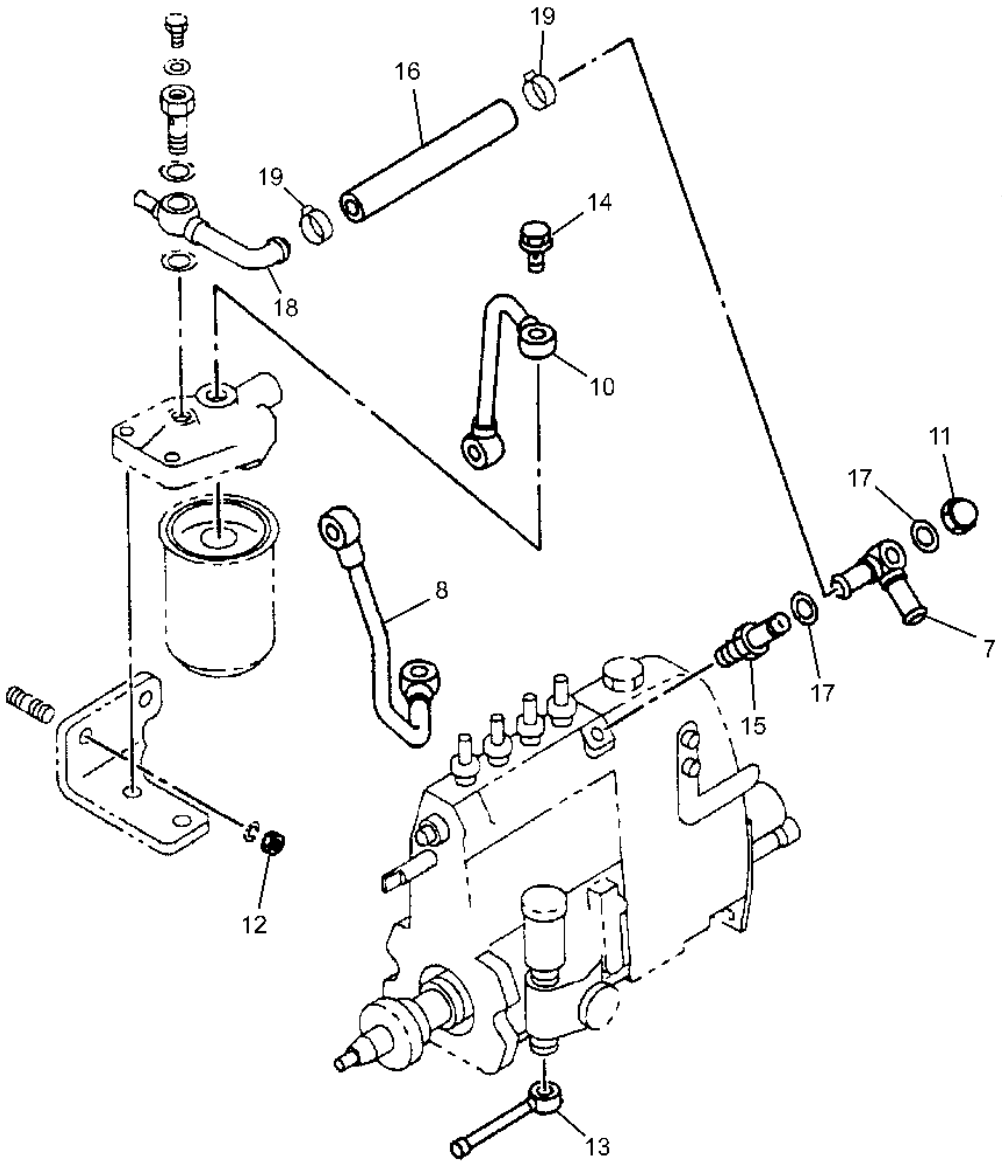

T159191

FUEL PUMP PIPING

KEY	PART NO.	PART NAME	QTY	SERIAL NO.	REMARKS
7	8973059430	PIPE	1		
8	8944241421	PIPE	1		
10	8944241430	PIPE	1		
11	1094680021	NUT	1		
12	9091105100	NUT	2		
13	AT264112	OIL TUBE	1		
14	1096751460	BOLT	2		M14X29 EYE BOLT
15	1132600410	FLOW CONTROL HYD. VALVE	1		
16	0012593000	HOSE	1		L=180 S.B. L=1000
17	AT255026	O-RING	6		
18	8944415921	PIPE	1		
19	8944660570	CLIP	2		

STARTER

T159195 -UN-19SEP02

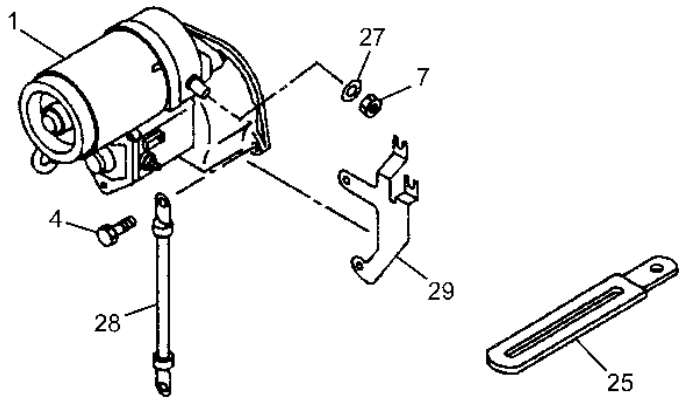

T159195

STARTER

KEY	PART NO.	PART NAME	QTY	SERIAL NO.	REMARKS
1	8972248130	STARTER MOTOR	1		(SUB FOR 8971374781) 24V-3.2KW
4	0281812400	BOLT	2		M12X40 FLANGE
7	AT260108	NUT	1		
25	8972395320	CLIP	1		
27	1099851770	WASHER	1		(SUB FOR AT255018)
28	8971805560	GROUND CABLE	1		L=300
29	8973296470	BRACKET	1		(SUB FOR 8972148510)

ALTERNATOR MOUNTING

T159197 -UN-19SEP02

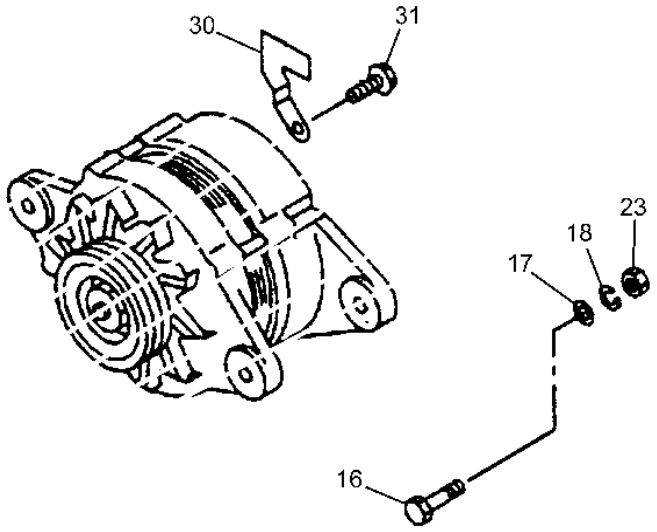

T159197

ALTERNATOR MOUNTING

KEY	PART NO.	PART NAME	QTY	SERIAL NO.	REMARKS
16	8972226840	BOLT	1		M8X124
17	9091605080	WASHER	1		(SUB FOR AT195657)
18	1099851770	WASHER	1		(SUB FOR AT255018)
23	9091105080	NUT	1		(SUB FOR AT260107)
30	8972292440	LATCH	1		
31	9039205100	SCREW	1		M5X10 W/LK&PL WASHER

FAN AND FAN BELT

T159188 -UN-11OCT02

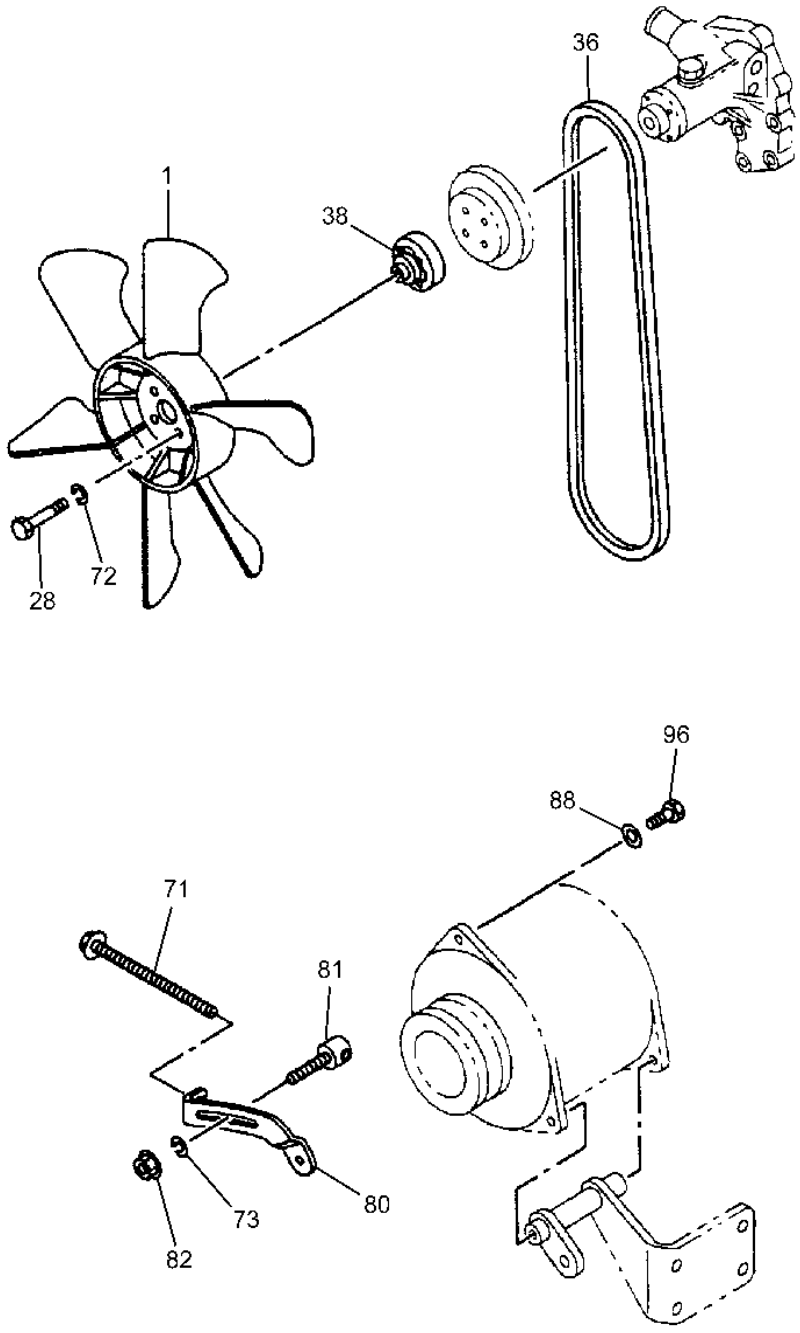

T159188

FAN AND FAN BELT

KEY	PART NO.	PART NAME	QTY	SERIAL NO.	REMARKS
1	8972876960	FAN	1		D=475-7-SUCT-PP
28	0280806500	BOLT	4		(SUB FOR AT259923) M6X55 FLANGE
36	8972414700	V-BELT	1		1-PIECE, L=1056
38	9136420780	HUB	1		(SUB FOR AT260112)
71	8971727201	BOLT	1		M8X130 FLANGE
72	1099851790	WASHER	4		
73	1099851770	WASHER	1		(SUB FOR AT255018)
80	8971842640	PLATE	1		
81	8972572230	BOLT	1		
82	9091105080	NUT	1		(SUB FOR AT260107)
88	9091647080	WASHER	1		
96	0500408350	BOLT	1		M8X35 W/LK WASHER
	19M7866	SCREW	1		(SUB FOR AT259925) M8X20 FLANGE

FLYWHEEL

T188447 -UN-14MAR03

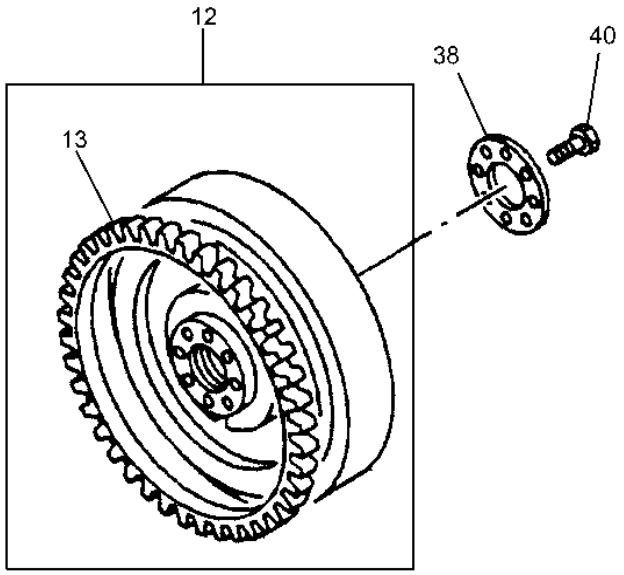

T188447

FLYWHEEL

KEY	PART NO.	PART NAME	QTY	SERIAL NO.	REMARKS
12	8972649302	FLYWHEEL	1		(SUB FOR 8972649300 OR 8972649301)
38	8941421561	WASHER	1		
40	8970659841	BOLT	8		M13X36

FLYWHEEL HOUSING

T159177 -UN-19SEP02

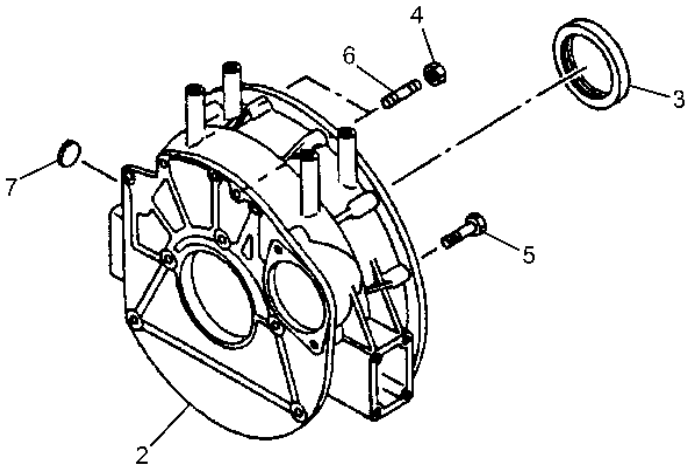

T159177

FLYWHEEL HOUSING

KEY	PART NO.	PART NAME	QTY	SERIAL NO.	REMARKS
2	8973054511	HOUSING	1		(SUB FOR 8973054510)
3	8970715611	SEAL	1		ALSO INCLUDED IN GASKET SET (ENGINE)
4	4447336	NUT	2		(SUB FOR AT259946)
5	5090002270	BOLT	3		M12X25
	AT263876	BOLT	1		M10X30 FLANGE
6	8941077260	STUD	2		
7	8972207400	COVER	1		

ENGINE GASKET SET

T157455 -UN-11OCT02

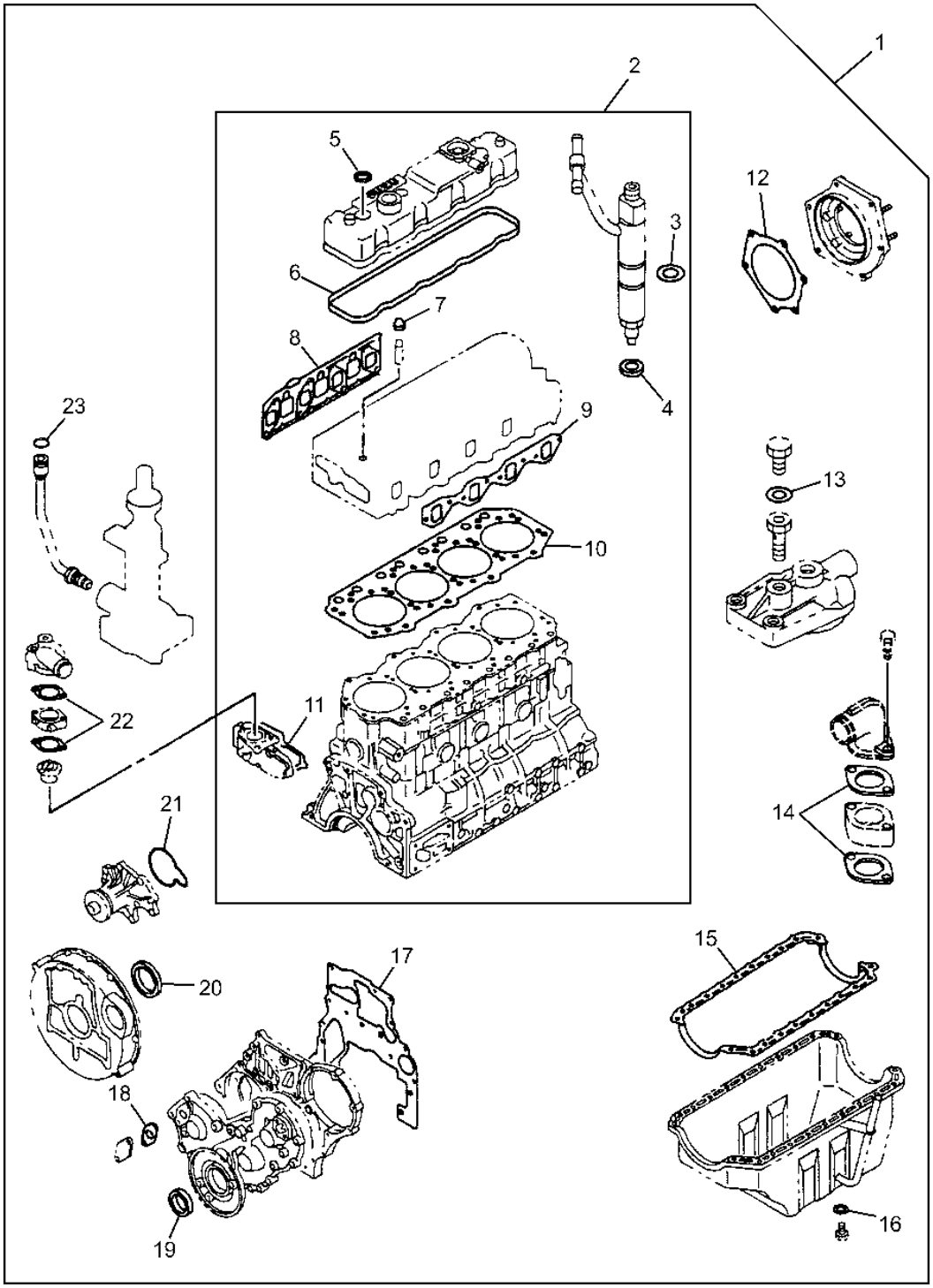

T157455

ENGINE GASKET SET

KEY	PART NO.	PART NAME	QTY	SERIAL NO.	REMARKS
1	5878136705	GASKET KIT	1		(SUB FOR 5878136703, 5878136702, 5878136700 OR 5878136704)
2	5878140202	GASKET KIT	1		(SUB FOR 5878140200 OR 5878140201)
3	8943264390	GASKET	4		
4	8971713310	GASKET	4		
5	8942024563	GASKET	3		ID=19.6
6	8973494160	GASKET	1		(SUB FOR 8971611310)
7	8971203070	SEAL	8		
8	.....	GASKET	1		(8973503170 NO LONGER AVAILABLE) (SUB FOR 8971092162)
9	8972125400	GASKET	1		
10	8970661960	GASKET	1		T=1.60 1-HOLE
11	8972125370	GASKET	1		
12	.....	GASKET	1		(8941097070 NO LONGER AVAILABLE)
13	9095714080	GASKET	1		
14	8970225710	PACKING	2		
15	8970801940	GASKET	1		
16	1096231830	GASKET	1		(SUB FOR AT254814)
17	8971172421	GASKET	1		(SUB FOR 8971172420)
18	.....	GASKET	2		(8971186980 NO LONGER AVAILABLE)
19	8970491450	SEAL	1		(SUB FOR AT254826)
20	8970715611	SEAL	1		
21	.....	GASKET	1		(8941780810 NO LONGER AVAILABLE)
22	.....	GASKET	2		(8943656742 NO LONGER AVAILABLE) (SUB FOR AT254863)
23	5096230020	GASKET	1		

COOLING SYSTEM

T160720 -UN-31OCT02

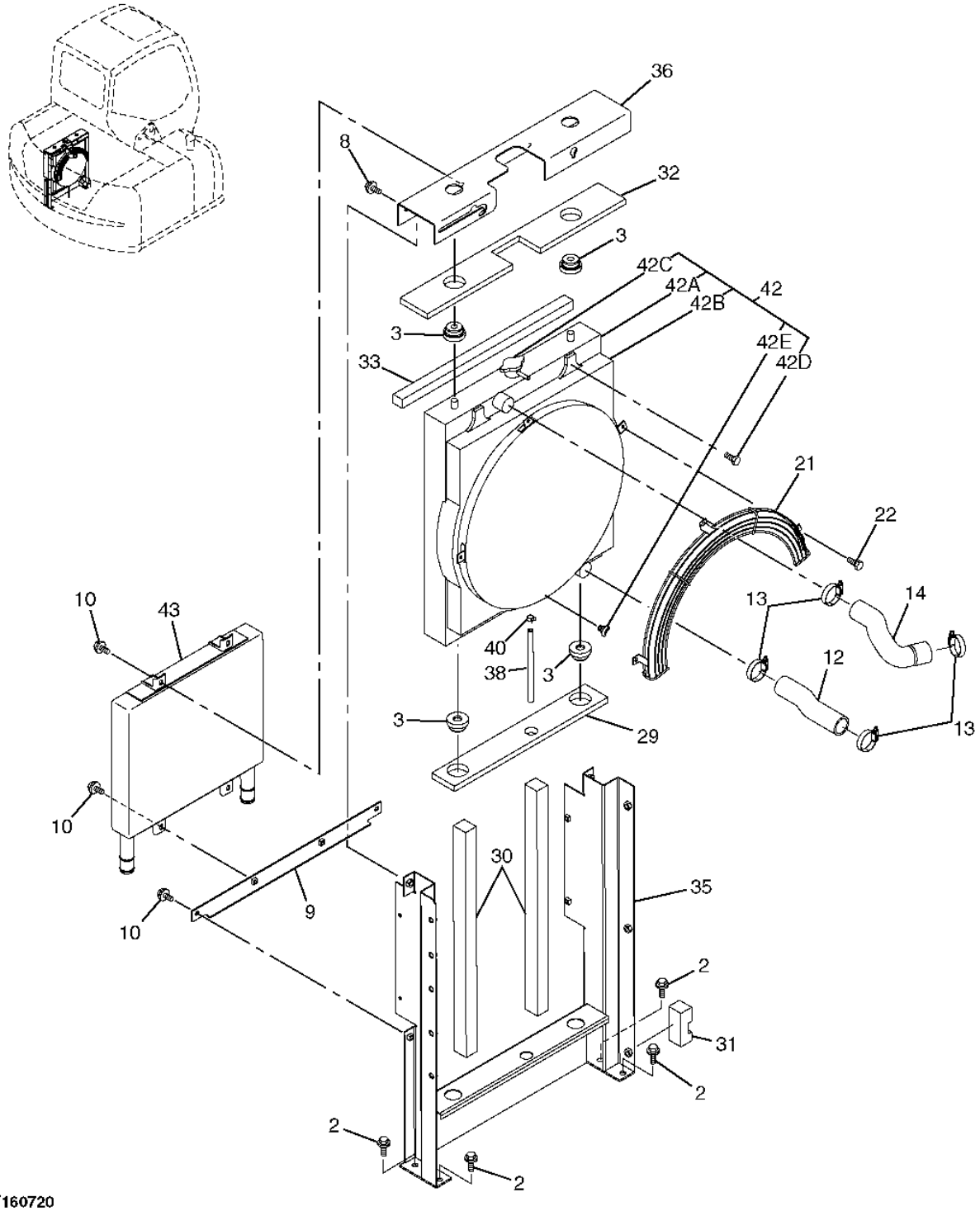

COOLING SYSTEM

KEY	PART NO.	PART NAME	QTY	SERIAL NO.	REMARKS
2	19M7402	CAP SCREW	4		M10 X 25
	24M7096	WASHER	4		10.500 X 18 X 1.600 MM (0.413" X 0.709" X 0.063")
	12M7066	LOCK WASHER	4		10 MM (0.394")
3	4418505	ISOLATOR	4		
8	19M7402	CAP SCREW	2		M10 X 25
	24M7096	WASHER	2		10.500 X 18 X 1.600 MM (0.413" X 0.709" X 0.063")
	12M7066	LOCK WASHER	2		10 MM (0.394")
9	8082971	BRACKET	1		
10	19M7881	SCREW	6		M8 X 20
12	4448661	RADIATOR HOSE	1		
13	AR65293	CLAMP	4		
14	3091811	RADIATOR HOSE	1		
21	7040974	GUARD	1		
22	4461363	BOLT	3		
29	4457646	ISOLATOR	1		
30	4457647	ISOLATOR	2		
31	4457664	ISOLATOR	1		
32	4457650	ISOLATOR	1		
33	4457724	ISOLATOR	1		
35	7040801	FRAME	1		
36	8084705	BRACKET	1		
38	.....	HOSE	1		CUT FROM BULK HOSE
40	4331118	CLAMP	1		
42	4464825	RADIATOR	1		
42A	.....	CORE	1		(4479181 NOT AVAILABLE FOR SERVICE)
42B	4479185	GUIDE	1		
42C	4435704	CAP	1		
42D	4461363	BOLT	4		
42E	4479188	PIPE PLUG	1		
43	4464826	OIL COOLER	1		

RADIATOR RESERVE TANK

T160721 -UN-31OCT02

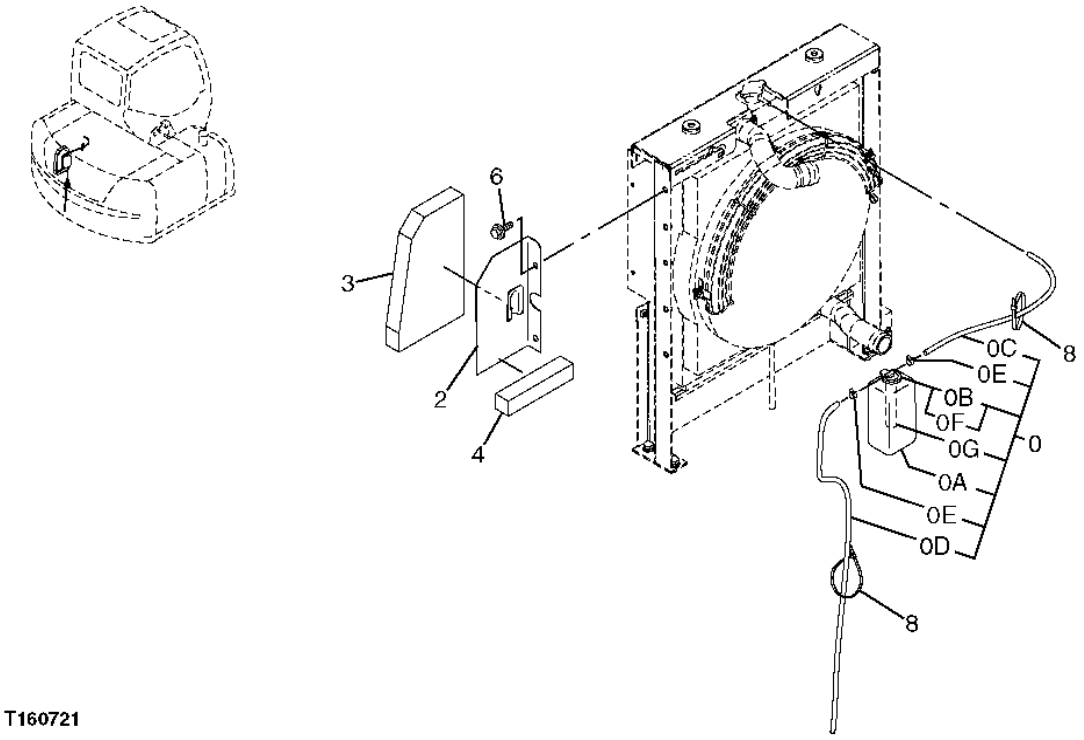

T160721

RADIATOR RESERVE TANK

KEY	PART NO.	PART NAME	QTY	SERIAL NO.	REMARKS
0	4431425	TANK	1		
0A	4397682	RESERVOIR	1		
0B	4397683	CAP	1		
0C	.....	HOSE	1		CUT FROM BULK HOSE
0D	.....	HOSE	1		CUT FROM BULK HOSE
0E	4397686	HOSE CLAMP	2		
0F	4398054	SEAL	1		
0G	4398055	HOSE	1		
2	8082972	BRACKET	1		
3	3092530	ISOLATOR	1		
4	4457703	ISOLATOR	1		
6	19M7402	CAP SCREW	2		M10 X 25
	12M7066	LOCK WASHER	2		10 MM (0.394")
	24M7096	WASHER	2		10.500 X 18 X 1.600 MM (0.413" X 0.709" X 0.063")
8	H77698	TIE BAND	2		

ENGINE SPEED CONTROL MOTOR AND CABLE

T198915 -UN-07APR04

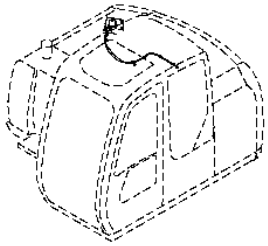

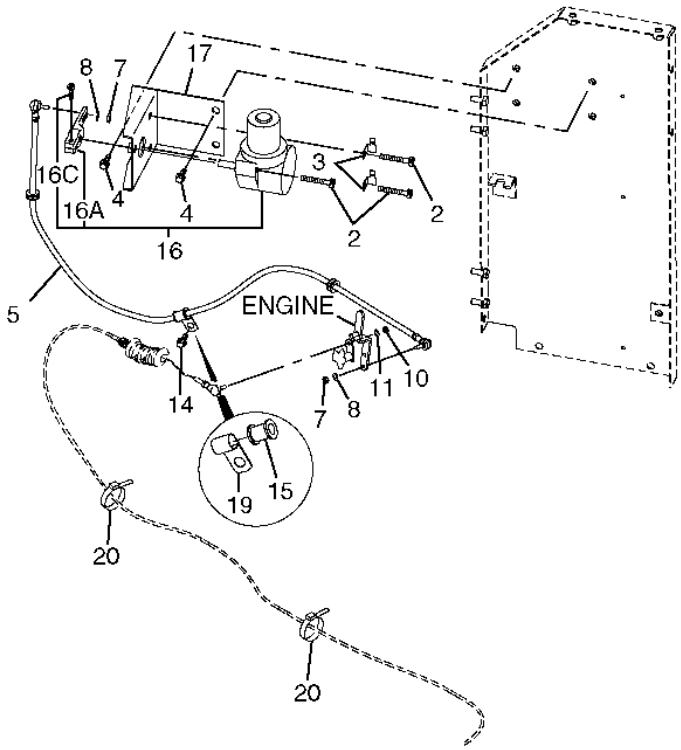

T198915

ENGINE SPEED CONTROL MOTOR AND CABLE

KEY	PART NO.	PART NAME	QTY	SERIAL NO.	REMARKS
2	19M8954	SCREW	3		M10 X 60
3	4257159	BRACKET	2		
4	19M7402	CAP SCREW	4		M10 X 25
	12M7066	LOCK WASHER	4		10 MM (0.394")
	24M7028	WASHER	4		10.500 X 20 X 2 MM (0.413" X 0.787" X 0.079")
5	4447957	PUSH PULL CABLE	1		
7	14M7272	NUT	2		M6
8	12M7006	LOCK WASHER	2		6 MM (0.236")
10	14M7272	NUT	1		M6
11	12M7006	LOCK WASHER	1		6 MM (0.236")
14	19M7938	CAP SCREW	1		M10 X 20
	12M7066	LOCK WASHER	1		10 MM (0.394")
15	4288070	BUSHING	1		
16	4614911	MOTOR	1		(SUB FOR 4360509)
16A	9756079	LEVER	1		(SUB FOR 9207252, ALONG WITH J780820)
16C	J780820	CAP SCREW	1		
17	8085595	BRACKET	1		
19	4190253	CLIP	1		
20	H77698	TIE BAND	2		

EMERGENCY ENGINE STOP CABLE

T160751 -UN-31OCT02

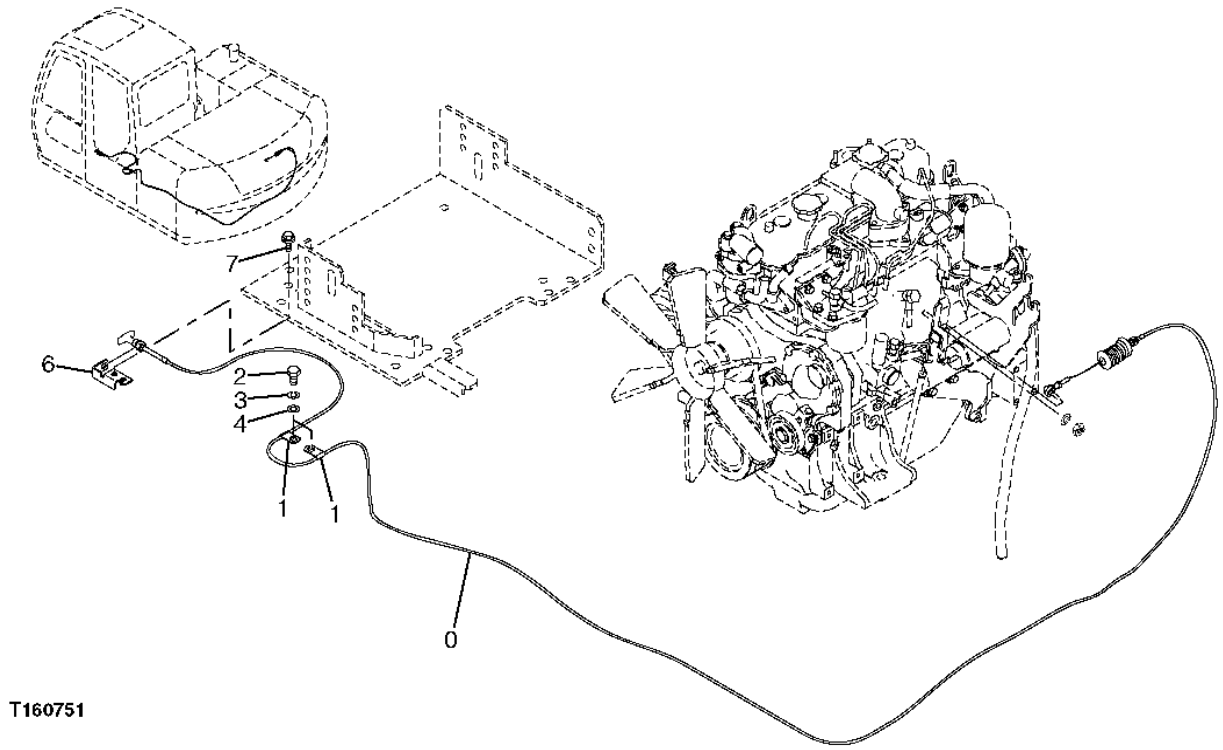

EMERGENCY ENGINE STOP CABLE

KEY	PART NO.	PART NAME	QTY	SERIAL NO.	REMARKS
0	4450769	PUSH PULL CABLE	1		
1	4190276	CLIP	1		
2	19M8324	CAP SCREW	2		M10 X 16
3	12M7066	LOCK WASHER	2		10 MM (0.394")
4	24M7028	WASHER	2		10.500 X 20 X 2 MM (0.413" X 0.787" X 0.079")
6	8083555	BRACKET	1		
7	19M7881	SCREW	2		M8 X 20

AIR CLEANER

T160722 -UN-31OCT02

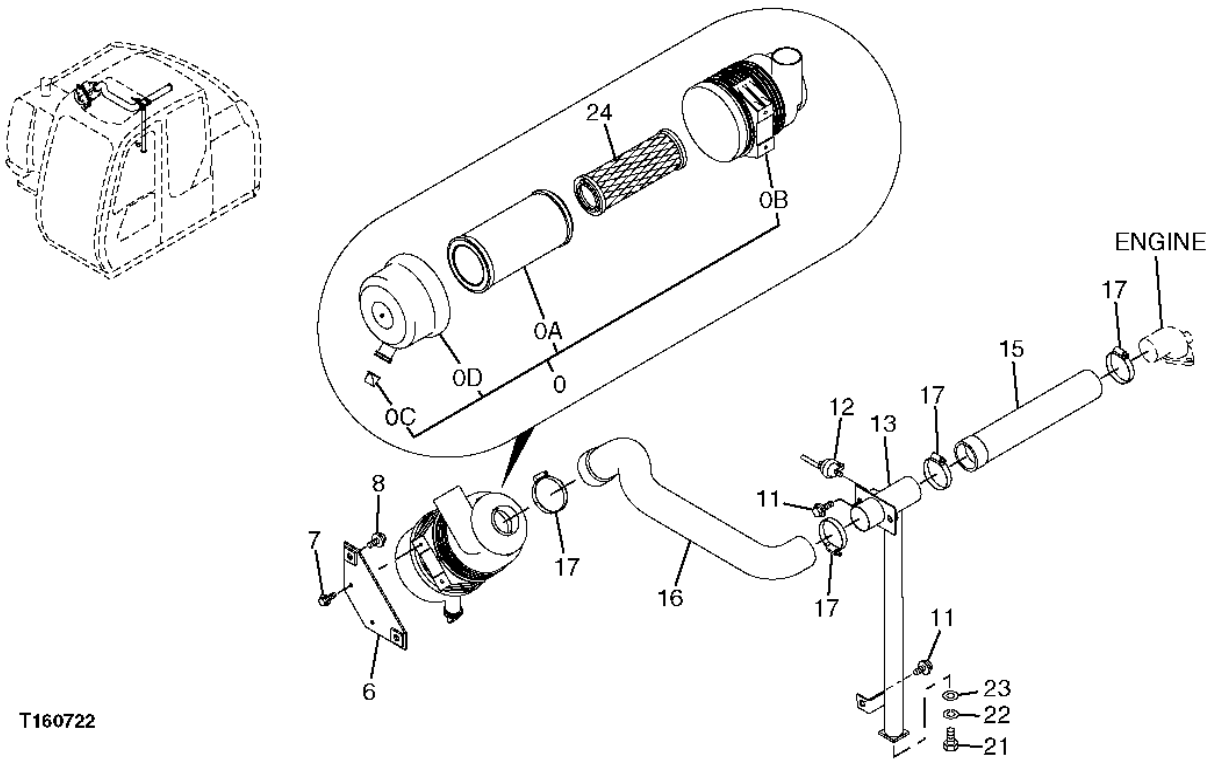

AIR CLEANER

KEY	PART NO.	PART NAME	QTY	SERIAL NO.	REMARKS
0	4444525	FILTER	1		
0A	RE68048	AIR FILTER	1		(SUB FOR 4290940 OR AT308570)
0B	.....	HOUSING	1		(4396694 NOT AVAILABLE FOR SERVICE)
0C	4208275	VALVE	1		
0D	.....	COVER	1		(4396695 NOT AVAILABLE FOR SERVICE)
6	9756771	BRACKET	1		
7	19M7163	CAP SCREW	2		M8 X 25
	12M7065	LOCK WASHER	2		8 MM (0.315")
8	19M7662	CAP SCREW	2		M10 X 30
	12M7066	LOCK WASHER	2		10 MM (0.394")
	24M7028	WASHER	2		10.500 X 20 X 2 MM (0.413" X 0.787" X 0.079")
11	19M7402	CAP SCREW	3		M10 X 25
	12M7066	LOCK WASHER	3		10 MM (0.394")
	24M7028	WASHER	3		10.500 X 20 X 2 MM (0.413" X 0.787" X 0.079")
12	4342334	INDICATOR	1		
13	7040577	PIPE	1		
15	4448641	HOSE	1		
16	3091184	HOSE	1		
17	AT145651	CLAMP	4		
21	19M8324	CAP SCREW	1		M10 X 16
22	12M7066	LOCK WASHER	1		10 MM (0.394")
23	24M7028	WASHER	1		10.500 X 20 X 2 MM (0.413" X 0.787" X 0.079")
24	RE68049	AIR FILTER	1		(SUB FOR 4326841, AT308572)

AIR CLEANER SUPPORT

T160723 -UN-31OCT02

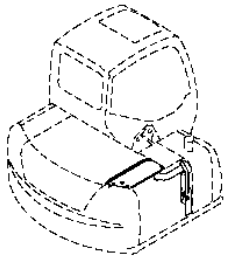

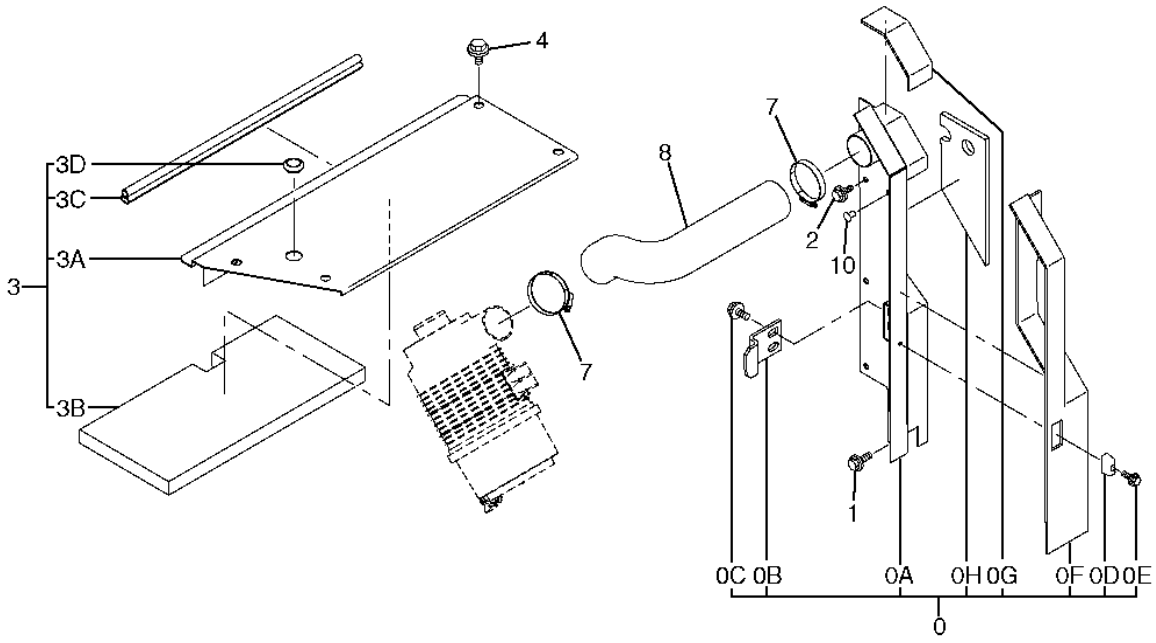

T160723

AIR CLEANER SUPPORT

KEY	PART NO.	PART NAME	QTY	SERIAL NO.	REMARKS
0	9206188	COVER	1		
0A	.....	COVER	1		(7041267 NO LONGER AVAILABLE)
0B	4449262	STOP	1		
0C	J031025	BOLT	2		
0D	4424157	STOP	1		
0E	19M8118	CAP SCREW	1		M10 X 35
	12M7066	LOCK WASHER	1		10 MM (0.394")
	24M7105	WASHER	1		6 X 12 X 1.600 MM (0.236" X 0.472" X 0.063")
0F	4463594	ISOLATOR	1		
0G	4463595	ISOLATOR	1		
0H	4463596	ISOLATOR	1		
1	19M7662	CAP SCREW	1		M10 X 30
	12M7066	LOCK WASHER	1		10 MM (0.394")
	24M7028	WASHER	1		10.500 X 20 X 2 MM (0.413" X 0.787" X 0.079")
2	19M7662	CAP SCREW	3		M10 X 30
	12M7067	LOCK WASHER	3		12 MM (0.472")
	24M7346	WASHER	3		11 X 20 X 2 MM (0.433" X 0.787" X 0.079")
3	9206189	COVER	1		
3A	.....	COVER	1		(8083005 NO LONGER AVAILABLE)
3B	4453800	ISOLATOR	1		
3C	4461741	ISOLATOR	1		
3D	4223492	BUSHING	1		
4	J031025	BOLT	4		
7	AT145651	CLAMP	2		
8	3091185	HOSE	1		
10	4280359	PLUG	1		

MUFFLER

T160724 -UN-31OCT02

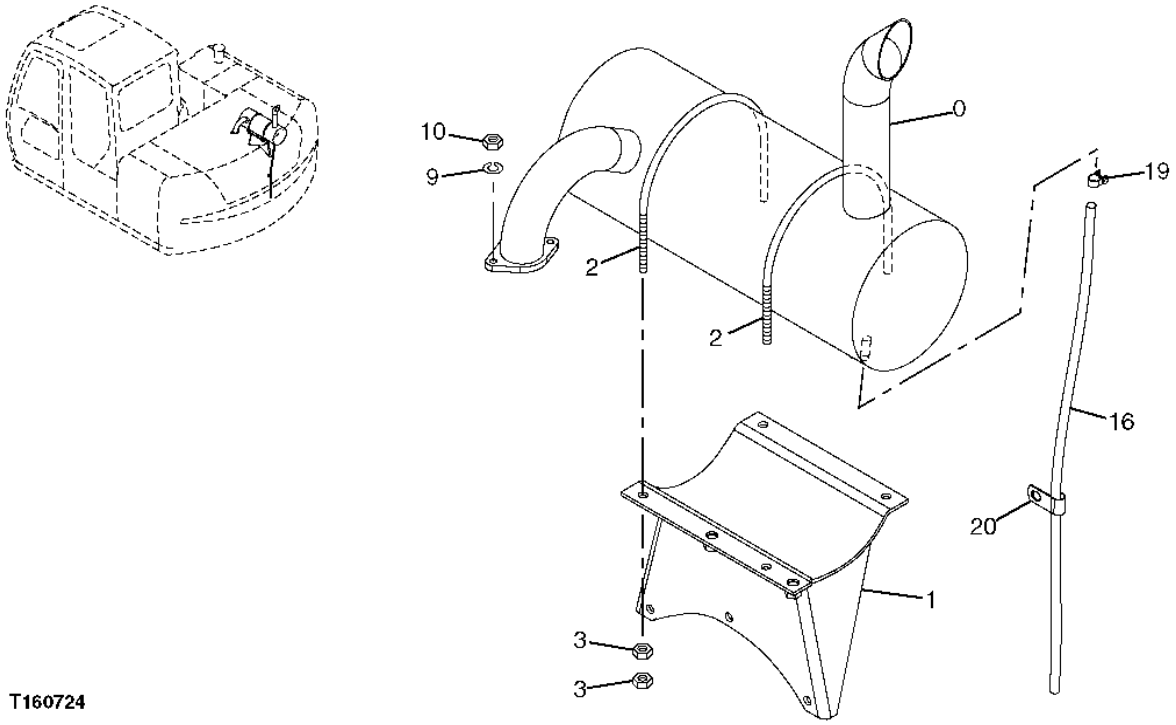

T160724

MUFFLER

KEY	PART NO.	PART NAME	QTY	SERIAL NO.	REMARKS
0	4448024	MUFFLER	1		
1	7039785	BRACKET	1		
2	4415969	BOLT	2		
3	14M7274	NUT	8		M10
9	12M7065	LOCK WASHER	2		8 MM, (SUB FOR A590908)
10	14M7273	NUT	2		M8
16	4297136	STRUCTURAL TUBING	1		(SUB FOR 4249788, 4276831 AND 4435717)
19	TY22462	CLAMP	1		(SUB FOR AR48236) (SUB FOR 4396451)
20	4344303	CLIP	1		

ENGINE MOUNTING

T188458 -UN-14MAR03

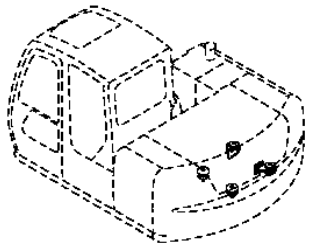

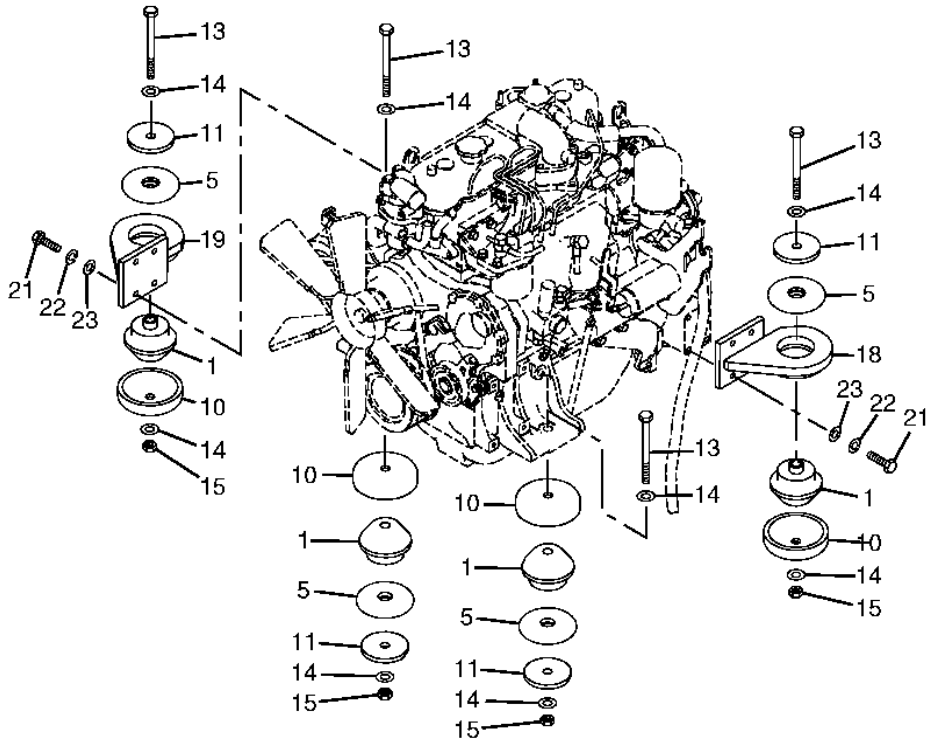

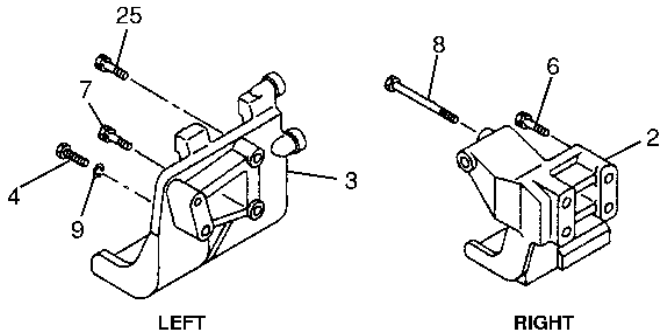

LEFT RIGHT

T188458

ENGINE MOUNTING

KEY	PART NO.	PART NAME	QTY	SERIAL NO.	REMARKS
1	4448738	ISOLATOR	8		
2	8973098570	BRACKET	1		
3	8972633970	BRACKET	1		
4	0208014800	BOLT	1		
5	4448739	ISOLATOR	4		
6	0500410600	BOLT	3		
7	0500410800	BOLT	2		
8	8972264700	BOLT	1		
9	AT264141	WASHER	1		
10	4428242	STOP	4		
11	4366699	RETAINER	4		
13	19M8043	CAP SCREW	4		M16 X 140
14	24M7338	WASHER	8		17 X 30 X 3 MM (0.669" X 1.181" X 0.118")
15	14M7276	NUT	4		M16
18	8085427	BRACKET	1		
19	8085428	BRACKET	1		
21	J901445	CAP SCREW	8		
22	12H317	LOCK WASHER	8		9/16"
23	J222014	WASHER	8		
25	0500410600	BOLT	1		

FUEL TANK

T160725 -UN-31OCT02

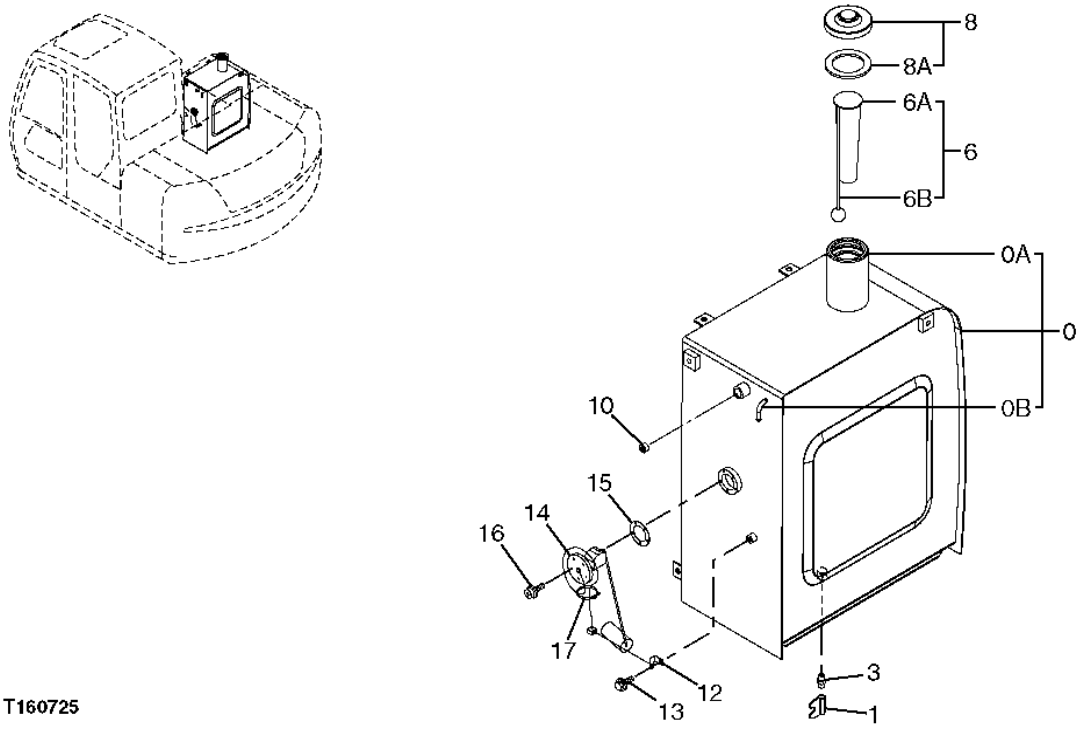

FUEL TANK

KEY	PART NO.	PART NAME	QTY	SERIAL NO.	REMARKS
0	6019668	FUEL TANK	1		
0A	4121497	BUSHING	1		
0B	4460751	PIPE	2		
1	4374265	DRAIN VALVE	1		
3	T116057	FITTING	1		
6	4353560	STRAINER	1		
6A	4353560	STRAINER	1		(SUB FOR 4372619)
6B	4372620	FLOAT	1		
8	4361638	FILLER CAP	1		
8A	4168820	PACKING	1		
10	94-2013	FITTING PLUG	1		
12	4257159	BRACKET	1		
13	19M8324	CAP SCREW	1		M10 X 16, (SUB FOR J011016)
	12M7067	LOCK WASHER	1		12 MM
14	4257128	FLOAT	1		
15	U42323	GASKET	1		
16	21M7278	SCREW	5		M5 X 10
17	R44302	TIE BAND	1		(SUB FOR 4326365)

FUEL TANK MOUNTING

T160726 -UN-31OCT02

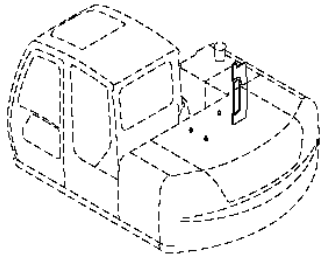

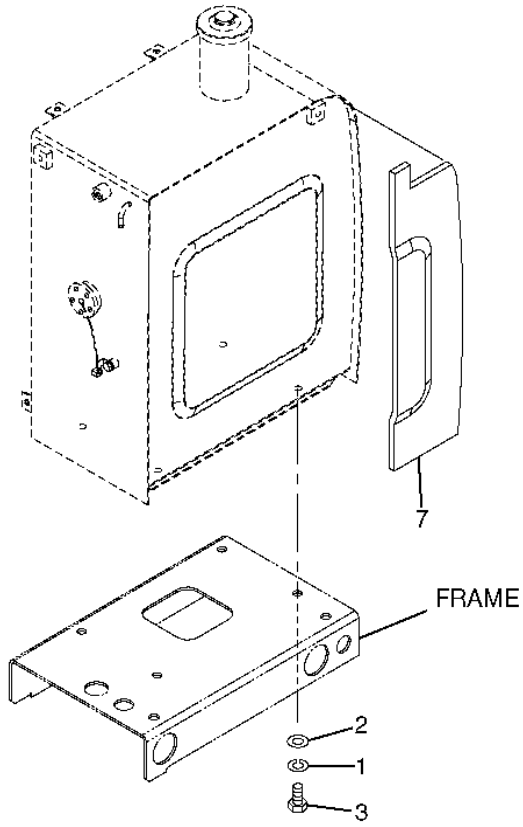

T160726

FUEL TANK MOUNTING

KEY	PART NO.	PART NAME	QTY	SERIAL NO.	REMARKS
1	12H294	LOCK WASHER	4		5/8"
2	24M7338	WASHER	4		17 X 30 X 3 MM (0.669" X 1.181" X 0.118")
3	19M8035	CAP SCREW	4		M16 X 35
7	4463597	ISOLATOR	1		

FUEL LINES AND HOSES

T160727 -UN-05NOV02

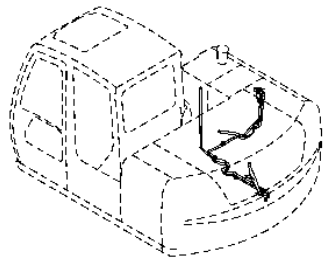

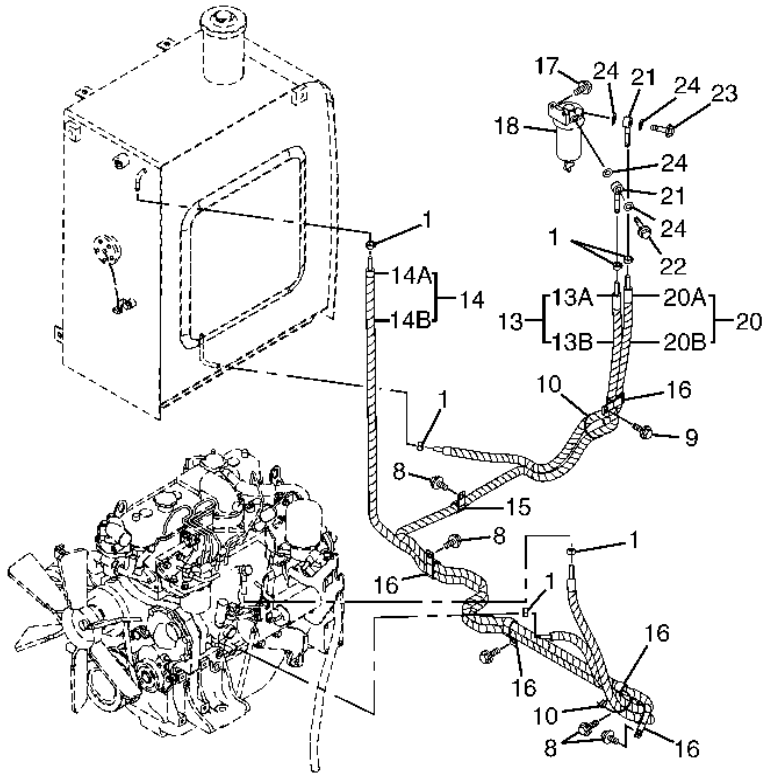

T160727

FUEL LINES AND HOSES

KEY	PART NO.	PART NAME	QTY	SERIAL NO.	REMARKS
1	4514700	CLAMP	6		
8	19M7938	CAP SCREW	5		M10 X 20
	12M7066	LOCK WASHER	5		10 MM (0.394")
9	19M7402	CAP SCREW	1		M10 X 25
	12M7066	LOCK WASHER	1		10 MM (0.394")
	24M7096	WASHER	1		10.500 X 18 X 1.600 MM (0.413" X 0.709" X 0.063")
10	H77698	TIE BAND	2		
13	.....	HOSE	1		(9191951 NOT AVAILABLE FOR SERVICE)
13A	.....	HOSE	1		(ORDER TY24398) (CUT TO LENGTH)
13B	4385002	TUBE	1		
14	.....	HOSE	1		
14A	4376825	HOSE	1		
14B	4217535	TUBE	1		
15	T24432	CLAMP	1		
16	4190266	CLIP	5		
17	19M7163	CAP SCREW	2		M8 X 25
	12M7065	LOCK WASHER	2		8 MM (0.315")
	24M7055	WASHER	2		8.400 X 16 X 1.600 MM (0.331" X 0.630" X 0.063")
18	4452161	SEPARATOR	1		
20	.....	HOSE	1		(9208781 NOT AVAILABLE FOR SERVICE)
20A	.....	HOSE	1		(ORDER TY24398) (CUT TO LENGTH)
20B	4462473	TUBE	1		
21	4452162	PIPE	2		
22	4452163	BOLT	1		
23	4452164	BOLT	1		
24	.....	PACKING	4		(SUB FOR 4452165)

LABELS AND DECALS

T188919 -UN-01APR03

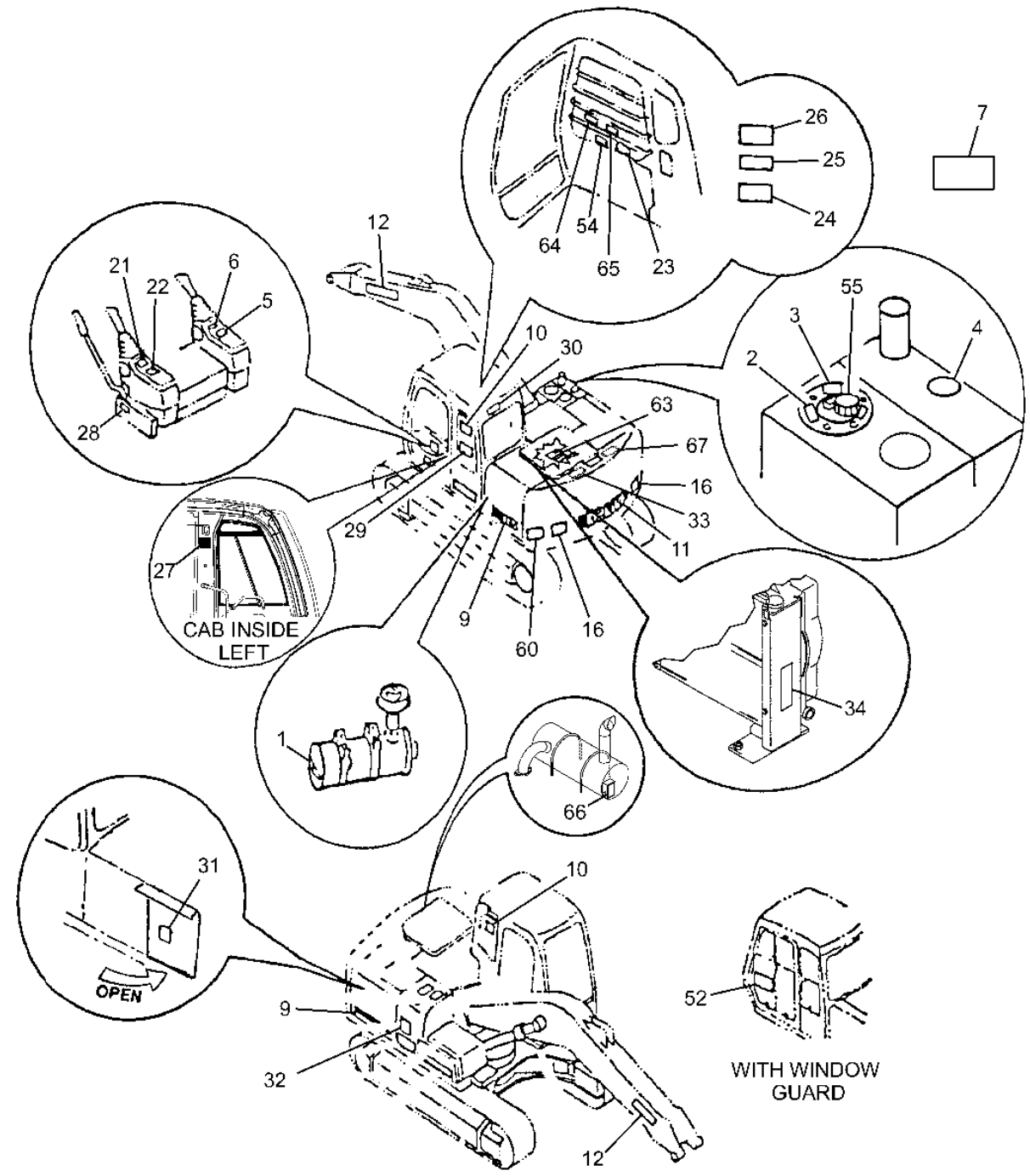

T188919

LABELS AND DECALS

KEY	PART NO.	PART NAME	QTY	SERIAL NO.	REMARKS
1	4432084	LABEL	1		(DRY AIR CLEANER)
2	P63448	LABEL	1		(PUMP BLEED INFORMATION)
3	T101942	LABEL	1		(HYDRAULIC OIL)
4	T79632	LABEL	1		(DIESEL ONLY)
5	4288417	LABEL	1		(IGNITION KEY SWITCH)
6	.....	LABEL	1		(SUB T201519) (SUB FOR T159842, THIS APPLICATION) (RIGHT CONTROL LEVER - SAE PATTERN) (WHITE BACKGROUND)
7	T200465	LABEL	1		(OFFSET BOOM LIFT CHART)
9	T191327	MOUNTING PARTS	2		(80C SERIES)
10	JD5770	LABEL	2		(TRANSPARENT LEAPING DEER)
11	T184044	LABEL	1		(DEERE)
12	T181116	LABEL	2		(DEERE)
16	JD5909	REFLECTOR	2		(RED REFLECTOR TAPE) (CUT TO LENGTH FROM JD5909 BULK MATERIAL) (T160910 NOT AVAILABLE FOR SERVICE)
21	.....	LABEL	1		(SUB T201519) (SUB FOR T159841, THIS APPLICATION) (LEFT CONTROL LEVER - SAE PATTERN) (WHITE BACKGROUND)
22	4288971	LABEL	1		(SUB FOR AT155729) (ETHER AID - MOTION CANCEL)
23	T191326	LABEL	1		(OPERATIONAL - START STOP)
24	T159887	SAFETY SIGN	1		ENGLISH (CAUTION)
25	T146668	SAFETY SIGN	1		(WARNING - AVOID CRUSHING)
26	T146667	SAFETY SIGN	1		(DANGER - ELECTROCUTION)
27	4485649	LABEL	1		(IMPORTANT - BREAK WINDOW FOR SECONDARY EXIT)
28	4299059	LABEL	1		(SUB FOR T138886) (HYDRAULIC LOCKOUT)
29	T191324	CHART	1		(LIFT CAPACITY)
30	T187535	LABEL	1		(CAUTION WINDOW LOCK - INSIDE CAB)
31	T208018	LABEL	1		(PERIODIC MAINTENANCE) (SUB FOR T191325)
32	T149983	LABEL	1		(IMPORTANT - OIL LEVEL) (INSIDE RIGHT PUMP COMPARTMENT)
33	T146102	LABEL	1		(SUB FOR T146103) (BYPASS START)
34	3088018	LABEL	1		(IMPORTANT - RADIATOR)
52	2050226	LABEL	1		(VANDAL PROTECTION COVER LOCATIONS)
54	T201519	LABEL	1		(PATTERN CHANGER DECAL) (SUB FOR T159842 AND T159841)
55	T187710	LABEL	1		(CAUTION - RESERVOIR COVER)
60	T190310	SAFETY SIGN	2		(WARNING - STAY CLEAR)
63	4604980	LABEL	1		(CAUTION - RADIATOR CAP)
64	T163997	LABEL	1		(BLADE OPERATION)
65	T164063	LABEL	1		(OFFSET BOOM OPERATION)
66	4455717	SAFETY SIGN	1		(WARNING - MUFFLER HOT)
67	T187757	LABEL	1		(WARNING - FINGERS IN FAN)

METRIC O-RING KIT

TP70402 -UN-13JUL00

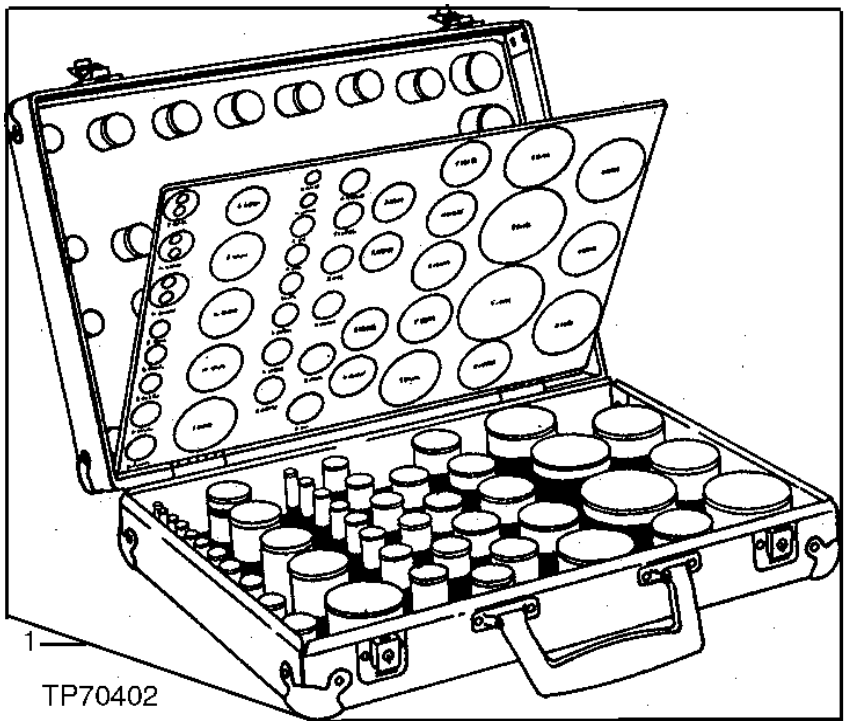

METRIC O-RING KIT

KEY	PART NO.	PART NAME	QTY	SERIAL NO.	REMARKS
1	AT130157	O-RING KIT	1		(CONTAINS ALL ITEMS LISTED BELOW)
..	CH11436	O-RING	5		49.400 X 3.100 MM (1.945" X 0.122")
..	CH11569	PACKING	5		
..	CH11570	O-RING	5		
..	CH11571	PACKING	5		
..	CH11572	PACKING	2		
..	CH12329	PACKING	5		
..	CH14634	O-RING	5		
..	CH14701	O-RING	5		
..	CH17167	O-RING	2		
..	CH19111	O-RING	5		
..	M800650	PACKING	10		
..	M800893	PACKING	5		
..	AT264324	O-RING	5		(SUB FOR TH100044)
..	4506424	O-RING	10		(SUB FOR TH100055)
..	AT264347	O-RING	5		(SUB FOR TH100136, 4506428)
..	A811030	O-RING	5		(SUB FOR TH101300)
..	4506408	O-RING	2		(SUB FOR TH101490)
..	TH101926	O-RING	5		28.700 X 3.500 MM (1.130" X 0.138")
..	957474	O-RING	2		(SUB FOR TH102706)
..	A811040	O-RING	2		(SUB FOR TH102992)
..	4153084	O-RING	2		(SUB FOR TH103446)
..	AT264354	O-RING	5		(SUB FOR TH103574)
..	970860	O-RING	2		(SUB FOR TH104634)
..	AT264360	O-RING	2		(SUB FOR TH104930, 4506430)
..	T110590	PACKING	5		
..	T110593	PACKING	5		
..	T59014	O-RING	5		24.994 X 3.531 MM (63/64" X 0.139")
..	A811045	O-RING	5		(SUB FOR T74492)
..	U10778	O-RING	5		16.358 X 2.210 MM (0.644" X 0.087")
..	U17409	O-RING	5		26.619 X 2.946 MM (1.048" X 0.116")
..	4506418	O-RING	10		(SUB FOR U46489)

BATTERIES AND BATTERY CABLES

T160861 -UN-05NOV02

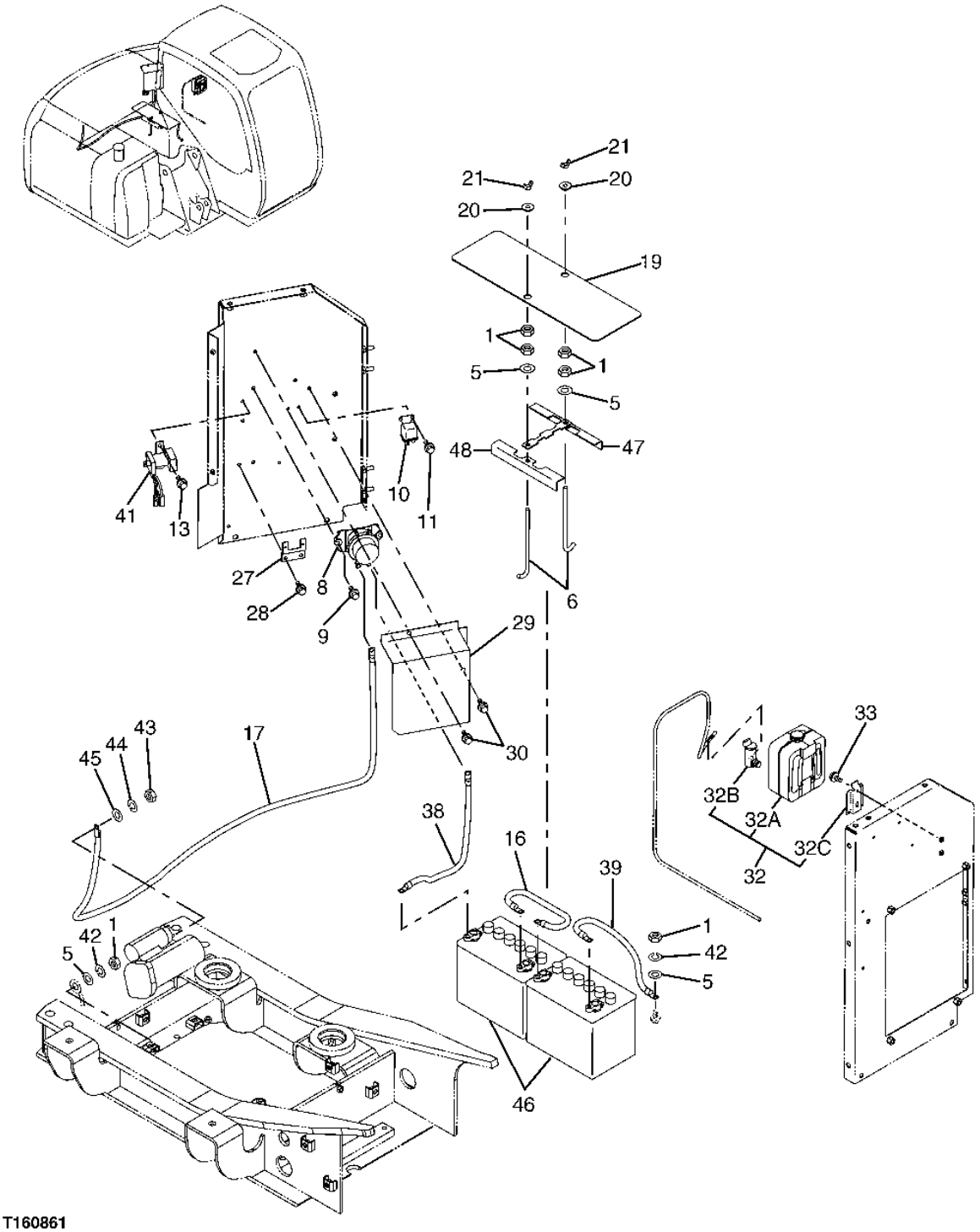

T160861

BATTERIES AND BATTERY CABLES

KEY	PART NO.	PART NAME	QTY	SERIAL NO.	REMARKS
1	14M7274	NUT	6		M10
5	24M7028	WASHER	4		10.500 X 20 X 2 MM (0.413" X 0.787" X 0.079")
6	4177557	BOLT	2		
8	4255762	RELAY	1		(BATTERY RELAY)
9	19M7513	CAP SCREW	2		M8 X 30
10	4251587	RELAY	1		(GLOW PLUG RELAY)
11	19M7077	CAP SCREW	2		M6 X 20
13	19M7881	SCREW	2		M8 X 20
	12M7065	LOCK WASHER	2		8 MM (0.315")
	24M7055	WASHER	2		8.400 X 16 X 1.600 MM (0.331" X 0.630" X 0.063")
16	AP33487	WIRING HARNESS	1		
17	4449807	BATTERY CABLE	1		
19	4427380	COVER	1		
20	4427417	BUSHING	2		
21	14M7025	WING NUT	2		M10
27	4449445	BRACKET	1		
28	19M7881	SCREW	2		M8 X 20
	12M7065	LOCK WASHER	2		8 MM (0.315")
29	3091312	COVER	1		
30	19M7881	SCREW	2		M8 X 20
	12M7065	LOCK WASHER	2		8 MM (0.315")
32	4333185	WINDSHIELD WASHER	1		
32A	4369472	RESERVOIR	1		
32B	4326095	PUMP	1		
32C	4338974	BRACKET	1		
33	19M7923	CAP SCREW	2		M6 X 12
	12M7006	LOCK WASHER	2		6 MM (0.236")
	24M7054	WASHER	2		6.400 X 12 X 1.600 MM (0.252" X 0.472" X 0.063")
38	4457915	BATTERY CABLE	1		
39	4457916	WIRING HARNESS	1		
41	1825530391	RELAY	1		(STARTER RELAY) (SUB FOR 4452158)
42	12M7066	LOCK WASHER	2		10 MM (0.394")
43	14M7273	NUT	1		M8
44	12M7065	LOCK WASHER	1		8 MM, (SUB FOR A590908)
45	24M7055	WASHER	1		8.400 X 16 X 1.600 MM, (SUB FOR A590108)
46	AT182298	WET CHARGED BATTERY	2		
47	4457930	CLAMP	1		
48	9757406	CLAMP	1		

ALTERNATOR

T159198 -UN-19SEP02

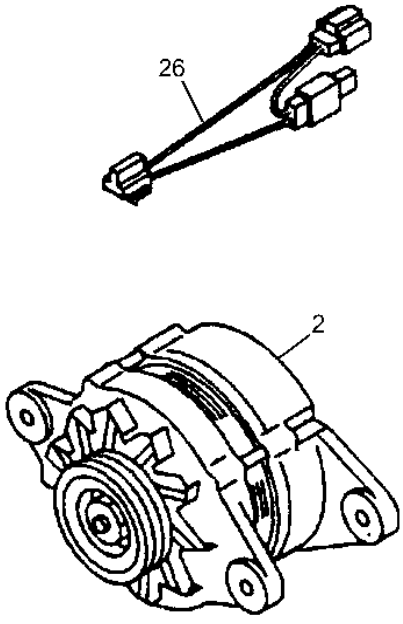

T159198

ALTERNATOR

KEY	PART NO.	PART NAME	QTY	SERIAL NO.	REMARKS
2	8971822892	ALTERNATOR	1		24V-30A
26	8972257181	WIRING HARNESS	1		

MACHINE WIRING HARNESS

T157039 -UN-31OCT02

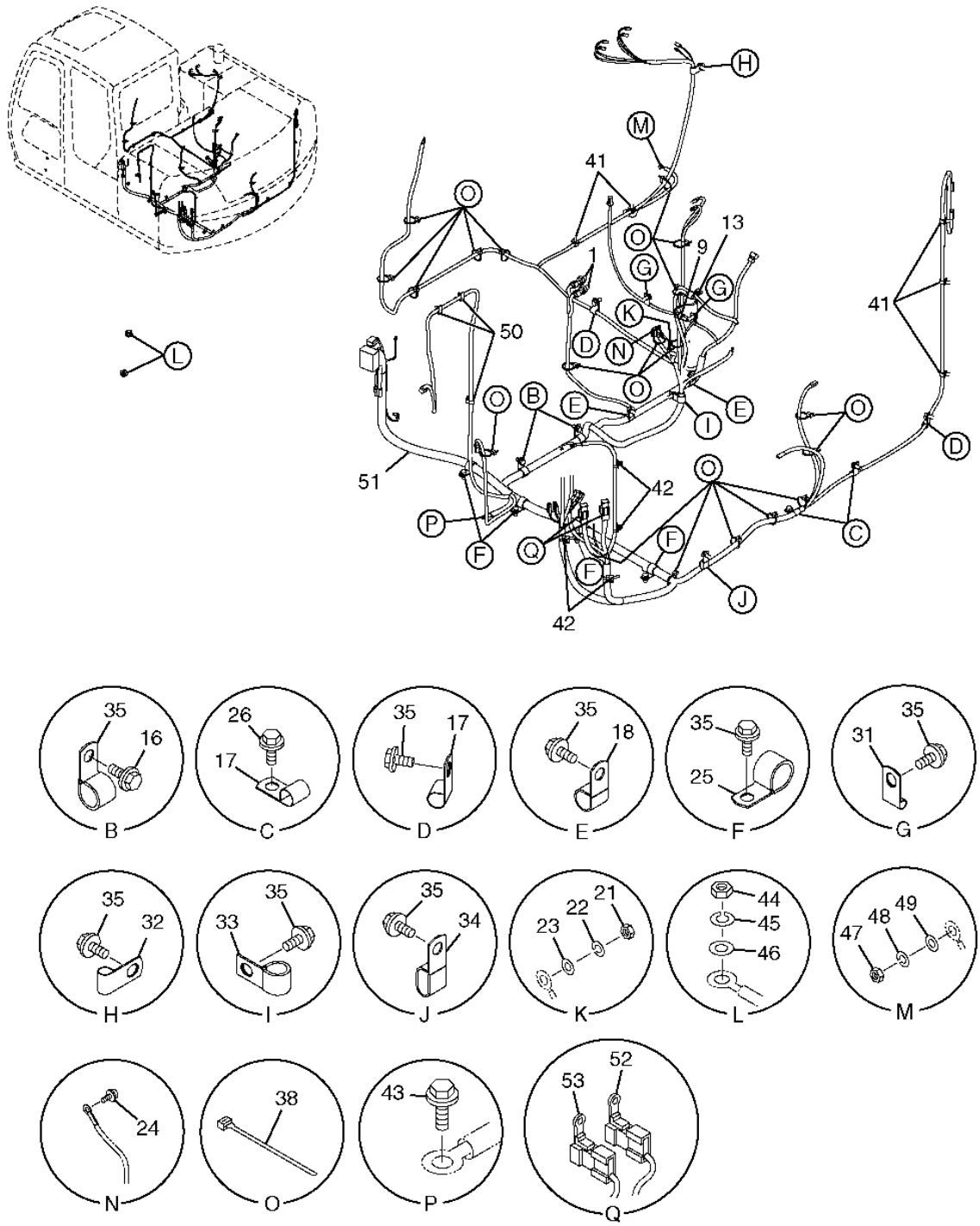

T157039

MACHINE WIRING HARNESS

KEY	PART NO.	PART NAME	QTY	SERIAL NO.	REMARKS
1	4436535	SENSOR	1		(DIG/SWING AND PROPEL PRESSURE SENSOR)
9	4436537	SENSOR	1		(COOLANT TEMPERATURE SENSOR)
13	4055311	TIE BAND	1		
16	T24432	CLAMP	2		
17	4190253	CLIP	4		
18	4190274	CLIP	2		
21	14M7297	NUT	1		
22	12M7064	LOCK WASHER	1		
23	24M7027	WASHER	1		
24	19M7700	CAP SCREW	1		
	12M7064	LOCK WASHER	1		
25	TH108594	CLIP	4		
26	19M7402	CAP SCREW	2		M10 X 25
	12M7066	LOCK WASHER	2		10 MM (0.394")
	24M7028	WASHER	2		10.500 X 20 X 2 MM (0.413" X 0.787" X 0.079")
31	T30367	CLAMP	2		
32	4190272	CLIP	1		
33	4190273	CLIP	1		
34	4190292	CLIP	1		
35	19M7938	CAP SCREW	15		M10 X 20
	12M7066	LOCK WASHER	15		10 MM (0.394")
38	H77698	TIE BAND	21		
41	4449250	CLIP	5		
42	4254600	CLIP	4		
43	19M7402	CAP SCREW	1		M10 X 25
	12M7066	LOCK WASHER	1		10 MM (0.394")
	24M7028	WASHER	1		10.500 X 20 X 2 MM (0.413" X 0.787" X 0.079")
44	14M7274	NUT	2		M10
45	12M7066	LOCK WASHER	2		10 MM (0.394")
46	24M7028	WASHER	2		10.500 X 20 X 2 MM (0.413" X 0.787" X 0.079")
47	14M7272	NUT	1		M6, (SUB FOR 14M7027)
48	12M7006	LOCK WASHER	1		6 MM (0.236")
49	24M7054	WASHER	1		6.400 X 12 X 1.600 MM (0.252" X 0.472" X 0.063")
50	4254600	CLIP	3		
51	0004062	WIRING HARNESS	1		
52	4423418	WIRE	1		
53	4315323	LINK	1		

BOOM LIGHT (STANDARD BOOM)

T157040 -UN-30OCT02

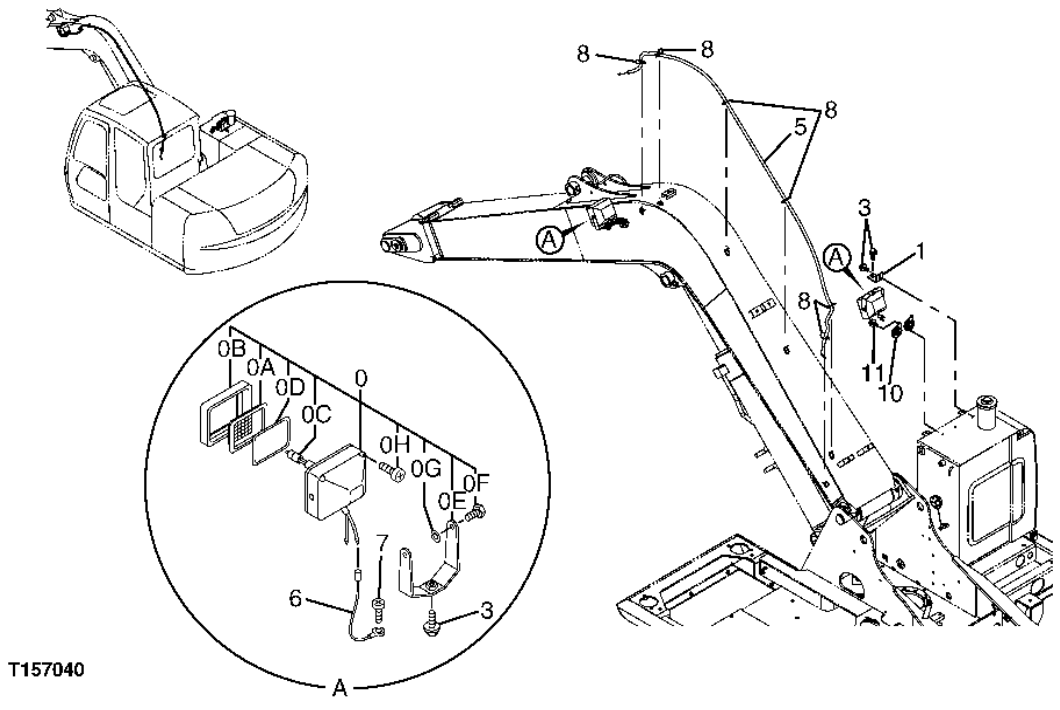

T157040

BOOM LIGHT (STANDARD BOOM)

KEY	PART NO.	PART NAME	QTY	SERIAL NO.	REMARKS
0	4389350	LAMP	2		
0A	4285646	LENS	1		
0B	4285647	RIM	1		
0C	AT154990	BULB	1		
0D	4288342	GASKET	1		
0E	4397146	BRACKET	1		
0F	4397147	SCREW	2		
0G	4397148	WASHER	2		
0H	4397160	SCREW	4		
1	4447958	BRACKET	1		
3	J031230	BOLT	3		
5	4386329	WIRING HARNESS	1		
6	4254604	WIRING HARNESS	1		(NOT ILLUSTRATED)
7	19M8425	CAP SCREW	1		M6 X 16
	12M7006	LOCK WASHER	1		6 MM (0.236")
	24M7293	WASHER	1		6.500 X 13 X 1.600 MM (0.256" X 0.512" X 0.063")
8	H77698	TIE BAND	6		
10	AT64237	HORN	2		
11	19M7163	CAP SCREW	2		M8 X 25
	12M7065	LOCK WASHER	2		8 MM (0.315")
	24M7055	WASHER	2		8.400 X 16 X 1.600 MM (0.331" X 0.630" X 0.063")
12	4254603	WIRING HARNESS	2		

BOOM LIGHT (OFFSET BOOM)

T157041 -UN-30OCT02

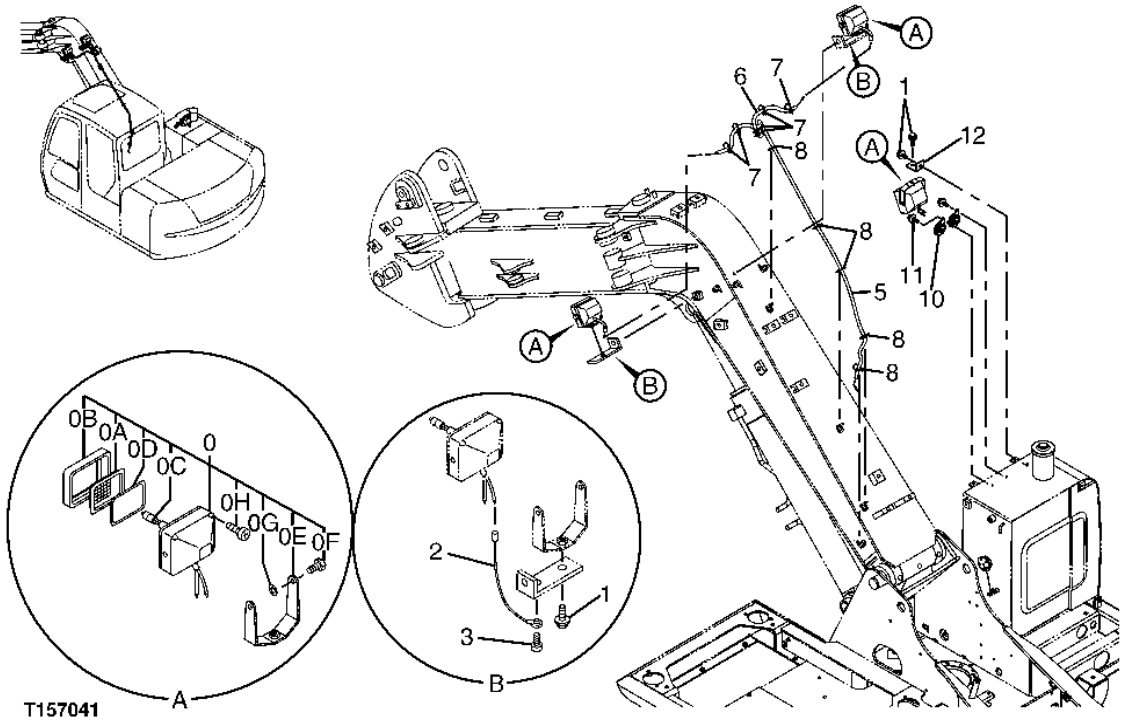

BOOM LIGHT (OFFSET BOOM)

KEY	PART NO.	PART NAME	QTY	SERIAL NO.	REMARKS
0	4389350	LAMP	3		
0A	4285646	LENS	1		
0B	4285647	RIM	1		
0C	AT154990	BULB	1		
0D	4288342	GASKET	1		
0E	4397146	BRACKET	1		
0F	4397147	SCREW	2		
0G	4397148	WASHER	2		
0H	4397160	SCREW	4		
1	J031230	BOLT	4		
2	4254604	WIRING HARNESS	2		
3	19M8425	CAP SCREW	2		M6 X 16
	12M7006	LOCK WASHER	2		6 MM (0.236")
	24M7293	WASHER	2		6.500 X 13 X 1.600 MM (0.256" X 0.512" X 0.063")
5	4386329	WIRING HARNESS	1		
6	4469635	WIRING HARNESS	1		
7	H77698	TIE BAND	8		
8	H77698	TIE BAND	6		
10	AT64237	HORN	2		
11	19M7163	CAP SCREW	2		M8 X 25
	12M7065	LOCK WASHER	2		8 MM (0.315")
	24M7055	WASHER	2		8.400 X 16 X 1.600 MM (0.331" X 0.630" X 0.063")
12	4447958	BRACKET	1		

CAB DISPLAY MONITOR

T157043 -UN-30OCT02

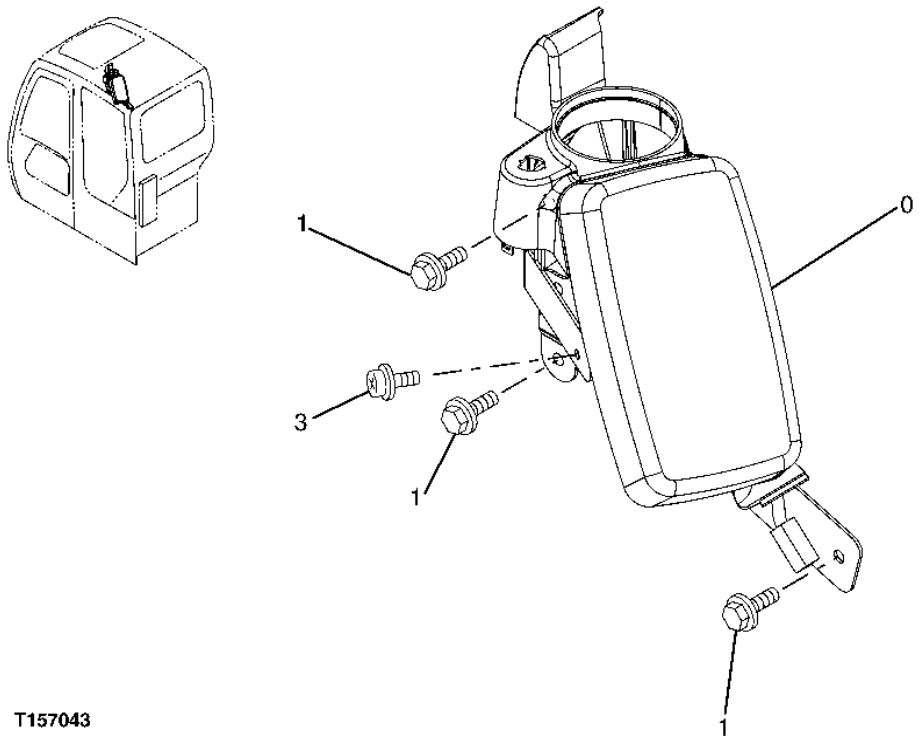

CAB DISPLAY MONITOR

KEY	PART NO.	PART NAME	QTY	SERIAL NO.	REMARKS
0	4609637	MONITOR	1		(4462635 OR 4468479 NOT USED FOR THIS APPLICATION)
1	19M7932	CAP SCREW	3		M8 X 16
	12M7065	LOCK WASHER	3		8 MM (0.315")
3	J460614	SCREW	1		

MIC CONTROLLER

T160848 -UN-30OCT02

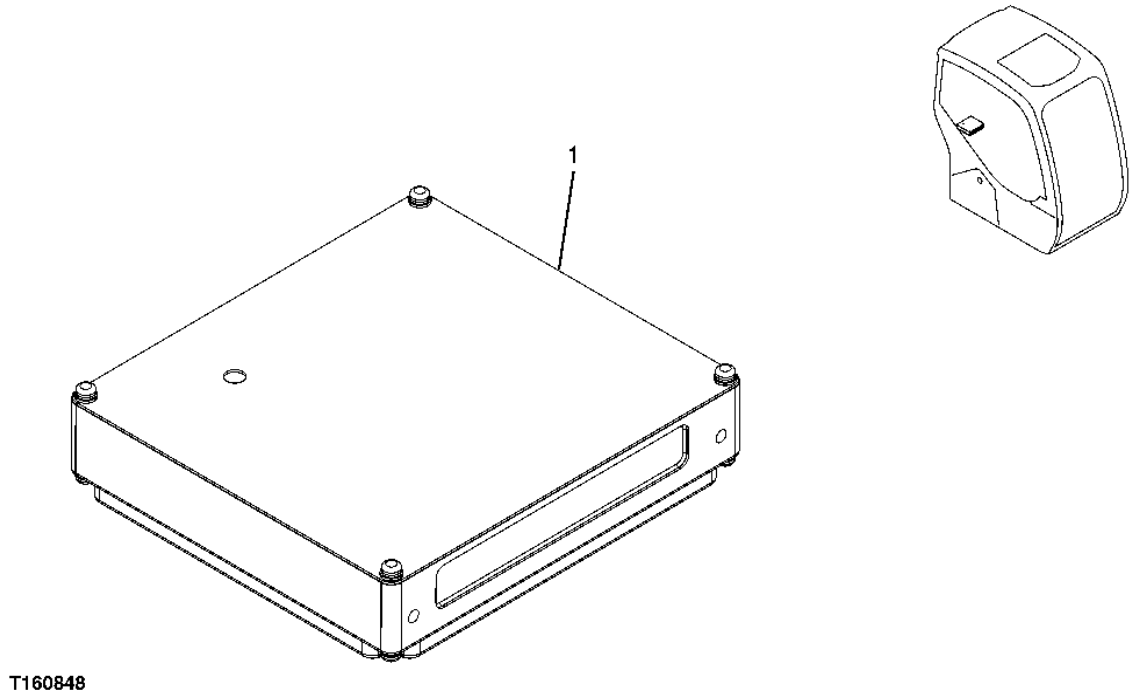

T160848

MIC CONTROLLER

KEY	PART NO.	PART NAME	QTY	SERIAL NO.	REMARKS
1	4442895	VEHICLE CONTROLLER	1		

CAB CONSOLE WIRING HARNESS

T157044 -UN-30OCT02

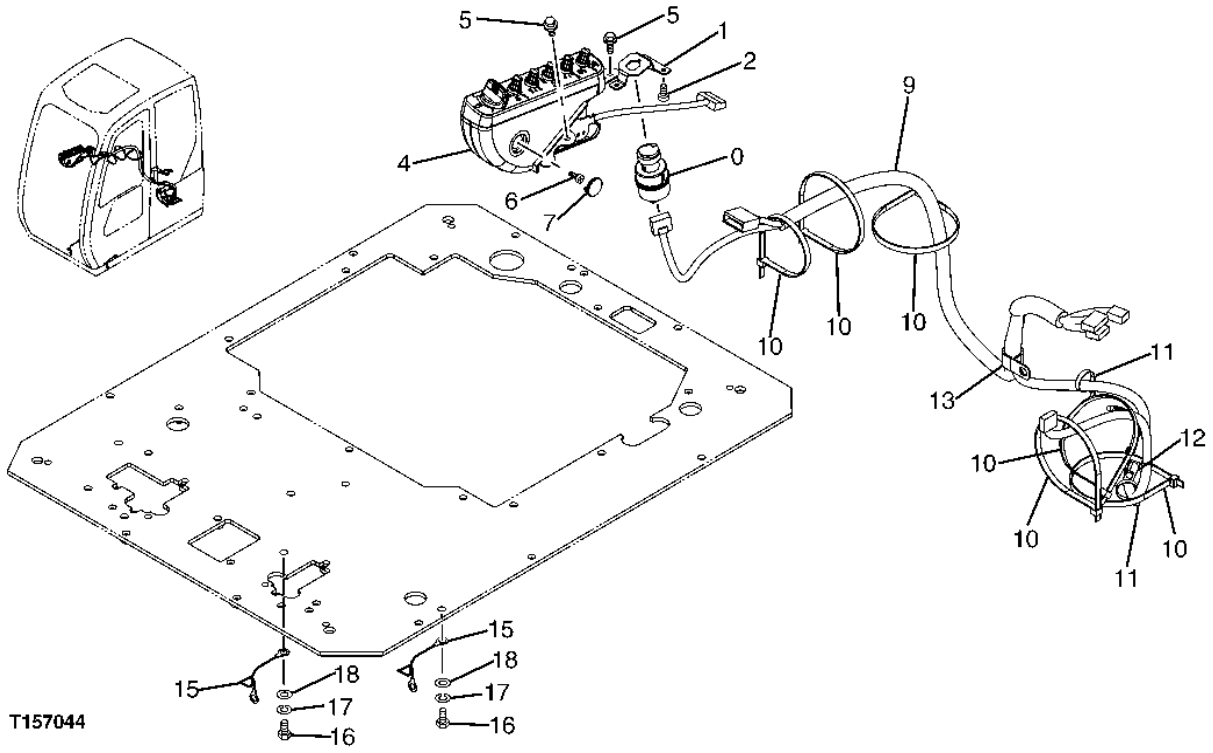

CAB CONSOLE WIRING HARNESS

KEY	PART NO.	PART NAME	QTY	SERIAL NO.	REMARKS
0	4477373	SWITCH	1		
	AT194969	KEY	1		
1	3087882	BRACKET	1		
2	4361800	SCREW	3		
4	4462636	BOX	1		(CAB SWITCH PANEL)
5	J010814	SCREW WITH WASHER	3		
6	4381572	SCREW	1		
7	4426354	CAP	1		
9	2045796	WIRING HARNESS	1		(CAB CONSOLE)
10	H77698	TIE BAND	6		
11	H77698	TIE BAND	2		
12	4190261	CLIP	1		
13	TH108594	CLIP	1		
15	4464075	WIRING HARNESS	2		
16	19M8324	CAP SCREW	2		M10 X 16
17	12M7066	LOCK WASHER	2		10 MM (0.394")
18	24M7028	WASHER	2		10.500 X 20 X 2 MM (0.413" X 0.787" X 0.079")

ELECTRICAL COMPONENTS (CAB)

T157045 -UN-31OCT02

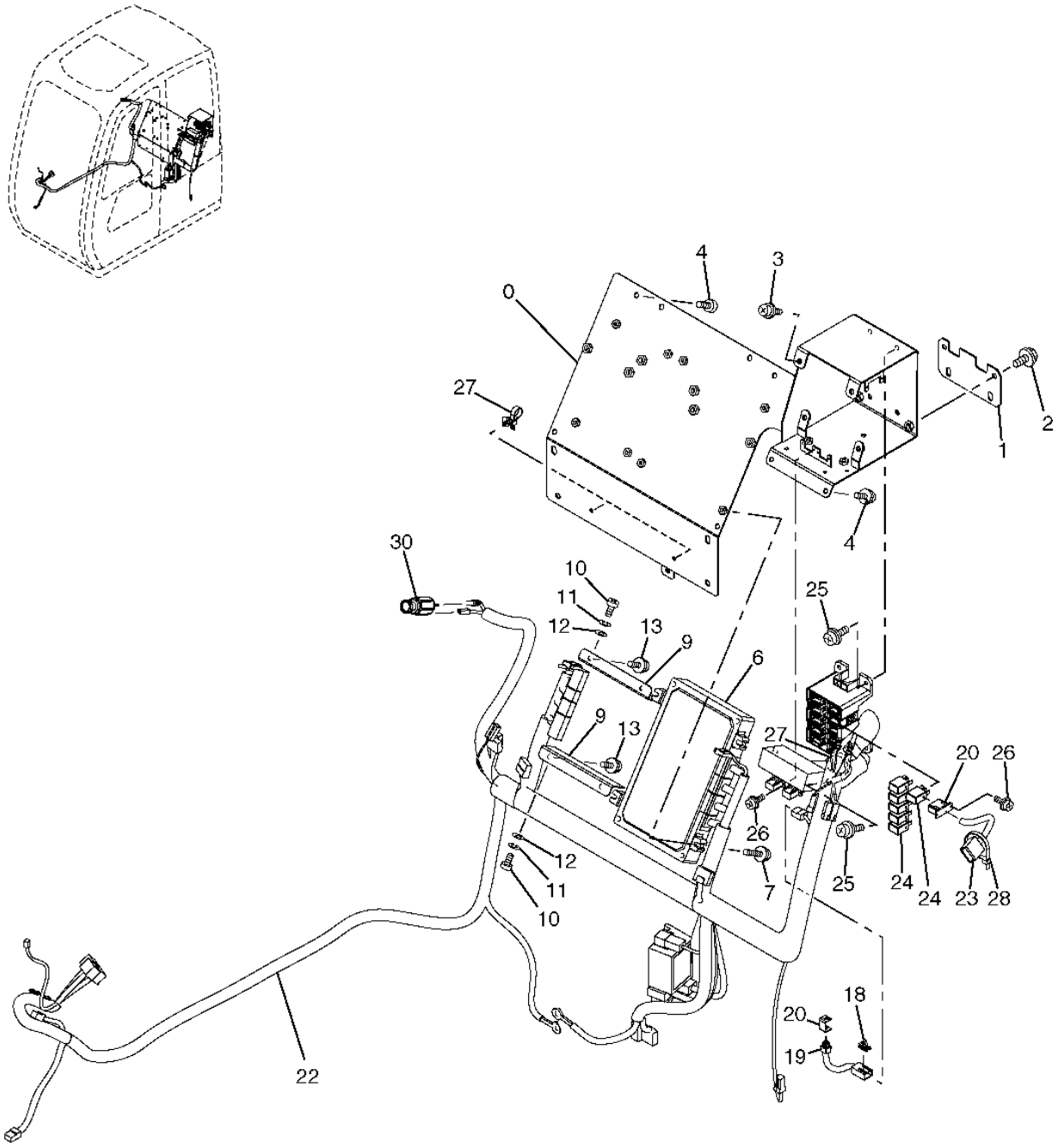

T157045

ELECTRICAL COMPONENTS (CAB)

KEY	PART NO.	PART NAME	QTY	SERIAL NO.	REMARKS
0	7040006	BRACKET	1		
1	4450291	BRACKET	1		
2	19M7162	CAP SCREW	2		M8 X 16
	12M7065	LOCK WASHER	2		8 MM (0.315")
3	19M8425	CAP SCREW	2		M6 X 16
	12M7006	LOCK WASHER	2		6 MM (0.236")
	24M7293	WASHER	2		6.500 X 13 X 1.600 MM (0.256" X 0.512" X 0.063")
4	4444700	SCREW	6		
6	4442895	VEHICLE CONTROLLER	1		(PUMP AND VALVE CONTROLLER)
7	19M7177	CAP SCREW	4		M6 X 35
	12M7006	LOCK WASHER	4		6 MM (0.236")
9	3090457	BRACKET	2		
10	21M7265	SCREW	4		M5 X 12
11	12M7064	LOCK WASHER	4		5 MM (0.197")
12	24M7027	WASHER	4		5.300 X 10 X 1 MM (0.209" X 0.394" X 0.039")
13	J460614	SCREW	4		
18	.....	CLIP	1		(4440981 NOT AVAILABLE FOR SERVICE)
19	4359384	SWITCH	1		
20	4367375	BRACKET	1		
22	0003947	WIRING HARNESS	1		
23	4439897	WIRING HARNESS	1		
24	4436534	RELAY	6		
25	J460620	SCREW WITH WASHER	6		
26	J460310	SCREW	6		
27	4254600	CLIP	3		
28	H77698	TIE BAND	1		
30	AR60937	ELECTRICAL LIGHTER	1		(12 VOLT)
	AU42809	RESISTOR	1		(12 VOLT)
	AT78634	WIRING LEAD	1		(12 VOLT)
	AT78633	HOUSING	1		(12 VOLT)
	.....	ELECTRICAL LIGHTER	1		(4357862 NO LONGER AVAILABLE) (SUB FOR AT190190) (24 VOLT)

12V POWER SUPPLY WIRING HARNESS

T157050 -UN-30OCT02

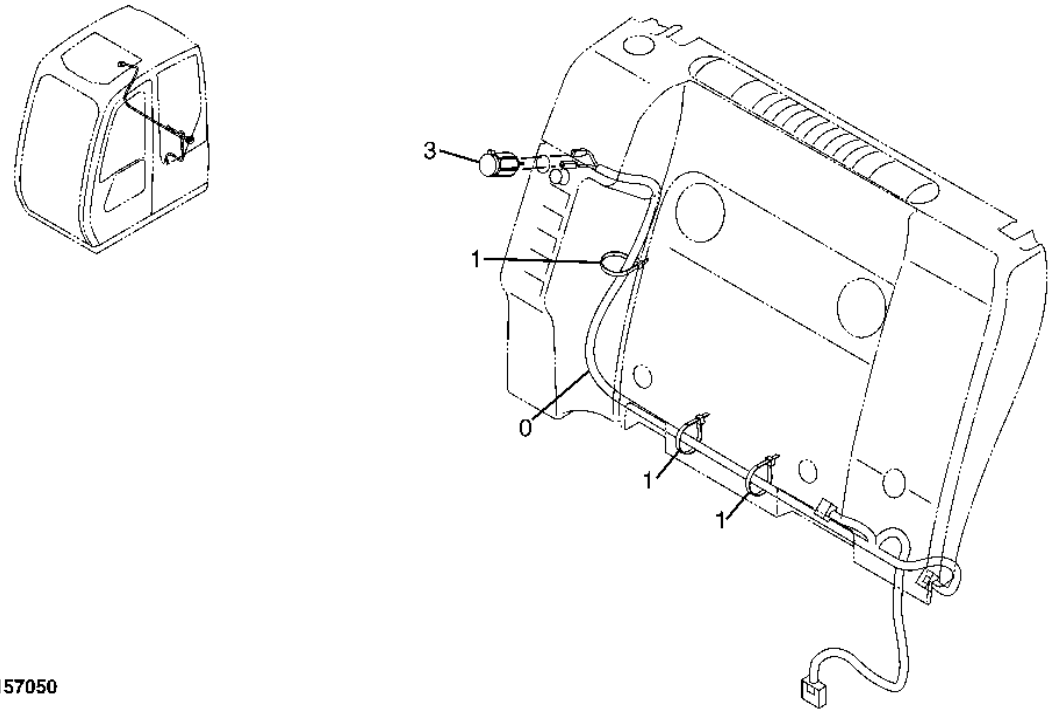

T157050

12V POWER SUPPLY WIRING HARNESS

KEY	PART NO.	PART NAME	QTY	SERIAL NO.	REMARKS
0	3092650	WIRING HARNESS	1		
1	H76698	BRACKET	3		
3	4432965	ELEC. CONNECTOR TERMINAL	1		

TWELVE VOLT POWER CONVERTER

T157058 -UN-30OCT02

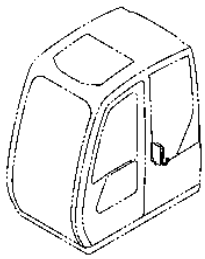

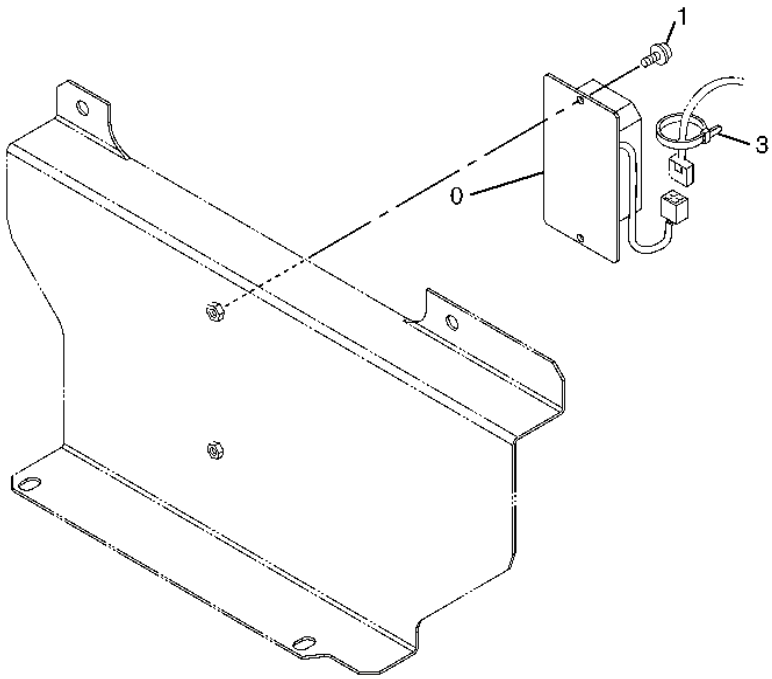

T157058

TWELVE VOLT POWER CONVERTER

KEY	PART NO.	PART NAME	QTY	SERIAL NO.	REMARKS
0	4450008	POWER SUPPLY	1		
1	19M8425	CAP SCREW	2		M6 X 16
	12M7006	LOCK WASHER	2		6 MM (0.236")
	24M7293	WASHER	2		6.500 X 13 X 1.600 MM (0.256" X 0.512" X 0.063")
3	H77698	TIE BAND	1		

ENGINE OVERHEAT WARNING SWITCH

T159199 -UN-19SEP02

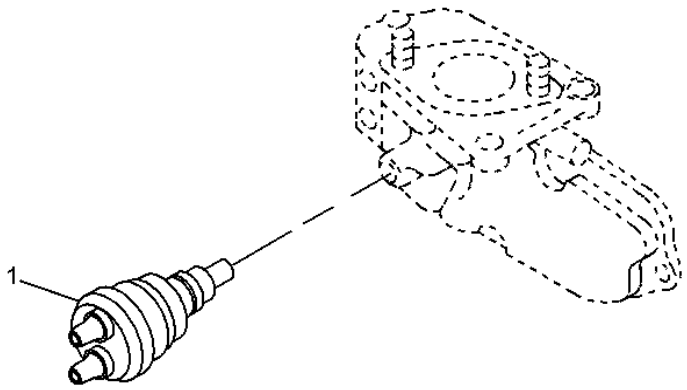

T159199

ENGINE OVERHEAT WARNING SWITCH

KEY	PART NO.	PART NAME	QTY	SERIAL NO.	REMARKS
1	8971256001	PRESSURE SWITCH	1		

ENGINE IGNITION SWITCH RELAY

T159204 -UN-19SEP02

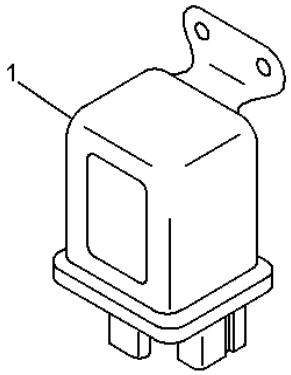

T159204

ENGINE IGNITION SWITCH RELAY

KEY	PART NO.	PART NAME	QTY	SERIAL NO.	REMARKS
1	AT263680	RELAY	1		

CONVERTER (24-VOLT TO 12-VOLT)

TP32780 -UN-01JAN94

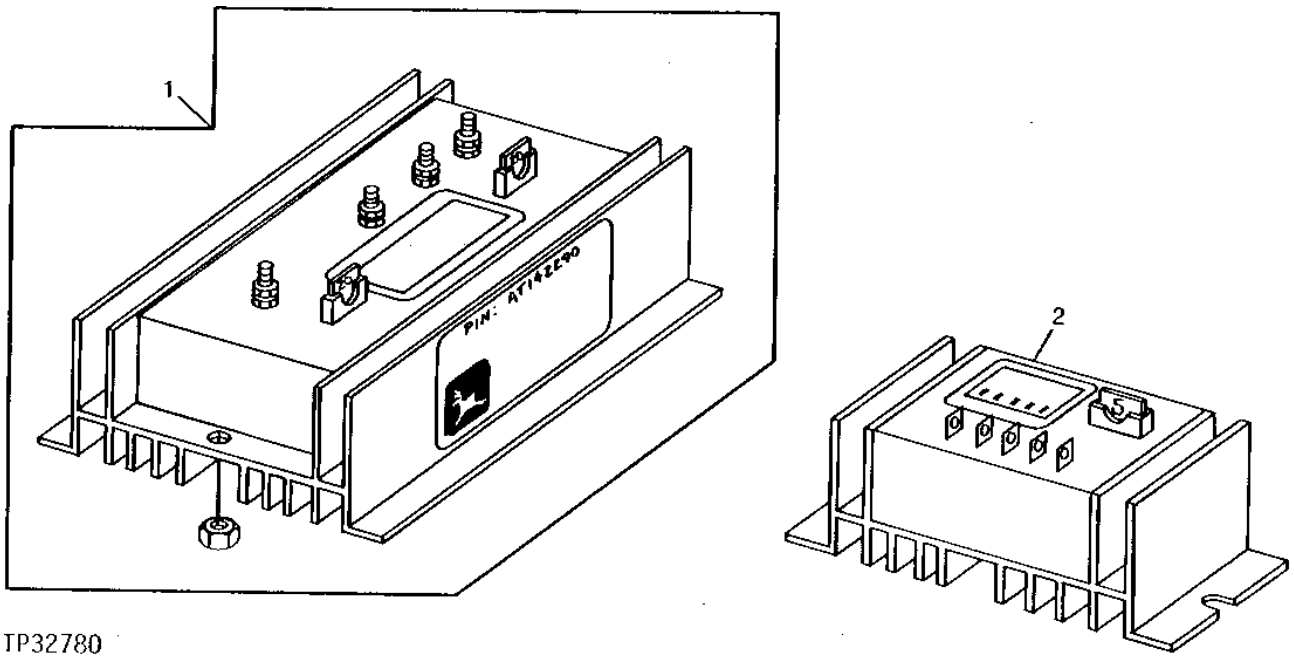

KEY	PART NO.	PART NAME	QTY	SERIAL NO.	REMARKS
1	AT142288	CONVERTER	1		(10/20 AMP - 24/12 VOLT)
	14H786	NUT	2		1/4", (NOT ILLUSTRATED)
2	AT164676	CONVERTER	1		(5 AMP - 24/12 VOLT)

MEMORANDA

MIC CONTROLLER

T153299 -UN-05APR02

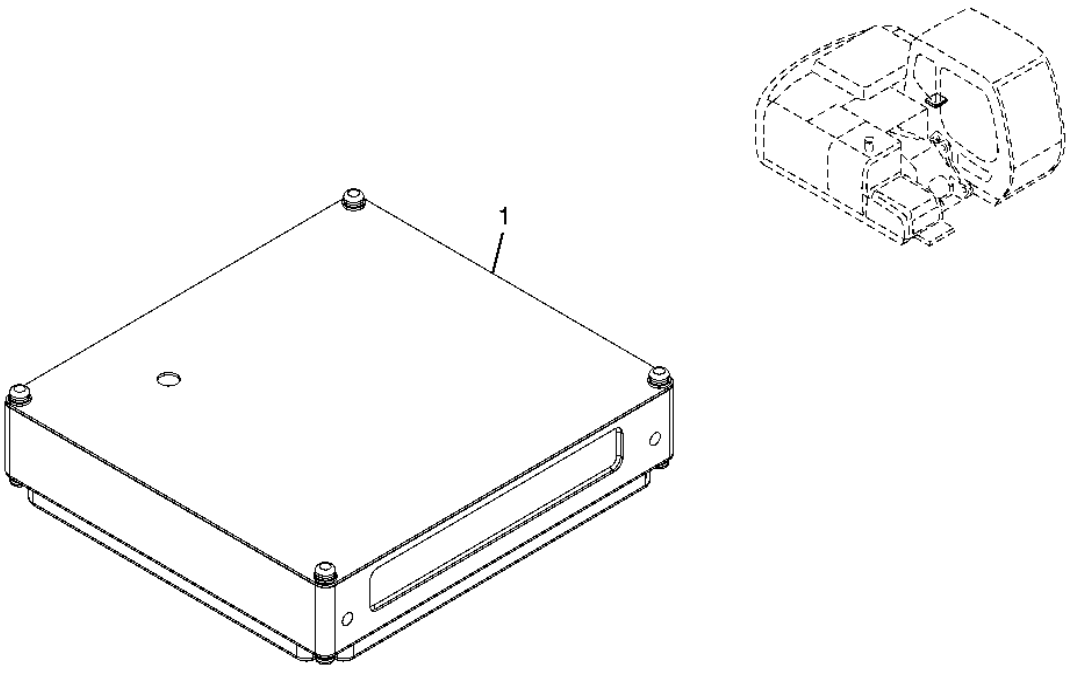

T153299

MIC CONTROLLER

KEY	PART NO.	PART NAME	QTY	SERIAL NO.	REMARKS
1	9239568	VEHICLE CONTROLLER	1		(SUB FOR 9194416 OR 9212078)

MIC CUSTOMER KIT AND CABLE

T192372A -UN-19JUN03

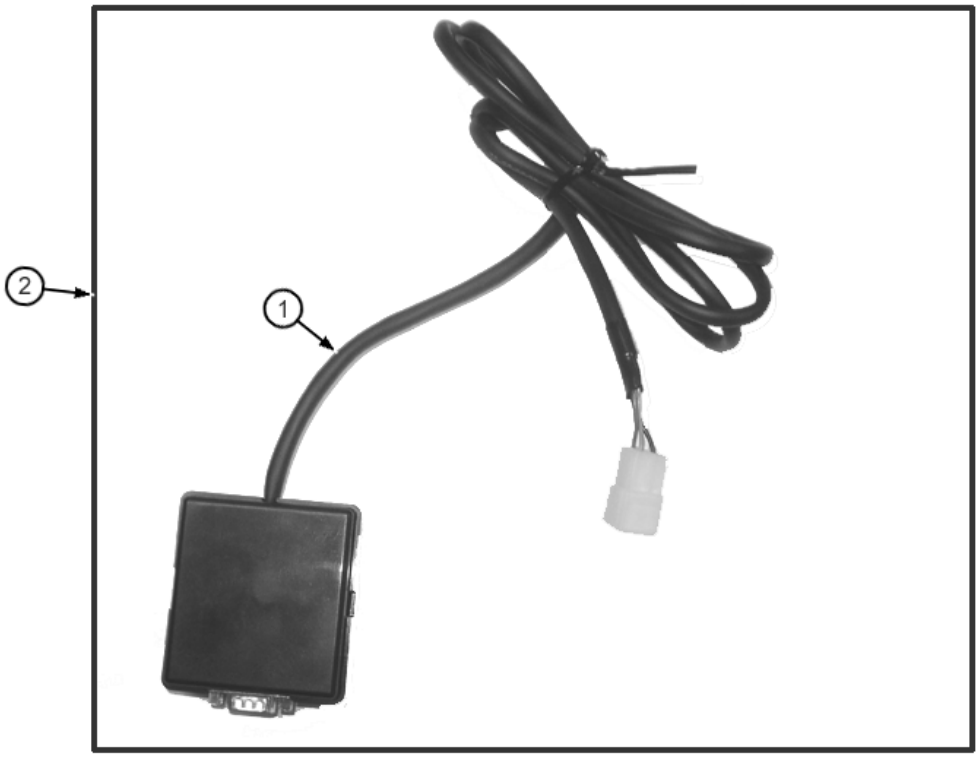

MIC CUSTOMER KIT AND CABLE

KEY	PART NO.	PART NAME	QTY	SERIAL NO.	REMARKS
1	TH3100010	CABLE	1		
2	AT301723	KIT	1		(WHOLEGOODS)(MIC CUSTOMER KIT)(INCLUDES SOFTWARE AND CABLE)

MAIN FRAME

T157026 -UN-30OCT02

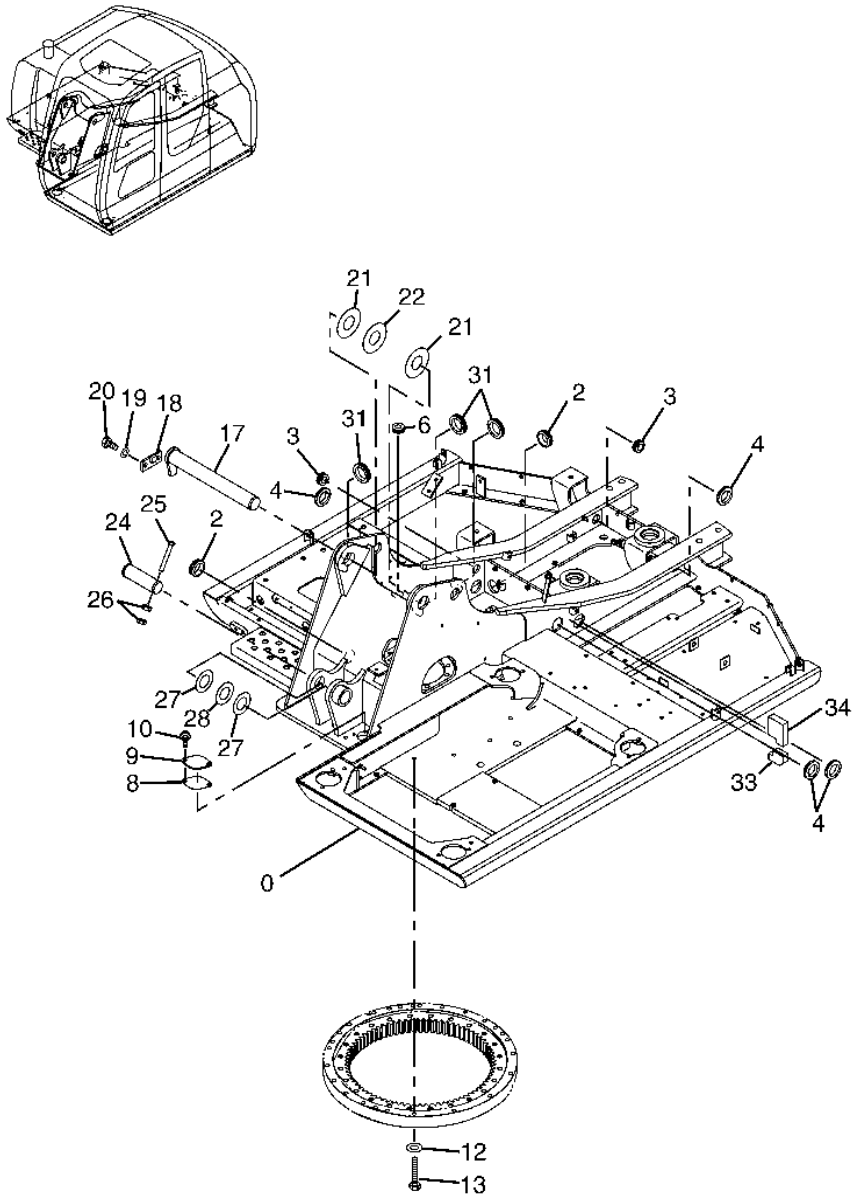

T157026

MAIN FRAME

KEY	PART NO.	PART NAME	QTY	SERIAL NO.	REMARKS
0	.....	FRAME	1		
2	4201749	GROMMET	2		
3	4279257	BUSHING	2		
4	4509404	GROMMET	4		
6	4279256	BUSHING	1		
8	4415233	PACKING	1		
9	4415231	COVER	1		
10	19M7402	CAP SCREW	2		M10 X 25
	12M7066	LOCK WASHER	2		10 MM (0.394")
	24M7028	WASHER	2		10.500 X 20 X 2 MM (0.413" X 0.787" X 0.079")
12	24M7338	WASHER	24		17 X 30 X 3 MM (0.669" X 1.181" X 0.118")
13	J921685	BOLT	24		
17	8083051	PIN FASTENER	1		
18	9754382	PLATE	1		
19	12H294	LOCK WASHER	2		5/8"
20	19M8035	CAP SCREW	2		M16 X 35
21	4394384	PLATE	2		
22	4394385	PLATE	1		
24	3076941	PIN	1		
25	4435123	PIN FASTENER	1		
26	14M7276	NUT	2		M16
27	4374459	PLATE	2		
28	4374437	PLATE	1		
31	4087462	BUSHING	3		
33	4461328	ISOLATOR	1		
34	4461330	ISOLATOR	1		

SWING BEARING

T161030 -UN-30OCT02

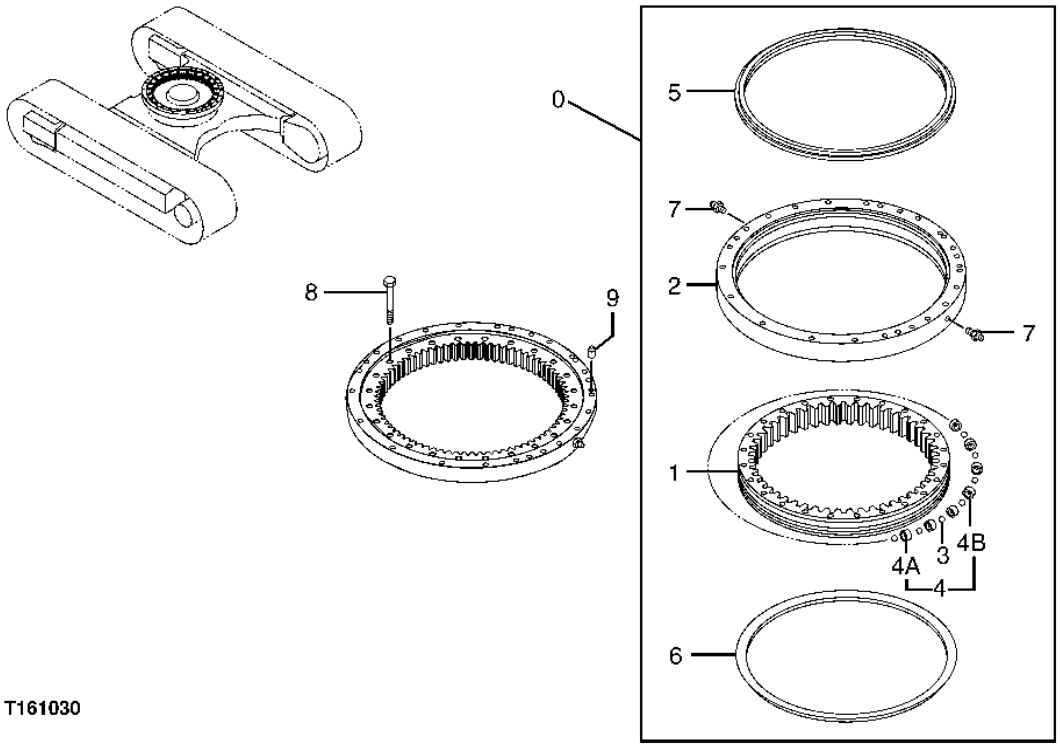

SWING BEARING

KEY	PART NO.	PART NAME	QTY	SERIAL NO.	REMARKS
0	4437132	SWING BEARING	1		(SUB FOR 4437132EX)
1	.....	BEARING RACE	1		
2	.....	BEARING RACE	1		
3	4468422	BALL	1		
4	4468423	SUPPORT	1		
4A	.....	SUPPORT	1		
4B	.....	SUPPORT	1		
5	4468431	SEAL	1		
6	4468432	SEAL	1		
7	TH100074	LUBRICATION FITTING	2		
8	19M8350	CAP SCREW	24		M16 X 85
9	4415325	PIN FASTENER	1		

SWING BEARING ACCESS COVER

TP59968 -UN-01OCT99

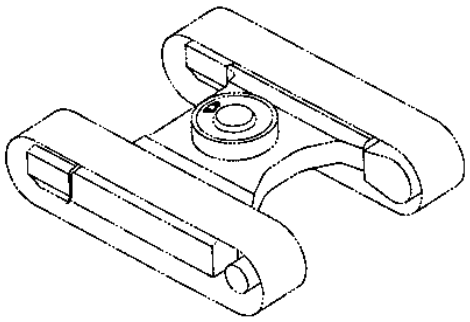

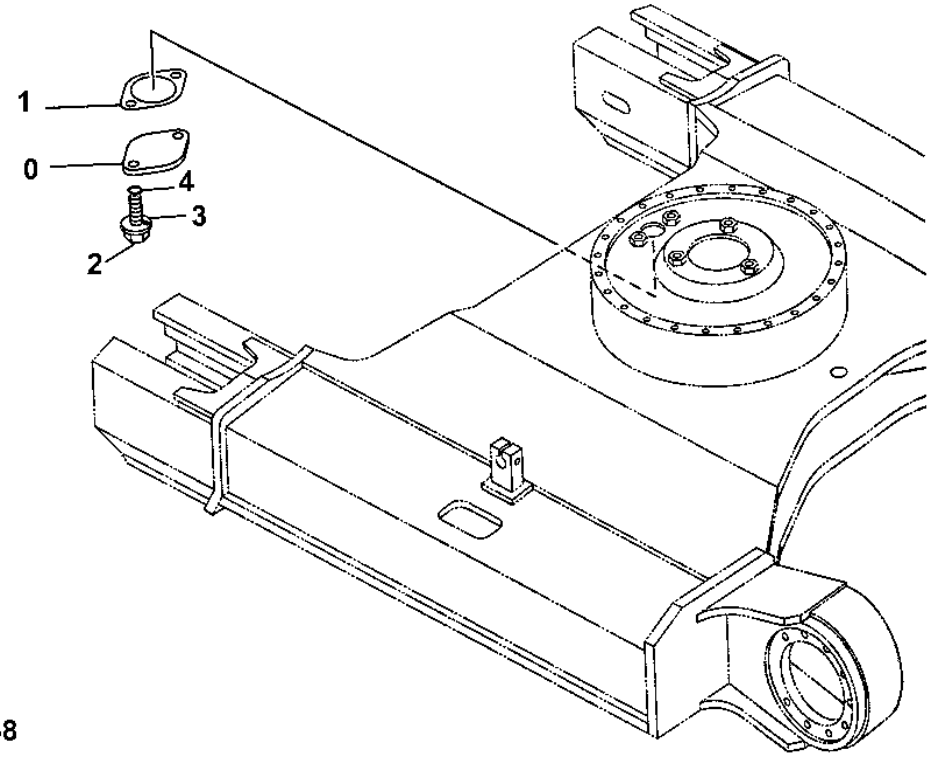

SWING BEARING ACCESS COVER

KEY	PART NO.	PART NAME	QTY	SERIAL NO.	REMARKS
0	4128863	PLATE	1		
1	4272297	GASKET	1		
2	19M7402	CAP SCREW	2		M10 X 25
3	12M7066	LOCK WASHER	2		10 MM (0.394")
4	24M7028	WASHER	2		10.500 X 20 X 2 MM (0.413" X 0.787" X 0.079")

COUNTERWEIGHT

T161027 -UN-30OCT02

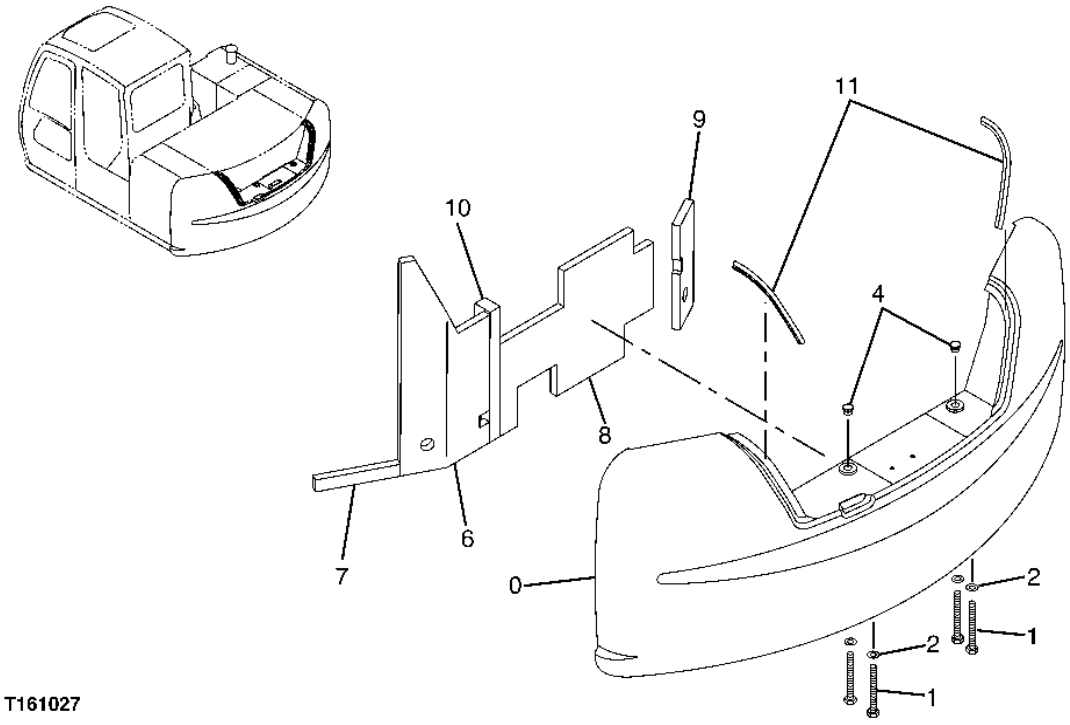

T161027

COUNTERWEIGHT

KEY	PART NO.	PART NAME	QTY	SERIAL NO.	REMARKS
0	5008263	COUNTERWEIGHT	1		
1	19M8100	CAP SCREW	4		M20 X 180
2	J222020	WASHER	4		
4	4149678	PLUG	2		
6	3092493	ISOLATOR	1		
7	4457587	ISOLATOR	1		
8	3092025	ISOLATOR	1		
9	4453803	ISOLATOR	1		
10	4457590	ISOLATOR	1		
11	4461744	SEAL	2		

CAB MOUNTING

T160834 -UN-30OCT02

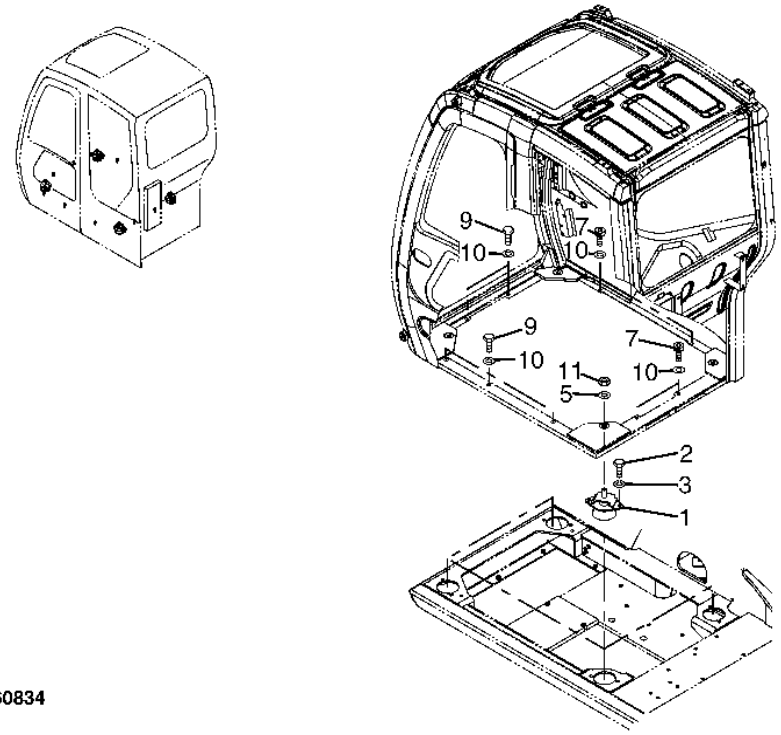

T160834

1H23

CAB MOUNTING

KEY	PART NO.	PART NAME	QTY	SERIAL NO.	REMARKS
1	4409999	ISOLATOR	4		
2	J921240	CAP SCREW	8		(4330785 NOT AVAILABLE FOR SERVICE)
3	12H301	LOCK WASHER	8		1/2"
5	24M7338	WASHER	4		17 X 30 X 3 MM (0.669" X 1.181" X 0.118")
7	19M8337	SCREW	4		(SUB FOR J781035)
9	19M7662	CAP SCREW	5		M10 X 30
10	24M7346	WASHER	9		11 X 20 X 2 MM (0.433" X 0.787" X 0.079")
11	14M7328	LOCK NUT	4		M16

CAB ASSEMBLY

T160835 -UN-30OCT02

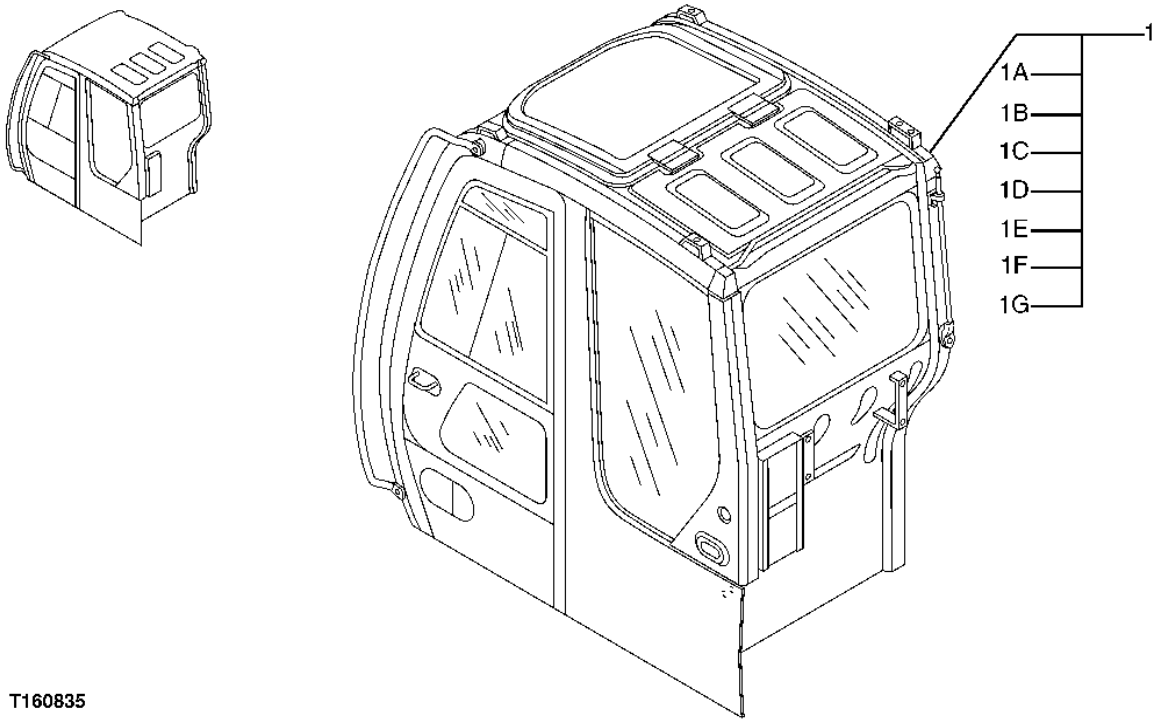

T160835

1H25

CAB ASSEMBLY

KEY	PART NO.	PART NAME	QTY	SERIAL NO.	REMARKS
1	4606542	CAB	1		
1A	.....	CAB	1		(WINDSHIELD WIPER SYSTEM) SEE SEPARATE PAGE LISTING FOR COMPONENTS
1B	.....	CAB	1		(SIDE AND REAR WINDOWS) SEE SEPARATE PAGE LISTING FOR COMPONENTS
1C	.....	CAB	1		(CAB DOOR ASSEMBLY) SEE SEPARATE PAGE LISTING FOR COMPONENTS
1D	.....	CAB	1		(FRONT WINDOW) SEE SEPARATE PAGE LISTING FOR COMPONENTS
1E	.....	CAB	1		(RIGHT SIDE WINDOW) SEE SEPARATE PAGE LISTING FOR COMPONENTS
1F	.....	CAB	1		(DOOR ACTUATOR CABLE) SEE SEPARATE PAGE LISTING FOR COMPONENTS
1G	.....	CAB	1		(SECONDARY EXIT) SEE SEPARATE PAGE LISTING FOR COMPONENTS

CAB COMPONENTS
(WINDSHIELD WIPER SYSTEM)

T160836 -UN-30OCT02

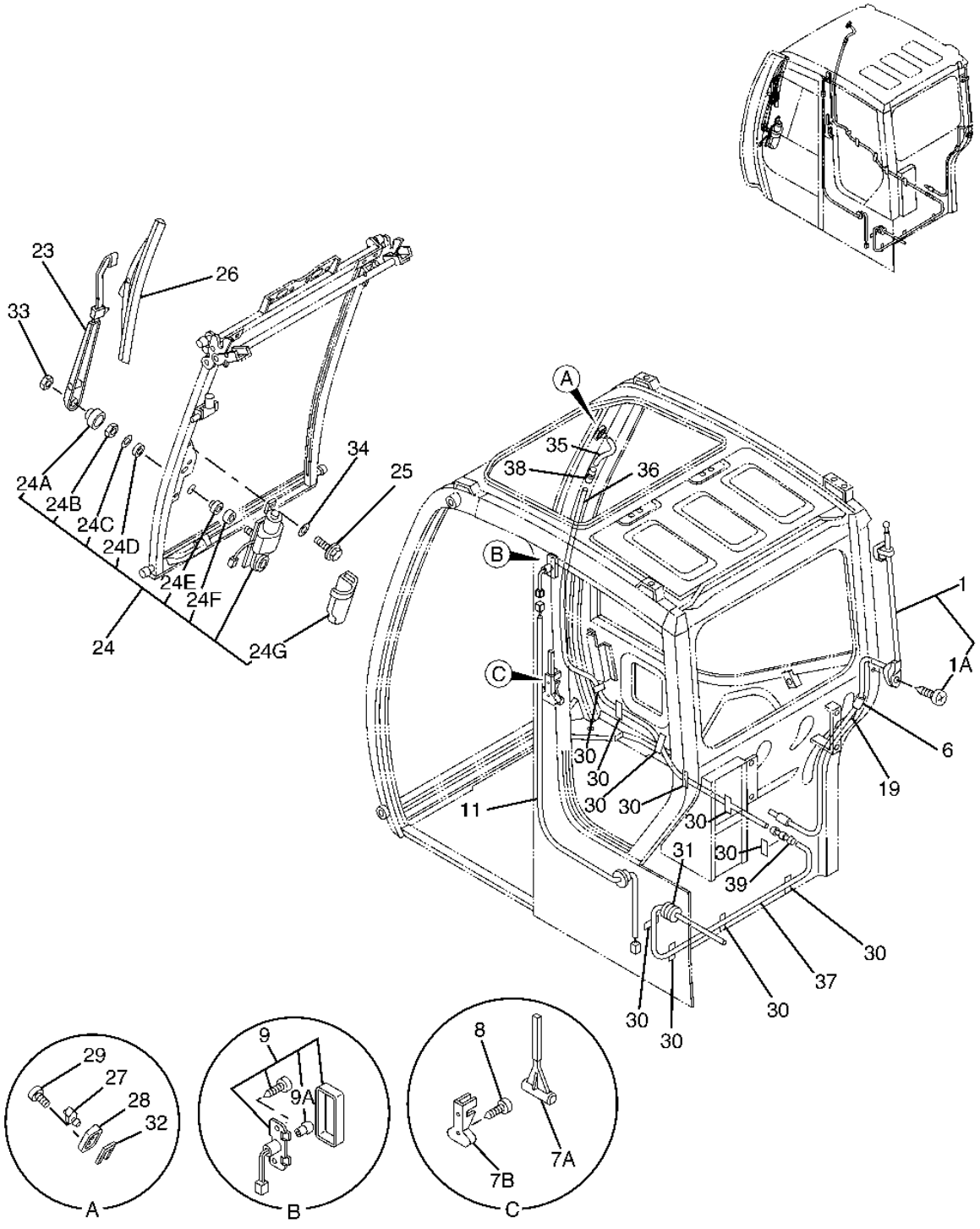

T160836

CAB COMPONENTS
(WINDSHIELD WIPER SYSTEM)

KEY	PART NO.	PART NAME	QTY	SERIAL NO.	REMARKS
1	4464381	ANTENNA	1		
1A	4464383	SCREW	2		
6	4464382	ISOLATOR	1		
7A	4362700	HAMMER	1		
7B	2038764	BRACKET	1		
8	4463959	SCREW	2		
9	4464384	LAMP	1		
9A	4466872	BULB	1		
11	4464387	WIRING HARNESS	1		
19	.....	TAPE	1		(4461947 NOT AVAILABLE FOR SERVICE)
23	4453433	WIPER ARM	1		
24	4458336	WIPER MOTOR	1		
24A	4419735	CAP	1		
24B	4419734	NUT	1		
24C	4419733	WASHER	1		
24D	4419732	ISOLATOR	1		
24E	4465105	ISOLATOR	1		
24F	4419730	SPACER	1		
24G	4465106	COVER	1		
25	4464393	BOLT	3		
26	4453434	WIPER BLADE	1		
27	4464394	NOZZLE	1		
28	4464397	HOUSING	1		
29	4464398	SCREW	1		
30	.....	TAPE	10		(4461947 NOT AVAILABLE FOR SERVICE)
31	4464399	BUSHING	1		
32	4464400	SEAL	1		
33	4464401	NUT	1		
34	4464783	WASHER	3		
35	.....	HOSE	1		(ORDER TY22566 - CUT TO LENGTH)
36	.....	HOSE	1		(ORDER TY22566 - CUT TO LENGTH)
37	.....	HOSE	1		(ORDER TY22566 - CUT TO LENGTH)
38	4464785	FLOW CONTROL HYD. VALVE	1		
39	4464786	ELECTRICAL CONNECTOR ASSY	1		

CAB COMPONENTS - CONTINUED
(SIDE AND REAR WINDOWS)

T160837 -UN-30OCT02

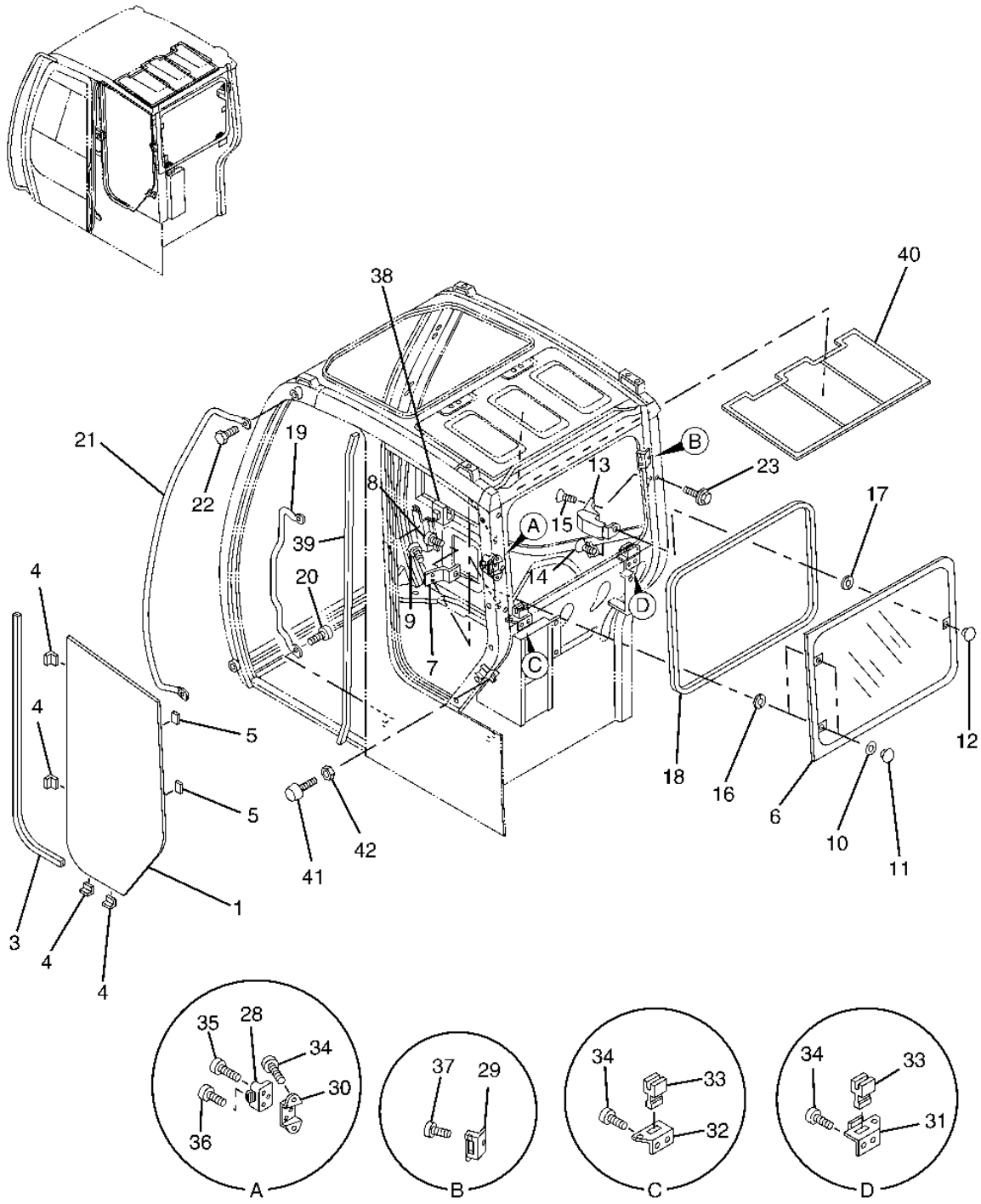

T160837

CAB COMPONENTS - CONTINUED
(SIDE AND REAR WINDOWS)

KEY	PART NO.	PART NAME	QTY	SERIAL NO.	REMARKS
1	4457178	WINDOWPANE	1		
3	4464234	ISOLATOR	1		
4	4458466	SPACER	4		
5	4458470	SPACER	2		
6	4457180	WINDOWPANE	1		
7	4464248	HINGE	2		
8	4464249	SCREW	2		
9	4463914	SCREW	4		
10	4464251	BUSHING	2		
11	4464252	NUT	2		
12	4464253	NUT	1		
13	4464254	LOCK	1		
14	4464255	SCREW	1		
15	4464256	SCREW	2		
16	4464250	BUSHING	2		
17	4464263	BUSHING	1		
18	4464264	WEATHERSTRIP	1		
19	4464267	HANDRAIL	1		
20	4464268	BOLT	2		
21	4624878	HANDRAIL	1		(JOHN DEERE GRAY)
22	4464270	BOLT	2		
23	4464788	BOLT	1		
28	4464273	HOLDER	1		
29	4464305	HOLDER	1		
30	4464306	BRACKET	1		
31	4464307	BRACKET	1		
32	4464308	BRACKET	1		
33	4464309	HOLDER	2		
34	4463914	SCREW	6		
35	4464271	SCREW	2		
36	4464272	SCREW	1		
37	4464239	SCREW	1		
38	4464337	HANGER	1		
39	4461955	ISOLATOR	1		
40	4464240	SHEET	1		
41	4464336	STOP	1		
	4463916	ISOLATOR	1		
42	4463920	NUT	1		

CAB COMPONENTS - CONTINUED
(DOOR ASSEMBLY)

T160838 -UN-30OCT02

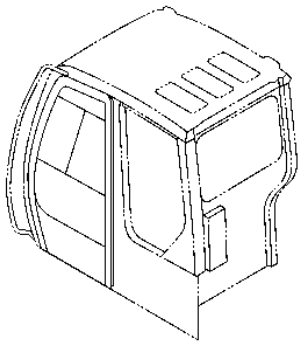

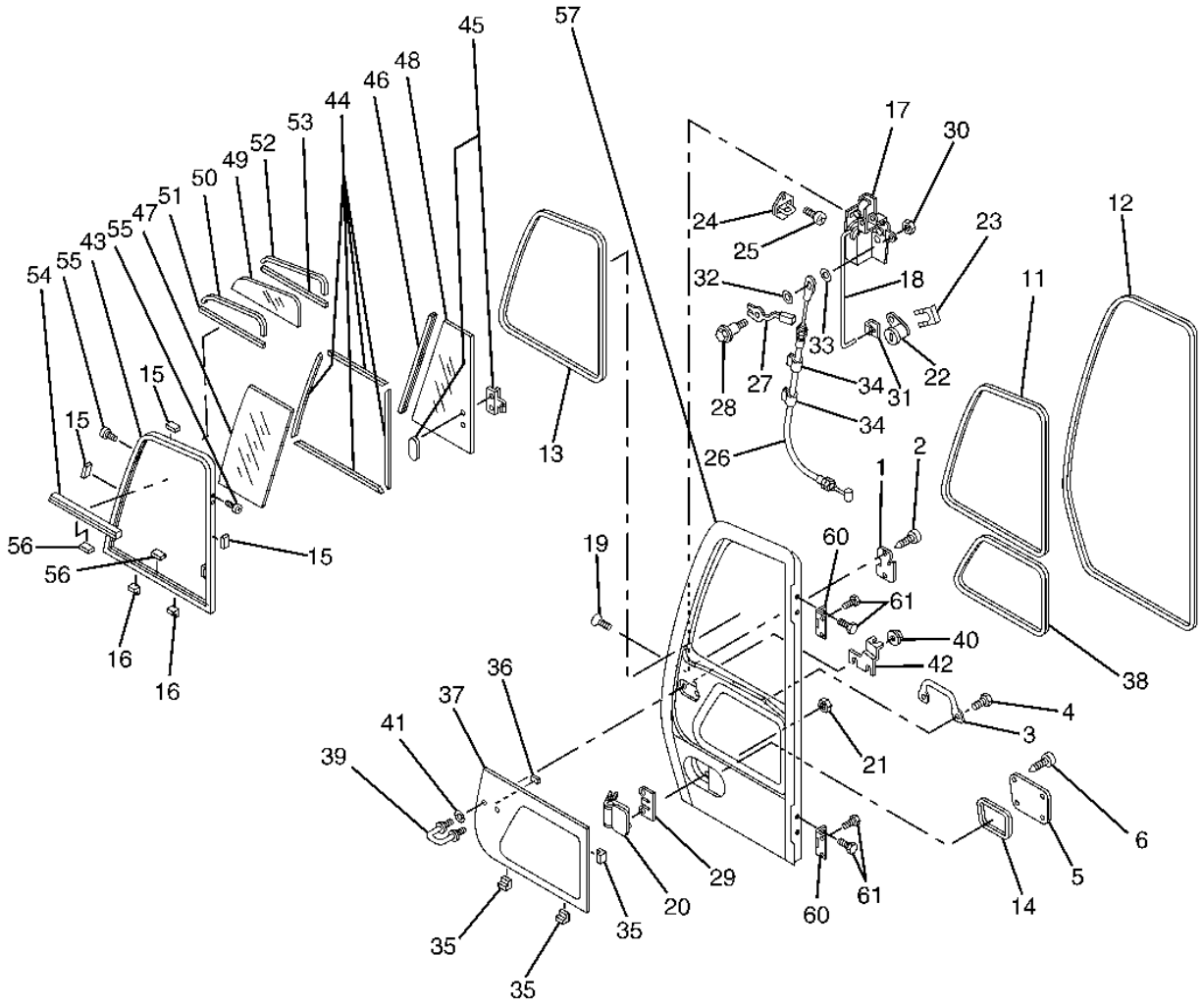

T160838

CAB COMPONENTS - CONTINUED
(DOOR ASSEMBLY)

KEY	PART NO.	PART NAME	QTY	SERIAL NO.	REMARKS
0	4624879	DOOR	1		
1	4624880	COVER	1		
2	4463959	SCREW	2		
3	4463960	HANDRAIL	1		
4	4463961	BOLT	2		
5	4624881	COVER	1		
6	4463959	SCREW	4		
11	4463965	ISOLATOR	1		
12	4463966	WEATHERSTRIP	1		
13	4463963	SEAL	1		
14	4463964	SEAL	1		
15	4464227	SPACER	3		
16	4464228	SPACER	2		
17	4461933	LOCK	1		
18	4461934	ROD	1		
19	4461935	SCREW	3		
20	4369645	HANDLE	1		
21	14M7303	FLANGE NUT	2		M6, (SUB FOR 4464245)
22	4362135	LOCK	1		
23	4372091	CLIP	1		
24	4461937	STRIKER	1		
25	4461938	SCREW	2		
26	4461939	PUSH PULL CABLE	1		
27	4461940	LEVER	1		
28	4461941	BOLT	1		
29	4461936	COVER	1		
30	4461943	NUT	1		
31	4461944	HOLDER	1		
32	4461945	WASHER	1		
33	4461946	WASHER	1		
34	.....	TAPE	2		(4461947 NOT AVAILABLE FOR SERVICE)
35	4458469	SPACER	3		
36	4458470	SPACER	1		
37	4457176	WINDOWPANE	1		
38	4464236	ISOLATOR	1		
39	4461956	STRIKER	1		
40	4461957	NUT	2		
41	4464338	WASHER	2		
42	4464339	BRACKET	1		
43	4466873	FRAME	1		
44	4466874	FRAME	1		
45	4466875	LOCK	1		
46	4467438	SEAL	1		
47	4457173	WINDOWPANE	1		
48	4457174	WINDOWPANE	1		
49	4457175	WINDOWPANE	1		
50	4467439	SEAL	1		
51	4467440	SEAL	1		
52	4467441	SEAL	1		
53	4467442	SEAL	1		
54	4467443	FRAME	1		
55	4467444	SCREW	4		
56	4467445	STOP	2		
57	.....	DOOR	1		
60	4624882	HINGE	2		
61	4467450	BOLT	8		

CAB COMPONENTS - CONTINUED
(FRONT WINDOW)

T160839 -UN-30OCT02

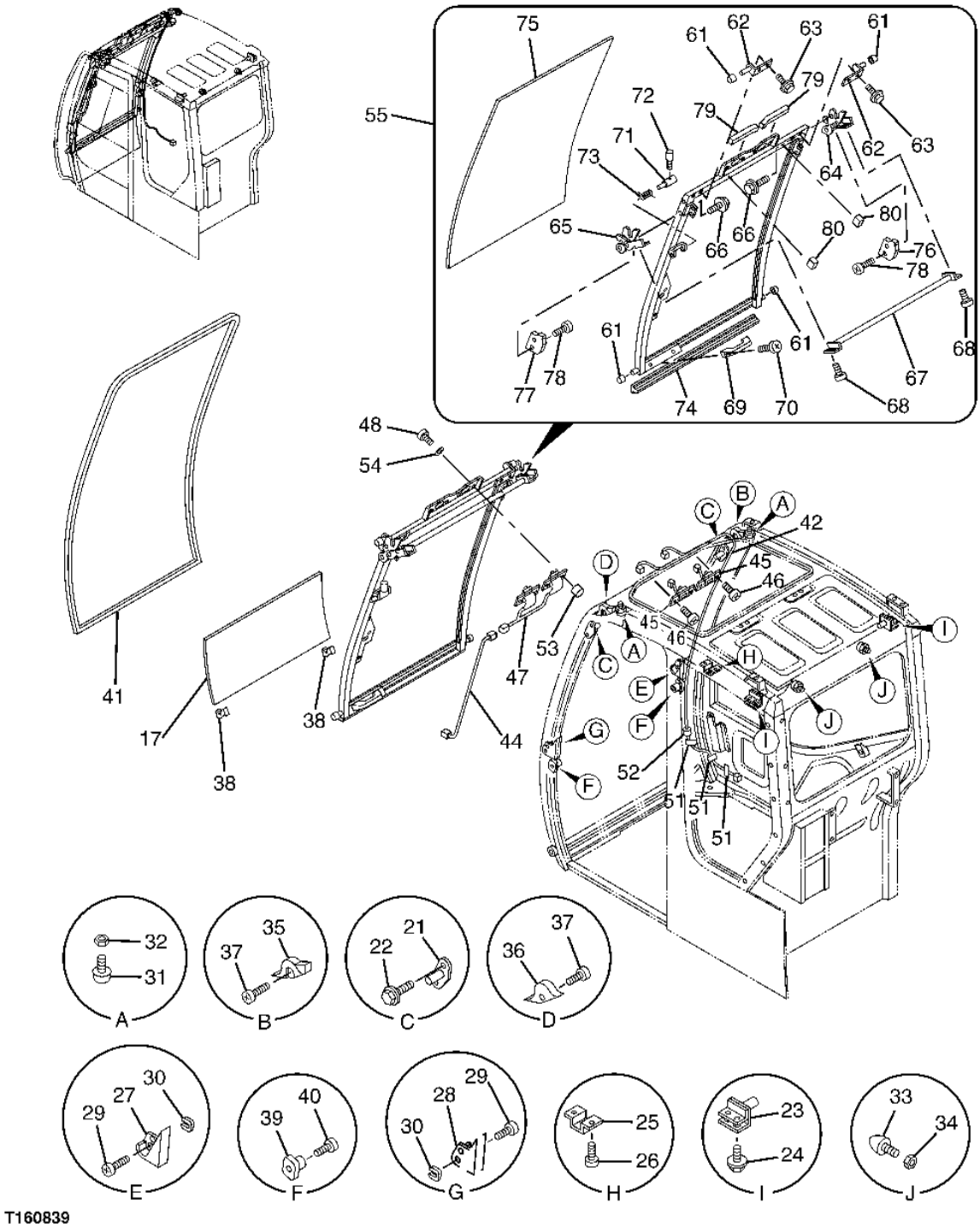

T160839

CAB COMPONENTS - CONTINUED
(FRONT WINDOW)

KEY	PART NO.	PART NAME	QTY	SERIAL NO.	REMARKS
17	4457161	WINDOWPANE	1		
18	4618252	SPACER	2		(GOES ON UPPER ROLLER OF WINDSHIELD-USES THE 17MM LONG SPACER) (NOT ILLUSTRATED)
19	4614046	SPACER	2		(GOES ON LOWER ROLLER OF WINDSHIELD-USES THE 13.5MM LONG SPACER) (NOT ILLUSTRATED)
21	4463915	STRIKER	2		
22	4463859	BOLT	4		
23	4463917	STRIKER	2		
24	4463918	BOLT	4		
25	4463919	BRACKET	1		
26	4463914	SCREW	2		
27	4463732	ISOLATOR	1		
28	4463733	ISOLATOR	1		
29	4463734	SCREW	4		
30	4463735	CLIP	4		
31	4463916	ISOLATOR	2		
32	4463920	NUT	2		
33	4463921	ISOLATOR	2		
34	4463920	NUT	2		
35	4463947	ISOLATOR	1		
36	4463948	ISOLATOR	1		
37	4463914	SCREW	2		
38	4463682	ISOLATOR	2		
39	4463736	ISOLATOR	2		
40	4463737	SCREW	2		
41	4463941	WEATHERSTRIP	1		
42	4464386	WIRING HARNESS	1		
44	4464388	WIRING HARNESS	1		
45	4464389	SWITCH	2		
46	4464256	SCREW	4		
47	4464385	SWITCH	1		
48	4463737	SCREW	4		
51	.....	TAPE	3		(4461947 NOT AVAILABLE FOR SERVICE)
52	4464382	ISOLATOR	1		
53	4464392	CAP	4		
54	4464787	WASHER	4		
55	4466871	FRAME	1		
61	4463857	GUIDE	4		
62	4463858	BRACKET	2		
63	4463859	BOLT	4		
64	4463860	LOCK	1		
65	4463861	LOCK	1		
66	4463859	BOLT	4		
67	4463863	GRIP	1		
68	4463914	SCREW	4		
69	4463942	GRIP	1		
70	4463943	SCREW	2		
71	4463944	PIN FASTENER	1		
72	4463945	LEVER	1		
73	4463946	SPRING	1		
74	4463949	WEATHERSTRIP	1		
75	4457160	WINDOWPANE	1		
76	4463862	COVER	1		
77	4463913	COVER	1		
78	4463914	SCREW	4		
79	4464390	ISOLATOR	2		
80	4464391	ISOLATOR	2		

CAB COMPONENTS - CONTINUED
(RIGHT SIDE WINDOW)

T160840 -UN-30OCT02

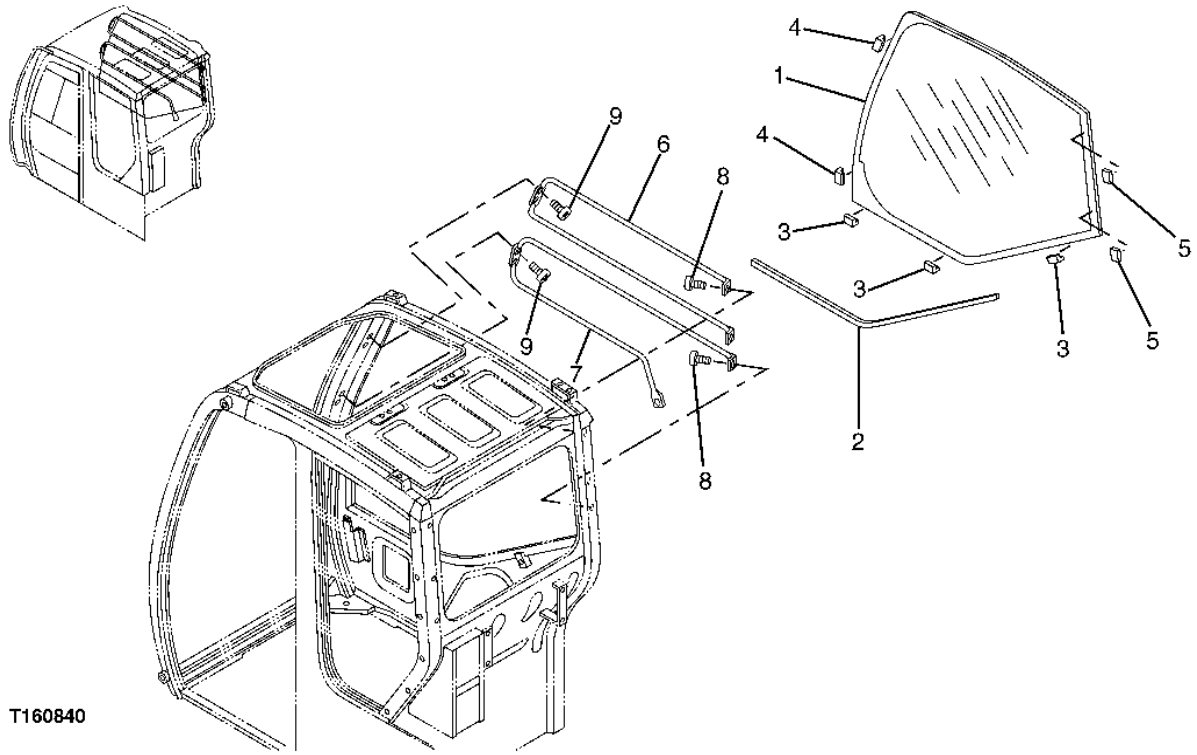

CAB COMPONENTS - CONTINUED
(RIGHT SIDE WINDOW)

KEY	PART NO.	PART NAME	QTY	SERIAL NO.	REMARKS
1	4457141	WINDOWPANE	1		
2	4464233	ISOLATOR	1		
3	4458466	SPACER	3		
4	4458469	SPACER	2		
5	4458470	SPACER	2		
6	4464265	GUARD	1		
7	4464266	GUARD	1		
8	4463914	SCREW	4		
9	4463737	SCREW	4		

CAB COMPONENTS - CONTINUED
(DOOR RELEASE CABLE)

T160850 -UN-30OCT02

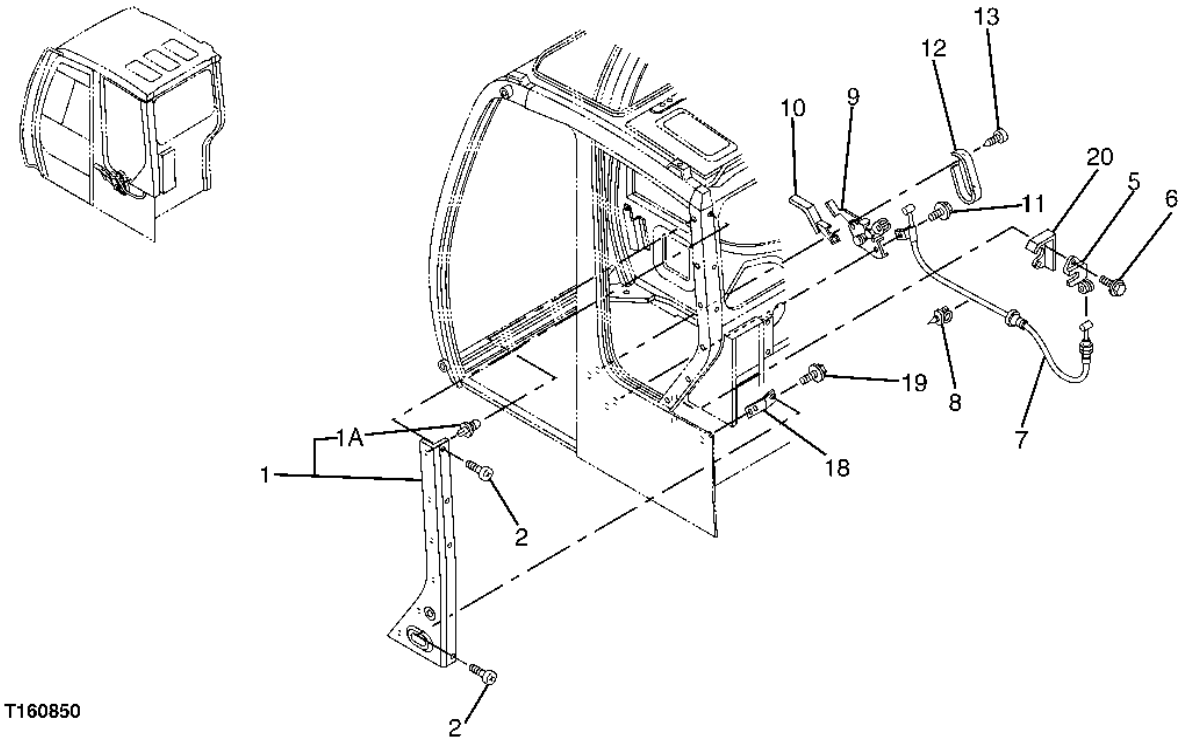

T160850

CAB COMPONENTS - CONTINUED
(DOOR RELEASE CABLE)

KEY	PART NO.	PART NAME	QTY	SERIAL NO.	REMARKS
1	4461954	COVER	1		
1A	4464899	CLIP	6		
2	4463914	SCREW	4		
5	4463203	CATCH	1		
6	4464320	BOLT	2		
7	4464329	PUSH PULL CABLE	1		
8	4464330	CLIP	1		
9	4464331	LEVER	1		
10	4464332	HANDLE	1		
11	4463918	BOLT	2		
12	4464334	COVER	1		
13	4464335	SCREW	2		
18	4464340	BRACKET	1		
19	4464230	BOLT	2		
20	4464333	BRACKET	1		

CAB TOP HATCH

T165361 -UN-20FEB03

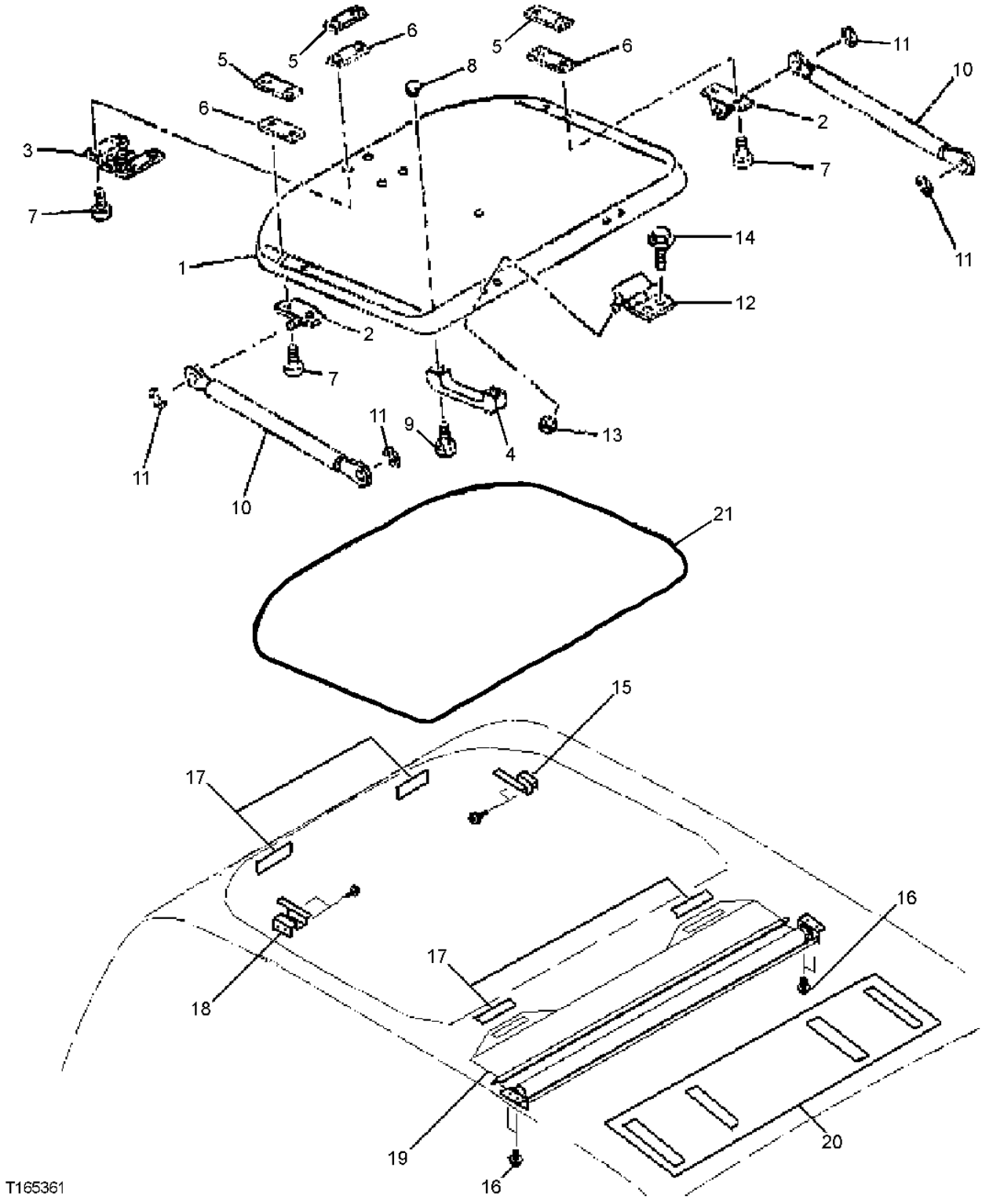

CAB TOP HATCH

KEY	PART NO.	PART NAME	QTY	SERIAL NO.	REMARKS
1	4459547	WINDOW	1		
2	4487040	BRACKET	2		
3	4487041	BRACKET	1		
4	4463942	GRIP	1		
5	4487042	RETAINER	4		
6	4487043	PACKING	4		
7	J650510	CAP SCREW	8		
8	4487045	RETAINER	2		
9	4487046	CAP SCREW	2		
10	4464231	SPRING	2		
11	4464232	SNAP RING	4		
12	4624883	HINGE	2		
13	14M7303	FLANGE NUT	4		M6, (SUB FOR 4464245)
14	4464230	BOLT	4		
15	4611308	HOOK	1		
16	4464272	SCREW	2		
17	4611311	DUAL LOCK FASTENER	4		
18	4611309	HOOK	1		(SUB FOR AT176636)
19	4611307	SHADE CURTAIN	1		
20	4611310	HEADLINER	1		
21	4464241	WEATHERSTRIP	1		

CAB CONSOLE

T160690 -UN-31OCT02

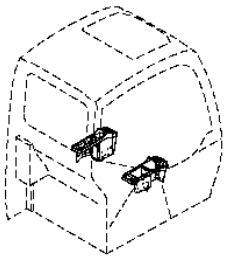

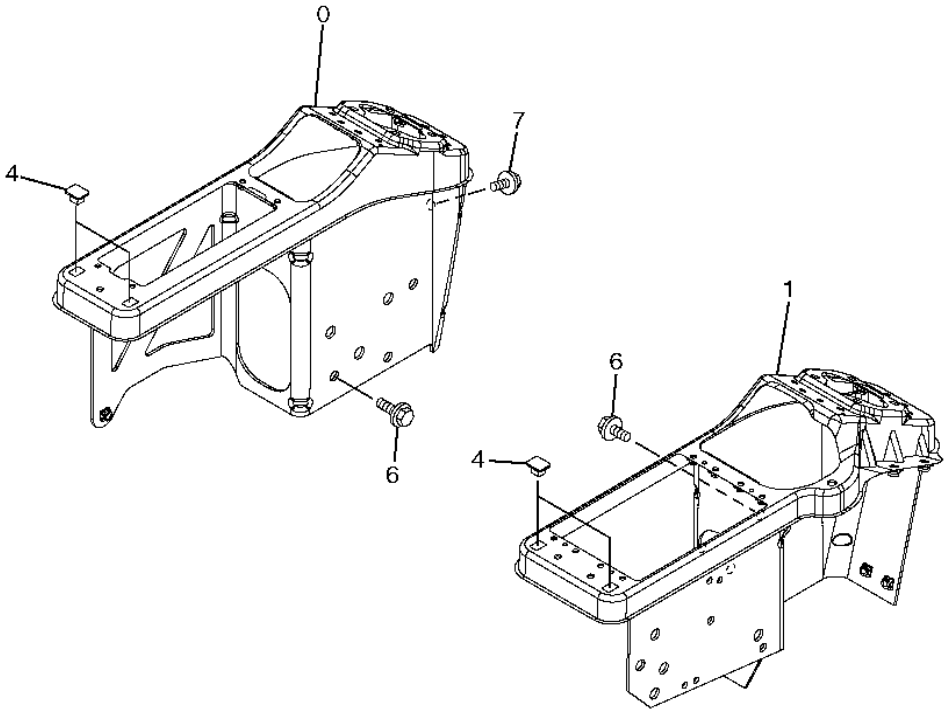

T160690

CAB CONSOLE

KEY	PART NO.	PART NAME	QTY	SERIAL NO.	REMARKS
0	7039796	CONSOLE	1		
1	7039797	CONSOLE	1		
4	4351255	CLIP	4		
6	19M7402	CAP SCREW	6		M10 X 25
	12M7066	LOCK WASHER	6		10 MM (0.394")
	24M7096	WASHER	6		10.500 X 18 X 1.600 MM (0.413" X 0.709" X 0.063")
7	19M7163	CAP SCREW	1		M8 X 25
	12M7065	LOCK WASHER	1		8 MM (0.315")
	24M7055	WASHER	1		8.400 X 16 X 1.600 MM (0.331" X 0.630" X 0.063")

CONSOLE COVER

T160691 -UN-31OCT02

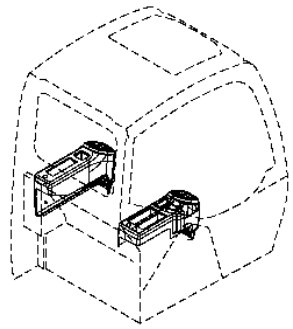

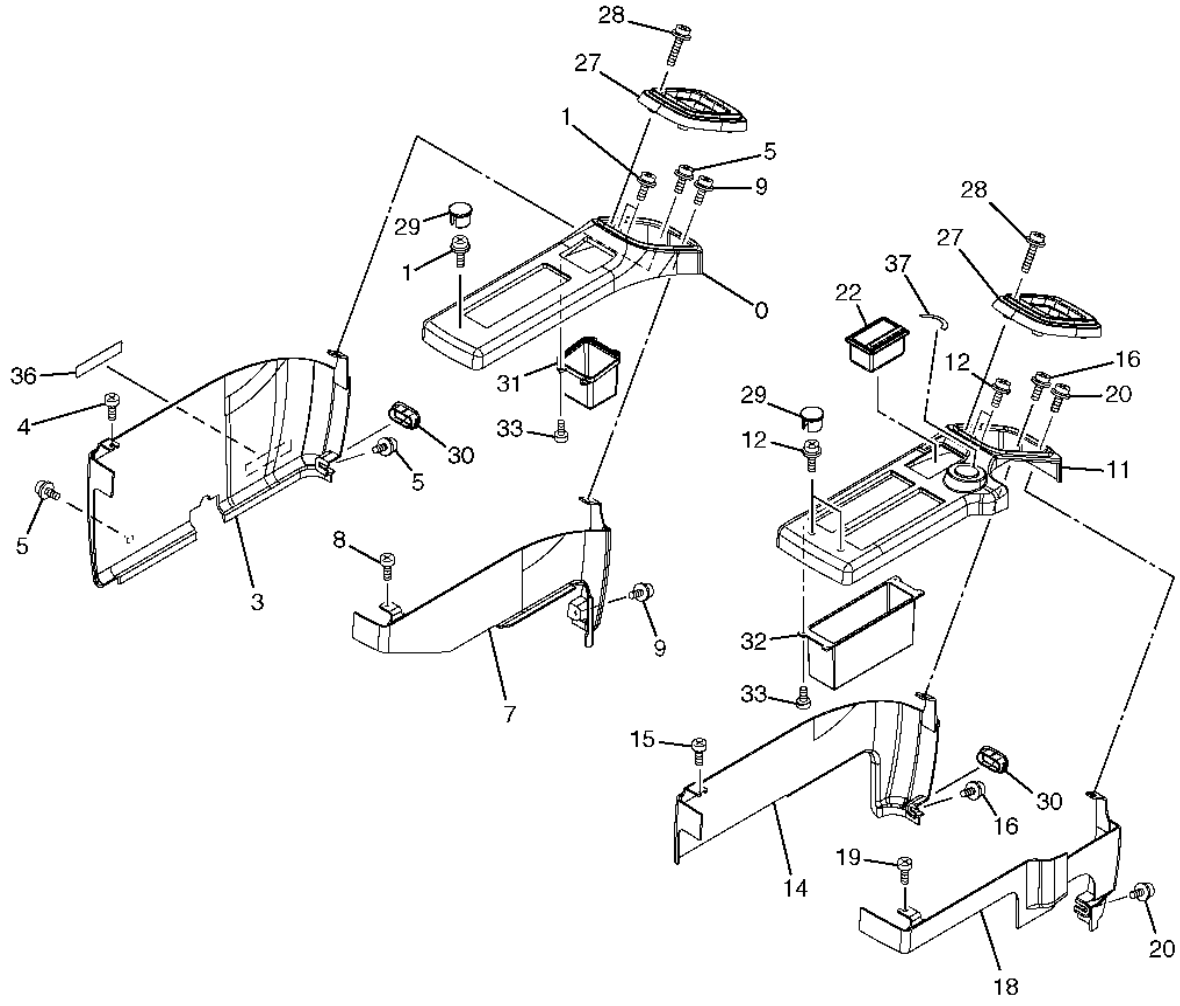

T160691

CONSOLE COVER

KEY	PART NO.	PART NAME	QTY	SERIAL NO.	REMARKS
0	4420875	COVER	1		
1	J680616	SCREW	3		
3	4464048	COVER	1		
4	4361802	SCREW	1		
5	J680616	SCREW	3		
7	4441968	COVER	1		
8	4361802	SCREW	1		
9	J680616	SCREW	2		
11	4420878	COVER	1		
12	J680616	SCREW	4		
14	4441965	COVER	1		
15	4361802	SCREW	1		
16	J680616	SCREW	2		
18	4446207	COVER	1		
19	4361802	SCREW	1		
20	J680616	SCREW	2		
22	4415024	ASHTRAY	1		
27	2045509	COVER	2		
28	19M7177	CAP SCREW	8		M6 X 35
	12M7006	LOCK WASHER	8		6 MM (0.236")
29	4448990	CAP	3		
30	4441117	CAP	2		
31	3090024	HOLDER	1		
32	3090025	HOLDER	1		
33	4361800	SCREW	8		
36	4299059	LABEL	1		
37	4288417	LABEL	1		

RIGHT COVER

T142595 -UN-06JUL01

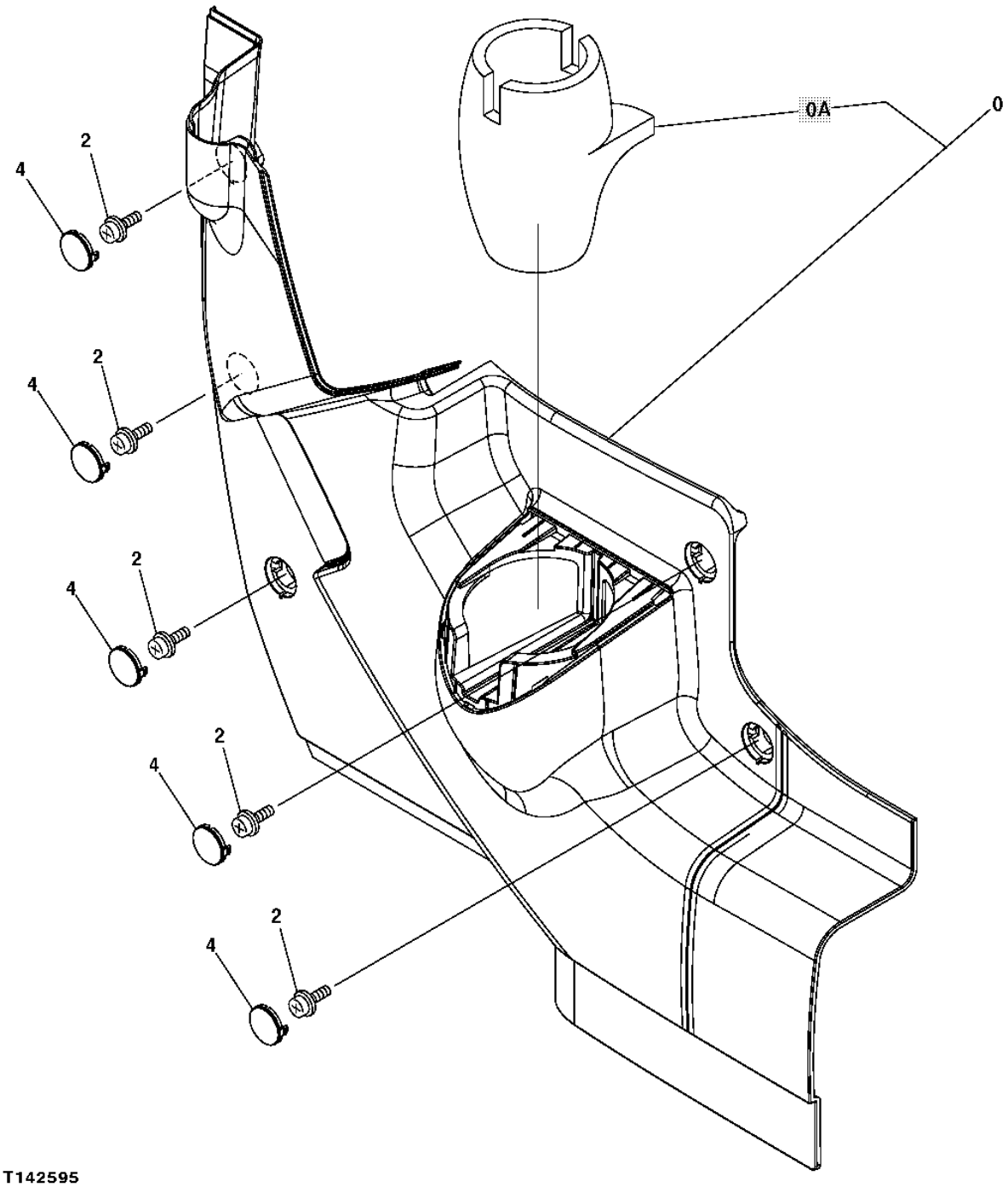

RIGHT COVER

KEY	PART NO.	PART NAME	QTY	SERIAL NO.	REMARKS
0	4445917	COVER	1		
0A	4445932	HOLDER	1		
2	4426354	CAP	5		
	12M7066	LOCK WASHER	5		
	24M7293	WASHER	5		
4	4426354	CAP	5		

CAB COVER

T160841 -UN-30OCT02

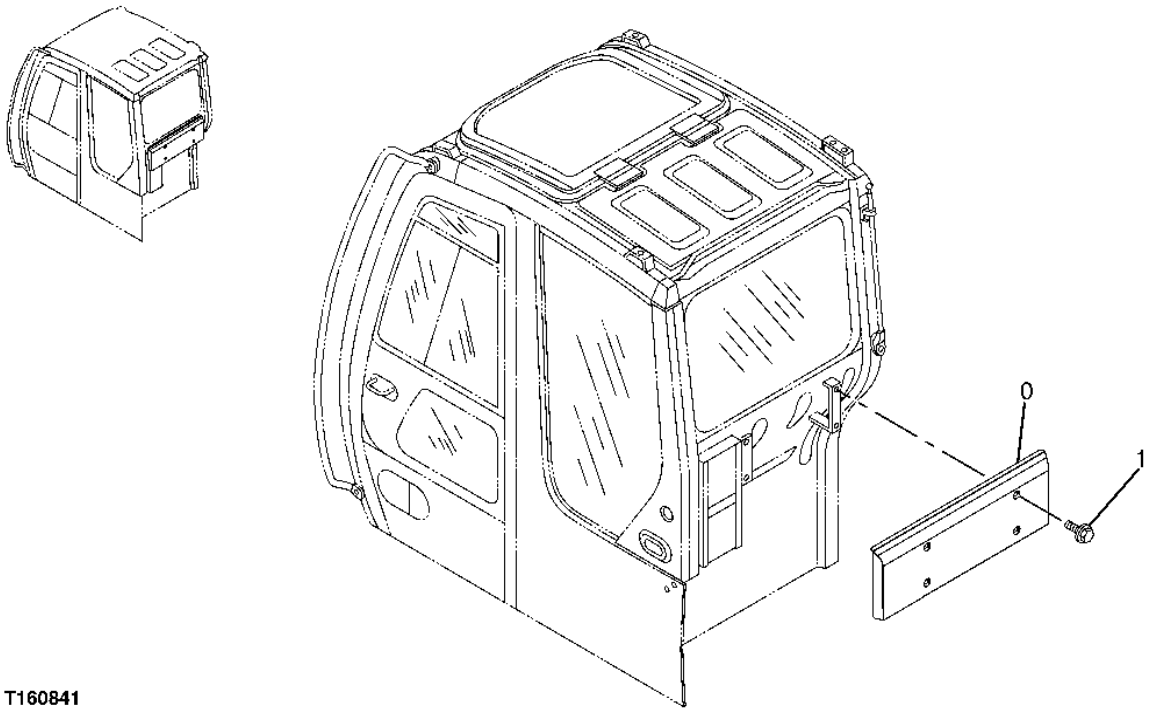

T160841

CAB COVER

KEY	PART NO.	PART NAME	QTY	SERIAL NO.	REMARKS
0	7040514	COVER	1		
1	4456332	BOLT	4		

CAB ISOLATORS

T160842 -UN-30OCT02

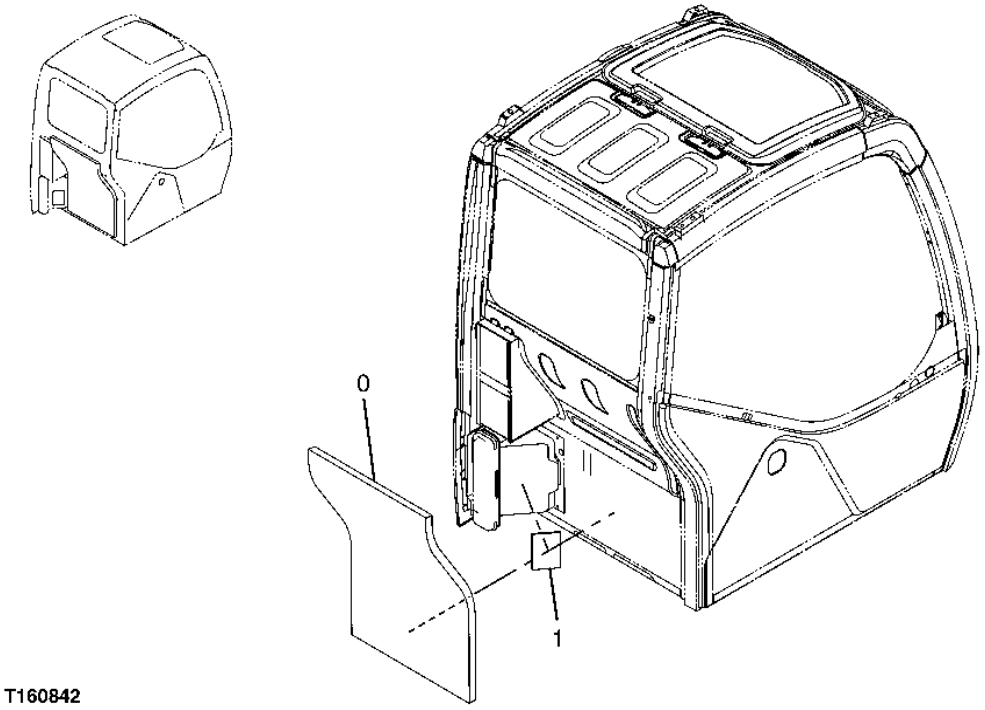

T160842

CAB ISOLATORS

KEY	PART NO.	PART NAME	QTY	SERIAL NO.	REMARKS
0	4464290	ISOLATOR	1		
1	4454116	ISOLATOR	1		

FLOOR PLATE

T160843 -UN-30OCT02

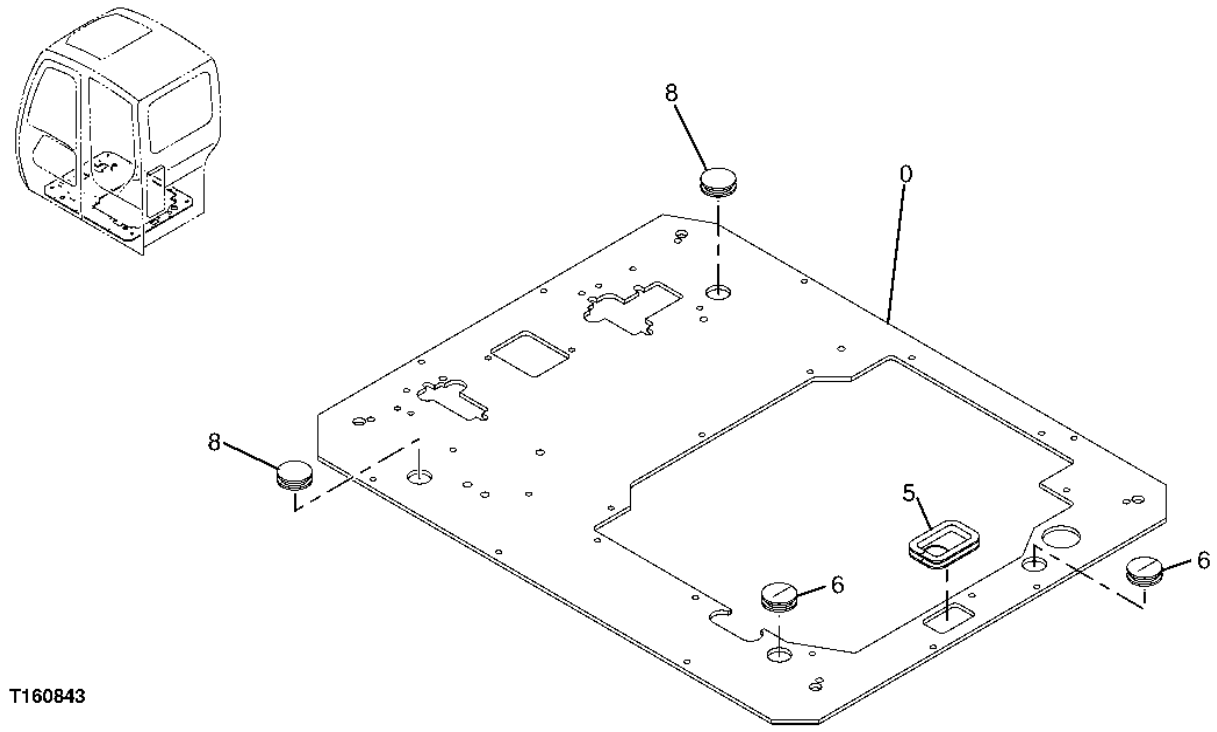

T160843

FLOOR PLATE

KEY	PART NO.	PART NAME	QTY	SERIAL NO.	REMARKS
0	6019229	PLATE	1		
5	4461384	BUSHING	1		
6	4387501	BUSHING	2		
8	4288445	BUSHING	2		

FLOOR PARTS

T160894 -UN-30OCT02

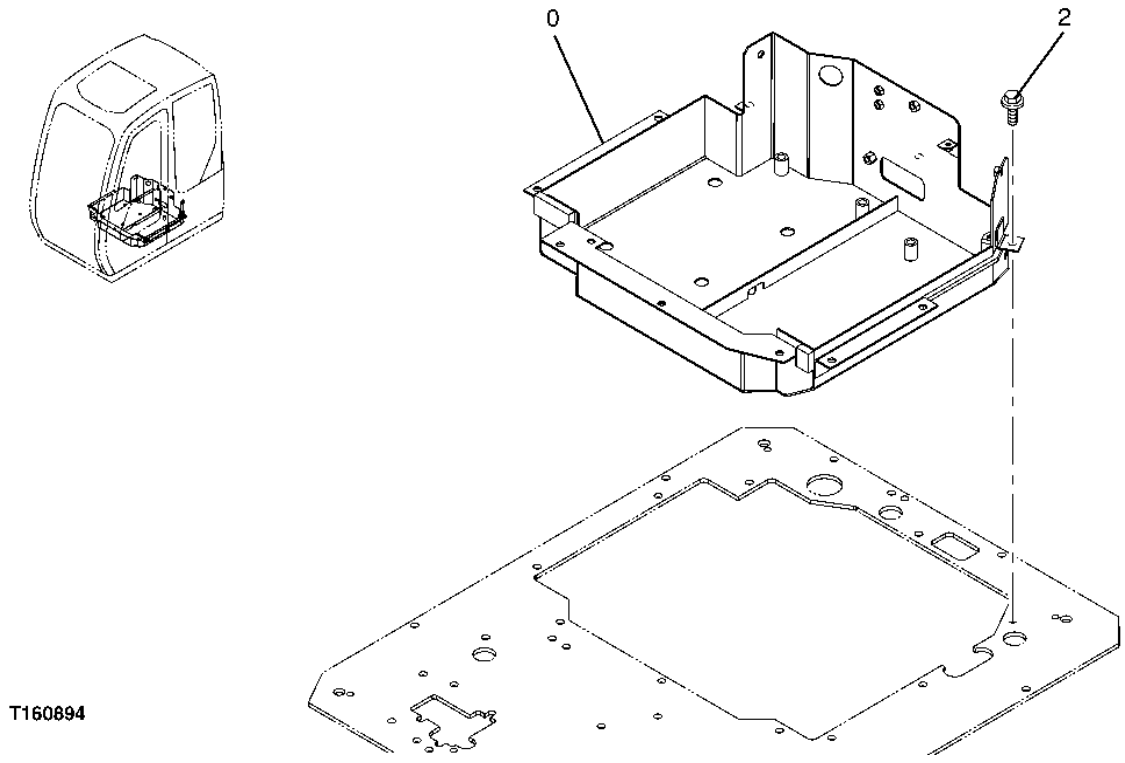

FLOOR PARTS

KEY	PART NO.	PART NAME	QTY	SERIAL NO.	REMARKS
0	5007260	FRAME	1		
2	19M7402	CAP SCREW	7		M10 X 25
	12M7066	LOCK WASHER	7		10 MM (0.394")
	24M7028	WASHER	7		10.500 X 20 X 2 MM (0.413" X 0.787" X 0.079")

CAB FLOOR MAT

T160844 -UN-30OCT02

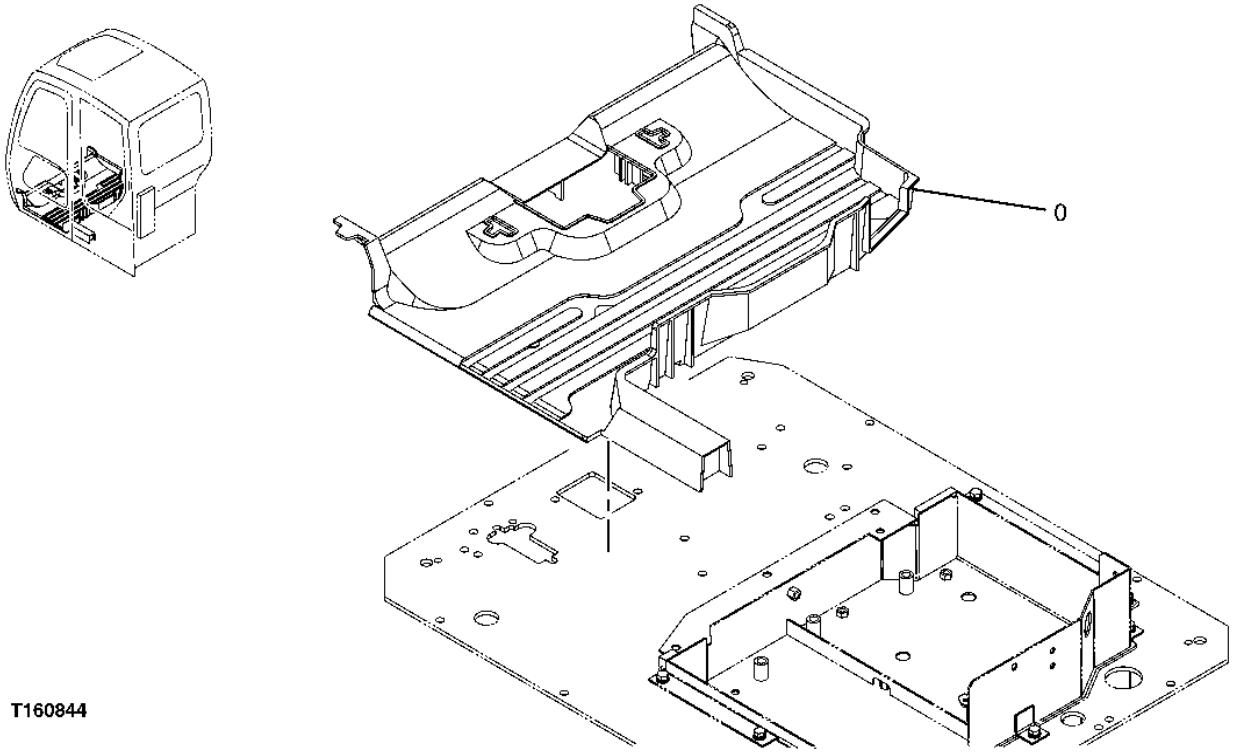

T160844

1J6

CAB FLOOR MAT

KEY	PART NO.	PART NAME	QTY	SERIAL NO.	REMARKS
0	0004140	MAT	1		(STANDARD BOOM)
	3093484	MAT	1		(OFFSET BOOM)

CAB VANDAL PROTECTION KIT

T164574 -UN-24JAN03

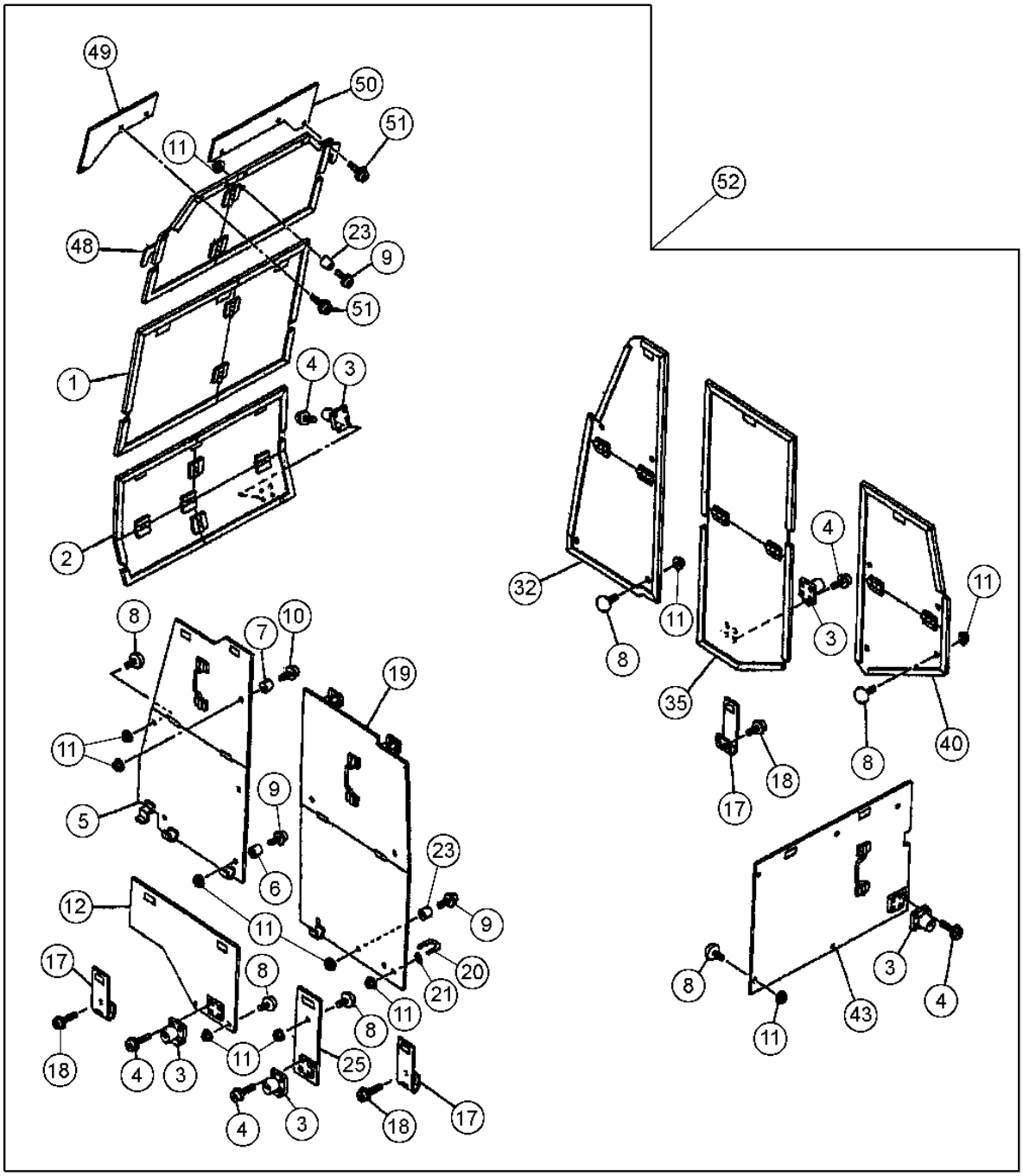

T164574

CAB VANDAL PROTECTION KIT

KEY	PART NO.	PART NAME	QTY	SERIAL NO.	REMARKS
1	4604759	COVER	1		
2	4604760	COVER	1		
3	4361601	LOCK	5		
4	21M7022	SCREW	20		
	12M7064	LOCK WASHER	20		
5	4604761	COVER	1		
6	4604762	ISOLATOR	2		
7	4604763	ISOLATOR	2		
8	9738682	STOP	18		
9	21M7022	SCREW	7		
10	21M7251	SCREW	4		
11	19M7297	CAP SCREW	29		
12	4604764	COVER	1		
17	4207538	HINGE	3		
18	21M7249	SCREW	4		(SUB FOR AT176636)
19	4604765	COVER	1		
20	4604766	STRIKER	1		
21	24M7027	WASHER	4		
23	4604767	ISOLATOR	5		
25	4604768	COVER	1		
32	4604769	COVER	1		
35	4604770	COVER	1		
40	4604771	COVER	1		
43	4604772	COVER	1		
48	4608027	COVER	1		
49	4608028	COVER	1		
50	4608029	COVER	1		
51	J680516	SCREW	6		
52	**9227382**	**KIT**	**1**		**(WHOLEGOODS)(CAB VANDAL PROTECTION)**

SECONDARY EXIT KIT

T189831 -UN-23APR03

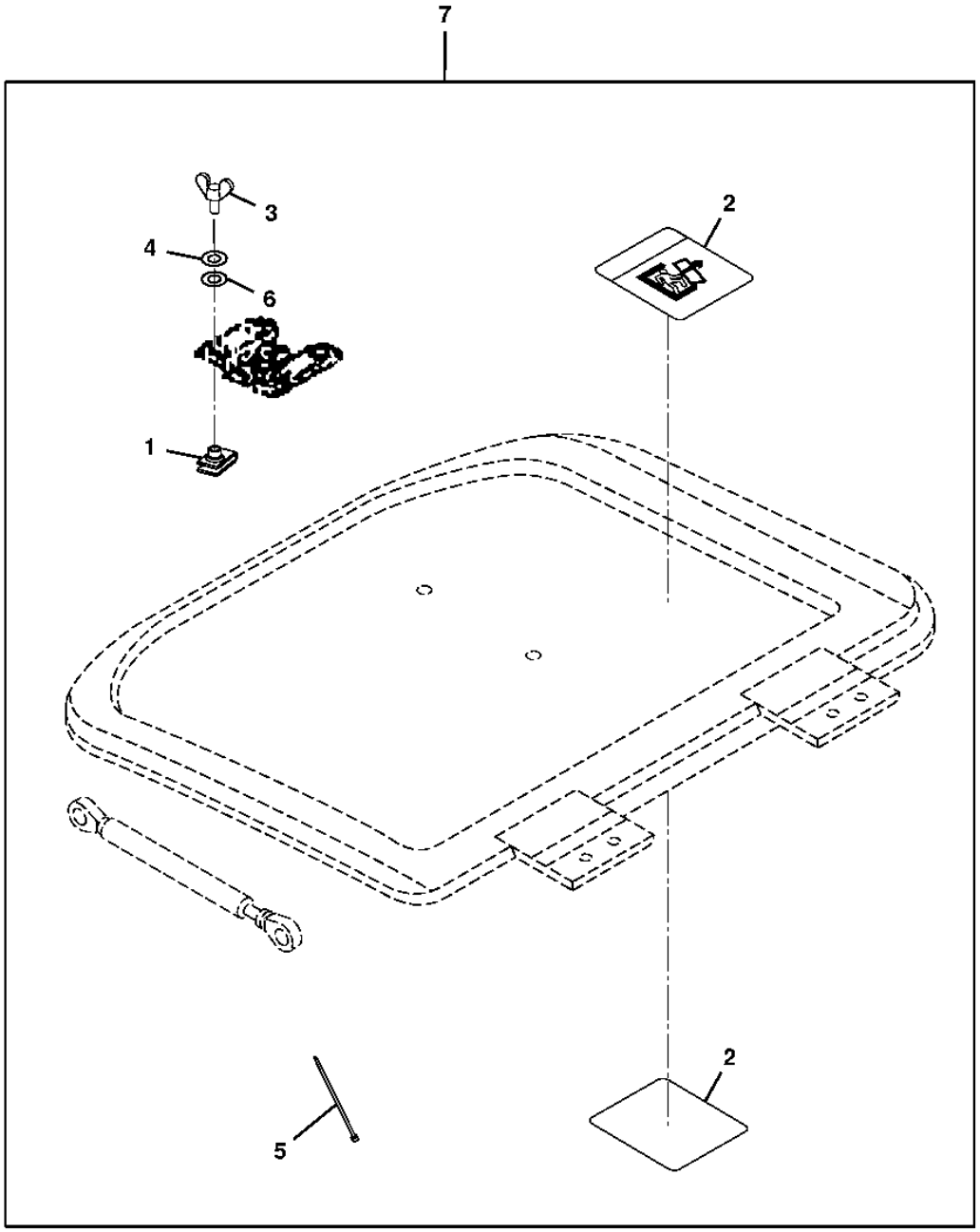

T189831

1J10

SECONDARY EXIT KIT

KEY	PART NO.	PART NAME	QTY	SERIAL NO.	REMARKS
1	M84972	NUT	4		
2	T167256	LABEL	2		
3	24M7344	WASHER	4		22 X 37 X 3 MM
4	24M7139	WASHER	4		6.400 X 18 X 1.600 MM
5	R44302	TIE BAND	2		(NOT REQUIRED, THIS APPLICATION)
6	T125809	WASHER	4		6.375 X 15.748 X 1.956 MM
7	**AT303431**	**KIT**	**1**		**(WHOLEGOODS)(SECONDARY EXIT KIT)**

SEAT AND SEAT SUSPENSION

T195609 -UN-24OCT03

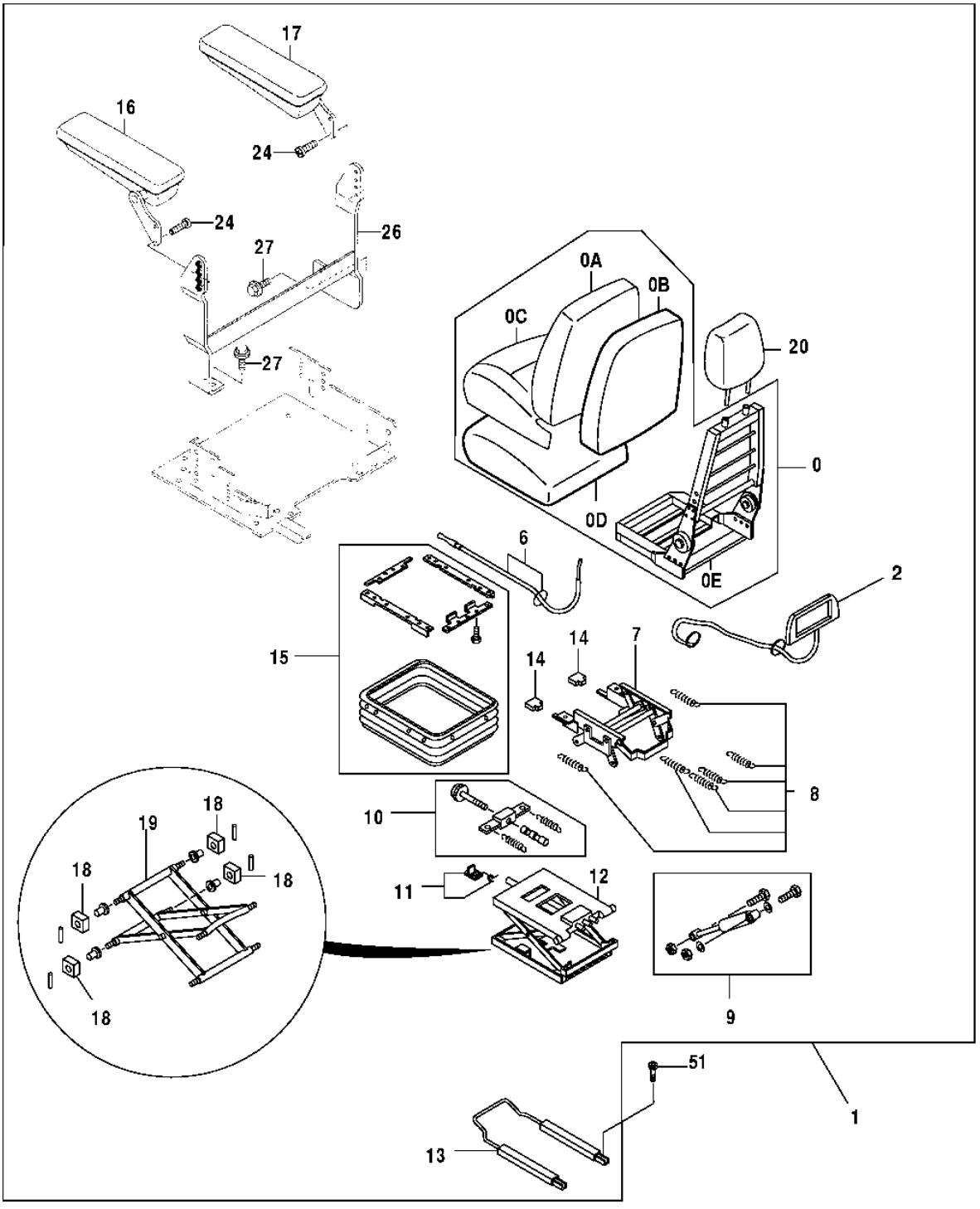

T195609

SEAT AND SEAT SUSPENSION

KEY	PART NO.	PART NAME	QTY	SERIAL NO.	REMARKS
0	AT195286	SEAT BACK	1		SEAT UPPER KIT
0A	AT309263	CUSHION COVER	1		
0B	AT309264	PAD	1		
0C	AT195278	CUSHION	1		(FABRIC)
0D	AT195279	PAD	1		(SEAT)
0E	.....	FRAME	1		
1	AT193964	SEAT	1		FABRIC
2	AT195284	KIT	1		(AIR LUMBAR KIT)
6	AT216522	CABLE	1		
7	AT180971	STAND	1		RECLINER CABLE KIT
8	AT195287	SPRING	1		
9	AT180973	TORSIONAL DAMPER	1		(KIT)
10	AT180974	ADJUSTER	1		HEIGHT RISER SPRING
11	AT180975	STOP	1		
12	AT180976	SEAT SUSPENSION	1		
13	AT180977	ADJUSTER	1		
14	AT216532	KIT	1		(KNOB)
15	AT180978	COVER	1		(SUSPENSION COVER KIT)
16	4463702	ARMREST KIT	1		LEFT
17	4463703	ARMREST KIT	1		RIGHT
18	AT180979	BUSHING	1		KIT
19	AT180980	LINK	1		LEVER/CENTER PIVOT KIT
20	AT195280	HEAD RESTRAINT	1		
24	21M7161	SCREW	4		M8 X 30
26	8085910	BRACKET	1		
27	19M7662	CAP SCREW	4		M10 X 30, (SUB FOR J021030)
	12M7066	LOCK WASHER	4		10 MM
	24M7028	WASHER	4		10.500 X 20 X 2 MM
51	19M7647	SCREW	4		M8 X 16, (SUB FOR AT217709)

3.00 INCH SEAT BELT KIT

T191801 -UN-13JUN03

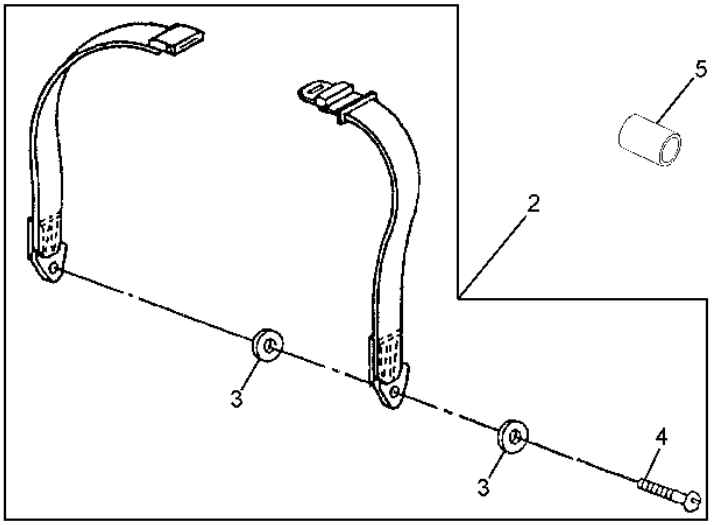

T191801

1J14

3.00 INCH SEAT BELT KIT

KEY	PART NO.	PART NAME	QTY	SERIAL NO.	REMARKS
2	**AT173678**	**SEAT BELT**	**1**		**WHOLEGOODS (INCLUDES HARDWARE)**
	T157779	FLANGE NUT	2		7/16" (NOT ILLUSTRATED)
3	T105740	WASHER	4		
4	R41778	BOLT	2		11.125 X 31.750 MM
5	R58462	WASHER	1		

SEAT BASE

T142631 -UN-28JUN01

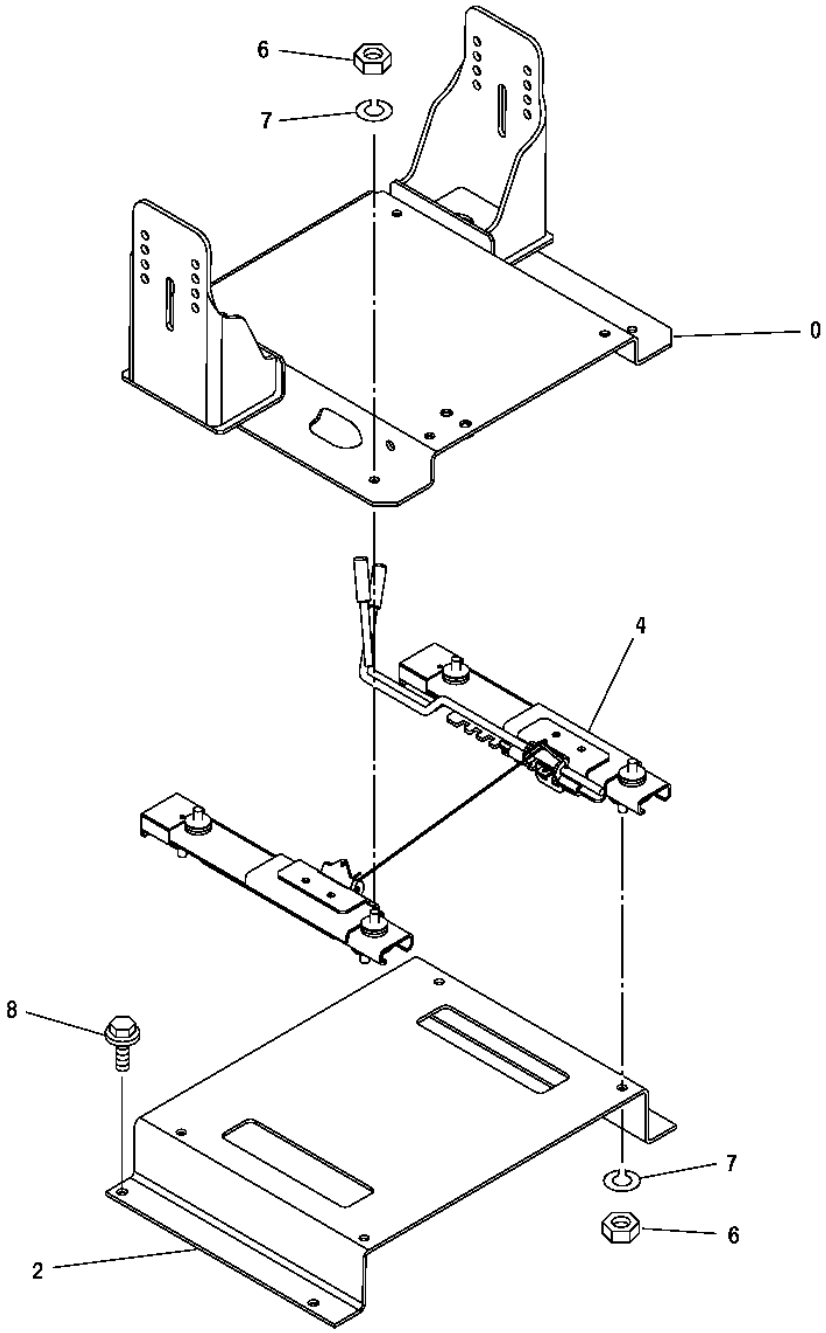

T142631

SEAT BASE

KEY	PART NO.	PART NAME	QTY	SERIAL NO.	REMARKS
0	6020125	BRACKET	1		(SUB FOR TH6020171)
2	TH3089486	BRACKET	1		
4	TH4405128	SEAT SLIDE TRACK KIT	1		
6	J952010	NUT	8		(SUB FOR TH104196)
7	12M7066	LOCK WASHER	8		10 MM
8	19M7402	CAP SCREW	4		M10 X 25

SEAT BELT

T189425 -UN-17APR03

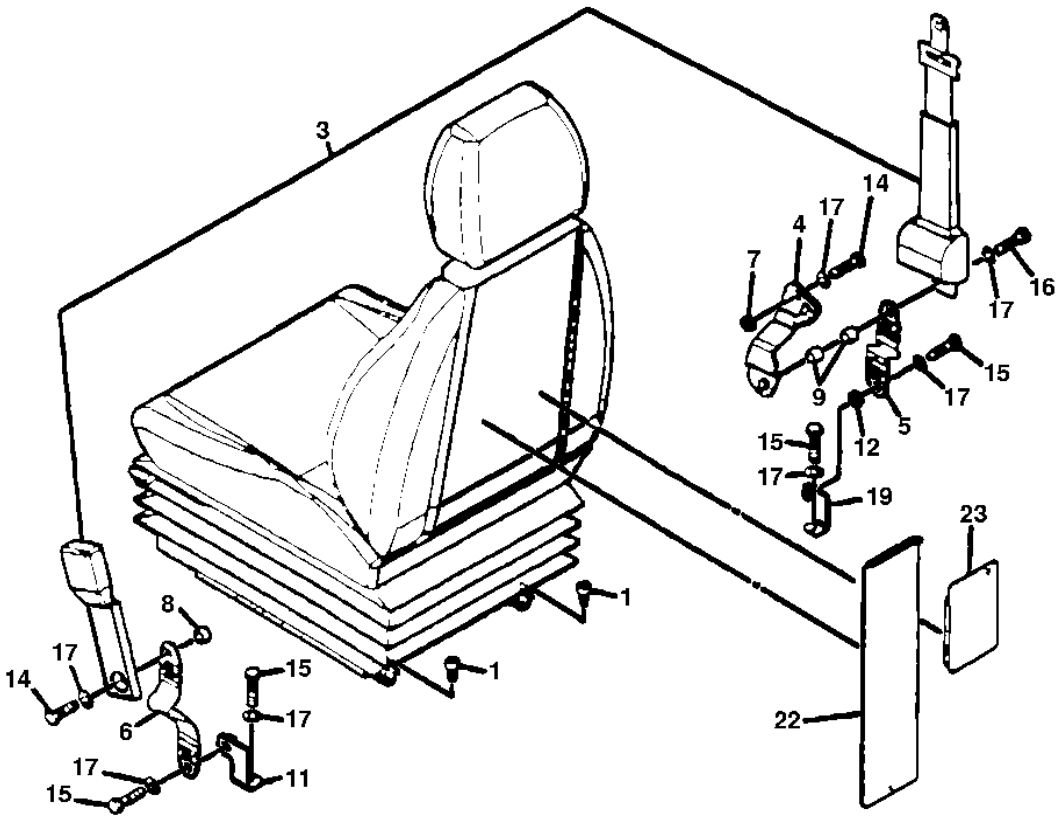

T189425

1J18

SEAT BELT

KEY	PART NO.	PART NAME	QTY	SERIAL NO.	REMARKS
1	M340816	BOLT	4		
3	4384239	SEAT BELT	1		
4	7041769	BRACKET	1		
5	4455566	BELT SET	1		
6	4366871	STRAP	1		
7	4372200	SPACER	1		
8	4453874	SPACER	1		
9	4468596	SPACER	2		
11	9756725	BRACKET	1		
12	4372200	SPACER	1		
14	4333835	BOLT	2		
15	19H3187	CAP SCREW	3		7/16" X 1-1/2", (SUB FOR 4235232)
16	4380534	CAP SCREW	1		
17	J219167	SPRING WASHER	6		
19	9758228	BRACKET	1		
22	3092010	COVER	1		
23	8083855	COVER	1		

AIR CONDITIONER AND HEATER

T160857 -UN-30OCT02

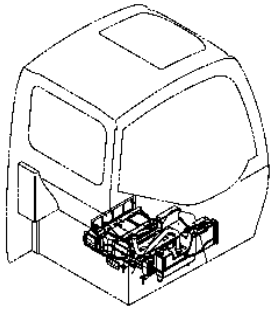

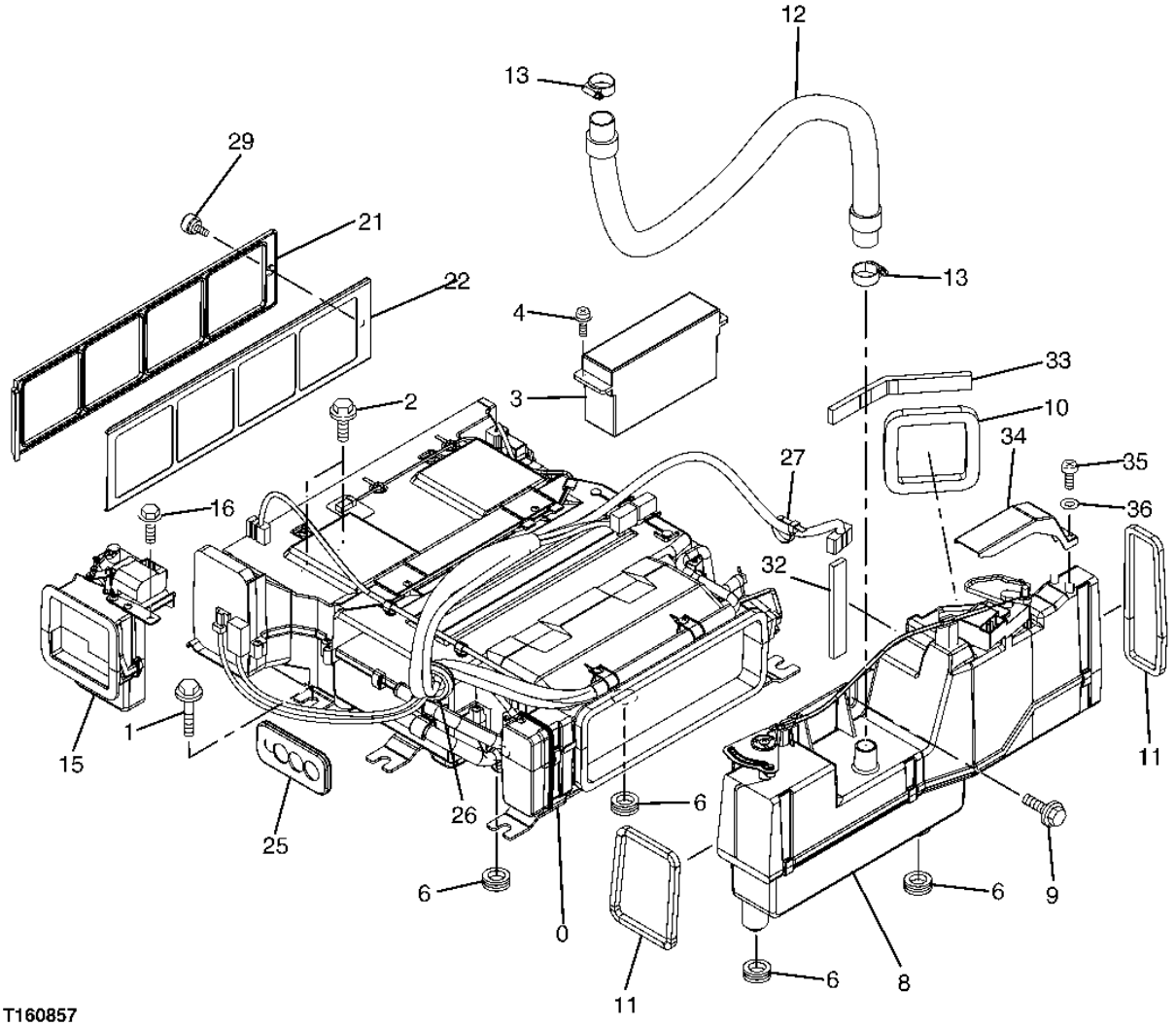

AIR CONDITIONER AND HEATER

KEY	PART NO.	PART NAME	QTY	SERIAL NO.	REMARKS
0	4438289	AIR CONDITIONER	1	-060812	(4438289 NO LONGER AVAILABLE) (FURNISH 4609051 ALONG WITH 4611360, (2) 4475767, AND (2) 4464483)
	4609051	AIR CONDITIONER	1	060813-	(USE WITH 4611360)
1	J021055	CAP SCREW	6		
2	19M7402	CAP SCREW	2		M10 X 25
	12M7066	LOCK WASHER	2		10 MM (0.394")
	24M7096	WASHER	2		10.500 X 18 X 1.600 MM (0.413" X 0.709" X 0.063")
3	4450315	BASIC CONTROL UNIT	1		
4	21M7265	SCREW	4		M5 X 12
6	4326229	BUSHING	4		
8	4447332	AIR DUCT	1		
9	19M7662	CAP SCREW	2		M10 X 30
	12M7066	LOCK WASHER	2		10 MM (0.394")
	24M7028	WASHER	2		10.500 X 20 X 2 MM (0.413" X 0.787" X 0.079")
10	4449878	ISOLATOR	1		
11	4449879	ISOLATOR	2		
12	4451258	HYDRAULIC HOSE	1		
13	AT145650	HOSE CLAMP	2		
15	4447331	AIR DUCT	1		
16	19M7881	SCREW	2		M8 X 20
	12M7065	LOCK WASHER	2		8 MM (0.315")
	24M7055	WASHER	2		8.400 X 16 X 1.600 MM (0.331" X 0.630" X 0.063")
21	4445864	BREATHER	1		
22	4442825	BRACKET	1		
25	4444022	BUSHING	1		
26	4184582	GROMMET	1		
27	H77698	TIE BAND	1		
29	4446097	KNOB	1		
32	4455712	ISOLATOR	1		
33	4455713	ISOLATOR	1		
34	4453351	COVER	1		
35	4452613	SCREW	2		
36	24H1281	WASHER	2		5/32" X 3/8" X 0.049"

AIR CONDITIONER COMPRESSOR , CONDENSOR AND DRYER

T157068 -UN-30OCT02

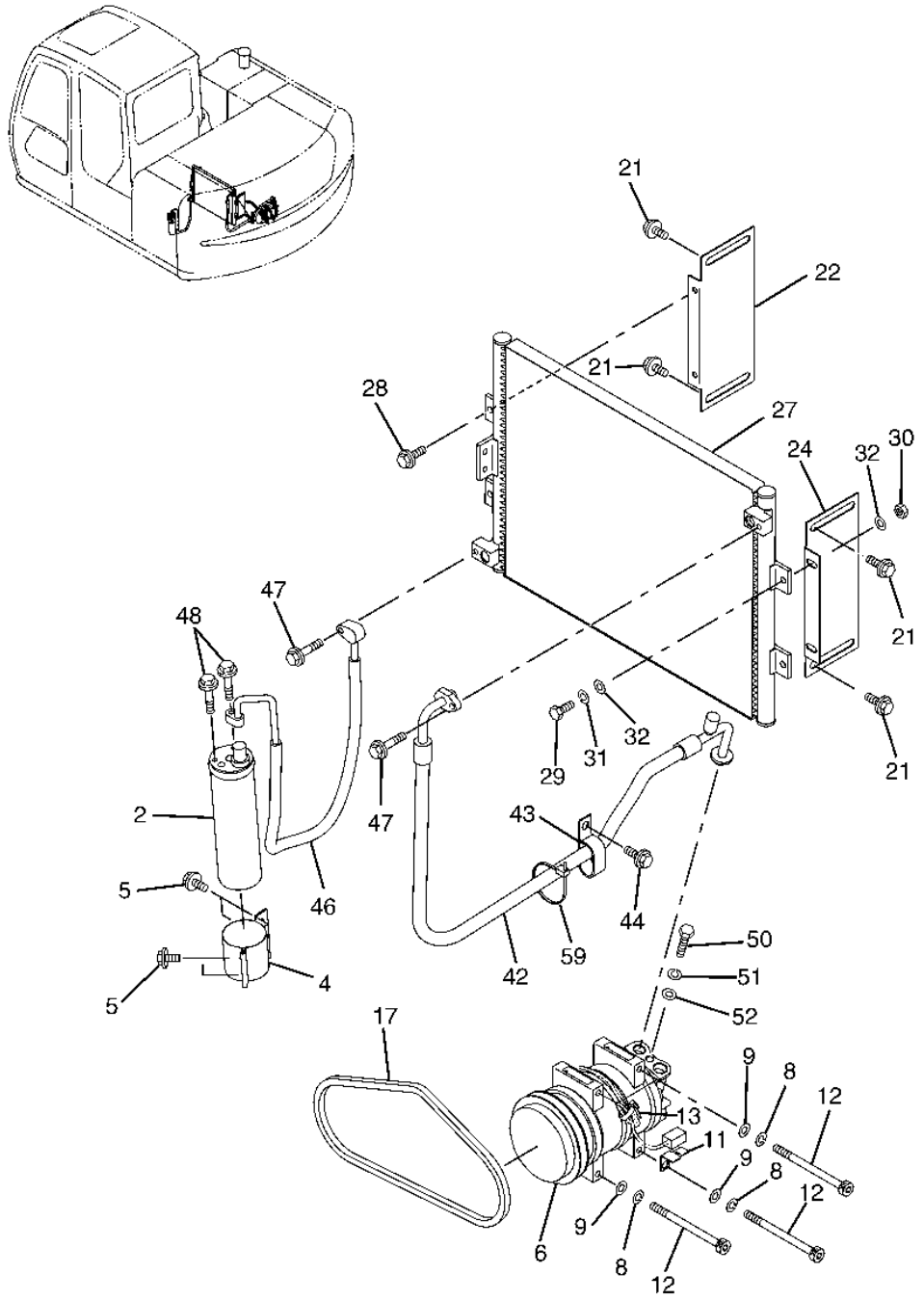

T157068

AIR CONDITIONER COMPRESSOR , CONDENSOR AND DRYER

KEY	PART NO.	PART NAME	QTY	SERIAL NO.	REMARKS
2	4448179	RECEIVER-DRYER	1		
4	4460399	BRACKET	1		
5	19M7077	CAP SCREW	4		M6 X 20
6	4456130	COMPRESSOR	1		(SUB FOR 4425700)
8	12M7065	LOCK WASHER	4		8 MM, (SUB FOR A590908)
9	24M7055	WASHER	4		8.400 X 16 X 1.600 MM, (SUB FOR A590108)
11	4355515	BRACKET	1		
12	J780800	BOLT	4		
13	R44302	TIE BAND	1		(SUB FOR 4326365)
17	4612876	V-BELT	1		(SUB FOR 4449870)
21	19M7881	SCREW	4		M8 X 20
	12M7065	LOCK WASHER	4		8 MM (0.315")
	24M7055	WASHER	4		8.400 X 16 X 1.600 MM (0.331" X 0.630" X 0.063")
22	8084192	BRACKET	1		
24	3091310	BRACKET	1		
27	4445865	VAPOR CONDENSER	1		
28	19M7881	SCREW	2		M8 X 20
	12M7065	LOCK WASHER	2		8 MM (0.315")
	24M7055	WASHER	2		8.400 X 16 X 1.600 MM (0.331" X 0.630" X 0.063")
29	19M7407	CAP SCREW	2		M8 X 25
30	14M7273	NUT	2		M8
31	12M7065	LOCK WASHER	2		8 MM, (SUB FOR A590908)
32	24M7055	WASHER	4		8.400 X 16 X 1.600 MM, (SUB FOR A590108)
42	4448902	REFRIGERANT HOSE	1		
43	4192034	CLIP	1		
44	19M7938	CAP SCREW	1		M10 X 20
	12M7066	LOCK WASHER	1		10 MM (0.394")
46	4455962	REFRIGERANT HOSE	1		
47	J020835	BOLT	2		
48	19M7874	CAP SCREW	2		M6 X 30, (SUB FOR J020630)
	24M7054	WASHER	2		6.400 X 12 X 1.600 MM
	12H302	LOCK WASHER	2		1/4"
50	19M8260	CAP SCREW	1		M10 X 40
51	12M7066	LOCK WASHER	1		10 MM (0.394")
52	24M7028	WASHER	1		10.500 X 20 X 2 MM (0.413" X 0.787" X 0.079")
59	H77698	TIE BAND	5		

AIR CONDITIONER HOSES

T160871 -UN-30OCT02

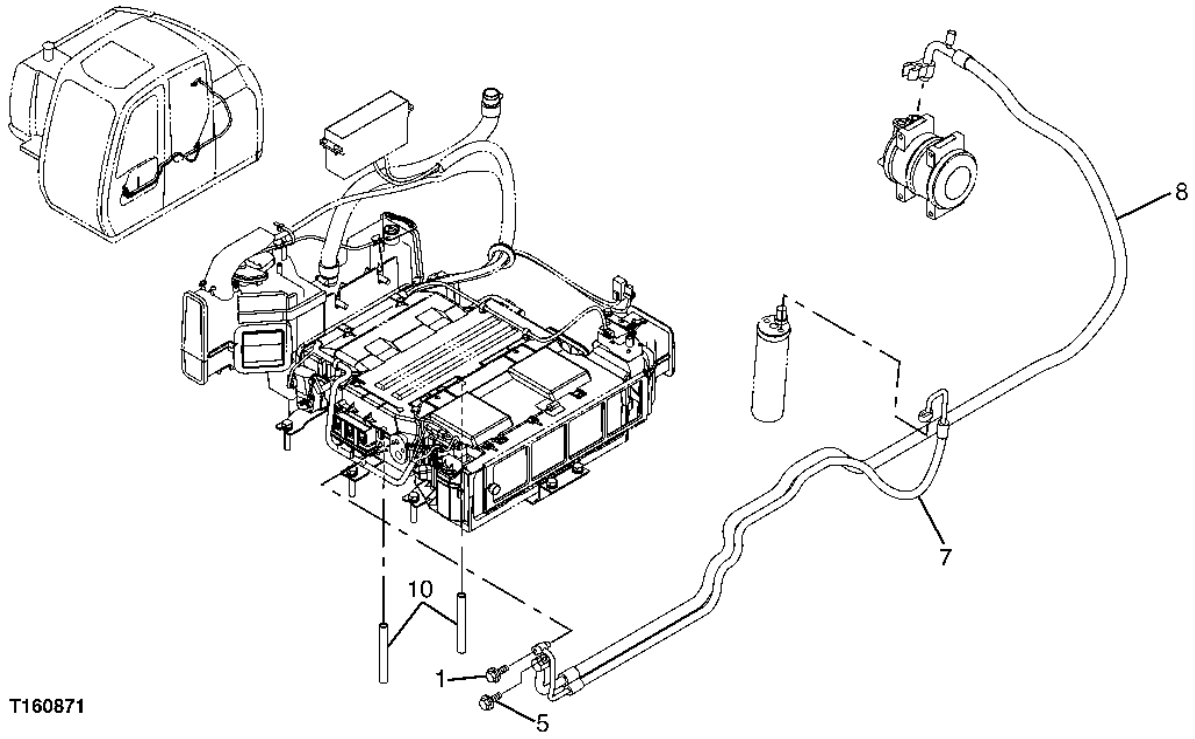

AIR CONDITIONER HOSES

KEY	PART NO.	PART NAME	QTY	SERIAL NO.	REMARKS
1	J020625	CAP SCREW	1		
5	19M7163	CAP SCREW	1		M8 X 25
	12M7065	LOCK WASHER	1		8 MM (0.315")
	24M7055	WASHER	1		8.400 X 16 X 1.600 MM (0.331" X 0.630" X 0.063")
7	4448901	REFRIGERANT HOSE	1		
8	4448900	REFRIGERANT HOSE	1		
10	.....	HOSE	2		(ORDER TY24398 - CUT TO LENGTH)

AIR CONDITIONER SENSORS

T160873 -UN-30OCT02

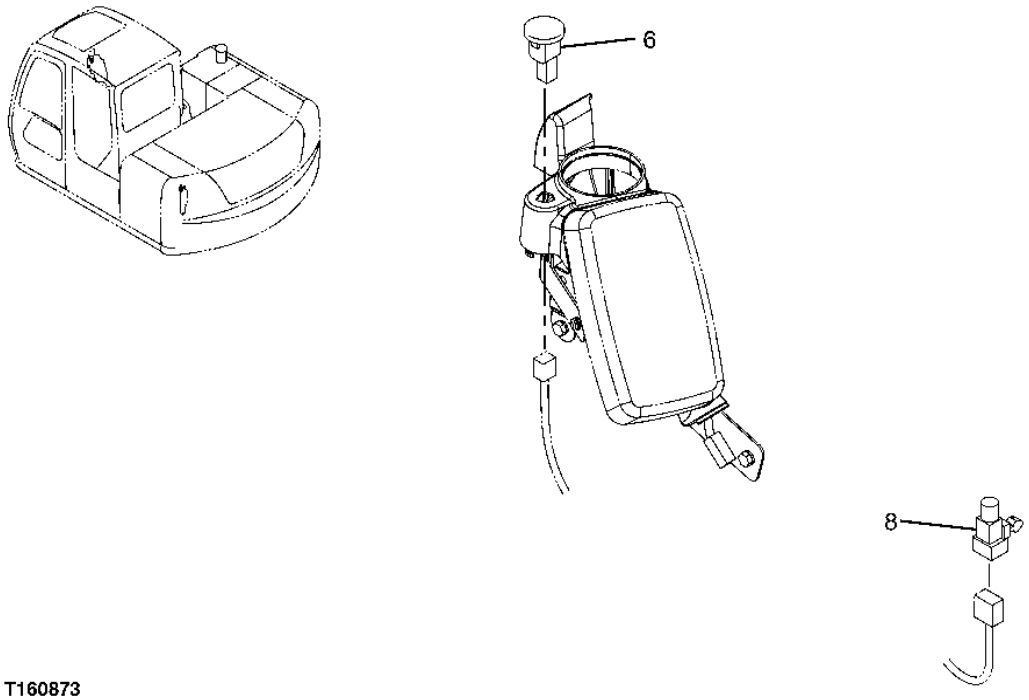

T160873

AIR CONDITIONER SENSORS

KEY	PART NO.	PART NAME	QTY	SERIAL NO.	REMARKS
6	4405166	SENSOR	1		(SOLAR)
8	4405164	SENSOR	1		(AMBIENT TEMPERATURE)

HEATER HOSES

T157059 -UN-30OCT02

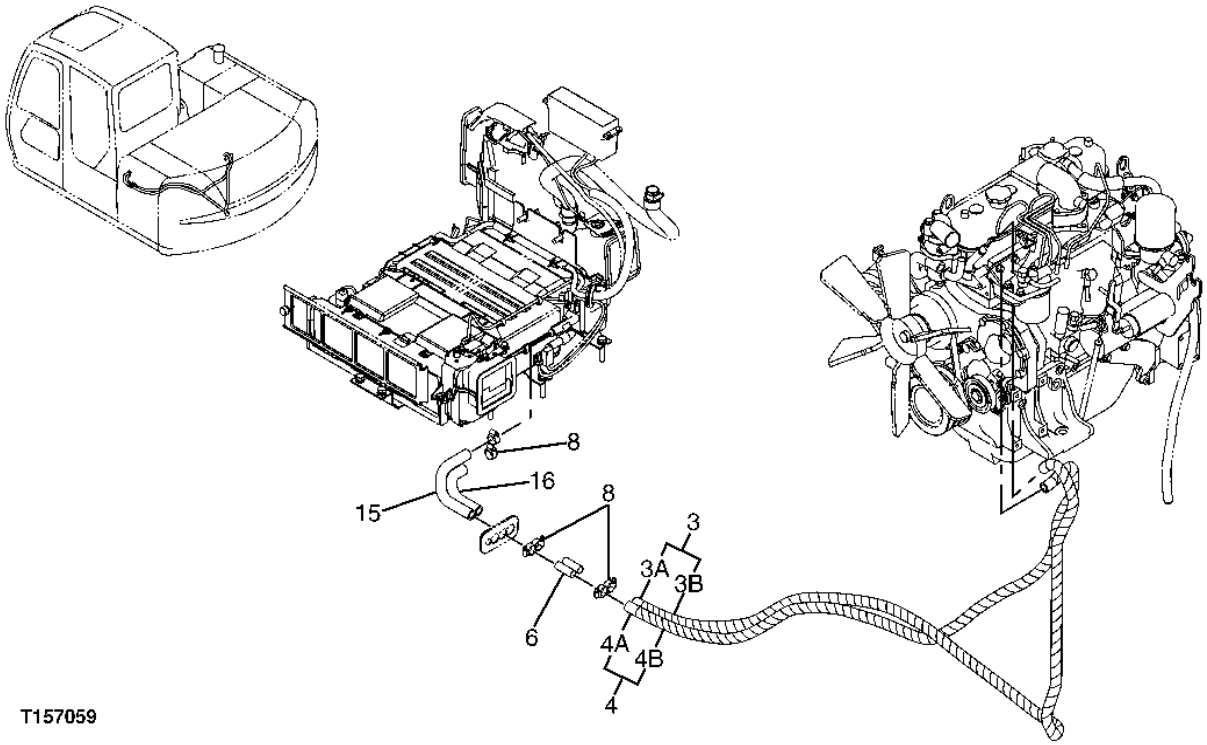

HEATER HOSES

KEY	PART NO.	PART NAME	QTY	SERIAL NO.	REMARKS
3	9202346	HOSE	1		(ORDER TY24400 - CUT TO LENGTH)
3A	.....	HOSE	1		(ORDER TY24400 - CUT TO LENGTH)
3B	4455925	GUARD	1		
4	9202347	HOSE	1		(ORDER TY24400 - CUT TO LENGTH)
4A	.....	HOSE	1		(ORDER TY24400 - CUT TO LENGTH)
4B	4455926	GUARD	1		
6	4347396	FITTING	2		
8	AA34965	HOSE CLAMP	6		
15	.....	HOSE	1		(ORDER TY24400 - CUT TO LENGTH)
16	.....	HOSE	1		(ORDER TY24400 - CUT TO LENGTH)

HEATER HOSE MOUNTING

T157060 -UN-30OCT02

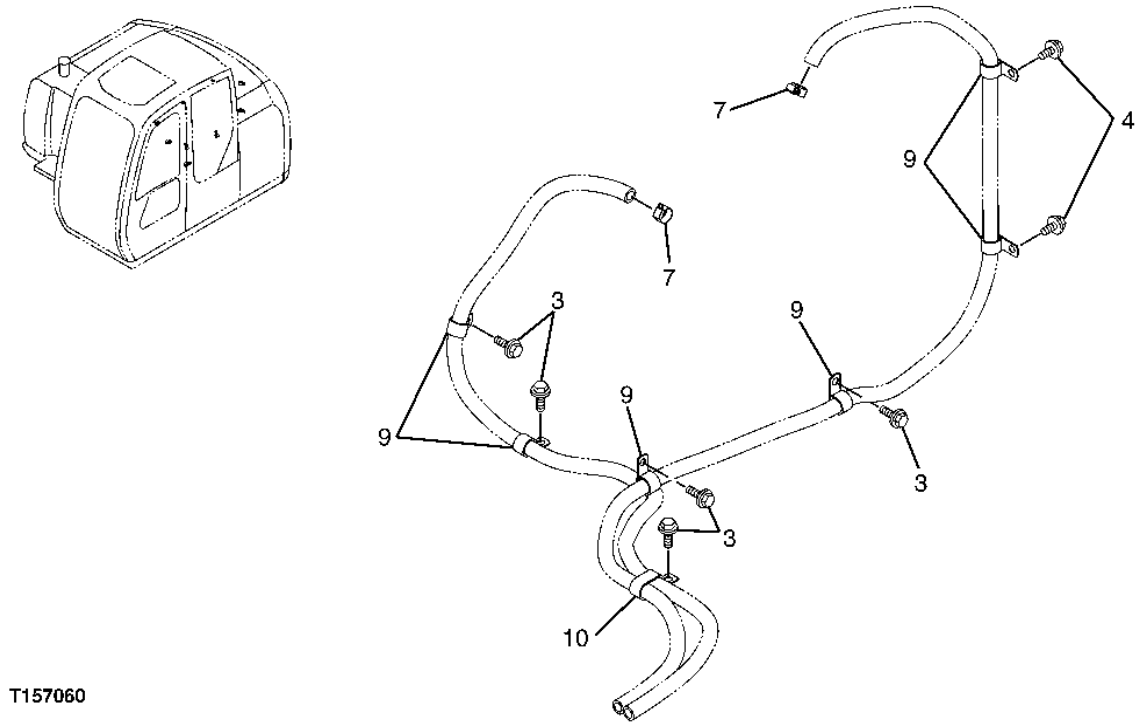

T157060

HEATER HOSE MOUNTING

KEY	PART NO.	PART NAME	QTY	SERIAL NO.	REMARKS
3	19M7938	CAP SCREW	5		M10 X 20
	12M7066	LOCK WASHER	5		10 MM (0.394")
4	19M7402	CAP SCREW	2		M10 X 25
	12M7066	LOCK WASHER	2		10 MM (0.394")
	24M7096	WASHER	2		10.500 X 18 X 1.600 MM (0.413" X 0.709" X 0.063")
7	AA34965	HOSE CLAMP	2		
9	4192035	CLIP	6		
10	4411911	SNAP RING	1		

HVAC DUCTS AND FILTER

T157061 -UN-30OCT02

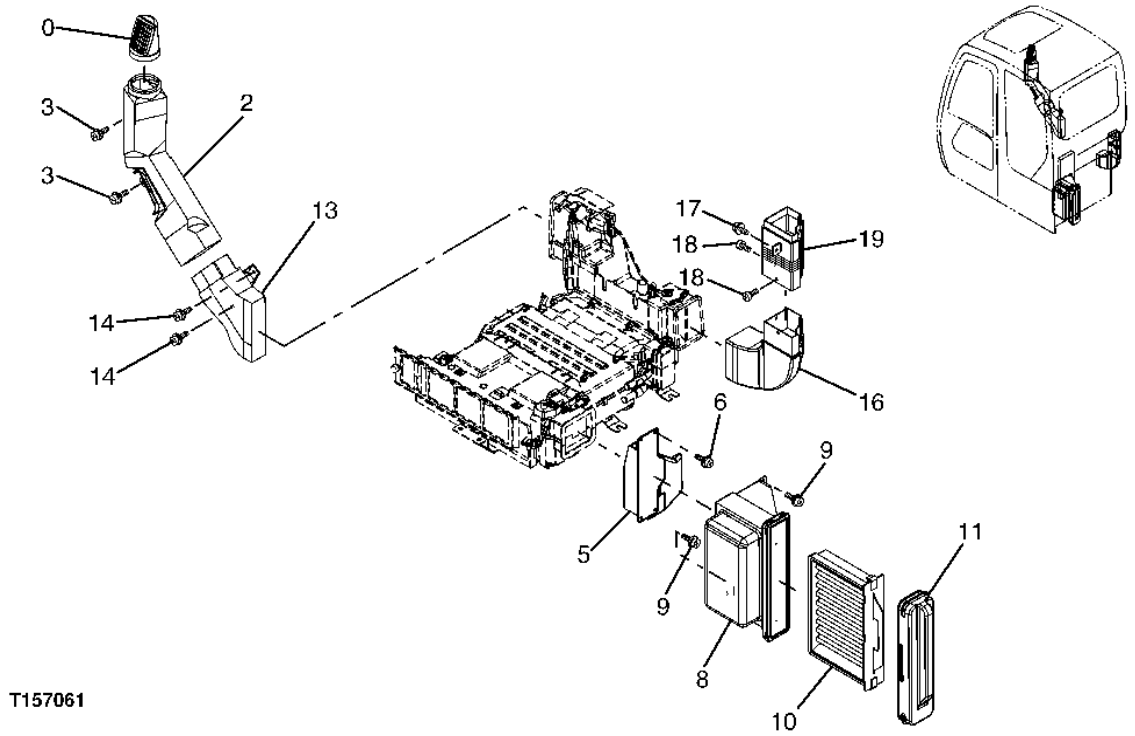

HVAC DUCTS AND FILTER

KEY	PART NO.	PART NAME	QTY	SERIAL NO.	REMARKS
0	4449068	AIR DUCT	1		
2	4426159	AIR DUCT	1		
3	19M8425	CAP SCREW	2		M6 X 16
	12M7006	LOCK WASHER	2		6 MM (0.236")
	24M7293	WASHER	2		6.500 X 13 X 1.600 MM (0.256" X 0.512" X 0.063")
5	4445708	AIR DUCT	1		
6	J460620	SCREW WITH WASHER	4		
8	4445709	AIR DUCT	1		
9	J460620	SCREW WITH WASHER	4		
10	4350249	FILTER ELEMENT	1		
11	4445710	AIR DUCT	1		
13	4445707	AIR DUCT	1		
14	19M8425	CAP SCREW	2		M6 X 16
	12M7006	LOCK WASHER	2		6 MM (0.236")
	24M7293	WASHER	2		6.500 X 13 X 1.600 MM (0.256" X 0.512" X 0.063")
16	4445711	AIR DUCT	1		
17	J460620	SCREW WITH WASHER	1		
18	4457412	SCREW	2		
19	4455512	AIR DUCT	1		

CAB REAR TRAY COMPONENTS

T165888 -UN-28FEB03

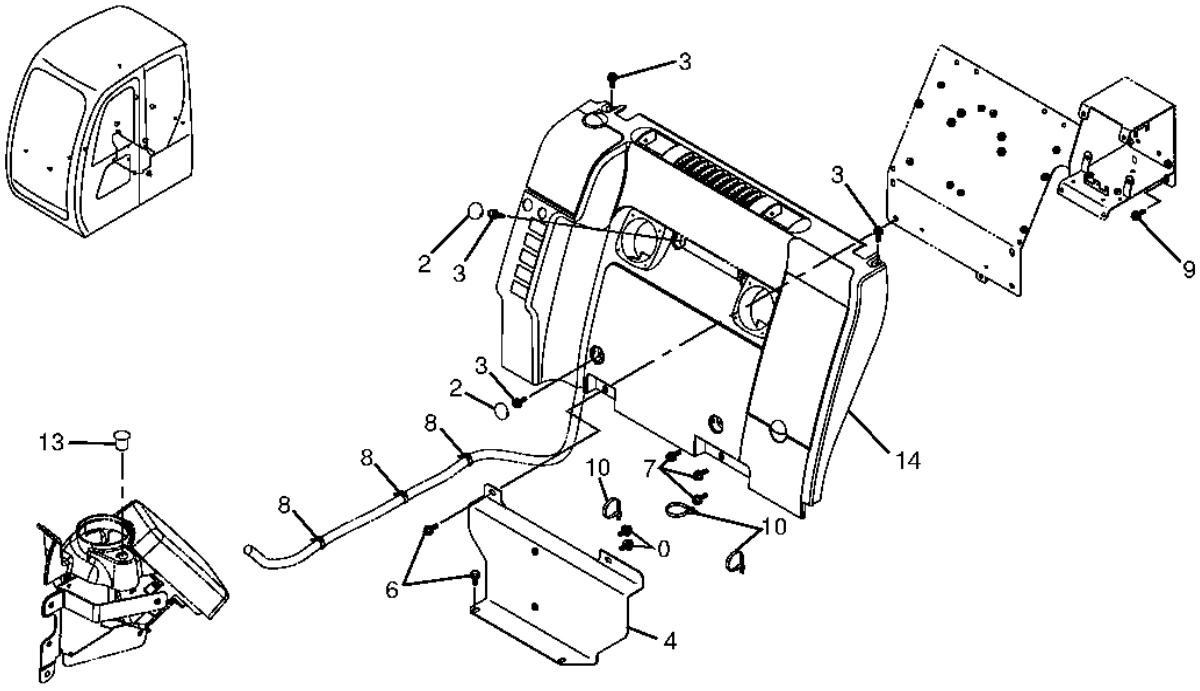

T165888

CAB REAR TRAY COMPONENTS

KEY	PART NO.	PART NAME	QTY	SERIAL NO.	REMARKS
0	19M7162	CAP SCREW	2		M8 X 16
	12M7065	LOCK WASHER	2		8 MM (0.315")
2	4449165	CAP	4		
3	19M7407	CAP SCREW	6		M8 X 25
	12M7065	LOCK WASHER	6		8 MM (0.315")
	24M7055	WASHER	6		8.400 X 16 X 1.600 MM (0.331" X 0.630" X 0.063")
4	7040364	COVER	1		
6	AT256004	BOLT	4		
7	19M7407	CAP SCREW	3		M8 X 25
	12M7065	LOCK WASHER	3		8 MM (0.315")
	24M7055	WASHER	3		8.400 X 16 X 1.600 MM (0.331" X 0.630" X 0.063")
8	.....	CLIP	3		(4452727 NOT AVAILABLE FOR SERVICE)
9	19M7162	CAP SCREW	2		M8 X 16
	12M7065	LOCK WASHER	2		8 MM (0.315")
10	H77698	TIE BAND	3		
13	4209296	GROMMET	1		
14	4448178	COVER	1		(REAR)

1K11

DEFROSTER / AIR CIRCULATION FAN

T144794 -UN-14AUG01

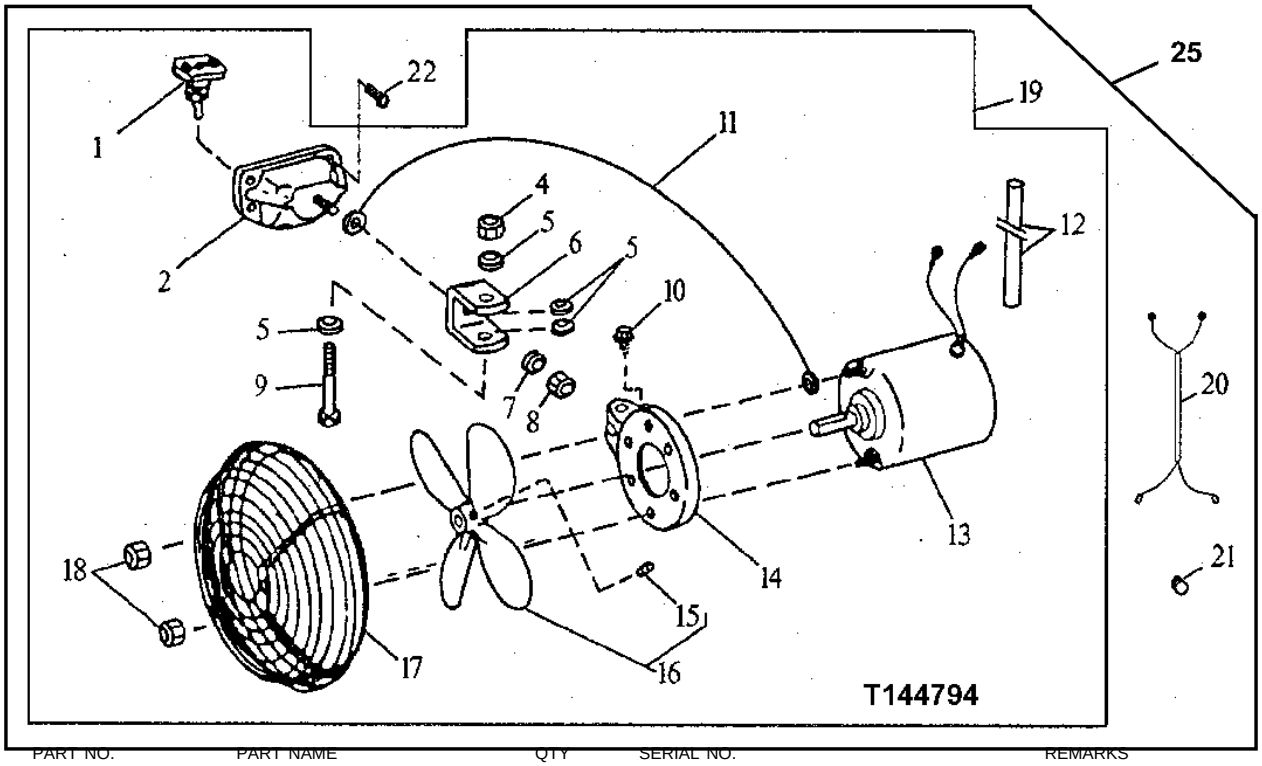

KEY	PART NO.	PART NAME	QTY	SERIAL NO.	REMARKS
1	T55564	TOGGLE/ROCKER SWITCH	1		
2	.....	BASE	1		
4	.....	LOCK NUT	1		(USE E19700 IF AVAILABLE)
5	T27860	WASHER	4		
6	.....	BRACKET	1		
7	24H1136	WASHER	2		11/32" X 11/16" X 0.065"
8	.....	LOCK NUT	1		
9	19H2650	CAP SCREW	1		1/4" X 2"
10	N162946	SCREW	1		
11	.....	WIRING LEAD	1		(MAKE FROM PM797NA WIRE KIT)
12	T105943	CONDUIT	1		
13	.....	MOTOR	1		
14	.....	BRACKET	1		
15	.....	SET SCREW	1		
16	AT101945	FAN BLADE	1		
17	AT101944	GUARD	1		
18	.....	LOCK NUT	2		
19	AT84953	FAN	1		
20	AT159804	WIRING HARNESS	1		
21	R26409	GROMMET	1		
22	37H129	SCREW	4		
25	AT161192	KIT	1		(AIR CIRCULATION FAN)

MEMORANDA

AIR CONDITIONER AND HEATER UNIT COMPONENTS

T197354 -UN-20JAN04

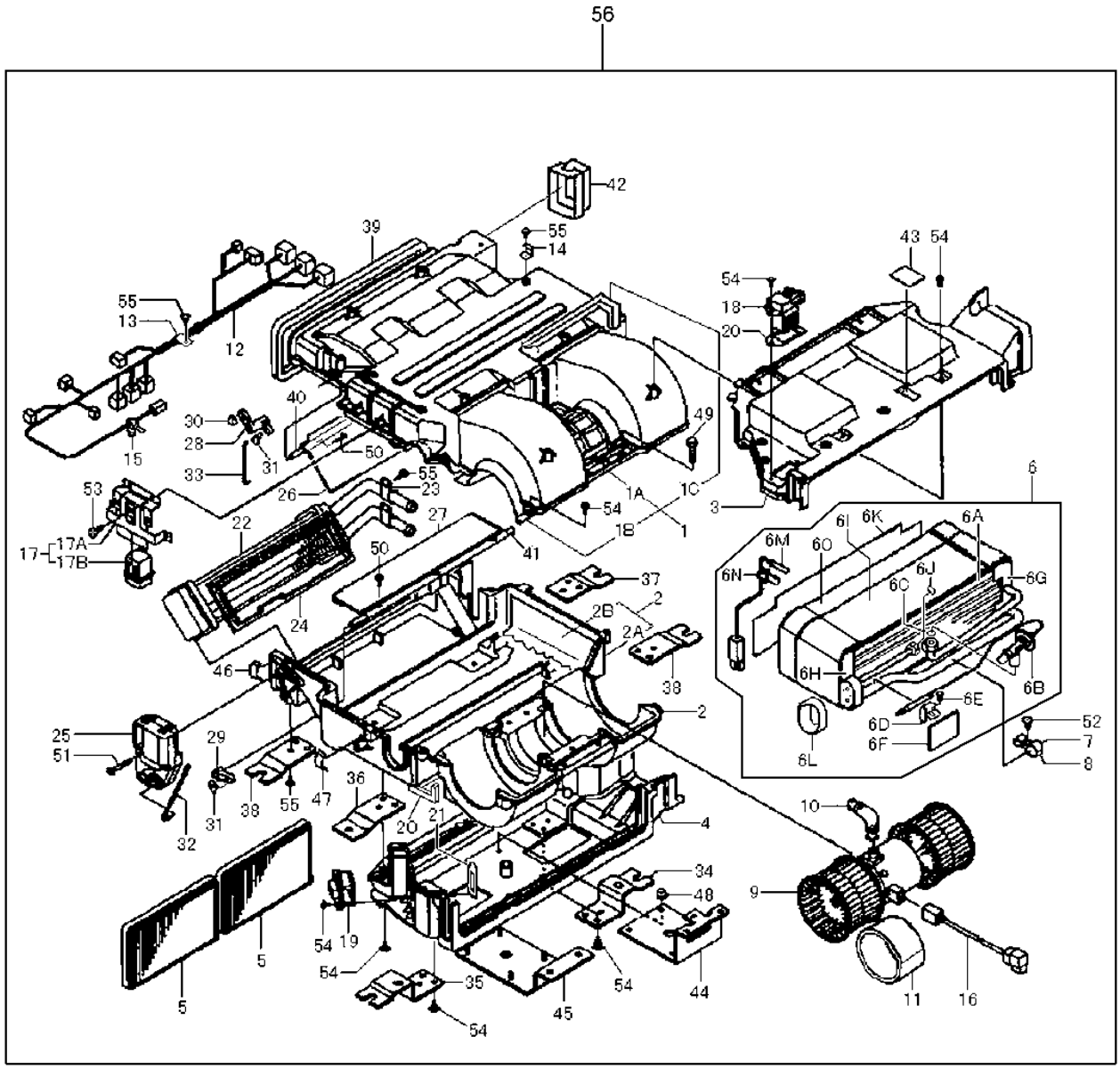

T197354

AIR CONDITIONER AND HEATER UNIT COMPONENTS

KEY	PART NO.	PART NAME	QTY	SERIAL NO.	REMARKS
1	.....	CASE	1	-060812	(4475659 NO LONGER AVAILABLE) (FURNISH 4614287)
	4614287	CASE	1	060813-	
1A	4475660	CASE	1		
1B	4475661	LINING	1	-060812	
1C	4475662	LINING	1		
2	.....	CASE	1	-060812	(4475663 NO LONGER AVAILABLE) (FURNISH 4614288)
	4614288	CASE	1	060813-	
2A	4475664	CASE	1		
2B	4475665	LINING	1	-060812	
2C	4475666	LINING	1		
3	4475667	COVER	1		
4	4475687	COVER	1		
5	4455778	AIR FILTER	2		
6	.....	EVAPORATOR	1	-060812	(4475688 NO LONGER AVAILABLE) (FURNISH 4614289)
	4614289	EVAPORATOR	1	060813-	
6A	4475689	EVAPORATOR	1		
6B	4475690	BALL COCK VALVE	1		
6C	4351478	O-RING	1		
6D	4475691	CLIP	1		
6E	4370310	SCREW	1		
6F	4416975	INSULATOR	1		
6G	4475692	LINING	1		
6H	4475693	LINING	1		
6I	.....	LINING	1	-060812	(4475694 NO LONGER AVAILABLE) (FURNISH 4614290)
	4614290	CASE	1	060813-	
6J	4475695	O-RING	1		
6K	4475710	FILTER	1		
6L	4475711	LINING	1		
6M	4475712	THERMOSTAT	1		
6N	4475713	CLIP	1		
6O	4614291	CASE	1	060813-	
7	4475714	CLIP	1		
8	4475715	CLIP	1		
9	4475716	MOTOR	1		
10	4464473	HOSE	1		
11	4475717	ISOLATOR	1		
12	4475718	AC COMPRESSOR WRG HARNESS	1	-060812	
13	4475767	CLIP	2	-060812	
14	4475768	CLIP	3		
15	4475769	CLIP	3		
16	4475770	AC COMPRESSOR WRG HARNESS	1		
17	4475771	RELAY	1		
17A	4475772	BRACKET	1		
17B	4475773	RELAY	3		
18	4464279	TRANSISTOR	1		
19	4464278	RESISTOR	1		
20	4464474	SEAL	1		
21	4475774	PLATE	1		
22	4475775	HEATER	1		
23	4475801	CLIP	1		
24	4475802	PLATE	1		
25	4475803	MOTOR	1		
26	4475804	DOOR	1		
27	4475805	DOOR	1		
28	4475806	LEVER	1		
29	4475807	LEVER	1		
30	4370306	CLIP	1		
31	4464477	CLIP	2		
32	4475808	ROD	1		
33	4475809	ROD	1		
34	4475822	BRACKET	1		
35	4475823	BRACKET	1		
36	4475824	BRACKET	1		
37	4475825	BRACKET	1		

AIR CONDITIONER AND HEATER UNIT COMPONENTS (CONTINUED)

T197354 -UN-20JAN04

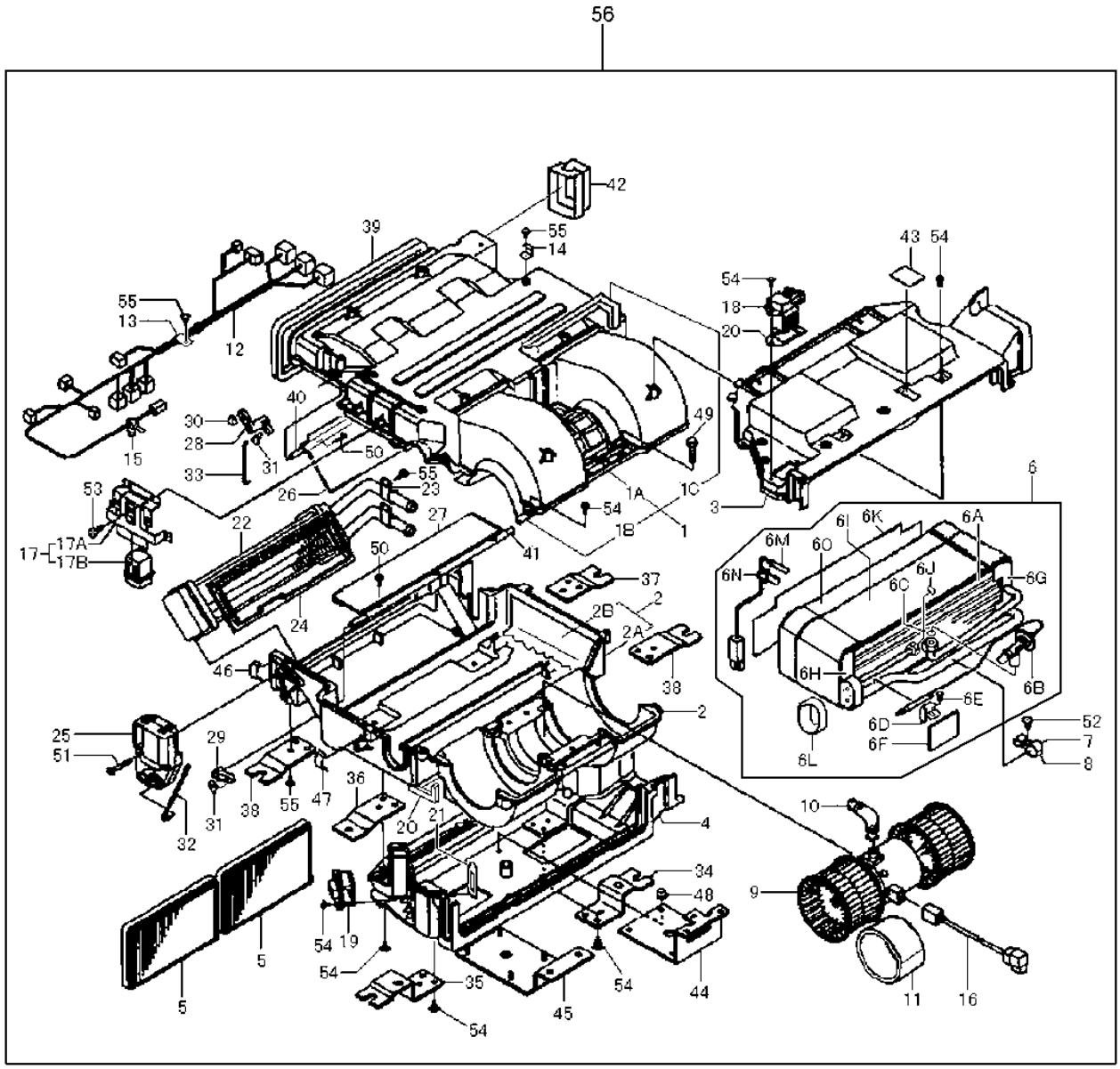

T197354

AIR CONDITIONER AND HEATER UNIT COMPONENTS (CONTINUED)

KEY	PART NO.	PART NAME	QTY	SERIAL NO.	REMARKS
38	4475826	BRACKET	2		
39	4475827	LINING	1		
40	4475828	SHAFT	1		
41	4475829	SHAFT	1		
42	4475830	COVER	1		
43	4475832	TAPE	1		
44	4475833	BRACKET	1		
45	4475834	BRACKET	1		
46	4464478	CLIP	3		
47	4475835	CLIP	1		
48	4475836	NUT	4		
49	4475837	BOLT	3		
50	4475838	CAP SCREW	6		
51	4370308	SCREW	3		
52	4475839	SCREW	1		
53	4475840	SCREW	1		
54	4370309	SCREW	29		
55	4464483	SCREW	27		
56	.....	AIR CONDITIONER	1	-060812	(4438289 NO LONGER AVAILABLE) (FURNISH 4609051 ALONG WITH 4611360, (2) 4475767, AND (2) 4464483)
	4609051	AIR CONDITIONER	1	060813-	

AIR CONDITIONING COMPRESSOR DRIVE BELT TENSIONER

T159205 -UN-19SEP02

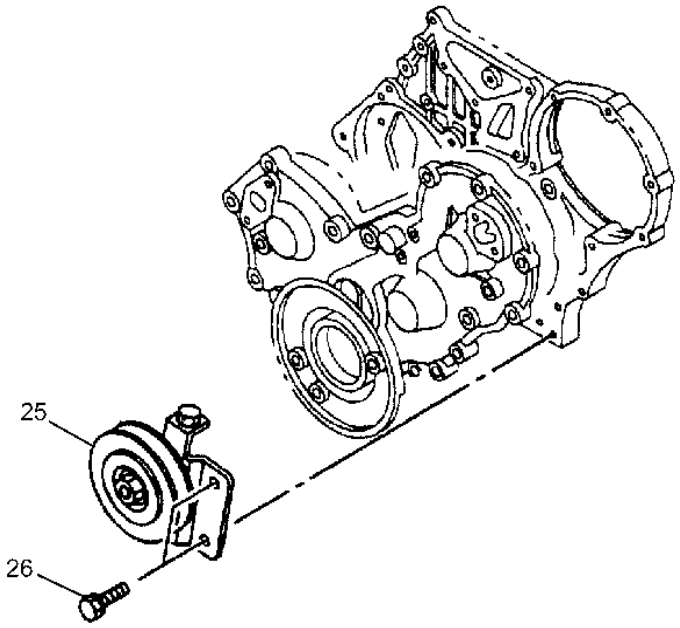

T159205

AIR CONDITIONING COMPRESSOR DRIVE BELT TENSIONER

KEY	PART NO.	PART NAME	QTY	SERIAL NO.	REMARKS
25	8972634250	PULLEY	1		
26	0280808160	BOLT	2		(SUB FOR AT259924) M8X16 FLANGE

ENGINE AND COOLING PACKAGE COMPARTMENT FRONT PANELS

T157062 -UN-30OCT02

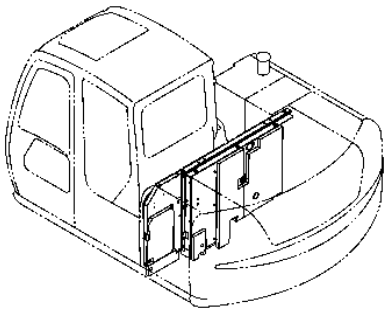

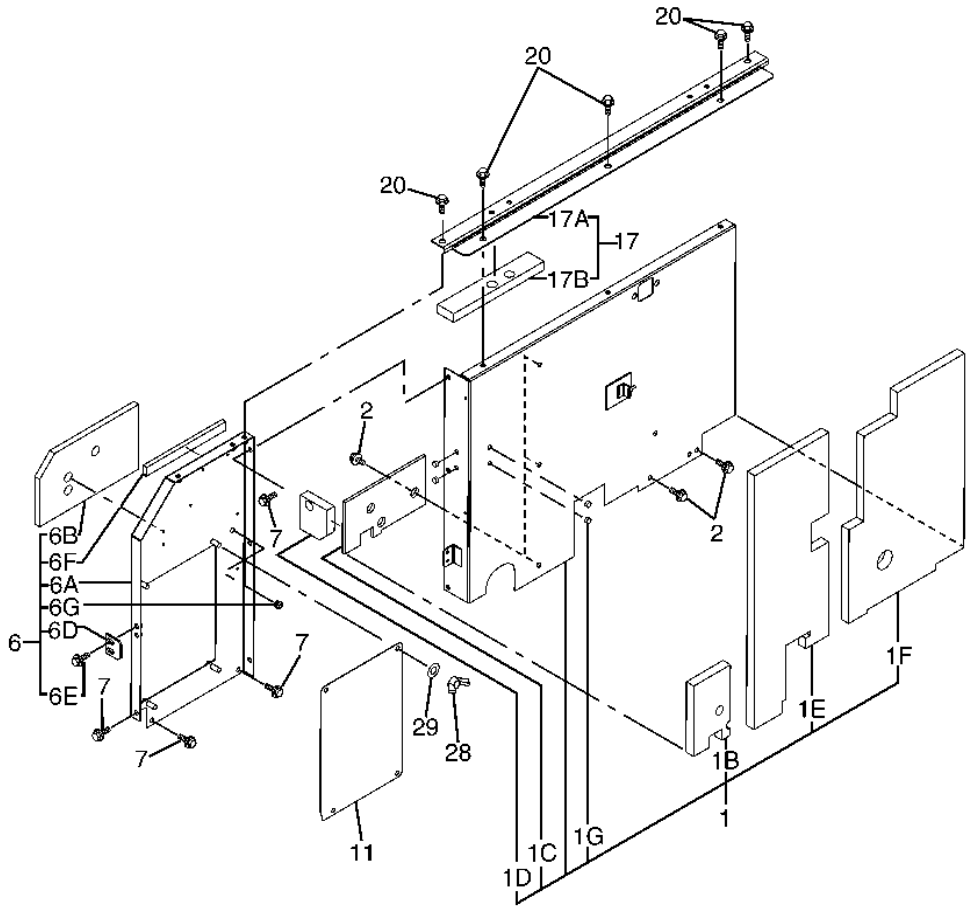

T157062

ENGINE AND COOLING PACKAGE COMPARTMENT FRONT PANELS

KEY	PART NO.	PART NAME	QTY	SERIAL NO.	REMARKS
1	9206201	COVER	1		
1B	4452136	ISOLATOR	1		
1C	4452147	ISOLATOR	1		
1D	4452132	ISOLATOR	1		
1E	3093108	ISOLATOR	1		
1F	3093110	ISOLATOR	1		
1G	4461449	PIPE PLUG	4		
2	19M7662	CAP SCREW	5		M10 X 30
	12M7066	LOCK WASHER	5		10 MM (0.394")
	24M7028	WASHER	5		10.500 X 20 X 2 MM (0.413" X 0.787" X 0.079")
6	9211555	COVER	1		
6A	.....	COVER	1		(7042033 NO LONGER AVAILABLE)
6B	4463747	ISOLATOR	1		
6D	4455694	STOP	1		
6E	J031025	BOLT	2		
6F	4457963	ISOLATOR	1		
6G	94-2817	GROMMET	1		
7	19M7662	CAP SCREW	6		M10 X 30
	12M7066	LOCK WASHER	6		10 MM (0.394")
	24M7028	WASHER	6		10.500 X 20 X 2 MM (0.413" X 0.787" X 0.079")
11	4470117	COVER	1		
17	9208524	COVER	1		
17A	.....	BRACKET	1		(8083007 NO LONGER AVAILABLE)
17B	4454331	ISOLATOR	1		
20	19M7662	CAP SCREW	5		M10 X 30
	12M7067	LOCK WASHER	5		12 MM (0.472")
	24M7346	WASHER	5		11 X 20 X 2 MM (0.433" X 0.787" X 0.079")
28	14M7025	WING NUT	4		M10
29	24M7101	WASHER	4		11 X 34 X 3 MM (0.433" X 1.339" X 0.118")

COOLING PACKAGE COMPARTMENT TOP COVER

T157063 -UN-30OCT02

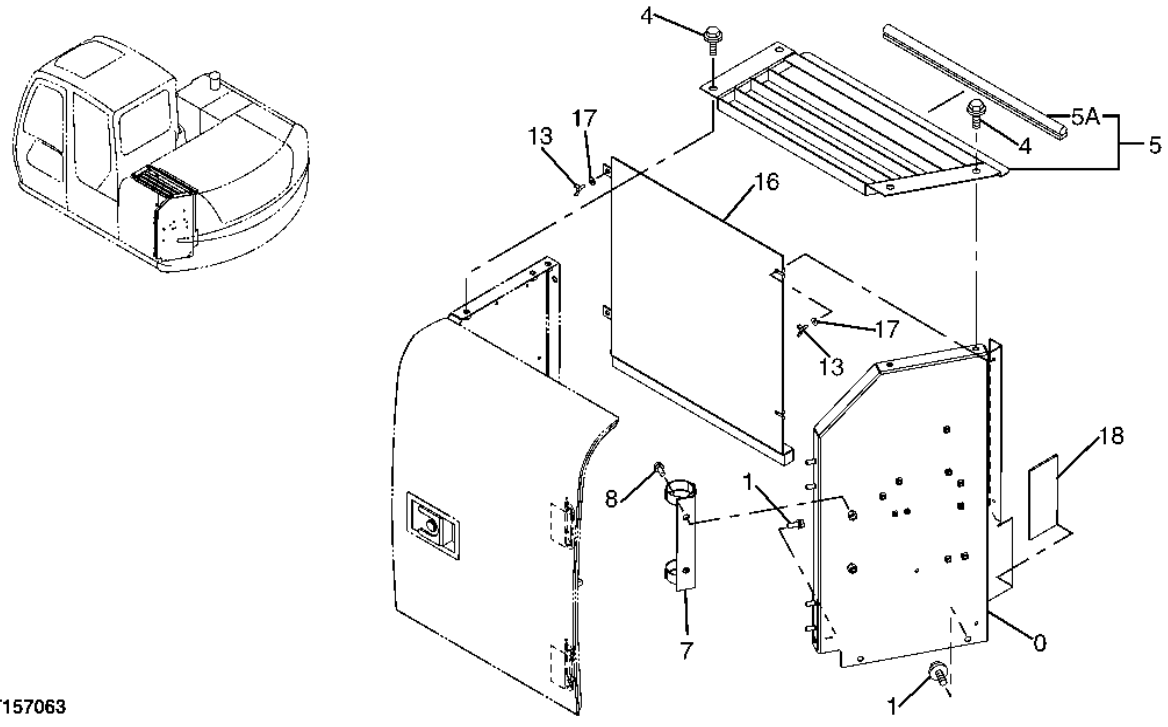

T157063

COOLING PACKAGE COMPARTMENT TOP COVER

KEY	PART NO.	PART NAME	QTY	SERIAL NO.	REMARKS
0	7039856	COVER	1		
1	19M7662	CAP SCREW	3		M10 X 30
	12M7066	LOCK WASHER	3		10 MM (0.394")
	24M7028	WASHER	3		10.500 X 20 X 2 MM (0.413" X 0.787" X 0.079")
4	J031025	BOLT	4		
5	9206216	COVER	1		
5A	4461741	ISOLATOR	1		
7	4375688	HOLDER	1		
8	19M7662	CAP SCREW	2		M10 X 30
	12M7066	LOCK WASHER	2		10 MM (0.394")
	24M7028	WASHER	2		10.500 X 20 X 2 MM (0.413" X 0.787" X 0.079")
13	J981845	SCREW	4		
16	4461743	SCREEN	1		
17	4466009	WASHER	4		
18	4466367	ISOLATOR	1		

HYDRAULIC PUMP COMPARTMENT PANELS

T157064 -UN-30OCT02

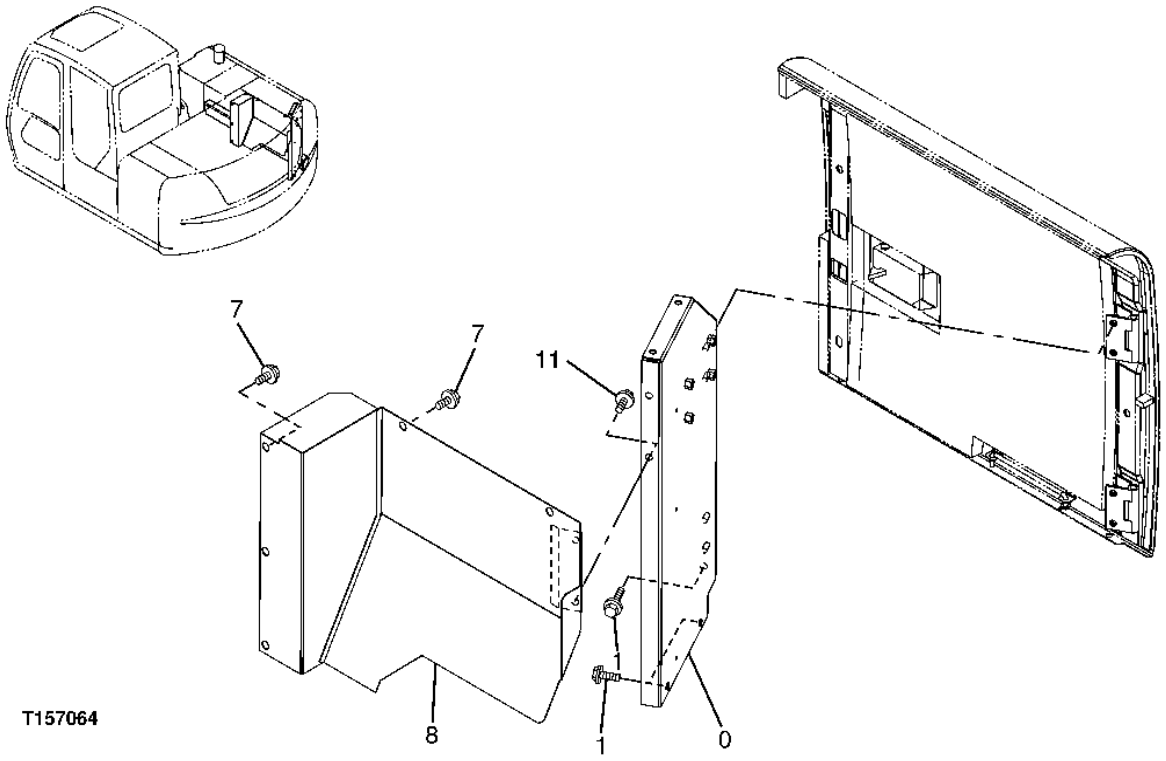

HYDRAULIC PUMP COMPARTMENT PANELS

KEY	PART NO.	PART NAME	QTY	SERIAL NO.	REMARKS
0	7039857	COVER	1		
1	19M7662	CAP SCREW	3		M10 X 30
	12M7066	LOCK WASHER	3		10 MM (0.394")
	24M7028	WASHER	3		10.500 X 20 X 2 MM (0.413" X 0.787" X 0.079")
7	J031020	BOLT	5		
8	7040553	COVER	1		
11	19M7402	CAP SCREW	2		M10 X 25
	12M7066	LOCK WASHER	2		10 MM (0.394")
	24M7028	WASHER	2		10.500 X 20 X 2 MM (0.413" X 0.787" X 0.079")

FUEL TANK FRONT COVER

T157065 -UN-30OCT02

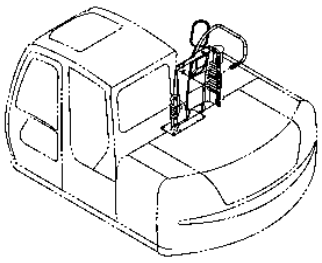

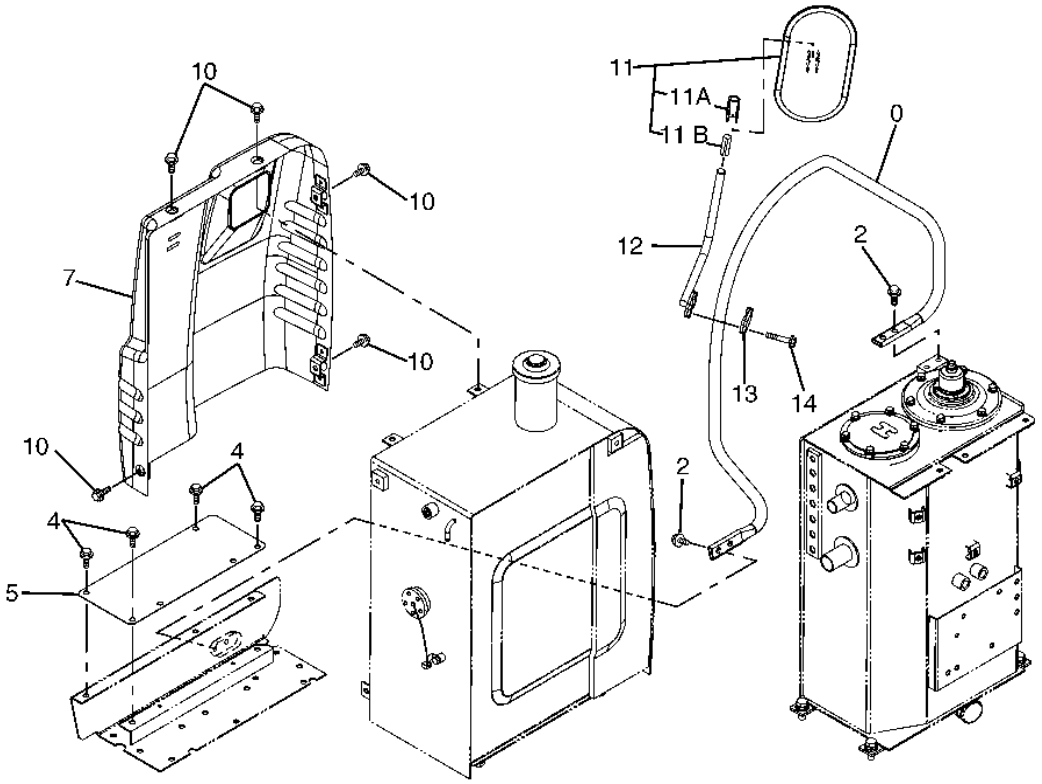

T157065

FUEL TANK FRONT COVER

KEY	PART NO.	PART NAME	QTY	SERIAL NO.	REMARKS
0	7040185	HANDRAIL	1		
2	J021230	CAP SCREW	4		
4	19M7402	CAP SCREW	4		M10 X 25
	12M7066	LOCK WASHER	4		10 MM (0.394")
	24M7028	WASHER	4		10.500 X 20 X 2 MM (0.413" X 0.787" X 0.079")
5	4455966	COVER	1		
7	6020198	COVER	1		
10	4456332	BOLT	5		
11	4420724	REAR VIEW MIRROR	1		
11A	.....	HOLDER	1		
11B	.....	PACKING	1		
12	8077521	BRACKET	1		
13	4425481	HOSE CLAMP	1		
14	19M9067	CAP SCREW	2		M8 X 50, (SUB FOR AT131124 OR J010850, ALONG WITH 24M7036 AND 12M7065)
	24M7036	WASHER	2		9 X 16 X 1.600 MM (0.354" X 0.630" X 0.063")
	12M7065	LOCK WASHER	2		8 MM (0.315")

COOLING PACKAGE COMPARTMENT DOOR

T157071 -UN-30OCT02

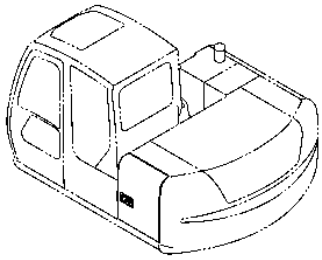

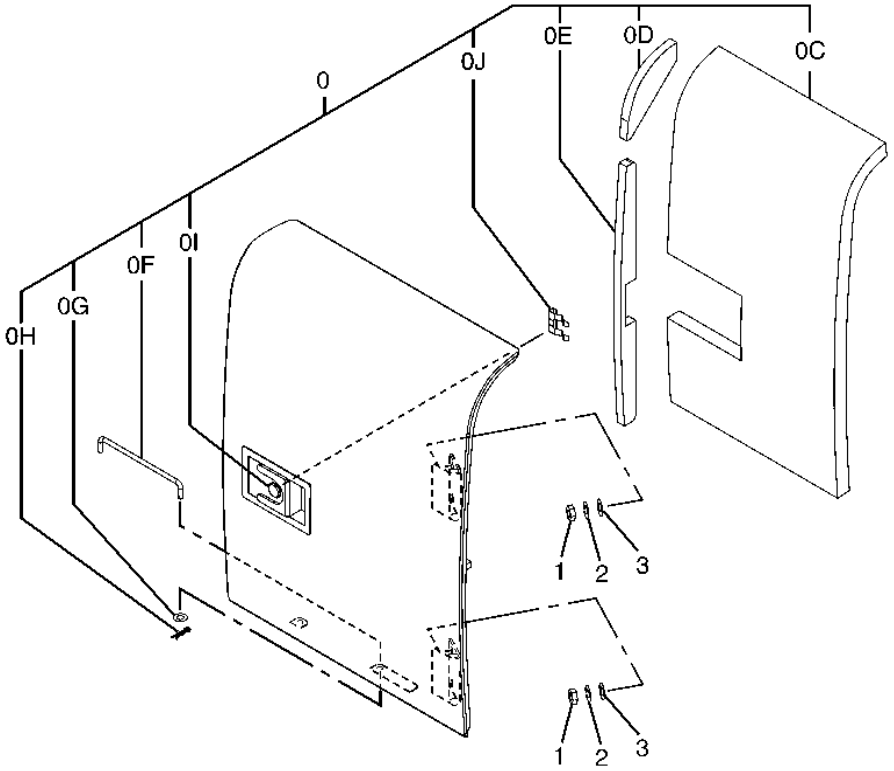

T157071

COOLING PACKAGE COMPARTMENT DOOR

KEY	PART NO.	PART NAME	QTY	SERIAL NO.	REMARKS
0	9206193	DOOR	1		
0C	4461782	ISOLATOR	1		
0D	4458070	ISOLATOR	1		
0E	4458071	ISOLATOR	1		
0F	4341788	ROD	1		
0G	24M7055	WASHER	1		8.400 X 16 X 1.600 MM, (SUB FOR A590108)
0H	H132922	COTTER PIN	1		
0I	4409394	LOCK	1		
0J	4461342	CLIP	1		
1	14M7274	NUT	4		M10
2	12M7066	LOCK WASHER	4		10 MM (0.394")
3	24M7101	WASHER	4		11 X 34 X 3 MM (0.433" X 1.339" X 0.118")

COOLING PACKAGE AND HYDRAULIC PUMP COMPARTMENT DOORS(VENTED)

T165685 -UN-22MAY03

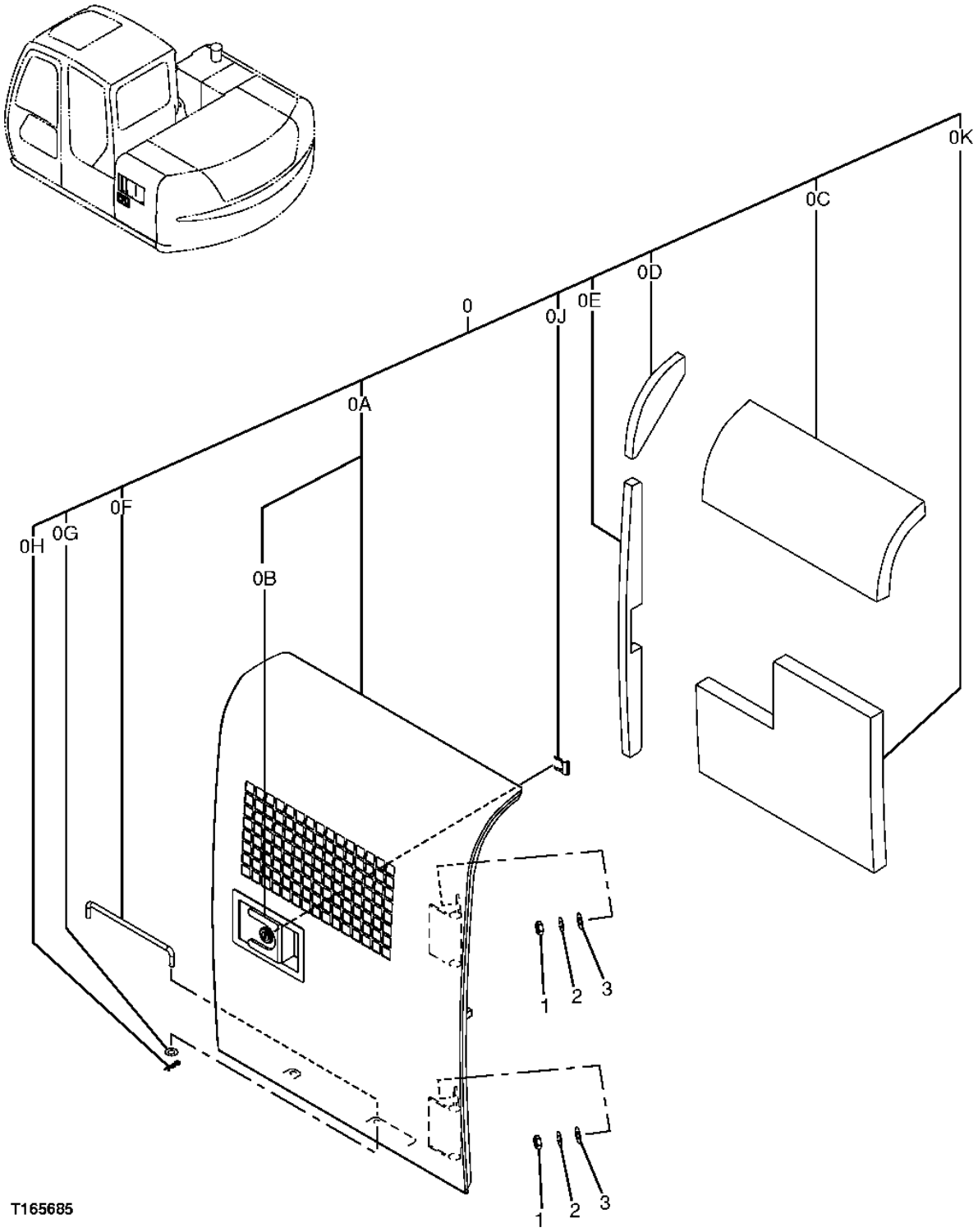

COOLING PACKAGE AND HYDRAULIC PUMP COMPARTMENT DOORS(VENTED)

KEY	PART NO.	PART NAME	QTY	SERIAL NO.	REMARKS
0	9212650	DOOR	1		(ASSEMBLY)
0A	5008116	DOOR	1		
0B	4409394	LOCK	1		
0C	4471733	ISOLATOR	1		
0D	4458070	ISOLATOR	1		
0E	4458071	ISOLATOR	1		
0F	4341788	ROD	1		
0G	24M7055	WASHER	1		8.400 X 16 X 1.600 MM, (SUB FOR A590108)
0H	H132922	COTTER PIN	1		
0J	4461342	CLIP	1		
0K	4471734	ISOLATOR	1		
1	14M7274	NUT	4		M10
2	12M7066	LOCK WASHER	4		10 MM (0.394")
3	24M7101	WASHER	4		11 X 34 X 3 MM (0.433" X 1.339" X 0.118")

HYDRAULIC PUMP COMPARTMENT DOOR

T157070 -UN-30OCT02

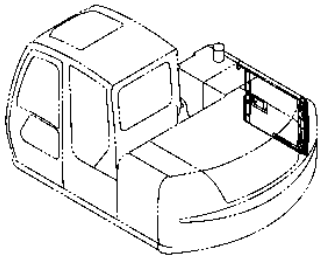

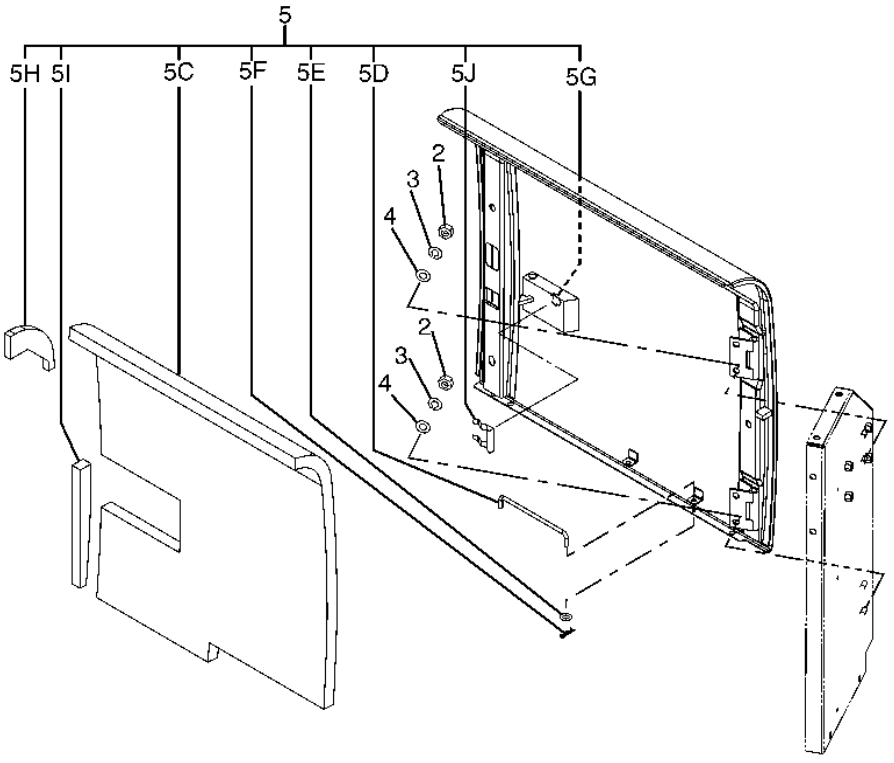

T157070

HYDRAULIC PUMP COMPARTMENT DOOR

KEY	PART NO.	PART NAME	QTY	SERIAL NO.	REMARKS
2	14M7274	NUT	4		M10
3	12M7066	LOCK WASHER	4		10 MM (0.394")
4	24M7101	WASHER	4		11 X 34 X 3 MM (0.433" X 1.339" X 0.118")
5	9206192	DOOR	1		
5C	4461780	ISOLATOR	1		
5D	4341788	ROD	1		
5E	24M7055	WASHER	1		8.400 X 16 X 1.600 MM, (SUB FOR A590108)
5F	H132922	COTTER PIN	1		
5G	4409446	LOCK	1		(WELD IN)
	DH400030	LOCK	1		(RIVET IN)
5H	4463592	ISOLATOR	1		
5I	4463593	ISOLATOR	1		
5J	4461342	CLIP	1		

DOOR LATCH (COOLING PACKAGE COMPARTMENT DOOR)

T157067 -UN-30OCT02

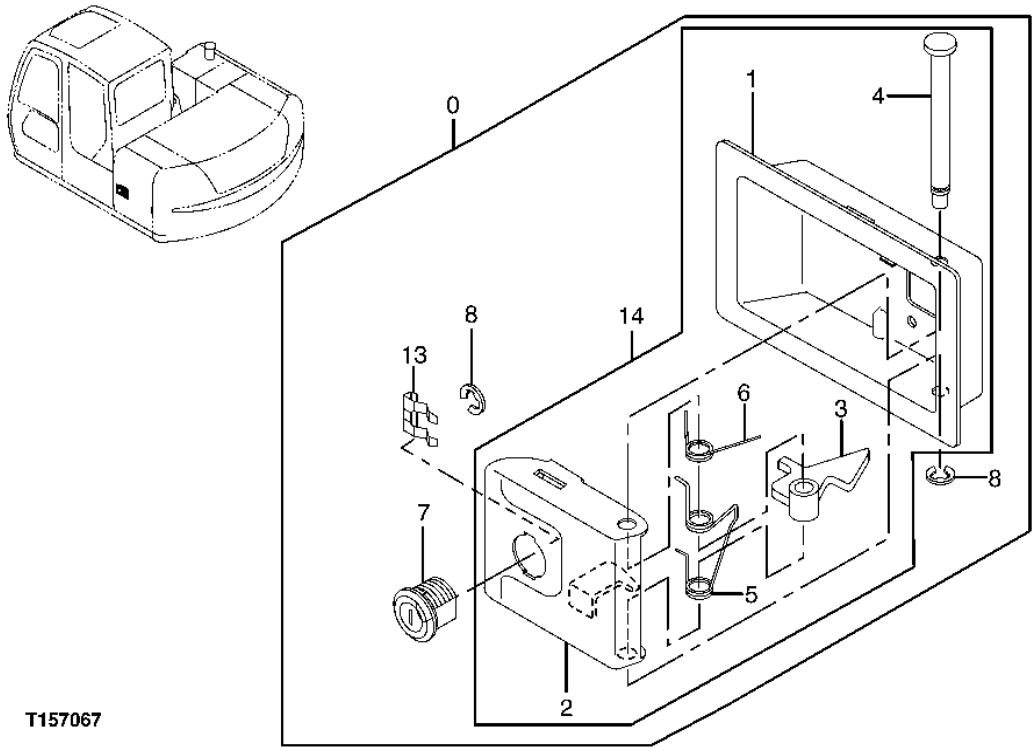

DOOR LATCH (COOLING PACKAGE COMPARTMENT DOOR)

KEY	PART NO.	PART NAME	QTY	SERIAL NO.	REMARKS
0	4409394	LOCK	1		
1	4461343	COVER	1		
2	4461344	LATCH	1		
3	4461345	LEVER	1		
4	4461346	SHAFT	1		
5	4461347	SPRING	1		
6	4461348	SPRING	1		
7	4409396	LOCK	1		
8	4461337	RING	2		
13	4461342	CLIP	1		
14	4409447	LOCK	1		

DOOR LATCH (HYDRAULIC PUMP COMPARTMENT DOOR)

T157066 -UN-30OCT02

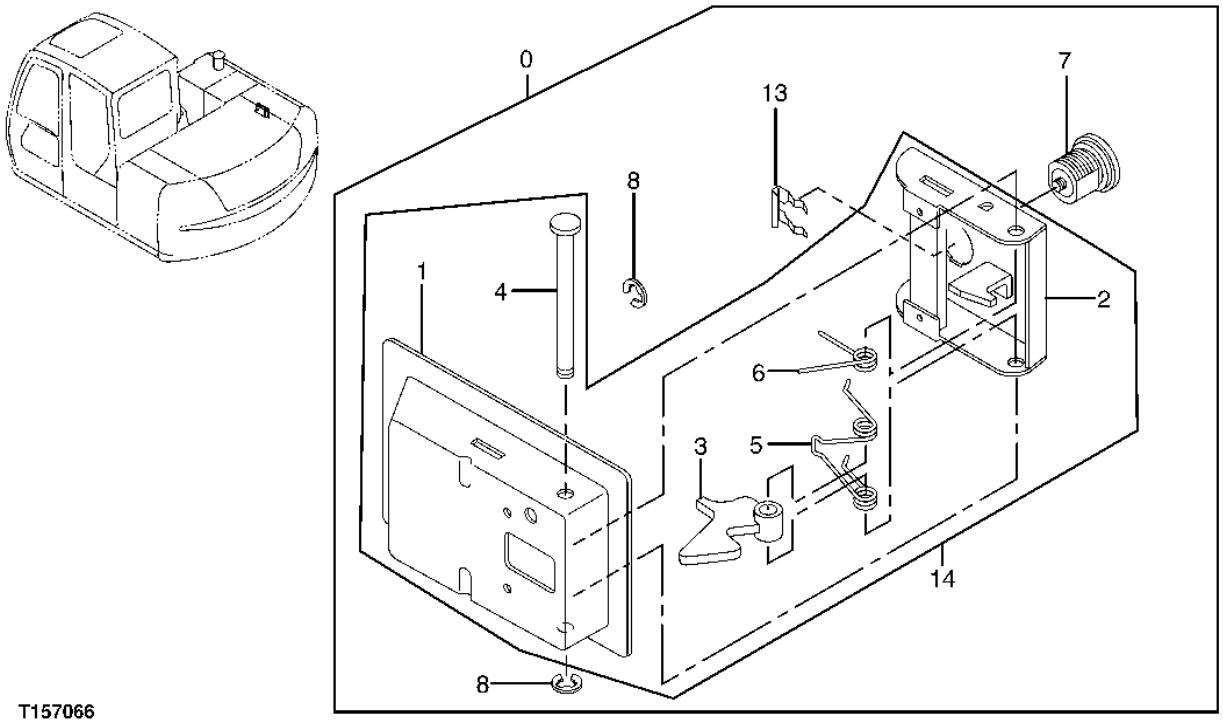

T157066

DOOR LATCH (HYDRAULIC PUMP COMPARTMENT DOOR)

KEY	PART NO.	PART NAME	QTY	SERIAL NO.	REMARKS
0	4409446	LOCK	1		(WELD IN)
	DH400030	LOCK	1		(RIVET IN)
1	4461343	COVER	1		
2	4461344	LATCH	1		
3	4461345	LEVER	1		
4	4461346	SHAFT	1		
5	4461347	SPRING	1		
6	4461348	SPRING	1		
8	4461337	RING	2		
13	4461342	CLIP	1		
14	4409396	LOCK	1		

ENGINE COMPARTMENT TOP COVER

T160847 -UN-30OCT02

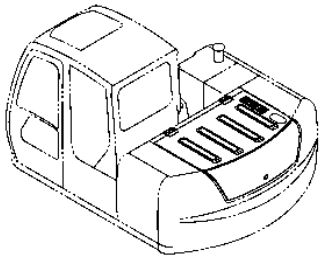

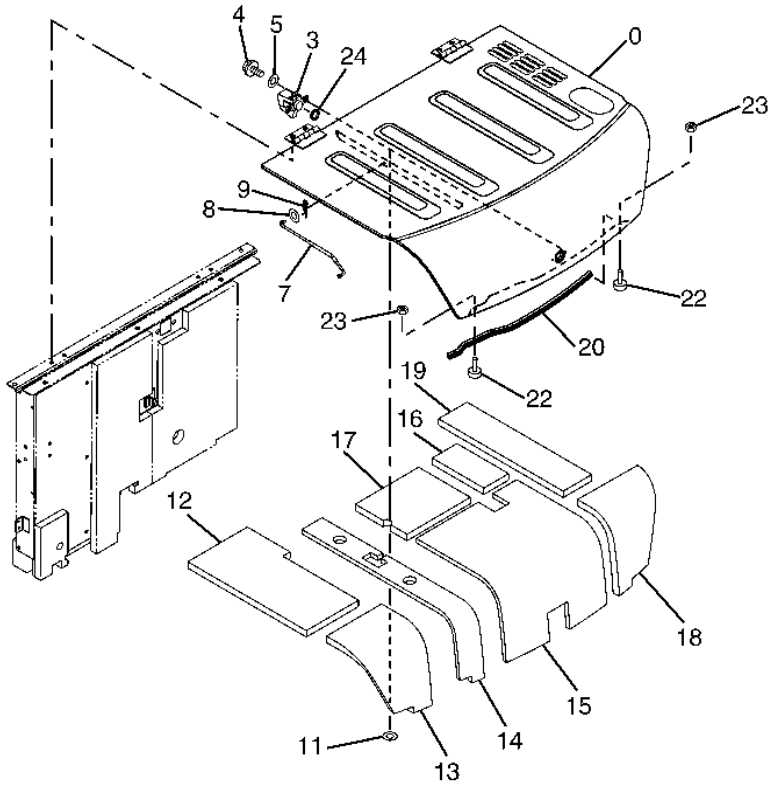

T160847

ENGINE COMPARTMENT TOP COVER

KEY	PART NO.	PART NAME	QTY	SERIAL NO.	REMARKS
0	9206191	COVER	1		(SUB FOR 5007495)
3	4448616	LATCH	1		
4	19M7560	CAP SCREW	3		M6 X 16
	12M7006	LOCK WASHER	3		6 MM (0.236")
5	24M7054	WASHER	3		6.400 X 12 X 1.600 MM (0.252" X 0.472" X 0.063")
7	8083107	LATCH	1		
8	24M7055	WASHER	1		8.400 X 16 X 1.600 MM, (SUB FOR A590108)
9	H132922	COTTER PIN	1		
11	4454290	WASHER	12		
12	4457594	ISOLATOR	1		
13	4457596	ISOLATOR	1		
14	3092526	ISOLATOR	1		
15	3092524	ISOLATOR	1		
16	4457626	ISOLATOR	1		
17	4457623	ISOLATOR	1		
18	4461140	ISOLATOR	1		
19	4461143	ISOLATOR	1		
20	4449821	ISOLATOR	1		
22	4288390	STOP	2		
23	14M7273	NUT	2		M8
24	4235210	BUSHING	1		

TOOL BOX

T157069 -UN-30OCT02

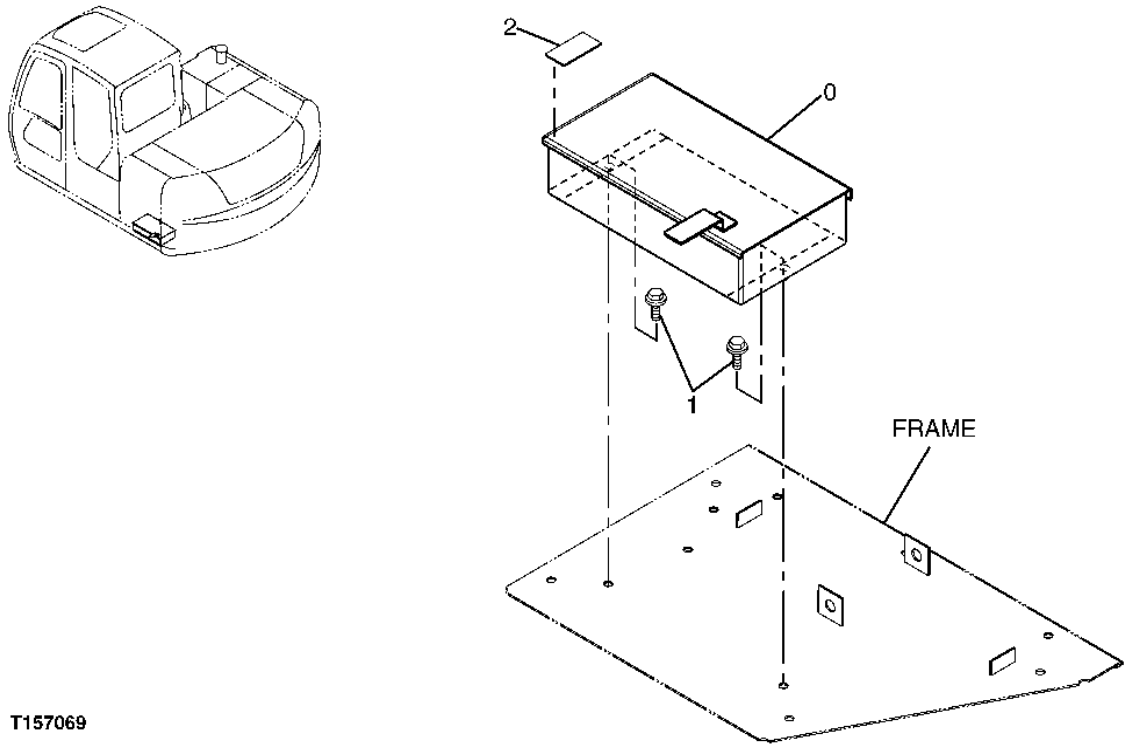

T157069

TOOL BOX

KEY	PART NO.	PART NAME	QTY	SERIAL NO.	REMARKS
0	8085045	TOOLBOX	1		
1	19M7402	CAP SCREW	2		M10 X 25
	12M7066	LOCK WASHER	2		10 MM (0.394")
	24M7028	WASHER	2		10.500 X 20 X 2 MM (0.413" X 0.787" X 0.079")
2	4408501	ISOLATOR	1		

BOTTOM COVERS

T157072 -UN-31OCT02

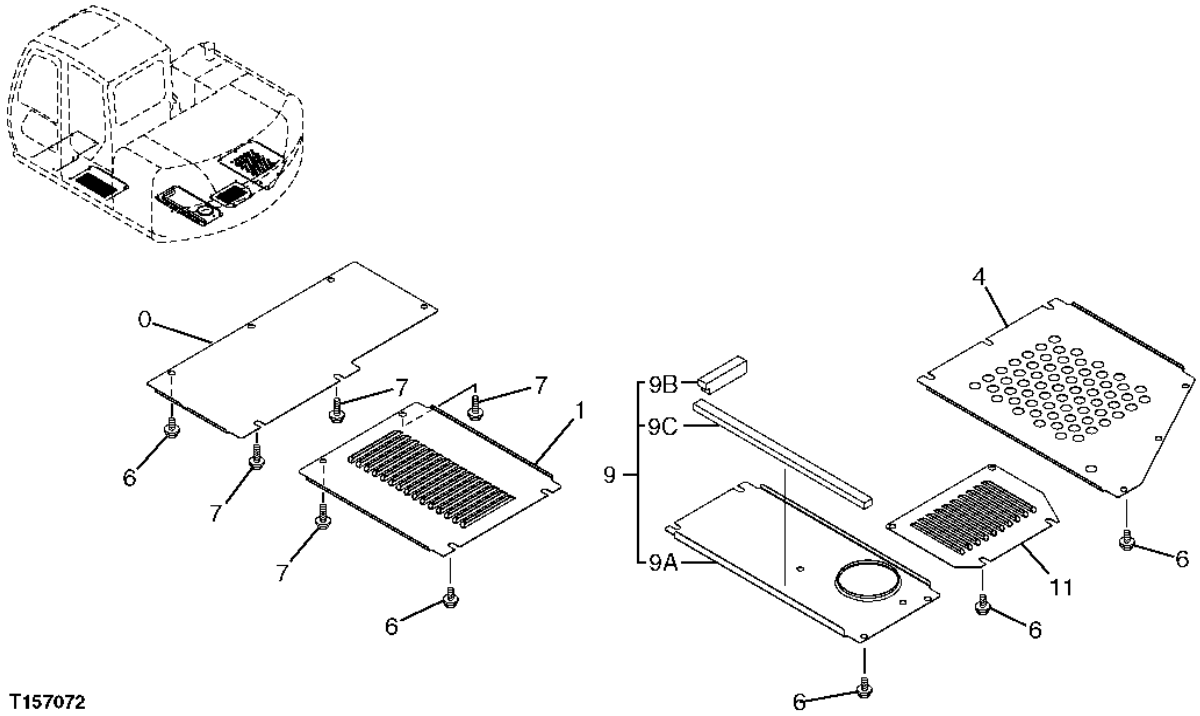

T157072

BOTTOM COVERS

KEY	PART NO.	PART NAME	QTY	SERIAL NO.	REMARKS
0	3091488	COVER	1		
1	3091489	COVER	1		
4	3091492	COVER	1		
6	J031035	BOLT	20		
7	J031045	BOLT	4		
9	9206212	COVER	1		
9A	.....	COVER	1		(3091490 NOT AVAILABLE FOR SERVICE)
9B	4445862	ISOLATOR	1		
9C	4453796	ISOLATOR	1		
11	3091491	COVER	1		

AM/FM RADIO

T157038 -UN-30OCT02

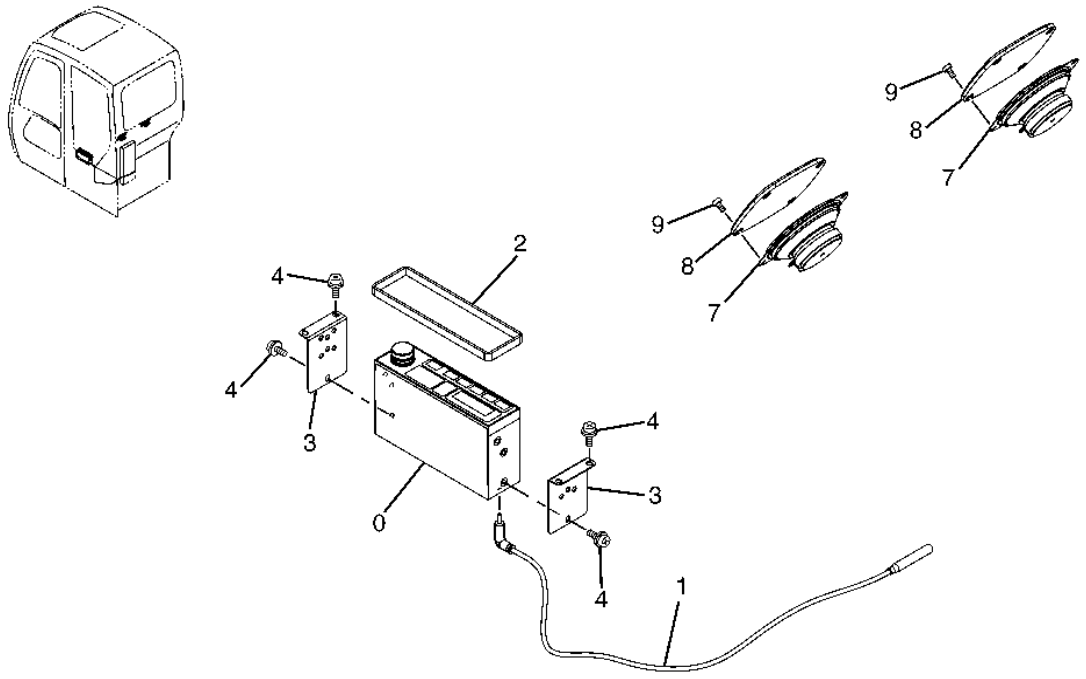

T157038

AM/FM RADIO

KEY	PART NO.	PART NAME	QTY	SERIAL NO.	REMARKS
0	4613913	RADIO	1		(SUB FOR 4351187)
1	4321872	FEEDER HOUSE	1		
2	4368973	ISOLATOR	1		
3	4341706	BRACKET	2		
4	19M7700	CAP SCREW	10		M5 X 10
	12M7064	LOCK WASHER	10		5 MM (0.197")
7	4361302	SPEAKER	2		
8	4364504	GRILLE	2		
9	4452613	SCREW	8		

REAR VIEW MIRROR

T160845 -UN-30OCT02

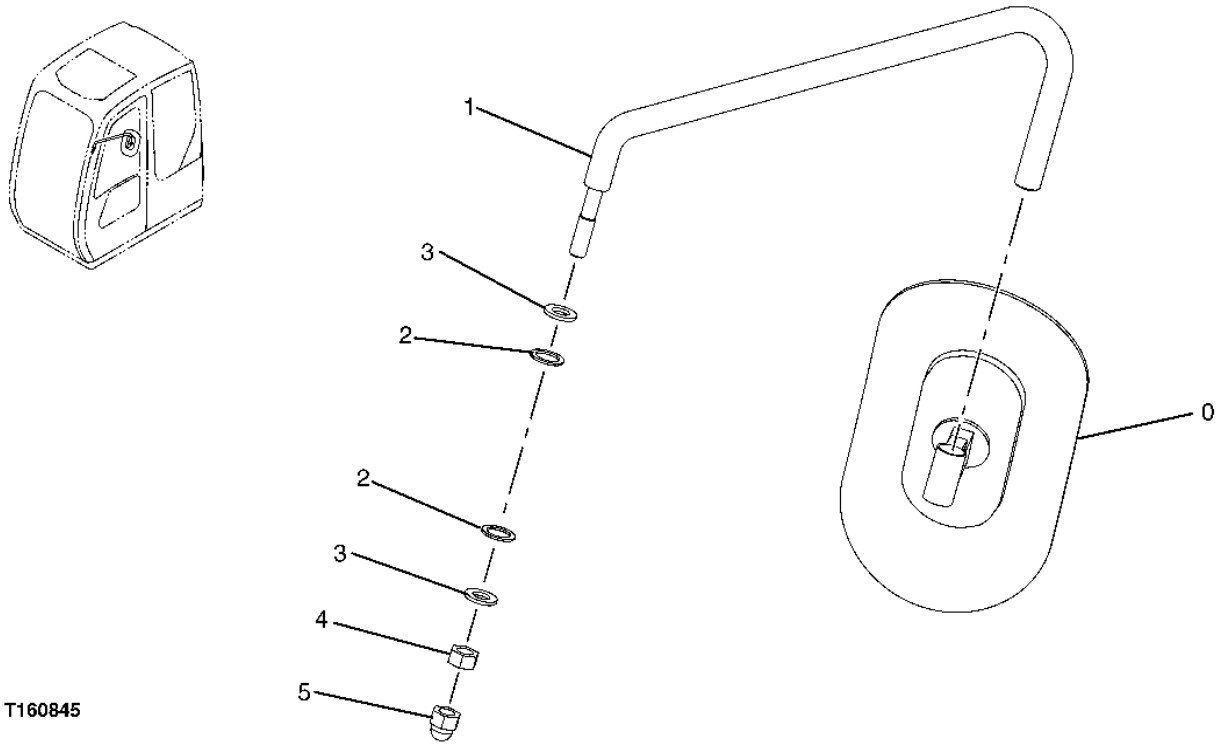

REAR VIEW MIRROR

KEY	PART NO.	PART NAME	QTY	SERIAL NO.	REMARKS
0	4420724	REAR VIEW MIRROR	1		
1	3091096	BRACKET	1		
2	4172172	WASHER	2		
3	J253112	WASHER	2		
4	14M7275	NUT	1		M12
5	4449509	NUT	1		

TRAVEL MOTION ALARM

T157049 -UN-30OCT02

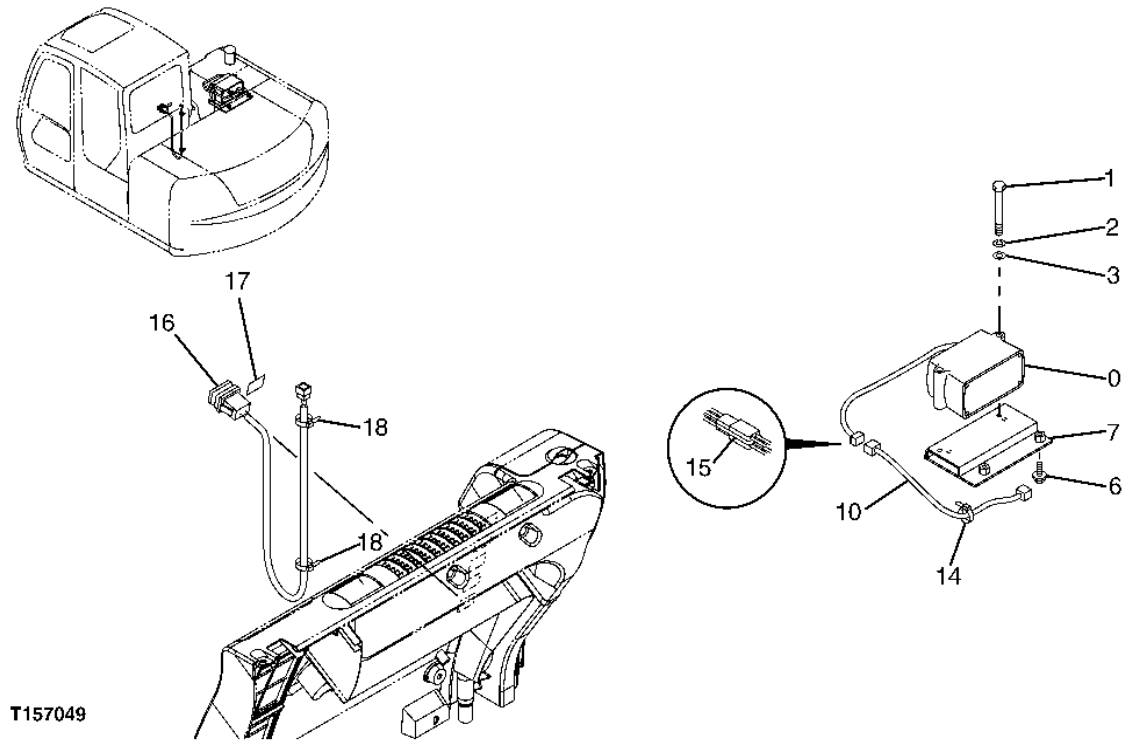

TRAVEL MOTION ALARM

KEY	PART NO.	PART NAME	QTY	SERIAL NO.	REMARKS
0	AT301074	ALARM SYSTEM	1		(SUB FOR 4283028)
1	19M8456	CAP SCREW	2		M8 X 100
2	12M7065	LOCK WASHER	2		8 MM, (SUB FOR A590908)
3	24M7055	WASHER	2		8.400 X 16 X 1.600 MM, (SUB FOR A590108)
6	19M7402	CAP SCREW	4		M10 X 25
	12M7066	LOCK WASHER	4		10 MM (0.394")
	24M7028	WASHER	4		10.500 X 20 X 2 MM (0.413" X 0.787" X 0.079")
7	8087115	BRACKET	1		
10	3092909	WIRING HARNESS	1		
14	H77698	TIE BAND	1		
15	H77698	TIE BAND	1		
16	4384758	SWITCH	1		
17	4460145	LABEL	1		
18	H77698	TIE BAND	2		

HYDRAULIC FILTER RESTRICTION INDICATOR KIT

TP80257 -UN-17NOV99

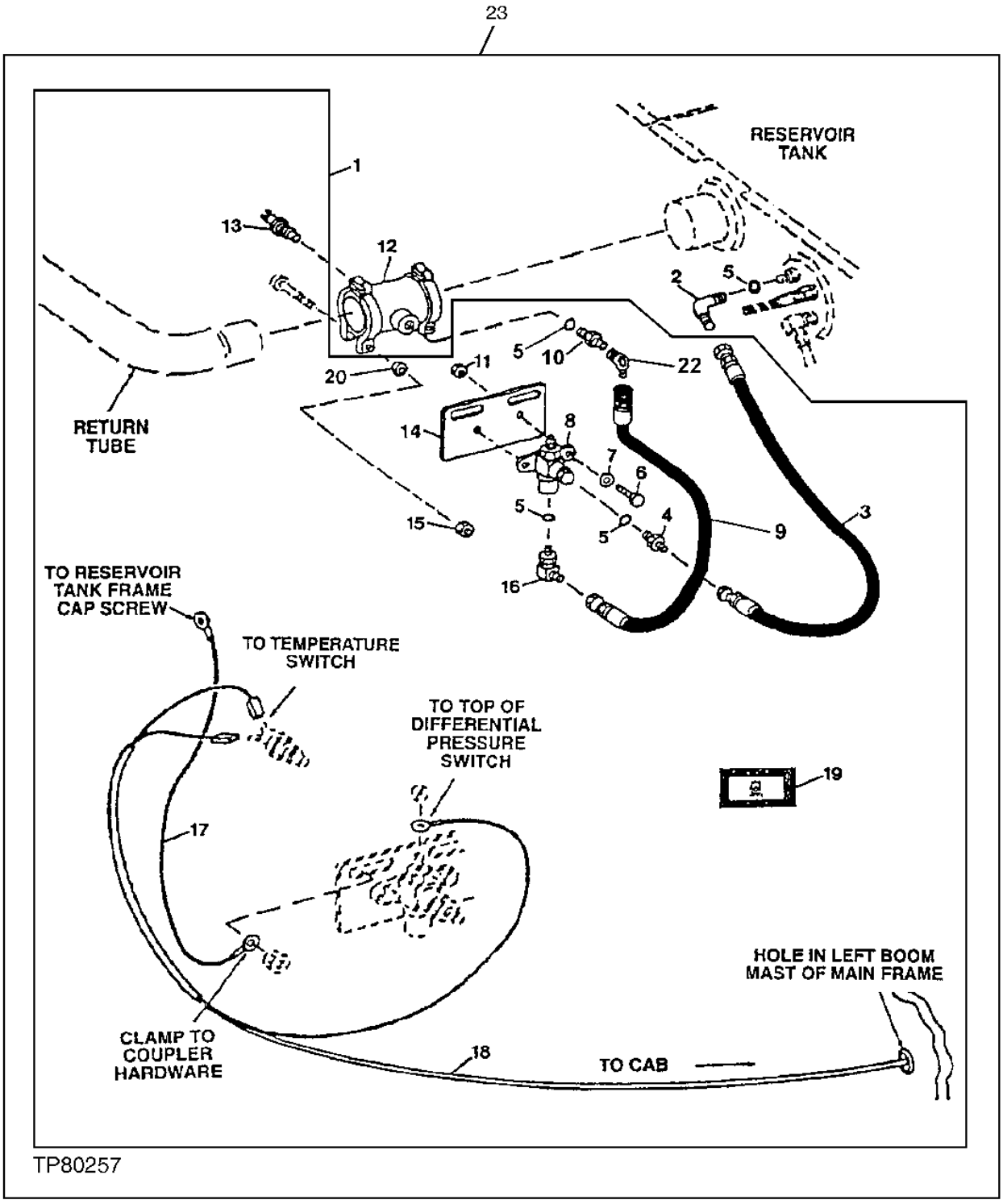

HYDRAULIC FILTER RESTRICTION INDICATOR KIT

KEY	PART NO.	PART NAME	QTY	SERIAL NO.	REMARKS
1	.....	KIT	1		(AT157667 KIT NO LONGER AVAILABLE)
2	AH89069	ELBOW FITTING	1		
3	AH97777	HYDRAULIC HOSE	1		7/16" X 407 MM (16") X 7/16"
4	H75414	ADAPTER	1		
5	T70177	O-RING	4		11.887 X 1.981 MM (0.468" X 5/64")
6	19H1919	CAP SCREW	2		6.350 X 15.875 MM (1/4" X 5/8")
7	24H1286	WASHER	2		7.137 X 12.700 X 1.600 MM (9/32" X 1/2" X 1/16")
8	AT131436	PRESSURE SWITCH	1		
9	AT38628	HYDRAULIC HOSE - FABRICATE	1		9/16" X 381 MM (15") X 9/16"
10	R27212	FITTING	1		
11	14H786	NUT	2		1/4"
12	AT134345	COUPLING	1		
13	AT131437	SWITCH	1		
14	T138910	BRACKET	1		
15	14M7273	NUT	2		M8
16	AT35121	ELBOW FITTING	1		
17	AR76140	WIRING LEAD	1		
18	AT196334	WIRING HARNESS	1		(SUB FOR AT157668)
19	T153187	LABEL	1		(AMBER) (SUB FOR T143272 CLEAR LABEL)
20	24M7036	WASHER	2		9 X 16 X 1.600 MM (0.354" X 0.630" X 0.063")
21	R44302	TIE BAND	7		(NOT ILLUSTRATED)
22	AE24616	ELBOW FITTING	1		
23	**AT189638**	**KIT**	**1**		**(WHOLEGOODS) (HYDRAULIC RESTRICTION INDICATOR KIT)**

BUCKET
(DITCH CLEANING)

T192634 -UN-03JUL03

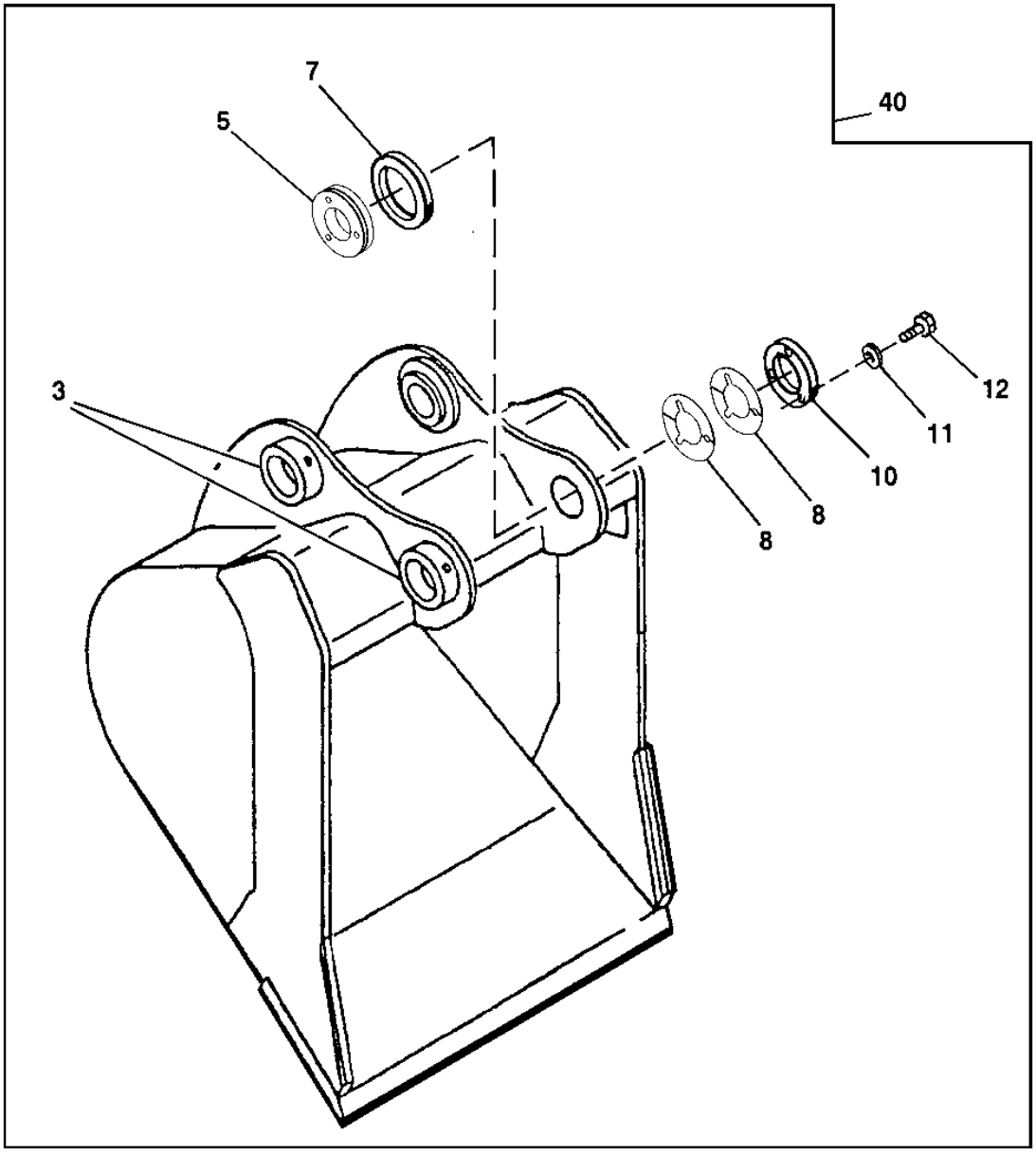

T192634

BUCKET
(DITCH CLEANING)

KEY	PART NO.	PART NAME	QTY	SERIAL NO.	REMARKS
3	T115092	BUSHING	2		
5	AT184010	BOSS	1		
7	AT184011	BOSS	1		
8	AT184008	SHIM	7		
10	AT184009	PLATE	1		
11	24M7047	WASHER	3		13 X 24 X 2.500 MM (0.512" X 0.945" X 0.098")
12	19M8348	CAP SCREW	3		M12 X 65
13	621900	PIVOT	1		(BUCKET EAR BLANK ASSEMBLY) (ORDER DIRECTLY FROM CENTRAL FABRICATORS) (NOT ILLUSTRATED)
40	**AT182225**	**EXCAVATOR BUCKET**	**1**		**WHOLEGOODS (42 INCH)**
	AT182226	**EXCAVATOR BUCKET**	**1**		**WHOLEGOODS (48 INCH)**
	AT182227	**EXCAVATOR BUCKET**	**1**		**WHOLEGOODS (60 INCH)**

BUCKET
(HEAVY DUTY)
(ALSO ORDER BUCKET TOOTH ASSEMBLIES)

T192636 -UN-03JUL03

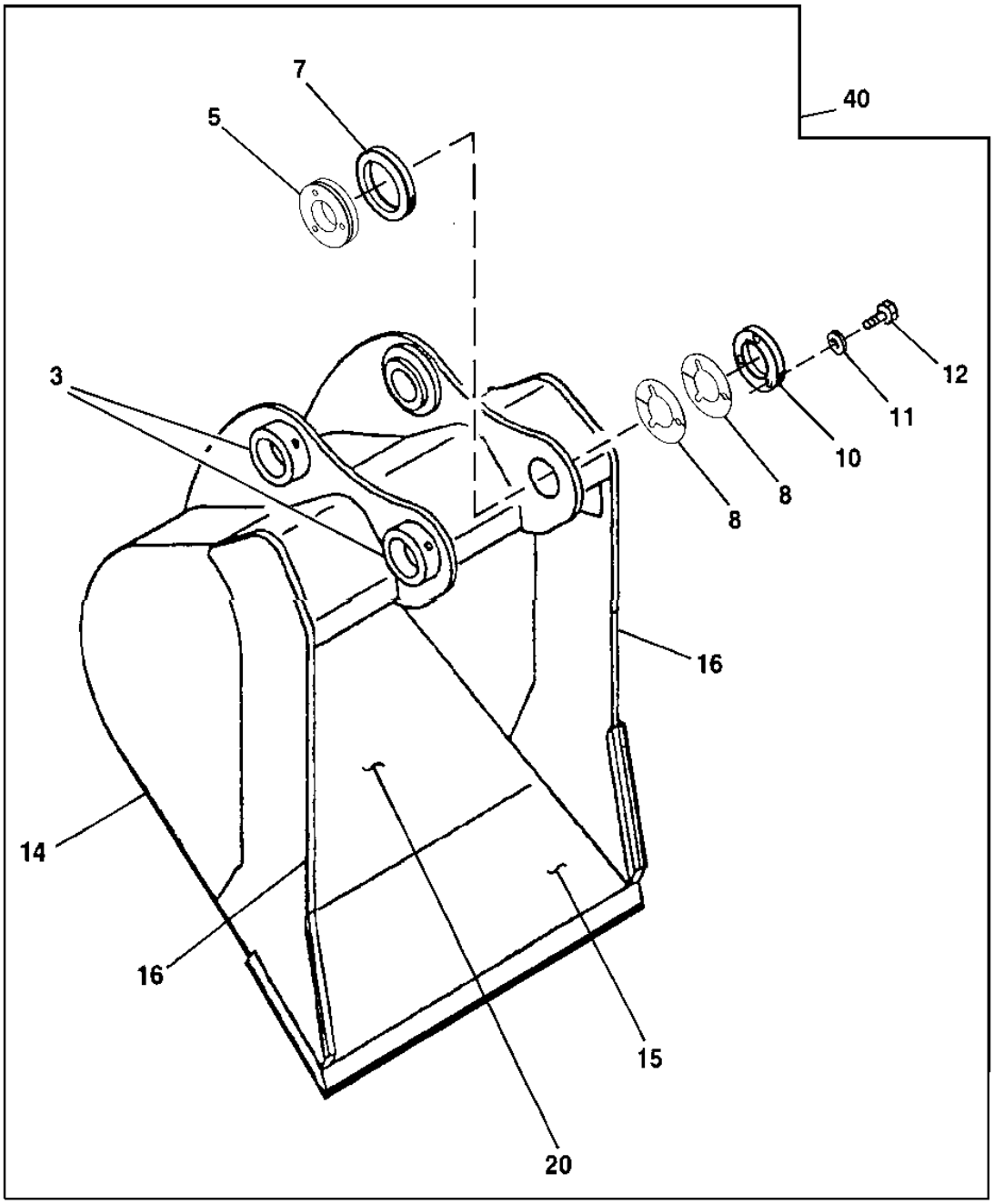

T192636

BUCKET
(HEAVY DUTY)
(ALSO ORDER BUCKET TOOTH ASSEMBLIES)

KEY	PART NO.	PART NAME	QTY	SERIAL NO.	REMARKS
3	T115092	BUSHING	2		
5	AT184010	BOSS	1		(3 TAPPED HOLES)
7	AT184011	BOSS	1		
8	AT184008	SHIM	7		(3 CLEARANCE HOLES)
10	AT184009	PLATE	1		
11	24M7047	WASHER	3		13 X 24 X 2.500 MM (0.512" X 0.945" X 0.098")
12	19M8348	CAP SCREW	3		M12 X 65
13	621899	PIVOT	1		(BUCKET EAR BLANK ASSEMBLY) (ORDER DIRECTLY FROM CENTRAL FABRICATORS) (NOT ILLUSTRATED)
14	304222	PLATE	2		(RIGHT AND LEFT SIDE) (ORDER DIRECTLY FROM CENTRAL FABRICATORS)
15	.....	CUTTING EDGE	1		(CUT TO LENGTH FROM AT163452 BULK MATERIAL)
16	304221	VERTICAL CUTTER	2		(RIGHT AND LEFT SIDE CUTTERS) (ORDER DIRECTLY FROM CENTRAL FABRICATORS)
20	603517	MOLDBOARD	1		(USE WITH 18 INCH - .19 CU. YD. BUCKET) (ORDER DIRECTLY FROM CENTRAL FABRICATORS)
	603520	MOLDBOARD	1		(USE WITH 24 INCH - .27 CU. YD. BUCKET) (ORDER DIRECTLY FROM CENTRAL FABRICATORS)
	603522	MOLDBOARD	1		(USE WITH 30 INCH - .36 CU. YD. BUCKET) (ORDER DIRECTLY FROM CENTRAL FABRICATORS)
	603523	MOLDBOARD	1		(USE WITH 36 INCH - .45 CU. YD. BUCKET) (ORDER DIRECTLY FROM CENTRAL FABRICATORS)
	603524	MOLDBOARD	1		(USE WITH 42 INCH - .65 CU. YD. BUCKET) (ORDER DIRECTLY FROM CENTRAL FABRICATORS)
40	**AT182228**	**EXCAVATOR BUCKET**	**1**		**WHOLEGOODS (18 INCH) (AVAILABLE TOOTH ASSEMBLIES ON SEPARATE PAGE)**
	AT182229	**EXCAVATOR BUCKET**	**1**		**WHOLEGOODS (24 INCH) (AVAILABLE TOOTH ASSEMBLIES ON SEPARATE PAGE)**
	AT182230	**EXCAVATOR BUCKET**	**1**		**WHOLEGOODS (30 INCH) (AVAILABLE TOOTH ASSEMBLIES ON SEPARATE PAGE)**
	AT182231	**EXCAVATOR BUCKET**	**1**		**WHOLEGOODS (36 INCH) (AVAILABLE TOOTH ASSEMBLIES ON SEPARATE PAGE)**
	AT182232	**EXCAVATOR BUCKET**	**1**		**WHOLEGOODS (42 INCH) (AVAILABLE TOOTH ASSEMBLIES ON SEPARATE PAGE)**

HEAVY DUTY BUCKET TOOTH ASSEMBLY
(18, 24, 30, 36 OR 42 INCH BUCKET)

TP43768 -UN-01JAN94

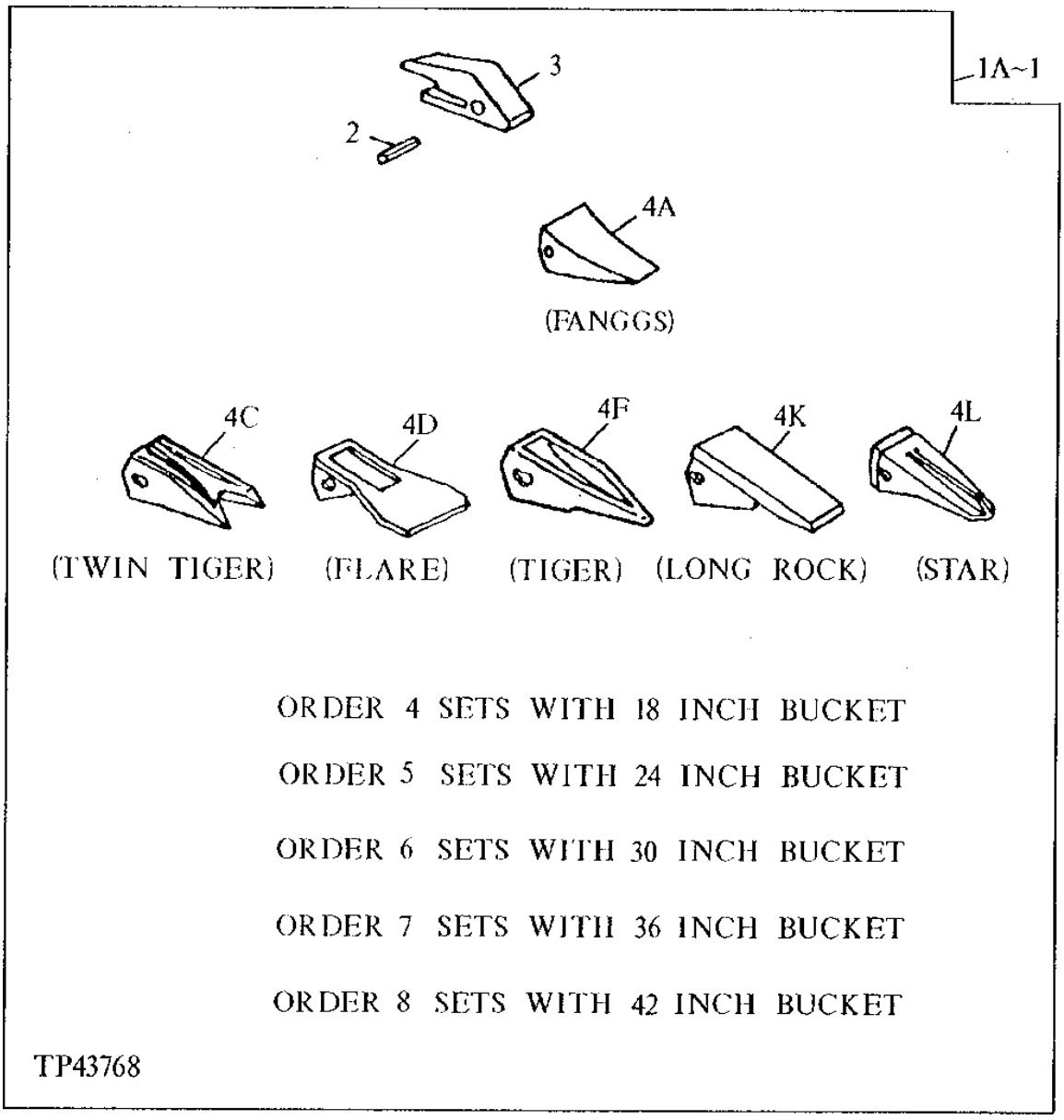

HEAVY DUTY BUCKET TOOTH ASSEMBLY
(18, 24, 30, 36 OR 42 INCH BUCKET)

KEY	PART NO.	PART NAME	QTY	SERIAL NO.	REMARKS
1A	.....	KIT	1		(TOOTH) WHOLEGOODS (FANGGS) (AT163464 ONLY AVAILABLE WHEN ORDERING BUCKET)
1C	.....	KIT	1		(TOOTH) WHOLEGOODS (TWIN TIGER) (AT163498 ONLY AVAILABLE WHEN ORDERING BUCKET)
1D	.....	KIT	1		(TOOTH) WHOLEGOODS (FLARE) (AT163500 ONLY AVAILABLE WHEN ORDERING BUCKET)
1F	.....	KIT	1		(TOOTH) WHOLEGOODS (TIGER) (AT163494 ONLY AVAILABLE WHEN ORDERING BUCKET)
1K	.....	KIT	1		(TOOTH) WHOLEGOODS (LONG ROCK) (AT163501 ONLY AVAILABLE WHEN ORDERING BUCKET)
1L	.....	KIT	1		(TOOTH) WHOLEGOODS (STAR) (AT163502 ONLY AVAILABLE WHEN ORDERING BUCKET)
2	TF23P	PIN	1		(USE WITH FANGGS TOOTH ONLY)
	T40910	PIN	1		(DO NOT USE WITH FANGGS TOOTH)
3	U43792	BUCKET TOOTH ADAPTER	1		
4A	TF23	TOOTH	1		
4C	IP8623TP	TOOTH	1		
4D	T72548	TOOTH	1		
4F	IP8623P	TOOTH	1		
4K	U42751	POINT	1		(LONG ROCK)
4L	T56524	POINT	1		

ESCO BUCKET CUTTING EDGES, TEETH AND ADAPTERS

T149713 -UN-04JAN02

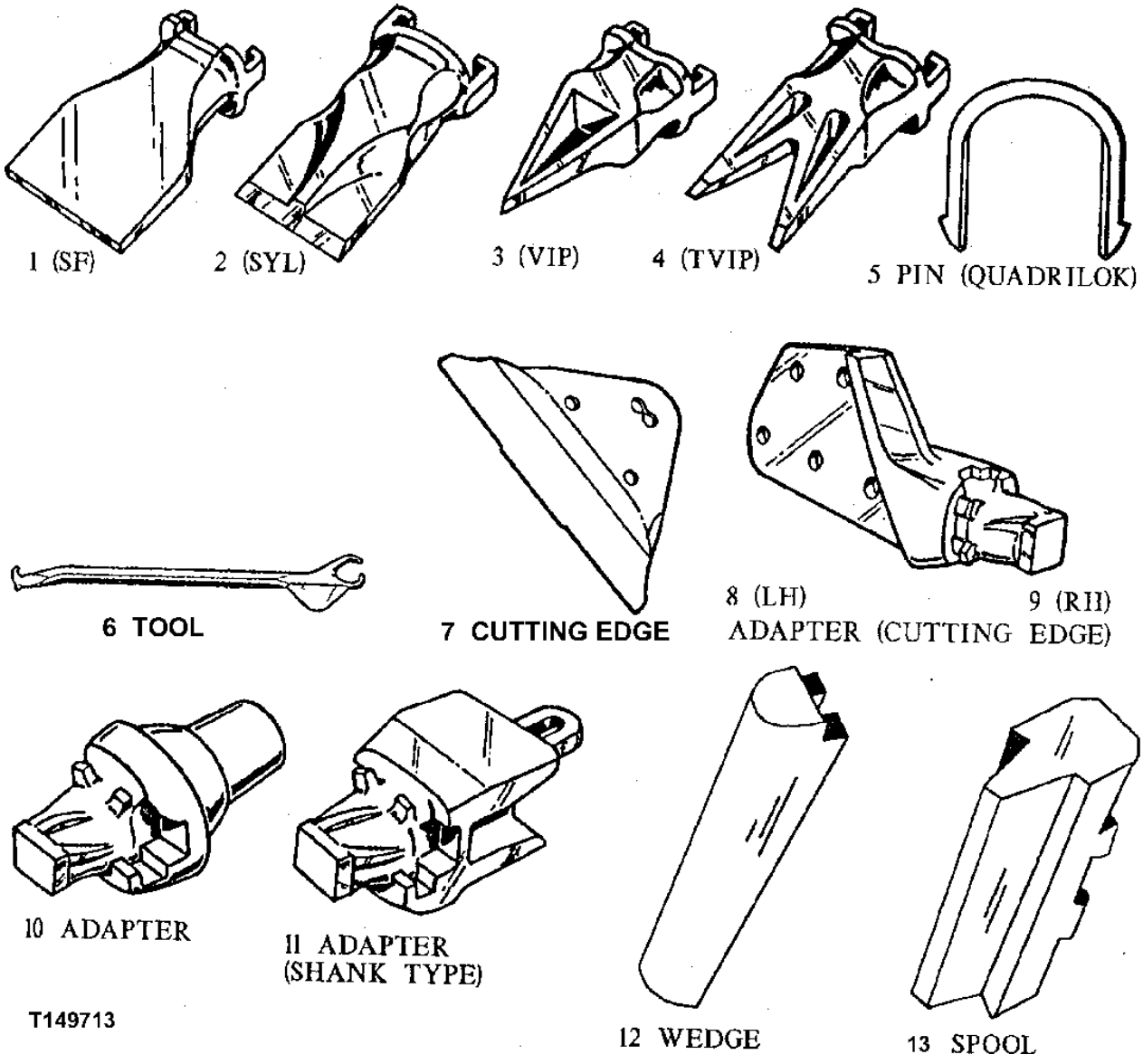

ESCO BUCKET CUTTING EDGES, TEETH AND ADAPTERS

KEY	PART NO.	PART NAME	QTY	SERIAL NO.	REMARKS
1	EX21S5F	TOOTH	AR		
2	EX21SYL	TOOTH	AR		
	EX47SYL	TOOTH	AR		
	EX27SYL	TOOTH	AR		
	EX37SYL	TOOTH	AR		
3	EX21VIP	TOOTH	AR		
4	EX21TVIP	TOOTH	AR		
5	EX21LKS	TOOTH RETAINER	AR		(SUB FOR EX21LK)
	EX47LK	PIN	AR		
	EX27LK	PIN	AR		
	EX37LKS	TOOTH RETAINER	AR		(SUB FOR EX37LK)
	EX27VPN	PIN	AR		
6	EX21-27QRT	TOOL	AR		
7	TPDE31329	SHROUD	AR		(SUB FOR EX31329-X)
8	.....	ADAPTER	AR		(EX1550-21 NLA)
9	.....	ADAPTER	AR		(EX1551-21 NLA)
10	EX360-21	BUCKET TOOTH ADAPTER	AR		
11	EX119-21	BUCKET TOOTH ADAPTER	AR		
	EX129A-37	BUCKET TOOTH ADAPTER	AR		
	EX5824-37	BUCKET TOOTH ADAPTER	AR		
	EX1829A-47	BUCKET TOOTH ADAPTER	AR		
	EX5849-21	BUCKET TOOTH ADAPTER	AR		(SUB FOR EX4894-21)
	EX5850-27V	BUCKET TOOTH ADAPTER	AR		(SUB FOR EX5827-27, ALONG WITH EX27VPN AND EX27VPL)
	EX5854-21	BUCKET TOOTH ADAPTER	AR		(SUB FOR EX5831-21)
	EX119-27	BUCKET TOOTH ADAPTER	AR		
12	EX29W1	WEDGE	AR		(SUB FOR T52975)
	EX20W1	WEDGE	AR		(SUB FOR T38819)
13	EX20SP	SPOOL	AR		(SUB FOR T38818)
	EX29SP	SPOOL	AR		(SUB FOR T52974)
14	EX27VPL	PLUG	AR		(NOT ILLUSTRATED)

BUCKET PIN-UP DATA
(30, 36 OR 42 INCH BUCKET)

T161147 -UN-01NOV02

EXCAVATOR BUCKET PIN-UP DATA

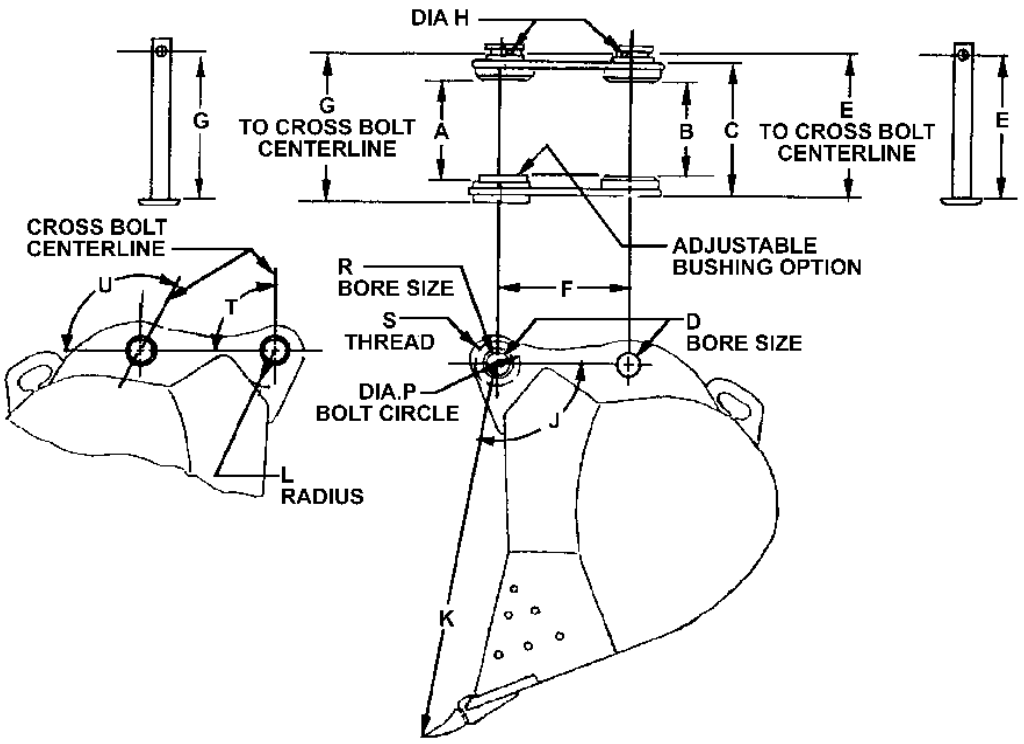

MODEL	80C 80	70-70D 190E	MODEL	80C 80	70-70D 190E
A	[225] 8.86	[190] 7.48	J (ANGLE)	112°	112°
B	[202] 7.97	[180] 7.09	K	[990] 39.00	[1050] 41.34
C	[279] 10.99	[256] 10.08	L	[80] 3.15	[80] 3.15
D	[50] 1.97	[45] 1.772	P	[88.9] 3.50	[100] 3.94
E	[296] 11.73	[283] 11.14	R	[50] 1.97	[75] 2.95
F	[310] 12.20	[310] 12.20	S (3 HOLES)	13ø/.53ø	M10 X 15
G	[325] 12.79	[295] 11.61	T (ANGLE)	0°	135°
H	[17] 0.67	[17] 0.67	U (ANGLE)	0°	135°

Company policy limits the use of the enclosed drawings and information to your company and any other usage is expressly prohibited without the written consent of Deere & Company. We regret we cannot keep you informed of subsequent changes in the specifications furnished. You are, therefore, responsible for the risks involved in their use.

It is to be understood that furnishing you with the requested material does not automatically constitute a Deere & Company endorsement of your products on or with any John Deere product.

T161147

MEMORANDA

PILOT CONTROLLERS (DIG AND SWING)

T160682 -UN-31OCT02

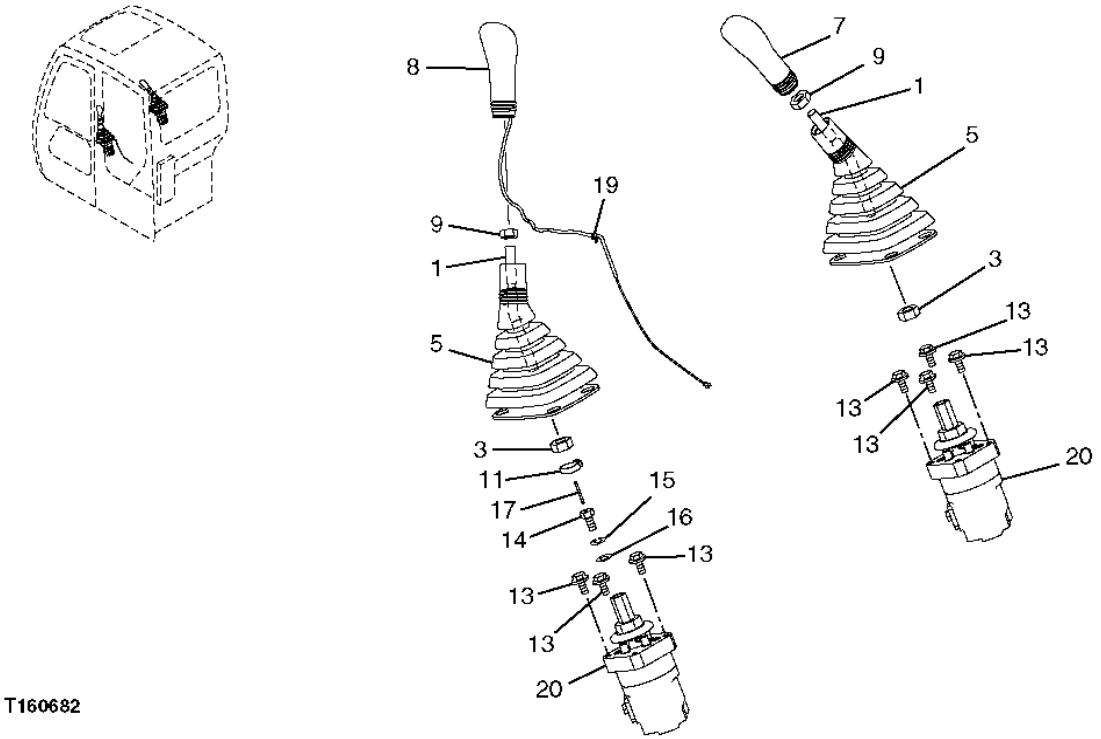

PILOT CONTROLLERS (DIG AND SWING)

KEY	PART NO.	PART NAME	QTY	SERIAL NO.	REMARKS
1	4445322	LEVER	2		
3	14M7141	NUT	2		M14
5	2045470	BOOT	2		
7	2045473	GRIP	1		
8	2045472	GRIP	1		
9	14M7357	NUT	2		M12, (SUB FOR J952012)
11	H77698	TIE BAND	1		
13	19M7932	CAP SCREW	6	-XXXXXX	M8 X 16
	12M7056	LOCK WASHER	6	-XXXXXX	8 MM (0.315")
	19M7139	CAP SCREW	6	XXXXXX-	(SUB FOR J260820 OR J900820)
	24M7055	WASHER	6	XXXXXX-	(SUB FOR A590108)
14	4438279	BOLT	2	-XXXXXX	
	4609956	BOLT	2	XXXXXX-	
15	12M7065	LOCK WASHER	1		8 MM, (SUB FOR A590908)
16	24M7055	WASHER	1		8.400 X 16 X 1.600 MM, (SUB FOR A590108)
17	34M7086	SPRING PIN	1		
19	H77698	TIE BAND	1		
20	9195304	HYDR./PILOT CONTROL VALVE	2	-XXXXXX	(USE IF AVAILABLE, IF NOT AVAILABLE SUB 9239583, ALONG WITH (3) 19M7139, (3) 24M7055, AND 4609956)
	9239583	HYDR./PILOT CONTROL VALVE	2	XXXXXX-	

**PILOT CONTROLLER VALVE COMPONENTS
(DIG AND SWING)**

T142561 -UN-18JUN01

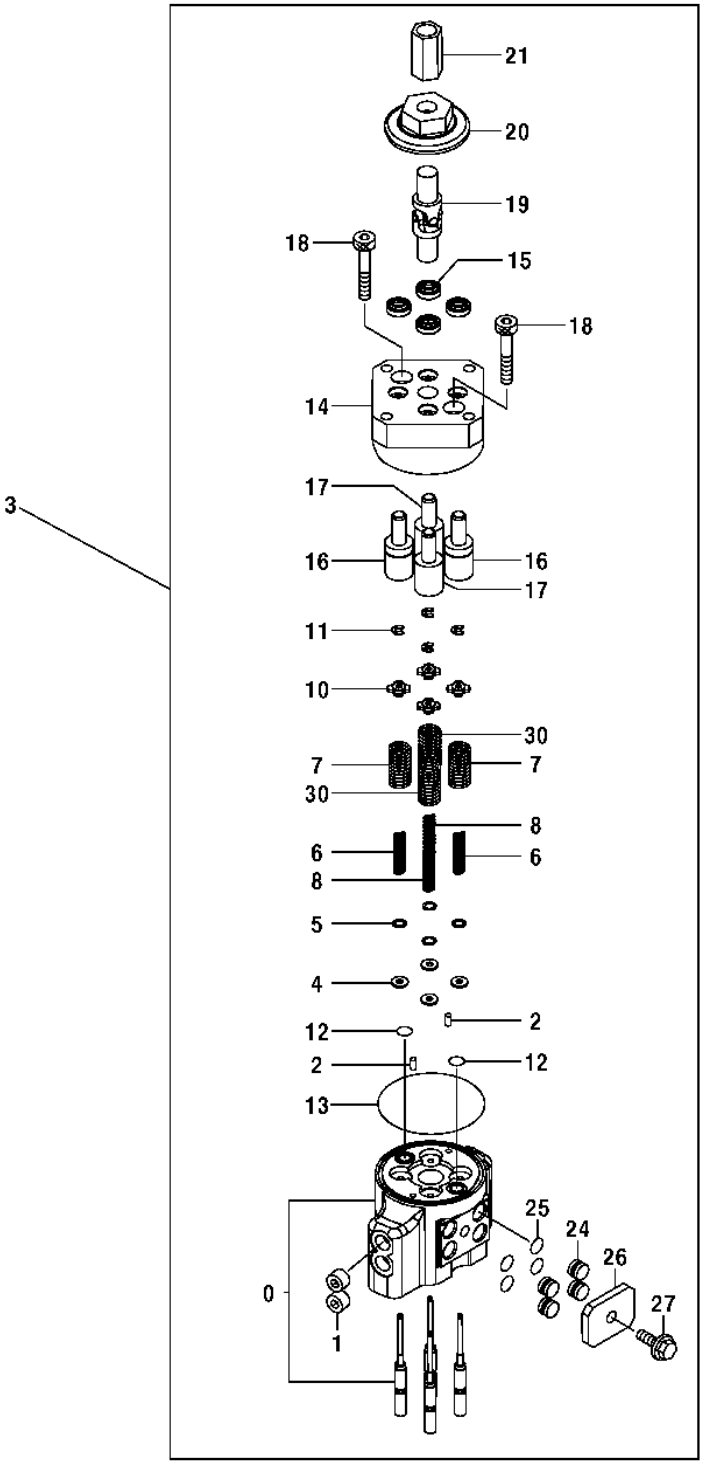

T142561

PILOT CONTROLLER VALVE COMPONENTS
(DIG AND SWING)

KEY	PART NO.	PART NAME	QTY	COMPONENT SERIAL NO.	REMARKS
0	.....	CASE	1		(TH8081319 NOT AVAILABLE)
1	94-2011	FITTING PLUG	2		
2	J400408	PIN	2		
3	9195304	HYDR./PILOT CONTROL VALVE	1	-XXXXXX	(USE IF AVAILABLE - IF NOT AVAILABLE SUB 9239583, ALONG WITH (3) 19M7139, (3) 24M7055, AND 4609956)
	9239583	HYDR./PILOT CONTROL VALVE	1	XXXXXX-	(COMPONENTS NOT CURRENTLY AVAILABLE)
4	4410898	SPACER	4		
5	4173208	SHIM	12		
6	4425414	SPRING	2		
7	4421771	SPRING	2		
8	4429120	SPRING	2		
10	4429119	GUIDE	4		
11	4437333	SNAP RING	4		
12	4431914	O-RING	2		
13	4431915	O-RING	1		
14	.....	MANIFOLD	1		(2044350 NO LONGER AVAILABLE) (SUB 9234284, (4) 4477852, (2) 9759158 AND (2) 9759157)
	9234284	MANIFOLD	1		(MANIFOLD HAS ONE PUNCH MARK ON TOP FACE) (SUB FOR 2044350, ALONG WITH (4) 4477852, (2) 9759158 AND(2) 9759157) (MANIFOLD HAS TWO PUNCH MARKS ON TOP FACE)
15	.....	SEAL	4		(4447050 NO LONGER AVAILABLE) (SUB 9234284, (4) 4477852, (2) 9759158 AND (2) 9759157)
	.....	SEAL	4		(USE WITH 2044350) (SUB FOR 4447050, ALONG WITH 9234284, (2) 9759158, AND (2) 9759157) (USE WITH 9234284) (4477852 NO LONGER AVAILABLE FOR SERVICE)
16	.....	PISTON	2		(9754825 NO LONGER AVAILABLE) (SUB 9234284, (4) 4477852, (2) 9759158 AND (2) 9759157) (USE WITH 2044350)
	9759157	PISTON	2		(SUB FOR 9754825, ALONG WITH (4) 4477852, 9234284, AND (2) 9759158) (USE WITH 9234284)
17	.....	PISTON	2		(9754826 NO LONGER AVAILABLE) (SUB 9234284, (4) 4477852, (2) 9759158 AND (2) 9759157) (USE WITH 2044350)
	9759158	PISTON	2		(SUB FOR 9754826, ALONG WITH (4) 4477852, (2)9759158, AND 9234284) (USE WITH 9234284)
18	J780845	BOLT	2		
19	4335060	UNIVERSAL JOINT	1		
20	4437106	CAM	1		
21	4182067	JOINTER	1		
24	4442323	PIPE PLUG	4		
25	CH11560	PACKING	4		
26	4442339	PLATE	1		
27	19M7932	CAP SCREW	1		M8 X 16
30	4446960	SPRING	2		

PROPEL PILOT CONTROLLER, LEVER, AND HANDLE

T160685 -UN-31OCT02

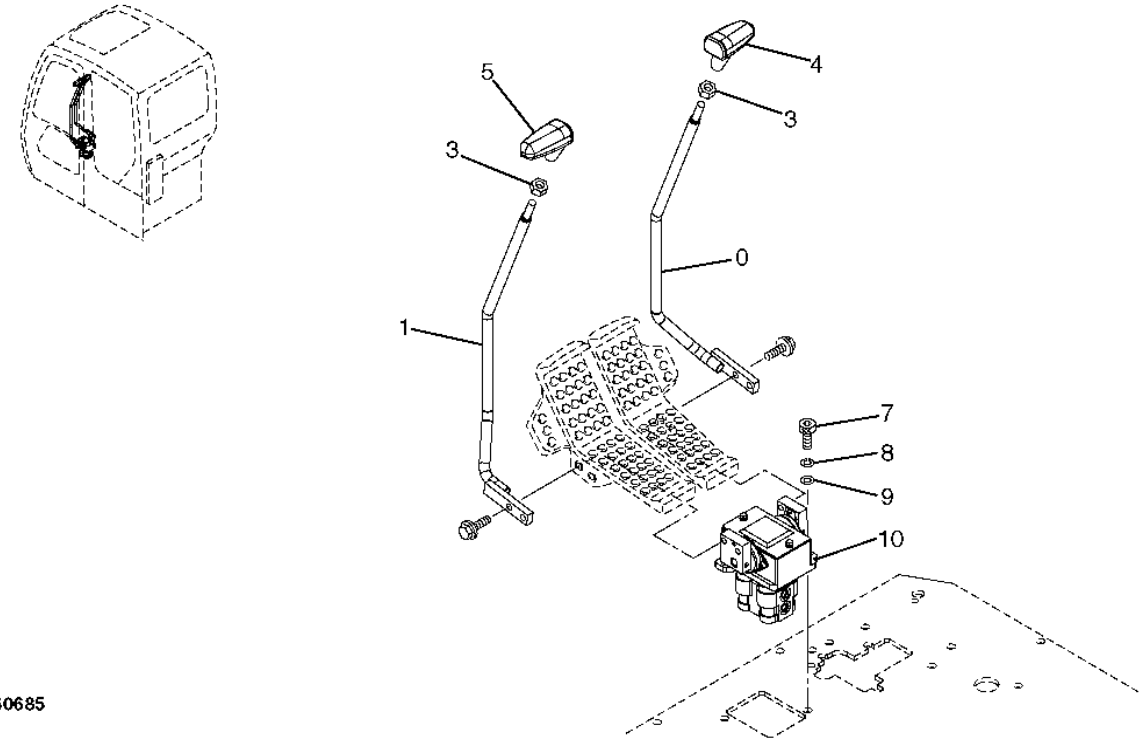

PROPEL PILOT CONTROLLER, LEVER, AND HANDLE

KEY	PART NO.	PART NAME	QTY	SERIAL NO.	REMARKS
0	8075450	LEVER	1		
1	8075449	LEVER	1		
3	4424185	NUT	2		
4	2051176	GRIP	1		(SUB FOR 2045468)
5	2051177	GRIP	1		(SUB FOR 2045469)
7	19M8337	SCREW	2		(SUB FOR J781035)
8	12M7066	LOCK WASHER	2		10 MM (0.394")
9	24M7028	WASHER	2		10.500 X 20 X 2 MM (0.413" X 0.787" X 0.079")
10	9195307	HYDR./PILOT CONTROL VALVE	1	-XXXXXX	
	9235551	HYDR./PILOT CONTROL VALVE	1	XXXXXX-	

BLADE PILOT CONTROL LEVER

T160688 -UN-31OCT02

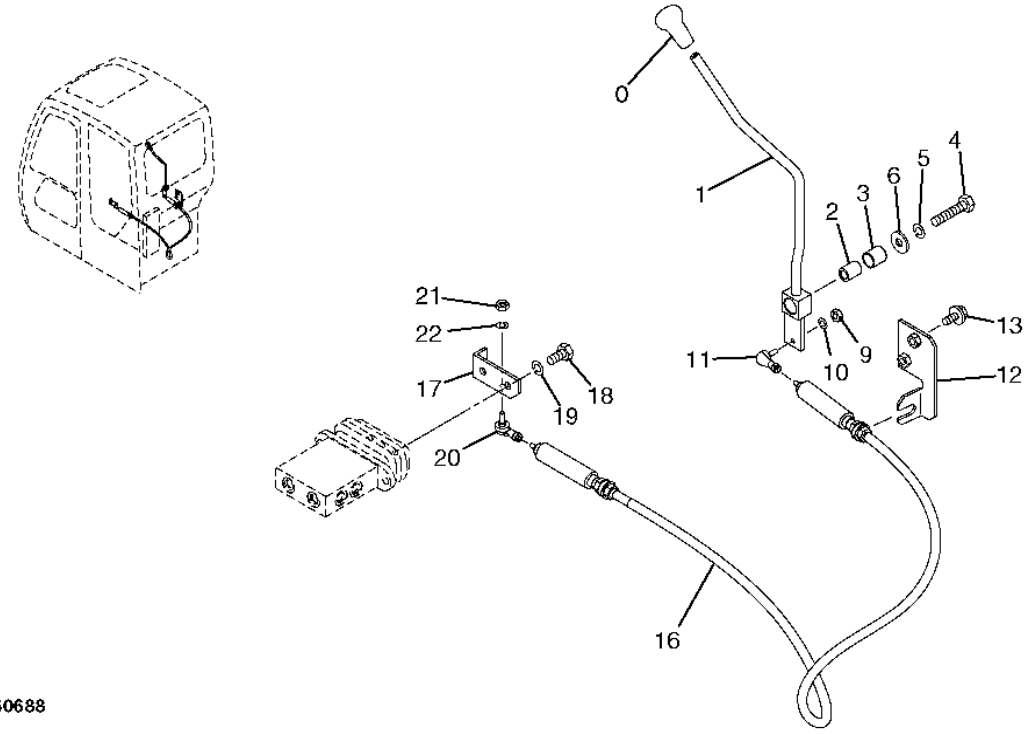

T160688

BLADE PILOT CONTROL LEVER

KEY	PART NO.	PART NAME	QTY	SERIAL NO.	REMARKS
0	4280117	GRIP	1		(USE WITH 8081981)
	4363754	GRIP	1		(USE WITH 7045626)
1	7045626	LEVER	1		(SUB FOR 8081981)
	8094751	BRACKET	1		(NOT ILLUSTRATED)
2	4279507	BUSHING	1		
3	4396083	BUSHING	1		
4	19M7362	CAP SCREW	1		M12 X 55
5	12H301	LOCK WASHER	1		1/2"
6	24H1748	WASHER	1		1/2" X 1-1/4" X 0.105"
9	14M7272	NUT	1		M6
10	12M7006	LOCK WASHER	1		6 MM (0.236")
11	4056017	BALL JOINT	1		
12	8080381	BRACKET	1		
13	19M7402	CAP SCREW	2		M10 X 25
	12M7066	LOCK WASHER	2		10 MM (0.394")
	24M7028	WASHER	2		10.500 X 20 X 2 MM (0.413" X 0.787" X 0.079")
16	4454725	PUSH PULL CABLE	1		
17	9754977	BRACKET	1		
18	19M7938	CAP SCREW	2		M10 X 20, (SUB FOR J901020)
19	12M7066	LOCK WASHER	2		10 MM (0.394")
20	4056017	BALL JOINT	1		
21	14M7272	NUT	1		M6
22	12M7006	LOCK WASHER	1		6 MM (0.236")

RIGHT PROPEL PEDAL (STANDARD BOOM)

T157030 -UN-30OCT02

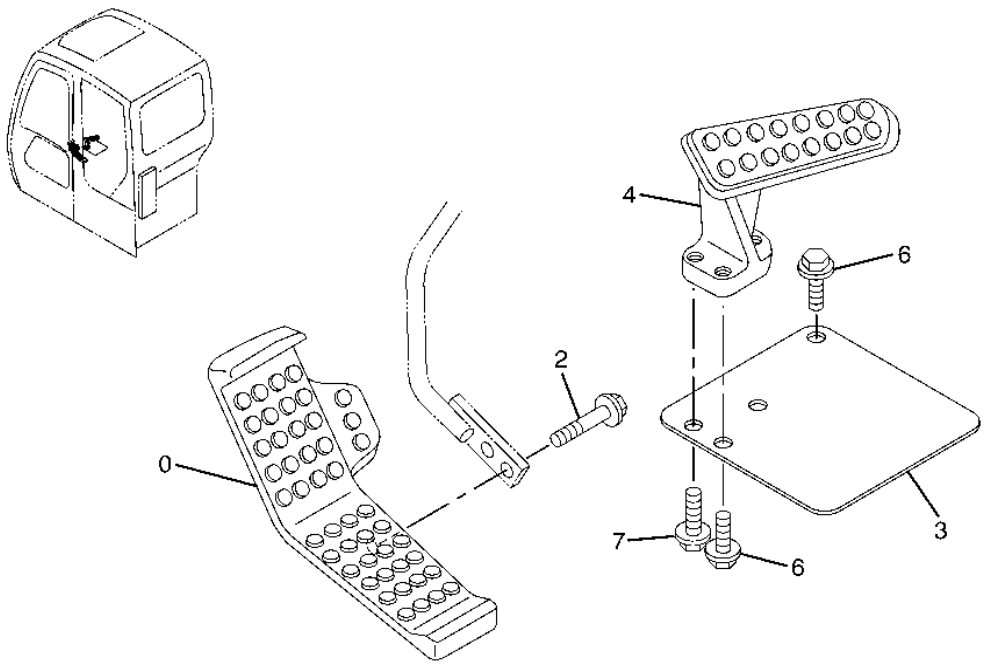

T157030

RIGHT PROPEL PEDAL (STANDARD BOOM)

KEY	PART NO.	PART NAME	QTY	SERIAL NO.	REMARKS
0	1024384	PEDAL	1		
2	19M7658	CAP SCREW	2		M10 X 50
	12M7066	LOCK WASHER	2		10 MM (0.394")
	24M7096	WASHER	2		10.500 X 18 X 1.600 MM (0.413" X 0.709" X 0.063")
3	4441706	COVER	1		
4	1015478	FOOTREST	1		
6	19M7402	CAP SCREW	3		M10 X 25
	12M7066	LOCK WASHER	3		10 MM (0.394")
	24M7028	WASHER	3		10.500 X 20 X 2 MM (0.413" X 0.787" X 0.079")
7	19M7550	CAP SCREW	1		M10 X 35
	12M7066	LOCK WASHER	1		10 MM (0.394")
	24M7028	WASHER	1		10.500 X 20 X 2 MM (0.413" X 0.787" X 0.079")

RIGHT PROPEL PEDAL (OFFSET BOOM)

T157031 -UN-30OCT02

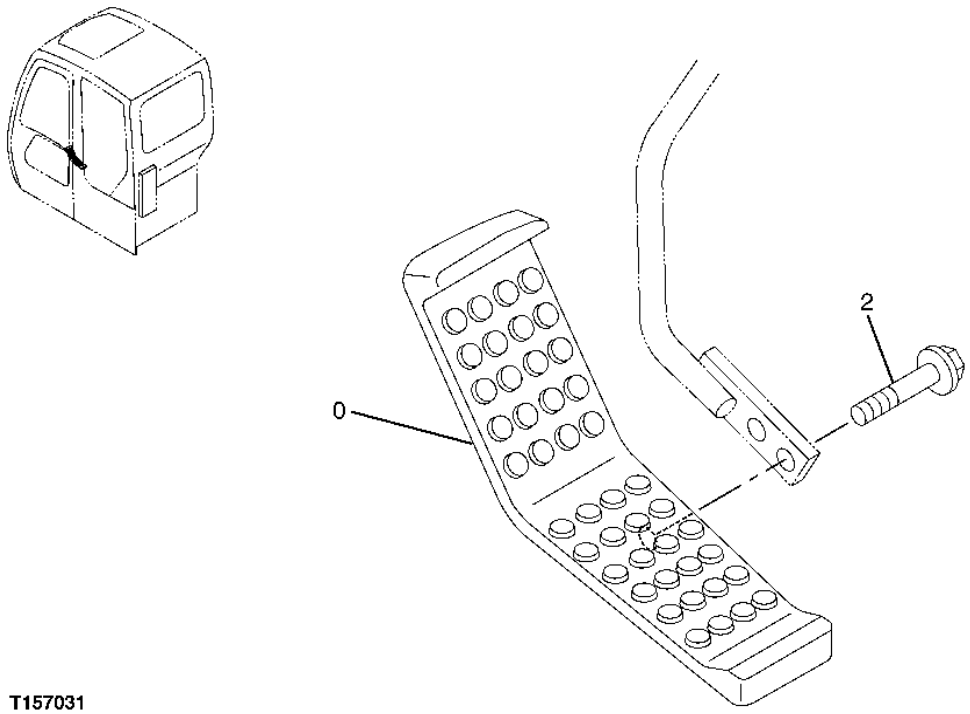

T157031

RIGHT PROPEL PEDAL (OFFSET BOOM)

KEY	PART NO.	PART NAME	QTY	SERIAL NO.	REMARKS
0	3079714	PEDAL	1		
2	19M7658	CAP SCREW	2		M10 X 50
	12M7066	LOCK WASHER	2		10 MM (0.394")
	24M7096	WASHER	2		10.500 X 18 X 1.600 MM (0.413" X 0.709" X 0.063")

LEFT PROPEL PEDAL

T157032 -UN-30OCT02

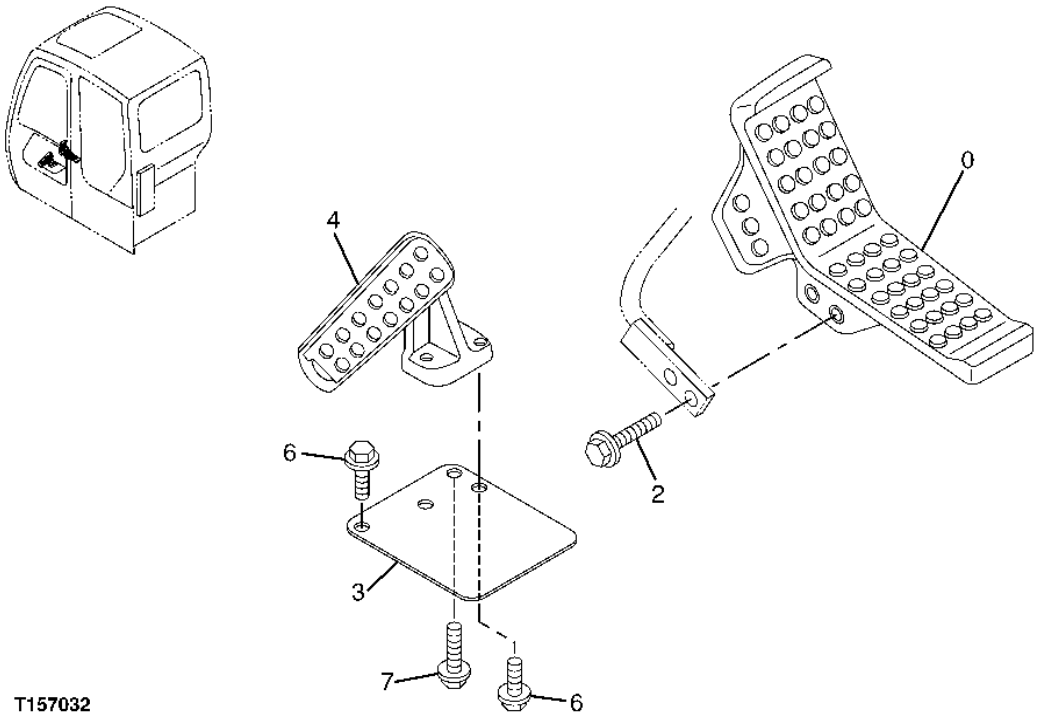

T157032

2D12

LEFT PROPEL PEDAL

KEY	PART NO.	PART NAME	QTY	SERIAL NO.	REMARKS
0	1024224	PEDAL	1		
2	19M7658	CAP SCREW	2		M10 X 50
	12M7066	LOCK WASHER	2		10 MM (0.394")
	24M7096	WASHER	2		10.500 X 18 X 1.600 MM (0.413" X 0.709" X 0.063")
3	4441713	COVER	1		
4	1015477	FOOTREST	1		
6	19M7402	CAP SCREW	3		M10 X 25
	12M7066	LOCK WASHER	3		10 MM (0.394")
	24M7028	WASHER	3		10.500 X 20 X 2 MM (0.413" X 0.787" X 0.079")
7	19M7550	CAP SCREW	1		M10 X 35
	12M7066	LOCK WASHER	1		10 MM (0.394")
	24M7028	WASHER	1		10.500 X 20 X 2 MM (0.413" X 0.787" X 0.079")

PILOT CONTROL PEDAL (OFFSET BOOM)

T157033 -UN-30OCT02

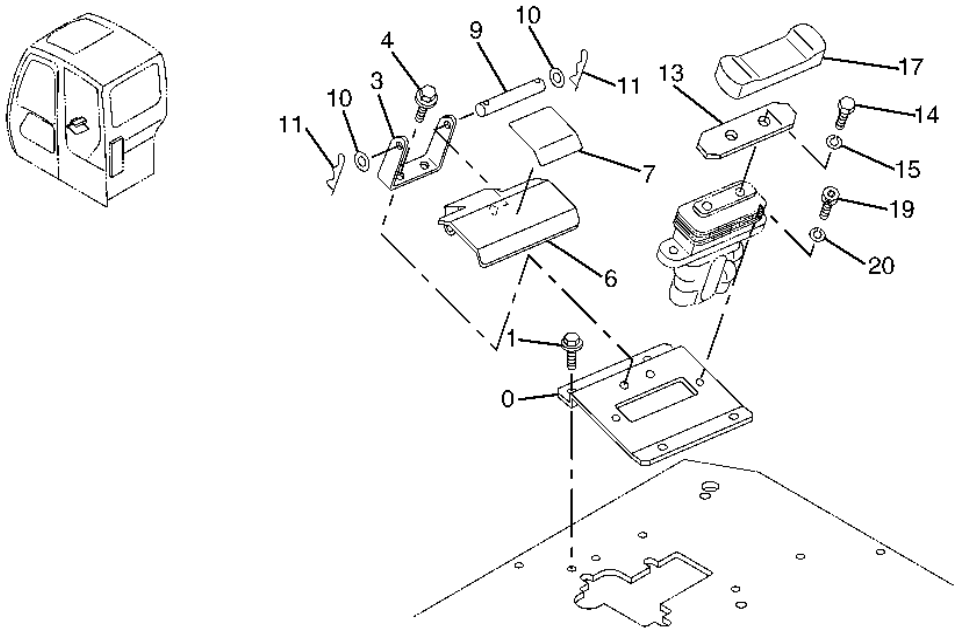

T157033

2D14

PILOT CONTROL PEDAL (OFFSET BOOM)

KEY	PART NO.	PART NAME	QTY	SERIAL NO.	REMARKS
0	8076935	BRACKET	1		
1	19M7402	CAP SCREW	2		M10 X 25
	12M7066	LOCK WASHER	2		10 MM (0.394")
3	4365416	BRACKET	1		
4	19M7881	SCREW	2		M8 X 20
	12M7065	LOCK WASHER	2		8 MM (0.315")
	24M7055	WASHER	2		8.400 X 16 X 1.600 MM (0.331" X 0.630" X 0.063")
6	9747100	COVER	1		
7	4345731	MAT	1		
9	4365417	PIN FASTENER	1		
10	24M7054	WASHER	2		6.400 X 12 X 1.600 MM (0.252" X 0.472" X 0.063")
11	4365839	SPRING LOCKING PIN	2		
13	4374030	PEDAL	1		
14	19M7938	CAP SCREW	2		M10 X 20, (SUB FOR J901020)
15	12M7066	LOCK WASHER	2		10 MM (0.394")
17	4374008	COVER	1		
19	J781030	SCREW	2		
20	12M7066	LOCK WASHER	2		10 MM (0.394")

LOCK LEVER

T157034 -UN-30OCT02

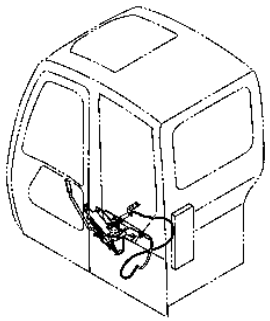

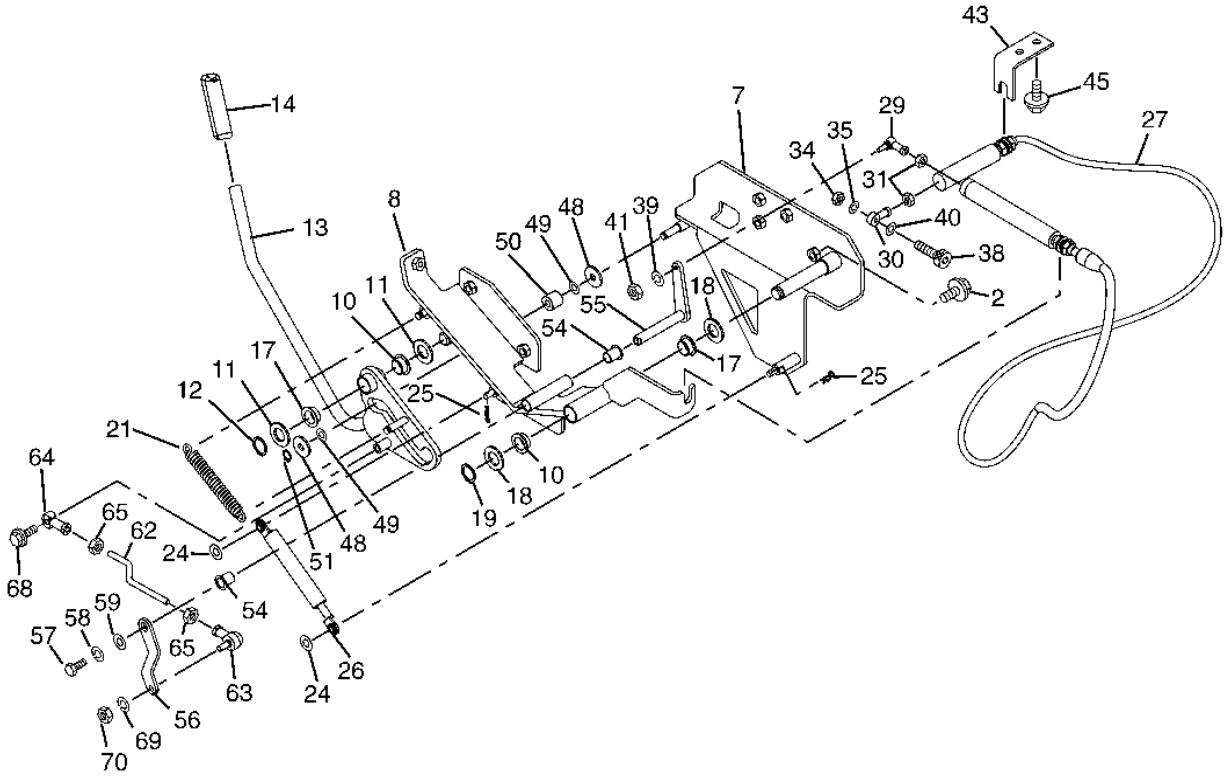

T157034

LOCK LEVER

KEY	PART NO.	PART NAME	QTY	SERIAL NO.	REMARKS
2	19M7168	CAP SCREW	4		M10 X 30
	12M7066	LOCK WASHER	4		10 MM (0.394")
	24M7096	WASHER	4		10.500 X 18 X 1.600 MM (0.413" X 0.709" X 0.063")
7	7040907	BRACKET	1		
8	7040432	BRACKET	1		
10	4451809	BUSHING	2		
11	24M7051	WASHER	2		21 X 37 X 3 MM (0.827" X 1.457" X 0.118")
12	40M7080	SNAP RING	1		
13	7041218	LEVER	1		
14	4455772	GRIP	1		
17	4451809	BUSHING	2		
18	24M7051	WASHER	2		21 X 37 X 3 MM (0.827" X 1.457" X 0.118")
19	40M7080	SNAP RING	1		
21	4454270	SPRING	1		
24	24M7055	WASHER	2		8.400 X 16 X 1.600 MM, (SUB FOR A590108)
25	H132922	COTTER PIN	2		
26	4452249	LATCH	1		
27	4455745	PUSH PULL CABLE	1		
29	4287791	BALL JOINT	1		
30	4286584	END	1		
31	14M7297	NUT	2		M5
34	14M7272	NUT	1		M6
35	12M7006	LOCK WASHER	1		6 MM (0.236")
38	19M8505	SCREW	1		M6 X 25
39	12M7006	LOCK WASHER	1		6 MM (0.236")
40	24M7054	WASHER	1		6.400 X 12 X 1.600 MM (0.252" X 0.472" X 0.063")
41	14M7272	NUT	1		M6
43	4462966	BRACKET	1		
45	19M7402	CAP SCREW	2		M10 X 25
	12M7066	LOCK WASHER	2		10 MM (0.394")
	24M7096	WASHER	2		10.500 X 18 X 1.600 MM (0.413" X 0.709" X 0.063")
48	4371706	WASHER	2		
49	4454269	SHIM	2		
50	4454268	NEEDLE BEARING	1		
51	991334	SNAP RING	1		
54	4459868	BUSHING	2		
55	8084140	LINK	1		
56	4459902	BRACKET	1		
57	J960812	BOLT	1		
58	12M7065	LOCK WASHER	1		8 MM (0.315")
59	12M7036	LOCK PLATE	1		
62	4459901	ROD	1		
63	T110021	BALL JOINT SOCKET	1		
64	4120969	END	1		
65	14M7273	NUT	2		M8
68	19M7407	CAP SCREW	1		M8 X 25
	12M7065	LOCK WASHER	1		8 MM (0.315")
	24M7055	WASHER	1		8.400 X 16 X 1.600 MM (0.331" X 0.630" X 0.063")
69	12M7065	LOCK WASHER	1		8 MM (0.315")
70	14M7273	NUT	1		M8

2D17

FOOT PEDAL CONTROL KIT

T190010 -UN-01MAY03

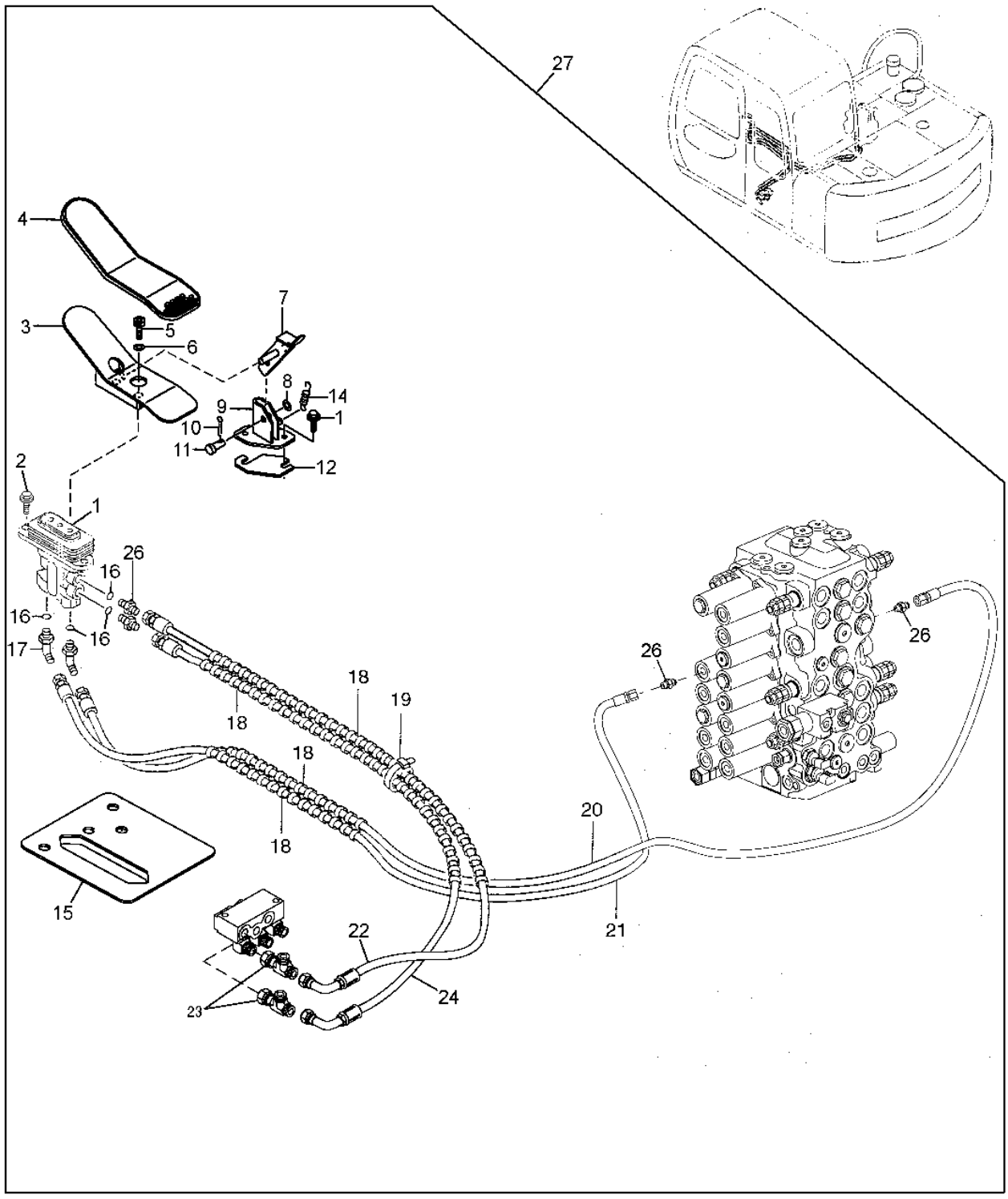

T190010

THIS PARTS LISTING IS CONTINUED

2D18

FOOT PEDAL CONTROL KIT

KEY	PART NO.	PART NAME	QTY	SERIAL NO.	REMARKS
1	4330467	VALVE	1		
2	19M7550	CAP SCREW	3		M10 X 35
3	8070805	PEDAL	1		
4	4283758	COVER	1		
5	J781020	BOLT	2		
6	12M7066	LOCK WASHER	2		10 MM
7	8061258	STOP	1		
8	24M7028	WASHER	1		10.500 X 20 X 2 MM
9	8060508	BRACKET	1		
10	11M7080	COTTER PIN	1		2.500 X 16 MM
11	4287795	PIN	1		
12	4402410	SOLID SHIM	3		
13	19M7550	CAP SCREW	3		M10 X 35
14	4279604	SPRING	1		
15	T201452	COVER	1		
16	M800650	PACKING	4		
17	4154670	ELBOW FITTING	2		
18	4133527	HOSE GUARD	4		
19	H77698	TIE BAND	5		
20	AP36018	HYDRAULIC HOSE - FABRICATE	1		
21	AP36017	HYDRAULIC HOSE - FABRICATE	1		
22	AT304329	HYDRAULIC HOSE - FABRICATE	1		
23	AE45056	TEE FITTING	2		
24	AT304329	HYDRAULIC HOSE - FABRICATE	1		
26	4200465	ADAPTER	4		
27	**AT303097**	**KIT**	**1**		**(TWO WAY HYDRAULIC FOOT PEDAL CONTROL KIT) (INCLUDES INSTALLATION INSTRUCTIONS T202175)**
28	14M7296	FLANGE NUT	1		(NOT ILLUSTRATED)

STANDARD ARM, 1.62M (FOR USE WITH STANDARD BOOM)

T157081 -UN-30OCT02

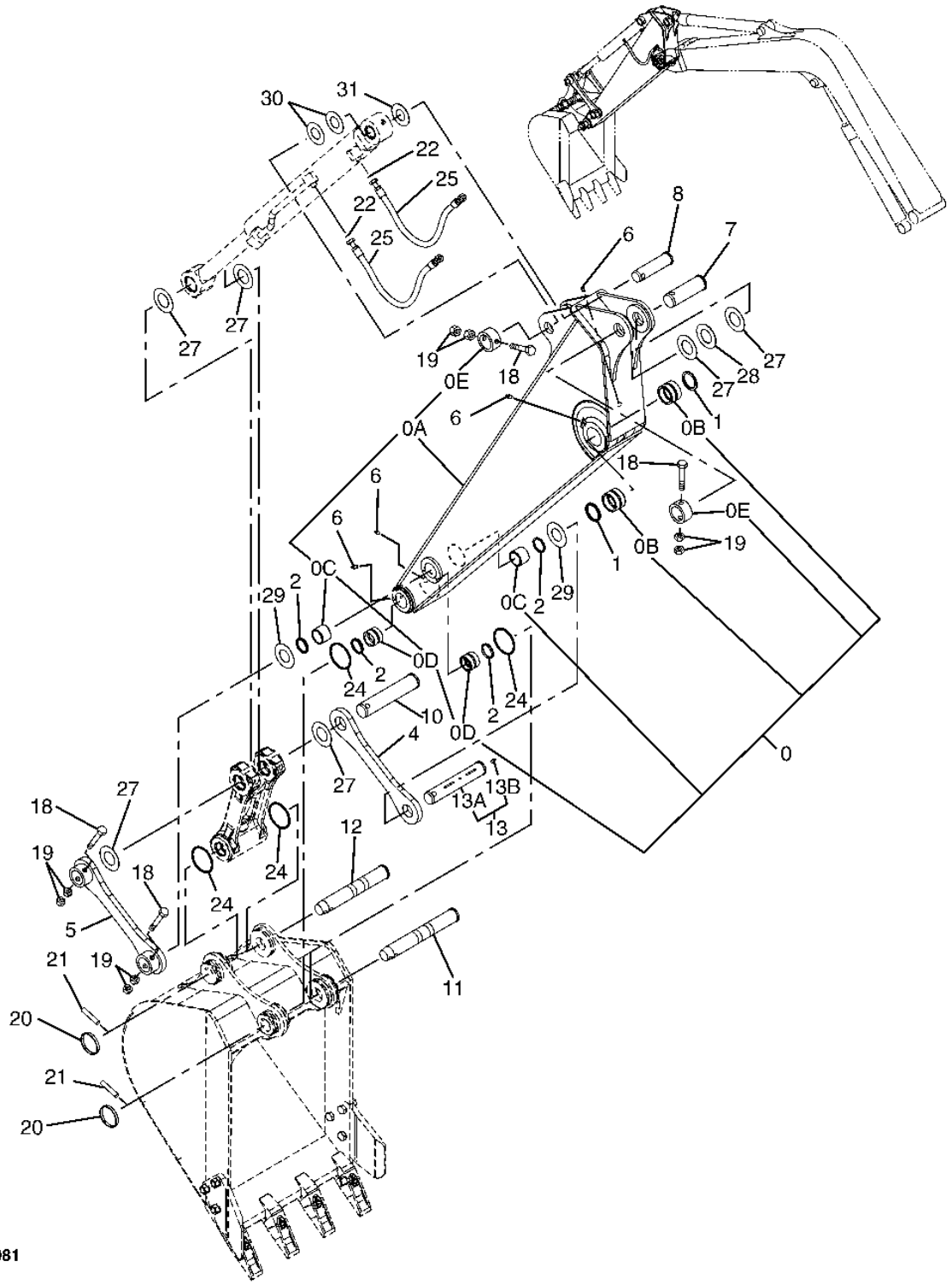

STANDARD ARM, 1.62M (FOR USE WITH STANDARD BOOM)

KEY	PART NO.	PART NAME	QTY	SERIAL NO.	REMARKS
0	7039606	ARM	1		
0A	6019742	ARM	1		
0B	4445477	BUSHING	2		
0C	4374061	BUSHING	2		
0D	4445475	BUSHING	2		
0E	4434950	STOP	2		
1	TH105979	SEAL	2		
2	4349913	SEAL	4		
4	3076932	LINK	1		
5	8082538	LINK	1		
6	TH100074	LUBRICATION FITTING	4		
7	3076942	PIN	1		
8	3076944	PIN	1		
10	3076951	PIN	1		
11	3090726	PIN FASTENER	1		
12	3090725	PIN FASTENER	1		
13	.....	PIN	1		(9154092 NOT AVAILABLE FOR SERVICE)
13A	3076948	PIN	1		
13B	TH100074	LUBRICATION FITTING	1		
18	4435123	PIN FASTENER	4		
19	14M7276	NUT	8		M16
20	4065688	RETAINER	2		
21	4065689	PIN FASTENER	2		
22	T77857	O-RING	2		
24	4406388	O-RING	4		
25	4464138	HYDRAULIC HOSE - FABRICATE	2		
27	4374459	PLATE	6		
28	4374437	PLATE	1		
29	4374458	PLATE	2		
30	4377449	PLATE	2		
31	4374453	PLATE	1		

LONG ARM (2.12M)(FOR USE WITH STANDARD BOOM)

T157082 -UN-30OCT02

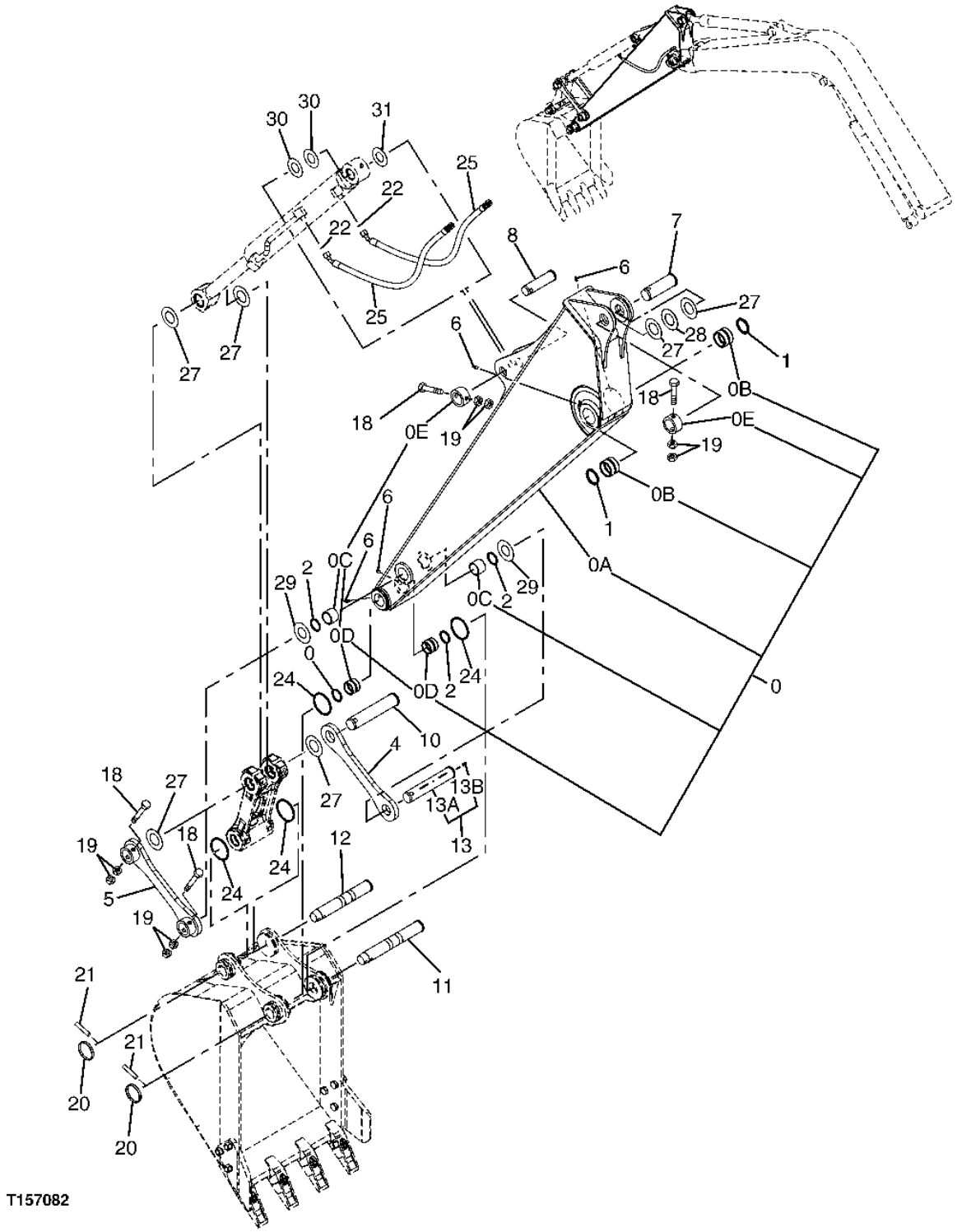

LONG ARM (2.12M)(FOR USE WITH STANDARD BOOM)

KEY	PART NO.	PART NAME	QTY	SERIAL NO.	REMARKS
0	7040529	ARM	1		
0A	6019882	ARM	1		
0B	4445477	BUSHING	2		
0C	4374061	BUSHING	2		
0D	4445475	BUSHING	2		
0E	4434950	STOP	2		
1	TH105979	SEAL	2		
2	4349913	SEAL	4		
4	3076932	LINK	1		
5	8082538	LINK	1		
6	TH100074	LUBRICATION FITTING	4		
7	3076942	PIN	1		
8	3076944	PIN	1		
10	3076951	PIN	1		
11	3090726	PIN FASTENER	1		
12	3090725	PIN FASTENER	1		
13	.....	PIN	1		(9154092 NOT AVAILABLE FOR SERVICE)
13A	3076948	PIN	1		
13B	TH100074	LUBRICATION FITTING	1		
18	4435123	PIN FASTENER	4		
19	14M7276	NUT	8		M16
20	4065688	RETAINER	2		
21	4065689	PIN FASTENER	2		
22	T77857	O-RING	2		
24	4406388	O-RING	4		
25	4347352	HYDRAULIC HOSE - FABRICATE	2		
27	4374459	PLATE	6		
28	4374437	PLATE	1		
29	4374458	PLATE	2		
30	4377449	PLATE	2		
31	4374453	PLATE	1		

STANDARD ARM , 1.62M (OFFSET BOOM)

T157088 -UN-01NOV02

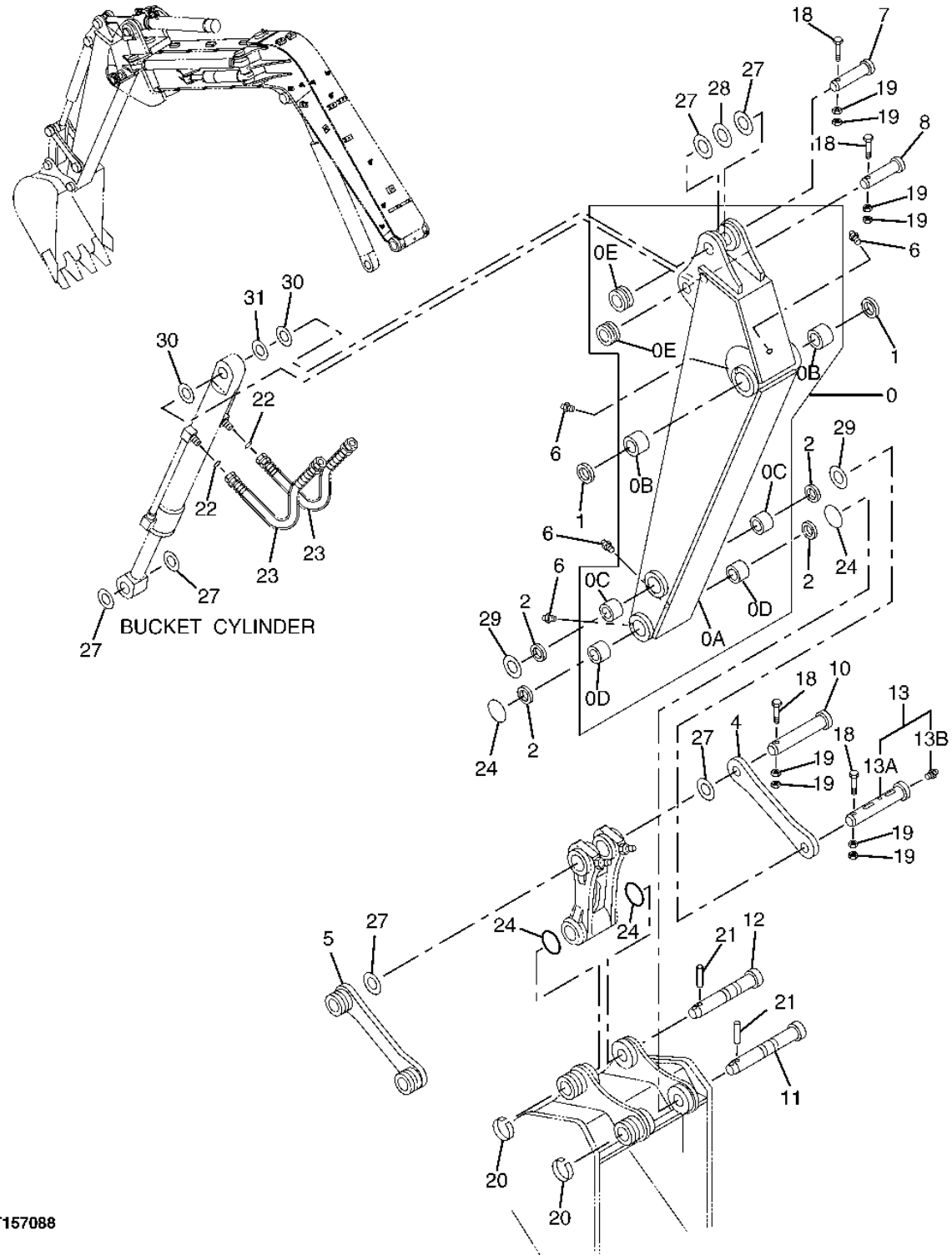

STANDARD ARM , 1.62M (OFFSET BOOM)

KEY	PART NO.	PART NAME	QTY	SERIAL NO.	REMARKS
0	7040638	ARM	1		
0A	6020175	ARM	1		
0B	4445477	BUSHING	2		
0C	4374061	BUSHING	2		
0D	4445475	BUSHING	2		
0E	4434950	STOP	2		
1	TH105979	SEAL	2		
2	4349913	SEAL	4		
4	3076932	LINK	1		
5	8082538	LINK	1		
6	TH100074	LUBRICATION FITTING	4		
7	3076942	PIN	1		
8	3076944	PIN	1		
10	3076951	PIN	1		
11	3090726	PIN FASTENER	1		
12	3090725	PIN FASTENER	1		
13	.....	PIN	1		(9154092 NOT AVAILABLE FOR SERVICE)
13A	3076948	PIN	1		
13B	TH100074	LUBRICATION FITTING	1		
18	4435123	PIN FASTENER	4		
19	14M7276	NUT	8		M16
20	4065688	RETAINER	2		
21	4065689	PIN FASTENER	2		
22	T77857	O-RING	2		
23	AP36006	HYDRAULIC HOSE - FABRICATE	2		
24	4406388	O-RING	4		
27	4374459	PLATE	6		
28	4374437	PLATE	1		
29	4374458	PLATE	2		
30	4377449	PLATE	2		
31	4374453	PLATE	1		

STANDARD BOOM, 3.72M

T199115 -UN-19APR04

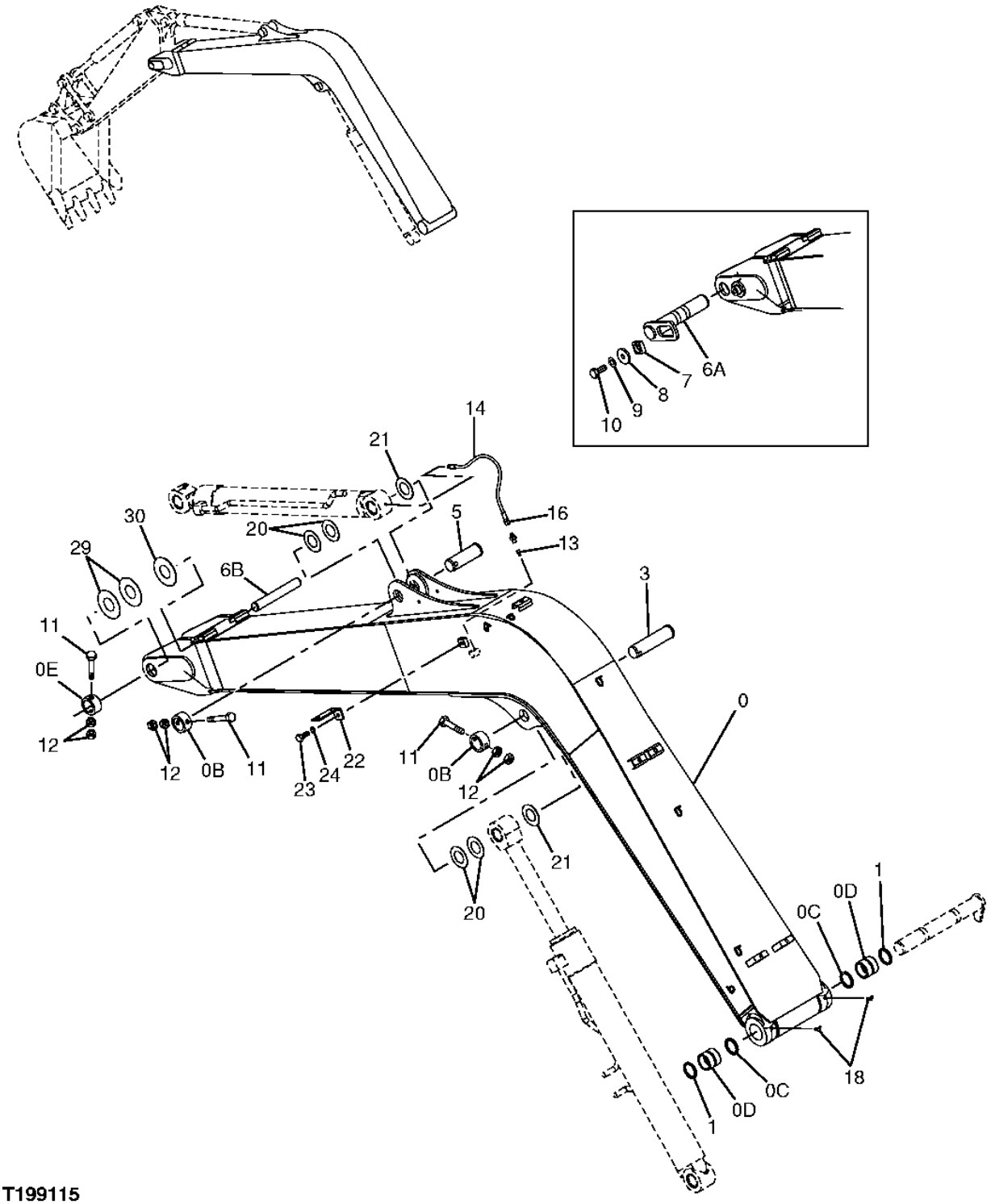

T199115

STANDARD BOOM, 3.72M

KEY	PART NO.	PART NAME	QTY	SERIAL NO.	REMARKS
0	7039607	EXCAVATOR BOOM	1		
0B	4434950	STOP	2		
0C	TH105979	SEAL	2		
0D	4445478	BUSHING	2		
0E	4434951	STOP	1	XXXXXX-	(UNITS BUILT AFTER MARCH 2002)
1	TH105979	SEAL	2		
3	3055536	PIN FASTENER	1		
5	3076942	PIN	1		
6A	8082132	PIN FASTENER	1	-XXXXXX	(UNITS BUILT BEFORE APRIL 2002)
6B	3096626	PIN	1	XXXXXX-	(UNITS BUILT AFTER MARCH 2002)
7	4424425	MANIFOLD	1	-XXXXXX	(UNITS BUILT BEFORE APRIL 2002)
8	4426128	WASHER	1	-XXXXXX	(UNITS BUILT BEFORE APRIL 2002)
9	J257218	LOCK WASHER	1	-XXXXXX	(UNITS BUILT BEFORE APRIL 2002)
10	T116332	BOLT	1	-XXXXXX	(UNITS BUILT BEFORE APRIL 2002)
11	4435123	PIN FASTENER	2		
	4435123	PIN FASTENER	1	XXXXXX-	(UNITS BUILT AFTER MARCH 2002)
12	14M7276	NUT	4		M16
	14M7276	NUT	2	XXXXXX-	(UNITS BUILT AFTER MARCH 2002)
13	TH100074	LUBRICATION FITTING	1		
14	4129123	HYDRAULIC HOSE	1		
16	X4F3P4S	ADAPTER	1		(SUB FOR 94-1301)
18	T116334	LUBRICATION FITTING	2		
20	4374459	PLATE	4		
21	4374437	PLATE	2		
22	4224631	BRACKET	1		
23	J901425	CAP SCREW	1		
24	12H317	LOCK WASHER	1		9/16"
29	4394384	PLATE	2		
30	4394385	PLATE	1		

OFFSET BOOM

T157087 -UN-01NOV02

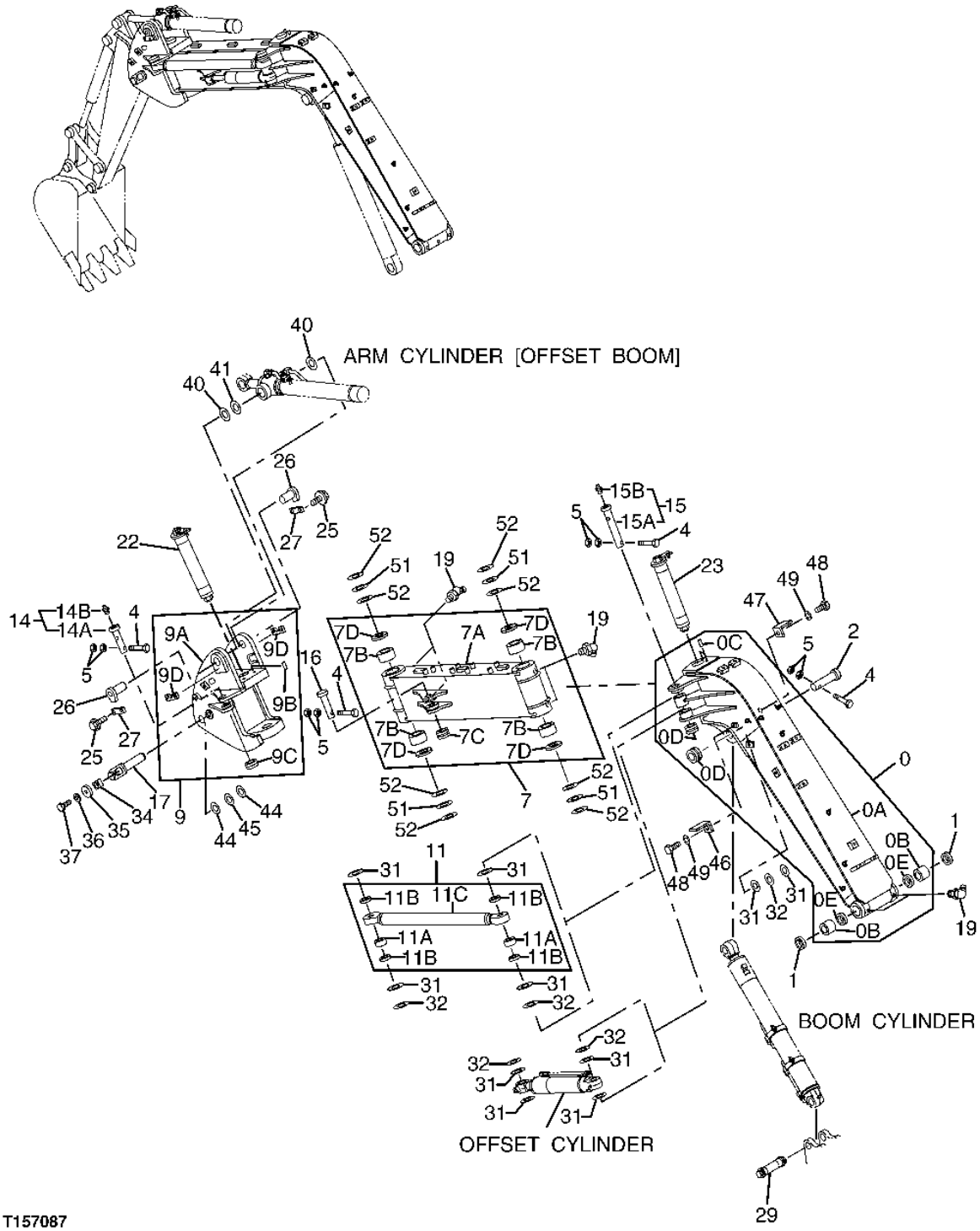

OFFSET BOOM

KEY	PART NO.	PART NAME	QTY	SERIAL NO.	REMARKS
0	7040792	MAIN BOOM	1		
0A	5007874	MAIN BOOM	1		
0B	4445478	BUSHING	2		
0C	4459167	STOP	2		
0D	4434950	STOP	2		
0E	TH105979	SEAL	2		
1	TH105979	SEAL	2		
2	3055536	PIN FASTENER	1		
4	4435123	PIN FASTENER	4		
5	14M7276	NUT	8		M16
7	8084919	EXCAVATOR BOOM	1		
7A	6016789	EXCAVATOR BOOM	1		
7B	4443885	BUSHING	4		(SUB FOR 4355877)
7C	4434950	STOP	1		
7D	TH102411	SEAL	4		
9	7040793	LATCH	1		
9A	6020284	LATCH	1		
9B	4459167	STOP	2		
9C	4434950	STOP	1		
9D	4400064	PLATE	2		
11	9163869	ROD	1		
11A	4345470	BUSHING	2		
11B	4117954	SEAL	4		
11C	9163869	ROD	1		(SUB FOR 9749316)
14	.....	PIN FASTENER	1		(9111317 NO LONGER AVAILABLE)
14A	3040621	PIN FASTENER	1		
14B	TH100074	LUBRICATION FITTING	1		
15	9111316	PIN FASTENER	1		
15A	3040620	PIN FASTENER	1		
15B	TH100074	LUBRICATION FITTING	1		
16	TH100441	ROLLER	1		
17	8082132	PIN FASTENER	1		
19	T116334	LUBRICATION FITTING	6		
22	4444485	PIN FASTENER	1		
23	4445060	PIN FASTENER	1		
25	19M7402	CAP SCREW	4		M10 X 25
	12M7066	LOCK WASHER	4		10 MM (0.394")
	24M7028	WASHER	4		10.500 X 20 X 2 MM (0.413" X 0.787" X 0.079")
26	8069904	PIN	2		
27	4390505	PLATE	2		
29	4468419	PIN FASTENER	1		
31	4374459	PLATE	10		
32	4374437	PLATE	5		
34	4424425	MANIFOLD	1		
35	4426128	WASHER	1		
36	J257218	LOCK WASHER	1		
37	T116332	BOLT	1		
40	4366694	PLATE	2		
41	4367411	PLATE	1		
44	4394384	PLATE	2		
45	4394385	PLATE	1		
46	4472379	BRACKET	1		
47	4224631	BRACKET	1		
48	J901425	CAP SCREW	2		
49	12H317	LOCK WASHER	2		9/16"
51	4375134	PLATE	4		
52	4375136	PLATE	8		

BUCKET LINK

T160697 -UN-05NOV02

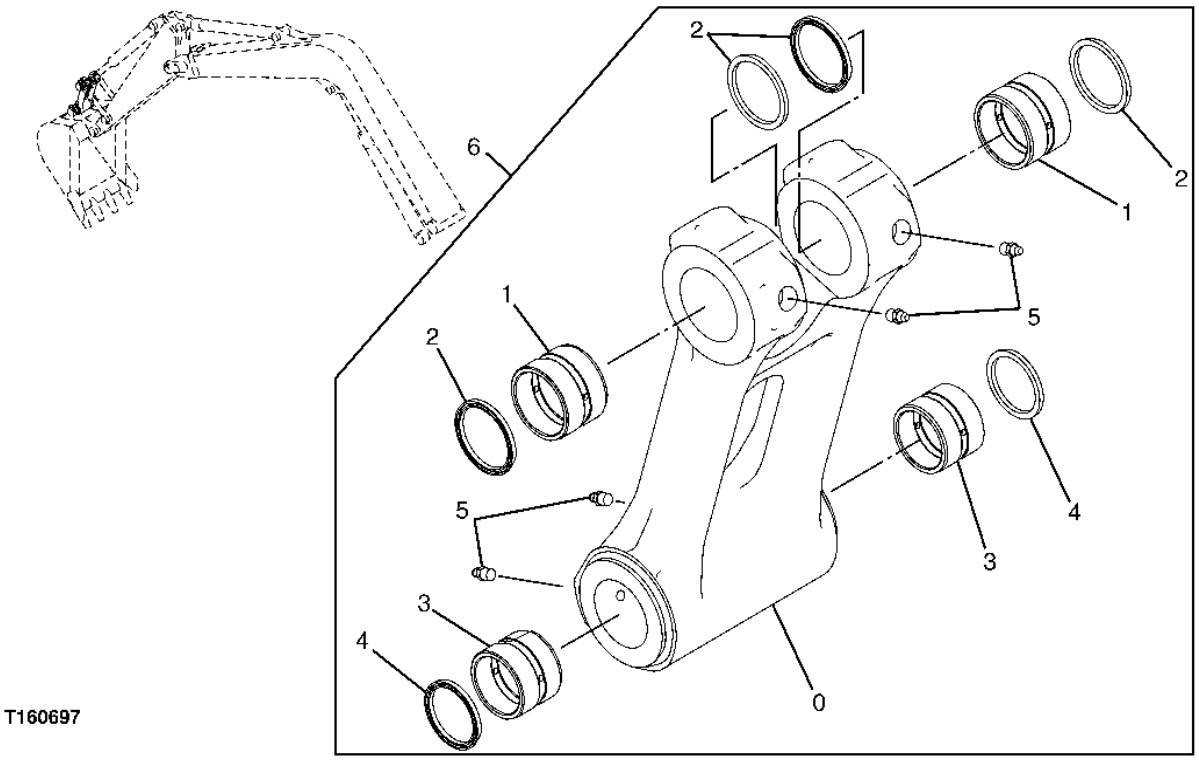

T160697

BUCKET LINK

KEY	PART NO.	PART NAME	QTY	SERIAL NO.	REMARKS
0	2045907	LINK	1		
1	4445476	BUSHING	2		
2	4117954	SEAL	4		
3	4445475	BUSHING	2		
4	4349913	SEAL	2		
5	TH100074	LUBRICATION FITTING	4		
6	8082095	LINK	1		

ELECTRIC SOLENOID VALVE KIT (1 WAY/2 WAY)
(WITHOUT PRESSURE SWITCH)

TP56835 -UN-09AUG99

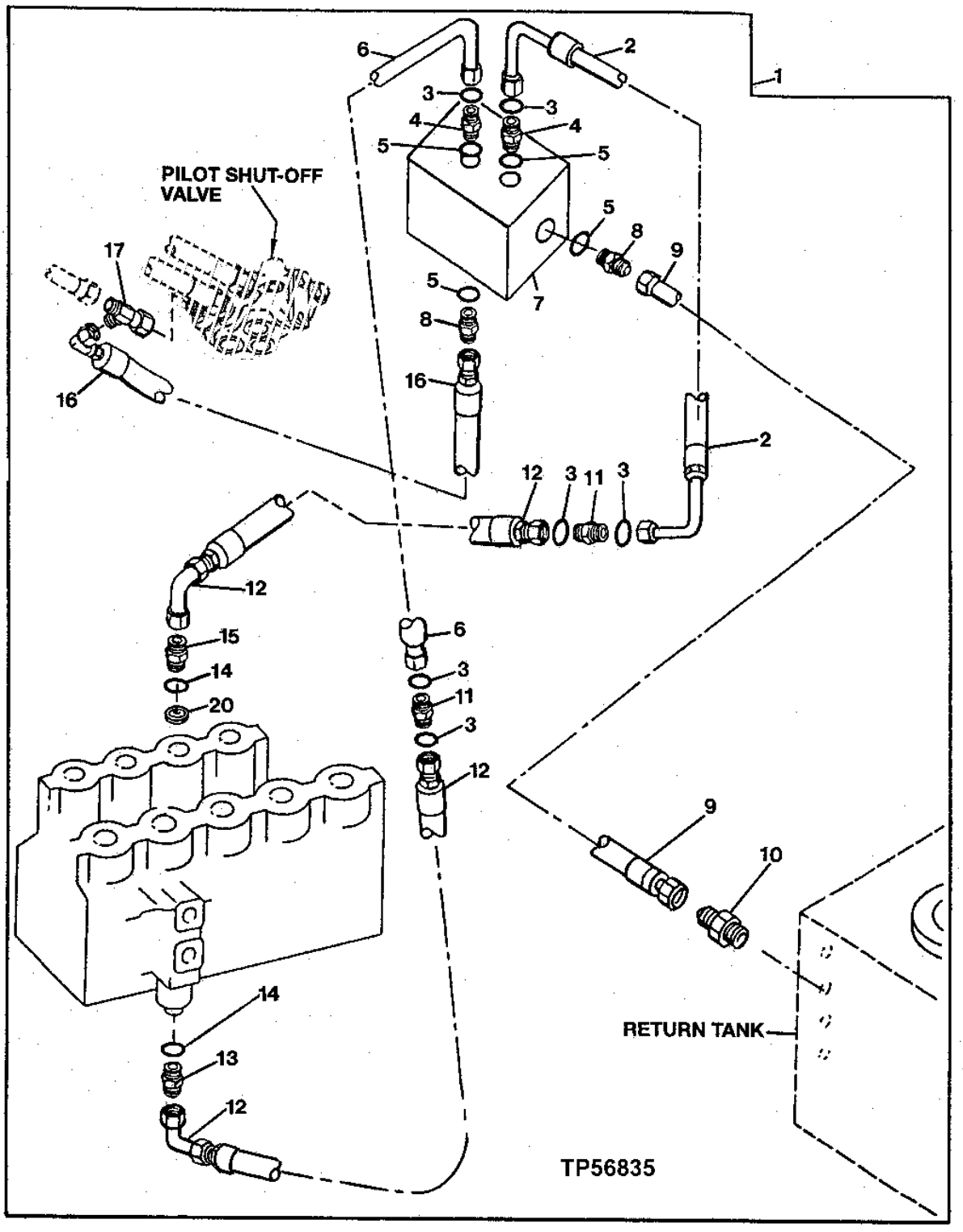

ELECTRIC SOLENOID VALVE KIT (1 WAY/2 WAY)
(WITHOUT PRESSURE SWITCH)

KEY	PART NO.	PART NAME	QTY	SERIAL NO.	REMARKS
1	.....	KIT	1		WHOLEGOODS (1/2 WAY ELECTRICAL SOLENOID KIT) (AT180467 NO LONGER AVAILABLE, THIS APPLICATION - SUB AT303496)
2	AT186417	HYDRAULIC HOSE - FABRICATE	1		7/16" X 254 MM (10") X 11/16" 3/8" X 17.475MM (0.688") X 15.98"
3	T77613	O-RING	6		9.246 X 1.778 MM (0.364" X 0.070")
4	38H1160	ADAPTER	2		
5	R26448	O-RING	4		11.887 X 1.981 MM (0.468" X 5/64")
6	AT168209	HYDRAULIC HOSE - FABRICATE	1		11/16" X 1 066 MM (42") X 11/16"
7	AT180585	SOLENOID	1		
8	R27212	FITTING	2		
9	AT71732	HYDRAULIC HOSE - FABRICATE	1		9/16" X 1 422 MM (56") X 9/16"
10	4200466	ADAPTER	1		(SUB FOR TH108320)
11	38H1278	UNION FITTING	2		
12	AT152138	HYDRAULIC HOSE - FABRICATE	2		9/16" X 515 MM (20-1/4") X 11/16"
13	AT131445	ADAPTER	1		
14	CH11570	O-RING	2		13.800 X 2.400 MM (0.543" X 0.094")
15	4255792	ADAPTER	1		(SUB FOR AT213811)
16	AT130684	HYDRAULIC HOSE - FABRICATE	1		9/16" X 2 520 MM (99-1/4") X 9/16"
17	AT36921	TEE FITTING	1		
18	14M7272	NUT	2		M6, /SOLENOID VALVE/ (NOT ILLUSTRATED)
19	19M7529	CAP SCREW	2		M6 X 55, /SOLENOID VALVE/ (NOT ILLUSTRATED)
20	T114635	ORIFICE	1		

ELECTRIC SOLENOID VALVE KIT (1 WAY/2 WAY)(REPLACEMENT)

T189807 -UN-22APR03

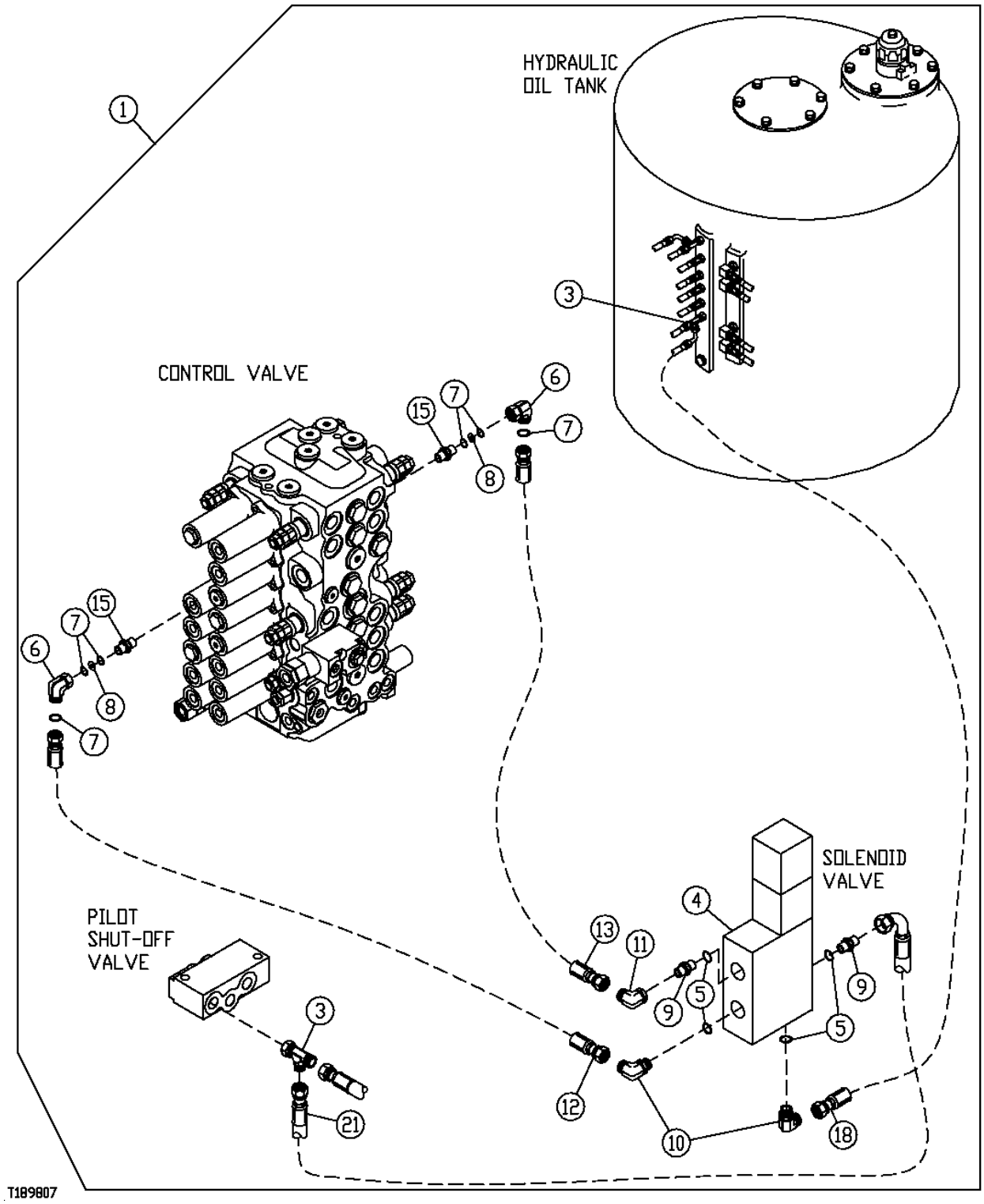

ELECTRIC SOLENOID VALVE KIT (1 WAY/2 WAY)(REPLACEMENT)

KEY	PART NO.	PART NAME	QTY	SERIAL NO.	REMARKS
1	**AT303496**	**KIT**	**1**		**(WHOLEGOODS) ELECTRIC SOLENOID VALVE KIT**
3	AE45056	TEE FITTING	2		
4	AT180585	SOLENOID	1		
5	R26448	O-RING	4		
6	38H1093	ELBOW FITTING	2		
7	T77814	O-RING	6		
8	M145979	ORIFICE	2		
9	H75414	ADAPTER	2		
10	AH75160	ELBOW FITTING	2		
11	AH89069	ELBOW FITTING	1		
12	AT303631	HYDRAULIC HOSE - FABRICATE	1		
13	AT303630	HYDRAULIC HOSE - FABRICATE	1		
15	4267506	ADAPTER	2		
18	AT303632	HYDRAULIC HOSE - FABRICATE	1		
21	AT303633	HYDRAULIC HOSE - FABRICATE	1		

DUAL CONTROL HANDLE WITH WIRING FOR AUXILIARY CONTROLS (2 SOLENOIDS)

T144288 -UN-06AUG01

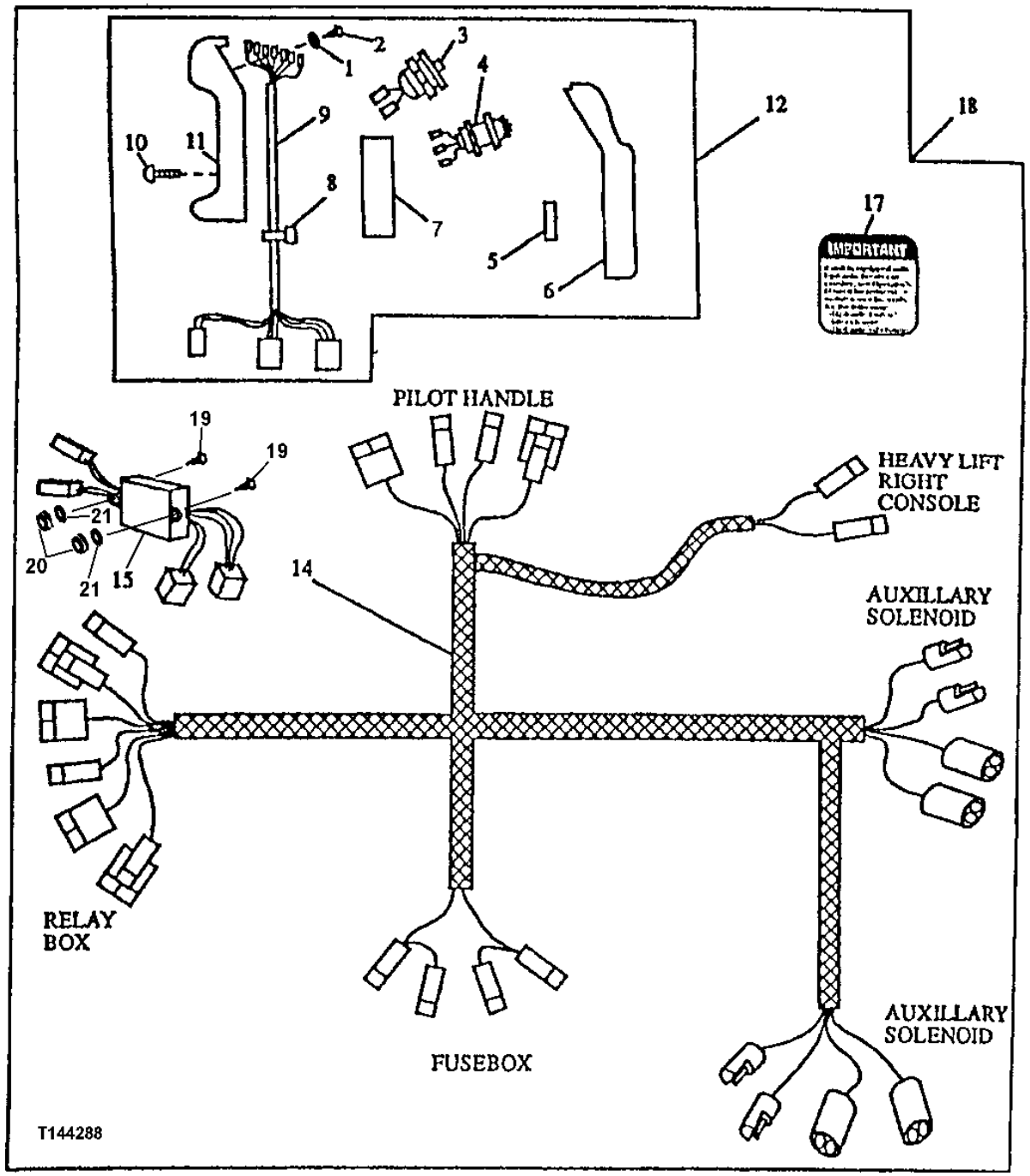

DUAL CONTROL HANDLE WITH WIRING
FOR AUXILIARY CONTROLS (2 SOLENOIDS)

KEY	PART NO.	PART NAME	QTY	SERIAL NO.	REMARKS
1	12H321	WASHER	7		0.138"
2	21H1308	SCREW	7		0.138" X 3/8"
3	AT139383	TOGGLE/ROCKER SWITCH	1		PUSH BUTTON (MOMENTARY)
4	AT139382	CUTTING EDGE	2		
5	R71799	NEEDLE ROLLER	2		
6	T114699	HANDLE	1		
7	T114698	SUPPORT	1		
8	R44302	TIE BAND	2		
9	AT195787	WIRING HARNESS	1		
10	T80394	SCREW	6		
11	AT115448	HANDLE	1		
12	AT195786	CONTROL LEVER	1		PILOT CONTROL
14	AT195788	WIRING HARNESS	1		SOLENOID VALVE
15	AT141562	RELAY MODULE	1		
17	T149434	LABEL	1		(IMPORTANT) (BETWEEN ASHTRAY AND OPERATOR'S CAUTION DECAL ON RIGHT SIDE OF CAB)
18	**AT195784**	**KIT**	**1**		**(CONTROL HANDLE WITH SWITCHES) (SUB FOR AT162242) WHOLEGOODS**
19	21M7246	SCREW	2		M6 X 16
20	14M7272	NUT	2		M6
21	24M7293	WASHER	2		6.500 X 13 X 1.600 MM

**ELECTRIC FOOT SWITCH
FOR AUXILIARY CONTROL (ONE SOLENOID)**

TP44347 -UN-01JAN94

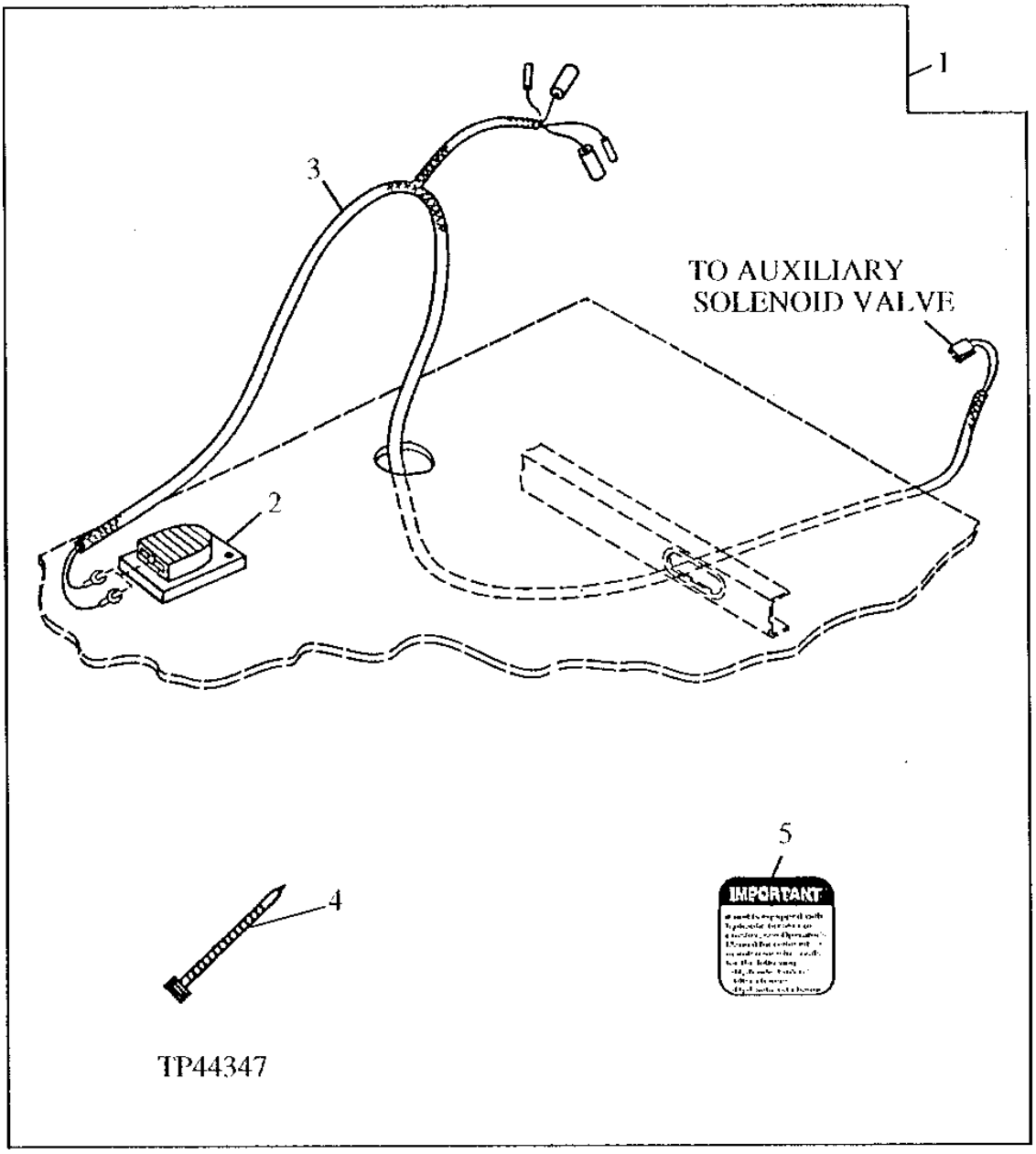

**ELECTRIC FOOT SWITCH
FOR AUXILIARY CONTROL (ONE SOLENOID)**

KEY	PART NO.	PART NAME	QTY	SERIAL NO.	REMARKS
1	**AT196587**	**SWITCH**	**1**		**(SUB FOR AT164896) WHOLEGOODS (ELECTRIC FOOT SWITCH FOR AUXILIARY VALVE)**
2	AT82210	SWITCH	1		(ELECTRIC FOOT CONTROL)
3	AT196588	WIRING HARNESS	1		
4	R44302	TIE BAND	2		(USE AS REQUIRED)
5	T149434	LABEL	1		(IMPORTANT - AUXILIARY ELECTRIC CONTROL)

AUXILIARY HYDRAULIC LINE KIT

T189013 -UN-04APR03

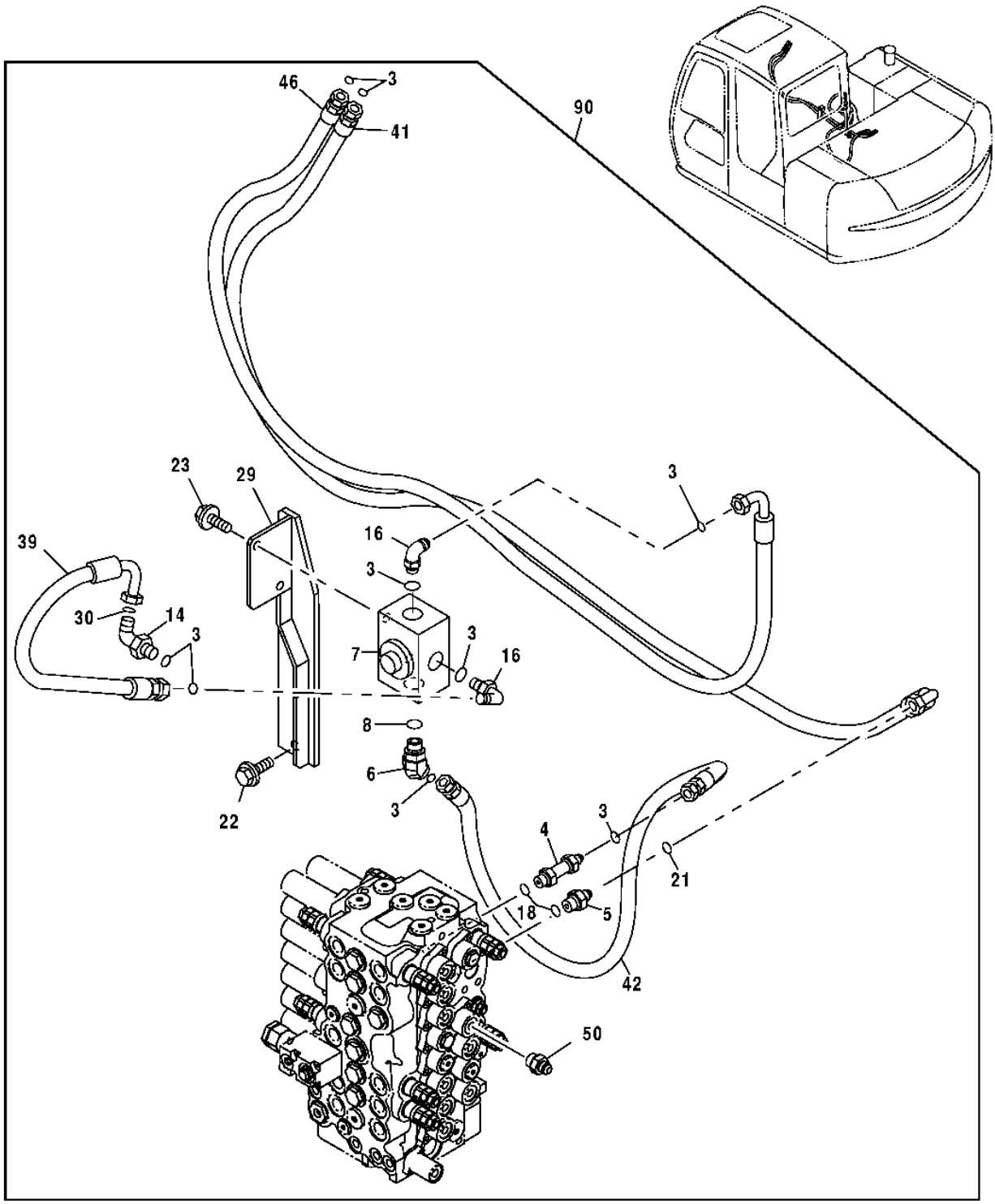

T189013

AUXILIARY HYDRAULIC LINE KIT

KEY	PART NO.	PART NAME	QTY	SERIAL NO.	REMARKS
3	T77858	O-RING	9		
4	4197532	ADAPTER	1		
5	4189602	FITTING	1		
6	PMH2406	FITTING	1		
7	4261540	VALVE	1		
8	TH101926	O-RING	1		
14	A853366	ELBOW FITTING	1		
16	4202113	ELBOW FITTING	2		
18	4506418	O-RING	2		
21	T77932	O-RING	1		
22	19M7788	SCREW	1		M12 X 25
28	19M7784	SCREW	2		M10 X 20
29	AT302575	BRACKET	1		
30	4506424	O-RING	1		
39	AT302489	HYDRAULIC HOSE - FABRICATE	1		
41	AT302486	HYDRAULIC HOSE - FABRICATE	1		
42	AT302487	HYDRAULIC HOSE	1		
46	AT302488	HYDRAULIC HOSE - FABRICATE	1		
50	4394262	PRESSURE RELIEF VALVE	2		
90	**AT302485**	**KIT**	**1**		**(AUXILIARY HYDRAULIC LINE KIT) (INCLUDES ALL COMPONENTS NECCESSARY TO ADD AUXILIARY LINES) (ADDITIONAL COMPONENTS LISTED ON FOLLOWING PAGES) (WHOLEGOODS)**

AUXILIARY HYDRAULIC LINE KIT (CONTINUED)

T189014 -UN-04APR03

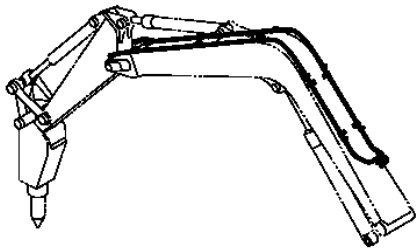

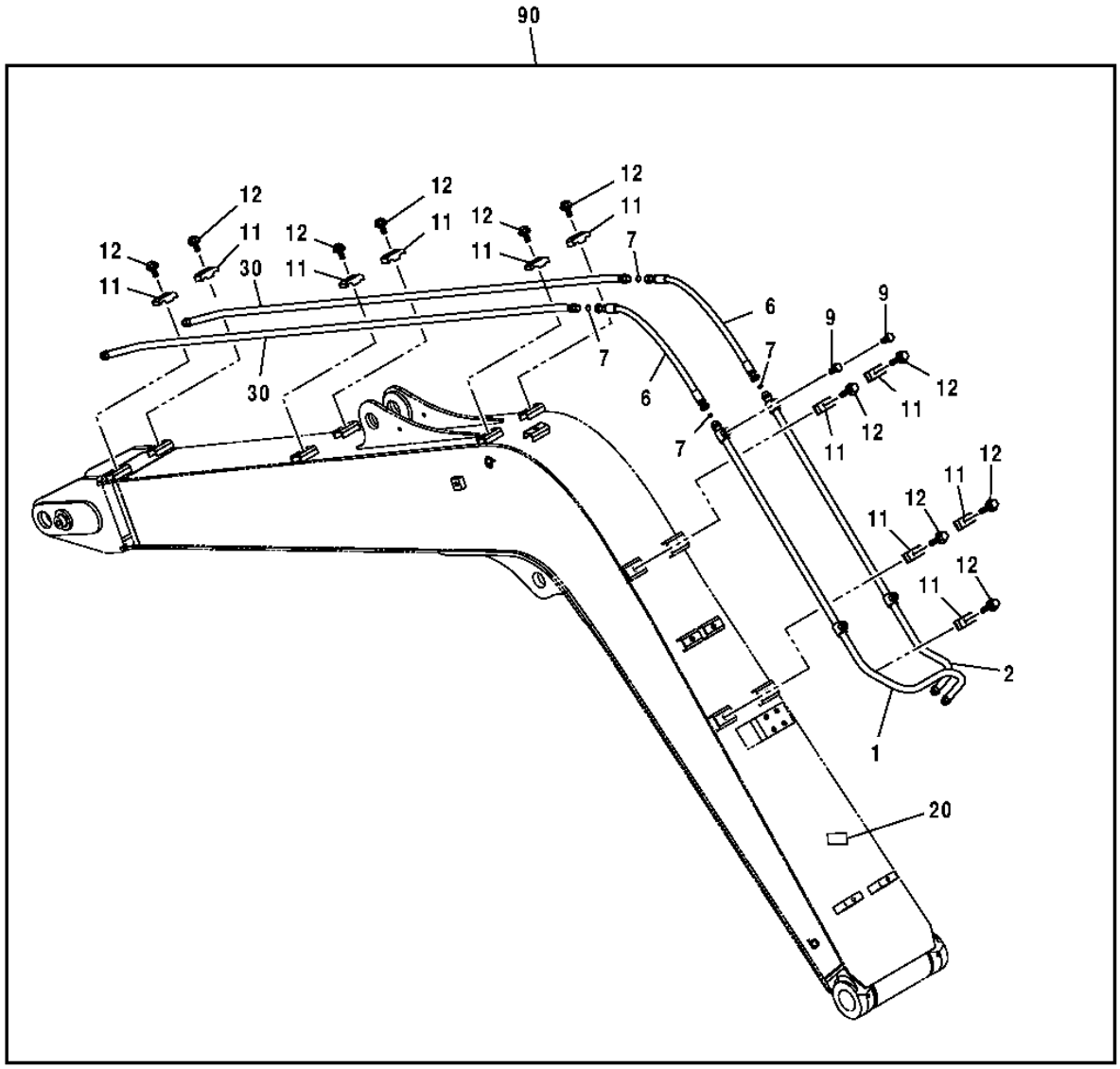

T189014

AUXILIARY HYDRAULIC LINE KIT (CONTINUED)

KEY	PART NO.	PART NAME	QTY	SERIAL NO.	REMARKS
1	AT302442	TUBE	1		
2	AT302457	TUBE	1		
6	AT107220	HYDRAULIC HOSE - FABRICATE	2		
7	T77858	O-RING	6		
11	4189858	CLAMP	10		
12	19M7361	CAP SCREW	10		M12 X 50
	12H301	LOCK WASHER	10		1/2"
20	9738322	SUPPORT	1		
30	AT184981	OIL LINE	2		
90	**AT302485**	**KIT**	**1**		**(AUXILIARY HYDRAULIC LINE KIT) (INCLUDES ALL NECESSARY COMPONENTS TO ADD AUXILIARY LINES) (ADDITIONAL COMPONENTS LISTED ON PREVIOUS AND FOLLOWING PAGES)**

AUXILIARY HYDRAULIC LINE KIT (CONTINUED)(ARM LINES)

T191194 -UN-22MAY03

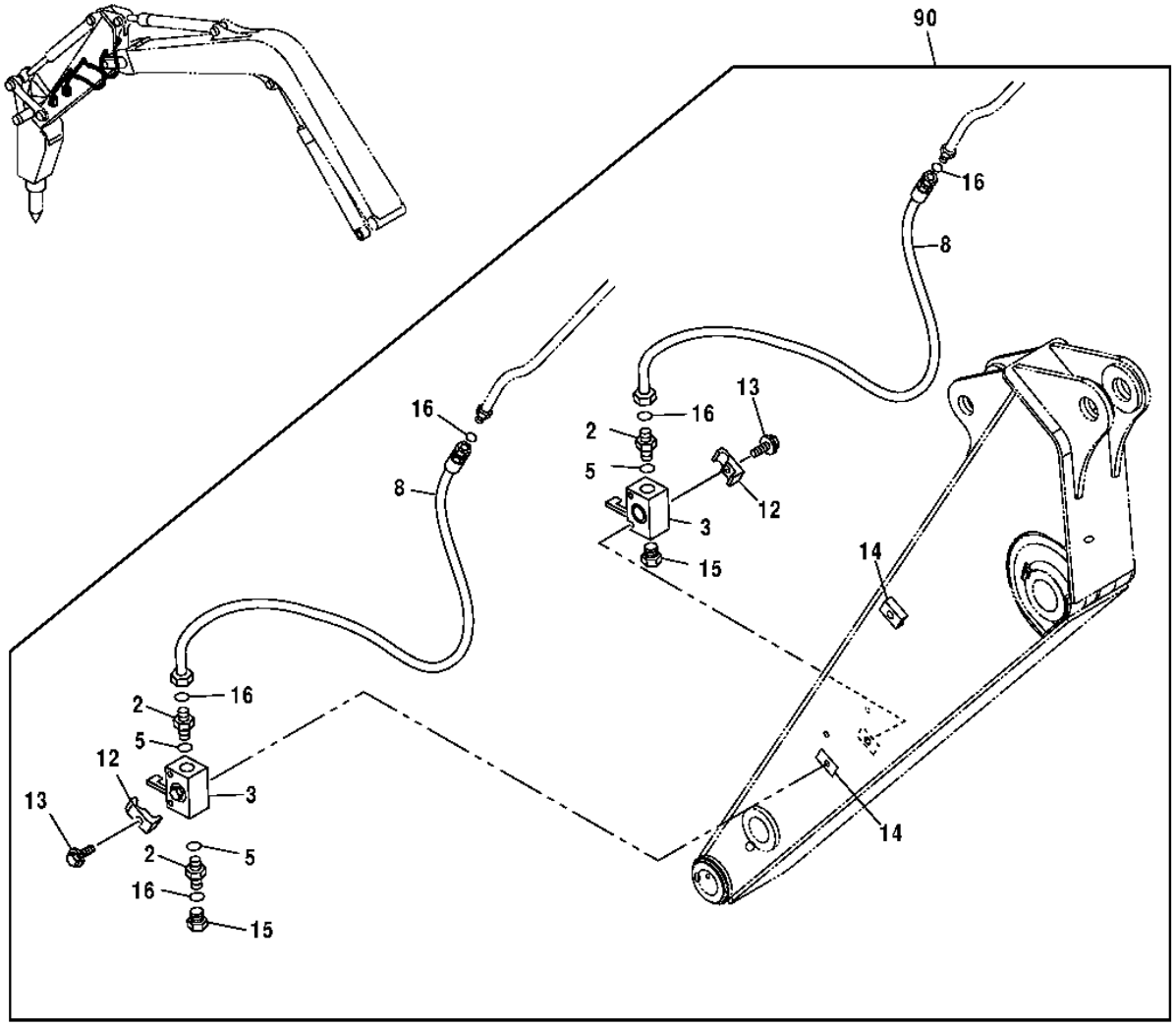

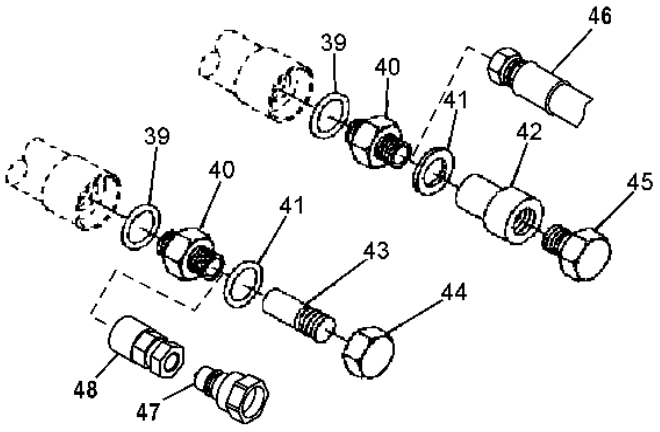

T191194

AUXILIARY HYDRAULIC LINE KIT (CONTINUED)(ARM LINES)

KEY	PART NO.	PART NAME	QTY	SERIAL NO.	REMARKS
2	38H1215	ADAPTER	4		
3	AT197375	BALL COCK VALVE	2		
5	U12547	O-RING	2		
8	AT302490	HYDRAULIC HOSE - FABRICATE	2		(FOR USE WITH 2.12M ARM) (ALSO ORDER (2) AT303616 IF MACHINE IS EQUIPPED WITH 1.62M ARM)
	AT303616	HYDRAULIC HOSE - FABRICATE	2		(NOT INCLUDED IN KIT) (FOR USE WITH 1.62M ARM ONLY)
12	4190126	CLAMP	4		
13	19M7362	CAP SCREW	4		
	24M7043	WASHER	4		
14	9735916	CHANNEL	4		
15	38H1418	FITTING	2		
16	T77858	O-RING	4		
39	U12547	O-RING	2		
40	38H1179	ADAPTER	2		(ALSO ORDER T76938) (1" ORFS)
	38H1215	ADAPTER	2		(ALSO ORDER T77858) (3/4" ORFS)
	AT83306	ADAPTER	2		(1" SAE, MALE)
	R27267	FITTING	2		(3/4" 37 DEGREE)
	T34433	ADAPTER	2		(1" 37 DEGREE)
41	R29936	O-RING	2		
42	AT186111	QUICK COUPLER	1		(1" FEMALE)(SCREW TOGETHER COUPLER)
	.....	KIT	1		(AT189410 NO LONGER AVAILABLE)
43	AT186112	QUICK COUPLER	1		(1" MALE)(SCREW TOGETHER COUPLER)
	.....	KIT	1		(AT189409 NO LONGER AVAILABLE)
44	AT186113	CAP	1		
45	AT186114	PLUG	1		
46	X1JS78-20-16	HOSE FITTING	2		HOSE END - STRAIGHT - 1 1/4 X 1 IN
	X1J978-20-16	ELBOW FITTING	2		HOSE END - 90 DEG 1 1/4 X 1 IN
47	AT117365	HYDR.QUICK COUPLER PLUG	2		MALE QUICK COUPLER (-12) 1 1/16 SAE O-RING
	AT120498	COUPLING	2		MALE QUICK COUPLER (-16) 1 5/16 SAE O-RING
48	AT117364	HYDR.QUICK COUPLER SOCKET	2		FEMALE QUICK COUPLER (-12) 1 1/16 SAE O-RING
	AT120499	COUPLING	2		FEMALE QUICK COUPLER (-16) 1 5/16 SAE O-RING
90	AT320485	KIT	1		(AUXILIARY HYDRAULIC LINE KIT) (INCLUDES ALL NECCESSARY COMPONENTS TO ADD AUXILARY LINES) (ADDITIONAL COMPONENTS LISTED ON PREVIOUS PAGES)

CONTROL PATTERN SELECTOR KIT

T191711 -UN-04JUN03

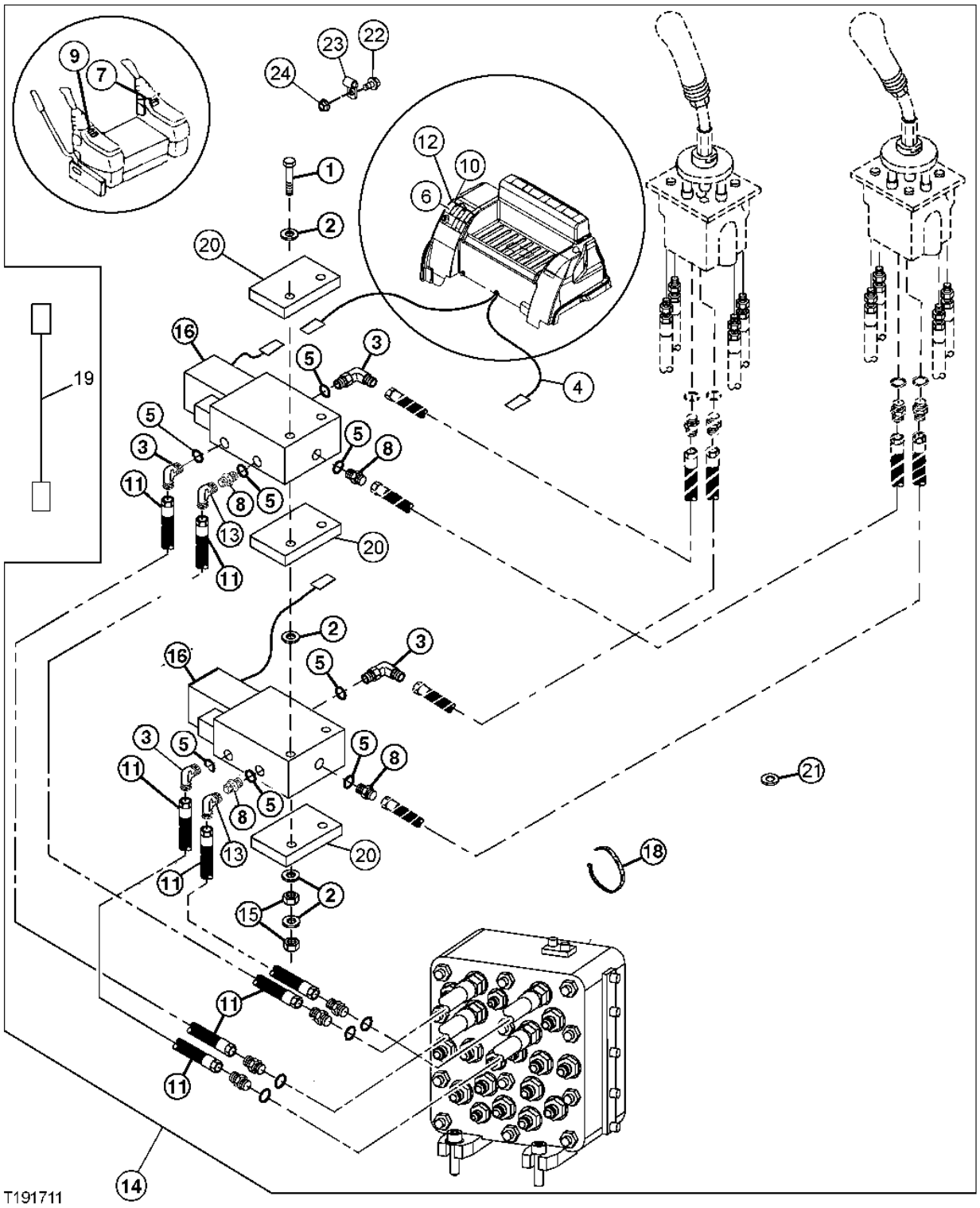

CONTROL PATTERN SELECTOR KIT

KEY	PART NO.	PART NAME	QTY	SERIAL NO.	REMARKS
1	19M8332	CAP SCREW	2		M6 X 90
2	24M7100	WASHER	10		6.600 X 22 X 2 MM
3	AT35121	ELBOW FITTING	4		37 DEG FLARE O-RING
4	AT307710	WIRING HARNESS	1		(SUB FOR AT190535)
5	R26448	O-RING	8		
6	AT83721	TOGGLE/ROCKER SWITCH	1		LOCKING
7	T159843	LABEL	4		CONTROL RIGHT
8	R27212	FITTING	4		
9	T159844	LABEL	1		CONTROL LEFT
10	T184858	LABEL	1		CONTROL PATTERN
11	AT71082	HYDRAULIC HOSE - FABRICATE	4		
12	37H43	SCREW	2		DRIVE SELF TAPPING
13	AE24616	ELBOW FITTING	2		
14	.....	KIT	1		(WHOLEGOODS) CONTROL PATTERN SELECTOR KIT (AT307709 NO LONGER AVAILABLE) (SUB FOR AT191397)
15	14M7272	NUT	4		M6
16	AT306723	ELEC.PROPORTIONAL VALVE	2		(SUB FOR AT116486 AND AT140041) PIN DISCONNECT
	.....	ELECTRICAL COIL	1		(AT140041 NO LONGER AVAILABLE)
18	R44302	TIE BAND	AR		
20	T202379	BRACKET	3		
21	T63817	GROMMET	1		
22	19M7863	SCREW	3		
23	T22645	CLIP	4		
24	14M7272	NUT	3		

MECHANICAL PATTERN CHANGER KIT(SERIAL NO. -011047)

T197436 -UN-03FEB04

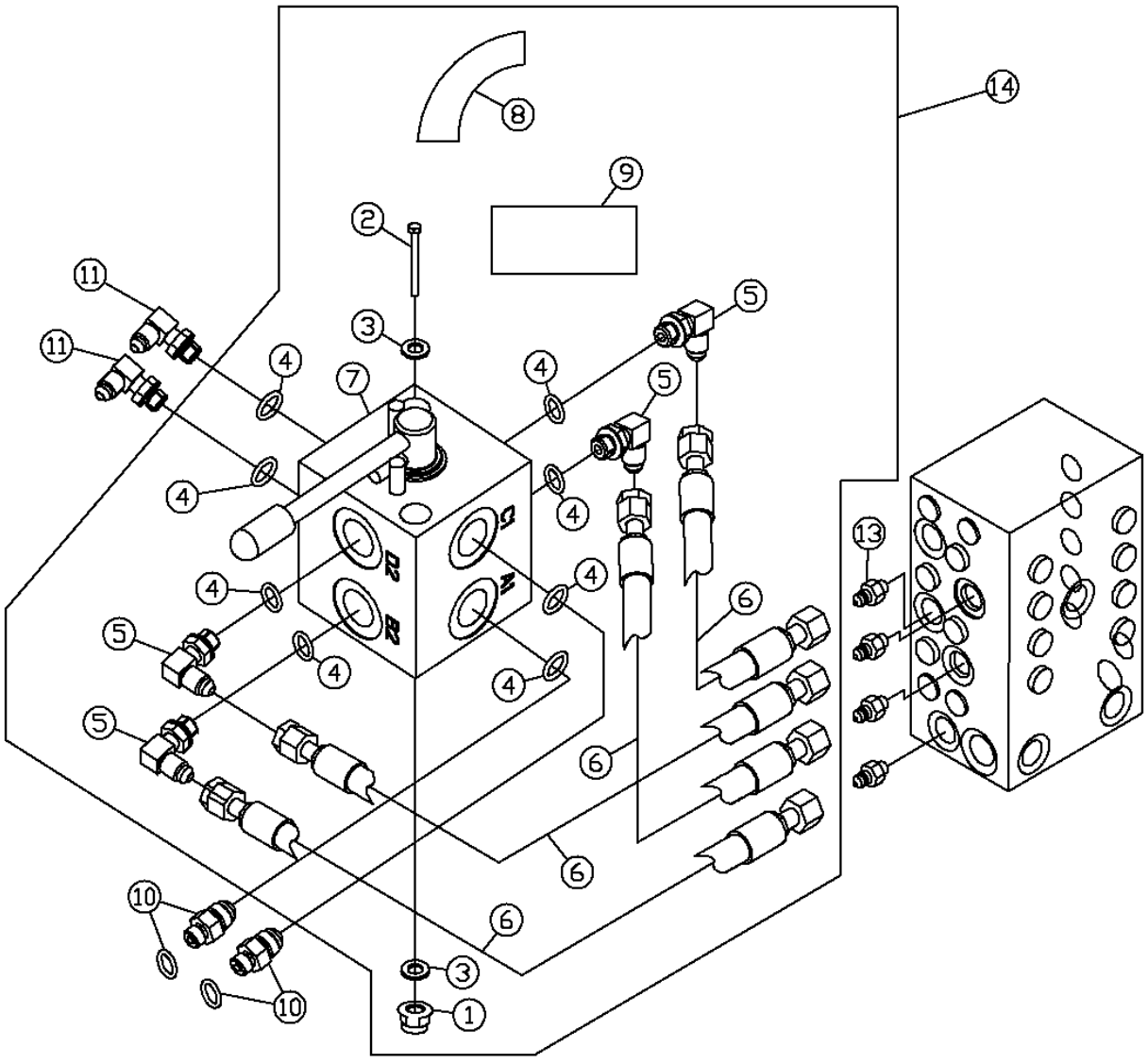

T197436

MECHANICAL PATTERN CHANGER KIT(SERIAL NO. -011047)

KEY	PART NO.	PART NAME	QTY	SERIAL NO.	REMARKS
1	14M7396	LOCK NUT	2		M8
2	19M8504	CAP SCREW	2		M8 X 80
3	24M7095	WASHER	4		8.400 X 15 X 1.600 MM
4	R28782	O-RING	8		
5	AH63565	ELBOW FITTING	4		
6	AT306775	HYDRAULIC HOSE - FABRICATE	4		
7	AT306737	MANUAL HYDRAULIC VALVE	1		
8	T205175	LABEL	1		
9	T201519	LABEL	1		
10	X4-4F4OMXS	ADAPTER	4		
11	AH63565	ELBOW FITTING	2		
13	4200467	ADAPTER	4		
14	**AT306757**	**KIT**	**1**		**(WHOLEGOODS) (ALSO ORDER (4) 4200467, (4) X4-4F4OMXS, (2) AH63565)**

MECHANICAL PATTERN CHANGER KIT(SERIAL NO. 011048-)

T197435 -UN-03FEB04

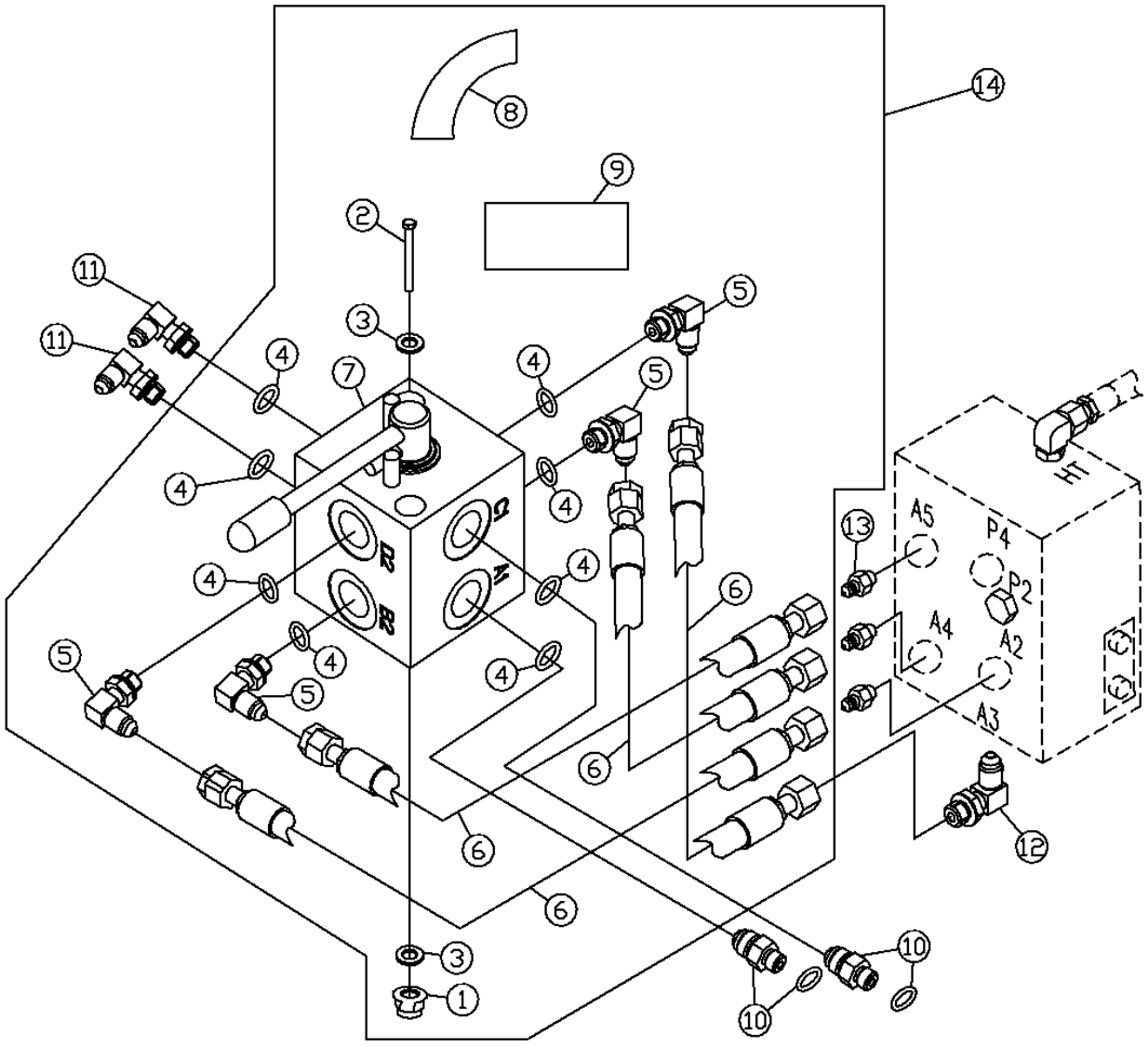

T197435

MECHANICAL PATTERN CHANGER KIT(SERIAL NO. 011048-)

KEY	PART NO.	PART NAME	QTY	SERIAL NO.	REMARKS
1	14M7396	LOCK NUT	2		M8
2	19M8504	CAP SCREW	2		M8 X 80
3	24M7095	WASHER	4		8.400 X 15 X 1.600 MM
4	R28782	O-RING	8		
5	AH63565	ELBOW FITTING	4		
6	AT306775	HYDRAULIC HOSE - FABRICATE	4		
7	AT306737	MANUAL HYDRAULIC VALVE	1		
8	T205175	LABEL	1		
9	T201519	LABEL	1		
10	X4-4F4OMXS	ADAPTER	4		
11	AH63565	ELBOW FITTING	2		
12	X6C4OMXS	ELBOW FITTING	1		
13	4200467	ADAPTER	4		
14	**AT306757**	**KIT**	**1**		**(WHOLEGOODS) (ALSO ORDER (3) 4200467, (4) X4-4F4OMXS, (2) AH63565, X6C4OMXS)**

HYDRAULIC PUMP MOUNTING

T160651 -UN-31OCT02

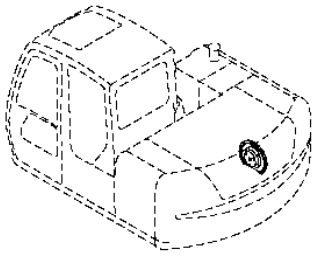

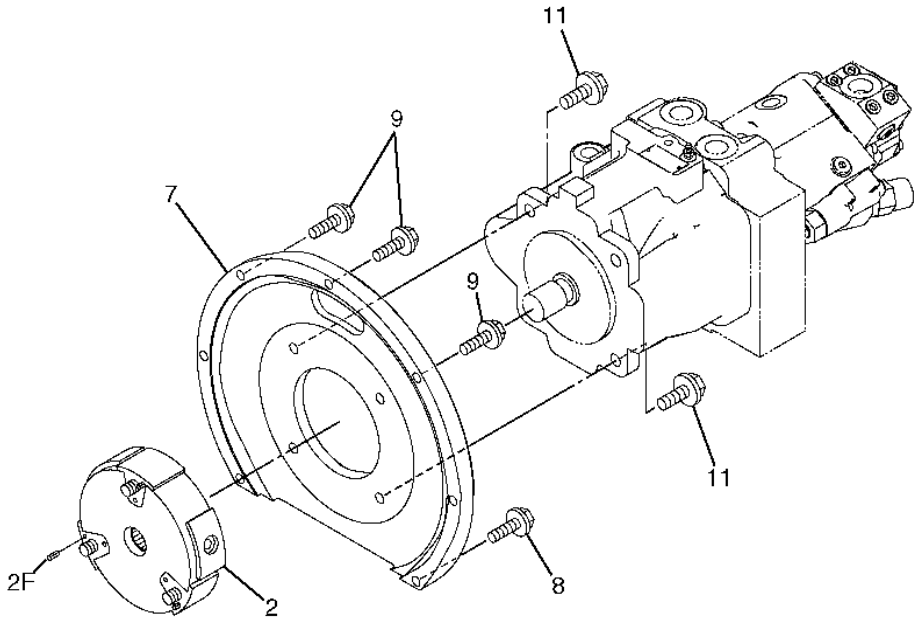

T160651

HYDRAULIC PUMP MOUNTING

KEY	PART NO.	PART NAME	QTY	SERIAL NO.	REMARKS
2	4447900	COUPLING	1		
2F	34M7117	SPRING PIN	9		
7	2045900	COVER	1		
8	19M7550	CAP SCREW	4		M10 X 35
	12M7066	LOCK WASHER	4		10 MM (0.394")
	24M7028	WASHER	4		10.500 X 20 X 2 MM (0.413" X 0.787" X 0.079")
9	19M7358	CAP SCREW	3		M10 X 40
	12M7066	LOCK WASHER	3		10 MM (0.394")
11	19M7403	CAP SCREW	4		M12 X 35
	12H301	LOCK WASHER	4		1/2"

HYDRAULIC PUMP COMPONENTS (PUMPS 1 AND 2)

T157453 -UN-05NOV02

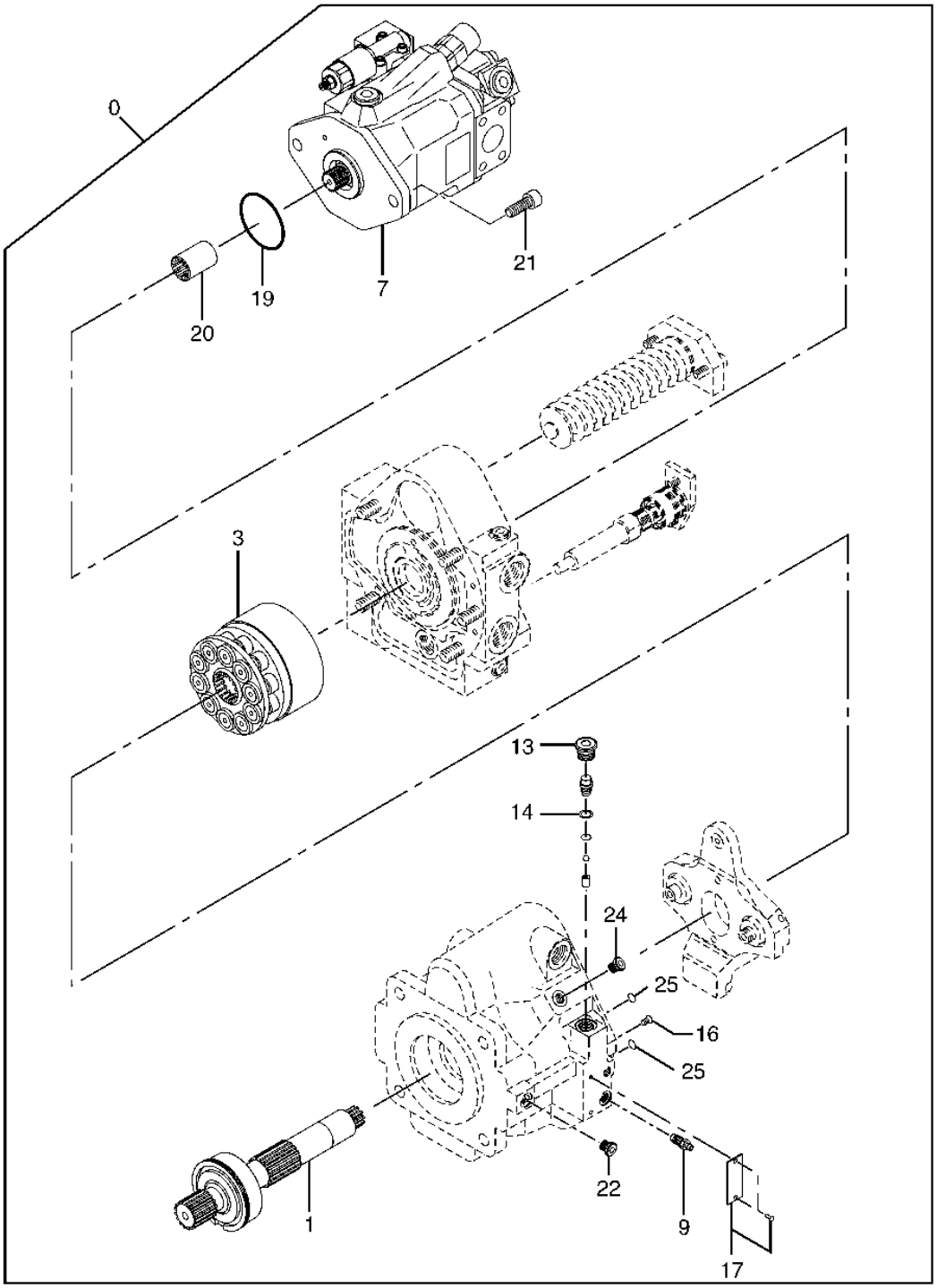

T157453

HYDRAULIC PUMP COMPONENTS (PUMPS 1 AND 2)

KEY	PART NO.	PART NAME	QTY	SERIAL NO.	REMARKS
0	4437197	HYDRAULIC PUMP	1		
1	4472004	SHAFT	1		
3	4472005	KIT	1		
7	4472052	KIT	1		
9	0747401	FLOW CONTROL HYD. VALVE	1		
13	TH104732	FITTING PLUG	1		(SUB FOR 0230126)
14	0215025	RING	1		
16	0231018	PIPE PLUG	1		
17	0715701	LABEL	1		
19	0294407	O-RING	1		
20	0826201	COUPLING	1		
21	M341230	SCREW	2		
22	0696004	FITTING PLUG	1		
24	0214912	DRAIN PLUG	1		
25	0661701	O-RING	2		

HYDRAULIC PUMP SHAFT COMPONENTS (PUMPS 1 AND 2)

TP61346 -UN-15OCT98

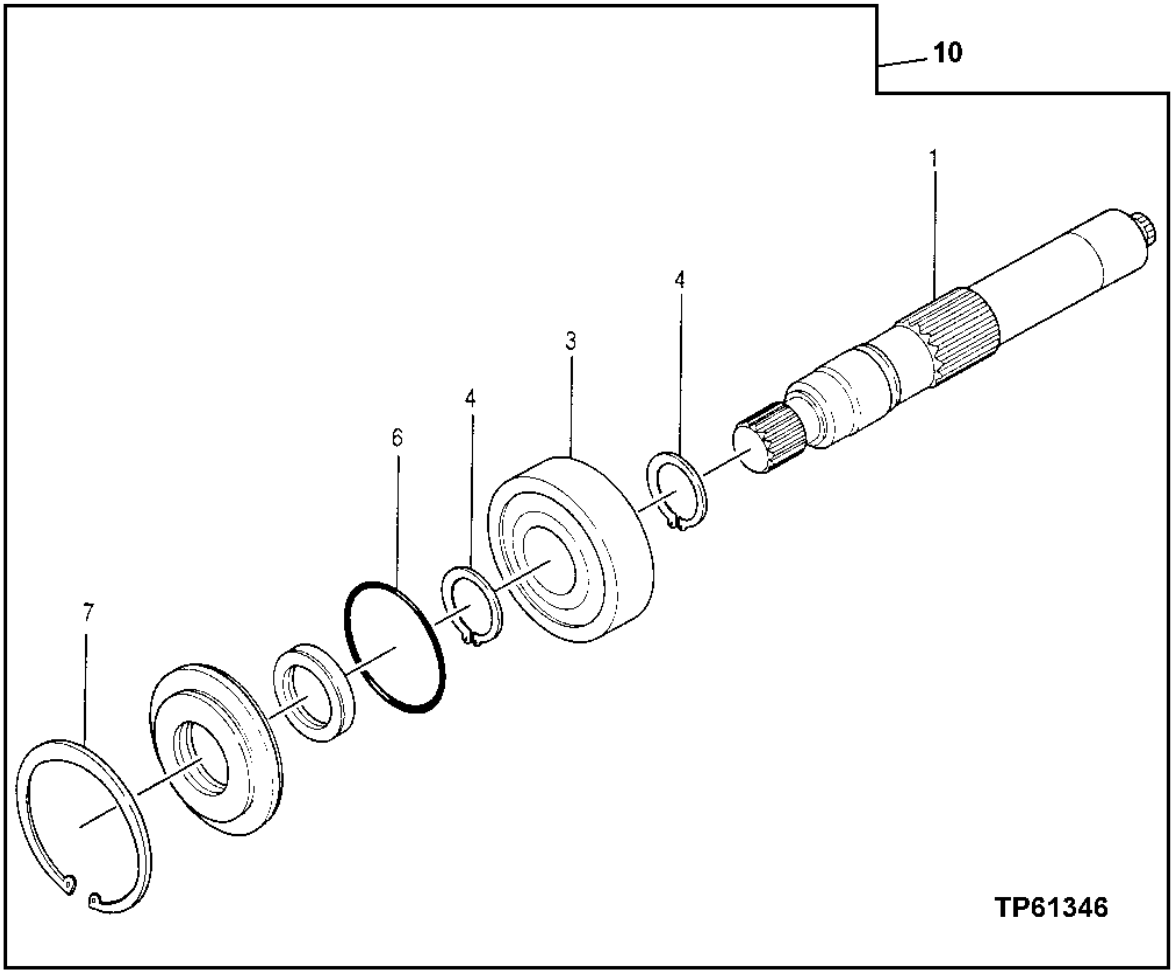

HYDRAULIC PUMP SHAFT COMPONENTS (PUMPS 1 AND 2)

KEY	PART NO.	PART NAME	QTY	SERIAL NO.	REMARKS
1	0825301	SHAFT	1		
3	0640402	BEARING	1		
4	0407903	SNAP RING	2		
6	0330402	O-RING	1		
7	0407706	SNAP RING	1		
10	4472004	SHAFT	1		

MAIN HYDRAULIC PUMP HANGER COMPONENTS (PUMPS 1 AND 2)

T157153 -UN-30OCT02

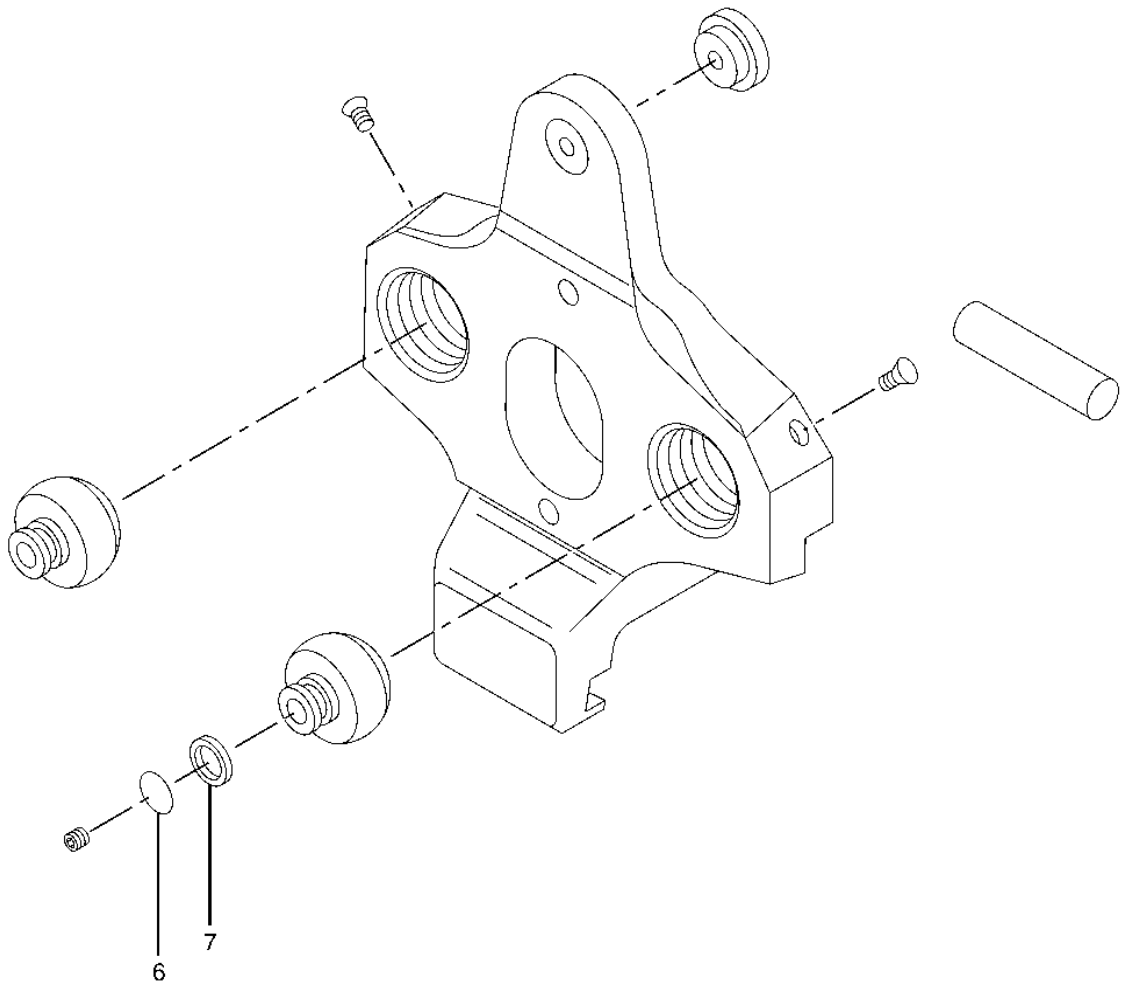

T157153

MAIN HYDRAULIC PUMP HANGER COMPONENTS (PUMPS 1 AND 2)

KEY	PART NO.	PART NAME	QTY	SERIAL NO.	REMARKS
6	M800650	PACKING	1		(SUB FOR 957366)
7	0825401	BACK-UP RING	1		

HYDRAULIC PUMP REAR COVER COMPONENTS (PUMPS 1 AND 2)

T157154 -UN-30OCT02

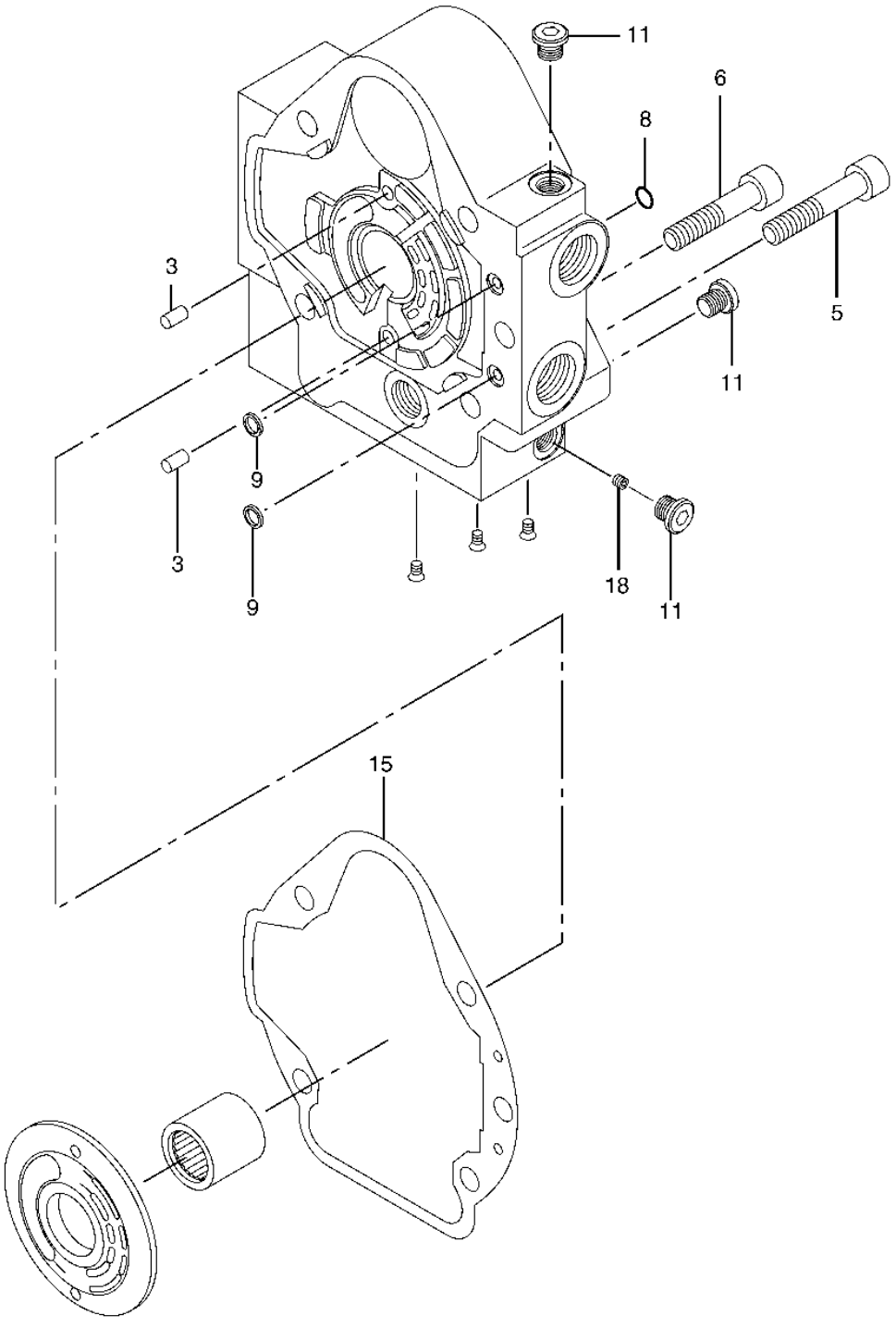

T157154

HYDRAULIC PUMP REAR COVER COMPONENTS (PUMPS 1 AND 2)

KEY	PART NO.	PART NAME	QTY	SERIAL NO.	REMARKS
3	.....	PIN	2		
5	0825601	BOLT	1		
6	0640701	SCREW	4		
8	CH17167	O-RING	1		(SUB FOR 4506320)
9	0661701	O-RING	2		
11	0696003	FITTING PLUG	3		
15	0825602	GASKET	1		
18	0311704	ORIFICE	1		

HYDRAULIC PUMP CONTROL SPRING ASSEMBLY (PUMPS 1 AND 2)

T157155 -UN-30OCT02

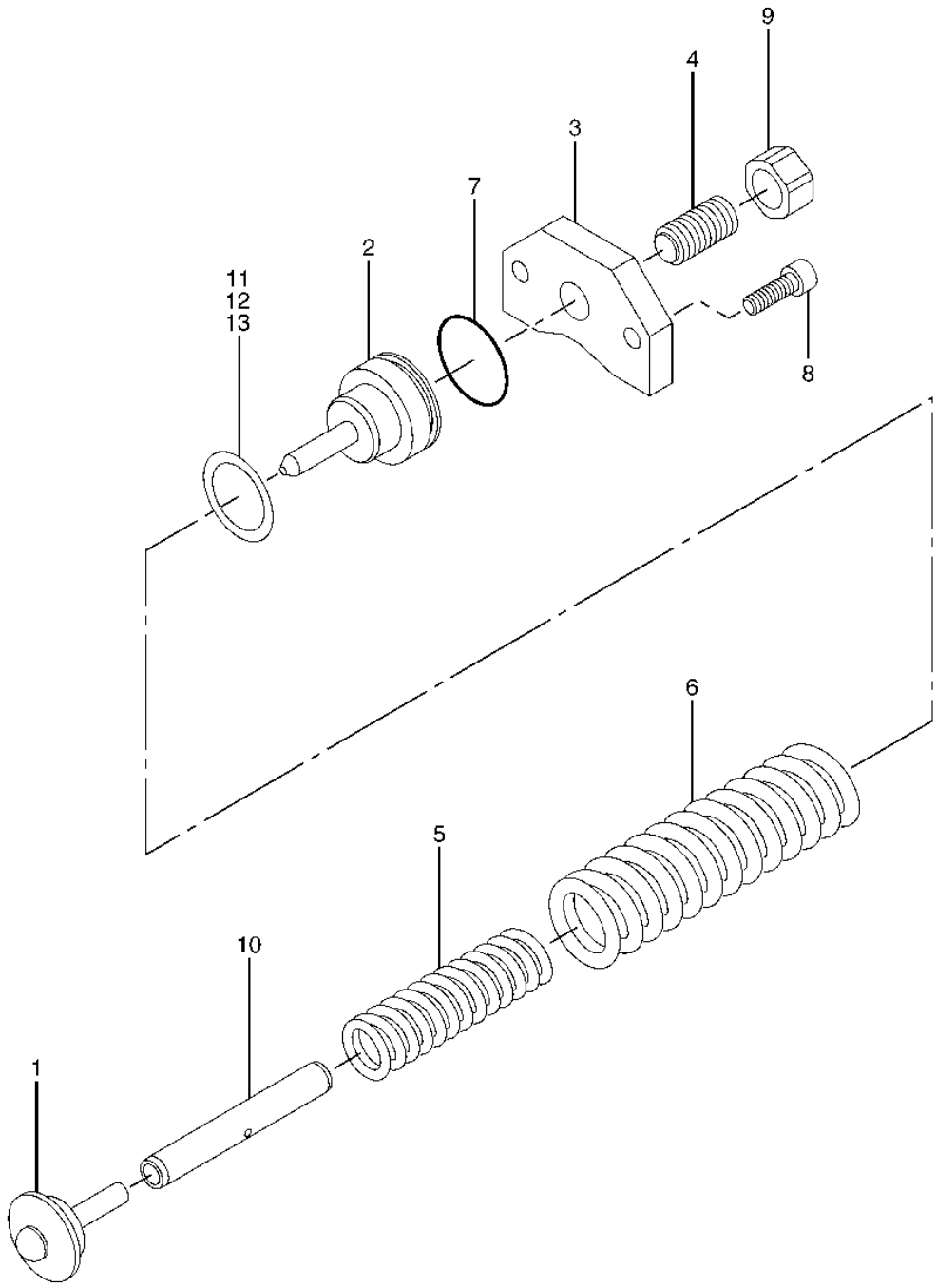

T157155

HYDRAULIC PUMP CONTROL SPRING ASSEMBLY (PUMPS 1 AND 2)

KEY	PART NO.	PART NAME	QTY	SERIAL NO.	REMARKS
1	0825701	VALVE SEAT	1		
2	0825702	VALVE SEAT	1		
3	0825703	COVER	1		
4	0640804	SET SCREW	1		
5	0825704	SPRING	1		
6	0825705	SPRING	1		
7	0640807	O-RING	1		
8	0215615	SCREW	2		
9	0640808	NUT	1		
10	0825706	GUIDE	1		
11	0825707	SHIM	2		
12	0825708	SHIM	2		
13	0825709	SHIM	2		

HYDRAULIC PUMP CONTROL PISTON ASSEMBLY (PUMPS 1 AND 2)

T157156 -UN-30OCT02

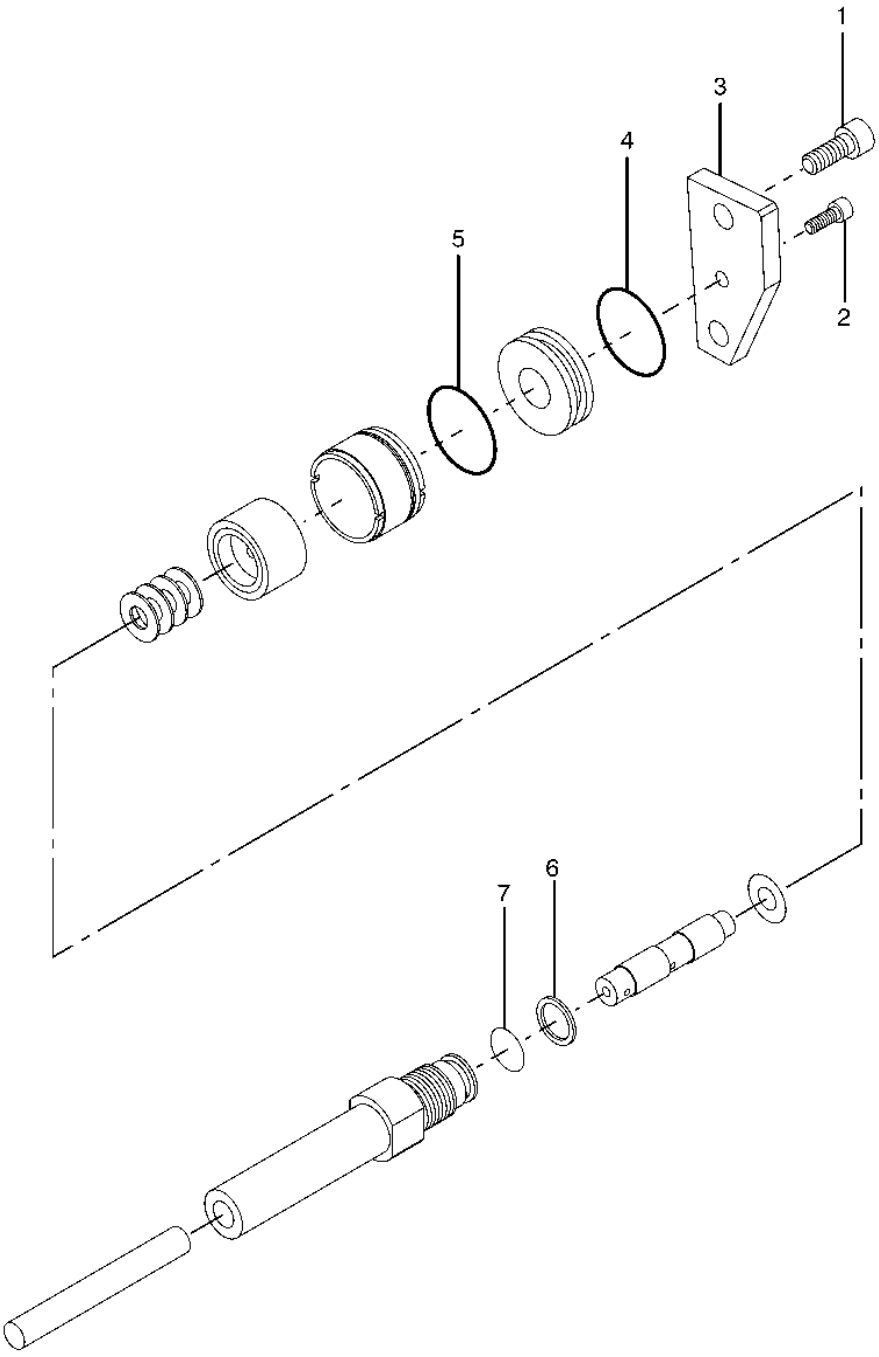

T157156

HYDRAULIC PUMP CONTROL PISTON ASSEMBLY (PUMPS 1 AND 2)

KEY	PART NO.	PART NAME	QTY	SERIAL NO.	REMARKS
1	0627910	BOLT	2		
2	0439402	BOLT	1		
3	0825805	PLATE	1		
4	0825802	O-RING	1		
5	0825803	O-RING	1		
6	0825804	BACK-UP RING	1		
7	0825801	O-RING	1		

HYDRAULIC PUMP FLOW REGULATING VALVES (PUMP 3)

T157157 -UN-30OCT02

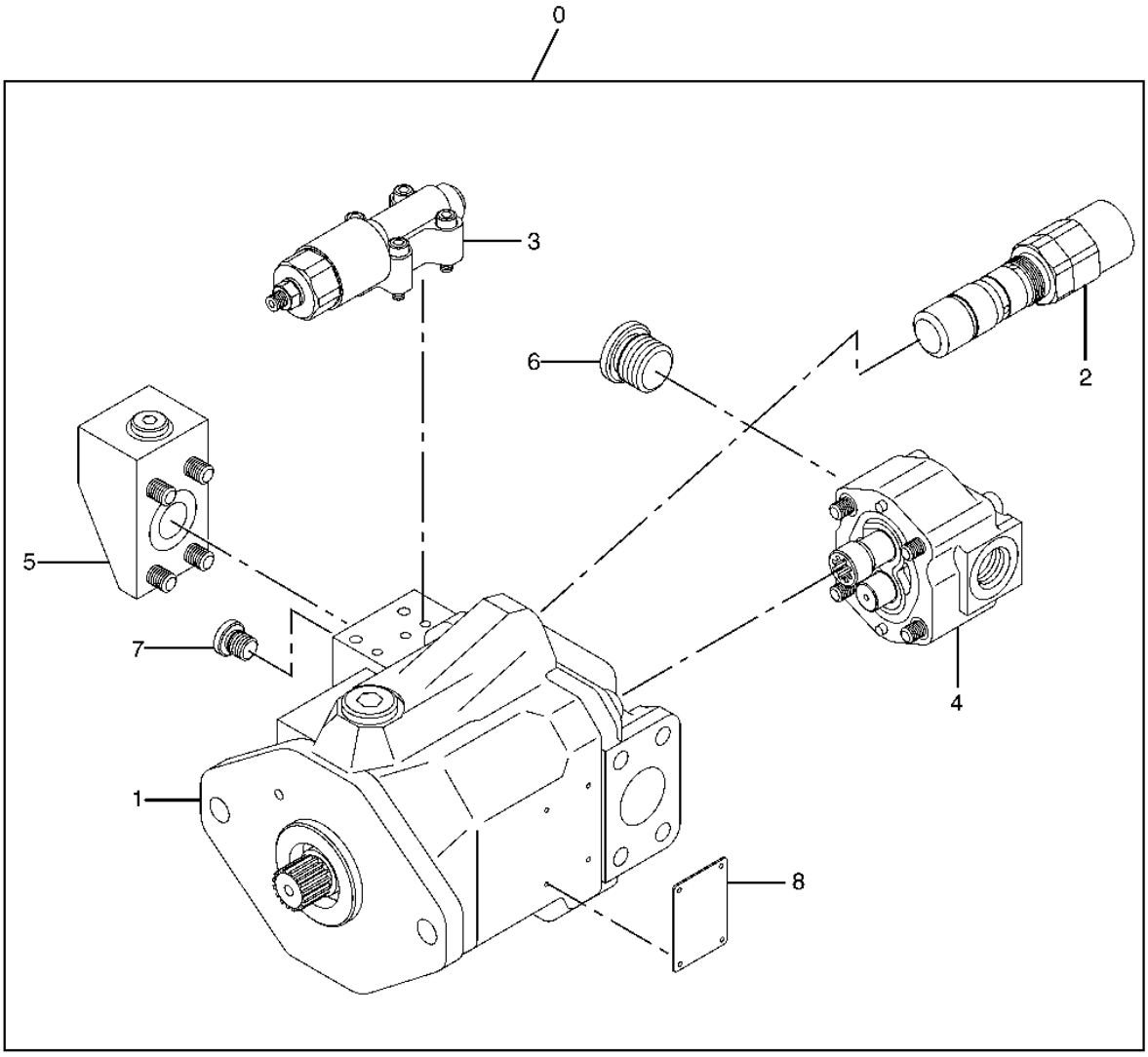

T157157

HYDRAULIC PUMP FLOW REGULATING VALVES (PUMP 3)

KEY	PART NO.	PART NAME	QTY	SERIAL NO.	REMARKS
0	4472052	KIT	1		
1	.....	HYDRAULIC PUMP	1		(4472053 NOT AVAILABLE - FURNISH 4472052)
2	4472006	REGULATOR	1		
	0825901	O-RING	2		(INTERNAL O-RINGS)
3	4472008	FLOW CONTROL HYD. VALVE	1		
4	4472007	PUMP	1		
5	4472054	FLANGE	1		
6	0324002	FITTING PLUG	1		
7	0696003	FITTING PLUG	1		
8	0824801	LABEL	1		

HYDRAULIC PUMP FLANGE COMPONENTS (PUMP 3)

T157166 -UN-30OCT02

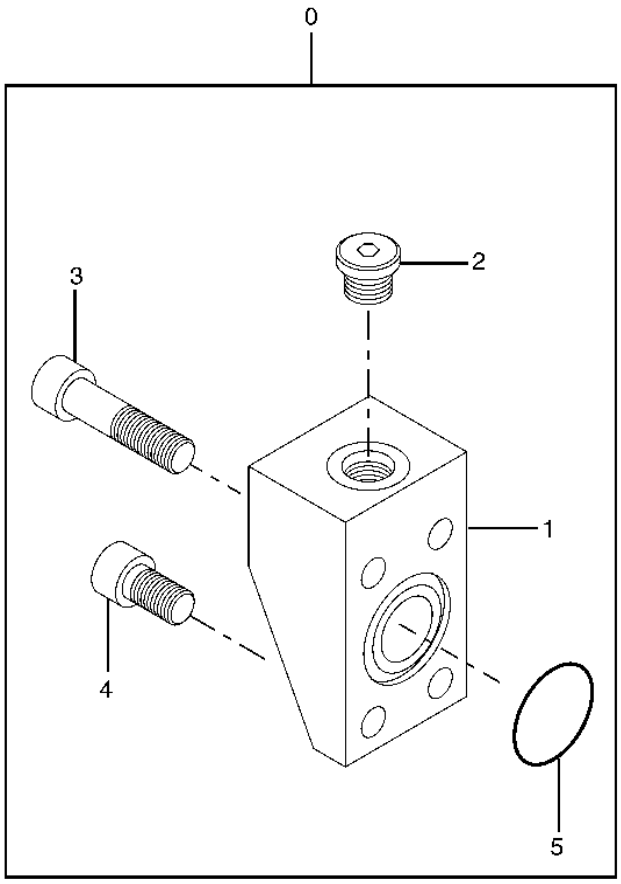

T157166

HYDRAULIC PUMP FLANGE COMPONENTS (PUMP 3)

KEY	PART NO.	PART NAME	QTY	SERIAL NO.	REMARKS
0	4472054	FLANGE	1		
1	0826301	FLANGE	1		
2	0696003	FITTING PLUG	1		
3	0294902	SCREW	2		
4	0738714	BOLT	2		
5	A811030	O-RING	1		

HYDRAULIC PUMP COMPONENTS (PUMP 3)

T157159 -UN-30OCT02

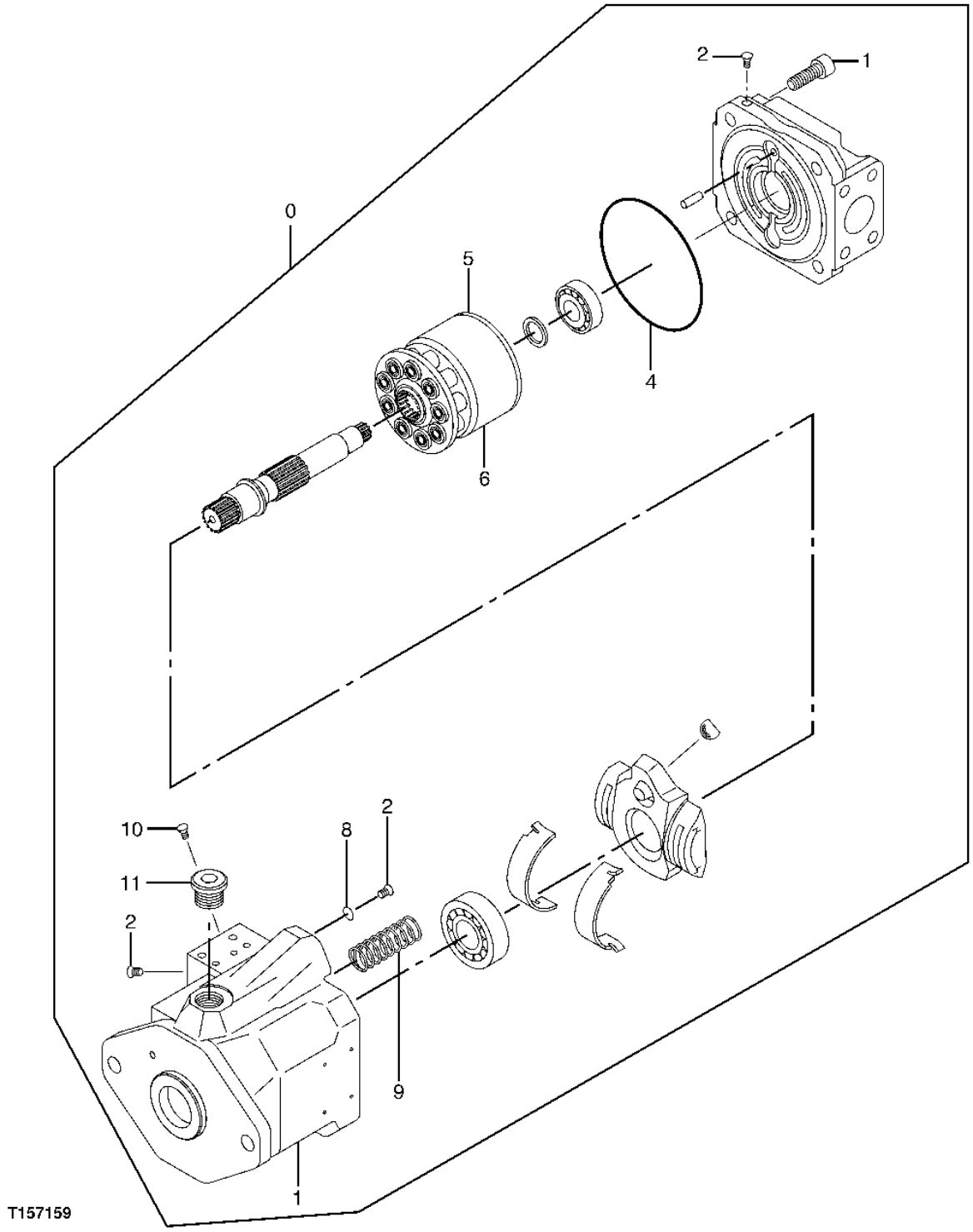

HYDRAULIC PUMP COMPONENTS (PUMP 3)

KEY	PART NO.	PART NAME	QTY	SERIAL NO.	REMARKS
0	.....	HYDRAULIC PUMP	1		(4472053 NOT AVAILABLE - FURNISH 4472052)
1	0824905	BOLT	4		
2	0824907	PIPE PLUG	3		
4	0824903	O-RING	1		
5	0824901	PLATE	1		
6	4472009	KIT	1		
8	0824904	SEAL	1		
9	0824902	SPRING	1		
10	0824908	PIPE PLUG	1		
11	0824906	PIPE PLUG	1		

PILOT PUMP COMPONENTS

T157165 -UN-30OCT02

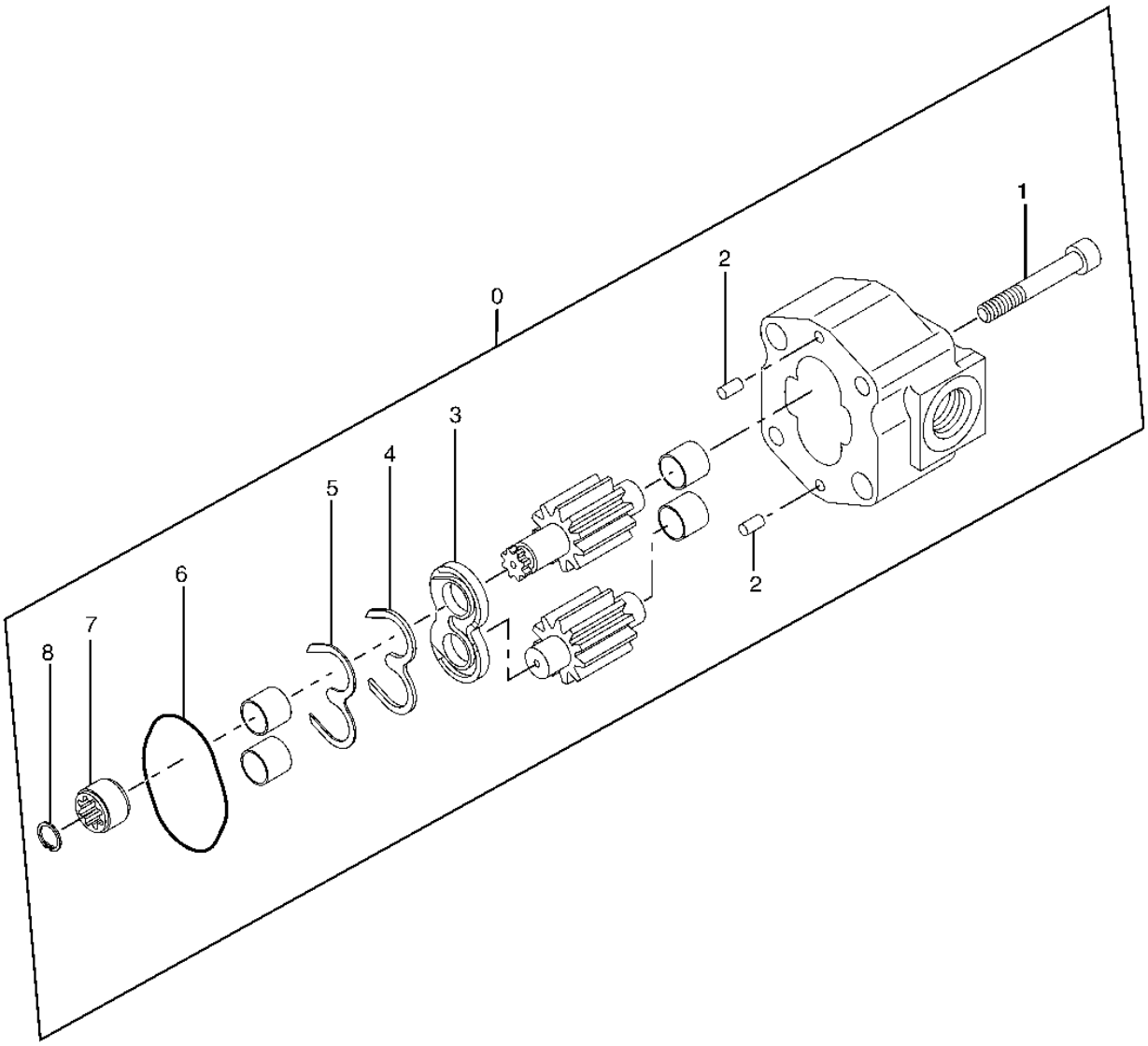

T157165

PILOT PUMP COMPONENTS

KEY	PART NO.	PART NAME	QTY	SERIAL NO.	REMARKS
0	4472007	PUMP	1		
1	0230142	SCREW	4		
2	0330401	DOWEL PIN	2		
3	0462201	WEAR PLATE	1		
4	0386403	RING	1		
5	0386402	BACK-UP RING	1		
6	0386405	O-RING	1		
7	0473701	COUPLING	1		
8	0473702	SNAP RING	1		

CONTROL VALVE

T157035 -UN-30OCT02

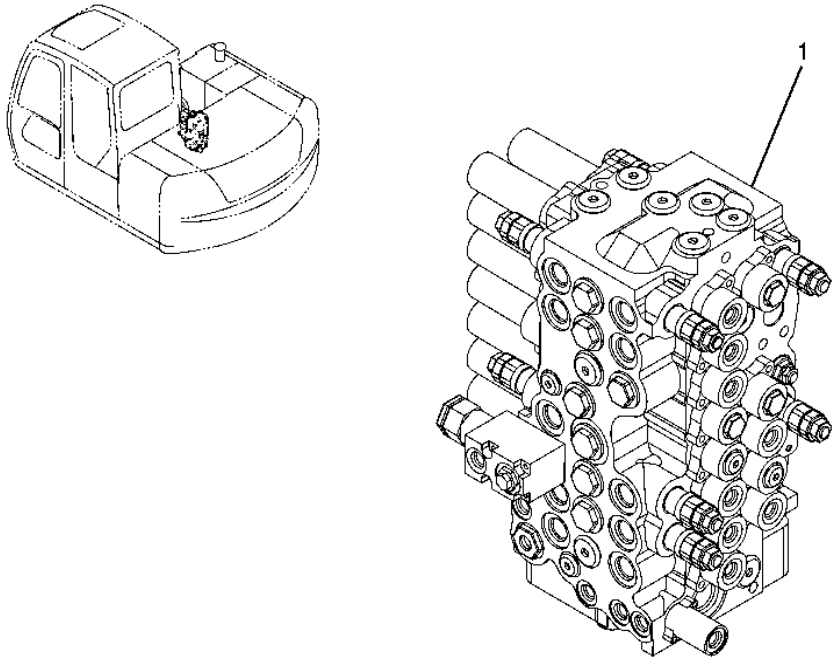

T157035

CONTROL VALVE

KEY	PART NO.	PART NAME	QTY	SERIAL NO.	REMARKS
1	4446245	HYD ACTUATED CONTROL VALVE	1		STANDARD BOOM
	4469026	HYD ACTUATED CONTROL VALVE	1		OFFSET BOOM

CONTROL VALVE SUPPORT

T157036 -UN-30OCT02

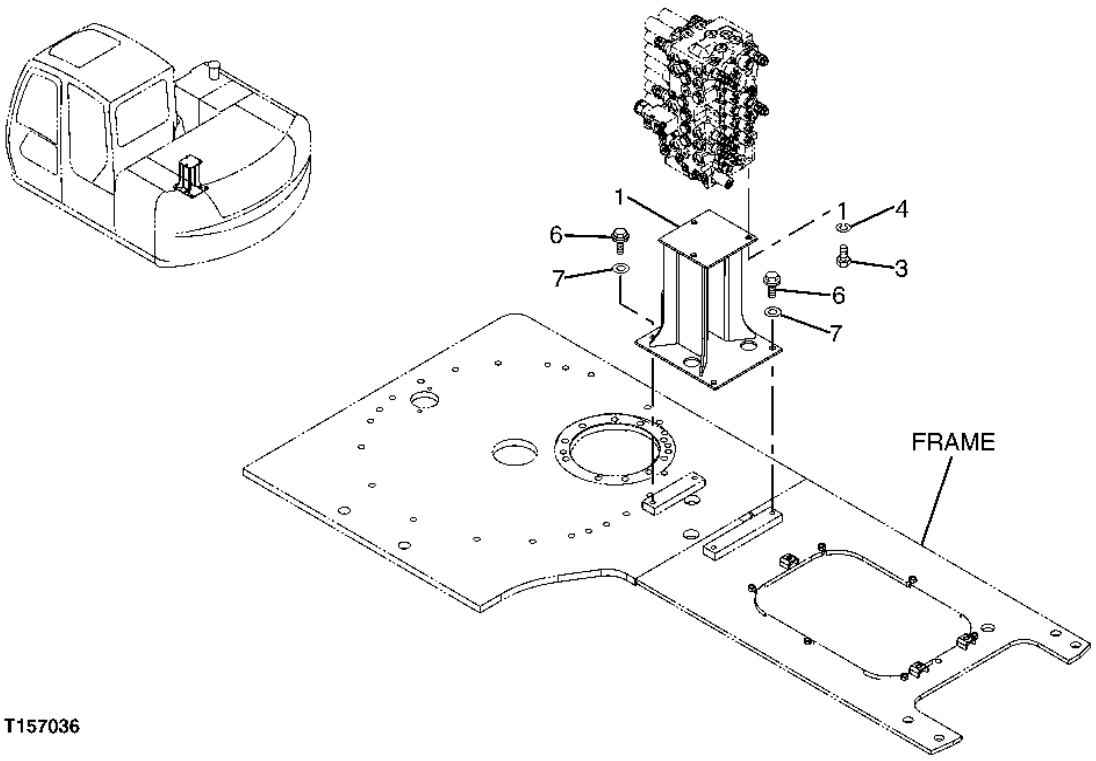

T157036

CONTROL VALVE SUPPORT

KEY	PART NO.	PART NAME	QTY	SERIAL NO.	REMARKS
1	7039917	BRACKET	1		
3	19M7877	CAP SCREW	3		M14 X 30
4	12H317	LOCK WASHER	3		9/16"
6	19M8011	CAP SCREW	4		M12 X 30
	12M7067	LOCK WASHER	4		12 MM (0.472")
7	4086891	WASHER	4		

FLOW REGULATOR VALVE MANIFOLD(SERIAL NUMBER -011047)

T157037 -UN-30OCT02

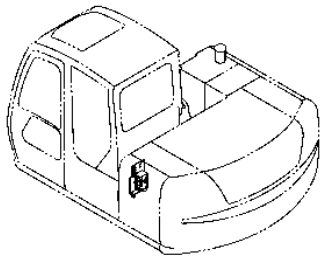

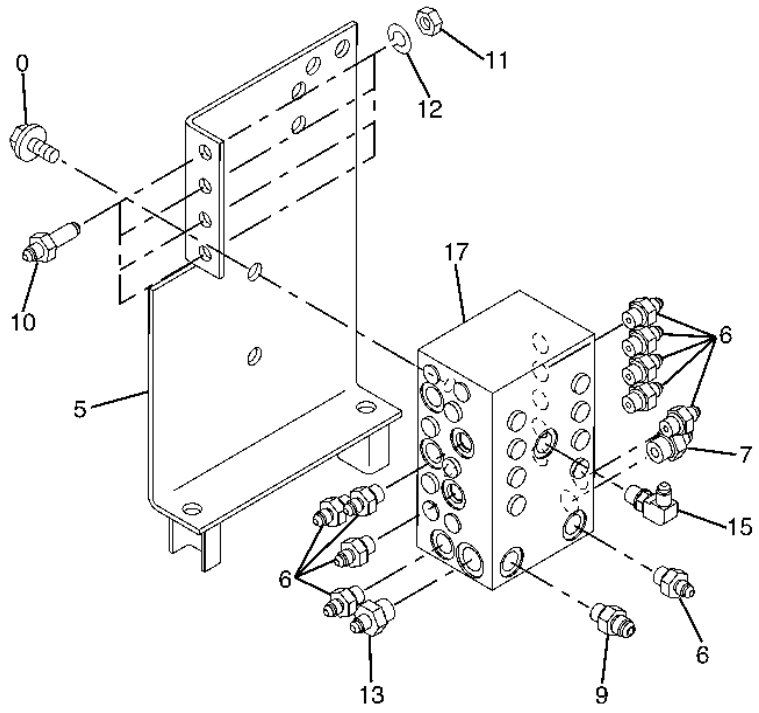

T157037

FLOW REGULATOR VALVE MANIFOLD(SERIAL NUMBER -011047)

KEY	PART NO.	PART NAME	QTY	SERIAL NO.	REMARKS
0	19M7402	CAP SCREW	2		M10 X 25
	12M7066	LOCK WASHER	2		10 MM (0.394")
	24M7096	WASHER	2		10.500 X 18 X 1.600 MM (0.413" X 0.709" X 0.063")
5	8083088	BRACKET	1		
6	A852122	ADAPTER	10		
	M800650	PACKING	1		
7	A852133	ADAPTER	1		
	CH11570	O-RING	1		
9	A852123	ADAPTER	1		
	M800650	PACKING	1		
10	4248117	ADAPTER	4		
11	14H1047	NUT	4		
12	12H301	LOCK WASHER	4		1/2"
13	A852132	ADAPTER	1		
	CH11570	O-RING	1		
15	4154670	ELBOW FITTING	1		(SUB FOR A852322, P67984 OR THA852322)
	M800650	PACKING	1		
17	4464222	FLOW CONTROL HYD. VALVE	1		

FLOW REGULATOR VALVE MANIFOLD(SERIAL NUMBER 011048-)

T197247 -UN-09JAN04

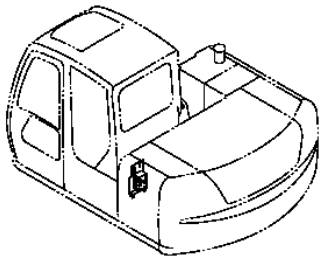

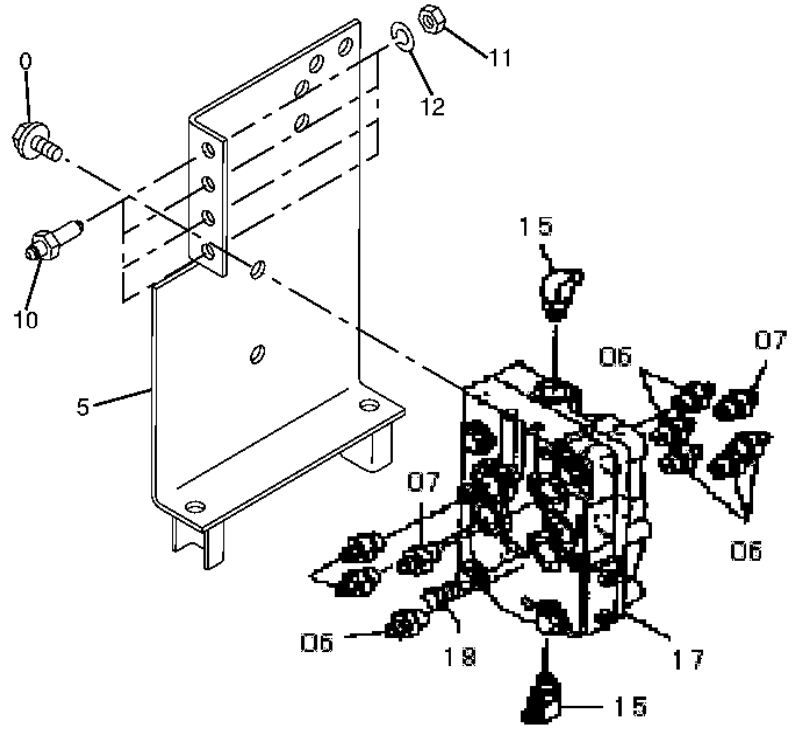

T197247

FLOW REGULATOR VALVE MANIFOLD (SERIAL NUMBER 011048-)

KEY	PART NO.	PART NAME	QTY	SERIAL NO.	REMARKS
0	19M7402	CAP SCREW	2		M10 X 25
	12M7066	LOCK WASHER	2		10 MM (0.394")
	24M7096	WASHER	2		10.500 X 18 X 1.600 MM (0.413" X 0.709" X 0.063")
5	8089794	BRACKET	1		
6	A852122	ADAPTER	8		
	M800650	PACKING	1		
7	A852133	ADAPTER	2		
	CH11570	O-RING	1		
15	4154670	ELBOW FITTING	2		(SUB FOR A852322, P67984 OR THA852322)
	M800650	PACKING	1		
17	4472522	FLOW CONTROL HYD. VALVE	1		
18	4093624	DRAIN PLUG	1		

CONTROL VALVE (STANDARD BOOM)
(SPRINGS, POPPETS AND PLUGS)

T157337 -UN-30OCT02

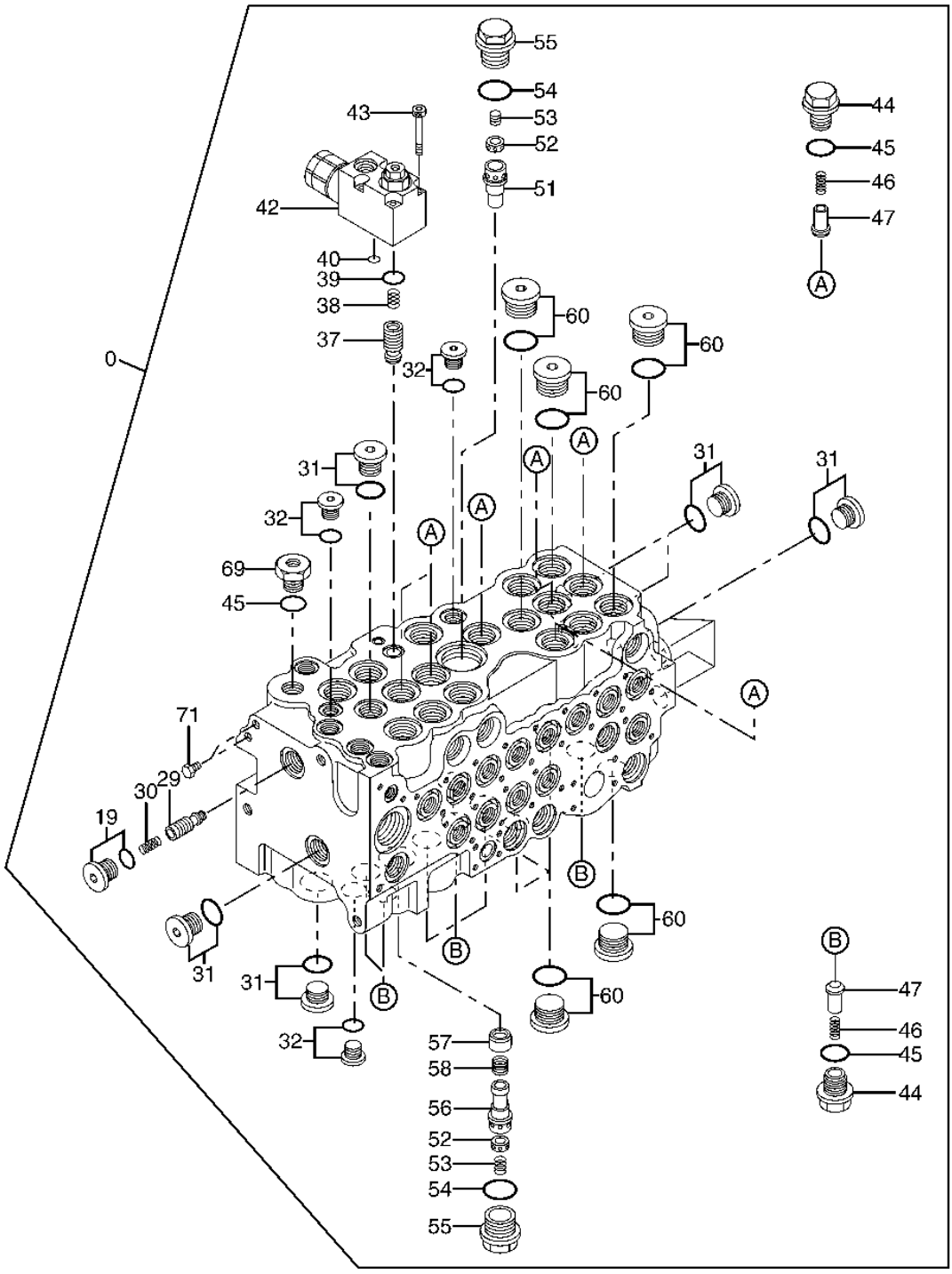

T157337

CONTROL VALVE (STANDARD BOOM)
(SPRINGS, POPPETS AND PLUGS)

KEY	PART NO.	PART NAME	QTY	SERIAL NO.	REMARKS
0	4446245	HYD ACTUATED CONTROL VALVE	1		INCLUDES ALL PARTS ON THIS PAGE - ADDITONAL PARTS ON FOLLOWING PAGES
19	0825101	PIPE PLUG	1		
29	0825102	POPPET	1		
30	0668007	SPRING	1		
31	0695007	FITTING PLUG	9		
32	0689405	FITTING PLUG	3		
37	0714608	POPPET	1		
38	0714609	SPRING	1		
39	4506420	PACKING	1		
40	CH11568	PACKING	1		(SUB FOR 4506407)
42	0825106	FLOW CONTROL HYD. VALVE	1		(SUB FOR 0825103)
43	0714404	SCREW	4		
44	0714504	FITTING PLUG	12		
45	4506418	O-RING	13		
46	0225209	SPRING	12		
47	0714503	POPPET	12		
51	0455111	SLEEVE	1		
52	0103012	POPPET	2		
53	0103013	SPRING	2		
54	4506424	O-RING	2		
55	0714502	FITTING PLUG	2		
56	0825104	SLEEVE	1		
57	0455102	POPPET	1		
58	0332917	SPRING	1		
60	0668108	FITTING PLUG	7		
69	0375802	PIPE PLUG	1		
71	0825105	PIPE PLUG	2		

CONTROL VALVE (STANDARD BOOM) - CONTINUED
(5 SPOOL)

T157336 -UN-30OCT02

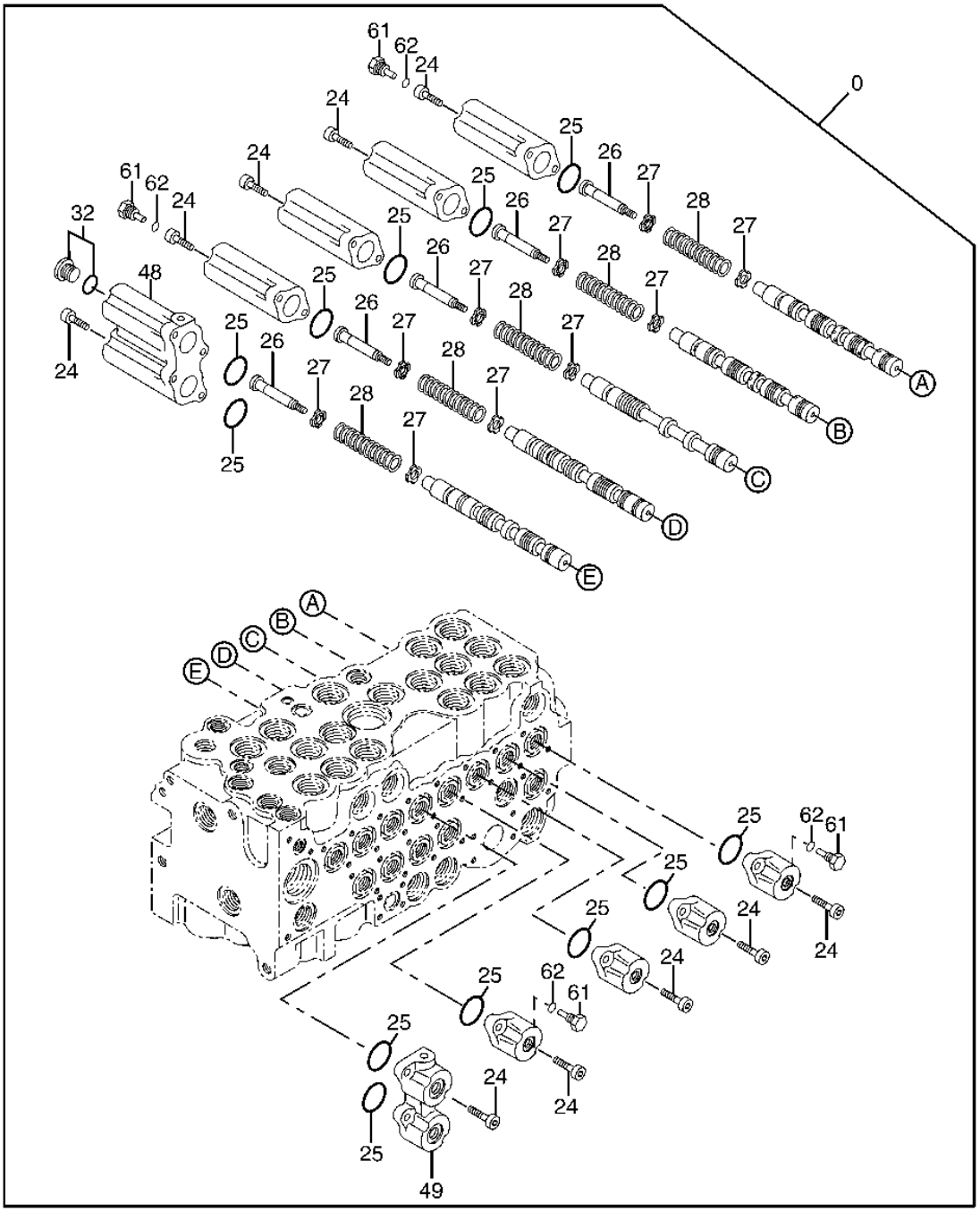

T157336

CONTROL VALVE (STANDARD BOOM) - CONTINUED
(5-SPOOL)

KEY	PART NO.	PART NAME	QTY	SERIAL NO.	REMARKS
0	4446245	HYD ACTUATED CONTROL VALVE	1		INCLUDES ALL PARTS ON THIS PAGE. ADDITIONAL PARTS ON PRECEDING AND FOLLOWING PAGES
24	19M7603	SCREW	24		M6 X 20
	12M7006	LOCK WASHER	24		6 MM (0.236")
	24M7105	WASHER	24		6 X 12 X 1.600 MM (0.236" X 0.472" X 0.063")
25	970486	PACKING	12		
26	0714403	HOLDER	5		
27	0332904	RETAINER	10		
28	0332905	SPRING	5		
32	0689405	FITTING PLUG	1		
48	0825201	CAP	1		
49	0825202	CAP	1		
61	0825203	PIPE PLUG	4		
62	M800650	PACKING	4		(SUB FOR 957366)

CONTROL VALVE (STANDARD BOOM) - CONTINUED
(3-SPOOL)

T157335 -UN-30OCT02

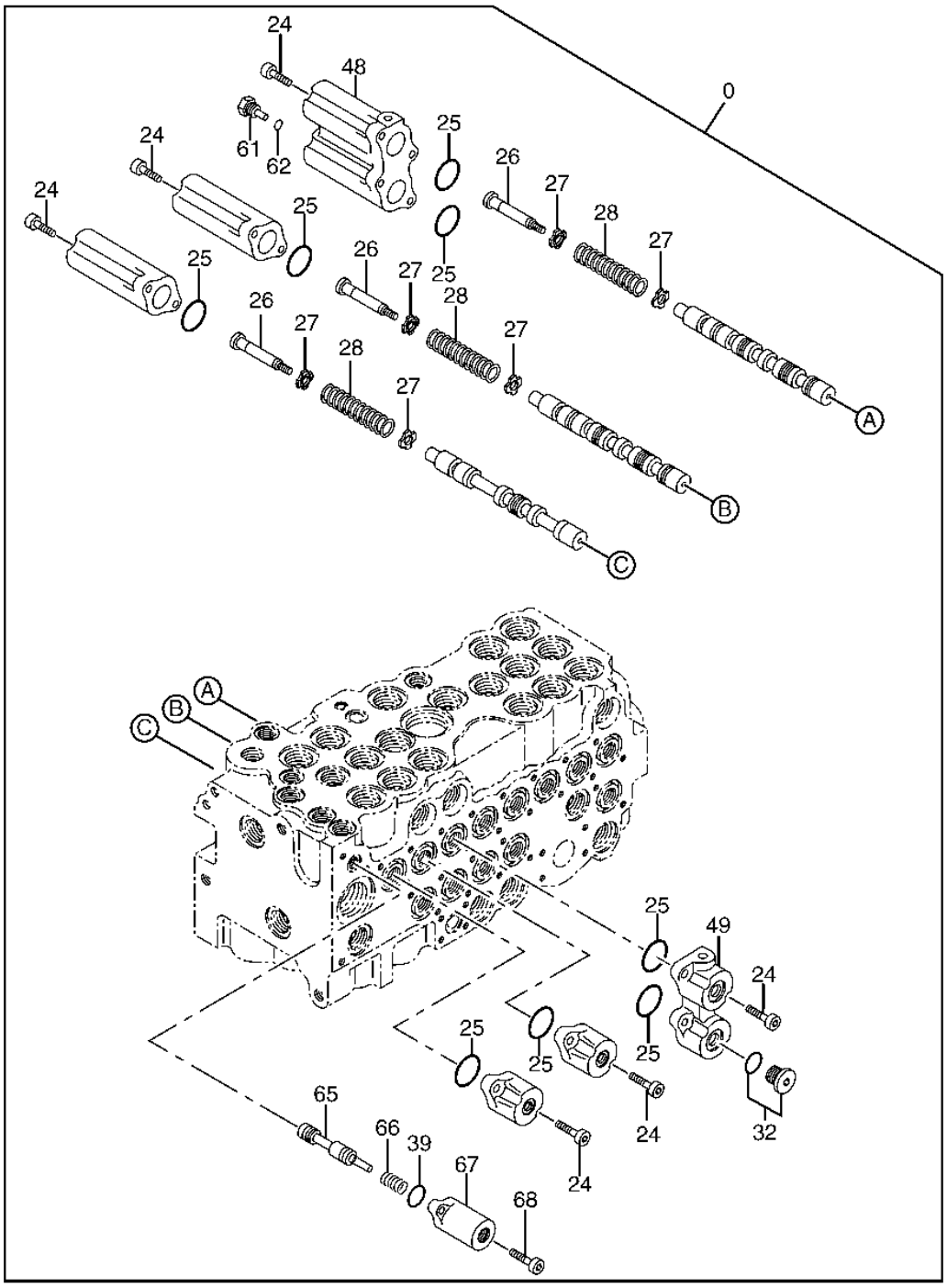

T157335

CONTROL VALVE (STANDARD BOOM) - CONTINUED
(3-SPOOL)

KEY	PART NO.	PART NAME	QTY	SERIAL NO.	REMARKS
0	4446245	HYD ACTUATED CONTROL VALVE	1		INCLUDES ALL PARTS ON THIS PAGE. ADDITIONAL PARTS ON PRECEDING AND FOLLOWING PAGES
24	12M7006	LOCK WASHER	16		6 MM, (SUB FOR 0455002)
	19M7603	SCREW	16		M6 X 20
	24M7105	WASHER	16		6 X 12 X 1.600 MM
25	970486	PACKING	8		
26	0714403	HOLDER	3		
27	0332904	RETAINER	6		
28	0332905	SPRING	3		
32	0689405	FITTING PLUG	1		
39	4506420	PACKING	1		
48	0825201	CAP	1		
49	0825202	CAP	1		
61	0825203	PIPE PLUG	1		
62	M800650	PACKING	1		(SUB FOR 957366)
65	0826501	VALVE SPOOL	1		
66	0826502	SPRING	1		
67	0826503	CAP	1		
68	0429314	BOLT	2		

CONTROL VALVE (STANDARD BOOM) - CONTINUED
(6-SPOOL)

T197617 -UN-04FEB04

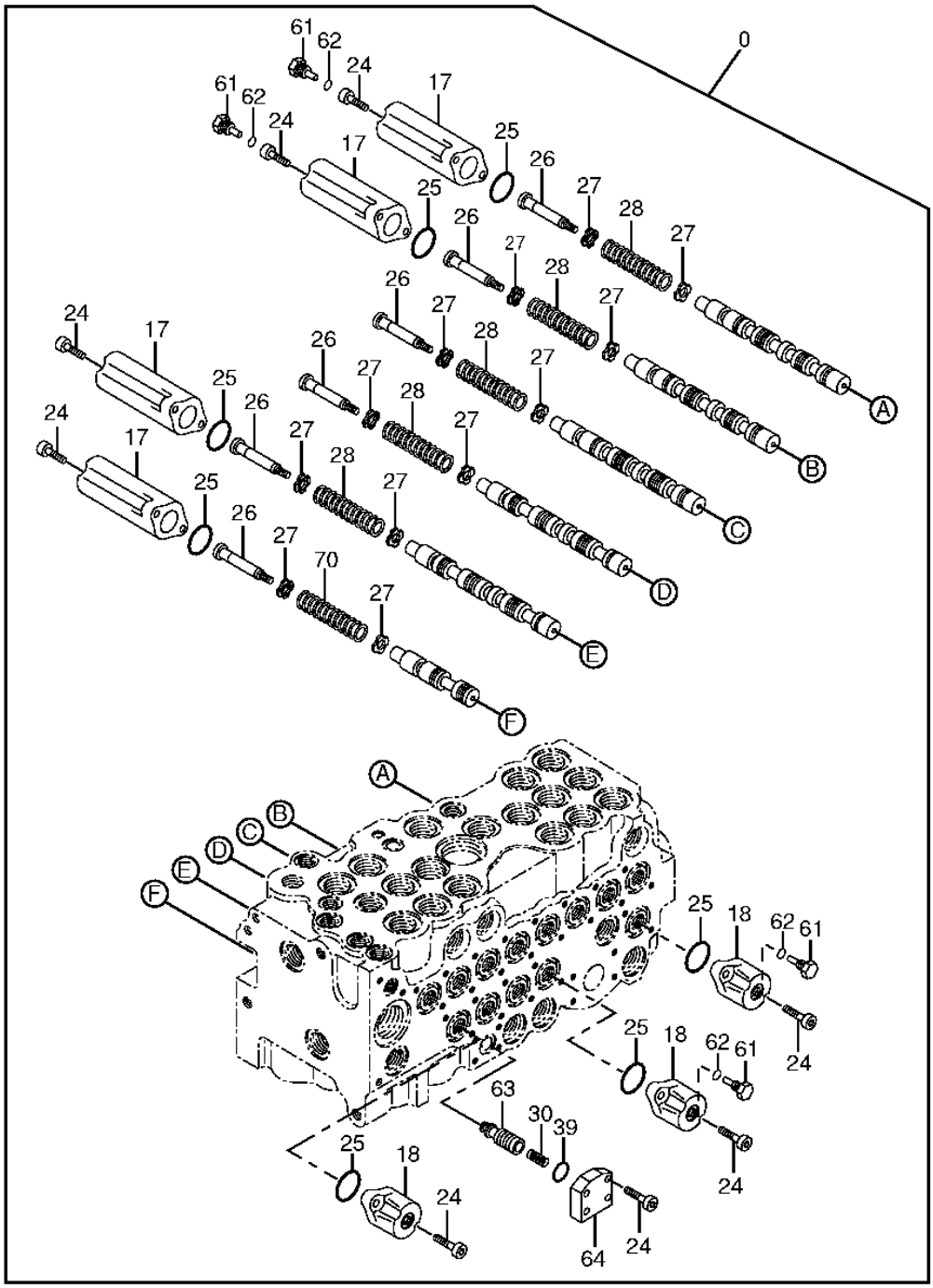

T197617

CONTROL VALVE (STANDARD BOOM) - CONTINUED
(6-SPOOL)

KEY	PART NO.	PART NAME	QTY	SERIAL NO.	REMARKS
0	4446245	HYD ACTUATED CONTROL VALVE	1		INCLUDES ALL PARTS ON THIS PAGE. ADDITIONAL PARTS ON PRECEDING AND FOLLOWING PAGES.
17	0828204	CAP	4		
18	0828205	CAP	3		
24	12M7006	LOCK WASHER	18		6 MM, (SUB FOR 0455002)
	19M7603	SCREW	18		M6 X 20
	24M7105	WASHER	18		6 X 12 X 1.600 MM
25	970486	PACKING	7		
26	0714403	HOLDER	6		
27	0332904	RETAINER	12		
28	0332905	SPRING	5		
30	0668007	SPRING	1		
39	4506420	PACKING	1		
61	0825203	PIPE PLUG	4		
62	M800650	PACKING	4		(SUB FOR 957366)
63	0828201	POPPET	1		
64	0828202	PLATE	1		
70	0828203	SPRING	1		

CONTROL VALVE (STANDARD BOOM) - CONTINUED
(RELIEF VALVES)

T157332 -UN-30OCT02

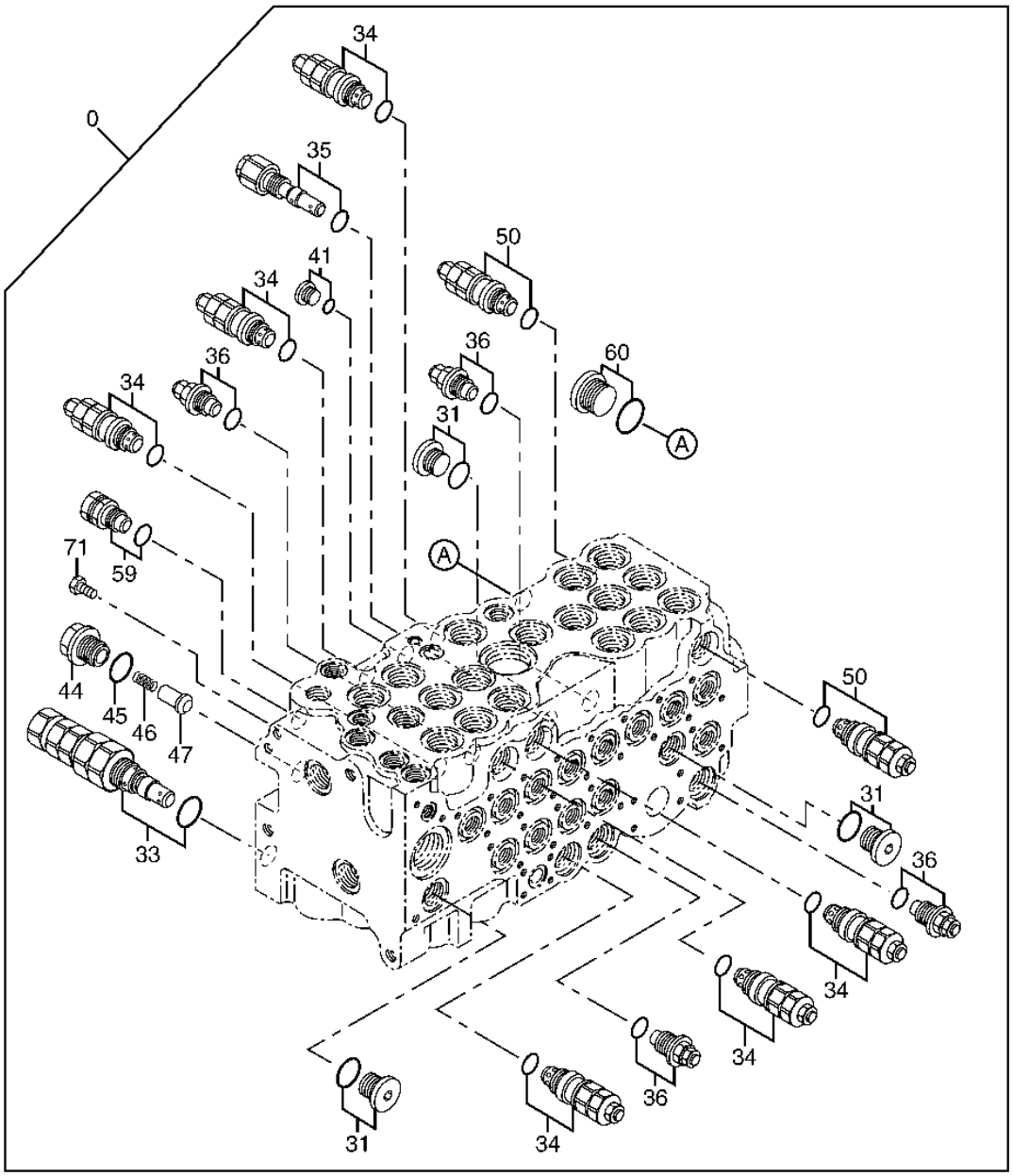

T157332

CONTROL VALVE (STANDARD BOOM) - CONTINUED
(RELIEF VALVES)

KEY	PART NO.	PART NAME	QTY	SERIAL NO.	REMARKS
0	4446245	HYD ACTUATED CONTROL VALVE	1		INCLUDES ALL PARTS ON THIS PAGE. ADDITIONAL PARTS ON PRECEDING PAGES
31	0695007	FITTING PLUG	3		
33	0828301	PRESSURE RELIEF VALVE	1		
34	4396776	PRESSURE RELIEF VALVE	6		
35	4470195	PRESSURE RELIEF VALVE	1		
36	0735916	RELIEF VALVE	4		
41	0667713	FITTING PLUG	1		
44	0714504	FITTING PLUG	1		
45	4506418	O-RING	1		
46	0225209	SPRING	1		
47	0714503	POPPET	1		
50	4468962	PRESSURE RELIEF VALVE	2		
59	0828304	PIPE PLUG	1		
60	0668108	FITTING PLUG	1		
71	0825105	PIPE PLUG	1		

CONTROL VALVE (OFFSET BOOM)
(SPRINGS, POPPETS AND PLUGS)

T157337 -UN-30OCT02

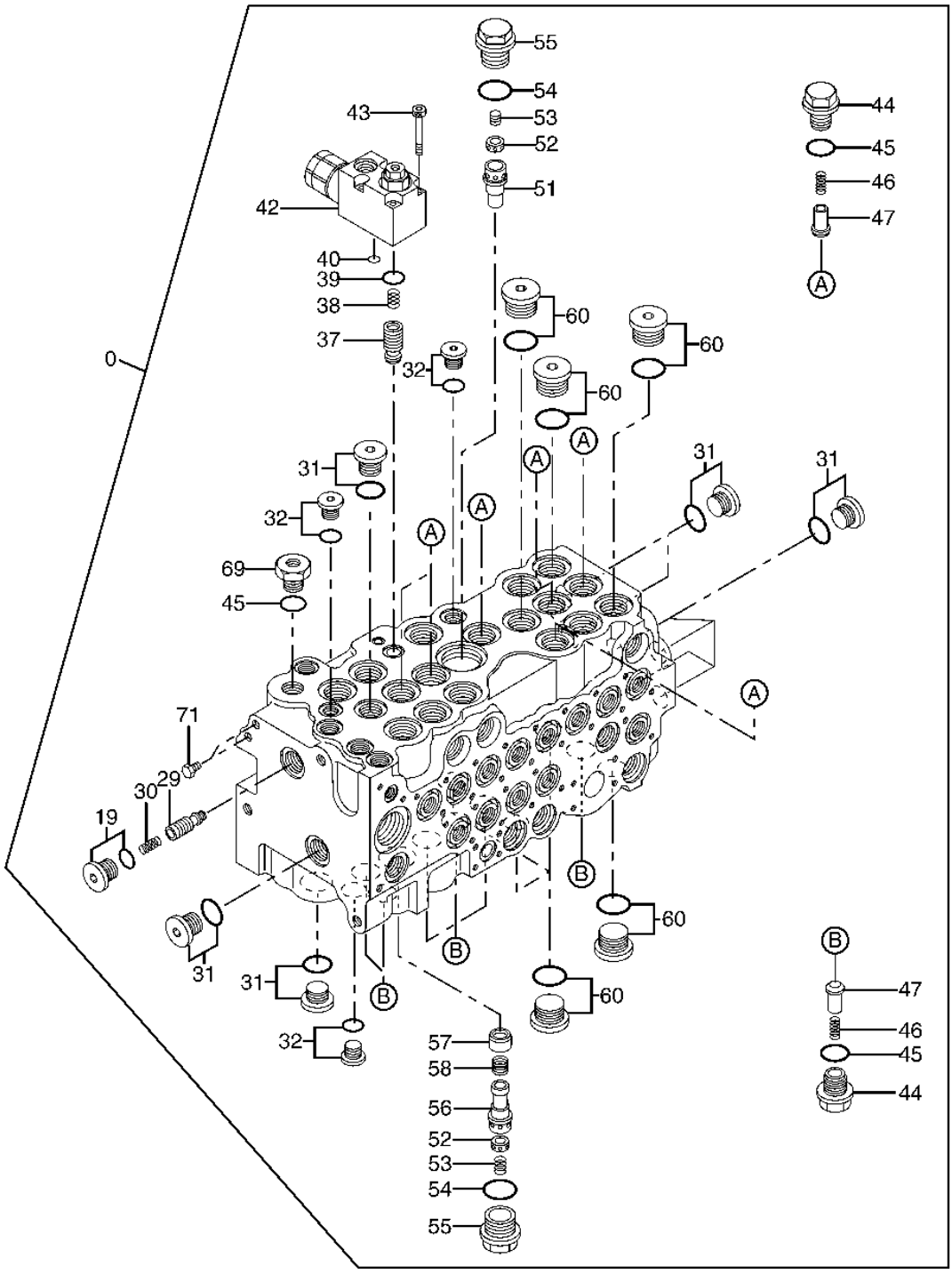

T157337

CONTROL VALVE (OFFSET BOOM)
(SPRINGS, POPPETS AND PLUGS)

KEY	PART NO.	PART NAME	QTY	SERIAL NO.	REMARKS
0	4469026	HYD ACTUATED CONTROL VALVE	1		INCLUDES ALL PARTS ON THIS PAGE. ADDITIONAL PARTS ON FOLLOWING PAGES
19	0825101	PIPE PLUG	1		
29	0825102	POPPET	1		
30	0668007	SPRING	1		
31	0695007	FITTING PLUG	9		
32	0689405	FITTING PLUG	3		
37	0714608	POPPET	1		
38	0714609	SPRING	1		
39	4506420	PACKING	1		
40	CH11568	PACKING	1		(SUB FOR 4506407)
42	0825106	FLOW CONTROL HYD. VALVE	1		(SUB FOR 0825103)
43	0714404	SCREW	4		
44	0714504	FITTING PLUG	12		
45	4506418	O-RING	13		
46	0225209	SPRING	12		
47	0714503	POPPET	12		
51	0455111	SLEEVE	1		
52	0103012	POPPET	2		
53	0103013	SPRING	2		
54	4506424	O-RING	2		
55	0714502	FITTING PLUG	2		
56	0825104	SLEEVE	1		
57	0455102	POPPET	1		
58	0332917	SPRING	1		
60	0668108	FITTING PLUG	7		
69	0375802	PIPE PLUG	1		
71	0825105	PIPE PLUG	2		

CONTROL VALVE (OFFSET BOOM) - CONTINUED
(5-SPOOL)

T157336 -UN-30OCT02

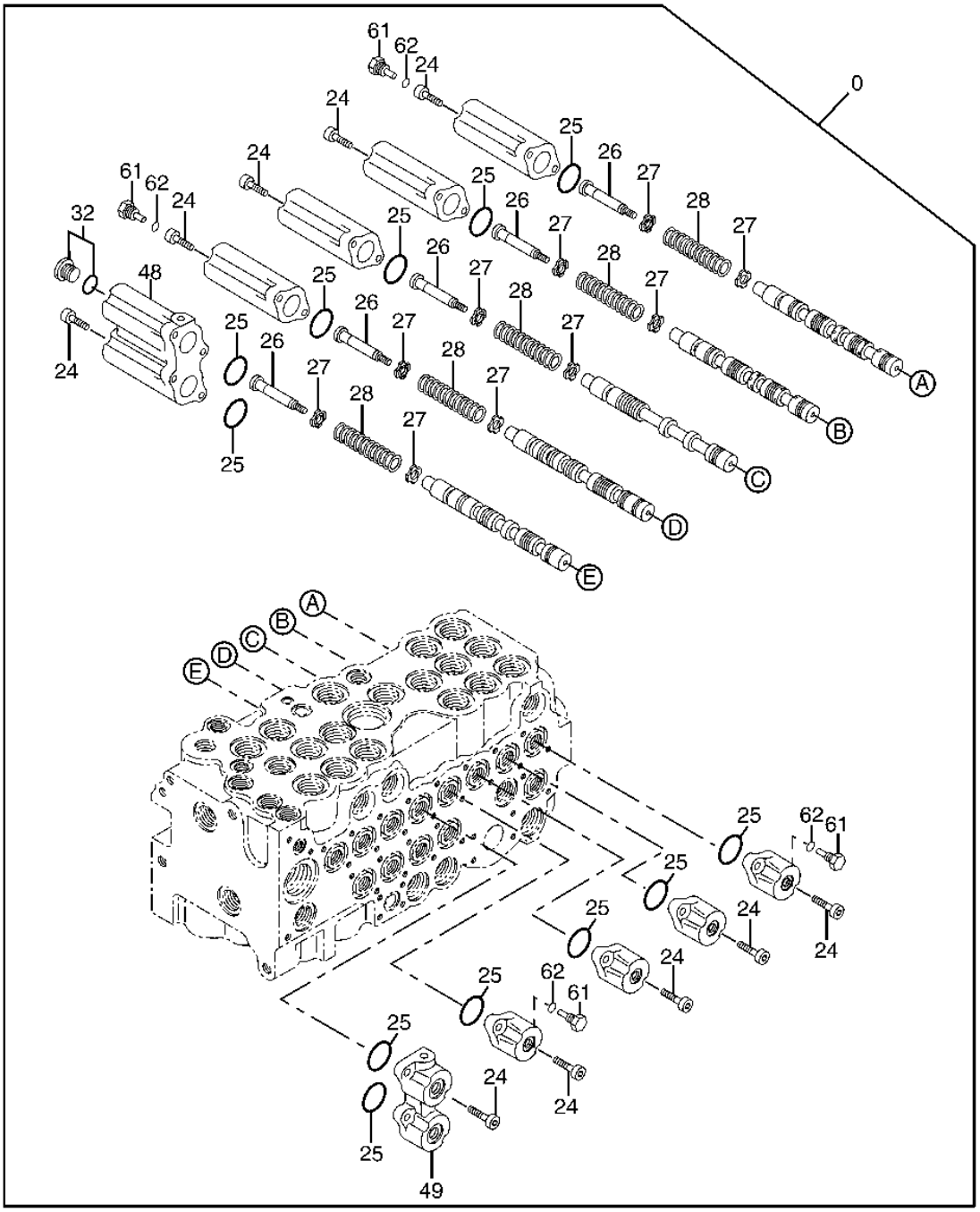

T157336

CONTROL VALVE (OFFSET BOOM) - CONTINUED
(5-SPOOL)

KEY	PART NO.	PART NAME	QTY	SERIAL NO.	REMARKS
0	4469026	HYD ACTUATED CONTROL VALVE	1		INCLUDES ALL PARTS ON THIS PAGE. ADDITIONAL PARTS ON PRECEDING AND FOLLOWING PAGES.
24	12M7006	LOCK WASHER	24		6 MM, (SUB FOR 0455002)
	19M7603	SCREW	24		M6 X 20
	24M7105	WASHER	24		6 X 12 X 1.600 MM
25	970486	PACKING	12		
26	0714403	HOLDER	5		
27	0332904	RETAINER	10		
28	0332905	SPRING	5		
32	0689405	FITTING PLUG	1		
48	0825201	CAP	1		
49	0825202	CAP	1		
61	0825203	PIPE PLUG	4		
62	M800650	PACKING	4		(SUB FOR 957366)

CONTROL VALVE (OFFSET BOOM) - CONTINUED
(3-SPOOL)

T157335 -UN-30OCT02

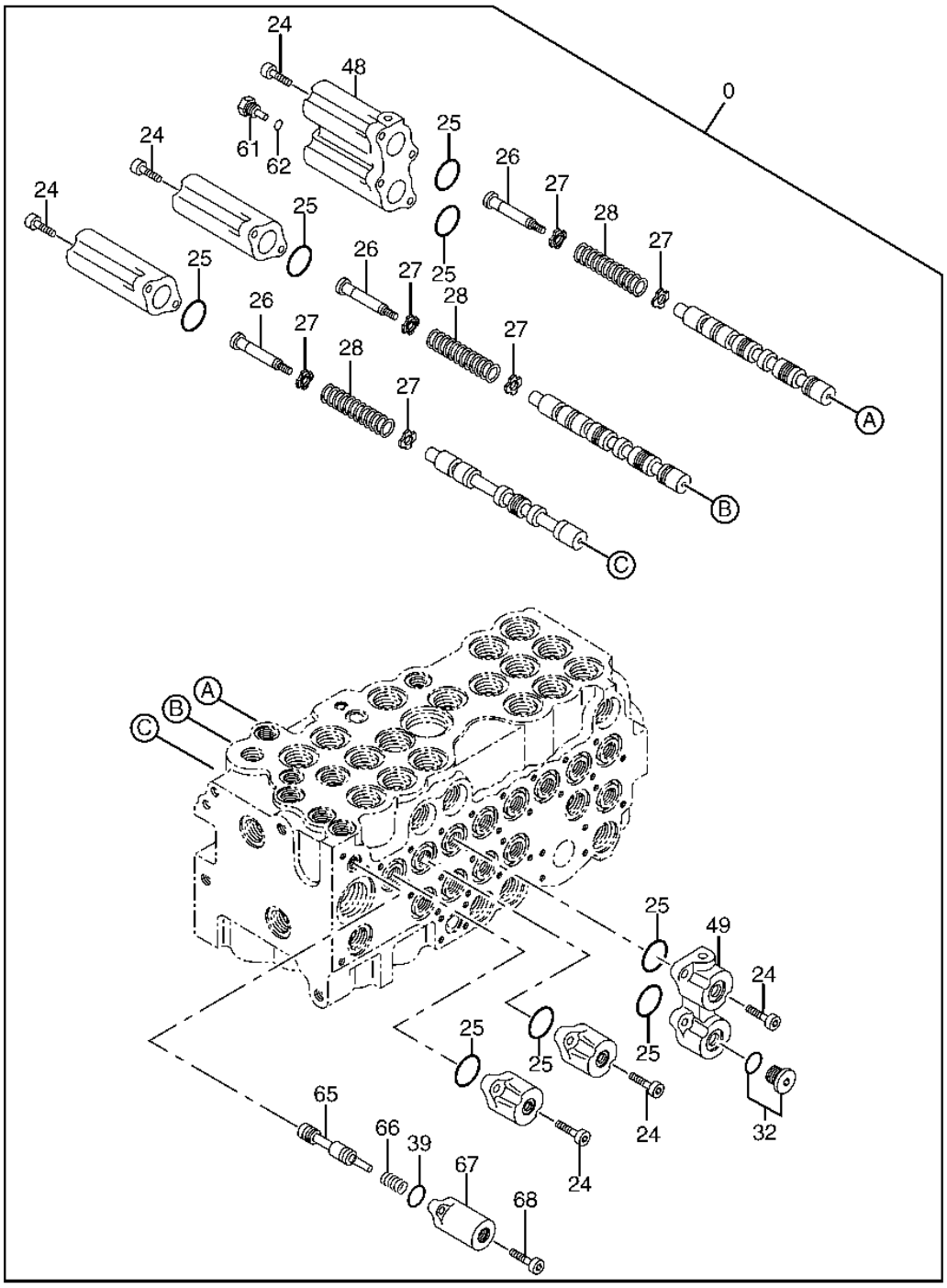

T157335

CONTROL VALVE (OFFSET BOOM) - CONTINUED
(3-SPOOL)

KEY	PART NO.	PART NAME	QTY	SERIAL NO.	REMARKS
0	4469026	HYD ACTUATED CONTROL VALVE	1		INCLUDES ALL PARTS ON THIS PAGE. ADDITIONAL PARTS ON PRECEDING AND FOLLOWING PAGES.
24	12M7006	LOCK WASHER	16		6 MM, (SUB FOR 0455002)
	19M7603	SCREW	16		M6 X 20
	24M7105	WASHER	16		6 X 12 X 1.600 MM
25	970486	PACKING	8		
26	0714403	HOLDER	3		
27	0332904	RETAINER	6		
28	0332905	SPRING	3		
32	0689405	FITTING PLUG	1		
39	4506420	PACKING	1		
48	0825201	CAP	1		
49	0825202	CAP	1		
61	0825203	PIPE PLUG	1		
62	M800650	PACKING	1		(SUB FOR 957366)
65	0826501	VALVE SPOOL	1		
66	0826502	SPRING	1		
67	0826503	CAP	1		
68	0429314	BOLT	2		

CONTROL VALVE (OFFSET BOOM) - CONTINUED
(6-SPOOL)

T157333 -UN-30OCT02

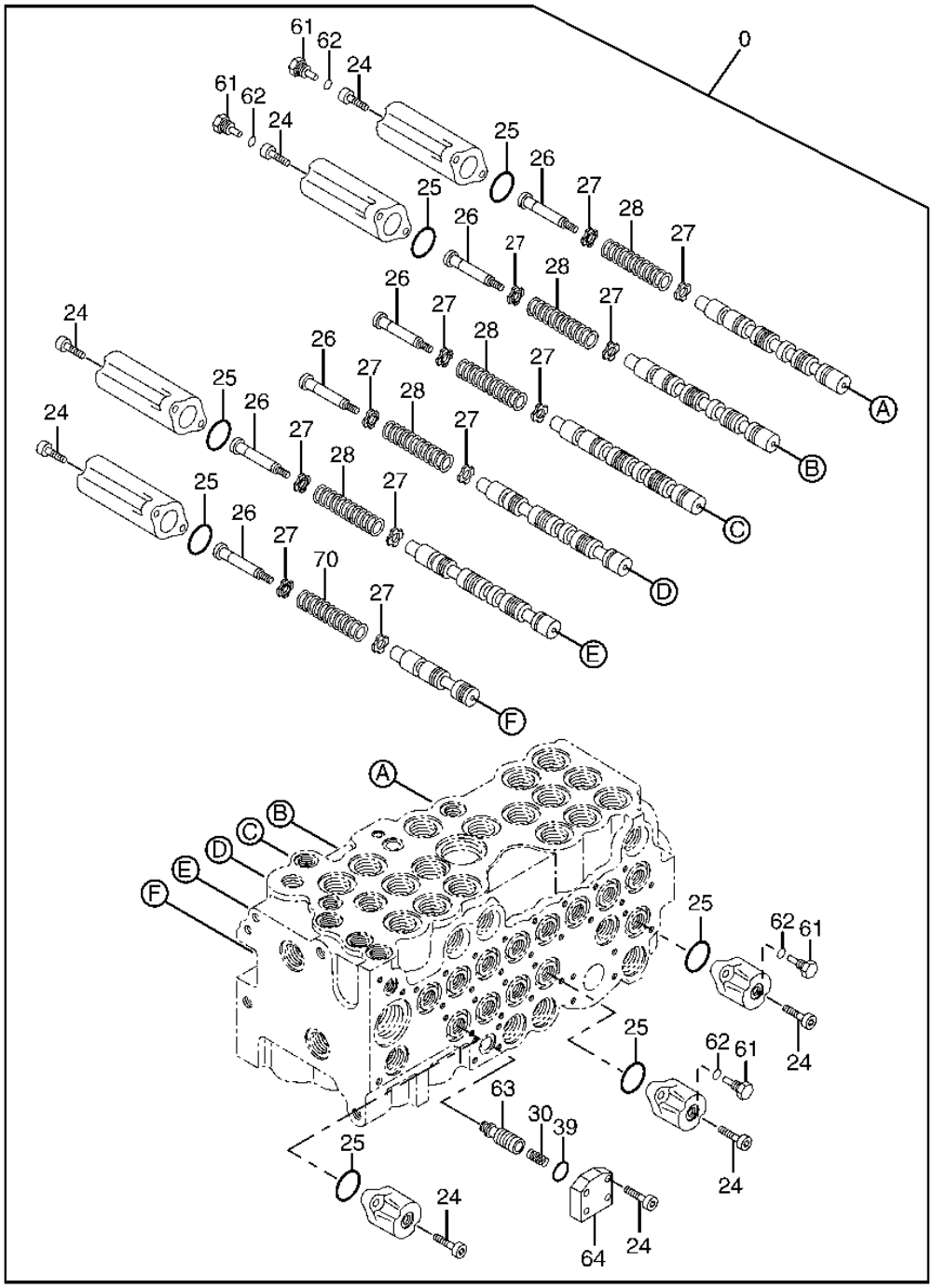

T157333

CONTROL VALVE (OFFSET BOOM) - CONTINUED
(6-SPOOL)

KEY	PART NO.	PART NAME	QTY	SERIAL NO.	REMARKS
0	4469026	HYD ACTUATED CONTROL VALVE	1		INCLUDES ALL PARTS ON THIS PAGE. ADDITIONAL PARTS ON PRECEDING AND FOLLOWING PAGES.
24	12M7006	LOCK WASHER	18		6 MM, (SUB FOR 0455002)
	19M7603	SCREW	18		M6 X 20
	24M7105	WASHER	18		6 X 12 X 1.600 MM
25	970486	PACKING	7		
26	0714403	HOLDER	6		
27	0332904	RETAINER	12		
28	0332905	SPRING	5		
30	0668007	SPRING	1		
39	4506420	PACKING	1		
61	0825203	PIPE PLUG	4		
62	M800650	PACKING	4		(SUB FOR 957366)
63	0828201	POPPET	1		
64	0828202	PLATE	1		
70	0828203	SPRING	1		

CONTROL VALVE (OFFSET BOOM) - CONTINUED
(RELIEF VALVES)

T157332 -UN-30OCT02

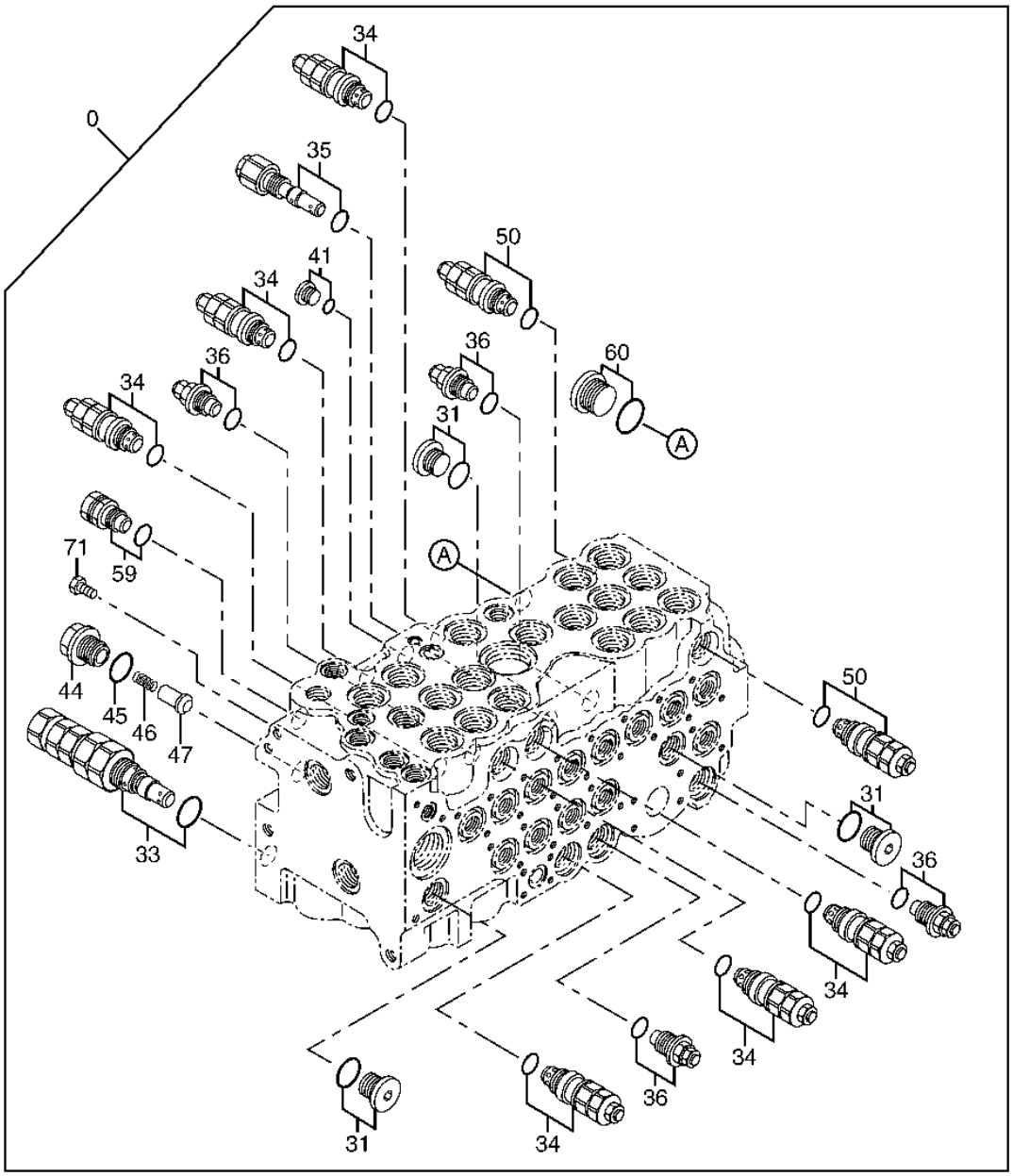

T157332

CONTROL VALVE (OFFSET BOOM) - CONTINUED
(RELIEF VALVES)

KEY	PART NO.	PART NAME	QTY	SERIAL NO.	REMARKS
0	4469026	HYD ACTUATED CONTROL VALVE	1		INCLUDES ALL PARTS ON THIS PAGE. ADDITIONAL PARTS ON PRECEDING PAGES.
31	0695007	FITTING PLUG	3		
33	0828301	PRESSURE RELIEF VALVE	1		
34	4396776	PRESSURE RELIEF VALVE	8		
35	4470195	PRESSURE RELIEF VALVE	1		
36	0735916	RELIEF VALVE	2		
41	0667713	FITTING PLUG	1		
44	0714504	FITTING PLUG	1		
45	4506418	O-RING	1		
46	0225209	SPRING	1		
47	0714503	POPPET	1		
50	4468962	PRESSURE RELIEF VALVE	2		
59	0828304	PIPE PLUG	1		
60	0668108	FITTING PLUG	1		
71	0825105	PIPE PLUG	1		

BLADE PILOT CONTROLLER

T160689 -UN-31OCT02

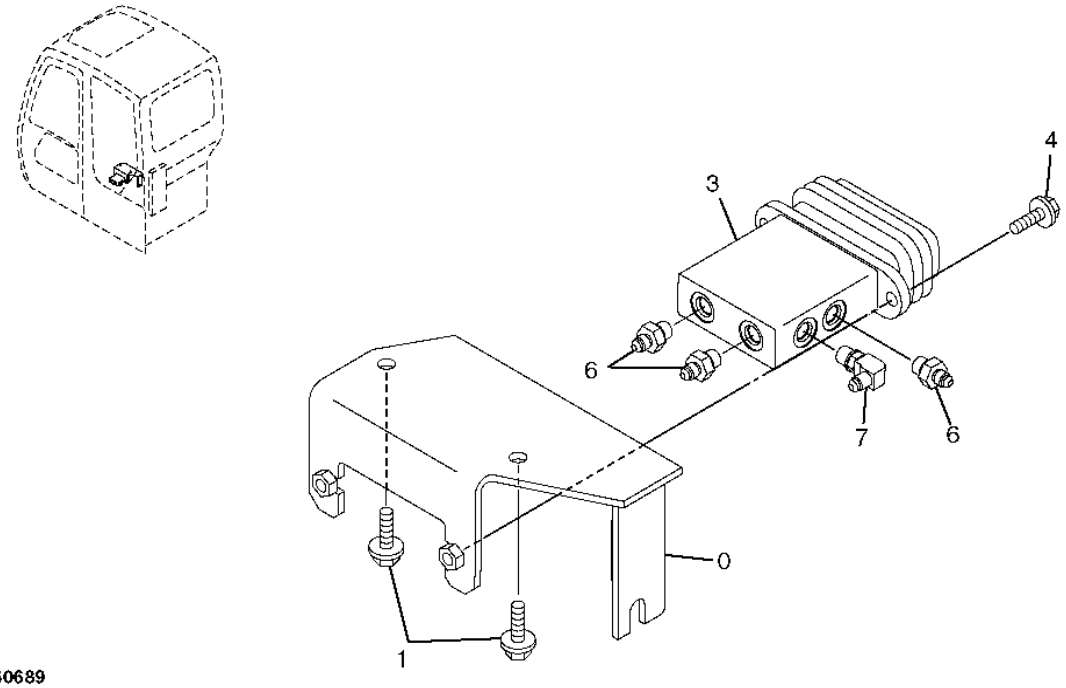

T160689

BLADE PILOT CONTROLLER

KEY	PART NO.	PART NAME	QTY	SERIAL NO.	REMARKS
0	8083108	BRACKET	1		
3	4357586	HYDR./PILOT CONTROL VALVE	1		
4	19M7662	CAP SCREW	2		M10 X 30
	12M7066	LOCK WASHER	2		10 MM (0.394")
6	A852122	ADAPTER	3		
	M800650	PACKING	1		
7	4154670	ELBOW FITTING	1		(SUB FOR A852322, P67984 OR THA852322)
	M800650	PACKING	1		

BLADE PILOT CONTROLLER COMPONENTS

T157175 -UN-05NOV02

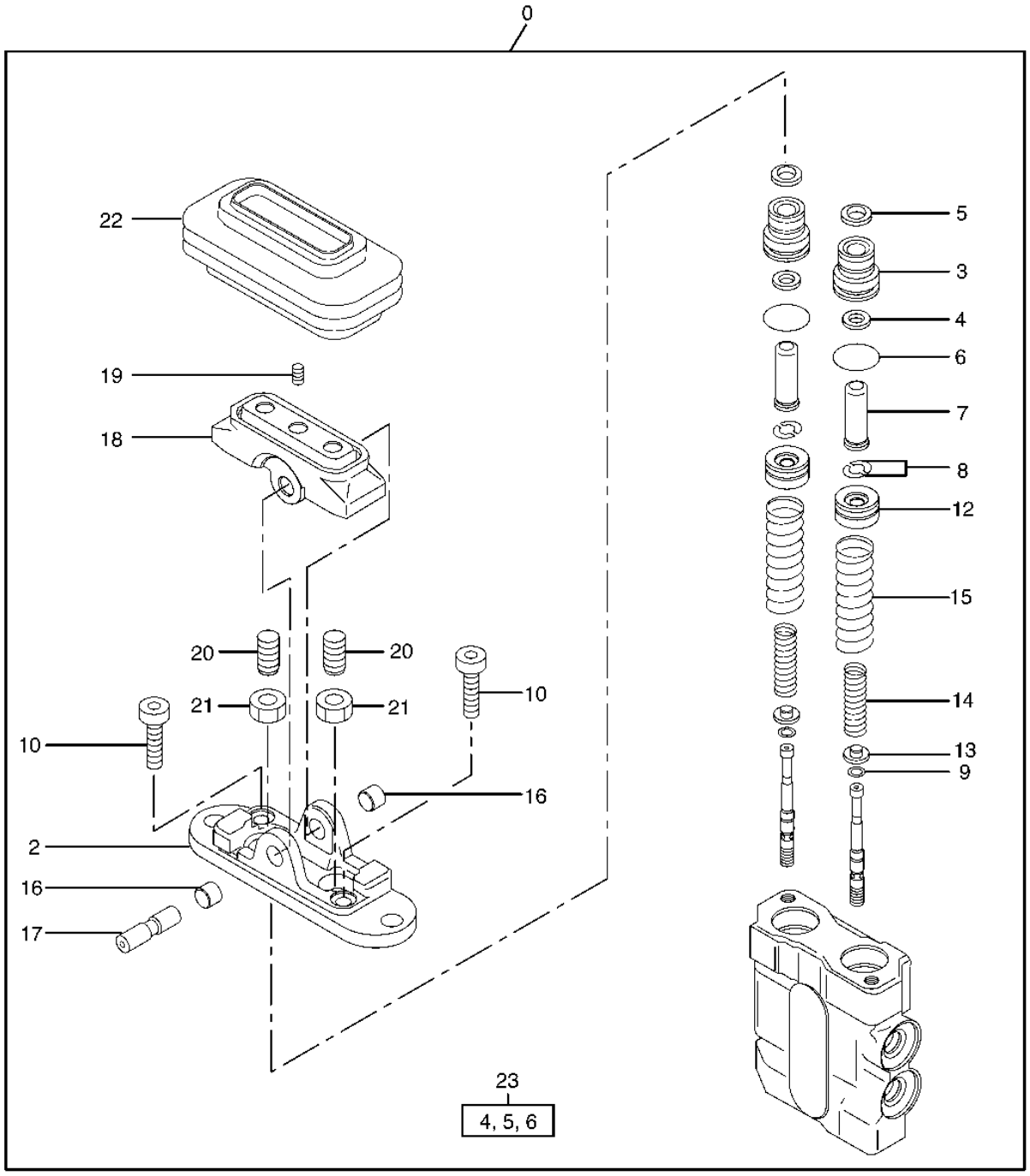

T157175

BLADE PILOT CONTROLLER COMPONENTS

KEY	PART NO.	PART NAME	QTY	SERIAL NO.	REMARKS
0	4357586	HYDR./PILOT CONTROL VALVE	1		
2	0630701	COVER	1		
3	0630702	PIPE PLUG	2		
4	0628908	SEAL	2		(K)
5	0630703	RING	2		(K)
6	4506420	PACKING	2		(K)
7	0681301	ROD	2		
8	0428906	WASHER	4		
9	TH0428907	WASHER	2		
10	0630705	BOLT	2		
12	0630706	VALVE SEAT	2		
13	0428910	WASHER	2		
14	0630707	SPRING	2		
15	0681302	SPRING	2		
16	0630709	BUSHING	2		
17	0630710	SHAFT	1		
18	0630711	CAM	1		
19	0179001	SCREW	1		
20	0630712	SCREW	2		
21	14M7274	NUT	2		M10, (SUB FOR 0630713)
22	0630714	BOOT	1		
23	4345769	SEAL KIT	1		(INLCUDES ALL (K) PARTS)

PILOT CONTROLLER (OFFSET BOOM)

T157175 -UN-05NOV02

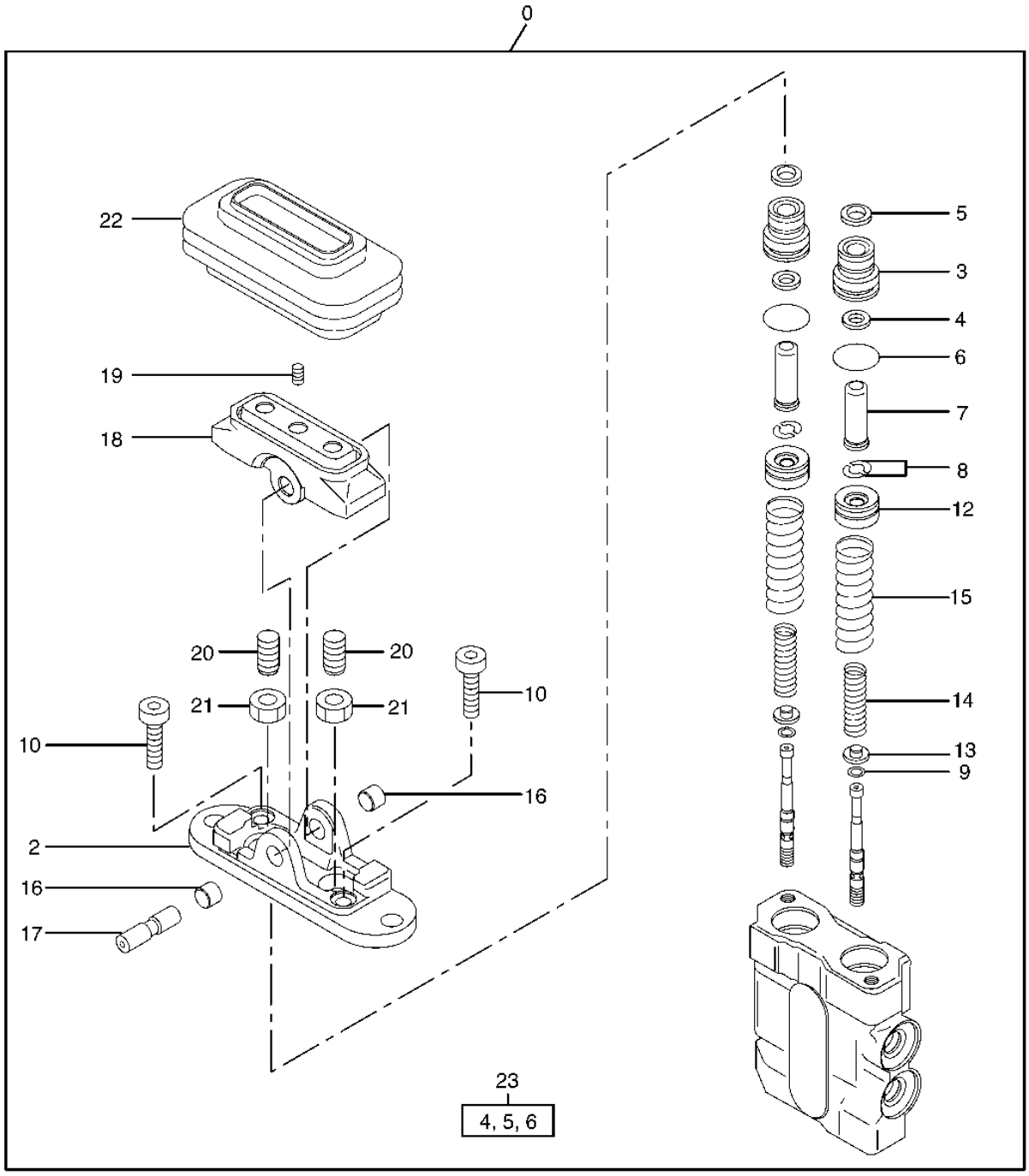

T157175

PILOT CONTROLLER (OFFSET BOOM)

KEY	PART NO.	PART NAME	QTY	SERIAL NO.	REMARKS
0	4330467	VALVE	1		
2	0630701	COVER	1		
3	0630702	PIPE PLUG	2		
4	0628908	SEAL	2		(K)
5	0630703	RING	2		(K)
6	4506420	PACKING	2		(K)
7	0630704	ROD	2		
8	0428906	WASHER	4		
9	0428907	WASHER	2		
10	0630705	BOLT	2		
12	0630706	VALVE SEAT	2		
13	0428910	WASHER	2		
14	0630707	SPRING	2		
15	0630708	SPRING	2		
16	0630709	BUSHING	2		
17	0630710	SHAFT	1		
18	0630711	CAM	1		
19	0179001	SCREW	1		
20	0630712	SCREW	2		
21	14M7274	NUT	2		M10, (SUB FOR 0630713)
22	0630714	BOOT	1		
23	4345769	SEAL KIT	1		(INCLUDES ALL (K) PARTS)

PILOT CONTROLLER (STANDARD BOOM)

T157176 -UN-05NOV02

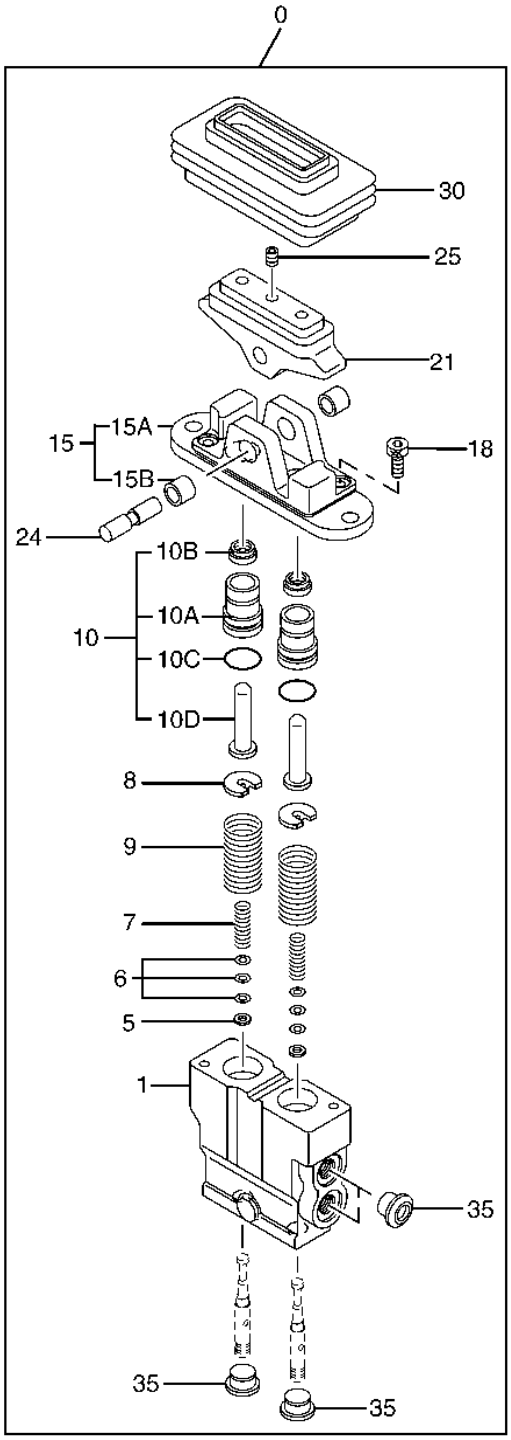

T157176

PILOT CONTROLLER (STANDARD BOOM)

KEY	PART NO.	PART NAME	QTY	SERIAL NO.	REMARKS
0	9197490	HYD ACTUATED CONTROL VALVE	1		
1	8083133	CASE	1		
5	4319299	SPACER	2		
6	4203411	SHIM	6		
7	4448725	SPRING	2		
8	4364970	GUIDE	2		
9	4448724	SPRING	2		
10	9151724	PLUNGER	2		
10A	3065877	BUSHING	1		
10B	984338	PACKING	1		
10C	3072517	PLUNGER	1		
10D	4447050	SEAL	1		
15	9204217	HOLDER	1		
15A	2045877	HOLDER	1		
15B	4449869	BUSHING	2		
18	J780825	SCREW	2		
21	3091016	CAM	1		
24	4449421	PIN FASTENER	1		
25	4234382	SCREW	1		
30	2046203	BOOT	1		
35	4365332	CAP	4		

FLOW CONTROL VALVE

T157177 -UN-05NOV02

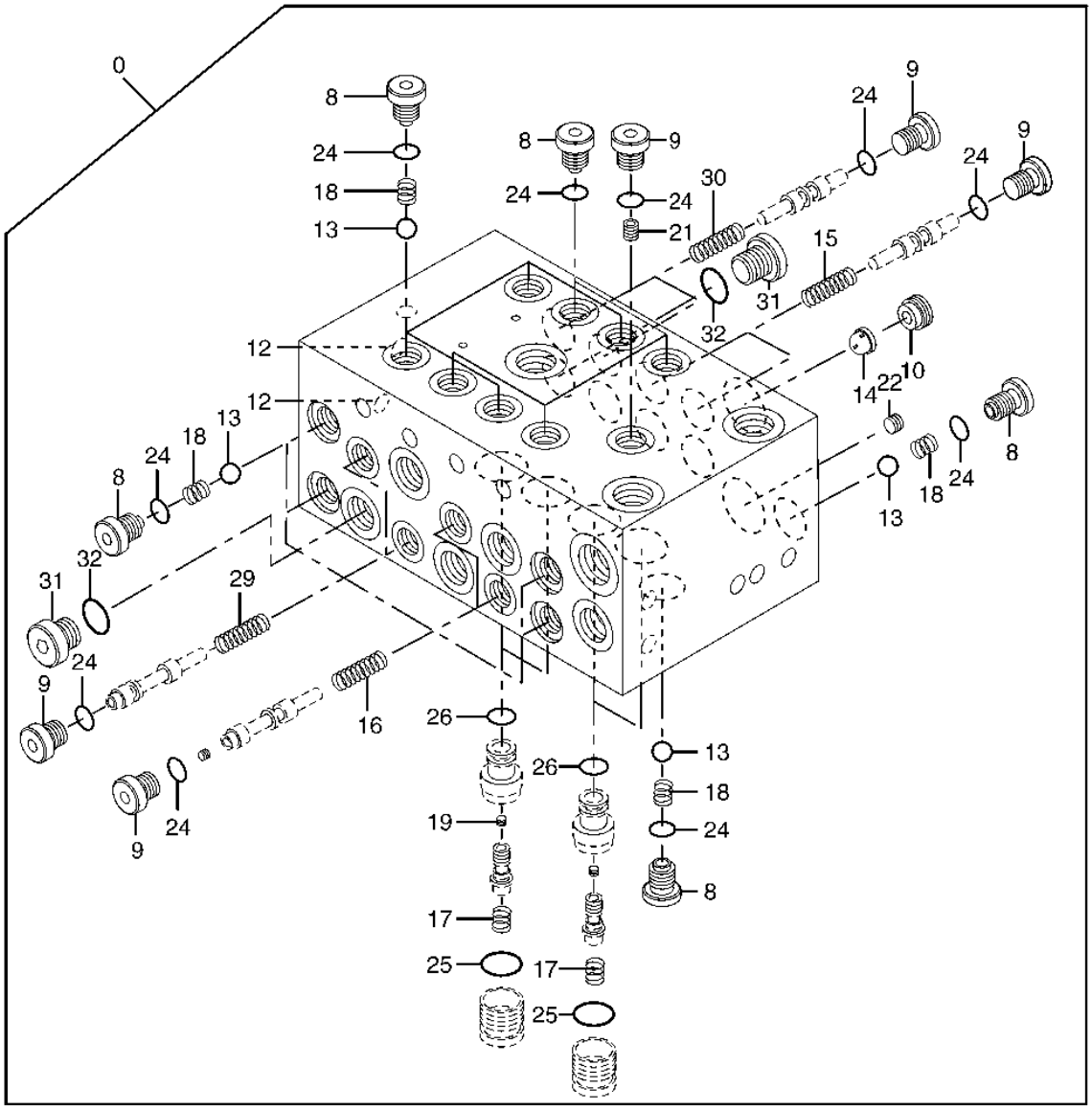

T157177

FLOW CONTROL VALVE

KEY	PART NO.	PART NAME	QTY	SERIAL NO.	REMARKS
0	4464222	FLOW CONTROL HYD. VALVE	1		
8	0323806	PIPE PLUG	14		
9	0215220	FITTING PLUG	9		
10	0756301	RETAINER	1		
13	0369812	BALL	10		
14	0756302	BREATHER	1		
15	0756303	SPRING	2		
16	0756304	SPRING	2		
17	0444409	SPRING	4		
18	0323807	SPRING	10		
21	0311804	ORIFICE	1		
22	0311704	ORIFICE	1		
24	4113154	O-RING	23		
25	962567	PACKING	4		
26	0390302	O-RING	4		
29	0756305	SPRING	2		
30	0756306	SPRING	2		
31	0624504	PIPE PLUG	2		
32	CH11561	PACKING	2		(SUB FOR 964255)

PROPEL SPEED SOLENOID VALVE

T157178 -UN-30OCT02

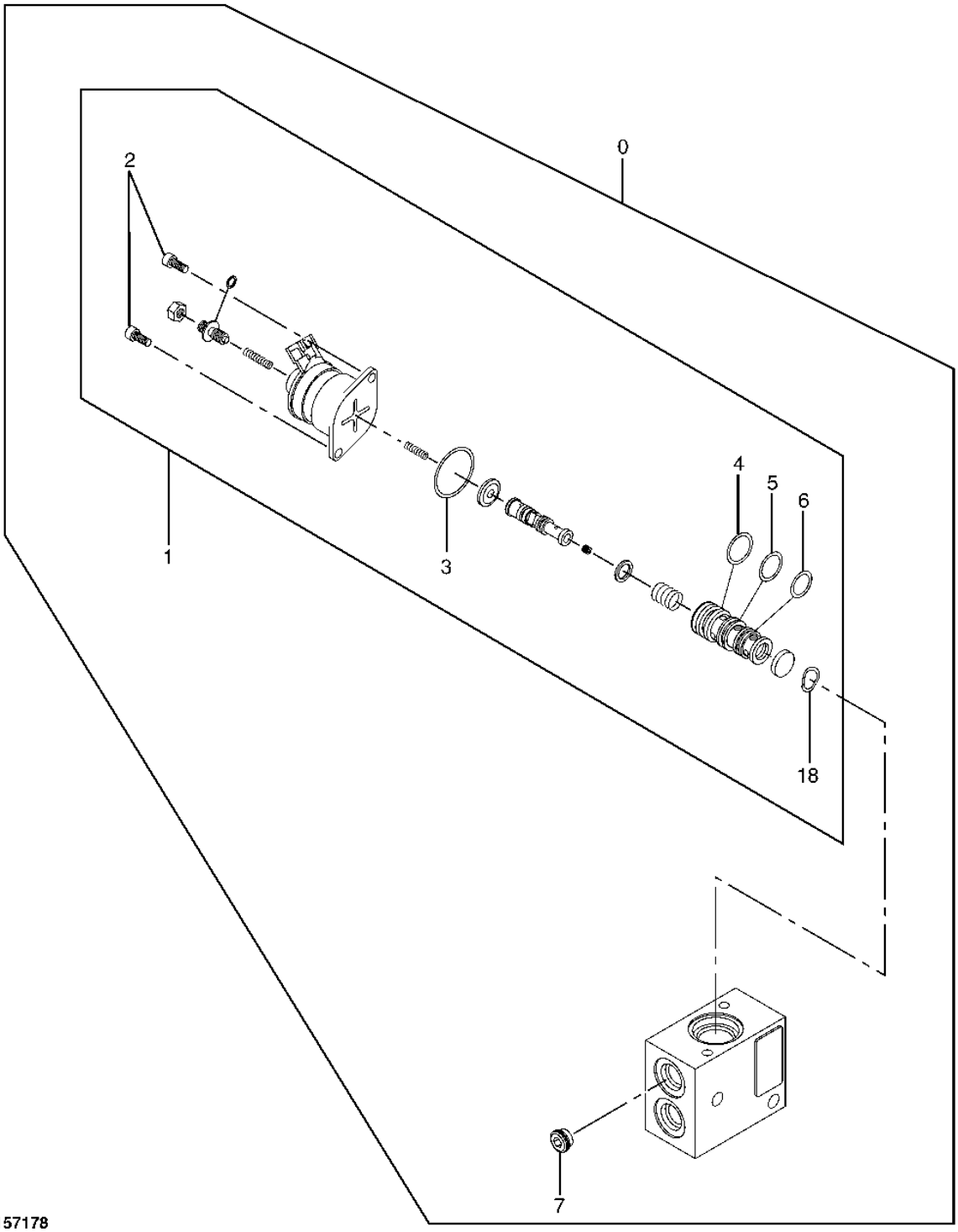

T157178

PROPEL SPEED SOLENOID VALVE

KEY	PART NO.	PART NAME	QTY	SERIAL NO.	REMARKS
0	4459699	SOLENOID HYDRAULIC VALVE	1		
1	4472675	FLOW CONTROL HYD. VALVE	1		
2	0387804	SCREW	2		
3	4455989	SEAL	1		
4	0408411	O-RING	1		
5	0408410	O-RING	1		
6	4185600	O-RING	1		(SUB FOR 0408409, AT153902 OR TH4185600)
7	4455986	PIPE PLUG	1		
18	4455990	WASHER	1		

SOLENOID VALVE

T157179 -UN-30OCT02

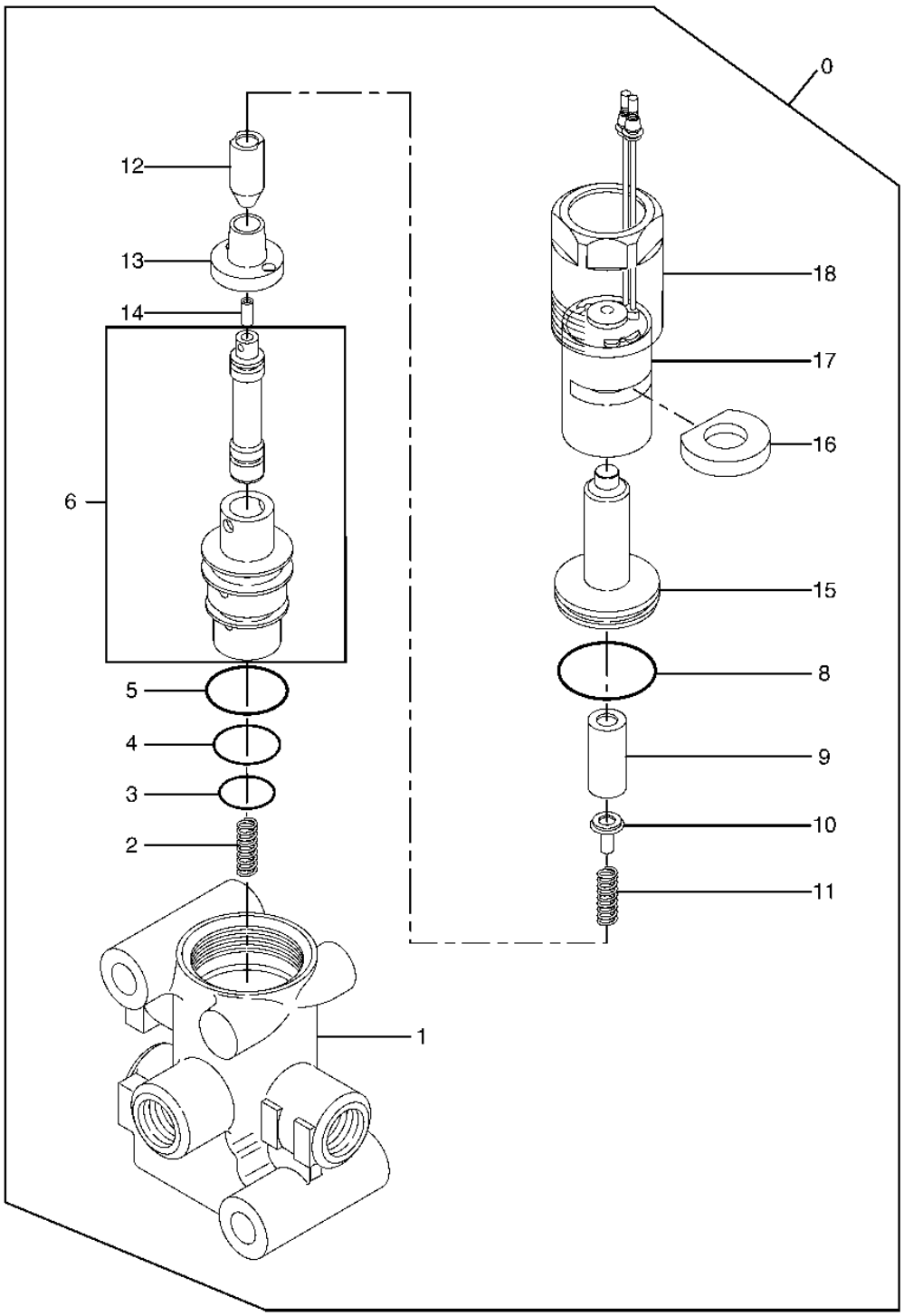

SOLENOID VALVE

KEY	PART NO.	PART NAME	QTY	SERIAL NO.	REMARKS
0	4210647	SOLENOID VALVE	1		
1	TH110254	HOUSING	1		
2	0308711	SPRING	1		
3	4509180	O-RING	1		
4	985099	O-RING	1		
5	AT264333	O-RING	1		(SUB FOR 4028265)
6	0308712	VALVE SPOOL	1		
8	0308713	O-RING	1		
9	0308714	PIPE	1		
10	0308715	VALVE SEAT	1		
11	0308716	SPRING	1		
12	0308717	PLUNGER	1		
13	0308718	STOP	1		
14	0308719	ROD	1		
15	0308720	HOUSING	1		
16	0308721	WASHER	1		
17	0308722	SOLENOID	1		
18	0308724	SCREW	1		

2H19

SOLENOID VALVE

T157180 -UN-30OCT02

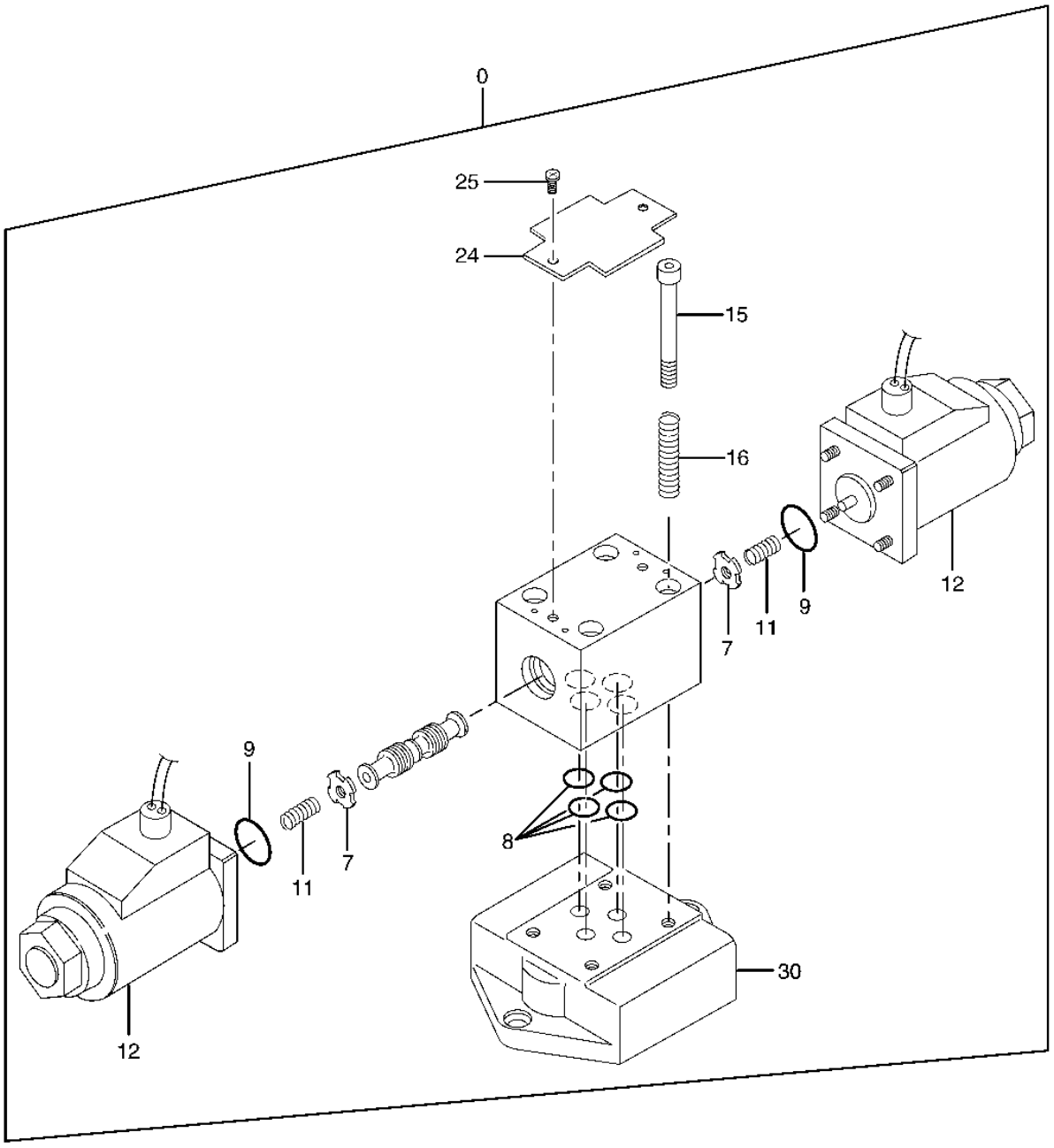

T157180

SOLENOID VALVE

KEY	PART NO.	PART NAME	QTY	SERIAL NO.	REMARKS
0	4350150	SOLENOID VALVE	1		
7	0322304	RETAINER	2		
8	0661701	O-RING	4		
9	0215710	O-RING	2		
11	0322602	SPRING	2		
12	0654305	SOLENOID	2		
15	0215310	SCREW	4		
16	0654306	SPRING PIN	4		
24	0661801	IDENTIFICATION PLATE	1		
25	0654304	SCREW	2		
30	0374707	PLATE	1		

PILOT SHUTOFF VALVE

T157182 -UN-30OCT02

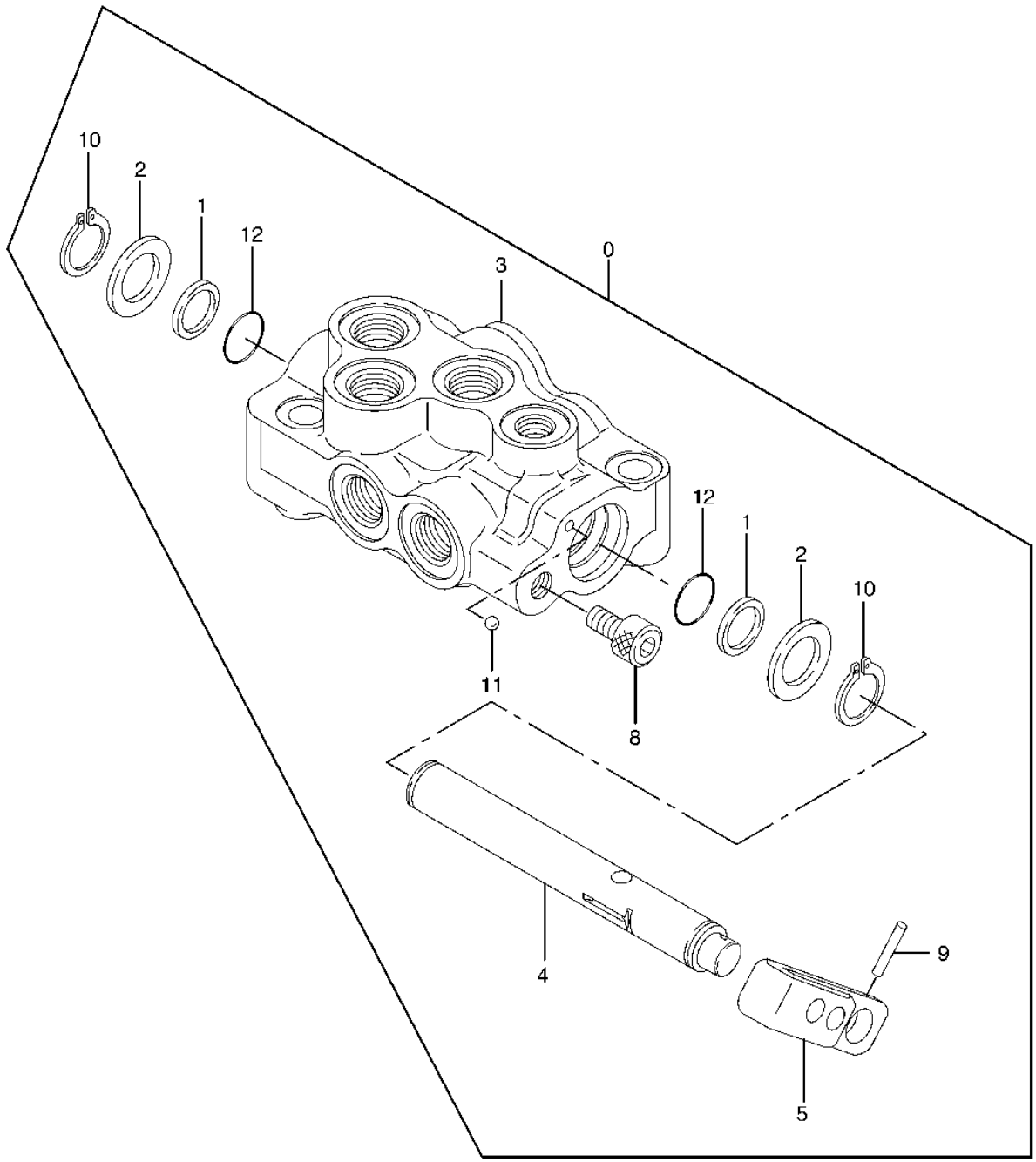

T157182

PILOT SHUTOFF VALVE

KEY	PART NO.	PART NAME	QTY	SERIAL NO.	REMARKS
0	4462892	FLOW CONTROL HYD. VALVE	1		
1	0309904	BACK-UP RING	2		
2	0396603	WASHER	2		
3	0823901	HOUSING	1		
4	0823902	VALVE SPOOL	1		
5	0804501	LEVER	1		
8	0396604	BOLT	1		
9	0668304	SPRING PIN	1		
10	0396605	SNAP RING	2		
12	954493	O-RING	2		

SLOW-RETURN VALVE

T157183 -UN-30OCT02

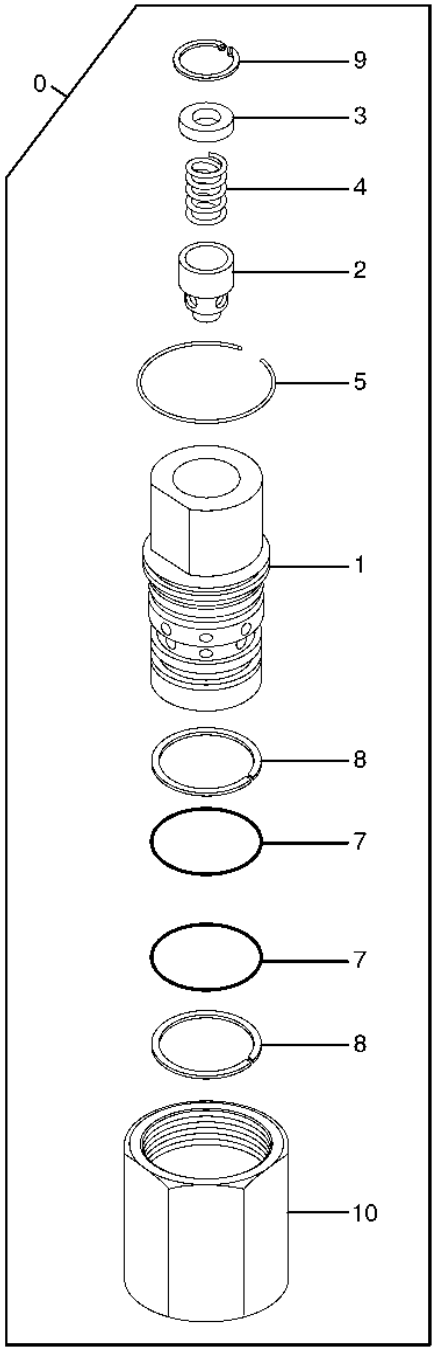

T157183

SLOW-RETURN VALVE

KEY	PART NO.	PART NAME	QTY	SERIAL NO.	REMARKS
0	9023408	VALVE	1		
1	TH100854	HOUSING	1		
2	4077173	PISTON	1		
3	4077175	RETAINER	1		
4	4077174	SPRING	1		
5	4077176	RING	1		
7	992444	O-RING	2		
8	4079356	BACK-UP RING	2		
9	991714	SNAP RING	1		
10	TH100853	HOUSING	1		

SLOW-RETURN VALVE

T157184 -UN-30OCT02

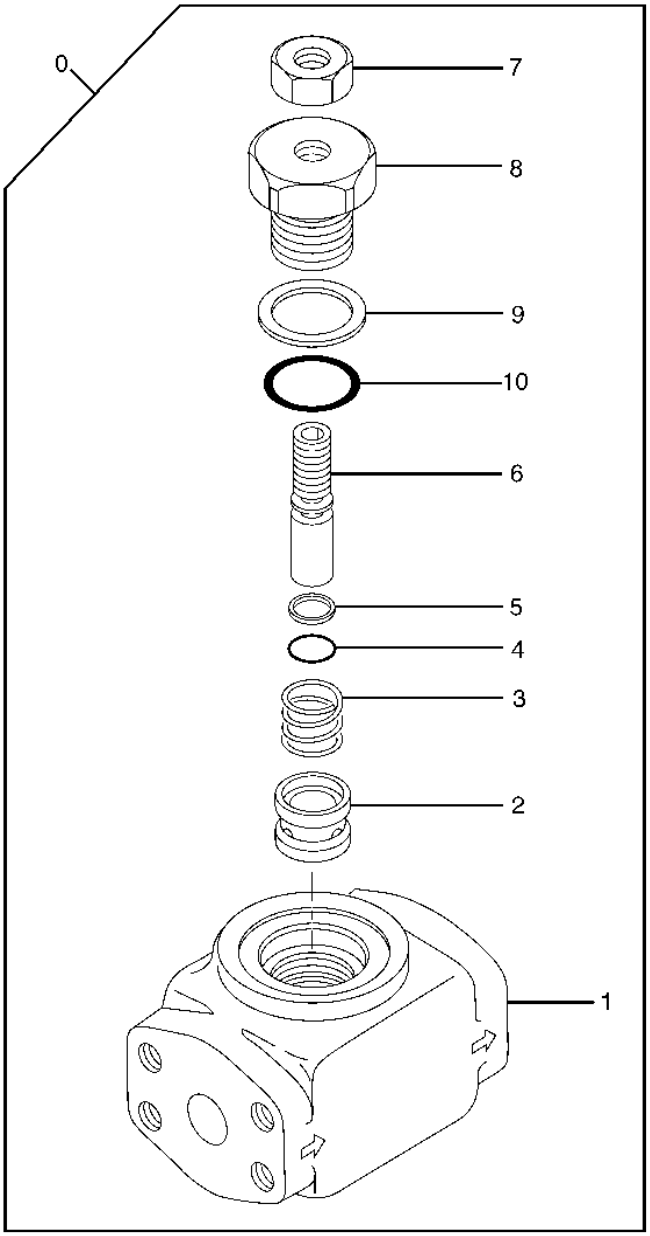

T157184

SLOW-RETURN VALVE

KEY	PART NO.	PART NAME	QTY	SERIAL NO.	REMARKS
0	4330223	FLOW CONTROL HYD. VALVE	1		
1	0671401	HOUSING	1		
2	0671402	POPPET	1		
3	0671403	SPRING	1		
4	M800650	PACKING	1		(SUB FOR 957366)
5	4092265	BACK-UP RING	1		
6	0671404	NUT	1		
7	0671405	CAP (HAT)	1		
8	0671406	PIN	1		
9	0212312	BACK-UP RING	1		
10	0212313	O-RING	1		

SELECTOR VALVE

T198356 -UN-09MAR04

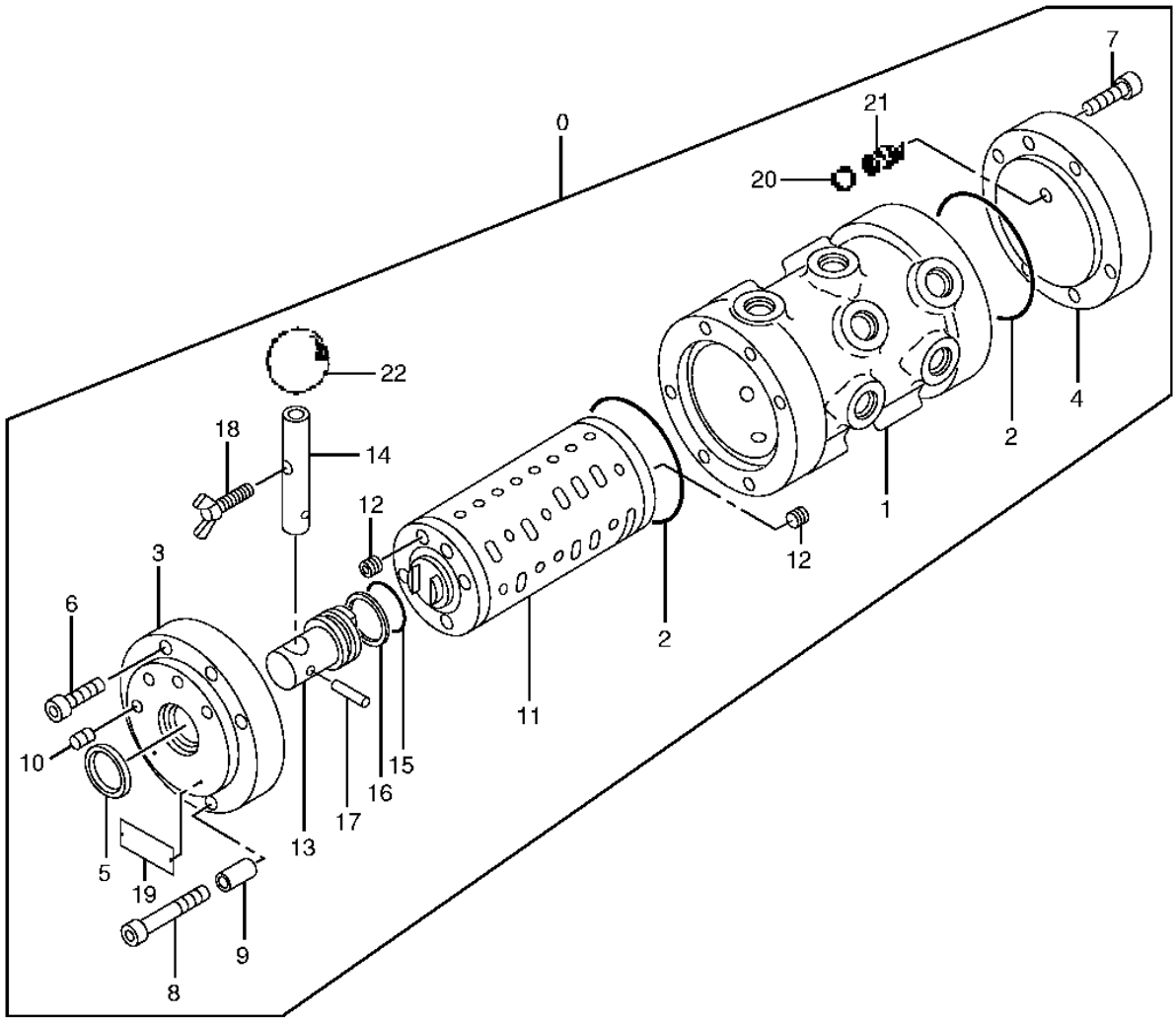

T198356

SELECTOR VALVE

KEY	PART NO.	PART NAME	QTY	SERIAL NO.	REMARKS
0	TH4447276	SELECTIVE CONTROL VALVE	1		
1	.....	CASE	1		
2	CH17160	PACKING	2		(SUB FOR A811080)
3	0824002	COVER	1		
4	0824003	COVER	1		
5	.....	SEAL	1		
6	0210718	SOCKET HEAD SCREW	4		
7	19M7660	SCREW	6		M8 X 20, (SUB FOR 0130519 OR 0134608)
8	0265201	BOLT	2		
9	0672707	SPACER	2		
10	0672708	INSERT	4		
11	.....	SPOOL VALVE	1		
12	0313107	BOLT	8		
13	0672709	PIN	1		
14	0672710	LEVER	1		
15	AT264347	O-RING	1		(SUB FOR TH100136, 4506428)
16	4044839	BACK-UP RING	1		(SUB FOR TH103457)
17	4051262	SPRING PIN	1		(SUB FOR AT213796)
18	M360830	BOLT	1		(SUB FOR 0672703)
19	.....	IDENTIFICATION PLATE	1		
20	0451104	BALL	1		
21	0672701	SPRING	1		
22	0824004	KNOB	1		

SUCTION PIPING

T157122 -UN-05NOV02

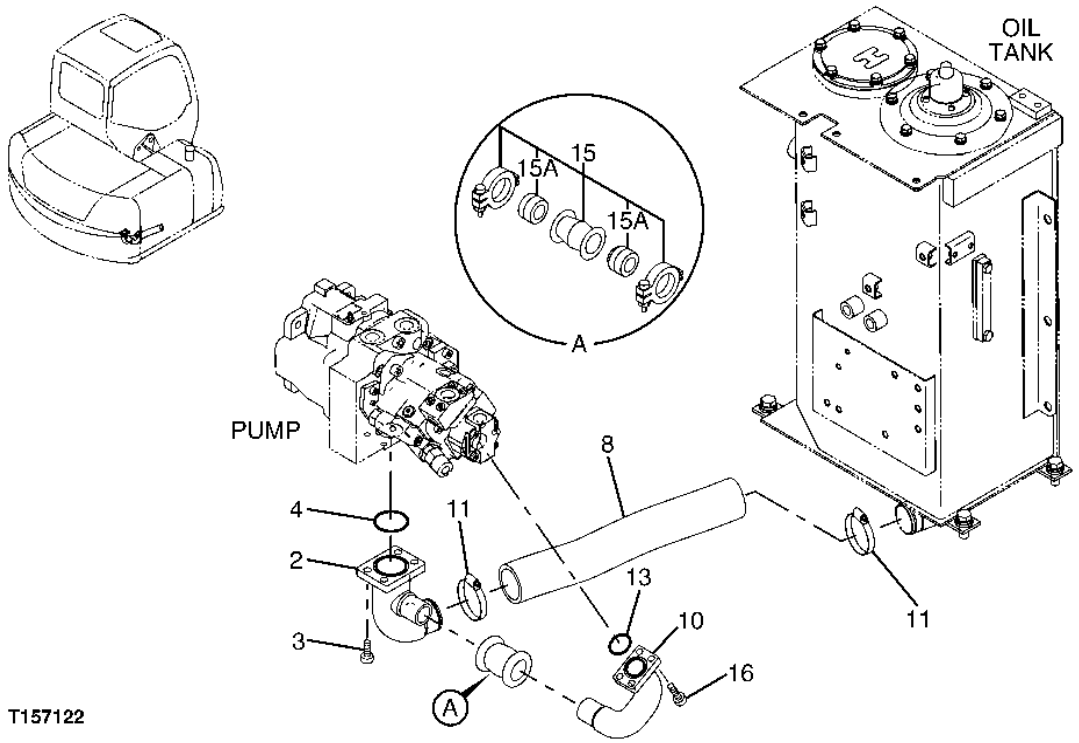

SUCTION PIPING

KEY	PART NO.	PART NAME	QTY	SERIAL NO.	REMARKS
2	2045941	PIPE	1		
3	J781230	SCREW	4		
4	TH105683	O-RING	1		
8	4120294	HOSE	1		
10	3089853	PIPE	1		
11	AT39141	HOSE CLAMP	2		
13	A811040	O-RING	1		
15	4069801	COUPLING	1		
15A	4196259	SEAL	2		
16	J781030	SCREW	4		

DELIVERY PIPING

T157123 -UN-30OCT02

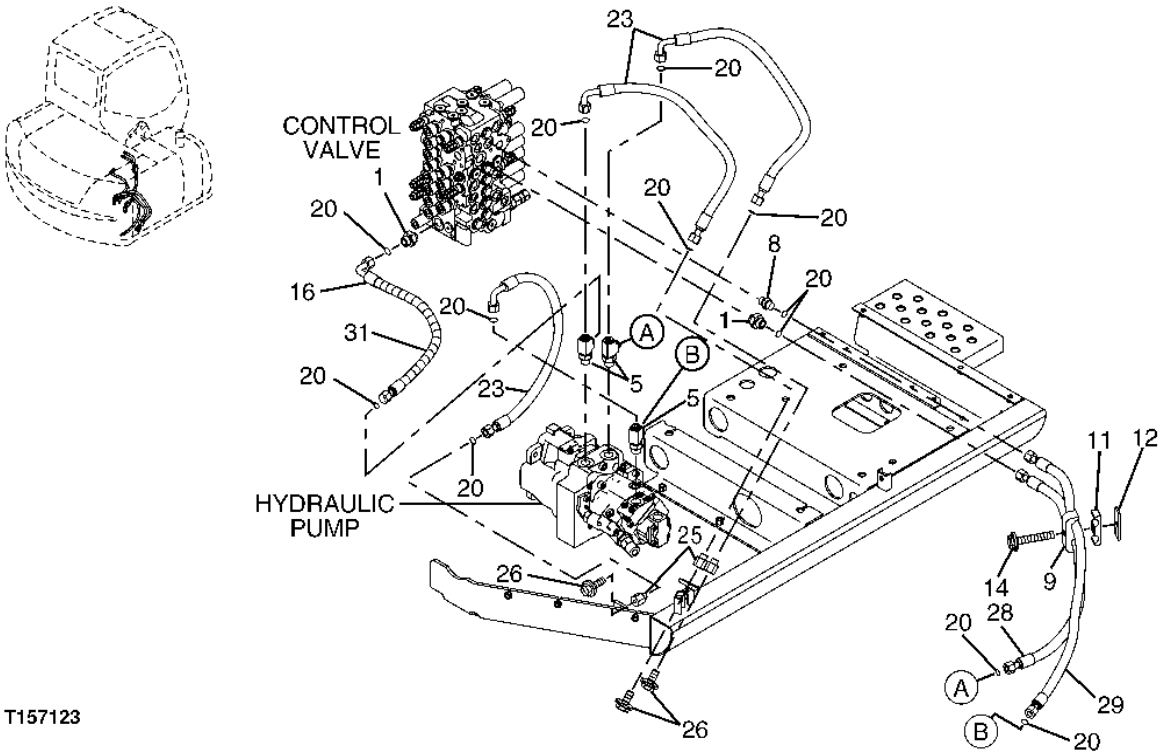

DELIVERY PIPING

KEY	PART NO.	PART NAME	QTY	SERIAL NO.	REMARKS
1	A853164	ADAPTER	2		
	4506424	O-RING	1		
5	A853464	FITTING	3		
	4506424	O-RING	1		
8	A853144	ADAPTER	1		
	4506418	O-RING	1		
9	8082431	CLAMP	1		
11	4285722	CLAMP	1		
12	4303989	ADJUSTING STRAP	1		
14	J021070	BOLT	1		
16	4455708	HYDRAULIC HOSE - FABRICATE	1		
20	T77857	O-RING	12		
23	4457818	HYDRAULIC HOSE - FABRICATE	3		
25	4446638	PIPE PLUG	3		
26	19M7662	CAP SCREW	3		M10 X 30
	12M7066	LOCK WASHER	3		10 MM (0.394")
	24M7028	WASHER	3		10.500 X 20 X 2 MM (0.413" X 0.787" X 0.079")
28	4455527	HYDRAULIC HOSE - FABRICATE	1		
29	4455528	HYDRAULIC HOSE - FABRICATE	1		
31	4327294	HOSE GUARD	2		

HYDRAULIC RETURN LINES (CONTROL VALVE TO RESERVOIR)

T157124 -UN-30OCT02

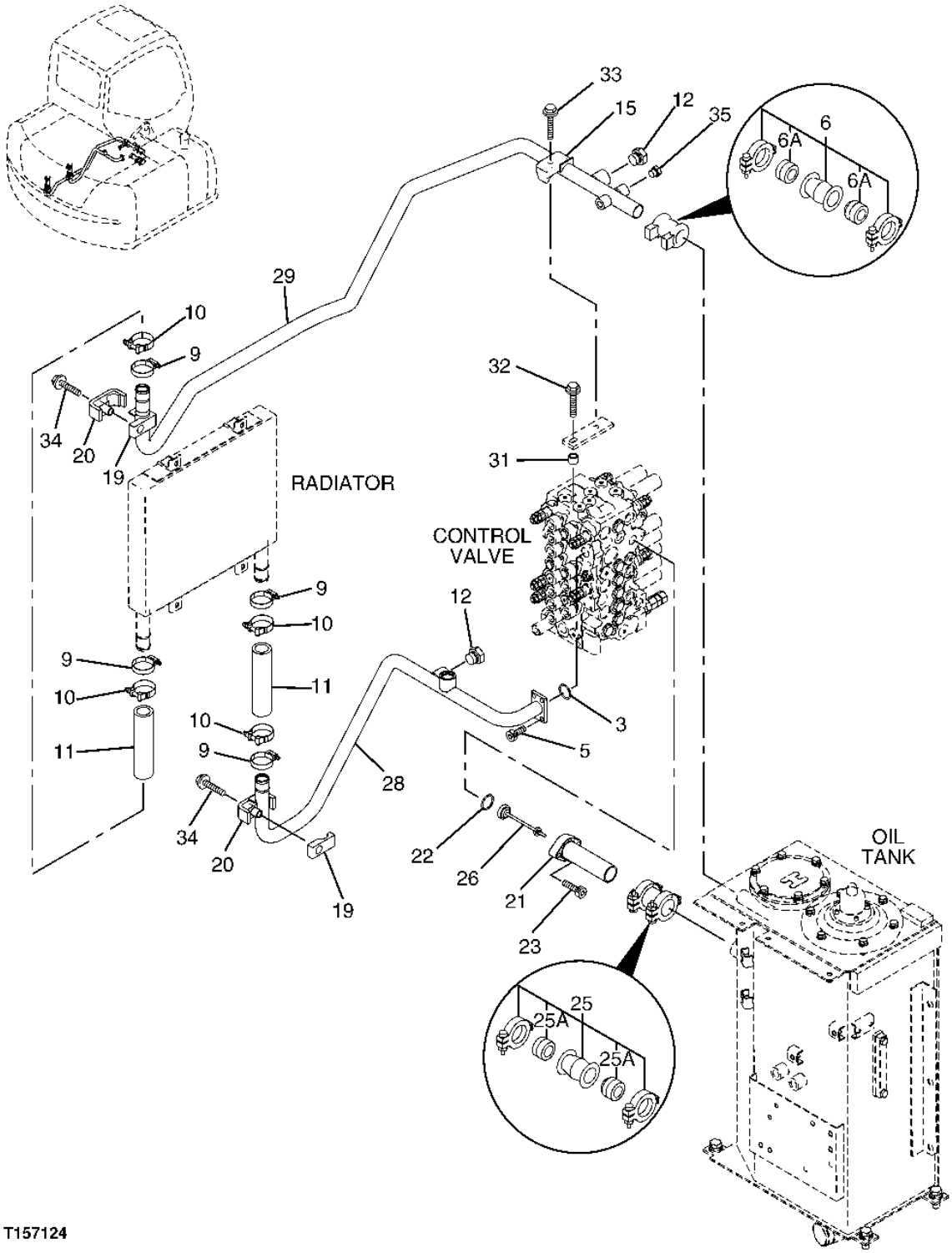

HYDRAULIC RETURN LINES (CONTROL VALVE TO RESERVOIR)

KEY	PART NO.	PART NAME	QTY	SERIAL NO.	REMARKS
3	AT264324	O-RING	1		(SUB FOR A811035)
5	J781025	BOLT	4		
6	4071213	COUPLING	1		
6A	4196258	SEAL	2		
9	AR65293	CLAMP	4		
10	4296063	HOSE CLAMP	4		
11	.....	HOSE	2		(CUT FROM BULK HOSE)
12	A885006	PLUG	2		
	4506424	O-RING	1		
15	4190127	CLAMP	1		
19	4462051	ISOLATOR	2		
20	8085521	CLAMP	2		
21	8082930	PIPE	1		
22	A811040	O-RING	1		
23	19M8337	SCREW	2		(SUB FOR J781035)
25	4069801	COUPLING	1		
25A	4196259	SEAL	2		
26	4255212	CHECK VALVE	1		
28	7040475	PIPE	1		
29	7040476	PIPE	1		
31	4457103	BUSHING	1		
32	19M7662	CAP SCREW	1		M10 X 30
	12M7067	LOCK WASHER	1		12 MM (0.472")
	24M7346	WASHER	1		11 X 20 X 2 MM (0.433" X 0.787" X 0.079")
33	19M8348	CAP SCREW	1		M12 X 65
	12H301	LOCK WASHER	1		1/2"
34	19M8088	CAP SCREW	2		M12 X 75
	12M7067	LOCK WASHER	2		12 MM (0.472")
	24M7047	WASHER	2		13 X 24 X 2.500 MM (0.512" X 0.945" X 0.098")
35	A885003	PIPE PLUG	1		
	CH11570	O-RING	1		

HYDRAULIC DRAIN HOSES(SWING MOTOR AND PUMP TO OIL TANK)

T157125 -UN-30OCT02

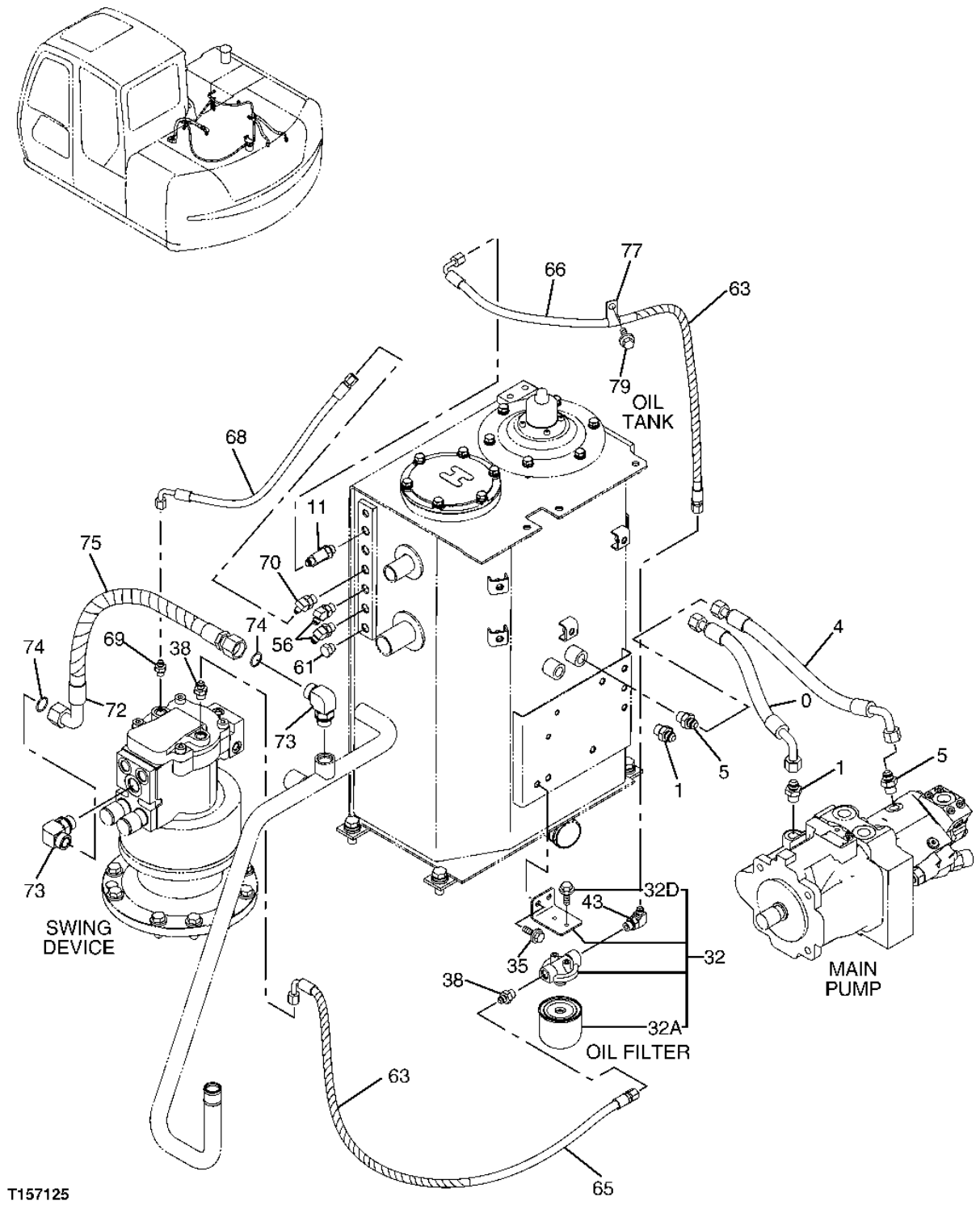

HYDRAULIC DRAIN HOSES(SWING MOTOR AND PUMP TO OIL TANK)

KEY	PART NO.	PART NAME	QTY	SERIAL NO.	REMARKS
0	4471500	HYDRAULIC HOSE - FABRICATE	1		
1	A852144	ADAPTER	2		
	4506418	O-RING	1		
4	4450087	HYDRAULIC HOSE - FABRICATE	1		
5	A852144	ADAPTER	2		
	4506418	O-RING	1		
11	4246385	TEE FITTING	1		
	CH11570	O-RING	1		
32	4453708	FILTER	1		
32A	4463783	FILTER ELEMENT	1		
32D	19M7932	CAP SCREW	2		M8 X 16
	12M7066	LOCK WASHER	2		10 MM (0.394")
35	19M7938	CAP SCREW	2		M10 X 20
	12M7066	LOCK WASHER	2		10 MM (0.394")
38	A852133	ADAPTER	2		
	CH11570	O-RING	1		
43	A852333	ELBOW FITTING	1		
	CH11570	O-RING	1		
56	4190244	ELBOW FITTING	2		(SUB FOR TH106152)
	CH11570	O-RING	1		
61	TH101813	PLUG	1		
	CH11570	O-RING	1		
63	4327293	HOSE GUARD	2		
65	4462116	HYDRAULIC HOSE - FABRICATE	1		
66	4462115	HYDRAULIC HOSE - FABRICATE	1		
68	4462617	HYDRAULIC HOSE - FABRICATE	1		
69	A852122	ADAPTER	1		
	M800650	PACKING	1		
70	A852232	FITTING PLUG	1		
	CH11570	O-RING	1		
72	4462476	HYDRAULIC HOSE - FABRICATE	1		
73	A853366	ELBOW FITTING	2		
	4506424	O-RING	1		
74	T77858	O-RING	2		
75	4327294	HOSE GUARD	1		
77	4190253	CLIP	1		
79	19M7938	CAP SCREW	1		M10 X 20
	12M7066	LOCK WASHER	1		10 MM (0.394")

HYDRAULIC DRAIN HOSES (CONTROL VALVE TO HYDRAULIC OIL TANK)

T157126 -UN-30OCT02

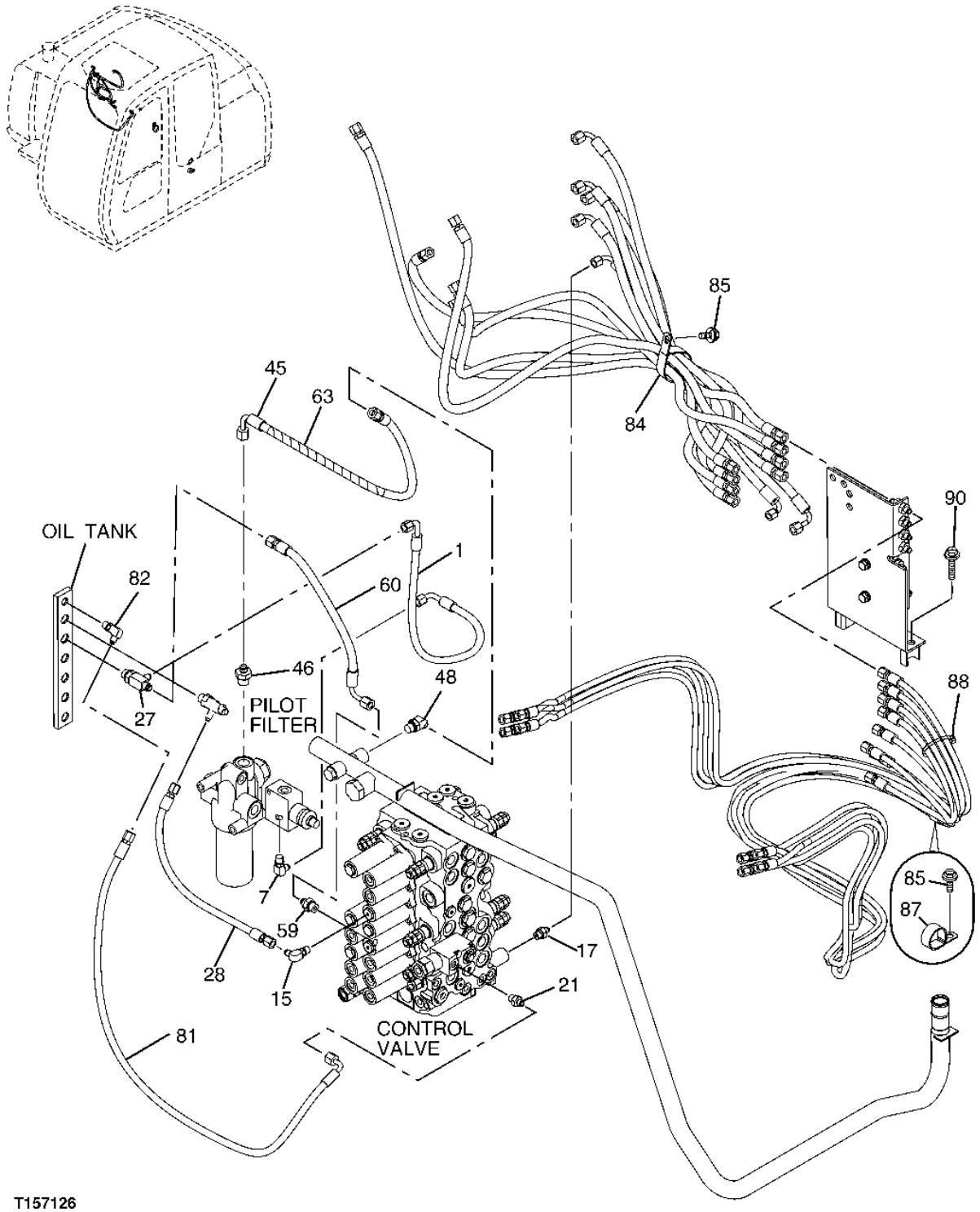

T157126

DRAIN PIPING (HYDRAULIC OIL TANK, CONTROL VALVE)

KEY	PART NO.	PART NAME	QTY	SERIAL NO.	REMARKS
1	4463068	HYDRAULIC HOSE - FABRICATE	1		
7	4154670	ELBOW FITTING	1		(SUB FOR A852322, P67984 OR THA852322)
	M800650	PACKING	1		
15	4154670	ELBOW FITTING	1		(SUB FOR A852322, P67984 OR THA852322)
	M800650	PACKING	1		
17	A852122	ADAPTER	1		
	M800650	PACKING	1		
21	A852122	ADAPTER	1		
	M800650	PACKING	1		
27	4246385	TEE FITTING	1		
	CH11570	O-RING	1		
28	4459662	HYDRAULIC HOSE - FABRICATE	1		
45	4441745	HYDRAULIC HOSE - FABRICATE	1		
46	A852143	ADAPTER	1		
	4506418	O-RING	1		
48	T106152	PIN FASTENER	1		
	CH11570	O-RING	1		
59	A852133	ADAPTER	1		
	CH11570	O-RING	1		
60	4466142	HYDRAULIC HOSE - FABRICATE	1		
63	4327293	HOSE GUARD	1		
81	4465533	HYDRAULIC HOSE - FABRICATE	1		
82	4154670	ELBOW FITTING	1		(SUB FOR A852322, P67984 OR THA852322)
	M800650	PACKING	1		
84	4193816	CLIP	1		
85	19M7402	CAP SCREW	2		M10 X 25
	12M7066	LOCK WASHER	2		10 MM (0.394")
	24M7028	WASHER	2		10.500 X 20 X 2 MM (0.413" X 0.787" X 0.079")
87	4193848	CLIP	1		(SUB FOR AT131725)
88	H77698	TIE BAND	1		
90	J021070	BOLT	2		

MAIN PIPING (STANDARD BOOM)

T157128 -UN-30OCT02

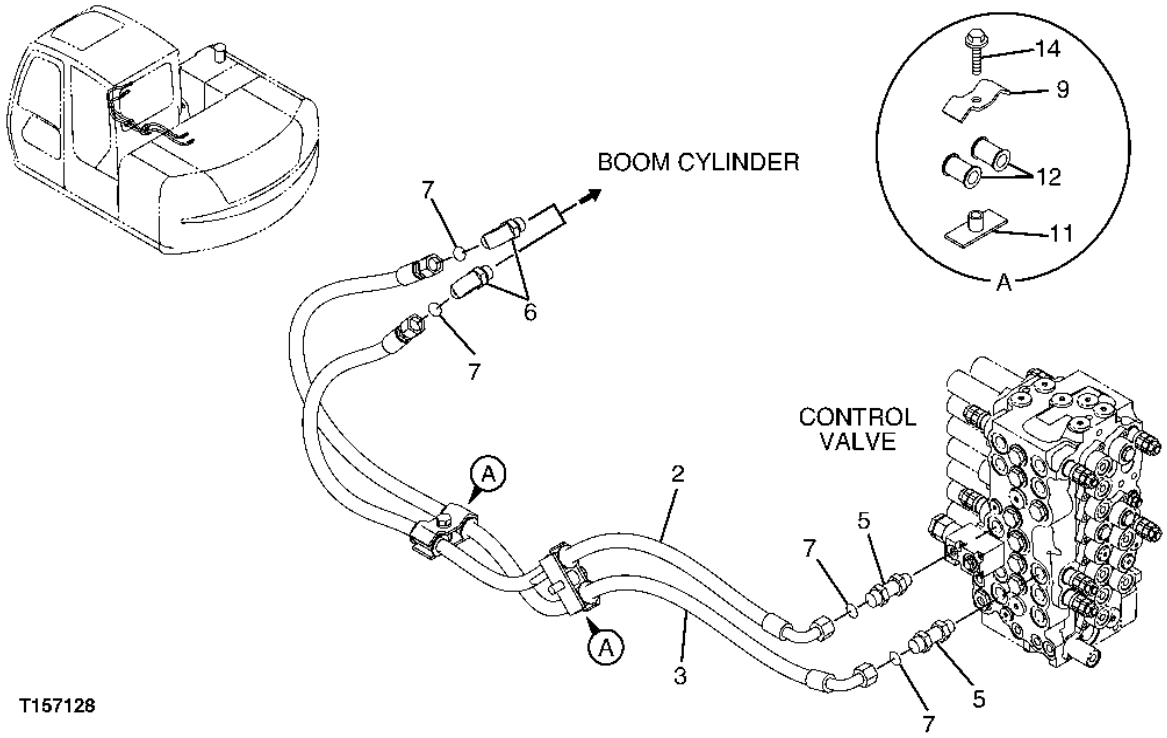

MAIN PIPING (STANDARD BOOM)

KEY	PART NO.	PART NAME	QTY	SERIAL NO.	REMARKS
2	4457455	HYDRAULIC HOSE - FABRICATE	1		
3	4457456	HYDRAULIC HOSE - FABRICATE	1		
5	4199247	ADAPTER	2		
	4506418	O-RING	1		
6	A853344	ELBOW FITTING	2		
	4506418	O-RING	1		
7	T77857	O-RING	4		
9	4202103	CLAMP	2		
11	9757642	CLAMP	2		
12	4463996	BUSHING	4		
14	19M7362	CAP SCREW	2		M12 X 55
	12H301	LOCK WASHER	2		1/2"

HYDRAULIC HOSES (CONTROL VALVE TO OFFSET CYLINDER LINES)

T157102 -UN-30OCT02

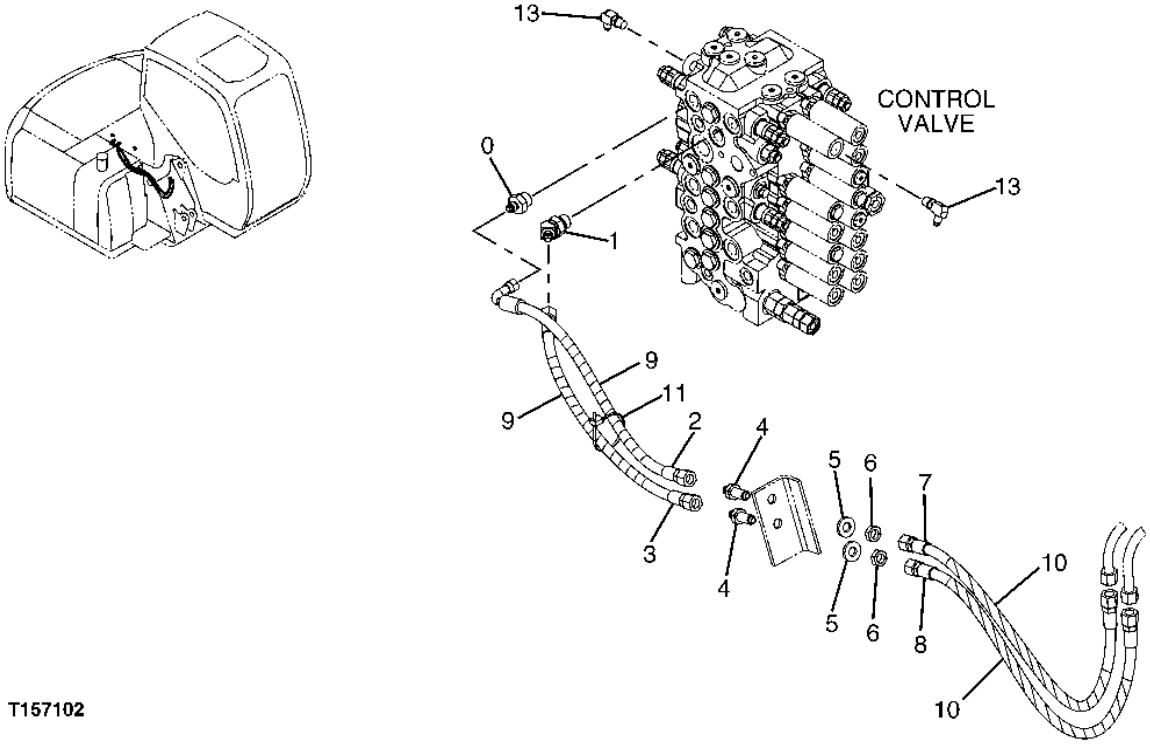

T157102

HYDRAULIC HOSES (CONTROL VALVE TO OFFSET CYLINDER LINES)

KEY	PART NO.	PART NAME	QTY	SERIAL NO.	REMARKS
0	A852143	ADAPTER	1		
	4506418	O-RING	1		
1	A852243	ELBOW FITTING	1		
	4506418	O-RING	1		
2	4471363	HYDRAULIC HOSE - FABRICATE	1		
3	4471365	HYDRAULIC HOSE - FABRICATE	1		
4	R27238	FITTING	2		
5	J222014	WASHER	2		
6	14H888	NUT	2		
7	4471366	HYDRAULIC HOSE - FABRICATE	1		
8	AT48428	HYDRAULIC HOSE - FABRICATE	1		
9	4449646	GUARD	2		
10	4327293	HOSE GUARD	2		
11	H77698	TIE BAND	1		
13	4154670	ELBOW FITTING	2		(SUB FOR A852322, P67984 OR THA852322)
	M800650	PACKING	1		

HYDRAULIC HOSES (CONTROL VALVE TO ARM CYLINDER LINES ON BOOM)

T157129 -UN-30OCT02

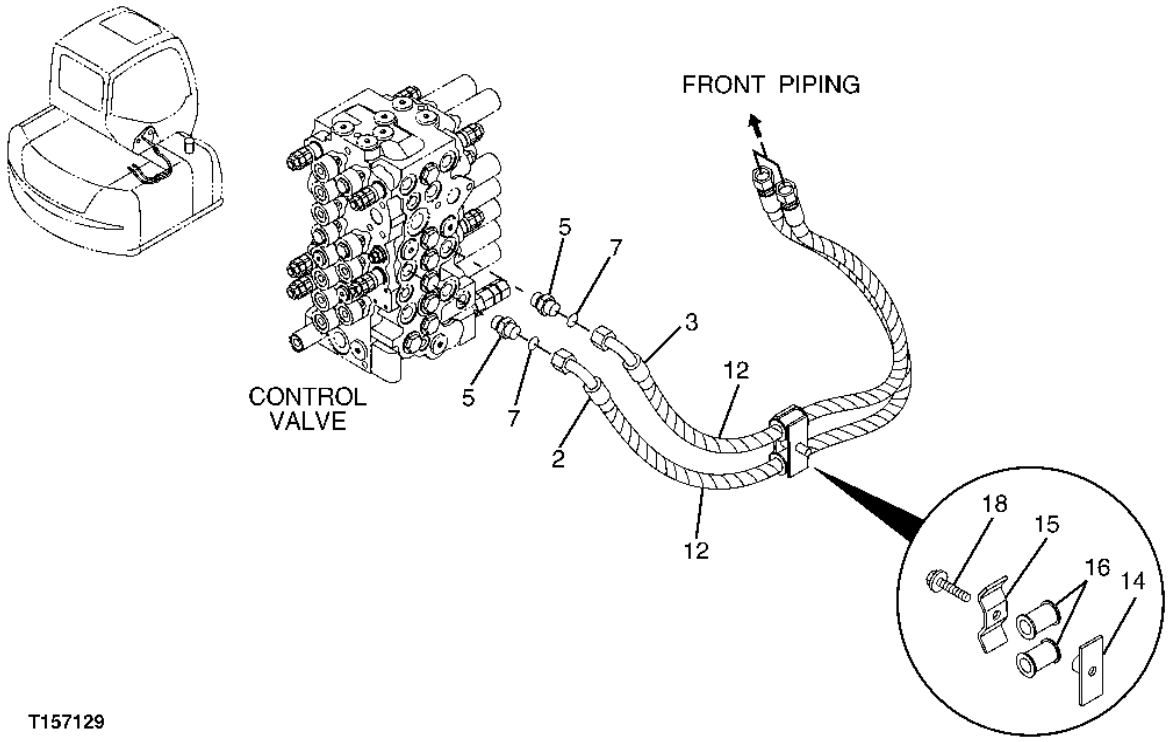

T157129

HYDRAULIC HOSES (CONTROL VALVE TO ARM CYLINDER LINES ON BOOM)

KEY	PART NO.	PART NAME	QTY	SERIAL NO.	REMARKS
2	4457457	HYDRAULIC HOSE - FABRICATE	1		
3	4457458	HYDRAULIC HOSE - FABRICATE	1		
5	A853144	ADAPTER	2		
	4506418	O-RING	1		
7	T77857	O-RING	2		
12	4327294	HOSE GUARD	4		
14	9757642	CLAMP	1		
15	4202103	CLAMP	1		
16	4463996	BUSHING	2		
18	19M7362	CAP SCREW	1		M12 X 55
	12H301	LOCK WASHER	1		1/2"

HYDRAULIC HOSES(CONTROL VALVE TO BUCKET CYLINDER LINES ON BOOM)

T157120 -UN-30OCT02

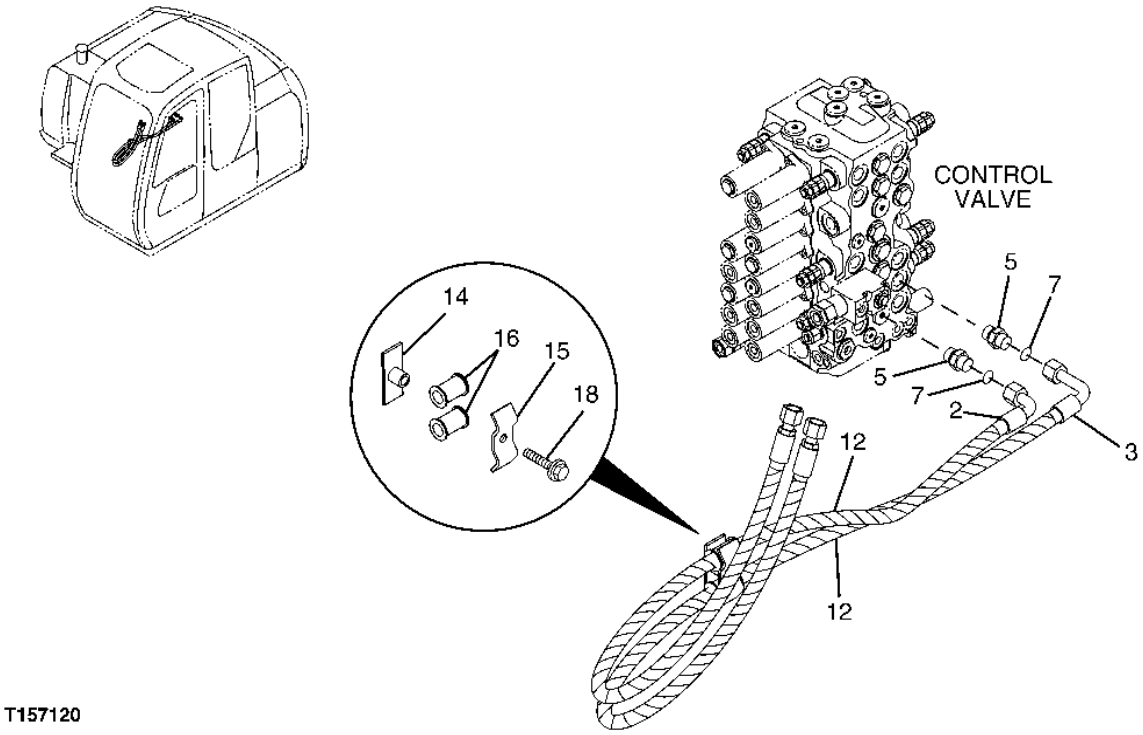

T157120

HYDRAULIC HOSES(CONTROL VALVE TO BUCKET CYLINDER LINES ON BOOM)

KEY	PART NO.	PART NAME	QTY	SERIAL NO.	REMARKS
2	4457459	HYDRAULIC HOSE - FABRICATE	1		
3	4457460	HYDRAULIC HOSE - FABRICATE	1		
5	A853144	ADAPTER	2		
	4506418	O-RING	1		
7	T77857	O-RING	2		
12	4327294	HOSE GUARD	6		
14	9757642	CLAMP	1		
15	4202103	CLAMP	1		
16	4463996	BUSHING	2		
18	19M7362	CAP SCREW	1		M12 X 55
	12H301	LOCK WASHER	1		1/2"

HYDRAULIC HOSES (CONTROL VALVE TO SWING MOTOR)

T157130 -UN-05NOV02

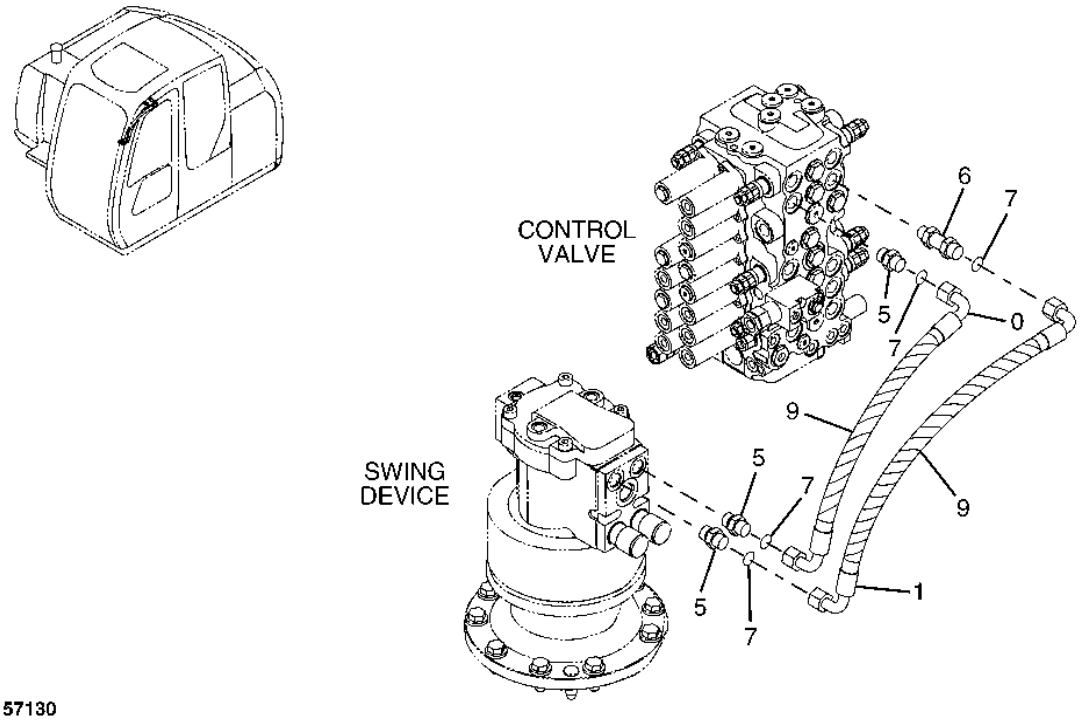

HYDRAULIC HOSES (CONTROL VALVE TO SWING MOTOR)

KEY	PART NO.	PART NAME	QTY	SERIAL NO.	REMARKS
0	4449924	HYDRAULIC HOSE - FABRICATE	1		
1	4449925	HYDRAULIC HOSE - FABRICATE	1		
5	A853144	ADAPTER	3		
	4506418	O-RING	1		
6	4199247	ADAPTER	1		
	4506418	O-RING	1		
7	T77857	O-RING	4		
9	4327294	HOSE GUARD	2		

HYDRAULIC HOSES (CONTROL VALVE TO ROTARY MANIFOLD-LEFT PROPEL)

T157131 -UN-30OCT02

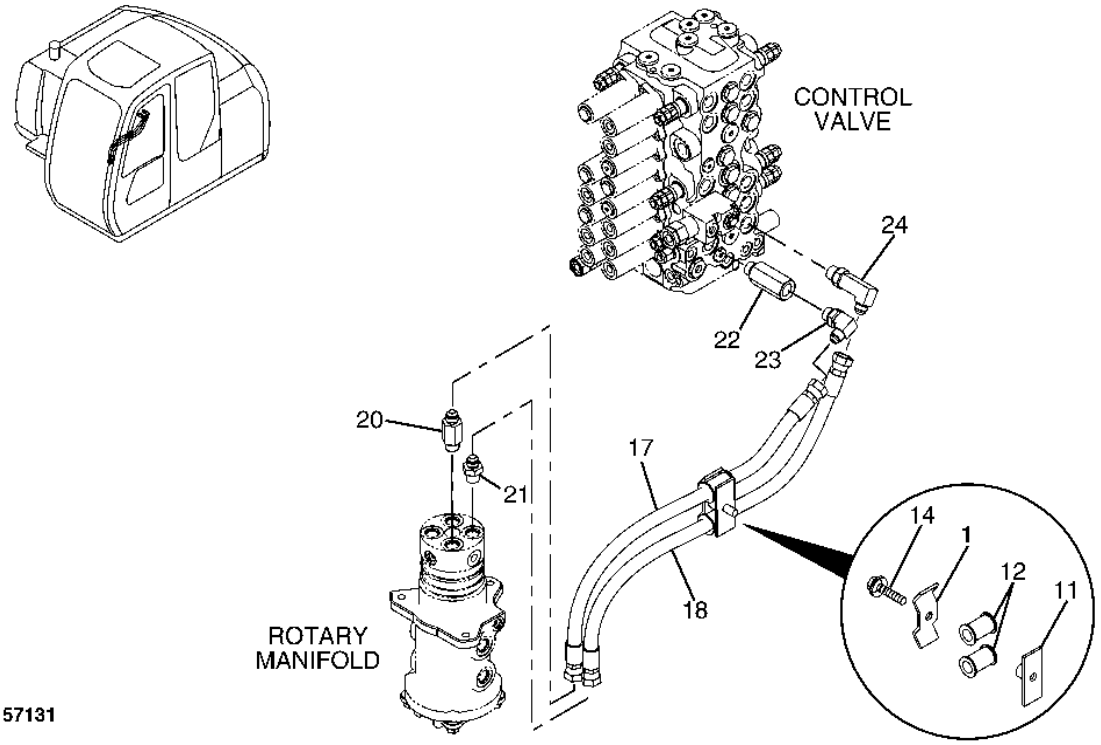

HYDRAULIC HOSES (CONTROL VALVE TO ROTARY MANIFOLD-LEFT PROPEL)

KEY	PART NO.	PART NAME	QTY	SERIAL NO.	REMARKS
1	4202103	CLAMP	1		
11	9757642	CLAMP	1		
12	4463996	BUSHING	2		
14	19M7362	CAP SCREW	1		M12 X 55
	12H301	LOCK WASHER	1		1/2"
17	4466325	HYDRAULIC HOSE - FABRICATE	1		
18	4466326	HYDRAULIC HOSE - FABRICATE	1		
20	4276940	ADAPTER	1		
	4506418	O-RING	1		
21	A852144	ADAPTER	1		
	4506418	O-RING	1		
22	4336625	ADAPTER	1		
	4506418	O-RING	1		
23	A852344	ELBOW FITTING	1		
	4506418	O-RING	1		
24	TH101008	ELBOW FITTING	1		
	4506418	O-RING	1		

HYDRAULIC HOSES (CONTROL VALVE TO ROTARY MANIFOLD-RIGHT PROPEL)

T157132 -UN-30OCT02

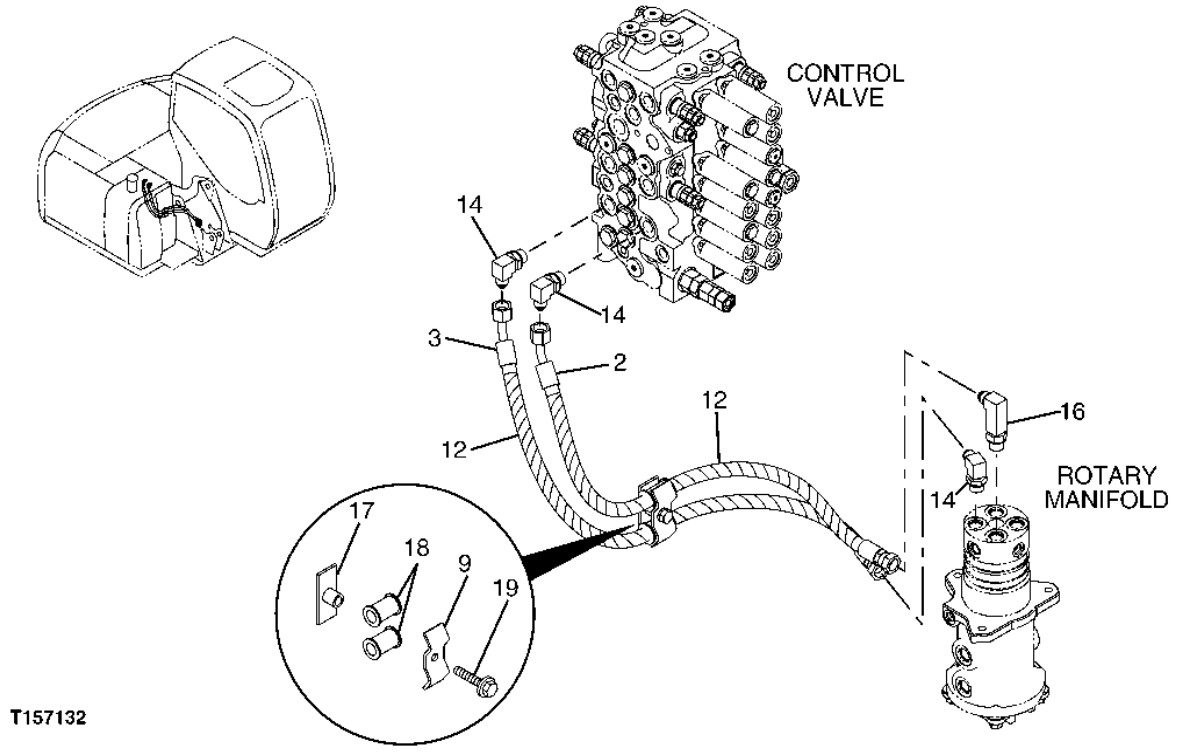

HYDRAULIC HOSES (CONTROL VALVE TO ROTARY MANIFOLD-RIGHT PROPEL)

KEY	PART NO.	PART NAME	QTY	SERIAL NO.	REMARKS
2	4463269	HYDRAULIC HOSE - FABRICATE	1		
3	4463270	HYDRAULIC HOSE - FABRICATE	1		
9	4202103	CLAMP	1		
12	4327294	HOSE GUARD	2		
14	A852344	ELBOW FITTING	3		
	4506418	O-RING	1		
16	TH101008	ELBOW FITTING	1		
	4506418	O-RING	1		
17	9757642	CLAMP	1		
18	4463996	BUSHING	2		
19	19M7362	CAP SCREW	1		M12 X 55
	12H301	LOCK WASHER	1		1/2"

HYDRAULIC HOSES (CONTROL VALVE TO ROTARY MANIFOLD-BLADE LIFT)

T160698 -UN-05NOV02

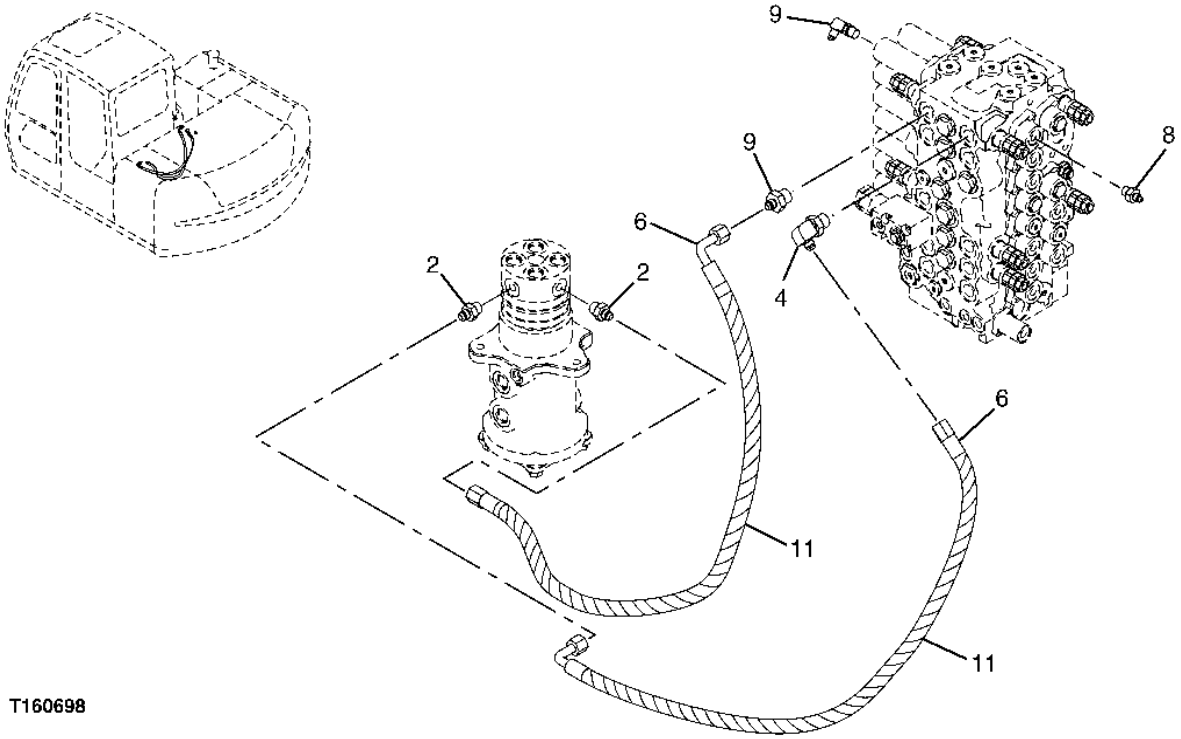

HYDRAULIC HOSES (CONTROL VALVE TO ROTARY MANIFOLD-BLADE LIFT)

KEY	PART NO.	PART NAME	QTY	SERIAL NO.	REMARKS
2	A852133	ADAPTER	2		
	4509180	O-RING	1		
3	A852143	ADAPTER	1		(NOT ILLUSTRATED)
	4506418	O-RING	1		
4	A852343	ELBOW FITTING	1		
	4506418	O-RING	1		
6	4456624	HYDRAULIC HOSE - FABRICATE	2		
8	A852122	ADAPTER	1		
	M800650	PACKING	1		
9	4154670	ELBOW FITTING	1		(SUB FOR A852322, P67984 OR THA852322)
	M800650	PACKING	1		
11	4327293	HOSE GUARD	4		

PILOT HOSES(HYDRAULIC PUMP TO PILOT FILTER AND CONTROL VALVE)

T200654 -UN-07JUN04

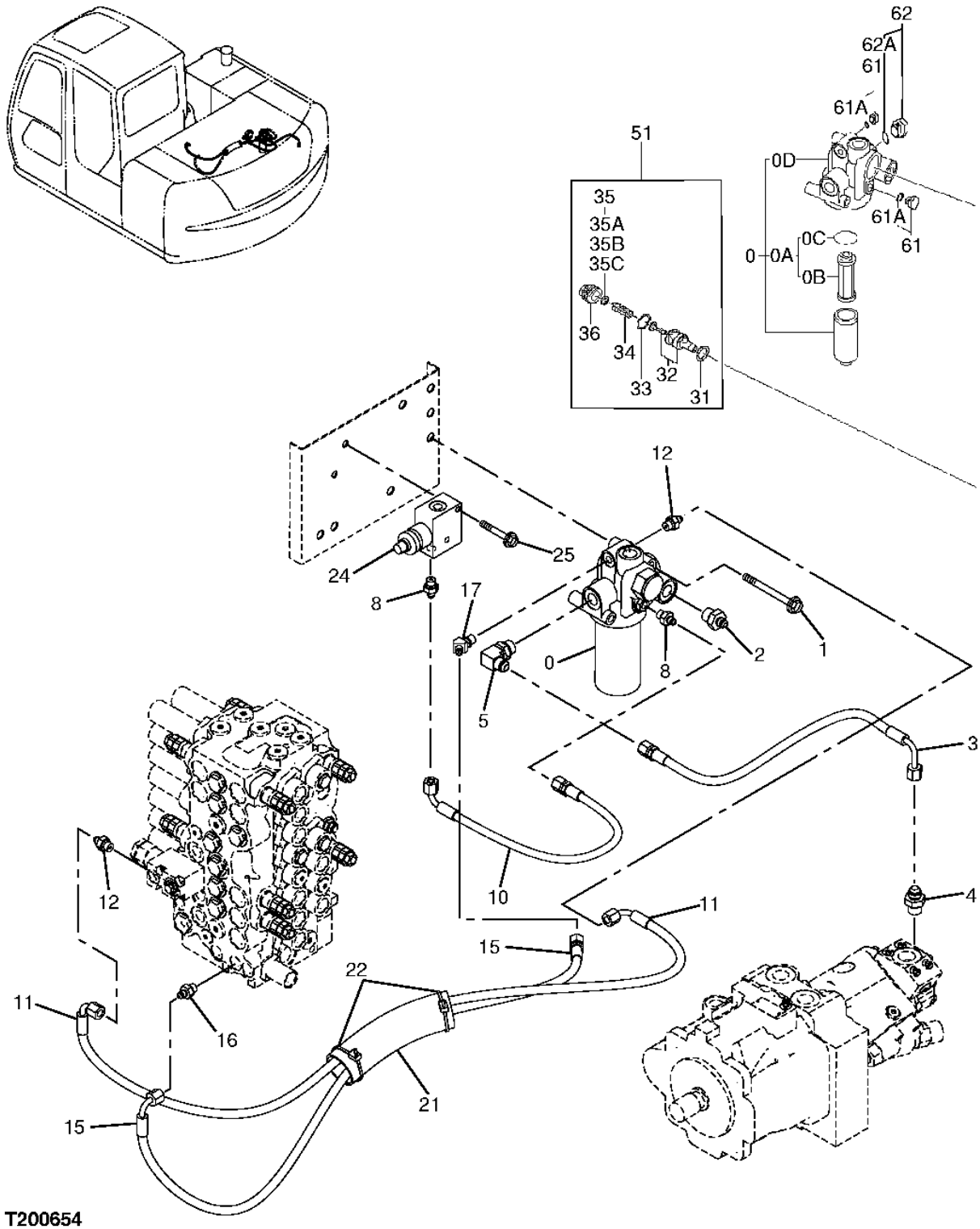

PILOT HOSES(HYDRAULIC PUMP TO PILOT FILTER AND CONTROL VALVE)

KEY	PART NO.	PART NAME	QTY	SERIAL NO.	REMARKS
0	4611025	OIL FILTER	1		(SUB FOR 4408959)
0A	AT186554	FILTER ELEMENT	1		(SUB FOR 4370435 OR AT214263)
0B	.....	FILTER ELEMENT	1		(4191301 NOT AVAILABLE FOR SERVICE)
0C	TH105683	O-RING	1		(SUB FOR A811060, 4153538, TH0430809 OR 0430809)
0D	4472430	PRESSURE RELIEF VALVE	1		
1	J901095	BOLT	2		(SUB FOR AT121865)
	12M7066	LOCK WASHER	2		10 MM (0.394")
2	A852143	ADAPTER	1		
	4506418	O-RING	1		
3	4450097	HYDRAULIC HOSE - FABRICATE	1		
4	A852144	ADAPTER	1		
	4506418	O-RING	1		
5	A852344	ELBOW FITTING	1		
	4506418	O-RING	1		
8	A852122	ADAPTER	2		
	M800650	PACKING	1		
10	4463067	HYDRAULIC HOSE - FABRICATE	1		
11	4450099	HYDRAULIC HOSE - FABRICATE	1		
12	A852122	ADAPTER	2		
	M800650	PACKING	1		
15	4450100	HYDRAULIC HOSE - FABRICATE	1		
16	A852122	ADAPTER	1		
	M800650	PACKING	1		
17	A852222	ELBOW FITTING	1		
	M800650	PACKING	1		
21	4219918	BUSHING	1		
22	H77698	TIE BAND	2		
24	4459699	SOLENOID HYDRAULIC VALVE	1		
25	19M7981	CAP SCREW	2		M8 X 55
	12M7065	LOCK WASHER	2		8 MM (0.315")
	24M7096	WASHER	2		10.500 X 18 X 1.600 MM (0.413" X 0.709" X 0.063")
31	0308704	GASKET	1		
32	0308703	PRESSURE RELIEF VALVE	1		
33	0308705	O-RING	1		
34	.....	SPRING	1		
35	4293211	SHIM	1		
35A	4309836	SHIM	2		
35B	4309837	SHIM	2		
35C	4309838	SHIM	2		
36	0308709	FITTING PLUG	1		
51	0709701	RELIEF VALVE	1		
61	4174541	DRAIN PLUG	2		
61A	M800650	PACKING	1		
62	A885002	PIPE PLUG	1		
62A	4506418	O-RING	1		

PILOT HOSES (CONTROL VALVE REAR TO FLOW REGULATOR VALVE)

T188774 -UN-28MAR03

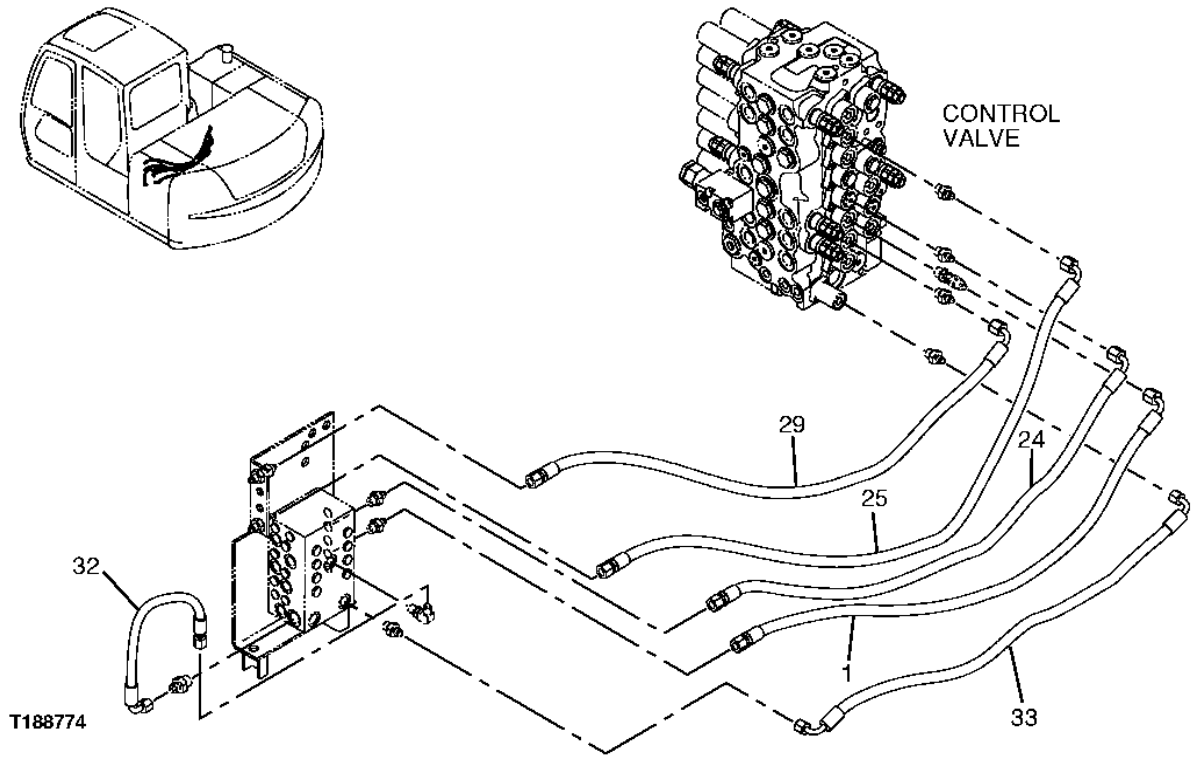

PILOT HOSES (CONTROL VALVE REAR TO FLOW REGULATOR VALVE)

KEY	PART NO.	PART NAME	QTY	SERIAL NO.	REMARKS
1	.....	HYDRAULIC HOSE	1		(4450102 NOT AVAILABLE FOR SERVICE)
24	.....	HYDRAULIC HOSE	1		(4463882 NOT AVAILABLE FOR SERVICE)
25	4463881	HYDRAULIC HOSE - FABRICATE	1		
29	4466315	HYDRAULIC HOSE - FABRICATE	1		
32	4450090	HYDRAULIC HOSE - FABRICATE	1	-011047	(THIS HOSE NOT REQUIRED AFTER S.N.011047)
33	4450092	HYDRAULIC HOSE - FABRICATE	1	-011047	
	4613038	HYDRAULIC HOSE - FABRICATE	1	011048-	

PILOT HOSES (CONTROL VALVE FRONT TO FLOW REGULATOR VALVE)

T197250 -UN-15JAN04

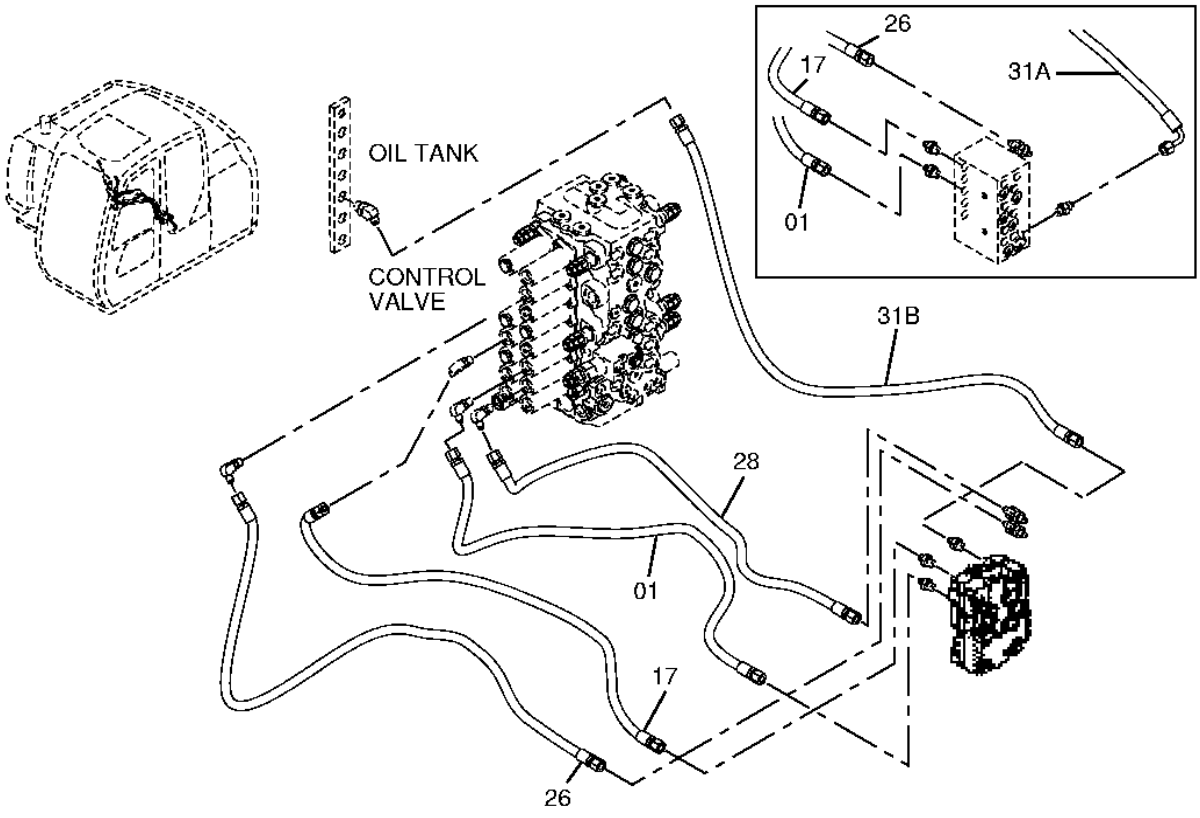

T197250

PILOT HOSES (CONTROL VALVE FRONT TO FLOW REGULATOR VALVE)

KEY	PART NO.	PART NAME	QTY	SERIAL NO.	REMARKS
1	4463880	HYDRAULIC HOSE - FABRICATE	1		
17	4456832	HYDRAULIC HOSE - FABRICATE	1		
26	4456831	HYDRAULIC HOSE - FABRICATE	1		
28	4466313	HYDRAULIC HOSE - FABRICATE	1		
31A	4450089	HYDRAULIC HOSE - FABRICATE	1	-011047	
31B	4602337	HYDRAULIC HOSE - FABRICATE	1	011048-	

PILOT HOSES (CONTROL VALVE TO SWING MOTOR)

T188779 -UN-28MAR03

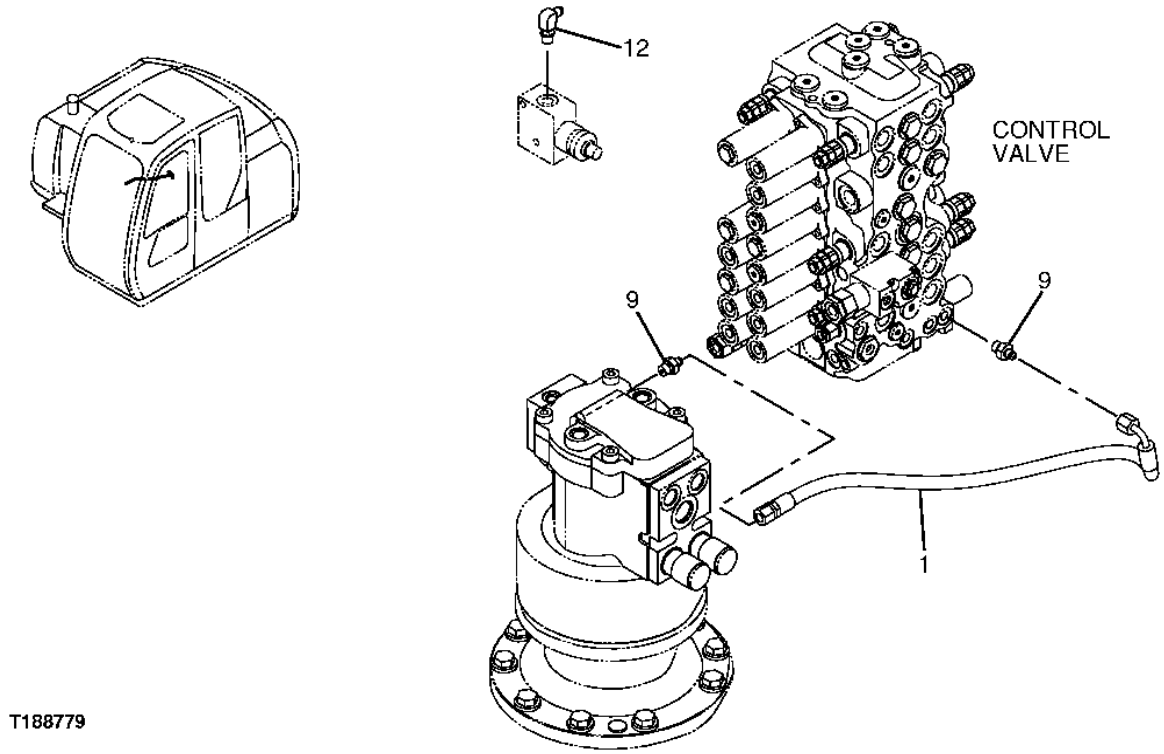

PILOT HOSES (CONTROL VALVE TO SWING MOTOR)

KEY	PART NO.	PART NAME	QTY	SERIAL NO.	REMARKS
1	4450111	HYDRAULIC HOSE - FABRICATE	1		
9	A852122	ADAPTER	2		
	M800650	PACKING	1		
12	4154670	ELBOW FITTING	1		(SUB FOR A852322, P67984 OR THA852322)
	M800650	PACKING	1		

PILOT LINES (CONTROL VALVE FRONT TO CONTROL VALVE LEFT SIDE)

T157140 -UN-30OCT02

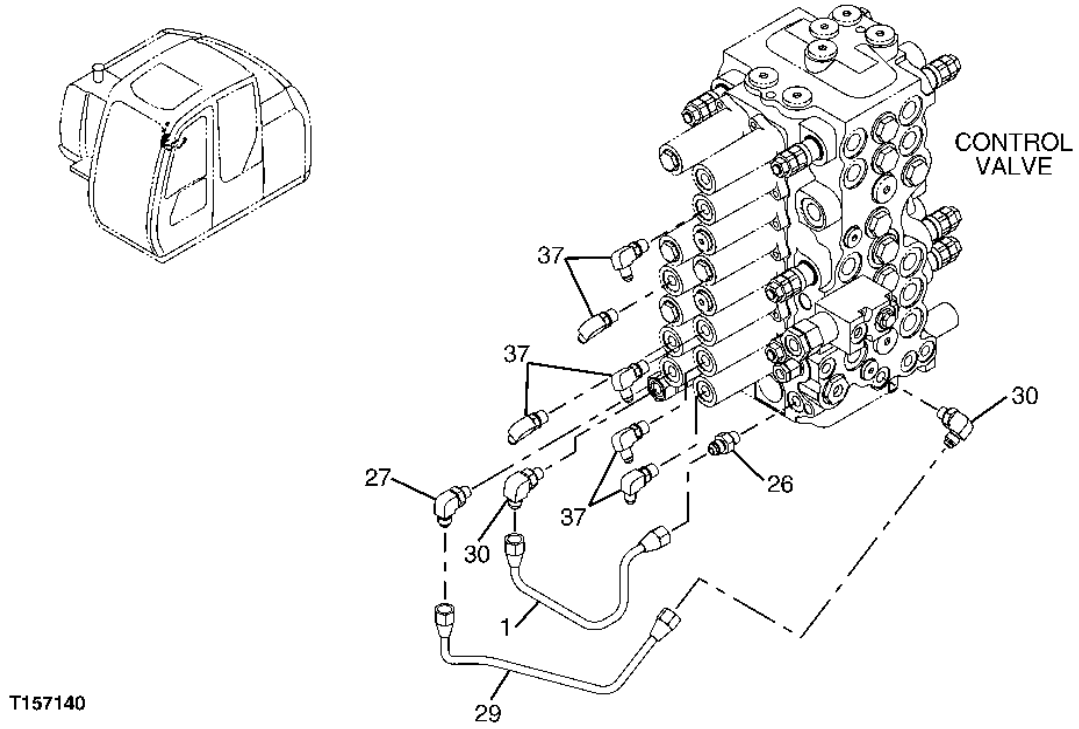

PILOT LINES (CONTROL VALVE FRONT TO CONTROL VALVE LEFT SIDE)

KEY	PART NO.	PART NAME	QTY	SERIAL NO.	REMARKS
1	4454924	OIL LINE	1		
26	4255304	ADAPTER	1		
	M800650	PACKING	1		
27	4293950	ELBOW FITTING	1		
	M800650	PACKING	1		
29	3092193	OIL LINE	1		
30	4293950	ELBOW FITTING	2		
	M800650	PACKING	1		
37	4154670	ELBOW FITTING	6		(SUB FOR A852322, P67984 OR THA852322)
	M800650	PACKING	1		

PILOT LINES (CONTROL VALVE FRONT TO CONTROL VALVE REAR)

T157141 -UN-30OCT02

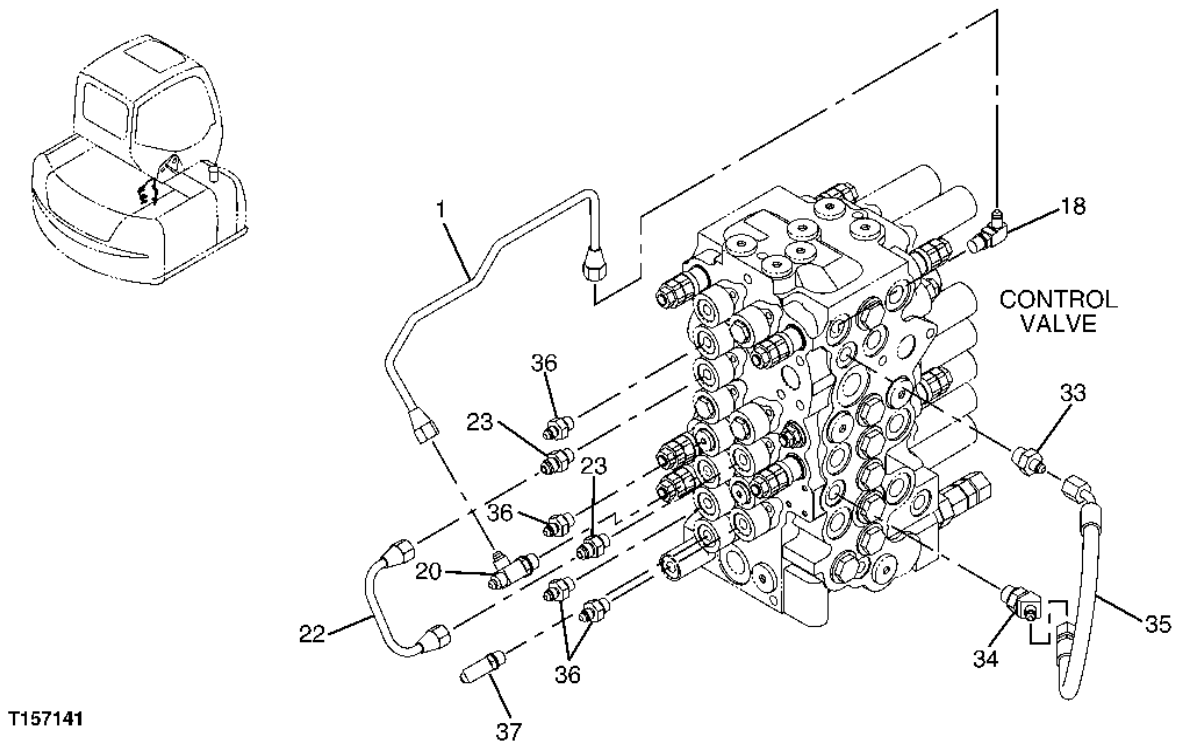

T157141

PILOT LINES (CONTROL VALVE FRONT TO CONTROL VALVE REAR)

KEY	PART NO.	PART NAME	QTY	SERIAL NO.	REMARKS
1	3092184	OIL LINE	1		
18	4293950	ELBOW FITTING	1		
	M800650	PACKING	1		
20	4203485	FITTING	1		
	M800650	PACKING	1		
22	4455038	OIL LINE	1		
23	4255304	ADAPTER	2		
	M800650	PACKING	1		
33	A852132	ADAPTER	1		
	CH11570	O-RING	1		
34	A852232	FITTING PLUG	1		
	CH11570	O-RING	1		
35	4463165	HYDRAULIC HOSE - FABRICATE	1		
36	A852122	ADAPTER	4		
	M800650	PACKING	1		
37	4154670	ELBOW FITTING	1		(SUB FOR A852322, P67984 OR THA852322)
	M800650	PACKING	1		

PILOT CONTROL SHUTOFF VALVE FITTINGS (STANDARD BOOM)

T157121 -UN-30OCT02

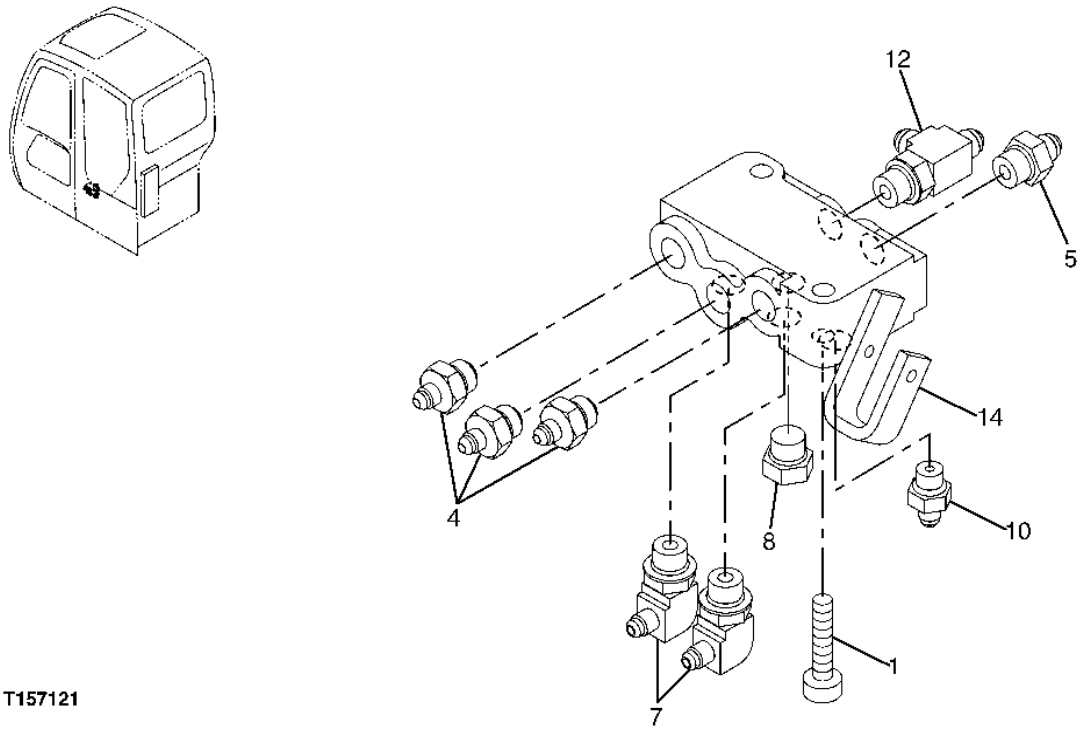

PILOT CONTROL SHUTOFF VALVE FITTINGS (STANDARD BOOM)

KEY	PART NO.	PART NAME	QTY	SERIAL NO.	REMARKS
1	M341045	SCREW	2		
4	4374837	FITTING	3		
	CH11570	O-RING	1		
5	A852133	ADAPTER	1		
	CH11570	O-RING	1		
7	A852332	ELBOW FITTING	2		
	CH11570	O-RING	1		
8	A885003	PIPE PLUG	1		
	CH11570	O-RING	1		
10	A852122	ADAPTER	1		
	M800650	PACKING	1		
12	A852433	TEE FITTING	1		
	CH11570	O-RING	1		
14	4462892	FLOW CONTROL HYD. VALVE	1		

PILOT HOSES (CONTROL VALVE TO OFFSET BOOM PILOT CONTROLLER)

T157142 -UN-30OCT02

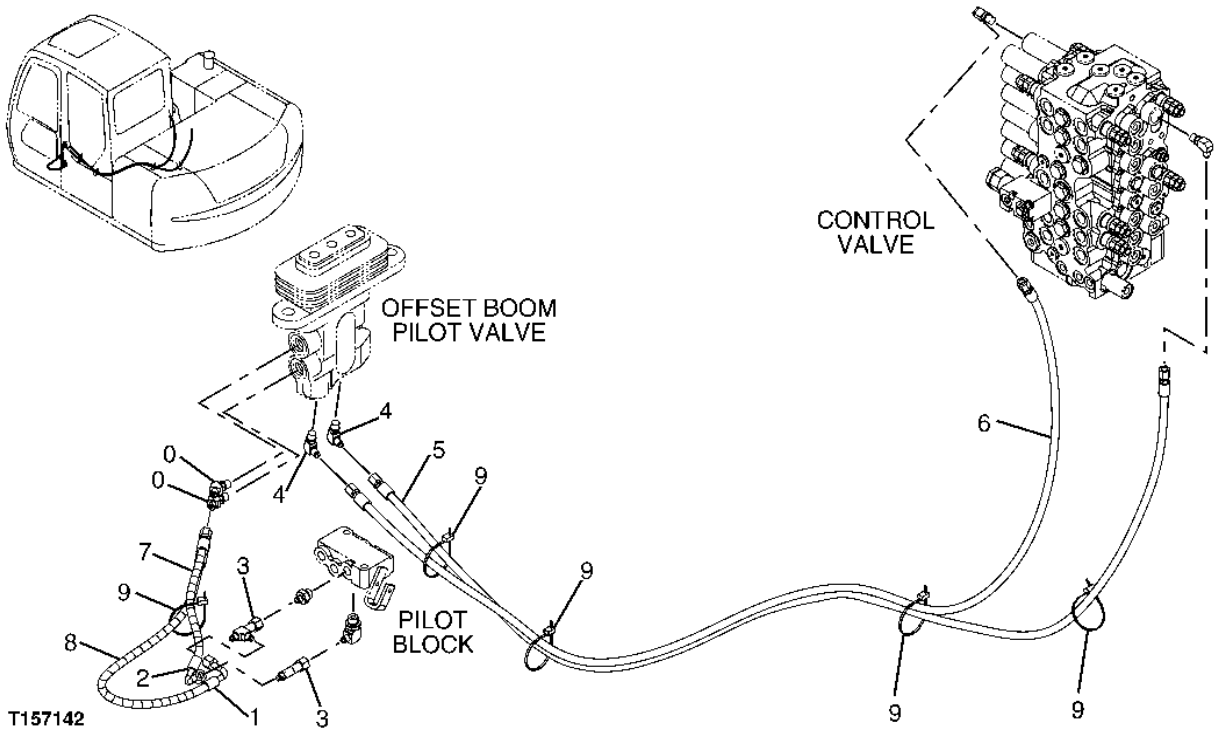

PILOT HOSES (CONTROL VALVE TO OFFSET BOOM PILOT CONTROLLER)

KEY	PART NO.	PART NAME	QTY	SERIAL NO.	REMARKS
0	A852222	ELBOW FITTING	2		
	M800650	PACKING	1		
1	4471570	HYDRAULIC HOSE - FABRICATE	1		
2	4471571	HYDRAULIC HOSE - FABRICATE	1		
3	4252786	TEE FITTING	2		
4	4154670	ELBOW FITTING	2		(SUB FOR A852322, P67984 OR THA852322)
	M800650	PACKING	1		
5	4471572	HYDRAULIC HOSE - FABRICATE	1		
6	4471573	HYDRAULIC HOSE - FABRICATE	1		
7	4449646	GUARD	1		
8	4327293	HOSE GUARD	7		
9	H77698	TIE BAND	5		

PILOT HOSES (CONTROL VALVE TO PROPEL PILOT CONTROLLER)

T157143 -UN-05NOV02

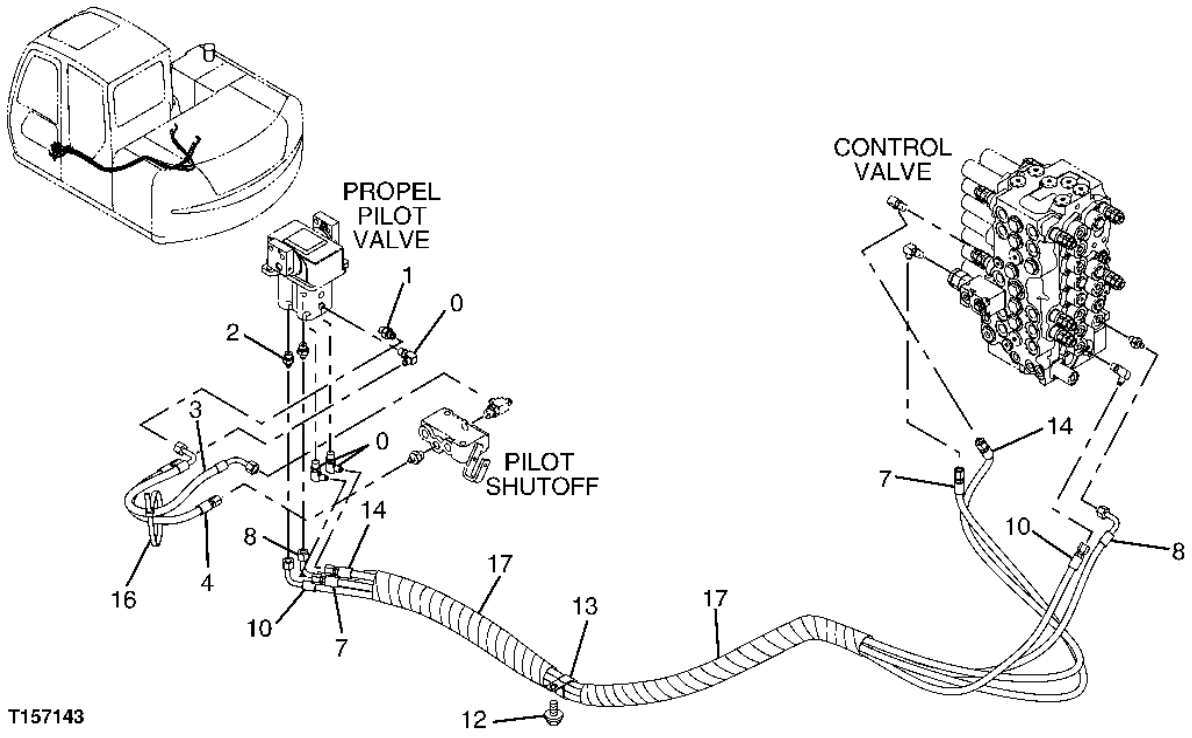

PILOT PIPING (CONTROL VALVE TO PROPEL PILOT CONTROLLER)

KEY	PART NO.	PART NAME	QTY	SERIAL NO.	REMARKS
0	4154670	ELBOW FITTING	3		(SUB FOR A852322, P67984 OR THA852322)
	M800650	PACKING	1		
1	A852123	ADAPTER	1		
	M800650	PACKING	1		
2	A852122	ADAPTER	2		
	M800650	PACKING	1		
3	4464246	HYDRAULIC HOSE - FABRICATE	1		
4	4450005	HYDRAULIC HOSE - FABRICATE	1		
7	4450183	HYDRAULIC HOSE - FABRICATE	1		
8	4450181	HYDRAULIC HOSE - FABRICATE	1		
10	4455603	HYDRAULIC HOSE - FABRICATE	1		
12	19M7938	CAP SCREW	1		M10 X 20
	12M7066	LOCK WASHER	1		10 MM (0.394")
13	4193848	CLIP	1		(SUB FOR 4190264)
14	4463166	HYDRAULIC HOSE	1		
16	H77698	TIE BAND	1		
17	4327294	HOSE GUARD	3		

PILOT HOSES(LEFT PILOT CONTROLLER TO FLOW REGULATING MANIFOLD)

T157098 -UN-05NOV02

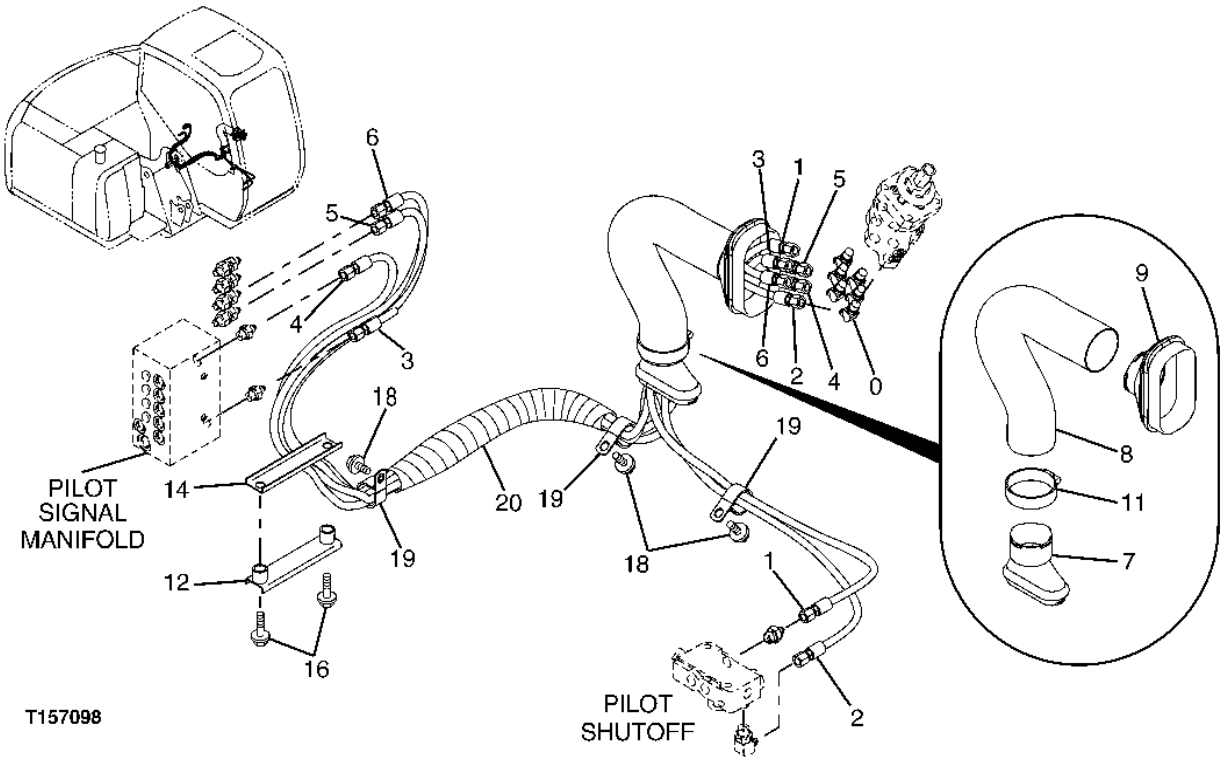

PILOT HOSES(LEFT PILOT CONTROLLER TO FLOW REGULATING MANIFOLD)

KEY	PART NO.	PART NAME	QTY	SERIAL NO.	REMARKS
0	4154670	ELBOW FITTING	6		(SUB FOR A852322, P67984 OR THA852322)
	M800650	PACKING	1		
1	4449982	HYDRAULIC HOSE	1		
2	4449985	HYDRAULIC HOSE - FABRICATE	1		
3	4449974	HYDRAULIC HOSE - FABRICATE	1		
4	4449975	HYDRAULIC HOSE - FABRICATE	1		
5	4449976	HYDRAULIC HOSE	1		
6	4449978	HYDRAULIC HOSE - FABRICATE	1		
7	2046296	BUSHING	1		
8	4351175	HOSE	1		
9	2045998	BUSHING	1		
11	4351774	CLAMP	1		
12	9756997	CLAMP	1		
14	4412666	CLAMP	1		
16	19M8162	SCREW	2		M10 X 40, (SUB FOR J021045)
18	19M7938	CAP SCREW	3		M10 X 20
	12M7066	LOCK WASHER	3		
19	4193848	CLIP	3		(SUB FOR 4190264)
20	4327294	HOSE GUARD	1		

PILOT HOSES(RIGHT PILOT CONTROLLER TO FLOW REGULATING MANIFOLD)

T161028 -UN-30OCT02

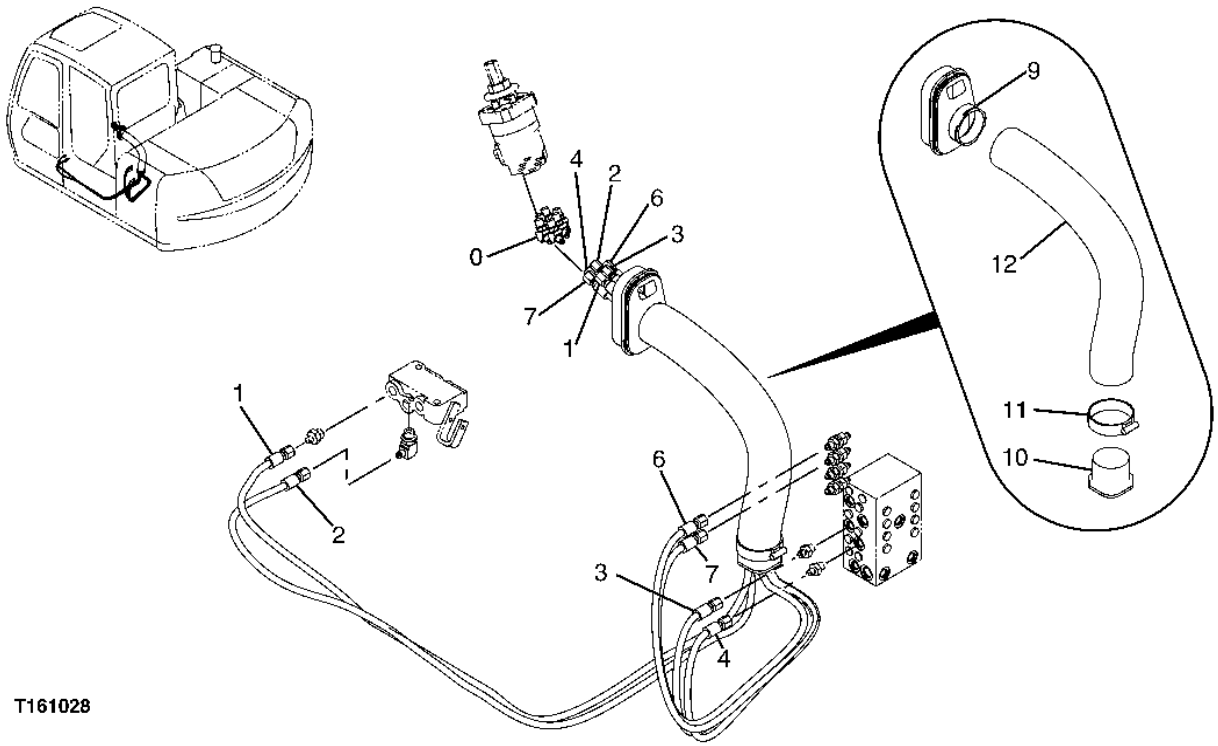

PILOT HOSES(RIGHT PILOT CONTROLLER TO FLOW REGULATING MANIFOLD)

KEY	PART NO.	PART NAME	QTY	SERIAL NO.	REMARKS
0	A852522	TEE FITTING	6		
	M800650	PACKING	1		
1	4449983	HYDRAULIC HOSE	1		
2	4449986	HYDRAULIC HOSE - FABRICATE	1		
3	4449971	HYDRAULIC HOSE	1		
4	4449973	HYDRAULIC HOSE - FABRICATE	1		
6	4449981	HYDRAULIC HOSE - FABRICATE	1		
7	4457101	HYDRAULIC HOSE - FABRICATE	1		
9	2045998	BUSHING	1		
10	3079728	BUSHING	1		
11	4351774	CLAMP	1		
12	4379665	HYDRAULIC HOSE	1		

PILOT HOSES (PILOT FILTER TO FLOW REGULATING MANIFOLD VALVE)

T157101 -UN-05NOV02

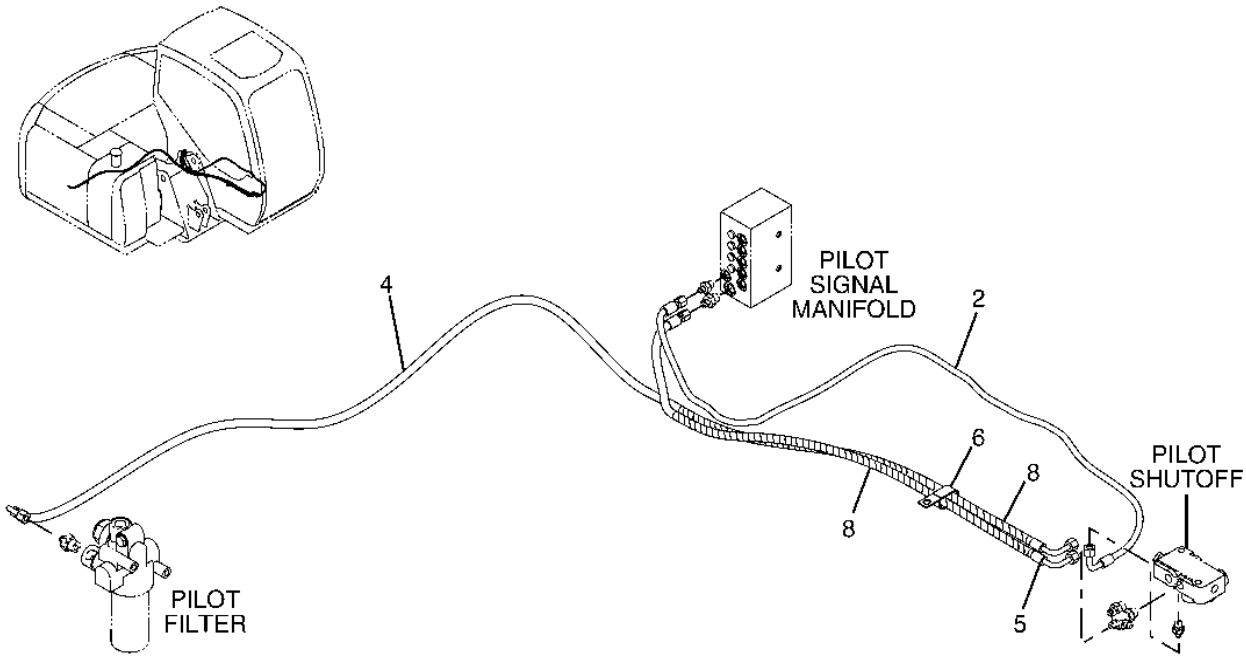

T157101

PILOT HOSES (PILOT FILTER TO FLOW REGULATING MANIFOLD VALVE)

KEY	PART NO.	PART NAME	QTY	SERIAL NO.	REMARKS
2	4450179	HYDRAULIC HOSE - FABRICATE	1		
4	4457098	HYDRAULIC HOSE - FABRICATE	1		
5	4457056	HYDRAULIC HOSE - FABRICATE	1	-011047	
	4442040	HYDRAULIC HOSE - FABRICATE	1	011048-	
6	4190266	CLIP	1		
8	4327293	HOSE GUARD	4		

PILOT HOSES (CONTROL VALVE TO BLADE PILOT CONTROLLER)

T160713 -UN-05NOV02

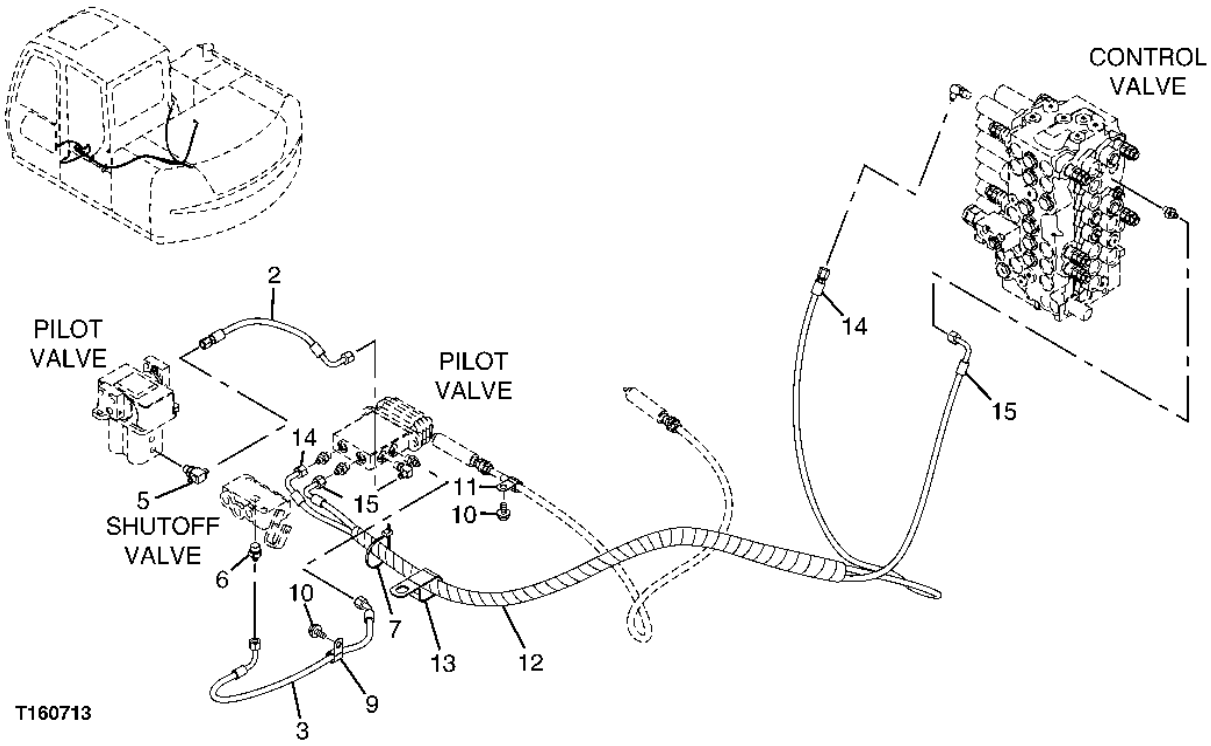

PILOT HOSES (CONTROL VALVE TO BLADE PILOT CONTROLLER)

KEY	PART NO.	PART NAME	QTY	SERIAL NO.	REMARKS
2	4450544	HYDRAULIC HOSE - FABRICATE	1		
3	4450527	HYDRAULIC HOSE - FABRICATE	1		
5	A852522	TEE FITTING	1		
	M800650	PACKING	1		
6	A852132	ADAPTER	1		
	CH11570	O-RING	1		
7	H77698	TIE BAND	1		
9	4190274	CLIP	1		
10	19M7938	CAP SCREW	2		M10 X 20
	12M7066	LOCK WASHER	2		10 MM (0.394")
11	T30367	CLAMP	1		
12	4327294	HOSE GUARD	2		
13	4411911	SNAP RING	1		
14	4457105	HYDRAULIC HOSE - FABRICATE	1		
15	4450976	HYDRAULIC HOSE - FABRICATE	1		

HYDRAULIC LINES ON BOOM TO CYLINDERS (STANDARD BOOM)

T157083 -UN-31OCT02

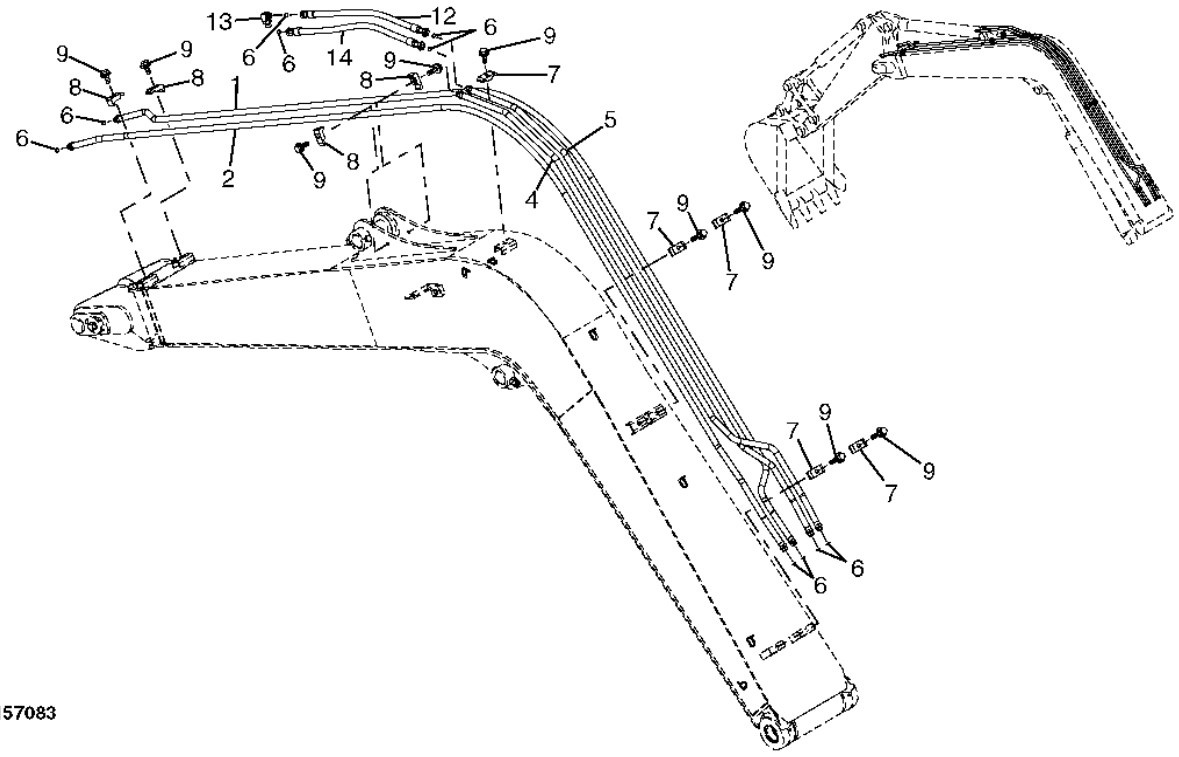

HYDRAULIC LINES ON BOOM TO CYLINDERS (STANDARD BOOM)

KEY	PART NO.	PART NAME	QTY	SERIAL NO.	REMARKS
1	8083103	PIPE	1		
2	8083104	PIPE	1		
4	8084023	PIPE	1		
5	8084024	PIPE	1		
6	T77857	O-RING	10		
7	4189858	CLAMP	5		
8	4190125	CLAMP	4		
9	19M7361	CAP SCREW	9		M12 X 50
	12H301	LOCK WASHER	9		1/2"
12	AP36236	HYDRAULIC HOSE - FABRICATE	1		
13	4200580	ELBOW FITTING	1		
	4506418	O-RING	1		
14	4388835	HYDRAULIC HOSE - FABRICATE	1		

HYDRAULIC LINES ON BOOM TO CYLINDERS (OFFSET BOOM)

T157096 -UN-05NOV02

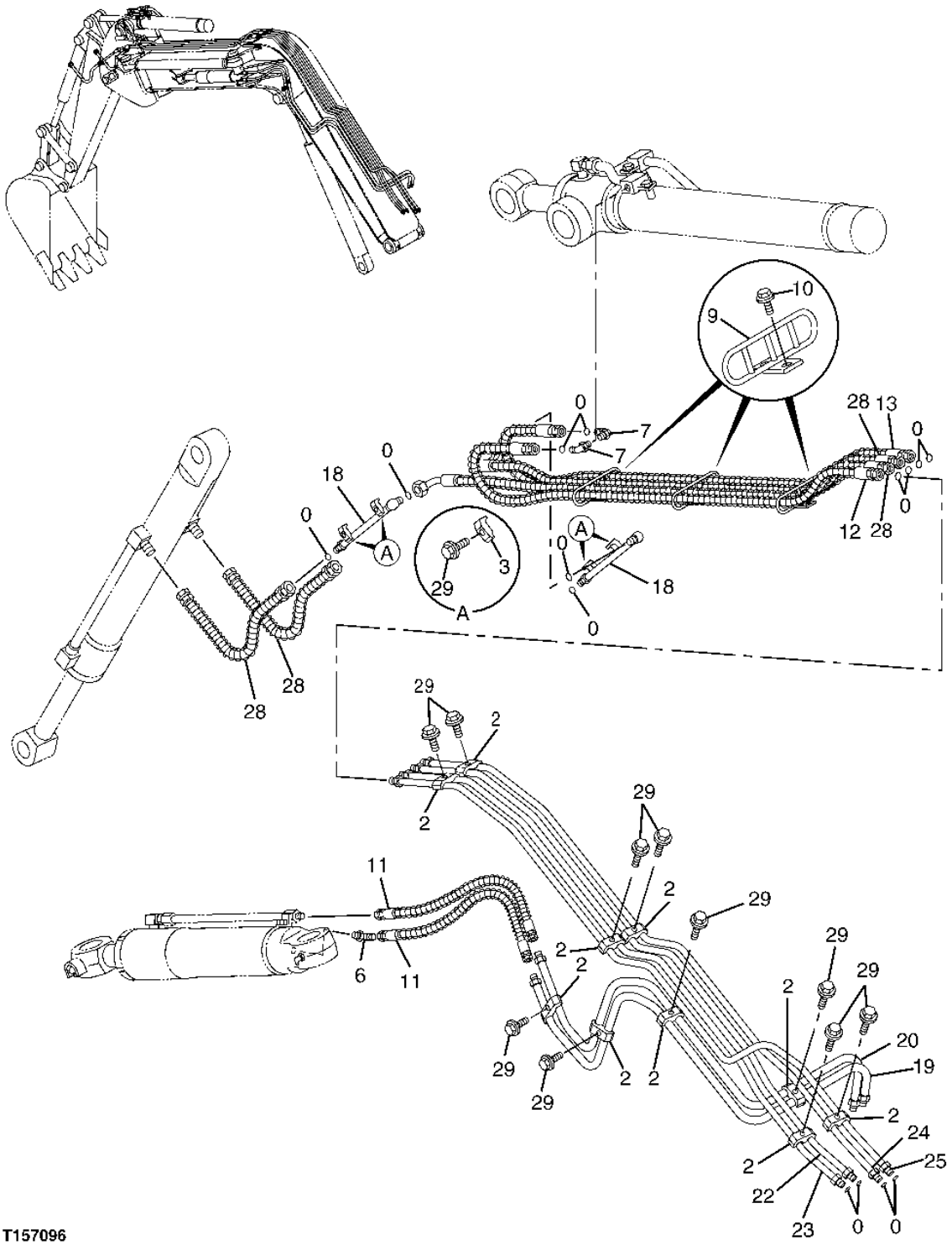

T157096

HYDRAULIC LINES ON BOOM TO CYLINDERS (OFFSET BOOM)

KEY	PART NO.	PART NAME	QTY	SERIAL NO.	REMARKS
0	T77857	O-RING	14		
2	4189858	CLAMP	10		
3	4190125	CLAMP	4		
6	4154671	ELBOW FITTING	1		
	CH11570	O-RING	1		
7	4200580	ELBOW FITTING	2		
	4506418	O-RING	1		
9	8060253	BRACKET	3		
10	19M7872	CAP SCREW	6		M12 X 25
	12H301	LOCK WASHER	6		1/2"
11	4392171	HYDRAULIC HOSE	2		
12	4415185	HYDRAULIC HOSE	1		
13	4418358	HYDRAULIC HOSE	1		
18	8082544	OIL LINE	2		
19	8070281	PIPE	1		
20	8070282	PIPE	1		
22	8084838	OIL LINE	1		
23	8084839	OIL LINE	1		
24	8084837	OIL LINE	1		
25	8084836	OIL LINE	1		
28	4464073	HYDRAULIC HOSE	4		
29	19M7361	CAP SCREW	14		M12 X 50
	12H301	LOCK WASHER	14		1/2"

BOOM HYDRAULIC LINE COVER (OFFSET BOOM)

T161029 -UN-30OCT02

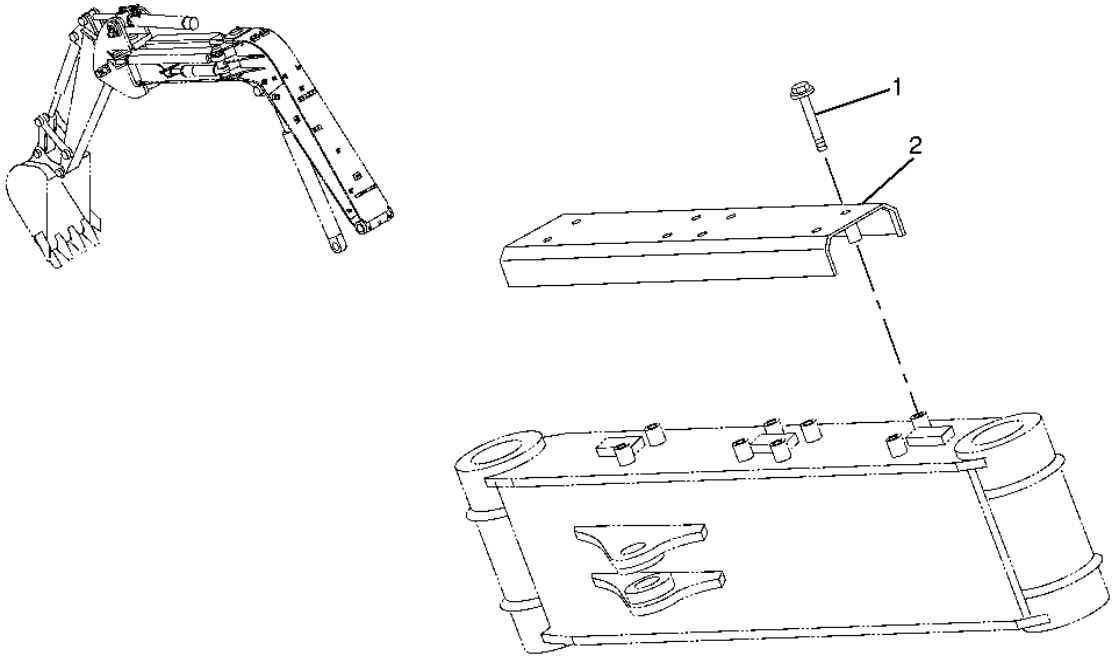

T161029

OFFSET BOOM

BOOM HYDRAULIC LINE COVER (OFFSET BOOM)

KEY	PART NO.	PART NAME	QTY	SERIAL NO.	REMARKS
1	AT250761	SCREW	8		
2	8086366	COVER	1		

HYDRAULIC OIL TANK

T191832 -UN-24JUN03

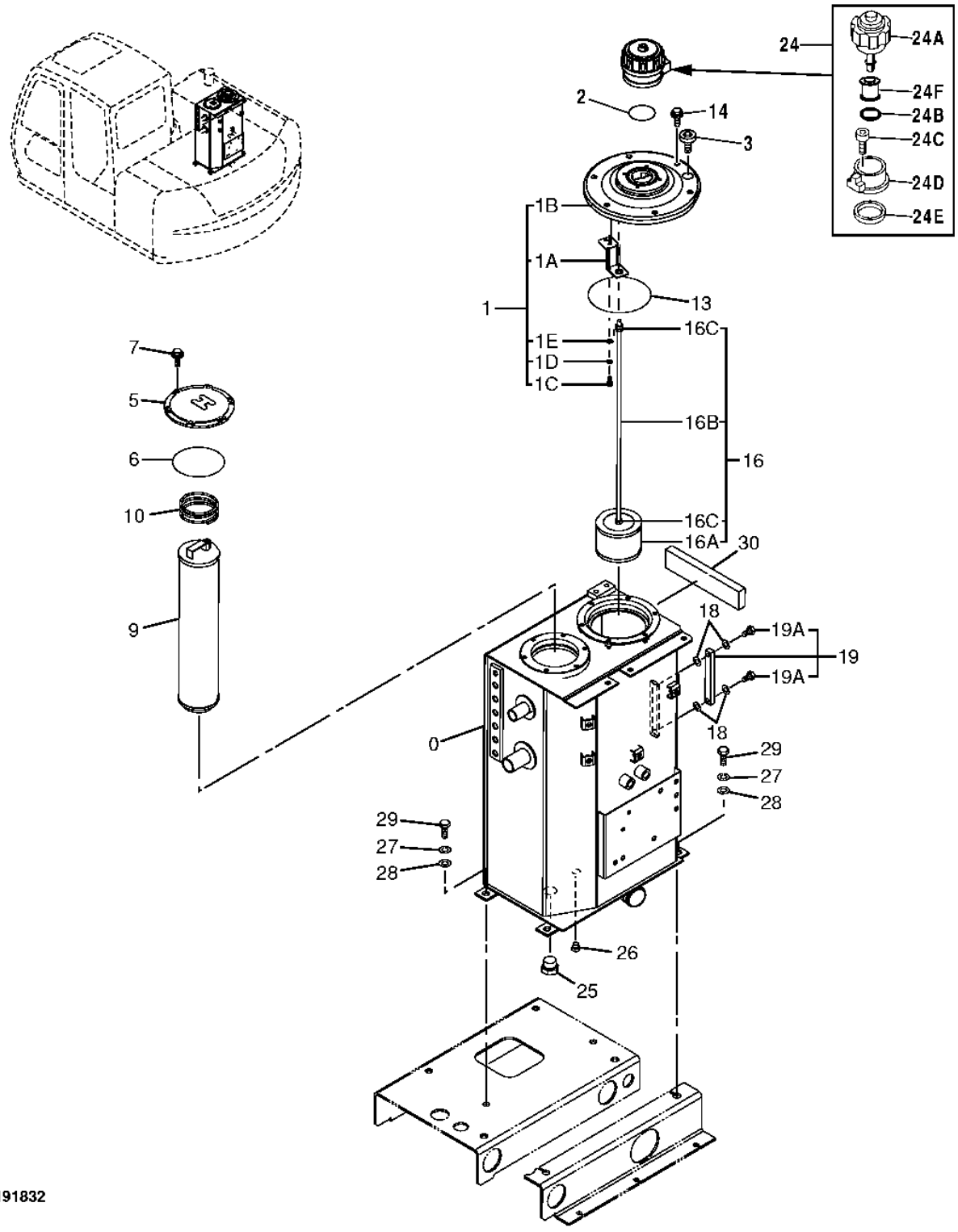

T191832

HYDRAULIC OIL TANK

KEY	PART NO.	PART NAME	QTY	SERIAL NO.	REMARKS
0	6021155	HYDRAULIC RESERVOIR	1		
1	9184556	COVER	1		
1A	4408661	BRACKET	1		
1B	1025093	COVER	1		
1C	4350623	BOLT	1		
1D	4225466	WASHER	1		
1E	4225472	WASHER	1		
2	A810060	PACKING	1		
3	TH109514	FITTING PLUG	1		
5	4443782	COVER	1		
6	997330	O-RING	1		
7	19M7402	CAP SCREW	6		M10 X 25
	12M7066	LOCK WASHER	6		10 MM (0.394")
	24M7028	WASHER	6		10.500 X 20 X 2 MM (0.413" X 0.787" X 0.079")
9	4443596	FILTER ELEMENT	1		
	4448602	FILTER ELEMENT	1		(OPTION-HIGH EFFECTIVENESS)
10	4444482	SPRING	1		
13	TH100679	O-RING	1		
14	19M7402	CAP SCREW	6		M10 X 25
	12M7066	LOCK WASHER	6		10 MM (0.394")
	24M7028	WASHER	6		10.500 X 20 X 2 MM (0.413" X 0.787" X 0.079")
16	.....	FILTER	1		(4449376 NO LONGER AVAILABLE)
16A	4396602	STRAINER	1		
16B	4396619	ROD	1		
16C	14M7274	NUT	3		M10
18	449558	WASHER	4		
19	8053499	LEVEL GAUGE	1		
19A	4100967	FITTING	2		
24	.....	BREATHER	1		(AT167079 NOT AVAILABLE)
24A	4326285	CAP	1		
24B	953612	O-RING	1		
24C	19M8146	SCREW	3		M5 X 16
24D	4222875	BASE	1		
24E	4222876	PACKING	1		
24F	4251384	FILTER ELEMENT	1		
25	AT126200	FITTING	1		
	TH101926	O-RING	1		
26	A885002	PIPE PLUG	1		
	M800650	PACKING	1		
27	12H294	LOCK WASHER	4		5/8"
28	24M7338	WASHER	4		17 X 30 X 3 MM (0.669" X 1.181" X 0.118")
29	19M7488	CAP SCREW	4		M16 X 40
30	4463598	ISOLATOR	1		

BOOM CYLINDER COMPONENTS

T157186 -UN-30OCT02

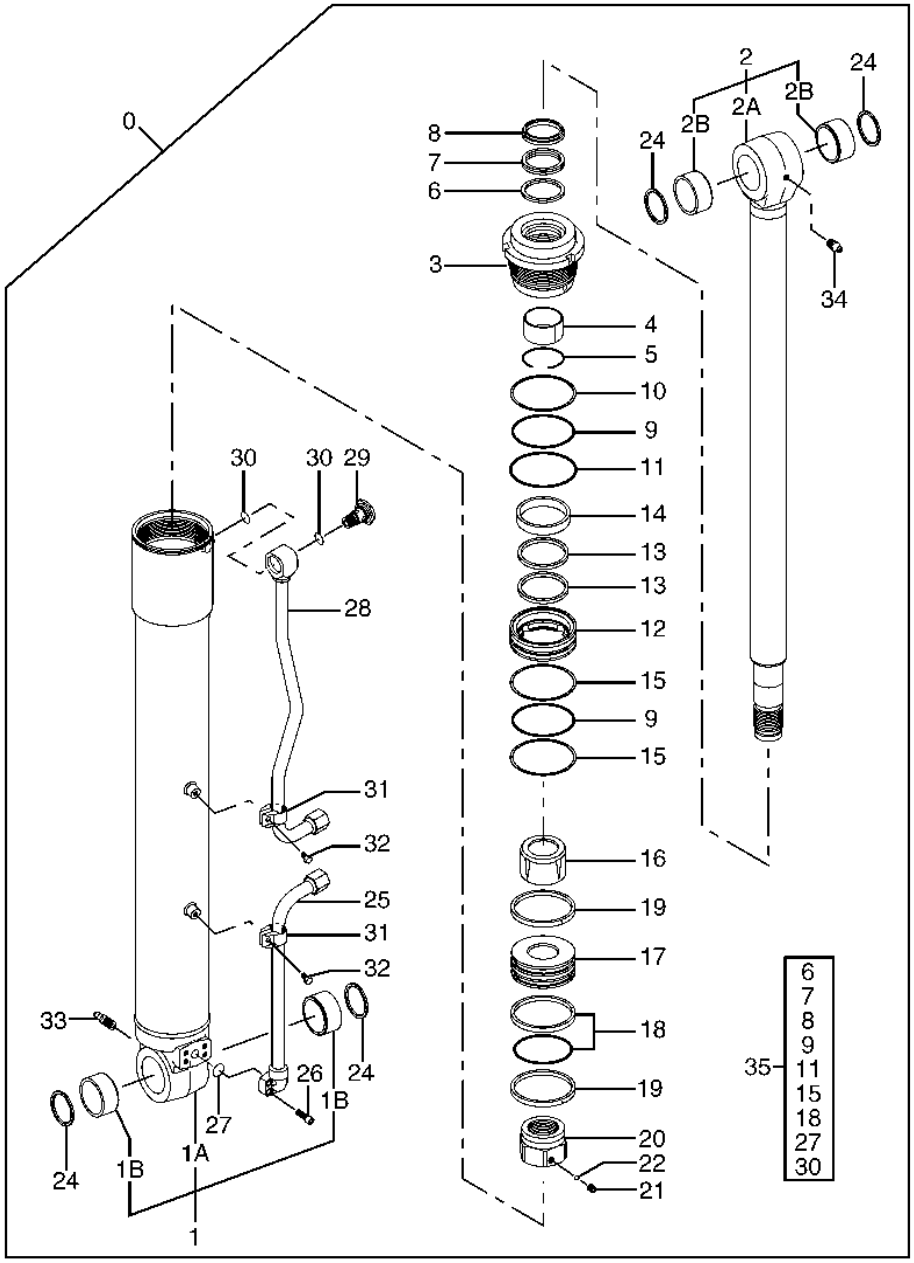

T157186

BOOM CYLINDER COMPONENTS

KEY	PART NO.	PART NAME	QTY	SERIAL NO.	REMARKS
0	9197149	HYDRAULIC CYLINDER	1		
1	0826801	HYDRAULIC CYLINDER BARREL	1		
1A	0826802	TUBE	1		
1B	4334426	BUSHING	2		(SUB FOR 0824204)
2	0826803	ROD	1		
2A	.....	ROD	1		(0826804 NO LONGER AVAILABLE FOR SERVICE)
2B	4334426	BUSHING	2		(SUB FOR 0824204)
3	0826805	HYDRAULIC CYLINDER CAP	1		
4	AT264389	WEAR RING	1		(SUB FOR 0310604)
5	4510494	SNAP RING	1		
6	0790006	RING	1		(K)
7	0225611	SEAL	1		(K)
8	0409117	SEAL	1		(K)
9	AT264320	O-RING	2		(K) (SUB FOR A811110)
10	0826806	BACK-UP RING	1		
11	A810115	PACKING	1		(K)
12	0826807	HOLDER	1		
13	0826808	SEAL	2		
14	0826809	BUSHING	1		
15	0310904	BACK-UP RING	2		(K)
16	0826810	BEARING	1		
17	0826811	PISTON	1		
18	0225614	RING	1		(K)
19	0686405	SCRAPER RING	2		
20	0789307	NUT	1		
21	0309011	SET SCREW	1		
22	0111707	BALL	1		
24	4117954	SEAL	4		(SUB FOR 0824205)
25	0826812	PIPE	1		
26	M340825	SCREW	4		
27	AT264354	O-RING	1		(K) (SUB FOR 4509181, TH103574)
28	0826813	PIPE	1		
29	0826814	PIPE PLUG	1		
30	CH17886	PACKING	2		(K) (SUB FOR 4509182)
31	0826815	HOLDER	2		
32	0826816	BOLT	2		
33	0271312	FITTING	1		
34	J75481	LUBRICATION FITTING	1		
35	4464984	SEAL KIT	1		(INCLUDES ALL (K) PARTS)

ARM CYLINDER (STANDARD BOOM)

T157187 -UN-30OCT02

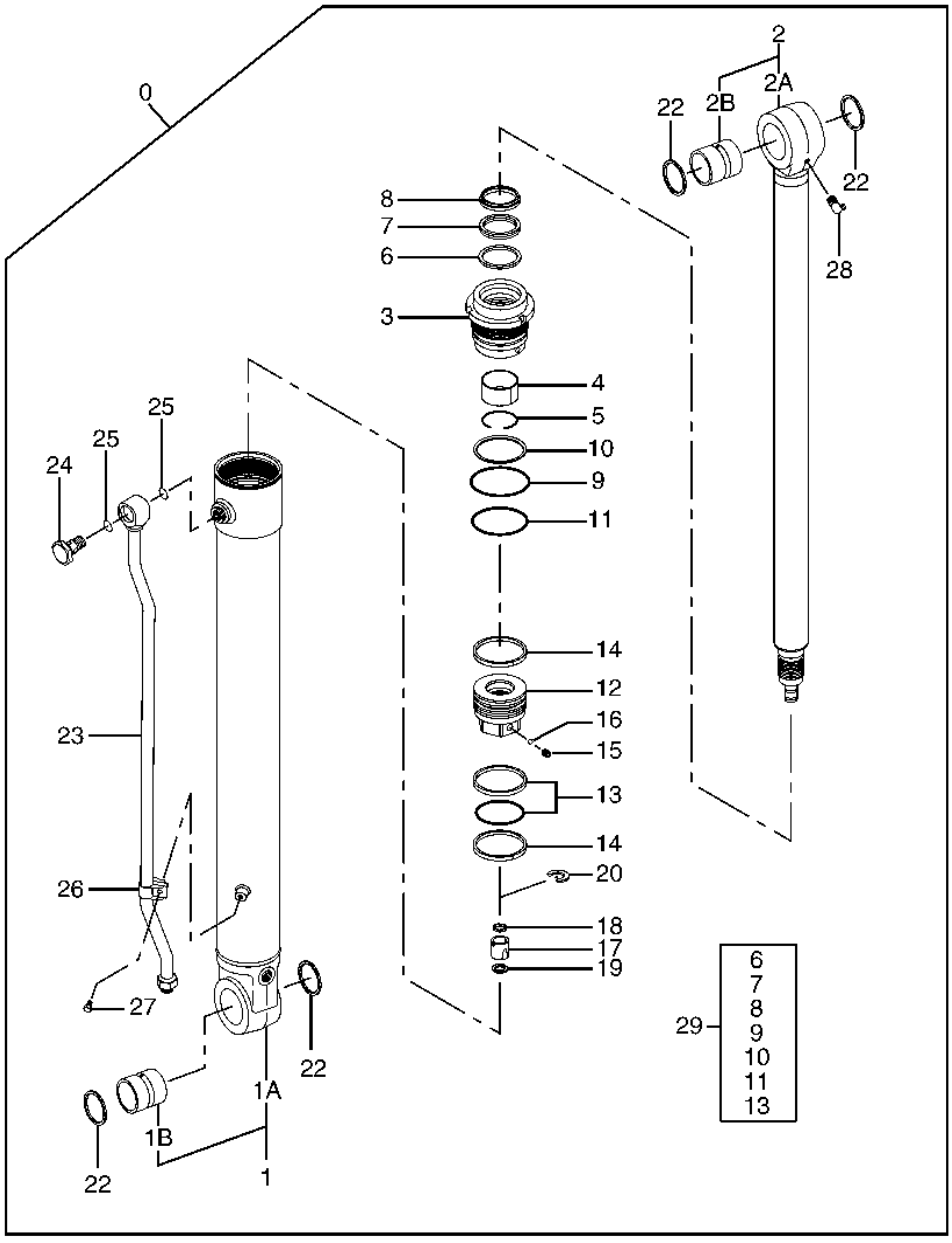

T157187

ARM CYLINDER (STANDARD BOOM)

KEY	PART NO.	PART NAME	QTY	SERIAL NO.	REMARKS
0	9197150	HYDRAULIC CYLINDER	1		
1	0826901	HYDRAULIC CYLINDER BARREL	1		
1A	0826902	TUBE	1		
1B	4374602	BUSHING	1		(SUB FOR 0826903)
2	0826904	ROD	1		
2A	.....	ROD	1		(0826905 NO LONGER AVAILABLE FOR SERVICE)
2B	4374602	BUSHING	1		(SUB FOR 0826903)
3	0826906	HYDRAULIC CYLINDER CAP	1		
4	0826907	BUSHING	1		
5	0225704	SNAP RING	1		
6	0826908	RING	1		(K)
7	AT264378	RING	1		(K) (SUB FOR 0225711)
8	AT264377	RING	1		(K) (SUB FOR 0444715)
9	CH18696	PACKING	1		(K) (SUB FOR A811090)
10	0826909	BACK-UP RING	1		(K)
11	A810095	PACKING	1		(K)
12	0826910	PISTON	1		
13	AT264392	RING	1		(K) (SUB FOR 0310608)
14	0667108	SCRAPER RING	2		
15	0310612	SET SCREW	1		
16	0111818	BALL	1		
17	0444708	BEARING	1		
18	0714904	SEAL	1		
19	0396211	SNAP RING	2		
20	0444710	SNAP RING	1		
22	4117954	SEAL	4		(SUB FOR 0824205)
23	0826911	PIPE	1		
24	0826814	PIPE PLUG	1		
25	CH17886	PACKING	2		(SUB FOR 4509182)
26	0826815	HOLDER	1		
27	0826816	BOLT	1		
28	0225709	FITTING	1		
29	4464985	SEAL KIT	1		(INCLUDES ALL (K) PARTS)

ARM CYLINDER (OFFSET BOOM)

T157089 -UN-30OCT02

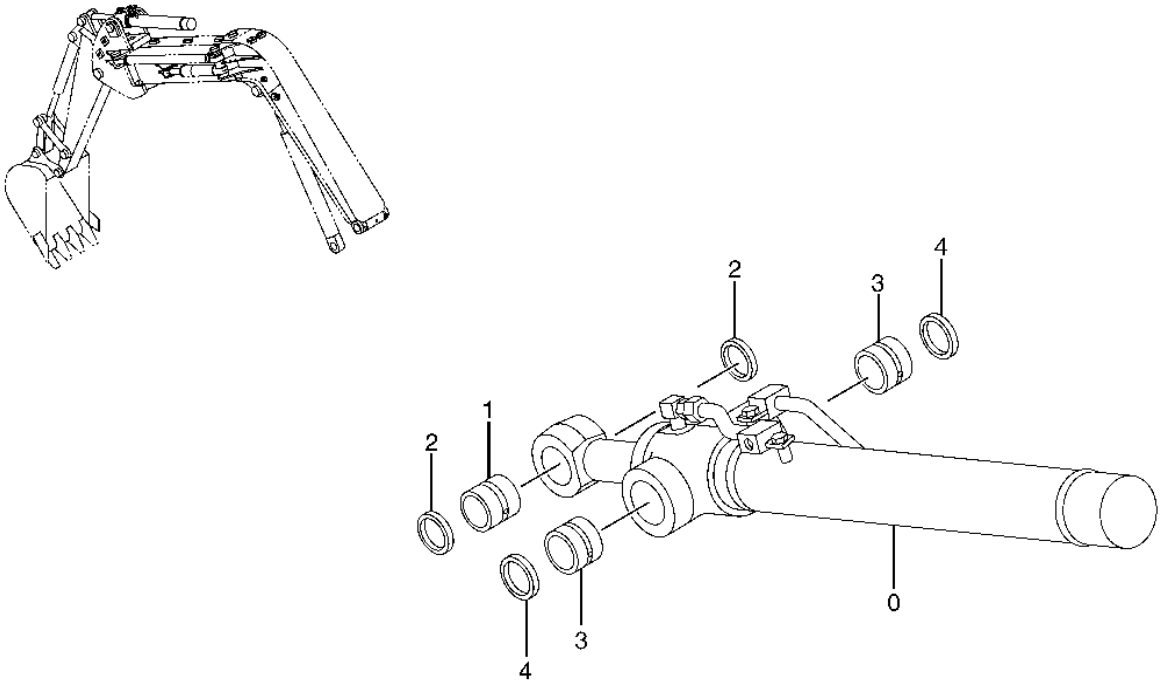

T157089

ARM CYLINDER (OFFSET BOOM)

KEY	PART NO.	PART NAME	QTY	SERIAL NO.	REMARKS
0	9163825	HYDRAULIC CYLINDER	1		
1	4374602	BUSHING	1		
2	4117954	SEAL	2		
3	4445477	BUSHING	2		(SUB FOR 4365456)
4	TH105979	SEAL	2		

ARM CYLINDER COMPONENTS (OFFSET BOOM)

T157188 -UN-05NOV02

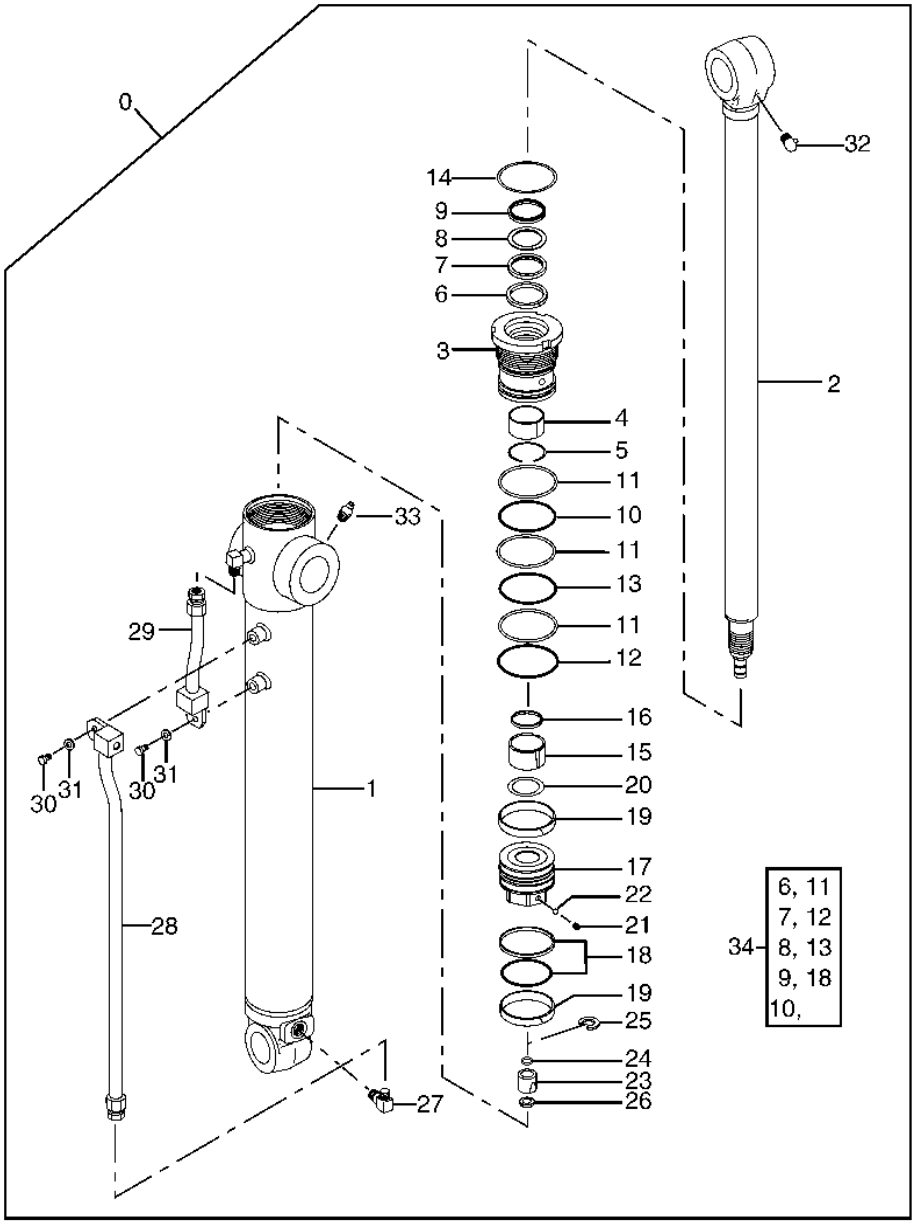

T157188

ARM CYLINDER COMPONENTS (OFFSET BOOM)

KEY	PART NO.	PART NAME	QTY	SERIAL NO.	REMARKS
0	9163825	HYDRAULIC CYLINDER	1		
1	0728701	HYDRAULIC CYLINDER BARREL	1		
2	0728702	ROD	1		
3	0728703	HYDRAULIC CYLINDER CAP	1		
4	0444706	BUSHING	1		
5	0225704	SNAP RING	1		
6	AT264380	RING	1		(K) (SUB FOR 0225714)
7	AT264378	RING	1		(K) (SUB FOR 0225711)
8	AT264379	BACK-UP RING	1		(K) (SUB FOR 0225712)
9	AT264377	RING	1		(K) (SUB FOR 0444715)
10	CH18696	PACKING	1		(K) (SUB FOR A811090)
11	AT264391	BACK-UP RING	3		(K) (SUB FOR 0310606)
12	A810095	PACKING	1		(K)
13	A811085	PACKING	1		(K)
14	4043327	LOCK WASHER	1		
15	0728704	BEARING	1		
16	0728705	SEAL	1		
17	0728706	PISTON	1		
18	AT264392	RING	1		(K) (SUB FOR 0310608)
19	AT264229	RING	2		(SUB FOR AT130547, 0495713, 0333007)
20	0728707	SHIM	1		
21	0310612	SET SCREW	1		
22	0111818	BALL	1		
23	0444708	BEARING	1		
24	0714904	SEAL	1		
25	0444710	SNAP RING	1		
26	0396211	SNAP RING	2		
27	0714804	ELBOW FITTING	1		
28	0728708	PIPE	1		
29	0728709	PIPE	1		
30	0714807	SCREW	2		
31	0714808	WASHER	2		
32	0159411	LUBRICATION FITTING	1		
33	J75481	LUBRICATION FITTING	2		
34	4415584	SEAL KIT	1		(INCLUDES ALL (K) PARTS)

OFFSET CYLINDER (OFFSET BOOM)

T157452 -UN-01NOV02

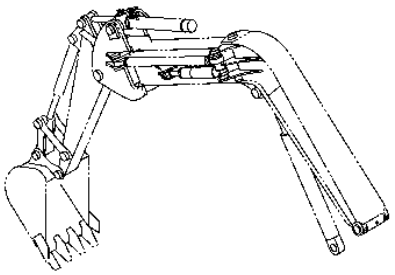

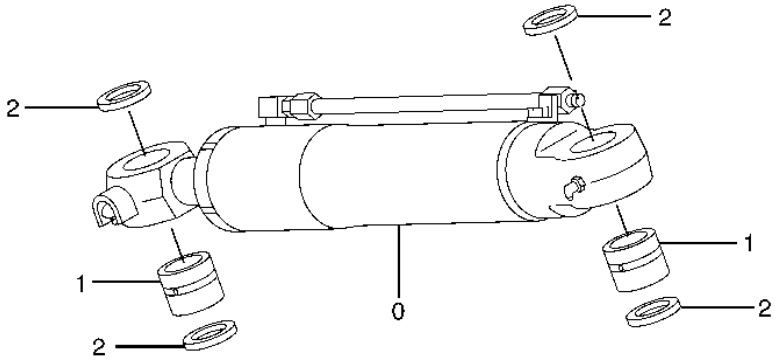

T157452

OFFSET CYLINDER (OFFSET BOOM)

KEY	PART NO.	PART NAME	QTY	SERIAL NO.	REMARKS
0	9163824	HYDRAULIC CYLINDER	1		
1	4334427	BUSHING	2		
2	4117954	SEAL	4		

OFFSET CYLINDER COMPONENTS (OFFSET BOOM)

T161889 -UN-18NOV02

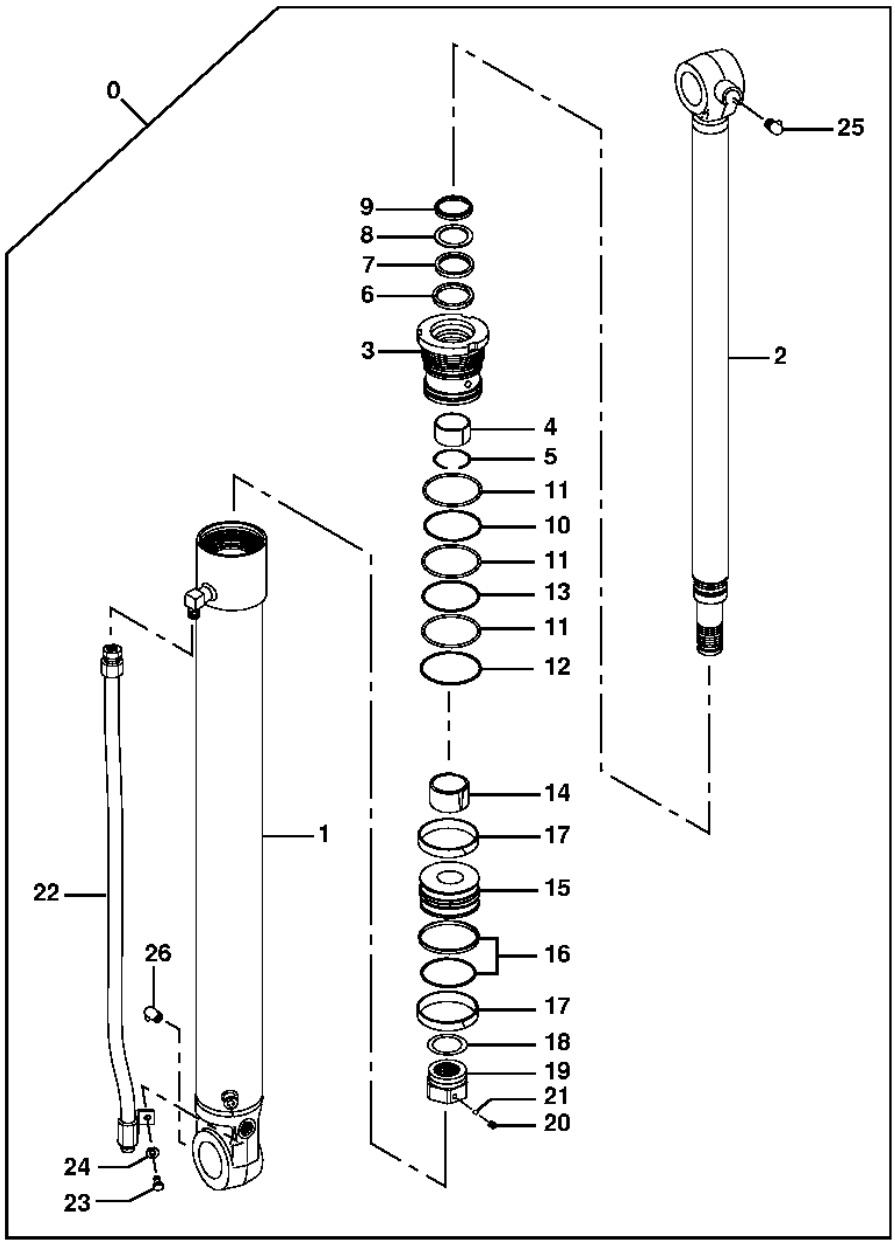

T161889

OFFSET CYLINDER COMPONENTS (OFFSET BOOM)

KEY	PART NO.	PART NAME	QTY	SERIAL NO.	REMARKS
0	4388223	HYDRAULIC CYLINDER	1		
1	0728801	HYDRAULIC CYLINDER BARREL	1		
2	0728802	ROD	1		
3	0728803	CYLINDER HEAD	1		
4	0444706	BUSHING	1		
5	0225704	SNAP RING	1		
6	AT264380	RING	1		(K) (SUB FOR 0225714)
7	AT264378	RING	1		(K) (SUB FOR 0225711)
8	AT264379	BACK-UP RING	1		(K) (SUB FOR 0225712)
9	AT264377	RING	1		(K) (SUB FOR 0444715)
10	AT264319	O-RING	1		(K) (SUB FOR A811100)
11	0310506	BACK-UP RING	3		(K)
12	A810105	O-RING	1		(K)
13	A811095	O-RING	1		(K)
14	0728804	BEARING	1		
15	0487002	PISTON	1		
16	AT264387	RING	1		(K) (SUB FOR 0310508)
17	AT264233	RING	2		(SUB FOR 0333209, AT130561)
18	0333008	SHIM	1		
19	0728805	NUT	1		
20	0310612	SET SCREW	1		
21	0111818	BALL	1		
22	0728806	PIPE	1		
23	0714807	SCREW	1		
24	0714808	WASHER	1		
25	0159411	LUBRICATION FITTING	1		
26	J75581	LUBRICATION FITTING	1		

BUCKET CYLINDER COMPONENTS

T188934 -UN-31MAR03

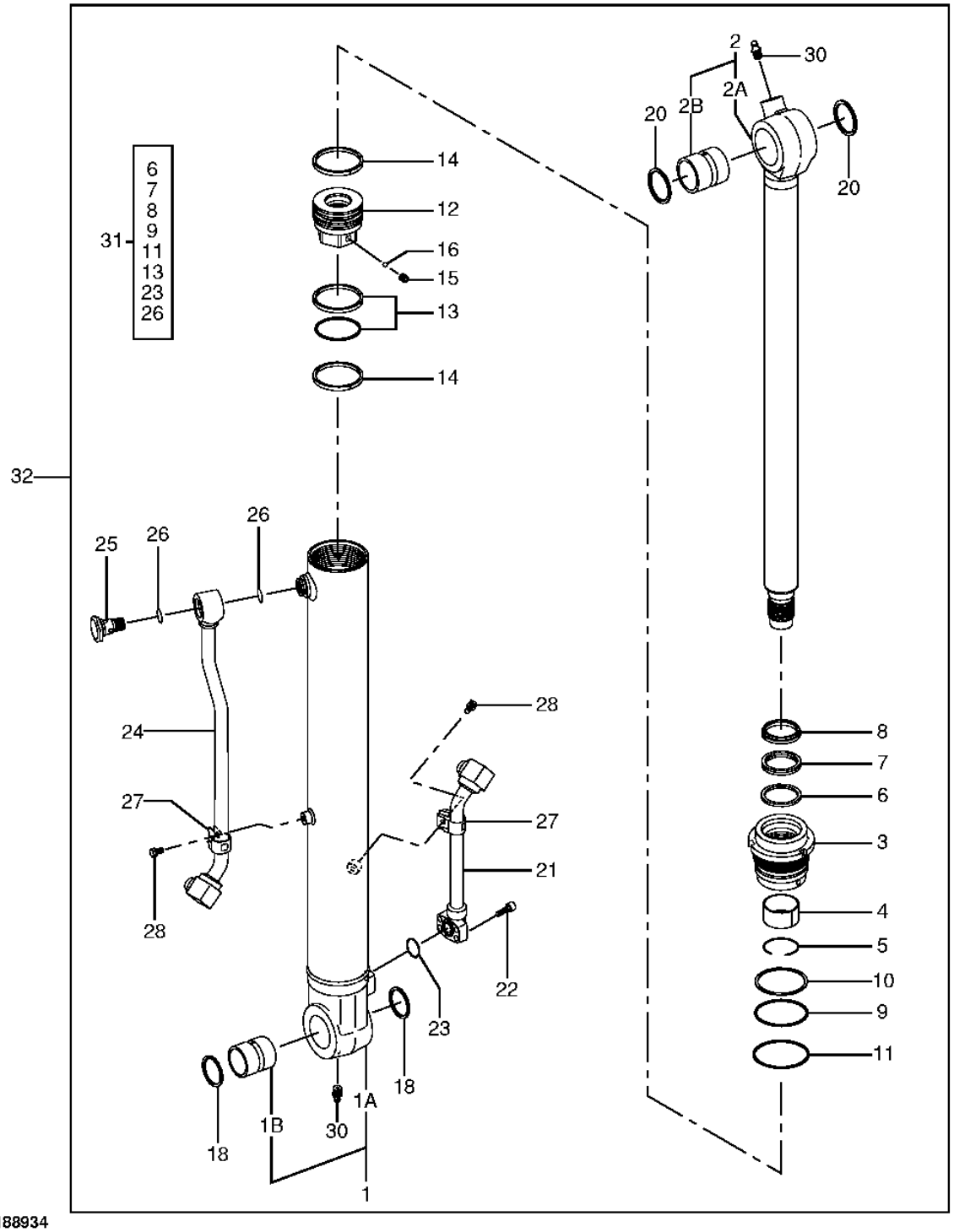

T188934

BUCKET CYLINDER COMPONENTS

KEY	PART NO.	PART NAME	QTY	SERIAL NO.	REMARKS
1	0827001	HYDRAULIC CYLINDER BARREL	1		
1A	0827002	SEAL	1		
1B	4334428	BUSHING	1		
2	TH0827004	ROD	1		(SUB FOR 0827004)
2A	0827005	HYDR. CYLINDER ROD GUIDE	1		
2B	4374602	BUSHING	1		(SUB FOR 0826903)
3	TH0827006	HYDR. CYLINDER ROD GUIDE	1		
4	TH0827007	BUSHING	1		
5	0225804	SNAP RING	1		
6	0827008	OIL	1		(K)
7	AT264382	SEAL	1		(K) (SUB FOR 0225810)
8	AT264381	SEAL	1		(K) (SUB FOR 0453517)
9	CH17160	PACKING	1		(K) (SUB FOR A811080)
10	0827009	PLUG	1		
11	A810085	O-RING	1		(K)
12	0827010	GEAR	1		
13	AT264286	RING	1		(K) (SUB FOR 0453510)
14	TH0827011	RING	2		
15	0310612	SET SCREW	1		
16	0111818	BALL	1		
18	4117955	SEAL	2		(SUB FOR 0827012)
20	4117954	SEAL	2		(SUB FOR 0824205)
21	TH0827013	PIPE	1		
22	M340825	SCREW	4		
23	AT264354	O-RING	1		(K) (SUB FOR 4509181, TH103574)
24	0827014	PUMP	1		
25	0826814	PIPE PLUG	1		
26	CH17886	PACKING	2		(K) (SUB FOR 4509182)
27	0826815	HOLDER	2		
28	0826816	BOLT	2		
30	J75481	LUBRICATION FITTING	2		
31	4464986	SEAL KIT	1		(INCLUDES ALL (K) PARTS)
32	9197151	HYDRAULIC CYLINDER	1		

BLADE CYLINDER

T157190 -UN-30OCT02

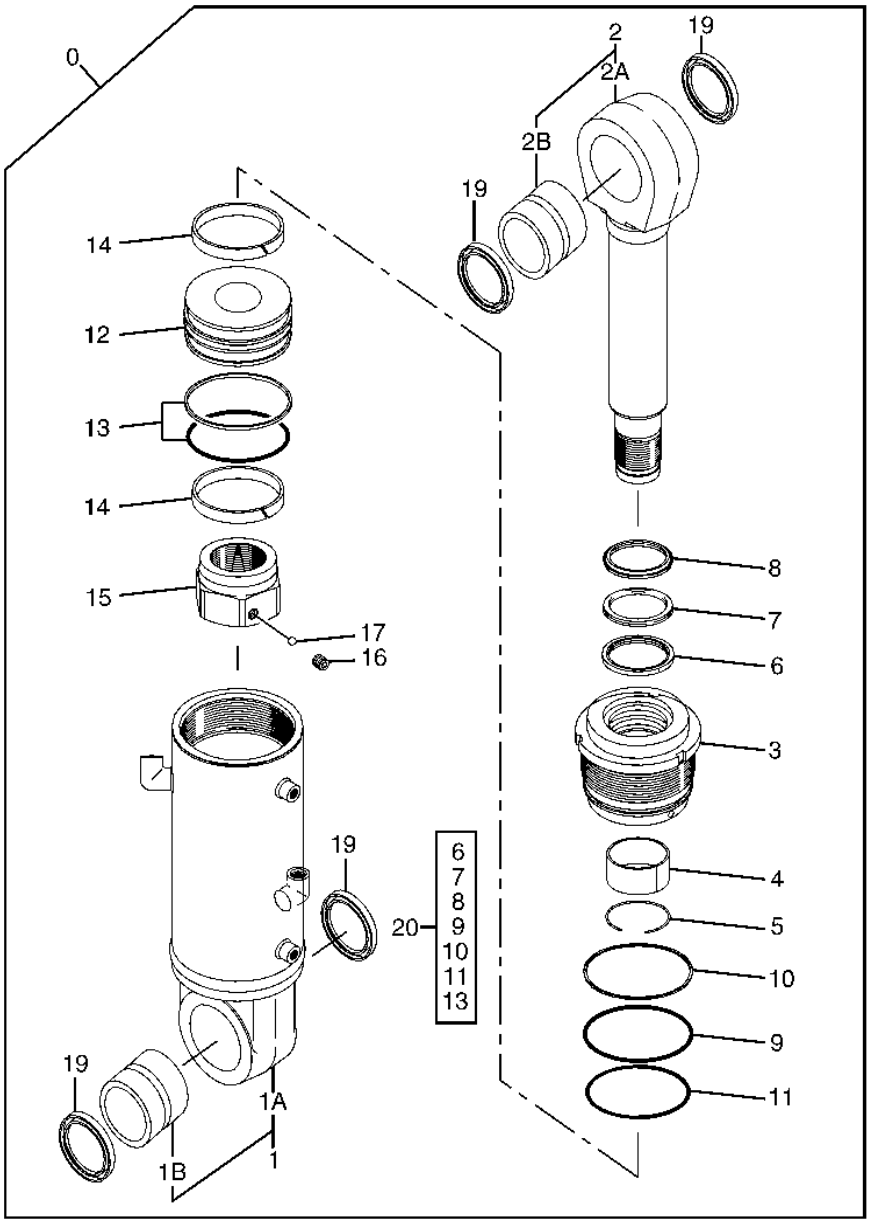

T157190

BLADE CYLINDER

KEY	PART NO.	PART NAME	QTY	SERIAL NO.	REMARKS
0	9201173	HYDRAULIC CYLINDER	1		
1	0814201	HYDRAULIC CYLINDER BARREL	1		
1A	0814202	TUBE	1		
1B	0814203	BUSHING	1		
2	0814204	ROD	1		
2A	.....	ROD	1		(0814205 NO LONGER AVAILABLE FOR SERVICE)
2B	0814203	BUSHING	1		
3	0814206	CYLINDER HEAD	1		
4	0310304	SPACER	1		
5	0271304	SNAP RING	1		
6	0789306	RING	1		(K)
7	AT264256	PACKING	1		(K) (SUB FOR AT133633, 0271309)
8	0666806	SCRAPER RING	1		(K)
9	AT264342	O-RING	1		(K) (SUB FOR A811115)
10	0814207	BACK-UP RING	1		(K)
11	A810120	O-RING	1		(K)
12	0814208	PISTON	1		
13	AT264355	SEAL	1		(K) (SUB FOR 0258205)
14	0667206	SEAL	2		
15	0814209	NUT	1		
16	0309011	SET SCREW	1		
17	0111707	BALL	1		
19	0814210	RING	4		
20	4465736	SEAL KIT	1		(INCLUDES ALL (K) PARTS)

BLADE COMPONENTS

T160694 -UN-31OCT02

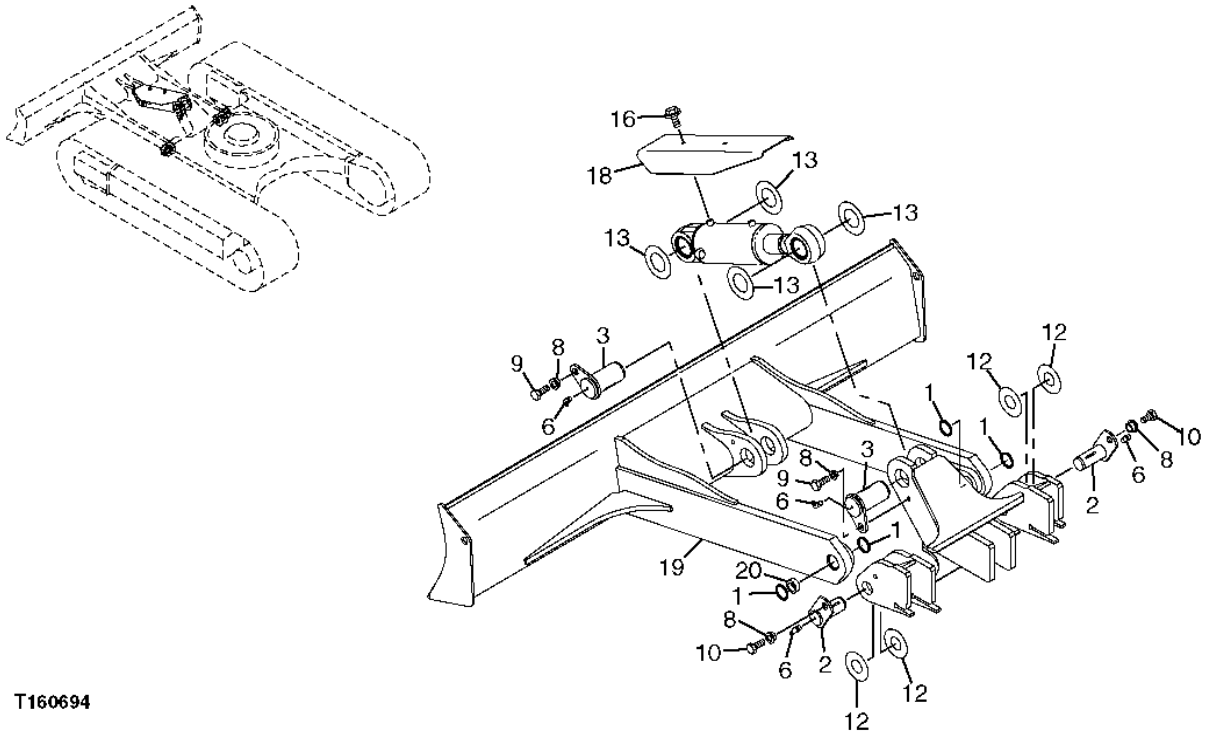

T160694

BLADE COMPONENTS

KEY	PART NO.	PART NAME	QTY	SERIAL NO.	REMARKS
1	4246939	SEAL	4		
2	9752136	PIN FASTENER	2		
3	9752182	PIN FASTENER	2		
6	T116334	LUBRICATION FITTING	4		
8	4350527	BUSHING	4		
9	19M7488	CAP SCREW	2		M16 X 40
10	19M8035	CAP SCREW	2		M16 X 35
12	4407996	PLATE	4		
13	4366692	THRUST WASHER	4		
16	19M7872	CAP SCREW	2		M12 X 25
	12M7067	LOCK WASHER	2		12 MM (0.472")
	24M7180	WASHER	2		13 X 37 X 3 MM (0.512" X 1.457" X 0.118")
18	3091742	COVER	1		
19	8083554	BLADE	1		
20	4353818	BUSHING	2		

BLADE HYDRAULIC CYLINDER HOSES

T160696 -UN-31OCT02

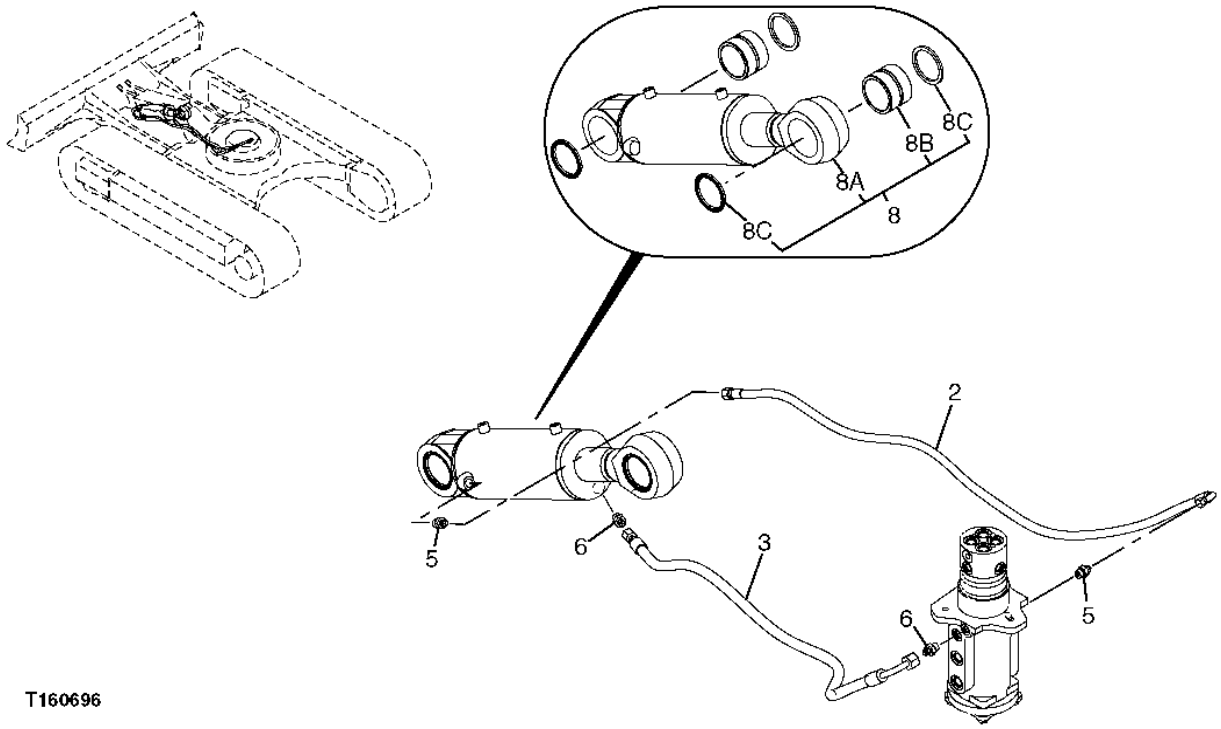

2L13

BLADE HYDRAULIC CYLINDER HOSES

KEY	PART NO.	PART NAME	QTY	SERIAL NO.	REMARKS
2	AP36095	HYDRAULIC HOSE - FABRICATE	1		
3	4418939	HYDRAULIC HOSE - FABRICATE	1		
5	A852133	ADAPTER	2		
	CH11570	O-RING	1		
6	A852134	ADAPTER	2		
	CH11570	O-RING	1		
8	9201173	HYDRAULIC CYLINDER	1		(SUB FOR 9201173EX)
8A	.....	CYLINDER	1		(4452571 NOT AVAILABLE FOR SERVICE)
8B	4376210	BUSHING	2		
8C	AH140157	BACK-UP RING	4		

SWING MOTOR AND GEARBOX

T157028 -UN-30OCT02

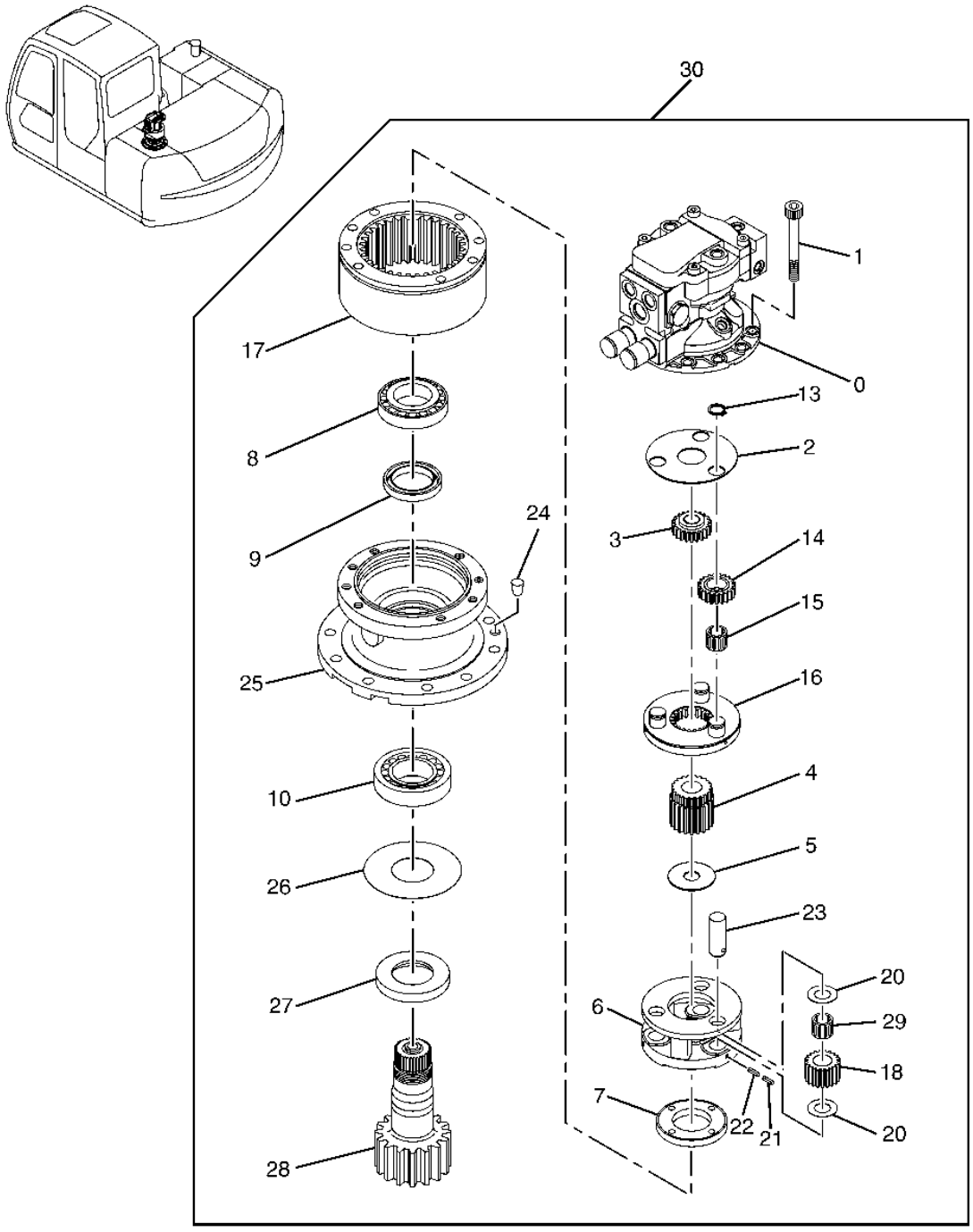

T157028

SWING MOTOR AND GEARBOX

KEY	PART NO.	PART NAME	QTY	SERIAL NO.	REMARKS
0	4429255	HYDRAULIC MOTOR	1		(SUB FOR 4429255EX)
1	4470166	BOLT	8		
2	4468029	PLATE	1		
3	4468030	GEAR	1		
4	4468031	GEAR	1		
5	4397238	WEAR PLATE	1		
6	4468032	PLANET PINION CARRIER	1		
7	4397240	NUT	1		
8	4397241	CYLINDRICAL ROLLER BEARING	1		
9	4395197	SEAL	1		
10	4468033	BEARING	1		
13	40M1828	SNAP RING	3		
14	4468034	GEAR	3		
15	4397245	NEEDLE BEARING	3		
16	4468035	PLANET PINION CARRIER	1		
17	4468036	GEAR	1		
18	4468037	GEAR	3		
20	4468038	PLATE	6		
21	4134502	SPRING PIN	3		
22	4395205	PIN FASTENER	3		
23	4468039	PIN FASTENER	3		
24	420802	PLUG	1		
25	.....	HOUSING	1		(4468040 NOT AVAILABLE FOR SERVICE)
26	4468041	PLATE	1		
27	4468042	SPACER	1		
28	4468043	SHAFT	1		
29	4468044	BEARING	3		
30	4445648	HYDRAULIC MOTOR	1		

SWING DEVICE SUPPORT

T157027 -UN-30OCT02

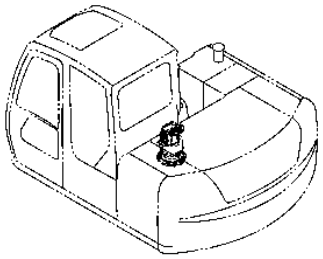

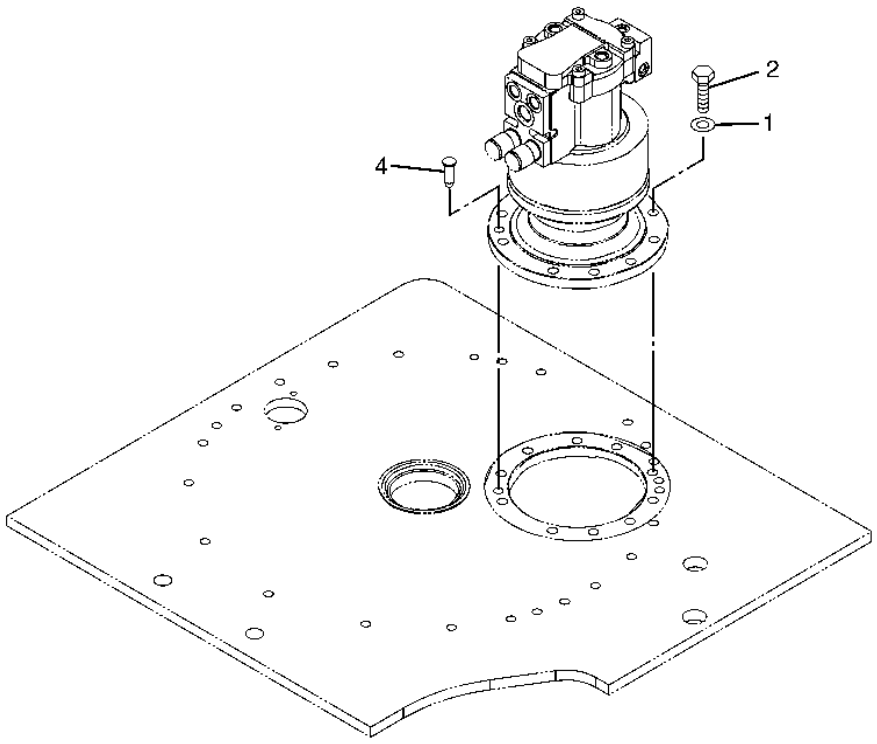

T157027

SWING DEVICE SUPPORT

KEY	PART NO.	PART NAME	QTY	SERIAL NO.	REMARKS
1	24M7338	WASHER	10		17 X 30 X 3 MM (0.669" X 1.181" X 0.118")
2	19M7488	CAP SCREW	10		M16 X 40
4	4415327	PIN FASTENER	1		

SWING OIL MOTOR

T157167 -UN-05NOV02

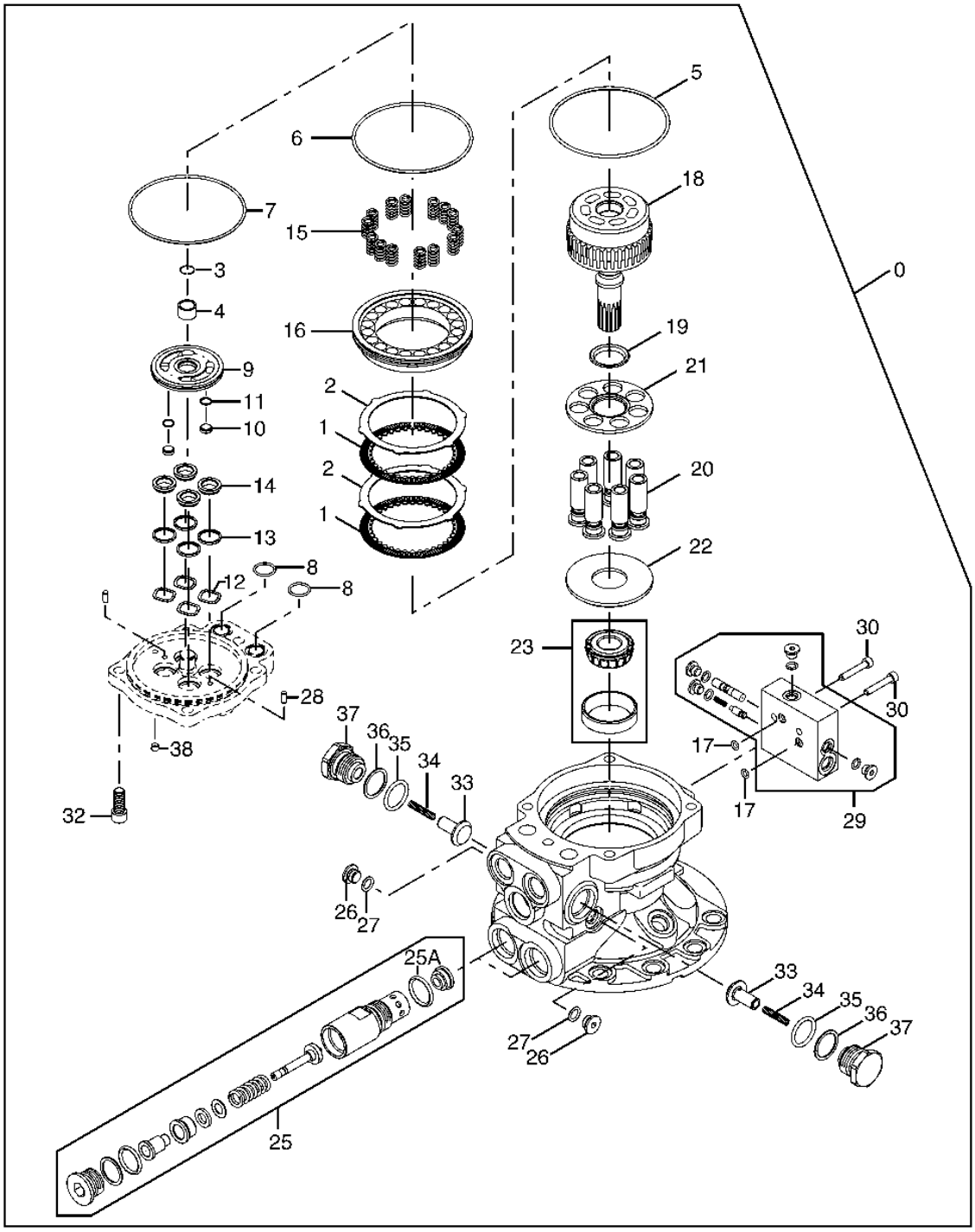

T157167

SWING OIL MOTOR

KEY	PART NO.	PART NAME	QTY	SERIAL NO.	REMARKS
0	4429255	HYDRAULIC MOTOR	1		
1	0443501	BRAKE DISK	2		
2	0443502	BRAKE DISK	2		
3	0476710	SNAP RING	1		
4	0443513	NEEDLE BEARING	1		
5	0443503	O-RING	1		
6	0476718	O-RING	1		
7	0443505	O-RING	1		
8	AT264354	O-RING	2		(SUB FOR 4509181, TH103574)
9	0802701	PLATE	1		
10	0443509	PISTON	2		
11	0443510	O-RING	2		
12	0802702	WEAR PLATE	4		
13	0802703	RING	4		
14	0802704	BUSHING	4		
15	0443512	SPRING	14		
16	0443504	HOUSING	1		
17	0443520	O-RING	2		
19	0476708	DISK SPRING	1		
21	0476707	SWASH PLATE	1		
22	0476705	RETAINER	1		
23	0476704	CYLINDRICAL ROLLER BEARING	1		
25	0802705	PRESSURE RELIEF VALVE	2		
25A	0212313	O-RING	1		
26	0622810	CAP	2		
27	M800650	PACKING	2		(SUB FOR 957366)
28	0476716	DOWEL PIN	2		
29	0802706	FLOW CONTROL HYD. VALVE	1		
30	0443521	SCREW	2		
32	M341230	SCREW	5		
33	0443518	CHECK VALVE	2		
34	0622827	SPRING	2		
35	0212313	O-RING	2		
36	0212312	BACK-UP RING	2		
37	0802707	CAP	2		
38	0101557	PIPE PLUG	1		

MEMORANDA

1L7

NUMERICAL INDEX

PART NO.	GRID	KEY	PAGE
AA34965	1K4	8	1830 - 11
AA34965	1K6	7	1830 - 13
AE24616	2C5	22	2160 - 3
AE24616	2E22	13	3360 - 15
AE45056	2D18	23	3315 - 19
AE45056	2E10	3	3360 - 3B
AH140157	2L13	8C	3401 - 5
AH63565	2E24	5	3360 - 15B
AH63565	2E24	11	3360 - 15B
AH63565	2E24	14	3360 - 15B
AH63565	2F2	5	3360 - 15D
AH63565	2F2	11	3360 - 15D
AH63565	2F2	14	3360 - 15D
AH75160	2E10	10	3360 - 3B
AH89069	2C5	2	2160 - 3
AH89069	2E10	11	3360 - 3B
AH97777	2C5	3	2160 - 3
AP33487	1G4	16	1671 - 3
AP34340	1B2	0	0130 - 7
AP34340	1B4	0	0130 - 7B
AP36006	2D24	23	3340 - 7
AP36017	2D18	21	3315 - 19
AP36018	2D18	20	3315 - 19
AP36078	1B22	4	0260 - 11
AP36095	2L13	2	3401 - 5
AP36236	2K10	12	3363 - 55
AR48236	1F12	19	0530 - 3
AR60937	1G20	30	1674 - 15
AR65293	1E24	13	0510 - 3
AR65293	2I10	9	3363 - 7
AR76140	2C5	17	2160 - 3
AT101944	1K11	17	1830 - 18
AT101945	1K11	16	1830 - 18
AT107220	2E18	6	3360 - 11
AT115448	2E12	11	3360 - 5
AT116486	2E22	16	3360 - 15
AT117364	2E20	48	3360 - 13
AT117365	2E20	47	3360 - 13
AT120498	2E20	47	3360 - 13
AT120499	2E20	48	3360 - 13
AT121865	2J8	1	3363 - 29
AT126200	2K16	25	3364 - 3
AT130157	1F25	1	1369 - 3
AT130547	2K24	19	3365 - 13
AT130561	2L4	17	3365 - 17
AT130684	2E8	16	3360 - 3
AT131124	2B4	14	1910 - 9
AT131436	2C5	8	2160 - 3
AT131437	2C5	13	2160 - 3
AT131445	2E8	13	3360 - 3
AT131725	2I14	87	3363 - 11
AT133633	2L8	7	3365 - 23
AT134345	2C5	12	2160 - 3
AT139382	2E12	4	3360 - 5
AT139383	2E12	3	3360 - 5
AT140041	2E22	16	3360 - 15
AT141562	2E12	15	3360 - 5
AT142288	1H5	1	1674 - 24
AT145650	1J20	13	1830 - 3
AT145651	1F8	17	0520 - 3
AT145651	1F10	7	0520 - 5
AT152138	2E8	12	3360 - 3
AT153902	2H16	6	3362 - 41
AT154990	1G10	0C	1674 - 5
AT154990	1G12	0C	1674 - 7
AT155729	1F23	22	1322 - 3
AT157667	2C5	1	2160 - 3
AT157668	2C5	18	2160 - 3
AT159804	1K11	20	1830 - 18
AT161192	1K11	25	1830 - 18
AT162242	2E12	18	3360 - 5
AT163452	2C17	15	3302 - 5
AT163464	2C19	1A	3302 - 7
AT163494	2C19	1F	3302 - 7
AT163498	2C19	1C	3302 - 7
AT163500	2C19	1D	3302 - 7
AT163501	2C19	1K	3302 - 7
AT163502	2C19	1L	3302 - 7
AT164676	1H5	2	1674 - 24
AT164896	2E14	1	3360 - 7
AT167079	2K16	24	3364 - 3
AT168209	2E8	6	3360 - 3
AT173678	1J14	2	1821 - 5
AT180467	2E8	1	3360 - 3
AT180585	2E8	7	3360 - 3
AT180585	2E10	4	3360 - 3B
AT180971	1J12	7	1821 - 3
AT180973	1J12	9	1821 - 3
AT180974	1J12	10	1821 - 3
AT180975	1J12	11	1821 - 3
AT180976	1J12	12	1821 - 3
AT180977	1J12	13	1821 - 3
AT180978	1J12	15	1821 - 3
AT180979	1J12	18	1821 - 3
AT180980	1J12	19	1821 - 3
AT182225	2C15	40	3302 - 3
AT182226	2C15	40	3302 - 3
AT182227	2C15	40	3302 - 3
AT182228	2C17	40	3302 - 5
AT182229	2C17	40	3302 - 5
AT182230	2C17	40	3302 - 5
AT182231	2C17	40	3302 - 5
AT182232	2C17	40	3302 - 5
AT182298	1G4	46	1671 - 3
AT183365	1A22	10	0130 - 3
AT184008	2C15	8	3302 - 3
AT184008	2C17	8	3302 - 5
AT184009	2C15	10	3302 - 3
AT184009	2C17	10	3302 - 5
AT184010	2C15	5	3302 - 3
AT184010	2C17	5	3302 - 5
AT184011	2C15	7	3302 - 3
AT184011	2C17	7	3302 - 5
AT184981	2E18	30	3360 - 11
AT186111	2E20	42	3360 - 13
AT186112	2E20	43	3360 - 13
AT186113	2E20	44	3360 - 13
AT186114	2E20	45	3360 - 13
AT186417	2E8	2	3360 - 3
AT186554	2J8	0A	3363 - 29
AT189409	2E20	43	3360 - 13
AT189410	2E20	42	3360 - 13
AT189638	2C5	23	2160 - 3
AT190190	1G20	30	1674 - 15
AT190535	2E22	4	3360 - 15
AT191397	2E22	14	3360 - 15
AT191643	1C17	83	0402 - 3
AT193964	1J12	1	1821 - 3
AT194969	1G18	0	1674 - 13
AT195278	1J12	0C	1821 - 3
AT195279	1J12	0D	1821 - 3
AT195280	1J12	20	1821 - 3
AT195284	1J12	2	1821 - 3
AT195286	1J12	0	1821 - 3
AT195287	1J12	8	1821 - 3
AT195657	1E12	17	0423 - 3
AT195658	1D10	44	0409 - 5
AT195658	1D20	20	0414 - 3
AT195784	2E12	18	3360 - 5
AT195786	2E12	12	3360 - 5
AT195787	2E12	9	3360 - 5
AT195788	2E12	14	3360 - 5
AT196334	2C5	18	2160 - 3
AT196587	2E14	1	3360 - 7
AT196588	2E14	3	3360 - 7
AT197375	2E20	3	3360 - 13
AT200011	1B4	55	0130 - 7B
AT213796	2I4	17	3362 - 53
AT213811	2E8	15	3360 - 3
AT214263	2J8	0A	3363 - 29
AT216522	1J12	6	1821 - 3
AT216532	1J12	14	1821 - 3
AT217709	1J12	51	1821 - 3
AT250761	2K14	1	3363 - 59
AT254808	1C23	18	0404 - 3
AT254808	1D10	7	0409 - 5
AT254809	1C23	20	0404 - 3
AT254812	1C23	15	0404 - 3
AT254814	1C25	3	0407 - 3
AT254814	1E20	16	0452 - 3
AT254817	1C23	45	0404 - 3
AT254823	1C23	22	0404 - 3
AT254823	1D10	10	0409 - 5
AT254825	1D24	58	0418 - 3
AT254826	1C19	83	0402 - 5
AT254826	1E20	19	0452 - 3
AT254831	1C23	40	0404 - 3
AT254831	1D10	9	0409 - 5
AT254844	1D8	5	0409 - 3
AT254847	1D8	4	0409 - 3
AT254850	1C15	31	0401 - 3
AT254863	1D24	64	0418 - 3
AT254863	1E20	22	0452 - 3
AT255018	1D12	13	0410 - 3
AT255018	1D20	22	0414 - 3
AT255018	1E10	27	0422 - 3
AT255018	1E12	18	0423 - 3
AT255018	1E14	73	0429 - 3
AT255025	1C23	73	0404 - 3
AT255026	1E6	73	0420 - 3
AT255026	1E8	17	0421 - 3
AT255027	1C25	4	0407 - 3
AT255028	1C23	7	0404 - 3
AT256004	1K10	6	1830 - 17
AT256018	1D10	8	0409 - 5
AT259916	1D22	54	0417 - 3
AT259923	1E14	28	0429 - 3
AT259924	1K17	26	1832 - 3
AT259925	1D4	40	0407 - 7
AT259925	1D4	47	0407 - 7
AT259925	1D14	73	0413 - 3
AT259925	1E2	25	0418 - 5
AT259925	1E14	96	0429 - 3
AT259926	1C19	63	0402 - 5
AT259939	1D10	15	0409 - 5
AT259940	1D24	44	0418 - 3
AT259940	1E4	46	0419 - 3
AT259945	1C25	24	0407 - 3
AT259945	1E4	48	0419 - 3
AT259946	1E18	4	0433 - 5
AT259978	1D8	6	0409 - 3

NUMERICAL INDEX - CONTINUED

PART NO.	GRID	KEY	PAGE
AT260107	1D12	18	0410 - 3
AT260107	1E12	23	0423 - 3
AT260107	1E14	82	0429 - 3
AT260108	1E10	7	0422 - 3
AT260112	1E14	38	0429 - 3
AT263680	1H4	1	1674 - 23
AT263794	1C23	19	0404 - 3
AT263852	1E6	9	0420 - 3
AT263858	1C19	64	0402 - 5
AT263858	1D24	50	0418 - 3
AT263859	1D20	59	0414 - 3
AT263876	1D10	41	0409 - 5
AT263876	1E18	5	0433 - 5
AT264112	1E8	13	0421 - 3
AT264141	1F14	9	0540 - 5
AT264169	1C23	72	0404 - 3
AT264229	2K24	19	3365 - 13
AT264233	2L4	17	3365 - 17
AT264256	2L8	7	3365 - 23
AT264286	2L6	13	3365 - 21
AT264319	2L4	10	3365 - 17
AT264320	2K18	9	3365 - 5
AT264324	1F25	..	1369 - 3
AT264324	2I10	3	3363 - 7
AT264333	2H18	5	3362 - 43
AT264342	2L8	9	3365 - 23
AT264347	1F25	..	1369 - 3
AT264347	2I4	15	3362 - 53
AT264354	1F25	..	1369 - 3
AT264354	2K18	27	3365 - 5
AT264354	2L6	23	3365 - 21
AT264354	2L20	8	4367 - 3
AT264355	2L8	13	3365 - 23
AT264360	1F25	..	1369 - 3
AT264377	2K20	8	3365 - 9
AT264377	2K24	9	3365 - 13
AT264377	2L4	9	3365 - 17
AT264378	2K20	7	3365 - 9
AT264378	2K24	7	3365 - 13
AT264378	2L4	7	3365 - 17
AT264379	2K24	8	3365 - 13
AT264379	2L4	8	3365 - 17
AT264380	2K24	6	3365 - 13
AT264380	2L4	6	3365 - 17
AT264381	2L6	8	3365 - 21
AT264382	2L6	7	3365 - 21
AT264387	2L4	16	3365 - 17
AT264389	2K18	4	3365 - 5
AT264391	2K24	11	3365 - 13
AT264392	2K20	13	3365 - 9
AT264392	2K24	18	3365 - 13
AT301074	2C2	0	2004 - 3
AT301723	1H9	2	1674 - 33B
AT302442	2E18	1	3360 - 11
AT302457	2E18	2	3360 - 11
AT302485	2E16	90	3360 - 9
AT302485	2E18	90	3360 - 11
AT302486	2E16	41	3360 - 9
AT302487	2E16	42	3360 - 9
AT302488	2E16	46	3360 - 9
AT302489	2E16	39	3360 - 9
AT302490	2E20	8	3360 - 13
AT302575	2E16	29	3360 - 9
AT303097	2D18	27	3315 - 19
AT303431	1J10	7	1810 - 37
AT303496	2E8	1	3360 - 3
AT303496	2E10	1	3360 - 3B
AT303616	2E20	8	3360 - 13
AT303630	2E10	13	3360 - 3B
AT303631	2E10	12	3360 - 3B
AT303632	2E10	18	3360 - 3B
AT303633	2E10	21	3360 - 3B
AT304329	2D18	22	3315 - 19
AT304329	2D18	24	3315 - 19
AT306723	2E22	16	3360 - 15
AT306737	2E24	7	3360 - 15B
AT306737	2F2	7	3360 - 15D
AT306757	2E24	14	3360 - 15B
AT306757	2F2	14	3360 - 15D
AT306775	2E24	6	3360 - 15B
AT306775	2F2	6	3360 - 15D
AT307709	2E22	14	3360 - 15
AT307710	2E22	4	3360 - 15
AT308570	1F8	0A	0520 - 3
AT308572	1F8	24	0520 - 3
AT309263	1J12	0A	1821 - 3
AT309264	1J12	0B	1821 - 3
AT320485	2E20	90	3360 - 13
AT35121	2C5	16	2160 - 3
AT35121	2E22	3	3360 - 15
AT36921	2E8	17	3360 - 3
AT38628	2C5	9	2160 - 3
AT39141	2I6	11	3363 - 3
AT48428	2I18	8	3363 - 15
AT64237	1G10	10	1674 - 5
AT64237	1G12	10	1674 - 7
AT71082	2E22	11	3360 - 15
AT71732	2E8	9	3360 - 3
AT78633	1G20	30	1674 - 15
AT78634	1G20	30	1674 - 15
AT82210	2E14	2	3360 - 7
AT83306	2E20	40	3360 - 13
AT83721	2E22	6	3360 - 15
AT84953	1K11	19	1830 - 18
AU42809	1G20	30	1674 - 15
A590102	1C4	17	0262 - 5
A590108	1G4	45	1671 - 3
A590108	1J22	9	1830 - 5
A590108	1J22	32	1830 - 5
A590108	2B6	0G	1910 - 11
A590108	2B8	0G	1910 - 13
A590108	2B10	5E	1910 - 15
A590108	2B16	8	1910 - 21
A590108	2C2	3	2004 - 3
A590108	2C24	13	3315 - 3
A590108	2C24	16	3315 - 3
A590108	2D16	24	3315 - 17
A590906	1C6	24	0262 - 7
A590908	1F12	9	0530 - 3
A590908	1G4	44	1671 - 3
A590908	1J22	8	1830 - 5
A590908	1J22	31	1830 - 5
A590908	2C2	2	2004 - 3
A590908	2C24	15	3315 - 3
A810060	2K16	2	3364 - 3
A810085	2L6	11	3365 - 21
A810095	2K20	11	3365 - 9
A810095	2K24	12	3365 - 13
A810105	2L4	12	3365 - 17
A810115	2K18	11	3365 - 5
A810120	2L8	11	3365 - 23
A811030	1F25	..	1369 - 3
A811030	2F20	5	3361 - 19B
A811035	2I10	3	3363 - 7
A811040	1F25	..	1369 - 3
A811040	2I6	13	3363 - 3
A811040	2I10	22	3363 - 7
A811045	1F25	..	1369 - 3
A811060	2J8	0C	3363 - 29
A811080	2I4	2	3362 - 53
A811080	2L6	9	3365 - 21
A811085	2K24	13	3365 - 13
A811090	2K20	9	3365 - 9
A811090	2K24	10	3365 - 13
A811095	2L4	13	3365 - 17
A811100	2L4	10	3365 - 17
A811110	2K18	9	3365 - 5
A811115	2L8	9	3365 - 23
A852122	1B22	8	0260 - 11
A852122	2G6	6	3362 - 7
A852122	2G8	6	3362 - 7B
A852122	2H6	6	3362 - 31
A852122	2I12	69	3363 - 9
A852122	2I14	17	3363 - 11
A852122	2I14	21	3363 - 11
A852122	2J6	8	3363 - 27
A852122	2J8	8	3363 - 29
A852122	2J8	12	3363 - 29
A852122	2J8	16	3363 - 29
A852122	2J14	9	3363 - 35
A852122	2J18	36	3363 - 39
A852122	2J20	10	3363 - 41
A852122	2J24	2	3363 - 45
A852123	2G6	9	3362 - 7
A852123	2J24	1	3363 - 45
A852132	2G6	13	3362 - 7
A852132	2J18	33	3363 - 39
A852132	2K8	6	3363 - 53
A852133	1B22	13	0260 - 11
A852133	2G6	7	3362 - 7
A852133	2G8	7	3362 - 7B
A852133	2I12	38	3363 - 9
A852133	2I14	59	3363 - 11
A852133	2J6	2	3363 - 27
A852133	2J20	5	3363 - 41
A852133	2L13	5	3401 - 5
A852134	2L13	6	3401 - 5
A852143	2I14	46	3363 - 11
A852143	2I18	0	3363 - 15
A852143	2J6	3	3363 - 27
A852143	2J8	2	3363 - 29
A852144	2I12	1	3363 - 9
A852144	2I12	5	3363 - 9
A852144	2J2	21	3363 - 23
A852144	2J8	4	3363 - 29
A852222	2J8	17	3363 - 29
A852222	2J22	0	3363 - 43
A852232	2I12	70	3363 - 9
A852232	2J18	34	3363 - 39
A852243	2I18	1	3363 - 15
A852322	2G6	15	3362 - 7
A852322	2G8	15	3362 - 7B
A852322	2H6	7	3362 - 31
A852322	2I14	7	3363 - 11
A852322	2I14	15	3363 - 11
A852322	2I14	82	3363 - 11
A852322	2I18	13	3363 - 15
A852322	2J6	9	3363 - 27
A852322	2J14	12	3363 - 35
A852322	2J16	37	3363 - 37
A852322	2J18	37	3363 - 39

NUMERICAL INDEX - CONTINUED

PART NO.	GRID	KEY	PAGE
A852322	2J22	4	3363 - 43
A852322	2J24	0	3363 - 45
A852322	2K2	0	3363 - 47
A852332	2J20	7	3363 - 41
A852333	2I12	43	3363 - 9
A852343	2J6	4	3363 - 27
A852344	2J2	23	3363 - 23
A852344	2J4	14	3363 - 25
A852344	2J8	5	3363 - 29
A852433	2J20	12	3363 - 41
A852522	2K4	0	3363 - 49
A852522	2K8	5	3363 - 53
A852543	1B22	22	0260 - 11
A853144	1B22	0	0260 - 11
A853144	2I8	8	3363 - 5
A853144	2I20	5	3363 - 17
A853144	2I22	5	3363 - 19
A853144	2I24	5	3363 - 21
A853164	2I8	1	3363 - 5
A853344	2I16	6	3363 - 13
A853366	2E16	14	3360 - 9
A853366	2I12	73	3363 - 9
A853464	2I8	5	3363 - 5
A885002	2J8	62	3363 - 29
A885002	2K16	26	3364 - 3
A885003	2I10	35	3363 - 7
A885003	2J20	8	3363 - 41
A885006	2I10	12	3363 - 7
CH11436	1A22	2	0130 - 3
CH11436	1F25	..	1369 - 3
CH11560	2D2	25	3315 - 3B
CH11561	1C6	36	0262 - 7
CH11561	2H14	32	3362 - 39
CH11568	2G10	40	3362 - 9
CH11568	2G20	40	3362 - 19
CH11569	1F25	..	1369 - 3
CH11570	1B22	13	0260 - 11
CH11570	1F25	..	1369 - 3
CH11570	2E8	14	3360 - 3
CH11570	2G6	7	3362 - 7
CH11570	2G6	13	3362 - 7
CH11570	2G8	7	3362 - 7B
CH11570	2I10	35	3363 - 7
CH11570	2I12	11	3363 - 9
CH11570	2I12	38	3363 - 9
CH11570	2I12	43	3363 - 9
CH11570	2I12	56	3363 - 9
CH11570	2I12	61	3363 - 9
CH11570	2I12	70	3363 - 9
CH11570	2I14	27	3363 - 11
CH11570	2I14	48	3363 - 11
CH11570	2I14	59	3363 - 11
CH11570	2J18	33	3363 - 39
CH11570	2J18	34	3363 - 39
CH11570	2J20	4	3363 - 41
CH11570	2J20	5	3363 - 41
CH11570	2J20	7	3363 - 41
CH11570	2J20	8	3363 - 41
CH11570	2J20	12	3363 - 41
CH11570	2K8	6	3363 - 53
CH11570	2K12	6	3363 - 57
CH11570	2L13	5	3401 - 5
CH11570	2L13	6	3401 - 5
CH11571	1F25	..	1369 - 3
CH11572	1F25	..	1369 - 3
CH12329	1F25	..	1369 - 3
CH14634	1F25	..	1369 - 3
CH14701	1F25	..	1369 - 3
CH16109	1B20	26	0260 - 9
CH17160	2I4	2	3362 - 53
CH17160	2L6	9	3365 - 21
CH17167	1C4	2	0262 - 5
CH17167	1F25	..	1369 - 3
CH17167	2F12	8	3361 - 13
CH17886	2K18	30	3365 - 5
CH17886	2K20	25	3365 - 9
CH17886	2L6	26	3365 - 21
CH18696	2K20	9	3365 - 9
CH18696	2K24	10	3365 - 13
CH19111	1F25	..	1369 - 3
DH400030	2B10	5G	1910 - 15
DH400030	2B14	0	1910 - 19
EX119-21	2C21	11	3302 - 9
EX119-27	2C21	11	3302 - 9
EX129A-37	2C21	11	3302 - 9
EX1829A-47	2C21	11	3302 - 9
EX20SP	2C21	13	3302 - 9
EX20W1	2C21	12	3302 - 9
EX21-27QRT	2C21	6	3302 - 9
EX21LK	2C21	5	3302 - 9
EX21LKS	2C21	5	3302 - 9
EX21SYL	2C21	2	3302 - 9
EX21S5F	2C21	1	3302 - 9
EX21TVIP	2C21	4	3302 - 9
EX21VIP	2C21	3	3302 - 9
EX27LK	2C21	5	3302 - 9
EX27SYL	2C21	2	3302 - 9
EX27VPL	2C21	11	3302 - 9
EX27VPL	2C21	14	3302 - 9
EX27VPN	2C21	5	3302 - 9
EX27VPN	2C21	11	3302 - 9
EX29SP	2C21	13	3302 - 9
EX29W1	2C21	12	3302 - 9
EX31329-X	2C21	7	3302 - 9
EX360-21	2C21	10	3302 - 9
EX37LK	2C21	5	3302 - 9
EX37LKS	2C21	5	3302 - 9
EX37SYL	2C21	2	3302 - 9
EX47LK	2C21	5	3302 - 9
EX47SYL	2C21	2	3302 - 9
EX4894-21	2C21	11	3302 - 9
EX5824-37	2C21	11	3302 - 9
EX5827-27	2C21	11	3302 - 9
EX5831-21	2C21	11	3302 - 9
EX5849-21	2C21	11	3302 - 9
EX5850-27V	2C21	11	3302 - 9
EX5854-21	2C21	11	3302 - 9
E19700	1K11	4	1830 - 18
GV11353	1C17	65	0402 - 3
GV11597	1D10	4	0409 - 5
H132922	2B6	0H	1910 - 11
H132922	2B8	0H	1910 - 13
H132922	2B10	5F	1910 - 15
H132922	2B16	9	1910 - 21
H132922	2D16	25	3315 - 17
H75414	2C5	4	2160 - 3
H75414	2E10	9	3360 - 3B
H76698	1G22	1	1674 - 17
H77698	1B22	20	0260 - 11
H77698	1B22	21	0260 - 11
H77698	1F2	8	0510 - 5
H77698	1F4	20	0515 - 3
H77698	1F20	10	0563 - 3
H77698	1G8	38	1674 - 3
H77698	1G10	8	1674 - 5
H77698	1G12	7	1674 - 7
H77698	1G12	8	1674 - 7
H77698	1G18	10	1674 - 13
H77698	1G18	11	1674 - 13
H77698	1G20	28	1674 - 15
H77698	1G24	3	1674 - 19
H77698	1J20	27	1830 - 3
H77698	1J22	59	1830 - 5
H77698	1K10	10	1830 - 17
H77698	2C2	14	2004 - 3
H77698	2C2	15	2004 - 3
H77698	2C2	18	2004 - 3
H77698	2C24	11	3315 - 3
H77698	2C24	19	3315 - 3
H77698	2D18	19	3315 - 19
H77698	2I14	88	3363 - 11
H77698	2I18	11	3363 - 15
H77698	2J8	22	3363 - 29
H77698	2J22	9	3363 - 43
H77698	2J24	16	3363 - 45
H77698	2K8	7	3363 - 53
IP8623P	2C19	4F	3302 - 7
IP8623TP	2C19	4C	3302 - 7
JD5770	1F23	10	1322 - 3
JD5909	1F23	16	1322 - 3
J010814	1G18	5	1674 - 13
J010850	2B4	14	1910 - 9
J011016	1F16	13	0560 - 3
J020614	1C6	33	0262 - 7
J020625	1J24	1	1830 - 7
J020630	1J22	48	1830 - 5
J020835	1J22	47	1830 - 5
J021030	1J12	27	1821 - 3
J021045	2K2	16	3363 - 47
J021055	1J20	1	1830 - 3
J021070	2I8	14	3363 - 5
J021070	2I14	90	3363 - 11
J021230	2B4	2	1910 - 9
J031020	2B2	7	1910 - 7
J031025	1F10	0C	0520 - 5
J031025	1F10	4	0520 - 5
J031025	2A23	6E	1910 - 3
J031025	2A25	4	1910 - 5
J031035	2B20	6	1910 - 25
J031045	2B20	7	1910 - 25
J031230	1G10	3	1674 - 5
J031230	1G12	1	1674 - 7
J219167	1J18	17	1821 - 9
J222014	1B2	55	0130 - 7
J222014	1B4	55	0130 - 7B
J222014	1B24	4	0260 - 13
J222014	1F14	23	0540 - 5
J222014	2I18	5	3363 - 15
J222020	1H18	2	1749 - 3
J253112	2B25	3	2002 - 3
J257218	2E2	9	3344 - 3
J257218	2E4	36	3344 - 5
J260820	2C24	13	3315 - 3
J400408	2D2	2	3315 - 3B
J401032	1B16	38	0260 - 5
J460310	1G20	26	1674 - 15
J460614	1G14	3	1674 - 9
J460614	1G20	13	1674 - 15
J460620	1G20	25	1674 - 15
J460620	1K8	6	1830 - 15
J460620	1K8	9	1830 - 15

NUMERICAL INDEX - CONTINUED

PART NO.	GRID	KEY	PAGE
J460620	1K8	17	1830 - 15
J650510	1I14	7	1810 - 17B
J680516	1J8	51	1810 - 35
J680616	1I18	1	1810 - 21
J680616	1I18	5	1810 - 21
J680616	1I18	9	1810 - 21
J680616	1I18	12	1810 - 21
J680616	1I18	16	1810 - 21
J680616	1I18	20	1810 - 21
J75481	2K18	34	3365 - 5
J75481	2K24	33	3365 - 13
J75481	2L6	30	3365 - 21
J75581	2L4	26	3365 - 17
J780612	1C6	41	0262 - 7
J780800	1J22	12	1830 - 5
J780820	1F4	16A	0515 - 3
J780820	1F4	16C	0515 - 3
J780825	2H12	18	3362 - 37
J780845	2D2	18	3315 - 3B
J781020	2D18	5	3315 - 19
J781025	2I10	5	3363 - 7
J781030	1C6	10	0262 - 7
J781030	2D14	19	3315 - 15
J781030	2I6	16	3363 - 3
J781035	1H23	7	1810 - 3
J781035	2D4	7	3315 - 5
J781035	2I10	23	3363 - 7
J781230	2I6	3	3363 - 3
J900820	2C24	13	3315 - 3
J901020	1B14	16	0260 - 3
J901020	2D6	18	3315 - 7
J901020	2D14	14	3315 - 15
J901095	2J8	1	3363 - 29
J901425	2E2	23	3344 - 3
J901425	2E4	48	3344 - 5
J901445	1F14	21	0540 - 5
J921240	1H23	2	1810 - 3
J921685	1H12	13	1740 - 3
J952010	1J16	6	1821 - 7
J952012	2C24	9	3315 - 3
J960812	2D16	57	3315 - 17
J981845	2A25	13	1910 - 5
M145979	2E10	8	3360 - 3B
M340816	1J18	1	1821 - 9
M340825	2K18	26	3365 - 5
M340825	2L6	22	3365 - 21
M341045	2J20	1	3363 - 41
M341230	2F6	21	3361 - 5
M341230	2L20	32	4367 - 3
M341432	1C8	35	0267 - 3
M341440	1B16	9	0260 - 5
M360830	2I4	18	3362 - 53
M800650	1B14	10	0260 - 3
M800650	1B22	8	0260 - 11
M800650	1C2	19A	0262 - 3
M800650	1C2	20A	0262 - 3
M800650	1C2	23A	0262 - 3
M800650	1F25	..	1369 - 3
M800650	2D18	16	3315 - 19
M800650	2F10	6	3361 - 9
M800650	2G6	6	3362 - 7
M800650	2G6	9	3362 - 7
M800650	2G6	15	3362 - 7
M800650	2G8	6	3362 - 7B
M800650	2G8	15	3362 - 7B
M800650	2G12	62	3362 - 11
M800650	2G14	62	3362 - 13
M800650	2G16	62	3362 - 15
M800650	2G22	62	3362 - 21
M800650	2G24	62	3362 - 23
M800650	2H2	62	3362 - 25
M800650	2H6	6	3362 - 31
M800650	2H6	7	3362 - 31
M800650	2I2	4	3362 - 51
M800650	2I12	69	3363 - 9
M800650	2I14	7	3363 - 11
M800650	2I14	15	3363 - 11
M800650	2I14	17	3363 - 11
M800650	2I14	21	3363 - 11
M800650	2I14	82	3363 - 11
M800650	2I18	13	3363 - 15
M800650	2J6	8	3363 - 27
M800650	2J6	9	3363 - 27
M800650	2J8	8	3363 - 29
M800650	2J8	12	3363 - 29
M800650	2J8	16	3363 - 29
M800650	2J8	17	3363 - 29
M800650	2J8	61A	3363 - 29
M800650	2J14	9	3363 - 35
M800650	2J14	12	3363 - 35
M800650	2J16	26	3363 - 37
M800650	2J16	27	3363 - 37
M800650	2J16	30	3363 - 37
M800650	2J16	37	3363 - 37
M800650	2J18	18	3363 - 39
M800650	2J18	20	3363 - 39
M800650	2J18	23	3363 - 39
M800650	2J18	36	3363 - 39
M800650	2J18	37	3363 - 39
M800650	2J20	10	3363 - 41
M800650	2J22	0	3363 - 43
M800650	2J22	4	3363 - 43
M800650	2J24	0	3363 - 45
M800650	2J24	1	3363 - 45
M800650	2J24	2	3363 - 45
M800650	2K2	0	3363 - 47
M800650	2K4	0	3363 - 49
M800650	2K8	5	3363 - 53
M800650	2K16	26	3364 - 3
M800650	2L20	27	4367 - 3
M800893	1F25	..	1369 - 3
M84972	1J10	1	1810 - 37
N162946	1K11	10	1830 - 18
PMH2406	2E16	6	3360 - 9
PM797NA	1K11	11	1830 - 18
P63448	1F23	2	1322 - 3
P65872	1B4	54	0130 - 7B
P66384	1B4	3	0130 - 7B
P66385	1B4	2	0130 - 7B
P66386	1B4	5	0130 - 7B
P66387	1B4	4	0130 - 7B
P66388	1B4	6	0130 - 7B
P67984	2G6	15	3362 - 7
P67984	2G8	15	3362 - 7B
P67984	2H6	7	3362 - 31
P67984	2I14	7	3363 - 11
P67984	2I14	15	3363 - 11
P67984	2I14	82	3363 - 11
P67984	2I18	13	3363 - 15
P67984	2J6	9	3363 - 27
P67984	2J14	12	3363 - 35
P67984	2J16	37	3363 - 37
P67984	2J18	37	3363 - 39
P67984	2J22	4	3363 - 43
P67984	2J24	0	3363 - 45
P67984	2K2	0	3363 - 47
RE68048	1F8	0A	0520 - 3
RE68049	1F8	24	0520 - 3
R26409	1K11	21	1830 - 18
R26448	2E8	5	3360 - 3
R26448	2E10	5	3360 - 3B
R26448	2E22	5	3360 - 15
R27212	2C5	10	2160 - 3
R27212	2E8	8	3360 - 3
R27212	2E22	8	3360 - 15
R27238	2I18	4	3363 - 15
R27267	2E20	40	3360 - 13
R28782	2E24	4	3360 - 15B
R28782	2F2	4	3360 - 15D
R29936	2E20	41	3360 - 13
R41778	1J14	4	1821 - 5
R44302	1F16	17	0560 - 3
R44302	1J10	5	1810 - 37
R44302	1J22	13	1830 - 5
R44302	2C5	21	2160 - 3
R44302	2E12	8	3360 - 5
R44302	2E14	4	3360 - 7
R44302	2E22	18	3360 - 15
R58462	1J14	5	1821 - 5
R71799	2E12	5	3360 - 5
TF23	2C19	4A	3302 - 7
TF23P	2C19	2	3302 - 7
THA852322	2G6	15	3362 - 7
THA852322	2G8	15	3362 - 7B
THA852322	2H6	7	3362 - 31
THA852322	2I14	7	3363 - 11
THA852322	2I14	15	3363 - 11
THA852322	2I14	82	3363 - 11
THA852322	2I18	13	3363 - 15
THA852322	2J6	9	3363 - 27
THA852322	2J14	12	3363 - 35
THA852322	2J16	37	3363 - 37
THA852322	2J18	37	3363 - 39
THA852322	2J22	4	3363 - 43
THA852322	2J24	0	3363 - 45
THA852322	2K2	0	3363 - 47
THJ901470	1B2	54	0130 - 7
TH0428907	2H8	9	3362 - 33
TH0430809	2J8	0C	3363 - 29
TH0827004	2L6	2	3365 - 21
TH0827006	2L6	3	3365 - 21
TH0827007	2L6	4	3365 - 21
TH0827011	2L6	14	3365 - 21
TH0827013	2L6	21	3365 - 21
TH100044	1F25	..	1369 - 3
TH100055	1F25	..	1369 - 3
TH100074	1H14	7	1740 - 5
TH100074	2D20	6	3340 - 3
TH100074	2D20	13B	3340 - 3
TH100074	2D22	6	3340 - 5
TH100074	2D22	13B	3340 - 5
TH100074	2D24	6	3340 - 7
TH100074	2D24	13B	3340 - 7
TH100074	2E2	13	3344 - 3
TH100074	2E4	14B	3344 - 5
TH100074	2E4	15B	3344 - 5
TH100074	2E6	5	3345 - 3
TH100136	1F25	..	1369 - 3
TH100136	2I4	15	3362 - 53
TH100441	2E4	16	3344 - 5
TH100452	1B2	2	0130 - 7

NUMERICAL INDEX - CONTINUED

PART NO.	GRID	KEY	PAGE
TH100454	1B2	4	0130 - 7
TH100679	2K16	13	3364 - 3
TH100853	2H24	10	3362 - 49
TH100854	2H24	1	3362 - 49
TH101008	2J2	24	3363 - 23
TH101008	2J4	16	3363 - 25
TH101300	1F25	..	1369 - 3
TH101490	1F25	..	1369 - 3
TH101813	2I12	61	3363 - 9
TH101926	1F25	..	1369 - 3
TH101926	2E16	8	3360 - 9
TH101926	2K16	25	3364 - 3
TH102411	2E4	7D	3344 - 5
TH102706	1F25	..	1369 - 3
TH102992	1F25	..	1369 - 3
TH103446	1F25	..	1369 - 3
TH103457	2I4	16	3362 - 53
TH103574	1F25	..	1369 - 3
TH103574	2K18	27	3365 - 5
TH103574	2L6	23	3365 - 21
TH103574	2L20	8	4367 - 3
TH104196	1J16	6	1821 - 7
TH104634	1F25	..	1369 - 3
TH104732	2F6	13	3361 - 5
TH104930	1F25	..	1369 - 3
TH105683	2I6	4	3363 - 3
TH105683	2J8	0C	3363 - 29
TH105979	2D20	1	3340 - 3
TH105979	2D22	1	3340 - 5
TH105979	2D24	1	3340 - 7
TH105979	2E2	0C	3344 - 3
TH105979	2E2	1	3344 - 3
TH105979	2E4	0E	3344 - 5
TH105979	2E4	1	3344 - 5
TH105979	2K22	4	3365 - 11
TH106152	2I12	56	3363 - 9
TH108320	2E8	10	3360 - 3
TH108594	1G8	25	1674 - 3
TH108594	1G18	13	1674 - 13
TH109514	2K16	3	3364 - 3
TH110254	2H18	1	3362 - 43
TH110489	1A22	6	0130 - 3
TH3089486	1J16	2	1821 - 7
TH3100010	1H9	1	1674 - 33B
TH4185600	2H16	6	3362 - 41
TH4405128	1J16	4	1821 - 7
TH4447276	2I4	0	3362 - 53
TH6020171	1J16	0	1821 - 7
TH8081319	2D2	0	3315 - 3B
TPDE31329	2C21	7	3302 - 9
TY22462	1F12	19	0530 - 3
T101942	1F23	3	1322 - 3
T105740	1J14	3	1821 - 5
T105943	1K11	12	1830 - 18
T106152	2I14	48	3363 - 11
T110021	2D16	63	3315 - 17
T110590	1F25	..	1369 - 3
T110593	1F25	..	1369 - 3
T114635	2E8	20	3360 - 3
T114698	2E12	7	3360 - 5
T114699	2E12	6	3360 - 5
T115092	2C15	3	3302 - 3
T115092	2C17	3	3302 - 5
T116057	1F16	3	0560 - 3
T116332	2E2	10	3344 - 3
T116332	2E4	37	3344 - 5
T116334	2E2	18	3344 - 3
T116334	2E4	19	3344 - 5
T116334	2L11	6	3401 - 3
T125809	1J10	6	1810 - 37
T138886	1F23	28	1322 - 3
T138910	2C5	14	2160 - 3
T143272	2C5	19	2160 - 3
T146102	1F23	33	1322 - 3
T146103	1F23	33	1322 - 3
T146667	1F23	26	1322 - 3
T146668	1F23	25	1322 - 3
T149434	2E12	17	3360 - 5
T149434	2E14	5	3360 - 7
T149983	1F23	32	1322 - 3
T153187	2C5	19	2160 - 3
T157779	1J14	2	1821 - 5
T159841	1F23	21	1322 - 3
T159841	1F23	54	1322 - 3
T159842	1F23	6	1322 - 3
T159842	1F23	54	1322 - 3
T159843	2E22	7	3360 - 15
T159844	2E22	9	3360 - 15
T159887	1F23	24	1322 - 3
T160910	1F23	16	1322 - 3
T163997	1F23	64	1322 - 3
T164063	1F23	65	1322 - 3
T167256	1J10	2	1810 - 37
T181116	1F23	12	1322 - 3
T184044	1F23	11	1322 - 3
T184858	2E22	10	3360 - 15
T187535	1F23	30	1322 - 3
T187710	1F23	55	1322 - 3
T187757	1F23	67	1322 - 3
T190310	1F23	60	1322 - 3
T191324	1F23	29	1322 - 3
T191325	1F23	31	1322 - 3
T191326	1F23	23	1322 - 3
T191327	1F23	9	1322 - 3
T200465	1F23	7	1322 - 3
T201452	2D18	15	3315 - 19
T201519	1F23	6	1322 - 3
T201519	1F23	21	1322 - 3
T201519	1F23	54	1322 - 3
T201519	2E24	9	3360 - 15B
T201519	2F2	9	3360 - 15D
T202379	2E22	20	3360 - 15
T205175	2E24	8	3360 - 15B
T205175	2F2	8	3360 - 15D
T208018	1F23	31	1322 - 3
T22645	2E22	23	3360 - 15
T24432	1F20	15	0563 - 3
T24432	1G8	16	1674 - 3
T27860	1K11	5	1830 - 18
T30367	1G8	31	1674 - 3
T30367	2K8	11	3363 - 53
T32587	1B6	5	0130 - 9
T34433	2E20	40	3360 - 13
T38818	2C21	13	3302 - 9
T38819	2C21	12	3302 - 9
T40910	2C19	2	3302 - 7
T52974	2C21	13	3302 - 9
T52975	2C21	12	3302 - 9
T55564	1K11	1	1830 - 18
T56524	2C19	4L	3302 - 7
T59014	1F25	..	1369 - 3
T63817	2E22	21	3360 - 15
T70177	2C5	5	2160 - 3
T72548	2C19	4D	3302 - 7
T74492	1F25	..	1369 - 3
T76938	2E20	40	3360 - 13
T77613	2E8	3	3360 - 3
T77814	2E10	7	3360 - 3B
T77857	1B22	2	0260 - 11
T77857	2D20	22	3340 - 3
T77857	2D22	22	3340 - 5
T77857	2D24	22	3340 - 7
T77857	2I8	20	3363 - 5
T77857	2I16	7	3363 - 13
T77857	2I20	7	3363 - 17
T77857	2I22	7	3363 - 19
T77857	2I24	7	3363 - 21
T77857	2K10	6	3363 - 55
T77857	2K12	0	3363 - 57
T77858	2E16	3	3360 - 9
T77858	2E18	7	3360 - 11
T77858	2E20	16	3360 - 13
T77858	2E20	40	3360 - 13
T77858	2I12	74	3363 - 9
T77932	2E16	21	3360 - 9
T79632	1F23	4	1322 - 3
T80394	2E12	10	3360 - 5
U10778	1F25	..	1369 - 3
U12547	2E20	5	3360 - 13
U12547	2E20	39	3360 - 13
U17409	1F25	..	1369 - 3
U42323	1F16	15	0560 - 3
U42751	2C19	4K	3302 - 7
U43792	2C19	3	3302 - 7
U46489	1F25	..	1369 - 3
X1JS78-20-16	2E20	46	3360 - 13
X1J978-20-16	2E20	46	3360 - 13
X4-4F4OMXS	2E24	10	3360 - 15B
X4-4F4OMXS	2E24	14	3360 - 15B
X4-4F4OMXS	2F2	10	3360 - 15D
X4-4F4OMXS	2F2	14	3360 - 15D
X4F3P4S	2E2	16	3344 - 3
X6C4OMXS	2F2	12	3360 - 15D
X6C4OMXS	2F2	14	3360 - 15D
0003947	1G20	22	1674 - 15
0004062	1G8	51	1674 - 3
0004140	1J6	0	1810 - 33
0012593000	1E8	16	0421 - 3
0101557	2L20	38	4367 - 3
0103012	2G10	52	3362 - 9
0103012	2G20	52	3362 - 19
0103013	2G10	53	3362 - 9
0103013	2G20	53	3362 - 19
0111707	2K18	22	3365 - 5
0111707	2L8	17	3365 - 23
0111818	2K20	16	3365 - 9
0111818	2K24	22	3365 - 13
0111818	2L4	21	3365 - 17
0111818	2L6	16	3365 - 21
0130519	2I4	7	3362 - 53
0134608	2I4	7	3362 - 53
0159411	2K24	32	3365 - 13
0159411	2L4	25	3365 - 17
0179001	2H8	19	3362 - 33
0179001	2H10	19	3362 - 35
0208006120	1D22	54	0417 - 3
0208014800	1F14	4	0540 - 5
0210718	2I4	6	3362 - 53
0212312	2I2	9	3362 - 51
0212312	2L20	36	4367 - 3
0212313	2I2	10	3362 - 51

NUMERICAL INDEX - CONTINUED

PART NO.	GRID	KEY	PAGE
0212313	2L20	25A	4367 - 3
0212313	2L20	35	4367 - 3
0214912	2F6	24	3361 - 5
0215025	2F6	14	3361 - 5
0215220	2H14	9	3362 - 39
0215310	2H20	15	3362 - 45
0215615	2F14	8	3361 - 15
0215710	2H20	9	3362 - 45
0225209	2G10	46	3362 - 9
0225209	2G18	46	3362 - 17
0225209	2G20	46	3362 - 19
0225209	2H4	46	3362 - 27
0225611	2K18	7	3365 - 5
0225614	2K18	18	3365 - 5
0225704	2K20	5	3365 - 9
0225704	2K24	5	3365 - 13
0225704	2L4	5	3365 - 17
0225709	2K20	28	3365 - 9
0225711	2K20	7	3365 - 9
0225711	2K24	7	3365 - 13
0225711	2L4	7	3365 - 17
0225712	2K24	8	3365 - 13
0225712	2L4	8	3365 - 17
0225714	2K24	6	3365 - 13
0225714	2L4	6	3365 - 17
0225804	2L6	5	3365 - 21
0225810	2L6	7	3365 - 21
0230126	2F6	13	3361 - 5
0230142	2F24	1	3361 - 29
0231018	2F6	16	3361 - 5
0258205	2L8	13	3365 - 23
0265201	2I4	8	3362 - 53
0271304	2L8	5	3365 - 23
0271309	2L8	7	3365 - 23
0271312	2K18	33	3365 - 5
0280806120	1C19	58	0402 - 5
0280806500	1E14	28	0429 - 3
0280808120	1E6	47	0420 - 3
0280808160	1K17	26	1832 - 3
0280808250	1D20	13	0414 - 3
0280808300	1C19	63	0402 - 5
0281812400	1E10	4	0422 - 3
0286808300	1D24	44	0418 - 3
0286808300	1E4	46	0419 - 3
0286810350	1E6	45	0420 - 3
0286810400	1C25	27	0407 - 3
0286812300	1C25	28	0407 - 3
0294407	2F6	19	3361 - 5
0294902	2F20	3	3361 - 19B
0308703	2J8	32	3363 - 29
0308704	2J8	31	3363 - 29
0308705	2J8	33	3363 - 29
0308709	2J8	36	3363 - 29
0308711	2H18	2	3362 - 43
0308712	2H18	6	3362 - 43
0308713	2H18	8	3362 - 43
0308714	2H18	9	3362 - 43
0308715	2H18	10	3362 - 43
0308716	2H18	11	3362 - 43
0308717	2H18	12	3362 - 43
0308718	2H18	13	3362 - 43
0308719	2H18	14	3362 - 43
0308720	2H18	15	3362 - 43
0308721	2H18	16	3362 - 43
0308722	2H18	17	3362 - 43
0308724	2H18	18	3362 - 43
0309011	2K18	21	3365 - 5
0309011	2L8	16	3365 - 23
0309904	2H22	1	3362 - 47
0310304	2L8	4	3365 - 23
0310506	2L4	11	3365 - 17
0310508	2L4	16	3365 - 17
0310604	2K18	4	3365 - 5
0310606	2K24	11	3365 - 13
0310608	2K20	13	3365 - 9
0310608	2K24	18	3365 - 13
0310612	2K20	15	3365 - 9
0310612	2K24	21	3365 - 13
0310612	2L4	20	3365 - 17
0310612	2L6	15	3365 - 21
0310904	2K18	15	3365 - 5
0311704	2F12	18	3361 - 13
0311704	2H14	22	3362 - 39
0311804	2H14	21	3362 - 39
0313107	2I4	12	3362 - 53
0322304	2H20	7	3362 - 45
0322602	2H20	11	3362 - 45
0323806	2H14	8	3362 - 39
0323807	2H14	18	3362 - 39
0324002	2F18	6	3361 - 19
0330401	2F24	2	3361 - 29
0330402	2F8	6	3361 - 7
0332904	2G12	27	3362 - 11
0332904	2G14	27	3362 - 13
0332904	2G16	27	3362 - 15
0332904	2G22	27	3362 - 21
0332904	2G24	27	3362 - 23
0332904	2H2	27	3362 - 25
0332905	2G12	28	3362 - 11
0332905	2G14	28	3362 - 13
0332905	2G16	28	3362 - 15
0332905	2G22	28	3362 - 21
0332905	2G24	28	3362 - 23
0332905	2H2	28	3362 - 25
0332917	2G10	58	3362 - 9
0332917	2G20	58	3362 - 19
0333007	2K24	19	3365 - 13
0333008	2L4	18	3365 - 17
0333209	2L4	17	3365 - 17
0369812	2H14	13	3362 - 39
0374707	2H20	30	3362 - 45
0375802	2G10	69	3362 - 9
0375802	2G20	69	3362 - 19
0386402	2F24	5	3361 - 29
0386403	2F24	4	3361 - 29
0386405	2F24	6	3361 - 29
0387804	2H16	2	3362 - 41
0390302	2H14	26	3362 - 39
0396211	2K20	19	3365 - 9
0396211	2K24	26	3365 - 13
0396603	2H22	2	3362 - 47
0396604	2H22	8	3362 - 47
0396605	2H22	10	3362 - 47
0407706	2F8	7	3361 - 7
0407903	2F8	4	3361 - 7
0408409	2H16	6	3362 - 41
0408410	2H16	5	3362 - 41
0408411	2H16	4	3362 - 41
0409117	2K18	8	3365 - 5
0428906	2H8	8	3362 - 33
0428906	2H10	8	3362 - 35
0428907	2H10	9	3362 - 35
0428910	2H8	13	3362 - 33
0428910	2H10	13	3362 - 35
0429314	2G14	68	3362 - 13
0429314	2G24	68	3362 - 23
0430809	2J8	0C	3363 - 29
0439402	2F16	2	3361 - 17
0443501	2L20	1	4367 - 3
0443502	2L20	2	4367 - 3
0443503	2L20	5	4367 - 3
0443504	2L20	16	4367 - 3
0443505	2L20	7	4367 - 3
0443509	2L20	10	4367 - 3
0443510	2L20	11	4367 - 3
0443512	2L20	15	4367 - 3
0443513	2L20	4	4367 - 3
0443518	2L20	33	4367 - 3
0443520	2L20	17	4367 - 3
0443521	2L20	30	4367 - 3
0444409	2H14	17	3362 - 39
0444706	2K24	4	3365 - 13
0444706	2L4	4	3365 - 17
0444708	2K20	17	3365 - 9
0444708	2K24	23	3365 - 13
0444710	2K20	20	3365 - 9
0444710	2K24	25	3365 - 13
0444715	2K20	8	3365 - 9
0444715	2K24	9	3365 - 13
0444715	2L4	9	3365 - 17
0451104	2I4	20	3362 - 53
0453510	2L6	13	3365 - 21
0453517	2L6	8	3365 - 21
0455002	2G14	24	3362 - 13
0455002	2G16	24	3362 - 15
0455002	2G22	24	3362 - 21
0455002	2G24	24	3362 - 23
0455002	2H2	24	3362 - 25
0455102	2G10	57	3362 - 9
0455102	2G20	57	3362 - 19
0455111	2G10	51	3362 - 9
0455111	2G20	51	3362 - 19
0462201	2F24	3	3361 - 29
0473701	2F24	7	3361 - 29
0473702	2F24	8	3361 - 29
0476704	2L20	23	4367 - 3
0476705	2L20	22	4367 - 3
0476707	2L20	21	4367 - 3
0476708	2L20	19	4367 - 3
0476710	2L20	3	4367 - 3
0476716	2L20	28	4367 - 3
0476718	2L20	6	4367 - 3
0487002	2L4	15	3365 - 17
0495713	2K24	19	3365 - 13
0500406120	1D4	45	0407 - 7
0500408160	1C17	11	0402 - 3
0500408180	1C19	36	0402 - 5
0500408200	1C19	36	0402 - 5
0500408200	1D4	27	0407 - 7
0500408250	1D2	7	0407 - 5
0500408300	1D12	15	0410 - 3
0500408350	1E14	96	0429 - 3
0500408450	1C19	36	0402 - 5
0500410600	1F14	6	0540 - 5
0500410600	1F14	25	0540 - 5
0500410800	1F14	7	0540 - 5
0501408180	1D14	82	0413 - 3
0501408250	1D2	29	0407 - 5
0622810	2L20	26	4367 - 3
0622827	2L20	34	4367 - 3
0624504	2H14	31	3362 - 39

NUMERICAL INDEX - CONTINUED

PART NO.	GRID	KEY	PAGE
0627910	2F16	1	3361 - 17
0628908	2H8	4	3362 - 33
0628908	2H10	4	3362 - 35
0630701	2H8	2	3362 - 33
0630701	2H10	2	3362 - 35
0630702	2H8	3	3362 - 33
0630702	2H10	3	3362 - 35
0630703	2H8	5	3362 - 33
0630703	2H10	5	3362 - 35
0630704	2H10	7	3362 - 35
0630705	2H8	10	3362 - 33
0630705	2H10	10	3362 - 35
0630706	2H8	12	3362 - 33
0630706	2H10	12	3362 - 35
0630707	2H8	14	3362 - 33
0630707	2H10	14	3362 - 35
0630708	2H10	15	3362 - 35
0630709	2H8	16	3362 - 33
0630709	2H10	16	3362 - 35
0630710	2H8	17	3362 - 33
0630710	2H10	17	3362 - 35
0630711	2H8	18	3362 - 33
0630711	2H10	18	3362 - 35
0630712	2H8	20	3362 - 33
0630712	2H10	20	3362 - 35
0630713	2H8	21	3362 - 33
0630713	2H10	21	3362 - 35
0630714	2H8	22	3362 - 33
0630714	2H10	22	3362 - 35
0640402	2F8	3	3361 - 7
0640701	2F12	6	3361 - 13
0640804	2F14	4	3361 - 15
0640807	2F14	7	3361 - 15
0640808	2F14	9	3361 - 15
0654304	2H20	25	3362 - 45
0654305	2H20	12	3362 - 45
0654306	2H20	16	3362 - 45
0661701	2F6	25	3361 - 5
0661701	2F12	9	3361 - 13
0661701	2H20	8	3362 - 45
0661801	2H20	24	3362 - 45
0666806	2L8	8	3365 - 23
0667108	2K20	14	3365 - 9
0667206	2L8	14	3365 - 23
0667713	2G18	41	3362 - 17
0667713	2H4	41	3362 - 27
0668007	2G10	30	3362 - 9
0668007	2G16	30	3362 - 15
0668007	2G20	30	3362 - 19
0668007	2H2	30	3362 - 25
0668108	2G10	60	3362 - 9
0668108	2G18	60	3362 - 17
0668108	2G20	60	3362 - 19
0668108	2H4	60	3362 - 27
0668304	2H22	9	3362 - 47
0671401	2I2	1	3362 - 51
0671402	2I2	2	3362 - 51
0671403	2I2	3	3362 - 51
0671404	2I2	6	3362 - 51
0671405	2I2	7	3362 - 51
0671406	2I2	8	3362 - 51
0672701	2I4	21	3362 - 53
0672703	2I4	18	3362 - 53
0672707	2I4	9	3362 - 53
0672708	2I4	10	3362 - 53
0672709	2I4	13	3362 - 53
0672710	2I4	14	3362 - 53
0681301	2H8	7	3362 - 33
0681302	2H8	15	3362 - 33
0686405	2K18	19	3365 - 5
0689405	2G10	32	3362 - 9
0689405	2G12	32	3362 - 11
0689405	2G14	32	3362 - 13
0689405	2G20	32	3362 - 19
0689405	2G22	32	3362 - 21
0689405	2G24	32	3362 - 23
0695007	2G10	31	3362 - 9
0695007	2G18	31	3362 - 17
0695007	2G20	31	3362 - 19
0695007	2H4	31	3362 - 27
0696003	2F12	11	3361 - 13
0696003	2F18	7	3361 - 19
0696003	2F20	2	3361 - 19B
0696004	2F6	22	3361 - 5
0709701	2J8	51	3363 - 29
0714403	2G12	26	3362 - 11
0714403	2G14	26	3362 - 13
0714403	2G16	26	3362 - 15
0714403	2G22	26	3362 - 21
0714403	2G24	26	3362 - 23
0714403	2H2	26	3362 - 25
0714404	2G10	43	3362 - 9
0714404	2G20	43	3362 - 19
0714502	2G10	55	3362 - 9
0714502	2G20	55	3362 - 19
0714503	2G10	47	3362 - 9
0714503	2G18	47	3362 - 17
0714503	2G20	47	3362 - 19
0714503	2H4	47	3362 - 27
0714504	2G10	44	3362 - 9
0714504	2G18	44	3362 - 17
0714504	2G20	44	3362 - 19
0714504	2H4	44	3362 - 27
0714608	2G10	37	3362 - 9
0714608	2G20	37	3362 - 19
0714609	2G10	38	3362 - 9
0714609	2G20	38	3362 - 19
0714804	2K24	27	3365 - 13
0714807	2K24	30	3365 - 13
0714807	2L4	23	3365 - 17
0714808	2K24	31	3365 - 13
0714808	2L4	24	3365 - 17
0714904	2K20	18	3365 - 9
0714904	2K24	24	3365 - 13
0715701	2F6	17	3361 - 5
0728701	2K24	1	3365 - 13
0728702	2K24	2	3365 - 13
0728703	2K24	3	3365 - 13
0728704	2K24	15	3365 - 13
0728705	2K24	16	3365 - 13
0728706	2K24	17	3365 - 13
0728707	2K24	20	3365 - 13
0728708	2K24	28	3365 - 13
0728709	2K24	29	3365 - 13
0728801	2L4	1	3365 - 17
0728802	2L4	2	3365 - 17
0728803	2L4	3	3365 - 17
0728804	2L4	14	3365 - 17
0728805	2L4	19	3365 - 17
0728806	2L4	22	3365 - 17
0735916	2G18	36	3362 - 17
0735916	2H4	36	3362 - 27
0738714	2F20	4	3361 - 19B
0747401	2F6	9	3361 - 5
0756301	2H14	10	3362 - 39
0756302	2H14	14	3362 - 39
0756303	2H14	15	3362 - 39
0756304	2H14	16	3362 - 39
0756305	2H14	29	3362 - 39
0756306	2H14	30	3362 - 39
0789306	2L8	6	3365 - 23
0789307	2K18	20	3365 - 5
0790006	2K18	6	3365 - 5
0802701	2L20	9	4367 - 3
0802702	2L20	12	4367 - 3
0802703	2L20	13	4367 - 3
0802704	2L20	14	4367 - 3
0802705	2L20	25	4367 - 3
0802706	2L20	29	4367 - 3
0802707	2L20	37	4367 - 3
0804501	2H22	5	3362 - 47
0814201	2L8	1	3365 - 23
0814202	2L8	1A	3365 - 23
0814203	2L8	1B	3365 - 23
0814203	2L8	2B	3365 - 23
0814204	2L8	2	3365 - 23
0814205	2L8	2A	3365 - 23
0814206	2L8	3	3365 - 23
0814207	2L8	10	3365 - 23
0814208	2L8	12	3365 - 23
0814209	2L8	15	3365 - 23
0814210	2L8	19	3365 - 23
0823901	2H22	3	3362 - 47
0823902	2H22	4	3362 - 47
0824002	2I4	3	3362 - 53
0824003	2I4	4	3362 - 53
0824004	2I4	22	3362 - 53
0824204	2K18	1B	3365 - 5
0824204	2K18	2B	3365 - 5
0824205	2K18	24	3365 - 5
0824205	2K20	22	3365 - 9
0824205	2L6	20	3365 - 21
0824801	2F18	8	3361 - 19
0824901	2F22	5	3361 - 21
0824902	2F22	9	3361 - 21
0824903	2F22	4	3361 - 21
0824904	2F22	8	3361 - 21
0824905	2F22	1	3361 - 21
0824906	2F22	11	3361 - 21
0824907	2F22	2	3361 - 21
0824908	2F22	10	3361 - 21
0825101	2G10	19	3362 - 9
0825101	2G20	19	3362 - 19
0825102	2G10	29	3362 - 9
0825102	2G20	29	3362 - 19
0825103	2G10	42	3362 - 9
0825103	2G20	42	3362 - 19
0825104	2G10	56	3362 - 9
0825104	2G20	56	3362 - 19
0825105	2G10	71	3362 - 9
0825105	2G18	71	3362 - 17
0825105	2G20	71	3362 - 19
0825105	2H4	71	3362 - 27
0825106	2G10	42	3362 - 9
0825106	2G20	42	3362 - 19
0825201	2G12	48	3362 - 11
0825201	2G14	48	3362 - 13
0825201	2G22	48	3362 - 21
0825201	2G24	48	3362 - 23
0825202	2G12	49	3362 - 11
0825202	2G14	49	3362 - 13

NUMERICAL INDEX - CONTINUED

PART NO.	GRID	KEY	PAGE
0825202	2G22	49	3362 - 21
0825202	2G24	49	3362 - 23
0825203	2G12	61	3362 - 11
0825203	2G14	61	3362 - 13
0825203	2G16	61	3362 - 15
0825203	2G22	61	3362 - 21
0825203	2G24	61	3362 - 23
0825203	2H2	61	3362 - 25
0825301	2F8	1	3361 - 7
0825401	2F10	7	3361 - 9
0825601	2F12	5	3361 - 13
0825602	2F12	15	3361 - 13
0825701	2F14	1	3361 - 15
0825702	2F14	2	3361 - 15
0825703	2F14	3	3361 - 15
0825704	2F14	5	3361 - 15
0825705	2F14	6	3361 - 15
0825706	2F14	10	3361 - 15
0825707	2F14	11	3361 - 15
0825708	2F14	12	3361 - 15
0825709	2F14	13	3361 - 15
0825801	2F16	7	3361 - 17
0825802	2F16	4	3361 - 17
0825803	2F16	5	3361 - 17
0825804	2F16	6	3361 - 17
0825805	2F16	3	3361 - 17
0825901	2F18	2	3361 - 19
0826201	2F6	20	3361 - 5
0826301	2F20	1	3361 - 19B
0826501	2G14	65	3362 - 13
0826501	2G24	65	3362 - 23
0826502	2G14	66	3362 - 13
0826502	2G24	66	3362 - 23
0826503	2G14	67	3362 - 13
0826503	2G24	67	3362 - 23
0826801	2K18	1	3365 - 5
0826802	2K18	1A	3365 - 5
0826803	2K18	2	3365 - 5
0826804	2K18	2A	3365 - 5
0826805	2K18	3	3365 - 5
0826806	2K18	10	3365 - 5
0826807	2K18	12	3365 - 5
0826808	2K18	13	3365 - 5
0826809	2K18	14	3365 - 5
0826810	2K18	16	3365 - 5
0826811	2K18	17	3365 - 5
0826812	2K18	25	3365 - 5
0826813	2K18	28	3365 - 5
0826814	2K18	29	3365 - 5
0826814	2K20	24	3365 - 9
0826814	2L6	25	3365 - 21
0826815	2K18	31	3365 - 5
0826815	2K20	26	3365 - 9
0826815	2L6	27	3365 - 21
0826816	2K18	32	3365 - 5
0826816	2K20	27	3365 - 9
0826816	2L6	28	3365 - 21
0826901	2K20	1	3365 - 9
0826902	2K20	1A	3365 - 9
0826903	2K20	1B	3365 - 9
0826903	2K20	2B	3365 - 9
0826903	2L6	2B	3365 - 21
0826904	2K20	2	3365 - 9
0826905	2K20	2A	3365 - 9
0826906	2K20	3	3365 - 9
0826907	2K20	4	3365 - 9
0826908	2K20	6	3365 - 9
0826909	2K20	10	3365 - 9
0826910	2K20	12	3365 - 9
0826911	2K20	23	3365 - 9
0827001	2L6	1	3365 - 21
0827002	2L6	1A	3365 - 21
0827004	2L6	2	3365 - 21
0827005	2L6	2A	3365 - 21
0827008	2L6	6	3365 - 21
0827009	2L6	10	3365 - 21
0827010	2L6	12	3365 - 21
0827012	2L6	18	3365 - 21
0827014	2L6	24	3365 - 21
0828201	2G16	63	3362 - 15
0828201	2H2	63	3362 - 25
0828202	2G16	64	3362 - 15
0828202	2H2	64	3362 - 25
0828203	2G16	70	3362 - 15
0828203	2H2	70	3362 - 25
0828204	2G16	17	3362 - 15
0828205	2G16	18	3362 - 15
0828301	2G18	33	3362 - 17
0828301	2H4	33	3362 - 27
0828304	2G18	59	3362 - 17
0828304	2H4	59	3362 - 27
1015477	2D12	4	3315 - 13
1015478	2D8	4	3315 - 9
1023762	1B8	0	0130 - 11
1023763	1B8	1	0130 - 11
1024217	1B16	10	0260 - 5
1024224	2D12	0	3315 - 13
1024384	2D8	0	3315 - 9
1025093	2K16	1B	3364 - 3
1026419	1B20	3A	0260 - 9
1028346	1C8	1	0267 - 3
1090440711	1D22	36	0417 - 3
1094680021	1E8	11	0421 - 3
1096000121	1C23	20	0404 - 3
1096000580	1C23	18	0404 - 3
1096000580	1D10	7	0409 - 5
1096231830	1C25	3	0407 - 3
1096231830	1E20	16	0452 - 3
1096751460	1E8	14	0421 - 3
1099851770	1D12	13	0410 - 3
1099851770	1D20	22	0414 - 3
1099851770	1E10	27	0422 - 3
1099851770	1E12	18	0423 - 3
1099851770	1E14	73	0429 - 3
1099851790	1E14	72	0429 - 3
1099851850	1D16	9	0413 - 5
1099853450	1C23	77	0404 - 3
1099853450	1E6	63	0420 - 3
1132112110	1E6	81	0420 - 3
1132121401	1E6	8	0420 - 3
1132193410	1E4	44	0419 - 3
1132600360	1E6	10	0420 - 3
1132600410	1E8	15	0421 - 3
1157890940	1D18	3	0413 - 7
1824100330	1C23	45	0404 - 3
1825130441	1D10	12	0409 - 5
1825130442	1D10	12	0409 - 5
1825530391	1G4	41	1671 - 3
2034607	1B20	31	0260 - 9
2038764	1I2	7B	1810 - 7
2039689	1B6	2	0130 - 9
2039919	1A22	51	0130 - 3
2039920	1A22	0	0130 - 3
2041073	1A24	0	0130 - 5
2041367	1B8	53	0130 - 11
2044179	1B6	1	0130 - 9
2044350	2D2	14	3315 - 3B
2044350	2D2	15	3315 - 3B
2044350	2D2	16	3315 - 3B
2044350	2D2	17	3315 - 3B
2044951	1C8	17	0267 - 3
2045468	2D4	4	3315 - 5
2045469	2D4	5	3315 - 5
2045470	2C24	5	3315 - 3
2045472	2C24	8	3315 - 3
2045473	2C24	7	3315 - 3
2045509	1I18	27	1810 - 21
2045796	1G18	9	1674 - 13
2045877	2H12	15A	3362 - 37
2045900	2F4	7	3361 - 3
2045907	2E6	0	3345 - 3
2045941	2I6	2	3363 - 3
2045998	2K2	9	3363 - 47
2045998	2K4	9	3363 - 49
2046203	2H12	30	3362 - 37
2046296	2K2	7	3363 - 47
2050226	1F23	52	1322 - 3
2051176	2D4	4	3315 - 5
2051177	2D4	5	3315 - 5
3035828	1A22	1	0130 - 3
3040620	2E4	15A	3344 - 5
3040621	2E4	14A	3344 - 5
304221	2C17	16	3302 - 5
304222	2C17	14	3302 - 5
3055536	2E2	3	3344 - 3
3055536	2E4	2	3344 - 5
3065877	1C6	6A	0262 - 7
3065877	2H12	10A	3362 - 37
3070250	1B20	23	0260 - 9
3072517	1C6	6D	0262 - 7
3072517	2H12	10C	3362 - 37
3076332	1A24	3	0130 - 5
3076340	1A24	7	0130 - 5
3076620	1B2	5	0130 - 7
3076932	2D20	4	3340 - 3
3076932	2D22	4	3340 - 5
3076932	2D24	4	3340 - 7
3076941	1H12	24	1740 - 3
3076942	2D20	7	3340 - 3
3076942	2D22	7	3340 - 5
3076942	2D24	7	3340 - 7
3076942	2E2	5	3344 - 3
3076944	2D20	8	3340 - 3
3076944	2D22	8	3340 - 5
3076944	2D24	8	3340 - 7
3076948	2D20	13A	3340 - 3
3076948	2D22	13A	3340 - 5
3076948	2D24	13A	3340 - 7
3076951	2D20	10	3340 - 3
3076951	2D22	10	3340 - 5
3076951	2D24	10	3340 - 7
3076985	1A22	3B	0130 - 3
3077925	1B8	3	0130 - 11
3077926	1B8	6	0130 - 11
3079540	1B6	10B	0130 - 9
3079714	2D10	0	3315 - 11
3079728	2K4	10	3363 - 49
3080619	1B16	37	0260 - 5
3083636	1A24	1	0130 - 5
3087882	1G18	1	1674 - 13
3087987	1C6	26	0262 - 7

NUMERICAL INDEX - CONTINUED

PART NO.	GRID	KEY	PAGE
3088018	1F23	34	1322 - 3
3088756	1C8	5	0267 - 3
3088757	1C8	22	0267 - 3
3088758	1C8	11	0267 - 3
3089165	1C8	10	0267 - 3
3089171	1C8	34	0267 - 3
3089853	2I6	10	3363 - 3
3089975	1C4	1	0262 - 5
3090024	1I18	31	1810 - 21
3090025	1I18	32	1810 - 21
3090457	1G20	9	1674 - 15
3090725	2D20	12	3340 - 3
3090725	2D22	12	3340 - 5
3090725	2D24	12	3340 - 7
3090726	2D20	11	3340 - 3
3090726	2D22	11	3340 - 5
3090726	2D24	11	3340 - 7
3091016	2H12	21	3362 - 37
3091096	2B25	1	2002 - 3
3091184	1F8	16	0520 - 3
3091185	1F10	8	0520 - 5
3091310	1J22	24	1830 - 5
3091312	1G4	29	1671 - 3
3091488	2B20	0	1910 - 25
3091489	2B20	1	1910 - 25
3091490	2B20	9A	1910 - 25
3091491	2B20	11	1910 - 25
3091492	2B20	4	1910 - 25
3091742	2L11	18	3401 - 3
3091811	1E24	14	0510 - 3
3092010	1J18	22	1821 - 9
3092025	1H18	8	1749 - 3
3092184	2J18	1	3363 - 39
3092193	2J16	29	3363 - 37
3092493	1H18	6	1749 - 3
3092524	2B16	15	1910 - 21
3092526	2B16	14	1910 - 21
3092530	1F2	3	0510 - 5
3092650	1G22	0	1674 - 17
3092909	2C2	10	2004 - 3
3093108	2A23	1E	1910 - 3
3093110	2A23	1F	1910 - 3
3093484	1J6	0	1810 - 33
3096626	2E2	6B	3344 - 3
4JG1PH02	1C13	0	0400 - 3
4S00203	1E6	2	0420 - 3
4027427	1C6	20	0262 - 7
4028265	2H18	5	3362 - 43
4036979	1C4	4	0262 - 5
4043327	2K24	14	3365 - 13
4044839	2I4	16	3362 - 53
4050968	1C2	25	0262 - 3
4050968	1C8	3	0267 - 3
4051262	1C6	31	0262 - 7
4051262	2I4	17	3362 - 53
4055311	1G8	13	1674 - 3
4056017	2D6	11	3315 - 7
4056017	2D6	20	3315 - 7
4065688	2D20	20	3340 - 3
4065688	2D22	20	3340 - 5
4065688	2D24	20	3340 - 7
4065689	2D20	21	3340 - 3
4065689	2D22	21	3340 - 5
4065689	2D24	21	3340 - 7
4069801	2I6	15	3363 - 3
4069801	2I10	25	3363 - 7
4071213	2I10	6	3363 - 7
4077173	2H24	2	3362 - 49
4077174	2H24	4	3362 - 49
4077175	2H24	3	3362 - 49
4077176	2H24	5	3362 - 49
4079356	2H24	8	3362 - 49
4082631	1B16	3	0260 - 5
4086891	2G4	7	3362 - 5
4087462	1H12	31	1740 - 3
4092265	2I2	5	3362 - 51
4093624	2G8	18	3362 - 7B
4096496	1C2	17	0262 - 3
4100967	2K16	19A	3364 - 3
4112336	1A24	5	0130 - 5
4113154	2H14	24	3362 - 39
4117954	2E4	11B	3344 - 5
4117954	2E6	2	3345 - 3
4117954	2K18	24	3365 - 5
4117954	2K20	22	3365 - 9
4117954	2K22	2	3365 - 11
4117954	2L2	2	3365 - 15
4117954	2L6	20	3365 - 21
4117955	2L6	18	3365 - 21
4120294	2I6	8	3363 - 3
4120969	2D16	64	3315 - 17
4121497	1F16	0A	0560 - 3
4122395	1C6	13C	0262 - 7
4128863	1H16	0	1740 - 7
4129123	2E2	14	3344 - 3
4133527	2D18	18	3315 - 19
4134502	2L16	21	4360 - 3
4135606	1A22	5	0130 - 3
4149678	1H18	4	1749 - 3
4153084	1F25	..	1369 - 3
4153538	2J8	0C	3363 - 29
4154670	2D18	17	3315 - 19
4154670	2G6	15	3362 - 7
4154670	2G8	15	3362 - 7B
4154670	2H6	7	3362 - 31
4154670	2I14	7	3363 - 11
4154670	2I14	15	3363 - 11
4154670	2I14	82	3363 - 11
4154670	2I18	13	3363 - 15
4154670	2J6	9	3363 - 27
4154670	2J14	12	3363 - 35
4154670	2J16	37	3363 - 37
4154670	2J18	37	3363 - 39
4154670	2J22	4	3363 - 43
4154670	2J24	0	3363 - 45
4154670	2K2	0	3363 - 47
4154671	2K12	6	3363 - 57
4167785	1B6	12	0130 - 9
4168820	1F16	8A	0560 - 3
4172172	2B25	2	2002 - 3
4173208	2D2	5	3315 - 3B
4174541	2J8	61	3363 - 29
4175763	1B2	0B	0130 - 7
4175765	1B2	3	0130 - 7
4177260	1B6	9	0130 - 9
4177557	1G4	6	1671 - 3
4182067	2D2	21	3315 - 3B
4184582	1J20	26	1830 - 3
4185600	1C6	22	0262 - 7
4185600	2H16	6	3362 - 41
4189602	2E16	5	3360 - 9
4189858	2E18	11	3360 - 11
4189858	2K10	7	3363 - 55
4189858	2K12	2	3363 - 57
4190125	2K10	8	3363 - 55
4190125	2K12	3	3363 - 57
4190126	2E20	12	3360 - 13
4190127	2I10	15	3363 - 7
4190244	2I12	56	3363 - 9
4190253	1B14	15	0260 - 3
4190253	1F4	19	0515 - 3
4190253	1G8	17	1674 - 3
4190253	2I12	77	3363 - 9
4190261	1G18	12	1674 - 13
4190264	2J24	13	3363 - 45
4190264	2K2	19	3363 - 47
4190266	1F20	16	0563 - 3
4190266	2K6	6	3363 - 51
4190272	1G8	32	1674 - 3
4190273	1G8	33	1674 - 3
4190274	1G8	18	1674 - 3
4190274	2K8	9	3363 - 53
4190276	1F6	1	0515 - 5
4190292	1G8	34	1674 - 3
4191301	2J8	0B	3363 - 29
4192034	1J22	43	1830 - 5
4192035	1K6	9	1830 - 13
4193400	1C2	10	0262 - 3
4193816	2I14	84	3363 - 11
4193848	2I14	87	3363 - 11
4193848	2J24	13	3363 - 45
4193848	2K2	19	3363 - 47
4196258	2I10	6A	3363 - 7
4196259	2I6	15A	3363 - 3
4196259	2I10	25A	3363 - 7
4197297	1B6	4	0130 - 9
4197532	2E16	4	3360 - 9
4199247	2I16	5	3363 - 13
4199247	2I24	6	3363 - 21
4200465	2D18	26	3315 - 19
4200466	2E8	10	3360 - 3
4200467	2E24	13	3360 - 15B
4200467	2E24	14	3360 - 15B
4200467	2F2	13	3360 - 15D
4200467	2F2	14	3360 - 15D
4200580	2K10	13	3363 - 55
4200580	2K12	7	3363 - 57
4201749	1H12	2	1740 - 3
4202103	2I16	9	3363 - 13
4202103	2I20	15	3363 - 17
4202103	2I22	15	3363 - 19
4202103	2J2	1	3363 - 23
4202103	2J4	9	3363 - 25
4202113	2E16	16	3360 - 9
4203411	1C6	2	0262 - 7
4203411	2H12	6	3362 - 37
4203485	2J18	20	3363 - 39
4205317	1C6	30	0262 - 7
4205318	1C6	29	0262 - 7
4207538	1J8	17	1810 - 35
420802	2L16	24	4360 - 3
4208275	1F8	0C	0520 - 3
4208977	1C6	35	0262 - 7
4209296	1K10	13	1830 - 17
4209776	1B14	10	0260 - 3
4210647	2H18	0	3362 - 43
4213419	1C6	21	0262 - 7
4217535	1F20	14B	0563 - 3
4219918	2J8	21	3363 - 29
4222875	2K16	24D	3364 - 3
4222876	2K16	24E	3364 - 3

NUMERICAL INDEX - CONTINUED

PART NO.	GRID	KEY	PAGE
4223492	1F10	3D	0520 - 5
4224631	2E2	22	3344 - 3
4224631	2E4	47	3344 - 5
4225466	2K16	1D	3364 - 3
4225472	2K16	1E	3364 - 3
4231142	1B14	7	0260 - 3
4234382	2H12	25	3362 - 37
4235210	2B16	24	1910 - 21
4235232	1J18	15	1821 - 9
4239611	1B20	3B	0260 - 9
4246385	2I12	11	3363 - 9
4246385	2I14	27	3363 - 11
4246939	2L11	1	3401 - 3
4248106	1A24	11	0130 - 5
4248117	2G6	10	3362 - 7
4249788	1F12	16	0530 - 3
4251384	2K16	24F	3364 - 3
4251587	1G4	10	1671 - 3
4252786	2J22	3	3363 - 43
4254047	1C13	0C	0400 - 3
4254600	1G8	42	1674 - 3
4254600	1G8	50	1674 - 3
4254600	1G20	27	1674 - 15
4254603	1G10	12	1674 - 5
4254604	1G10	6	1674 - 5
4254604	1G12	2	1674 - 7
4255212	2I10	26	3363 - 7
4255304	2J16	26	3363 - 37
4255304	2J18	23	3363 - 39
4255762	1G4	8	1671 - 3
4255792	2E8	15	3360 - 3
4257128	1F16	14	0560 - 3
4257159	1F4	3	0515 - 3
4257159	1F16	12	0560 - 3
4261540	2E16	7	3360 - 9
4262587	1B8	52	0130 - 11
4265247	1E6	2	0420 - 3
4267506	2E10	15	3360 - 3B
4272297	1H16	1	1740 - 7
4275015	1B22	18	0260 - 11
4275016	1B22	19	0260 - 11
4276831	1F12	16	0530 - 3
4276940	2J2	20	3363 - 23
4279256	1H12	6	1740 - 3
4279257	1H12	3	1740 - 3
4279507	2D6	2	3315 - 7
4279604	2D18	14	3315 - 19
4280117	2D6	0	3315 - 7
4280359	1F10	10	0520 - 5
4281720	1C13	0E	0400 - 3
4283028	2C2	0	2004 - 3
4283758	2D18	4	3315 - 19
4285643	1E6	2	0420 - 3
4285646	1G10	0A	1674 - 5
4285646	1G12	0A	1674 - 7
4285647	1G10	0B	1674 - 5
4285647	1G12	0B	1674 - 7
4285722	2I8	11	3363 - 5
4286584	2D16	30	3315 - 17
4287791	2D16	29	3315 - 17
4287795	2D18	11	3315 - 19
4288070	1F4	15	0515 - 3
4288342	1G10	0D	1674 - 5
4288342	1G12	0D	1674 - 7
4288390	2B16	22	1910 - 21
4288417	1F23	5	1322 - 3
4288417	1I18	37	1810 - 21
4288445	1J2	8	1810 - 29
4288971	1F23	22	1322 - 3
4290940	1F8	0A	0520 - 3
4293211	2J8	35	3363 - 29
4293255	1A24	12	0130 - 5
4293950	2J16	27	3363 - 37
4293950	2J16	30	3363 - 37
4293950	2J18	18	3363 - 39
4296063	2I10	10	3363 - 7
4297136	1F12	16	0530 - 3
4299059	1F23	28	1322 - 3
4299059	1I18	36	1810 - 21
4303989	2I8	12	3363 - 5
4309836	2J8	35A	3363 - 29
4309837	2J8	35B	3363 - 29
4309838	2J8	35C	3363 - 29
4312681	1C8	16	0267 - 3
4315323	1G8	53	1674 - 3
4319299	1C6	1	0262 - 7
4319299	2H12	5	3362 - 37
4321872	2B23	1	2001 - 3
4326095	1G4	32B	1671 - 3
4326229	1J20	6	1830 - 3
4326285	2K16	24A	3364 - 3
4326365	1F16	17	0560 - 3
4326365	1J22	13	1830 - 5
4326841	1F8	24	0520 - 3
4327293	1B14	13	0260 - 3
4327293	2I12	63	3363 - 9
4327293	2I14	63	3363 - 11
4327293	2I18	10	3363 - 15
4327293	2J6	11	3363 - 27
4327293	2J22	8	3363 - 43
4327293	2K6	8	3363 - 51
4327294	1B22	7	0260 - 11
4327294	2I8	31	3363 - 5
4327294	2I12	75	3363 - 9
4327294	2I20	12	3363 - 17
4327294	2I22	12	3363 - 19
4327294	2I24	9	3363 - 21
4327294	2J4	12	3363 - 25
4327294	2J24	17	3363 - 45
4327294	2K2	20	3363 - 47
4327294	2K8	12	3363 - 53
4330223	2I2	0	3362 - 51
4330467	2D18	1	3315 - 19
4330467	2H10	0	3362 - 35
4330785	1H23	2	1810 - 3
4331118	1E24	40	0510 - 3
4333185	1G4	32	1671 - 3
4333835	1J18	14	1821 - 9
4334426	2K18	1B	3365 - 5
4334426	2K18	2B	3365 - 5
4334427	2L2	1	3365 - 15
4334428	2L6	1B	3365 - 21
4335060	2D2	19	3315 - 3B
4336625	2J2	22	3363 - 23
4338974	1G4	32C	1671 - 3
4341706	2B23	3	2001 - 3
4341788	2B6	0F	1910 - 11
4341788	2B8	0F	1910 - 13
4341788	2B10	5D	1910 - 15
4342334	1F8	12	0520 - 3
4344303	1F12	20	0530 - 3
4345470	2E4	11A	3344 - 5
4345731	2D14	7	3315 - 15
4345769	2H8	23	3362 - 33
4345769	2H10	23	3362 - 35
4347352	2D22	25	3340 - 5
4347396	1K4	6	1830 - 11
4349913	2D20	2	3340 - 3
4349913	2D22	2	3340 - 5
4349913	2D24	2	3340 - 7
4349913	2E6	4	3345 - 3
4350150	2H20	0	3362 - 45
4350249	1K8	10	1830 - 15
4350527	2L11	8	3401 - 3
4350623	2K16	1C	3364 - 3
4351175	2K2	8	3363 - 47
4351187	2B23	0	2001 - 3
4351255	1I16	4	1810 - 19
4351478	1K13	6C	1830 - 21
4351774	2K2	11	3363 - 47
4351774	2K4	11	3363 - 49
4353560	1F16	6	0560 - 3
4353560	1F16	6A	0560 - 3
4353818	2L11	20	3401 - 3
4355515	1J22	11	1830 - 5
4355877	2E4	7B	3344 - 5
4357586	2H6	3	3362 - 31
4357586	2H8	0	3362 - 33
4357862	1G20	30	1674 - 15
4359384	1G20	19	1674 - 15
4360252	1A24	10	0130 - 5
4360509	1F4	16	0515 - 3
4361302	2B23	7	2001 - 3
4361601	1J8	3	1810 - 35
4361638	1F16	8	0560 - 3
4361800	1G18	2	1674 - 13
4361800	1I18	33	1810 - 21
4361802	1I18	4	1810 - 21
4361802	1I18	8	1810 - 21
4361802	1I18	15	1810 - 21
4361802	1I18	19	1810 - 21
4361838	1A24	2	0130 - 5
4362135	1I6	22	1810 - 11
4362700	1I2	7A	1810 - 7
4363754	2D6	0	3315 - 7
4364504	2B23	8	2001 - 3
4364970	1C6	4	0262 - 7
4364970	2H12	8	3362 - 37
4365332	2H12	35	3362 - 37
4365416	2D14	3	3315 - 15
4365417	2D14	9	3315 - 15
4365456	2K22	3	3365 - 11
4365839	2D14	11	3315 - 15
4366692	2L11	13	3401 - 3
4366694	2E4	40	3344 - 5
4366699	1F14	11	0540 - 5
4366871	1J18	6	1821 - 9
4367375	1G20	20	1674 - 15
4367411	2E4	41	3344 - 5
4367521	1C13	0F	0400 - 3
4368621	1C2	20	0262 - 3
4368629	1C6	3	0262 - 7
4368630	1C6	5	0262 - 7
4368973	2B23	2	2001 - 3
4369472	1G4	32A	1671 - 3
4369645	1I6	20	1810 - 11
4370306	1K13	30	1830 - 21
4370308	1K15	51	1830 - 23
4370309	1K15	54	1830 - 23
4370310	1K13	6E	1830 - 21
4370435	2J8	0A	3363 - 29

NUMERICAL INDEX - CONTINUED

PART NO.	GRID	KEY	PAGE
4371706	2D16	48	3315 - 17
4371835	1A24	8	0130 - 5
4372091	1I6	23	1810 - 11
4372152	1A24	13	0130 - 5
4372200	1J18	7	1821 - 9
4372200	1J18	12	1821 - 9
4372619	1F16	6A	0560 - 3
4372620	1F16	6B	0560 - 3
4372840	1B2	1A	0130 - 7
4372847	1B2	1B	0130 - 7
4373800	1B10	0A	0131 - 3
4373810	1B10	0B	0131 - 3
4373812	1B24	0	0260 - 13
4374008	2D14	17	3315 - 15
4374030	2D14	13	3315 - 15
4374061	2D20	0C	3340 - 3
4374061	2D22	0C	3340 - 5
4374061	2D24	0C	3340 - 7
4374265	1F16	1	0560 - 3
4374437	1H12	28	1740 - 3
4374437	2D20	28	3340 - 3
4374437	2D22	28	3340 - 5
4374437	2D24	28	3340 - 7
4374437	2E2	21	3344 - 3
4374437	2E4	32	3344 - 5
4374453	2D20	31	3340 - 3
4374453	2D22	31	3340 - 5
4374453	2D24	31	3340 - 7
4374458	2D20	29	3340 - 3
4374458	2D22	29	3340 - 5
4374458	2D24	29	3340 - 7
4374459	1H12	27	1740 - 3
4374459	2D20	27	3340 - 3
4374459	2D22	27	3340 - 5
4374459	2D24	27	3340 - 7
4374459	2E2	20	3344 - 3
4374459	2E4	31	3344 - 5
4374602	2K20	1B	3365 - 9
4374602	2K20	2B	3365 - 9
4374602	2K22	1	3365 - 11
4374602	2L6	2B	3365 - 21
4374837	2J20	4	3363 - 41
4375134	2E4	51	3344 - 5
4375136	2E4	52	3344 - 5
4375688	2A25	7	1910 - 5
4376210	2L13	8B	3401 - 5
4376825	1F20	14A	0563 - 3
4377449	2D20	30	3340 - 3
4377449	2D22	30	3340 - 5
4377449	2D24	30	3340 - 7
4378884	1B8	51	0130 - 11
4378885	1B8	2	0130 - 11
4378888	1B8	7	0130 - 11
4379665	2K4	12	3363 - 49
4380534	1J18	16	1821 - 9
4381572	1G18	6	1674 - 13
4382097	1B8	8	0130 - 11
4382098	1B8	9	0130 - 11
4382100	1B8	10	0130 - 11
4384239	1J18	3	1821 - 9
4384758	2C2	16	2004 - 3
4385002	1F20	13B	0563 - 3
4386329	1G10	5	1674 - 5
4386329	1G12	5	1674 - 7
4387501	1J2	6	1810 - 29
4388223	2L4	0	3365 - 17
4388835	2K10	14	3363 - 55
4389125	1A24	14	0130 - 5
4389350	1G10	0	1674 - 5
4389350	1G12	0	1674 - 7
4390505	2E4	27	3344 - 5
4392171	2K12	11	3363 - 57
4392320	1B16	13	0260 - 5
4392321	1B16	22	0260 - 5
4392322	1B16	23	0260 - 5
4392324	1B16	26	0260 - 5
4392326	1B16	33	0260 - 5
4394262	2E16	50	3360 - 9
4394384	1H12	21	1740 - 3
4394384	2E2	29	3344 - 3
4394384	2E4	44	3344 - 5
4394385	1H12	22	1740 - 3
4394385	2E2	30	3344 - 3
4394385	2E4	45	3344 - 5
4395197	2L16	9	4360 - 3
4395205	2L16	22	4360 - 3
4396083	2D6	3	3315 - 7
4396451	1F12	19	0530 - 3
4396602	2K16	16A	3364 - 3
4396619	2K16	16B	3364 - 3
4396694	1F8	0B	0520 - 3
4396695	1F8	0D	0520 - 3
4396776	2G18	34	3362 - 17
4396776	2H4	34	3362 - 27
4397146	1G10	0E	1674 - 5
4397146	1G12	0E	1674 - 7
4397147	1G10	0F	1674 - 5
4397147	1G12	0F	1674 - 7
4397148	1G10	0G	1674 - 5
4397148	1G12	0G	1674 - 7
4397160	1G10	0H	1674 - 5
4397160	1G12	0H	1674 - 7
4397238	2L16	5	4360 - 3
4397240	2L16	7	4360 - 3
4397241	2L16	8	4360 - 3
4397245	2L16	15	4360 - 3
4397682	1F2	0A	0510 - 5
4397683	1F2	0B	0510 - 5
4397686	1F2	0E	0510 - 5
4398054	1F2	0F	0510 - 5
4398055	1F2	0G	0510 - 5
4398846	1C2	30	0262 - 3
4400064	2E4	9D	3344 - 5
4402410	2D18	12	3315 - 19
4405164	1K2	8	1830 - 9
4405166	1K2	6	1830 - 9
4405320	1B8	53	0130 - 11
4406165	1B20	14	0260 - 9
4406388	2D20	24	3340 - 3
4406388	2D22	24	3340 - 5
4406388	2D24	24	3340 - 7
4407802	1B16	16	0260 - 5
4407996	2L11	12	3401 - 3
4408501	2B18	2	1910 - 23
4408661	2K16	1A	3364 - 3
4408959	2J8	0	3363 - 29
4409394	2B6	0I	1910 - 11
4409394	2B8	0B	1910 - 13
4409394	2B12	0	1910 - 17
4409396	2B12	7	1910 - 17
4409396	2B14	14	1910 - 19
4409446	2B10	5G	1910 - 15
4409446	2B14	0	1910 - 19
4409447	2B12	14	1910 - 17
4409999	1H23	1	1810 - 3
4410066	1B20	18	0260 - 9
4410445	1B20	8	0260 - 9
4410446	1B20	10	0260 - 9
4410898	2D2	4	3315 - 3B
4411911	1K6	10	1830 - 13
4411911	2K8	13	3363 - 53
4412666	2K2	14	3363 - 47
4415024	1I18	22	1810 - 21
4415081	1B22	16	0260 - 11
4415185	2K12	12	3363 - 57
4415231	1H12	9	1740 - 3
4415233	1H12	8	1740 - 3
4415325	1H14	9	1740 - 5
4415327	2L18	4	4360 - 5
4415584	2K24	34	3365 - 13
4415969	1F12	2	0530 - 3
4416975	1K13	6F	1830 - 21
4418358	2K12	13	3363 - 57
4418505	1E24	3	0510 - 3
4418939	2L13	3	3401 - 5
4419730	1I2	24F	1810 - 7
4419732	1I2	24D	1810 - 7
4419733	1I2	24C	1810 - 7
4419734	1I2	24B	1810 - 7
4419735	1I2	24A	1810 - 7
4420724	2B4	11	1910 - 9
4420724	2B25	0	2002 - 3
4420875	1I18	0	1810 - 21
4420878	1I18	11	1810 - 21
4421771	2D2	7	3315 - 3B
4423418	1G8	52	1674 - 3
4424157	1F10	0D	0520 - 5
4424185	2D4	3	3315 - 5
4424425	2E2	7	3344 - 3
4424425	2E4	34	3344 - 5
4425270	1B14	0	0260 - 3
4425290	1C6	13B	0262 - 7
4425305	1C6	18	0262 - 7
4425414	2D2	6	3315 - 3B
4425481	2B4	13	1910 - 9
4425700	1J22	6	1830 - 5
4426128	2E2	8	3344 - 3
4426128	2E4	35	3344 - 5
4426159	1K8	2	1830 - 15
4426354	1G18	7	1674 - 13
4426354	1I20	2	1810 - 23
4426354	1I20	4	1810 - 23
4427380	1G4	19	1671 - 3
4427417	1G4	20	1671 - 3
4428242	1F14	10	0540 - 5
4428902	1C6	40	0262 - 7
4429119	2D2	10	3315 - 3B
4429120	2D2	8	3315 - 3B
4429255	2L16	0	4360 - 3
4429255	2L20	0	4367 - 3
4429255EX	2L16	0	4360 - 3
4431425	1F2	0	0510 - 5
4431914	2D2	12	3315 - 3B
4431915	2D2	13	3315 - 3B
4432084	1F23	1	1322 - 3
4432663	1C13	0B	0400 - 3
4432965	1G22	3	1674 - 17
4434041	1C8	14	0267 - 3
4434042	1C8	13	0267 - 3
4434043	1C8	19	0267 - 3
4434044	1C8	20	0267 - 3

NUMERICAL INDEX - CONTINUED

PART NO.	GRID	KEY	PAGE
4434046	1C8	26	0267 - 3
4434047	1C8	7	0267 - 3
4434048	1C8	32	0267 - 3
4434402	1C8	2	0267 - 3
4434403	1C8	23	0267 - 3
4434404	1C8	25	0267 - 3
4434405	1C8	28	0267 - 3
4434406	1C2	6	0262 - 3
4434407	1C2	3	0262 - 3
4434408	1C2	4	0262 - 3
4434410	1C2	13	0262 - 3
4434423	1C4	7	0262 - 5
4434424	1C4	14	0262 - 5
4434950	2D20	0E	3340 - 3
4434950	2D22	0E	3340 - 5
4434950	2D24	0E	3340 - 7
4434950	2E2	0B	3344 - 3
4434950	2E4	0D	3344 - 5
4434950	2E4	7C	3344 - 5
4434950	2E4	9C	3344 - 5
4434951	2E2	0E	3344 - 3
4435123	1H12	25	1740 - 3
4435123	2D20	18	3340 - 3
4435123	2D22	18	3340 - 5
4435123	2D24	18	3340 - 7
4435123	2E2	11	3344 - 3
4435123	2E4	4	3344 - 5
4435704	1E24	42C	0510 - 3
4435717	1F12	16	0530 - 3
4436534	1G20	24	1674 - 15
4436535	1G8	1	1674 - 3
4436537	1G8	9	1674 - 3
4437106	2D2	20	3315 - 3B
4437132	1H14	0	1740 - 5
4437132EX	1H14	0	1740 - 5
4437197	2F6	0	3361 - 5
4437333	2D2	11	3315 - 3B
4437432	1C6	39	0262 - 7
4437433	1C6	8B	0262 - 7
4438279	2C24	14	3315 - 3
4438289	1J20	0	1830 - 3
4438289	1K15	56	1830 - 23
4439129	1C4	8	0262 - 5
4439897	1G20	23	1674 - 15
4440620	1C4	18	0262 - 5
4440873	1C4	13	0262 - 5
4440981	1G20	18	1674 - 15
4441117	1I18	30	1810 - 21
4441706	2D8	3	3315 - 9
4441707	1C8	4	0267 - 3
4441713	2D12	3	3315 - 13
4441745	2I14	45	3363 - 11
4441965	1I18	14	1810 - 21
4441968	1I18	7	1810 - 21
4442040	2K6	5	3363 - 51
4442323	2D2	24	3315 - 3B
4442339	2D2	26	3315 - 3B
4442825	1J20	22	1830 - 3
4442895	1G16	1	1674 - 11
4442895	1G20	6	1674 - 15
4443296	1C13	0D	0400 - 3
4443372	1C2	12	0262 - 3
4443596	2K16	9	3364 - 3
4443685	1C2	18	0262 - 3
4443782	2K16	5	3364 - 3
4443885	2E4	7B	3344 - 5
4444022	1J20	25	1830 - 3
4444482	2K16	10	3364 - 3
4444485	2E4	22	3344 - 5
4444525	1F8	0	0520 - 3
4444700	1G20	4	1674 - 15
4445060	2E4	23	3344 - 5
4445322	2C24	1	3315 - 3
4445475	2D20	0D	3340 - 3
4445475	2D22	0D	3340 - 5
4445475	2D24	0D	3340 - 7
4445475	2E6	3	3345 - 3
4445476	2E6	1	3345 - 3
4445477	2D20	0B	3340 - 3
4445477	2D22	0B	3340 - 5
4445477	2D24	0B	3340 - 7
4445477	2K22	3	3365 - 11
4445478	2E2	0D	3344 - 3
4445478	2E4	0B	3344 - 5
4445648	2L16	30	4360 - 3
4445707	1K8	13	1830 - 15
4445708	1K8	5	1830 - 15
4445709	1K8	8	1830 - 15
4445710	1K8	11	1830 - 15
4445711	1K8	16	1830 - 15
4445862	2B20	9B	1910 - 25
4445864	1J20	21	1830 - 3
4445865	1J22	27	1830 - 5
4445917	1I20	0	1810 - 23
4445932	1I20	0A	1810 - 23
4446097	1J20	29	1830 - 3
4446207	1I18	18	1810 - 21
4446245	2G2	1	3362 - 3
4446245	2G10	0	3362 - 9
4446245	2G12	0	3362 - 11
4446245	2G14	0	3362 - 13
4446245	2G16	0	3362 - 15
4446245	2G18	0	3362 - 17
4446283	1C2	29	0262 - 3
4446638	2I8	25	3363 - 5
4446960	2D2	30	3315 - 3B
4447050	1C6	6B	0262 - 7
4447050	2D2	15	3315 - 3B
4447050	2H12	10D	3362 - 37
4447067	1C6	42	0262 - 7
4447331	1J20	15	1830 - 3
4447332	1J20	8	1830 - 3
4447336	1E18	4	0433 - 5
4447338	1C25	24	0407 - 3
4447338	1E4	48	0419 - 3
4447900	2F4	2	3361 - 3
4447957	1F4	5	0515 - 3
4447958	1G10	1	1674 - 5
4447958	1G12	12	1674 - 7
4448024	1F12	0	0530 - 3
4448178	1K10	14	1830 - 17
4448179	1J22	2	1830 - 5
4448342	1B16	40	0260 - 5
4448602	2K16	9	3364 - 3
4448616	2B16	3	1910 - 21
4448641	1F8	15	0520 - 3
4448661	1E24	12	0510 - 3
4448724	2H12	9	3362 - 37
4448725	2H12	7	3362 - 37
4448738	1F14	1	0540 - 5
4448739	1F14	5	0540 - 5
4448900	1J24	8	1830 - 7
4448901	1J24	7	1830 - 7
4448902	1J22	42	1830 - 5
4448990	1I18	29	1810 - 21
4449068	1K8	0	1830 - 15
4449165	1K10	2	1830 - 17
4449250	1G8	41	1674 - 3
4449262	1F10	0B	0520 - 5
4449376	2K16	16	3364 - 3
4449421	2H12	24	3362 - 37
4449445	1G4	27	1671 - 3
4449509	2B25	5	2002 - 3
4449646	2I18	9	3363 - 15
4449646	2J22	7	3363 - 43
4449807	1G4	17	1671 - 3
4449821	2B16	20	1910 - 21
4449869	2H12	15B	3362 - 37
4449870	1J22	17	1830 - 5
4449878	1J20	10	1830 - 3
4449879	1J20	11	1830 - 3
4449924	2I24	0	3363 - 21
4449925	2I24	1	3363 - 21
4449971	2K4	3	3363 - 49
4449973	2K4	4	3363 - 49
4449974	2K2	3	3363 - 47
4449975	2K2	4	3363 - 47
4449976	2K2	5	3363 - 47
4449978	2K2	6	3363 - 47
4449981	2K4	6	3363 - 49
4449982	2K2	1	3363 - 47
4449983	2K4	1	3363 - 49
4449985	2K2	2	3363 - 47
4449986	2K4	2	3363 - 49
4450005	2J24	4	3363 - 45
4450008	1G24	0	1674 - 19
4450087	2I12	4	3363 - 9
4450089	2J12	31A	3363 - 33
4450090	2J10	32	3363 - 31
4450092	2J10	33	3363 - 31
4450097	2J8	3	3363 - 29
4450099	2J8	11	3363 - 29
4450100	2J8	15	3363 - 29
4450102	2J10	1	3363 - 31
4450110	1B14	11	0260 - 3
4450111	2J14	1	3363 - 35
4450179	2K6	2	3363 - 51
4450181	2J24	8	3363 - 45
4450183	2J24	7	3363 - 45
4450291	1G20	1	1674 - 15
4450315	1J20	3	1830 - 3
4450527	2K8	3	3363 - 53
4450544	2K8	2	3363 - 53
4450769	1F6	0	0515 - 5
4450976	2K8	15	3363 - 53
4451258	1J20	12	1830 - 3
4451809	2D16	10	3315 - 17
4451809	2D16	17	3315 - 17
4452132	2A23	1D	1910 - 3
4452136	2A23	1B	1910 - 3
4452147	2A23	1C	1910 - 3
4452158	1G4	41	1671 - 3
4452161	1E6	3	0420 - 3
4452161	1F20	18	0563 - 3
4452162	1E6	44	0420 - 3
4452162	1F20	21	0563 - 3
4452163	1F20	22	0563 - 3
4452164	1F20	23	0563 - 3
4452165	1F20	24	0563 - 3
4452249	2D16	26	3315 - 17
4452571	2L13	8A	3401 - 5

NUMERICAL INDEX - CONTINUED

PART NO.	GRID	KEY	PAGE
4452613	1J20	35	1830 - 3
4452613	2B23	9	2001 - 3
4452727	1K10	8	1830 - 17
4453351	1J20	34	1830 - 3
4453433	1I2	23	1810 - 7
4453434	1I2	26	1810 - 7
4453704	1B8	4	0130 - 11
4453708	2I12	32	3363 - 9
4453796	2B20	9C	1910 - 25
4453800	1F10	3B	0520 - 5
4453803	1H18	9	1749 - 3
4453874	1J18	8	1821 - 9
4454116	1I24	1	1810 - 27
4454268	2D16	50	3315 - 17
4454269	2D16	49	3315 - 17
4454270	2D16	21	3315 - 17
4454290	2B16	11	1910 - 21
4454331	2A23	17B	1910 - 3
4454725	2D6	16	3315 - 7
4454924	2J16	1	3363 - 37
4455038	2J18	22	3363 - 39
4455438	1B22	9	0260 - 11
4455512	1K8	19	1830 - 15
4455527	2I8	28	3363 - 5
4455528	2I8	29	3363 - 5
4455566	1J18	5	1821 - 9
4455603	2J24	10	3363 - 45
4455694	2A23	6D	1910 - 3
4455708	2I8	16	3363 - 5
4455712	1J20	32	1830 - 3
4455713	1J20	33	1830 - 3
4455717	1F23	66	1322 - 3
4455745	2D16	27	3315 - 17
4455772	2D16	14	3315 - 17
4455778	1K13	5	1830 - 21
4455925	1K4	3B	1830 - 11
4455926	1K4	4B	1830 - 11
4455962	1J22	46	1830 - 5
4455966	2B4	5	1910 - 9
4455986	2H16	7	3362 - 41
4455989	2H16	3	3362 - 41
4455990	2H16	18	3362 - 41
4456130	1J22	6	1830 - 5
4456332	1I22	1	1810 - 25
4456332	2B4	10	1910 - 9
4456624	2J6	6	3363 - 27
4456831	2J12	26	3363 - 33
4456832	2J12	17	3363 - 33
4457056	2K6	5	3363 - 51
4457098	2K6	4	3363 - 51
4457101	2K4	7	3363 - 49
4457103	2I10	31	3363 - 7
4457105	2K8	14	3363 - 53
4457141	1I10	1	1810 - 15
4457160	1I8	75	1810 - 13
4457161	1I8	17	1810 - 13
4457173	1I6	47	1810 - 11
4457174	1I6	48	1810 - 11
4457175	1I6	49	1810 - 11
4457176	1I6	37	1810 - 11
4457178	1I4	1	1810 - 9
4457180	1I4	6	1810 - 9
4457412	1K8	18	1830 - 15
4457455	2I16	2	3363 - 13
4457456	2I16	3	3363 - 13
4457457	2I20	2	3363 - 17
4457458	2I20	3	3363 - 17
4457459	2I22	2	3363 - 19
4457460	2I22	3	3363 - 19
4457587	1H18	7	1749 - 3
4457590	1H18	10	1749 - 3
4457594	2B16	12	1910 - 21
4457596	2B16	13	1910 - 21
4457623	2B16	17	1910 - 21
4457626	2B16	16	1910 - 21
4457646	1E24	29	0510 - 3
4457647	1E24	30	0510 - 3
4457650	1E24	32	0510 - 3
4457664	1E24	31	0510 - 3
4457703	1F2	4	0510 - 5
4457724	1E24	33	0510 - 3
4457818	2I8	23	3363 - 5
4457915	1G4	38	1671 - 3
4457916	1G4	39	1671 - 3
4457930	1G4	47	1671 - 3
4457963	2A23	6F	1910 - 3
4458070	2B6	0D	1910 - 11
4458070	2B8	0D	1910 - 13
4458071	2B6	0E	1910 - 11
4458071	2B8	0E	1910 - 13
4458336	1I2	24	1810 - 7
4458466	1I4	4	1810 - 9
4458466	1I10	3	1810 - 15
4458469	1I6	35	1810 - 11
4458469	1I10	4	1810 - 15
4458470	1I4	5	1810 - 9
4458470	1I6	36	1810 - 11
4458470	1I10	5	1810 - 15
4459167	2E4	0C	3344 - 5
4459167	2E4	9B	3344 - 5
4459547	1I14	1	1810 - 17B
4459662	2I14	28	3363 - 11
4459665	1B14	8	0260 - 3
4459699	2H16	0	3362 - 41
4459699	2J8	24	3363 - 29
4459868	2D16	54	3315 - 17
4459901	2D16	62	3315 - 17
4459902	2D16	56	3315 - 17
4460145	2C2	17	2004 - 3
4460399	1J22	4	1830 - 5
4460751	1F16	0B	0560 - 3
4461140	2B16	18	1910 - 21
4461143	2B16	19	1910 - 21
4461328	1H12	33	1740 - 3
4461330	1H12	34	1740 - 3
4461337	2B12	8	1910 - 17
4461337	2B14	8	1910 - 19
4461342	2B6	0J	1910 - 11
4461342	2B8	0J	1910 - 13
4461342	2B10	5J	1910 - 15
4461342	2B12	13	1910 - 17
4461342	2B14	13	1910 - 19
4461343	2B12	1	1910 - 17
4461343	2B14	1	1910 - 19
4461344	2B12	2	1910 - 17
4461344	2B14	2	1910 - 19
4461345	2B12	3	1910 - 17
4461345	2B14	3	1910 - 19
4461346	2B12	4	1910 - 17
4461346	2B14	4	1910 - 19
4461347	2B12	5	1910 - 17
4461347	2B14	5	1910 - 19
4461348	2B12	6	1910 - 17
4461348	2B14	6	1910 - 19
4461363	1E24	22	0510 - 3
4461363	1E24	42D	0510 - 3
4461384	1J2	5	1810 - 29
4461449	2A23	1G	1910 - 3
4461741	1F10	3C	0520 - 5
4461741	2A25	5A	1910 - 5
4461743	2A25	16	1910 - 5
4461744	1H18	11	1749 - 3
4461780	2B10	5C	1910 - 15
4461782	2B6	0C	1910 - 11
4461933	1I6	17	1810 - 11
4461934	1I6	18	1810 - 11
4461935	1I6	19	1810 - 11
4461936	1I6	29	1810 - 11
4461937	1I6	24	1810 - 11
4461938	1I6	25	1810 - 11
4461939	1I6	26	1810 - 11
4461940	1I6	27	1810 - 11
4461941	1I6	28	1810 - 11
4461943	1I6	30	1810 - 11
4461944	1I6	31	1810 - 11
4461945	1I6	32	1810 - 11
4461946	1I6	33	1810 - 11
4461947	1I2	19	1810 - 7
4461947	1I2	30	1810 - 7
4461947	1I6	34	1810 - 11
4461947	1I8	51	1810 - 13
4461954	1I12	1	1810 - 17
4461955	1I4	39	1810 - 9
4461956	1I6	39	1810 - 11
4461957	1I6	40	1810 - 11
4462051	2I10	19	3363 - 7
4462115	2I12	66	3363 - 9
4462116	2I12	65	3363 - 9
4462473	1F20	20B	0563 - 3
4462476	2I12	72	3363 - 9
4462617	2I12	68	3363 - 9
4462635	1G14	0	1674 - 9
4462636	1G18	4	1674 - 13
4462892	2H22	0	3362 - 47
4462892	2J20	14	3363 - 41
4462966	2D16	43	3315 - 17
4463067	2J8	10	3363 - 29
4463068	2I14	1	3363 - 11
4463165	2J18	35	3363 - 39
4463166	2J24	14	3363 - 45
4463203	1I12	5	1810 - 17
4463269	2J4	2	3363 - 25
4463270	2J4	3	3363 - 25
4463469	1B22	6	0260 - 11
4463592	2B10	5H	1910 - 15
4463593	2B10	5I	1910 - 15
4463594	1F10	0F	0520 - 5
4463595	1F10	0G	0520 - 5
4463596	1F10	0H	0520 - 5
4463597	1F18	7	0560 - 5
4463598	2K16	30	3364 - 3
4463682	1I8	38	1810 - 13
4463702	1J12	16	1821 - 3
4463703	1J12	17	1821 - 3
4463732	1I8	27	1810 - 13
4463733	1I8	28	1810 - 13
4463734	1I8	29	1810 - 13
4463735	1I8	30	1810 - 13
4463736	1I8	39	1810 - 13
4463737	1I8	40	1810 - 13
4463737	1I8	48	1810 - 13

NUMERICAL INDEX - CONTINUED

PART NO.	GRID	KEY	PAGE
4463737	1I10	9	1810 - 15
4463747	2A23	6B	1910 - 3
4463783	2I12	32A	3363 - 9
4463857	1I8	61	1810 - 13
4463858	1I8	62	1810 - 13
4463859	1I8	22	1810 - 13
4463859	1I8	63	1810 - 13
4463859	1I8	66	1810 - 13
4463860	1I8	64	1810 - 13
4463861	1I8	65	1810 - 13
4463862	1I8	76	1810 - 13
4463863	1I8	67	1810 - 13
4463880	2J12	1	3363 - 33
4463881	2J10	25	3363 - 31
4463882	2J10	24	3363 - 31
4463913	1I8	77	1810 - 13
4463914	1I4	9	1810 - 9
4463914	1I4	34	1810 - 9
4463914	1I8	26	1810 - 13
4463914	1I8	37	1810 - 13
4463914	1I8	68	1810 - 13
4463914	1I8	78	1810 - 13
4463914	1I10	8	1810 - 15
4463914	1I12	2	1810 - 17
4463915	1I8	21	1810 - 13
4463916	1I4	41	1810 - 9
4463916	1I8	31	1810 - 13
4463917	1I8	23	1810 - 13
4463918	1I8	24	1810 - 13
4463918	1I12	11	1810 - 17
4463919	1I8	25	1810 - 13
4463920	1I4	42	1810 - 9
4463920	1I8	32	1810 - 13
4463920	1I8	34	1810 - 13
4463921	1I8	33	1810 - 13
4463941	1I8	41	1810 - 13
4463942	1I8	69	1810 - 13
4463942	1I14	4	1810 - 17B
4463943	1I8	70	1810 - 13
4463944	1I8	71	1810 - 13
4463945	1I8	72	1810 - 13
4463946	1I8	73	1810 - 13
4463947	1I8	35	1810 - 13
4463948	1I8	36	1810 - 13
4463949	1I8	74	1810 - 13
4463959	1I2	8	1810 - 7
4463959	1I6	2	1810 - 11
4463959	1I6	6	1810 - 11
4463960	1I6	3	1810 - 11
4463961	1I6	4	1810 - 11
4463963	1I6	13	1810 - 11
4463964	1I6	14	1810 - 11
4463965	1I6	11	1810 - 11
4463966	1I6	12	1810 - 11
4463996	2I16	12	3363 - 13
4463996	2I20	16	3363 - 17
4463996	2I22	16	3363 - 19
4463996	2J2	12	3363 - 23
4463996	2J4	18	3363 - 25
4464048	1I18	3	1810 - 21
4464073	2K12	28	3363 - 57
4464075	1G18	15	1674 - 13
4464138	2D20	25	3340 - 3
4464222	2G6	17	3362 - 7
4464222	2H14	0	3362 - 39
4464227	1I6	15	1810 - 11
4464228	1I6	16	1810 - 11
4464230	1I12	19	1810 - 17
4464230	1I14	14	1810 - 17B
4464231	1I14	10	1810 - 17B
4464232	1I14	11	1810 - 17B
4464233	1I10	2	1810 - 15
4464234	1I4	3	1810 - 9
4464236	1I6	38	1810 - 11
4464239	1I4	37	1810 - 9
4464240	1I4	40	1810 - 9
4464241	1I14	21	1810 - 17B
4464245	1I6	21	1810 - 11
4464245	1I14	13	1810 - 17B
4464246	2J24	3	3363 - 45
4464248	1I4	7	1810 - 9
4464249	1I4	8	1810 - 9
4464250	1I4	16	1810 - 9
4464251	1I4	10	1810 - 9
4464252	1I4	11	1810 - 9
4464253	1I4	12	1810 - 9
4464254	1I4	13	1810 - 9
4464255	1I4	14	1810 - 9
4464256	1I4	15	1810 - 9
4464256	1I8	46	1810 - 13
4464263	1I4	17	1810 - 9
4464264	1I4	18	1810 - 9
4464265	1I10	6	1810 - 15
4464266	1I10	7	1810 - 15
4464267	1I4	19	1810 - 9
4464268	1I4	20	1810 - 9
4464270	1I4	22	1810 - 9
4464271	1I4	35	1810 - 9
4464272	1I4	36	1810 - 9
4464272	1I14	16	1810 - 17B
4464273	1I4	28	1810 - 9
4464278	1K13	19	1830 - 21
4464279	1K13	18	1830 - 21
4464290	1I24	0	1810 - 27
4464305	1I4	29	1810 - 9
4464306	1I4	30	1810 - 9
4464307	1I4	31	1810 - 9
4464308	1I4	32	1810 - 9
4464309	1I4	33	1810 - 9
4464320	1I12	6	1810 - 17
4464329	1I12	7	1810 - 17
4464330	1I12	8	1810 - 17
4464331	1I12	9	1810 - 17
4464332	1I12	10	1810 - 17
4464333	1I12	20	1810 - 17
4464334	1I12	12	1810 - 17
4464335	1I12	13	1810 - 17
4464336	1I4	41	1810 - 9
4464337	1I4	38	1810 - 9
4464338	1I6	41	1810 - 11
4464339	1I6	42	1810 - 11
4464340	1I12	18	1810 - 17
4464381	1I2	1	1810 - 7
4464382	1I2	6	1810 - 7
4464382	1I8	52	1810 - 13
4464383	1I2	1A	1810 - 7
4464384	1I2	9	1810 - 7
4464385	1I8	47	1810 - 13
4464386	1I8	42	1810 - 13
4464387	1I2	11	1810 - 7
4464388	1I8	44	1810 - 13
4464389	1I8	45	1810 - 13
4464390	1I8	79	1810 - 13
4464391	1I8	80	1810 - 13
4464392	1I8	53	1810 - 13
4464393	1I2	25	1810 - 7
4464394	1I2	27	1810 - 7
4464397	1I2	28	1810 - 7
4464398	1I2	29	1810 - 7
4464399	1I2	31	1810 - 7
4464400	1I2	32	1810 - 7
4464401	1I2	33	1810 - 7
4464473	1K13	10	1830 - 21
4464474	1K13	20	1830 - 21
4464477	1K13	31	1830 - 21
4464478	1K15	46	1830 - 23
4464483	1J20	0	1830 - 3
4464483	1K15	55	1830 - 23
4464483	1K15	56	1830 - 23
4464783	1I2	34	1810 - 7
4464785	1I2	38	1810 - 7
4464786	1I2	39	1810 - 7
4464787	1I8	54	1810 - 13
4464788	1I4	23	1810 - 9
4464825	1E24	42	0510 - 3
4464826	1E24	43	0510 - 3
4464899	1I12	1A	1810 - 17
4464984	2K18	35	3365 - 5
4464985	2K20	29	3365 - 9
4464986	2L6	31	3365 - 21
4465105	1I2	24E	1810 - 7
4465106	1I2	24G	1810 - 7
4465533	2I14	81	3363 - 11
4465736	2L8	20	3365 - 23
4466009	2A25	17	1910 - 5
4466142	2I14	60	3363 - 11
4466313	2J12	28	3363 - 33
4466315	2J10	29	3363 - 31
4466325	2J2	17	3363 - 23
4466326	2J2	18	3363 - 23
4466367	2A25	18	1910 - 5
4466871	1I8	55	1810 - 13
4466872	1I2	9A	1810 - 7
4466873	1I6	43	1810 - 11
4466874	1I6	44	1810 - 11
4466875	1I6	45	1810 - 11
4467438	1I6	46	1810 - 11
4467439	1I6	50	1810 - 11
4467440	1I6	51	1810 - 11
4467441	1I6	52	1810 - 11
4467442	1I6	53	1810 - 11
4467443	1I6	54	1810 - 11
4467444	1I6	55	1810 - 11
4467445	1I6	56	1810 - 11
4467450	1I6	61	1810 - 11
4467553	1C13	0A	0400 - 3
4467646	1C13	0G	0400 - 3
4468029	2L16	2	4360 - 3
4468030	2L16	3	4360 - 3
4468031	2L16	4	4360 - 3
4468032	2L16	6	4360 - 3
4468033	2L16	10	4360 - 3
4468034	2L16	14	4360 - 3
4468035	2L16	16	4360 - 3
4468036	2L16	17	4360 - 3
4468037	2L16	18	4360 - 3
4468038	2L16	20	4360 - 3
4468039	2L16	23	4360 - 3
4468040	2L16	25	4360 - 3
4468041	2L16	26	4360 - 3
4468042	2L16	27	4360 - 3

NUMERICAL INDEX - CONTINUED

PART NO.	GRID	KEY	PAGE
4468043	2L16	28	4360 - 3
4468044	2L16	29	4360 - 3
4468419	2E4	29	3344 - 5
4468422	1H14	3	1740 - 5
4468423	1H14	4	1740 - 5
4468431	1H14	5	1740 - 5
4468432	1H14	6	1740 - 5
4468596	1J18	9	1821 - 9
4468674	1B16	2	0260 - 5
4468675	1B16	4	0260 - 5
4468676	1B16	8	0260 - 5
4468678	1B16	12	0260 - 5
4468679	1B16	15	0260 - 5
4468680	1B16	19	0260 - 5
4468681	1B16	20	0260 - 5
4468682	1B16	21	0260 - 5
4468683	1B16	24	0260 - 5
4468684	1B16	29	0260 - 5
4468685	1B16	30	0260 - 5
4468686	1B16	31	0260 - 5
4468687	1B16	32	0260 - 5
4468688	1B16	34	0260 - 5
4468962	2G18	50	3362 - 17
4468962	2H4	50	3362 - 27
4469026	2G2	1	3362 - 3
4469026	2G20	0	3362 - 19
4469026	2G22	0	3362 - 21
4469026	2G24	0	3362 - 23
4469026	2H2	0	3362 - 25
4469026	2H4	0	3362 - 27
4469635	1G12	6	1674 - 7
4470117	2A23	11	1910 - 3
4470166	2L16	1	4360 - 3
4470195	2G18	35	3362 - 17
4470195	2H4	35	3362 - 27
4471363	2I18	2	3363 - 15
4471365	2I18	3	3363 - 15
4471366	2I18	7	3363 - 15
4471500	2I12	0	3363 - 9
4471570	2J22	1	3363 - 43
4471571	2J22	2	3363 - 43
4471572	2J22	5	3363 - 43
4471573	2J22	6	3363 - 43
4471733	2B8	0C	1910 - 13
4471734	2B8	0K	1910 - 13
4472004	2F6	1	3361 - 5
4472004	2F8	10	3361 - 7
4472005	2F6	3	3361 - 5
4472006	2F18	2	3361 - 19
4472007	2F18	4	3361 - 19
4472007	2F24	0	3361 - 29
4472008	2F18	3	3361 - 19
4472009	2F22	6	3361 - 21
4472052	2F6	7	3361 - 5
4472052	2F18	0	3361 - 19
4472053	2F18	1	3361 - 19
4472053	2F22	0	3361 - 21
4472054	2F18	5	3361 - 19
4472054	2F20	0	3361 - 19B
4472379	2E4	46	3344 - 5
4472430	2J8	0D	3363 - 29
4472522	2G8	17	3362 - 7B
4472675	2H16	1	3362 - 41
4475659	1K13	1	1830 - 21
4475660	1K13	1A	1830 - 21
4475661	1K13	1B	1830 - 21
4475662	1K13	1C	1830 - 21
4475663	1K13	2	1830 - 21
4475664	1K13	2A	1830 - 21
4475665	1K13	2B	1830 - 21
4475666	1K13	2C	1830 - 21
4475667	1K13	3	1830 - 21
4475687	1K13	4	1830 - 21
4475688	1K13	6	1830 - 21
4475689	1K13	6A	1830 - 21
4475690	1K13	6B	1830 - 21
4475691	1K13	6D	1830 - 21
4475692	1K13	6G	1830 - 21
4475693	1K13	6H	1830 - 21
4475694	1K13	6I	1830 - 21
4475695	1K13	6J	1830 - 21
4475710	1K13	6K	1830 - 21
4475711	1K13	6L	1830 - 21
4475712	1K13	6M	1830 - 21
4475713	1K13	6N	1830 - 21
4475714	1K13	7	1830 - 21
4475715	1K13	8	1830 - 21
4475716	1K13	9	1830 - 21
4475717	1K13	11	1830 - 21
4475718	1K13	12	1830 - 21
4475767	1J20	0	1830 - 3
4475767	1K13	13	1830 - 21
4475767	1K15	56	1830 - 23
4475768	1K13	14	1830 - 21
4475769	1K13	15	1830 - 21
4475770	1K13	16	1830 - 21
4475771	1K13	17	1830 - 21
4475772	1K13	17A	1830 - 21
4475773	1K13	17B	1830 - 21
4475774	1K13	21	1830 - 21
4475775	1K13	22	1830 - 21
4475801	1K13	23	1830 - 21
4475802	1K13	24	1830 - 21
4475803	1K13	25	1830 - 21
4475804	1K13	26	1830 - 21
4475805	1K13	27	1830 - 21
4475806	1K13	28	1830 - 21
4475807	1K13	29	1830 - 21
4475808	1K13	32	1830 - 21
4475809	1K13	33	1830 - 21
4475822	1K13	34	1830 - 21
4475823	1K13	35	1830 - 21
4475824	1K13	36	1830 - 21
4475825	1K13	37	1830 - 21
4475826	1K15	38	1830 - 23
4475827	1K15	39	1830 - 23
4475828	1K15	40	1830 - 23
4475829	1K15	41	1830 - 23
4475830	1K15	42	1830 - 23
4475832	1K15	43	1830 - 23
4475833	1K15	44	1830 - 23
4475834	1K15	45	1830 - 23
4475835	1K15	47	1830 - 23
4475836	1K15	48	1830 - 23
4475837	1K15	49	1830 - 23
4475838	1K15	50	1830 - 23
4475839	1K15	52	1830 - 23
4475840	1K15	53	1830 - 23
4477373	1G18	0	1674 - 13
4477852	2D2	14	3315 - 3B
4477852	2D2	15	3315 - 3B
4477852	2D2	16	3315 - 3B
4477852	2D2	17	3315 - 3B
4479181	1E24	42A	0510 - 3
4479185	1E24	42B	0510 - 3
4479188	1E24	42E	0510 - 3
4485649	1F23	27	1322 - 3
4487040	1I14	2	1810 - 17B
4487041	1I14	3	1810 - 17B
4487042	1I14	5	1810 - 17B
4487043	1I14	6	1810 - 17B
4487045	1I14	8	1810 - 17B
4487046	1I14	9	1810 - 17B
449558	2K16	18	3364 - 3
4506320	1C4	2	0262 - 5
4506320	2F12	8	3361 - 13
4506407	2G10	40	3362 - 9
4506407	2G20	40	3362 - 19
4506408	1C2	24A	0262 - 3
4506408	1C8	30A	0267 - 3
4506408	1F25	..	1369 - 3
4506412	1C8	29	0267 - 3
4506418	1B22	0	0260 - 11
4506418	1B22	22	0260 - 11
4506418	1C4	16	0262 - 5
4506418	1F25	..	1369 - 3
4506418	2E16	18	3360 - 9
4506418	2G10	45	3362 - 9
4506418	2G18	45	3362 - 17
4506418	2G20	45	3362 - 19
4506418	2H4	45	3362 - 27
4506418	2I8	8	3363 - 5
4506418	2I12	1	3363 - 9
4506418	2I12	5	3363 - 9
4506418	2I14	46	3363 - 11
4506418	2I16	5	3363 - 13
4506418	2I16	6	3363 - 13
4506418	2I18	0	3363 - 15
4506418	2I18	1	3363 - 15
4506418	2I20	5	3363 - 17
4506418	2I22	5	3363 - 19
4506418	2I24	5	3363 - 21
4506418	2I24	6	3363 - 21
4506418	2J2	20	3363 - 23
4506418	2J2	21	3363 - 23
4506418	2J2	22	3363 - 23
4506418	2J2	23	3363 - 23
4506418	2J2	24	3363 - 23
4506418	2J4	14	3363 - 25
4506418	2J4	16	3363 - 25
4506418	2J6	3	3363 - 27
4506418	2J6	4	3363 - 27
4506418	2J8	2	3363 - 29
4506418	2J8	4	3363 - 29
4506418	2J8	5	3363 - 29
4506418	2J8	62A	3363 - 29
4506418	2K10	13	3363 - 55
4506418	2K12	7	3363 - 57
4506420	2G10	39	3362 - 9
4506420	2G14	39	3362 - 13
4506420	2G16	39	3362 - 15
4506420	2G20	39	3362 - 19
4506420	2G24	39	3362 - 23
4506420	2H2	39	3362 - 25
4506420	2H8	6	3362 - 33
4506420	2H10	6	3362 - 35
4506424	1C2	7	0262 - 3
4506424	1F25	..	1369 - 3
4506424	2E16	30	3360 - 9
4506424	2G10	54	3362 - 9
4506424	2G20	54	3362 - 19

NUMERICAL INDEX - CONTINUED

PART NO.	GRID	KEY	PAGE
4506424	2I8	1	3363 - 5
4506424	2I8	5	3363 - 5
4506424	2I10	12	3363 - 7
4506424	2I12	73	3363 - 9
4506428	1F25	..	1369 - 3
4506428	2I4	15	3362 - 53
4506430	1F25	..	1369 - 3
4509180	1C2	22A	0262 - 3
4509180	2H18	3	3362 - 43
4509180	2J6	2	3363 - 27
4509181	2K18	27	3365 - 5
4509181	2L6	23	3365 - 21
4509181	2L20	8	4367 - 3
4509182	2K18	30	3365 - 5
4509182	2K20	25	3365 - 9
4509182	2L6	26	3365 - 21
4509404	1H12	4	1740 - 3
4509493	1C2	9	0262 - 3
4510494	2K18	5	3365 - 5
4514700	1F20	1	0563 - 3
4602337	2J12	31B	3363 - 33
4604759	1J8	1	1810 - 35
4604760	1J8	2	1810 - 35
4604761	1J8	5	1810 - 35
4604762	1J8	6	1810 - 35
4604763	1J8	7	1810 - 35
4604764	1J8	12	1810 - 35
4604765	1J8	19	1810 - 35
4604766	1J8	20	1810 - 35
4604767	1J8	23	1810 - 35
4604768	1J8	25	1810 - 35
4604769	1J8	32	1810 - 35
4604770	1J8	35	1810 - 35
4604771	1J8	40	1810 - 35
4604772	1J8	43	1810 - 35
4604980	1F23	63	1322 - 3
4606542	1H25	1	1810 - 5
4608027	1J8	48	1810 - 35
4608028	1J8	49	1810 - 35
4608029	1J8	50	1810 - 35
4609051	1J20	0	1830 - 3
4609051	1K15	56	1830 - 23
4609637	1G14	0	1674 - 9
4609649	1B10	1	0131 - 3
4609956	2C24	14	3315 - 3
4609956	2C24	20	3315 - 3
4609956	2D2	3	3315 - 3B
4611025	2J8	0	3363 - 29
4611307	1I14	19	1810 - 17B
4611308	1I14	15	1810 - 17B
4611309	1I14	18	1810 - 17B
4611310	1I14	20	1810 - 17B
4611311	1I14	17	1810 - 17B
4611360	1J20	0	1830 - 3
4611360	1K15	56	1830 - 23
4612876	1J22	17	1830 - 5
4613038	2J10	33	3363 - 31
4613913	2B23	0	2001 - 3
4614046	1I8	19	1810 - 13
4614287	1K13	1	1830 - 21
4614288	1K13	2	1830 - 21
4614289	1K13	6	1830 - 21
4614290	1K13	6I	1830 - 21
4614291	1K13	6O	1830 - 21
4614911	1F4	16	0515 - 3
4618252	1I8	18	1810 - 13
4624878	1I4	21	1810 - 9
4624879	1I6	0	1810 - 11
4624880	1I6	1	1810 - 11
4624881	1I6	5	1810 - 11
4624882	1I6	60	1810 - 11
4624883	1I14	12	1810 - 17B
5007260	1J4	0	1810 - 31
5007495	2B16	0	1910 - 21
5007874	2E4	0A	3344 - 5
5008116	2B8	0A	1910 - 13
5008263	1H18	0	1749 - 3
5090000690	1C17	28	0402 - 3
5090002270	1E18	5	0433 - 5
5090002732	1C15	21	0401 - 3
5095031270	1C15	59	0401 - 3
5095390020	1D18	4	0413 - 7
5096000130	1C23	22	0404 - 3
5096000130	1D10	10	0409 - 5
5096050050	1D24	58	0418 - 3
5096050192	1C23	15	0404 - 3
5096230020	1D4	28	0407 - 7
5096230020	1E20	23	0452 - 3
5096230700	1E6	11	0420 - 3
5096300240	1E6	6	0420 - 3
5096750181	1D4	2	0407 - 7
5096750430	1D4	3	0407 - 7
5111290030	1C23	70	0404 - 3
5111290060	1C23	40	0404 - 3
5111290060	1D10	9	0409 - 5
5112190170	1C23	16	0404 - 3
5112190180	1C23	17	0404 - 3
5112190180	1C23	21	0404 - 3
5113210090	1C19	57	0402 - 5
5125190021	1C17	16	0402 - 3
5125190021	1C17	45	0402 - 3
5125630010	1C17	71	0402 - 3
5132120751	1E6	12	0420 - 3
5132190200	1E6	5	0420 - 3
5132190210	1E6	17	0420 - 3
5132190221	1E6	79	0420 - 3
5156390020	1D16	10	0413 - 5
5157590270	1E6	77	0420 - 3
5878136700	1E20	1	0452 - 3
5878136702	1E20	1	0452 - 3
5878136703	1E20	1	0452 - 3
5878136704	1E20	1	0452 - 3
5878136705	1E20	1	0452 - 3
5878140200	1E20	2	0452 - 3
5878140201	1E20	2	0452 - 3
5878140202	1E20	2	0452 - 3
5878140670	1C23	2	0404 - 3
5878140680	1C23	2	0404 - 3
5878140690	1C23	2	0404 - 3
5878140700	1C23	2	0404 - 3
6016789	2E4	7A	3344 - 5
6019229	1J2	0	1810 - 29
6019668	1F16	0	0560 - 3
6019728	1B10	0	0131 - 3
6019742	2D20	0A	3340 - 3
6019882	2D22	0A	3340 - 5
6020125	1J16	0	1821 - 7
6020175	2D24	0A	3340 - 7
6020198	2B4	7	1910 - 9
6020284	2E4	9A	3344 - 5
6021155	2K16	0	3364 - 3
603517	2C17	20	3302 - 5
603520	2C17	20	3302 - 5
603522	2C17	20	3302 - 5
603523	2C17	20	3302 - 5
603524	2C17	20	3302 - 5
621899	2C17	13	3302 - 5
621900	2C15	13	3302 - 3
7039606	2D20	0	3340 - 3
7039607	2E2	0	3344 - 3
7039785	1F12	1	0530 - 3
7039796	1I16	0	1810 - 19
7039797	1I16	1	1810 - 19
7039856	2A25	0	1910 - 5
7039857	2B2	0	1910 - 7
7039917	2G4	1	3362 - 5
7040006	1G20	0	1674 - 15
7040185	2B4	0	1910 - 9
7040364	1K10	4	1830 - 17
7040432	2D16	8	3315 - 17
7040475	2I10	28	3363 - 7
7040476	2I10	29	3363 - 7
7040514	1I22	0	1810 - 25
7040529	2D22	0	3340 - 5
7040553	2B2	8	1910 - 7
7040577	1F8	13	0520 - 3
7040638	2D24	0	3340 - 7
7040792	2E4	0	3344 - 5
7040793	2E4	9	3344 - 5
7040801	1E24	35	0510 - 3
7040907	2D16	7	3315 - 17
7040974	1E24	21	0510 - 3
7041218	2D16	13	3315 - 17
7041267	1F10	0A	0520 - 5
7041769	1J18	4	1821 - 9
7042033	2A23	6A	1910 - 3
7045626	2D6	0	3315 - 7
7045626	2D6	1	3315 - 7
8053499	2K16	19	3364 - 3
8060253	2K12	9	3363 - 57
8060508	2D18	9	3315 - 19
8061258	2D18	7	3315 - 19
8063718	1C6	0	0262 - 7
8069904	2E4	26	3344 - 5
8070281	2K12	19	3363 - 57
8070282	2K12	20	3363 - 57
8070805	2D18	3	3315 - 19
8075449	2D4	1	3315 - 5
8075450	2D4	0	3315 - 5
8076935	2D14	0	3315 - 15
8077521	2B4	12	1910 - 9
8077903	1C6	32	0262 - 7
8079477	1C2	2	0262 - 3
8080381	2D6	12	3315 - 7
8081981	2D6	0	3315 - 7
8081981	2D6	1	3315 - 7
8082095	2E6	6	3345 - 3
8082132	2E2	6A	3344 - 3
8082132	2E4	17	3344 - 5
8082431	2I8	9	3363 - 5
8082538	2D20	5	3340 - 3
8082538	2D22	5	3340 - 5
8082538	2D24	5	3340 - 7
8082544	2K12	18	3363 - 57
8082930	2I10	21	3363 - 7
8082971	1E24	9	0510 - 3
8082972	1F2	2	0510 - 5
8083005	1F10	3A	0520 - 5
8083007	2A23	17A	1910 - 3
8083051	1H12	17	1740 - 3
8083088	2G6	5	3362 - 7

NUMERICAL INDEX - CONTINUED

PART NO.	GRID	KEY	PAGE
8083103	2K10	1	3363 - 55
8083104	2K10	2	3363 - 55
8083107	2B16	7	1910 - 21
8083108	2H6	0	3362 - 31
8083133	2H12	1	3362 - 37
8083554	2L11	19	3401 - 3
8083555	1F6	6	0515 - 5
8083855	1J18	23	1821 - 9
8084023	2K10	4	3363 - 55
8084024	2K10	5	3363 - 55
8084140	2D16	55	3315 - 17
8084192	1J22	22	1830 - 5
8084705	1E24	36	0510 - 3
8084836	2K12	25	3363 - 57
8084837	2K12	24	3363 - 57
8084838	2K12	22	3363 - 57
8084839	2K12	23	3363 - 57
8084919	2E4	7	3344 - 5
8085045	2B18	0	1910 - 23
8085427	1F14	18	0540 - 5
8085428	1F14	19	0540 - 5
8085521	2I10	20	3363 - 7
8085595	1F4	17	0515 - 3
8085910	1J12	26	1821 - 3
8086366	2K14	2	3363 - 59
8087115	2C2	7	2004 - 3
8089794	2G8	5	3362 - 7B
8094751	2D6	1	3315 - 7
8941077260	1E18	6	0433 - 5
8941097061	1C17	15	0402 - 3
8941097070	1D16	20	0413 - 5
8941097070	1E20	12	0452 - 3
8941099131	1C17	18	0402 - 3
8941102710	1C17	24	0402 - 3
8941104801	1C17	10	0402 - 3
8941236231	1D8	5	0409 - 3
8941258621	1D24	79	0418 - 3
8941258621	1E2	38	0418 - 5
8941300211	1C23	71	0404 - 3
8941332075	1D8	4	0409 - 3
8941332751	1C17	4	0402 - 3
8941335202	1C17	89	0402 - 3
8941335203	1C17	89	0402 - 3
8941337312	1C17	72	0402 - 3
8941339732	1C25	23	0407 - 3
8941419371	1C17	19	0402 - 3
8941421561	1E16	38	0433 - 3
8941500451	1C17	22	0402 - 3
8941522831	1C17	81	0402 - 3
8941523440	1C17	78	0402 - 3
8941523451	1C17	84	0402 - 3
8941523530	1D14	28	0413 - 3
8941537231	1D10	13	0409 - 5
8941537232	1D10	13	0409 - 5
8941678860	1E6	33	0420 - 3
8941701231	1D4	1	0407 - 7
8941734300	1D8	75	0409 - 3
8941741390	1D14	46	0413 - 3
8941741410	1D14	44	0413 - 3
8941741830	1D14	47	0413 - 3
8941741840	1D14	35	0413 - 3
8941780810	1D22	3	0417 - 3
8941780810	1E20	21	0452 - 3
8941845731	1D14	72	0413 - 3
8942016410	1C15	31	0401 - 3
8942024563	1D8	27	0409 - 3
8942024563	1E20	5	0452 - 3
8942248290	1D22	40	0417 - 3
8942386100	1D14	29	0413 - 3
8942420340	1D6	45	0408 - 3
8942501720	1D6	12	0408 - 3
8942505140	1C23	41	0404 - 3
8942505141	1C23	41	0404 - 3
8942506151	1D6	65	0408 - 3
8942525361	1C17	69	0402 - 3
8943127230	1D14	43	0413 - 3
8943243350	1C15	28	0401 - 3
8943243361	1C17	9	0402 - 3
8943243391	1D18	27	0413 - 7
8943264390	1D14	50	0413 - 3
8943264390	1E20	3	0452 - 3
8943282170	1C17	20	0402 - 3
8943427130	1D20	62	0414 - 3
8943656742	1D24	64	0418 - 3
8943656742	1E20	22	0452 - 3
8943656762	1E2	37	0418 - 5
8943656763	1E2	37	0418 - 5
8943721931	1C21	73	0403 - 3
8943862330	1D8	6	0409 - 3
8944104040	1E6	40	0420 - 3
8944147963	1E6	2	0420 - 3
8944241421	1E8	8	0421 - 3
8944241430	1E8	10	0421 - 3
8944254500	1C23	74	0404 - 3
8944272012	1C23	25	0404 - 3
8944272062	1C23	24	0404 - 3
8944300000	1D14	68	0413 - 3
8944300010	1D14	68	0413 - 3
8944326420	1C23	8	0404 - 3
8944333020	1C17	85	0402 - 3
8944333030	1C17	23	0402 - 3
8944333040	1C17	87	0402 - 3
8944334270	1D14	59	0413 - 3
8944337171	1D14	61	0413 - 3
8944348271	1D4	26	0407 - 7
8944383050	1C17	89	0402 - 3
8944383051	1C17	89	0402 - 3
8944404921	1D10	45	0409 - 5
8944415921	1E8	18	0421 - 3
8944422250	1D14	32	0413 - 3
8944519902	1D12	1	0410 - 3
8944533440	1C23	13	0404 - 3
8944537460	1E6	7	0420 - 3
8944537620	1C15	42	0401 - 3
8944556670	1D10	3	0409 - 5
8944567942	1C23	63	0404 - 3
8944570081	1C21	83	0403 - 3
8944575170	1D18	30	0413 - 7
8944606870	1C21	88	0403 - 3
8944660570	1E8	19	0421 - 3
8944739670	1D14	83	0413 - 3
8970110740	1D20	61	0414 - 3
8970114882	1D20	1	0414 - 3
8970161010	1D12	19	0410 - 3
8970162680	1D14	85	0413 - 3
8970177871	1D14	16	0413 - 3
8970177881	1D14	17	0413 - 3
8970177891	1D14	18	0413 - 3
8970177901	1D14	19	0413 - 3
8970225710	1D20	60	0414 - 3
8970225710	1E20	14	0452 - 3
8970361970	1C17	53	0402 - 3
8970441120	1D2	19	0407 - 5
8970491450	1C19	83	0402 - 5
8970491450	1E20	19	0452 - 3
8970497081	1C13	0B	0400 - 3
8970497081	1E4	2	0419 - 3
8970620860	1C21	86	0403 - 3
8970632580	1C15	10	0401 - 3
8970632590	1C15	10	0401 - 3
8970632600	1C15	10	0401 - 3
8970659830	1E4	43	0419 - 3
8970659841	1E16	40	0433 - 3
8970661960	1D10	2	0409 - 5
8970661960	1E20	10	0452 - 3
8970661970	1D10	2	0409 - 5
8970661980	1D10	2	0409 - 5
8970715611	1E18	3	0433 - 5
8970715611	1E20	20	0452 - 3
8970716730	1C17	88	0402 - 3
8970801940	1C25	16	0407 - 3
8970801940	1E20	15	0452 - 3
8970951672	1C23	1	0404 - 3
8971050121	1D22	1	0417 - 3
8971050123	1D22	1	0417 - 3
8971077390	1D10	14	0409 - 5
8971092162	1D12	2	0410 - 3
8971092162	1E20	8	0452 - 3
8971096423	1D10	1	0409 - 5
8971160290	1D14	84	0413 - 3
8971160320	1D14	84	0413 - 3
8971160330	1D14	84	0413 - 3
8971160340	1D14	84	0413 - 3
8971160350	1D14	84	0413 - 3
8971160360	1D14	84	0413 - 3
8971160370	1D14	84	0413 - 3
8971160380	1D14	84	0413 - 3
8971160390	1D14	84	0413 - 3
8971160400	1D14	84	0413 - 3
8971160410	1D14	84	0413 - 3
8971160420	1D14	84	0413 - 3
8971160430	1D14	84	0413 - 3
8971160440	1D14	84	0413 - 3
8971172420	1C19	32	0402 - 5
8971172420	1E20	17	0452 - 3
8971172421	1C19	32	0402 - 5
8971172421	1E20	17	0452 - 3
8971186980	1C19	65	0402 - 5
8971186980	1E20	18	0452 - 3
8971187670	1C17	5	0402 - 3
8971187671	1C17	5	0402 - 3
8971198870	1D6	12	0408 - 3
8971203070	1D10	42	0409 - 5
8971203070	1E20	7	0452 - 3
8971256001	1H2	1	1674 - 21
8971294130	1D14	30	0413 - 3
8971374781	1E10	1	0422 - 3
8971473340	1C17	21	0402 - 3
8971479840	1C21	68	0403 - 3
8971483240	1D10	6	0409 - 5
8971607060	1D4	43	0407 - 7
8971611310	1D8	69	0409 - 3
8971611310	1E20	6	0452 - 3
8971713310	1D14	66	0413 - 3
8971713310	1E20	4	0452 - 3
8971727201	1E14	71	0429 - 3
8971766990	1C23	4	0404 - 3
8971767000	1C23	4	0404 - 3
8971767010	1C23	4	0404 - 3
8971767020	1C23	4	0404 - 3
8971767030	1C23	4	0404 - 3

NUMERICAL INDEX - CONTINUED

PART NO.	GRID	KEY	PAGE
8971767040	1C23	4	0404 - 3
8971767050	1C23	4	0404 - 3
8971767060	1C23	4	0404 - 3
8971798541	1E6	1	0420 - 3
8971798550	1E6	12	0420 - 3
8971805560	1E10	28	0422 - 3
8971815100	1D16	2	0413 - 5
8971822892	1G6	2	1672 - 3
8971842640	1E14	80	0429 - 3
8971909301	1C15	1	0401 - 3
8972072321	1D24	49	0418 - 3
8972096090	1D10	8	0409 - 5
8972112090	1D24	1	0418 - 3
8972112800	1D14	31	0413 - 3
8972125370	1D24	66	0418 - 3
8972125370	1E20	11	0452 - 3
8972125400	1D20	7	0414 - 3
8972125400	1E20	9	0452 - 3
8972148510	1E10	29	0422 - 3
8972153860	1D4	46	0407 - 7
8972153870	1D4	48	0407 - 7
8972153880	1E4	45	0419 - 3
8972189930	1C17	17	0402 - 3
8972190014	1C19	1	0402 - 5
8972193150	1E4	47	0419 - 3
8972193420	1D14	33	0413 - 3
8972207400	1E18	7	0433 - 5
8972222470	1D24	80	0418 - 3
8972226840	1E12	16	0423 - 3
8972248130	1E10	1	0422 - 3
8972257181	1G6	26	1672 - 3
8972264700	1F14	8	0540 - 5
8972291680	1E4	42	0419 - 3
8972292440	1E12	30	0423 - 3
8972300690	1C25	26	0407 - 3
8972300700	1C25	25	0407 - 3
8972312141	1C19	54	0402 - 5
8972312280	1D10	5	0409 - 5
8972312290	1D10	6	0409 - 5
8972315210	1D18	1	0413 - 7
8972322410	1D24	2	0418 - 3
8972324250	1D10	5	0409 - 5
8972324260	1D10	6	0409 - 5
8972326750	1D8	1	0409 - 3
8972329570	1D4	1	0407 - 7
8972386310	1C19	84	0402 - 5
8972395320	1E10	25	0422 - 3
8972413670	1D22	7	0417 - 3
8972414700	1E14	36	0429 - 3
8972473140	1D14	80	0413 - 3
8972481611	1C15	56	0401 - 3
8972539870	1C25	1	0407 - 3
8972539990	1C23	54	0404 - 3
8972572230	1E14	81	0429 - 3
8972579790	1D20	63	0414 - 3
8972579791	1D20	63	0414 - 3
8972633951	1D14	1	0413 - 3
8972633970	1F14	3	0540 - 5
8972633980	1E2	39	0418 - 5
8972634250	1K17	25	1832 - 3
8972649300	1E16	12	0433 - 3
8972649301	1E16	12	0433 - 3
8972649302	1E16	12	0433 - 3
8972872771	1E2	2	0418 - 5
8972876750	1C17	1	0402 - 3
8972876960	1E14	1	0429 - 3
8972882500	1C21	63	0403 - 3
8972882510	1C21	63	0403 - 3
8972892630	1C21	84	0403 - 3
8972892631	1C21	84	0403 - 3
8972892640	1C21	85	0403 - 3
8973052250	1D6	19	0408 - 3
8973054510	1E18	2	0433 - 5
8973054511	1E18	2	0433 - 5
8973059430	1E8	7	0421 - 3
8973059520	1D14	15	0413 - 3
8973098570	1F14	2	0540 - 5
8973251570	1D2	1	0407 - 5
8973251740	1C25	2	0407 - 3
8973296470	1E10	29	0422 - 3
8973494160	1D8	69	0409 - 3
8973494160	1E20	6	0452 - 3
8973503170	1D12	2	0410 - 3
8973503170	1E20	8	0452 - 3
8973582340	1C21	73	0403 - 3
8973674590	1D14	85	0413 - 3
8973781470	1C23	25	0404 - 3
9023408	2H24	0	3362 - 49
9039104080	1D6	13	0408 - 3
9039205100	1E12	31	0423 - 3
9041108220	1D22	42	0417 - 3
9041108250	1D12	16	0410 - 3
9041108350	1D10	16	0409 - 5
9080007180	1C17	14	0402 - 3
9081510200	1C19	85	0402 - 5
9081510200	1C23	76	0404 - 3
9081605080	1C21	87	0403 - 3
9081610320	1C23	50	0404 - 3
9091105080	1D12	18	0410 - 3
9091105080	1E12	23	0423 - 3
9091105080	1E14	82	0429 - 3
9091105100	1E8	12	0421 - 3
9091115080	1C17	83	0402 - 3
9091115100	1C23	75	0404 - 3
9091605080	1E12	17	0423 - 3
9091607080	1C19	82	0402 - 5
9091645100	1C17	94	0402 - 3
9091645100	1D16	8	0413 - 5
9091647060	1D22	6	0417 - 3
9091647080	1E14	88	0429 - 3
9091800190	1C17	56	0402 - 3
9092023080	1E6	80	0420 - 3
9095612220	1D4	44	0407 - 7
9095713160	1D24	59	0418 - 3
9095714080	1E6	66	0420 - 3
9095714080	1E20	13	0452 - 3
9095714140	1C23	73	0404 - 3
9095714160	1C23	69	0404 - 3
9095720080	1D4	42	0407 - 7
9096065350	1C23	53	0404 - 3
9096300341	1D10	11	0409 - 5
9096300341	1D10	43	0409 - 5
9096610050	1D24	14	0418 - 3
9096620070	1D18	2	0413 - 7
9096620120	1C25	4	0407 - 3
9096640010	1C23	7	0404 - 3
9111316	2E4	15	3344 - 5
9111317	2E4	14	3344 - 5
9126260050	1C17	55	0402 - 3
9131130771	1D2	31	0407 - 5
9131430100	1D2	66	0407 - 5
9134109	1C2	24	0262 - 3
9134109	1C8	30	0267 - 3
9134110	1C2	23	0262 - 3
9134111	1C2	22	0262 - 3
9136420780	1E14	38	0429 - 3
9151724	1C6	6	0262 - 7
9151724	2H12	10	3362 - 37
9153151	1B6	10	0130 - 9
9153288	1B2	0	0130 - 7
9153329	1B2	0	0130 - 7
9154092	2D20	13	3340 - 3
9154092	2D22	13	3340 - 5
9154092	2D24	13	3340 - 7
9154166	1A22	10	0130 - 3
9154167	1A22	3	0130 - 3
9154190721	1D14	81	0413 - 3
9156478	1B8	11	0130 - 11
9163824	2L2	0	3365 - 15
9163825	2K22	0	3365 - 11
9163825	2K24	0	3365 - 13
9163869	2E4	11	3344 - 5
9163869	2E4	11C	3344 - 5
9167977	1C2	19	0262 - 3
9182805	1B6	0	0130 - 9
9182806	1B6	1	0130 - 9
9184275	1C6	8	0262 - 7
9184556	2K16	1	3364 - 3
9190694	1C8	0	0267 - 3
9191951	1F20	13	0563 - 3
9192656	1C2	15	0262 - 3
9192656	1C4	0	0262 - 5
9193338	1B20	0	0260 - 9
9194416	1H7	1	1674 - 33
9195304	2C24	20	3315 - 3
9195304	2D2	3	3315 - 3B
9195307	1C6	43	0262 - 7
9195307	2D4	10	3315 - 5
9196167	1B20	0	0260 - 9
9197149	2K18	0	3365 - 5
9197150	2K20	0	3365 - 9
9197151	2L6	32	3365 - 21
9197490	2H12	0	3362 - 37
9199146	1C6	13	0262 - 7
9201173	2L8	0	3365 - 23
9201173	2L13	8	3401 - 5
9201173EX	2L13	8	3401 - 5
9202346	1K4	3	1830 - 11
9202347	1K4	4	1830 - 11
9204217	2H12	15	3362 - 37
9204704	1C2	0	0262 - 3
9204704	1C8	31	0267 - 3
9204752	1B16	0	0260 - 5
9206188	1F10	0	0520 - 5
9206189	1F10	3	0520 - 5
9206191	2B16	0	1910 - 21
9206192	2B10	5	1910 - 15
9206193	2B6	0	1910 - 11
9206201	2A23	1	1910 - 3
9206212	2B20	9	1910 - 25
9206216	2A25	5	1910 - 5
9207252	1F4	16A	0515 - 3
9208524	2A23	17	1910 - 3
9208781	1F20	20	0563 - 3
9211555	2A23	6	1910 - 3
9212078	1H7	1	1674 - 33
9212650	2B8	0	1910 - 13
9227382	1J8	52	1810 - 35
9234284	2D2	14	3315 - 3B
9234284	2D2	15	3315 - 3B
9234284	2D2	16	3315 - 3B

NUMERICAL INDEX - CONTINUED

PART NO.	GRID	KEY	PAGE
9234284	2D2	17	3315 - 3B
9235551	2D4	10	3315 - 5
9239568	1H7	1	1674 - 33
9239583	2C24	20	3315 - 3
9239583	2D2	3	3315 - 3B
94-1301	2E2	16	3344 - 3
94-2010	1B2	6	0130 - 7
94-2010	1B6	6	0130 - 9
94-2011	1A22	7	0130 - 3
94-2011	1B20	34	0260 - 9
94-2011	2D2	1	3315 - 3B
94-2013	1B16	14	0260 - 5
94-2013	1F16	10	0560 - 3
94-2817	2A23	6G	1910 - 3
953612	2K16	24B	3364 - 3
954493	2H22	12	3362 - 47
957366	1C2	19A	0262 - 3
957366	1C2	20A	0262 - 3
957366	1C2	23A	0262 - 3
957366	2F10	6	3361 - 9
957366	2G12	62	3362 - 11
957366	2G14	62	3362 - 13
957366	2G16	62	3362 - 15
957366	2G22	62	3362 - 21
957366	2G24	62	3362 - 23
957366	2H2	62	3362 - 25
957366	2I2	4	3362 - 51
957366	2L20	27	4367 - 3
957474	1F25	..	1369 - 3
962567	2H14	25	3362 - 39
964255	1C6	36	0262 - 7
964255	2H14	32	3362 - 39
970486	2G12	25	3362 - 11
970486	2G14	25	3362 - 13
970486	2G16	25	3362 - 15
970486	2G22	25	3362 - 21
970486	2G24	25	3362 - 23
970486	2H2	25	3362 - 25
970860	1F25	..	1369 - 3
972658	1C8	8	0267 - 3
9735916	2E20	14	3360 - 13
9738322	2E18	20	3360 - 11
9738682	1J8	8	1810 - 35
9747100	2D14	6	3315 - 15
9749316	2E4	11C	3344 - 5
9752136	2L11	2	3401 - 3
9752182	2L11	3	3401 - 3
9754382	1H12	18	1740 - 3
9754825	2D2	16	3315 - 3B
9754826	2D2	17	3315 - 3B
9754977	2D6	17	3315 - 7
9755255	1B14	5	0260 - 3
9755730	1C4	6	0262 - 5
9756079	1F4	16A	0515 - 3
9756725	1J18	11	1821 - 9
9756771	1F8	6	0520 - 3
9756997	2K2	12	3363 - 47
9757406	1G4	48	1671 - 3
9757642	2I16	11	3363 - 13
9757642	2I20	14	3363 - 17
9757642	2I22	14	3363 - 19
9757642	2J2	11	3363 - 23
9757642	2J4	17	3363 - 25
9758228	1J18	19	1821 - 9
9759157	2D2	14	3315 - 3B
9759157	2D2	15	3315 - 3B
9759157	2D2	16	3315 - 3B
9759157	2D2	17	3315 - 3B
9759158	2D2	14	3315 - 3B
9759158	2D2	15	3315 - 3B
9759158	2D2	16	3315 - 3B
9759158	2D2	17	3315 - 3B
984338	1C6	6C	0262 - 7
984338	2H12	10B	3362 - 37
985099	2H18	4	3362 - 43
9884102640	1D18	5	0413 - 7
988975	1C2	27	0262 - 3
991334	2D16	51	3315 - 17
991714	2H24	9	3362 - 49
992444	2H24	7	3362 - 49
9958212550	1C19	62	0402 - 5
997330	2K16	6	3364 - 3

PART NO.	GRID	KEY	PAGE