PRIMARY INDEX
INDEX PRINCIPAL
HAUPTINDEX
INDICE PRINCIPALE
INDICE DE MATERIAS
HUVUDFORTECKNING

JOHN DEERE

RXP022558 -UN-11MAY99

RUTHZIL TRATOR COMERCIAL DE PEÇAS LTDA 11 97083-6812 ROLANDO

20 -	1D10
30 -	2D6
40 -	3D12
41 -	3I9
42 -	4D3
43 -	4E4
51 -	4E19
53 -	5D3
54 -	5E13
60 -	6D4
70 -	7D5
71 -	8D2
80 -	8E4
90 -	8H3
91 -	9D3
92 -	9F15

20

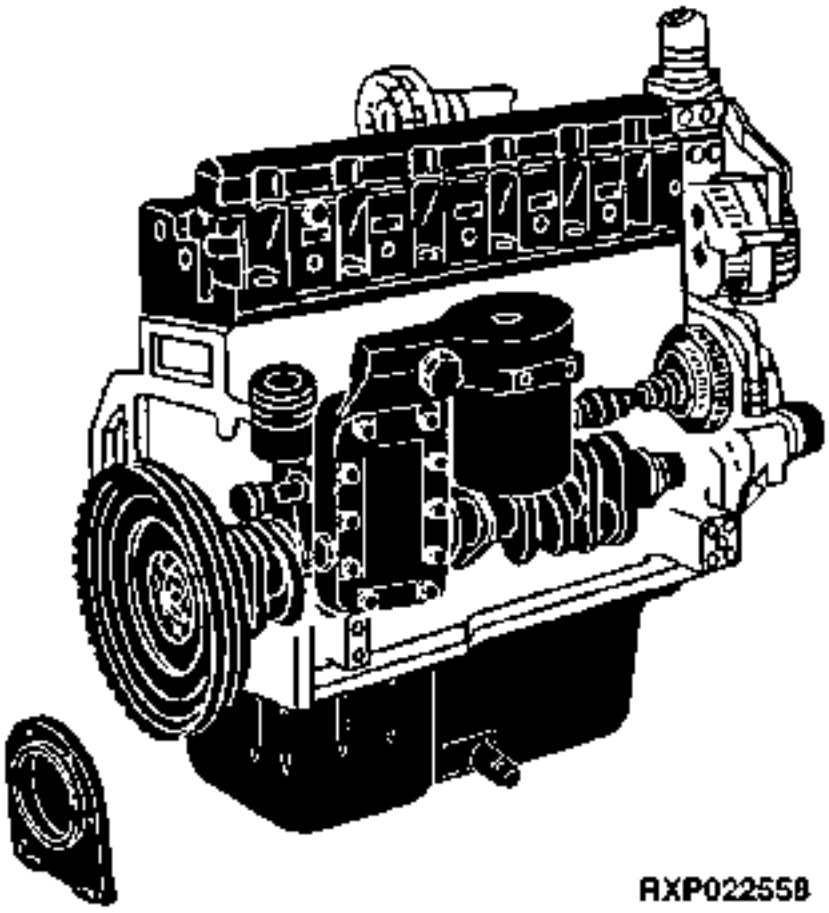

https://www.truck-manuals.net/

PRIMARY INDEX
INDEX PRINCIPAL
HAUPTINDEX
INDICE PRINCIPALE
INDICE DE MATERIAS
HUVUDFORTECKNING

RXP022559 -UN-11MAY99

20 -	1D10
30 -	2D6
40 -	3D12
41 -	3I9
42 -	4D3
43 -	4E4
51 -	4E19
53 -	5D3
54 -	5E13
60 -	6D4
70 -	7D5
71 -	8D2
80 -	8E4
90 -	8H3
91 -	9D3
92 -	9F15

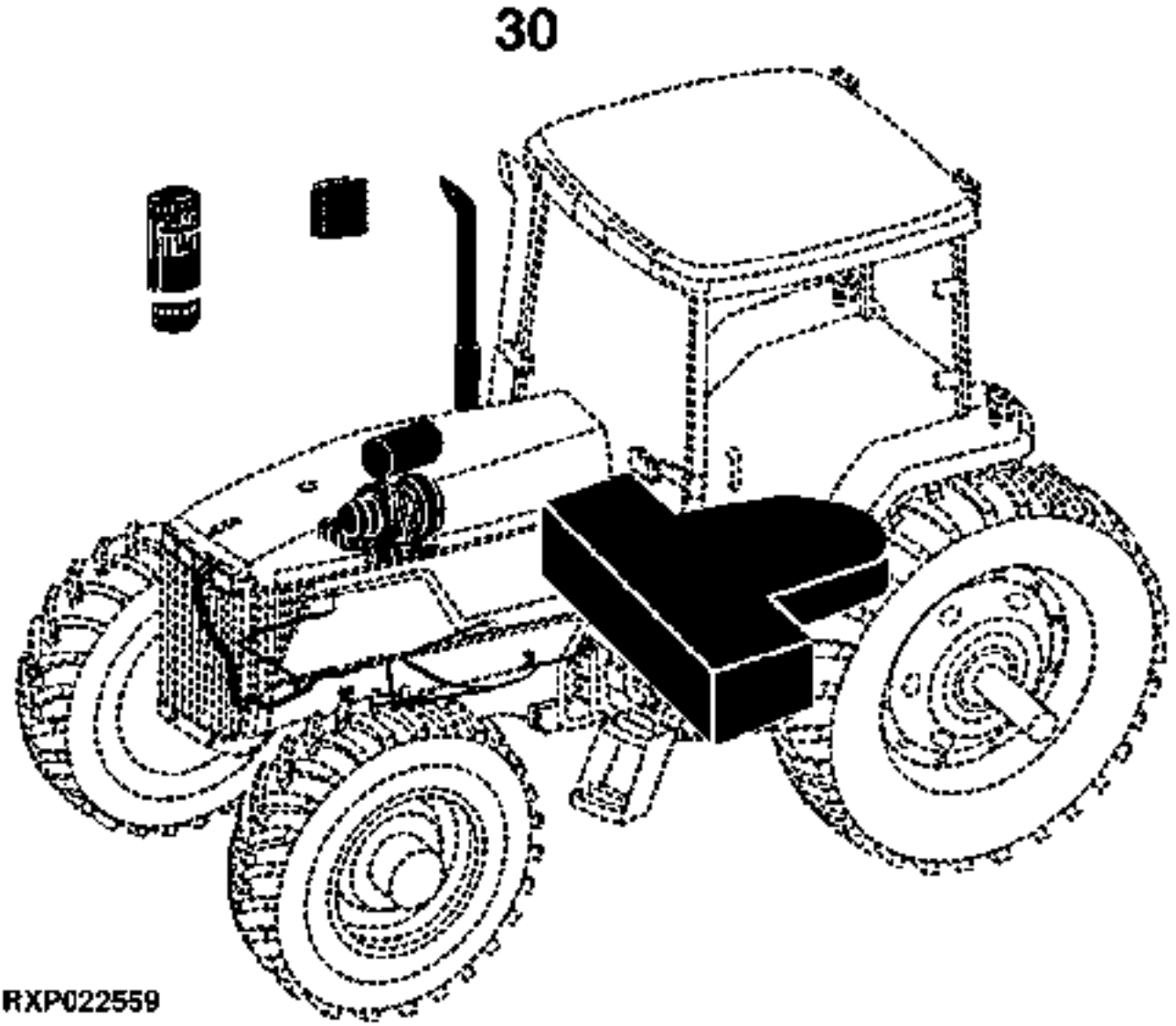

https://www.truck-manuals.net/

PRIMARY INDEX
INDEX PRINCIPAL
HAUPTINDEX
INDICE PRINCIPALE
INDICE DE MATERIAS
HUVUDFORTECKNING

RE029116 -UN-10MAY99

20 -	1D10
30 -	2D6
40 -	3D12
41 -	3I9
42 -	4D3
43 -	4E4
51 -	4E19
53 -	5D3
54 -	5E13
60 -	6D4
70 -	7D5
71 -	8D2
80 -	8E4
90 -	8H3
91 -	9D3
92 -	9F15

40

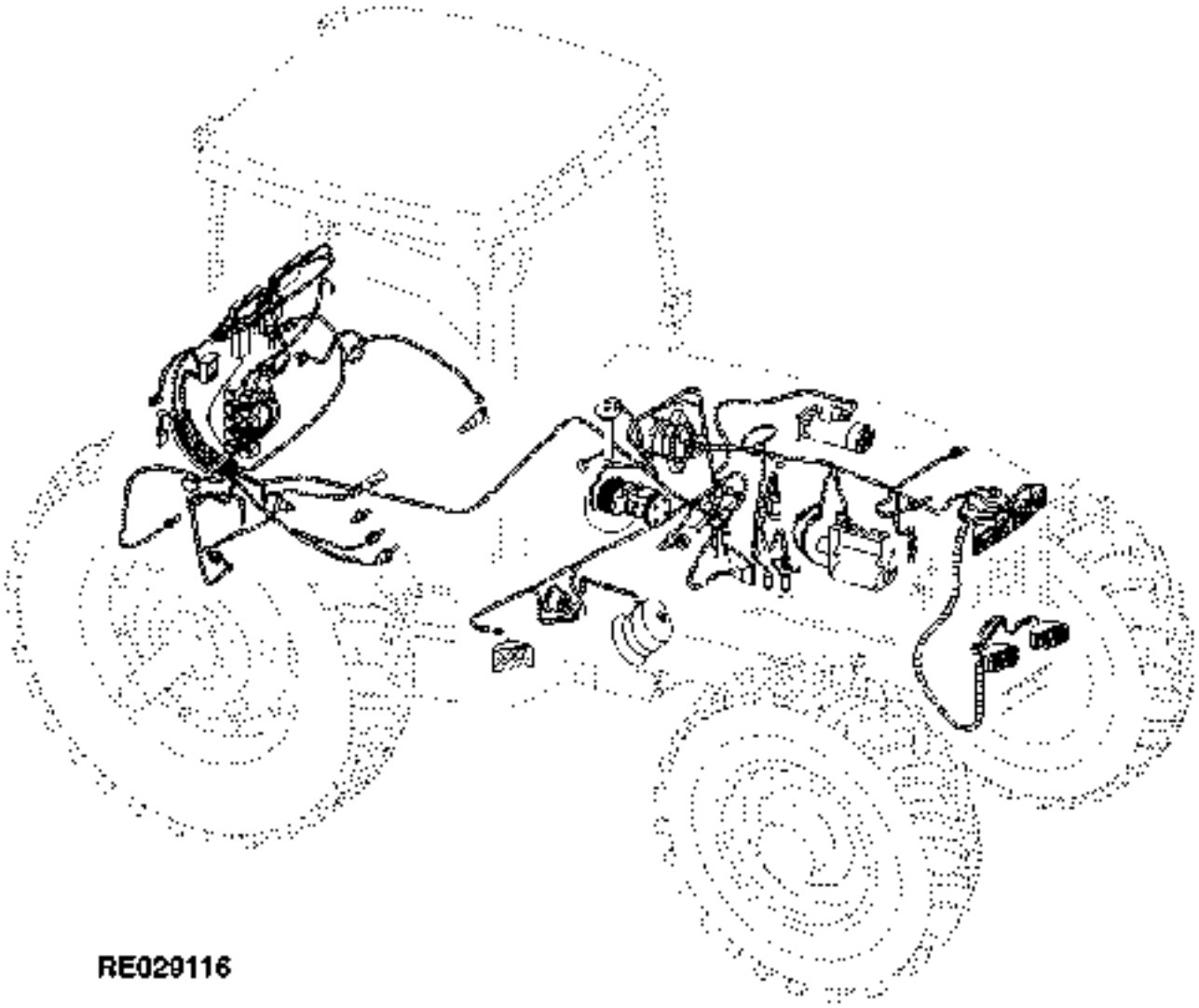

RE029116

https://www.truck-manuals.net/

PRIMARY INDEX
INDEX PRINCIPAL
HAUPTINDEX
INDICE PRINCIPALE
INDICE DE MATERIAS
HUVUDFORTECKNING

RE029117 -UN-10MAY99

20 -	1D10
30 -	2D6
40 -	3D12
41 -	3I9
42 -	4D3
43 -	4E4
51 -	4E19
53 -	5D3
54 -	5E13
60 -	6D4
70 -	7D5
71 -	8D2
80 -	8E4
90 -	8H3
91 -	9D3
92 -	9F15

41

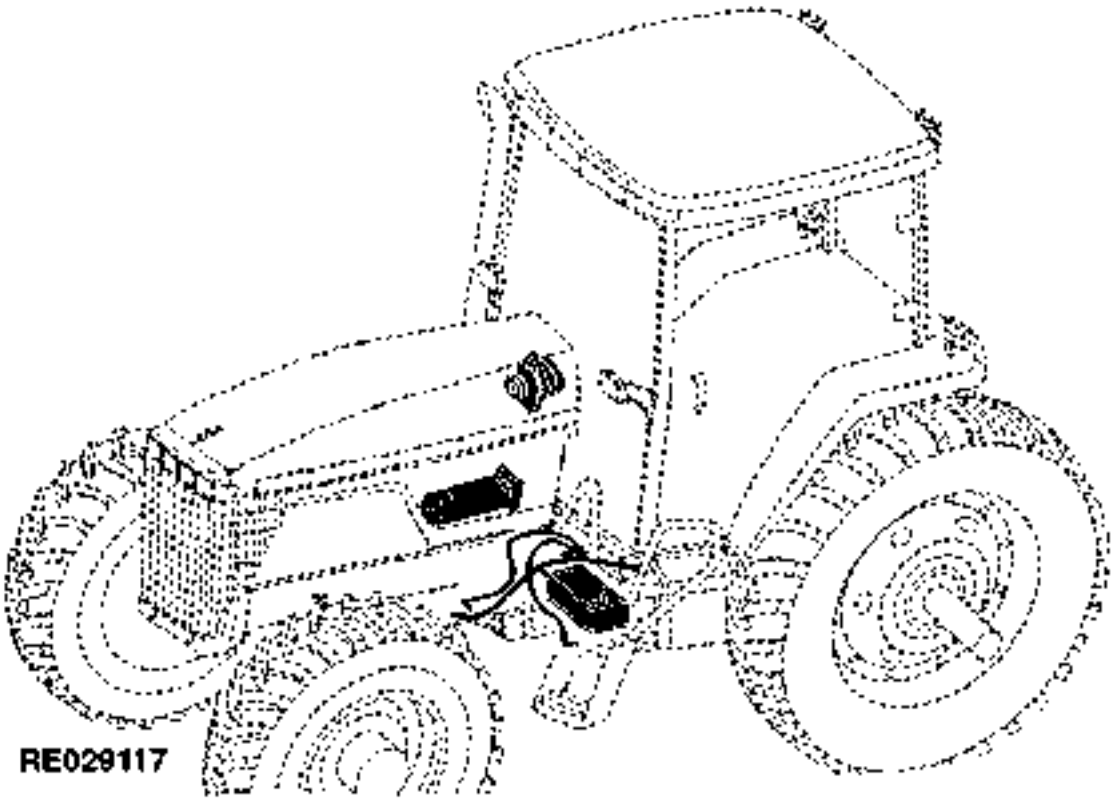

https://www.truck-manuals.net/

PRIMARY INDEX
INDEX PRINCIPAL
HAUPTINDEX
INDICE PRINCIPALE
INDICE DE MATERIAS
HUVUDFORTECKNING

RE029118 -UN-10MAY99

20 -	1D10
30 -	2D6
40 -	3D12
41 -	3I9
42 -	4D3
43 -	4E4
51 -	4E19
53 -	5D3
54 -	5E13
60 -	6D4
70 -	7D5
71 -	8D2
80 -	8E4
90 -	8H3
91 -	9D3
92 -	9F15

42

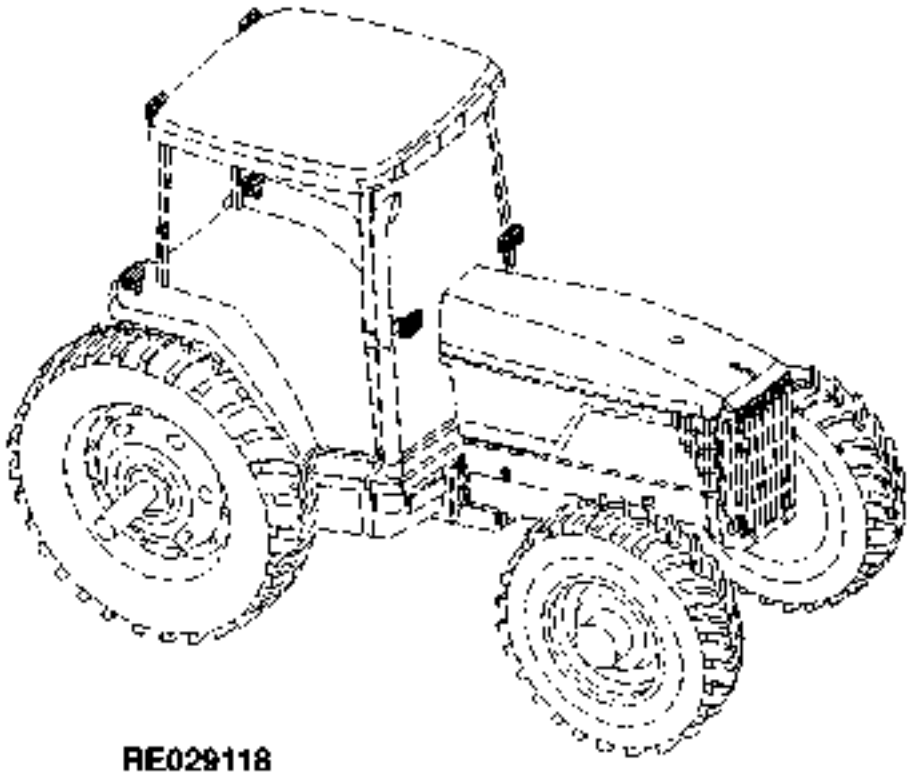

RE029118

https://www.truck-manuals.net/

PRIMARY INDEX
INDEX PRINCIPAL
HAUPTINDEX
INDICE PRINCIPALE
INDICE DE MATERIAS
HUVUDFORTECKNING

RE029503 -UN-11MAY99

20 -	1D10
30 -	2D6
40 -	3D12
41 -	3I9
42 -	4D3
43 -	4E4
51 -	4E19
53 -	5D3
54 -	5E13
60 -	6D4
70 -	7D5
71 -	8D2
80 -	8E4
90 -	8H3
91 -	9D3
92 -	9F15

43



RE029503

https://www.truck-manuals.net/

PRIMARY INDEX
INDEX PRINCIPAL
HAUPTINDEX
INDICE PRINCIPALE
INDICE DE MATERIAS
HUVUDFORTECKNING

RXP022561 -UN-09JUN98

20 -	1D10
30 -	2D6
40 -	3D12
41 -	3I9
42 -	4D3
43 -	4E4
51 -	4E19
53 -	5D3
54 -	5E13
60 -	6D4
70 -	7D5
71 -	8D2
80 -	8E4
90 -	8H3
91 -	9D3
92 -	9F15

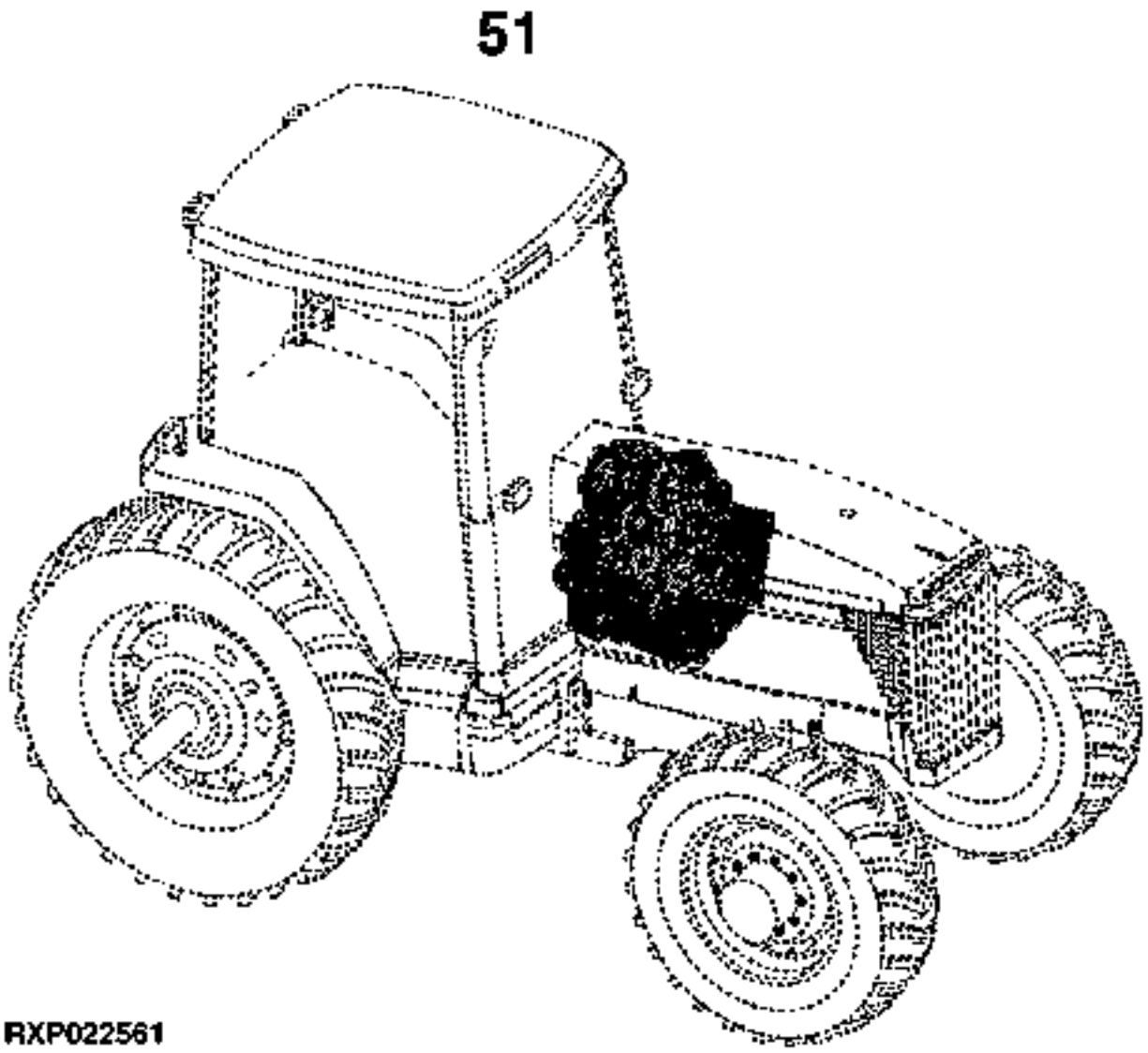

https://www.truck-manuals.net/

PRIMARY INDEX
INDEX PRINCIPAL
HAUPTINDEX
INDICE PRINCIPALE
INDICE DE MATERIAS
HUVUDFORTECKNING

RE029109 -UN-10MAY99

20 -	1D10
30 -	2D6
40 -	3D12
41 -	3I9
42 -	4D3
43 -	4E4
51 -	4E19
53 -	5D3
54 -	5E13
60 -	6D4
70 -	7D5
71 -	8D2
80 -	8E4
90 -	8H3
91 -	9D3
92 -	9F15

53

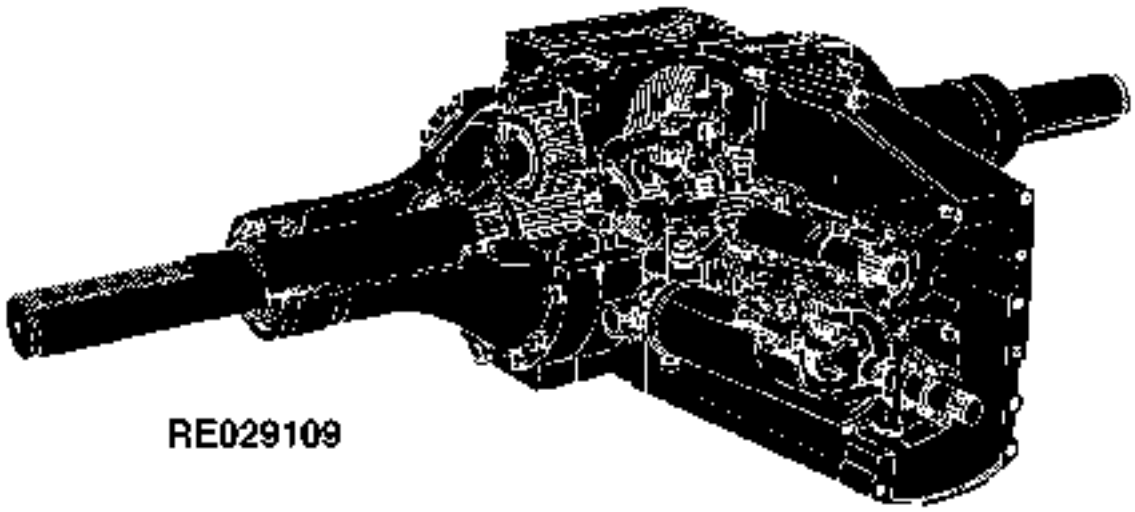

RE029109

https://www.truck-manuals.net/

PRIMARY INDEX
INDEX PRINCIPAL
HAUPTINDEX
INDICE PRINCIPALE
INDICE DE MATERIAS
HUVUDFORTECKNING

RE029103 -UN-10MAY99

20 -	1D10
30 -	2D6
40 -	3D12
41 -	3I9
42 -	4D3
43 -	4E4
51 -	4E19
53 -	5D3
54 -	5E13
60 -	6D4
70 -	7D5
71 -	8D2
80 -	8E4
90 -	8H3
91 -	9D3
92 -	9F15

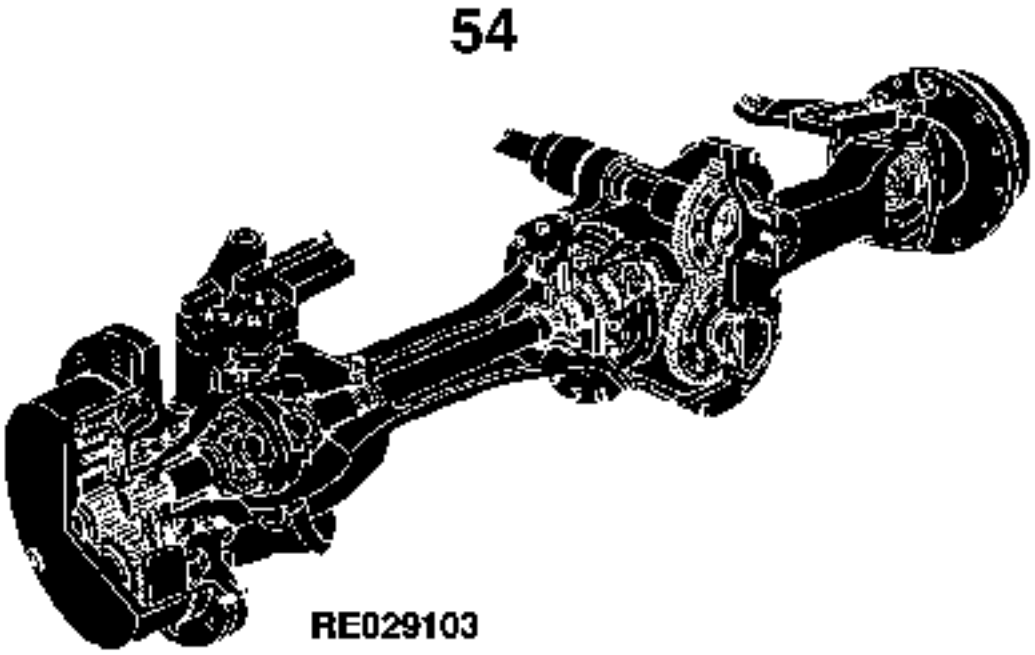

https://www.truck-manuals.net/

PRIMARY INDEX
INDEX PRINCIPAL
HAUPTINDEX
INDICE PRINCIPALE
INDICE DE MATERIAS
HUVUDFORTECKNING

RXP022564 -UN-11MAY99

20 -	1D10
30 -	2D6
40 -	3D12
41 -	3I9
42 -	4D3
43 -	4E4
51 -	4E19
53 -	5D3
54 -	5E13
60 -	6D4
70 -	7D5
71 -	8D2
80 -	8E4
90 -	8H3
91 -	9D3
92 -	9F15

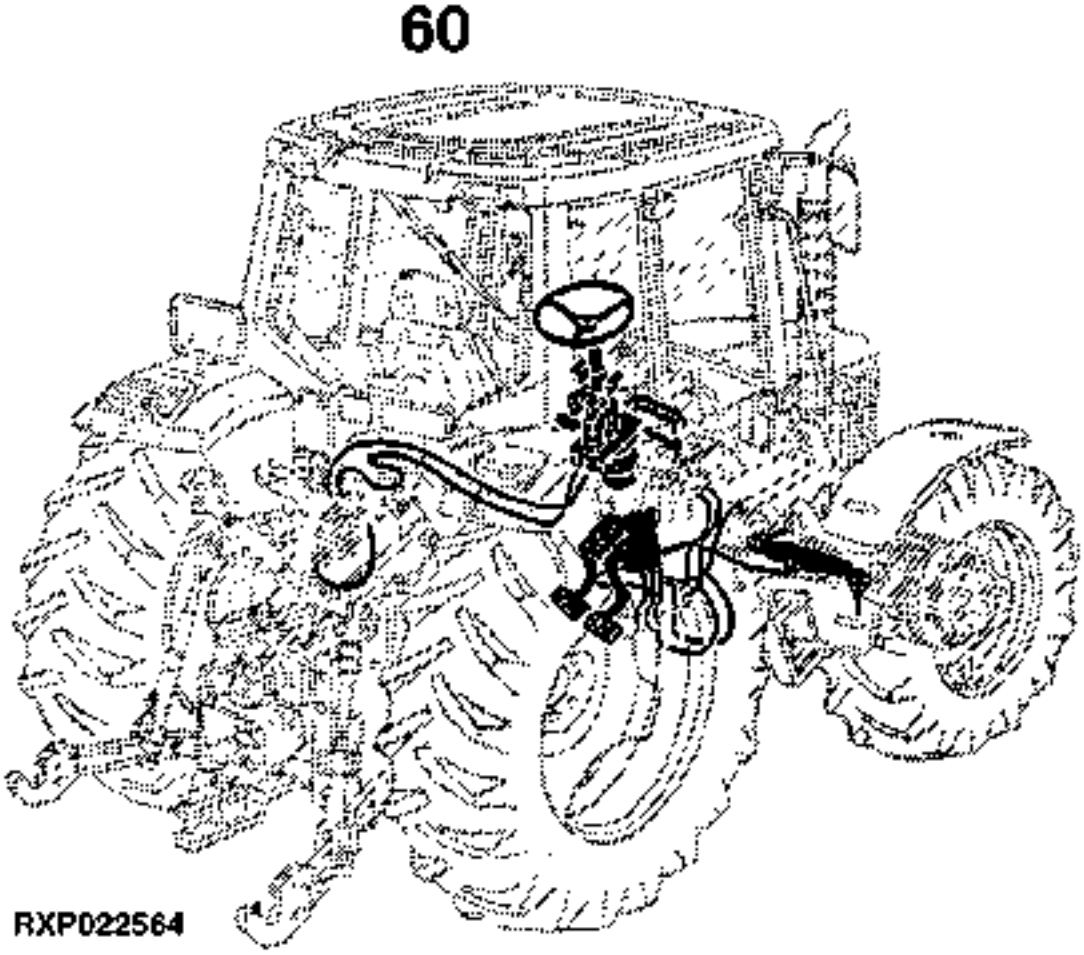

https://www.truck-manuals.net/

PRIMARY INDEX
INDEX PRINCIPAL
HAUPTINDEX
INDICE PRINCIPALE
INDICE DE MATERIAS
HUVUDFORTECKNING

RXP022565 -UN-11MAY99

20 -	1D10
30 -	2D6
40 -	3D12
41 -	3I9
42 -	4D3
43 -	4E4
51 -	4E19
53 -	5D3
54 -	5E13
60 -	6D4
70 -	7D5
71 -	8D2
80 -	8E4
90 -	8H3
91 -	9D3
92 -	9F15

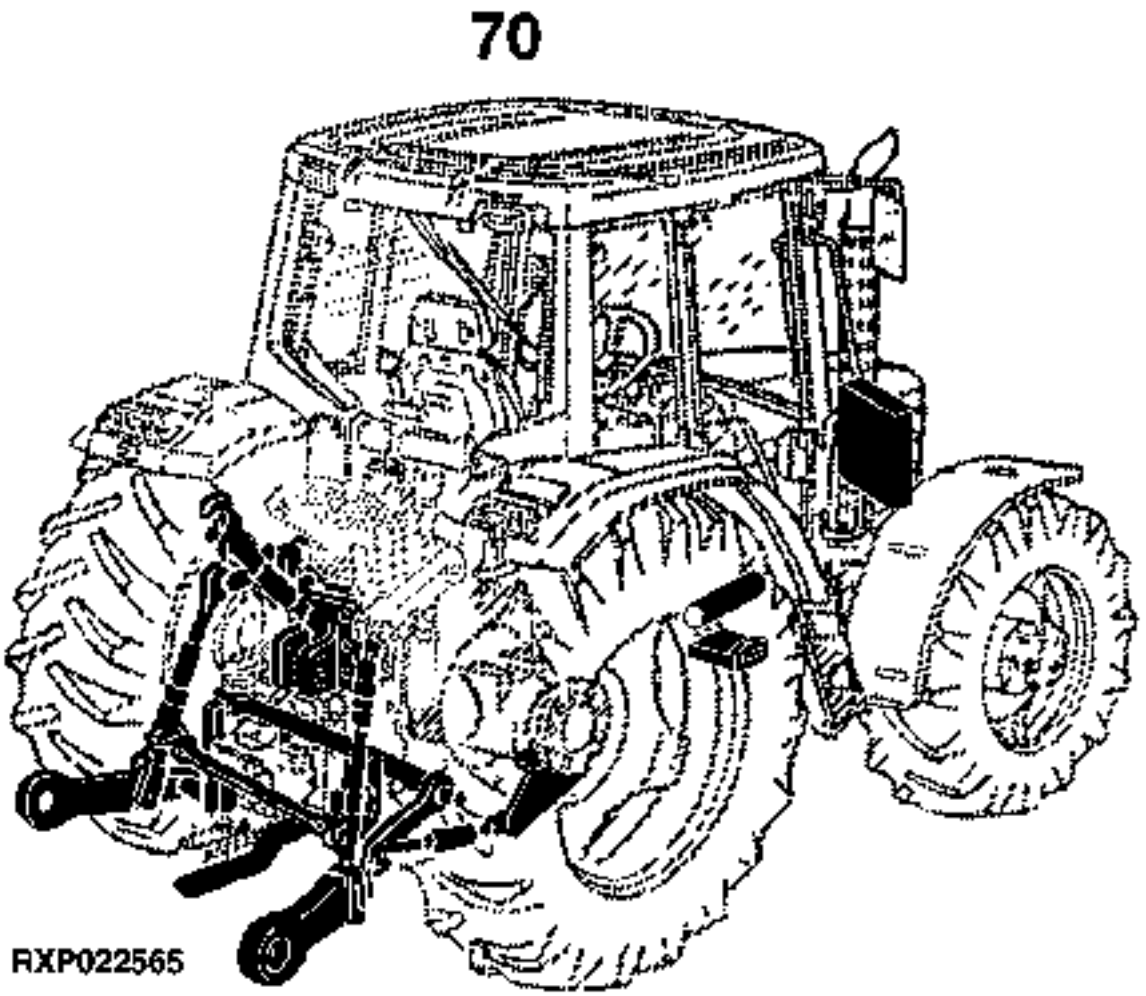

https://www.truck-manuals.net/

PRIMARY INDEX
INDEX PRINCIPAL
HAUPTINDEX
INDICE PRINCIPALE
INDICE DE MATERIAS
HUVUDFORTECKNING

RXP022566 -UN-11MAY99

20 -	1D10
30 -	2D6
40 -	3D12
41 -	3I9
42 -	4D3
43 -	4E4
51 -	4E19
53 -	5D3
54 -	5E13
60 -	6D4
70 -	7D5
71 -	8D2
80 -	8E4
90 -	8H3
91 -	9D3
92 -	9F15

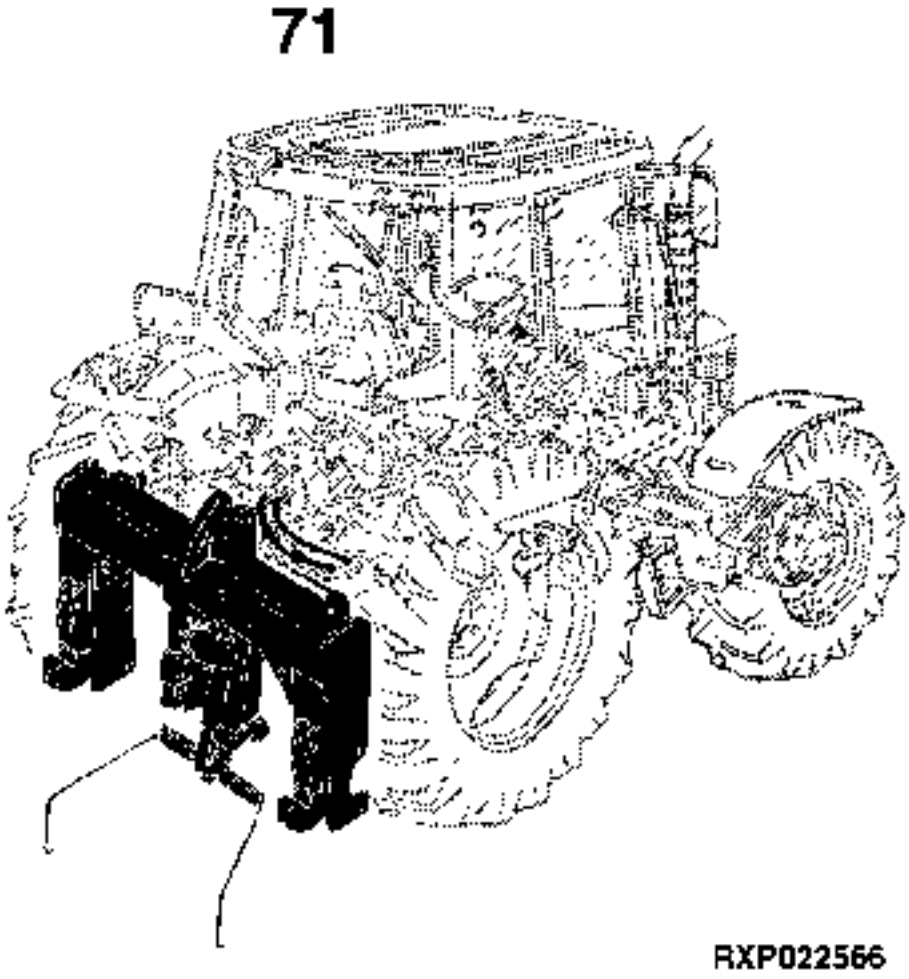

https://www.truck-manuals.net/

PRIMARY INDEX
INDEX PRINCIPAL
HAUPTINDEX
INDICE PRINCIPALE
INDICE DE MATERIAS
HUVUDFORTECKNING

RXP022567 -UN-11MAY99

20 -	1D10
30 -	2D6
40 -	3D12
41 -	3I9
42 -	4D3
43 -	4E4
51 -	4E19
53 -	5D3
54 -	5E13
60 -	6D4
70 -	7D5
71 -	8D2
80 -	8E4
90 -	8H3
91 -	9D3
92 -	9E15

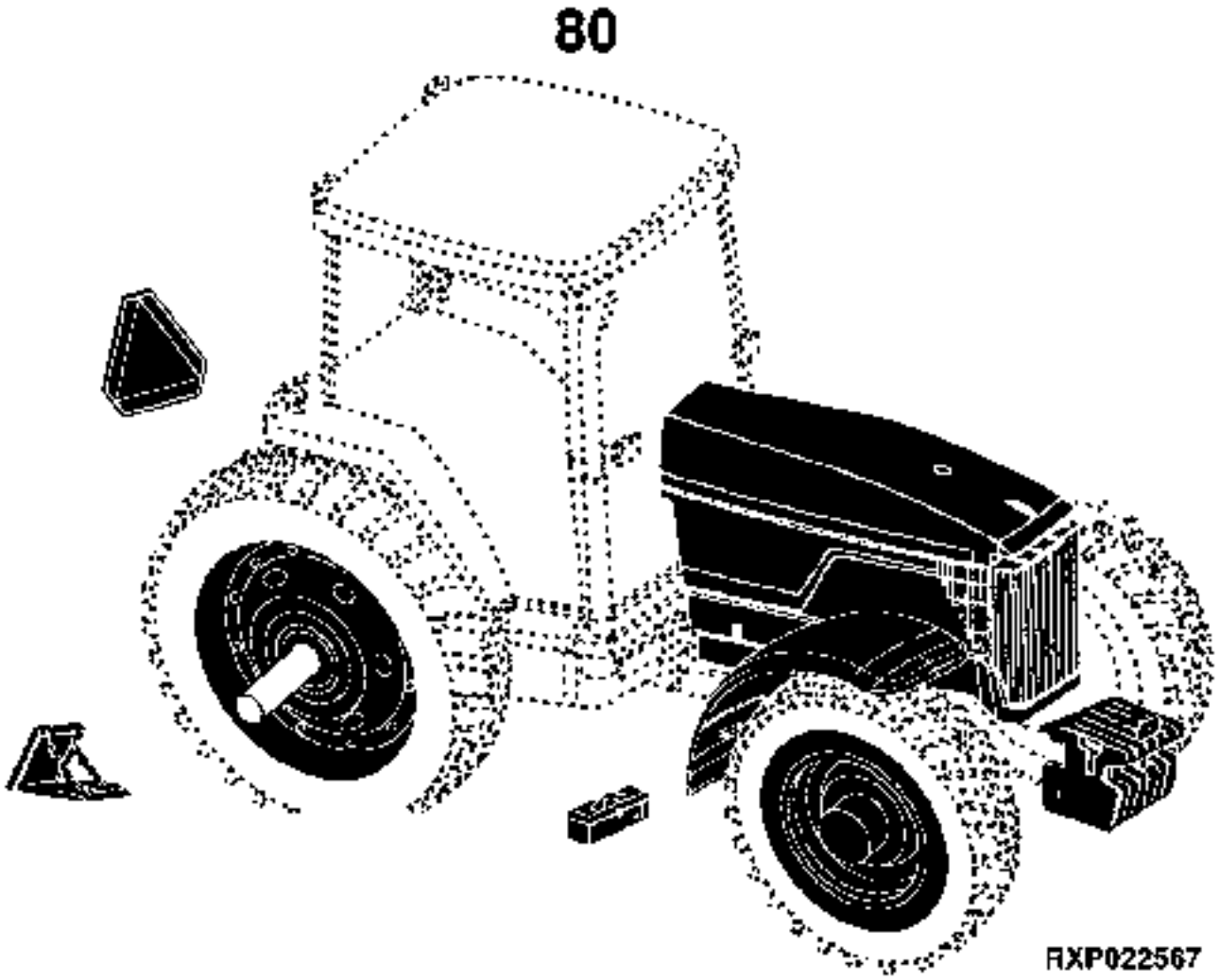

https://www.truck-manuals.net/

PRIMARY INDEX
INDEX PRINCIPAL
HAUPTINDEX
INDICE PRINCIPALE
INDICE DE MATERIAS
HUYUDFORTECKNING

RXP022568 -UN-11MAY99

20 -	1D10
30 -	2D6
40 -	3D12
41 -	3I9
42 -	4D3
43 -	4E4
51 -	4E19
53 -	5D3
54 -	5E13
60 -	6D4
70 -	7D5
71 -	8D2
80 -	8E4
90 -	8H3
91 -	9D3
92 -	9F15

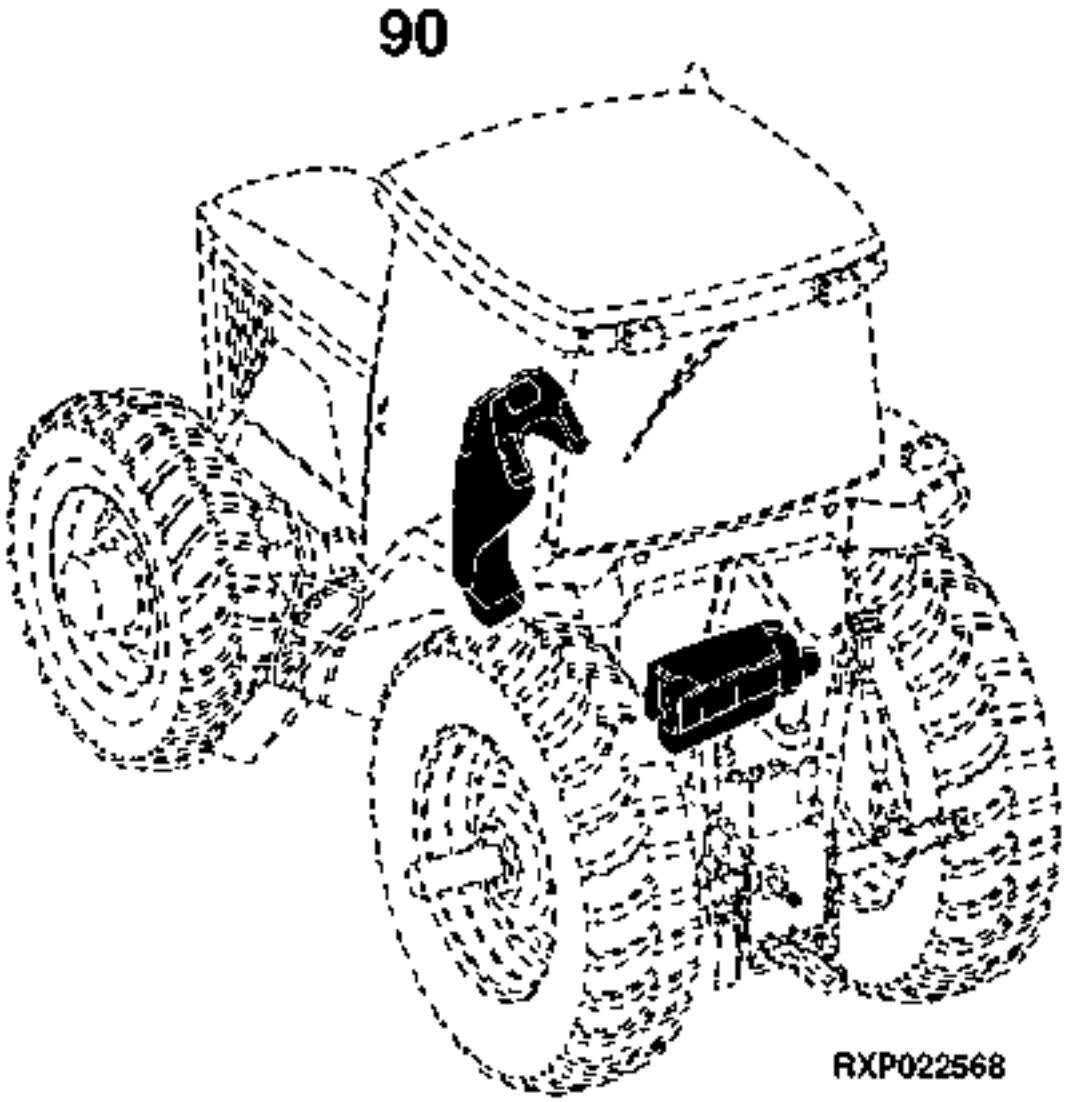

https://www.truck-manuals.net/

PRIMARY INDEX
INDEX PRINCIPAL
HAUPTINDEX
INDICE PRINCIPALE
INDICE DE MATERIAS
HUYUDFORTECKNING

RXP022569 -UN-11MAY99

20 -	1D10
30 -	2D6
40 -	3D12
41 -	3I9
42 -	4D3
43 -	4E4
51 -	4E19
53 -	5D3
54 -	5E13
60 -	6D4
70 -	7D5
71 -	8D2
80 -	8E4
90 -	8H3
91 -	9D3
92 -	9F15

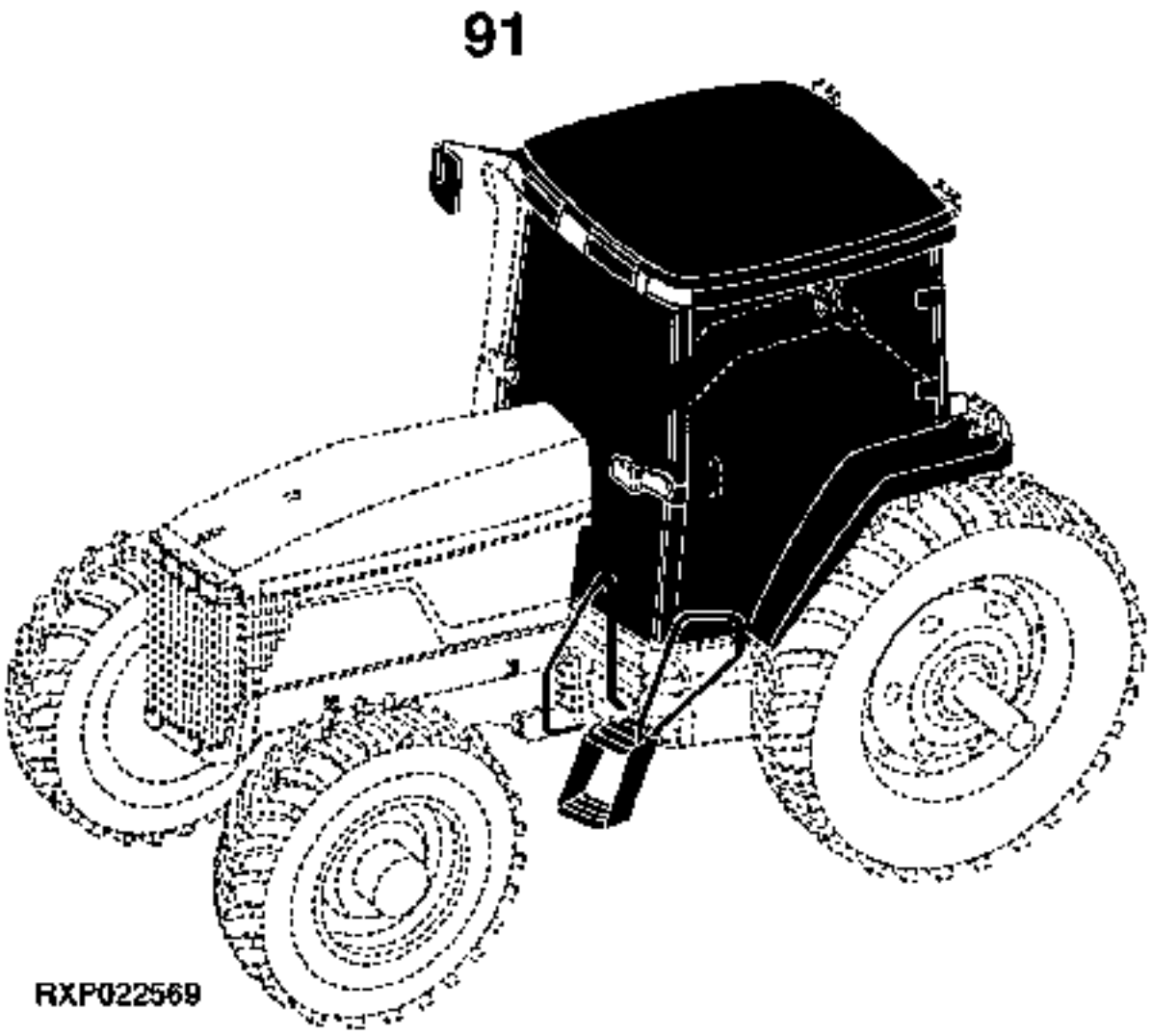

https://www.truck-manuals.net/

PRIMARY INDEX
INDEX PRINCIPAL
HAUPTINDEX
INDICE PRINCIPALE
INDICE DE MATERIAS
HUYUDFORTECKNING

RXP022570 -UN-11MAY99

20 -	1D10
30 -	2D6
40 -	3D12
41 -	3I9
42 -	4D3
43 -	4E4
51 -	4E19
53 -	5D3
54 -	5E13
60 -	6D4
70 -	7D5
71 -	8D2
80 -	8E4
90 -	8H3
91 -	9D3
92 -	9F15

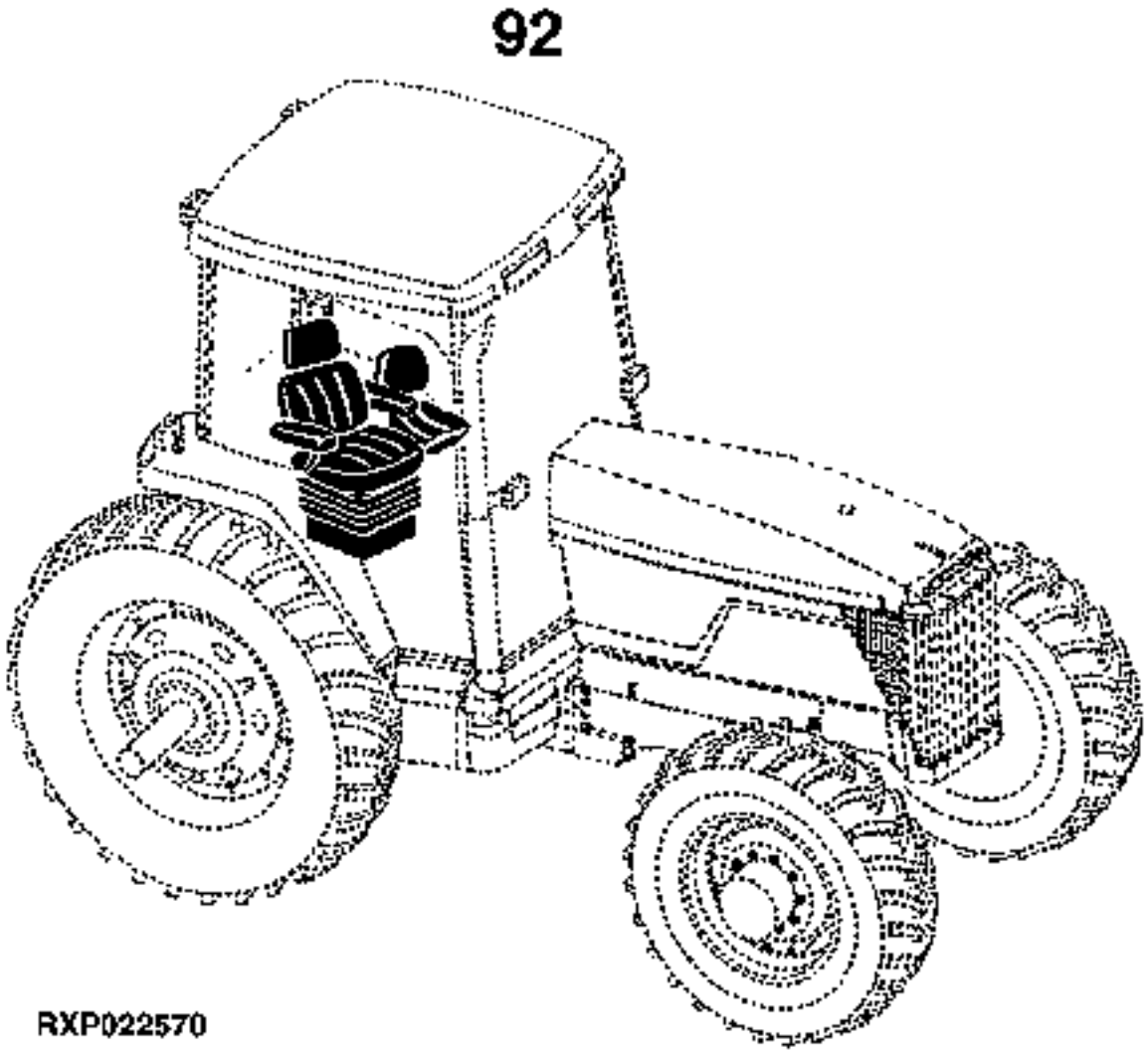

https://www.truck-manuals.net/

RXP010147 -UN-01JAN94



JOHN DEERE 8100, 8200, 8300 OR 8400 TRACTOR
(MANUFACTURED 1994-)

(SPECIFICATIONS AND DESIGN SUBJECT TO CHANGE WITHOUT NOTICE)

COPYRIGHT (C) 1999. DEERE & COMPANY, MOLINE, ILLINOIS. ALL RIGHTS RESERVED.

https://www.truck-manuals.net/

CODES USED IN "REMARKS" COLUMN

RXP022211 -UN-01JUL97

	ENGLISH	FRANCAIS	DEUTSCH
ALSO ORDER	ALSO ORDER	COMMANDER AUSSI	EBENSO BESTELLEN
AMP	AMPERE	AMPERE	AMPERE
AND	AND	ET	UND
APPL	THIS APPLICATION ONLY	UNIQUEMENT POUR CETTE UTILISATION	NUR FUR DIESE ANWENDUNG
AR	AS REQUIRED	SELON LE BESOIN	NACH BEDARF
ASSY	COMPLETE ASSEMBLY	ENSEMBLE COMPLET	KOMPLETTE BAUGRUPPE
COMPLETE	COMPLETE	COMPLET	VOLLSTANDIG
FRONT	FRONT	AVANT	VORN
HP	HORSEPOWER	PUISSANCE EN CV	PFERDESTARKE
ID	INSIDE DIAMETER	DIAMETRE INTERIEUR	INNENDURCHMESSER
INCL KEYS	INCLUDES KEYS	COMPREND LES REPERES	EINSCHLIEBLICH TEILE
KIT	KIT	JEU	SATZ
LH	LEFT-HAND	GAUCHE	LINKS
LOW	LOWER	INFERIEUR	UNTEN
MARKED	MARKED	MARQUE	MARKIERT
MF	MAKE FROM	REALISER AVEC	HERSTELLEN VON
MFWD	MECHANICAL FRONT WHEEL DRIVE	TRACTION AVANT MECANIQUE	MECHANISCHER FRONTRADANTRIEB
NA	NOT USED THIS APPLICATION	NE SERT PAS POUR CETTE APPLICATION	IN DIESER ANWENDUNG NICHT BENUTZT
NLA	NO LONGER AVAILABLE	EPUISE	NICHT MEHR LIEFERBAR
NSEP	NOT SUPPLIED SEPARATELY	NON LIVRE SEPAREMENT	EINZELN NICHT LIEFERBAR
OD	OUTSIDE DIAMETER	DIAMETRE EXTERIEUR	AUBENDURCHMESSER
OR	OR	OU	ODER
ORD	ORDER	COMMANDER	BESTELLE
OS	OVERSIZE	SURDIMENSIONNE	UBERGROSSE
PKG	PACKAGE	PAR PAQUET DE	VERPACKT ZU
REAR	REAR	ARRIERE	HINTEN
RH	RIGHT-HAND	DROIT	RECHTS
STD	STANDARD	STANDARD	STANDARD
SUB	REPLACED BY	REMPLACE PAR	ERSETZT DURCH
SUB FOR	SUBSTITUTES FOR	REMPLACE	ERSATZ FUR
TK	THICKNESS	EPAISSEUR	STARKE
UP	UPPER	SUPERIEUR	OBEN
US	UNDERSIZE	SOUS-DIMENSIONNE	UNTERGROSSE
USE WITH	USE WITH	A UTILISER AVEC	BENUTZEN MIT
W/	WITH	AVEC	MIT
W/O	WITHOUT	SANS	OHNE
Z	GEAR AND SPROCKET TEETH NUMBER	NOMBRE DE DENTS DES PIGNONS	ZAHNEZAHL FUR KETTEN- UND ZAHNRAD

RXP022211

https://www.truck-manuals.net/

CODES USED IN "REMARKS" COLUMN

RXP9419 -UN-26AUG94

	ITALIANO	ESPANOL	SVENSKA
ALSO ORDER	ORDINARE ANCHE	PEDIR TAMBIEN	BESTALL AVEN
AMP	AMPERE	AMPERIO	AMPERE
AND	E	Y	OCH
APPL	SOLO PER QUESTO IMPIEGO	TAN SOLO PARA ESTE PROPOSITO	ENDAST FOR DENNA ANVANDNING
AR	SECONDO NECCESSITA	SEGUN NECESIDAD	VID BEHOV
ASSY	GRUPPO COMPLETO	CONJUNTO COMPLETO	KOMPLETT SATS
COMPLETE	COMPLETO	COMPLETO	FULLSTANDIG
FRONT	ANTERIORE	FRENTE	FRAM
HP	POTENZA IN CAVALLI	POTENCIA	HASTKRAFT
ID	DIAMETRO INTERNO	DIAMETRO INTERIOR	INRE DIAMETER
INCL KEYS	CHIAVETTE INCLUSE	INCLUYE LAS POSICIONES	INKLUSIVE NYCKLAR
KIT	CORREDO	JUEGO	SATS
LH	SINISTRA	IZQUIERDA	VANSTER SIDA
LOW	INFERIORE	MAS BAJO	NEDRE
MARKED	MARCATO	MARCADO	MARKT
MF	FABBRICARE DI	HACER DE	TILLVERKA AV
MFWD	TRAZIONE ANTERIORE MECCANICA	TRACCION DELANTERA MECANICA	MEKANISK FRAMHJULSDRIFT
NA	NON USATO IN QUESTA APPLICAZIONE	NO SE USA EN ESTA APLICACION	EJ ANVAND I DETTA SAMMANHANG
NLA	NON PIU' DISPONIBILE	DESCONTINUADO	EJ LANGRE TILLGANGLIG
NSEP	NON FORNITO SEPARATAMENTE	NO SE SUMINISTRA POR SEPARADO	KAN EJ FRHALLAS SEPARAT
OD	DIAMETRO ESTERNO	DIAMETRO EXTERIOR	YTTRE DIAMETER
OR	OPPURE	O	ELLER
ORD	ORDINARE	PIDASE	ORDER, REKVISITION
OS	EXTRA GRANDE	SOBRETAMANO	OEVERDIMENSIONERAD
PKG	IN CONFEZIONE DA	POR PAQUETE DE	I SATS ELLER PAKET
REAR	POSTERIORE	TRASERO	BAK, BAKRE
RH	DESTRA	DERECHA	HOGER
STD	STANDARD	NORMAL	STANDARD
SUB	SOSTITUITO PER	SUSTITUIDO POR	ERSATT MED
SUB FOR	SOSTITUISCE	SUSTITUCION PARA	ERSATTER
TK	SPESSORE	ESPESOR	TJOCKLEK
UP	SUPERIORE	SUPERIOR	OEVRE
US	EXTRA PICCOLO	SUBTAMANO	UNDERDIMENSIONERAD
USE WITH	USARE CON	USAR CON	ANVAND MED
W/	CON	CON	MED, INKLUSIVE
W/O	SENZA	SIN	UTAN, EXKLUSIVE
Z	NO DENTI CORONA O PIGNONE	NUMERO DE DIENTES DE LOS ENGRANAJES	ANTAL TANDER PA DREV OCH KUGGHJUL

RXP9419

https://www.truck-manuals.net/

SERIAL NUMBERS

EACH 8000 SERIES TRACTOR HAS THE FOLLOWING SERIAL NUMBER PLATES: BASIC TRACTOR, ENGINE, TRANSMISSION, COMFORTVIEW CAB AND MECHANICAL FRONT WHEEL DRIVE.

BASIC TRACTOR SERIAL NUMBER

(PRODUCT IDENTIFICATION NUMBER)

RXP010148 -UN-01JAN94

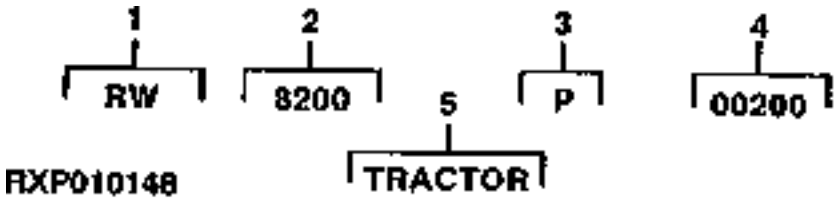

1. DESIGNATES TRACTOR MANUFACTURER	RW- JOHN DEERE WATERLOO WORKS
2. DESIGNATES TRACTOR MODEL	8200
3. DESIGNATES TRANSMISSION TYPE	P - POWER SHIFT
4. DESIGNATES TRACTOR SERIAL NUMBER	
5. DESIGNATES UNIT TYPE	TRACTOR

RXP010149 -UN-01JAN94



THE BASIC TRACTOR SERIAL NUMBER PLATE IS LOCATED AT THE REAR OF THE HITCH FRAME.

https://www.truck-manuals.net/

ENGINE SERIAL NUMBER

RXP7252 -UN-01JAN94

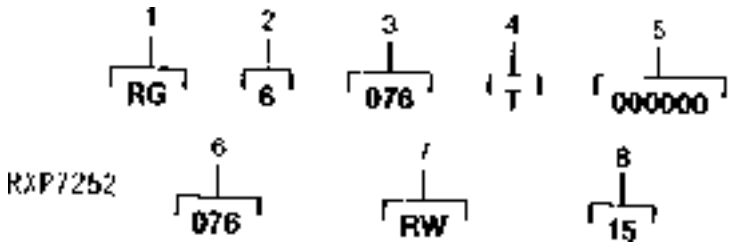

1. DESIGNATES ENGINE MANUFACTURER	RG - JOHN DEERE ENGINE WORKS
2. DESIGNATES NUMBER OF CYLINDERS	6
3. DESIGNATES CUBIC LITER DISPLACEMENT	076 (7.6 LITERS)
4. DESIGNATES TYPE OF AIR INTAKE SYSTEM	H - AIR TO AIR
5. DESIGNATES ENGINE SERIAL NUMBER	
6. DESIGNATES MODEL	076
7. DESIGNATES FACTORY USER	RW - JOHN DEERE WATERLOO WORKS
8. DESIGNATES APPLICATION	

RXP010150 -UN-01JAN94



THE ENGINE SERIAL NUMBER PLATE IS LOCATED ON THE LEFT-HAND SIDE OF THE ENGINE BEHIND THE STARTING MOTOR.

https://www.truck-manuals.net/

TWO-LINE BAR-CODED ENGINE SERIAL NUMBER PLATE (LOCATED ON STARTER SIDE OF ENGINE)

RGP3513 -UN-01JAN94



FIRST LINE

1. DESIGNATES ENGINE MANUFACTURER.	RG - WATERLOO ENGINE WORKS
2. DESIGNATES NUMBER OF CYLINDERS.	6
3. DESIGNATES LITER DISPLACEMENT.	076 (7.6 LITERS)
	081 (8.1 LITERS)
4. DESIGNATES TYPE OF AIR INTAKE SYSTEM.	H - AIR TO AIR
5. DESIGNATES TRACTOR WORKS VEHICLE.	RW - TRACTOR WORKS
6. DESIGNATES ENGINE SERIAL NUMBER.	XXXXXX

SECOND LINE

THE FIRST FIVE DIGITS ARE THE SAME AS TWO THRU FOUR FROM ABOVE. THE SIXTH DIGIT THRU THE NINTH DIGIT DESIGNATE THE FACTORY USER AND APPLICATION.

6076HRW33	8100 (TSN -009999)
6081HRW06	8100 (TSN 010000-)
6076HRW34	8200 (TSN -009999)
6081HRW07	8200 (TSN 010000-)
6076HRW35	8300 (TSN -009999)
6081HRW08	8300 (TSN 010000-)
6081HRW01	8400

https://www.truck-manuals.net/

SHORT BLOCK SERIAL NUMBER PLATE
(-RGSB076882500)

RGP4573 -UN-25SEP95



A SHORT BLOCK SERIAL NUMBER PLATE PLUS 2-37H44 DRIVE SCREWS ARE USED TO ATTACH TO REPLACEMENT SHORT BLOCK ASSEMBLIES. THIS NUMBER WILL BE REFERRED TO WHEN NEW PARTS AFFECT THE SHORT BLOCK ASSEMBLY. THE PREVIOUS ENGINE SERIAL NUMBER SHOULD BE STAMPED INTO THE BLANK SPACE PROVIDED, AS A REFERENCE FOR YOUR DEALER.

1. DESIGNATES ENGINE MANUFACTURER	RG - WATERLOO ENGINE WORKS
2. DESIGNATES REPLACEMENT SHORT BLOCK	SB
3. DESIGNATES LITERS	076
	081
4. DESIGNATES THE PRODUCTION DATE	8825

https://www.truck-manuals.net/

SHORT BLOCK SERIAL NUMBER IDENTIFICATION

(RE650490995-)

RGP4680 -UN-24MAY96

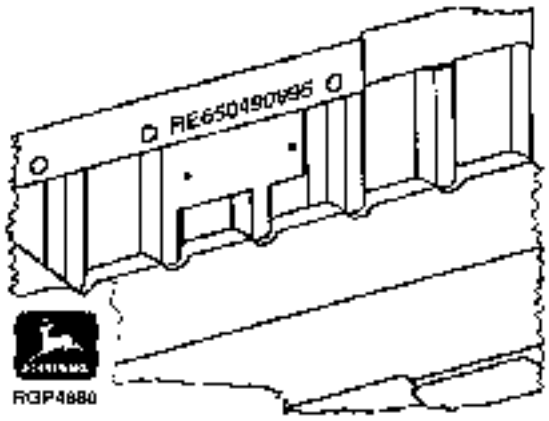

SERIAL NUMBER STAMPED INTO CASTING OF BLOCK NEAR PREVIOUS SERIAL NUMBER PLATE.

EXAMPLE: RE650490995

1. DESIGNATES SERVICE PART NUMBER	RE65049
2. DESIGNATES MONTH ASSEMBLED	09
3. DESIGNATES YEAR ASSEMBLED	95

https://www.truck-manuals.net/

SERIAL NUMBER CODES

THE FOLLOWING CODES ARE USED TO DESIGNATE SERIAL NUMBER TYPES IN GROUP HEADINGS AND FOOTNOTES BECAUSE OFF LIMITED SPACE. THEY WILL BE USED ONLY WHEN THE TYPE IS DIFFERENT THAN THE SERIAL COLUMN HEADING SHOWN ON THE PAGE.

RG--ROLL-GARD
SGB--SOUND-GARD BODY
CSN--CAB SERIAL NUMBER
ESN--ENGINE SERIAL NUMBER
ASN--AXLE SERIAL NUMBER
PSN--HYDRAULIC PUMP SERIAL NUMBER
TSN--TRACTOR SERIAL NUMBER
PQT--POWRQUAD TRANSMISSION SERIAL NUMBER
PST--POWER SHIFT TRANSMISSION SERIAL NUMBER
QRT--QUADRANGE TRANSMISSION SERIAL NUMBER
SPT--SYNCROPLUS TRANSMISSION SERIAL NUMBER
SRT--SYNCRO-RANGE TRANSMISSION SERIAL NUMBER
DSN--DIFFERENTIAL SERIAL NUMBER

https://www.truck-manuals.net/

TRANSMISSION SERIAL NUMBER

RWP3478 -UN-01JAN94

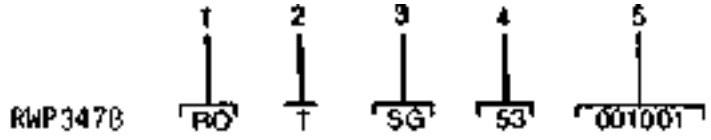

1. DESIGNATES TRANSMISSION MANUFACTURER	RO- JOHN DEERE WATERLOO WORKS
2. DESIGNATES TYPE	T - TRANSMISSION
3. DESIGNATES TRANSMISSION TYPE	PF- POWER SHIFT
4. DESIGNATES INPUT TORQUE (ROUNDED TO NEAREST 10 NEWTON METERS)	01-99 - 10-990 NM (7-730 LB-FT)
5. DESIGNATES TRANSMISSION SERIAL NUMBER	

RXP020901 -UN-01JAN94

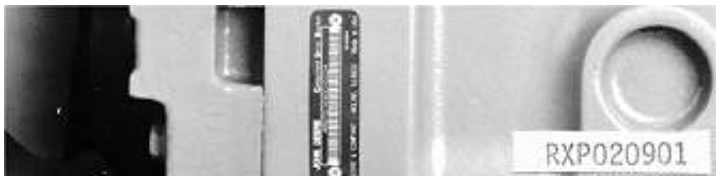

THE TRANSMISSION SERIAL NUMBER PLATE IS LOCATED ON THE RIGHT-HAND SIDE OF THE TRANSMISSION.

https://www.truck-manuals.net/

HYDRAULIC PUMP SERIAL NUMBER

RXP7313 -UN-01JAN94

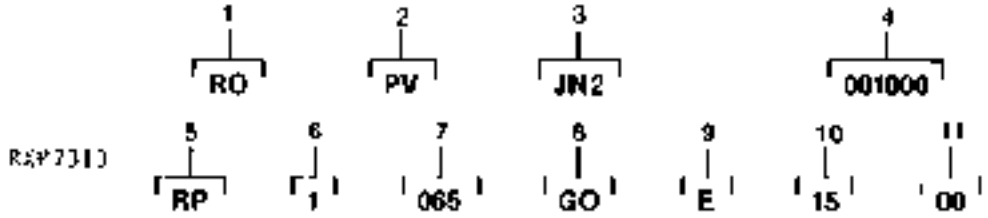

1. DESIGNATES MANUFACTURING FACTORY	RO - JOHN DEERE WATERLOO WORKS
2. DESIGNATES COMPONENT	PV - PUMP VARIABLE
3. DESIGNATES MODEL NUMBER	JN2- 65 CM3 (4 IN3)
4. DESIGNATES COMPONENT NUMERIC NUMBER	
5. DESIGNATES TYPE COMPONENT	RP - RADIAL PISTON PUMP
6. DESIGNATES FAMILY	1 - FRAME SIZE
7. DESIGNATES SIZE	65 - 65 CM3
8. DESIGNATES PORT ARRANGEMENT	GO - PRIMARY HOUSING
9. DESIGNATES SHAFT ROTATION	E - EITHER R - RIGHT L - LEFT
10. DESIGNATES STROKE CONTROL VALVE TYPE	15 - STROKE CONTROL VALVE CODE
11. NO SIGNIFICANCE	00 - NO SIGNIFICANCE

RXP020902 -UN-01JAN94



THE HYDRAULIC PUMP SERIAL NUMBER PLATE IS LOCATED ON THE TOP RIGHT-HAND SIDE OF THE PUMP.

https://www.truck-manuals.net/

COMFORTVIEW CAB SERIAL NUMBER

RXP020903 -UN-01JAN94

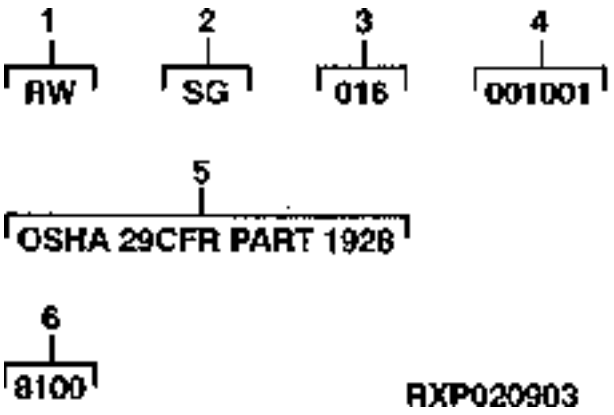

1. DESIGNATES CAB MANUFACTURER	RW - JOHN DEERE WATERLOO WORKS
2. DESIGNATES TYPE	SG - COMFORTVIEW CAB
3. DESIGNATES VERSION	016- SIXTEENTH
4. DESIGNATES SERIAL NUMBER	
5. DESIGNATES CERTIFICATION	CERTIFICATION DATA
6. DESIGNATES MODEL	8100, 8200, 8300 OR 8400

RXP020904 -UN-01JAN94



THE COMFORTVIEW CAB SERIAL NUMBER PLATE IS LOCATED ON THE RIGHT-HAND SIDE WINDOW AT THE FENDER LEVEL TOWARD THE REAR.

https://www.truck-manuals.net/

JOHN DEERE AXLE SERIAL NUMBER

RXP6447 -UN-01JAN94

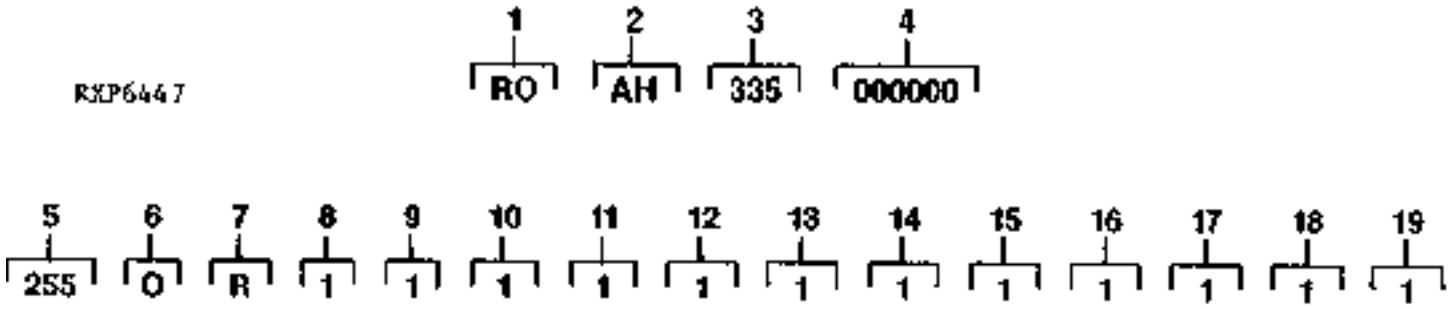

1. DESIGNATES MANUFACTURING UNIT	RO - JOHN DEERE WATERLOO WORKS
2. DESIGNATES COMPONENT IDENTIFICATION	AH - OUTBOARD AXLES
3. DESIGNATES CONFIGURATION IDENTITY	335 - WHEEL BOLT CIRCLE DIAMETER 425 - WHEEL BOLT CIRCLE DIAMETER
4. DESIGNATES SERIAL NUMBER	
5. DESIGNATES MASTER MACHINE CODE	255 256
6. DESIGNATES FAMILY CODE	0
7. DESIGNATES MANUFACTURING UNIT	R - JOHN DEERE WATERLOO WORKS
8. DESIGNATES PRIMARY INPUT ROTATION AND AXLE TRAVEL	2 - CW AWAY FROM INPUT 4 - CCW AWAY FROM INPUT
9. DESIGNATES SPIRAL BEVEL REDUCTION	1 - 1.993:1 2 - 2.588:1 3 - 3.071:1 5 - 3.727:1
10. DESIGNATES INPUT YOKE	2 - DANA 1480
11. DESIGNATES FLANGE TO FLANGE DIMENSION	1 - 1831MM
12. DESIGNATES STEERING SYSTEM	2 - STEERABLE STEERING ARMS ONLY-INPUT SIDE-13 DEGREE CASTER
13. DESIGNATES MOUNTING TYPE	4 - OSCILLATING-TOP PIVOT-CENTER DRIVE
14. DESIGNATES BRAKE TYPE	1 - NO BRAKES
15. DESIGNATES DIFFERENTIAL TYPE	3 - LIMITED SLIP DIFFERENTIAL
16. DESIGNATES WHEEL MOUNT CONFIGURATION	1 - TYPE 1
17. DESIGNATES FINAL DRIVE REDUCTION	1 - 5.2:1
18. DESIGNATES PAINT	2 - JOHN DEERE GREEN
19. DESIGNATES SHIPPING CONTAINER	1 - PALLET

https://www.truck-manuals.net/

JOHN DEERE MECHANICAL FRONT WHEEL DRIVE SERIAL NUMBER

RXP020905 -UN-01JAN94



THE SERIAL NUMBER PLATE IS LOCATED ON THE REAR RIGHT-HAND SIDE OF THE AXLE HOUSING.

REAR AXLE SERIAL NUMBER

RXP020906 -UN-01JAN94



RXP020906

THE DIFFERENTIAL HOUSING SERIAL NUMBER IS LOCATED ON THE TOP RIGHT-HAND SIDE.

https://www.truck-manuals.net/

SERIAL NUMBER LISTING INFORMATION

SERIAL NUMBER INFORMATION IS LISTED TO SHOW ON WHICH MACHINES EACH PART CAN BE USED; FOR EXAMPLE:

- THE PART CAN BE USED ON ALL MACHINES.

000000- THE PART CAN BE USED ON ALL MACHINES BEGINNING WITH THE SERIAL NUMBER LISTED.

-000000 THE PART CAN BE USED ON ALL MACHINES UP TO AND INCLUDING THE SERIAL NUMBER LISTED.

000000-000000 THE PART CAN BE USED ON ALL MACHINES BETWEEN AND INCLUDING THE SERIAL NUMBERS LISTED.

WHEN XXXXXX'S ARE LISTED IN PLACE OF A SERIAL NUMBER, A SERIAL NUMBER CHANGE WAS MADE BUT THE EXACT SERIAL NUMBER WAS NOT AVAILABLE WHEN THE CATALOG WAS PRODUCED.

THROUGHOUT THIS CATALOG YOU WILL FIND PAGES THAT ARE DESIGNATED AS EUROPEAN VERSION OR NORTH AMERICAN VERSION. THIS IS DONE TO HELP THE PARTS PERSON IN A FOREIGN COUNTRY DETERMINE CORRECT SERVICE PARTS BY RECOGNIZING THAT THERE MAY BE MORE THAN ONE VERSION.

EUROPEAN VERSION IS ALSO SHOWN AS A FOOTNOTE ON SOME PAGES. PARTS WITHOUT THIS FOOTNOTE ARE FOR NORTH AMERICAN VERSION. DECALS ARE IN ENGLISH UNLESS OTHERWISE SPECIFIED.

QUANTITY COLUMN OR REMARKS COLUMN

GENERALLY THE QUANTITY SHOWN IS FOR THE ENTIRE TRACTOR AT ANY GIVEN LOCATION. THERE ARE EXCEPTIONS AS IN WHEEL HARDWARE WHERE ONLY ENOUGH IS SHOWN FOR ONE WHEEL.

THE FOLLOWING ABBREVIATIONS ARE USED IN THE REMARKS COLUMN:

NLR - NO LONGER REQUIRED

NA - NOT APPLICABLE

NLA - NO LONGER AVAILABLE

FI - FIELD INSTALLED

FI IS AN OPTION THAT MUST BE ORDERED DIRECT FROM THE PRODUCING FACTORY.

https://www.truck-manuals.net/

DIRECTION ARROW

ARROWS ARE USED WITH ILLUSTRATIONS TO INDICATE THE FRONT OF THE UNIT. "RIGHT-HAND" AND "LEFT-HAND" SIDES ARE DETERMINED BY FACING IN THE DIRECTION OF MACHINE FORWARD TRAVEL.

BOX-ENCLOSED ILLUSTRATIONS

A KEY NUMBER, SHOWN IN THE PARTS LIST, IS ASSIGNED TO A BOX ENCLOSING ALL PARTS SOLD AS A SERVICE ASSEMBLY.

BOLT AND CAP SCREW STRENGTH IDENTIFICATION

U.S. CUSTOMARY DIMENSIONED PRODUCT: BOLTS AND CAP SCREWS REQUIRED TO HAVE HIGH-STRENGTH QUALITII EQUIVALENT TO SAE GRADE 8 ARE IDENTIFIED THROUGHOUT THIS CATALOG BY THE DESCRIPTION HS SAE 8. ALL STANDARD BOLTS AND CAP SCREWS ARE SAE GRADE 5.

METRIC DIMENSIONED PRODUCT: BOLTS AND CAP SCREWS REQUIRED TO HAVE HIGH-STRENGTH QUALITIES EQUIVALENT TO PROPERTY CLASS 10.9 ARE IDENTIFIED THROUGHOUT THIS CATALOG BY THE DESCRIPTION HS 10.9. ALL STANDARD BOLTS AND CAP SCREWS ARE PROPERTY CLASS 8.8.

JDM REMANUFACTURED COMPONENTS

THE SERVICE PARTS LISTED IN THIS CATALOG ARE INTENDED FOR THE REPAIR OF ORIGINAL EQUIPMENT COMPONENTS. ALTHOUGH MOST SERVICE PARTS MAY BE USED TO REPAIR REMANUFACTURED COMPONENTS, THE REMANUFACTURING PROCESS MAY CHANGE PARTS SUFFICIENTLY SO THAT SERVICE PARTS ARE INADEQUATE OR NOT USABLE.

TRADEMARKS

THROUGHOUT THIS PARTS CATALOG, YOU WILL FIND THE FOLLOWING DEERE AND COMPANY TRADEMARKS:

INTELLITRAK®
COMMANDARM™
PERSONAL-POSTURE™
TOUCHSET™
PERFORMANCE TRAK™ II
TOUCH-N-FLOW™
OVERDRIVE™
ULTRA-TURN™
HYDRACUSHIONED™
COMFORTVIEW CAB™
TORQ-GARD PLUS 50®
HY-GARD®
QUIK-TATCH®
PATHFINDER™
FIELD CRUISE™
ROW-TRAK™

CHANGE INDICATOR LINE

(MICROFICHE CATALOGS ONLY)

CHANGES AFFECTING THE ORDERING OF PARTS ARE IDENTIFIED BY VERTICAL LINES MARKED IN THE LEFT-HAND MARGIN OF REVISED PARTS LISTING IMAGES. A LINE IS ALSO AT THE LEFT-HAND EDGE OF THE SAME PART NUMBER IN THE NUMERICAL INDEX TO SHOW THE LOCATION OF REVISED INFORMATION.

https://www.truck-manuals.net/

SYMBOL DESCRIPTION
DESCRIPTION DE SYMBOLE
SYMBOL-BESCHREIBUNG
DESCRIZIONE DEI SIMBOLI
DESCRIPCION DEL SIMBOLO
SYMBOLBESKRIVNING

RXP020929 -UN-15APR98

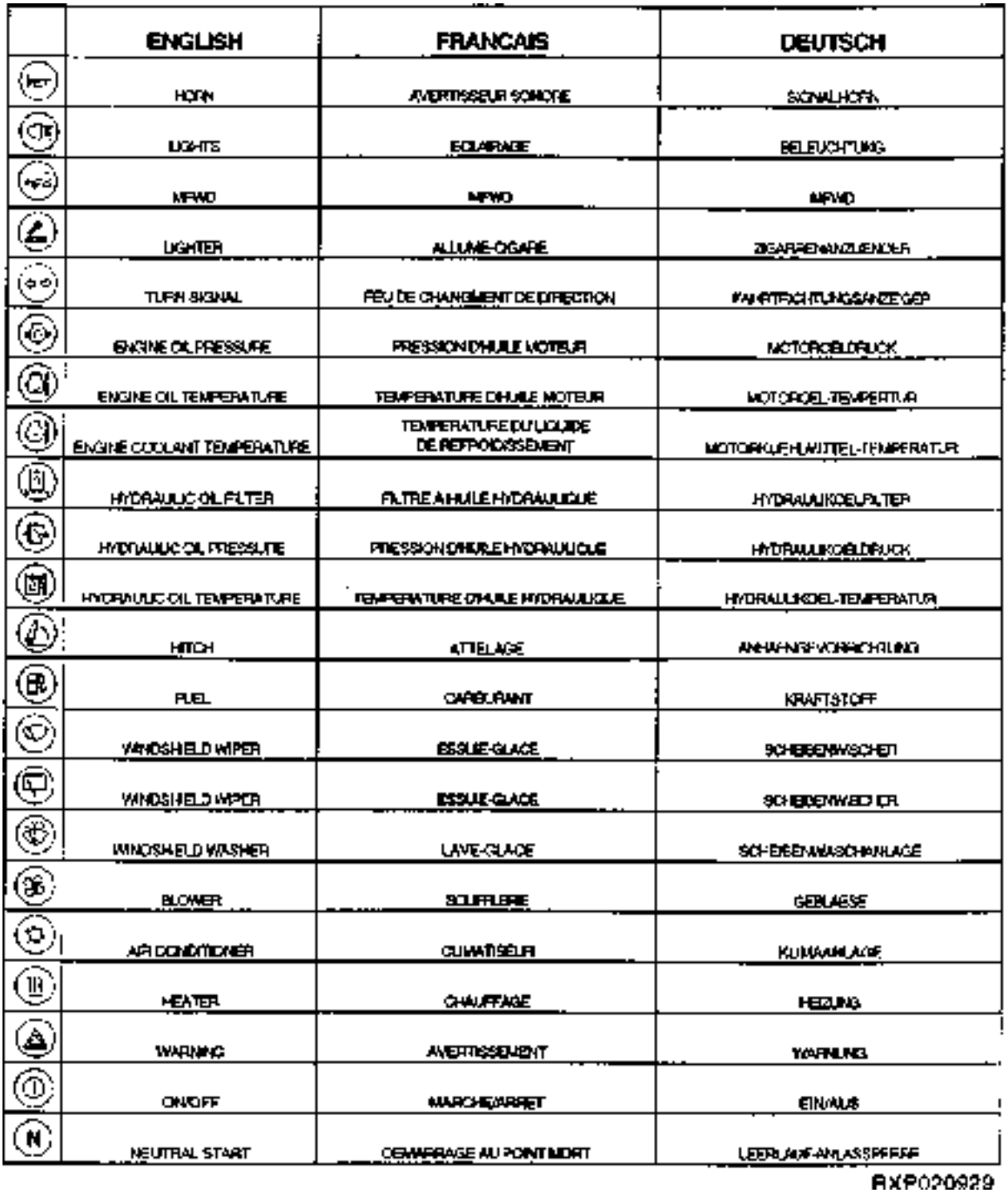

	ENGLISH	FRANCAIS	DEUTSCH
	HORN	AVERTISSEUR SONORE	SIGNALHORN
	LIGHTS	ECLAIRAGE	BELEUCHTUNG
	MFWD	MFWD	MFWD
	LIGHTER	ALLUME-CIGARE	ZIGARRENANZUENDER
	TURN SIGNAL	FEU DE CHANGEMENT DE DIRECTION	FAHRTRICHTUNGSANZEIGER
	ENGINE OIL PRESSURE	PRESSION D'HUILE MOTEUR	MOTOROELDRUCK
	ENGINE OIL TEMPERATURE	TEMPERATURE D'HUILE MOTEUR	MOTOROEL-TEMPERTUR
	ENGINE COOLANT TEMPERATURE	TEMPERATURE DU LIQUIDE DE REFROIDISSEMENT	MOTORKUEHLMITTEL-TEMPERATUR
	HYDRAULIC OIL FILTER	FILTRE A HUILE HYDRAULIQUE	HYDRAULIKOELFILTER
	HYDRAULIC OIL PRESSURE	PRESSION D'HUILE HYDRAULIQUE	HYDRAULIKOELDRUCK
	HYDRAULIC OIL TEMPERATURE	TEMPERATURE D'HUILE HYDRAULIQUE	HYDRAULIKOEL-TEMPERATUR
	HITCH	ATTELAGE	ANHAENGEVORRICHTUNG
	FUEL	CARBURANT	KRAFTSTOFF
	WINDSHIELD WIPER	ESSUIE-GLACE	SCHEIBENWISCHER
	WINDSHIELD WIPER	ESSUIE-GLACE	SCHEIBENWISCHER
	WINDSHIELD WASHER	LAVE-GLACE	SCHEIBENWASCHANLAGE
	BLOWER	SOUFFLERIE	GEBLAESE
	AIR CONDITIONER	CLIMATISEUR	KLIMAANLAGE
	HEATER	CHAUFFAGE	HEIZUNG
	WARNING	AVERTISSEMENT	WARNUNG
	ON/OFF	MARCHE/ARRET	EIN/AUS
	NEUTRAL START	DEMARRAGE AU POINT MORT	LEERLAUF-ANLASSPERRE

RXP020929

https://www.truck-manuals.net/

SYMBOL DESCRIPTION
DESCRIPTION DE SYMBOLE
SYMBOL-BESCHREIBUNG
DESCRIZIONE DEI SIMBOLI
DESCRIPCION DEL SIMBOLO
SYMBOLBESKRIVNING

RXP020930 -UN-15APR98

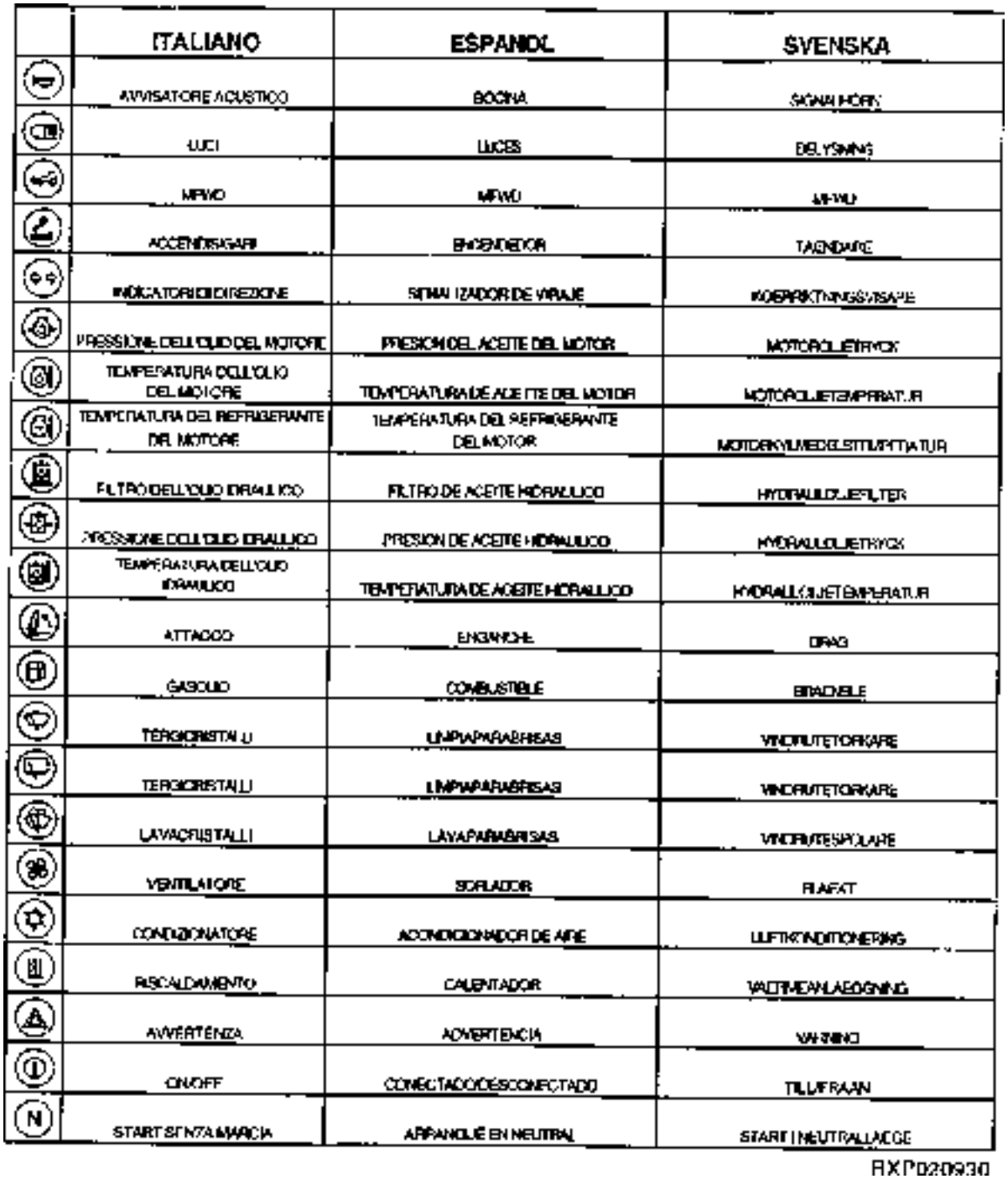

https://www.truck-manuals.net/

SYMBOL DESCRIPTION
DESCRIPTION DE SYMBOLE
SYMBOL-BESCHREIBUNG
DESCRIZIONE DEI SIMBOLI
DESCRIPCION DEL SIMBOLO
SYMBOLBESKRIVNING

RXP020867 -UN-15APR98

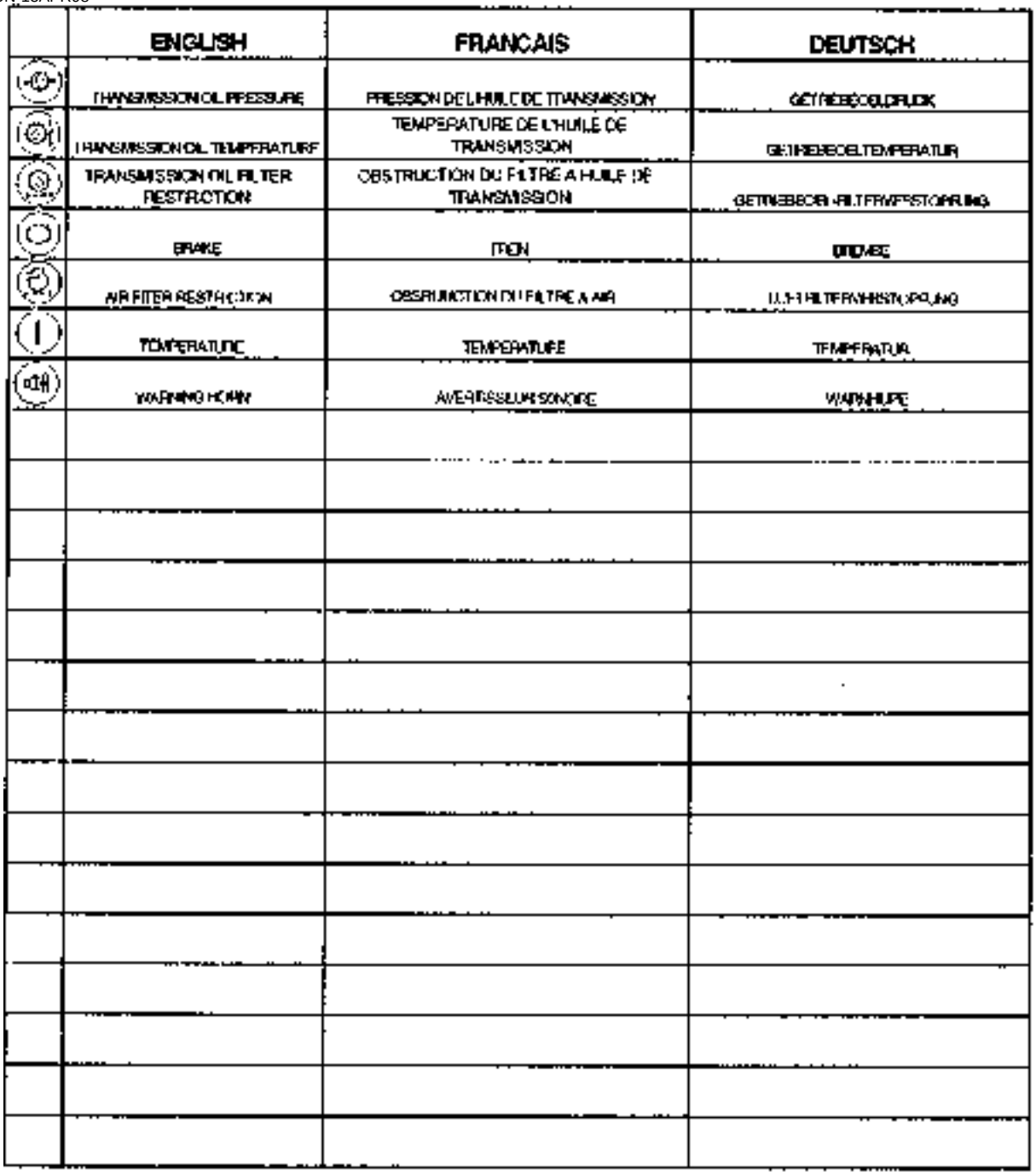

	ENGLISH	FRANCAIS	DEUTSCH
	TRANSMISSION OIL PRESSURE	PRESSION DE L'HUILE DE TRANSMISSION	GETRIEBEOLDRUCK
	TRANSMISSION OIL TEMPERATURE	TEMPERATURE DE L'HUILE DE TRANSMISSION	GETRIEBEOLTEMPERATUR
	TRANSMISSION OIL FILTER RESTRICTION	OBSTRUCTION DU FILTRE A HUILE DE TRANSMISSION	GETRIEBEOL-FILTERVERSTOPFUNG
	BRAKE	FREIN	BREMSE
	AIR FILTER RESTRICTION	OBSTRUCTION DU FILTRE A AIR	LUFTFILTERVERSTOPFUNG
	TEMPERATURE	TEMPERATURE	TEMPERATUR
	WARNING HORN	AVERTISSEUR SONORE	WARNHUPE

RXP020867

https://www.truck-manuals.net/

SYMBOL DESCRIPTION
DESCRIPTION DE SYMBOLE
SYMBOL-BESKREIBUNG
DESCRIZIONE DEI SIMBOLI
DESCRIPCION DEL SIMBOLO
SYMBOLBESKRIVNING

RXP020868 -UN-15APR98

	ITALIANO	ESPANOL	SVENSKA
	PRESSIONE DELL'OLIO DELLA TRASMISSIONE	PRESION DEL ACEITE DE LA TRANSMISION	TRANSMISSIONSOLJETRYCK
	TEMPERATURA DELL'OLIO DELLA TRASMISSIONE	TEMPERATURA DEL ACEITE DE LA TRANSMISION	TRANSMISSIONSOLJETEMPERATUR
	OSTRUZIONE DEL FILTRO DELL'OLIO DELLA TRASMISSIONE	RESTRICCION DEL FILTRO DEL ACEITE DE LA TRANSMISION	IGENSAETTNING AV TRANSMISSIONSOLJEFILTER
	FRENO	FRENO	BROMS
	OSTRUZIONE DEL FILTRO DELL'ARIA	RESTRICCION DEL FILTRO DE AIRE	LUFTFILTERIGENSAETTNING
	TEMPERATURA	TEMPERATURA	TEMPERATUR
	AVVISATORE ACUSTICO	BOCINA DE ADVERTENCIA	VARNINGSSIGNAL

RXP020868

https://www.truck-manuals.net/

SECTION INDEX

GENERAL INFORMATION 10

ENGINE 20

FUEL AND AIR 30

ELECTRICAL 40

ALTERNATOR, STARTER, BATTERY AND BATTERY CABLE 41

LIGHTS 42

ELECTRICAL CONNECTORS 43

POWER SHIFT TRANSMISSION 51

DIFFERENTIAL AND REAR PTO 53

MFWD 54

STEERING AND BRAKES 60

HYDRAULICS 70

ROW-TRAK 71

WHEELS, FRONT AXLES, SHEET METAL 80

OPERATOR'S STATION ACCESSORIES 90

OPERATOR STATION 91

SEAT 92

NUMERICAL INDEX 95

https://www.truck-manuals.net/

ALPHABETICAL INDEX

GRID		PAGE
	A	
3E1	A/C COMPRESSOR(TSN -009999)	40 - 8
3E3	A/C COMPRESSOR(TSN -009999)	40 - 9A
3E7	A/C COMPRESSOR(TSN 010000-)	40 - 12
8H9	A/C DRYER	90 - 6
8H9	A/C LINES	90 - 6
8H9	A/C LINES BRACKET	90 - 6
3F2	ADAPTER PLUG(TSN -009999)	40 - 32
3F3	ADAPTER PLUG(TSN 010000-)	40 - 33
1G14	ADAPTER, OIL COOLER (8100, 8200, 8300) (LATE TSN)	20 - 66
1I4	ADAPTER, OIL COOLER (8400)	20 - 107
1G13	ADAPTER, OIL COOLER BYPASS (6081) (LATE TSN-81,82,8300)	20 - 65
3F2	ADAPTER,ELECTRICAL(TSN -009999)	40 - 32
3F3	ADAPTER,ELECTRICAL(TSN 010000-)	40 - 33
8F5	ADJUSTABLE FRONT AXLE EXTENSION (8100, 8200, 8300)	80 - 26
2D14	AFTERCOOLER	30 - 6
6H18	AIR BRAKE AIR COMPRESSOR (EUROPEAN VERSION)	60 - 106
6H10	AIR BRAKE AIR TANK (EUROPEAN VERSION)	60 - 98
6H12	AIR BRAKE AIR TANK (LATE DESIGN)	60 - 100
6I5	AIR BRAKE CABLE (EUROPEAN VERSION)	60 - 116
6G19	AIR BRAKE CONTROL VALVE (EUROPEAN VERSION)	60 - 82
6G21	AIR BRAKE CONTROL VALVE (EUROPEAN VERSION) (LATE DESIGN)	60 - 84
6H14	AIR BRAKE CONTROL VALVE (EUROPEAN VERSION)	60 - 102
6H16	AIR BRAKE CONTROL VALVE (EUROPEAN VERSION) (LATE DESIGN)	60 - 104
6G23	AIR BRAKE CONTROL VALVE BRACKETS (EUROPEAN VERSION)	60 - 86
6H1	AIR BRAKE CONTROL VALVE BRACKETS (EUROPEAN VERSION)	60 - 88
6H7	AIR BRAKE CONTROL VALVE LINES (EUROPEAN VERSION) (LATE DESIGN) (83,8400)	60 - 94
6H5	AIR BRAKE CONTROL VALVE LINES (EUROPEAN VERSION) (LATE DESIGN)(81,8200)	60 - 92
6H3	AIR BRAKE CONTROL VALVE LINES (EUROPEAN VERSION)(EARLY DESIGN)	60 - 90
6H14	AIR BRAKE COUPLERS (EUROPEAN VERSION)	60 - 102
6H16	AIR BRAKE COUPLERS (EUROPEAN VERSION) (LATE DESIGN)	60 - 104
6I3	AIR BRAKE LINE (REAR) (LATE DESIGN)	60 - 114
6H22	AIR BRAKE LINES (FRONT)	60 - 108
6H24	AIR BRAKE LINES (FRONT)	60 - 110
6I1	AIR BRAKE LINES (REAR) (EARLY DESIGN)	60 - 112
6G17	AIR BRAKE PRESSURE REGULATING VALVE (EUROPEAN VERSION)	60 - 80
6G17	AIR BRAKE PRESSURE RELEIF VALVE (EUROPEAN VERSION	60 - 80
6H9	AIR BRAKE PRESSURE SWITCH MANIFOLD (EUROPEAN VERSION)	60 - 97
3F5	AIR BRAKE PRESSURE SWITCH(EUROPEAN VERSION)	40 - 35
3F5	AIR BRAKE WIRING HARNESS(EUROPEAN VERSION)	40 - 35
8H17	AIR CIRCULATION DUCT	90 - 14
8H17	AIR CIRCULATION SEAL	90 - 14
2D10	AIR CLEANER	30 - 2
8H5	AIR CONDITIONING COMPRESSOR	90 - 1
7E1	AIR CONDITIONING CONDENSOR	70 - 19
3E1	AIR FILTER RESTRICTION SENSOR(TSN -009999)	40 - 8
3E3	AIR FILTER RESTRICTION SENSOR(TSN -009999)	40 - 9A
3E7	AIR FILTER RESTRICTION SENSOR(TSN 010000-)	40 - 12
3E1	AIR INTAKE TEMPERTURE SENSOR(TSN -009999)	40 - 8
3E3	AIR INTAKE TEMPERTURE SENSOR(TSN -009999)	40 - 9A
3E7	AIR INTAKE TEMPERTURE SENSOR(TSN 010000-)	40 - 12
9F22	AIR SPRING SEAT KIT	92 - 8
6H12	AIR TANK, AIR BRAKE (LATE DESIGN)	60 - 100
3E13	ALARM,WARNING(EUROPEAN VERSION)(TSN -009999)	40 - 18
3E15	ALARM,WARNING(EUROPEAN VERSION)(TSN 010000-)	40 - 20
3E11	ALARM,WARNING(NORTH AMERICAN VERSION)(TSN 010000-)	40 - 16
3E9	ALARM,WARNING(NORTH AMERICAN VERSION)(-009999)	40 - 14
3E17	ALARM,WARNING(UKRAINIAN VERSION)	40 - 22
3I11	ALTERNATOR	41 - 1
3I12	ALTERNATOR	41 - 2
3I11	ALTERNATOR WIRING LEAD(NEGATIVE)	41 - 1
3E1	ALTERNATOR(TSN -009999)	40 - 8
3E3	ALTERNATOR(TSN -009999)	40 - 9A
3E7	ALTERNATOR(TSN 010000-)	40 - 12
3I11	ALTERNATOR,REMANUFACTURED	41 - 1
3I12	ALTERNATOR,REMANUFACTURED	41 - 2
3H19	ANTENNA,RADIO	40 - 99
3H21	ANTENNA,RADIO	40 - 102
5F1	ARM, STEERING	54 - 14
5F3	ARM, STEERING	54 - 16
5F24	ARM, STEERING	54 - 36
4E1	ARM,EXTREMITY WARNING LAMP(027100-)	42 - 22
3I17	ARMATURE,STARTING MOTOR(8100,8200,8300,8 400)	41 - 6
9F24	ARMREST BRACKET, R.H.	92 - 10
9G7	ARMREST CONTROL HOUSING	92 - 18
3G3	ARMREST CONTROLLER UNIT COVER	40 - 60
3F24	ARMREST CONTROLLER UNIT(ACU)	40 - 56
3G3	ARMREST CONTROLLER UNIT(ACU)	40 - 60
9F17	ARMREST KIT, LEFT-HAND	92 - 2
3G1	ARMREST PLUG	40 - 58
9F24	ARMREST SUPPORT PLATE, R.H.	92 - 10
3G11	ARMREST TO CAB WIRING HARNESS	40 - 68
9G5	ARMREST, LEFT-HAND	92 - 16
9G7	ARMREST, RIGHT-HAND	92 - 18
1D21	ARMS, ROCKER (6076) (EARLY TSN 8100,8200,8300)	20 - 8
1F15	ARMS, ROCKER (6081) (LATE TSN-8100,8200,8300)	20 - 44
1H2	ARMS, ROCKER (8400)	20 - 80
9D14	ASHTRAY	91 - 9
9D15	ASHTRAY	91 - 10
5F1	ASSEMBLY, CROSS SPIDER	54 - 14
5F3	ASSEMBLY, CROSS SPIDER	54 - 16
5F24	ASSEMBLY, CROSS SPIDER	54 - 36
4G15	ASSEMBLY, DRIVE SHAFT	51 - 44
5E23	ASSEMBLY, TIE ROD	54 - 12
5F1	ASSEMBLY, U-JOINT	54 - 14
5F3	ASSEMBLY, U-JOINT	54 - 16
5F24	ASSEMBLY, U-JOINT	54 - 36
6F7	ATTENUATOR, BRAKE VALVE	60 - 51A
3F11	AUXILARY POWER STRIP	40 - 42
3F11	AUXILARY POWER STRIP BRACKET	40 - 42
3F11	AUXILARY POWER STRIP CONNECTOR	40 - 42

https://www.truck-manuals.net/

ALPHABETICAL INDEX - CONTINUED

GRID		PAGE
3F11	AUXILARY POWER STRIP,CAP	40 - 42
5E23	AXLE HOUSING	54 - 12
5F18	AXLE HOUSING, MFWD LH, (ASN 000001-000747; 800001-)	54 - 30
5F20	AXLE HOUSING, MFWD RH, (ASN 000001-000747; 800001-)	54 - 32
5F1	AXLE RETAINING SLEEVE	54 - 14
5F3	AXLE RETAINING SLEEVE	54 - 16
5F24	AXLE RETAINING SLEEVE	54 - 36
5D17	AXLE SHAFT	53 - 14
5D19	AXLE SHAFT	53 - 16
5D21	AXLE SHAFT	53 - 18
5E23	AXLE SHAFT	54 - 12
8E8	AXLE, FRONT CENTER	80 - 1

B

3I5	BACK-UP ALARM BRACKET	40 - 110
3I5	BACK-UP ALARM FUSE	40 - 110
3I5	BACK-UP ALARM KIT	40 - 110
3I5	BACK-UP ALARM RELAY	40 - 110
3I5	BACK-UP ALARM WIRING HARNESS	40 - 110
8F10	BAFFLE, GRILLE SCREEN	80 - 31
2F5	BASE, FUEL FILTER (6081) (LATE TSN-8100,8200,8300)	30 - 44
2G2	BASE, FUEL FILTER (6081) (8400)	30 - 66
2G4	BASE, FUEL FILTER (6081) (8400)	30 - 68
1G15	BASE, OIL FILTER (6081) (LATE TSN-8100,8200,8300)	20 - 68
1I1	BASE, OIL FILTER (8400)	20 - 104
2E16	BASE, PRE-FUEL FILTER (6081)	30 - 31A
2F17	BASE, PRE-FUEL FILTER (8400)	30 - 54
3H21	BASE,RADIO ANTENNA	40 - 102
3I22	BATTERY	41 - 12
8G3	BATTERY BOX COVER	80 - 50
3I23	BATTERY CABLE,NEGATIVE	41 - 13
3E21	BATTERY CABLE,POSITIVE	40 - 26
3I23	BATTERY CABLE,POSITIVE	41 - 13
3I22	BATTERY CLAMP	41 - 12
1G2	BEARING KIT, UNDERSIZED MAIN BEARING CRANKSHAFT (6081) (8100, 8200, 8300)	20 - 55A
1E15	BEARING, THRUST (6076) (EARLT TSN 8100,8200,8300)	20 - 21
1G5	BEARING, THRUST (6081) (LATE TSN-8100,8200,8300)	20 - 57
1H18	BEARING, THRUST (8400)	20 - 96
1F2	BEARING, WATER PUMP (6076) (EARLY TSN-8100,8200,8300)	20 - 34
1E15	BEARINGS, MAIN (6076) (EARLY TSN 8100,8200,8300)	20 - 21
1G5	BEARINGS, MAIN (6081) (LATE TSN-8100,8200,8300)	20 - 57
1H18	BEARINGS, MAIN (8400)	20 - 96
1J6	BELT, COMPRESSOR	20 - 134
1J8	BELT, COMPRESSOR	20 - 136
5D25	BEVEL SHAFT	53 - 22
5D25	BEVEL, SPIRAL	53 - 22
5E18	BEVEL, SPIRAL	54 - 5
3H16	BEZEL BRACKET,RADIO	40 - 96
3H16	BEZEL,RADIO	40 - 96
1F19	BLOCK, SHORT (WITH HEAD BOLTS)(6081) (LATE TSN-81,82,8300)	20 - 48
1E3	BLOCK, SHORT (6076)(EARLY TSN 8100 8200,8300)(WITH HEAD BOLTS)	20 - 13A
1H8	BLOCK, SHORT (8400) (WITH HEAD BOLTS)	20 - 86
1H6	BLOCK, SHORT(8400) (WITHOUT HEAD BOLTS)	20 - 84
1E1	BLOCK,SHORT(6076)(EARLT TSN-8100,8200,8300)(WITHOUT HEAD BLOTS)	20 - 12
3E13	BLOWER MOTOR(AQS)(EUROPEAN VERSION)(TSN -009999)	40 - 18
3E15	BLOWER MOTOR(AQS)(EUROPEAN VERSION)(TSN 010000-)	40 - 20
3E9	BLOWER MOTOR(AQS)(NORTH AMERICAN VERSION)(TSN -009999)	40 - 14
3E11	BLOWER MOTOR(AQS)(NORTH AMERICAN VERSION)(TSN 010000-)	40 - 16
3E17	BLOWER MOTOR(AQS)(UKRAINIAN VERSION)	40 - 22
3E13	BLOWER MOTOR,PRESSURIZER(EUROPEAN VERSION)(TSN -009999)	40 - 18
3E15	BLOWER MOTOR,PRESSURIZER(EUROPEAN VERSION)(TSN 010000-)	40 - 20
3E9	BLOWER MOTOR,PRESSURIZER(NORTH AMERICAN VERSION)(TSN -009999)	40 - 14
3E11	BLOWER MOTOR,PRESSURIZER(NORTH AMERICAN VERSION)(TSN 010000-)	40 - 16
3E17	BLOWER MOTOR,PRESSURIZER(UKRAINIAN VERSION)	40 - 22
4E14	BLOWER SWITCH CONNECTOR	43 - 9
1D17	BOLTS, CYLINDER HEAD (6076) (EARLY TSN-8100,8200,8300)	20 - 4
1F10	BOLTS, CYLINDER HEAD (6081) (LATE TSN-8100,8200,8300)	20 - 40
1G22	BOLTS, CYLINDER HEAD (8400)	20 - 76
1D17	BOLTS, HEAD (6076) (EARLY TSN-8100,8200,8300)	20 - 4
9F20	BOOT ATTACHING HARDWARE KIT	92 - 6
4D23	BOOT,REAR FENDER WORK LIGHT(TSN XXXXXX-)	42 - 19
9E7	BRACE, REAR FENDER	91 - 26
9E9	BRACE, REAR FENDER (ERUOPEAN VERSION)	91 - 28
6E17	BRACKET, BRAKE VALVE	60 - 36
7F21	BRACKET, CENTER LINK (EUROPEAN VERSION)	70 - 66
7F19	BRACKET, CENTER LINK (HIGH-LIFT HITCH) (NORTH AMERICAN VERSION)	70 - 64
7F17	BRACKET, CENTER LINK (REGULAR HITCH) (NORTH AMERICAN VERSION)	70 - 62
7F15	BRACKET, CENTER LINK HOOK (EUROPEAN VERSION)	70 - 60
2E13	BRACKET, ETHER AID (6076)	30 - 29B
2E12	BRACKET, ETHER AID (6081) (LATE TSN-8100,8200,8300)	30 - 29A
2E11	BRACKET, ETHER AID (8400 TRACTOR)	30 - 29
7H17	BRACKET, PICK-UP HITCH DRAWBAR (EUROPEAN VERSION)	70 - 110
2E16	BRACKET, PRE-FUEL FILTER SUPPORT (6081)	30 - 31A
2F17	BRACKET, PRE-FUEL FILTER SUPPORT (8400)	30 - 54
4D20	BRACKET, REAR ROOF WORK LAMP(TSN -XXXXXX)	42 - 16
4D21	BRACKET, REAR ROOF WORK LAMP(TSN XXXXXX-)	42 - 17
7E10	BRACKET, ROCKSHAFT POSITION SENSOR	70 - 30
6D13	BRACKET, STEERING VALVE	60 - 9
8H9	BRACKET,A/C LINES	90 - 6
3F11	BRACKET,AUXILARY POWER STRIP	40 - 42
3I5	BRACKET,BACK-UP ALARM	40 - 110
3I1	BRACKET,COLD WEATHER START(NORTH AMREICAN VERSION)	40 - 106
4D14	BRACKET,DIRECTION INDICATOR(CAB)(EV)	42 - 10
3F12	BRACKET,ELECTRICAL 7-TERMINAL OUTLET(NORTH AMERICAN VERSION)	40 - 43

https://www.truck-manuals.net/

ALPHABETICAL INDEX - CONTINUED

GRID		PAGE
3F13	BRACKET,ELECTRICAL 7-TERMINAL OUTLET SOCKET(EUROPEAN VERSION)	40 - 44
3F22	BRACKET,ENGINE SPEED CONTROL(ARMREST)	40 - 54
4D24	BRACKET,EXTREMITY WARNING LAMP(-027099)	42 - 20
4E1	BRACKET,EXTREMITY WARNING LAMP(027100-)	42 - 22
4D17	BRACKET,FRONT HEADLIGHTS(EV)	42 - 13
4D16	BRACKET,FRONT HEADLIGHTS(UNITED KINGDOM)	42 - 12
3I3	BRACKET,GEAR PUMP HEATER(EUROPEAN VERSION)	40 - 108
3G18	BRACKET,HITCH CONTROL SWITCH(NORTH AMERICAN VERSION)	40 - 74
3G5	BRACKET,HYDRAULIC CONTROL LEVER(ARMREST)	40 - 62
3F21	BRACKET,KEY AND ETHER AID SWITCHES	40 - 53
3F6	BRACKET,LOAD CENTER	40 - 36
3H23	BRACKET,MOBILE RADIO	40 - 104
3H10	BRACKET,PERFORMANCE MONITOR	40 - 90
8H16	BRACKET,PRESSURIZER BLOWER MOTOR	90 - 13
3H4	BRACKET,RADAR(TSN -XXXXXX)	40 - 84
3H8	BRACKET,RADAR(TSN XXXXXX-)	40 - 88
3H6	BRACKET,RADAR(TSN XXXXXX-XXXXXX)	40 - 86
4D23	BRACKET,REAR FENDER WORK LIGHT(TSN XXXXXX-)	42 - 19
3H13	BRACKET,ROW-TRAK MONITOR	40 - 93
3G7	BRACKET,SELECTIVE CONTROL(ARMREST)	40 - 64
3F24	BRACKET,TRANSMISSION CONTROL(ARMREST)	40 - 56
4D8	BRACKET,WORK LAMP(UPPER MID-BODY)(NORTH AMERICAN VERSION)(TSN -XXXXXX)	42 - 4
4D9	BRACKET,WORK LAMP(UPPER MID-BODY)(NORTH AMERICAN VERSION)(TSN XXXXXX-)	42 - 5
4D10	BRACKET,WORK LAMPS(CAB)(UPPER MID-BODY) (EUROPEAN VERSION)(TSN -XXXXXX)	42 - 6
4D11	BRACKET,WORK LAMPS(CAB)(UPPER MID-BODY) (EUROPEAN VERSION)(TSN XXXXXX-)	42 - 7
4D13	BRACKET,WORKING LAMPS(LOWER MID-BODY)(TSN XXXXXX-)	42 - 9
4D12	BRACKET,WORKING LAMPS(LOWER MID-BODY) (TSN -XXXXXX)	42 - 8
6G23	BRACKETS, AIR BRAKE CONTROL VALVE (EUROPEAN VERSION)	60 - 86
6H1	BRACKETS, AIR BRAKE CONTROL VALVE (EUROPEAN VERSION)	60 - 88
7E4	BRACKETS, OIL COOLER LINE	70 - 22
2E16	BRACKETS, PRE-FUEL FILTER (6081)	30 - 31A
2F17	BRACKETS, PRE-FUEL FILTER (8400)	30 - 54
6F4	BRAKE DISK	60 - 49
6F13	BRAKE LEVER, SECONDARY (EUROPEAN VERSION) (EARLY DESIGN)	60 - 56
6F15	BRAKE LEVER, SECONDARY (EUROPEAN VERSION) (LATE DESIGN)	60 - 58
6F19	BRAKE LEVER, SECONDARY (EUROPEAN VERSION) (LATEST DESIGN)	60 - 62
3F4	BRAKE LIGHT EXTENSION WIRING HARNESS	40 - 34
3F4	BRAKE LIGHT RELAY	40 - 34
6E25	BRAKE MAKE-UP CHECK VALVE KIT	60 - 44
6F5	BRAKE OIL LINES (EARLY DESIGN)	60 - 50
6F9	BRAKE OIL LINES (REAR) (W/ TRAILER BRAKE) (LATE DESIGN)	60 - 52
6F11	BRAKE OIL LINES (REAR) (W/O TRAILER BRAKE) (LATE DESIGN)	60 - 54
6F2	BRAKE PEDALS	60 - 46
5E22	BRAKE PISTON	54 - 10
5F14	BRAKE PISTON	54 - 26
5D5	BRAKE PISTON, PTO	53 - 2
5D7	BRAKE PISTON, PTO	53 - 4
6F1	BRAKE PRE-FILL PISTON KIT	60 - 45
6F1	BRAKE PRESSURE INLET CHECK VALVE KIT	60 - 45
3G25	BRAKE SWITCH	40 - 81
3G25	BRAKE SWITCH RETAINER	40 - 81
6E19	BRAKE VALVE	60 - 38
6F7	BRAKE VALVE ATTENUATOR	60 - 51A
6F7	BRAKE VALVE ATTENUATOR LINES	60 - 51A
6E17	BRAKE VALVE BRACKET	60 - 36
6E23	BRAKE VALVE HARDWARE KIT	60 - 42
6E21	BRAKE VALVE OVERHAUL KIT	60 - 40
6G4	BRAKE VALVE OVERHAUL KIT	60 - 69C
5E22	BRAKES, WET DISK	54 - 10
5F14	BRAKES, WET DISK	54 - 26
4D12	BULB,CAB WORK LAMP(LOWER MID-BODY)(TSN -XXXXXX)	42 - 8
4D13	BULB,CAB WORK LAMP(LOWER MID-BODY)(TSN XXXXXX-)	42 - 9
4D10	BULB,CAB WORK LAMP(UPPER MID-BODY) (EUROPEAN VERSION)(TSN -XXXXXX)	42 - 6
4D11	BULB,CAB WORK LAMP(UPPER MID-BODY) (EUROPEAN VERSION)(TSN XXXXXX-)	42 - 7
4D8	BULB,CAB WORKLAMP(UPPER MID-BODY)(NORTH AMERICAN VERSION(TSN -XXXXXX)	42 - 4
4D9	BULB,CAB WORKLAMP(UPPER MID-BODY)(NORTH AMERICAN VERSION(TSN XXXXXX-)	42 - 5
3G23	BULB,CONSOLE LIGHT	40 - 79
3H12	BULB,CORNER POST DISPLAY	40 - 92
4D14	BULB,DIRECTION INDICATOR LAMP(EV)	42 - 10
3G20	BULB,DOME LIGHT	40 - 76
4D24	BULB,EXTREMITY WARNING LAMP(-027099)	42 - 20
4E1	BULB,EXTREMITY WARNING LAMP(027100-)	42 - 22
4D17	BULB,HEADLIGHT(EV)	42 - 13
4D16	BULB,HEADLIGHT(UNITED KINGDOM)	42 - 12
4D15	BULB,HOOD HEADLIGHT	42 - 11
3F20	BULB,INSTRUMENT CONTROL PANEL(ICU)	40 - 52
3H10	BULB,PERFORMANCE MONITOR	40 - 90
4D22	BULB,REAR FENDER WORK LIGHT(TSN -XXXXXX)	42 - 18
4D23	BULB,REAR FENDER WORK LIGHT(TSN XXXXXX-)	42 - 19
4D20	BULB,REAR ROOF WORK LAMP(TSN -XXXXXX)	42 - 16
4D21	BULB,REAR ROOF WORK LAMP)(TSN XXXXXX-)	42 - 17
4D18	BULB,ROOF WARNING LIGHT(NAV)	42 - 14
3H13	BULB,ROW-TRAK MONITOR	40 - 93
3F20	BULB,SCV SETUP PANEL(SUP)	40 - 52
4D5	BULB,TAIL LIGHT(NAV)	42 - 1
4D6	BULB,TAIL/STOP(EV)(TSN -009999)	42 - 2
4D7	BULB,TAIL/STOP(TSN 010000-)	42 - 3
4D6	BULB,TURN SIGNAL/HAZARD WARNING(EV)	42 - 2
4D7	BULB,TURN SIGNAL/HAZARD WARNING(TSN 010000)	42 - 3
7F12	BUMPER, DRAFT LINK	70 - 57
1D23	BUSHING, CAMSHAFT (6076) (EARLY TSN -009999)	20 - 10
1D22	BUSHING, CAMSHAFT (6076) (EARLY TSN-8100,8200,8300)	20 - 9
1F17	BUSHING, CAMSHAFT (6081) (LATE TSN-81,82,8300)	20 - 46
1F16	BUSHING, CAMSHAFT (6081) (LATE TSN-8100,8200,8300)	20 - 45
1H3	BUSHING, CAMSHAFT (8400)	20 - 81
1H4	BUSHING, CAMSHAFT (8400)	20 - 82
3I19	BYPASS START LABEL	41 - 8
3I20	BYPASS START LABEL(8100,8200,8300,8400)	41 - 10
3I16	BYPASS START LABEL(8400)	41 - 5
1G13	BYPASS TUBES, OIL COOLER (6081) (LATE TSN-81,82,8300)	20 - 65
1I3	BYPASS VALVE, OIL COOLER (6081)	20 - 106

https://www.truck-manuals.net/

ALPHABETICAL INDEX - CONTINUED

GRID		PAGE
1E22	BYPASS VALVE, OIL FILTER (6076)	20 - 28
1G15	BYPASS VALVE, OIL FILTER (6081) (LATE TSN-8100,8200,8300)	20 - 68
1I1	BYPASS VALVE, OIL FILTER (8400)	20 - 104

C

9D7	CAB	91 - 2
3F8	CAB AND CHASSIS GROUND CABLE	40 - 39
3F10	CAB ELECTRICAL JUNCTION BLOCK	40 - 41
3F10	CAB JUNCTION BLOCK,ELECTRICAL	40 - 41
9D9	CAB MOUNTS	91 - 4
3E21	CAB POWER CABLE	40 - 26
8G5	CAB REAR COVER	80 - 52
9D7	CAB REPLACEMENT	91 - 2
9D9	CAB SUPPORTS	91 - 4
3F6	CAB WIRING HARNESS(EUROPEAN VERSION)	40 - 36
3F6	CAB WIRING HARNESS(NORTH AMERICAIN VERSION	40 - 36
3F6	CAB WIRING HARNESS(UKRAINIAN VERSION)	40 - 36
6I5	CABLE, AIR BRAKE (EUROPEAN VERSION)	60 - 116
7F16	CABLE, DRAFT LINK RELEASE (EUROPEAN VERSION)	70 - 61
7H15	CABLE, PICK-UP HITCH CONTROL (EUROPEAN VERSION)	70 - 108
9D11	CABLE, TOW DISCONNECT LEVER (CAB)	91 - 6
3F8	CABLE,CAB AND CHASSIS GROUND	40 - 39
3E21	CABLE,CAB POWER	40 - 26
3H23	CABLE,MOBILE RADIO ANTENNA	40 - 104
3H21	CABLE,RADIO ANTENNA	40 - 102
8H19	CABLE,TEMPERATURE CONTROL	90 - 16
1D22	CAMSHAFT (6076) (EARLY TSN-8100,8200,8300)	20 - 9
1F16	CAMSHAFT (6081) (LATE TSN-8100,8200,8300)	20 - 45
1H3	CAMSHAFT (8400)	20 - 81
1D23	CAMSHAFT BUSHING (6076) (EARLY TSN -009999)	20 - 10
1D22	CAMSHAFT BUSHING (6076) (EARLY TSN-8100,8200,8300)	20 - 9
1F17	CAMSHAFT BUSHING (6081) (LATE TSN-81,82,8300)	20 - 46
1F16	CAMSHAFT BUSHING (6081) (LATE TSN-8100,8200,8300)	20 - 45
1H3	CAMSHAFT BUSHING (8400)	20 - 81
1H4	CAMSHAFT BUSHING (8400)	20 - 82
1D21	CAMSHAFT FOLLOWER (6076) (EARLY TSN 8100,8200,8300)	20 - 8
1D22	CAMSHAFT FOLLOWER (6076) (EARLY TSN-8100,8200,8300)	20 - 9
1F15	CAMSHAFT FOLLOWER (6081) (LATE TSN-8100,8200,8300)	20 - 44
1F16	CAMSHAFT FOLLOWER (6081) (LATE TSN-8100,8200,8300)	20 - 45
1H2	CAMSHAFT FOLLOWER (8400)	20 - 80
1H3	CAMSHAFT FOLLOWER (8400)	20 - 81
1D22	CAMSHAFT GEAR (6076) (EARLY TSN-8100,8200,8300)	20 - 9
1F16	CAMSHAFT GEAR (6081) (LATE TSN-8100,8200,8300)	20 - 45
1H3	CAMSHAFT GEAR (8400)	20 - 81
1D22	CAMSHAFT THRUST WASHER (6076) (EARLY TSN-8100,8200,8300)	20 - 9
8F11	CAP, COOLANT FILL ACCESS	80 - 32
2G8	CAP, FUEL	30 - 72
3F11	CAP,AUXILARY POWER STRIP	40 - 42
3I23	CAP,POSITIVE TERMINAL	41 - 13
3H21	CAP,W/O RADIO	40 - 102
1D23	CAPS, MAIN BEARING (6076) (EARLY TSN -009999)	20 - 10
1F17	CAPS, MAIN BEARING (6081) (LATE TSN-81,82,8300)	20 - 46
1H4	CAPS, MAIN BEARING (8400)	20 - 82
5D17	CARRIER, PLANET PINION	53 - 14
5D19	CARRIER, PLANET PINION	53 - 16
5D21	CARRIER, PLANET PINION	53 - 18
5F9	CARRIER, PLANETARY	54 - 20
5F22	CARRIER, PLANETARY	54 - 34
5G5	CARRIER, PLANETARY	54 - 42
5D13	CASE, DIFFERENTIAL	53 - 10
5E17	CASE, DIFFERENTIAL (MFWD)	54 - 4
4G13	CASE, TRANSMISSION	51 - 42
4I17	CASE, TRANSMISSION	51 - 94
8E21	CAST REAR WHEELS	80 - 16
2D17	CENTER HOUSING, TURBOCHARGER (SCHWITZER) (6076)	30 - 9
2E3	CENTER HOUSING, TURBOCHARGER (SCHWITZER) (6081)	30 - 20
7F21	CENTER LINK (EUROPEAN VERSION)	70 - 66
7F19	CENTER LINK (HIGH-LIFT HITCH) (NORTH AMERICAN VERSION)	70 - 64
7F17	CENTER LINK (REGULAR HITCH) (NORTH AMERICAN VERSION)	70 - 62
7F21	CENTER LINK BRACKET SPACER KIT (EUROPEAN VERSION)	70 - 66
7F15	CENTER LINK TRANSPORT HOOK (EUROPEAN VERSION)	70 - 60
3G13	CENTRAL CONTROL UNIT(CCU)	40 - 70
3G15	CENTRAL CONTROL UNIT(CCU)	40 - 72
3E5	CENTRAL CONTROL UNIT(CCU)(TSN 010000-)	40 - 10
7G18	CHAIN, IMPLEMENT SAFETY	70 - 89
6E9	CHARGE PUMP	60 - 28
6E13	CHARGE PUMP REAR LINES	60 - 32
6E10	CHARGE PUMP/STEERING PUMP	60 - 29
6E25	CHECK VALVE KIT, BRAKE MAKE-UP	60 - 44
6F1	CHECK VALVE KIT, BRAKE PRESSURE INLET	60 - 45
8G4	CHOCK BLOCK HOLDER (EUROPEAN VERSION)	80 - 51
3E13	CIGAR LIGHTER(EUROPEAN VERSION)(TSN -009999)	40 - 18
3E15	CIGAR LIGHTER(EUROPEAN VERSION)(TSN 010000-)	40 - 20
3E9	CIGAR LIGHTER(NORTH AMERICAN VERSION)(TSN -009999)	40 - 14
3E11	CIGAR LIGHTER(NORTH AMERICAN VERSION)(TSN 010000-)	40 - 16
3F16	CIGAR LIGHTER(TSN -009999)	40 - 48
3F18	CIGAR LIGHTER(TSN 010000-)	40 - 50
3E17	CIGAR LIGHTER(UKRAINIAN VERSION)	40 - 22
3F24	CIRCUIT BOARD COVER(ARMREST)	40 - 56
3I22	CLAMP,BATTERY	41 - 12
8H13	CLAMP,HEATER HOSE	90 - 10
7E4	CLAMPS, OIL COOLER LINE	70 - 22
7G21	CLEVIS, DRAWBAR (EUROPEAN VERSION)	70 - 92
7G5	CLEVIS, DRAWBAR (8100, 8200, 8300) (EARLY DESIGN)	70 - 74
7G7	CLEVIS, DRAWBAR(NORTH AMERICAN VERSION) (LATE DESIGN)	70 - 76
7G15	CLEVIS, DRAWBAR(NORTH AMERICAN VERSION) (LATE DESIGN)	70 - 84
7G13	CLEVIS, DRAWBAR(NORTH AMERICAN VERSION) (8400) (EARLY DESIGN)	70 - 82
3H3	CLOCK(EUROPEAN VERSION)	40 - 83

https://www.truck-manuals.net/

ALPHABETICAL INDEX - CONTINUED

GRID		PAGE
3E13	CLOCK(EUROPEAN VERSION)(TSN -009999)	40 - 18
3F16	CLOCK(EUROPEAN VERSION)(TSN -009999)	40 - 48
3E15	CLOCK(EUROPEAN VERSION)(TSN 010000-)	40 - 20
3F18	CLOCK(EUROPEAN VERSION)(TSN 010000-)	40 - 50
9E6	CLOTHES HOOK	91 - 25
5E22	CLUTCH DRIVE PLATE	54 - 10
5F14	CLUTCH DRIVE PLATE	54 - 26
5D5	CLUTCH DRUM	53 - 2
5D7	CLUTCH DRUM	53 - 4
5D5	CLUTCH HUB	53 - 2
5D7	CLUTCH HUB	53 - 4
4E23	CLUTCH PEDAL	51 - 2
4H1	CLUTCH PEDAL	51 - 54
4G11	CLUTCH, MFWD	51 - 40
4I15	CLUTCH, MFWD	51 - 92
5D5	CLUTCH, PTO	53 - 2
5D7	CLUTCH, PTO	53 - 4
3I17	CLUTCH,STATING MOTOR(8100,8200,8300,8400)	41 - 6
3I20	CLUTCH,STATING MOTOR(8100,8200,8300,8400)	41 - 10
3I1	COLD WEATHER START BRACKET(NORTH AMERICAN VERSION)	40 - 106
3I1	COLD WEATHER START HEATER(NORTH AMERICAN VERSION)	40 - 106
3I3	COLD WEATHER START KIT(EUROPEAN VERSION)	40 - 108
3I1	COLD WEATHER START KIT(NORTH AMERICAN VERSION)	40 - 106
3I3	COLD WEATHER START WIRING HRANESS(EUROPEAN VERSION)	40 - 108
3I1	COLD WEATHER START WIRING HARNESS(NORTH AMERICAN VERSION)	40 - 106
2E8	COLD WEATHER STARTING AID	30 - 26
1J6	COMPRESSOR BELT	20 - 134
1J8	COMPRESSOR BELT	20 - 136
8H8	COMPRESSOR CLUTCH	90 - 4
9F22	COMPRESSOR FILTER KIT	92 - 8
8H7	COMPRESSOR HARDWARE KIT	90 - 3
8H5	COMPRESSOR, A/C	90 - 1
6H18	COMPRESSOR, AIR BRAKE AIR (EUROPEAN VERSION)	60 - 106
7E1	CONDENSOR, AIR CONDITIONING	70 - 19
4E15	CONDUIT	43 - 10
1E14	CONNECTING RODS (6076) (EARLY TSN 8100,8200,8300)	20 - 20
1G6	CONNECTING RODS (6081) (LATE TSN-8100,8200,8300)	20 - 58
1H17	CONNECTING RODS (6081HRW01)(8400)	20 - 95
4E14	CONNECTOR,BLOWER SWITCH	43 - 9
4E13	CONNECTOR,ELECTRICAL	43 - 8
4E11	CONNECTOR,METRI-PACK	43 - 6
3F14	CONNECTOR,NINE-PIN IMPLEMENT FEEDBACK	40 - 45
4E14	CONNECTOR,REAR WINDSHIELD WIPER	43 - 9
4E14	CONNECTOR,START SWITCH	43 - 9
4E7	CONNECTOR,WEATHERPACK	43 - 2
2F1	CONNECTORS, FUEL INJECTION PUMP HOUSING (6076)	30 - 40
2F13	CONNECTORS, FUEL INJECTION PUMP HOUSING (6081) (LATE TSN-8100,8200,8300)	30 - 50
2F23	CONNECTORS, FUEL INJECTION PUMP HOUSING (8400)	30 - 60
4E9	CONNECTORS,METRI-PACK	43 - 4
3G23	CONSOLE LIGHT HOUSING	40 - 79
3E13	CONSOLE LIGHT(EUROPEAN VERSION)(TSN -009999)	40 - 18
3E15	CONSOLE LIGHT(EUROPEAN VERSION)(TSN 010000-)	40 - 20
3E9	CONSOLE LIGHT(NORTH AMERICAN VERSION)(TSN -009999)	40 - 14
3E11	CONSOLE LIGHT(NORTH AMERICAN VERSION)(TSN 010000-)	40 - 16
3E17	CONSOLE LIGHT(UKRAINIAN VERSION)	40 - 22
9D15	CONTROL CONSOLE	91 - 10
7H15	CONTROL LEVER, PICK-UP HITCH (EUROPEAN VERSION)	70 - 108
2E24	CONTROL UNIT, ELECTRONIC (6076)	30 - 38
2F9	CONTROL UNIT, ELECTRONIC (6081) (LATE TSN-8100,8200,8300)	30 - 48
2F11	CONTROL UNIT, ELECTRONIC (6081) (LATE TSN-8100,8200,8300)	30 - 49A
2F21	CONTROL UNIT, ELECTRONIC (8400)	30 - 58
6G23	CONTROL VALVE BRACKETS, AIR BRAKE (EUROPEAN VERSION)	60 - 86
6H1	CONTROL VALVE BRACKETS, AIR BRAKE (EUROPEAN VERSION)	60 - 88
6H3	CONTROL VALVE LINES, AIR BRAKE (EUROPEAN VERSION) (EARLY DESIGN)	60 - 90
6H7	CONTROL VALVE LINES,AIR BRAKE (EUROPEAN VERSION) (LATE DESIGN) (83,8400)	60 - 94
6H5	CONTROL VALVE LINES,AIR BRAKE (EUROPEAN VERSION) (LATE DESIGN)(81,8200)	60 - 92
6G19	CONTROL VALVE, AIR BRAKE (EUROPEAN VERSION)	60 - 82
6G21	CONTROL VALVE, AIR BRAKE (EUROPEAN VERSION) (LATE DESIGN)	60 - 84
7H20	CONTROL VALVE, SELECTIVE	70 - 114
3G3	CONTROLLER UNIT,ARMREST(ACU)	40 - 60
3E5	CONTROLLER,ENGINE CONTROL UNIT(ECU)(TSN 010000-)	40 - 10
3G13	CONTROLLER,ENGINE(ECU)	40 - 70
3G15	CONTROLLER,ENGINE(ECU)	40 - 72
3E23	CONTROLLER,HITCH	40 - 28
3G13	CONTROLLER,HITCH(HCU/SCU)	40 - 70
3G15	CONTROLLER,HITCH(HCU/SCU)	40 - 72
3G13	CONTROLLER,POWER SHIFT(CCU/PCU)	40 - 70
3G15	CONTROLLER,POWER SHIFT(CCU/PCU)	40 - 72
3E5	CONTROLLER,POWERSHIFT CONTROL UNIT(PCU)(TSN 010000-)	40 - 10
3E5	CONTROLLER,SCV/HITCH CONTROL UNIT(HCU/SCU)(TSN 010000-	40 - 10
7H15	CONTROLS, PICK-UP HITCH (EUROPEAN VERSION)	70 - 108
7H9	CONTROLS, WAGON HITCH (EUROPEAN VERSION)	70 - 102
3F15	CONVENIENCE OUTLET SOCKET	40 - 46
3F15	CONVENIENCE OUTLET SOCKET ELECTRICAL PLUG	40 - 46
3F2	CONVENIENCE OUTLET(TSN -009999)	40 - 32
3F16	CONVENIENCE OUTLET(TSN -009999)	40 - 48
3F3	CONVENIENCE OUTLET(TSN 010000-)	40 - 33
3F18	CONVENIENCE OUTLET(TSN 010000-)	40 - 50
8F11	COOLANT FILL ACCESS CAP	80 - 32
1F1	COOLANT HEATER, ENGINE (220V)	20 - 32
1E24	COOLANT HEATER, ENGINE (6076)	20 - 30
1I12	COOLANT RECOVERY TANK	20 - 114
1E22	COOLER AND OIL FILTER HOUSING (6076)	20 - 28
7E4	COOLER LINE CLAMPS AND BRACKETS	70 - 22
1E22	COOLER, ENGINE OIL (6076)	20 - 28
1G14	COOLER, ENGINE OIL (8100, 8200, 8300) (LATE TSN)	20 - 66
1I4	COOLER, ENGINE OIL (8400)	20 - 107
7E1	COOLER, HYDRAULIC OIL	70 - 19

https://www.truck-manuals.net/

ALPHABETICAL INDEX - CONTINUED

GRID		PAGE
8H19	CORE,EVAPORATOR/HEATER	90 - 16
3H12	CORNER POST DISPLAY	40 - 92
4G1	COUNTERSHAFT	51 - 30
4I5	COUNTERSHAFT	51 - 82
4G1	COUNTERSHAFT GEAR	51 - 30
4I5	COUNTERSHAFT GEAR	51 - 82
7I21	COUPLER KIT, POWER BEYOND (W/ TRAILER BRAKE) (EUROPEAN VERSION)	70 - 140
7I19	COUPLER KIT, POWER BEYOND (W/O TRAILER BRAKE)	70 - 138
8D14	COUPLER, ROW-TRAK QUICK	71 - 12
7H22	COUPLER, SELECTIVE CONTROL VALVE	70 - 116
7H5	COUPLER, WAGON HITCH (EUROPEAN VERSION) (LATE DESIGN)	70 - 100
7H7	COUPLER, WAGON HITCH (EUROPEAN VERSION) (LATE DESIGN)	70 - 101A
6H14	COUPLERS, AIR BRAKE (EUROPEAN VERSION)	60 - 102
6H16	COUPLERS, AIR BRAKE (EUROPEAN VERSION) (LATE DESIGN)	60 - 104
7H3	COUPLING, WAGON HITCH (EUROPEAN VERSION)	70 - 98
3I14	COVER STARTER SOLENOID (DENSO) (6076)	41 - 4
3I15	COVER STARTER SOLENOID (NIPPONDENSO) (6081) (LATE TSN-8100,8200,8300)	41 - 4A
8G3	COVER, BATTERY BOX	80 - 50
8G5	COVER, CAB REAR	80 - 52
9D17	COVER, COWL	91 - 12
5E15	COVER, DIFFERENTIAL CASE	54 - 2
5F12	COVER, DIFFERENTIAL CASE	54 - 24
5E17	COVER, DIFFERENTIAL CASE (MFWD)	54 - 4
5D15	COVER, DIFFERENTIAL HOUSING	53 - 12
7E12	COVER, DRAFT LINK SUPPORT	70 - 32
8F18	COVER, FRONT FRAME (8100, 8200, 8300)	80 - 39
1H20	COVER, INJECTION PUMP ACCESS (8400 TRACTOR)	20 - 98
1E17	COVER, INJECTION PUMP ACCESS (6076) (EARLY TSN-8100,8200,8300)	20 - 23
1G8	COVER, INJECTION PUMP ACCESS (6081) (LATE TSN-8100,8200,8300)	20 - 60
4F13	COVER, MANIFOLD	51 - 16
4H15	COVER, MANIFOLD	51 - 68
4G11	COVER, MFWD CLUTCH	51 - 40
4I15	COVER, MFWD CLUTCH	51 - 92
1G14	COVER, OIL COOLER (8100, 8200, 8300) (LATE TSN)	20 - 66
1I4	COVER, OIL COOLER (8400)	20 - 107
7H15	COVER, PICK-UP HITCH CONTROL LEVER (EUROPEAN VERSON)	70 - 108
9F12	COVER, REAR WIPER HOLE	91 - 54
1G24	COVER, ROCKER ARM (ESN -018791)(8400)	20 - 78
1G25	COVER, ROCKER ARM (ESN 018792-)(8400)	20 - 78A
1D19	COVER, ROCKER ARM (6076) (EARLY TSN-8100,8200,8300)	20 - 6
1F12	COVER, ROCKER ARM (6081) (LATE TSN-8100,8200,8300)	20 - 42
1F13	COVER, ROCKER ARM (6081) (LATE TSN-8100,8200,8300)	20 - 42A
6F21	COVER, SECONDARY BRAKE LEVER (EUROPEAN VERSION)	60 - 64
7H19	COVER, SELECTIVE CONTROL VALVE END	70 - 113
9D17	COVER, STEERING COLUMN	91 - 12
1E17	COVER, TIMING GEAR (6076) (EARLY TSN-8100,8200,8300)	20 - 23
1G8	COVER, TIMING GEAR (6081) (LATE TSN-8100,8200,8300)	20 - 60
1H20	COVER, TIMING GEAR (8400 TRACTOR)	20 - 98
4F17	COVER, TRANSMISSION CASE REAR	51 - 20
4F19	COVER, TRANSMISSION CASE REAR	51 - 22
4H19	COVER, TRANSMISSION CASE REAR	51 - 72
4H21	COVER, TRANSMISSION CASE REAR	51 - 74
1G24	COVER, VALVE (ESN -018791)(8400)	20 - 78
1D19	COVER, VALVE (6076) (EARLY TSN-8100,8200,8300)	20 - 6
1F12	COVER, VALVE (6081) (LATE TSN-8100,8200,8300)	20 - 42
1G25	COVER, VALVE (ESN 018792-)(8400)	20 - 78A
1F13	COVER, VALVE (6081) (LATE TSN-8100,8200,8300)	20 - 42A
1G17	COVER, WATER PUMP (6081) (LATE TSN-8100,8200,8300)	20 - 70
1I5	COVER, WATER PUMP (8400)	20 - 108
3G3	COVER,ARMREST CONTROLLER UNIT	40 - 60
3F24	COVER,CIRCUIT BOARD(ARMREST)	40 - 56
8H15	COVER,FRESH AIR FILTER HOUSING	90 - 12
8H21	COVER,HEATER AND A/C COMPARTMENT	90 - 18
3F24	COVER,NEUTRAL START SWITCH	40 - 56
3H4	COVER,RADAR(TSN -XXXXXX)	40 - 84
3H6	COVER,RADAR(TSN XXXXXX-XXXXXX)	40 - 86
3G9	COVER,ROCKSHAFT CONTROL(ARMREST)	40 - 66
3F9	COVER,STARTING CIRCUIT RELAY	40 - 40
3I19	COVER,STARTING MOTOR SOLENOID SWITCH	41 - 8
3I16	COVER,STARTING MOTOR(8400)	41 - 5
4D8	COVER,WORK LAMP(UPPER MID-BODY)(NORTH AMERICAN VERSION(TSN -XXXXXX)	42 - 4
4D9	COVER,WORK LAMP(UPPER MID-BODY)(NORTH AMERICAN VERSION(TSN XXXXXX-)	42 - 5
9D17	COWL ASSEMBLY	91 - 12
9D17	COWL COVER	91 - 12
1E12	CRANKSHAFT (6076) (EARLY TSN 8100,8200,8300)	20 - 18
1G1	CRANKSHAFT (6081) (LATE TSN-81,82,8300)	20 - 55
1H15	CRANKSHAFT (8400)	20 - 93
1E11	CRANKSHAFT DAMPER (6076)	20 - 17
1H14	CRANKSHAFT DAMPER (6081)	20 - 92
1F25	CRANKSHAFT DAMPER (6081) (LATE TSN-81,82,8300)	20 - 54
1H20	CRANKSHAFT FRONT OIL SEAL (8400 TRACTOR)	20 - 98
1E17	CRANKSHAFT FRONT OIL SEAL (6076) (EARLY TSN-8100,8200,8300)	20 - 23
1G8	CRANKSHAFT FRONT OIL SEAL (6081) (LATE TSN-8100,8200,8300)	20 - 60
1G3	CRANKSHAFT KIT, UNDERSIZE (6081) (CONNECTING ROD JOURNAL) (81, 82, 83)	20 - 55B
1E11	CRANKSHAFT PULLEY (6076)	20 - 17
1H14	CRANKSHAFT PULLEY (6081)	20 - 92
1F25	CRANKSHAFT PULLEY (6081) (LATE TSN-81,82,8300)	20 - 54
5F1	CROSS SPIDER ASSEMBLY	54 - 14
5F3	CROSS SPIDER ASSEMBLY	54 - 16
5F24	CROSS SPIDER ASSEMBLY	54 - 36
9G3	CUSHIONS, SEAT	92 - 14
1D23	CYLINDER BLOCK FITTINGS (6076) (EARLY TSN -009999)	20 - 10
1F17	CYLINDER BLOCK FITTINGS (6081) (LATE TSN-81,82,8300)	20 - 46
1H4	CYLINDER BLOCK FITTINGS (8400)	20 - 82

https://www.truck-manuals.net/

ALPHABETICAL INDEX - CONTINUED

GRID		PAGE
1D17	CYLINDER HEAD (6076) (EARLY TSN-8100,8200,8300)	20 - 4
1F10	CYLINDER HEAD (6081) (LATE TSN-8100,8200,8300)	20 - 40
1G22	CYLINDER HEAD (8400)	20 - 76
1D17	CYLINDER HEAD BOLTS (6076) (EARLY TSN-8100,8200,8300)	20 - 4
1F10	CYLINDER HEAD BOLTS (6081) (LATE TSN-8100,8200,8300)	20 - 40
1G22	CYLINDER HEAD BOLTS (8400)	20 - 76
1D17	CYLINDER HEAD GASKET (6076) (EARLY TSN-8100,8200,8300)	20 - 4
1F10	CYLINDER HEAD GASKET (6081) (LATE TSN-8100,8200,8300)	20 - 40
1G22	CYLINDER HEAD GASKET (8400)	20 - 76
1F7	CYLINDER HEAD GASKET KIT (6076)	20 - 38
1I8	CYLINDER HEAD GASKET KIT (6081)	20 - 110
1G20	CYLINDER HEAD GASKET KIT (6081) (LATE TSN-8100,8200,8300)	20 - 74
1E14	CYLINDER LINERS (6076) (EARLY TSN 8100,8200,8300)	20 - 20
1G6	CYLINDER LINERS (6081) (LATE TSN-8100,8200,8300)	20 - 58
1H17	CYLINDER LINERS (6081HRW01)(8400)	20 - 95
7E24	CYLINDER, LIFT (100 MM) (HIGH-LIFT) (EARLY DESIGN)	70 - 44
7E25	CYLINDER, LIFT (100 MM) (HIGH-LIFT) (LATE DESIGN)	70 - 45
7E18	CYLINDER, LIFT (8100, 8200) (EUROPEAN VERSION)	70 - 38
7E20	CYLINDER, LIFT (8100,8200) (EARLY DESIGN)	70 - 40
7E15	CYLINDER, LIFT (8100,8200) (NORTH AMERICAN HIGH-LIFT)	70 - 35
7E21	CYLINDER, LIFT (8100,8200)(LATE DESIGN)	70 - 41
7E19	CYLINDER, LIFT (8300,8400) (EUROPEAN VERSION)	70 - 39
7E17	CYLINDER, LIFT (8300,8400) (NORTH AMERICAN HIGH-LIFT)	70 - 37
7E22	CYLINDER, LIFT (90 MM) (EARLY DESIGN)	70 - 42
7E23	CYLINDER, LIFT (90 MM) (LATE DESIGN)	70 - 43
6D20	CYLINDER, STEERING (ADJUSTABLE AXLE)	60 - 16
6D22	CYLINDER, STEERING (ADJUSTABLE AXLE)	60 - 17B
6D23	CYLINDER, STEERING (MFWD)	60 - 18
6D25	CYLINDER, STEERING (MFWD) (LATE DESIGN)	60 - 21
6E1	CYLINDER, STEERING (MFWD) (LATE DESIGN)	60 - 21A
6E2	CYLINDER, STEERING (MFWD) (LATE DESIGN)	60 - 21B
7H13	CYLINDERS, PICK-UP HITCH (EUROPEAN VERSION)	70 - 106

D

1G1	DAMPER KEY (6081) (LATE TSN-81,82,8300)	20 - 55
1H15	DAMPER KEY (8400)	20 - 93
1E11	DAMPER, CRANKSHAFT (6076)	20 - 17
1H14	DAMPER, CRANKSHAFT (6081)	20 - 92
1F25	DAMPER, CRANKSHAFT (6081) (LATE TSN-81,82,8300)	20 - 54
8G15	DECAL, A/C FILTER SERVICE	80 - 62
8G13	DECAL, FIRST SCV	80 - 60
8G15	DECAL, SCV COUPLER	80 - 62
8G13	DECAL, SECOND SCV	80 - 60
8G7	DECALS (8100, 8200)(-009999)	80 - 54
8G8	DECALS (8300, 8400)(-009999)	80 - 55
8G21	DECALS KIT (CANADA)	80 - 68
8G19	DECALS KIT (SPANISH)	80 - 66
8G9	DECALS, MODEL DESIGNATION (8100, 8200)(010000-)	80 - 56
8G7	DECALS, MODEL DESIGNATION (8100, 8200) (-009999)	80 - 54
8G10	DECALS, MODEL DESIGNATION (8300, 8400)(010000-)	80 - 57
8G8	DECALS, MODEL DESIGNATION (8300, 8400)(009999)	80 - 55
8G17	DECALS, RH CONTROL	80 - 64
9D17	DEFROST LOUVERS	91 - 12
3G9	DIAL ADJUSTMENT,ROCKSHAFT CONTROL(ARMREST)	40 - 66
5D15	DIFFERENTIAL	53 - 12
5D13	DIFFERENTIAL CASE	53 - 10
5E17	DIFFERENTIAL CASE (MFWD)	54 - 4
5E15	DIFFERENTIAL CASE COVER	54 - 2
5F12	DIFFERENTIAL CASE COVER	54 - 24
5E15	DIFFERENTIAL DRIVE SHAFT	54 - 2
5F12	DIFFERENTIAL DRIVE SHAFT	54 - 24
5D15	DIFFERENTIAL HOUSING COVER	53 - 12
5E19	DIFFERENTIAL HOUSING SET (MFWD)	54 - 6
5E20	DIFFERENTIAL QUILL	54 - 8
5G3	DIFFERENTIAL, MFWD, HIGH CAPACITY, (ASN 000001-000747; 800001-)	54 - 40
5G1	DIFFERENTIAL, MFWD, STANDARD, (ASN 000001-000747; 800001-)	54 - 38
5E17	DIFFERNTIAL CASE COVER (MFWD)	54 - 4
5D15	DIFFERNTIAL HUB	53 - 12
5D15	DIFFERNTIAL QUILL	53 - 12
5D15	DIFFERNTIAL SHAFT	53 - 12
5E20	DIFFERNTIAL SHAFT	54 - 8
3F6	DIODE,LOAD CENTER	40 - 36
1E10	DIPSTICK, ENGINE OIL (6076) (EARLY TSN-8100,8200,8300)	20 - 16
1H13	DIPSTICK, ENGINE OIL (6081)	20 - 91
1F24	DIPSTICK, ENGINE OIL (6081) (LATE TSN-81,82,8300)	20 - 53
4D14	DIRECTION INDICATOR BRACKET(CAB)(EV)	42 - 10
4D14	DIRECTION INDICATOR LAMP(CAB)(EV)	42 - 10
6F4	DISK, BRAKE	60 - 49
5G3	DISK, DIFFERENTIAL, MFWD, HIGH CAPACITY, (ASN 000001-000747; 800001-)	54 - 40
5G1	DISK, DIFFERENTIAL, MFWD, STANDARD, (ASN 000001-000747; 800001-)	54 - 38
3G20	DOME LIGHT	40 - 76
3G20	DOME LIGHT SWITCH	40 - 76
3E13	DOME LIGHT(EUROPEAN VERSION)(TSN -009999)	40 - 18
3E15	DOME LIGHT(EUROPEAN VERSION)(TSN 010000-)	40 - 20
3E9	DOME LIGHT(NORTH AMERICAN VERSION)(TSN -009999)	40 - 14
3E11	DOME LIGHT(NORTH AMERICAN VERSION)(TSN 010000-)	40 - 16
3E17	DOME LIGHT(UKRAINIAN VERSION)	40 - 22
3G21	DOME SWITCH,DOOR	40 - 77
9F6	DOOR HANDLE	91 - 50
9F6	DOOR HANDRAIL	91 - 50
9F6	DOOR LATCH	91 - 50
3E13	DOOR LIGHT SWITCH(EUROPEAN VERSION)(TSN -009999)	40 - 18
3E15	DOOR LIGHT SWITCH(EUROPEAN VERSION)(TSN 010000-)	40 - 20

https://www.truck-manuals.net/

ALPHABETICAL INDEX - CONTINUED

GRID		PAGE
3E9	DOOR LIGHT SWITCH(NORTH AMERICAN VERSION)(TSN -009999)	40 - 14
3E11	DOOR LIGHT SWITCH(NORTH AMERICAN VERSION)(TSN 010000-)	40 - 16
3E17	DOOR LIGHT SWITCH(UKRAINIAN VERSION)	40 - 22
9F6	DOOR, LEFT-HAND (NORTH AMERICAN VERSION)	91 - 50
9F8	DOOR, LEFT-HAND, LATE DESIGN	91 - 52
9F10	DOOR, LEFT-HAND, LATE DESIGN	91 - 53A
9F2	DOOR, RIGHT-HAND OPENING (EUROPEAN VERSION)	91 - 47
7F13	DRAFT LINK (EUROPEAN VERSION)	70 - 58
7F9	DRAFT LINK (NORTH AMERICAN VERSION)	70 - 54
7F12	DRAFT LINK BUMPER	70 - 57
7E12	DRAFT LINK POTENTIOMETER	70 - 32
7F16	DRAFT LINK RELEASE CABLE (EUROPEAN VERSION)	70 - 61
7E12	DRAFT LINK SUPPORT	70 - 32
7I17	DRAIN LINE, SELECTIVE CONTROL VALVE	70 - 136
7G21	DRAWBAR CLEVIS (EUROPEAN VERSION)	70 - 92
7G7	DRAWBAR CLEVIS (NORTH AMERICAN VERSION) (LATE DESIGN)	70 - 76
7G15	DRAWBAR CLEVIS (NORTH AMERICAN VERSION) (LATE DESIGN)	70 - 84
7G13	DRAWBAR CLEVIS (NORTH AMERICAN VERSION) (8400) (EARLY DESIGN)	70 - 82
7G5	DRAWBAR CLEVIS (8100, 8200, 8300) (EARLY DESIGN)	70 - 74
7G3	DRAWBAR FRONT SUPPORT (8100,8200,8300)	70 - 72
7G9	DRAWBAR FRONT SUPPORT (8400)	70 - 78
7G19	DRAWBAR KIT, REVERSIBLE (EUROPEAN VERSION)	70 - 90
7G3	DRAWBAR RETAINER (8100,8200,8300)	70 - 72
7G9	DRAWBAR RETAINER (8400)	70 - 78
7G5	DRAWBAR STRAP (8100,8200,8300) (EARLY DESIGN)	70 - 74
7H17	DRAWBAR, PICK-UP HITCH (EUROPEAN VERSION)	70 - 110
7G17	DRAWBAR, REGULAR (EUROPEAN VERSION)	70 - 88
7G3	DRAWBAR, REGULAR (8100,8200,8300)	70 - 72
7G9	DRAWBAR, REGULAR (8400)	70 - 78
9G1	DRAWER	92 - 12
9G1	DRAWER W/LATCH	92 - 12
1E12	DRIVE GEAR, OIL PUMP (6076) (EARLY TSN 8100,8200,8300)	20 - 18
1G1	DRIVE GEAR, OIL PUMP (6081) (LATE TSN-81,82,8300)	20 - 55
1H15	DRIVE GEAR, OIL PUMP (8400)	20 - 93
4G15	DRIVE SHAFT ASSEMBLY	51 - 44
1I19	DRIVE, FAN	20 - 122
1I23	DRIVE, FAN	20 - 126
1I21	DRIVE, FAN (8100,8200 010000-)	20 - 124
5F9	DRIVE, FINAL	54 - 20
5F22	DRIVE, FINAL	54 - 34
5G5	DRIVE, FINAL	54 - 42
7D10	DRIVE, HYDRAULIC PUMP	70 - 2
5E15	DRIVE, SPUR GEAR	54 - 2
5F12	DRIVE, SPUR GEAR	54 - 24
1J1	DRIVE,FAN (8100,8200 010000-)	20 - 128
5F11	DRIVELINE SHIELD	54 - 22
5D5	DRUM, CLUTCH	53 - 2
5D7	DRUM, CLUTCH	53 - 4
4G5	DRUM, OUTPUT SHAFT	51 - 34
4G7	DRUM, OUTPUT SHAFT	51 - 36
4I9	DRUM, OUTPUT SHAFT	51 - 86
4I11	DRUM, OUTPUT SHAFT	51 - 88
8F1	DUAL HUB EXTENSION (10-BOLT HUB ONLY)	80 - 21
8H17	DUCT,AIR CIRCULATION	90 - 14
8H16	DUCT,PRESSURIZER BLOWER MOTOR	90 - 13

E

2E24	E.C.U. (6076)	30 - 38
2F9	E.C.U. (6081) (LATE TSN-8100,8200,8300)	30 - 48
2F11	E.C.U. (6081) (LATE TSN-8100,8200,8300)	30 - 49A
2F21	E.C.U. (8400)	30 - 58
3F2	ELECTRICAL ADAPTER(TSN -009999)	40 - 32
3F3	ELECTRICAL ADAPTER(TSN 010000-)	40 - 33
4E13	ELECTRICAL CONNECTOR	43 - 8
4E6	ELECTRICAL CONNECTORS AND TERMINALS KIT	43 - 1
3H23	ELECTRICAL JUNCTION BLOCK	40 - 104
3E21	ELECTRICAL JUNCTION BLOCK(CAB POWER)	40 - 26
3E13	ELECTRICAL JUNCTION BLOCK(EUROPEAN VERSION)(TSN -009999)	40 - 18
3E15	ELECTRICAL JUNCTION BLOCK(EUROPEAN VERSION)(TSN 010000-)	40 - 20
3E9	ELECTRICAL JUNCTION BLOCK(NORTH AMERICAN VERSION)(TSN -009999)	40 - 14
3E11	ELECTRICAL JUNCTION BLOCK(NORTH AMERICAN VERSION)(TSN 010000-)	40 - 16
3E1	ELECTRICAL JUNCTION BLOCK(TSN -009999)	40 - 8
3E3	ELECTRICAL JUNCTION BLOCK(TSN -009999)	40 - 9A
3F16	ELECTRICAL JUNCTION BLOCK(TSN -009999)	40 - 48
3E7	ELECTRICAL JUNCTION BLOCK(TSN 010000-)	40 - 12
3F18	ELECTRICAL JUNCTION BLOCK(TSN 010000-)	40 - 50
3E17	ELECTRICAL JUNCTION BLOCK(UKRAINIAN VERSION)	40 - 22
3F10	ELECTRICAL JUNCTION BLOCK,CAB	40 - 41
3F2	ELECTRICAL JUNCTION BLOCK,FIELD OFFICE(TSN -009999)	40 - 32
3F3	ELECTRICAL JUNCTION BLOCK,FIELD OFFICE(TSN 010000-)	40 - 33
3F15	ELECTRICAL PLUG,CONVENIENCE OUTLET SOCKET	40 - 46
3F12	ELECTRICAL PLUG,7-TERMINAL OUTLET(NORTH AMERICAN VERSION)	40 - 43
4E13	ELECTRICAL TERMINAL	43 - 8
3F12	ELECTRICAL 7- TERMINAL OUTLET(NORTH AMERICAN VERSION)	40 - 43
3F13	ELECTRICAL 7-TERMINAL OUTLET SOCKET(EUROPEAN VERSION)	40 - 44
2E24	ELECTRONIC CONTROL UNIT (6076)	30 - 38
2F9	ELECTRONIC CONTROL UNIT (6081) (LATE TSN-8100,8200,8300)	30 - 48
2F11	ELECTRONIC CONTROL UNIT (6081) (LATE TSN-8100,8200,8300)	30 - 49A
2F21	ELECTRONIC CONTROL UNIT (8400)	30 - 58
2E24	ELECTRONIC FUEL INJECTION PUMP (6076)	30 - 38
2F21	ELECTRONIC FUEL INJECTION PUMP (8400)	30 - 58
2F9	ELECTRONIC FUEL INJECTION PUMP (6081) (LATE TSN-8100,8200,8300)	30 - 48
2F11	ELECTRONIC FUEL INJECTION PUMP (6081) (LATE TSN-8100,8200,8300)	30 - 49A
8G12	EMBLEM, LEAPING DEERE	80 - 59
8G5	EMBLEM, SLOW MOVING VEHICLE	80 - 52
7H19	END COVER, SELECTIVE CONTROL VALVE	70 - 113
3G13	ENGINE CONTROL UNIT(ECU)	40 - 70
3G15	ENGINE CONTROL UNIT(ECU)	40 - 72
3E5	ENGINE CONTROL UNIT(ECU)(TSN 010000-)	40 - 10

https://www.truck-manuals.net/

ALPHABETICAL INDEX - CONTINUED

GRID		PAGE
3G13	ENGINE CONTROLLER(ECU)	40 - 70
3G15	ENGINE CONTROLLER(ECU)	40 - 72
1F1	ENGINE COOLANT HEATER (220V)	20 - 32
1E24	ENGINE COOLANT HEATER (6076)	20 - 30
1D14	ENGINE OIL (TORQ-GARD)	20 - 1
1E22	ENGINE OIL COOLER (6076)	20 - 28
1G14	ENGINE OIL COOLER (8100, 8200, 8300) (LATE TSN)	20 - 66
1I4	ENGINE OIL COOLER (8400)	20 - 107
1E10	ENGINE OIL DIPSTICK (6076) (EARLY TSN-8100,8200,8300)	20 - 16
1H13	ENGINE OIL DIPSTICK (6081)	20 - 91
1F24	ENGINE OIL DIPSTICK (6081) (LATE TSN-81,82,8300)	20 - 53
1E10	ENGINE OIL DIPSTICK TUBE (6076) (EARLY TSN-8100,8200,8300)	20 - 16
1H13	ENGINE OIL DIPSTICK TUBE (6081)	20 - 91
1F24	ENGINE OIL DIPSTICK TUBE (6081) (LATE TSN-81,82,8300)	20 - 53
1E22	ENGINE OIL FILTER (6076)	20 - 28
1G15	ENGINE OIL FILTER (6081) (LATE TSN-8100,8200,8300)	20 - 68
1I1	ENGINE OIL FILTER (8400)	20 - 104
1E20	ENGINE OIL PUMP (6076)	20 - 26
1G10	ENGINE OIL PUMP (6081) (LATE TSN-81,82,8300)	20 - 62
1H23	ENGINE OIL PUMP (8400)	20 - 102
1E19	ENGINE OIL PUMP INTAKE (6076) (EARLY TSN-8100,8200,8300)	20 - 25
1G12	ENGINE OIL PUMP INTAKE (6081) (LATE TSN-8100,8200,8300)	20 - 64
1H22	ENGINE OIL PUMP INTAKE (8400)	20 - 101
1F21	ENGINE OVERHAUL KIT (6081) (LATE TSN-81,82,8300)	20 - 50
1H10	ENGINE OVERHAUL KIT (8400)	20 - 88
1F7	ENGINE REBUILD GASKET KIT (6076)	20 - 38
1I8	ENGINE REBUILD GASKET KIT (6081)	20 - 110
1G20	ENGINE REBUILD GASKET KIT (6081) (LATE TSN-8100,8200,8300)	20 - 74
8F11	ENGINE SIDE PANEL	80 - 32
8F19	ENGINE SIDE SHIELDS	80 - 40
3F22	ENGINE SPEED CONTROL POTENTIOMETER(ARMREST)	40 - 54
3F22	ENGINE SPEED CONTROL BRACKET(ARMREST)	40 - 54
3F22	ENGINE SPEED CONTROL GEAR(ARMREST)	40 - 54
3F22	ENGINE SPEED CONTROL KNOB(ARMREST)	40 - 54
3F22	ENGINE SPEED CONTROL LEVER(ARMREST)	40 - 54
1E18	ENGINE SPEED SENSOR (6076) (EARLY TSN-8100,8200,8300)	20 - 24
1H21	ENGINE SPEED SENSOR (6081)	20 - 99
1G9	ENGINE SPEED SENSOR (6081) (LATE TSN-81,82,8300)	20 - 61
3E1	ENGINE SPEED SENSOR(TSN -009999)	40 - 8
3E3	ENGINE SPEED SENSOR(TSN -009999)	40 - 9A
3E7	ENGINE SPEED SENSOR(TSN 010000-)	40 - 12
1E7	ENGINE UNDERHAUL KIT (6076)	20 - 13E
3F20	ENGINE WATER TEMPERATURE GAUGE	40 - 52
2E8	ETHER	30 - 26
2E13	ETHER AID BRACKET (6076)	30 - 29B
2E12	ETHER AID BRACKET (6081) (LATE TSN-8100,8200,8300)	30 - 29A
2E11	ETHER AID BRACKET (8400 TRACTOR)	30 - 29
3F21	ETHER AID SWITCH	40 - 53
2D21	ETHER NOZZLE (6081) (LATE TSN-8100,8200,8300)	30 - 13
2D25	ETHER NOZZLE (8400)	30 - 17
2E10	ETHER STARTING FITTINGS (6076)	30 - 28
8H19	EVAPORATOR/HEATER CORE	90 - 16
2D20	EXHAUST MANIFOLD (6076) (EARLY TSN - 8100,8200,8300)	30 - 12
2D20	EXHAUST MANIFOLD GASKETS (6076) (EARLY TSN - 8100,8200,8300)	30 - 12
2D24	EXHAUST MANIFOLD GASKETS (6081) (LATE TSN-8100,8200,8300)	30 - 16
2E4	EXHAUST MANIFOLD GASKETS (8400)	30 - 21
2D24	EXHAUST MANIFOLDS (6081 (LATE TSN-8100,8200,8300)	30 - 16
2E4	EXHAUST MANIFOLDS (8400)	30 - 21
2E6	EXHAUST PIPE	30 - 24
8F11	EXHAUST PIPE SHIELD	80 - 32
2E5	EXHAUST SHIELDS	30 - 23
1D17	EXHAUST VALVE SHIELD (6076) (EARLY TSN-8100,8200,8300)	20 - 4
1F10	EXHAUST VALVE SHIELD (6081) (LATE TSN-8100,8200,8300)	20 - 40
1G22	EXHAUST VALVE SHIELD (8400)	20 - 76
1D17	EXHAUST VALVES (6076) (EARLY TSN-8100,8200,8300)	20 - 4
1F10	EXHAUST VALVES (6081) (LATE TSN-8100,8200,8300)	20 - 40
1G22	EXHAUST VALVES (8400)	20 - 76
8H19	EXPANSION VALVE,HEATER AND A/C	90 - 16
8F5	EXTENSION, ADJUSTABLE FRONT AXLE (8100, 8200, 8300)	80 - 26
8F1	EXTENSION, DUAL HUB (10-BOLT HUB ONLY)	80 - 21
8F13	EXTENSION, HOOD	80 - 34
9E9	EXTENSION, REAR FENDER (EUROPEAN VERSION)	91 - 28
7F11	EXTENSION, SWAY BLOCK	70 - 56
4E1	EXTREMITY WARNING LAMP ARM KIT(027100-)	42 - 22
4E1	EXTREMITY WARNING LAMP ARM(027100-)	42 - 22
4D24	EXTREMITY WARNING LAMP BRACKET(-027099)	42 - 20
4E1	EXTREMITY WARNING LAMP BRACKET(027100-)	42 - 22
4E1	EXTREMITY WARNING LAMP BULB(027100-)	42 - 22
4D24	EXTREMITY WARNING LAMP KIT(-027099)	42 - 20
4E1	EXTREMITY WARNING LAMP REFLECTOR LABEL(0 27100-)	42 - 22
4E1	EXTREMITY WARNING LAMP SHIELD(027100-)	42 - 22
4E1	EXTREMITY WARNING LAMP WIRING HARNESS(02 7100-)	42 - 22
4E1	EXTREMITY WARNING LAMP(027100-)	42 - 22

F

1I19	FAN	20 - 122
1I23	FAN	20 - 126
1I19	FAN DRIVE	20 - 122
1I23	FAN DRIVE	20 - 126
1I21	FAN DRIVE (8100,8200 010000-)	20 - 124
1J1	FAN DRIVE (8100,8200 010000-)	20 - 128
8F25	FENDER SUPPORT	80 - 46
8F25	FENDER SUPPORT BRACKET	80 - 46
8F25	FENDER SUPPORT KIT	80 - 46
9D19	FENDER UPHOLSTERY, L.H. (CAB)	91 - 14
8F23	FENDER, FRONT (MFWD)	80 - 44
8F23	FENDER, FRONT (600/65 R28 TIRES)	80 - 44
9E9	FENDER, REAR (EUROPEAN VERSION)	91 - 28
3E13	FIELD CRUISE CONTRO(EUROPEAN VERSION)(TSN -009999)	40 - 18
3E15	FIELD CRUISE CONTROL(EUROPEAN VERSION)(TSN 010000-)	40 - 20

https://www.truck-manuals.net/

ALPHABETICAL INDEX - CONTINUED

GRID		PAGE
3E9	FIELD CRUISE CONTROL(NORTH AMERICAN VERSION)(-009999)	40 - 14
3E11	FIELD CRUISE CONTROL(NORTH AMERICAN VERSION)(TSN 010000-)	40 - 16
3E17	FIELD CRUISE CONTROL(UKRAINIAN VERSION)	40 - 22
9D21	FIELD OFFICE	91 - 16
3F2	FIELD OFFICE JUNCTION BLOCK,ELECTRICAL(TSN -009999)	40 - 32
3F3	FIELD OFFICE JUNCTION BLOCK,ELECTRICAL,(TSN 010000-)	40 - 33
3F2	FIELD OFFICE WIRING HARNESS(TSN -009999)	40 - 32
3F3	FIELD OFFICE WIRING HARNESS(TSN 010000-)	40 - 33
3I17	FIELD WINDING COIL,STARTING MOTOR (8100,8200,8300,8400)	41 - 6
7I5	FIFTH REMOTE CYLINDER CONTROL KIT	70 - 124
1E22	FILTER, ENGINE OIL (6076)	20 - 28
1G15	FILTER, ENGINE OIL (6081) (LATE TSN-8100,8200,8300)	20 - 68
1I1	FILTER, ENGINE OIL (8400)	20 - 104
2E18	FILTER, FUEL (6076)	30 - 32
2E20	FILTER, FUEL (6076)	30 - 34
2F5	FILTER, FUEL (6081) (LATE TSN-8100,8200,8300)	30 - 44
2G2	FILTER, FUEL (6081) (8400)	30 - 66
2G4	FILTER, FUEL (6081) (8400)	30 - 68
2E16	FILTER, PRE-FUEL (6081)	30 - 31A
2F17	FILTER, PRE-FUEL (8400)	30 - 54
1F2	FILTER, WEEP HOLE (WATER PUMP)(6076) (EARLY TSN-8100,8200,8300)	20 - 34
8H15	FILTER,FRESH AIR	90 - 12
5F9	FINAL DRIVE	54 - 20
5F22	FINAL DRIVE	54 - 34
5G5	FINAL DRIVE	54 - 42
5D23	FINAL DRIVE KIT, HEAVY DUTY	53 - 20
1D23	FITTINGS, CYLINDER BLOCK (6076) (EARLT TSN -009999)	20 - 10
1F17	FITTINGS, CYLINDER BLOCK (6081) (LATE TSN-81,82,8300)	20 - 46
1H4	FITTINGS, CYLINDER BLOCK (8400)	20 - 82
2E10	FITTINGS, ETHER STARTING (6076)	30 - 28
7J9	FITTINGS, IMPLEMENT HYDRAULIC OIL	70 - 152
5D9	FITTINGS, PTO	53 - 6
3F16	FLASHER(EUROPEAN VERSION)(TSN -009999)	40 - 48
3F18	FLASHER(EUROPEAN VERSION)(TSN 010000-)	40 - 50
3E17	FLOOD LAMPS,CAB UPPER MID-BODY(UKRAINIAN VERSION)	40 - 22
3E9	FLOOD LAMPS,CAB UPPER MID-BODY(NORTH AMERICAN VERSION)(TSN -009999)	40 - 14
3E11	FLOOD LAMPS,CAB UPPER MID-BODY(NORTH AMERICAN VERSION)(TSN 010000-)	40 - 16
3E13	FLOOD LAMPS,UPPER MID-BODY(EUROPEAN VERSION)(TSN -009999)	40 - 18
3E15	FLOOD LAMPS,UPPER MID-BODY(EUROPEAN VERSION)(TSN 010000-)	40 - 20
3E19	FLOOD LIGHTS,FRONT ROOF	40 - 24
3E13	FLOOD LIGHTS,REAR FENDER(EUROPEAN VERSION)(TSN -009999)	40 - 18
3E15	FLOOD LIGHTS,REAR FENDER(EUROPEAN VERSION)(TSN 010000-)	40 - 20
3E9	FLOOD LIGHTS,REAR FENDER(NORTH AMERICAN VERSION)(TSN -009999)	40 - 14
3E11	FLOOD LIGHTS,REAR FENDER(NORTH AMERICAN VERSION)(TSN 010000-)	40 - 16
3E17	FLOOD LIGHTS,REAR FENDER(UKRAINIAN VERSION)	40 - 22
3E19	FLOOD LIGHTS,REAR ROOF	40 - 24
9D11	FLOOR (CAB)	91 - 6
9D13	FLOOR MAT	91 - 8
1E13	FLYWHEEL (6076) (EARLY TSN 8100,8200,8300)	20 - 19
1G4	FLYWHEEL (6081) (LATE TSN-8100,8200,8300)	20 - 56
1H16	FLYWHEEL (8400)	20 - 94
1J4	FLYWHEEL COVER	20 - 131
1D21	FOLLOWER, CAMSHAFT (6076) (EARLY TSN 8100,8200,8300)	20 - 8
1D22	FOLLOWER, CAMSHAFT (6076) (EARLY TSN-8100,8200,8300)	20 - 9
1F15	FOLLOWER, CAMSHAFT (6081) (LATE TSN-8100,8200,8300)	20 - 44
1F16	FOLLOWER, CAMSHAFT (6081) (LATE TSN-8100,8200,8300)	20 - 45
1H2	FOLLOWER, CAMSHAFT (8400)	20 - 80
1H3	FOLLOWER, CAMSHAFT (8400)	20 - 81
3G17	FOOT THROTTLE	40 - 73
3G17	FOOT THROTTLE KIT	40 - 73
3G17	FOOT THROTTLE SENSOR	40 - 73
9D11	FOOTREST	91 - 6
7I5	FOURTH REMOTE CYLINDER CONTROL KIT	70 - 124
8F15	FRAME WEIGHTS (EUROPEAN VERSION)	80 - 36
8F17	FRAME WEIGHTS AND FRONT WEIGHT SUPPORT	80 - 38
8F9	FRAME, FRONT	80 - 30
8F18	FRAME, FRONT COVER (8100, 8200, 8300)	80 - 39
1F23	FRAME, FRONT SUMP (6081) (OIL PAN) (LATE TSN-8100,8200,8300)	20 - 52
1H12	FRAME, FRONT SUMP (8400) (OIL PAN)	20 - 90
7F5	FRAME, HITCH	70 - 50
8F7	FRAME, MID ASSEMBLY	80 - 28
8H15	FRESH AIR FILTER	90 - 12
8H15	FRESH AIR FILTER HOUSING	90 - 12
8H15	FRESH AIR FILTER HOUSING COVER	90 - 12
9E22	FRONT AND REAR WIPER ASSEMBLY KIT	91 - 42
8E8	FRONT AXLE CENTER	80 - 1
8E11	FRONT AXLE FRONT PIVOT FRONT SUPPORT (MFWD)	80 - 4
8E13	FRONT AXLE KNEE SPINDLE KNUCKLE	80 - 6
8E9	FRONT AXLE REAR PIVOT SUPPORT	80 - 2
8F23	FRONT FENDER ASSEMBLY, MFWD	80 - 44
8G1	FRONT FENDER SUPPORT	80 - 48
8F9	FRONT FRAME	80 - 30
8F9	FRONT FRAME AND FRONT SUPPORT	80 - 30
8F18	FRONT FRAME COVER (8100, 8200, 8300)	80 - 39
1F23	FRONT FRAME SUMP (6081) (OIL PAN) (LATE TSN-8100,8200,8300)	20 - 52
1H12	FRONT FRAME SUMP (8400) (OIL PAN)	20 - 90
4D17	FRONT HEADLIGHTS BRACKET(EV)	42 - 13
4D16	FRONT HEADLIGHTS BRACKET(UNITED KINGDOM)	42 - 12
4D17	FRONT HEADLIGHTS WIRING HARNESS(EV)	42 - 13
1E17	FRONT OIL SEAL (6076) (EARLY TSN-8100,8200,8300)	20 - 23
1G8	FRONT OIL SEAL (6081) (LATE TSN-8100,8200,8300)	20 - 60
1H20	FRONT OIL SEAL (8400 TRACTOR)	20 - 98
3E19	FRONT ROOF FLOOD LIGHTS	40 - 24
8F9	FRONT SUPPORT	80 - 30
7G9	FRONT SUPPORT, DRAWBAR (8400)	70 - 78

https://www.truck-manuals.net/

ALPHABETICAL INDEX - CONTINUED

GRID		PAGE
1F6	FRONT WATER MANIFOLD (6076)	20 - 37A
1F5	FRONT WATER MANIFOLD (6076) (EARLY TSN-8100,8200,8300)	20 - 37
1G19	FRONT WATER MANIFOLD (6081) (LATE TSN-8100,8200,8300)	20 - 73
1I7	FRONT WATER MANIFOLD (8400)	20 - 109
8F15	FRONT WEIGHT (EUROPEAN VERSION)	80 - 36
8F17	FRONT WEIGHT SUPPORT AND FRAME WEIGHTS	80 - 38
8E17	FRONT WHEEL	80 - 10
8E19	FRONT WHEELS (MFWD)	80 - 14
9E24	FRONT WINDOW	91 - 44
3E19	FRONT WIPER MOTOR	40 - 24
2E18	FUEL CHECK VALVE (6076)	30 - 32
2E20	FUEL CHECK VALVE (6076)	30 - 34
2F5	FUEL CHECK VALVE (6081) (LATE TSN-8100,8200,8300)	30 - 44
2G2	FUEL CHECK VALVE (6081) (8400)	30 - 66
2G4	FUEL CHECK VALVE (6081) (8400)	30 - 68
2E18	FUEL FILTER (6076)	30 - 32
2E20	FUEL FILTER (6076)	30 - 34
2F5	FUEL FILTER (6081) (LATE TSN-8100,8200,8300)	30 - 44
2G2	FUEL FILTER (6081) (8400)	30 - 66
2G4	FUEL FILTER (6081) (8400)	30 - 68
2F5	FUEL FILTER BASE (6081) (LATE TSN-8100,8200,8300)	30 - 44
2G2	FUEL FILTER BASE (6081) (8400)	30 - 66
2G4	FUEL FILTER BASE (6081) (8400)	30 - 68
2E18	FUEL FILTER LINES (6076) (EARLY DESIGN)	30 - 32
2E20	FUEL FILTER LINES (6076) (LATE DESIGN)	30 - 34
2G2	FUEL FILTER LINES (6081) (EARLY DESIGN) (8400)	30 - 66
2F5	FUEL FILTER LINES (6081) (LATE TSN-8100,8200,8300)	30 - 44
2G4	FUEL FILTER LINES (6081) (8400) (LATE DESIGN ENGINE)	30 - 68
3F20	FUEL GAUGE	40 - 52
2E22	FUEL INJ LINES (6076)	30 - 36
2F7	FUEL INJ LINES (6081 ENGINE) (LATE TSN-8100,8200,8300)	30 - 46
2F19	FUEL INJ LINES (6081) (8400 ONLY)	30 - 56
2F3	FUEL INJECTION NOZZLE (NIPPONDENSO) (EARLY TSN-8100,8200,8300)	30 - 42
2F15	FUEL INJECTION NOZZLE (6081) (LATE TSN-8100, 8200, 8300)	30 - 52
2F25	FUEL INJECTION NOZZLE (8400)	30 - 62
2E22	FUEL INJECTION NOZZLES (6076)	30 - 36
2F7	FUEL INJECTION NOZZLES (6081 ENGINE) (LATE TSN-8100,8200,8300)	30 - 46
2F19	FUEL INJECTION NOZZLES (6081) (ROBERT BOSCH) (8400 ONLY)	30 - 56
2E24	FUEL INJECTION PUMP (6076)	30 - 38
2F9	FUEL INJECTION PUMP (6081) (LATE TSN-8100,8200,8300)	30 - 48
2F11	FUEL INJECTION PUMP (6081) (LATE TSN-8100,8200,8300)	30 - 49A
2F21	FUEL INJECTION PUMP (8400)	30 - 58
2F1	FUEL INJECTION PUMP HOUSING CONNECTOR (6076)	30 - 40
2F13	FUEL INJECTION PUMP HOUSING CONNECTORS (6081) (LATE TSN-8100,8200,8300)	30 - 50
2F23	FUEL INJECTION PUMP HOUSING CONNECTORS (8400)	30 - 60
2E22	FUEL LEAK-OFF LINES (6076)	30 - 36
2E24	FUEL LEAK-OFF LINES (6076)	30 - 38
2F7	FUEL LEAK-OFF LINES (6081 ENGINE) (LATE TSN-8100,8200,8300)	30 - 46
2F9	FUEL LEAK-OFF LINES (6081) (LATE TSN-8100,8200,8300)	30 - 48
2F11	FUEL LEAK-OFF LINES (6081) (LATE TSN-8100,8200,8300)	30 - 49A
2F19	FUEL LEAK-OFF LINES (6081) (8400 ONLY)	30 - 56
2F21	FUEL LEAK-OFF LINES (8400)	30 - 58
2G6	FUEL LINES	30 - 70
3E1	FUEL SENDER(TSN -009999)	40 - 8
3E3	FUEL SENDER(TSN -009999)	40 - 9A
3E7	FUEL SENDER(TSN 010000-)	40 - 12
2E24	FUEL SHUT-OFF SOLENOID (6076)	30 - 38
2F9	FUEL SHUT-OFF SOLENOID (6081) (LATE TSN-8100,8200,8300)	30 - 48
2F11	FUEL SHUT-OFF SOLENOID (6081) (LATE TSN-8100,8200,8300)	30 - 49A
2F21	FUEL SHUT-OFF SOLENOID (8400)	30 - 58
2G8	FUEL TANK	30 - 72
3E1	FUEL TEMPERTURE SENSOR(TSN -009999)	40 - 8
3E3	FUEL TEMPERTURE SENSOR(TSN -009999)	40 - 9A
3E7	FUEL TEMPERTURE SENSOR(TSN 010000-)	40 - 12
2F2	FUEL TRANSFER PUMP (ROBERT BOSCH) (6076)	30 - 41
2F14	FUEL TRANSFER PUMP (ROBERT BOSCH) (6081) (LATE TSN-81,82,8300)	30 - 51
2F24	FUEL TRANSFER PUMP (ROBERT BOSCH) (8400 TRACTOR)	30 - 61
4E14	FUSE TERMINAL BOARD	43 - 9
3I5	FUSE,BACK-UP ALARM	40 - 110
3F6	FUSE,LOAD CENTER	40 - 36

G

1F7	GASKET KIT, CYLINDER HEAD (6076)	20 - 38
1I8	GASKET KIT, CYLINDER HEAD (6081)	20 - 110
1G20	GASKET KIT, CYLINDER HEAD (6081) (LATE TSN-8100,8200,8300)	20 - 74
1F7	GASKET KIT, ENGINE REBUILD (6076)	20 - 38
1I8	GASKET KIT, ENGINE REBUILD (6081)	20 - 110
1G20	GASKET KIT, ENGINE REBUILD (6081) (LATE TSN-8100,8200,8300)	20 - 74
1F7	GASKET KIT, SHORT BLOCK (6076)	20 - 38
1I8	GASKET KIT, SHORT BLOCK (6081)	20 - 110
1G20	GASKET KIT, SHORT BLOCK (6081) (LATE TSN-8100,8200,8300)	20 - 74
1D17	GASKET, CYLINDER HEAD (6076) (EARLY TSN-8100,8200,8300)	20 - 4
1F10	GASKET, CYLINDER HEAD (6081) (LATE TSN-8100,8200,8300)	20 - 40
1G22	GASKET, CYLINDER HEAD (8400)	20 - 76
1E22	GASKET, OIL COOLER (6076)	20 - 28
1I1	GASKET, OIL FILTER HOUSING (8400)	20 - 104
1E22	GASKET, OIL FILTER HOUSING (6076)	20 - 28
1G15	GASKET, OIL FILTER HOUSING (6081) (LATE TSN-8100,8200,8300)	20 - 68

https://www.truck-manuals.net/

ALPHABETICAL INDEX - CONTINUED

GRID		PAGE
1E9	GASKET, OIL PAN (6076) (EARLY TSN 8100,8200,8300)	20 - 15
1F23	GASKET, OIL PAN (6081) (LATE TSN-8100,8200,8300)	20 - 52
1H12	GASKET, OIL PAN (8400)	20 - 90
1G10	GASKET, OIL PUMP (6081) (LATE TSN-81,82,8300)	20 - 62
1H23	GASKET, OIL PUMP (8400)	20 - 102
1G12	GASKET, OIL PUMP INTAKE (LATE TSN-8100,8200,8300)	20 - 64
1E19	GASKET, OIL PUMP INTAKE (6076) (EARLT TSN-8100,8200,8300)	20 - 25
1H22	GASKET, OIL PUMP INTAKE (8400)	20 - 101
1G7	GASKET, REAR OIL SEAL (6081) (LATE TSN-8100,8200,8300)	20 - 59
1H19	GASKET, REAR OIL SEAL (8400)	20 - 97
1G24	GASKET, ROCKER ARM COVER (ESN -018791)(8400)	20 - 78
1G25	GASKET, ROCKER ARM COVER (ESN 018792-)(8400)	20 - 78A
1D19	GASKET, ROCKER ARM COVER (6076) (EARLY TSN-8100,8200,8300)	20 - 6
1F12	GASKET, ROCKER ARM COVER (6081) (LATE TSN-8100,8200,8300)	20 - 42
1F13	GASKET, ROCKER ARM COVER (6081) (LATE TSN-8100,8200,8300)	20 - 42A
1E17	GASKET, TIMING GEAR COVER (6076) (EARLY TSN-8100,8200,8300)	20 - 23
1G8	GASKET, TIMING GEAR COVER (6081) (LATE TSN-8100,8200,8300)	20 - 60
1H20	GASKET, TIMING GEAR COVER (8400 TRACTOR)	20 - 98
2D18	GASKET, TURBOCHARGER (6076) (EARLY TSN 8100,8200,8300)	30 - 10
2D22	GASKET, TURBOCHARGER (6081) (LATE TSN-8100,8200,8300)	30 - 14
2E1	GASKET, TURBOCHARGER (8400)	30 - 18
1F6	GASKET, WATER MANIFOLD (6076)	20 - 37A
1F5	GASKET, WATER MANIFOLD (6076) (EARLY TSN-8100,8200,8300)	20 - 37
1G19	GASKET, WATER MANIFOLD (6081) (LATE TSN-8100,8200,8300)	20 - 73
1I7	GASKET, WATER MANIFOLD (8400)	20 - 109
1F2	GASKET, WATER PUMP (6076) (EARLY TSN-8100,8200,8300)	20 - 34
1G17	GASKET, WATER PUMP (6081) (LATE TSN-8100,8200,8300)	20 - 70
1I5	GASKET, WATER PUMP (8400)	20 - 108
2D20	GASKETS, EXHAUST MANIFOLD (6076) (EARLY TSN - 8100,8200,8300)	30 - 12
2D24	GASKETS, EXHAUST MANIFOLD (6081) (LATE TSN-8100,8200,8300)	30 - 16
2E4	GASKETS, EXHAUST MANIFOLD (8400)	30 - 21
2D16	GASKETS, INTAKE MANIFOLD (6076)	30 - 8
2D21	GASKETS, INTAKE MANIFOLD (6081) (LATE TSN-8100,8200,8300)	30 - 13
2D25	GASKETS, INTAKE MANIFOLD (8400)	30 - 17
5E9	GAUGE, OIL FILL	53 - 32
3F20	GAUGE,ENGINE WATER TEMPERATURE	40 - 52
3F20	GAUGE,FUEL	40 - 52
3I3	GEAR PUMP HEATER BRACKET(EUROPEAN VERSION)	40 - 108
3I3	GEAR PUMP HEATER(EUROPEAN VERSION)	40 - 108
3I1	GEAR PUMP HEATER(NORTH AMERICAN VERSION)	40 - 106
1D22	GEAR, CAMSHAFT (6076) (EARLY TSN-8100,8200,8300)	20 - 9
1F16	GEAR, CAMSHAFT (6081) (LATE TSN-8100,8200,8300)	20 - 45
1H3	GEAR, CAMSHAFT (8400)	20 - 81
4G1	GEAR, COUNTERSHAFT	51 - 30
4I5	GEAR, COUNTERSHAFT	51 - 82
2E24	GEAR, INJECTION PUMP (6076)	30 - 38
2F9	GEAR, INJECTION PUMP (6081) (LATE TSN-8100,8200,8300)	30 - 48
2F11	GEAR, INJECTION PUMP (6081) (LATE TSN-8100,8200,8300)	30 - 49A
2F21	GEAR, INJECTION PUMP (8400)	30 - 58
1E20	GEAR, OIL PUMP (6076)	20 - 26
1E12	GEAR, OIL PUMP DRIVE (6076) (EARLY TSN 8100,8200,8300)	20 - 18
1G1	GEAR, OIL PUMP DRIVE (6081) (LATE TSN-81,82,8300)	20 - 55
1G10	GEAR, OIL PUMP DRIVE (6081) (LATE TSN-81,82,8300)	20 - 62
1H15	GEAR, OIL PUMP DRIVE (8400)	20 - 93
1H23	GEAR, OIL PUMP DRIVE (8400)	20 - 102
4G5	GEAR, OUTPUT SHAFT	51 - 34
4G7	GEAR, OUTPUT SHAFT	51 - 36
4I9	GEAR, OUTPUT SHAFT	51 - 86
4I11	GEAR, OUTPUT SHAFT	51 - 88
4F21	GEAR, REVERSE IDLER	51 - 24
4H23	GEAR, REVERSE IDLER	51 - 76
1E13	GEAR, STARTER (6076) (EARLY TSN 8100,8200,8300)	20 - 19
1G4	GEAR, STARTER (6081) (LATE TSN-8100,8200,8300)	20 - 56
1H16	GEAR, STARTER (8400)	20 - 94
3F22	GEAR,ENGINE SPEED CONTROL(ARMREST)	40 - 54
9E24	GLASS, CAB FRONT	91 - 44
9F6	GLASS, DOOR	91 - 50
9F2	GLASS, DOOR, RIGHT-HAND OPENING (EUROPEAN VERSION)	91 - 47
9F1	GLASS, STATIONARY RIGHT-HAND GLASS	91 - 46
7I3	GLYD RING KIT, SCV SOLENOID	70 - 122
8F10	GRILLE SCREEN	80 - 31
3H18	GRILLE,RADIO SPEAKER	40 - 98
3F24	GUIDE,SHIFT LEVER(ARMREST)	40 - 56

H

9F6	HANDLE, DOOR	91 - 50
9F6	HANDRAIL, DOOR	91 - 50
9E13	HANDRAIL, LEFT HAND	91 - 32
9F3	HANDRAIL, RIGHT-HAND (OPENING R.H.DOOR)	91 - 47A
2E24	HARNESS, WIRING (6076)	30 - 38
2F9	HARNESS, WIRING (6081) (LATE TSN-8100,8200,8300)	30 - 48
2F11	HARNESS, WIRING (6081) (LATE TSN-8100,8200,8300)	30 - 49A
2F21	HARNESS, WIRING (8400)	30 - 58
1D17	HEAD BOLT KIT (6076) (EARLY TSN-8100,8200,8300)	20 - 4
1F10	HEAD BOLT KIT (6081) (LATE TSN-8100,8200,8300)	20 - 40
1G22	HEAD BOLT KIT (8400)	20 - 76
1D17	HEAD BOLTS (6076) (EARLY TSN-8100,8200,8300)	20 - 4
1D17	HEAD, CYLINDER (6076) (EARLY TSN-8100,8200,8300)	20 - 4
1F10	HEAD, CYLINDER (6081) (LATE TSN-8100,8200,8300)	20 - 40
1G22	HEAD, CYLINDER (8400)	20 - 76

https://www.truck-manuals.net/

ALPHABETICAL INDEX - CONTINUED

GRID		PAGE
8F14	HEADLIGHT HOUSING	80 - 35
4D15	HEADLIGHT,HOOD	42 - 11
3E7	HEADLIGHTS(LEFT-HAND TRAFFIC),UNITED KIN GDOM(TSN 010000-)	40 - 12
4D16	HEADLIGHTS(LEFT-HAND TRAFFIC)UNITED KING DOM)	42 - 12
4D17	HEADLIGHTS(RIGHT-HAND TRAFFIC)(EV)	42 - 13
3E1	HEADLIGHTS(RIGHT-HAND TRAFFIC),EUROPEAN(TSN -009999)	40 - 8
3E3	HEADLIGHTS(RIGHT-HAND TRAFFIC),EUROPEAN(TSN -009999)	40 - 9A
3E7	HEADLIGHTS(RIGHT-HAND TRAFFIC),EUROPEAN(TSN 010000-)	40 - 12
3E1	HEADLIGHTS(TSN -009999)	40 - 8
3E3	HEADLIGHTS(TSN -009999)	40 - 9A
3E7	HEADLIGHTS(TSN 010000-)	40 - 12
3E1	HEADLIGHTS,(LEFT-HAND TRAFFIC),UNITED KI NGDOM(TSN -009999)	40 - 8
3E3	HEADLIGHTS,(LEFT-HAND TRAFFIC),UNITED KI NGDOM(TSN -009999)	40 - 9A
9E1	HEADLINER	91 - 20
9E1	HEADLINER SUPPORTS	91 - 20
8H19	HEATER AND A/C BLOWER MOTOR	90 - 16
8H19	HEATER AND A/C BLOWER MOTOR IMPELLER	90 - 16
8H21	HEATER AND A/C COMPARTMENT COVER	90 - 18
8H21	HEATER AND A/C COMPARTMENT SEAL	90 - 18
8H19	HEATER AND A/C EXPANSION VALVE	90 - 16
8H19	HEATER AND A/C HOUSING	90 - 16
8H19	HEATER AND A/C RESISTOR	90 - 16
8H19	HEATER AND A/C THERMOSTAT	90 - 16
8H13	HEATER HOSE	90 - 10
8H13	HEATER HOSE CLAMP	90 - 10
1F1	HEATER, ENGINE COOLANT (220V)	20 - 32
1E24	HEATER, ENGINE COOLANT (6076)	20 - 30
3I1	HEATER,COLD WEATHER START(NORTH AMERICAN VERSION)	40 - 106
3I3	HEATER,GEAR PUMP(EUROPEAN VERSION)	40 - 108
3I1	HEATER,GEAR PUMP(NORTH AMERICAN VERSION)	40 - 106
3I3	HEATER,TRANSMISSION(EUROPEAN VERSION)	40 - 108
3I1	HEATER,TRANSMISSION(NORTH AMERICAN VERSION)	40 - 106
5D23	HEAVY DUTY FINAL DRIVE KIT	53 - 20
9F4	HINGE ASSEMBLY, REAR WINDOW	91 - 48
7G23	HITCH BRACKETS, WAGON (EUROPEAN VERSION) (EARLY DESIGN)	70 - 94
7H1	HITCH BRACKETS, WAGON (EUROPEAN VERSION) (LATE DESIGN)	70 - 96
3G9	HITCH COMMAND POTENTIOMETER(ARMREST)	40 - 66
3G19	HITCH CONTROL LABEL(EUROPEAN VERSION)	40 - 75
3G18	HITCH CONTROL LABEL(NORTH AMERICAN VERSION)	40 - 74
3G1	HITCH CONTROL LEVER POTENTIOMETER(ARMREST)	40 - 58
3G19	HITCH CONTROL SWITCH (EUROPEAN VERSION)	40 - 75
3G18	HITCH CONTROL SWITCH BRACKET(NORTH AMERICAN VERSION)	40 - 74
3G18	HITCH CONTROL SWITCH(NORTH AMERICAN VERSION)	40 - 74
3E23	HITCH CONTROL UNIT(HCU)	40 - 28
3G13	HITCH CONTROL UNIT(HCU)	40 - 70
3G15	HITCH CONTROL UNIT(HCU)	40 - 72
3E5	HITCH CONTROL UNIT(HCU)(TSN 010000-)	40 - 10
3E23	HITCH CONTROLLER	40 - 28
3G13	HITCH CONTROLLER(HCU/SCU)	40 - 70
3G15	HITCH CONTROLLER(HCU/SCU)	40 - 72
7H9	HITCH CONTROLS, WAGON (EUROPEAN VERSION)	70 - 102
7H3	HITCH COUPLING, WAGON (EUROPEAN VERSION)	70 - 98
7F5	HITCH FRAME	70 - 50
7G1	HITCH KIT (W/O LIFT CYLINDERS)	70 - 70
3G1	HITCH RAISE LIMIT POTENTIOMETER(ARMREST)	40 - 58
3G1	HITCH RAISE/LOWER SWITCH(ARMREST)	40 - 58
3G1	HITCH RATE OF DROP POTENTIOMETER(ARMREST)	40 - 58
7F5	HITCH SIGHT GAUGE	70 - 50
7J5	HITCH STABILIZER (EUROPEAN VERSION) (EARLY DESIGN)	70 - 148
7J7	HITCH STABILIZER (EUROPEAN VERSION) (LATE DESIGN)	70 - 150
3G1	HITCH SWITCH KNOB(ARMREST)	40 - 58
7I7	HITCH VALVE	70 - 126
7I9	HITCH VALVE	70 - 128
7I11	HITCH VALVE OVERHAUL KIT	70 - 130
7I13	HITCH VALVE RELIEF VALVE	70 - 132
7H11	HITCH, PICK-UP (EUROPEAN VERSION) (EARLY DESIGN)	70 - 104
8F11	HOOD	80 - 32
8F13	HOOD EXTENSION	80 - 34
4D15	HOOD HEADLIGHT	42 - 11
7F15	HOOK, CENTER LINK TRANSPORT (EUROPEAN VERSION)	70 - 60
9E6	HOOK, CLOTHES	91 - 25
3H1	HORN(-026686)	40 - 82
3E1	HORN(TSN -009999)	40 - 8
3E3	HORN(TSN -009999)	40 - 9A
3E7	HORN(TSN 010000-)	40 - 12
3H2	HORN(026687-)	40 - 82A
7J11	HOSE IDENTIFICATION KIT	70 - 154
1I10	HOSE, RADIATOR	20 - 112
8H13	HOSE,HEATER	90 - 10
5F1	HOUSING	54 - 14
5F3	HOUSING	54 - 16
5F24	HOUSING	54 - 36
2F1	HOUSING CONNECTORS, FUEL INJECTION PUMP (6076)	30 - 40
2F13	HOUSING CONNECTORS, FUEL INJECTION PUMP (6081) (LATE TSN-8100,8200,8300)	30 - 50
2F23	HOUSING CONNECTORS, FUEL INJECTION PUMP (8400)	30 - 60
5E23	HOUSING, AXLE	54 - 12
5D15	HOUSING, DIFFERENTIAL COVER	53 - 12
5E19	HOUSING, DIFFERENTIAL SET (MFWD)	54 - 6
8F14	HOUSING, HEADLIGHT	80 - 35
5D11	HOUSING, INPUT	53 - 8
1E22	HOUSING, OIL COOLER AND FILTER (6076)	20 - 28
1G15	HOUSING, OIL FILTER (6081) (LATE TSN-8100,8200,8300)	20 - 68
1I1	HOUSING, OIL FILTER (8400)	20 - 104
4G9	HOUSING, PTO	51 - 38
4I13	HOUSING, PTO	51 - 90
5E1	HOUSING, PTO	53 - 24
5E3	HOUSING, PTO	53 - 26
5E5	HOUSING, PTO	53 - 28
1E16	HOUSING, REAR OIL SEAL (6076) (EARLY TSN 8100, 8200, 8300)	20 - 22
1G7	HOUSING, REAR OIL SEAL (6081) (LATE TSN-8100,8200,8300)	20 - 59
1H19	HOUSING, REAR OIL SEAL (8400)	20 - 97
1F6	HOUSING, THERMOSTAT, FRONT (6076)	20 - 37A
1F5	HOUSING, THERMOSTAT, FRONT (6076) (EARLY TSN-8100,8200,8300)	20 - 37

https://www.truck-manuals.net/

ALPHABETICAL INDEX - CONTINUED

GRID		PAGE
1G19	HOUSING, THERMOSTAT, FRONT (6081) (LATE TSN-8100,8200,8300)	20 - 73
1I7	HOUSING, THERMOSTAT, FRONT (8400)	20 - 109
2D17	HOUSING, TURBOCHARGER CENTER (SCHWITZER) (6076)	30 - 9
2E3	HOUSING, TURBOCHARGER CENTER (SCHWITZER) (6081)	30 - 20
3G23	HOUSING,CONSOLE LIGHT	40 - 79
8H15	HOUSING,FRESH AIR FILTER	90 - 12
8H19	HOUSING,HEATER AND A/C	90 - 16
3H18	HOUSING,RADIO SPEAKER	40 - 98
5D5	HUB, CLUTCH	53 - 2
5D7	HUB, CLUTCH	53 - 4
5D15	HUB, DIFFERNTIAL	53 - 12
5F9	HUB, WHEEL	54 - 20
5F22	HUB, WHEEL	54 - 34
5G5	HUB, WHEEL	54 - 42
7D9	HYDRAULIC AND TRANSMISSION OIL	70 - 1
3G24	HYDRAULIC DIFFERENTIAL LOCK LABEL	40 - 80
3G24	HYDRAULIC DIFFERENTIAL LOCK SWITCH	40 - 80
7J1	HYDRAULIC MOTOR RETURN KIT, MULTIPLE	70 - 144
7I23	HYDRAULIC MOTOR RETURN OR SUMP KIT	70 - 142
7E1	HYDRAULIC OIL COOLER	70 - 19
7E2	HYDRAULIC OIL COOLER LINES	70 - 20
7E6	HYDRAULIC OIL FILTER	70 - 24
7D14	HYDRAULIC PUMP (45 CM3 (2.75 IN3))	70 - 6
7D18	HYDRAULIC PUMP (57 CM3 (3.5 IN3))	70 - 10
7D10	HYDRAULIC PUMP DRIVE	70 - 2
7D16	HYDRAULIC PUMP SEAL KIT (45 CM3 (2.75 IN3))	70 - 8
7D20	HYDRAULIC PUMP SEAL KIT (57 CM3 (3.5 IN3))	70 - 12
9F4	HYDROPNEUMATIC SPRING, REAR WINDOW	91 - 48
7D22	HYDRUALIC PUMP LINES (45 CM3 (2.75 IN3))	70 - 14
7D24	HYDRUALIC PUMP LINES (57 CM3 (3.5 IN3))	70 - 16

I

7J11	IDENTIFICATION KIT, HOSE	70 - 154
4F21	IDLER, REVERSE	51 - 24
4H23	IDLER, REVERSE	51 - 76
1F2	IMPELLER, WATER PUMP (6076) (EARLT TSN-8100,8200,8300)	20 - 34
8H19	IMPELLER,HEATER AND A/C BLOWER MOTOR	90 - 16
8H16	IMPELLER,PRESSURIZER BLOWER MOTOR	90 - 13
7J9	IMPLEMENT HYDRAULIC OIL LINES AND FITTINGS	70 - 152
7F23	IMPLEMENT QUICK COUPLER (CATEGORY III/IIIN)	70 - 68
7G18	IMPLEMENT SAFETY CHAIN	70 - 89
3H14	IMPLEMENT SWITCH	40 - 94
3H14	IMPLEMENT SWITCH WIRING HARNESS	40 - 94
2F3	INJECTION NOZZLE, FUEL (NIPPONDENSO) (EARLY TSN-8100,8200,8300)	30 - 42
1H20	INJECTION PUMP ACCESS COVER (8400 TRACTOR)	20 - 98
1E17	INJECTION PUMP ACCESS COVER (6076) (EARLY TSN-8100,8200,8300)	20 - 23
1G8	INJECTION PUMP ACCESS COVER (6081) (LATE TSN-8100,8200,8300)	20 - 60
2E24	INJECTION PUMP GEAR (6076)	30 - 38
2F9	INJECTION PUMP GEAR (6081) (LATE TSN-8100,8200,8300)	30 - 48
2F11	INJECTION PUMP GEAR (6081) (LATE TSN-8100,8200,8300)	30 - 49A
2F21	INJECTION PUMP GEAR (8400)	30 - 58
2E24	INJECTION PUMP LUBE LINE (6076)	30 - 38
2F9	INJECTION PUMP LUBE LINE (6081) (LATE TSN-8100,8200,8300)	30 - 48
2F11	INJECTION PUMP LUBE LINE (6081) (LATE TSN-8100,8200,8300)	30 - 49A
2F21	INJECTION PUMP LUBE LINE (8400)	30 - 58
3E1	INJECTION PUMP(TSN -009999)	40 - 8
3E3	INJECTION PUMP(TSN -009999)	40 - 9A
3E7	INJECTION PUMP(TSN 010000-)	40 - 12
2E24	INJECTION PUMP, ELECTRONIC FUEL (6076)	30 - 38
2F21	INJECTION PUMP, ELECTRONIC FUEL (8400)	30 - 58
2F9	INJECTION PUMP, ELECTRONIC FUEL (6081) (LATE TSN-8100,8200,8300)	30 - 48
2F11	INJECTION PUMP, ELECTRONIC FUEL (6081) (LATE TSN-8100,8200,8300)	30 - 49A
9F12	INNER ROOF	91 - 54
5D11	INPUT HOUSING	53 - 8
4F22	INPUT SHAFT	51 - 26
4F24	INPUT SHAFT	51 - 28
4I1	INPUT SHAFT	51 - 78
4I3	INPUT SHAFT	51 - 80
1D17	INSERTS, VALVE SEAT (6076) (EARLY TSN-8100,8200,8300)	20 - 4
1F10	INSERTS, VALVE SEAT (6081) (LATE TSN-8100,8200,8300)	20 - 40
1G22	INSERTS, VALVE SEAT (8400)	20 - 76
9E4	INSIDE REAR VIEW MIRROR	91 - 23
3F20	INSTRUMENT CONTROL UNIT(ICU)	40 - 52
3E13	INSTRUMENT CONTROL UNIT(ICU)(EUROPEAN VERSION)(TSN -009999)	40 - 18
3F16	INSTRUMENT CONTROL UNIT(ICU)(EUROPEAN VERSION)(TSN -009999)	40 - 48
3E15	INSTRUMENT CONTROL UNIT(ICU)(EUROPEAN VERSION)(TSN 010000-)	40 - 20
3F18	INSTRUMENT CONTROL UNIT(ICU)(EUROPEAN VERSION)(TSN 010000-)	40 - 50
3E9	INSTRUMENT CONTROL UNIT(ICU)(NORTH AMERICAN VERSION)(-009999)	40 - 14
3F16	INSTRUMENT CONTROL UNIT(ICU)(NORTH AMERICAN VERSION)(TSN -009999)	40 - 48
3E11	INSTRUMENT CONTROL UNIT(ICU)(NORTH AMERICAN VERSION)(TSN 010000-)	40 - 16
3F18	INSTRUMENT CONTROL UNIT(ICU)(NORTH AMERICAN VERSION)(TSN 010000-)	40 - 50
3E17	INSTRUMENT CONTROL UNIT(ICU)(UKRAINIAN VERSION)	40 - 22
2D16	INTAKE MANIFOLD (6076)	30 - 8
2D21	INTAKE MANIFOLD (6081) (LATE TSN-8100,8200,8300)	30 - 13
2D25	INTAKE MANIFOLD (8400)	30 - 17
2D16	INTAKE MANIFOLD GASKETS (6076)	30 - 8
2D21	INTAKE MANIFOLD GASKETS (6081) (LATE TSN-8100,8200,8300)	30 - 13
2D25	INTAKE MANIFOLD GASKETS (8400)	30 - 17
1D17	INTAKE VALVES (6076) (EARLY TSN-8100,8200,8300)	20 - 4
1F10	INTAKE VALVES (6081) (LATE TSN-8100,8200,8300)	20 - 40
1G22	INTAKE VALVES (8400)	20 - 76
1E19	INTAKE, ENGINE OIL PUMP (6076) (EARLY TSN-8100,8200,8300)	20 - 25
1G12	INTAKE, ENGINE OIL PUMP (6081) (LATE TSN-8100,8200,8300)	20 - 64
1H22	INTAKE, ENGINE OIL PUMP (8400)	20 - 101

https://www.truck-manuals.net/

ALPHABETICAL INDEX - CONTINUED

GRID		PAGE
1I14	INTERCOOLER	20 - 116
1I16	INTERCOOLER	20 - 118
	J	
1D23	JETS, PISTON COOLING (6076) (EARLT TSN -009999)	20 - 10
1F17	JETS, PISTON COOLING (6081) (LATE TSN-81,82,8300)	20 - 46
1H4	JETS, PISTON COOLING (8400)	20 - 82
3H23	JUNCTION BLOCK,ELECTRICAL	40 - 104
3E21	JUNCTION BLOCK,ELECTRICAL(CAB POWER)	40 - 26
3E13	JUNCTION BLOCK,ELECTRICAL(EUROPEAN VERSION)(TSN -009999)	40 - 18
3E15	JUNCTION BLOCK,ELECTRICAL(EUROPEAN VERSION)(TSN 010000-)	40 - 20
3E9	JUNCTION BLOCK,ELECTRICAL(NORTH AMERICAN VERSION)(TSN -009999)	40 - 14
3E11	JUNCTION BLOCK,ELECTRICAL(NORTH AMERICAN VERSION)(TSN 010000-)	40 - 16
3E17	JUNCTION BLOCK,ELECTRICAL(UKRAINIAN VERSION)	40 - 22
	K	
3F21	KEY AND ETHER AID SWITCHES BRACKET	40 - 53
3F21	KEY SWITCH	40 - 53
1G1	KEY, DAMPER (6081) (LATE TSN-81,82,8300)	20 - 55
1H15	KEY, DAMPER (8400)	20 - 93
3F21	KEYS	40 - 53
9F22	KIT, AIR SPRING SEAT	92 - 8
9F17	KIT, ARMREST, LEFT-HAND	92 - 2
9F20	KIT, BOOT ATTACHING HARDWARE	92 - 6
6E25	KIT, BRAKE MAKE-UP CHECK VALVE	60 - 44
6F1	KIT, BRAKE PRE-FILL PISTON	60 - 45
6F1	KIT, BRAKE PRESSURE INLET CHECK VALVE	60 - 45
6E23	KIT, BRAKE VALVE HARDWARE	60 - 42
6E21	KIT, BRAKE VALVE OVERHAUL	60 - 40
6G4	KIT, BRAKE VALVE OVERHAUL	60 - 69C
7F21	KIT, CENTER LINK BRACKET SPACER (EUROPEAN VERSION)	70 - 66
9F22	KIT, COMPRESSOR FILTER	92 - 8
1F21	KIT, ENGINE OVERHAUL (6081) (LATE TSN-81,82,8300)	20 - 50
1H10	KIT, ENGINE OVERHAUL (8400)	20 - 88
8F25	KIT, FENDER SUPPORT	80 - 46
7I5	KIT, FIFTH REMOTE CYLINDER CONTROL	70 - 124
5D23	KIT, FINAL DRIVE, HEAVY DUTY	53 - 20
7I5	KIT, FOURTH REMOTE CYLINDER CONTROL	70 - 124
9E22	KIT, FRONT AND REAR WIPER ASSEMBLY	91 - 42
1D17	KIT, HEAD BOLT (6076) (EARLY TSN-8100,8200,8300)	20 - 4
1F10	KIT, HEAD BOLT (6081) (LATE TSN-8100,8200,8300)	20 - 40
1G22	KIT, HEAD BOLT (8400)	20 - 76
7G1	KIT, HITCH (W/O LIFT CYLINDERS)	70 - 70
7I11	KIT, HITCH VALVE OVERHAUL	70 - 130
7J11	KIT, HOSE IDENTIFICATION	70 - 154
7I23	KIT, HYDRAULIC MOTOR RETURN OR SUMP	70 - 142
7D16	KIT, HYDRAULIC PUMP SEAL (45 CM3 (2.75 IN3))	70 - 8
7D20	KIT, HYDRAULIC PUMP SEAL (57 CM3 (3.5 IN3))	70 - 12
7G18	KIT, IMPLEMENT SAFETY CHAIN ADAPTER	70 - 89
7E14	KIT, LIFT CYLINDER (8100, 8200) (NORTH AMERICAN VERSION)	70 - 34
7E16	KIT, LIFT CYLINDER (8300, 8400) (NORTH AMERICAN VERSION)	70 - 36
7I9	KIT, MANUAL LOWER (HITCH VALVE)	70 - 128
7J1	KIT, MULTIPLE HYDRAULIC MOTOR RETURN	70 - 144
7J10	KIT, O-RING	70 - 153
9F20	KIT, OPERATOR PRESENCE SWITCH	92 - 6
9E15	KIT, OUTER MIRRORS	91 - 34
1G6	KIT, PISTON/LINER (6081) (LATE TSN-8100,8200,8300)	20 - 58
1H17	KIT, PISTON/LINER (6081HRW01)(8400)	20 - 95
7I21	KIT, POWER BEYOND COUPLER (W/ TRAILER BRAKE) (EUROPEAN VERSION)	70 - 140
7I19	KIT, POWER BEYOND COUPLER (W/O TRAILER BRAKE)	70 - 138
9E11	KIT, REAR FENDER SIDE EXTENSION AND MUD GUARD	91 - 30
8H22	KIT, RECIRCULATION FILTER KIT	90 - 19
7G19	KIT, REVERSIBLE DRAWBAR (EUROPEAN VERSION)	70 - 90
9F22	KIT, RIDE ZONE PROTECTOR	92 - 8
8D4	KIT, ROW-TRAK	71 - 2
8D12	KIT, ROW-TRAK PROBE BOX	71 - 10
8D10	KIT, ROW-TRAK WAND PROBE	71 - 8
8D8	KIT, ROW-TRAK 2 BALL PROBE	71 - 6
8D6	KIT, ROW-TRAK 3 BALL PROBE	71 - 4
7I3	KIT, SCV PILOT VALVE SEAL	70 - 122
8H6	KIT, SEAL (A/C COMPRESSOR)	90 - 2
7I9	KIT, SEAL SECTION INTERFACE (HITCH VALVE)	70 - 128
9F20	KIT, SEAT ADJUSTMENT CABLE	92 - 6
9F23	KIT, SEAT AIR SPRING	92 - 9
9F20	KIT, SEAT ATTENUATOR SPRING	92 - 6
9F20	KIT, SEAT BEARING ROLLER	92 - 6
9F23	KIT, SEAT COMPRESSOR FILTER	92 - 9
9F22	KIT, SEAT COMPRESSOR VALVE	92 - 8
9F23	KIT, SEAT COMPRESSOR VALVE	92 - 9
9F20	KIT, SEAT CONTROL LEVER	92 - 6
9F23	KIT, SEAT FORE-AFT ATTENUATOR	92 - 9
9F17	KIT, SEAT HEIGHT SWITCH	92 - 2
9F20	KIT, SEAT KNOB	92 - 6
9F23	KIT, SEAT LATERAL ATTENUATOR SHOCK	92 - 9
9F23	KIT, SEAT RIDE ZONE PROTECTOR	92 - 9
9F22	KIT, SEAT SHOCK ABSORBER	92 - 8
9F17	KIT, SEAT SLIDE TRACK	92 - 2
9F20	KIT, SEAT SUSPENSION BOOT	92 - 6
9F17	KIT, SEAT SWIVEL	92 - 2
9F22	KIT, SEAT WIRING HARNESS	92 - 8
6F17	KIT, SECONDARY BRAKE (EUROPEAN VERSION) (EARLY DESIGN)	60 - 60
7H24	KIT, SELECTIVE CONTROL VALVE OVERHAUL	70 - 118
6D21	KIT, STEERING CYLINDER SEAL (ADJUSTABLE AXLE) (EARLY DESIGN)	60 - 17
6D17	KIT, STEERING VALVE SEAL	60 - 13
6G13	KIT, TRAILER BRAKE VALVE (EUROPEAN VERSION)	60 - 76
1E7	KIT, UNDERHAUL ENGINE (6076)	20 - 13E
7J3	KIT, WAGON TILT	70 - 146
9E21	KIT, WINDSHIELD AND REAR WASHER	91 - 40
3I5	KIT,BACK-UP ALARM	40 - 110
3I3	KIT,COLD WEATHER START(EUROPEAN VERSION)	40 - 108
3I1	KIT,COLD WEATHER START(NORTH AMERICAN VERSION)	40 - 106
4E6	KIT,ELECTRICAL CONNECTORS AND TERMINALS	43 - 1
4E1	KIT,EXTREMITY WARNING LAMP ARM(027100-)	42 - 22

https://www.truck-manuals.net/

ALPHABETICAL INDEX - CONTINUED

GRID		PAGE
4D24	KIT,EXTREMITY WARNING LAMP(-027099)	42 - 20
3G17	KIT,FOOT THROTTLE	40 - 73
3H4	KIT,RADAR(TSN -XXXXXX)	40 - 84
3H8	KIT,RADAR(TSN XXXXXX-)	40 - 88
3H6	KIT,RADAR(TSN XXXXXX-XXXXXX)	40 - 86
3H16	KIT,RADIO KNOB	40 - 96
3H19	KIT,RADIO,ANTENNA AND SPEAKER	40 - 99
3H20	KIT,REAR SPEAKER	40 - 100
3G22	KIT,ROTATING BEACON SWITCH	40 - 78
1F4	KIT,WATER PUMP REPAIR (6076) (EARLY TSN 8100,8200,8300)	20 - 36
4D10	KIT,WORK LAMP(CAB)(UPPER MID-BODY) (EUROPEAN VERSION)(TSN -XXXXXX)	42 - 6
4D11	KIT,WORK LAMP(CAB)(UPPER MID-BODY) (EUROPEAN VERSION)(TSN XXXXXX-)	42 - 7
4D8	KIT,WORK LAMP(UPPER MID-BODY)(NORTH AMERICAN VERSION)(TSN -XXXXXX)	42 - 4
4D9	KIT,WORK LAMP(UPPER MID-BODY)(NORTH AMERICAN VERSION)(TSN XXXXXX-)	42 - 5
8E13	KNEE SPINDLE KNUCKLE, FRONT AXLE	80 - 6
3F22	KNOB,ENGINE SPEED CONTROL(ARMREST)	40 - 54
3G1	KNOB,HITCH SWITCHES(ARMREST)	40 - 58
3G9	KNOB,ROCKSHAFT CONTROL(ARMREST)	40 - 66
3H13	KNOB,ROW-TRAK MONITOR	40 - 93
3F20	KNOB,SCV SETUP MODULE	40 - 52
3F24	KNOB,SHIFT LEVER(ARMREST)	40 - 56
3H16	KNOBS,RADIO	40 - 96
8E13	KNUCKLE, FRONT AXLE KNEE SPINDLE	80 - 6

L

8G11	LABEL, ACCUMULATOR	80 - 58
8G21	LABEL, BY-PASS START (CANADA)	80 - 68
8G19	LABEL, BY-PASS START (SPANISH)	80 - 66
8G12	LABEL, BYPASS START	80 - 59
8G12	LABEL, DIFFERENTIAL	80 - 59
8G13	LABEL, DRAWBAR	80 - 60
8G17	LABEL, DRAWBAR	80 - 64
8G15	LABEL, ELECTRIC LOAD CENTER	80 - 62
8G12	LABEL, ELECTRICAL LOAD CENTER	80 - 59
8G21	LABEL, ENGINE START & SLOW SPEED	80 - 68
8G17	LABEL, FILED CRUISE	80 - 64
8G13	LABEL, FOURTH SCV	80 - 60
8G12	LABEL, FROMT ARMREST	80 - 59
8G13	LABEL, HITCH	80 - 60
8G12	LABEL, HITCH ADJUSTMENT	80 - 59
8G17	LABEL, HITCH ADJUSTMENT	80 - 64
8G15	LABEL, IMPORTER	80 - 62
8G11	LABEL, INJECTION PUMP	80 - 58
8G21	LABEL, INJECTION PUMP	80 - 68
8G19	LABEL, INJECTION PUMP (SPANISH)	80 - 66
8G15	LABEL, POWER SHAFT ADAPTER	80 - 62
8G13	LABEL, PTO	80 - 60
8G21	LABEL, PTO SAFETY (CANADA)	80 - 68
8G19	LABEL, PTO SAFETY (SPANISH)	80 - 66
8G11	LABEL, QUICK COUPLER	80 - 58
8G21	LABEL, QUICK COUPLER (CANADA)	80 - 68
8G19	LABEL, QUICK COUPLER (SPANISH)	80 - 66
8G11	LABEL, RADAR SENSOR	80 - 58
8G12	LABEL, RADAR WARNING	80 - 59
8G21	LABEL, RADAR WARNING (CANADA)	80 - 68
8G19	LABEL, RADAR WARNING (SPANISH)	80 - 66
8G11	LABEL, ROPS WARNING	80 - 58
8G12	LABEL, ROPS WARNING	80 - 59
8G15	LABEL, ROPS WARNING	80 - 62
8G21	LABEL, ROPS WARNING (CANADA)	80 - 68
8G19	LABEL, ROPS WARNING (SPANISH/ENGISH)	80 - 66
8G15	LABEL, ROW GUIDANCE & SCV	80 - 62
8G11	LABEL, SAFETY	80 - 58
8G15	LABEL, SAFETY	80 - 62
8G17	LABEL, SAFETY (GERMANY)	80 - 64
8G17	LABEL, SCV & HITCH	80 - 64
8G13	LABEL, SPEED CONTROL	80 - 60
8G13	LABEL, THIRD SCV	80 - 60
8G17	LABEL, TRACTOR TOW, EXPORT	80 - 64
8G19	LABEL, TRANSMISSION (SPANISH)	80 - 66
8G17	LABEL, TRANSMISSION PARK	80 - 64
8G21	LABEL, TRANSMISSION PARK	80 - 68
8G17	LABEL, 40 KM/H	80 - 64
3I19	LABEL,BYPASS START	41 - 8
3I20	LABEL,BYPASS START(8100,8200,8300,8400)	41 - 10
3I16	LABEL,BYPASS START(8400)	41 - 5
3F16	LABEL,CONSOLE CONTROLS(TSN -009999)	40 - 48
3F18	LABEL,CONSOLE CONTROLS(TSN 010000-)	40 - 50
3G19	LABEL,HITCH CONTROL(EUROPEAN VERSION)	40 - 75
3G18	LABEL,HITCH CONTROL(NORTH AMERICAN VERSION)	40 - 74
3G1	LABEL,HITCH RAISE /LOWER(ARMREST)	40 - 58
3G1	LABEL,HITCH(ARMREST)	40 - 58
3G24	LABEL,HYDRAULIC DIFFERENTIAL LOCK	40 - 80
3F6	LABEL,LOAD CENTER	40 - 36
3G5	LABEL,NO.1 SCV(ARMREST)	40 - 62
3G5	LABEL,NO.2 SCV(ARMREST)	40 - 62
3G5	LABEL,NO.3 SCV(ARMREST)	40 - 62
3G7	LABEL,NO.4 SCV(ARMREST)	40 - 64
3H4	LABEL,RADAR(TSN -XXXXXX)	40 - 84
3H6	LABEL,RADAR(TSN XXXXXX-XXXXXX)	40 - 86
3G1	LABEL,REAR PTO(ARMREST)	40 - 58
3G3	LABEL,SPEED CONTROL(ARMREST)	40 - 60
3F13	LABEL,7-TERMINAL ELECTRICAL OUTLET SOCKET(EUROPEAN VERSION)	40 - 44
3F12	LABEL,7-TERMINAL ELECTRICAL OUTLET SOCKET(NORTH AMERICAN VERSION)	40 - 43
8G6	LAMP, LICENSE PLATE	80 - 53
4D14	LAMP,DIRECTION INDICATOR(CAB)(EV)	42 - 10
4E1	LAMP,EXTREMITY WARNING(027100-)	42 - 22
4D19	LAMP,FRONT CAB ROOF	42 - 15
4D20	LAMP,REAR ROOF WORK(TSN -XXXXXX)	42 - 16
4D21	LAMP,REAR ROOF WORK(TSN XXXXXX-)	42 - 17
4D12	LAMPS,WORKING(LOWER MID-BODY)(TSN -XXXXXX)	42 - 8
4D13	LAMPS,WORKING(LOWER MID-BODY)(TSN XXXXXX-)	42 - 9
8G3	LATCH, BATTERY BOX COVER	80 - 50
9F6	LATCH, DOOR	91 - 50
9E13	LEFT HAND STEP W/HANDRAIL	91 - 32
9G5	LEFT-HAND ARMREST	92 - 16
9F6	LEFT-HAND DOOR (NORTH AMERICAN VERSION)	91 - 50
9F8	LEFT-HAND DOOR, LATE DESIGN	91 - 52
9F10	LEFT-HAND DOOR, LATE DESIGN	91 - 53A
6F21	LEVER COVER, SECONDARY BRAKE (EUROPEAN VERSION)	60 - 64
7E10	LEVER, ROCKSHAFT POSITION SENSOR	70 - 30
6F13	LEVER, SECONDARY BRAKE (EUROPEAN VERSION) (EARLY DESIGN)	60 - 56
6F15	LEVER, SECONDARY BRAKE (EUROPEAN VERSION) (LATE DESIGN)	60 - 58
6F19	LEVER, SECONDARY BRAKE (EUROPEAN VERSION) (LATEST DESIGN)	60 - 62
7H20	LEVER, SELECTIVE CONTROL VALVE	70 - 114
3F22	LEVER,ENGINE SPEED CONTROL(ARMREST)	40 - 54
3G5	LEVER,SELECTIVE CONTROLS 1,2,3(ARMREST)	40 - 62

https://www.truck-manuals.net/

ALPHABETICAL INDEX - CONTINUED

GRID		PAGE
3G7	LEVERS,SELECTIVE CONTROL 4 AND 5(ARMREST)	40 - 64
3E25	LICENCE PLATE LAMP WIRING HARNESS (EUROPEAN VERSION)	40 - 30
8G6	LICENSE PLATE AND LAMP	80 - 53
7E8	LIFT ARM, ROCKSHAFT (EARLY DESIGN)	70 - 28
7E9	LIFT ARM, ROCKSHAFT (LATE DESIGN)	70 - 29
7E24	LIFT CYLINDER (100 MM) (HIGH-LIFT) (EARLY DESIGN)	70 - 44
7E25	LIFT CYLINDER (100 MM) (HIGH-LIFT) (LATE DESIGN)	70 - 45
7E18	LIFT CYLINDER (8100, 8200) (EUROPEAN VERSION)	70 - 38
7E20	LIFT CYLINDER (8100,8200) (EARLY DESIGN)	70 - 40
7E21	LIFT CYLINDER (8100,8200) (LATE DESIGN)	70 - 41
7E15	LIFT CYLINDER (8100,8200) (NORTH AMERICAN HIGH-LIFT)	70 - 35
7E19	LIFT CYLINDER (8300,8400) (EUROPEAN VERSION)	70 - 39
7E17	LIFT CYLINDER (8300,8400) (NORTH AMERICAN HIGH-LIFT)	70 - 37
7E22	LIFT CYLINDER (90 MM) (EARLY DESIGN)	70 - 42
7E23	LIFT CYLINDER (90 MM) (LATE DESIGN)	70 - 43
7E14	LIFT CYLINDER KIT (8100, 8200) (NORTH AMERICAN VERSION)	70 - 34
7E16	LIFT CYLINDER KIT (8300, 8400) (NORTH AMERICAN VERSION)	70 - 36
7F3	LIFT CYLINDER LINES (EUROPEAN VERSION)	70 - 48
7F1	LIFT CYLINDER LINES (NORTH AMERICAN VERSION)	70 - 46
7F7	LIFT LINK	70 - 52
1D20	LIFT STRAPS, ENGINE (6076)	20 - 7
1H1	LIFT STRAPS, ENGINE (6081)	20 - 79
1F14	LIFT STRAPS, ENGINE (6081) (LATE TSN-81,82,8300)	20 - 43
3G20	LIGHT,DOME	40 - 76
3E13	LIGHT,LICENCE PLATE(EUROPEAN VERSION)(TSN -009999)	40 - 18
3E15	LIGHT,LICENCE PLATE(EUROPEAN VERSION)(TSN 010000-)	40 - 20
4D7	LIGHT,TAIL(EV)(TSN 010000-)	42 - 3
4D6	LIGHT,TAIL(EV)(TSN -009999)	42 - 2
4D5	LIGHT,TAIL(NAV)	42 - 1
9D14	LIGHTER	91 - 9
6I3	LINE, AIR BRAKE (REAR) (LATE DESIGN)	60 - 114
7E6	LINE, HYDRAULIC OIL FILTER	70 - 24
2E24	LINE, INJECTION PUMP LUBE (6076)	30 - 38
2F9	LINE, INJECTION PUMP LUBE (6081) (LATE TSN-8100,8200,8300)	30 - 48
2F11	LINE, INJECTION PUMP LUBE (6081) (LATE TSN-8100,8200,8300)	30 - 49A
2F21	LINE, INJECTION PUMP LUBE (8400)	30 - 58
7I15	LINE, SELECTIVE CONTROL VALVE PILOT	70 - 134
6E15	LINE, STEERING PUMP FRONT	60 - 34
1E14	LINER O-RINGS (6076) (EARLY TSN 8100,8200,8300)	20 - 20
1G6	LINER O-RINGS (6081) (LATE TSN-8100,8200,8300)	20 - 58
1H17	LINER O-RINGS (6081HRW01)(8400)	20 - 95
1E14	LINER SHIM (6076) (EARLY TSN 8100,8200,8300)	20 - 20
1G6	LINER SHIM (6081) (LATE TSN-8100,8200,8300)	20 - 58
1H17	LINER SHIM (6081HRW01)(8400)	20 - 95
1E14	LINERS, CYLINDER (6076) (EARLY TSN 8100,8200,8300)	20 - 20
1G6	LINERS, CYLINDER (6081) (LATE TSN-8100,8200,8300)	20 - 58
1H17	LINERS, CYLINDER (6081HRW01)(8400)	20 - 95
6H22	LINES, AIR BRAKE (FRONT)	60 - 108
6H24	LINES, AIR BRAKE (FRONT)	60 - 110
6I1	LINES, AIR BRAKE (REAR) (EARLY DESIGN)	60 - 112
6H3	LINES, AIR BRAKE CONTROL VALVE (EUROPEAN VERSION) (EARLY DESIGN)	60 - 90
6F5	LINES, BRAKE OIL (EARLY DESIGN)	60 - 50
6F9	LINES, BRAKE OIL (REAR) (W/ TRAILER BRAKE) (LATE DESIGN)	60 - 52
6F11	LINES, BRAKE OIL (REAR) (W/O TRAILER BRAKE) (LATE DESIGN)	60 - 54
6F7	LINES, BRAKE VALVE ATTENUATOR	60 - 51A
6E13	LINES, CHARGE PUMP REAR	60 - 32
2G6	LINES, FUEL	30 - 70
2E18	LINES, FUEL FILTER (6076) (EARLY DESIGN)	30 - 32
2E20	LINES, FUEL FILTER (6076) (LATE DESIGN)	30 - 34
2G2	LINES, FUEL FILTER (6081) (EARLY DESIGN) (8400)	30 - 66
2F5	LINES, FUEL FILTER (6081) (LATE TSN-8100,8200,8300)	30 - 44
2G4	LINES, FUEL FILTER (6081) (8400) (LATE DESIGN ENGINE)	30 - 68
2E22	LINES, FUEL INJ (6076)	30 - 36
2F7	LINES, FUEL INJ (6081 ENGINE) (LATE TSN-8100,8200,8300)	30 - 46
2F19	LINES, FUEL INJ (6081) (8400 ONLY)	30 - 56
2E22	LINES, FUEL LEAK-OFF (6076)	30 - 36
2E24	LINES, FUEL LEAK-OFF (6076)	30 - 38
2F7	LINES, FUEL LEAK-OFF (6081 ENGINE) (LATE TSN-8100,8200,8300)	30 - 46
2F9	LINES, FUEL LEAK-OFF (6081) (LATE TSN-8100,8200,8300)	30 - 48
2F11	LINES, FUEL LEAK-OFF (6081) (LATE TSN-8100,8200,8300)	30 - 49A
2F19	LINES, FUEL LEAK-OFF (6081) (8400 ONLY)	30 - 56
2F21	LINES, FUEL LEAK-OFF (8400)	30 - 58
7E2	LINES, HYDRAULIC OIL COOLER	70 - 20
7D22	LINES, HYDRAULIC PUMP (45 CM3 (2.75 IN3))	70 - 14
7D24	LINES, HYDRAULIC PUMP(57 CM3 (3.5 IN3))	70 - 16
7J9	LINES, IMPLEMENT HYDRAULIC OIL	70 - 152
7F3	LINES, LIFT CYLINDER (EUROPEAN VERSION)	70 - 48
7F1	LINES, LIFT CYLINDER (NORTH AMERICAN VERSION)	70 - 46
7H13	LINES, PICK-UP HITCH CYLINDER (EUROPEAN VERSION)	70 - 106
2E16	LINES, PRE-FUEL (6081)	30 - 31A
2F17	LINES, PRE-FUEL (8400)	30 - 54
6D18	LINES, PRIORITY VALVE	60 - 14
7D12	LINES, PUMP DRIVE	70 - 4
8H11	LINES, REFRIGERANT	90 - 8
8D18	LINES, ROW-TRAK QUICK COUPLER CYLINDER	71 - 16
6G7	LINES, SECONDARY BRAKE (EUROPEAN VERSION) (EARLY DESIGN)	60 - 70
6G9	LINES, SECONDARY BRAKE (EUROPEAN VERSION) (LATE DESIGN)	60 - 72
6G11	LINES, SECONDARY BRAKE (EUROPEAN VERSION) (LATE DESIGN)	60 - 74
7I17	LINES, SELECTIVE CONTROL VALVE DRAIN	70 - 136
6E3	LINES, STEERING CYLINDER (MFWD)	60 - 22

https://www.truck-manuals.net/

ALPHABETICAL INDEX - CONTINUED

GRID		PAGE
6E5	LINES, STEERING CYLINDER (W/O MFWD) (EARLY DESIGN)	60 - 24
6E7	LINES, STEERING CYLINDER (W/O MFWD) (LATE DESIGN)	60 - 26
6E13	LINES, STEERING PUMP REAR	60 - 32
4G19	LINES, TRANSMISSION	51 - 48
4G21	LINES, TRANSMISSION	51 - 50
4G23	LINES, TRANSMISSION	51 - 52
2D18	LINES, TURBOCHARGER OIL (6076) (EARLY TSN 8100,8200,8300)	30 - 10
2D22	LINES, TURBOCHARGER OIL (6081) (LATE TSN-8100,8200,8300)	30 - 14
2E1	LINES, TURBOCHARGER OIL (8400)	30 - 18
6H7	LINES,AIR BRAKE CONTROL VALVE (EUROPEAN VERSION) (LATE DESIGN) (83,8400)	60 - 94
6H5	LINES,AIR BRAKE CONTROL VALVE (EUROPEAN VERSION) (LATE DESIGN)(81,8200)	60 - 92
7F21	LINK, CENTER (EUROPEAN VERSION)	70 - 66
7F19	LINK, CENTER (HIGH-LIFT HITCH) (NORTH AMERICAN VERSION)	70 - 64
7F17	LINK, CENTER (REGULAR HITCH) (NORTH AMERICAN VERSION)	70 - 62
7F13	LINK, DRAFT (EUROPEAN VERSION)	70 - 58
7F9	LINK, DRAFT (NORTH AMERICAN VERSION)	70 - 54
7F7	LINK, LIFT	70 - 52
3F6	LOAD CENTER	40 - 36
3F6	LOAD CENTER BRACKET	40 - 36
3F6	LOAD CENTER DIODE	40 - 36
3F6	LOAD CENTER FUSE	40 - 36
3F6	LOAD CENTER LABEL	40 - 36
3F6	LOAD CENTER RELAY	40 - 36
3F6	LOAD CENTER TREMINAL BOARD	40 - 36
3E13	LOAD CENTER(EUROPEAN VERSION)(TSN -009999)	40 - 18
3E15	LOAD CENTER(EUROPEAN VERSION)(TSN 010000-)	40 - 20
3E9	LOAD CENTER(NORTH AMERICAN VERSION)(TSN -009999)	40 - 14
3E11	LOAD CENTER(NORTH AMERICAN VERSION)(TSN 010000-)	40 - 16
3E17	LOAD CENTER(UKRAINIAN VERSION)	40 - 22
7H22	LOAD CHECK VENT CARTRIDGE KIT (SCV)	70 - 116
8F21	LOUVER, SIDE PANEL (8100, 8200, 8300)	80 - 42
8F22	LOUVER, SIDE PANEL (8400)	80 - 43
9F23	LUBRICATION HARNESS	92 - 9

M

4G18	MAGNETIC PICK-UP	51 - 47
1E18	MAGNETIC PICK-UP (6076) (EARLY TSN-8100,8200,8300)	20 - 24
1H21	MAGNETIC PICK-UP (6081)	20 - 99
1G9	MAGNETIC PICK-UP (6081) (LATE TSN-81,82,8300)	20 - 61
4G18	MAGNETIC SENSOR	51 - 47
1D23	MAIN BEARING CAPS (6076) (EARLY TSN -009999)	20 - 10
1F17	MAIN BEARING CAPS (6081) (LATE TSN-81,82,8300)	20 - 46
1H4	MAIN BEARING CAPS (8400)	20 - 82
1E15	MAIN BEARINGS (6076) (EARLY TSN 8100,8200,8300)	20 - 21
1G5	MAIN BEARINGS (6081) (LATE TSN-8100,8200,8300)	20 - 57
1H18	MAIN BEARINGS (8400)	20 - 96
4F1	MANIFOLD	51 - 4
4F3	MANIFOLD	51 - 6
4F5	MANIFOLD	51 - 8
4F7	MANIFOLD	51 - 10
4F9	MANIFOLD	51 - 12
4F11	MANIFOLD	51 - 14
4F13	MANIFOLD	51 - 16
4H3	MANIFOLD	51 - 56
4H5	MANIFOLD	51 - 58
4H7	MANIFOLD	51 - 60
4H9	MANIFOLD	51 - 62
4H11	MANIFOLD	51 - 64
4H13	MANIFOLD	51 - 66
4H15	MANIFOLD	51 - 68
4F13	MANIFOLD COVER	51 - 16
4H15	MANIFOLD COVER	51 - 68
4F1	MANIFOLD VALVE	51 - 4
4F3	MANIFOLD VALVE	51 - 6
4F5	MANIFOLD VALVE	51 - 8
4F7	MANIFOLD VALVE	51 - 10
4F9	MANIFOLD VALVE	51 - 12
4F11	MANIFOLD VALVE	51 - 14
4F13	MANIFOLD VALVE	51 - 16
4H3	MANIFOLD VALVE	51 - 56
4H5	MANIFOLD VALVE	51 - 58
4H7	MANIFOLD VALVE	51 - 60
4H9	MANIFOLD VALVE	51 - 62
4H11	MANIFOLD VALVE	51 - 64
4H13	MANIFOLD VALVE	51 - 66
4H15	MANIFOLD VALVE	51 - 68
6H9	MANIFOLD, AIR BRAKE PRESSURE SWITCH (EUROPEAN VERSION)	60 - 97
2D20	MANIFOLD, EXHAUST (6076) (EARLY TSN - 8100,8200,8300)	30 - 12
2D16	MANIFOLD, INTAKE (6076)	30 - 8
2D21	MANIFOLD, INTAKE (6081) (LATE TSN-8100,8200,8300)	30 - 13
2D25	MANIFOLD, INTAKE (8400)	30 - 17
8D18	MANIFOLD, ROW-TRAK QUICK COUPLER	71 - 16
7I7	MANIFOLD, SELECTIVE CONTROL VALVE (W/O HITCH)	70 - 126
1F6	MANIFOLD, WATER, FRONT (6076)	20 - 37A
1F5	MANIFOLD, WATER, FRONT (6076) (EARLY TSN-8100,8200,8300)	20 - 37
1G19	MANIFOLD, WATER, FRONT (6081) (LATE TSN-8100,8200,8300)	20 - 73
1I7	MANIFOLD, WATER, FRONT (8400)	20 - 109
2D24	MANIFOLDS, EXHAUST (6081) (LATE TSN-8100,8200,8300)	30 - 16
2E4	MANIFOLDS, EXHAUST (8400)	30 - 21
7I9	MANUAL LOWER KIT (HITCH VALVE)	70 - 128
9D13	MAT, FLOOR	91 - 8
4E11	METRI-PACK CONNECTOR	43 - 6
4E9	METRI-PACK CONNECTORS	43 - 4
4E11	METRI-PACK TERMINAL	43 - 6
4E9	METRI-PACK TERMINALS	43 - 4
5F18	MFWD AXLE HOUSING, LH, (ASN 000001-000747; 800001-)	54 - 30
5F20	MFWD AXLE HOUSING, RH, (ASN 000001-000747; 800001-)	54 - 32
5F16	MFWD AXLE PIVOT PIN (ASN 000001-000747; 800001-)	54 - 28
4G11	MFWD CLUTCH	51 - 40
4I15	MFWD CLUTCH	51 - 92
4G11	MFWD CLUTCH COVER	51 - 40
4I15	MFWD CLUTCH COVER	51 - 92
5G3	MFWD DIFFERENTIAL, HIGH CAPACITY, (ASN 000001-000747; 800001-)	54 - 40

https://www.truck-manuals.net/

ALPHABETICAL INDEX - CONTINUED

GRID		PAGE
5G1	MFWD DIFFERENTIAL, STANDARD, (ASN 000001-000747; 800001-)	54 - 38
8F23	MFWD FRONT FENDER ASSEMBLY	80 - 44
3D19	MFWD SOLENOID(TSN -019999)	40 - 2
3D21	MFWD SOLENOID(TSN 020000-)	40 - 4
5F7	MFWD U-JOINT/WHEEL HUB RETROFIT SEAL KIT	54 - 18
8F7	MIDFRAME ASSEMBLY	80 - 28
8F7	MIDFRAME COVER	80 - 28
8F7	MIDFRAME SHIELD	80 - 28
9E4	MIRROR, INSIDE REAR VIEW	91 - 23
9E17	MIRROR, REMOTE (EUROPEAN VERSION)	91 - 36
9E19	MIRROR, REMOTE POWER (EUROPEAN VERSION)	91 - 38
9E15	MIRRORS, OUTER, KIT	91 - 34
3H23	MOBILE RADIO ANTENNA CABLE	40 - 104
3H23	MOBILE RADIO BRACKET	40 - 104
3H23	MOBILE RADIO WIRING HARNESS	40 - 104
8G7	MODEL DESIGNATION (8100, 8200) (-009999)	80 - 54
8G9	MODEL DESIGNATION (8100, 8200)(010000-)	80 - 56
8G8	MODEL DESIGNATION (8300, 8400)(-009999)	80 - 55
8G10	MODEL DESIGNATION DECALS (8300, 8400)(010000-)	80 - 57
9E24	MOLDING, FRONT CLASS	91 - 44
3H10	MONITOR,PERFORMANCE	40 - 90
3E23	MONITOR,ROW-TRAC	40 - 28
3H13	MONITOR,ROW-TRAK	40 - 93
7I23	MOTOR RETURN OR SUMP KIT, HYDRAULIC	70 - 142
3I14	MOTOR, STARTING (DENSO) (12V F4) (6076)	41 - 4
3I15	MOTOR, STARTING (NIPPONDENSO) (12V F4) (6081) (LATE TSN-8100,8200,8300)	41 - 4A
8H19	MOTOR,HEATER AND A/C BLOWER	90 - 16
8H16	MOTOR,PRESSURIZER BLOWER	90 - 13
3I17	MOTOR,STARTING(8100,8200,8300,8400)	41 - 6
3I20	MOTOR,STARTING(8100,8200,8300,8400)	41 - 10
3I16	MOTOR,STARTING(8400)	41 - 5
8D16	MOUNTING RAIL, ROW-TRAK PROBE BOX	71 - 14
9D9	MOUNTS, CAB	91 - 4
9E11	MUD GUARD, REAR FENDER	91 - 30
2E6	MUFFLER	30 - 24
8E25	MULTI-POSITION (DUALS)	80 - 20
7J1	MULTIPLE HYDRAULIC MOTOR RETURN KIT	70 - 144

N

3F14	NINE-PIN IMPLEMENT FEEDBACK CONNECTOR	40 - 45
2D21	NOZZLE, ETHER (6081) (LATE TSN-8100,8200,8300)	30 - 13
2D25	NOZZLE, ETHER (8400)	30 - 17
2F3	NOZZLE, FUEL INJECTION (NIPPONDENSO) (EARLY TSN-8100,8200,8300)	30 - 42
2F15	NOZZLE, FUEL INJECTION (6081) (LATE TSN-8100, 8200, 8300)	30 - 52
2F25	NOZZLE, FUEL INJECTION (8400)	30 - 62
2E22	NOZZLES, FUEL INJECTION (6076)	30 - 36
2F7	NOZZLES, FUEL INJECTION (6081 ENGINE) (LATE TSN-8100,8200,8300)	30 - 46
2F19	NOZZLES, FUEL INJECTION (6081) (ROBERT BOSCH) (8400 ONLY)	30 - 56

O

7J10	O-RING KIT	70 - 153
1E14	O-RINGS, LINER (6076) (EARLY TSN 8100,8200,8300)	20 - 20
1G6	O-RINGS, LINER (6081) (LATE TSN-8100,8200,8300)	20 - 58
1H17	O-RINGS, LINER (6081HRW01)(8400)	20 - 95
1G14	OIL COOLER ADAPTER (8100, 8200, 8300) (LATE TSN)	20 - 66
1I4	OIL COOLER ADAPTER (8400)	20 - 107
1G13	OIL COOLER BYPASS ADAPTER (6081) (LATE TSN-81,82,8300)	20 - 65
1G13	OIL COOLER BYPASS TUBES (6081) (LATE TSN-81,82,8300)	20 - 65
1I3	OIL COOLER BYPASS VALVE (6081)	20 - 106
1G14	OIL COOLER COVER (8100, 8200, 8300) (LATE TSN)	20 - 66
1I4	OIL COOLER COVER (8400)	20 - 107
1E22	OIL COOLER GASKET (6076)	20 - 28
7E4	OIL COOLER LINE CLAMPS AND BRACKETS	70 - 22
1G14	OIL COOLER TUBES (8100, 8200, 8300) (LATE TSN)	20 - 66
1I4	OIL COOLER TUBES (8400)	20 - 107
1G14	OIL COOLER, ENGINE (8100, 8200, 8300) (LATE TSN)	20 - 66
1I4	OIL COOLER, ENGINE (8400)	20 - 107
5E9	OIL FILL GAUGE	53 - 32
5E9	OIL FILL TUBE	53 - 32
1G15	OIL FILTER BASE (6081) (LATE TSN-8100,8200,8300)	20 - 68
1I1	OIL FILTER BASE (8400)	20 - 104
1E22	OIL FILTER BYPASS VALVE (6076)	20 - 28
1G15	OIL FILTER BYPASS VALVE (6081) (LATE TSN-8100,8200,8300)	20 - 68
1I1	OIL FILTER BYPASS VALVE (8400)	20 - 104
1G15	OIL FILTER HOUSING (6081) (LATE TSN-8100,8200,8300)	20 - 68
1I1	OIL FILTER HOUSING (8400)	20 - 104
1E22	OIL FILTER HOUSING GASKET (6076)	20 - 28
1G15	OIL FILTER HOUSING GASKET (6081) (LATE TSN-8100,8200,8300)	20 - 68
1I1	OIL FILTER HOUSING GASKET (8400)	20 - 104
1E22	OIL FILTER, ENGINE (6076)	20 - 28
1G15	OIL FILTER, ENGINE (6081) (LATE TSN-8100,8200,8300)	20 - 68
1I1	OIL FILTER, ENGINE (8400)	20 - 104
7E6	OIL FILTER, HYDRAULIC	70 - 24
7J9	OIL LINES, IMPLEMENT HYDRAULIC	70 - 152
2D18	OIL LINES, TURBOCHARGER (6076) (EARLY TSN 8100,8200,8300)	30 - 10
2D22	OIL LINES, TURBOCHARGER (6081) (LATE TSN-8100,8200,8300)	30 - 14
2E1	OIL LINES, TURBOCHARGER (8400)	30 - 18
1E9	OIL PAN (6076) (EARLY TSN 8100,8200,8300)	20 - 15
1F23	OIL PAN (6081) (LATE TSN-8100,8200,8300)	20 - 52
1H12	OIL PAN (8400)	20 - 90
1E9	OIL PAN GASKET (6076) (EARLY TSN 8100,8200,8300)	20 - 15
1F23	OIL PAN GASKET (6081) (LATE TSN-8100,8200,8300)	20 - 52
1H12	OIL PAN GASKET (8400)	20 - 90
1I1	OIL PRESSURE REGULATING VALVE (8400)	20 - 104
1E22	OIL PRESSURE REGULATING VALVE (6076)	20 - 28

https://www.truck-manuals.net/

ALPHABETICAL INDEX - CONTINUED

GRID		PAGE
1G15	OIL PRESSURE REGULATING VALVE (6081) (LATE TSN-8100,8200,8300)	20 - 68
1G14	OIL PRESSURE REGULATING VALVE (8100, 820 0, 8300) (LATE TSN)	20 - 66
1I4	OIL PRESSURE REGULATING VALVE (8400)	20 - 107
3E1	OIL PRESSURE TRANSDUCER SWITCH(TSN -009999)	40 - 8
3E3	OIL PRESSURE TRANSDUCER SWITCH(TSN -009999)	40 - 9A
3E7	OIL PRESSURE TRANSDUCER SWITCH(TSN 010000-)	40 - 12
4G3	OIL PUMP	51 - 32
4I7	OIL PUMP	51 - 84
1E12	OIL PUMP DRIVE GEAR (6076) (EARLY TSN 8100,8200,8300)	20 - 18
1G1	OIL PUMP DRIVE GEAR (6081) (LATE TSN-81,82,8300)	20 - 55
1G10	OIL PUMP DRIVE GEAR (6081) (LATE TSN-81,82,8300)	20 - 62
1H15	OIL PUMP DRIVE GEAR (8400)	20 - 93
1H23	OIL PUMP DRIVE GEAR (8400)	20 - 102
1G10	OIL PUMP GASKET (6081) (LATE TSN-81,82,8300)	20 - 62
1H23	OIL PUMP GASKET (8400)	20 - 102
1E19	OIL PUMP INTAKE (6076) (EARLY TSN-8100,8200,8300)	20 - 25
1G12	OIL PUMP INTAKE (6081) (LATE TSN-8100,8200,8300)	20 - 64
1H22	OIL PUMP INTAKE (8400)	20 - 101
1G12	OIL PUMP INTAKE GASKET (LATE TSN-8100,8200,8300)	20 - 64
1E19	OIL PUMP INTAKE GASKET (6076) (EARLY TSN-8100,8200,8300)	20 - 25
1H22	OIL PUMP INTAKE GASKET (8400)	20 - 101
4G3	OIL PUMP QUILL	51 - 32
4I7	OIL PUMP QUILL	51 - 84
1E20	OIL PUMP, ENGINE (6076)	20 - 26
1G10	OIL PUMP, ENGINE (6081) (LATE TSN-81,82,8300)	20 - 62
1H23	OIL PUMP, ENGINE (8400)	20 - 102
1H20	OIL SEAL, CRANKSHAFT FRONT (8400 TRACTOR)	20 - 98
1E17	OIL SEAL, CRANKSHAFT FRONT (6076) (EARLY TSN-8100,8200,8300)	20 - 23
1G8	OIL SEAL, CRANKSHAFT FRONT (6081) (LATE TSN-8100,8200,8300)	20 - 60
1E16	OIL SEAL, REAR (6076) (EARLY TSN (8100, 8200, 8300)	20 - 22
1G7	OIL SEAL, REAR (6081) (LATE TSN-8100,8200,8300)	20 - 59
1H19	OIL SEAL, REAR (8400)	20 - 97
7E1	OIL, HYDRAULIC, COOLER	70 - 19
7D9	OIL, TRANSMISSION AND HYDRAULIC	70 - 1
9F20	OPERATOR PRESENCE SWITCH KIT	92 - 6
3F1	OPERATOR PRESENCE SWITCH(SEAT)	40 - 31
5E3	OPTIONAL PTO	53 - 26
5E5	OPTIONAL PTO	53 - 28
9E15	OUTER MIRROR GLASS	91 - 34
9E15	OUTER MIRRORS KIT	91 - 34
9F13	OUTER ROOF	91 - 55
4G5	OUTPUT SHAFT	51 - 34
4G7	OUTPUT SHAFT	51 - 36
4I9	OUTPUT SHAFT	51 - 86
4I11	OUTPUT SHAFT	51 - 88
4G5	OUTPUT SHAFT DRUM	51 - 34
4G7	OUTPUT SHAFT DRUM	51 - 36
4I9	OUTPUT SHAFT DRUM	51 - 86
4I11	OUTPUT SHAFT DRUM	51 - 88
4G5	OUTPUT SHAFT GEAR	51 - 34
4G7	OUTPUT SHAFT GEAR	51 - 36
4I9	OUTPUT SHAFT GEAR	51 - 86
4I11	OUTPUT SHAFT GEAR	51 - 88
7D15	OUTTEXT	70 - 7
7I4	OUTTEXT	70 - 123
8F16	OUTTEXT	80 - 37
9D20	OUTTEXT	91 - 15
9D22	OUTTEXT	91 - 17
6E21	OVERHAUL KIT, BRAKE VALVE	60 - 40
6G4	OVERHAUL KIT, BRAKE VALVE	60 - 69C
1F21	OVERHAUL KIT, ENGINE (6081) (LATE TSN-81,82,8300)	20 - 50
1H10	OVERHAUL KIT, ENGINE (8400)	20 - 88
7I11	OVERHAUL KIT, HITCH VALVE	70 - 130
7H24	OVERHAUL KIT, SELECTIVE CONTROL VALVE	70 - 118

P

1E9	PAN, ALUMINUM OIL (6076) (EARLY TSN 8100,8200,8300)	20 - 15
1E9	PAN, OIL (6076) (EARLY TSN 8100,8200,8300)	20 - 15
1F23	PAN, OIL (6081) (LATE TSN-8100,8200,8300)	20 - 52
1H12	PAN, OIL (8400)	20 - 90
8F21	PANEL, SIDE (8100, 8200, 8300)	80 - 42
8F22	PANEL, SIDE (8400)	80 - 43
3F16	PANEL,SCV SET-UP(TSN -009999)	40 - 48
3F18	PANEL,SCV SET-UP(TSN 010000-)	40 - 50
9G9	PASSENGER SEAT (EUROPEAN VERSION)	92 - 20
9G11	PASSENGER SEAT MOUNTING KIT (EUROPEAN VERSION)	92 - 22
4E23	PEDAL, CLUTCH	51 - 2
4H1	PEDAL, CLUTCH	51 - 54
6D12	PEDAL, PIVOT RELEASE	60 - 8
6F2	PEDALS, BRAKE	60 - 46
3H10	PERFORMANCE MONITOR	40 - 90
3H10	PERFORMANCE MONITOR BRACKET	40 - 90
7H11	PICK-UP HITCH (EUROPEAN VERSION) (EARLY DESIGN)	70 - 104
7H15	PICK-UP HITCH CONTROLS (EUROPEAN VERSION)	70 - 108
7H13	PICK-UP HITCH CYLINDERS (EUROPEAN VERSION)	70 - 106
7H17	PICK-UP HITCH DRAWBAR (EUROPEAN VERSION)	70 - 110
4G18	PICK-UP, MAGNETIC	51 - 47
1E18	PICK-UP, MAGNETIC (6076) (EARLY TSN-8100,8200,8300)	20 - 24
1H21	PICK-UP, MAGNETIC (6081)	20 - 99
1G9	PICK-UP, MAGNETIC (6081) (LATE TSN-81,82,8300)	20 - 61
7I3	PILOT VALVE SEAL KIT, SCV	70 - 122
7I1	PILOT VALVE, SCV	70 - 120
7I2	PILOT VALVE, SCV	70 - 121
5D17	PINION, PLANET	53 - 14
5D19	PINION, PLANET	53 - 16
5D21	PINION, PLANET	53 - 18
5F9	PINION, SUN	54 - 20
5F22	PINION, SUN	54 - 34
5G5	PINION, SUN	54 - 42
1D23	PISTON COOLING JETS (6076) (EARLT TSN -009999)	20 - 10

https://www.truck-manuals.net/

ALPHABETICAL INDEX - CONTINUED

GRID		PAGE
1F17	PISTON COOLING JETS (6081) (LATE TSN-81,82,8300)	20 - 46
1H4	PISTON COOLING JETS (8400)	20 - 82
1E14	PISTON RINGS (6076) (EARLY TSN 8100,8200,8300)	20 - 20
1G6	PISTON RINGS (6081) (LATE TSN-8100,8200,8300)	20 - 58
1H17	PISTON RINGS (6081HRW01)(8400)	20 - 95
1G6	PISTON/LINER KIT (6081) (LATE TSN-8100,8200,8300)	20 - 58
1H17	PISTON/LINER KIT (6081HRW01)(8400)	20 - 95
5E22	PISTON, BRAKE	54 - 10
5F14	PISTON, BRAKE	54 - 26
1E14	PISTON, ENGINE (6076) (EARLY TSN 8100,8200,8300)	20 - 20
1G6	PISTON, ENGINE (6081) (LATE TSN-8100,8200,8300)	20 - 58
1H17	PISTON, ENGINE (6081HRW01)(8400)	20 - 95
5D5	PISTON, PTO BRAKE	53 - 2
5D7	PISTON, PTO BRAKE	53 - 4
5F16	PIVOT PIN,MFWD AXLE (ASN 000001-000747; 800001-)	54 - 28
6D12	PIVOT RELEASE PEDAL	60 - 8
6D8	PIVOT, STEERING COLUMN	60 - 4
5D17	PLANET PINION	53 - 14
5D19	PLANET PINION	53 - 16
5D21	PLANET PINION	53 - 18
5D17	PLANET PINION CARRIER	53 - 14
5D19	PLANET PINION CARRIER	53 - 16
5D21	PLANET PINION CARRIER	53 - 18
5F9	PLANETARY CARRIER	54 - 20
5F22	PLANETARY CARRIER	54 - 34
5G5	PLANETARY CARRIER	54 - 42
5E22	PLATE, CLUTCH DRIVE	54 - 10
5F14	PLATE, CLUTCH DRIVE	54 - 26
5G3	PLATE, DIFFERENTIAL, MFWD, HIGH CAPACITY (ASN 0001-000747; 80001-	54 - 40
5G1	PLATE, DIFFERENTIAL, MFWD, STANDARD, (ASN 000001-000747; 800001-)	54 - 38
8G6	PLATE, LICENSE PLATE AND LAMP	80 - 53
3G1	PLUG,ARMREST	40 - 58
7F5	PLUGS, HITCH FRAME	70 - 50
7E10	POSITION SENSOR, ROCKSHAFT	70 - 30
3I23	POSITIVE TERMINAL	41 - 13
9D23	POST UPHOLSTERY (CAB)	91 - 18
7E12	POTENTIOMETER, DRAFT LINK	70 - 32
3F22	POTENTIOMETER,ENGINE SPEED CONTROL(ARMREST)	40 - 54
3E13	POTENTIOMETER,FOOT THROTTLE(EUROPEAN VERSION)(TSN -009999)	40 - 18
3E15	POTENTIOMETER,FOOT THROTTLE(EUROPEAN VERSION)(TSN 010000-)	40 - 20
3E9	POTENTIOMETER,FOOT THROTTLE(NORTH AMERICAN VERSION)(TSN -009999)	40 - 14
3E11	POTENTIOMETER,FOOT THROTTLE(NORTH AMERICAN VERSION)(TSN 010000-)	40 - 16
3E17	POTENTIOMETER,FOOT THROTTLE(UKRAINIAN VERSION)	40 - 22
3G1	POTENTIOMETER,HITCH CONTROL LEVER(ARMREST)	40 - 58
3D23	POTENTIOMETER,HITCH DRAFT SENSOR(TSN -009999)	40 - 6
3E5	POTENTIOMETER,HITCH DRAFT SENSOR(TSN 010000-)	40 - 10
3D23	POTENTIOMETER,HITCH POSITION(TSN -009999)	40 - 6
3E5	POTENTIOMETER,HITCH POSITION(TSN 010000-)	40 - 10
3G1	POTENTIOMETER,HITCH RAISE LIMIT(ARMREST)	40 - 58
3G1	POTENTIOMETER,HITCH RATE OF DROP(ARMREST)	40 - 58
3G5	POTENTIOMETER,SELECTIVE CONTROL(ARMREST)	40 - 62
3G9	POTENTIOMTER,HITCH COMMAND(ARMREST)	40 - 66
7I21	POWER BEYOND COUPLER KIT (W/ TRAILER BRAKE) (EUROPEAN VERSION)	70 - 140
7I19	POWER BEYOND COUPLER KIT (W/O TRAILER BRAKE)	70 - 138
9E19	POWER MIRROR, REMOTE (EUROPEAN VERSION)	91 - 38
3G13	POWER SHIFT CONTROLLER(CCU/PCU)	40 - 70
3G15	POWER SHIFT CONTROLLER(CCU/PCU)	40 - 72
3E5	POWERSHIFT CONTROL UNIT(PCU)(TSN 010000-)	40 - 10
3G13	POWRSHIFT CONTROL UNIT(PCU)	40 - 70
3G15	POWRSHIFT CONTROL UNIT(PCU)	40 - 72
2E16	PRE-FUEL FILTER (6081)	30 - 31A
2F17	PRE-FUEL FILTER (8400)	30 - 54
2E16	PRE-FUEL FILTER BASE (6081)	30 - 31A
2F17	PRE-FUEL FILTER BASE (8400)	30 - 54
2E16	PRE-FUEL FILTER BRACKETS (6081)	30 - 31A
2F17	PRE-FUEL FILTER BRACKETS (8400)	30 - 54
2E16	PRE-FUEL FILTER SUPPORT BRACKET (6081)	30 - 31A
2F17	PRE-FUEL FILTER SUPPORT BRACKET (8400)	30 - 54
2D12	PRESCREENER	30 - 4
6G17	PRESSURE REGULATING VALVE, AIR BRAKE (EUROPEAN VERSION)	60 - 80
6G17	PRESSURE RELIEF VALVE, AIR BRAKE (EUROPEAN VERSION)	60 - 80
6H9	PRESSURE SWITCH MANIFOLD, AIR BRAKE (EUROPEAN VERSION)	60 - 97
8H16	PRESSURIZER BLOWER MOTOR	90 - 13
8H16	PRESSURIZER BLOWER MOTOR BRACKET	90 - 13
8H16	PRESSURIZER BLOWER MOTOR DUCT	90 - 13
8H16	PRESSURIZER BLOWER MOTOR IMPELLER	90 - 13
8H22	PRESSURIZER HOUSING SEAL	90 - 19
6D14	PRIORITY VALVE (MFWD)	60 - 10
6D15	PRIORITY VALVE (W/O MFWD)	60 - 11
6D18	PRIORITY VALVE LINES	60 - 14
5D5	PTO BRAKE PISTON	53 - 2
5D7	PTO BRAKE PISTON	53 - 4
5D5	PTO CLUTCH	53 - 2
5D7	PTO CLUTCH	53 - 4
4G15	PTO DRIVELINE SHIELD	51 - 44
5D9	PTO FITTINGS	53 - 6
4G9	PTO HOUSING	51 - 38
4I13	PTO HOUSING	51 - 90
5E1	PTO HOUSING	53 - 24
5E3	PTO HOUSING	53 - 26
5E5	PTO HOUSING	53 - 28
5E7	PTO MASTER SHIELD	53 - 30
5E1	PTO OUTPUT SHAFT	53 - 24
5E3	PTO OUTPUT SHAFT	53 - 26
5E5	PTO OUTPUT SHAFT	53 - 28
4G9	PTO SHAFT	51 - 38
4I13	PTO SHAFT	51 - 90
5D9	PTO VALVES	53 - 6
5D7	PTO, CLUTCH	53 - 4
5E3	PTO, OPTIONAL	53 - 26
5E5	PTO, OPTIONAL	53 - 28
5E1	PTO, STANDARD	53 - 24
1J6	PULLEY/IDLER PULLEY	20 - 134
1J8	PULLEY/IDLER PULLEY	20 - 136

https://www.truck-manuals.net/

ALPHABETICAL INDEX - CONTINUED

GRID		PAGE
1E11	PULLEY, CRANKSHAFT (6076)	20 - 17
1H14	PULLEY, CRANKSHAFT (6081)	20 - 92
1F25	PULLEY, CRANKSHAFT (6081) (LATE TSN-81,82,8300)	20 - 54
3I12	PULLEY,ALTERNATOR	41 - 2
7D12	PUMP DRIVE LINES	70 - 4
6E9	PUMP, CHARGE	60 - 28
1E20	PUMP, ENGINE OIL (6076)	20 - 26
2E24	PUMP, FUEL INJECTION (6076)	30 - 38
2F9	PUMP, FUEL INJECTION (6081) (LATE TSN-8100,8200,8300)	30 - 48
2F11	PUMP, FUEL INJECTION (6081) (LATE TSN-8100,8200,8300)	30 - 49A
2F21	PUMP, FUEL INJECTION (8400)	30 - 58
2F2	PUMP, FUEL TRANSFER (ROBERT BOSCH) (6076)	30 - 41
2F14	PUMP, FUEL TRANSFER (ROBERT BOSCH) (6081) (LATE TSN-81,82,8300)	30 - 51
2F24	PUMP, FUEL TRANSFER (ROBERT BOSCH) (8400 TRACTOR)	30 - 61
7D14	PUMP, HYDRAULIC (45 CM3 (2.75 IN3))	70 - 6
7D18	PUMP, HYDRAULIC (57 CM3 (3.5 IN3))	70 - 10
4G3	PUMP, OIL	51 - 32
4I7	PUMP, OIL	51 - 84
1G10	PUMP, OIL ENGINE (6081) (LATE TSN-81,82,8300)	20 - 62
1H23	PUMP, OIL ENGINE (8400)	20 - 102
4G9	PUMP, SCAVENGE	51 - 38
4I13	PUMP, SCAVENGE	51 - 90
6E9	PUMP, STEERING	60 - 28
6E10	PUMP, STEERING/CHARGE	60 - 29
1F2	PUMP, WATER (6076) (EARLY TSN-8100,8200,8300)	20 - 34
1G17	PUMP, WATER (6081) (LATE TSN-8100,8200,8300)	20 - 70
1I5	PUMP, WATER (8400)	20 - 108
1D21	PUSH RODS (6076) (EARLY TSN 8100 8200 8300)	20 - 8
1F15	PUSH RODS (6081) (LATE TSN-8100,8200,8300)	20 - 44
1H2	PUSH RODS (8400)	20 - 80

Q

8D18	QUICK COUPLER CYLINDER LINES, ROW-TRAK	71 - 16
7F23	QUICK COUPLER, IMPLEMENT (CATEGORY III/IIIN)	70 - 68
5D15	QUILL, DIFFERENTIAL	53 - 12
5E20	QUILL, DIFFERENTIAL	54 - 8

R

3H4	RADAR BRACKET(TSN -XXXXXX)	40 - 84
3H8	RADAR BRACKET(TSN XXXXXX-)	40 - 88
3H6	RADAR BRACKET(TSN XXXXXX-XXXXXX)	40 - 86
3H4	RADAR COVER(TSN -XXXXXX)	40 - 84
3H6	RADAR COVER(TSN XXXXXX-XXXXXX)	40 - 86
3H4	RADAR KIT(TSN -XXXXXX)	40 - 84
3H8	RADAR KIT(TSN XXXXXX-)	40 - 88
3H6	RADAR KIT(TSN XXXXXX-XXXXXX)	40 - 86
3H4	RADAR LABEL(TSN -XXXXXX)	40 - 84
3H6	RADAR LABEL(TSN XXXXXX-XXXXXX)	40 - 86
3E1	RADAR SENSOR(TSN -009999)	40 - 8
3E3	RADAR SENSOR(TSN -009999)	40 - 9A
3E7	RADAR SENSOR(TSN 010000-)	40 - 12
3H8	RADAR SHIELD(TSN XXXXXX-)	40 - 88
3H4	RADAR(TSN -XXXXXX)	40 - 84
3H8	RADAR(TSN XXXXXX-)	40 - 88
3H6	RADAR(TSN XXXXXX-XXXXXX)	40 - 86
1I14	RADIATOR	20 - 116
1I16	RADIATOR	20 - 118
1I10	RADIATOR HOSE	20 - 112
3H16	RADIO	40 - 96
3H19	RADIO	40 - 99
3H19	RADIO ANTENNA	40 - 99
3H21	RADIO ANTENNA	40 - 102
3H21	RADIO ANTENNA BASE	40 - 102
3H21	RADIO ANTENNA CABLE	40 - 102
3H21	RADIO ANTENNA GROUND PLANE	40 - 102
3H16	RADIO BEZEL	40 - 96
3H16	RADIO BEZEL BRACKET	40 - 96
3H16	RADIO KNOB KIT	40 - 96
3H16	RADIO KNOBS	40 - 96
3H18	RADIO SPEAKER	40 - 98
3H18	RADIO SPEAKER HOUSING	40 - 98
3H18	RADIO SPEAKER,GRILLE	40 - 98
3E13	RADIO SPEAKERS(EUROPEAN VERSION)(TSN -009999)	40 - 18
3E15	RADIO SPEAKERS(EUROPEAN VERSION)(TSN 010000-)	40 - 20
3E9	RADIO SPEAKERS(NORTH AMERICAN VERSION)(TSN -009999)	40 - 14
3E11	RADIO SPEAKERS(NORTH AMERICAN VERSION)(TSN 010000-)	40 - 16
3E17	RADIO SPEAKERS(UKRAINIAN VERSION)	40 - 22
3E13	RADIO(EUROPEAN VERSION)(TSN -009999)	40 - 18
3E15	RADIO(EUROPEAN VERSION)(TSN 010000-)	40 - 20
3E9	RADIO(NORTH AMERICAN VERSION)(TSN -009999)	40 - 14
3E11	RADIO(NORTH AMERICAN VERSION)(TSN 010000-)	40 - 16
3E17	RADIO(UKRAINIAN VERSION)	40 - 22
3H19	RADIO,ANTENNA AND SPEAKER KIT	40 - 99
8D16	RAIL, ROW-TRAK PROBE BOX MOUNTING	71 - 14
3F1	RAISE/LOWER SEAT SWITCH	40 - 31
9E7	REAR EXTENSION, REAR FENDER	91 - 26
9E9	REAR FENDER (EUROPEAN VERSION)	91 - 28
9E9	REAR FENDER EXTENSION (EUROPEAN VERSION)	91 - 28
9E11	REAR FENDER MUD GUARD	91 - 30
9E11	REAR FENDER SIDE EXTENSION	91 - 30
9E12	REAR FENDER SIDE EXTENSION (EUROPEAN VERSION)	91 - 31
9E11	REAR FENDER SIDE EXTENSION AND MUD GUARD KIT	91 - 30
4D23	REAR FENDER WORK LIGHT BOOT(TSN XXXXXX-)	42 - 19
4D23	REAR FENDER WORK LIGHT BRACKET(TSN XXXXXX-)	42 - 19
4D22	REAR FENDER WORK LIGHT(TSN -XXXXXX)	42 - 18
4D23	REAR FENDER WORK LIGHT(TSN XXXXXX-)	42 - 19
9E7	REAR FENDER, REAR EXTENSION	91 - 26
1E16	REAR OIL SEAL (6076) (EARLY TSN 8100, 8200, 8300)	20 - 22
1G7	REAR OIL SEAL (6081) (LATE TSN-8100,8200,8300)	20 - 59
1H19	REAR OIL SEAL (8400)	20 - 97
1G7	REAR OIL SEAL GASKET (6081) (LATE TSN-8100,8200,8300)	20 - 59
1H19	REAR OIL SEAL GASKET (8400)	20 - 97
1E16	REAR OIL SEAL HOUSING (6076) (EARLY TSN 8100, 8200, 8300)	20 - 22

https://www.truck-manuals.net/

ALPHABETICAL INDEX - CONTINUED

GRID		PAGE
1G7	REAR OIL SEAL HOUSING (6081) (LATE TSN-8100,8200,8300)	20 - 59
1H19	REAR OIL SEAL HOUSING (8400)	20 - 97
3E19	REAR ROOF FLOOD LIGHTS	40 - 24
4D20	REAR ROOF WORK LAMP BRACKET(TSN -XXXXXX)	42 - 16
4D21	REAR ROOF WORK LAMP BRACKET(TSN XXXXXX-)	42 - 17
4D20	REAR ROOF WORK LAMP(TSN -XXXXXX)	42 - 16
4D21	REAR ROOF WORK LAMP(TSN XXXXXX-)	42 - 17
3H20	REAR SPEAKER KIT	40 - 100
9E3	REAR UPHOLSTERY (CAB)	91 - 22
9E21	REAR WASHER KIT	91 - 40
8E21	REAR WHEELS, CAST	80 - 16
9F4	REAR WINDOW	91 - 48
4E14	REAR WINSHIELD WIPER CONNECTOR	43 - 9
9F12	REAR WIPER HOLE COVER	91 - 54
3E19	REAR WIPER MOTOR	40 - 24
8H22	RECIRCULATION FILTER	90 - 19
8H22	RECIRCULATION FILTER HOUSING	90 - 19
1I12	RECOVERY TANK, COOLANT	20 - 114
3I12	RECTIFIER,ALTERNATOR	41 - 2
4E1	REFLECTOR LABEL,EXTREMITY WARNING LAMP(0 27100-)	42 - 22
8H11	REFRIGERANT LINES	90 - 8
7G17	REGULAR DRAWBAR (EUROPEAN VERSION)	70 - 88
7G3	REGULAR DRAWBAR (8100,8200,8300)	70 - 72
7G9	REGULAR DRAWBAR (8400)	70 - 78
3I12	REGULATOR,ALTERNATOR	41 - 2
4E14	RELAY TERMINAL BOARD	43 - 9
3I5	RELAY,BACK-UP ALARM	40 - 110
3F4	RELAY,BRAKE LIGHT	40 - 34
3F6	RELAY,LOAD CENTER	40 - 36
3F9	RELAY,STARTING CIRCUIT	40 - 40
7I13	RELIEF VALVE, HITCH VALVE	70 - 132
7I5	REMOTE CYLINDER CONTROL KIT	70 - 124
9E17	REMOTE MIRROR (EUROPEAN VERSION)	91 - 36
9E19	REMOTE POWER MIRROR (EUROPEAN VERSION)	91 - 38
1F4	REPAIR KIT, WATER PUMP (6076) (EARLY TSN 8100,8200,8300)	20 - 36
6F21	RESERVOIR, SECONDARY BRAKE (EUROPEAN VERSION)	60 - 64
3E13	RESISTOR,BLOWER MOTOR(EUROPEAN VERSION)(TSN -009999)	40 - 18
3E15	RESISTOR,BLOWER MOTOR(EUROPEAN VERSION)(TSN 010000-)	40 - 20
3E9	RESISTOR,BLOWER MOTOR(NORTH AMERICAN VERSION)(TSN -009999)	40 - 14
3E11	RESISTOR,BLOWER MOTOR(NORTH AMERICAN VERSION)(TSN 010000-)	40 - 16
3E17	RESISTOR,BLOWER MOTOR(UKRAINIAN VERSION)	40 - 22
8H19	RESISTOR,HEATER AND A/C	90 - 16
7G3	RETAINER, DRAWBAR (8100,8200,8300)	70 - 72
7G9	RETAINER, DRAWBAR (8400)	70 - 78
3G25	RETAINER,BRAKE SWITCH	40 - 81
5F7	RETROFIT SEAL KIT,MFWD,U-JOINT/WHEEL HUB	54 - 18
4F21	REVERSE IDLER	51 - 24
4H23	REVERSE IDLER	51 - 76
4F21	REVERSE IDLER GEAR	51 - 24
4H23	REVERSE IDLER GEAR	51 - 76
7G19	REVERSIBLE DRAWBAR KIT (EUROPEAN VERSION)	70 - 90
7G11	REVERSIBLE DRAWBAR KIT (NORTH AMERICAN VERSION)	70 - 80
9F22	RIDE ZONE PROTECTOR KIT	92 - 8
9F23	RIDE ZONE PROTECTOR KIT	92 - 9
9D15	RIGHT-HAND CONSOLE	91 - 10
9F1	RIGHT-HAND GLASS, STATIONARY	91 - 46
9F3	RIGHT-HAND HANDRAIL (OPENING R.H.DOOR)	91 - 47A
9F2	RIGHT-HAND OPENING DOOR (EUROPEAN VERSION)	91 - 47
8E19	RIMS, FRONT WHEELS (MFWD)	80 - 14
1E14	RINGS, PISTON (6076) (EARLY TSN 8100,8200,8300)	20 - 20
1G6	RINGS, PISTON (6081) (LATE TSN-8100,8200,8300)	20 - 58
1H17	RINGS, PISTON (6081HRW01)(8400)	20 - 95
1G24	ROCKER ARM COVER (ESN -018791)(8400)	20 - 78
1G25	ROCKER ARM COVER (ESN 018792-)(8400)	20 - 78A
1D19	ROCKER ARM COVER (6076) (EARLY TSN-8100,8200,8300)	20 - 6
1F12	ROCKER ARM COVER (6081) (LATE TSN-8100,8200,8300)	20 - 42
1F13	ROCKER ARM COVER (6081) (LATE TSN-8100,8200,8300)	20 - 42A
1G24	ROCKER ARM COVER GASKET (ESN -018791)(8400)	20 - 78
1G25	ROCKER ARM COVER GASKET (ESN 018792-)(8400)	20 - 78A
1D19	ROCKER ARM COVER GASKET (6076) (EARLY TSN-8100,8200,8300)	20 - 6
1F12	ROCKER ARM COVER GASKET (6081) (LATE TSN-8100,8200,8300)	20 - 42
1F13	ROCKER ARM COVER GASKET (6081) (LATE TSN-8100,8200,8300)	20 - 42A
1D21	ROCKER ARM SHAFT (6076) (EARLY TSN 8100,8200,8300)	20 - 8
1F15	ROCKER ARM SHAFT (6081) (LATE TSN-8100,8200,8300)	20 - 44
1H2	ROCKER ARM SHAFT (8400)	20 - 80
1D21	ROCKER ARMS (6076) (EARLY TSN 8100,8200,8300)	20 - 8
1F15	ROCKER ARMS (6081) (LATE TSN-8100,8200,8300)	20 - 44
1H2	ROCKER ARMS (8400)	20 - 80
7E8	ROCKSHAFT (EARLY DESIGN)	70 - 28
7E9	ROCKSHAFT (LATE DESIGN)	70 - 29
3G9	ROCKSHAFT CONTROL ADJUSTMENT DIAL(ARMREST)	40 - 66
3G9	ROCKSHAFT CONTROL COVER(ARMREST)	40 - 66
3G9	ROCKSHAFT CONTROL KNOB(ARMREST)	40 - 66
7E10	ROCKSHAFT POSITION SENSOR	70 - 30
7F13	ROD, DRAFT LINK (EUROPEAN VERSION)	70 - 58
1E14	RODS, CONNECTING (6076) (EARLY TSN 8100,8200,8300)	20 - 20
1G6	RODS, CONNECTING (6081) (LATE TSN-8100,8200,8300)	20 - 58
1H17	RODS, CONNECTING (6081HRW01)(8400)	20 - 95
1D21	RODS, PUSH (6076) (EARLY TSN 8100 8200 8300)	20 - 8
1F15	RODS, PUSH (6081) (LATE TSN-8100,8200,8300)	20 - 44
1H2	RODS, PUSH (8400)	20 - 80
9E1	ROOF HEADLINER	91 - 20
3E19	ROOF WARNING LIGHTS,NORTH AMERICAN VERSION	40 - 24
3E19	ROOF WIRING HARNESS	40 - 24
4D18	ROOF WIRING HARNESS	42 - 14
4D19	ROOF WIRING HARNESS	42 - 15
9F12	ROOF, INNER	91 - 54

https://www.truck-manuals.net/

ALPHABETICAL INDEX - CONTINUED

GRID		PAGE
9F13	ROOF, OUTER	91 - 55
3G22	ROTATING BEACON SWITCH KIT	40 - 78
3I12	ROTOR ASSEMBLY,ALTERNATOR	41 - 2
3E23	ROW-TRAC MONITOR	40 - 28
8D4	ROW-TRAK KIT	71 - 2
3H13	ROW-TRAK MONITOR	40 - 93
3H13	ROW-TRAK MONITOR BRACKET	40 - 93
3H13	ROW-TRAK MONITOR WIRING HARNESS	40 - 93
8D12	ROW-TRAK PROBE BOX KIT	71 - 10
8D16	ROW-TRAK PROBE BOX MOUNTING RAIL	71 - 14
8D14	ROW-TRAK QUICK COUPLER	71 - 12
8D18	ROW-TRAK QUICK COUPLER CYLINDER LINES	71 - 16
8D10	ROW-TRAK WAND PROBE KIT	71 - 8
3E23	ROW-TRAK WIRING HARNESS	40 - 28
8D8	ROW-TRAK 2 BALL PROBE KIT	71 - 6
8D6	ROW-TRAK 3 BALL PROBE KIT	71 - 4

S

7G18	SAFETY CHAIN ADAPTER KIT,IMPLEMENT	70 - 89
4G9	SCAVENGE PUMP	51 - 38
4I13	SCAVENGE PUMP	51 - 90
8F10	SCREEN, GRILLE	80 - 31
7I1	SCV PILOT VALVE	70 - 120
7I1	SCV SOLENOID	70 - 120
7I2	SCV SOLENOID	70 - 121
7I3	SCV SOLENOID GLYD RING KIT	70 - 122
8H6	SEAL KIT, A/C COMPRESSOR	90 - 2
7D16	SEAL KIT, HYDRAULIC PUMP (45 CM3 (2.75 IN3))	70 - 8
7D20	SEAL KIT, HYDRAULIC PUMP (57 CM3 (3.5 IN3))	70 - 12
6D17	SEAL KIT, STEERING VALVE	60 - 13
5F7	SEAL KIT,MFWD,U-JOINT/WHEEL HUB RETROFIT	54 - 18
7I9	SEAL SECTION INTERFACE KIT (HITCH VALVE)	70 - 128
7H22	SEAL SECTION INTERFACE KIT (SCV)	70 - 116
1E17	SEAL, FRONT OIL (6076) (EARLY TSN-8100,8200,8300)	20 - 23
1G8	SEAL, FRONT OIL (6081) (LATE TSN-8100,8200,8300)	20 - 60
1H20	SEAL, FRONT OIL (8400 TRACTOR)	20 - 98
1E16	SEAL, REAR OIL (6076) (EARLY TSN 8100, 8200, 8300)	20 - 22
1G7	SEAL, REAR OIL (6081) (LATE TSN-8100,8200,8300)	20 - 59
1H19	SEAL, REAR OIL (8400)	20 - 97
1G17	SEAL, TUBE (6081) (LATE TSN-8100,8200,8300)	20 - 70
1I5	SEAL, TUBE (8400)	20 - 108
1F2	SEAL, WATER PUMP (6076) (EARLY TSN-8100,8200,8300)	20 - 34
9E24	SEAL, WINDSHIELD	91 - 44
8H17	SEAL,AIR CIRCULATION	90 - 14
8H21	SEAL,HEATER AND A/C COMPARTMENT	90 - 18
9F20	SEAT ADJUSTMENT CABLE KIT	92 - 6
9F23	SEAT AIR SPRING KIT	92 - 9
9F20	SEAT ATTENUATOR SPRING KIT	92 - 6
9G2	SEAT BACKREST SUPPORTS	92 - 13
9F20	SEAT BEARING ROLLER KIT	92 - 6
9G3	SEAT BELT	92 - 14
9G13	SEAT BELT	92 - 24
9G3	SEAT BELT AND SEAT CUSIONS	92 - 14
9F23	SEAT COMPRESSOR FILTER KIT	92 - 9
9F22	SEAT COMPRESSOR VALVE KIT	92 - 8
9F23	SEAT COMPRESSOR VALVE KIT	92 - 9
9F20	SEAT CONTROL LEVER KIT	92 - 6
9G3	SEAT CUSHIONS	92 - 14
9G3	SEAT CUSHIONS AND SEAT BELT	92 - 14
9F23	SEAT FORE-AFT ATTENUATOR KIT	92 - 9
9F17	SEAT HEIGHT SWITCH KIT	92 - 2
9F20	SEAT KNOB KIT	92 - 6
9F23	SEAT LATERAL ATTENUATOR SHOCK KIT	92 - 9
3F1	SEAT OPERATOR PRESENCE SWITCH	40 - 31
3F1	SEAT RAISE/LOWER SWITCH	40 - 31
9F23	SEAT RIDE ZONE PROTECTOR KIT	92 - 9
9F22	SEAT SHOCK ABSORBER KIT	92 - 8
9F17	SEAT SLIDE TRACK KIT	92 - 2
9F24	SEAT SUPPORT	92 - 10
9F17	SEAT SUSPENSION	92 - 2
9F19	SEAT SUSPENSION ARM	92 - 5
9F20	SEAT SUSPENSION BOOT KIT	92 - 6
9F17	SEAT SWIVEL KIT	92 - 2
3F1	SEAT WIRING HARNESS	40 - 31
9F22	SEAT WIRING HARNESS KIT	92 - 8
6F17	SECONDARY BRAKE KIT (EUROPEAN VERSION) (EARLY DESIGN)	60 - 60
6F13	SECONDARY BRAKE LEVER (EUROPEAN VERSION) (EARLY DESIGN)	60 - 56
6F15	SECONDARY BRAKE LEVER (EUROPEAN VERSION) (LATE DESIGN)	60 - 58
6F19	SECONDARY BRAKE LEVER (EUROPEAN VERSION) (LATEST DESIGN)	60 - 62
6F21	SECONDARY BRAKE LEVER COVER (EUROPEAN VERSION)	60 - 64
6G7	SECONDARY BRAKE LINES (EUROPEAN VERSION) (EARLY DESIGN)	60 - 70
6G9	SECONDARY BRAKE LINES (EUROPEAN VERSION) (LATE DESIGN)	60 - 72
6G11	SECONDARY BRAKE LINES (EUROPEAN VERSION) (LATE DESIGN)	60 - 74
6F21	SECONDARY BRAKE RESERVOIR (EUROPEAN VERSION)	60 - 64
6F23	SECONDARY BRAKE VALVE	60 - 66
6G2	SECONDARY BRAKE VALVE	60 - 69A
3G5	SECTIVE CONTROL LEVERS 1,2,3 WIRING HARNESS(ARMREST)	40 - 62
3G7	SELECTIVE CONTROL BRACKET(ARMREST)	40 - 64
3G5	SELECTIVE CONTROL LEVER BRACKET(ARMREST)	40 - 62
3G7	SELECTIVE CONTROL LEVER SENSOR(ARMREST)	40 - 64
3G5	SELECTIVE CONTROL LEVERS 1,2,3(ARMREST)	40 - 62
3G7	SELECTIVE CONTROL LEVERS 4 AND 5(ARMREST)	40 - 64
3G7	SELECTIVE CONTROL LEVERS 4 AND 5 WIRING HARNESS(ARMREST)	40 - 64
3E23	SELECTIVE CONTROL OPTION(SCO)	40 - 28
3G13	SELECTIVE CONTROL OPTION(SCO)	40 - 70
3G15	SELECTIVE CONTROL OPTION(SCO)	40 - 72
3D23	SELECTIVE CONTROL OPTION(SCO)(TSN -009999)	40 - 6
3E5	SELECTIVE CONTROL OPTION(SCO)(TSN 010000-)	40 - 10
3G5	SELECTIVE CONTROL POTENTIOMETER(ARMREST)	40 - 62
3G13	SELECTIVE CONTROL UNIT(SCU)	40 - 70
3G15	SELECTIVE CONTROL UNIT(SCU)	40 - 72
3D23	SELECTIVE CONTROL UNIT(SCU)(TSN -009999)	40 - 6
3E5	SELECTIVE CONTROL UNIT(SCU)(TSN 010000-)	40 - 10
7H20	SELECTIVE CONTROL VALVE	70 - 114
7H22	SELECTIVE CONTROL VALVE COUPLER	70 - 116
7I17	SELECTIVE CONTROL VALVE DRAIN LINES	70 - 136

https://www.truck-manuals.net/

ALPHABETICAL INDEX - CONTINUED

GRID		PAGE
7H19	SELECTIVE CONTROL VALVE END COVER	70 - 113
7I7	SELECTIVE CONTROL VALVE MANIFOLD (W/O HITCH)	70 - 126
7H24	SELECTIVE CONTROL VALVE OVERHAUL KIT	70 - 118
7I15	SELECTIVE CONTROL VALVE PILOT LINE	70 - 134
3D23	SELECTIVE CONTROL VALVE(SCV)(TSN -009999)	40 - 6
3E5	SELECTIVE CONTROL VALVE(SCV)(TSN 010000-)	40 - 10
3F24	SELECTOR,TRANSMISSION CONTROL(ARMREST)	40 - 56
2G8	SENDER, FUEL	30 - 72
2D25	SENSOR, AIR INTAKE TEMPERATURE (8400)	30 - 17
2D21	SENSOR, AIR INTAKE TEMPERATURE (6081) (LATE TSN-8100,8200,8300)	30 - 13
1E18	SENSOR, ENGINE SPEED (6076) (EARLY TSN-8100,8200,8300)	20 - 24
1H21	SENSOR, ENGINE SPEED (6081)	20 - 99
1G9	SENSOR, ENGINE SPEED (6081) (LATE TSN-81,82,8300)	20 - 61
4G18	SENSOR, MAGNETIC	51 - 47
7E10	SENSOR, ROCKSHAFT POSITION	70 - 30
2E24	SENSOR, TEMPERATURE (6076)	30 - 38
2F9	SENSOR, TEMPERATURE (6081) (LATE TSN-8100,8200,8300)	30 - 48
2F11	SENSOR, TEMPERATURE (6081) (LATE TSN-8100,8200,8300)	30 - 49A
2F21	SENSOR, TEMPERATURE (8400)	30 - 58
3E1	SENSOR,AIR FILTER RESTRICTION(TSN -009999)	40 - 8
3E3	SENSOR,AIR FILTER RESTRICTION(TSN -009999)	40 - 9A
3E7	SENSOR,AIR FILTER RESTRICTION(TSN 010000-)	40 - 12
3E7	SENSOR,AIR INTAKE TEMPERTURE	40 - 12
3E1	SENSOR,AIR INTAKE TEMPERTURE(TSN -009999)	40 - 8
3E3	SENSOR,AIR INTAKE TEMPERTURE(TSN -009999)	40 - 9A
3D23	SENSOR,CLEAN OIL LEVEL(TSN -009999)	40 - 6
3E5	SENSOR,CLEAN OIL LEVEL(TSN 010000-)	40 - 10
3E1	SENSOR,ENGINE SPEED(TSN -009999)	40 - 8
3E3	SENSOR,ENGINE SPEED(TSN -009999)	40 - 9A
3E7	SENSOR,ENGINE SPEED(TSN 010000-)	40 - 12
3G17	SENSOR,FOOT THROTTLE	40 - 73
3E1	SENSOR,FUEL TEMPERTURE(TSN -009999)	40 - 8
3E3	SENSOR,FUEL TEMPERTURE(TSN -009999)	40 - 9A
3E7	SENSOR,FUEL TEMPERTURE(TSN 010000-)	40 - 12
3D23	SENSOR,HYDRAULIC OIL FILTER RESTRICTION(TSN -009999)	40 - 6
3E5	SENSOR,HYDRAULIC OIL FILTER RESTRICTION (TSN 010000-)	40 - 10
3D23	SENSOR,HYDRAULIC OIL PRESSURE(TSN -009999)	40 - 6
3E5	SENSOR,HYDRAULIC OIL PRESSURE(TSN 010000-)	40 - 10
3D23	SENSOR,HYDRAULIC OIL TEMPERATURE(TSN -009999)	40 - 6
3E5	SENSOR,HYDRAULIC OIL TEMPERATURE(TSN 010000-)	40 - 10
3D23	SENSOR,PTO SPEED(STANDARD)(TSN -009999)	40 - 6
3E5	SENSOR,PTO SPEED(STANDARD)(TSN 010000-)	40 - 10
3E1	SENSOR,RADAR(TSN -009999)	40 - 8
3E3	SENSOR,RADAR(TSN -009999)	40 - 9A
3E7	SENSOR,RADAR(TSN 010000-)	40 - 12
3D23	SENSOR,REAR PTO SPEED(TSN -009999)	40 - 6
3E5	SENSOR,REAR PTO SPEED(TSN 010000-)	40 - 10
3E13	SENSOR,SECONDARY HAND BRAKE RESERVOIR LEVEL(EUROPEAN VERSION)(TSN -009999)	40 - 18
3E15	SENSOR,SECONDARY HAND BRAKE RESERVOIR LEVEL(EUROPEAN VERSION)(TSN 010000-)	40 - 20
3G7	SENSOR,SELECTIVE CONTROL LEVER(ARMREST)	40 - 64
3E1	SENSOR,WATER TEMPERTURE(TSN -009999)	40 - 8
3E3	SENSOR,WATER TEMPERTURE(TSN -009999)	40 - 9A
3E7	SENSOR,WATER TEMPERTURE(TSN 010000-)	40 - 12
2E14	SEPARATOR, WATER	30 - 30
3F20	SET-UP PANEL(SUP)	40 - 52
3E13	SET-UP PANEL(SUP)(EUROPEAN VERSION)(TSN -009999)	40 - 18
3E15	SET-UP PANEL(SUP)(EUROPEAN VERSION)(TSN 010000-)	40 - 20
3E9	SET-UP PANEL(SUP)(NORTH AMERICAN VERSION)(-009999)	40 - 14
3E11	SET-UP PANEL(SUP)(NORTH AMERICAN VERSION)(TSN 010000-)	40 - 16
3F16	SET-UP PANEL(SUP)(TSN -009999)	40 - 48
3F18	SET-UP PANEL(SUP)(TSN 010000-)	40 - 50
3E17	SET-UP PANEL(SUP)(UKRAINIAN VERSION)	40 - 22
3E13	SEVEN-TERMINAL OUTLET SOCKET(EUROPEAN VERSION)(TSN -009999)	40 - 18
3E15	SEVEN-TERMINAL OUTLET SOCKET(EUROPEAN VERSION)(TSN 010000-)	40 - 20
3E9	SEVEN-TERMINAL OUTLET SOCKET(NORTH AMERICAN VERSION)(TSN -009999)	40 - 14
3E11	SEVEN-TERMINAL OUTLET SOCKET(NORTH AMERICAN VERSION)(TSN 010000-)	40 - 16
3E17	SEVEN-TERMINAL OUTLET SOCKET(UKRAINIAN VERSION)	40 - 22
5D17	SHAFT, AXLE	53 - 14
5D19	SHAFT, AXLE	53 - 16
5D21	SHAFT, AXLE	53 - 18
5E23	SHAFT, AXLE	54 - 12
5D25	SHAFT, BEVEL	53 - 22
5D15	SHAFT, DIFFERENTIAL	53 - 12
5E20	SHAFT, DIFFERENTIAL	54 - 8
5E15	SHAFT, DIFFERENTIAL DRIVE	54 - 2
5F12	SHAFT, DIFFERENTIAL DRIVE	54 - 24
4F22	SHAFT, INPUT	51 - 26
4F24	SHAFT, INPUT	51 - 28
4I1	SHAFT, INPUT	51 - 78
4I3	SHAFT, INPUT	51 - 80
4G5	SHAFT, OUTPUT	51 - 34
4G7	SHAFT, OUTPUT	51 - 36
4I9	SHAFT, OUTPUT	51 - 86
4I11	SHAFT, OUTPUT	51 - 88
4G9	SHAFT, PTO	51 - 38
4I13	SHAFT, PTO	51 - 90
5E1	SHAFT, PTO OUTPUT	53 - 24
5E3	SHAFT, PTO OUTPUT	53 - 26
5E5	SHAFT, PTO OUTPUT	53 - 28
1D21	SHAFT, ROCKER ARM (6076) (EARLY TSN 8100,8200,8300)	20 - 8
1F15	SHAFT, ROCKER ARM (6081) (LATE TSN-8100,8200,8300)	20 - 44
1H2	SHAFT, ROCKER ARM (8400)	20 - 80
6D10	SHAFT, STEERING	60 - 6
5F11	SHIELD, DRIVELINE	54 - 22
8F11	SHIELD, EXHAUST PIPE	80 - 32
1D17	SHIELD, EXHAUST VALVE (6076) (EARLY TSN-8100,8200,8300)	20 - 4
1F10	SHIELD, EXHAUST VALVE (6081) (LATE TSN-8100,8200,8300)	20 - 40
1G22	SHIELD, EXHAUST VALVE (8400)	20 - 76

https://www.truck-manuals.net/

ALPHABETICAL INDEX - CONTINUED

GRID		PAGE
2E6	SHIELD, MUFFLER	30 - 24
4G15	SHIELD, PTO DRIVELINE	51 - 44
5E7	SHIELD, PTO MASTER	53 - 30
9E7	SHIELD, REAR FENDER	91 - 26
9E9	SHIELD, REAR FENDER (EUROPEAN VERSION)	91 - 28
4E1	SHIELD,EXTREMITY WARNING LAMP(027100-)	42 - 22
3H8	SHIELD,RADAR(TSN XXXXXX-)	40 - 88
2E5	SHIELDS, EXHAUST	30 - 23
8F19	SHIELDS, SIDE, ENGINE	80 - 40
3F24	SHIFT LEVER GUIDE(ARMREST)	40 - 56
3F24	SHIFT LEVER KNOB(ARMREST)	40 - 56
3F24	SHIFT LEVER,TRANSMISSION CONTROL(ARMREST)	40 - 56
1E14	SHIM, LINER (6076) (EARKY TSN 8100,8200,8300)	20 - 20
1G6	SHIM, LINER (6081) (LATE TSN-8100,8200,8300)	20 - 58
1H17	SHIM, LINER (6081HRW01)(8400)	20 - 95
1F19	SHORT BLOCK (WITH HEAD BOLTS)(6081) (LATE TSN-81,82,8300)	20 - 48
1E3	SHORT BLOCK (6076)(EARLT TSN 8100 8200,8300)(WITH HEAD BOLTS)	20 - 13A
1H6	SHORT BLOCK (8400) (WITHOUT HEAD BOLTS)	20 - 84
1H8	SHORT BLOCK (8400) (WITH HEAD BOLTS)	20 - 86
1F7	SHORT BLOCK GASKET KIT (6076)	20 - 38
1I8	SHORT BLOCK GASKET KIT (6081)	20 - 110
1G20	SHORT BLOCK GASKET KIT (6081) (LATE TSN-8100,8200,8300)	20 - 74
1E1	SHORT BLOCK(6076)(EARLY TSN-8100,8200,83 00)WITHOUT HEAD BLOTS)	20 - 12
2E24	SHUT-OFF HOUSING SOLENOID (6076)	30 - 38
2F9	SHUT-OFF HOUSING SOLENOID (6081) (LATE TSN-8100,8200,8300)	30 - 48
2F11	SHUT-OFF HOUSING SOLENOID (6081) (LATE TSN-8100,8200,8300)	30 - 49A
2F21	SHUT-OFF HOUSING SOLENOID (8400)	30 - 58
9E11	SIDE EXTENSION, REAR FENDER	91 - 30
9E12	SIDE EXTENSION, REAR FENDER (EUROPEAN VERSION)	91 - 31
8F21	SIDE PANEL (8100, 8200, 8300)	80 - 42
8F22	SIDE PANEL (8400)	80 - 43
8F19	SIDE SHIELDS, ENGINE	80 - 40
7F5	SIGHT GAUGE, HITCH	70 - 50
5F1	SLEEVE, AXLE RETAINING	54 - 14
5F3	SLEEVE, AXLE RETAINING	54 - 16
5F24	SLEEVE, AXLE RETAINING	54 - 36
8G5	SLOW MOVING VEHICLE EMBLEM	80 - 52
8G5	SMV EMBLEM	80 - 52
3E1	SOLENOID STARTING AID(TSN -009999)	40 - 8
3E3	SOLENOID STARTING AID(TSN -009999)	40 - 9A
3E7	SOLENOID STARTING AID(TSN 010000)	40 - 12
3I17	SOLENOID SWITCH,STARTING MOTOR (8100,8200,8300,8400)	41 - 6
3I20	SOLENOID SWITCH,STARTING MOTOR (8100,8200,8300,8400)	41 - 10
4F3	SOLENOID VALVE	51 - 6
4F5	SOLENOID VALVE	51 - 8
4F7	SOLENOID VALVE	51 - 10
4F9	SOLENOID VALVE	51 - 12
4F11	SOLENOID VALVE	51 - 14
4G17	SOLENOID VALVE	51 - 46
4H5	SOLENOID VALVE	51 - 58
4H7	SOLENOID VALVE	51 - 60
4H9	SOLENOID VALVE	51 - 62
4H11	SOLENOID VALVE	51 - 64
4H13	SOLENOID VALVE	51 - 66
5D13	SOLENOID VALVE	53 - 10
2E24	SOLENOID, FUEL SHUT-OFF (6076)	30 - 38
2F9	SOLENOID, FUEL SHUT-OFF (6081) (LATE TSN-8100,8200,8300)	30 - 48
2F11	SOLENOID, FUEL SHUT-OFF (6081) (LATE TSN-8100,8200,8300)	30 - 49A
2F21	SOLENOID, FUEL SHUT-OFF (8400)	30 - 58
7I1	SOLENOID, SCV	70 - 120
2E24	SOLENOID, SHUT-OFF HOUSING (6076)	30 - 38
2F9	SOLENOID, SHUT-OFF HOUSING (6081) (LATE TSN-8100,8200,8300)	30 - 48
2F11	SOLENOID, SHUT-OFF HOUSING (6081) (LATE TSN-8100,8200,8300)	30 - 49A
2F21	SOLENOID, SHUT-OFF HOUSING (8400)	30 - 58
3D19	SOLENOID,MFWD(TSN -019999)	40 - 2
3D21	SOLENOID,MFWD(TSN 020000-)	40 - 4
3D23	SOLENOID,PTO(TSN -009999)	40 - 6
3E5	SOLENOID,PTO(TSN 010000-)	40 - 10
3D23	SOLENOID,SCV(TSN -009999)	40 - 6
3E5	SOLENOID,SCV(TSN 010000-)	40 - 10
3D19	SOLENOIDS,TRANSMISSION(TSN -019999)	40 - 2
3D21	SOLENOIDS,TRANSMISSION(TSN 020000-)	40 - 4
7F21	SPACER KIT, CENTER LINK BRACKET (EUROPEAN VERSION)	70 - 66
3H19	SPEAKER	40 - 99
3H18	SPEAKER,RADIO	40 - 98
5D25	SPIRAL BEVEL	53 - 22
5E18	SPIRAL BEVEL	54 - 5
5G3	SPIRAL BEVEL GEAR SET, MFWD, HIGH CAPACITY (ASN 0001-000747; 80001-	54 - 40
5G1	SPIRAL BEVEL GEAR SET, MFWD, STANDARD, (ASN 000001-000747; 800001-)	54 - 38
7F13	SPRING, DRAFT LINK (EUROPEAN VERSION)	70 - 58
5E15	SPUR GEAR DRIVE	54 - 2
5F12	SPUR GEAR DRIVE	54 - 24
7J5	STABILIZER, HITCH (EUROPEAN VERSION) (EARLY DESIGN)	70 - 148
7J7	STABILIZER, HITCH (EUROPEAN VERSION) (LATE DESIGN)	70 - 150
5E1	STANDARD PTO	53 - 24
4E14	START SWITCH CONNECTOR	43 - 9
1E13	STARTER GEAR (6076) (EARLY TSN 8100,8200,8300)	20 - 19
1G4	STARTER GEAR (6081) (LATE TSN-8100,8200,8300)	20 - 56
1H16	STARTER GEAR (8400)	20 - 94
3I14	STARTER SOLENOID COVER (DENSO) (6076)	41 - 4
3I15	STARTER SOLENOID COVER (NIPPONDENSO) (6081) (LATE TSN-8100,8200,8300)	41 - 4A
3E1	STARTER(TSN -009999)	40 - 8
3E3	STARTER(TSN -009999)	40 - 9A
3E7	STARTER(TSN 010000-)	40 - 12
2E8	STARTING AID	30 - 26
3E1	STARTING AID SOLENOID(TSN -009999)	40 - 8
3E3	STARTING AID SOLENOID(TSN -009999)	40 - 9A
3E7	STARTING AID SOLENOID(TSN 010000)	40 - 12
3F9	STARTING CIRCUIT RELAY	40 - 40
3F9	STARTING CIRCUIT RELAY COVER	40 - 40
3E1	STARTING CIRCUIT RELAY(TSN -009999)	40 - 8
3E3	STARTING CIRCUIT RELAY(TSN -009999)	40 - 9A
3E7	STARTING CIRCUIT RELAY(TSN 010000-)	40 - 12
2E10	STARTING FITTINGS, ETHER (6076)	30 - 28
3I14	STARTING MOTOR (DENSO) (12V F4) (6076)	41 - 4

https://www.truck-manuals.net/

ALPHABETICAL INDEX - CONTINUED

GRID		PAGE
3I15	STARTING MOTOR (NIPPONDENSO) (12V F4) (6081) (LATE TSN-8100,8200,8300)	41 - 4A
3I17	STARTING MOTOR ARMATURE(8100,8200,8300,8400)	41 - 6
3I17	STARTING MOTOR CLUTCH(8100,8200,8300,840 0)	41 - 6
3I20	STARTING MOTOR CLUTCH(8100,8200,8300,840 0)	41 - 10
3I16	STARTING MOTOR COVER(8400)	41 - 5
3I17	STARTING MOTOR FIELD WINDING COIL (8100,8200,8300,8400)	41 - 6
3I19	STARTING MOTOR SOLENOID SWITCH	41 - 8
3I17	STARTING MOTOR SOLENOID SWITCH (8100,8200,8300,8400)	41 - 6
3I20	STARTING MOTOR SOLENOID SWITCH (8100,8200,8300,8400)	41 - 10
3I19	STARTING MOTOR SOLENOID SWITCH COVER	41 - 8
3I17	STARTING MOTOR(8100,8200,8300,8400)	41 - 6
3I20	STARTING MOTOR(8100,8200,8300,8400)	41 - 10
3I16	STARTING MOTOR(8400)	41 - 5
9F1	STATIONARY RIGHT-HAND GLASS	91 - 46
8H8	STATOR,A/C	90 - 4
8F4	STEEL DISK REAR WHEEL WEIGHTS (10-BOLT HUB ONLY)(34", 38", 42", 46", OR 50")	80 - 24
8E23	STEEL DISK REAR WHEELS (10-BOLT HUB)	80 - 18
5F1	STEERING ARM	54 - 14
5F3	STEERING ARM	54 - 16
5F24	STEERING ARM	54 - 36
8E15	STEERING ARM	80 - 8
9D17	STEERING COLUMN COVER	91 - 12
6D8	STEERING COLUMN PIVOT	60 - 4
3E13	STEERING COLUMN(EUROPEAN VERSION)(TSN -009999)	40 - 18
3E15	STEERING COLUMN(EUROPEAN VERSION)(TSN 010000-)	40 - 20
3E9	STEERING COLUMN(NORTH AMERICAN VERSION)(TSN -009999)	40 - 14
3E11	STEERING COLUMN(NORTH AMERICAN VERSION)(TSN 010000-)	40 - 16
3E17	STEERING COLUMN(UKRAINIAN VERSION)	40 - 22
6D20	STEERING CYLINDER (ADJUSTABLE AXLE)	60 - 16
6D22	STEERING CYLINDER (ADJUSTABLE AXLE)	60 - 17B
6D23	STEERING CYLINDER (MFWD)	60 - 18
6D25	STEERING CYLINDER (MFWD) (LATE DESIGN)	60 - 21
6E1	STEERING CYLINDER (MFWD) (LATE DESIGN)	60 - 21A
6E2	STEERING CYLINDER (MFWD) (LATE DESIGN)	60 - 21B
6E3	STEERING CYLINDER LINES (MFWD)	60 - 22
6E5	STEERING CYLINDER LINES (W/O MFWD) (EARLY DESIGN)	60 - 24
6E7	STEERING CYLINDER LINES (W/O MFWD) (LATE DESIGN)	60 - 26
6D21	STEERING CYLINDER SEAL KIT (ADJUSTABLE AXLE) (EARLY DESIGN)	60 - 17
6E9	STEERING PUMP	60 - 28
6E15	STEERING PUMP FRONT LINE	60 - 34
6E13	STEERING PUMP REAR LINES	60 - 32
6E10	STEERING PUMP/CHARGE PUMP	60 - 29
6D10	STEERING SHAFT	60 - 6
6D14	STEERING VALVE (MFWD)	60 - 10
6D15	STEERING VALVE (W/O MFWD)	60 - 11
6D13	STEERING VALVE BRACKET	60 - 9
6D17	STEERING VALVE SEAL KIT	60 - 13
6D6	STEERING WHEEL	60 - 2
9E13	STEP, LEFT HAND	91 - 32
9D21	STORAGE TRAY	91 - 16
7G5	STRAP, DRAWBAR (8100,8200,8300) (EARLY DESIGN)	70 - 74
1D20	STRAPS, ENGINE LIFT (6076)	20 - 7
1H1	STRAPS, ENGINE LIFT (6081)	20 - 79
1F14	STRAPS, ENGINE LIFT (6081) (LATE TSN-81,82,8300)	20 - 43
5F9	SUN PINION	54 - 20
5F22	SUN PINION	54 - 34
5G5	SUN PINION	54 - 42
9D25	SUN VISOR	91 - 19A
9E5	SUN VISOR	91 - 24
7E12	SUPPORT, DRAFT LINK	70 - 32
7F16	SUPPORT, DRAFT LINK RELEASE CABLE (EUROPEAN VERSION)	70 - 61
7G3	SUPPORT, DRAWBAR FRONT (8100,8200,8300)	70 - 72
7G9	SUPPORT, DRAWBAR FRONT (8400)	70 - 78
8E9	SUPPORT, FRONT AXLE REAR PIVOT	80 - 2
7E1	SUPPORT, HYDRAULIC OIL COOLER	70 - 19
7G17	SUPPORT, REGULAR DRAWBAR FRONT (EUROPEAN VERSION)	70 - 88
9E1	SUPPORTS, HEADLINER	91 - 20
9G2	SUPPORTS, SEAT BACKREST	92 - 13
7F11	SWAY BLOCK	70 - 56
7E6	SWITCH, HYDRAULIC OIL FILTER	70 - 24
6D6	SWITCH, TURN SIGNAL	60 - 2
3F16	SWITCH,A/C HEATING FAN(TSN -009999)	40 - 48
3F18	SWITCH,A/C / HEATING FAN(TSN 010000-)	40 - 50
3E13	SWITCH,A/C COMPRESSOR(EUROPEAN VERSION)(TSN -009999)	40 - 18
3E15	SWITCH,A/C COMPRESSOR(EUROPEAN VERSION)(TSN 010000-)	40 - 20
3E9	SWITCH,A/C COMPRESSOR(NORTH AMERICAN VERSION)(-009999)	40 - 14
3E11	SWITCH,A/C COMPRESSOR(NORTH AMERICAN VERSION)(TSN 010000-)	40 - 16
3F16	SWITCH,A/C COMPRESSOR(TSN -009999)	40 - 48
3F18	SWITCH,A/C COMPRESSOR(TSN 010000-)	40 - 50
3E17	SWITCH,A/C COMPRESSOR(UKRAINIAN VERSION)	40 - 22
3E13	SWITCH,A/C DEICING(EUROPEAN VERSION)(TSN -009999)	40 - 18
3E15	SWITCH,A/C DEICING(EUROPEAN VERSION)(TSN 010000-)	40 - 20
3E9	SWITCH,A/C DEICING(NORTH AMERICAN VERSION)(TSN -009999)	40 - 14
3E11	SWITCH,A/C DEICING(NORTH AMERICAN VERSION)(TSN 010000-)	40 - 16
3E17	SWITCH,A/C DEICING(UKRAINIAN VERSION)	40 - 22
3E13	SWITCH,A/C HIGH PRESSURE(EUROPEAN VERSION)(TSN -009999)	40 - 18
3E15	SWITCH,A/C HIGH PRESSURE(EUROPEAN VERSION)(TSN 010000-)	40 - 20
3E9	SWITCH,A/C HIGH(NORTH AMERICAN VERSION)(-009999)	40 - 14
3E11	SWITCH,A/C HIGH(NORTH AMERICAN VERSION)(TSN 010000-)	40 - 16
3E17	SWITCH,A/C HIGH(UKRAINIAN VERSION)	40 - 22
3E13	SWITCH,A/C LOW PRESSURE(EUROPEAN VERSION)(TSN -009999)	40 - 18
3E15	SWITCH,A/C LOW PRESSURE(EUROPEAN VERSION)(TSN 010000-)	40 - 20
3E9	SWITCH,A/C LOW(NORTH AMERICAN VERSION)(TSN -009999)	40 - 14
3E11	SWITCH,A/C LOW(NORTH AMERICAN VERSION)(TSN 010000-)	40 - 16
3E17	SWITCH,A/C LOW(UKRAINIAN VERSION)	40 - 22
3E13	SWITCH,A/C-HEATING FAN(EUROPEAN VERSION)(TSN -009999)	40 - 18

https://www.truck-manuals.net/

ALPHABETICAL INDEX - CONTINUED

GRID		PAGE
3E15	SWITCH,A/C-HEATING FAN(EUROPEAN VERSION)(TSN 010000-)	40 - 20
3E9	SWITCH,A/C-HEATING FAN(NORTH AMERICAN VERSION)(-009999)	40 - 14
3E11	SWITCH,A/C-HEATING FAN(NORTH AMERICAN VERSION)(TSN 010000-)	40 - 16
3E17	SWITCH,A/C-HEATING FAN(UKRAINIAN VERSION)	40 - 22
3F5	SWITCH,AIR BRAKE PRESSURE(EUROPEAN VERSION)	40 - 35
3G25	SWITCH,BRAKE	40 - 81
3E13	SWITCH,BRAKE(EUROPEAN VERSION)(TSN -009999)	40 - 18
3E15	SWITCH,BRAKE(EUROPEAN VERSION)(TSN 010000-)	40 - 20
3E9	SWITCH,BRAKE(NORTH AMERICAN VERSION)(TSN -009999)	40 - 14
3E11	SWITCH,BRAKE(NORTH AMERICAN VERSION)(TSN 010000-)	40 - 16
3E17	SWITCH,BRAKE(UKRAINIAN VERSION)	40 - 22
3D19	SWITCH,CLUTCH DISENGAGE(TSN -019999)	40 - 2
3D21	SWITCH,CLUTCH DISENGAGE(TSN 020000-)	40 - 4
3D19	SWITCH,CLUTCH ENGAGE PRESSURE(TSN -019999)	40 - 2
3D21	SWITCH,CLUTCH ENGAGE PRESSURE(TSN 020000-)	40 - 4
3E13	SWITCH,DIFFERENTIAL LOCK(EUROPEAN VERSION)(TSN -009999)	40 - 18
3E15	SWITCH,DIFFERENTIAL LOCK(EUROPEAN VERSION)(TSN 010000-)	40 - 20
3E9	SWITCH,DIFFERENTIAL LOCK(NORTH AMERICAN VERSION)(TSN -009999)	40 - 14
3E11	SWITCH,DIFFERENTIAL LOCK(NORTH AMERICAN VERSION)(TSN 010000-)	40 - 16
3E17	SWITCH,DIFFERENTIAL LOCK(UKRAINIAN VERSION)	40 - 22
3G20	SWITCH,DOME LIGHT	40 - 76
3E13	SWITCH,DOME LIGHT(EUROPEAN VERSION)(TSN -009999)	40 - 18
3E15	SWITCH,DOME LIGHT(EUROPEAN VERSION)(TSN 010000-)	40 - 20
3E9	SWITCH,DOME LIGHT(NORTH AMERICAN VERSION)(TSN -009999)	40 - 14
3E11	SWITCH,DOME LIGHT(NORTH AMERICAN VERSION)(TSN 010000-)	40 - 16
3E17	SWITCH,DOME LIGHT(UKRAINIAN VERSION)	40 - 22
3G21	SWITCH,DOME,DOOR	40 - 77
3F21	SWITCH,ETHER AID	40 - 53
3E13	SWITCH,ETHER AID(EUROPEAN VERSION)(TSN -009999)	40 - 18
3E15	SWITCH,ETHER AID(EUROPEAN VERSION)(TSN 010000-)	40 - 20
3E9	SWITCH,ETHER AID(NORTH AMERICAN VERSION)(TSN -009999)	40 - 14
3E11	SWITCH,ETHER AID(NORTH AMERICAN VERSION)(TSN 010000-)	40 - 16
3E17	SWITCH,ETHER AID(UKRAINIAN VERSION)	40 - 22
3F16	SWITCH,FIELD CRUISE(TSN -009999)	40 - 48
3F18	SWITCH,FIELD CRUISE(TSN 010000-)	40 - 50
3E13	SWITCH,FRONT WIPER/WASHER(EUROPEAN VERSION)(TSN -009999)	40 - 18
3E15	SWITCH,FRONT WIPER/WASHER(EUROPEAN VERSION)(TSN 010000-)	40 - 20
3E9	SWITCH,FRONT WIPER/WASHER(NORTH AMERICAN VERSION)(-009999)	40 - 14
3E11	SWITCH,FRONT WIPER/WASHER(NORTH AMERICAN VERSION)(TSN 010000-)	40 - 16
3F16	SWITCH,FRONT WIPER/WASHER(TSN -009999)	40 - 48
3F18	SWITCH,FRONT WIPER/WASHER(TSN 010000-)	40 - 50
3E17	SWITCH,FRONT WIPER/WASHER(UKRAINIAN VERSION)	40 - 22
3D19	SWITCH,GROUND DRIVE PUMP(TSN -019999)	40 - 2
3D21	SWITCH,GROUND DRIVE PUMP(TSN 020000-)	40 - 4
3E13	SWITCH,HAZARD LIGHTS(EUROPEAN VERSION)(TSN -009999)	40 - 18
3E15	SWITCH,HAZARD LIGHTS(EUROPEAN VERSION)(TSN 010000-)	40 - 20
3E9	SWITCH,HAZARD LIGHTS(NORTH AMERICAN VERSION)(TSN -009999)	40 - 14
3E11	SWITCH,HAZARD LIGHTS(NORTH AMERICAN VERSION)(TSN 010000-)	40 - 16
3F16	SWITCH,HAZARD LIGHTS(TSN -009999)	40 - 48
3F18	SWITCH,HAZARD LIGHTS(TSN 010000-)	40 - 50
3E17	SWITCH,HAZARD LIGHTS(UKRAINIAN VERSION)	40 - 22
8H9	SWITCH,HIGH PRESSURE A/C	90 - 6
3G19	SWITCH,HITCH CONTROL(EUROPEAN VERSION)	40 - 75
3G18	SWITCH,HITCH CONTROL(NORTH AMERICAN VERSION)	40 - 74
3G1	SWITCH,HITCH RAISE/LOWER(ARMREST)	40 - 58
3E13	SWITCH,HITCH(EUROPEAN VERSION)(TSN -009999)	40 - 18
3E15	SWITCH,HITCH(EUROPEAN VERSION)(TSN 010000-)	40 - 20
3E9	SWITCH,HITCH(NORTH AMERICAN VERSION)(TSN -009999)	40 - 14
3E11	SWITCH,HITCH(NORTH AMERICAN VERSION)(TSN 010000-)	40 - 16
3E17	SWITCH,HITCH(UKRAINIAN VERSION)	40 - 22
3G24	SWITCH,HYDRAULIC DIFFERENTIAL LOCK	40 - 80
3H14	SWITCH,IMPLEMENT	40 - 94
3F21	SWITCH,KEY	40 - 53
3E13	SWITCH,KEY(EUROPEAN VERSION)(TSN -009999)	40 - 18
3E15	SWITCH,KEY(EUROPEAN VERSION)(TSN 010000-)	40 - 20
3E9	SWITCH,KEY(NORTH AMERICAN VERSION)(TSN -009999)	40 - 14
3E11	SWITCH,KEY(NORTH AMERICAN VERSION)(TSN 010000-)	40 - 16
3E17	SWITCH,KEY(UKRAINIAN VERSION)	40 - 22
8H9	SWITCH,LOW PRESSURE A/C	90 - 6
3E13	SWITCH,MAIN LIGHTS(EUROPEAN VERSION)(TSN -009999)	40 - 18
3E15	SWITCH,MAIN LIGHTS(EUROPEAN VERSION)(TSN 010000-)	40 - 20
3E9	SWITCH,MAIN LIGHTS(NORTH AMERICAN VERSION)(-009999)	40 - 14
3E11	SWITCH,MAIN LIGHTS(NORTH AMERICAN VERSION)(TSN 010000-)	40 - 16
3F16	SWITCH,MAIN LIGHTS(TSN -009999)	40 - 48
3F18	SWITCH,MAIN LIGHTS(TSN 010000-)	40 - 50
3E17	SWITCH,MAIN LIGHTS(UKRAINIAN VERSION)	40 - 22
3E13	SWITCH,MFWD(EUROPEAN VERSION)(TSN -009999)	40 - 18
3E15	SWITCH,MFWD(EUROPEAN VERSION)(TSN 010000-)	40 - 20
3E9	SWITCH,MFWD(NORTH AMERICAN VERSION)(TSN -009999)	40 - 14
3E11	SWITCH,MFWD(NORTH AMERICAN VERSION)(TSN 010000-)	40 - 16
3F16	SWITCH,MFWD(TSN -009999)	40 - 48
3F18	SWITCH,MFWD(TSN 010000-)	40 - 50
3E17	SWITCH,MFWD(UKRAINIAN VERSION)	40 - 22
3F24	SWITCH,NEUTRAL START	40 - 56

https://www.truck-manuals.net/

ALPHABETICAL INDEX - CONTINUED

GRID		PAGE
3E1	SWITCH,OIL PRESSURE TRANSDUCER(TSN -009999)	40 - 8
3E3	SWITCH,OIL PRESSURE TRANSDUCER(TSN -009999)	40 - 9A
3E7	SWITCH,OIL PRESSURE TRANSDUCER(TSN 010000-)	40 - 12
3F1	SWITCH,OPERATOR PRESENCE(SEAT)	40 - 31
3F1	SWITCH,RAISE/LOWER SEAT	40 - 31
3E13	SWITCH,REAR WIPER/WASHER(EUROPEAN VERSION)(TSN -009999)	40 - 18
3E15	SWITCH,REAR WIPER/WASHER(EUROPEAN VERSION)(TSN 010000-)	40 - 20
3E9	SWITCH,REAR WIPER/WASHER(NORTH AMERICAN VERSION)(TSN -009999)	40 - 14
3E11	SWITCH,REAR WIPER/WASHER(NORTH AMERICAN VERSION)(TSN 010000-)	40 - 16
3F16	SWITCH,REAR WIPER/WASHER(TSN -009999)	40 - 48
3F18	SWITCH,REAR WIPER/WASHER(TSN 010000-)	40 - 50
3E17	SWITCH,REAR WIPER/WASHER(UKRAINIAN VERSION)	40 - 22
3E13	SWITCH,SECONDARY HAND BRAKE(EUROPEAN VERSION)(TSN -009999)	40 - 18
3E15	SWITCH,SECONDARY HAND BRAKE(EUROPEAN VERSION)(TSN 010000-)	40 - 20
3I19	SWITCH,STARTING MOTOR SOLENOID	41 - 8
3D19	SWITCH,TRANSMISSION PRESSURE(TSN -019999)	40 - 2
3D21	SWITCH,TRANSMISSION PRESSURE(TSN 020000-)	40 - 4
3E13	SWITCH,WORK LIGHT(EUROPEAN VERSION)(TSN -009999)	40 - 18
3E15	SWITCH,WORK LIGHT(EUROPEAN VERSION)(TSN 010000-)	40 - 20
3F16	SWITCH,WORK LIGHTS(TSN -009999)	40 - 48
3F18	SWITCH,WORK LIGHTS(TSN 010000-)	40 - 50

T

3E13	TACHOMETER(EUROPEAN VERSION)(TSN -009999)	40 - 18
3E15	TACHOMETER(EUROPEAN VERSION)(TSN 010000-)	40 - 20
3E11	TACHOMETER(NORTH AMERICAN VERSION)(TSN 010000-)	40 - 16
3E9	TACHOMETER(NORTH AMERICAN VERSION))(TSN -009999)	40 - 14
3E17	TACHOMETER(UKRAINIAN VERSION)	40 - 22
8F9	TACTOR FRONT SUPPORT	80 - 30
8G19	TAG, BATTERY CABLE (SPANISH)	80 - 66
3E13	TAIL LIGHT(EUROPEAN VERSION)(TSN -009999)	40 - 18
3E15	TAIL LIGHT(EUROPEAN VERSION)(TSN 010000-)	40 - 20
4D6	TAIL LIGHT(EV)(TSN -009999)	42 - 2
4D7	TAIL LIGHT(EV)(TSN 010000-)	42 - 3
4D5	TAIL LIGHT(NAV)	42 - 1
3E9	TAIL LIGHT(NORTH AMERICAN VERSION)(TSN -009999)	40 - 14
3E11	TAIL LIGHT(NORTH AMERICAN VERSION)(TSN 010000-)	40 - 16
3E17	TAIL LIGHT(UKRAINIAN VERSION)	40 - 22
6H10	TANK, AIR BRAKE AIR (EUROPEAN VERSION)	60 - 98
6H12	TANK, AIR BRAKE AIR (LATE DESIGN)	60 - 100
2G8	TANK, FUEL	30 - 72
8H19	TEMPERATURE CONTROL CABLE	90 - 16
2E24	TEMPERATURE SENSOR (6076)	30 - 38
2F9	TEMPERATURE SENSOR (6081) (LATE TSN-8100,8200,8300)	30 - 48
2F11	TEMPERATURE SENSOR (6081) (LATE TSN-8100,8200,8300)	30 - 49A
2F21	TEMPERATURE SENSOR (8400)	30 - 58
2D25	TEMPERATURE SENSOR, AIR INTAKE (8400)	30 - 17
2D21	TEMPERATURE SENSOR, AIR INTAKE (6081) (LATE TSN-8100,8200,8300)	30 - 13
4E14	TERMINAL BOARD,FUSE	43 - 9
4E14	TERMINAL BOARD,RELAY	43 - 9
3I23	TERMINAL CAP	41 - 13
4E13	TERMINAL,ELECTRICAL	43 - 8
4E11	TERMINAL,METRI-PACK	43 - 6
3I23	TERMINAL,POSITIVE	41 - 13
4E7	TERMINAL,WEATHERPACK	43 - 2
4E9	TERMINALS,METRI-PACK	43 - 4
1F6	THERMOSTAT HOUSING, FRONT (6076)	20 - 37A
1F5	THERMOSTAT HOUSING, FRONT (6076) (EARLY TSN-8100,8200,8300)	20 - 37
1G19	THERMOSTAT HOUSING, FRONT (6081) (LATE TSN-8100,8200,8300)	20 - 73
1I7	THERMOSTAT HOUSING, FRONT (8400)	20 - 109
8H19	THERMOSTAT,HEATER AND A/C	90 - 16
3G17	THROTTLE,FOOT	40 - 73
1E15	THRUST BEARING (6076) (EARLT TSN 8100,8200,8300)	20 - 21
1G5	THRUST BEARING (6081) (LATE TSN-8100,8200,8300)	20 - 57
1H18	THRUST BEARING (8400)	20 - 96
1E15	THRUST WASHER (6076) (EARLY TSN 8100,8200,8300)	20 - 21
1G5	THRUST WASHER (6081) (LATE TSN-8100,8200,8300)	20 - 57
1H18	THRUST WASHER (8400)	20 - 96
8E15	TIE ROD	80 - 8
5E23	TIE ROD ASSEMBLY	54 - 12
1E17	TIMING GEAR COVER (6076) (EARLY TSN-8100,8200,8300)	20 - 23
1G8	TIMING GEAR COVER (6081) (LATE TSN-8100,8200,8300)	20 - 60
1H20	TIMING GEAR COVER (8400 TRACTOR)	20 - 98
1E17	TIMING GEAR COVER GASKET (6076) (EARLY TSN-8100,8200,8300)	20 - 23
1G8	TIMING GEAR COVER GASKET (6081) (LATE TSN-8100,8200,8300)	20 - 60
1H20	TIMING GEAR COVER GASKET (8400 TRACTOR)	20 - 98
8G2	TOOL BOX	80 - 49
1D14	TORQ-GARD ENGINE OIL	20 - 1
9D11	TOW DISCONNECT LEVER (CAB)	91 - 6
6G15	TRAILER BRAKE VALVE (EUROPEAN VERSION)	60 - 78
6G13	TRAILER BRAKE VALVE KIT (EUROPEAN VERSION)	60 - 76
2F2	TRANSFER PUMP, FUEL (ROBERT BOSCH) (6076)	30 - 41
2F14	TRANSFER PUMP, FUEL (ROBERT BOSCH) (6081) (LATE TSN-81,82,8300)	30 - 51
2F24	TRANSFER PUMP, FUEL (ROBERT BOSCH) (8400 TRACTOR)	30 - 61
7D9	TRANSMISSION AND HYDRAULIC OIL	70 - 1
4G13	TRANSMISSION CASE	51 - 42
4I17	TRANSMISSION CASE	51 - 94
4F17	TRANSMISSION CASE REAR COVER	51 - 20
4F19	TRANSMISSION CASE REAR COVER	51 - 22
4H19	TRANSMISSION CASE REAR COVER	51 - 72
4H21	TRANSMISSION CASE REAR COVER	51 - 74
3F24	TRANSMISSION CONTROL BRACKET(ARMREST)	40 - 56

https://www.truck-manuals.net/

ALPHABETICAL INDEX - CONTINUED

GRID		PAGE
3F24	TRANSMISSION CONTROL SELECTOR(ARMREST)	40 - 56
3F24	TRANSMISSION CONTROL SHIFT LEVER(ARMREST)	40 - 56
3I3	TRANSMISSION HEATER(EUROPEAN VERSION)	40 - 108
3I1	TRANSMISSION HEATER(NORTH AMERICAN VERSION)	40 - 106
4G19	TRANSMISSION LINES	51 - 48
4G21	TRANSMISSION LINES	51 - 50
4G23	TRANSMISSION LINES	51 - 52
3D19	TRANSMISSION SOLENOIDS(TSN -019999)	40 - 2
3D21	TRANSMISSION SOLENOIDS(TSN 020000-)	40 - 4
3D19	TRANSMISSION WIRING HARNESS(TSN -019999)	40 - 2
3D21	TRANSMISSION WIRING HARNESS(TSN 020000-)	40 - 4
7F15	TRANSPORT HOOK, CENTER LINK (EUROPEAN VERSION)	70 - 60
1G17	TUBE SEAL (6081) (LATE TSN-8100,8200,8300)	20 - 70
1I5	TUBE SEAL (8400)	20 - 108
1E10	TUBE, ENGINE OIL DIPSTICK (6076) (EARLY TSN-8100,8200,8300)	20 - 16
1H13	TUBE, ENGINE OIL DIPSTICK (6081)	20 - 91
1F24	TUBE, ENGINE OIL DIPSTICK (6081) (LATE TSN-81,82,8300)	20 - 53
5E9	TUBE, OIL FILL	53 - 32
1F5	TUBE, WATER MANIFOLD (6076) (EARLY TSN-8100,8200,8300)	20 - 37
1F6	TUBE, WATER MANIFOLD (6076) (LATE DESIGN)	20 - 37A
1G14	TUBES, OIL COOLER (8100, 8200, 8300) (LATE TSN)	20 - 66
1I4	TUBES, OIL COOLER (8400)	20 - 107
1G13	TUBES, OIL COOLER BYPASS (6081) (LATE TSN-81,82,8300)	20 - 65
2D18	TURBOCHARGER (6076) (EARLY TSN 8100,8200,8300)	30 - 10
2D22	TURBOCHARGER (6081) (LATE TSN-8100,8200,8300)	30 - 14
2E1	TURBOCHARGER (8400)	30 - 18
2D17	TURBOCHARGER CENTER HOUSING (SCHWITZER) (6076)	30 - 9
2E3	TURBOCHARGER CENTER HOUSING (SCHWITZER) (6081)	30 - 20
2D18	TURBOCHARGER GASKET (6076) (EARLY TSN 8100,8200,8300)	30 - 10
2D22	TURBOCHARGER GASKET (6081) (LATE TSN-8100,8200,8300)	30 - 14
2E1	TURBOCHARGER GASKET (8400)	30 - 18
2D18	TURBOCHARGER OIL LINES (6076) (EARLY TSN 8100,8200,8300)	30 - 10
2D22	TURBOCHARGER OIL LINES (6081) (LATE TSN-8100,8200,8300)	30 - 14
2E1	TURBOCHARGER OIL LINES (8400)	30 - 18
3E13	TURN SIGNAL FLASHER(EUROPEAN VERSION)(TSN -009999)	40 - 18
3E15	TURN SIGNAL FLASHER(EUROPEAN VERSION)(TSN 010000-)	40 - 20
6D6	TURN SIGNAL SWITCH	60 - 2

U

5F1	U JOINT ASSEMBLY	54 - 14
5F3	U JOINT ASSEMBLY	54 - 16
5F24	U JOINT ASSEMBLY	54 - 36
5F7	U-JOINT/WHEEL HUB MFWD RETROFIT SEAL KIT	54 - 18
1E7	UNDERHAUL KIT, ENGINE (6076)	20 - 13E
1G3	UNDERSIZE CRANKSHAFT KIT (6081) (CONNECTING ROD JOURNAL)(81,82,83)	20 - 55B
1G2	UNDERSIZE MAIN BEARING CRANKSHAFT AND BEARING KIT (6081) (8100, 8200, 8300)	20 - 55A
9D19	UPHOLSTERY, FENDER, L.H. (CAB)	91 - 14
9D23	UPHOLSTERY, POST (CAB)	91 - 18
9E3	UPHOLSTERY, REAR (CAB)	91 - 22
9D15	UPHOLSTERY, RIGHT-HAND CONSOLE	91 - 10
9D15	UPPER LOAD CENTER ACCESS COVER	91 - 10

V

1G24	VALVE COVER (ESN -018791)(8400)	20 - 78
1G25	VALVE COVER (ESN 018792-)(8400)	20 - 78A
1D19	VALVE COVER (6076) (EARLY TSN-8100,8200,8300)	20 - 6
1F12	VALVE COVER (6081) (LATE TSN-8100,8200,8300)	20 - 42
1F13	VALVE COVER (6081) (LATE TSN-8100,8200,8300)	20 - 42A
1D17	VALVE SEAT INSERTS (6076) (EARLY TSN-8100,8200,8300)	20 - 4
1F10	VALVE SEAT INSERTS (6081) (LATE TSN-8100,8200,8300)	20 - 40
1G22	VALVE SEAT INSERTS (8400)	20 - 76
6G19	VALVE, AIR BRAKE CONTROL (EUROPEAN VERSION)	60 - 82
6G21	VALVE, AIR BRAKE CONTROL (EUROPEAN VERSION) (LATE DESIGN)	60 - 84
6H14	VALVE, AIR BRAKE CONTROL (EUROPEAN VERSION)	60 - 102
6H16	VALVE, AIR BRAKE CONTROL (EUROPEAN VERSION) (LATE DESIGN)	60 - 104
6G17	VALVE, AIR BRAKE PRESSURE REGULATING (EUROPEAN VERSION)	60 - 80
6G17	VALVE, AIR BRAKE PRESSURE RELIEF (EUROPEAN VERSION)	60 - 80
6E19	VALVE, BRAKE	60 - 38
2E18	VALVE, FUEL CHECK (6076)	30 - 32
2E20	VALVE, FUEL CHECK (6076)	30 - 34
2F5	VALVE, FUEL CHECK (6081) (LATE TSN-8100,8200,8300)	30 - 44
2G2	VALVE, FUEL CHECK (6081) (8400)	30 - 66
2G4	VALVE, FUEL CHECK (6081) (8400)	30 - 68
7I7	VALVE, HITCH	70 - 126
7I9	VALVE, HITCH	70 - 128
7I13	VALVE, HITCH VALVE RELIEF	70 - 132
4F1	VALVE, MANIFOLD	51 - 4
4F3	VALVE, MANIFOLD	51 - 6
4F5	VALVE, MANIFOLD	51 - 8
4F7	VALVE, MANIFOLD	51 - 10
4F9	VALVE, MANIFOLD	51 - 12
4F11	VALVE, MANIFOLD	51 - 14
4F13	VALVE, MANIFOLD	51 - 16
4H3	VALVE, MANIFOLD	51 - 56
4H5	VALVE, MANIFOLD	51 - 58
4H7	VALVE, MANIFOLD	51 - 60
4H9	VALVE, MANIFOLD	51 - 62
4H11	VALVE, MANIFOLD	51 - 64
4H13	VALVE, MANIFOLD	51 - 66
4H15	VALVE, MANIFOLD	51 - 68

https://www.truck-manuals.net/

ALPHABETICAL INDEX - CONTINUED

GRID		PAGE
1I3	VALVE, OIL COOLER BYPASS (6081)	20 - 106
1E22	VALVE, OIL FILTER BYPASS (6076)	20 - 28
1G15	VALVE, OIL FILTER BYPASS (6081) (LATE TSN-8100,8200,8300)	20 - 68
1I1	VALVE, OIL FILTER BYPASS (8400)	20 - 104
1I1	VALVE, OIL PRESSURE REGULATING (8400)	20 - 104
1E22	VALVE, OIL PRESSURE REGULATING (6076)	20 - 28
1G15	VALVE, OIL PRESSURE REGULATING (6081) (LATE TSN-8100,8200,8300)	20 - 68
1G14	VALVE, OIL PRESSURE REGULATING (8100, 8200, 8300) (LATE TSN)	20 - 66
1I4	VALVE, OIL PRESSURE REGULATING (8400)	20 - 107
6D14	VALVE, PRIORITY (MFWD)	60 - 10
6D15	VALVE, PRIORITY (W/O MFWD)	60 - 11
7I1	VALVE, SCV PILOT	70 - 120
7I2	VALVE, SCV PILOT	70 - 121
6F23	VALVE, SECONDARY BRAKE	60 - 66
6G2	VALVE, SECONDARY BRAKE	60 - 69A
7H20	VALVE, SELECTIVE CONTROL	70 - 114
4F3	VALVE, SOLENOID	51 - 6
4F5	VALVE, SOLENOID	51 - 8
4F7	VALVE, SOLENOID	51 - 10
4F9	VALVE, SOLENOID	51 - 12
4F11	VALVE, SOLENOID	51 - 14
4G17	VALVE, SOLENOID	51 - 46
4H5	VALVE, SOLENOID	51 - 58
4H7	VALVE, SOLENOID	51 - 60
4H9	VALVE, SOLENOID	51 - 62
4H11	VALVE, SOLENOID	51 - 64
4H13	VALVE, SOLENOID	51 - 66
5D13	VALVE, SOLENOID	53 - 10
6D14	VALVE, STEERING (MFWD)	60 - 10
6D15	VALVE, STEERING (W/O MFWD)	60 - 11
6G15	VALVE, TRAILER BRAKE (EUROPEAN VERSION)	60 - 78
8H19	VALVE,WATER	90 - 16
3E23	VALVE,5TH SCV	40 - 28
1D17	VALVES, EXHAUST (6076) (EARLY TSN-8100,8200,8300)	20 - 4
1F10	VALVES, EXHAUST (6081) (LATE TSN-8100,8200,8300)	20 - 40
1G22	VALVES, EXHAUST (8400)	20 - 76
1D17	VALVES, INTAKE (6076) (EARLY TSN-8100,8200,8300)	20 - 4
1F10	VALVES, INTAKE (6081) (LATE TSN-8100,8200,8300)	20 - 40
1G22	VALVES, INTAKE (8400)	20 - 76
5D9	VALVES, PTO	53 - 6
2G8	VENT, FUEL	30 - 72
9D25	VISOR, SUN	91 - 19A
9E5	VISOR, SUN	91 - 24

W

7H1	WAGON HITCH BRACKETS (EUROPEAN VERSION)(LATE DESIGN)	70 - 96
7G23	WAGON HITCH BRACKETS (EUROPEAN VERSION) (EARLY DESIGN)	70 - 94
7H9	WAGON HITCH CONTROLS (EUROPEAN VERSION)	70 - 102
7H5	WAGON HITCH COUPLER (EUROPEAN VERSION) (LATE DESIGN)	70 - 100
7H7	WAGON HITCH COUPLER (EUROPEAN VERSION) (LATE DESIGN)	70 - 101A
7H3	WAGON HITCH COUPLING (EUROPEAN VERSION)	70 - 98
7J3	WAGON TILT KIT	70 - 146
3F16	WARNING ALARM(TSN -009999)	40 - 48
3F18	WARNING ALARM(TSN 010000-)	40 - 50
4D18	WARNING LIGHTS,ROOF(NAV)	42 - 14
3E19	WARNING LIGHTS,ROOF,NORTH AMERICAN VERSION	40 - 24
9E21	WASHER KIT, WINDSHIELD AND REAR	91 - 40
1E15	WASHER THRUST (6076) (EARLY TSN 8100,8200,8300)	20 - 21
1D22	WASHER, CAMSHAFT THRUST (6076) (EARLY TSN-8100,8200,8300)	20 - 9
1G5	WASHER, THRUST (6081) (LATE TSN-8100,8200,8300)	20 - 57
1H18	WASHER, THRUST (8400)	20 - 96
1F6	WATER MANIFOLD GASKET (6076)	20 - 37A
1F5	WATER MANIFOLD GASKET (6076) (EARLY TSN-8100,8200,8300)	20 - 37
1G19	WATER MANIFOLD GASKET (6081) (LATE TSN-8100,8200,8300)	20 - 73
1I7	WATER MANIFOLD GASKET (8400)	20 - 109
1F5	WATER MANIFOLD TUBE (6076) (EARLY TSN-8100,8200,8300)	20 - 37
1F6	WATER MANIFOLD TUBE (6076) (LATE DESIGN)	20 - 37A
1F6	WATER MANIFOLD, FRONT (6076)	20 - 37A
1F5	WATER MANIFOLD, FRONT (6076) (EARLY TSN-8100,8200,8300)	20 - 37
1G19	WATER MANIFOLD, FRONT (6081) (LATE TSN-8100,8200,8300)	20 - 73
1I7	WATER MANIFOLD, FRONT (8400)	20 - 109
1F2	WATER PUMP (6076) (EARLY TSN-8100,8200,8300)	20 - 34
1G17	WATER PUMP (6081) (LATE TSN-8100,8200,8300)	20 - 70
1I5	WATER PUMP (8400)	20 - 108
1F2	WATER PUMP BEARING (6076) (EARLY TSN-8100,8200,8300)	20 - 34
1G17	WATER PUMP COVER (LATE TSN=81,82,8300)	20 - 70
1I5	WATER PUMP COVER (8400)	20 - 108
1F2	WATER PUMP GASKET (6076) (EARLY TSN-8100,8200,8300)	20 - 34
1G17	WATER PUMP GASKET (6081) (LATE TSN-8100,8200,8300)	20 - 70
1I5	WATER PUMP GASKET (8400)	20 - 108
1F2	WATER PUMP IMPELLER (6076) (EARLY TSN-8100,8200,8300)	20 - 34
1F4	WATER PUMP REPAIR KIT (6076) (EARLY TSN 8100,8200,8300)	20 - 36
1F2	WATER PUMP SEAL (6076) (EARLT TSN-8100,8200,8300)	20 - 34
2E14	WATER SEPARATOR	30 - 30
3E1	WATER TEMPERTURE SENSOR(TSN -009999)	40 - 8
3E3	WATER TEMPERTURE SENSOR(TSN -009999)	40 - 9A
3E7	WATER TEMPERTURE SENSOR(TSN 010000-)	40 - 12
8H19	WATER VALVE	90 - 16
7F11	WEAR PLATE, SWAY BLOCK	70 - 56
4E7	WEATHERPACK CONNECTOR	43 - 2
4E7	WEATHERPACK TERMINAL	43 - 2
1F2	WEEP HOLE FILTER (WATER PUMP)(6076) (EARLY TSN-8100,8200,8300)	20 - 34
8F17	WEIGHT SUPPORT	80 - 38
8F2	WEIGHTS FOR CAST AND HEAVY CAST REAR WHEELS	80 - 22
8F3	WEIGHTS FOR CAST WHEELS	80 - 23
8F17	WEIGHTS, FRAME	80 - 38
8F15	WEIGHTS, FRAME (EUROPEAN VERSION)	80 - 36
8F4	WEIGHTS, STEEL DISK REAR WHEEL (10-BOLT HUB ONLY)(34", 38", 42", 46". OR 50")	80 - 24

https://www.truck-manuals.net/

ALPHABETICAL INDEX - CONTINUED

GRID		PAGE
5E22	WET DISK BRAKES	54 - 10
5F14	WET DISK BRAKES	54 - 26
5F9	WHEEL HUB	54 - 20
5F22	WHEEL HUB	54 - 34
5G5	WHEEL HUB	54 - 42
4G18	WHEEL SPEED SENSOR	51 - 47
8F2	WHEEL WEIGHTS	80 - 22
8E17	WHEEL, FRONT	80 - 10
6D6	WHEEL, STEERING	60 - 2
8E21	WHEELS, CAST REAR	80 - 16
8E19	WHEELS, FRONT (MFWD)	80 - 14
8E23	WHEELS, STEEL DISK REAR (10-BOLT HUB)	80 - 18
9E24	WINDOW, FRONT	91 - 44
9F4	WINDOW, REAR	91 - 48
9F1	WINDOW, RIGHT-HAND	91 - 46
9E24	WINDSHIELD	91 - 44
9E21	WINDSHIELD AND REAR WASHER KIT	91 - 40
3E19	WIPER MOTOR,FRONT	40 - 24
3E19	WIPER MOTOR,REAR	40 - 24
9E22	WIPER, FRONT AND REAR ASSEMBLY KIT	91 - 42
2E24	WIRING HARNESS (6076)	30 - 38
2F9	WIRING HARNESS (6081) (LATE TSN-8100,8200,8300)	30 - 48
2F11	WIRING HARNESS (6081) (LATE TSN-8100,8200,8300)	30 - 49A
2F21	WIRING HARNESS (8400)	30 - 58
3F5	WIRING HARNESS,AIR BRAKE(EUROPEAN VERSION)	40 - 35
3G11	WIRING HARNESS,ARMREST TO CAB	40 - 68
3I5	WIRING HARNESS,BACK-UP ALARM	40 - 110
3F4	WIRING HARNESS,BRAKE LIGHT EXTENSION	40 - 34
3E21	WIRING HARNESS,CAB	40 - 26
3E21	WIRING HARNESS,CAB POWER JUNCTION BLOCK	40 - 26
3E13	WIRING HARNESS,CAB(EUROPEAN VERSION)(TSN -009999)	40 - 18
3E15	WIRING HARNESS,CAB(EUROPEAN VERSION)(TSN 010000-)	40 - 20
3F6	WIRING HARNESS,CAB(EUROPEAN VERSION)	40 - 36
3F6	WIRING HARNESS,CAB(NORTH AMERICAN VERSION)	40 - 36
3F12	WIRING HARNESS,CAB(NORTH AMERICAN VERSION)	40 - 43
3E9	WIRING HARNESS,CAB(NORTH AMERICAN VERSION)(TSN -009999)	40 - 14
3E11	WIRING HARNESS,CAB(NORTH AMERICAN VERSION)(TSN 010000-)	40 - 16
3E17	WIRING HARNESS,CAB(UKRAINIAN VERSION)	40 - 22
3F6	WIRING HARNESS,CAB(UKRAINIAN VERSION)	40 - 36
3G13	WIRING HARNESS,CHASSIS	40 - 70
3G15	WIRING HARNESS,CHASSIS	40 - 72
3I3	WIRING HARNESS,COLD WEATHER START(EUROPEAN VERSION)	40 - 108
3I1	WIRING HARNESS,COLD WEATHER START(NORTH AMERICAN VERSION)	40 - 106
3E21	WIRING HARNESS,ENGINE AND CHASSIS	40 - 26
3D23	WIRING HARNESS,ENGINE AND CHASSIS(TSN -009999)	40 - 6
3E1	WIRING HARNESS,ENGINE AND CHASSIS(TSN -011000)	40 - 8
3E3	WIRING HARNESS,ENGINE AND CHASSIS(TSN -011000)	40 - 9A
3E5	WIRING HARNESS,ENGINE AND CHASSIS(TSN 010000-)	40 - 10
3E7	WIRING HARNESS,ENGINE AND CHASSIS(TSN 010000-)	40 - 12
4D24	WIRING HARNESS,EXTREMITY WARNING LAMP(- 027099)	42 - 20
4E1	WIRING HARNESS,EXTREMITY WARNING LAMP(02 7100-	42 - 22
3F2	WIRING HARNESS,FIELD OFFICE(TSN -009999)	40 - 32
3F3	WIRING HARNESS,FIELD OFFICE(TSN 010000-)	40 - 33
4D16	WIRING HARNESS,FRONT HEADLIGHTS(UNITED KINGDOM)	42 - 12
3E21	WIRING HARNESS,FUSE LINK	40 - 26
3E1	WIRING HARNESS,HEADLIGHTS(TSN -009999)	40 - 8
3E3	WIRING HARNESS,HEADLIGHTS(TSN -009999)	40 - 9A
3E7	WIRING HARNESS,HEADLIGHTS(TSN 010000-)	40 - 12
3E1	WIRING HARNESS,HEADLIGHTS,UNITED KINGDOM(TSN -009999)	40 - 8
3E3	WIRING HARNESS,HEADLIGHTS,UNITED KINGDOM(TSN -009999)	40 - 9A
3E7	WIRING HARNESS,HEADLIGHTS,UNITED KINGDOM(TSN 010000-)	40 - 12
3H14	WIRING HARNESS,IMPLEMENT SWITCH	40 - 94
3E25	WIRING HARNESS,LICENCE PLATE LAMP (EUROPEAN VERSION)	40 - 30
3H23	WIRING HARNESS,MOBILE RADIO	40 - 104
3H10	WIRING HARNESS,PERFORMANCE MONITOR	40 - 90
3H4	WIRING HARNESS,RADAR(TSN -XXXXXX)	40 - 84
3H8	WIRING HARNESS,RADAR(TSN XXXXXX-)	40 - 88
3H6	WIRING HARNESS,RADAR(TSN XXXXXX-XXXXXX)	40 - 86
3E19	WIRING HARNESS,ROOF	40 - 24
4D18	WIRING HARNESS,ROOF	42 - 14
4D19	WIRING HARNESS,ROOF	42 - 15
3G13	WIRING HARNESS,ROW GUIDANCE-4/5 SCV	40 - 70
3G15	WIRING HARNESS,ROW GUIDANCE-4/5 SCV	40 - 72
3E23	WIRING HARNESS,ROW-TRAK	40 - 28
3H13	WIRING HARNESS,ROW-TRAK MONITOR	40 - 93
3D23	WIRING HARNESS,SCV(TSN -009999)	40 - 6
3E5	WIRING HARNESS,SCV(TSN 010000-)	40 - 10
3F1	WIRING HARNESS,SEAT	40 - 31
3G5	WIRING HARNESS,SELECTIVE CONTROL LEVERS 1,2,3(ARMREST)	40 - 62
3G7	WIRING HARNESS,SELECTIVE CONTROL LEVERS 4 AN 5(ARMREST)	40 - 64
3D19	WIRING HARNESS,TRANSMISSION(TSN -019999)	40 - 2
3D21	WIRING HARNESS,TRANSMISSION(TSN 020000-)	40 - 4
3I11	WIRING LEAD,ALTERNATOR	41 - 1
4D8	WORK LAMP BRACKET(UPPER MID-BODY)(NORTH AMERICAN VERSION)(TSN -XXXXXX)	42 - 4
4D9	WORK LAMP BRACKET(UPPER MID-BODY)(NORTH AMERICAN VERSION)(TSN XXXXXX-)	42 - 5
4D8	WORK LAMP COVER(UPPER MID-BODY)(NORTH AMERICAN VERSION(TSN -XXXXXX)	42 - 4
4D9	WORK LAMP COVER(UPPER MID-BODY)(NORTH AMERICAN VERSION(TSN XXXXXX-)	42 - 5
4D10	WORK LAMP KIT(CAB)(UPPER MID-BODY) (EUROPEAN VERSION)(TSN -XXXXXX)	42 - 6
4D11	WORK LAMP KIT(CAB)(UPPER MID-BODY) (EUROPEAN VERSION)(TSN XXXXXX-)	42 - 7
4D8	WORK LAMP KIT(UPPER MID-BODY)(NORTH AMERICAN VERSION)(TSN -XXXXXX)	42 - 4
4D9	WORK LAMP KIT(UPPER MID-BODY)(NORTH AMERICAN VERSION)(TSN XXXXXX-)	42 - 5
4D10	WORK LAMPS BRACKET,(CAB)(UPPER MID-BODY (EUROPEAN VERSION)(TSN -XXXXXX)	42 - 6
4D11	WORK LAMPS BRACKET,(CAB)(UPPER MID-BODY (EUROPEAN VERSION)(TSN XXXXXX-)	42 - 7

https://www.truck-manuals.net/

ALPHABETICAL INDEX - CONTINUED

GRID		PAGE
4D10	WORK LAMPS,(CAB)(UPPER MID-BODY) (EUROPEAN VERSION)(TSN -XXXXXX)	42 - 6
4D11	WORK LAMPS,(CAB)(UPPER MID-BODY) (EUROPEAN VERSION)(TSN XXXXXX-)	42 - 7
4D19	WORK LIGHT,FRONT CAB ROOF	42 - 15
4D22	WORK LIGHT,REAR FENDER(TSN -XXXXXX)	42 - 18
4D23	WORK LIGHT,REAR FENDER(TSN XXXXXX-)	42 - 19
4D13	WORKING LAMP BRACKET(LOWER MID-BODY)(TSN XXXXXX-)	42 - 9
4D12	WORKING LAMP BRACKET(LOWER MID-BODY)(TSN-XXXXXX)	42 - 8
4D12	WORKING LAMPS(LOWER MID-BODY)(TSN -XXXXXX)	42 - 8
4D13	WORKING LAMPS(LOWER MID-BODY)(TSN XXXXXX-)	42 - 9
4D8	WORKLAMPS(CAB)(UPPER MID-BODY)(NORTH AMERICAN VERSION)(TSN -XXXXXX)	42 - 4
4D9	WORKLAMPS(CAB)(UPPER MID-BODY)(NORTH AMERICAN VERSION)(TSN XXXXXX)	42 - 5

https://www.truck-manuals.net/

SECTIONAL INDEX (8100,8200,8300 TSN -009999)
INDEX DE SECTION (8100,8200,8300 TSN -009999)
GRUPPENINDEX (8100,8200,8300 TSN -009999)
INDICE DELLA SEZIONE (8100,8200,8300 TSN -009999)
INDICE DE SECCION (8100,8200,8300 TSN -009999)
GRUPPSFORTECKNING (8100,8200,8300 TSN -009999)

RXP022571 -UN-11MAY99

1 -	1D14
5 -	1E12
6 -	1E13
7 -	1E14
8 -	1E16
9 -	1E22
10 -	1F2
16 -	1G1
37 -	1I14
38 -	1I16
39 -	1I19
40 -	1I21
41 -	1I23

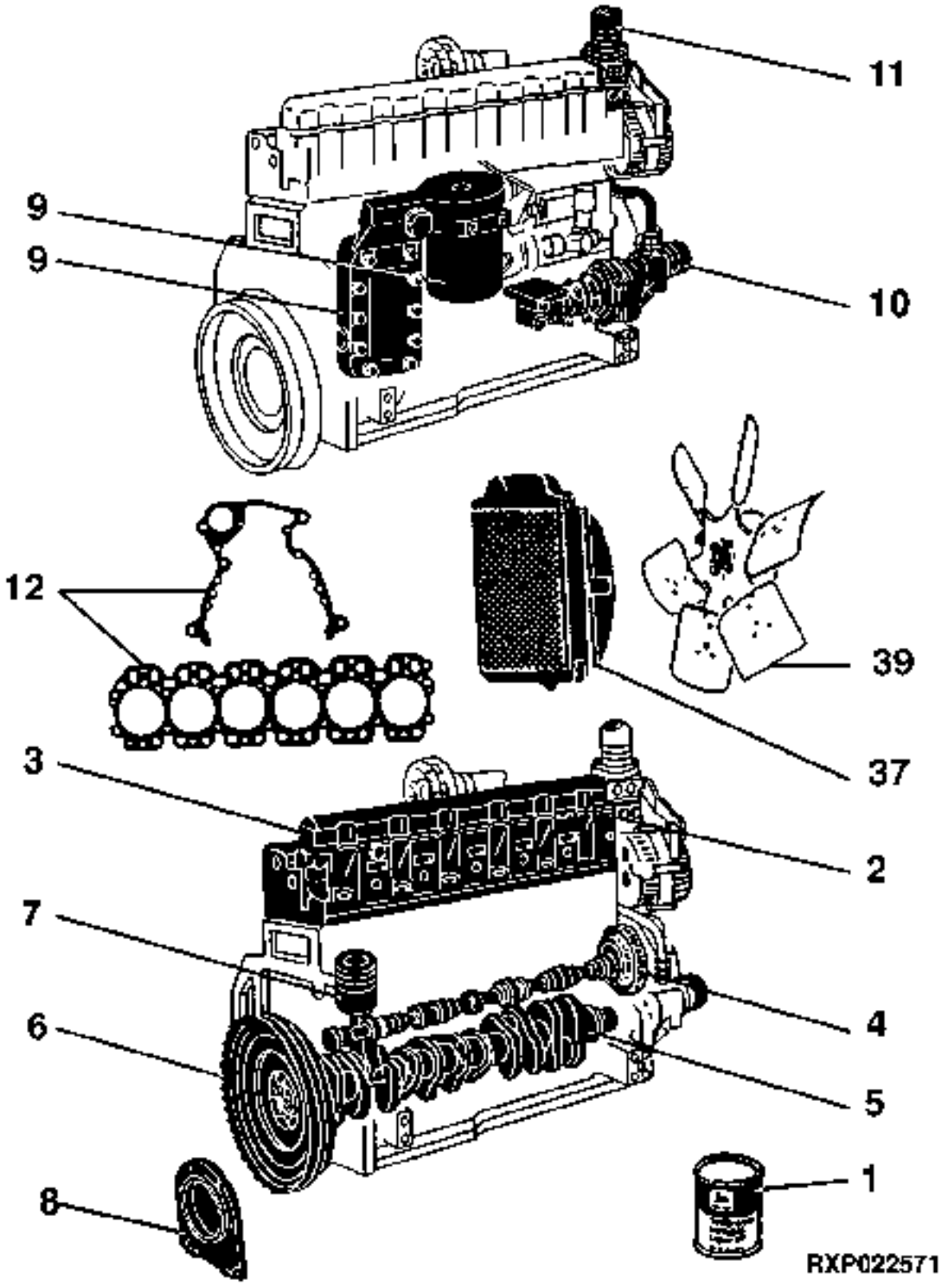

https://www.truck-manuals.net/

SECTIONAL INDEX (8100,8200,8300 TSN 010000-)
INDEX DE SECTION (8100,8200,8300 TSN 010000-)
GRUPPENINDEX (8100,8200,8300 TSN 010000-)
INDICE DELLA SEZIONE (8100,8200,8300 TSN 010000-)
INDICE DE SECCION (8100,8200,8300 TSN 010000-)
GRUPPSFORTECKNING (8100,8200,8300 TSN 010000-)

RXP022572 -UN-11MAY99

1 -	1D14
5 -	1E12
6 -	1E13
7 -	1E14
8 -	1E16
9 -	1E22
10 -	1F2
16 -	1G1
37 -	1I14
38 -	1I16
39 -	1I19
40 -	1I21
41 -	1I23

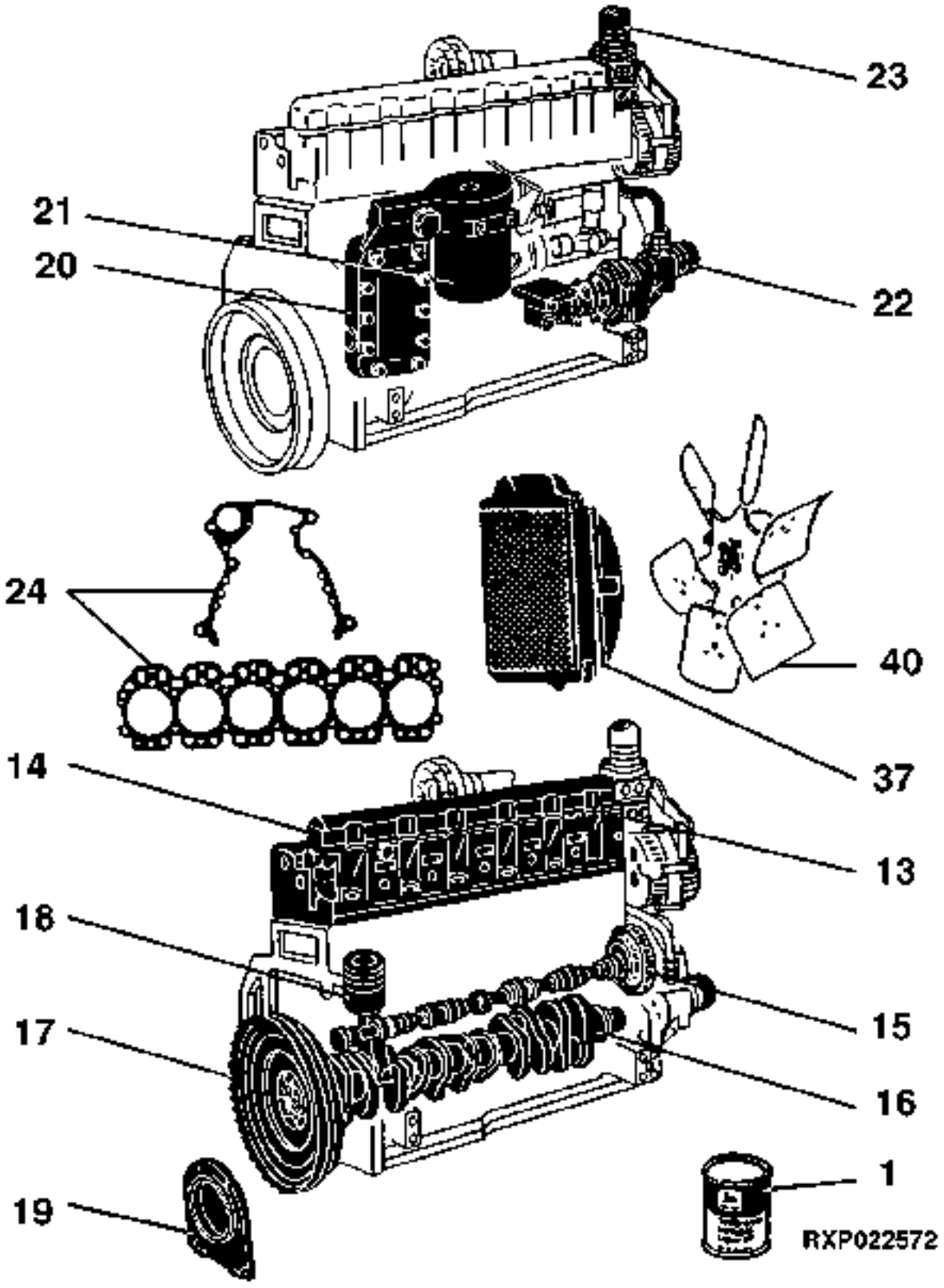

https://www.truck-manuals.net/

SECTIONAL INDEX (8400)
INDEX DE SECTION (8400)
GRUPPENINDEX (8400)
INDICE DELLA SEZIONE (8400)
INDICE DE SECCION (8400)
GRUPPSFORTECKNING (8400)
RXP022675 -UN-11MAY99

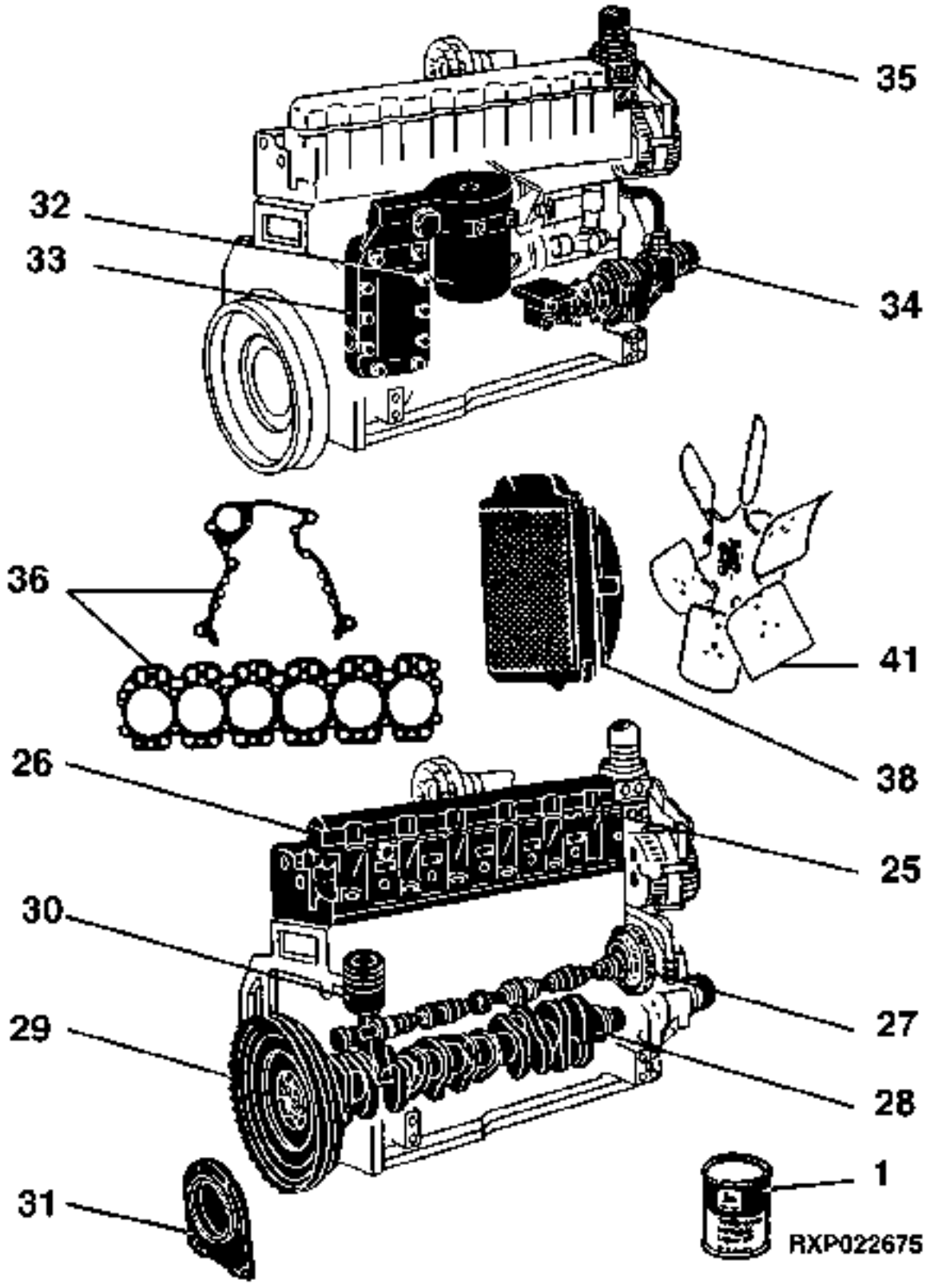

1 -	1D14
5 -	1E12
6 -	1E13
7 -	1E14
8 -	1E16
9 -	1E22
10 -	1F2
16 -	1G1
37 -	1I14
38 -	1I16
39 -	1I19
40 -	1I21
41 -	1I23

https://www.truck-manuals.net/

SECTIONAL INDEX
INDEX DE SECTION
GRUPPENINDEX
INDICE DELLA SEZIONE
INDICE DE SECCION
GRUPPSFORTECKNING

https://www.truck-manuals.net/

TORQ-GARD PLUS-50 ENGINE OIL
HUILE MOTEUR TORQ-GARD OIL
TORQ-GARD PLUS 50 MOTOROEL
OLIO MOTORE TORQ-GARD PLUS 50
ACEITE DE MOTOR TORQ-GARD PLUS 50
TORQ-GARD PLUS 50 MOTOROLJA
RGP3291 -UN-01JAN94



RGP3291

KEY	PART NO.	PART NAME	QTY	ENGINE SERIAL NO.	ALL	REMARKS
1	TY6359	OIL	1		X	(SAE 5W/30), 0.9 L (1 QUART)
	TY22064	OIL	1		X	(SAE 5W/30), 0.9L (1 QUART)
	TY6360	OIL	1		X	(SAE 5W/30), 19 L (5 GALLON)
	TY22065	OIL	1		X	(SAE 5W/30), 19L (5 GALLON)
	TY6361	OIL	1		X	(SAE 5W/30), 208 L (55 GALLON) DRUM
	TY22066	OIL	1		X	(SAE 5W/30), 208L (55 GALLON)
	TY6364	OIL	1		X	(SAE 10W/30), 0.9 L (1 QUART) (BREAK-IN)
	TY6297	OIL	1		X	(SAE 15W/40, 0.9 L (1 QUART)
	TY6298	OIL	1		X	(SAE 15W/40), 19 L (5 GALLON)
	TY6300	OIL	1		X	(SAE 15W/40), 114 L (30 GALLON)
	TY6301	OIL	1		X	(SAE 15W/40), 208 L (55 GALLON)
	TY6311	OIL	1		X	(SAE 10W), 0.9 L (1 QUART) (NLA)
	TY22009	OIL	1		X	(SAE 10W), 3.8 L (1 GALLON)
	TY22067	OIL	1		X	(SAE 10W), .9L (1 GALLON)
	TY6312	OIL	1		X	(SAE 10W), 19 L (5 GALLON)
	TY22068	OIL	1		X	(SAE 10W), 19L (5 GALLON)
	TY6313	OIL	1		X	(SAE 10W), 208 L (55 GALLON)
	TY22069	OIL	1		X	(SAE 10W), 208L (55 GALLON)
	AR63979	OIL	1		X	(SAE 30W), 0.2 L (1 HALF PINT)
	AR63218	OIL	1		X	(SAE 30W), 0.9 L (1 QUART)
	TY22070	OIL	1		X	(SAE 30W), 0.9L (1 GALLON)
	AR63219	OIL	1		X	(SAE 30W), 19 L (5 GALLON)
	TY22073	OIL	1		X	(SAE 30W), 19L (5 GALLON)
	TY6280	OIL	1		X	(SAE 30W), 114 L (30 GALLON)
	AR63222	OIL	1		X	(SAE 30W), 208 L (55 GALLON)
	TY22074	OIL	1		X	(SAE 30W), 208L (55 GALLON)
2	TY6389	OIL	1		X	(SAE 15W/40), 0.9 L (1 QUART)
	TY22008	OIL	1		X	(SAE 15W/40), 3.8 L (1 GALLON)
	TY6390	OIL	1		X	(SAE 15W/40), 19 L (5 GALLON)
	TY22010	OIL	1		X	(SAE 15W/40), 113.6 L (30 GALLON)
	TY6391	OIL	1		X	(SAE 15W/40), 208 L (55 GALLON)
	TY6392	OIL	1		X	(SAE 30W), 0.9 L (1 QUART)
	TY22007	OIL	1		X	(SAE 30W), 3.8 L (1 GALLON)
	TY6393	OIL	1		X	(SAE 30W), 19 L (5 GALLON)
	TY22011	OIL	1		X	(SAE 30W), 113.6 L (30 GALLON)
	TY6394	OIL	1		X	(SAE 30W), 208 L (55 GALLON)
..	TY22041	OIL	1		X	(SAE 10W/30), 3.8 L (1 GALLON) (FACTORY SPEC. BREAK-IN)
..	TY22042	OIL	1		X	(SAE 10W/30), 208 L (55 GALLON) (FACTORY SPEC. BREAK-IN)

https://www.truck-manuals.net/

ACCESSORY PARTS
ACCESSOIRES
ZUBEHOERTEILE
ACCESSORI
ACCESORIOS
TILLBEHOR
RGP4314 -UN-01JAN94

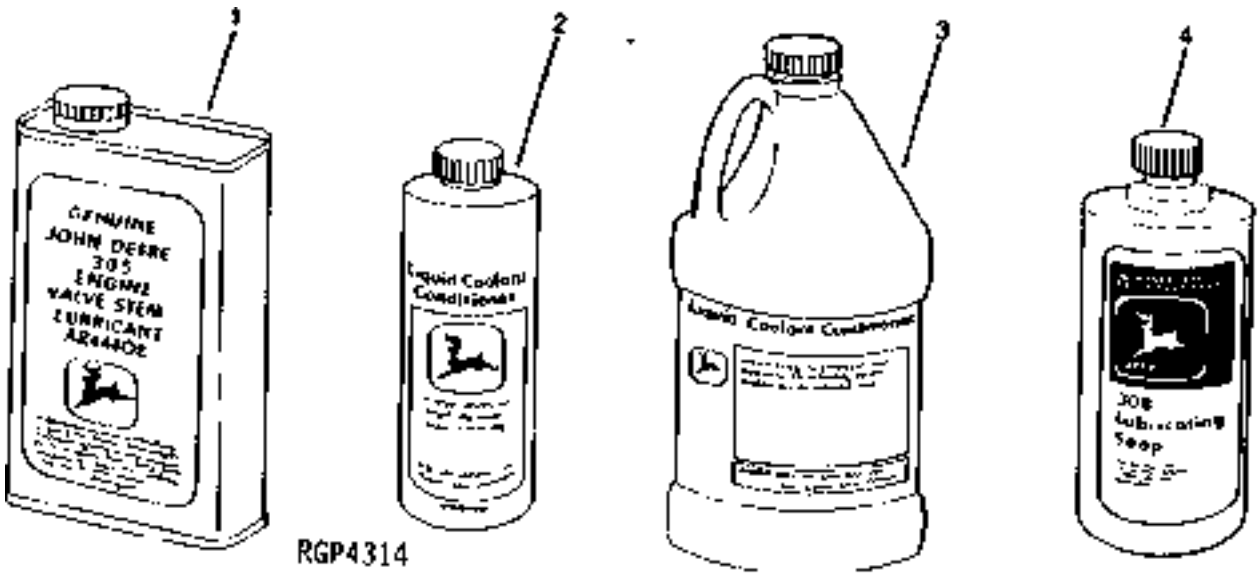

KEY	PART NO.	PART NAME	QTY	ENGINE SERIAL NO.	ALL	REMARKS
1	AR44402	OIL	1		X	.473 ML (32 OZ.)
2	RE23182	ENGINE COOLANT CONDITIONER	1		X	0.473 L (16 OZ.) (PHOSPHATE - FREE) (SUB TY16004)
	TY16004	ENGINE COOLANT CONDITIONER	1		X	0.472 L (16 OZ.)
3	RE35992	ENGINE COOLANT CONDITIONER	1		X	3.8 L (1 GAL.) (PHOSPHATE - FREE) (SUB TY16005)
	TY16005	ENGINE COOLANT CONDITIONER	1		X	1.9 L (1/2 GAL.)
4	AR54749	LUBRICANT	1		X	.9 L (1 QT.)
	AT66865	LUBRICANT	1		X	(ELECTRICAL CONNECTION)
..	AR21969	KIT	1		X	(DUST CAP/COVER KIT)
..	DS0251	KIT	1		X	(COOLANT SCAN TEST)
..	IPSKIT1	KIT	1		X	(OIL SCAN TEST)
..	DS0557	VALVE	1		X	(SAMPLING SYSTEM)
..	TY16423	INDICATOR	1		X	(COOLING EYE)

https://www.truck-manuals.net/

KIT FOR OFF-SEASON STORAGE
JEU DE PIECE POUR STOCKAGE HORS SAISON
EINLAGERUNGSSATZ
SERIE PEZZI PER STORAGGIO FUORI STAGIONE
JUEGO PARA ALMACENAMIENTO DURANTE TEMPORADA DE DESUSO
SATS FOER LAANGTIDSLAGRING

KEY	PART NO.	PART NAME	QTY	ENGINE SERIAL NO.	ALL	REMARKS
..	AR41785	KIT	1		X	0.9L (1 QT) (NOT SHOWN)

https://www.truck-manuals.net/

CYLINDER HEAD AND VALVES (6076) (8100,8200,8300 TSN -009999)
CULASSE (6076) (8100,8200,8300 TSN -009999)
ZYLINDERKOPF (6076) (8100,8200,8300 TSN -009999)
ZYLINDERKOPF (6076) (8100,8200,8300 TSN -009999)
TESTATA (6076) (8100,8200,8300 TSN -009999)
CYLINDERTOPP (6076) (8100,8200,8300 TSN -009999)
RGP3684 -UN-01JAN94

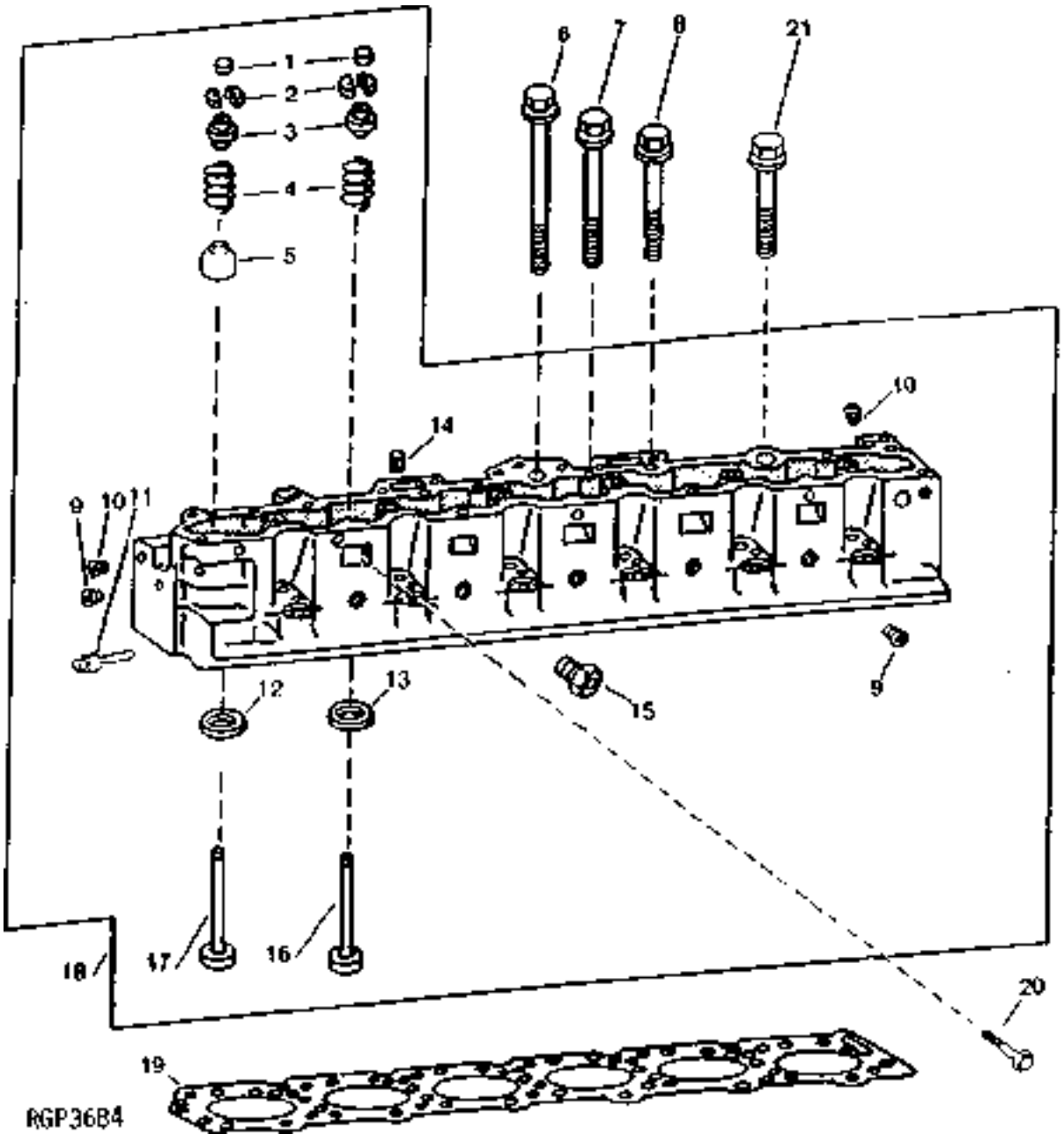

https://www.truck-manuals.net/

KEY	PART NO.	PART NAME	QTY	ENGINE SERIAL NO.	8 8 8 1 2 3 0 0 0 0 0 0	REMARKS
1	T20129	CAP	12		X X X	
2	T20077	RETAINER	24		X X X	
3	RE11410	ROTATOR	12		X X X	
4	R91822	SPRING	12		X X X	
5	R102882	SHIELD	6		X X X	(EXHAUST VALVES ONLY)
6	R121491	CAP SCREW	7		X X X	(MARKED "SPECIAL")
7	R121490	CAP SCREW	8		X X X	(MARKED "SPECIAL")
8	R121320	CAP SCREW	6		X X X	(MARKED "SPECIAL")
9	15H690	PIPE PLUG	10		X X X	3/4"
10	15H584	PIPE PLUG	2		X X X	1/2"
11	AT107509	PLUG	1		X X X	
12	R84976	VALVE SEAT INSERT	6		X X X	EXHAUST
	R93350	VALVE SEAT INSERT	AR		X X X	0.25MM (.010") OS
13	R84977	VALVE SEAT INSERT	6		X X X	INTAKE
	R93349	VALVE SEAT INSERT	AR		X X X	0.25MM (.010") OS
14	34H387	SPRING PIN	1		X X X	3/16" X 3/4"
15	R76491	PIPE PLUG	1		X X X	
16	R84618	INTAKE VALVE	6		X X X	STD
	R93308	INTAKE VALVE	AR		X X X	0.08MM (.003") OS
	R93312	INTAKE VALVE	AR		X X X	0.38MM (.015") OS
	R93314	INTAKE VALVE	AR		X X X	0.76MM (.030") OS
17	R84619	EXHAUST VALVE	6		X X X	STD
	R93311	EXHAUST VALVE	AR		X X X	0.08MM (.003") OS
	R93313	EXHAUST VALVE	AR		X X X	0.38MM (.015") OS
	R93315	EXHAUST VALVE	AR		X X X	0.76MM (.030") OS
18	RE58516	CYLINDER HEAD	1		X X X	(MARKED R122112 OR R122491)
19	RE47336	ENGINE CYLINDER HEAD GASKET	1		X X X	
20	19H2367	CAP SCREW	1		X X X	5/8" X 3/4"
21	R121489	CAP SCREW	5		X X X	(MARKED "SPECIAL")
..	RG24026	KIT	1		X X X	(CONTAINS (26) "SPECIAL" HEAD BOLTS)

https://www.truck-manuals.net/

ROCKER ARM COVER (6076) (8100,8200,8300 TSN -009999)
CULBUTEURS (6076) (8100,8200,8300 TSN -009999)
ZYLINERKOPFHAUBE (6076) (8100,8200,8300 TSN -009999)
COPERCHIO BILANCIERI (6076) (8100,8200,8300 TSN -009999)
TAPA DE BALANCINES (6076) (8100,8200,8300 TSN -009999)
VENTILKAPA (6076) (8100,8200,8300 TSN -009999)
RGP4346 -UN-01JAN94

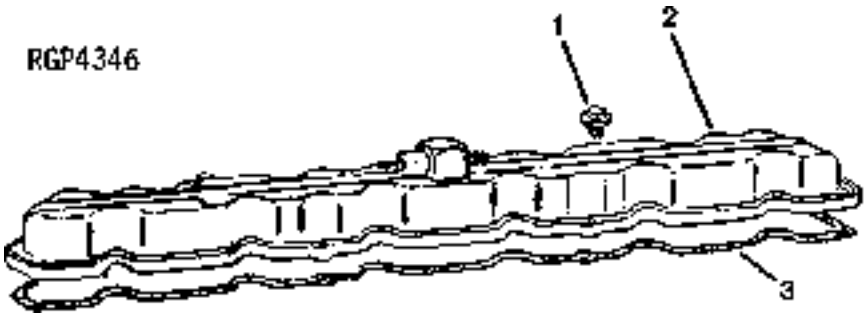

KEY	PART NO.	PART NAME	QTY	ENGINE SERIAL NO.	8 8 8 1 2 3 0 0 0 0 0 0	REMARKS
1	AR100124	SCREW, WITH WASHER	8		X X X	
2	RE37448	COVER	1		X X X	
3	R49866	GASKET	1		X X X	
..	TY24446	ADHESIVE	1		X X X	(SUB FOR AR31790)

https://www.truck-manuals.net/

LIFT STRAPS (6076) (8100,8200,8300 TSN -009999)
ECLISSES D'APAREIL DE LEVAGE (6076) (8100,8200,8300 TSN -00009999)
HUBSTREBE (6076) (8100,8200,8300 TSN -009999)
FASCETTE DEL PARANCO (6076) (8100,8200,8300 TSN -009999)
TIRAS DE ELEVADOR (6076) (8100,8200,8300 TSN -009999)
MOTORLYFTSFAESTEN (6076) (8100,8200,8300 TSN -009999)
RGP3009 -UN-01JAN94

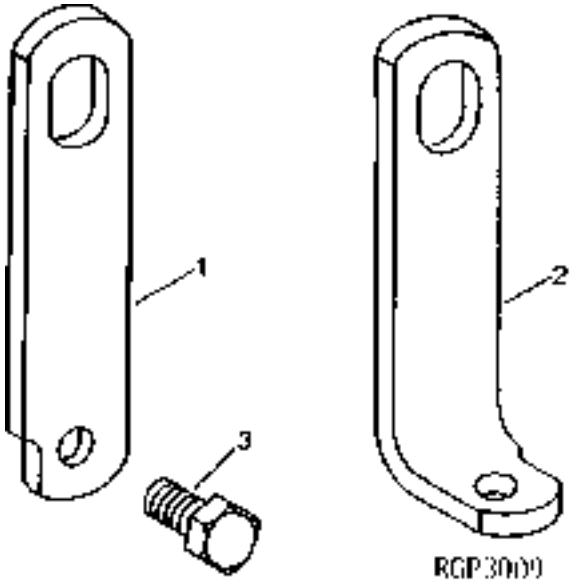

KEY	PART NO.	PART NAME	QTY	ENGINE SERIAL NO.	8 8 8 1 2 3 0 0 0 0 0 0	REMARKS
1	R61497	STRAP	1		X X X	
2	R86571	ANGLE	1		X X X	
3	19H1756	CAP SCREW	2		X X X	5/8" X 1-1/2"

https://www.truck-manuals.net/

ROCKER ARMS, SHAFT AND PUSH RODS (6076) (8100,8200,8300 TSN -009999)
ARBRES DES CULBUTEURS (6076) (8100,8200,8300 TSN -009999)
KIPPHEBELWELLE (6076) (8100,8200,8300 TSN -009999)
ALBERO BILANCIERI (6076) (8100,8200,8300 TSN -009999)
EJE DE BALANCINES (6076) (8100,8200,8300 TSN -009999)
VIPPARMSAXEL (6076) (8100,8200,8300 TSN -009999)
RGP2824 -UN-01JAN94

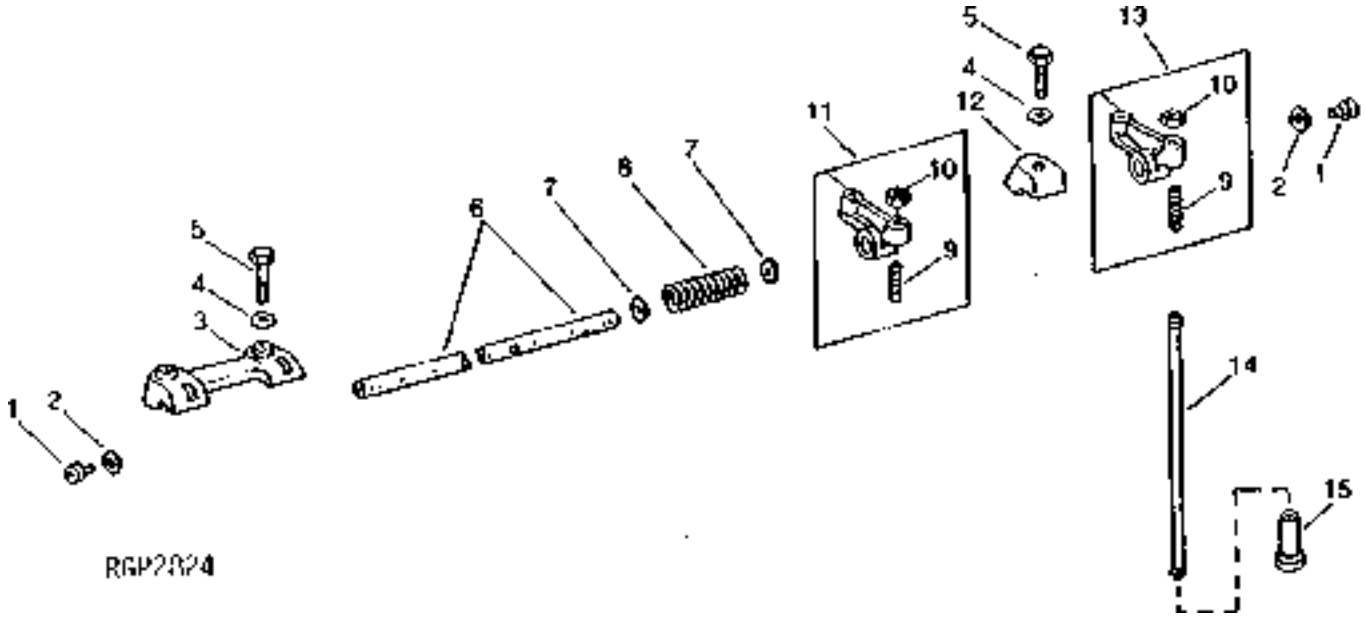

KEY	PART NO.	PART NAME	QTY	ENGINE SERIAL NO.	8 8 8 1 2 3 0 0 0 0 0 0	REMARKS
1	R54565	PLUG	2		X X X	
2	R26081	WASHER	2		X X X	
3	R136083	CLAMP	2		X X X	(SUB FOR R65553)
4	R26559	WASHER	6		X X X	
5	19H1740	CAP SCREW	6		X X X	7/16" X 1-3/4"
6	R70826	ROCKER ARM SHAFT	1		X X X	
7	R71208	WASHER	10		X X X	
8	R26079	SPRING	5		X X X	
9	R27443	SET SCREW	12		X X X	
10	14H1080	NUT	12		X X X	3/8"
11	RE24045	ROCKER ARM	6		X X X	(A) (1E, 2I, 3E, 4I, 5E, 6I) (RH)
12	R26748	CLAMP	2		X X X	
13	RE24046	ROCKER ARM	6		X X X	(A) (1I, 2E, 3I, 4E, 5I, 6E) (LH)
14	R85027	PUSH ROD	12		X X X	
15	R110126	CAM FOLLOWER	12		X X X	

(A) - E (EXHAUST VALVE) I (INTAKE VALVE)

https://www.truck-manuals.net/

CAMSHAFT AND GEAR (6076) (8100,8200,8300 TSN -009999)
ARBRE A CAMES (6076) (8100,8200,8300 TSN -009999)
NOCKENWELLE (6076) (8100,8200,8300 TSN -009999)
ALBERO A CAMME (6076) (8100,8200,8300 TSN -009999)
EJE DE LEVAS (6076) (8100,8200,8300 TSN -009999)
KAMAXEL/VENTILER (6076) (8100,8200,8300 TSN -009999)
RGP3752 -UN-01JAN94

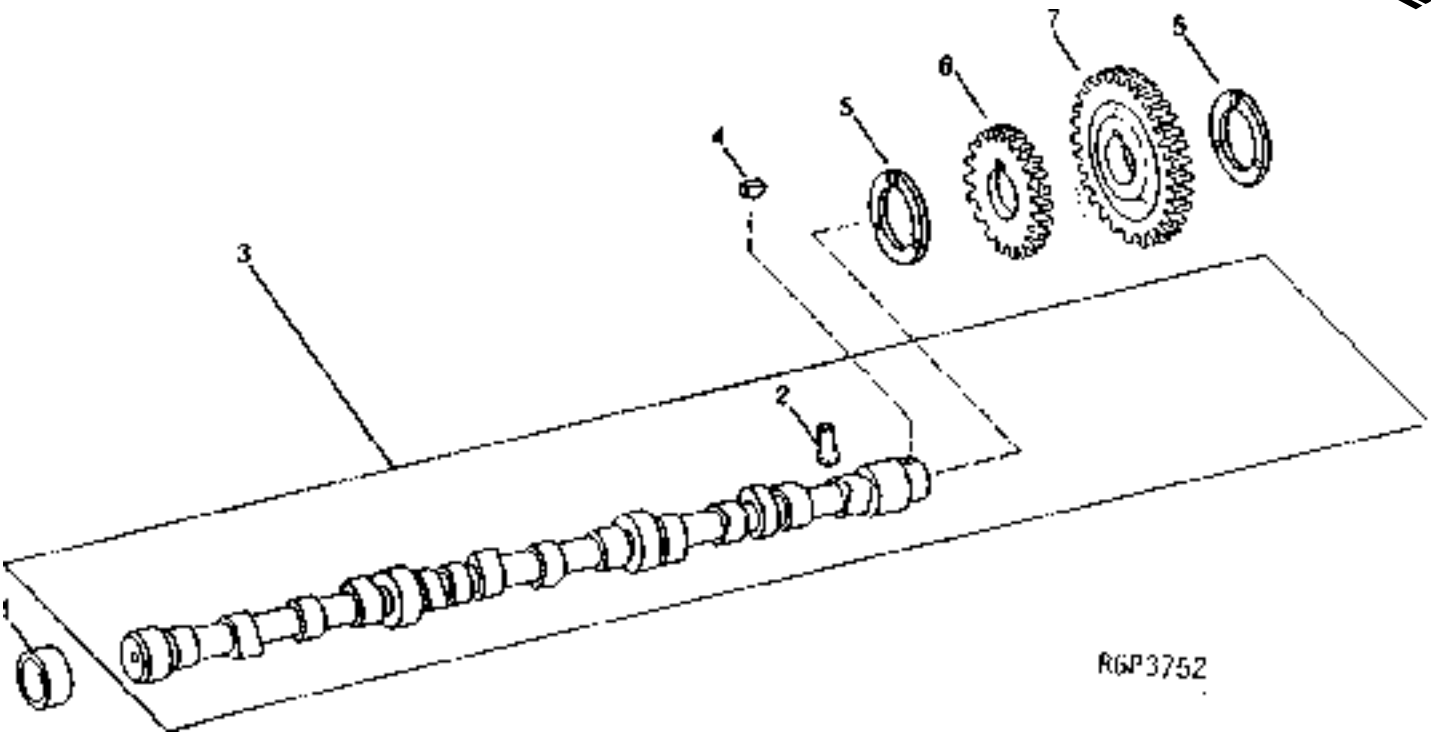

KEY	PART NO.	PART NAME	QTY	ENGINE SERIAL NO.	8 8 8 1 2 3 0 0 0 0 0 0	REMARKS
1	R87561	BUSHING	4		X X X	
2	R110126	CAM FOLLOWER	12		X X X	(USE WITH R120872)
3	RE57054	CAMSHAFT	1		X X X	(MARKED R120872)
4	26H91	SHAFT KEY	1		X X X	3/16" X 1-1/4"
5	R104656	THRUST WASHER	2		X X X	
6	R104589	GEAR	1		X X X	
7	R112053	GEAR	1		X X X	

https://www.truck-manuals.net/

CYLINDER BLOCK FITTINGS (6076) (8100,8200,8300 TSN -009999)
RACCORDS DE BLOC-CYLINDRES (6076) (8100,8200,8300 TSN -009999)
ZYLINDERBLOCK-FITTINGS (6076) (8100,8200,8300 TSN -009999)
RACCORDI DEL MONOBLOQIE DE CILINDRO (6076) (8100,8200,8300 TSN -009999)
CONECTORES DEL BLOQUE DE CILINDRO (6076) (8100,8200,8300 TSN -009999)
SKRUVFOERBINDNINGAR FOER CYLINDERBLOCK (6076) (8100,8200,8300 TSN -009999)
RGP4347 -UN-01JAN94

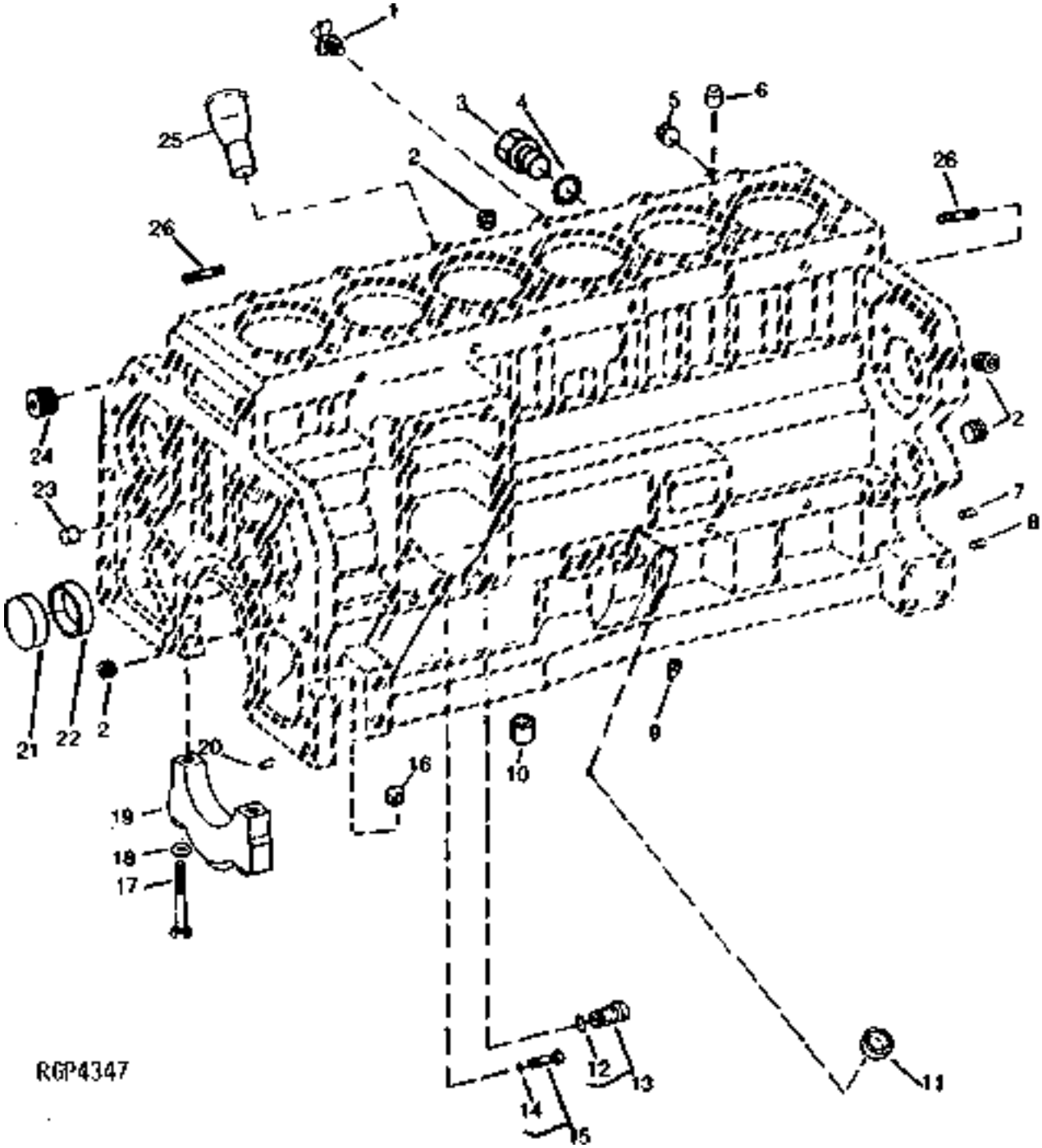

https://www.truck-manuals.net/

KEY	PART NO.	PART NAME	QTY	ENGINE SERIAL NO.	8100	8200	8300	REMARKS
1	AT13740	DRAIN VALVE	1		X	X	X	
2	R36599	PLUG	1		X	X	X	(FROST PLUG NOT AS SHOWN)
3	R39741	DRAIN PLUG	1		X	X	X	
4	U13639	O-RING	1		X	X	X	
5	15H690	PIPE PLUG	1		X	X	X	3/4"
	15H624	PIPE PLUG	2		X	X	X	
6	R42340	BUSHING	2		X	X	X	
7	R1612R	DOWEL PIN	NA		X	X	X	
8	F1743R	DOWEL PIN	2		X	X	X	
9	R43621	ORIFICE	6		X	X	X	
10	R500642	BUSHING	2		X	X	X	(SUB FOR R62930, THIS APPLICATION)
11	T35390	CAP	1		X	X	X	(R.H.)
12	R27149	O-RING	1		X	X	X	
13	AR61533	PLUG	1		X	X	X	
14	A4365R	O-RING	1		X	X	X	
15	AR61589	PLUG	1		X	X	X	
16	R104592	PIPE PLUG	6		X	X	X	
17	R42365	BOLT	14		X	X	X	
18	R70268	WASHER	14		X	X	X	
19	R57158	BEARING CAP	6		X	X	X	(A)
	R57159	BEARING CAP	1		X	X	X	(B)
20	H79910	DOWEL PIN	NA		X	X	X	
21	R82007	CAP	1		X	X	X	
22	R87561	BUSHING	4		X	X	X	
23	R61288	DOWEL PIN	1		X	X	X	
24	15H562	PIPE PLUG	1		X	X	X	1"
25	R120801	DIPSTICK TUBE	1		X			107.5 MM (4.23") (6076HRW33)(L.H.)
	R121764	DIPSTICK TUBE	1			X		118.5 MM (4.66")(6076HRW34)(L.H.)
	R121765	DIPSTICK TUBE	1				X	126 MM (4.96")(6076HRW35)(L.H.)
26	R114130	STUD	5		X	X	X	
..	RE57420	SCREW	1		X	X	X	(FRONT LH)

(A) MAIN
PRINCIPAL
HAUPT
PRINCIPALE
PRINCIPAL
HUVUD

(B) THRUST
EPAULEMENT
SCHUB
SPINTA
EMPUJE
TRYCK

https://www.truck-manuals.net/

ENGINE SHORT BLOCK (6076) (8100,8200,8300 TSN -009999) (WITHOUT HEAD BOLTS)
MOTEUR DEPOUILLE POUR RECHANGE (SANS BOULONS DE CALASSE) (6076) (8100,8200,8300 TSN -009999
KURZMOTOR (OHNE ZYLINDERKOPFSCHRAUBEN) (6076) (8100,8200,8300 TSN -009999)
MOTORE CORTO (SENZA VITI DELLA TESTATA) (6076) (8100,8200,8300 TSN -009999)
MOTOR BASICO (SIN PERNOS DE CABEZA) (6076) (8100,8200,8300 TSN -00999
KORTMOTOR (UTAN TOPPLOCKSSKRUVAR) (6076) (8100,8200,8300 TSN -009999)
RGP3581 -UN-01JAN94

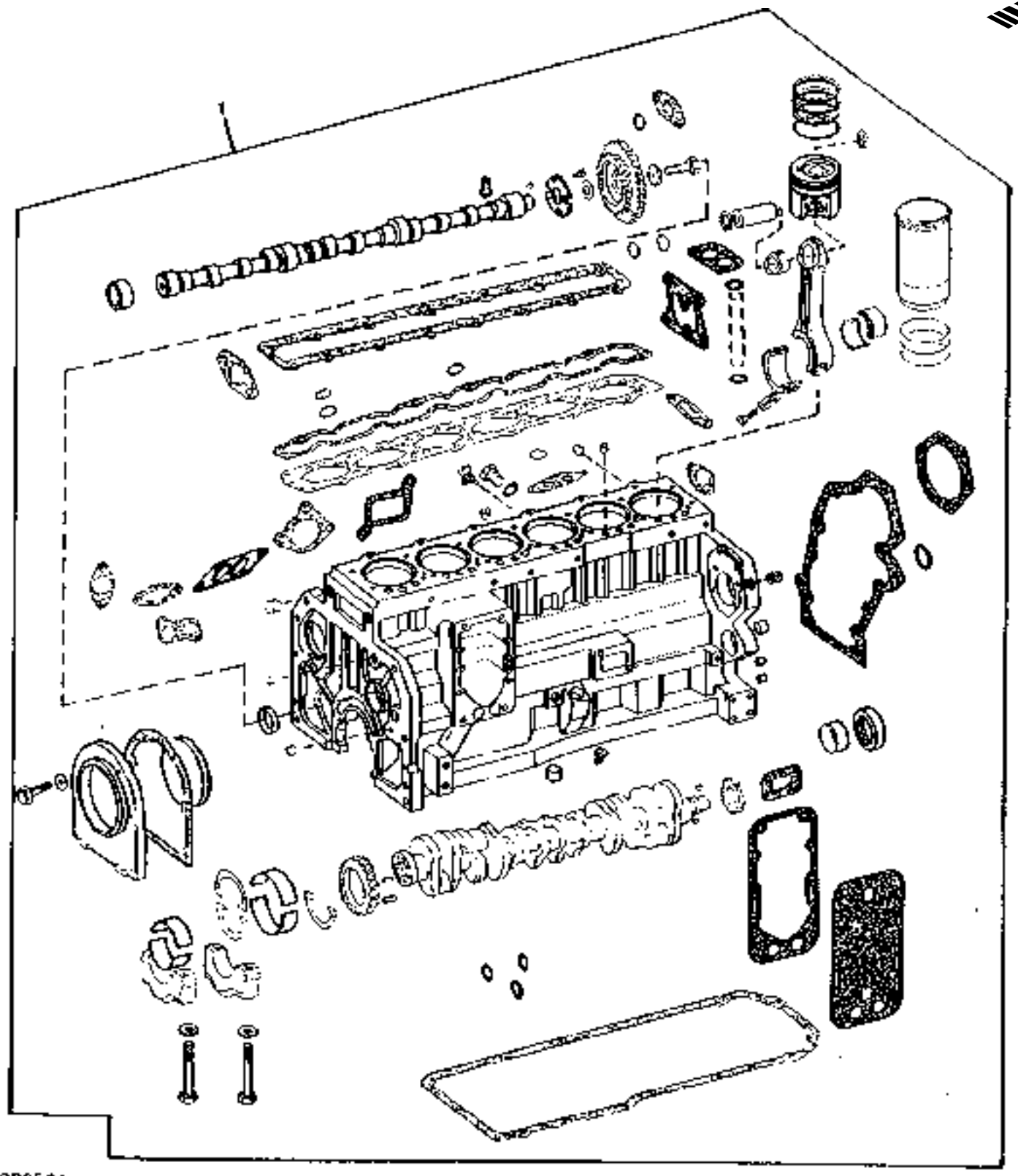

https://www.truck-manuals.net/

KEY	PART NO.	PART NAME	QTY	ENGINE SERIAL NO.	8 8 8 1 2 3 0 0 0 0 0 0	REMARKS
1	RE60458	SHORT BLOCK ASSEMBLY	1		X X X	(A) (MARKED R122741) (ALSO ORDER R125855) (SUB RE65081)

(A) - (ALSO ORDER R120801, 8100; R121764, 8200; R121765, 8300)

https://www.truck-manuals.net/

SHORT ENGINE (WITH) HEAD BOLTS) (6076) (8100,8200,8300 TSN-009999)
MOTEUR DEPOUILLE POUR RECHANGE (AVEC (26) BOULONS DE CULASSE) (6076) (8100,8200,8300 TSN -009999)
KURZMOTOR (MIT (26) ZYLINDERKOPFSCHRAUBEN) (6076) (8100,8200,8300 TSN -009999)
MOTORE CORTO (CON (26) VITI DELLA TESTATA) (6076) (8100,8200,8300 TSN -009999)
MOTOR BASICO (CON (26) PERNOS DE CABEZA) (6076) (8100,8200,8300 TSN -009999)
KORTMOTOR (MED (26) TOPPLOCKSSKRUVAR) (6076) (8100,8200,8300 TSN -009999
RGP4593 -UN-26OCT95

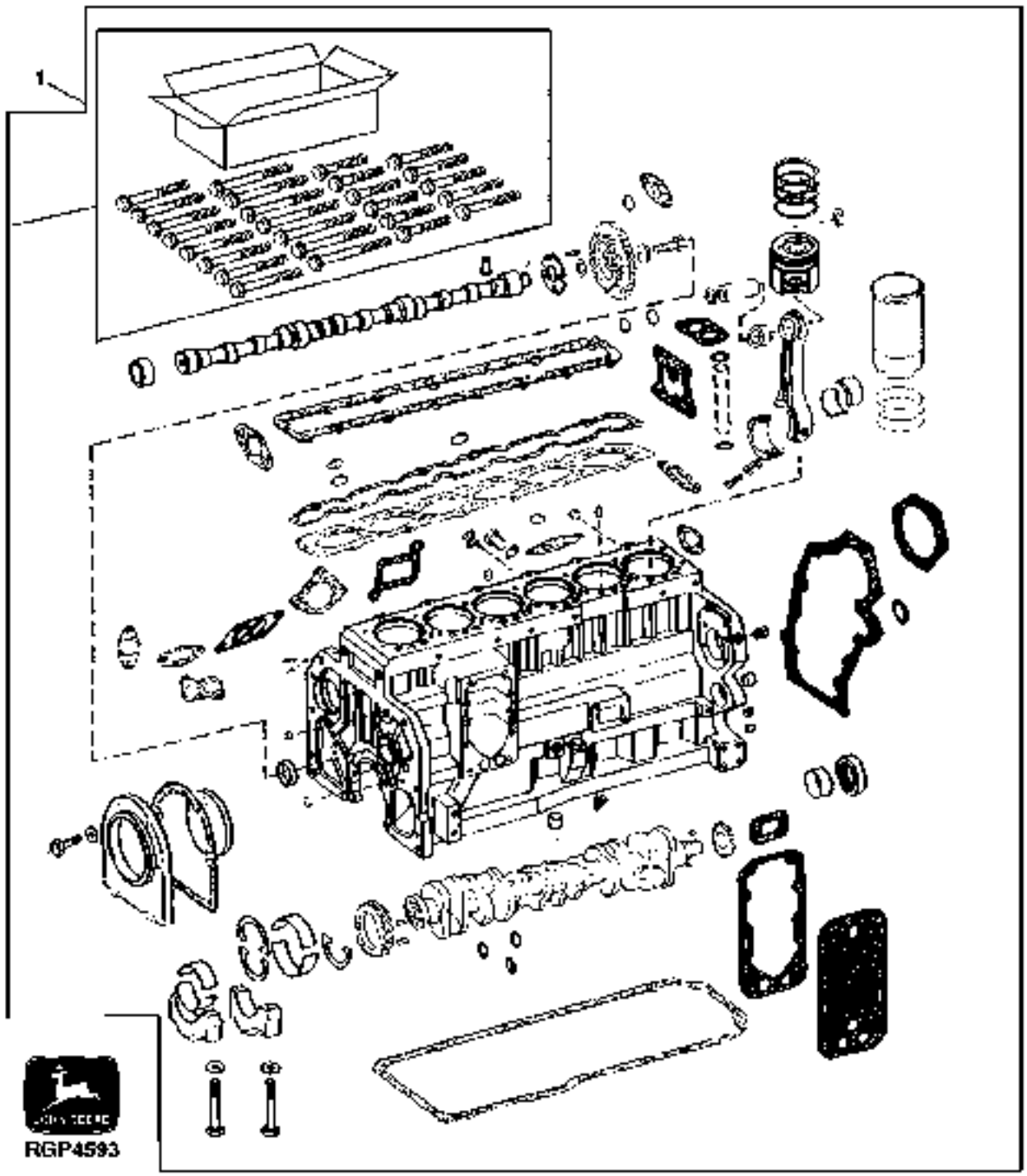

https://www.truck-manuals.net/

KEY	PART NO.	PART NAME	QTY	ENGINE SERIAL NO.	8 8 8 1 2 3 0 0 0 0 0 0	REMARKS
1	RE65081	SHORT BLOCK ASSEMBLY	1		X X X	(A) (MARKED R122741) (ALSO ORDER R125855) (CONTAINED (26) "SPECIAL" HEAD BOLTS)

(A) - (ALSO ORDER R120801, 8100; R121764, 8200; R121765, 8300)

https://www.truck-manuals.net/

KEY	PART NO.	PART NAME	QTY	ENGINE SERIAL NO.	8 8 8 1 2 3 0 0 0 0 0 0	REMARKS
1	RE65081	SHORT BLOCK ASSEMBLY	1		X X X	(A) (MARKED R122741) (ALSO ORDER R125855) (CONTAINED (26) "SPECIAL" HEAD BOLTS)

(A) - (ALSO ORDER R120801, 8100; R121764, 8200; R121765, 8300)

https://www.truck-manuals.net/

KEY	PART NO.	PART NAME	QTY	ENGINE SERIAL NO.	8 8 8 1 2 3 0 0 0 0 0 0	REMARKS
1	RG27914	ENGINE OVERHAUL KIT	1		X X X	(AS SHOWN) (CONTAINS (6) RE60294 PISTON LINERS, GASKET KIT, STD BEARINGS, FRONT/REAR SEALS, AND SNAP RINGS) (ALSO ORDER R66452 ROD BOLTS) (SUB FOR RE64212) (ALSO ORDER R125855)
	RG27920	ENGINE OVERHAUL KIT	1		X X X	(NOT AS SHOWN) (EXPANDED - STD BEARINGS KIT) (CONTAINS RG27914 PARTS, (12) R66492, (6) R57771, (6) R74008 AND (4) R87561) (SUB FOR RE66784) (ALSO ORDER R125855)
	RG27921	ENGINE OVERHAUL KIT	1		X X X	(NOT AS SHOWN) (EXPANDED .010" US BRG KIT) (CONTAINS (6) RE60294, (6) AR73279, (6) AR74816, AR77750, AR77753, RG27881, AR49025, RE22764, (12) E1343FN, (12) R66452, (6) R74008, (6) R57771 AND (4) R87561) (ALSO ORDER R125855) (SUB FOR RE66785)

https://www.truck-manuals.net/

ENGINE UNDERHAUL KIT (STANDARD BEARINGS) (6076) (8100,8200,8300 TSN -009999)
KIT D'ENTRETIEN DU MOTEUR SUR LE TRACTEUR (6076) (8100,8200, 8300 TSN -009999)
TEILESATZ FUER DIE WARTUNG DES EINGEBAUTEN MOTORSTEILESATZ FUER (6076) (81,82,83 TSN -009999
KIT PER LA REVISIONE DEL MOTORE DA SOTTO (6076) (8100,8200,8300 TSN -009999)
JUEGO DE REACONDICIONAMIENTO PARCIAL DEL MOTOR (6076)(8100,8200,8300 TSN -009999
SATS FOER REPARATION AV MOTORN PAA PLATS (6076) (8100,8200,8300 TSN -009999)
RGP4403 -UN-14DEC94

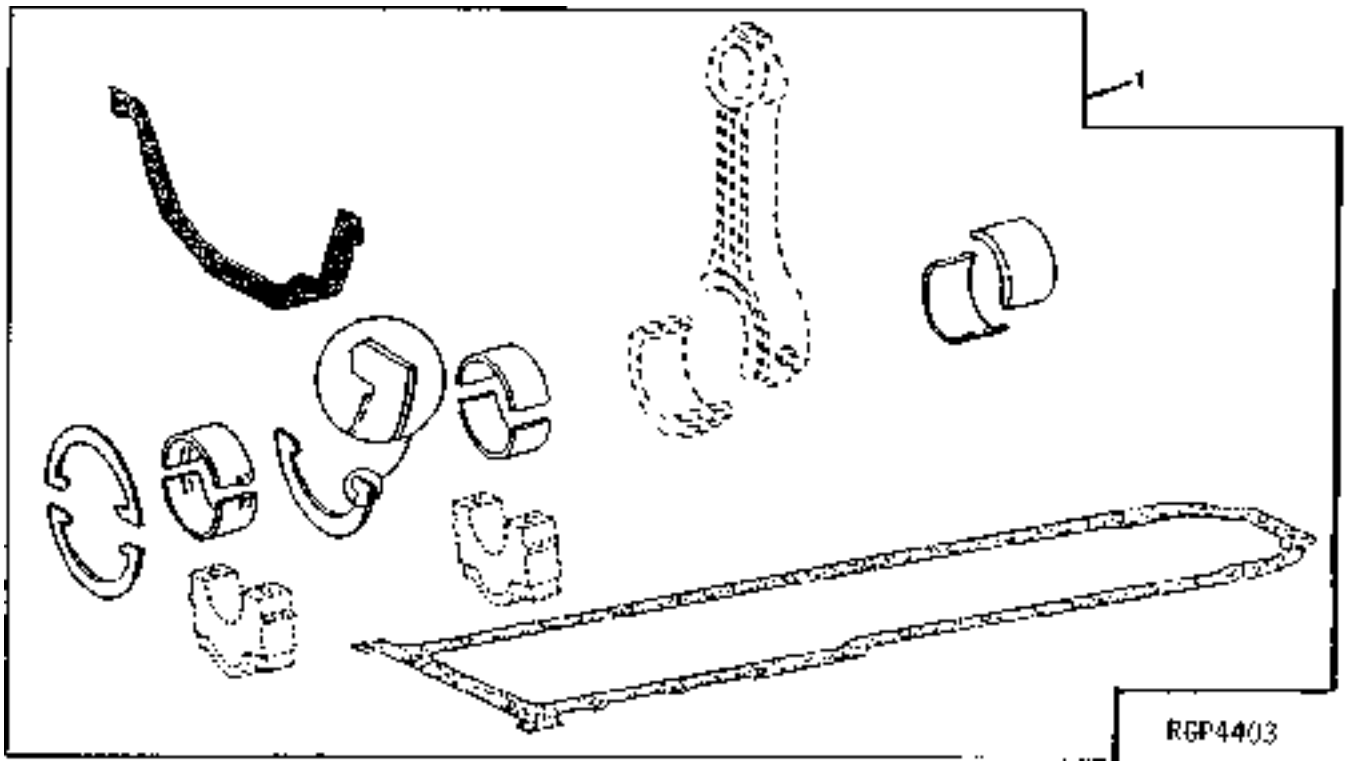

KEY	PART NO.	PART NAME	QTY	ENGINE SERIAL NO.	888 123 000 000	REMARKS
1	RG23426	KIT	1		X X X	(ALSO ORDER R125855, APPL)

https://www.truck-manuals.net/

MEMORANDA
MEMORANDA
MEMORANDA
MEMORANDA
MEMORANDA
MEMORANDA

https://www.truck-manuals.net/

ENGINE OIL PRESSURE SENDING UNIT
PRESSION D'HUILE MOTEUR
MOTOROELDRUCK
CONTATTO PRESS.OLIO
PRESION ACEITE MOTOR
MOTOROLJETRYCK-GIVARE
RXP011248 -UN-01JAN94

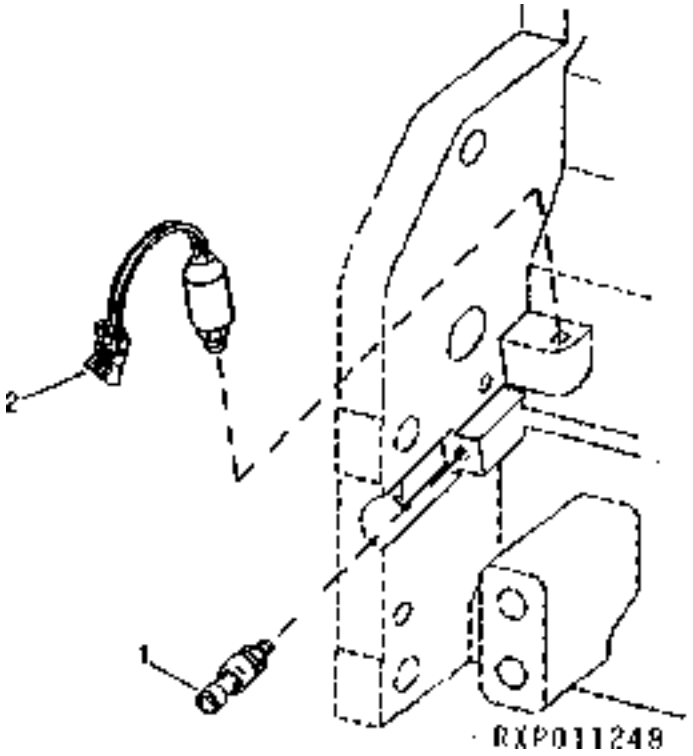

KEY	PART NO.	PART NAME	QTY	ENGINE SERIAL NO.	ALL	REMARKS
1	RE56009	ENGINE OIL PRESS. SENSOR	1		X	(A) 3-TERMINAL
2	RE63289	SWITCH	1		X	(B) 2-WIRE, (SUB FOR RE52866)

(A) DELUXE CAB
CABINE DELUXE
LUKUSKABINE
CABINA DELUXE
CABINA DE LUJO
LYXHYTT

(B) ECONOMY CAB
CABINE "ECONOMIE"
EINFACHE KABINE
CABINA ECONOMICA
CABINA ECONOMICA
EKONOMIHYTT

https://www.truck-manuals.net/

OIL PAN (6076) (8100,8200,8300 TSN -009999)
CARTER D'HUILE (6076) (8100,8200,8300 TSN -009999)
OELWANNE (6076) (8100,8200,8300 TSN -009999)
COPPA DELL'OLIO (6076) (8100,8200,8300 TSN -009999)
CARTER DEL ACEITE (6076) (8100,8200,8300 TSN -009999)
OLJETRAG (6076) (8100,8200,8300 TSN -009999)
RGP4886 -UN-13MAY97

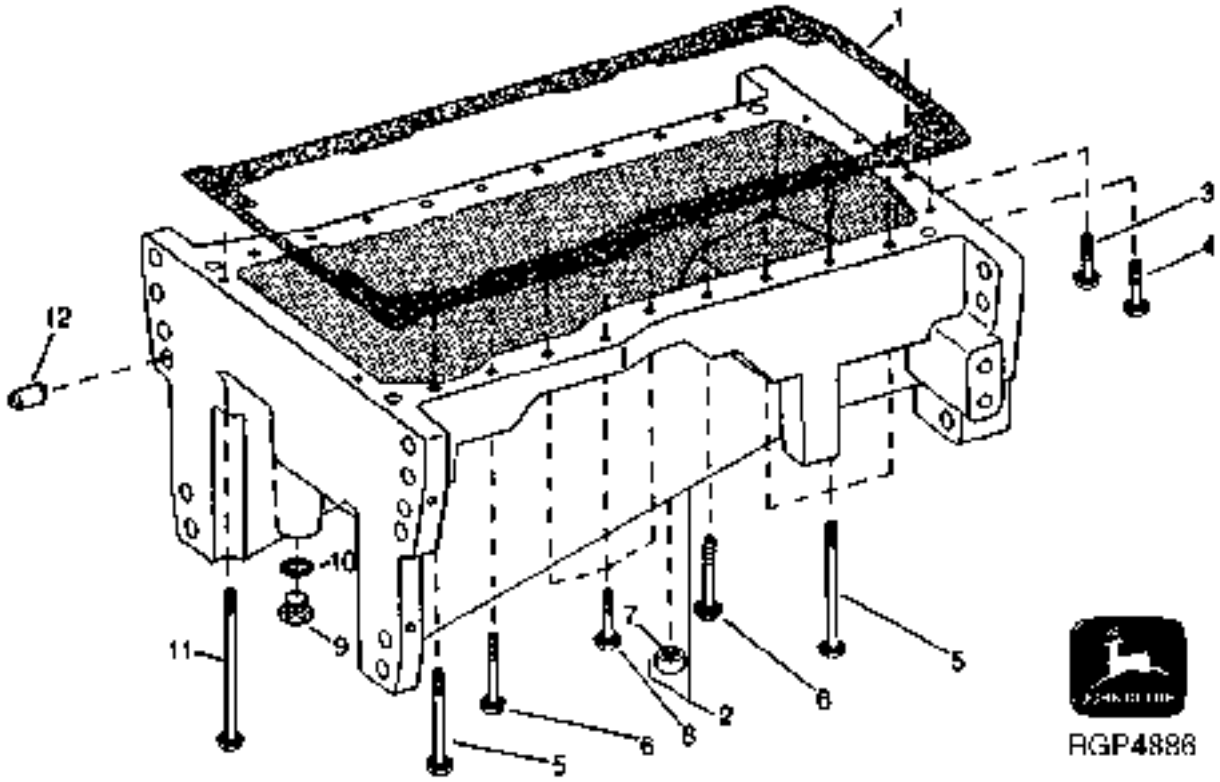

KEY	PART NO.	PART NAME	QTY	ENGINE SERIAL NO.	8 8 8 1 2 3 0 0 0 0 0 0	REMARKS
1	R125855	GASKET	1		X X X	(SUB FOR R107343)
2	RE71509	OIL PAN	1	-XXXXXX	X X X	(MARKED R136471 OR R107229) (SUB FOR RE50889)
	RE161680	OIL PAN	1	XXXXXX-	X X X	
	19M7963	CAP SCREW	2	XXXXXX-	X X X	
3	R122474	CAP SCREW	2		X X X	.375 X 2.25
4	R121395	CAP SCREW	2		X X X	.375 X 1.875
5	R122477	CAP SCREW	8		X X X	.500 X 6.000
6	R122476	CAP SCREW	4		X X X	.500 X 4.000
7	ET14521	BUSHING	4		X X X	
8	R122475	CAP SCREW	6		X X X	.500 X 2.500
9	R27175	DRAIN PLUG	1		X X X	
10	F3171R	O-RING	1		X X X	
11	R126912	CAP SCREW	2		X X X	.375 X 7.750
12	.....	DOWEL PIN	4		X X X	(SUB RE71509)

https://www.truck-manuals.net/

ENGINE OIL DIPSTICK (6076) (8100,8200,8300 TSN -009999)
JAUGE A HUILE MOTEUR (6076) (8100,8200,8300 TSN -009999)
MOTORDELMESSTAB (6076) (8100,8200,8300 TSN -009999)
ASTINA DE LIVELLO OLIO MOTORE (6076) (8100,8200,8300 TSN -009999)
ASPILLA PARA MEDIR EL NIVEL DE ACEITE DEL MOTORE (6076) (8100,8200,8300 TSN -009999)
MOTORNS OLJETICKA (6076) (8100,8200,8300 TSN -009999)
RGP4446 -UN-03MAR95

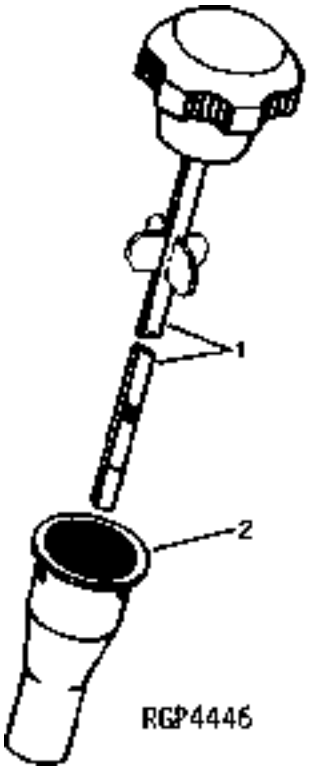

KEY	PART NO.	PART NAME	QTY	ENGINE SERIAL NO.	8100	8200	8300	REMARKS
1	RE500209	DIPSTICK	1		X	X	X	(6076HRW33,34,35) (SUB FOR RE56493)
2	R120801	DIPSTICK TUBE	1		X			(6076HRW33) 107.5 MM (4.23")
	R121764	DIPSTICK TUBE	1			X		(6076HRW34) 118.5 MM (4.66")
	R121765	DIPSTICK TUBE	1				X	(6076HRW35) 126.0 MM (4.96")

https://www.truck-manuals.net/

CRANKSHAFT PULLEY (6076) (8100,8200,8300 TSN -009999)
POULIE DE VILEBREQUIN (6076) (8100,8200,8300 TSN -009999)
KURBELWELLENRIEMENSCHEIBE (6076) (8100,8200,8300 TSN -009999)
PULEGGIA DELL'ALBERO A GOMITI (6076) (8100,8200,8300 TSN -009999)
POLEA DEL CIGUENAL (6076) (8100,8200,8300 TSN -009999)
VEVAXELREMSKIVA (6076) (8100,8200,8300 TSN -009999)
RGP4359 -UN-01JAN94

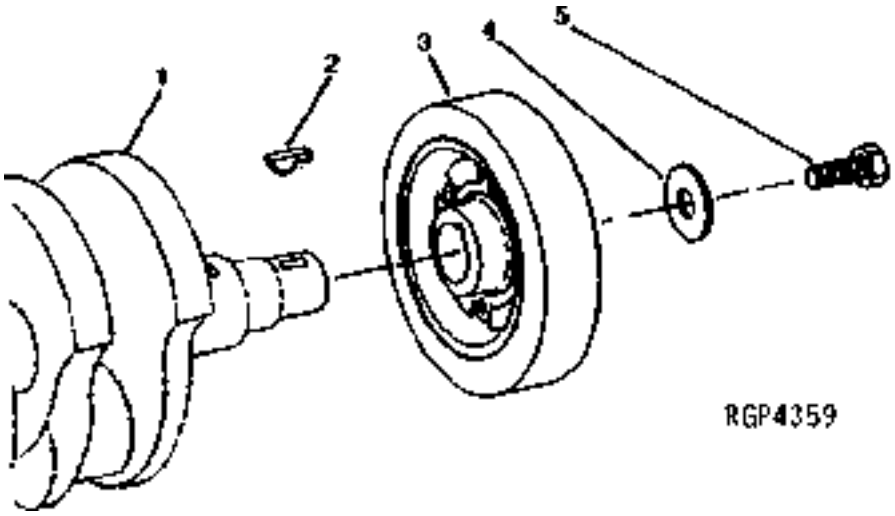

KEY	PART NO.	PART NAME	QTY	ENGINE SERIAL NO.	8 8 8 1 2 3 0 0 0 0 0 0	REMARKS
1	.....	CRANKSHAFT	1		X X X	
2	R116311	KEY	1		X X X	
3	RE24975	TORSIONAL DAMPENER	1		X X X	
4	R26333	WASHER	1		X X X	
5	R79846	CAP SCREW	1		X X X	

https://www.truck-manuals.net/

CRANKSHAFT (6076) (8100,8200,8300 TSN -009999)
VILEBREQUIN (6076) (8100,8200,8300 TSN -009999)
KURBELWELLE (6076) (8100,8200,8300 TSN -009999)
ALBERO A COLLI (6076) (8100,8200,8300 TSN -009999)
CIGUENAL (6076) (8100,8200,8300 TSN -009999)
VEVAXEL (6076) (8100,8200,8300 TSN -009999)
RGP3958 -UN-01JAN94

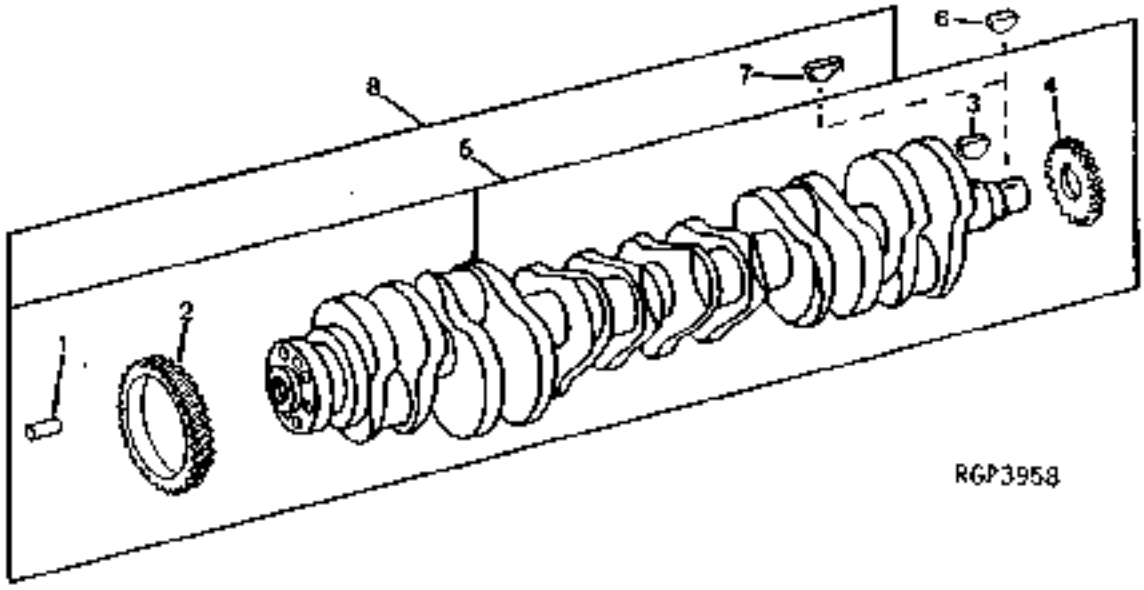

KEY	PART NO.	PART NAME	QTY	ENGINE SERIAL NO.	8 8 8 1 2 3 0 0 0 0 0 0	REMARKS
1	R41934	DOWEL PIN	1		X X X	
2	R63326	GEAR	1		X X X	(SUB RG23551, THIS APPLICATION)
3	R120752	KEY	1		X X X	
4	R104587	GEAR	1		X X X	
5	RE53199	CRANKSHAFT	1		X X X	(MARKED RE53199) (SUB RG23551)
6	.....	SHAFT KEY	1		X X X	
7	R116311	KEY	1		X X X	
8	RG23551	CRANKSHAFT	1		X X X	(MARKED RE53199)

https://www.truck-manuals.net/

FLYWHEEL (6076) (8100,8200,8300 TSN -009999)
VOLANT (6076) (8100,8200,8300 TSN -009999)
SCHWUNGRAD (6076) (8100,8200,8300 TSN -009999)
VOLANO (6076) (8100,8200,8300 TSN -009999)
VOLANTE (6076) (8100,8200,8300 TSN -009999)
SVANGHJUL (6076) (8100,8200,8300 TSN -009999)
RGP3073 -UN-01JAN94

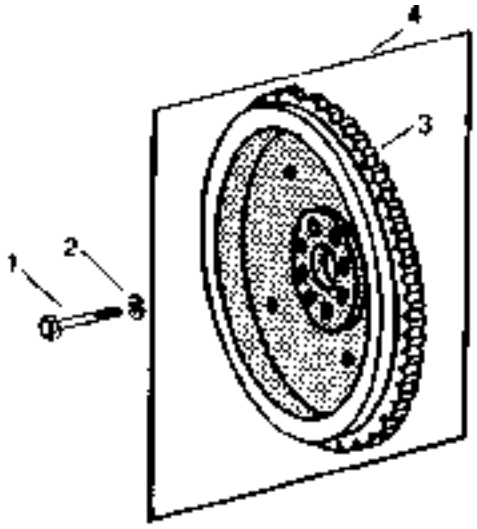

KEY	PART NO.	PART NAME	QTY	ENGINE SERIAL NO.	8 8 8 1 2 3 0 0 0 0 0 0	REMARKS
1	19H3579	CAP SCREW	6		X X X	12.700 X 34.925 MM (1/2" X 1-3/8") (SUB FOR R41049 OR R52634, THIS APPLICATION)
2	T23891	WASHER	6		X X X	13.487 X 20.625 X 1.524 MM (17/32" X 13/16" X 0.060")
3	R28811	RING GEAR	1		X X X	
4	RE44632	FLYWHEEL	1		X X X	(MARKED R107339)

https://www.truck-manuals.net/

PISTON/CONNECTING RODS/CYLINDER LINER (6076) (8100,8200,8300 TSN -009999)
PISTON/BIELLE/CHEMISE DE CYLINDRE (6076) (8100,8200,8300 TSN -009999)
KOLBEIN/PLEUELSTANGE/ZYLINDERLAUFBUECHSE (6076) (8100,8200,8300 TSN -009999)
PISTONE/BIELLA/CAMICIE (6076) (8100,8200,8300 TSN -009999)
PISTON/BIELA/CAMISA DEL CILINDRO (6076) (8100,8200,8300 TSN -009999)
KOLV/KOLVSTAKE/CYLINDERFODER (6076) (8100,8200,8300 TSN -009999)
RGP3595 -UN-01JAN94

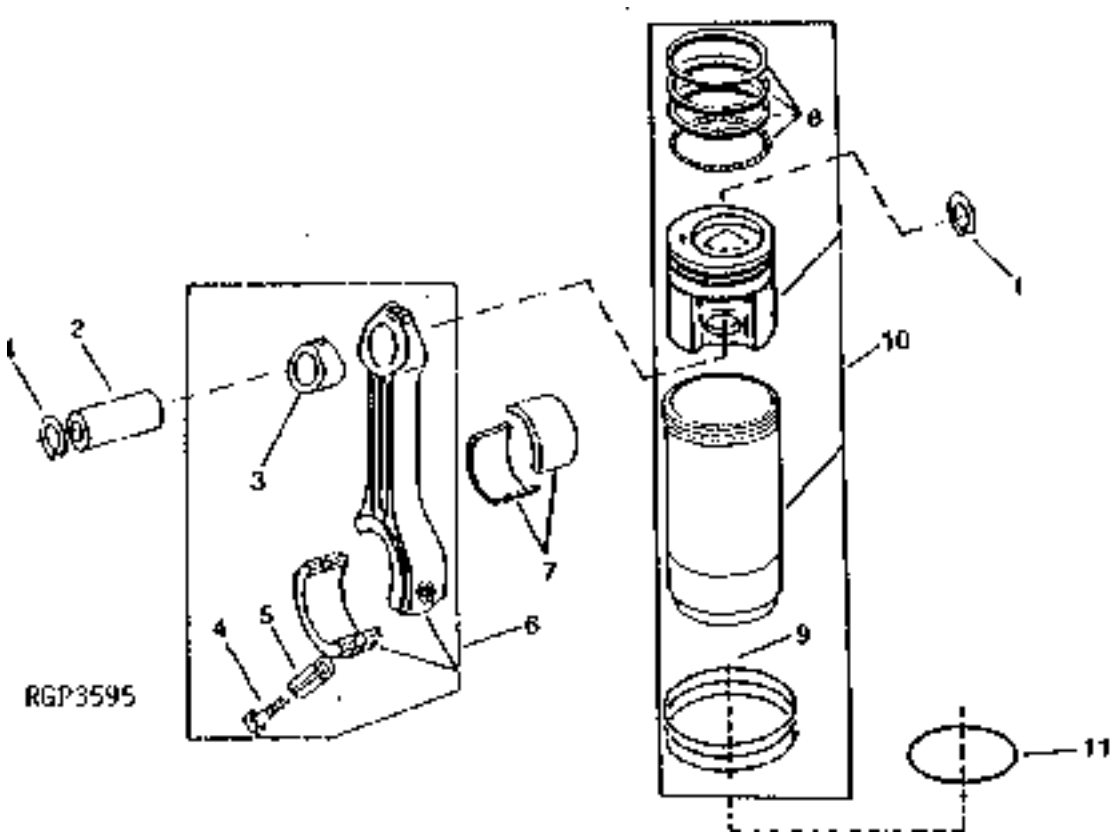

KEY	PART NO.	PART NAME	QTY	ENGINE SERIAL NO.	8 8 8 1 2 3 0 0 0 0 0 0	REMARKS
1	E1343FN	SNAP RING	12		X X X	
2	R57771	PISTON PIN	6		X X X	
3	R74008	BUSHING	6		X X X	
4	R66452	CAP SCREW	12		X X X	
5	R53292	SLEEVE	12		X X X	
6	AR93341	CONNECTING ROD	6		X X X	(MARKED R71074)
7	AR73277	BEARING	AR		X X X	STD (PKG (2) R57583)
	AR73278	BEARING	AR		X X X	0.05MM (.002") US (PKG (2) R60485)
	AR73279	BEARING	AR		X X X	0.25MM (.010") US (PKG (2) R60486)
	AR73280	BEARING	AR		X X X	0.51MM (.020") US (PKG (2) R60487)
	AR73281	BEARING	AR		X X X	0.76MM (.030") US (PKG (2) R60488)
8	RE57517	PISTON RING	6		X X X	(USE WITH RE57512)
9	AR98850	KIT	6		X X X	
10	RE60294	KIT	6		X X X	(MARKED RE57512)
11	R93948	SHIM	2		X X X	0.05MM (.002") (MAX)

https://www.truck-manuals.net/

MAIN BEARINGS (6076) (8100,8200,8300 TSN -009999)
PALIERS PRINCIPAUX (6076) (8100,8200,8300 TSN -009999)
HAUPTLAGER (6076) (8100,8200,8300 TSN -009999)
CUSCINETTI PRINCIPALI (6076) (8100,8200,8300 TSN -009999)
COJINETES DE BANCADA (6076) (8100,8200,8300 TSN -009999)
RAMLAGER (6076) (8100,8200,8300 TSN -009999)
RGP1272 -UN-01JAN94

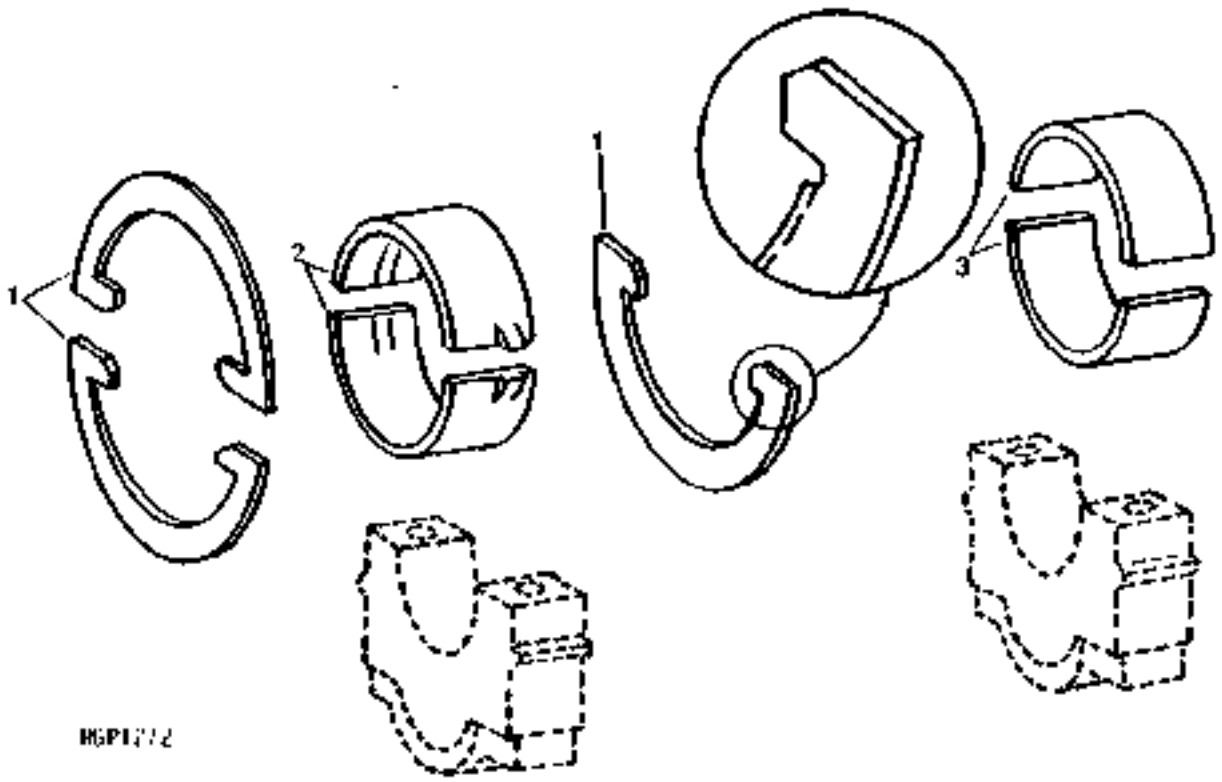

KEY	PART NO.	PART NAME	QTY	ENGINE SERIAL NO.	8 8 8 1 2 3 0 0 0 0 0 0	REMARKS
1	AR77747	THRUST WASHER	1		X X X	STD (PKG (3) R62986)
	AR77753	THRUST WASHER	1		X X X	0.18 MM (.007") OS FLANGE (PKG (2) R63010 AND R62986)
2	AR77748	THRUST BEARING	1		X X X	STD (PKG R62987 AND R62988)
	AR77749	THRUST BEARING	1		X X X	0.05 MM (.002") US (PKG R63002 AND R63006)
	AR77750	THRUST BEARING	1		X X X	0.25 MM (.010") US (PKG R63003 AND R63007)
	AR77751	THRUST BEARING	1		X X X	0.51 MM (.020") US (PKG R63004 AND R63008)
	AR77752	THRUST BEARING	1		X X X	0.76 MM (.030") US (PKG R63005 AND R63009)
3	AR74814	BEARING	AR		X X X	STD (PKG R61289 AND R57584)
	AR74815	BEARING	AR		X X X	0.05 MM (.002") US (PKG R61608 AND R60472)
	AR74816	BEARING	AR		X X X	0.25 MM (.010") US (PKG R61609 AND R60473)
	AR74817	BEARING	AR		X X X	0.51 MM (.020") US (PKG R61610 AND R60474)
	AR74818	BEARING	AR		X X X	0.76 MM (.030") US (PKG R61611 AND R60475)

https://www.truck-manuals.net/

CRANKSHAFT OIL SEAL AND HOUSING (6076) (8100,8200,8300 TSN -009999)
JOINT A LEVRE ET CARTER DE VILEBREQUIN (6076) (8100,8200,8300 TSN -009999)
KURBELWELLENDICHTRING UND GEHAEUSE (6076) (8100,8200,8300 TSN -009999)
ANELLO DI TENUTA E CARCASSA DELL'ALBERO A GOMITI (6076) (8100,8200,8300 TSN -009999)
RETEN Y CARACASA DEL ACEITE CIGUENAL (6076) (8100,8200,8300 TSN -009999)
VEVAXELNS TAETNINGSRING OCH HUS (6076) (8100,8200,8300 TSN -009999)
RGP2382 -UN-01JAN94

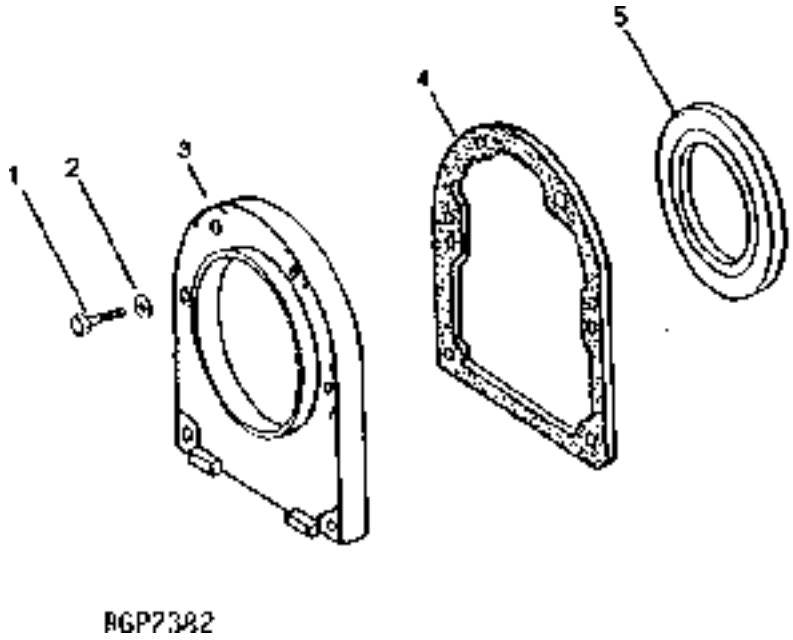

KEY	PART NO.	PART NAME	QTY	ENGINE SERIAL NO.	8 8 8 1 2 3 0 0 0 0 0 0	REMARKS
1	R47074	CAP SCREW	6		X X X	7.925 X 28.448 MM (5/16" X 1.120")
2	T27860	WASHER	6		X X X	11/32" X 11/16" X 0.065"
3	R125027	HOUSING	1		X X X	
4	R26058	GASKET	1		X X X	
5	RE22764	SEAL	1		X X X	

https://www.truck-manuals.net/

TIMING GEAR COVER (6076) (8100,8200,8300 TSN -009999)
COUVERCLE DE DISTRIBUTION (6076) (8100,8200,8300 TSN -009999)
STEUERGEHAEUSE (6076) (8100,8200,8300 TSN -009999)
COPERCHIO DISTRIBUZIONE (6076) (8100,8200,8300 TSN -009999)
TAPA DE LA DISTRIBUCION (6076) (8100,8200,8300 TSN -009999)
TIDHJULSKAPA (6076) (8100,8200,8300 TSN -009999)
RGP4438 -UN-28FEB95

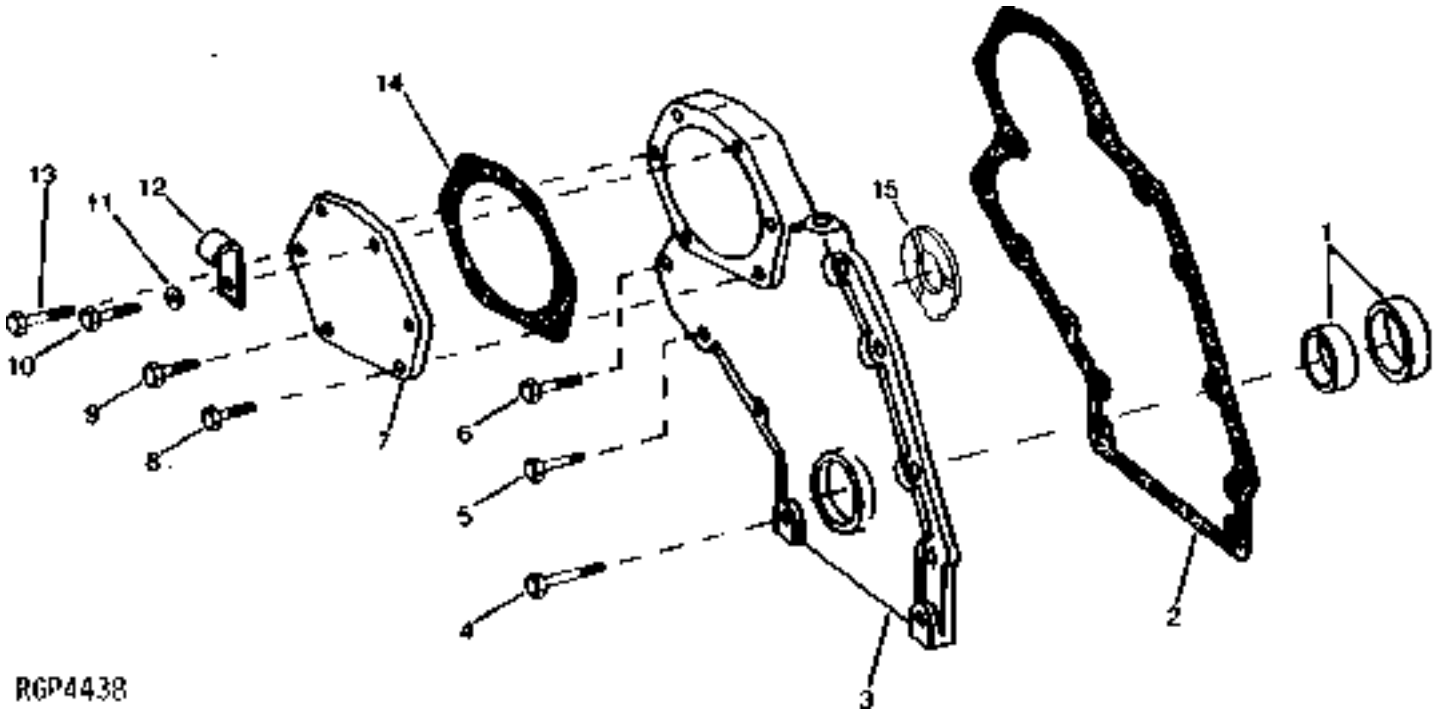

KEY	PART NO.	PART NAME	QTY	ENGINE SERIAL NO.	8 8 8 1 2 3 0 0 0 0 0 0	REMARKS
1	AR49025	SEAL	1		X X X	
2	R104623	GASKET	1		X X X	
3	R124178	COVER	1		X X X	
4	R104859	CAP SCREW	7		X X X	
5	R104861	CAP SCREW	1		X X X	
	12H303	LOCK WASHER	1		X X X	5/16"
6	R112269	CAP SCREW	1		X X X	
7	R99463	COVER	1		X X X	
8	R112268	CAP SCREW	1		X X X	
9	R112267	CAP SCREW	1		X X X	
	12H303	LOCK WASHER	1		X X X	5/16"
10	R112273	CAP SCREW	3		X X X	
11	24H1136	WASHER	1		X X X	11/32" X 11/16" X 0.065"
12	R72853	CLAMP	NA		X X X	
	AH89557	CLIP	NA		X X X	
13	R105732	CAP SCREW	NA		X X X	
14	R99464	GASKET	1		X X X	
15	R104656	THRUST WASHER	1		X X X	

https://www.truck-manuals.net/

MAGNETIC PICK-UP (ENGINE SPEED SENSOR)(6076) 8100,8200,8300 TSN -009999)
OUTIL AIMANTE A MANCHE (6076) (8100,8200,8300 TSN -009999)
MAGNETISCHER MESSWERTGEBER (6076) (8100,8200,8300 TSN -009999)
CALAMITA RACCATTAPEZZI (6076) (8100,8200,8300 TSN -009999)
CAPTADOR MAGNETICO (6076) (8100,8200,8300 TSN -009999)
MAGNETISK GIVARE (6076) (8100,8200,8300 TSN -009999)
RGP4321 -UN-01JAN94

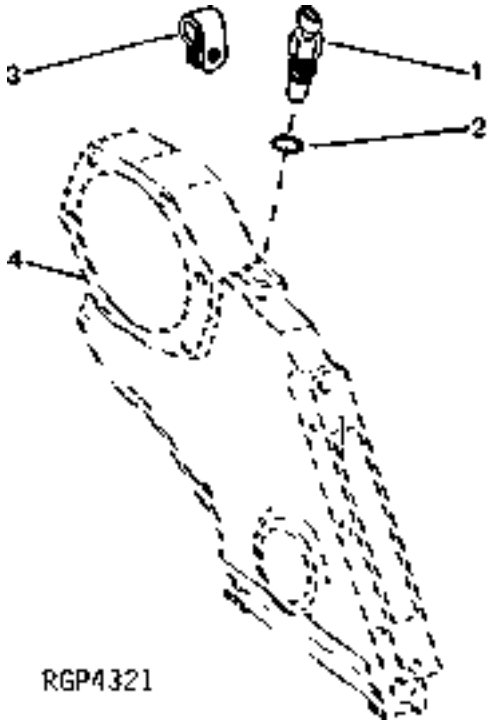

KEY	PART NO.	PART NAME	QTY	ENGINE SERIAL NO.	8 8 8 1 2 3 0 0 0 0 0 0	REMARKS
1	RE71121	SENSOR	1		X X X	(SUB FOR RE43511)
2	51M7044	O-RING	1		X X X	17.300 X 2.200 MM, (SUB FOR R54856, THIS APPLICATION)
3	.....	CLAMP	NA		X X X	
4	.....	COVER	1		X X X	

https://www.truck-manuals.net/

ENGINE OIL PUMP INTAKE (6076)(8100,8200,8300 TSN-009999)
ADMISSION DE LA POMPE A HUILE MOTEUR (6076)(8100,8200,8300 TSN-009999)
MOTOROELPUMPENEINLASS (6076)(8100,8200,8300 TSN-009999)
ASPIRAZIONE DELLA POMPA DELL'OLIO DEL MOTORE (6076)(8100,8200, 8300 TSN-009999)
ADMISION DE LA BOMBA DE ACEITE DEL MOTOR (6076)(8100,8200,8300 TSN-009999)
MOTOROLJEPUMP, INSUGNING (6076)(8100,8200,8300 TSN-009999)
RGP3629 -UN-01JAN94

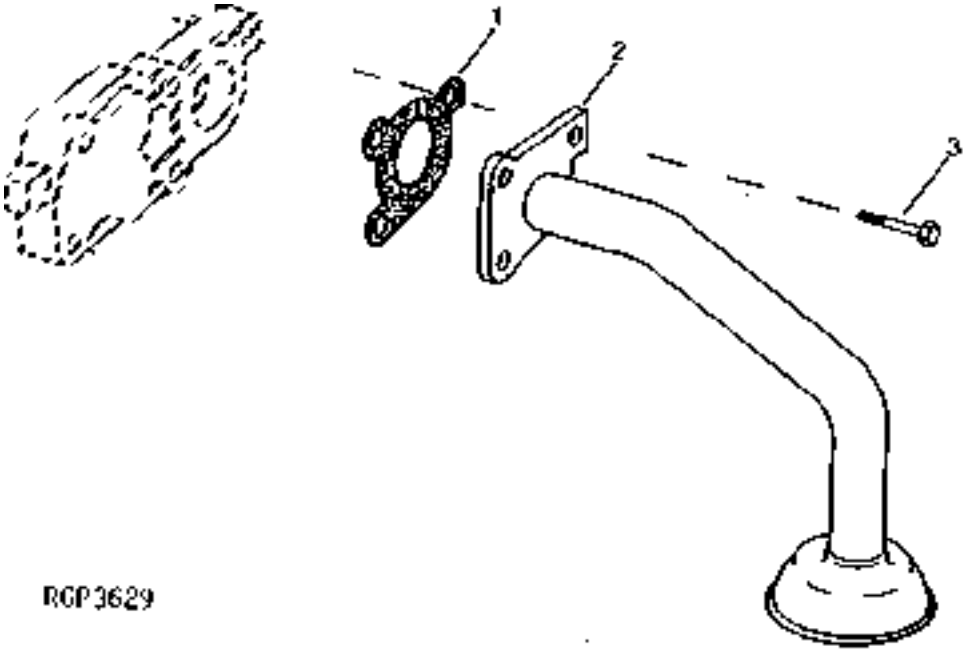

KEY	PART NO.	PART NAME	QTY	ENGINE SERIAL NO.	8 8 8 1 2 3 0 0 0 0 0 0	REMARKS
1	R100569	GASKET	1		X X X	
2	RE42809	OIL PUMP INTAKE	1		X X X	
3	R104628	CAP SCREW	3		X X X	

https://www.truck-manuals.net/

OIL PUMP (6076) (8100,8200,8300 TSN -009999)
POMPE A HUILE (6076) (8100,8200,8300 TSN -009999)
OELPUMPE (6076) (8100,8200,8300 TSN -009999)
POMPA OLIO (6076) (8100,8200,8300 TSN -009999)
BOMBA DE ACEITE (6076) (8100,8200,8300 TSN -009999)
OLJEPUMP (6076) (8100,8200,8300 TSN -009999)
RGP4523 -UN-10AUG95

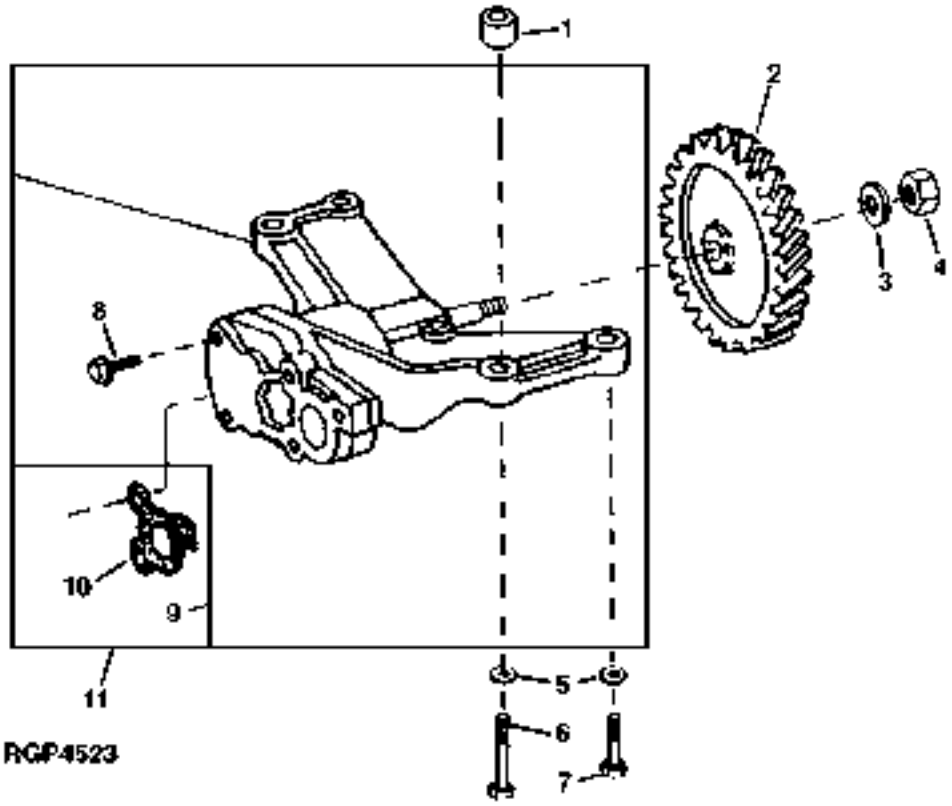

https://www.truck-manuals.net/

KEY	PART NO.	PART NAME	QTY	ENGINE SERIAL NO.	8 8 8 1 2 3 0 0 0 0 0 0	REMARKS
1	R500642	BUSHING	2		X X X	(SUB FOR R62930, THIS APPLICATION)
2	R62938	GEAR	1		X X X	
3	T21242	WASHER	1		X X X	
4	14H826	NUT	1		X X X	1/2"
5	R57696	WASHER	4		X X X	
6	19H2549	CAP SCREW	2		X X X	3/8" X 1-7/8"
7	19H3219	CAP SCREW	2		X X X	3/8" X 1-3/8"
8	R104628	CAP SCREW	2		X X X	
	R104628	CAP SCREW	3		X X X	(OIL PUMP INTAKE TO COVER)
9	RE62723	OIL PUMP	1		X X X	(SUB FOR RE52277) (SUB RE63115)
10	R100569	GASKET	1		X X X	
11	RE63115	OIL PUMP	1		X X X	(MARKED R124746)

https://www.truck-manuals.net/

ENGINE OIL COOLER/ENGINE OIL FILTER (6076) (8100,8200,8300 TSN -009999)
REFROIDISSEUR D'HUILE MOTEUR/FILTRE A HUILE MOTEUR (6076) (8100,8200,8300 TSN -009999)
MOTOR-OELKUEHLER/MOTOROELFILTER (6076) (8100,8200,8300 TSN -009999)
RAFFREDDATORE OLIO MOTORE/FILTRO OLIO MOTORE (6076) (8100,8200,8300 TSN -009999)
REFRIGERADOR DEL ACEITE DEL MOTOR/FILTRO DE ACEITE DEL MOTORE (6076) (8100,8200,8300 TSN -009999)
MOTOROLJEKYLARE/MOTOROLJEFILTER (6076) (8100,8200,8300 TSN -009999)
RGP4860 -UN-11FEB97

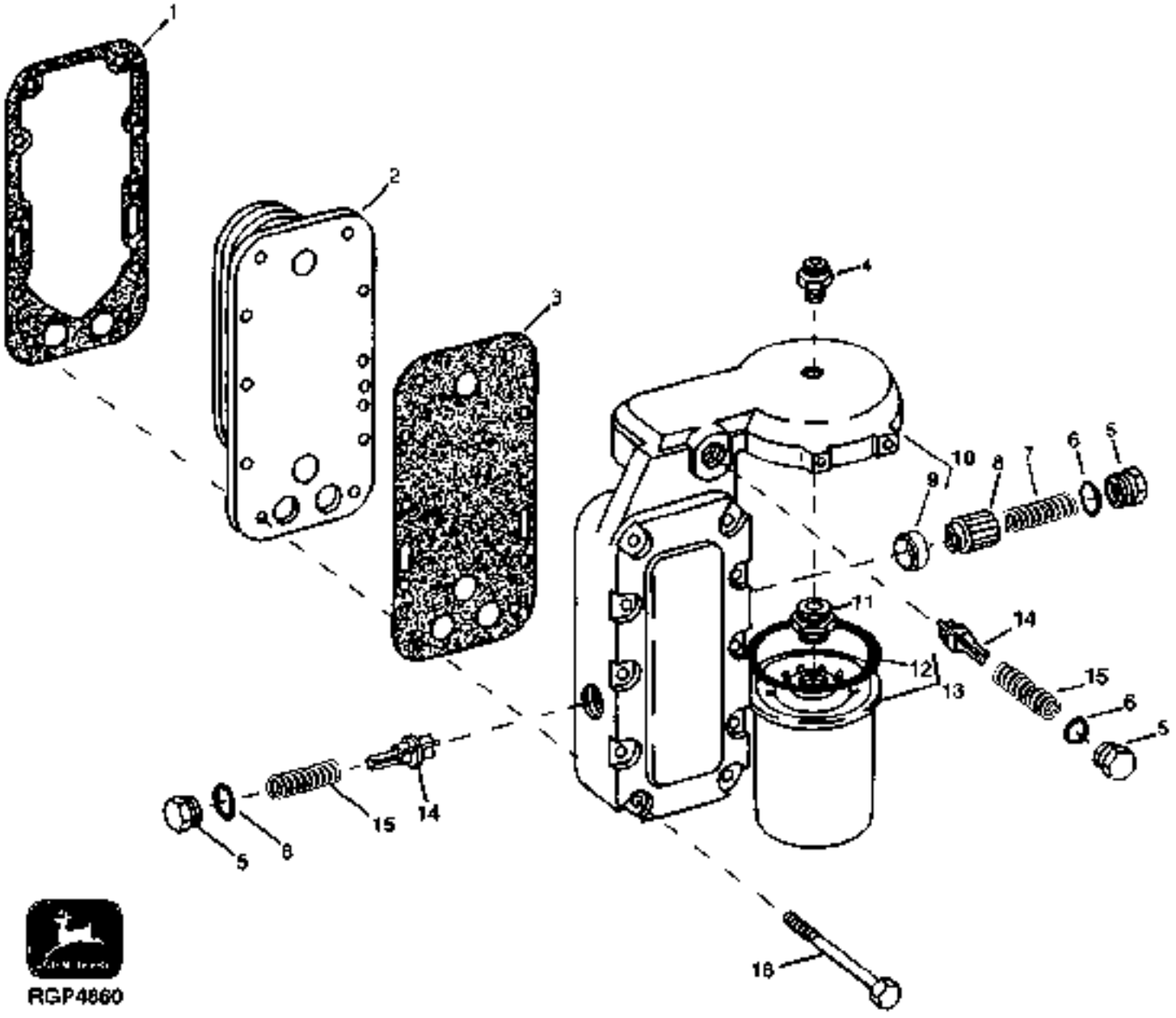

https://www.truck-manuals.net/

KEY	PART NO.	PART NAME	QTY	ENGINE SERIAL NO.	8 8 8 1 2 3 0 0 0 0 0 0	REMARKS
1	R94618	GASKET	1	-547515	X X X	(SUB R128557)
	R128557	GASKET	1	547516-	X X X	
2	RE36367	OIL COOLER	1		X X X	
3	R94619	GASKET	1	-547515	X X X	(SUB R128558)
	R128558	GASKET	1	547516-	X X X	
4	R51133	FITTING	1		X X X	
5	R134727	PLUG	3		X X X	(SUB FOR R100499)
6	U17409	O-RING	3		X X X	
7	R102844	SPRING	1	-591825	X X X	(SUB R500330)
	R500330	SPRING	1	591826-	X X X	
8	R124186	RELIEF VALVE	1		X X X	(SUB FOR R94615)
9	R94620	BUSHING	1		X X X	
10	RE39890	HOUSING	1		X X X	(MARKED R120412)
11	R104621	ADAPTER	1		X X X	
12	R43660	PACKING	1		X X X	
13	RE57394	OIL FILTER	1		X X X	(MARKED RE57394)
14	R108867	VALVE	2		X X X	
15	R98064	SPRING	2		X X X	
16	19H3769	CAP SCREW	10		X X X	5/16" X 2-1/2", (SUB FOR R104862)

https://www.truck-manuals.net/

ENGINE COOLANT HEATER (110 V) (NORTH AMERICAN VERSION)
RECHAUFFEUR DU LIQUIDE DE REFROIDISSEMENT (110 V) (VERSION NORD AMERICAINE)
KUEHLWASSER-VORWAERMER (110 V) (NORDAMERIKANISCHE AUSFUEHRUNG)
RISACALDATORE REFRIGERANTE (110 V) (VERSIONE NORDAMERICANA)
DISPOSITIVO PARA EL CALENTAMIENTO DEL LIQUIDO REFRIGERANTE (110 V) (VERSION NORTEAMERICANA)
KYLVATSKEVARMARE (110 V) (NORDAMERIKANSK VERSION)
HP3746 -UN-01JAN94

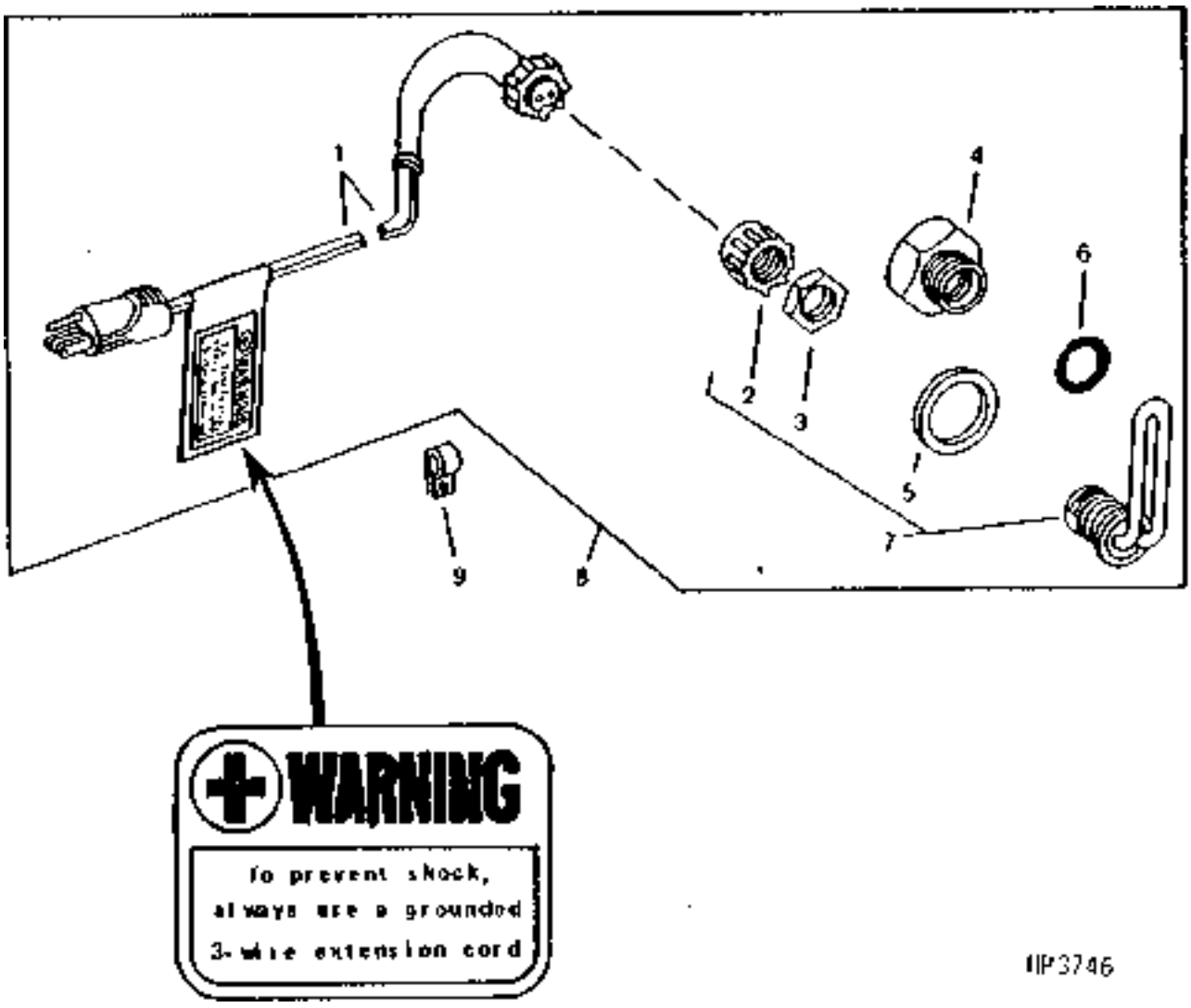

https://www.truck-manuals.net/

KEY	PART NO.	PART NAME	QTY	ENGINE SERIAL NO.	ALL	REMARKS
1	AR50411	WIRING LEAD	1		X	
2	R54510	CAP	1		X	
3	R54511	NUT	1		X	
4	R54123	ADAPTER	1		X	
5	U13639	O-RING	1		X	
6	R47693	GASKET	1		X	
7	AR62399	COOLANT HEATER	1		X	(110 VOLT)
8	AR62492	COOLANT HEATER	1		X	
9	R72853	CLAMP	1		X	

https://www.truck-manuals.net/

ENGINE COOLANT HEATER (220 V) (EUROPEAN VERSION)
RECHAUFFEUR DU LIQUIDE DE REFROIDISSEMENT (220 V) (VERSION EUROPEENNE)
KUEHLWASSER-VORWAERMER (220 V) (EUROPAEISCHE AUSFUEHRUNG)
RISACALDATORE REFRIGERANTE (220 V) (VERSIONE EUROPEA)
DISPOSITIVO PARA EL CALENTAMIENTO DEL LIQUIDO REFRIGERANTE (220 V) (VERSION EUROPEA)
KYLVATSKEVARMARE (220 V) (EUROPEISK VERSION)
RGP1379 -UN-01JAN94

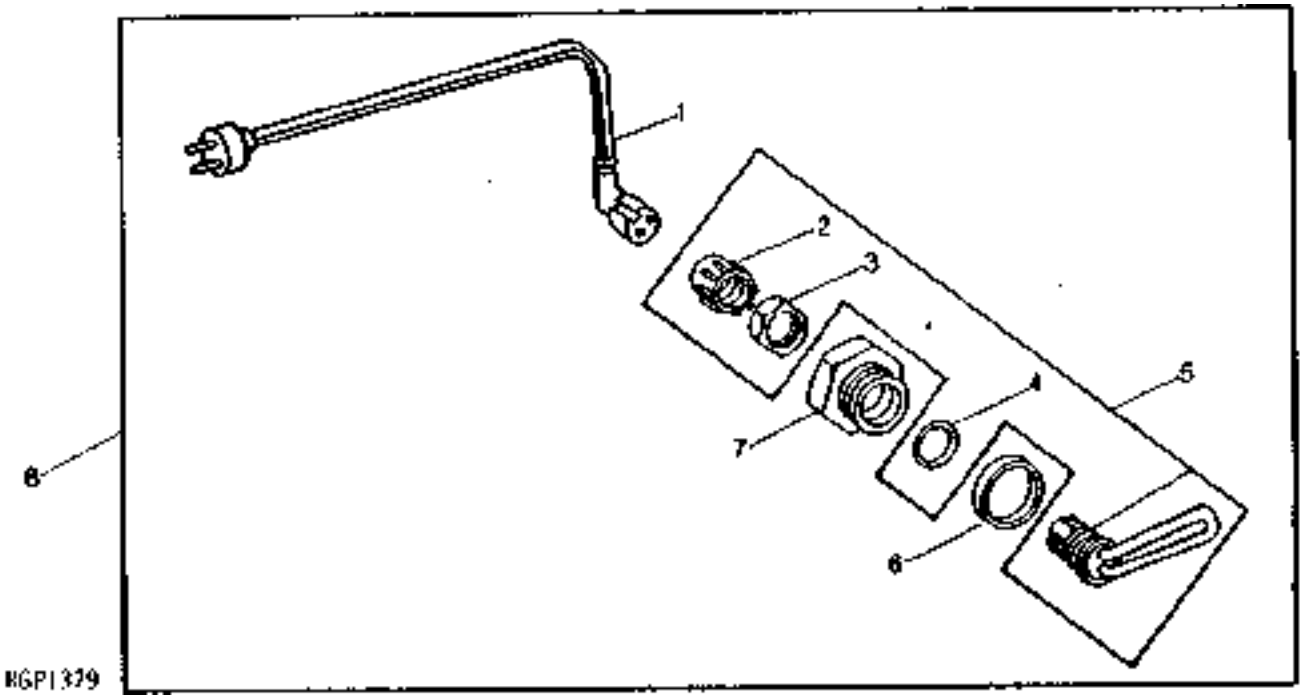

KEY	PART NO.	PART NAME	QTY	ENGINE SERIAL NO.	ALL	REMARKS
1	AR87079	POWER CORD	1		X	
2	R54510	CAP	1		X	(SUB AR103807, THIS APPLICATION)
3	R54511	NUT	1		X	(SUB AR103807, THIS APPLICATION)
4	R47693	GASKET	1		X	
5	AR103807	HEATER	1		X	(220 VOLT)
6	U13639	O-RING	1		X	
7	R54123	ADAPTER	1		X	
8	RE39476	HEATER	1		X	(ORDER COMPONENT PARTS)

https://www.truck-manuals.net/

MEMORANDA
MEMORANDA
MEMORANDA
MEMORANDA
MEMORANDA
MEMORANDA

https://www.truck-manuals.net/

WATER PUMP (6076) (8100,8200,8300 TSN -009999)
POMPE A EAU (6076) (8100,8200,8300 TSN -009999)
WASSERPUMPE (6076) (8100,8200,8300 TSN -009999)
POMPA ACQUA (6076) (8100,8200,8300 TSN -009999)
BOMBA DE AGUA (6076) (8100,8200,8300 TSN -009999)
VATTENPUMP (6076) (8100,8200,8300 TSN -009999)
RGP4070 -UN-01JAN94

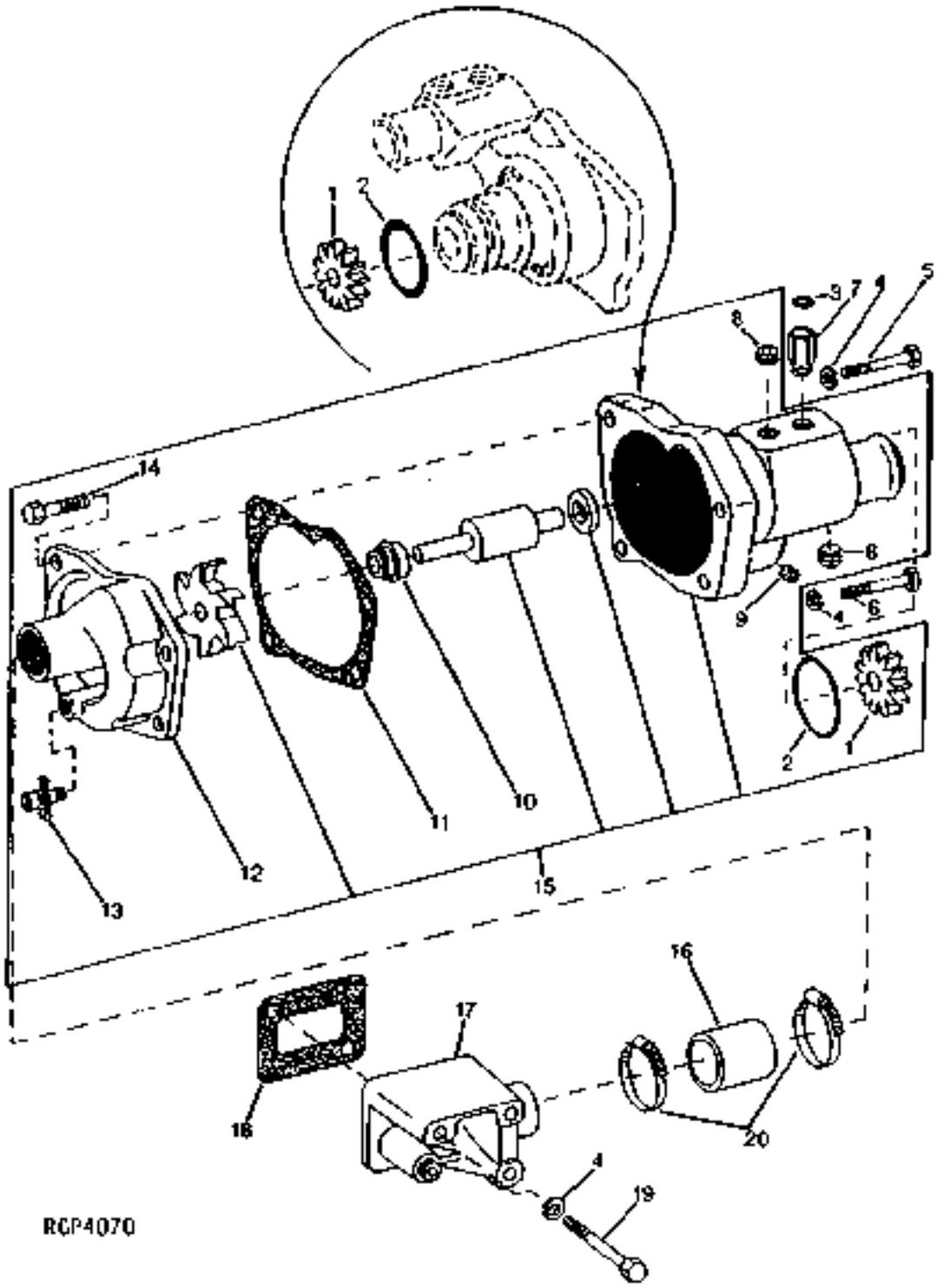

https://www.truck-manuals.net/

KEY	PART NO.	PART NAME	QTY	ENGINE SERIAL NO.	8 8 8 1 2 3 0 0 0 0 0 0	REMARKS
1	R104591	GEAR	1		X X X	
2	R101042	O-RING	1		X X X	
3	R72328	O-RING	1		X X X	
4	12H303	LOCK WASHER	NA		X X X	
5	R112267	CAP SCREW	1		X X X	
6	R104861	CAP SCREW	1		X X X	
7	R41285	ADAPTER	1		X X X	
8	15H624	PIPE PLUG	2		X X X	1/2"
9	R100369	FILTER	2		X X X	
10	RE69839	SEAL	1		X X X	(SUB FOR RE45337) (SUB RE500214 OR RG28370, THIS APPLICATION)
11	R100367	GASKET	1		X X X	
12	R100364	COVER	1		X X X	
13	AT13740	DRAIN VALVE	1		X X X	
14	R112268	CAP SCREW	1		X X X	
15	RE39121	WATER PUMP	1	-557384	X X X	(MARKED RE39121) (SUB RE500214 OR RG28370, THIS APPLICATION)
	RE49540	WATER PUMP	1	557385-XXXXXX	X X X	(MARKED RE49540) (SUB RE500214 OR RG28370, THIS APPLICATION)
	RE68229	WATER PUMP	1	XXXXXX-	X X X	(MARKED RE68229) (SUB RE500214 OR RG28370, THIS APPLICATION)
	RE500214	WATER PUMP	1		X X X	
	RG28370	WATER PUMP	1		X X X	(REMANUFACTURED)
	RE503260	KIT	1		X X X	(REPAIR KIT LOW FLOW PUMP)
16	R96622	HOSE	1		X X X	
17	R96606	COVER	1		X X X	
18	R96616	GASKET	1		X X X	
19	R105732	CAP SCREW	2		X X X	
20	RE67208	CLAMP	2		X X X	(SUB FOR RE43166, THIS APPLICATION)

https://www.truck-manuals.net/

WATER PUMP SEAL KIT (6076) (8100,8200,8300 TSN -009999)
POMPE A EAU/JEU DE JOINTS (6076) (8100,8200,8300 TSN -009999)
WASSERPUMPE/DICHTUNGSSATZ (6076) (8100,8200,8300 TSN -009999)
POMPA DELL'ACQUA/CORREDO DI GUARNIZIONI (6076) (8100,8200,8300 TSN -009999)
BOMBA DE AGUA/JUEGO DE JUNTAS (6076) (8100,8200,8300 TSN -009999)
VATTENPUMP/REPARATIONSSATS (6076) (8100,8200,8300 TSN -009999)
RGP3734 -UN-01JAN94

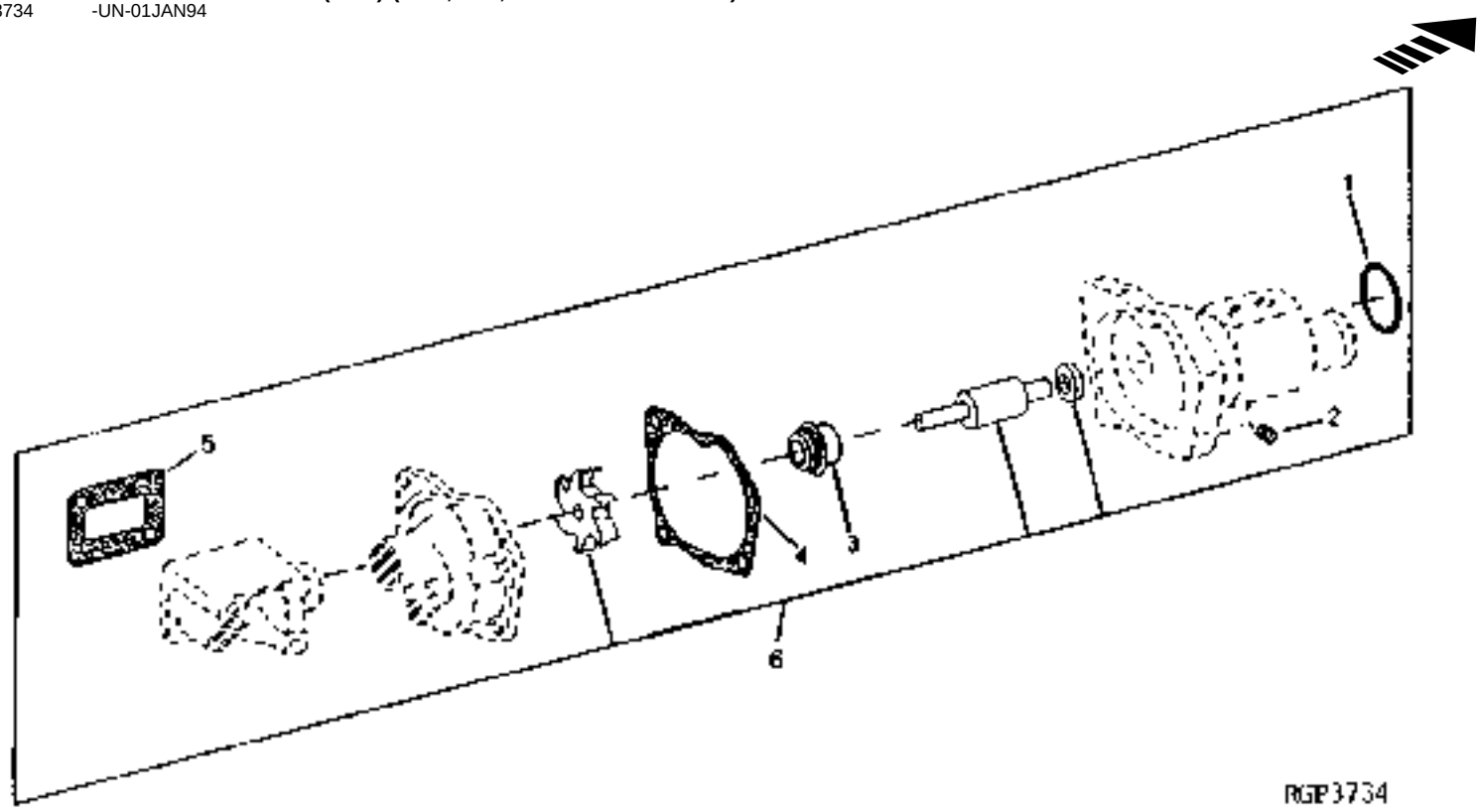

KEY	PART NO.	PART NAME	QTY	ENGINE SERIAL NO.	8 8 8 1 2 3 0 0 0 0 0 0	REMARKS
1	R101042	O-RING	1		X X X	
2	R100369	FILTER	2		X X X	
3	RE69839	SEAL	1		X X X	(SUB FOR RE45337) (SUB RE500214 OR RG28370, THIS APPLICATION)
4	R100367	GASKET	1		X X X	
5	R96616	GASKET	1		X X X	
6	RE58350	KIT	1	-557384	X X X	(USE WITH RE39121) (SUB RE500214 OR RG28370, THIS APPLICATION) (HIGH FLOW)
	RE58356	KIT	1	557385-XXXXXX	X X X	(USE WITH RE49540) (SUB RE500214 OR RG28370, THIS APPLICATION) (LOW FLOW)
	RE68315	KIT	1	XXXXXX-	X X X	(USE WITH RE39121, RE49540 OR RE68229)
	RE500214	WATER PUMP	1	XXXXXX-	X X X	(SUB RE500214 OR RG28370, THIS APPLICATION) (LOW FLOW) (SUB FOR RE68315) (LOW FLOW)

https://www.truck-manuals.net/

WATER MANIFOLD AND THERMOSTAT (6076) (8100,8200,8300 TSN -009999) (ESN -548694)
PIPE D'EAU/THERMOSTAT (6076) (8100,8200,8300 TSN -009999) (ESN -548694)
KUEHLWASSERKRUEMMER/THERMOSTAT (6076) (8100,8200,8300 TSN -009999) (ESN -548694)
COLLETTORE DELL'ACQUA/TERMOSTATO (6076) (8100,8200.8300 TSN -009999)(ESN -548694)
COLECTOR DEL AQUA DE REFRIGERACION/TERMOSTATO (6076)8100,8200,8300 TSN -009999)(ESN-548694)
VATTENMANTEL/TERMOSTAT (6076) (8100,8200,8300 TSN -009999) (ESN -548694)
RGP4300 -UN-01JAN94

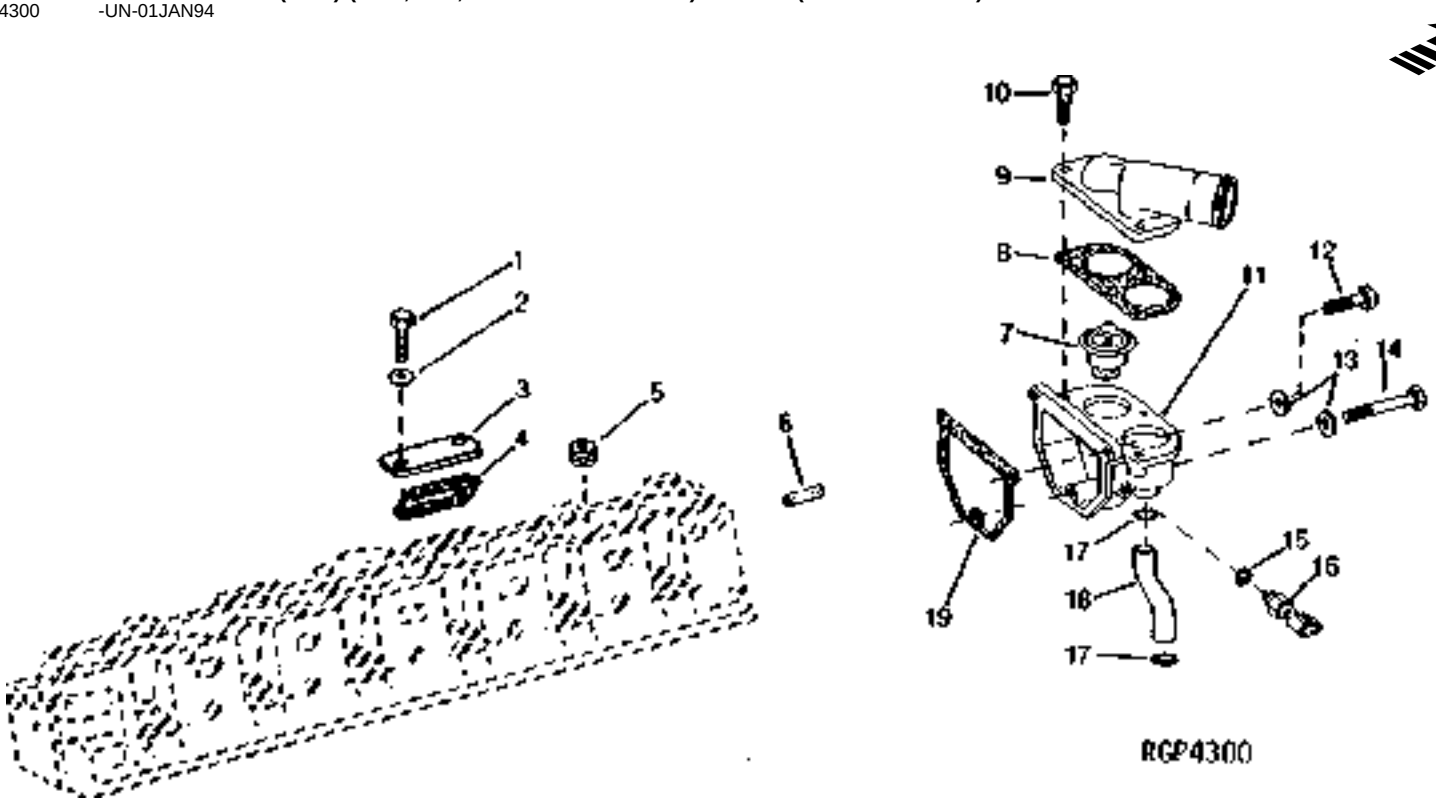

KEY	PART NO.	PART NAME	QTY	ENGINE SERIAL NO.	8 8 8 1 2 3 0 0 0 0 0 0	REMARKS
1	19H2284	CAP SCREW	4		X X X	3/8" X 7/8"
2	24H1305	WASHER	4		X X X	13/32" X 13/16" X 0.065"
3	R86061	STRAP	2		X X X	
4	R88397	GASKET	2		X X X	
5	15H691	PIPE BUSHING	NA		X X X	1/8"
6	34H329	SPRING PIN	1		X X X	5/16" X 1-1/4"
7	AR48675	THERMOSTAT	2		X X X	82°C (180°F)
8	R124607	GASKET	1		X X X	
9	R122196	COVER	1		X X X	
10	19H2284	CAP SCREW	3		X X X	3/8" X 7/8"
11	R122195	HOUSING	1		X X X	
12	19H3483	CAP SCREW	2		X X X	3/8" X 1-1/8"
13	24M7096	WASHER	3		X X X	10.500 X 18 X 1.600 MM
14	19H1819	CAP SCREW	1		X X X	3/8" X 2-1/8"
15	R77673	O-RING	1		X X X	
16	RE151433	WATER TEMPERATURE SENSOR	1		X X X	(SUB FOR RE48073)
17	R72328	O-RING	2		X X X	
18	R121990	TUBE	1		X X X	(SUB R127595)
19	R124211	GASKET	1		X X X	

https://www.truck-manuals.net/

WATER MANIFOLD (6076) (8100,8200,8300 TSN -009999) (ESN 548695-)
PIPE D'EAU/THERMOSTAT (6076) (8100,8200,8300 TSN -009999) (ESN 548695-)
KUEHLWASSERKRUEMMER/THERMOSTAT (6076) (8100,8200,8300 TSN -009999) (ESN 548695-)
COLLETTORE DELL'ACQUA/TERMOSTATO (6076) (8100,8200,8300 TSN -009999) (ESN 548695-)
COLECTOR DEL AGUQ DE REFRIGACION/TERMOSTATO (6076)8100,8200,8300 TSN -009999)(ESN 548695-)
VATTENMANTEL/TERMOSTAT (6076) (8100,8200,8300 TSN -009999) (ESN 548695-)
RGP4606 -UN-14NOV95

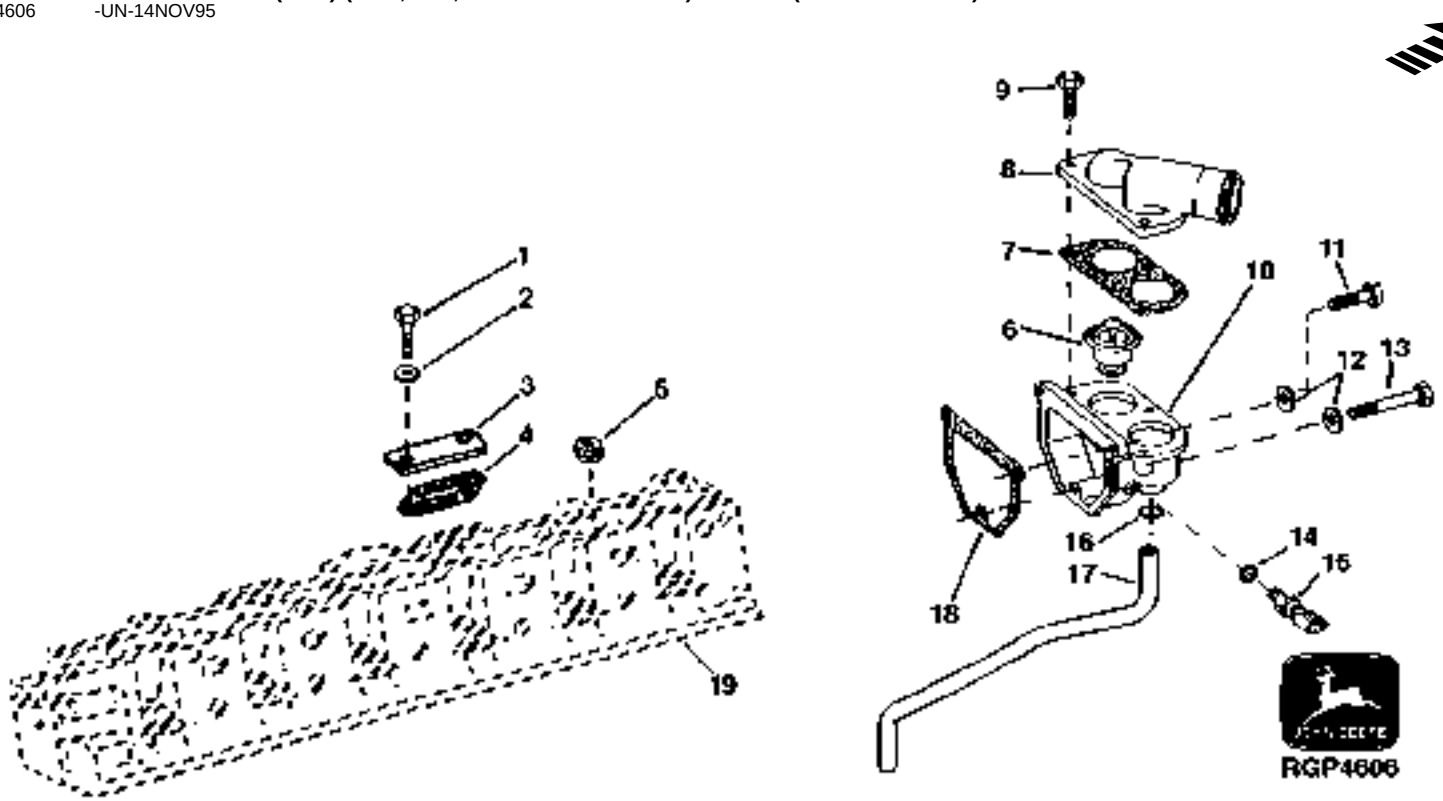

KEY	PART NO.	PART NAME	QTY	ENGINE SERIAL NO.	8 8 8 1 2 3 0 0 0 0 0 0	REMARKS
1	19H2284	CAP SCREW	4		X X X	3/8" X 7/8"
2	24H1305	WASHER	4		X X X	13/32" X 13/16" X 0.065"
3	R86061	STRAP	2		X X X	
4	R88397	GASKET	2		X X X	
5	15H691	PIPE BUSHING	NA		X X X	1/8"
6	AR48675	THERMOSTAT	2		X X X	82°C (180°F)
7	R124607	GASKET	1		X X X	
8	R122196	COVER	1		X X X	
9	19H2284	CAP SCREW	3		X X X	3/8" X 7/8"
10	R122195	HOUSING	1		X X X	
11	19H3483	CAP SCREW	2		X X X	3/8" X 1-1/8"
12	24M7096	WASHER	3		X X X	10.500 X 18 X 1.600 MM
13	19H1819	CAP SCREW	1		X X X	3/8" X 2-1/8"
14	R77673	O-RING	1		X X X	
15	RE151433	WATER TEMPERATURE SENSOR	1		X X X	(SUB FOR RE48073)
16	R72328	O-RING	2		X X X	
17	R127595	TUBE	1		X X X	
18	R124211	GASKET	1		X X X	
19	RE58516	CYLINDER HEAD	1		X X X	
	34H329	SPRING PIN	1		X X X	5/16" X 1-1/4"

https://www.truck-manuals.net/

MEMORANDA
MEMORANDA
MEMORANDA
MEMORANDA
MEMORANDA
MEMORANDA

https://www.truck-manuals.net/

ENGINE GASKET KITS (6076) (8100,8200,8300 TSN -009999)
JEU DE JOINTS MOTEUR (6076) (8100,8200,8300 TSN -009999)
MOTOR-DICHTUNGSSATZ (6076) (8100,8200,8300 TSN -009999)
SERIE GUARNIZIONI MORORE (6076) (8100,8200,8300 TSN -009999)
JUEGO DE JUNTAS PARA EL MOTOR (6076) (8100,8200,8300 TSN -009999)
PACKNINGSSATS FOR MOTOR (6076) (8100,8200,8300 TSN -009999)
RGP4352 -UN-01JAN94

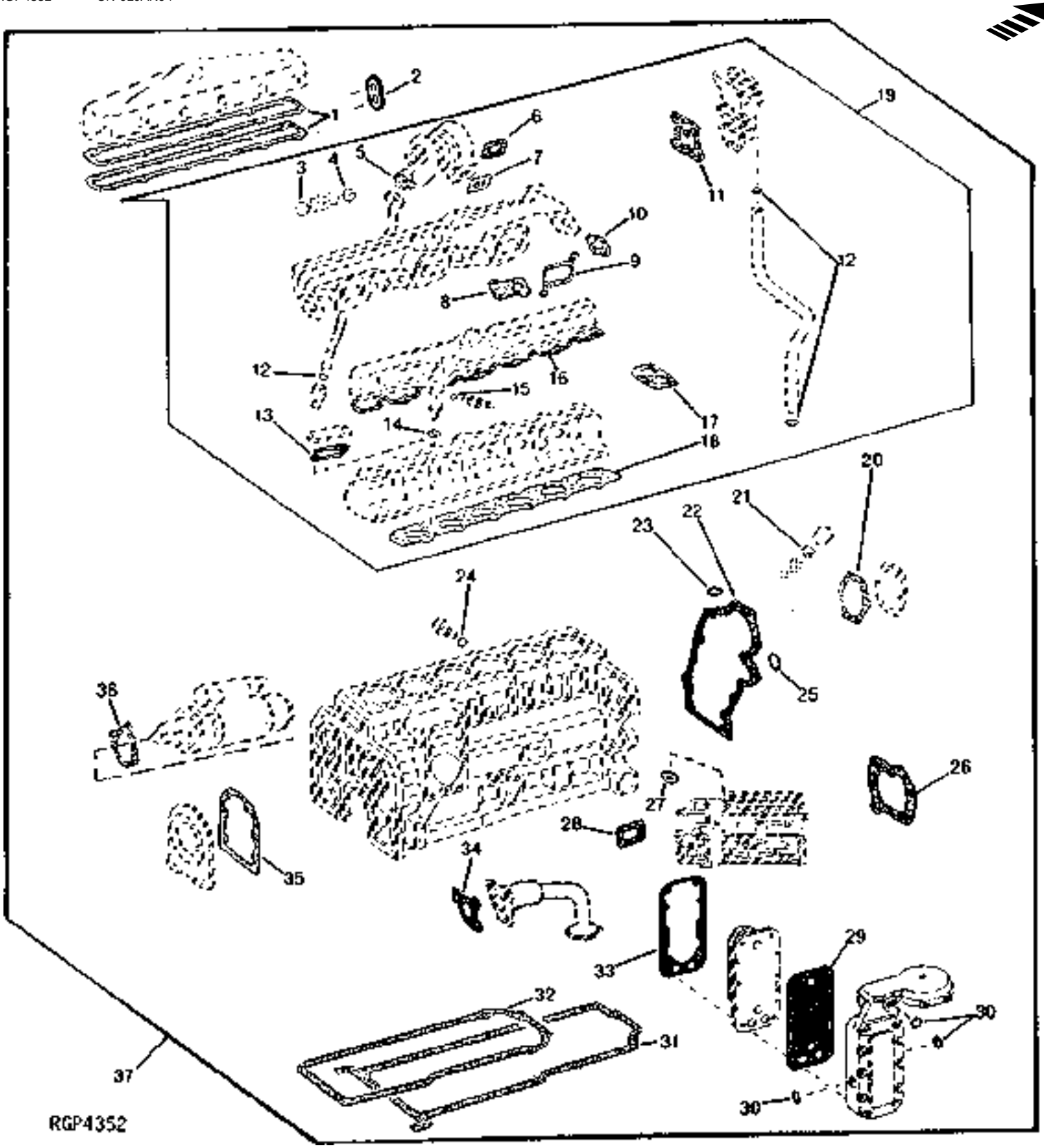

https://www.truck-manuals.net/

KEY	PART NO.	PART NAME	QTY	ENGINE SERIAL NO.	8 8 8 1 2 3 0 0 0 0 0 0	REMARKS
1	R88993	GASKET	NA		X X X	
2	R100911	SEAL	NA		X X X	
3	R50405	O-RING	NA		X X X	
4	R86743	O-RING	NA		X X X	
5	R105346	GASKET	1		X X X	
6	R92097	GASKET	1		X X X	
7	R89879	GASKET	1		X X X	
8	RE62776	GASKET	2		X X X	(SUB FOR R83020 OR R122503, APPL)
9	R120646	GASKET	3		X X X	
10	RE62777	GASKET	2		X X X	(SUB FOR R83021 OR R122504, APPL)
11	R86062	GASKET	1		X X X	
12	R72328	O-RING	2		X X X	
13	R88397	GASKET	2		X X X	
14	R84472	WASHER	6		X X X	
15	R77551	O-RING	6		X X X	
16	R49866	GASKET	1		X X X	
17	R124607	GASKET	1		X X X	(SUB FOR R46479)
18	RE47336	ENGINE CYLINDER HEAD GASKET	1		X X X	
19	RG27880	GASKET KIT	1		X X X	(SUB FOR RE29859 OR RG22248, APPL) CYLINDER HEAD
20	R99464	GASKET	1		X X X	
21	T20328	GASKET	1		X X X	
22	R104623	GASKET	1		X X X	
23	R79915	O-RING	1		X X X	
24	U13639	O-RING	1		X X X	
25	R101042	O-RING	1		X X X	
26	R100367	GASKET	1		X X X	
27	R53899	WASHER	1		X X X	(USE WITH R83490)
	R53901	WASHER	1		X X X	(USE WITH R83489)
28	R96616	GASKET	1		X X X	
29	R94619	GASKET	1	-547515	X X X	(SUB R128558)
	R128558	GASKET	1	547516-	X X X	
30	U17409	O-RING	3		X X X	
31	.....	GASKET	NA		X X X	
32	.....	GASKET	NA		X X X	
33	R94618	GASKET	1	-547515	X X X	(SUB R128557)
	R128557	GASKET	1	547516-	X X X	
34	R100569	GASKET	1		X X X	
35	R26058	GASKET	1		X X X	
36	R53108	GASKET	1		X X X	
37	RG27881	GASKET KIT	1		X X X	(A) ENGINE REBUILD, (SUB FOR RE64206) (ALSO ORDER R124607, AND R124211, APPL)

(A) ALSO ORDER R125855 OIL PAN GASKET, AS REQUIRED.

https://www.truck-manuals.net/

KEY	PART NO.	PART NAME	QTY	ENGINE SERIAL NO.	8100	8200	8300	REMARKS
2	R51936	PACKING	6		X	X	X	
3	RE30920	FUEL LINE	1		X	X	X	
4	R97061	TEE FITTING	1		X	X	X	
5	RE30833	FUEL LINE	1		X	X	X	
6	R91824	FITTING	1		X	X	X	
7	R48693	WASHER	1		X	X	X	
8	RE35684	FUEL LINE	1		X	X	X	
9	R67364	ELBOW FITTING	1		X	X	X	
10	RE57372	FUEL INJECTION PUMP	1	-XXXXXX	X	X	X	(A) (ROBERT BOSCH) (PES6P120A720RS3184)
								(SUB RE63514, R121164 AND (4) R121195)
	RE63514	FUEL INJECTION PUMP	1	XXXXXX-XXXXXX	X	X	X	(A) (ROBERT BOSCH) (PES6P120A720RS3347)
								(SUB RE502259, R121164 AND (4) R121195, THIS APPLICATION)
	RE502259	FUEL INJECTION PUMP	1	XXXXXX-	X	X	X	
11	R104590	GEAR	1	-XXXXXX	X	X	X	(USE WITH RE57372 OR RE63514)
	R121164	GEAR	1	XXXXXX-	X	X	X	(USE WITH RE502259)
12	R63845	WASHER	4	-XXXXXX	X	X	X	(USE WITH RE57372 OR RE63514)
13	19H3690	CAP SCREW	4	-XXXXXX	X	X	X	3/8" X 3/4", (USE WITH RE57372 OR RE63514)
	R121195	CAP SCREW	4	XXXXXX-	X	X	X	(USE WITH RE502259)
14	R114130	STUD	4		X	X	X	(SUB FOR R55396, APPL)
15	M72490	WASHER	4		X	X	X	
16	14H1090	NUT	4		X	X	X	3/8", (SUB FOR E55662, APPL)
17	RE46252	FUEL PUMP	1		X	X	X	
18	R79060	O-RING	1		X	X	X	(SUB FOR R73858)
19	AR88903	ELBOW FITTING	1		X	X	X	
20	R67264	PACKING	2		X	X	X	
21	RE43369	OIL LINE	1		X	X	X	
22	R76822	FITTING	1		X	X	X	
23	RE28217	FUEL TEMPERATURE SENSOR	1		X	X	X	(TEMPERATURE)
24	R89014	SOLENOID	1		X	X	X	(SHUT-OFF HOUSING)
	R99047	O-RING	1		X	X	X	(TO SOLENOID AND PUMP)
	12H296	WASHER	1		X	X	X	(TO SOLENOID)
	14M7297	NUT	1		X	X	X	(TO SOLENOID)
25	R98500	O-RING	1		X	X	X	
26	R53899	WASHER	1		X	X	X	
..	R105388	TIE BAND	2		X	X	X	

(A) "SEE YOUR AUTHORIZED PUMP REPAIR STATION FOR PARTS NOT LISTED"

https://www.truck-manuals.net/

MEMORANDA
MEMORANDA
MEMORANDA
MEMORANDA
MEMORANDA
MEMORANDA

https://www.truck-manuals.net/

CYLINDER HEAD AND VALVES (6081) (8100,8200,8300 TSN 010000-)
CULASSE (6081) (8100,8200,8300 TSN 010000-)
ZYLINDERKOPF (6081) (8100,8200,8300 TSN 010000-)
TESTATA (6081) (8100,8200,8300 TSN 010000-)
CULATA (6081) (8100,8200,8300 TSN 010000-)
CYLINDERTOPP (6081) (8100,8200,8300 TSN 010000-)
RGP4443 -UN-28FEB95

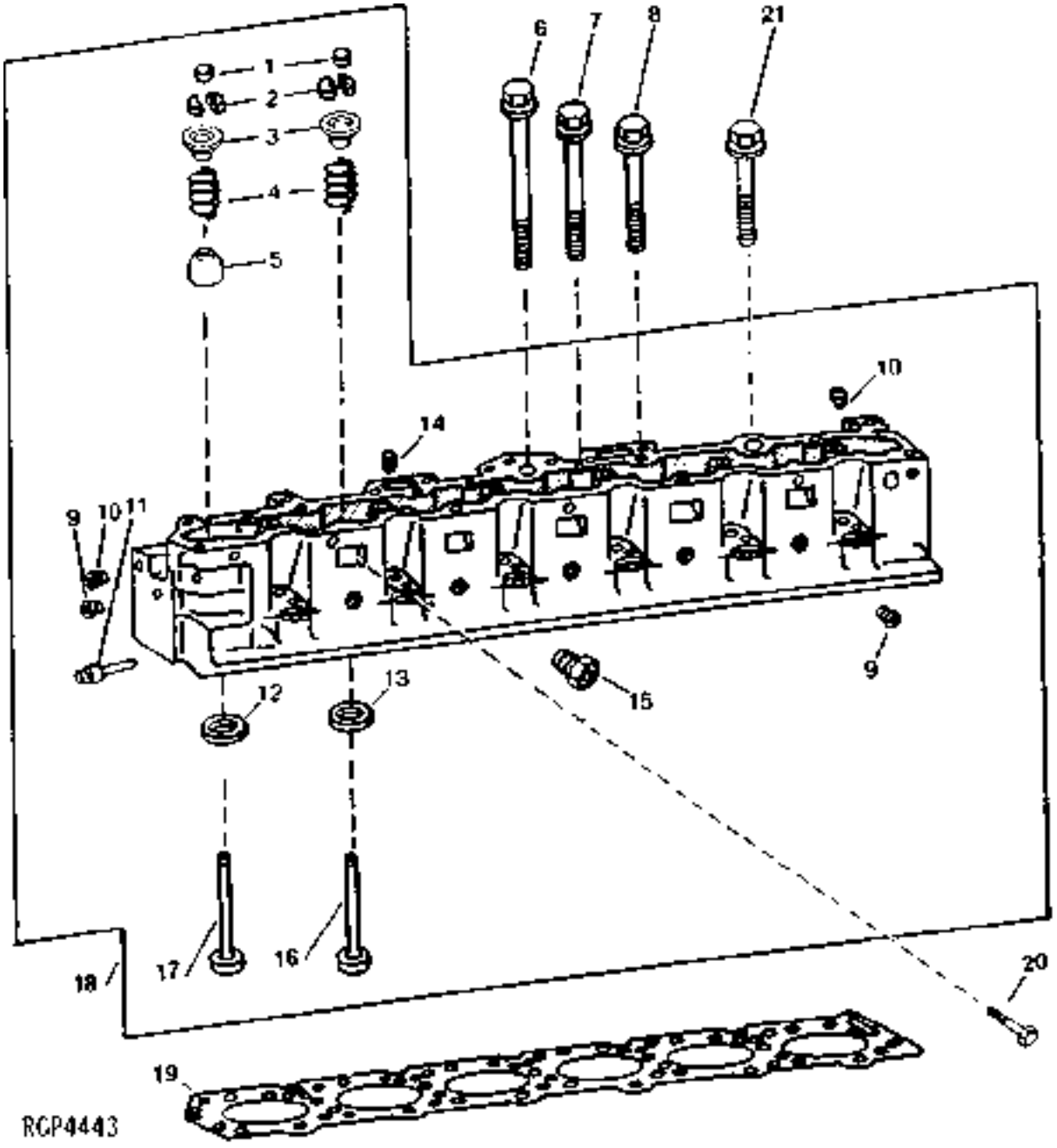

https://www.truck-manuals.net/

KEY	PART NO.	PART NAME	QTY	ENGINE SERIAL NO.	8 8 8 1 2 3 0 0 0 0 0 0	REMARKS
1	T20129	CAP	12		X X X	
2	T20077	RETAINER	24		X X X	
3	R136320	CAP	12		X X X	(SUB FOR R104534)
4	R91822	SPRING	12		X X X	
5	R102882	SHIELD	6		X X X	(EXHAUST VALVES ONLY)
6	R121491	CAP SCREW	7		X X X	203 MM (8.0") (MARKED "SPECIAL")
7	R121490	CAP SCREW	8		X X X	175 MM (6.9") (MARKED "SPECIAL")
8	R121320	CAP SCREW	6		X X X	134 MM (5.3") (MARKED "SPECIAL")
9	15H690	PIPE PLUG	10		X X X	3/4"
10	15H584	PIPE PLUG	2		X X X	1/2"
11	AT107509	PLUG	1		X X X	
12	R119132	VALVE SEAT INSERT	6		X X X	EXHAUST
13	R121193	VALVE SEAT INSERT	6		X X X	INTAKE
14	34H387	SPRING PIN	1		X X X	3/16" X 3/4"
15	R76491	PIPE PLUG	1		X X X	
16	R84618	INTAKE VALVE	6		X X X	STD
	R93308	INTAKE VALVE	AR		X X X	0.08MM (.003") OS
	R93312	INTAKE VALVE	AR		X X X	0.38MM (.015") OS
	R93314	INTAKE VALVE	AR		X X X	0.76MM (.030") OS
17	R84619	EXHAUST VALVE	6		X X X	STD
	R93311	EXHAUST VALVE	AR		X X X	0.08MM (.003") OS
	R93313	EXHAUST VALVE	AR		X X X	0.38MM (.015") OS
	R93315	EXHAUST VALVE	AR		X X X	0.76MM (.030") OS
18	RE57750	CYLINDER HEAD	1		X X X	(MARKED R122419 OR R122492)
19	RE55475	ENGINE CYLINDER HEAD GASKET	1		X X X	
20	19H2367	CAP SCREW	1		X X X	5/8" X 3/4"
21	R121489	CAP SCREW	5		X X X	149 MM (5.9") (MARKED "SPECIAL")
..	RG24026	KIT	1		X X X	(A) (CONTAINS (26) "SPECIAL" HEAD BOLTS)

(A) ALSO CONTAINED IN NEW SHORT BLOCK ASSEMBLY

https://www.truck-manuals.net/

ROCKER ARM COVER (6081) (8100,8200,8300 TSN 010000-)
CULBUTEURS (6081) (8100,8200,8300 TSN 010000-)
ZYLINERKOPFHAUBE (6081) (8100,8200,8300 TSN 010000-)
COPERCHIO BILANCIERI (6081) (8100,8200,8300 TSN 010000-)
TAPA DE BALANCINES (6081) (8100,8200,8300 TSN 010000-)
VENTILKAPA (6081) (8100,8200,8300 TSN 010000-)
RGP4346 -UN-01JAN94

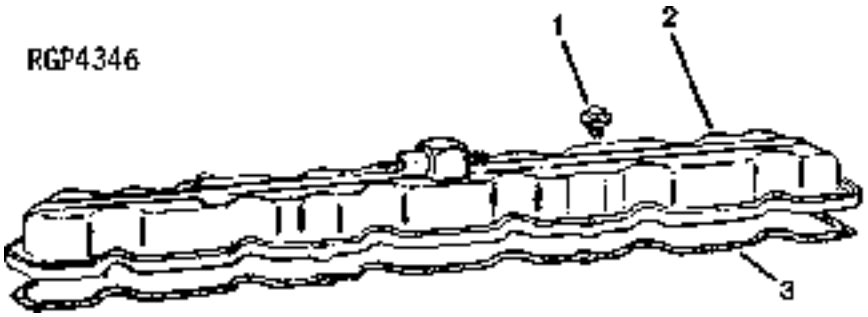

KEY	PART NO.	PART NAME	QTY	ENGINE SERIAL NO.	8100 8200 8300	REMARKS
1	AR100124	SCREW, WITH WASHER	8	-018791	X X X	
2	RE37448	COVER	1	-018791	X X X	
3	R49866	GASKET	1	-018791	X X X	
..	AR31790	ADHESIVE	1	-018791	X X X	(SUB TY24446)
..	TY24446	ADHESIVE	1		X X X	(SUB FOR AR31790)

https://www.truck-manuals.net/

ROCKER ARM COVER (6081) (8100, 8200, 8300 TSN 010000-)
CULBUTEURS (6081) (8100,8200,8300 TSN 010000-)
ZYLINERKOPFHAUBE (6081) (8100,820,8300 TSN 010000-)
COPERCHIO BILANCIERI (6081) (8100,8200,8300 TSN 010000-)
TAPA DE BALANCINES (6081) (8100,8200,8300 TSN 010000-)
VENTILKAPA (6081) (8100,8200, 8300 TSN 010000-)
RGP4885 -UN-13MAY97

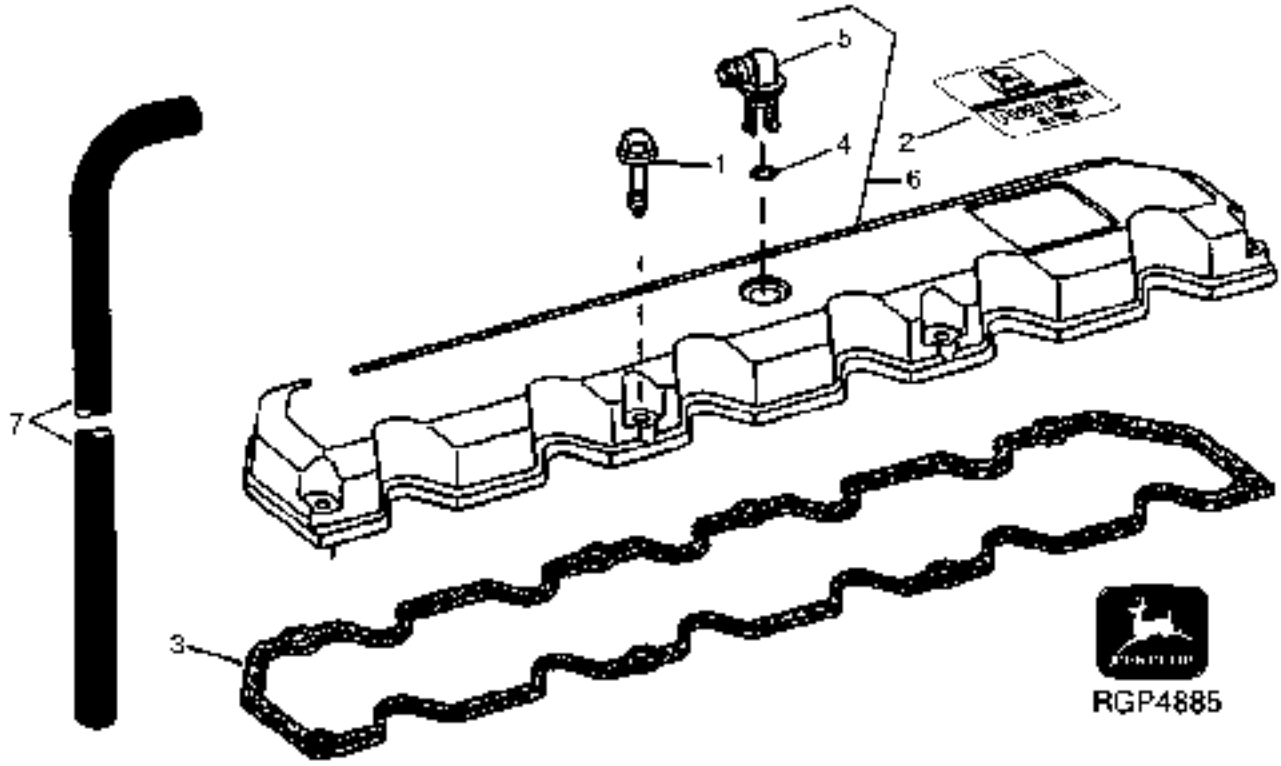

KEY	PART NO.	PART NAME	QTY	ENGINE SERIAL NO.	8 8 8 1 2 3 0 0 0 0 0 0	REMARKS
1	RE57632	SCREW, WITH WASHER	8	018792-	X X X	
2	R116932	MEDALLION	1	018792-	X X X	
3	RE54368	GASKET	1	018792-	X X X	
4	R72328	O-RING	1	018792-	X X X	
5	R120467	ELBOW FITTING	1	018792-	X X X	
6	RE70023	COVER	1	018792-	X X X	
7	R126432	HOSE	1	018792-	X X X	
..	R72659	CLAMP	1	018792-	X X X	

https://www.truck-manuals.net/

MEMORANDA
MEMORANDA
MEMORANDA
MEMORANDA
MEMORANDA
MEMORANDA

https://www.truck-manuals.net/

LIFT STRAPS (6081) (8100,8200,8300 TSN 010000-)
ECLISSES D'APAREIL DE LEVAGE (6081) (8100,8200,8300 TSN 010000-)
HUBSTREBE (6081) (8100,8200,8300 TSN 010000-)
FASCETTE DEL PARANCO (6081) (8100,8200,8300 TSN 010000-)
TIRAS DE ELEVADOR (6081) (8100,8200,8300 TSN 010000-)
MOTORLYFTSFAESTEN (6081) (8100,8200,8300 TSN 010000-)
RGP3009 -UN-01JAN94

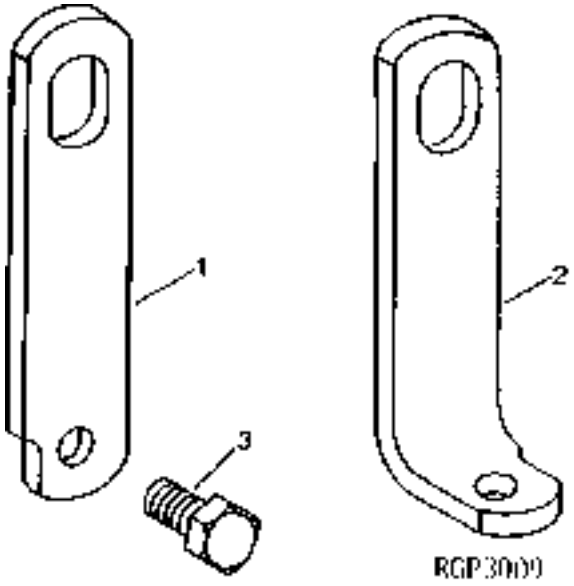

KEY	PART NO.	PART NAME	QTY	ENGINE SERIAL NO.	8 8 8 1 2 3 0 0 0 0 0 0	REMARKS
1	R61497	STRAP	1		X X X	
2	R86571	ANGLE	1		X X X	
3	19H1756	CAP SCREW	2		X X X	5/8" X 1-1/2"

https://www.truck-manuals.net/

ROCKER ARMS, SHAFT AND PUSH RODS (6081) (8100,8200,8300 TSN 010000-)
ARBRES DES CULBUTEURS (6081) (8100,8200,8300 TSN 010000-)
KIPPHEBELWELLE (6081) (8100,8200,8300 TSN 010000-)
ALBERO BILANCIERI (6081) (8100,8200,8300 TSN 010000-)
EJE DE BALANCINES (6081) (8100,8200,8300 TSN 010000-)
VIPPARMSAXEL (6081) (8100,8200,8300 TSN 010000-)
RGP2824 -UN-01JAN94

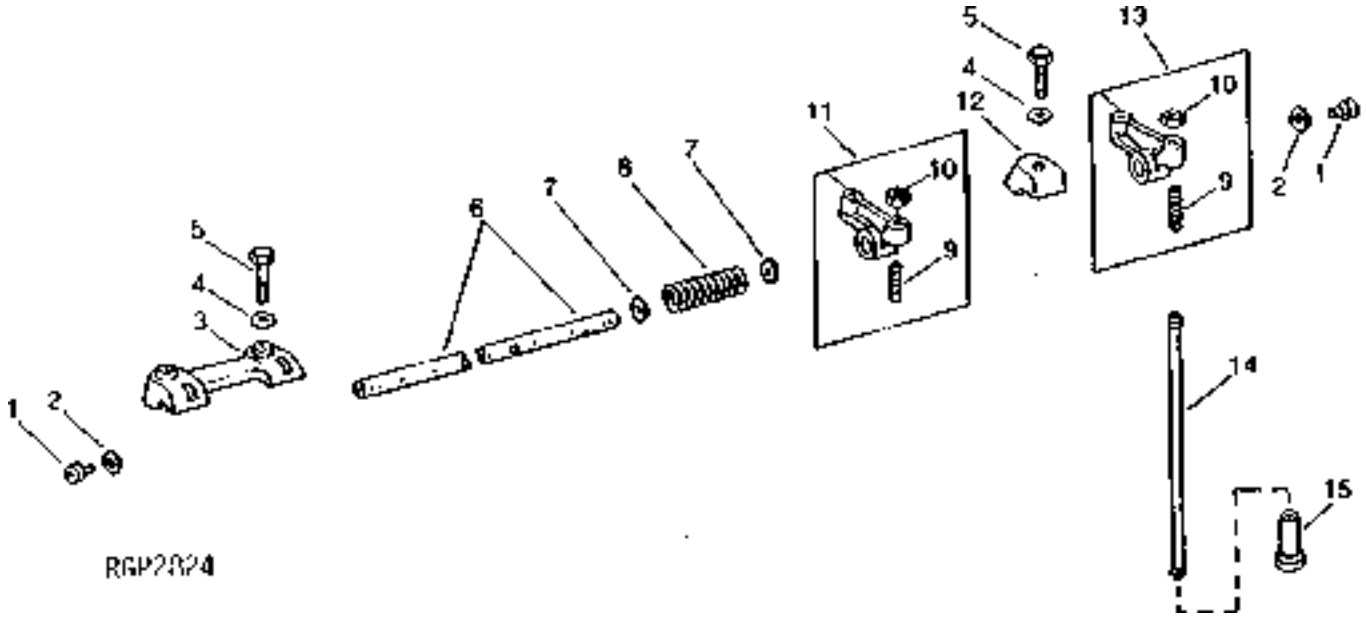

KEY	PART NO.	PART NAME	QTY	ENGINE SERIAL NO.	8 8 8 1 2 3 0 0 0 0 0 0	REMARKS
1	R54565	PLUG	2		X X X	
2	R26081	WASHER	2		X X X	
3	R136083	CLAMP	2		X X X	(SUB FOR R65553)
4	R26559	WASHER	6		X X X	
5	19H1740	CAP SCREW	6		X X X	7/16" X 1-3/4"
6	R70826	ROCKER ARM SHAFT	1		X X X	
7	R71208	WASHER	10		X X X	
8	R26079	SPRING	5		X X X	
9	R27443	SET SCREW	12		X X X	
10	14H1080	NUT	12		X X X	3/8"
11	RE24045	ROCKER ARM	6		X X X	(A) (1E, 2I, 3E, 4I, 5E, 6I) (RH)
12	R26748	CLAMP	2		X X X	
13	RE24046	ROCKER ARM	6		X X X	(A) (1I, 2E, 3I, 4E, 5I, 6E) (LH)
14	R85027	PUSH ROD	12		X X X	
15	R110126	CAM FOLLOWER	12		X X X	

(A) - E (EXHAUST VALVE) - I (INTAKE VALVE)

https://www.truck-manuals.net/

CAMSHAFT AND GEAR (6081) (8100,8200,8300 TSN 010000-)
ARBRE A CAMES (6081) (8100,8200,8300 TSN 010000-)
NOCKENWELLE (6081) (8100,8200,8300 TSN 010000-)
ALBERO A CAMME (6081) (8100,8200,8300 TSN 010000-)
EJE DE LEVAS (6081) (8100,8200,8300 TSN 010000-)
KAMAXEL/VENTILER (6081) (8100,8200,8300 TSN 010000-)
RGP3752 -UN-01JAN94

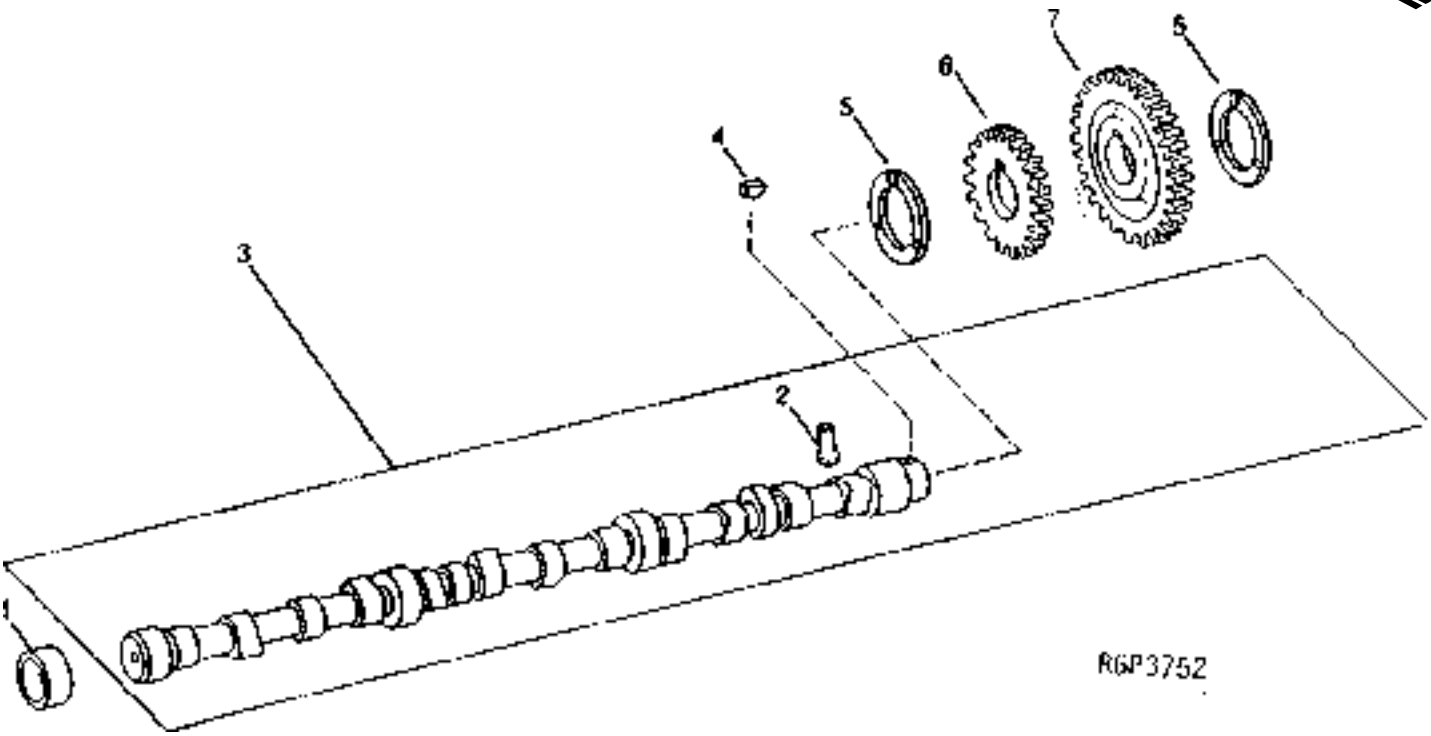

KEY	PART NO.	PART NAME	QTY	ENGINE SERIAL NO.	8 8 8 1 2 3 0 0 0 0 0 0	REMARKS
1	R87561	BUSHING	4		X X X	
2	R110126	CAM FOLLOWER	12		X X X	
3	RE57054	CAMSHAFT	1		X X X	(MARKED R120872)
4	26H91	SHAFT KEY	1		X X X	3/16" X 1-1/4"
5	R104656	THRUST WASHER	2		X X X	
6	R104589	GEAR	1		X X X	
7	R112053	GEAR	1		X X X	

https://www.truck-manuals.net/

CYLINDER BLOCK FITTINGS (6081) (8100,8200,8300 TSN 010000-)
RACCORDS DE BLOC-CYLINDRES (6081) (8100,8200,8300 TSN 010000-)
ZYLINDERBLOCK-FITTINGS (6081) (8100,8200,8300 TSN 010000-)
RACCORDI DEL MONOBLOQIE DE CILANDRO (6081) (8100,8200,8300 TSN 010000-)
CONECTORES DEL BLOQUE DE CILANDRO (6081) (8100,8200,8300 TSN 010000-)
SKRUVFOER BINDNINGAR FOER CYLINDERBLOCK (6081) (8100,8200,8300 TSN 010000-)
RGP4339 -UN-01JAN94

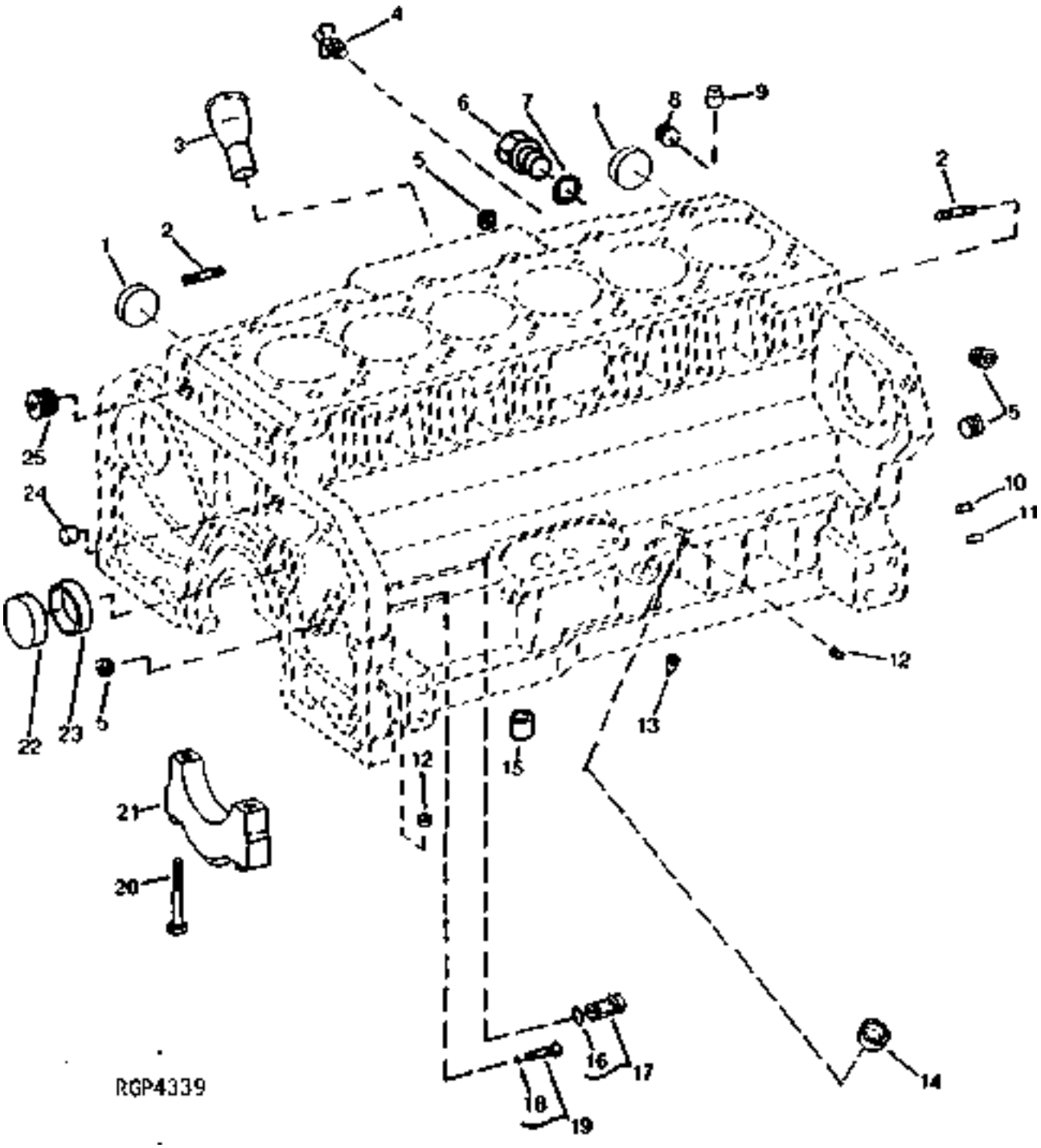

https://www.truck-manuals.net/

KEY	PART NO.	PART NAME	QTY	ENGINE SERIAL NO.	8 8 8 1 2 3 0 0 0 0 0 0	REMARKS
1	R43409	CAP	2		X X X	
2	R114130	STUD	5		X X X	
3	R120864	DIPSTICK TUBE	1		X X X	141.5 MM (5.57")
4	AT13740	DRAIN VALVE	1		X X X	
5	R36599	PLUG	1		X X X	(NOT AS SHOWN)
6	R39741	DRAIN PLUG	1		X X X	
7	U13639	O-RING	1		X X X	
8	15H690	PIPE PLUG	1		X X X	3/4"
9	R42340	BUSHING	2		X X X	
10	R1612R	DOWEL PIN	2		X X X	
11	F1743R	DOWEL PIN	2		X X X	
12	R104592	PIPE PLUG	6		X X X	
13	R43621	ORIFICE	6		X X X	
14	T35390	CAP	1		X X X	
15	R500642	BUSHING	2		X X X	(SUB FOR R62930, THIS APPLICATION)
16	R27149	O-RING	1		X X X	
17	AR61533	PLUG	1		X X X	
18	A4365R	O-RING	1		X X X	
19	AR61589	PLUG	1		X X X	
20	R122364	BOLT	14		X X X	
21	R120953	BEARING CAP	6		X X X	(MAIN)
	R120954	BEARING CAP	1		X X X	(THRUST)
22	R82007	CAP	1		X X X	
23	R87561	BUSHING	4		X X X	
24	R61288	DOWEL PIN	1		X X X	
25	15H562	PIPE PLUG	1		X X X	1"
..	15H686	PIPE PLUG	1		X X X	1", (CYLINDER BLOCK REAR COOLANT OPENING)
..	.....	CYLINDER BLOCK	NA		X X X	(NOT AVAILABLE)
..	15H624	PIPE PLUG	2		X X X	

https://www.truck-manuals.net/

ENGINE SHORT BLOCK (WITH HEAD BOLTS) (6081) (8100,8200,8300 TSN 010000-)
MONTEUR DEPOUILLE POUR RECHANGE (AVEC (26) BOULONS DE CULASSE) (6081) (8100,8200,8300 TSN 010000-
KURZMOTOR (MIT (26) ZYLINDERKOPFSCHRAUBEN) (6081) (8100,8200,8300 TSN 010000-)
MOTORE CORTO (CON (26) VITI DELLA TESTATA) (6081) (8100,8200,8300 TSN 010000-)
MOTOR BASICO (CON (26) PERNOS DE CABEZA) (6081) (8100,8200,8300 TSN 010000-)
KORTMOTOR (MED (26) TOPPLOCKSSKRUVAR) (6081) (8100,8200,8300 TSN 010000-)
RGP4577 -UN-02NOV95

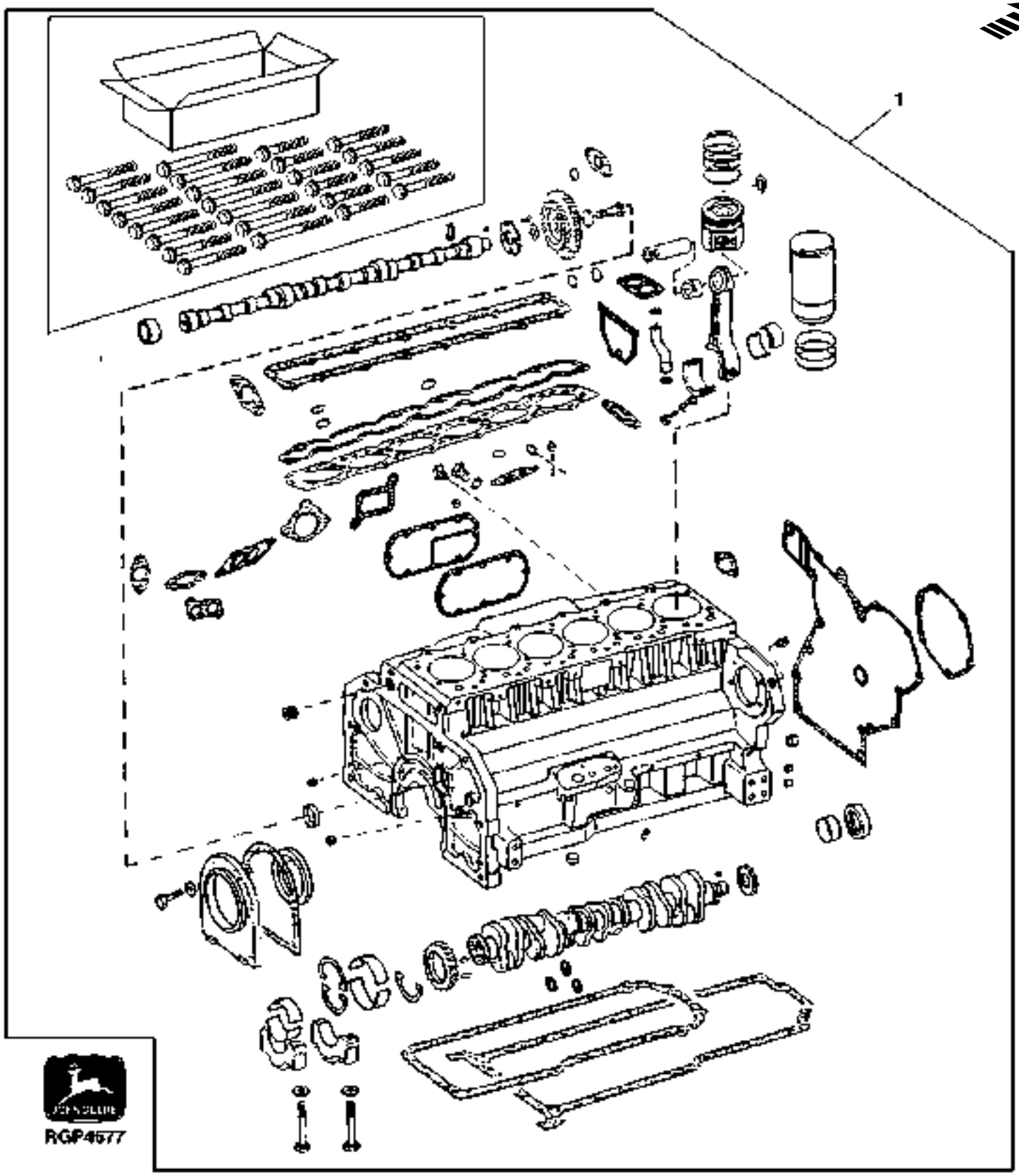

https://www.truck-manuals.net/

KEY	PART NO.	PART NAME	QTY	ENGINE SERIAL NO.	8 8 8 1 2 3 0 0 0 0 0 0	REMARKS
1	RE65049	SHORT BLOCK ASSEMBLY	1		X X X	(MARKED R120032) (ALSO ORDER R125855 AND R120864, APPL)

https://www.truck-manuals.net/

ENGINE OVERHAUL KIT (6081) (8100,8200,8300 TSN 010000-)
JEU POUR LA REVISION DU MOTEUR (6081) (8100,8200,8300 TSN 01000 0-)
MOTOR-UEBERHILSATZ (6081) (8100,8200,8300 TSN 010000-)
KIT DI REVISIONE DEL MOTORE (6081) (8100,8200,8300 TSN 010000-)
CONJUNTO DE RECONDICIONAMIENTO DEL MOTOR (6081) (8100,8200,8300)
MOTOROEVERSYNSSATS (6081) (8100,8200,8300 TSN 010000-)
RGP5031 -UN-11MAY98

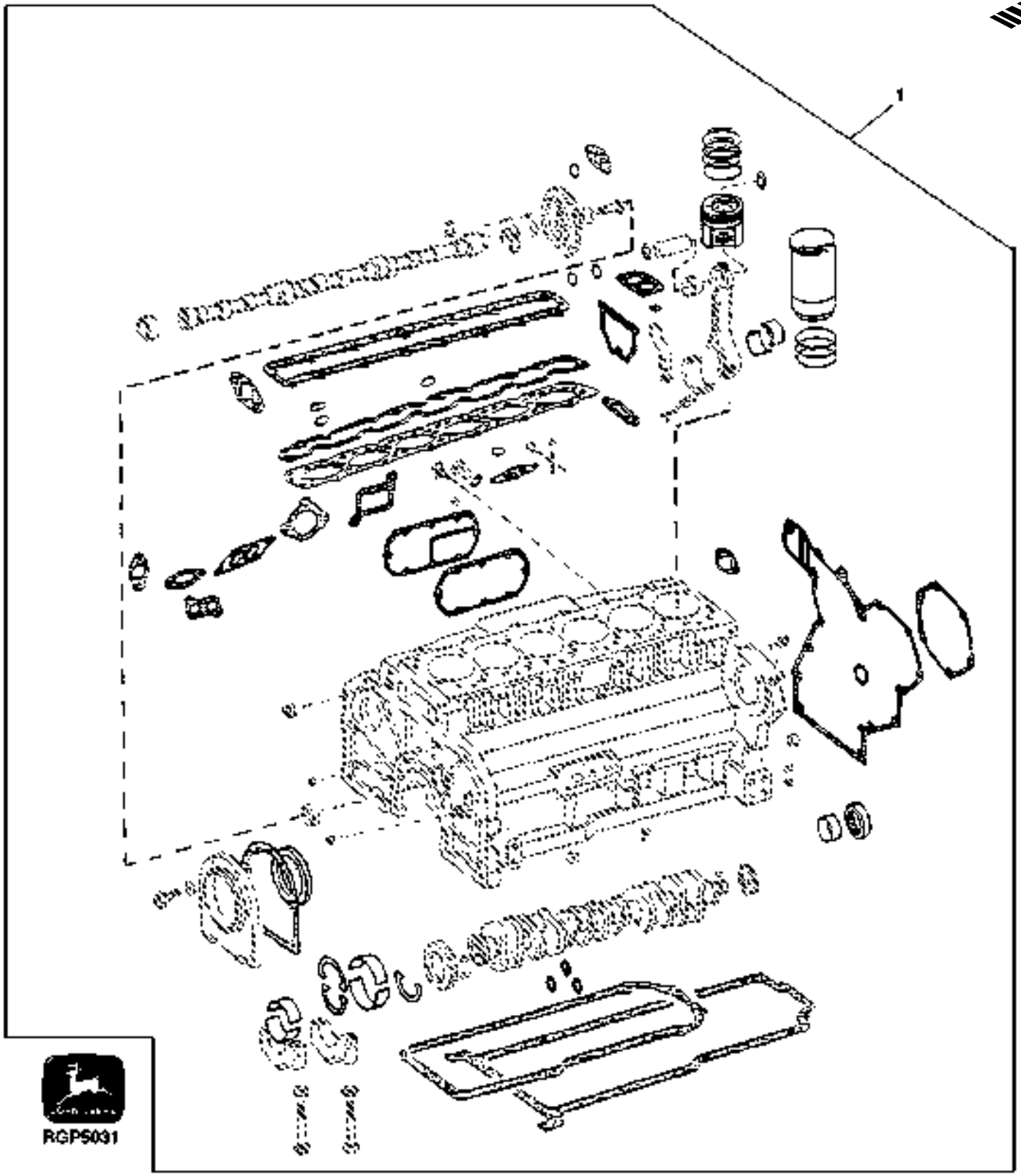

https://www.truck-manuals.net/

KEY	PART NO.	PART NAME	QTY	ENGINE SERIAL NO.	8 8 8 1 2 3 0 0 0 0 0 0	REMARKS
1	RE67677	ENGINE OVERHAUL KIT	1		X X X	(CONTAINS (6) RE64509 PISTON/LINERS, GASKET KIT, STD BEARINGS, FRONT/REAR SEALS, AND SNAP RINGS) (ALSO ORDER R66452 ROD BOLTS) (HIGH COMPRESSION) (ALSO ORDER R125855)

https://www.truck-manuals.net/

OIL PAN (6081) (8100,8200,8300 TSN 010000-)
CARTER D'HUILE (6081) (8100,8200,8300 TSN 010000-)
DELWANNE (6081) (8100,8200,8300 TSN 010000-)
COPPA DELL'OLIO (6081) (8100,8200,8300 TSN 010000-)
CARTER DEL ACEITE (6081) (8100,8200,8300 TSN 010000-)
OLJETRAG (6081) (8100,8200,8300 TSN 010000-)
RGP4886 -UN-13MAY97

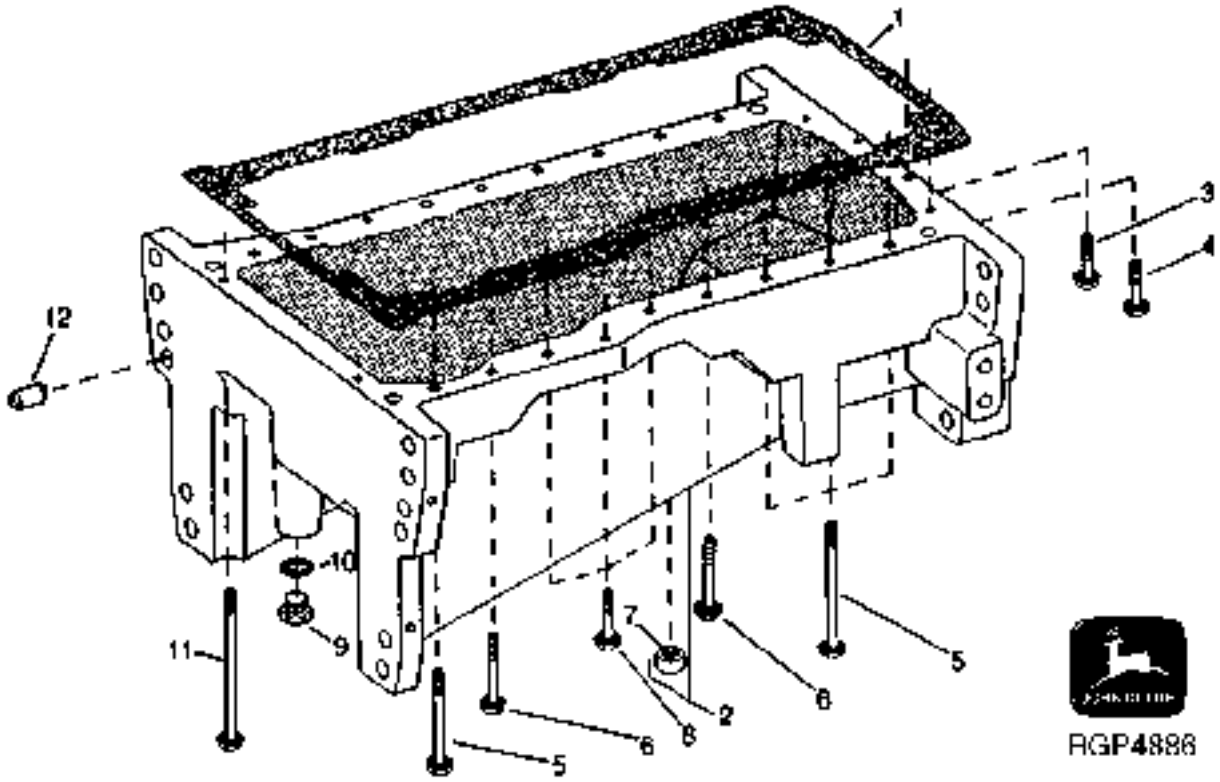

KEY	PART NO.	PART NAME	QTY	ENGINE SERIAL NO.	8 8 8 1 2 3 0 0 0 0 0 0	REMARKS
1	R125855	GASKET	1		X X X	
2	RE71509	OIL PAN	1	-XXXXXX	X X X	(MARKED R136471 OR R107229) (SUB FOR RE50889)
	RE161680	OIL PAN	1	XXXXXX-	X X X	
	19M7963	CAP SCREW	2	XXXXXX-	X X X	
3	R122474	CAP SCREW	2		X X X	.375 X 2.25
4	R121395	CAP SCREW	2		X X X	.375 X 1.875
5	R122477	CAP SCREW	8		X X X	.500 X 6.000
6	R122476	CAP SCREW	4		X X X	.500 X 4.000
7	ET14521	BUSHING	4		X X X	
8	R122475	CAP SCREW	6		X X X	.500 X 2.500
9	R27175	DRAIN PLUG	1		X X X	
10	F3171R	O-RING	1		X X X	
11	R126912	CAP SCREW	2		X X X	.375 X 7.750
12	.....	DOWEL PIN	6		X X X	(SUB RE71509)

https://www.truck-manuals.net/

ENGINE OIL DIPSTICK AND TUBE (6081) (8100,8200,8300 TSN 010000-)
JAUGE A HUILE MOTEUR (6081) (8100,8200,8300 TSN 010000-)
MOTORDELMESSTAB (6081) (8100,8200,8300 TSN 010000-)
ASTINA DE LIVELLO OLIO MOTORE (6081) (8100,8200,8300 TSN 010000-)
ASPILLA PARA MEDIR EL NIVEL DE ACEITE DEL MOTORE (6081) (8100, 8200,8300 TSN 010000-)
MOTORNS OLJETICKA (6081) (8100,8200,8300 TSN 010000-)
RGP4446 -UN-03MAR95

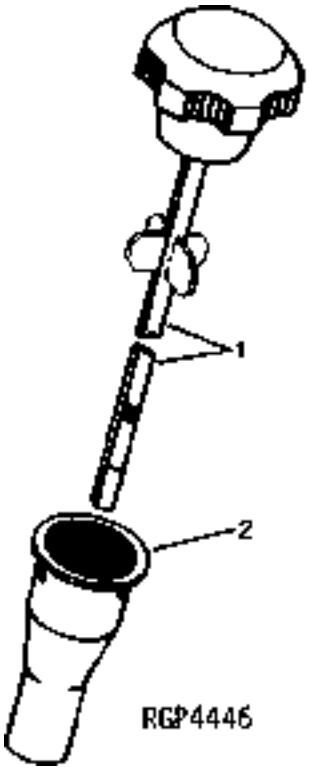

KEY	PART NO.	PART NAME	QTY	ENGINE SERIAL NO.	8 8 8 1 2 3 0 0 0 0 0 0	REMARKS
1	RE500209	DIPSTICK	1		X X X	(6081HRW06,07,08) (SUB FOR RE56493)
2	R120801	DIPSTICK TUBE	1		X	(6081HRW06) 107.5 MM (4.23")
	R121764	DIPSTICK TUBE	1		X	(6081HRW07) 118.5 MM (4.66")
	R121765	DIPSTICK TUBE	1		X	(6081HRW08) 126.0 MM (4.96")

https://www.truck-manuals.net/

CRANKSHAFT PULLEY AND DAMPER (6081) (8100,8200,8300 TSN 010000-)
POULIE DE VILEBREQUIN (6081) (8100,8200,8300 TSN 010000-)
KURBELWELLENRIEMENSCHEIBE (6081) (8100,8200,8300 TSN 010000-)
PULLEGIA DELL'ALBERO A GOMITI (6081) (8100,8200,8300 TSN 010000-)
POLEA DEL CIGUENAL (6081) (8100,8200,8300 TSN 010000-)
VEVAXELREMSKIVA (6081) (8100,8200,8300 TSN 010000-)
RGP4359 -UN-01JAN94

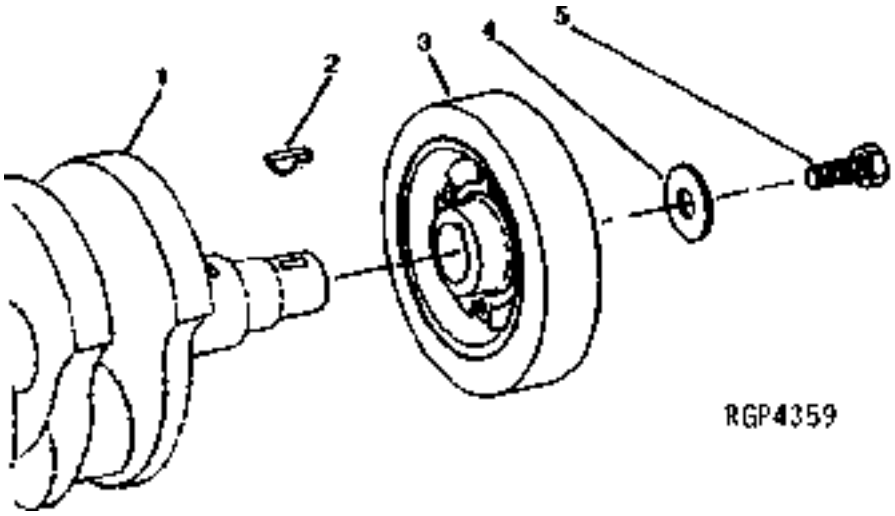

KEY	PART NO.	PART NAME	QTY	ENGINE SERIAL NO.	8100 8200 8300	REMARKS
1	.....	CRANKSHAFT	1		X X X	
2	R116311	KEY	1		X X X	
3	RE57603	TORSIONAL DAMPENER	1	-016632	X X X	(SUB RE24975, APPL)
	RE24975	TORSIONAL DAMPENER	1	016633-	X X X	
4	R26333	WASHER	1		X X X	
5	R79846	CAP SCREW	1		X X X	

https://www.truck-manuals.net/

CRANKSHAFT (6081) (8100,8200,8300 TSN 010000-)
VILEBREQUIN (6081) (8100,8200,8300 TSN 010000-)
KURBELWELLE (6081) (8100,8200,8300 TSN 010000-)
ALBERO A COLLI (6081) (8100,8200,8300 TSN 010000-)
CIGUENAL (6081) (8100,8200,8300 TSN 010000-)
VEVAXEL (6081) (8100,8200,8300 TSN 010000-)
RGP4306 -UN-01JAN94

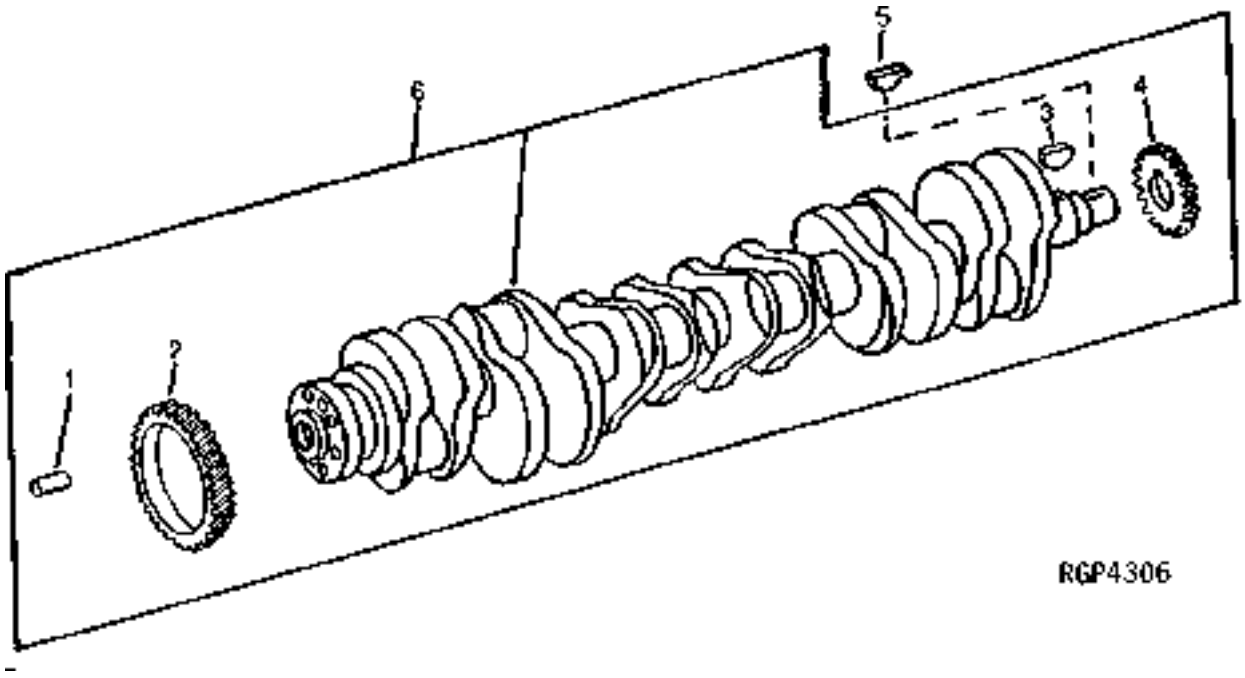

KEY	PART NO.	PART NAME	QTY	ENGINE SERIAL NO.	8 8 8 1 2 3 0 0 0 0 0 0	REMARKS
1	R41934	DOWEL PIN	1		X X X	
2	R63326	GEAR	1		X X X	(SUB RE55522, THIS APPLICATION)
3	R120752	KEY	1		X X X	1/8" X 0.625"
4	R104587	GEAR	1		X X X	
5	R116311	KEY	1		X X X	
6	RE55522	CRANKSHAFT	1		X X X	(MARKED RE55522)

https://www.truck-manuals.net/

UNDERSIZE MAIN BEARING CRANKSHAFT AND BEARING KIT (6081) (TSN 01000-)
JEU DE PALIER POUR VILEBREQUIN SOUS-DIMENSIONNE (6081)
HAUPTLAGERSATZ FUER UNTERGROESSE KURBELWELLE (6081)
KIT CUSCINETTO DI BANCO PER ALBERO A GOMITI MINORATO (6081)
JUEGO DE COJINETES DE BANCADA DE SUBTAMANO (6081)
SATS MED RAMLAGER FOER UNDERDIMENSIONERAD VEVAXEL (6081)
RGP4816 -UN-21OCT96

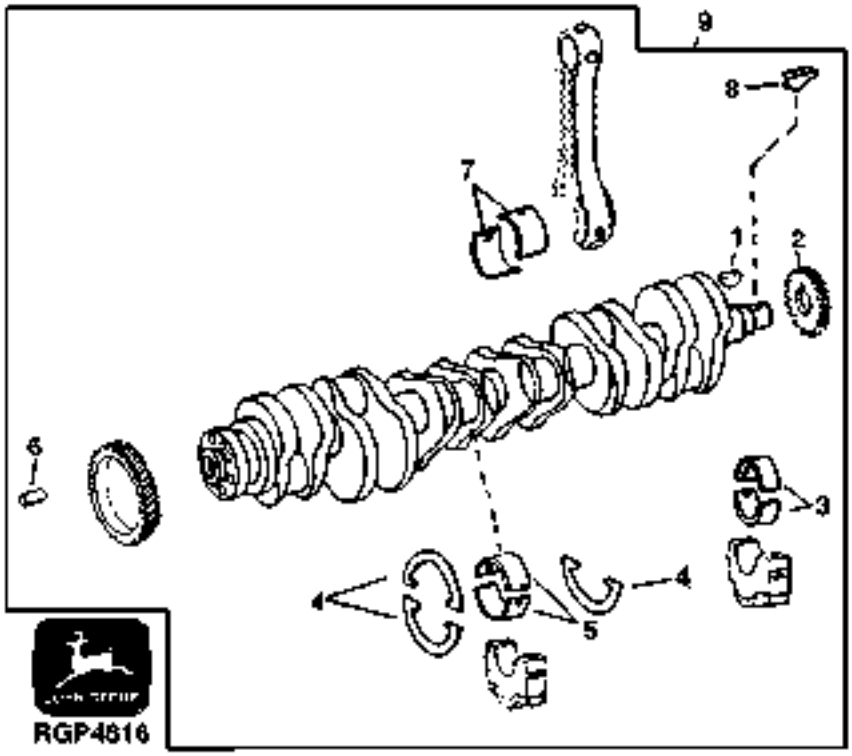

KEY	PART NO.	PART NAME	QTY	ENGINE SERIAL NO.	8 8 8 1 2 3 0 0 0 0 0 0	REMARKS
1	R120752	KEY	1		X X X	1/8" X 0.625"
2	R104587	GEAR	1		X X X	
3	RE57172	BEARING	6		X X X	.292 MM (.011") US (PKG R121342 AND, R121346)
4	RE61851	THRUST WASHER	1		X X X	0.18MM (.007") OS FLANGE (PKG (3) R124842)
5	RE57177	THRUST BEARING	1		X X X	.292 MM (.011") US (PKG R121350 AND, R121354)
6	R41934	DOWEL PIN	1		X X X	
7	R116081	BEARING	6		X X X	STD
8	R116311	KEY	1		X X X	
9	RE61268	CRANKSHAFT	1		X X X	(MARKED R122654 OR RE58781)

https://www.truck-manuals.net/

UNDERSIZE CONNECTING ROD JOURNAL CRANKSHAFT AND BEARING KIT (TSN 010000-)
JEU DE TOURILLON DE BIELLE POUR VILEBREQUIN SOUS-DIMENSIONNE
PLEUELSTANGENZAPFENSATZ FUER UNTERGROESSE KURBELWELLE
KIT PERNI DI BANCO DELLE BIELLE PER ALBERO A GOMITI MINORATO
JUEGO DE MUNONES DE BIELA DE SUBTAMANO
SATS MED VEVSTAKSLAGERGAANG FOER UNDERDIMENSIONERAD VEVAXEL
RGP4816 -UN-21OCT96

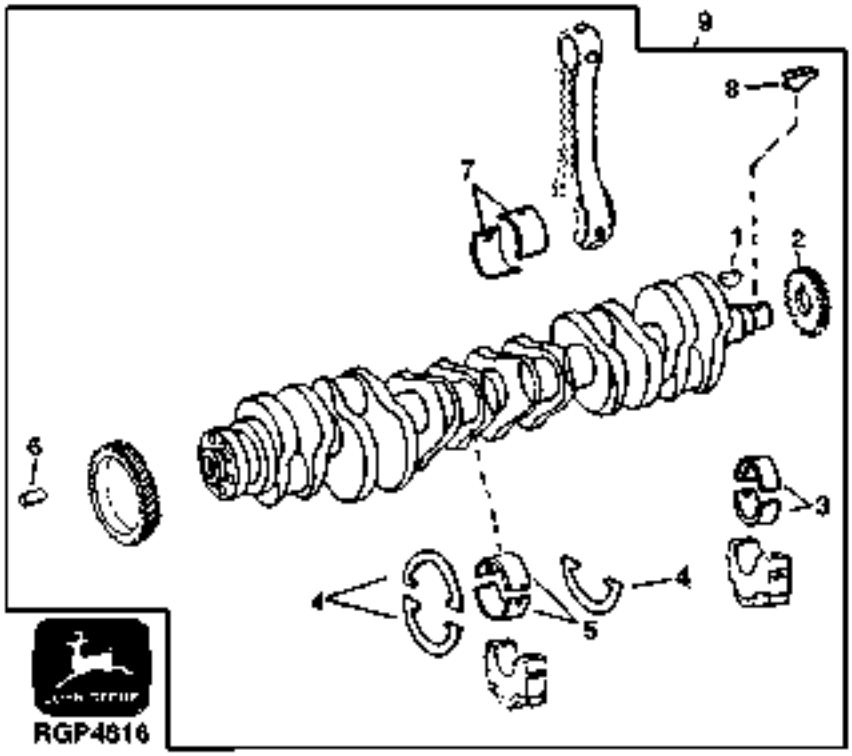

KEY	PART NO.	PART NAME	QTY	ENGINE SERIAL NO.	8 8 8 1 2 3 0 0 0 0 0 0	REMARKS
1	R120752	KEY	1		X X X	
2	R104587	GEAR	1		X X X	
3	RE57170	BEARING	6		X X X	STD
4	RE61253	THRUST WASHER	1		X X X	STD (PKG R116084 AND, R116085)
5	RE57175	THRUST BEARING	1		X X X	STD (PKG R116085)
6	R41934	DOWEL PIN	1		X X X	
7	RE57167	BEARING	6		X X X	.292 MM (.011") US (PKG (2) R121338)
8	R116311	KEY	1		X X X	
9	RE61267	CRANKSHAFT	1		X X X	.292 MM (.011") US, (MARKED RE58780 OR R122653)

https://www.truck-manuals.net/

FLYWHEEL (6081) (8100,8200,8300 TSN 010000-)
VOLANT (6081) (8100,8200,8300 TSN 010000-)
SCHWUNGRAD (6081) (8100,8200,8300 TSN 010000-)
VOLANO (6081) (8100,8200,8300 TSN 010000-)
VOLANTE (6081) (8100,8200,8300 TSN 010000-)
SVANGHJUL (6081) (8100,8200,8300 TSN 010000-)
RGP3073 -UN-01JAN94

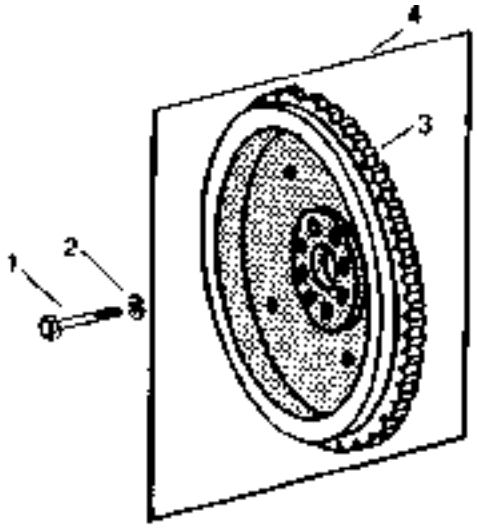

RGP30173

KEY	PART NO.	PART NAME	QTY	ENGINE SERIAL NO.	8 8 8 1 2 3 0 0 0 0 0 0	REMARKS
1	19H3579	CAP SCREW	6		X X X	(SUB FOR R41049 OR R52634 THIS APPLICATION)
2	T23891	WASHER	6		X X X	13.487 X 20.625 X 1.524 MM (17/32" X 13/16" X 0.060")
3	R28811	RING GEAR	1		X X X	
4	RE44632	FLYWHEEL	1		X X X	(MARKED R107339)

https://www.truck-manuals.net/

MAIN AND MAIN THRUST BEARINGS (6081) (8100,8200,8300 TSN 010000-)
PALIERS PRINCIPAUX (6081) (8100,8200,8300 TSN 010000-)
HAUPTLAGER (6081) (8100,8200,8300 TSN 010000-)
CUSCINETTI PRINCIPALLI (6081) (8100,8200,8300 TSN 010000-)
COJINETES DE BANCADA (6081) (8100,8200,8300 TSN 010000-)
RAMLAGER (6081) (8100,8200,8300 TSN 010000-)
RGP1272 -UN-01JAN94

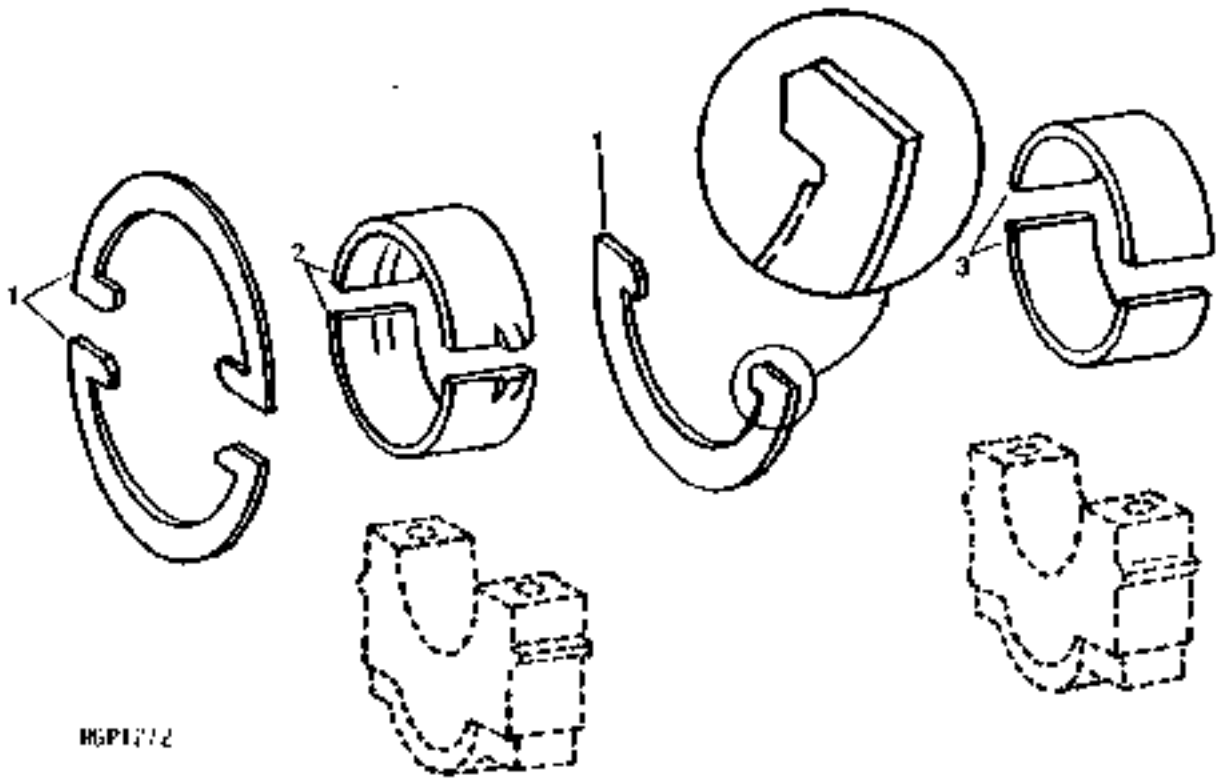

KEY	PART NO.	PART NAME	QTY	ENGINE SERIAL NO.	8 8 8 1 2 3 0 0 0 0 0 0	REMARKS
1	RE61253	THRUST WASHER	1		X X X	STD (PKG (3) R124381)
2	RE57175	THRUST BEARING	1		X X X	STD (PKG R116084 AND R116085)
3	RE57170	BEARING	AR		X X X	STD (PKG R116082 AND R116083)

https://www.truck-manuals.net/

PISTON/CONNECTING RODS/CYLINDER LINER (6081) (8100,8200,8300 TSN 010000-)
PISTON/BIELLE/CHEMISE DE CYLINDRE(6081)(8100,8200,8300 TSN 0100 00-)
KOLBEIN/PLEUELSTANGE/ZYLINDERLAUFBUECHSE(6081)(8100,8200,8300 TSN 010000-)
PISTONE/BIELLA/CAMACIE (6081) (8100,8200,8300 TSN 010000-)
PISTON/BIELA/CAMISA DEL CILANDRO(6081)(8100,8200,8300 TSN 010000-)
KOLV/KOLVSTAKE/CYLINDERFODER (6081) (8100,8200,8300 TSN 010000-)
RGP3595 -UN-01JAN94

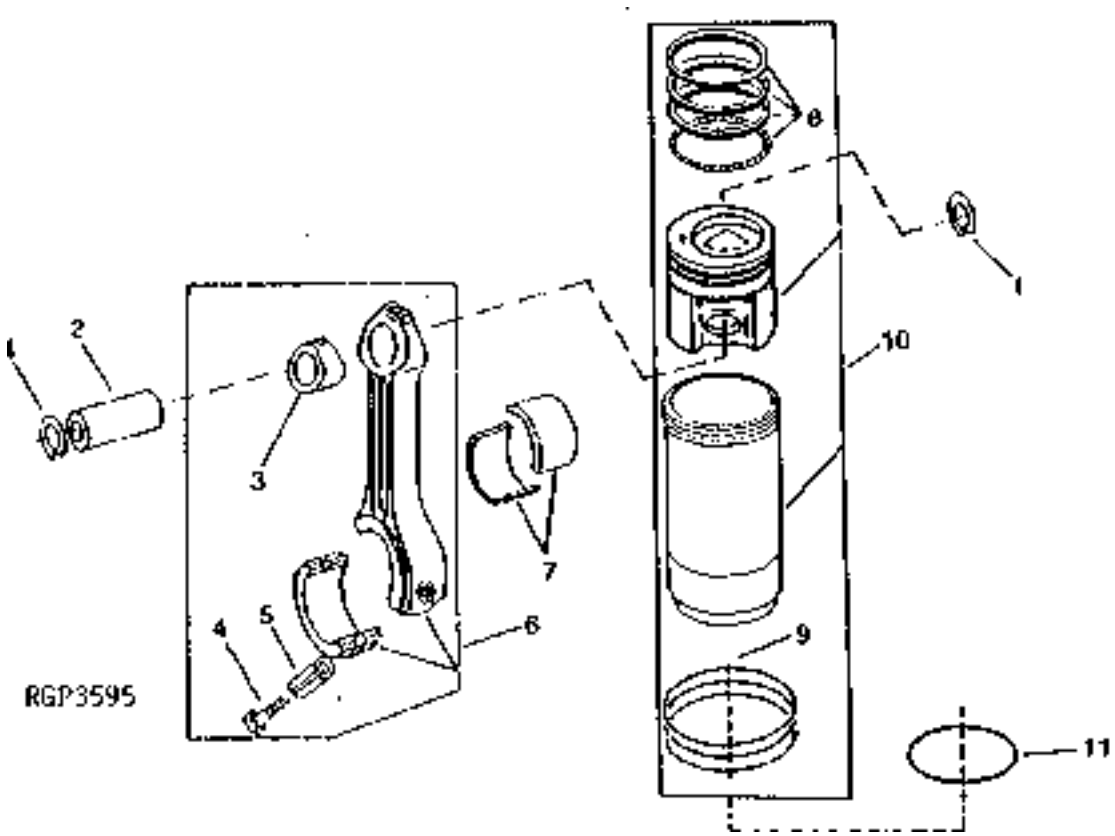

KEY	PART NO.	PART NAME	QTY	ENGINE SERIAL NO.	8 8 8 1 2 3 0 0 0 0 0 0	REMARKS
1	E1343FN	SNAP RING	12		X X X	
2	R57771	PISTON PIN	6		X X X	
3	R74008	BUSHING	6		X X X	
4	R66452	CAP SCREW	12		X X X	
5	R53292	SLEEVE	12		X X X	
6	RE53154	CONNECTING ROD	6		X X X	(MARKED R116340)
7	R116081	BEARING	AR		X X X	STD PKG (2) (SUB FOR RE57165)
8	RE57188	PISTON RING	6		X X X	(USE WITH RE60328 OR RE62640)
9	AR98850	KIT	6		X X X	
10	RE64509	KIT	6		X X X	(MARKED RE53000, RE64170 OR RE65289)
11	R93948	SHIM	2		X X X	TK = 0.05MM (.002") (MAX.)

https://www.truck-manuals.net/

CRANKSHAFT OIL SEAL AND HOUSING (6081) (8100,8200,8300 TSN 010000-)
JOINT A LEVRE ET CARTER DE VILEBREQUIN (6081) (8100,8200,8300 TSN 010000-)
KURBELWELLENDICHTRING UND GEHAEUSE (6081) (8100,8200,8300 TSN 010000-)
ANELLO DI TENUTA E CARCASSA DELL'ABERO A GOMITI (6081) (8100,8200,8300 TSN 010000-)
RETEN Y CARACASA DEL ACEITE CIGUENAL (6081) (8100,8200,8300 TSN 010000-)
VEVAXELNS TAETNINGSRING OCH HUS (6081) (8100,8200,8300 TSN 010000-)
RGP2382 -UN-01JAN94

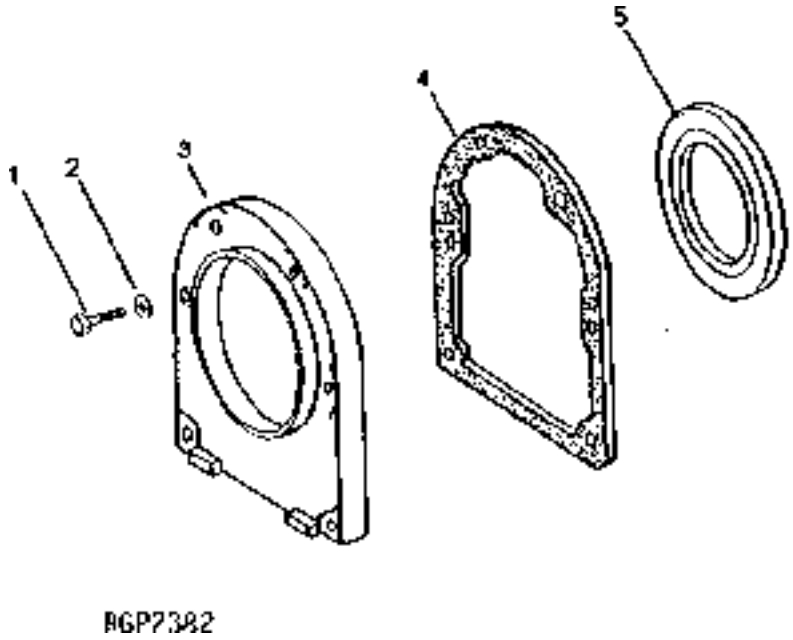

KEY	PART NO.	PART NAME	QTY	ENGINE SERIAL NO.	8 8 8 1 2 3 0 0 0 0 0 0	REMARKS
1	R47074	CAP SCREW	6		X X X	7.925 X 28.448 MM (5/16" X 1.120")
2	T27860	WASHER	6		X X X	11/32" X 11/16" X 0.065"
3	R125027	HOUSING	1		X X X	
4	R26058	GASKET	1		X X X	
5	RE22764	SEAL	1		X X X	

https://www.truck-manuals.net/

TIMING GEAR COVER AND FRONT OIL SEAL (6081) (8100,8200,8300 TSN 010000-)
OUVERCLE DE DISTRIBUTION (6081) (8100,8200,8300 TSN 010000-)
STEUERGEHAEUSE (6081) (8100,8200,8300 TSN 010000-)
COPERCHIO DISTRIBUZIONE (6081) (8100,8200,8300 TSN 010000-)
TAPA DE LA DISTRIBUCION (6081) (8100,8200,8300 TSN 010000-)
TIDHJULSKAPA (6081) (8100, 8200, 8300 TSN 010000-)
RGP4447 -UN-28FEB95

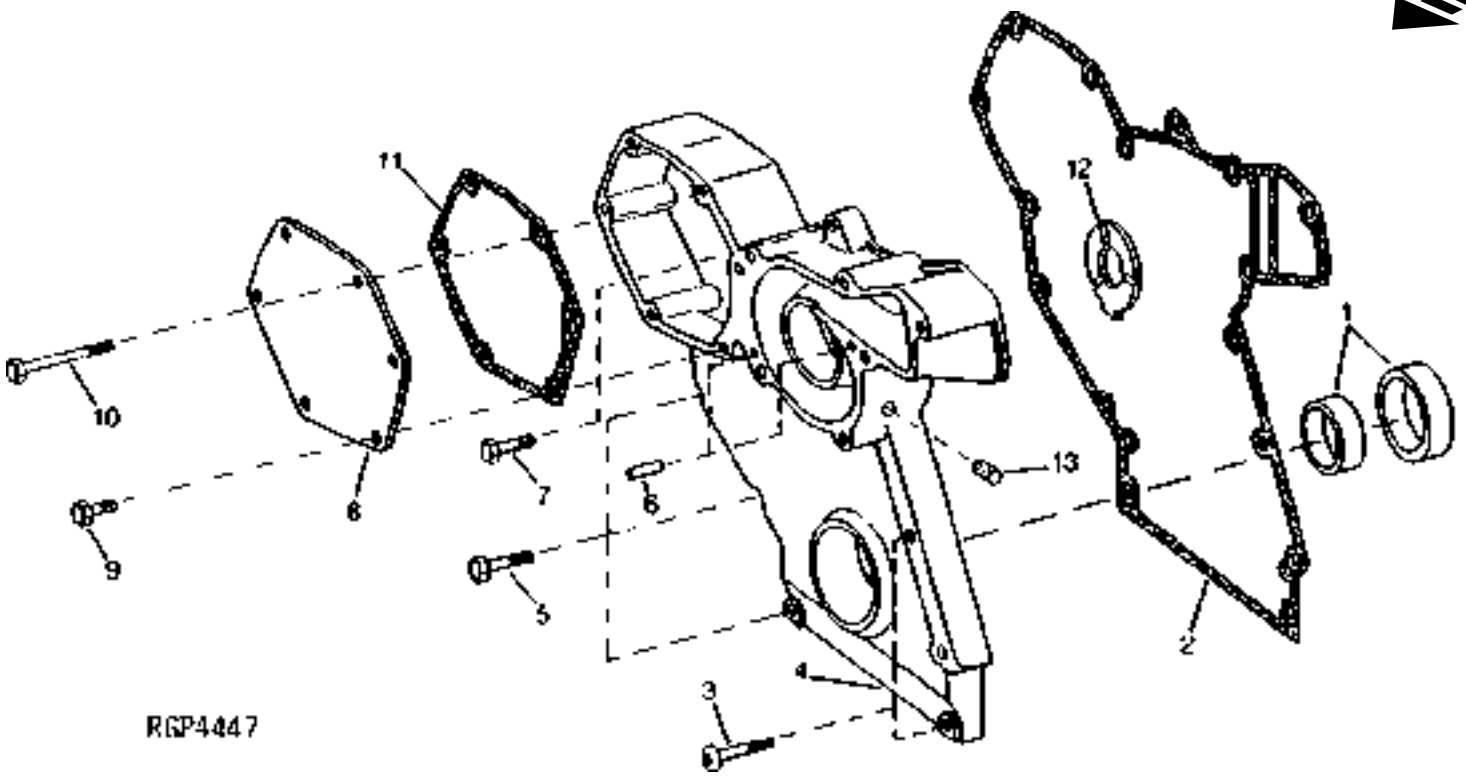

KEY	PART NO.	PART NAME	QTY	ENGINE SERIAL NO.	8 8 8 1 2 3 0 0 0 0 0 0	REMARKS
1	AR49025	SEAL	1		X X X	
2	R119384	GASKET	1		X X X	
3	R115129	CAP SCREW	3		X X X	
4	R119381	COVER	1		X X X	
5	R104859	CAP SCREW	3		X X X	
6	R11086	DOWEL PIN	2		X X X	
7	19H3693	CAP SCREW	1		X X X	3/8" X 1-1/4"
8	R50393	COVER	1		X X X	
9	R112268	CAP SCREW	1		X X X	
10	R104861	CAP SCREW	5		X X X	
11	R50390	GASKET	1		X X X	
12	R104656	THRUST WASHER	1		X X X	
13	R98527	FILTER	1		X X X	

https://www.truck-manuals.net/

MAGNETIC PICK-UP (6081) (8100,8200,8300 TSN 010000-)
OUTIL AIMANTE A MANCHE (6081)(8100,8200,8300 TSN 010000-)
MAGNETISCHER MESSWERTGEBER (6081) (8100,8200,8300 TSN 010000-)
CALAMITA RACCATTAPEZZI (6081) (8100,8200,8300 TSN 010000-)
CAPTADOR MAGNETICO (6081) (8100,8200,8300 TSN 010000-)
MAGNETISK GIVARE (6081) (8100,8200,8300 TSN 010000-)
RGP4360 -UN-01JAN94

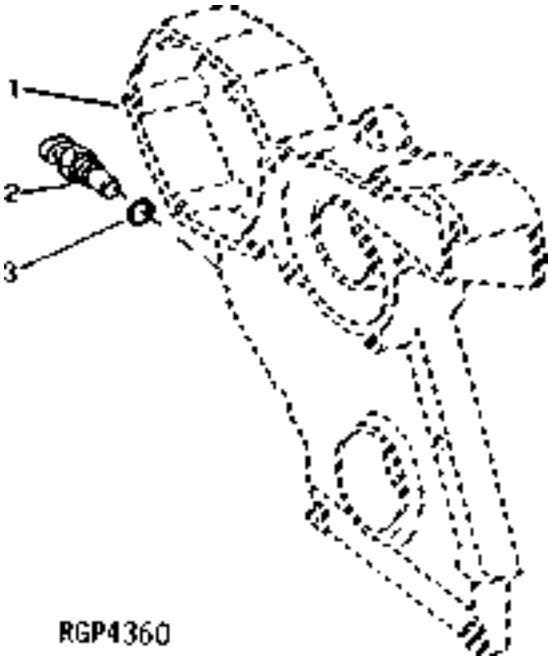

KEY	PART NO.	PART NAME	QTY	ENGINE SERIAL NO.	8 8 8 1 2 3 0 0 0 0 0 0	REMARKS
1	.....	COVER	1		X X X	
2	RE71121	SENSOR	1		X X X	(SUB FOR RE43511)
3	51M7044	O-RING	1		X X X	17.300 X 2.200 MM

https://www.truck-manuals.net/

ENGINE OIL PUMP (6081) (8100,8200,8300 TSN 010000-)
POMPE A HUILE (6081) (8100,8200,8300 TSN 010000-)
OELPUMPE (6081) (8100,8200,8300 TSN 010000-)
POMPA OLIO (6081) (8100,8200,8300 TSN 010000-)
BOMBA DE ACEITE (6081) (8100,8200,8300 TSN 010000-)
OLJEPUMP (6081) (8100,8200,8300 TSN 010000-)
RGP4450 -UN-03MAR95

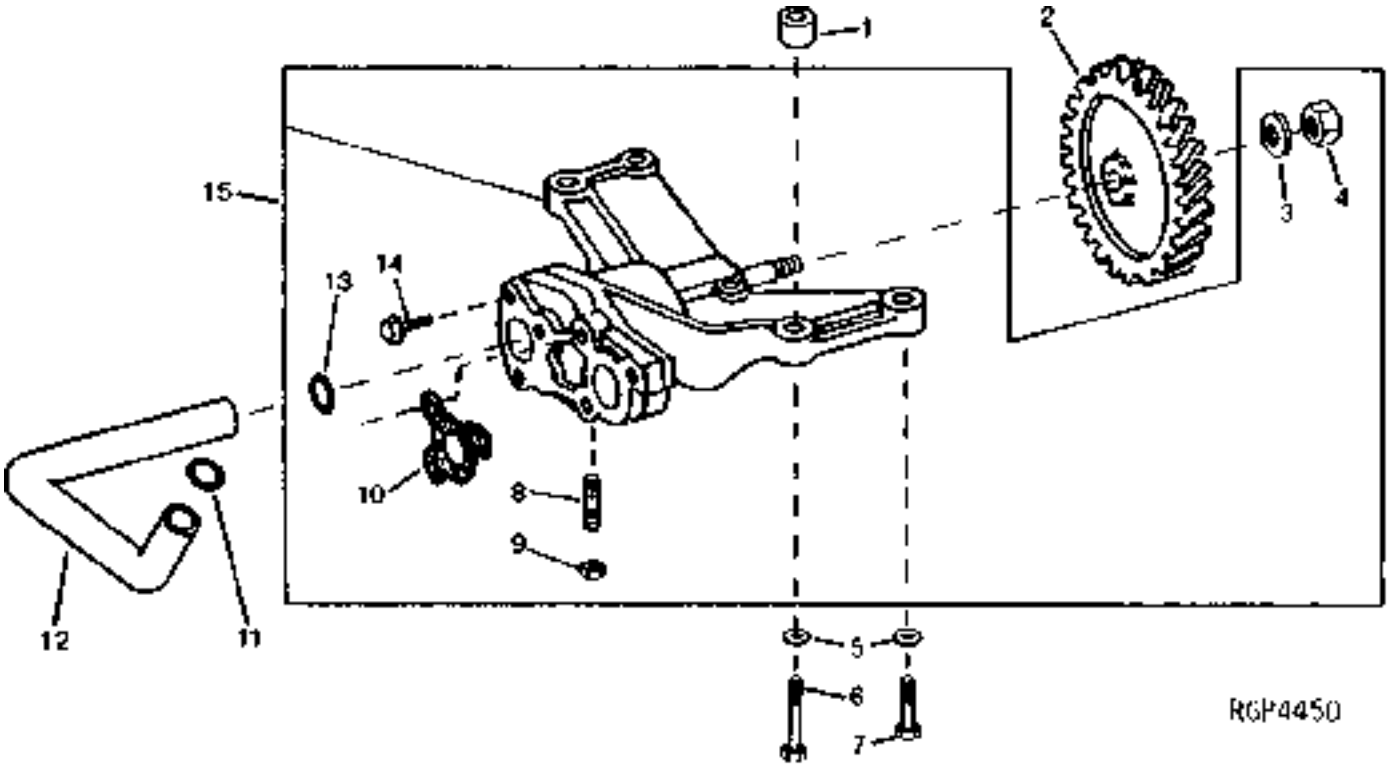

https://www.truck-manuals.net/

KEY	PART NO.	PART NAME	QTY	ENGINE SERIAL NO.	8 8 8 1 2 3 0 0 0 0 0 0	REMARKS
1	R500642	BUSHING	2		X X X	(SUB FOR R62930, THIS APPLICATION)
2	R62938	GEAR	1		X X X	
3	T21242	WASHER	1		X X X	
4	14H826	NUT	1		X X X	1/2"
5	R57696	WASHER	4		X X X	
6	19H2549	CAP SCREW	2		X X X	3/8" X 1-7/8"
7	19H3219	CAP SCREW	2		X X X	3/8" X 1-3/8"
8	22H1040	SET SCREW	1		X X X	5/16" X 1-1/4"
9	14H785	NUT	1		X X X	5/16"
10	R100569	GASKET	1		X X X	
11	R71732	O-RING	1		X X X	
12	R116718	OIL TUBE	1		X X X	
13	R71732	O-RING	1		X X X	
14	R104628	CAP SCREW	5			
	R104628	CAP SCREW	3		X X X	(INTAKE COVER TO HOUSING)
15	RE60622	OIL PUMP	1		X X X	(MARKED R124328)

https://www.truck-manuals.net/

ENGINE OIL PUMP INTAKE (6081) (8100,8200,8300 TSN 010000-)
ADMISSION DE LA POMPE A HUILE MOTEUR (6081) (8100,8200,8300 TSN 010000-)
MOTOROELPUMPENEINLASS (6081) (8100,8200,8300 TSN 010000-)
ASPIRAZIONE DELLA POMPA DELL'OLIO DEL MOTORE (6081) (8100,8200 8300 TSN 010000-)
ADMISION DE LA BOMBA DE ACEITE DEL MOTOR (6081) (8100,8200,8300 TSN 010000-)
MOTOROLJEPIMP, INSUGNING (6081) (8100,8200,8300 TSN 010000-)
RGP3629 -UN-01JAN94

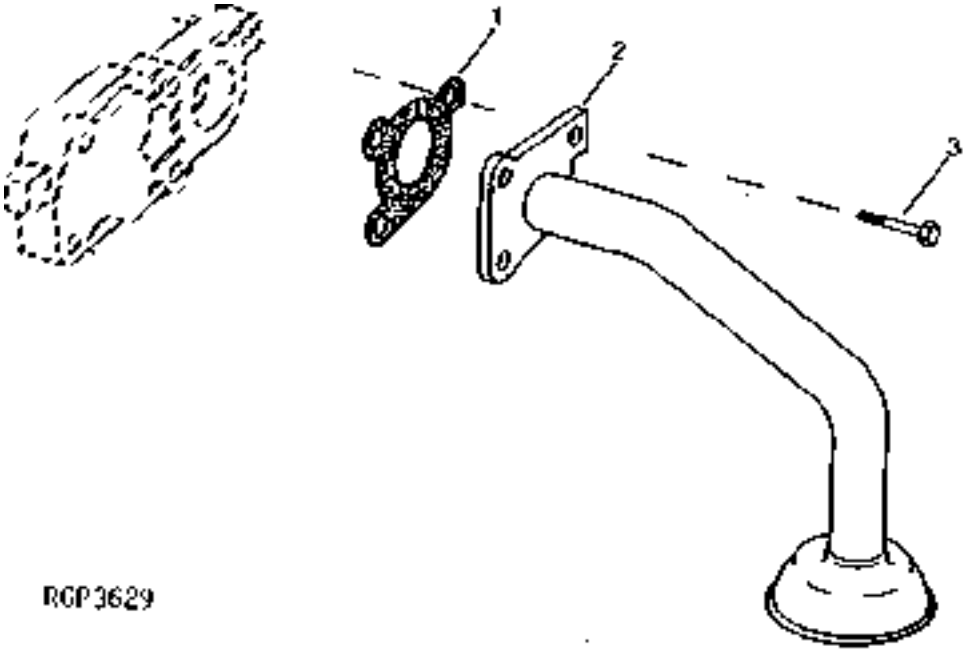

KEY	PART NO.	PART NAME	QTY	ENGINE SERIAL NO.	8 8 8 1 2 3 0 0 0 0 0 0	REMARKS
1	R100569	GASKET	1		X X X	
2	RE60546	OIL PUMP INTAKE	1		X X X	
3	R104628	CAP SCREW	3		X X X	

https://www.truck-manuals.net/

ENGINE OIL COOLER BYPASS TUBES AND ADAPTER (6081) (8100,8200,8300 TSN 010000-)
BY-PASS DE REFROIDISSEUR (6081) (8100,8200,8300 TSN 010000-)
OELKUEHLER-UMGEHUNGSVENTL (6081) (8100,8200,8300 TSN 010000-)
VALVOLA BY-PASS PER REFFREDDATORE OLIO (6081) (8100,8200,8300 TSN 010000-)
VALVULA DE DERIVACION DEL RADIADOR (6081) (8100,8200,8300 TSN 010000-)
OLJEKYLARENS FORBISTROMNINGSVENTIL (6081) (8100,8200,8300 TSN 010000-)
RGP4343 -UN-01JAN94

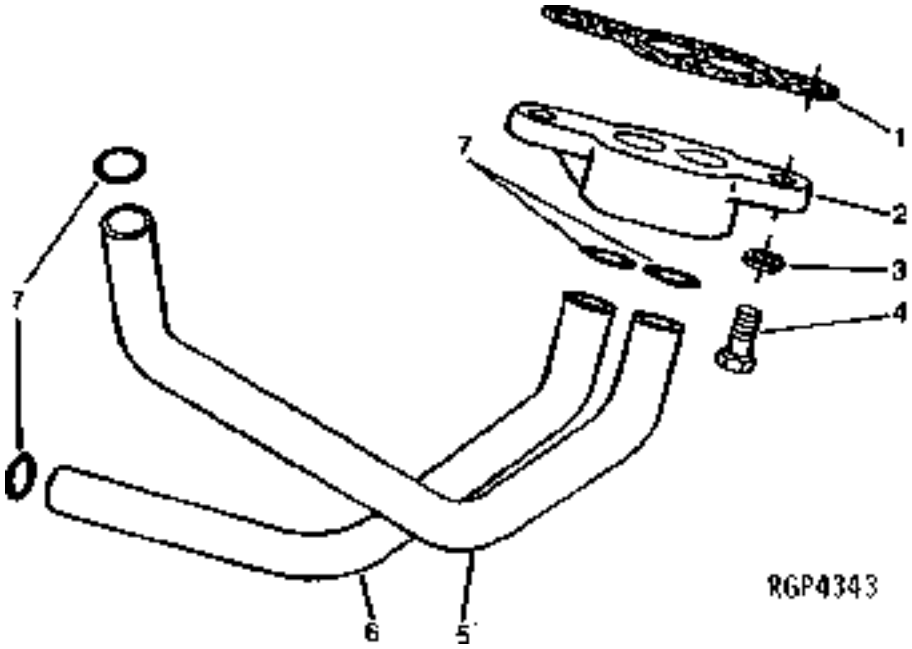

KEY	PART NO.	PART NAME	QTY	ENGINE SERIAL NO.	8 8 8 1 2 3 0 0 0 0 0 0	REMARKS
1	R109625	GASKET	1		X X X	
2	R116233	ADAPTER	1		X X X	
3	24M7096	WASHER	2		X X X	10.500 X 18 X 1.600 MM
4	R40236	CAP SCREW	2		X X X	
5	R126337	OIL TUBE	1		X X X	
6	R116718	OIL TUBE	1		X X X	
7	R71732	O-RING	4		X X X	

https://www.truck-manuals.net/

ENGINE OIL COOLER (8100, 8200, 8300 TSN 010000-)
REFROIDISSEUR D'HUILE MOTEUR (8400)
MOTOR-OELKUELER (8400)
RAFFREDDATORE OLIO MOTORE (8400)
REFRIGERADOR DEL ACEITE DEL MOTOR (8400)
MOTOROLJEKYLARE (8400)
RGP4342 -UN-01JAN94

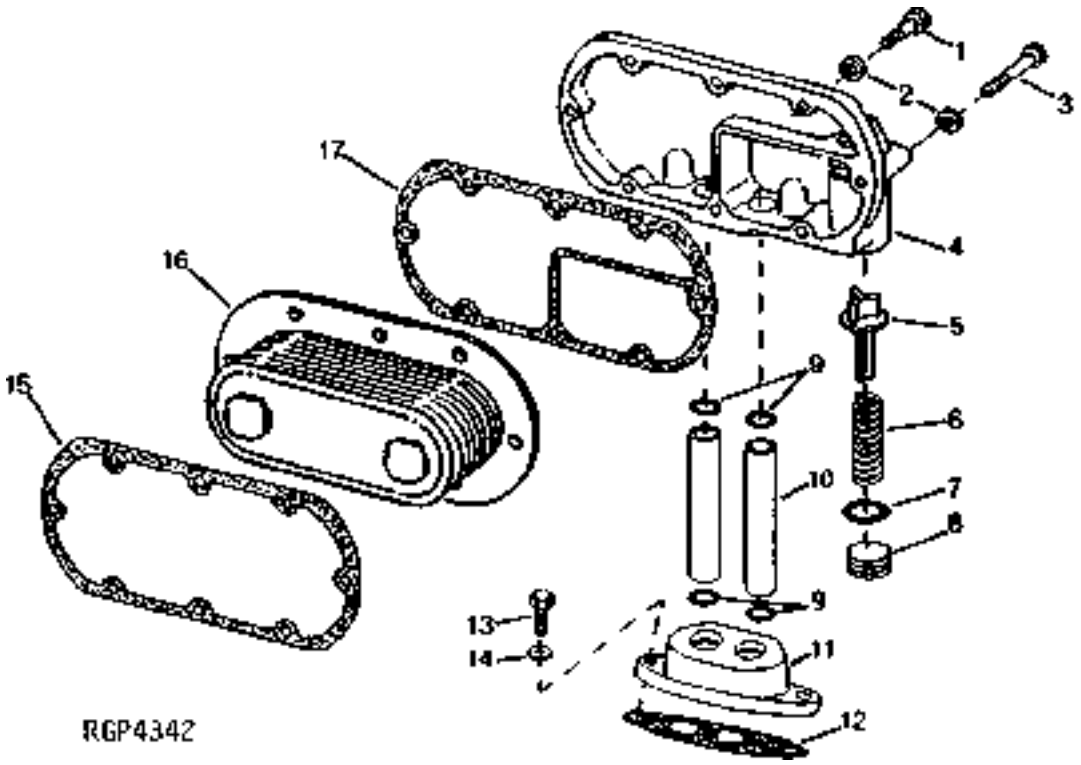

KEY	PART NO.	PART NAME	QTY	ENGINE SERIAL NO.	8 8 8 1 2 3 0 0 0 0 0 0	REMARKS
1	19H2661	CAP SCREW	5		X X X	5/16" X 1-3/8"
2	24M7055	WASHER	8		X X X	8.400 X 16 X 1.600 MM
3	19H1949	CAP SCREW	3		X X X	5/16" X 2-1/2"
4	R133135	COVER	1		X X X	(SUB FOR R116237)
5	R108867	VALVE	1		X X X	
6	R98064	SPRING	1		X X X	
7	U17409	O-RING	1		X X X	
8	R121163	FITTING PLUG	1		X X X	
9	R47153	O-RING	4		X X X	
10	R51053	OIL TUBE	2		X X X	(SUB FOR R124208)
11	R127297	ADAPTER	1		X X X	(SUB FOR R121200)
12	R50424	GASKET	2		X X X	
13	19H3483	CAP SCREW	2		X X X	3/8" X 1-1/8"
14	24M7096	WASHER	2		X X X	10.500 X 18 X 1.600 MM
15	AR58952	GASKET	1		X X X	
16	AR55394	OIL COOLER	1		X X X	
17	R117060	GASKET	1		X X X	

https://www.truck-manuals.net/

MEMORANDA
MEMORANDA
MEMORANDA
MEMORANDA
MEMORANDA
MEMORANDA

https://www.truck-manuals.net/

ENGINE OIL FILTER AND HOUSING (6081) (8100,8200,8300 TSN 010000-)
REFROIDISSEUR D'HUILE MOTEUR/FILTRE A HUILE MOTEUR (6081) (8100,8200, 8300 TSN 010000-)
MOTOR-OELKUEHLER/MOTOROEFILTER (6081) (8100,8200,8300 TSN 010000-)
RAFFREDDATORE OLIO MOTORE/FILTRO OLIO MOTORE (6081) (8100,8200, 8300 TSN 010000-)
REFRIGERADOR DEL ACEITE DEL MOTOR/FILTRO DE ACEITE DEL MOTORE(6081) (8100, 8200,8300 TSN 010000-
MOTOROLJEKYLARE/MOTOROLJEFILTER (6081) (8100,8200,8300 TSN 010000-)
RGP4993 -UN-26MAR98

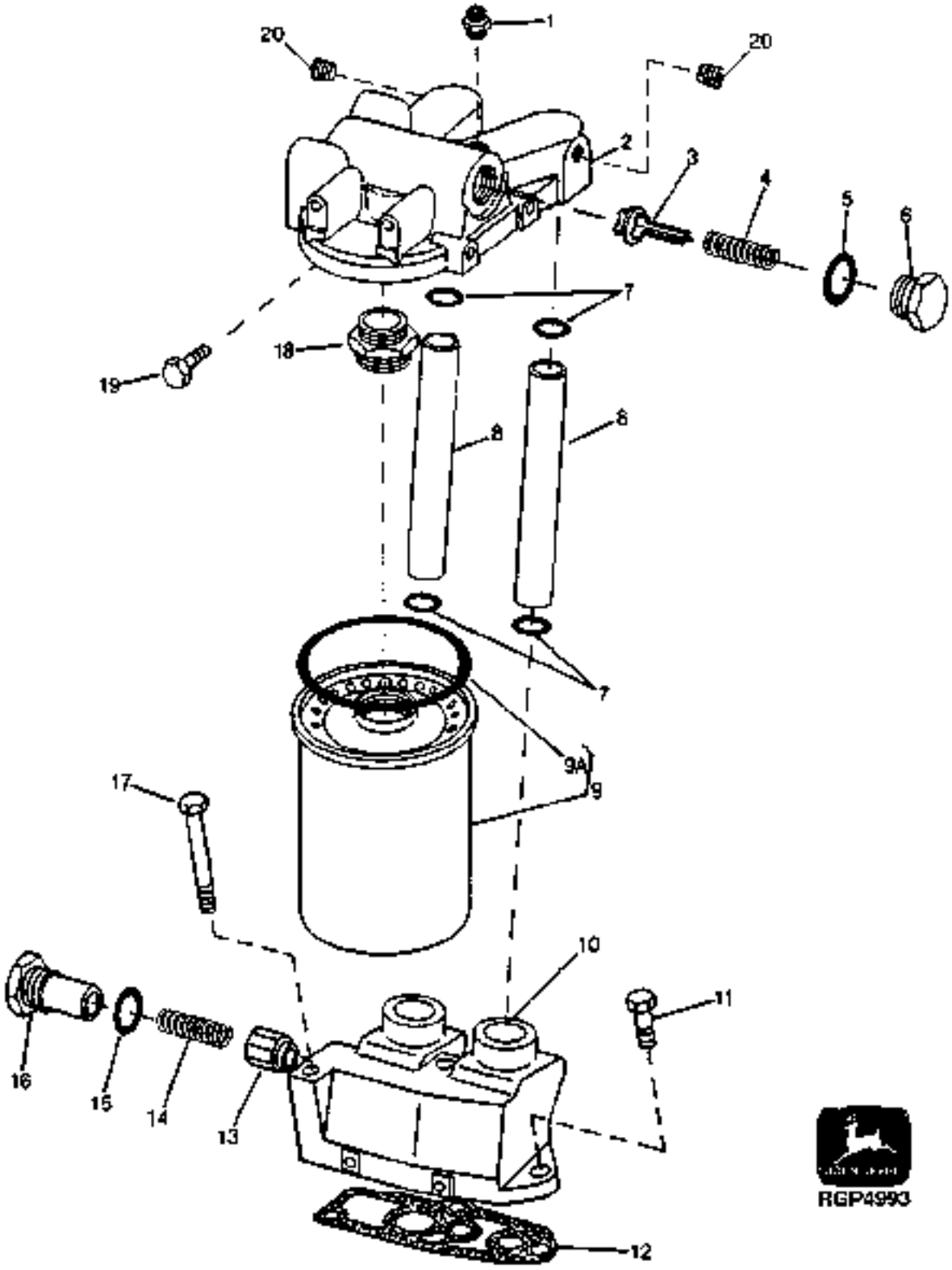

https://www.truck-manuals.net/

KEY	PART NO.	PART NAME	QTY	ENGINE SERIAL NO.	8 8 8 1 2 3 0 0 0 0 0 0	REMARKS
1	RE58294	CONNECTOR	1		X X X	
2	R128694	BASE	1		X X X	
3	R108867	VALVE	1		X X X	
4	R98064	SPRING	1		X X X	
5	U17409	O-RING	1		X X X	
6	R117073	FITTING PLUG	1		X X X	
7	R47153	O-RING	4		X X X	
8	R86063	TUBE	2		X X X	
9	RE57394	OIL FILTER	1		X X X	(MARKED RE57394)
9A	R43660	PACKING	1		X X X	
10	R129820	HOUSING	1		X X X	
11	19H3239	CAP SCREW	1		X X X	3/8" X 1-1/4"
12	R119847	GASKET	1		X X X	
13	R124186	RELIEF VALVE	1		X X X	
14	R102844	SPRING	1	-024534	X X X	(SUB R500330)
	R500330	SPRING	1	024535-	X X X	
15	U17409	O-RING	1		X X X	
16	R129821	FITTING PLUG	1		X X X	(USE WITH R129820)
17	19H3445	CAP SCREW	2		X X X	3/8" X 3-3/4"
18	R104621	ADAPTER	1		X X X	
19	19H3104	CAP SCREW	2		X X X	7/16" X 1-1/4"
20	R104592	PIPE PLUG	2		X X X	

https://www.truck-manuals.net/

WATER PUMP (6081) (8100,8200,8300 TSN 010000-)
POMPE A EAU (6081) (8100,8200,8300 TSN 010000-)
WASSERPUMPE (6081) (8100,8200,8300 TSN 010000-)
POMPA ACQUA (6081) (8100,8200,8300 TSN 010000-)
BOMBA DE AGUA (6081) (8100,8200,8300 TSN 010000-)
VATTENPUMP (6081) (8100,8200,8300 TSN 010000-)
RGP4684 -UN-01JUN96

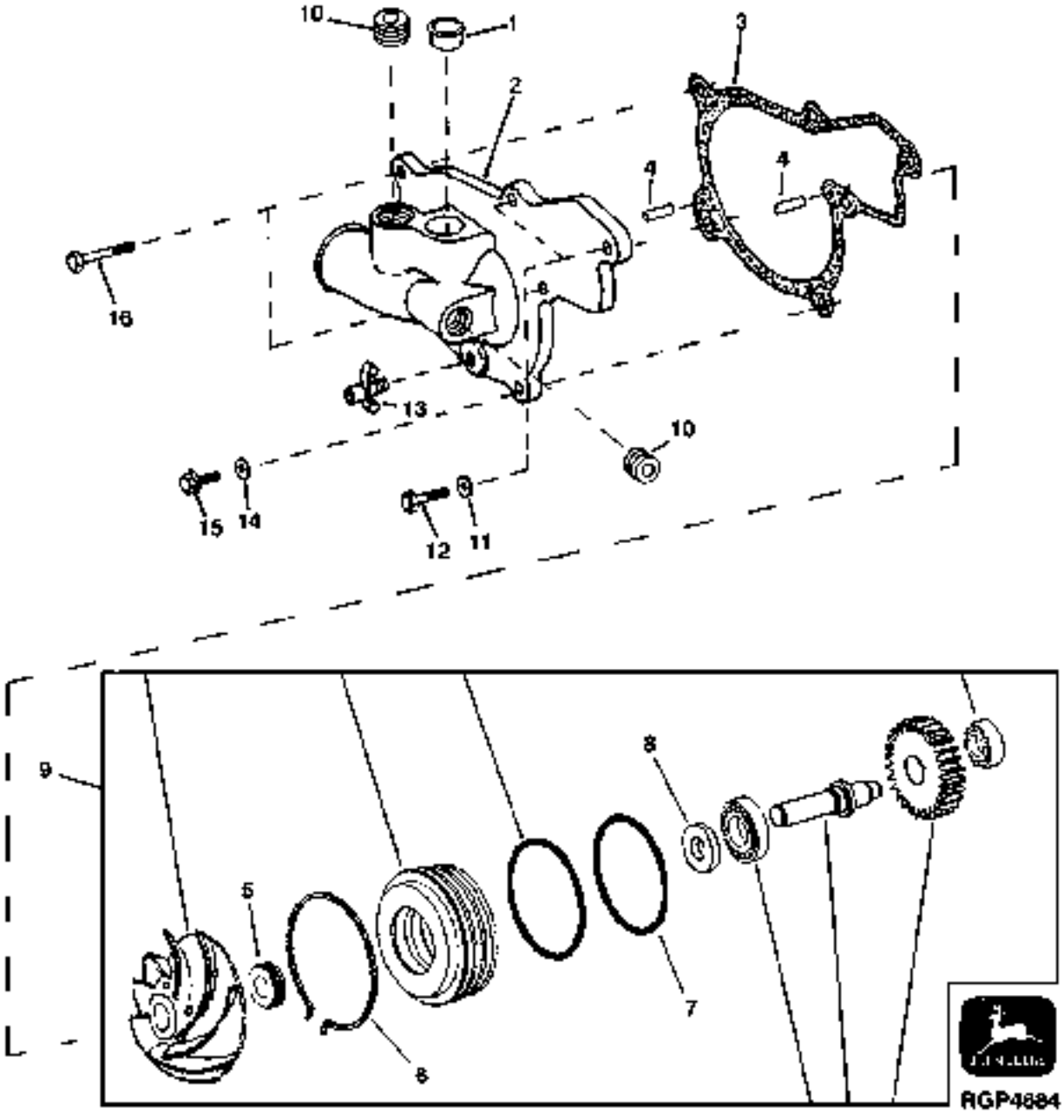

https://www.truck-manuals.net/

KEY	PART NO.	PART NAME	QTY	ENGINE SERIAL NO.	8 8 8 1 2 3 0 0 0 0 0 0	REMARKS
1	RE57190	SEAL	1		X X X	
2	R120523	COVER	1		X X X	
3	R119383	GASKET	1		X X X	
4	R11086	DOWEL PIN	2		X X X	
5	RE69844	KIT	1		X X X	(SUB RE502154, THIS APPLICATION)
6	R121316	RING	1		X X X	(RETAINING)
7	R122430	O-RING	2		X X X	
	RE502154	KIT	1		X X X	(CONTAINS RETAINING RING AND (2) O-RINGS)
8	RE39134	SEAL	1		X X X	(OIL)
9	RE57154	WATER PUMP	1		X X X	(MARKED RE57154) (16 TEETH)
10	15H624	PIPE PLUG	2		X X X	1/2"
11	24M7096	WASHER	3		X X X	10.500 X 18 X 1.600 MM
12	19H1854	CAP SCREW	3		X X X	3/8" X 3-3/4"
13	AT13740	DRAIN VALVE	1		X X X	
14	24H1136	WASHER	1		X X X	11/32" X 11/16" X 0.065"
15	19H1897	CAP SCREW	1		X X X	5/16" X 3-3/4"
16	19H3411	CAP SCREW	2		X X X	3/8" X 1-1/8"
..	R98527	FILTER	1		X X X	(CONTAINED IN RE69844)

https://www.truck-manuals.net/

MEMORANDA
MEMORANDA
MEMORANDA
MEMORANDA
MEMORANDA
MEMORANDA

https://www.truck-manuals.net/

WATER MANIFOLD (6081) (8100,8200,8300 TSN 010000-)
PIPE D'EAU/THERMOSTAT (6081) (8100,8200,8300 TSN 010000-)
KUEHLWASSERKRUEMMER/THERMOSTAT (6081) (8100,8200,8300 TSN 010000-)
COLLETTORE DELL'ACQUA/TERMOSTATO (6081) (8100,8200,8300 TSN 010000-)
COLECTOR DEL AGUQ DE REFRIGERACION/TERMOSTATO (6081) (8100,8200,8300 TSN 010000-)
VATTENMANTEL/TERMOSTAT (6081) (8100,8200,8300 TSN 010000-)
RGP4449 -UN-03MAR95

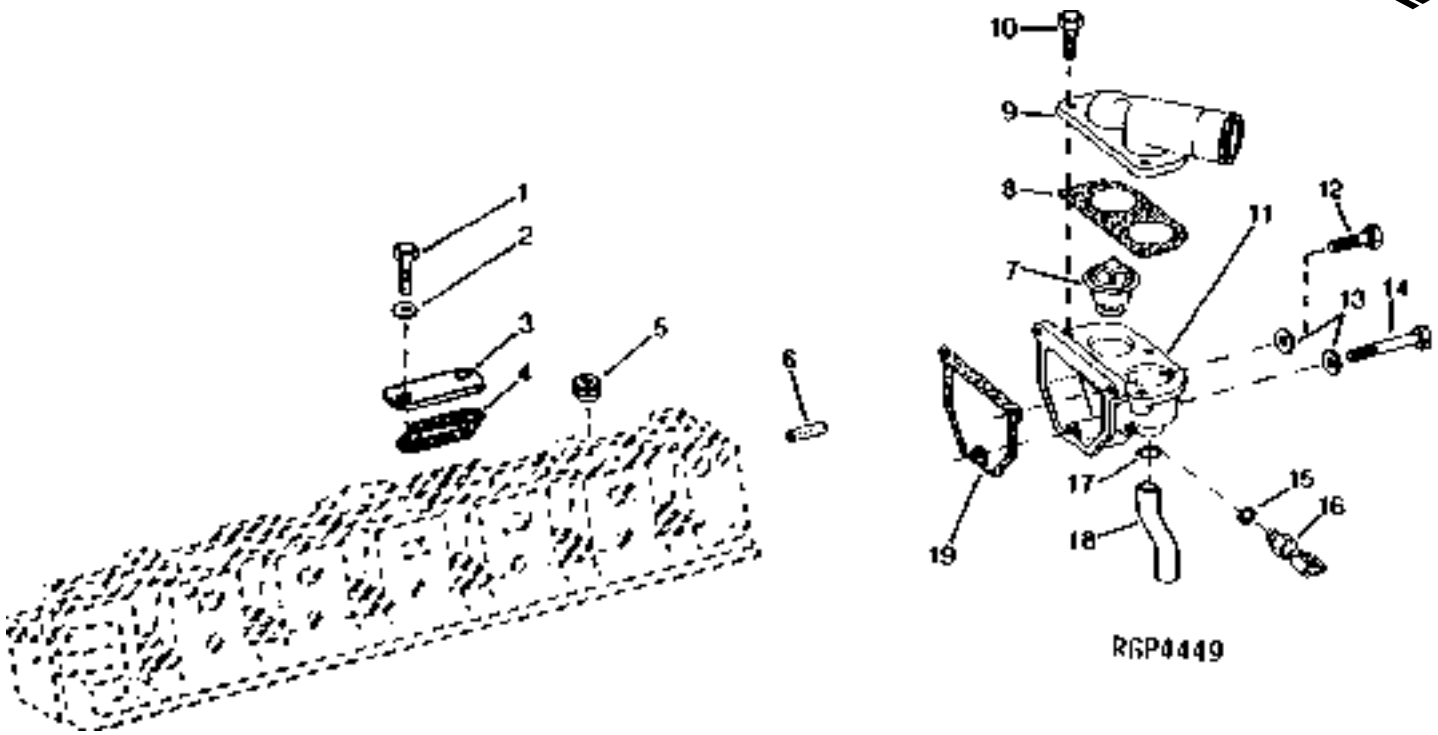

KEY	PART NO.	PART NAME	QTY	ENGINE SERIAL NO.	8 8 8 1 2 3 0 0 0 0 0 0	REMARKS
1	19H2284	CAP SCREW	4		X X X	3/8" X 7/8"
2	24H1305	WASHER	4		X X X	13/32" X 13/16" X 0.065"
3	R86061	STRAP	2		X X X	
4	R88397	GASKET	2		X X X	
5	15H691	PIPE BUSHING	1		X X X	1/8"
6	34H329	SPRING PIN	1		X X X	
7	AR48675	THERMOSTAT	2		X X X	82°C (180°F)
8	R124607	GASKET	1		X X X	
9	R122196	COVER	1		X X X	
10	19H2284	CAP SCREW	3		X X X	3/8" X 7/8"
11	R122195	HOUSING	1		X X X	
12	19H3483	CAP SCREW	2		X X X	3/8" X 1-1/8"
13	24M7096	WASHER	3		X X X	10.500 X 18 X 1.600 MM
14	19H1819	CAP SCREW	1		X X X	3/8" X 2-1/8"
15	R77673	O-RING	1		X X X	
16	RE151433	WATER TEMPERATURE SENSOR	1		X X X	(SUB FOR RE48073)
17	R72328	O-RING	1		X X X	
18	R120022	TUBE	1		X X X	
19	R124211	GASKET	1		X X X	

https://www.truck-manuals.net/

ENGINE GASKET KITS (6081) (8100,8200,8300 TSN 010000-)
JEU DE JOINTS MOTEUR (6081) (8100,8200,8300 TSN 010000-)
MOTOR-DICHTUNGSSATZ (6081) (8100,8200,8300 TSN 010000-)
SERIE GUARNIZIONI MOTORE (6081) (8100,8200,8300 TSN 010000-)
JUEGO DE JUNTAS PARE EL MOTOR (6081) (8100,8200,8300 TSN 010000-)
PACKNINGSSATS FOR MOTOR (6081) (8100,8200,8300 TSN 010000-)
RGP4358 -UN-01JAN94

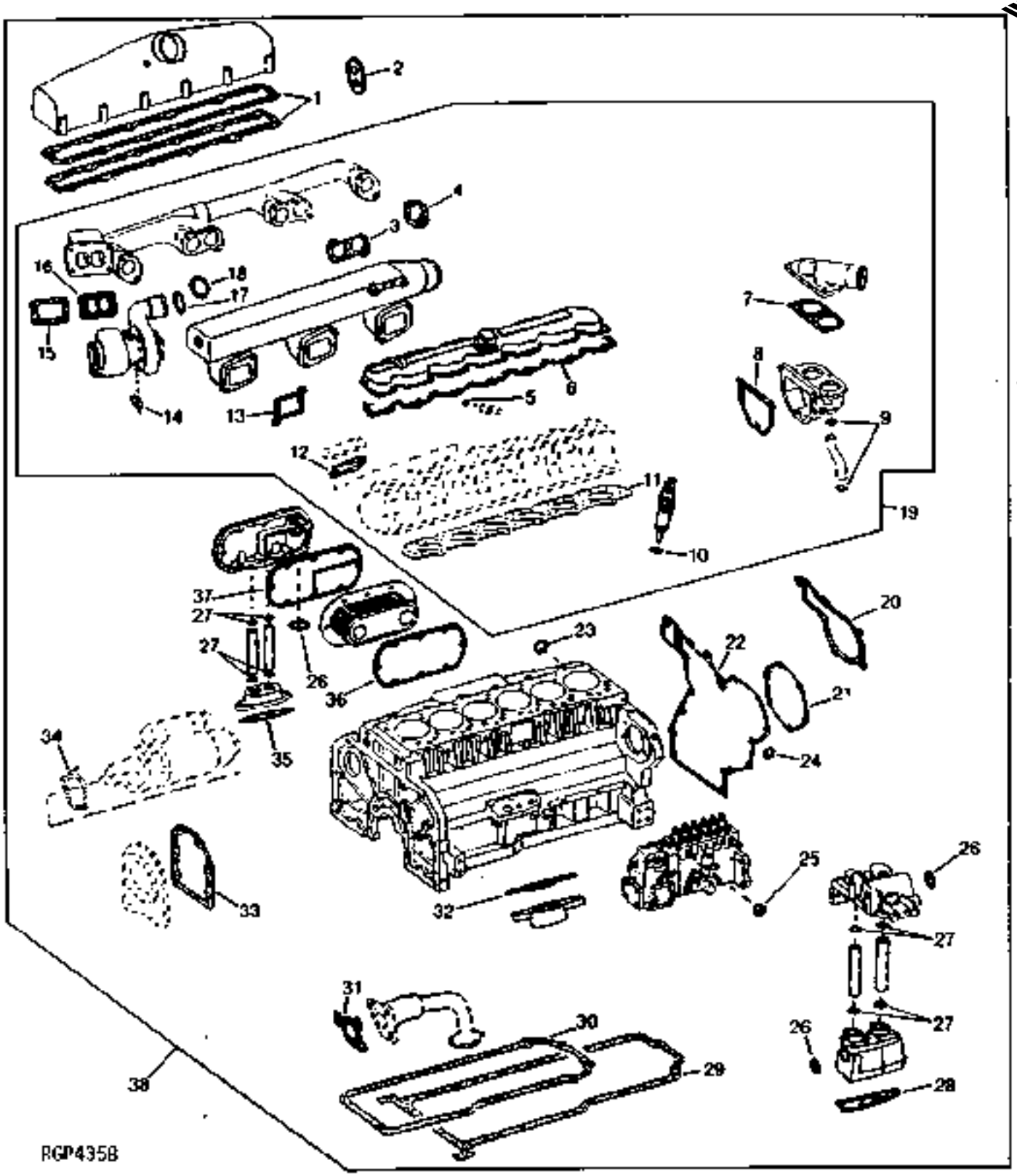

https://www.truck-manuals.net/

KEY	PART NO.	PART NAME	QTY	ENGINE SERIAL NO.	8 8 8 1 2 3 0 0 0 0 0 0	REMARKS
1	R88993	GASKET	NA			
2	R100911	SEAL	NA			
3	RE62776	GASKET	2		X X X	
4	RE62777	GASKET	2		X X X	
5	R77551	O-RING	6		X X X	
6	R49866	GASKET	1		X X X	
7	R124607	GASKET	1		X X X	
8	R124211	GASKET	1		X X X	
9	R72328	O-RING	1		X X X	
10	R84472	WASHER	6		X X X	
11	RE55475	ENGINE CYLINDER HEAD GASKET	1		X X X	
12	R88397	GASKET	2		X X X	
13	R120646	GASKET	3		X X X	
14	R105346	GASKET	1		X X X	
15	R92097	GASKET	NA			
16	R89879	GASKET	1		X X X	
17	R86743	O-RING	1		X X X	
18	R50405	O-RING	NA			
19	RE57186	GASKET KIT	1		X X X	CYLINDER HEAD
20	R119383	GASKET	1		X X X	
21	R50390	GASKET	1		X X X	
22	R119384	GASKET	1		X X X	
23	U13639	O-RING	1		X X X	
24	R54856	O-RING	1		X X X	
25	R53899	WASHER	1		X X X	(USE WITH R83489)
	R53901	WASHER	1		X X X	(USE WITH R83490)
26	U17409	O-RING	3		X X X	
27	R47153	O-RING	4		X X X	
	R47153	O-RING	4		X X X	
28	R119847	GASKET	1		X X X	
29	.....	GASKET	NA			
30	R49377	GASKET	1		X X X	
31	R100569	GASKET	1		X X X	
32	R109625	GASKET	1		X X X	
33	R26058	GASKET	1		X X X	
34	R53108	GASKET	1		X X X	
35	R50424	GASKET	1		X X X	
36	AR58952	GASKET	1		X X X	
37	R117060	GASKET	1		X X X	
38	RE57187	GASKET KIT	1		X X X	(A) ENGINE REBUILD
..	R124030	GASKET	1		X X X	

(A) ALSO ORDER R125855 OIL PAN GASKET, AS REQUIRED.

https://www.truck-manuals.net/

CYLINDER HEAD AND VALVES (8400)
CULASSE (6081)
ZYLINDERKOPF
TESTATA
TESTATA (6081)
CULATA (6081)
RGP4443 -UN-28FEB95

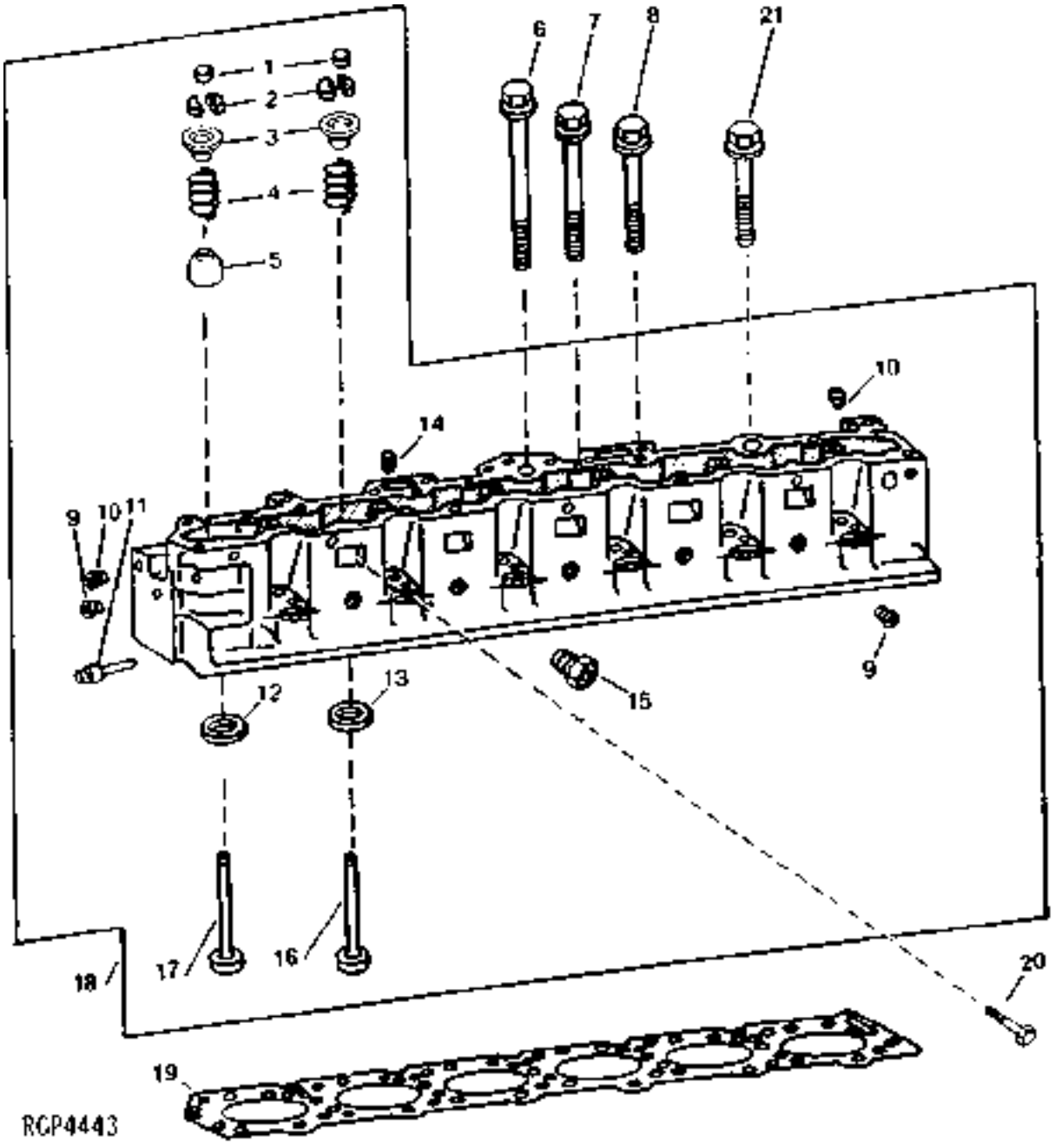

https://www.truck-manuals.net/

KEY	PART NO.	PART NAME	QTY	ENGINE SERIAL NO.	8400	REMARKS
1	T20129	CAP	12		X	
2	T20077	RETAINER	24		X	
3	R136320	CAP	12		X	(SUB FOR R104534)
4	R91822	SPRING	12		X	
5	R102882	SHIELD	6		X	(A)
6	R121491	CAP SCREW	7		X	
7	R121490	CAP SCREW	8		X	
8	R121320	CAP SCREW	6		X	
9	15H690	PIPE PLUG	10		X	3/4"
10	15H584	PIPE PLUG	2		X	1/2"
11	AT107509	PLUG	1		X	
12	R119132	VALVE SEAT INSERT	6		X	(A)
13	R121193	VALVE SEAT INSERT	6		X	(B)
14	34H387	SPRING PIN	1		X	3/16" X 3/4"
15	R76491	PIPE PLUG	1		X	
16	R84618	INTAKE VALVE	6		X	STD
	R93308	INTAKE VALVE	AR		X	0.08MM (.003") OS
	R93312	INTAKE VALVE	AR		X	0.38MM (.015") OS
	R93314	INTAKE VALVE	AR		X	0.76MM (.030") OS
17	R84619	EXHAUST VALVE	6		X	STD
	R93311	EXHAUST VALVE	AR		X	0.08MM (.003") OS
	R93313	EXHAUST VALVE	AR		X	0.38MM (.015") OS
	R93315	EXHAUST VALVE	AR		X	0.76MM (.030") OS
18	RE57750	CYLINDER HEAD	1		X	(MARKED R122419)
19	RE55475	ENGINE CYLINDER HEAD GASKET	1		X	
20	19H2367	CAP SCREW	1		X	5/8" X 3/4"
21	R121489	CAP SCREW	5		X	
..	RG24026	KIT	1		X	(CONTAINS (26) HEAD BOLTS)

(A) EXHAUST VALVE
SOUPAPE D'AECHAPPEMENT
AUSLASSVENTIL
VALVOLA DI SCARICO
VALVULA DE ESCAPE
AVGASVENTIL

(B) INTAKE VALVE
SOUPAPE D'ADMISION
EINLASSVENTIL
VALVOLA D'ASPIRAZIONE
VALVULA DE ADMISION
INSUGSVENTIL

https://www.truck-manuals.net/

ROCKER ARM COVER
CULBUTEURS
ZYLINERKOPFHAUBE
COPERCHIO BILANCIERI
TAPA DE BALANCINES
VENTILKAPA
RGP4346 -UN-01JAN94

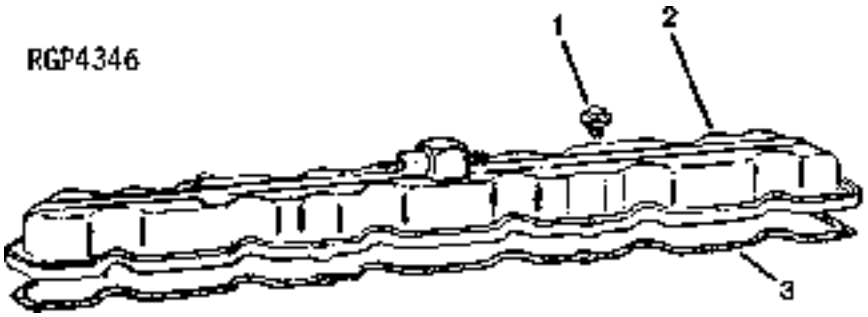

KEY	PART NO.	PART NAME	QTY	ENGINE SERIAL NO.	8400	REMARKS
1	AR100124	SCREW, WITH WASHER	8	-018791	X	
2	RE37448	COVER	1	-018791	X	
3	R49866	GASKET	1	-018791	X	
..	TY24446	ADHESIVE	1		X	(SUB FOR AR31790)

https://www.truck-manuals.net/

ROCKER ARM COVER
CULBUTEURS
ZYLINERKOPFHAUBE
COPERCHIO BILANCIERI
TAPA DE BALANCINES
VENTILKAPA
RGP4885 -UN-13MAY97

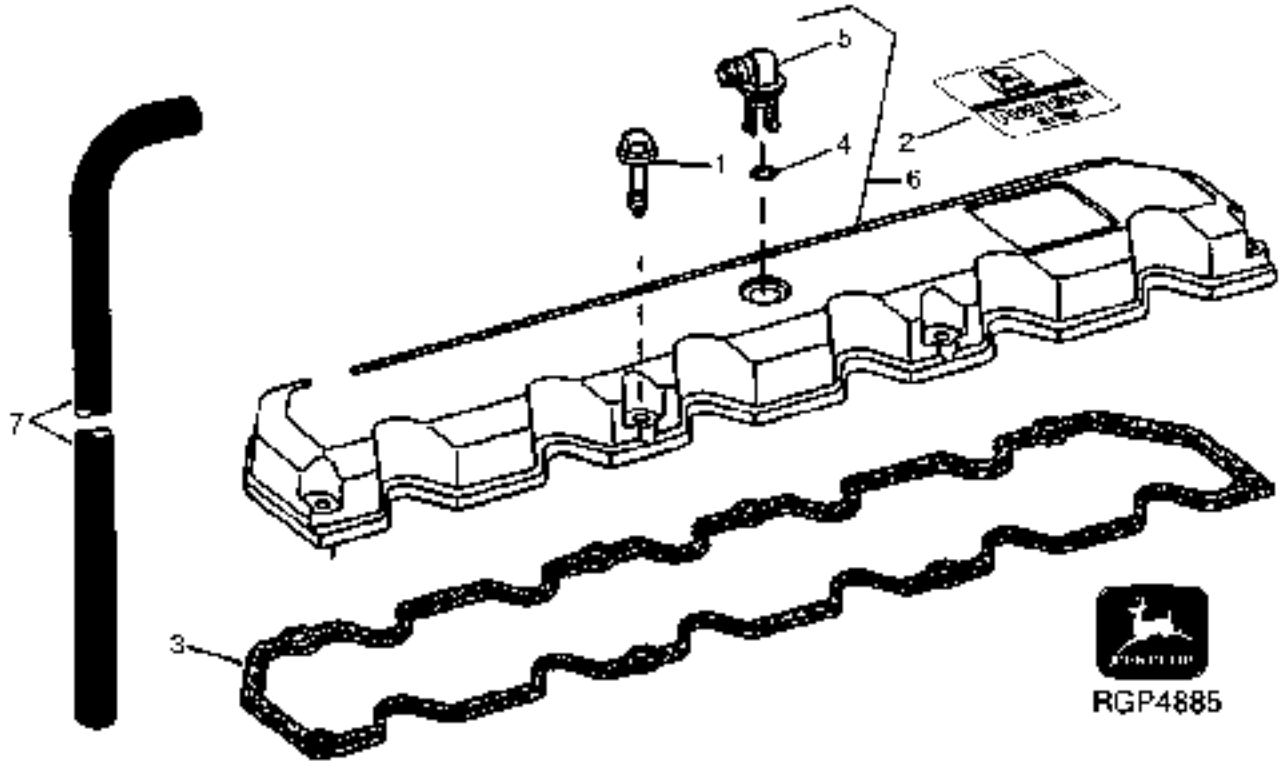

KEY	PART NO.	PART NAME	QTY	ENGINE SERIAL NO.	8400	REMARKS
1	RE57632	SCREW, WITH WASHER	8	018792-	X	
2	R116932	MEDALLION	1	018792-	X	
3	RE54368	GASKET	1	018792-	X	
4	R72328	O-RING	1	018792-	X	
5	R120467	ELBOW FITTING	1	018792-	X	
6	RE70023	COVER	1	018792-	X	
7	R126432	HOSE	1	018792-	X	
..	R72659	CLAMP	1	018792-	X	

https://www.truck-manuals.net/

MEMORANDA
MEMORANDA
MEMORANDA
MEMORANDA
MEMORANDA
MEMORANDA

https://www.truck-manuals.net/

LIFT STRAPS (6081)
ECLISSES D'APAREIL DE LEVAGE (6081)
HUBSTREBE (6081)
FASCETTE DEL PARANCO (6081)
TIRAS DE ELEVADOR (6081)
MOTORLYFTSFAESTEN (6081)
RGP3009 -UN-01JAN94

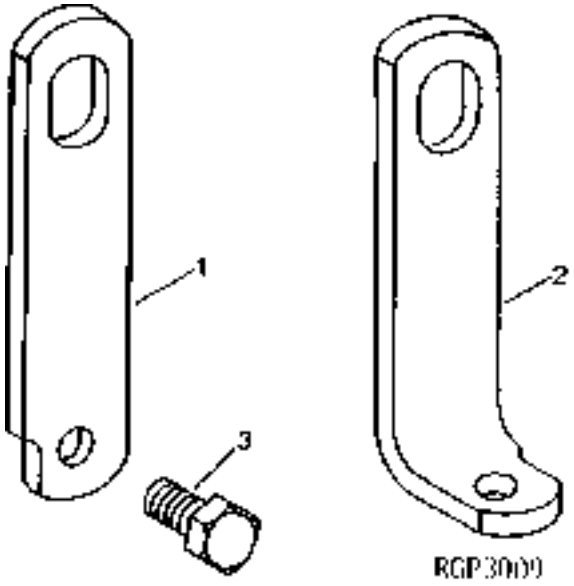

KEY	PART NO.	PART NAME	QTY	ENGINE SERIAL NO.	8400	REMARKS
1	R61497	STRAP	2		X	
2	R86571	ANGLE	NA		X	
3	19H1756	CAP SCREW	2		X	5/8" X 1-1/2"

https://www.truck-manuals.net/

ROCKER ARMS AND SHAFT (8400)
ARBRES DES CULBUTEURS (8400)
KIPPHEBELWELLE (8400)
ALBERO BILANCIERI (8400)
EJE DE BALANCINES (8400)
VIPPARMSAXEL (8400)
RGP2824 -UN-01JAN94

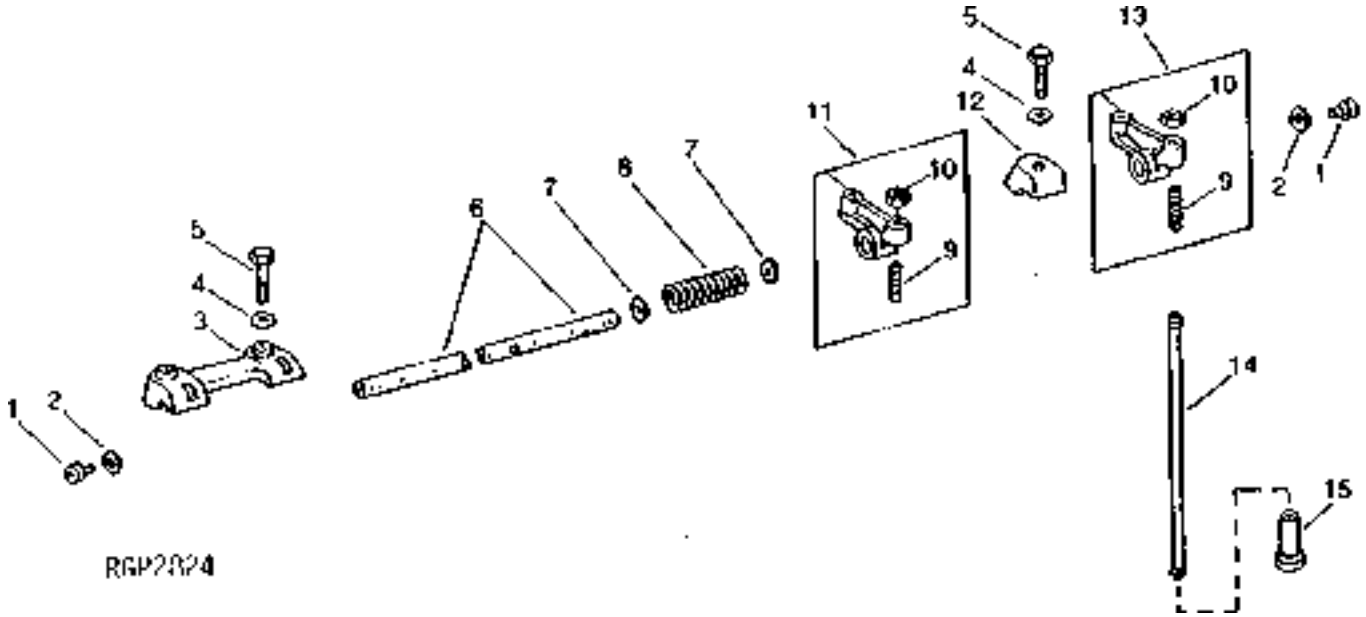

KEY	PART NO.	PART NAME	QTY	ENGINE SERIAL NO.	8400	REMARKS
1	R54565	PLUG	2		X	
2	R26081	WASHER	2		X	
3	R136083	CLAMP	2		X	(SUB FOR R65553)
4	R26559	WASHER	6		X	
5	19H1740	CAP SCREW	6		X	7/16" X 1-3/4"
6	R70826	ROCKER ARM SHAFT	1		X	
7	R71208	WASHER	10		X	
8	R26079	SPRING	5		X	
9	R27443	SET SCREW	12		X	
10	14H1080	NUT	12		X	3/8"
11	RE24045	ROCKER ARM	6		X	(A) (1E, 2I, 3E, 4I, 5E, 6I) (RH)
12	R26748	CLAMP	2		X	
13	RE24046	ROCKER ARM	6		X	(A) (1I, 2E, 3I, 4E, 5I, 6E) (LH)
14	R85027	PUSH ROD	12		X	
15	R110126	CAM FOLLOWER	12		X	

(A) - E (EXHAUST VALVE) - I (INTAKE VALVE)

https://www.truck-manuals.net/

CAMSHAFT AND GEAR
ARBRE A CAMES
NOCKENWELLE
ALBERO A CAMME
EJE DE LEVAS
KAMAXEL/VENTILER
RGP3752 -UN-01JAN94

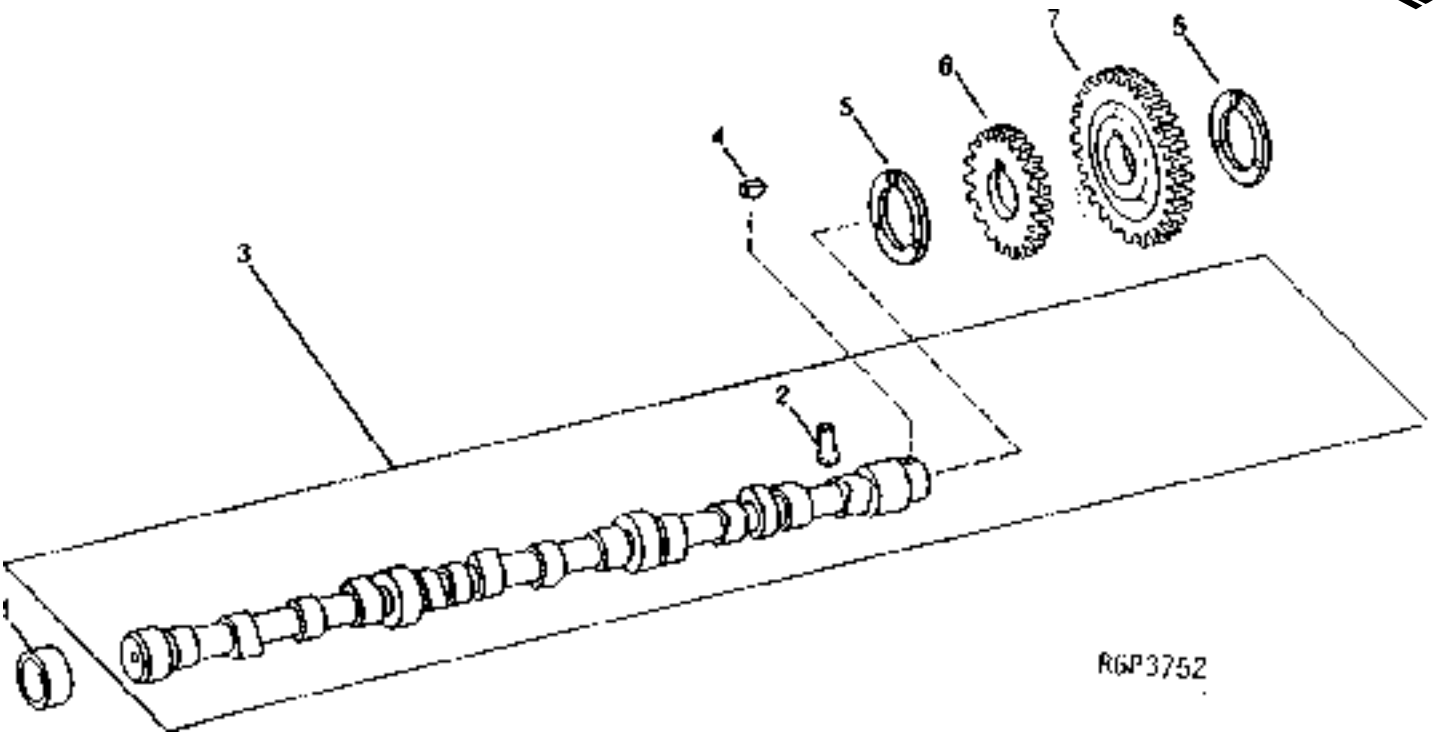

KEY	PART NO.	PART NAME	QTY	ENGINE SERIAL NO. 8400	REMARKS
1	R87561	BUSHING	4	X	
2	R110126	CAM FOLLOWER	12	X	
3	RE57054	CAMSHAFT	1	X	(MARKED R120872)
4	26H91	SHAFT KEY	1	X	3/16" X 1-1/4"
5	R104656	THRUST WASHER	2	X	
6	R104589	GEAR	1	X	
7	R112053	GEAR	1	X	

https://www.truck-manuals.net/

CYLINDER BLOCK FITTINGS
RACCORDS DE BLOC-CYLINDRES
ZYLINDERBLOCK-FITTINGS
RACCORDI DEL MONOBLOQIE DE CILANDRO
CONECTORES DEL BLOQUE DE CILANDRO
SKRUVFOERBINDNINGAR FOER CYLINDERBLOCK
RGP4339 -UN-01JAN94

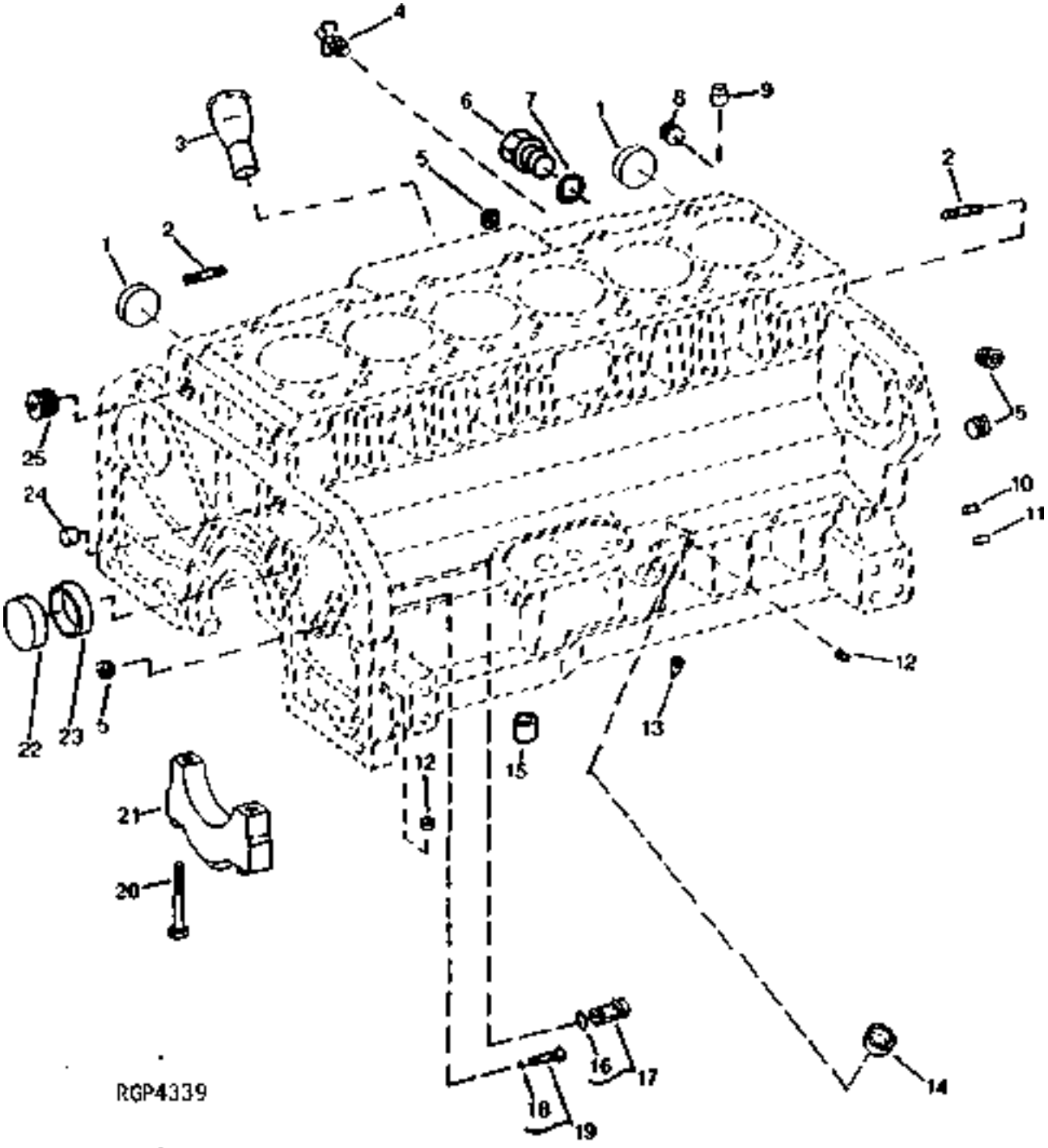

https://www.truck-manuals.net/

KEY	PART NO.	PART NAME	QTY	ENGINE SERIAL NO.	8400	REMARKS
1	R43409	CAP	2		X	
2	R114130	STUD	5		X	
3	R120864	DIPSTICK TUBE	1		X	141.5 MM (5.57")
4	AT13740	DRAIN VALVE	1		X	
5	R36599	PLUG	1		X	(NOT AS SHOWN)
6	R39741	DRAIN PLUG	1		X	
7	U13639	O-RING	1		X	
8	15H690	PIPE PLUG	1		X	3/4"
9	R42340	BUSHING	2		X	
10	R1612R	DOWEL PIN	2		X	
11	F1743R	DOWEL PIN	2		X	
12	R104592	PIPE PLUG	6		X	
13	R43621	ORIFICE	6		X	
14	T35390	CAP	1		X	
15	R500642	BUSHING	2		X	(SUB FOR R62930, THIS APPLICATION)
16	R27149	O-RING	1		X	
17	AR61533	PLUG	1		X	
18	A4365R	O-RING	1		X	
19	AR61589	PLUG	1		X	
20	R122364	BOLT	14		X	
21	R120953	BEARING CAP	6		X	(MAIN)
	R120954	BEARING CAP	1		X	(THRUST)
22	R82007	CAP	1		X	
23	R87561	BUSHING	4		X	
24	R61288	DOWEL PIN	1		X	
25	15H562	PIPE PLUG	1		X	1"
..	15H686	PIPE PLUG	1		X	1", (CYLINDER BLOCK REAR COOLANT OPENING)
..	.....	CYLINDER BLOCK	NA		X	(NOT AVAILABLE)
..	15H624	PIPE PLUG	2		X	

https://www.truck-manuals.net/

ENGINE SHORT BLOCK (WITHOUT HEAD BOLTS)
MOTEUR DEPOUILLE POUR RECHANGE (SANS BOULONS DE CULASSE)
KURZMOTOR (OHNE ZYLINDERKOPFSCHRAUBEN)
MOTORE CORTO (SENZA VITI DELLA TESTATA)
MOTOR BASICO (SIN PERNOS DE CABEZA)
KORTMOTOR (UTAN TOPPLOCKSSKRUVAR)
RGP4340 -UN-01JAN94

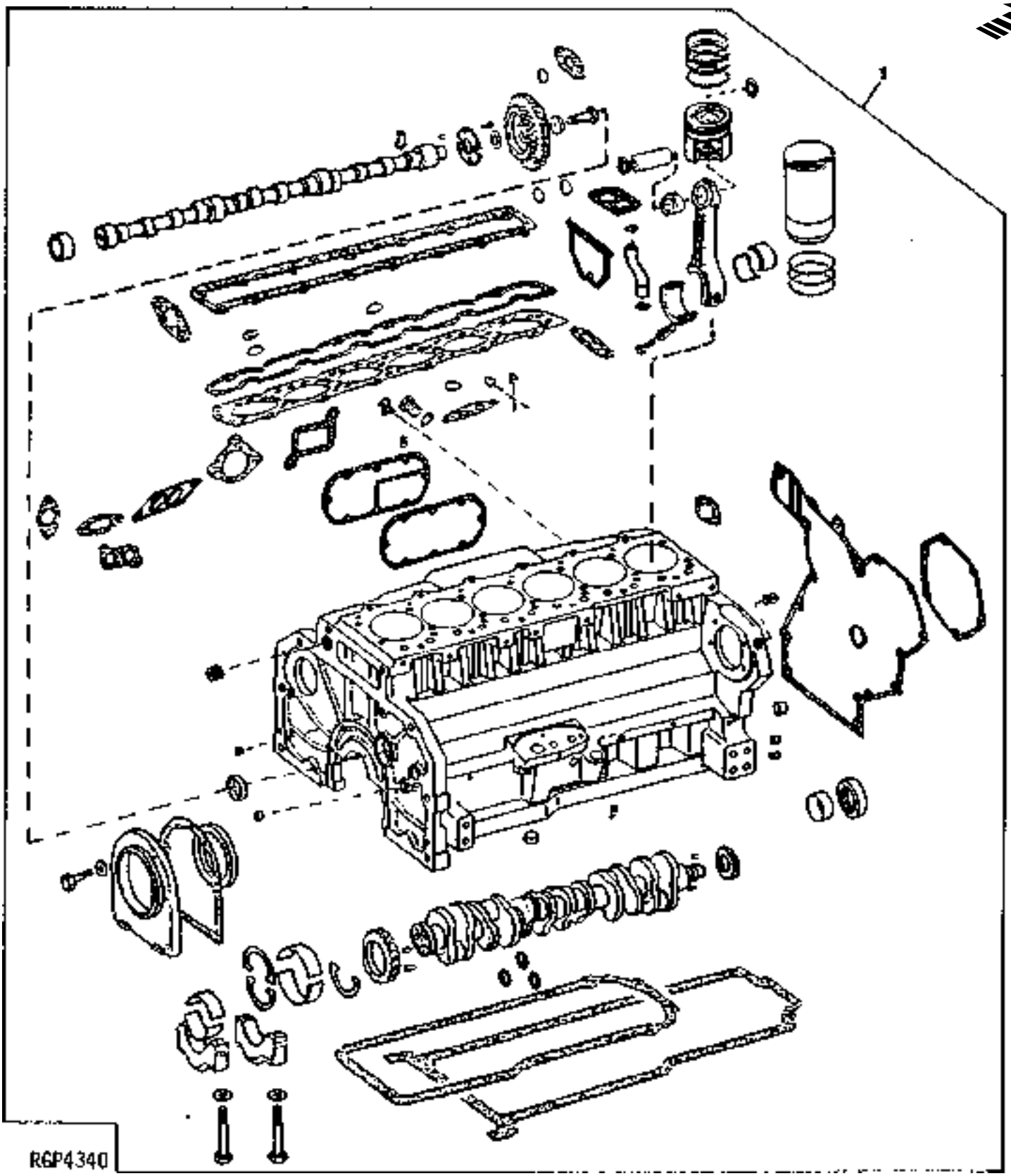

https://www.truck-manuals.net/

KEY	PART NO.	PART NAME	QTY	ENGINE SERIAL NO.	8400	REMARKS
1	RE57181	SHORT BLOCK ASSEMBLY	1		X	(MARKED R120032) (SUB RE65049, R125855, AND R120864, APPL)

https://www.truck-manuals.net/

ENGINE SHORT BLOCK (WITH HEAD BOLTS)
MONTEUR DEPOUILLE POUR RECHANGE (AVEC BOULONS DE CULASSE)
KURZMOTOR (MIT ZYLINDERKOPFSCHRAUBEN)
MOTORE CORTO (CON VITI DELLA TESTATA)
MOTOR BASICO (CON OERNOS DE CABEZA)
KORTMOTOR (MED TOPPLOCKSSKRUVAR)
RGP4577 -UN-02NOV95

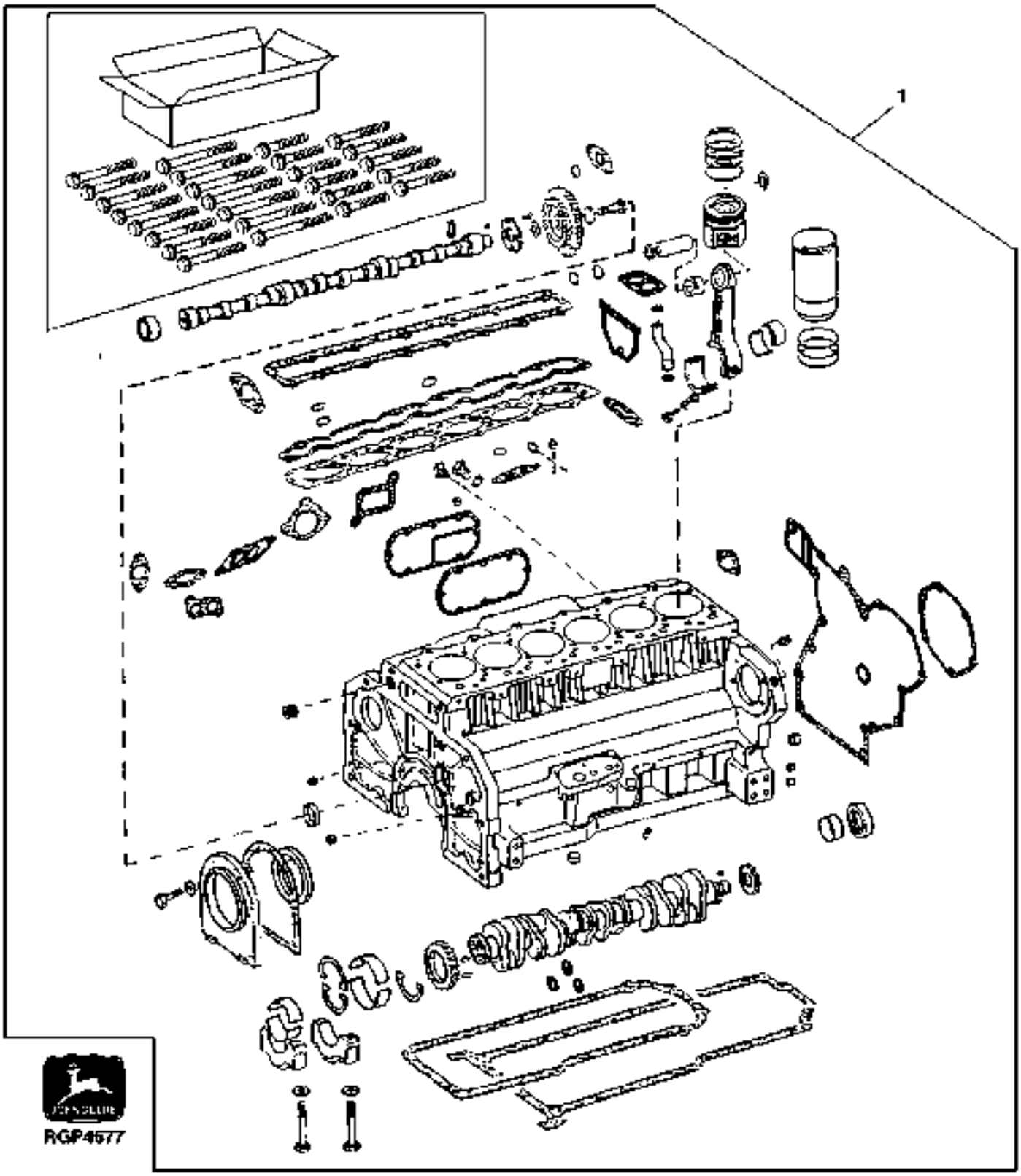

https://www.truck-manuals.net/

KEY	PART NO.	PART NAME	QTY	ENGINE SERIAL NO.	8400	REMARKS
1	RE65049	SHORT BLOCK ASSEMBLY	1		X	(MARKED R120032) (ALSO ORDER R125855 AND R120864, APPL)

https://www.truck-manuals.net/

ENGINE OVERHAUL KIT
JEU POUR LA REVISION DU MOTEUR
MOTOR-UEBERHILSATZ
KIT DI REVISIONE DEL MOTORE
CONJUNTO DE RECONDICIONAMIENTO DEL MOTOR
MOTOROEVERSYNSSATS
RGP5031 -UN-11MAY98

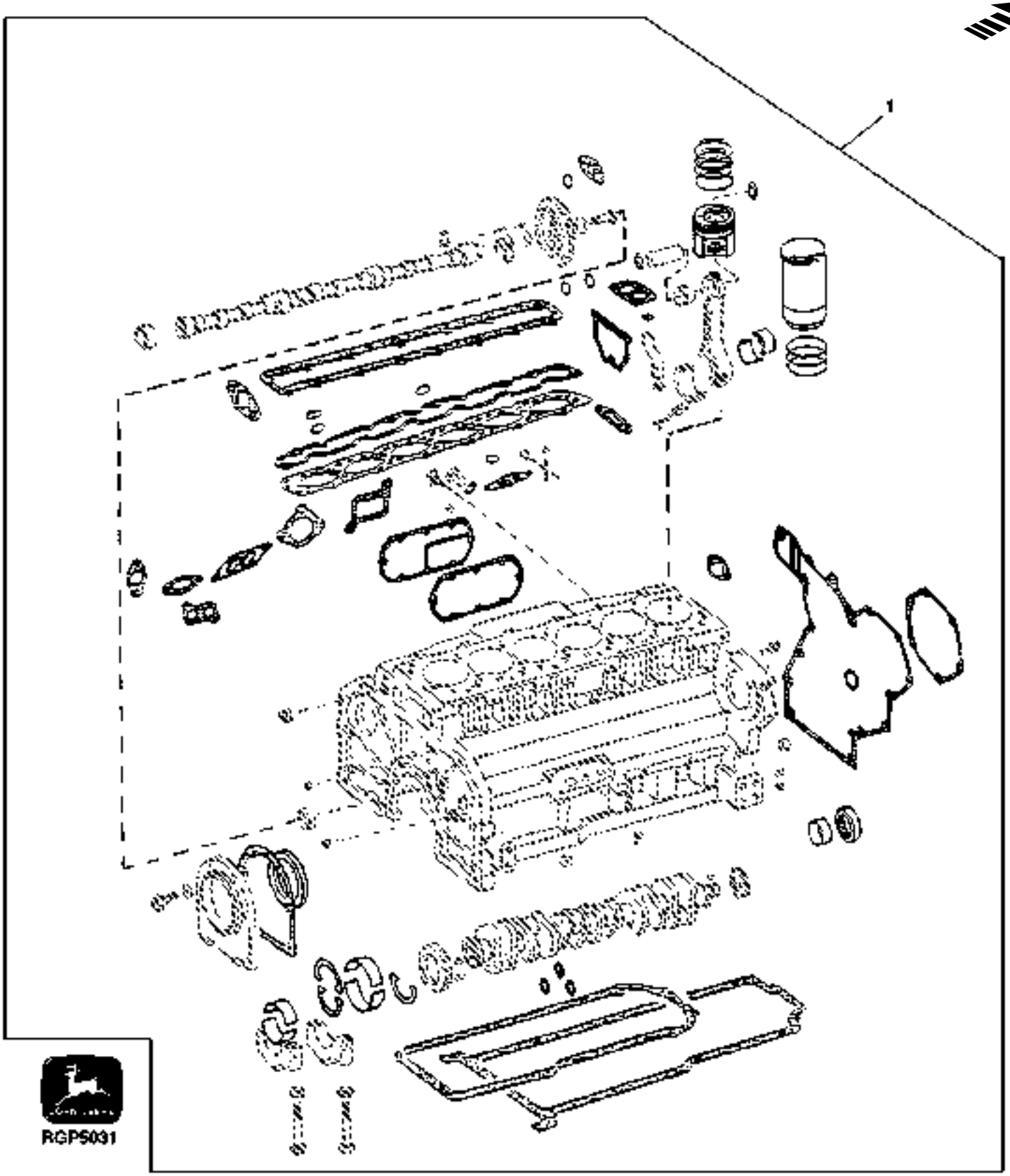

https://www.truck-manuals.net/

KEY	PART NO.	PART NAME	QTY	ENGINE SERIAL NO.	8400	REMARKS
1	RE64907	ENGINE OVERHAUL KIT	2	-002973	X	(CONTAINS (6) RE62791 PISTON/LINERS,GASKET KIT, STD BEARINGS, FRONT/REAR SEALS, AND SNAP RINGS) (ALSO ORDER R66452 ROD BOLTS)
	RE67677	ENGINE OVERHAUL KIT	1	002974-	X	(SUB RE67677) (ALSO ORDER R125855) (CONTAINS (6) RE64509 PISTON/LINERS, GASKET KIT, STD BEARINGS, FRONT/REAR SEALS, AND SNAP RINGS) (ALSO ORDER R66452 ROD BOLTS) (ALSO ORDER R125855)

https://www.truck-manuals.net/

OIL PAN
CARTER D'HUILE
DELWANNE
COPPA DELL'OLIO
CARTER DEL ACEITE
OLJETRAG
RGP4886 -UN-13MAY97

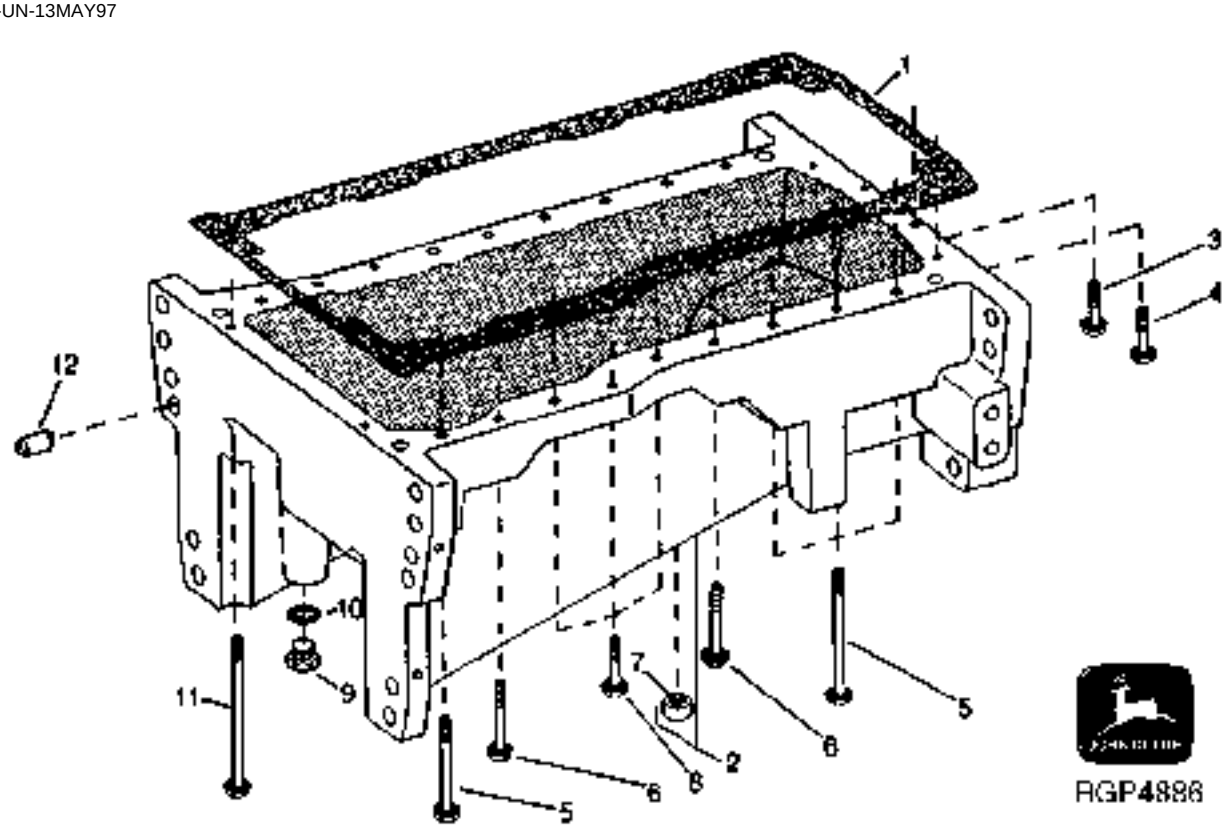

KEY	PART NO.	PART NAME	QTY	ENGINE SERIAL NO.	8400	REMARKS
1	R125855	GASKET	1		X	(SUB FOR R107343)
2	RE71509	OIL PAN	1	-XXXXXX	X	(MARKED R136471 OR R107229) (SUB FOR RE50889)
	RE161680	OIL PAN	1	XXXXXX-	X	
	19M7963	CAP SCREW	2	XXXXXX-	X	
3	R122474	CAP SCREW	2		X	.375 X 2.25
4	R121395	CAP SCREW	2		X	.375 X 1.875
5	R122477	CAP SCREW	8		X	.500 X 6.000
6	R122476	CAP SCREW	4		X	.500 X 4.000
7	ET14521	BUSHING	4		X	
8	R122475	CAP SCREW	6		X	.500 X 2.500
9	R27175	DRAIN PLUG	1		X	
10	F3171R	O-RING	1		X	
11	R126912	CAP SCREW	2		X	.375 X 7.750
12	.....	DOWEL PIN	6		X	(SUB RE71509)

https://www.truck-manuals.net/

ENGINE OIL DIPSTICK AND TUBE
JAUGE A HUILE MOTEUR
MOTOROELMESSTAB
ASTINA DE LIVELLO OLIO MOTORE
ASPILLA PARA MEDIR EL NIVEL DE ACEITE DEL MOTOR
MOTORNS OLJETICKA
RGP4446 -UN-03MAR95

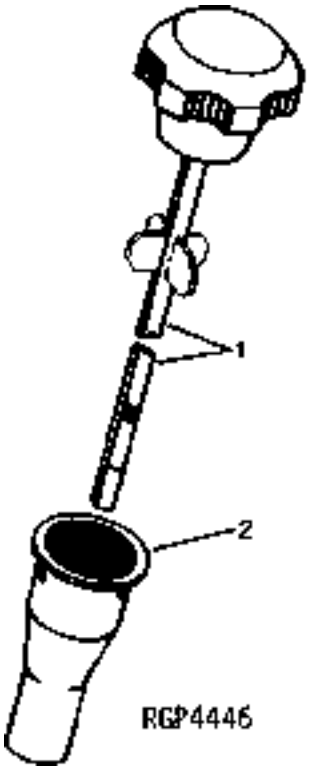

KEY	PART NO.	PART NAME	QTY	ENGINE SERIAL NO.	8400	REMARKS
1	RE500209	DIPSTICK	1		X	(SUB FOR RE56493)
2	R120864	DIPSTICK TUBE	1		X	141.5 MM (5.57") (6081HRW01)

https://www.truck-manuals.net/

CRANKSHAFT PULLEY AND DAMPER
POULE DE VILEBREQUIN
KURBELWELLENRIEMENSCHEIBE
PULEGGIA DELL'ALBERO A GOMITI
POLEA DEL CIGUENAL
VEVAXELREMSKIVA
RGP4359 -UN-01JAN94

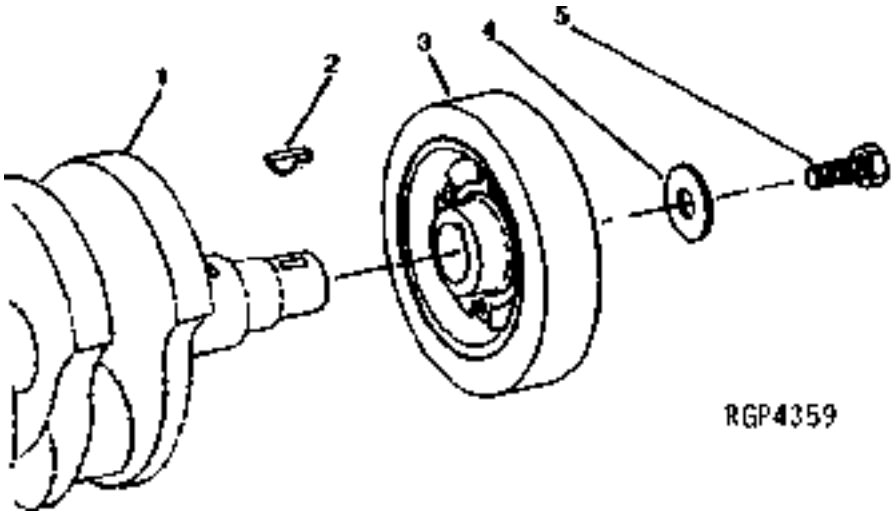

KEY	PART NO.	PART NAME	QTY	ENGINE SERIAL NO.	8400	REMARKS
1	.....	CRANKSHAFT	1		X	
2	R116311	KEY	1		X	
3	RE57603	TORSIONAL DAMPENER	1		X	
4	R26333	WASHER	1		X	
5	R79846	CAP SCREW	1		X	

https://www.truck-manuals.net/

CRANKSHAFT
VILEBREQUIN
KURBELWELLE
ALBERO A COLLI
CIGUENAL
VEVAXEL
RGP4306 -UN-01JAN94

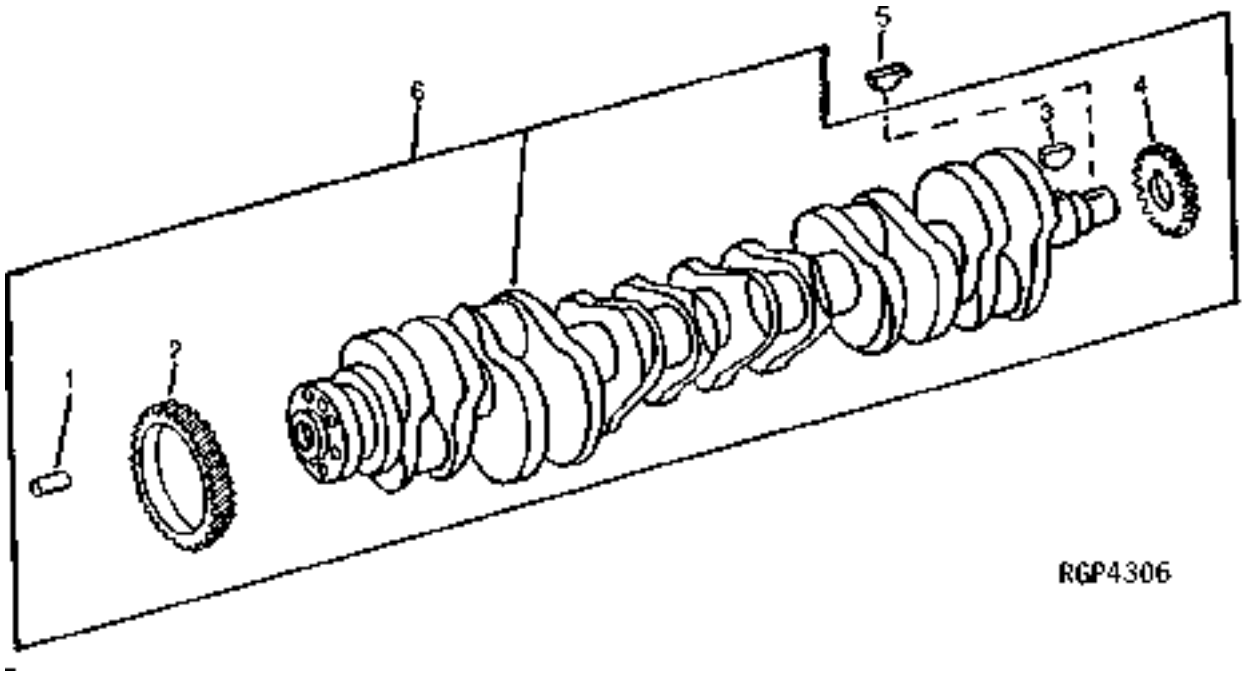

KEY	PART NO.	PART NAME	QTY	ENGINE SERIAL NO. 8400	REMARKS
1	R41934	DOWEL PIN	1	X	
2	R63326	GEAR	1	X	(SUB RE55522, APPL)
3	R120752	KEY	1	X	1/8" X 0.625"
4	R104587	GEAR	1	X	
5	R116311	KEY	1	X	
6	RE55522	CRANKSHAFT	1	X	(MARKED RE55522)

https://www.truck-manuals.net/

FLYWHEEL
VOLANT
SCGWUNGRAD
VOLANO
VOLANTE
SVANGHJUL
RGP3073 -UN-01JAN94

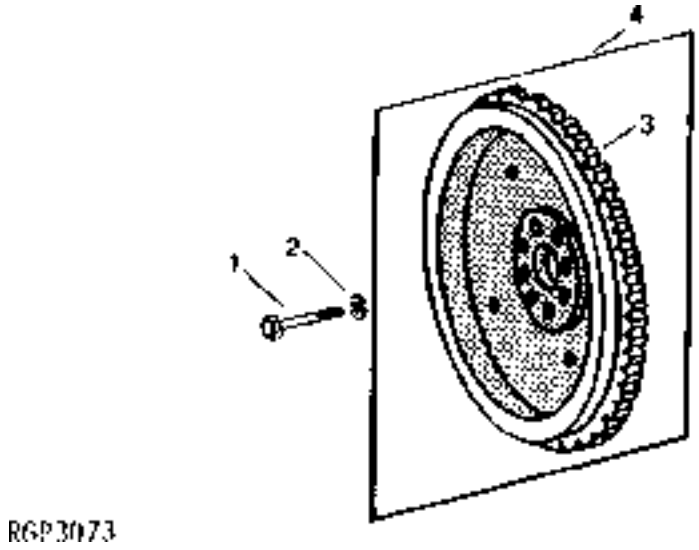

KEY	PART NO.	PART NAME	QTY	ENGINE SERIAL NO. 8400	REMARKS
1	19H3579	CAP SCREW	6	X	(SUB FOR R41049 OR R52634 THIS APPLICATION)
2	T23891	WASHER	6	X	13.487 X 20.625 X 1.524 MM (17/32" X 13/16" X 0.060")
3	R28811	RING GEAR	1	X	
4	RE44632	FLYWHEEL	1	X	(MARKED R107339)

https://www.truck-manuals.net/

PISTON/CONNECTING RODS/CYLINDER LINER
PISTON/BIELLE/CHEMISE DE CYLINDRE
KOLBEN/PLEUELSTANGE/ZYLINDERLAUFBUECHSE
PISTONE/BIELLA/CAMICIE
PISTON/BIELA/CAMISA DEL CILANDRO
KOLV/KOLVSTAKE/CYLINDERFODER
RGP3595 -UN-01JAN94

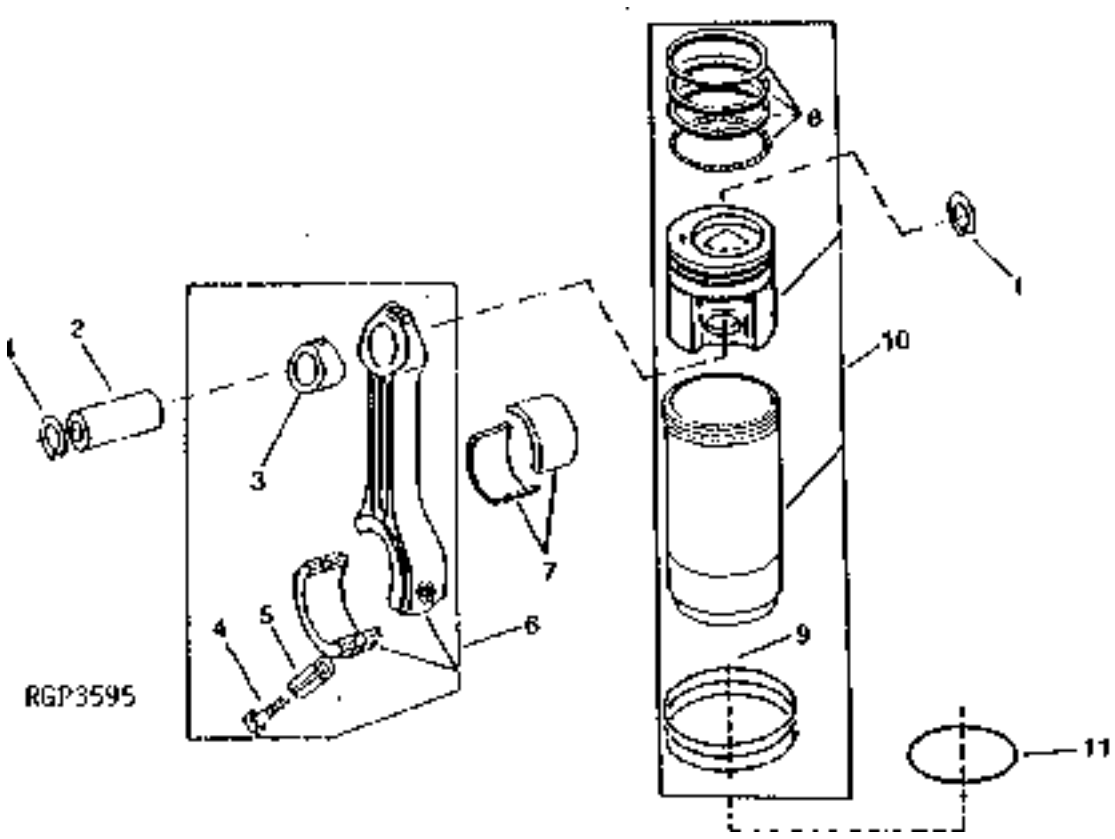

KEY	PART NO.	PART NAME	QTY	ENGINE SERIAL NO.	8400	REMARKS
1	E1343FN	SNAP RING	12		X	
2	R57771	PISTON PIN	6		X	
3	R74008	BUSHING	6		X	
4	R66452	CAP SCREW	12		X	
5	R53292	SLEEVE	12		X	
6	RE53154	CONNECTING ROD	6		X	(MARKED R116340)
7	R116081	BEARING	AR		X	STD PKG (2) (SUB FOR RE57165)
8	RE57188	PISTON RING	6		X	
9	AR98850	KIT	6		X	
10	RE62791	KIT	6	-002973	X	(A) (MARKED RE60328, RE62640 OR RE65407) (SUB FOR RE57189) (LOW COMPRESSION) (SUB RE64509, APPL.)
	RE64509	KIT	6	002974-	X	(MARKED RE64170 OR RE65289) (HIGH COMPRESSION)
11	R93948	SHIM	2		X	0.05MM (.002") (MAX.)

(A) ORDER (6) RE64509 IF REPLACING ALL SIX OR RE67677 OVERHAUL KIT.

https://www.truck-manuals.net/

MAIN AND MAIN THRUST BEARINGS
PALIERS PRINCIPAUX
HAUPTLAGER
CUSCINETTI PRINCIPALLI
COJINETES DE BANCADA
RAMLAGER
RGP1272 -UN-01JAN94

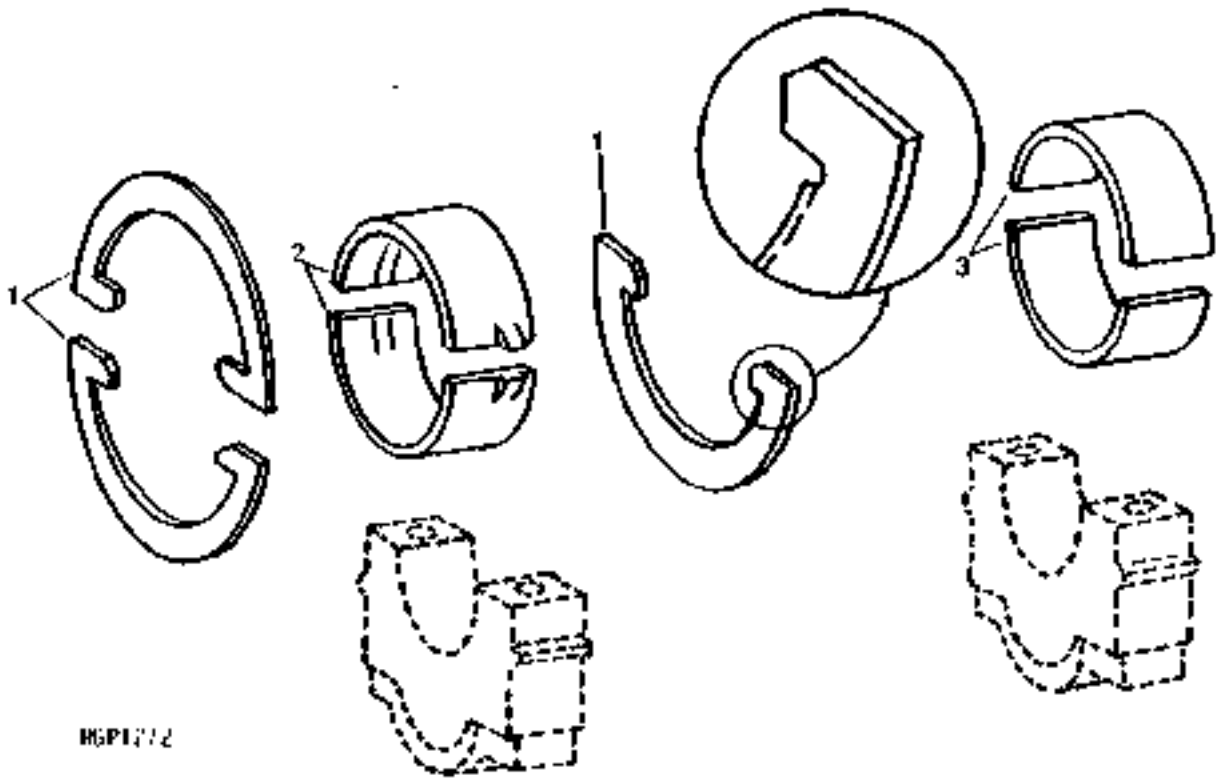

KEY	PART NO.	PART NAME	QTY	ENGINE SERIAL NO.	8400	REMARKS
1	RE61253	THRUST WASHER	1		X	STD (PKG (3) R124381)
	RE61851	THRUST WASHER	1		X	0.18 MM (.007") (PKG (3) R124842)
2	RE57175	THRUST BEARING	1		X	STD (PKG R116084 AND R116085)
	RE57177	THRUST BEARING	1		X	0.292 MM (.011") (PKG R121350 AND R121354)
	RE57178	THRUST BEARING	1		X	0.552 MM (.022") (PKG R121351 AND R121355)
3	RE57170	BEARING	AR		X	STD (PKG R116082 AND R116083)
	RE57172	BEARING	AR		X	0.292 MM (.011") (PKG R121342 AND R121346)
	RE57173	BEARING	AR		X	0.552 MM (.022") (PKG R121343 AND R121347)

https://www.truck-manuals.net/

CRANKSHAFT OIL SEAL AND HOUSING
JOINT A LEVRE ET CARTER DE VILEBREQUIN (6081)
KURBELWELLENDICHTRING UND GEHAEUSE (6081)
ANELLO DI TENUTA E CARCASSA DELL'ALBERO A GOMITI (6081)
RETEN Y CARACASA DEL ACEITE CIGUENAL (6081)
VEVAXELNS TAETNINGSRING OCH HUS (6081)
RGP2382 -UN-01JAN94

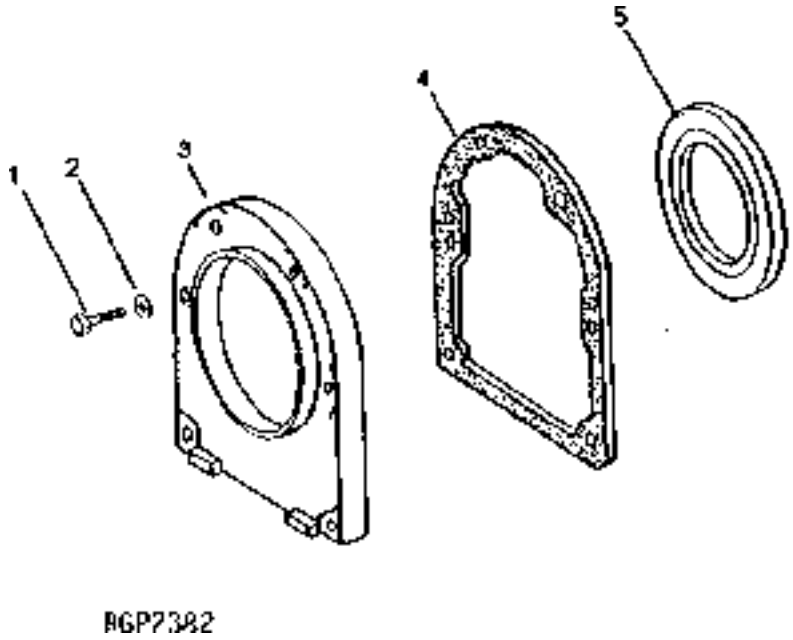

RGP2382

KEY	PART NO.	PART NAME	QTY	ENGINE SERIAL NO.	8400	REMARKS
1	R47074	CAP SCREW	6		X	7.925 X 28.448 MM (5/16" X 1.120")
2	T27860	WASHER	6		X	11/32" X 11/16" X 0.065"
3	R125027	HOUSING	1		X	
4	R26058	GASKET	1		X	
5	RE22764	SEAL	1		X	

https://www.truck-manuals.net/

TIMING GEAR COVER AND FRONT OIL SEAL
COUVERCLE DE DISTRIBUTUIN
STEUERGEHAEUSE
COPERCHIO DISTRIBUZIONE
TAPA DE LA DISTRIBUCION
TIDJULSKAPA
RGP4447 -UN-28FEB95

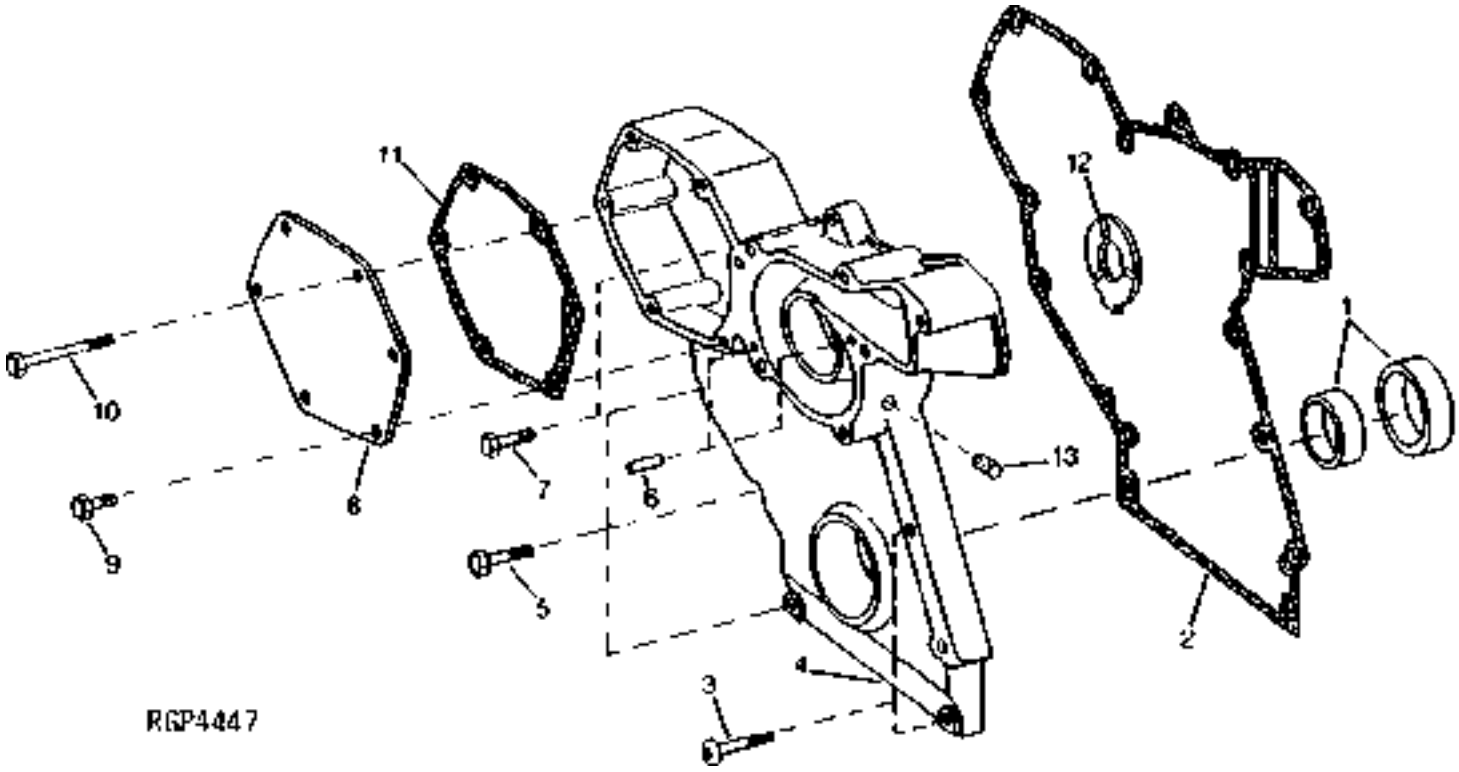

KEY	PART NO.	PART NAME	QTY	ENGINE SERIAL NO. 8400	REMARKS
1	AR49025	SEAL	1	X	
2	R119384	GASKET	1	X	
3	R115129	CAP SCREW	3	X	
4	R119381	COVER	1	X	
5	R104859	CAP SCREW	3	X	
6	R11086	DOWEL PIN	2	X	
7	19H3693	CAP SCREW	1	X	3/8" X 1-1/4"
8	R50393	COVER	1	X	
9	R112268	CAP SCREW	1	X	
10	R104861	CAP SCREW	5	X	
11	R50390	GASKET	1	X	
12	R104656	THRUST WASHER	1	X	
13	R98527	FILTER	1	X	

https://www.truck-manuals.net/

MAGNETIC PICK-UP
OUTIL AIMANTE A MANCHE
MAGNETISCHER MESSWERTGEBER
CALAMITA RACCATTAPEZZI
CAPTADOR MAGNETICO
MAGNETISK GIVARE
RGP4360 -UN-01JAN94

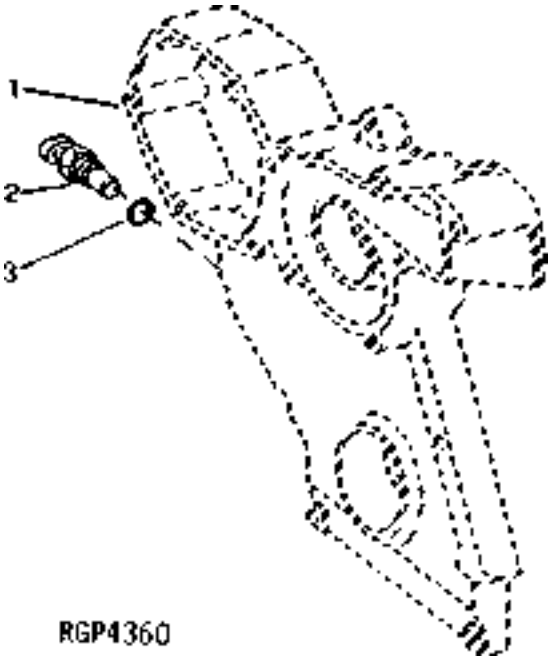

KEY	PART NO.	PART NAME	QTY	ENGINE SERIAL NO. 8400	REMARKS
1	.....	COVER	1	X	
2	RE71121	SENSOR	1	X	(SUB FOR RE43511)
3	51M7044	O-RING	1	X	17.300 X 2.200 MM, (SUB FOR R54856, APPL)

https://www.truck-manuals.net/

MEMORANDA
MEMORANDA
MEMORANDA
MEMORANDA
MEMORANDA
MEMORANDA

https://www.truck-manuals.net/

ENGINE OIL PUMP INTAKE (8400)
ADMISSION DE LA POMPE A HUILE MOTEUR (8400)
MOTOROELPUMPENEINLASS (8400)
ASPIRAZIONE DELLA POMPA DELL'OLIO DEL MOTORE (8400)
ADMISION DE LA BOMBA DE ACEITE DEL MOTOR (8400)
MOTOROLJEPUMP, INSUGNING (8400)
RGP3629 -UN-01JAN94

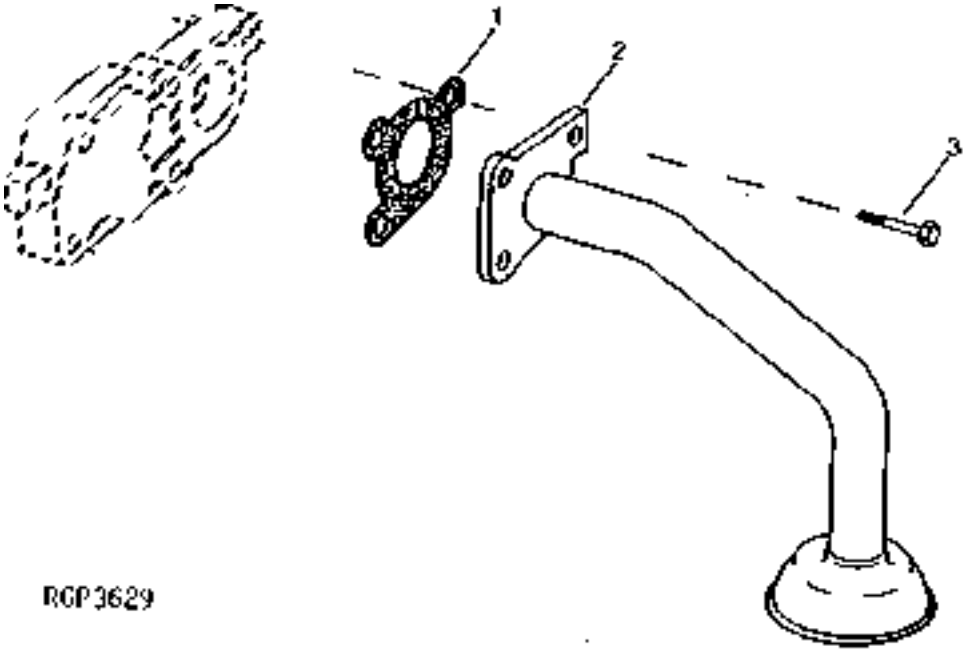

KEY	PART NO.	PART NAME	QTY	ENGINE SERIAL NO.	8400	REMARKS
1	R100569	GASKET	1		X	
2	RE60546	OIL PUMP INTAKE	1		X	
3	R104628	CAP SCREW	3		X	

https://www.truck-manuals.net/

ENGINE OIL PUMP
POMPE A HUILE
OELPUMPE
POMPA OLIO
BOMBA DE ACEITE
BOMBA DE ACEITE
RGP4450 -UN-03MAR95

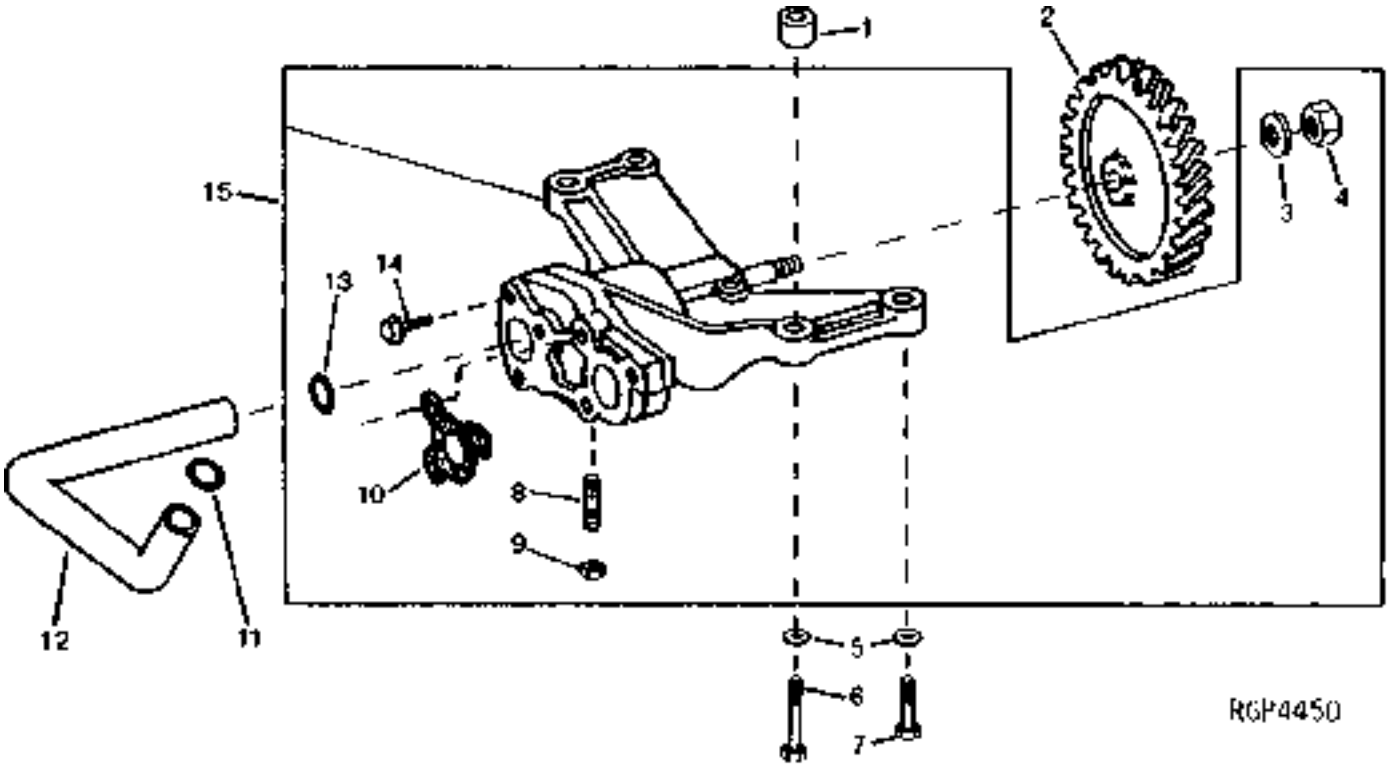

https://www.truck-manuals.net/

KEY	PART NO.	PART NAME	QTY	ENGINE SERIAL NO.	8400	REMARKS
1	R500642	BUSHING	2		X	(SUB FOR R62930, THIS APPLICATION)
2	R62938	GEAR	1		X	
3	T21242	WASHER	1		X	
4	14H826	NUT	1		X	1/2"
5	R57696	WASHER	4		X	
6	19H2549	CAP SCREW	2		X	3/8" X 1-7/8"
7	19H3219	CAP SCREW	2		X	3/8" X 1-3/8"
8	22H1040	SET SCREW	1		X	5/16" X 1-1/4"
9	14H785	NUT	1		X	5/16"
10	R100569	GASKET	1		X	
11	R71732	O-RING	1		X	
12	R116718	OIL TUBE	1		X	
13	R71732	O-RING	1		X	
14	R104628	CAP SCREW	5		X	
15	RE60622	OIL PUMP	1		X	(MARKED R124328) (SUB FOR RE44118, APPL)

https://www.truck-manuals.net/

ENGINE OIL FILTER AND HOUSING
FILTRE A HUILE MOTEUR
MOTOROELFILTER
FILTRO OLIO MOTORE
FILTRO DE ACEITE DEL MOTOR
MOTOROLJEFILTER
RGP4845 -UN-18DEC96

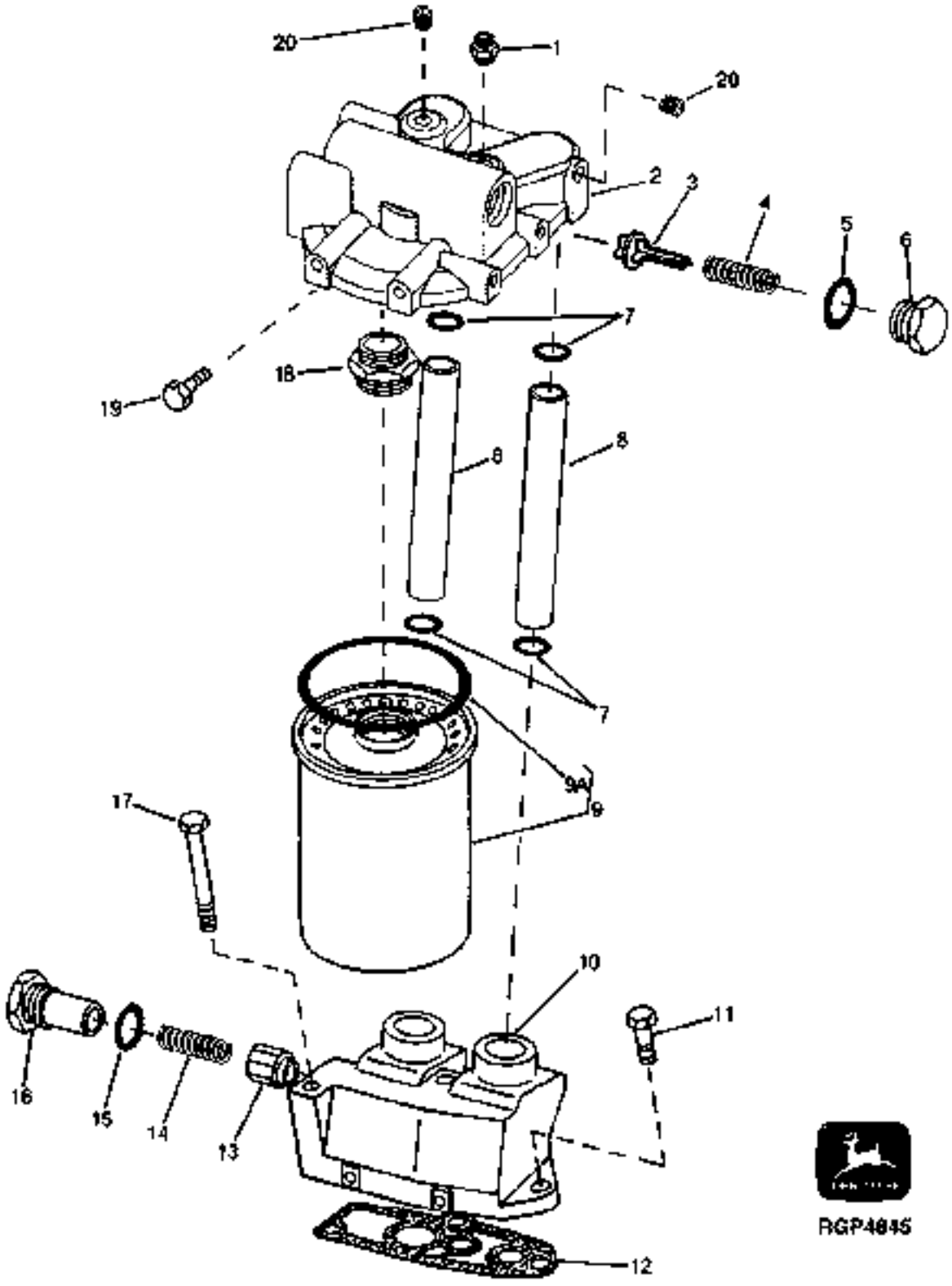

https://www.truck-manuals.net/

KEY	PART NO.	PART NAME	QTY	ENGINE SERIAL NO.	8400	REMARKS
1	RE58294	CONNECTOR	1		X	
2	R127415	BASE	1		X	(SUB FOR R116464) (SUB R128694 AND (2) R104592)
	R128694	BASE	1		X	
3	R108867	VALVE	1		X	
4	R98064	SPRING	1		X	
5	U17409	O-RING	1		X	
6	R117073	FITTING PLUG	1		X	
7	R47153	O-RING	4		X	
8	R86063	TUBE	2		X	
9	RE57394	OIL FILTER	1		X	(MARKED RE57394)
9A	R43660	PACKING	1		X	
10	R116231	HOUSING	1	-000487	X	(SUB R129820 AND R129821)
	R127235	HOUSING	1	000488-XXXXXX	X	(SUB R129820 AND R129821)
	R129820	HOUSING	1	XXXXXX-	X	(USE WITH R129821)
11	19H3239	CAP SCREW	1		X	3/8" X 1-1/4"
12	R119847	GASKET	1		X	
13	R124186	RELIEF VALVE	1		X	
14	R102844	SPRING	1	-024534	X	(SUB R500330)
	R500330	SPRING	1	024535-	X	
15	U17409	O-RING	1		X	
16	R117074	FITTING PLUG	1	-000487	X	(USE WITH R116231)
	R127236	FITTING PLUG	1	000488-XXXXXX	X	(USE WITH R127235)
	R129821	FITTING PLUG	1	XXXXXX-	X	(USE WITH R129820)
17	19H3445	CAP SCREW	2		X	3/8" X 3-3/4"
18	R104621	ADAPTER	1		X	
19	19H3104	CAP SCREW	2		X	7/16" X 1-1/4"
20	R104592	PIPE PLUG	2		X	

https://www.truck-manuals.net/

OIL COOLER BYPASS VALVE
BY-PASS DE REFROIDISSEUR
OELKUEHLER-UMGEHUNGSVENTIL
VALVOLA BY-PASS PER REFFREDDATORE OLIO
VALVULA DE DERIVACION DEL RADIADOR
OLJEKYLARENS FORBISTROMNINGSVENTIL
RGP4343 -UN-01JAN94

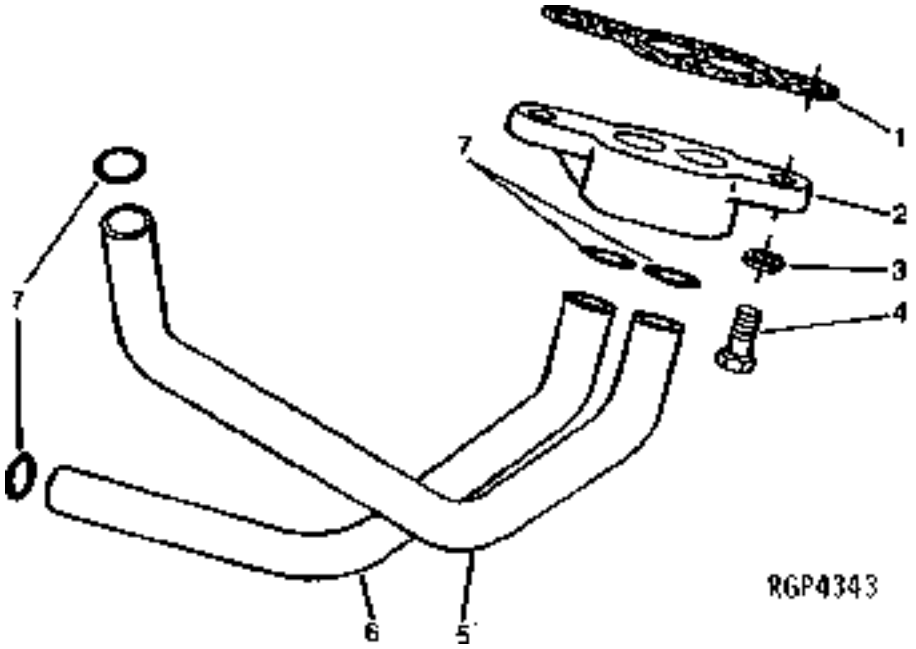

KEY	PART NO.	PART NAME	QTY	ENGINE SERIAL NO.	8400	REMARKS
1	R109625	GASKET	1		X	
2	R116233	ADAPTER	1		X	
3	24H7096	WASHER	NA		X	
4	R40236	CAP SCREW	2		X	
5	R126337	OIL TUBE	1		X	(SUB FOR R116719)
6	R116718	OIL TUBE	1		X	
7	R71732	O-RING	4		X	

https://www.truck-manuals.net/

ENGINE OIL COOLER (8400)
REFROIDISSEUR D'HUILE MOTEUR (8400)
MOTOR-OELKUELER (8400)
RAFFREDDATORE OLIO MOTORE (8400)
REFRIGERADOR DEL ACEITE DEL MOTOR (8400)
MOTOROLJEKYLARE (8400)
RGP4342 -UN-01JAN94

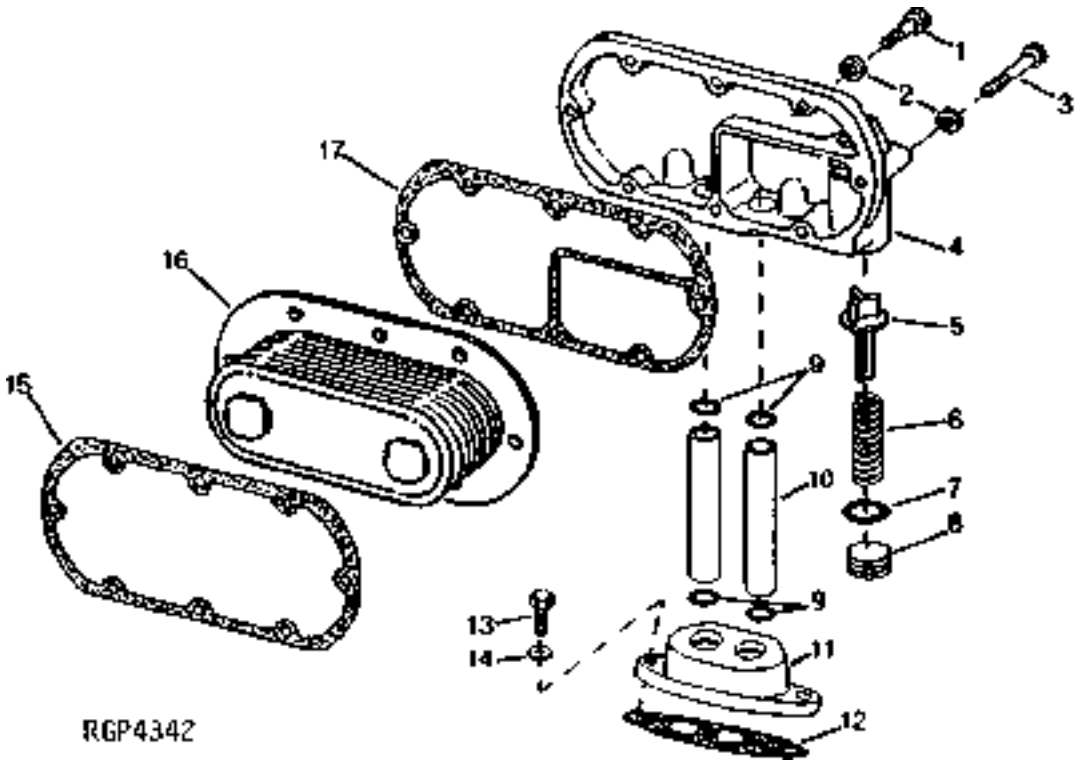

KEY	PART NO.	PART NAME	QTY	ENGINE SERIAL NO.	8400	REMARKS
1	19H2661	CAP SCREW	5		X	5/16" X 1-3/8"
2	24M7055	WASHER	8		X	8.400 X 16 X 1.600 MM
3	19H1949	CAP SCREW	3		X	5/16" X 2-1/2"
4	R133135	COVER	1		X	(SUB FOR R116237)
5	R108867	VALVE	1		X	
6	R98064	SPRING	1		X	
7	U17409	O-RING	1		X	
8	R121163	FITTING PLUG	1		X	
9	R47153	O-RING	4		X	
10	R51053	OIL TUBE	2		X	(SUB FOR R124208)
11	R127297	ADAPTER	1		X	(SUB FOR R121200)
12	R50424	GASKET	2		X	
13	19H3483	CAP SCREW	2		X	3/8" X 1-1/8"
14	24M7096	WASHER	2		X	10.500 X 18 X 1.600 MM
15	AR58952	GASKET	1		X	
16	AR55394	OIL COOLER	1		X	
17	R117060	GASKET	1		X	

https://www.truck-manuals.net/

WATER PUMP
POMPE A EAU
WASSERPUMPE
POMPA ACQUA
BOMBA DE AQUA
VATTENPUMP
RGP4684 -UN-01JUN96

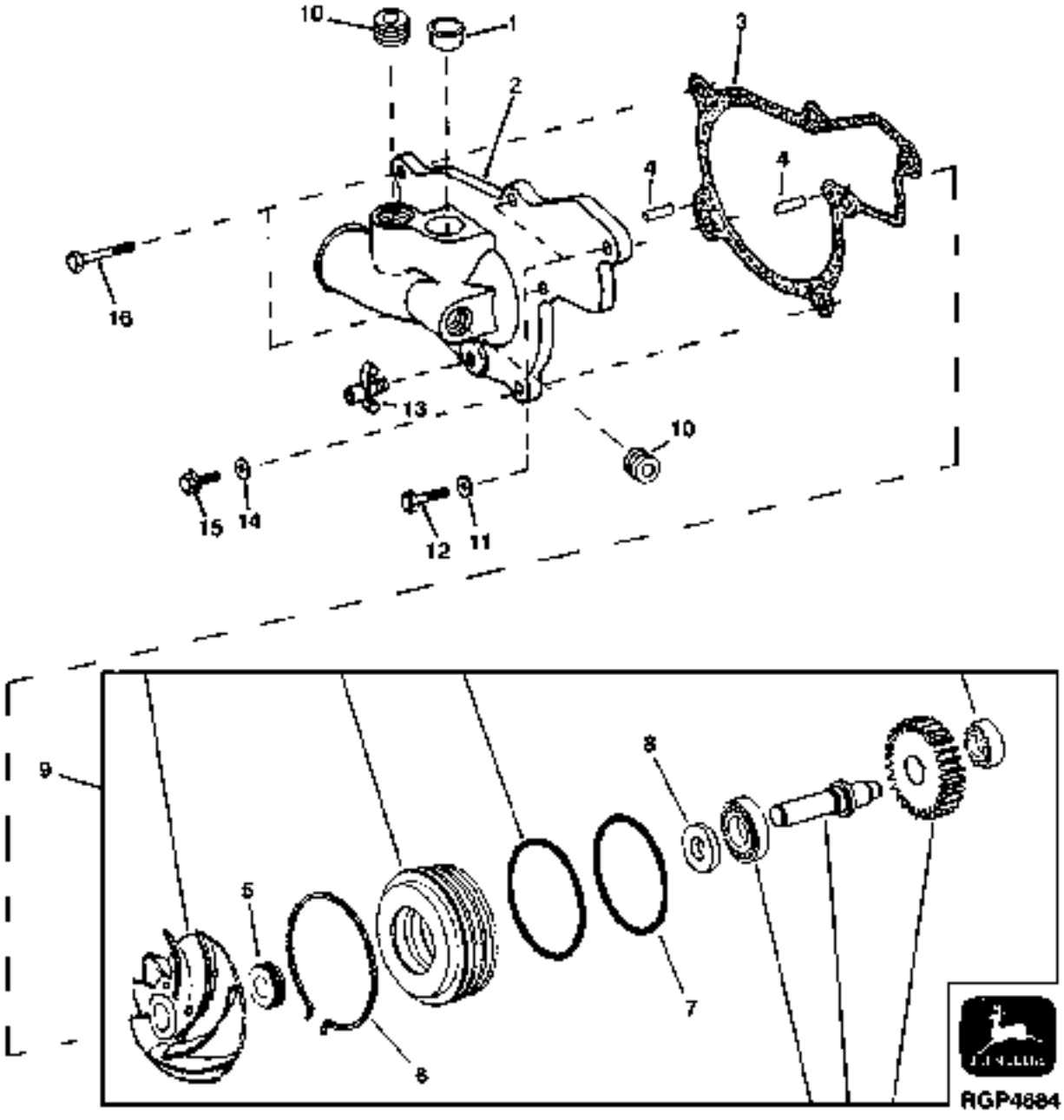

https://www.truck-manuals.net/

KEY	PART NO.	PART NAME	QTY	ENGINE SERIAL NO.	8400	REMARKS
1	RE57190	SEAL	1		X	
2	R120523	COVER	1		X	
3	R119383	GASKET	1		X	
4	R11086	DOWEL PIN	2		X	
5	RE69844	KIT	1		X	(SUB FOR RE55992) (SUB RE502154, THIS APPLICATION)
6	R121316	RING	1		X	(RETAINING)
7	R122430	O-RING	2		X	
	RE502154	KIT	1		X	(CONTAINS RETAINING RING AND (2) O-RINGS)
8	RE39134	SEAL	1		X	(OIL)
9	RE57154	WATER PUMP	1		X	(MARKED RE57154) (16 TEETH)
10	15H624	PIPE PLUG	2		X	1/2"
11	24M7096	WASHER	3		X	10.500 X 18 X 1.600 MM
12	19H1854	CAP SCREW	3		X	3/8" X 3-3/4"
13	AT13740	DRAIN VALVE	1		X	
14	24H1136	WASHER	1		X	11/32" X 11/16" X 0.065"
15	19H1897	CAP SCREW	1		X	5/16" X 3-3/4"
16	19H3411	CAP SCREW	2		X	3/8" X 1-1/8"
..	R98527	FILTER	1		X	(CONTAINED IN RE69844)

https://www.truck-manuals.net/

MEMORANDA
MEMORANDA
MEMORANDA
MEMORANDA
MEMORANDA
MEMORANDA

https://www.truck-manuals.net/

WATER MANIFOLD AND THERMOSTAT
PIPE D'EAU/THERMOSTAT
KUEHLWASSERKRUEMMER/THERMOSTAT
COLLETTORE DELL'ACQUA/TERMOSTATO
COLECTOR DEL AQUA DE REFRIGERACION/TERMOSTATO
VATTENMANTEL/TERMOSTAT
RGP4449 -UN-03MAR95

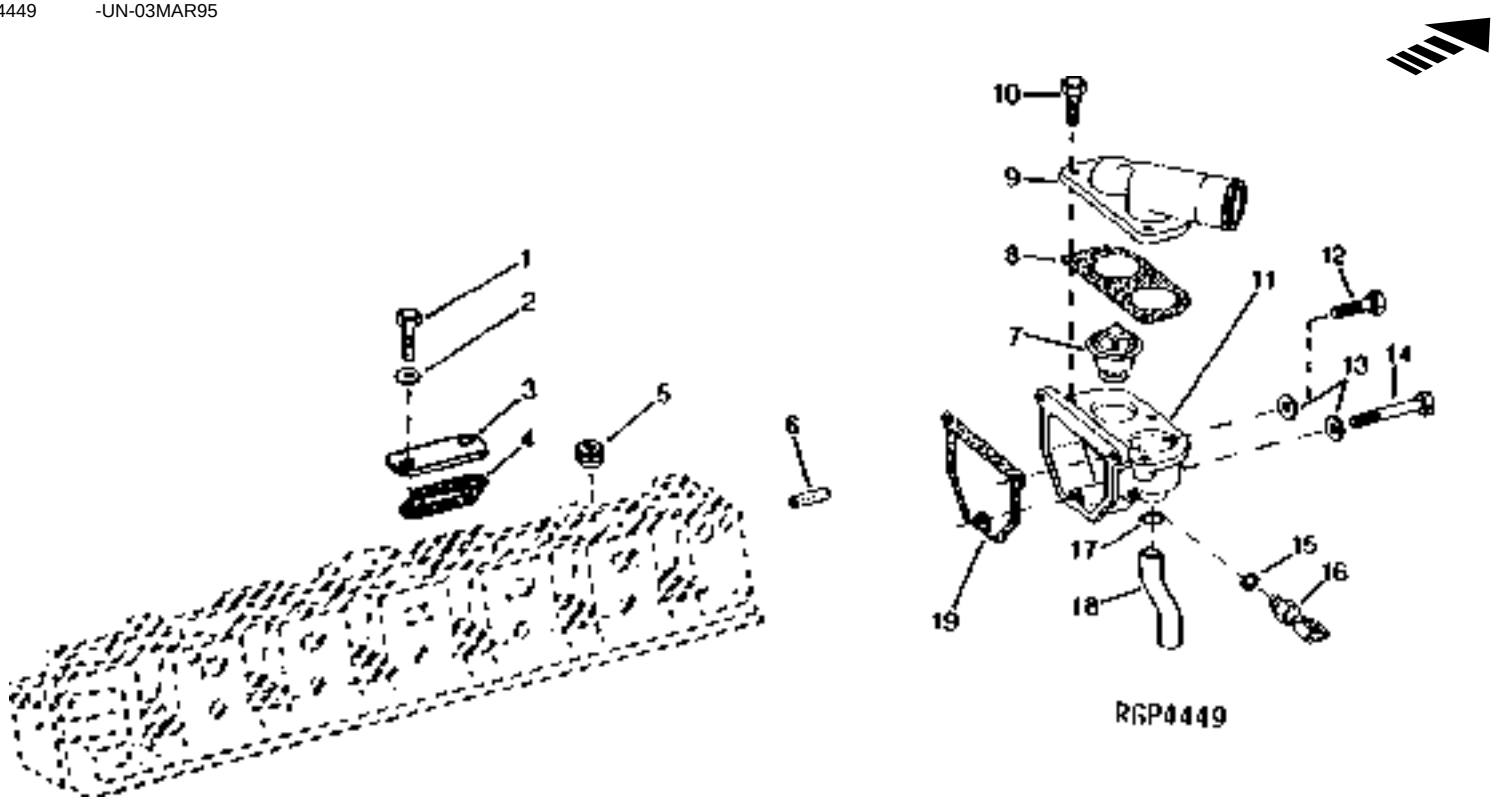

KEY	PART NO.	PART NAME	QTY	ENGINE SERIAL NO. 8400	REMARKS
1	19H2284	CAP SCREW	4	X	3/8" X 7/8"
2	24H1305	WASHER	4	X	13/32" X 13/16" X 0.065"
3	R86061	STRAP	2	X	
4	R88397	GASKET	2	X	
5	15H691	PIPE BUSHING	1	X	1/8"
6	34H329	SPRING PIN	1	X	
7	AR48675	THERMOSTAT	2	X	82°C (180°F)
8	R124607	GASKET	1	X	
9	R122196	COVER	1	X	
10	19H2284	CAP SCREW	3	X	3/8" X 7/8"
11	R122195	HOUSING	1	X	
12	19H3483	CAP SCREW	2	X	3/8" X 1-1/8"
13	24M7096	WASHER	3	X	10.500 X 18 X 1.600 MM
14	19H1819	CAP SCREW	1	X	3/8" X 2-1/8"
15	R77673	O-RING	1	X	
16	RE151433	WATER TEMPERATURE SENSOR	1	X	(SUB FOR RE48073)
17	R72328	O-RING	1	X	
18	R120022	TUBE	1	X	
19	R124211	GASKET	1	X	

https://www.truck-manuals.net/

ENGINE GASKET KITS
JEU DE JOINTS MOTEUR
MOTOR-DICHTUNGSSATZ
SERIE GUARNIZIONI MORORE
JUEGO DE JUNTAS PARA EL MOTOR
PACKNINGSSATS FOR MOTOR
RGP4358 -UN-01JAN94

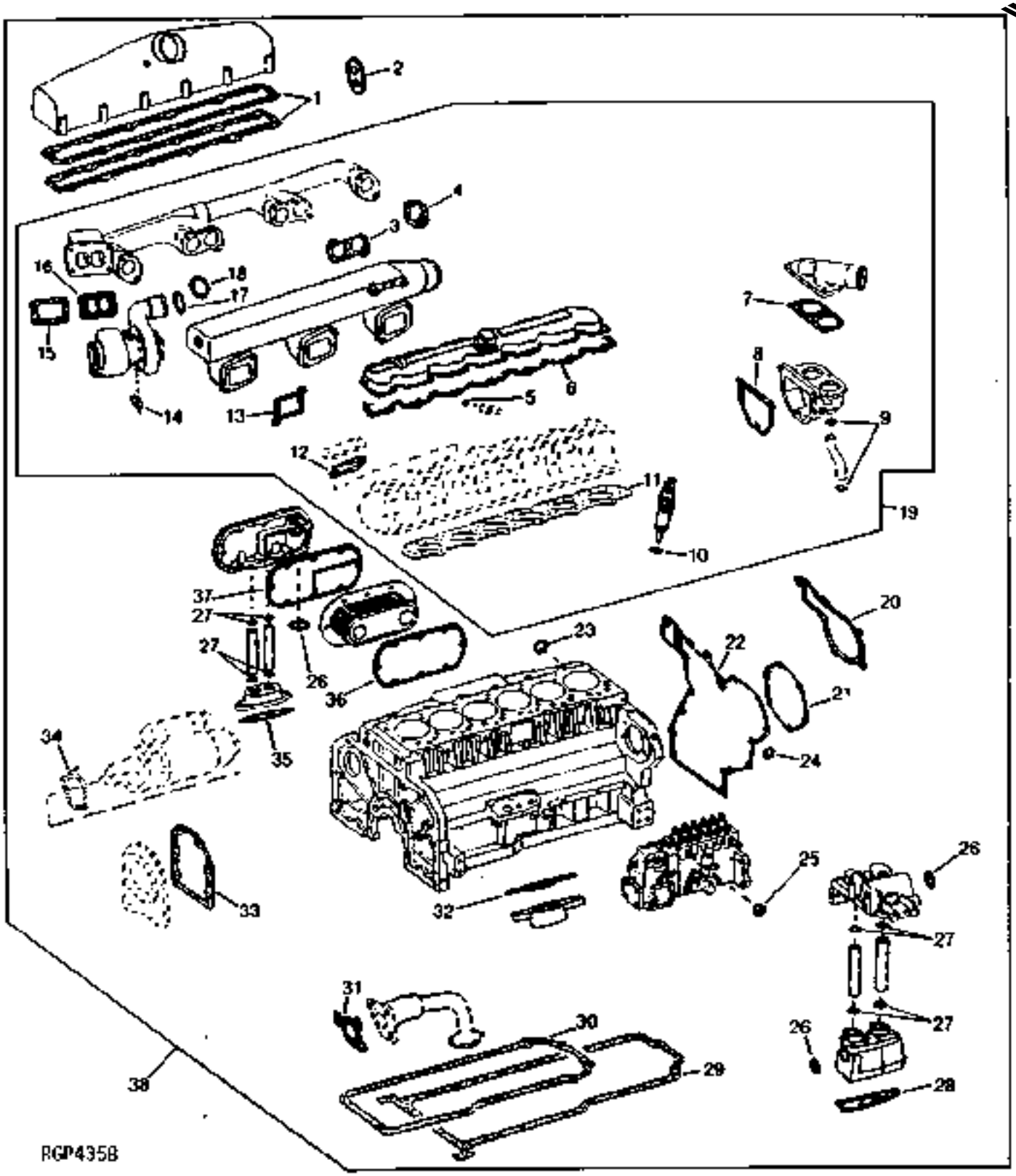

https://www.truck-manuals.net/

KEY	PART NO.	PART NAME	QTY	ENGINE SERIAL NO.	8400	REMARKS
1	R88993	GASKET	NA		X	
2	R100911	SEAL	NA		X	
3	RE62776	GASKET	2		X	(SUB FOR R122503, APPL)
4	RE62777	GASKET	2		X	(SUB FOR R122504, APPL)
5	R77551	O-RING	6		X	
6	R49866	GASKET	1		X	
7	R124607	GASKET	1		X	
8	R124211	GASKET	1		X	
9	R72328	O-RING	1		X	
10	R84472	WASHER	6		X	
11	RE55475	ENGINE CYLINDER HEAD GASKET	1		X	
12	R88397	GASKET	2		X	
13	R120646	GASKET	3		X	
14	R105346	GASKET	1		X	
15	R92097	GASKET	NA		X	
16	R89879	GASKET	1		X	
17	R86743	O-RING	1		X	
18	R50405	O-RING	NA		X	
19	RE57186	GASKET KIT	1		X	CYLINDER HEAD
20	R119383	GASKET	1		X	
21	R50390	GASKET	1		X	
22	R119384	GASKET	1		X	
23	U13639	O-RING	1		X	
24	R54856	O-RING	1		X	
25	R53899	WASHER	1		X	(USE WITH R83489)
	R53901	WASHER	1		X	(USE WITH R83490)
26	U17409	O-RING	3		X	
27	R47153	O-RING	4		X	
28	R119847	GASKET	1		X	
29	.....	GASKET	NA		X	
30	R49377	GASKET	1		X	
31	R100569	GASKET	1		X	
32	R109625	GASKET	1		X	
33	R26058	GASKET	1		X	
34	R53108	GASKET	1		X	
35	R50424	GASKET	1		X	
36	AR58952	GASKET	1		X	
37	R117060	GASKET	1		X	
38	RE57187	GASKET KIT	1		X	(A) ENGINE REBUILD
..	R124030	GASKET	1		X	

(A) ALSO ORDER R125855 OIL PAN GASKET, AS REQUIRED.

https://www.truck-manuals.net/

RADIATOR HOSES
FLEXIBLES (DURITS) DE RADIATEUR
KUEHLERSSCHLAEUCHE
TUBI FLESSIBLI DEL RADIATORE
MANGUERAS DEL RADIADOR
KYLARSLANGAR
RXP022786 -UN-25AUG98

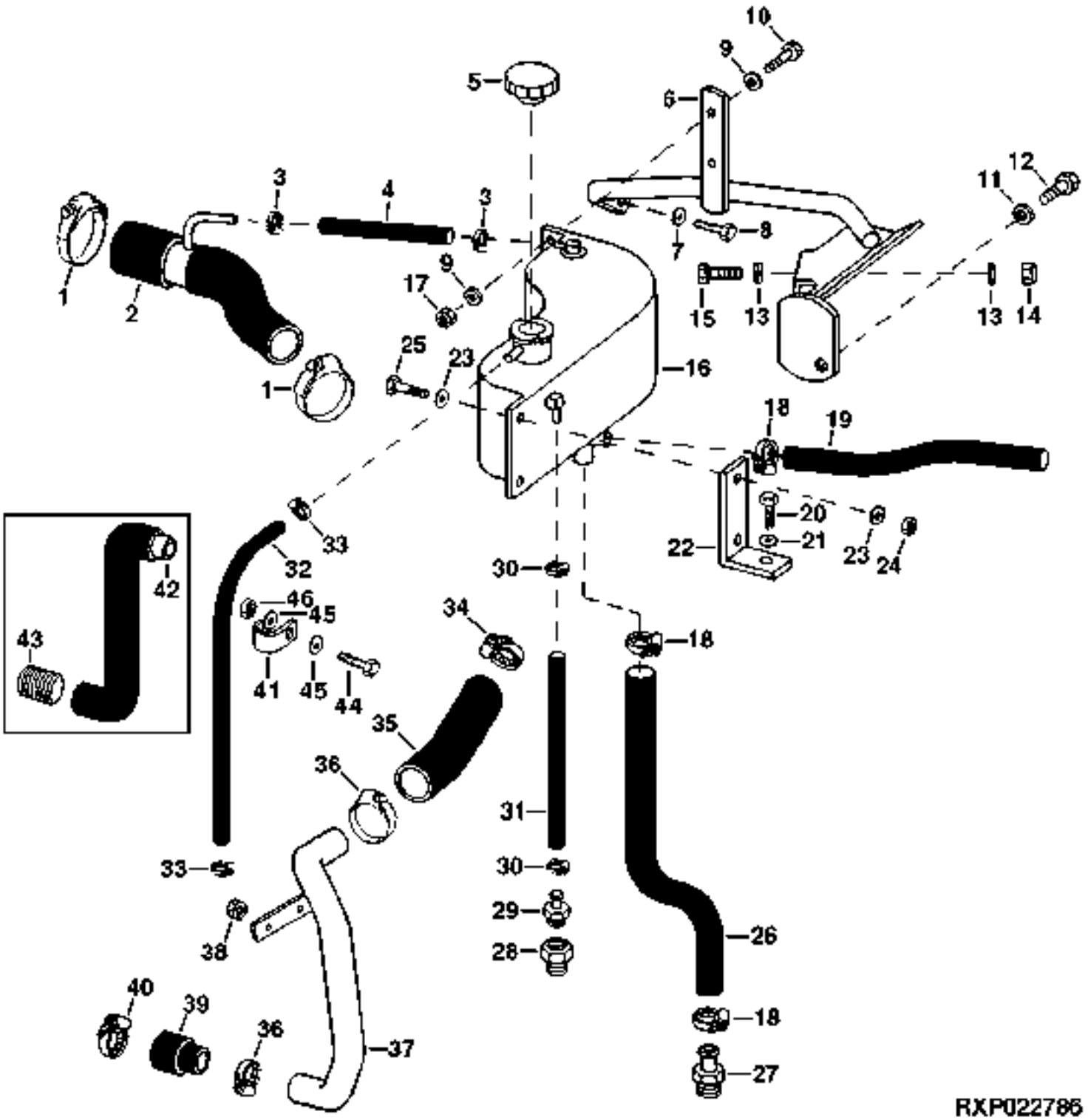

https://www.truck-manuals.net/

KEY	PART NO.	PART NAME	QTY	TRACTOR SERIAL NO.	ALL	REMARKS
1	TY22486	CLAMP	2		X	
2	RE61659	HOSE	1		X	
3	TY22462	CLAMP	2		X	(SUB FOR AR48236)
4	R125635	HOSE	1		X	
5	RE43593	FILLER CAP	1		X	
6	RE60649	SUPPORT	1		X	
7	24M7336	WASHER	2		X	9 X 16 X 1.600 MM
8	19M7407	CAP SCREW	2		X	M8 X 25
9	24M7036	WASHER	4		X	9 X 16 X 1.600 MM
10	19M7881	SCREW	2		X	M8 X 20
11	24M7338	WASHER	4		X	17 X 30 X 3 MM
12	RE10901	SCREW	1		X	
13	24M7036	WASHER	2		X	9 X 16 X 1.600 MM
14	14M7273	NUT	1		X	M8
15	19M7881	SCREW	1		X	M8 X 20
16	RE154389	TANK	1		X	(SUB FOR RE61879)
17	14M7273	NUT	2		X	M8
18	R117721	CLAMP	4		X	
19	R121969	HOSE	1		X	(A) (MAKE FROM TY22413)
20	19H1833	CAP SCREW	1		X	5/8" X 1-1/4"
21	24M7338	WASHER	1		X	17 X 30 X 3 MM
22	R121738	BRACKET	1		X	
23	24M7336	WASHER	4		X	9 X 16 X 1.600 MM
24	14M7273	NUT	2		X	M8
25	19M7881	SCREW	2		X	M8 X 20
26	R107666	HOSE	1	-009999		(8100, 8200, 8300)
	R125175	HOSE	1	010000-		(8100, 8200, 8300)
	R125175	HOSE	1			8400 ONLY
27	R41985	FITTING	1		X	
28	15H691	PIPE BUSHING	1		X	1/8"
29	E48764	FITTING	1		X	
30	N194814	CLAMP	2		X	
31	R111932	HOSE	1		X	
32	R125166	HOSE	1		X	
33	TY22462	CLAMP	2		X	
34	RE56098	CLAMP	1		X	
35	R131646	HOSE	1	010000-	X	
36	TY22485	CLAMP	2	010000-	X	
37	RE66801	TUBE	1	010000-	X	
38	14M7296	FLANGE NUT	2	010000-	X	
39	R131520	HOSE	1	010000-	X	
40	TY22486	CLAMP	1		X	
41	R126404	CLAMP	1		X	
42	RE61673	HOSE	1	-009999		(8100, 8200, 8300)
	RE61674	HOSE	1	-009999		8400 ONLY
43	R125365	BUSHING	2	-009999	X	
44	19M8008	CAP SCREW	2		X	
45	24M7338	WASHER	4		X	
46	14M7273	NUT	2		X	

(A) HEATER RETURN
CONDUIT, RETOUR DE CHAUFFAGE
HEIZUNGS-RUECKLAUF
TUBO DI RITORNO DEL RISCALDATORE
RETORNO DEL CALENTADOR
VAERMEAPPARAT, RETUR

https://www.truck-manuals.net/

COOLANT RECOVERY TANK
RESERVOIR DE COMPENSATION, LIQUIDE DE REFROIDISSEMENT
KUEHLMITTEL-UEBERLAUFTANK
SERBATOIO DI RECUPERO DEL LIQUIDO DI RAFFREDDAMENTO
TANQUE DE RECUPERACION DE REFRIGERANTE
AATERVINNINGSTANK FOER KYLMEDEL
RXP021110 -UN-28MAR95

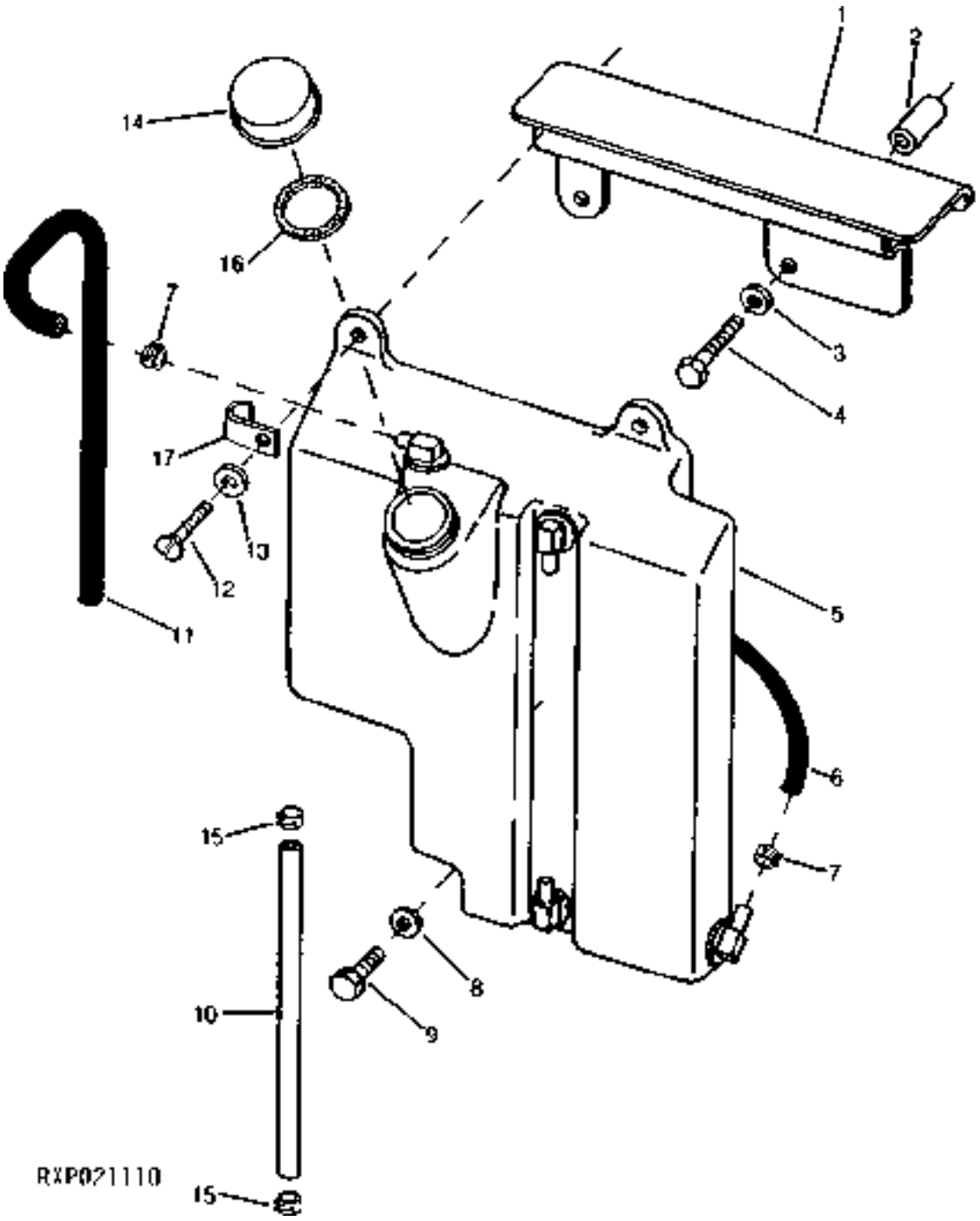

https://www.truck-manuals.net/

KEY	PART NO.	PART NAME	QTY	TRACTOR SERIAL NO.	ALL	REMARKS
1	R124354	BRACKET	1		X	
2	28H3377	BUSHING	2		X	0.423" X 0.675" X 1-3/4"
3	24M7106	WASHER	2		X	10 X 18 X 2.500 MM
4	19H3031	CAP SCREW	2		X	3/8" X 2-1/2"
5	RE65458	TANK	1		X	(SUB FOR RE61394 OR RE65457)
6	R125166	HOSE	1		X	
7	TY22462	CLAMP	2		X	
8	24M7106	WASHER	1		X	0.394" X 0.709" X 0.098"
9	19H1936	CAP SCREW	1		X	3/8" X 3/4"
10	R121759	LINE	1		X	
11	R125170	HOSE	1		X	
12	37M7031	SCREW	2		X	M6 X 16
13	24M7139	WASHER	1		X	6.400 X 18 X 1.600 MM (REAR)
14	RE63194	FILLER CAP	1		X	(SUB FOR RE49661)
15	TY22462	CLAMP	2		X	
16	R127245	GASKET	NA	-XXXXXX	X	
17	R126404	CLAMP	1		X	
	AH107416	CLIP	1		X	
..	R121762	CABLE	1		X	

https://www.truck-manuals.net/

RADIATOR/AFTERCOOLER
RADIATEUR/ECHANGEUR THERMIQUE AIR/EAU
KUEHLER/LADELUFTKUEHLER
RADIATORE/REFRIGERATORE SUCCESSIVO
RADIADOR/POSREFRIGERADOR
KYLAARE/MELLANKYLARE
RXP021615 -UN-31JUL96

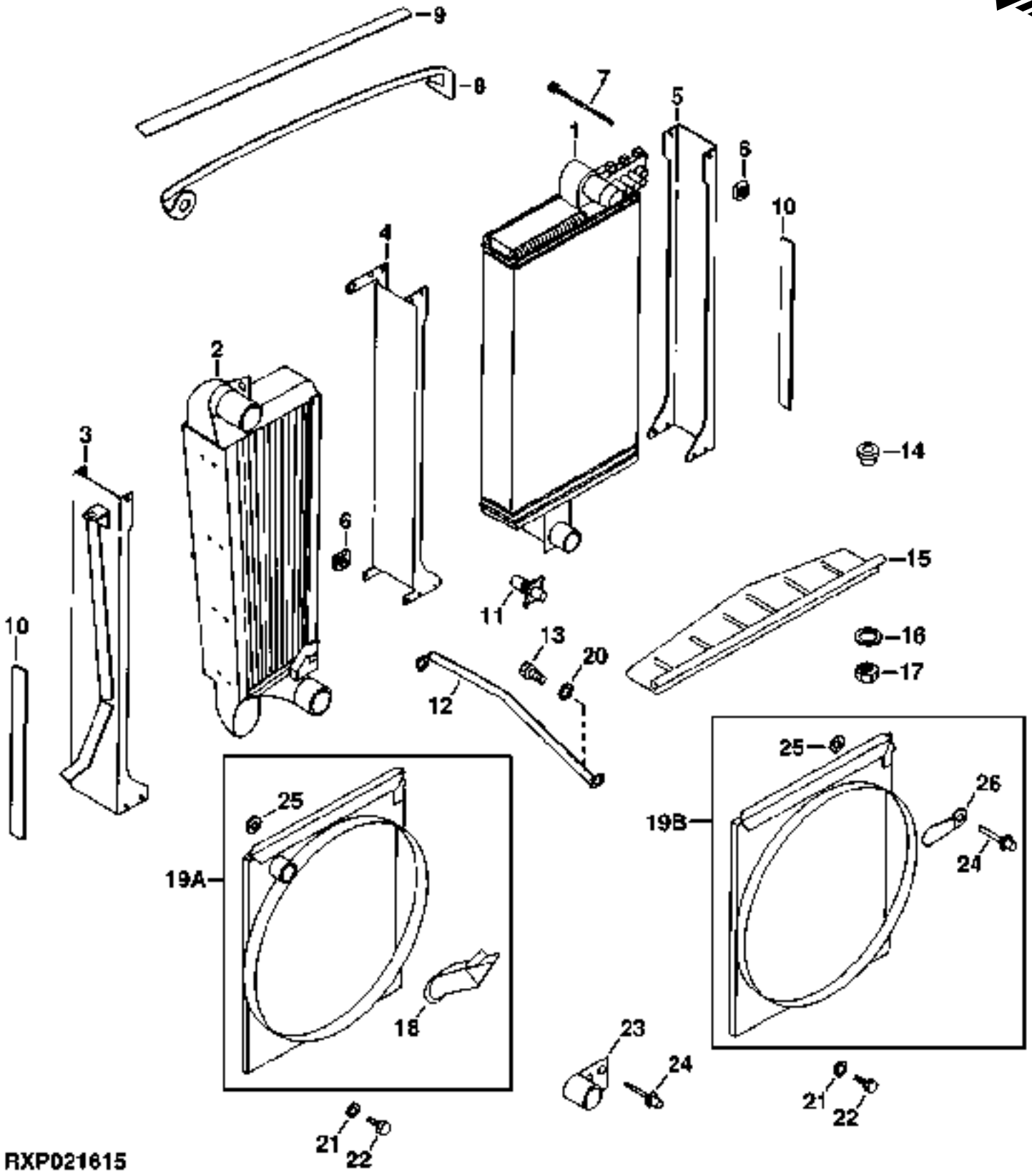

https://www.truck-manuals.net/

KEY	PART NO.	PART NAME	QTY	TRACTOR SERIAL NO.	8100	8200	8300	REMARKS
1	RE69135	RADIATOR	1		X	X		(SUB FOR RE61305)
	RE69135	RADIATOR	1	-025859			X	
	R122268	RADIATOR TOP	1		X	X		
	R122268	RADIATOR TOP	1	-025859			X	
	RE58362	BOTTOM	1		X	X		BOTTOM TANK
	RE58362	BOTTOM	1	-025859			X	
	R122269	GASKET	2		X	X		
	R122269	GASKET	1	-025859			X	
	RE159541	RADIATOR	1	025860-			X	
2	RE61307	AFTERCOOLER	1	-009999	X	X	X	
	RE66342	AFTERCOOLER	1	010000-	X	X		
	RE66342	AFTERCOOLER	1	010000-025859			X	
	RE61307	AFTERCOOLER	1	025860-			X	
3	RE69133	CHANNEL	1		X	X	X	(SUB FOR RE54925)
4	RE70715	CHANNEL	1		X	X	X	(SUB FOR RE54927)
5	RE69134	CHANNEL	1		X	X	X	(SUB FOR RE54928)
6	R122267	CLAMP	4		X	X	X	
7	R122266	PIN	4		X	X	X	
8	RE60504	PLATE	1		X	X	X	
9	R122550	SEAL	1		X	X	X	
10	R122029	SEAL	3		X	X	X	
11	AT13740	DRAIN VALVE	1		X	X	X	
12	R120522	BRACKET	1		X	X	X	
13	19H2021	CAP SCREW	1		X	X	X	3/8" X 5/8"
14	AT139776	ISOLATOR	2		X	X	X	
15	RE70714	SUPPORT	1		X	X	X	(SUB FOR RE54930)
	R124759	FOAM PAD	1		X	X	X	
16	24M7180	WASHER	2		X	X	X	13 X 37 X 3 MM
17	14M7275	NUT	2		X	X	X	M12
18	R121714	SHROUD	1	-009999	X	X	X	
19A	RE61220	SHROUD	1	-009999	X	X	X	
19B	RE69082	SHROUD	1	010000-	X	X	X	
20	24M7346	WASHER	1		X	X	X	11 X 20 X 2 MM
21	24H1291	WASHER	4		X	X	X	21/64" X 1-15/32" X 7/64"
22	19M7932	CAP SCREW	4		X	X	X	M8 X 16
23	R122473	TUBE	1	-009999	X	X	X	
24	M67889	RIVET	3		X	X	X	
25	24M7027	WASHER	3		X	X	X	5.300 X 10 X 1 MM
26	R134058	SHROUD	1	010000-	X	X	X	

https://www.truck-manuals.net/

RADIATOR/AFTERCOOLER
RADIATEUR/ECHANGEUR THERMIQUE AIR/EAU
KUEHLER/LADELUFTKUEHLER
RADIATORE/REFRIGERATORE SUCCESSIVO
RADIADOR/POSREFRIGERADOR
KYLAARE/MELLANKYLARE
RXP021615 -UN-31JUL96

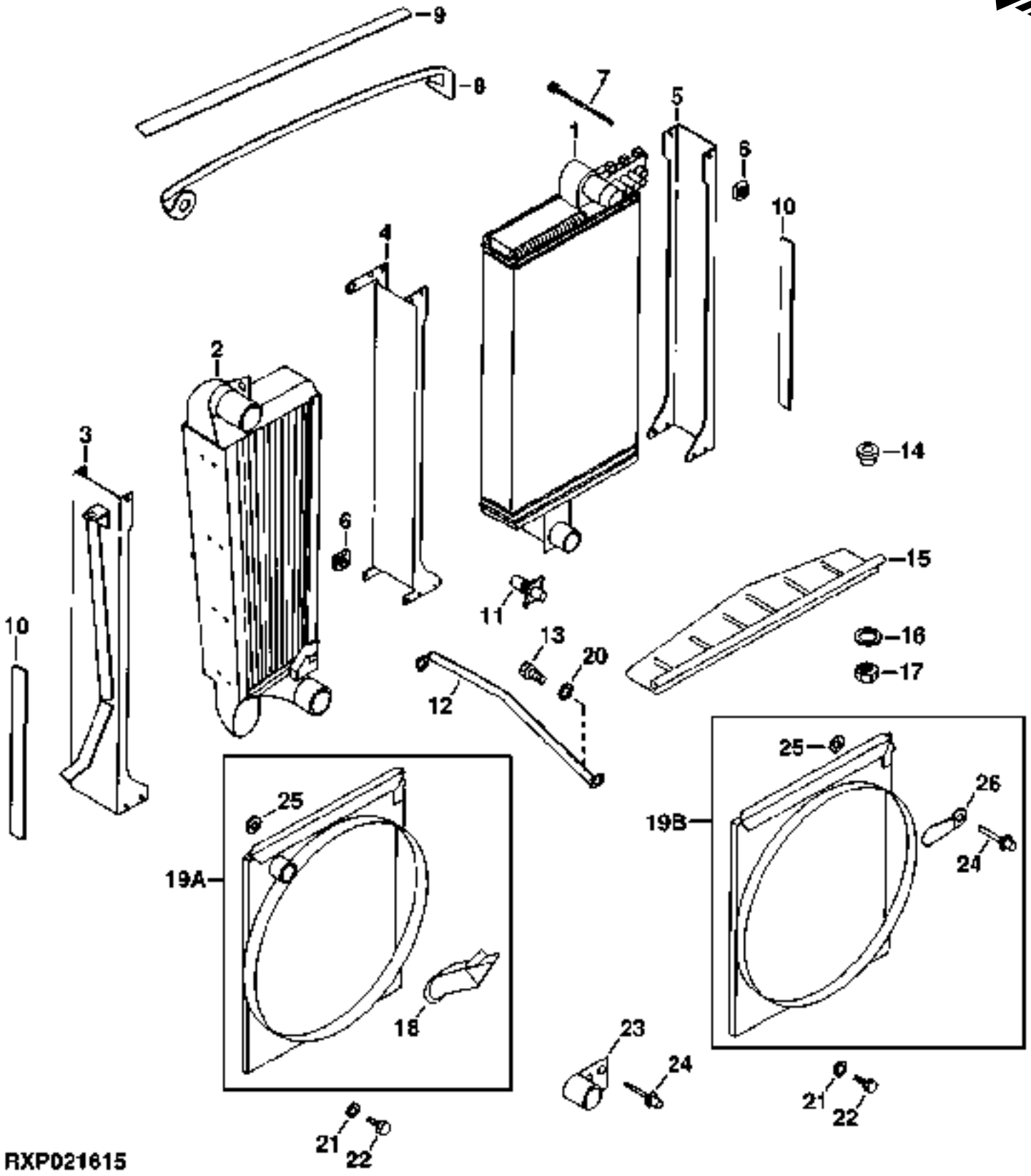

https://www.truck-manuals.net/

KEY	PART NO.	PART NAME	QTY	TRACTOR SERIAL NO.	8400	REMARKS
1	RE69136	RADIATOR	1	-025855	X	(SUB FOR RE61306 OR RE61305)
	R122268	RADIATOR TOP	1	-025855	X	
	RE58362	BOTTOM	1	-025855	X	
	R122269	GASKET	2	-025855	X	
	RE159541	RADIATOR	1	025856-		
2	RE61307	AFTERCOOLER	1		X	
	R124838	WASHER	1		X	
	RE61307	AFTERCOOLER	1		X	
3	RE69133	CHANNEL	1		X	(SUB FOR RE54925)
4	RE70715	CHANNEL	1		X	(SUB FOR RE54927)
5	RE69134	CHANNEL	1		X	(SUB FOR RE54928)
6	R122267	CLAMP	4		X	
7	R122266	PIN	4		X	
8	RE60504	PLATE	1		X	
9	R122550	SEAL	1		X	
10	R122029	SEAL	3		X	
11	AT13740	DRAIN VALVE	1		X	
12	R120522	BRACKET	1		X	
13	19H2021	CAP SCREW	1		X	3/8" X 5/8"
14	AT139776	ISOLATOR	2		X	
15	RE70714	SUPPORT	1		X	(SUB FOR RE54930)
	R124759	FOAM PAD	1		X	
16	24M7180	WASHER	2		X	13 X 37 X 3 MM
17	14M7275	NUT	2		X	M12
18	R121714	SHROUD	1	-009999	X	
19A	RE61220	SHROUD	1	-009999	X	
19B	RE69082	SHROUD	1	010000-	X	(SUB FOR RE66337)
20	24M7346	WASHER	1		X	11 X 20 X 2 MM
21	24H1291	WASHER	4		X	21/64" X 1-15/32" X 7/64"
22	19M7932	CAP SCREW	4		X	M8 X 16
23	R122473	TUBE	1	-009999	X	
24	M67889	RIVET	3		X	
25	24M7027	WASHER	3		X	5.300 X 10 X 1 MM
26	R134058	SHROUD	1	010000-	X	

https://www.truck-manuals.net/

SHIELD
DISPOSITIF DE PROTECTION
ABDECKUNG
PROTEZIONE
ESCUDO
SKYDD
RXP010146 -UN-01JAN94

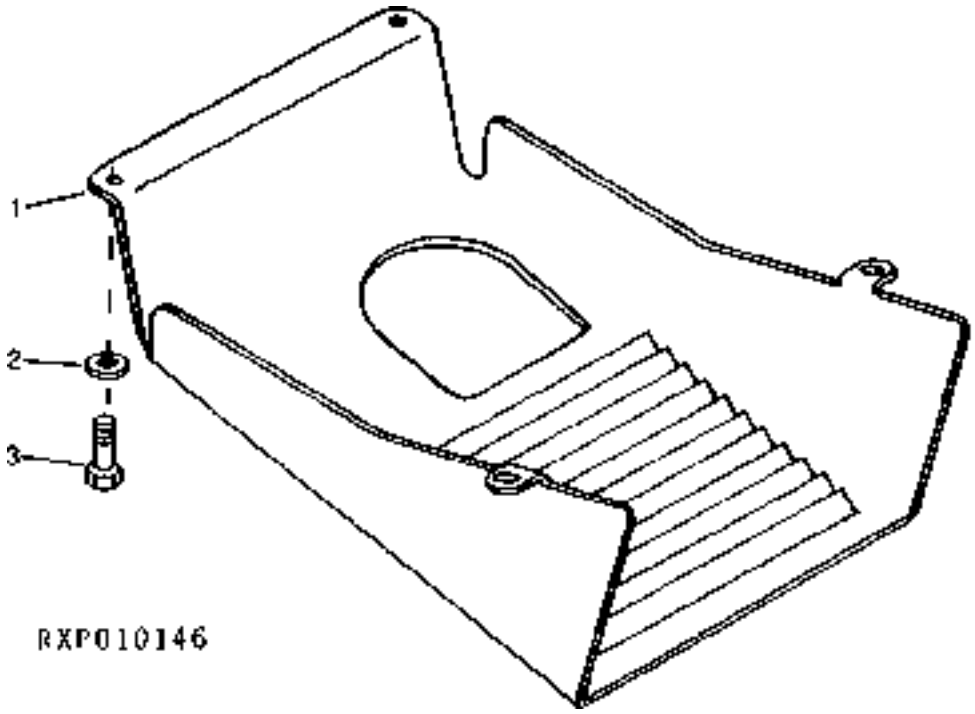

KEY	PART NO.	PART NAME	QTY	TRACTOR SERIAL NO.	ALL	REMARKS
1	R131224	DEFLECTOR	1		X	(SUB FOR R124431)
2	24M7346	WASHER	4		X	11 X 20 X 2 MM
3	19M8324	CAP SCREW	4		X	M10 X 16

https://www.truck-manuals.net/

MEMORANDA
MEMORANDA
MEMORANDA
MEMORANDA
MEMORANDA
MEMORANDA

https://www.truck-manuals.net/

FAN DRIVE (8100,8200 -009999)
VICO-COUPLEUR DE VENTILATEUR (8100,8200 -009999)
LUEFTERANTRIEB (8100,8200 -009999)
COMANDO VISCOSO VENTOLA (8100,8200 -009999)
EMBRAGUE'VISCO' D. VENTILADOR (8100,8200 -009999)
FLAEKTDRIVNING (8100,8200 -009999)
RXP025006 -UN-01JAN94

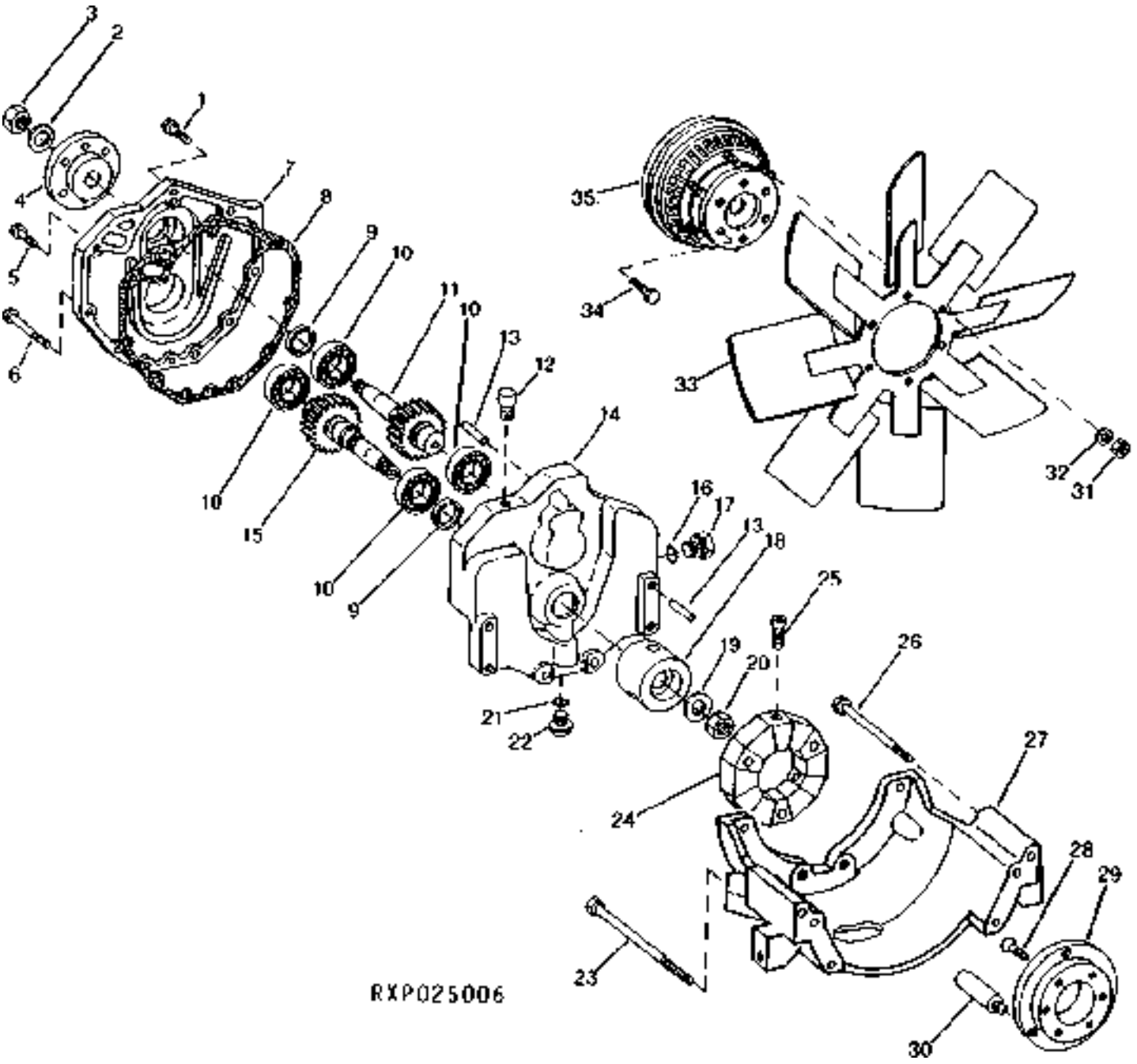

https://www.truck-manuals.net/

KEY	PART NO.	PART NAME	QTY	TRACTOR SERIAL NO.	8100	8200	8300	REMARKS
1	19M7658	CAP SCREW	1		X	X		M10 X 50
2	24M7242	WASHER	1		X	X		21.400 X 42 X 5 MM
3	14M7335	NUT	1		X	X		M20
4	R125036	HUB	1		X	X		
5	19M7662	CAP SCREW	4		X	X		M10 X 30
6	19M8081	CAP SCREW	4		X	X		M10 X 80
7	R119397	COVER	1		X	X		
8	R122134	GASKET	1		X	X		
9	RE61409	SEAL	2		X	X		
10	CH14887	BALL BEARING	4		X	X		
11	R124165	SHAFT	1	-001341	X			(SUB R125217 AND R125216)
	R125217	SHAFT	1	001342-	X			
	R125217	SHAFT	1	-001341		X		
	R124167	SHAFT	1	001342-		X		
12	JD5801	PRESSURE RELIEF FITTING	1		X	X		
13	R125033	PIN	4		X	X		
14	R125180	HOUSING	1		X	X		
15	R124164	SHAFT	1	-001341	X			(SUB R125216 AND R125217)
	R125216	SHAFT	1	001342-	X			
	R125216	SHAFT	1	-001341		X		
	R124166	SHAFT	1	001342-		X		
16	51M7045	O-RING	1		X	X		
17	RE46687	FITTING	1		X	X		
18	R125034	HUB	1		X	X		
19	24M7242	WASHER	1		X	X		21.400 X 42 X 5 MM
20	14M7335	NUT	1		X	X		M20
21	51M7042	O-RING	1		X	X		13.300 X 2.200 MM
22	RE52242	PLUG	1		X	X		
23	19H3542	CAP SCREW	2		X	X		1/2" X 6-1/2"
24	RE61441	COUPLING	1		X	X		
25	RE61558	SCREW	3		X	X		
26	19H3586	CAP SCREW	2		X	X		1/2" X 4-1/4", UP, LH
27	R124926	SUPPORT	1		X	X		
28	R112893	SCREW	6		X	X		
29	R125037	PLATE	1		X	X		
30	R129839	SCREW	3		X	X		(SUB FOR R125035)
31	14M7273	NUT	6		X	X		M8
32	12M7065	LOCK WASHER	6		X	X		0.319"
33	RE61236	FAN	1		X	X		
34	19M7402	CAP SCREW	6		X	X		M10 X 25 HS 10.9
35	RE63002	DRIVE	1		X	X		

https://www.truck-manuals.net/

FAN DRIVE (8100,8200 010000-)
VISCO-COUPLEUR DE VENTILATOR (8100,8200 010000-)
LUEFTERANTRIEB (8100,8200 010000-)
COMANDO VISCOSO VENTOLA (8100,8200 010000-)
EMBRAGUE'VISCO' D. VENTILADOR (8100,8200 010000-)
FLAEKTDRIVNING (8100,8200 010000-)
RXP022257 -UN-12SEP97

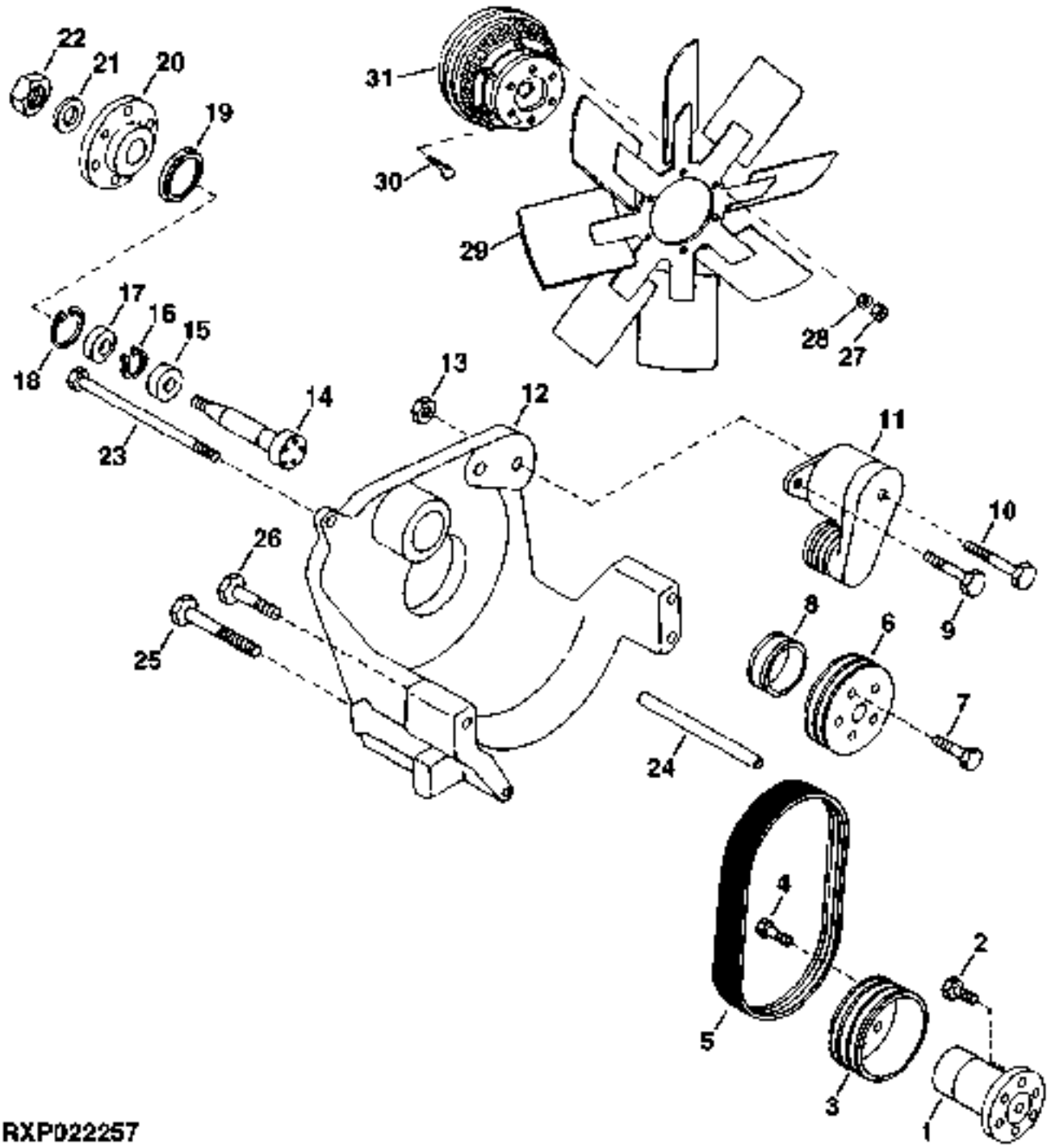

RXP022257

https://www.truck-manuals.net/

KEY	PART NO.	PART NAME	QTY	TRACTOR SERIAL NO.	8100	8200	8300	REMARKS
1	R131275	PULLEY	1		X	X		
2	19H2676	CAP SCREW	6		X	X		3/8" X 1"
3	R132498	PULLEY	1	-025869	X	X		
	R163158	PULLEY	1	025870-	X	X		
4	19M7784	SCREW	5		X	X		M10 X 20
5	R131213	BELT	1		X	X		
6	R132497	PULLEY	1	-025869	X	X		
	R163157	PULLEY	1	025870-	X	X		
7	19M7784	SCREW	5		X	X		M10 X 20
8	R119207	SEAL	1		X	X		
9	19M7808	SCREW	1		X	X		M10 X 65
10	19M7944	SCREW	1		X	X		M10 X 120
11	RE69083	TIGHTENER	1		X	X		
12	R131222	DRIVE	1		X	X		
13	14M7296	FLANGE NUT	2		X	X		M10
14	R130135	SHAFT	1		X	X		
	R133966	ROCKSHAFT	1		X	X		
15	RE65610	BALL BEARING	1		X	X		
16	40M7109	SNAP RING	1		X	X		
17	RE65651	BALL BEARING	1		X	X		
18	40M1870	SNAP RING	1		X	X		
19	R130561	V-RING SEAL	1		X	X		
20	R130141	HUB	1		X	X		
21	24M7242	WASHER	1		X	X		21.400 X 42 X 5 MM
22	14M7335	NUT	1		X	X		M20
23	19H3767	CAP SCREW	1		X	X		3/8" X 10-1/2"
24	R129245	SPACER	1		X	X		
25	19H3770	CAP SCREW	2		X	X		1/2" X 7", LOW
26	19H3542	CAP SCREW	1		X	X		1/2" X 6-1/2", L.H.UP
	19H3586	CAP SCREW	1		X	X		1/2" X 4-1/4", L.H. UP
	19H3057	CAP SCREW	1		X	X		1/2" X 2-3/4", R.H. UP
27	14M7273	NUT	6		X	X		M8
28	12M7065	LOCK WASHER	6		X	X		8.100 MM
29	RE66338	FAN	1		X	X		
30	19M7402	CAP SCREW	6		X	X		M10 X 25 HS 10.9
31	RE71379	DRIVE	1	-025869	X	X		(SUB FOR RE65891)
	RE155581	DRIVE	1	025870-	X	X		

https://www.truck-manuals.net/

FAN DRIVE (8300,8400 -009999)
VISCO-COUPLEUR DE VENTILATOR (8300,8400 -009999)
LUEFTERANTRIEB (8300,8400 -009999)
COMANDO VISCOSO VENTOLA (8300,8400 -009999)
EMBRAGUE'VISCO' D. VENTILADOR (8300,8400 -009999)
FLAEKTDRIVNING (8300,8400 -009999)
RXP025006 -UN-01JAN94

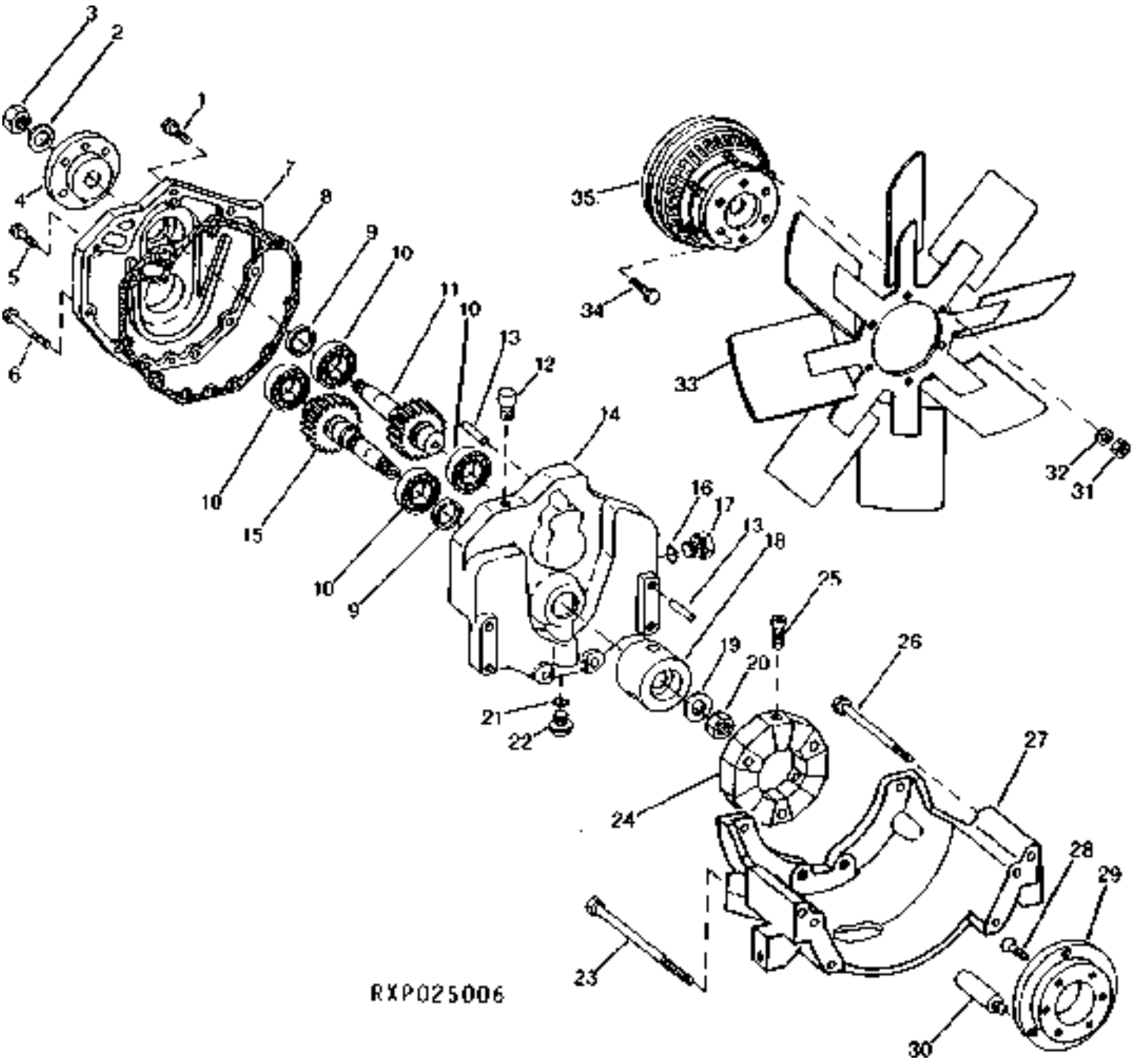

https://www.truck-manuals.net/

KEY	PART NO.	PART NAME	QTY	TRACTOR SERIAL NO.	8200	8300	8400	REMARKS
1	19M7658	CAP SCREW	1		X	X		M10 X 50
2	24M7242	WASHER	1		X	X		21.400 X 42 X 5 MM
3	14M7335	NUT	1		X	X		M20
4	R125036	HUB	1		X	X		
5	19M7662	CAP SCREW	4		X	X		M10 X 30
6	19M8081	CAP SCREW	4		X	X		M10 X 80
7	R119397	COVER	1		X	X		
8	R122134	GASKET	1		X	X		
9	RE61409	SEAL	2		X	X		
10	CH14887	BALL BEARING	4		X	X		
11	R124167	SHAFT	1	-002162	X			
	R125219	SHAFT	1	002163-	X			
	R125219	SHAFT	1	-002162		X		
	R126793	SHAFT	1	002163-		X		
12	JD5801	PRESSURE RELIEF FITTING	1		X	X		
13	R125033	PIN	4		X	X		
14	R125180	HOUSING	1		X	X		
15	R124166	SHAFT	1	-002162	X			
	R125218	SHAFT	1	002163-	X			
	R125218	SHAFT	1	-002162		X		
	R126792	SHAFT	1	002163-		X		
16	51M7045	O-RING	1		X	X		
17	RE46687	FITTING	1		X	X		
18	R125034	HUB	1		X	X		
19	24M7242	WASHER	1		X	X		21.400 X 42 X 5 MM
20	14M7335	NUT	1		X	X		M20
21	51M7042	O-RING	1		X	X		13.300 X 2.200 MM
22	RE52242	PLUG	1		X	X		
23	19H3542	CAP SCREW	2		X	X		1/2" X 6-1/2"
24	RE61441	COUPLING	1		X	X		
25	RE61558	SCREW	3		X	X		
26	19H3586	CAP SCREW	2		X	X		1/2" X 4-1/4"
27	R124926	SUPPORT	1		X	X		LH
28	R112893	SCREW	6		X	X		
29	R125037	PLATE	1		X	X		
30	R129839	SCREW	3		X	X		(SUB FOR R125035)
31	14M7273	NUT	6		X	X		M8
32	12M7065	LOCK WASHER	6		X	X		8.100 MM
33	RE61236	FAN	1		X	X		
34	19M7402	CAP SCREW	6		X	X		M10 X 25 HS 10.9
35	RE63003	DRIVE	1		X	X		

https://www.truck-manuals.net/

FAN DRIVE (8300,8400 010000-)
VISCO-COUPLEUR DE VENTILATOR (8300,8400 010000-XXXXXX)
LUEFTERANTRIEB (8300,8400 010000-XXXXXX)
COMANDO VISCOSO VENTOLA (8300,8400 010000-XXXXXX)
EMBRAGUE'VISCO' D. VENTILADOR (8300,8400 010000-XXXXXX)
FLAEKTDRIVNING (8300,8400 010000-XXXXXX)
RXP022257 -UN-12SEP97

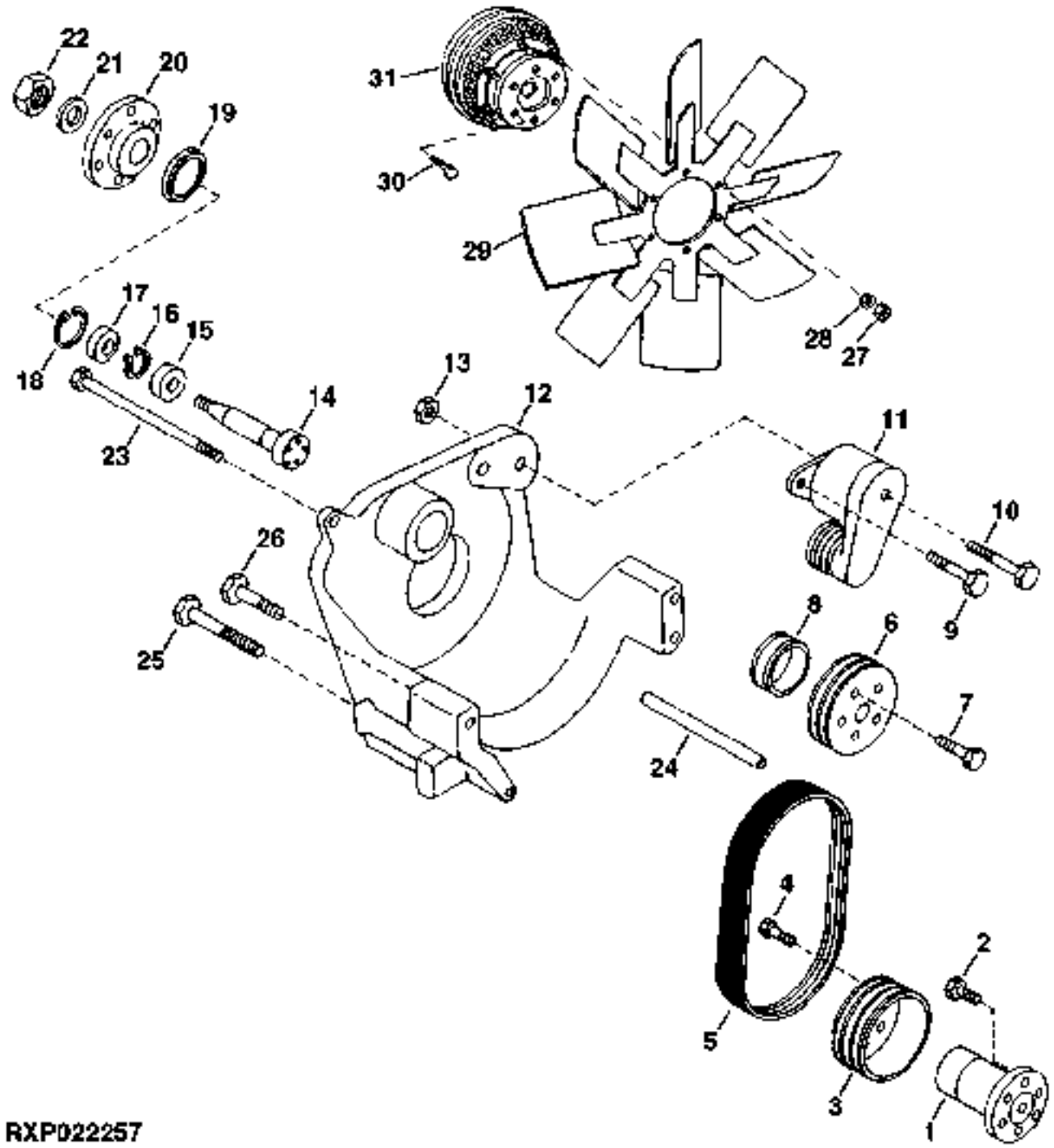

RXP022257

https://www.truck-manuals.net/

KEY	PART NO.	PART NAME	QTY	TRACTOR SERIAL NO.	8200	8300	8400	REMARKS
1	R131275	PULLEY	1		X	X		
2	19H2676	CAP SCREW	6		X	X		3/8" X 1"
3	R132499	PULLEY	1	-025855	X	X		
	R163158	PULLEY	1	025856-		X		
	R132498	PULLEY	1	025856-		X		
4	19M7784	SCREW	5		X	X		M10 X 20
5	R131213	BELT	1		X	X		
6	R132496	PULLEY	1	-025855	X	X		
	R163157	PULLEY	1	025856-	X			
	R152709	PULLEY	1	025856-		X		
7	19M7784	SCREW	5		X	X		M10 X 20
8	R119207	SEAL	1		X	X		
9	19M7808	SCREW	1		X	X		M10 X 65
10	19M7944	SCREW	1		X	X		M10 X 120
11	RE69083	TIGHTENER	1		X	X		
12	R131222	DRIVE	1		X	X		
13	14M7296	FLANGE NUT	2		X	X		M10
14	R130135	SHAFT	1	-025855	X	X		
	R133966	ROCKSHAFT	1	025856-	X	X		
15	RE65610	BALL BEARING	1		X	X		
16	40M7109	SNAP RING	1		X	X		
17	RE65651	BALL BEARING	1		X	X		
18	40M1870	SNAP RING	1		X	X		
19	R130561	V-RING SEAL	1		X	X		
20	R130141	HUB	1		X	X		
21	24M7242	WASHER	1		X	X		21.400 X 42 X 5 MM
22	14M7335	NUT	1		X	X		M20
23	19H3767	CAP SCREW	1		X	X		3/8" X 10-1/2"
24	R129245	SPACER	1		X	X		
25	19H3542	CAP SCREW	2		X	X		1/2" X 6-1/2", LOW
26	19H3586	CAP SCREW	1		X	X		1/2" X 4-1/4", L.H. UP
	19H3057	CAP SCREW	1		X	X		1/2" X 2-3/4", R.H. UP
27	14M7273	NUT	6		X	X		M8
28	12M7065	LOCK WASHER	6		X	X		8.100 MM
29	RE66338	FAN	1		X	X		
30	19M7402	CAP SCREW	6		X	X		M10 X 25
31	RE71379	DRIVE	1	-XXXXXX	X	X		(SUB FOR RE65891)
	RE155581	DRIVE	1	XXXXXX-	X	X		

https://www.truck-manuals.net/

MEMORANDA
MEMORANDA
MEMORANDA
MEMORANDA
MEMORANDA
MEMORANDA

https://www.truck-manuals.net/

MEMORANDA
MEMORANDA
MEMORANDA
MEMORANDA
MEMORANDA
MEMORANDA

https://www.truck-manuals.net/

ENGINE COOLANT HEATER (NO HEATER)
RECHAUFFEUR DU LIQUIDE DE REFROIDISSEMENT (SANS CHAUFFAGE)
KUEHLWASSER-VORWAERMER (OHNE HEIZUNG)
RISACALDATORE REFRIGERANTE (SENZA RISDALDATORE)
DISPOSITIVO PARA EL CALENTAMIENTO DEL LIQUIDO REFRIGERANTE (SIN CALEFACTOR)
KYLVATSKEVARMARE (UTAN VAERMEAPPARAT)
RXP020093 -UN-01JAN94

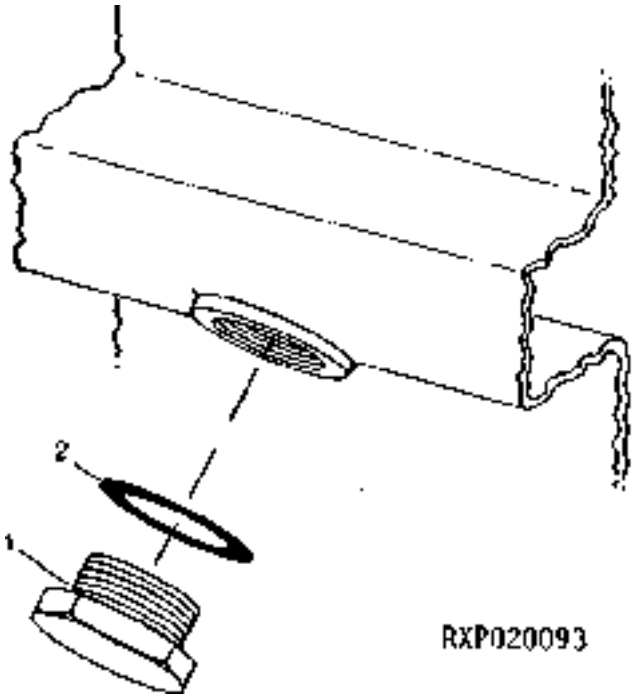

KEY	PART NO.	PART NAME	QTY	ENGINE SERIAL NO.	ALL	REMARKS
1	R39741	DRAIN PLUG	1		X	
2	U13639	O-RING	1		X	

https://www.truck-manuals.net/

FLYWHEEL COVER
VOLANT-MOTEUR, PROTECTION
SCHWUNGRAD, ABDECKUNG
VOLANO, COPERTURA
VOLANTE, CUBIERTA
SVAENGHJUL, SKYDD
RXP021604 -UN-20JUN96



KEY	PART NO.	PART NAME	QTY	TRACTOR SERIAL NO.	ALL	REMARKS
1	R129054	COVER	1		X	(SUB FOR R124622)
2	19H1871	CAP SCREW	6		X	3/4" X 1-1/4", W/ MFWD
	R120252	CAP SCREW	2		X	W/O MFWD
	19H1871	CAP SCREW	1		X	3/4" X 1-1/4", W/O MFWD
	19H1735	CAP SCREW	1	-009999	X	3/4" X 3-1/2"
	19H1871	CAP SCREW	1	010000-	X	3/4" X 1-1/4"
3	24H1392	WASHER	6		X	25/32" X 1-3/8" X 0.120"
4	14H793	NUT	1	-009999	X	3/4"

https://www.truck-manuals.net/

ENGINE COUPLING
ACCOUPLEMENT DE MOTEUR
MOTORKUPPLUNG
RACCORDO DEL MOTORE
ACOPLAMIENTO DEL MOTOR
MOTORKOPPLING
RXP022272 -UN-29SEP97

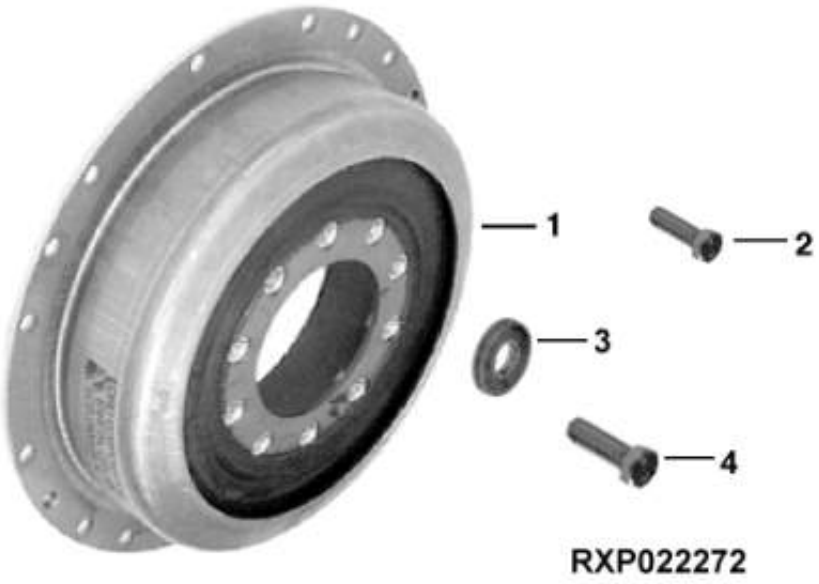

KEY	PART NO.	PART NAME	QTY	ENGINE SERIAL NO.	ALL	REMARKS
1	RE45382	TORSIONAL DAMPENER	1		X	
2	19M7835	SCREW	8		X	M10 X 35
3	24M7240	WASHER	9		X	13 X 25 X 3 MM
4	19M7789	SCREW	9		X	M12 X 30

https://www.truck-manuals.net/

MEMORANDA
MEMORANDA
MEMORANDA
MEMORANDA
MEMORANDA
MEMORANDA

https://www.truck-manuals.net/

PULLEY/IDLER PULLEY/SHIELD (W/O AIR BRAKE)
POULIE/TENDEUR/DISPOSITIF DE PROTECTION (W/O FREIN A AIR COMPRIME)
RIEMENSCHEIBE/ZWISCHENSCHEIBE/ABDECKUNG (W/O DRUCKLUFTBREMS)
PILEGGIA/PULEGGIA FOLLE/ PROTEZIONE (W/O FRENO AD ARIA COMPRESSA)
POLEA/POLEA TENSORA/ESCUDO (W/O FRENOS NEUMATICOS)
REMSKIVA/TOMGAANGSSKIVA/SKYDD (W/O TRYCKLUFTSBROMS)
RXP025109 -UN-01JAN94

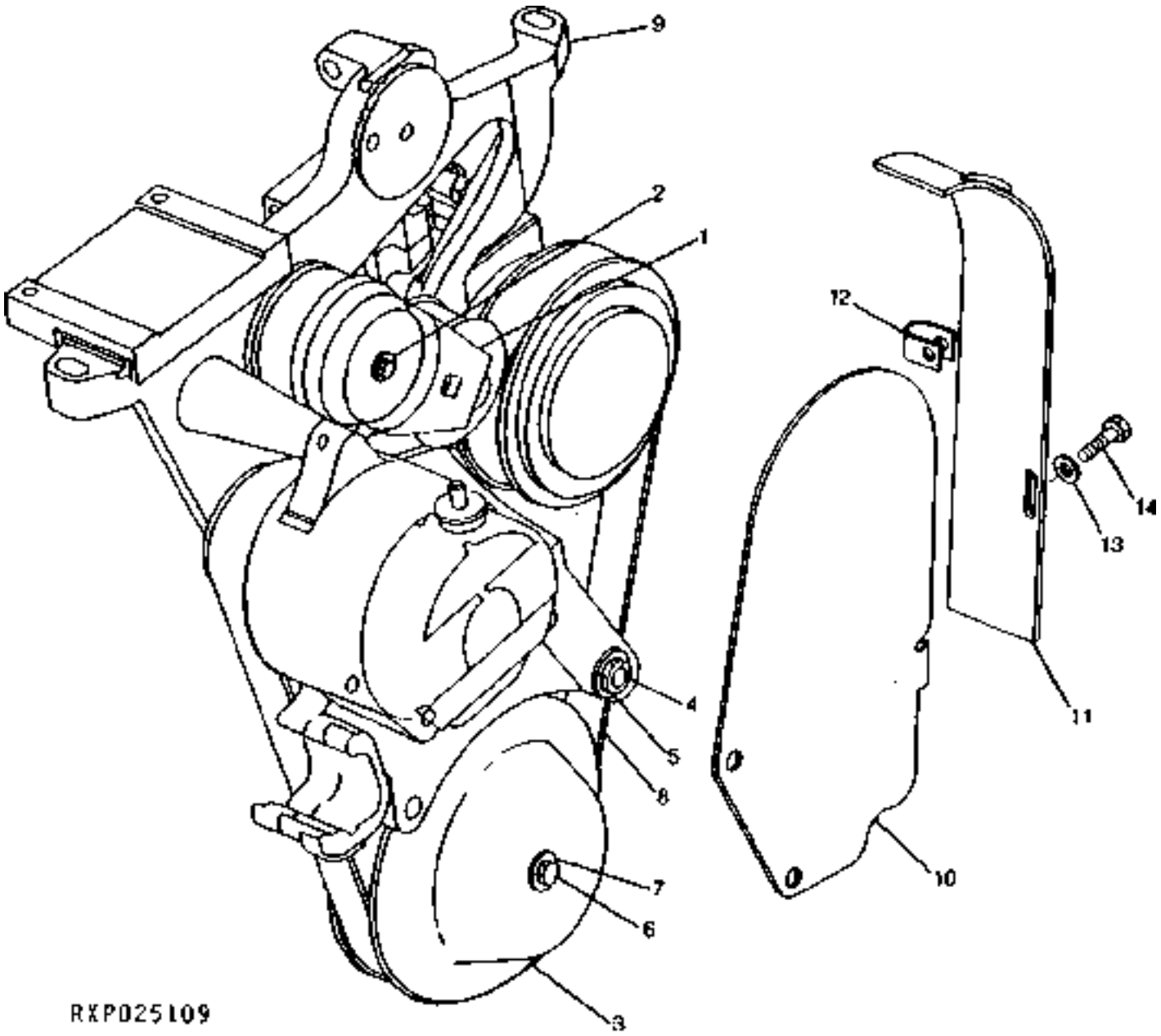

https://www.truck-manuals.net/

KEY	PART NO.	PART NAME	QTY	TRACTOR SERIAL NO.	ALL	REMARKS
1	RE57498	TIGHTENER	1		X	
2	19M7810	SCREW	1		X	M10 X 80
3	R107078	PULLEY	1		X	
4	19M7496	CAP SCREW	4		X	M12 X 45
5	24M7047	WASHER	4		X	13 X 24 X 2.500 MM
6	19M7791	SCREW	1		X	M12 X 40
7	24H1900	WASHER	1		X	17/32" X 2" X 1/4"
8	R124785	BELT	1		X	
9	R119489	BRACKET	1		X	
10	R125746	GUARD	1		X	
11	R125747	GUARD	1		X	
12	M84971	NUT	1		X	
13	24M7047	WASHER	1		X	13 X 24 X 2.500 MM
14	19M7881	SCREW	1		X	M8 X 20

https://www.truck-manuals.net/

PULLEY/IDLER PULLEY/SHIELD (W/ AIR BRAKE)
POULIE/TENDEUR/DISPOSITIF DE PROTECTION (W/ FREIN A AIR COMPRIME)
RIEMENSCHEIBE/ZWISCHENSCHEIBE/ABDECKUNG (W/ DRUCKLUFTBREMS)
PULEGGIA/PULEGGIA FOLLE/PROTEZIONE (FRENO AD ARIA COMPRESSA)
POLEA/POLEA TENSORA/ESCUDO (W/ FRENOS NEUMATICOS)
REMSKIVA/TOMGAANGSSKIVA/SKYDD (W/TRYCKLUFTSBROMS)
RXP025110 -UN-01JAN94

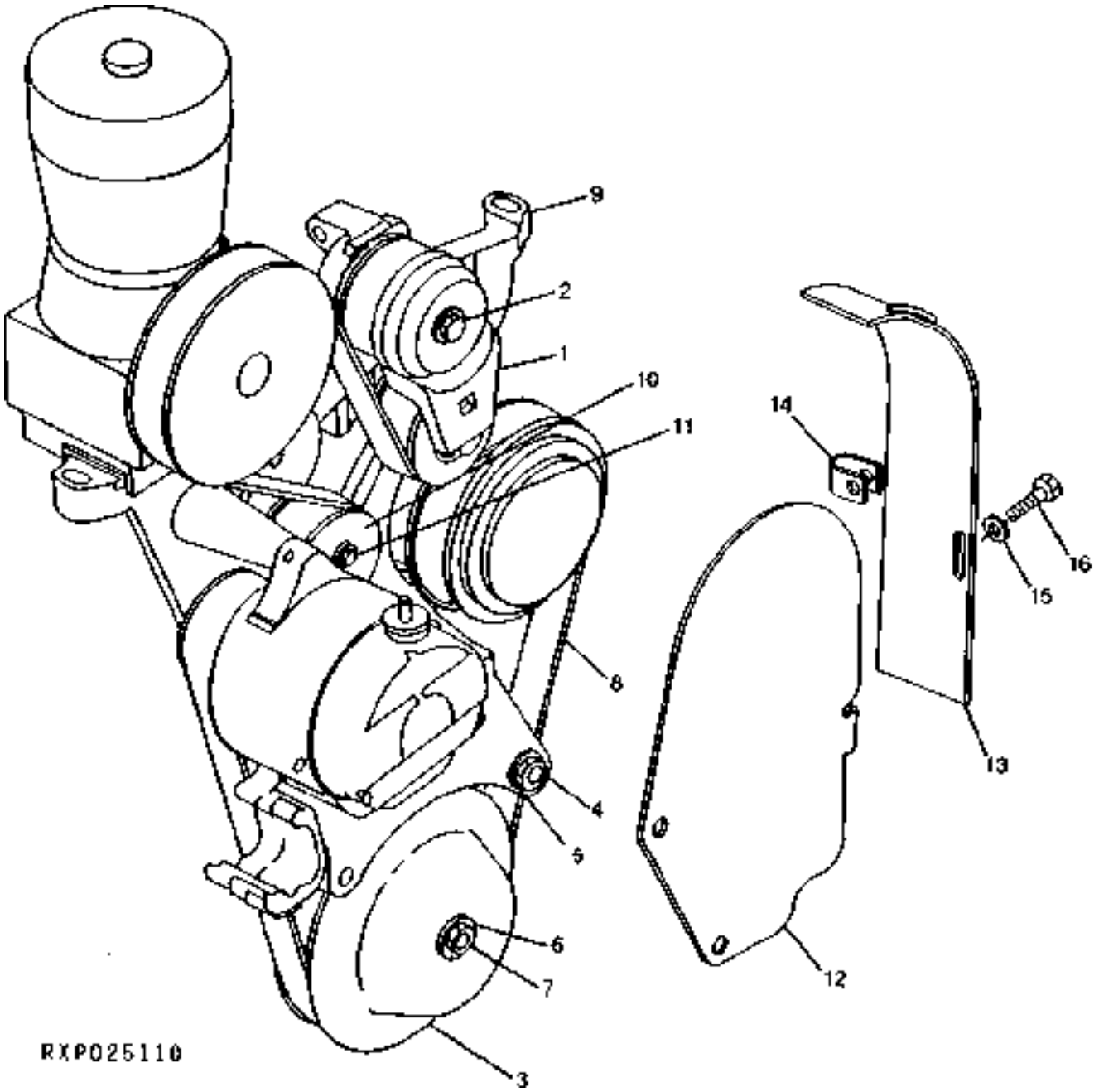

https://www.truck-manuals.net/

KEY	PART NO.	PART NAME	QTY	TRACTOR SERIAL NO.	ALL	REMARKS
1	RE57498	TIGHTENER	1		X	
2	19M7810	SCREW	1		X	M10 X 80
3	R107078	PULLEY	1		X	
4	19M7496	CAP SCREW	4		X	M12 X 45
5	24M7047	WASHER	4		X	
6	19M7791	SCREW	1		X	M12 X 40
7	24H1900	WASHER	1		X	17/32" X 2" X 1/4"
8	R124786	BELT	1		X	(A)
9	R121379	SUPPORT	1		X	
10	RE68722	PULLEY	1		X	(SUB FOR RE51281)
11	R120143	BOLT	1		X	
	T14386	BUSHING	1		X	
	R114837	DUST SHIELD	1		X	
12	R125746	GUARD	1		X	
13	R125747	GUARD	1		X	
14	M84971	NUT	1		X	
15	24M7047	WASHER	1		X	13 X 24 X 2.500 MM
16	19M7881	SCREW	1		X	M8 X 20

(A) TRAILER AIR BRAKE AIR COMPRESSOR
REMORQUE, COMPRESSEUR DU FREIN A AIR COMPRIME
ANHAENGER-LUFTDRUCKBREMSE, LUFTKOMPRESSOR
COMPRESSORE DELL'ARIA DEL FRENO PHEUMATICO DEL RI MORCHIO
COMPRESOR DE FRENOS DE AIRE DEL REMOLOQUE
SLAEPVAGNSBROMS, LUFTKOMPRESSOR

https://www.truck-manuals.net/

MEMORANDA
MEMORANDA
MEMORANDA
MEMORANDA
MEMORANDA
MEMORANDA

https://www.truck-manuals.net/

SECTIONAL INDEX (8100,8200,8300 TSN -009999)
INDEX DE SECTION (8100,8200,8300 TSN -009999)
GRUPPENINDEX (8100,8200,8300 TSN -009999)
INDICE DELLA SEZIONE (8100,8200,8300 TSN -009999)
INDICE DE SECCION (8100,8200,8300 TSN -009999)
GRUPPSFORTECKNING (8100,8200,8300 TSN -009999)
RXP022574 -UN-11MAY99

1 -	2D10
2 -	2D12
3 -	2D14
4 -	2D16
14 -	2E6
15 -	2E14
26 -	2G1
28 -	2G6
29 -	2G8

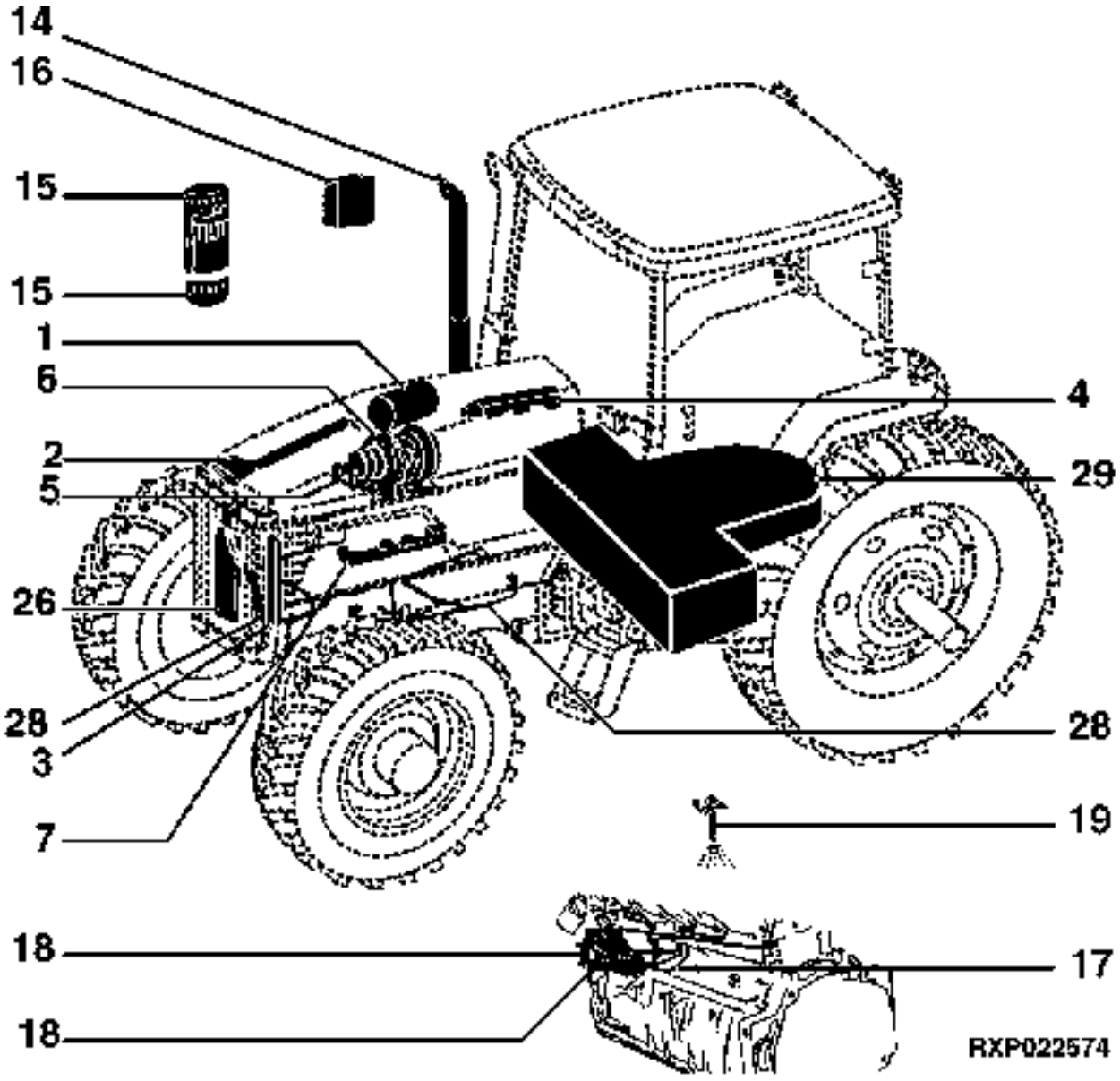

https://www.truck-manuals.net/

SECTIONAL INDEX (8100,8200,8300 TSN 010000-)
INDEX DE SECTION (8100,8200,8300 TSN 010000-)
GRUPPENINDEX (8100,8200,8300 TSN 010000-)
INDICE DELLA SEZIONE (8100,8200,8300 TSN 010000-)
INDICE DE SECCION (8100,8200,8300 TSN 010000-)
GRUPPSFORTECKNING (8100,8200,8300 TSN 010000-)

RXP022575 -UN-11MAY99

1 -	2D10
2 -	2D12
3 -	2D14
4 -	2D16
14 -	2E6
15 -	2E14
26 -	2G1
28 -	2G6
29 -	2G8

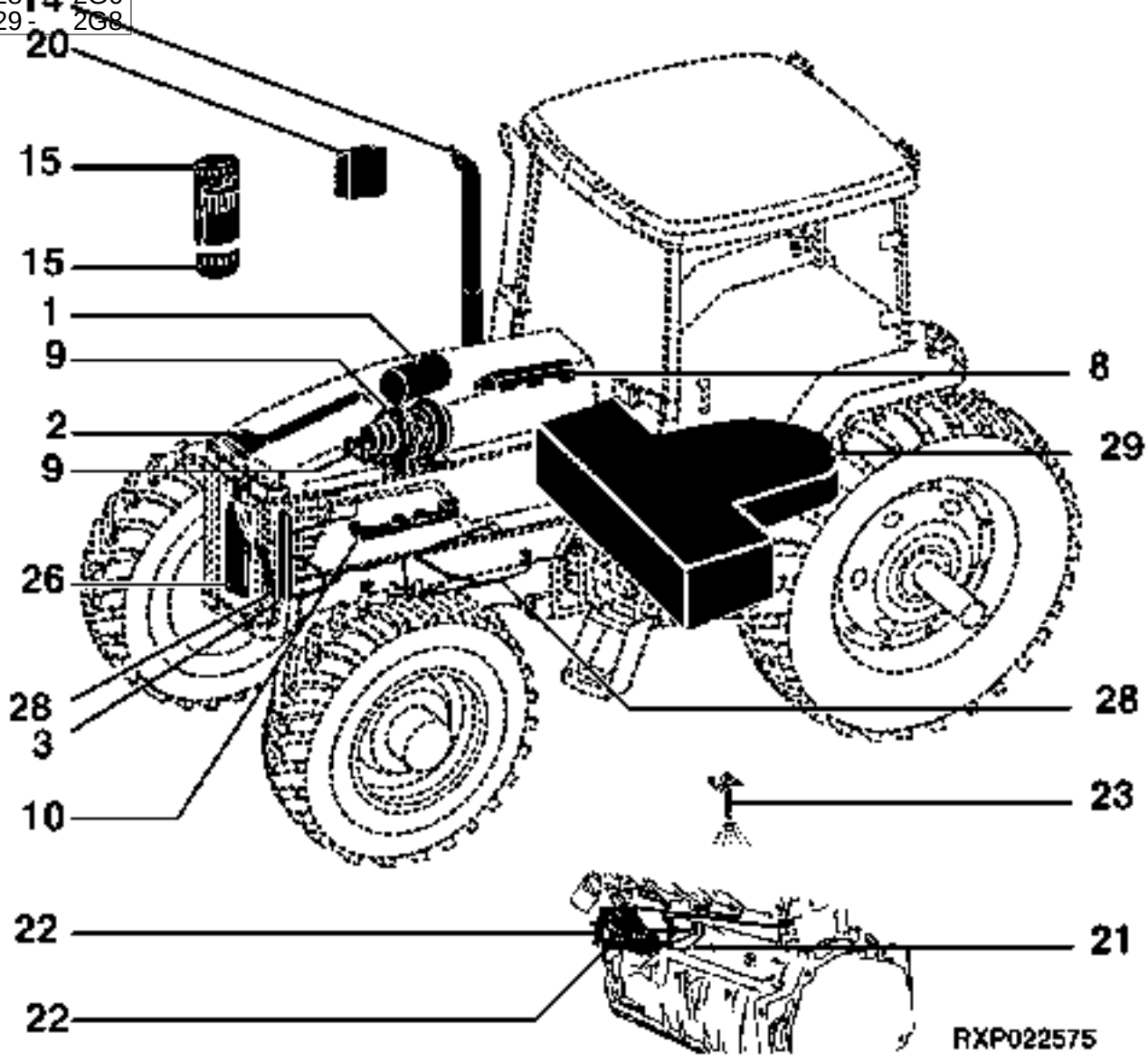

https://www.truck-manuals.net/

SECTIONAL INDEX (8400)
INDEX DE SECTION (8400)
GRUPPENINDEX (8400)
INDICE DELLA SEZIONE (8400)
INDICE DE SECCION (8400)
GRUPPSFORTECKNING (8400)
RXP022674 -UN-11MAY99

1 -	2D10
2 -	2D12
3 -	2D14
4 -	2D16
14 -	2E6
15 -	2E14
26 -	2G1
28 -	2G6
29 -	2G8

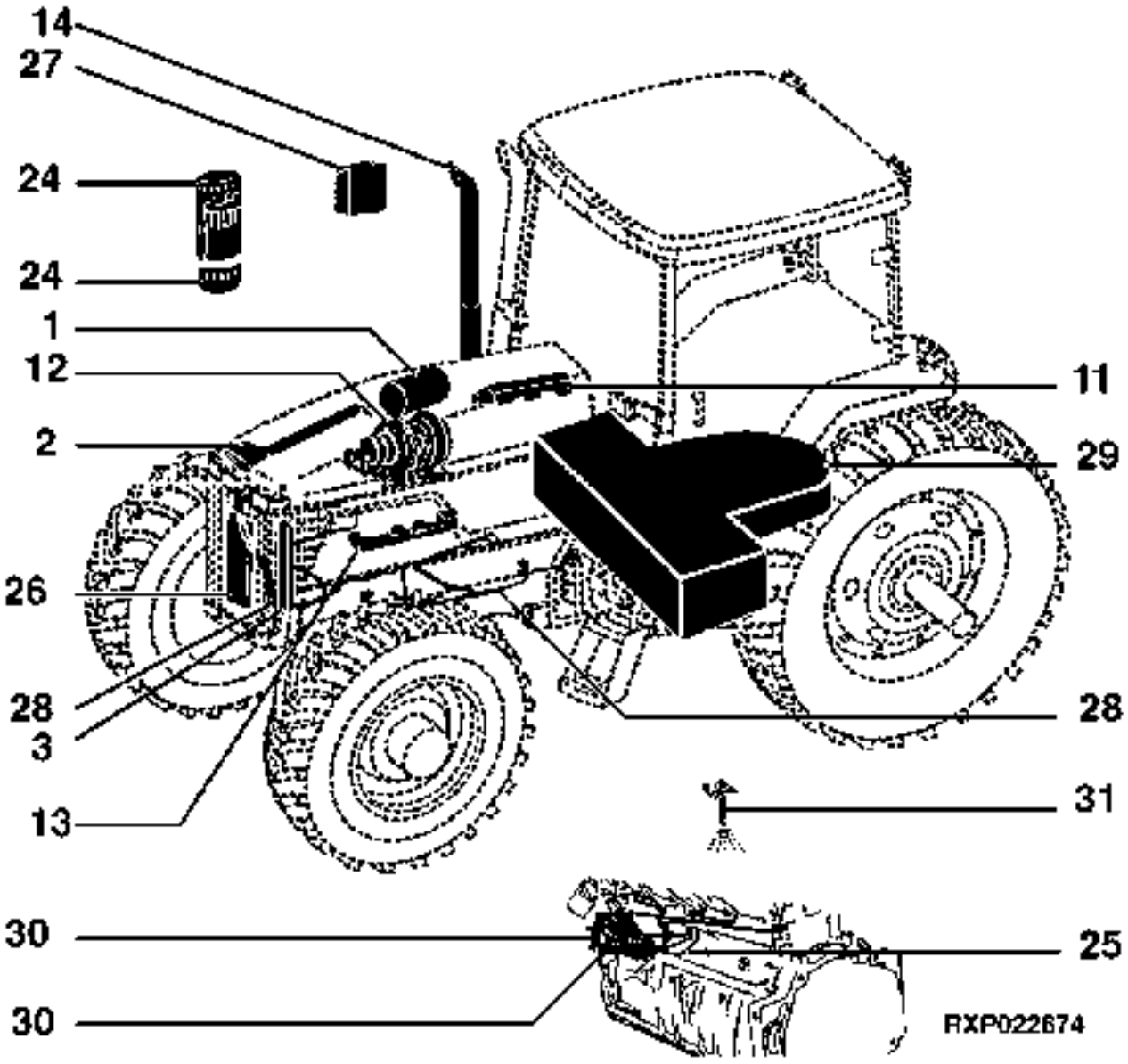

https://www.truck-manuals.net/

SECTIONAL INDEX
INDEX DE SECTION
GRUPPENINDEX
INDICE DELLA SEZIONE
INDICE DE SECCION
GRUPPSFORTECKNING

https://www.truck-manuals.net/

MEMORANDA
MEMORANDA
MEMORANDA
MEMORANDA
MEMORANDA
MEMORANDA

https://www.truck-manuals.net/

DRY AIR CLEANER
FILTRE A AIR SEC
TROKENLUFTFILTER
FILTRO ARIA SECCO
FILTRO DE AIRE EN SECO
TORRLUFTRENARE
RXP010837 -UN-01JAN94

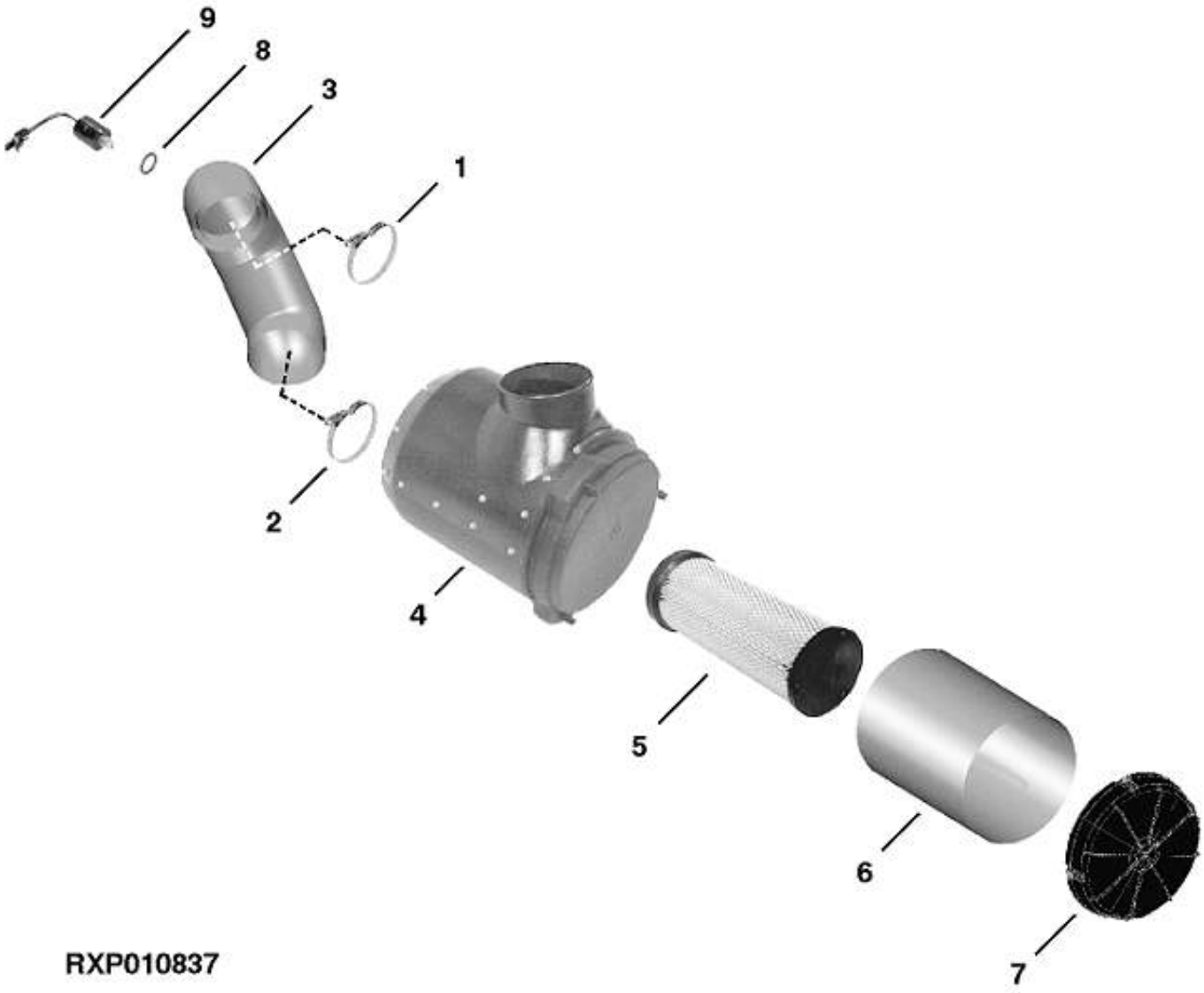

https://www.truck-manuals.net/

KEY	PART NO.	PART NAME	QTY	TRACTOR SERIAL NO.	ALL	REMARKS
1	RE52703	CLAMP	1		X	
2	RE67747	CLAMP	1		X	
3	RE61167	ELBOW FITTING	1		X	
	RE61168	ELBOW FITTING	1		X	(A)
4	RE67898	HOUSING	1		X	
5	RE51630	FILTER ELEMENT	1		X	
6	RE51629	FILTER ELEMENT	1		X	
7	RE61332	COVER	1		X	
	R124848	LATCH	1		X	
8	R77673	O-RING	1		X	
9	RE12176	AIR FILTER RSTR SENSOR	1		X	

(A) W/AIR BRAKE COUPLERS
FREINS A AIR COMPRIME, RACCORDS
DRUCKLUFTBREMSE, KUPPLUNGEN
FRENO AD ARIA COMPRESSA, RACCORDI
FRENO NEUMATICO, ACOPLADORES
TRYCKLUFTSBROMS, KOPPLINGAR

https://www.truck-manuals.net/

PRESCREENER
PREFILTRE
VORFILTER
PREFILTRO
PREFILTRO DE MALLA
FOERFILTER
RXP021916 -UN-05FEB97

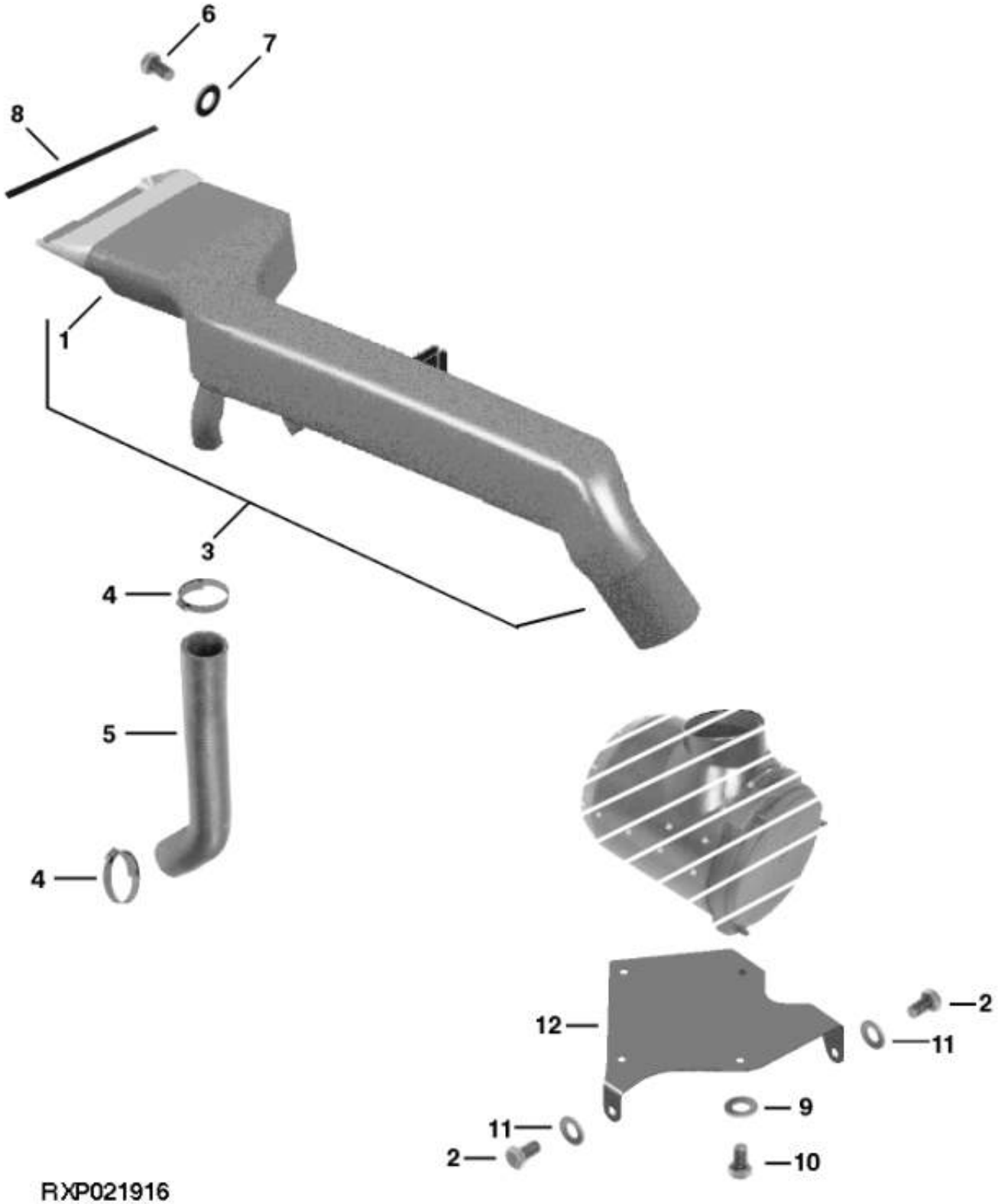

https://www.truck-manuals.net/

KEY	PART NO.	PART NAME	QTY	TRACTOR SERIAL NO.	ALL	REMARKS
1	RE164286	PRESCREENER	1		X	(SUB FOR RE51631)
2	19M7788	SCREW	3		X	M12 X 25
3	RE163458	PRESCREENER	1		X	(SUB FOR RE55358)
4	TY22486	CLAMP	2		X	
5	R120723	HOSE	1	-009999	X	
	R131221	HOSE	1	010000-	X	
6	19M7139	CAP SCREW	2		X	M8 X 20
7	24M7036	WASHER	2		X	9 X 16 X 1.600 MM
8	R122550	SEAL	1		X	
9	24M7346	WASHER	4		X	11 X 20 X 2 MM
10	19M8324	CAP SCREW	4		X	M10 X 16
11	24M7047	WASHER	3		X	13 X 24 X 2.500 MM
12	R124826	BRACKET	1		X	
	R136260	BRACKET	1		X	RH, (SUB FOR R124823)

https://www.truck-manuals.net/

AFTERCOOLER
ECHANGEUR THERMIQUE AIR/EAU
LADELUFTKUEHLER
REFRIGERATORE SUCCESSIVO
POSREFROFERADOR
MELLANKYLARE
RXP010869 -UN-01JAN94

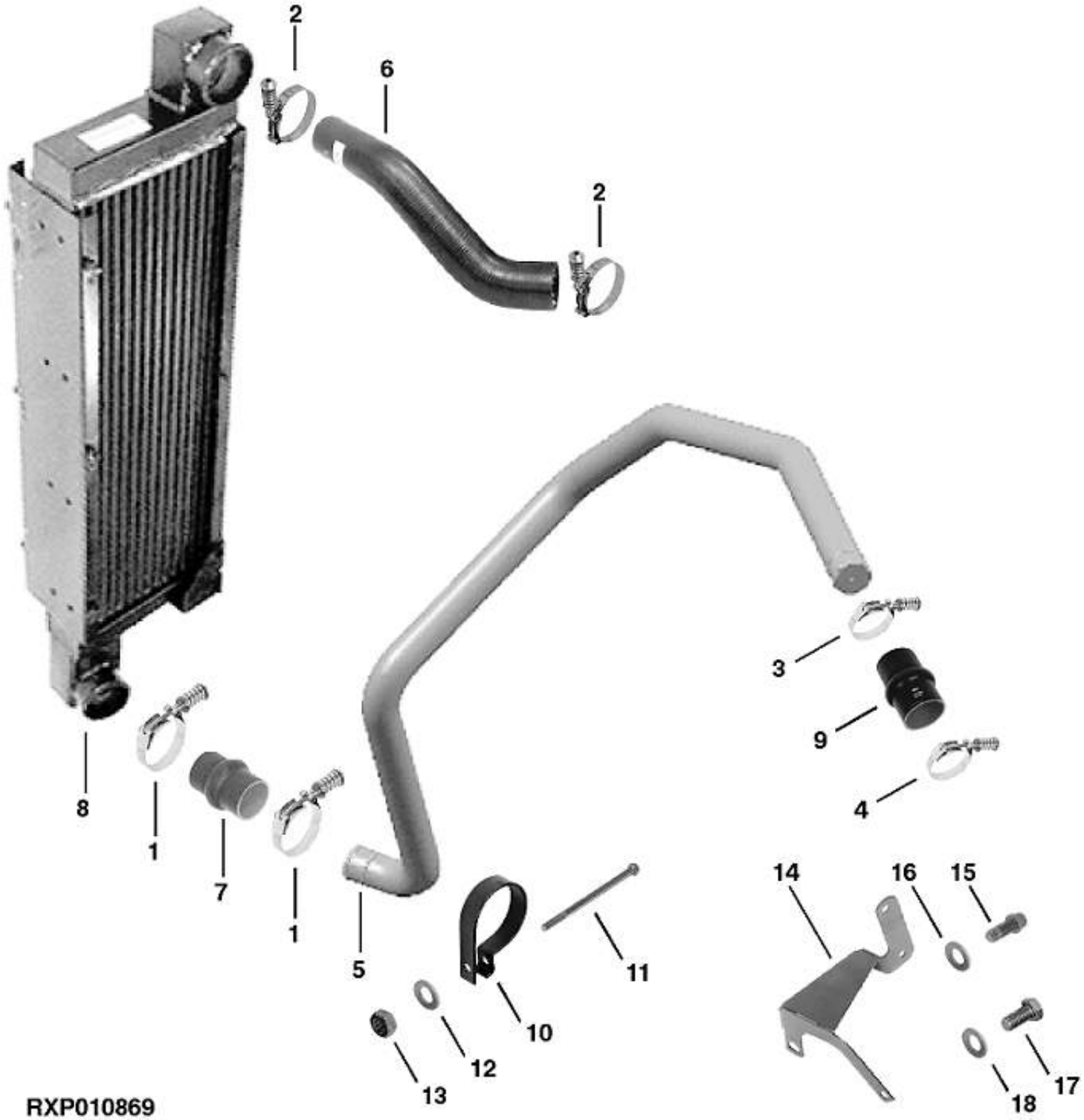

https://www.truck-manuals.net/

KEY	PART NO.	PART NAME	QTY	TRACTOR SERIAL NO.	ALL	REMARKS
1	RE52702	CLAMP	2		X	
2	RE52702	CLAMP	2		X	
3	RE52702	CLAMP	1		X	
4	RE52702	CLAMP	1		X	
5	R130848	PIPE	1		X	(SUB FOR R124579, R126645 OR R127791)
6	R115037	HYDRAULIC HOSE	1		X	
7	R98412	HOSE	1		X	
8	RE61307	AFTERCOOLER	1	-009999		8100,8200,8300
	RE66342	AFTERCOOLER	1	010000-		8100,8200
	RE66342	AFTERCOOLER	1	010000-XXXXXX		8300
	RE61307	AFTERCOOLER	1	XXXXXX-		8300, 8400
	RE61307	AFTERCOOLER	1	-XXXXXX		8400
9	R98412	HOSE	1		X	
10	R111156	CLIP	2		X	
11	19M8853	SCREW	1		X	M10 X 50
12	24M7346	WASHER	1		X	11 X 20 X 2 MM
13	14M7274	NUT	1		X	M10
14	R122424	RAIL	1		X	
15	RE10901	SCREW	1		X	
16	24M7338	WASHER	1		X	17 X 30 X 3 MM
17	19H1731	CAP SCREW	1		X	3/8" X 1"
18	24M7346	WASHER	1		X	11 X 20 X 2 MM
..	R124838	WASHER	1		X	
..	19M8853	SCREW	2		X	M10 X 50

https://www.truck-manuals.net/

AIR INTAKE MANIFOLD (6076) (8100,8200,8300 TSN -009999)
PIPE D'ADMISSION (6076) (8100,8200,8300 TSN -009999)
LUFTANSAUGKRUEMMER (6076) (8100,8200,8300 TSN -009999)
COLLETTORE D'ASPIRAZIONE (6076) (8100,8200,8300 TSN -009999)
COLECTOR DE ADMISION DE AIRE (6076) (8100,8200,8300 TSN -009999)
INSUGNINGSROR (6076) (8100,8200,8300 TSN -009999)
RGP4301 -UN-01JAN94

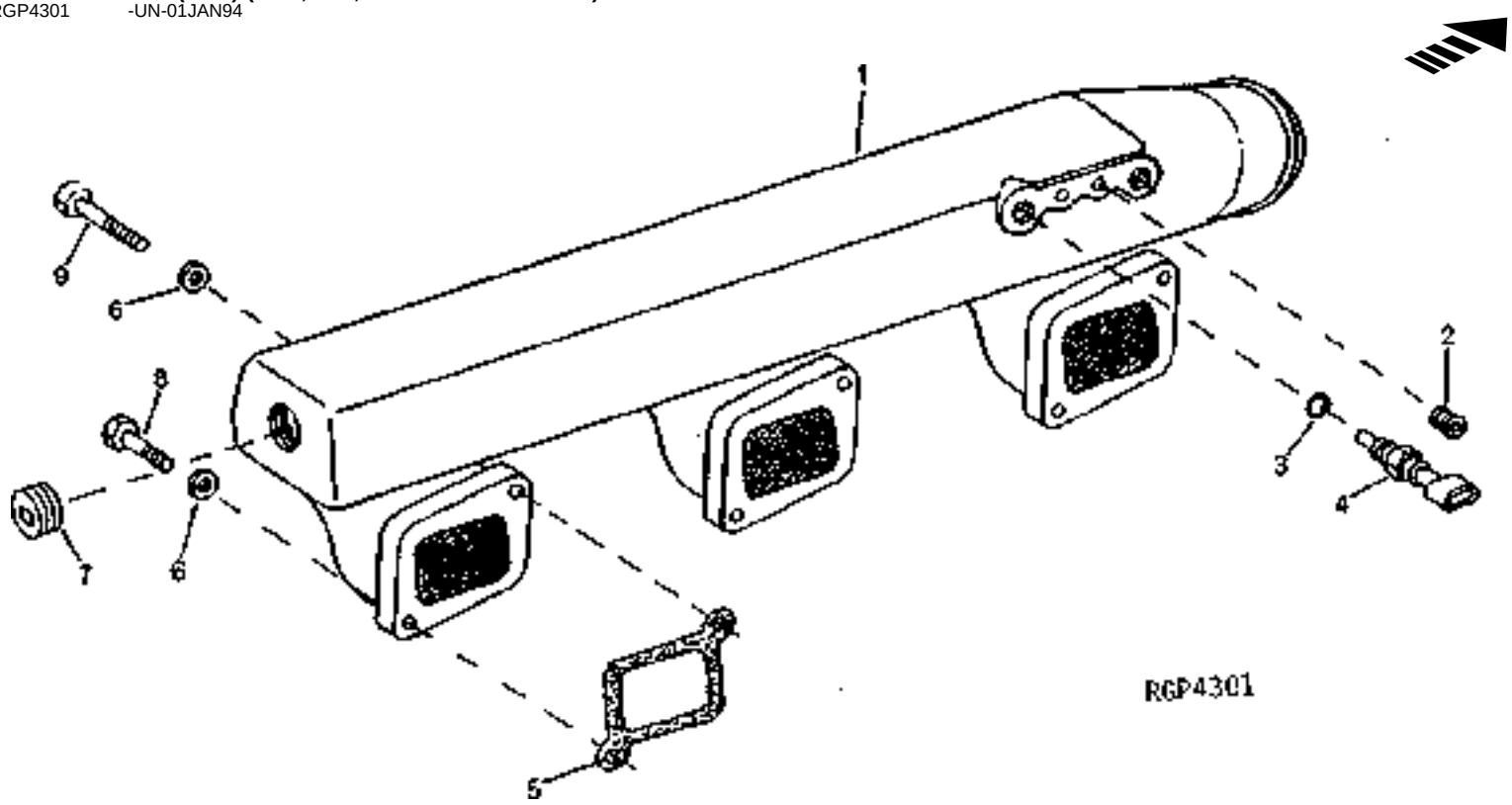

KEY	PART NO.	PART NAME	QTY	ENGINE SERIAL NO.	8 8 8 1 2 3 0 0 0 0 0 0	REMARKS
1	R116727	INTAKE MANIFOLD	1		X X X	
2	R104592	PIPE PLUG	2		X X X	
3	R77673	O-RING	1		X X X	
4	RE38310	SENSOR	1		X X X	
5	R120646	GASKET	3		X X X	
6	24H1682	WASHER	6		X X X	13/32" X 7/8" X 0.120"
7	15H280	PIPE PLUG	1		X X X	
8	19H1801	CAP SCREW	3		X X X	3/8" X 2"
9	19H2458	CAP SCREW	3		X X X	3/8" X 3"

https://www.truck-manuals.net/

TURBOCHARGER CENTER HOUSING (6076) (8100,8200,8300 TSN -009999) (SCHWITZER)
TURBOCOMPRESSEUR (6076) (8100,8200,8300 TSN -009999) (SCHWITZER)
TURBOLADER (6076) (8100,8200,8300 TSN -009999) (SCHWITZER)
TURBOCOMPRESSORE (6076) (8100,8200,8300 TSN -009999) (SCHWITZER)
TURBOCARGADOR (6076) (8100,8200,8300 TSN -009999) (SCHWITZER)
TURBOAGGREGAT (6076) (8100,8200,8300 TSN -009999) (SCHWITZER)
RGP3045 -UN-01JAN94

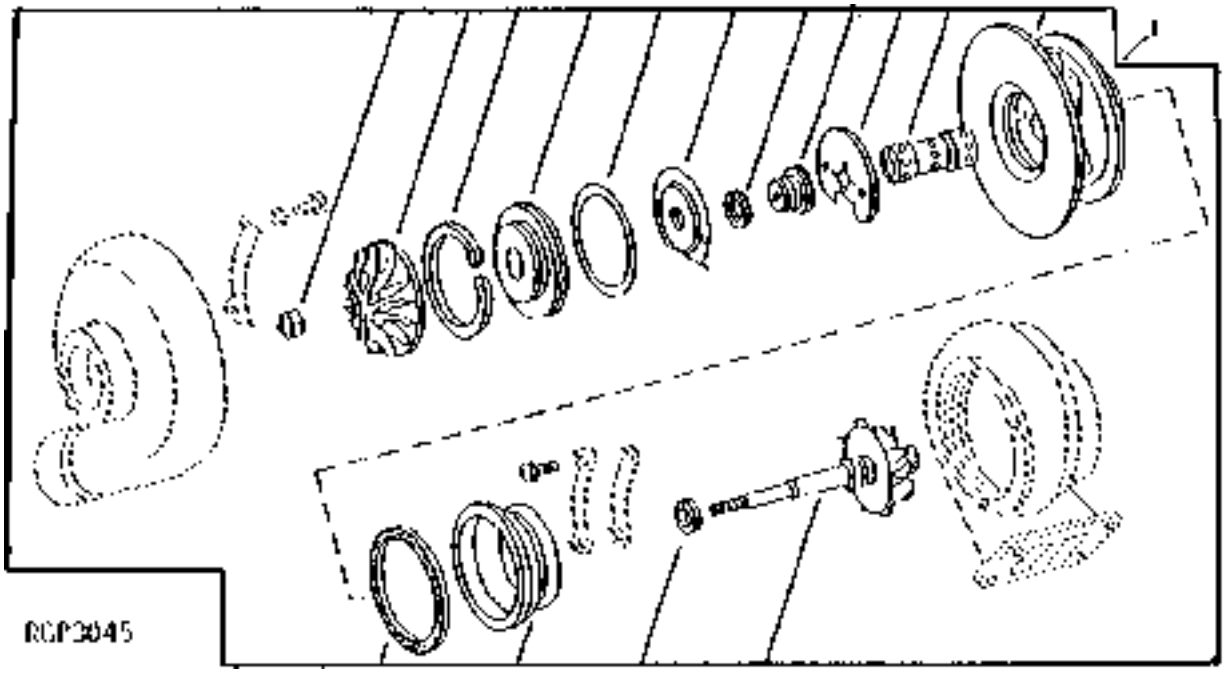

KEY	PART NO.	PART NAME	QTY	ENGINE SERIAL NO.	8 8 8 1 2 3 0 0 0 0 0 0	REMARKS
1	RE58563	HOUSING	1		X X X	(SUB RE54979)

https://www.truck-manuals.net/

TURBOCHARGER (6076) (8100,8200,8300 TSN -009999)
TURBOCOMPRESSEUR (6076) (8100,8200,8300 TSN -009999)
TURBOLADER (6076) (8100,8200,8300 TSN -009999)
TURBOCOMPRESSORE (6076) (8100,8200,8300 TSN -009999)
TURBOCARGADOR (6076) (8100,8200,8300 TSN -009999)
TURBOAGGREGAT (6076) (8100,8200,8300 TSN -009999)
RGP4997 -UN-30MAR98

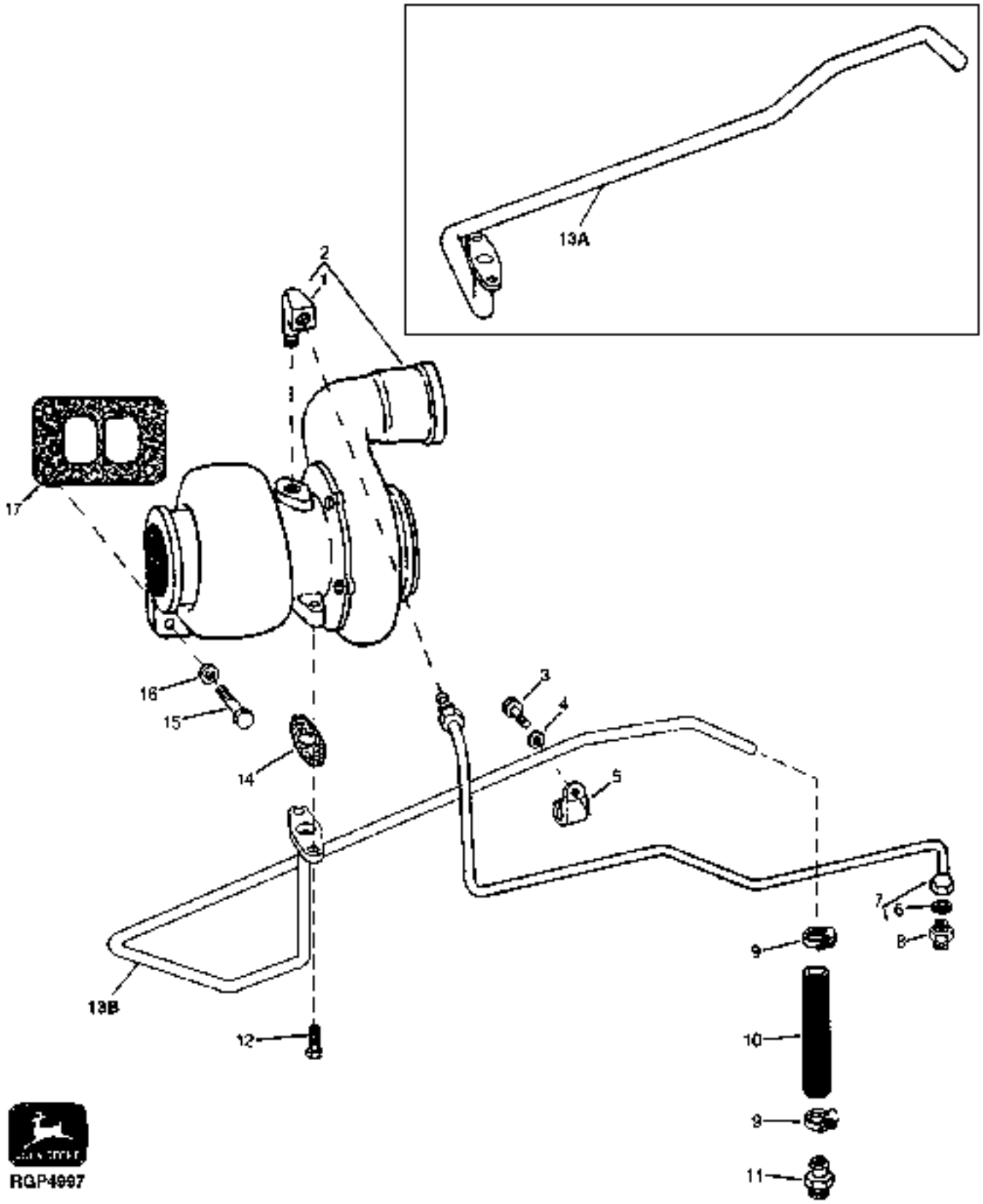

https://www.truck-manuals.net/

KEY	PART NO.	PART NAME	QTY	ENGINE SERIAL NO.	8 8 8 1 2 3 0 0 0 0 0 0	REMARKS
1	T11180	ELBOW FITTING	1		X X X	
2	RE54979	TURBOCHARGER	1		X X X	(MARKED RE56237) REMANUFACTURED (SCHWITZER)
3	19H1900	CAP SCREW	1		X X X	5/16" X 3/4"
4	24H1136	WASHER	1		X X X	11/32" X 11/16" X 0.065"
5	AH89486	CLIP	1		X X X	
6	R67092	SEAL	1		X X X	
7	RE62255	OIL LINE	1		X X X	(INLET)
8	R51133	FITTING	1		X X X	
9	TY22467	CLAMP	2		X X X	(SUB FOR AR21839)
10	R87682	HOSE	1		X X X	(SUB RE501270 AND TY22425, THIS APPLICATION)
	TY22425	HOSE	1		X X X	
11	R39503	FITTING	1		X X X	
12	R122618	SCREW	2		X X X	
13A	RE62794	OIL LINE	1		X X X	(SUB RE501270 AND TY22425)
13B	RE501270	OIL LINE	1		X X X	(SUB FOR RE62794 OR RE500157)
14	R105346	GASKET	1		X X X	
15	R54500	SCREW	4		X X X	
16	24H1305	WASHER	4		X X X	13/32" X 13/16" X 0.065"
17	R89879	GASKET	1		X X X	

https://www.truck-manuals.net/

EXHAUST MANIFOLD (6076) (8100,8200,8300 TSN -009999)
COLLECTEUR D'ECHAPPEMENT (6076) (8100,8200,8300 TSN -009999)
AUSPUFFKRUEMMER (6076) (8100,8200,8300 TSN -009999)
COLLECTORE DI SCARICO (6076) (8100,8200,8300 TSN -009999)
COLECTOR DE ESACAPE (6076) (8100,8200,8300 TSN -009999)
AVGASGRENROR (6076) (8100,8200,8300 TSN -009999)
RGP5154 -UN-22JAN99

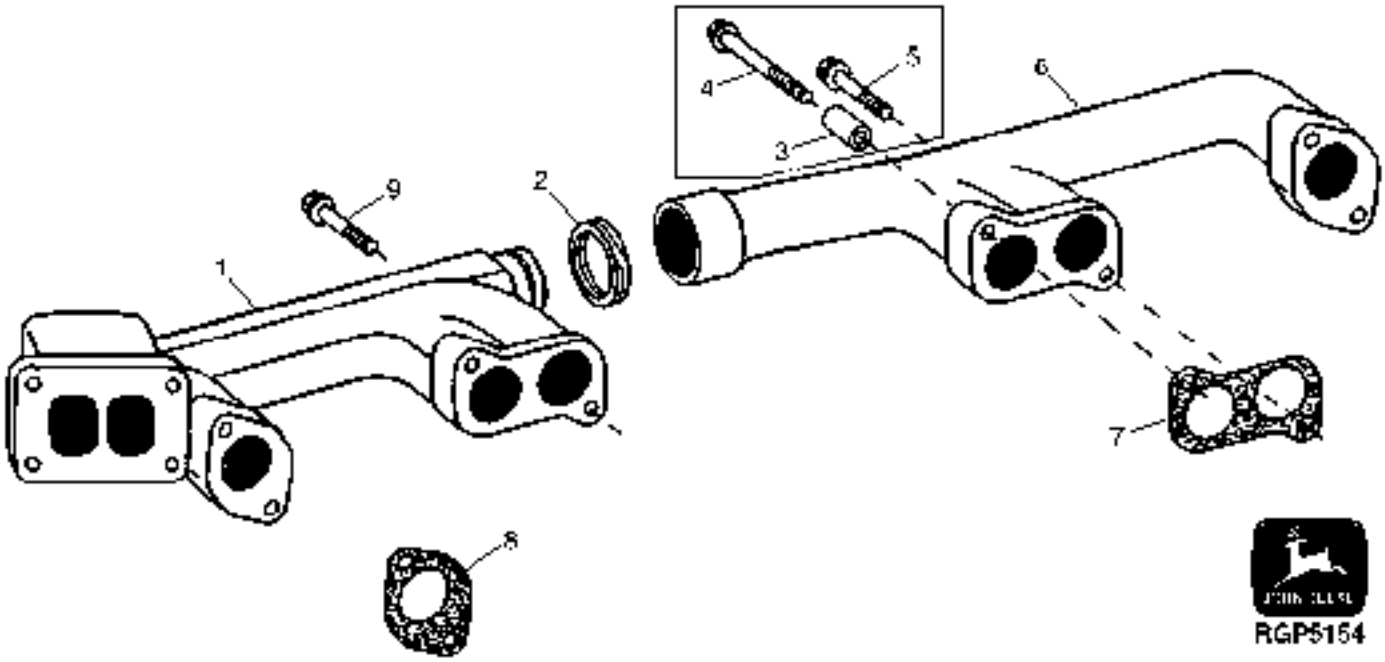

KEY	PART NO.	PART NAME	QTY	ENGINE SERIAL NO.	8 8 8 1 2 3 0 0 0 0 0 0	REMARKS
1	R120645	EXHAUST MANIFOLD	1		X X X	(REAR)
2	R122595	RING	1		X X X	
3	R122502	SPACER	4	-XXXXXX	X X X	(SUB (8) R135359)
4	R125469	CAP SCREW	4	-XXXXXX	X X X	(SUB (8) R135359)
5	R125468	CAP SCREW	4	-XXXXXX	X X X	(SUB (8) R135359)
6	R120644	EXHAUST MANIFOLD	1		X X X	(FRONT)
7	RE62776	GASKET	2		X X X	(SUB FOR R122503)
8	RE62777	GASKET	2		X X X	(SUB FOR R122504)
9	R135359	CAP SCREW	8	XXXXXX-	X X X	

https://www.truck-manuals.net/

INTAKE MANIFOLD (6081) (8100,8200,8300 TSN 010000-)
PIPE D'ADMISSION (6081) (8100,8200,8300 TSN 010000-)
LUFTANSAUGKRUEMMER (6081) (8100,8200,8300 TSN 010000-)
COLLETTORE D'ASPIRAZIONE (6081) (8100,8200,8300 TSN 010000-)
COLECTOR DE ADMISION DE AIRE (6081) (8100,8200,8300 TSN 010000-)
INSUGNINGSROR (6081) (8100,8200,8300 TSN 010000-)
RGP4301 -UN-01JAN94

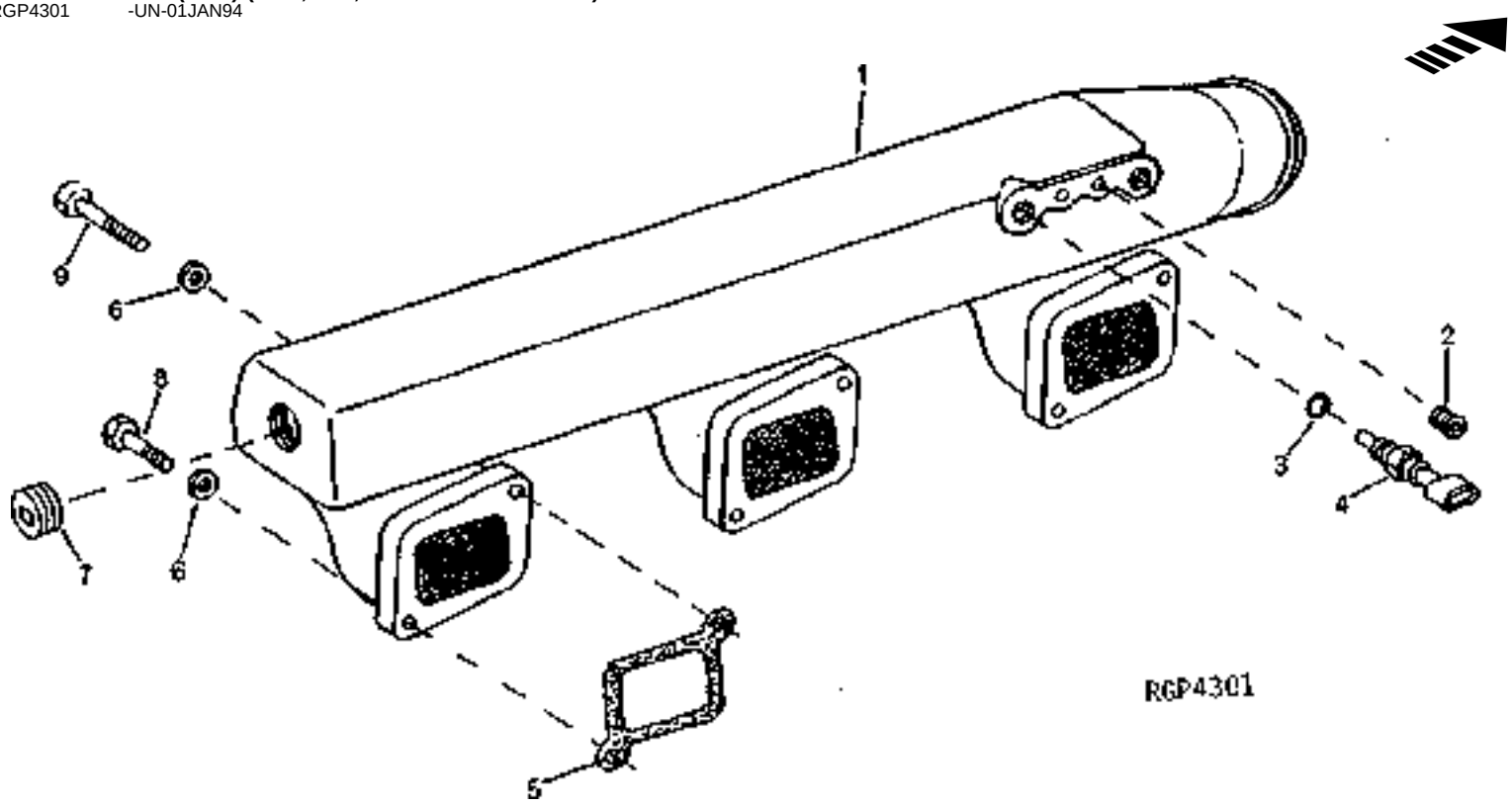

KEY	PART NO.	PART NAME	QTY	ENGINE SERIAL NO.	8 8 8 1 2 3 0 0 0 0 0 0	REMARKS
1	R116727	INTAKE MANIFOLD	1		X X X	
2	R104592	PIPE PLUG	2		X X X	
3	R77673	O-RING	1		X X X	
4	RE38310	SENSOR	1		X X X	
5	R120646	GASKET	3		X X X	
6	24H1682	WASHER	6		X X X	13/32" X 7/8" X 0.120"
7	15H280	PIPE PLUG	1		X X X	
8	19H1801	CAP SCREW	3		X X X	3/8" X 2"
9	19H2458	CAP SCREW	3		X X X	3/8" X 3"

https://www.truck-manuals.net/

TURBOCHARGER AND OIL LINES (6081) (8100,8200,8300 TSN 010000-)
TURBOCOMPRESSEUR (6081) (8100,8200,8300 TSN 010000-)
TURBOLADER (6081) (8100,8200,8300 TSN 010000-)
TURBOCOMPRESSORE (6081) (8100,8200,8300 TSN 010000-)
TURBOCARGADOR (6081) (8100,8200,8300 TSN 010000-)
TURBOAGGREGAT (6081) (8100,8200,8300 TSN 010000-)
RGP4686 -UN-01JUN96

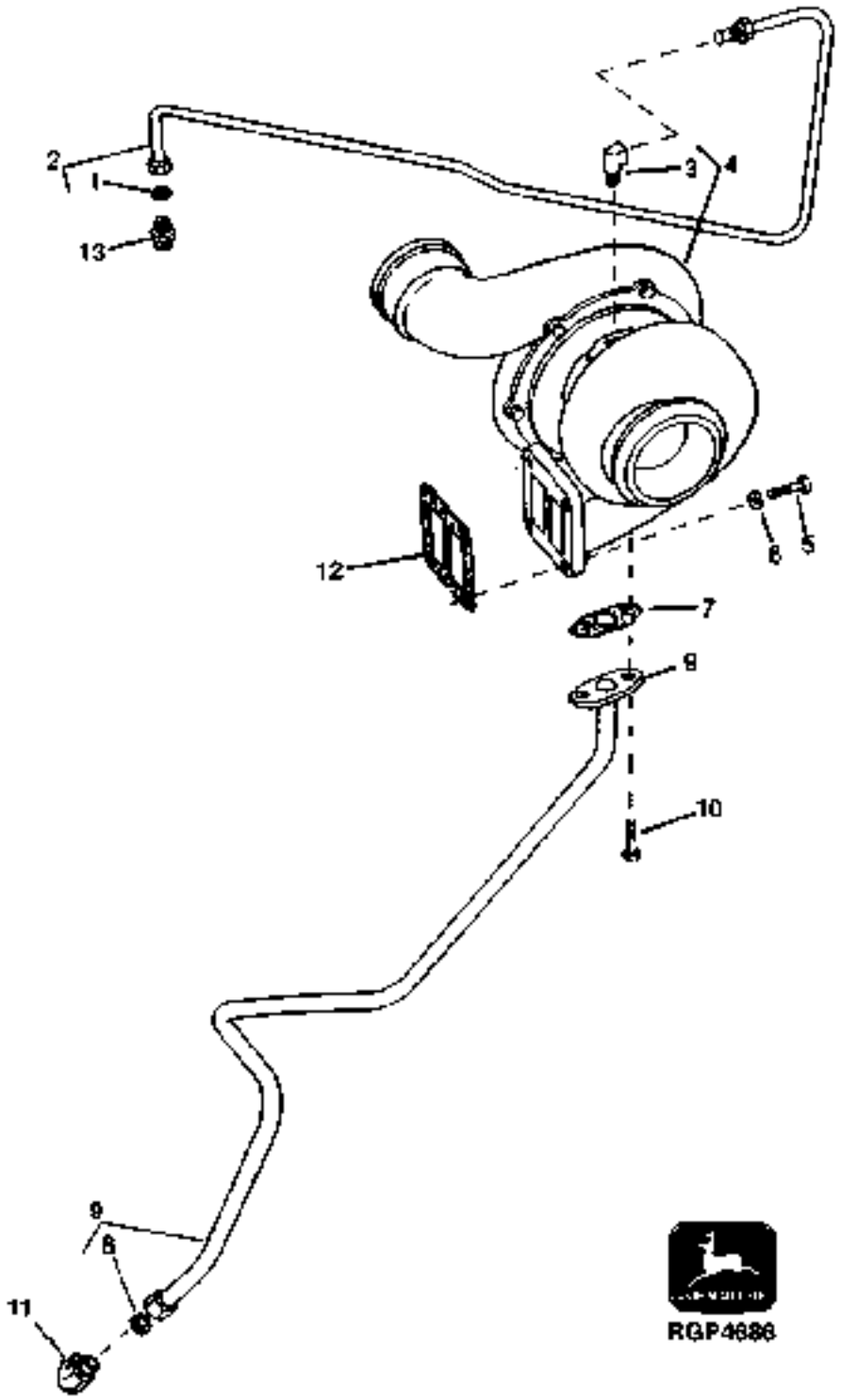

https://www.truck-manuals.net/

KEY	PART NO.	PART NAME	QTY	ENGINE SERIAL NO.	8 8 8 1 2 3 0 0 0 0 0 0	REMARKS
1	R67092	SEAL	1		X X X	
2	RE57530	OIL LINE	1		X X X	
3	T11180	ELBOW FITTING	1		X X X	
4	RE64936	TURBOCHARGER	1		X X X	(REMANUFACTURED) (SCHWITZER) (MARKED RE64765)
5	R54500	SCREW	4		X X X	9.525 X 25.400 MM (3/8" X 1")
6	24H1305	WASHER	8		X X X	13/32" X 13/16" X 0.065"
7	R105346	GASKET	1		X X X	
8	R120138	SLEEVE	1		X X X	(PACKING)
9	RE55542	OIL LINE	1		X X X	
10	R122618	SCREW	2		X X X	
11	R120187	ELBOW FITTING	1		X X X	(LH)
12	R89879	GASKET	1		X X X	
13	RE58294	CONNECTOR	1		X X X	

https://www.truck-manuals.net/

EXHAUST MANIFOLD (6081) (8100,8200,8300 TSN 010000-)
COLLECTEUR D'ECHAPPEMENT (6081) (8100,8200,8300 TSN 010000-)
AUSPUFFKRUEMMER (6081) (8100,8200,8300 TSN 010000-)
COLLETTORE DI SCARICO (6081) (8100,8200,8300 TSN 010000-)
COLECTOR DE ESACAPE (6081) (8100,8200,8300 TSN 010000-)
AVGASGRENROR (6081) (8100,8200,8300 TSN 010000-)
RGP5154 -UN-22JAN99

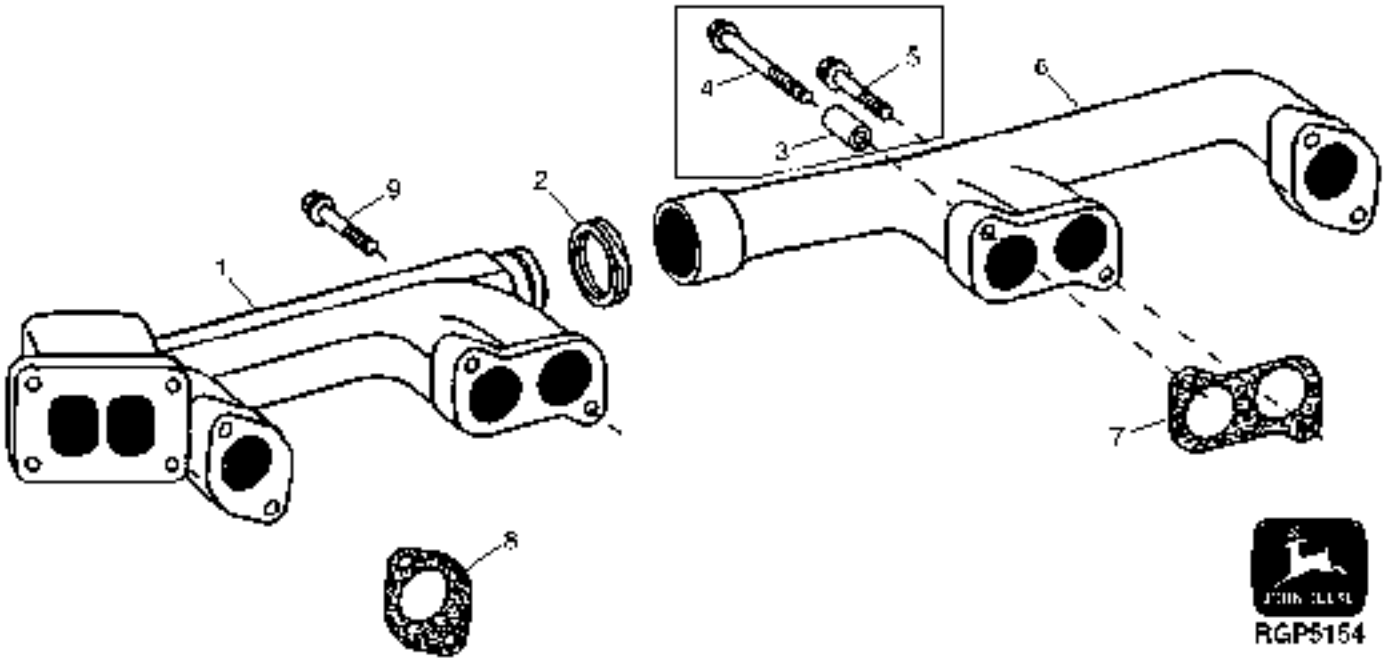

KEY	PART NO.	PART NAME	QTY	ENGINE SERIAL NO.	8 8 8 1 2 3 0 0 0 0 0 0	REMARKS
1	R120645	EXHAUST MANIFOLD	1		X X X	(REAR)
2	R122595	RING	1		X X X	
3	R122502	SPACER	4	-XXXXXX	X X X	(SUB (8) R135359)
4	R125469	CAP SCREW	4	-XXXXXX	X X X	(SUB (8) R135359)
5	R125468	CAP SCREW	4	-XXXXXX	X X X	(SUB (8) R135359)
6	R120644	EXHAUST MANIFOLD	1		X X X	(FRONT)
7	RE62776	GASKET	2		X X X	(SUB FOR R122503)
8	RE62777	GASKET	2		X X X	(SUB FOR R122504)
9	R135359	CAP SCREW	8	XXXXXX-	X X X	

https://www.truck-manuals.net/

INTAKE MANIFOLD
PIPE D'ADMISSION
LUFTANSAUGKRUEMMER
COLLECTTORE D'ASPIRAZIONE
COLECTOR DE ADMISION E AIRE
INSUGNINGSROR
RGP4301 -UN-01JAN94

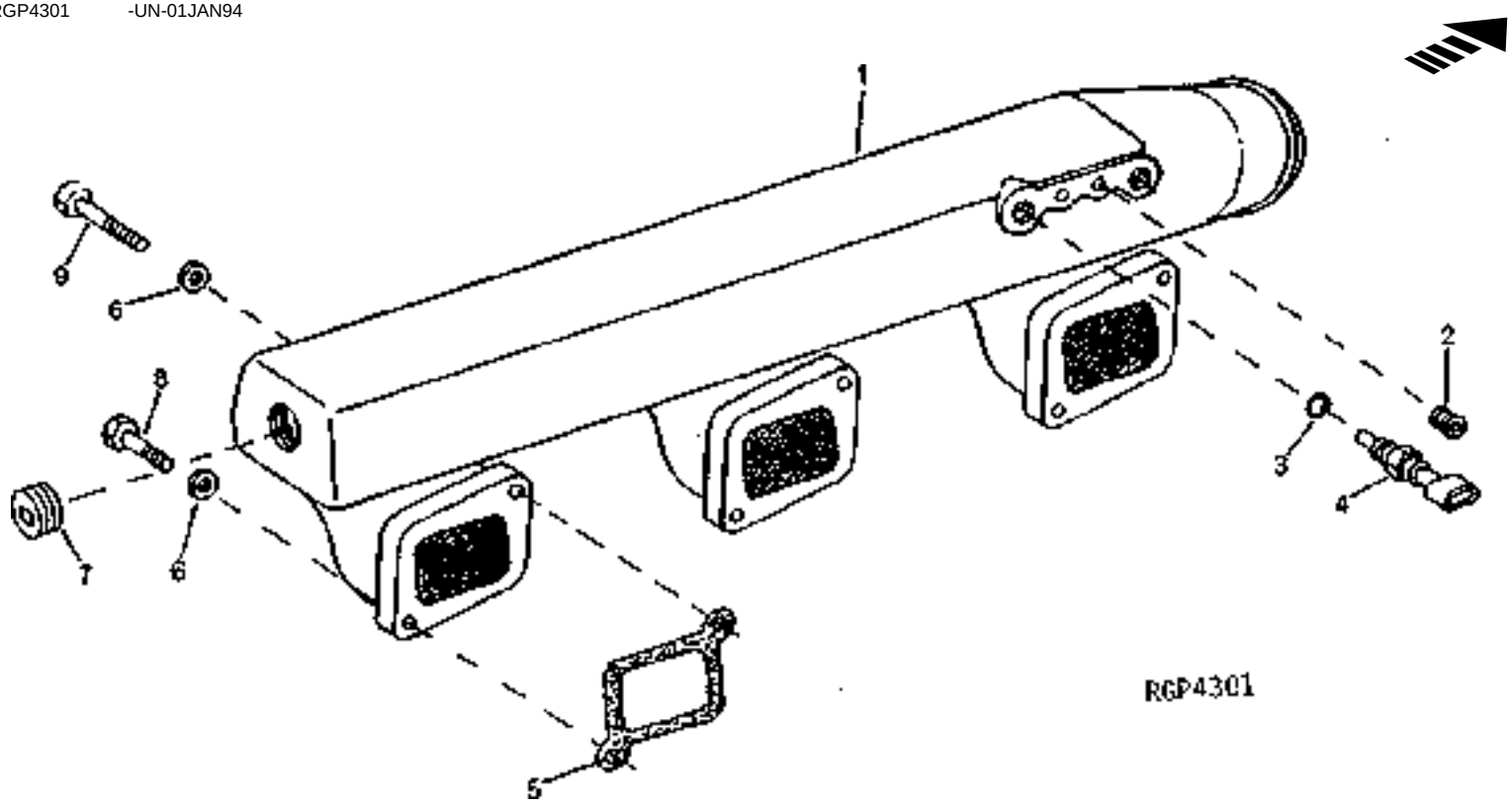

KEY	PART NO.	PART NAME	QTY	ENGINE SERIAL NO. 8400	REMARKS
1	R116727	INTAKE MANIFOLD	1	X	
2	R104592	PIPE PLUG	2	X	
3	R77673	O-RING	1	X	
4	RE38310	SENSOR	1	X	
5	R120646	GASKET	3	X	
6	24H1682	WASHER	6	X	13/32" X 7/8" X 0.120"
7	15H280	PIPE PLUG	1	X	
8	19H1801	CAP SCREW	3	X	3/8" X 2"
9	19H2458	CAP SCREW	3	X	3/8" X 3"

https://www.truck-manuals.net/

TURBOCHARGER AND OIL LINES
TURBOCOMPRESSEUR
TURBOLADER
TURBOCOMPRESSORE
TURBOCARGADOR
TURBOAGGREGAT
RGP4686 -UN-01JUN96

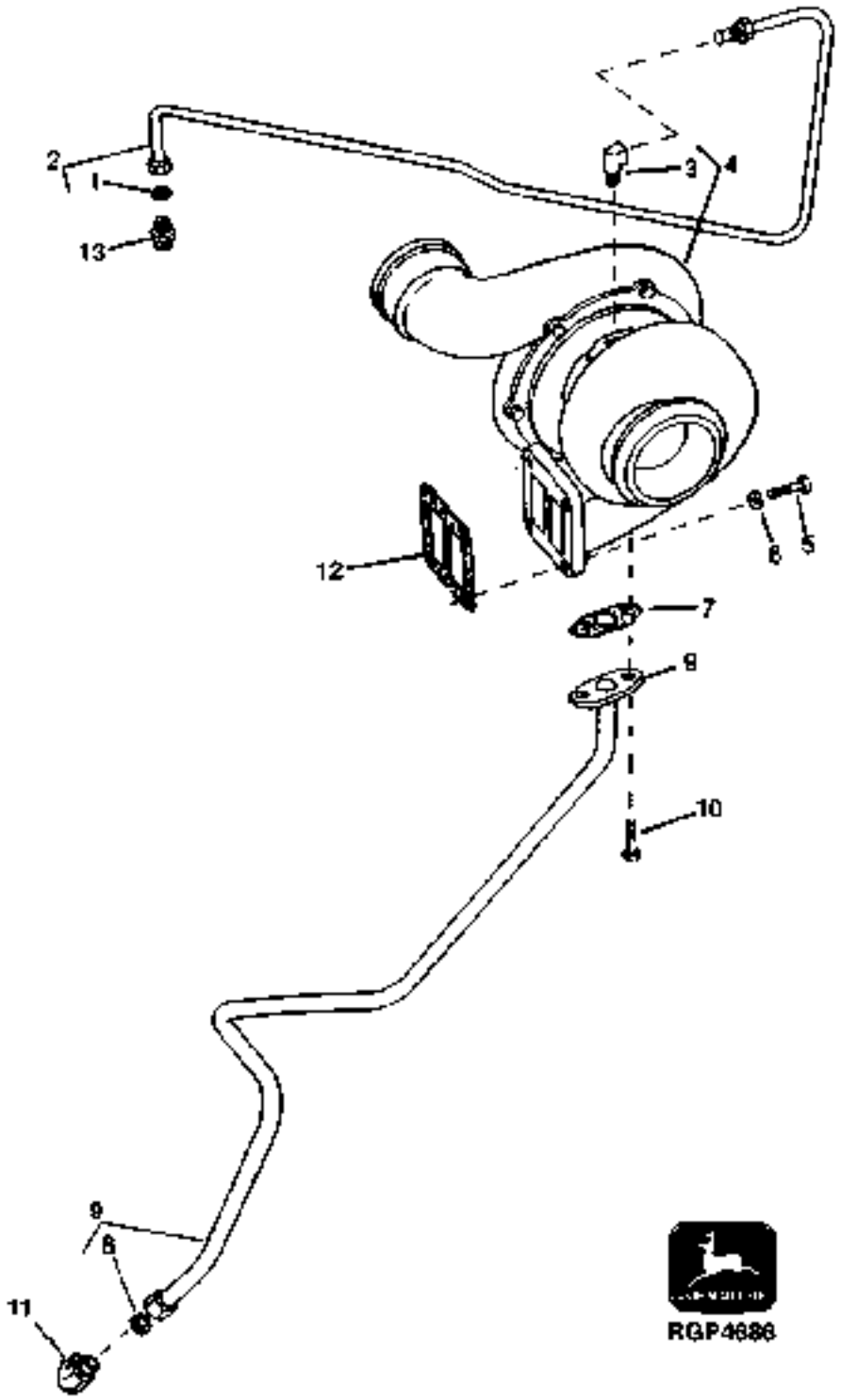

https://www.truck-manuals.net/

KEY	PART NO.	PART NAME	QTY	ENGINE SERIAL NO.	8400	REMARKS
1	R67092	SEAL	1		X	
2	RE57530	OIL LINE	1		X	
3	T11180	ELBOW FITTING	1		X	
4	RE57184	TURBOCHARGER	1		X	(REMANUFACTURED) (SCHWITZER) (MARKED RE56488)
5	R54500	SCREW	4		X	9.525 X 25.400 MM (3/8" X 1")
6	24H1305	WASHER	8		X	13/32" X 13/16" X 0.065"
7	R105346	GASKET	1		X	
8	R120138	SLEEVE	1		X	
9	RE55542	OIL LINE	1		X	
10	R122618	SCREW	2		X	(LH)
11	R120187	ELBOW FITTING	1		X	
12	R89879	GASKET	1		X	
13	RE58294	CONNECTOR	1		X	

https://www.truck-manuals.net/

TURBOCHARGER CENTER HOUSING WITH ROTATING PARTS (SCHWITZER)
TURBOCOMPRESSEUR (SCHWITZER)
TURBOLADER (SCHWITZER)
TURBOCOMPRESSORE (SCHWITZER)
TURBOCARGADOR (SCHWITZER)
TURBOAGGREGAT (SCHWITZER)
RGP3045 -UN-01JAN94

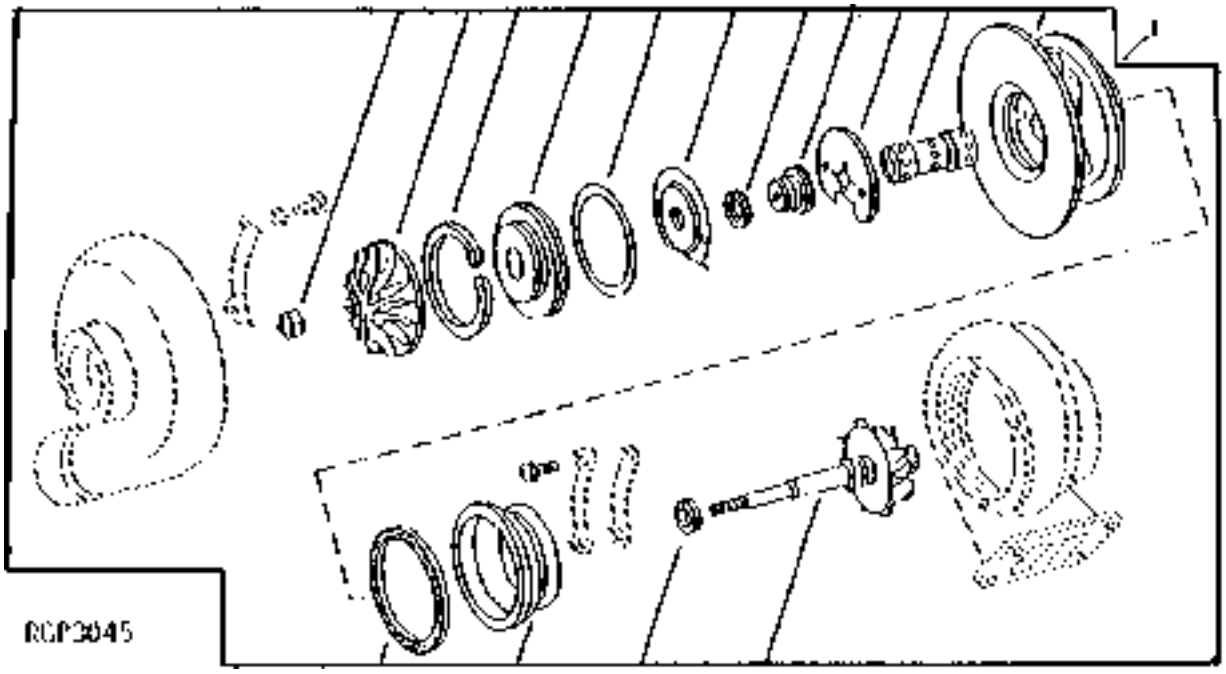

KEY	PART NO.	PART NAME	QTY	ENGINE SERIAL NO.	8400	REMARKS
1	RE57185	HOUSING	1		X	(SUB RE57184)

https://www.truck-manuals.net/

EXHAUST MANIFOLD
COLLECTEUR D'ECHAPPEMENT
AUSPUFFKRUEMMER
COLLECTORE DI SCARICO
COLECTOR DE ESACAPE
AVGASGRENROR
RGP5154 -UN-22JAN99

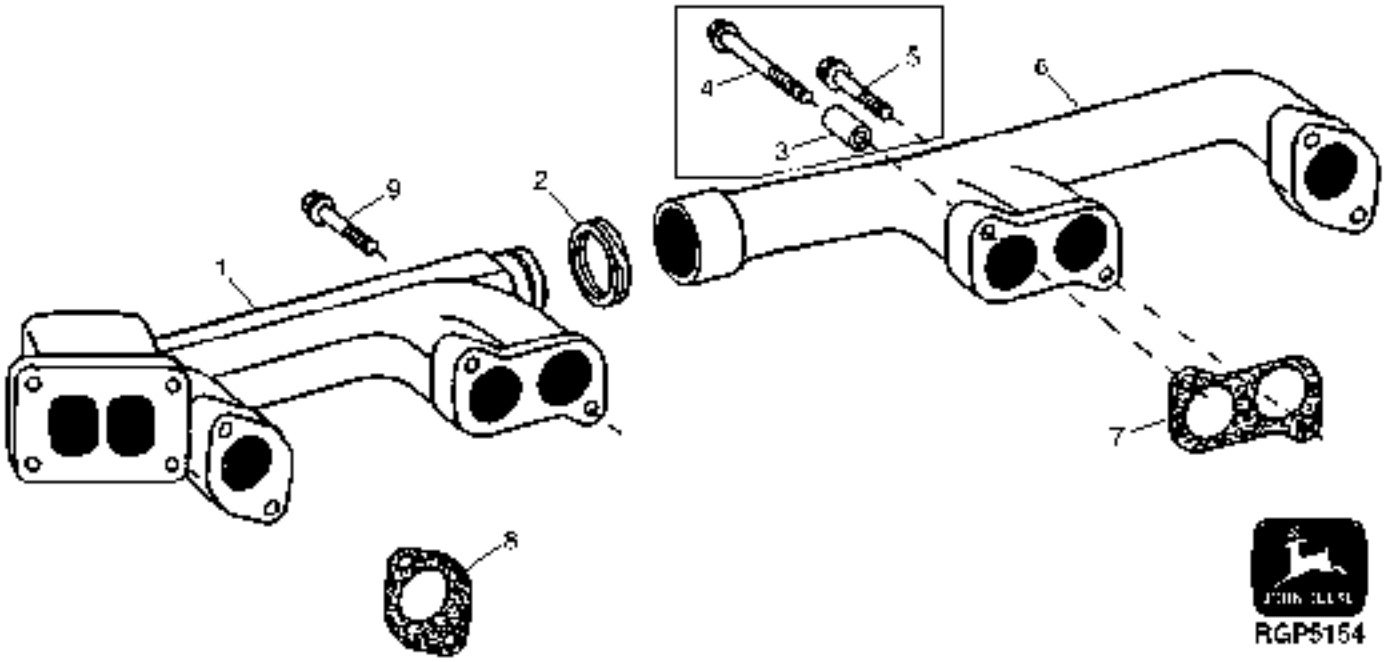

KEY	PART NO.	PART NAME	QTY	ENGINE SERIAL NO.	8400	REMARKS
1	R120645	EXHAUST MANIFOLD	1		X	(REAR)
2	R122595	RING	1		X	
3	R122502	SPACER	4	-XXXXXX	X	(SUB (8) R135359)
4	R125469	CAP SCREW	4	-XXXXXX	X	(SUB (8) R135359)
5	R125468	CAP SCREW	4	-XXXXXX	X	(SUB (8) R135359)
6	R120644	EXHAUST MANIFOLD	1		X	(FRONT)
7	RE62776	GASKET	2		X	(SUB FOR R122503)
8	RE62777	GASKET	2		X	(SUB FOR R122504)
9	R135359	CAP SCREW	8	XXXXXX-	X	

https://www.truck-manuals.net/

MEMORANDA
MEMORANDA
MEMORANDA
MEMORANDA
MEMORANDA
MEMORANDA

https://www.truck-manuals.net/

EXHAUST SHIELDS
ECHAPPEMENT, DISPOSITIFS DE PROTECTION
AUSPUFF-SCHILDER
PROTEZIONI DI SCARICO
PROTECTORES DEL ESCAPE
AVGASSKYDD
RXP010843 -UN-01JAN94

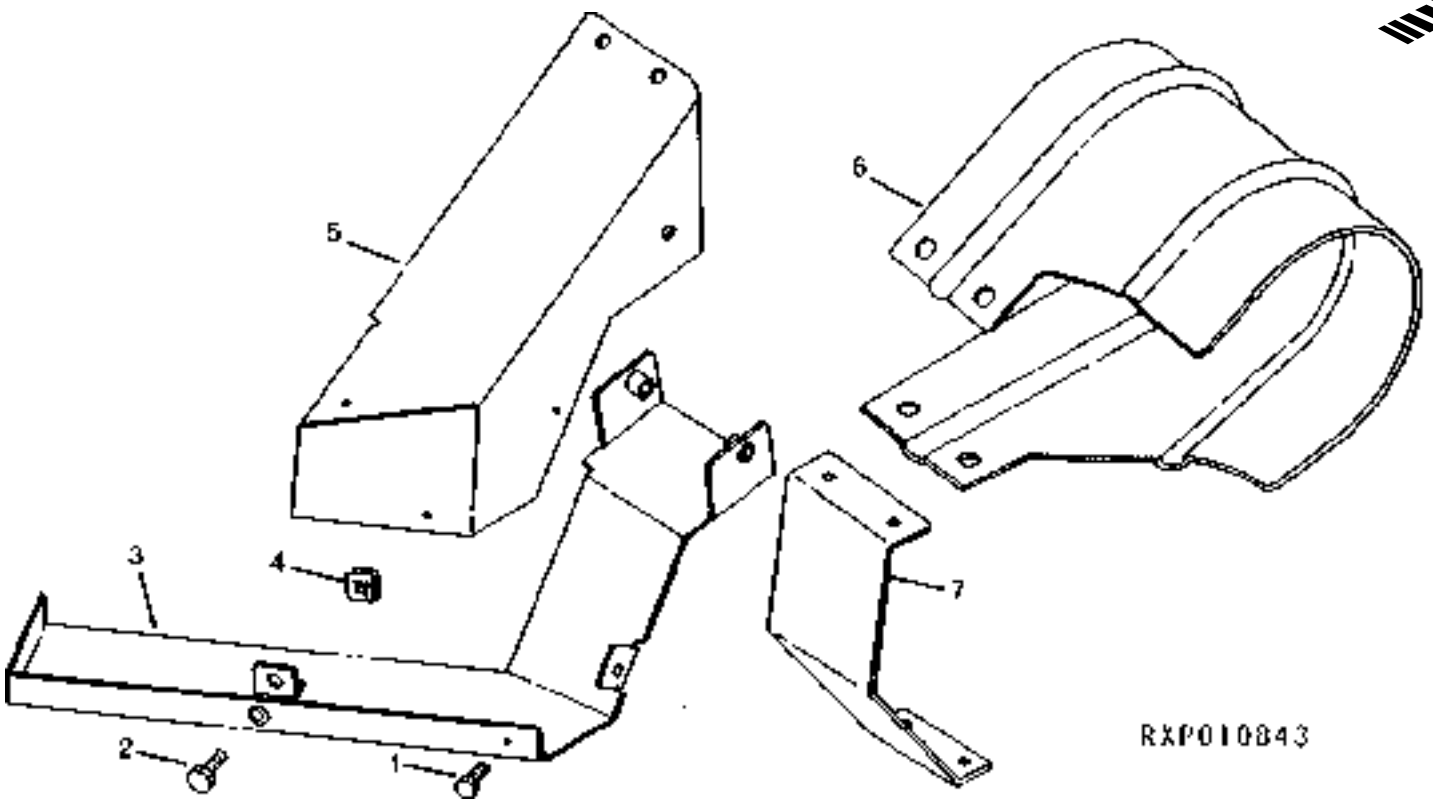

KEY	PART NO.	PART NAME	QTY	TRACTOR SERIAL NO.	ALL	REMARKS
1	19M7775	SCREW	10		X	M6 X 16
2	19M7801	SCREW	1		X	M8 X 60
3	RE60826	SHIELD	1		X	
4	R151387	NUT	10		X	
5	RE60825	SHIELD	1		X	
6	RE60827	SHIELD	1		X	
7	RE60828	SHIELD	1		X	
8	19M8125	SCREW	1		X	M8 X 140
9	14M7298	FLANGE NUT	1		X	M8

https://www.truck-manuals.net/

EXHAUST SYSTEM
ECHAPPEMENT
ABGASANLAGE
SCARICO
SISTEMA DE ESCAPE
AVGASSYSTEM
RXP022178 -UN-09SEP97

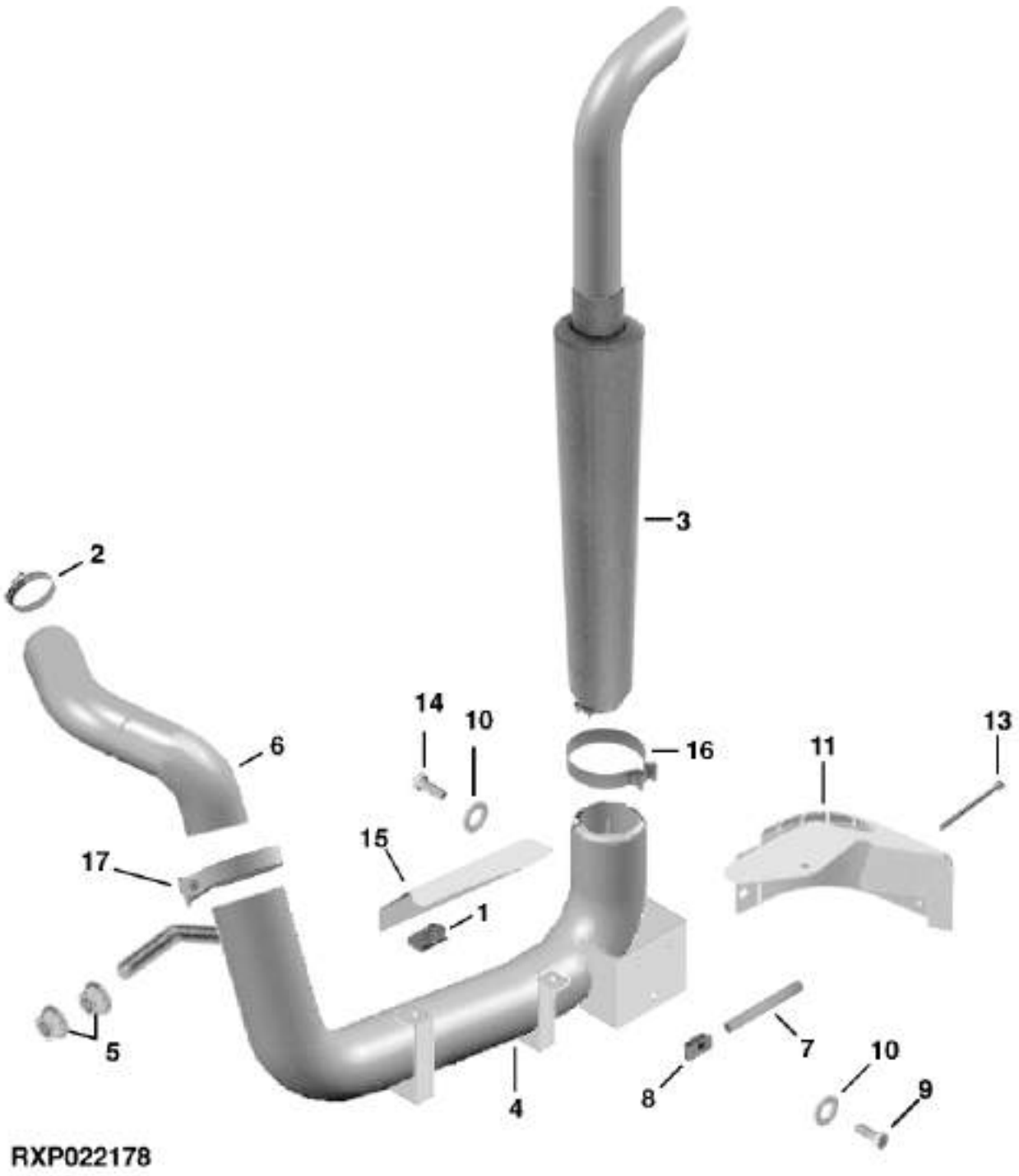

https://www.truck-manuals.net/

KEY	PART NO.	PART NAME	QTY	TRACTOR SERIAL NO.	ALL	REMARKS
1	R151387	NUT	5		X	
2	RE157613	CLAMP	1		X	
3	RE44716	MUFFLER	1		X	
4	RE61175	PIPE	1	-XXXXXX	X	(SUB RE151728, R120332, R124679 AND 19M7862)
	RE151728	PIPE	1	XXXXXX-	X	(SUB FOR RE64215) W/CLAMP
5	14M7299	FLANGE NUT	2		X	M12
6	RE44784	EXHAUST PIPE	1		X	
7	28H3403	BUSHING	1		X	0.269" X 0.405" X 4.090"
8	R120332	NUT	1		X	
9	19M7493	CAP SCREW	3		X	M12 X 40
10	24M7226	WASHER	3		X	13 X 35 X 5 MM
11	R124418	SHIELD	1		X	
12	24M7088	WASHER	6		X	6.600 X 12 X 1.600 MM
13	19M8827	SCREW	1		X	M6 X 130
14	19M7560	CAP SCREW	5		X	M6 X 16
15	R124419	SHIELD	1		X	
16	RE53282	CLAMP	1		X	
17	RE52087	CLAMP	1		X	

https://www.truck-manuals.net/

ETHER COLD WEATHER STARTING AID
AIDE AU DEMARRAGE A L'ETHER
AETHER-STARTHILFE
DISP. PERL'AVVIAMENTO A FREDDO CON ETRE
DISP. PARA FACILITAR EL ARRANQUE EN FRIO CON ETER
KALLSTART(ETER)
RXP8989 -UN-01JAN94

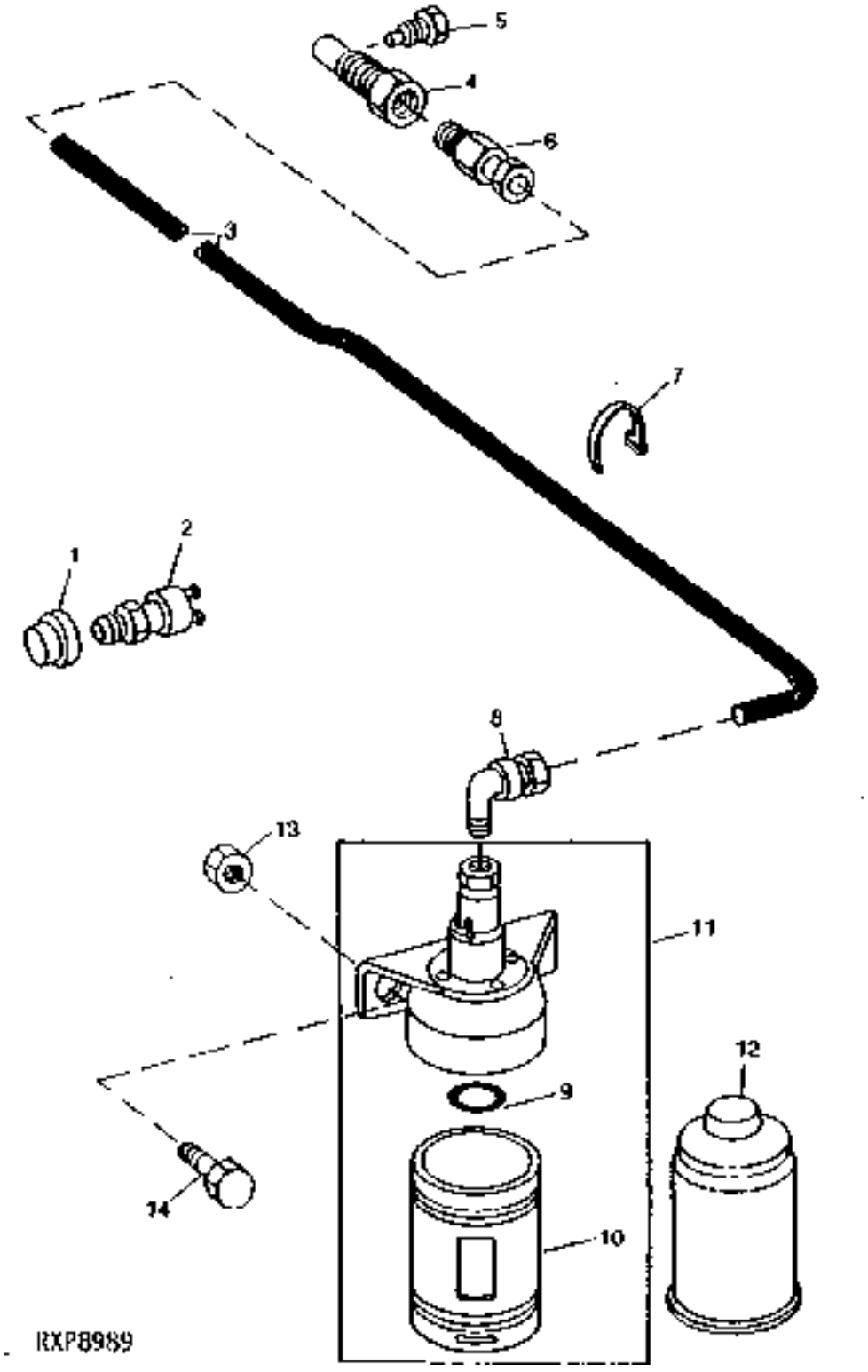

https://www.truck-manuals.net/

KEY	PART NO.	PART NAME	QTY	TRACTOR SERIAL NO.	ALL	REMARKS
1	T55585	CAP	1		X	
2	R39554	SWITCH	1		X	
3	R123993	HOSE	1		X	
4	R47160	NOZZLE HOLDER	1		X	
5	T155858	NOZZLE	1		X	(SUB FOR R28583)
6	RE21790	ELBOW FITTING	1		X	
7	R44302	TIE BAND	AR		X	
8	RE21790	ELBOW FITTING	1		X	
9	T13119	O-RING	1		X	
10	R73498	CONTAINER	1		X	
11	RE48310	STARTING AID SOLENOID	1		X	
	RE48321	ADAPTER	1		X	
12	RE33636	STARTING FLUID	1		X	
13	14H785	NUT	NA		X	5/16"
14	37M7031	SCREW	2		X	M6 X 16

https://www.truck-manuals.net/

ETHER COLD WEATHER STARTING AID FITTINGS
RACCORDS D'AIRE DEMARRAGE A L'ETHER POUR TEMPS FROID
AETHERSTARTHILFE UND FITTINGS
RACCORDI DISPOSITIVO AUSILIARE DI AVVIAMENTO A BASSE TEMPERATURE
CONEXIONES AUXILIARES DE TERMOARRANQUE
ETERKALLSTARTHJAELP MED ANSLUTNINGAR
RGP4304 -UN-01JAN94

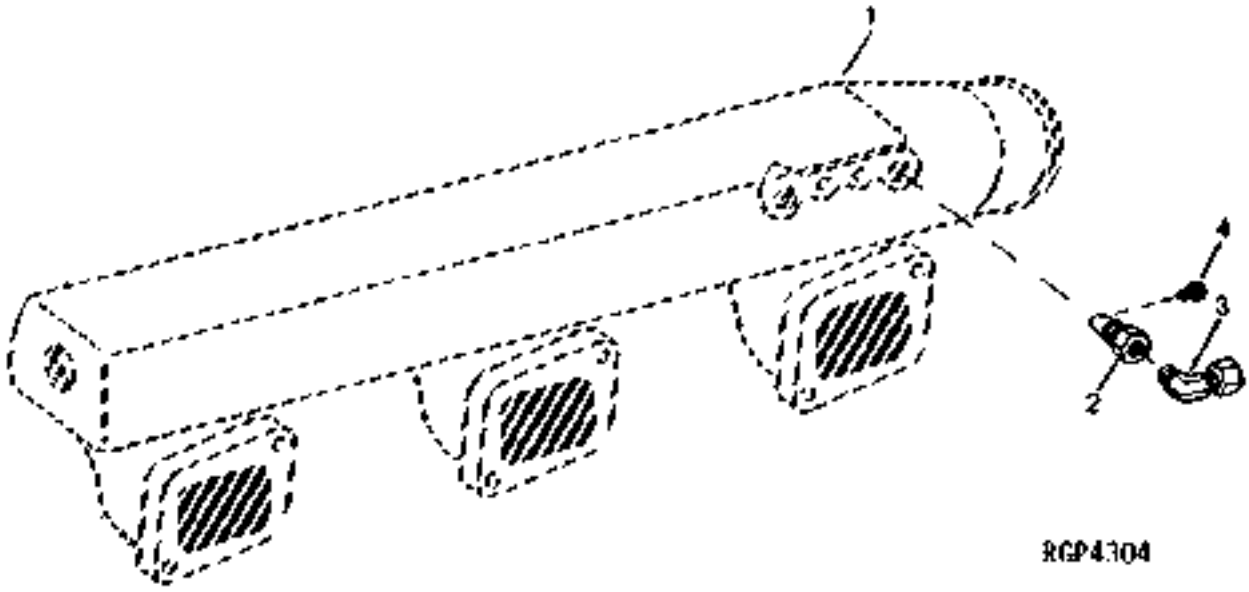

KEY	PART NO.	PART NAME	QTY	ENGINE SERIAL NO.	ALL	REMARKS
1	.....	INTAKE MANIFOLD	1		X	
2	R47160	NOZZLE HOLDER	1		X	
3	RE21790	ELBOW FITTING	1		X	
4	T155858	NOZZLE	1		X	(SUB FOR R28583)

https://www.truck-manuals.net/

ETHER COLD WEATHER STARTING AID BRACKET
DISPOSITIF D'AIDE AU DEMARRAGE A L'ETHER, SUPPORT
HALTERUNG DER KALTWETTER-STARTHILFE
STAFFA DEL DISPOSITIVO (SUSSIDIARIO) DI AVVIAMENTO CON ETERE
SOPORTE DEL AUXILIAR DE ETER PARA ARRANQUE EN FRIO
ETERSTARTHJAELP, FAESTE
RGP4994 -UN-26MAR98

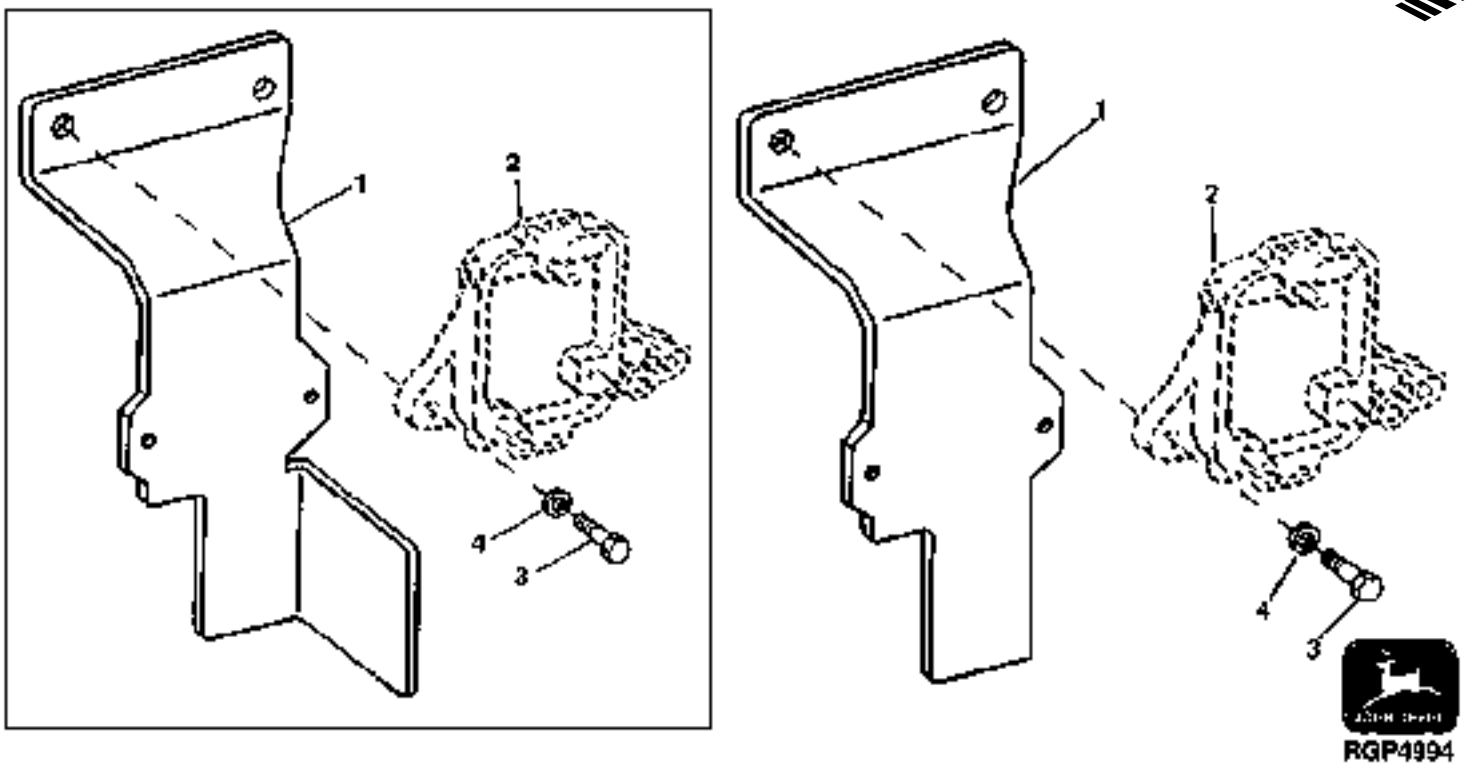

KEY	PART NO.	PART NAME	QTY	ENGINE SERIAL NO.	8400	REMARKS
1	R110710	BRACKET	1	-XXXXXX	X	
	R128490	BRACKET	1	XXXXXX-	X	
2	.....	BASE	1		X	
3	19H3205	CAP SCREW	2		X	7/16" X 1-1/2"
4	24H1325	WASHER	2		X	15/32" X 59/64" X 0.065"

https://www.truck-manuals.net/

ETHER COLD WEATHER STARTING AID BRACKET (6081) (8100,8200,8300 TSN 010000-)
DISPOSITIF D'AIDE AU DEMARRAGE A L'ETHER, SUPPORT (6081) (8100,8200,8300 TSN 010000-)
HALTERUNG DER KALTWETTER-STARTHILFE (6081) (8100,8200,8300 TSN 010000-)
STAFFA DEL DISPOSITIVO (SUSSIDIARIO) DI AVVIAMENTO CON ETERE (6081) (8100, 8200,8300 TSN 010000-
SOPORTE DEL AUXILIAR DE ETER PARA ARRANQUE EN FRIO (6081)(8100,8200,8300 TSN 010000-)
ETERSTARTHJAELP, FAESTE (6081) (8100,8200,8300 TSN 010000-)
RGP4888 -UN-13MAY97

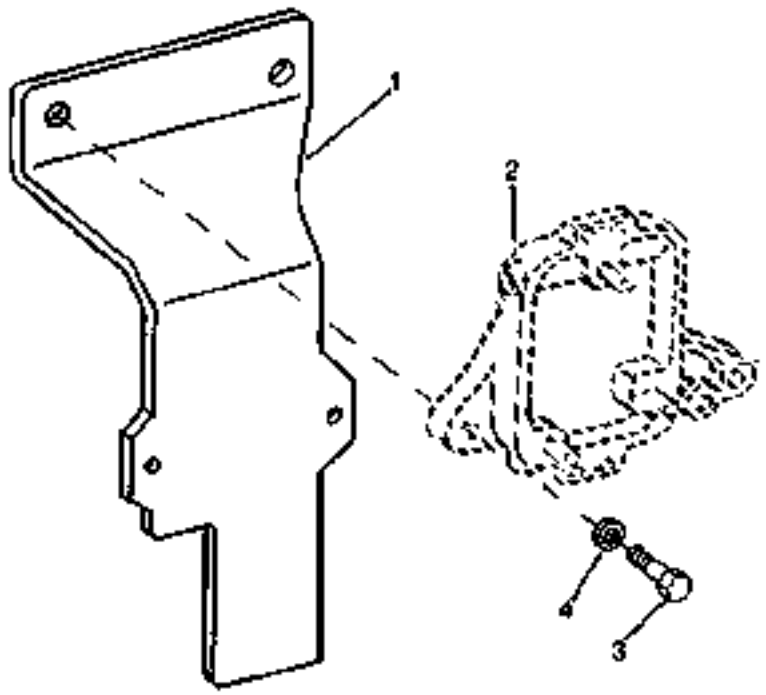

RGP4888

KEY	PART NO.	PART NAME	QTY	ENGINE SERIAL NO.	8 8 8 1 2 3 0 0 0 0 0 0	REMARKS
1	R128490	BRACKET	1		X X X	
2	.....	BASE	1		X X X	
3	19H3205	CAP SCREW	2		X X X	7/16" X 1-1/2"
4	24H1325	WASHER	2		X X X	15/32" X 59/64" X 0.065"

https://www.truck-manuals.net/

ETHER COLD WEATHER STARTING AID BRACKET (6076) (8100,8200,8300 TSN -009999)
DISPOSITIF D'AIDE AU DEMARRAGE A L'ETHER, SUPPORT (6076) (8100,8200,8300 TSN -009999)
HALTERUNG DER KALTWETTER-STARTHILFE (6076) (8100,8200,8300 TSN -009999)
STAFFA DEL DISPOSITIVO (SUSSIDIARIO) DI AVVIAMENTO CON ETERE (6076) (8100, 82,83 TSN -009999)
SOPORTE DEL AUXILIAR DE ETER PARA ARRANQUE EN FRIO (6076) (8100,8200,8300 TSN -009999)
ETERSTARTHJAELP, FAESTE (6076) (8100,8200,8300 TSN -009999)
RGP4336 -UN-01JAN94

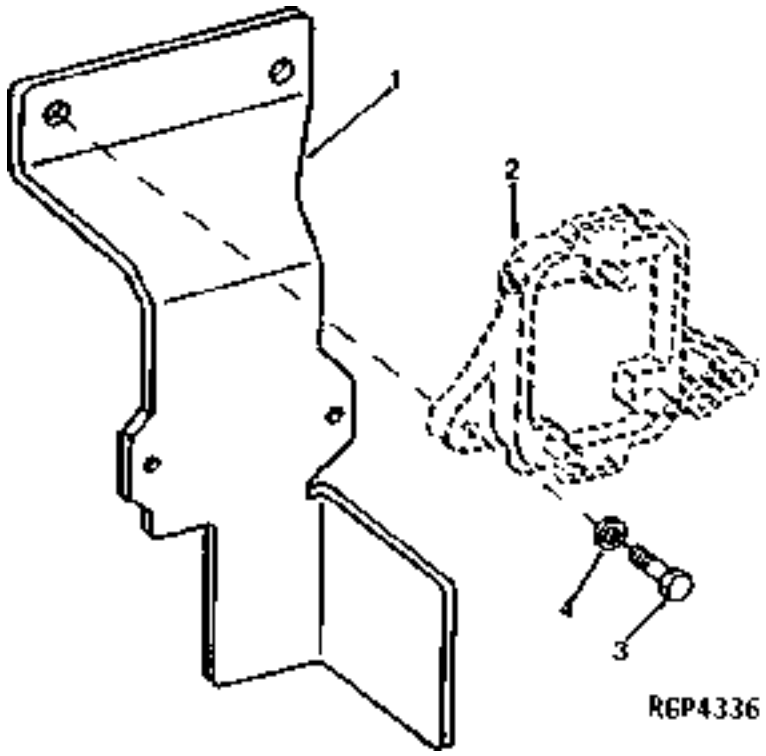

KEY	PART NO.	PART NAME	QTY	ENGINE SERIAL NO.	8 8 8 1 2 3 0 0 0 0 0 0	REMARKS
1	R110710	BRACKET	1		X X X	
2	.....	BASE	1		X X X	
3	19H3205	CAP SCREW	2		X X X	7/16" X 1-1/2"
4	24H1325	WASHER	2		X X X	15/32" X 59/64" X 0.065"

https://www.truck-manuals.net/

FUEL FILTER/SEDIMENT BOWL (8100,8200,8300 -009999)
FILTRE A COMBUSTIBLE / BOL DE DECANTATION (8100,8200,8300 -009999)
KRAFTSTOFFILTER / ABSCHEIDEGEFAESS (8100,8200,8300 -009999)
KRAFTSTOFFILTER / ABSCHEIDEGEFAESS (8100,8200,8300 -009999)
FILTRO DE COMBUSTIBLE / VASO DE DECANTATION (8100,8200,8300 -009999)
VATTENAVSKILJARE (8100,8200,8300 -009999)
RXP010845 -UN-01JAN94

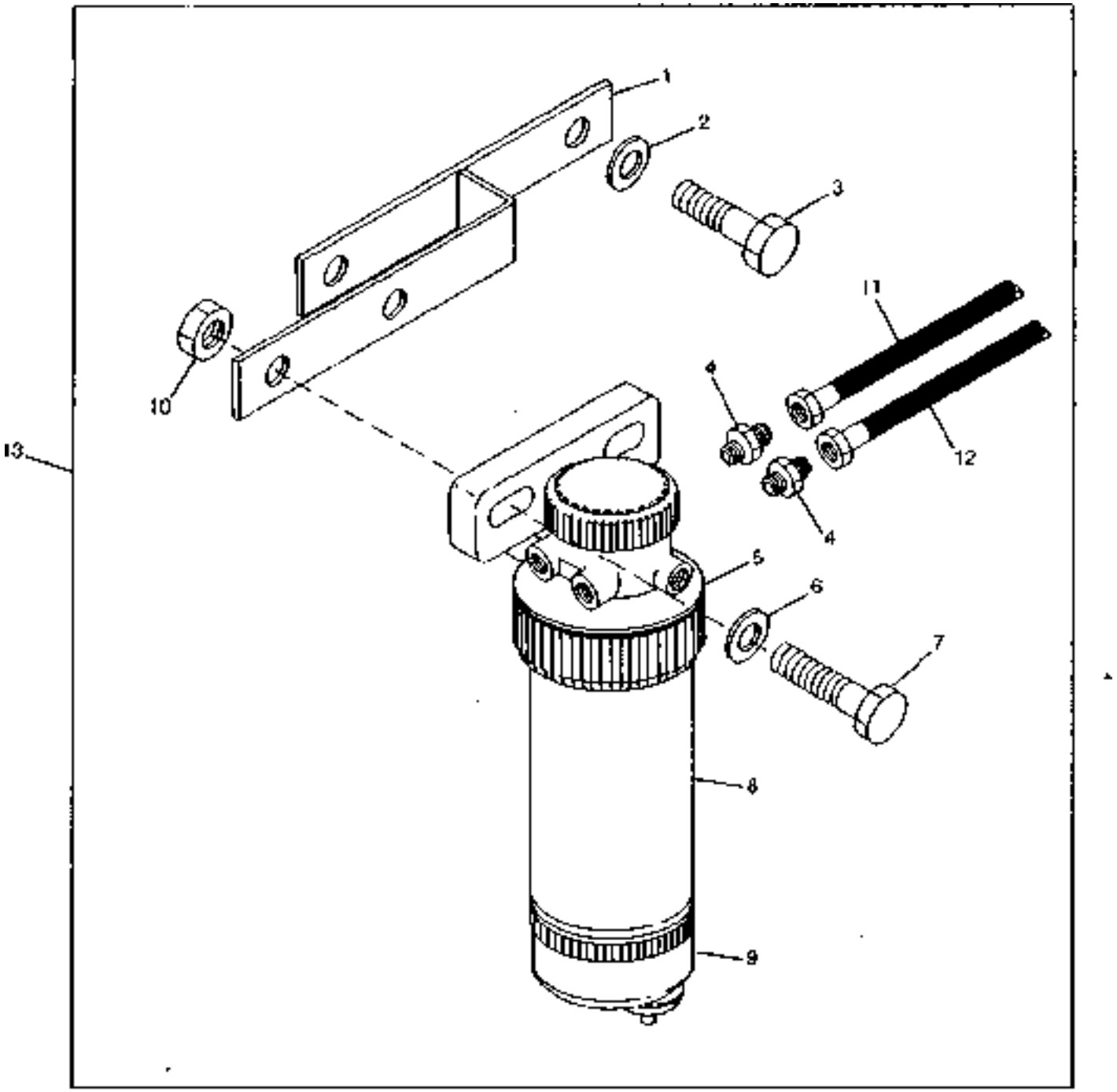

RXP010845

https://www.truck-manuals.net/

KEY	PART NO.	PART NAME	QTY	TRACTOR SERIAL NO.	8 8 8 1 2 3 0 0 0 0 0 0	REMARKS
1	RE60559	SUPPORT	1		X X X	
2	24M7051	WASHER	2		X X X	21 X 37 X 3 MM
3	19H1871	CAP SCREW	2		X X X	3/4" X 1-1/4"
4	R122789	FITTING	2		X X X	
5	RE500161	KIT	1		X X X	(SUB FOR RE54077, RE63182 OR RE63183)
	RE51649	KIT	1		X X X	
6	24M7238	WASHER	2		X X X	8.700 X 17 X 2 MM
7	19M7513	CAP SCREW	2		X X X	M8 X 30
8	RE65431	FILTER ELEMENT	1		X X X	(SUB FOR RE58376 OR RE62423)
9	RE51650	SEDIMENT BOWL	1		X X X	
10	14M7273	NUT	2		X X X	M8
11	RE61665	HYDRAULIC HOSE	1		X X X	
12	RE58881	HYDRAULIC HOSE - FABRICATE	1		X X X	
13	**AR112618**	**SEPARATOR**	**1**		**X X X**	**(FI)**
..	RE50752	SEAL KIT	1		X X X	(A)
..	R27094	DRAIN PLUG	2		X X X	

(A) O-RING KIT
JEU DE PIECES DE JOINT TORIQUE
O-RINGSATZ
SERIE PEZZI ANELLI O-R
JUEGO DE ANILLO TORICO
O-RINGSATS

https://www.truck-manuals.net/

PRE-FUEL FILTER AND LINE (8100, 8200, 8300 TSN 010000-)
PREFILTRE A CARBURANT ET CONDUITE (8100, 8200, 8300 TSN 010000-)
KRAFTSTOFF-VORFILTER UND LEITUNG (8100, 8200, 8300 TSN 010000-)
PREFILTRO E TUBO DI ALIMENTAZIONE (8100, 8200, 8300 TSN 010000-)
PREFILTRO DE COMBUSTIBLE Y LINEA (8100, 8200, 8300 TSN 010000-)
BRAENSLEFOERFILTER OCH LEDNING (8100, 8200, 8300 TSN 010000-)
RE030467 -UN-22APR99

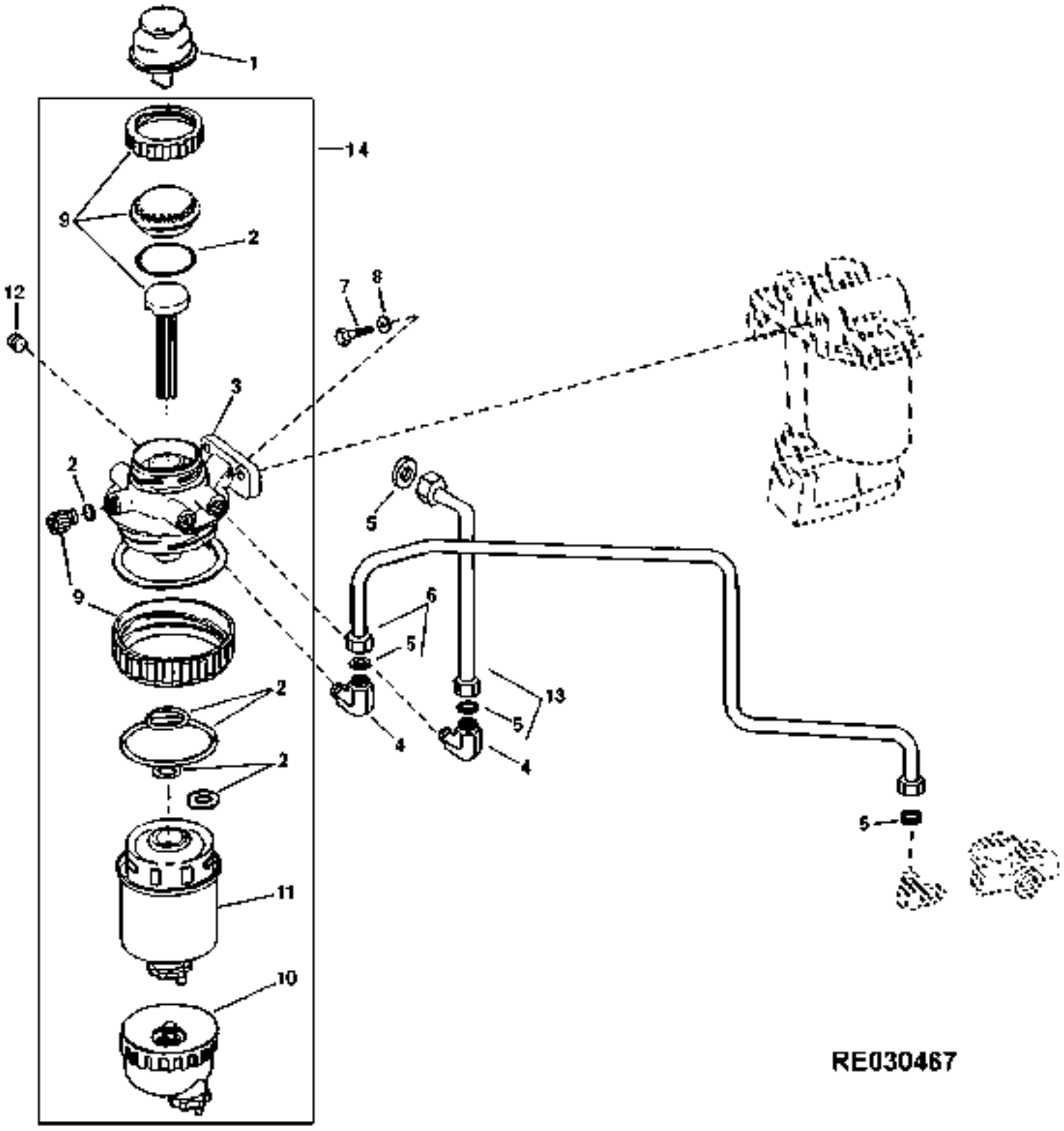

https://www.truck-manuals.net/

KEY	PART NO.	PART NAME	QTY	ENGINE SERIAL NO.	8 8 8 1 2 3 0 0 0 0 0 0	REMARKS
1	RE50467	HAND PRIMER	1		X X X	
2	RE50752	SEAL KIT	1		X X X	(FUEL FILTER PACKINGS)
3	RE63182	BASE	1		X X X	(HEADER) (USE WITH RE58376) (SUB RE63183, RE65431, (4) R26286, (2) R82719 AND (2) R134957, APPL)
4	AR101212	ELBOW FITTING	2		X X X	(USE WITH RE54077 OR RE63182)
	R26286	O-RING	2		X X X	(USE WITH RE63182 OR RE63183)
5	R67092	SEAL	4		X X X	
6	RE63313	FUEL LINE	1		X X X	OUTLET
7	19H1731	CAP SCREW	2		X X X	3/8" X 1"
8	24M7040	WASHER	2		X X X	11 X 20 X 2 MM
9	RE51649	KIT	1		X X X	(MECHANICAL COMPONENTS)
10	RE51650	SEDIMENT BOWL	1		X X X	
11	RE65431	FILTER ELEMENT	1		X X X	(USE WITH RE54077) (SUB RE65431)
12	R82719	FITTING PLUG	2		X X X	
	R26286	O-RING	2		X X X	
13	RE63312	LINE	1		X X X	INLET
14	RE65432	FUEL FILTER	1		X X X	
..	RE50752	SEAL KIT	1		X X X	
..	AR116902	SEPARATOR	1		X X X	

https://www.truck-manuals.net/

FUEL FILTER AND LINES (6076) (8100,8200,8300 TSN -009999)(ESN -564508)
FILTRE A COMBUSTIBLE (6076)(8100,8200,8300 TSN -009999) (ESN -56450
KRAFTSTOFF-FILTER (6076) (8100,8200,8300 TSN -009999) (ESN -564508)
FILTRO COMBUSTIBLE (6076) (8100,8200,8300 TSN -009999) (ESN -564508)
FILTRO DE COMBUSTIBLE (6076) (8100,8200,8300 TSN -009999) (ESN -564508)
BRANSLEFFILTER (6076) (8100,8200,8300 TSN -009999) (ESN -564508)
RGP4451 -UN-28FEB95

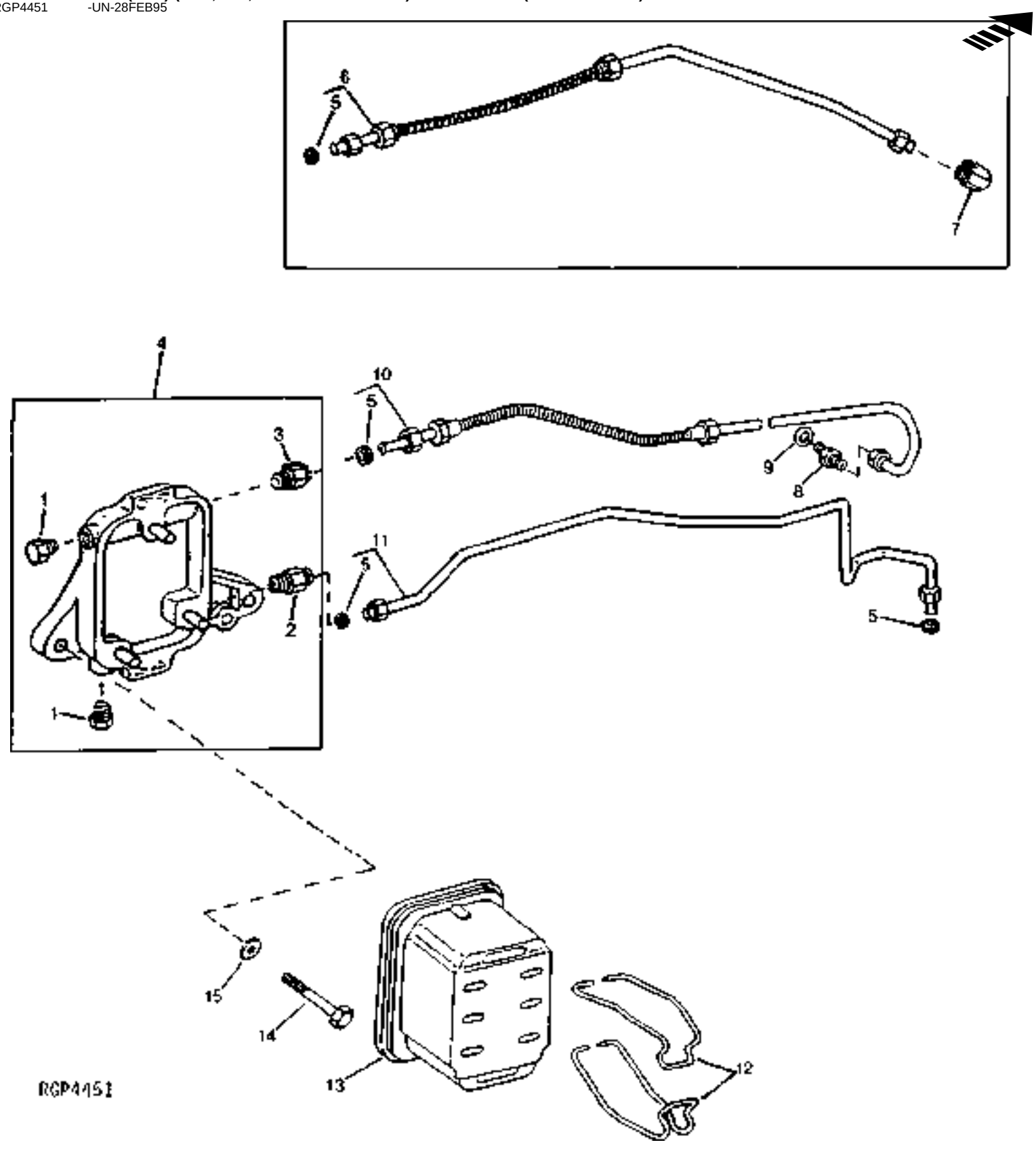

https://www.truck-manuals.net/

KEY	PART NO.	PART NAME	QTY	ENGINE SERIAL NO.	8 8 8 1 2 3 0 0 0 0 0 0	REMARKS
1	R119223	PLUG	2		X X X	
2	RE54244	CHECK VALVE	1		X X X	
3	RE54245	FITTING	1		X X X	
4	RE47501	BASE	1		X X X	(NOT AS SHOWN)
5	R67092	SEAL	3		X X X	
6	RE49445	FUEL LINE	1	-537402	X X X	(SUB RE65787, RE500280, R127595, R83489 AND R93008, APPL)
7	RE62345	ELBOW FITTING	1	-537402	X X X	(SUB FOR RE49446)
8	R83489	FITTING	1		X X X	
9	R93008	WASHER	1		X X X	
10	RE63090	FUEL LINE	1	537403-	X X X	(SUB RE65787, RE500280 AND R127595, APPL)
11	RE49444	FUEL LINE	1		X X X	(SUB RE65787, RE500280 AND R127595, APPL)
12	R89927	CLAMP	2		X X X	
13	RE27091	FUEL FILTER	1		X X X	
14	19H3205	CAP SCREW	2		X X X	7/16" X 1-1/2"
15	24H1325	WASHER	2		X X X	15/32" X 59/64" X 0.065"

https://www.truck-manuals.net/

FUEL FILTER AND LINES (6076) (8100,8200,8300 TSN -009999)(ESN 564509-)
FILTRE A COMBUSTIBLE (6076) (8100,8200,8300 TSN -009999) (ESN 564509-)
KRAFTSTOFF-FILTER (6076) (8100,8200,8300 TSN -009999) (ESN 564509-)
FILTRO COMBUSTIBLE (6076) (8100,8200,8300 TSN -009999) (ESN 564509-)
FILTRO DE COMBUSTIBLE (6076) (8100,8200,8300 TSN -009999) (ESN 564509-)
BRANSLEFFILTER (6076) (8100,8200,8300 TSN -009999) (ESN 564509-)
RGP4608 -UN-17NOV95

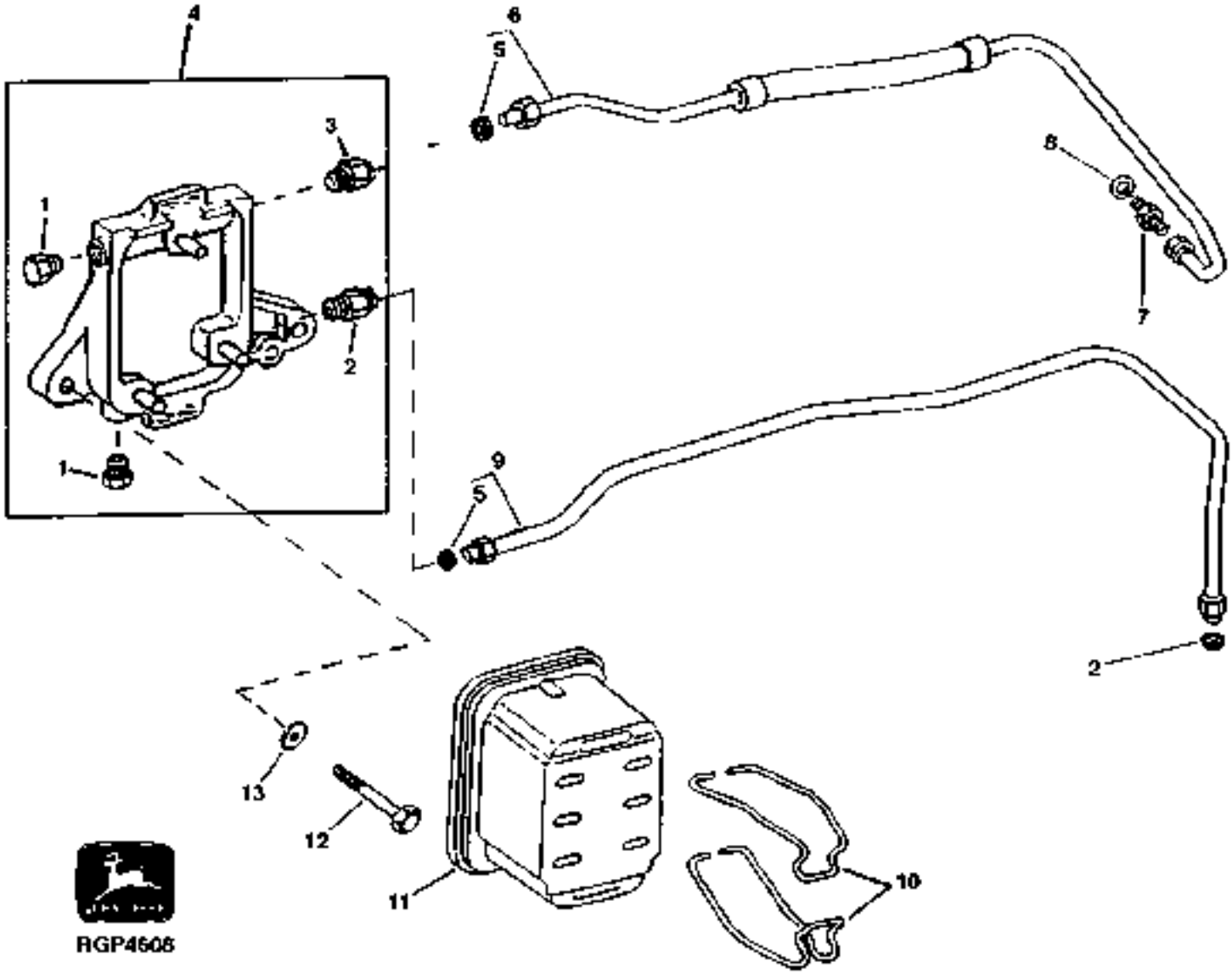

https://www.truck-manuals.net/

KEY	PART NO.	PART NAME	QTY	ENGINE SERIAL NO.	8 8 8 1 2 3 0 0 0 0 0 0	REMARKS
1	R119223	PLUG	2		X X X	
2	RE54244	CHECK VALVE	1		X X X	
3	RE54245	FITTING	1		X X X	
4	RE47501	BASE	1		X X X	(NOT AS SHOWN)
5	R67092	SEAL	3		X X X	
6	RE500280	FUEL LINE	1		X X X	(SUB FOR RE63414)
7	R83489	FITTING	1		X X X	
8	R93008	WASHER	1		X X X	
9	RE65787	FUEL LINE	1		X X X	(SUB FOR RE63413)
10	R89927	CLAMP	2		X X X	
11	AR86745	FILTER ELEMENT	1		X X X	(SUB FOR RE27091)
12	19H3205	CAP SCREW	2		X X X	7/16" X 1-1/2"
13	24H1325	WASHER	2		X X X	15/32" X 59/64" X 0.065"

https://www.truck-manuals.net/

FUEL INJECTION NOZZLES AND LINES (6076) (8100,8200,8300 TSN -009999)
TUYAUX D'INJECTION (6076) (8100,8200,8300 TSN -009999)
FRAFTSTOFFLEITUNGEN (6076) (8100,8200,8300 TSN -009999)
TABAZIONI COMBUSTIBLE (6076) (8100,8200,8300 TSN -009999)
TUBERIAS DE COMBUSTIBLE (6076) (8100,8200,8300 TSN -009999)
BRANSLELEDNINGAR (6076) (8100,8200,8300 TSN -009999)
RGP3574 -UN-01JAN94

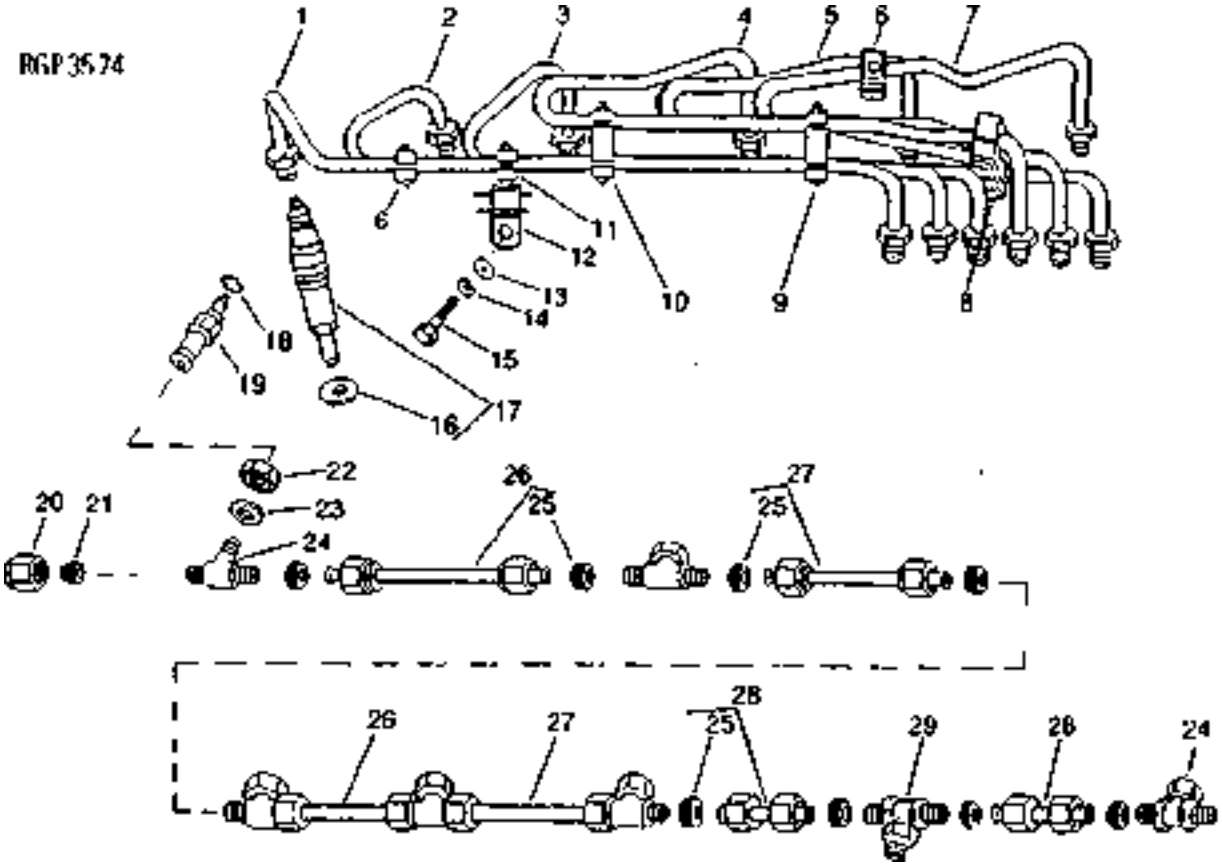

https://www.truck-manuals.net/

KEY	PART NO.	PART NAME	QTY	ENGINE SERIAL NO.	8 8 8 1 2 3 0 0 0 0 0 0	REMARKS
1	RE47431	FUEL LINE	1		X X X	NO. 6
2	RE47430	FUEL LINE	1		X X X	NO. 5
3	RE47429	FUEL LINE	1		X X X	NO. 4
4	RE47428	FUEL LINE	1		X X X	NO. 3
5	RE47427	FUEL LINE	1		X X X	NO. 2
6	R59305	STRAP	1		X X X	
	R58186	CLAMP	2		X X X	
	R61144	STRAP	1		X X X	
	21H1463	CAP SCREW	2		X X X	0.190" X 7/8"
7	RE47426	FUEL LINE	1		X X X	NO. 1
8	R59298	STRAP	1		X X X	
	R59297	HALF CLAMP	2		X X X	
	21H1463	CAP SCREW	2		X X X	0.190" X 7/8"
9	R59298	STRAP	2		X X X	
	R71212	CLAMP	1		X X X	
	R61145	STRAP	1		X X X	
	R71398	SCREW	2		X X X	0.190" X 1-1/2"
10	R59305	STRAP	1		X X X	
	R58186	CLAMP	1		X X X	
	R74030	CLAMP	1		X X X	
	R74804	CLAMP	1		X X X	
	R61144	STRAP	1		X X X	
	R71398	SCREW	1		X X X	0.190" X 1-1/2"
11	R59298	STRAP	1		X X X	
	R59297	HALF CLAMP	2		X X X	
	21H1463	CAP SCREW	2		X X X	0.190" X 7/8"
12	RE47120	ABSORBER	1		X X X	
13	24H1884	WASHER	1		X X X	13/32" X 13/16" X 0.120"
14	12M7066	LOCK WASHER	NA		X X X	10.200 MM
15	19M7166	CAP SCREW	1		X X X	M10 X 20
16	R84472	WASHER	6		X X X	7.360 X 18.160 X 2 MM (0.290" X 0.715" X 0.079")
17	RE30159	INJECTION NOZZLE	6		X X X	(DENSO) (6076HRW33, HRW34) (SUB RE52109 AND R84472)
	RE25253	INJECTION NOZZLE	6		X X X	(DENSO) (6076HRW35) (SUB RE52113 AND R84472)
	RE52109	INJECTION NOZZLE	6		X X X	(DENSO) (6076HRW33, HRW34)
	RE52113	INJECTION NOZZLE	6		X X X	(DENSO) (6076HRW35)
18	R77551	O-RING	6		X X X	
19	R87082	FITTING	6		X X X	(ALSO ORDER R77551)
20	R51937	TUBE NUT	1		X X X	
21	AR85519	PLUG	1		X X X	
22	R79604	TUBE NUT	6		X X X	
23	R79605	WASHER	6		X X X	
24	R79606	TEE FITTING	6		X X X	
25	R51936	PACKING	11		X X X	
26	RE15807	FUEL LINE	2		X X X	
27	RE15808	FUEL LINE	2		X X X	
28	RE36421	FUEL LINE	2		X X X	
29	R97061	TEE FITTING	1		X X X	

https://www.truck-manuals.net/

FUEL INJECTION PUMP (6076) (8100,8200,8300 TSN -009999)
POMPE D'INJECTION/TUYAUX D'INJECTION/CONTROLEUR DE MOTEUR(6076) (8100,8200,8300 TSN -009999)
KRAFTSTOFF-EINSPRITZPUMPE/KRAFTSTOFFLEITUNGEN/MOTOR-STEURUNG(6076) (81,82,83 TSN -009999)
POMPA DI INIEZIONI/TUBAZIONI COMBUSTIBLE/UNITA DI CONTROLLO DEL MOTORE 6076-8100,8200,8300
BOMBA DE INYEXXION DE COMBUSTBLE/TUBERIAS DE COMBUSTBLE/CONROLA DOR DEL MOTOR 6076-8100
INSPRUTNINGSPUMP/BRANSLELEDNINGAR/MOTORSTYRENHET (6076) (8100,8200,8300 TSN -009999)
RGP5050 -UN-27JUL98

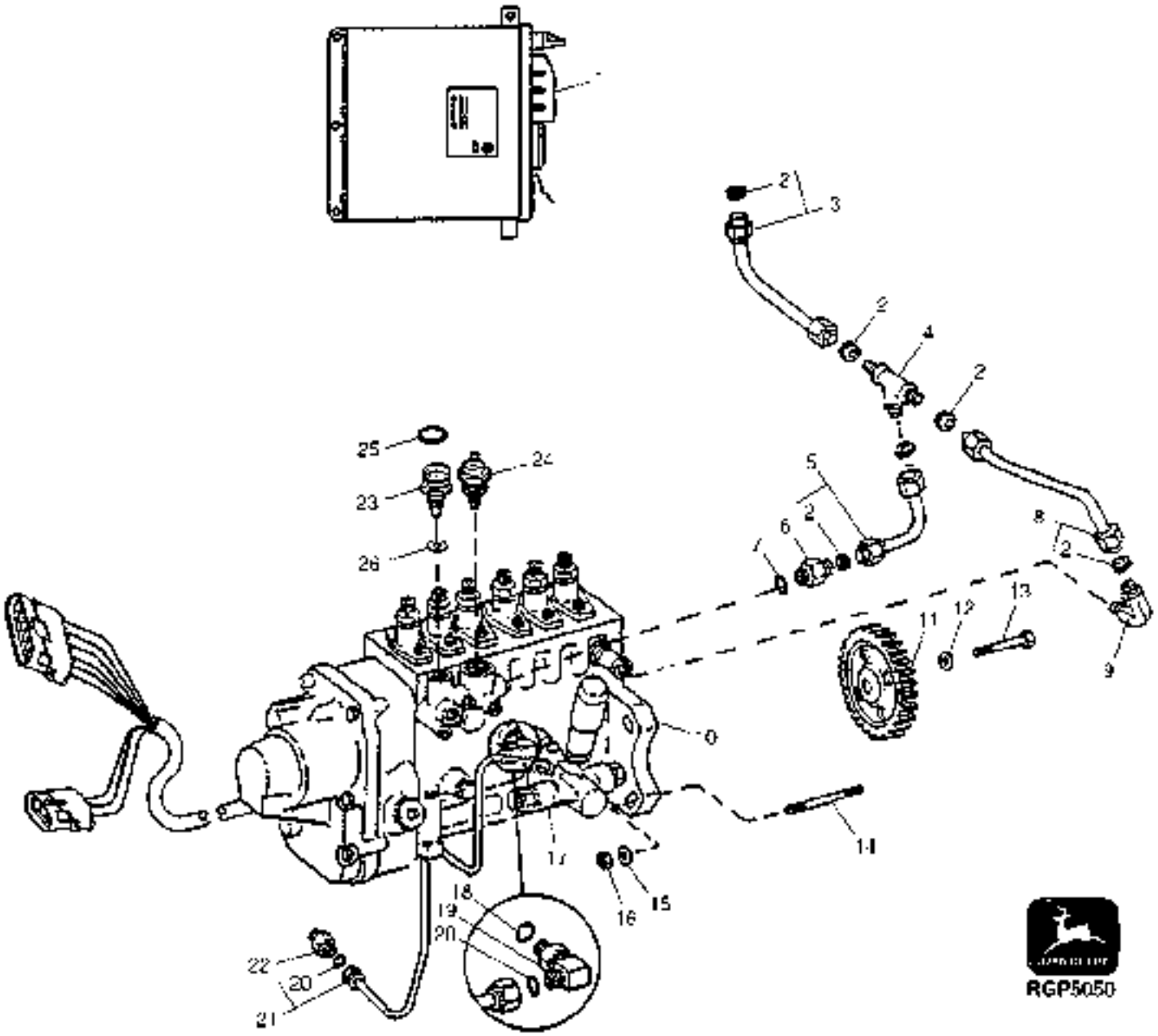

https://www.truck-manuals.net/

KEY	PART NO.	PART NAME	QTY	ENGINE SERIAL NO.	8100	8200	8300	REMARKS
1	RE57525	ENGINE CONTROLLER	1		X			(MARKED RE28320) (SUB RE501825, RE502110 OR RE503177 AND RE502125) (6076HRW33); (ROBERT BOSCH)
	RE501825	ENGINE CONTROLLER	1		X			(REMANUFACTURED) (6076HRW33) (MARKED RE501731) (SUB RE503177 OR RE502110 AND RE502125)
	RE503177	ENGINE CONTROLLER	1		X			(6076HRW33) (MARKED RE66614) (SUB FOR RE57525, RE501825 OR RE502110)
	RE57526	ENGINE CONTROLLER	1		X			(MARKED RE28320) (SUB RE501826, RE502111 OR RE503178 AND RE502125)
	RE501826	ENGINE CONTROLLER	1			X		(MARKED RE501731) (SUB RE503178 AND RE502125) (6076HRW34)
	RE503178	ENGINE CONTROLLER	1			X		(REMANUFACTURED) (6076HRW34) (MARKED RE66614) (SUB FOR RE57526, RE501826 OR RE502111)
	RE57524	ENGINE CONTROLLER	1			X		(ROBERT BOSCH) (HRW35) (MARKED RE28320) (SUB RE503179 AND RE502125)
	RE501824	ENGINE CONTROLLER	1			X		(HRW35) (MARKED RE501731) (SUB RE503179 AND RE502125)
	RE503179	ENGINE CONTROLLER	1				X	(HRW35) (MARKED RE66614) (SUB FOR RE57524, RE501824 OR RE502112)
	RE502125	KIT	1				X	(MOUNTING KIT) (USE WITH RE66614)
	RE502135	KIT	1		X	X	X	(BALER KIT)
2	R51936	PACKING	6		X	X	X	
3	RE30920	FUEL LINE	1		X	X	X	
4	R97061	TEE FITTING	1		X	X	X	
5	RE30833	FUEL LINE	1		X	X	X	
6	R91824	FITTING	1		X	X	X	
7	R48693	WASHER	1		X	X	X	
8	RE35684	FUEL LINE	1		X	X	X	
9	R67364	ELBOW FITTING	1		X	X	X	
10	RE57372	FUEL INJECTION PUMP	1	-XXXXXX	X	X	X	(A) (ROBERT BOSCH) (PES6P120A720RS3184) (SUB RE63514, R121164 AND (4) R121195)
	RE63514	FUEL INJECTION PUMP	1	XXXXXX-XXXXXX	X	X	X	(A) (ROBERT BOSCH) (PES6P120A720RS3347) (SUB RE502259, R121164 AND (4) R121195)
	RE502259	FUEL INJECTION PUMP	1	XXXXXX-	X	X	X	
11	R104590	GEAR	1	-XXXXXX	X	X	X	(USE WITH RE57372 OR RE63514)
	R121164	GEAR	1	XXXXXX-	X	X	X	(USE WITH RE502259)
12	R63845	WASHER	4	-XXXXXX	X	X	X	(USE WITH RE57372 OR RE63514)
13	19H3690	CAP SCREW	4	-XXXXXX	X	X	X	3/8" X 3/4", (USE WITH RE57372 OR RE63514)
	R121195	CAP SCREW	4	XXXXXX-	X	X	X	(USE WITH RE502259)
14	R114130	STUD	4		X	X	X	(SUB FOR R55396, APPL)
15	M72490	WASHER	4		X	X	X	
16	14H1090	NUT	4		X	X	X	3/8", (SUB FOR E55662, APPL)
17	RE46252	FUEL PUMP	1		X	X	X	
18	R79060	O-RING	1		X	X	X	(SUB FOR R73858)
19	AR88903	ELBOW FITTING	1		X	X	X	
20	R67264	PACKING	2		X	X	X	
21	RE43369	OIL LINE	1		X	X	X	
22	R76822	FITTING	1		X	X	X	
23	RE28217	FUEL TEMPERATURE SENSOR	1		X	X	X	(TEMPERATURE)
24	R89014	SOLENOID	1		X	X	X	(SHUT-OFF HOUSING)
	R99047	O-RING	1		X	X	X	(TO SOLENOID AND PUMP)
	12H296	WASHER	1		X	X	X	(TO SOLENOID)
	14M7297	NUT	1		X	X	X	(TO SOLENOID)
25	R98500	O-RING	1		X	X	X	
26	R53899	WASHER	1		X	X	X	
..	R105388	TIE BAND	2		X	X	X	

(A) "SEE YOUR AUTHORIZED PUMP REPAIR STATION FOR PARTS NOT LISTED"

https://www.truck-manuals.net/

FUEL INJECTION PUMP HOUSING CONNECTORS (6076) (8100,8200,8300 TSN -009999)
CONNECTEURS DE CARTER DE POMPE D'INJECTION (6076) (8100,8200,8300 TSN -009999)
EINSPRITZPUMPENGEHAEUSE ANSCHLUESSE (6076) (8100,8200,8300 TSN -009999)
CONNETTORI PER CARCASSA POMPA DE INIEZIONE (6076) (8100,8200,8300 TSN -009999)
CONECTORES DE CARCASA DE LA BOMBA DE INYECCION DE GASOLINA (6076) (8100,8200,8300 TSN -009999)
BRAENSLEINSPRUTNINGSPUMPHUSETS ANSLUTNINGAR (6076) (8100,8200,8300 TSN -009999)
RGP3634 -UN-01JAN94

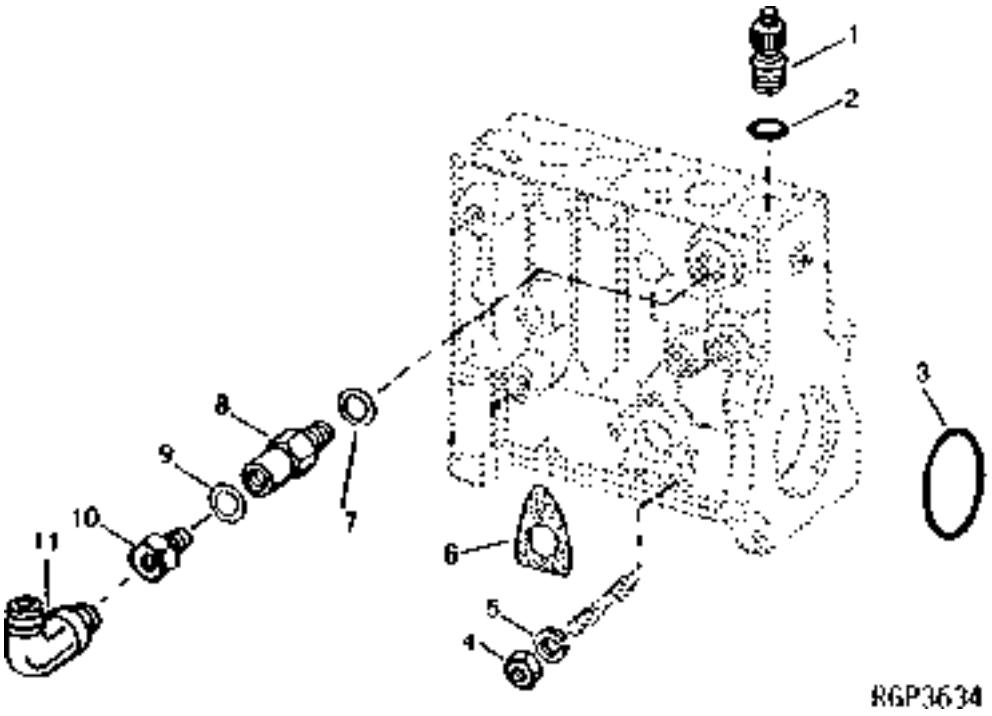

KEY	PART NO.	PART NAME	QTY	ENGINE SERIAL NO.	8 8 8 1 2 3 0 0 0 0 0 0	REMARKS
1	.....	HOLDER	6		X X X	
2	T24210	O-RING	6		X X X	
3	R53884	O-RING	1		X X X	
4	14M7297	NUT	3		X X X	M5
5	12H296	WASHER	3		X X X	0.216"
6	R67879	GASKET	1		X X X	
7	R53899	WASHER	1		X X X	
8	RE36151	CONTROL VALVE	1		X X X	
9	R53901	WASHER	1		X X X	
10	R63016	ADAPTER	1		X X X	
11	R67364	ELBOW FITTING	1		X X X	
..	R93008	WASHER	1		X X X	
..	R83489	FITTING	1		X X X	(SUB FOR RE49446 OR RE62345)

https://www.truck-manuals.net/

FUEL TRANSFER PUMP (6076) (8100,8200,8300 TSN -009999) (ROBERT BOSCH)
POMPE D'ALIMENTATION (6076) (8100,8200,8300 TSN -009999) (ROBERT BOSCH)
KRAFTSTOFFOERDERPUMPE (6076) (8100,8200,8300 TSN -009999)
POMPA ALIMENTACION DE COMBUSTIBLE (6076) (8100,8200,8300 TSN -009999) (ROBERT BOSCH)
BOMBA DE ALIMENTACION DE COMBUSTIBLE (6076) (8100,8200,8300 TSN -009999) (ROBERT BOSCH)
MATAREPUMP (6076) (8100,8200,8300 TSN -009999) (ROBERT BOSCH)
RGP3934 -UN-01JAN94

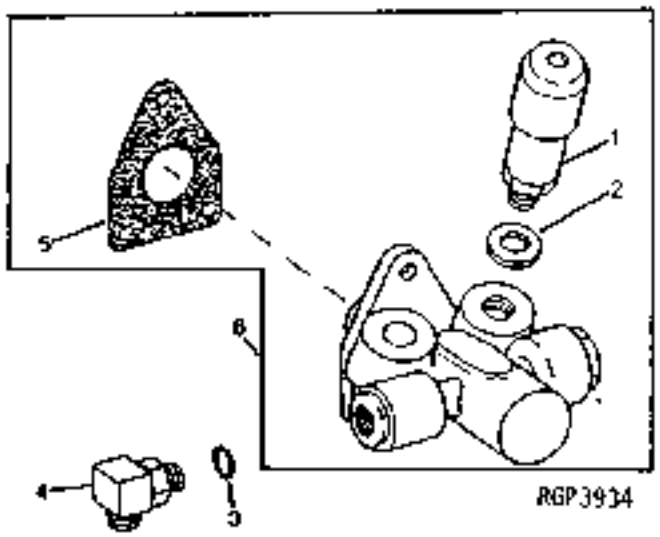

KEY	PART NO.	PART NAME	QTY	ENGINE SERIAL NO.	8 8 8 1 2 3 0 0 0 0 0 0	REMARKS
1	RE65265	HAND PRIMER	1		X X X	(SUB FOR RE48048)
2	R54025	WASHER	1		X X X	
3	R26448	O-RING	2		X X X	
4	RE10258	ELBOW FITTING	2		X X X	
5	R67879	GASKET	1		X X X	
6	RE46252	FUEL PUMP	1		X X X	

https://www.truck-manuals.net/

FUEL INJECTION NOZZLE (6076) (8100,8200,8300 TSN -009999)(NIPPONDENSO)
INJECTEUR (CONCEPTION RECENTE) (6076) (8100,8200,8300 TSN -009999) NIPPONDENSO
KRAFTSTOFF-EINSPRITZDUESE (NEURE BAUWEISE) (6076) (8100,8200,8300 TSN -009999)(NIPPONDENSO
INYECTOR (DISENO RECIENTE) (6076) (8100,8200,8300 TSN-009999)(NIPPONDENSO
INYECTOR (DISENO RECIENTE) (6076) (8100,8200,8300 TSN -009999) (NIPPONDENSO)
BRANSLEINSPRUTARE SENARE UTFOERANDE) (6076) (8100,8200,8300 TSN -009999) NIPPONDENSO
RGP3247 -UN-01JAN94

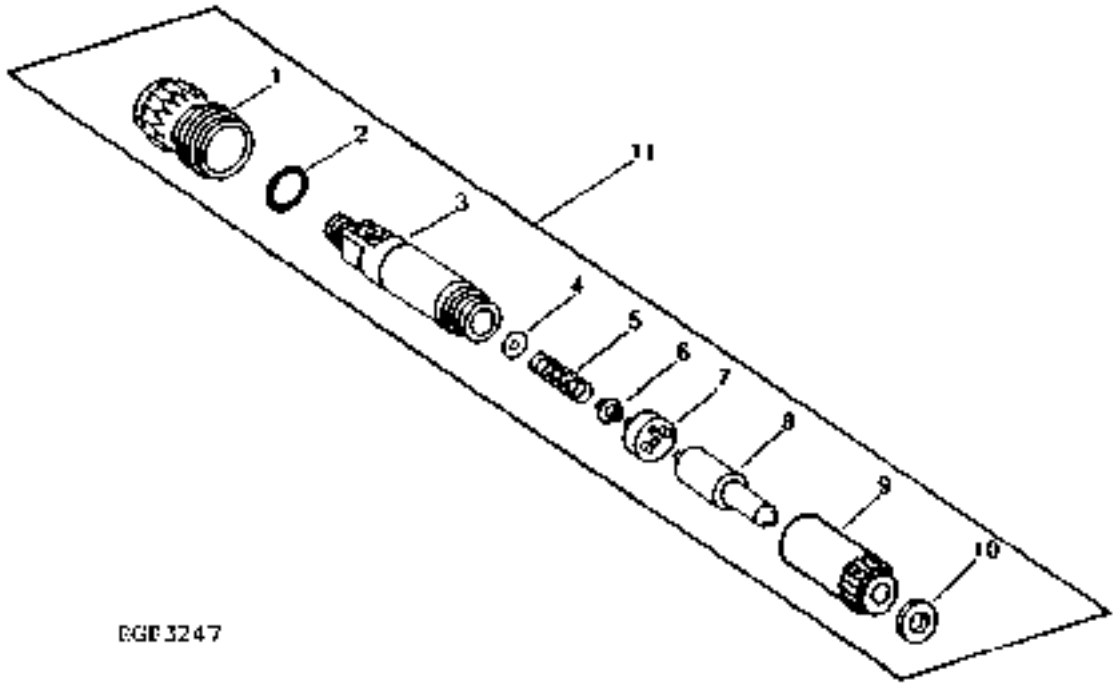

https://www.truck-manuals.net/

KEY	PART NO.	PART NAME	QTY	ENGINE SERIAL NO.	8100	8200	8300	REMARKS
1	R68035	NUT	1		X	X	X	
2	R69089	O-RING	1		X	X	X	
3	R115369	NOZZLE HOLDER	1		X	X	X	
4	R68036	SHIM	AR		X	X	X	0.70MM (.028")
	R90544	SHIM	AR		X	X	X	0.725MM (.0285")
	R68037	SHIM	AR		X	X	X	0.75MM (.030")
	R90543	SHIM	AR		X	X	X	0.775MM (.0305")
	R68038	WASHER	AR		X	X	X	0.80MM (.032")
	R90542	WASHER	AR		X	X	X	0.825MM (.0324")
	R68039	WASHER	AR		X	X	X	0.85MM (.034")
	R90541	WASHER	AR		X	X	X	0.875MM (.0344")
	R68040	WASHER	AR		X	X	X	0.90MM (.035")
	R90540	WASHER	AR		X	X	X	0.925MM (.0364")
	R68041	WASHER	AR		X	X	X	0.95MM (.037")
	R90539	WASHER	AR		X	X	X	0.0975MM (.0383")
	R68042	WASHER	AR		X	X	X	1.00MM (.039")
	R90538	WASHER	AR		X	X	X	1.025MM (.0403")
	R68043	WASHER	AR		X	X	X	1.05MM (.041")
	R90537	WASHER	AR		X	X	X	1.075MM (.0423")
	R68044	WASHER	AR		X	X	X	1.10MM (.043")
	R90536	WASHER	AR		X	X	X	1.125MM (.0443")
	R68045	WASHER	AR		X	X	X	1.15MM (.045")
	R90535	WASHER	AR		X	X	X	1.175MM (.0462")
	R68046	WASHER	AR		X	X	X	1.20MM (.047")
	R90534	WASHER	AR		X	X	X	1.225MM (.0482")
	R68047	WASHER	AR		X	X	X	1.25MM (.049")
	R90533	WASHER	AR		X	X	X	1.275MM (.0502")
	R68048	WASHER	AR		X	X	X	1.30MM (.051")
	R90532	WASHER	AR		X	X	X	1.325MM (.0522")
	R68049	WASHER	AR		X	X	X	1.35MM (.053")
	R90531	WASHER	AR		X	X	X	1.375MM (.0541")
	R68050	WASHER	AR		X	X	X	1.40MM (.055")
	R90530	WASHER	AR		X	X	X	1.425MM (.0561")
	R68051	WASHER	AR		X	X	X	1.45MM (.057")
	R90529	WASHER	AR		X	X	X	1.475MM (.0580")
	R68052	WASHER	AR		X	X	X	1.50MM (.059")
5	R115368	SPRING	1		X	X	X	
6	R94410	SEAT	1		X	X	X	
7	R94412	PLATE	1		X	X	X	
8	RE52110	INJECTION NOZZLE	1		X	X		(7 X 0.23) (6076HRW33, 34)
	RE52114	INJECTION NOZZLE	1				X	(7 X 0.255) (6076HRW35)
9	R94414	NUT	1		X	X	X	
10	R84472	WASHER	1		X	X	X	
11	RE30159	INJECTION NOZZLE	6		X	X		(DENSO) (6076HRW33, 34) (SUB RE52109 AND R84472)
	RE25253	INJECTION NOZZLE	6				X	(DENSO) (6076HRW35) (SUB RE52113 AND R84472)
	RE52109	INJECTION NOZZLE	6		X	X		(DENSO) (6076HRW33, 34)
	RE52113	INJECTION NOZZLE	6				X	(DENSO) (6076HRW35)

https://www.truck-manuals.net/

FUEL FILTER AND LINES (6081) (8100,8200,8300 TSN 010000-)
FILTRE A COMBUSTIBLE (6081) (8100,8200,8300 TSN 010000-)
KRAFTSTOFF-FILTER (6081) (8100,8200,8300 TSN 010000-)
FILTRO COMBUSTIBLE (6081) (8100,8200,8300 TSN 010000-)
FILTRO DE COMBUSTIBLE (6081) (8100,8200,8300 TSN 010000-)
BRANSLEFFILTER (6081) (8100,8200,8300 TSN 010000-)
RGP4607 -UN-20NOV95

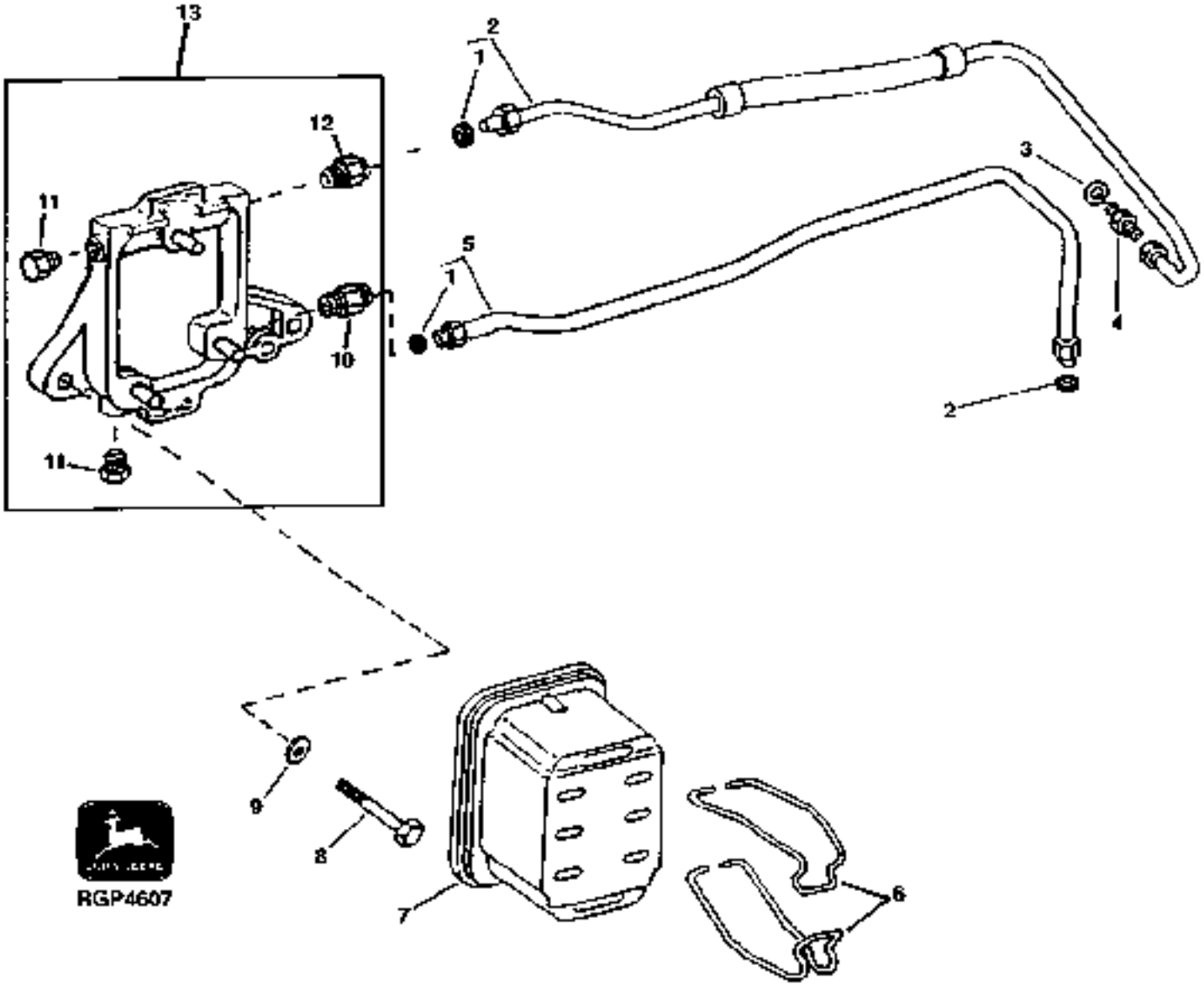

https://www.truck-manuals.net/

KEY	PART NO.	PART NAME	QTY	ENGINE SERIAL NO.	8 8 8 1 2 3 0 0 0 0 0 0	REMARKS
1	R67092	SEAL	3		X X X	
2	RE500280	FUEL LINE	1		X X X	(SUB FOR RE63414)
3	R93008	WASHER	1		X X X	
4	R83489	FITTING	1		X X X	
5	RE65787	FUEL LINE	1		X X X	
6	R89927	CLAMP	2		X X X	
7	AR86745	FILTER ELEMENT	1		X X X	
8	19H2964	CAP SCREW	2		X X X	7/16" X 1-1/8"
9	24H1325	WASHER	2		X X X	15/32" X 59/64" X 0.065"
10	RE54244	CHECK VALVE	1		X X X	
11	R119223	PLUG	2		X X X	
12	RE54245	FITTING	1		X X X	
13	RE61693	BASE	1		X X X	

https://www.truck-manuals.net/

FUEL INJECTION NOZZLES AND LINES (6081) (8100,8200,8300 TSN 010000-)
TUYAUX D'INJECTION (6081) (8100,8200,8300 TSN 010000-)
KRAFTSTOFFFLEITUNGEN (6081) (8100,8200,8300 TSN 010000-)
TABAZIONI COMBUSTIBLE (6081) (8100,8200,8300 TSN 010000-)
TUBERIAS DE COMBUSTIBLE (6081) (8100,8200,8300 TSN 010000-)
BRANSLELEDNINGAR (6081) (8100,8200,8300 TSN 010000-)
RGP4542 -UN-29AUG95

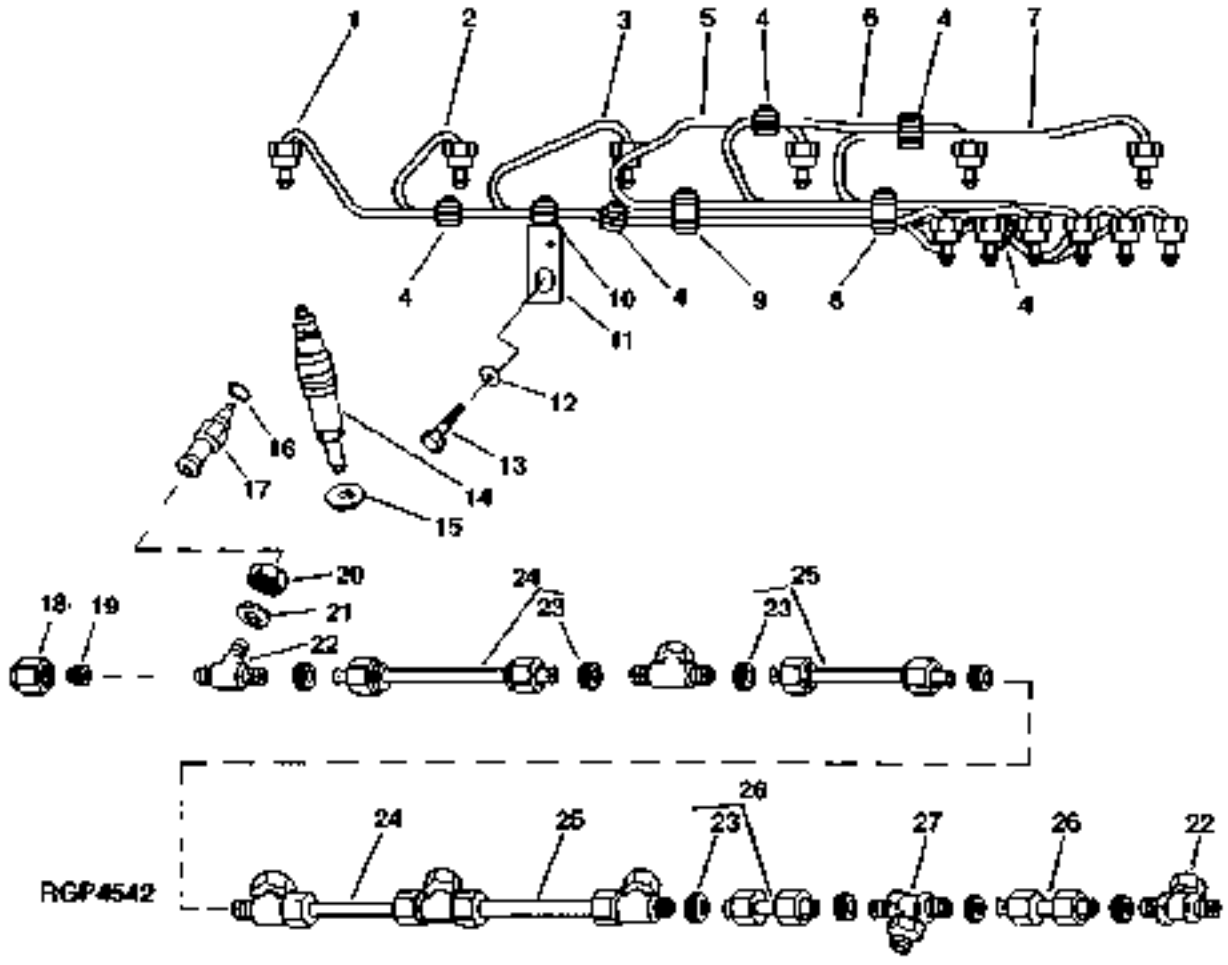

https://www.truck-manuals.net/

KEY	PART NO.	PART NAME	QTY	ENGINE SERIAL NO.	8100	8200	8300	REMARKS
1	RE47431	FUEL LINE	1		X	X	X	NO. 6
2	RE47430	FUEL LINE	1		X	X	X	NO. 5
3	RE47429	FUEL LINE	1		X	X	X	NO. 4
4	R120185	BOLT	5		X	X	X	
	R58186	CLAMP	10		X	X	X	
	R120181	STRAP	5		X	X	X	
	R120182	STRAP	5		X	X	X	
5	RE47428	FUEL LINE	1		X	X	X	NO. 3
6	RE47427	FUEL LINE	1		X	X	X	NO. 2
7	RE47426	FUEL LINE	1		X	X	X	NO. 1
8	R120186	BOLT	2		X	X	X	
	R71212	CLAMP	1		X	X	X	
	R120183	STRAP	1		X	X	X	
	R120184	STRAP	1		X	X	X	
	R59297	HALF CLAMP	2		X	X	X	
9	R71212	CLAMP	1		X	X	X	
	R59297	HALF CLAMP	2		X	X	X	
	R74030	CLAMP	1		X	X	X	
	R74804	CLAMP	1		X	X	X	
	R120186	BOLT	2		X	X	X	
	R120183	STRAP	1		X	X	X	
	R120184	STRAP	1		X	X	X	
10	R120185	BOLT	1		X	X	X	
	R59297	HALF CLAMP	2		X	X	X	
	R120183	STRAP	2		X	X	X	
11	RE55662	ABSORBER	1		X	X	X	
12	24H1884	WASHER	1		X	X	X	13/32" X 13/16" X 0.120"
13	19M7166	CAP SCREW	1		X	X	X	M10 X 20
14	RE64391	INJECTION NOZZLE	6		X			(ROBERT BOSCH) (6081HRW06) (2 DARK BLUE DOTS)
	RE61593	INJECTION NOZZLE	6			X		(ROBERT BOSCH) (6081HRW07) (1 ORANGE DOT)
	RE57152	INJECTION NOZZLE	6				X	(ROBERT BOSCH) (6081HRW08) (2 ORANGE DOTS)
15	R84472	WASHER	6		X	X	X	7.360 X 18.160 X 2 MM (0.290" X 0.715" X 0.079")
16	R77551	O-RING	6		X	X	X	
17	R87082	FITTING	6		X	X	X	(ALSO ORDER R77551)
18	R51937	TUBE NUT	1		X	X	X	
19	AR85519	PLUG	1		X	X	X	
20	R79604	TUBE NUT	6		X	X	X	
21	R79605	WASHER	6		X	X	X	
22	R79606	TEE FITTING	6		X	X	X	
23	R51936	PACKING	11		X	X	X	
24	RE15807	FUEL LINE	2		X	X	X	
25	RE15808	FUEL LINE	2		X	X	X	
26	RE36421	FUEL LINE	2		X	X	X	
27	R97061	TEE FITTING	1		X	X	X	

https://www.truck-manuals.net/

FUEL INJECTION PUMP, LUBE LINE AND ENGINE CONTROLLER (6081) (8100,8200,8300 TSN 010000-)
POMPE D'INJECTION/TUYAUX D'INJECTION/CONTROLEUR DE MOTEUR(6081) (8100,8200,8300 TSN 010000-)
KRAFTSTOFF-EINSPRITZPUMPE/KRAFTSTOFFLEITUNGEN/MOTOR-STEURUNG(6081) (8100, 8200,8300 TSN 010000-
POMPA DI INIEZIONE/TUBAZIONI COMBUSTIBLE/UNITA DI CONTROLLO DEL MOTORE 6081-8100,8200,8300 010000-
BOMBA DE INYEXXION DE COMBUSTIBLE/TUBERIAS DE COMBUSTIBLE/CONRO LADOR DEL MOTOR 6081-8100,8200,83
INSPRUTNINGSPUMP/BRANSLELEDNINGAR/MOTORSTYRENHET (6081) (8100,8200,8300 TSN 010000-)
RGP4995 -UN-26MAR98

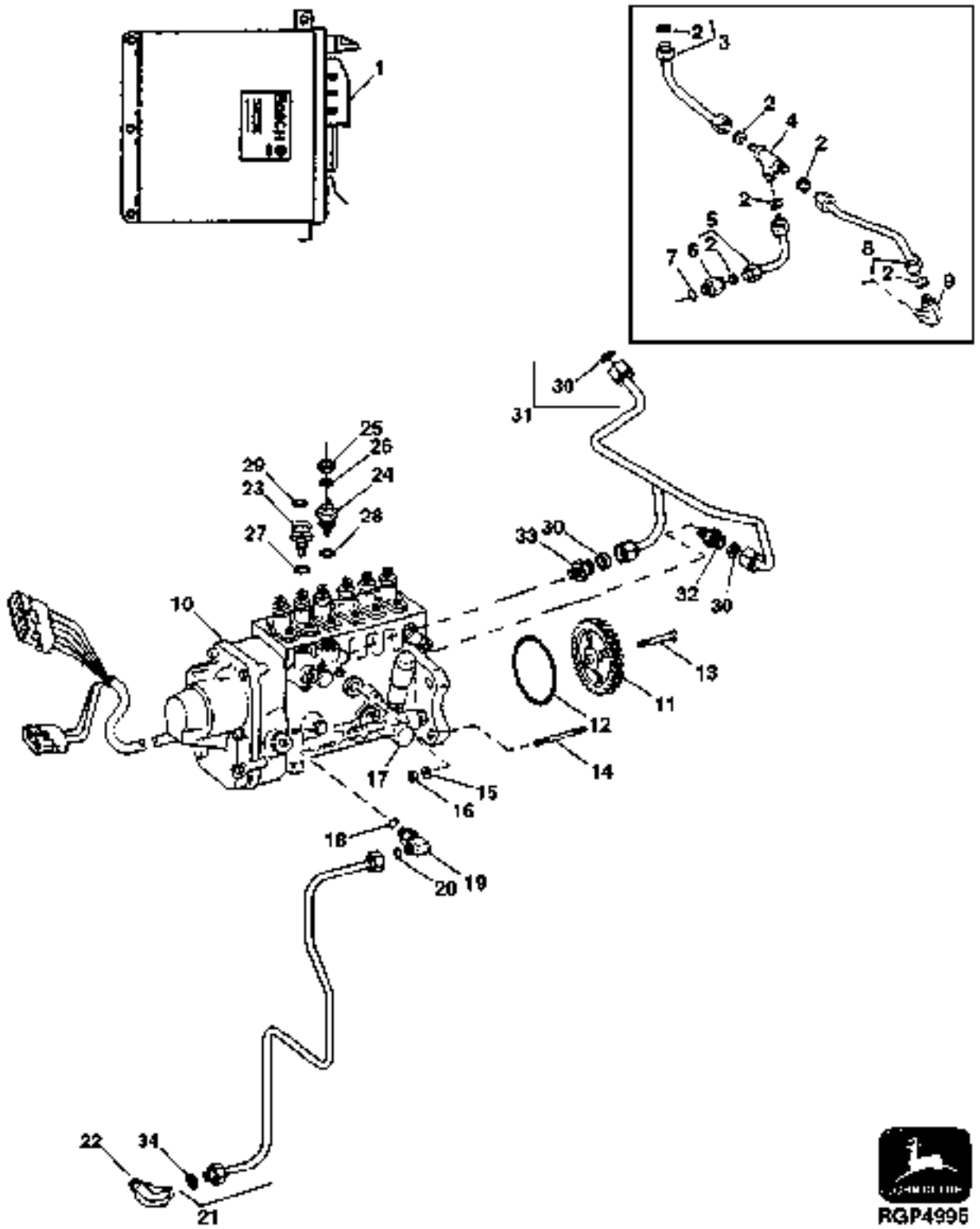

https://www.truck-manuals.net/

KEY	PART NO.	PART NAME	QTY	TRACTOR SERIAL NO.	8100	8200	8300	REMARKS
1	RE70026	ENGINE CONTROLLER	1	010000-010999	X			(MARKED RE28320) (SUB RE503182 AND RE502125) (ROBERT BOSCH)
	RE501847	ENGINE CONTROLLER	1	XXXXXX-	X			(REMANUFACTURED) (MARKED RE501731) (SUB RE503182 OR RE502121 AND RE502125)
	RE500772	ENGINE CONTROLLER	1	011000-	X			(MARKED RE66614) (SUB RE503182) (HRW06) (SUB FOR RE69551)
	RE502428	ENGINE CONTROLLER	1	XXXXXX-XXXXXX	X			(MARKED RE66614) (SUB RE503182)
	RE502121	ENGINE CONTROLLER	1	XXXXXX-	X			(MARKED RE66614) (SUB RE503182) (SUB FOR RE501834 OR RE501847)
	RE503182	ENGINE CONTROLLER	1	XXXXXX-	X			(MARKED RE66614 OR RE502404) (SUB FOR RE70026, RE501847, RE500772, RE502428 OR RE502121)
	RE70027	ENGINE CONTROLLER	1	010000-010999		X		(MARKED RE28320) (SUB RE503183 AND RE502125) (SUB FOR RE69552) (ROBERT BOSCH)
	RE501848	ENGINE CONTROLLER	1	XXXXXX-		X		(REMANUFACTURED) (MARKED RE501731) (SUB RE503183 OR RE502122 AND RE502125)
	RE500773	ENGINE CONTROLLER	1	011000-		X		(MARKED RE501731) (SUB RE503183)
	RE502427	ENGINE CONTROLLER	1	011000-		X		(MARKED RE66614) (SUB RE503183)
	RE502122	ENGINE CONTROLLER	1	011000-		X		(MARKED RE66614) (SUB RE503183) (SUB FOR RE501835)
	RE503183	ENGINE CONTROLLER	1	011000-		X		(MARKED RE66614 OR RE502404) (SUB FOR RE70072, RE501848, RE500773, RE502427 OR RE502122)
	RE70028	ENGINE CONTROLLER	1	010000-010999			X	(SUB RE504071 AND RE502125) (MARKED RE28320) (ROBERT BOSCH)
	RE501849	ENGINE CONTROLLER	1	XXXXXX-			X	(SUB RE504071 AND RE502125) (MARKED RE501723) (REMANUFACTURED)
	RE500774	ENGINE CONTROLLER	1	011000-			X	(MARKED RE66614) (SUB RE504071) (SUB FOR RE69553)
	RE502426	ENGINE CONTROLLER	1				X	(SUB RE504071) (MARKED RE66614)
	RE502123	ENGINE CONTROLLER	1	-079718			X	(MARKED RE66614) (SUB FOR RE70028, RE501849, RE500774, RE502426 OR RE501835) (SUB RE504071)
	RE504071	ENGINE CONTROLLER	1	079719-			X	(MARKED RE66614 OR RE502404)
	RE502125	KIT	1		X	X	X	(MOUNTING KIT)

https://www.truck-manuals.net/

FUEL INJECTION PUMP, LUBE LINE AND ENGINE CONTROLLER (6081) (8100,8200,8300 TSN 010000-)
POMPE D'INJECTION/TUYAUX D'INJECTION/CONTROLEUR DE MOTEUR(6081) (8100,8200,8300 TSN 010000-)
KRAFTSTOFF-EINSPRITZPUMPE/KRAFTSTOFFLEITUNGEN/MOTOR-STEURUNG (6081) (8100, 8200,8300 TSN 010000-
POMPA DI INIEZIONE/TUBAZIONI COMBUSTIBLE/UNITA DI CONTROLLO DEL MOTORE 60818100,8200,8300 010000-
BOMBA DE INYEXXION DE COMBUSTIBLE/TUBERIAS DE COMBUSTIBLE/CONRO LADOR DEL MOTOR 6081-8100,8200,83
INSPRUTNINGSPUMP/BRANSLELEDNINGAR/MOTORSTYRENHET (6081) (8100,8300 TSN 010000-
RGP4995 -UN-26MAR98

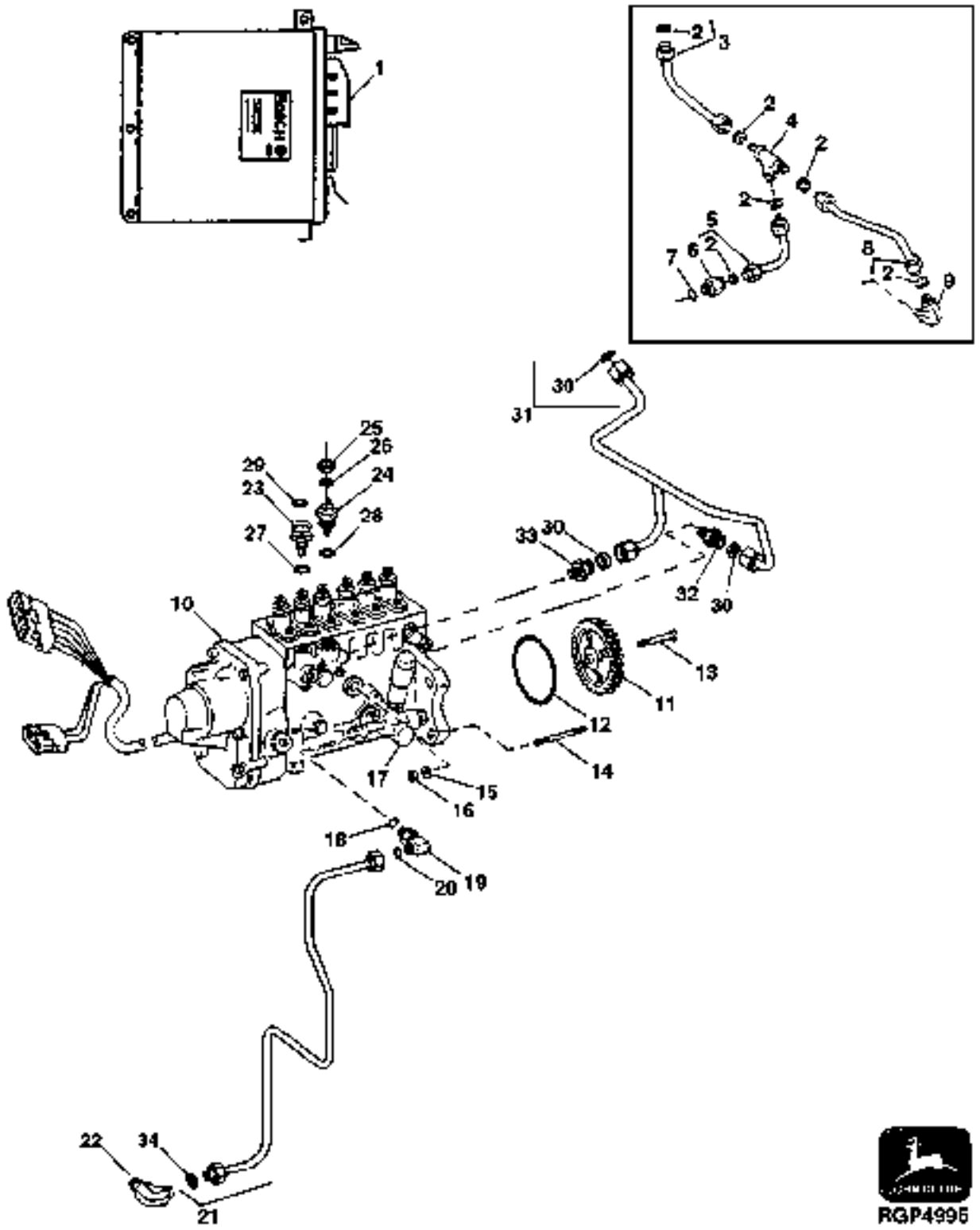

https://www.truck-manuals.net/

KEY	PART NO.	PART NAME	QTY	TRACTOR SERIAL NO.	8100	8200	8300	REMARKS
1	RE57525	ENGINE CONTROLLER	1		X			(MARKED RE28320) (SUB RE501825, RE502110 OR RE503177 AND RE502125) (6076HRW33); (ROBERT BOSCH)
	RE501825	ENGINE CONTROLLER	1		X			(REMANUFACTURED) (6076HRW33) (MARKED RE501731) (SUB RE503177 OR RE502110 AND RE502125)
	RE503177	ENGINE CONTROLLER	1		X			(6076HRW33) (MARKED RE66614) (SUB FOR RE57525, RE501825 OR RE502110)
	RE57526	ENGINE CONTROLLER	1		X			(6076HRW34) (MARKED RE28320) (SUB RE503178 AND RE502125)
	RE501826	ENGINE CONTROLLER	1			X		(MARKED RE501731) (SUB RE503178 AND RE502125) (6076HRW34)
	RE503178	ENGINE CONTROLLER	1			X		(REMANUFACTURED) (6076HRW34) (MARKED RE66614) (SUB FOR RE57526, RE501826 OR RE502111)
	RE57524	ENGINE CONTROLLER	1			X		(ROBERT BOSCH) (HRW35) (MARKED RE28320) (SUB RE503179 AND RE502125)
	RE501824	ENGINE CONTROLLER	1			X		(HRW35) (MARKED RE501731) (SUB RE503179 AND RE502125)
	RE503179	ENGINE CONTROLLER	1				X	(HRW35) (MARKED RE66614) (SUB RE57524, RE502824 OR RE502112)
	RE502125	KIT	1				X	(MOUNTING KIT) (USE WITH RE66614)
	RE502135	KIT	1		X	X	X	(BALER KIT)
2	R51936	PACKING	6	-035177	X	X	X	
3	RE30920	FUEL LINE	1	-035177	X	X	X	
4	R97061	TEE FITTING	1	-035177	X	X	X	
5	RE30833	FUEL LINE	1	-035177	X	X	X	
6	R91824	FITTING	1	-035177	X	X	X	
7	R48693	WASHER	1	-035177	X	X	X	
8	RE35684	FUEL LINE	1	-035177	X	X	X	
9	R67364	ELBOW FITTING	1	-035177	X	X	X	
10	RE67771	FUEL INJECTION PUMP	1		X			(A) (ROBERT BOSCH) (PES6P120A720RS3354) (6081HRW06) (SUB RE502697)
	RE62645	FUEL INJECTION PUMP	1			X	X	(A) (ROBERT BOSCH) (PES6P120A720RS3354) (6081HRW07, HRW08) (SUB RE502698)
	RE502698	FUEL INJECTION PUMP	1			X	X	
	RE502697	FUEL INJECTION PUMP	1		X			
11	R121164	GEAR	1		X	X	X	
12	R76358	O-RING	1		X	X	X	
13	R121195	CAP SCREW	4		X	X	X	(SUB FOR R112975) (T45)
14	R114130	STUD	4		X	X	X	
15	M72490	WASHER	4		X	X	X	
16	14H1090	NUT	4		X	X	X	3/8"
17	RE46252	FUEL PUMP	1		X	X	X	
18	R79060	O-RING	1		X	X	X	(SUB FOR R73858)
19	AR88903	ELBOW FITTING	1		X	X	X	
20	R67264	PACKING	2		X	X	X	
21	RE60577	OIL LINE	1		X	X	X	
22	T18012	ELBOW FITTING	1		X	X	X	(NOT AS SHOWN)
23	RE28217	FUEL TEMPERATURE SENSOR	1		X	X	X	(TEMPERATURE)
24	R89014	SOLENOID	1		X	X	X	(SHUT-OFF HOUSING)
25	14M7279	NUT	1		X	X	X	M30
26	12H296	WASHER	1		X	X	X	5.486 MM (0.216")
27	R53899	WASHER	1		X	X	X	(BOTTOM)
28	R99047	O-RING	1		X	X	X	
29	R98500	O-RING	1		X	X	X	(TOP)
30	R51936	PACKING	3	035178-	X	X	X	
31	RE66000	FUEL LINE	1	035178-	X	X	X	
32	R63604	FITTING	1	035178-	X	X	X	
33	RE67934	CONNECTOR	1	035178-	X	X	X	
34	R67264	PACKING	1		X	X	X	

(A) "SEE YOUR AUTHORIZED PUMP REPAIR STATION FOR PARTS NOT LISTED"

https://www.truck-manuals.net/

FUEL INJECTION PUMP HOUSING CONNECTORS (6081) (8100,8200,8300 TSN 010000-)
COCNECTEURS DE CARTER DE POMPE D'INJECTION (6081) (8100,8200,83 00 TSN 010000-)
EINSPPRITZPUMPENGEHAEUSE ANSCHLUESSE (6081) (8100,8200,8300 TSN 010000-)
CONNETTORI PER CARCASSA POMPA DE INIEZIONE (6081) (8100,8200,83 00 TSN 010000-)
CCNECTORES DE CARCASSA DE LA BOMBA DE INYECCION DE GASOLINA (60 81)(81002,8200,8300
BRAENSLEINSPRUTNINGSPUMPHUSETS ANSLUTNINGAR (6081) (8100,8200,8 300 TSN 010000-)
RGP3634 -UN-01JAN94

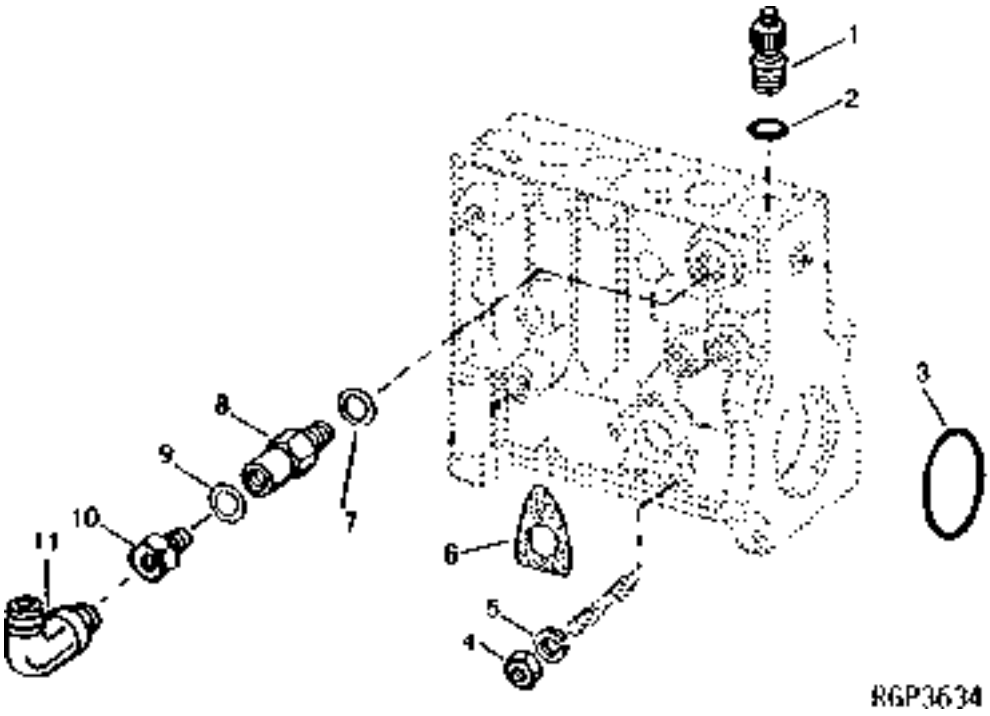

KEY	PART NO.	PART NAME	QTY	ENGINE SERIAL NO.	8 8 8 1 2 3 0 0 0 0 0 0	REMARKS
1	R99531	HOLDER	6		X X X	(NLA)
2	T24210	O-RING	6		X X X	
3	R53884	O-RING	1		X X X	
4	14M7297	NUT	3		X X X	M5
5	12H296	WASHER	3		X X X	0.216"
6	R67879	GASKET	1		X X X	
7	R53899	WASHER	1		X X X	
8	RE36151	CONTROL VALVE	1		X X X	
9	R53901	WASHER	1		X X X	
10	R63016	ADAPTER	1		X X X	
11	R67364	ELBOW FITTING	1		X X X	
..	R93008	WASHER	1		X X X	(FUEL INLET)
..	RE49446	ELBOW FITTING	1		X X X	(FUEL INLET)

https://www.truck-manuals.net/

FUEL TRANSFER PUMP (6081) (8100,8200,8300 TSN 010000-) (ROBERT BOSCH)
POMPE D'ALIMENTATION (ROBERT BOSCH) (6081) (8100,8200,8300 TSN TSN 010000-)
KRAFTSTOFFOERDERPUMPE (ROBERT BOSCH) (6081) (8100,8200,8300 TSN 010000-)
POMPA ALIMENTAZIONE (ROBERT BOSCH) (6081) (8100,8200,8300 TSN 010000-)
BOMBA DE ALIMENTACION DE COMBUSTIBLE (ROBERT BOSCH) (6081) (8100,8200, 8300 TSN 01000-)
MATARAEPUMP (ROBERT BOSCH) (6081) (8100,8200,8300 TSN 010000-)
RGP3934 -UN-01JAN94

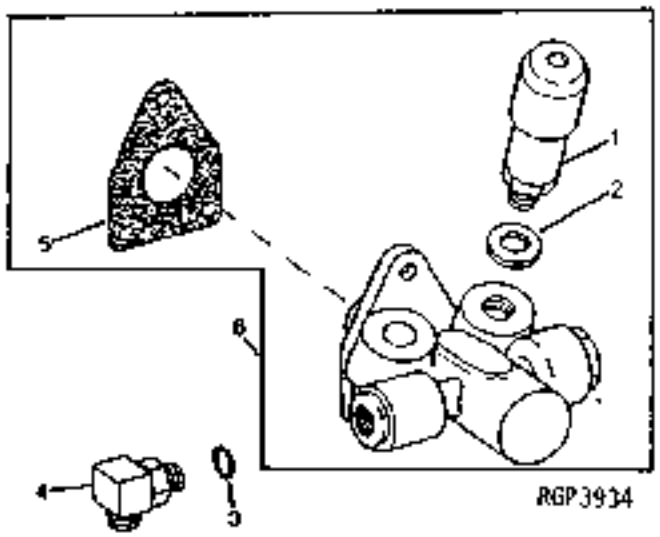

KEY	PART NO.	PART NAME	QTY	ENGINE SERIAL NO.	8 8 8 1 2 3 0 0 0 0 0 0	REMARKS
1	RE65265	HAND PRIMER	1		X X X	(SUB FOR RE48048)
2	R54025	WASHER	1		X X X	
3	R26448	O-RING	2		X X X	
4	RE10258	ELBOW FITTING	2		X X X	(TRANSFER PUMP TO RE65787)
	RE34128	ELBOW FITTING	1		X X X	(TRANSFER PUMP TO RE63313)
5	R67879	GASKET	1		X X X	
6	RE46252	FUEL PUMP	1		X X X	

https://www.truck-manuals.net/

FUEL INJECTION NOZZLE (ROBERT BOSCH) (6081) (8100,8200,8300 TSN 010000-)
INJECTEUR (ROBERT BOSCH) (6081) (8100,8200,8300 TSN 010000-)
KRAFTSTOFF-EINSPRITZDUESE (ROBERT BOSCH) (6081) (8100,8200,8300 TSN 010000-)
INIETTORE (ROBERT BOSCH) (6081) (8100,8200,8300 TSN 010000-)
INYECTOR (ROBERT BOSCH) (6081) (8100,8200,8300 TSN 010000-)
BRANSLEINSPRUTARE (ROBERT BOSCH) (8100,8200,8300 TSN 010000-)
RGP4537 -UN-30AUG95

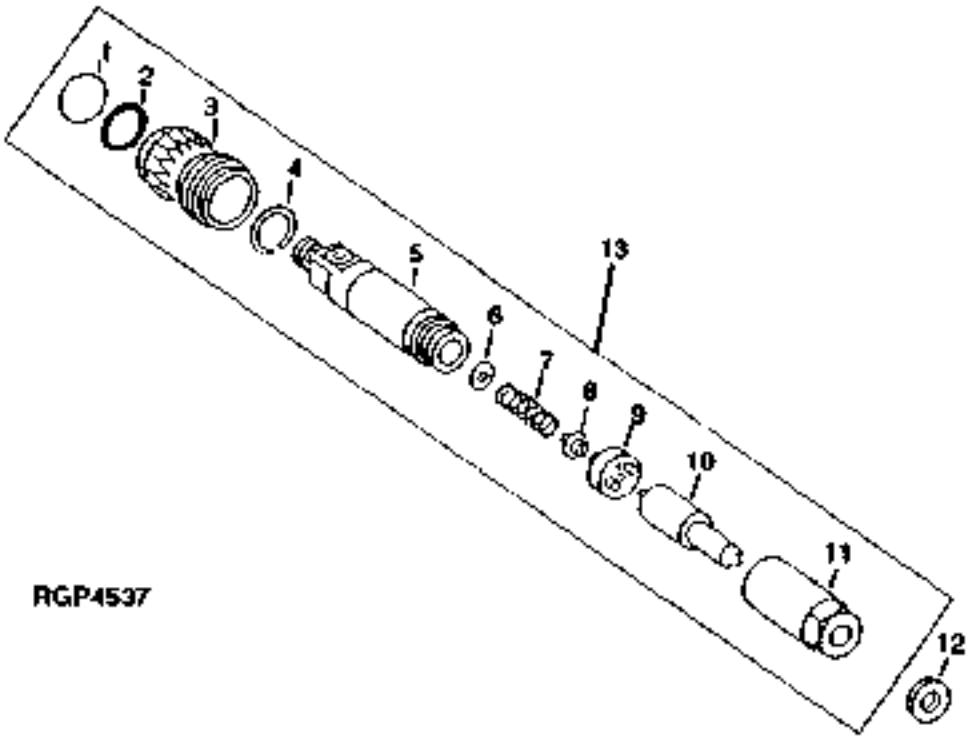

https://www.truck-manuals.net/

KEY	PART NO.	PART NAME	QTY	ENGINE SERIAL NO.	8100000	8200000	8300000	REMARKS
1	R60277	SNAP RING	1		X	X	X	
2	R375R	O-RING	1		X	X	X	
3	R60279	NUT	1		X	X	X	
4	R60278	SNAP RING	1		X	X	X	
5	.....	NOZZLE HOLDER	1		X	X	X	(SUB RE57152, RE61593 OR RE64391, APPL)
6	R83720	WASHER	1		X	X	X	1.02 MM (.0402")
	R83721	WASHER	1		X	X	X	1.08 MM (.0425")
	R83722	WASHER	1		X	X	X	1.12 MM (.0441")
	R83723	WASHER	1		X	X	X	1.18 MM (.0465")
	R83724	WASHER	1		X	X	X	1.22 MM (.0480")
	R83725	WASHER	1		X	X	X	1.28 MM (.0504")
	R83726	WASHER	1		X	X	X	1.30 MM (.0512")
	R83727	WASHER	1		X	X	X	1.38 MM (.0543")
	R83728	WASHER	1		X	X	X	1.42 MM (.0559")
	R83729	WASHER	1		X	X	X	1.48 MM (.0583")
	R83730	WASHER	1		X	X	X	1.50 MM (.0591")
	R83731	WASHER	1		X	X	X	1.58 MM (.0622")
	R83732	WASHER	1		X	X	X	1.60 MM (.0630")
	R83733	WASHER	1		X	X	X	1.68 MM (.0661")
	R83734	WASHER	1		X	X	X	1.70 MM (.0669")
	R83735	WASHER	1		X	X	X	1.78 MM (.0701")
	R83736	WASHER	1		X	X	X	1.82 MM (.0717")
	R83737	WASHER	1		X	X	X	1.88 MM (.0740")
	R83738	WASHER	1		X	X	X	1.90 MM (.0748")
	R83739	WASHER	1		X	X	X	1.98 MM (.0780")
7	R108699	SPRING	1		X	X		(6081HRW06, HRW07)
	R60273	SPRING	1				X	(6081HRW08)
8	R108700	SEAT	1		X	X		(6081HRW06, HRW07)
	R60274	SEAT	1				X	(6081HRW08)
9	R108701	PLATE	1		X	X		(6081HRW06, HRW07)
	R60275	PLATE	1				X	(6081HRW08)
10	RE64392	INJECTION NOZZLE	1		X			(7 X 0.22) (6081HRW06)
	RE42306	INJECTION NOZZLE	1			X		(7 X 0.24) (6081HRW07)
	RE57153	INJECTION NOZZLE	1				X	(7 X 0.236) (6081HRW08)
11	R127176	NUT	1		X	X	X	
12	R84472	WASHER	1		X	X	X	
13	RE64391	INJECTION NOZZLE	6		X			(ROBERT BOSCH) (6081HRW06) (2 DARK BLUE DOTS)
	RE61593	INJECTION NOZZLE	6			X		(ROBERT BOSCH) (6081HRW07) (1 ORANGE DOT)
	RE57152	INJECTION NOZZLE	6				X	(ROBERT BOSCH) (6081HRW08) (2 ORANGE DOTS)

https://www.truck-manuals.net/

PRE-FUEL FILTER AND LINE
PREFILTRE A CARBURANT ET CONDUITE
KRAFTSTOFF-VORFILTER UND LEITUNG
PREFILTRO E TUBO DI ALIMENTAZIONE
PREFILTRO DE COMBUSTIBLE Y LINEA
BRAENSLEFOERFILTER OCH LEDNING
RGP5056 -UN-03NOV98

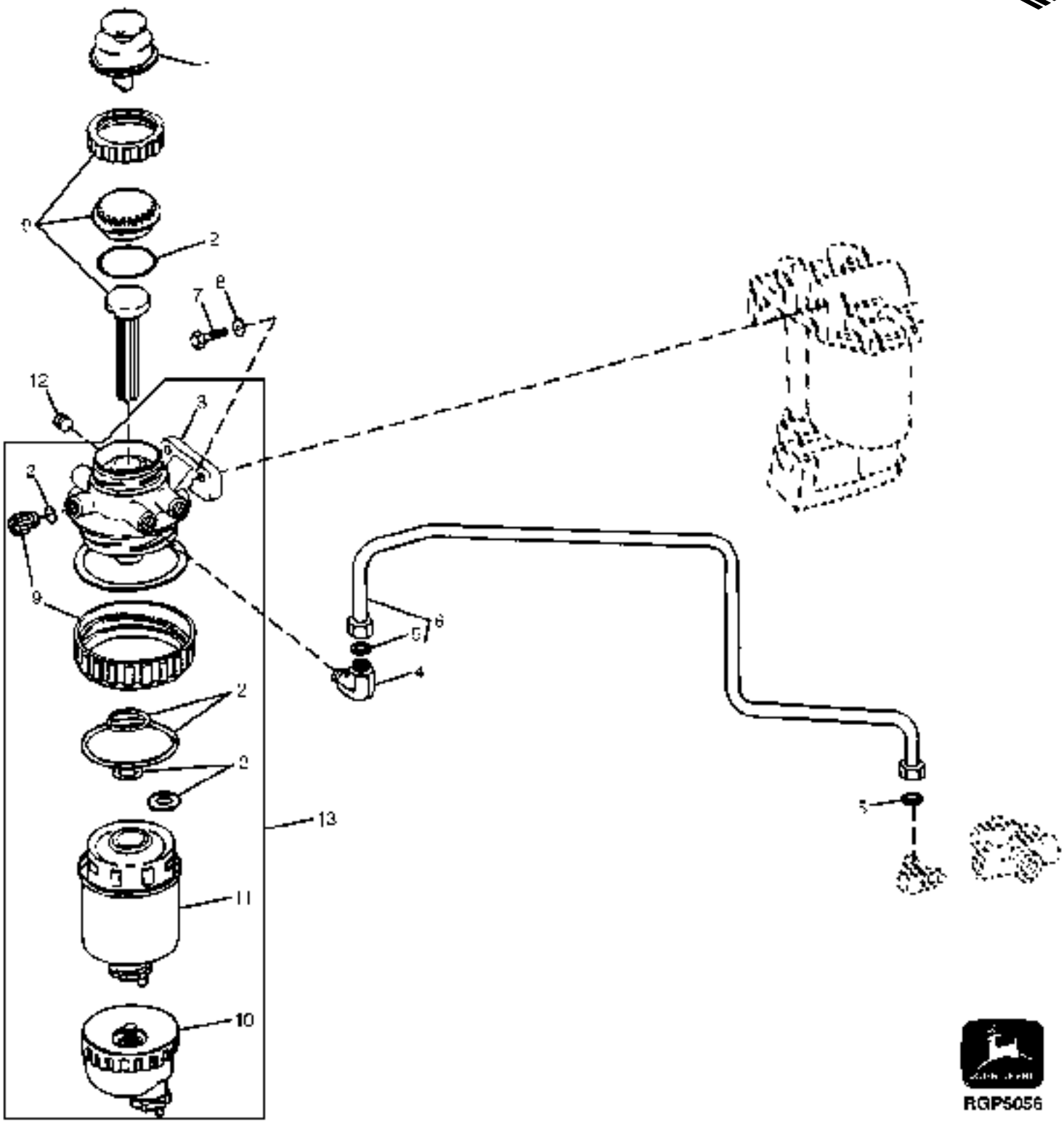

https://www.truck-manuals.net/

KEY	PART NO.	PART NAME	QTY	ENGINE SERIAL NO.	8400	REMARKS
1	RE50467	HAND PRIMER	1		X	
2	RE50752	SEAL KIT	1		X	(FUEL FILTER PACKINGS)
3	RE54077	BASE	1	-XXXXXX	X	(HEADER) (USE WITH RE58376) (SUB RE63183, RE65431, (4) R26286, (2) R82719 AND (2) R134957, APPL)
	RE63182	BASE	1	XXXXXX-XXXXXX	X	(HEADER) (SUB RE63183, RE65431, (4) R26286, (2) R82719 AND (2) R134957, APPL) (USE WITH RE65431 OR RE62423)
	RE63183	FILTER HEAD	1	XXXXXX-	X	(HEADER) (USE WITH RE65431)
4	R125498	FITTING	2	-XXXXXX	X	(USE WITH RE54077 OR RE63182)
	AR101212	ELBOW FITTING	2	-XXXXXX	X	(USE WITH RE63182)
	R26286	O-RING	2	XXXXXX-	X	(USE WITH RE63183)
	R134957	ELBOW FITTING	2	XXXXXX-	X	(USE WITH RE63183)
5	R67092	SEAL	1		X	
6	RE63313	FUEL LINE	1		X	
7	19H1731	CAP SCREW	2		X	3/8" X 1"
8	24M7346	WASHER	2		X	11 X 20 X 2 MM
9	RE51649	KIT	1		X	(MECHANICAL COMPONENTS)
	R82719	FITTING PLUG	2	XXXXXX-	X	(USE WITH RE63183)
	R26286	O-RING	2	XXXXXX-	X	(USE WITH RE63183)
10	RE51650	SEDIMENT BOWL	1		X	
11	RE58376	FILTER ELEMENT	1	-XXXXXX	X	(USE WITH RE54077) (SUB RE65431)
	RE62423	FILTER ELEMENT	1	XXXXXX-XXXXXX	X	(USE WITH RE63182 OR RE54077) (SUB RE65431, APPL.)
	RE65431	FILTER ELEMENT	1	XXXXXX-	X	
12	15H685	PIPE PLUG	2		X	1/4", (USE WITH RE54077 OR RE63182)
	R82719	FITTING PLUG	2	XXXXXX-	X	(USE WITH RE63183)
	R26286	O-RING	2	XXXXXX-	X	(USE WITH RE63183)
13	RE65432	FUEL FILTER	1		X	PRIMARY

https://www.truck-manuals.net/

FUEL INJECTION NOZZLES AND LINES
TUYAUX D'INJECTION
FRAFTSTOFFLEITUNGEN
TABAZIONI COMBUSTIBLE
TUBERIAS DE COMBUSTIBLE
BRANSLELEDNINGAR
RGP3574 -UN-01JAN94

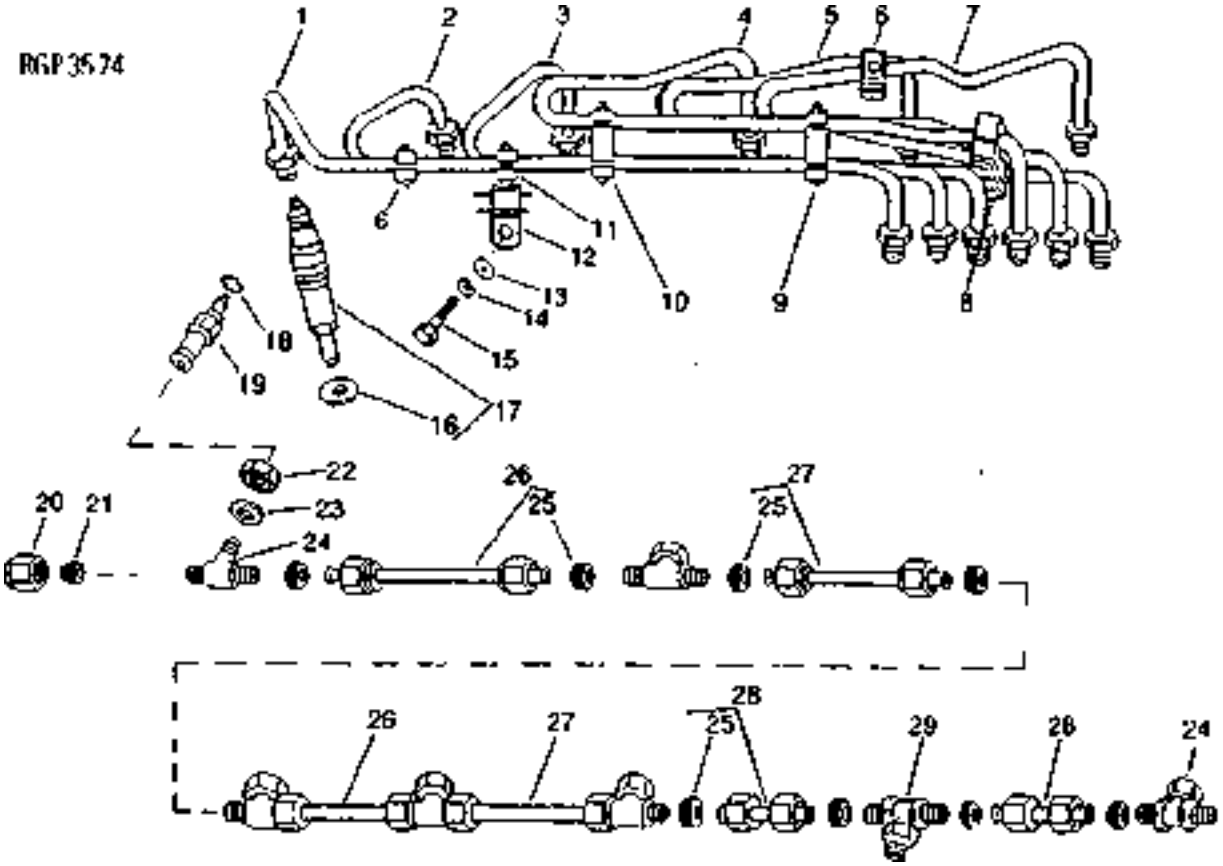

https://www.truck-manuals.net/

KEY	PART NO.	PART NAME	QTY	ENGINE SERIAL NO.	8400	REMARKS
1	RE57151	FUEL LINE	1		X	NO. 6
2	RE57150	FUEL LINE	1		X	NO. 5
3	RE57149	FUEL LINE	1		X	NO. 4
4	RE57148	FUEL LINE	1		X	NO. 3
5	RE57147	FUEL LINE	1		X	NO. 2
6	R59305	STRAP	1		X	
	R58186	CLAMP	2		X	
	R61144	STRAP	1		X	
	21H1463	CAP SCREW	2		X	0.190" X 7/8"
7	RE57146	FUEL LINE	1		X	NO. 1
8	R59298	STRAP	1		X	
	R59297	HALF CLAMP	2		X	
	21H1463	CAP SCREW	2		X	0.190" X 7/8"
9	R59298	STRAP	2		X	
	R71212	CLAMP	1		X	
	R61145	STRAP	1		X	
	R71398	SCREW	2		X	0.190" X 1-1/2"
10	R59305	STRAP	1		X	
	R58186	CLAMP	1		X	
	R74030	CLAMP	1		X	
	R74804	CLAMP	1		X	
	R61144	STRAP	1		X	
	R71398	SCREW	1		X	0.190" X 1-1/2"
11	R59298	STRAP	1		X	
	R59297	HALF CLAMP	2		X	
	21H1463	CAP SCREW	2		X	0.190" X 7/8"
12	RE47120	ABSORBER	1		X	
13	24H1884	WASHER	1		X	13/32" X 13/16" X 0.120"
14	12M7066	LOCK WASHER	NA		X	10.200 MM
15	19M7166	CAP SCREW	1		X	M10 X 20
16	R84472	WASHER	6		X	
17	RE62615	INJECTION NOZZLE	6	-000225	X	(ROBERT BOSCH) (ORANGE DOT) (SUB RE61593)
	RE61593	INJECTION NOZZLE	6	000226-	X	(ROBERT BOSCH) (ORANGE DOT)
18	R77551	O-RING	6		X	
19	R87082	FITTING	6		X	(ALSO ORDER R77551)
20	R51937	TUBE NUT	1		X	
21	AR85519	PLUG	1		X	
22	R79604	TUBE NUT	6		X	
23	R79605	WASHER	6		X	
24	R79606	TEE FITTING	6		X	
25	R51936	PACKING	11		X	
26	RE15807	FUEL LINE	2		X	
27	RE15808	FUEL LINE	2		X	
28	RE36421	FUEL LINE	2		X	
29	R97061	TEE FITTING	1		X	

https://www.truck-manuals.net/

FUEL INJECTION PUMP, LUBE LINE AND ENGINE CONTROLLER
POMPE D'INJECTION/TUYAUX D'INJECTION
KRAFTSTOFF-EINSPRITZPUMPE/KRAFTSTOFFLEITUNGEN
POMPA DI INIEZIONE/TUBAZIONI COMBUSTIBLE
BOMBA DE INYECCION DE COMBUSTIBLE/TUBERIAS
INSPRUTNINGSPUMP/BRANSLELEDNINGAR
RGP4995 -UN-26MAR98

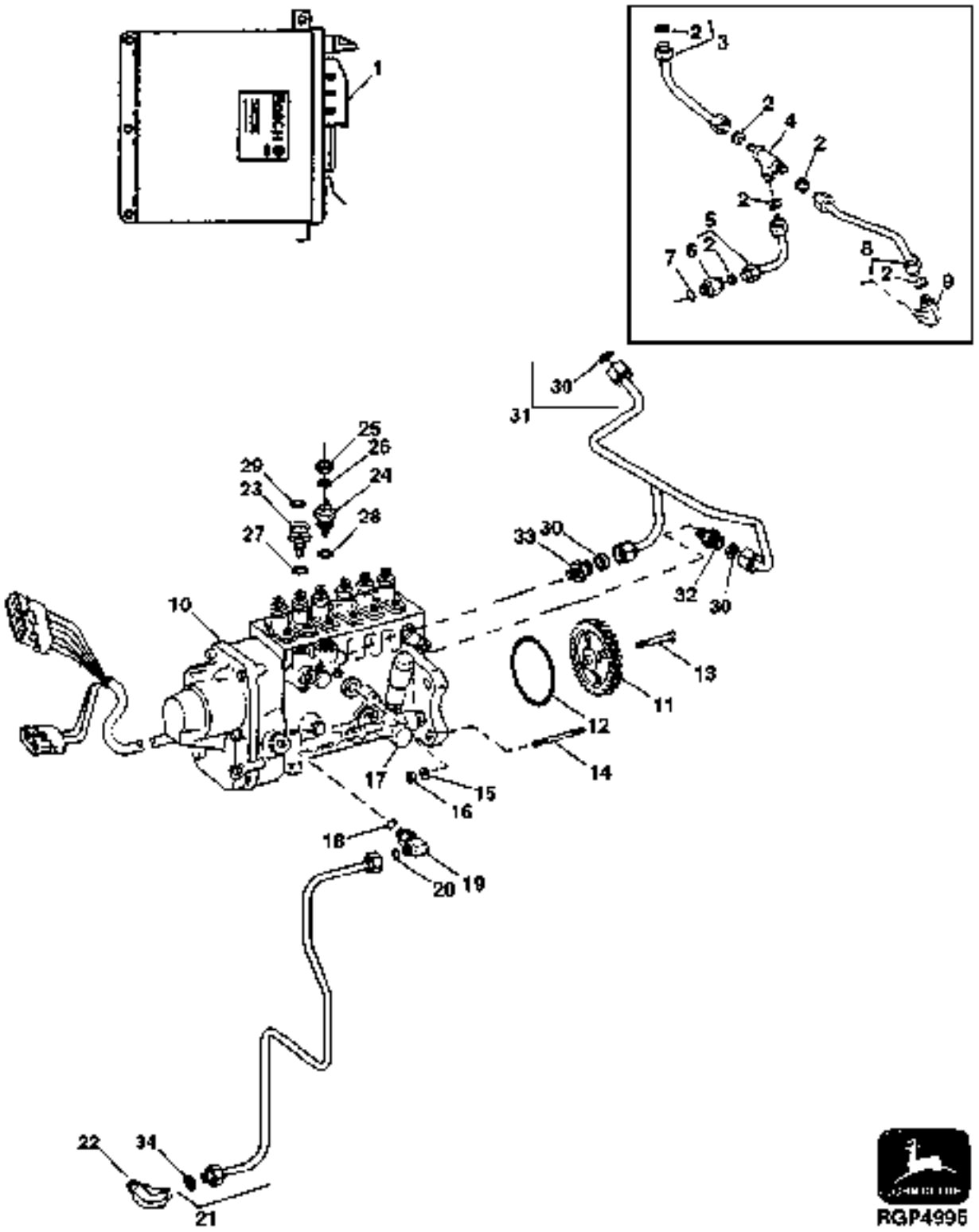

https://www.truck-manuals.net/

KEY	PART NO.	PART NAME	QTY	ENGINE SERIAL NO.	8400	REMARKS
1	RE57501	ENGINE CONTROLLER	1	-009810	X	(ROBERT BOSCH) (MARKED RE28320) (SUB RE501823)
	RE501823	ENGINE CONTROLLER	1	-009810	X	(USE RE502124 OR RE503340 WITH 6081HRWOB) (USE RE502429 OR RE503184 WITH 6081HRWO3) (MARKED RE501731) (SUB RE503340, RE503184, RE502429 OR RE502124 AND RE502125)
	RE69550	ENGINE CONTROLLER	1	009811-	X	(MARKED RE66614) (SUB RE500769, RE503340)
	RE500769	ENGINE CONTROLLER	1	009811-	X	(MARKED RE66614) (SUB RE503340 OR RE502124)
	RE502124	ENGINE CONTROLLER	1	009811-	X	(MARKED RE66614) (SUB RE503340) (SUB FOR RE502425)
	RE502124	ENGINE CONTROLLER	1		X	(MARKED RE66614) (SUB RE503340) (SUB FOR RE57501, RE501823, RE500769 OR RE502425)
	RE503340	ENGINE CONTROLLER	1		X	(MARKED RE66614) (SUB FOR RE502124)
	RE502125	KIT	1		X	(USE WITH RE66614) (MOUNTING KIT)
	RE502135	KIT	1		X	(BALER KIT)
2	R51936	PACKING	6	-035177	X	
3	RE30920	FUEL LINE	1	-035177	X	
4	R97061	TEE FITTING	1	-035177	X	
5	RE30833	FUEL LINE	1	-035177	X	
6	R91824	FITTING	1	-035177	X	
7	R48693	WASHER	1	-035177	X	
8	RE35684	FUEL LINE	1	-035177	X	
9	R67364	ELBOW FITTING	1	-035177	X	
10	RE61658	FUEL INJECTION PUMP	1		X	(A) (SUB FOR RE57373) (ROBERT BOSCH)(PES6P120A720RS7315)
11	R121164	GEAR	1		X	
12	R76358	O-RING	1		X	
13	R121195	CAP SCREW	4		X	(SUB FOR R112975) (T45)
14	R114130	STUD	4		X	
15	M72490	WASHER	4		X	
16	14H1090	NUT	4		X	9.525 MM (3/8")
17	RE46375	FUEL PUMP	1		X	
18	R79060	O-RING	1		X	(SUB FOR R73858)
19	AR88903	ELBOW FITTING	1		X	3/8"
20	R67264	PACKING	1		X	
21	RE60577	OIL LINE	1		X	
22	T18012	ELBOW FITTING	1		X	
23	RE28217	FUEL TEMPERATURE SENSOR	1		X	(TEMPERATURE)
24	R89014	SOLENOID	1		X	(SHUT-OFF HOUSING)
	R89014	SOLENOID	1		X	
25	14M7279	NUT	1		X	
26	12H296	WASHER	1		X	(SUB FOR R73858)
27	R53899	WASHER	1		X	(BOTTOM)
28	R99047	O-RING	1		X	(TEMPERATURE)
29	R98500	O-RING	1		X	(TOP)
30	R51936	PACKING	3	035178-	X	
31	RE66000	FUEL LINE	1	035178-	X	(SHUT-OFF HOUSING)
32	R63604	CONNECTOR	1	035178-	X	
33	RE67934	CONNECTOR	1	035178-	X	
	.....	RING	1		X	(SUB RE67934)
34	R67264	PACKING	1		X	
..	R105388	TIE BAND	2		X	

(A) "SEE YOUR AUTHORIZED PUMP REPAIR STATION FOR PARTS NOT LISTED"

https://www.truck-manuals.net/

FUEL INJECTION PUMP HOUSING CONNECTORS
CONNECTEURS DE CARTER DE POMPE D'INJECTION
EINSPRITZPUMPENGEHAEUSE ANSCHLUESSE
CONNETTORI PER CARCASSA POMPA DI INIEZIONE
CONECTORES DE CARCASSA DE LA BOMBA DE INYECCION DE GASOLINA
BRAENSLEINSPRUTNINGSPUMPHUSETS ANSLUTNINGAR
RGP3634 -UN-01JAN94

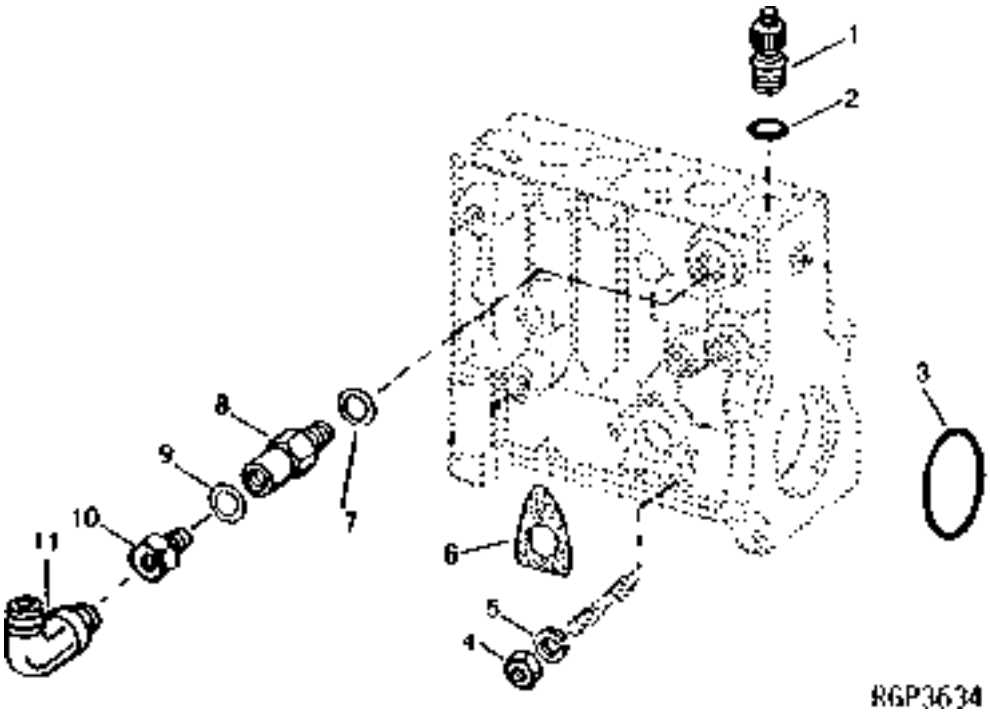

KEY	PART NO.	PART NAME	QTY	ENGINE SERIAL NO. 8400	REMARKS
1	R99531	HOLDER	6	X	(NLA)
2	T24210	O-RING	6	X	
3	R53884	O-RING	1	X	
4	14M7297	NUT	3	X	M5
5	12H296	WASHER	3	X	0.216"
6	R67879	GASKET	1	X	
7	R53899	WASHER	1	X	
8	RE36151	CONTROL VALVE	1	X	
9	R53901	WASHER	1	X	
10	R63016	ADAPTER	1	X	
11	R67364	ELBOW FITTING	1	X	
..	R93008	WASHER	1	X	(FUEL INLET)
..	RE49446	ELBOW FITTING	1	X	(FUEL INLET)

https://www.truck-manuals.net/

FUEL TRANSFER PUMP (ROBERT BOSCH)
POMPE D'ALIMENTATION (ROBERT BOSCH)
KRAFTSTOFFOERDERPUMPE (ROBERT BOSCH)
POMPA ALIMENTACION DE COMBUSTIBLE (ROBERT BOSCH)
BOMBA DE ALIMENTACION DE COMBUSTIBLE (ROBERT BOSCH)
MATAREPUMP (ROBERT BOSCH)
RGP3934 -UN-01JAN94

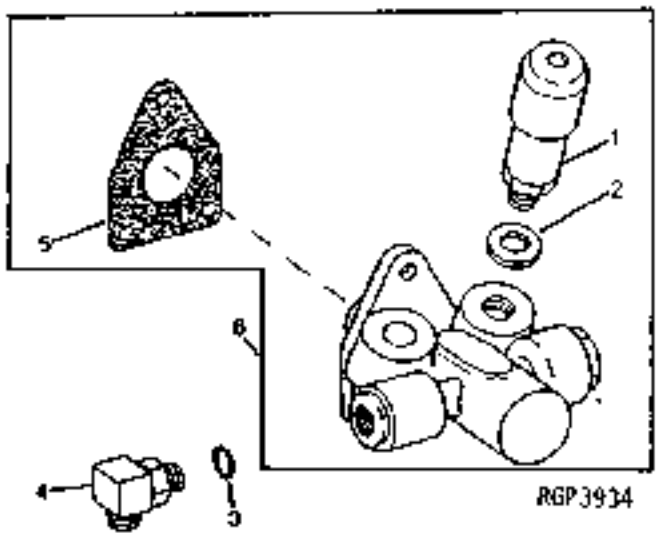

KEY	PART NO.	PART NAME	QTY	ENGINE SERIAL NO. 8400	REMARKS
1	RE65265	HAND PRIMER	1	X	(SUB FOR RE48048)
2	R54025	WASHER	1	X	
3	R26448	O-RING	2	X	
4	RE10258	ELBOW FITTING	2	X	(TRANSFER PUMP TO RE65787)
	RE34128	ELBOW FITTING	1	X	(TRANSFER PUMP TO RE63313)
5	R67879	GASKET	1	X	
6	RE46375	FUEL PUMP	1	X	

https://www.truck-manuals.net/

FUEL INJECTION NOZZLE
INJECTEUR (CONCEPTION RECENTE)
INIETTORE (NUOVO MODELLO)
INIETTORE (NUOVO MODELLO)
INYECTOR (DISENO RECIENTE)
BRANSLEINSPRUTARE (SENARE UTFOERANDE)
RGP2547 -UN-01JAN94

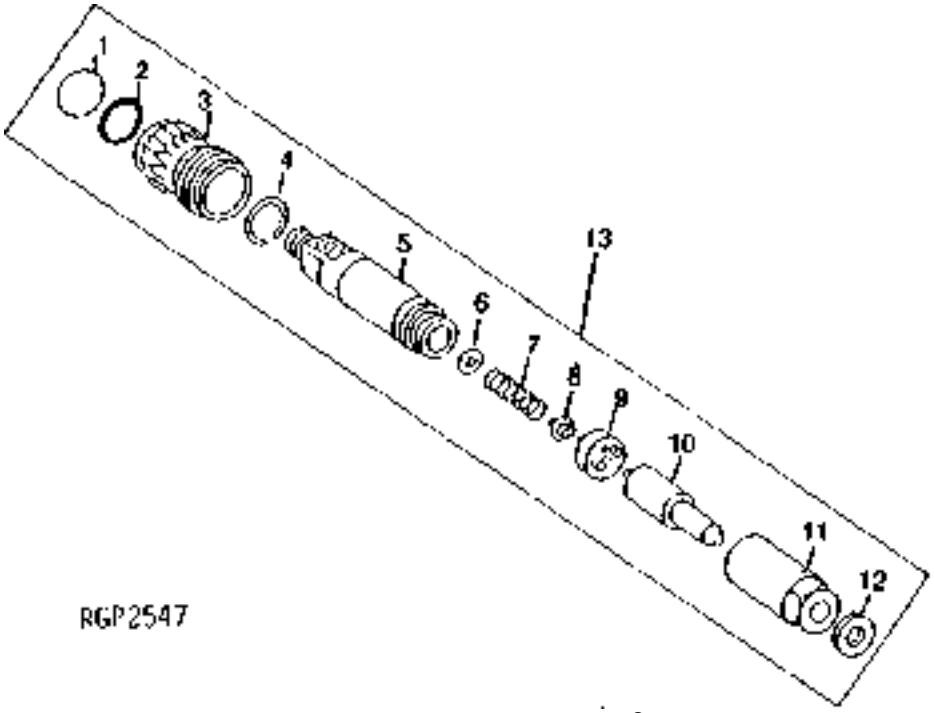

KEY	PART NO.	PART NAME	QTY	ENGINE SERIAL NO.	8400	REMARKS
1	R60277	SNAP RING	1		X	
2	R375R	O-RING	1		X	
3	R60279	NUT	1		X	
4	R60278	SNAP RING	1		X	
5	.....	NOZZLE HOLDER	1		X	(SUB RE62615)
6	R83720	WASHER	1		X	1.02 MM (.0402")
	R83721	WASHER	1		X	1.08 MM (.0425")
	R83722	WASHER	1		X	1.12 MM (.0441")
	R83723	WASHER	1		X	1.18 MM (.0465")
	R83724	WASHER	1		X	1.22 MM (.0480")
	R83725	WASHER	1		X	1.28 MM (.0504")
	R83726	WASHER	1		X	1.30 MM (.0512")
	R83727	WASHER	1		X	1.38 MM (.0543")
	R83728	WASHER	1		X	1.42 MM (.0559")
	R83729	WASHER	1		X	1.48 MM (.0583")
	R83730	WASHER	1		X	1.50 MM (.0591")
	R83731	WASHER	1		X	1.58 MM (.0622")
	R83732	WASHER	1		X	1.60 MM (.0630")
	R83733	WASHER	1		X	1.68 MM (.0661")
	R83734	WASHER	1		X	1.70 MM (.0669")
	R83735	WASHER	1		X	1.78 MM (.0701")
	R83736	WASHER	1		X	1.82 MM (.0717")
	R83737	WASHER	1		X	1.88 MM (.0740")
	R83738	WASHER	1		X	1.90 MM (.0748")
	R83739	WASHER	1		X	1.98 MM (.0780")
7	R108699	SPRING	1		X	
8	R108700	SEAT	1		X	
9	R108701	PLATE	1		X	
10	RE42306	INJECTION NOZZLE	1		X	(7 X 0.24)
11	R127181	NUT	1	-000225	X	
	R127176	NUT	1	000226-	X	(USE WITH RE61593)
12	R84472	WASHER	1		X	(NOT INCLUDED W/ RE61593)
13	RE62615	INJECTION NOZZLE	6	-000225	X	(ROBERT BOSCH) (1 ORANGE DOT) (SUB RE61593)
	RE61593	INJECTION NOZZLE	1	000226-	X	

https://www.truck-manuals.net/

FUEL COOLER
REFROIDISSEUR DE CARBURANT
KRAFTSTOFFKUEHLER
RADIATORE DEL CARBURANTE
ENFRIADOR DE COMBUSTIBLE
BRAENSLEKYLARE
RXP021617 -UN-30JUL96

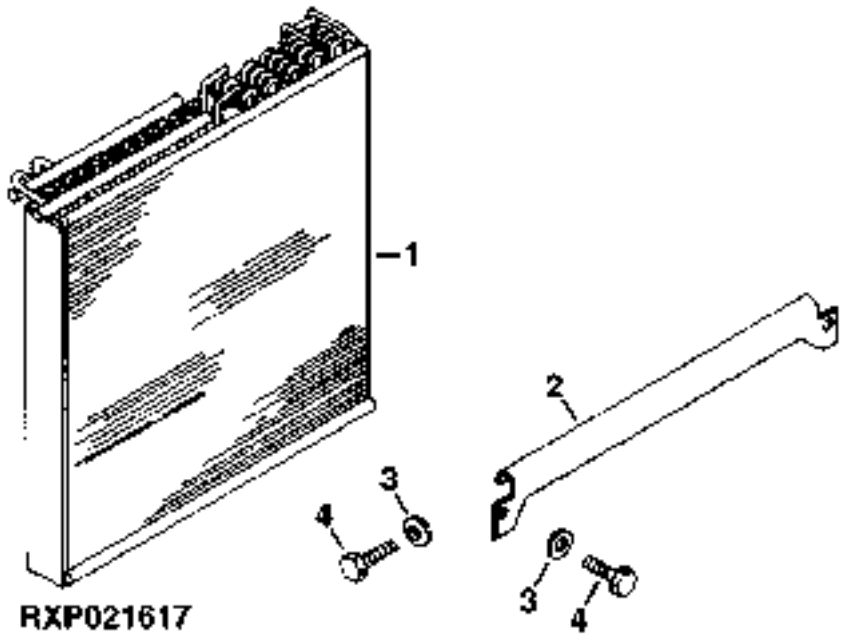

KEY	PART NO.	PART NAME	QTY	TRACTOR SERIAL NO.	ALL	REMARKS
1	RE63468	OIL COOLER	1	-009999	X	(SUB FOR RE61071)
	RE66573	OIL COOLER	1	010000-	X	
2	R63647	SUPPORT	1		X	
3	24M7336	WASHER	8		X	9 X 16 X 1.600 MM
4	19M7932	CAP SCREW	8		X	M8 X 16

https://www.truck-manuals.net/

FUEL FILTER AND LINES (ESN -002919)
FILTRE A COMBUSTIBLE (ESN -002919)
KRAFSTOFF-FILTER (ESN -002919)
FILTRO COMBUSTIBLE (ESN -002919)
FILTRO DE COMBUSTIBLE (ESN -002919)
BRANSLEFFILTER (ESN -002919)
RGP5000 -UN-25MAR98

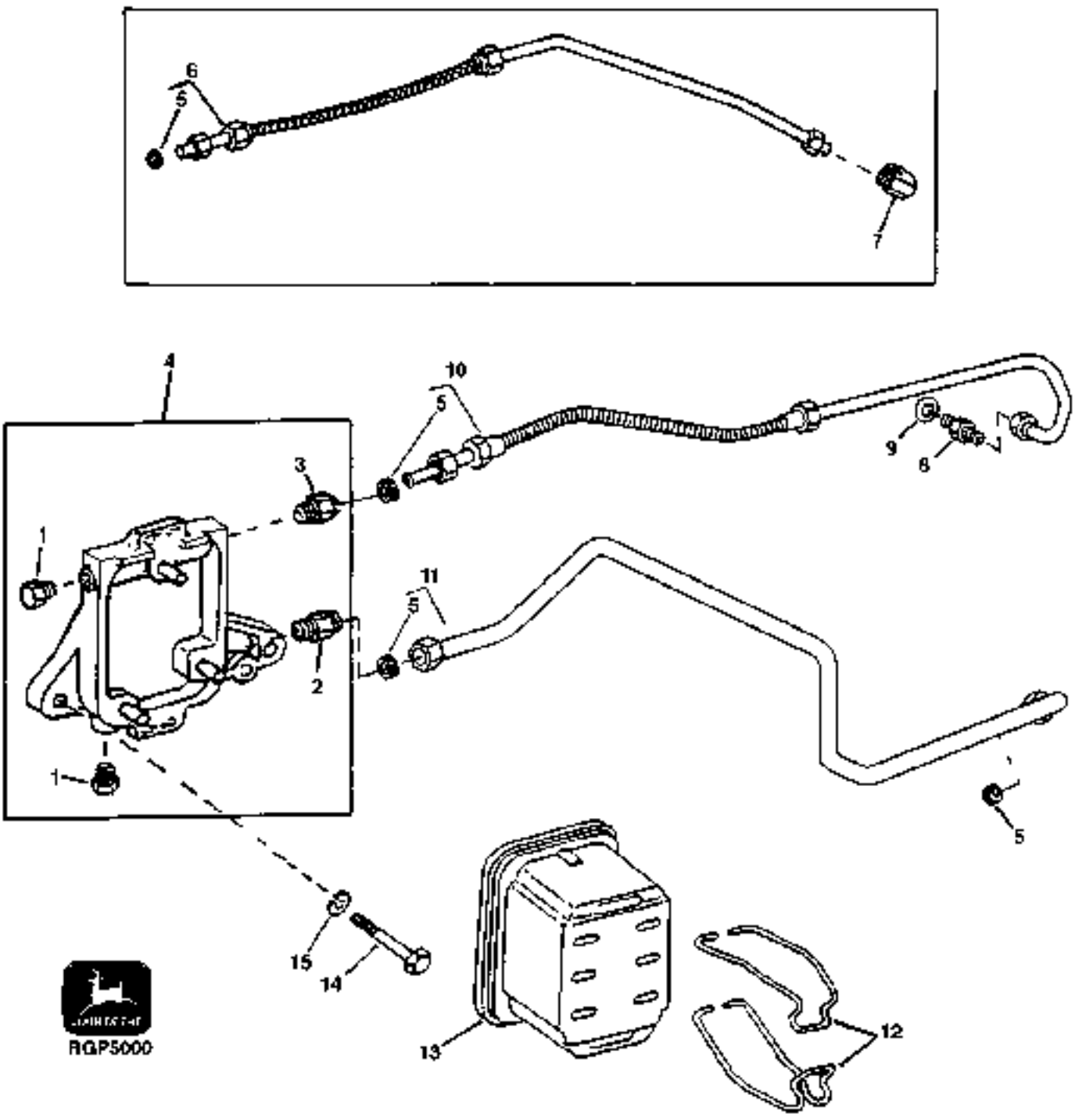

https://www.truck-manuals.net/

KEY	PART NO.	PART NAME	QTY	ENGINE SERIAL NO.	8400	REMARKS
1	R119223	PLUG	2		X	
2	RE54244	CHECK VALVE	1		X	
3	RE54245	FITTING	1		X	
4	RE61693	BASE	1		X	(NOT AS SHOWN)
5	R67092	SEAL	4		X	
6	RE49445	FUEL LINE	1	-XXXXXX	X	(SUB RE47635) (NLA)
7	RE62345	ELBOW FITTING	1	-XXXXXX	X	(SUB FOR RE49446) (USE WITH RE49445) (SUB RE47635) (NLA)
8	R83489	FITTING	1		X	
9	R93008	WASHER	1		X	
10	RE47635	FUEL LINE	1	XXXXXX-	X	
11	RE49444	FUEL LINE	1		X	(SUB RE65787 AND RE500280, THIS APPLICATION)
	R93008	WASHER	1		X	
12	R89927	CLAMP	2		X	
13	AR86745	FILTER ELEMENT	1		X	(SUB FOR RE57073)
14	19H2964	CAP SCREW	2		X	7/16" X 1-1/8"
15	24H1325	WASHER	2		X	15/32" X 59/64" X 0.065"

https://www.truck-manuals.net/

FUEL FILTER AND LINES (ESN 002920-)
FILTRE A COMBUSTIBLE (ESN 002920-)
KRAFTSTOFF-FILTER (ESN 002920-)
FILTRO COMBUSTIBLE (ESN 002920-)
FILTRO DE COMBUSTIBLE (ESN 002920-)
BRANSLEFFILTER (ESN 002920-)
RGP4607 -UN-20NOV95

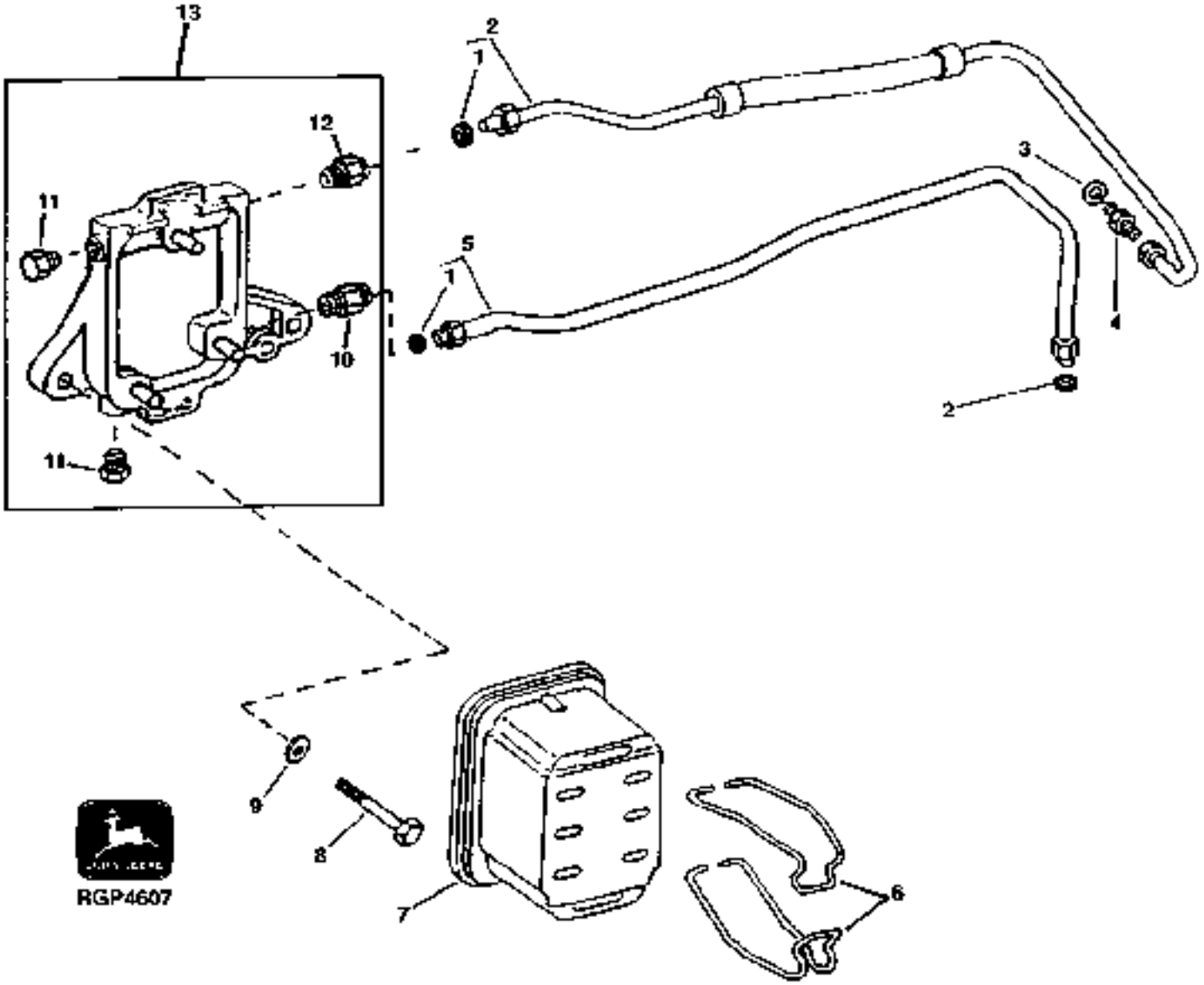

https://www.truck-manuals.net/

KEY	PART NO.	PART NAME	QTY	ENGINE SERIAL NO.	8400	REMARKS
1	R67092	SEAL	3		X	
2	RE500280	FUEL LINE	1		X	(SUB FOR RE63414)
3	R93008	WASHER	1		X	
4	R83489	FITTING	1		X	
5	RE65787	FUEL LINE	1		X	(SUB FOR RE63413, THIS APPLICATION)
6	R89927	CLAMP	2		X	
7	AR86745	FILTER ELEMENT	1		X	
8	19H2964	CAP SCREW	2		X	7/16" X 1-1/8"
9	24H1325	WASHER	2		X	15/32" X 59/64" X 0.065"
10	RE54244	CHECK VALVE	1		X	
11	R119223	PLUG	2		X	
12	RE54245	FITTING	1		X	
13	RE61693	BASE	1		X	

https://www.truck-manuals.net/

FUEL LINES
TUYAUX D'INJECTION
KRAFTSTOFFLEITUNGEN
TABAZIONI COMBUSTIBLE
TUBERIAS DE COMBUSTIBLE
BRANSLELEDNINGAR
RXP022770 -UN-16JUL98

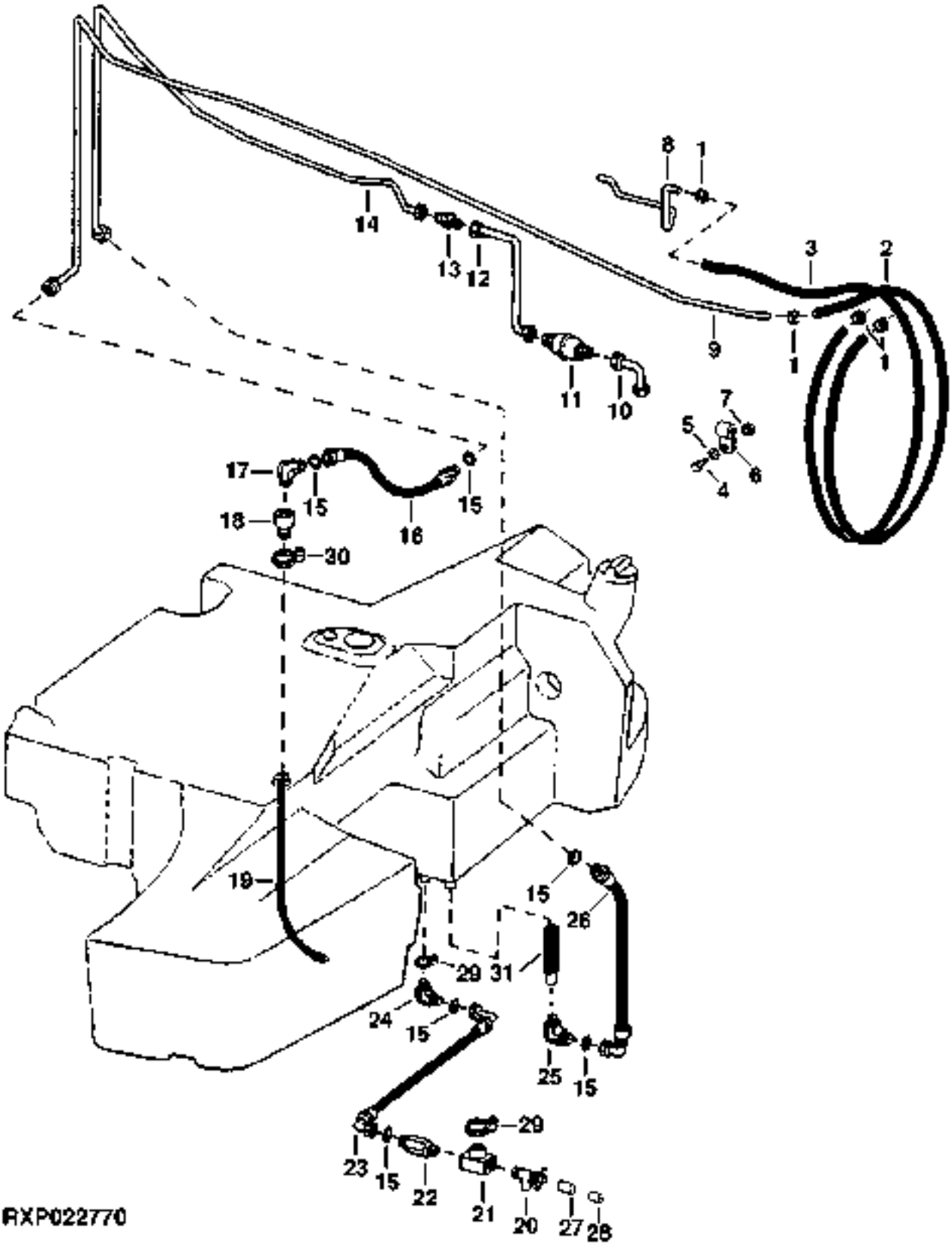

https://www.truck-manuals.net/

KEY	PART NO.	PART NAME	QTY	TRACTOR SERIAL NO.	ALL	REMARKS
1	TY22462	CLAMP	4		X	(SUB FOR AR48236)
2	R134711	HOSE	1		X	(SUB FOR R124362)
3	R134712	HOSE	1		X	(SUB FOR R124363)
4	19M7881	SCREW	1		X	M8 X 20
5	24M7336	WASHER	1		X	9 X 16 X 1.600 MM
6	AH87142	CLIP	1		X	
7	14M7372	NUT	1		X	M4
8	R126441	LINE	1	-009999	X	
	R134052	FUEL LINE	1	010000-	X	(SUB FOR R132540)
9	RE66671	FUEL LINE	1		X	(SUB FOR RE61148)
10	RE61813	HOSE	1		X	(NA TO 8400)
11	AR103220	STRAINER	1		X	(NA TO 8400)
12	RE61814	HOSE	1		X	(NA TO 8400)
	R67092	SEAL	2		X	
13	R125553	FITTING	1		X	
14	RE66672	FUEL LINE	1		X	(SUB FOR RE57850)
	R67092	SEAL	1		X	
15	T77857	O-RING	AR		X	
16	RE57849	HOSE	1		X	
17	R87907	ELBOW FITTING	2		X	
18	R120667	FLANGE FITTING	1		X	
19	R107601	HOSE	1		X	
20	RE61660	VALVE	1	-XXXXXX	X	(E)
	AM38104	SHUT-OFF VALVE	1	XXXXXX-	X	(F)
21	R122371	FITTING	1		X	
22	R122199	ADAPTER	1		X	
23	RE44718	HOSE	1	-XXXXXX	X	(A)
	RE62840	HOSE	1	XXXXXX-XXXXXX	X	(B) (C)
	RE65123	HYDRAULIC HOSE - FABRICATE	1	XXXXXX-	X	(D)
24	38H1519	ELBOW FITTING	1		X	
25	R87907	ELBOW FITTING	1		X	
26	RE60850	HYDRAULIC HOSE - FABRICATE	1		X	
27	N30405	ADAPTER	1	XXXXXX-	X	(F)
28	L2646N	PIPE PLUG	1	XXXXXX-	X	(F) (SUB FOR R126441)
29	TY22465	CLAMP	2	XXXXXX-	X	(F)
30	AT18904	CLAMP	1	XXXXXX-	X	(F)
31	R134770	STRAINER	1		X	
..	15H623	PIPE PLUG	1		X	3/8"

(A)(-XXXXXX) 8100-001091; 8200-001095; 8300-001313; 8400-001041
(B)(XXXXXX-) 8100-001092; 8200-001096; 8300-001314; 8400-001042
(C)(-XXXXXX) 8100-003547; 8200-002729; 8300-004629; 8400-003075
(D)(XXXXXX-) 8100-003548; 8200-002730; 8300-004630; 8400-003076
(E)(-XXXXXX) 8100-002834; 8200-002236; 8300-003938; 8400-002549
(F)(XXXXXX-) 8100-002835; 8200-002237; 8300-003939; 8400-002550

https://www.truck-manuals.net/

FUEL TANK
RESERVOIR A COMBUSTIBLE
KRAFTSTOFFTANK
SERBATOIO COMBUSTIBLE
DEPOSITO DE COMBUSTIBLE
BRANSLETANK
RXP021373 -UN-06DEC95

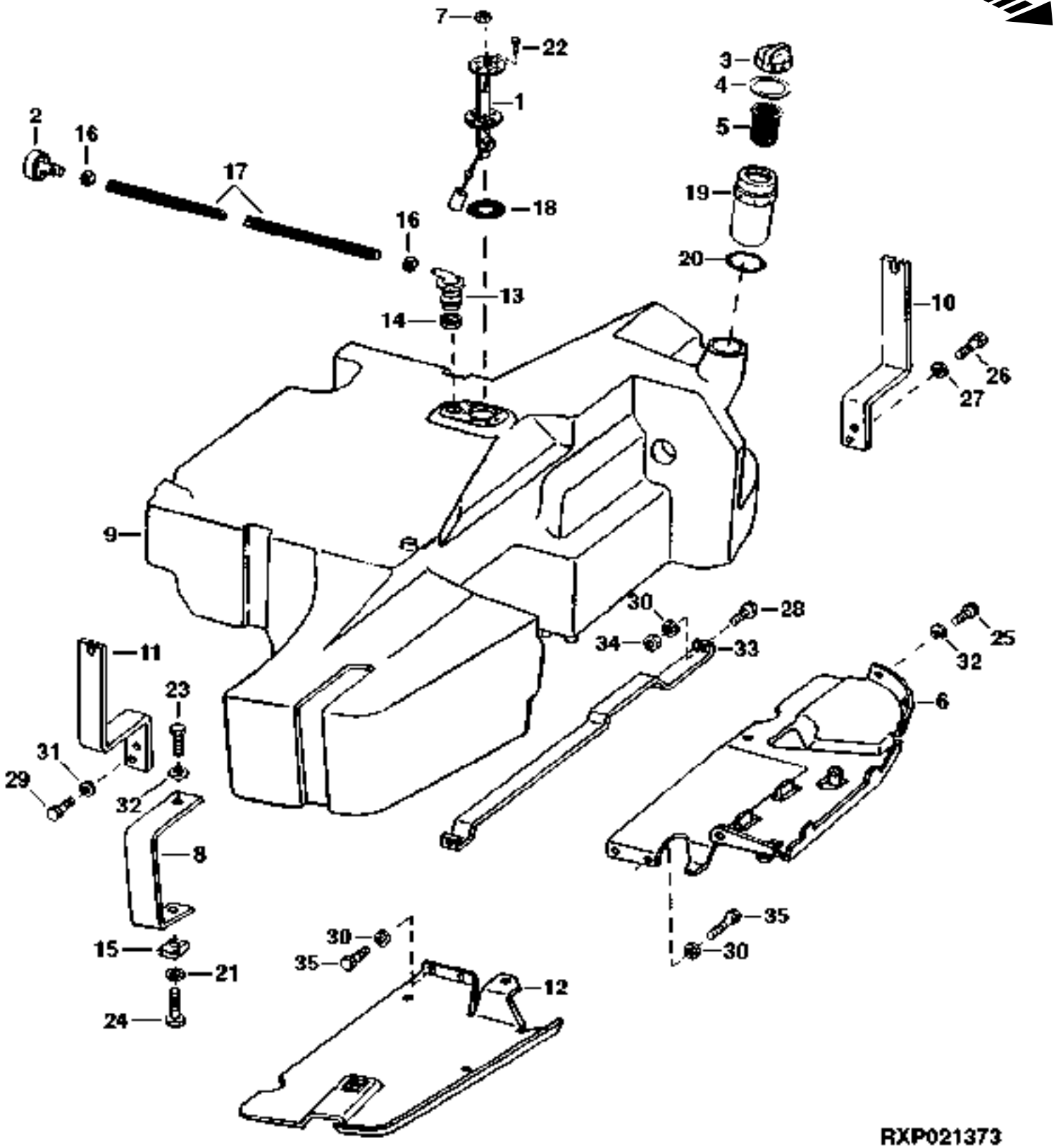

https://www.truck-manuals.net/

KEY	PART NO.	PART NAME	QTY	TRACTOR SERIAL NO.	ALL	REMARKS
1	RE51519	FUEL SENDER	1		X	
2	RE52504	BREATHER	1		X	
3	RE58873	FILLER CAP	1		X	
4	R122754	GASKET	1		X	
5	AH162914	STRAINER	1		X	(SUB FOR AH135155)
6	R107603	PLATE	1		X	
7	R32176	NUT	2		X	
8	R107138	SUPPORT	1		X	
9	RE151465	FUEL TANK	1		X	(SUB FOR RE60321 OR RE67610)
10	R126656	STRAP	1	-XXXXXX	X	(SUB FOR R124011) (SUB RE65320)
	R126525	BRACKET	1	-XXXXXX	X	L.H. (REAR) (SUB RE65320)
	RE65320	STRAP	1	XXXXXX-	X	
	19M7938	CAP SCREW	1		X	M10 X 20
	24M7346	WASHER	1		X	11 X 20 X 2 MM
11	R124012	STRAP	1		X	
12	R112477	PLATE	1		X	
13	R114022	VENT	1		X	
14	R114023	GROMMET	1		X	
15	R120213	NUT	1		X	
16	R56101	CLIP	2		X	
17	R125344	HYDRAULIC HOSE - FABRICATE	1		X	
18	R95430	GASKET	1		X	
19	R116933	FUNNEL	1		X	
20	R120233	O-RING	1		X	
21	24M7047	WASHER	1		X	13 X 24 X 2.500 MM
22	19M7640	CAP SCREW	6		X	M5 X 12
23	19M8011	CAP SCREW	2		X	M12 X 30
24	19M7744	CAP SCREW	1		X	M12 X 35
25	19M8011	CAP SCREW	1		X	M12 X 30
26	19M7744	CAP SCREW	1		X	M12 X 35
27	24M7047	WASHER	3		X	13 X 24 X 2.500 MM
28	03M7192	BOLT	2		X	M10 X 30
29	19M8011	CAP SCREW	1		X	M12 X 30
30	24M7028	WASHER	6		X	10.500 X 20 X 2 MM
31	24M7240	WASHER	3		X	13 X 25 X 3 MM
32	24M7207	WASHER	1		X	8.400 X 24 X 2 MM
33	R122429	STRAP	1		X	
34	14M7274	NUT	2		X	M10
35	19M7382	CAP SCREW	4		X	M10 X 40
..	H143834	NUT	2		X	
..	19M7788	SCREW	1		X	M12 X 25, CAB SUPPORT TO FUEL TANK OUTER

https://www.truck-manuals.net/

FILTERS
FILTRES
FILTER
FILTRI
FILTROS
FILTER
RXP022180 -UN-02SEP97

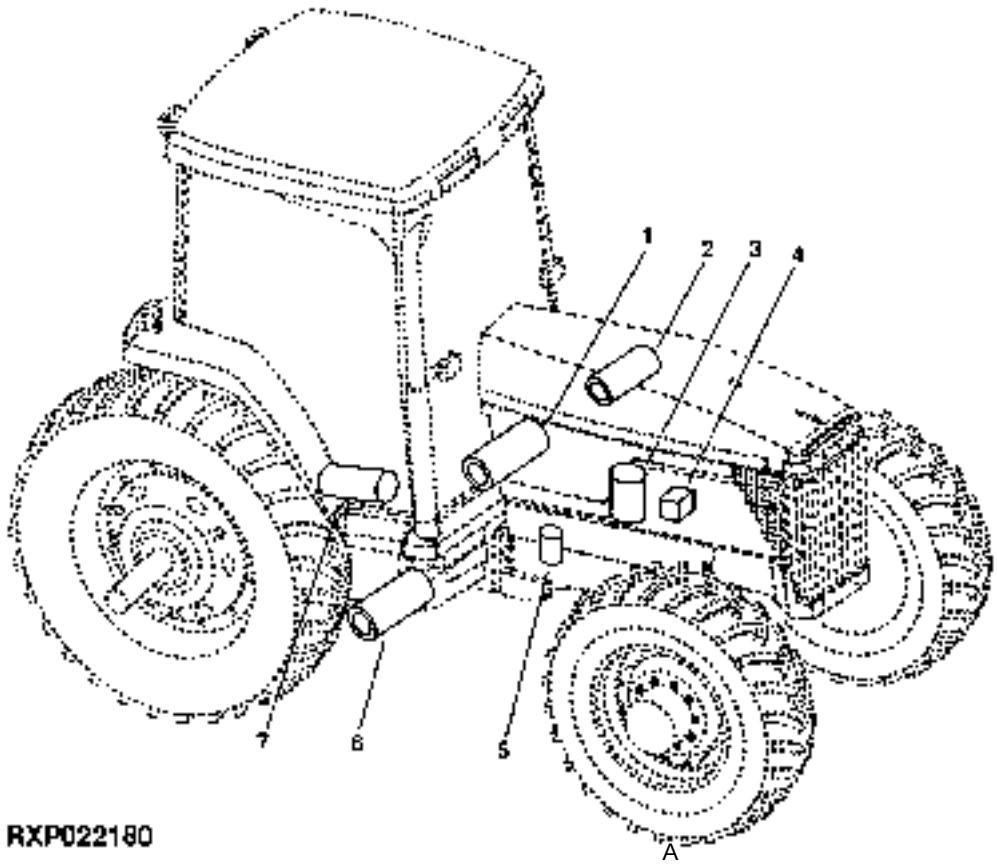

RXP022180

KEY	PART NO.	PART NAME	QTY	TRACTOR SERIAL NO.	ALL	REMARKS
1	RE51629	FILTER ELEMENT	1		X	
2	RE51630	FILTER ELEMENT	1		X	
3	RE57394	OIL FILTER	1		X	
4	AR86745	FILTER ELEMENT	1		X	
5	RE65431	FILTER ELEMENT	1		X	
6	R119168	AIR FILTER	1		X	
	RE67828	AIR FILTER	1		X	(A)
7	RE51797	OIL FILTER	1		X	

(A) HIGH EFFICIENCY
HAUT RENDEMENT
HOCHLEISTUNGSFAEHIG
ALTA EFFICIENZA
ALTA EFICIENCIA
HOEG EFFEKTIVITET

https://www.truck-manuals.net/

SECTIONAL INDEX
GRUPPENINDEX
INDEX DE SECTION
INDICE DELLA SEZIONE
INDICE DE SECCION
GRUPPSFORTECKNING

RE029262 -UN-10MAY99

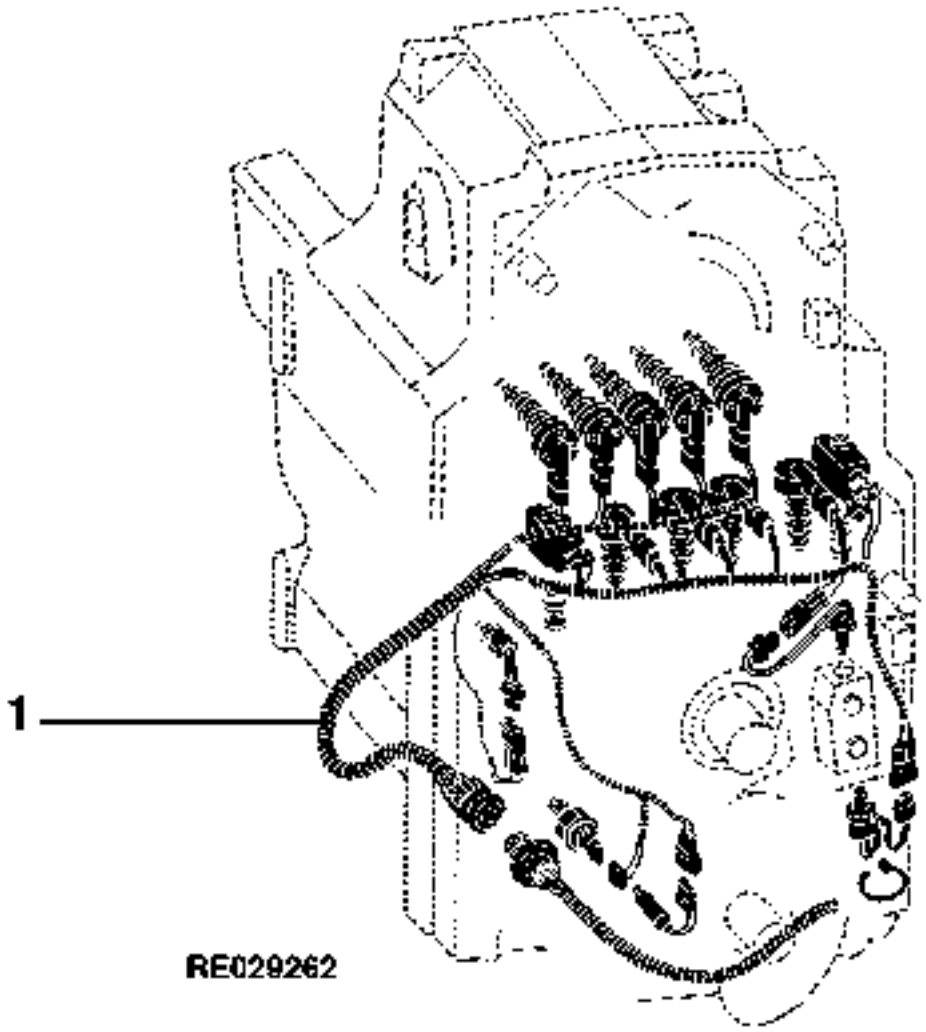

1 -	3D19
2 -	3D23
3 -	3E9
4 -	3E19
5 -	3E21
6 -	3E23
7 -	3E25
8 -	3F1
9 -	3F2
10 -	3F4
11 -	3F6
12 -	3F8
13 -	3F9
14 -	3F10
15 -	3F11
16 -	3F12
17 -	3F14
18 -	3F15
19 -	3F16
20 -	3F20
21 -	3F21
22 -	3F22
23 -	3F24
24 -	3G1
25 -	3G5
26 -	3G9
27 -	3G11
28 -	3G13
28 -	3G15
29 -	3G17
30 -	3G18
31 -	3G20
32 -	3G21
33 -	3G22
34 -	3G23
35 -	3G24
36 -	3G25
37 -	3H1
37 -	3H2
38 -	3H3
39 -	3H4
40 -	3H10
41 -	3H12
42 -	3H13
43 -	3H14
44 -	3H16
45 -	3H18
46 -	3H21
47 -	3I1
48 -	3I5

https://www.truck-manuals.net/

SECTIONAL INDEX
GRUPPENINDEX
INDEX DE SECTION
INDICE DELLA SEZIONE
INDICE DE SECCION
GRUPPSFORTECKNING

RE029318 -UN-10MAY99

1 -	3D19
2 -	3D23
3 -	3E9
4 -	3E19
5 -	3E21
6 -	3E23
7 -	3E25
8 -	3F1
9 -	3F2
10 -	3F4
11 -	3F6
12 -	3F8
13 -	3F9
14 -	3F10
15 -	3F11
16 -	3F12
17 -	3F14
18 -	3F15
19 -	3F16
20 -	3F20
21 -	3F21
22 -	3F22
23 -	3F24
24 -	3G1
25 -	3G5
26 -	3G9
27 -	3G11
28 -	3G13
28 -	3G15
29 -	3G17
30 -	3G18
31 -	3G20
32 -	3G21
33 -	3G22
34 -	3G23
35 -	3G24
36 -	3G25
37 -	3H1
37 -	3H2
38 -	3H3
39 -	3H4
40 -	3H10
41 -	3H12
42 -	3H13
43 -	3H14
44 -	3H16
45 -	3H18
46 -	3H21
47 -	3I1
48 -	3I5

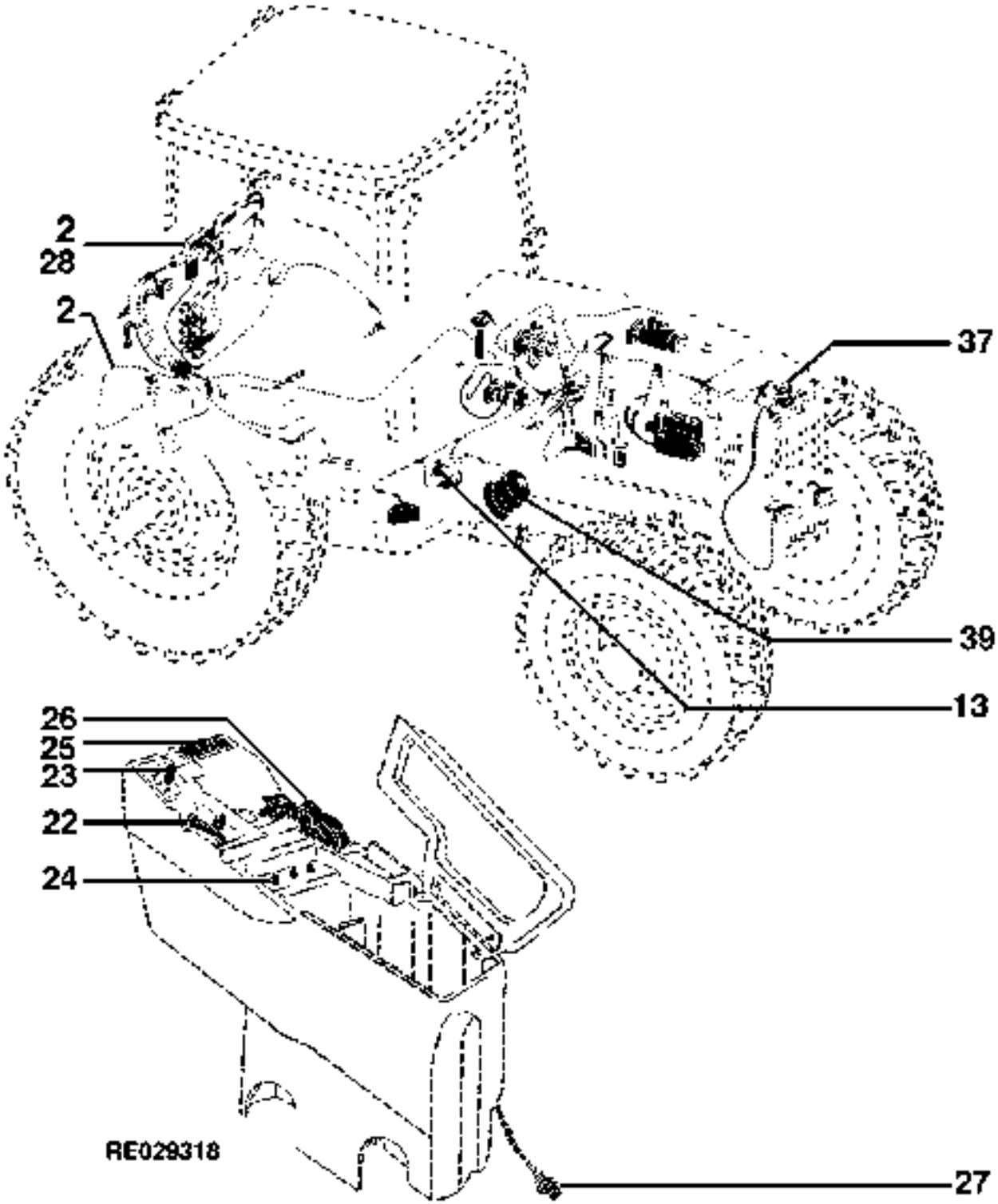

https://www.truck-manuals.net/

SECTIONAL INDEX
GRUPPENINDEX
INDEX DE SECTION
INDICE DELLA SEZIONE
INDICE DE SECCION
GRUPPSFORTECKNING

RE029319 -UN-10MAY99

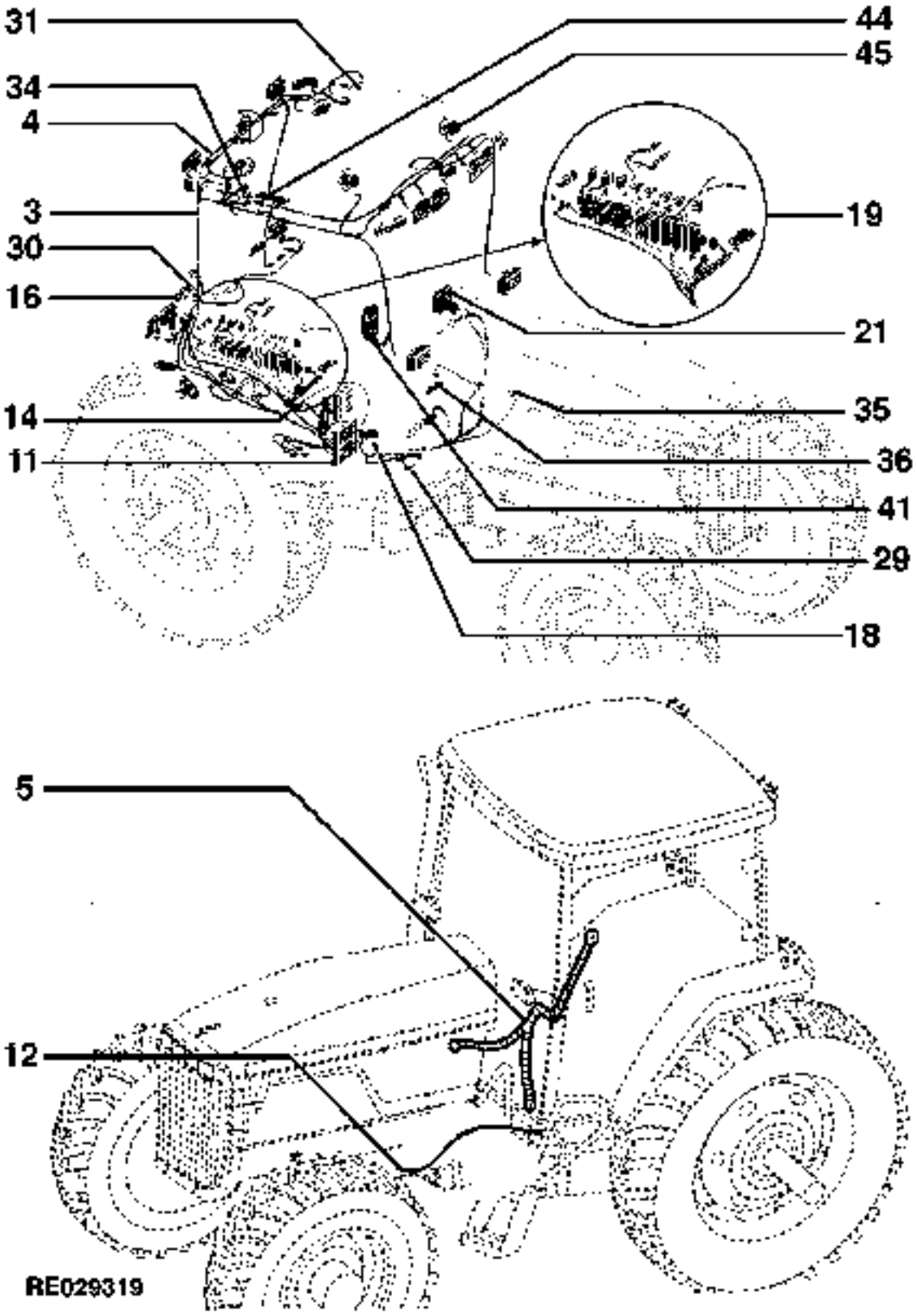

1 -	3D19
2 -	3D23
3 -	3E9
4 -	3E19
5 -	3E21
6 -	3E23
7 -	3E25
8 -	3F1
9 -	3F2
10 -	3F4
11 -	3F6
12 -	3F8
13 -	3F9
14 -	3F10
15 -	3F11
16 -	3F12
17 -	3F14
18 -	3F15
19 -	3F16
20 -	3F20
21 -	3F21
22 -	3F22
23 -	3F24
24 -	3G1
25 -	3G5
26 -	3G9
27 -	3G11
28 -	3G13
28 -	3G15
29 -	3G17
30 -	3G18
31 -	3G20
32 -	3G21
33 -	3G22
34 -	3G23
35 -	3G24
36 -	3G25
37 -	3H1
37 -	3H2
38 -	3H3
39 -	3H4
40 -	3H10
41 -	3H12
42 -	3H13
43 -	3H14
44 -	3H16
45 -	3H18
46 -	3H21
47 -	3I1
48 -	3I5

https://www.truck-manuals.net/

SECTIONAL INDEX
GRUPPENINDEX
INDEX DE SECTION
INDICE DELLA SEZIONE
INDICE DE SECCION
GRUPPSFORTECKNING

RE029265 -UN-10MAY99

1 -	3D19
2 -	3D23
3 -	3E9
4 -	3E19
5 -	3E21
6 -	3E23
7 -	3E25
8 -	3F1
9 -	3F2
10 -	3F4
11 -	3F6
12 -	3F8
13 -	3F9
14 -	3F10
15 -	3F11
16 -	3F12
17 -	3F14
18 -	3F15
19 -	3F16
20 -	3F20
21 -	3F21
22 -	3F22
23 -	3F24
24 -	3G1
25 -	3G5
26 -	3G9
27 -	3G11
28 -	3G13
28 -	3G15
29 -	3G17
30 -	3G18
31 -	3G20
32 -	3G21
33 -	3G22
34 -	3G23
35 -	3G24
36 -	3G25
37 -	3H1
37 -	3H2
38 -	3H3
39 -	3H4
40 -	3H10
41 -	3H12
42 -	3H13
43 -	3H14
44 -	3H16
45 -	3H18
46 -	3H21
47 -	3I1
48 -	3I5

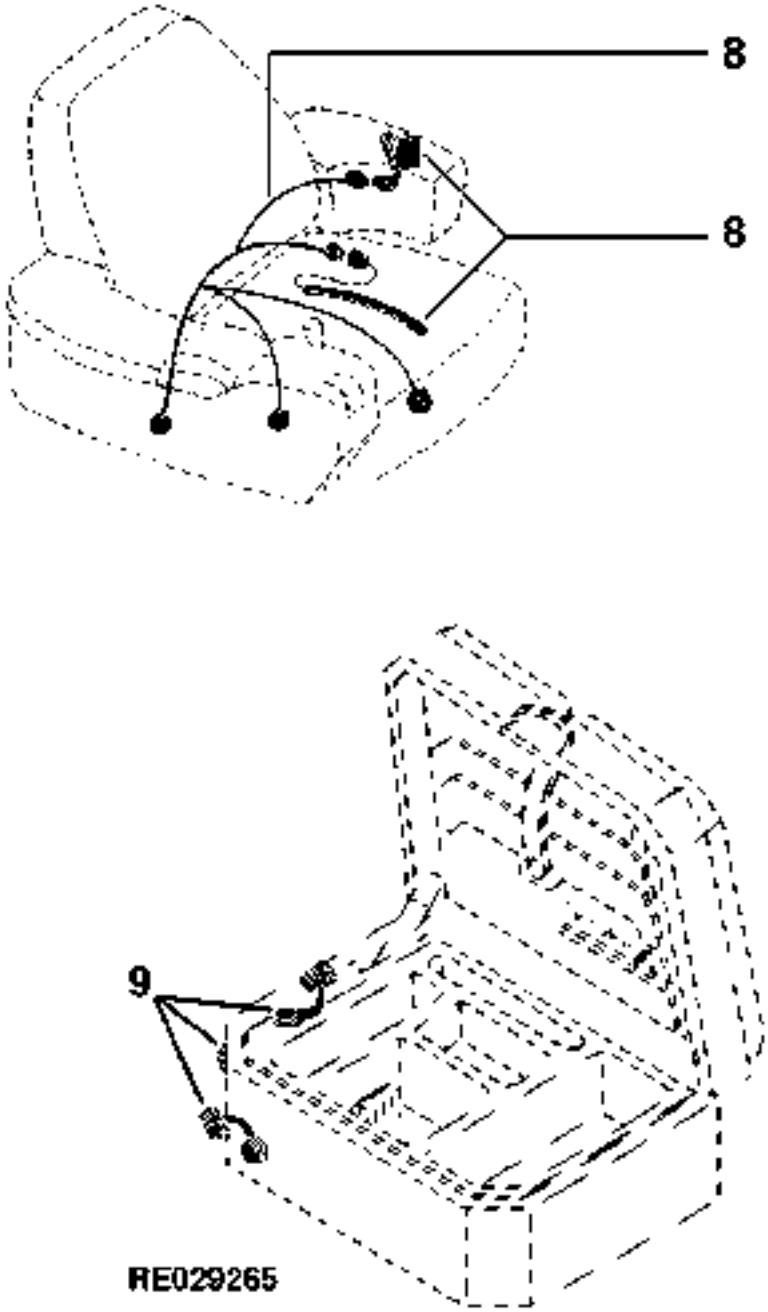

https://www.truck-manuals.net/

SECTIONAL INDEX
INDEX DE SECTION
GRUPPENINDEX
INDICE DELLA SEZIONE
INDICE DE SECCION
GRUPPSFORTECKNING

RE029320 -UN-10MAY99

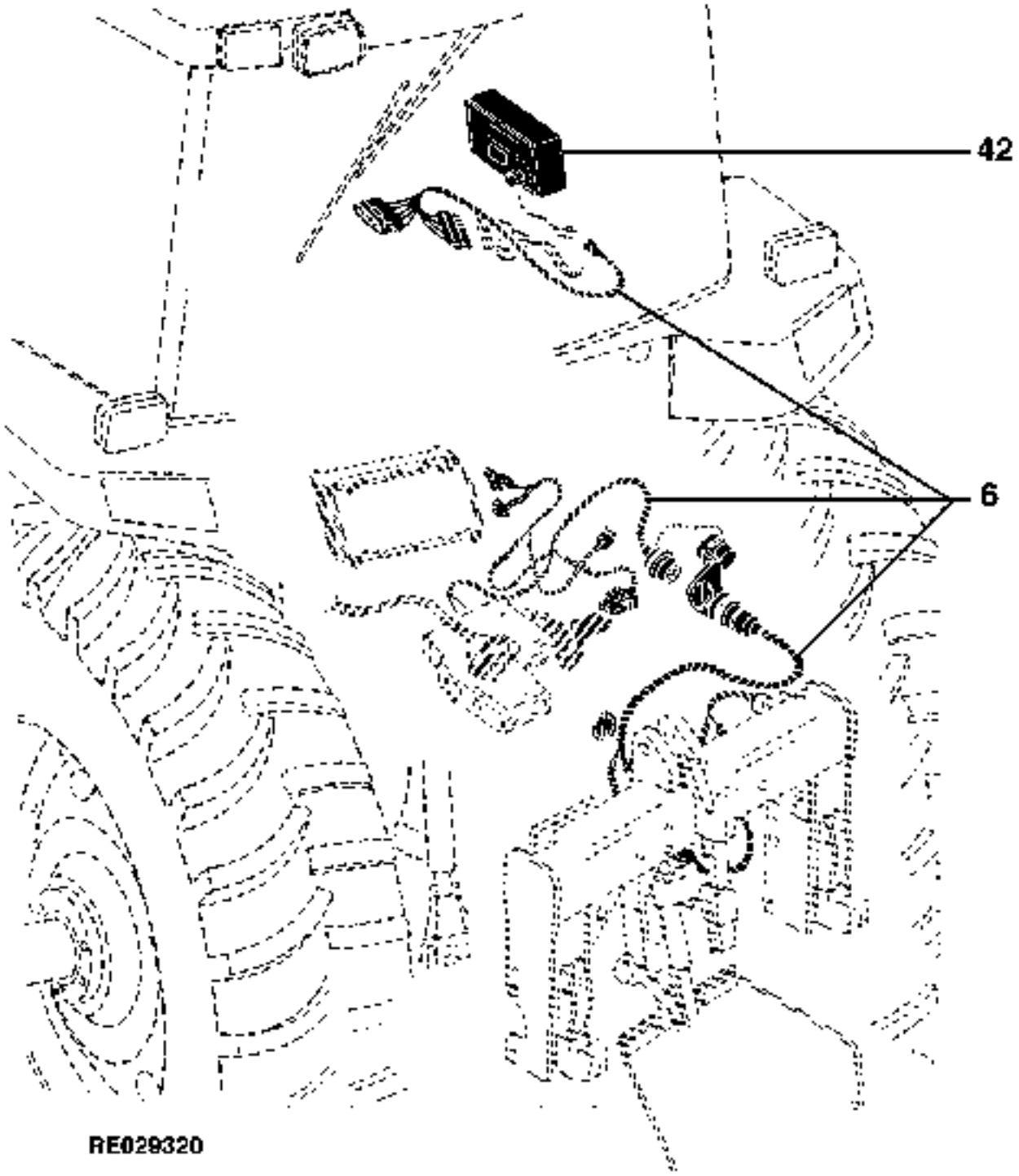

1 -	3D19
2 -	3D23
3 -	3E9
4 -	3E19
5 -	3E21
6 -	3E23
7 -	3E25
8 -	3F1
9 -	3F2
10 -	3F4
11 -	3F6
12 -	3F8
13 -	3F9
14 -	3F10
15 -	3F11
16 -	3F12
17 -	3F14
18 -	3F15
19 -	3F16
20 -	3F20
21 -	3F21
22 -	3F22
23 -	3F24
24 -	3G1
25 -	3G5
26 -	3G9
27 -	3G11
28 -	3G13
28 -	3G15
29 -	3G17
30 -	3G18
31 -	3G20
32 -	3G21
33 -	3G22
34 -	3G23
35 -	3G24
36 -	3G25
37 -	3H1
37 -	3H2
38 -	3H3
39 -	3H4
40 -	3H10
41 -	3H12
42 -	3H13
43 -	3H14
44 -	3H16
45 -	3H18
46 -	3H21
47 -	3I1
48 -	3I5

https://www.truck-manuals.net/

SECTIONAL INDEX
INDEX DE SECTION
GRUPPENINDEX
INDICE DELLA SEZIONE
INDICE DE SECCION
GRUPPSFORTECKNING

RE029321 -UN-10MAY99

1 -	3D19
2 -	3D23
3 -	3E9
4 -	3E19
5 -	3E21
6 -	3E23
7 -	3E25
8 -	3F1
9 -	3F2
10 -	3F4
11 -	3F6
12 -	3F8
13 -	3F9
14 -	3F10
15 -	3F11
16 -	3F12
17 -	3F14
18 -	3F15
19 -	3F16
20 -	3F20
21 -	3F21
22 -	3F22
23 -	3F24
24 -	3G1
25 -	3G5
26 -	3G9
27 -	3G11
28 -	3G13
28 -	3G15
29 -	3G17
30 -	3G18
31 -	3G20
32 -	3G21
33 -	3G22
34 -	3G23
35 -	3G24
36 -	3G25
37 -	3H1
37 -	3H2
38 -	3H3
39 -	3H4
40 -	3H10
41 -	3H12
42 -	3H13
43 -	3H14
44 -	3H16
45 -	3H18
46 -	3H21
47 -	3I1
48 -	3I5

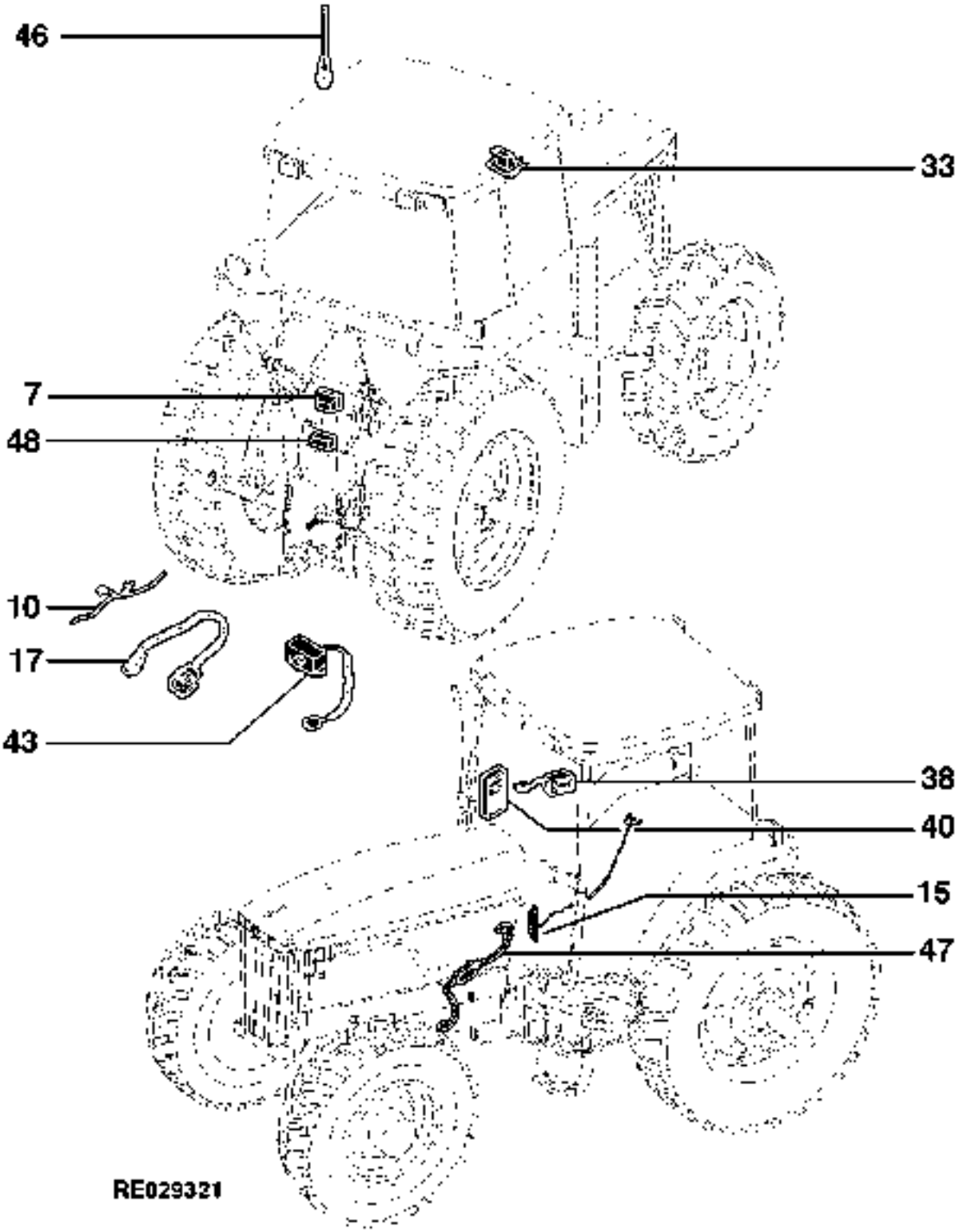

https://www.truck-manuals.net/

SYMBOL DESCRIPTION
DESCRIPTION DE SYMBOLE
SYMBOL-BESCHREIBUNG
DESCRIZIONE DEI IMBOLI
DESCRIPCION DEL SIMBOLO
SYMBOLBESKRIVNING
RE027856 -UN-10MAY99

	ENGLISH	FRANCAIS	DEUTSCH
(ACU)	Armrest Control Unit	Commande d'accoudoir	Armlehnen-Steuereinheit
(CCU)	Central Control Unit	Unite' commande centrale	Hauptsteuereinheit
(ECU)	Engine Control Unit	Unite' de commande moteur	Motorsteuereinheit
(HCU)	Hitch Control Unit	Unite' de commande attel	Regelhydraulik-Steuereinheit
(ICU)	InstrumentControl Unit	Unite' commande instrum	Instrumenten-Steuereinheit
(PCU)	Powershift Control Unit	"Unite,comde,servotrans"	Powershift-Steuereinheit
(RCU)	Reverser Control Unit	Unite de commande d'inverseur	Umkehrgetriebe-Steuereinheit
(SCo)	Selective Control Option	Option de commande dist	Steuereinheit-Option
(SCU)	Selective Control Unit	Unite de cmde dist.se.	Steuereinheit
(SCV)	Selective Control Valve	Distributeur selectif	Zusatzsteuerventil
(SSU)	Steering System Unit	Unite du systeme de direction	Lenksystem-Einheit
(SUP)	Set-Up Panel	Panneau de reglage	Einstellungs-Armaturenbrett

	ITALIANO	ESPANOL	SVENSKA
(ACU)	Unita di comando bracciolo	Unidad de control en el apoyabrazos	"Armstoed,styreinhet"
(CCU)	Unita di comando centrale	Unidad central de control	Central styrenhet
(ECU)	Unita di comando del motore	Unidad de control del motor	Motorstyrenhet
(HCU)	Unita di comando del sollevatore	Unidad de control del enganche	Lyftstyrenhet
(ICU)	Unita di comando degli strumenti	Unidad de control de instrumentos	Instrumentstyrenhet
(PCU)	Unita di comando Power Shift	Unidad de control de la servotransmision	Power Shift-styrenhet
(RCU)	Unita' di comando inversore	Unidad de control del inversor	Styrenhet foer inam-backkoppla e
(SCo)	Unita di comando dei distrutori a richiesta	Opcion de control selectivo	"Hydraulolleventil,tillval"
(SCU)	Unita di comando dei distributori	Unidad de control selectivo	Hydraulolleventilanhet
(SCV)	Valvola di controllo selettivo	Valvula de control selectivo	Selektiv manoeverventil
(SSU)	Unita' del sistema dello sterzo	Unidad del sistema de la direccion	Styrsystemenhet
(SUP)	Pannello di impostazione	Panel de preparacion	Installningspanel

RE027856

https://www.truck-manuals.net/

WIRING HARNESS (TRANSMISSION)(TSN -019999)
FAISCEAU DE CABLES(BOITE DE VITESSES)(TRANSMISSION)(TSN -019999)
KABELBAUM(GETRIEBE)(TSN -019999)
CABLAGGIO(TRASMISSIONE)(TSN -019999)
GRUPO DE CABLES(TRANSMISION)(TSN -019999)
KABELHAERVA(KRAFTOEVERFOERING(TSN -019999)
RXP011203 -UN-01JAN94

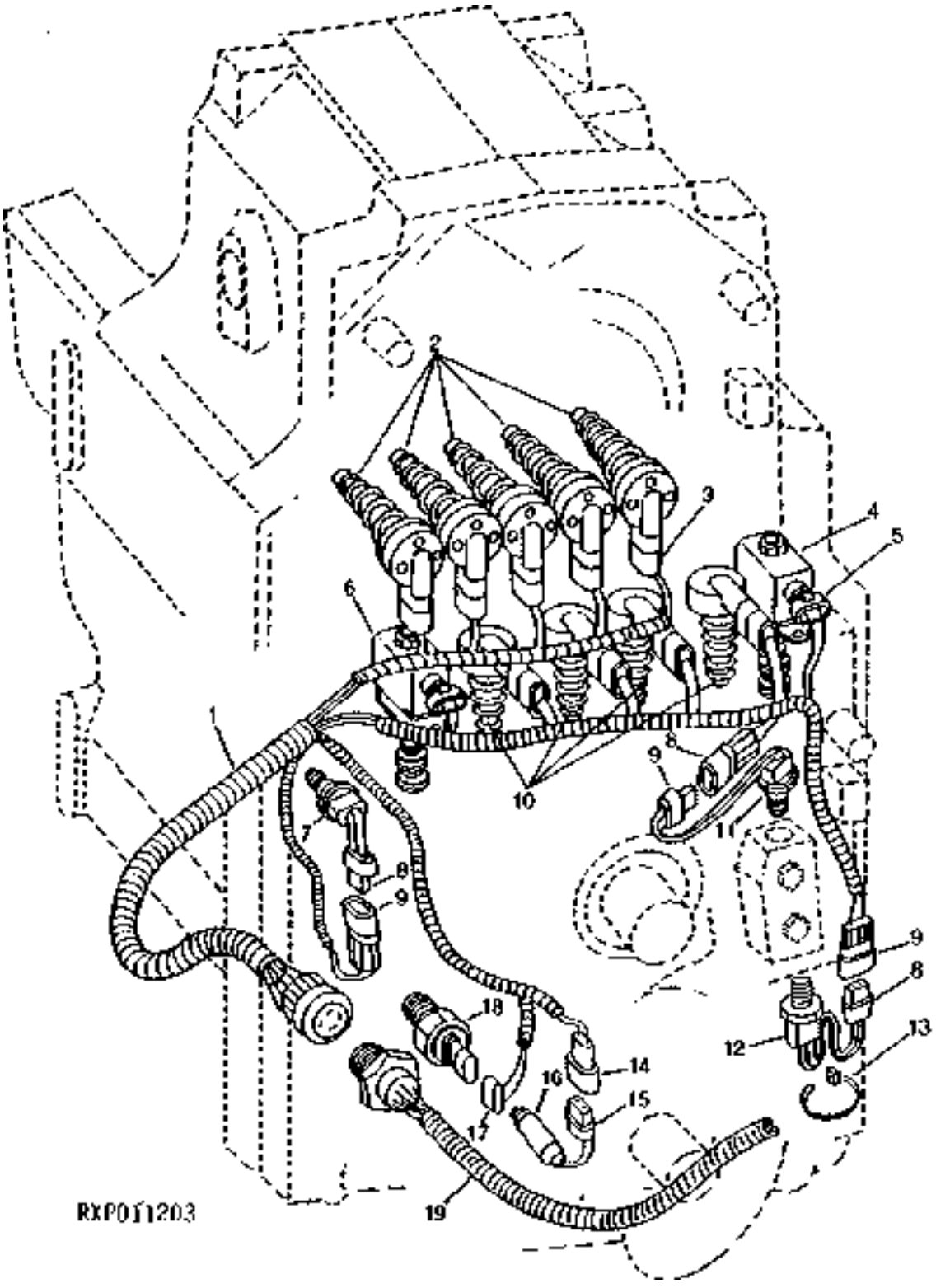

https://www.truck-manuals.net/

KEY	PART NO.	PART NAME	QTY	TRANSMISSION SERIAL NO.	ALL	REMARKS
1	RE60542	WIRING HARNESS	1		X	(ALSO ORDER 51M7041) (SUB FOR RE52868)
2	RE71490	VALVE	5		X	(ALSO ORDER U41966, U11326, R62070, R106663, P42061 AND R150892)
3	57M7278	CONNECTOR	1		X	(ALSO ORDER (2) R104701)
4	RE52319	SOLENOID VALVE	1		X	
5	57M7278	CONNECTOR	1		X	(ALSO ORDER (2) R104701)
6	RE52319	SOLENOID VALVE	1		X	
7	RE160680	SWITCH	1		X	(A) (SUB FOR RE61344, RE62929, RE65350 OR RE66881) (ALSO ORDER 51M7041)
8	57M7365	CONNECTOR	1		X	(ALSO ORDER (2) R104919, (2) 57M7258 AND 57M7289)
9	57M7328	CONNECTOR	1		X	(ALSO ORDER (2) R104846, (2) 57M7258 AND 57M7289)
10	RE71489	VALVE	4		X	(ALSO ORDER U41966, U11326, R62070, R106663, P42061 AND R150892)
11	RE160680	SWITCH	1		X	(B) (SUB FOR RE61344, RE62929, RE65350 OR RE66881) (ALSO ORDER 51M7041)
12	RE160680	SWITCH	1		X	(F) (SUB FOR RE61344, RE62929, RE65350 OR RE66881) (ALSO ORDER 51M7041) (NLR)
13	R44302	TIE BAND	1		X	
14	57M7256	CONNECTOR	1		X	(ALSO ORDER (2) R104919, (2) 57M7258 AND 57M7316)
15	57M7254	CONNECTOR	1		X	(ALSO ORDER (2) R104846, (2) 57M7258 AND 57M7289)
16	RE70062	SWITCH	1		X	(C) (ALSO ORDER 51M7041) (SUB FOR RE52868)
17	57M7328	CONNECTOR	1		X	(ALSO ORDER (2) R104846, (2) 57M7258 AND 57M7291)
18	RE46534	SWITCH	1		X	(D) (ALSO ORDER 51M7042)
19	RE60541	WIRING HARNESS	1	-XXXXXX	X	(E) (G) (SUB RE64628, (2) 57M7254, (2) 57M7289, (4) R104846 AND (4) 57M7258)
	RE64628	WIRING HARNESS	1	XXXXXX-XXXXXX	X	(E) (H) (SUB FOR RE60541)
	RE70449	WIRING HARNESS	1	XXXXXX-XXXXXX	X	(E) (I)
	RE71393	WIRING HARNESS	1	XXXXXX-XXXXXX	X	(E) (J)

(A)PARK BRAKE PRESSURE
PRESSION DU FREIN STATIONNMENT
PARKBREMSENDRUCK
PRESSINE DEL FRENO DI STAZIONAMENTO
PRESION DE FRENO DE ESTACIONMIENTO
PARKERINGSBROMSTRYCK

(B)CLUTCH ENGAGE
EMBRAYAGE
KUPPLUNG EINRUECKEN
INNESTO DELLA FRIZIONE
EMBRAGAR
KOPPLINGEN INKOPPLAD

(C)GROUND DRIVE PUMP
POMPE A ENGRENAGES D'ENTRAINEMENT PAR
BEWEGUNGSGETRIEBENE PUMPE
POMPA DI AZIONAMENTO
BOMBA DE PROPULSION
ROERELSEDRIVE PUMP

(D)CLUTCH DISENGAGE
DEBRAYAGE
KUPPLUNG AUSRUECKEN
DISINNESTO DELLA FRIZIONE
DESEMBRAGAR
KOPPLINGEN URKOPPLAD

(E)ENGINE AND CHASSIS
MOTEUR ET CHASSIS
MOTOR UND CHASSIS
MOTORE E TELAIO
MOTOR Y CHASIS
MOTOR OCH CHASSI

(F)TRANSMISSION OIL PRESSURE
PRESSION DE L'HUILE TRANSMISSION
GETRIEBEOELDRUCK
PRESSIONE DELL'OLIO DELLA TRASMISSIONE
PRESION DE ACEITE DE LA TRANSMISION
TRANSMISSIONSOJETRYCK

(G)(XXXXXX-)TSN 8100-002801;8200-002215;8300-003900;8400-002531
(H)(XXXXXX-XXXXXX)TSN 8100-002802-011000;8200-002216-011000;8300-003901-011000;8400-002532-011000
(I)(XXXXXX-XXXXXX)TSN 8100-011001-012002;8200-011001-011672;8300-011001-012165;8400-011001-012257
(J)(XXXXXX-XXXXXX)TSN 8100-012003-019999;8200-011673-019999;8300-012166-019999;8400-012258-019999

https://www.truck-manuals.net/

WIRING HARNESS (TRANSMISSION)(TSN 020000-)
FAISCEAU DE CABLES(BOITE DE VITESSES)(TSN 020000-)
KABELBAUM(GETRIEBE)(TSN 020000-)
CABLAGGIO(TRASMISSIONE)(TSN 020000-)
GRUPO DE CABLES(TRANSMISION)(TSN 020000-)
KABELHAERVA(KRAFTOEVERFOERING)(TSN 020000-)
RE028231 -UN-03SEP97

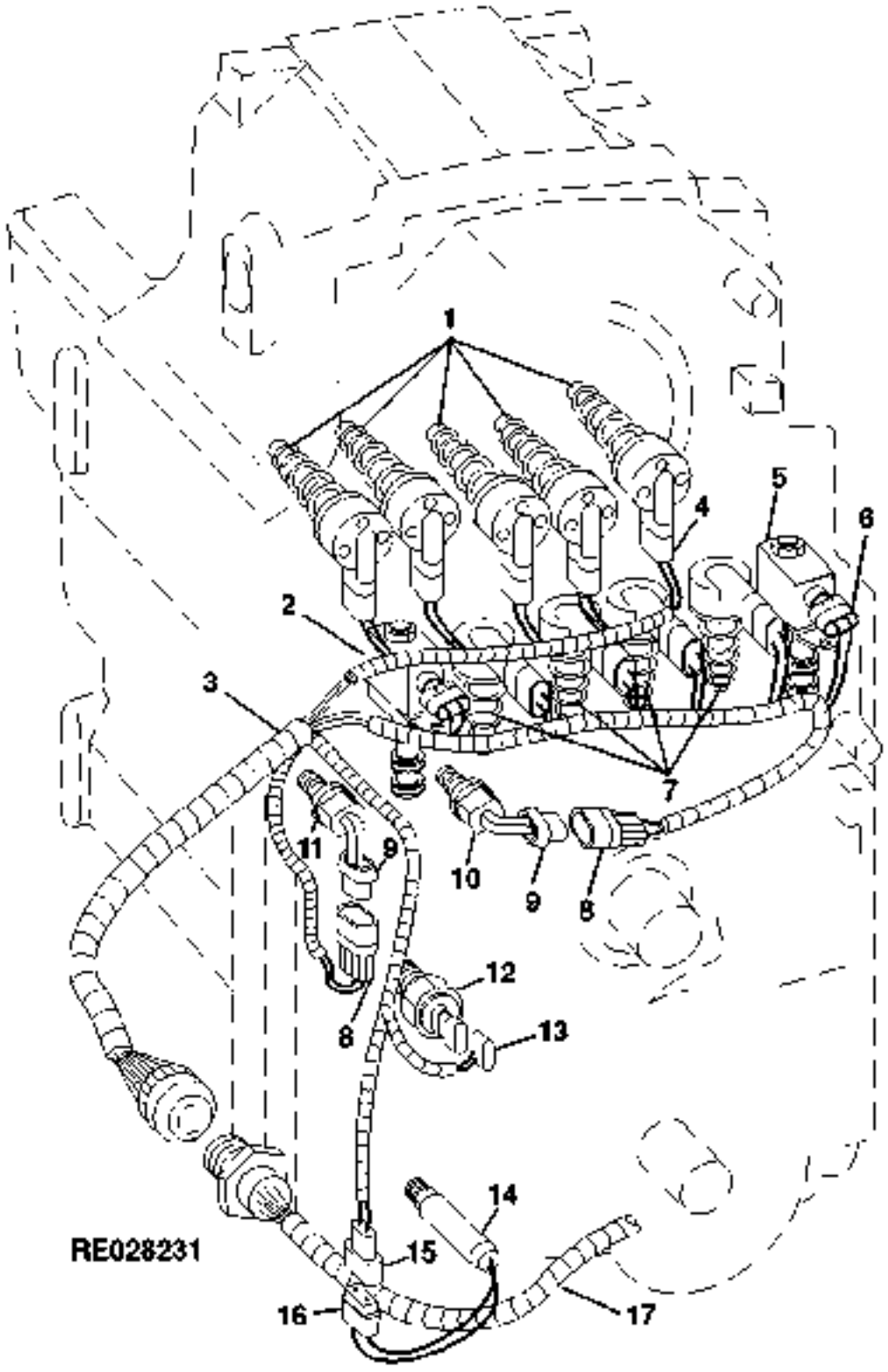

https://www.truck-manuals.net/

KEY	PART NO.	PART NAME	QTY	TRANSMISSION SERIAL NO.	ALL	REMARKS
1	RE155966	VALVE	5		X	(ALSO ORDER U41966, R106663, T143166, R62070, R27928 AND P42061) (SUB FOR RE153329 OR RE150945)
2	RE52319	SOLENOID VALVE	1		X	(D) (ALSO ORDER 51M7041)
3	RE158819	WIRING HARNESS	1	-XXXXXX	X	(F) (SUB FOR RE70992)
	RE158819	WIRING HARNESS	1	XXXXXX-	X	(G)
4	57M7850	CONNECTOR	1		X	(ALSO ORDER (2) 57M7829)
5	RE52319	SOLENOID VALVE	1		X	(ALSO ORDER 51M7041) MFWD
6	57M7850	CONNECTOR	1		X	(ALSO ORDER (2) 57M7829)
7	RE155967	VALVE	4		X	(ALSO ORDER U41966, R106663, U11326, R62070, R27928 AND R151701) (SUB FOR RE153330 OR RE150946)
8	57M7365	CONNECTOR	1		X	(ALSO ORDER (2) R104919, (2) 57M7258 AND 57M7289)
9	57M7328	CONNECTOR	1		X	(ALSO ORDER (2) R104846, (2) 57M7258 AND 57M7289)
10	RE160680	SWITCH	1		X	(B) (SUB FOR RE66881) (ALSO ORDER 51M7041)
11	RE160680	SWITCH	1		X	(D) (SUB FOR RE66881) (ALSO ORDER 51M7041)
12	RE46534	SWITCH	1		X	(C) (ALSO ORDER 51M7042)
13	57M7328	CONNECTOR	1		X	(ALSO ORDER (2) R104846, (2) 57M7258 AND 57M7291)
14	RE70062	SWITCH	1	-XXXXXX	X	(A) (H) (ALSO ORDER 51M7041)
	RE46684	PLUG	1	XXXXXX-	X	(I)
15	57M7256	CONNECTOR	1		X	(ALSO ORDER (2) R104919, (2) 57M7258 AND 57M7316)
16	57M7254	CONNECTOR	1		X	(ALSO ORDER (2) R104846, (2) 57M7258 AND 57M7289)
17	.....	WIRING HARNESS	1		X	(E)

(A)GROUND DRIVE PUMP
POMPE A ENGRENAGES D'ENTRAINEMENT PAR
BEWEGUNGSGETRIEBENE PUMPE
POMPA DI AZIONAMENTO
BOMBA DE PROPULSION
ROERELSEDRIVE PUMP

(B)CLUTCH ENGAGE
EMBRAYAGE
KUPPLUNG EINRUECKEN
INNESTO DELLA FRIZIONE
EMBRAGAR
KOPPLINGEN INKOPPLAD

(C)CLUTCH DISENGAGE
DEBRAYAGE
KUPPLUNG AUSRUECKEN
DISINNESTO DELLA FRIZIONE
DESEMBRAGAR
KOPPLINGEN URKOPPLAD

(D)PARK BRAKE PRESSURE
PRESSION DU FRIEN DE STATIONNMENT
PARKBREMSENDDRUCK
PRESSINE DEL FRENP DI STAZIONAMENTO
PRESION DE FRENO DE ESTACIONMIENTO
PARKERINGSBROMSTRYCK

(E)ENGINE AND CHASSIS
MOTEUR ET CHASSIS
MOTOR UND CHASSIS
MOTORE E TELAIO
MOTOR Y CHASIS
MOTOR OCH CHASSI

(F)(-XXXXXX)8100-024829;8200-024824;8300-024819;8400-024850
(G)(XXXXXX-)8100-024830;8200-024825;8300-024820;8400-024851
(H)(-XXXXXX)8100-021126;8200-020922;8300-021609;8400-021944
(I)(XXXXXX-)8100-021127;8200-020923;8300-021610;8400-021945

https://www.truck-manuals.net/

WIRING HARNESS(ENGINE AND CHASSIS)(8100,8200,8300,8400 -009999)
FAISCEAU DE FILS(MOTEUR ET CHASSIS)(8100,8200,8300,8400 -009999)
KABELBAUM(MOTOR UND CHASSIS)(8100,8200,8300,8400 -009999)
CABLAGGIO(MOTORE E TELAIO)(8100,8200,8300,8400 -009999)
GRUPO DE CABLES(MOTOR Y CHASIS)(8100,8200,8300,8400 -009999)
KABELHAERVA(MOTOR OCH CHASSI)(8100,8200,8300,8400 -009999)
RE027017 -UN-17JUL96

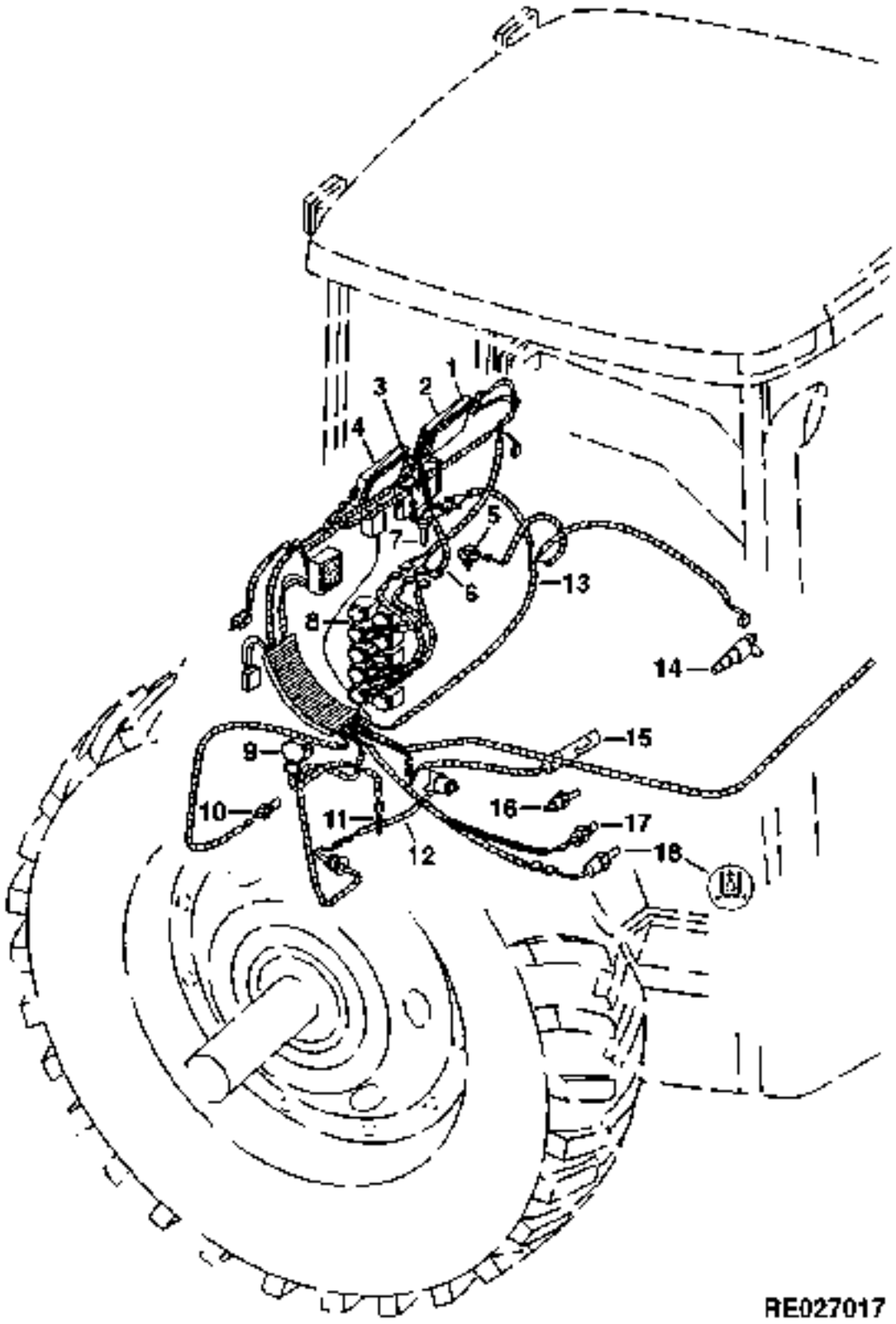

https://www.truck-manuals.net/

KEY	PART NO.	PART NAME	QTY	TRACTOR SERIAL NO.	ALL	REMARKS
1	.....	HITCH AND SCV CONTROLLER	1		X	(HCU/SCU-1,2,3 SCV)
2	.....	HITCH AND SCV CONTROLLER	1		X	(HCU/SCO-4 OR 5 SCV/ROW-TRAK)
3	.....	ENGINE CONTROLLER	1			(ECU)
4	.....	VEHICLE CONTROLLER	1		X	(CCU/PCU)
5	RE52319	SOLENOID VALVE	1		X	(A)
6	RE58782	WIRING HARNESS	1		X	(4,5 SCV)
7	RE56950	WHEEL SPEED SENSOR	1		X	(ALSO ORDER R375)
8	RE61119	SOLENOID	5		X	
9	RE56165	SENSOR	1		X	(SUB FOR RE24467)
10	RE71121	SENSOR	1		X	(B) (ALSO ORDER 57M7041) (SUB FOR RE43511)
11	RE61568	CONNECTOR	1		X	(NLR)
12	RE43738	HITCH DRAFT SENSOR	1		X	
	R44302	TIE BAND	1		X	
13	RE60541	WIRING HARNESS	1	-XXXXXX	X	(F) (SUB RE64628, (2) 57M7254, (2) 57M7289, (4) R104846 AND (4) 57M7258)
	RE64628	WIRING HARNESS	1	XXXXXX-	X	(G) (SUB FOR RE60541)
	R124804	CLAMP	1		X	
	R122472	CLIP	1		X	
14	RE71489	VALVE	1		X	(C) (ALSO ORDER U41966)
15	RE55516	SWITCH	1		X	(D) (ALSO ORDER 51M7049)
16	RE71121	SENSOR	1		X	(B) (ALSO ORDER 51M7041) (SUB FOR RE43511)
17	RE52722	SENSOR	1		X	(ALSO ORDER 51M7041)
18	RE43508	SENSOR	1		X	(E) (ALSO ORDER R27976 AND 51M7041)

(A)DIFFERENTIAL LOCK
BLOCAGE DU DIFFERENTIEL
DIFFERENTIALSPERRE
BLOCCAGGIO DEL DIFFERENZIALE
TRABA DEL DIFERENCIAL
DIFFERENTIALSPAERR

(B)REAR PTO SPEED
REGIME DE PDF ARRIERE
DREHZAHL DER HINTEREN ZAPFWELLE
VELOCITA'DELLA PTO POSTERIORE
VELOCIDAD DE LA TRASERA
VARVTAL,BAKRE KRAFTUTTAG

(C)REAR PTO
PDF ARRIERE
HINTERE ZAPFWELLE
PTO POSTERIORE
TDF TRASERA
BAKRE KRAFTUTTAG

(D)CLEAN OIL LEVEL RESERVOIR
RESERVOIR,NIVEAU D'HUILE PROPRE
BEHAELTER,OELSTAND,SAUBER
SERBATOIO,LIVELLO DELL'OLIO PULITO
DEPOSITO,NIVEL DE ACEITE LIMPIO
BEHALLARE,REN OLJENIVAA

(E)HYDRAULIC OIL PRESSURE
PRESSION D'HUILE HYDRAULIQUE
HYDRAULIKOELDRUCK
PRESSIONE DELL'OLIO IDRAULICO
PRESION DE ACEITE HIDRAULICO
HYDRAULOJETRYCK

(F)(-XXXXXX)8100-002801;8200-002215;8300-003900;8400-00253

(G)(XXXXXX-)8100-002802;8200-002216;8300-003901;8400-002532

https://www.truck-manuals.net/

WIRING HARNESS(ENGINE AND CHASSIS(8100,8200,8300,8400 -009999)
FAISCEAU DE FILS(MOTEUR ET CHASSIS)(8100,8200,8300,8400 -009999)
KABELBAUM(MOTOR UND CHASSIS)(8100,8200,8300,8400 -009999)
CABLAGGIO(MOTORE E TELAIO)(8100,8200,8300,8400 -009999)
GRUPO DE CABLES(MOTOR Y CHASIS)(8100,8200,8300,8400 -009999)
KABELHAERVA(MOTOR OCH CHASSI)(8100,8200,8300,8400 -009999)
RE027008 -UN-17JUL96

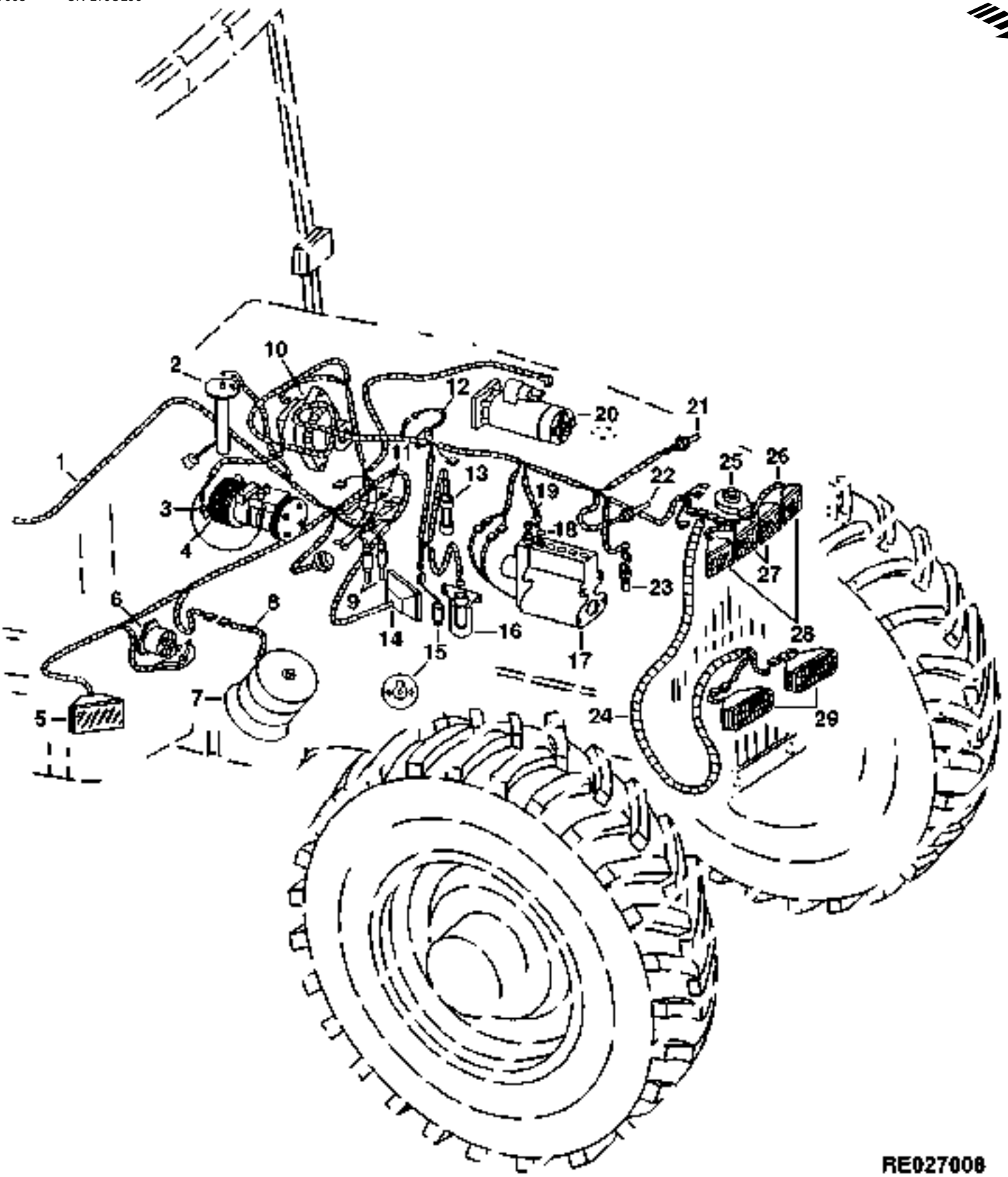

https://www.truck-manuals.net/

KEY	PART NO.	PART NAME	QTY	TRACTOR SERIAL NO.	ALL	REMARKS
1	RE60541	WIRING HARNESS	1	-XXXXXX	X	(J) (SUB RE64628, (2) 57M7254, (2) 57M7289, (4) R104846 AND (4) 57M7258)
	RE64628	WIRING HARNESS	1	XXXXXX-	X	(K) (SUB FOR RE60541)
2	RE69669	FUEL SENDER	1		X	(SUB FOR RE51519)
3	RE52510	STATOR	1		X	
4	TY6764	COMPRESSOR	1		X	(A)
5	RE61164	FLOODLAMP	1	-XXXXXX	X	(J) R.H.
	RE150428	FLOODLAMP	1	XXXXXX-	X	(K) (SUB FOR RE63957, RE66007 OR RE71429) R.H.
6	RE38391	STARTER RELAY	1		X	(MARKED AT68973)
7	RE43025	RADAR SENSOR	1		X	(B) (SUB RE153333)
	RE58592	RADAR SENSOR	1		X	(C) (SUB RE153334)
8	RE52645	WIRING HARNESS	1		X	(USE WITH RE43025, RE58592 OR RE66845)
9	AL79013	PUMP	2		X	
10	RE46608	ALTERNATOR	1		X	
	TY6762	ALTERNATOR	1		X	(A)
11	RE48875	JUNCTION BLOCK	1		X	
12	RE12176	AIR FILTER RSTR SENSOR	1		X	(ALSO ORDER R77673)
13	RE63289	SWITCH	1		X	(E) (SUB FOR RE52866)
14	RE61165	FLOODLAMP	1	-XXXXXX	X	(J) L.H.
	RE150426	FLOODLAMP	1	XXXXXX-	X	(K) (SUB FOR RE58598, RE70044 OR RE71427) L.H.
15	RE63289	ENGINE OIL PRESS. SENSOR	1		X	(E) (SUB FOR RE52866)
	RE56009	ENGINE OIL PRESS. SENSOR	1		X	(E) (F)
16	RE48310	STARTING AID SOLENOID	1		X	
17	.....	FUEL INJECTION PUMP	1		X	
18	R89014	SOLENOID	1		X	(G) (ALSO ORDER R99047)
19	RE28217	FUEL TEMPERATURE SENSOR	1		X	(ALSO ORDER R98500)
20	TY6781	STARTER MOTOR	1			(A) (SUB FOR RE56053 OR RE65176) (8100,8200,8300)
	RE65103	STARTER MOTOR	1			(SUB FOR RE61087) (SUB RE70957) (MARKED RE65100) (8400)
21	RE38310	SENSOR	1		X	(H) (ALSO ORDER R77673)
22	RE151433	WATER TEMPERATURE SENSOR	1		X	(ALSO ORDER R77673) (SUB FOR RE48073)
23	RE71121	SENSOR	1		X	(I) (ALSO ORDER R54856) (SUB FOR RE43511)
24	RE60633	WIRING HARNESS	1		X	(C) (D) (ALSO ORDER R72853)
25	R64700	HIGH NOTE HORN	1		X	(SUB RE159897, 14M7273 AND (2) 24M7036)
26	RE60632	WIRING HARNESS	1		X	
27	RE150422	HEADLIGHT	2		X	(SUB FOR RE61243 OR RE71422)
28	RE150423	FLOODLAMP	2		X	(SUB FOR RE61244 OR RE71423)
29	RE71268	HEADLIGHT	2		X	(C) (SUB FOR RE61786) (R.H.TRAFFIC)
	AL56092	HOUSING	2		X	(D) (L.H. TRAFFIC)

(A)REMANUFACTURED
ECHANGE STANDARD
GENERALUEBERHOLT
RIGATTO
REFABRICADO
RENOVERAD

(B)NORTH AMERICAN VERSION
VERSION NORD AMERICAINE
NORDAMERIKANISCHE
VERSIONE NORDAMERICANA
VERSION NORTEAMERICANA
NORDAMERIKANSK VERSION

(C)EUROPEAN VERSION
VERSIONE EUROPEENNE
EUROPAEISCHE AUSFUEHRUNG
VERSIONE EUROPEA
VERSION EUROPEA
EUROPEISK VERSION

(D)UNITED KINGDOM
ROYAUME-UNI
ENGLAND
REGNO UNITO
REINO UNIDO
ENGLAND

(E)OIL PRESSURE TRANSDUCER
TRANSDUCTEUR,PRESSION
OELDRUCK-UMFORMER
TRASDUTTORE DELLA PRESSIONE
TRANSDUCTOR DE PRESION DE
OLJETRYCKSOMFORMARE

(F)DELUXE CAB
CABINE DELUXE
LUXUSKABINE
CABINA DELUXE
CABINA DE LUJO
LYXHTTT

(G)SHUT-OFF
ROBINET-D'ARRET
ABSCHALTUNG
RUBINETTO D'ARRESTO
GRIFO DE CIERRE
AVSTAENGNING

(H)AIR INTAKE TEMPERATURE
TEMPERATURE,ADMISSIOM D'AIR
LUIFTANSAUGTEMPERTUR
TEMPERTURA D'INGRESSO
TEMPERTURA DE LA ADMISION
LUFTINTAGSTEMPERATUR

(I)ENGINE SPEED
REGIME MOTEUR
MOTORDREHZAHL
REGIME DEL MOTORE
VELOCIDAD DEL MOTOR
MOTORVARVTAL

(J)(-XXXXXX)8100-002801;8200-002215;8300-003900;8400-002531
(K)(XXXXXX-)8100-002802;8200-002216;8300-003901;8400-002532

THIS PARTS LISTING IS CONTINUED

https://www.truck-manuals.net/

WIRING HARNESS(ENGINE AND CHASSIS(8100,8200,8300,8400 -009999)
FAISCEAU DE FILS(MOTEUR ET CHASSIS)(8100,8200,8300,8400 -009999)
KABELBAUM(MOTOR UND CHASSIS)(8100,8200,8300,8400 -009999)
CABLAGGIO(MOTORE E TELAIO)(8100,8200,8300,8400 -009999)
GRUPO DE CABLES(MOTOR Y CHASIS)(8100,8200,8300,8400 -009999)
KABELHAERVA(MOTOR OCH CHASSI)(8100,8200,8300,8400 -009999)
RE027008 -UN-17JUL96

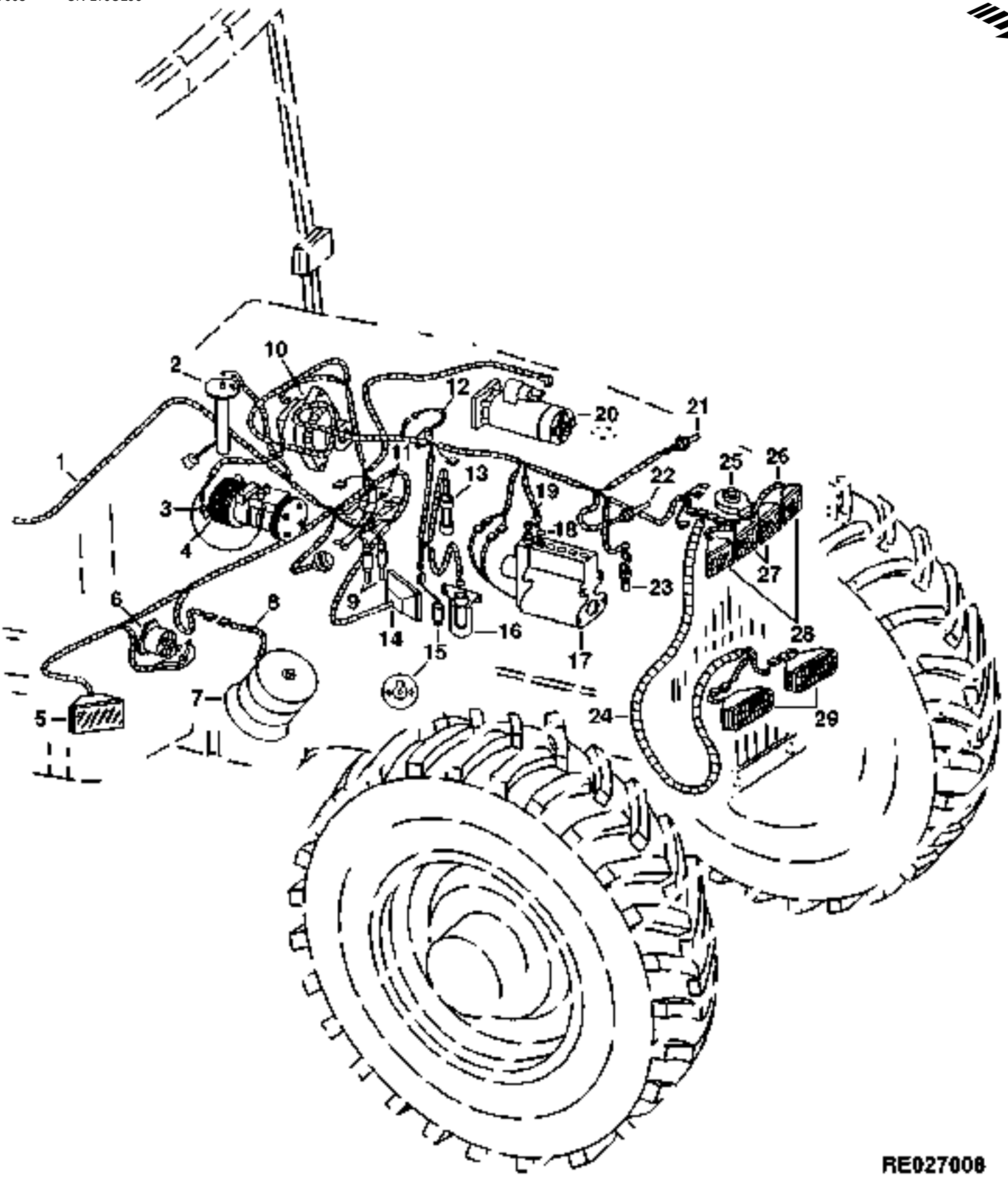

https://www.truck-manuals.net/

KEY	PART NO.	PART NAME	QTY	TRACTOR SERIAL NO.	ALL	REMARKS
21	RE38310	SENSOR	1		X	(H) (ALSO ORDER R77673)
22	RE151433	WATER TEMPERATURE SENSOR	1		X	(ALSO ORDER R77673) (SUB FOR RE48073)
23	RE71121	SENSOR	1		X	(I) (ALSO ORDER R54856) (SUB FOR RE43511)
24	RE60633	WIRING HARNESS	1		X	(C) (D) (ALSO ORDER R72853)
25	R64700	HIGH NOTE HORN	1		X	
26	RE60632	WIRING HARNESS	1		X	
27	RE150422	HEADLIGHT	2		X	(SUB FOR RE61243 OR RE71422)
28	RE150423	FLOODLAMP	2		X	(SUB FOR RE61244 OR RE71423)
29	RE71268	HEADLIGHT	2		X	(C) (SUB FOR RE61786) (R.H.TRAFFIC)
	AL56092	HOUSING	2		X	(D) (L.H. TRAFFIC)

(A)REMANUFACTURED
ECHANGE STANDARD
GENERALUEBERHOLT
RIGATTO
REFABRICADO
RENOVERAD

(B)NORTH AMERICAN VERSION
VERSION NORD AMERICAINE
NORDAMERIKANISCHE
VERSIONE NORDAMERICANA
VERSION NORTEAMERICANA
NORDAMERIKANSK VERSION

(C)EUROPEAN VERSION
VERSIONE EUROPEENNE
EUROPAEISCHE AUSFUEHRUNG
VERSIONE EUROPEA
VERSION EUROPEA
EUROPEISK VERSION

(D)UNITED KINGDOM
ROYAUME-UNI
ENGLAND
REGNO UNITO
REINO UNIDO
ENGLAND

(E)OIL PRESSURE TRANSDUCER
TRANSDUCTEUR,PRESSION
OELDRUCK-UMFORMER
TRASDUTTORE DELLA PRESSIONE
TRANSDUCTOR DE PRESION DE
OLJETRYCKSOMFORMARE

(F)DELUXE CAB
CABINE DELUXE
LUXUSKABINE
CABINA DELUXE
CABINA DE LUJO
LYXHTTT

(G)SHUT-OFF
ROBINET-D'ARRET
ABSCHALTUNG
RUBINETTO D'ARRESTO
GRIFO DE CIERRE
AVSTAENGNING

(H)AIR INTAKE TEMPERATURE
TEMPERATURE,ADMISSIOM D'AIR
LUIFTANSAUGTEMPERTUR
TEMPERTURA D'INGRESSO
TEMPERTURA DE LA ADMISION
LUFTINTAGSTEMPERATUR

(I)ENGINE SPEED
REGIME MOTEUR
MOTORDREHZAHL
REGIME DEL MOTORE
VELOCIDAD DEL MOTOR
MOTORVARVTAL

(J)(-XXXXXX)8100-002801;8200-002215;8300-003900;8400-002531
(K)(XXXXXX-)8100-002802;8200-002216;8300-003901;8400-002532

https://www.truck-manuals.net/

WIRING HARNESS(ENGINE AND CHASSIS(8100,8200,8300,8400 010000-)
FAISCEAU DE FILS(MOTEUR ET CHASSIS)(8100,8200,8300,8400 010000-)
KABELBAUM(MOTOR UND CHASSIS)(8100,8200,8300,8400 010000-)
CABLAGGIO(MOTORE E TELAI)(8100,8200,8300,8400 010000-)
GRUPO DE CABLES(MOTOR Y CHASIS)(8100,8200,8300,8400 010000-)
KABELHAERVA(MOTOR OCH CHASSI)(8100,8200,8300,8400 010000-)
RE027021 -UN-17JUL96

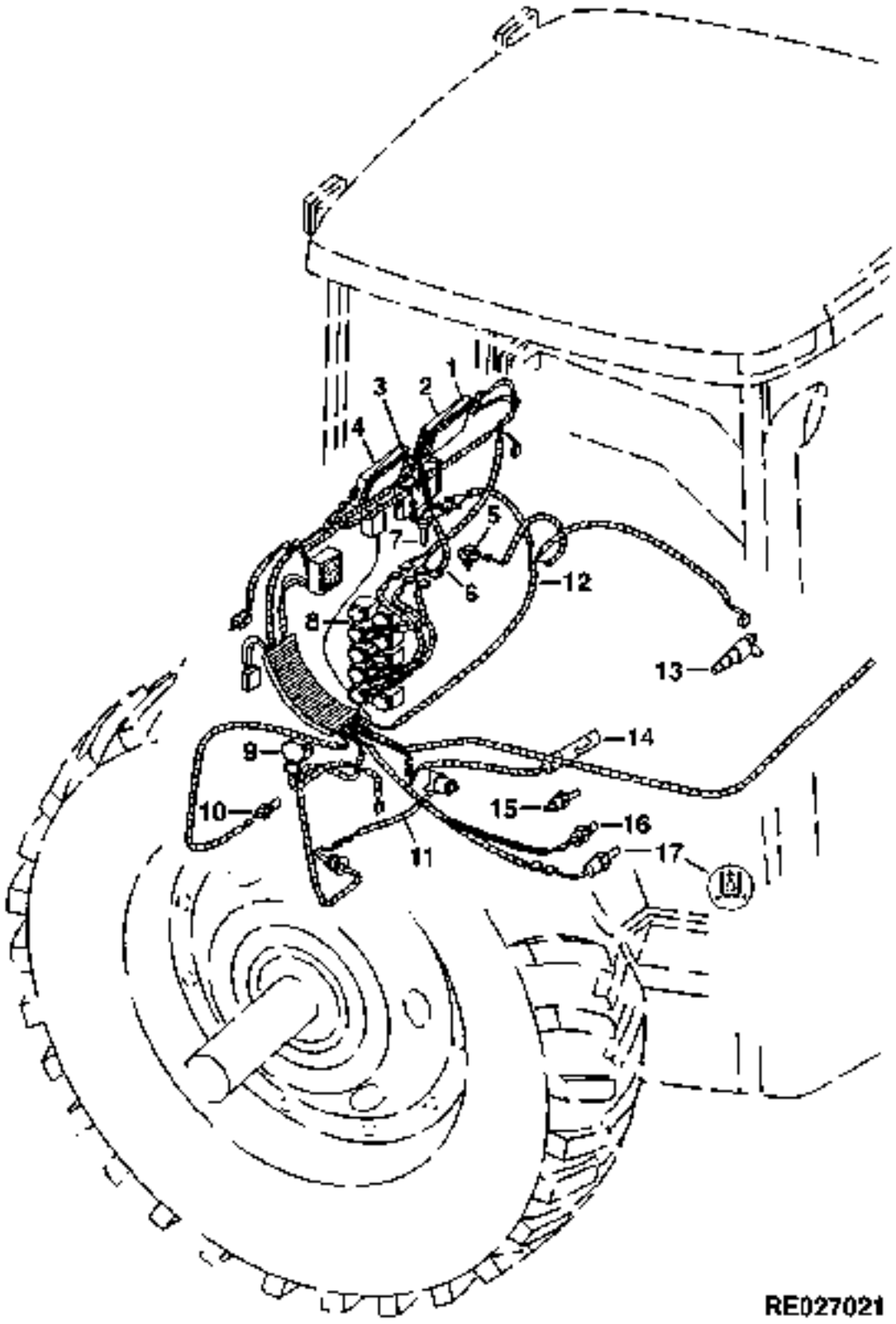

https://www.truck-manuals.net/

KEY	PART NO.	PART NAME	QTY	TRACTOR SERIAL NO.	ALL	REMARKS
1	.....	HITCH AND SCV CONTROLLER	1		X	(HCU/SCU-1,2,3 SCV)
2	.....	HITCH AND SCV CONTROLLER	1		X	(HCU/SCO-4 OR 5 SCV/ROW-TRAK)
3	.....	ENGINE CONTROLLER	1		X	(ECU)
4	.....	VEHICLE CONTROLLER	1		X	(CCU/PCU)
5	RE58782	WIRING HARNESS	1		X	(4,5 SCV)
6	RE52319	SOLENOID VALVE	1		X	(A)
7	RE56950	WHEEL SPEED SENSOR	1		X	(ALSO ORDER R375)
8	RE61119	SOLENOID	5		X	
9	RE56165	SENSOR	1		X	
10	RE71121	SENSOR	1		X	(B) (ALSO ORDER 57M7041) (SUB FOR RE43511)
11	RE43738	HITCH DRAFT SENSOR	1		X	
	R44302	TIE BAND	1		X	
12	RE64628	WIRING HARNESS	1	-011000	X	
	RE70449	WIRING HARNESS	1	XXXXXX-XXXXXX	X	(F) (SUB RE71393)
	RE71393	WIRING HARNESS	1	XXXXXX-XXXXXX	X	(G)
	RE70991	WIRING HARNESS	1	XXXXXX-XXXXXX	X	(H) (SUB RE158817)
	RE158817	WIRING HARNESS	1	XXXXXX-	X	(I)
	R122472	CLIP	1		X	
13	RE71489	VALVE	1		X	(C) (ALSO ORDER U41966)
14	RE55516	SWITCH	1		X	(D) (ALSO ORDER 51M7049)
15	RE71121	SENSOR	1		X	(B) (ALSO ORDER 51M7041) (SUB FOR RE43511)
16	RE52722	SENSOR	1		X	(ALSO ORDER 51M7041)
17	RE43508	SENSOR	1		X	(E) (ALSO ORDER R27976 AND 51M7041)

(A)DIFFERENTIAL LOCK
BLOCAGE DU DIFFERENTIEL
DIFFERENTIALSPERRE
BLOCCAGGIO DEL DIFFERENZIALE
TRABA DEL DIFERENCIAL
DIFFERENTIALSPAERR

(B)REAR PTO SPEED
REGIME DE PDF ARRIERE
DREHZAHL DER HINTEREN ZAPFWELLE
VELOCITA'DELLA PTO POSTERIORE
VELOCIDAD DE LA TRASERA
VARVTAL,BAKRE KRAFTUTTAG

(C)REAR PTO
PDF ARRIERE
HINTERE ZAPFWELLE
PTO POSTERIORE
TDF TRASERA
BAKRE KRAFTUTTAG

(D)CLEAN OIL LEVEL RESERVOIR
RESERVOIR,NIVEAU D'HUILE PROPRE
BEHAELTER,OELSTAND,SAUBER
SERBATOIO,LIVELLO DELL'OLIO PULITO
DEPOSITO,NIVEL DE ACEITE LIMPIO
BEHALLARE,REN OLJENIVAA

(E)HYDRAULIC OIL PRESSURE
PRESSION D'HUILE HYDRAULIQUE
HYDRAULIKOELDRUCK
PRESSIONE DELL'OLIO IDRAULICO
PRESION DE ACCITE HIDRAULICO
HYDRAULOLJETRYCK

(F)(XXXXXX-XXXXXX)8100-011001-012002;8200-011001-011672;8300-011001-012165-;8400-011001-012257
(G)(XXXXXX-XXXXXX)8100-012003-019999;8200-011673-019999;8300-012166-019999-;8400-012258-019999
(H)(XXXXXX-XXXXXX)8100-020000-024829:8200-020000-024824;8300-020000-024819-;8400-020000-024850
(I)(XXXXXX-)8100-024830;8200-024825;8300-024820;8400-024851

https://www.truck-manuals.net/

WIRING HARNESS(ENGINE AND CHASSIS (8100,8200,8300,8400 010000-)
FAISCEAU DE FILS(MOTEUR ET CHASSIS)(8100,8200,8300,8400 010000-)
KABELBAUM(MOTOR UND CHASSIS)(8100,8200,8300,8400 010000-)
CABLAGGIO(MOTORE E TELAIO)(8100,8200,8300,8400 010000-)
GRUPO DE CABLES(MOTOR Y CHASIS)(8100,8200,8300,8400 010000-)
KABELHAERVA(MOTOR OCH CHASSI)(8100,8200,8300,8400 010000-)
RE027009 -UN-17JUL96

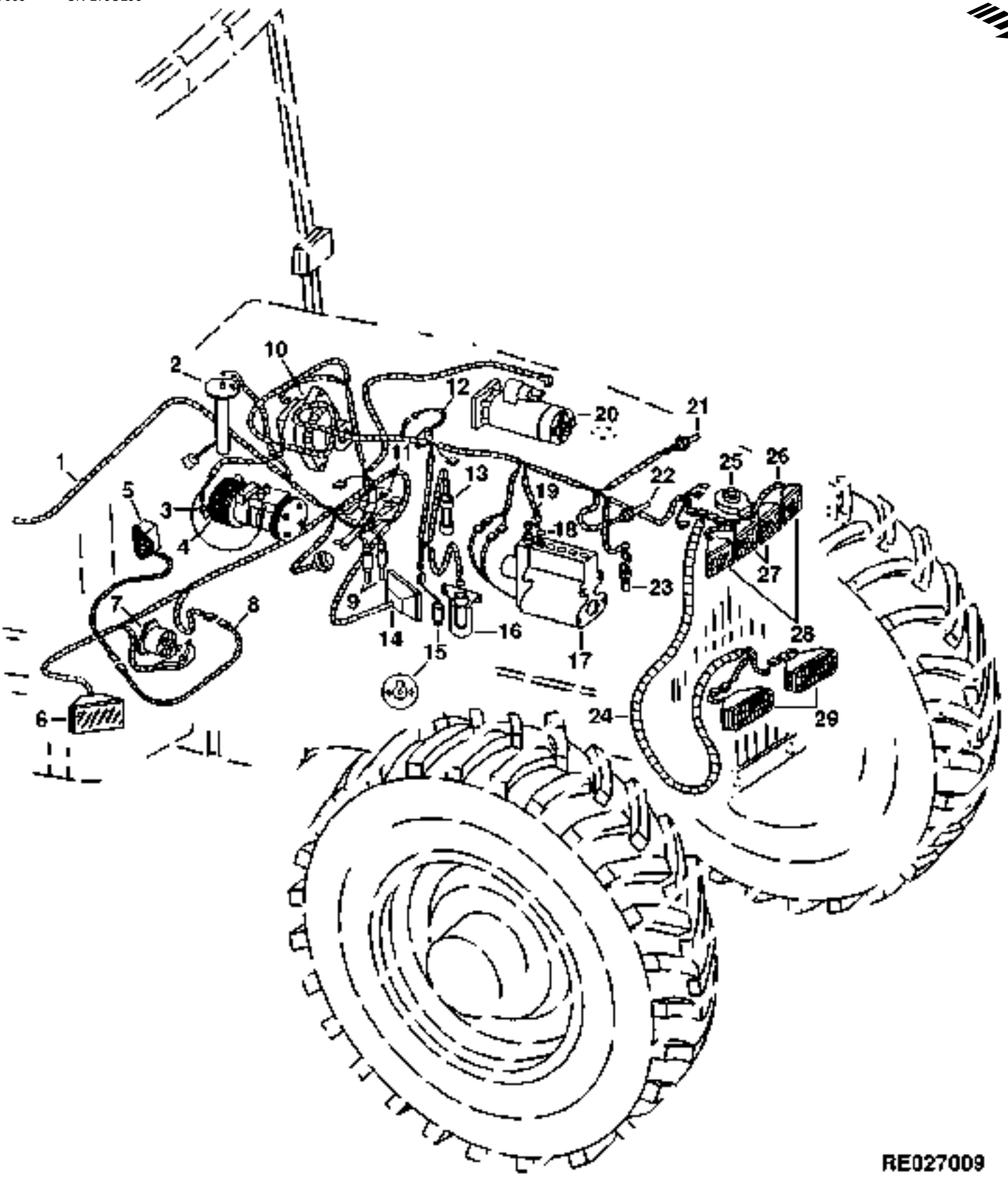

https://www.truck-manuals.net/

KEY	PART NO.	PART NAME	QTY	TRACTOR SERIAL NO.	ALL	REMARKS
1	RE64628	WIRING HARNESS	1	-011000	X	
	RE70449	WIRING HARNESS	1	XXXXXX-XXXXXX	X	(J)
	RE71393	WIRING HARNESS	1	XXXXXX-XXXXXX	X	(K)
	RE70991	WIRING HARNESS	1	XXXXXX-XXXXXX	X	(L)
	RE158817	WIRING HARNESS	1	XXXXXX-	X	(M)
2	RE69669	FUEL SENDER	1		X	(SUB FOR RE51519)
3	RE52510	STATOR	1		X	
4	TY6764	COMPRESSOR	1		X	(A)
5	RE152877	RADAR SENSOR	1		X	(B) (SUB FOR RE52719)
	RE152880	RADAR SENSOR	1		X	(C) (SUB FOR RE54017)
6	RE150428	FLOODLAMP	1		X	R.H. (SUB FOR RE66007 OR RE71429)
7	RE38391	STARTER RELAY	1		X	(MARKED AT68973)
8	RE52645	WIRING HARNESS	1		X	
9	AL79013	PUMP	2		X	
10	RE46608	ALTERNATOR	1		X	
	TY6762	ALTERNATOR	1		X	(A)
11	RE48875	JUNCTION BLOCK	1		X	
12	RE12176	AIR FILTER RSTR SENSOR	1		X	(ALSO ORDER R77673)
13	RE63289	SWITCH	1		X	(E)
14	RE150426	FLOODLAMP	1		X	(SUB FOR RE58593, RE70044 OR RE71427) L.H.
15	RE63289	ENGINE OIL PRESS. SENSOR	1		X	(E) (SUB FOR RE52866)
	RE56009	ENGINE OIL PRESS. SENSOR	1		X	(E) (F)
16	RE48310	STARTING AID SOLENOID	1		X	
17	.....	FUEL INJECTION PUMP	1		X	
18	R89014	SOLENOID	1		X	(G) (ALSO ORDER R99047)
19	RE28217	FUEL TEMPERATURE SENSOR	1		X	(ALSO ORDER R98500)
20	RE65103	STARTER MOTOR	1		X	(MARKED RE65100) (SUB RE70957)
	RE70957	STARTER MOTOR KIT	1		X	(MARKED RE69704) (SUB FOR RE65103)
21	RE38310	SENSOR	1		X	(H) (ALSO ORDER R77673)
22	RE151433	WATER TEMPERATURE SENSOR	1		X	(ALSO ORDER R77673) (SUB FOR RE48073)
23	RE71121	SENSOR	1		X	(I) (ALSO ORDER R54856) (SUB FOR RE43511)
24	RE60633	WIRING HARNESS	1		X	(C) (D) (ALSO ORDER R72853)
25	R64700	HORN	1	-026686	X	(SUB RE159897, 14M7273 AND (2) 24M7036)
	R159897	HORN	1	026687-	X	
26	RE60632	WIRING HARNESS	1		X	
27	RE150422	HEADLIGHT	2		X	(SUB FOR RE61243 OR RE71422)
28	RE150423	FLOODLAMP	2		X	(SUB FOR RE61244 OR RE71423)
29	RE71268	HEADLIGHT	2		X	(C) (SUB FOR RE61786) (R.H. TRAFFIC)
	AL56092	HOUSING	2		X	(D) (L.H. TRAFFIC)

(A)REMANUFACTURED
ECHANGE STANDARD
GENERALUEBERHOLT
RIGATTO
REFABRICADO
RENOVERAD

(B)NORTH AMERICAN VERSION
VERSION NORD AMERICAINE
NORDAMERIKANISCHE
VERSIONE NORDAMERICANA
VERSION NORTEAMERICANA
NORDAMERIKANSK VERSION

(C)EUROPEAN VERSION
VERSIONE EUROPEENNE
EUROPAEISCHE AUSFUEHRUNG
VERSIONE EUROPEA
VERSION EUROPEA
EUROPEISK VERSION

(D)UNITED KINGDOM
ROYAUME-UNI
ENGLAND
REGNO UNITO
REINO UNIDO
ENGLAND

(E)OIL PRESSURE TRANSDUCER
TRANSDUCTEUR,PRESSION
OELDRUCK-UMFORMER
TRASDUTTORE DELLA PRESSIONE
TRANSDUCTOR DE PRESION DE
OLJETRYCKSOMFORMARE

(F)DELUXE CAB
CABINE DELUXE
LUXUSKABINE
CABINA DELUXE
CABINA DE LUJO
LYXHYTT

(G)SHUT-OFF
ROBINET D'ARRET
ABSCHALTUNG
RUBINETTO D'ARRESTO
GRIFO DE CIERRE
AVSTAENGNING

(H)AIR INTAKE TEMPERATURE
TEMPERATURE,ADMISSIOM D'AIR
LUIFTANSAUGTEMPERTUR
TEMPERTURA D'INGRESSO
TEMPERTURA DE LA ADMISION
LUFTINTAGSTEMPERATUR

(I)ENGINE SPEED
REGIME MOTEUR
MOTORDREHZAHL
REGIME DEL MOTORE
VELOCIDAD DEL MOTOR
MOTORVARVTAL

(J)(XXXXXX-XXXXXX)8100-011001-012002;8200-011001-011672;8300-011001-012165;8400-011001-012257
(K)(XXXXXX-XXXXXX)8100-012003-019999;8200-011673-019999;8300-012166-019999;8400-012258-019999
(L)(XXXXXX-XXXXXX)8100-020000-024829;8200-020000-024824;8300-020000-024819;8400-020000-024850
(M)(XXXXXX-)8100-024830;8200-024825;8300-024820;8400-024851

https://www.truck-manuals.net/

WIRING HARNESS(CAB)(NORTH AMERICAN VERSION)(8100,8200,8300,8400 -009999)
FAISCEAU DE CABLES(CABINE)(VERSION NORD AMERICAINE)(8100,8200,8300,8400 -009999)
KABELBAUM(FAHRERKABINE)(NORDAMERIKANISCHE AUSFUEHRUNG)(8100,8200,8300,8400 -009999)
CABLAGGIO(CABINA)(VERSIONE NORDAMERICANA)(8100,8200,8300,8400 -009999)
GRUPO DE CABLES)(CABINA)(VERSION NORTEAMERICANA)(8100,8200,8300,8400 -009999)
KABELHAERVA(HYTT)(NORDAMERIKANSK VERSION)(8100,8200,8300,8400 -009999)
RE027033 -UN-17JUL96

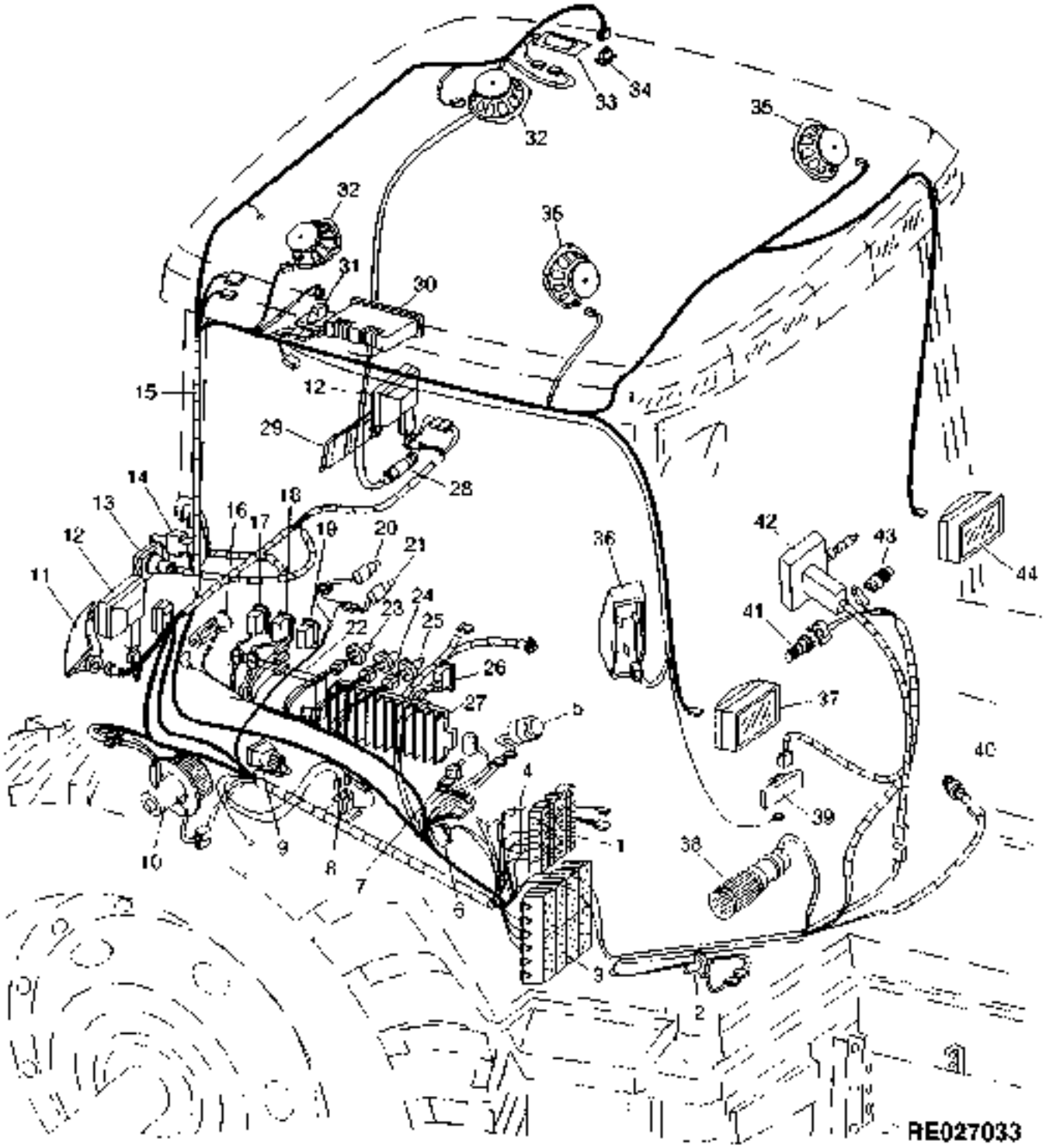

https://www.truck-manuals.net/

KEY	PART NO.	PART NAME	QTY	TRACTOR SERIAL NO.	ALL	REMARKS
1	RE43737	TERMINAL BOARD	4		X	
2	RE155987	ACCELERATOR	1		X	(SUB FOR RE61183)
3	RE49724	TERMINAL BOARD	6		X	
4	RE48875	JUNCTION BLOCK	1		X	
5	RE49727	HORN	1		X	
6	R111931	JUNCTION BLOCK	1		X	
7	RE62163	POTENTIOMETER	1		X	
8	AH144020	THERMOSTAT	1		X	
9	RE49636	RESISTOR	1		X	
10	RE67645	MOTOR	1		X	(SUB FOR RE62653)
11	RE48954	LENS	1		X	R.H.
12	RE48989	FLOODLAMP	2	-XXXXXX	X	(C)
	RE151346	FLOODLAMP	2	XXXXXX-	X	(D) (SUB FOR RE51240, RE71421 OR RE150421)
13	AR75695	SOCKET OUTLET	1		X	
14	RE32042	HITCH SWITCH	1	-024819	X	(SUB RE161844)
	RE161844	KIT	1	024820-	X	(SUB FOR RE32042)
15	RE60537	CAB WIRING HARNESS	1	-XXXXXX	X	(C) (ALSO ORDER R76477) (SUB RE64626, (2) 57M7254, (2) 57M7289, (4) R104846 AND (4) 57M7258)
	RE64626	CAB WIRING HARNESS	1	XXXXXX-	X	
16	AR60937	LIGHTER	1		X	
17	RE55476	WIPER/WASHER SWITCH	1		X	
18	RE55477	ROCKER SWITCH	1		X	(MFWD)
19	RE55036	HAZARD LIGHTS SWITCH	1		X	
20	RE60888	AC HIGH PRESSURE SWITCH	1		X	
21	RE155938	AC LOW PRESSURE SWITCH	1		X	(SUB FOR RE60887)
22	RE64583	DIGITAL DISPLAY	1		X	(SUB FOR RE60928 AND RE63440) (SUP)
23	AL36529	SWITCH	1		X	
24	RE46717	WIPER/WASHER SWITCH	1		X	
25	RE43497	BLOWER SWITCH	1		X	
26	RE55478	AC COMPRESSOR SWITCH	1		X	
27	RE62649	VEHICLE MONITOR	1		X	(SUB FOR RE60476) W/RE61185(ICU)
	RE62650	VEHICLE MONITOR	1		X	(SUB FOR RE60927) W/O RE61188(ICU)
	RE62651	VEHICLE MONITOR	1		X	(SUB FOR RE60477) W/RE61188(ICU)
28	RE51234	DOOR LIGHT SWITCH	1		X	
29	RE48955	LENS	1		X	L.H.
30	**RE64377**	**RADIO**	**1**		**X**	**(FI)**
	RE64376	**RADIO**	**1**		**X**	**(FI)**
31	RE57892	LAMP	1		X	
32	RE61546	SPEAKER	2		X	(REAR)(6")(4 OHM)
33	RE44590	HOUSING	1		X	
34	RE48838	ROCKER SWITCH	1		X	
35	RE61545	SPEAKER	2		X	(FRONT)(6")(4 OHM)
36	RE63458	MODULE	1		X	(SUB FOR RE60929)
37	RE48986	FLOODLAMP	1	-XXXXXX	X	(C) R.H.
	RE150425	FLOODLAMP	1	XXXXXX-	X	(D) (SUB FOR RE51239 OR RE71420)
38	RE61419	BLOWER	1		X	
39	RE66277	BRAKE LIGHT SWITCH	1		X	(SUB FOR RE55468 OR RE63211)
40	RE46534	SWITCH	1		X	(A)
41	RE61717	KEY SWITCH	1		X	
42	RE63512	MODULE	1		X	(SUB FOR RE60588)
43	R39554	SWITCH	1		X	(B)
44	RE48985	FLOODLAMP	1	-XXXXXX	X	(C) L.H.
	RE150420	FLOODLAMP	1	XXXXXX-	X	(D) (SUB FOR RE51239 OR RE71420)

(A)DIFFERENTIAL LOCK
BLOCCAGE DE DIFFERENTIEL
DIFFERENTIALSPERRE
BLOCCAGGIO DIFFERENZIALE
TRABA DEL DIFERENCIAL
DIFFERENTIALSPAERR

(B)ETHER AID
AIDE AU DEMARRAGE A L'ETHER
AETHER-STARTHILFE
SUSSIDIO DI AVVIAMENTO
AUXILIAR DE ARRANQUE DE
ETERSTARTHJELP

(C)(-XXXXXX) 8100-002801;8200-002215;8300-003900;8400-002531
(D)(XXXXXX-) 8100-002802;8200-002216;8300-003901;8400-002532

https://www.truck-manuals.net/

WIRING HARNESS(CAB)(NORTH AMERICAN VERSION)(8100,8200,8300,8400 010000-)
FAISCEAU DE CABLES(CABINE)(VERSION NORD AMERICAINE)(8100,8200,8300,8400 010000-)
KABELBAUM(FAHRERKABINE)(NORDAMERIKANISCHE AUSFUEHRUNG)(8100,8200,8300,8400 010000-)
CABLAGGIO(CABINA)(VERSIONE NORDAMERICANA)(8100,8200,8300,8400 010000-)
GRUPO DE CABLES)(CABINA)(VERSION NORTEAMERICANA)(8100,8200,8300,8400 010000-)
KABELHAERVA(HYTT)(NORDAMERIKANSK VERSION)(8100,8200,8300,8400 010000-)
RE027013 -UN-17JUL96

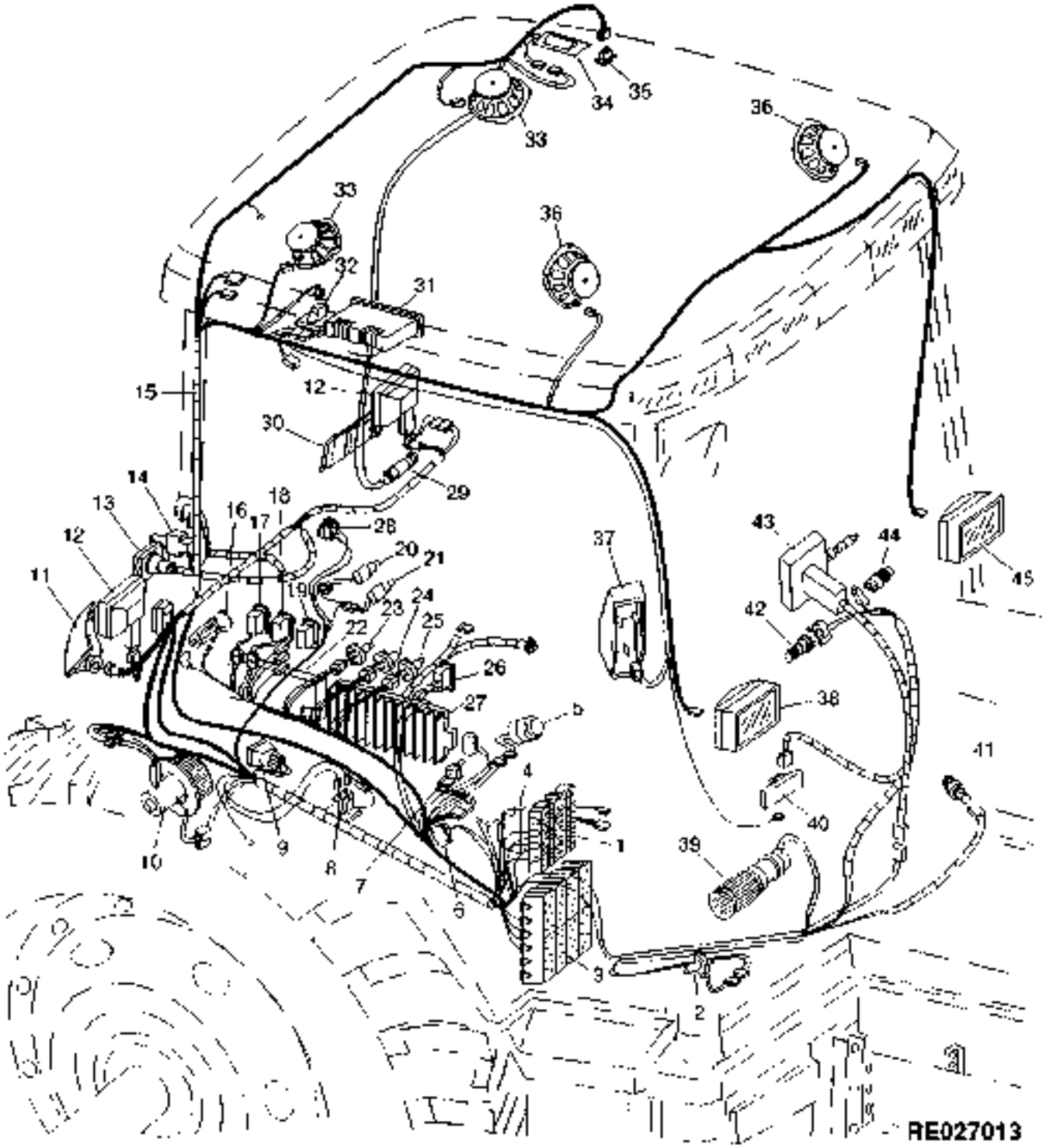

https://www.truck-manuals.net/

KEY	PART NO.	PART NAME	QTY	TRACTOR SERIAL NO.	ALL	REMARKS
1	RE43737	TERMINAL BOARD	4		X	
2	RE155987	ACCELERATOR	1		X	(SUB FOR RE61183)
3	RE49724	TERMINAL BOARD	6		X	
4	RE48875	JUNCTION BLOCK	1		X	
5	RE49727	HORN	1		X	
6	R111931	JUNCTION BLOCK	1		X	
7	RE62163	POTENTIOMETER	1		X	
8	AH144020	THERMOSTAT	1		X	
9	RE49636	RESISTOR	1		X	
10	RE67645	MOTOR	1		X	
11	RE48954	LENS	1		X	R.H.
12	RE151346	FLOODLAMP	2		X	(SUB FOR RE51240, RE71421 OR RE150421)
13	AR75695	SOCKET OUTLET	1		X	
14	RE32042	HITCH SWITCH	1	-024819	X	(SUB RE161844)
	RE161844	KIT	1	024820-	X	(SUB FOR RE32042)
15	RE163725	CAB WIRING HARNESS	1		X	(ALSO ORDER R76477) (SUB FOR RE69159, RE158815 OR RE160770)
16	AR60937	LIGHTER	1		X	
17	RE55476	WIPER/WASHER SWITCH	1		X	
18	RE55477	ROCKER SWITCH	1		X	(MFWD)
19	RE55036	HAZARD LIGHTS SWITCH	1		X	
20	RE60888	AC HIGH PRESSURE SWITCH	1		X	
21	RE155938	AC LOW PRESSURE SWITCH	1		X	(SUB FOR RE60887)
22	RE64583	DIGITAL DISPLAY	1		X	(SUP)
23	AL36529	SWITCH	1		X	
24	RE46717	WIPER/WASHER SWITCH	1		X	
25	RE43497	BLOWER SWITCH	1		X	
26	RE55478	AC COMPRESSOR SWITCH	1		X	
27	RE62649	VEHICLE MONITOR	1		X	W/RE61185(ICU)
	RE62650	VEHICLE MONITOR	1		X	W/O RE61188(ICU)
	RE62651	VEHICLE MONITOR	1		X	W/RE61188(ICU)
28	R111931	JUNCTION BLOCK	1		X	
29	RE51234	DOOR LIGHT SWITCH	1		X	
30	RE48955	LENS	1		X	L.H.
31	**RE64377**	**RADIO**	**1**		**X**	**(FI)**
	RE64376	**RADIO**	**1**		**X**	**(FI)**
32	RE57892	LAMP	1		X	
33	RE61546	SPEAKER	2		X	(REAR)(6")(4 OHM)
34	RE44590	HOUSING	1		X	
35	RE48838	ROCKER SWITCH	1		X	
36	RE61545	SPEAKER	2		X	(FRONT)(6")(4 OHM)
37	RE63458	MODULE	1		X	
38	RE150425	FLOODLAMP	1		X	(SUB FOR RE51239 OR RE71420)
39	RE61419	BLOWER	1		X	
40	RE66277	BRAKE LIGHT SWITCH	1		X	
41	RE46534	SWITCH	1		X	(A)
42	RE61717	KEY SWITCH	1		X	
43	RE63512	MODULE	1		X	
44	R39554	SWITCH	1		X	(B)
45	RE150420	FLOODLAMP	1		X	(SUB FOR RE51239 OR RE71420)

(A)DIFFERENTIAL LOCK
BLOCCAGE DE DIFFERENTIEL
DIFFERENTIALSPERRE
BLOCCAGGIO DIFFERENZIALE
TRABA DEL DIFERENCIAL
DIFFERENTIALSPAERR

(B)ETHER AID
AIDE AU DEMARRAGE A L'ETHER
AETHER-STARTHILFE
SUSSIDIO DI AVVIAMENTO
AUXILIAR DE ARRANQUE DE
ETERSTARTHJELP

https://www.truck-manuals.net/

WIRING HARNESS(CAB)(EUROPEAN VERSION)(8100,8200,8300,8400 -009999)
FAISCEAU DE CABLES(CABINE)(VERSION EUROPEENNE)(8100,8200,8300,8400 -009999)
KABELBAUM(FAHRERKABINE)(EUROPEAEISCHE AUSFUEHRUNG(8100,8200,8300,8400 -009999)
CABLAGGIO(CABINA)(VERSIONE EUROPEA)(8100,8200,8300,8400 -009999)
GRUPO DE CABLES(CABINA)(VERSION EUROPEA)(8100,8200,8300,8400 -009999)
KABELHAERVA(HYTT)(EUROPEISK VERSION)(8100,8200,8300,8400 -009999)
RE028293 -UN-05SEP97

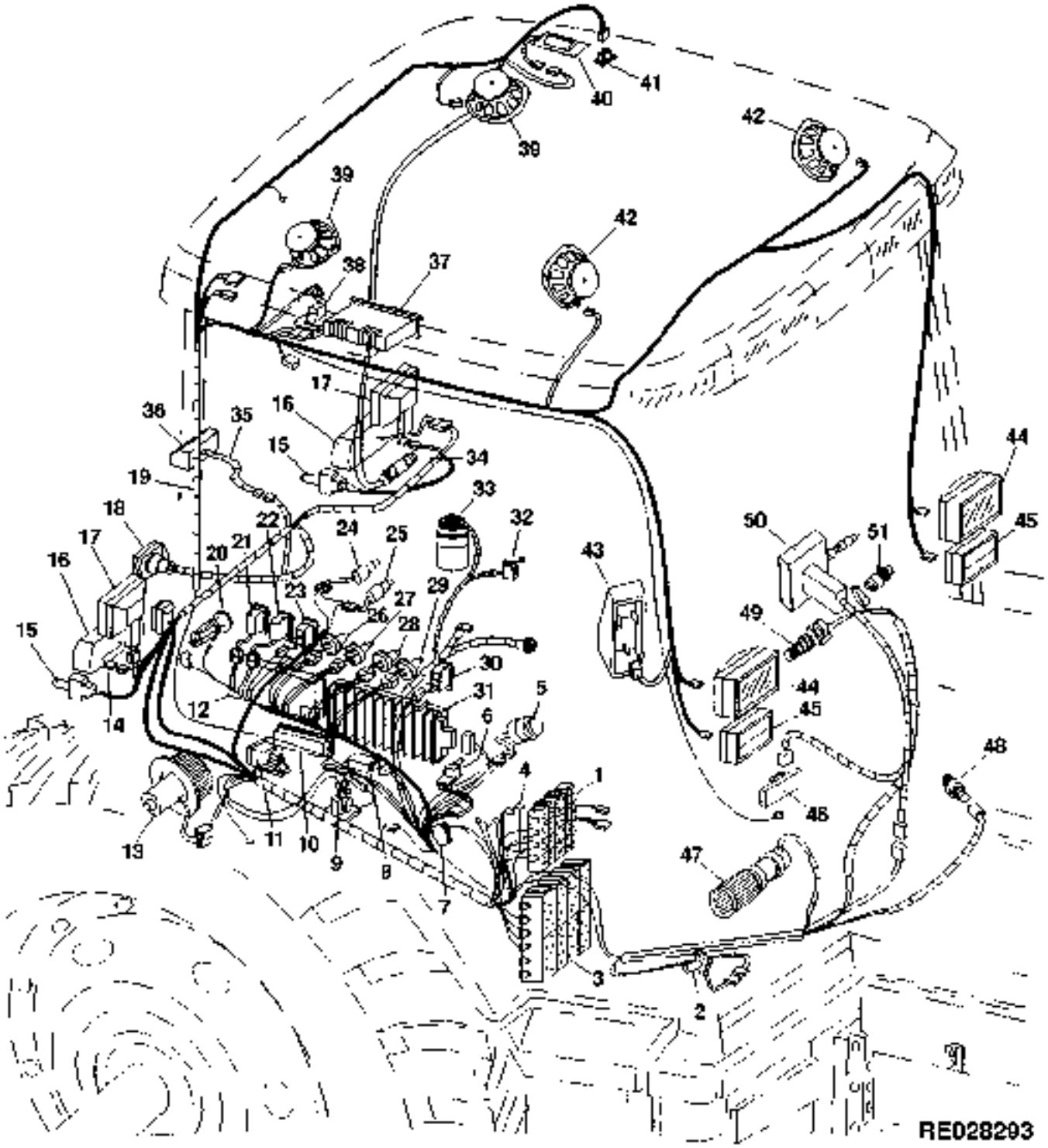

https://www.truck-manuals.net/

KEY	PART NO.	PART NAME	QTY	TRACTOR SERIAL NO.	ALL	REMARKS
1	RE43737	TERMINAL BOARD	4		X	
2	RE155987	ACCELERATOR	1		X	(SUB FOR RE61183)
3	RE49724	TERMINAL BOARD	6		X	
4	RE48875	JUNCTION BLOCK	1		X	
5	RE49727	HORN	1		X	
6	RE62163	POTENTIOMETER	1		X	(SUB FOR RE57697)
7	R111931	JUNCTION BLOCK	1		X	
8	AL32891	FLASHER	1		X	
9	AH144020	THERMOSTAT	1		X	
10	AL78989	CLOCK	1		X	
11	RE49636	RESISTOR	1		X	
12	RE64583	DIGITAL DISPLAY	1		X	(SUB FOR RE60928 OR RE63440) (SUP)
13	RE62653	MOTOR	1		X	(SUB FOR RE57571) (SUB RE67645, R121666 AND R126547)
14	AL113022	WIRING HARNESS	1		X	(USE WITH AL112964)
15	RE32042	HITCH SWITCH	1	-024819	X	(SUB RE161844)
	RE161844	KIT	2	024820-	X	(SUB FOR RE32042)
16	AL112964	TAIL LAMP	2		X	(SUB FOR AL77138 OR AL112012)
17	RE151346	FLOODLAMP	2		X	(SUB FOR RE51240, RE71421 OR RE150421)
18	L83677	SOCKET OUTLET	1		X	
19	RE60538	CAB WIRING HARNESS	1	-XXXXXX	X	(D) (ALSO ORDER R76477) (SUB RE64627, (2) 57M7254, (2) 57M7289, (4) R104846 AND (4) 57M7258)
	RE64627	CAB WIRING HARNESS	1	XXXXXX-	X	(E) (SUB FOR RE60538)
20	AR60937	LIGHTER	1		X	
21	RE55476	WIPER/WASHER SWITCH	1		X	
22	RE55477	ROCKER SWITCH	1		X	(MFWD)
23	RE55036	HAZARD LIGHTS SWITCH	1		X	
24	RE60888	AC HIGH PRESSURE SWITCH	1		X	
25	RE155938	AC LOW PRESSURE SWITCH	1		X	(SUB FOR RE60887)
26	AL36529	SWITCH	1		X	
27	AL36529	SWITCH	1		X	
28	RE46717	WIPER/WASHER SWITCH	1		X	
29	RE43497	BLOWER SWITCH	1		X	
30	RE55478	AC COMPRESSOR SWITCH	1		X	
31	RE62652	VEHICLE MONITOR	1		X	(SUB FOR RE60955) (ICU)
32	RE30714	SWITCH	1		X	
	RE33778	DIODE	1		X	(A) (INCLUDES RE12363, R78057 AND R78059)
33	RE63981	FILLER CAP	1		X	(SUB FOR RE63427)
34	RE51234	DOOR LIGHT SWITCH	1		X	
35	RE52633	WIRING HARNESS	1		X	
36	AL33161	FLOODLAMP	1		X	
37	**RE64377**	**RADIO**	**1**		**X**	**(FI)**
	RE64376	**RADIO**	**1**		**X**	**(FI)**
38	RE57892	LAMP	1		X	
39	RE61546	SPEAKER	2		X	(REAR)(6")(4 OHM)
40	RE44590	HOUSING	1		X	
41	RE48838	ROCKER SWITCH	1		X	
42	RE61545	SPEAKER	2		X	(FRONT)(6")(4 OHM)
43	RE63458	MODULE	1		X	(SUB FOR RE60929)
44	RE48989	FLOODLAMP	2	-XXXXXX	X	(D)
	RE151346	FLOODLAMP	2	XXXXXX-	X	(E) (SUB FOR RE51240, RE71421 OR RE150421)
45	AL75642	TURN SIGNAL LAMP	2		X	
46	RE66277	BRAKE LIGHT SWITCH	1		X	(SUB FOR RE55468 OR RE63211)
47	RE61419	BLOWER	1		X	
48	RE46534	SWITCH	1		X	(B)
49	RE61717	KEY SWITCH	1		X	
50	RE63513	TURN SIGNAL SWITCH	1		X	(SUB FOR RE60589)
51	R39554	SWITCH	1		X	(C)

(A)W/O SECONDARY BRAKE
W/O FREIN SECONDAIRE
W/O ZWEITBREMSE
W/O FRENO SECONDARIO
W/O FRENO SECUNDARIO
W/O PARKERINGSBROMS

(B)DIFFERENTIAL LOCK
BLOCAGE DE DIFFERENTIEL
DIFFERENTIALSPERRE
BLOCCAGGIO DIFFERZIALE
TRABA DEL DIFERENCIAL
DIFFERENTIALSPAERR

(C)ETHER AID
AIDE AU DEMARRAGE A L'ETHER
AETHER-STARTHILFE
SUSSIDIO DI AVVIAMENTO
AUXILIAR DE ARRANQUE DE
ETERSTARTHJELP

(D)(-XXXXXX)8100-002801;8200-002215;8300-003900;8400-002531
(E)(XXXXXX-)8100-002802;8200-002216;8300-003901;8400-002532

https://www.truck-manuals.net/

WIRING HARNESS(CAB)(EUROPEAN VERSION)(8100,8200,8300,8400 010000-)
FAISCEAU DE CABLES(CABINE)(VERSION EUROPEENNE)(8100,8200,8300,8400 010000-)
KABELBAUM(FAHRERKABINE)(EUROPEAEISCHE AUSFUEHRUNG)(8100,8200,8300,8400 010000-)
CABLAGGIO(CABINA)(VERSIONE EUROPEA)(8100,8200,8300,8400 010000-)
GRUPO DE CABLES(CABINA)(VERSION EUROPEA)(8100,8200,8300,8400 010000-)
KABELHAERVA(HYTT)(EUROPEISK VERSION)(8100,8200,8300,8400 010000-)
RE028479 -UN-29OCT97

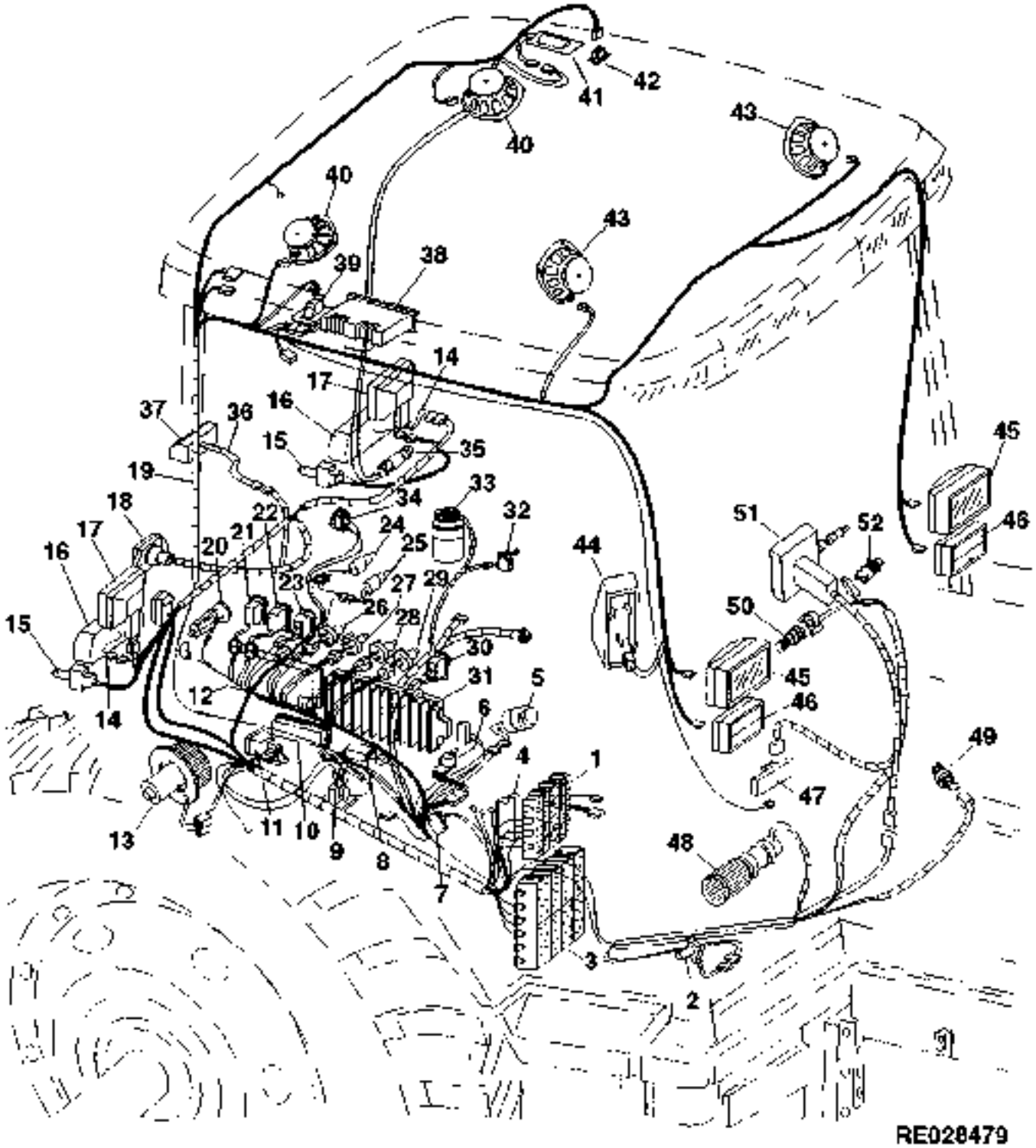

https://www.truck-manuals.net/

KEY	PART NO.	PART NAME	QTY	TRACTOR SERIAL NO.	ALL	REMARKS
1	RE43737	TERMINAL BOARD	4		X	
2	RE155987	ACCELERATOR	1		X	(SUB FOR RE61183)
3	RE49724	TERMINAL BOARD	6		X	
4	RE48875	JUNCTION BLOCK	1		X	
5	RE49727	HORN	1		X	
6	RE62163	POTENTIOMETER	1		X	
7	R111931	JUNCTION BLOCK	1		X	
8	AL32891	FLASHER	1		X	
9	AH144020	THERMOSTAT	1		X	
10	AL78989	CLOCK	1		X	
11	RE49636	RESISTOR	1		X	
12	RE64583	DIGITAL DISPLAY	1		X	(SUP)
13	RE67645	MOTOR	1		X	
14	RE71246	WIRING HARNESS	2		X	(SUB FOR RE69341)
15	RE32042	HITCH SWITCH	1	-024819	X	(SUB RE161844)
	RE161844	KIT	2	024820-	X	(SUB FOR RE32042)
16	RE67285	LENS	2		X	
17	RE151346	FLOODLAMP	2		X	(SUB FOR RE51240, RE71421 OR RE150421)
18	L83677	SOCKET OUTLET	1		X	
19	RE158816	WIRING HARNESS	1		X	(ALSO ORDER R76477) (SUB FOR RE69160)
20	AR60937	LIGHTER	1		X	
21	RE55476	WIPER/WASHER SWITCH	1		X	
22	RE55477	ROCKER SWITCH	1		X	(MFWD)
23	RE55036	HAZARD LIGHTS SWITCH	1		X	
24	RE60888	AC HIGH PRESSURE SWITCH	1		X	
25	RE155938	AC LOW PRESSURE SWITCH	1		X	(SUB FOR RE60887)
26	AL36529	SWITCH	1		X	
27	AL36529	SWITCH	1		X	
28	RE46717	WIPER/WASHER SWITCH	1		X	
29	RE43497	BLOWER SWITCH	1		X	
30	RE55478	AC COMPRESSOR SWITCH	1		X	
31	RE62652	VEHICLE MONITOR	1		X	(ICU)
32	RE48234	SWITCH	1		X	
	RE33778	DIODE	1		X	(A) (INCLUDES RE12363, R78057 AND R78059)
33	RE63981	FILLER CAP	1		X	
34	R111931	JUNCTION BLOCK	1		X	
35	RE51234	DOOR LIGHT SWITCH	1		X	
36	RE52633	WIRING HARNESS	1		X	
37	AL33161	FLOODLAMP	1		X	
38	**RE64377**	**RADIO**	**1**		**X**	**(FI)**
	RE64376	**RADIO**	**1**		**X**	**(FI)**
39	RE57892	LAMP	1		X	
40	RE61546	SPEAKER	2		X	(REAR)(6")(4 OHM)
41	RE44590	HOUSING	1		X	
42	RE48838	ROCKER SWITCH	1		X	
43	RE61545	SPEAKER	2		X	(FRONT)(6")(4 OHM)
44	RE63458	MODULE	1		X	
45	RE151346	FLOODLAMP	2		X	(SUB FOR RE51240, RE71421 OR RE150421)
46	AL75642	TURN SIGNAL LAMP	2		X	
47	RE66277	BRAKE LIGHT SWITCH	1		X	
48	RE61419	BLOWER	1		X	
49	RE46534	SWITCH	1		X	(B)
50	RE61717	KEY SWITCH	1		X	
51	RE63513	TURN SIGNAL SWITCH	1		X	
52	R39554	SWITCH	1		X	(C)

(A)W/O SECONDARY BRAKE
W/O FREIN SECONDAIRE
W/O ZWEITBREMSE
W/O FRENO SECONDARIO
W/O FRENO SECUNDARIO
W/O PARKERINGSBROMS

(B)DIFFERENTIAL LOCK
BLOCAGE DE DIFFERENTIEL
DIFFERENTIALSPERRE
BLOCCAGGIO DIFFERZIALE
TRABA DEL DIFERENCIAL
DIFFERENTIALSPAERR

(C)ETHER AID
AIDE AU DEMARRAGE A L'ETHER
AETHER-STARTHILFE
SUSSIDIO DI AVVIAMENTO
AUXILIAR DE ARRANQUE DE
ETERSTARTHJELP

https://www.truck-manuals.net/

WIRING HARNESS(CAB)(UKRAINIAN VERSION)(8400 011969 -)
FAISCEAU DE CABLES(CABINE)(VERSION UKRAINIENNE)(8400 011969-)
KABELBAUM(FAHRERKABINE)(UKRAINISCHE AUSFUEHRUNG)(8400 011969-)
CABLAGGIO(CABINA)(VERSIONE PER L'UCRAINA)(8400 011969-)
GRUPO DE CABLES)(CABINA)(VERSION UCRANIANA)(8400 011969-)
KABELHAERVA(HYTT)(VERSION FOER UKRAINA)(8400 011969-)
RE027013 -UN-17JUL96

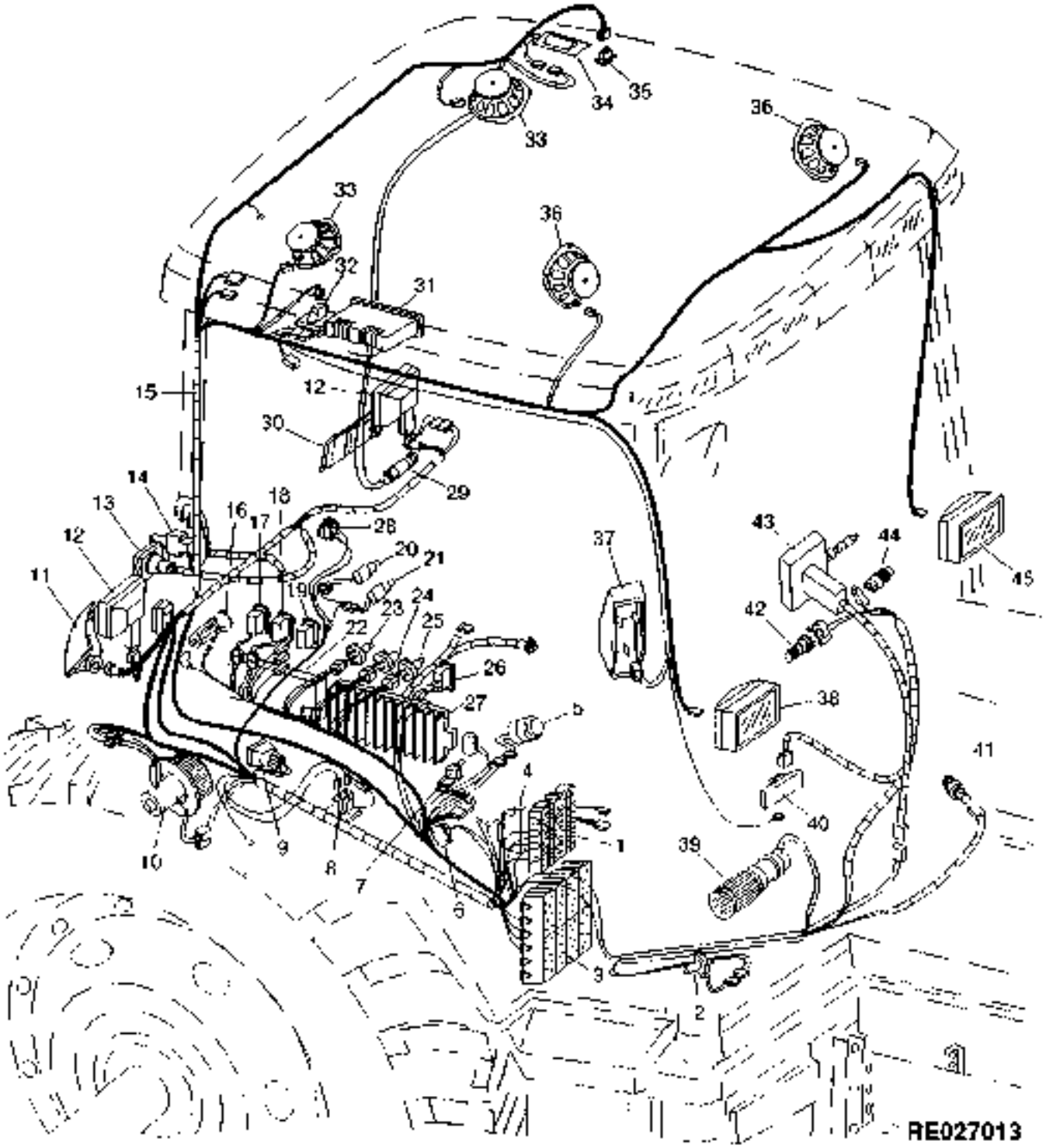

https://www.truck-manuals.net/

KEY	PART NO.	PART NAME	QTY	TRACTOR SERIAL NO.	8400	REMARKS
1	RE43737	TERMINAL BOARD	4		X	
2	RE155987	ACCELERATOR	1		X	(SUB FOR RE61183)
3	RE49724	TERMINAL BOARD	6		X	
4	RE48875	JUNCTION BLOCK	1		X	
5	RE49727	HORN	1		X	
6	R111931	JUNCTION BLOCK	1		X	
7	RE62163	POTENTIOMETER	1		X	
8	AH144020	THERMOSTAT	1		X	
9	RE49636	RESISTOR	1		X	
10	RE67645	MOTOR	1		X	
11	RE48954	LENS	1		X	R.H.
12	RE151346	FLOODLAMP	2		X	(SUB FOR RE51240, RE71421 OR RE150421)
13	AR75695	SOCKET OUTLET	1		X	
14	RE32042	HITCH SWITCH	1	-024819	X	(SUB RE161844)
	RE161844	KIT	1	024820-	X	(SUB FOR RE32042)
15	RE150544	CAB WIRING HARNESS	1	XXXXXX-XXXXXX	X	(C) (ALSO ORDER R76477) (SUB RE163725)
	RE163725	CAB WIRING HARNESS	1	XXXXXX-	X	(D) (ALSO ORDER R76477) (SUB FOR RE150544, RE158815 OR RE160770)
16	AR60937	LIGHTER	1		X	
17	RE55476	WIPER/WASHER SWITCH	1		X	
18	RE55477	ROCKER SWITCH	1		X	(MFWD)
19	RE55036	HAZARD LIGHTS SWITCH	1		X	
20	RE60888	AC HIGH PRESSURE SWITCH	1		X	
21	RE155938	AC LOW PRESSURE SWITCH	1		X	(SUB FOR RE60887)
22	RE64583	DIGITAL DISPLAY	1		X	(SUP)
23	AL36529	SWITCH	1		X	
24	RE46717	WIPER/WASHER SWITCH	1		X	
25	RE43497	BLOWER SWITCH	1		X	
26	RE55478	AC COMPRESSOR SWITCH	1		X	
27	RE62652	VEHICLE MONITOR	1		X	W/RE61185(ICU)
28	R111931	JUNCTION BLOCK	1		X	
29	RE51234	DOOR LIGHT SWITCH	1		X	
30	RE48955	LENS	1		X	L.H.
31	**RE64377**	**RADIO**	**1**		**X**	**(FI)**
	RE64376	**RADIO**	**1**		**X**	**(FI)**
32	RE57892	LAMP	1		X	
33	RE61546	SPEAKER	2		X	(REAR)(6")(4 OHM)
34	RE44590	HOUSING	1		X	
35	RE48838	ROCKER SWITCH	1		X	
36	RE61545	SPEAKER	2		X	(FRONT)(6")(4 OHM)
37	RE63458	MODULE	1		X	
38	RE150425	FLOODLAMP	1		X	(SUB FOR RE51239 OR RE71420)
39	RE61419	BLOWER	1		X	
40	RE66277	BRAKE LIGHT SWITCH	1		X	
41	RE46534	SWITCH	1		X	(A)
42	RE61717	KEY SWITCH	1		X	
43	RE63512	MODULE	1		X	
44	R39554	SWITCH	1		X	(B)
45	RE150420	FLOODLAMP	1		X	(SUB FOR RE51239 OR RE71420)

(A)DIFFERENTIAL LOCK
BLOCCAGE DE DIFFERENTIEL
DIFFERENTIALSPERRE
BLOCCAGGIO DIFFERENZIALE
TRABA DEL DIFERENCIAL
DIFFERENTIALSPAERR

(B)ETHER AID
AIDE AU DEMARRAGE A L'ETHER
AETHER-STARTHILFE
SUSSIDIO DI AVVIAMENTO
AUXILIAR DE ARRANQUE DE
ETERSTARTHJELP

(C)(XXXXXX-XXXXXX)8400-011969-023110
(D)(XXXXXX-)8400-023111

https://www.truck-manuals.net/

WIRING HARNESS(ROOF)
FAISCEAU DE CABLES(TOIT)
KABELBAUM(DACH)
CABLAGGIO(TETTO)
GRUPO DE CABLES(TECHO)
KABELHAERVA(TAK)
RE028191 -UN-06AUG97

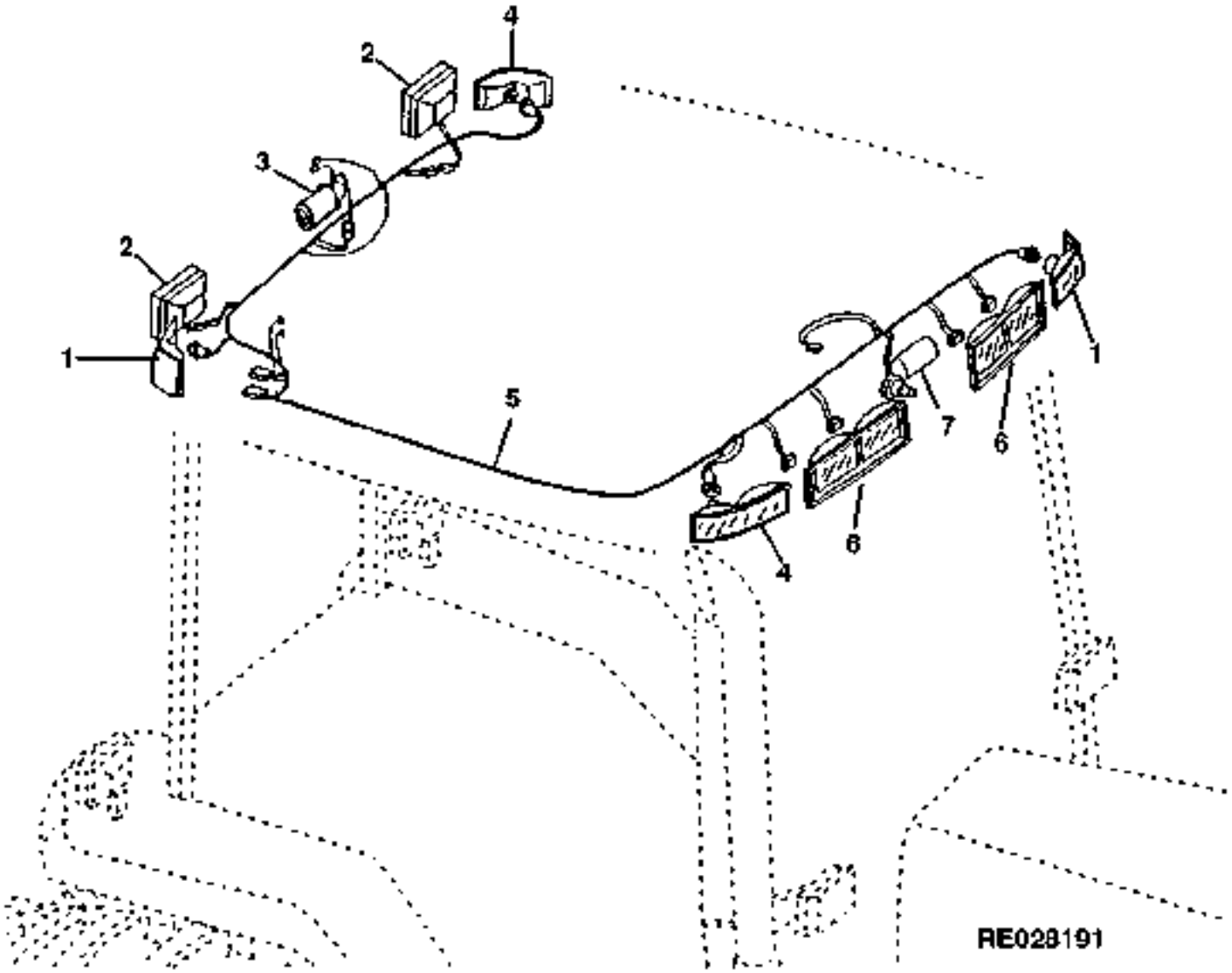

https://www.truck-manuals.net/

KEY	PART NO.	PART NAME	QTY	TRACTOR SERIAL NO.	ALL	REMARKS
1	RE55150	TAIL LAMP	2		X	(A) R.H.FRONT/L.H.REAR
2	RE61201	FLOODLAMP	2	-XXXXXX	X	(B)
	RE151345	FLOODLAMP	2	XXXXXX-	X	(C) (SUB FOR RE63958, RE71424 OR RE150424)
3	RE151494	WIPER MOTOR	1		X	(SUB FOR AL76686)
4	RE55151	TAIL LAMP	2		X	(A) L.H.FRONT/R.H.REAR
5	RE60647	ROOF WIRING HARNESS	1	-XXXXXX	X	(B)
	RE64629	ROOF WIRING HARNESS	1	XXXXXX-	X	(C)
	37M7059	SCREW	1		X	M5 X 12
6	RE37450	LAMP	4		X	
7	RE151494	WIPER MOTOR	1		X	(SUB FOR AL76686)

(A)NORTH AMERICAN VERSION
VERSION NORD AMERICAINE
NORDAMERIKANISCHE
VERSIONE NORDAMERICANA
VERSION NORTEAMERICANA
NORDAMERIKANSK VERSION

(B)(-XXXXXX)8100-002801;8200-002215;8300-003900;8400-002531

(C)(XXXXXX-)8100-002802;8200-002216;8300-003901;8400-002532

https://www.truck-manuals.net/

WIRING HARNESS (CAB POWER)
FAISCEAU DE CABLES(ALIMENTATION DE CABINE)
KABELBAUM(FAHRERKABINE-STROMVERSORGUNG)
CABLAGGIO(ALIMENTAZIONE DELLA CABINA)
GRUPO DE CABLES(ENERGIA DE LA CABINA)
KABELHAERVA(HYTTSTROEMFOERSOERJNING)
RXP011182 -UN-01JAN94

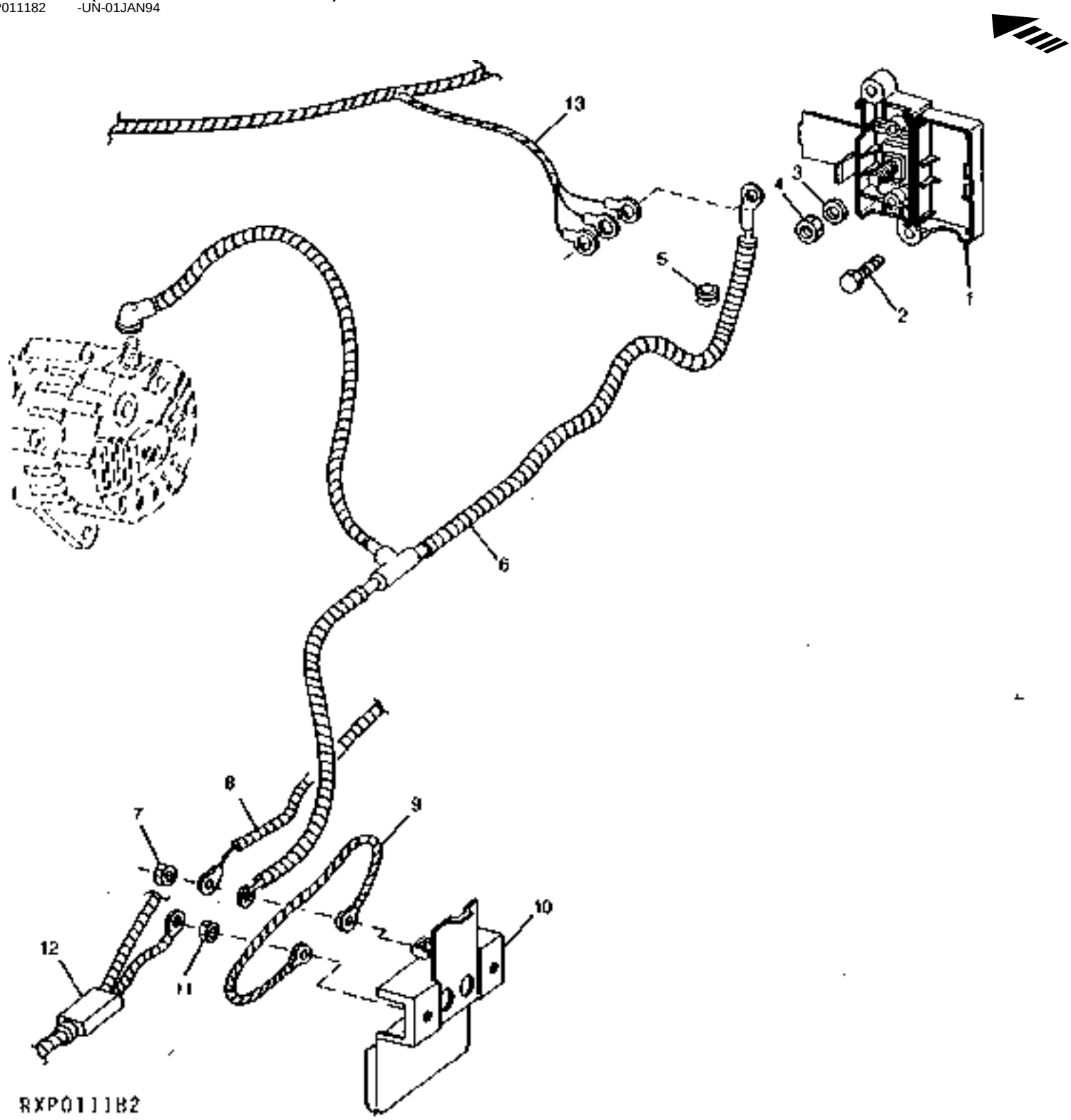

https://www.truck-manuals.net/

KEY	PART NO.	PART NAME	QTY	TRACTOR SERIAL NO.	ALL	REMARKS
1	RE48875	JUNCTION BLOCK	1		X	
2	19M7372	CAP SCREW	2		X	M5 X 16
3	24M7146	WASHER	1		X	4.300 X 12 X 1 MM
4	14M7100	NUT	1		X	M4
5	R70350	GROMMET	1		X	
6	RE56273	CABLE	1		X	(+)
7	14M7273	NUT	1		X	
8	.....	WIRING HARNESS	1		X	(A)
9	RE49736	WIRING LEAD	1		X	
10	RE48867	JUNCTION BLOCK	1		X	
11	14M7274	NUT	1		X	M10
12	RE44581	CABLE	1		X	(B) (+)
13	.....	CAB WIRING HARNESS	1		X	
..	RE54810	ISOLATOR	1		X	

(A) ENGINE AND CHASSIS
MOTEUR ET CHASSIS
MOTOR UND CHASSIS
MOTORE E TELAIO
MOTOR Y CHASIS
MOTOR OCH CHASSIS

(B) BATTERY
BATTERIE
BATTERIE
BATTERIA
BATERIA
BATTREI

https://www.truck-manuals.net/

WIRING HARNESS(ROW-TRAK)
FAISCEAU DE CABLES(ROW-TRAK)
KABELBAUM(ROW-TRAK)
CABLAGGIO(ROW-TRAK)
GRUPO DE CABLES(ROW-TRAK)
KABELHAERVA(ROW-TRAK)
RE030138 -UN-03NOV98

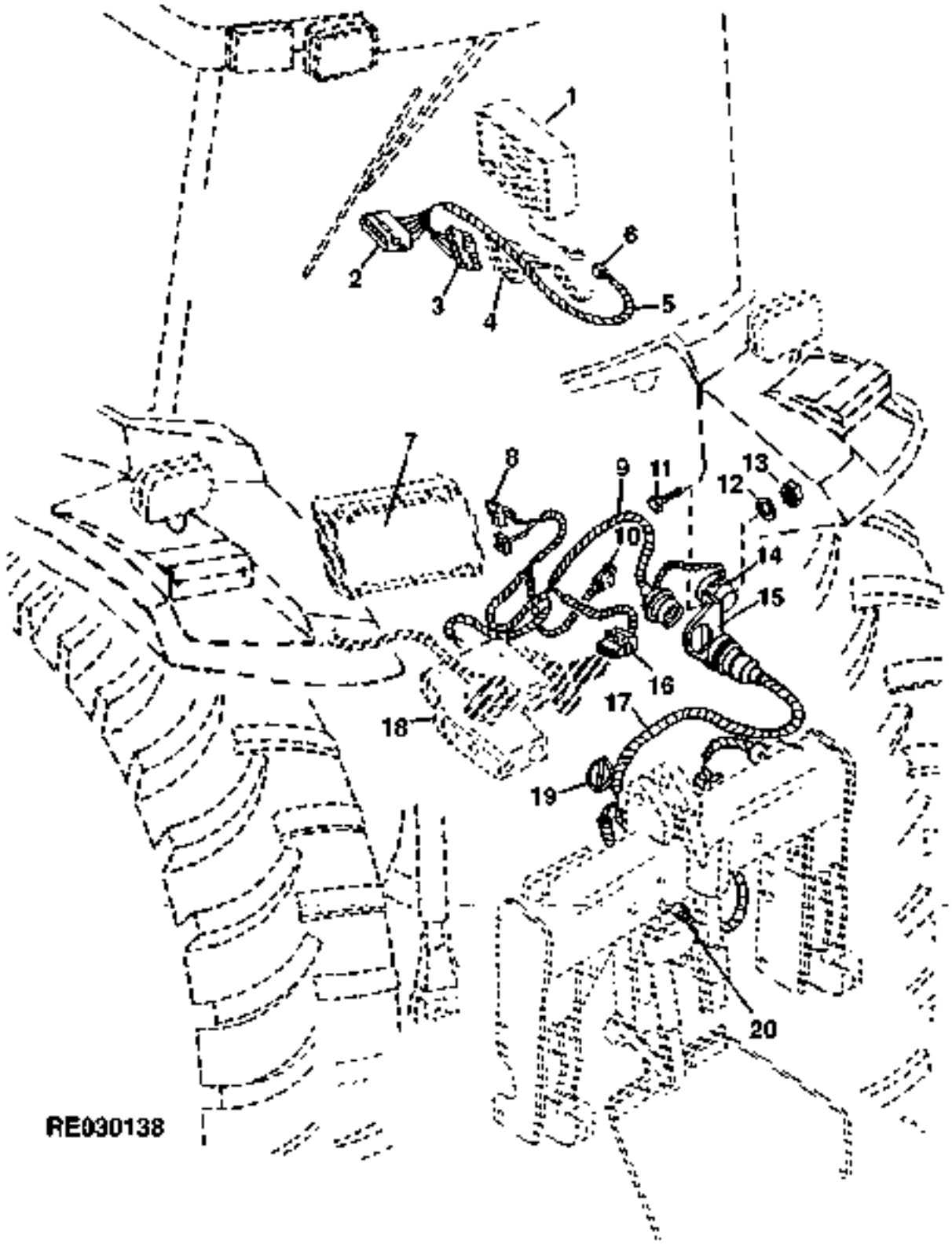

https://www.truck-manuals.net/

KEY	PART NO.	PART NAME	QTY	TRACTOR SERIAL NO.	ALL	REMARKS
1	RE57744	MONITOR	1		X	
2	R78056	CONNECTOR	1		X	(ALSO ORDER (6) R78058 AND (6) 57M7292)
3	RE12366	CONNECTOR	1		X	(ALSO ORDER (6) R78057 AND (6) 57M7292)
4	.....	CAB WIRING HARNESS	1		X	
5	RE64323	WIRING LEAD	1		X	(SUB FOR RE58312)
6	T138822	CONNECTOR	1		X	(ALSO ORDER (4) R78058 AND (4) 57M7292)
7	.....	HITCH AND SCV CONTROLLER	1		X	
8	57M7253	RECEPTACLE	1		X	
9	RE58311	WIRING HARNESS	1		X	(ALSO INCLUDES E73240)
10	57M7260	CONNECTOR	1		X	
11	19M7550	CAP SCREW	2		X	
12	24M7346	WASHER	4		X	
13	14M7274	NUT	2		X	
14	AE44632	CONNECTOR	1		X	(ALSO ORDER (2) R44302)
15	R124308	BRACKET	1		X	
16	57M7265	CONNECTOR	1		X	(ALSO ORDER (8) R104919 AND (8) 57M7258) (SUB FOR RE42196)
17	RE58548	WIRING HARNESS	1		X	
	RE63306	WIRING HARNESS	1		X	(A) (CONSISTS OF AE44976)
	RE63763	WIRING LEAD	1		X	(B)
18	**AR114034**	**KIT**	**1**		**X**	**(FI)(5TH SCV)**
19	M115827	QUICK LOCK PIN	1		X	
20	57M7309	CONNECTOR	1		X	(ALSO ORDER (2) 57M7297 AND (2) 57M7292)
..	R107991	CLAMP	1		X	

(A) EXTENSION
EXTENSION
VERLAENGERUNG
ESTENSIONE
EXTENSION
FOERLAENGNING

(B) HITCH DISABLE
DESENGAGEMENT DE L'ATTELAGE
REGELHYDRAULIK-ABSCHALTUNG
DISATTIVAZIONE DELL'ATTACCO
DESACTIVACION DEL ENGANCHE
LYFTURKOPPLING

https://www.truck-manuals.net/

WIRING HARNESS(LICENCE PLATE LAMP)(EUROPEAN VERSION)
FAISCEAU DE FILS(PLAQUE MINERALOGIQUE,ECLAIRAGE)
KABELBAUM(NUMMERNSCHILD-BELEUCHTUNG)
CABLAGGIO(LUCE DELLA TARGA)
GRUPO DE CABLES(INTERRUPTOR DE FRENO)
KABELHAERVA(BROMSKONTAKT)
RE026646 -UN-07DEC95

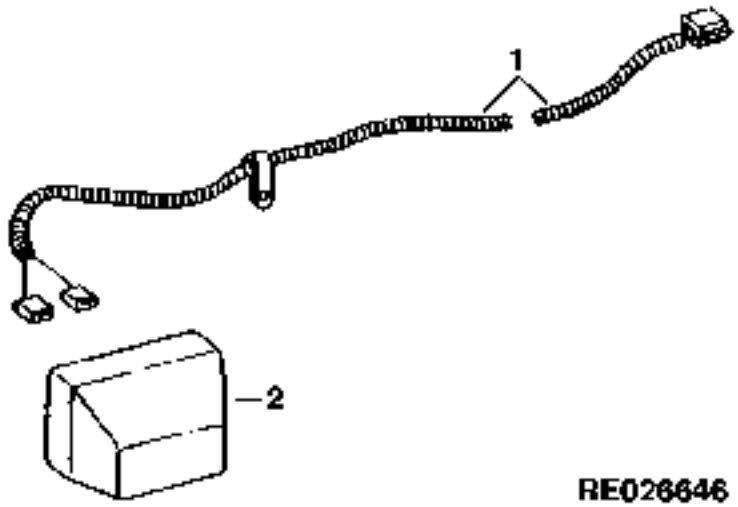

KEY	PART NO.	PART NAME	QTY	TRACTOR SERIAL NO.	ALL	REMARKS
1	RE52633	WIRING HARNESS	1		X	(A)
	RE62300	**WIRING HARNESS**	**1**		**X**	**(B) (FI)**
2	AL33161	FLOODLAMP	1		X	

(A)EUROPEAN VERSION
VERSIONE EUROPEENNE
EUROPAEISCHE AUSFUEHRUNG
VERSIONE EUROPEA
VERSION EUROPEA
EUROPEISK VERSION

(B)USE OTHER THAN NORTH AMERICAN AND EUROPEAN VERSION
USAGE AUTRE QUE LES VERSIONNORD-AMERICAINES OU EUROPEENNES
FUER DEN GEBRAUCH AUSSER MIT DEN NORDAMERIKANISCHEN UND EUROPAEISCHEN AUSFUEHRUNGEN
UEARE SULLE VERSIONI NON NORDAMERICANE O EUROPEE
USAR EN TRACTORES DE VERSION DIFERENTE A LA NORTEAMERICANA O EUROPEA
ANVAENDS PAA ALLA TRAKTORER UTOM I NORDAMERIKA OCH EUROPA

https://www.truck-manuals.net/

WIRING HARNESS(SEAT)
FAISCEAU COND.DE GRAISSAGE(SIEGE)
SCHMIERLEITUNGSPAKET(SITZ)
CONDOTTI DI LUBRIFICAZIONE(SEDILE)
SISTEMA DE ENGRASE(ASIENTO)
CENTRALSMOERJNING(SAETE)
RE026648 -UN-19DEC95

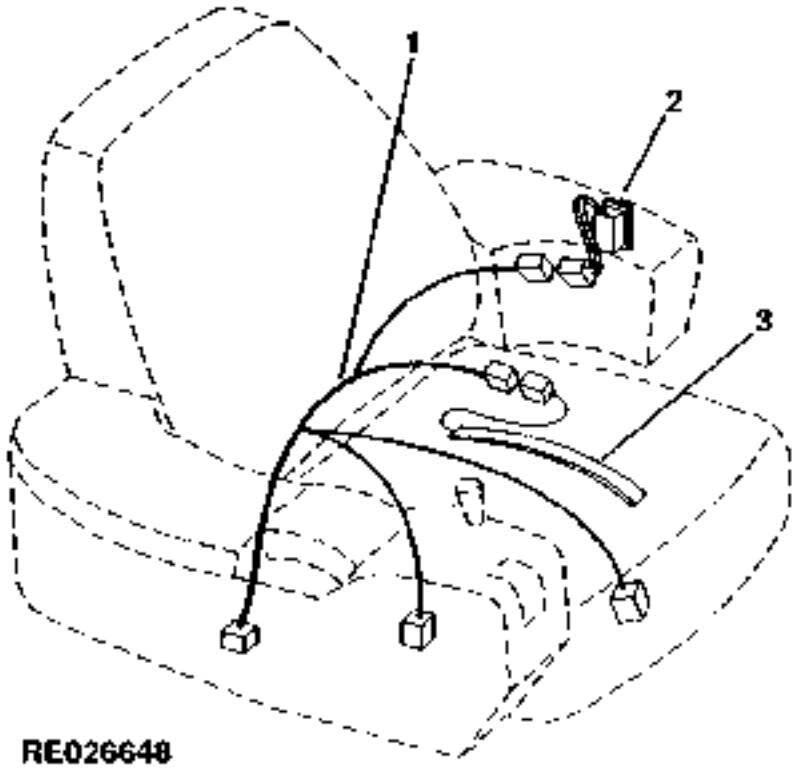

KEY	PART NO.	PART NAME	QTY	TRACTOR SERIAL NO.	ALL	REMARKS
1	RE52550	WIRING HARNESS	1		X	
2	RE43451	ROCKER SWITCH	1		X	
3	RE43526	SWITCH	1		X	

https://www.truck-manuals.net/

WIRING HARNESS(FIELD OFFICE)(8100,8200,8300,8400 -009999)
FAISCEAU DE CABLES(BUREAU MOBILE)(8100,8200,8300,8400 -009999)
KABELBAUM(BORD-BUERO)(8100,8200,8300,8400 -009999)
CABLAGGIO(UFFICIO MOBILE)(8100,8200,8300,8400 -009999)
GRUPO DE CABLES(OFICINA PORTATIL)(8100,8200,8300,8400 -009999)
KABELHAERVA(TRAKTORKONTOR)(8100,8200,8300,8400 -009999)
RE027046 -UN-17JUL96

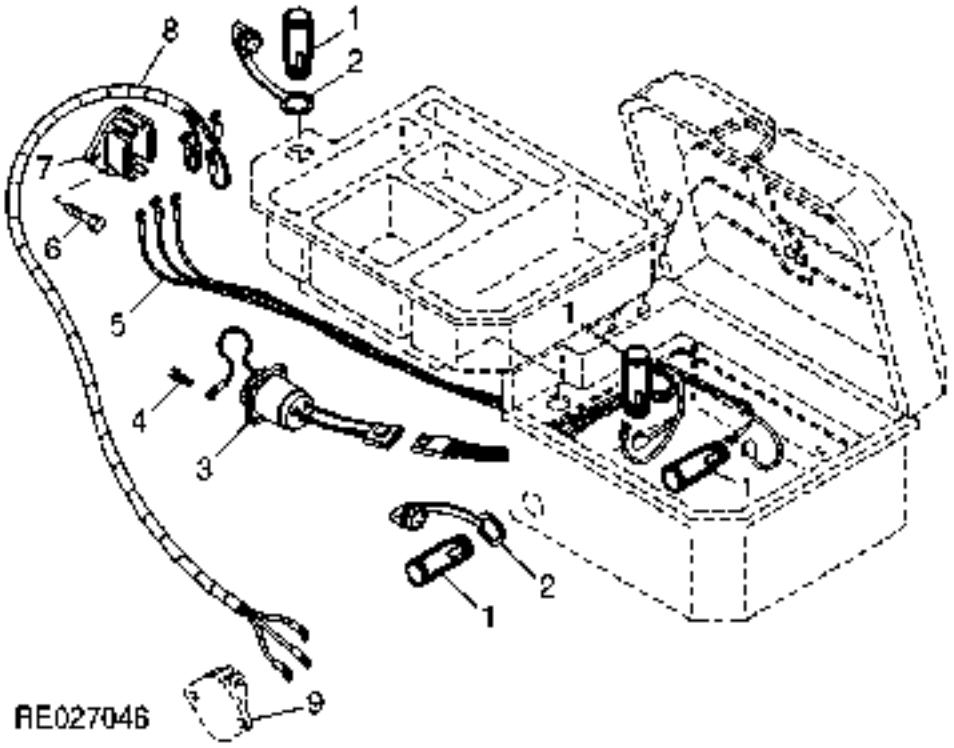

KEY	PART NO.	PART NAME	QTY	CAB SERIAL NO.	ALL	REMARKS
1	AR56766	HOUSING	2		X	
2	R131671	PLUG	2		X	
3	RE37640	SOCKET OUTLET	1		X	
4	R133192	RIVET	4		X	
5	RE67821	WIRING HARNESS	1		X	
6	21H1463	CAP SCREW	2		X	0.190" X 7/8"
7	R111931	JUNCTION BLOCK	1		X	
8	RE69474	WIRING HARNESS	1		X	
9	R111931	JUNCTION BLOCK	1		X	

https://www.truck-manuals.net/

WIRING HARNESS(FIELD OFFICE)(8100,8200,8300,8400 010000-)
FAISCEU DE CABLES(BUREAU MOBILE)(8100,8200,8300,8400 010000-)
KABELBAUM(BORD-BUERO)(8100,8200,8300,8400 010000-)
CABLAGGIO(UFFICIO MOBILE)(8100,8200,8300,8400 010000-)
GRUPO DE CABLES(OFICINA PORTATIL)(8100,8200,8300,8400 010000-)
KABELHAERVA(TRAKTORKONTOR)(8100,8200,8300,8400 010000-)
RE027045 -UN-17JUL96

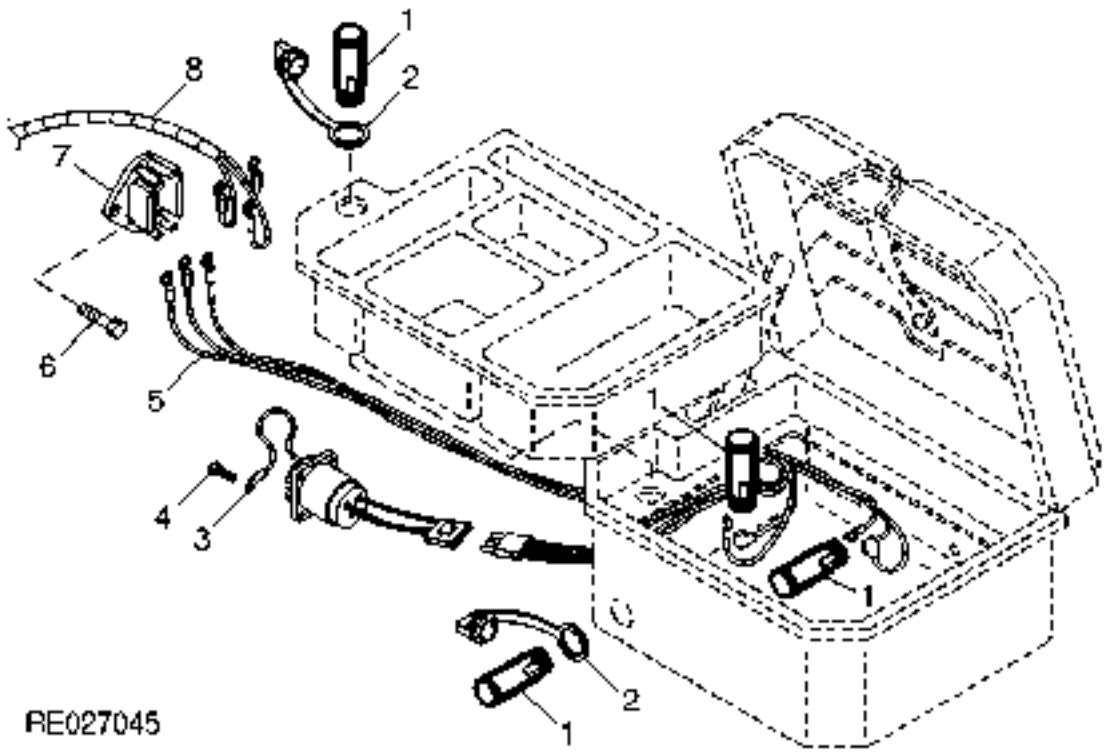

KEY	PART NO.	PART NAME	QTY	CAB SERIAL NO.	ALL	REMARKS
1	AR56766	HOUSING	2		X	
2	R131671	PLUG	2		X	
3	RE37640	SOCKET OUTLET	1		X	
4	R133192	RIVET	4		X	
5	RE67821	WIRING HARNESS	1		X	
6	21H1463	CAP SCREW	2		X	0.190" X 7/8"
7	R111931	JUNCTION BLOCK	1		X	
8	.....	CAB WIRING HARNESS	1		X	

https://www.truck-manuals.net/

BRAKE LIGHT EXTENSION WIRING HARNESS
FAISCEAU DE FILS RALLONGE DES FEUX DES FREINS
BREMSLIGHT-VERLAENGERUNGSKABELBAUM
CAVO DI PROLUNGA DELLA LUCE DEL FRENO
GRUPO DE CABLES DE EXTENSION DE LUZ DE FRENO
KABELHAERVA FOER BROMSLJUSFOERLAENGNING
RE028209 -UN-06AUG97

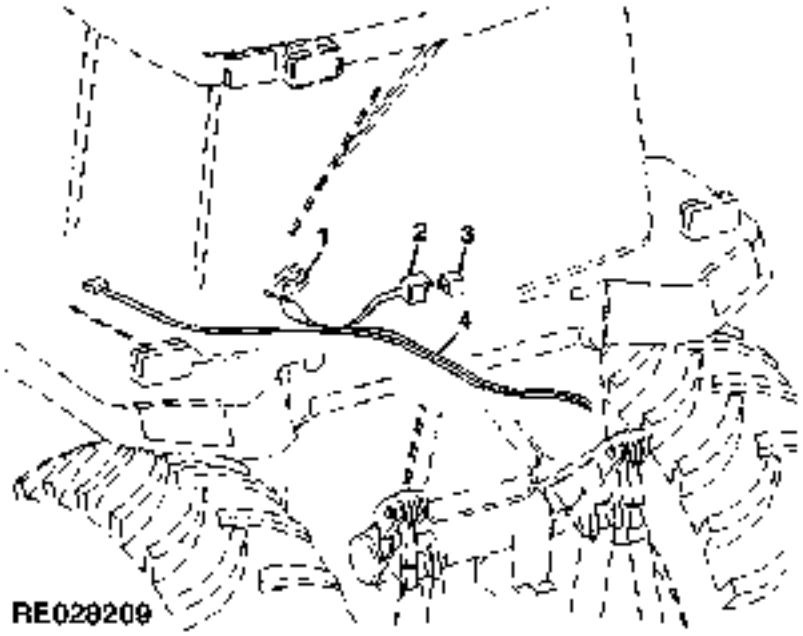

KEY	PART NO.	PART NAME	QTY	TRACTOR SERIAL NO.	ALL	REMARKS
1	R111931	JUNCTION BLOCK	1		X	
2	ET15766	CONNECTOR	1		X	(ALSO ORDER (4) 57M7514)
3	RE68327	RELAY	1		X	(SUB FOR RE48876) (40 AMP)
4	RE61403	WIRING HARNESS	1		X	

https://www.truck-manuals.net/

AIR BRAKE WIRING HARNESS(EUROPEAN VERSION)
FAISCEAU DE FILS DE FREIN PNEUMATIQUE(VERSION EUROPEENNE)
DRUCKLUFTBREMSEN-KABELBAUM(EUROPEAEISCHE AUSFUEHRUNG)
CAVO FRENO A COMANDO PNEUMATICO(VERSIONE EUROPEA)
ARNES DE ALAMBRADO DE FRENOS DE AIRE(VERSION EUROPEA)
KABELHAERVA FOER LUFTBROMS(EUROPEISK VERSION)
RE028273 -UN-05SEP97

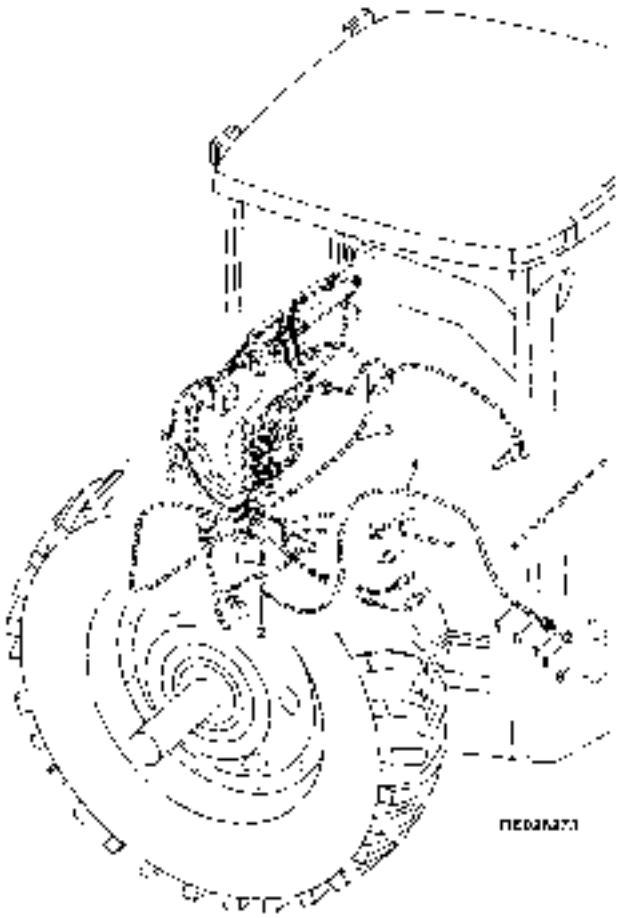

KEY	PART NO.	PART NAME	QTY	TRACTOR SERIAL NO.	ALL	REMARKS
1	57M7254	CONNECTOR	1		X	(ALSO ORDER 57M7289, (2) R104846 AND (2) 57M7258)
2	57M7256	CONNECTOR	1		X	(ALSO ORDER 57M7289, (2) R104919 AND (2) 57M7258)
3	.....	WIRING HARNESS	1		X	(A)
4	RE150545	WIRING HARNESS	1		X	(ALSO ORDER (3) R44302)
5	57M7256	CONNECTOR	1		X	(ALSO ORDER 57M7289, (2) 57M7258 AND (2) R104919)
6	RE150606	SWITCH	1		X	
7	51M7040	O-RING	1		X	
8	RE150663	CONNECTOR	1		X	
9	AL111802	RESERVOIR	1		X	

(A)ENGINE AND CHASSIS
MOTEUR ET CHASSIS
MOTOR UND CHASSIS
MOTORE E TELAIO
MOTOR Y CHASIS
MOTOR OCH CHASSI

https://www.truck-manuals.net/

LOAD CENTER
POINT D'ALIMENTATION GENERALE
ZENTRALER STROMANSCHLUSSSPUNKT
ALIMENTATORE
CENTRO DE CARGA
ELCENTRAL
RE026645 -UN-07DEC95

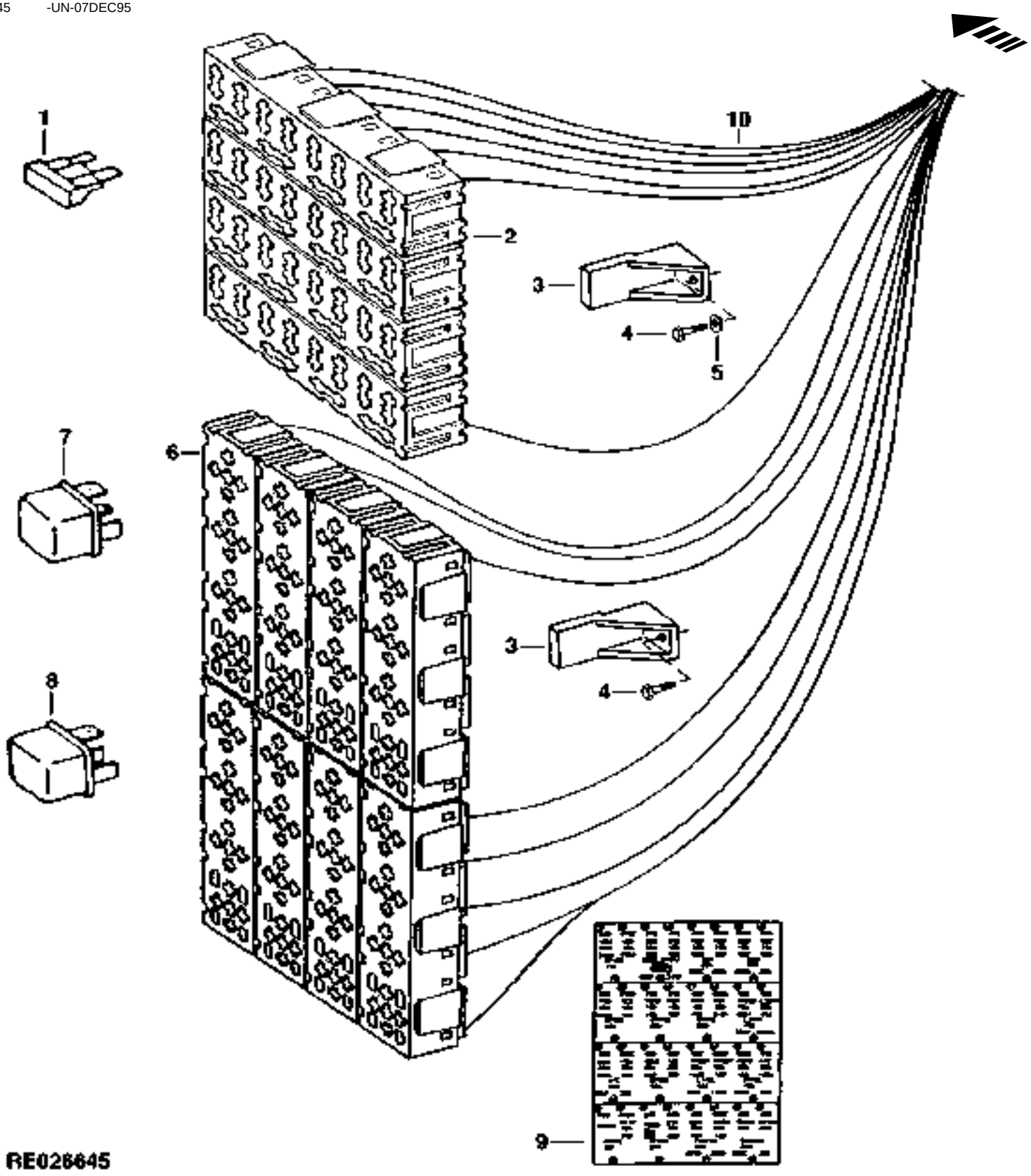

https://www.truck-manuals.net/

KEY	PART NO.	PART NAME	QTY	TRACTOR SERIAL NO.	ALL	REMARKS
1	57M7121	FUSE	20		X	10 AMP
	57M7120	FUSE	10		X	20 AMP
	57M7146	FUSE	10		X	30 AMP
2	RE43737	TERMINAL BOARD	4		X	
3	RE49726	SUPPORT	8		X	
4	37M7089	SCREW	8		X	
5	24H1325	WASHER	2		X	15/32" X 59/64" X 0.065"
6	RE49724	TERMINAL BOARD	8		X	
7	RE39967	DIODE	2		X	
8	RE68327	RELAY	26		X	(SUB FOR RE48876) 40 AMP
	RE161437	RELAY	1	-019999	X	(K-13 LOCATION ONLY)
	RE68327	RELAY	1	020000-	X	(K-13 LOCATION ONLY)
9	R111807	LABEL	1	-XXXXXX	X	(A) (D)
	R134324	LABEL	1	XXXXXX-	X	(A) (F)
	R111808	LABEL	1	-XXXXXX	X	(B) (D)
	R134325	LABEL	1	XXXXXX-	X	(B) (F)
10	RE60537	CAB WIRING HARNESS	1	-XXXXXX	X	(A) (D) (SUB RE64626, (2) 57M7254, (2) 57M7289, (4) R104846 AND (4) 57M7258)
	RE64626	CAB WIRING HARNESS	1	XXXXXX-XXXXXX	X	(A) (E) (SUB FOR RE60537)
	RE163725	CAB WIRING HARNESS	1	010000-	X	(A) (SUB FOR RE69159, RE158815 OR RE160770)
	RE60538	CAB WIRING HARNESS	1	-XXXXXX	X	(B) (D) (SUB RE64627, (2) 57M7254, (2) 57M7289, (4) R104846 AND (4) 57M7258)
	RE64627	CAB WIRING HARNESS	1	XXXXXX-XXXXXX	X	(B) (E) (SUB FOR RE60538)
	RE158816	CAB WIRING HARNESS	1	010000-	X	(B) (SUB FOR RE69160)
	RE150544	CAB WIRING HARNESS	1	XXXXXX-XXXXXX		(C) (F) (SUB RE163725) (8400 ONLY)
	RE163725	CAB WIRING HARNESS	1	XXXXXX-		(C) (G) (SUB FOR RE150544, RE158815 OR RE160770) (8400 ONLY)
..	RE71260	WIRING HARNESS	1	-009999	X	(ALSO ORDER RE68327) (USE WITH RE60537 OR RE64626)

(A)NORTH AMERICAN VERSION
VERSION NORD AMERICAINE
NORDAMERIKANISCHE
VERSIONE NORDAMERICANA
VERSION NORTAMERICANA
NORDAMERIKANSK VERSION

(B)EUROPEAN VERSION
VERSION EUROPEENNE
EUROPAEISCHE AUSFUEHRUNG
VERSIONE EUROPEA
VERSION EUROPEA
EUROPEISK VERSION

(C)UKRAINIAN VERSION
VERSION UKRAINIENNE
UKRAINISCHE AUSFUEHRUNG
VERSIONE PER L'UCRAINA
VERSION UCRAINIANA
VERSION FOER UKRAINA

(D)(-XXXXXX)8100-002801;8200-002215;8300-003900;8400-002531
(E)(XXXXXX-XXXXXX)8100-002802-009999;8200-002216-009999;8300-003901-009999;8400-002532-009999
(F)(XXXXXX-XXXXXX)8400-011969-023110
(G)(XXXXXX-)8400-023111

https://www.truck-manuals.net/

MEMORANDA
MEMORANDA
MEMORANDA
MEMORANDA
MEMORANDA
MEMORANDA

https://www.truck-manuals.net/

CAB AND CHASSIS GROUND CABLE
CABLE DE MASSE, CABINE ET CHASSIS
MASSEKABEL, KABINE UND FAHRGESTELL
FILO DI TERRA DI CABINA E TELAIO
CABLE A TIERRA DE CABINA Y CHASIS
JORDKABEL, HYTT OCH CHASSI
RXP011245 -UN-01JAN94

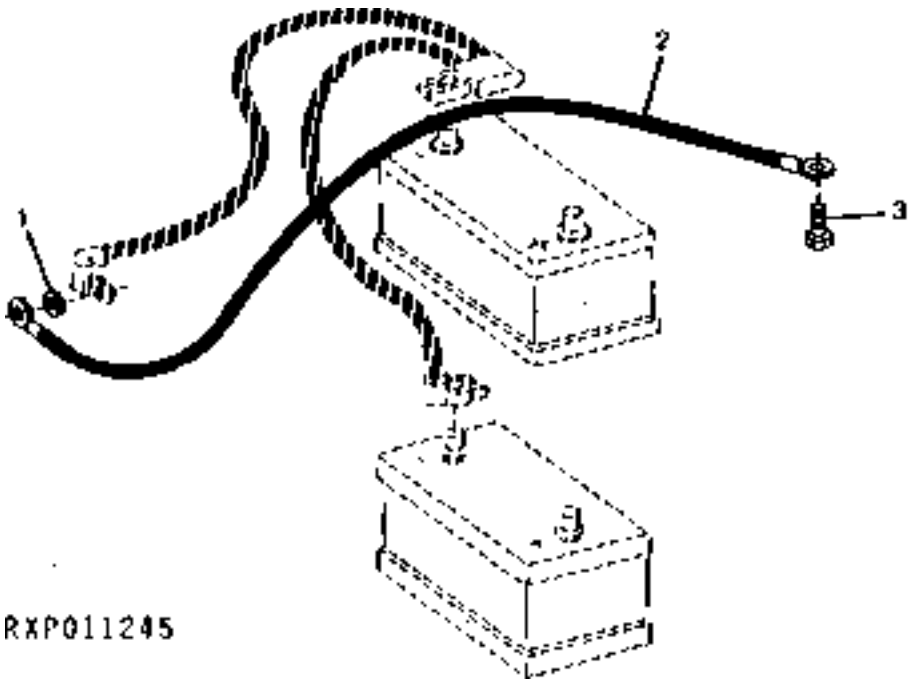

KEY	PART NO.	PART NAME	QTY	TRACTOR SERIAL NO.	ALL	REMARKS
1	14M7274	NUT	1		X	M10
2	RE60634	CABLE	1		X	(-)
3	19M7783	SCREW	1		X	M10 X 16, HS 10.9

https://www.truck-manuals.net/

STARTING CIRCUIT RELAY
RELAIS DU CIRCUIT DE MARRAGE
ANLASSERSTROMKREISRELAY
INTERRUTTORE CIRCIITO DI ACCENSIONE
RELE DEL CIRCUITO DE ARRANQUE
STARTRELAE
RXP025024 -UN-01JAN94

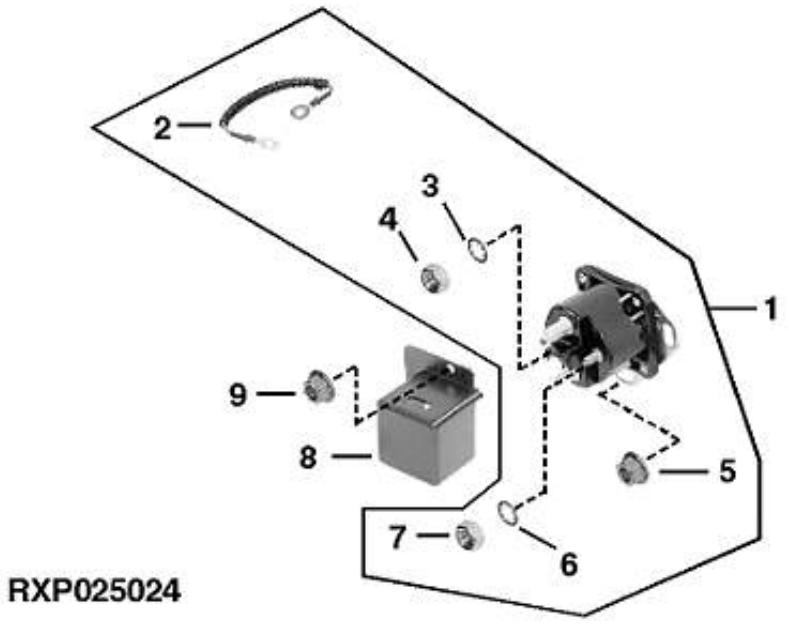

KEY	PART NO.	PART NAME	QTY	TRACTOR SERIAL NO.	ALL	REMARKS
1	RE38391	STARTER RELAY	1		X	(MARKED AT68973) INCLUDES (2) R74993
2	.....	WIRING LEAD	1		X	MAKE FROM R65593,R65599 & R32018
3	12M7032	LOCK WASHER	2		X	0.331"
4	14H785	NUT	2		X	5/16"
5	14M7303	FLANGE NUT	2		X	M6
6	12M7060	WASHER	2		X	0.209"
7	14H631	NUT	2		X	0.190"
8	R113164	COVER	1		X	
9	14M7303	FLANGE NUT	2		X	M6

https://www.truck-manuals.net/

ELECTRICAL JUNCTION BLOCK
BLOC DE DERIVATION ELECTRIQUE
STROMVERTEILERBLOCK
BLOQUE DE EMPALME ELECTRICO
BLOCCO DI DERIVAZIONE ELETTRICA
ELEKTRISK AVGRENINGSDOSA
RXP011298 -UN-01JAN94

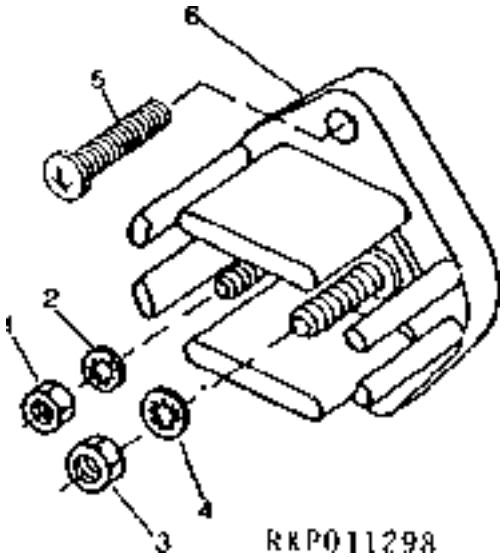

KEY	PART NO.	PART NAME	QTY	TRACTOR SERIAL NO.	ALL	REMARKS
1	14H778	NUT	3		X	0.190"
2	12M7060	WASHER	3		X	0.209"
3	14H786	NUT	1		X	1/4"
4	12H297	LOCK WASHER	1		X	1/4"
5	21H1463	CAP SCREW	2		X	0.190" X 7/8"
6	R111931	JUNCTION BLOCK	1		X	

https://www.truck-manuals.net/

AUXILARY POWER STRIP
MULTIPRISE AUXILAIRS
ZUSAETZLICHE MEHRFACH-STECKDOSE
BASETTA AUSILIARIA DI ALIMENTAZIONE
TIRA DE CONEXION DE ALIMENTACION AUXILIAR
RESERVUTTAGSPLINT
RE026984 -UN-06AUG96

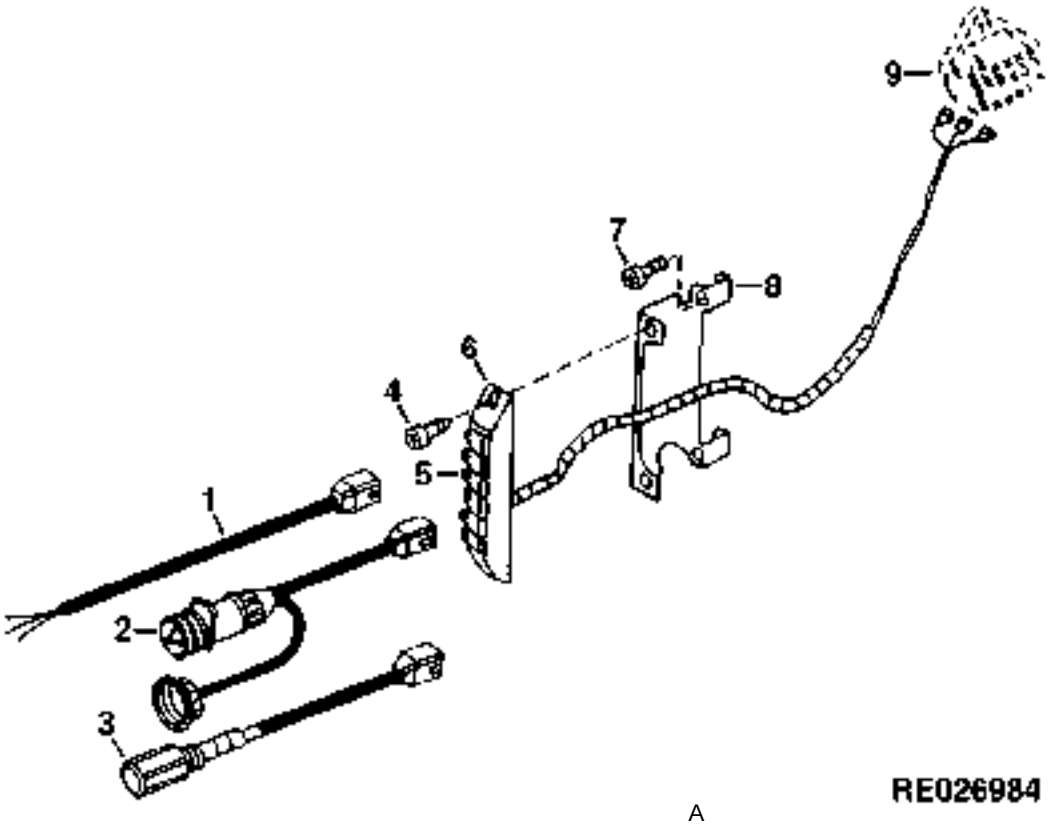

KEY	PART NO.	PART NAME	QTY	TRACTOR SERIAL NO.	ALL	REMARKS
1	RE67013	ADAPTER	1		X	
2	RE67015	ADAPTER	1		X	(A)
	RE67016	ADAPTER	1		X	(B)
3	RE67014	ADAPTER	1		X	
4	37M7090	SCREW	2		X	M6 X 16
5	RE67019	CAP	5		X	
6	RE68495	STRIP	1		X	
7	37M7089	SCREW	3		X	M6 X 12
8	R132150	BRACKET	1		X	
9	R111931	JUNCTION BLOCK	1		X	

(A)NORTH AMERICAN VERSION
VERSION NORD AMERICAINE
NORDAMERIKANISCHE
VERSIONE NORDAMREICANA
VERSION NORTEAMERICANA
NORDAMREIKANSK VERSION

(B)EUROPEAN VERSION
VERSION EUROPEENNE
AUSFUEHRUNG EUROPEAEISCHE
VERSIONE EUROPEA
VERSION EUROPEA
EUROPEISK VERSION

https://www.truck-manuals.net/

7-TERMINAL ELECTRICAL OUTLET SOCKET (NORTH AMERICAN VERSION)
PRISE FEMELLE ELECTRIQUE'A 7 COSSES(VERSION NORD AMERICAINE)
7-STIFT STECKDOSE(NORDAMERIKANISCHE AUSFUEHRUNG)
MORSETTO PRESA ELETTRICA ESTERNA(VERSIONE NORDAMERICANA)
CASQUILLO DE TOMA ELECTRICA DE 7 TERMINALES(VERSION NORTEAMERICANA)
SJUPOLIGT ELEKTRISKT KONTAKTDON(NORDAMERIKANSK VERSION)
RE026591 -UN-13DEC95

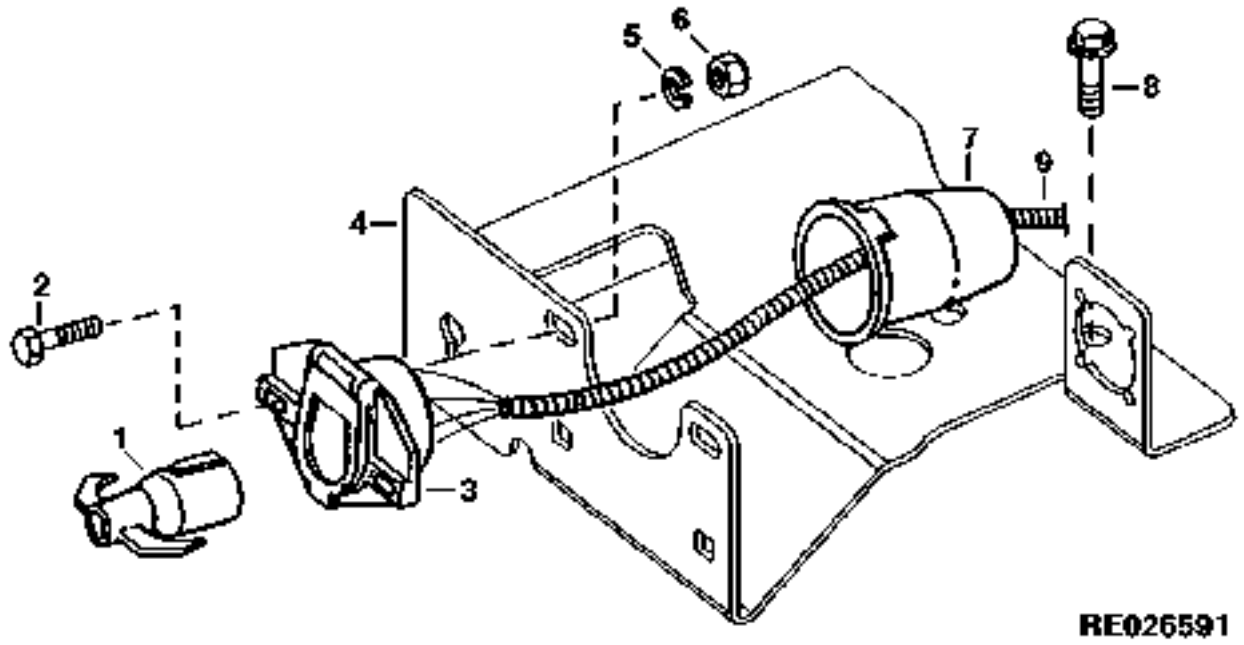

KEY	PART NO.	PART NAME	QTY	TRACTOR SERIAL NO.	ALL	REMARKS
1	AH93625	PLUG	1		X	
2	19H1900	CAP SCREW	2		X	5/16" X 3/4"
3	AR75695	SOCKET OUTLET	1		X	
4	RE63638	BRACKET	1		X	(SUB FOR R111975 OR R126536)
	R128894	LABEL	1		X	(SUB FOR R123139, THIS APPLICATION)
5	12H303	LOCK WASHER	2		X	5/16"
6	14H785	NUT	2		X	5/16"
7	R61775	BOOT	1		X	
8	19M8242	SCREW	2		X	HS 10.9
9	RE60537	CAB WIRING HARNESS	1	-XXXXXX	X	(A) (SUB RE64626, (2) 57M7254, (2) 57M7289, (4) R104846 AND (4) 57M7258) (SUB FOR RE69159)
	RE64626	CAB WIRING HARNESS	1	XXXXXX-XXXXXX	X	(B) (SUB FOR RE60537)
	RE163725	CAB WIRING HARNESS	1	100000-	X	(SUB FOR RE69159, RE158815 OR RE160770)

(A) (-XXXXXX)8100-002801;8200-002215;8300-003900;8400-002531
(B) (XXXXXX-XXXXXX)8100-002802-009999;8200-002216-009999;8300-003901-009999;8400-002532-009999

https://www.truck-manuals.net/

7-TERMINAL ELECTRICAL OUTLET SOCKET(EUROPEAN VERSION)
PRISE FEMELLE ELECTRIQUE A 7 COSSE(VERSION EUROPEENNE)
7-STIFT STECKDOSE(EUROPAEISCHE AUSFUEHRUNG)
MORSETTO PRESA ELETTRICA ESTERNA(VERSIONE EUROPEA)
CASQUILLO DE TOMA ELECTRICA DE 7 TERMINALES(VERSION EUROPEA)
SJUPOLIGT ELEKTRISSKT KONTAKTDON(EUROPEISK VERSION)
RE026592 -UN-13DEC95

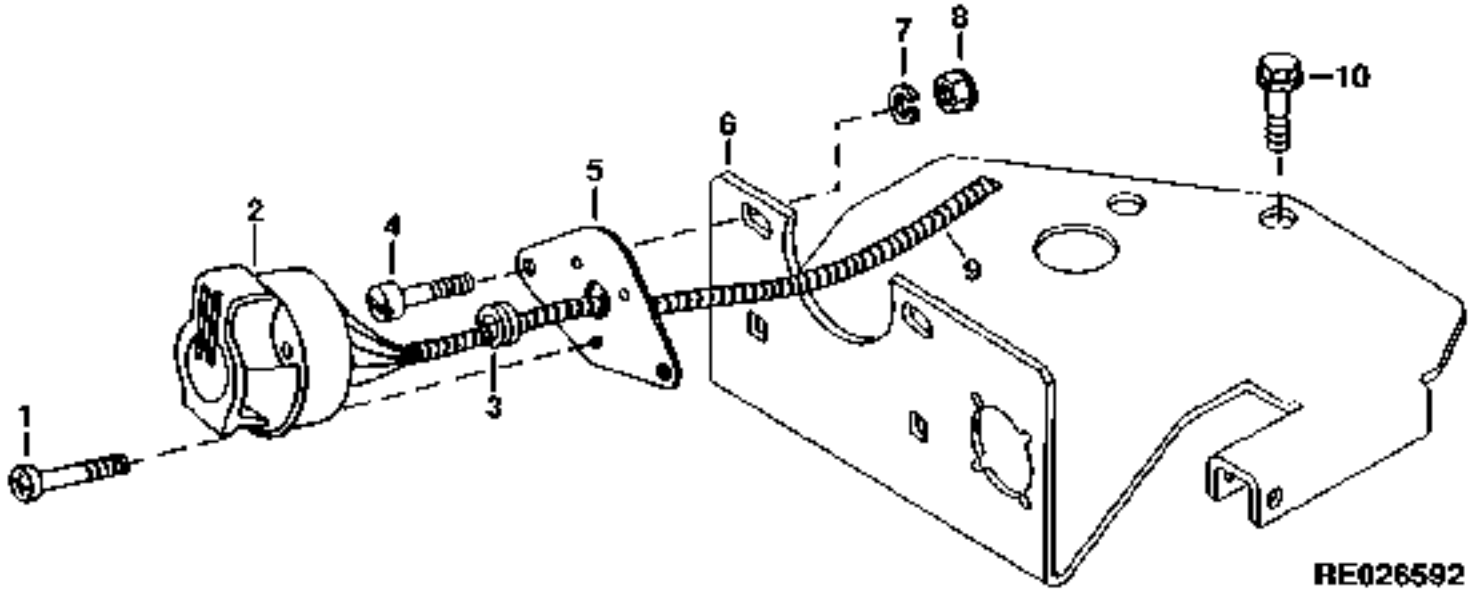

KEY	PART NO.	PART NAME	QTY	TRACTOR SERIAL NO.	ALL	REMARKS
1	37M7077	SCREW	3		X	
2	L83677	SOCKET OUTLET	1		X	
3	R26941	GROMMET	1		X	
4	21H1356	SCREW	2		X	0.190" X 1-1/4"
5	R125964	BRACKET	1		X	
6	R128387	BRACKET	1		X	(SUB FOR R121827 OR R126537)
	R123139	LABEL	1		X	
7	12H246	LOCK WASHER	2		X	0.190"
8	14H778	NUT	2		X	0.190"
9	RE60538	CAB WIRING HARNESS	1	-XXXXXX	X	(A) (SUB RE64627, (2) 57M7254, (2) 57M7289, (4) R104846 AND (4) 57M7258)
	RE64627	CAB WIRING HARNESS	1	XXXXXX-XXXXXX	X	(B) (SUB FOR RE60538)
	RE158816	CAB WIRING HARNESS	1	010000-	X	(SUB FOR RE69160)
10	19M8242	SCREW	2		X	HS 10.9

(A) (-XXXXXX)8100-002801;8200-002215;8300-003900;8400-002531
(B) (XXXXXX-XXXXXX)8100-002802-009999;8200-002216-009999;8300-003901-00999;8400-002532-009999

https://www.truck-manuals.net/

9-PIN IMPLEMENT FEEDBACK CONNECTOR
CONNECTEUR DE REACTION D'OUTIL A NEUF BROCHES
NEUNFACH-ANBAUGERAET-REGELUNGSSTECKER
CONNECTTORE A 9 CONTATTI DI SEGNALAZIONE DELL'ATTREZZO
CONECTOR DE NUEVE CLAVIJAS DE REALIMENTACION DEL IMPLEMENTO
NIO-STIFTANSLUTNING FOER REDSKAPSRESPONS
RE029557 -UN-21MAY98

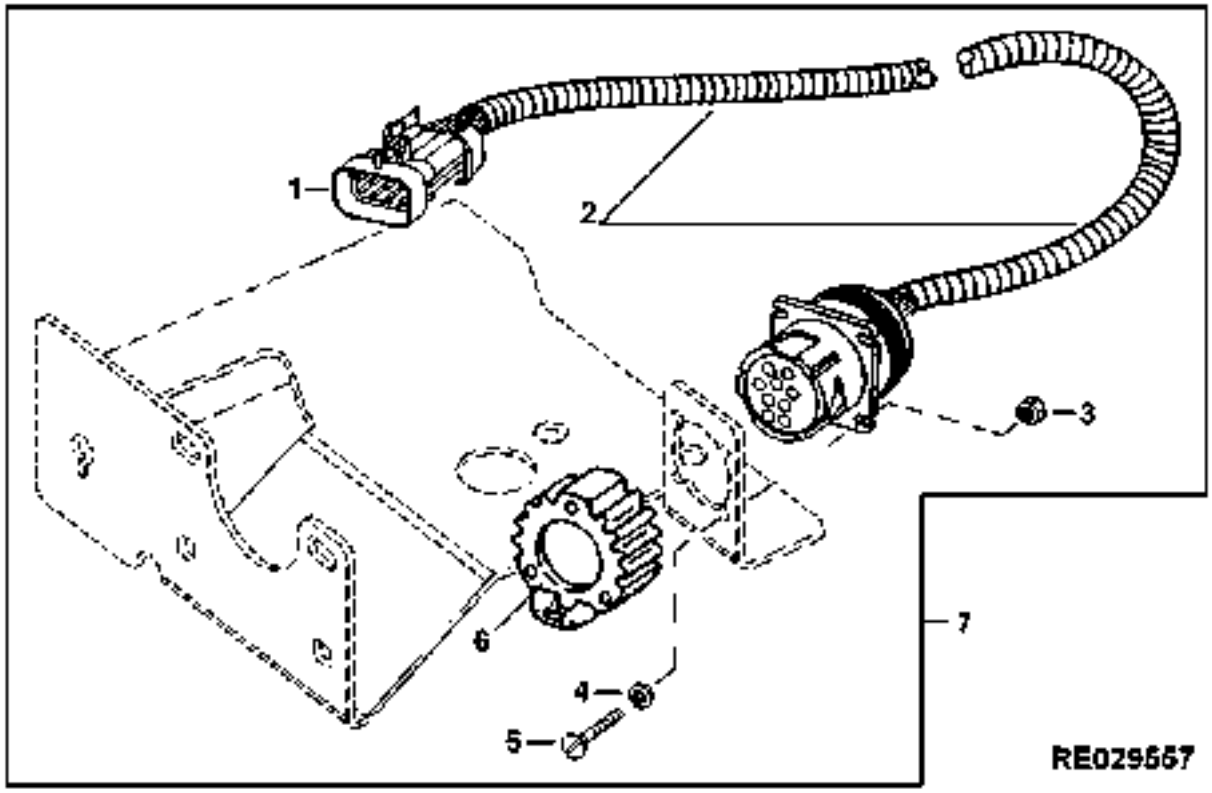

KEY	PART NO.	PART NAME	QTY	TRACTOR SERIAL NO.	ALL	REMARKS
1	57M7265	CONNECTOR	1		X	(SUB FOR RE42196) (ALSO ORDER (9) R78066 AND (9) R78063)
2	RE61404	WIRING HARNESS	1		X	
3	14H1000	NUT	4		X	0.112"
4	12H378	LOCK WASHER	4		X	0.112"
5	21H1176	SCREW	4		X	0.112" X 1/2"
6	57M7923	CAP	1		X	
7	**RE58827**	**KIT**	**1**		**X**	**(FI)**

https://www.truck-manuals.net/

CONVENIENCE OUTLET SOCKET
PRISE FEMELLE ELECTRIQUE PATIQUE
ZUSATZSTECKDOSE
PRESA DI CORRENTE DI EMERGENZA
CASQUILLO DE TOMA ELECTRICA DE SERVICO
UTTAG FOER EXTRA ELUTRUSTNING
RE026153 -UN-07MAR95

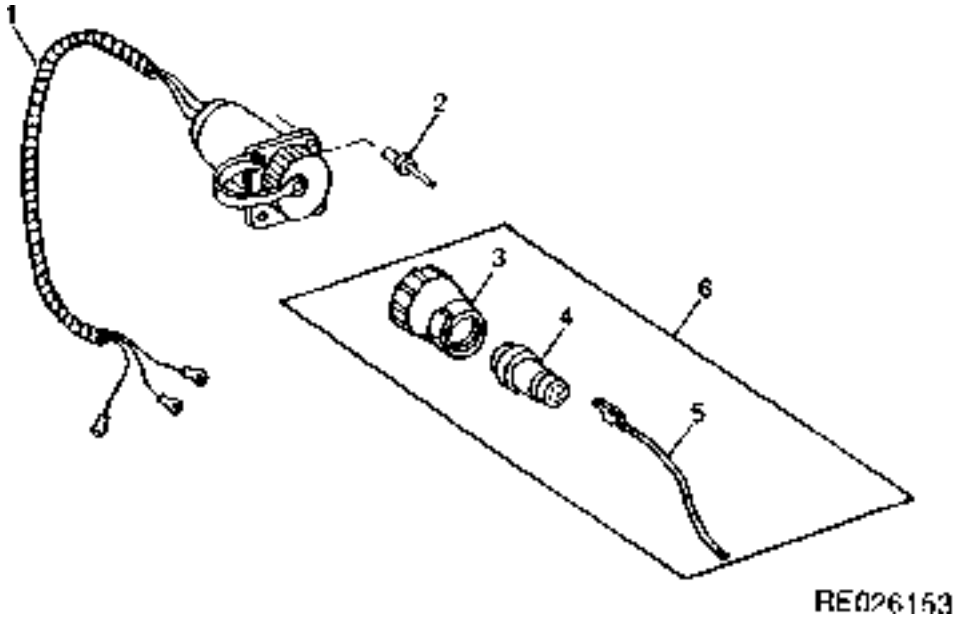

KEY	PART NO.	PART NAME	QTY	TRACTOR SERIAL NO.	ALL	REMARKS
1	RE51091	WIRING HARNESS	1		X	
2	R108166	RIVET	2		X	
3	RE48029	CLAMP	1		X	
4	AE44929	CONNECTOR	1		X	(SUB FOR RE48031)
5	RE48028	WIRING LEAD	3		X	
6	RE37651	PLUG	1		X	
..	R81207	COVER	1		X	(A)

(A)WITH OUT CONVENIENCE OUTLET SOCKET
SANS PRISE ELECTRIQUE AUXILIARE
OHNE GERAETEANSCHLUSS
SENZA PRESA AUSILIARIA
SIN TOMACORRIENTE AUXILIAR
UTAN EXTRA STROEMUTTAG

https://www.truck-manuals.net/

MEMORANDA
MEMORANDA
MEMORANDA
MEMORANDA
MEMORANDA
MEMORANDA

https://www.truck-manuals.net/

CONSOLE CONTROLS AND SWITCHES(8100,8200,8300,8400 -009999)
CONSOLE, COMMANDES ET INTERRUPTEURS(8100,8200,8300,8400 -009999)
KONSOLEN-BEDIENUNGSELEMENTE UND-SCHALTER(8100,8200,8300,8400 -009999)
INTERRUTTORI E COMANDI DELLA CONSOLLE(8100,8200,8300,8400 -009999)
CONTROLES E INTERRUPTORES EN LA CONSOLA(8100,8200,8300,8400 -009999)
KONSOL, REGLAGE OCH KONTAKTER(8100,8200,8300,8400 -009999)
RE026584 -UN-04DEC95

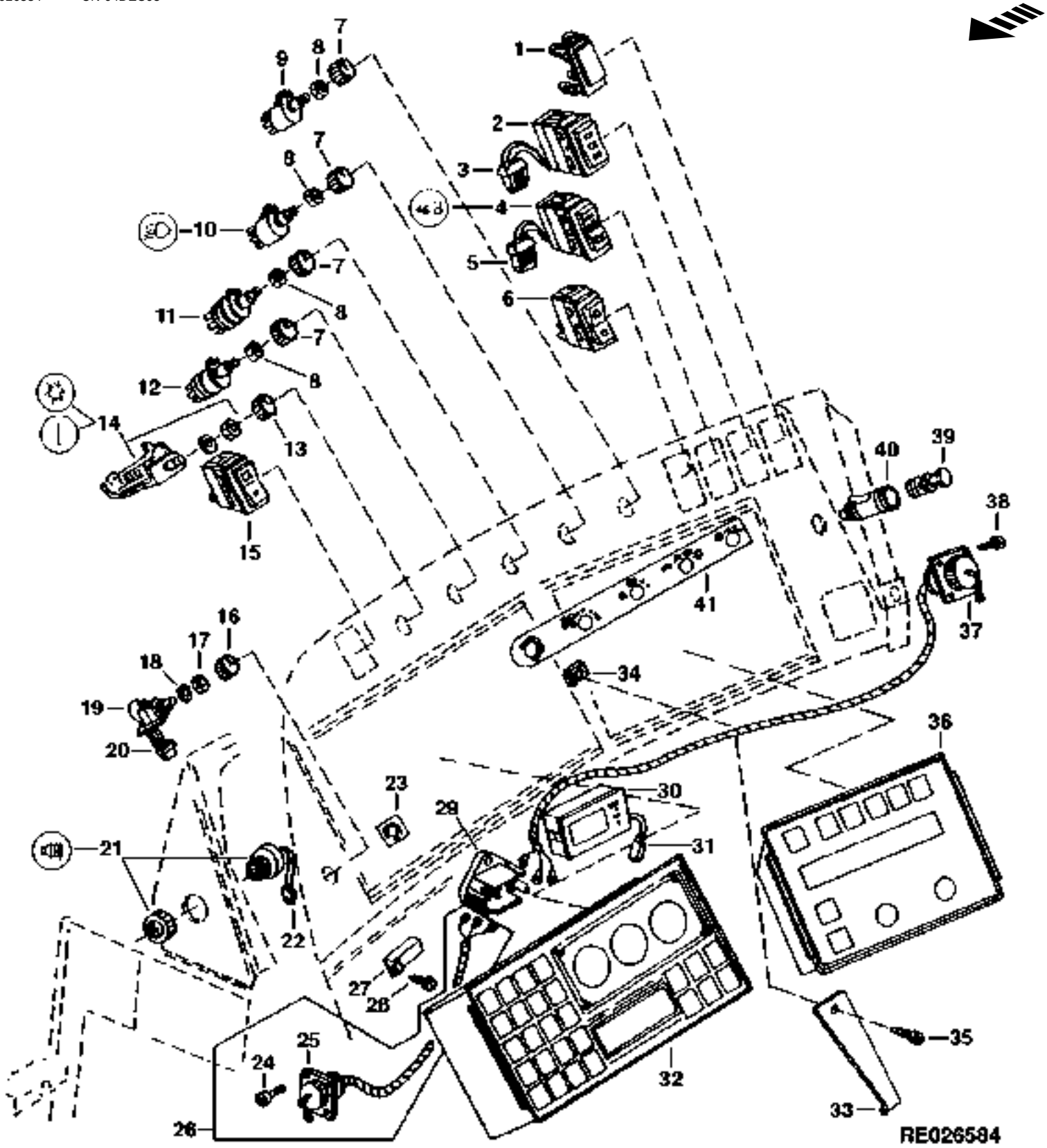

https://www.truck-manuals.net/

KEY	PART NO.	PART NAME	QTY	TRACTOR SERIAL NO.	ALL	REMARKS
1	M115279	PLUG	1		X	
2	RE55476	WIPER/WASHER SWITCH	1		X	REAR
3	57M7255	CONNECTOR	1		X	(ALSO ORDER (2) R104846, (2) 57M7258 AND 57M7290)
4	RE55477	ROCKER SWITCH	1		X	
5	57M7260	CONNECTOR	1		X	(ALSO ORDER (2) R104846, (2) 57M7258 AND 57M7291)
6	RE55036	HAZARD LIGHTS SWITCH	1		X	
7	AL76568	KNOB	3		X	
8	R44165	LOCK NUT	3		X	
9	AL36529	SWITCH	1		X	(A) (F)
10	AL36529	SWITCH	1		X	
11	RE46717	WIPER/WASHER SWITCH	1		X	FRONT
12	RE43497	BLOWER SWITCH	1		X	
13	AL76568	KNOB	1		X	
14	RE46742	CONTROL	1		X	
	RE58614	CABLE	1		X	
15	RE55478	AC COMPRESSOR SWITCH	1		X	
16	RE152147	KNOB	1		X	(SUB FOR RE57696)
17	R121233	NUT	1		X	
18	R121235	WASHER	1		X	
19	RE62163	POTENTIOMETER	1		X	(B) (SUB FOR RE57697)
20	57M7247	CONNECTOR	1		X	(ALSO ORDER (2) R104846, (2) 57M7258 AND 57M7318)
21	RE49727	HORN	1		X	
22	57M7254	CONNECTOR	1		X	(ALSO ORDER (2) R104846, (2) 57M7258 AND 57M7289)
23	R125138	LABEL	1		X	
24	R108166	RIVET	3		X	
25	RE51091	WIRING HARNESS	1		X	(USE WITH RE37651)
26	**AR113048**	**KIT**	**1**		**X**	**(FI)**
	R124157	BRACKET	1		X	(ALSO ORDER (2) 37M7089)
27	AL32891	FLASHER	1		X	(A)
28	37M7089	SCREW	1		X	M6 X 12
29	R111931	JUNCTION BLOCK	1		X	
30	AL78989	CLOCK	1		X	(A)
31	57M7244	CONNECTOR	1		X	(ALSO ORDER (2) R104919, (2) 57M7258 AND 57M7318)
32	RE62649	VEHICLE MONITOR	1		X	(C) (D) (SUB FOR RE60476) (INCLUDES R106952) W/RE61185(ICU)
	RE62650	VEHICLE MONITOR	1		X	(C) (E) (SUB FOR RE60927) (INCLUDES R106952) W/O RE61188(ICU)
	RE62651	VEHICLE MONITOR	1		X	(A) (E) (SUB FOR RE60477) (INCLUDES R106952) W/RE61188(ICU)
	RE62652	VEHICLE MONITOR	1		X	(A) (SUB FOR RE60955) (INCLUDES R106952) (ICU)
33	R121810	CLAMP	1		X	
34	R64822	NUT	2		X	
35	37H203	SCREW	2		X	
36	RE64583	DIGITAL DISPLAY	1		X	(SUB FOR RE60928 OR RE63440) (SUP)
37	RE51091	WIRING HARNESS	1		X	(USE WITH RE37651)
38	R108166	RIVET	3		X	
39	AR60937	LIGHTER	1		X	
40	AR56766	HOUSING	1		X	
	R131671	PLUG	1		X	
41	R126010	DECAL	1		X	(A)
	R126009	DECAL	1		X	(C)

(A)EUROPEAN VERSION
VERSION EUROPEENNE
EUROPAEISCHE
VERSIONE EUROPEA
VERSION EUROPEA
EUROPEISK VERSION

(B)FIELD CRUISE
REGULATEUR DE VITESSE
ARBEITSTEMPOREGLER
VELOCITA' DI CROCIERA
CONTROL DE CRUCERO
ARBETSFARTHAALLARE

(C)NORTH AMERICAN VERSION
VERSION NORD AMERICAINE
NORDAMERIKANISCHE
VERSIONE NORDAMERICANA
VERSION NORTEAMERICANA
NORDAMERIKANSK VERSION

(D)DELUXE CAB
CABINE DELUXE
LUXUSKABINE
CABINA DELUXE
CABINA DE LUJO
LYXHYTT

(E)ECONOMY CAB
CABINE ECONOMIE
EINFACHE KABINE
CABINA ECONOMICA
CABINA ECONOMICA
EKONOMIHYTT

(F)FIELD LIGHT
PROJECTEUR DE TRAVAIL
ARBEITSLICHT
LUCE DI LAVORO
LUZ DE TRABAJO
ARBETSLYKTA

https://www.truck-manuals.net/

CONSOLE CONTROLS AND SWITCHES(8100,8200,8300,8400 010000-)
CONSOLE, COMMANDES ET INTERRUPTEURS(8100,8200,8300,8400 010000-)
KONSOLEN-BEDIENUNGSELEMENTE UND-SCHALTER(8100,8200,8300,8400 010000-)
INTERRUTTORI E COMANDI DELLA CONSOLLE(8100,8200,8300,8400 010000-)
CONTROLES E INTERRUPTORES EN LA CONSOLA(8100,8200,8300,8400 010000-)
KONSOL, REGLAGE OCH KONTAKTER(8100,8200,8300,8400 010000-)
RE026975 -UN-30JUL96

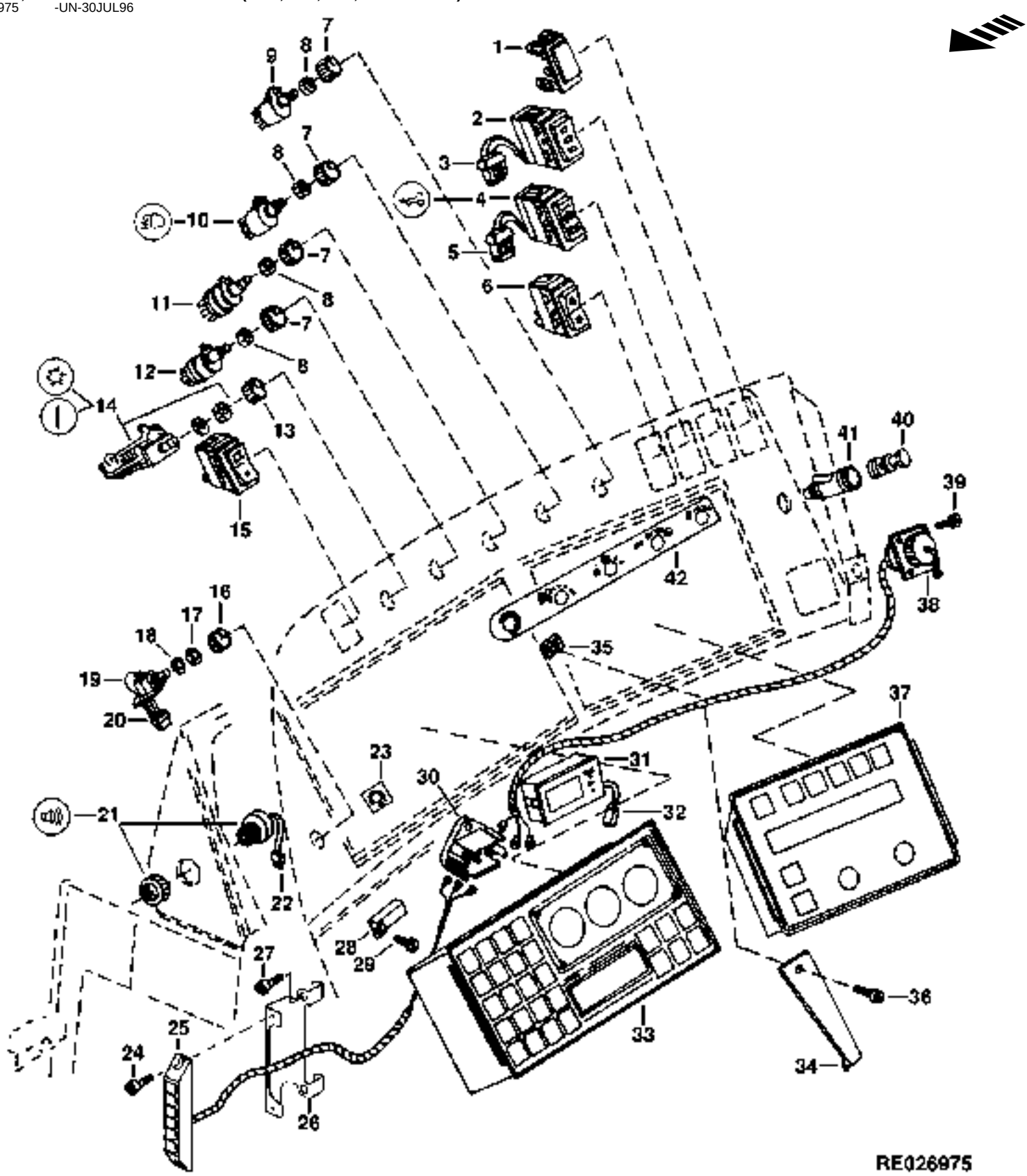

https://www.truck-manuals.net/

KEY	PART NO.	PART NAME	QTY	TRACTOR SERIAL NO.	ALL	REMARKS
1	M115279	PLUG	1		X	
2	RE55476	WIPER/WASHER SWITCH	1		X	REAR
3	57M7255	CONNECTOR	1		X	(ALSO ORDER (2) R104846, (2) 57M7258 AND 57M7290)
4	RE55477	ROCKER SWITCH	1		X	
5	57M7260	CONNECTOR	1		X	(ALSO ORDER (2) R104846, (2) 57M7258 AND 57M7291)
6	RE55036	HAZARD LIGHTS SWITCH	1		X	
7	AL76568	KNOB	3		X	
8	R44165	LOCK NUT	3		X	
9	AL36529	SWITCH	1		X	(A) (F)
10	AL36529	SWITCH	1		X	
11	RE46717	WIPER/WASHER SWITCH	1		X	FRONT
12	RE43497	BLOWER SWITCH	1		X	
13	AL76568	KNOB	1		X	
14	RE46742	CONTROL	1		X	
	RE58614	CABLE	1		X	
15	RE55478	AC COMPRESSOR SWITCH	1		X	
16	RE152147	KNOB	1		X	(SUB FOR RE57696)
17	R121233	NUT	1		X	
18	R121235	WASHER	1		X	
19	RE62163	POTENTIOMETER	1		X	(B) (SUB FOR RE57697)
20	57M7247	CONNECTOR	1		X	(ALSO ORDER (2) R104846, (2) 57M7258 AND 57M7318)
21	RE49727	HORN	1		X	
22	57M7254	CONNECTOR	1		X	(ALSO ORDER (2) R104846, (2) 57M7258 AND 57M7289)
23	R125138	LABEL	1		X	
24	37M7090	SCREW	2		X	
25	RE68495	STRIP	1		X	
26	R132150	BRACKET	1		X	
27	37M7089	SCREW	3		X	
28	AL32891	FLASHER	1		X	(A)
29	37M7089	SCREW	1		X	M6 X 12
30	R111931	JUNCTION BLOCK	1		X	
31	AL78989	CLOCK	1		X	(A)
32	57M7244	CONNECTOR	1		X	(ALSO ORDER (2) R104919, (2) 57M7258 AND 57M7318)
33	RE62649	VEHICLE MONITOR	1		X	(C) (D) (SUB FOR RE60476) (INCLUDES R106952) W/RE61185(ICU)
	RE62650	VEHICLE MONITOR	1		X	(C) (E) (SUB FOR RE60927) (INCLUDES R106952) W/O RE61188(ICU)
	RE62651	VEHICLE MONITOR	1		X	(A) (E) (SUB FOR RE60477) (INCLUDES R106952) W/RE61188(ICU)
	RE62652	VEHICLE MONITOR	1		X	(A) (SUB FOR RE60955) (INCLUDES R106952) (ICU)
34	R121810	CLAMP	1		X	
35	R64822	NUT	2		X	
36	37H203	SCREW	2		X	
37	RE64583	DIGITAL DISPLAY	1		X	(SUP)
38	RE51091	WIRING HARNESS	1		X	(USE WITH RE37651)
39	R108166	RIVET	3		X	
40	AR60937	LIGHTER	1		X	
41	AR56766	HOUSING	1		X	
	R131671	PLUG	1		X	
42	R126010	DECAL	1		X	(A)
	R126009	DECAL	1		X	(C)

(A)EUROPEAN VERSION
VERSION EUROPEENNE
EUROPAEISCHE
VERSIONE EUROPEA
VERSION EUROPEA
EUROPEISK VERSION

(B)FIELD CRUISE
REGULATEUR DE VITESSE
ARBEITSTEMPOREGLER
VELOCITA' DI CROCIERA
CONTROL DE CRUCERO
ARBETSFARTHAALLARE

(C)NORTH AMERICAN VERSION
VERSION NORD AMERICAINE
NORDAMERIKANISCHE
VERSIONE NORDAMERICANA
VERSION NORTEAMERICANA
NORDAMERIKANSK VERSION

(D)DELUXE CAB
CABINE DELUXE
LUXUSKABINE
CABINA DELUXE
CABINA DE LUJO
LYXHYTT

(E)ECONOMY CAB
CABINE ECONOMIE
EINFACHE KABINE
CABINA ECONOMICA
CABINA ECONOMICA
EKONOMIHYTT

(F)FIELD LIGHT
PROJECTEUR DE TRAVAIL
ARBEITSLICHT
LUCE DI LAVORO
LUZ DE TRABAJO
ARBETSLYKTA

https://www.truck-manuals.net/

INSTRUMENT CONTROL UNIT(ICU) AND SCV SETUP PANEL(SUP)
UNITE DE COMMANDE DE TABLEAU DE BORD ET PANNEAU DE PREPARATION DE DISTRIBUTEUR SELECTIF
INSTRUMENTEN-STEUEREINHEIT UND ZUSATZSTUERGERAET-VORBEREITUNGS-BEDIENUNGSFELD
UNITA'DI CONTROLLO DEGLI STRUMENTI E PANNELLO DI APPRONTAMENTO DEI DISTRIBUTORI IDRAULICI
UNIDAD DE CONTROL DE INSTRUMENTTOS Y PANEL DE PREPARACION DE LA VCS
INSTRUMENTSTYRENHET OCH FOERBEREDNINGSPANEL FOER SMV
RE030010 -UN-28SEP98

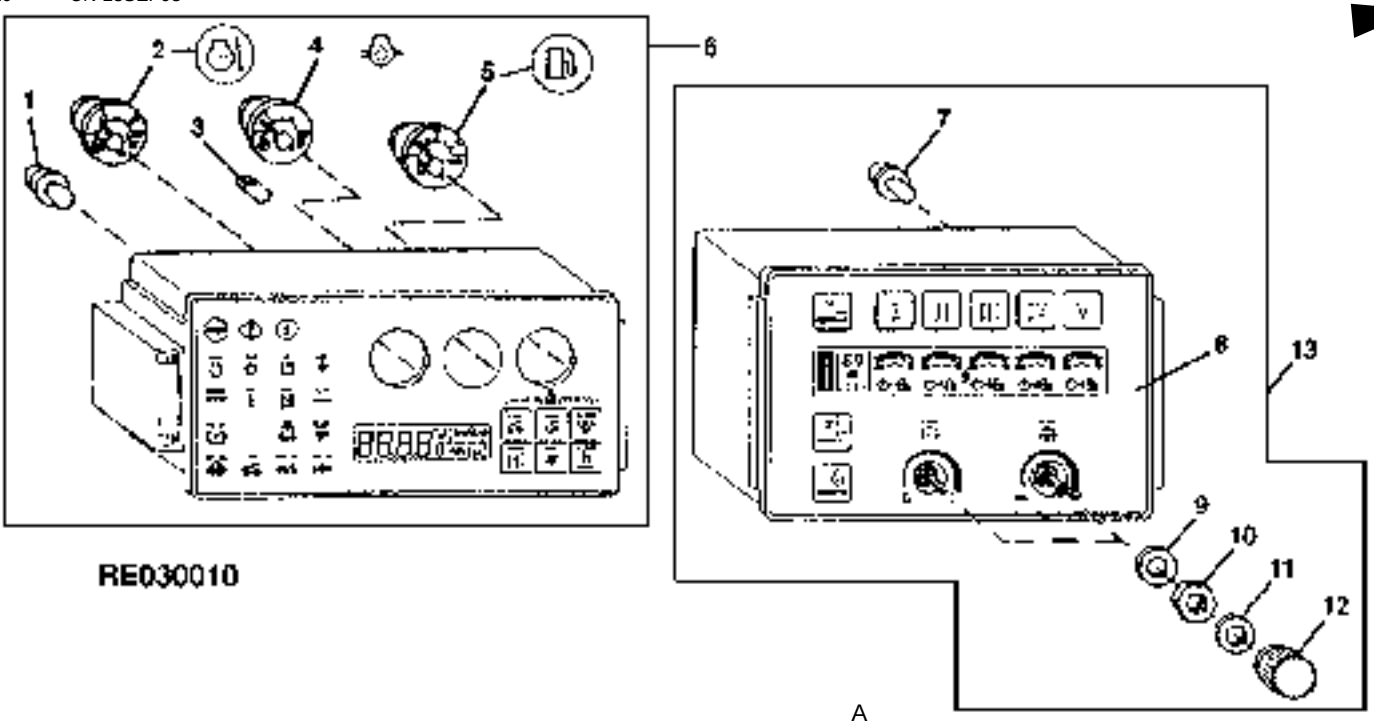

RE030010

KEY	PART NO.	PART NAME	QTY	CAB SERIAL NO.	ALL	REMARKS
1	R107890	BULB	23		X	(PC37)
2	RE61186	GAUGE	1		X	(A)
	RE61189	GAUGE	1		X	(B)
3	AA27536	BULB	2		X	
4	RE61188	GAUGE	1		X	(B) (D) (ALSO ORDER RE56009)
	RE61185	GAUGE	1		X	(A) (D) (ALSO ORDER RE56009)
5	RE61184	GAUGE	1		X	(A)
	RE61187	GAUGE	1		X	(B)
6	RE62649	VEHICLE MONITOR	1		X	(A) (D) (SUB FOR RE60476) (INCLUDES R106952) (ICU)
	RE62650	VEHICLE MONITOR	1		X	(A) (C) (SUB FOR RE60927) (INCLUDES R106952) W/O RE61185(ICU)
	RE62651	VEHICLE MONITOR	1		X	(B) (C) (SUB FOR RE60477) (INCLUDES R106952) W/O RE61188(ICU)
	RE62652	VEHICLE MONITOR	1		X	(B) (D) (SUB FOR RE60955) (INCLUDES R106952) (ICU)
7	R107890	BULB	5		X	(PC37)
8	R107357	PANEL	1		X	
9	R121798	WASHER	2		X	
10	R121797	NUT	2		X	
11	R121796	WASHER	2		X	
12	R120432	KNOB	2		X	
13	RE64583	DIGITAL DISPLAY	1		X	(SUB FOR RE60928 OR RE63440) (SUP)

(A)NORTH AMERICAN VERSION
VERSION NORD AMERICAINE
NORDAMERIKANISCHE
VERSIONE NORDAMERICANA
VERSION NORTEAMERICANA
NORDAMERIKANSK VERSION

(B)EUROPEAN VERSION
VERSION EUROPEENNE
EUROPAEISCHE AUSFUEHRUNG
VERSIONE EUROPEA
VERSION EUROPEA
EUROPEISK VERSION

(C)ECONOMY CAB
CABINE ECONOMIE
EINFACHE KABINE
CABINA ECONOMICA
CABINA ECONOMICA
EKONOMIHYTT

(D)DELUXE CAB
CABINE DELUXE
LUXUSKABINE
CABINA DELUXE
CABINA DE LUJO
LYXHYTT

https://www.truck-manuals.net/

KEY AND ETHER AID SWITCHES
CONTACTEUR A CLE ET INTERRUPTEUR D'AIDE AU DEMARRAGE A L'ETHER
ZUNDSCHALTER UND STAATHILFESCHALTER
INTERRUTTORE A CHIVE E PULSANTE DI AVVIAMENTO AD ETERE
INTERRUPTORES DE LLAVE Y DEL AUXILIAR DE ARRANQUE CON ETER
TAENDLAAS OCH ETERSTARTHJAELPKONTAKT
RXP010870 -UN-01JAN94

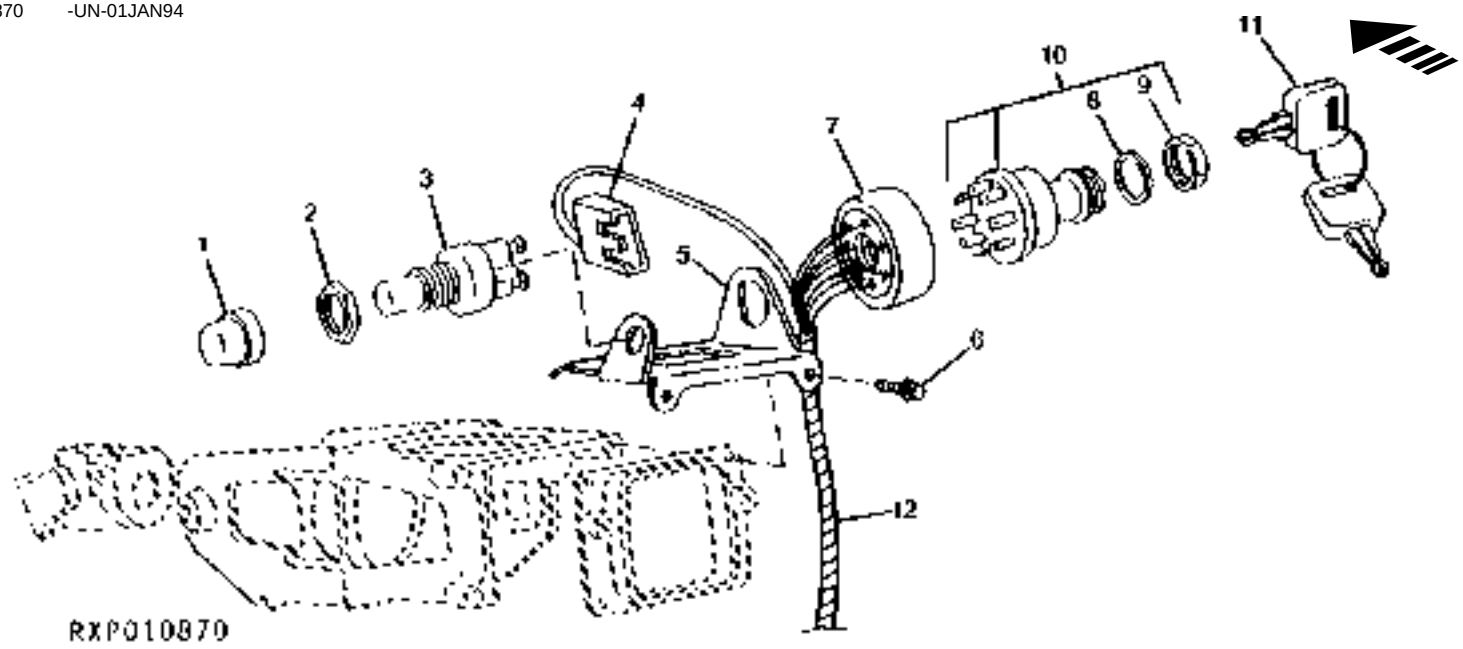

KEY	PART NO.	PART NAME	QTY	TRACTOR SERIAL NO.	ALL	REMARKS
1	T55585	CAP	1		X	
2	T15969	NUT	1		X	15.875 MM
3	R39554	SWITCH	1		X	
4	R77480	CONNECTOR	1		X	(ALSO ORDER (2) U46662)
5	R107598	BRACKET	1		X	
6	19M7775	SCREW	2		X	M6 X 16
7	RE46736	CONNECTOR	1		X	(ALSO ORDER (3) 57M7429, (3) 57M7511 AND 57M7512)
8	A4827R	WASHER	1		X	
9	R44342	NUT	1		X	
10	RE61717	KEY SWITCH	1		X	
11	RE71557	KEY	1		X	(SUB FOR RE43492)
12	.....	CAB WIRING HARNESS	1		X	

https://www.truck-manuals.net/

ENGINE SPEED CONTROL(ARMREST)
COMMANDE DE REGIME NOTEUR (ACCOUDOIR)
MOTORDREHZAHLSTEUERUNG (ARMLEHNE)
CONTROLLO DEL REGIME DEL MOTORE (A BRACCIOLO)
CONTROL DE VELOCIDAD DEL MOTOR (APOYABRAZOS)
MOTORVARVTALSREGLAGE (ARMSTOED)
RE027613 -UN-22JAN97

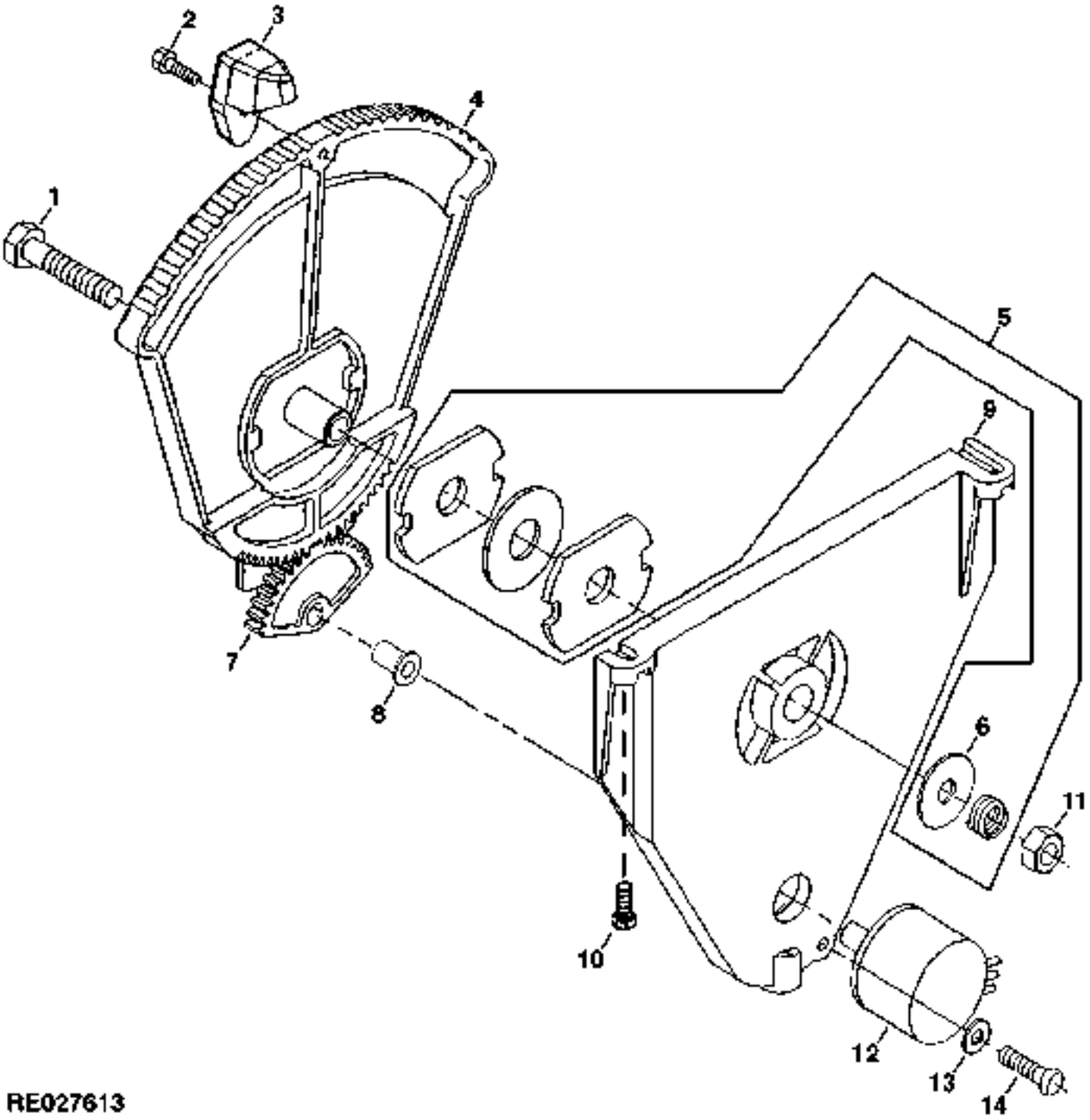

https://www.truck-manuals.net/

KEY	PART NO.	PART NAME	QTY	TRACTOR SERIAL NO.	ALL	REMARKS
1	19M7874	CAP SCREW	1		X	M6 X 30
2	19M8825	SCREW	1		X	M3 X 10
3	R153185	KNOB	1		X	(SUB FOR R121922)
4	R110682	LEVER	1		X	
5	RE68290	KIT	1		X	
6	R112513	WASHER	1		X	
7	R129518	GEAR	1		X	(SUB FOR R107629)
8	R118453	CLIP	1		X	
9	R124812	BRACKET	1		X	
10	H111706	SCREW	1		X	
11	14M7165	LOCK NUT	1		X	M6
12	RE56400	CONTROL	1		X	
13	24M7117	WASHER	1		X	4.300 X 9 X 0.800 MM
14	H111706	SCREW	1		X	

https://www.truck-manuals.net/

TRANSMISSION CONTROL SELECTOR(ARMREST)
SELECTEUR DE COMMANDE DE LA TRANSMISSION (ACCOUDOIR)
GETRIEBE-WAEHLSCHALTER (ARMLEHNE)
SELETTORE DELLA TRASMISSIONE (A BRACCOILO)
SELECTOR DE CONTROL DE LA TRANSMISION (APOYABRAZOS)
TRANSMISSIONSREGLAGE (ARMSTOED)
RE028206 -UN-06AUG97

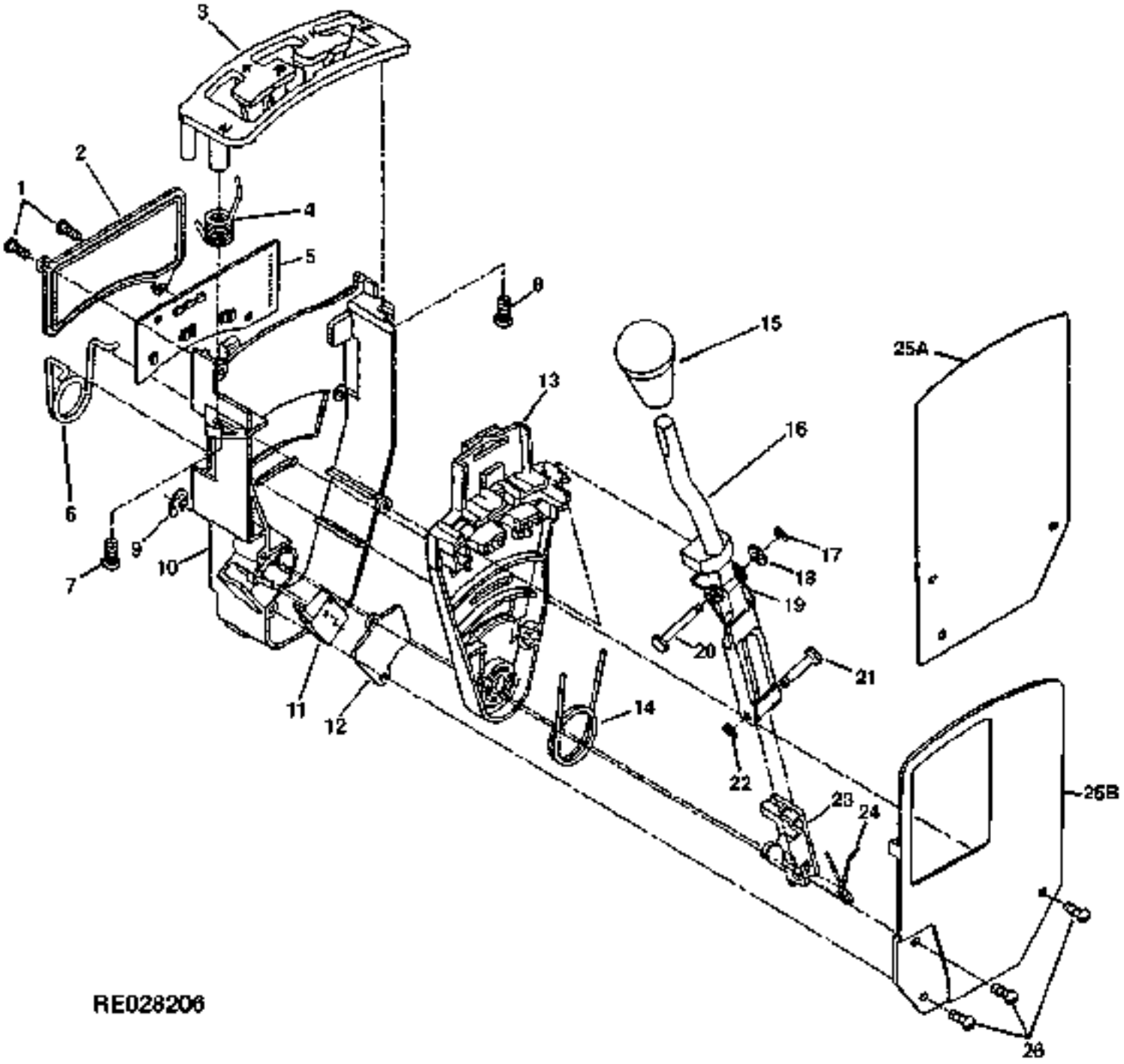

https://www.truck-manuals.net/

KEY	PART NO.	PART NAME	QTY	TRACTOR SERIAL NO.	ALL	REMARKS
1	R113246	SCREW	2		X	
2	R107588	COVER	1		X	
3	R121915	GUIDE	1		X	
4	R124712	SPRING	1		X	
5	RE62561	TRANSMISSION CONTROLLER	1	-XXXXXX	X	(B) (SUB RE71084, RE63687 AND R127879) (ACU)
	RE63007	TRANSMISSION CONTROLLER	1	XXXXXX-XXXXXX	X	(C) (SUB RE71084, RE63687 AND R127879) (ACU)
	RE65126	TRANSMISSION CONTROLLER	1	XXXXXX-XXXXXX	X	(D) (SUB RE71084) (SUB FOR RE64012) (ACU)
	RE71084	TRANSMISSION CONTROLLER	1	XXXXXX-	X	(E) (SUB FOR RE62561, RE63007, RE64012 OR RE65126) (ACU)
6	R124241	SPRING	1		X	
7	21M7276	SCREW	1		X	M4 X 30
8	21M7216	SCREW	1		X	M4 X 20
9	R72654	SNAP RING	1		X	
10	R125873	BRACKET	1	-XXXXXX	X	(F)
	R127879	BRACKET	1	XXXXXX-	X	(E) (SUB R127879, RE63687 AND RE64012)
11	RE56362	SWITCH	1		X	(A) (SUB FOR R125873)
12	R121920	COVER	1	-XXXXXX	X	(G) A
13	RE60319	SECTOR	1	-XXXXXX	X	(I) (SUB R127849)
	RE62399	SECTOR	1	XXXXXX-XXXXXX	X	(J) (SUB RE71084, RE63687 AND R127879)
	RE63687	SECTOR	1	XXXXXX-	X	(E)
14	R107583	EXTENSION SPRING	1		X	(SUB FOR RE60319 OR RE62399)
15	R153184	KNOB	1		X	(SUB FOR R107583 OR R121917)
16	RE58224	LEVER	1	-XXXXXX	X	(K) (SUB RE62778)
	RE62778	LEVER	1	XXXXXX-	X	(L)
17	R40687	SNAP RING	1		X	L
18	24M7117	WASHER	1		X	0.169" X 0.354" X 0.031"
19	R134449	SPRING	1		X	
20	R121919	PIN	1		X	(SUB FOR R107628)
21	R121918	PIN	1		X	
22	R40687	SNAP RING	1		X	
23	R123999	PIVOT	1		X	
24	R124711	SPRING	1		X	
25A	R124274	COVER	1	-XXXXXX	X	(G)
25B	R127849	COVER	1	XXXXXX-	X	(H)
26	R113246	SCREW	3		X	(SUB FOR R121920 AND R124274)

(A)NEUTRAL START
DEMARRAGE AU POINT MORT
ANLASSICHERUNG
AVVIAMENTO IN FOLLE
ARRANQUE EN PUNTO MUERTO
START I NEUTRALLAEGE

(B)(-XXXXXX) 8100-1707;8200-001604;8300-002820;8400-001419
(C)(XXXXXX-XXXXXX) 8100-001708-002560;8200-001605-002089;8300-002821-003675;8400-001420-002439
(D)(XXXXXX-XXXXXX) 8100-002561-009999;8200-002090-009999;8300-003676-009999;8400-002440-009999
(E)(XXXXXX-) 8100-010000;8200-010000;8300-010000;8400-010000
(F)(-XXXXXX) 8100-002560;8200-002089;8300-003675;8400-002439
(G)(-XXXXXX) 8100-001198;8200-001208;8300-001711;8400-001068
(H)(XXXXXX-) 8100-001199;8200-001209;8300-001712;8400-001069
(I)(-XXXXXX) 8100-001153;8200-001155;8300-001527;8400-001065
(J)(XXXXXX-XXXXXX) 8100-001154-002560;8200-001156-002089;8300-001528-003675;8400-001066-002439
(K)(-XXXXXX) 8100-001599;8200-001543;8300-002684;8400-001250
(L)(XXXXXX-) 8100-001600-8200-001544;8300-002685;8400-001251

https://www.truck-manuals.net/

ARMREST ELECTRICAL COMPONENTS
COMPOSANTS ELECTRIQUES D'ACCOURDOIR
ELEKTRISCHE KOMPONENTEN D.ARMSTUETZE
COMPONENTI ELETTRICI DEL BRACCIOLO
COMPONENTES ELECTRICOS DEL APOYABRAZOS
ELKOMPONENTER I ARMSTOED
RXP026049 -UN-07MAR95

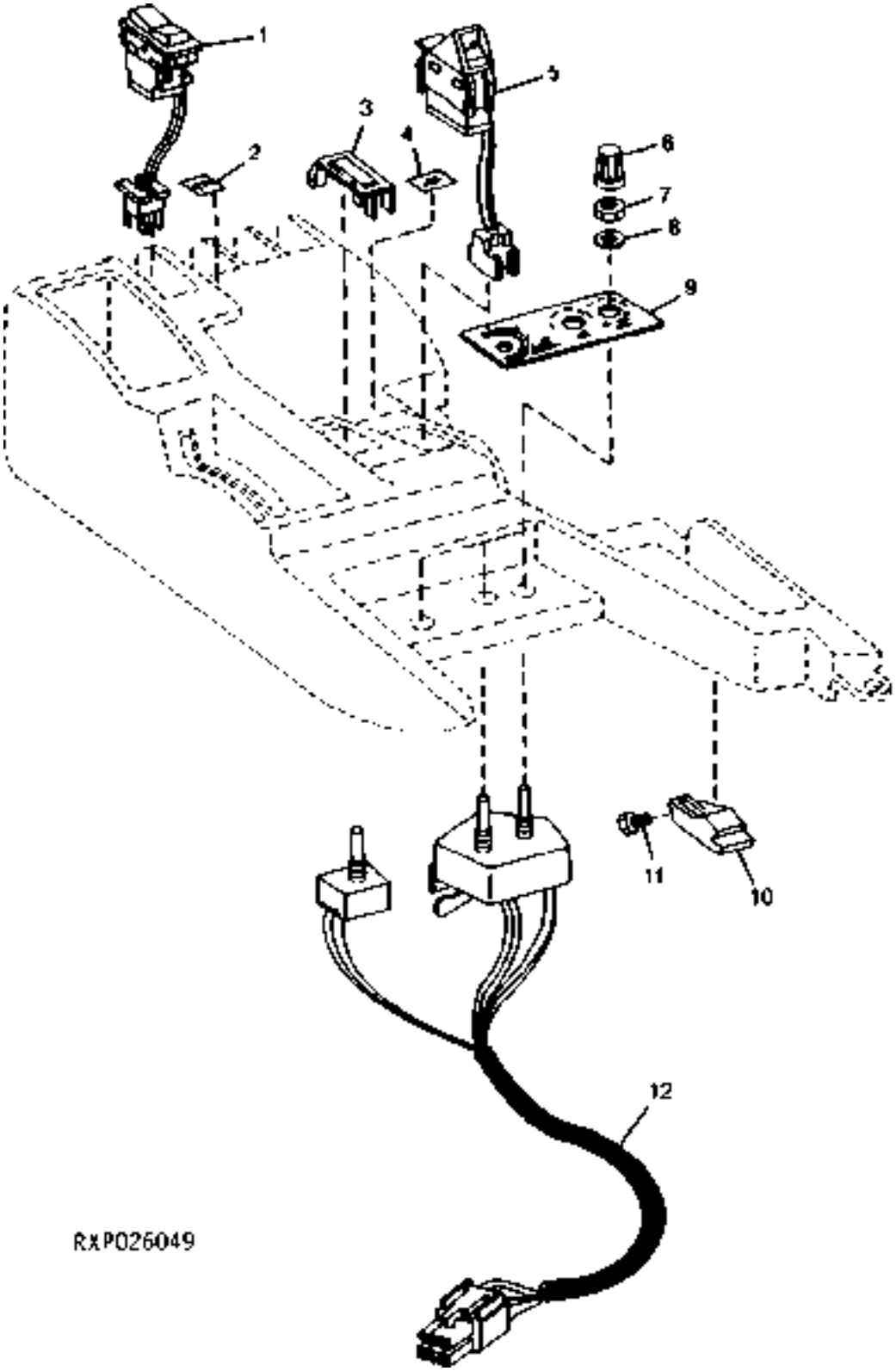

https://www.truck-manuals.net/

KEY	PART NO.	PART NAME	QTY	TRACTOR SERIAL NO.	ALL	REMARKS
1	RE60586	ROCKER SWITCH	1		X	(A)
	N202894	PLUG	1		X	(B)
2	R133058	LABEL	1		X	(SUB FOR R126468)
3	M115279	PLUG	1		X	
4	R133057	LABEL	1		X	(SUB FOR R126467)
5	RE160963	SWITCH	1		X	(C) (SUB FOR RE60587 OR RE154488)
6	RE49639	KNOB	3		X	
7	R121233	NUT	3		X	
8	R121235	WASHER	3		X	
9	R124530	LABEL	1		X	
10	R107562	COVER	1		X	
11	PT11362	SCREW	1		X	
12	RE64278	WIRING HARNESS	1		X	(SUB FOR RE56773)
	R44302	TIE BAND	1		X	

(A)HITCH RAISE/LOWER
ATTELAGE,RELEVAGE ET ABAISSEMENT
ANHAENGEVORRICHTUNG HEBEN/SENKEN
SOLLEVATORE,SOLLEVAMENTO/ABBASSAMENTO
ELEVAR/BAJAR ENGANCHE
LYFT,HOEJ/SAENK

(B)W/O HITCH
W/O ATTELAGE
W/O ANHAENGEVOPPICHTUNG
W/O ATTACCO
W/O ENGANCHE
W/O DRAG

(C)REAR PTO
PDF ARRIERE
HINTERE ZAPFWELLE
PTO POSTERIORE
TDF TRASERA
BAKRE KRAFTUTTAG

https://www.truck-manuals.net/

ARMREST CONTROLLER UNIT(ACU)
ACCOUDOIR, UNTIE DE COMMANDE (ACU)
ARMLEHNE-STEUERUNGSEINHEIT (ACU)
UNITA'DEL REGOLATORE DEL BRACCIOLO (ACU)
UNIDAD DE CONTROL EN EL APOYABRAZOS (ACU)
ARMSTOED, STYRENHET (ACU)
RXP026050 -UN-07MAR95

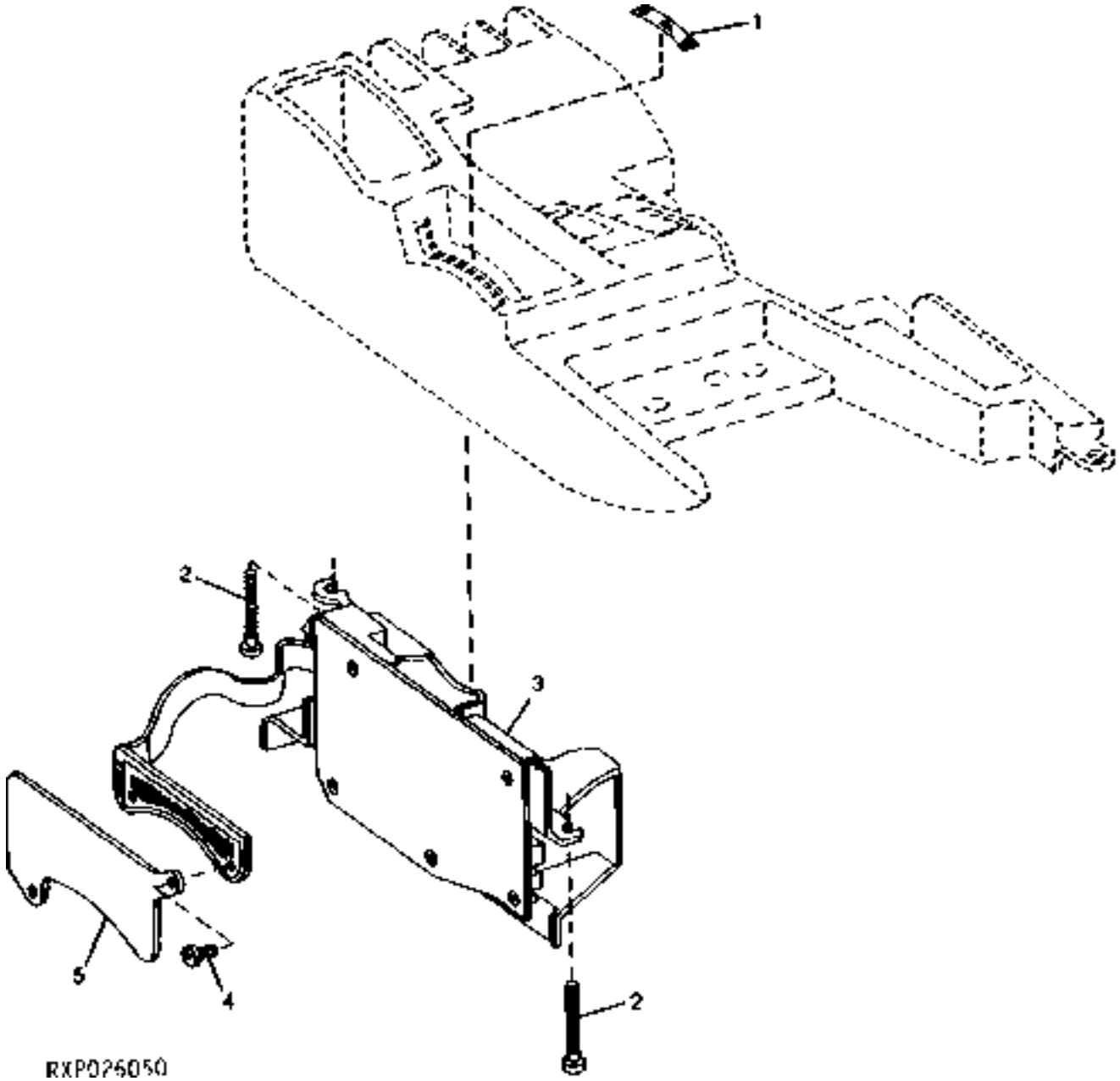

https://www.truck-manuals.net/

KEY	PART NO.	PART NAME	QTY	TRACTOR SERIAL NO.	ALL	REMARKS
1	R126466	LABEL	1		X	
2	R115850	SCREW	2		X	
3	RE62561	TRANSMISSION CONTROLLER	1	-XXXXXX	X	(A) (SUB RE71084, RE63687 AND R127879)
	RE63007	TRANSMISSION CONTROLLER	1	XXXXXX-XXXXXX	X	(B) (SUB RE71084, RE63687 AND R127879)
	RE65126	TRANSMISSION CONTROLLER	1	XXXXXX-XXXXXX	X	(C) (SUB RE71084) (SUB FOR RE64012)
	RE71084	TRANSMISSION CONTROLLER	1	XXXXXX-	X	(D) (SUB FOR RE62561, RE63007, RE64012 OR RE65126)
4	R113246	SCREW	2		X	
5	R107588	COVER	1		X	

(A) (-XXXXXX)8100-001707;8200-001604;8300-002820;8400-001419
(B) (XXXXXX-XXXXXX)8100-001708-002560;8200-001605-002089;8300-002821-003675;8400-001420-002439
(C) (XXXXXX-XXXXXX)8100-002561-009999;8200-002090-009999;8300-003676-009999;8400-002440-009999
(D) (XXXXXX-)8100-010000;8200-010000;8300-010000;8400-010000

https://www.truck-manuals.net/

SELECTIVE CONTROL LEVERS 1,2 AND 3(ARMREST)
DISTRIBUTEURS SELECTIFS 1,2 ET 3, LEVIERS (ACCOUDOIR)
ZUSATZSTEUERGERAETHEBEL 1,2 UND 3 (ARMLEHNE)
LEVE DI DISTRIBUTORI IDRAULICI 1,2 E 3 (A BRACCIOLO)
PALANCAS DE CONTROL SELECTIVO 1,2 Y 3 (APOYABRAZOS)
SELEKTIV MANOEVERVENTIL NR 1,2 OCH 3, SPAKAR (ARMSTOED)
RE029152 -UN-27MAR98

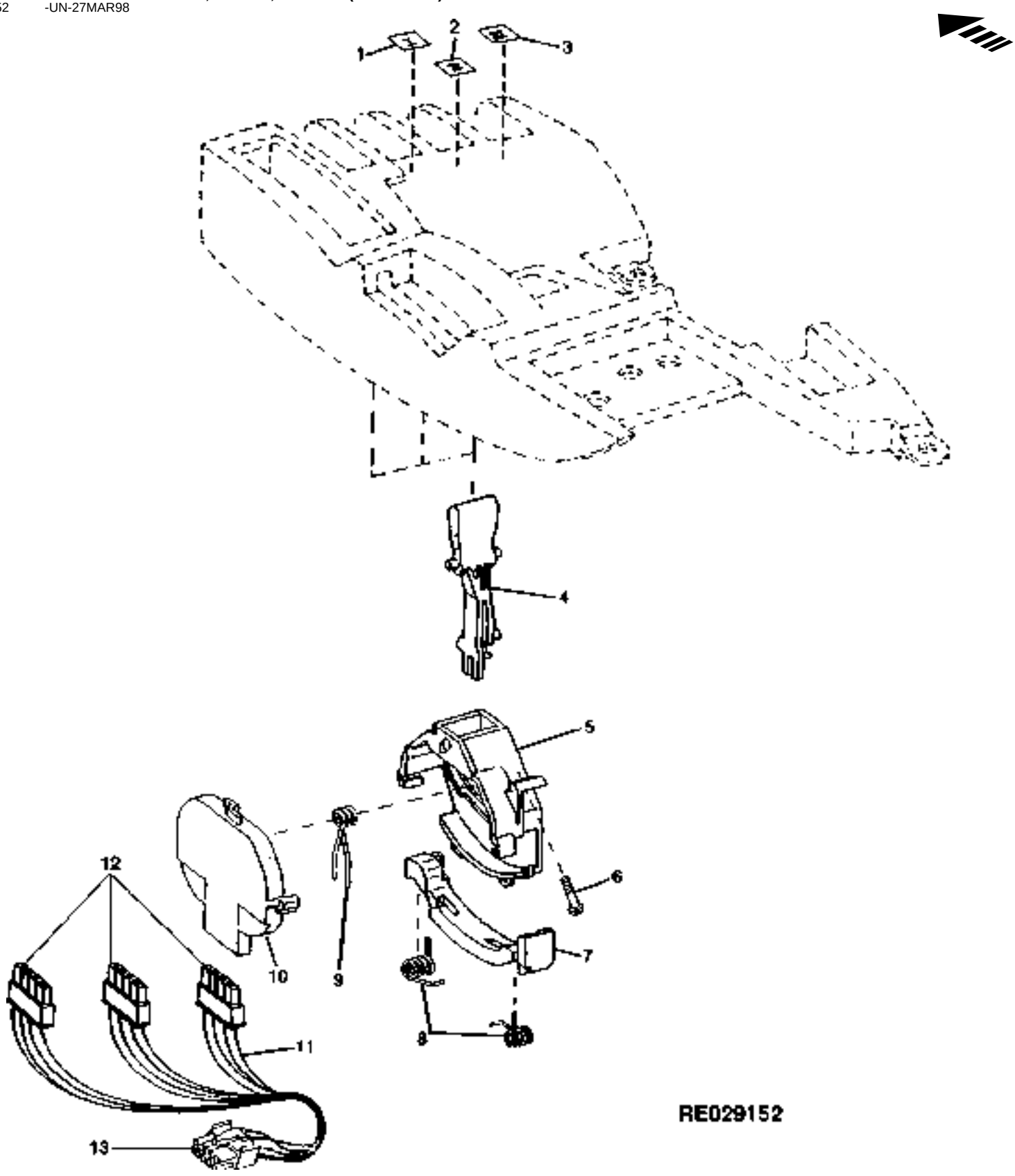

https://www.truck-manuals.net/

KEY	PART NO.	PART NAME	QTY	TRACTOR SERIAL NO.	ALL	REMARKS
1	R133053	LABEL	1		X	(SUB FOR R126463) (NO.1 SCV)
2	R133054	LABEL	1		X	(SUB FOR R126464) (NO.2 SCV)
3	R133055	LABEL	1		X	(SUB FOR R126465) (NO.3 SCV)
4	RE63708	LEVER	1		X	(SUB FOR RE61107)
5	R125877	BRACKET	1		X	(SUB R127893 AND RE63708)
6	R115850	SCREW	1		X	
7	R125878	ARM	1		X	
8	R124097	SPRING	2		X	
9	R125879	SPRING	1		X	
10	RE60659	SENSOR	1		X	
11	RE60630	WIRING HARNESS	1		X	
12	57M7708	CONNECTOR	3		X	(ALSO ORDER (4) 57M7551)
13	57M7470	CONNECTOR	1		1	(ALSO ORDER (10) 57M7551)

https://www.truck-manuals.net/

SELECTIVE CONTROL LEVERS 4 AND 5(ARMREST)
DISTRIBUTEURS SELECTIFS 4 ET 5 LEVIERS (ACCOUDOIR)
ZUSATZSTEUERGERAETHEBEL 4 UND 5 (ARMLEHNE)
LEVE DI DISTRIBUTORI IDRAULICI 4 E 5 (A BRACCIOLO)
PALANCAS DE CONTROL SELECTIVO 4 Y 5 (APOYABRAZOS)
SELEKTIV MANOEVERVENTIL NR 4 OCH 5, SPAKAR (ARMSTOED)
RE030193 -UN-13NOV98

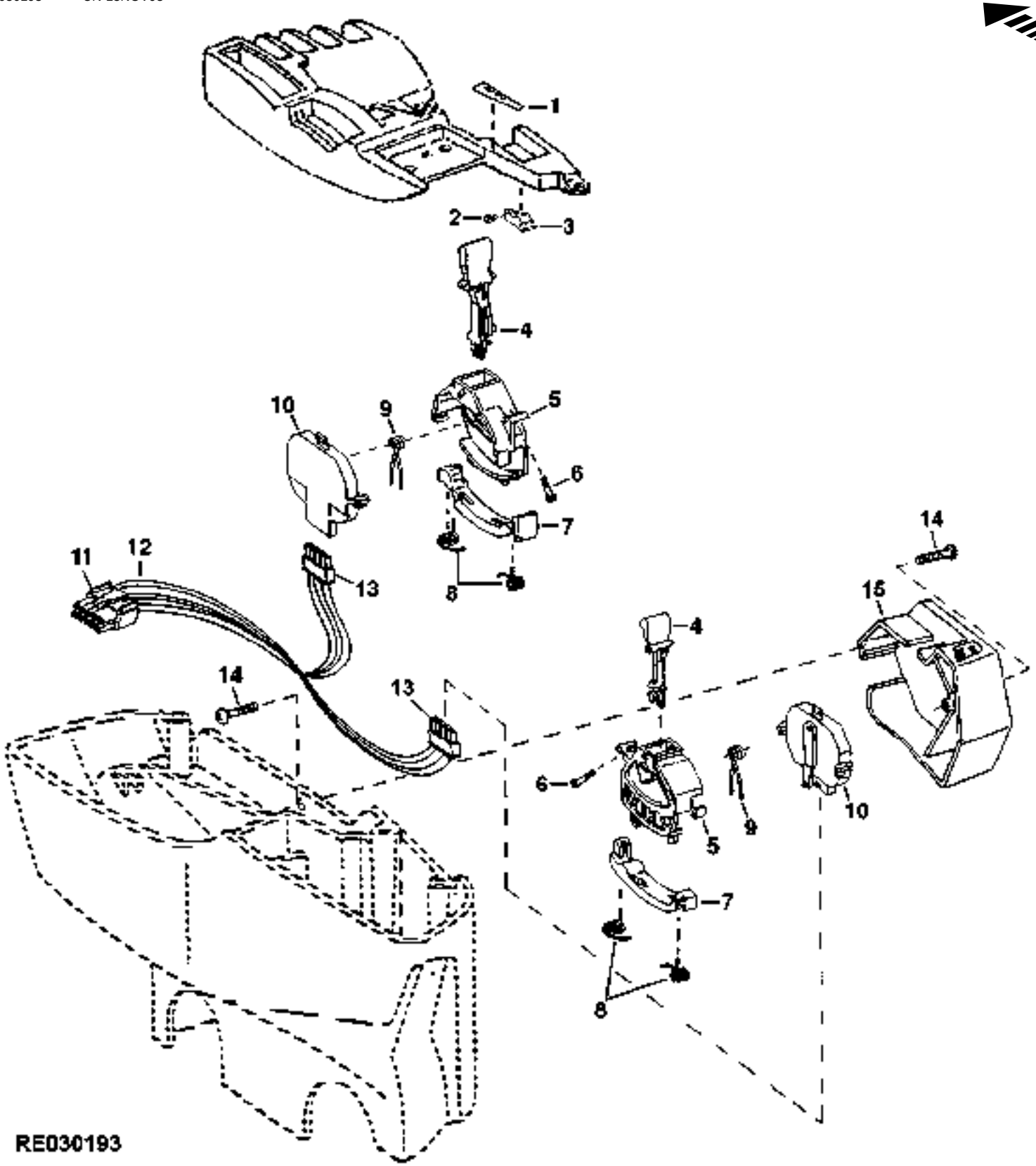

https://www.truck-manuals.net/

KEY	PART NO.	PART NAME	QTY	TRACTOR SERIAL NO.	ALL	REMARKS
1	R133056	LABEL	1		X	(NO.4 SCV)
2	R115850	SCREW	1		X	
3	R107562	COVER	1		X	
4	RE63708	LEVER	1		X	
5	R127893	BRACKET	1		X	
6	R115850	SCREW	1		X	
7	R125878	ARM	1		X	
8	R124097	SPRING	2		X	
9	R125879	SPRING	1		X	
10	RE60659	SENSOR	1		X	
11	57M7714	CONNECTOR	1		X	(ALSO ORDER (6) 57M7549)
12	RE60631	WIRING HARNESS	1		X	
13	57M7708	CONNECTOR	2		X	(ALSO ORDER (8) 57M7549)
14	37M7217	SCREW	1		X	
15	R124675	HOUSING	1		X	(NO.5 SCV)

https://www.truck-manuals.net/

HITCH CONTROL(ARMREST)
COMMANDE D'ATTELAGE(ACCOUDOIR)
BEDIENUNGSELEMENTE FUER DIE ANHAENGEVORRICHTUNG(ARMSTUETZE)
CONTROLLI DELL'ATTACCO(BRACCIOLO)
CONTROLES DEL ENGANCHE(APOYABRAZOS)
DRAGANORDNINGSREGLAGE(ARMSTOED)
RE026737 -UN-05AUG96

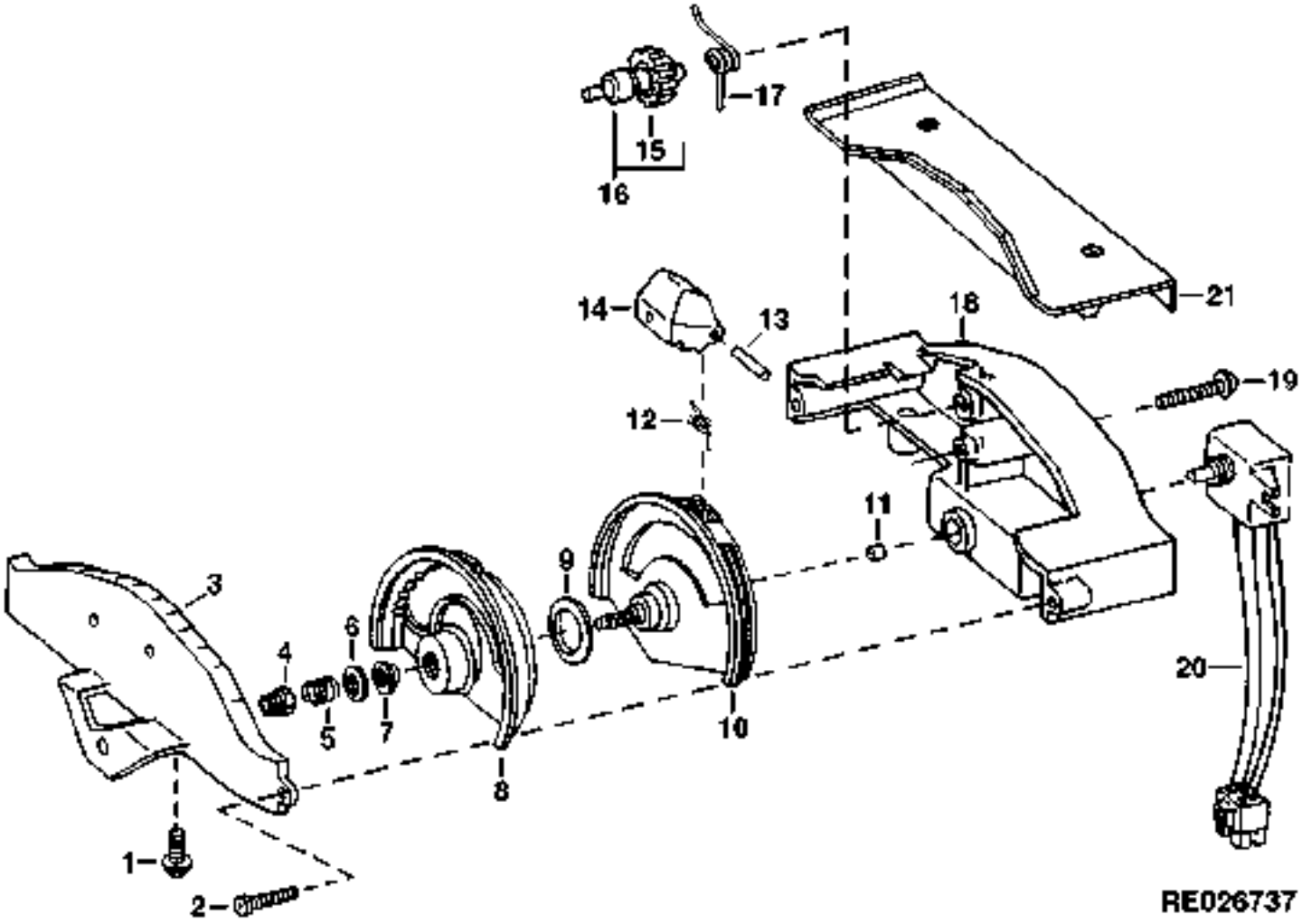

https://www.truck-manuals.net/

KEY	PART NO.	PART NAME	QTY	TRACTOR SERIAL NO.	ALL	REMARKS
1	R113246	SCREW	2		X	
2	H123995	SCREW	3		X	
3	R124276	HOUSING	1		X	
4	14M7165	LOCK NUT	1		X	M6
5	R124873	SPRING	1		X	(SUB FOR R114899)
6	R112513	WASHER	1		X	
7	R131047	BUSHING	1		X	(SUB FOR R112514) (ALSO ORDER R131135)
8	R131135	WHEEL	1		X	(SUB FOR R112526) (ALSO ORDER R131047)
9	R112515	WASHER	1		X	
10	R125915	WHEEL	1		X	(ALSO ORDER R118453)
11	R118453	CLIP	1		X	
12	R112553	TORSION SPRING	1		X	
13	34H233	SPRING PIN	1		X	
14	R130026	KNOB	1		X	(SUB FOR R120151)
15	R130025	WHEEL	1		X	
16	RE58029	KNOB	1		X	(SUB FOR RE49011)
17	R112551	SPRING	1		X	
18	R130024	HOUSING	1		X	(SUB FOR R124275)
19	37M7179	SCREW	1		X	
20	RE64279	POTENTIOMETER	1		X	(SUB FOR RE60658)
21	R120152	COVER	1		X	(A)

(A)W/O HITCH
W/O ATTELAGE
W/O ANHAENGEVORRICHTUNG
W/O ATTACCO
W/O ENGANCHE
W/O DRAG

https://www.truck-manuals.net/

WIRING HARNESS(ARMREST TO CAB)
FAISCEAU DE FILS (ENTRE ACCOUDOIR ET CABINE)
KABELBAUM (ARMLEHNE ZUR KABINE)
CABLAGGIO (DA BRACCIOLA A CABINA)
GRUPO DE CABLES(APOYABRAZOS A LA CABINA)
KABELHAERVA (ARMSTOED TILL HYTT)
RE030190 -UN-09NOV98

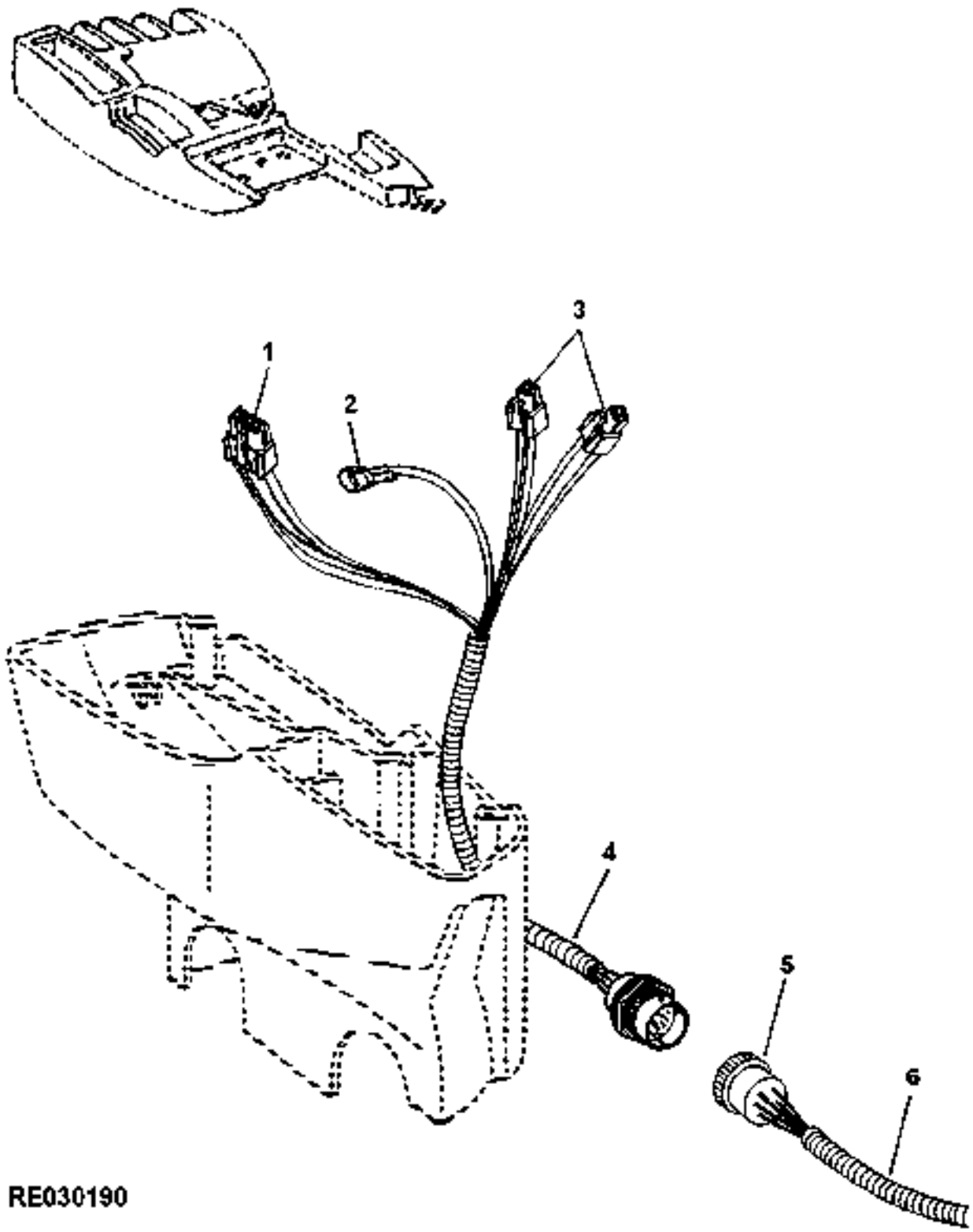

https://www.truck-manuals.net/

KEY	PART NO.	PART NAME	QTY	TRACTOR SERIAL NO.	ALL	REMARKS
1	57M7716	CONNECTOR	1		X	(ALSO ORDER (9) 57M7549)
2	57M7256	CONNECTOR	1		X	(ALSO ORDER (2) R104919, (2) 57M7258 AND 57M7316)
3	57M7712	CONNECTOR	2	-099999	X	(ALSO ORDER (3) 57M7549)
	57M7712	CONNECTOR	1	010000-	X	(ALSO ORDER (3) 57M7549)
4	RE60629	WIRING HARNESS	1	-099999	X	
	RE67355	WIRING HARNESS	1	010000-	X	
5	AH135787	CONNECTOR	1		X	(ALSO ORDER (12) R77465)
6	.....	CAB WIRING HARNESS	1		X	

https://www.truck-manuals.net/

CONTROLLERS(HCU/SCU,CCU/PCU,ECU,SCO)
CONTROLEURS(HCU/SCU,CCU/PCU,ECU,SCO)
STEUEREINHEITEN(HCU/SCU,CCU/PCU,ECU,SCO)
REGOLATORI(HCU/SCU,CCU/PCU,ECU,SCO)
CONTROLADORES(HCU/SCU,CCU/PCU,ECU,SCO)
STYRENHETER(HCU/SCU,CCU/PCU,ECU,SCO)
RE029505 -UN-04MAY98

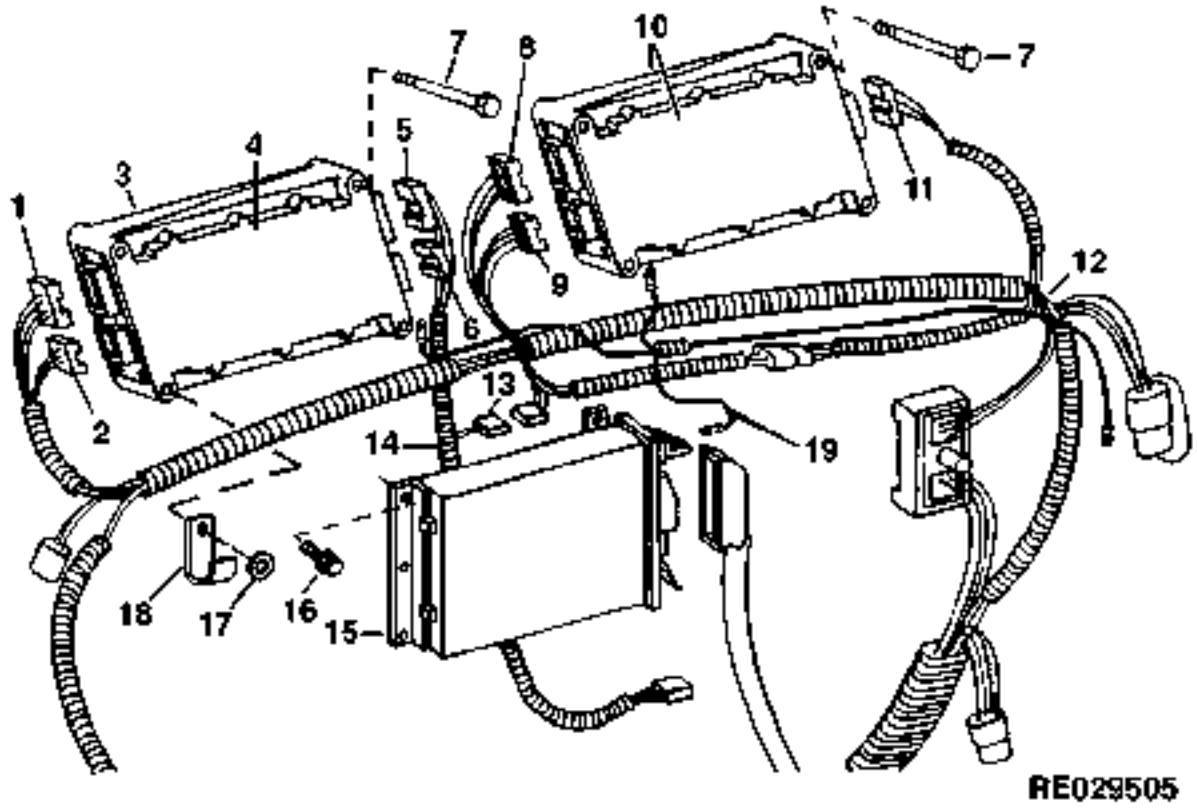

https://www.truck-manuals.net/

KEY	PART NO.	PART NAME	QTY	TRACTOR SERIAL NO.	ALL	REMARKS
1	57M7797	RECEPTACLE	1		X	(ALSO ORDER (30) R104701)
2	57M7459	CONNECTOR	1		X	(ALSO ORDER (18) R104701)
3	RE162764	HITCH AND SCV CONTROLLER	1		X	(MARKED RE162766, RE60959, RE62610, RE67022, RE67869 OR RE159623) (SUB FOR RE60956, RE62607, RE67009, RE67117, RE67866 OR RE159620) (HCU/SCU-1,2,3 SCV)
	RE162773	KIT	1		X	(SUB FOR RE157354 OR RE159625) (HCU/SCU UPGRADE)
4	RE162770	HITCH AND SCV CONTROLLER	1		X	(MARKED RE162767, RE60959, RE62611, RE63896, RE159624, RE67870 OR RE156219) (SUB FOR RE60957, RE62609, RE63895, RE67116, RE67868, RE156220 OR RE159622) (HCU/SCO-4 OR 5 SCV/ROW-TRAK)
	RE162774	KIT	1		X	(SUB FOR RE159626) (SCO UPGRADE)
5	57M7253	RECEPTACLE	1		X	(ALSO ORDER (30) R104701)
6	57M7279	CONNECTOR	1		X	(ALSO ORDER (18) R104701)
7	R124359	SCREW	8		X	
8	57M7275	CONNECTOR	1		X	(ALSO ORDER (30) R104701)
9	57M7279	CONNECTOR	1		X	(ALSO ORDER (18) R104701)
10	RE66876	VEHICLE CONTROLLER	1	-009999	X	(A) (SUB FOR RE60974, RE61675 OR RE63350) (SUB RE69215) (CCU/PCU)(30K)
	RE152006	VEHICLE CONTROLLER	1	010000-019999	X	(A) (SUB FOR RE66880 OR RE69215) (CCU/PCU)(30K)
	RE156940	VEHICLE CONTROLLER	1	XXXXXX-XXXXXX	X	(A) (C) (SUB FOR RE152382) (CCU/PCU)(30K)
	RE156940	VEHICLE CONTROLLER	1	XXXXXX-	X	(D) (CCU/PCU)(30K)
	RE165401	VEHICLE CONTROLLER	1	-019999	X	(SUB FOR RE60974, RE61675, RE62807, RE66875, RE69214 OR RE152005) (CCU/PCU)(40K)
	RE156939	VEHICLE CONTROLLER	1	020000-	X	(SUB FOR RE152380) (CCU/PCU)(40K)
11	57M7253	RECEPTACLE	1		X	(ALSO ORDER (30) R104701)
12	.....	WIRING HARNESS	1		X	(B)
13	57M7260	CONNECTOR	1		X	(ALSO ORDER (6) R104846, (6) 57M7258 AND 57M7291)
14	RE58782	WIRING HARNESS	1		X	(SCO-4 OR 5 SCV)
	RE58311	WIRING HARNESS	1		X	(ROW-TRAK)

(A)USE ONLY IN BELGIUM,DENMARK,FRANCE,GREECE,PORTUGAL,SWEDEN&SWITZERLAND
BELGIQUE,DANEMARK,FRANCE,GRECE,PROTUGAL,SUEDE ET SUISSE
BELGIEN,DAENEMARK,FRANKREICH,GRIECHENLAND,PORTUGAL,SCHWEDEN UND IN DER S CHWEIZ
BELGIO, DANIMARCA, FRANCIA, GRECIA, PORTOGALLO, SVEZIA E SVIZZERA
BELGICA,DINAMARCA,FREANCIA,GRECIA,PORTUGAL,SUECIA Y SUIZA
BELGIEN,DANMARK,FRANKRIKE,GREKLAND,PORTUGAL,SVERIGE OCH SCHWEIZ

(B)ENGINE AND CHASSIS
MOTEUR ET CHASSIS
MOTOR UND CHASSIS
MOTORE E TELAIO
MOTOR Y CHASIS
MOTOR OCH CHASSI

(C)(XXXXXX-XXXXXX)8100-020000-021128;8200-020000-020965;8300-020000-021683;8400-020000-022126
(D)(XXXXXX-)8100-021129;8200-020966;8300-021684;8400-022127

https://www.truck-manuals.net/

CONTROLLERS(HCU/SCU,CCU/PCU,ECU,SCO) - CONTINUED
CONTROLEURS(HCU/SCU,CCU/PCU,ECU,SCO) - A SUIVRE
STEUEREINHEITEN(HCU/SCU,CCU/PCU,ECU,SCO) - FORTS
REGOLATORI(HCU/SCU,CCU/PCU,ECU,SCO) - CONTINUA
CONTROLADORES(HCU/SCU,CCU/PCU,ECU,SCO) - CONTINUACION
STYRENHETER(HCU/SCU,CCU/PCU,ECU,SCO) - FORTS
RE029505 -UN-04MAY98

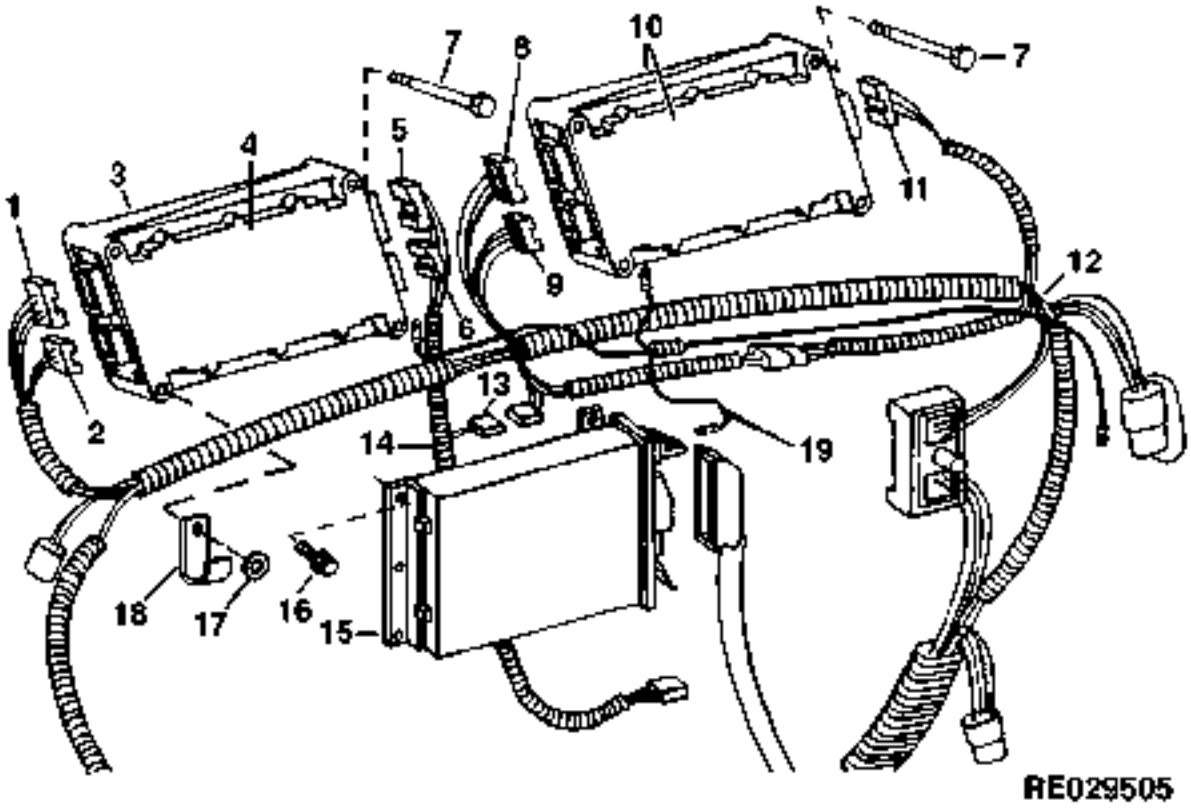

https://www.truck-manuals.net/

KEY	PART NO.	PART NAME	QTY	TRACTOR SERIAL NO.	ALL	REMARKS
15	RE502110	ENGINE CONTROLLER	1	-009999		(MARKED RE28320) (SUB FOR RE57525 OR RE501825) (ALSO ORDER RE502125) (ECU)(FOCUS)(8100 ONLY)
	RE501847	ENGINE CONTROLLER	1	010000-010999		(MARKED RE501731) (SUB FOR RE70026) (ALSO ORDER RE502125) (ECU)(FOCUS)(8100 ONLY)
	RE502121	ENGINE CONTROLLER	1	011000-		(MARKED RE66614) (SUB FOR RE69551, RE500772 OR RE502428) (ECU)(FOCUS)(8100 ONLY)
	RE502111	ENGINE CONTROLLER	1	-009999		(MARKED RE66614) (SUB FOR RE57526 OR RE501826) (ECU)(FOCUS)(8200 ONLY)
	RE502147	ENGINE CONTROLLER	1	010000-010999		(MARKED RE66614) (SUB FOR RE70027 OR RE501828) (ECU)(FOCUS)(8200 ONLY)
	RE502122	ENGINE CONTROLLER	1	011000-		(MARKED RE66614) (SUB FOR RE69552, RE500773 OR RE502427) (ECU)(FOCUS)(8200 ONLY)
	RE502112	ENGINE CONTROLLER	1	-009999		(MARKED RE66614) (SUB FOR RE57524 OR RE501824) (ECU)(FOCUS)(8300 ONLY)
	RE504071	ENGINE CONTROLLER	1	010000-010999		(MARKED RE66614) (SUB FOR RE69553, RE70028, RE500774, RE501849, RE502426 OR RE502123) (ECU)(FOCUS)(8300 ONLY)
	RE502124	ENGINE CONTROLLER	1	-XXXXXX		(A) (MARKED RE66614) (SUB FOR RE57501 OR RE501823) (ECU)(FOCUS)(8400 ONLY)
	RE502124	ENGINE CONTROLLER	1	XXXXXX-		(B) (MARKED RE66614) (SUB FOR RE69550, RE500769 OR RE502425) (ECU)(FOCUS)(8400 ONLY)
	RE502125	KIT	1		X	(CONTAINS RE501940, RE502104, (2) R105388 AND (4) 14M7303) (USE WITH RE66614) (MOUNTING KIT)
16	R124359	SCREW	4		X	
17	24H1923	WASHER	2		X	9/32" X 3/4" X 0.120"
18	AH117301	CLAMP	2		X	
19	RE153902	WIRING HARNESS	1	-024820	X	

(A)(-XXXXXX)ESN 8400-009810
(B)(XXXXXX-)ESN 8400-009811

https://www.truck-manuals.net/

MEMORANDA
MEMORANDA
MEMORANDA
MEMORANDA
MEMORANDA
MEMORANDA

https://www.truck-manuals.net/

FOOT THROTTLE
PEDALE D'ACCELLATEUR
GASPEDAL
PEDALE DEL GAS
ACELERADOR DE PEDAL
GASPEDAL
RE026679 -UN-13DEC95

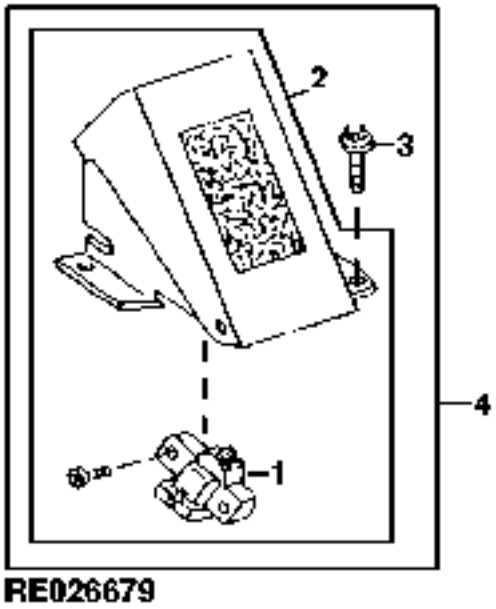

RE026679

KEY	PART NO.	PART NAME	QTY	TRACTOR SERIAL NO.	ALL	REMARKS
1	.....	SENSOR	1		X	(ORDER RE155987)
2	RE155987	ACCELERATOR	1		X	(SUB FOR RE61183)
3	37M7089	SCREW	3		X	M6 X 12
4	**AR152577**	**KIT**	**1**		**X**	**(FI) (SUB FOR AR113819)**

https://www.truck-manuals.net/

HITCH CONTROL(NORTH AMERICAN VERSION)
COMMANDE D'ATTELAGE(VERSION NORD AMERICAINE)
ANHANGEVORRICHTUNGS-BEDIENUNGSELEMENT(NORDAMERIKANISCHE AUSFUEHRUNG)
CONTROLLO DISPOSITIVO DI ATTACCO(VERSIONE NORDAMERICANA)
CONTROL DEL ENGANCHE(VERSION NORTEAMERICANA)
DRAGANORDNINGSREGLAGE(NORDAMERIKANSK VERSION)
RE030137 -UN-05NOV98

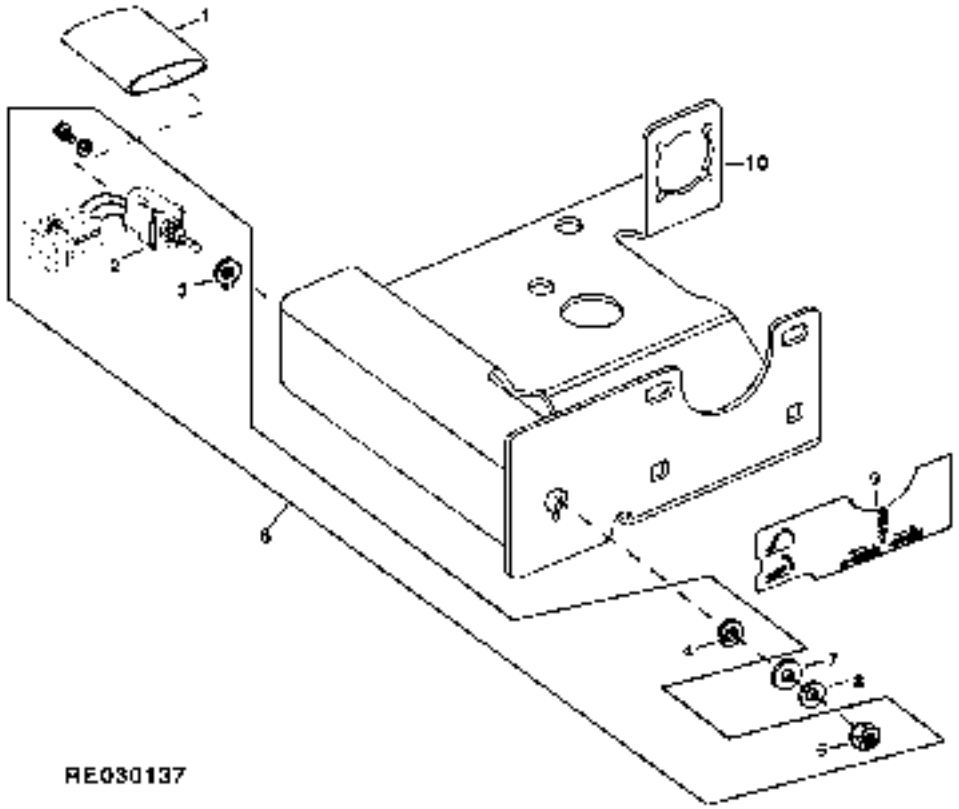

KEY	PART NO.	PART NAME	QTY	TRACTOR SERIAL NO.	ALL	REMARKS
1	R154392	TUBE	1		X	(USE WITH RE32042)
2	RE32042	HITCH SWITCH	1	-024819	X	(SUB RE161844)
	RE160903	HITCH SWITCH	1	024820-	X	(SUB FOR RE32042)
3	R121234	WASHER	1		X	
4	R121236	WASHER	1		X	
5	R44097	NUT	1		X	
6	RE161844	KIT	1	024820-	X	(INCLUDES RE160903, (6) R104846, (6) 57M7258, 57M7260 AND 57M7291)
7	24H1325	WASHER	1		X	11.913 X 23.419 X 1.651 MM
8	24M7044	WASHER	1		X	
9	R128894	LABEL	1		X	(SUB FOR R123139)
10	RE63638	BRACKET	1		X	(SUB FOR R111975 OR R126536)

https://www.truck-manuals.net/

HITCH CONTROL(EUROPEAN VERSION)
COMMANDE D'ATTELAGE(VERSION EUROPEENNE)
ANHANGEVORRICHTUNGS-BEDIENUNGSELEMENT(EUROPAEISCHE AUSFUEHRUNG)
CONTROLLO DISPOSITIVO DI ATTACCO(VERSIONE EUROPEA)
CONTROL DEL ENGANCHE(VERSION EUROPEA)
DRAGANORDNINGSREGLAGE(EUROPEISK VERSION)
RE030188 -UN-09NOV98

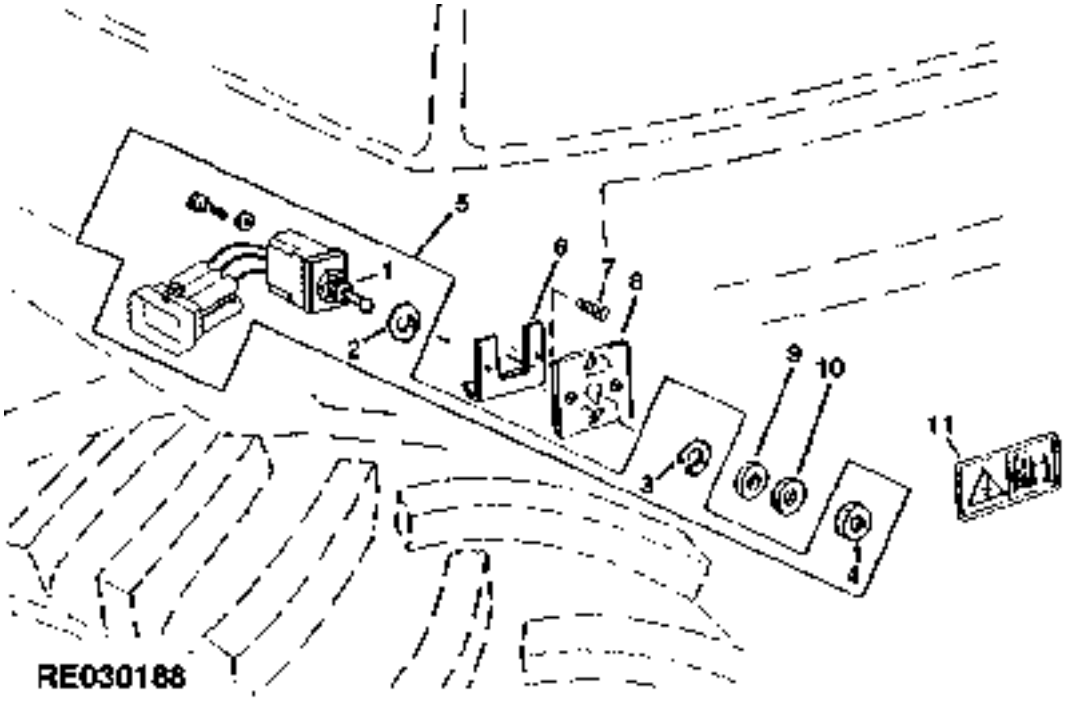

KEY	PART NO.	PART NAME	QTY	TRACTOR SERIAL NO.	ALL	REMARKS
1	RE32042	HITCH SWITCH	1	-024819	X	(SUB RE161844)
	RE160903	HITCH SWITCH	1	024820-	X	(SUB FOR RE32042)
2	R121234	WASHER	1		X	
3	R121236	WASHER	1		X	
4	R44097	NUT	1		X	
5	RE161844	KIT	2	024820-	X	(INCLUDES RE160903, (6) R104846, (6) 57M7258, 57M7260 AND 57M7291)
6	R126716	PLATE	2		X	(SUB FOR R115676)
7	H132899	SCREW	4		X	
8	R115675	PLATE	2		X	
9	24H1325	WASHER	2		X	15/32" X 59/64" X 0.065"
10	24M7044	WASHER	2		X	13 X 20 X 2 MM
11	R135481	LABEL	1		X	(SUB FOR L65071) L.H.
	R135480	LABEL	1		X	R.H.

https://www.truck-manuals.net/

DOME LIGHT AND SWITCH
PLAFONNIER ET INTERRUPTEUR
KABINENBELEUCHTUNG UND SCHALTER
INTERRUTTORE E LUCE A PLAFONIERA
LUZ DEL TECHO E INTERUPTOR
TAKLAMPA OCH KONTAKT
RXP010821 -UN-01JAN94

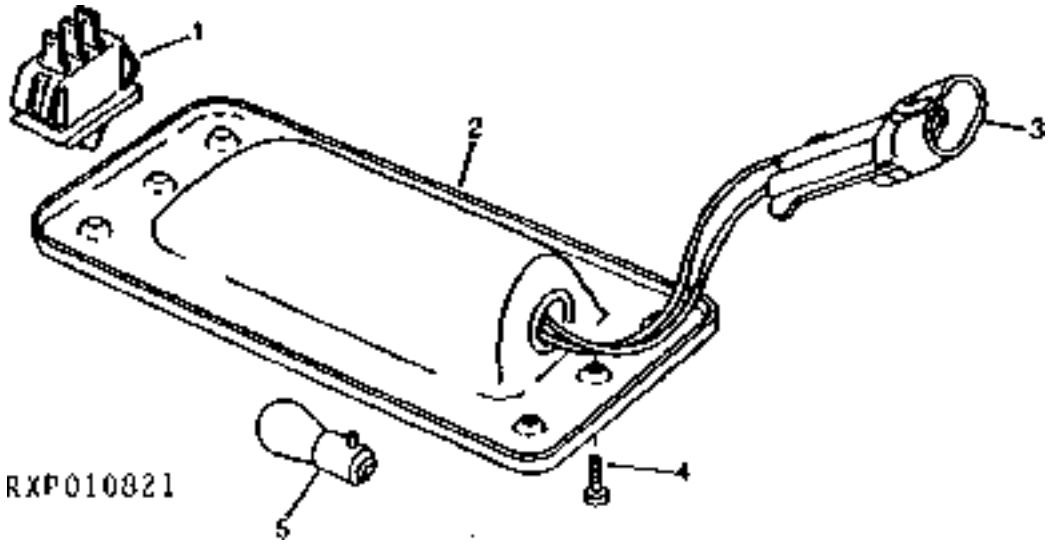

KEY	PART NO.	PART NAME	QTY	CAB SERIAL NO.	ALL	REMARKS
1	RE48838	ROCKER SWITCH	1		X	
2	RE44590	HOUSING	1		X	
3	57M7256	CONNECTOR	1		X	(ALSO ORDER (2) R104919, (2) 57M7258 AND 57M7316)
4	37M7063	SCREW	2		X	
5	RE47095	BULB	1		X	

https://www.truck-manuals.net/

DOOR LIGHT SWITCH
PORTE, INTERRUPTEUR D'ECLAIRAGE
TUER-LICHTSCHALTER
INTERRUTTORE DELLA LUCE DELLA PORTA
INTERRUPTOR DE LUZ DE PUERTA
DOERR, BELYSNINGSKONTAKT
RXP011179 -UN-01JAN94

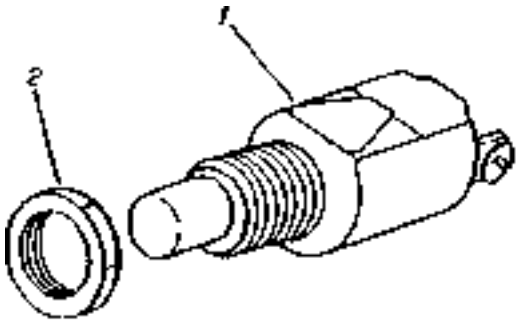

RXP011179

KEY	PART NO.	PART NAME	QTY	CAB SERIAL NO.	ALL	REMARKS
1	RE51234	DOOR LIGHT SWITCH	1		X	
2	R44097	NUT	1		X	

https://www.truck-manuals.net/

ROTATING BEACON SWITCH KIT
JEU D'INTERRUPTEUR DE PHARE A ECLATS
DREHLICHSCHALTER-BAUSATZ
KIT DELL'INTERRUTTORE DE SEGNALE LUMINOSO ROTANTE
CONJUNTO DEL INTERRUPTOR DEL FARO GIRATORIO
STROEMBRYTARSATS FOER ROTERANDE STRAALKASTARE
RXP021842 -UN-27JAN97

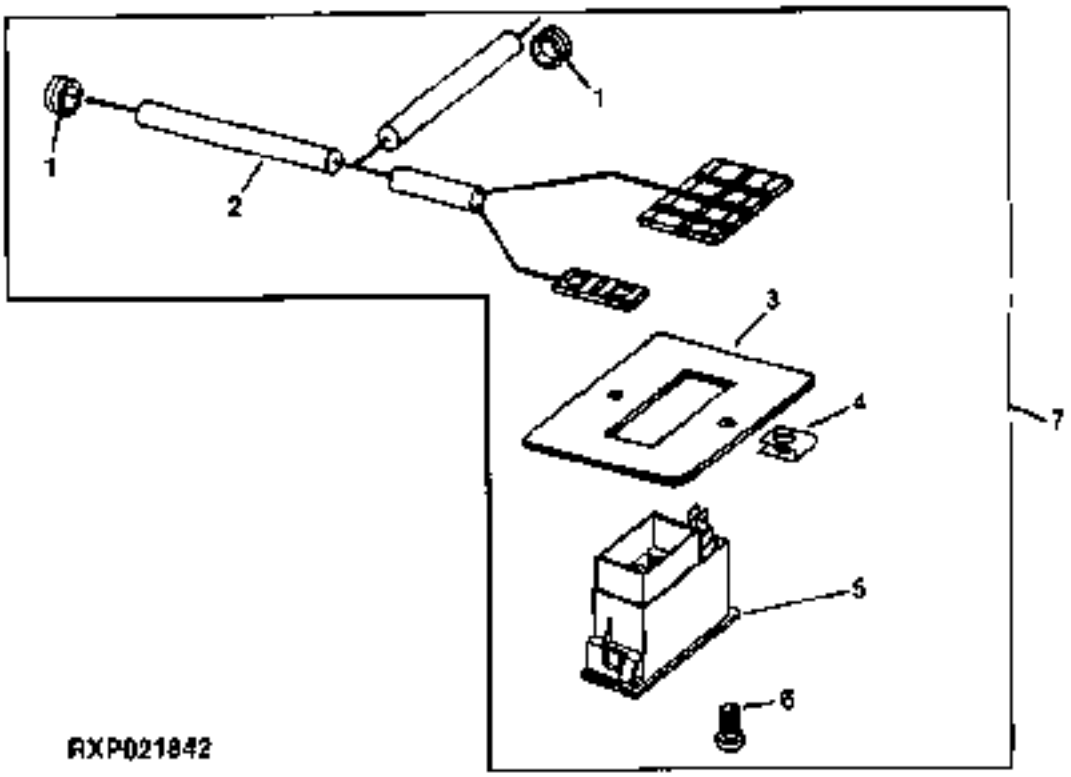

KEY	PART NO.	PART NAME	QTY	CAB SERIAL NO.	ALL	REMARKS
1	N30256	GROMMET	2		X	
2	RE51267	WIRING HARNESS	1		X	
3	R115828	PLATE	1		X	
4	R52130	LOCK NUT	2		X	
5	AT140957	SWITCH	1		X	
6	R52931	SCREW	2		X	
7	**RE51266**	**KIT**	**1**		**X**	**(FI)**

https://www.truck-manuals.net/

CONSOLE LIGHT
ECLAIRAGE DE CONSOLE
KONSOLEN-BELEUCHTUNG
LUCE DELLA CONSOLLE
LUZ DE LA CONSOLA
INSTRUMENTBRAEDA,BELYSNING
RXP011282 -UN-01JAN94

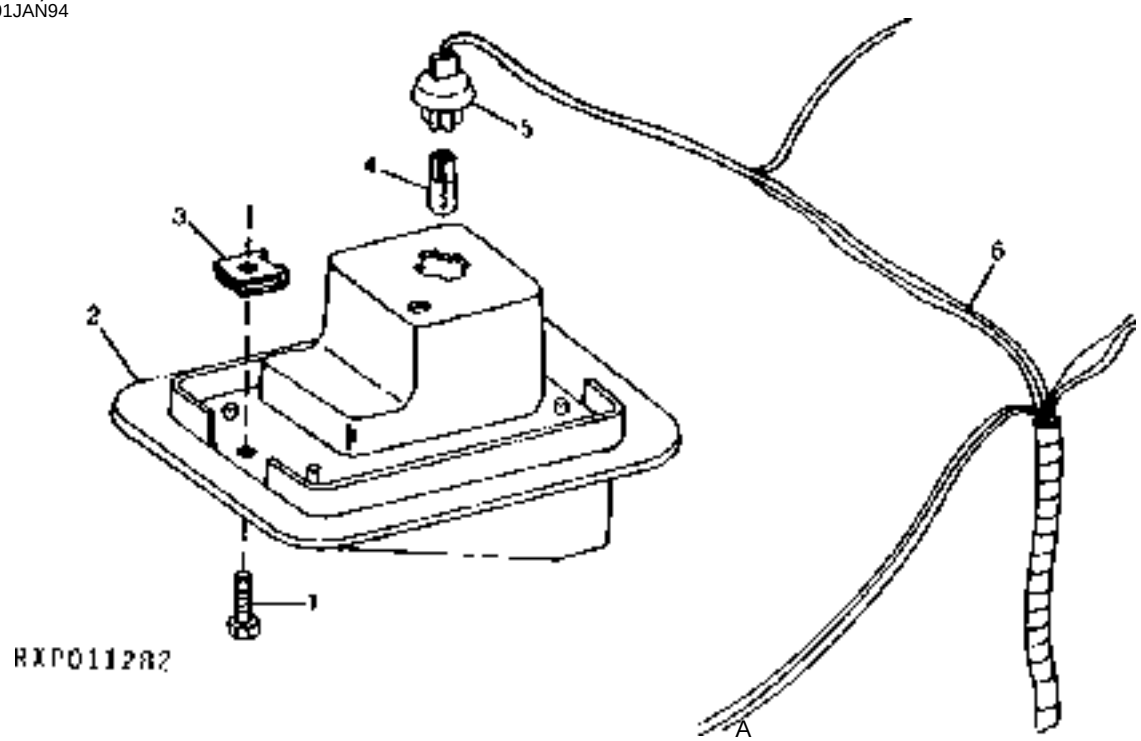

KEY	PART NO.	PART NAME	QTY	TRACTOR SERIAL NO.	ALL	REMARKS
1	37H203	SCREW	2		X	
2	RE57892	LAMP	1		X	
3	R52130	LOCK NUT	2		X	
4	AR48015	BULB	1		X	
5	57M7458	CONNECTOR	1		X	
6	.....	CAB WIRING HARNESS	1		X	

https://www.truck-manuals.net/

HYDRAULIC DIFFERENTIAL LOCK SWITCH
INTERRUPTEUR DE BLOCAGE HYDRALIQUE DE DIFFERENTIEL
HYDRAULISCHER DIFFERENTIALSPERREN-SCHALTER
INTERRUTTORE DI BLOCCAGGIO IDRAULICO DIFFERENZIALE
INTERRUPTOR DE LA TRABA HIDRAULICO DEL DIFERENCIAL
STROEMBRYTARE FOER HYDRAULDIFFERENTIALSPAERR
RXP011226 -UN-01JAN94

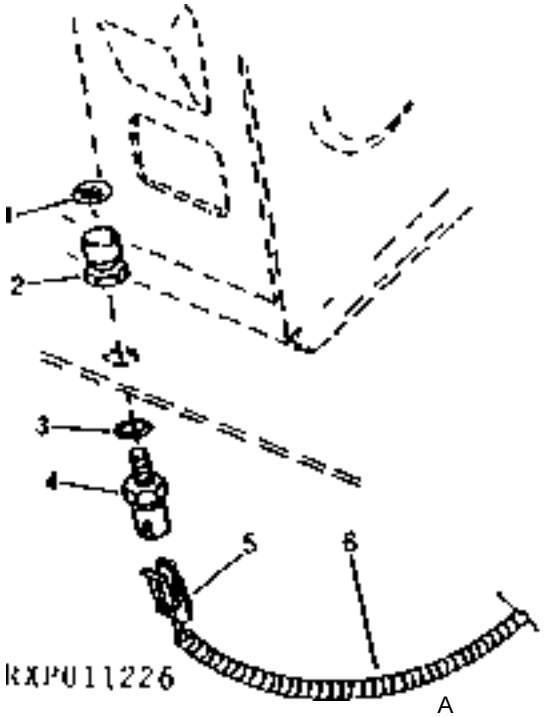

KEY	PART NO.	PART NAME	QTY	TRACTOR SERIAL NO.	ALL	REMARKS
1	L80302	LABEL	1		X	
2	RE43637	PUSH BUTTON	1		X	
3	51M7042	O-RING	1		X	13.300 X 2.200 MM
4	RE46534	SWITCH	1		X	
5	57M7328	CONNECTOR	1		X	(ALSO ORDER (2) R104846, (2) 57M7258 AND 57M7316)
6	.....	CAB WIRING HARNESS	1		X	

https://www.truck-manuals.net/

BRAKE SWITCH
FREIN, INTERRUPTEUR
BREMSSCHALTER
INTERRUTTORE DEL FRENO
INTERRUPTOR DE FRENO
BROMSKONTAKT
RXP011227 -UN-01JAN94

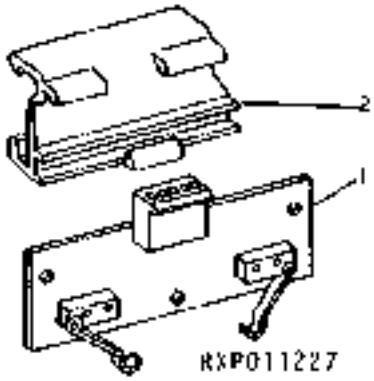

KEY	PART NO.	PART NAME	QTY	CAB SERIAL NO.	ALL	REMARKS
1	RE66277	BRAKE LIGHT SWITCH	1		X	(SUB FOR RE55468 OR RE63211)
2	R124716	RETAINER	1		X	

https://www.truck-manuals.net/

HORN(-026686)
AVERTISSEUR SONORE(-026686)
SIGNALHORN(-026686)
AVVISATORE ACUSTICO(-026686)
BOCINA(-026686)
SIGNALHORN(-026686)
RXP010828 -UN-01JAN94

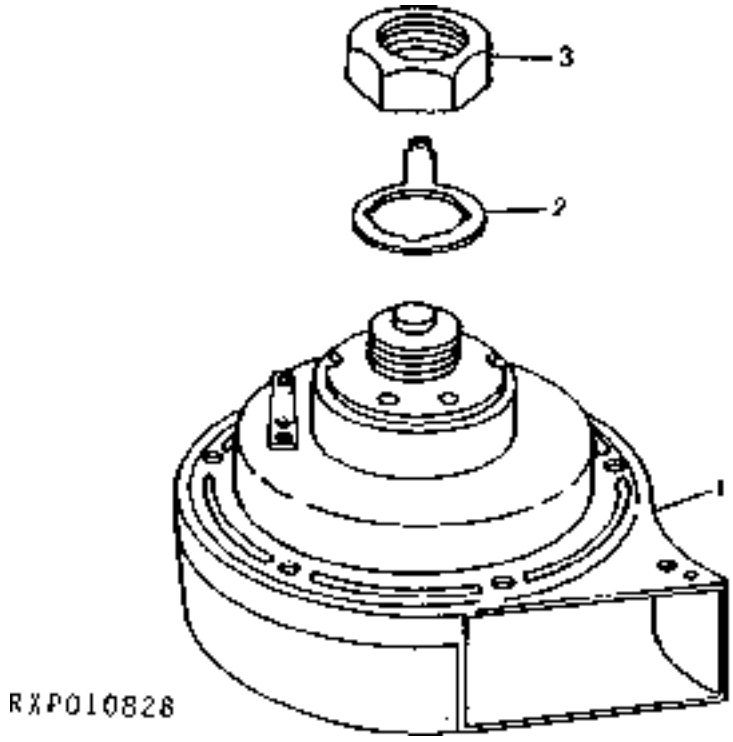

KEY	PART NO.	PART NAME	QTY	TRACTOR SERIAL NO.	ALL	REMARKS
1	R64700	HORN	1		X	(SUB RE159897, 14M7273 AND (2) 24M7036)
2	R52725	CONNECTOR	1		X	(-)
3	R11278	NUT	1		X	

https://www.truck-manuals.net/

HORN(026687-)
AVERTISSEUR SONORE(026687-)
SIGNALHORN(026687-)
AVVISATORE ACUSTICO(026687-)
BOCINA(026687-)
SIGNALHORN(026687-)
RE030625 -UN-18MAY99

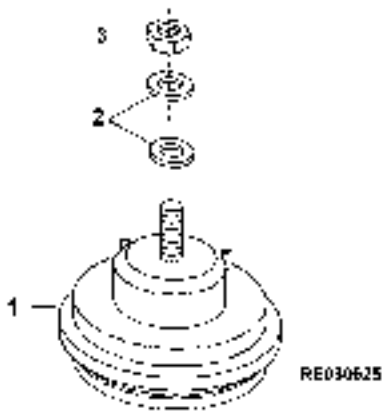

KEY	PART NO.	PART NAME	QTY	TRACTOR SERIAL NO.	ALL	REMARKS
1	RE159897	HORN	1		X	
2	24M7036	WASHER	2		X	
3	14M7273	NUT	1		X	

https://www.truck-manuals.net/

MEMORANDA
MEMORANDA
MEMORANDA
MEMORANDA
MEMORANDA
MEMORANDA

https://www.truck-manuals.net/

CLOCK(EUROPEAN VERSION)
MONTRE(VERSION EUROPEENNE)
UHR(EUROPAEISCHE AUSFUEHRUNG)
OROLOGIO(VERSIONE EUROPEA)
RELOJ(VERSION EUROPEA)
KLOCKA(EUROPEISK VERSION)
RXP011210 -UN-01JAN94

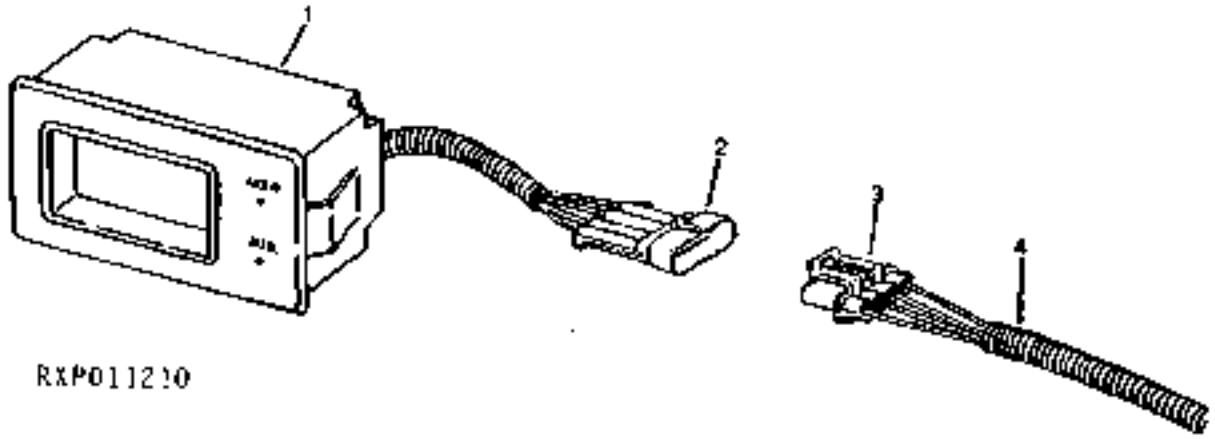

KEY	PART NO.	PART NAME	QTY	TRACTOR SERIAL NO.	ALL	REMARKS
1	AL78989	CLOCK	1		X	
2	57M7244	CONNECTOR	1		X	(ALSO ORDER (4) R104919, (4) 57M7258 AND 57M7318)
3	57M7247	CONNECTOR	1		X	(ALSO ORDER (4) R104846, (4) 57M7258 AND 57M7318)
4	.....	CAB WIRING HARNESS	1		X	

https://www.truck-manuals.net/

RADAR(8100 -003523;8200 -002714;8300 -004617;8400 -003062)
RADAR(8100 -003523;8200 -002714;8300 -004617;8400 -003062)
RADAR(8100 -003523;8200 -002714;8300 -004617;8400 -003062)
RADAR(8100 -003523;8200 -002714;8300 -004617;8400 -003062)
RADAR(8100 -003523;8200 -002714;8300 -004617;8400 -003062)
RADAR(8100 -003523;8200 -002714;8300 -004617;8400 -003062)
RXP026056 -UN-07MAR95

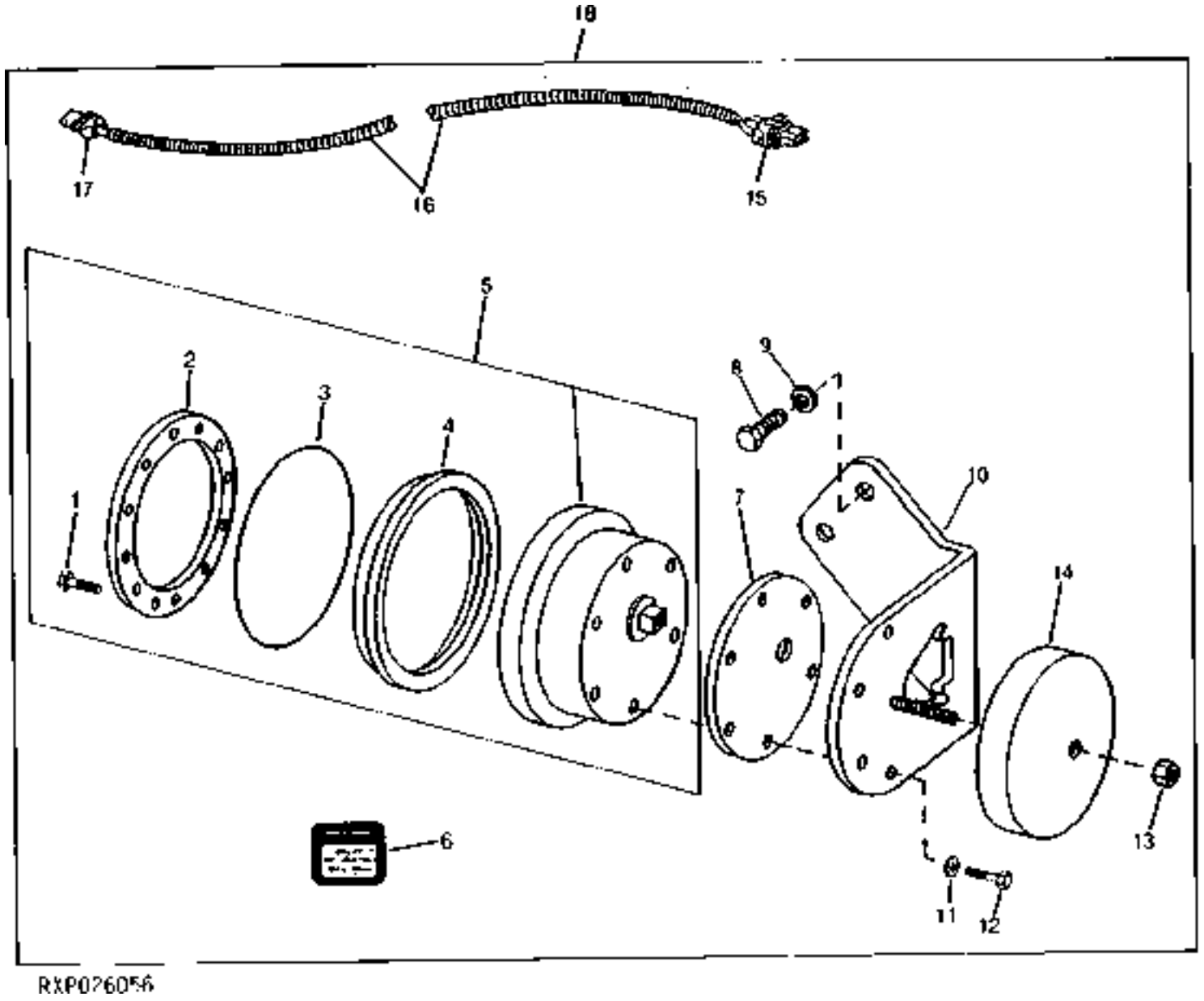

https://www.truck-manuals.net/

KEY	PART NO.	PART NAME	QTY	TRACTOR SERIAL NO.	ALL	REMARKS
1	R82239	SCREW	12		X	0.164" X 1-1/4"
2	R82237	SNAP RING	1		X	
3	R82238	O-RING	1		X	
4	R82236	COVER	1		X	
5	RE43025	RADAR SENSOR	1		X	(A) (SUB RE153333)
	RE58592	RADAR SENSOR	1		X	(B) (SUB RE153334)
6	R120107	LABEL	1		X	(ENGLISH)
	R120106	LABEL	1		X	(FRANCAIS)
	R105942	LABEL	1		X	(DEUTSCH)
	R120108	LABEL	1		X	(ESPANOL)
	L65000	LABEL	1		X	(B)
7	R82243	GASKET	1		X	
8	19M7946	CAP SCREW	2		X	M20 X 40
9	24M7344	WASHER	2		X	22 X 37 X 3 MM, HS 10.9
10	RE62529	BRACKET	1		X	(SUB RE65689, (3) RE65690, (3) 19H1849 AND (3) 24H1250)
11	24M7336	WASHER	6		X	9 X 16 X 1.600 MM
12	19H2705	CAP SCREW	6		X	5/16" X 1"
13	14M7273	NUT	1		X	M8
14	R82355	SHIELD	1		X	
15	RE42193	CONNECTOR	1		X	(ALSO ORDER (4) R78057 AND 57M7292)
16	RE52645	WIRING HARNESS	1		X	
17	57M7257	CONNECTOR	1		X	(ALSO ORDER (3) R104919, (3) 57M7258 AND 57M7290)
18	**AR114073**	**KIT**	**1**		**X**	**(A) (SUB RE153333) (FI)**
	AR114074	**KIT**	**1**		**X**	**(B) (SUB RE153334) (FI)**

(A)NORTH AMERICAN VERSION
VERSION NORD AMERICAINE
NORDAMERIKANISCHE
VERSIONE NORDAMERICANA
VERSION NORTEAMERICANA
NORDAMERIKANSK VERSION

(B)EUROPEAN VERSION
VERSION EUROPEENNE
EUROPAEISCHE AUSFUEHRUNG
VERSIONE EUROPEA
VERSION EUROPEA
EUROPEISK VERSION

https://www.truck-manuals.net/

RADAR(8100 003524-009999;8200 002715 -009999;8300 004618-009999;8400 003063-009999)
RADAR(8100 003524-009999;8200 002715 -009999;8300 004618-009999;8400 003039-009999)
RADAR(8100 003524-009999;8200 002715 -009999;8300 004618-009999;8400 003063-009999)
RADAR(8100 003524-009999;8200 002715 -009999;8300 004618-009999;8400 003063-009999)
RADAR(8100 003524-009999;8200 002715 -009999;8300 004618-009999;8400 003063-009999)
RADAR(8100 003524-009999;8200 002715 -009999;8300 004618-009999;8400 003063-009999)
RE026654 -UN-12DEC95

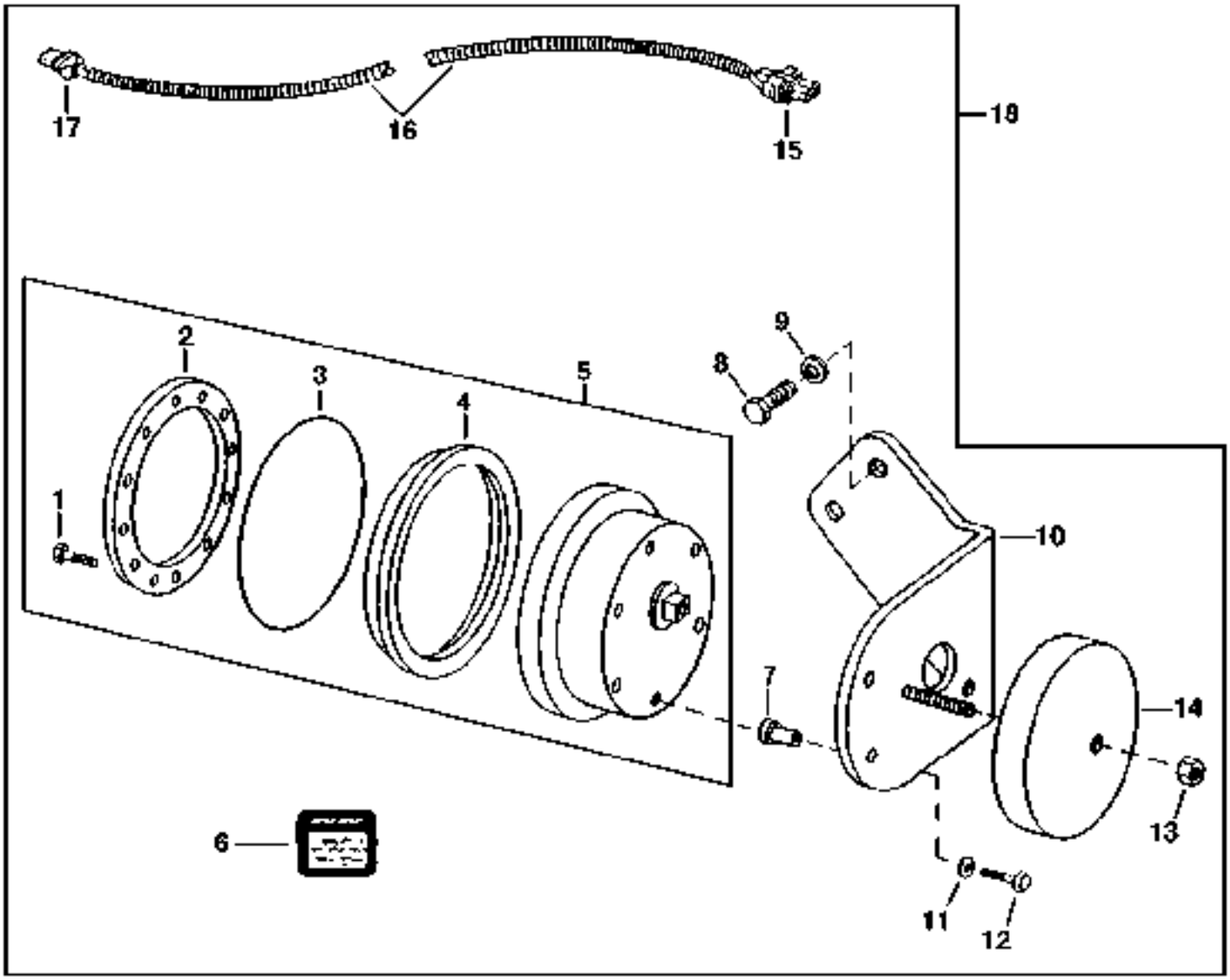

RE026654

https://www.truck-manuals.net/

KEY	PART NO.	PART NAME	QTY	TRACTOR SERIAL NO.	ALL	REMARKS
1	R82239	SCREW	12		X	(A) 0.164" X 1-1/4"
2	R82237	SNAP RING	1		X	
3	R82238	O-RING	1		X	
4	R82236	COVER	1		X	
5	RE43025	RADAR SENSOR	1		X	(A) (SUB RE153333)
	RE58592	RADAR SENSOR	1		X	(B) (SUB RE153334)
6	R120107	LABEL	1		X	(ENGLISH)
	R120106	LABEL	1		X	(FRANCAIS)
	R105942	LABEL	1		X	(DEUTSCH)
	R120108	LABEL	1		X	(ESPANOL)
	L65000	LABEL	1		X	(B)
7	RE65690	RUBBER MOUNT	3		X	
8	19M7946	CAP SCREW	2		X	M20 X 40
9	24M7344	WASHER	2		X	22 X 37 X 3 MM, HS 10.9
10	RE65689	BRACKET	1		X	(SUB FOR RE62529)
11	24H1250	WASHER	3		X	5/16" X 1" X 0.060"
12	19H1849	CAP SCREW	3		X	5/16" X 1-1/4"
13	14M7273	NUT	1		X	M8
14	R82355	SHIELD	1		X	
15	RE42193	CONNECTOR	1		X	(ALSO ORDER (4) R78057 AND 57M7292)
16	RE52645	WIRING HARNESS	1		X	
17	57M7257	CONNECTOR	1		X	(ALSO ORDER (3) R104919, (3) 57M7258 AND 57M7290)
18	**AR115540**	**KIT**	**1**		**X**	**(A) (SUB RE153333) (FI)**
	AR115541	**KIT**	**1**		**X**	**(B) (SUB RE153334) (FI)**

(A)NORTH AMERICAN VERSION
VERSION NORD AMERICAINE
NORDAMERIKANISCHE
VERSIONE NORDAMERICANA
VERSION NORTEAMERICANA
NORDAMERIKANSK VERSION

(B)EUROPEAN VERSION
VERSION EUROPEENNE
EUROPAEISCHE AUSFUEHRUNG
VERSIONE EUROPEA
VERSION EUROPEA
EUROPEISK VERSION

https://www.truck-manuals.net/

RADAR(8100 010000- ;8200 010000- ;8300 010000- ;8400 010000-)
RADAR(8100 010000- ;8200 010000- ;8300 010000- ;8400 010000-)
RADAR(8100 010000- ;8200 010000- ;8300 010000- ;8400 010000-)
RADAR(8100 010000- ;8200 010000- ;8300 010000- ;8400 010000-)
RADAR(8100 010000- ;8200 010000- ;8300 010000- ;8400 010000-)
RADAR(8100 010000- ;8200 010000- ;8300 010000- ;8400 010000-)
RE028240 -UN-03SEP97

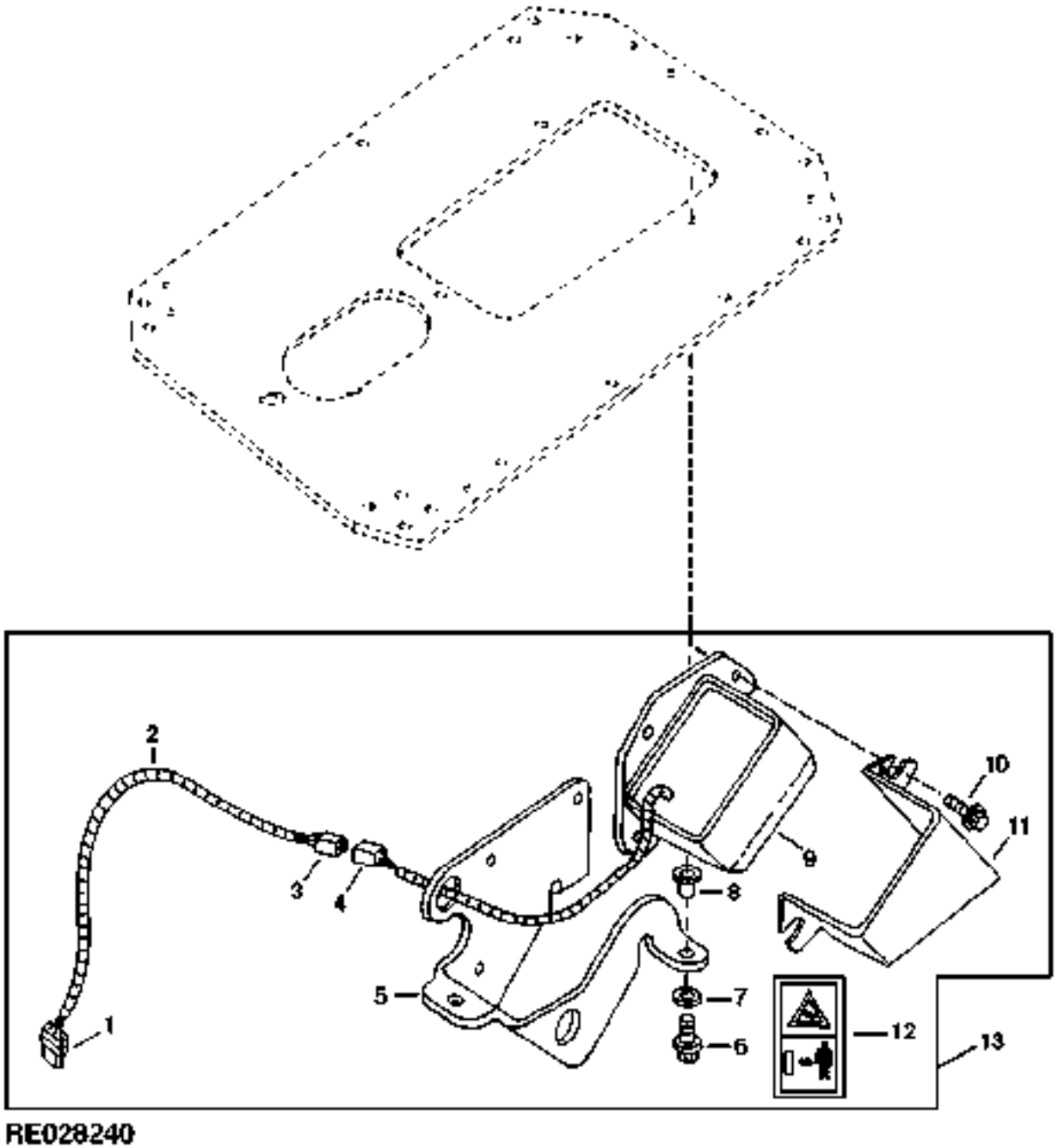

RE028240

https://www.truck-manuals.net/

KEY	PART NO.	PART NAME	QTY	TRACTOR SERIAL NO.	ALL	REMARKS
1	57M7257	CONNECTOR	1		X	(ALSO ORDER (3) R104919, (3) 57M7258 AND 57M7290)
2	RE52645	WIRING HARNESS	1		X	
3	RE42193	CONNECTOR	1		X	(ALSO ORDER (4) R78057 AND 57M7292)
4	T138822	CONNECTOR	1		X	(ALSO ORDER (4) R78058 AND 57M7292)
5	R132066	BRACKET	1		X	
6	37M7080	SCREW	3		X	M10 X 30
7	24M7178	WASHER	3		X	10.500 X 30 X 2.500 MM
8	AT116162	RUBBER MOUNT	3		X	
9	RE152877	RADAR SENSOR	1		X	(SUB FOR RE52719)
	RE152880	RADAR SENSOR	1		X	(A) (SUB FOR RE54017)
10	37M7087	SCREW	3		X	M10 X 25
11	R151924	SHIELD	1		X	
12	L65000	LABEL	1		X	
13	**RE153333**	**KIT**	**1**		**X**	**(SUB FOR AR114073, AR115540 OR RE69103) (FI)**
	RE153334	**KIT**	**1**		**X**	**(A) (SUB FOR AR114074, AR115541 OR RE69104) (FI)**

(A)UNITED KINGDOM
ROYAUME-UNI
ENGLAND
REGNO UNITO
REINO UNIDO
ENGLAND

https://www.truck-manuals.net/

PERFORMANCE MONITOR
MONITEUR DE PERFORMANCES
LEISTUNGSMONITOR
MONITOR DELLE PRESTAZIONI
MONITOR DE RENDIMIENTO
PRESTATIONSMONITOR
RE030191 -UN-12NOV98

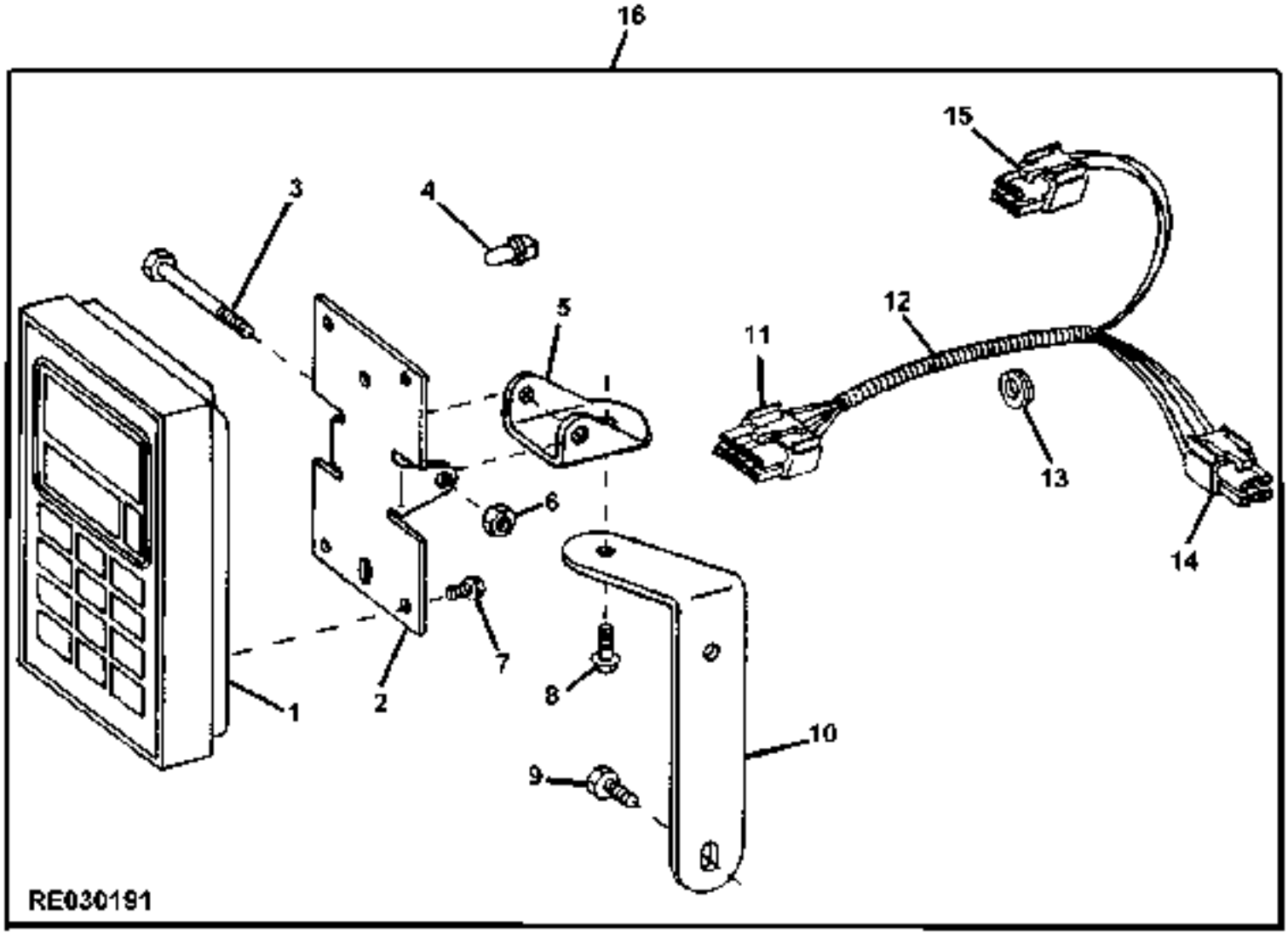

https://www.truck-manuals.net/

KEY	PART NO.	PART NAME	QTY	TRACTOR SERIAL NO.	ALL	REMARKS
1	RE60389	MONITOR CONSOLE	1		X	(A) (INCLUDES (5) R107890)
	RE61600	PERFORMANCE MONITOR	1		X	(B) (INCLUDES (5) R107890)
2	R124225	BRACKET	1		X	
3	19M7156	CAP SCREW	1		X	M10 X 60
4	R107890	BULB	5		X	
5	R124771	BRACKET	1		X	
6	14M7274	NUT	1		X	M10
7	37M7089	SCREW	4		X	M6 X 12
8	19M7560	CAP SCREW	1		X	M6 X 16
9	19M7166	CAP SCREW	2		X	M10 X 20
10	R125193	SUPPORT	1		X	
11	57M7470	CONNECTOR	1		X	(ALSO ORDER (10) 57M7549)
12	RE60540	WIRING HARNESS	1		X	
13	R115350	GROMMET	1		X	
14	57M7714	CONNECTOR	1		X	(ALSO ORDER (4) 57M7549)
15	57M7714	CONNECTOR	1		X	(ALSO ORDER (5) 57M7549)
16	**AR112626**	**KIT**	**1**		**X**	**(A) (FI)**
	AR114555	**KIT**	**1**		**X**	**(B) (FI)**

(A)NORTH AMERICAN VERSION
VERSION NORD AMERICAINE
NORDAMERIKANISCHE
VERSIONE NORDAMREICANA
VERSION NORTEAMERICANA
NORDAMERIKANSK VERSION

(B)EUROPEAN VERSION
VERSION EUROPEENNE
EUROPAEISCHE AUSFUEHRUNG
VERSIONE EUROPEA
VERSION EUROPEA
EUROPEISK VERSION

https://www.truck-manuals.net/

CORNER POST DISPLAY
AFFICHAGE,MONTANT D'ANGLE
ECKPFOSTEN-ANZEIGE
DISPLAY SUL MONTANTE
PANTALLA DE POSTE DE ESQUINA
HOERNSTOLPVISNING
RXP011209 -UN-01JAN94

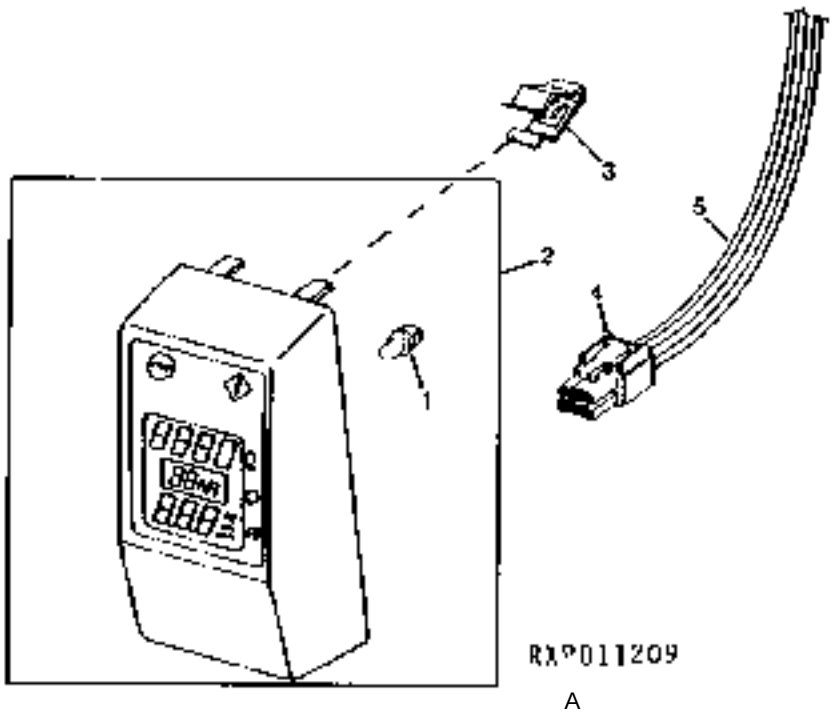

KEY	PART NO.	PART NAME	QTY	TRACTOR SERIAL NO.	ALL	REMARKS
1	R107890	BULB	5		X	
2	RE63458	MODULE	1		X	(INCLUDES (5) R107890) (SUB FOR RE60929)
3	R120160	CLIP	4		X	
4	57M7714	CONNECTOR	1		X	(ALSO ORDER (6) 57M7549)
5	.....	CAB WIRING HARNESS	1		X	

https://www.truck-manuals.net/

ROW-TRAK MONITOR
MONITEUR ROW-TRAK
ROW-TRAK MONITOR
MONITOR ROW-TRAK
MONITOR ROW-TRAK
ROW-TRAK MONITOR
RE026174 -UN-23MAR95

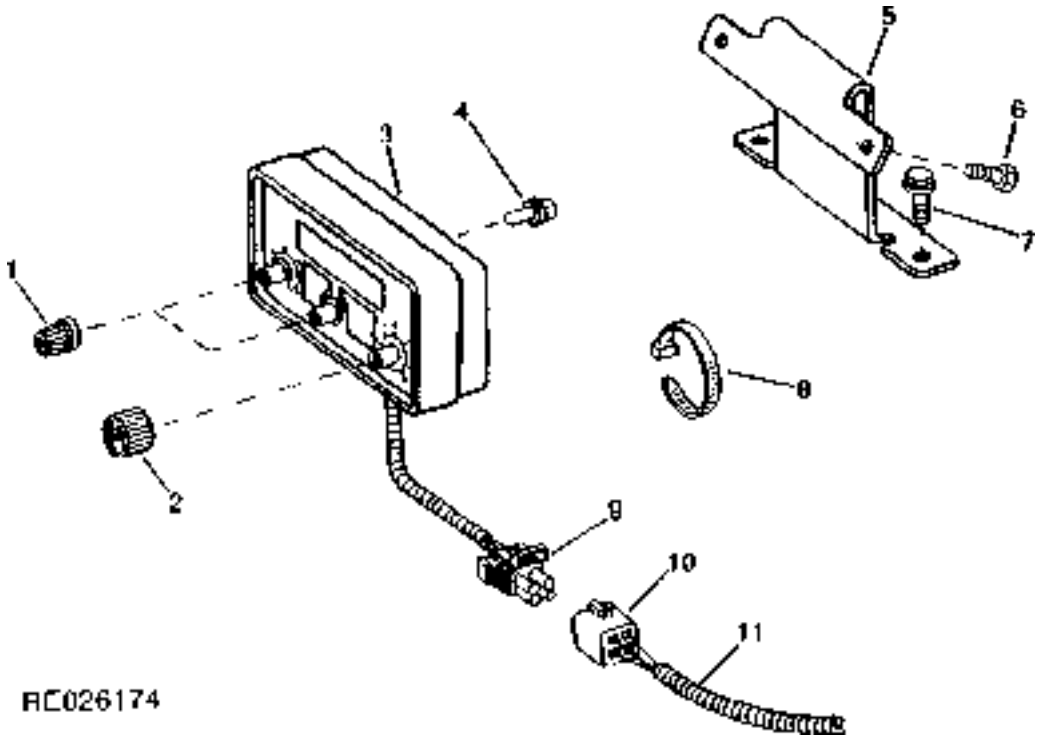

KEY	PART NO.	PART NAME	QTY	TRACTOR SERIAL NO.	ALL	REMARKS
1	R122613	KNOB	2		X	
2	RE43462	KNOB	1		X	
3	RE57744	MONITOR	1		X	
4	R107890	BULB	2		X	
5	R122225	BRACKET	1		X	
6	19M6614	CAP SCREW	2		X	M6 X 12
7	19M7784	SCREW	2		X	M10 X 20
8	R44302	TIE BAND	1		X	
9	RE42193	CONNECTOR	1		X	(ALSO ORDER (4) R78058 AND (4) 57M7292)
10	T138822	CONNECTOR	1		X	(ALSO ORDER (4) R78061 AND (4) R78063)
11	RE64323	WIRING LEAD	1		X	(SUB FOR RE58312)

https://www.truck-manuals.net/

IMPLEMENT SWITCH
INTERRUPTEUR D'EQUIPEMENT
GERAETESCHALTER
INTERRUTTORE PER EQUIAGGIAMENTO
INTERRUPTOR DE EJECUCION
REDSKAPSSTROEMSTAELLARE
RXP026058 -UN-07MAR95

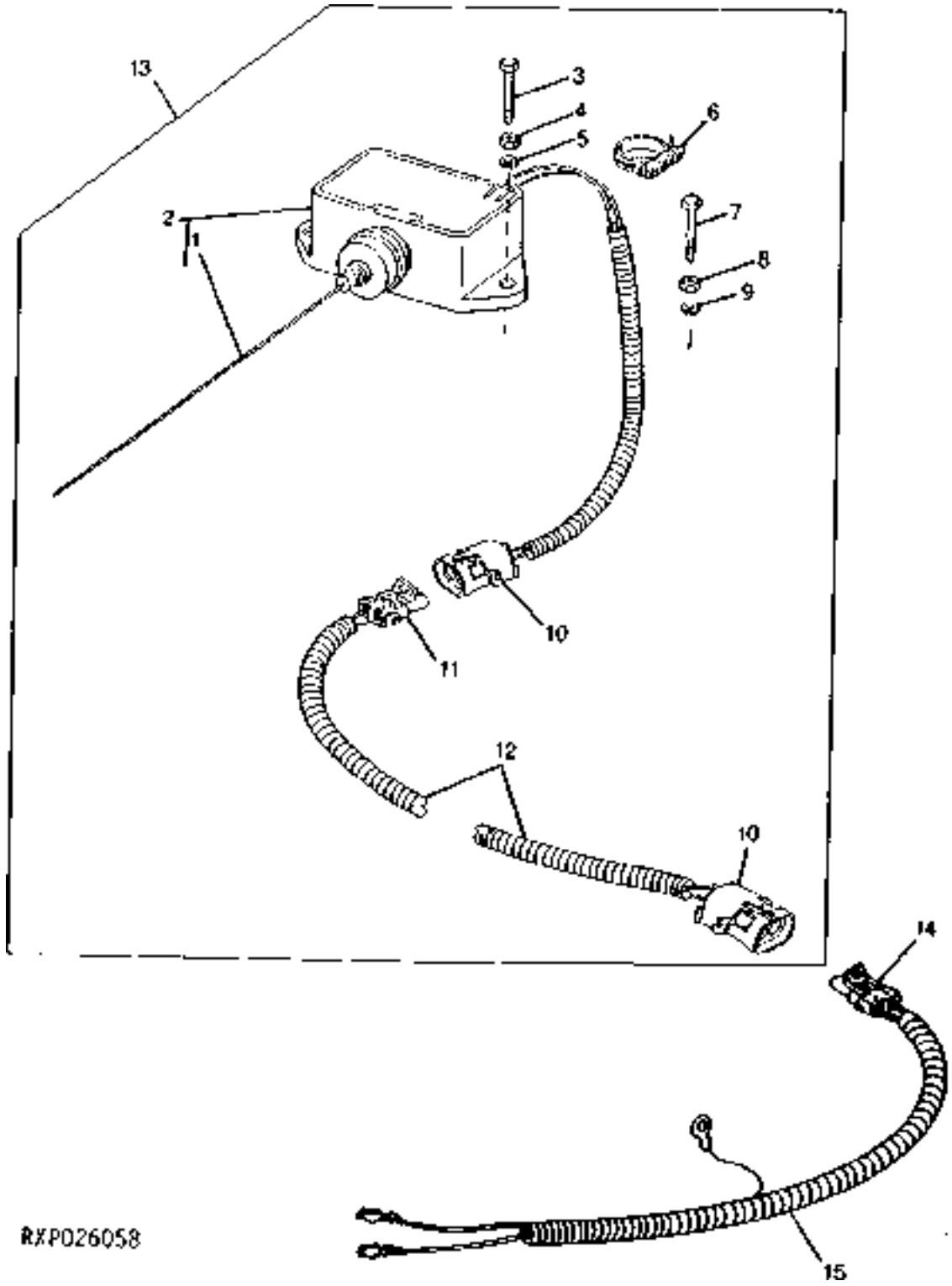

https://www.truck-manuals.net/

KEY	PART NO.	PART NAME	QTY	TRACTOR SERIAL NO.	ALL	REMARKS
1	R83562	WIRE	1		X	
2	RE49242	SWITCH	1		X	(SUB FOR RE21117)
	37H24	SCREW	1		X	1/4" X 3/4"
3	19H1914	CAP SCREW	2		X	1/4" X 1"
4	14H786	NUT	2		X	1/4"
5	12H302	LOCK WASHER	2		X	1/4"
6	TY22473	CLAMP	1		X	(SUB FOR AR21841)
	TY22475	CLAMP	1		X	(SUB FOR C16054)
7	19H1914	CAP SCREW	2		X	1/4" X 1"
8	14H786	NUT	2		X	1/4"
9	12H302	LOCK WASHER	2		X	1/4"
10	R78053	CONNECTOR	1		X	(ALSO ORDER (2) R78061 AND R78063)
11	RE12363	CONNECTOR	1		X	(ALSO ORDER (2) R78060, (2) R78063 AND R78048)
12	RE21099	WIRING HARNESS	1		X	
13	**RE21519**	**SENSOR**	**1**		**X**	**(FI)**
14	RE12363	CONNECTOR	1		X	(ALSO ORDER (2) R78060, (2) R78063 AND R78048)
15	RE63376	WIRING HARNESS	1		X	

https://www.truck-manuals.net/

RADIO AND BRACKETS
RADIO ET SUPPORT
RADIO UND KONSOLE
RADIO E STAFFA
RADIO Y SOPORTE
RADIO OCH KONSOL
RXP026059 -UN-07MAR95

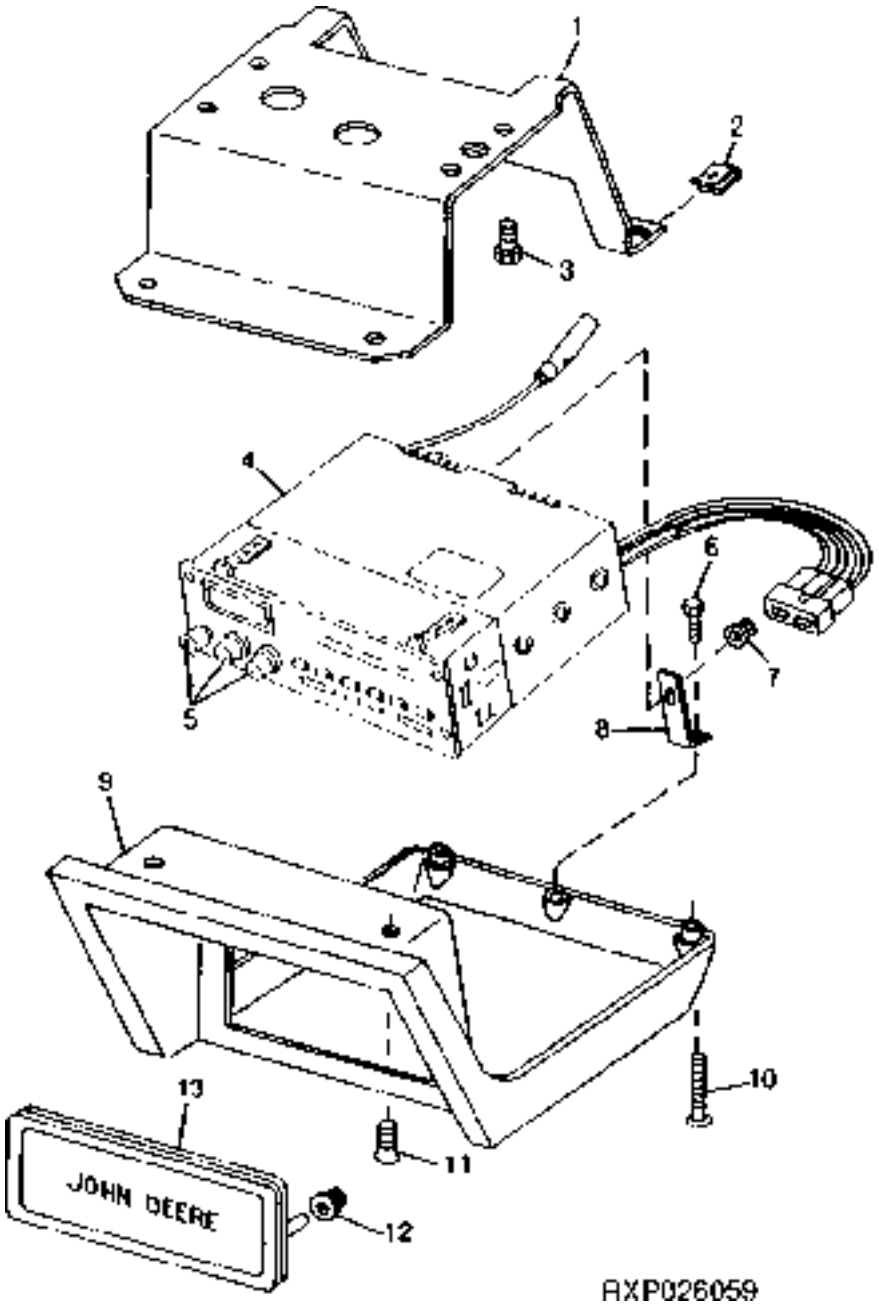

https://www.truck-manuals.net/

KEY	PART NO.	PART NAME	QTY	CAB SERIAL NO.	ALL	REMARKS
1	R121435	BRACKET	1		X	
2	R115945	NUT	4		X	
3	19M6614	CAP SCREW	4	-XXXXXX	X	M6 X 12
	H123995	SCREW	4	XXXXXX-	X	
4	**RE64377**	**RADIO**	**1**		**X**	**(A) (FI)**
	RE64376	**RADIO**	**1**		**X**	**(B) (FI)**
5	RE60726	KNOB	1		X	
6	21M7395	SCREW	1		X	M4 X 8
7	R99233	NUT	1		X	(SUB 14M7297 AND 24M7138)
8	R113042	BRACKET	1		X	
9	R95800	BEZEL	1		X	
10	37M7243	SCREW	2		X	
11	37H215	SCREW	2		X	
12	H117239	FLANGE NUT	2		X	W/O RADIO
13	H132795	PANEL	1		X	W/O RADIO

(A)AM/FM STEREO
STEREO MA/MF
AM/FM STEREO
STEREO AM/FM
AM/FM ESTEREOFONICO
AM/FM STEREO

(B)AM/FM SEREO/CASSETTE/WEATHERBAND
STEREO MA/MF-LECTEUR DE CASSETTES-BANDE METEOROLOGIE
AM/FMSTEREO/KASSETTE/WETTER-FREQUENZBAND
STEREO AM/FM/CASSETTE/BANDAMETEOROLOGICA
AM/FMESTEREOFONICO/TOCACINTAS/BANDA/METEOROLOGICA
AM/FM STEREO/KASSETT/VAEDERBAND

https://www.truck-manuals.net/

SPEAKER (RADIO)
HAUT-PARLEUR(RADIO)
LAUTSPECHER(RADIO)
ALTOPARLANTE(RADIO)
ALTAVOZ(RADIO)
HOEGTALARE(RADIO)
RXP010832 -UN-01JAN94

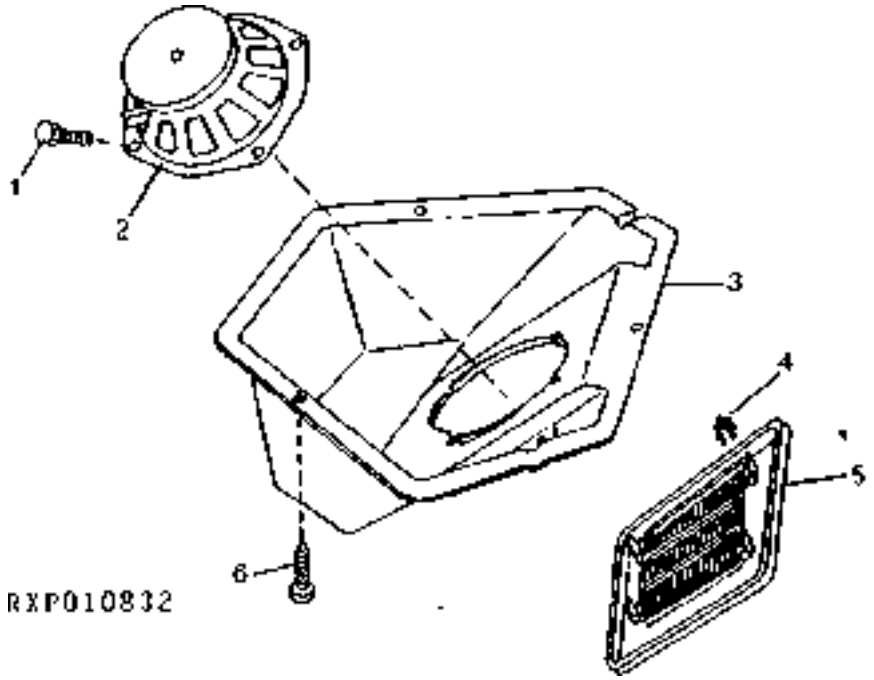

KEY	PART NO.	PART NAME	QTY	CAB SERIAL NO.	ALL	REMARKS
1	37M7218	SCREW	16		X	
2	RE61545	SPEAKER	2		X	(FRONT)(6")(4 OHM)
	RE61546	SPEAKER	2		X	(REAR)(6")(4 OHM)
3	R107414	HOUSING	4		X	
4	R120160	CLIP	16		X	
5	R124331	GRILLE	4		X	
6	21M7285	SCREW	12	-XXXXXX	X	M6 X 12
	H123995	SCREW	12	XXXXXX-	X	

https://www.truck-manuals.net/

RADIO,ANTENNA AND SPEAKER KIT
JEU DE RADIO,ANTENNE ET HAUT-PARLEURS
RADIO,ANTENNE UND LAUTSPRECHER-SATZ
KIT DELLA RADIO,ANTENNA E DEGLI ALTOPARLANTI
JUEGO DE RADIO,ANTENA Y ALTOPARLANTE
RADIO,ANTENN-OCH HOEGTALARSATS
RE026649 -UN-11DEC95

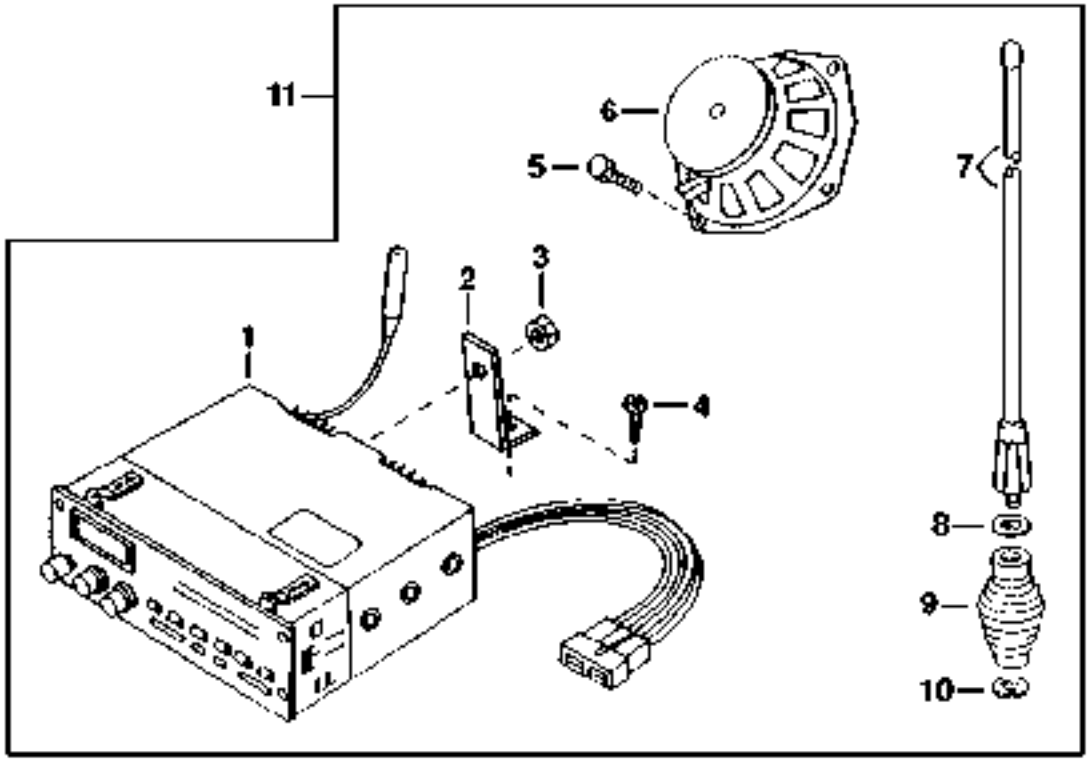

RE026649

KEY	PART NO.	PART NAME	QTY	CAB SERIAL NO.	ALL	REMARKS
1	**RE64377**	**RADIO**	**1**		**X**	**(A) (FI)**
	RE64376	**RADIO**	**1**		**X**	**(B) (FI)**
2	R113042	BRACKET	1		X	
3	R99233	NUT	1		X	(SUB 14M7297 AND 24M7138)
4	21M7395	SCREW	1		X	M4 X 8
5	37M7218	SCREW	16		X	
6	RE61545	SPEAKER	2		X	(FRONT)(6")(4 OHM)
	RE61546	SPEAKER	2		X	(REAR)(6")(4 OHM)
7	AR104516	ANTENNA	1		X	
8	12H310	LOCK WASHER	1		X	3/8"
9	RE61651	SPRING	1		X	
10	12H302	LOCK WASHER	1		X	1/4"
11	**AR116475**	**KIT**	**1**		**X**	**(A) (SUB FOR AR112622) (FI)**
	AR116476	**KIT**	**1**		**X**	**(B) (SUB FOR AR112623) (FI)**

(A)AM/FM STEREO
STEREO MA/MF
AM/FM STEREO
STEREO AM/FM
AM/FM ESTEREOFONICO
AM/FM STEREO

(B)AM/FM STEREO/CASSETTE/WEATHERBAND
STEREO MA/MF-LECTEUR DE CASSETTE-BANDE METEOROLOGIE
AM/FM STEREO/KASSETTE/WETTER-FREQUEZBAND
STEREO AM/FM/CASSETTE/BANDA METEOROLOGICA
AM/FM ESTEREOFONICO/TOCACINTAS/BANDA METEOROLOGICA
AM/FM STEREO/KASSETT/VAEDERBAND

https://www.truck-manuals.net/

REAR SPEAKER(KIT)(EUROPEAN VERSION)
JEU DE HAUT-PARLEUR ARRIERE(VERSION EUROPEENNE)
HINTERER LAUTSPRECHERSATZ(EUROPEAEISCHE AUSFUEHRUNG)
KIT DELL'ALTOPARLANTE ANTERIORE(VERSIONE EUROPEA)
JUEGO DE ALTOPARLANTE TRASERO(VERSION EUROPEA)
BAKRE HOEGTALARSATS(EUROPEISK VERSION)
RXP011213 -UN-01JAN94

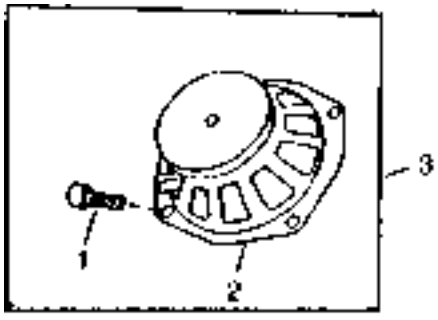

KEY	PART NO.	PART NAME	QTY	CAB SERIAL NO.	ALL	REMARKS
1	37M7218	SCREW	8		X	
2	RE61546	SPEAKER	2		X	(6")(4 OHM)
3	**AR114564**	**KIT**	**1**		**X**	**(FI)**

https://www.truck-manuals.net/

MEMORANDA
MEMORANDA
MEMORANDA
MEMORANDA
MEMORANDA
MEMORANDA

https://www.truck-manuals.net/

RADIO ANTENNA
RADIO, ANTENNE
RADIO ANTENNE
ANTENNA RADIO
ANTENA DE RADIO
RADIOANTENN
RXP026060 -UN-07MAR95

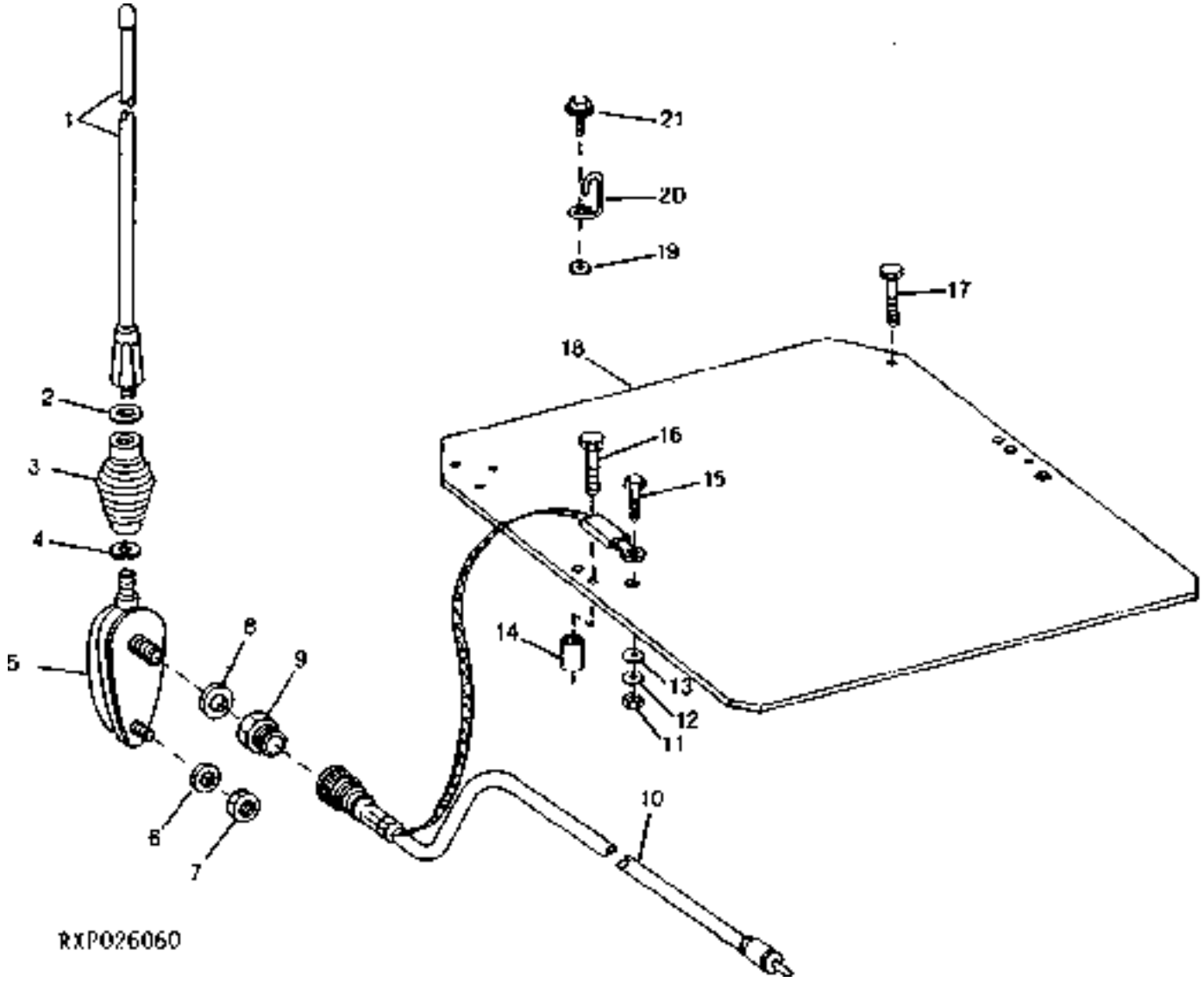

https://www.truck-manuals.net/

KEY	PART NO.	PART NAME	QTY	CAB SERIAL NO.	ALL	REMARKS
1	AR104516	ANTENNA	1		X	
2	12H310	LOCK WASHER	1		X	
3	RE61651	SPRING	1		X	
4	12H302	LOCK WASHER	1		X	1/4"
5	RE61648	BASE	1		X	
	R131991	CAP	1		X	W/O RADIO
6	24M7088	WASHER	1		X	6.600 X 12 X 1.600 MM
7	14H786	NUT	1		X	
8	R47172	WASHER	1		X	33/64" X 0.900" X 0.048"
9	R76695	NUT	1		X	
10	RE61650	CABLE	1		X	
11	14M7166	LOCK NUT	1		X	M8
12	12M7032	LOCK WASHER	1		X	8.400 MM
13	24M7055	WASHER	1		X	8.400 X 16 X 1.600 MM
14	R115968	SPACER	2		X	
15	19M7932	CAP SCREW	1		X	M8 X 16, HS 10.9
16	19M7979	SCREW	2		X	M8 X 55
17	19M7875	CAP SCREW	2		X	(A)
18	R125325	PLANE	1		X	(B) (-)
19	24M7100	WASHER	1		X	
20	R126033	HOOK	1		X	
21	R117569	SCREW	1		X	

(A)EUROPEAN VERSION
VERSION EUROPEENNE
EUROPAEISCHE AUSFUEHRUNG
VERSIONE EUROPEA
VERSION EUROPEA
EUROPEISK VERSION

(B)ANTENNA GROUND
ANTENNE,MASSE
ANTENNENMASSE
MESSA A TERRA DELL ANTENNA
TIERRA DE A ANTENA
ANTENNJORD

https://www.truck-manuals.net/

ANTENNA CABLE AND RADIO BRACKET(MOBILE RADIO)(8100,8200,8300,8400 TSN 010000-)
ANTENNE CABLE ET SUPPORT RADIO(RADIO MOBILE)(8100,8200,8300,8400 TSN 010000-)
ANTENNE KABEL MIT RADIO-HALTERRUNG(FUNKGERAET)(8100,8200,8300,8400 TSN 010000-)
ANTENNA CAVO E STAFFA DELLA RADIO(RADIO PORTATILE)(8100,8200,8300,8400 TSN 010000-)
ESCUADRA DE ANTENA CABLES Y RADIO(TRANSCEPTOR DE RADIO)(8100,8200,8300,8400 TSN 010000-)
ANTENN KABELVAJER-OCH RADIO(MOBILRADIO)(8100,8200,8300,8400 TSN 010000-)
RE026983 -UN-06AUG96

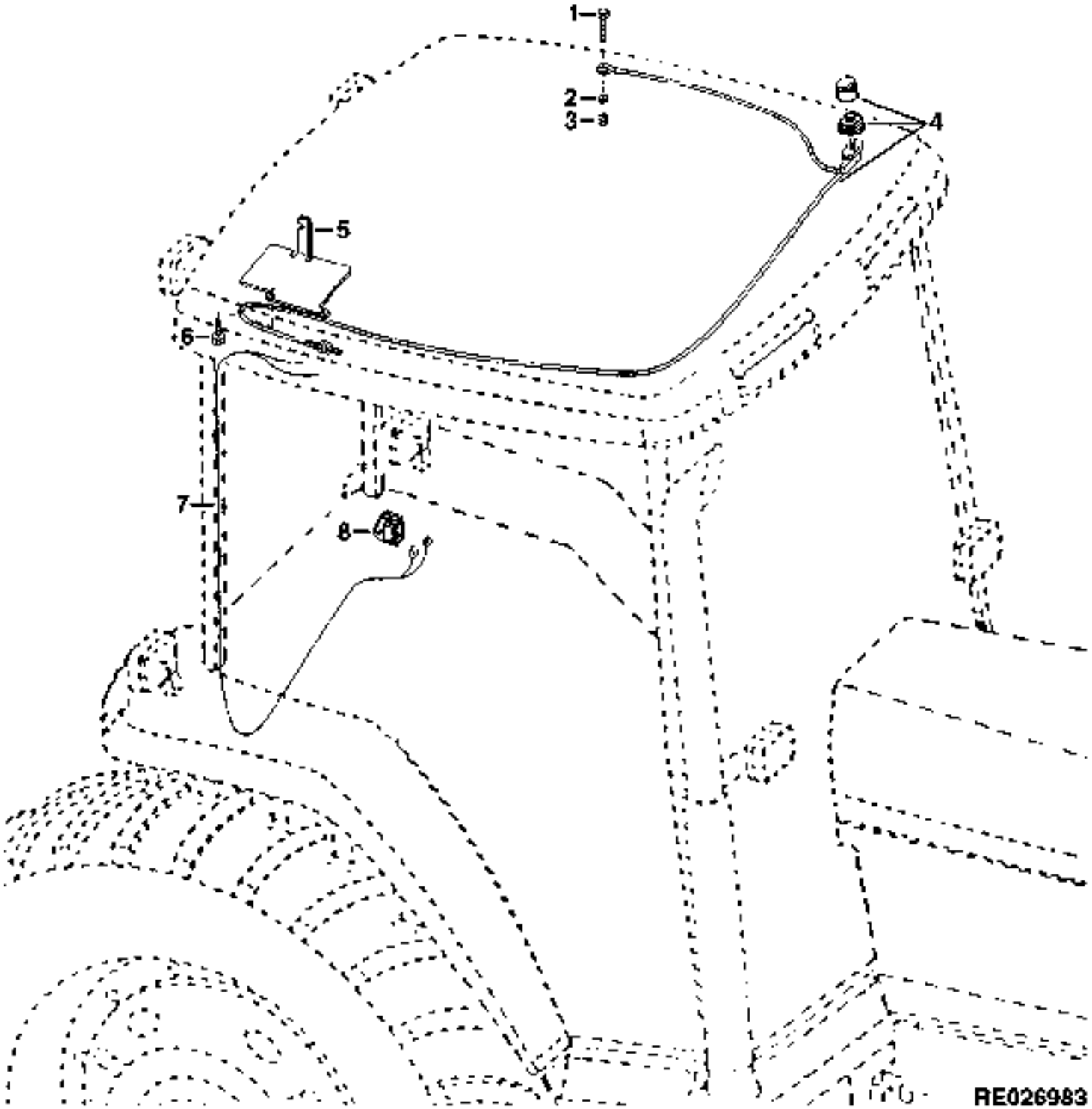

https://www.truck-manuals.net/

KEY	PART NO.	PART NAME	QTY	CAB SERIAL NO.	ALL	REMARKS
1	19M7932	CAP SCREW	1		X	M8 X 16
2	12M7032	LOCK WASHER	1		X	8.400 MM
3	14M7166	LOCK NUT	1		X	M8
4	RE70019	CABLE	1		X	
5	R134326	PLATE	1		X	
6	R126355	SCREW	2		X	
7	RE67820	WIRING HARNESS	1		X	
	R41440	GROMMET	1		X	
8	R111931	JUNCTION BLOCK	1		X	

https://www.truck-manuals.net/

COLD WEATHER START KIT(NORTH AMERICAN VERSION)
JEU D'AIDE AU DEMARRAGE PAR TEMPS FROID(VERSION NORD AMERICAINE)
KALTSTART-BAUSATZ(NORDAMERIKANISCHE AUSFUEHRUNG)
KIT AVVIAMENTO PER LA STAGIONE FREDDA(VERSIONE NORDAMERICANA)
CONJUNTO DE ARRANQUE PARA TIEMPO FRIO(VERSION NORTEAMREICANA)
SATS FOER START I KALLT VAEDERNORDAMERIKANSK VERSION)
RXP011299 -UN-01JAN94

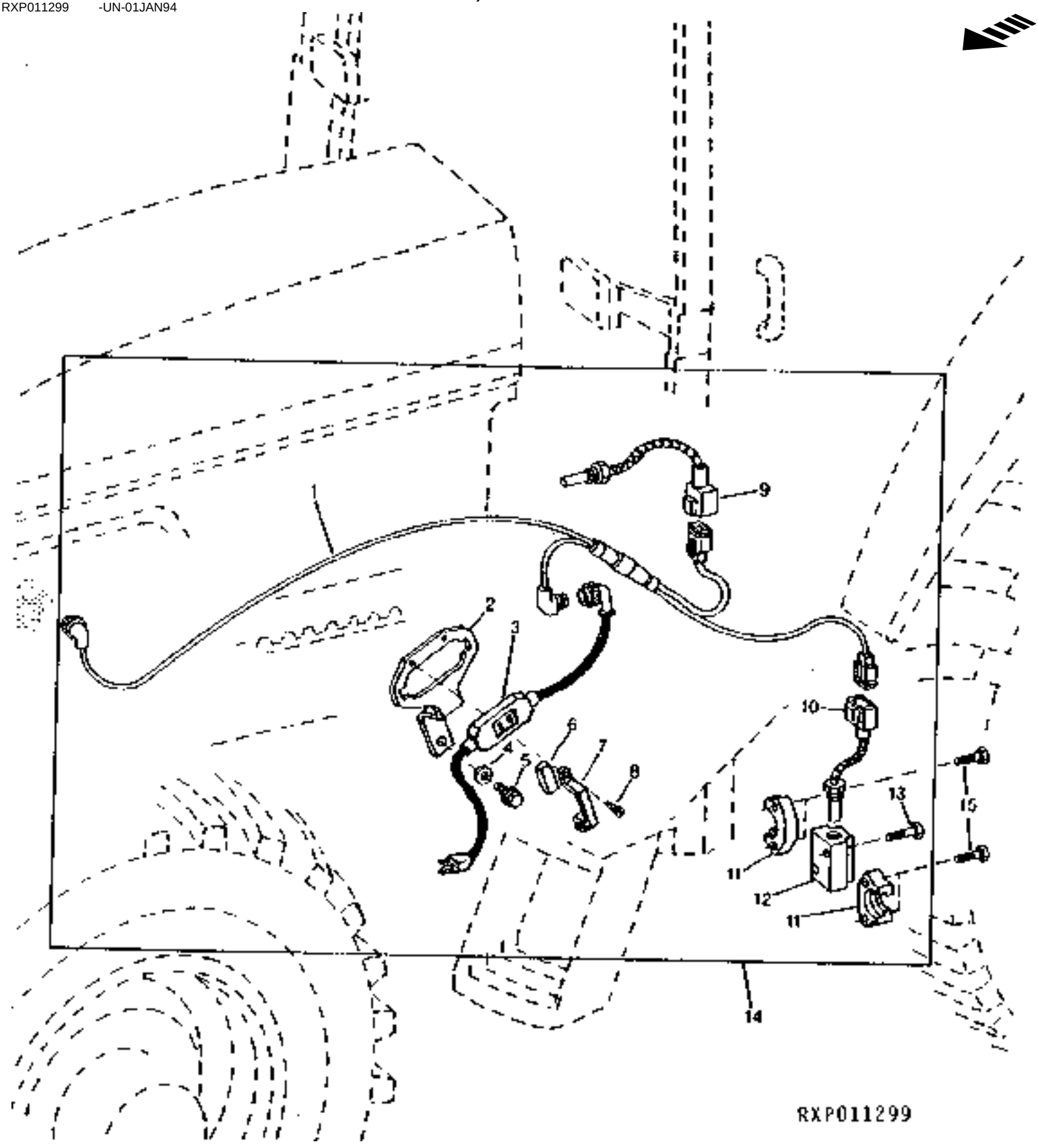

https://www.truck-manuals.net/

KEY	PART NO.	PART NAME	QTY	TRACTOR SERIAL NO.	ALL	REMARKS
1	RE55891	POWER CORD	1		X	
2	AR113795	BRACKET	1		X	
3	RE153289	MODULE	1		X	(SUB FOR RE52427)
	R152283	LABEL	1		X	
4	24M7051	WASHER	1		X	21 X 37 X 3 MM
5	19M7946	CAP SCREW	1		X	M20 X 40
6	R117260	STRIP	2		X	
7	R117185	STRAP	2		X	
8	37M7089	SCREW	4		X	M6 X 12
9	RE61760	HEATER	1		X	(A)
10	RE61760	HEATER	1		X	(B)
11	R125563	FLANGE FITTING	2		X	
12	R122537	HOUSING	1		X	
13	19M8513	SCREW	2		X	M6 X 40
14	**RE56234**	**KIT**	**1**		**X**	**(FI) (110 V)**
15	19M8011	CAP SCREW	4		X	M12 X 30, HS 10.9

(A)TRANSMISSION
BOITE DE VITESSES
GETRIEBE
TRANSMISSIONE
TRANSMISION
KRAFTOEVERFOERING

(B)GEAR PUMP
POMPE A ENGRENAGES
ZAHNRADPUMPE
POMPA A INGRANAGGI
BOMBA DE ENGRANAJES
KUGGHJULSPUMP

https://www.truck-manuals.net/

COLD WEATHER START KIT(EUROPEAN VERSION)
JEU D'AIDE AU DEMARRAGE PAR TEMPS FROID(VERSION EUROPEENNE)
KALTSTART-BAUSATZ(EUROPAEISCHE AUSFUEHRUNG)
KIT AVVIAMENTO PER LA STAGIONE FREDDA(VERSIONE EUROPEA)
CONJUNTO DE ARRANQUE PARA TIEMPO FRIO(VERSION EUROPEA)
SATS FOER START I KALLT VAEDER(EUROPEISK VERSION)
RXP011287 -UN-01JAN94

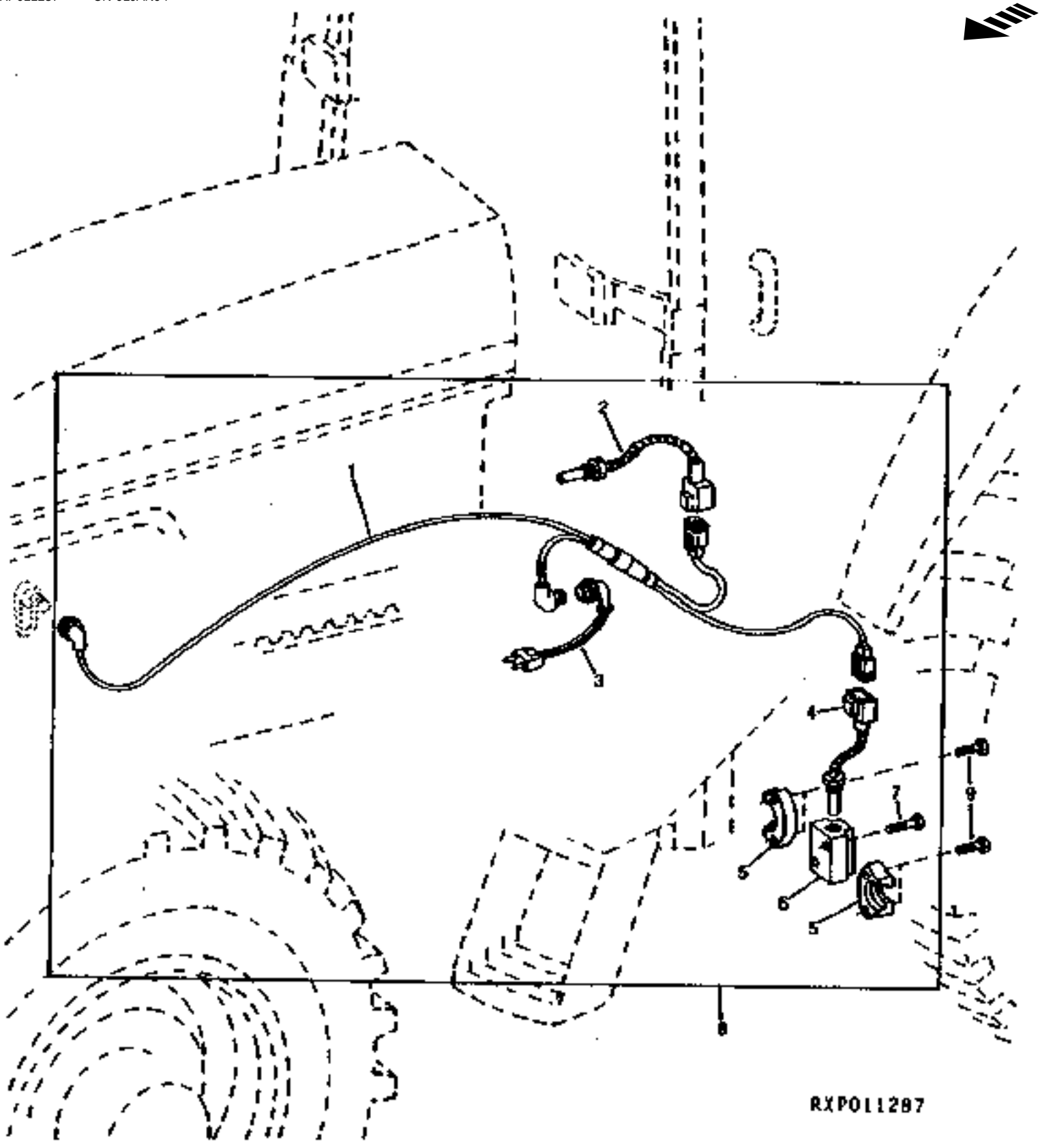

https://www.truck-manuals.net/

KEY	PART NO.	PART NAME	QTY	TRACTOR SERIAL NO.	ALL	REMARKS
1	RE55976	POWER CORD	1		X	
2	RE61760	HEATER	1		X	(A)
3	AR87079	POWER CORD	1		X	
4	RE61760	HEATER	1		X	(B)
5	R125563	FLANGE FITTING	2		X	
6	R122537	HOUSING	1		X	
7	19M8513	SCREW	2		X	M6 X 40
8	**RE56235**	**KIT**	**1**		**X**	**(FI) (220 V)**
9	19M8011	CAP SCREW	1		X	HS 10.9

(A)TRANSMISSION
BOITE DE VITESSES
GETRIEBE
TRANSMISSIONE
TRANSMISION
KRAFTOEVERFOERING

(B)GEAR PUMP
POMPE A ENGRENAGES
ZAHNRADPUMPE
POMPA A INGRANAGGI
BOMBA DE ENGRANAJES
KUGGHJULSPUMP

https://www.truck-manuals.net/

BACK-UP ALARM KIT
AVERTISSEUR DE MARCHE ARRIERE,JEU DE PIECES
RUECKSTOSS-WARNANLAGE
KIT DEL SEGNALATORE RETROMARCIA
CONJUNTO DE ALAEMA DE RETROCESO
BACKNINGSSIGNALSATS
RE026173 -UN-22MAR95

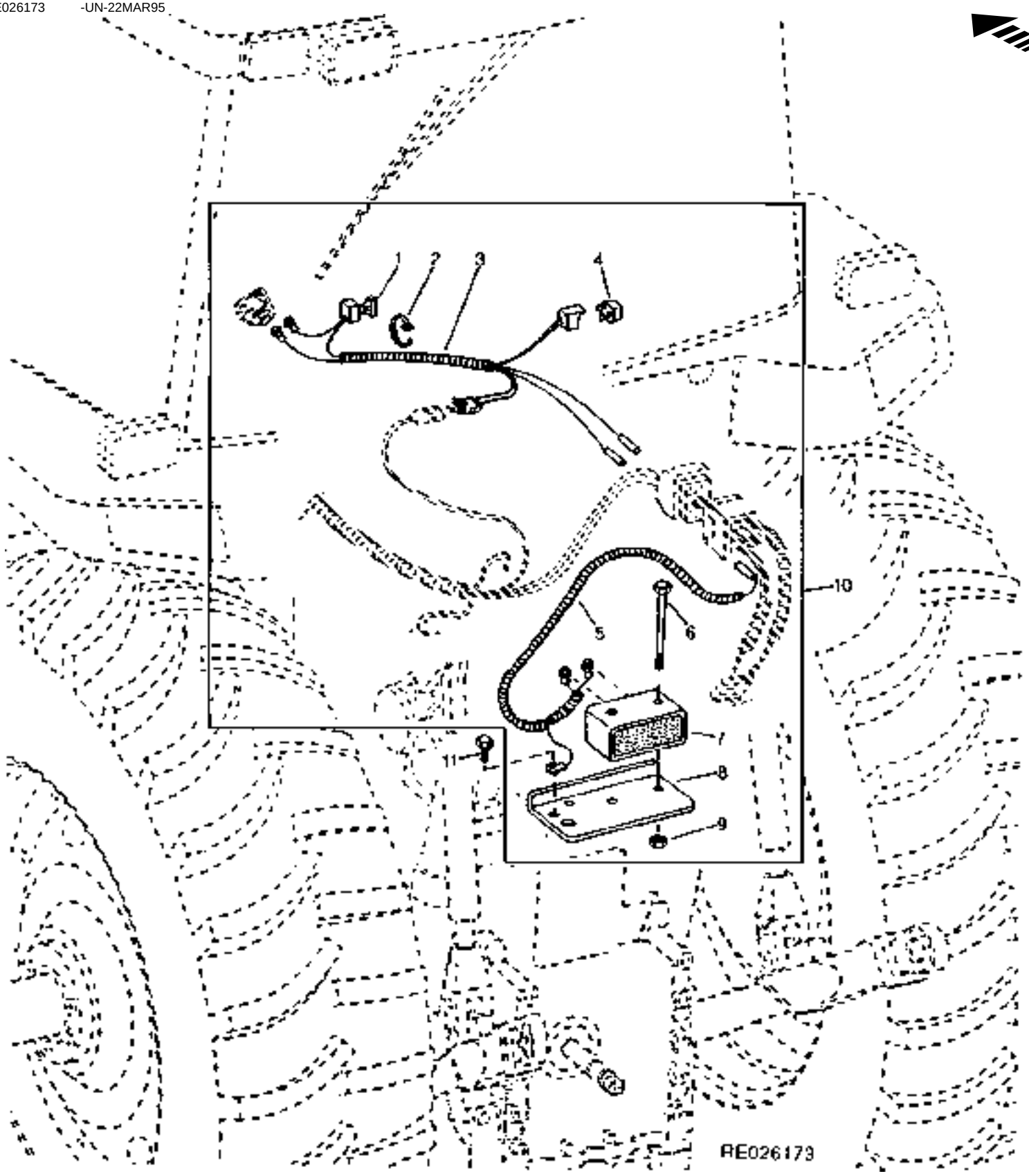

https://www.truck-manuals.net/

KEY	PART NO.	PART NAME	QTY	TRACTOR SERIAL NO.	ALL	REMARKS
1	57M7121	FUSE	1		X	10 AMP
2	R44302	TIE BAND	1		X	
3	RE58718	WIRING HARNESS	1		X	
4	RE48876	RELAY	1		X	40 AMP
5	RE58719	WIRING HARNESS	1		X	
6	19M7408	CAP SCREW	2		X	M10 X 90
7	AT78534	BACK-UP ALARM	1		X	
8	R111982	BRACKET	2		X	
9	14M7296	FLANGE NUT	2		X	M10
10	**RE61779**	**KIT**	**1**		**X**	**(FI)**
11	19M8242	SCREW	2		X	M12 X 16, HS 10.9

https://www.truck-manuals.net/

MEMORANDA
MEMORANDA
MEMORANDA
MEMORANDA
MEMORANDA
MEMORANDA

https://www.truck-manuals.net/

SECTIONAL INDEX
GRUPPENINDEX
INDEX DE SECTION
INDICE DELLA SEZIONE
INDICE DE SECCION
GRUPPSFORTECKNING

RE029120 -UN-11MAY99

1 -	3I11
3 -	3I22
4 -	3I23

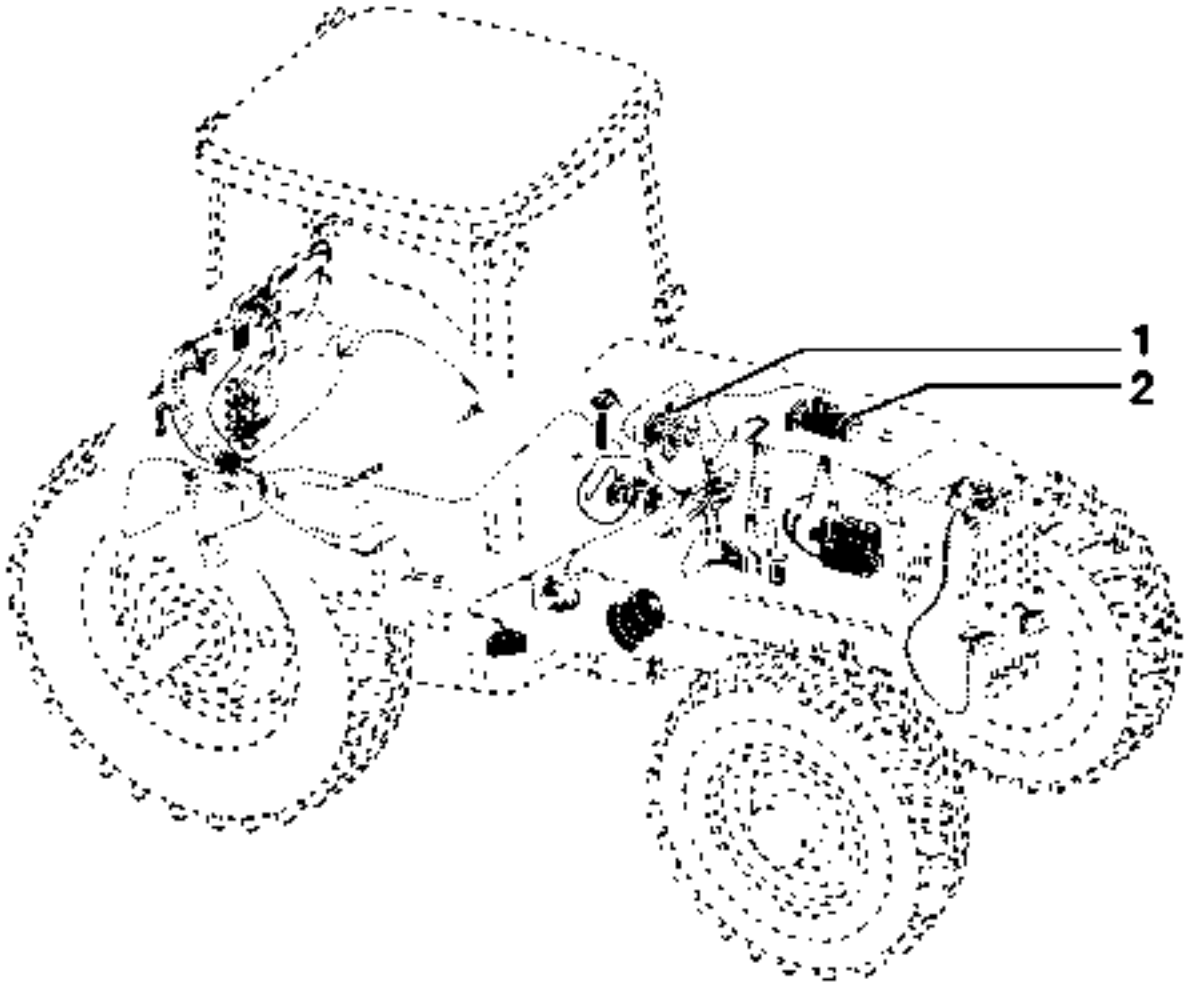

RE029120

https://www.truck-manuals.net/

SECTIONAL INDEX
GRUPPENINDEX
INDEX DE SECTION
INDICE DELLA SEZIONE
INDICE DE SECCION
GRUPPSFORTECKNING

RE029121 -UN-10MAY99

1 - 3I11
3 - 3I22
4 - 3I23

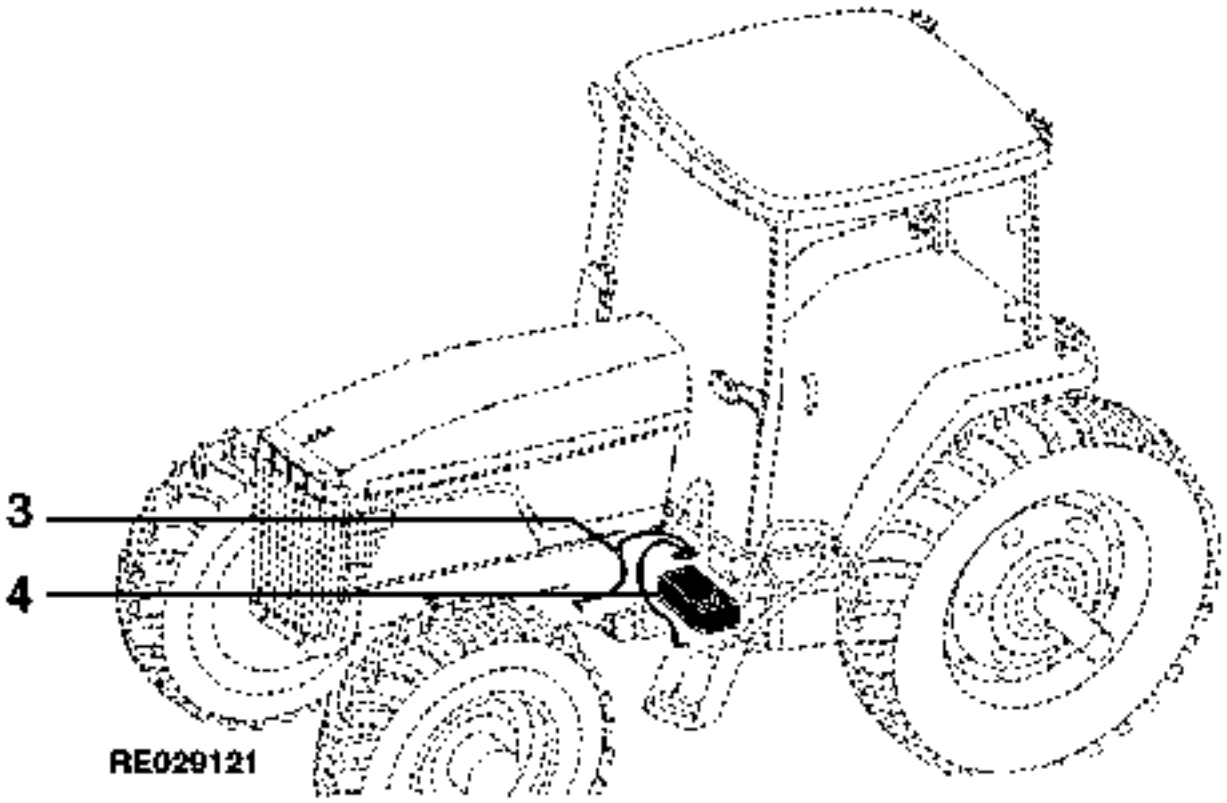

https://www.truck-manuals.net/

ALTERNATOR
ALTERNATEUR
DREHSTROM-GENERATOR
ALTERNATORE
ALTERNADOR
VAXELSTROMSGENERATOR
RXP011321 -UN-01JAN94

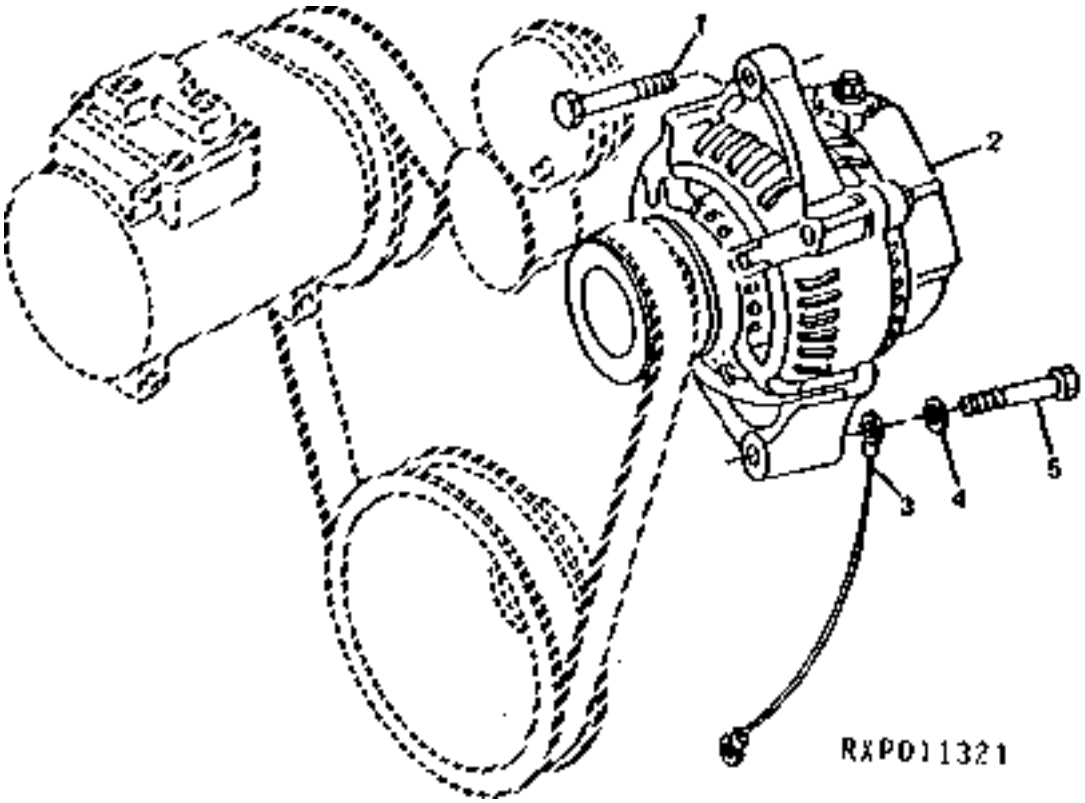

KEY	PART NO.	PART NAME	QTY	ENGINE SERIAL NO.	ALL	REMARKS
1	19M7328	CAP SCREW	1		X	M10 X 70
2	RE46608	ALTERNATOR	1		X	(NIPPONDENSO)(140 AMPS)
	TY6762	ALTERNATOR	1		X	(A) (140 AMPS)
3	RE40588	WIRING LEAD	1		X	(-)
4	24M7239	WASHER	1		X	10.700 X 21 X 2.500 MM
5	19M7997	CAP SCREW	1		X	M8 X 110

(A)REMANUFACTURED
ECHANGE STANDARD
GENERAUEBERHOLT
RIGATTO
REFABRICADO POR
RENOVERAD

https://www.truck-manuals.net/

ALTERNATOR
ALTERNATEUR
DREHSTROM-GENERATOR
ALTERNATORE
ALTERNADOR
VAXELSTROMSGENERATOR
RXP010824 -UN-01JAN94

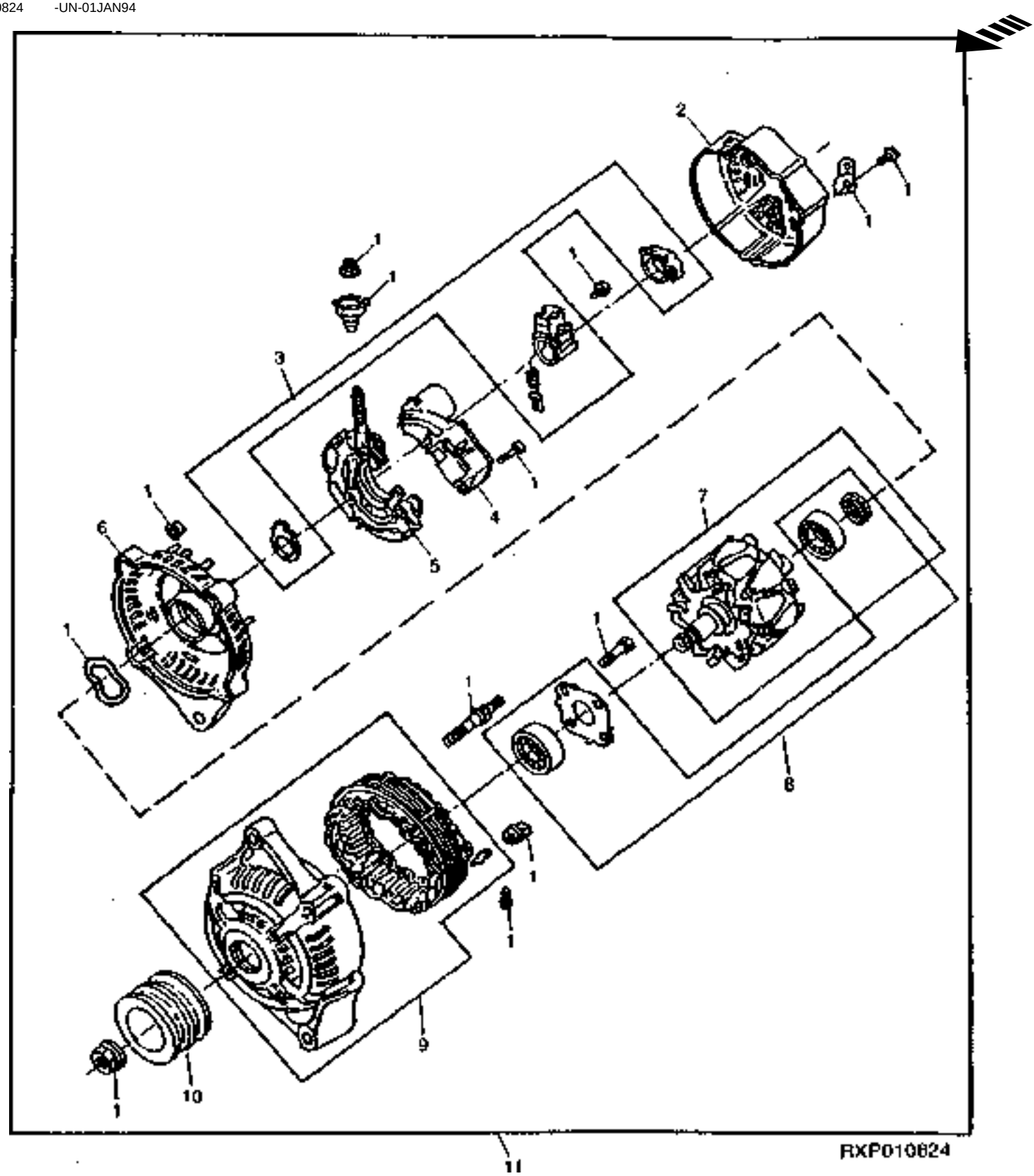

https://www.truck-manuals.net/

KEY	PART NO.	PART NAME	QTY	ENGINE SERIAL NO.	ALL	REMARKS
1	RE52026	PACKAGE OF PARTS	1		X	
2	R115289	COVER	1		X	
3	RE52028	CARBON BRUSH HOLDER	1		X	
4	RE51297	REGULATOR	1		X	
5	RE51298	RECTIFIER	1		X	
6	R115609	FRAME	1		X	
7	RE51299	ROTOR	1		X	
8	.....	BEARING	1		X	(ORDER RE46608 OR TY6762)
9	RE51300	FRAME	1		X	
10	R114844	PULLEY	1		X	
11	RE46608	ALTERNATOR	1		X	(140 AMP)
..	TY6762	ALTERNATOR	1		X	(A)

(A)REMANUFACTURED
ECHANGE STANDARD
GENERAUEBERHOLT
RIGATTO
REFABRICADO POR
RENOVERAD

https://www.truck-manuals.net/

STARTING MOTOR (12V) (6076) (8100,8200,8300 TSN -009999)(DENSO)
MOTEUR DU DEMARREUR (12V) (6076)(8100,8200,8300 TSN -009999) (DENSO)
ANLASSER (12V) (6076) (8100,8200,8300 TSN -009999) (DENSO)
MOTORE D'AVVIAMENTO (12V) (6076) (8100,8200,8300 TSN -009999) (DENSO)
MOTOR DE ARRANQUE (12V) (6076) (8100,8200,8300 TSN -009999) (DENSO)
STARTMOTOR (12V) (6076) (8100,8200,8300 TSN -009999) (DENSO)
RGP4309 -UN-14SEP95

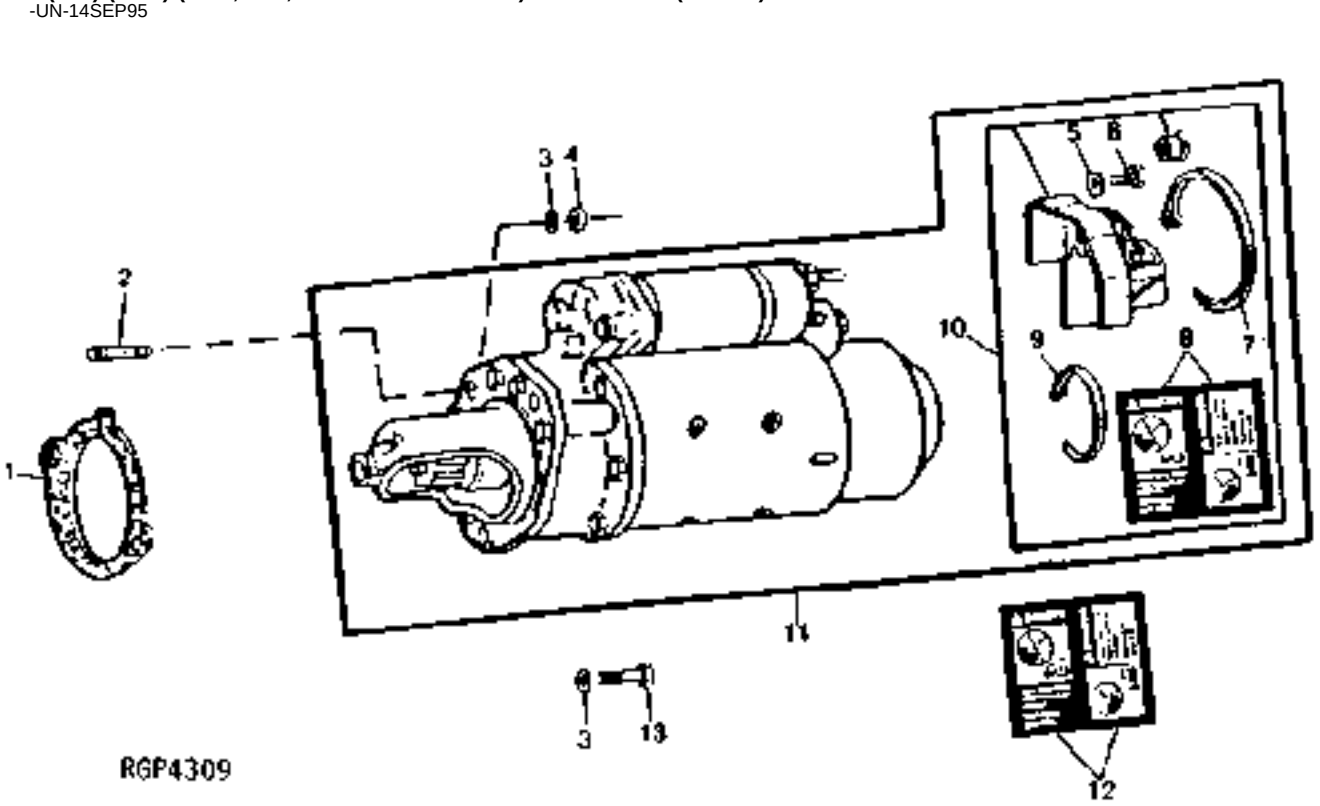

KEY	PART NO.	PART NAME	QTY	ENGINE SERIAL NO.	8 8 8 1 2 3 0 0 0 0 0 0	REMARKS
1	.....	GASKET	NA		X X X	
2	R114130	STUD	1		X X X	(SUB FOR R55396, APPL)
3	24M7096	WASHER	2		X X X	10.500 X 18 X 1.600 MM
4	E55662	FLANGE NUT	1		X X X	
5	R104676	SHIM	1		X X X	
6	R104646	SCREW	1		X X X	
7	H113196	TIE BAND	1		X X X	(INCLUDED WITH RE56053)
8	T146102	LABEL	1		X X X	(ENGLISH)
9	R44302	TIE BAND	1		X X X	
10	RE41758	COVER	1		X X X	(USE WITH TY6731)
	RE45329	COVER	1		X X X	(USE WITH RE43266)
11	RE56053	STARTER MOTOR	1		X X X	(DENSO NO. 128000-2360) (MARKED RE54416) (MARKED RE61516) (CONTAINS RE45329) (SUB RE70957 OR TY6781)
	RE65176	KIT	1		X X X	(DENSO NO. 22800-4601) (MARKED RE59589)
	RE70957	STARTER MOTOR KIT	1		X X X	(SUB RE70957 OR TY6781) (DENSO NO. 228000-6530) (MARKED RE69704)
	TY6781	STARTER MOTOR	1		X X X	(REMANUFACTURED) (DENSO) (CONTAINS RE45329)
12	T146517	SAFETY SIGN	1		X X X	(ENGLISH/FRENCH))
	T146104	SAFETY SIGN	1		X X X	(FRENCH)
	T146515	SAFETY SIGN	1		X X X	(GERMAN)
	T146516	SAFETY SIGN	1		X X X	(ITALIAN)
	T146106	SAFETY SIGN	1		X X X	(SPANISH)
13	19H3219	CAP SCREW	2		X X X	3/8" X 1-3/8"
..	RE43166	CLAMP	1		X X X	

https://www.truck-manuals.net/

STARTING MOTOR (12V F4) (6081) (8100,8200,8300 TSN 010000-) (NIPPONDENSO)
MOTEUR DU DEMARREUR (12V F4) (6081) (8100,8200,8300 TSN 010000-) (NIPPONDENSO)
MOTEUR DU DEMARREUR (12V F4) (6081) (8100,8200,8300 TSN 010000-) (NIPPONDENSO)
MOTORE D'AVVIAMENTO (12V F4) (8100,8200,8300 TSN 010000-) (NIPPONDENSO)
MOTOR DE ARRANQUE (12V F4) (8100,8200,8300 TSN 010000-) (NIPPONDENSO)
STARTMOTOR (12V F4) (8100,8200,8300 TSN 010000-) (NIPPONDENSO)
RXP8953 -UN-01JAN94

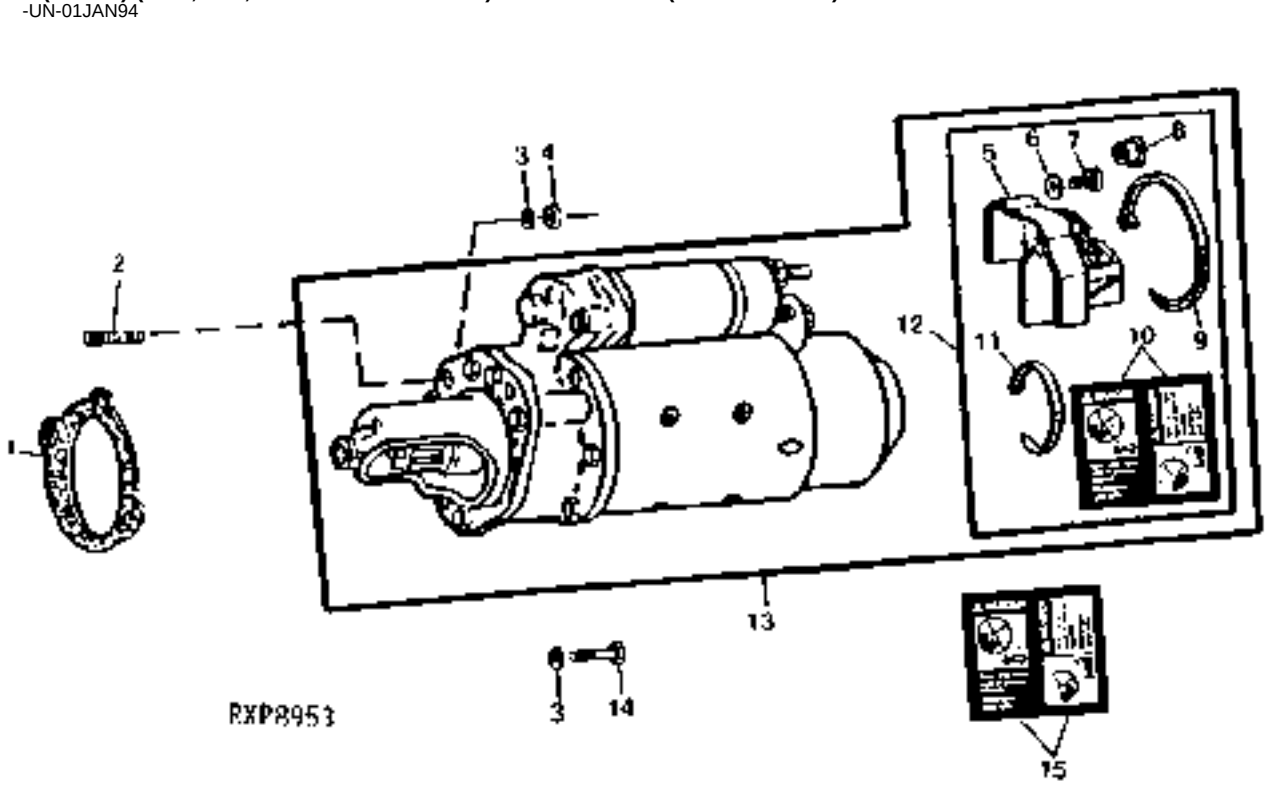

KEY	PART NO.	PART NAME	QTY	ENGINE SERIAL NO.	8 8 8 1 2 3 0 0 0 0 0 0	REMARKS
1	.....	GASKET	NA		X X X	
2	R114130	STUD	1		X X X	
3	24M7096	WASHER	2		X X X	10.500 X 18 X 1.600 MM
4	E55662	FLANGE NUT	1		X X X	
5	.....	COVER	1		X X X	(SUB RE45329)
6	R104676	SHIM	1		X X X	
7	R104646	SCREW	1		X X X	
8	R104677	BUSHING	1		X X X	(NO LONGER INCLUDED)
9	H113196	TIE BAND	1		X X X	
10	T146102	LABEL	1		X X X	(ENGLISH)
11	R44302	TIE BAND	1		X X X	
12	RE45329	COVER	1		X X X	
13	RE65103	STARTER MOTOR	1		X X X	(NIPPONDENSO NO. 228000-4630) (MARKED RE65100) (CONTAINS RE45329) (SUB RE70957)
	RE70957	STARTER MOTOR KIT	1		X X X	(NIPPONDENSO NO. 228000-6530) (MARKED RE69704)
14	19H3219	CAP SCREW	2		X X X	3/8" X 1-3/8"
15	T146517	SAFETY SIGN	1		X X X	(ENGLISH/FRENCH))
	T146104	SAFETY SIGN	1		X X X	(FRENCH)
	T146515	SAFETY SIGN	1		X X X	(GERMAN)
	T146516	SAFETY SIGN	1		X X X	(ITALIAN)
	T146106	SAFETY SIGN	1		X X X	(SPANISH)

https://www.truck-manuals.net/

MEMORANDA
MEMORANDA
MEMORANDA
MEMORANDA
MEMORANDA
MEMORANDA

https://www.truck-manuals.net/

STARTING MOTOR(8400)
MOTEUR DU DEMARREUR(8400)
ANLASSER(8400)
MOTORE D'AVVIAMENTO(8400)
MOTOR DE ARRANQUE(8400)
STARTMOTOR(8400)
RE026581 -UN-01DEC95

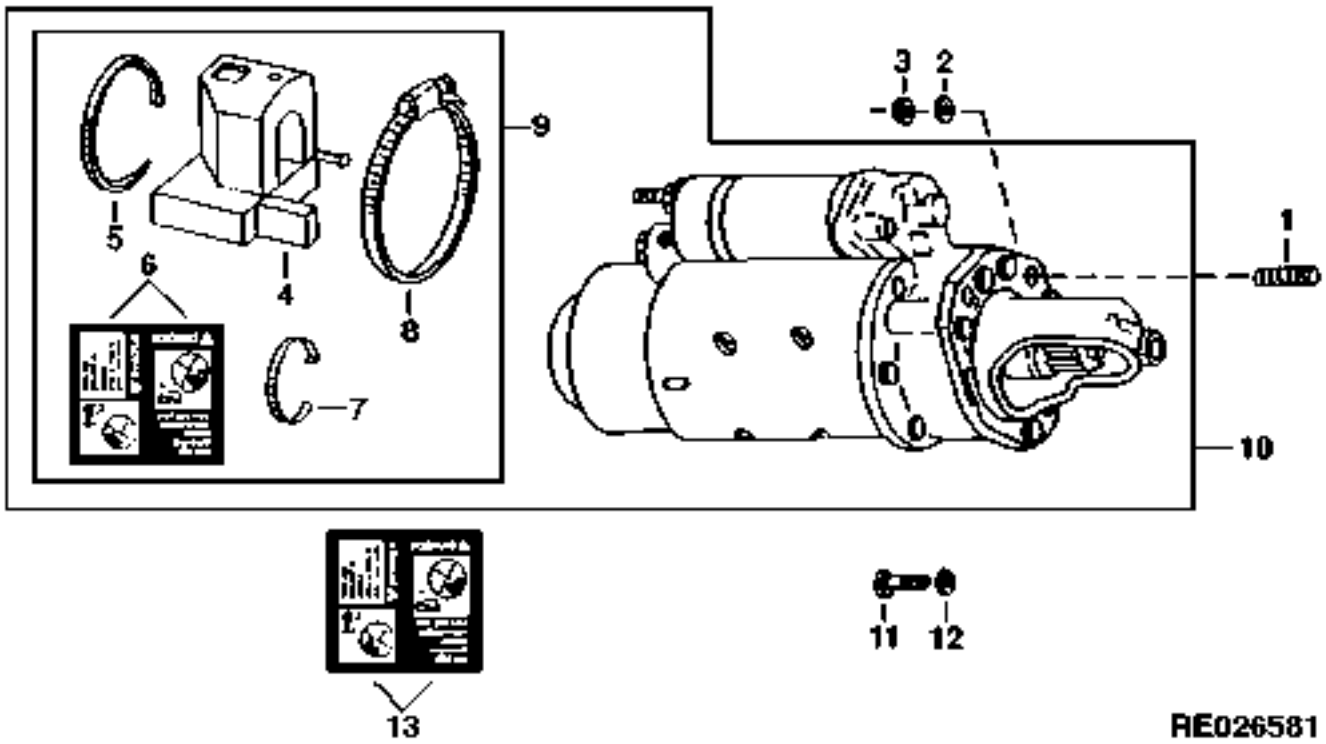

KEY	PART NO.	PART NAME	QTY	ENGINE SERIAL NO.	8400	REMARKS
1	R114130	STUD	1		X	
2	24M7096	WASHER	2		X	10.500 X 18 X 1.600 MM
3	E55662	FLANGE NUT	1		X	
4	.....	COVER	1		X	(ORDER RE45329) (NIPPONDENSO NO.028033-5330)
5	H113196	TIE BAND	1		X	
6	T146102	LABEL	1		X	(ENGLISH)
7	R44302	TIE BAND	1		X	
8	TY22471	CLAMP	1		X	(SUB FOR RE43166)
9	RE45329	COVER	1		X	
10	RE65103	STARTER MOTOR	1		X	(MARKED RE57483 OR RE65100) (SUB FOR RE61087) (SUB RE70957) (NIPPONDENSO NO.228000-4630)
11	19H3219	CAP SCREW	2		X	3/8" X 1-3/8"
12	12H304	LOCK WASHER	2		X	3/8", (USE WITH RE61087)
13	T146517	SAFETY SIGN	1		X	(ENGLISH/FRANCAIS)
	T146104	SAFETY SIGN	1		X	(FRANCAIS)
	T146515	SAFETY SIGN	1		X	(DEUTSCH)
	T146516	SAFETY SIGN	1		X	(ITALIANO)
	T146106	SAFETY SIGN	1		X	(ESPANOL)

https://www.truck-manuals.net/

STARTING MOTOR(8100,8200,8300,8400)
MOTEUR DU DEMARREUR(8100,8200,8300,8400)
ANLASSER(8100,8200,8300,8400)
MOTORE D'AVVIAMENTO(8100,8200,8300,8400)
MOTOR DE ARRANQUE(8100,8200,8300,8400)
STARTMOTOR (8100,8200,8300,8400)
RXP010826 -UN-01JAN94

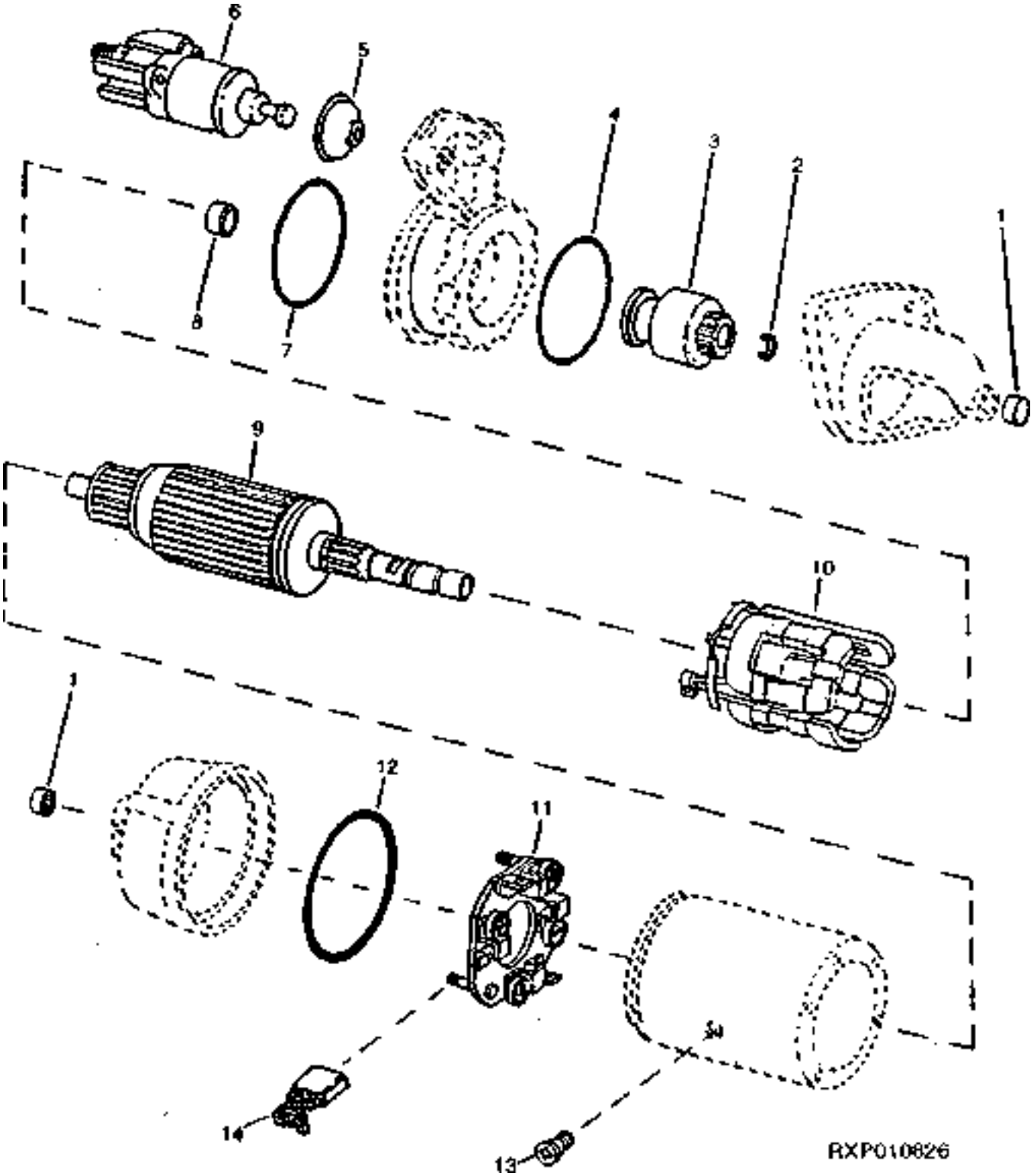

https://www.truck-manuals.net/

KEY	PART NO.	PART NAME	QTY	ENGINE SERIAL NO.	ALL	REMARKS
1	RE39251	NEEDLE BEARING	2		X	
2	R50902	SNAP RING	1		X	
3	RE39249	CLUTCH	1		X	
4	R50901	WASHER	1		X	
5	R100513	COVER	1		X	
6	RE42777	SWITCH	1		X	(NIPPONDENSO NO.053400-9891)
7	R100511	O-RING	1		X	
8	R100509	BUSHING	1		X	
9	RE39243	FIELD WINDING COIL	1		X	
10	RE39245	ARMATURE	1		X	
11	RE39250	CARBON BRUSH HOLDER	1		X	
12	R100512	O-RING	1		X	
13	R100508	SCREW	4		X	
14	RE39247	BRUSH	4		X	
..	RE56053	STARTER MOTOR	1	-009999		(A) (8100,8200,8300) (NIPPONDENSO NO. 128000-2360) (MARKED RE54416) (SUB TY6781)
..	RE65176	KIT	1	-009999		(A) (MARKED RE59589) (SUB TY6781)
..	TY6781	STARTER MOTOR	1	-009999		(8100,8200,8300)(NIPPONDENSO NO.22800-4610) (A) (B) (8100,8200,8300)
..	RE65103	STARTER MOTOR	1	010000-		(A) (MARKED RE57483 OR RE65100) (SUB RE70957) (8100,8200,8300) (NIPPONDENSO NO.228000-4630)
..	RE65103	STARTER MOTOR	1			(8400) (NIPPONDENSO NO. 228000-4630) (MARKED RE57483 OR RE65100) (SUB RE70957)
..	R124581	DUST SHIELD	1			

(A)TSN
TSN
TSN
TSN
TSN
TSN

(B)REMANUFACTURED
ECHANGE STANDARD
GENERAUEBERHOLT
RIGATTO
REFABRICADO
RENOVERAD

https://www.truck-manuals.net/

STARTER SOLENOID SWITCH
COMMUTATEUR MAGNETIQUE DE DEMARREUR
ANLASSER-MAGNETSCHALTER
TELERUTTORE DI AVVIAMENTO
INTERRRUPTOR DE SOLENIIDE DE ARRANQUE
SOLENOIDKONTAKT FOER STARTMOTOR
RXP026046 -UN-07MAR95

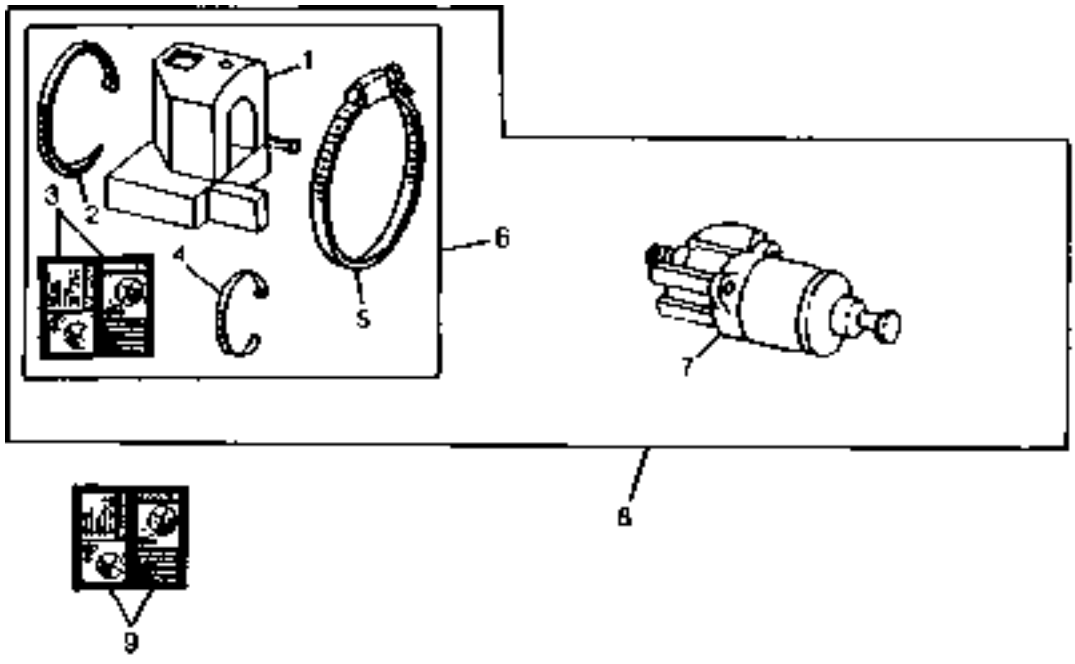

KEY	PART NO.	PART NAME	QTY	ENGINE SERIAL NO.	ALL	REMARKS
1	.....	COVER	1		X	(ORDER RE45329) (NIPPONDENSO NO.028033-5330)
2	H113196	TIE BAND	1		X	
3	T146102	LABEL	1		X	(ENGLISH)
4	R44302	TIE BAND	1		X	
5	TY22471	CLAMP	1		X	(SUB FOR RE43166)
6	RE45329	COVER	1		X	(USE WITH RE56053, RE65103 OR RE65176)
7	RE42777	SWITCH	1		X	(USE WITH RE56053, RE65103 OR RE65176) (NIPPONDENSO NO.053400-9891)
8	RE45330	SWITCH	1		X	(USE WITH RE56053, RE65103 OR RE65176)
9	T146106	SAFETY SIGN	1		X	(ESPANOL)
	T146104	SAFETY SIGN	1		X	(FRANCAIS)
	T146515	SAFETY SIGN	1		X	(DEUTSCH)
	T146516	SAFETY SIGN	1		X	(ITALIANO)
	T146517	SAFETY SIGN	1		X	(ENGLISH/FRANCAIS)

https://www.truck-manuals.net/

MEMORANDA
MEMORANDA
MEMORANDA
MEMORANDA
MEMORANDA
MEMORANDA

https://www.truck-manuals.net/

STARTING MOTOR(8100,8200,8300,8400)
MOTEUR DU DEMARREUR(8100,8200,8300,8400)
ANLASSER (8100,8200,8300,8400)
MOTORE D'AVVIAMENTO(8100,8200,8300,8400)
MOTOR DE ARRANQUE(8100,8200,8300,8400)
STARTMOTOR(8100,8200,8300,8400)
RGP4851 -UN-11FEB97

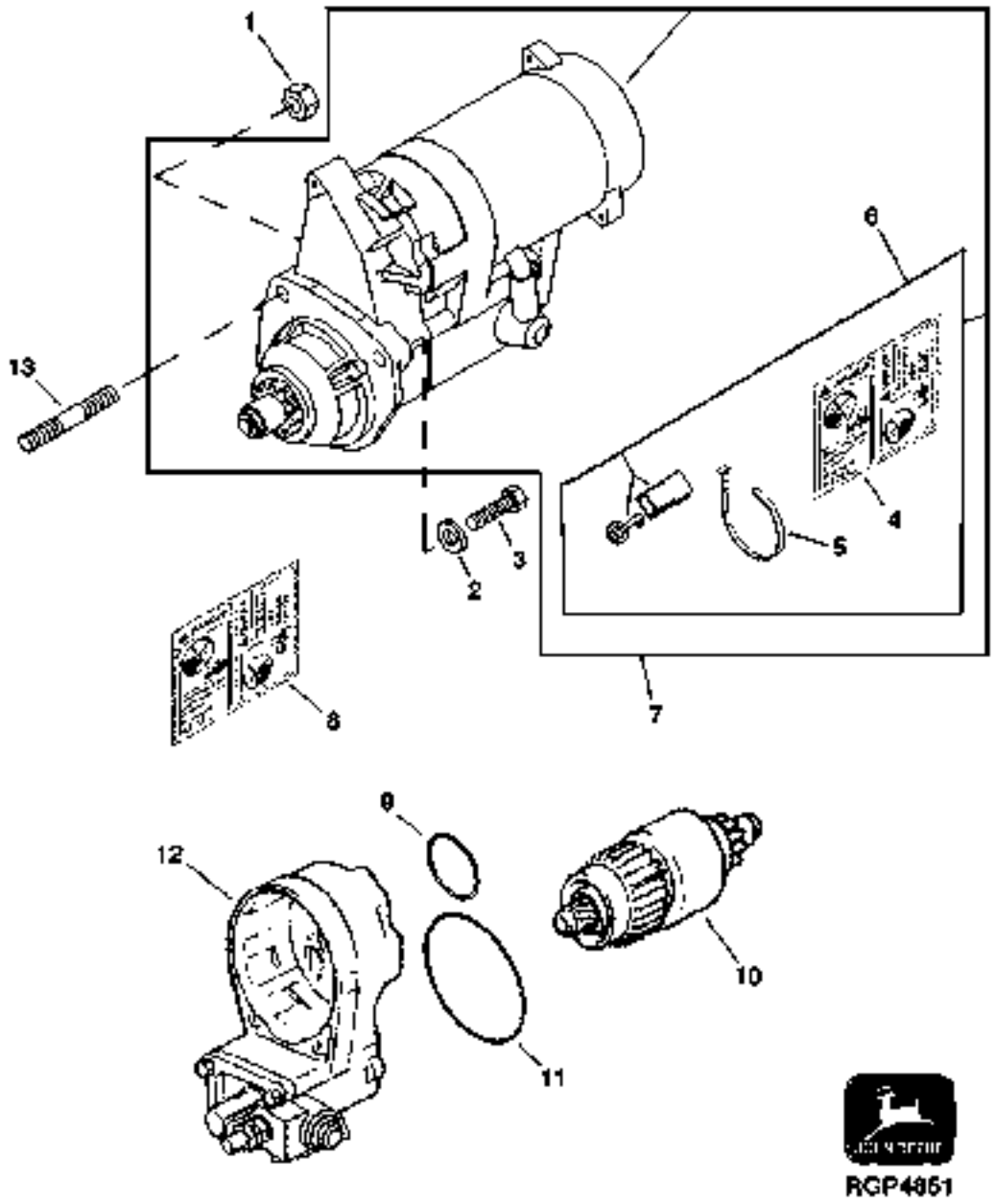

https://www.truck-manuals.net/

KEY	PART NO.	PART NAME	QTY	ENGINE SERIAL NO.	ALL	REMARKS
1	E55662	FLANGE NUT	1		X	
2	24H1303	WASHER	2		X	13/32" X 11/16" X 0.065"
3	19H3219	CAP SCREW	2		X	3/8" X 1-3/8"
4	T146102	LABEL	1		X	(ENGLISH)
5	R96703	TIE BAND	1		X	
6	RE70756	KIT	1		X	
7	RE70957	STARTER MOTOR KIT	1		X	(MARKED RE69704) (SUB FOR RE65103) (NIPPONDENSO NO.228000-6530)
8	T146106	SAFETY SIGN	1		X	(ESPANOL)
	T146104	SAFETY SIGN	1		X	(FRANCAIS)
	T146515	SAFETY SIGN	1		X	(DEUTSCH)
	T146516	SAFETY SIGN	1		X	(ITALIANO)
	T146517	SAFETY SIGN	1		X	(ENGLISH/FRANCAIS)
9	R135510	O-RING	1		X	
10	RE70487	CLUTCH	1		X	
11	R135509	SEAL	1		X	
12	RE70486	SWITCH	1		X	
13	R114130	STUD	1		X	

https://www.truck-manuals.net/

BATTERY
BATTERIE
BATTERIE
BATTERIA
BATERIA
BATTERI
RXP010842 -UN-01JAN94

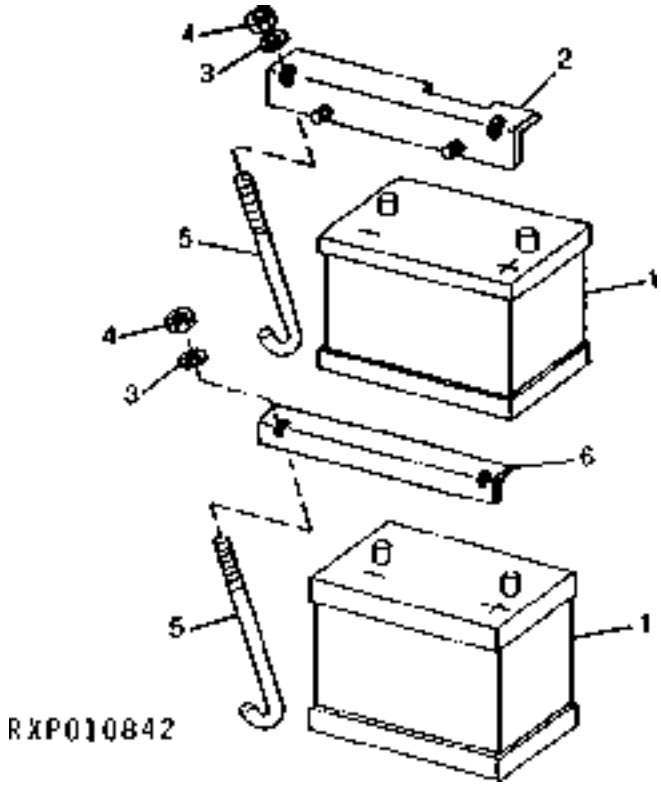

KEY	PART NO.	PART NAME	QTY	TRACTOR SERIAL NO.	ALL	REMARKS
1	TY6128	BATTERY	2		X	(A) 12V
2	RE55999	BRACKET	1		X	
3	24M7088	WASHER	4		X	
4	14M7272	NUT	4		X	M6
5	M71107	HOOK BOLT	4		X	
6	R119989	ANGLE	1		X	
..	R125472	TAG	1		X	(ENGLISH)
..	R120119	TAG	1		X	(FRANCAIS/ENGLISH)
..	R120120	TAG	1		X	(ESPANOL)

(A)950 COLD CRANKING AMPS
950 AMPERES EN DEMARRAGE A FROID
950 KALTSTART AMPERES
MOTORINO DI AVVIAMENTO 950
950 AMP DE ARRANQUE EN FRIO
STARTSTROEM,KALL MOTOR

https://www.truck-manuals.net/

BATTERY CABLES
BATTERIE CABLES
BATTERIE KABEL
BATERIA CABLES
BATTERIA CAVI
BATTERI KABELVAJRAR
RE028229 -UN-20AUG97

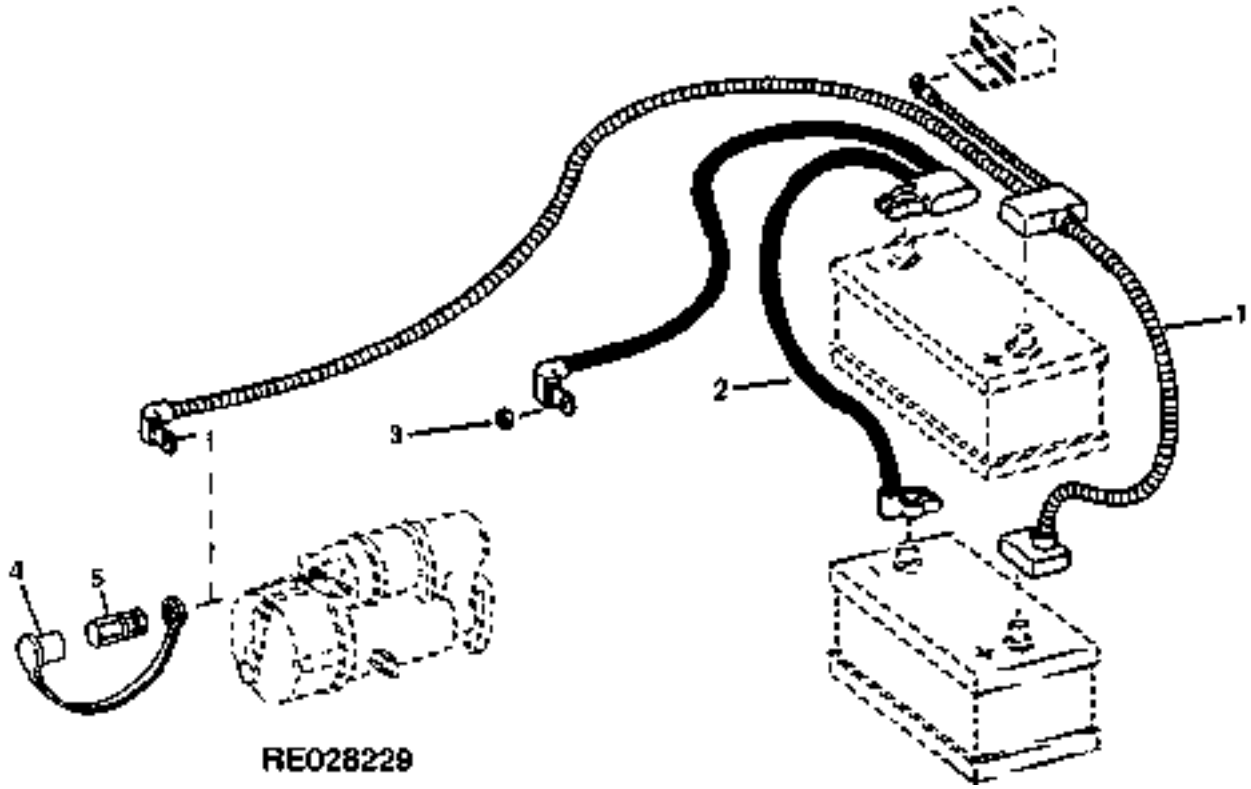

KEY	PART NO.	PART NAME	QTY	TRACTOR SERIAL NO.	ALL	REMARKS
1	RE44581	CABLE	1	-XXXXXX	X	(A) (+)
	RE71543	CABLE	1	XXXXXX-	X	(B) (+)
2	RE44582	CABLE	1		X	(-)
3	14M7274	NUT	1		X	M10
4	R96066	COVER	1		X	
5	RE39659	TERMINAL	1		X	(USE WITH RE56053, RE65103, RE65176 OR TY6781) (+)
	R135871	TERMINAL	1		X	(USE WITH RE70957) (+)

(A)(-XXXXXX)8100-012002;8200-011672;8300-012165;8400-012257
(B)(XXXXXX-)8100-012003;8200-011673;8300-012166;8400-012258

https://www.truck-manuals.net/

MEMORANDA
MEMORANDA
MEMORANDA
MEMORANDA
MEMORANDA
MEMORANDA

https://www.truck-manuals.net/

SECTIONAL INDEX
GRUPPENINDEX
INDEX DE SECTION
INDICE DELLA SEZIONE
INDICE DE SECCION
GRUPPSFORTECKNING

RE029268 -UN-10MAY99

1 -	4D5
2 -	4D8
3 -	4D12
4 -	4D15
5 -	4D16
6 -	4D18
7 -	4D19
8 -	4D20
9 -	4D22
10 -	4D24

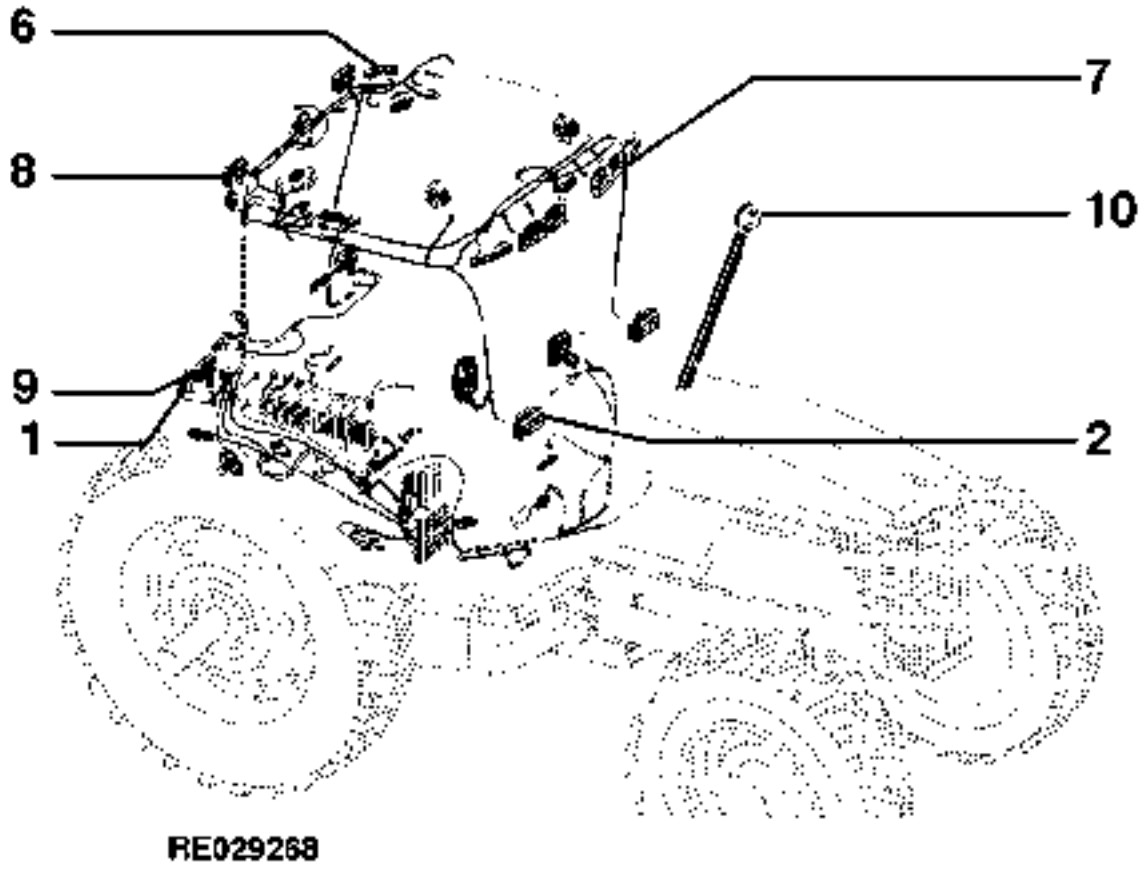

https://www.truck-manuals.net/

SECTIONAL INDEX
GRUPPENINDEX
INDEX DE SECTION
INDICE DELLA SEZIONE
INDICE DE SECCION
GRUPPSFORTECKNING

RE029269 -UN-10MAY99

1 -	4D5
2 -	4D8
3 -	4D12
4 -	4D15
5 -	4D16
6 -	4D18
7 -	4D19
8 -	4D20
9 -	4D22
10 -	4D24

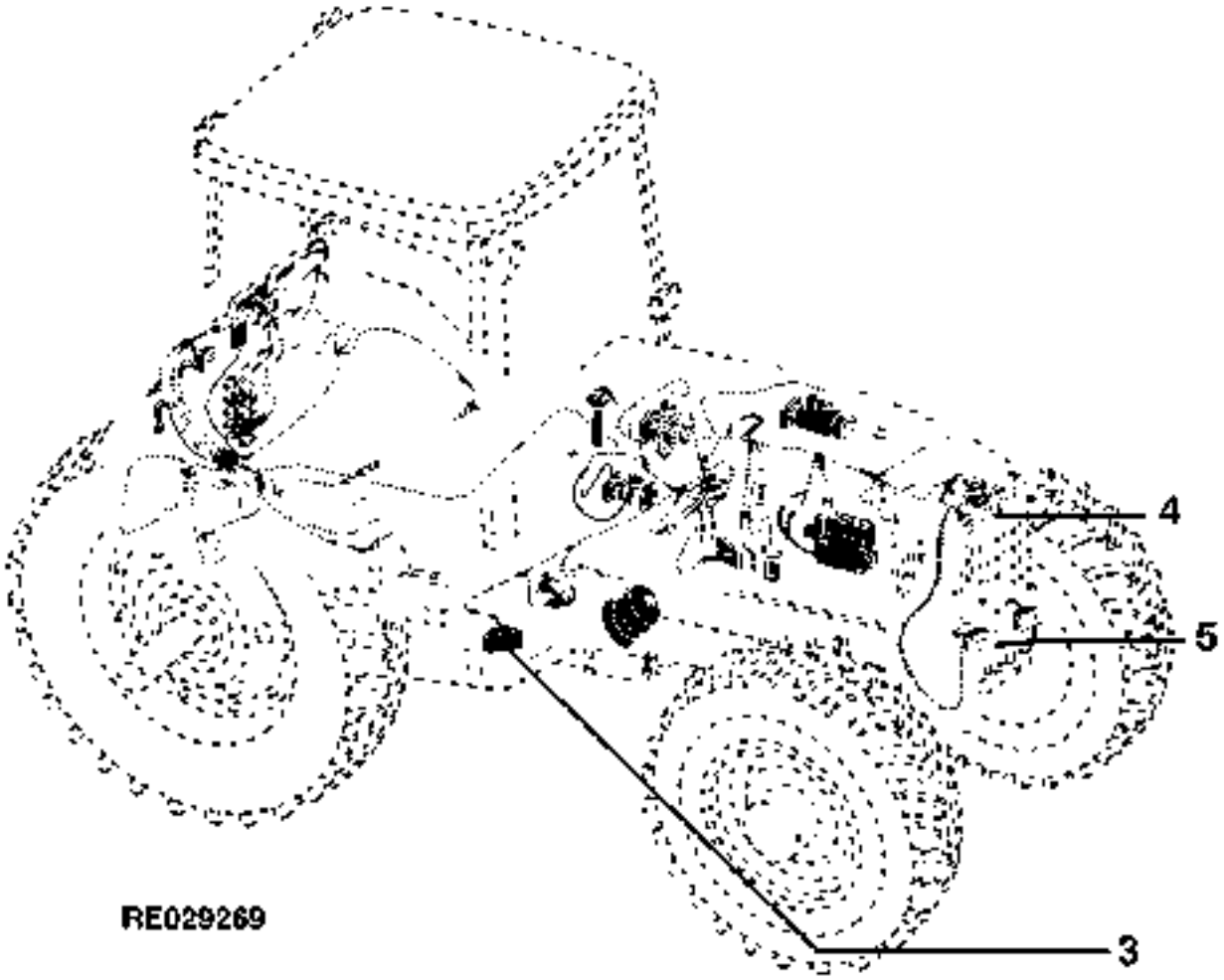

https://www.truck-manuals.net/

TAIL LIGHTS(NORTH AMERICAN VERSION)
FEUX ARRIERE(VERSION NORD AMERICAINE)
SCHLUSSLEUCHTEN(NORDAMERIKANISCHE AUSFUEHRUNG)
LUCI CODA(VERSIONE NORDAMERICANA)
LUCES PILOTO TRASERAS(VERSION NORTEAMERICANA)
BAKLJUS(NORDAMERIKANSK VERSION)
RE026519 -UN-15SEP95

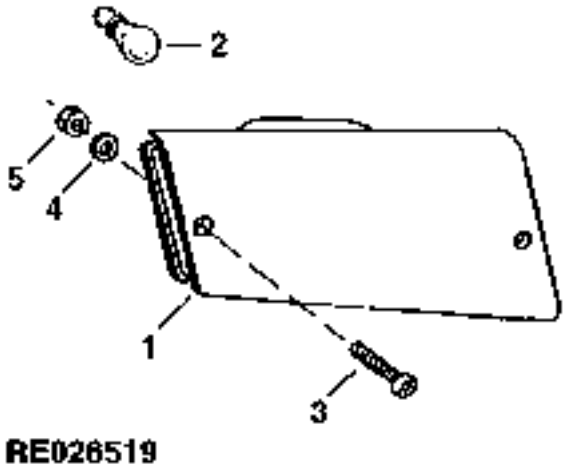

KEY	PART NO.	PART NAME	QTY	TRACTOR SERIAL NO.	ALL	REMARKS
1	RE48954	LENS	1		X	RH
	RE48955	LENS	1		X	LH
2	RE49778	BULB	1		X	(GE3157)
3	R131432	SCREW	2		X	(SUB FOR R115908)
4	24M7262	WASHER	2		X	5.300 X 10 X 1 MM
5	14M7265	LOCK NUT	2		X	M5

https://www.truck-manuals.net/

TAIL LIGHT(EUROPEAN VERSION)(8100,8200,8200,8400 -009999)
FEUX ARRIERE(VERSION EUROPEENNE)(8100,8200,8200,8400 -009999)
SCHLUSSEUCHTEN(EUROPAEISCHE AUSFUEHRUNG(8100,8200,8200,8400 -009999)
LUCI CODA(VERSIONE EUROPEA)(8100,8200,8200,8400 -009999)
LUCES PILOTO TRASERAS(VERSION EUROPEA)(8100,8200,8200,8400 -009999)
BAKLJUS(EUROPEISK VERSION)(8100,8200,8200,8400 -009999)
RE028292 -UN-05SEP97

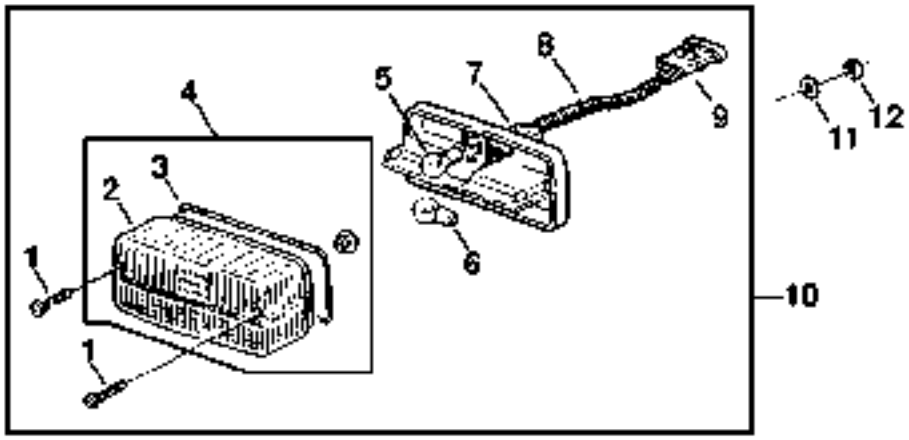

RE028292

KEY	PART NO.	PART NAME	QTY	TRACTOR SERIAL NO.	ALL	REMARKS
1	37M7177	SCREW	2		X	
2	AL112474	LENS	1		X	(SUB FOR AL78137)
3	L79690	GASKET	1		X	
4	AL112011	TAIL LAMP	1		X	(SUB FOR AL75405)
5	57M7014	BULB	1		X	21W
6	57M7011	BULB	1		X	21W/5W
7	57M7349	CONNECTOR	1		X	(ALSO ORDER 57M7347, (4) R104846 AND (4) 57M7258)
8	AL113022	WIRING HARNESS	1		X	(USE WITH AL112964)
9	57M7244	CONNECTOR	1		X	(ALSO ORDER 57M7318, (4) R104919 AND (4) 57M7258)
10	AL112964	TAIL LAMP	2		X	(SUB FOR AL77138 OR AL112012)
11	24M7333	WASHER	4		X	5.300 X 10 X 1 MM
12	14M7480	NUT	4		X	M5

https://www.truck-manuals.net/

TAIL LIGHT(EUROPEAN VERSION)(8100,8200,8300,8400 010000-)
FEUX ARRIERE(VERSION EUROPEENNE)(8100,8200,8300,8400 010000-)
SCHLUSSEUCHTEN(EUROPAEISCHE AUSFUEHRUNG)(8100,8200,8300,8400 010000-)
LUCI CODA(VERSIONE EUROPEA)(8100,8200,8300,8400 010000-)
LUCES PILOTO TRASERAS(VERSION EUROPEA)(8100,8200,8300,8400 010000-)
BAKLJUS(EUROPEISK VERSION)(8100,8200,8300,8400 010000-)
RE028228 -UN-06AUG97

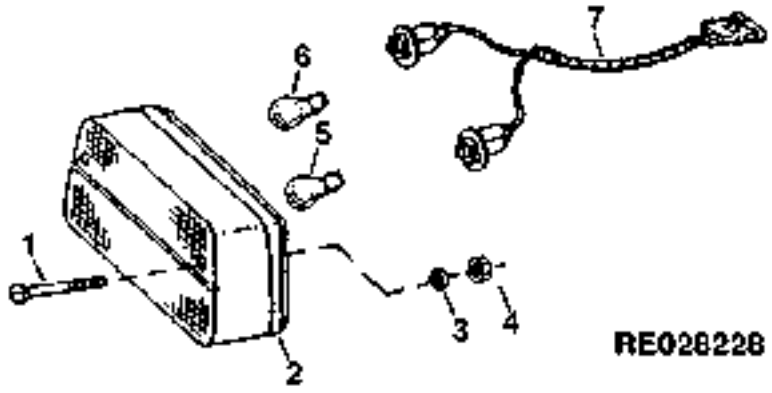

KEY	PART NO.	PART NAME	QTY	TRACTOR SERIAL NO.	ALL	REMARKS
1	21M7452	SCREW	4		X	M6 X 90
2	RE67285	LENS	2		X	
3	24M7244	WASHER	4		X	6.400 X 12 X 1.600 MM
4	14M7480	NUT	4		X	M5
5	R133301	BULB	2		X	21W (GE1057)
6	R133302	BULB	2		X	21W/5W (GE1077)
7	RE71246	WIRING HARNESS	2		X	(SUB FOR RE69341)

https://www.truck-manuals.net/

WORKLAMPS(CAB)(NORTH AMERICAN VERSION)(8100 -00280 1;8200 -002215;8300 -003900;8400 -002531)
PROJECTEURS DE TRAVAIL(CABINE)(VERSION N. A.)(8100 -002801;8200 -002215;8300 -003900;8400 -002531)
ARBEITSLEUCHTEN(FAHRERKABINE)(NORD A.)(8100 -002801;8200 -002215;8300 -003900;8400 -002531)
FANALI DI LAVORO(CABINA)(VERSIONE N.A.)(8100 -002801;8200 -002215;8300 -003900;8400 -002531)
LUCES DE TRABAJO(CABINA)(VERSION N.A.)(8100 -002801;8200 -002215;8300 -003900;8400 -002531)
ARBETSLYKTOR(HYTT)(N.A. VERSION)(8100 -002801;8200 -002215;8300 -003900;8400 -002531)
RE026685 -UN-19DEC95

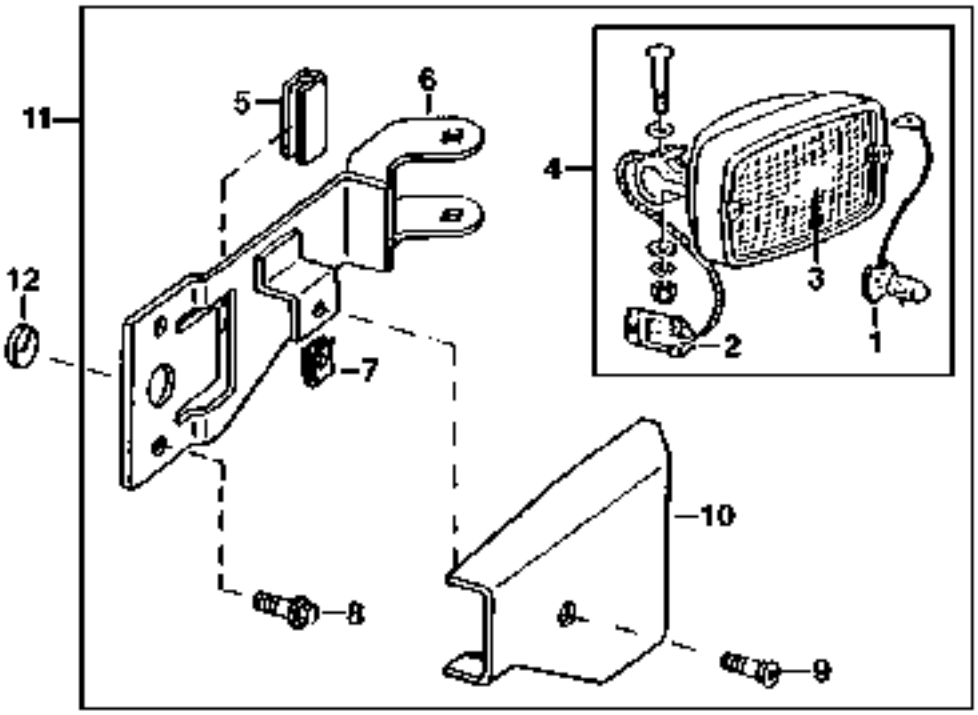

RE026685

KEY	PART NO.	PART NAME	QTY	TRACTOR SERIAL NO.	ALL	REMARKS
1	AT130104	BULB	1		X	55W
2	57M7256	CONNECTOR	1		X	(ALSO ORDER R104919, 57M7258 AND 57M7289)
3	RE60765	LENS	1		X	
4	RE48985	FLOODLAMP	1		X	LH
	RE48986	FLOODLAMP	1		X	RH
5	RE56284	ISOLATOR	1		X	
6	RE60627	BRACKET	1		X	LH
	RE60628	BRACKET	1		X	RH
7	R115945	NUT	1		X	
8	19M7867	SCREW	2		X	
9	37M7243	SCREW	1		X	HS 10.9
10	R120201	COVER	1		X	
	R120283	COVER	1		X	
11	**AR112611**	**KIT**	**1**		**X**	**(SUB AR115340) (FI)**
12	R130562	GROMMET	1		X	(SUB FOR R124719)

https://www.truck-manuals.net/

WORKLAMPS(CAB)(NORTH AMERICAN.VERSION) (8100 002802-;8300 002216-;8300 003901-;8400 003232-)
PROJECTEURS DE TRAVAIL(CABINE)(VERSION N.A.)(8100 002802-;8300 002216-;8300 003901-;8400 003232-)
ARBEITSLEUCHTEN(FAHRERKABINE)(NORD A.)(8100 002802-;8200 002216-;8300 003901-;8400 003232-)
FANALI DI LAVORO(CABINA)(VERSIONE N.A.)(8100 002802-;8200 002216-;8300 003901-;8400 003232-)
LUCES DE TRABAJO(CABINA)(VERSION N.A.)(8100 002802-;8200 002216-;8300 003901-;8400 003232-)
ARBETSLYKTOR(HYTT)(N.A. VERSION)(8100 002802-;8200 002216-;8300 003901-;8400 003232-)
RE027665 -UN-13MAR97

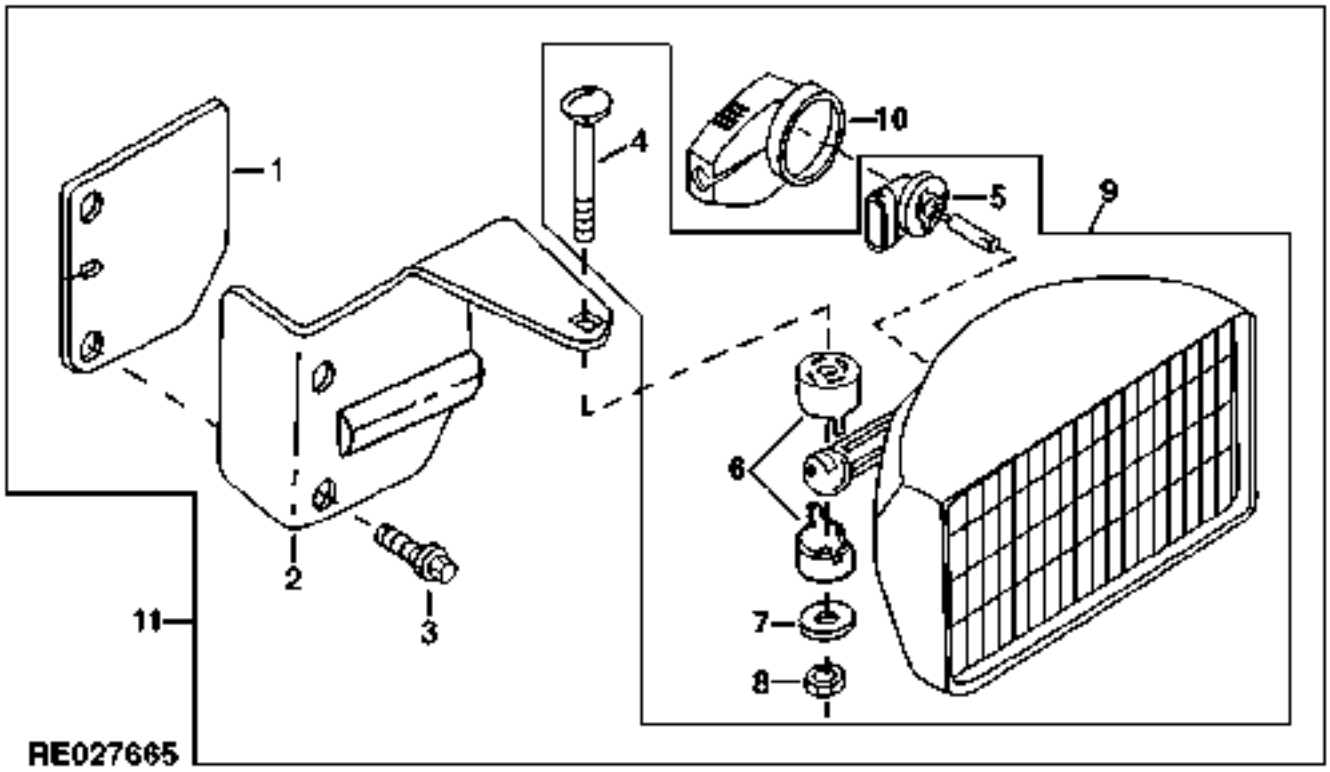

KEY	PART NO.	PART NAME	QTY	CAB SERIAL NO.	ALL	REMARKS
1	R128326	GASKET	1		X	
2	R127195	BRACKET	1		X	R.H.
	R127194	BRACKET	1		X	L.H.
3	37M7265	SCREW	2		X	M8 X 25
4	03M7280	BOLT	1		X	
5	R136239	BULB	1		X	(SUB FOR 57M7358, THIS APPLICATION) (GE 888X)
6	R122487	BASE	1		X	
7	L37975	LOCK WASHER	1		X	
8	14M7165	LOCK NUT	1		X	M6
9	R122488	BOOT	1		X	
10	RE150425	FLOODLAMP	1		X	(SUB FOR RE51239 OR RE71420)
11	**AR115340**	**KIT**	**1**		**X**	**(FI)**

https://www.truck-manuals.net/

WORKLAMPS(CAB)(EUROPEAN VERSION)(8100- 002801;8200 -002215;8300 -003900;8400 -002531)
PROJECTEURS DE TRAVAIL(CABINE)(VERSION E.)(8100 -002801;8200 -002215;8300 -003900;8400 -002531)
ARBEITSLEUCHTEN(FAHRERKABINE)(E. AUSFUEHRUNG)(8100 -002801;8200 -002215;8300 -003900;8400 -002531)
FANALI DI LAVORO(CABINA)(VERSIONE EUROPEA)(8100 -002801;8200 -002215;8300 -003900;8400 -002531)
LUCES DE TRABAJO(CABINA)(VERSION EUROPEA)(8100 -002801;8200 -002215;8300 -003900;8400 -002531)
ARBETSLYKTOR(HYTT)(EUROPEISK VERSION)(8100 -002801;8200 -002215;8300 -003900;8400 -002531)
RE026628 -UN-19DEC95

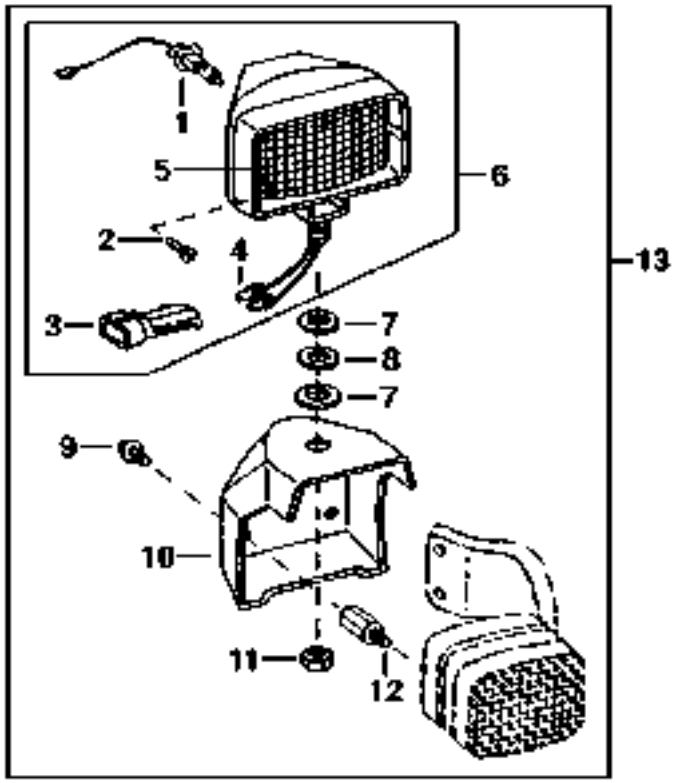

RE026628

KEY	PART NO.	PART NAME	QTY	TRACTOR SERIAL NO.	ALL	REMARKS
1	AT130104	BULB	1		X	
2	37M7217	SCREW	2		X	
3	57M7256	CONNECTOR	1		X	(ALSO ORDER 57M7316)
4	R104919	PIN CONTACT	2		X	
	57M7258	ELECTRICAL PLUG	2		X	
5	RE60765	LENS	1		X	
6	RE48989	FLOODLAMP	2		X	
7	12H301	LOCK WASHER	2		X	1/2"
8	24M7047	WASHER	4		X	13 X 24 X 2.500 MM
9	21M7460	SCREW	4		X	M5 X 40
10	L113561	BRACKET	2		X	(SUB FOR R112586) (ALSO ORDER (2) 21M7460)
11	14M7319	LOCK NUT	2		X	M12
12	L113561	BRACKET	2		X	(SUB FOR L79568)
13	**AR113536**	**KIT**	**1**		**X**	**(FI)**

https://www.truck-manuals.net/

WORKLAMPS(CAB)(EUROPEAN VERSION)(8100 002802-; 8200 002216-;8300 003901-;8400 002532-)
PROJECTEURS DE TRAVAIL(CABINE)(VERSION E.)(8100 002802-;8200 002216-;8300 003901-;8400 002532-)
ARBEITSLEUCHTEN(FAHRERKABINE)(E. AUSFUEHRUNG)(8100 002802-;8200 002216-;8300 003901-;8400 002532-)
FANALI DI LAVORO(CABINA)(VERSIONE EUROPEA)(8100 002802-;8200 002216-;8300 003901-;8400 002532-)
LUCES DE TRABAJO(CABINA)(VERSION EUROPEA)(8100 002802-;8200 002216-;8300 003901-;8400 002532-)
ARBETSLYKTOR(HYTT)(EUROPEISK VERSION)(8100 002802-;8200 002216-;8300 003901-;8400 002532-)
RE030502 -UN-27APR99

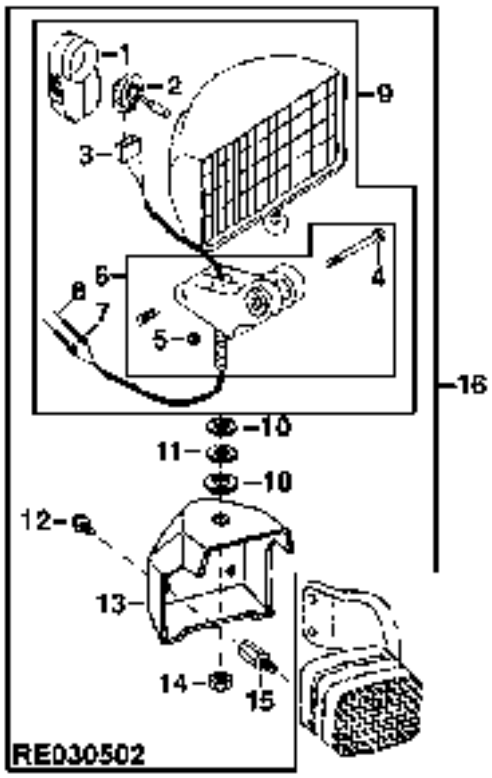

KEY	PART NO.	PART NAME	QTY	TRACTOR SERIAL NO.	ALL	REMARKS
1	R122488	BOOT	1		X	
2	R136239	BULB	1		X	(SUB FOR 57M7358, THIS APPLICATION) (GE 888X)
3	57M7344	CONNECTOR	1		X	(ALSO ORDER (2) 57M7297 AND (2) Z44689)
4	19M7320	CAP SCREW	1		X	M6 X 40
5	14M7165	LOCK NUT	1		X	M6
6	RE58619	BASE	1		X	
7	57M7258	ELECTRICAL PLUG	2		X	
8	R104919	PIN CONTACT	2		X	(SUB FOR 57M7252)
9	RE151346	FLOODLAMP	1		X	(SUB FOR RE51240, RE71421 OR RE150421)
10	24M7047	WASHER	4		X	
11	12H301	LOCK WASHER	2		X	1/2"
12	21M7460	SCREW	4		X	M5 X 40
13	L113561	BRACKET	2		X	(SUB FOR R112586) (ALSO ORDER (2) 21M7460)
14	14M7168	LOCK NUT	2		X	M12
15	L113561	BRACKET	2		X	(SUB FOR L79568)
16	**AR115337**	**KIT**	**1**		**X**	**(FI)**

https://www.truck-manuals.net/

WORKLAMPS(LOWER MID-BODY)(8100- 002801;8200- 002215;8300- 003900;8400 - 002531)
PROJECTEURS DE TRAVAIL(CEINTURE INFERIEURE(8100 -002801;8200 -002215;8300 -003900;8400 -002531)
ARBEITSLEUCHTEN(UNTERE MITTELLINIE)(8100 -002801;8200 -002215;8300 -003900;8400 -002531)
FANALI DI LAVORO(META' TELAIO INFERIORE)(8100 -002801;8200 -002215;8300 -003900;8400 -002531)
LUCES DE TRABAJO(CARROCERIA CENTRAL INFERIOR)(8100 -002801;8200 -002215;8300 -003900;8400 -002531)
ARBETSLYKTOR(UNDRE MITTKAROSSERI)(8100 -002801;8200 -002215;8300 -003900;8400 -002531)
RE026629 -UN-19DEC95

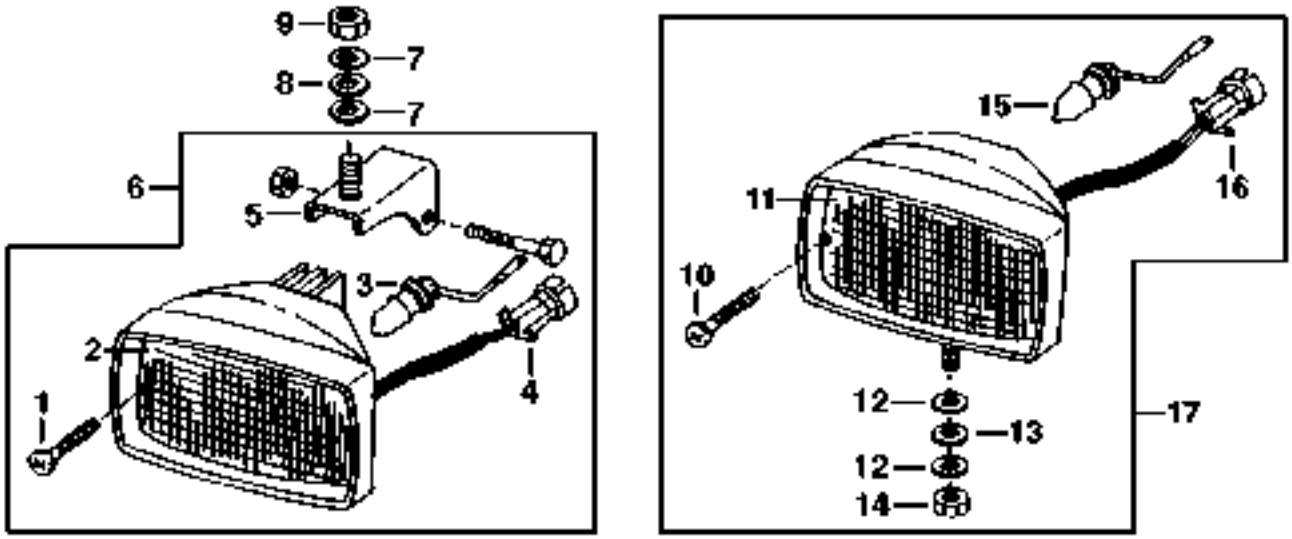

RE026629

KEY	PART NO.	PART NAME	QTY	TRACTOR SERIAL NO.	ALL	REMARKS
1	37M7217	SCREW	2		X	
2	RE60765	LENS	1		X	
3	AT130104	BULB	1		X	
4	57M7256	CONNECTOR	1		X	(ALSO ORDER (2) R104919, (2) 57M7258 AND 57M7289)
5	RE52434	BRACKET	1		X	
6	RE61164	FLOODLAMP	1		X	R.H.
7	24M7047	WASHER	2		X	13 X 24 X 2.500 MM
8	12H301	LOCK WASHER	1		X	1/2"
9	14M7319	LOCK NUT	1		X	M12
10	37M7217	SCREW	2		X	
11	RE60765	LENS	1		X	
12	24M7047	WASHER	2		X	13 X 24 X 2.500 MM
13	12H301	LOCK WASHER	1		X	1/2"
14	14M7168	LOCK NUT	1		X	M12
15	AT130104	BULB	1		X	
16	57M7256	CONNECTOR	1		X	(ALSO ORDER (2) R104919, (2) 57M7258 AND 57M7289)
17	RE61165	FLOODLAMP	1		X	L.H.

https://www.truck-manuals.net/

WORKLAMPS (LOWER MID-BODY)(8100 002802-;8200 002216-;8300 003901-;8400-002532-)
PROJECTEURS DE TRAVAIL(CEINTURE INFERIEURE)(8100 002802-;8200 002216-;8300 003901-;8400 002532-)
ARBEITSLEUCHTEN(UNTERE MITTELLINIE)(8100 002802-;8200 002216-;8300 003901-;8400 002532-)
FANALI DI LAVORO(META' TELAIO INFERIORE)(8100 002802-;8200 002216-;8300 003901-;8400 002532-)
LUCES DE TRABAJO(CARROCERIA CENTRAL INFERIOR)(8100 002802-;8200 002216-;8300 003901-;8400 002532-)
ARBETSLYKTOR(UNDRE MITTKAROSSERI)(8100 002802-;8200 002216-;8300 003901-;8400 002532-)
RE029450 -UN-20APR98

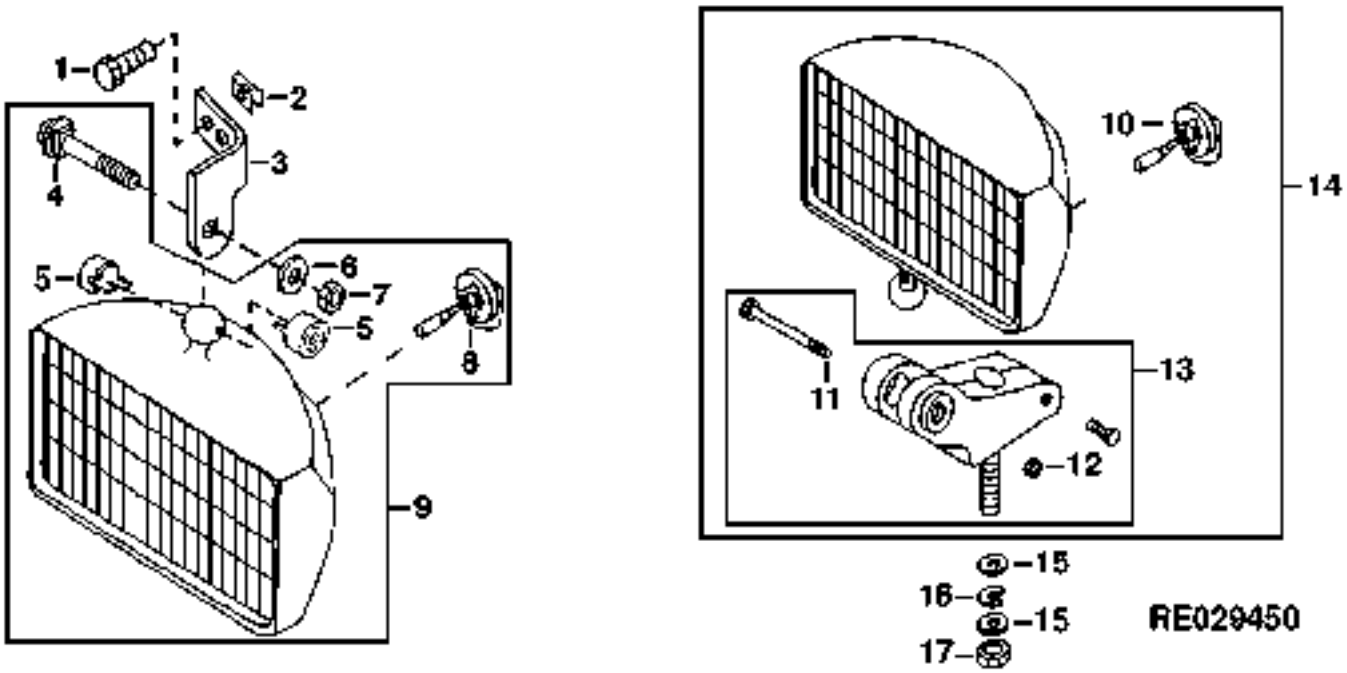

KEY	PART NO.	PART NAME	QTY	TRACTOR SERIAL NO.	ALL	REMARKS
1	19M7862	SCREW	2		X	M6 X 20
2	R120332	NUT	2		X	
3	R130639	ANGLE	1		X	(SUB FOR R122469)
4	03M7280	BOLT	1		X	M6 X 45
5	R122487	BASE	1		X	
6	L37975	LOCK WASHER	1		X	
7	14M7165	LOCK NUT	1		X	M6
8	R136239	BULB	1		X	(SUB FOR RE44688, THIS APPLICATION) (55W)(GE 888X)
	R136238	BULB	1	-XXXXXX	X	(A) (USE WITH RE60541) (55W)(GE 885X)
9	RE150428	FLOODLAMP	1		X	(SUB FOR RE63957, RE66007, RE70054 OR RE71429) R.H.
10	R136239	BULB	1		X	(SUB FOR RE44688, THIS APPLICATION) (55W)(GE 888X)
	R136238	BULB	1	-XXXXXX	X	(A) (USE WITH RE60541) (55W)(GE 885X)
11	19M7320	CAP SCREW	1		X	M6 X 40
12	14M7165	LOCK NUT	1		X	M6
13	RE58619	BASE	1		X	
14	RE150426	FLOODLAMP	1		X	(SUB FOR RE58593, RE70044 OR RE71427) L.H.
15	24M7047	WASHER	2		X	13 X 24 X 2.500 MM
16	12H301	LOCK WASHER	1		X	1/2"
17	14M7168	LOCK NUT	1		X	M12

(A)(-XXXXXX)8100-002801;8200-002215;8300-003900;8400-002531

https://www.truck-manuals.net/

DIRECTION INDICATOR LAMPS (CAB)(EUROPEAN VERSION)
FEUX DE CHANGEMENT DE DIRECTION(CABINE)(VERSION EUROPEENNE)
BLINKLEUCHTEN(FAHRERKABINE)(EUROPAEISCHE AUSFUEHRUNG)
FRECCE(CABINA)(VERSIONE EUROPEA)
LUCES SENALIZADORAS DE DIRECCION(CABINA)(VERSION EUROPEA)
KOERRIKTNINGSVISARE(HYTT)(EUROPEISK VERSION)
RE026627 -UN-04DEC95

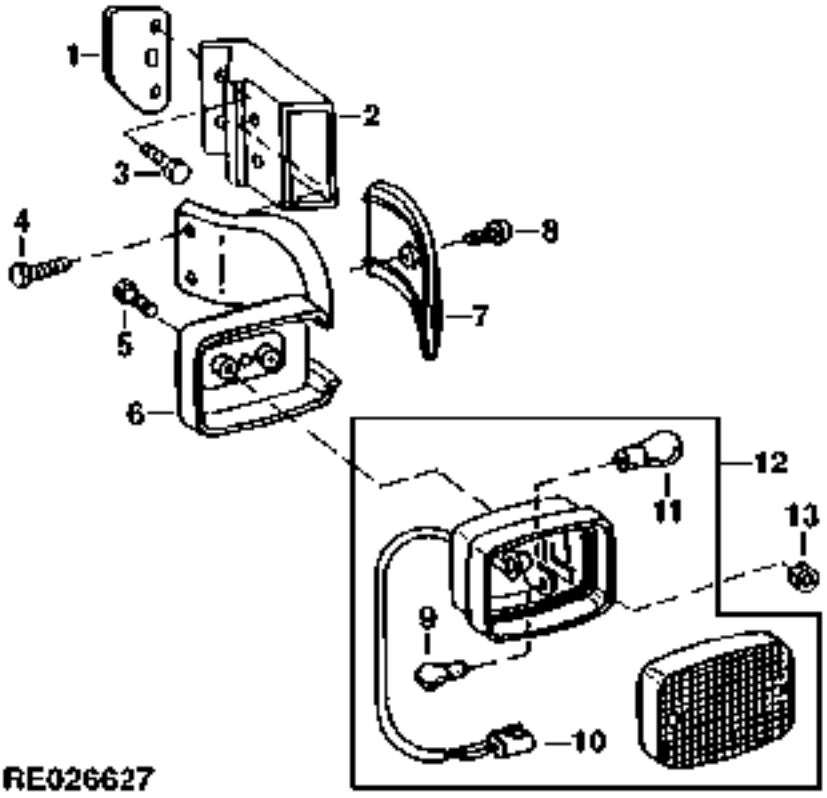

KEY	PART NO.	PART NAME	QTY	TRACTOR SERIAL NO.	ALL	REMARKS
1	R128326	GASKET	1		X	(SUB FOR RE56284, THIS APPLICATION)
2	R129869	SUPPORT	1		X	(SUB FOR R107336)
3	19M7867	SCREW	2		X	M8 X 25, HS 10.9
4	19M8327	SCREW	2		X	M8 X 25, HS 10.9
5	21M7309	SCREW	2		X	M5 X 16
6	R110386	BRACKET	1		X	
7	R110387	COVER	1		X	
8	21M7366	SCREW	1		X	M5 X 12
9	57M7013	BULB	1		X	12V / 21W
10	57M7257	CONNECTOR	1		X	(ALSO ORDER (3) R104919, (3) 57M7258 AND 57M7317)
11	57M7014	BULB	1		X	12V / 5W
12	AL75642	TURN SIGNAL LAMP	1		X	
13	14M7265	LOCK NUT	2		X	M5

https://www.truck-manuals.net/

HEADLIGHT(HOOD)
PHARE(CAPOT)
FRONTSCHEINWERFER(HAUBE)
FARO(COFANO)
FARO DELANTERO(GANCHO)
STRAALKASTARE(HUVA)
RXP011196 -UN-01JAN94

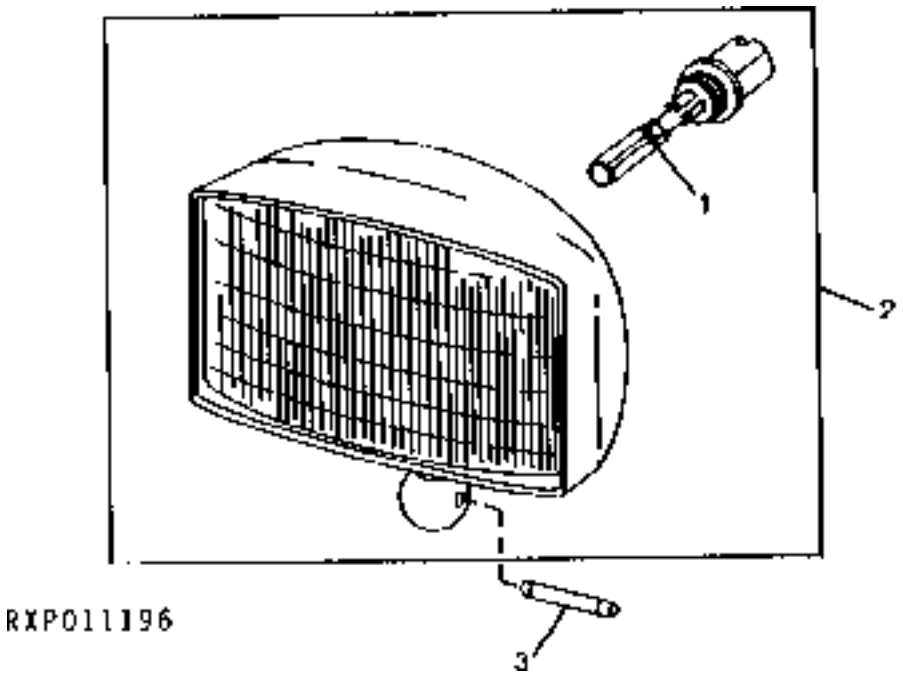

KEY	PART NO.	PART NAME	QTY	TRACTOR SERIAL NO.	ALL	REMARKS
1	R136238	BULB	1		X	(SUB FOR RE44688, THIS APPLICATION) (55W) (GE885X)
2	RE150422	HEADLIGHT	2		X	(A) (SUB FOR RE61243 OR RE71422)
	RE150423	FLOODLAMP	2		X	(B) (SUB FOR RE61244 OR RE71423)
3	R43244	NEEDLE ROLLER	4		X	

(A)INNER
INTERNE
INNEN
INTERNO
INTERIOR
INRE

(B)OUTER
EXTERNE
AUSSEN
ESTERNO
EXTERIOR
YTTRE

https://www.truck-manuals.net/

HEADLIGHTS LEFT-HAND TRAFFIC (UNITED KINGDOM)
PHARE ROUTE-GAUCHE (ROYAUME-UNI)
FRONTSCHEINWERFER LINKSVERKEHR (ENGLAND)
FARO CIRCOLAZIONE DEL TRAFFICO SULLA SINSITRA (REGNO UNITO)
FARO DELANTERO CIRCULACION IZQUIERDA (REINO UNIDO)
STRAALKASTARE VAENSTERTRAFIK (ENGLAND)
RXP011192 -UN-01JAN94

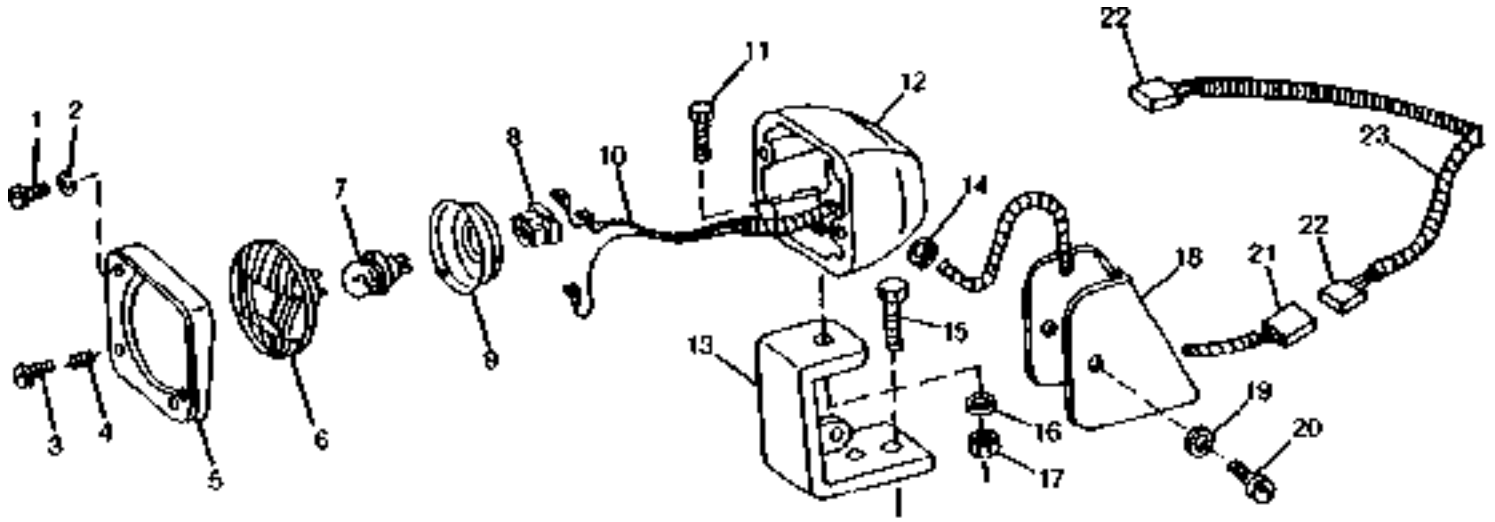

KEY	PART NO.	PART NAME	QTY	TRACTOR SERIAL NO.	ALL	REMARKS
1	21M7142	SCREW	2		X	
2	12M7064	LOCK WASHER	2		X	
3	21M7142	SCREW	3		X	
4	T28631	SPRING	3		X	
5	L55980	BEZEL	1		X	
6	AL56092	HOUSING	1		X	
7	57M7166	BULB	1		X	
8	57M7063	CONNECTOR	1		X	
9	CE15294	DUST SHIELD	1		X	
10	RE62145	WIRING HARNESS	1		X	
11	19M7168	CAP SCREW	1		X	M10 X 30
12	L38416	HOUSING	1		X	
13	RE62977	SUPPORT	1		X	(SUB FOR RE62146)
14	L12807	GROMMET	1		X	
15	19M7167	CAP SCREW	2		X	M10 X 25
16	12M7033	LOCK WASHER	1		X	10.500 MM
17	14M7517	LOCK NUT	1		X	M10
18	R126920	COVER	1		X	(SUB FOR R125874)
19	24M7244	WASHER	2		X	6.400 X 12 X 1.600 MM
20	21M7312	SCREW	2		X	M6 X 12
21	57M7257	CONNECTOR	1		X	(ALSO ORDER (3) R104919, (3) 57M7258 AND 57M7317)
22	57M7255	CONNECTOR	1		X	(ALSO ORDER (3) R104846, (3) 57M7258 AND 57M7317)
23	RE60633	WIRING HARNESS	1		X	

https://www.truck-manuals.net/

HEADLIGHTS RIGHT-HAND TRAFFIC (EUROPEAN VERSION)
PHARE ROUTE-DROITE (VERSION EUROPEENNE)
FRONTSCHEINWERFER RECHTSVERKEHR (EUROPAEISCHE AUSFUEHRUNG)
FARO CIRCOLAZIONE DE TRAFFICO SULLA DESTRA (VERSIONE EUROPEA)
FARO DELANTERO CIRCULACION DERECHA (VERSION EUROPEA)
STRAALKASTARE HOEGERTRAFIK (EUROPEISK VERSION)
RXP026055 -UN-07MAR95

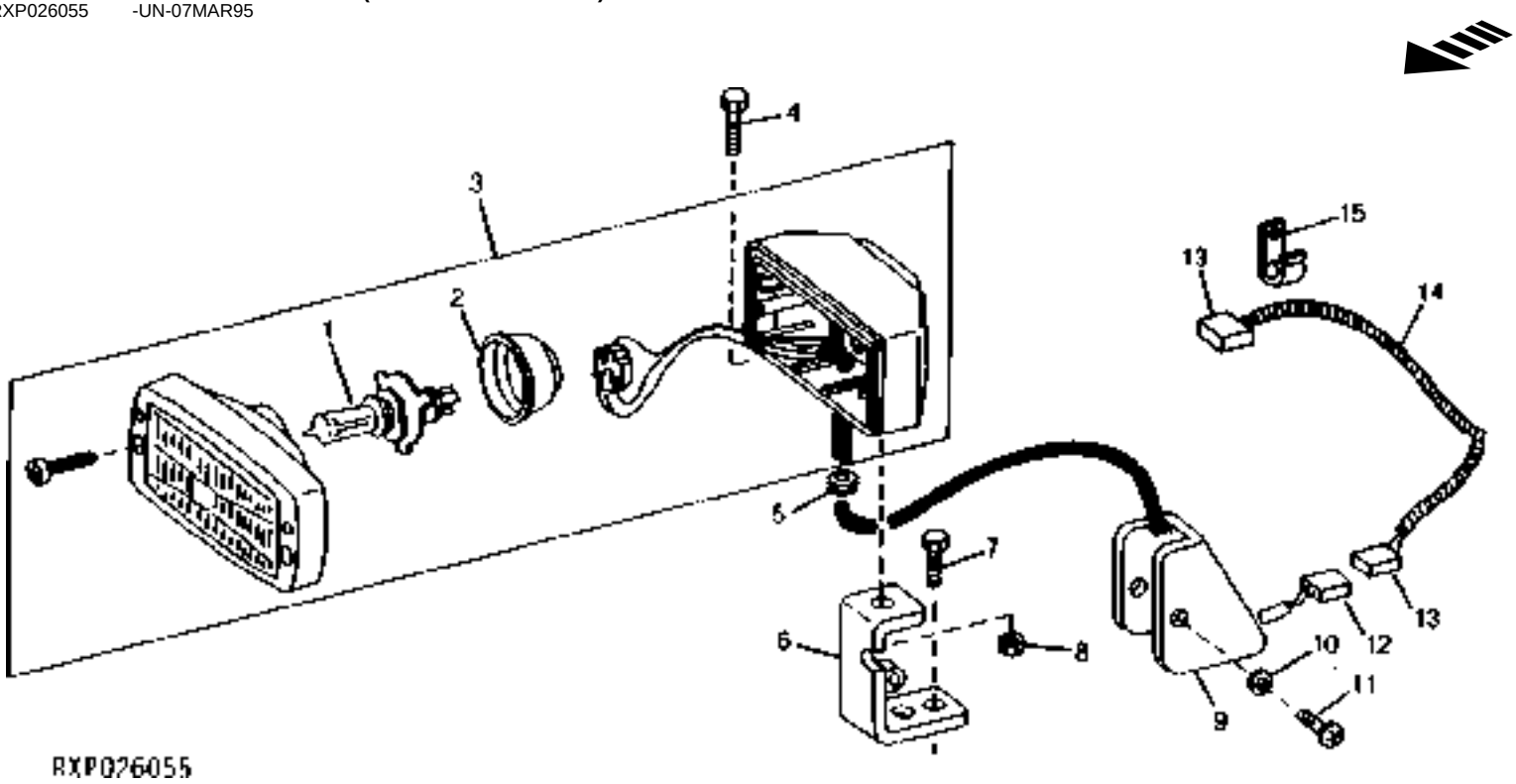

KEY	PART NO.	PART NAME	QTY	TRACTOR SERIAL NO.	ALL	REMARKS
1	57M7166	BULB	1		X	60/55W
2	CE15294	DUST SHIELD	1		X	(USE WITH RE61786)
3	RE61786	HEADLIGHT	1	-XXXXXX	X	(A) (SUB (2) RE71268 AND (2) RE62976)
	RE71268	HEADLIGHT	2	XXXXXX-	X	(B) (SUB FOR RE61786)
4	19M7168	CAP SCREW	1		X	M10 X 30
5	L12807	GROMMET	1		X	
6	RE62976	SUPPORT	1		X	(SUB FOR RE61744)
7	19M7167	CAP SCREW	2		X	M10 X 25
8	14M7517	LOCK NUT	2		X	M10
9	R126919	COVER	1		X	(SUB FOR R125161)
10	24M7244	WASHER	2		X	6.400 X 12 X 1.600 MM
11	21M7312	SCREW	2		X	M6 X 12
12	57M7257	CONNECTOR	1		X	(ALSO ORDER (3) R104919, (3) 57M7258 AND 57M7317)
13	57M7255	CONNECTOR	1		X	(ALSO ORDER (3) R104846, (3) 57M7258 AND 57M7290)
14	RE60633	WIRING HARNESS	1		X	
15	T19935	CLAMP	4		X	

(A) (-XXXXXX) 8100-011484; 8200-011311; 8300-011597; 8400-011581
(B) (XXXXXX-) 8100-011485; 8200-011312; 8300-011598; 8400-011582

https://www.truck-manuals.net/

WARNING/TURNING LIGHT(ROOF)(NORTH AMERICAN VERSION)
FEU D'AVERTISSEMENT/CLIGOTANT(TOIT)(VERSION NORD AMERICAINE)
WARNLAMPE/BLINKER(DACH)(NORDAMERIKANISCHE AUSFUEHRUNG)
LUCE DI AVVERTENZA/INDICATOR DI DIREZIONE(TETTO)(VERSIONE NORDAMERICANA)
LUZ DE ADVERTENCIA/VIRAJE(TECHO)(VERSION NORTHAMERICANA)
VARNINGSLUS/KOERRIKTNINGAVISARE(TAK)(NORDAMERIKANSK VERSION)
RXP011189 -UN-01JAN94

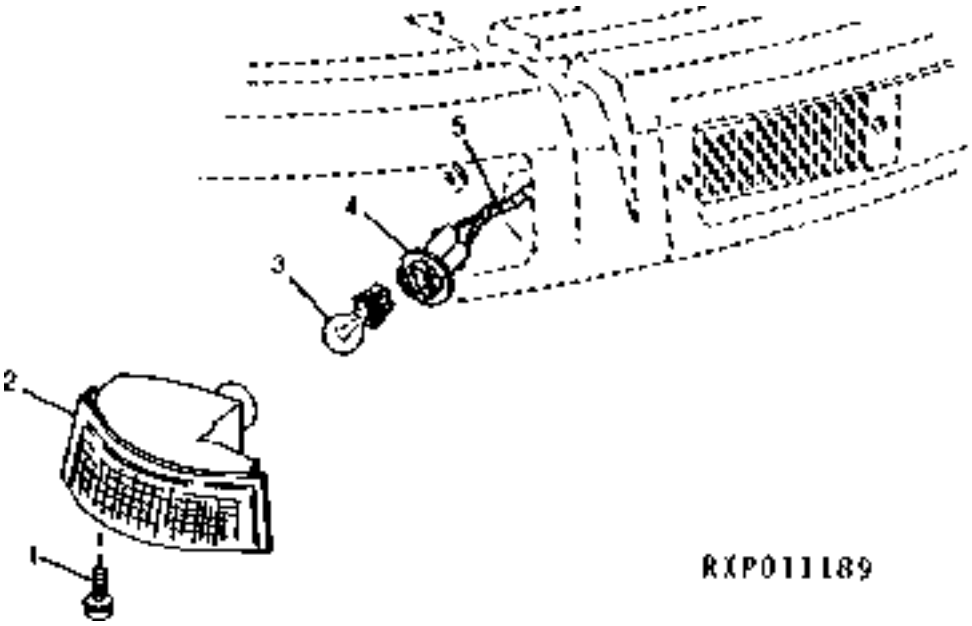

KEY	PART NO.	PART NAME	QTY	TRACTOR SERIAL NO.	ALL	REMARKS
1	21M7305	SCREW	8		X	M6 X 12
2	RE55150	TAIL LAMP	2		X	R.H.FRONT/L.H.REAR
	RE55151	TAIL LAMP	2		X	L.H.FRONT/R.H.REAR
3	RE49778	BULB	4		X	(GE3157)
4	R114917	CONNECTOR	1		X	(ALSO ORDER (4) 57M7519)
5	RE60647	WIRING HARNESS	1	-XXXXXX	X	(A)
	RE64629	WIRING HARNESS	1	XXXXXX-	X	(B)

(A) (-XXXXXX) 8100-002801;8200-002215;8300-003900;8400-002531
(B) (XXXXXX-) 8100-002802;8200-002216;8300-003901;8400-002532

https://www.truck-manuals.net/

WORKING LAMPS,(ROOF)(FRONT)
PROJECTEURS DE TRAVAIL(TOIT)(AVANT)
ARBEITSLEUCHTEN(VORN)(DACH)
FANALI DI LAVORO(ANTERIORE)(TETTO)
LUCES DE TRABAJO(FRENTE)(TECHO)
ARBETSLYKTOR(FRAM)(TAK)
RXP011188 -UN-01JAN94

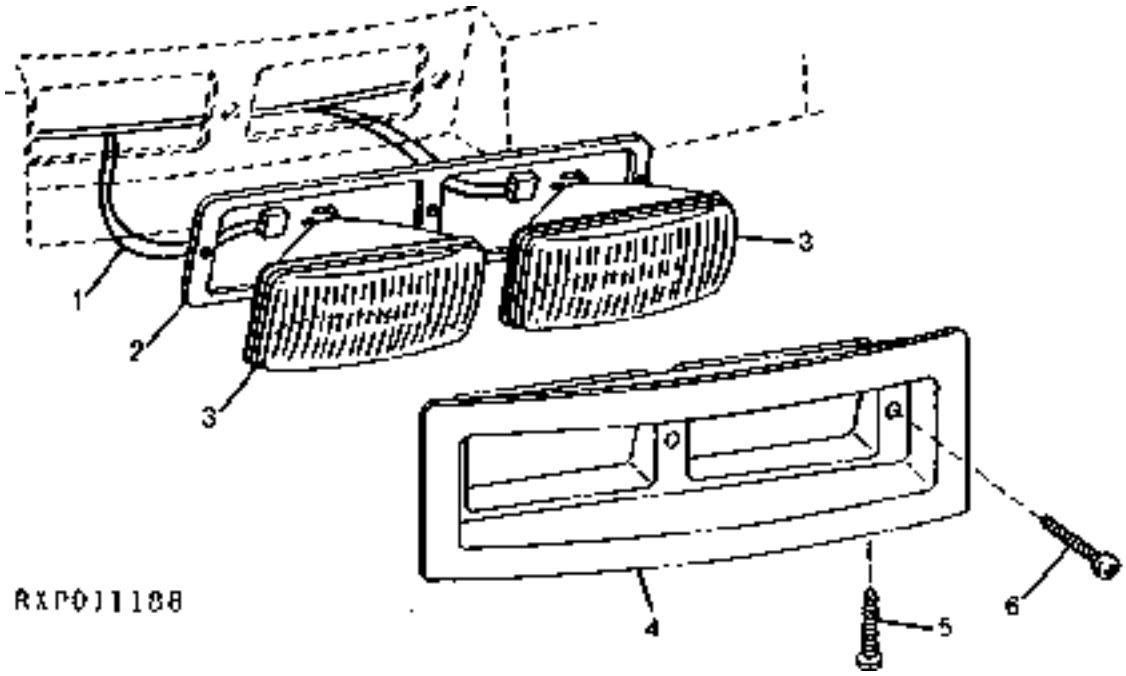

KEY	PART NO.	PART NAME	QTY	TRACTOR SERIAL NO.	ALL	REMARKS
1	RE60647	WIRING HARNESS	1	-XXXXXX	X	(A)
	RE64629	WIRING HARNESS	1	XXXXXX-	X	(B)
2	R107478	RETAINER	1		X	
3	RE37450	LAMP	2		X	(GE H4360)
4	R107477	HOUSING	1		X	
5	21M7305	SCREW	2		X	M6 X 12
6	37H203	SCREW	3		X	

(A) (-XXXXXX) 8100-002801;8200-002215;8300-003900;8400-002531
(B) (XXXXXX-) 8100-002802;8200-002216;8300-003901;8400-002532

https://www.truck-manuals.net/

WORKING LAMPS(ROOF)(REAR)(8100- 002801;8200- 00221 5;8300 -003900;8400 -002531)
PROJECTEURS DE TRAVAIL(TOIT)(ARRIERE)(8100 -002801;8200 -002215;8300 -003900;8400 -002531)
ARBEITSLEUCHTEN(DACH)(HINTEN)(8100 -002801;8200 -002215;8300 -003900;8400 -002531)
FANALI DI LAVORO(TETTO)(POSTERIORE)(8100 -002801;8200 -002215;8300 -003900;8400 -002531)
LUCES DE TRABAJO(TECHO)(TRASERO)(8100 -002801;8200 -002215;8300 -003900;8400 -002531)
ARBETSLYKTOR(TAK)(BAK,BAKRE)(8100 -002801;8200 -002215;8300 -003900;8400 -002531)
RXP011191 -UN-01JAN94

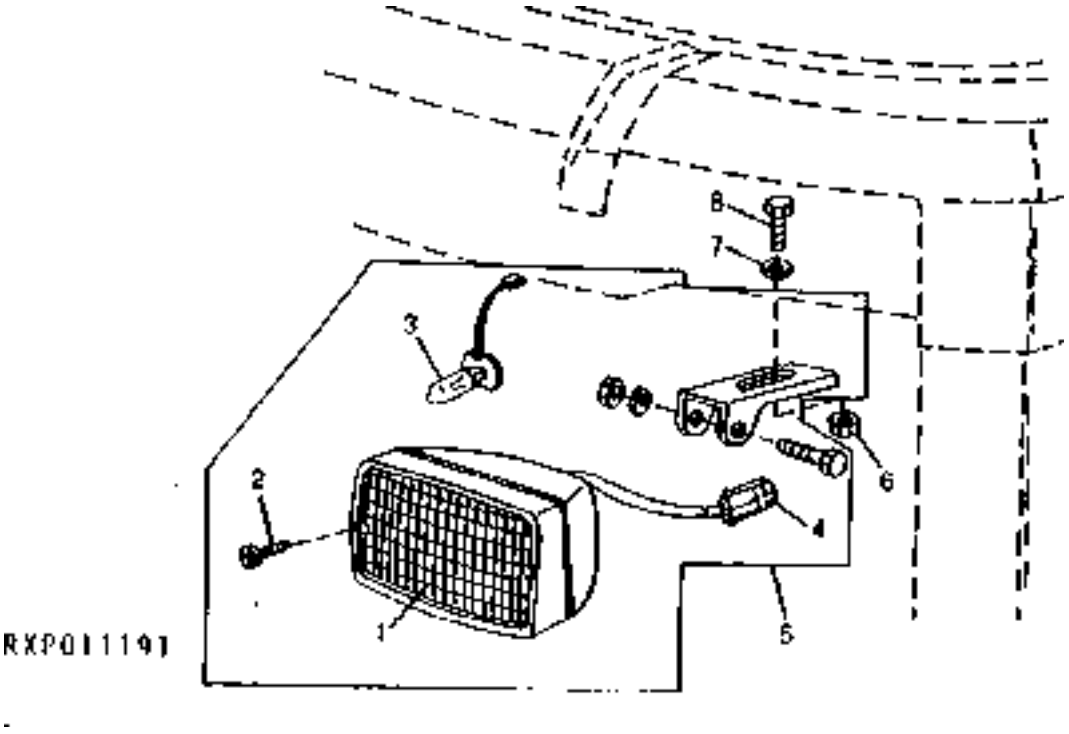

KEY	PART NO.	PART NAME	QTY	TRACTOR SERIAL NO.	ALL	REMARKS
1	RE60765	LENS	1		X	
2	37M7217	SCREW	2		X	
3	AT130104	BULB	1		X	
4	57M7256	CONNECTOR	1		X	(ALSO ORDER (2) R104919, (2) 57M7258 AND 57M7289)
5	RE61201	FLOODLAMP	1		X	
6	R124552	NUT	1		X	
7	24H1822	WASHER	1		X	
8	19M7270	CAP SCREW	1		X	

https://www.truck-manuals.net/

WORKING LAMPS(ROOF)(REAR)(8100 002802-;8200 002216-;8300 003901-;8400 002532-)
PROJECTEURS DE TRAVAIL(TOIT)(ARRIERE)(8100 002802-;8200 002216-;8300 003901-;8400 002532-)
ARBEITSLEUCHTEN(DACH)(HINTEN)(8100 002802-;8200 002216-;8300 003901-;8400 002532-)
FANALI DI LAVORO(TETTO)(POSTERIORE)(8100 002802-;8200 002216-;8300 003901-;8400 002532-)
LUCES DE TRABAJO(TECHO)(TRASERO)(8100 002802-;8200 002216-;8300 003901-;8400 002532-)
ARBETSLYKTOR(TAK)(BAK,BAKRE)(8100 002802-;8200 002216-;8300 003901-;8400 002532-)
RE028671 -UN-05DEC97

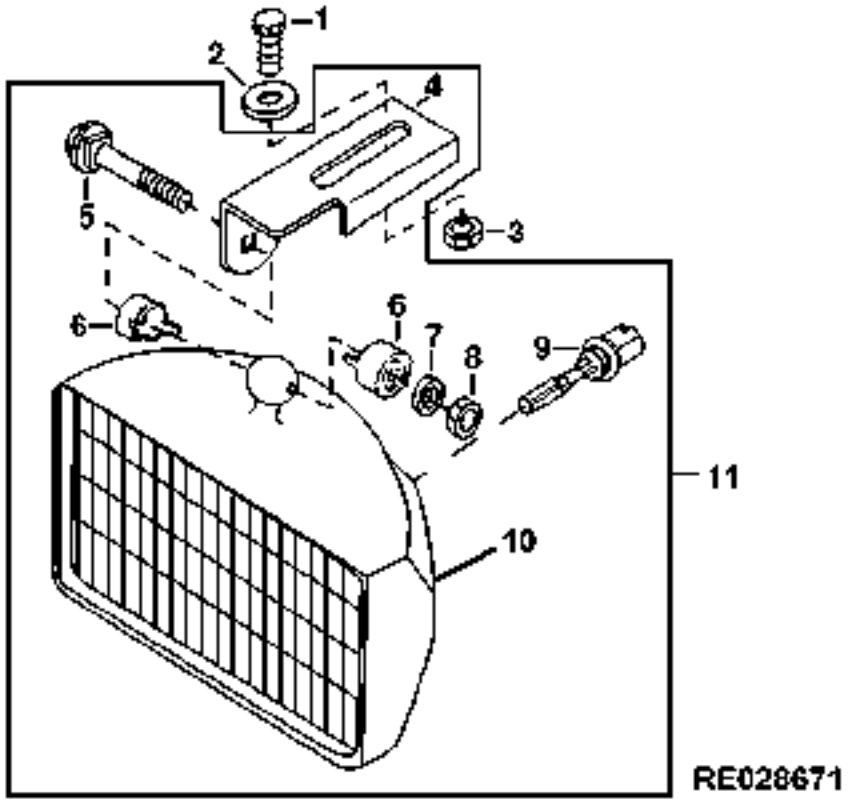

KEY	PART NO.	PART NAME	QTY	TRACTOR SERIAL NO.	ALL	REMARKS
1	19M8836	CAP SCREW	2		X	M8 X 65
2	24H1822	WASHER	2		X	11/32" X 7/8" X 1/16"
3	R124552	NUT	2		X	
4	R135758	BRACKET	1		X	(SUB FOR R127437) (ALSO ORDER L37975)
5	03M7280	BOLT	1		X	M6 X 45
6	R122487	BASE	1		X	
7	L37975	LOCK WASHER	1		X	
8	14M7165	LOCK NUT	1		X	M6
9	R136238	BULB	1		X	(SUB FOR RE44688, THIS APPLICATION) (55W)(GE885X)
10	RE150419	LAMP	1		X	
11	RE151345	FLOODLAMP	2		X	(SUB FOR RE63958, RE71424 OR RE150424)

https://www.truck-manuals.net/

REAR WORK LIGHT(FENDER)(8100 -002801;8200 -002215; 8300 -003900;8400 -002531)
PHARE DE LABOUR(GARDE-BOUE)(8100 -002801;8200 -002215;8300 -003900;8400 -002531)
GERAETESCHEINWERFER(KOTSCHUETZER)(8100 -002801;8200 -002215;8300 -003900;8400 -002531)
LUCE LAVORO(PARAFANGO)(8100 -002801;8200 -002215;8300 -003900;8400 -002531)
FARO AUXILAR(GUARDABARRO)(8100 -002801;8200 -002215;8300 -003900;8400 -002531))
BAKRE ARBETSLAMPA(SKAERM)(8100 -002801;8200 -002215;8300 -003900;8400 -002531)
RE026630 -UN-19DEC95

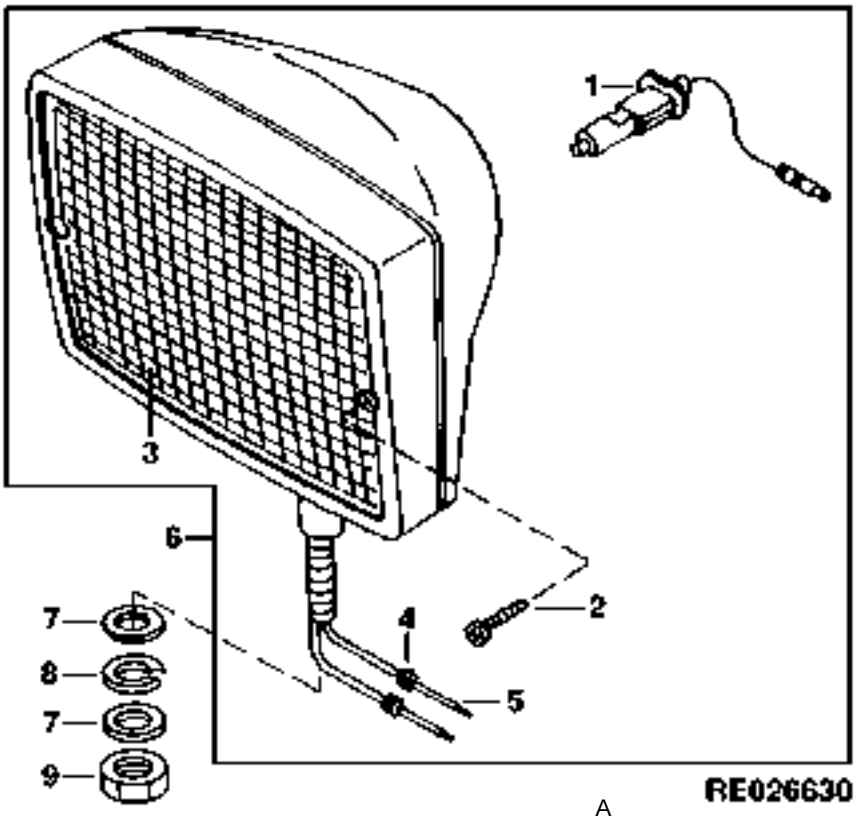

KEY	PART NO.	PART NAME	QTY	TRACTOR SERIAL NO.	ALL	REMARKS
1	AT130104	BULB	1		X	55W
2	37M7217	SCREW	2		X	
3	RE60765	LENS	1		X	
4	57M7258	ELECTRICAL PLUG	2		X	
5	R104919	PIN CONTACT	2		X	
6	RE48989	FLOODLAMP	1		X	
7	24M7047	WASHER	2		X	
8	12H301	LOCK WASHER	1		X	
9	14M7168	LOCK NUT	1		X	

https://www.truck-manuals.net/

REAR WORK LIGHT(FENDER)(8100-002802; 8200-002216; 8300-003901; 8400-002532)
PHARE DE LABOUR(GARDE-BOUE)(8100 -002802;8200 -002216;8300 -3901;8400 -002532)
GERAETESCHEINWERFER(KOTSCHUETZER)(8100 -002802;8200 -002216;8300 -3901;8400 -002532)
LUCE LAVORO(PARAFANGO)(8100 -002802;8200 -002216;8300 -3901;8400 -002532)
FARO AUXILAR(GUARDABARRO)(8100 -002802;8200 -002216;8300 -3901;8400 -002532)
BAKRE ARBETSLAMPA(SKAERM)(8100 -002802;8200 -002216;8300 -3901;8400 -002532)
RE027651 -UN-03FEB97

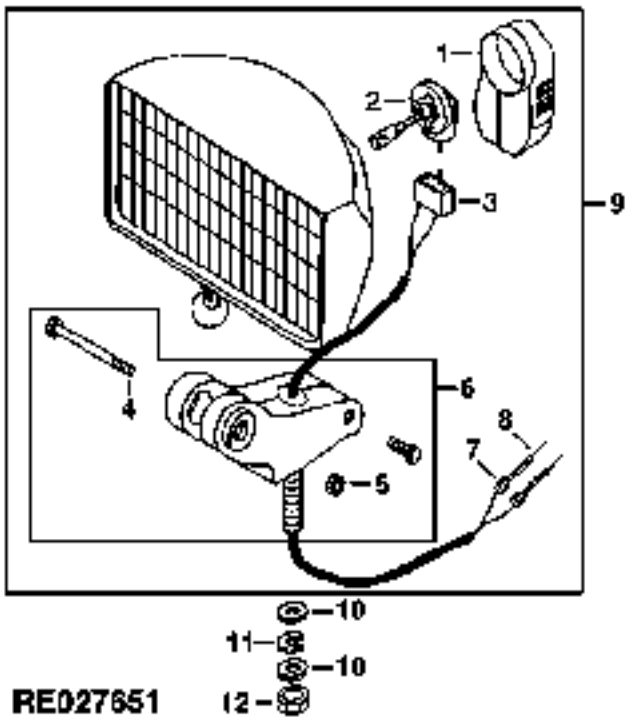

KEY	PART NO.	PART NAME	QTY	TRACTOR SERIAL NO.	ALL	REMARKS
1	R122488	BOOT	1		X	
2	R136239	BULB	1		X	(SUB FOR 57M7358) (GE888X)
3	57M7344	CONNECTOR	1		X	(ALSO ORDER (2) 57M7297 AND (2) Z44689)
4	19M7320	CAP SCREW	1		X	M6 X 40
5	14M7165	LOCK NUT	1		X	M6
6	RE58619	BASE	1		X	
7	57M7258	ELECTRICAL PLUG	2		X	
8	R104919	PIN CONTACT	2		X	(SUB FOR 57M7252)
9	RE151346	FLOODLAMP	2		X	(SUB FOR RE51240, RE71421 OR RE150421)
10	12H301	LOCK WASHER	1		X	1/2"
11	24M7047	WASHER	2		X	13 X 24 X 2.500 MM
12	14M7168	LOCK NUT	1		X	M12

https://www.truck-manuals.net/

EXTREMITY WARNING LAMP KIT(-027099)
JEU DE FEUX D'AVERTISSEMENT D'EXTREMITE(-027099)
AEUSSERE WARNLEUCHTENSATZ(-027099)
KIT DI LUCI DI AVVERTIMENTO ESTREMO(-027099)
CONJUNTO DE LUCES DE ADVERTENCIA DE LOS EXTREMOS(-027099)
YTTERVARNINGSLAMPSATS(-027099)
RXP011201 -UN-01JAN94

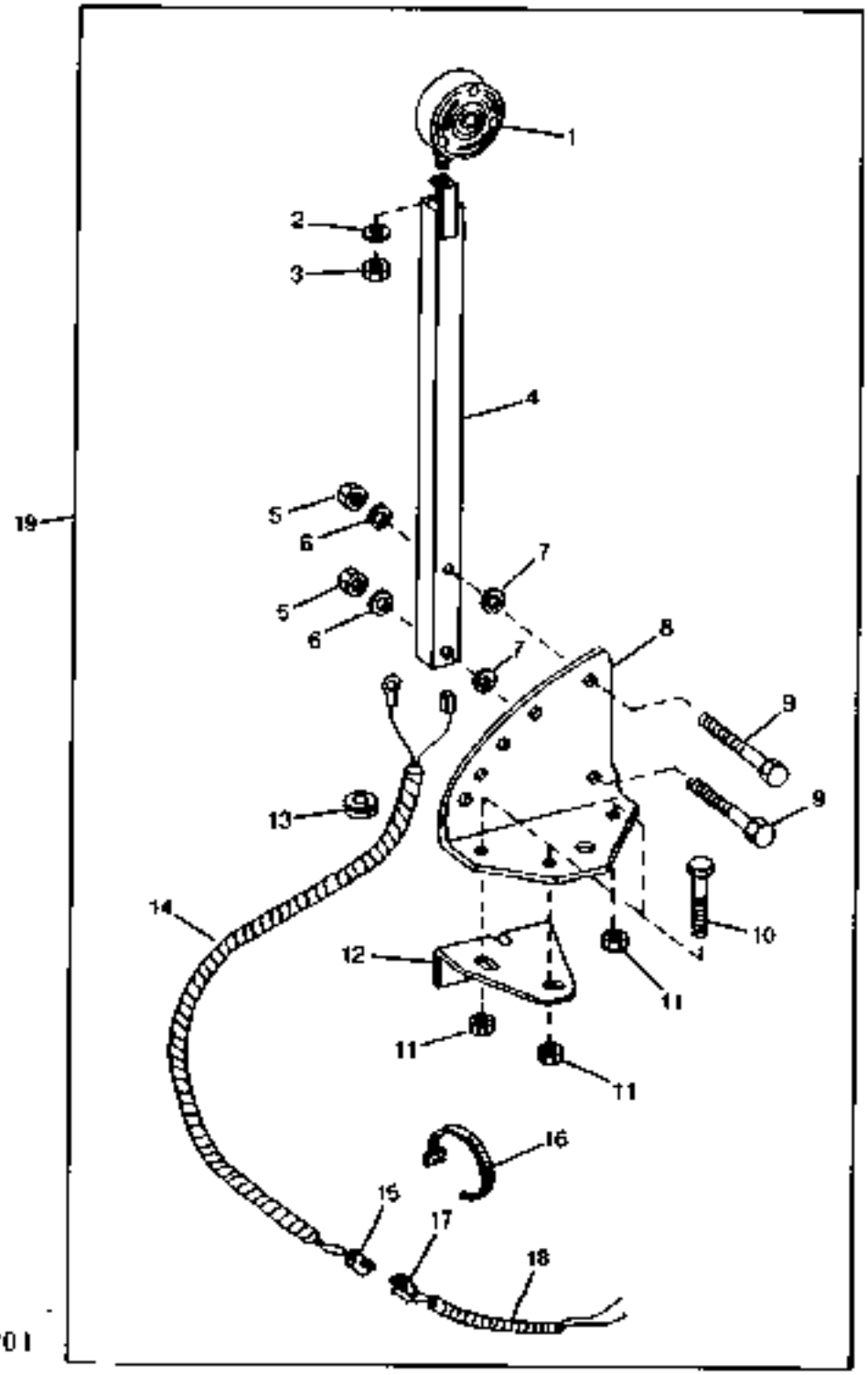

https://www.truck-manuals.net/

KEY	PART NO.	PART NAME	QTY	TRACTOR SERIAL NO.	ALL	REMARKS
1	CH12713	LAMP	2		X	(CONTAINS (2) 12M7066, (3) 14M7274, T116274, T116275, CH12638, (3) CH12639, (2) 24M7028 AND AD2062R)
2	24M7028	WASHER	2		X	10.500 X 20 X 2 MM
3	14M7274	NUT	2		X	M10
4	RE41223	TUBE	2		X	
5	14M7274	NUT	2		X	M10
6	24H1909	WASHER	4		X	13/32" X 1-3/8" X 1/4"
7	R102944	SPACER	4		X	
8	R124261	BRACKET	1		X	L.H.
	R124264	BRACKET	1		X	R.H.
9	19M7742	CAP SCREW	4		X	M10 X 65, HS 10.9
10	19M7168	CAP SCREW	6		X	M10 X 30
11	14M7274	NUT	6		X	M10
12	R124262	SUPPORT	1		X	L.H.
	R124263	SUPPORT	1		X	R.H.
13	B30667	GROMMET	2		X	
14	RE46890	WIRING HARNESS	2		X	
15	R78053	CONNECTOR	1		X	(ALSO ORDER (2) R78061 AND (2) R78063)
16	R44302	TIE BAND	2		X	
17	RE12363	CONNECTOR	1		X	(ALSO ORDER (2) R78060 AND (2) R78063)
18	RE58689	WIRING HARNESS	2		X	
19	**RE61520**	**KIT**	**1**		**X**	**(FI)**

https://www.truck-manuals.net/

EXTREMITY WARNING LAMP(027100-)
FEUX D'AVERTTISSEMENT D'EXTREMITE(027100-)
UEBERSTANDS-WARNLEUCHTE(027100-)
LAMPADA TERMINALE DI AVVERTIMENTO(027100-)
LUZ DE ADVERTENCIA DE EXTREMIDAD(027100-)
UTVAENDIG VARNINGSLAMPA(027100-)
RE030619 -UN-17MAY99

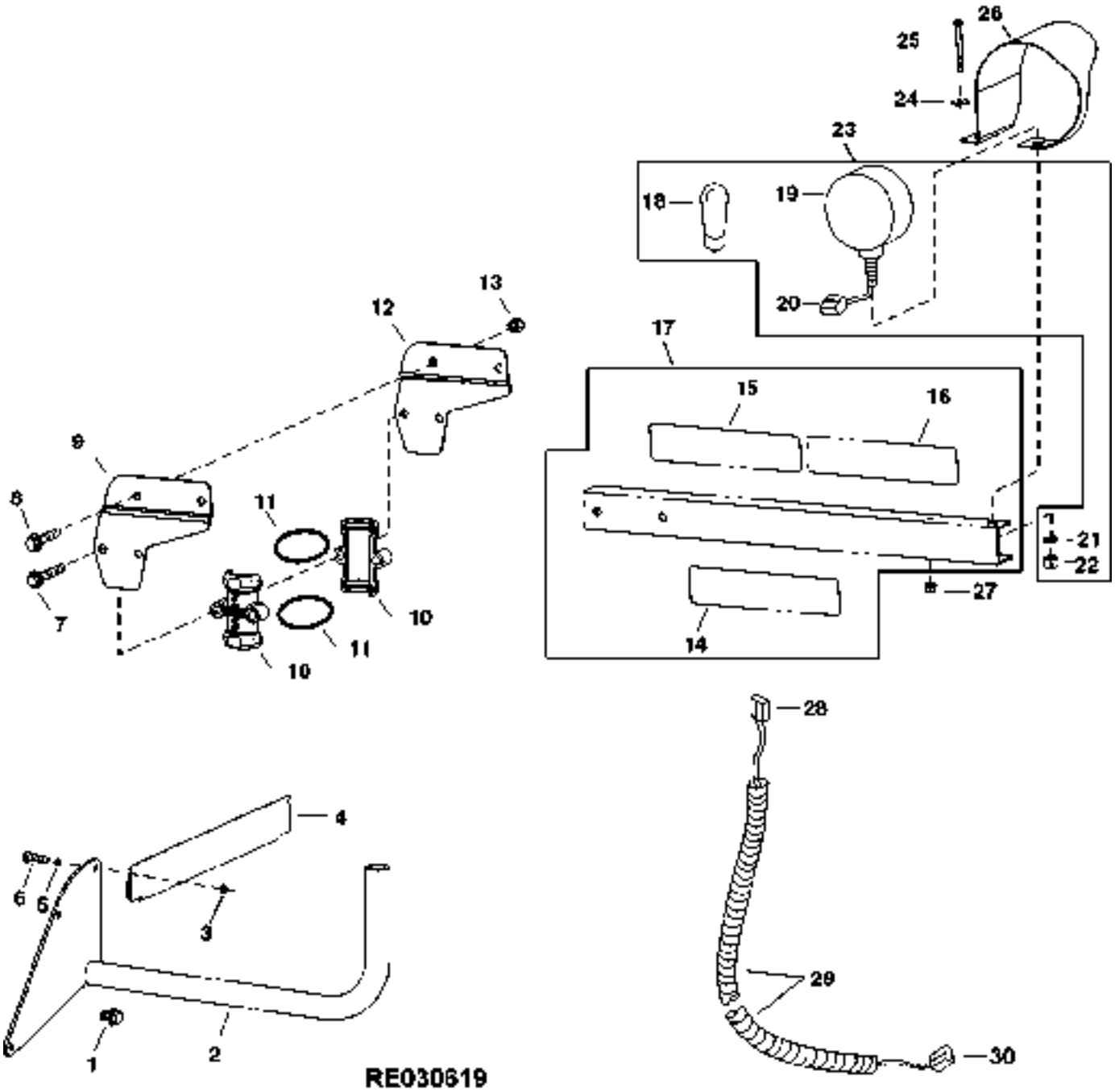

https://www.truck-manuals.net/

KEY	PART NO.	PART NAME	QTY	TRACTOR SERIAL NO.	ALL	REMARKS
1	19M7785	SCREW	4		X	
2	RE164116	BRACKET	1		X	L.H.
	RE164175	BRACKET	1		X	(A) L.H.
	RE164117	BRACKET	1		X	R.H.
	RE164176	BRACKET	1		X	(A) R.H.
3	14M7298	FLANGE NUT	6		X	
4	R164437	SHIELD	2		X	
5	12M7065	LOCK WASHER	6		X	
6	19M7513	CAP SCREW	6		X	
7	19M9032	SCREW	4		X	
8	19M9031	SCREW	4		X	
9	R163774	BRACKET	2		X	
10	H161618	HOUSING	4		X	
11	H136110	ISOLATOR	4		X	
12	R163775	BRACKET	2		X	
13	14M7546	LOCK NUT	8		X	
14	JD5921	REFLECTOR	2		X	
15	JD5922	REFLECTOR	2		X	
16	JD5920	REFLECTOR	2		X	
17	RE166045	ARM	2		X	
18	AD2062R	BULB	2		X	(GE1156)
19	R162459	LENS	1		X	
20	57M7254	CONNECTOR	2		X	(ALSO ORDER (2) R104846 AND 14H865 AND 57M7289)
21	12H301	LOCK WASHER	2		X	
22	14H865	NUT	2		X	
23	RE161626	LAMP	2		X	
24	24M7309	WASHER	2		X	
25	19M9030	CAP SCREW	2		X	
26	R161280	SHIELD	1		X	L.H.
	R161279	SHIELD	1		X	R.H.
27	14M7547	LOCK NUT	2		X	
28	57M7254	CONNECTOR	2		X	(ALSO ORDER (2) R104846, (2) 57M7258 AND 57M7289)
29	RE163804	WIRING HARNESS	1		X	
30	R78053	CONNECTOR	1		X	(ALSO ORDER (2) R78058 AND (2) 57M7292)

(A)FENDER EXTENSION
EXTENSION DE GARDE-BOUE
KOTFLUEGELVERLARNGERUNG
ETENSIONE PARAFANGO
EXTENSION DE GUARDABARRO
STAENKSAERMSFOERLAENGARE

https://www.truck-manuals.net/

MEMORANDA
MEMORANDA
MEMORANDA
MEMORANDA
MEMORANDA
MEMORANDA

https://www.truck-manuals.net/

SECTIONAL INDEX
GRUPPENINDEX
INDEX DE SECTION
INDICE DELLA SEZIONE
INDICE DE SECCION
GRUPPSFORTECKNING
RE028841 -UN-10MAY99

1 - 4E6

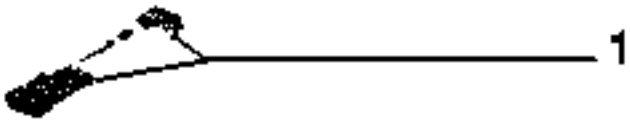

RE028841

https://www.truck-manuals.net/

SECTIONAL INDEX
GRUPPENINDEX
INDEX DE SECTION
INDICE DELLA SEZIONE
INDICE DE SECCION
GRUPPSFORTECKNING

https://www.truck-manuals.net/

ELECTRICAL CONNECTOR AND TERMINAL KIT
JEU DE CONNECTEURS ELECTRIQUES ET DE BORNES
ELEKTROANSCHLUSS UND ANSCHLUSSKLEMMEN-TEILESATZ
KIT DI TERMINALI E CONNETTORI ELETTRICI
JUEGO DE CONECTORES Y BORNES ELECTRICOS
SATS MED ELEKTRISKA ANSLUTNINGAR OCH UTTAG
RXP010001 -UN-01JAN94

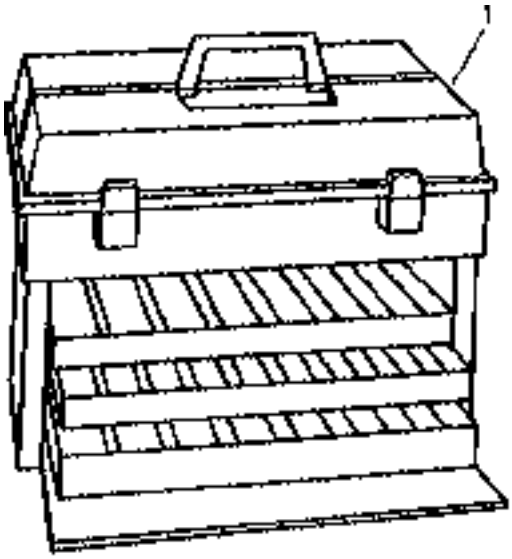

KEY	PART NO.	PART NAME	QTY	TRACTOR SERIAL NO.	ALL	REMARKS
1	PM797NA	KIT	1		X	(A)

(A)KIT INCLUDES CONNECTORS,TERMINAL AND TOOLS
LE JEU COMPREND LES CONNECTEURS,LES BORNES RT LES OUTILS
TEILESATZENTHAELTANSCHLUESSE,ANSCHLUSSKLEMMEN,UND WERKZEUGE
IL KIT COMPRENDE CONNECTORI.TERMINALI ED ATTREZZI
EL JUEGO INCLUYS LOS CONNECTORES,BORNES Y HERRAMIENTAS
SATSEN INNEHAALLER ANSLUTNINGAR,UTTAG OCH VERKTYG

https://www.truck-manuals.net/

WEATHERPACK TERMINALS AND CONNECTORS
CONNECTEURS ET BORNES
WETTERFEST STECKGEHAEUSE UND-ANSCHLUESSE
COSSES ET CONNECTEURS WEATHERPACK
WEATHERPACK ANSCHLUESSE
MORSETTIE CONNETTORI TIPO WEATHERPACK
RWP3850 -UN-01JAN94

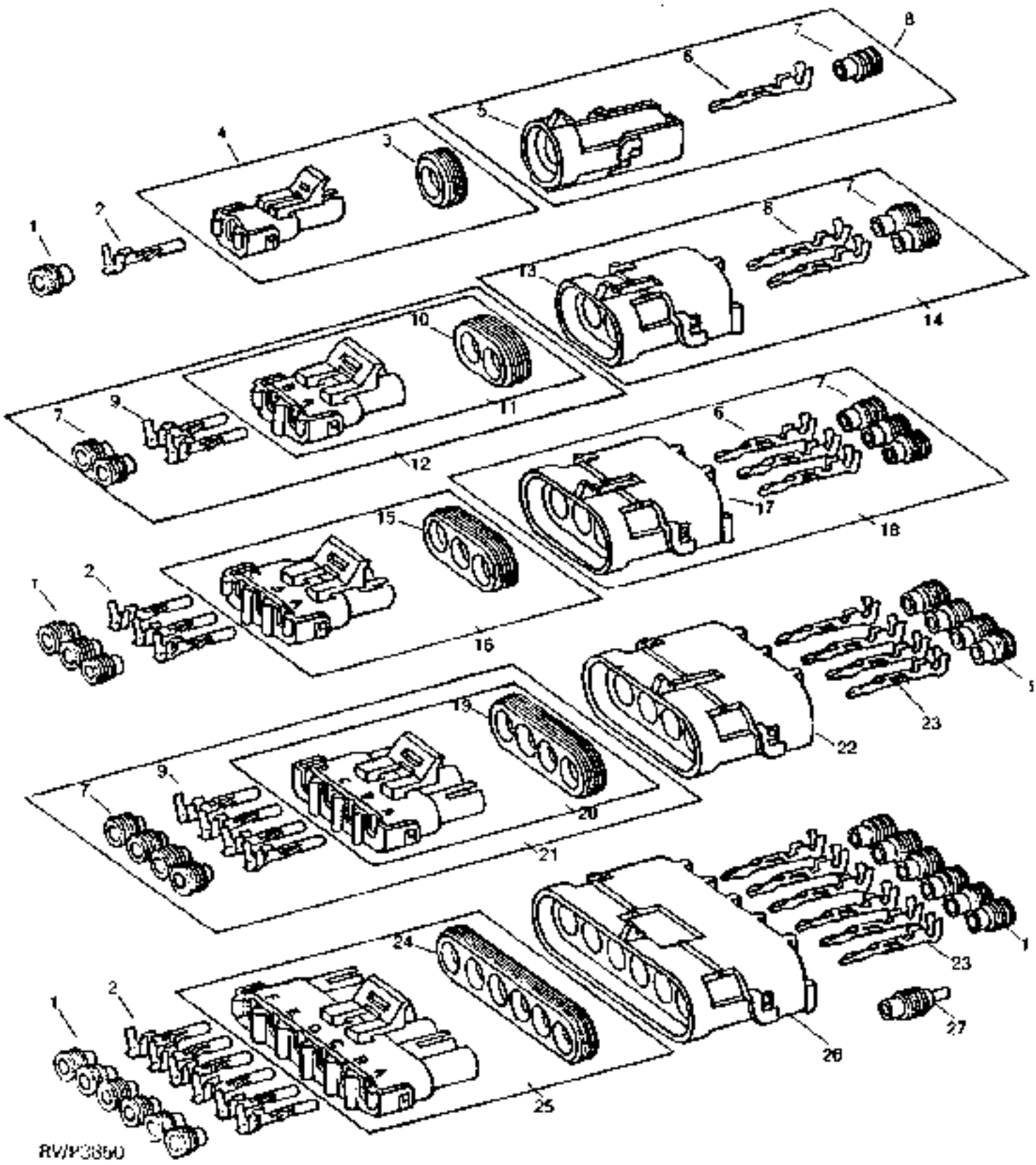

https://www.truck-manuals.net/

KEY	PART NO.	PART NAME	QTY	TRACTOR SERIAL NO.	ALL	REMARKS
1	R78063	TERMINAL NIPPLE	1		X	(16 GA.)
	R78059	ELECTRICAL PLUG	1		X	(18-20 GA.)
	R78062	TERMINAL NIPPLE	1		X	(14 GA.)
2	R78057	SOCKET CONTACT	1		X	(18-20 GA.)(NO.19)
	R78060	SOCKET CONTACT	1		X	(14-16 GA.)(NO.15)
3	R78047	SEAL	1		X	
4	RE12362	CONNECTOR	1		X	
5	R78052	PIN CONTACT CONNECTOR BODY	1		X	
6	R78061	PIN CONTACT	1		X	(14-16 GA.)(NO.15)
7	R78063	TERMINAL NIPPLE	1		X	(16 GA.)
8	RE12334	CONNECTOR	1		X	
9	R78060	SOCKET CONTACT	1		X	(14-16 GA.)(NO.15)
10	R78048	TERMINAL NIPPLE	1		X	
11	RE12363	CONNECTOR	1		X	
12	RE12331	CONNECTOR	1		X	(SUB RE12363, (2) R78060 AND (2) R78063)
13	R78053	PIN CONTACT CONNECTOR BODY	1		X	
14	RE12330	CONNECTOR	1		X	
15	R78049	SEAL	1		X	
16	RE12364	SOCKET CONT.CONNECTOR BODY	1		X	
17	R78054	PIN CONTACT CONNECTOR BODY	1		X	
18	RE12332	CONNECTOR	1		X	
19	R78050	SEAL	1		X	
20	RE12365	CONNECTOR	1		X	
21	RE12333	CONNECTOR	1		X	
22	R78055	PIN CONTACT CONNECTOR BODY	1		X	
23	R78061	PIN CONTACT	1		X	(14-16 GA.)(NO.15)
	R78058	PIN CONTACT	1		X	(18-20 GA.)(NO.19)
24	R78051	SEAL	1		X	
25	RE12366	CONNECTOR	1		X	
26	R78056	PIN CONTACT CONNECTOR BODY	1		X	
27	R78064	ELECTRICAL PLUG	1		X	

https://www.truck-manuals.net/

METI-PACK TERMINAL AND CONNECTORS
COSSES ET CONNECTEURS METRI-PACK
METRI-PACKANSCHLUSSE UND VERBINDER
MORSETTI METRI-PACK E COLLEGAMENTI ELETTRICI
TERMINALES Y CONECTORES METRI-PACK
METRI-PACK ANSLUTNINGSDON OCH KONTAKTER
RXP020749 -UN-01JAN94

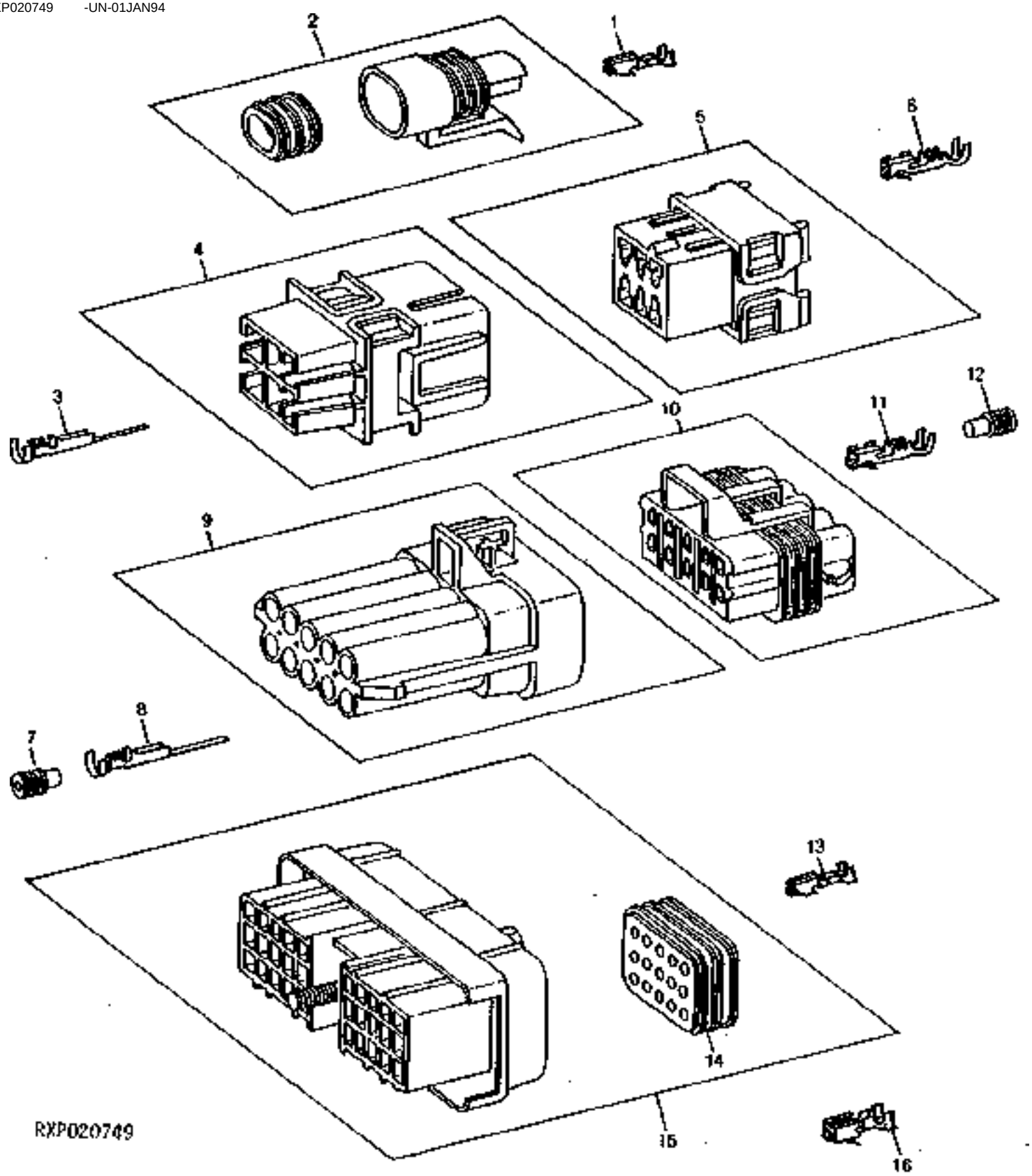

https://www.truck-manuals.net/

KEY	PART NO.	PART NAME	QTY	TRACTOR SERIAL NO.	ALL	REMARKS
1	R104701	TERMINAL	1		X	(14-16 GA.)
2	57M7278	CONNECTOR	1		X	(SUB FOR RE42192)
3	R104923	TERMINAL	1		X	(14-16 GA.)
4	R104920	CONNECTOR	1		X	
5	R104922	CONNECTOR	1		X	
6	R104921	TERMINAL	1		X	(14-16 GA.)
7	R78063	TERMINAL NIPPLE	1		X	(16 GA.)
8	R104919	PIN CONTACT	1		X	(18 GA.)
9	57M7265	PIN CONTACT CONNECTOR BODY	1		X	(SUB FOR RE42196)
10	57M7262	RECEPTACLE CONNECTOR BODY	1		X	(SUB FOR RE42195)
11	R104846	SOCKET CONTACT	1		X	(16 GA.)
12	R78063	TERMINAL NIPPLE	1		X	(16 GA.)
13	R104701	TERMINAL	1		X	(14-16 GA.)
14	R104700	CONNECTOR	1		X	
15	RE41949	CONNECTOR	1		X	
16	R104936	TERMINAL	1		X	(14-16 GA.)
	R104937	TERMINAL	1		X	(18 GA.)
	R104938	TERMINAL	1		X	(12 GA.)

https://www.truck-manuals.net/

METRI-PACK TERMINALS AND CONNECTORS
COSSES ET CONNECTEURS METRI-PACK
METRI-PACKANSCHLUSSE UND VERBINDER
MORSETTI METRI-PACK E COLLEGAMENTI ELETTRICI
TERMINALES Y CONECTORES METRI-PACK
METRI-PACK ANSLUTNINGSDON OCH KONTAKTER
RXP011000 -UN-01JAN94

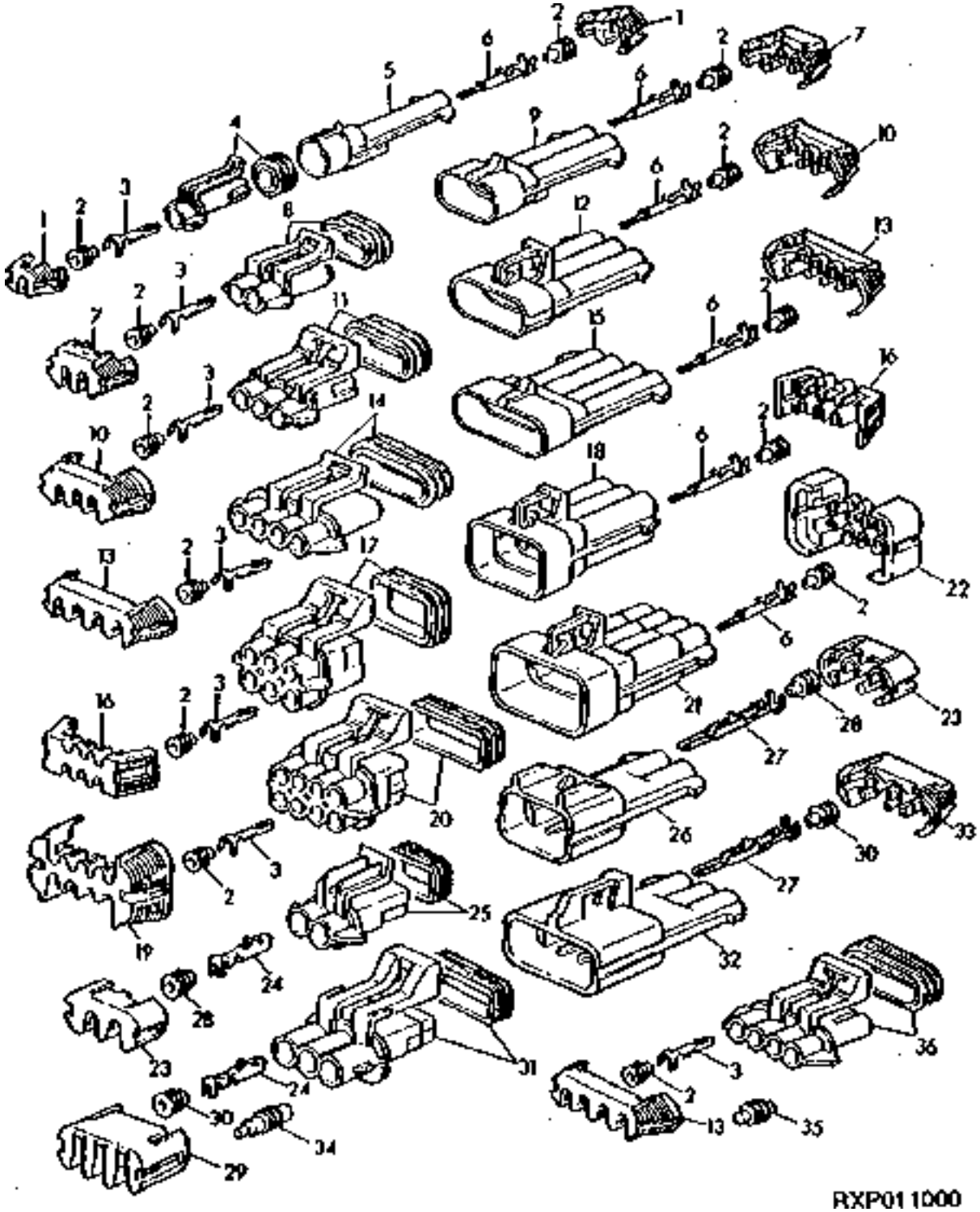

https://www.truck-manuals.net/

KEY	PART NO.	PART NAME	QTY	TRACTOR SERIAL NO.	ALL	REMARKS
1	57M7315	CONNECTOR	1		X	
2	57M7258	ELECTRICAL PLUG	AR		X	
3	R104846	SOCKET CONTACT	AR		X	(16 GA.)
4	57M7266	RECEPTACLE CONNECTOR BODY	1		X	
5	57M7267	PIN CONTACT CONNECTOR BODY	1		X	
6	R104919	PIN CONTACT	AR		X	(18 GA.)
7	57M7316	CONNECTOR	1		X	
8	57M7254	RECEPTACLE CONNECTOR BODY	1		X	
9	57M7256	PIN CONTACT CONNECTOR BODY	1		X	
10	57M7317	CONNECTOR	1		X	
11	57M7255	RECEPTACLE CONNECTOR BODY	1		X	
12	57M7257	PIN CONTACT CONNECTOR BODY	1		X	
13	57M7318	CONNECTOR	1		X	
14	57M7247	RECEPTACLE CONNECTOR BODY	1		X	
15	57M7244	PIN CONTACT CONNECTOR BODY	1		X	
16	57M7291	CONNECTOR	1		X	
17	57M7260	RECEPTACLE CONNECTOR BODY	1		X	
18	57M7263	PIN CONTACT CONNECTOR BODY	1		X	
19	57M7296	CONNECTOR	1		X	
20	57M7261	RECEPTACLE CONNECTOR BODY	1		X	
21	57M7264	PIN CONTACT CONNECTOR BODY	1		X	
22	57M7283	CONNECTOR	1		X	
23	57M7306	CONNECTOR	1		X	
24	57M7298	TERMINAL	AR		X	(14-16 GA.)
	57M7299	TERMINAL	AR		X	(12 GA.)
25	57M7309	RECEPTACLE CONNECTOR BODY	1		X	
26	57M7304	PIN CONTACT CONNECTOR BODY	1		X	
27	57M7286	TERMINAL	AR		X	(12 GA.)
	57M7277	TAB	AR		X	(14-16 GA.)
28	R78063	TERMINAL NIPPLE	AR		X	
29	57M7274	CONNECTOR	1		X	
30	R78059	ELECTRICAL PLUG	AR		X	
31	57M7280	CONNECTOR	1		X	
32	57M7305	PIN CONTACT CONNECTOR BODY	1		X	
33	57M7307	CONNECTOR	1		X	
34	R78064	ELECTRICAL PLUG	AR		X	
35	57M7259	ELECTRICAL PLUG	AR		X	
36	57M7364	RECEPTACLE CONNECTOR BODY	1		X	

https://www.truck-manuals.net/

ELECTRICAL CONNECTORS AND TERMINALS
CONNECTEURS ET COSSES ELECTRIQUES
ELEKTROSTECKER UND ANSCHLUSSKLEMMEN
COLLEGAMENTI E MORSETTI ELETTRICI
CONECTORES Y TERMINALES ELECTRICOS
ELEKTRISKA KOPPLINGAR OCH ANSLUTNINGAR
RXP8696 -UN-01JAN94

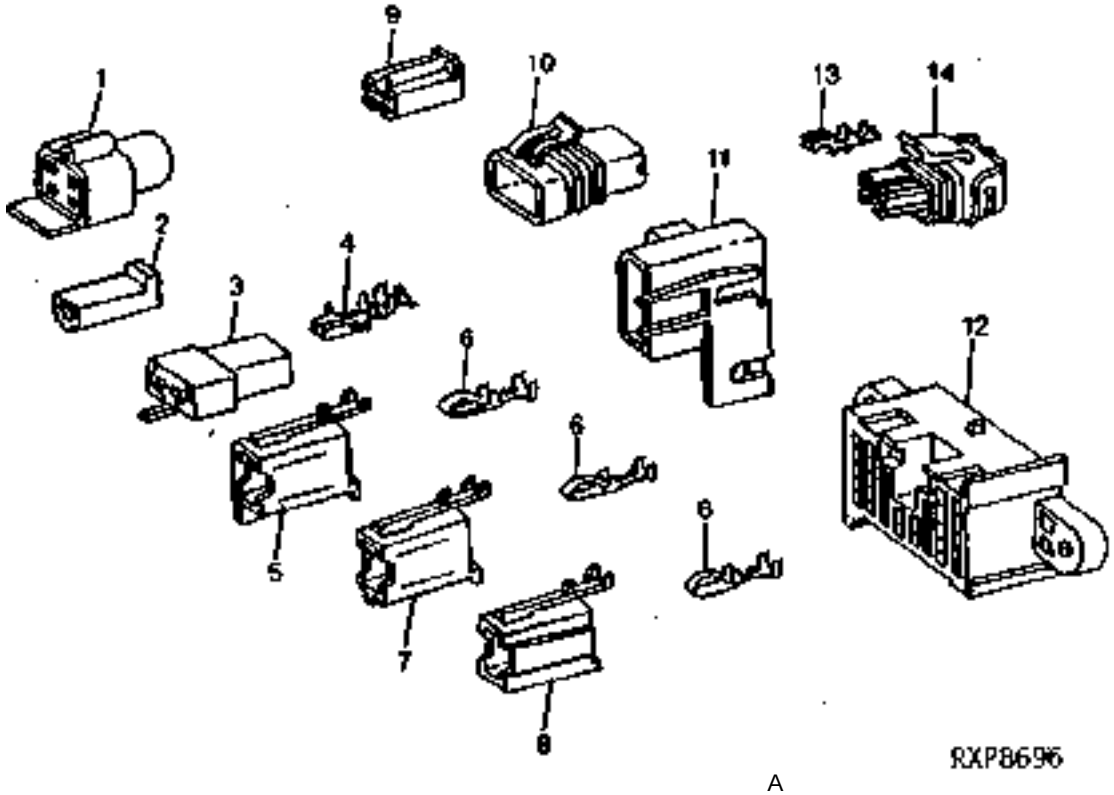

KEY	PART NO.	PART NAME	QTY	TRACTOR SERIAL NO.	ALL	REMARKS
1	T24166	CONNECTOR	1		X	(SUB FOR R104425)
2	R104926	ELECTRICAL PLUG	1		X	
3	R104927	ELECTRICAL PLUG	1		X	
4	R104928	TERMINAL	1		X	(14-16 GA.)
5	R104929	ELECTRICAL PLUG	1		X	
6	R104932	ELECTRICAL PLUG	1		X	(18-20 GA.)
7	R104930	CONNECTOR	1		X	
8	R104931	ELECTRICAL PLUG	1		X	
9	T24167	RECEPTACLE CONNECTOR BODY	1		X	(ALSO ORDER R65595 OR U4662)
10	R104570	CONNECTOR	1		X	
11	R104572	CAP	1		X	
12	R104934	CONNECTOR	1		X	
13	R104571	TERMINAL	1		X	(12 GA.)
	R104933	TERMINAL	1		X	(14-16 GA.)
14	RE42193	CONNECTOR	1		X	

https://www.truck-manuals.net/

ELECTRICAL CONNECTORS
CONNECTEURS ELECTRIQUES
ELEKTRISCHE ANSCHLUESSE
CONNECTTORI ELETTRICI
CONECTORES ELECTRICOS
ELKOPPLINGAR
RXP010513 -UN-01JAN94

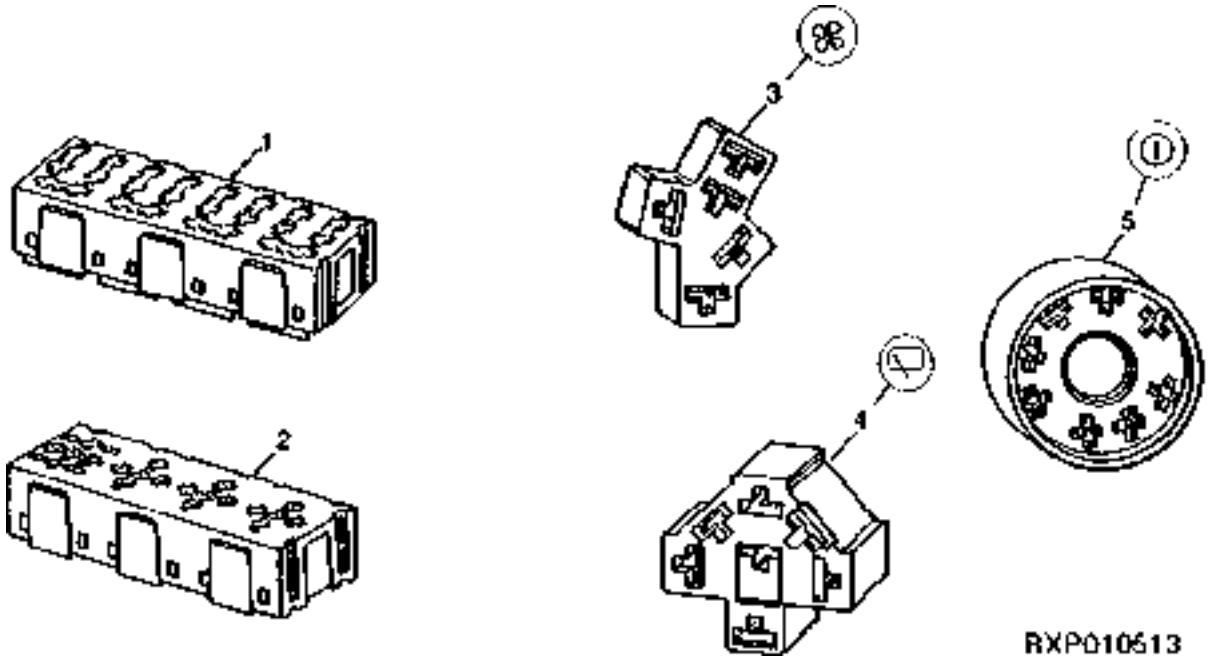

KEY	PART NO.	PART NAME	QTY	TRACTOR SERIAL NO.	ALL	REMARKS
1	RE43737	TERMINAL BOARD	4		X	(A)
2	RE49724	TERMINAL BOARD	8		X	(B)
3	RE46734	CONNECTOR	1		X	
4	RE46735	CONNECTOR	1		X	
5	RE46736	CONNECTOR	1		X	(ALSO ORDER (8) 57M7429)

(A)FUSE
FUSIBLE
SICHERUNG
FUSIBILE
FUSIBLE
SAEKRING

(B)RELAYS
RELAIS
RELAIS
RELE'
RELE
RELAE

https://www.truck-manuals.net/

CONDUIT
GAINE DE TUBULAIRE
ISOLIERSCHLAUCH
GUAINA TUBOLARE
VAINA
SKYDDSROER
RXP010999 -UN-01JAN94

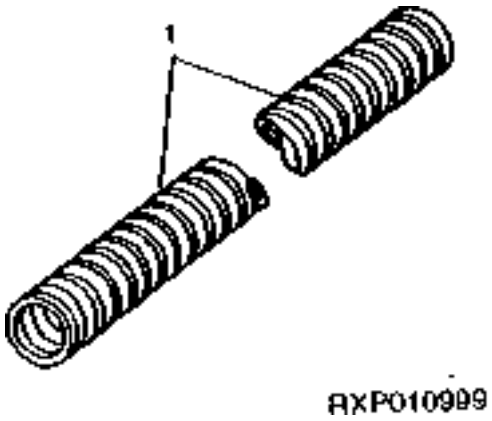

KEY	PART NO.	PART NAME	QTY	TRACTOR SERIAL NO.	ALL	REMARKS
1	R93219	CONDUIT	1		X	6.3 X 3048 MM(1/4" X 120")
	R93220	CONDUIT	1		X	10.4 X 3048 MM(13/32" X 120")
	R93221	CONDUIT	1		X	15.9 X 3048 MM(5/8" X 120")
	R93222	CONDUIT	1		X	25.4 X 3048 MM(1" X 120")

https://www.truck-manuals.net/

SECTIONAL INDEX (TSN -019999)
INDEX DE SECTION (TSN -019999)
GRUPPENINDEX (TSN -019999)
INDICE DELLA SEZIONE (TSN -019999)
INDICE DE SECCION (TSN -019999)
GRUPPSFORTECKNING (TSN -019999)
RXP022577 -UN-11MAY99

1 -	4F1
2 -	4F17
3 -	4F21
4 -	4F22
5 -	4G1
6 -	4G5
7 -	4G11
8 -	4G13
9 -	4G15
10 -	4G17
11 -	4H13
12 -	4H19
13 -	4H23
14 -	4I1
15 -	4I5
16 -	4I9
17 -	4I15
18 -	4I17

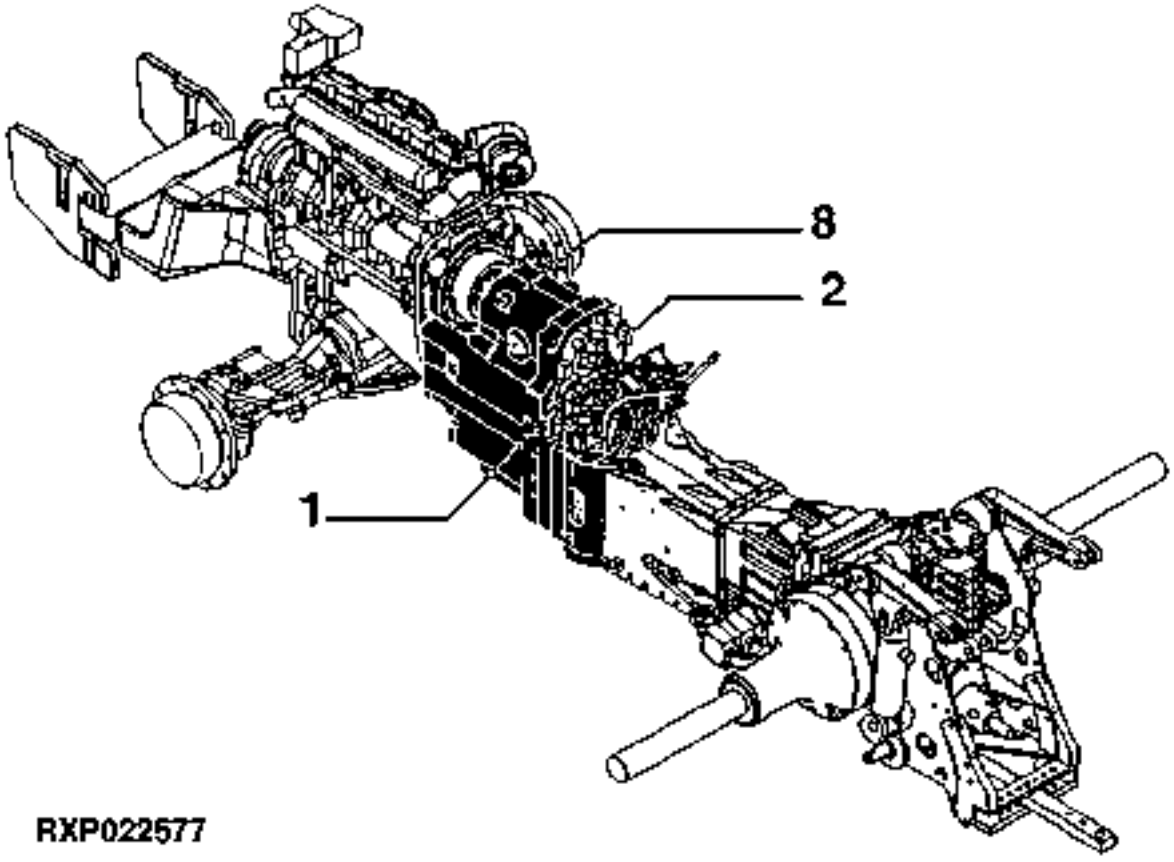

RXP022577

https://www.truck-manuals.net/

SECTIONAL INDEX (TSN -019999)
INDEX DE SECTION (TSN -019999)
GRUPPENINDEX (TSN -019999)
INDICE DELLA SEZIONE (TSN -019999)
INDICE DE SECCION (TSN -019999)
GRUPPSFORTECKNING (TSN -019999)

RXP022578 -UN-11MAY99

1 -	4F1
2 -	4F17
3 -	4F21
4 -	4F22
5 -	4G1
6 -	4G5
7 -	4G11
8 -	4G13
9 -	4G15
10 -	4G17
11 -	4H13
12 -	4H19
13 -	4H23
14 -	4I1
15 -	4I5
16 -	4I9
17 -	4I15
18 -	4I17

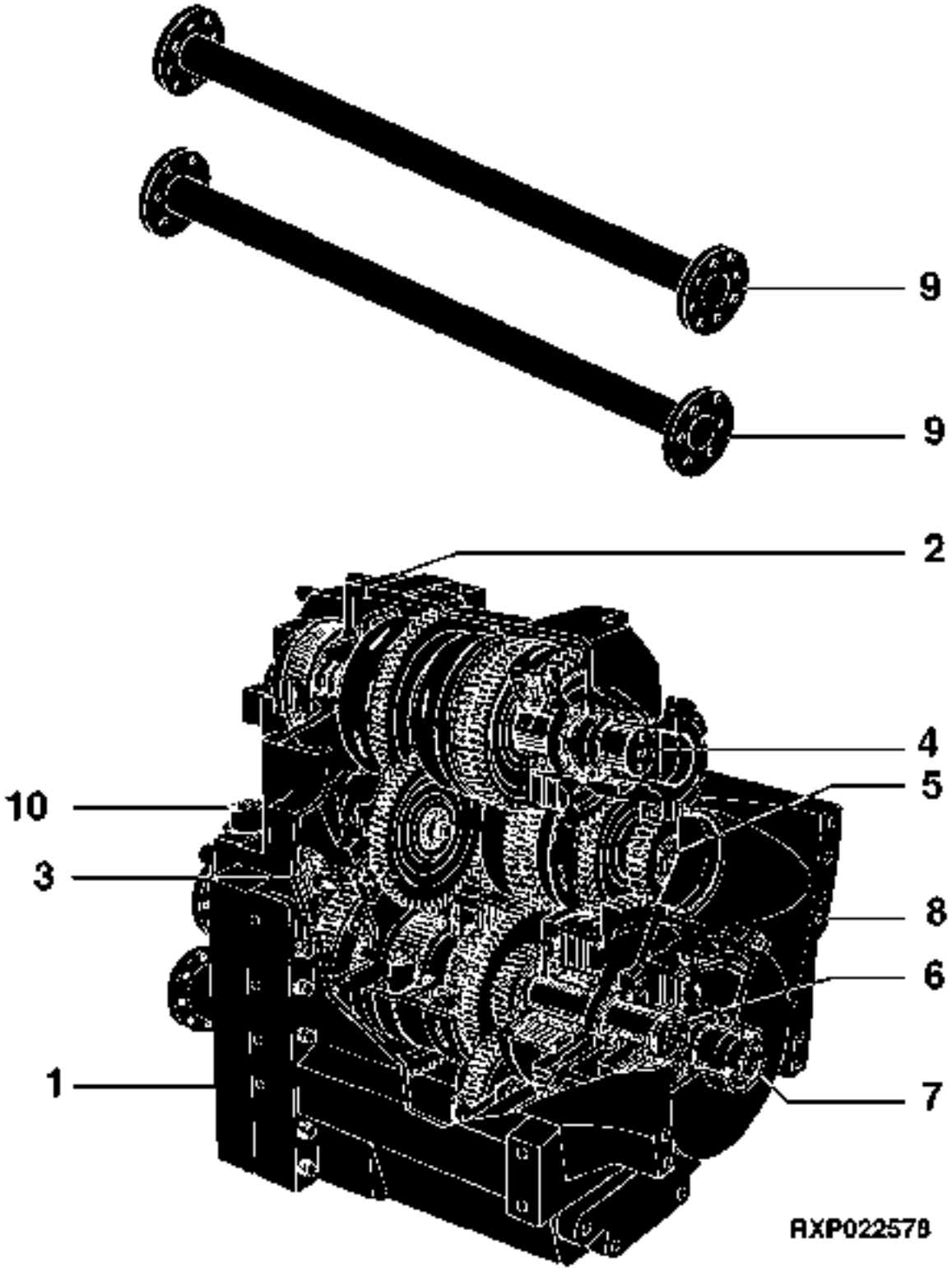

https://www.truck-manuals.net/

SECTIONAL INDEX (TSN 020000-)
INDEX DE SECTION (TSN 020000-)
GRUPPENINDEX (TSN 020000-)
INDICE DELLA SEZIONE (TSN 020000-)
INDICE DE SECCION (TSN 020000-)
GRUPPSFORTECKNING (TSN 020000-)
RXP022579 -UN-11MAY99

1 -	4F1
2 -	4F17
3 -	4F21
4 -	4F22
5 -	4G1
6 -	4G5
7 -	4G11
8 -	4G13
9 -	4G15
10 -	4G17
11 -	4H13
12 -	4H19
13 -	4H23
14 -	4I1
15 -	4I5
16 -	4I9
17 -	4I15
18 -	4I17

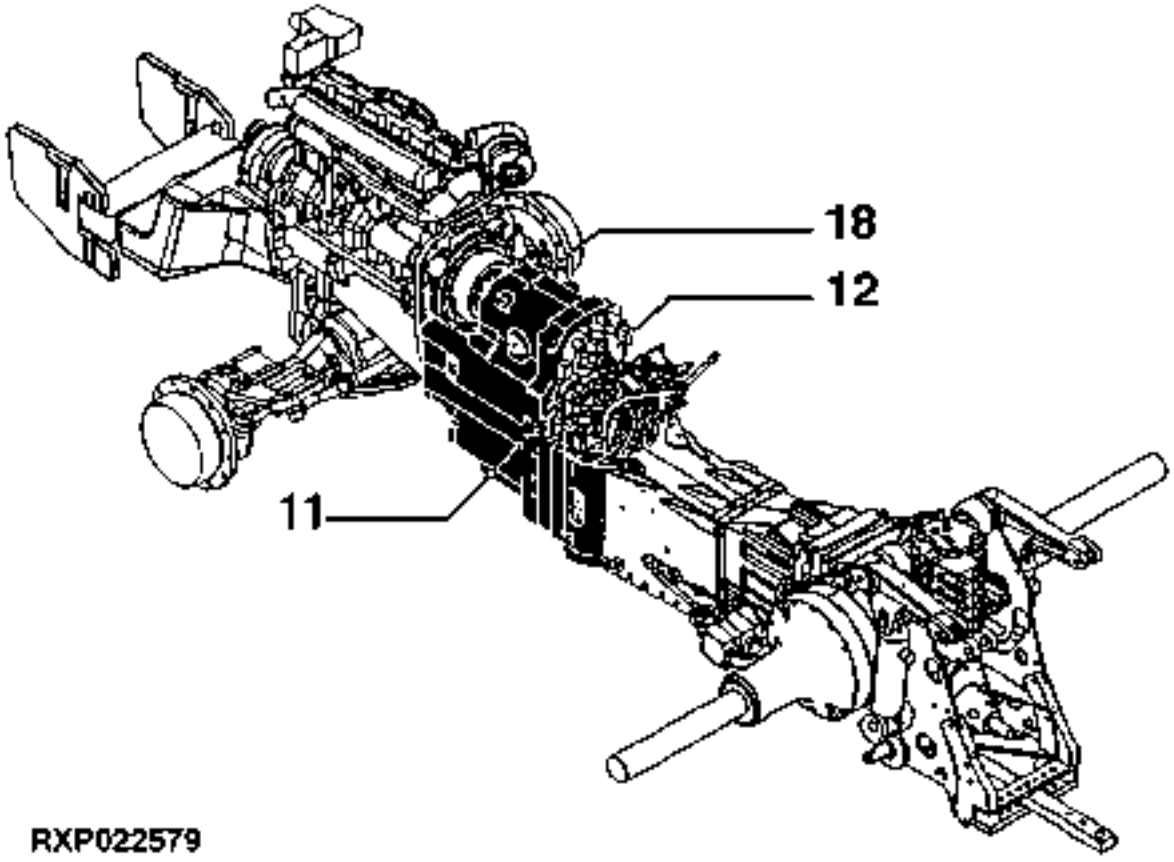

RXP022579

https://www.truck-manuals.net/

SECTIONAL INDEX (TSN 020000-)
INDEX DE SECTION (TSN 020000-)
GRUPPENINDEX (TSN 020000-)
INDICE DELLA SEZIONE (TSN 020000-)
INDICE DE SECCION (TSN 020000-)
GRUPPSFORTECKNING (TSN 020000-)

RXP022580 -UN-11MAY99

1 -	4F1
2 -	4F17
3 -	4F21
4 -	4F22
5 -	4G1
6 -	4G5
7 -	4G11
8 -	4G13
9 -	4G15
10 -	4G17
11 -	4H13
12 -	4H19
13 -	4H23
14 -	4I1
15 -	4I5
16 -	4I9
17 -	4I15
18 -	4I17

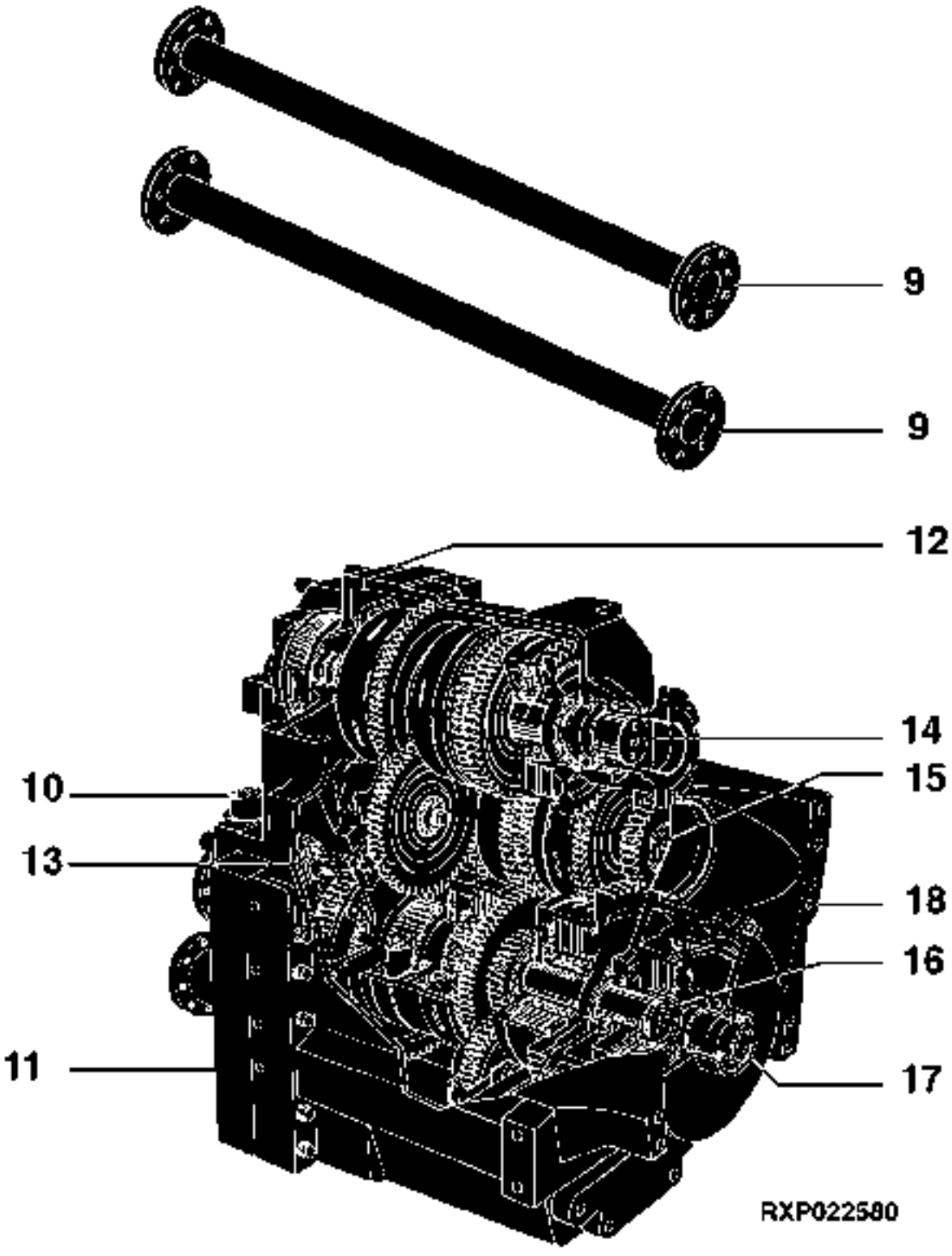

https://www.truck-manuals.net/

MEMORANDA
MEMORANDA
MEMORANDA
MEMORANDA
MEMORANDA
MEMORANDA

https://www.truck-manuals.net/

CLUTCH PEDAL (TSN 8100,8200,8300,8400 -019999)
PEDALE D'EMBR (TSN 8100,8200,8300,8400 -019999)
KUPPLUNGSFUSSHEBEL (TSN 8100,8200,8300,8400 -019999)
PEDALE FRIZIONE (TSN 8100,8200,8300,8400 -019999)
PEDAL DEL EMBRAGUE (TSN 8100,8200,8300,8400 -019999)
KOPPLINGSPEDAL (TSN 8100,8200,8300,8400 -019999)
RXP022111 -UN-07JUN97

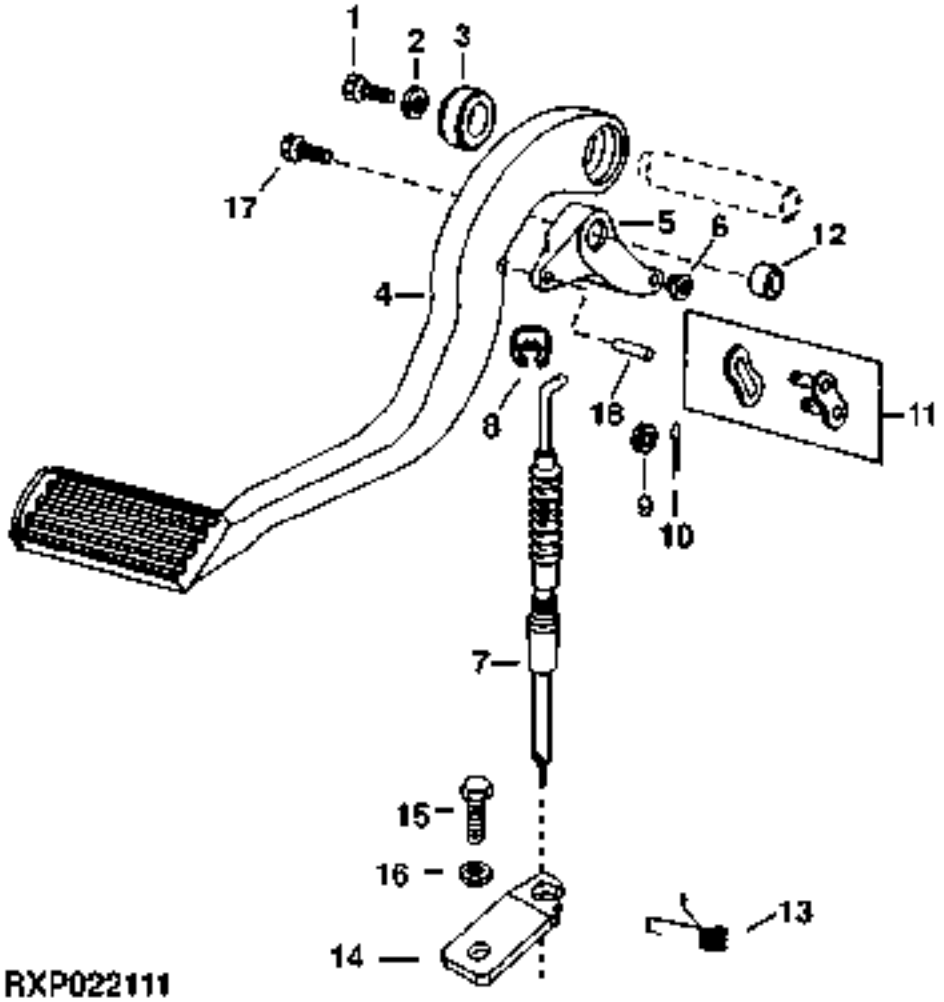

https://www.truck-manuals.net/

KEY	PART NO.	PART NAME	QTY	TRANSMISSION SERIAL NO.	ALL	REMARKS
1	19M7932	CAP SCREW	1		X	M8 X 16
2	R56397	WASHER	1		X	
3	JD8535	BALL BEARING	1		X	
4	R122783	PEDAL	1	-XXXXXX	X	(SUB R127830 AND R127832)
	R127830	PEDAL	1	XXXXXX-	X	
5	R122784	ARM	1	-XXXXXX	X	
	R127831	ARM	1	XXXXXX-	X	
6	R78425	BUSHING	1		X	
7	RE60687	CABLE	1		X	
8	R108214	CLIP	1		X	UP
9	R113023	GROMMET	1		X	
10	11M7059	COTTER PIN	2		X	3.200 X 20 MM
11	J4216H	CHAIN LINK	1		X	
12	JD10181	BALL BEARING	2		X	
13	R121823	SPRING	1		X	LOW
14	R124428	BRACKET	1		X	
	R131875	BRACE	1		X	(A)
15	19M7938	CAP SCREW	1		X	M10 X 20
16	24M7346	WASHER	1		X	11 X 20 X 2 MM
17	19M8291	SCREW	1		X	M8 X 35
18	R127832	BUSHING	1	XXXXXX-	X	

(A) EUROPEAN VERSION
VERSION EUROPEENNE
EROPAEISCHE AUSFUEHRUNG
VERSIONE EUROPEA
VERSION EUROPEA
EUROPEISK VERSION

https://www.truck-manuals.net/

MANIFOLD (TSN 8100,8200,8300,8400 -019999)
COLLECTEUR (TSN 8100,8200,8300,8400 -019999)
KUPPLUNGS (TSN 8100,8200,8300,8400 -019999)
COLLETTORE (TSN 8100,8200,8300,8400 -019999)
MULTIPLE (TSN 8100,8200,8300,8400 -019999)
KOPPLINGSGRENDOER (TSN 8100,8200,8300,8400 -019999)
RXP022488 -UN-23FEB98

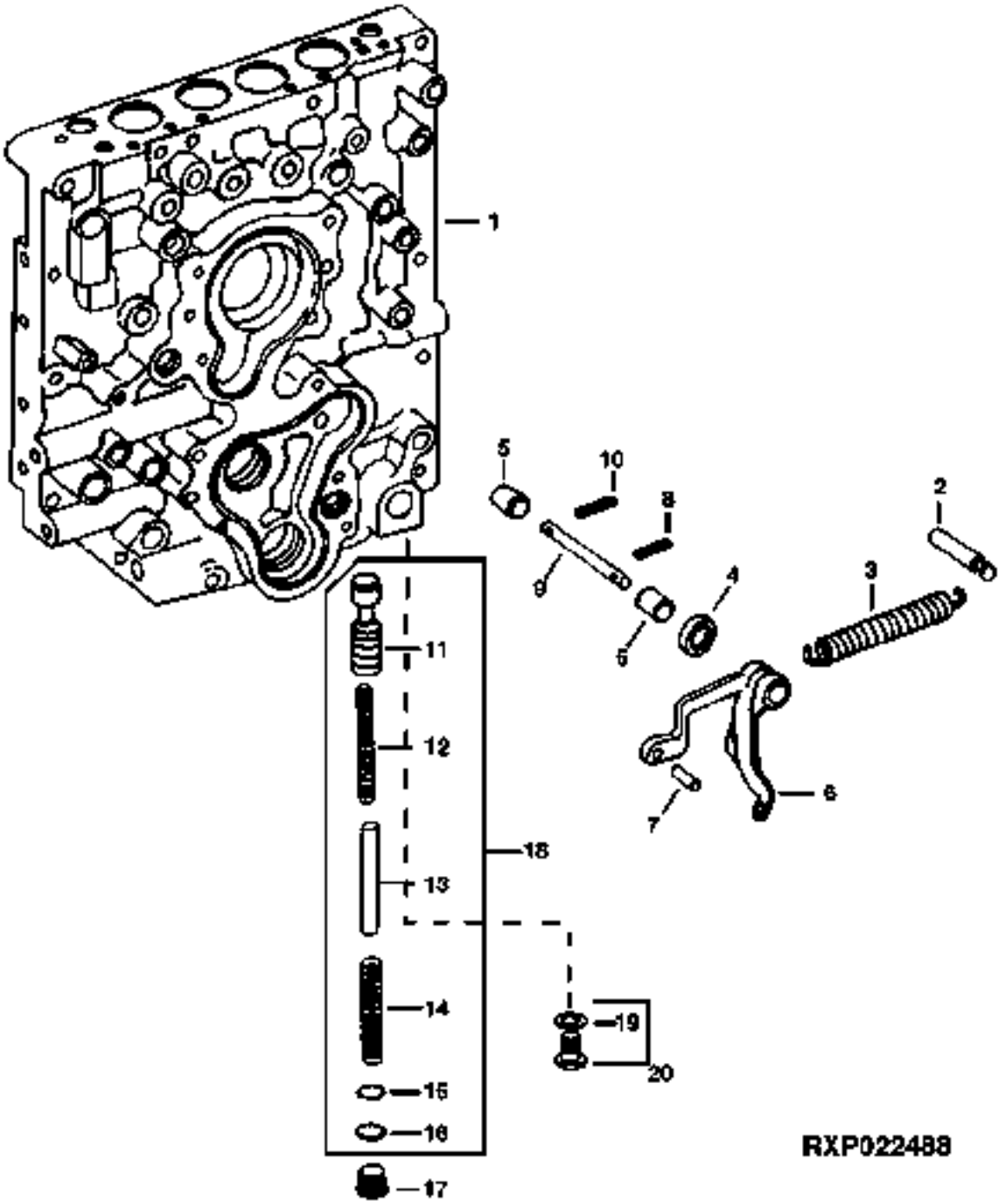

https://www.truck-manuals.net/

KEY	PART NO.	PART NAME	QTY	TRANSMISSION SERIAL NO.	ALL	REMARKS
1	R108466	MANIFOLD	1	-008116	X	(MARKED R108466 OR RE63455) (SUB RE70834)
	RE70834	KIT	1	008117-	X	(MARKED R128681) (SUB FOR RE64309)
2	R108565	PIN	1		X	
3	R108499	SPRING	1		X	
4	AR103873	SEAL	1		X	
5	JD9833	NEEDLE BEARING	2		X	
6	R108500	LEVER	1		X	
7	R48685	DOWEL PIN	1		X	
8	34M7207	SPRING PIN	1		X	5 X 30 MM
9	R108551	SHAFT	1		X	
10	34M7207	SPRING PIN	1		X	5 X 30 MM
11	R115501	VALVE	1		X	
12	R125208	SPRING	1		X	
13	R116726	PIN	1		X	
14	R125209	SPRING	1		X	
15	R115504	SHIM	AR		X	
16	51M7045	O-RING	1		X	
17	R116115	FITTING	1		X	
18	RE68291	KIT	1		X	
19	51M7041	O-RING	1		X	
20	RE46684	PLUG	1		X	

https://www.truck-manuals.net/

MANIFOLD (TSN 8100,8200,8300,8400 -019999)
COLLECTEUR (TSN 8100,8200,8300,8400 -019999)
KUPPLUNGS (TSN 8100,8200,8300,8400 -019999)
COLLETTORE (TSN 8100,8200,8300,8400 -019999)
MULTIPLE (TSN 8100,8200,8300,8400 -019999)
KOPPLINGSGRENROER (TSN 8100,8200,8300,8400 -019999)
RXP022222 -UN-21AUG97

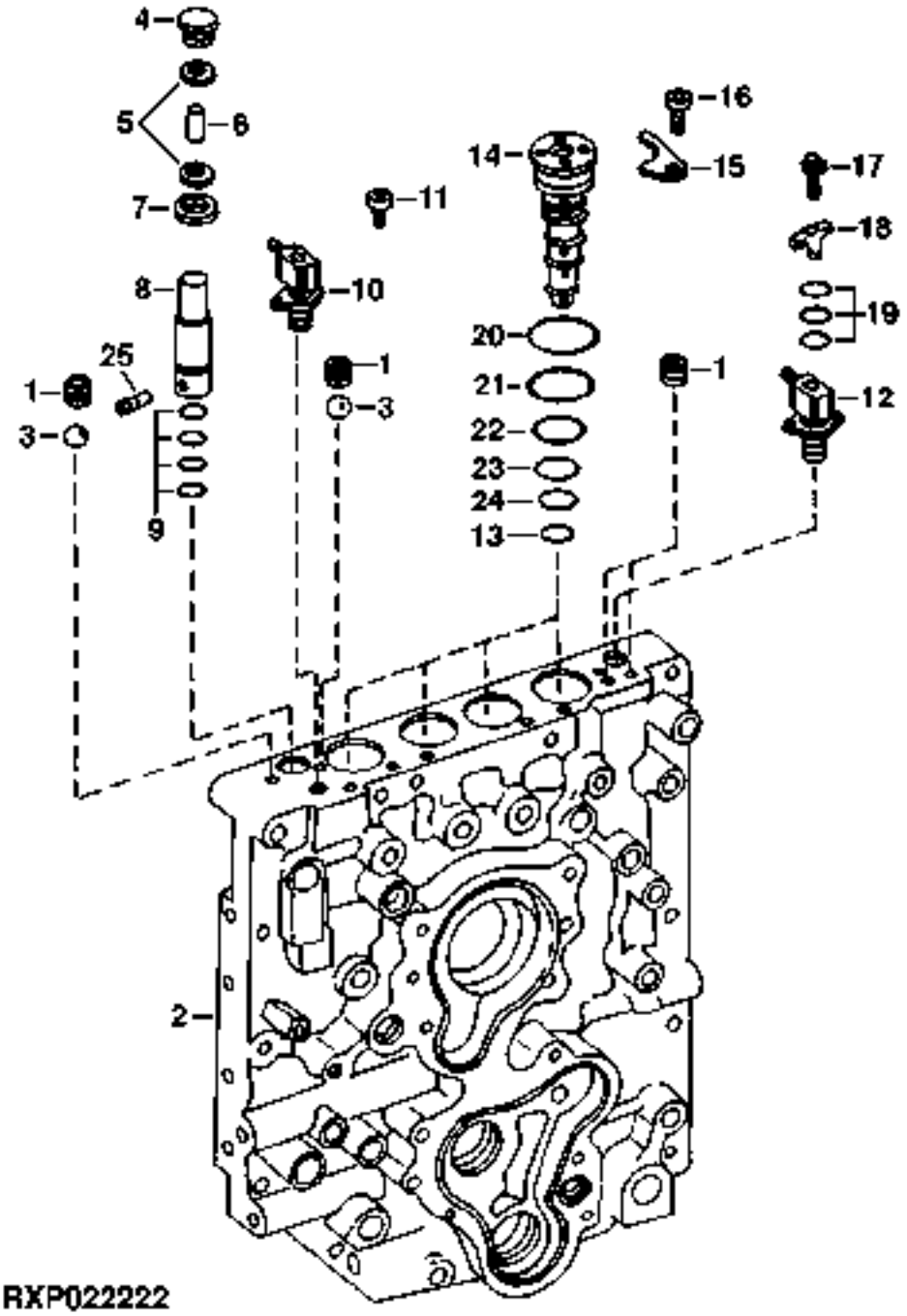

https://www.truck-manuals.net/

KEY	PART NO.	PART NAME	QTY	TRANSMISSION SERIAL NO.	ALL	REMARKS
1	R125064	PIPE PLUG	1		X	
	R125064	PIPE PLUG	3		X	
2	R108466	MANIFOLD	1	-008116	X	(MARKED R108466) (SUB FOR RE63236 OR RE63455) (SUB RE70834) (ALSO ORDER (3) RE63751)
	RE70834	KIT	1	008117-	X	(MARKED R128681) (SUB FOR RE64309)
3	D2361	BALL	2		X	
4	R97116	KNOB	1		X	
5	24M7139	WASHER	2		X	
6	R108562	STUD	1		X	
7	AR103873	SEAL	1		X	
8	R108489	VALVE	1		X	
9	R33259	O-RING	4		X	
10	RE52319	SOLENOID VALVE	1		X	(A)
11	19M7560	CAP SCREW	4		X	M6 X 16
12	RE52319	SOLENOID VALVE	1		X	(A)
13	P42061	O-RING	4		X	
14	RE71489	VALVE	4		X	(ALSO ORDER U41966, U11326, R106663, R62070, R27928 AND P42061)
	R150892	SCREEN	4		X	
	R150891	SUPPORT	8		X	
15	R95045	CLAMP	4		X	
16	19M7560	CAP SCREW	4		X	M6 X 16
17	19M7775	SCREW	2		X	(B) M6 X 16, HS 10.9
18	L100496	PLUG	1		X	(B)
19	RE47392	O-RING KIT	1		X	(B)
20	U41966	O-RING	4		X	
21	R106663	O-RING	4		X	
22	U11326	O-RING	4		X	
23	R62070	RING	4		X	
24	R27928	O-RING	4		X	
25	R44394	NEEDLE ROLLER	1		X	

(A) MECHANICAL FRONT WHEEL DRIVE
TRACTION AVANT MECANIQUE
MECHANISCHER FRONTANTRIEB
TRAZIONE ANTERIORE MECANNICA
TRACCION DELANTERA
MEKANISK FRAMHJULSDRIVNING

(B) W/O MECHANICAL FRONT WHEEL DRIVE
W/O TRACTION AVANT MECANIQUE
W/O MECHANISCHER FRONTANTRIEB
W/O TRAZIONE ANTERIORE MECANNICA
W/O TRACCION DELANTERA
W/O MEKANISK FRAMHJULSDRIVNING

https://www.truck-manuals.net/

MANIFOLD (TSN 8100,8200,8300,8400 -019999)
COLLECTEUR (TSN 8100,8200,8300,8400 -019999)
KUPPLUNGS (TSN 8100,8200,8300,8400 -019999)
COLLETTORE (TSN 8100,8200,8300,8400 -019999)
MULTIPLE (TSN 8100,8200,8300,8400 -019999)
KOPPLINGSGRENROER (TSN 8100,8200,8300,8400 -019999)
RXP022114 -UN-07JUN97

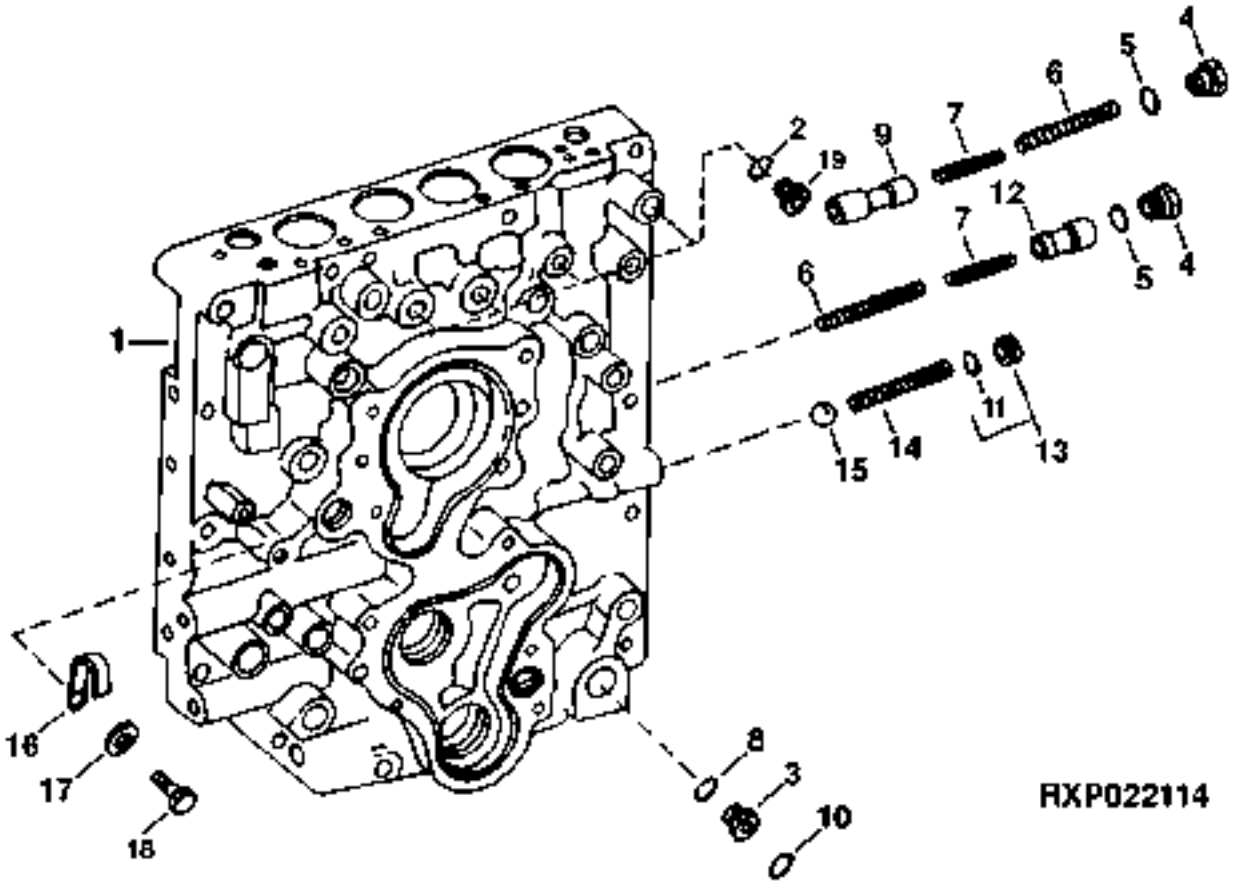

https://www.truck-manuals.net/

KEY	PART NO.	PART NAME	QTY	TRANSMISSION SERIAL NO.	ALL	REMARKS
1	R108466	MANIFOLD	1	-008116	X	(MARKED R108466) (SUB FOR RE63236 OR RE63455) (SUB RE70834) (ALSO ORDER (3) RE63751)
	RE70834	KIT	1	008117-	X	(MARKED R128681) (SUB FOR RE64309)
2	51M7041	O-RING	5		X	(A)
3	38H5121	ADAPTER	1		X	(A)
4	R116115	FITTING	1		X	
5	51M7045	O-RING	1		X	
6	R150574	SPRING	2		X	
7	R150573	SPRING	2		X	
8	51M7045	O-RING	1		X	
9	R120235	VALVE	1		X	
10	T77858	O-RING	1		X	
11	51M7043	O-RING	1	008117-	X	15.300 X 2.200 MM
12	R108491	VALVE	1		X	
13	R125064	PIPE PLUG	1	-008116	X	
	RE63751	PIPE PLUG	1	008117-	X	
14	R108502	SPRING	1		X	
15	D2361	BALL	1		X	
16	R72853	CLAMP	1	-XXXXXX	X	
17	24M7040	WASHER	1	-XXXXXX	X	11 X 20 X 2 MM
18	19M8324	CAP SCREW	1	-XXXXXX	X	M10 X 16
19	RE46684	PLUG	5	-XXXXXX	X	(A)

(A)MECHANICAL FRONT WHEEL DRIVE
TRACTION AVANT MECANIQUE
MECHANISCHER FRONTANTRIEB
TRAZIONE ANTERIORE MECANNICA
TRACCION DELANTERA
MEKANISK FRAMHJULSDRIVNING

https://www.truck-manuals.net/

MANIFOLD (TSN 8100,8200,8300,8400 -019999)
COLLECTEUR (TSN 8100,8200,8300,8400 -019999)
KUPPLUNGS (TSN 8100,8200,8300,8400 -019999)
COLLETTORE (TSN 8100,8200,8300,8400 -019999)
MULTIPLE (TSN 8100,8200,8300,8400 -019999)
KOPPLINGSGRENROER (TSN 8100,8200,8300,8400 -019999)
RXP022790 -UN-24AUG98

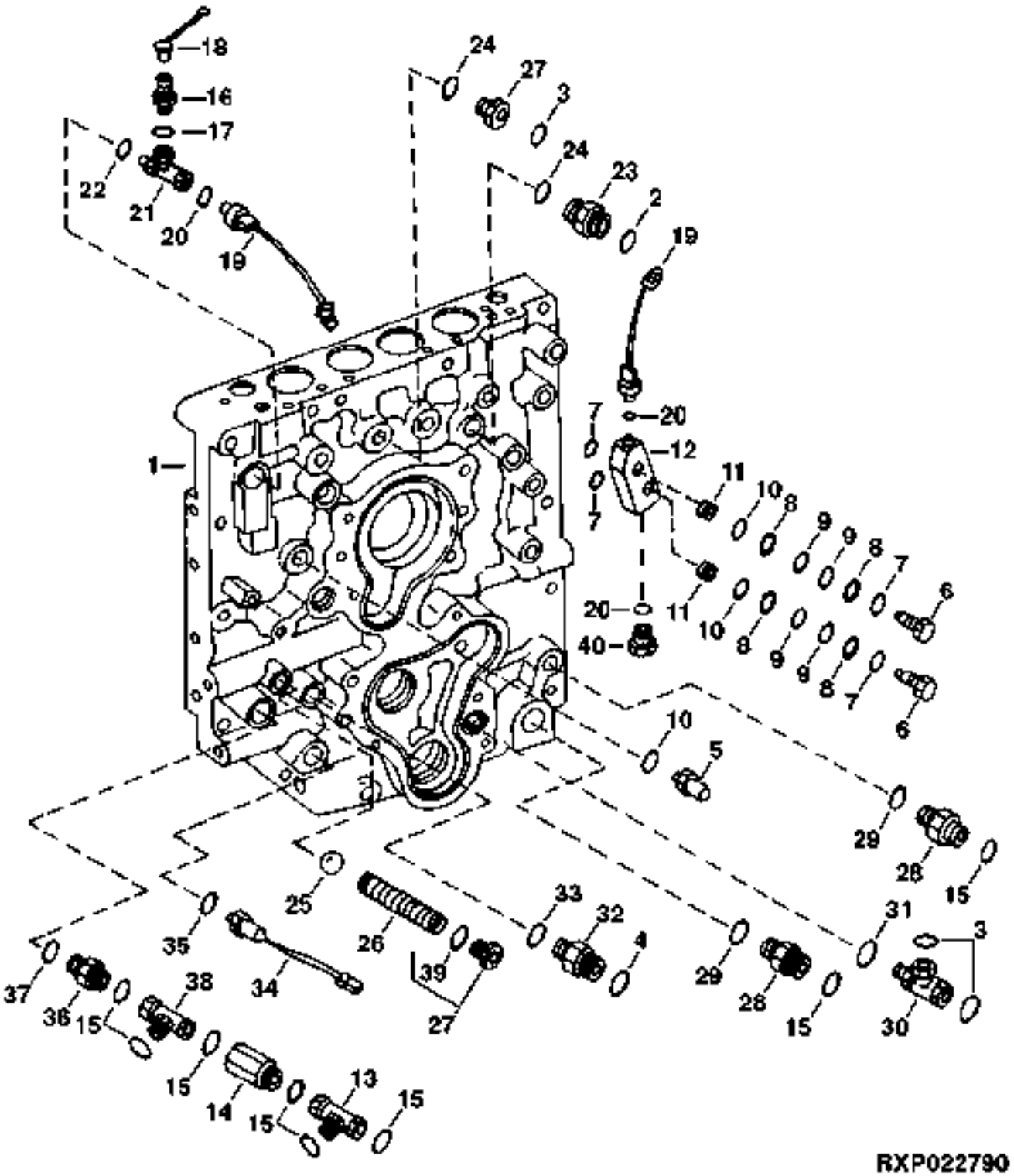

https://www.truck-manuals.net/

KEY	PART NO.	PART NAME	QTY	TRANSMISSION SERIAL NO.	ALL	REMARKS
1	R108466	MANIFOLD	1	-008116	X	(MARKED R108466) (SUB FOR RE63236 OR RE63455) (SUB RE70834) (ALSO ORDER (3) RE63751)
	RE70834	KIT	1	008117-	X	(MARKED R128681) (SUB FOR RE64309)
2	T77857	O-RING	1		X	
3	T77932	O-RING	3		X	
4	T77613	O-RING	1		X	
5	RE46534	SWITCH	1		X	
6	R125991	FITTING	2		X	
7	R26149	PACKING	4		X	
8	R32588	BACK-UP RING	NA		X	
9	R126014	O-RING	4		X	
10	51M7041	O-RING	3		X	
11	T71307	ORIFICE	2		X	
12	R125992	ISOLATOR	1		X	
13	38H5136	TEE FITTING	1		X	
14	RE51573	FITTING	1		X	
15	T77858	O-RING	8		X	
16	RE12187	RECEPTACLE	1		X	
17	51M7041	O-RING	1		X	
18	R77175	COVER	1		X	
19	RE160680	SWITCH	2		X	(SUB FOR RE65350 OR RE66881)
	RE67263	SHIELD	1		X	
20	51M7041	O-RING	3		X	
21	RE61274	TEE FITTING	1		X	
22	51M7041	O-RING	1		X	
23	38H5003	ADAPTER	1		X	
24	51M7043	O-RING	2		X	
25	D2361	BALL	1		X	
26	R108502	SPRING	1		X	
27	38H5010	ADAPTER	1	-008116	X	
	RE63751	PIPE PLUG	1	008117-	X	
28	38H5121	ADAPTER	2		X	
29	51M7045	O-RING	2		X	
30	38H5140	TEE FITTING	1		X	
31	51M7047	O-RING	1		X	
32	38H5002	ADAPTER	1		X	
33	51M7041	O-RING	1		X	
34	RE70062	SWITCH	1	-XXXXXX	X	(SUB FOR RE52868)
	RE46684	PLUG	1	XXXXXX-	X	
	51M7041	O-RING	1	XXXXXX-	X	
35	51M7041	O-RING	1		X	
36	38H5005	ADAPTER	1		X	
37	51M7047	O-RING	1		X	
38	38H5136	TEE FITTING	1		X	
39	51M7043	O-RING	1	008117-	X	
40	RE46684	PLUG	1		X	

https://www.truck-manuals.net/

MANIFOLD (TSN 8100,8200,8300,8400 -019999)
COLLECTEUR (TSN 8100,8200,8300,8400 -019999)
KUPPLUNGS (TSN 8100,8200,8300,8400 -019999)
COLLETTORE (TSN 8100,8200,8300,8400 -019999)
MULTIPLE (TSN 8100,8200,8300,8400 -019999)
KOPPLINGSGRENROER (TSN 8100,8200,8300,8400 -019999)
RXP022769 -UN-16JUL98

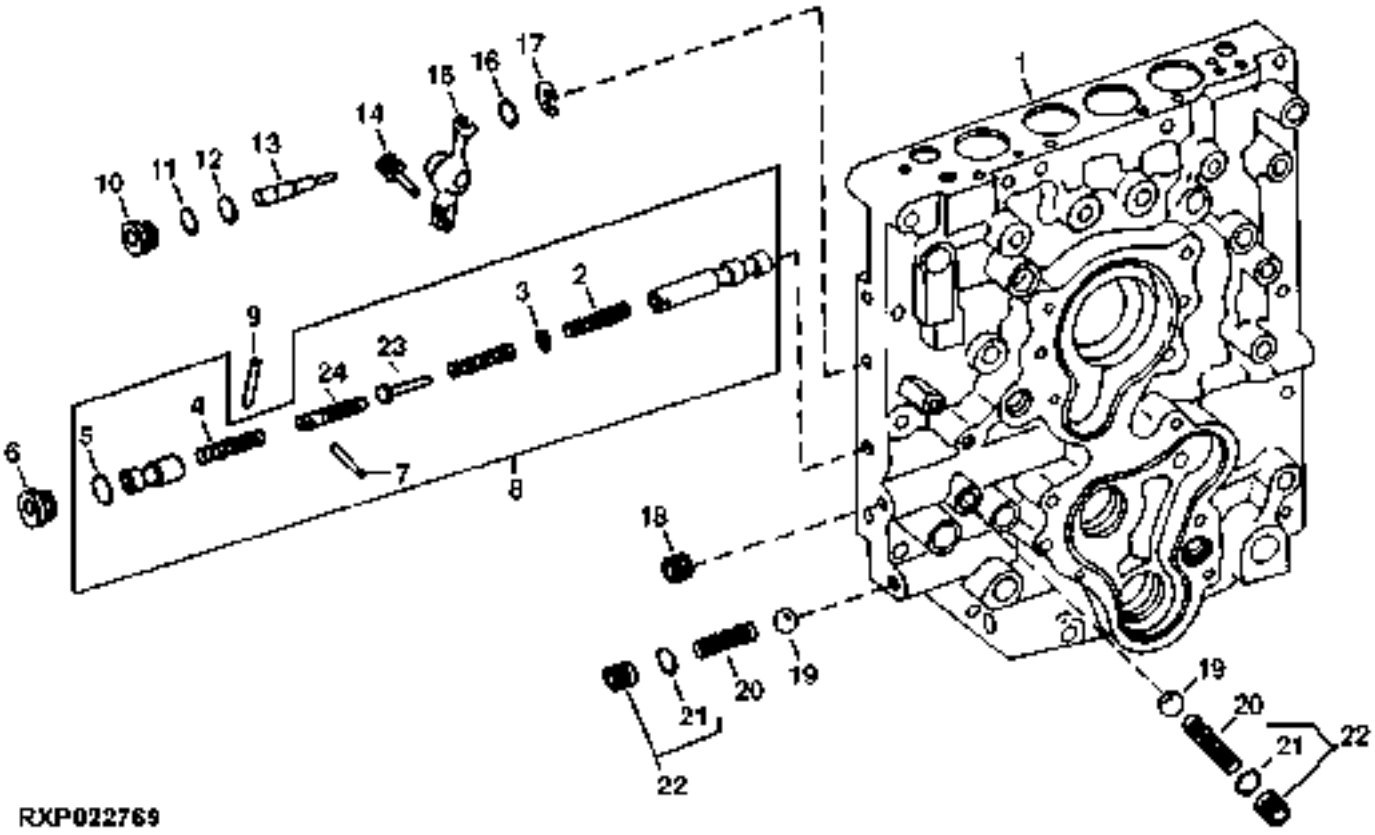

https://www.truck-manuals.net/

KEY	PART NO.	PART NAME	QTY	TRANSMISSION SERIAL NO.	ALL	REMARKS
1	R108466	MANIFOLD	1	-008116	X	(MARKED RE63455) (SUB FOR RE63236 OR RE63455) (SUB RE70834) (ALSO ORDER (3) RE63751)
	RE70834	KIT	1	008117-	X	(MARKED R128681) (SUB FOR RE64309)
2	R104814	SPRING	1		X	
3	R52665	DISK	1		X	
4	R104814	SPRING	1		X	
5	51M7045	O-RING	1		X	19.300 X 2.200 MM
6	R116115	FITTING	1		X	
7	34H261	SPRING PIN	1		X	
8	RE68292	KIT	1		X	
9	R44394	NEEDLE ROLLER	1		X	
10	R116115	FITTING	1		X	
11	51M7045	O-RING	1		X	19.300 X 2.200 MM
12	R33259	O-RING	1		X	
13	R108492	VALVE	1		X	
14	R104745	PIN	1		X	
15	R108488	ARM	1		X	
16	24M7036	WASHER	1		X	9 X 16 X 1.600 MM
17	R72653	SNAP RING	1		X	
18	R125064	PIPE PLUG	1		X	
19	D2361R	BALL	2		X	
20	R108502	SPRING	2		X	
21	51M7043	O-RING	2	008117-	X	
22	RE63751	PIPE PLUG	2	008117-	X	
23	R121609	GUIDE	1		X	
24	R122197	LINK	1		X	

https://www.truck-manuals.net/

MANIFOLD (TSN 8100,8200,8300,8400 -019999)
COLLECTEUR (TSN 8100,8200,8300,8400 -019999)
KUPPLUNGS (TSN 8100,8200,8300,8400 -019999)
COLLETTORE (TSN 8100,8200,8300,8400 -019999)
MULTIPLE (TSN 8100,8200,8300,8400 -019999)
KOPPLINGSGRENROER (TSN 8100,8200,8300,8400 -019999)
RXP022791 -UN-25AUG98

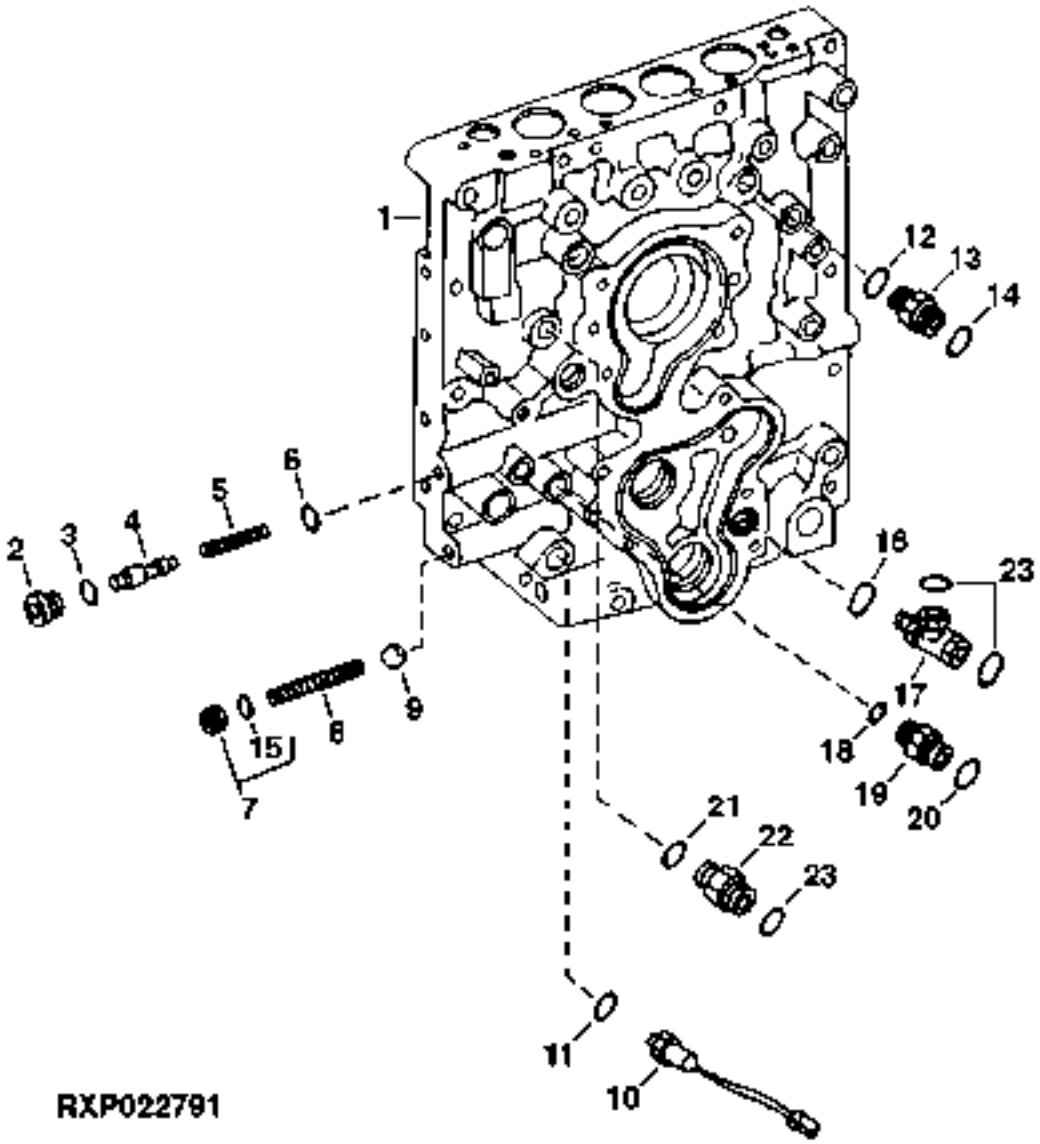

https://www.truck-manuals.net/

KEY	PART NO.	PART NAME	QTY	TRANSMISSION SERIAL NO.	ALL	REMARKS
1	R108466	MANIFOLD	1	-008116	X	(MARKED RE63455) (SUB FOR RE63236 OR RE63455) (SUB RE70834) (ALSO ORDER (3) RE63751)
	RE70834	KIT	1	008117-	X	(MARKED R128681) (SUB FOR RE64309)
2	R116115	FITTING	1		X	
3	51M7045	O-RING	1		X	
4	R125848	VALVE	1		X	
5	R104814	SPRING	1		X	
6	R33259	O-RING	1		X	
7	R125064	PIPE PLUG	1	-008116	X	
	RE63751	PIPE PLUG	1	008117-	X	
8	R108501	SPRING	1		X	
9	D2361	BALL	1		X	
10	RE70062	SWITCH	1		X	(SUB FOR RE52868)
11	51M7041	O-RING	1		X	
12	51M7043	O-RING	1	-009999	X	
13	38H5003	ADAPTER	1	-009999	X	
	RE46685	PLUG	1	010000-	X	
14	T77857	O-RING	1	-009999	X	
15	51M7043	O-RING	1		X	
16	51M7047	O-RING	1		X	
17	38H5140	TEE FITTING	1		X	
18	51M7041	O-RING	1		X	
19	38H5002	ADAPTER	1		X	
20	T77613	O-RING	1		X	
21	51M7043	O-RING	1		X	
22	38H5010	ADAPTER	1	-009999	X	
	38H5003	ADAPTER	1	010000-	X	
23	T77932	O-RING	2		X	

https://www.truck-manuals.net/

MANIFOLD COVER (TSN 8100,8200,8300,8400 -019999)
COUVRE-COLLECTEUR (TSN 8100,8200,8300,8400 -019999)
KRUEMMERDECKEL (TSN 8100,8200,8300,8400 -019999)
COPERCHIO DEL COLLETTORE (TSN 8100,8200,8300,8400 -019999)
CUBIERTA DEL MULTIPLE (TSN 8100,8200,8300,8400 -019999)
GRENROERSKAAPA (TSN 8100,8200,8300,8400 -019999)
RXP021380 -UN-03JUN96

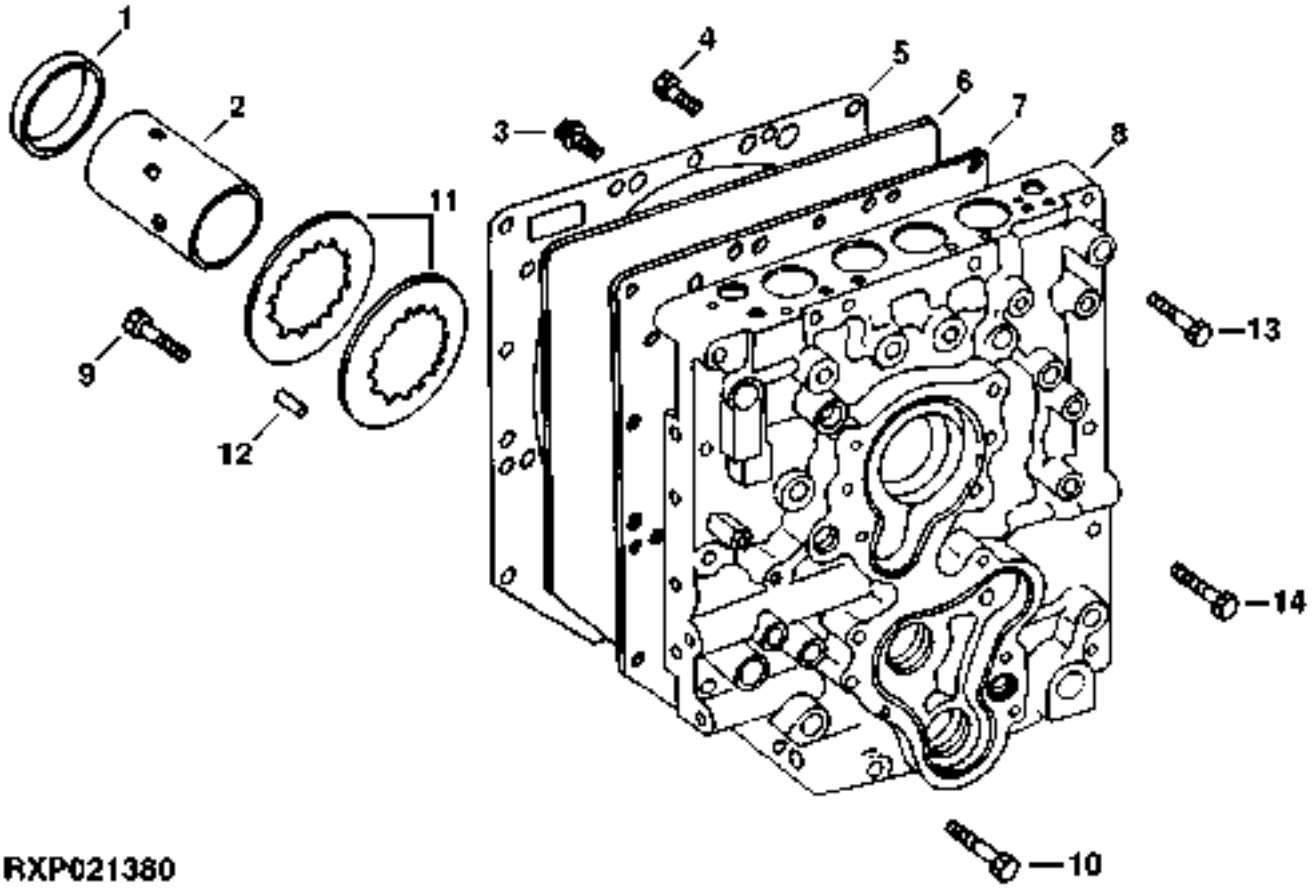

RXP021380

https://www.truck-manuals.net/

KEY	PART NO.	PART NAME	QTY	TRANSMISSION SERIAL NO.	ALL	REMARKS
1	R108547	BEARING CUP	1		X	
2	R108576	SLEEVE	1		X	
3	R153676	SCREW	11		X	HS 10.9
4	19M7807	SCREW	2		X	M10 X 60
5	R125971	GASKET	1		X	(SUB FOR R124816)
6	R108468	END PLATE	1		X	(SUB FOR R127197)
7	R125972	GASKET	1		X	(SUB FOR R124857)
8	R108466	MANIFOLD	1	-008116	X	(MARKED R108466) (SUB FOR RE63236 OR RE63455) (SUB RE70834) (ALSO ORDER (3) RE63751)
	RE70834	KIT	1	008117-	X	(MARKED R128681) (SUB FOR RE64309)
9	R125379	CAP SCREW	4		X	HS 10.9
10	19M8737	SCREW	5		X	M12 X 140, HS 10.9
11	R105833	DISK SPRING	2		X	
12	T26565	DOWEL PIN	2		X	
13	19M7817	SCREW	12		X	M12 X 70
14	19M7820	SCREW	3		X	M12 X 100

https://www.truck-manuals.net/

TOW DISCONNECT (EUROPEAN VERSION) (TSN 8100,8200,8300,8400 -019999)
REMORQUE, DISPOSITIF DE DESACCOUPLEMENT (TSN 8100,8200,8300,8400 -019999)
ABSCHLEPP-AUSRUECKUNG (TSN 8100,8200,8300,8400 -019999)
DISINSERIMENTO DEL TRAINO (TSN 8100,8200,8300,8400 -019999)
DESCONEXION PARA REMOLCAR (TSN 8100,8200,8300,8400 -019999)
BOGSERINGSURKOPPLING (TSN 8100,8200,8300,8400 -019999)
RE026010 -UN-23MAR95

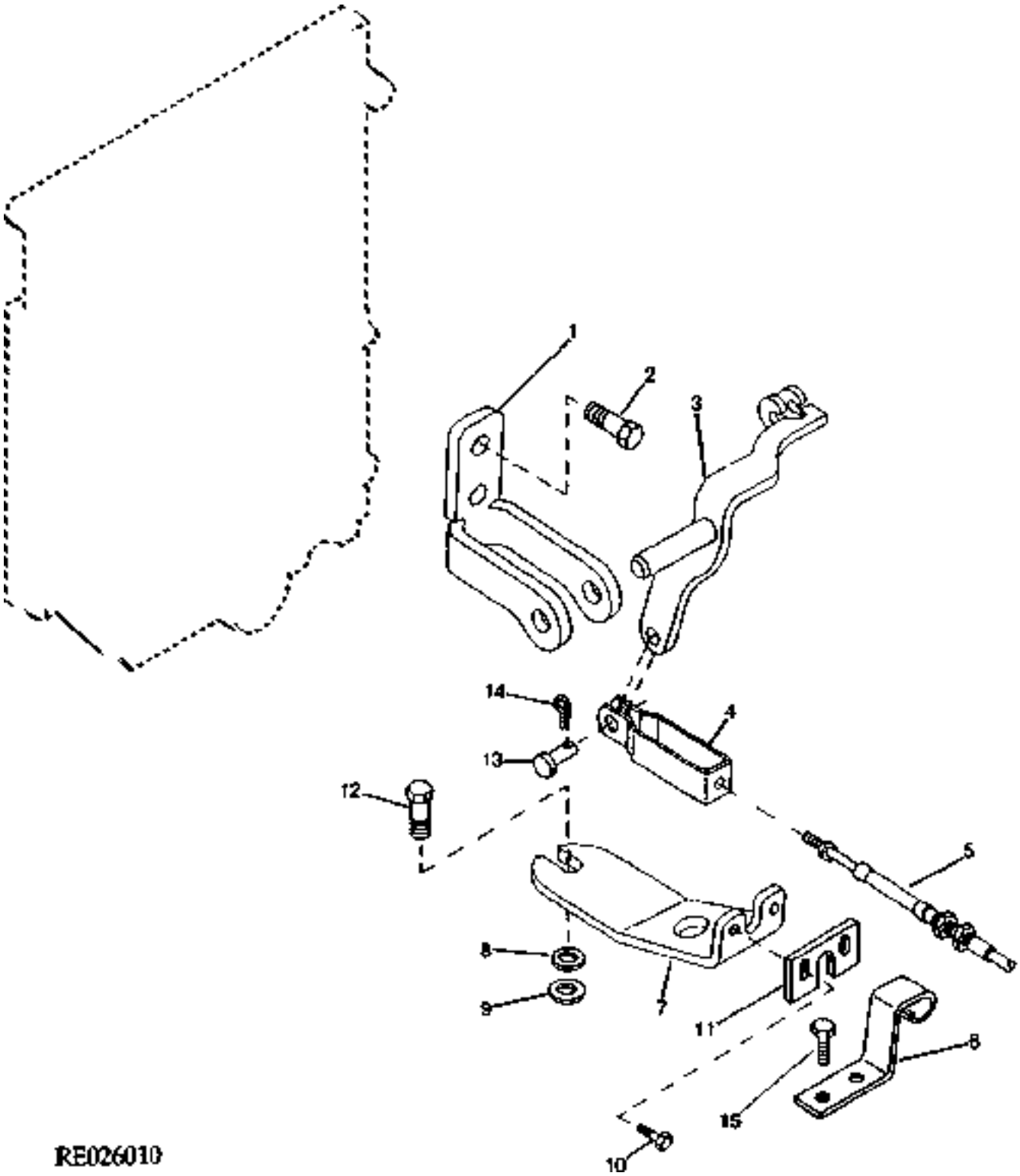

https://www.truck-manuals.net/

KEY	PART NO.	PART NAME	QTY	TRANSMISSION SERIAL NO.	ALL	REMARKS
1	R124004	BRACKET	1		X	
2	19M7932	CAP SCREW	2		X	M8 X 16
3	RE60320	LEVER	1		X	
4	RE60897	RETAINER	1		X	
5	RE61051	CABLE	1		X	
	T13814	CLAMP	1		X	
6	R119604	BRACKET	1		X	
7	R124005	BRACKET	1		X	
8	24M7346	WASHER	AR		X	11 X 20 X 2 MM
9	24M7028	WASHER	AR		X	10.500 X 20 X 2 MM
10	37M7079	SCREW	2		X	
11	R125144	CLIP	1		X	
12	19M7402	CAP SCREW	1		X	M10 X 25
13	J19366	PIN	1		X	
14	A5067R	SPRING LOCKING PIN	1		X	
15	37M7165	SCREW	2		X	

https://www.truck-manuals.net/

TRANSMISSION CASE REAR COVER (TSN 8100,8200,8300,8400 -019999)
COUVERCLE ARRIERE DE CARTER DE TRANSMISSION (TSN 8100,8200,8300,8400 -019999)
HINTERE ABDECKUNG DES GETRIEBEGEHAEUSES (TSN 8100,8200,8300,8400 -019999)
COPERCHIO POSTERIORE DELLA SCATOLA DELLA TRASMISSIONE (TSN 8100,8200,8300,8400 -019999)
CUBIERTA POSTERIOR DE LA CAJA DE LA TRANSMISION (TSN 8100,8200,8300,8400 -019999)
TRANSMISSIONSKAAPANS BAKRE PLAAT (TSN 8100,8200,8300,8400 -019999)
RXP022120 -UN-02JUN97

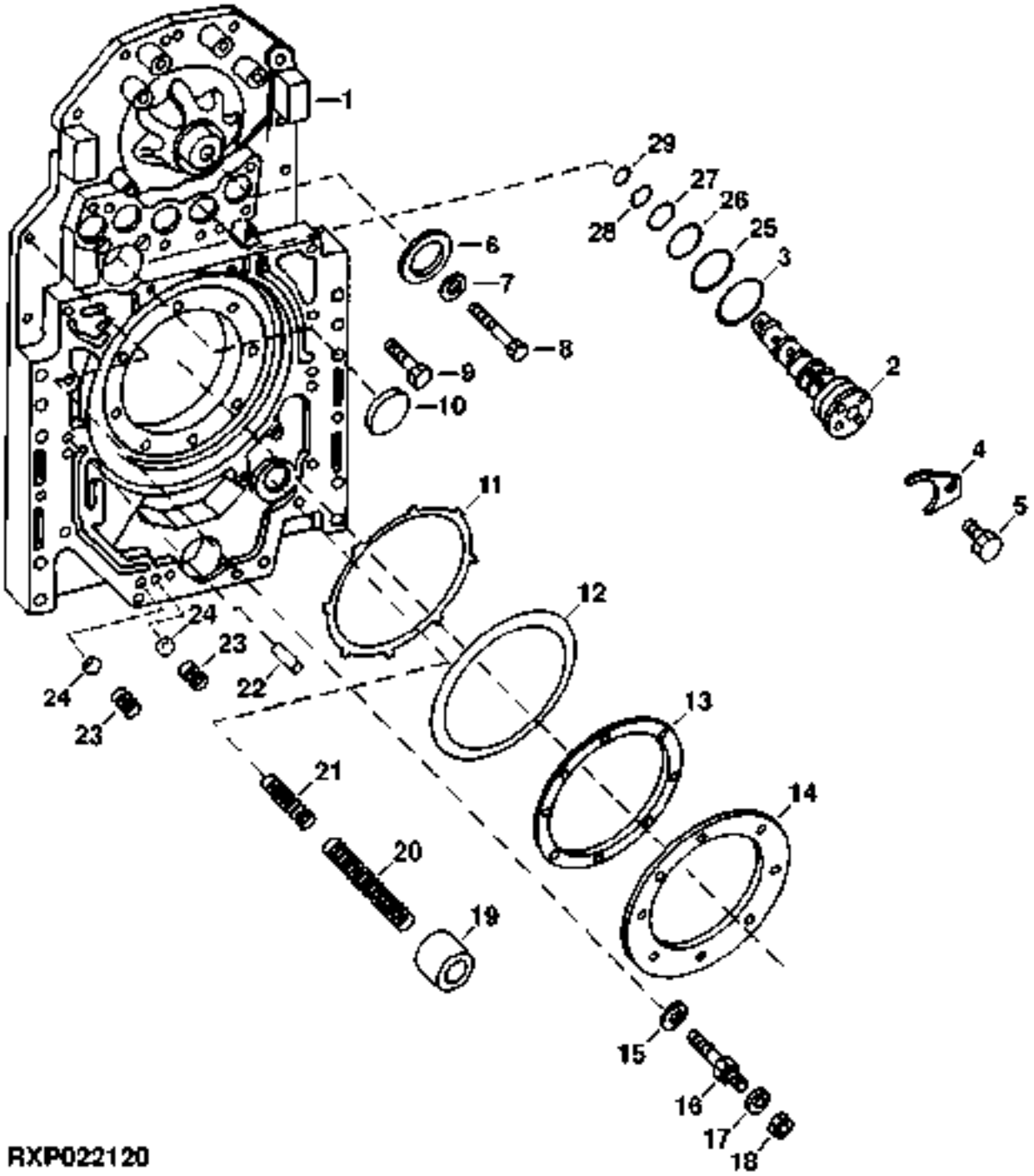

https://www.truck-manuals.net/

KEY	PART NO.	PART NAME	QTY	TRANSMISSION SERIAL NO.	ALL	REMARKS
1	RE71368	COVER	1		X	(MARKED R108465 OR R135516) (SUB FOR RE63229)
2	RE71490	VALVE	5		X	(ALSO ORDER U11326, U41966, R106663, R62070, R27928 AND P42061)
	R150892	SCREEN	5		X	
3	U41966	O-RING	5		X	
4	R95045	CLAMP	5		X	
5	19M7932	CAP SCREW	5		X	M8 X 16
6	AH89023	SEAL	1		X	
7	24H1900	WASHER	1		X	17/32" X 2" X 1/4"
8	19M7791	SCREW	1		X	M12 X 40
9	19M7813	SCREW	3		X	M12 X 45
10	R26115	CAP	1		X	
11	R108481	PLATE	5		X	
12	RE45407	DISK, WITH INNER SPLINE	4		X	
13	RE45388	PISTON	1		X	
14	R108482	PLATE	1		X	
15	24M7028	WASHER	1		X	10.500 X 20 X 2 MM
16	R120578	STUD	1		X	
17	24M7240	WASHER	1		X	13 X 25 X 3 MM
18	14M7274	NUT	1		X	M10
19	R124175	PISTON	1		X	
20	R124173	SPRING	1		X	
21	R124174	COMPRESSION SPRING	1		X	
22	T26565	DOWEL PIN	2		X	
23	R128397	SPRING	2		X	
24	D2361R	BALL	2		X	
25	R106663	O-RING	5		X	
26	U11326	O-RING	5		X	
27	R62070	RING	5		X	
28	R27928	O-RING	5		X	
29	P42061	O-RING	5		X	
..	R49002	SHIM	AR		X	

https://www.truck-manuals.net/

TRANSMISSION CASE REAR COVER (TSN 8100,8200,8300,8400 -019999)
COUVERCLE ARRIERE DE CARTER DE TRANSMISSION (TSN 8100,8200,8300,8400 -019999)
HINTERE ABDECKUNG DES GETRIEBEGEHAEUSES (TSN 8100,8200,8300,8400 -019999)
COPERCHIO POSTERIORE DELLA SCATOLA DELLA TRASMISSIONE (TSN 8100,8200,8300,8400 -019999)
CUBIERTA POSTERIOR DE LA CAJA DE LA TRANSMISION (TSN 8100,8200,8300,8400 -019999)
TRANSMISSIONSKAAPANS BAKRE PLAAT (TSN 8100,8200,8300,8400 -019999)
RE026012 -UN-13MAR95

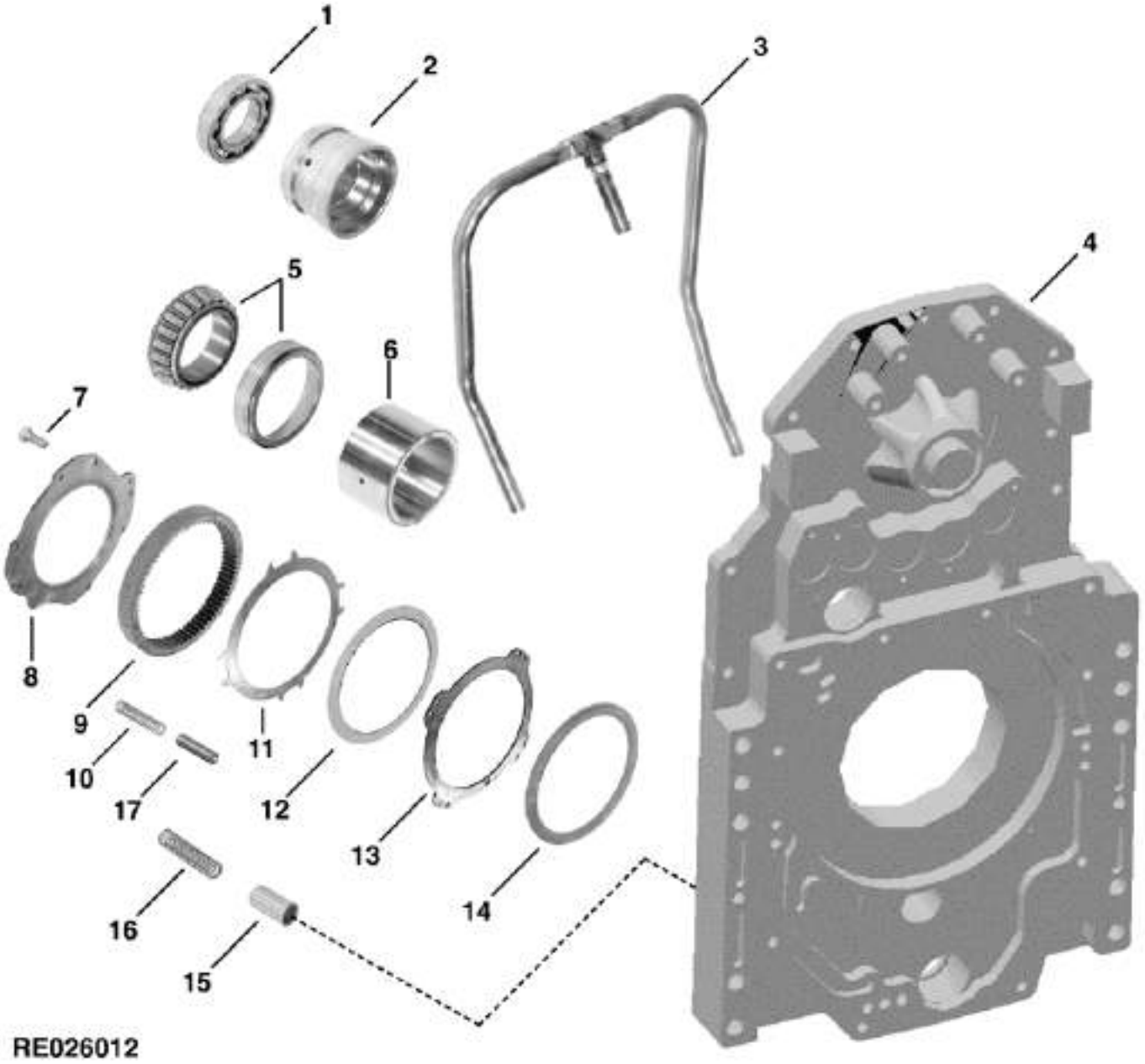

https://www.truck-manuals.net/

KEY	PART NO.	PART NAME	QTY	TRANSMISSION SERIAL NO.	ALL	REMARKS
1	RE67948	BEARING	1		X	
2	R108582	SLEEVE	1		X	
3	RE45368	OIL LINE	1		X	
4	RE71368	COVER	1		X	(MARKED R108465 OR R135516) (SUB FOR RE63229)
	15H561	PIPE PLUG	3		X	1/2"
5	RE45399	ROLLER BEARING	1		X	
6	R108583	SLEEVE	1		X	
7	R124725	SELF-LOCKING SCREW	8		X	M10 X 1.5, HS 10.9
8	R108472	PLATE	1		X	
9	R108474	GEAR	1		X	
10	R122236	SPRING	7		X	RETURN
11	R86308	PLATE	3		X	
12	RE45415	DISK, WITH INNER SPLINE	4		X	
13	R135537	BRAKE DISK	1		X	
14	RE45388	PISTON	1		X	W/SEAL
15	R120147	VALVE	1		X	
16	R121741	SPRING	1		X	
17	34M7124	SPRING PIN	7		X	

https://www.truck-manuals.net/

REVERSE IDLER (TSN 8100,8200,8300,8400 -019999)
PIGNON FOU DE MARCHE ARRIERE (TSN 8100,8200,8300,8400 -019999)
ZWISCHENRAD DES RUECKWAERTSGANGES (TSN 8100,8200,8300,8400 -019999)
INGRANAGGIO INTERMEDIO DI RETROMARCIA (TSN 8100,8200,8300,8400 -019999)
ENGRANAJE INTERMEDIO DE RETROCESO (TSN 8100,8200,8300,8400 -019999)
BACKDREV (TSN 8100,8200,8300,8400 -019999)
RXP025046 -UN-01JAN94

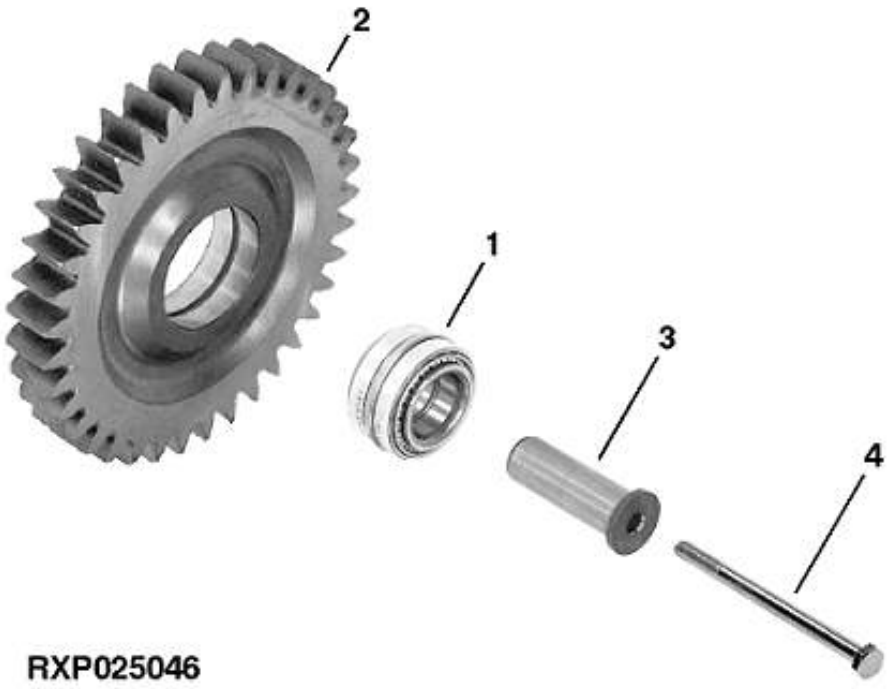

KEY	PART NO.	PART NAME	QTY	TRANSMISSION SERIAL NO.	ALL	REMARKS
1	AH94661	BEARING	1		X	
2	R108454	GEAR	1		X	
3	R108455	SHAFT	1		X	
4	19M7838	SCREW	1		X	M12 X 130

https://www.truck-manuals.net/

MEMORANDA
MEMORANDA
MEMORANDA
MEMORANDA
MEMORANDA
MEMORANDA

https://www.truck-manuals.net/

INPUT SHAFT (TSN 8100,8200,8300,8400 -019999)
ARBRE PRIMAIRE (TSN 8100,8200,8300,8400 -019999)
EINGANGSWELLE (TSN 8100,8200,8300,8400 -019999)
ALBERO DI INGRESSO (TSN 8100,8200,8300,8400 -019999)
EJE DE ENTRADA (TSN 8100,8200,8300,8400 -019999)
INGAAENDE AXEL (TSN 8100,8200,8300,8400 -019999)
RXP022185 -UN-21AUG97

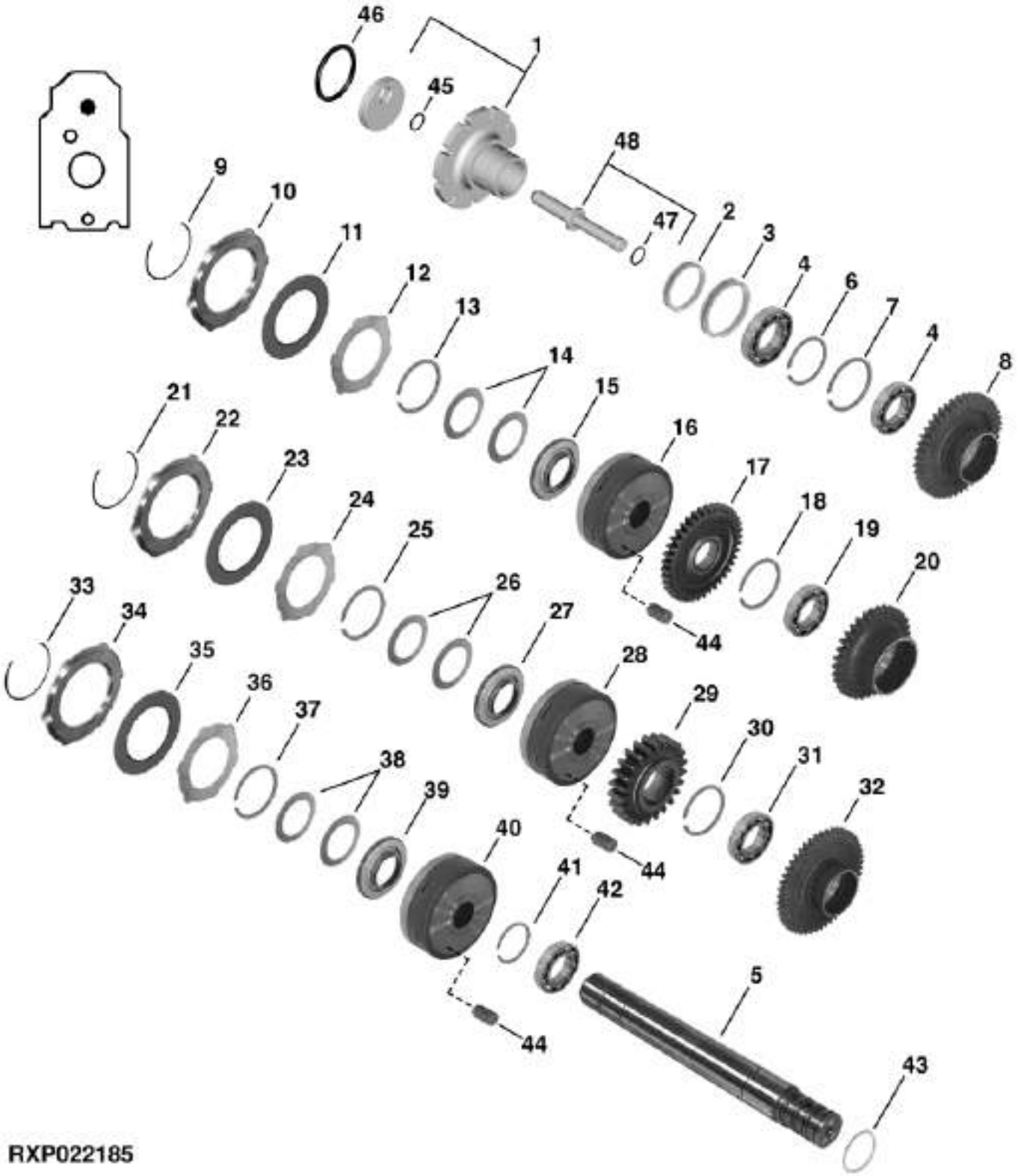

https://www.truck-manuals.net/

KEY	PART NO.	PART NAME	QTY	TRANSMISSION SERIAL NO.	ALL	REMARKS
1	RE70976	HUB	1		X	(SUB FOR RE57402 OR RE67440)
2	R130561	V-RING SEAL	1		X	(SUB FOR R89581, THIS APPLICATION)
3	RE158066	SEAL	1		X	(SUB FOR RE13181, THIS APPLICATION)
4	RE67948	BEARING	1		X	
5	RE67483	SHAFT	1		X	(SUB FOR RE55580) (SUB RE70088, RE70206, RE71323 AND F3353R)
6	R115171	SNAP RING	2		X	
7	R108496	SNAP RING	1		X	
8	R132236	GEAR	1		X	(SUB FOR R108448)
9	R99692	SNAP RING	1		X	
10	R108530	CLUTCH PLATE	1		X	
11	RE67458	DISK, WITH INNER SPLINE	5		X	(SUB FOR AR94516, THIS APPLICATION)
12	R108507	CLUTCH PLATE	5		X	
13	R26246	SNAP RING	1		X	
14	R75176	DISK SPRING	7		X	
15	RE45374	PISTON	1		X	W/SEAL
16	RE45409	DRUM	1		X	
17	R108447	GEAR	1		X	
18	R108496	SNAP RING	1		X	
19	RE67948	BEARING	1		X	
20	R132245	GEAR	1		X	(SUB FOR R108451)
21	R99692	SNAP RING	1		X	
22	R108530	CLUTCH PLATE	1		X	
23	RE67458	DISK, WITH INNER SPLINE	5		X	(SUB FOR AR94516, THIS APPLICATION)
24	R108507	CLUTCH PLATE	5		X	

THIS PARTS LISTING IS CONTINUED

https://www.truck-manuals.net/

INPUT SHAFT-CONTINUED (TSN 8100,8200,8300,8400 -019999)
ARBRE PRIMAIRE-A SUIVRE (TSN 8100,8200,8300,8400 -019999)
EINGANGSWELLE-FORTS. (TSN 8100,8200,8300,8400 -019999)
ALBERO DI INGRESSO-CONTINUA (TSN 8100,8200,8300,8400 -019999)
EJE DE ENTRADA-CONTINUACION (TSN 8100,8200,8300,8400 -019999)
INGAAENDE AXEL-FORTS. (TSN 8100,8200,8300,8400 -019999)
RXP022185 -UN-21AUG97

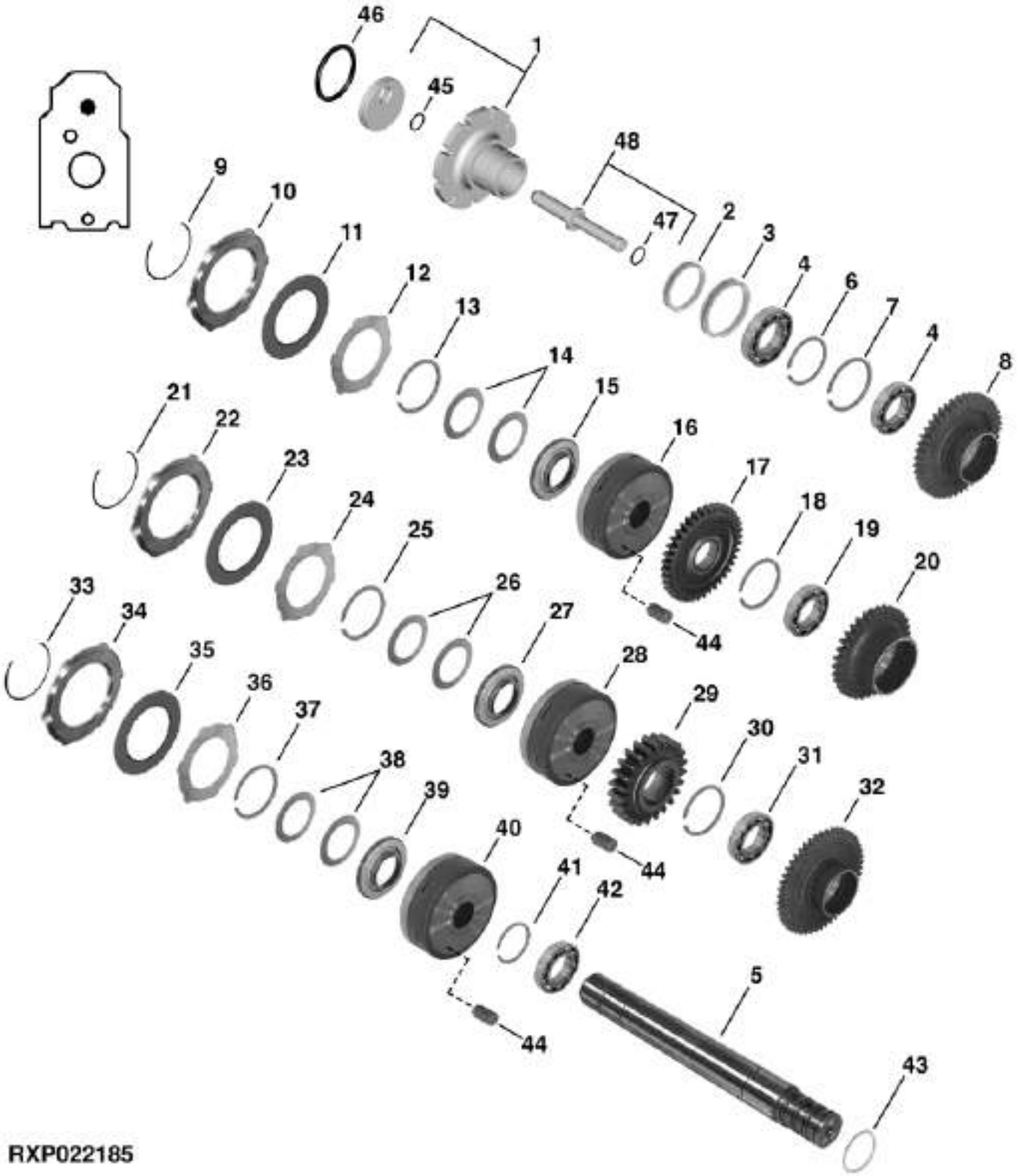

https://www.truck-manuals.net/

KEY	PART NO.	PART NAME	QTY	TRANSMISSION SERIAL NO.	ALL	REMARKS
25	R26246	SNAP RING	1		X	
26	R75176	DISK SPRING	7		X	
27	RE45374	PISTON	1		X	W/SEAL
28	RE45409	DRUM	1		X	
29	R108584	GEAR	1		X	
30	R108496	SNAP RING	1		X	
31	RE67948	BEARING	1		X	
32	R132247	GEAR	1		X	(SUB FOR R108461)
33	R99692	SNAP RING	1		X	
34	R108530	CLUTCH PLATE	1		X	
35	RE67458	DISK, WITH INNER SPLINE	5		X	(SUB FOR AR94516, THIS APPLICATION)
36	R108507	CLUTCH PLATE	5		X	
37	R26246	SNAP RING	1		X	
38	R75176	DISK SPRING	7		X	
39	RE45374	PISTON	1		X	W/SEAL
40	RE45409	DRUM	7		X	
41	R115171	SNAP RING	1		X	
42	RE67948	BEARING	1		X	
43	R115508	RING	5		X	
44	RE45400	VALVE SEAT	1		X	
45	F3353R	O-RING	1		X	
46	R132237	O-RING	1		X	
47	R132239	O-RING	1		X	
48	RE67505	BREATHER	1		X	(SUB RE71323)

https://www.truck-manuals.net/

COUNTERSHAFT (TSN 8100,8200,8300,8400 -019999)
ARBRE DE'RENVOI (TSN 8100,8200,8300,8400 -019999)
GEGENWELLE (TSN 8100,8200,8300,8400 -019999)
CONTRALBERO (TSN 8100,8200,8300,8400 -019999)
CONTRAEJE (TSN 8100,8200,8300,8400 -019999)
MELLANAXEL (TSN 8100,8200,8300,8400 -019999)
RE026014 -UN-13MAR95

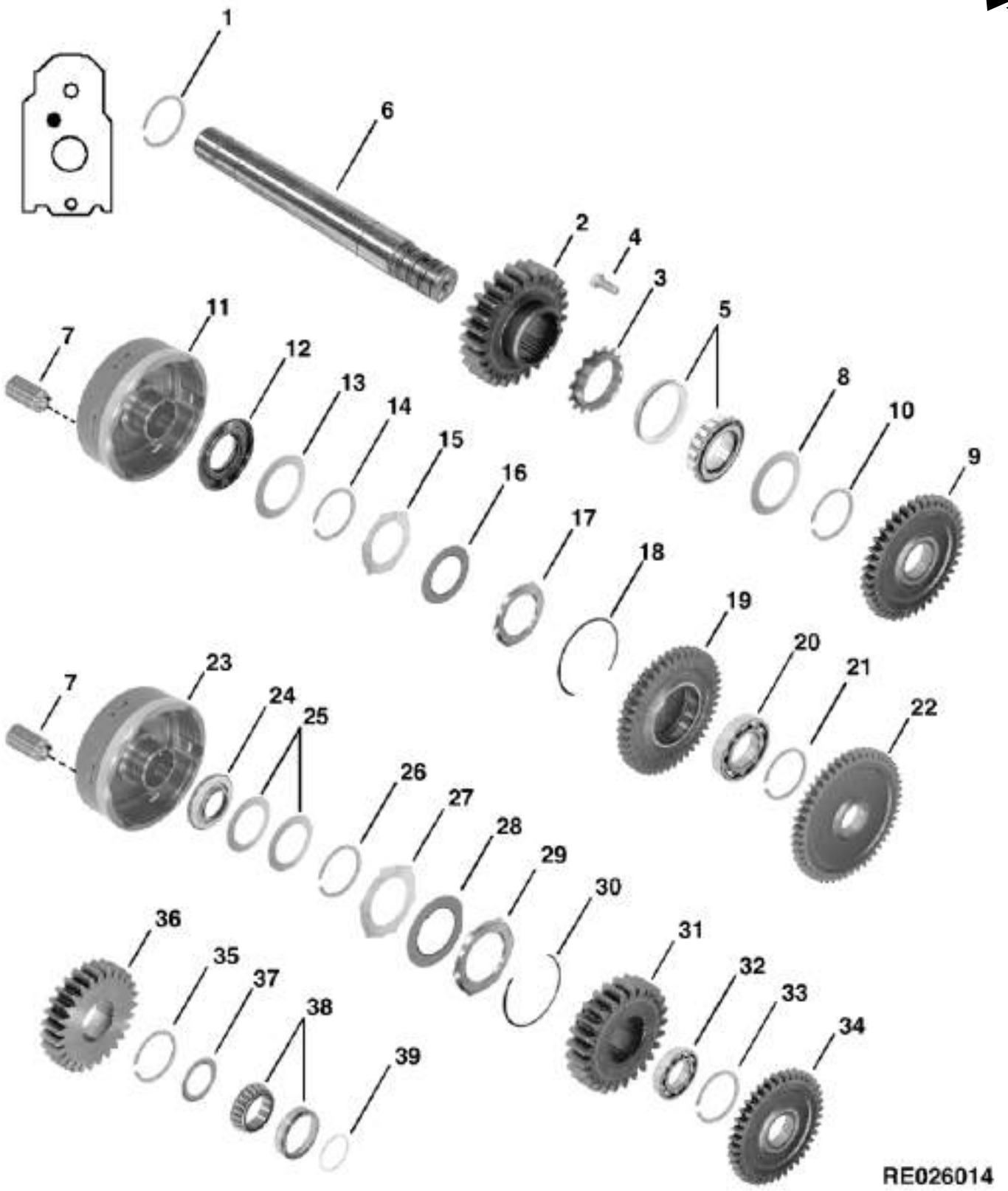

https://www.truck-manuals.net/

KEY	PART NO.	PART NAME	QTY	TRANSMISSION SERIAL NO.	ALL	REMARKS
1	R115171	SNAP RING	1		X	
2	R108437	GEAR	1		X	
3	R125196	NUT	1		X	
4	R91842	SCREW	1		X	
5	RE45399	ROLLER BEARING	1		X	
6	RE55581	SHAFT	1		X	
7	RE45400	VALVE SEAT	1		X	
8	R108573	THRUST WASHER	1		X	
9	R108447	GEAR	1		X	
10	R115171	SNAP RING	1		X	
11	RE45409	DRUM	1		X	
12	RE45374	PISTON	1		X	W/SEAL
13	R75176	DISK SPRING	7		X	
14	R26246	SNAP RING	1		X	
15	R108507	CLUTCH PLATE	5		X	
16	RE67458	DISK, WITH INNER SPLINE	5		X	(SUB FOR AR94516, THIS APPLICATION)
17	R108530	CLUTCH PLATE	1		X	
18	R99692	SNAP RING	1		X	
19	R132236	GEAR	1		X	(SUB FOR R108448)
20	RE67948	BEARING	1		X	
21	R108496	SNAP RING	1		X	
22	R127196	GEAR	1		X	D-RANGE, (SUB FOR R108450)
23	RE45409	DRUM	1		X	
24	RE45374	PISTON	1		X	W/SEAL
25	R75176	DISK SPRING	7		X	
26	R26246	SNAP RING	1		X	
27	R108507	CLUTCH PLATE	5		X	
28	RE67458	DISK, WITH INNER SPLINE	5		X	(SUB FOR AR94516, THIS APPLICATION)
29	R108530	CLUTCH PLATE	1		X	
30	R99692	SNAP RING	1		X	
31	R132246	GEAR	1		X	(SUB FOR R108453)
32	RE67948	BEARING	1		X	
33	R108496	SNAP RING	1		X	
34	R108460	GEAR	1		X	
35	R115171	SNAP RING	1		X	
36	R108459	GEAR	1		X	
37	R108573	THRUST WASHER	1		X	
38	RE45399	ROLLER BEARING	1		X	
39	R115508	RING	4		X	

https://www.truck-manuals.net/

OIL PUMP (TSN 8100,8200,8300,8400 -019999)
POMPE A HUILE (TSN 8100,8200,8300,8400 -019999)
OELPUMPE (TSN 8100,8200,8300,8400 -019999)
POMPA DELL'OLIO (TSN 8100,8200,8300,8400 -019999)
BOMBA DE ACEITE (TSN 8100,8200,8300,8400 -019999)
OLJEPUMP (TSN 8100,8200,8300,8400 -019999)
RXP021383 -UN-21NOV95

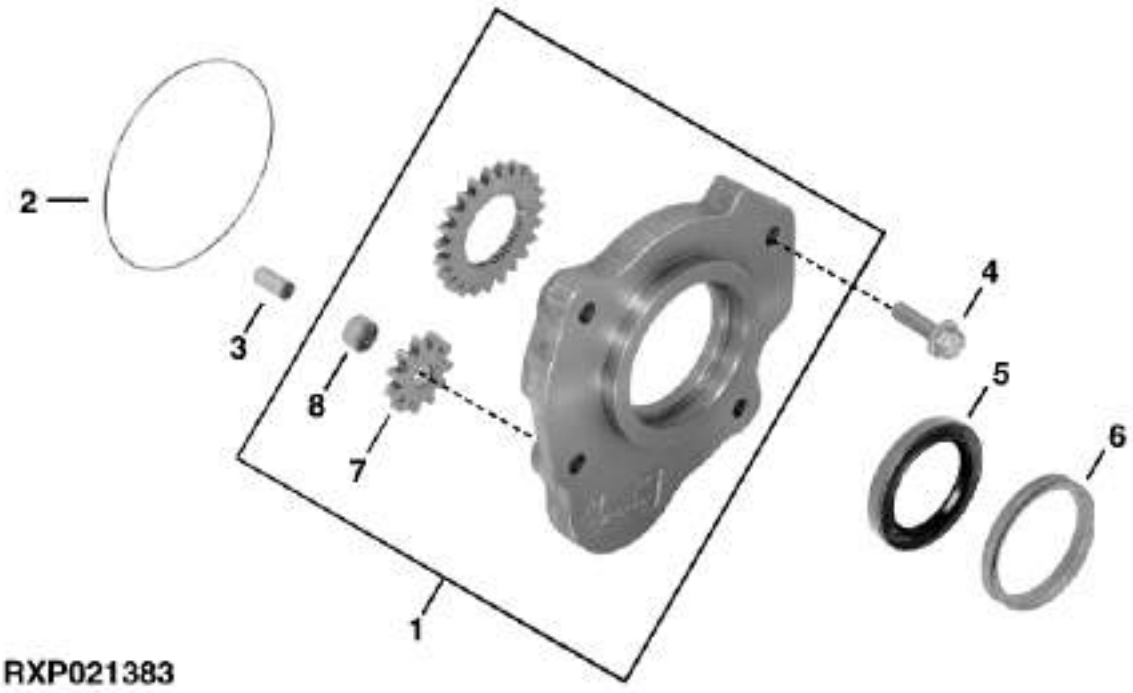

KEY	PART NO.	PART NAME	QTY	TRANSMISSION SERIAL NO.	ALL	REMARKS
1	RE63465	PUMP	1		X	(MARKED R108535 OR R134054)
2	R99039	O-RING	1		X	
3	R114219	SHAFT	1		X	
4	19M7835	SCREW	4		X	M10 X 35
5	RE32442	SEAL	1		X	
6	R119207	SEAL	1		X	
7	R108486	GEAR	1		X	
8	RE45406	NEEDLE BEARING	1		X	

https://www.truck-manuals.net/

POWER SHIFT TRANSMISSION (REMANUFACTURED)(TSN -019999)
BOITE DE VITESSES POWER SHIFT (ECHANGE STANDARD)(TSN -019999)
POWER SHIFT GETRIEBE (GENERAUEBERHOLT)(TSN -019999)
TRANSMISSIONE PRESA CAMBIO (RIGATTO)(TSN -019999)
TRANSMISION POWER-SHIFT (REFABRICADO POR)(TSN -019999)
POWER SHIFT VAEXELLAADA (RENOVERAD)(TSN -019999)
RXP022860 -UN-14DEC98

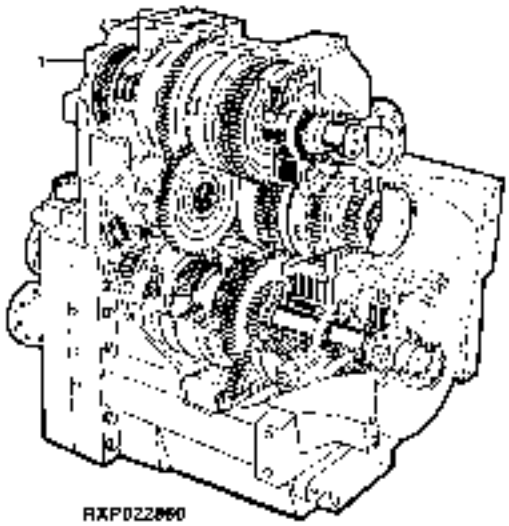

KEY	PART NO.	PART NAME	QTY	TRANSMISSION SERIAL NO.	ALL	REMARKS
1	RE151986	TRANSMISSION	1		X	W/MFWD
	RE153022	TRANSMISSION	1		X	W/O MFWD

https://www.truck-manuals.net/

TRANSMISSION OUTPUT SHAFT (TSN 8100,8200,8300,8400 -019999)
ARBRE DE SORTIE DE TRANSMISSION (TSN 8100,8200,8300,8400 -019999)
GETRIEBEABTRIEBSWELLE (TSN 8100,8200,8300,8400 -019999)
ALBERO DI USCITA DELLA TRASMISSIONE (TSN 8100,8200,8300,8400 -019999)
EJE DE SALIDA DE LA TRANSMISION (TSN 8100,8200,8300,8400 -019999)
TRANSMISSIONENS UTGAAENDE AXEL (TSN 8100,8200,8300,8400 -019999)
RXP022095 -UN-06MAY97

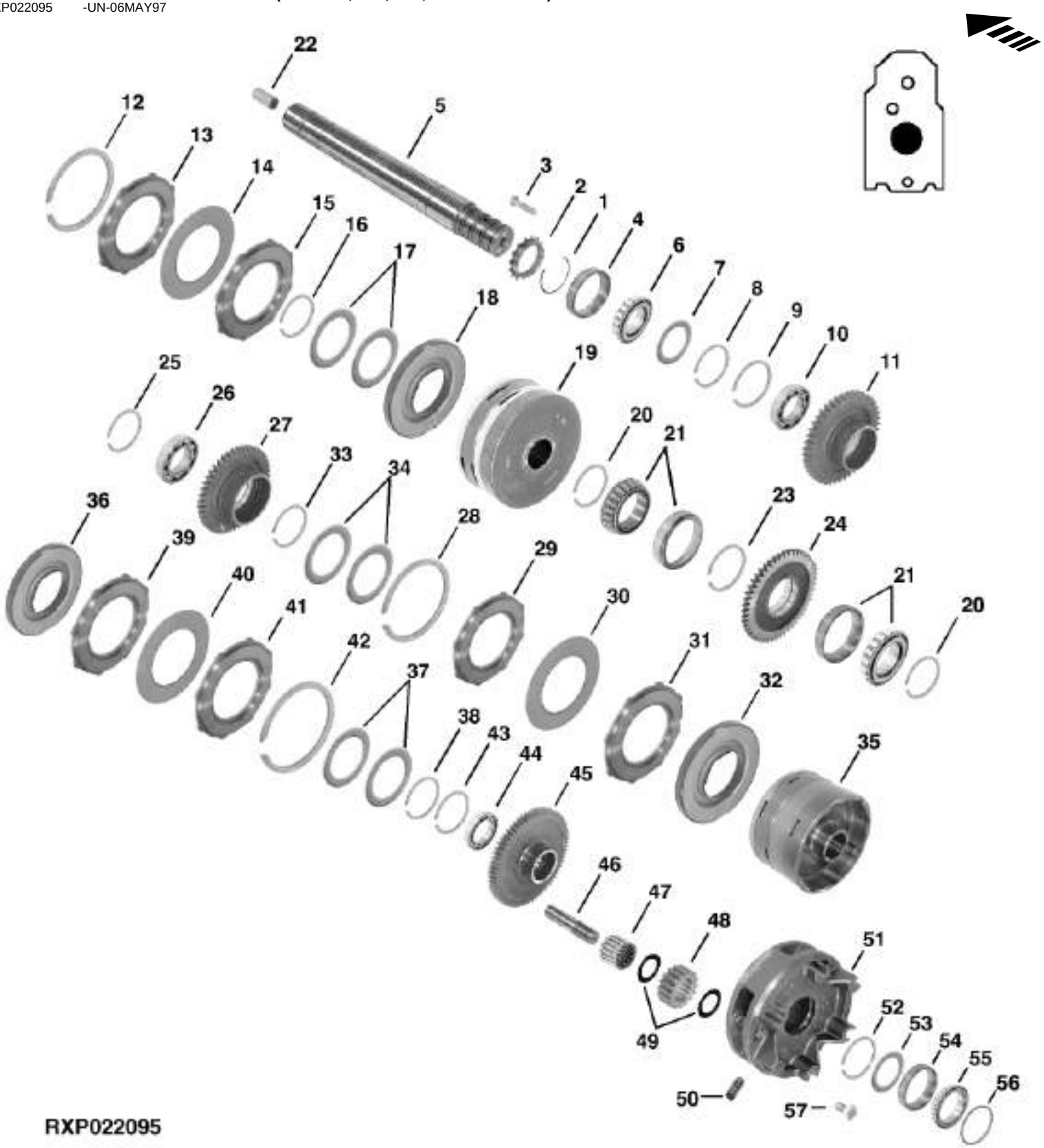

https://www.truck-manuals.net/

KEY	PART NO.	PART NAME	QTY	TRANSMISSION SERIAL NO.	ALL	REMARKS
1	R114345	SNAP RING	1		X	
2	R128775	NUT	1		X	(SUB FOR R108514)
3	R91842	SCREW	1		X	
4	R108547	BEARING CUP	1		X	
5	RE150781	KIT	1		X	
	RE150608	VALVE	3		X	
6	R108546	BEARING CONE	1		X	
7	R115331	THRUST WASHER	1		X	
8	R114345	SNAP RING	1		X	
9	R108496	SNAP RING	1		X	
10	RE67949	BALL BEARING	1		X	(SUB FOR RE45397)
11	R132250	GEAR	1		X	(SUB FOR R108438)
12	R108512	SNAP RING	1		X	
13	R108511	CLUTCH PLATE	1		X	
14	RE67457	CLUTCH DISK	7		X	(SUB FOR RE45370)
15	R108509	CLUTCH PLATE	7		X	
16	R124952	SNAP RING	3		X	
17	R120946	DISK SPRING	9		X	
18	RE62358	PISTON	1		X	W/SEAL
19	R108446	DRUM	1		X	
20	R114345	SNAP RING	2		X	
21	R108546	BEARING CONE	2		X	
	R108547	BEARING CUP	2		X	
22	N137598	SPRING PIN	1		X	
23	R108528	SNAP RING	1		X	
24	R108449	GEAR	1		X	
25	R108496	SNAP RING	1		X	
26	RE67949	BALL BEARING	1		X	(SUB FOR RE45397)
27	R132249	GEAR	1		X	(SUB FOR R108456)
28	R108512	SNAP RING	1		X	
29	R108511	CLUTCH PLATE	1		X	
30	RE67457	CLUTCH DISK	3		X	(SUB FOR RE45370)
31	R108509	CLUTCH PLATE	3		X	

THIS PARTS LISTING IS CONTINUED

https://www.truck-manuals.net/

TRANSMISSION OUTPUT SHAFT-CONTINUED (TSN 8100,8200,8300,8400 -019999)
ARBRE DE SORTIE DE TRANSMISSION- A SUIVRE (TSN 8100,8200,8300,8400 -019999
GETRIEBEABTRIEBSWELLE-FORTE. (TSN 8100,8200,8300,8400 -019999)
ALBERO DI USCITA DELLA TRASMISSIONE-CONTINUA (TSN 8100,8200,8300,8400 -019999)
EJE DE SALIDA DE LA TRANSMISION-CONTINACION (TSN 8100,8200,8300,8400 -019999)
TRANSMISSIONENS UTGAAENDE AXEL-FORTE. (TSN 8100,8200,8300,8400 -019999)
RXP021384 -UN-21NOV95

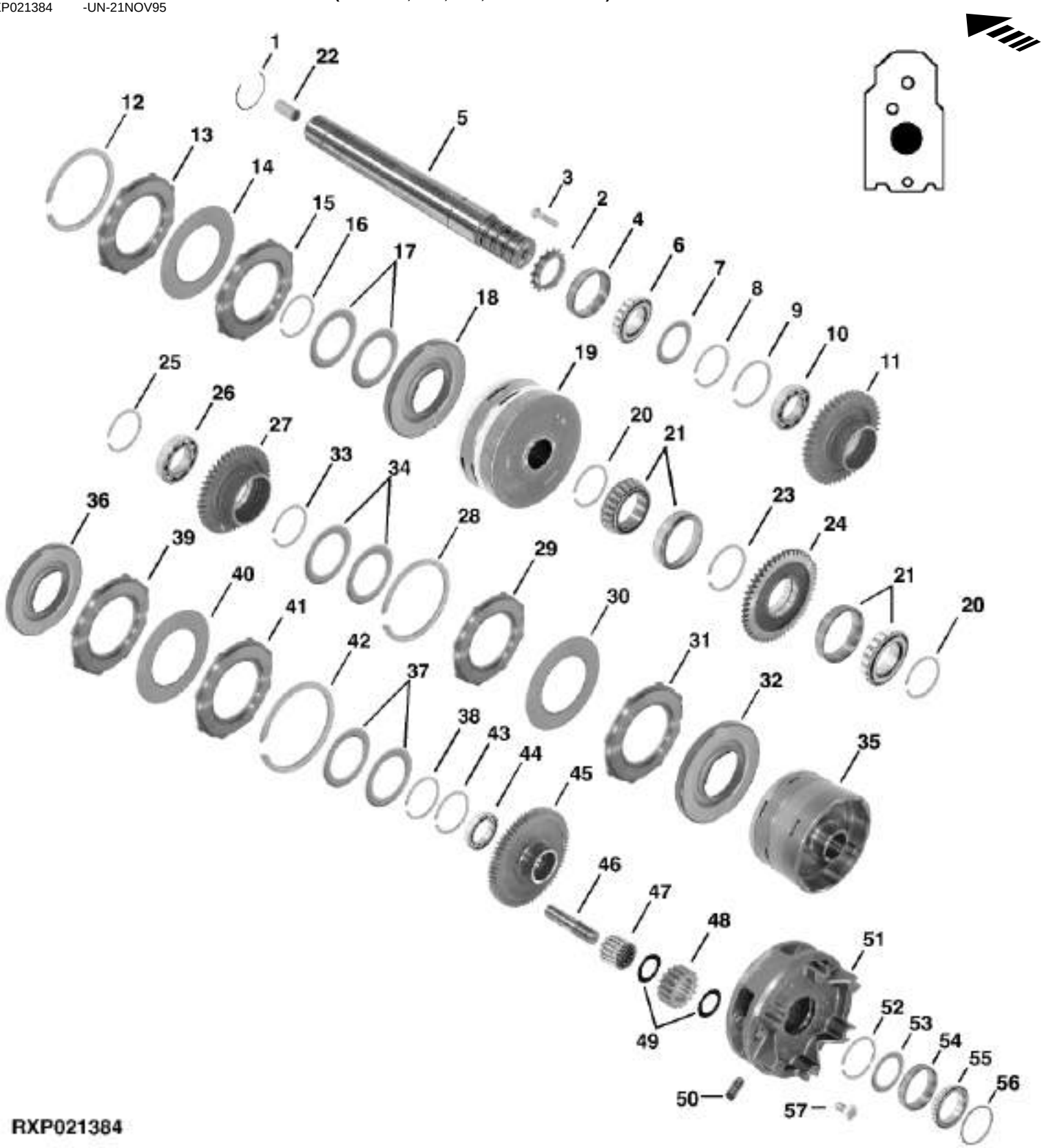

https://www.truck-manuals.net/

KEY	PART NO.	PART NAME	QTY	TRANSMISSION SERIAL NO.	ALL	REMARKS
32	RE69329	PISTON	1		X	W/SEAL (RED OR 2 GROOVES)
33	R124952	SNAP RING	1		X	
34	R120946	DISK SPRING	5		X	
35	R108457	DRUM	1		X	C & D-RANGE
36	RE62358	PISTON	1		X	W/SEAL
37	R120946	DISK SPRING	9		X	
38	R124952	SNAP RING	1		X	
39	R108510	CLUTCH PLATE	7		X	
40	RE67457	CLUTCH DISK	7		X	(SUB FOR RE45370)
41	R108511	CLUTCH PLATE	1		X	
42	R108512	SNAP RING	1		X	
43	R108496	SNAP RING	1		X	
44	RE67949	BALL BEARING	1		X	(SUB FOR RE45397)
45	R132248	GEAR	1		X	C-RANGE Z=67, (SUB FOR R108458)
46	R108478	PINION SHAFT	3		X	
47	RE45410	NEEDLE BEARING	3		X	
48	R108473	PLANET PINION	3		X	
49	R108534	THRUST WASHER	6		X	
50	R122374	PIN	3		X	
51	R108469	PLANET PINION CARRIER	1		X	
52	R114345	SNAP RING	1		X	
53	R115331	THRUST WASHER	1		X	
54	R108547	BEARING CUP	1		X	
55	R108546	BEARING CONE	1		X	
56	R115507	RING	6		X	
57	R122390	SELF-LOCKING SCREW	3		X	

https://www.truck-manuals.net/

PTO SHAFT (TSN 8100,8200,8300,8400 -019999)
ARBRE DE PDF (TSN 8100,8200,8300,8400 -019999)
ZAPFWELLENSCHAFT (TSN 8100,8200,8300,8400 -019999)
ALBERO DELLA PTO (TSN 8100,8200,8300,8400 -019999)
EJE DE TDF (TSN 8100,8200,8300,8400 -019999)
KRAFTUTTAGSAXEL (TSN 8100,8200,8300,8400 -019999)
RXP022186 -UN-03SEP97

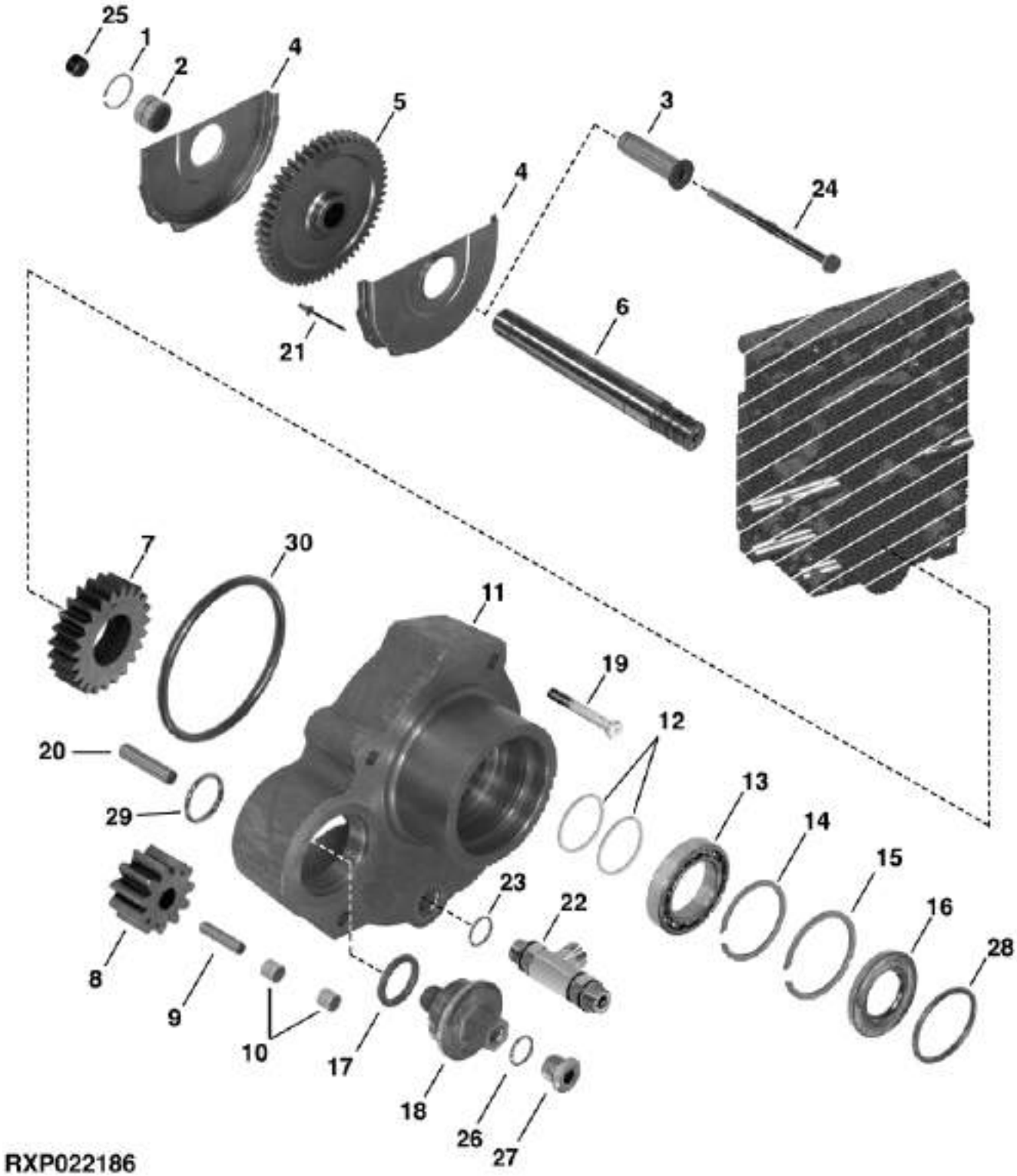

https://www.truck-manuals.net/

KEY	PART NO.	PART NAME	QTY	TRANSMISSION SERIAL NO.	ALL	REMARKS
1	40M7201	SNAP RING	1		X	
2	RE57653	ROLLER BEARING	1		X	
3	R121603	SHAFT	1		X	
4	R108531	PTO POWR-GARD SHIELD	2		X	
5	R108471	GEAR	1		X	
6	R108508	SHAFT	1		X	
7	R108484	GEAR	1		X	
8	R108485	GEAR	1		X	
9	R115233	SHAFT	1		X	
10	JD10116	NEEDLE BEARING	2		X	
11	R108537	HOUSING	1		X	
12	R115508	RING	2		X	
13	JD8568	BALL BEARING	1		X	
14	R28640	SNAP RING	1		X	
15	40M7115	SNAP RING	1		X	
16	RE151144	SEAL	1		X	(SUB FOR RE64427 OR RE52341, THIS APPLICATION)
17	H63262	O-RING	1		X	
18	R114108	PLUG	1		X	
19	19M7809	SCREW	4		X	M10 X 70
20	R28671	DOWEL PIN	2		X	
21	H86981	RIVET	6		X	
22	38H5140	TEE FITTING	1		X	
23	51M7047	O-RING	1		X	
24	RE47959	BOLT	1		X	M12 X 1.75 HS 10.9
25	R125064	PIPE PLUG	1		X	
26	51M7042	O-RING	1		X	13.300 X 2.200 MM
27	RE52242	PLUG	1		X	
28	T121280	SEAL	1		X	
29	F3171R	O-RING	1		X	
30	N153493	O-RING	1		X	

https://www.truck-manuals.net/

MFWD CLUTCH (TSN 8100,8200,8300,8400 -019999)
EMBRAYAGE DE TAM (TSN 8100,8200,8300,8400 -019999)
MF-KUPPLUNG (TSN 8100,8200,8300,8400 -019999)
FRIZIONE DELLA MFWD (TSN 8100,8200,8300,8400 -019999)
EMBRAGUE DE TDM (TSN 8100,8200,8300,8400 -019999)
MFHD-KOPPLING (TSN 8100,8200,8300,8400 -019999)
RXP021542 -UN-20JUN96

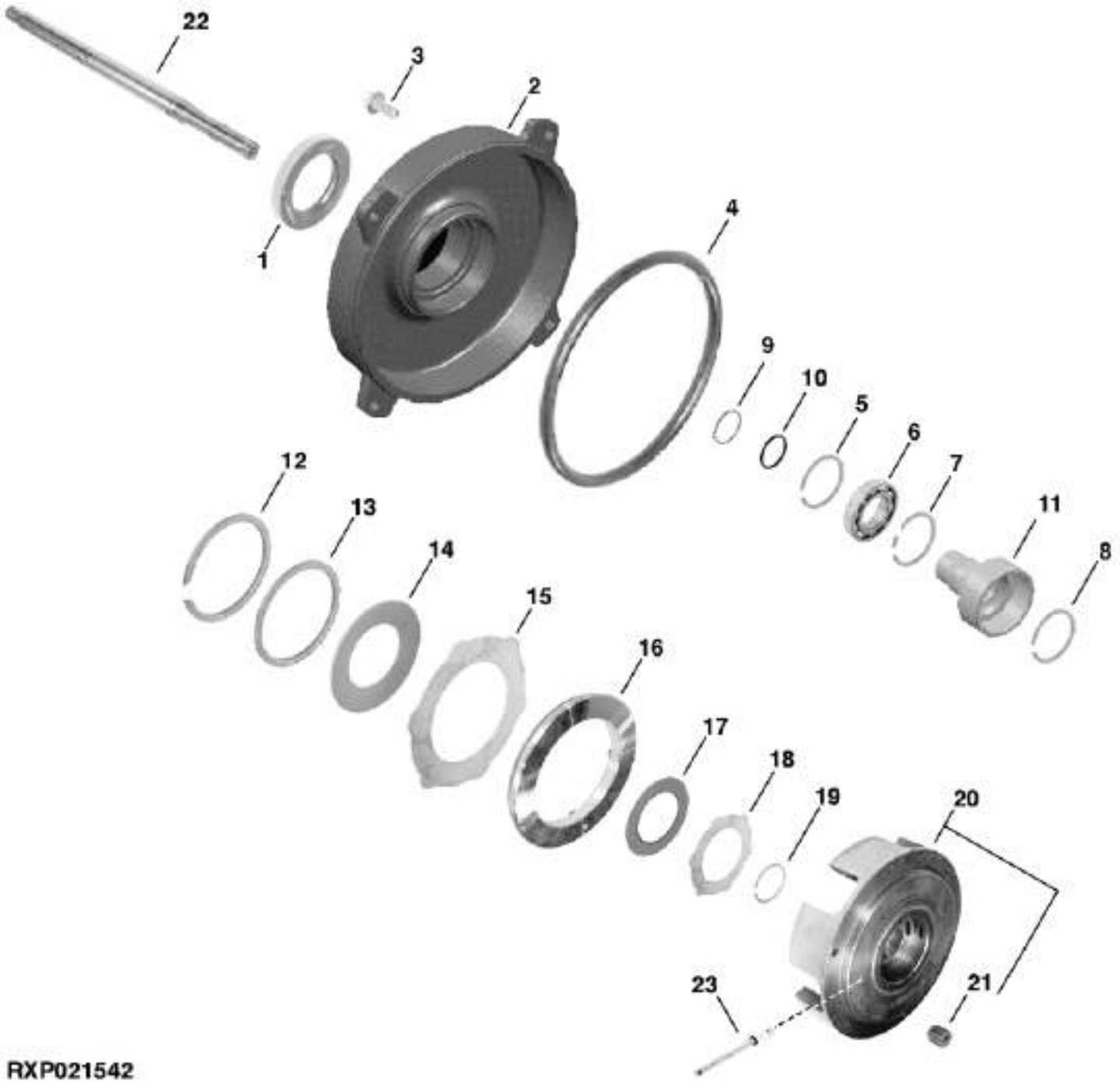

https://www.truck-manuals.net/

KEY	PART NO.	PART NAME	QTY	TRANSMISSION SERIAL NO.	ALL	REMARKS
1	AH89023	SEAL	1		X	
2	R108518	COVER	1	-015288	X	(A) (SUB R131811)
	R131811	COVER	1	015289-	X	(A)
	R108569	COVER	1		X	(B)
3	19M7789	SCREW	4		X	M12 X 30, HS 10.9
4	T39741	RING	1		X	
5	T44824	SNAP RING	1		X	
6	RE67948	BEARING	1		X	
7	R108496	SNAP RING	1		X	
8	L1610N	SNAP RING	1		X	
9	R124576	SNAP RING	1		X	
10	U10289	O-RING	1		X	
11	R108519	HUB	1		X	
12	R108526	SNAP RING	1		X	
13	R108533	RETAINER	1		X	
14	R108525	DISK SPRING	1		X	
15	R108521	PLATE	1		X	
16	RE155037	SEAL	1		X	(SUB FOR R108520)
17	RE67458	DISK, WITH INNER SPLINE	6		X	(SUB FOR AR94516, THIS APPLICATION)
18	R108507	CLUTCH PLATE	6		X	
19	R114345	SNAP RING	1		X	
20	RE69122	DRUM	1		X	(MARKED R108517)
21	RE45393	VALVE SEAT	1		X	
22	R108384	SHAFT	1	-XXXXXX	X	(A) (C) (SUB R130895, R130894 AND CH17453)
	R130895	SHAFT	1	XXXXXX-	X	(D)
23	AT107509	PLUG	1		X	

(A)MECHANICAL FRONT WHEEL DRIVE
TRACTION AVANT MECANIQUE
MECHANISCHER FRONTANTRIEB
TRAZIONE ANTERIORE MECANNICA
TRACCION DELANTERA
MEKANISK FRAMHJULSDRIVNING

(B)W/O MECHANICAL FRONT WHEEL DRIVE
W/O TRACTION AVANT MECANIQUE
W/O MECHANISCHER FRONTANTRIEB
W/O TRAZIONE ANTERIORE MECANNICA
W/O TRACCION DELANTERA
W/O MEKANISK FRAMHJULSDRIVNING

(C)(-XXXXXX) TSN 8100-004350; 8200-003234; 8300-005399; 8400-006270

(D)(XXXXXX-) TSN 8100-004351; 8200-003235; 8300-005400; 8400-006271

https://www.truck-manuals.net/

TRANSMISSION CASE (TSN 8100,8200,8300,8400 -019999)
CARTER DE TRANSMISSION (TSN 8100,8200,8300,8400 -019999)
GETRIEBEGEHAEUSE (TSN 8100,8200,8300,8400 -019999)
SCATOLA DELLA TRASMISSIONE (TSN 8100,8200,8300,8400 -019999)
CAJA DE TRANSMISION (TSN 8100,8200,8300,8400 -019999)
TRANSMISSIONSKAAPA (TSN 8100,8200,8300,8400 -019999)
RXP022335 -UN-23OCT97

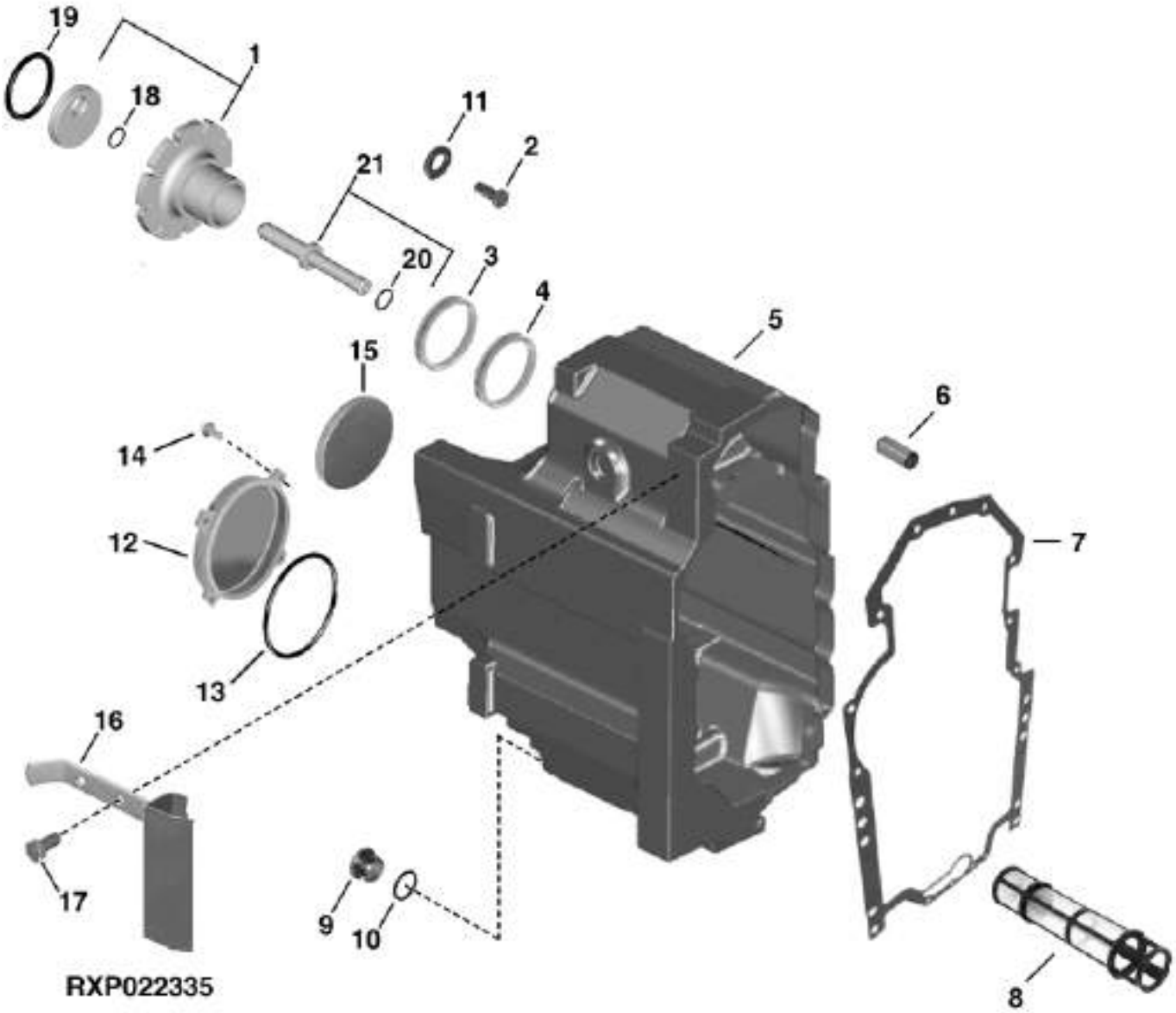

https://www.truck-manuals.net/

KEY	PART NO.	PART NAME	QTY	TRANSMISSION SERIAL NO.	ALL	REMARKS
1	RE70976	HUB	1		X	(SUB FOR RE57402 OR RE67440)
2	19M7789	SCREW	9		X	M12 X 30, HS 10.9
3	R130561	V-RING SEAL	1		X	(SUB FOR R89581, THIS APPLICATION)
4	RE158066	SEAL	1		X	(SUB FOR RE13181, THIS APPLICATION)
5	R136157	TRANSMISSION CASE	1		X	
6	R48685	DOWEL PIN	2		X	
7	R132860	GASKET	1		X	(SUB FOR R108480)
8	RE45369	SCREEN	1		X	
9	R98012	PLUG	1		X	
10	P47889	O-RING	1		X	
11	24M7240	WASHER	9		X	
12	R108569	COVER	1		X	(A)
13	T39741	RING	1		X	
14	19M7789	SCREW	4		X	M12 X 30, HS 10.9
15	R108503	PLUG	1		X	
16	R120133	SUPPORT	2	-XXXXXX	X	
	R120133	SUPPORT	1	XXXXXX-	X	RH
	RE62562	BRACKET	1	XXXXXX-	X	LH
17	19M7166	CAP SCREW	4		X	M10 X 20
18	F3353R	O-RING	1		X	
19	R132237	O-RING	1		X	
20	R132239	O-RING	1		X	
21	RE67505	BREATHER	1		X	

(A)W/O MECHANICAL FRONT WHEEL DRIVE
W/O TRACTION AVANT MECANIQUE
W/O MECHANISCHER FRONTANTRIEB
W/O TRAZIONE ANTERIORE MECANNICA
W/O TRACCION DELANTERA
W/O MEKANISK FRAMHJULSDRIVNING

https://www.truck-manuals.net/

MID-FRAME SHAFTS
ABRES DE CHASSIS CENTRAL
MITTERLRAHMENWELLEN
ALBERI A META'TELAIO
EJES DEL BASTIDOR CENTRAL
MITTENRAMAXLAR
RXP021386 -UN-08DEC95

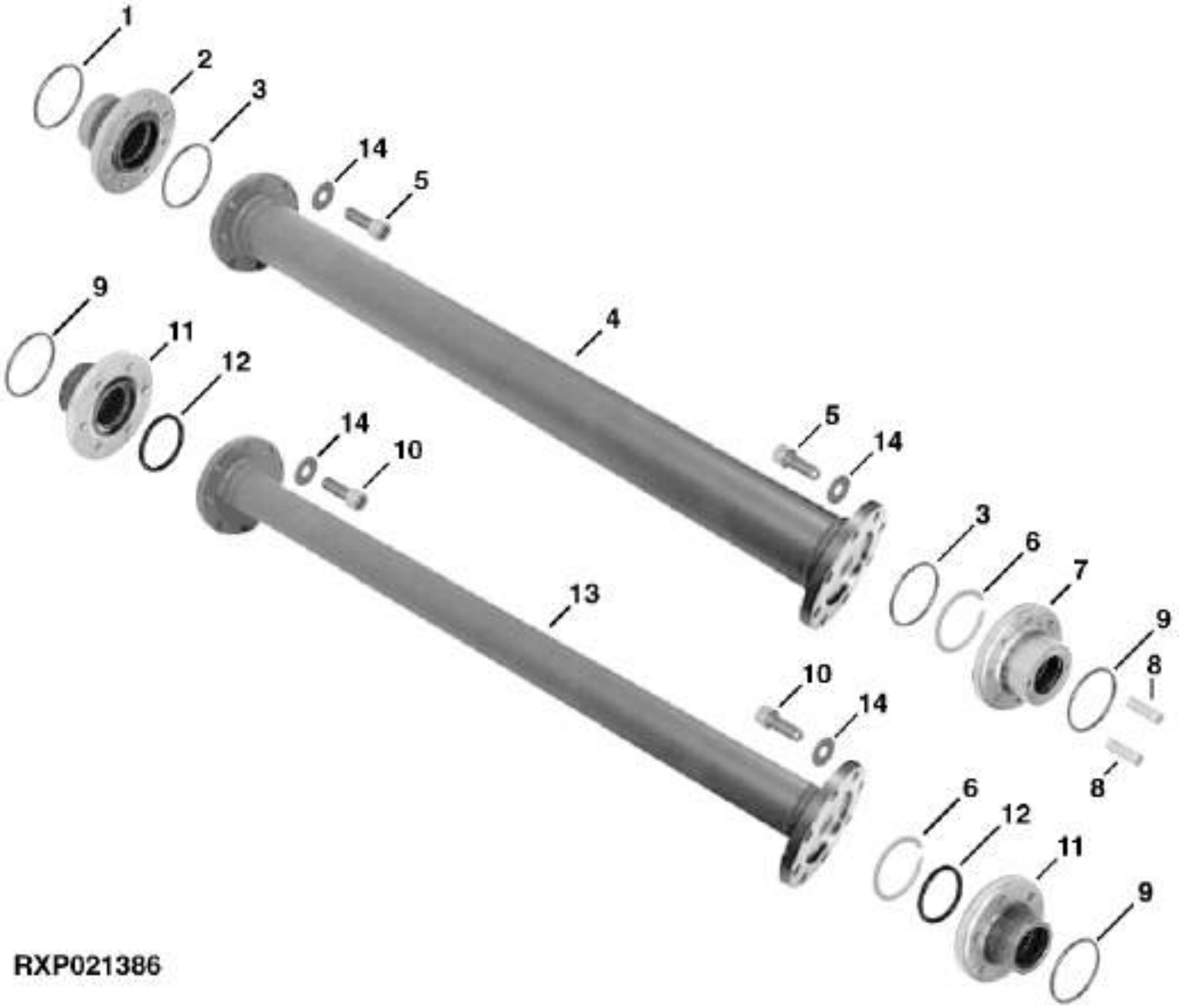

RXP021386

https://www.truck-manuals.net/

KEY	PART NO.	PART NAME	QTY	TRACTOR SERIAL NO.	ALL	REMARKS
1	R122886	O-RING	1		X	
2	R108555	COUPLING	1		X	
3	U44496	O-RING	2		X	
4	RE45391	DRIVE SHAFT	1		X	(TRANSMISSION OUTPUT)
5	19M8850	CAP SCREW	16		X	M10 X 30, HS 12.9
6	P46770	SNAP RING	2		X	
7	R108558	YOKE	1		X	
8	R116713	NEEDLE ROLLER	1		X	
9	P50631	O-RING	3		X	
10	19M8850	CAP SCREW	12		X	M10 X 30, HS 12.9
11	R108559	QUICK COUPLER	2		X	
12	R112857	O-RING	2		X	
13	RE45392	DRIVE SHAFT	1		X	(PTO)
14	24M7239	WASHER	12		X	10.700 X 21 X 2.500 MM

https://www.truck-manuals.net/

SOLENOID VALVE
ELECTROVANNE
MAGNETVENTIL
VALVOLA A SOLENOIDE
VALVULA DE SOLENOIDE
SOLENOIDVENTIL
RXP020610 -UN-01JAN94

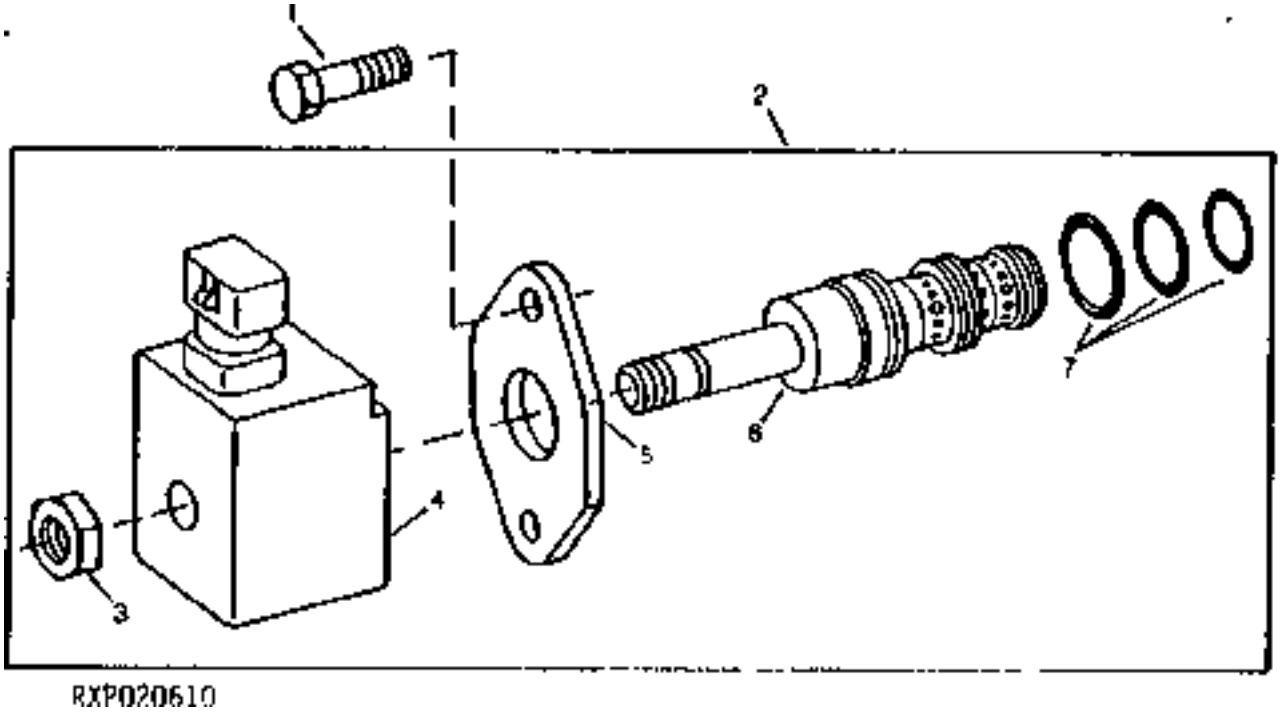

KEY	PART NO.	PART NAME	QTY	TRANSMISSION SERIAL NO.	ALL	REMARKS
1	19M7560	CAP SCREW	2		X	M6 X 16
2	RE52319	SOLENOID VALVE	1		X	
3	R109691	NUT	1		X	
4	RE50782	SOLENOID VALVE COIL	1		X	
5	R109690	CLAMP	1		X	
6	RE53089	VALVE	1		X	(SUB RE52319)
7	RE47392	O-RING KIT	1		X	

https://www.truck-manuals.net/

MAGNETIC PICK-UP
OUTIL AIMANTE A MANCE
MAGNETISCHER MESSWERTGEBER
CALAMITA RACCATTAPEZZI
CAPTADOR MAGNETICO
MAGNETISK GIVARE
RXP025030 -UN-01JAN94

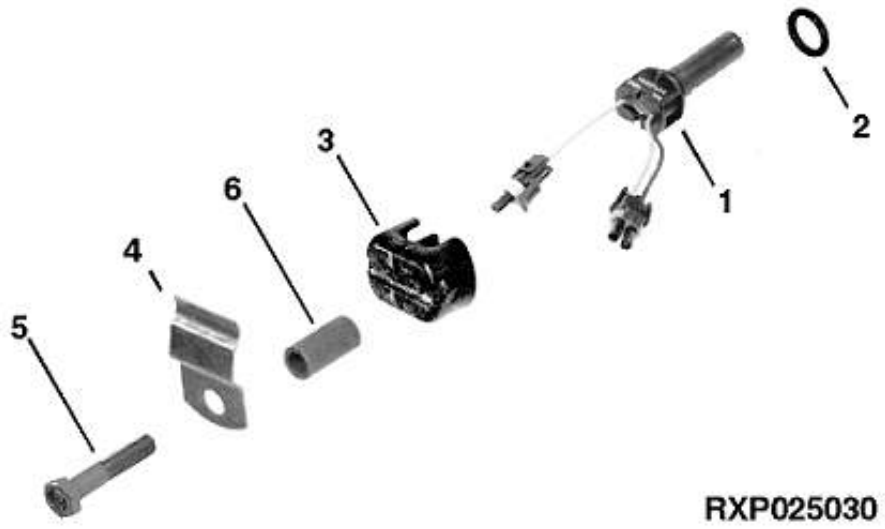

KEY	PART NO.	PART NAME	QTY	TRANSMISSION SERIAL NO.	ALL	REMARKS
1	RE56950	WHEEL SPEED SENSOR	1		X	
2	R375	O-RING	1		X	
3	R69185	CAP	1		X	
4	R66477	CLAMP	1		X	
5	R120256	CAP SCREW	1		X	10M X 1.5 HS 10.9
6	28H1527	SPACER	1		X	0.493" X 0.675" X 1-3/8"

https://www.truck-manuals.net/

TRANSMISSION LINES
CONDUITES DE TRANSMISSION
GETRIEBE-LEITUNGEN
LINEE DELLA TRASMISSIONE
LINEAS DE TRANSMISION
TRANSMISSIONSLEDNINGAR
RXP021387 -UN-21NOV95

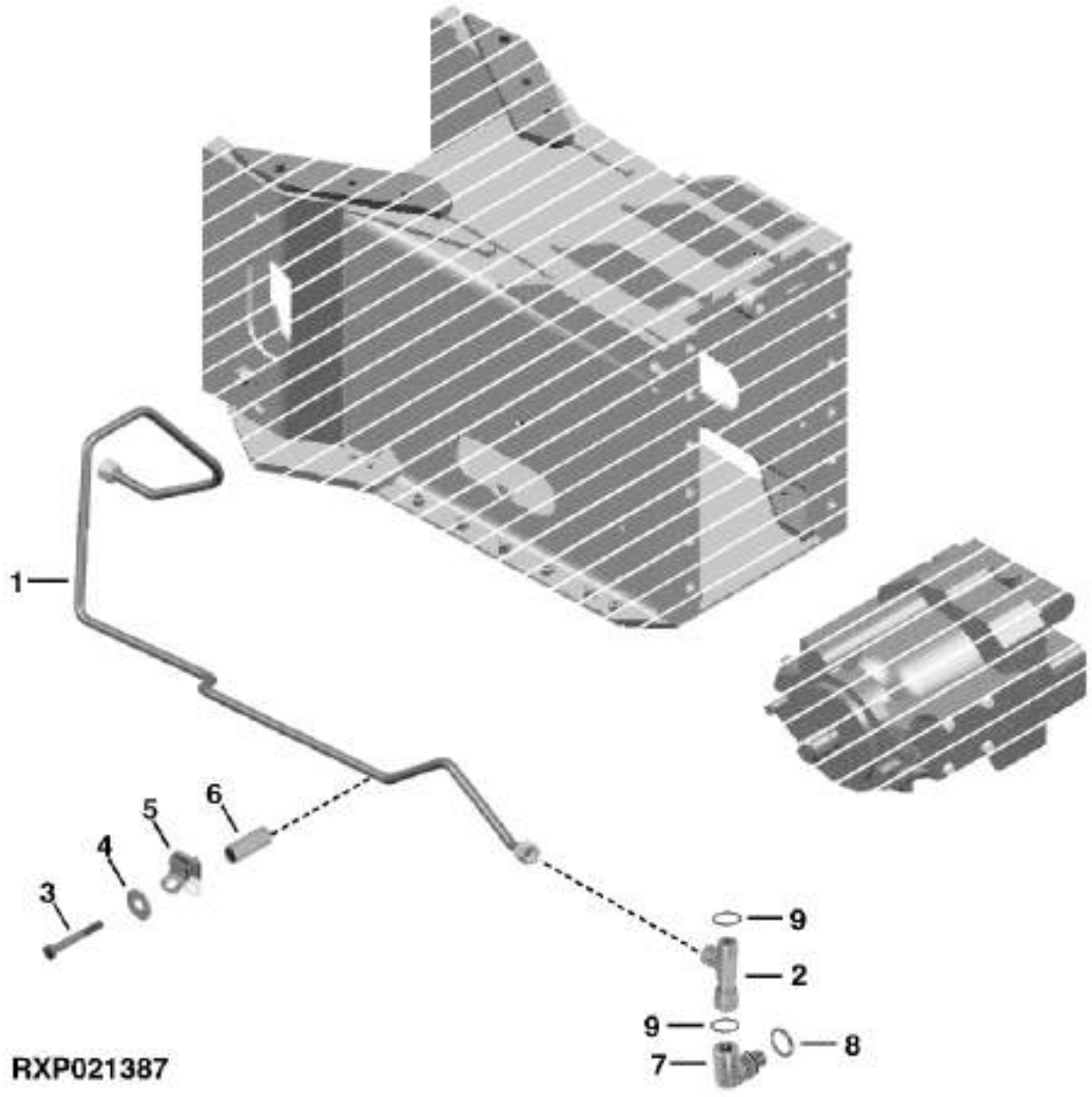

https://www.truck-manuals.net/

KEY	PART NO.	PART NAME	QTY	TRACTOR SERIAL NO.	ALL	REMARKS
1	RE61136	OIL LINE	1		X	
2	38H5069	TEE FITTING	1		X	
3	19M7185	CAP SCREW	2		X	M8 X 60
4	24M7207	WASHER	2		X	8.400 X 24 X 2 MM
5	R73291	CLAMP	1		X	
6	28H1497	BUSHING	2		X	0.493" X 0.675" X 1-1/2"
7	38H5023	ELBOW FITTING	1		X	
8	51M7041	O-RING	1		X	
9	T77857	O-RING	3		X	

https://www.truck-manuals.net/

TRANSMISSION LINES (TSN -009999)
CONDUITES DE TRANSMISSION (TSN -009999)
GETRIEBE-LEITUNGEN (TSN -009999)
LINEE DELLA TRASMISSIONE (TSN -009999)
LINEAS DE TRANSMISION (TSN -009999)
TRANSMISSIONSLEDNINGAR (TSN -009999)
RE026021 -UN-16MAR95

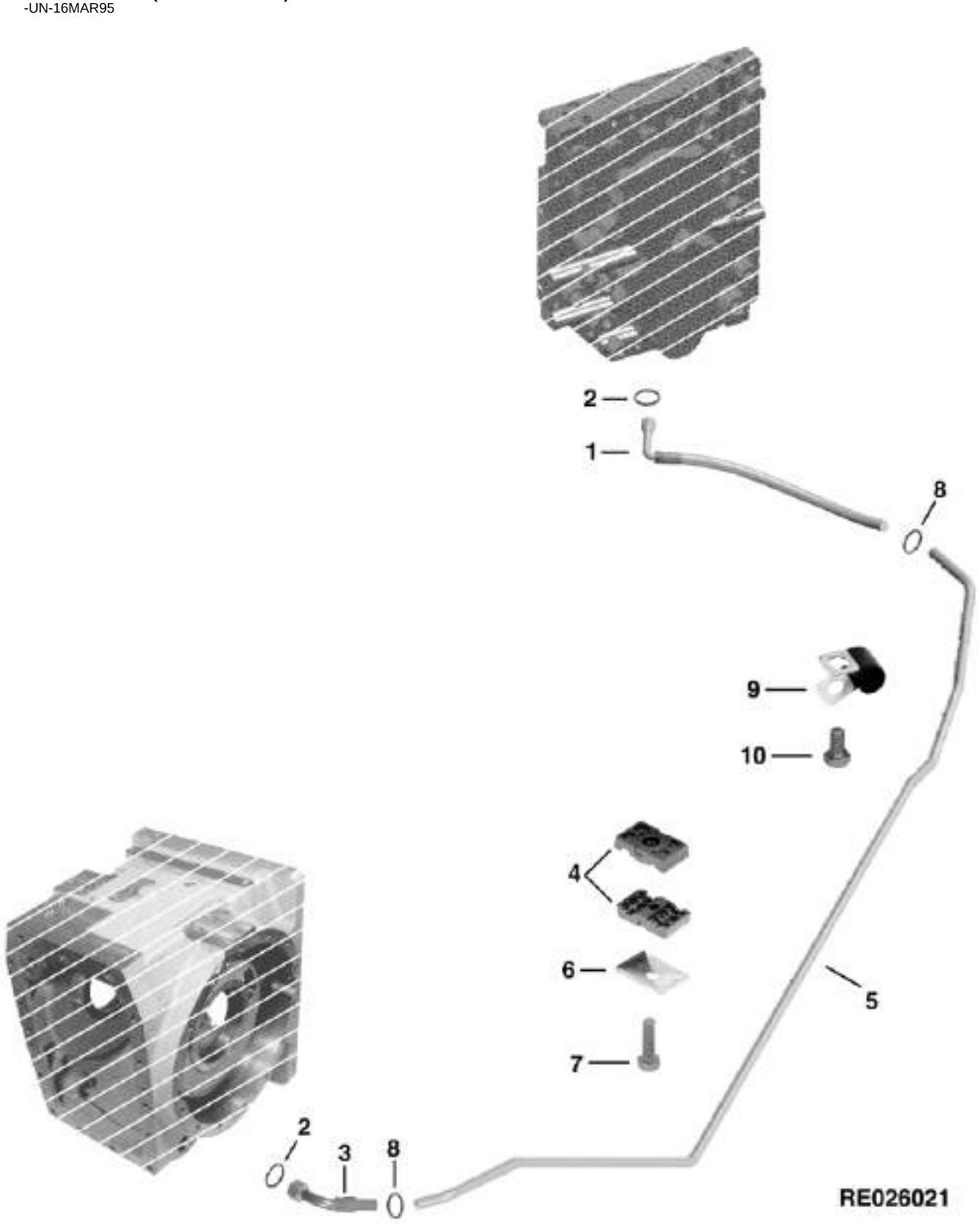

https://www.truck-manuals.net/

KEY	PART NO.	PART NAME	QTY	TRACTOR SERIAL NO.	ALL	REMARKS
1	RE62341	HYDRAULIC HOSE - FABRICATE	1		X	(SUB FOR RE44757)
2	T77857	O-RING	2		X	
3	RE60686	HYDRAULIC HOSE - FABRICATE	1		X	
4	H108291	CLAMP	4		X	
5	RE44769	HYDRAULIC LINE	1		X	
6	H121168	PLATE	2		X	
7	37M7103	SCREW	2		X	
8	RE32361	CLAMP	2		X	(SUB TY22465)
9	H75541	CLAMP	2		X	
10	37M7058	SCREW	2		X	M8 X 20

https://www.truck-manuals.net/

TRANSMISSION LINES (TSN 010000-)
CONDUITES DE TRANSMISSION (TSN 010000-)
GETRIEBE-LEITUNGEN (TSN 010000-)
LINEE DELLA TRASMISSIONE (TSN 010000-)
LINEAS DE TRANSMISION (TSN 010000-)
TRANSMISSIONSLEDNINGAR (TSN 010000-)
RXP021522 -UN-24MAY96

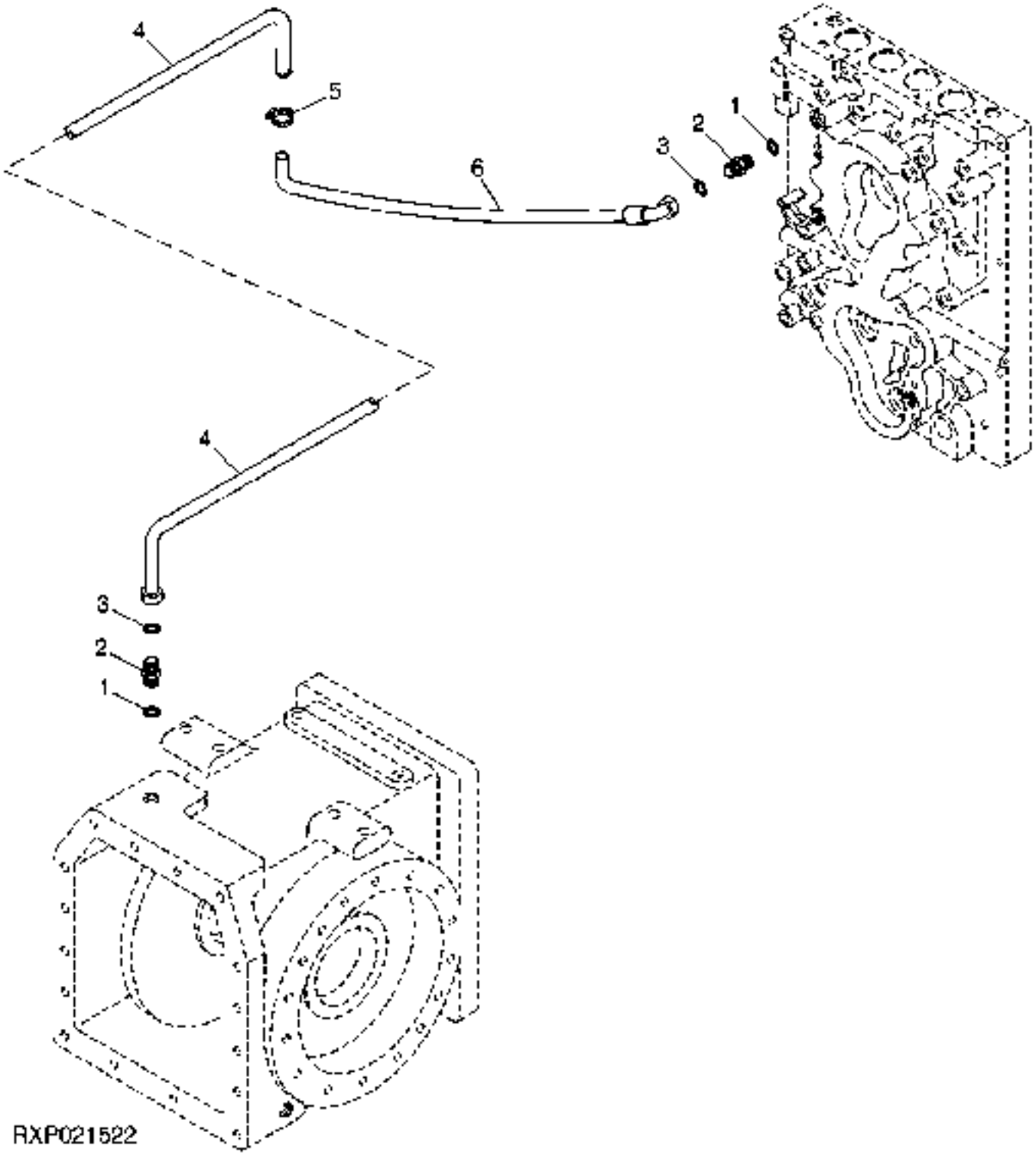

https://www.truck-manuals.net/

KEY	PART NO.	PART NAME	QTY	TRACTOR SERIAL NO.	ALL	REMARKS
1	51M7043	O-RING	2		X	15.300 X 2.200 MM
2	38H5003	ADAPTER	2		X	
3	T77857	O-RING	2		X	
4	RE69071	HOSE	1		X	
5	TY22465	CLAMP	1		X	
6	RE66667	HOSE	1		X	

https://www.truck-manuals.net/

CLUTCH PEDAL (TSN 8100,8200,8300,8400, 020000-)
PEDALE D'EMBRAYAGE (TSN 8100,8200,8300,8400, 020000-)
KUPPLUNGSFUSSHEBEL (TSN 8100,8200,8300,8400, 020000-)
PEDALE FRIZIONE (TSN 8100,8200,8300,8400, 020000-)
PEDAL DEL EMBRAGUE (TSN 8100,8200,8300,8400, 020000-)
KOPPLINGSPEDAL (TSN 8100,8200,8300,8400, 020000-)
RXP022111 -UN-07JUN97

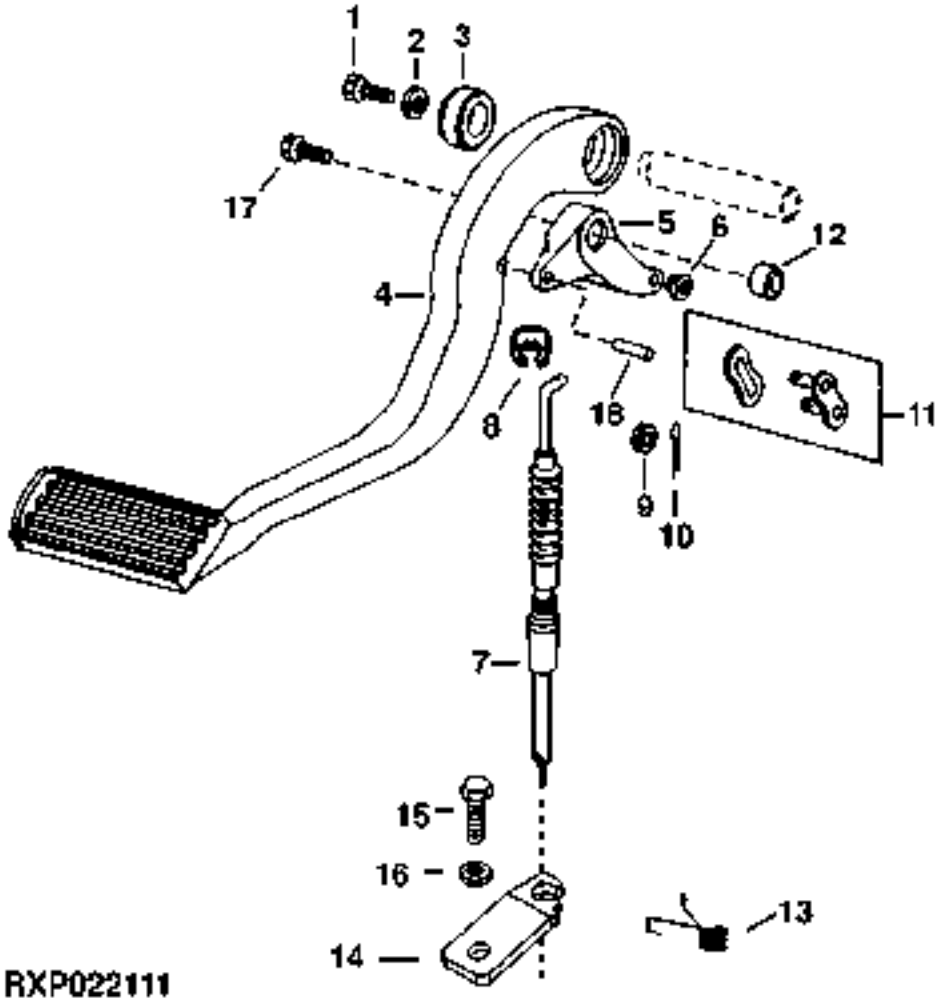

https://www.truck-manuals.net/

KEY	PART NO.	PART NAME	QTY	TRANSMISSION SERIAL NO.	ALL	REMARKS
1	19M7932	CAP SCREW	1		X	M8 X 16
2	R56397	WASHER	1		X	
3	JD8535	BALL BEARING	1		X	
4	R127830	PEDAL	1		X	
5	R127831	ARM	1		X	
6	R78425	BUSHING	1		X	
7	RE60687	CABLE	1		X	
8	R108214	CLIP	1		X	UP
9	R113023	GROMMET	1		X	
10	11M7059	COTTER PIN	2		X	3.200 X 20 MM
11	J4216H	CHAIN LINK	1		X	
12	JD10181	BALL BEARING	2		X	
13	R121823	SPRING	1		X	LOW
14	R124428	BRACKET	1		X	
15	19M7938	CAP SCREW	1		X	M10 X 20
16	24M7346	WASHER	1		X	11 X 20 X 2 MM
17	19M8291	SCREW	1		X	M8 X 35
18	R127832	BUSHING	1		X	

https://www.truck-manuals.net/

MANIFOLD (TSN 8100,8200,8300,8400 020000-)
COLLECTEUR (TSN 8100,8200,8300,8400, 020000-)
KUPPLUNGS (TSN 8100,8200,8300,8400, 020000-)
COLLETTORE (TSN 8100,8200,8300,8400, 020000-)
MULTIPLE (TSN 8100,8200,8300,8400, 020000-)
KOPPLINGSGRENDOER (TSN 8100,8200,8300,8400, 020000-)
RXP022488 -UN-23FEB98

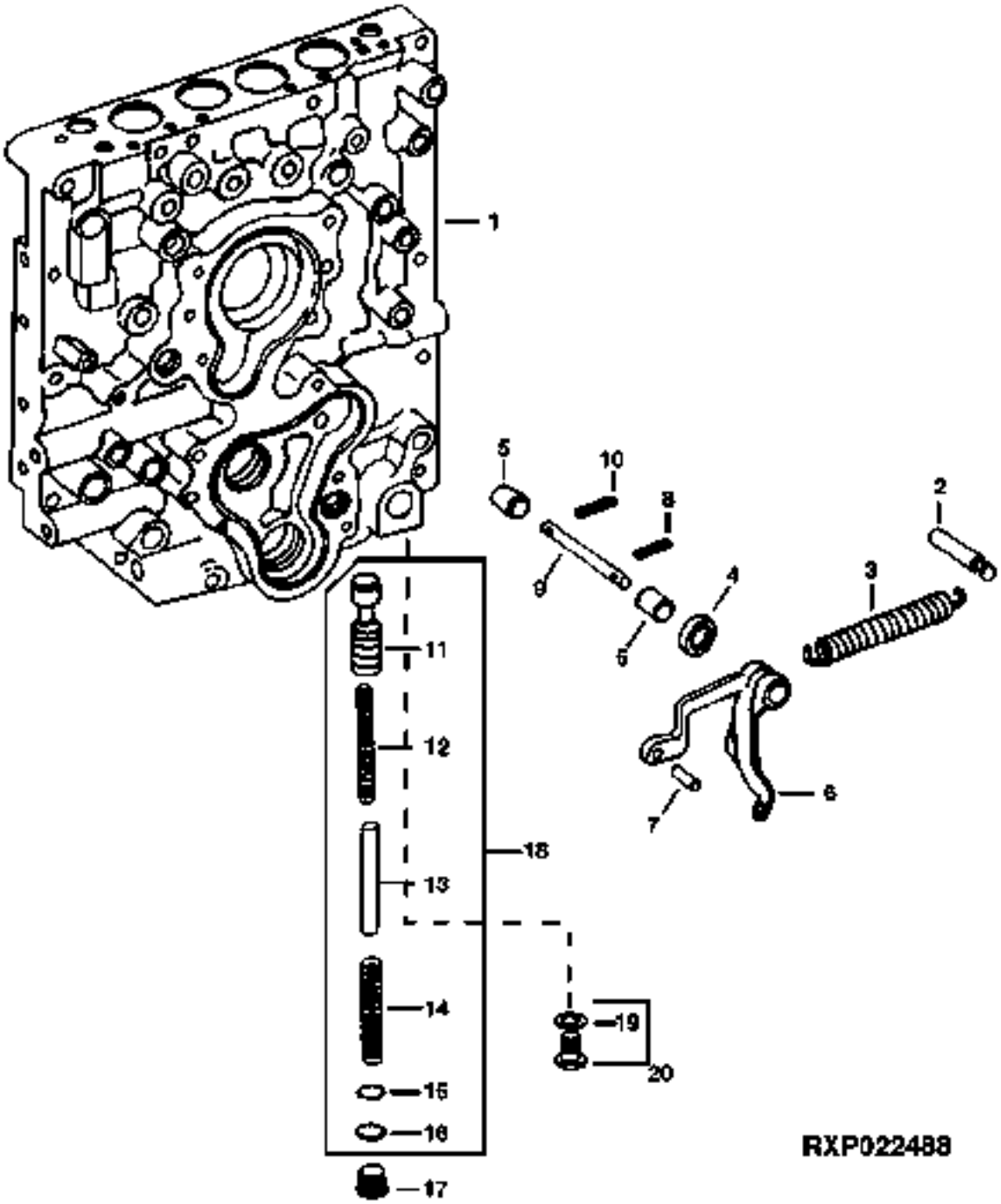

https://www.truck-manuals.net/

KEY	PART NO.	PART NAME	QTY	TRANSMISSION SERIAL NO.	ALL	REMARKS
1	RE70834	KIT	1		X	(MARKED R135816)
2	R108565	PIN	1		X	
3	R108499	SPRING	1		X	
4	AR103873	SEAL	1		X	
5	JD9833	NEEDLE BEARING	2		X	
6	R108500	LEVER	1		X	
7	R48685	DOWEL PIN	1		X	
8	34M7207	SPRING PIN	1		X	5 X 30 MM
9	R108551	SHAFT	1		X	
10	34M7207	SPRING PIN	1		X	5 X 30 MM
11	R115501	VALVE	1		X	
12	R125208	SPRING	1		X	
13	R116726	PIN	1		X	
14	R125209	SPRING	1		X	
15	R115504	SHIM	AR		X	
16	51M7045	O-RING	1		X	
17	R116115	FITTING	1		X	
18	RE68291	KIT	1		X	
19	51M7041	O-RING	1		X	
20	RE46684	PLUG	1		X	

https://www.truck-manuals.net/

MANIFOLD (TSN 8100,8200,8300,8400 020000-)
COLLECTEUR (TSN 8100,8200,8300,8400, 020000-)
KUPPLUNGS (TSN 8100,8200,8300,8400, 020000-)
COLLETTORE (TSN 8100,8200,8300,8400, 020000-)
MULTIPLE (TSN 8100,8200,8300,8400, 020000-)
KOPPLINGSGRENROER (TSN 8100,8200,8300,8400, 020000-)
RXP022217 -UN-21AUG97

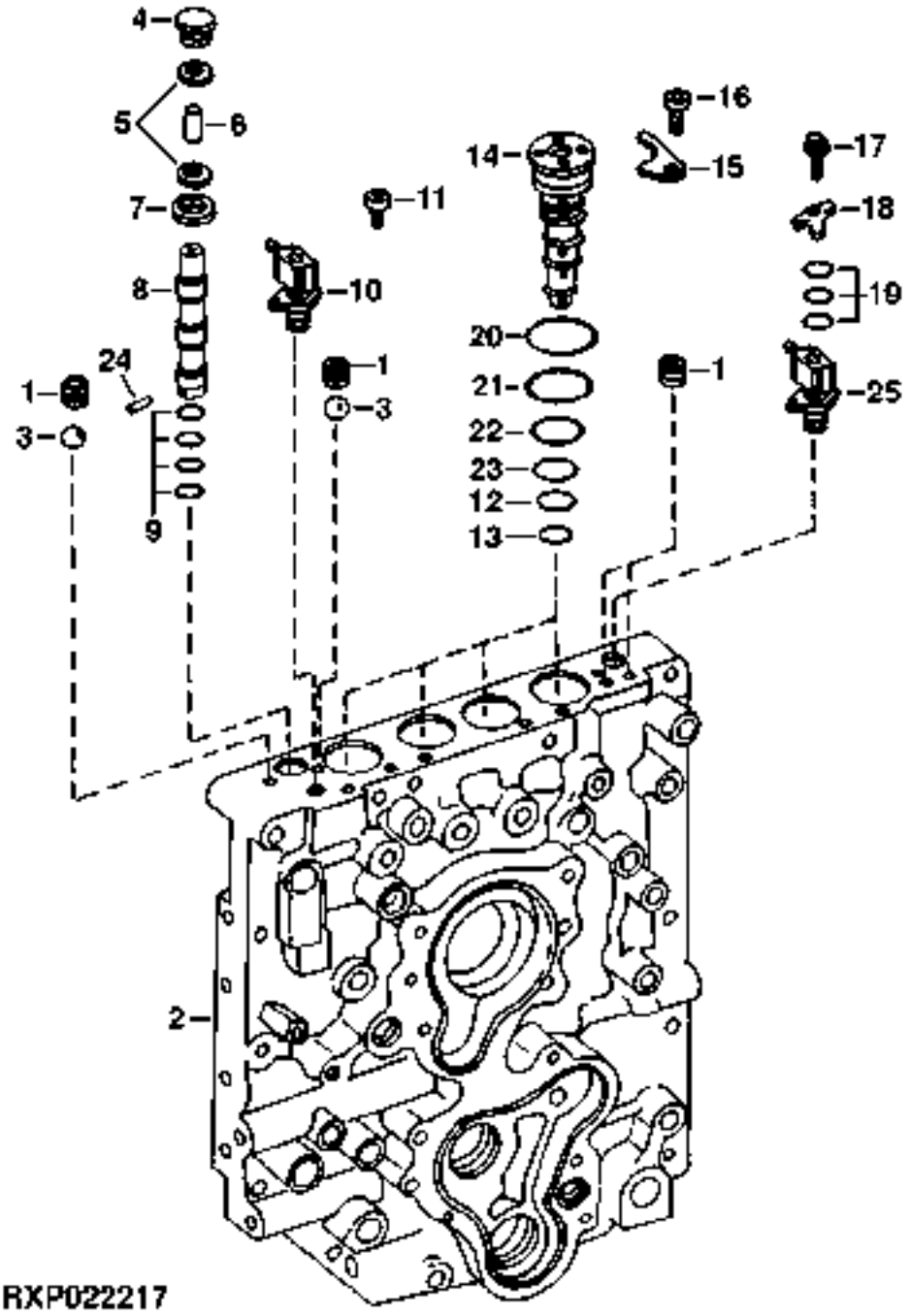

https://www.truck-manuals.net/

KEY	PART NO.	PART NAME	QTY	TRANSMISSION SERIAL NO.	ALL	REMARKS
1	R125064	PIPE PLUG	4		X	
2	RE70834	KIT	1		X	(MARKED R135816)
3	D2361	BALL	2		X	
4	R97116	KNOB	1		X	
5	24M7139	WASHER	2		X	
6	R108562	STUD	1		X	
7	AR103873	SEAL	1		X	
8	R108489	VALVE	1		X	
9	R33259	O-RING	4		X	
10	RE52319	SOLENOID VALVE	1		X	
11	19M7560	CAP SCREW	4		X	M6 X 16
12	R27928	O-RING	4		X	
13	P42061	O-RING	4		X	
14	RE155967	VALVE	4		X	(ALSO ORDER U41966, U11326, R106663, R62070, R27928 AND R151701) (SUB FOR RE153330 OR RE150946)
15	R95045	CLAMP	4		X	
16	19M7560	CAP SCREW	4		X	M6 X 16
17	19M7775	SCREW	2		X	(B) M6 X 16, HS 10.9
18	L100496	PLUG	1		X	(B)
19	RE47392	O-RING KIT	1		X	(B)
20	U41966	O-RING	4		X	
21	R106663	O-RING	4		X	
22	U11326	O-RING	4		X	
23	R62070	RING	4		X	
24	R44394	NEEDLE ROLLER	1		X	
25	RE52319	SOLENOID VALVE	1		X	(A)

(A) MECHANICAL FRONT WHEEL DRIVE
TRACTION AVANT MECANIQUE
MECHANISCHER FRONTANTRIEB
TRAZIONE ANTERIORE MECANNICA
TRACCION DELANTERA
MEKANISK FRAMHJULSDRIVNING

(B) W/O MECHANICAL FRONT WHEEL DRIVE
W/O TRACTION AVANT MECANIQUE
W/O MECHANISCHER FRONTANTRIEB
W/O TRAZIONE ANTERIORE MECANNICA
W/O TRACCION DELANTERA
W/O MEKANISK FRAMHJULSDRIVNING

https://www.truck-manuals.net/

MANIFOLD (TSN 8100,8200,8300,8400 020000-)
COLLECTEUR (TSN 8100,8200,8300,8400, 020000-)
KUPPLUNGS (TSN 8100,8200,8300,8400, 020000-)
COLLETTORE (TSN 8100,8200,8300,8400, 020000-)
MULTIPLE (TSN 8100,8200,8300,8400, 020000-)
KOPPLINGSGRENROER (TSN 8100,8200,8300,8400, 020000-)
RXP022337 -UN-24OCT97

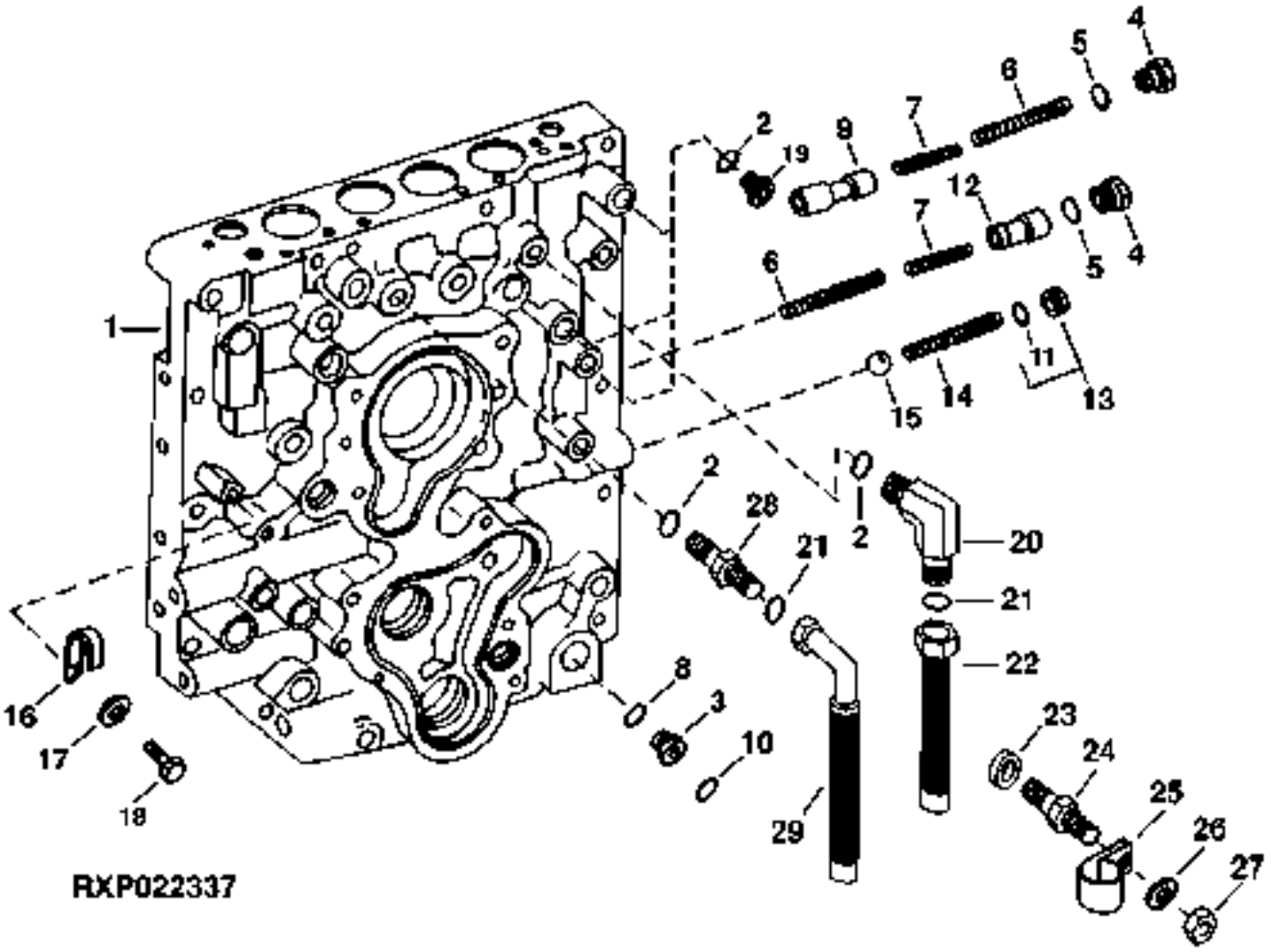

https://www.truck-manuals.net/

KEY	PART NO.	PART NAME	QTY	TRANSMISSION SERIAL NO.	ALL	REMARKS
1	RE70834	KIT	1		X	(MARKED R135816)
2	51M7041	O-RING	AR		X	(A)
3	38H5121	ADAPTER	1		X	(A)
4	R116115	FITTING	1		X	
5	51M7045	O-RING	1		X	
6	R150574	SPRING	2		X	
7	R150573	SPRING	2		X	
8	51M7045	O-RING	1		X	
9	R120235	VALVE	1		X	
10	T77858	O-RING	1		X	
11	51M7043	O-RING	1		X	15.300 X 2.200 MM
12	R108491	VALVE	1		X	
13	RE63751	PLUG	1		X	
14	R108502	SPRING	1		X	
15	D2361	BALL	1		X	
16	R72853	CLAMP	1	-XXXXXX	X	
17	24M7028	WASHER	1	-XXXXXX	X	10.500 X 20 X 2 MM
18	19M8324	CAP SCREW	1	-XXXXXX	X	M10 X 16
19	RE46684	PLUG	AR		X	(A)
20	38H5023	ELBOW FITTING	1		X	
21	T77613	O-RING	3		X	
22	RE154412	OIL LINE	1		X	
23	24M7240	WASHER	1		X	13 X 25 X 3 MM
24	R120578	STUD	1		X	
25	R35794	CLAMP	1		X	
26	24M7028	WASHER	1		X	10.500 X 20 X 2 MM
27	14M7244	NUT	1		X	M12
28	38H5009	ADAPTER	2		X	
29	RE154411	OIL LINE	2		X	

(A)MECHANICAL FRONT WHEEL DRIVE
TRACTION AVANT MECANIQUE
MECHANISCHER FRONTANTRIEB
TRAZIONE ANTERIORE MECANNICA
TRACCION DELANTERA
MEKANISK FRAMHJULSDRIVNING

https://www.truck-manuals.net/

MANIFOLD (TSN 8100,8200,8300 8400 020000-)
COLLECTEUR (TSN 8100,8200,8300,8400, 020000-)
KUPPLUNGS (TSN 8100,8200,8300,8400, 020000-)
COLLETTORE (TSN 8100,8200,8300,8400, 020000-)
MULTIPLE (TSN 8100,8200,8300,8400, 020000-)
KOPPLINGSGRENROER (TSN 8100,8200,8300,8400, 020000-)
RXP022792 -UN-24AUG98

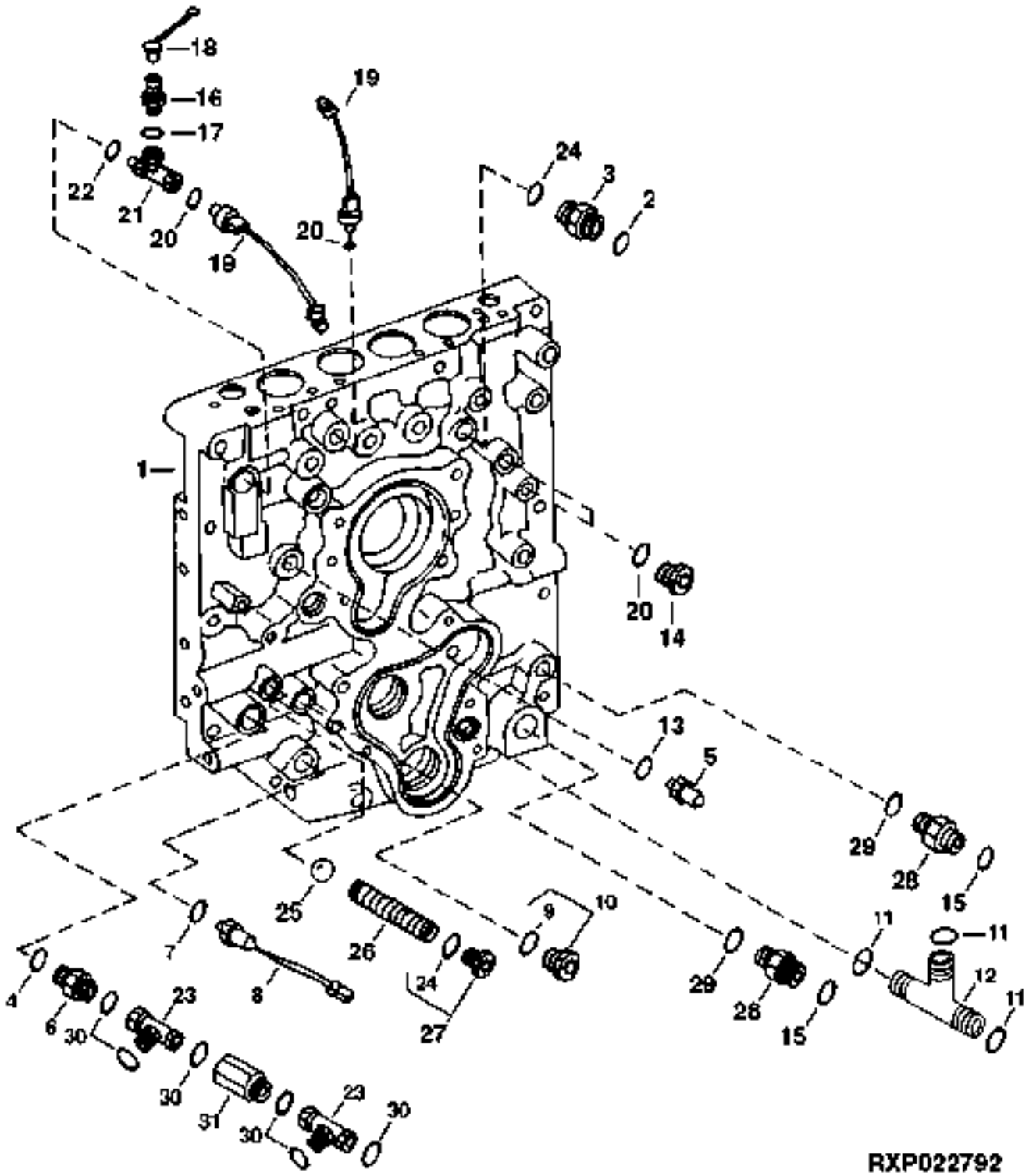

https://www.truck-manuals.net/

KEY	PART NO.	PART NAME	QTY	TRANSMISSION SERIAL NO.	ALL	REMARKS
1	RE70834	KIT	1		X	(MARKED R135816)
2	T77857	O-RING	1		X	
3	38H5003	ADAPTER	3		X	
4	51M7047	O-RING	3		X	
5	RE46534	SWITCH	1		X	
6	38H5005	ADAPTER	1		X	
7	51M7041	O-RING	1		X	
8	RE70062	SWITCH	1	-XXXXXX	X	
	RE46684	PLUG	1	XXXXXX-	X	
	51M7041	O-RING	1	XXXXXX-	X	
9	51M7041	O-RING	1		X	
10	RE46684	PLUG	1		X	
11	51M7047	O-RING	1		X	
12	38H5140	TEE FITTING	1		X	
13	T77613	O-RING	1		X	
14	RE46684	PLUG	2		X	
15	T77858	O-RING	2		X	
16	RE12187	RECEPTACLE	1		X	
17	51M7041	O-RING	1		X	
18	R77175	COVER	1		X	
19	RE160680	SWITCH	2		X	(SUB FOR RE66881)
20	51M7041	O-RING	4		X	
21	RE61274	TEE FITTING	1		X	
22	51M7041	O-RING	1		X	
23	38H5136	TEE FITTING	1		X	
24	51M7043	O-RING	2		X	
25	D2361R	BALL	1		X	
26	R108502	SPRING	1		X	
27	RE63751	PIPE PLUG	1		X	
28	38H5121	ADAPTER	2		X	
29	51M7045	O-RING	2		X	
30	T77858	O-RING	6		X	
31	RE51573	FITTING	1		X	

https://www.truck-manuals.net/

MANIFOLD (TSN 8100,8200,8300,8400 020000-)
COLLECTEUR (TSN 8100,8200,8300,8400, 020000-)
KUPPLUNGS (TSN 8100,8200,8300,8400, 020000-)
COLLETTORE (TSN 8100,8200,8300,8400, 020000-)
MULTIPLE (TSN 8100,8200,8300,8400, 020000-)
KOPPLINGSGRENROER (TSN 8100,8200,8300,8400, 020000-)
RXP022219 -UN-21AUG97

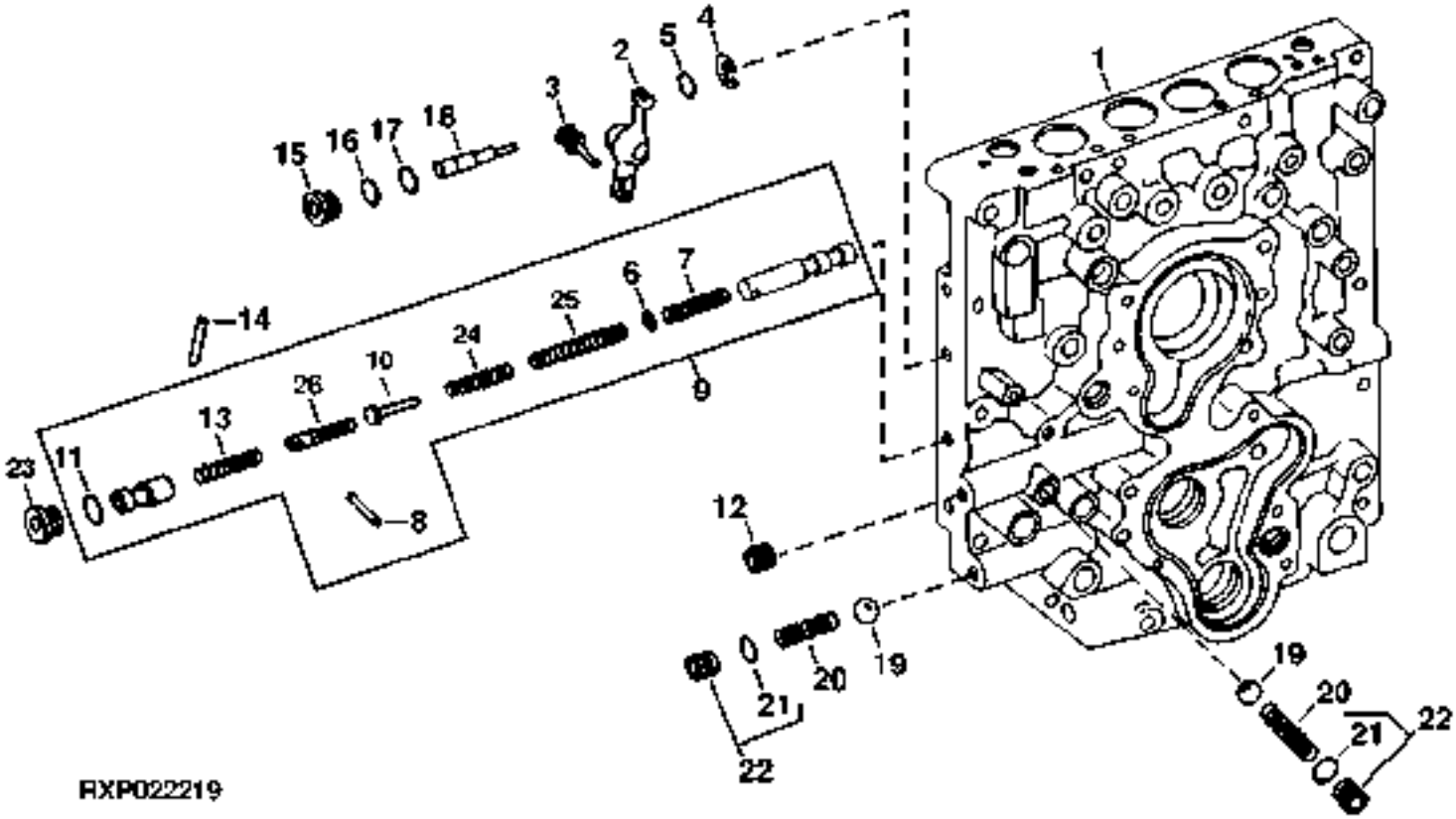

https://www.truck-manuals.net/

KEY	PART NO.	PART NAME	QTY	TRANSMISSION SERIAL NO.	ALL	REMARKS
1	RE70834	KIT	1		X	(MARKED R135816)
2	R108488	ARM	1		X	
3	R104745	PIN	1		X	
4	R72653	SNAP RING	1		X	
5	24M7420	WASHER	1		X	8.250 X 16 X 1.600 MM
6	R52665	THRUST WASHER	1		X	
7	R134582	SPRING	1		X	
8	34H261	SPRING PIN	1		X	
9	RE151801	KIT	1		X	
10	R134584	GUIDE	1		X	
11	51M7045	O-RING	1		X	19.300 X 2.200 MM
12	R125064	PIPE PLUG	1		X	
13	R104814	SPRING	1		X	
14	R44394	NEEDLE ROLLER	1		X	
15	R116115	FITTING	1		X	
16	51M7045	O-RING	1		X	19.300 X 2.200 MM
17	R33259	O-RING	1		X	
18	R108492	VALVE	1		X	
19	D2361R	BALL	2		X	
20	R108502	SPRING	2		X	
21	51M7043	O-RING	2		X	
22	RE63751	PLUG	2		X	
23	R116115	FITTING	1		X	
24	R134583	SPRING	1		X	(OUTER)
25	R134581	SPRING	1		X	(INNER)
26	R122197	LINK	1		X	

https://www.truck-manuals.net/

MANIFOLD (TSN 8100,8200,8300,8400 020000-)
COLLECTEUR (TSN 8100,8200,8300,8400, 020000-)
KUPPLUNGS (TSN 8100,8200,8300,8400, 020000-)
COLLETTORE (TSN 8100,8200,8300,8400, 020000-)
MULTIPLE (TSN 8100,8200,8300,8400, 020000-)
KOPPLINGSGRENROER (TSN 8100,8200,8300,8400, 020000-)
RXP022793 -UN-25AUG98

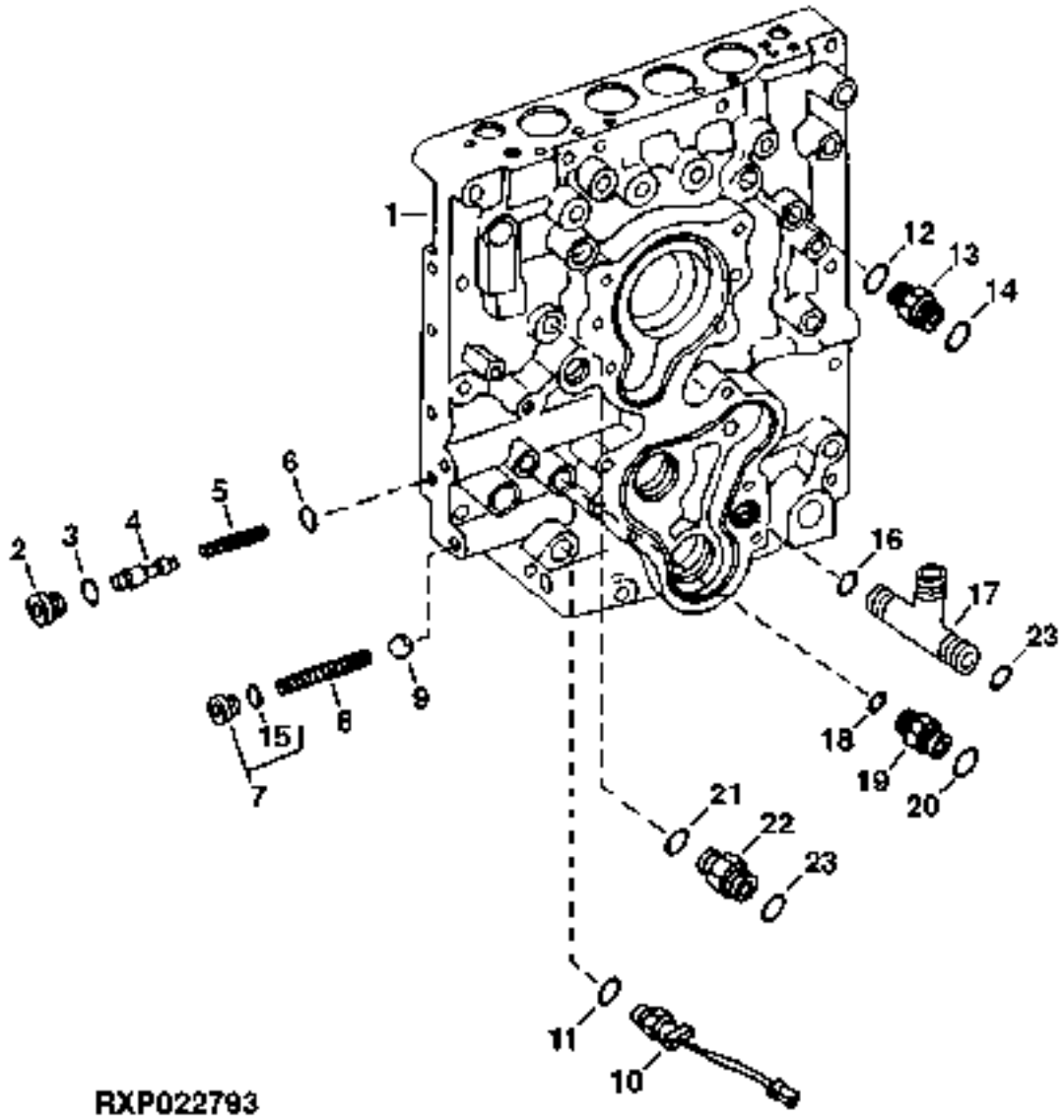

https://www.truck-manuals.net/

KEY	PART NO.	PART NAME	QTY	TRANSMISSION SERIAL NO.	ALL	REMARKS
1	RE70834	KIT	1		X	(MARKED R135816)
2	R116115	FITTING	1		X	
3	51M7045	O-RING	1		X	
4	R125848	VALVE	1		X	
5	R104814	SPRING	1		X	
6	R33259	O-RING	1		X	
7	RE63751	PLUG	1		X	
8	R108501	SPRING	1		X	
9	D2361	BALL	1		X	
10	RE70062	SWITCH	1	-XXXXXX	X	(SUB FOR RE52868)
	RE46684	PLUG	1	XXXXXX-	X	
	51M7041	O-RING	1	XXXXXX-	X	
11	51M7041	O-RING	1		X	
12	51M7043	O-RING	1		X	
13	RE46685	PLUG	1		X	
14	T77857	O-RING	1		X	
15	51M7043	O-RING	1		X	
16	51M7047	O-RING	1		X	
17	38H5140	TEE FITTING	1		X	
18	51M7041	O-RING	1		X	
19	38H5002	ADAPTER	1		X	
20	T77613	O-RING	1		X	
21	51M7043	O-RING	1		X	
22	38H5003	ADAPTER	1		X	
23	T77932	O-RING	2		X	

https://www.truck-manuals.net/

MANIFOLD COVER (TSN 8100,8200,8300,8400 020000-)
COUVRE-COLLECTEUR (TSN 8100,8200,8300,8400, 020000-)
KRUEMMERDECKEL (TSN 8100,8200,8300,8400, 020000-)
COPERCHIO DEL COLLETTORE (TSN 8100,8200,8300,8400, 020000-)
CUBIERTA DEL MULTIPLE (TSN 8100,8200,8300,8400, 020000-)
GRENROERSKAAPA (TSN 8100,8200,8300,8400, 020000-)
RXP022118 -UN-07JUN97

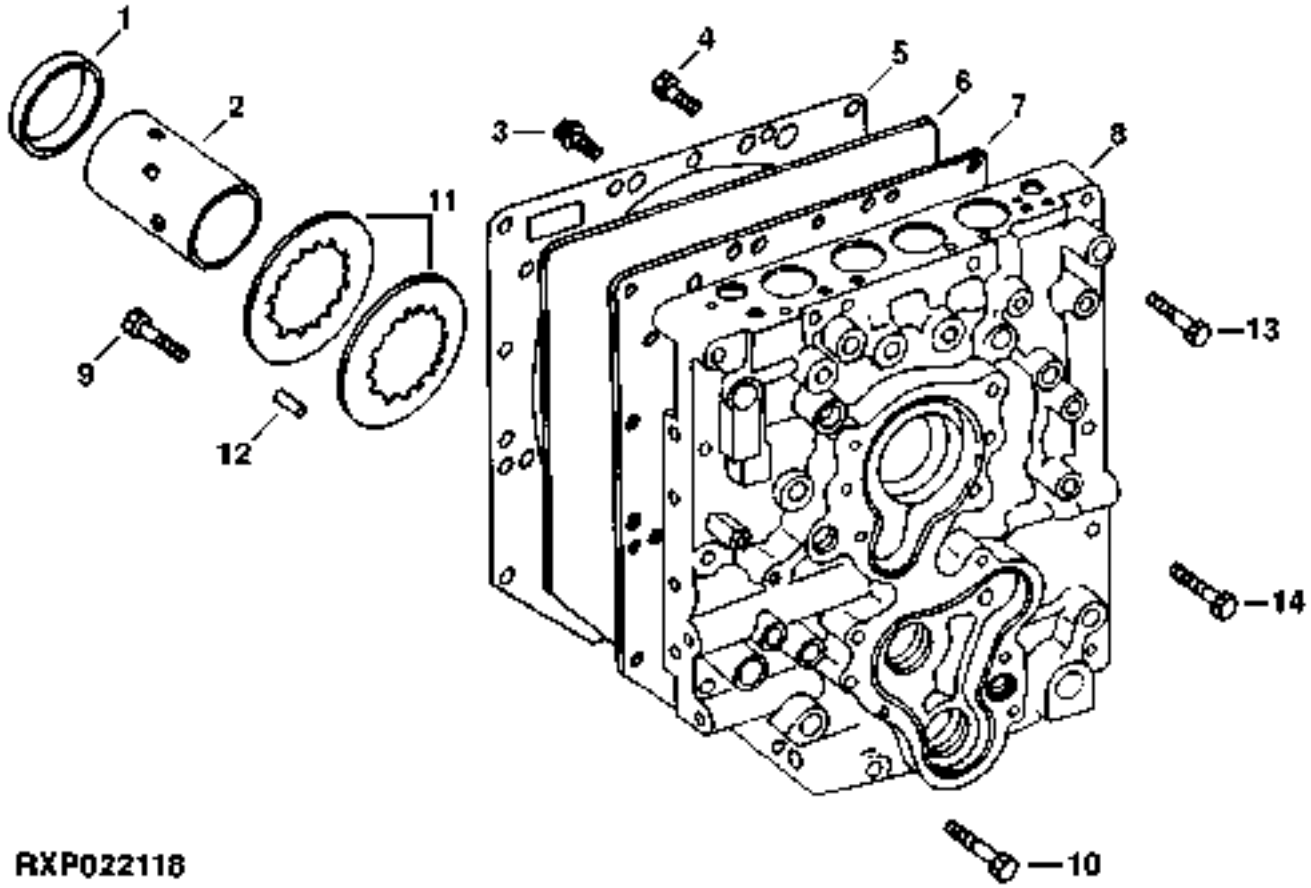

RXP022118

https://www.truck-manuals.net/

KEY	PART NO.	PART NAME	QTY	TRANSMISSION SERIAL NO.	ALL	REMARKS
1	R108547	BEARING CUP	1		X	
2	R108576	SLEEVE	1		X	
3	R153676	SCREW	11		X	HS 10.9
4	19M7807	SCREW	2		X	M10 X 60
5	R125971	GASKET	1		X	
6	R108468	END PLATE	1		X	
7	R125972	GASKET	1		X	
8	RE70834	KIT	1		X	(MARKED R135816)
9	R125379	CAP SCREW	4		X	HS 10.9
10	19M8737	SCREW	5		X	M12 X 140, HS 10.9
11	R105833	DISK SPRING	2		X	
12	T26565	DOWEL PIN	2		X	
13	19M7817	SCREW	12		X	M12 X 70
14	19M7820	SCREW	3		X	M12 X 100

https://www.truck-manuals.net/

TOW DISCONNECT (EUROPEAN VERSION) (TSN 8100,8200,8300,8400 020000-)
REMORQUE, DISPOSITIF DE DESACCOUPLEMENT (TSN 8100,8200,8300,8400, 020000-)
ABSCHLEPP-AUSRUECKUNG (TSN 8100,8200,8300,8400, 020000-)
DISINSERIMENTO DEL TRAINO (TSN 8100,8200,8300,8400, 020000-)
DESCONEXION PARA REMOLCAR (TSN 8100,8200,8300,8400, 020000-)
BOGSERINGSURKOPPLING (TSN 8100,8200,8300,8400, 020000-)
RE026010 -UN-23MAR95

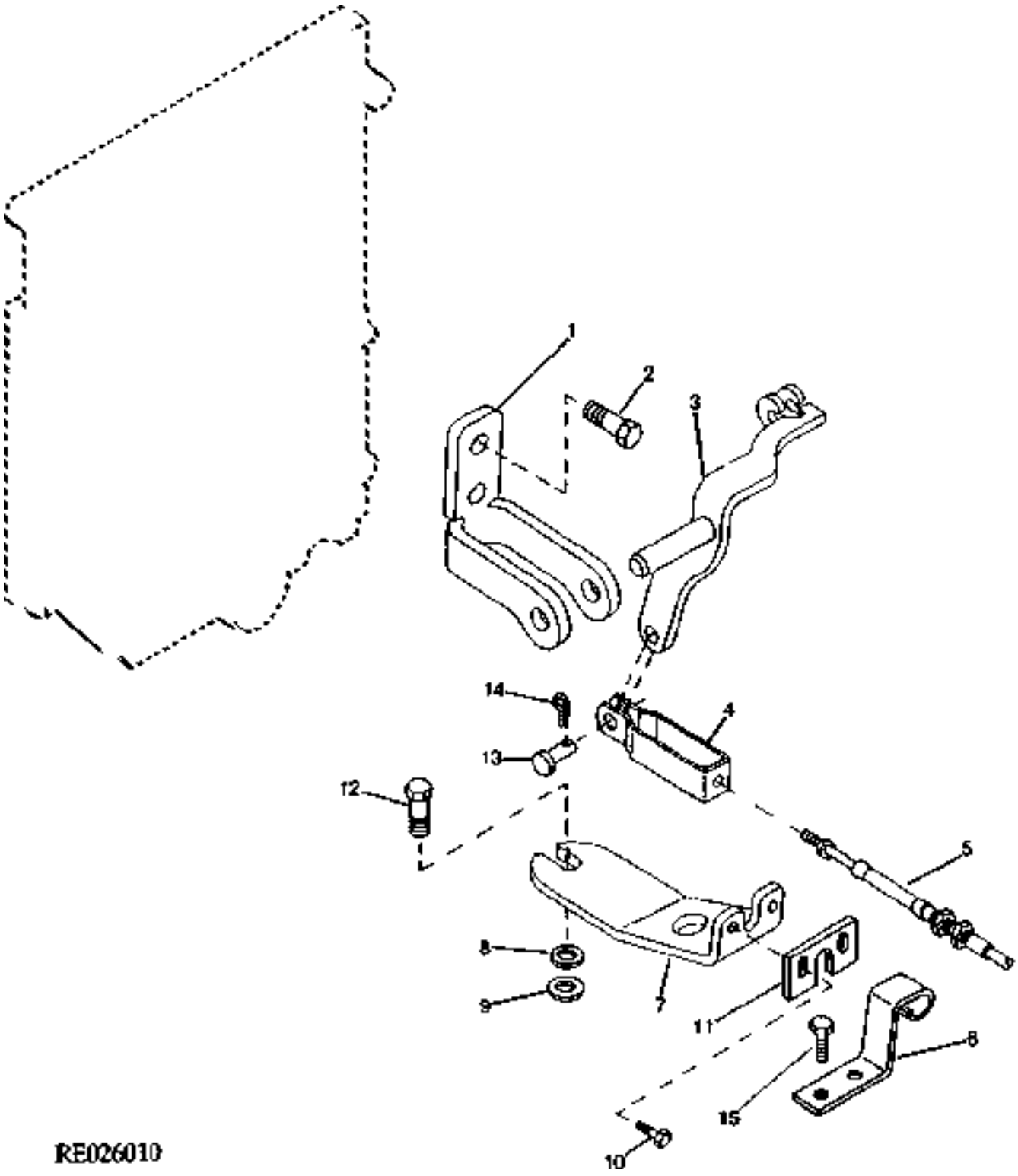

https://www.truck-manuals.net/

KEY	PART NO.	PART NAME	QTY	TRACTOR SERIAL NO.	ALL	REMARKS
1	R124004	BRACKET	1		X	
2	19M7932	CAP SCREW	2		X	M8 X 16
3	RE60320	LEVER	1		X	
4	RE60897	RETAINER	1		X	
5	RE61051	CABLE	1		X	
	T13814	CLAMP	1		X	
6	R119604	BRACKET	1		X	
7	R124005	BRACKET	1		X	
8	24M7346	WASHER	AR		X	11 X 20 X 2 MM
9	24M7028	WASHER	AR		X	10.500 X 20 X 2 MM
10	37M7079	SCREW	2		X	
11	R125144	CLIP	1		X	
12	19M7402	CAP SCREW	1		X	M10 X 25
13	J19366	PIN	1		X	
14	A5067R	SPRING LOCKING PIN	1		X	
15	37M7165	SCREW	2		X	

https://www.truck-manuals.net/

TRANSMISSION CASE REAR COVER (TSN 8100,8200,8300,8400 020000-)
COUVERCLE ARRIERE DE CARTER DE TRANSMISSION (TSN 8100,8200,8300,8400, 020000-)
HINTERE ABDECKUNG DES GETRIEBEGEHAEUSES (TSN 8100,8200,8300,8400, 020000-)
COPERCHIO POSTERIORE DELLA SCATOLA DELLA TRASMISSIONE (TSN 8100,8200,8300,8400 020000-)
CUBIERTA POSTERIOR DE LA CAJA DE LA TRANSMISION (TSN 8100,8200,8300,8400, 020000-)
TRANSMISSIONSKAAPANS BAKRE PLAAT (TSN 8100,8200,8300,8400, 020000-)
RXP022120 -UN-02JUN97

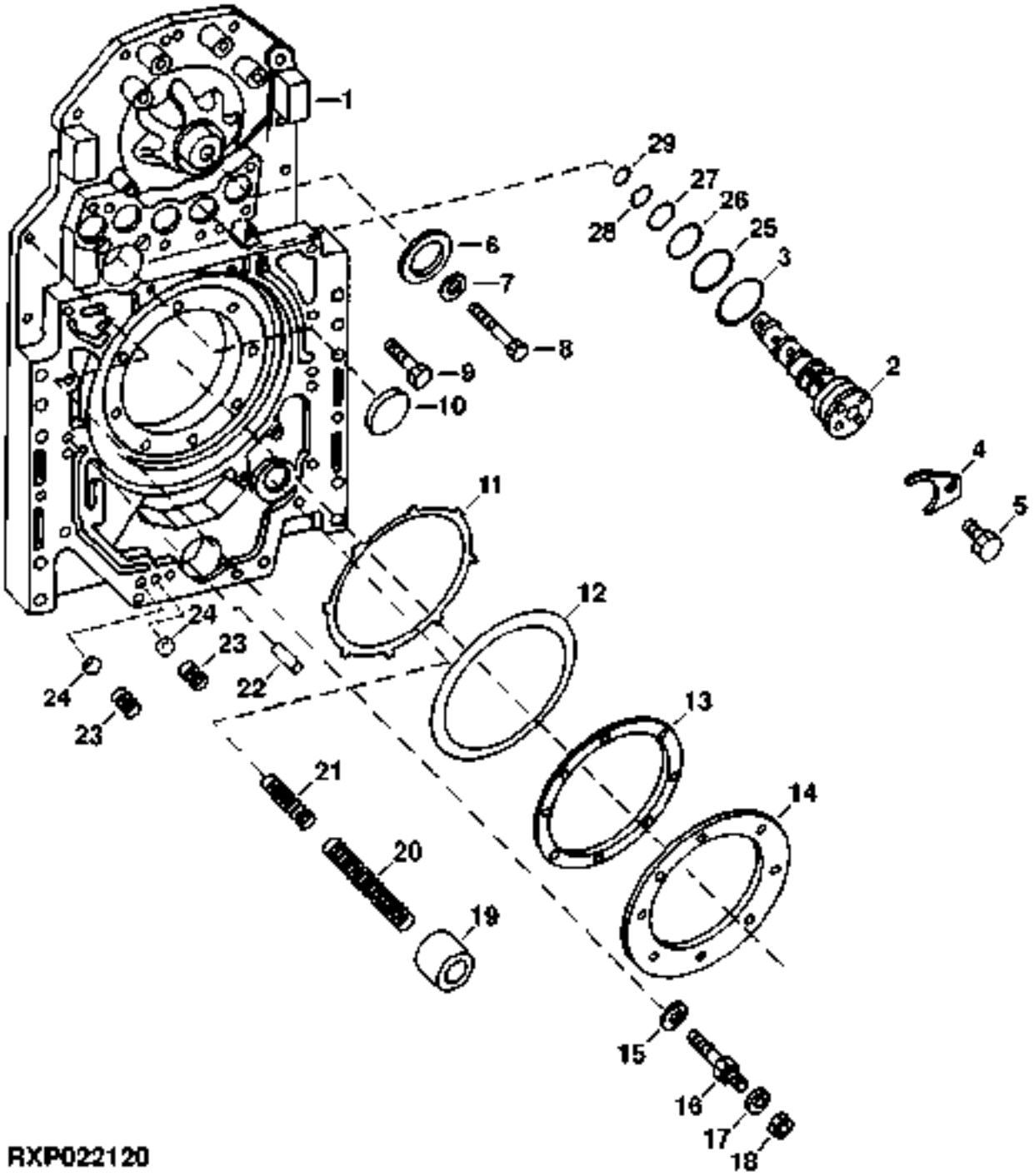

https://www.truck-manuals.net/

KEY	PART NO.	PART NAME	QTY	TRANSMISSION SERIAL NO.	ALL	REMARKS
1	RE71368	COVER	1		X	(MARKED R135516)
2	RE155966	VALVE	5		X	(ALSO ORDER T143166, U41966, R106663, R62070, R27928 AND P42061) (SUB FOR RE153329 OR RE150945)
3	U41966	O-RING	5		X	
4	R95045	CLAMP	5		X	
5	19M7932	CAP SCREW	5		X	M8 X 16
6	AH89023	SEAL	1		X	
7	24H1900	WASHER	1		X	17/32" X 2" X 1/4"
8	19M7791	SCREW	1		X	M12 X 40
9	19M7813	SCREW	3		X	M12 X 45
10	R26115	CAP	1		X	
11	R108481	PLATE	5		X	
12	RE45407	DISK, WITH INNER SPLINE	4		X	
13	RE45388	PISTON	1		X	
14	R108482	PLATE	1		X	
15	24M7028	WASHER	1		X	10.500 X 20 X 2 MM
16	R120578	STUD	1		X	
17	24M7240	WASHER	1		X	13 X 25 X 3 MM
18	14M7274	NUT	1		X	M10
19	R124175	PISTON	1		X	
20	R124173	SPRING	1		X	
21	R124174	COMPRESSION SPRING	1		X	
22	T26565	DOWEL PIN	2		X	
23	R128397	SPRING	2		X	
24	D2361R	BALL	2		X	
25	R106663	O-RING	5		X	
26	U11326	O-RING	5		X	
27	R62070	RING	5		X	
28	R27928	O-RING	5		X	
29	P42061	O-RING	5		X	

https://www.truck-manuals.net/

TRANSMISSION CASE REAR COVER (TSN 8100,8200,8300,8400 020000-)
COUVERCLE ARRIERE DE CARTER DE TRANSMISSION (TSN 8100,8200,8300,8400, 020000-)
HINTERE ABDECKUNG DES GETRIEBEGEHAEUSES (TSN 8100,8200,8300,8400, 020000-)
COPERCHIO POSTERIORE DELLA SCATOLA DELLA TRASMISSIONE (TSN 8100,8200,8300,8400 020000-)
CUBIERTA POSTERIOR DE LA CAJA DE LA TRANSMISION (TSN 8100,8200,8300,8400, 020000-)
TRANSMISSIONSKAAPANS BAKRE PLAAT (TSN 8100,8200,8300,8400, 020000-)
RXP022220 -UN-21AUG97

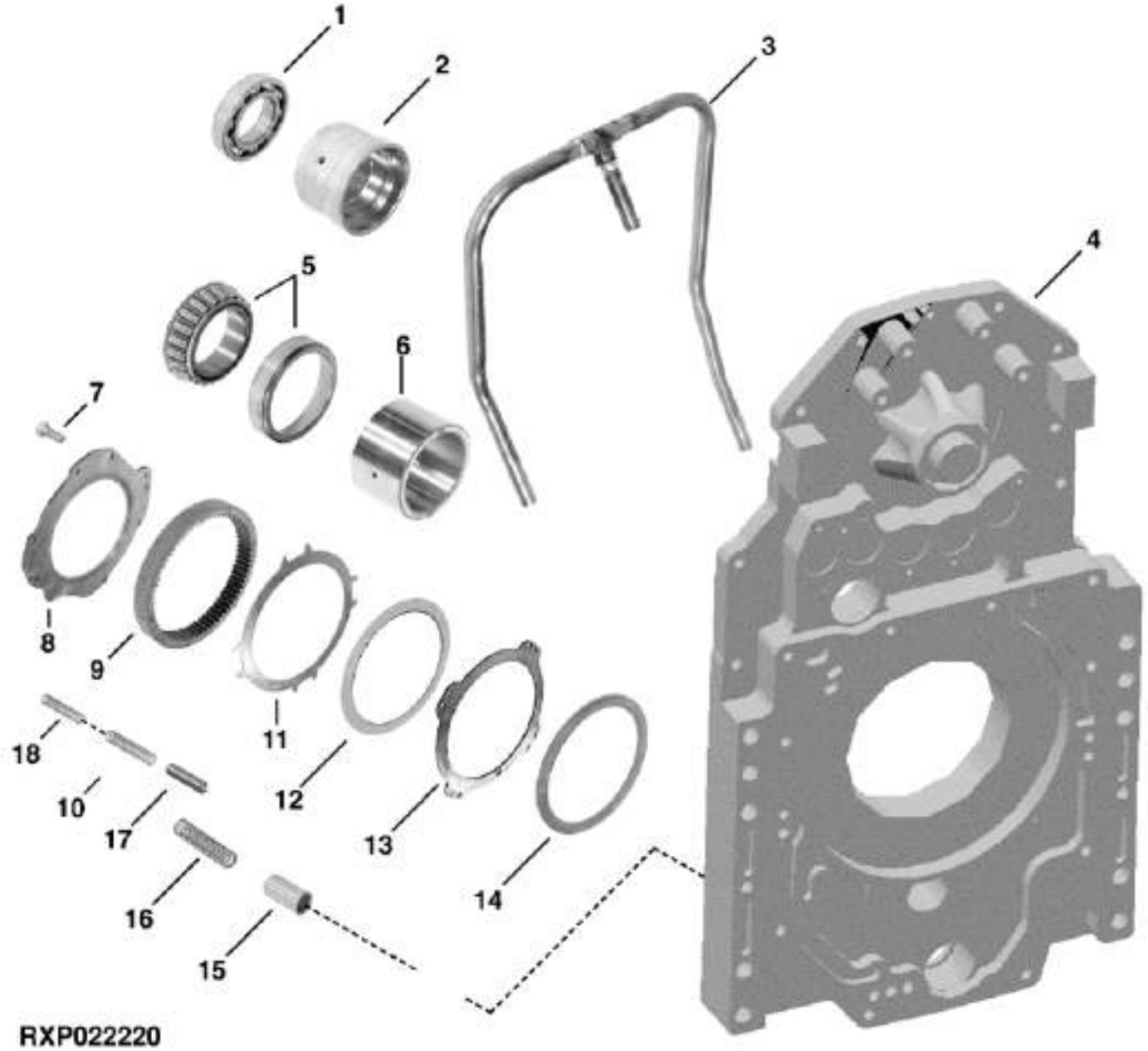

https://www.truck-manuals.net/

KEY	PART NO.	PART NAME	QTY	TRANSMISSION SERIAL NO.	ALL	REMARKS
1	RE67948	BEARING	1		X	
2	R108582	SLEEVE	1		X	
3	RE70389	OIL LINE	1		X	
4	RE71368	COVER	1		X	(MARKED R135516)
5	RE45399	ROLLER BEARING	1		X	
6	R108583	SLEEVE	1		X	
7	R124725	SELF-LOCKING SCREW	8		X	M10 X 1.5, HS 10.9
8	R108472	PLATE	1		X	
9	R108474	RING GEAR	1		X	
10	R134390	SPRING	8		X	
11	R86308	PLATE	3		X	
12	RE45415	DISK, WITH INNER SPLINE	4		X	
13	R135537	BRAKE DISK	1		X	
14	RE45388	PISTON	1		X	W/SEAL
15	R120147	VALVE	1		X	
16	R121741	SPRING	1		X	
17	34M7124	SPRING PIN	8		X	
18	R134391	SPRING	8		X	
..	R135621	PLUG	4		X	
..	AT107509	PLUG	1		X	

https://www.truck-manuals.net/

REVERSE IDLER (TSN 8100,8200,8300,8400 020000-)
PIGNON FOU DE MARCHE ARRIERE (TSN 8100,8200,8300,8400, 020000-)
ZWISCHENRAD DES RUECKWAERTSGANGES (TSN 8100,8200,8300,8400, 020000-)
INGRANAGGIO INTERMEDIO DI RETROMARCIA (TSN 8100,8200,8300,8400, 020000-)
ENGRANAJE INTERMEDIO DE RETROCESO (TSN 8100,8200,8300,8400, 020000-)
BACKDREV (TSN 8100,8200,8300,8400, 020000-)
RXP025046 -UN-01JAN94

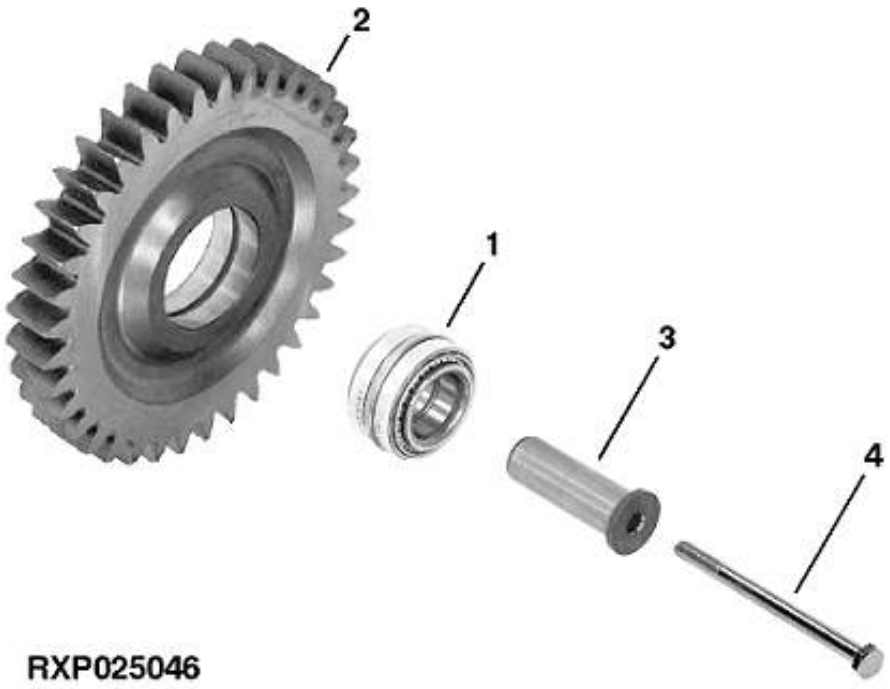

KEY	PART NO.	PART NAME	QTY	TRANSMISSION SERIAL NO.	ALL	REMARKS
1	AH94661	BEARING	1		X	
2	R108454	GEAR	1		X	
3	R108455	SHAFT	1		X	
4	19M7838	SCREW	1		X	M12 X 130

https://www.truck-manuals.net/

MEMORANDA
MEMORANDA
MEMORANDA
MEMORANDA
MEMORANDA
MEMORANDA

https://www.truck-manuals.net/

INPUT SHAFT (TSN 8100,8200,8300,8400 020000-)
ARBRE PRIMAIRE (TSN 8100,8200,8300,8400, 020000-)
EINGANGSWELLE (TSN 8100,8200,8300,8400, 020000-)
ALBERO DI INGRESSO (TSN 8100,8200,8300,8400, 020000-)
EJE DE ENTRADA (TSN 8100,8200,8300,8400, 020000-)
INGAAENDE AXEL (TSN 8100,8200,8300,8400, 020000-)
RXP022226 -UN-05SEP97

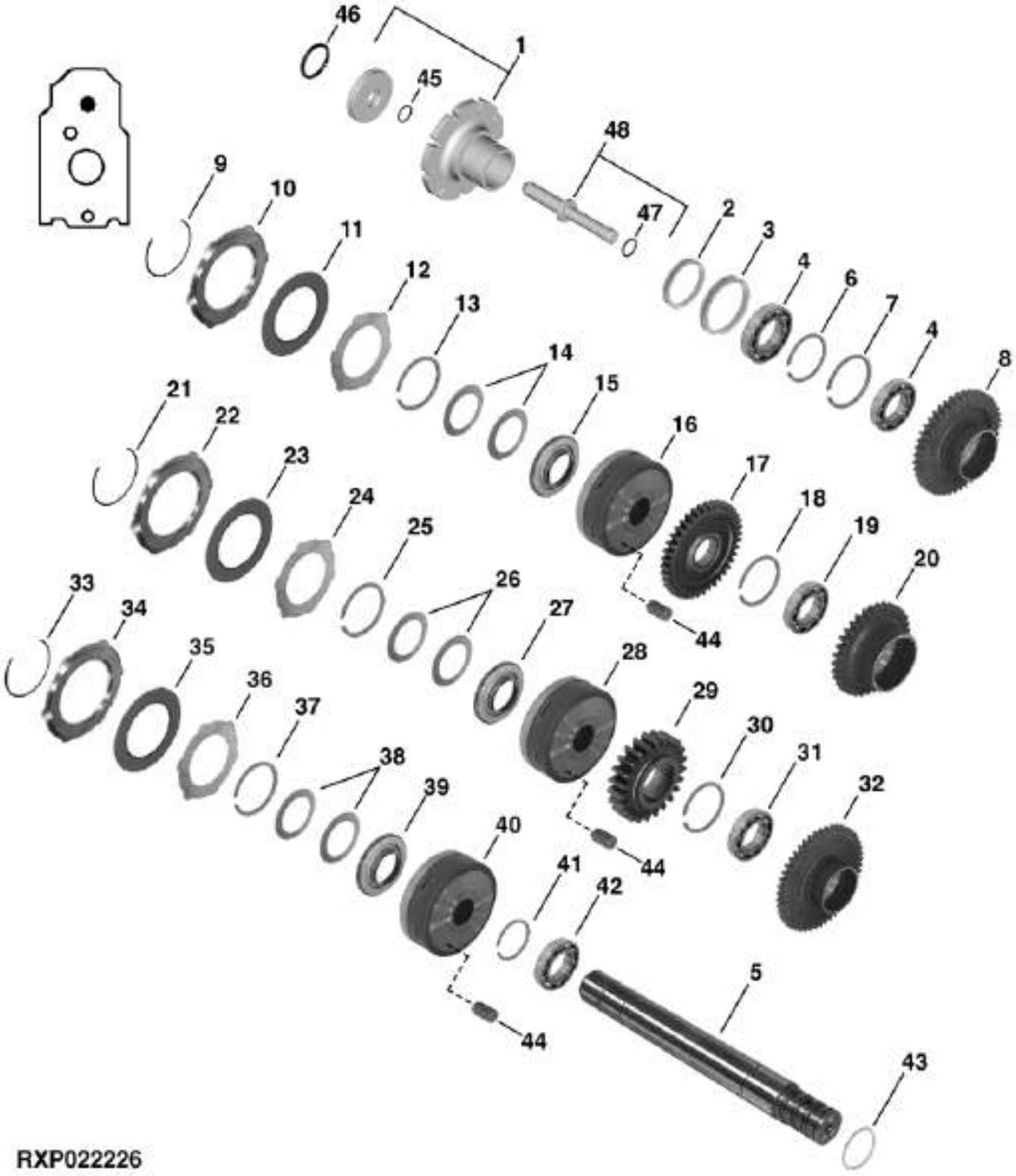

https://www.truck-manuals.net/

KEY	PART NO.	PART NAME	QTY	TRANSMISSION SERIAL NO.	ALL	REMARKS
1	RE70206	HUB	1		X	
2	R130561	V-RING SEAL	1		X	
3	RE158066	SEAL	1		X	(SUB FOR RE13181, THIS APPLICATION)
4	RE67948	BEARING	1		X	
5	RE67483	SHAFT	1	-029133	X	(SUB RE70088, RE70206, RE71323 AND F3353R)
	RE70088	SHAFT	1	029134-	X	
6	R115171	SNAP RING	2		X	
7	R108496	SNAP RING	1		X	
8	R132236	GEAR	1		X	
9	R99692	SNAP RING	1		X	
10	R108530	CLUTCH PLATE	1		X	
11	RE67458	DISK, WITH INNER SPLINE	5		X	
12	R108507	CLUTCH PLATE	5		X	
13	R26246	SNAP RING	1		X	
14	R133095	DISK SPRING	5		X	
15	RE45374	PISTON	1		X	W/SEAL
16	RE70833	DRUM	1		X	(MARKED R135349)
17	R108447	GEAR	1		X	
18	R108496	SNAP RING	1		X	
19	RE67948	BEARING	1		X	
20	R132245	GEAR	1		X	
21	R99692	SNAP RING	1		X	
22	R108530	CLUTCH PLATE	1		X	
23	RE67458	DISK, WITH INNER SPLINE	5		X	
24	R108507	CLUTCH PLATE	5		X	

THIS PARTS LISTING IS CONTINUED

https://www.truck-manuals.net/

INPUT SHAFT-CONTINUED (TSN 8100,8200,8300,8400 020000-)
ARBRE PRIMAIRE-A SUIVRE (TSN 8100,8200,8300,8400, 020000-)
EINGANGSWELLE-FORTS. (TSN 8100,8200,8300,8400, 020000-)
ALBERO DI INGRESSO-CONTINUA (TSN 8100,8200,8300,8400, 020000-)
EJE DE ENTRADA-CONTINUACION (TSN 8100,8200,8300,8400, 020000-)
INGAAENDE AXEL-FORTS. (TSN 8100,8200,8300,8400, 020000-)
RXP022226 -UN-05SEP97

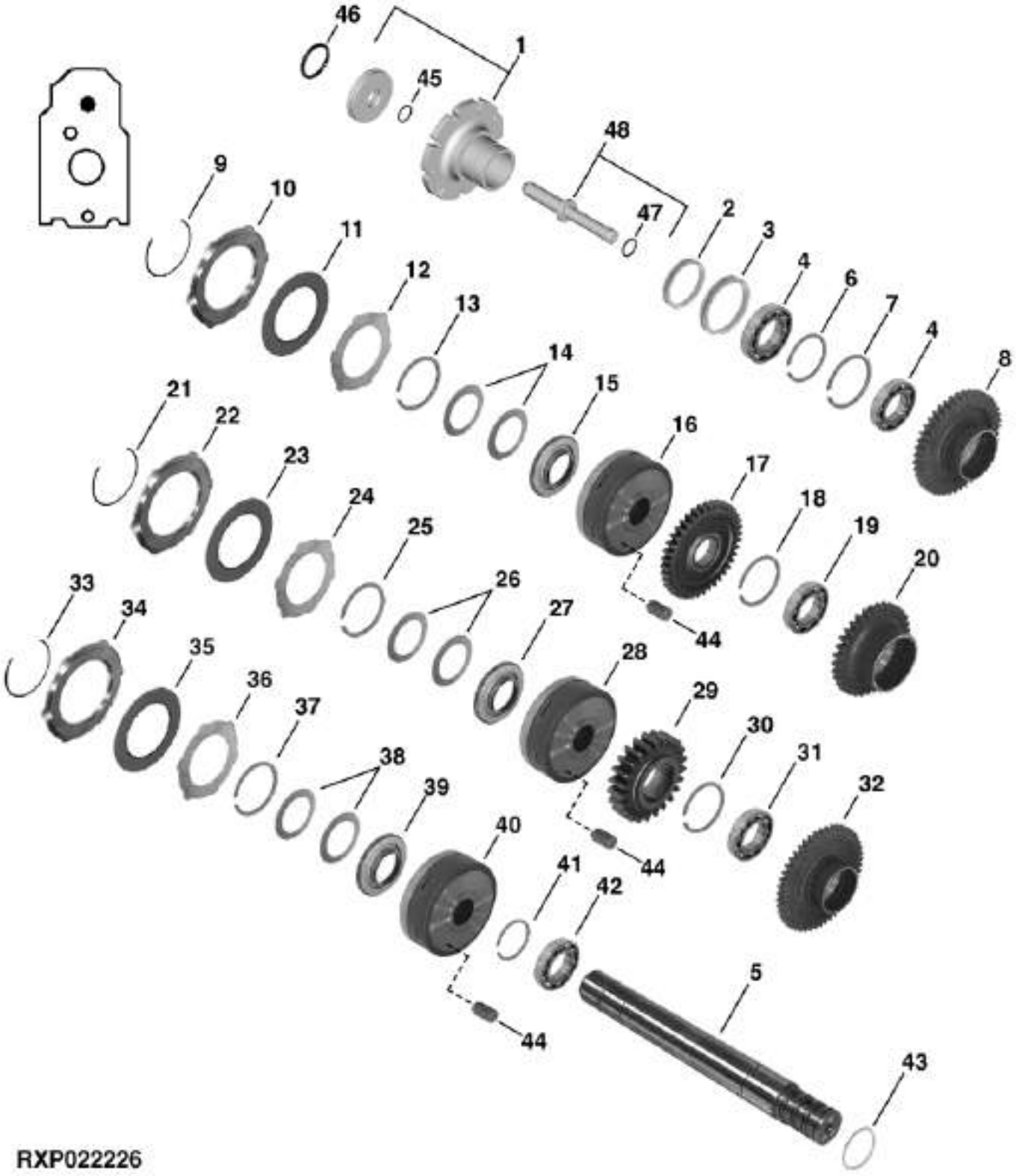

https://www.truck-manuals.net/

KEY	PART NO.	PART NAME	QTY	TRANSMISSION SERIAL NO.	ALL	REMARKS
25	R26246	SNAP RING	1		X	
26	R133095	DISK SPRING	5		X	
27	RE45374	PISTON	1		X	W/SEAL
28	RE70833	DRUM	1		X	(MARKED R135349)
29	R108584	GEAR	1		X	
30	R108496	SNAP RING	1		X	
31	RE67948	BEARING	1		X	
32	R132247	GEAR	1		X	
33	R99692	SNAP RING	1		X	
34	R108530	CLUTCH PLATE	1		X	
35	RE67458	DISK, WITH INNER SPLINE	5		X	
36	R108507	CLUTCH PLATE	5		X	
37	R135096	SNAP RING	1		X	
38	R133095	DISK SPRING	1		X	
39	RE45374	PISTON	1		X	W/SEAL
40	RE70833	DRUM	1		X	(MARKED R135349)
41	R115171	SNAP RING	1		X	
42	RE67948	BEARING	1		X	
43	R115508	RING	5		X	
44	R1612R	DOWEL PIN	1		X	
45	F3353R	O-RING	1		X	
46	R132237	O-RING	1		X	
47	R132239	O-RING	1		X	
48	RE71323	BREATHER	1		X	

https://www.truck-manuals.net/

COUNTERSHAFT (TSN 8100,8200,8300,8400 020000-)
ARBRE DE'RENVOI (TSN 8100,8200,8300,8400, 020000-)
GEGENWELLE (TSN 8100,8200,8300,8400, 020000-)
CONTRALBERO (TSN 8100,8200,8300,8400, 020000-)
CONTRAEJE (TSN 8100,8200,8300,8400, 020000-)
MELLANAXEL (TSN 8100,8200,8300,8400, 020000-)
RE026014 -UN-13MAR95

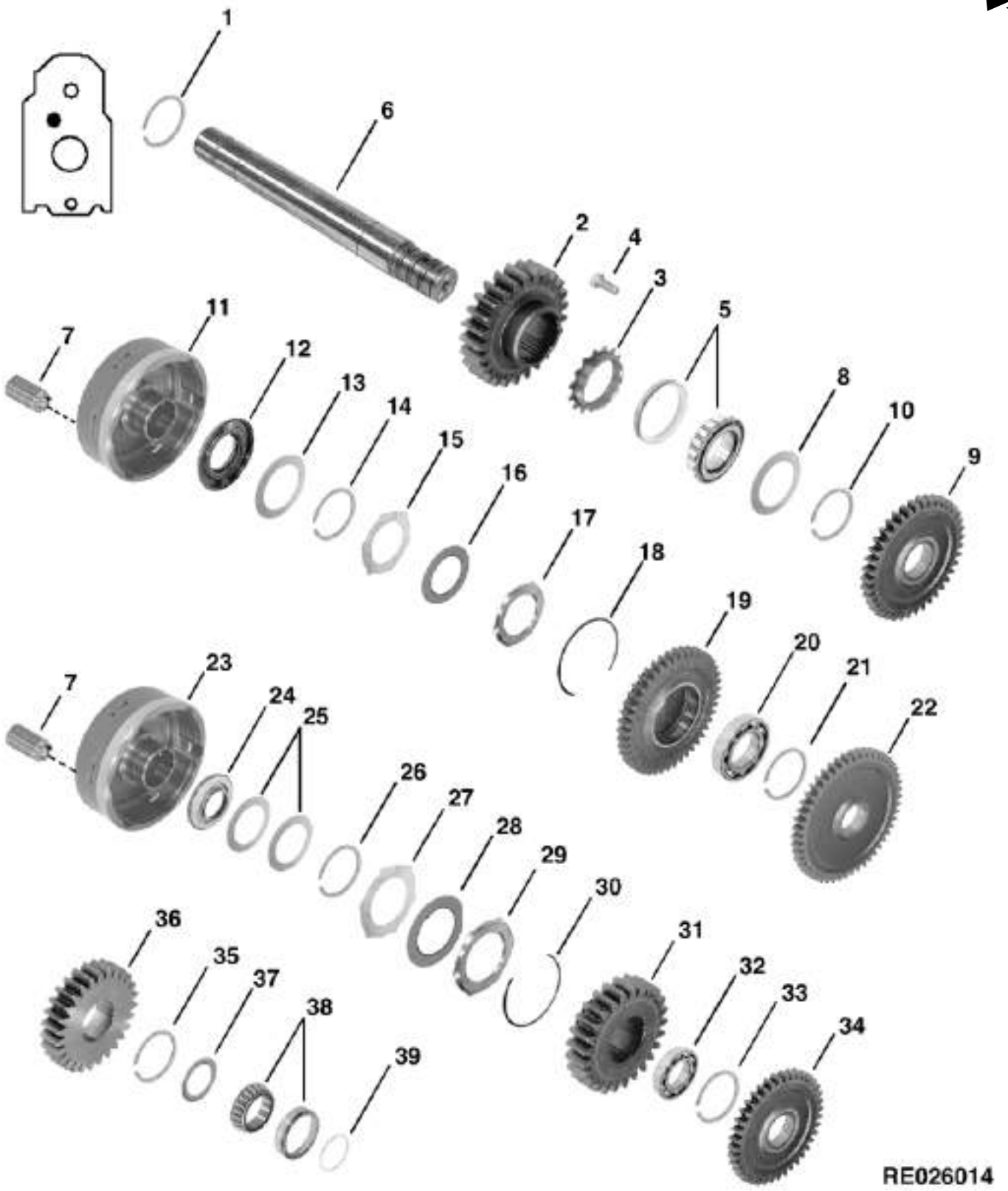

https://www.truck-manuals.net/

KEY	PART NO.	PART NAME	QTY	TRANSMISSION SERIAL NO.	ALL	REMARKS
1	R115171	SNAP RING	1		X	
2	R108437	GEAR	1		X	
3	R125196	NUT	1		X	
4	R91842	SCREW	1		X	
5	RE45399	ROLLER BEARING	1		X	
6	RE55581	SHAFT	1		X	
7	R1612R	DOWEL PIN	1		X	
8	R108573	THRUST WASHER	1		X	
9	R108447	GEAR	1		X	
10	R115171	SNAP RING	1		X	
11	RE70833	DRUM	1		X	
12	RE45374	PISTON	1		X	W/SEAL
13	R133095	DISK SPRING	5		X	
14	R26246	SNAP RING	1		X	
15	R108507	CLUTCH PLATE	5		X	
16	RE67458	DISK, WITH INNER SPLINE	5		X	
17	R108530	CLUTCH PLATE	1		X	
18	R99692	SNAP RING	1		X	
19	R132236	GEAR	1		X	
20	RE67948	BEARING	1		X	
21	R108496	SNAP RING	1		X	
22	R127196	GEAR	1		X	D-RANGE
23	RE70833	DRUM	1		X	
24	RE45374	PISTON	1		X	W/SEAL
25	R133095	DISK SPRING	5		X	
26	R26246	SNAP RING	1		X	
27	R108507	CLUTCH PLATE	5		X	
28	RE67458	DISK, WITH INNER SPLINE	5		X	
29	R108530	CLUTCH PLATE	1		X	
30	R99692	SNAP RING	1		X	
31	R132246	GEAR	1		X	
32	RE67948	BEARING	1		X	
33	R108496	SNAP RING	1		X	
34	R108460	GEAR	1		X	
35	R115171	SNAP RING	1		X	
36	R108459	GEAR	1		X	
37	R108573	THRUST WASHER	1		X	
38	RE45399	ROLLER BEARING	1		X	
39	R115508	RING	4		X	

https://www.truck-manuals.net/

OIL PUMP (TSN 8100,8200,8300,8400 020000-)
POMPE A HUILE (TSN 8100,8200,8300,8400, 020000-)
OELPUMPE (TSN 8100,8200,8300,8400, 020000-)
POMPA DELL'OLIO (TSN 8100,8200,8300,8400, 020000-)
BOMBA DE ACEITE (TSN 8100,8200,8300,8400, 020000-)
OLJEPUMP (TSN 8100,8200,8300,8400, 020000-)
RXP021383 -UN-21NOV95

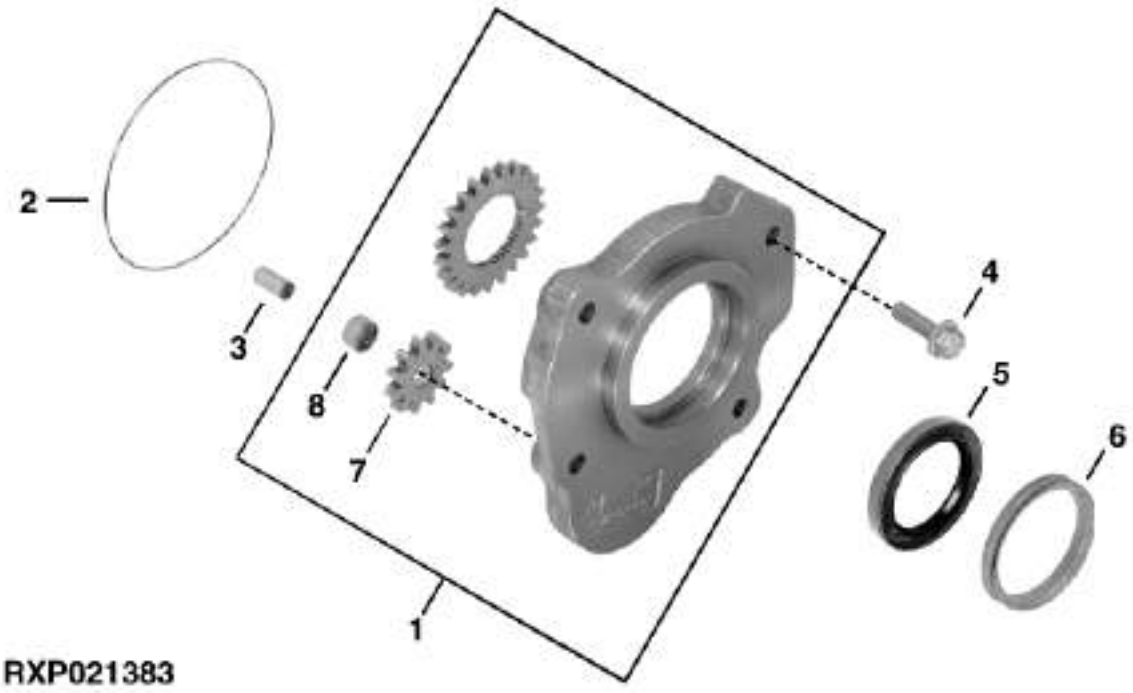

KEY	PART NO.	PART NAME	QTY	TRANSMISSION SERIAL NO.	ALL	REMARKS
1	RE63465	PUMP	1		X	(MARKED R134054)
2	R99039	O-RING	1		X	
3	R114219	SHAFT	1		X	
4	19M7835	SCREW	4		X	M10 X 35
5	RE32442	SEAL	1		X	
6	R119207	SEAL	1		X	
7	R108486	GEAR	1		X	
8	RE45406	NEEDLE BEARING	1		X	

https://www.truck-manuals.net/

TRANSMISSION COVER (W/O MFWD) (TSN 8100,8200,8300,8400 020000-)
COUVERCLE DE TRANSMISSION (W/O MFWD) (TSN 8100,8200,8300,8400 020000-)
GETRIEBEABDECKUNG (W/O MFWD) (TSN 8100,8200,8300,8400 020000-)
COPERTURA DELLA TRANSMISSIONE (W/O MFWD) (TSN 8100,8200,8300,8400 020000-
CUBIERTA DE LA TRANSMISION (W/O MFWD) (TSN 8100,8200,8300,8400 020000-)
KAAPA FOER TRANSMISSION (W/O MFWD) (TSN 8100,8200,8300,8400 020000-)
RXP022109 -UN-07JUN97



KEY	PART NO.	PART NAME	QTY	TRANSMISSION SERIAL NO.	ALL	REMARKS
1	19M7789	SCREW	4		X	M12 X 30
2	R108569	COVER	1		X	
3	T39741	RING	1		X	

https://www.truck-manuals.net/

TRANSMISSION OUTPUT SHAFT (TSN 8100,8200,8300,8400 020000-)
ARBRE DE SORTIE DE TRANSMISSION (TSN 8100,8200,8300,8400 020000-)
GETRIEBEABTRIEBSWELLE (TSN 8100,8200,8300,8400 020000-)
ALBERO DI USCITA DELLA TRASMISSIONE (TSN 8100,8200,8300,8400 020000-)
EJE DE SALIDA DE LA TRANSMISION (TSN 8100,8200,8300,8400 020000-)
TRANSMISSIONENS UTGAAENDE AXEL (TSN 8100,8200,8300,8400 020000-)
RXP022227 -UN-21AUG97

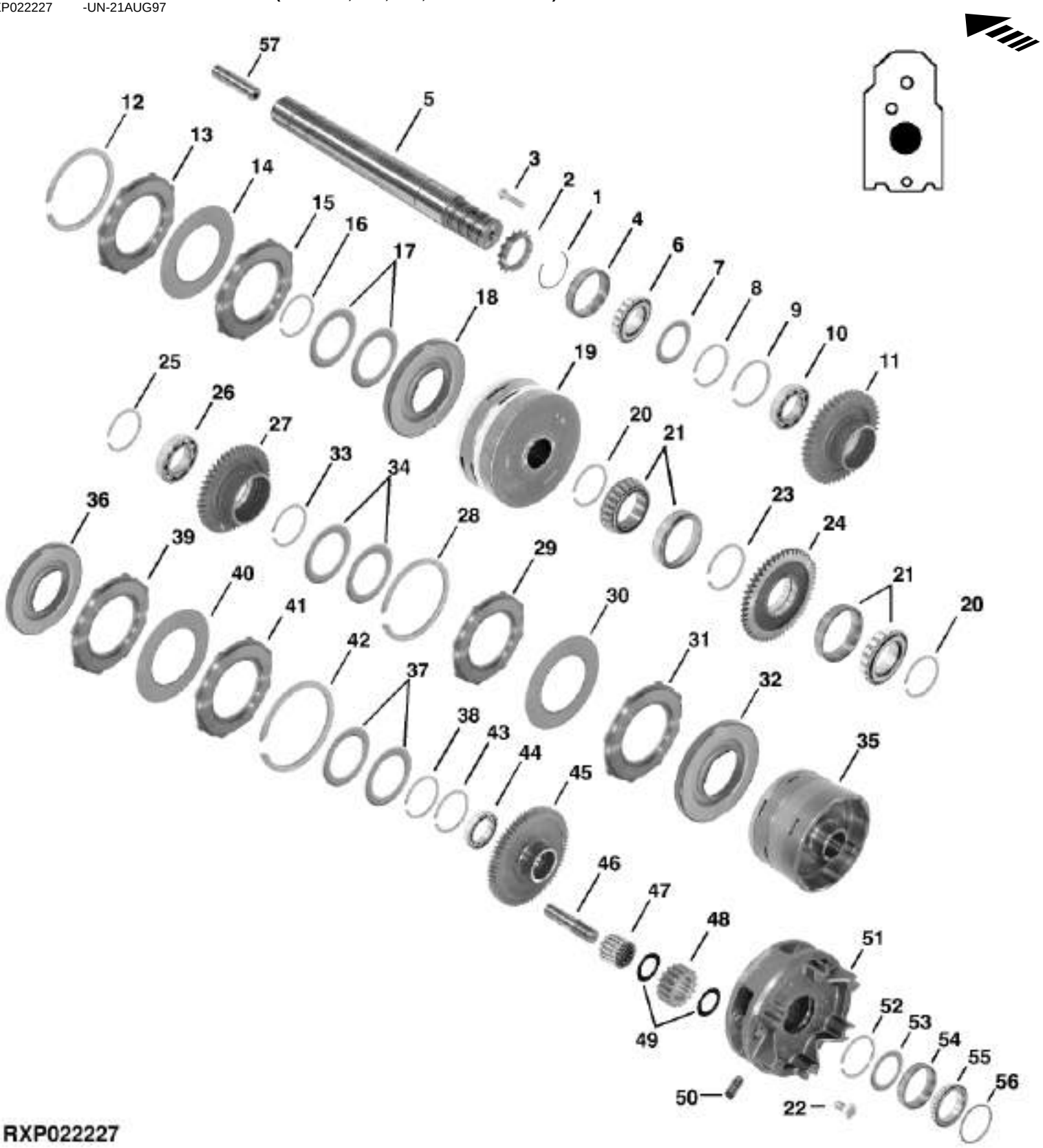

RXP022227

https://www.truck-manuals.net/

KEY	PART NO.	PART NAME	QTY	TRANSMISSION SERIAL NO.	ALL	REMARKS
1	R114345	SNAP RING	1		X	
2	R128775	NUT	1		X	
3	R91842	SCREW	1		X	
4	R108547	BEARING CUP	1		X	
5	RE150781	KIT	1		X	
	RE150608	VALVE	3		X	
	15H559	PIPE PLUG	3		X	1/4"
6	R108546	BEARING CONE	1		X	
7	R115331	THRUST WASHER	1		X	
8	R114345	SNAP RING	1		X	
9	R108496	SNAP RING	1		X	
10	RE67949	BALL BEARING	1		X	
11	R132250	GEAR	1		X	
12	R108512	SNAP RING	1		X	
13	R108511	CLUTCH PLATE	1		X	
14	RE67457	CLUTCH DISK	7		X	
15	R108509	CLUTCH PLATE	7		X	
16	R135364	SNAP RING	3		X	
17	R134075	DISK SPRING	7		X	
18	RE70838	PISTON	1		X	W/SEAL-3 GROOVES
19	R134986	DRUM	1		X	
20	R114345	SNAP RING	2		X	
21	R108546	BEARING CONE	2		X	
	R108547	BEARING CUP	2		X	
22	R122390	SELF-LOCKING SCREW	3		X	
23	R108528	SNAP RING	1		X	
24	R108449	GEAR	1		X	
25	R108496	SNAP RING	1		X	
26	RE67949	BALL BEARING	1		X	
27	R132249	GEAR	1		X	
28	R108512	SNAP RING	1		X	
29	R108511	CLUTCH PLATE	1		X	
30	RE67457	CLUTCH DISK	3		X	
31	R108509	CLUTCH PLATE	3		X	

https://www.truck-manuals.net/

TRANSMISSION OUTPUT SHAFT-CONTINUED (TSN 8100,8200,8300,8400 020000-)
ARBRE DE SORTIE DE TRANSMISSION- A SUIVRE (TSN 8100,8200,8300,8400 020000-)
GETRIEBEABTRIEBSWELLE-FORTE. (TSN 8100,8200,8300,8400 020000-)
ALBERO DI USCITA DELLA TRASMISSIONE-CONTINUA (TSN 8100,8200,8300,8400 020000-)
EJE DE SALIDA DE LA TRANSMISION-CONTINACION (TSN 8100,8200,8300,8400 020000-)
TRANSMISSIONENS UTGAAENDE AXEL-FORTE. (TSN 8100,8200,8300,8400 020000-)
RXP022227 -UN-21AUG97

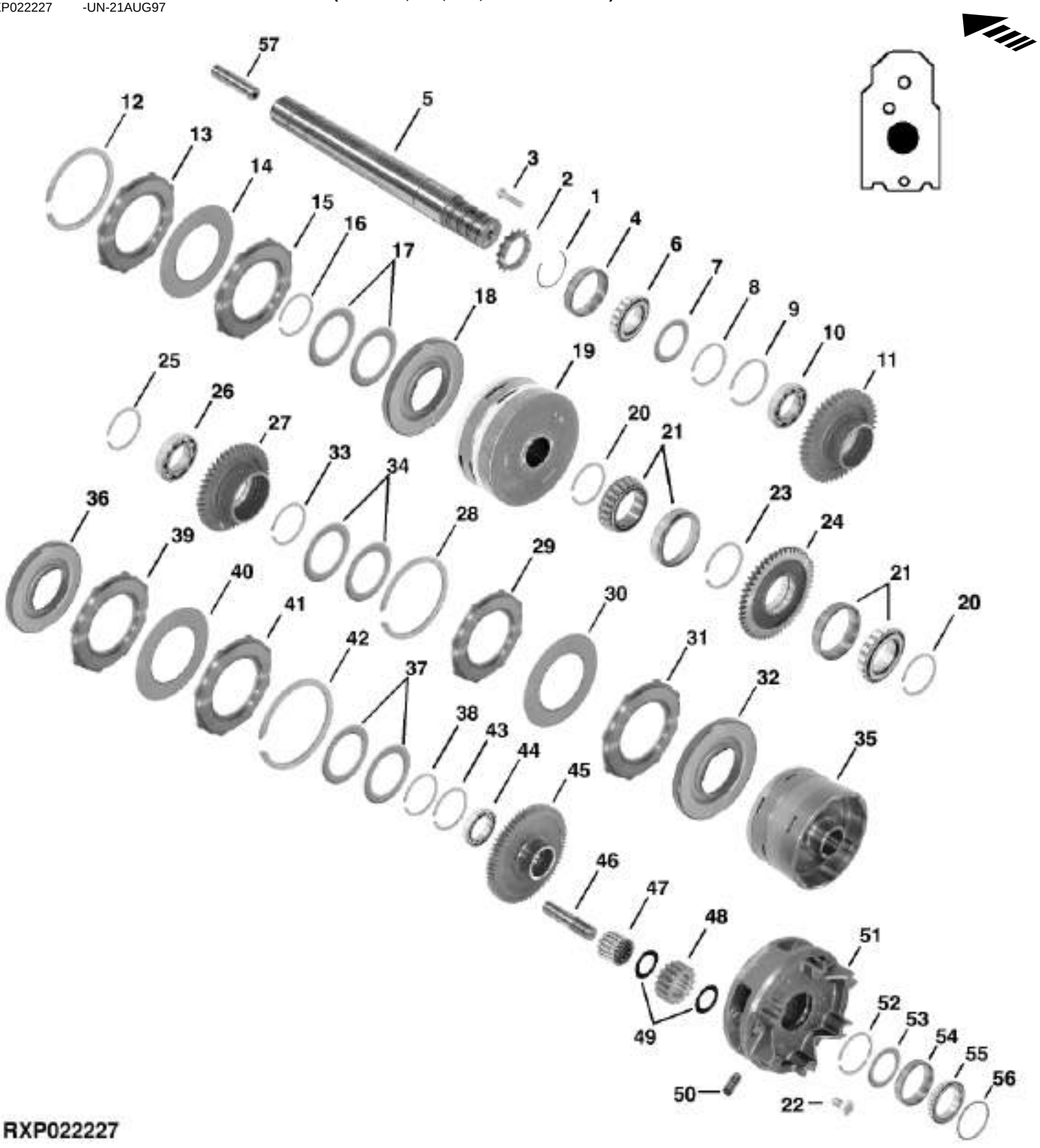

RXP022227

https://www.truck-manuals.net/

KEY	PART NO.	PART NAME	QTY	TRANSMISSION SERIAL NO.	ALL	REMARKS
32	RE70838	PISTON	1		X	W/SEAL-3 GROOVES
33	R135364	SNAP RING	1		X	
34	R134075	DISK SPRING	5		X	
35	R135380	DRUM	1		X	C & D-RANGE
36	RE70838	PISTON	1		X	W/SEAL-3 GROOVES
37	R134075	DISK SPRING	7		X	
38	R124952	SNAP RING	1		X	
39	R108510	CLUTCH PLATE	7		X	
40	RE67457	CLUTCH DISK	7		X	
41	R108511	CLUTCH PLATE	1		X	
42	R108512	SNAP RING	1		X	
43	R108496	SNAP RING	1		X	
44	RE67949	BALL BEARING	1		X	
45	R132248	GEAR	1		X	C-RANGE Z=67
46	R108478	PINION SHAFT	3		X	
47	RE45410	NEEDLE BEARING	3		X	
48	R108473	PLANET PINION	3		X	
49	R108534	THRUST WASHER	6		X	
50	R122374	PIN	3		X	
51	R108469	PLANET PINION CARRIER	1		X	
52	R114345	SNAP RING	1		X	
53	R115331	THRUST WASHER	1		X	
54	R108547	BEARING CUP	1		X	
55	R108546	BEARING CONE	1		X	
56	R115507	RING	6		X	
57	N137598	SPRING PIN	1		X	

https://www.truck-manuals.net/

PTO SHAFT (TSN 8100,8200,8300,8400 020000-)
ARBRE DE PDF (TSN 8100,8200,8300,8400 020000-)
ZAPFWELLENSCHAFT (TSN 8100,8200,8300,8400 020000-)
ALBERO DELLA PTO (TSN 8100,8200,8300,8400 020000-)
EJE DE TDF (TSN 8100,8200,8300,8400 020000-)
KRAFTUTTAGSAXEL (TSN 8100,8200,8300,8400 020000-)
RXP022228 -UN-21AUG97

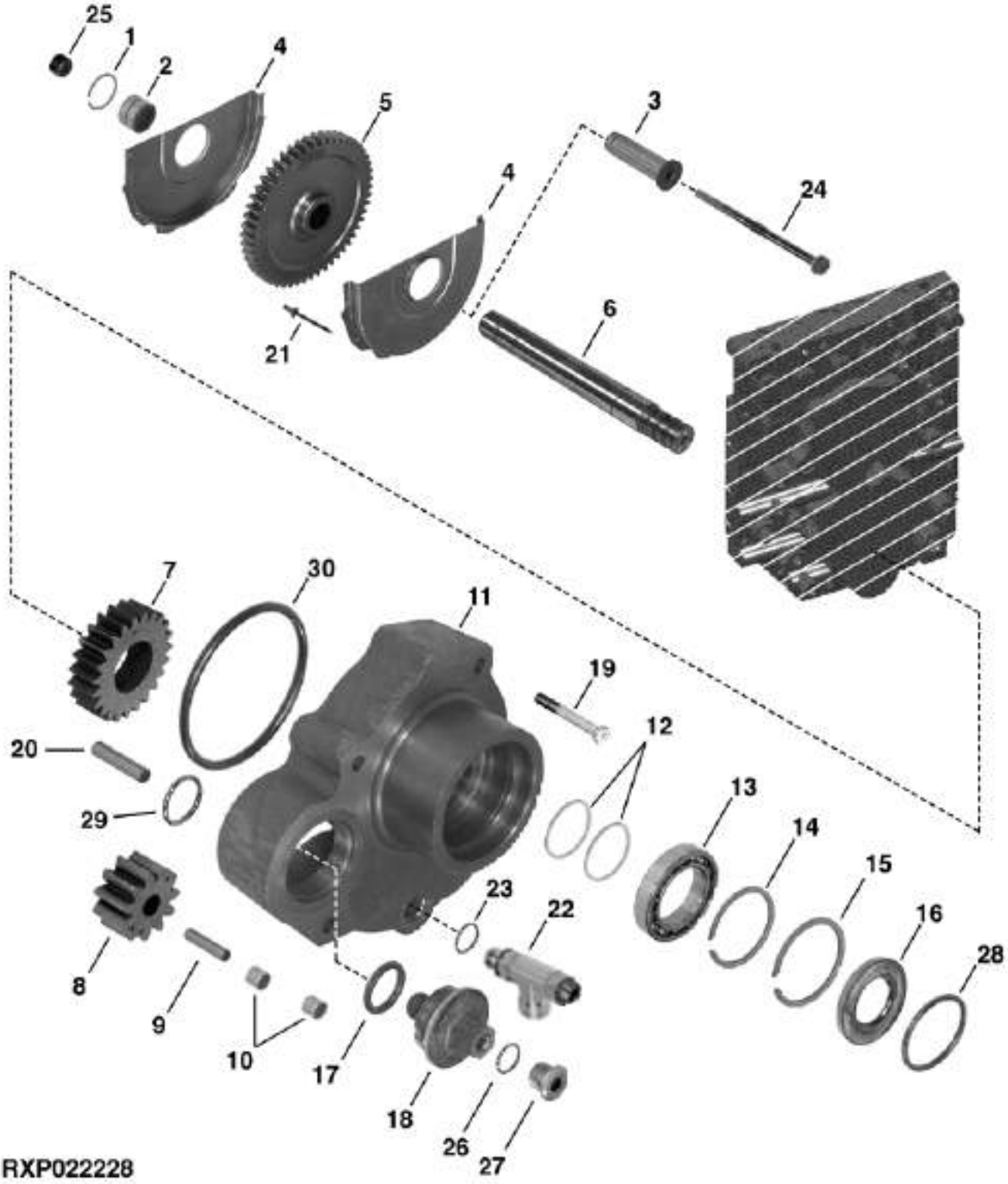

https://www.truck-manuals.net/

KEY	PART NO.	PART NAME	QTY	TRANSMISSION SERIAL NO.	ALL	REMARKS
1	40M7201	SNAP RING	1		X	
2	RE57653	ROLLER BEARING	1		X	
3	R121603	SHAFT	1		X	
4	R108531	PTO POWR-GARD SHIELD	2		X	
5	R108471	GEAR	1		X	
6	R108508	SHAFT	1		X	
7	R108484	GEAR	1		X	
8	R108485	GEAR	1		X	
9	R115233	SHAFT	1		X	
10	JD10116	NEEDLE BEARING	2		X	
11	R108537	HOUSING	1		X	
12	R115508	RING	2		X	
13	JD8568	BALL BEARING	1		X	
14	R28640	SNAP RING	1		X	
15	40M7115	SNAP RING	1		X	
16	RE64427	SEAL	1	-026292	X	
	RE52341	SEAL	1	026293-	X	
17	H63262	O-RING	1		X	
18	R114108	PLUG	1		X	
19	19M7809	SCREW	4		X	M10 X 70
20	R28671	DOWEL PIN	2		X	
21	R126821	PIN	6		X	
22	38H5140	TEE FITTING	1		X	
23	51M7047	O-RING	1		X	
24	RE47959	BOLT	1		X	M12 X 1.75 HS 10.9
25	R125064	PIPE PLUG	1		X	
26	51M7042	O-RING	1		X	13.300 X 2.200 MM
27	RE52242	PLUG	1		X	
28	T121280	SEAL	1		X	
29	F3171R	O-RING	1		X	
30	N153493	O-RING	1		X	

https://www.truck-manuals.net/

MFWD CLUTCH (TSN 8100,8200,8300,8400 020000-)
EMBRAYAGE DE TAM (TSN 8100,8200,8300,8400 020000-)
MF-KUPPLUNG (TSN 8100,8200,8300,8400 020000-)
FRIZIONE DELLA MFWD (TSN 8100,8200,8300,8400 020000-)
EMBRAGUE DE TDM (TSN 8100,8200,8300,8400 020000-)
MFHD-KOPPLING (TSN 8100,8200,8300,8400 020000-)
RXP021542 -UN-20JUN96

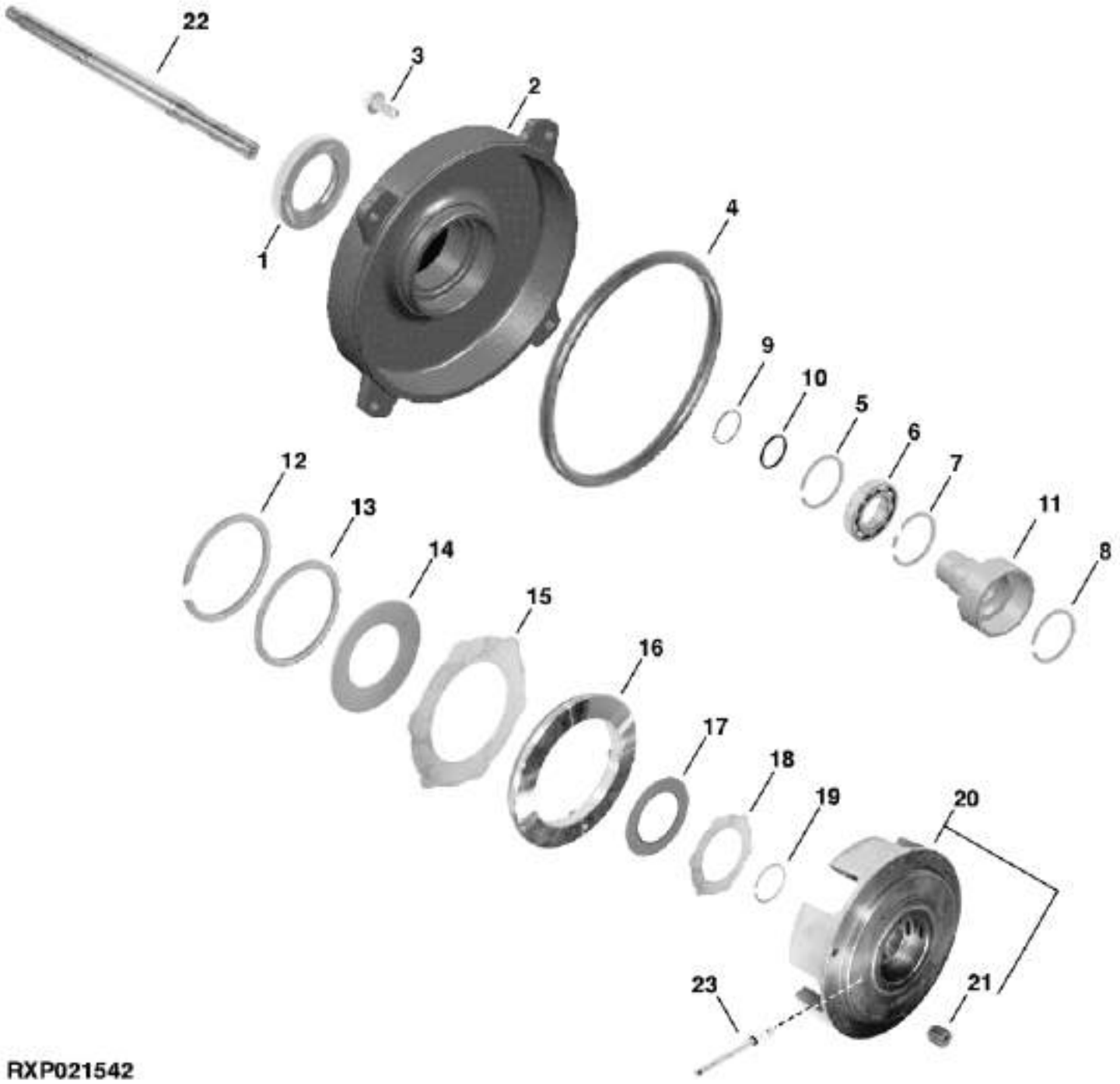

https://www.truck-manuals.net/

KEY	PART NO.	PART NAME	QTY	TRANSMISSION SERIAL NO.	ALL	REMARKS
1	AH89023	SEAL	1		X	
2	R131811	COVER	1		X	(A)
	R108569	COVER	1		X	(B)
3	19M7789	SCREW	4		X	M12 X 30, HS 10.9
4	T39741	RING	1		X	
5	T44824	SNAP RING	1		X	
6	RE67948	BEARING	1		X	
7	R108496	SNAP RING	1		X	
8	L1610N	SNAP RING	1		X	
9	R124576	SNAP RING	1		X	
10	U10289	O-RING	1		X	
11	R108519	HUB	1		X	
12	R108526	SNAP RING	1		X	
13	R108533	RETAINER	1		X	
14	R108525	DISK SPRING	1		X	
15	R108521	PLATE	1		X	
16	RE155037	SEAL	1		X	(SUB FOR R108520)
17	RE67458	DISK, WITH INNER SPLINE	6		X	
18	R108507	CLUTCH PLATE	6		X	
19	R114345	SNAP RING	1		X	
20	RE69122	DRUM	1		X	(MARKED R108517)
21	RE45393	VALVE SEAT	1		X	
22	R130895	SHAFT	1		X	
23	AT107509	PLUG	1		X	

(A)MECHANICAL FRONT WHEEL DRIVE
TRACTION AVANT MECANIQUE
MECHANISCHER FRONTANTRIEB
TRAZIONE ANTERIORE MECANNICA
TRACCION DELANTERA
MEKANISK FRAMHJULSDRIVNING

(B)W/O MECHANICAL FRONT WHEEL DRIVE
W/O TRACTION AVANT MECANIQUE
W/O MECHANISCHER FRONTANTRIEB
W/O TRAZIONE ANTERIORE MECANNICA
W/O TRACCION DELANTERA
W/O MEKANISK FRAMHJULSDRIVNING

https://www.truck-manuals.net/

TRANSMISSION CASE (TSN 8100,8200,8300,8400 020000-)
CARTER DE TRANSMISSION (TSN 8100,8200,8300,8400 020000-)
GETRIEBEGEHAEUSE (TSN 8100,8200,8300,8400 020000-)
SCATOLA DELLA TRASMISSIONE (TSN 8100,8200,8300,8400 020000-)
CAJA DE TRANSMISION (TSN 8100,8200,8300,8400 020000-)
TRANSMISSIONSKAAPA (TSN 8100,8200,8300,8400 020000-)
RXP022335 -UN-23OCT97

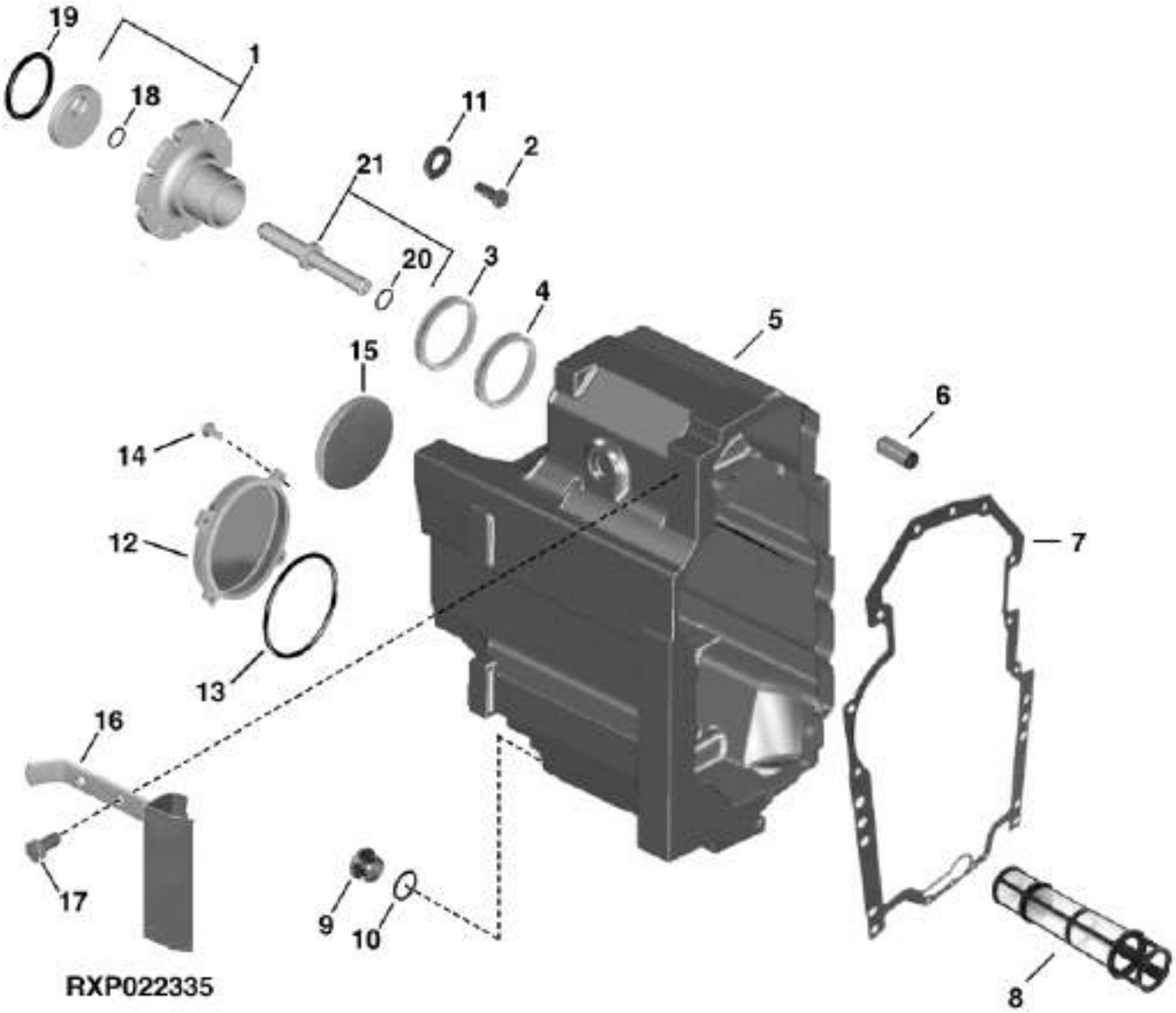

https://www.truck-manuals.net/

KEY	PART NO.	PART NAME	QTY	TRANSMISSION SERIAL NO.	ALL	REMARKS
1	RE70206	HUB	1		X	
2	19M7789	SCREW	9		X	M12 X 30, HS 10.9
3	R130561	V-RING SEAL	1		X	
4	RE158066	SEAL	1		X	(SUB FOR RE13181, THIS APPLICATION)
5	R136157	TRANSMISSION CASE	1		X	
6	R48685	DOWEL PIN	2		X	
7	R132860	GASKET	1		X	
8	RE45369	SCREEN	1		X	
9	R98012	PLUG	1		X	
10	P47889	O-RING	1		X	
11	24M7240	WASHER	9		X	
12	R108569	COVER	1		X	(A)
13	T39741	RING	1		X	
14	19M7789	SCREW	4		X	M12 X 30, HS 10.9
15	R108503	PLUG	1		X	
16	R120133	SUPPORT	1		X	RH
	RE62562	BRACKET	1		X	LH
17	19M7166	CAP SCREW	4		X	M10 X 20
18	F3353R	O-RING	1		X	
19	R132237	O-RING	1		X	
20	R132239	O-RING	1		X	
21	RE71323	BREATHER	1		X	

(A)W/O MECHANICAL FRONT WHEEL DRIVE
W/O TRACTION AVANT MECANIQUE
W/O MECHANISCHER FRONTANTRIEB
W/O TRAZIONE ANTERIORE MECANNICA
W/O TRACCION DELANTERA
W/O MEKANISK FRAMHJULSDRIVNING

https://www.truck-manuals.net/

MEMORANDA
MEMORANDA
MEMORANDA
MEMORANDA
MEMORANDA
MEMORANDA

https://www.truck-manuals.net/

SECTIONAL INDEX
INDEX DE SECTION
GRUPPENINDEX
INDICE DELLA SEZIONE
INDICE DE SECCION
GRUPPSFORTECKNING

RE029157 -UN-10MAY99

1 -	5D5
2 -	5D11
3 -	5D13
4 -	5D15
5 -	5D17
6 -	5D25
7 -	5E1
8 -	5E3
9 -	5E5

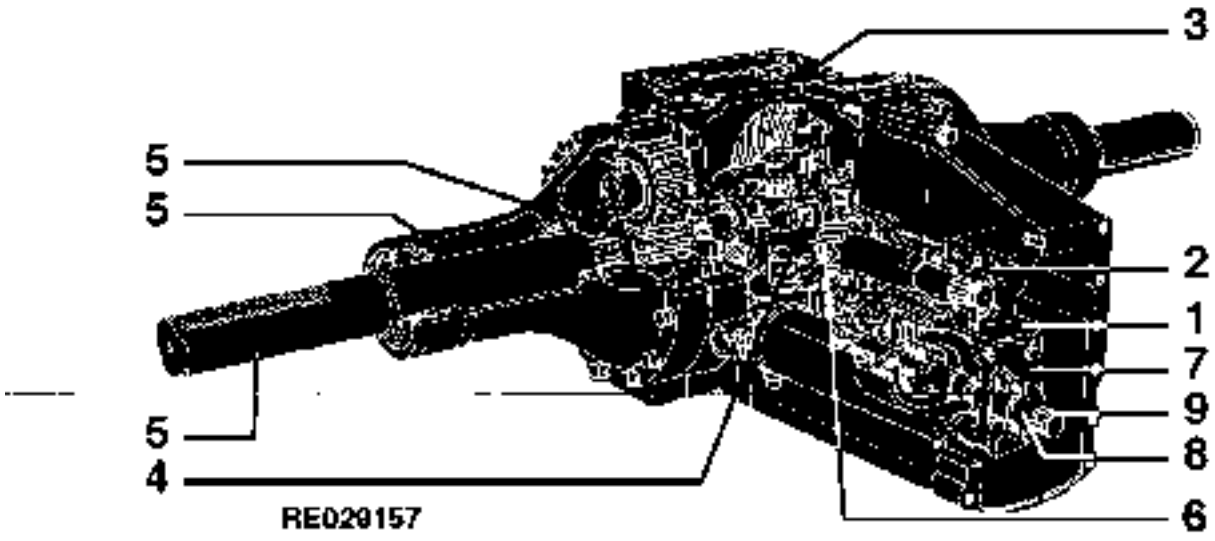

https://www.truck-manuals.net/

SECTIONAL INDEX
INDEX DE SECTION
GRUPPENINDEX
INDICE DELLA SEZIONE
INDICE DE SECCION
GRUPPSFORTECKNING

https://www.truck-manuals.net/

MEMORANDA
MEMORANDA
MEMORANDA
MEMORANDA
MEMORANDA
MEMORANDA

https://www.truck-manuals.net/

PTO CLUTCH
EMBRAYAGE DE LA PDF AVANT
VORDERE ZAPFWELLE, KUPPLUNG
FRIZIONE DELLA PTO ANTERIORE
EMBRAGUE DE LA TDF DELANTERA
KOPPLING FOER FRAEMRE KRAFTUTTAG
RE026025 -UN-10SEP95

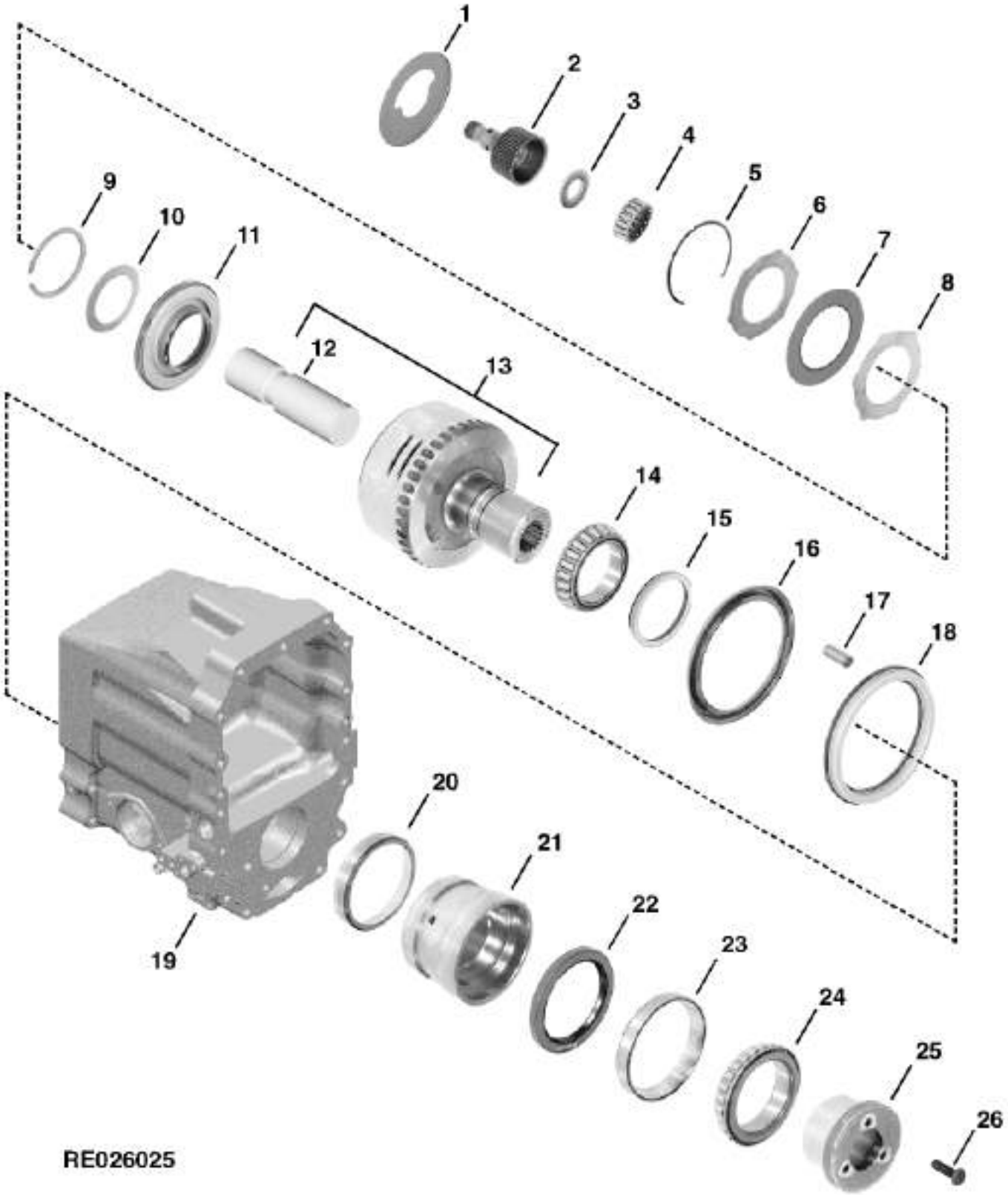

https://www.truck-manuals.net/

KEY	PART NO.	PART NAME	QTY	AXLE SERIAL NO.	8100	8200	REMARKS
1	R115403	DEFLECTOR	1		X	X	
2	R108580	HUB	1		X	X	
3	R119527	THRUST WASHER	1		X	X	
4	JD8870	NEEDLE BEARING	1		X	X	
5	R99692	SNAP RING	1		X	X	
6	R108530	CLUTCH PLATE	1		X	X	
7	RE67458	DISK, WITH INNER SPLINE	6		X	X	(SUB FOR AR94516, THIS APPLICATION)
8	R108507	CLUTCH PLATE	6		X	X	
9	C19243	SNAP RING	1		X	X	
10	R113435	DISK SPRING	9		X	X	
11	RE45374	PISTON	1		X	X	W/SEAL
12	R112314	SLEEVE	1		X	X	
13	RE55025	DRUM	1		X	X	
14	JD9075	BEARING CONE	1		X	X	
15	R112315	RING	2		X	X	
16	RE50747	BRAKE DISK	1		X	X	
17	R27302	DOWEL PIN	2		X	X	
18	R112313	PISTON	1		X	X	
19	RE164598	HOUSING	1		X	X	(SUB FOR R122901)
20	JD9132	BEARING CUP	1		X	X	
21	R115450	SLEEVE	1		X	X	
22	RE69802	SEAL	1		X	X	
23	JD8213	BEARING CUP	1		X	X	
24	JD8177	BEARING CONE	1		X	X	
25	R115451	QUILL	1		X	X	
26	19M7163	CAP SCREW	3		X	X	M8 X 25

https://www.truck-manuals.net/

PTO CLUTCH
EMBRAYAGE DE LA PDF AVANT
VORDERE ZAPFWELLE, KUPPLUNG
FRIZIONE DELLA PTO ANTERIORE
EMBRAGUE DE LA TDF DELANTERA
KOPPLING FOER FRAEMRE KRAFTUTTAG
RE026025 -UN-10SEP95

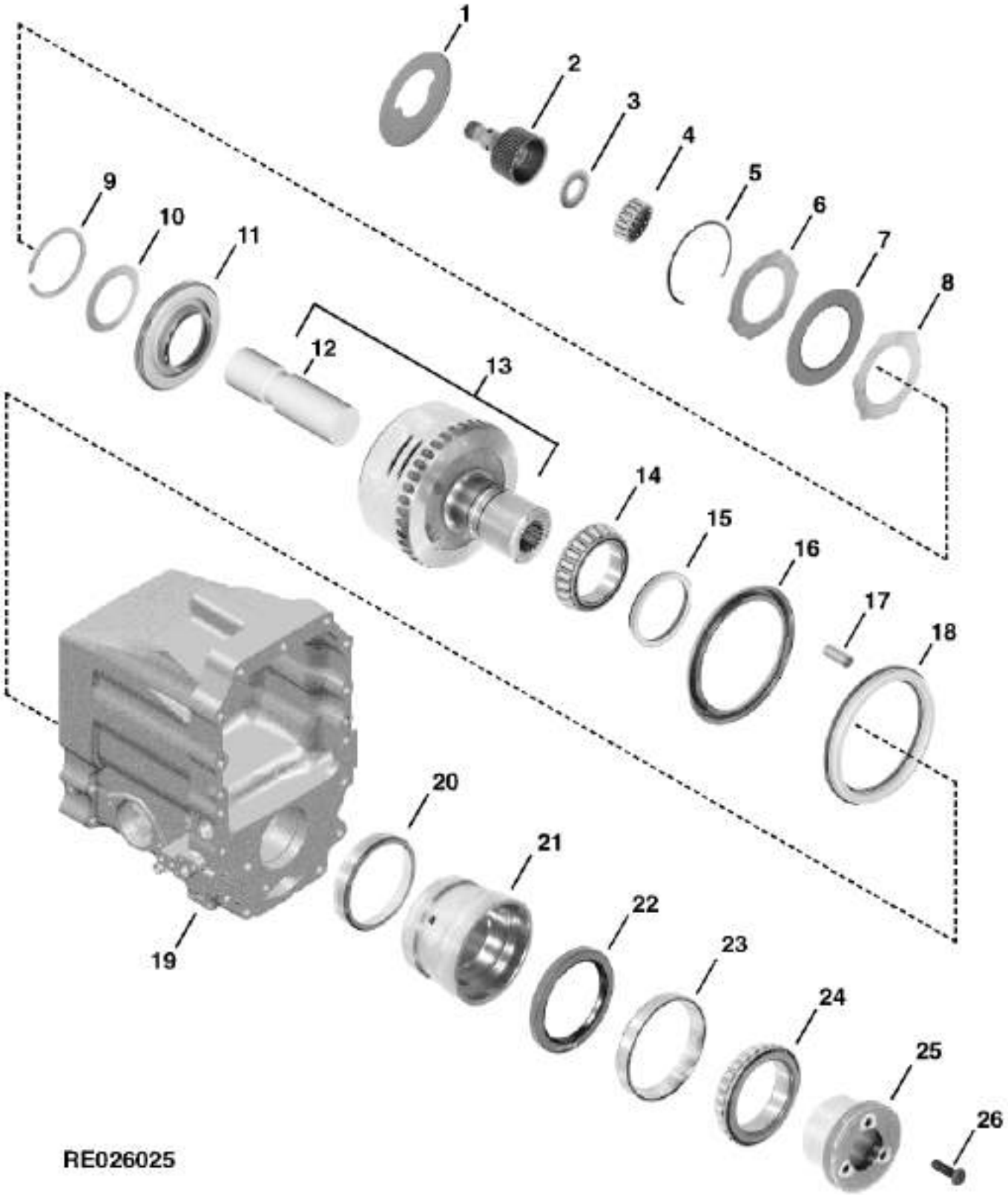

https://www.truck-manuals.net/

KEY	PART NO.	PART NAME	QTY	AXLE SERIAL NO.	8300 8400	REMARKS
1	R115403	DEFLECTOR	1		X X	
2	R108580	HUB	1		X X	
3	R119527	THRUST WASHER	1		X X	
4	JD8870	NEEDLE BEARING	1		X X	
5	R99692	SNAP RING	1		X X	
6	R108530	CLUTCH PLATE	1		X X	
7	RE67458	DISK, WITH INNER SPLINE	8		X X	(SUB FOR AR94516, THIS APPLICATION)
8	R108507	CLUTCH PLATE	8		X X	
9	C19243	SNAP RING	1		X X	
10	R113435	DISK SPRING	9		X X	
11	RE45374	PISTON	1		X X	W/SEAL
12	R112314	SLEEVE	1		X X	
13	RE52228	DRUM	1		X X	
14	JD9075	BEARING CONE	1		X X	
15	R112315	RING	2		X X	
16	RE50747	BRAKE DISK	1		X X	
17	R27302	DOWEL PIN	2		X X	
18	R112313	PISTON	1		X X	
19	RE164598	HOUSING	1		X X	(SUB FOR R122901)
20	JD9132	BEARING CUP	1		X X	
21	R115450	SLEEVE	1		X X	
22	RE69802	SEAL	1		X X	
23	JD8213	BEARING CUP	1		X X	
24	JD8177	BEARING CONE	1		X X	
25	R115451	QUILL	1		X X	
26	19M7163	CAP SCREW	3		X X	M8 X 25

https://www.truck-manuals.net/

PTO VALVES AND FITTINGS
PDF, SOUPAPES ET RACCORDS
ZAPFWELLE, VENTILE UND VERSCHRAUBUNGEN
PRESA DI FORZA, VALVOLE E RACCORDI
TDF, VALVULAS Y ADAPTADORES
KRAFTUTTAG, VENTILER OCH FOERSKRUVNINGAR
RE030477 -UN-15APR99

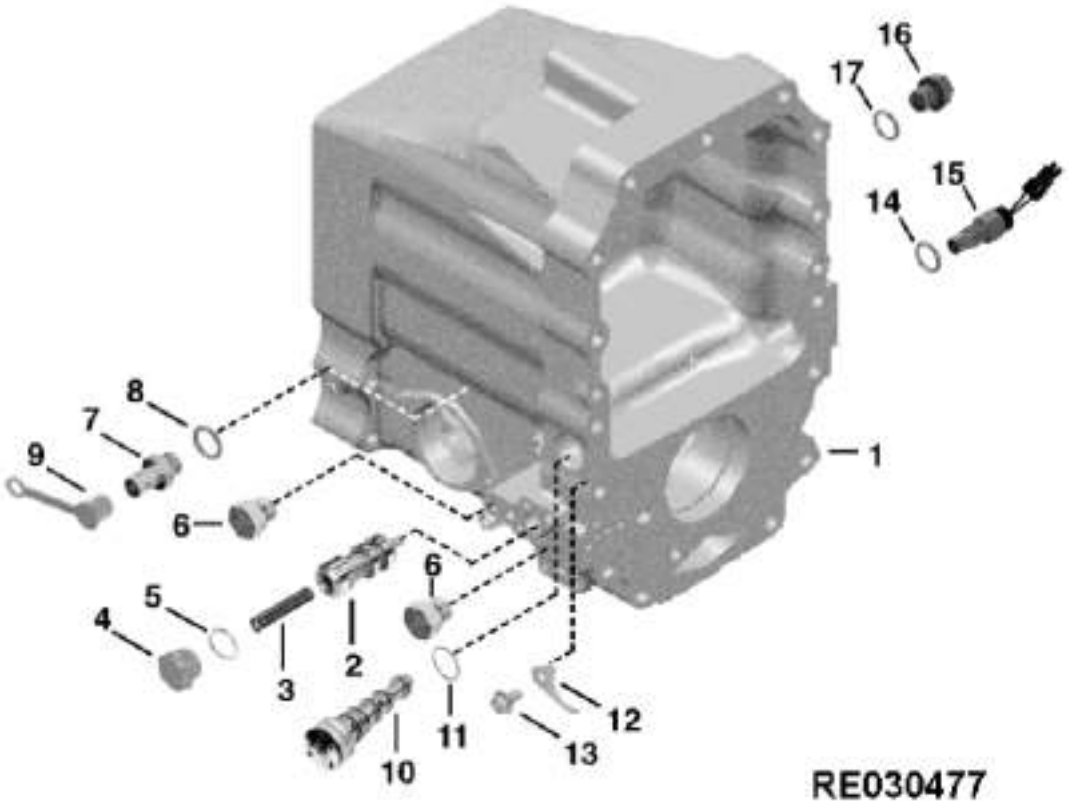

https://www.truck-manuals.net/

KEY	PART NO.	PART NAME	QTY	AXLE SERIAL NO.	ALL	REMARKS
1	RE164598	HOUSING	1		X	(SUB FOR R122901)
2	R112316	VALVE	1		X	
3	R42057	SPRING	1		X	
4	R27175	DRAIN PLUG	1		X	
	R70534	PIPE PLUG	1		X	(USE WITH F3171)
5	F3171	O-RING	1		X	
6	RE46684	PLUG	2		X	
7	RE12187	RECEPTACLE	1		X	
8	51M7041	O-RING	1		X	11.300 X 2.200 MM
9	R77175	COVER	1		X	
10	RE55461	VALVE	1	-XXXXXX	X	(ALSO ORDER U11326, U41966, R106663, R62070, R27928 AND P42061)
	RE71489	VALVE	1	XXXXXX-XXXXXX	X	(ALSO ORDER U11326, U41966, R106663, R62070, R27928 AND P42061)
	RE150945	VALVE	1	XXXXXX-XXXXXX	X	(ALSO ORDER T143166, U41966, R106663, R62070, R27928 AND P42061)
	RE155966	VALVE	1	XXXXXX-	X	(ALSO ORDER U11326, U41966, R106663, R62070, R27928 AND P42061)
11	U41966	O-RING	1		X	
12	R95045	CLAMP	1		X	
13	19M7784	SCREW	1		X	M10 X 20
14	51M7044	O-RING	1		X	W/PTO
15	RE71121	SENSOR	1		X	W/PTO, (SUB FOR RE43511)
16	RE501938	PLUG	1		X	W/O PTO, (SUB FOR R101085)
17	51M7044	O-RING	1		X	17.300 X 2.200 MM, W/O PTO

https://www.truck-manuals.net/

INPUT HOUSING
CARTER D'ENTREE
EINGANGSGEHAEUSE
SCATOLA DI INGRESSO
CAJA DE ENTRADA
INGAANGSHUS
RE029749 -UN-18JUN98

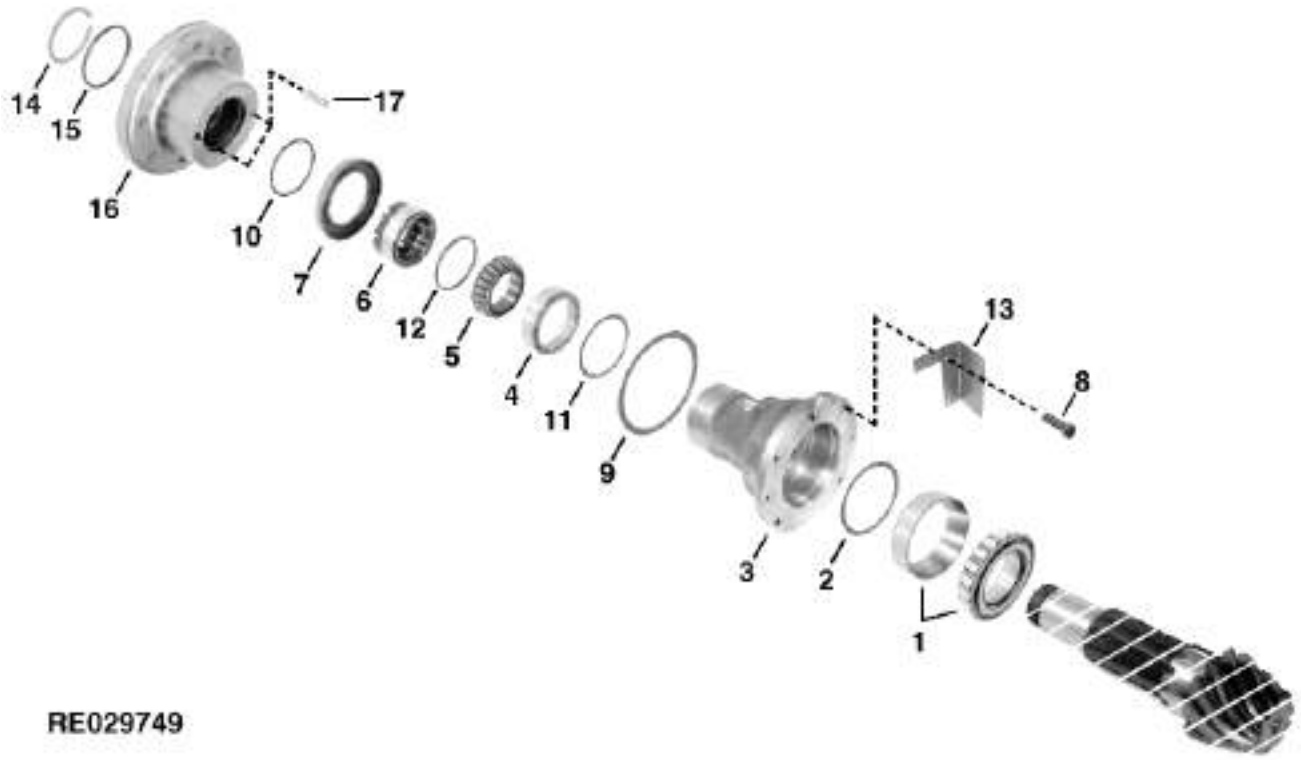

RE029749

https://www.truck-manuals.net/

KEY	PART NO.	PART NAME	QTY	AXLE SERIAL NO.	ALL	REMARKS
1	RE48761	ROLLER BEARING	1		X	
2	R81362	SHIM	2		X	
	R81363	SHIM	2		X	
	R81364	SHIM	2		X	
3	R112906	QUILL	1		X	
4	JD8255	BEARING CUP	1		X	
5	JD8941	BEARING CONE	1		X	
6	R113547	NUT	1		X	
7	RE40296	SEAL	1		X	
8	R132326	CAP SCREW	4		X	
9	U10624	O-RING	1		X	
10	R113668	BACK-UP RING	1		X	
11	R58255	SHIM	2		X	
	R58256	SHIM	2		X	
	R58257	SHIM	2		X	
	R58258	SHIM	2		X	
12	U42111	O-RING	1		X	
13	R116402	DEFLECTOR	1		X	
14	P46770	SNAP RING	1		X	
15	P50631	O-RING	1		X	
16	R108558	YOKE	1		X	
17	R116713	NEEDLE ROLLER	2		X	

https://www.truck-manuals.net/

DIFFERENTIAL CASE
CARTER DE DIFFERENTIEL
DIFFERENTIALGEHAEUSE
SCATOLA DEL DIFFERENZIALE
CAJA DEL DIFERENCIAL
DIFFERENTIALKAAPA
RE029134 -UN-06MAR98

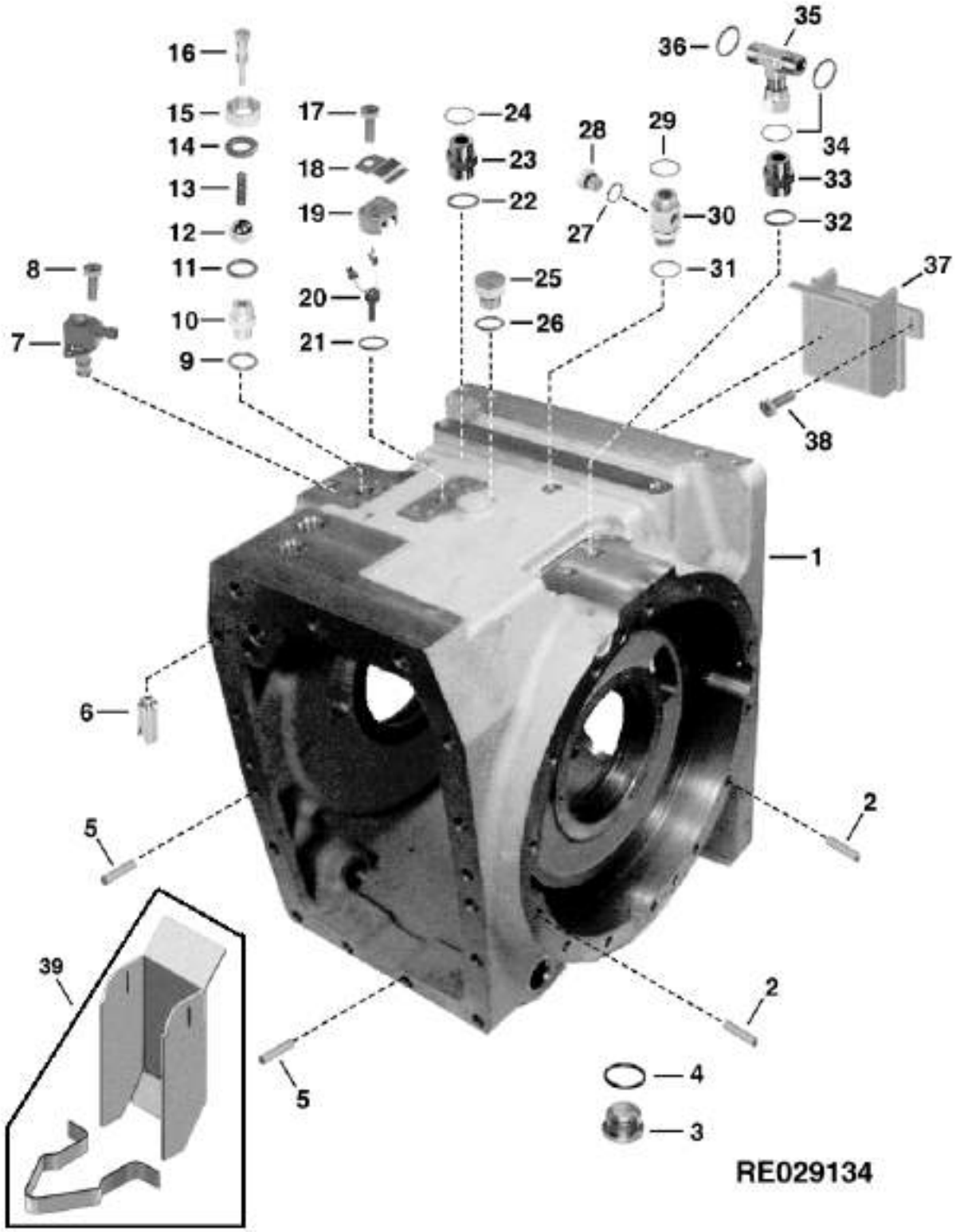

https://www.truck-manuals.net/

KEY	PART NO.	PART NAME	QTY	AXLE SERIAL NO.	ALL	REMARKS
1	RE62765	CASE	1	-023257	X	(MARKED R109528, R114238 OR R126506) (ALSO ORDER (6) 24M7242) (SUB RE150629, R150627 AND R150628)
	RE150629	CASE	1	023258-	X	(MARKED R150626)
2	R54380	DOWEL PIN	2		X	
3	R84262	FITTING PLUG	1		X	
4	F3171R	O-RING	1		X	
5	R54380	DOWEL PIN	2		X	
6	R125700	TUBE	1	-023257	X	
	R132574	TUBE	1	023258-	X	
7	RE52319	SOLENOID VALVE	1		X	
	R109690	CLAMP	1		X	
8	19M7560	CAP SCREW	2		X	M6 X 16
9	R26448	O-RING	2		X	
10	38H1160	ADAPTER	2		X	
11	T77613	O-RING	2		X	
12	R42849	BALL	2		X	
13	R39208	SPRING	2		X	
14	R27136	WASHER	2		X	
15	R26572	NUT	2		X	14.275 MM
16	R84015	SCREW	2		X	
17	19M7167	CAP SCREW	1		X	M10 X 25
18	R66477	CLAMP	1		X	
19	R69185	CAP	1		X	
20	RE56950	WHEEL SPEED SENSOR	1		X	
21	R375R	O-RING	1		X	
22	51M7043	O-RING	1		X	15.300 X 2.200 MM
23	38H5003	ADAPTER	1		X	
24	T77857	O-RING	1		X	
25	RE46685	PLUG	1		X	
26	51M7043	O-RING	1		X	15.300 X 2.200 MM
27	51M7043	O-RING	1		X	15.300 X 2.200 MM
28	RE46685	PLUG	1		X	(A)
29	T77857	O-RING	1		X	
30	RE58409	CONNECTOR	1		X	
31	51M7048	O-RING	1		X	
32	51M7043	O-RING	1		X	15.300 X 2.200 MM
33	38H5003	ADAPTER	1		X	
34	R26448	O-RING	2		X	
35	38H5059	TEE FITTING	1		X	
36	R26448	O-RING	1		X	
37	R150627	DEFLECTOR	1	023258-	X	
38	R150628	CAP SCREW	2	023258-	X	
39	RE154099	KIT	1		X	
..	UN7189	SEALANT	1		X	(SUB TY16021)

(A) W/O HITCH
W/O ATTELAGE
W/O ANHAENGEVORRICHTUNG
W/O ATTACCO
W/O ENGANCHE
W/O DRAG

https://www.truck-manuals.net/

DIFFERENTIAL
DIFFERENTIEL
DIFFERENTIAL
DIFFERENZIALE
DIFERENCIAL
DIFFERENTIAL
RXP021613 -UN-21JUN96

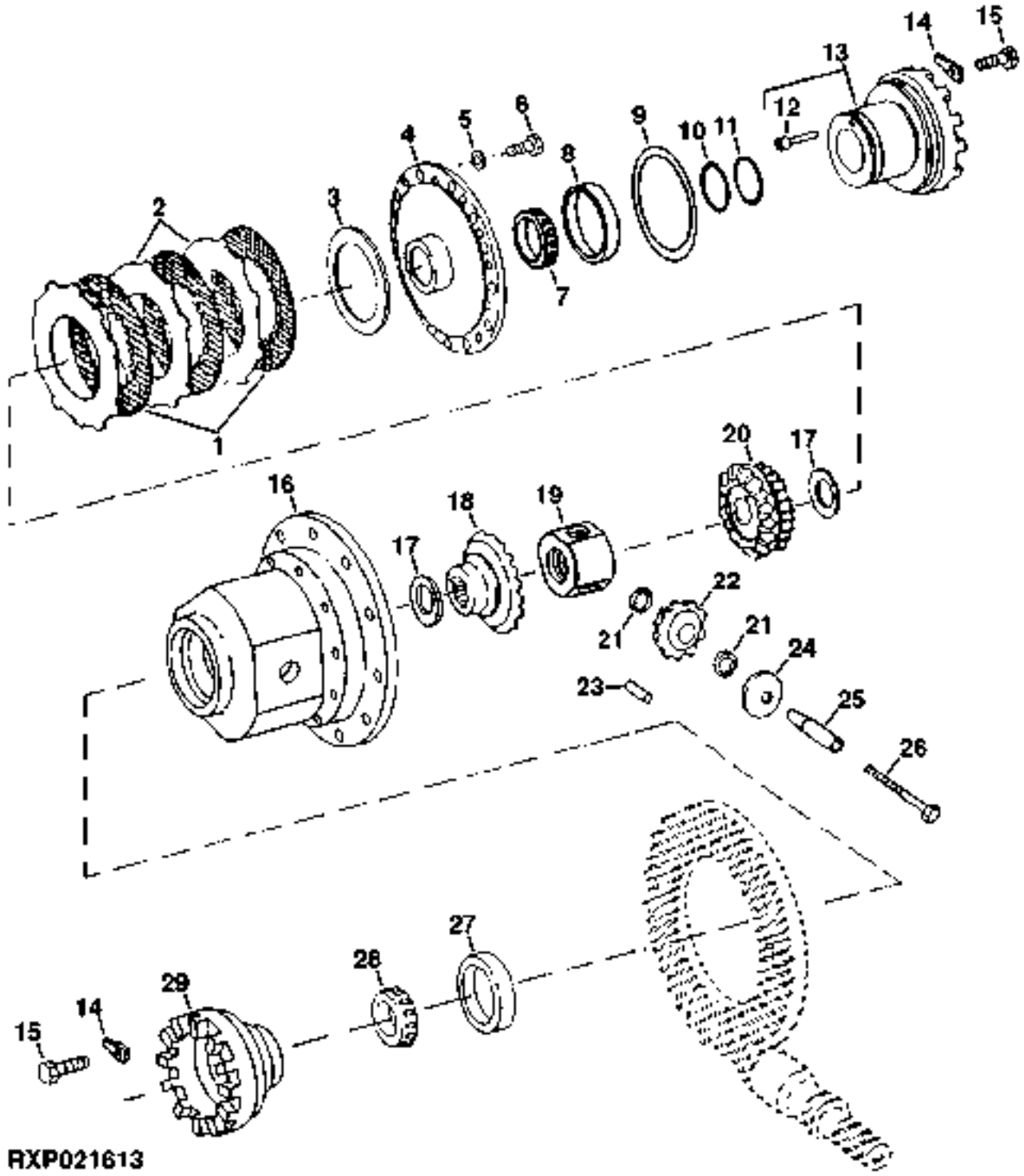

https://www.truck-manuals.net/

KEY	PART NO.	PART NAME	QTY	AXLE SERIAL NO.	ALL	REMARKS
1	RE46800	DISK, WITH INNER SPLINE	3	-011593	X	(SUB RE64004) (ALSO ORDER R128328)
	RE64004	DISK, WITH INNER SPLINE	3	011594-	X	
2	R109486	CLUTCH DISK	3		X	
3	R109483	PISTON	1		X	
4	R109481	COVER	1		X	
5	R135543	WASHER	12		X	
6	R119211	SCREW	12		X	
7	JD9069	BEARING CONE	1		X	
8	JD9127	BEARING CUP	1		X	
9	R119126	RING	2		X	
10	R59384	RING	1		X	
11	R84609	O-RING	1		X	
12	AT107509	PLUG	1		X	
13	RE64806	QUILL	1		X	(MARKED R109487)
14	R109822	LOCK PLATE	2		X	
15	R88246	CAP SCREW	2		X	(SUB FOR R84570)
16	R109480	HOUSING	1		X	
17	R99466	THRUST WASHER	2		X	
18	R109489	BEVEL GEAR	1		X	
19	R129557	HUB	1		X	(SUB FOR R126002)
20	R109488	GEAR	1	-011593	X	(SUB R128328) (ALSO ORDER (3) RE64004)
	R128328	GEAR	1	011594-	X	
21	R68167	WASHER	6		X	
22	R134733	PINION	3		X	(SUB FOR R67784)
23	R55081	NEEDLE ROLLER	18		X	
24	R68166	THRUST WASHER	3		X	
25	R115566	SHAFT	3		X	
26	R115567	CAP SCREW	3		X	
27	JD8214	BEARING CUP	1		X	
28	JD8191	BEARING CONE	1		X	
29	R111410	QUILL	1		X	

https://www.truck-manuals.net/

PLANETARY AND AXLE SHAFT (8100, 8200)(100MM)
PLANETAIRE ET ARBRE D'ESSIEU (8100, 8200)
PLANETENGETRIEBE UND ACHSWELLE (8100, 8200)
GRUPPO PLANETARIO ED ALBERO DELL'ASSALE (8100, 8200)
PLANETARIO Y EJE (8100, 8200)
PLANETVAEXEL OCH AXEL (8100, 8200)
RE026987 -UN-23MAY96

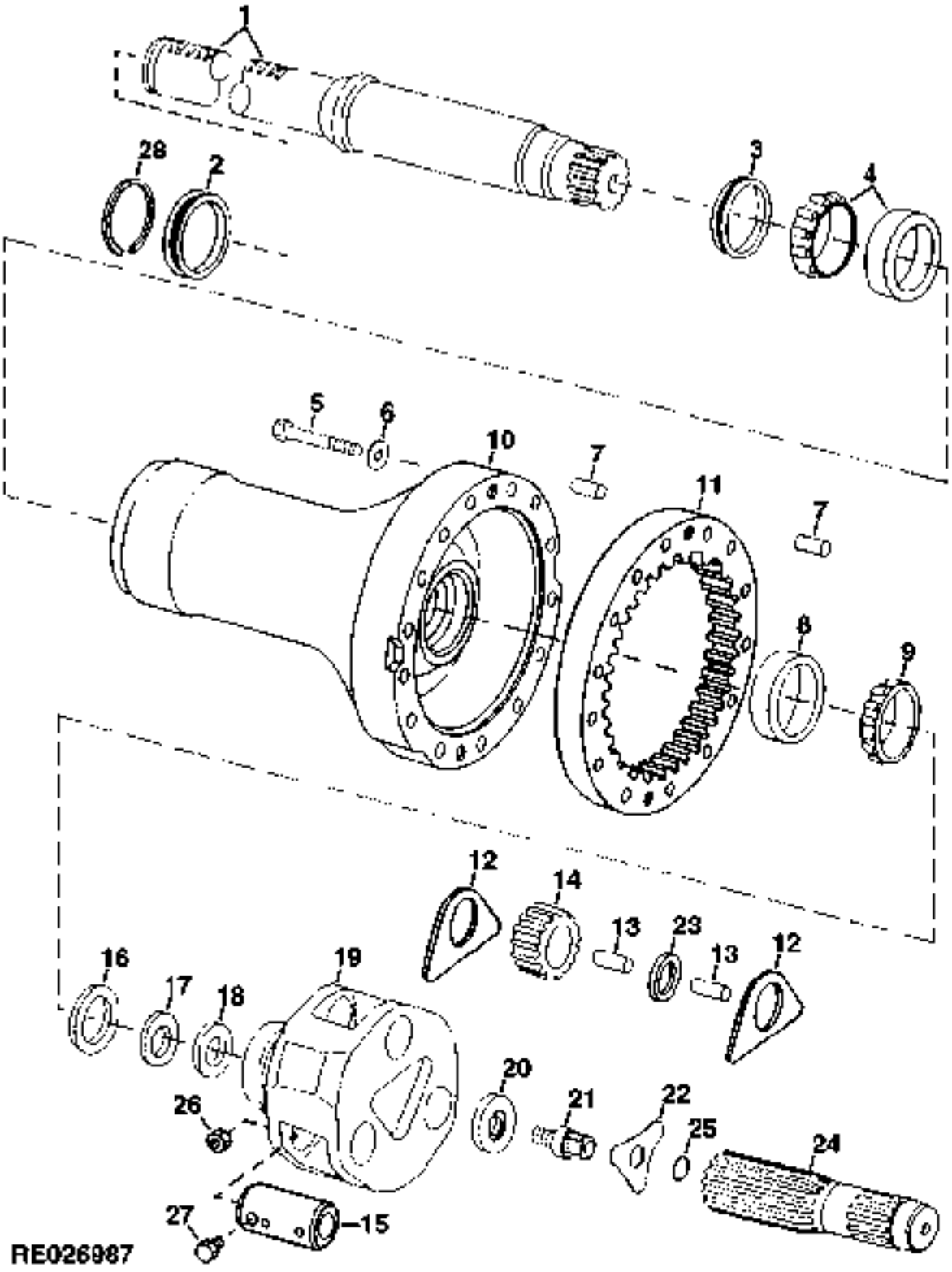

https://www.truck-manuals.net/

KEY	PART NO.	PART NAME	QTY	AXLE SERIAL NO.	8100	8200	REMARKS
1	R109847	SPINDLE	2		X	X	(A)
	R109848	SHAFT	2		X	X	(B)
	R109849	SHAFT	2		X	X	(C)
2	R127247	SEAL	2	-042113	X	X	(SUB FOR R114347)
	R163305	SEAL	2	042114-	X	X	
3	R112071	BUSHING	2		X	X	
4	RE50957	BEARING	2		X	X	
5	19M8622	CAP SCREW	28		X	X	HS 12.9
6	R135543	WASHER	28		X	X	
7	R54380	DOWEL PIN	8		X	X	
8	JD8248	BEARING CUP	2		X	X	
9	JD9018	BEARING CONE	2		X	X	
10	R109846	HOUSING	2		X	X	
11	R135966	GEAR	2		X	X	(SUB FOR R124631)
12	R121239	THRUST WASHER	12		X	X	
13	R94655	NEEDLE ROLLER	408		X	X	
14	R124629	PLANET PINION	6		X	X	
15	R125069	PINION SHAFT	6		X	X	
16	R52389	SHIM	AR		X	X	
17	R59439	SHIM	AR		X	X	0.13 MM
	R59440	SHIM	AR		X	X	0.51 MM
	R61461	SHIM	AR		X	X	0.076 MM
	R79989	SHIM	AR		X	X	0.178 MM
18	F2380R	WASHER	2		X	X	
19	R111467	PLANET PINION CARRIER	2		X	X	
20	R110303	SPACER	2		X	X	
21	R81162	BOLT	2		X	X	
22	R94545	LOCK PLATE	2		X	X	
23	R107242	SPACER	2		X	X	
24	R111450	PINION	2		X	X	
25	F3171R	O-RING	2		X	X	
26	14M7452	LOCK NUT	6		X	X	M8
27	R125362	BOLT	6		X	X	
28	R59843	SNAP RING	1		X	X	100 MM

(A) SHORT (857 X 100MM)
COURT (857 X 100MM)
KURZ (857 X 100MM)
CORTO (857 X 100MM)
CORTO (857 X 100MM)
KORT (857 X 100MM)

(B) LONG (1042 X 100MM)
LONG (1042 X 100MM)
LANG (1042 X 100MM)
LUNGO (1042 X 100MM)
LARGO (1042 X 100MM)
LAANG (1042 X 100MM)

(C) EXTRA LONG (1144 X 100MM)
EXTRA LONG (1144 X 100MM)
EXTRALANG (1144 X 100MM)
EXTRA LUNGO (1144 X 100MM)
EXTRA LARGO (1144 X 100MM)
EXTRALAANG (1144 X 100MM)

https://www.truck-manuals.net/

PLANETARY AND AXLE SHAFT (8100, 8200)(110MM)
PLANETAIRE ET ARBRE D'ESSIEU (8100, 8200)
PLANETENGETRIEBE UND ACHSWELLE (8100, 8200)
GRUPPO PLANETARIO ED ALBERO DELL'ASSALE (8100, 8200)
PLANETARIO Y EJE (8100, 8200)
PLANETVAEXEL OCH AXEL (8100, 8200)
RE028461 -UN-17OCT97

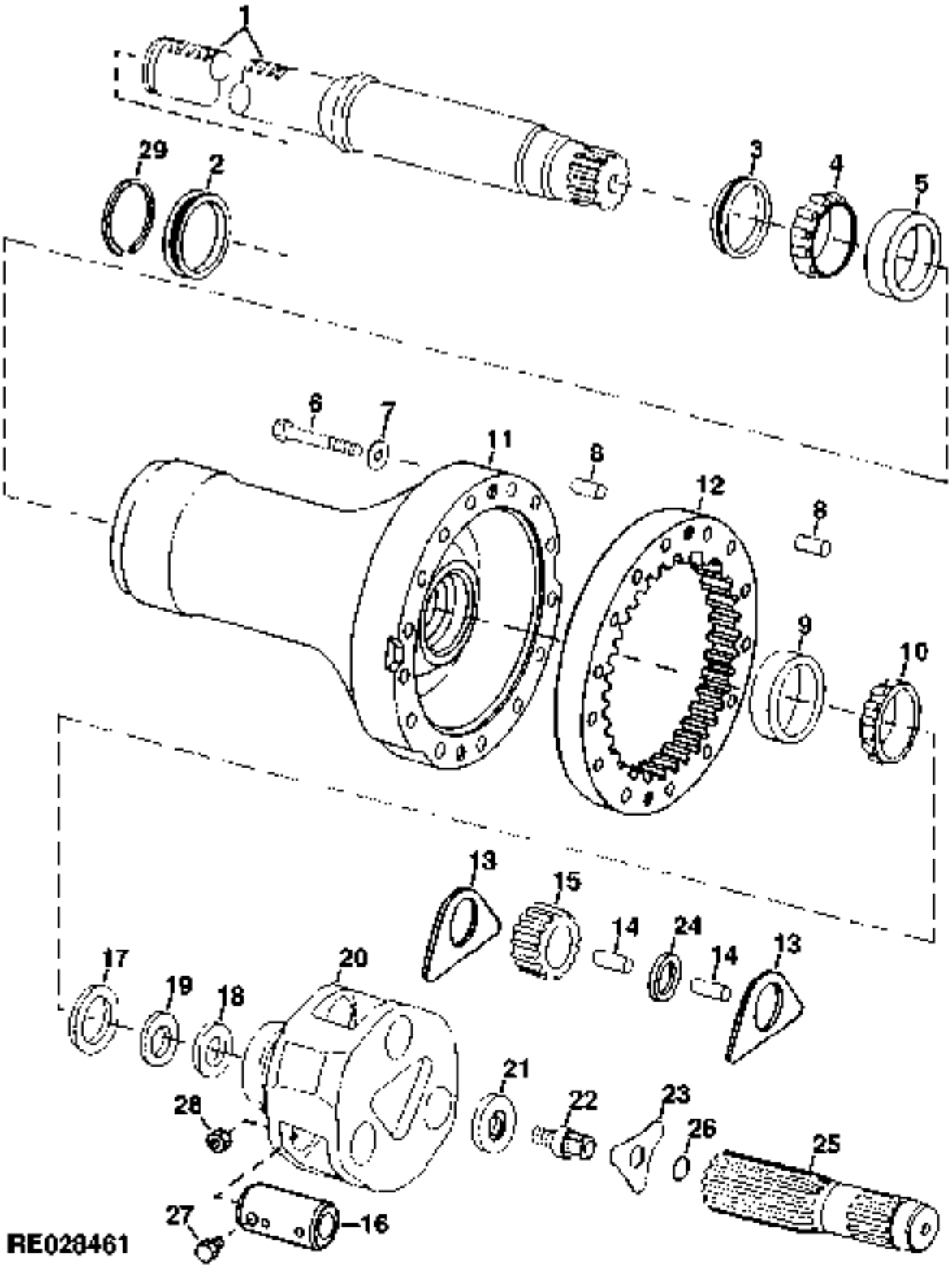

https://www.truck-manuals.net/

KEY	PART NO.	PART NAME	QTY	AXLE SERIAL NO.	8810 8200	REMARKS
1	R109843	SHAFT	2		X X	(A)
	R109845	SHAFT	2		X X	(B)
2	R111904	BUSHING	2		X X	
3	R127247	SEAL	2	-042113	X X	(SUB FOR R114347)
	R163305	SEAL	2	042114-	X X	
4	JD10134	BEARING CONE	2		X X	
5	JD10135	BEARING CUP	2		X X	
6	19M8190	CAP SCREW	28		X X	M16 X 180 HS 12.9
7	R135543	WASHER	28		X X	
8	R54380	DOWEL PIN	8		X X	
9	JD9127	BEARING CUP	2		X X	
10	JD9069	BEARING CONE	2		X X	
11	R109842	HOUSING	2		X X	
12	R135967	GEAR	2		X X	(SUB FOR R124632)
13	R121239	THRUST WASHER	12		X X	
14	R63575	NEEDLE ROLLER	408		X	(C)
15	R124629	PLANET PINION	6		X X	(C)
16	R125069	PINION SHAFT	6		X X	(C)
17	R63237	SHIM	2		X X	
18	R59439	SHIM	AR		X X	
	R59440	SHIM	AR		X X	
	R61461	SHIM	AR		X X	
	R79989	SHIM	AR		X X	
19	F2380R	WASHER	2		X X	
20	R111449	PLANET PINION CARRIER	2		X	(C)
21	R86675	SPACER	2		X X	
22	R81162	BOLT	2		X X	
23	R69549	PLATE	2		X X	
24	R107242	SPACER	2		X X	
25	R134669	PINION	2		X X	(SUB FOR R109840)
26	F3171R	O-RING	2		X X	
27	R125362	BOLT	6		X X	
28	14M7452	LOCK NUT	6		X X	M8
29	R71975	SNAP RING	1		X X	110 MM

(A) SHORT (824 X 110MM)
COURT (824 X 110MM)
KURZ (824 X 110MM)
CORTO (824 X 110MM)
CORTO (824 X 110MM)
KORT (824 X 110MM)

(B) LONG (1111 X 110MM)
LONG (1111 X 110MM)
LANG (1111 X 110MM)
LUNGO (1111 X 110MM)
LARGO (1111 X 110MM)
LAANG (1111 X 110MM)

(C) W/O MECHANICAL FRONT WHEEL DRIVE
W/O TRACTION AVANT MECANIQUE
W/O MECHANISCHER FRONTANTRIEB
W/O TRAZIONE ANTERIORE MECANNICA
W/O TRACCION DELANTERA
W/O MEKANISK FRAMHJULSDRIVNING

https://www.truck-manuals.net/

PLANETARY AND AXLE SHAFT (8300, 8400)(110MM)
PLANETAIRE ET ARBRE D'ESSIEU (8300, 8400)
PLANETENGETRIEVE UND ACHSWELLE (8300, 8400)
GRUPPO PLANETARIO ED ALBERO DELL'ASSALE (8300, 8400)
PLANETARIO Y EJE (8300, 8400)
PLANETVAEXEL OCH AXEL (8300, 8400)
RE028461 -UN-17OCT97

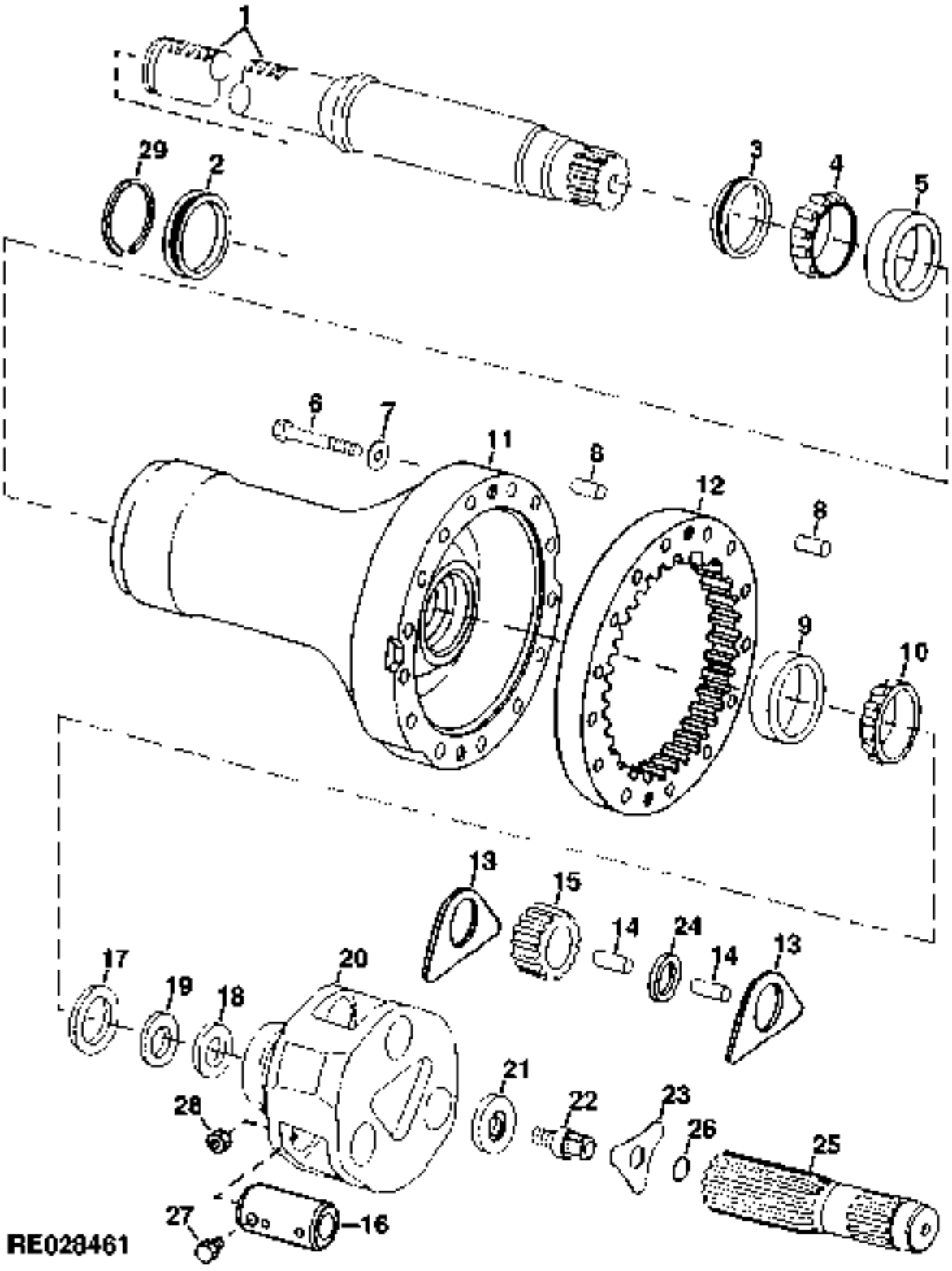

https://www.truck-manuals.net/

KEY	PART NO.	PART NAME	QTY	AXLE SERIAL NO.	8300	8400	REMARKS
1	R109843	SHAFT	2		X	X	(A)
	R109845	SHAFT	2		X	X	(B)
2	R111904	BUSHING	2		X	X	
3	R127247	SEAL	1	-042113	X	X	(SUB FOR R114347)
	R163305	SEAL	1	042114-	X	X	
4	JD10134	BEARING CONE	2		X	X	
5	JD10135	BEARING CUP	2		X	X	
6	19M8190	CAP SCREW	28		X	X	M16 X 180 HS 12.9
7	R135543	WASHER	28		X	X	
8	R54380	DOWEL PIN	8		X	X	
9	JD9127	BEARING CUP	2		X	X	
10	JD9069	BEARING CONE	2		X	X	
11	R109842	HOUSING	2		X	X	
12	R135967	GEAR	2		X	X	(SUB FOR R124632)
13	R121239	THRUST WASHER	12		X	X	
14	R94655	NEEDLE ROLLER	408		X		(C)
	R63575	NEEDLE ROLLER	408		X		(D)
	R63575	NEEDLE ROLLER	408			X	(C)
15	R124630	PLANET PINION	6		X		(D)
	R124629	PLANET PINION	6		X		(C)
	R124630	PLANET PINION	6			X	(C)
16	R125070	PINION SHAFT	6		X		(D)
	R125069	PINION SHAFT	6		X		(C)
	R125070	PINION SHAFT	6			X	(C)
17	R63237	SHIM	2		X	X	
18	R59439	SHIM	AR		X	X	
	R59440	SHIM	AR		X	X	
	R61461	SHIM	AR		X	X	
	R79989	SHIM	AR		X	X	
19	F2380R	WASHER	2		X	X	
20	R115413	PLANET PINION CARRIER	2		X		(D)
	R111449	PLANET PINION CARRIER	2		X		(C)
	R115413	PLANET PINION CARRIER	2			X	(C)
21	R86675	SPACER	2		X	X	
22	R81162	BOLT	2		X	X	
23	R69549	PLATE	2		X	X	
24	R107242	SPACER	6		X	X	
25	R134669	PINION	2		X	X	(SUB FOR R109840)
26	F3171R	O-RING	2		X	X	
27	R125362	BOLT	6		X	X	
28	14M7452	LOCK NUT	6		X	X	M8
29	R71975	SNAP RING	1		X	X	110 MM
..	TY16021	SEALANT	1		X	X	

(A) SHORT (824 X 110MM)
COURT (824 X 110MM)
KURZ (824 X 110MM)
CORTO (824 X 110MM)
CORTO (824 X 110MM)
KORT (824 X 110MM)

(B) LONG (1111 X 110MM)
LONG (1111 X 110MM)
LANG (1111 X 110MM)
LUNGO (1111 X 110MM)
LARGO (1111 X 110MM)
LAANG (1111 X 110MM)

(C) W/ MECHANICAL FRONT WHEEL DRIVE
W/ TRACTION AVANT MECHANIQUE
W/ MECHANISCHER FRONTANTRIEB
W/ TRAZIONE ANTERIORE MECANNICA
W/ TRACCION DELANTERA
W/ MEKANISK FRAMHJULSDRIVNING

(D) W/O MECHANICAL FRONT WHEEL DRIVE
W/O TRACTION AVANT MECANIQUE
W/O MECHANISCHER FRONTANTRIEB
W/O TRAZIONE ANTERIORE MECANNICA
W/O TRACCION DELANTERA
W/O MEKANISK FRAMHJULSDRIVNING

https://www.truck-manuals.net/

FINAL DRIVE/HEAVY DUTY KIT (8300, 8400)
REDUCTEUR/POUR SERVICE SEV'RE
ENDANTRIEBE/SCHWERE AUSFUEHRUNG
COPPIA CONICA/PER SERVIZIO PESANTE
MANDO FINAL/SERVICIO SEVERO
BAKAXELVAEXEL/EXTRA KRAFTIG
RXP021528 -UN-09MAY96

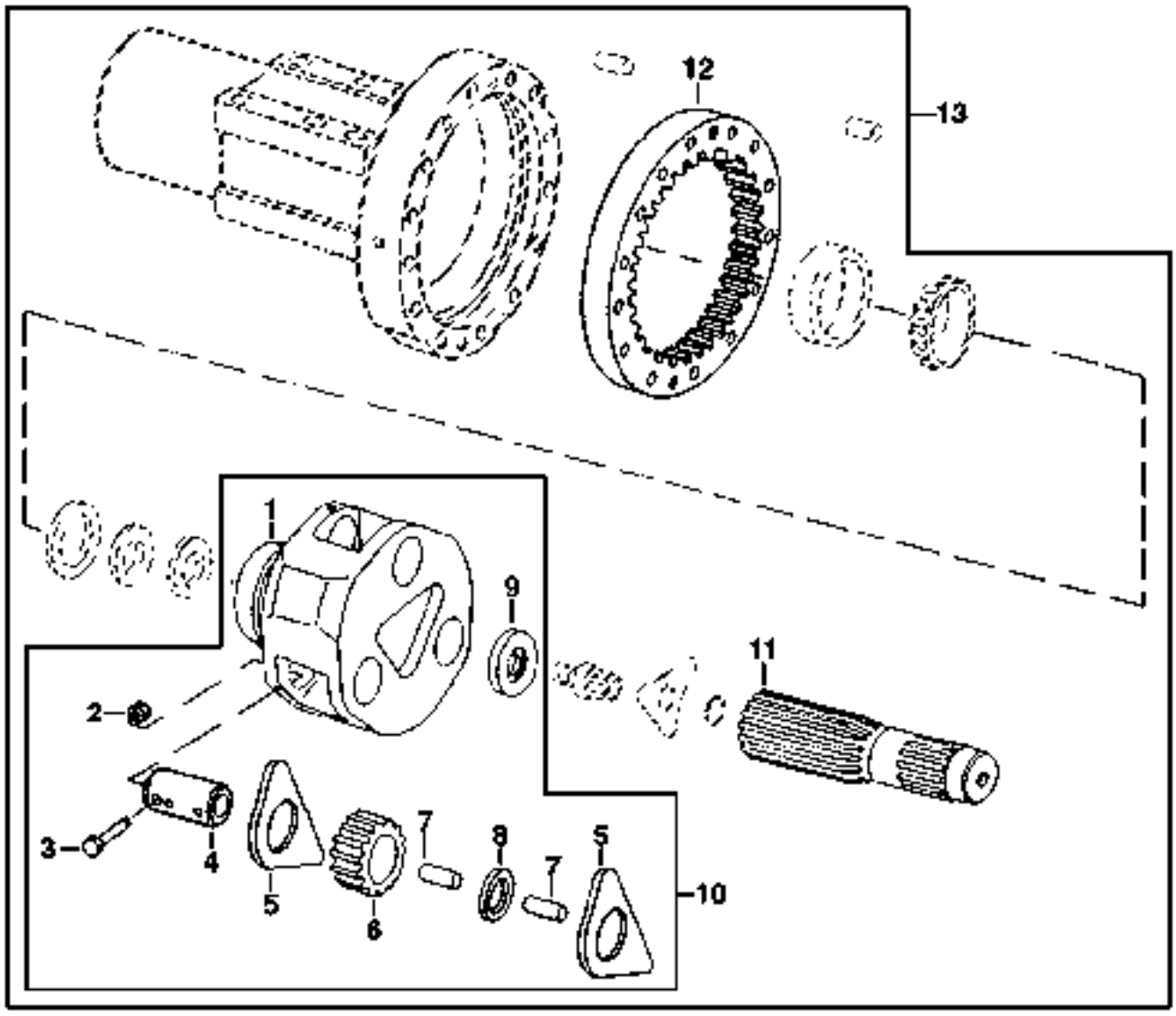

RXP021528

https://www.truck-manuals.net/

KEY	PART NO.	PART NAME	QTY	AXLE SERIAL NO.	8 3 0 0	8 4 0 0	REMARKS
1	R115413	PLANET PINION CARRIER	1		X	X	
2	14M7452	LOCK NUT	3		X	X	M8
3	R125362	BOLT	3		X	X	
4	R125070	PINION SHAFT	3		X	X	
5	R121239	THRUST WASHER	6		X	X	
6	R124630	PLANET PINION	3		X	X	
7	R63575	NEEDLE ROLLER	204		X	X	
8	R107242	SPACER	3		X	X	
9	R86675	SPACER	1		X	X	
10	RE49256	PLANET PINION CARRIER	1		X	X	
11	R134669	PINION	1		X	X	(SUB FOR R109840)
12	R135967	GEAR	1		X	X	(SUB FOR R124632)
13	RE63683	KIT	1		X	X	

https://www.truck-manuals.net/

SPIRAL BEVEL WITH SHAFT
ENGRENAGE HELICOIDAL AVEC ARBRE
SCHRAEGERZAHNTES KEGELRAD MIT WELLE
INGRANAGGIO CONICO SPIROIDALE CON ALBERO
ENGRANAJE HELICOIDAL CONICO CON EJE
KONISKT KUGGHJUL MED AXEL
RWP6340 -UN-01JAN94

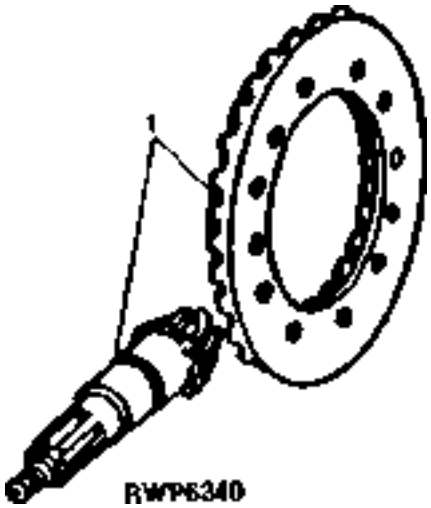

KEY	PART NO.	PART NAME	QTY	AXLE SERIAL NO.	ALL	REMARKS
1	RE54453	GEAR	1		X	(MARKED R119442 AND R119443)

https://www.truck-manuals.net/

MEMORANDA
MEMORANDA
MEMORANDA
MEMORANDA
MEMORANDA
MEMORANDA

https://www.truck-manuals.net/

STANDARD PTO
PDF STANDARD
STANDARD-ZAPFWELLE
PTO STANDARD
TDF NORMAL
STANDARD KRAFTUTTAG
RXP025015 -UN-01JAN94

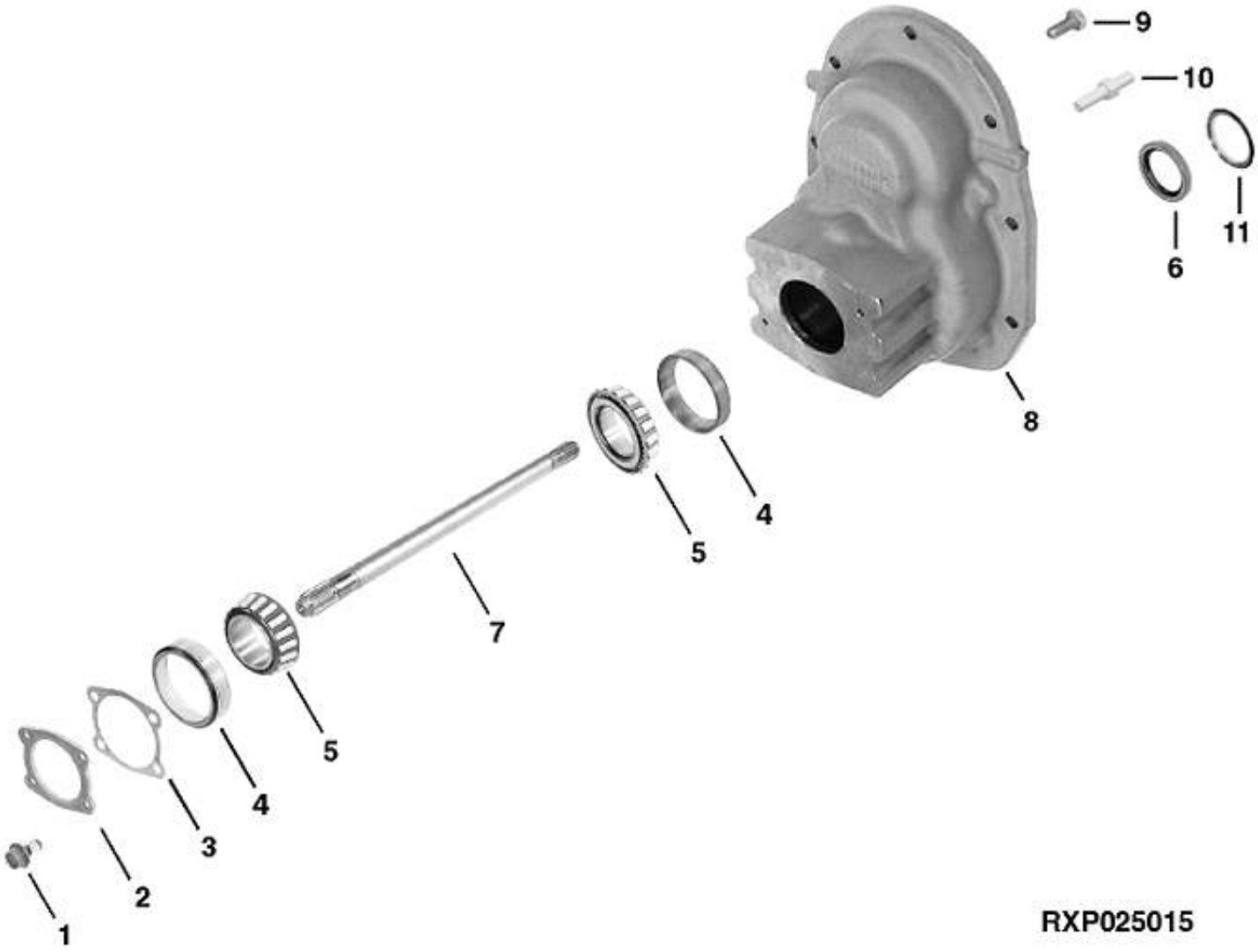

https://www.truck-manuals.net/

KEY	PART NO.	PART NAME	QTY	AXLE SERIAL NO.	ALL	REMARKS
1	R153676	SCREW	4		X	HS 10.9
2	R73040	PLATE	1		X	
3	RE68293	KIT	2		X	
4	JD7297	BEARING CUP	2		X	
5	JD7370	BEARING CONE	2		X	
6	RE14439	SEAL	1		X	
7	R110061	SHAFT	1		X	
8	R122905	HOUSING	1		X	(SUB FOR R108568)
9	R153676	SCREW	5		X	HS 10.9
10	R126027	CAP SCREW	4		X	
11	R116086	SEAL	1		X	

https://www.truck-manuals.net/

OPTIONAL PTO
PDF EN OPTION
ZUSATZ-ZAPFWELLE
PTO OPZIONALE
TDF OPCIONAL
ALTERNATIVT KRAFTUTTAG
RE028253 -UN-22AUG97

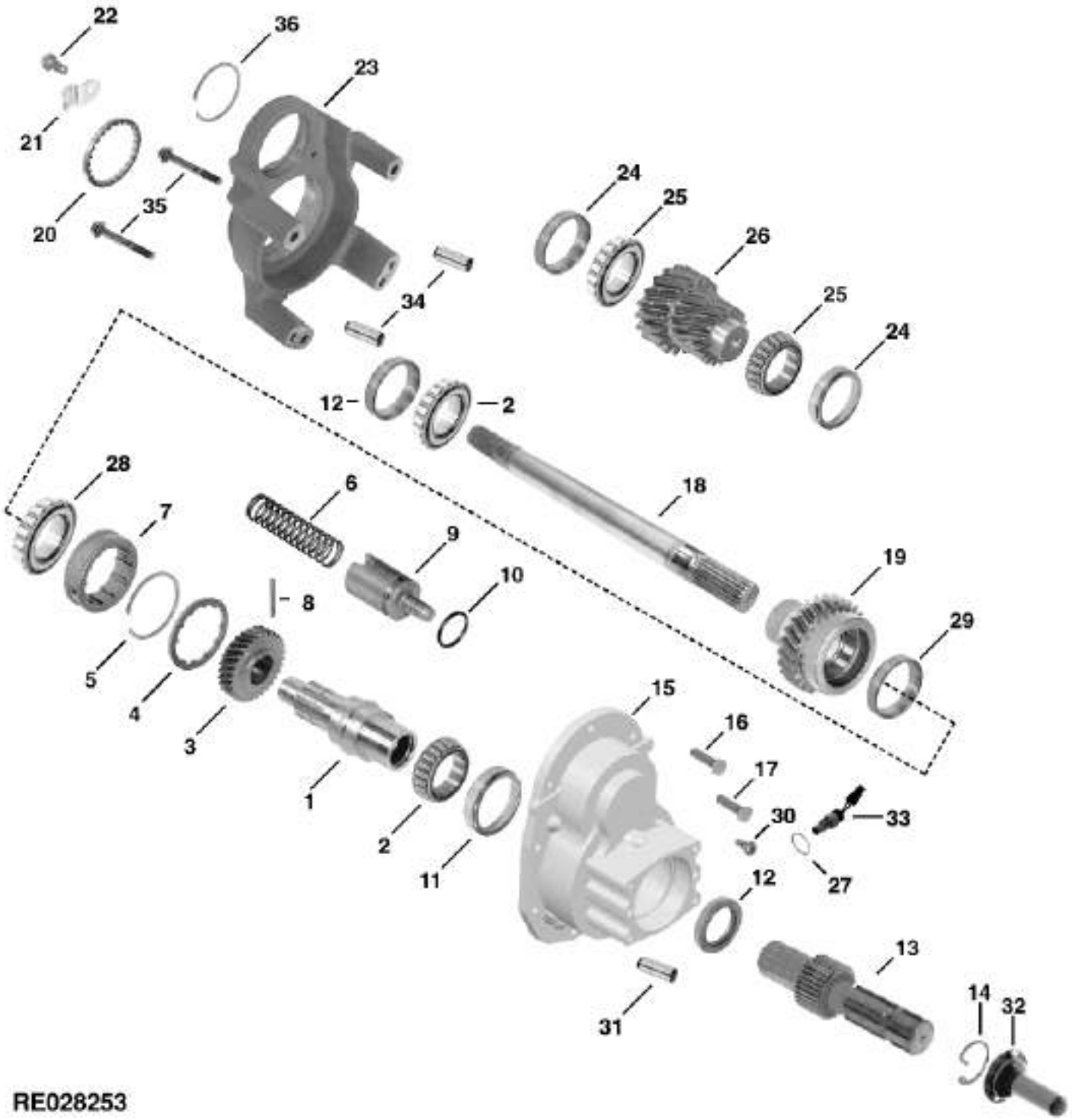

https://www.truck-manuals.net/

KEY	PART NO.	PART NAME	QTY	AXLE SERIAL NO.	ALL	REMARKS
1	R122908	SHAFT	1		X	
2	JD7378	BEARING CONE	2		X	
3	R125980	GEAR	1		X	
4	R95784	THRUST WASHER	1		X	
5	L33035	SNAP RING	1		X	
6	R93485	SPRING	1		X	
7	R125178	SHIFT COLLAR	1		X	
8	34M7074	SPRING PIN	1		X	8 X 75 MM
9	R125086	PLUNGER	1		X	
10	R122750	O-RING	1		X	
11	JD7292	BEARING CUP	2		X	
12	RE38725	SEAL	1		X	
13	R122910	SHAFT	1		X	1-3/4" 1000 RPM
14	R38221	SNAP RING	1		X	
15	R122904	HOUSING	1		X	
16	R153676	SCREW	5		X	HS 10.9
17	R126027	CAP SCREW	4		X	
18	R122912	SHAFT	1		X	
19	R126104	GEAR	1		X	
20	R106843	RING	1		X	
21	R106839	RETAINER	1		X	
22	R88246	CAP SCREW	1		X	8M X 16
23	R122907	HOUSING	1		X	
24	JD8247	BEARING CUP	2		X	
25	JD10527	BEARING CONE	2		X	
26	R122906	GEAR	1		X	
27	51M7044	O-RING	1		X	
	RE501938	PLUG	1		X	
28	JD8100	BEARING CONE	1		X	
29	JD7424	BEARING CUP	1		X	
30	R27329	SCREW	2		X	(A)
31	44M7070	DOWEL PIN	2		X	
32	L64456	GUARD	1		X	(A)
33	RE71121	SENSOR	1		X	(SUB FOR RE43511)
34	44M7070	DOWEL PIN	2		X	
35	19M7810	SCREW	4		X	M10 X 80
36	RE47328	KIT	1		X	

(A) EUROPEAN VERSION
VERSION EUROPEENNE
EUROPAEISCHE AUSFUEHRUNG
VERSIONE EUROPEA
VERSION EUROPEA
EUROPEISK VERSION

https://www.truck-manuals.net/

OPTIONAL PTO
PDF EN OPTION
ZUSATZ-ZAPFWELLE
PTO OPZIONALE
TDF OPCIONAL
ALTERNATIVT KRAFTUTTAG
RE026616 -UN-08DEC95

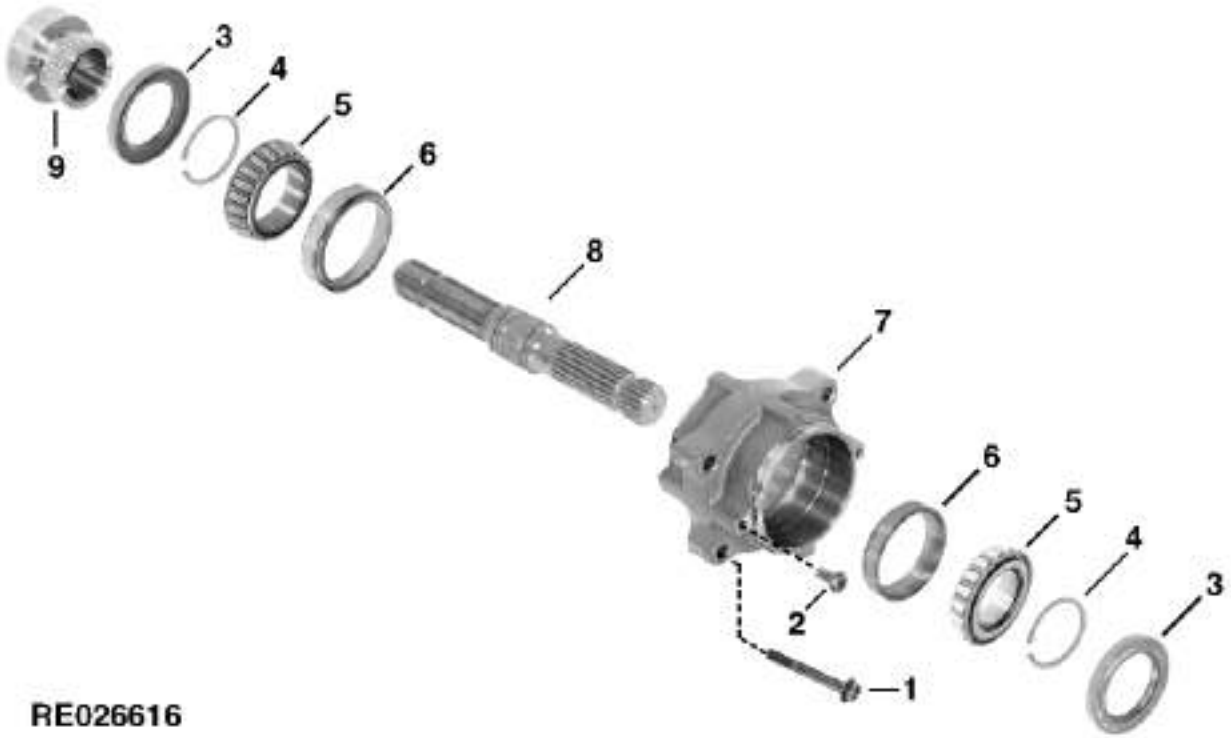

https://www.truck-manuals.net/

KEY	PART NO.	PART NAME	QTY	AXLE SERIAL NO.	ALL	REMARKS
1	19M7810	SCREW	4		X	M10 X 80, HS 10.9
2	R27329	SCREW	4		X	
3	RE60467	SEAL	2		X	
4	T44931	SNAP RING	2		X	4.724MM(.186")
	T44932	SNAP RING	1		X	4.267MM(.168")
	T44933	SNAP RING	1		X	4.318MM(.170")
	T44934	SNAP RING	1		X	4.368MM(.172")
	T44935	SNAP RING	1		X	4.445MM(.175")
	T44936	SNAP RING	1		X	4.597MM(.181")
	T44937	SNAP RING	1		X	4.673MM(.184")
5	JD7370	BEARING CONE	2		X	
6	JD7297	BEARING CUP	2		X	
7	R122914	HOUSING	1		X	
8	R122909	SHAFT	1		X	
9	R122915	BUSHING	1		X	

https://www.truck-manuals.net/

PTO MASTER SHIELD
ECRAN DE PROTECTION DE PDF
ZAPFWELLENHAUPTABDECKUNG
PROTEZIONE PRINCIPALE DELLA PRESA DI FORZA
ESCUDO PRINCIPAL DE LA TDF
KRAFTUTTAGETS CENTRALSKYDDSPLAAT
RXP025020 -UN-01JAN94

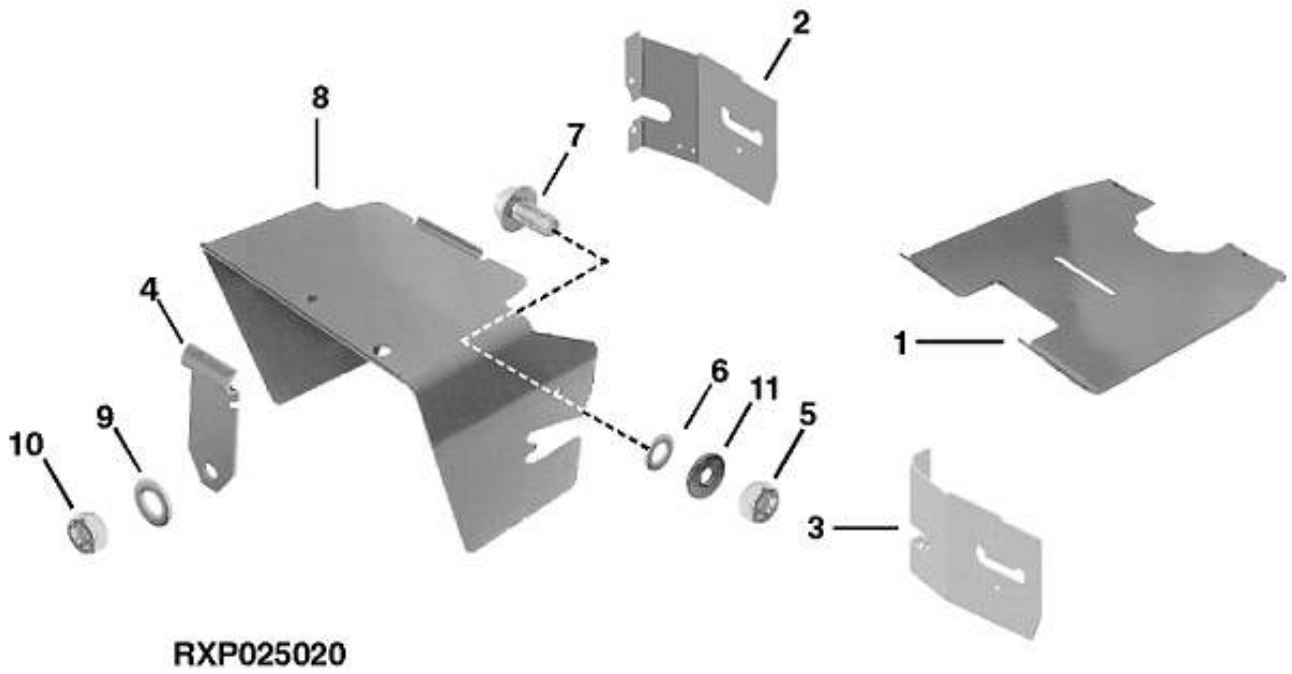

RXP025020

KEY	PART NO.	PART NAME	QTY	AXLE SERIAL NO.	ALL	REMARKS
1	RE44871	SHIELD	1		X	
2	RE60861	STEEL	1		X	
3	RE60862	SUPPORT	1		X	
4	R107454	PTO SHIELD RETAINER	2		X	
5	14M7274	NUT	2		X	M10
6	R116948	WASHER	6		X	
7	21M7442	SCREW	2		X	M10 X 20, HS 12.9
8	R124049	SHIELD	1		X	
9	24M7346	WASHER	4		X	(A) 11 X 20 X 2 MM
10	14M7274	NUT	4		X	M10
11	24M7178	WASHER	2		X	10.500 X 30 X 2.500 MM

(A) HARDENED
TREMPE
GEHAERTET
TEMPRATO
TEMPLADO
HAERDAD

https://www.truck-manuals.net/

ADAPTER FOR 1 3/8" PTO
ADAPTATEUR POUR PDF DE 1 3/8" PO
ADAPTER FUER 1 3/8" ZOLL ZAPFWELLE
ADATTATORE PER PTO DA 1 3/8" POLLICI
ADAPTADOR PARA TDF DE 1 3/8" PULG.
ADAPTER FOER ETT KRAFTUTTAG PAA 1 3/8" TUM
RE026033 -UN-27FEB95

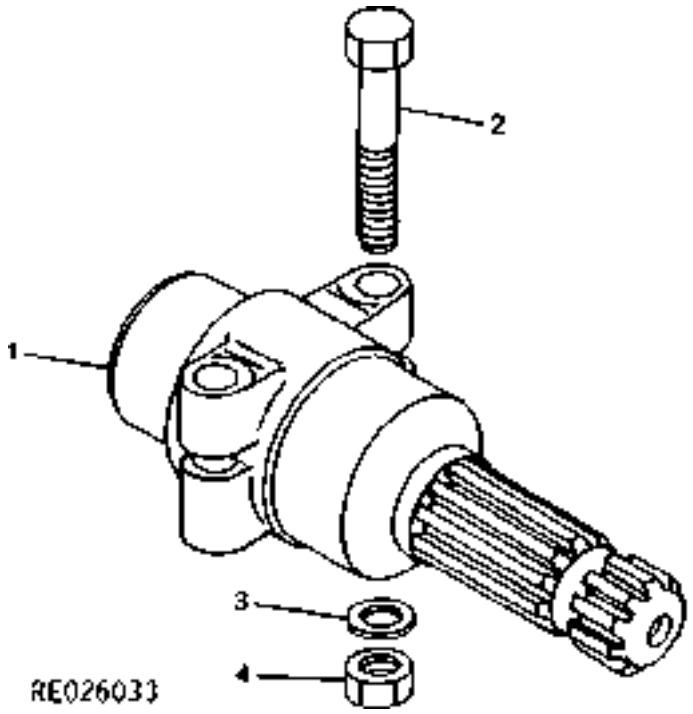

KEY	PART NO.	PART NAME	QTY	AXLE SERIAL NO.	ALL	REMARKS
1	AR89543	ADAPTER	1		X	
2	19H1974	CAP SCREW	2		X	1/2" X 2-3/4"
3	12H301	LOCK WASHER	2		X	1/2"
4	14H1040	NUT	2		X	1/2"
..	R68682	LABEL	1		X	

https://www.truck-manuals.net/

OIL FILL TUBE AND GAGE
TUBE DE REMPLISSAGE ET JAUGE D'HUILE
OELEINFUELLROHR UND ANZEIGER
TUBO DI RIFORNIMENTO DELL'OLIO E INDICATORE
TUBO DE LLENADO DE ACEITE Y MEDIDOR
OLJEPAAFYLLNINGSROER OCH MAETARE
RXP025095 -UN-01JAN94

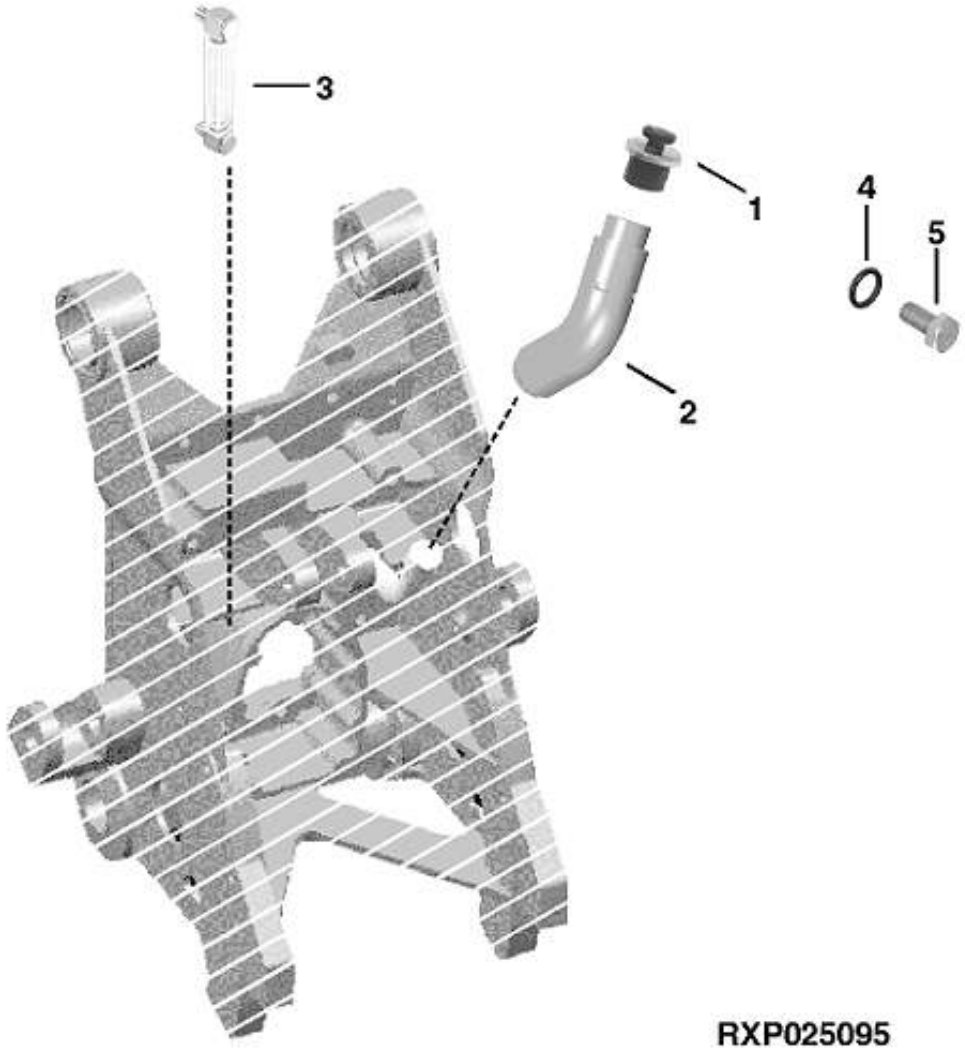

https://www.truck-manuals.net/

KEY	PART NO.	PART NAME	QTY	AXLE SERIAL NO.	ALL	REMARKS
1	RE28429	FILLER CAP	1		X	
2	RE60349	OIL TUBE	1		X	
3	RE57519	GAUGE	1		X	
4	R30319	O-RING	1		X	
5	19M7784	SCREW	1		X	M10 X 20, HS 10.9

https://www.truck-manuals.net/

MEMORANDA
MEMORANDA
MEMORANDA
MEMORANDA
MEMORANDA
MEMORANDA

https://www.truck-manuals.net/

SECTIONAL INDEX ASN(-077515)
INDEX DE SECTION ASN(-077515)
GRUPPENINDEX ASN(-077515)
INDICE DELLA SEZIONE ASN(-077515)
INDICE DE SECCION ASN(-077515)
GRUPPSFORTECKNING ASN(-077515)
RE029146 -UN-10MAY99

1 -	5E15
2 -	5E17
3 -	5E18
4 -	5E19
5 -	5E20
6 -	5E23
7 -	5F1
8 -	5F9
9 -	5F12
10 -	5F16
11 -	5F18
12 -	5F20
13 -	5F22
14 -	5F24
15 -	5G1
16 -	5G3

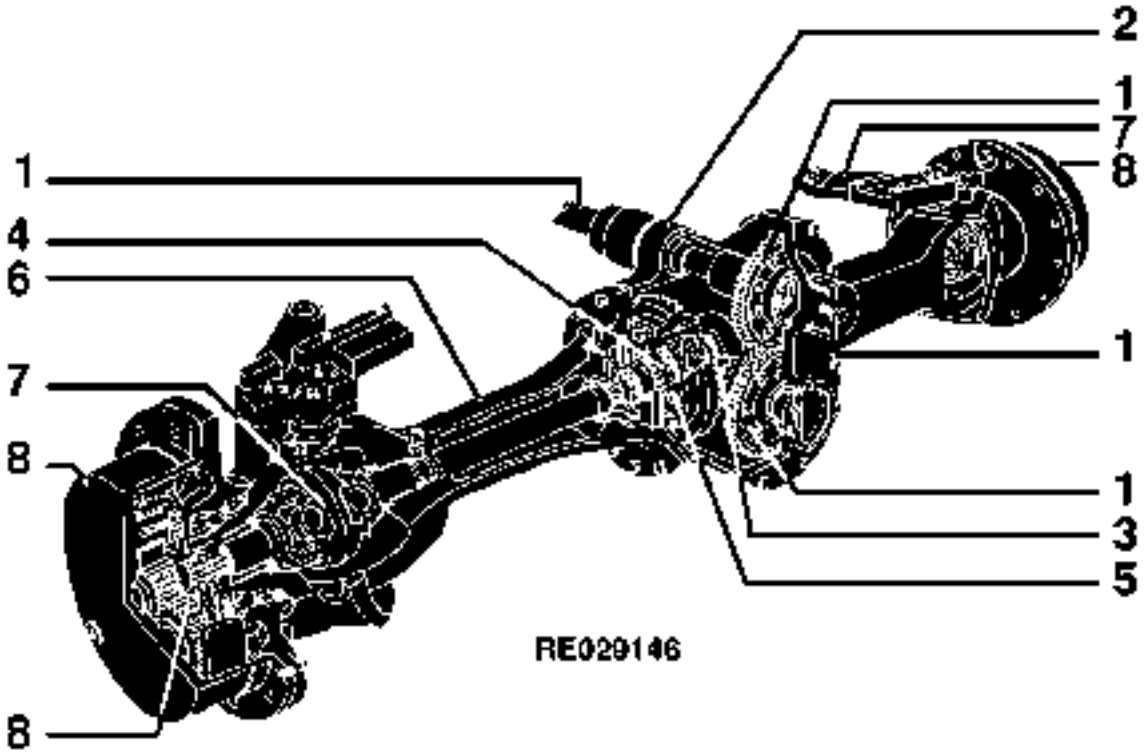

https://www.truck-manuals.net/

SECTIONAL INDEX ASN(800001-)
INDEX DE SECTION ASN(800001-)
GRUPPENINDEX ASN(800001-)
INDICE DELLA SEZIONE ASN(800001-)
INDICE DE SECCION ASN(800001-)
GRUPPSFORTECKNING ASN(800001-)

RE030228 -UN-10NOV98

1 -	5E15
2 -	5E17
3 -	5E18
4 -	5E19
5 -	5E20
6 -	5E23
7 -	5F1
8 -	5F9
9 -	5F12
10 -	5F16
11 -	5F18
12 -	5F20
13 -	5F22
14 -	5F24
15 -	5G1
16 -	5G3

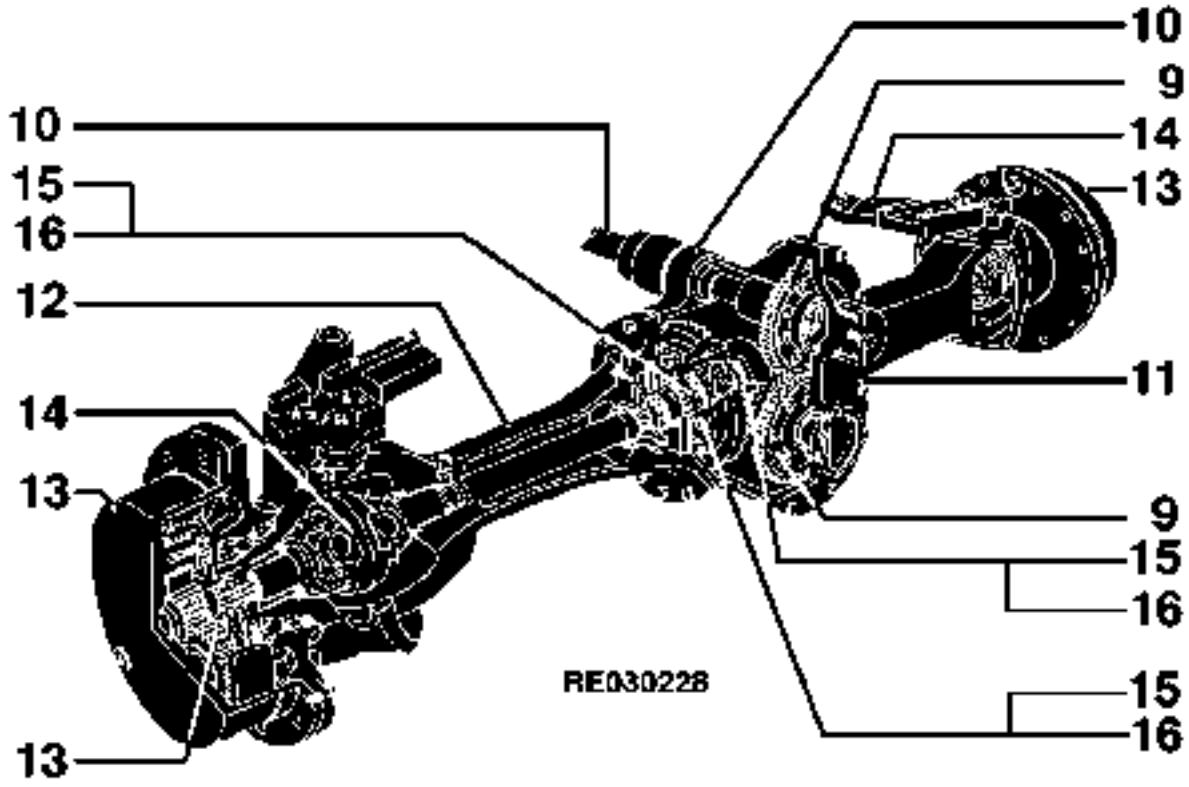

https://www.truck-manuals.net/

MEMORANDA
MEMORANDA
MEMORANDA
MEMORANDA
MEMORANDA
MEMORANDA

https://www.truck-manuals.net/

SPUR GEAR DRIVE (MFWD) ASN(-077515)
ENTRAINEMENT PAR ENGRENAGE A PIGNON DROIT ASN(-077515)
STIRNRAD-ANTRIEB ASN(-077515)
INGRANAGGIO CILINDRICO DI DISTRIBUZIONE ASN(-077515)
MANDO DE ENGRANAJES RECTOS ASN(-077515)
DREV MED CYLINDRISKT KUGGHUJL ASN(-077515)
RXP021367 -UN-08NOV95

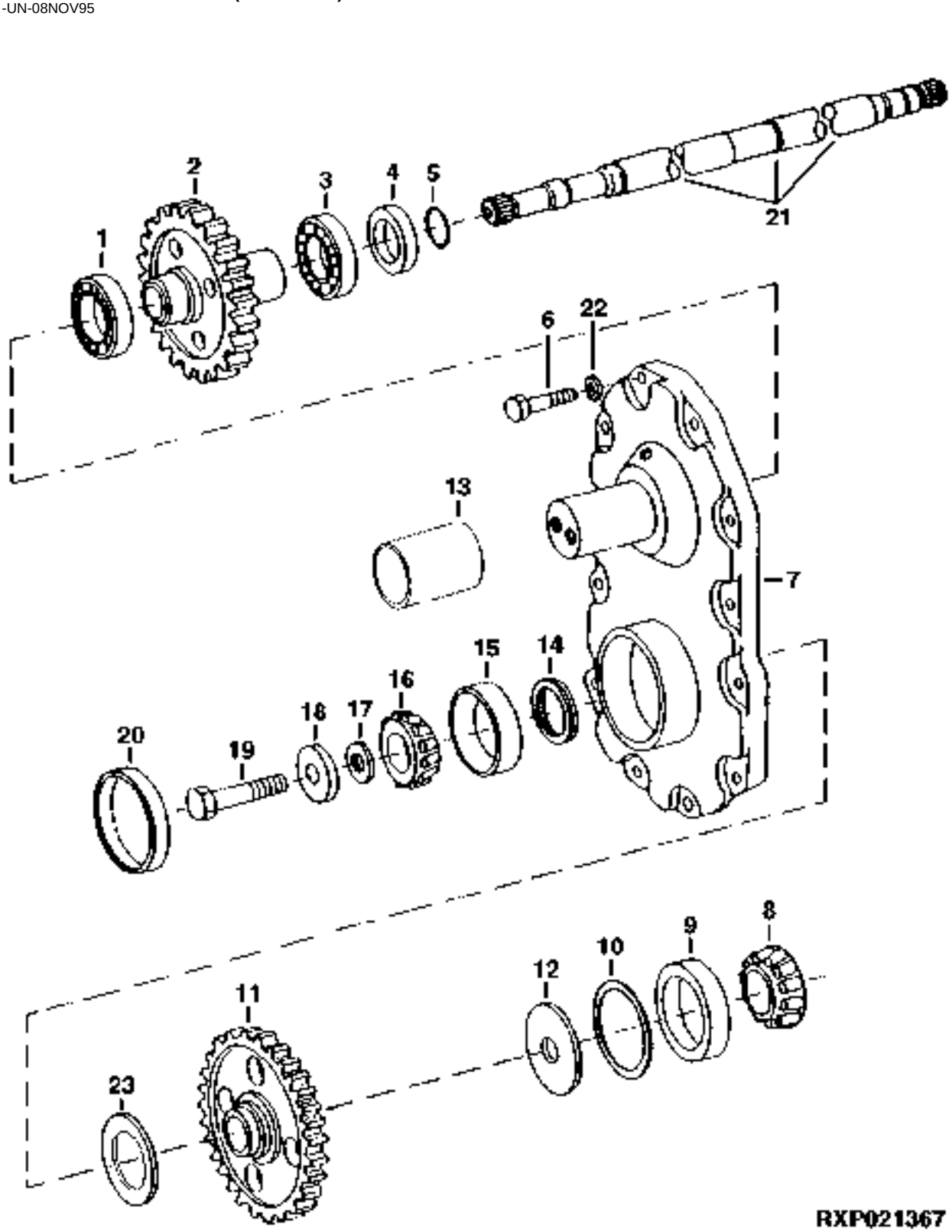

https://www.truck-manuals.net/

KEY	PART NO.	PART NAME	QTY	AXLE SERIAL NO.	ALL	REMARKS
1	CH17453	BEARING	1		X	(SUB FOR JD9279)
2	R119221	GEAR	1	-031960	X	(SUB R130894) (ALSO ORDER R130895 AND CH17453)
	R130894	GEAR	1	031961-	X	
3	JD8537	BEARING	1		X	
4	RE49315	SEAL	1		X	
5	A4540R	O-RING	1		X	
6	19M7361	CAP SCREW	12	-029083	X	M12 X 50, HS 10.9
	19M7759	CAP SCREW	12	029084-	X	M16 X 60 M16
7	R124957	COVER	1	-018006	X	(SUB R127372 AND (12) 24M7240)
	R127372	COVER	1	018007-029083	X	
	R127420	COVER	1	029084-	X	
8	JD10353	BEARING CONE	1	-021454	X	(SUB RE63575)
	RE63575	ROLLER BEARING	1	021455-029083	X	
	JD10226	BEARING CONE	1	029084-	X	
9	JD10354	BEARING CUP	1	-021454	X	(SUB RE63575)
	RE63575	ROLLER BEARING	1	021455-029083	X	
	JD10227	BEARING CUP	1	029084-	X	
10	R83059	SHIM	3	-029083	X	0.08
	R83150	SHIM	3	029084-	X	0.08
	R83060	SHIM	2	-029083	X	0.13
	R83151	SHIM	4	029084-	X	0.13
	R83061	SHIM	1	-029083	X	0.25
	R83152	SHIM	1	029084-	X	0.25
11	R119222	GEAR	1	-029083	X	
	R128359	GEAR	1	029084-	X	
12	40M7027	SNAP RING	1	-029083	X	
	T61226	SNAP RING	1	029084-	X	
13	R107718	SLEEVE	1		X	
14	R83474	RING	1		X	
15	JD9109	BEARING CUP	1		X	
16	JD9043	BEARING CONE	1		X	
17	T13331	SHIM	1		X	0.003
	T13332	SHIM	2		X	0.005
	T13333	SHIM	1		X	0.010
	24H1390	SHIM	2		X	
18	R26333	WASHER	1	-023537	X	
	R126422	WASHER	1	023538-	X	
19	19M7409	CAP SCREW	1		X	M16 X 50, HS 10.9
20	T12529	CAP	1		X	
21	R108384	SHAFT	1	-031960	X	(SUB R130895) (ALSO ORDER R130894 AND CH17453)
	R130895	SHAFT	1	031961-	X	
22	24M7240	WASHER	12	-029083	X	13 X 25 X 3 MM
	24M7241	WASHER	12	029084-	X	17 X 34 X 4 MM
23	R128360	WASHER	1	029084-	X	

https://www.truck-manuals.net/

DIFFERENTIAL CASE (MFWD) ASN(-077515)
CARTER DE DIFFERENTIEL (MFWD) ASN(-077515)
DIFFERENTIALGEHAEUSE (MFWD) ASN(-077515)
SCATOLA DEL DIFFERENZIALE (MFWD) ASN(-077515)
CAJA DEL DIFERENCIAL (MFWD) ASN(-077515)
DIFFERENTIALKAAPA (MFWD) ASN(-077515)
RE026669 -UN-13DEC95

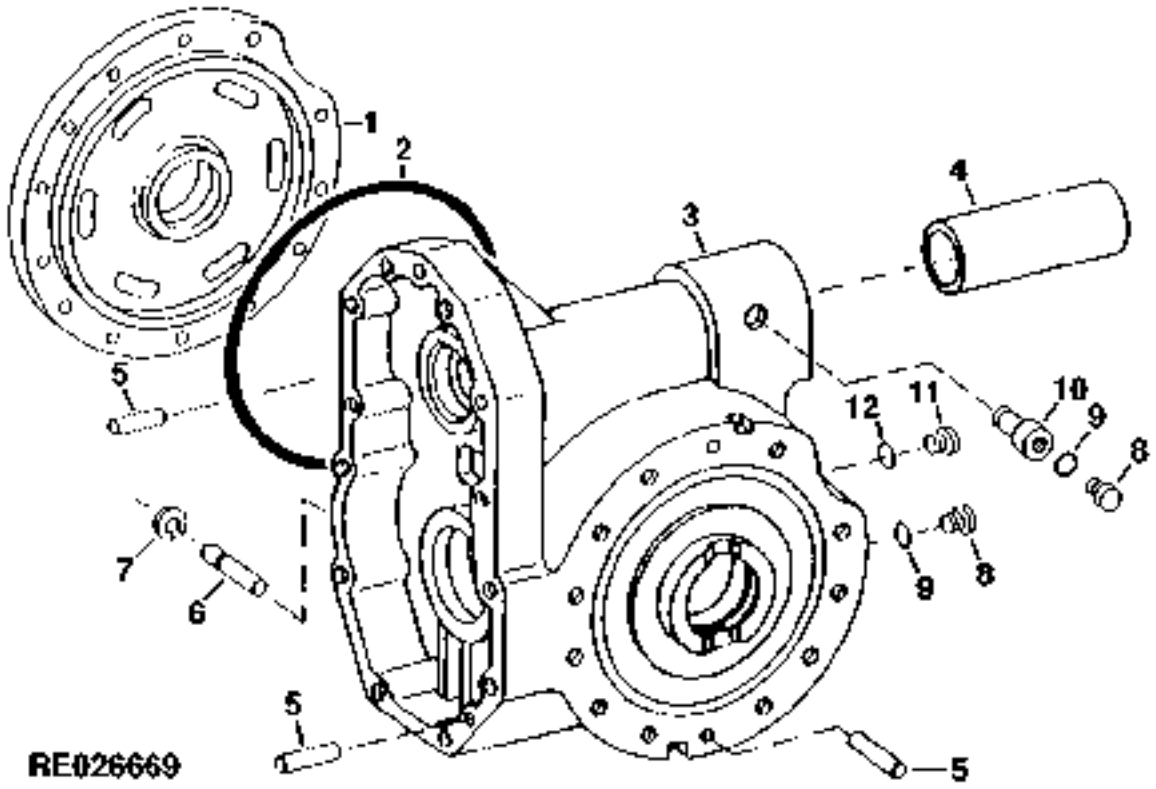

KEY	PART NO.	PART NAME	QTY	AXLE SERIAL NO.	ALL	REMARKS
1	R115436	COVER	1		X	(SUB R129090)
2	R37287	O-RING	1		X	
3	RE52321	CASE	1	-029083	X	(SUB RE63351, R127420, (12) 19M7759, (12) 24M7241, JD10226, JD10227, RE64060, R128360, T61226, (3) R83150, R83152, (4) R83151 AND R129090)
	RE63351	CASE	1	029084-	X	
4	R107719	BUSHING	1		X	
5	R48685	DOWEL PIN	4		X	
6	R98885	PIN	2		X	
7	P42894	SNAP RING	2		X	
8	R98012	PLUG	2		X	
9	P47889	O-RING	2		X	
10	R122120	PIN	1		X	
11	RE46685	PLUG	1		X	
12	51M7043	O-RING	1		X	0.08

https://www.truck-manuals.net/

SPIRAL BEVEL SET L.H. ASN(-077515)
ENGRENAGE CONIQUE A DENTURE HELICONIDALE, GAUCHE ASN(-077515)
SPIRALKEGELRAD LINKS ASN(-077515)
INGRANNAGGIO CONICO SPIROIDALE SINISTRO ASN(-077515)
ENGRANAJE CONICO ESPIRAL DEL LADO IZQUIERDO ASN(-077515)
KONISKT KUGGHJUL MED SPIRALSKURNA KUGGAR, VAENSTER ASN(-077515)
RXP011172 -UN-01JAN94

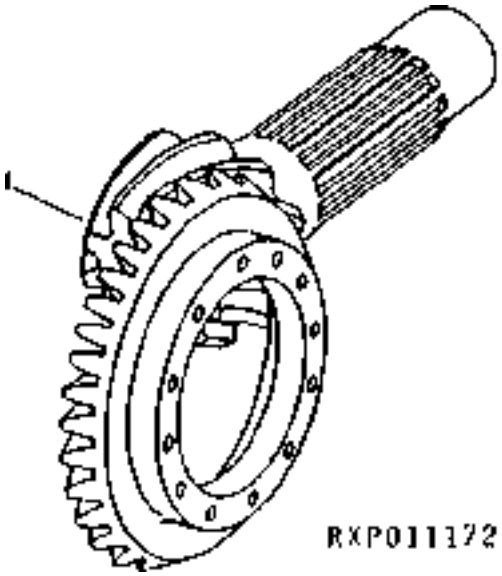

KEY	PART NO.	PART NAME	QTY	AXLE SERIAL NO.	ALL	REMARKS
1	RE44831	BEVEL GEAR	1	-027625	X	L.H. ASSEMBLY, (MARKED R107710 AND R99510) (SUB RE62677)
	RE62677	BEVEL GEAR	1	027626-029083	X	(MARKED R126566 AND R99510) L.H. ASSEMBLY
	RE64060	BEVEL GEAR	1	029084-	X	(MARKED R129108 AND R99510)

https://www.truck-manuals.net/

DIFFERENTIAL HOUSING SET (MFWD) ASN(-077515)
JEU DE CARTER DE DIFFERENTIEL (MFWD) ASN(-077515)
DIFFERENTIALGEHAEUSE-SATZ (MFWD) ASN(-077515)
KIT DELLA SCATOLA DEL DIFFERNENZIALE (MFWD) ASN(-077515)
JUEGO DE CAJA DEL DIFERENCIAL (MFWD) ASN(-077515)
DIFFERENTIALHUSSATS (MFWD) ASN(-077515)
RXP010841 -UN-01JAN94

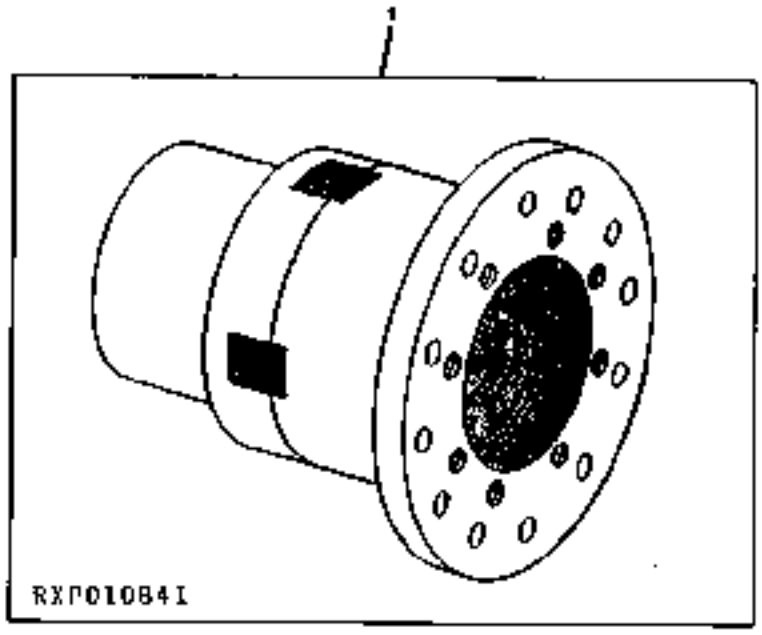

KEY	PART NO.	PART NAME	QTY	AXLE SERIAL NO.	ALL	REMARKS
1	RE61239	HOUSING	1		X	(MARKED R114123 AND R83148)

https://www.truck-manuals.net/

MEMORANDA
MEMORANDA
MEMORANDA
MEMORANDA
MEMORANDA
MEMORANDA

https://www.truck-manuals.net/

DIFFERENTIAL (MFWD) ASN(-077515)
DIFFERENTIEL (MFWD) ASN(-077515)
DIFFERENTIAL (MFWD) ASN(-077515)
DIFFERENZIALE (MFWD) ASN(-077515)
DIFERENCIAL (MFWD) ASN(-077515)
DIFFERENTIAL (MFWD) ASN(-077515)
RXP010848 -UN-01JAN94

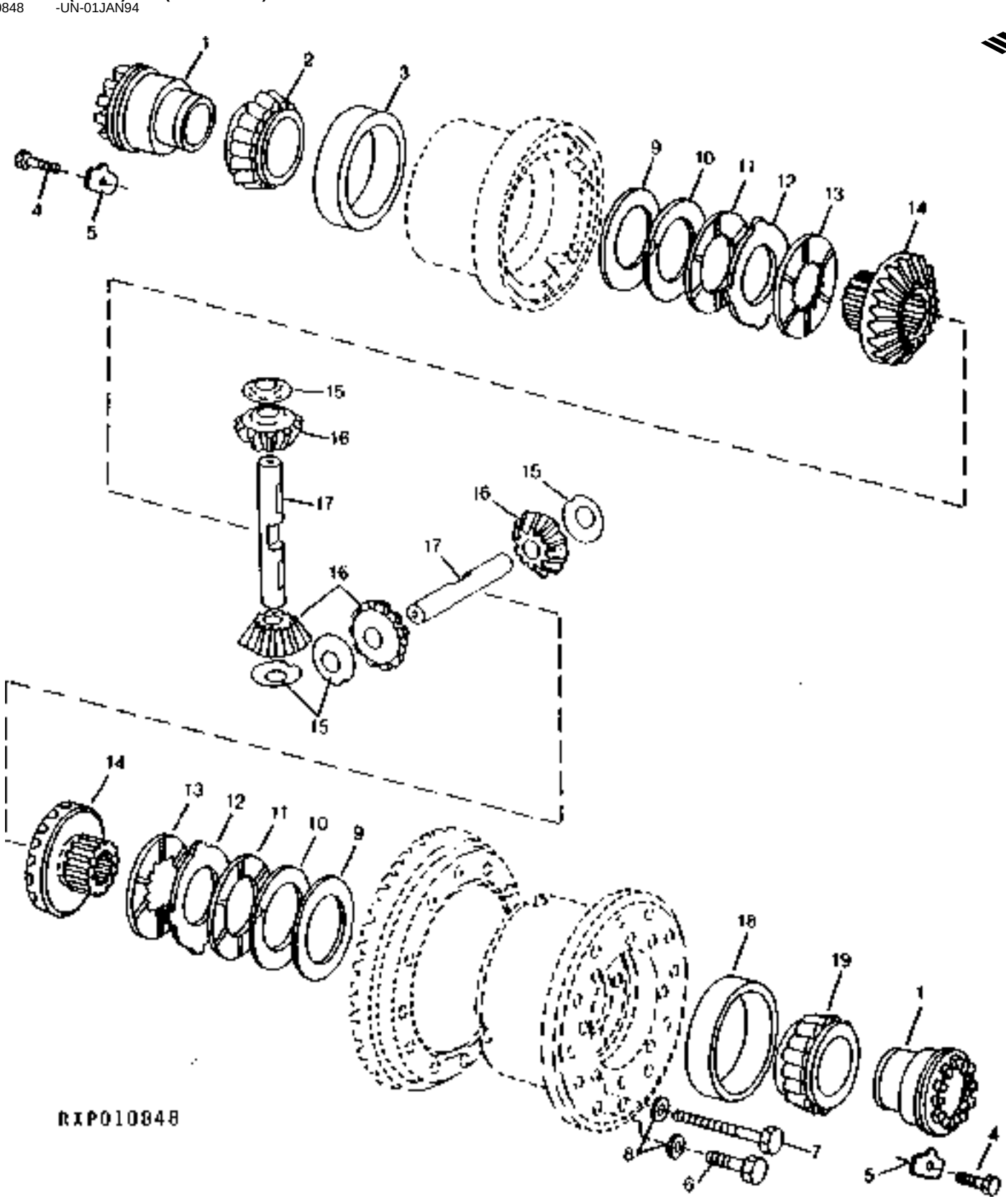

https://www.truck-manuals.net/

KEY	PART NO.	PART NAME	QTY	AXLE SERIAL NO.	ALL	REMARKS
1	R83120	QUILL	2		X	
2	RE62066	BEARING CONE	1		X	
3	JD7425	BEARING CUP	1		X	
4	19M7695	SCREW	2		X	M10 X 20
5	R97549	LOCK PLATE	2		X	
6	19M7403	CAP SCREW	12		X	M12 X 35, HS 10.9
7	R102839	BOLT	8		X	12M X 130, HS 10.9
8	R32214	WASHER	20		X	
9	R83559	SHIM	AR		X	
	R132971	SHIM	AR		X	
10	R83560	SHIM	AR		X	
11	RE22337	DISK	6	-XXXXXX	X	(SUB RE43059)
	RE43059	DISK	6	XXXXXX-	X	
	RE58267	DISK	10		X	(A)
12	R82908	PLATE	8		X	
	R82908	PLATE	12		X	(A)
13	RE22336	DISK	2	-XXXXXX	X	(SUB RE43058)
	RE43058	DISK	2	XXXXXX-	X	
	RE22336	DISK	2	-XXXXXX	X	(A) (SUB RE43058)
	RE43058	DISK	2	XXXXXX-	X	(A)
14	R83035	BEVEL GEAR	2		X	
15	R83121	THRUST WASHER	4		X	
16	R83036	PINION	4		X	
17	R83119	SHAFT	2		X	
18	JD7292	BEARING CUP	1		X	
19	JD7386	BEARING	1		X	

(A) EUROPEAN VERSION
VERSION EUROPEENNE
EUROPAEISCHE AUSFUEHRUNG
VERSIONE EUROPEA
VERSION EUROPEA
EUROPEISK VERSION

https://www.truck-manuals.net/

SECONDARY BRAKE (EUROPEAN VERSION) ASN(-077515)
FREIN SECONDAIRE (VERSION EUROPEENNE) ASN(-077515)
ZWEITBREMSE (EUROPAEISCHE AUSFUEHRUNG) ASN(-077515)
FRENO SECONDAARIO (VERSIONE EUROPEA) ASN(-077515)
FRENO SECUNDARIO (VERSION EUROPEA) ASN(-077515)
PARKERINGSBROMS (EUROPEISK VERSION) ASN(-077515)
RXP021369 -UN-20DEC95

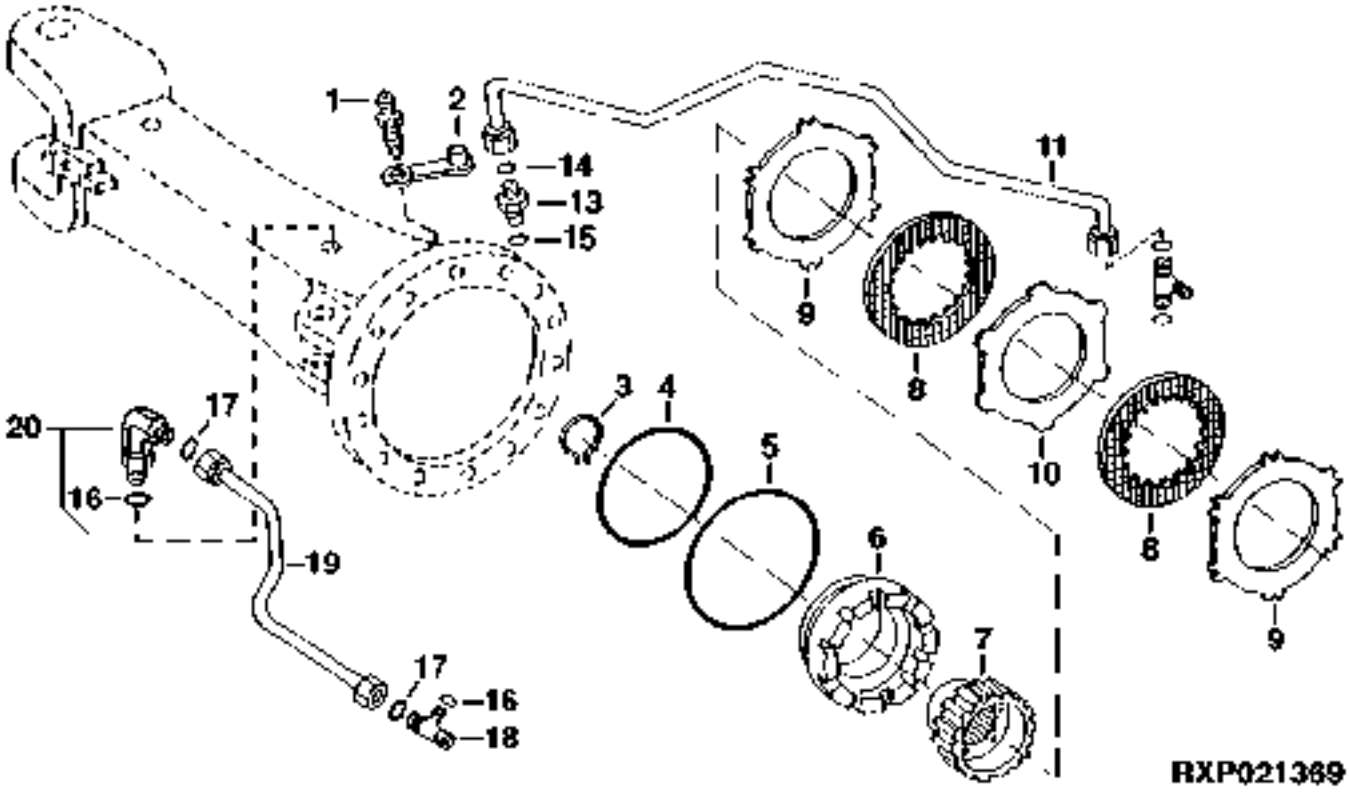

KEY	PART NO.	PART NAME	QTY	AXLE SERIAL NO.	ALL	REMARKS
1	R21612	BLEED SCREW	2		X	
2	R100122	PLUG	2		X	
3	R34222	SNAP RING	2		X	
4	R126459	PACKING	2		X	(SUB FOR R115434)
5	R126458	PACKING	2		X	(SUB FOR R113486)
6	R115433	PISTON	2		X	(SUB R130599)
7	R98809	HUB	2		X	
8	RE41973	DISK, WITH INNER SPLINE	4		X	
9	R95110	CLUTCH PLATE	4		X	
10	R98810	BRAKE DISK	2		X	
11	RE56014	OIL LINE	1		X	
12	38H1023	TEE FITTING	1	-XXXXXX	X	(A)
	38H1160	ADAPTER	1	XXXXXX-	X	(B)
13	38H1160	ADAPTER	1	-XXXXXX	X	(A)
	38H1023	TEE FITTING	1	XXXXXX-	X	(B)
14	T77613	O-RING	2		X	
15	R26448	O-RING	2		X	
16	51M7043	O-RING	3	033995-	X	15.300 X 2.200 MM
17	T77857	O-RING	4	033995-	X	
18	38H5111	TEE FITTING	1	033995-	X	
19	RE65538	OIL LINE	1	033995-	X	L.H.
	RE65537	OIL LINE	1	033995-	X	R.H.
20	38H5017	ELBOW FITTING	2	033995-	X	

(A) (-XXXXXX) 8100-004722; 8200-003490; 8300-005814; 8400-006583

(B) (XXXXXX-) 8100-004723; 8200-003491; 8300-005815; 8400-006584

https://www.truck-manuals.net/

MEMORANDA
MEMORANDA
MEMORANDA
MEMORANDA
MEMORANDA
MEMORANDA

https://www.truck-manuals.net/

AXLE HOUSING (MFWD) ASN(-077515)
TROMPETTE D'ESSIEU (MFWD) ASN(-077515)
ACHSGEHAEUSE (MFWD) ASN(-077515)
ALLOGGIAMENTO DELL'ASSALE (MFWD) ASN(-077515)
CAJA DEL EJE (MFWD) ASN(-077515)
AXELHUS (MFWD) ASN(-077515)
RE026678 -UN-13DEC95

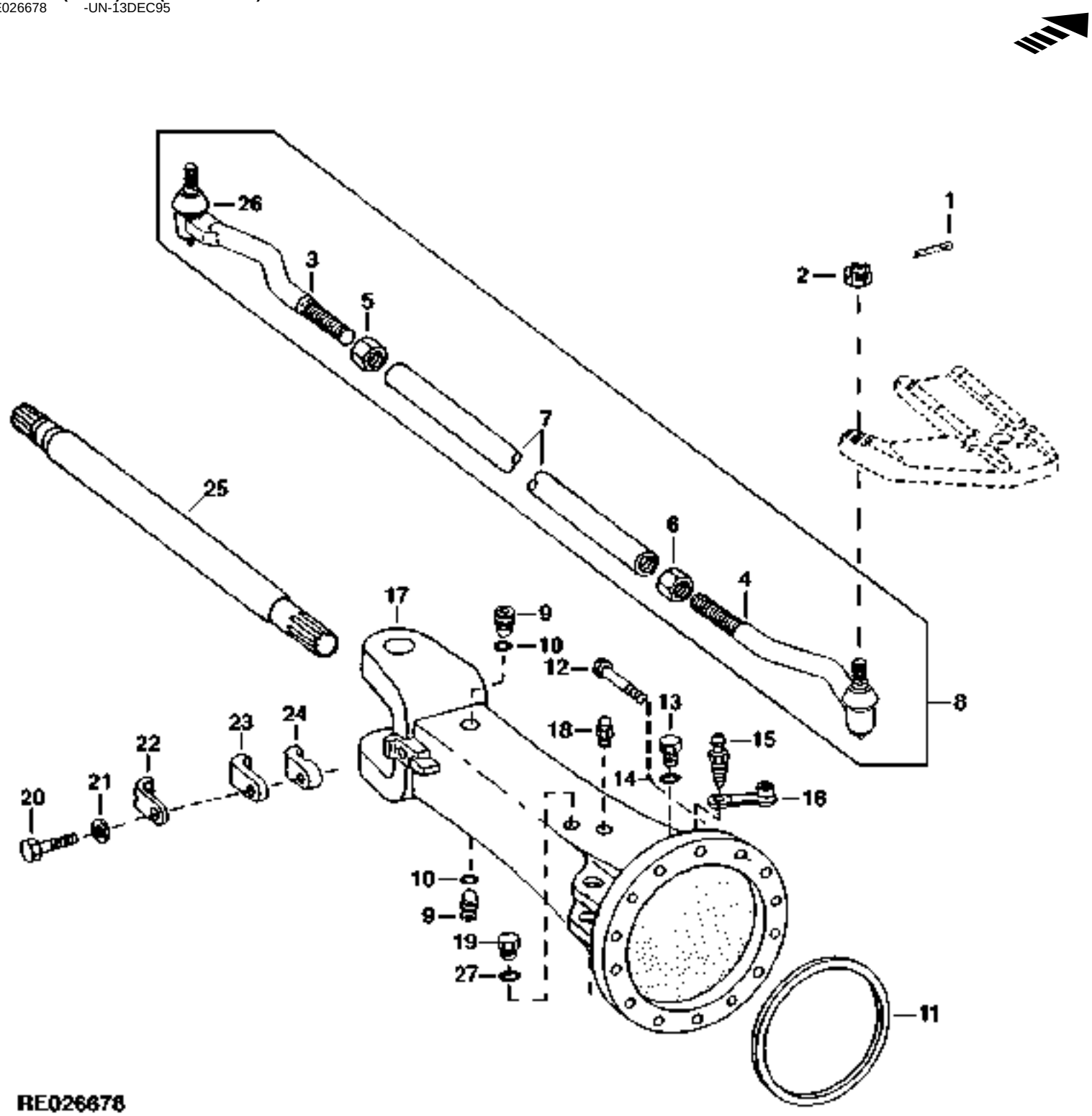

https://www.truck-manuals.net/

KEY	PART NO.	PART NAME	QTY	AXLE SERIAL NO.	ALL	REMARKS
1	11M7017	COTTER PIN	2		X	0.126" X 1.260"
2	14H875	NUT	2		X	7/8"
3	RE61402	TIE ROD	1		X	L.H.
4	RE61401	TIE ROD	1		X	R.H.
5	R121022	LOCK NUT	1		X	L.H.
6	R121023	LOCK NUT	1		X	R.H.
7	R124745	TIE ROD	1		X	
8	RE61217	TIE ROD	1		X	
9	R97605	SET SCREW	4		X	
10	H36256	O-RING	4		X	
11	T30349	WASHER	2		X	
12	19M7759	CAP SCREW	10		X	M16 X 60, HS 10.9, R.H.
	19M8020	CAP SCREW	1		X	M16 X 100, HS 10.9 R.H.
	19M7489	CAP SCREW	10		X	M16 X 45, HS 10.9 L.H.
	19M7720	CAP SCREW	1		X	M16 X 80, HS 10.9 L.H.
13	R27218	FITTING PLUG	2		X	
14	R26448	O-RING	2		X	
15	R21612	BLEED SCREW	2		X	
16	R100122	PLUG	2		X	
17	RE53050	HOUSING	1		X	(MARKED R124137, R130548, R124139 OR R130550) L.H. ALSO ORDER R108024 AND 51M7043 IF NOT PREVIOUSLY INSTALLED
	RE53049	HOUSING	1		X	(MARKED R124136, R130547, R124138 OR R130549) R.H. ALSO ORDER R108024 AND 51M7043 IF NOT PREVIOUSLY INSTALLED
18	JD5801	PRESSURE RELIEF FITTING	1	-018051	X	
	RE62981	PRESSURE RELIEF FITTING	1	018052-	X	
	P40098	ADAPTER	1	018052-	X	
19	R108024	DRAIN PLUG	2		X	
20	19M7361	CAP SCREW	2		X	M12 X 50
21	24M7240	WASHER	2		X	13 X 25 X 3 MM
22	R115093	STOP	2		X	(A)
23	R109831	STOP	2		X	(B)
24	R109830	STOP	2		X	(C)
25	R99088	SHAFT	2		X	
26	R78027	COVER	2		X	
27	51M7043	O-RING	2		X	15.300 X 2.200 MM

(A) OUTER
EXTERNE
AUSSEN
ESTERNO
EXTERIOR
YTTRE

(B) CENTER
CENTRAL
MITTE
CENTRALE
CENTRAL
MITTEN

(C) INNER
INTERNE
INNEN
INTERNO
INTERIOR
INRE

https://www.truck-manuals.net/

STEERING ARM AND KNUCKLE (ASN -059073)
BRAS ET ARTICULATION DE DIRECTION (ASN -059073)
SPURHEBEL UND LENKACHSSCHENKEL (ASN -059073)
BRACCIO DI GOVERNO E ARTICLAZIONE (ASN -059073)
ROTULA Y BRAZO DE LA DIRECCION (ASN -059073)
STYRARM OCH-SPINDEL (ASN -059073)
RE026680 -UN-15DEC95

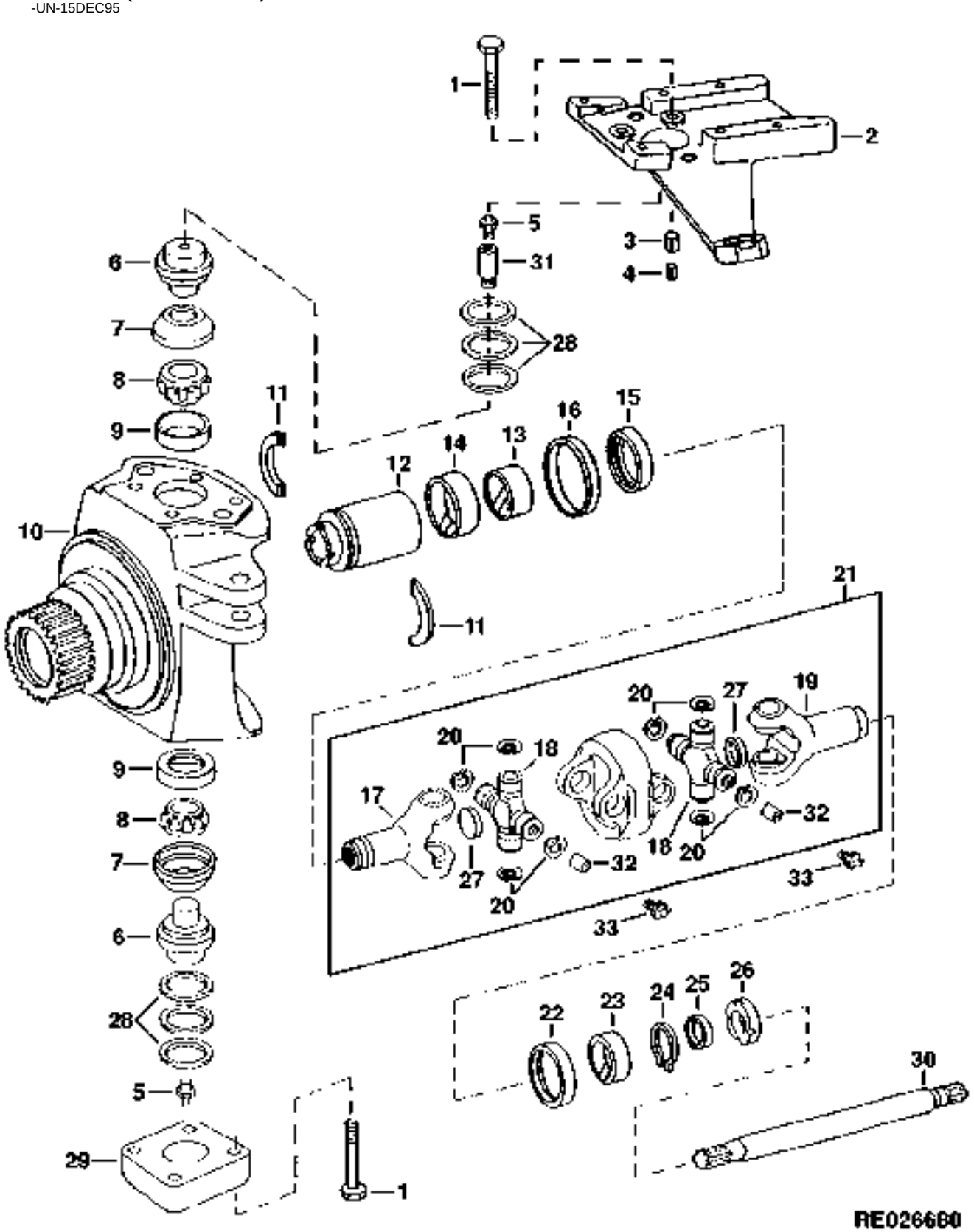

https://www.truck-manuals.net/

KEY	PART NO.	PART NAME	QTY	AXLE SERIAL NO.	ALL	REMARKS
1	19M7409	CAP SCREW	16		X	M16 X 50
2	R127661	STEERING ARM	1		X	(SUB FOR R124380) L.H.
	R127660	STEERING ARM	1		X	(SUB FOR R124379) R.H.
3	34M7128	SPRING PIN	4		X	20 X 50 MM
4	34M7077	SPRING PIN	4		X	12 X 50 MM
5	JD7781	LUBRICATION FITTING	4		X	
6	RE63382	KINGPIN	4		X	(SUB FOR R106674 OR R126390)
7	RE50803	SEAL	4		X	
8	AR94761	BEARING CONE	4		X	
9	R72090	BEARING CUP	4		X	
10	R116537	HOUSING	1	-022786	X	L.H. (SUB R126437 AND RE67242)
	R126437	HOUSING	1	022787-	X	LH
	R116536	HOUSING	1	-022786	X	R.H. (SUB R126436 AND RE67242)
	R126436	HOUSING	1	022787-	X	RH
11	R106879	WASHER	4		X	
12	R127715	SLEEVE	2		X	(SUB FOR R115438)
13	R82982	BUSHING	2		X	
14	R86488	BUSHING	2		X	
15	RE36282	SEAL	2		X	
16	RE61248	SEAL	2		X	
17	RE58646	YOKE	2		X	(A)
18	RE65621	UNIVERSAL JOINT CROSS	2		X	(SUB FOR RE47758)
19	RE58639	YOKE	2		X	(B)
20	40M7119	SNAP RING	8		X	
21	RE65603	UNIVERSAL JOINT CROSS	2		X	(SUB FOR RE46957) (SUB RE70738 AND RE150320)
22	RE61249	SEAL	2		X	
23	R82982	BUSHING	2		X	
24	R124576	SNAP RING	2		X	
25	R93055	SPACER	2		X	
26	R124701	SLEEVE	2		X	
27	R119118	PLUG	4		X	
28	RE48345	KIT	1		X	
29	R110039	CAP	2		X	
30	R99088	SHAFT	2		X	
31	R115881	EXTENSION	2		X	
32	15M7033	PIPE PLUG	8		X	
33	58M5578	LUBRICATION FITTING	8		X	

(A) OUTBOARD
EXTERIEUR
AUSSEN
ESTERNO
EXTERIOR
YTTRE

(B) INBOARD
INTERERIEUR
INNEN
INTERNO
INTERIOR
INRE

https://www.truck-manuals.net/

STEERING ARM AND KNUCKLE (ASN 059074-077515)
BRAS ET ARTICULATION DE DIRECTION (ASN 059074-077515)
SPURHEBEL UND LENKACHSSCHENKEL (ASN 059074-077515)
BRACCIO DI GOVERNO E ARTICLAZIONE (ASN 059074-077515)
ROTULA Y BRAZO DE LA DIRECCION (ASN 059074-077515)
STYRARM OCH-SPINDEL (ASN 059074-077515)
RE028679 -UN-05DEC97

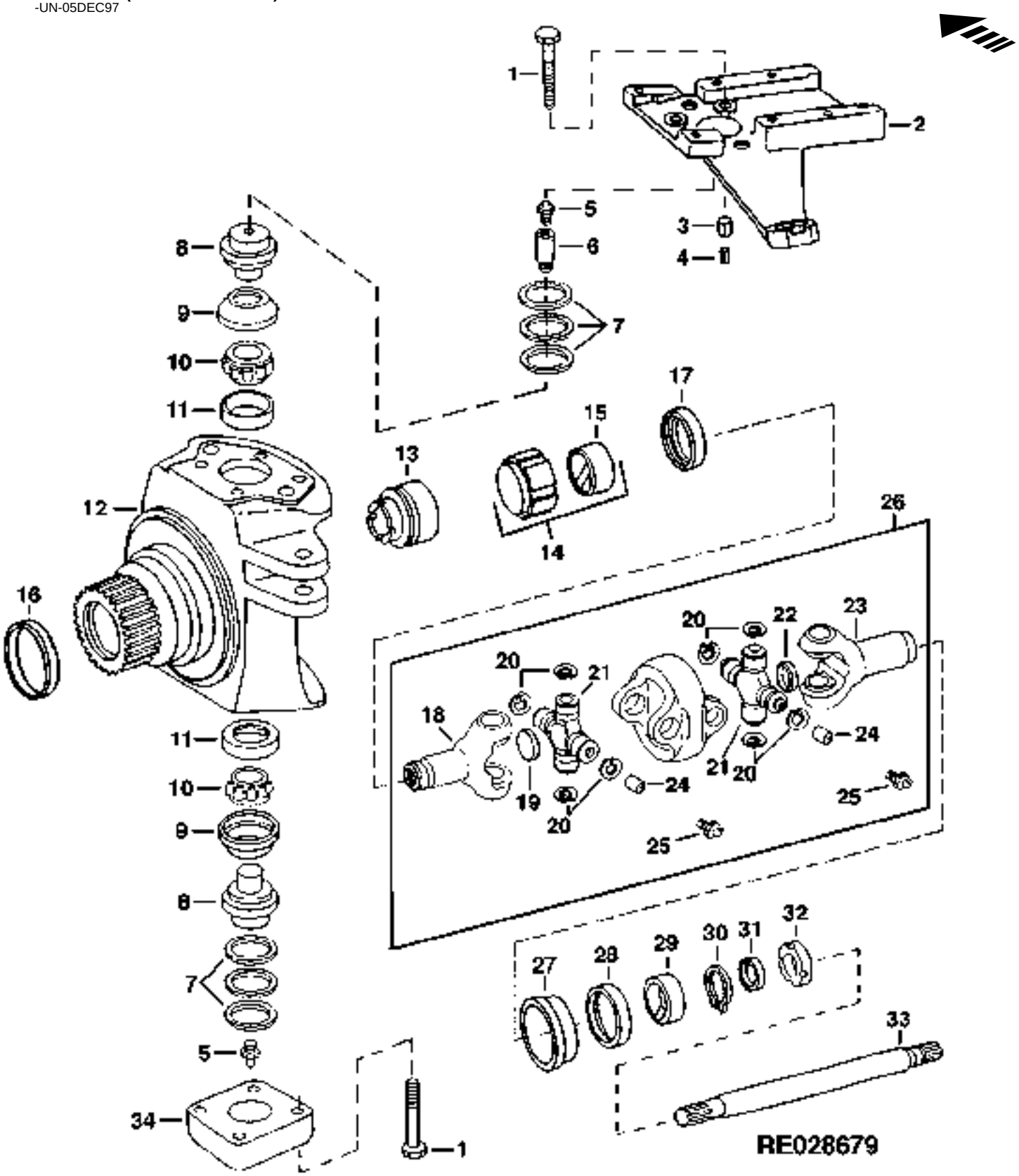

THIS PARTS LISTING IS CONTINUED

https://www.truck-manuals.net/

KEY	PART NO.	PART NAME	QTY	AXLE SERIAL NO.	ALL	REMARKS
1	19M7409	CAP SCREW	16		X	M16 X 50
2	R127661	STEERING ARM	1		X	L.H.
	R127660	STEERING ARM	1		X	R.H.
3	34M7128	SPRING PIN	4		X	20 X 50 MM
4	34M7077	SPRING PIN	4		X	12 X 50 MM
5	JD7781	LUBRICATION FITTING	4		X	
6	R115881	EXTENSION	2		X	
7	RE48345	KIT	1		X	
8	RE63382	KINGPIN	4		X	
9	RE50803	SEAL	4		X	
10	AR94761	BEARING CONE	4		X	
11	R72090	BEARING CUP	4		X	
12	R126437	HOUSING	1		X	LH
	R126436	HOUSING	1		X	RH
13	R135218	SPACER	2		X	
14	RE150316	SLEEVE	2		X	
15	R136467	BUSHING	2		X	
16	RE154869	SEAL	2		X	(SUB FOR RE46365)
17	RE150317	SEAL	2		X	
18	RE71566	YOKE	2		X	(A)
19	R150315	PLUG	2		X	
20	40M7119	SNAP RING	8		X	
21	RE65621	UNIVERSAL JOINT CROSS	2		X	
22	R119118	PLUG	2		X	(B)
23	RE58639	YOKE	2		X	(B)
24	15M7033	PIPE PLUG	8		X	
25	58M5578	LUBRICATION FITTING	8		X	
26	RE70738	UNIVERSAL JOINT CROSS	2		X	
27	R135247	SLEEVE	2		X	
28	RE150318	SEAL	2		X	(INCLUDES RE64225)
29	R82982	BUSHING	2		X	
30	R124576	SNAP RING	2		X	
31	R93055	SPACER	2		X	
32	R124701	SLEEVE	2		X	
33	R99088	SHAFT	2		X	
34	R110039	CAP	2		X	

(A) OUTBOARD
EXTERIEUR
AUSSEN
ESTERNO
EXTERIOR
YTTRE

(B) INBOARD
INTERERIEUR
INNEN
INTERNO
INTERIOR
INRE

https://www.truck-manuals.net/

KIT, HEAVY DUTY KINGPIN (ASN -077515)
KIT DE PIVOT DE FUSEE D'ESSIEU A USAGE INTENSIF (ASN -077515)
SATZ MIT VERSTAERKTEM ACHSSCHENKELBOLZEN (ASN -077515)
KIT PERNI DEI DUSI PER PRESTAZIONI PESANTI (ASN -077515)
JUEGO DE PIVOT DE DIRECTION PARA SERVICIO SEVERO (ASN -077515)
SATS MED EXTRA KRAFTIG HJULSPINDELBULT (ASN -077515)
RE030332 -UN-20JAN99

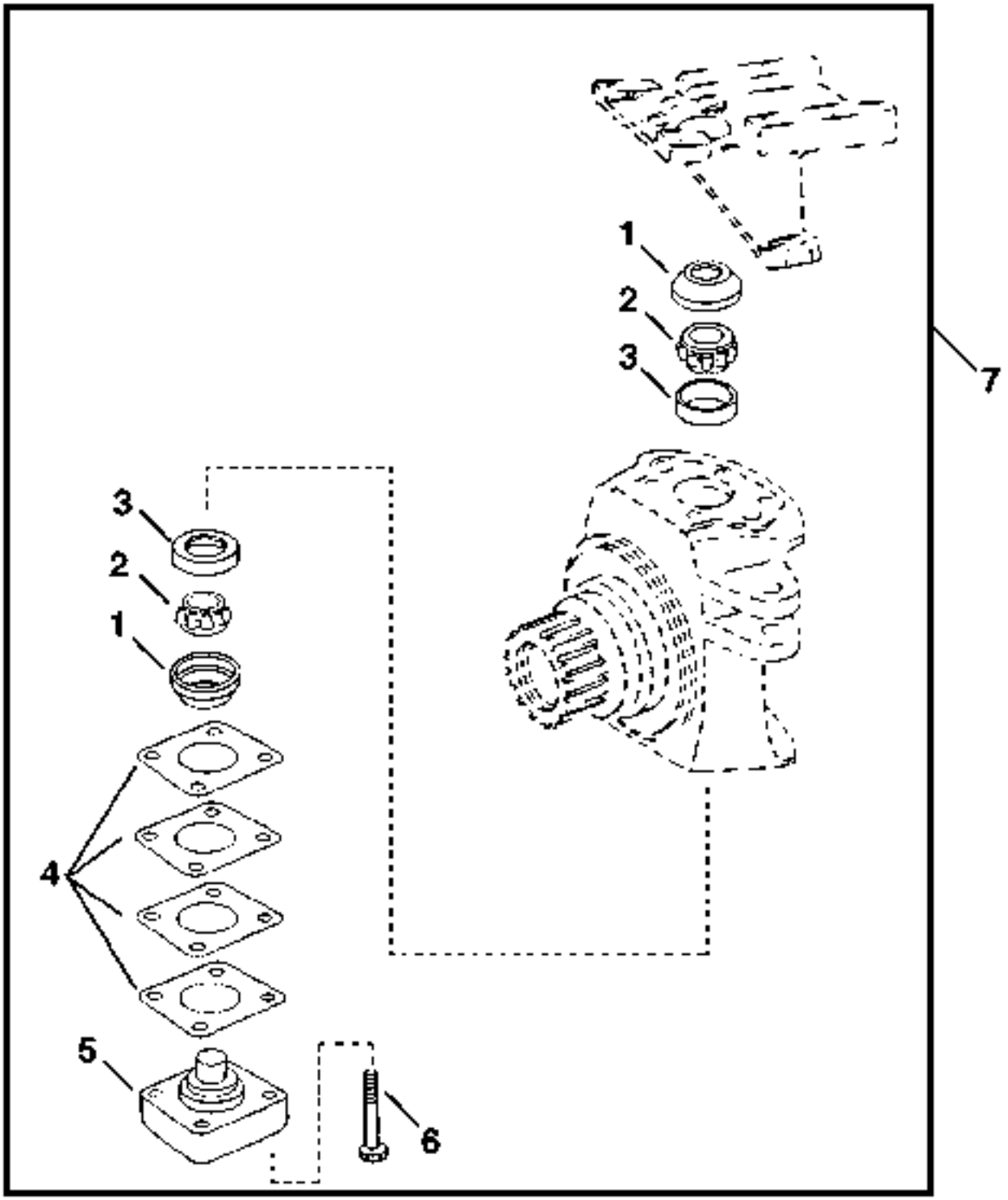

RE030332

https://www.truck-manuals.net/

KEY	PART NO.	PART NAME	QTY	AXLE SERIAL NO.	ALL	REMARKS
1	RE50803	SEAL	2			
2	AR94761	BEARING CONE	2			
3	R72090	BEARING CUP	2			
4	R156636	SHIM	1			
	R156637	SHIM	1			
	R156638	SHIM	2			
	R156639	SHIM	1			
5	R156627	KINGPIN	1			
6	19M7489	CAP SCREW	4			
7	RE156751	KIT	1			(ALSO ORDER RE155825 OR RE155826)

https://www.truck-manuals.net/

RETROFIT SEAL KIT ASN(-077515)
KIT DE JOINTS DE MODIFICATION ASN(-077515)
NACHRUESTUNGS-DICHTRINGSATZ ASN(-077515)
KIT GUARNIZIONI DI AGGIORNAMENTO ASN(-077515)
JUEGO DE MODIFICACION DE SELLOS ASN(-077515)
TAETNINGSSATS FOER UPPDATERING ASN(-077515)
RE028674 -UN-05DEC97

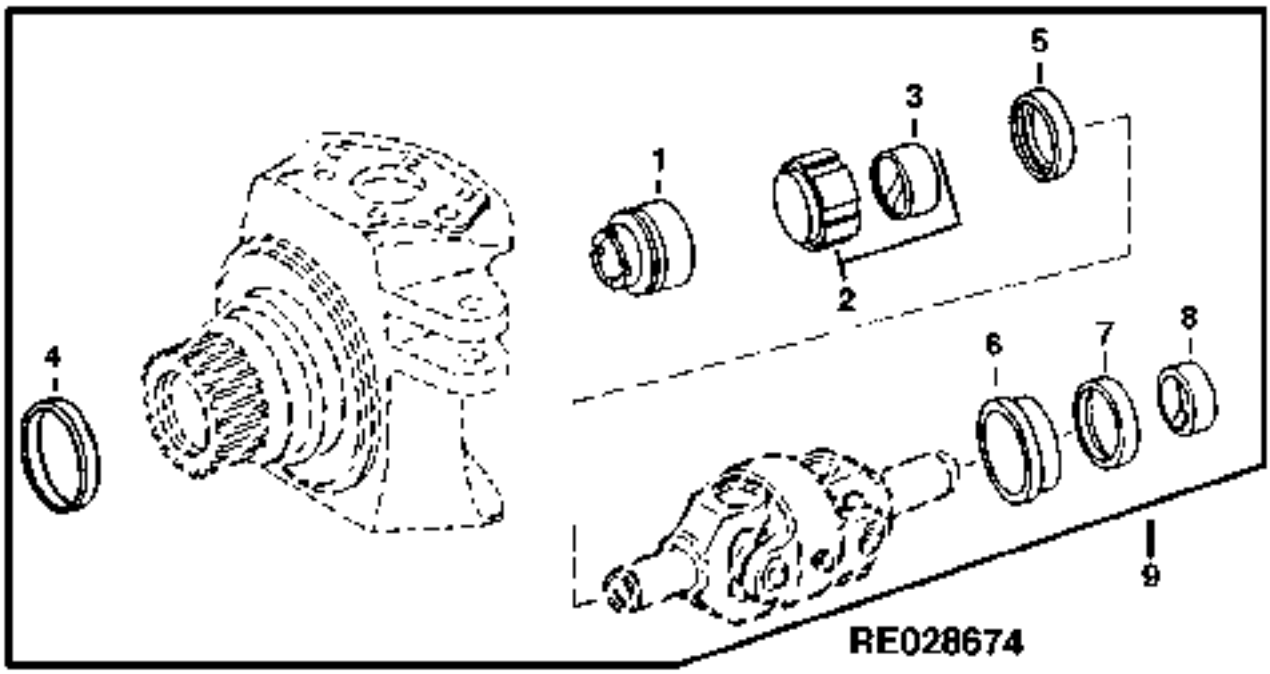

https://www.truck-manuals.net/

KEY	PART NO.	PART NAME	QTY	AXLE SERIAL NO.	ALL	REMARKS
1	R135218	SPACER	1		X	
2	RE150316	SLEEVE	1		X	
3	R136467	BUSHING	1		X	
4	RE154869	SEAL	1		X	(SUB FOR RE46365)
5	RE150317	SEAL	1		X	
6	R135247	SLEEVE	1		X	
7	RE150318	SEAL	1		X	(INCLUDES RE64225)
8	R82982	BUSHING	1		X	
9	RE150320	SEAL KIT	1	-022787	X	(ALSO ORDER RE71566 OR RE70738 AND RE150319)
	RE150320	SEAL KIT	1	022788-035964	X	(ALSO ORDER RE71566 OR RE70738 AND RE67242)
	RE150320	SEAL KIT	1	035966-059073	X	(ALSO ORDER RE71566 OR RE70738)
	RE150320	SEAL KIT	1	059074-	X	

https://www.truck-manuals.net/

FINAL DRIVE (MFWD) ASN(-077515)
REDUCTEUR (MFWD) ASN(-077515)
ENDANTRIEB (MFWD) ASN(-077515)
COPPIA CONICA (MFWD) ASN(-077515)
MANDO FINAL (MFWD) ASN(-077515)
NSKSCRLBSRCRL (MFWD) ASN(-077515)
RE028258 -UN-14AUG97

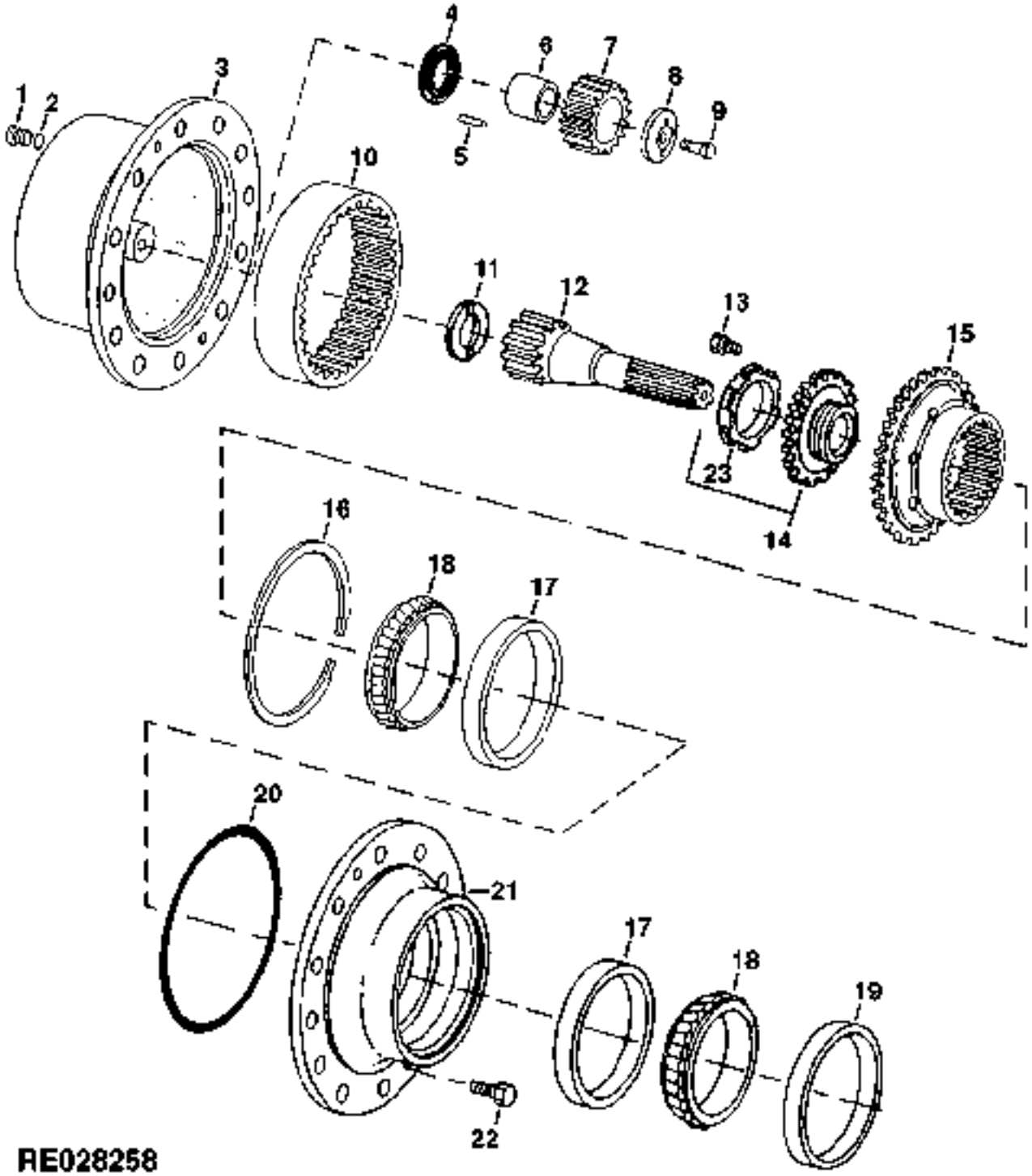

https://www.truck-manuals.net/

KEY	PART NO.	PART NAME	QTY	AXLE SERIAL NO.	ALL	REMARKS
1	R98012	PLUG	2		X	
2	P47889	O-RING	2		X	
3	R104755	PLANET PINION CARRIER	2		X	
4	R92872	THRUST WASHER	6		X	
5	R121283	NEEDLE ROLLER	198		X	
6	R121362	BEARING RACE	6		X	
7	R121282	PLANET PINION	6		X	
8	R92871	RETAINER	6		X	
9	R112888	CAP SCREW	6		X	16M X 40, HS 10.9
10	R99498	RING GEAR	2		X	
11	R100774	THRUST WASHER	2		X	
12	R100246	PINION SHAFT	2	-035803	X	(SUB R131740)
	R131740	PINION SHAFT	1	035804-	X	
13	R91842	SCREW	2		X	10M X 1.5, HS 12.9
14	R99353	RETAINER	2	-022786	X	(SUB RE150319)
	R124404	RETAINER	2	022787-035803	X	(SUB RE67242)
	RE67242	RETAINER	1	035804-	X	
15	R99499	HUB	2		X	
16	R99673	SNAP RING	2		X	
17	JD9115	BEARING CUP	2		X	
18	JD9050	BEARING CONE	2		X	
19	RE154869	SEAL	2		X	(SUB FOR RE46365)
20	R87047	RING	2		X	
21	R104756	HUB	2		X	
22	19M8011	CAP SCREW	4		X	M12 X 30, HS 10.9
23	R131738	SPACER	1		X	

https://www.truck-manuals.net/

DRIVELINE SHIELDING (MFWD)
ECRAN PROTECTEUR DE L'ARBRE D'ENTRAINEMENT (TRACTION AVANT MECANIQUE)
KARDANWELLEN SCHUTZ (MECHANISCHER FRONTANTRIEB)
SCHERMATURA PER LENEA DI GUIDA (TRAZIONE ANTERIORE MECANNICA)
PROTECCION DEL SISTEMA DE TRANSMISION (TRACCION DELANTERA)
KRAFTOEVERFOERINGSSKYDD (MEKANISK FRAMHJULSDRIVNING)
RXP025025 -UN-01JAN94

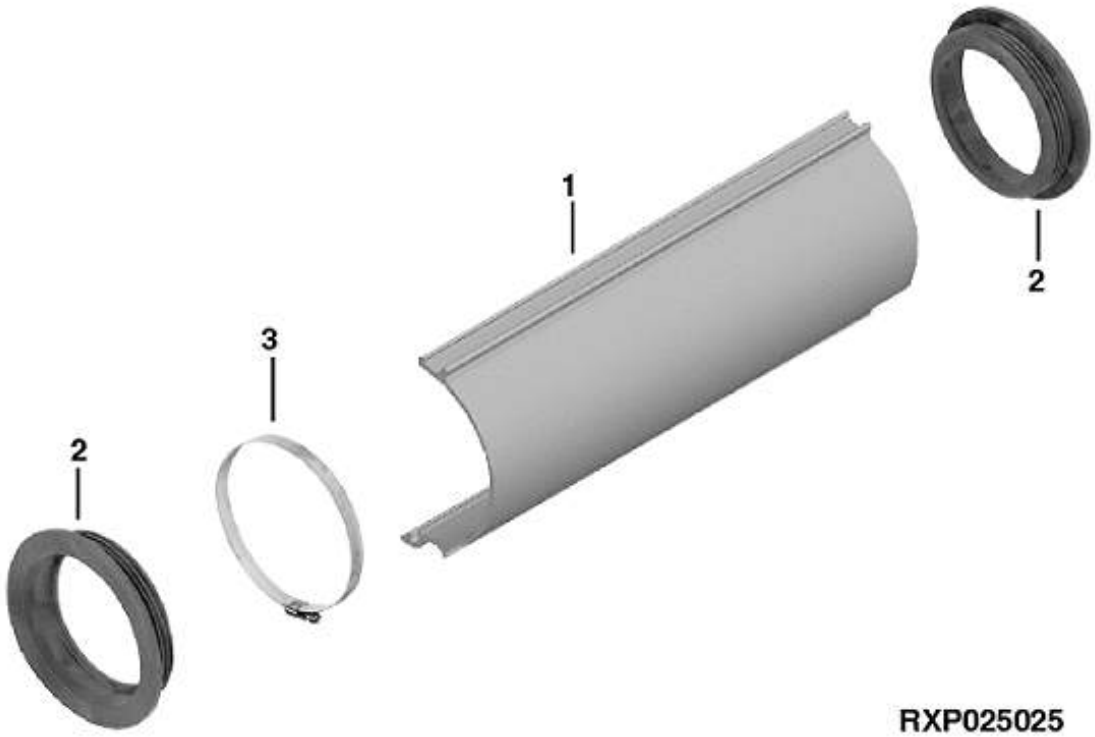

KEY	PART NO.	PART NAME	QTY	AXLE SERIAL NO.	ALL	REMARKS
1	R124886	SHIELD	2		X	
2	R116353	SEAL	2		X	
3	C16054	CLAMP	2		X	(SUB TY22475)

https://www.truck-manuals.net/

MEMORANDA
MEMORANDA
MEMORANDA
MEMORANDA
MEMORANDA
MEMORANDA

https://www.truck-manuals.net/

SPUR GEAR DRIVE (MFWD) ASN(800001-)
ENTRAINEMENT PAR ENGRENAGE A PIGNON DROIT
STIRNRAD-ANTRIEB
INGRANAGGIO CILINDRICO DI DISTRIBUZIONE
MANDO DE ENGRANAJES RECTOS
DREV MED CYLINDRISKT KUGGHUJL
RE030225 -UN-06NOV98

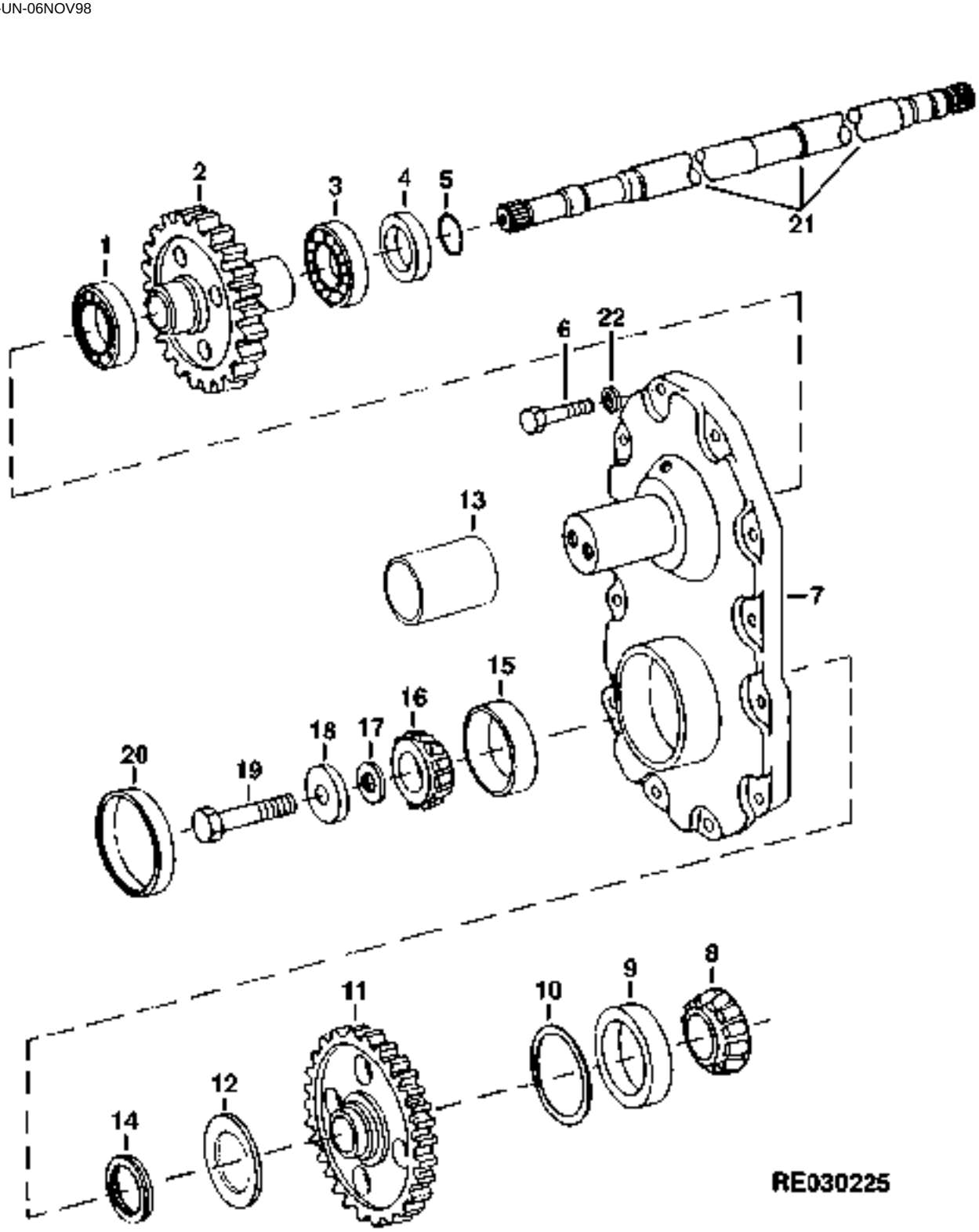

https://www.truck-manuals.net/

KEY	PART NO.	PART NAME	QTY	AXLE SERIAL NO.	ALL	REMARKS
1	CH17453	BEARING	1		X	
2	R130894	GEAR	1		X	
3	JD8537	BEARING	1		X	
4	RE49315	SEAL	1		X	
5	A4540R	O-RING	1		X	
6	19M7759	CAP SCREW	12		X	M16 X 60 M16
7	R127420	COVER	1		X	
8	JD10226	BEARING CONE	1		X	
9	JD10227	BEARING CUP	1		X	
10	T61226	SNAP RING	1		X	
11	R128359	GEAR	1		X	
12	R128360	WASHER	1		X	
13	R107718	SLEEVE	1		X	
14	R83474	RING	1		X	
15	JD9109	BEARING CUP	1		X	
16	JD9043	BEARING CONE	1		X	
17	T13331	SHIM	AR		X	0.003
	T13332	SHIM	AR		X	0.005
	T13333	SHIM	AR		X	0.010
	24H1390	SHIM	AR		X	
18	R126422	WASHER	1		X	
19	19M7409	CAP SCREW	1		X	M16 X 50, HS 10.9
20	T12529	CAP	1		X	
21	R130895	SHAFT	1		X	
22	24M7241	WASHER	12		X	17 X 34 X 4 MM

https://www.truck-manuals.net/

SECONDARY BRAKE (EUROPEAN VERSION) ASN(800001-)
FREIN SECONDAIRE (VERSION EUROPEENNE) ASN(800001-)
ZWEITBREMSE (EUROPAEISCHE AUSFUEHRUNG) ASN(800001-)
FRENO SECONDAARIO (VERSIONE EUROPEA) ASN(800001-)
FRENO SECUNDARIO (VERSION EUROPEA) ASN(800001-)
PARKERINGSBROMS (EUROPEISK VERSION) ASN(800001-)
RE030129 -UN-06NOV98

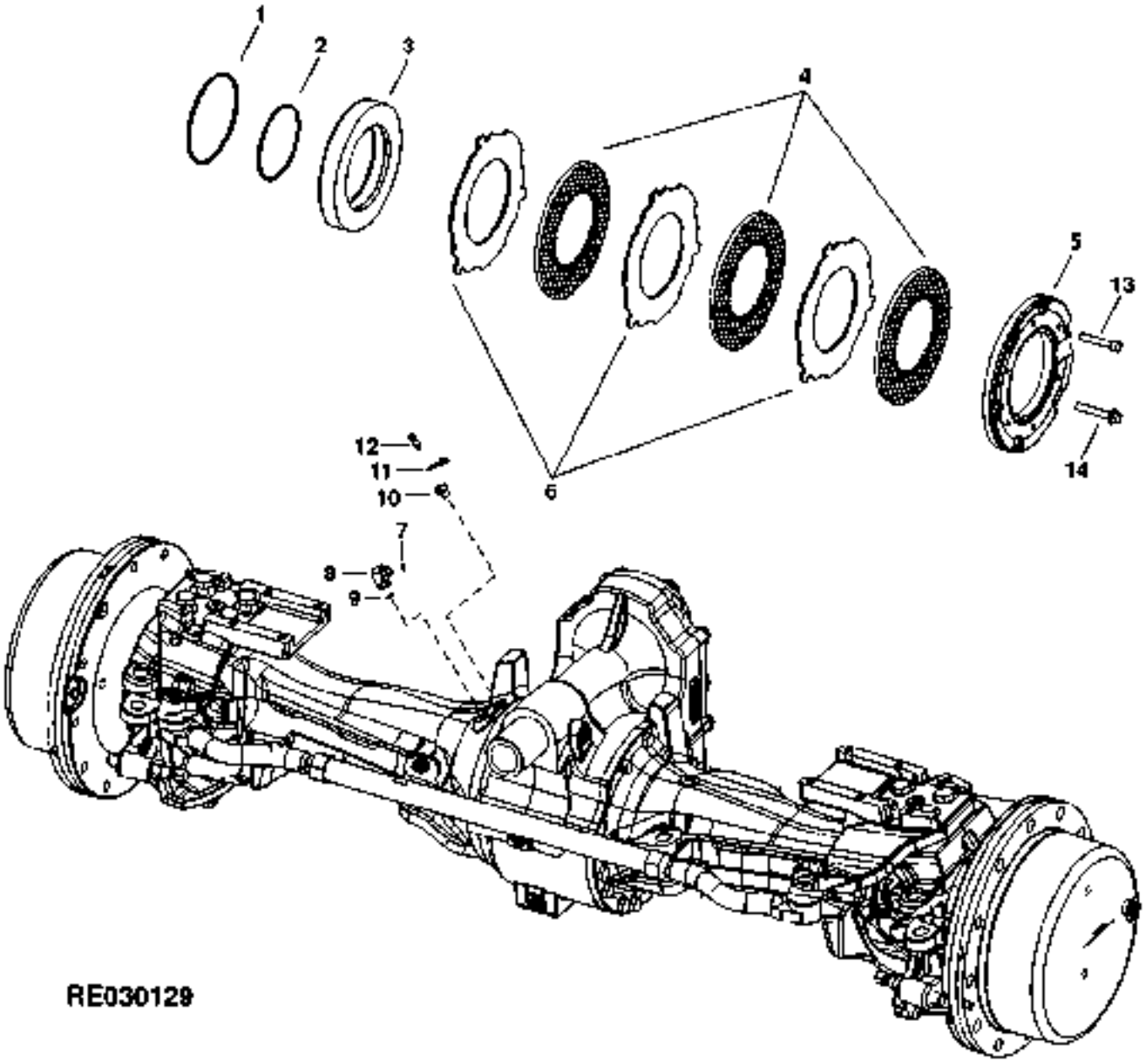

https://www.truck-manuals.net/

KEY	PART NO.	PART NAME	QTY	AXLE SERIAL NO.	ALL	REMARKS
1	R158630	SEAL	1		X	
2	R158631	SEAL	1		X	
3	R150222	PISTON	1		X	
4	RE159560	DISK, WITH INNER SPLINE	3		X	
5	R136355	BRAKE DISK	1		X	
6	R150350	BRAKE DISK	3		X	
7	T77613	O-RING	1		X	
8	38H1004	ELBOW FITTING	1		X	
9	R26448	O-RING	1		X	
10	R106789	BUSHING	1		X	
11	R100122	PLUG	1		X	
12	R21612	BLEED SCREW	1		X	
13	19M8912	SCREW	1		X	
14	19M7817	SCREW	5		X	

https://www.truck-manuals.net/

MFWD PIVOT ASN(800001-)
PIVOT DE PONT AVANT ASN(800001-)
VORDERACHSGELENKZAPFEN ASN(800001-)
PERNO MFWD ASN(800001-)
PIVOTE DE TDM ASN(800001-)
MFWD-SVAENGTAPP ASN(800001-)
RE030126 -UN-06NOV98

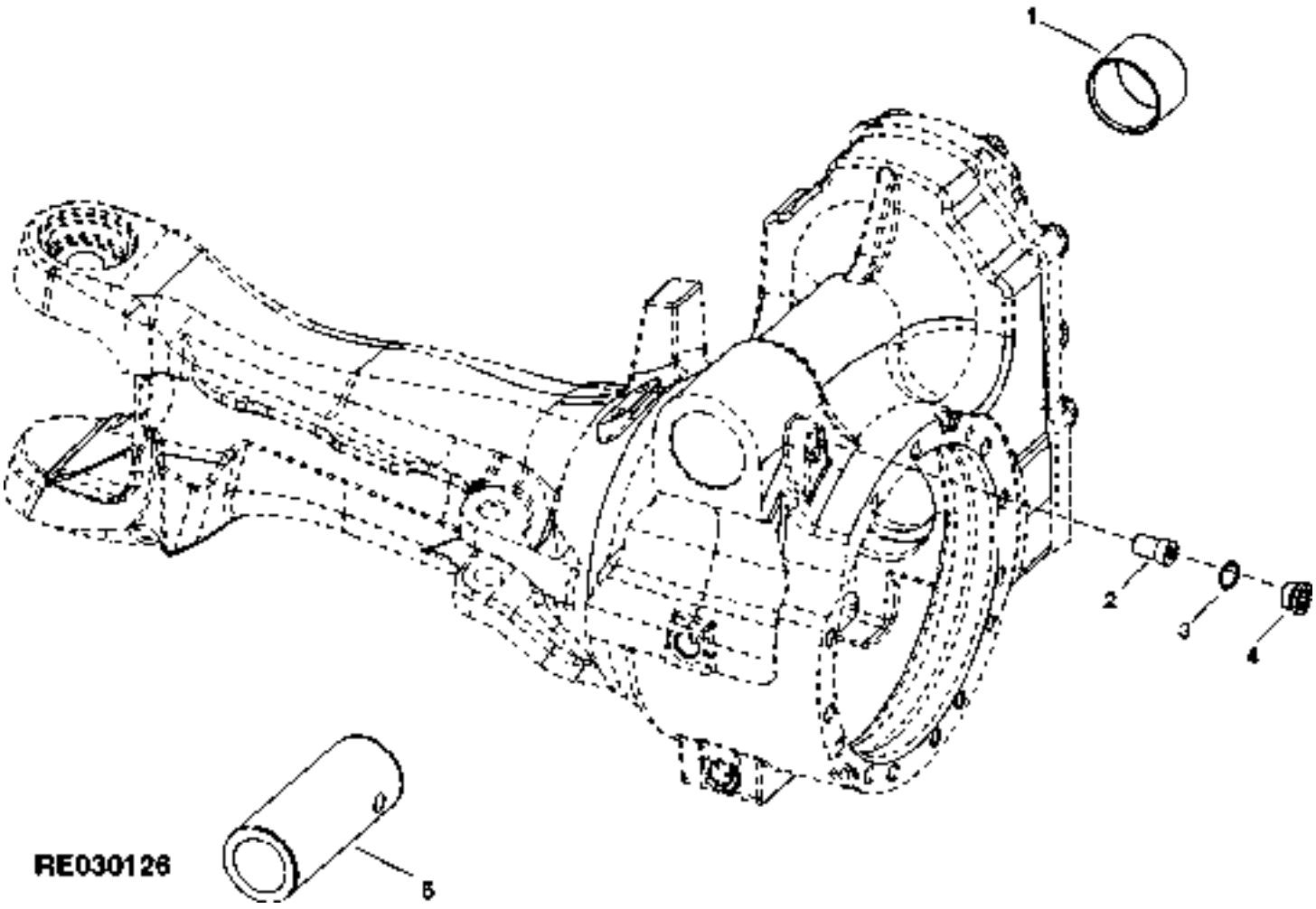

https://www.truck-manuals.net/

KEY	PART NO.	PART NAME	QTY	AXLE SERIAL NO.	ALL	REMARKS
1	R107718	SLEEVE	1		X	
2	R122120	PIN	1		X	
3	P47889	O-RING	1		X	
4	R98012	PLUG	1		X	
5	R107719	BUSHING	1		X	

https://www.truck-manuals.net/

AXLE HOUSING (LH) (MFWD) ASN(800001-)
TROMPETTE D'ESSIEU (LH) (MFWD) ASN(800001-)
ACHSGEHAEUSE (LH) (MFWD) ASN(800001-)
ALLOGGIAMENTO DELL'ASSALE (LH) (MFWD) ASN(800001-)
CAJA DEL EJE (LH) (MFWD) ASN(800001-)
AXELHUS (LH) (MFWD) ASN(800001-)
RE030128 -UN-06NOV98

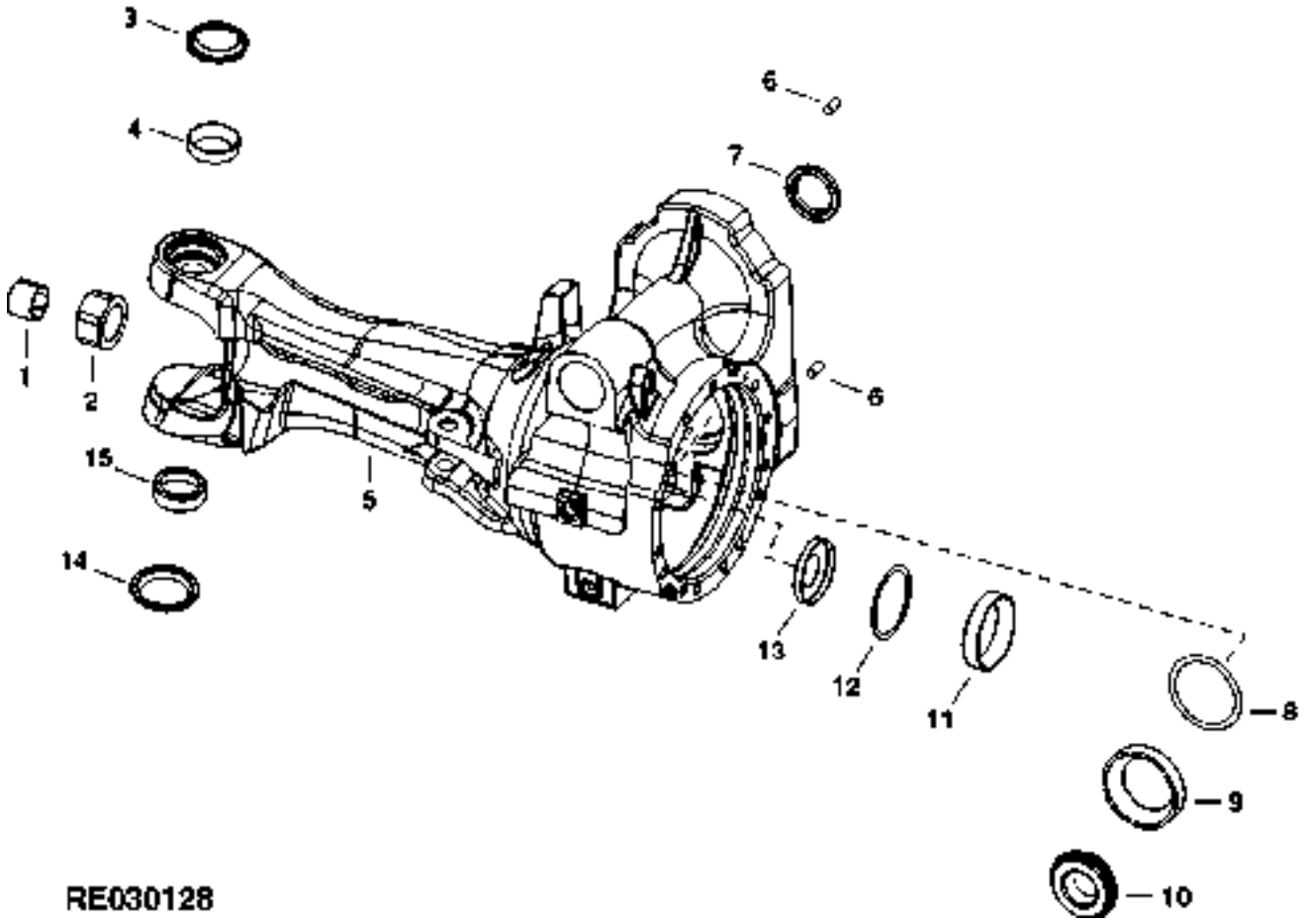

https://www.truck-manuals.net/

KEY	PART NO.	PART NAME	QTY	AXLE SERIAL NO.	ALL	REMARKS
1	R130069	BUSHING	1		X	
2	R133871	SPACER	1		X	
3	RE50803	SEAL	1		X	
4	JD7292	BEARING CUP	1		X	
5	R135989	CASE	1		X	
	R135990	CASE	1		X	(A)
6	R48685	DOWEL PIN	2		X	
7	RE49315	SEAL	1		X	
8	R83150	SHIM	AR		X	
	R83151	SHIM	AR		X	
	R83152	SHIM	AR		X	
9	JD10227	BEARING CUP	1		X	
10	JD10226	BEARING CONE	1		X	
11	JD7292	BEARING CUP	1		X	
12	R131996	SHIM	AR		X	
	R131997	SHIM	AR		X	
	R131998	SHIM	AR		X	
	R131999	SHIM	AR		X	
	R132000	SHIM	AR		X	
	R132001	SHIM	AR		X	
13	R150907	PLUG	1		X	
14	RE71181	SEAL	1		X	
15	JD8252	BEARING CUP	1		X	

EUROPEAN VERSION

https://www.truck-manuals.net/

AXLE HOUSING (RH) (MFWD) ASN(800001-)
TROMPETTE D'ESSIEU (RH) (MFWD) ASN(800001-)
ACHSGEHAEUSE (RH) (MFWD) ASN(800001-)
ALLOGGIAMENTO DELL'ASSALE (RH) (MFWD) ASN(800001-)
CAJA DEL EJE (RH) (MFWD) ASN(800001-)
AXLEHUS (RH) (MFWD) ASN(800001-)
RE030320 -UN-19JAN99

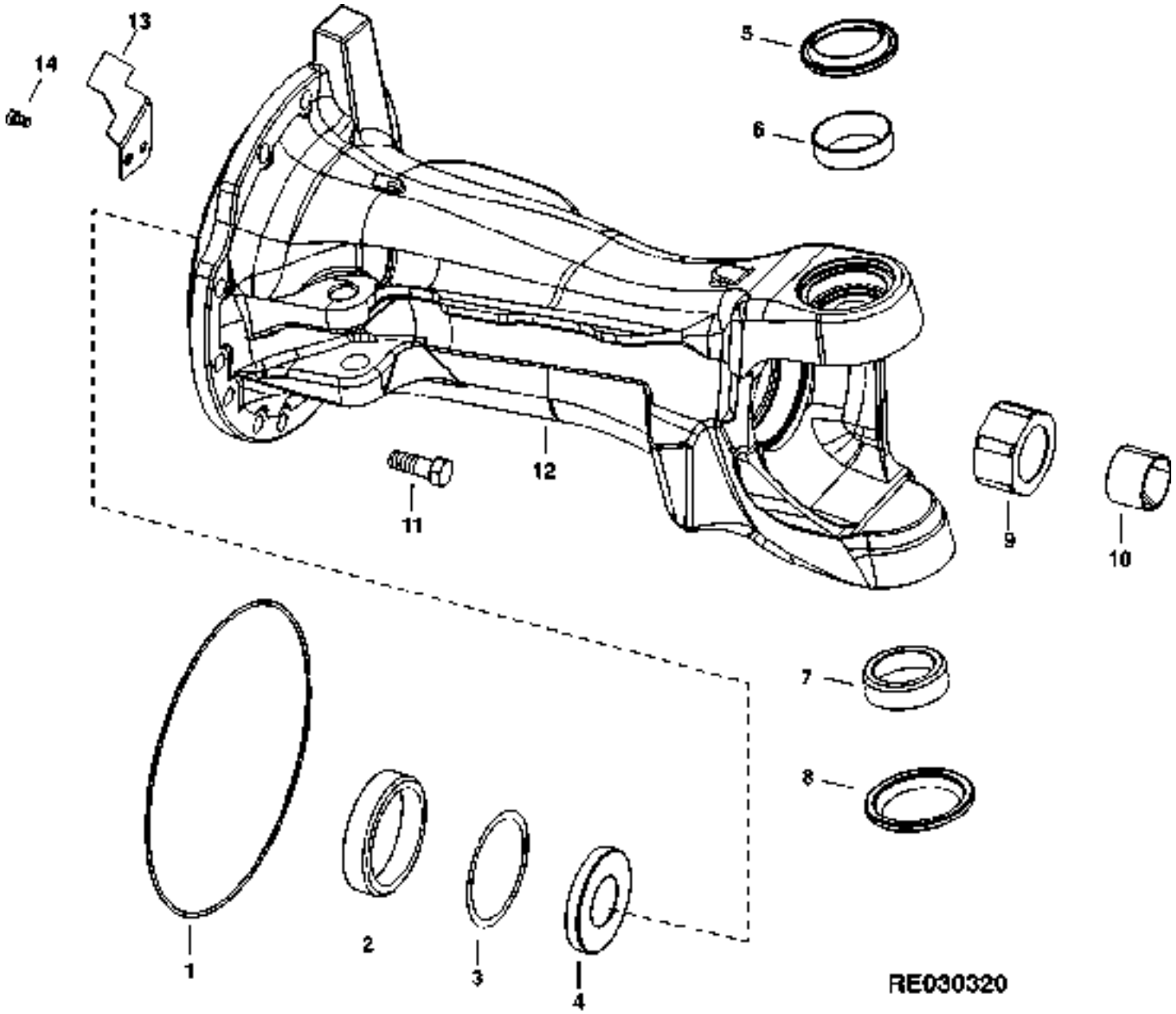

https://www.truck-manuals.net/

KEY	PART NO.	PART NAME	QTY	AXLE SERIAL NO.	ALL	REMARKS
1	R37287	O-RING	1		X	
2	JD7292	BEARING CUP	1		X	
3	R131996	SHIM	AR		X	
	R131997	SHIM	AR		X	
	R131998	SHIM	AR		X	
	R131999	SHIM	AR		X	
	R132000	SHIM	AR		X	
	R132001	SHIM	AR		X	
4	R150907	PLUG	1		X	
5	RE50803	SEAL	1		X	
6	JD8252	BEARING CUP	1		X	
7	R72090	BEARING CUP	1		X	
8	RE71181	SEAL	1		X	
9	R133871	SPACER	1		X	
10	R130069	BUSHING	1		X	
11	19M7489	CAP SCREW	13		X	M16 X 45
12	R135991	HOUSING	1		X	
13	R159204	DEFLECTOR	1		X	
14	19M7932	CAP SCREW	2		X	

https://www.truck-manuals.net/

FINAL DRIVE (MFWD) ASN(800001-)
REDUCTEUR (MFWD) ASN(800001-)
ENDANTRIEB (MFWD) ASN(800001-)
COPPIA CONICA (MFWD) ASN(800001-)
MANDO FINAL (MFWD) ASN(800001-)
NSKSCRLBSRCRL (MFWD) ASN(800001-)
RE030446 -UN-11MAY99

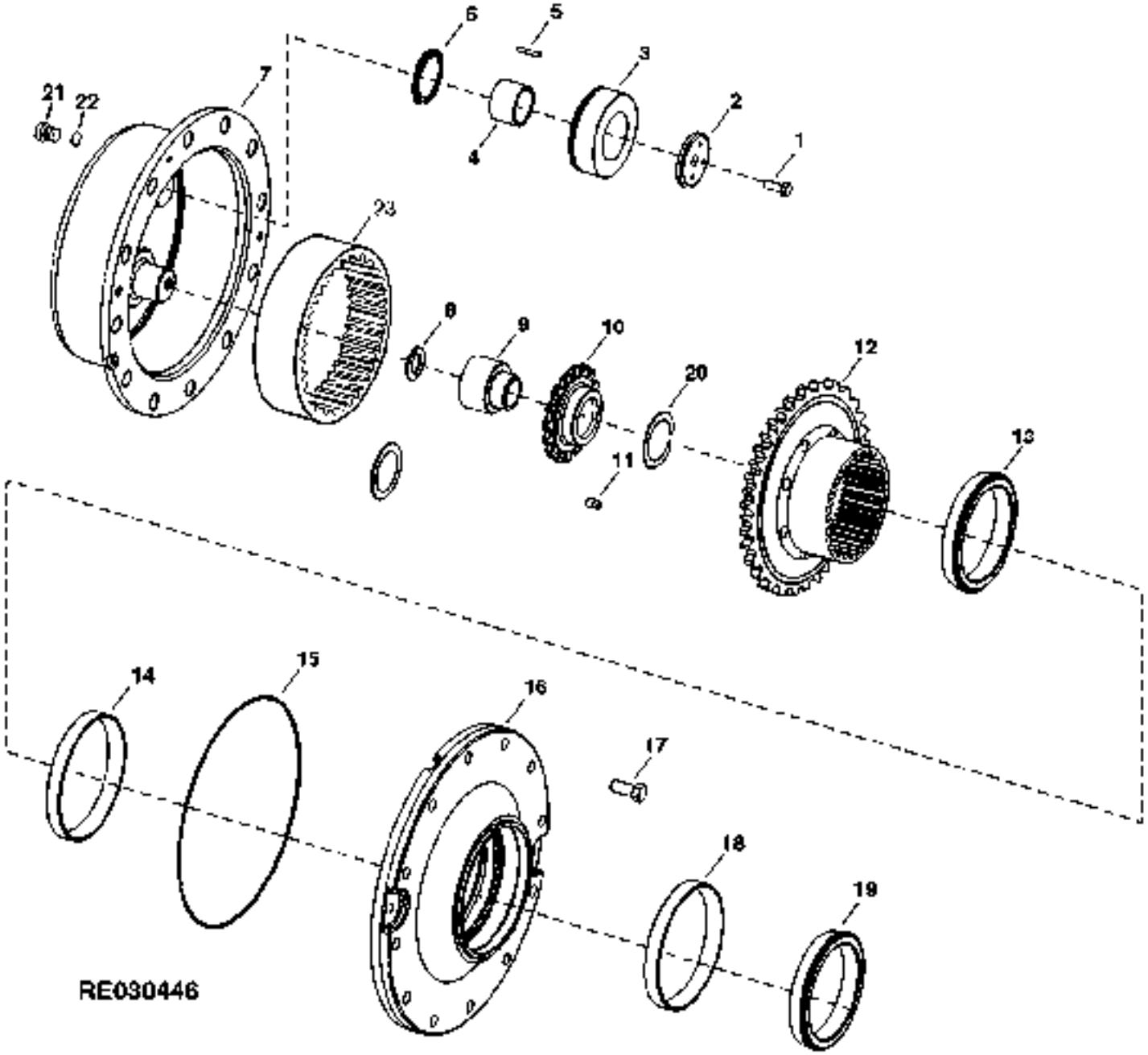

https://www.truck-manuals.net/

KEY	PART NO.	PART NAME	QTY	AXLE SERIAL NO.	ALL	REMARKS
1	R112888	CAP SCREW	3		X	
2	R92871	RETAINER	3		X	
3	R121282	PLANET PINION	3		X	
4	R121362	BEARING RACE	3		X	
5	R121283	NEEDLE ROLLER	99		X	
6	R92872	THRUST WASHER	3		X	
7	R104755	PLANET PINION CARRIER	1		X	
8	R100774	THRUST WASHER	1		X	
9	R130078	PINION	1		X	
10	R124404	RETAINER	1		X	
11	R91842	SCREW	1		X	
12	R99499	HUB	1		X	
13	JD9050	BEARING CONE	1		X	
14	JD9115	BEARING CUP	1		X	
15	R87047	RING	1		X	
16	R135866	HUB	1		X	
17	19M8011	CAP SCREW	1		X	
18	JD9115	BEARING CUP	1		X	
19	JD9050	BEARING CONE	1		X	
20	R99673	SNAP RING	1		X	
21	R98012	PLUG	1		X	
22	P47889	O-RING	1		X	
23	R156869	RING GEAR	1		X	

https://www.truck-manuals.net/

STEERING ARM AND KNUCKLE ASN(800001-)
BRAS ET ARTICULATION DE DIRECTION ASN(800001-)
SPURHEBEL UND LENKACHSSCHENKEL ASN(800001-)
BRACCIO DI GOVERNO E ARTICLAZIONE ASN(800001-)
ROTULA Y BRAZO DE LA DIRECCION ASN(800001-)
STYRARM OCH-SPINDEL ASN(800001-)
RE030447 -UN-15APR99

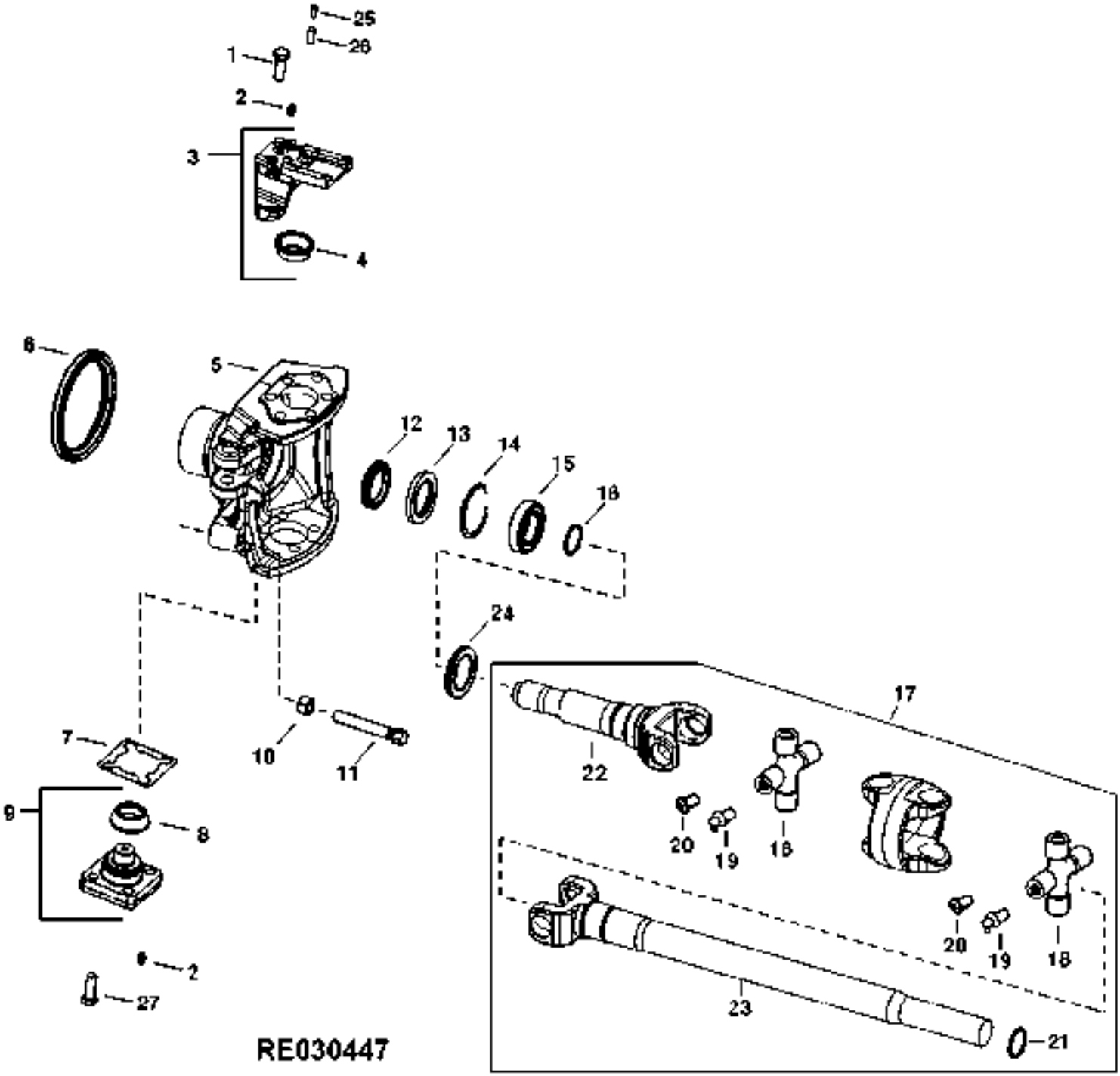

https://www.truck-manuals.net/

KEY	PART NO.	PART NAME	QTY	AXLE SERIAL NO.	ALL	REMARKS
1	19M8002	CAP SCREW	4		X	M20 X 55
2	JD7759	LUBRICATION FITTING	2		X	
3	RE158048	ARM	1		X	L.H.
	RE158047	ARM	1		X	R.H.
4	AR94761	BEARING CONE	1		X	
5	R135865	HOUSING	1		X	L.H.
	R135864	HOUSING	1		X	R.H.
6	RE154869	SEAL	1		X	
7	R131673	SHIM	AR		X	
	R131675	SHIM	AR		X	
	R131676	SHIM	AR		X	
	R131985	SHIM	AR		X	
8	JD8930	BEARING CONE	1		X	
9	RE71437	KINGPIN	1		X	
10	14M7277	NUT	1		X	
11	R133288	BOLT	1		X	
12	RE65592	SEAL	1		X	
13	RE65591	SEAL	1		X	
14	40M1873	SNAP RING	1		X	
15	JD9346	BALL BEARING	1		X	
16	40M7166	SNAP RING	1		X	
17	RE65595	SHAFT	1	-800511	X	
	RE157739	UNIVERSAL JOINT	1	800512-	X	
18	RE65621	UNIVERSAL JOINT CROSS	2		X	
19	58M5578	LUBRICATION FITTING	4		X	
20	15M7033	PIPE PLUG	4		X	
21	RE65596	SEAL	1		X	
22	R153306	YOKE	1	-800511	X	(A)
	R157897	YOKE	1	800512-	X	(A)
23	R153307	YOKE	1		X	(B)
24	R157679	OIL SLINGER	1	800512-	X	
25	34M7077	SPRING PIN	2		X	
26	34M7128	SPRING PIN	2		X	
27	19M7496	CAP SCREW	4		X	

(A) OUTBOARD
EXTERIEUR
AUSSEN
ESTERNO
EXTERIOR
YTTRE

(B) INBOARD
INTERERIEUR
INNEN
INTERNO
INTERIOR
INRE

https://www.truck-manuals.net/

DIFFERENTIAL(STANDARD)(MFWD)ASN(800001-)
DIFFERNTIEL (STANDARD) (MFWD)ASN(800001-)
DIFFERENTIAL (STANDARD) (MFWD)ASN(800001-)
DIFFERENZIALE (STANDARD) (MFWD)ASN(800001-)
DIFFERENCIAL (NORMAL) (MFWD) ASN(800001-)
DIFFERENTIAL (STANDARD) (MFWD)ASN(800001-)
RE030172 -UN-06NOV98

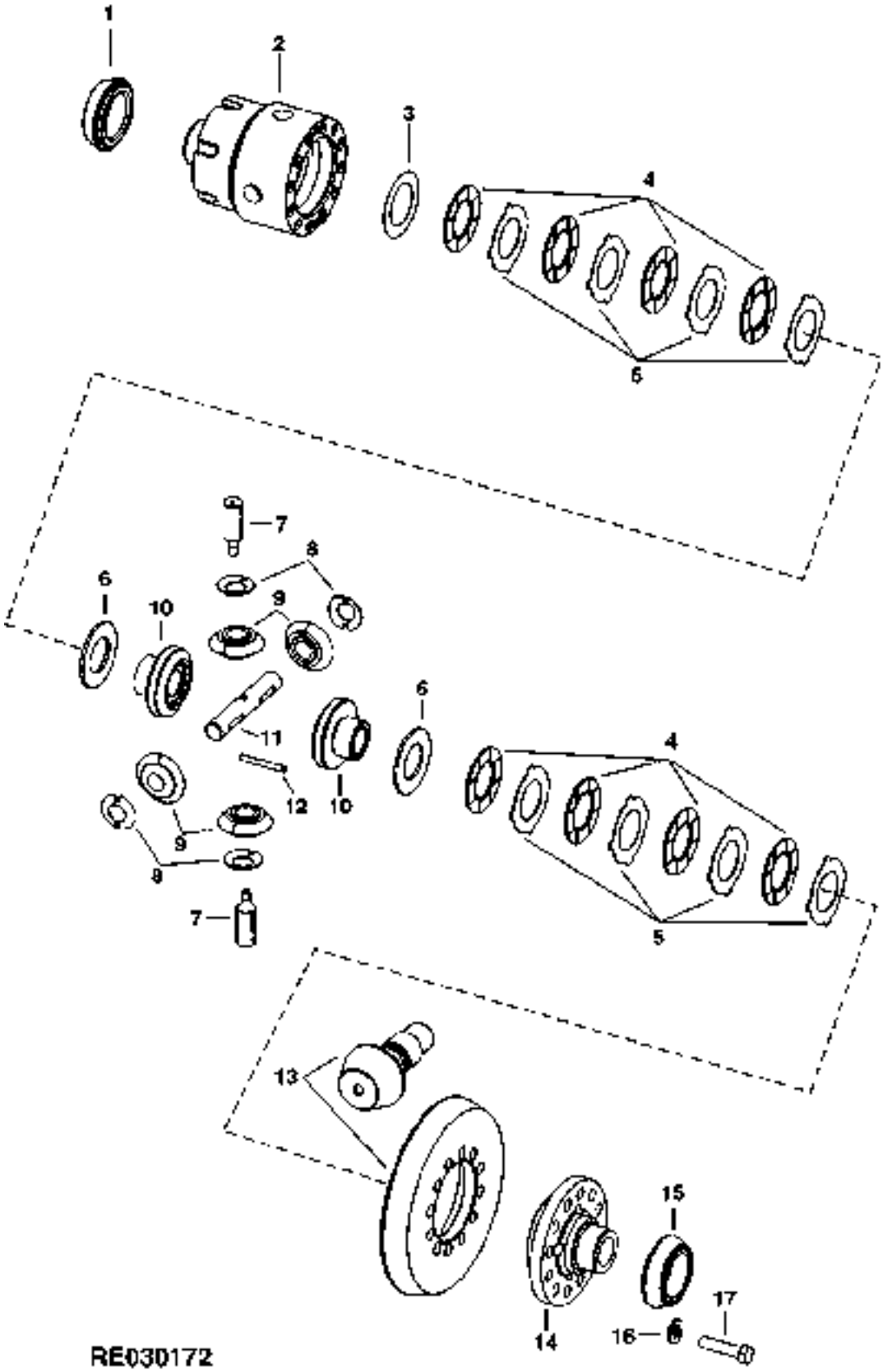

https://www.truck-manuals.net/

KEY	PART NO.	PART NAME	QTY	AXLE SERIAL NO.	ALL	REMARKS
1	JD7242	BEARING CONE	1		X	
2	R133867	HOUSING	1		X	
3	R132971	SHIM	AR		X	
	R83559	SHIM	AR		X	
	R83560	SHIM	AR		X	
4	RE43059	DISK	4		X	
5	R82908	PLATE	4		X	
6	R131336	SPACER	2		X	
7	R131511	SHAFT	2		X	
8	R135876	THRUST WASHER	4		X	
9	R135875	PINION	4		X	
10	R133149	BEVEL GEAR	2		X	
11	R131346	SHAFT	1		X	
12	R62129	PIN	2		X	
13	RE67924	BEVEL GEAR	1		X	(MARKED R129108 AND R132916)
14	R130753	HOUSING	1		X	
15	JD7242	BEARING CONE	1		X	
16	24M7338	WASHER	12		X	
17	19M8995	CAP SCREW	12		X	

https://www.truck-manuals.net/

DIFFERENTIAL(HIGH CAPACITY)(MFWD)ASN(800001-)
DIFFERENTIEL (HAUTE CAPACITE) (MFWD)ASN(800001-)
DIFFERNTIAL (HOHE KAPZAITAET) (MFWD)ASN(800001-)
DIFFERNENZIALE (ALTA CAPACITA) (MFWD)ASN(800001-)
DIFFERENCIAL (CPACIDAD ALTA) (MFWD)ASN(800001-)
DIFFERNTIAL (HOEG KAPACITET) (MFWD)ASN(800001-)
RE030127 -UN-06NOV98

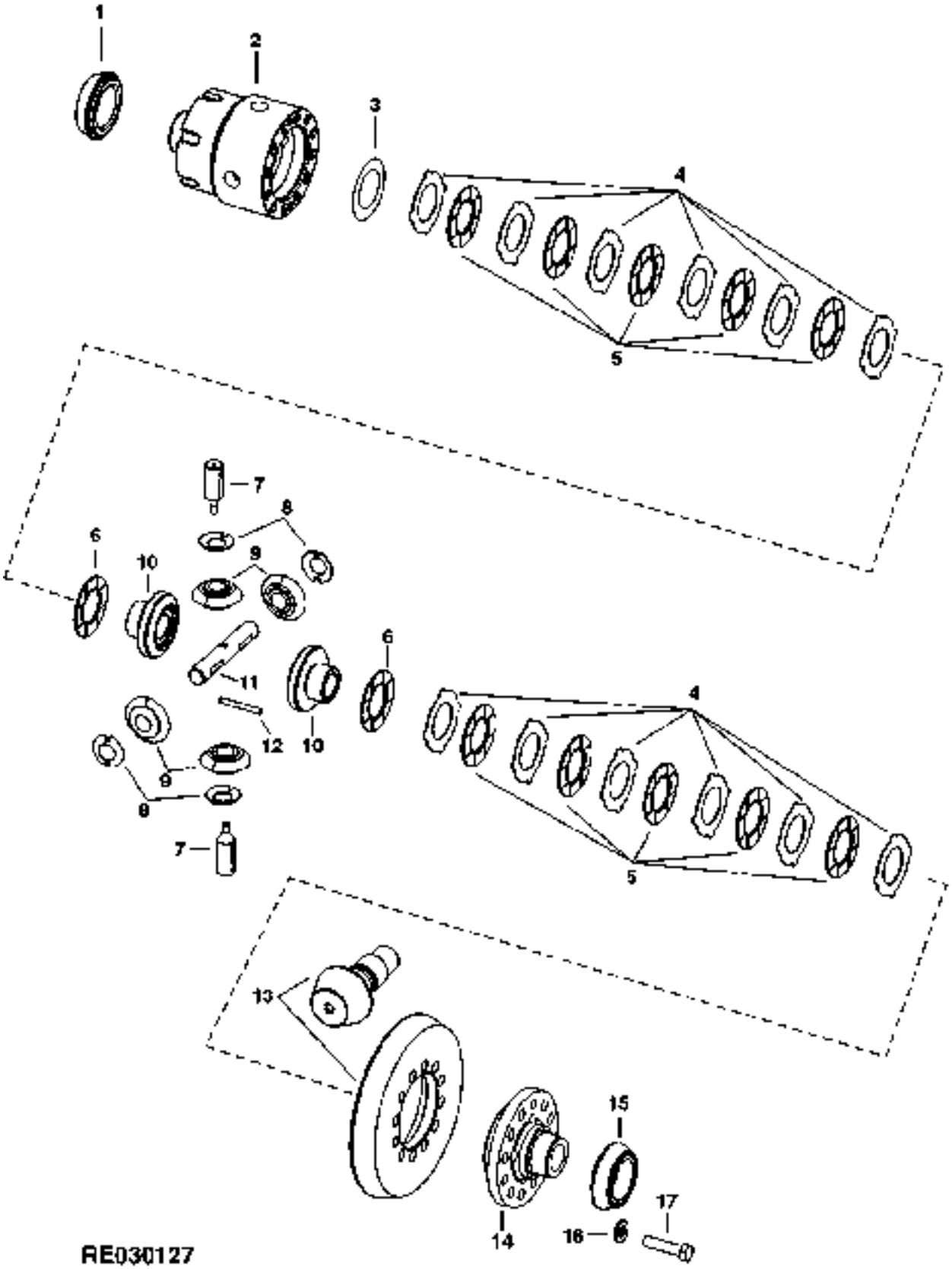

https://www.truck-manuals.net/

KEY	PART NO.	PART NAME	QTY	AXLE SERIAL NO.	ALL	REMARKS
1	JD7242	BEARING CONE	1		X	
2	R131418	HOUSING	1		X	
3	R132971	SHIM	AR		X	
	R83559	SHIM	AR		X	
	R83560	SHIM	AR		X	
4	R82908	PLATE	12		X	
5	RE43059	DISK	10		X	
6	RE43058	DISK	2		X	
7	R131511	SHAFT	2		X	
8	R135876	THRUST WASHER	4		X	
9	R135875	PINION	4		X	
10	R133149	BEVEL GEAR	2		X	
11	R131346	SHAFT	1		X	
12	R62129	PIN	2		X	
13	RE67924	BEVEL GEAR	1		X	(MARKED R129108 AND R132916)
14	R130753	HOUSING	1		X	
15	JD7242	BEARING CONE	1		X	
16	24M7338	WASHER	12		X	
17	19M8995	CAP SCREW	12		X	

https://www.truck-manuals.net/

TIE ROD (MFWD) ASN(800001-)
BARRE D'ACCOUPLEMENT (MFWD) ASN(800001-)
SPURSTANGE (MFWD) ASN(800001-)
BARRA D'ACCOPPIAMENTO (MFWD) ASN(800001-)
BARRA TRANSV. DE DIRECTION (MFWD) ASN(800001-)
PARALLELLSTAG (MFWD) ASN(800001-)
RE030281 -UN-22DEC98

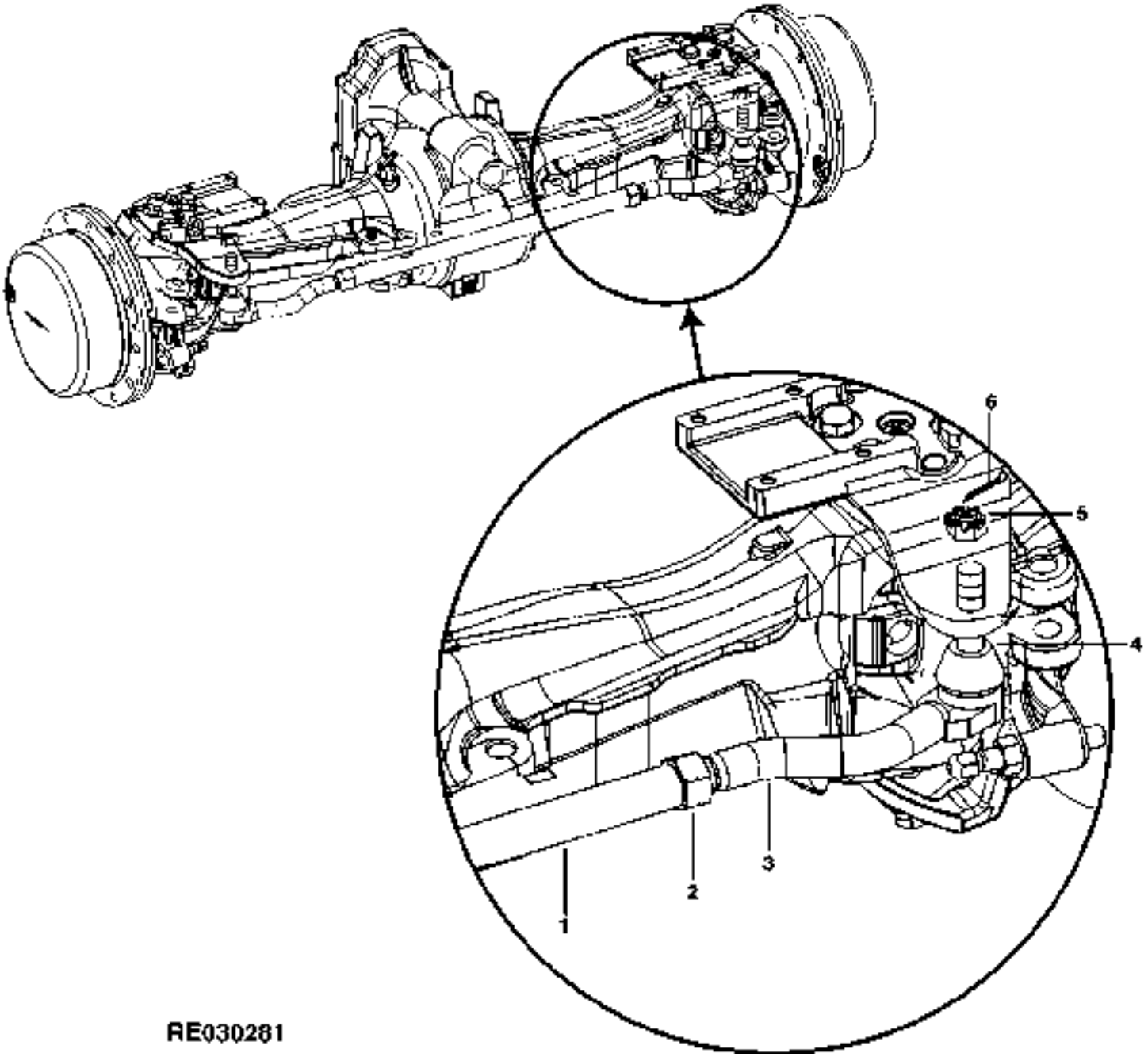

https://www.truck-manuals.net/

KEY	PART NO.	PART NAME	QTY	AXLE SERIAL NO.	ALL	REMARKS
1	R124745	TIE ROD	1		X	
2	R121022	LOCK NUT	1		X	RH
	R121023	LOCK NUT	1		X	LH
3	RE61402	TIE ROD	1		X	RH
	RE61401	TIE ROD	1		X	LH
4	R78027	COVER	2		X	
5	14H875	NUT	2		X	
6	11M7017	COTTER PIN	2		X	
..	RE61217	TIE ROD	1		X	(INCLUDES R124745, R121022, R121023, RE61401, RE61402, (2) R78027, (2) 14H875 AND (2) 11M7017)

https://www.truck-manuals.net/

MEMORANDA
MEMORANDA
MEMORANDA
MEMORANDA
MEMORANDA
MEMORANDA

https://www.truck-manuals.net/

SECTIONAL INDEX
INDEX DE SECTION
GRUPPENINDEX
INDICE DELLA SEZIONE
INDICE DE SECCION
GRUPPSFORTECKNING
RE029164 -UN-10MAY99

1 -	6D6
2 -	6D8
3 -	6D14
4 -	6D20
5 -	6E3
6 -	6E9
7 -	6E13
8 -	6E19
9 -	6F2
10 -	6F4
11 -	6F5
12 -	6F13
16 -	6F17
13 -	6G13
14 -	6H10
15 -	6I5

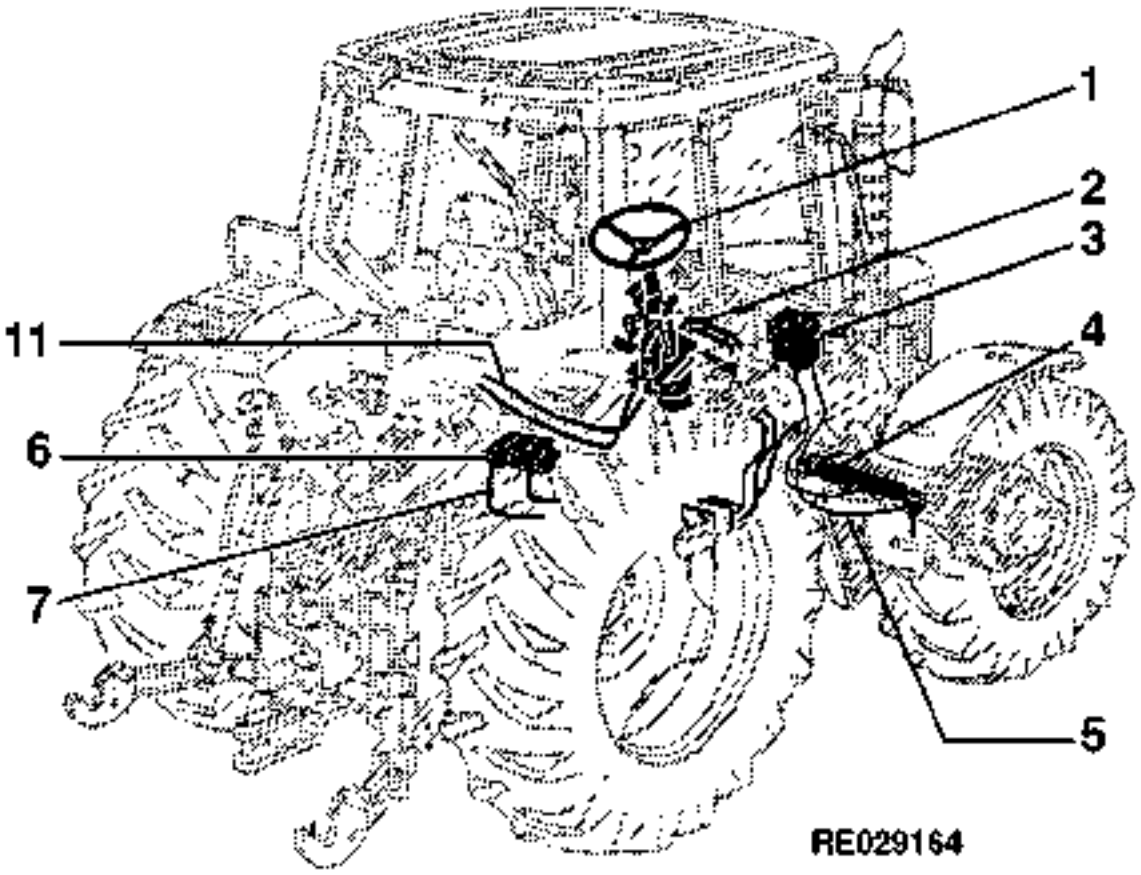

https://www.truck-manuals.net/

SECTIONAL INDEX
INDEX DE SECTION
GRUPPENINDEX
INDICE DELLA SEZIONE
INDICE DE SECCION
GRUPPSFORTECKNING

RE029165 -UN-10MAY99

1 -	6D6
2 -	6D8
3 -	6D14
4 -	6D20
5 -	6E3
6 -	6E9
7 -	6E13
8 -	6E19
9 -	6F2
10 -	6F4
11 -	6F5
12 -	6F13
16 -	6F17
13 -	6G13
14 -	6H10
15 -	6I5

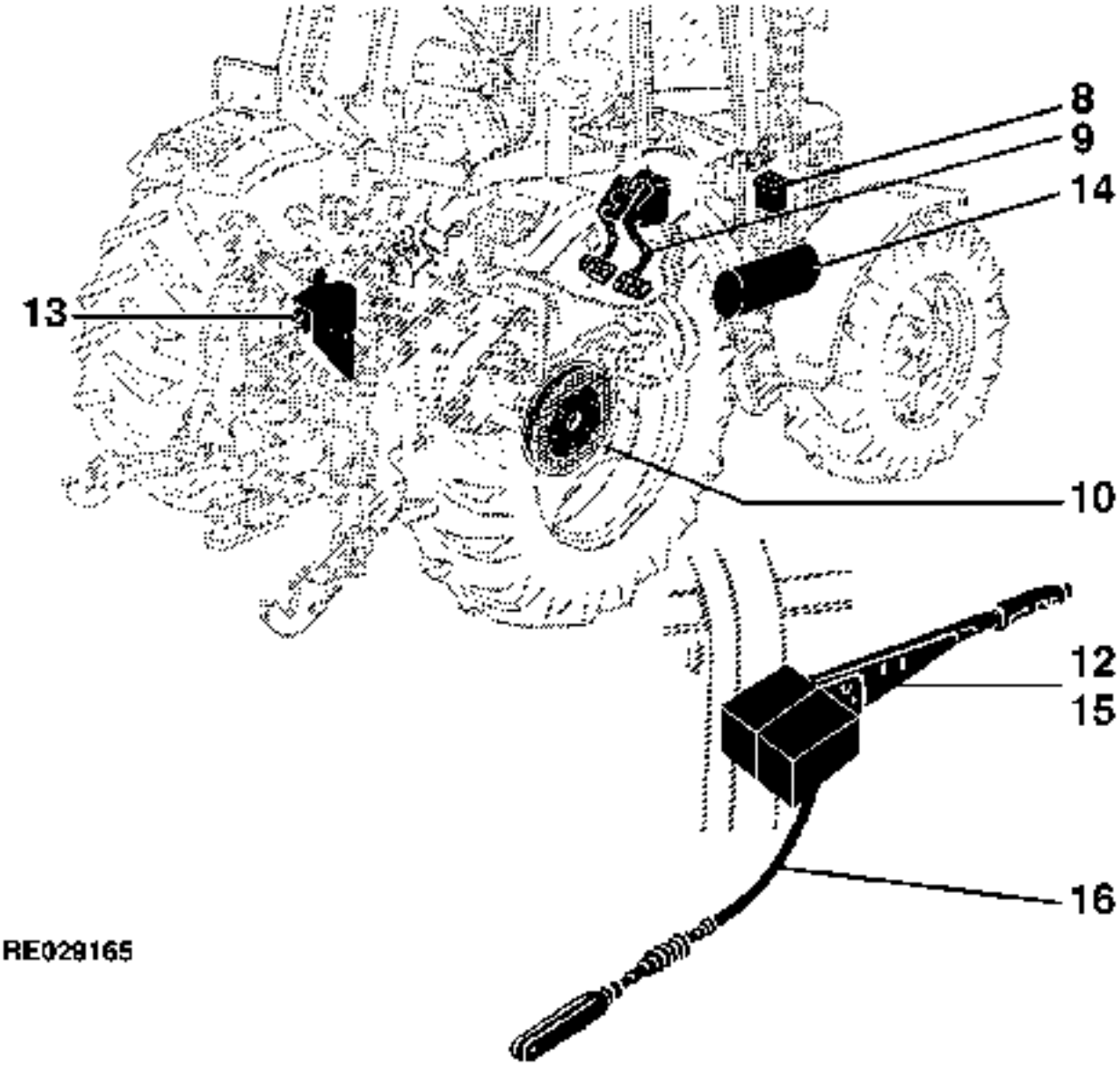

https://www.truck-manuals.net/

MEMORANDA
MEMORANDA
MEMORANDA
MEMORANDA
MEMORANDA
MEMORANDA

https://www.truck-manuals.net/

STEERING WHEEL
VOLANT DE DIRECTION
LENKRAD
VOLANTE
VOLANTE DE LA DIRECCION
RATT
RE028737 -UN-08JAN98

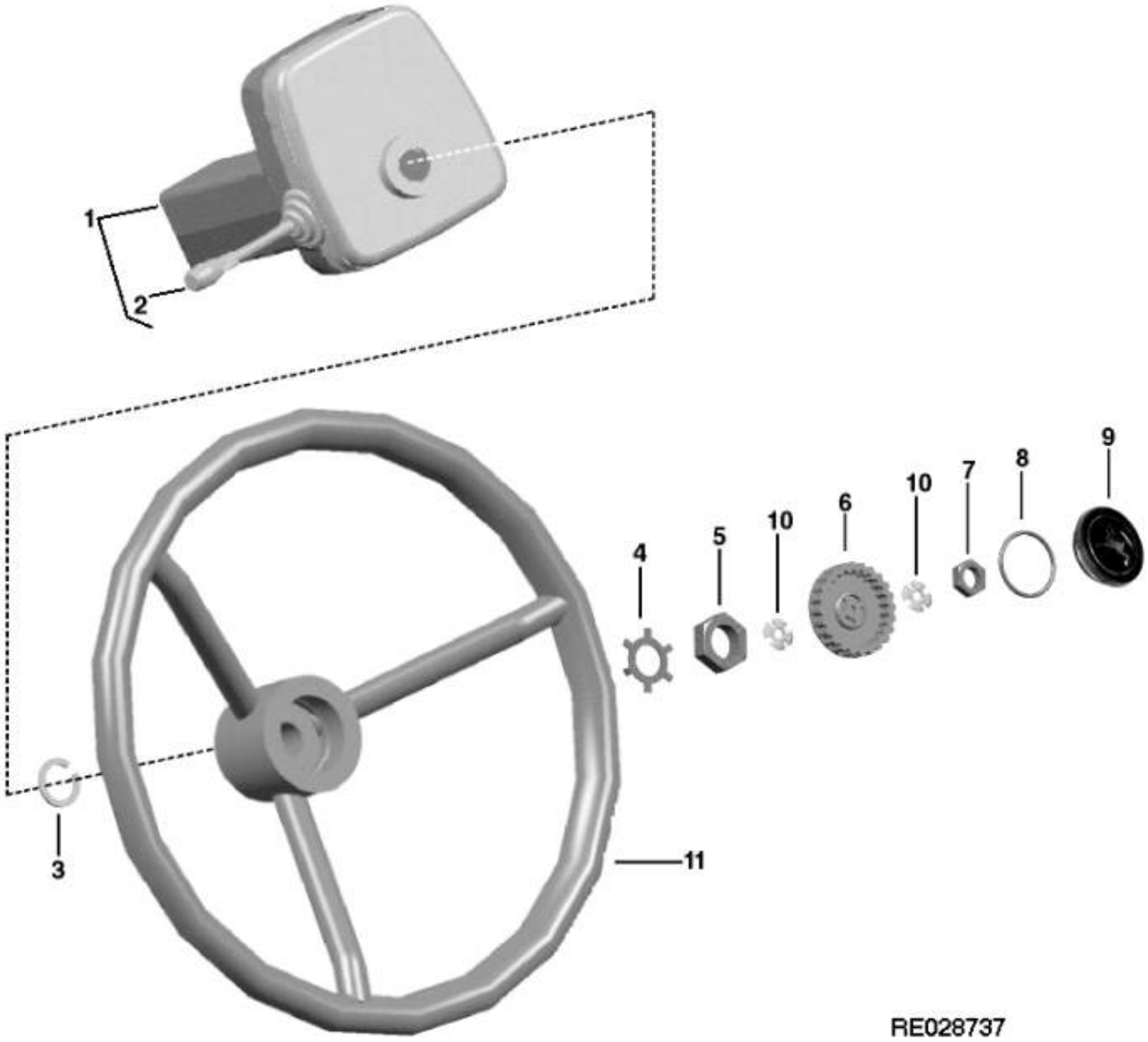

https://www.truck-manuals.net/

KEY	PART NO.	PART NAME	QTY	TRACTOR SERIAL NO.	ALL	REMARKS
1	RE63512	MODULE	1		X	(SUB FOR RE60588) (INCLUDES (3) R107890)
	RE63513	TURN SIGNAL SWITCH	1		X	(A) (SUB FOR RE60589 OR RE63422) (INCLUDES (7) R107890)
2	RE151774	DETENT	1		X	
3	R114841	SNAP RING	1		X	
4	T17148	LOCK WASHER	1		X	
5	14M7257	NUT	1		X	M20
6	R117432	KNOB	1		X	
7	14M7426	LOCK NUT	1		X	M8
8	B3690R	O-RING	1		X	
9	R47998	CAP	1		X	
10	L100436	WASHER	2		X	
11	RE39719	STEERING WHEEL	1		X	

(A) EUROPEAN VERSION
VERSION EUROPEENNE
EUROPAEISCHE AUSFUEHRUNG
VERSIONE EUROPEA
VERSION EUROPEA
EUROPEISK VERSION

https://www.truck-manuals.net/

STEERING COLUMN PIVOT
COLONNE DE DIRECTION, PIVOT
LENKSAEULEN-GELENKZAPFEN
ARTICOLAZIONE DEL PIANTONE DELLO STERZO
PIVOTE DE COLUMNA DE DIRECCION
RATTSTAANGSTAPP
RE026625 -UN-08DEC95

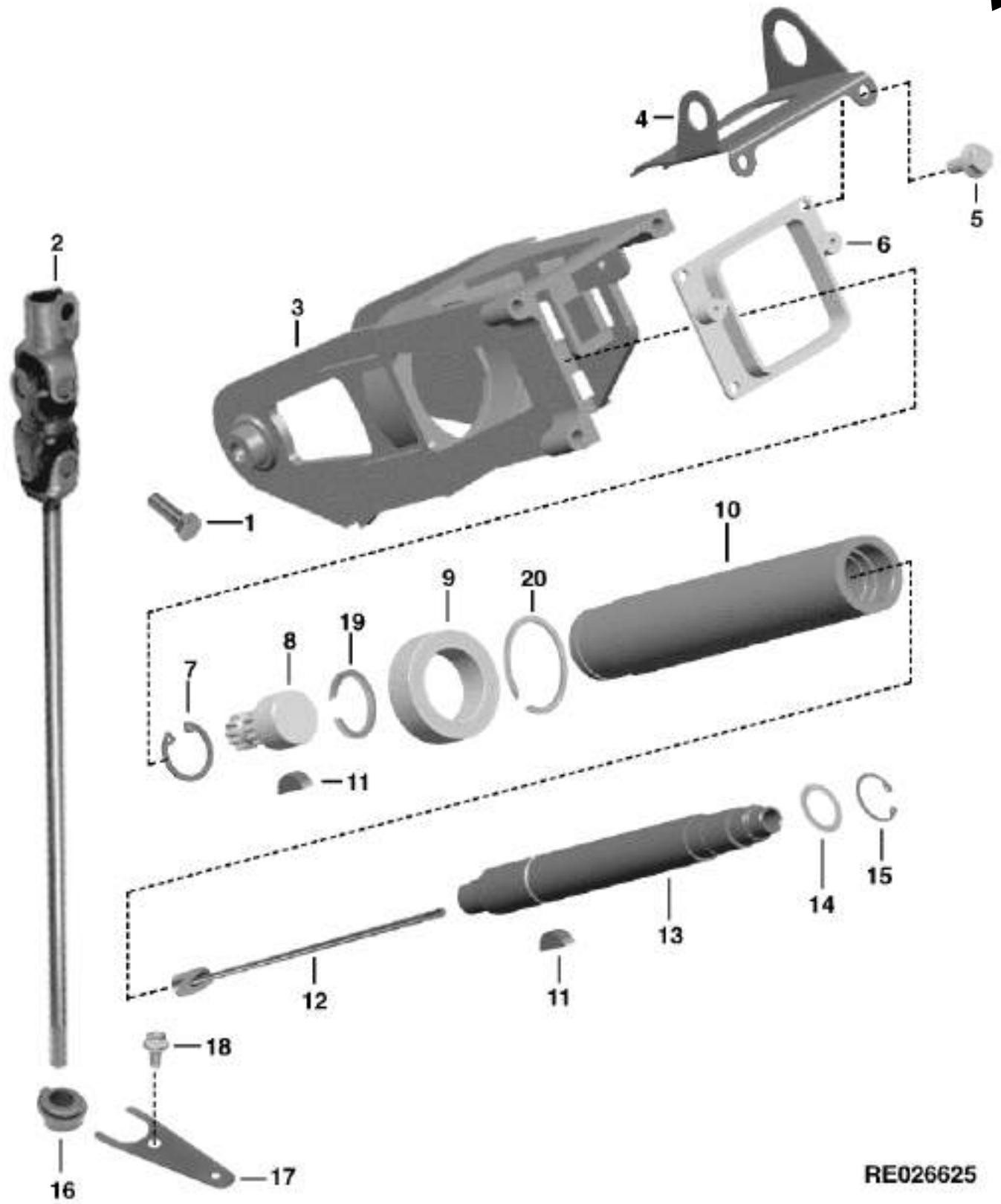

https://www.truck-manuals.net/

KEY	PART NO.	PART NAME	QTY	TRACTOR SERIAL NO.	ALL	REMARKS
1	19M8584	CAP SCREW	1		X	M10 X 30, HS 10.9
2	RE62130	UNIVERSAL JOINT CROSS	1		X	
3	R126039	PIVOT	1		X	
4	R107598	BRACKET	1		X	
5	19M7775	SCREW	3		X	M6 X 16, HS 10.9
6	R126024	GUIDE	1		X	
7	40M7256	SNAP RING	1		X	
8	R107561	END	1		X	
9	R119596	BEARING	1		X	
10	R126040	HOUSING	1		X	
11	26H86	SHAFT KEY	2		X	5/16" X 1"
12	RE57594	ROD	1		X	
	24H1283	WASHER	1		X	7/32" X 1/2" X 0.049"
13	R107567	SHAFT	1		X	
14	24H1439	WASHER	1		X	1" X 1-3/8" X 0.060"
15	40M7119	SNAP RING	1		X	
16	R114569	GROMMET	1		X	
17	R126911	STRAP	1		X	(SUB FOR (2) R122173)
18	37M7090	SCREW	1		X	M6 X 16
19	A364R	SNAP RING	1		X	
20	A3815R	SNAP RING	1		X	

https://www.truck-manuals.net/

STEERING SHAFT
ARBRE DE DIRECTION
LENKSPINDEL
PIANTONE DELLO STERZO
EJE DE DIRECCION
STYRAXEL
RE026138 -UN-13MAR95

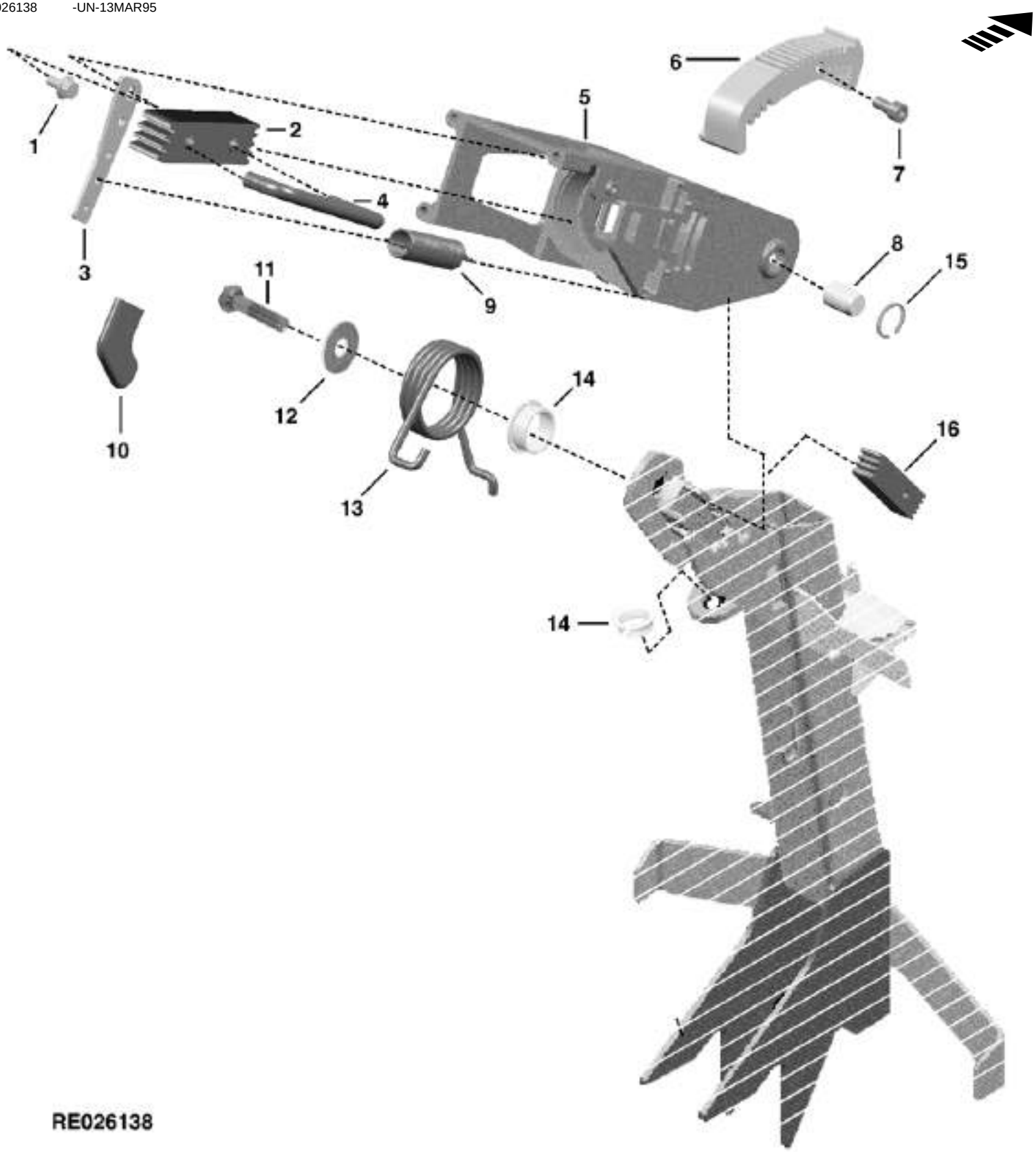

https://www.truck-manuals.net/

KEY	PART NO.	PART NAME	QTY	TRACTOR SERIAL NO.	ALL	REMARKS
1	19M7774	SCREW	1		X	M6 X 12, HS 10.9
2	R126570	PAWL	1		X	(SUB FOR R107554)
3	R107563	LEVER	1		X	
4	R120055	ROD	1		X	
5	R126039	PIVOT	1		X	
6	R124242	SECTOR	1	-XXXXXX	X	(A) (SUB R126569 AND R126570)
	R126569	SECTOR	1	XXXXXX-	X	(B)
7	19M7887	SCREW	1		X	M5 X 10, HS 12.9
8	R121466	DOWEL PIN	1		X	
9	H80128	SPRING	1		X	
10	L76191	HANDLE	1		X	
11	19M7932	CAP SCREW	1		X	M8 X 16, HS 10.9
12	24M7207	WASHER	1		X	8.400 X 24 X 2 MM
13	R107548	SPRING	1		X	
14	R111774	BUSHING	2		X	
15	R73380	SNAP RING	1		X	
16	R107554	PAWL	1	-XXXXXX	X	(A) (SUB R126570)
	R126570	PAWL	1	XXXXXX-	X	(B)

(A) (-XXXXXX) 8100-001569; 8200-001513; 8300-002605; 8400-001211
(B) (XXXXXX-) 8100-001570; 8200-001514; 8300-002606; 8400-001212

https://www.truck-manuals.net/

PIVOT RELEASE PEDAL
PEDALE DE DEVERROUILLAGE DE PIVOT
GELENKZAPFEN-AUSRUECKPEDAL
PEDALE DI RILASCIO DELL'ARTICOLAZIONE
PEDAL DE LIBERACION DE PIVOTE
VAENDTAPPENS UTLOESNINGSPEDAL
RXP025206 -UN-01JAN94

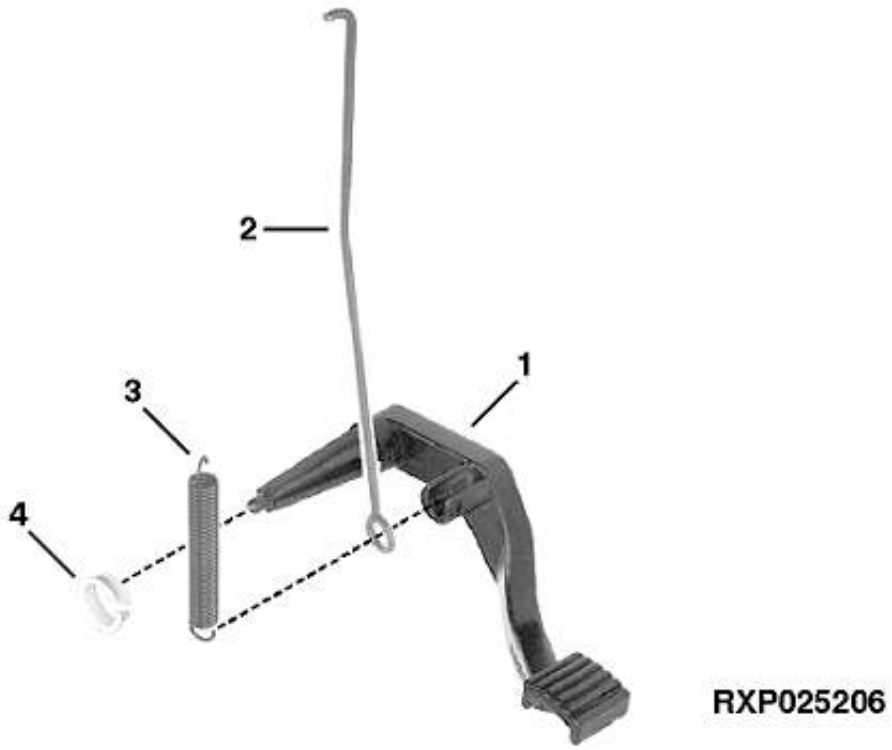

KEY	PART NO.	PART NAME	QTY	TRACTOR SERIAL NO.	ALL	REMARKS
1	R107551	PEDAL	1		X	
2	R107552	ROD	1		X	
3	R60730	SPRING	1		X	
4	R111774	BUSHING	1		X	

https://www.truck-manuals.net/

STEERING VALVE BRACKET
DISTRIBUTEUR DE DIRECTION, SUPPORT
LENKVENTILHALTERUNG
VALVOLA DELLO STERZO, STAFFA
VALVULA DE DIRECCION, SOPORTE
STYRVENTILFAESTE
RE026959 -UN-17MAY96

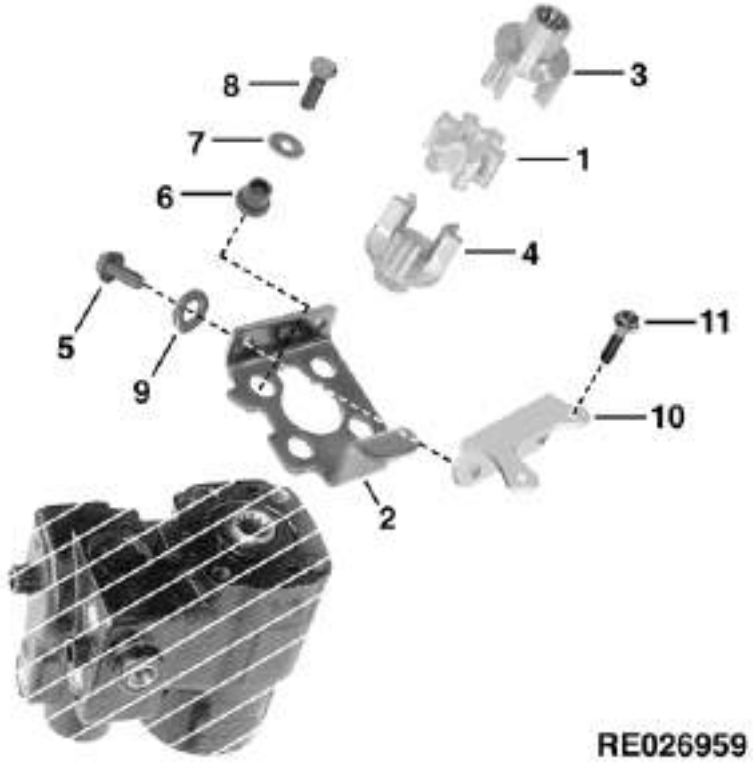

KEY	PART NO.	PART NAME	QTY	TRACTOR SERIAL NO.	ALL	REMARKS
1	R126636	ISOLATOR	1		X	(SUB FOR H134624, THIS APPLICATION)
2	R124619	BRACKET	1	-XXXXXX	X	(A) (SUB R132275)
	R132275	BRACKET	1	XXXXXX-	X	(B)
3	R126640	FITTING	1		X	(SUB FOR R107555)
4	R126641	COUPLING	1		X	(SUB FOR R107556)
5	19M7402	CAP SCREW	2		X	M10 X 25, HS 10.9
6	AT116162	RUBBER MOUNT	4		X	
7	24M7178	WASHER	4		X	10.500 X 30 X 2.500 MM
8	19M7168	CAP SCREW	4		X	M10 X 30
9	24M7028	WASHER	2		X	10.500 X 20 X 2 MM
10	RE66710	BRACKET	1	XXXXXX-	X	(B)
11	37M7087	SCREW	2	XXXXXX-	X	(B) M10 X 25

(A) (-XXXXXX) 8100-010371; 8200-010237; 8300-010414; 8400-010420
(B) (XXXXXX-) 8100-010372; 8200-010238; 8300-010415; 8400-010421

https://www.truck-manuals.net/

STEERING VALVE WITH PRIORITY VALVE (MFWD)
DISTRIBUTEUR DE DIRECTION AVEC SOUPAPE PRIORITAIRE (MFWD)
LENKVENTIL MIT VORRANGVENTIL (MFWD)
VALVOLA DELLO STERZO CON VALVOLA PRIORITARIA (MFWD)
VALVULA DE DIRECCION CON VALVULA PRIORITARIA (MFWD)
STYRVENTIL MED PRIORITETSVENTIL (MFWD)
RE026976 -UN-15MAY96

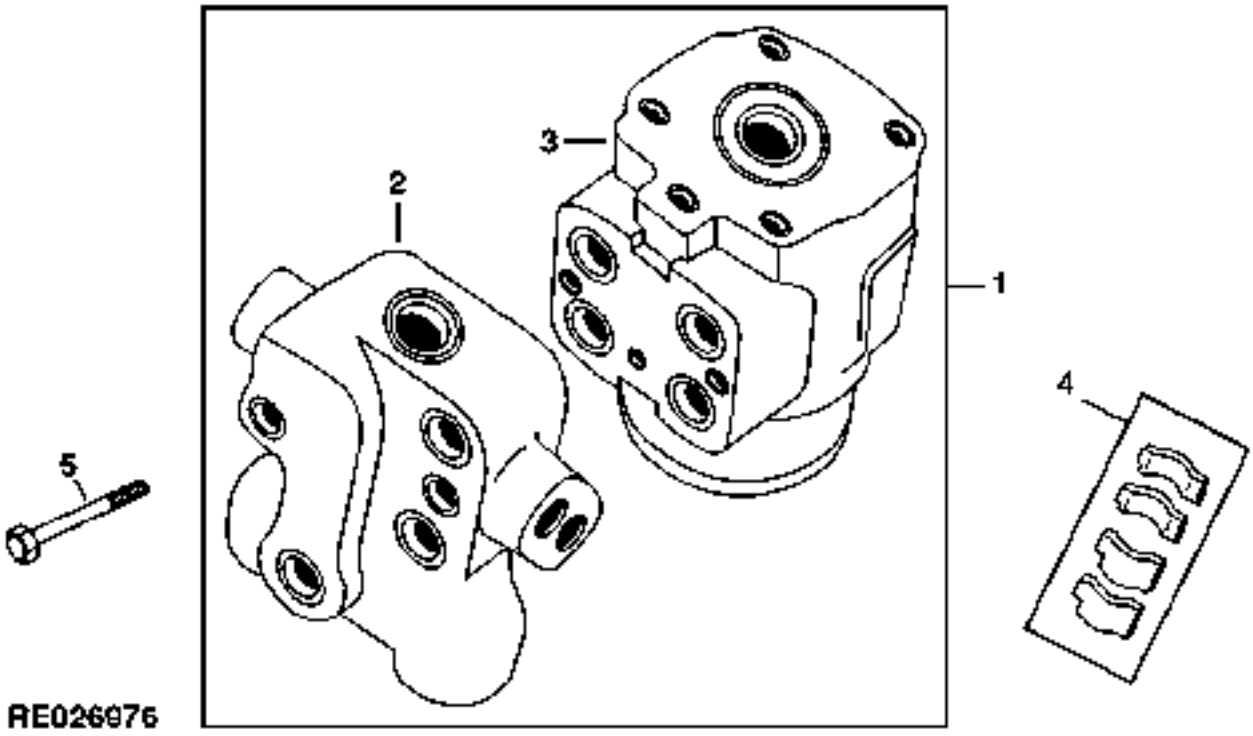

KEY	PART NO.	PART NAME	QTY	TRACTOR SERIAL NO.	ALL	REMARKS
1	RE61046	VALVE	1		X	
2	RE57817	VALVE	1		X	(A) (B)
3	RE60562	VALVE	1		X	(B)
4	RE50401	KIT	1		X	(C)
5	19M8489	SCREW	1		X	M12 X 65, HS 12.9
	19M8548	SCREW	1		X	M12 X 80, HS 12.9

(A) PRIORITY VALVE
SOUPAPE PRIORITAIRE
VORRANGVENTIL
VALVOLA DI PRIORITA'
VALVULA PRIORITARIA
PRIORITETSVENTIL

(B) W/ SEAL KIT
W/ JEU DE JOINTS
W/ DICHTUNGSSATZ
W/ SERIE ANELLI DI
W/ JUEGO DE RETENES
W/ LAGER-OCH

(C) CENTERING SPRING
RESSORT DE CENTRAGE
ZENTRIERFEDER
MOLLA DE CENTRAGGIO
RESORTE CENTRADOR
CENTRERINGSFJAEDER

https://www.truck-manuals.net/

STEERING VALVE WITH PRIORITY VALVE (WITHOUT MFWD)
DISTRIBUTEUR DE DIRECTION AVEC SOUPAPE PRIORITAIRE (SANS MFWD)
LENKVENTIL MIT VORRANGVENTIL (OHNE MFWD)
VALVOLA DELLO STERZO CON VALVOLA PRIORITARIA (SENZA MFWD)
VALVULA DE DIRECCION CON VALVULA PRIORITARIA (SIN MFWD)
STYRVENTIL MED PRIORITETSVENTIL (UTAN MFWD)
RE026976 -UN-15MAY96

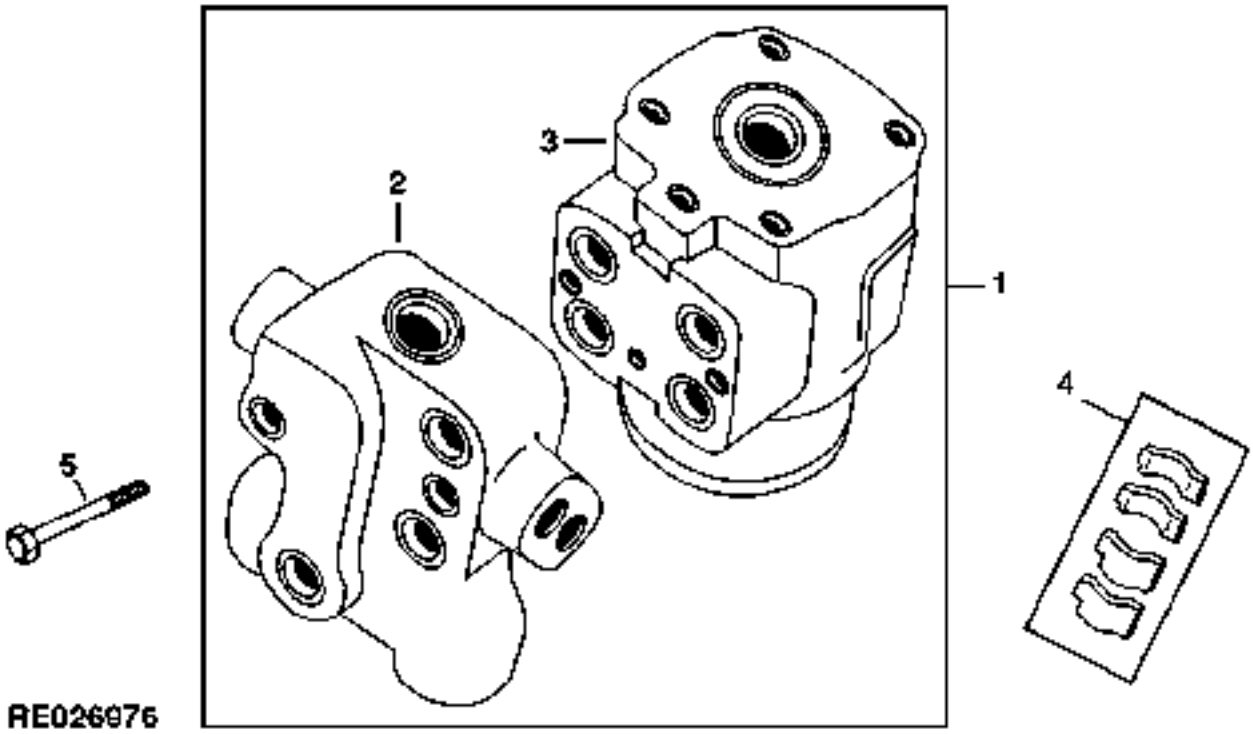

KEY	PART NO.	PART NAME	QTY	TRACTOR SERIAL NO. 8 8 8 1 2 3 0 0 0 0 0 0	REMARKS
1	RE61047	VALVE	1	X X X	
2	RE57817	VALVE	1	X X X	(A) (B)
3	RE60561	VALVE	1	X X X	(B)
4	RE50401	KIT	1	X X X	(C)
5	19M8489	SCREW	1	X X X	M12 X 65, HS 12.9
	19M8548	SCREW	1	X X X	M12 X 80, HS 12.9

(A) PRIORITY VALVE
SOUPAPE PRIORITAIRE
VORRANGVENTIL
VALVOLA DI PRIORITA'
VALVULA PRIORITARIA
PRIORITETSVENTIL

(B) W/ SEAL KIT
W/ JEU DE JOINTS
W/ DICHTUNGSSATZ
W/ SERIE ANELLI DI
W/ JUEGO DE RETENES
W/ LAGER-OCH

(C) CENTERING SPRING
RESSORT DE CENTRAGE
ZENTRIERFEDER
MOLLA DE CENTRAGGIO
RESORTE CENTRADOR
CENTRERINGSFJAEDER

https://www.truck-manuals.net/

SEAL KIT/THRUST NEEDLE BEARING KIT
KIT D'ETANCHEITE A FAIBLE COUPLE / KIT DE PALIER DE BUTEE A AIGUILLES
NIEDRIG-DREHMOMENT-DICHTUNGSSATZ / NADEL-DRUCKLAGER
KIT DELLA GUARNIZIONE A BASSA COPPIA DI TORSIONE / KIT DEL CUSCINETTO DI SPINTA A RULLINI
JUEGO DE SELLOS DE BAJO APRIETE / JUEGO DE COJINETES DE AGUJAS DE EMPUJE
TAETNINGSSATS FOR LAAGT VRIDMOMENT / SATS MED TRYCKNAALLAGER
RE027003 -UN-19JUN96

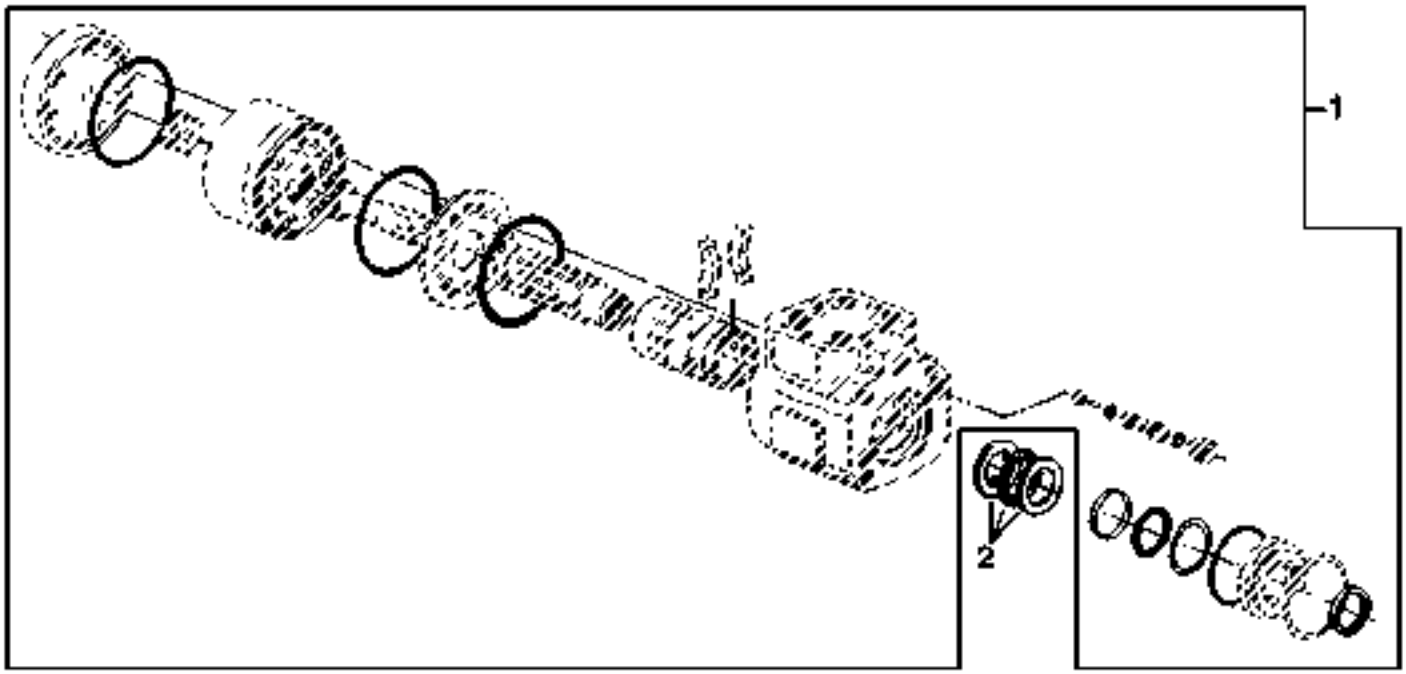

RE027003

KEY	PART NO.	PART NAME	QTY	TRACTOR SERIAL NO.	ALL	REMARKS
1	RE153242	SEAL KIT	1		X	(SUB FOR RE61797)
2	RE58878	BEARING KIT	1		X	

https://www.truck-manuals.net/

STEERING VALVE SEAL KIT
KIT D'ETANCHEITE DE SOUPAPE DE DIRECTION
LENKVENTIL-DICHTUNGSSATZ
KIT DELLA GUARNIZIONE DELLA VALVOLA DELLO STERZO
JUEGO DE SELLOS DE VALVULA DE LA DIRECCION
TAETNINGSSATS FOER STYRVENTIL
RE026639 -UN-08DEC95

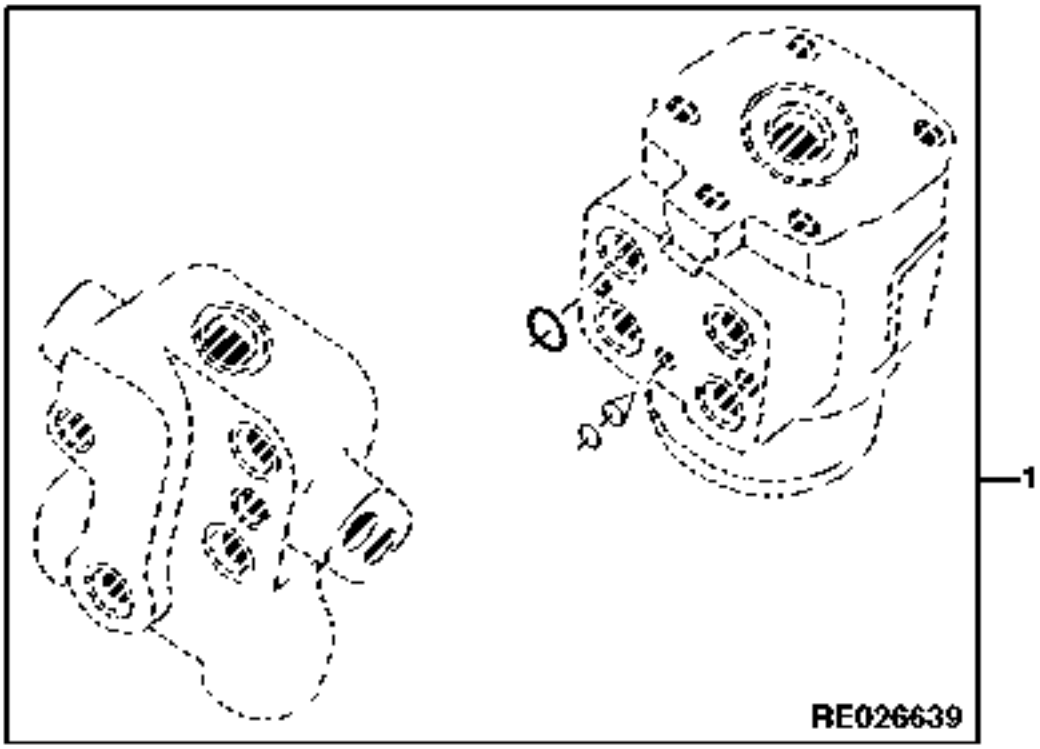

KEY	PART NO.	PART NAME	QTY	TRACTOR SERIAL NO.	ALL	REMARKS
1	RE57815	SEAL KIT	1		X	

https://www.truck-manuals.net/

PRIORITY VALVE LINES
SOUPAPE PRIORITAIRE, CONDUITES
VORRANGVENTIL, LEITUNGEN
VALVOLA PRIORITARIA, TUBI
VALVULA PRIORITARIA, LINEAS
PRIORITETSVENTIL, LEDNINGAR
RE028843 -UN-27FEB98

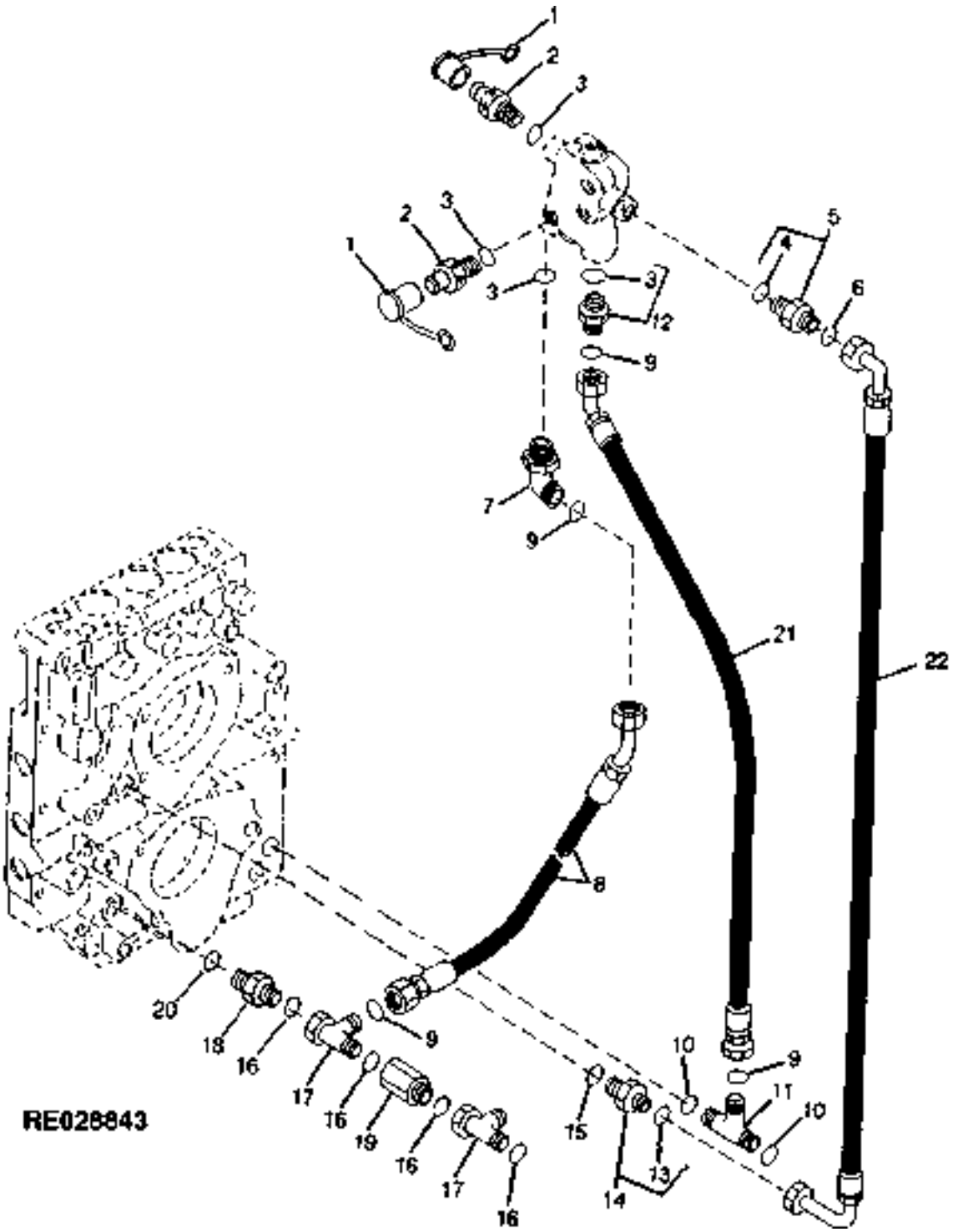

https://www.truck-manuals.net/

KEY	PART NO.	PART NAME	QTY	TRACTOR SERIAL NO.	ALL	REMARKS
1	R77175	COVER	2		X	
2	RE12187	RECEPTACLE	2		X	
3	51M7045	O-RING	4		X	19.300 X 2.200 MM
4	51M7040	O-RING	1		X	9.300 X 2.200 MM
5	38H5001	ADAPTER	1		X	
6	T77814	O-RING	1		X	
7	38H5004	ADAPTER	1	-009999	X	
	38H5146	ELBOW FITTING	1	010000-	X	
8	RE62191	HYDRAULIC HOSE	1	-009999	X	(SUB RE154628 AND 38H5146)
	RE154628	HYDRAULIC HOSE - FABRICATE	1	010000-	X	(SUB FOR RE66537 OR RE70844)
9	T77932	O-RING	4		X	
10	51M7047	O-RING	1		X	23.600 X 2.900 MM
11	38H5140	TEE FITTING	1		X	
12	38H5004	ADAPTER	1		X	
13	51M7041	O-RING	1		X	11.300 X 2.200 MM
14	38H5002	ADAPTER	1		X	
15	T77613	O-RING	1		X	
16	T77858	O-RING	4		X	
17	38H5136	TEE FITTING	2		X	
18	38H5005	ADAPTER	1		X	
19	RE51573	FITTING	1		X	
20	51M7047	O-RING	1		X	23.600 X 2.900 MM
21	RE60681	HYDRAULIC HOSE - FABRICATE	1		X	
22	RE70845	HYDRAULIC HOSE - FABRICATE	1		X	(SUB FOR RE60679)

https://www.truck-manuals.net/

STEERING CYLINDER (ADJUSTABLE AXLE) (8100 -021582; 8200 -021323; 8300 -022376)
VERIN DE DIRECTION POUR ESSIEU REGLABLE (8100 -021582; 8200 -021323; 8300 -022376)
LENKZYLINDER FUER EINSTELLBARE ACHSE (8100 -021582; 8200 -021323;8300 -022376)
CILINDRO DI GUIDA DELL'ASSALE REGOLABILE (8100 -021582; 8200 -021323; 8300 -022376)
CILINDRO DE LA DIRECCION PARA EJE AJUSTABLE (8100 -021582; 8200 -021323; 8300 -022376)
STYRCYLINDER FOER REGLERBAR AXEL (8100 -021582; 8200 -021323; 8300 -022376)
RXP010860 -UN-01JAN94



KEY	PART NO.	PART NAME	QTY	TRACTOR SERIAL NO.	8 8 8 1 2 3 0 0 0 0 0 0	REMARKS
1	RE62060	HYDRAULIC CYLINDER	1	-XXXXXX	X X X	(A) (SUB RE155989)
	RE155989	HYDRAULIC CYLINDER	1	XXXXXX-	X X X	(B)
2	AL75721	END	2		X X X	
3	A5518R	SNAP RING	2		X X X	
4	14M7173	LOCK NUT	2		X X X	M20

(A) (-XXXXXX) 8100-021582; 8200-021323; 8300-022376
(B) (XXXXXX-) 8100-021583; 8200-021324; 8300-022377

https://www.truck-manuals.net/

STEERING CYLINDER SEAL KIT (ADJUSTABLE AXLE) (8100 -021582; 8200 -021323; 8300 -022376)
JEU DE JOINTS DE VERIN DE DIRECTION (ESSIEU REGLABLE)(8100 -021582;8200 -021323;8300 -022376)
KENKZYLINDER-DICHTUNGSSATZ (EINSTELLBARE ACHSE) (8100 -021582; 8200 -021323; 8300 -022376)
KIT DE TENUTA DEL CILINDRO DELLO STERZO(ASSALE REGOLABILE)(8100 -021582;8200 -021323;8300 -022376)
JUEGO DE SELLOS DEL CILINDRO DE LA DIRECCION(EJE AJUSTABLE)(8100 -021582;8200 -021323;8300 -022376
TAETNINGSSATS FOER STYRCYLINDER (REGLERBAR AXEL)(8100 -021582; 8200 -021323; 8300 -022376)
RE026141 -UN-23MAR95

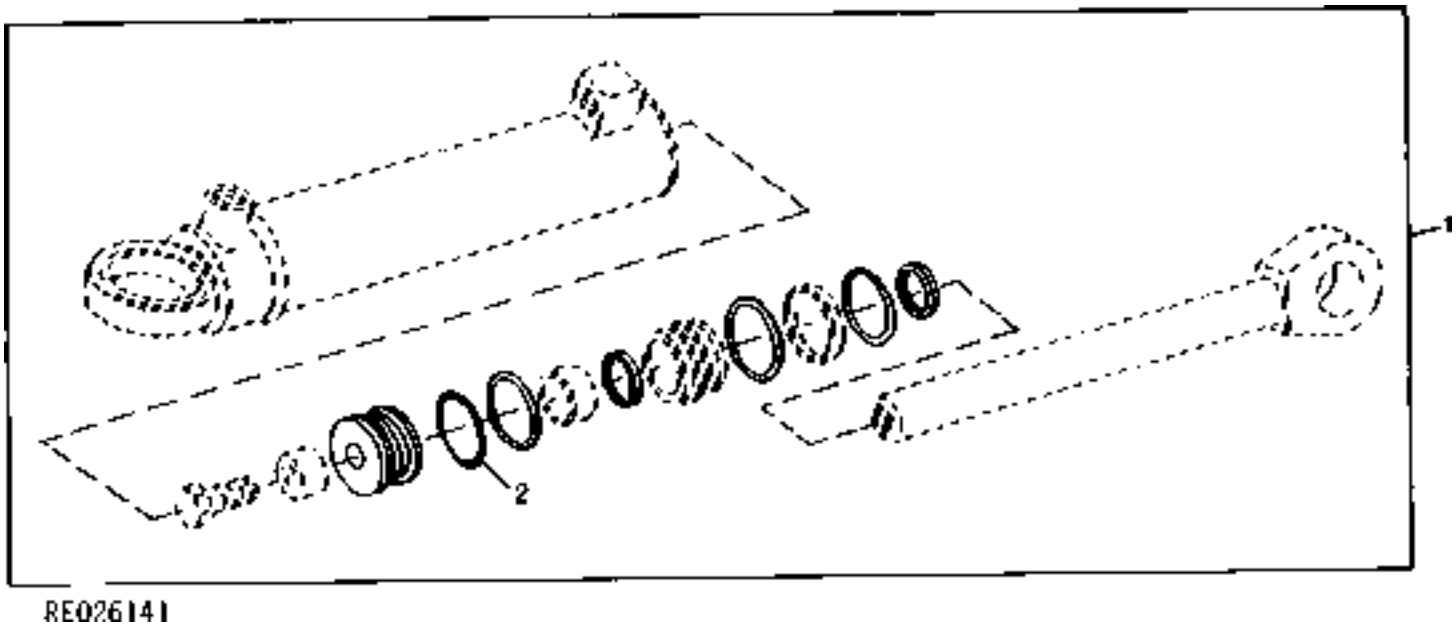

KEY	PART NO.	PART NAME	QTY	TRACTOR SERIAL NO.	8 8 8 1 2 3 0 0 0 0 0 0	REMARKS
1	RE61764	HYDRAULIC CYLINDER KIT	1		X X X	(USE WITH RE62060)
2	U46335	O-RING	1		X X X	

https://www.truck-manuals.net/

MEMORANDA
MEMORANDA
MEMORANDA
MEMORANDA
MEMORANDA
MEMORANDA

https://www.truck-manuals.net/

STEERING CYLINDER (ADJUSTABLE AXLE) (8100 021583- ; 8200 0213424- ; 8300 022377-)
VERIN DE DIRECTION POUR ESSIEU REGLABLE (8100 021583- ; 8200 0213424- ; 8300 022377-)
LENKZYLINDER FUER EINSTELLBARE ACHSE (8100 021583- ; 8200 0213424- ; 8300 022377-)
CILINDRO DI GUIDA DELL'ASSALE REGOLABILE (8100 021583- ; 8200 0213424- ; 8300 022377-)
CILINDRO DE LA DIRECCION PARA EJE AJUSTABLE (8100 021583- ; 8200 0213424- ; 8300 022377-)
STYRCYLINDER FOER REGLERBAR AXEL (8100 021583- ; 8200 0213424- ; 8300 022377-)
RE030276 -UN-20JAN99

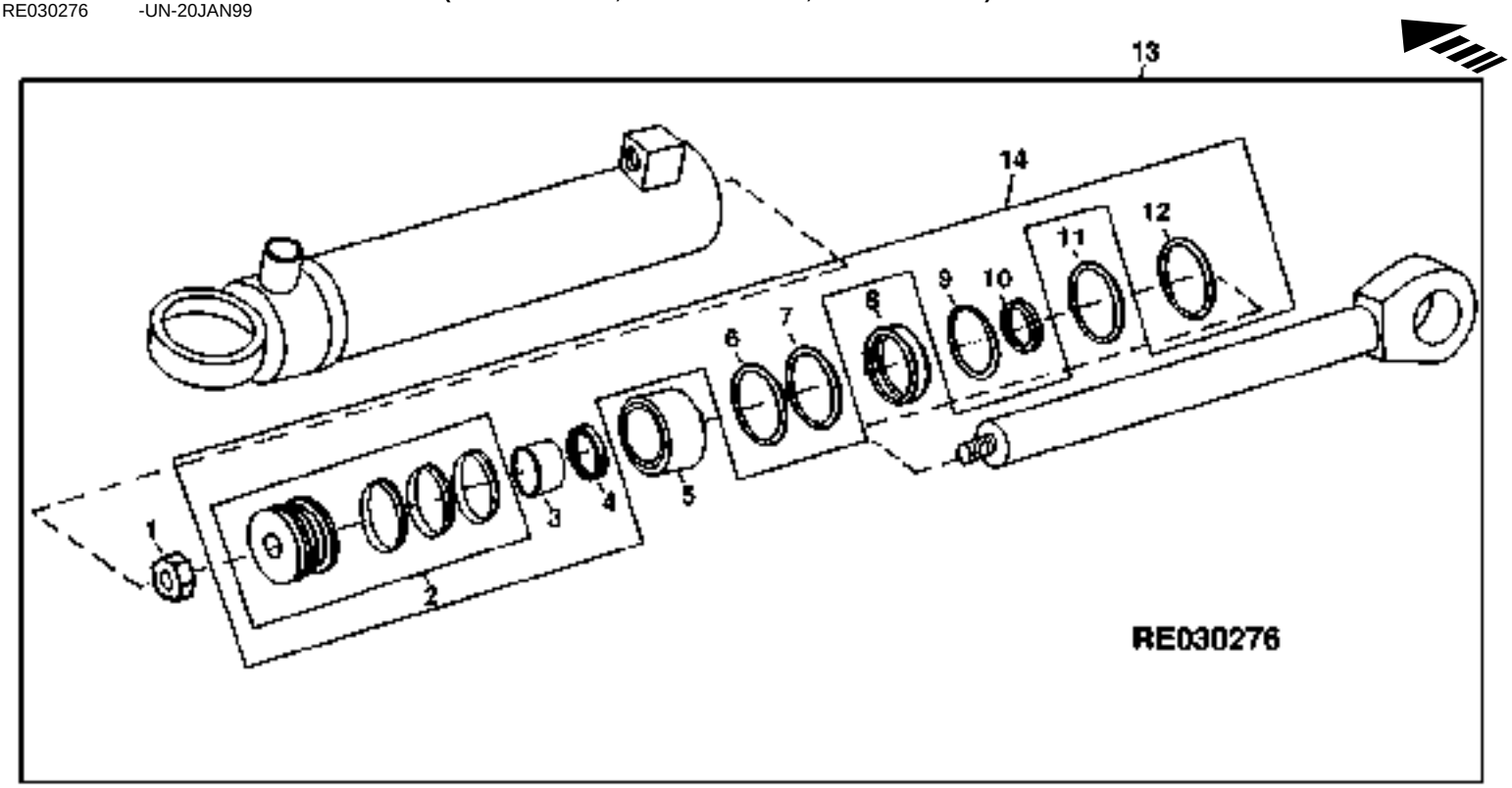

KEY	PART NO.	PART NAME	QTY	TRACTOR SERIAL NO.	8 8 8 1 2 3 0 0 0 0 0 0	REMARKS
1	H153834	LOCK NUT	1		X X X	
2	AH160036	PISTON	1		X X X	
3	H151629	WEAR RING	1		X X X	
4	H153659	SEAL	1		X X X	
5	H168109	HYDR. CYLINDER ROD GUIDE	1		X X X	
6	H158942	O-RING	1		X X X	
7	R79117	BACK-UP RING	1		X X X	
8	H164359	SNAP RING	1		X X X	
9	T22828	O-RING	1		X X X	
10	H150411	SEAL	1		X X X	
11	H164360	SNAP RING	1		X X X	
12	H169509	BACK-UP RING	1		X X X	
13	RE155989	HYDRAULIC CYLINDER	1		X X X	
14	AH158827	HYDRAULIC CYLINDER KIT	1		X X X	(USE WITH RE155989)

https://www.truck-manuals.net/

STEERING CYLINDER (MFWD) (ASN -077515)
VERIN DE DIRECTION (MFWD) (ASN -077515)
LENKZYLINDER (MFWD) (ASN -077515)
CILINDRO DI GUIDA (MFWD) (ASN -077515)
CILINDRO DE LA DIRECCION (MFWD) (ASN -077515)
STYRCYLINDER (MFWD) (ASN -077515)
RE028844 -UN-27FEB98

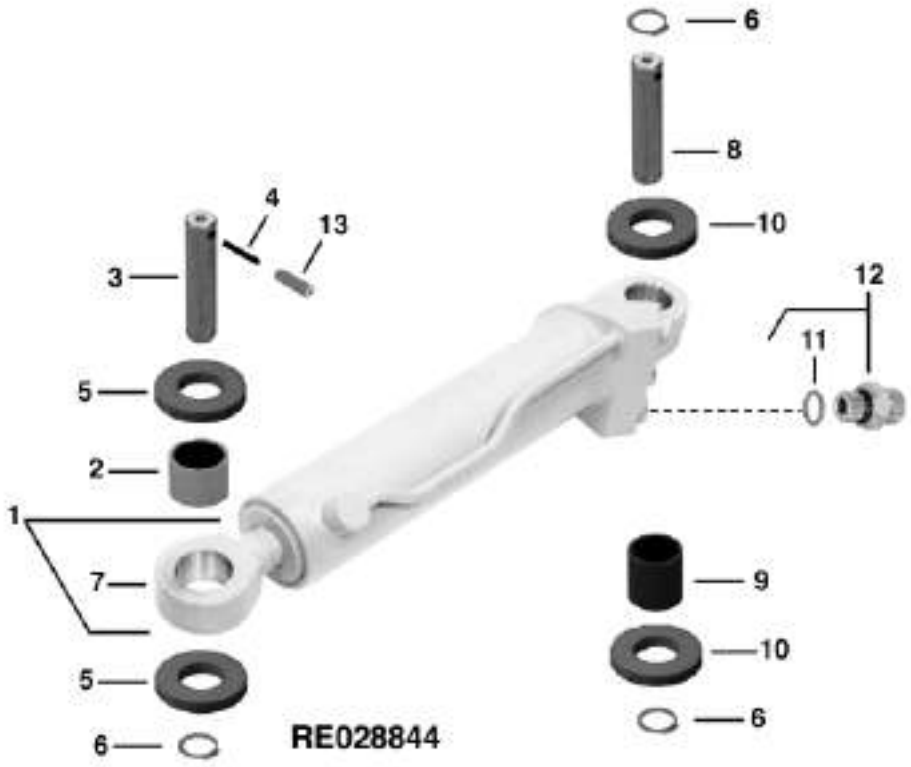

KEY	PART NO.	PART NAME	QTY	AXLE SERIAL NO.	ALL	REMARKS
1	RE60867	CYLINDER	1	-029259	X	R.H. (SUB RE65292)
	RE65292	CYLINDER	1	029260-	X	
	RE60868	CYLINDER	1	-029259	X	L.H. (SUB RE65293)
	RE65293	CYLINDER	1	029260-	X	
2	R95118	BUSHING	2		X	
3	R95117	PIN	2	-068186	X	(SUB R153160, 34H421 AND 34H305)
	R153160	PIN	2	068187-	X	
4	34M7044	SPRING PIN	2	-068168	X	6 X 50 MM
	34H421	SPRING PIN	2	068187-	X	3/8" X 2"
5	R95119	SEAL	4		X	
6	40M7259	SNAP RING	6		X	
7	R158652	ROD	2		X	(USE WITH RE60867 OR RE60868) (SUB FOR R123988)
	AH163058	ROD	2		X	(USE WITH RE65292 OR RE65293) (SUB FOR AH146050)
8	R116206	PIN	2		X	
9	R95250	BUSHING	2		X	
10	R112954	SEAL	4		X	
11	51M7043	O-RING	2		X	15.300 X 2.200 MM
12	38H5002	ADAPTER	2		X	
13	34H305	SPRING PIN	2	068187-	X	7/32" X 2"

https://www.truck-manuals.net/

STEERING CYLINDER SEAL KIT (MFWD) (ASN -029259)
JEU DE JOINTS DE VERIN DE DIRECTION (MFWD) (ASN -029259)
LENKZYLINDER-DICHTUNGSSATZ (MFWD) (ASN -029259)
KIT DI TENUTA DEL CILINDRO DELLO STERZO (MFWD) (ASN -029259)
JUEGO DE SELLOS DEL CILINDRO DE LA DIRECCION (MFWD) (ASN -029259)
TAETNINGSSATS FOER STYRCYLINDER (MFWD) (ASN -029259)
RE026681 -UN-13DEC95

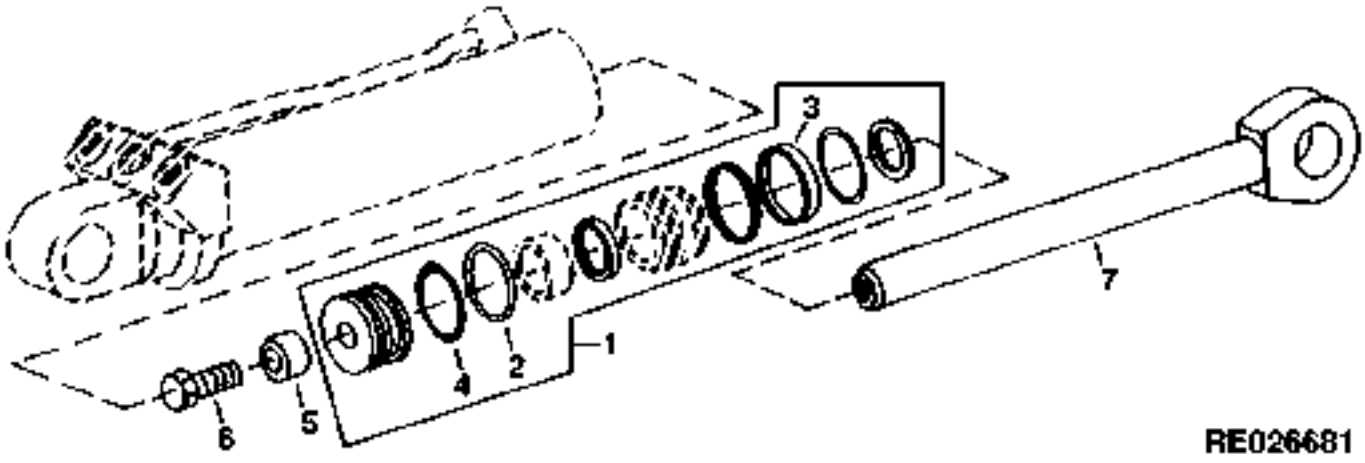

KEY	PART NO.	PART NAME	QTY	TRACTOR SERIAL NO.	ALL	REMARKS
1	RE61543	HYDRAULIC CYLINDER KIT	1		X	
2	R113066	BACK-UP RING	1		X	
3	R125153	SPACER	1		X	
4	T34248	O-RING	1		X	
5	R122557	SPACER	1		X	
6	19H3726	CAP SCREW	1		X	9/16" X 2", HS SAE 8
7	R158652	ROD	1		X	(SUB FOR R123988)

https://www.truck-manuals.net/

MEMORANDA
MEMORANDA
MEMORANDA
MEMORANDA
MEMORANDA
MEMORANDA

https://www.truck-manuals.net/

STEERING CYLINDER (MFWD) (ASN 029260-077515)
JEU DE JOINTS DE VERIN DE DIRECTION (MFWD) (ASN 029260-077515)
LENKZYLINDER-DICHTUNGSSATZ (MFWD) (ASN 029260-077515)
KIT DE TENUTA DEL CILINDRO DELLO STERZO (MFWD) (ASN 029260-077515)
JUEGO DE SELLOS DEL CILINDRO DE LA DIRECCION (MFWD) (ASN 029260-077515)
TAETNINGSSATS FOER STYRCYLINDER (MFWD) (ASN 029260-077515)
RE026608 -UN-19DEC95

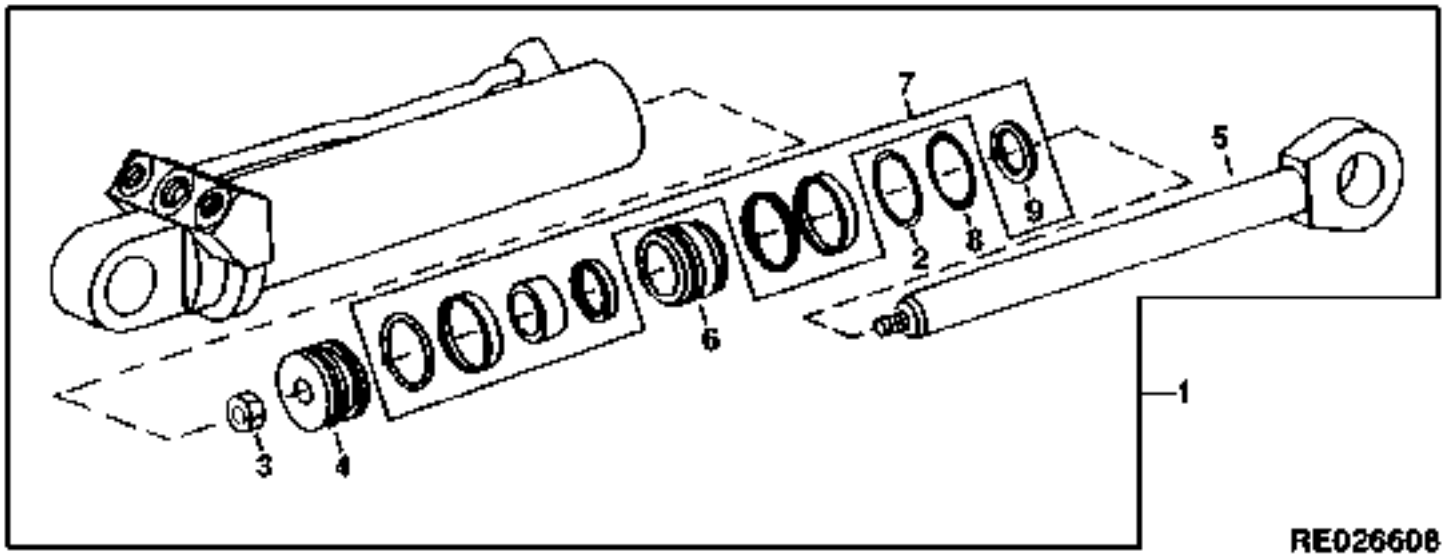

KEY	PART NO.	PART NAME	QTY	TRACTOR SERIAL NO.	ALL	REMARKS
1	RE65292	CYLINDER	1		X	R.H.
	RE65293	CYLINDER	1		X	L.H.
2	H152104	SNAP RING	1		X	
3	H153834	LOCK NUT	1		X	
4	AH146443	PISTON	1		X	
5	AH163058	ROD	1		X	(SUB FOR AH146050)
6	H151674	HYDR. CYLINDER ROD GUIDE	1		X	
7	AH146052	KIT	1		X	
8	N34349	SNAP RING	1		X	
9	P50635	O-RING	1		X	

https://www.truck-manuals.net/

STEERING CYLINDER (MFWD) (ASN 800001-)
JEU DE JOINTS DE VERIN DE DIRECTION (MFWD) (ASN 800001-)
LENKZYLINDER-DICHTUNGSSATZ (MFWD) (ASN 800001-)
KIT DE TENUTA DEL CILINDRO DELLO STERZO (MFWD) (ASN 800001-)
JUEGO DE SELLOS DEL CILINDRO DE LA DIRECCION (MFWD) (ASN 800001-)
TAETNINGSSATS FOER STYRCYLINDER (MFWD) (ASN 800001-)
RE026608 -UN-19DEC95

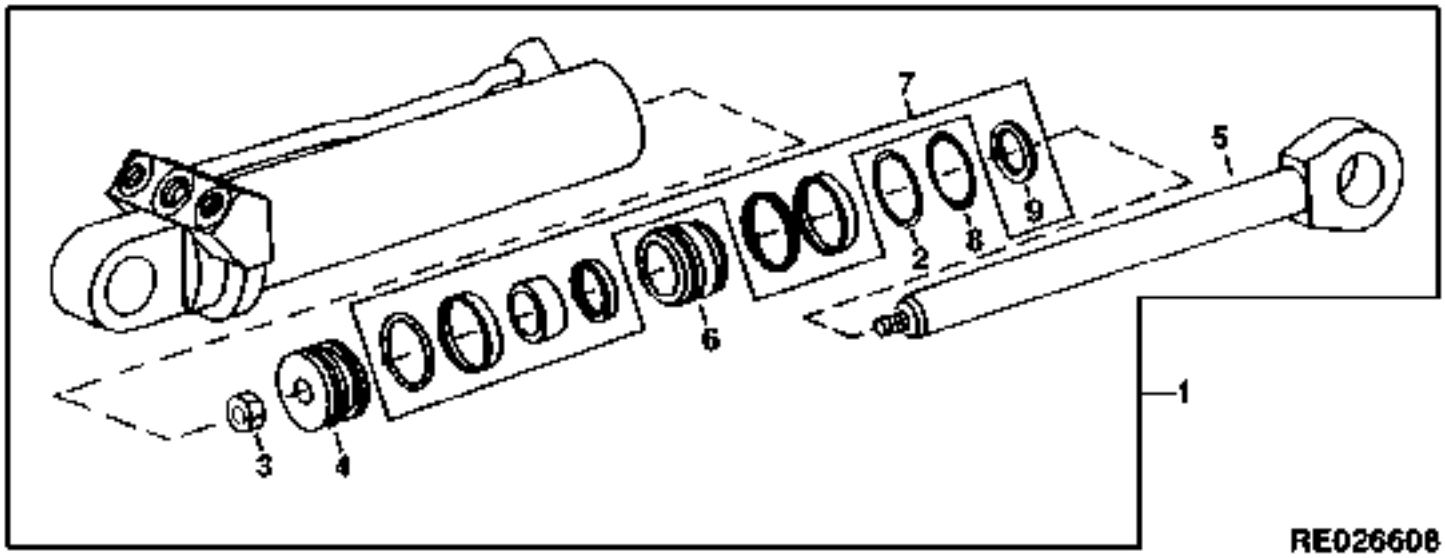

KEY	PART NO.	PART NAME	QTY	TRACTOR SERIAL NO.	ALL	REMARKS
1	RE161017	HYDRAULIC CYLINDER	1		X	R.H. (SUB FOR RE68622)
	RE161018	HYDRAULIC CYLINDER	1		X	L.H. (SUB FOR RE68623)
2	H152104	SNAP RING	1		X	
3	H153834	LOCK NUT	1		X	
4	AH146443	PISTON	1		X	
5	AH163057	ROD	1		X	(SUB FOR AH149964)
6	H151674	HYDR. CYLINDER ROD GUIDE	1		X	
7	AH146052	KIT	1		X	
8	N34349	SNAP RING	1		X	
9	P50635	O-RING	1		X	

https://www.truck-manuals.net/

STEERING CYLINDER ATTACHING PINS (MFWD) (ASN 800001-)
VERIN DE DIRECTION (MFWD) (ASN 800001-)
LENKZYLINDER (MFWD) (ASN 800001-)
CILINDRO DI GUIDA (MFWD) (ASN 800001-)
CILINDRO DE LA DIRECCION (MFWD) (ASN 800001-)
STYRCYLINDER (MFWD) (ASN 800001-)
RE030275 -UN-21DEC98

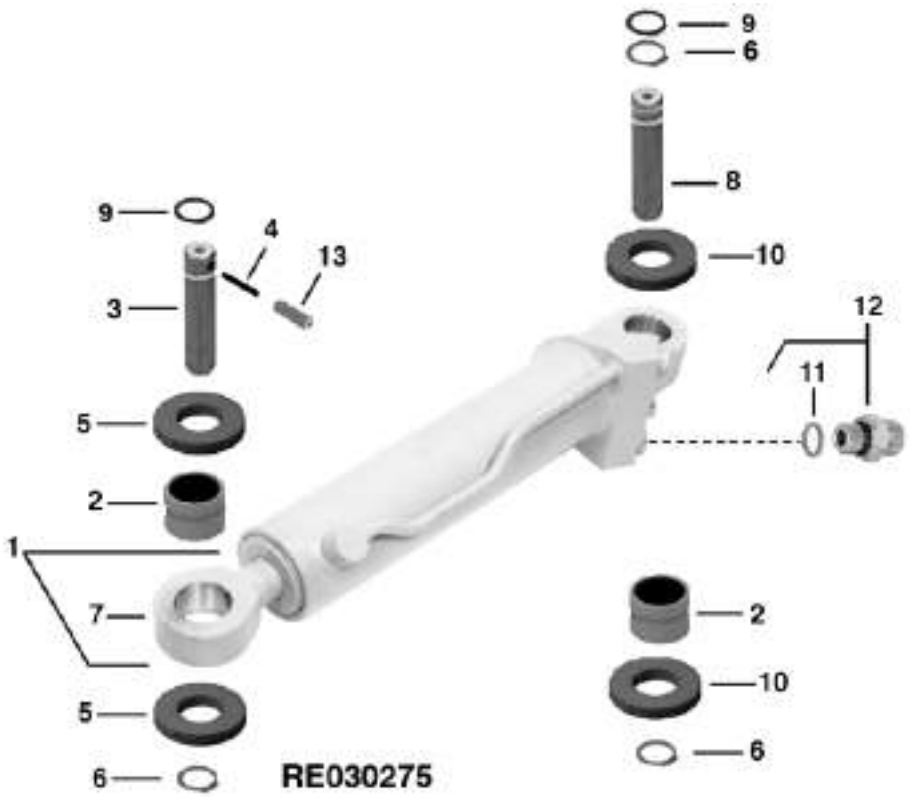

KEY	PART NO.	PART NAME	QTY	AXLE SERIAL NO.	ALL	REMARKS
1	RE161017	HYDRAULIC CYLINDER	1		X	R.H. (SUB FOR RE68622)
	RE161018	HYDRAULIC CYLINDER	1		X	L.H. (SUB FOR RE68623)
2	R152274	BUSHING	4		X	
3	R133564	PISTON	2		X	
4	34H421	SPRING PIN	2		X	3/8" X 2"
5	R95119	SEAL	4		X	
6	40M7259	SNAP RING	6		X	
7	AH163057	ROD	2		X	(SUB FOR AH149964)
8	R133572	PIN	2		X	
9	P47889	O-RING	2		X	
10	R112954	SEAL	4		X	
11	51M7043	O-RING	2		X	15.300 X 2.200 MM
12	38H5002	ADAPTER	2		X	
13	34H305	SPRING PIN	2		X	7/32" X 2"

https://www.truck-manuals.net/

STEERING CYLINDER LINES (MFWD)
CONDUITES DES VERINS DE DIRECTION (MFWD)
LENKZYLINDERLEITUNGEN (MFWD)
LINEE DEL CILINDRO CELLO STERZ0 (MFWD)
LINEAS DE LOS CILINDROS DE LA DIRECCION (MFWD)
STYRCYLINDERLEDNINGAR (MFWD)
RE028465 -UN-22OCT97

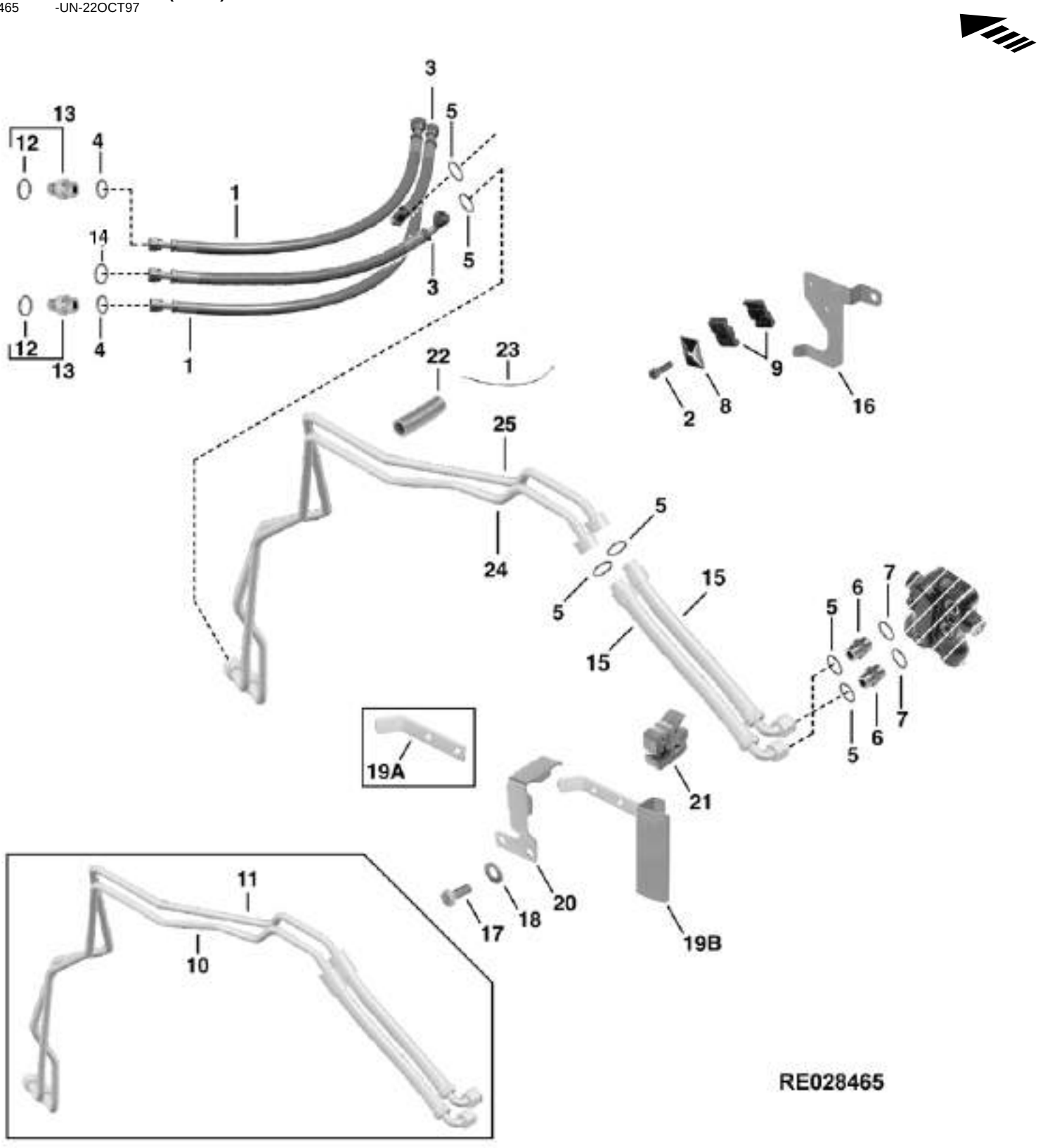

https://www.truck-manuals.net/

KEY	PART NO.	PART NAME	QTY	TRACTOR SERIAL NO.	ALL	REMARKS
1	RE44737	HYDRAULIC HOSE	2		X	
2	19M8318	SCREW	2	-XXXXXX	X	(B) M8 X 45, HS 10.9
	19M8318	SCREW	3	XXXXXX-	X	(C) M8 X 45, HS 10.9
3	RE60847	HYDRAULIC HOSE	2		X	
4	T77613	O-RING	4		X	
5	T77857	O-RING	6		X	
6	38H5003	ADAPTER	2		X	
7	51M7043	O-RING	2		X	15.300 X 2.200 MM
8	H121168	PLATE	2	-XXXXXX	X	(B)
	H121168	PLATE	3	XXXXXX-	X	(C)
9	H135156	CLAMP	4	-XXXXXX	X	(B)
	H135156	CLAMP	6	XXXXXX-	X	(C)
10	RE61141	OIL LINE	1		X	R.H. (SUB RE66235, RE66236, H121168, (2) H135156, 19M8318 AND (2) RE62783)
	RE61141	OIL LINE	1		X	(A) R.H. (SUB RE66235, RE66236, H121168, 19M8318, (2) H135156, (2) RE62783, RE66231 AND T13814)
11	RE61142	OIL LINE	1		X	L.H. (SUB RE66236, RE66235, H121168, 19M8318, (2) H135156 AND (2) RE62783)
	RE61142	OIL LINE	1		X	(A) L.H. (SUB RE66235, RE66236, H121168, 19M8318, (2) H135156, (2) RE62783, RE66231 AND T13814)
12	51M7041	O-RING	4		X	11.300 X 2.200 MM
13	38H5002	ADAPTER	4		X	
14	51M7043	O-RING	2		X	15.300 X 2.200 MM
15	RE62783	HYDRAULIC HOSE - FABRICATE	2		X	
16	R135811	BRACKET	1		X	(SUB FOR R124824)
17	19M7167	CAP SCREW	2		X	M10 X 25
18	24M7346	WASHER	2		X	11 X 20 X 2 MM
19A	R120133	SUPPORT	1	-XXXXXX	X	
19B	RE62562	BRACKET	1	XXXXXX-	X	
20	R121776	BRACKET	1	-XXXXXX	X	
	R151216	BRACKET	1	XXXXXX-	X	
21	R126381	CLAMP	1		X	
22	N32491	ISOLATOR	2		X	
23	R44302	TIE BAND	2		X	
24	RE62779	OIL LINE	1	-XXXXXX	X	(B) (SUB RE66235, RE66236, H121168, 19M8318 AND (2) H135156)
	RE62779	OIL LINE	1	-XXXXXX	X	(A) (B) (SUB RE66235, RE66236, H121168, 19M8318, (2) H135156, RE66231 AND T13814)
	RE66235	OIL LINE	1	XXXXXX-	X	
25	RE62780	OIL LINE	1	-XXXXXX	X	(SUB RE66236, RE66235, H121168, 19M8318 AND (2) H135156)
	RE62780	OIL LINE	1	-XXXXXX	X	(A) (SUB RE66235, RE66236, H121168, 19M8318, (2) H135156, RE66231 AND T13814)
	RE66236	OIL LINE	1	XXXXXX-	X	

(A) SECONDARY BRAKE
FREIN SECONDAIRE
ZWEITBREMSE
FRENO SECONDARIO
FRENO SECUNDARIO
PARKERINGSBROMS

(B) (-XXXXXX) 8100 004722; 8200 003490; 8300 005814; 8400 006583
(C) (XXXXXX-) 8100 004723; 8200 003491; 8300 005815; 8400 006584

https://www.truck-manuals.net/

STEERING CYLINDER LINES (W/O MFWD) (8100 -004262; 8200 -003194; 8300 -005441)
CONDUITES DES VERINS DE DIRECTION (W/O MFWD) (8100 -004262; 8200 -003194; 8300 -005441)
LENKZYLINDERLEITUNGEN (W/O MFWD) (8100 -004262; 8200 -003194; 8300 -005441)
LINEE DEL CILINDRO DELLO STERZO (W/O MFWD) (8100 -004262; 8200 -003194; 8300 -005441)
LINEAS DE LOS CILINDROS DE LA DIRECCION (W/O MFWD)(8100 -004262; 8200 -003194; 8300 -005441)
STYRCYLINDERLEDNINGAR (W/O MFWD) (8100 -004262; 8200 -003194; 8300 -005441)
RE026972 -UN-31MAY96

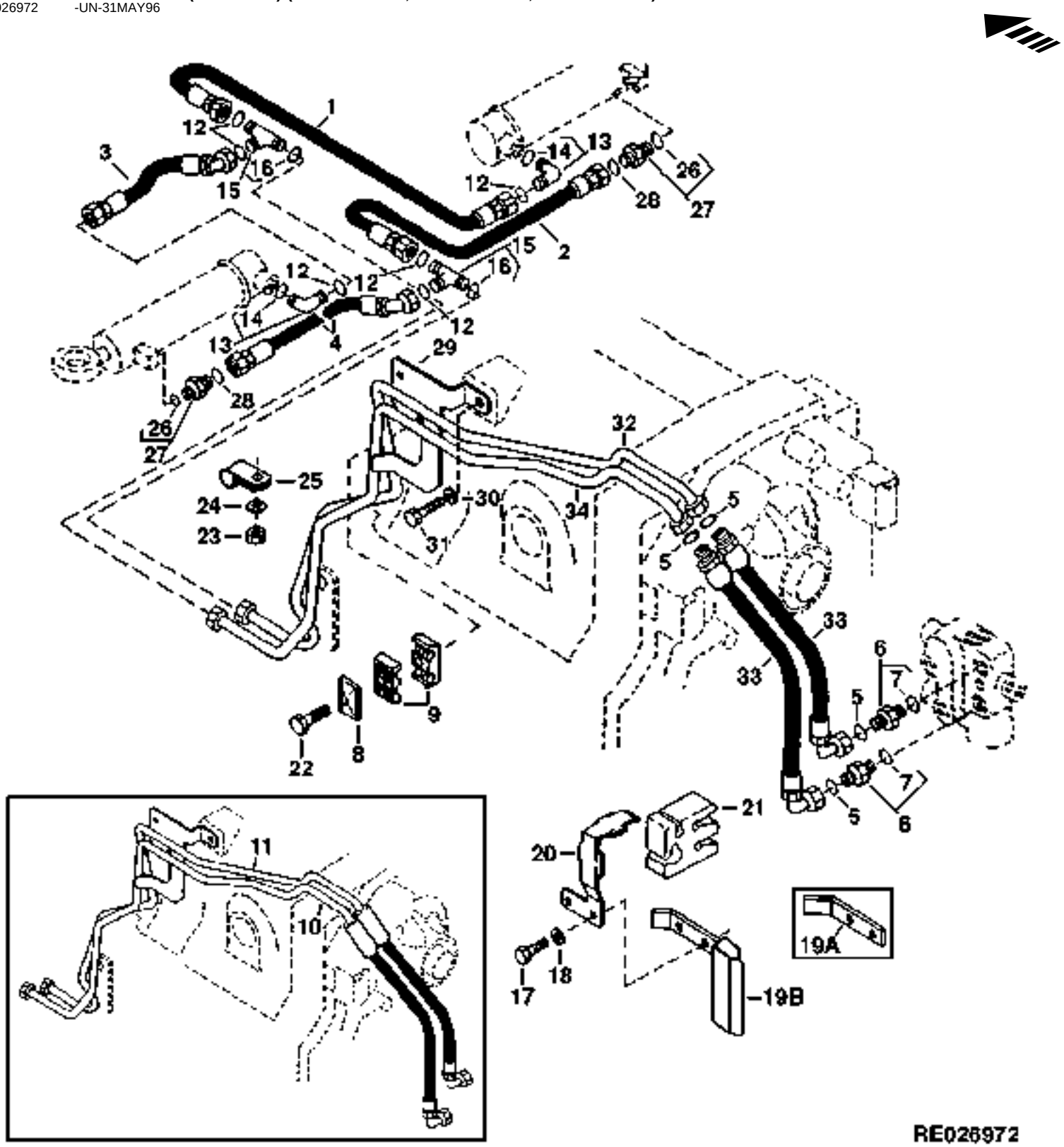

https://www.truck-manuals.net/

KEY	PART NO.	PART NAME	QTY	TRACTOR SERIAL NO.	8 8 8 1 2 3 0 0 0 0 0 0	REMARKS
1	RE61746	HYDRAULIC HOSE	1		X X X	
2	RE61745	HYDRAULIC HOSE	1		X X X	
3	RE61576	HYDRAULIC HOSE	1		X X X	
4	RE61578	HYDRAULIC HOSE	1		X X X	
5	T77857	O-RING	4		X X X	
6	38H5003	ADAPTER	2		X X X	
7	51M7043	O-RING	2		X X X	15.300 X 2.200 MM
8	H121168	PLATE	2		X X X	
9	H135156	CLAMP	4		X X X	
10	RE61141	OIL LINE	1		X X X	(SUB (2) RE62783, RE65254, RE65255, RE65330, H112567, (2) H141510, 19M7162 AND 19M7185)
	RE61141	OIL LINE	1		X X X	(A) (SUB (2) RE62783, RE65254, RE65255, RE65330, (2) RE66231, H112567, (2) H141510, T13814, 19M7162 AND 19M7185)
11	RE61142	OIL LINE	1		X X X	(SUB (2) RE62783, RE65254, RE65255, RE65330, H112567, (2) H141510, 19M7162 AND 19M7185)
	RE61142	OIL LINE	1		X X X	(A) (SUB (2) RE62783, RE65254, RE65255, RE65330, RE66231, H112567, (2) H141510, T13814, 19M7162 AND 19M7185)
12	T77857	O-RING	6		X X X	
13	38H5017	ELBOW FITTING	2		X X X	
14	51M7043	O-RING	2		X X X	15.300 X 2.200 MM
15	38H5031	TEE FITTING	2		X X X	
16	T77857	O-RING	2		X X X	
17	19M7167	CAP SCREW	2		X X X	M10 X 25
18	24M7346	WASHER	2		X X X	11 X 20 X 2 MM
19A	R120133	SUPPORT	1	-XXXXXX	X X X	
19B	RE62562	BRACKET	1	XXXXXX-	X X X	
20	R121776	BRACKET	1		X X X	
21	R126381	CLAMP	1		X X X	(SUB FOR R121777)
22	19M8318	SCREW	2		X X X	M8 X 45, HS 10.9
23	14M7275	NUT	2		X X X	M12
24	24M7240	WASHER	2		X X X	13 X 25 X 3 MM
25	R125461	CLAMP	2		X X X	
26	51M7041	O-RING	4		X X X	11.300 X 2.200 MM
27	38H5002	ADAPTER	2		X X X	
28	T77613	O-RING	2		X X X	
29	R135811	BRACKET	1		X X X	(SUB FOR R124824)
30	24M7240	WASHER	1		X X X	13 X 25 X 3 MM
31	19M7872	CAP SCREW	1		X X X	M12 X 25, HS 10.9
32	RE62780	OIL LINE	1		X X X	(SUB (2) RE62783, RE65254, RE65255, RE65330, H112567, (2) H141510, 19M7162 AND 19M7185)
	RE62780	OIL LINE	1		X X X	(A) (SUB RE65254, RE65255, RE65330, RE66231, H112567, (2) H141510, T13814 AND 19M7162)
33	RE62783	HYDRAULIC HOSE - FABRICATE	2		X X X	
34	RE62779	OIL LINE	1		X X X	(SUB (2) RE62783, RE65254, RE65255, RE65330, H112567, (2) H141510, 19M7162 AND 19M7185)
	RE62779	OIL LINE	1		X X X	(A) (SUB RE65254, RE65255, RE65330, RE66231, H112567, (2) H141510, T13814, 19M7162 AND 19M7185)

(A) SECONDARY BRAKE
FREIN SECONDAIRE
ZWEITBREMSE
FRENO SECONDARIO
FRENO SECUNDARIO
PARKERINGSBROMS

https://www.truck-manuals.net/

STEERING CYLINDER LINES (W/O MFWD) (8100 004263- ; 8200 003195- ; 8300 005442-)
CONDUITES DES VERINS DE DIRECTION (W/O MFWD) (8100 004263- ; 8200 003195- ; 8300 005442-)
LENKZYLINDERLEITUNGEN (W/O MFWD) (8100 004263- ; 8200 003195- ; 8300 005442-)
LINEE DEL CILINDRO DELLO STERZO (W/O MFWD) (8100 004263- ; 8200 003195- ; 8300 005442-)
LINEAS DE LOS CILINDROS DE LA DIRECCION (W/O MFWD) (8100 004263- ; 8200 003195- ; 8300 005442-
STYRCYLINDERLEDNINGAR (W/O MFWD) (8100 004263- ; 8200 003195- ; 8300 005442-)
RE026973 -UN-30JUL96

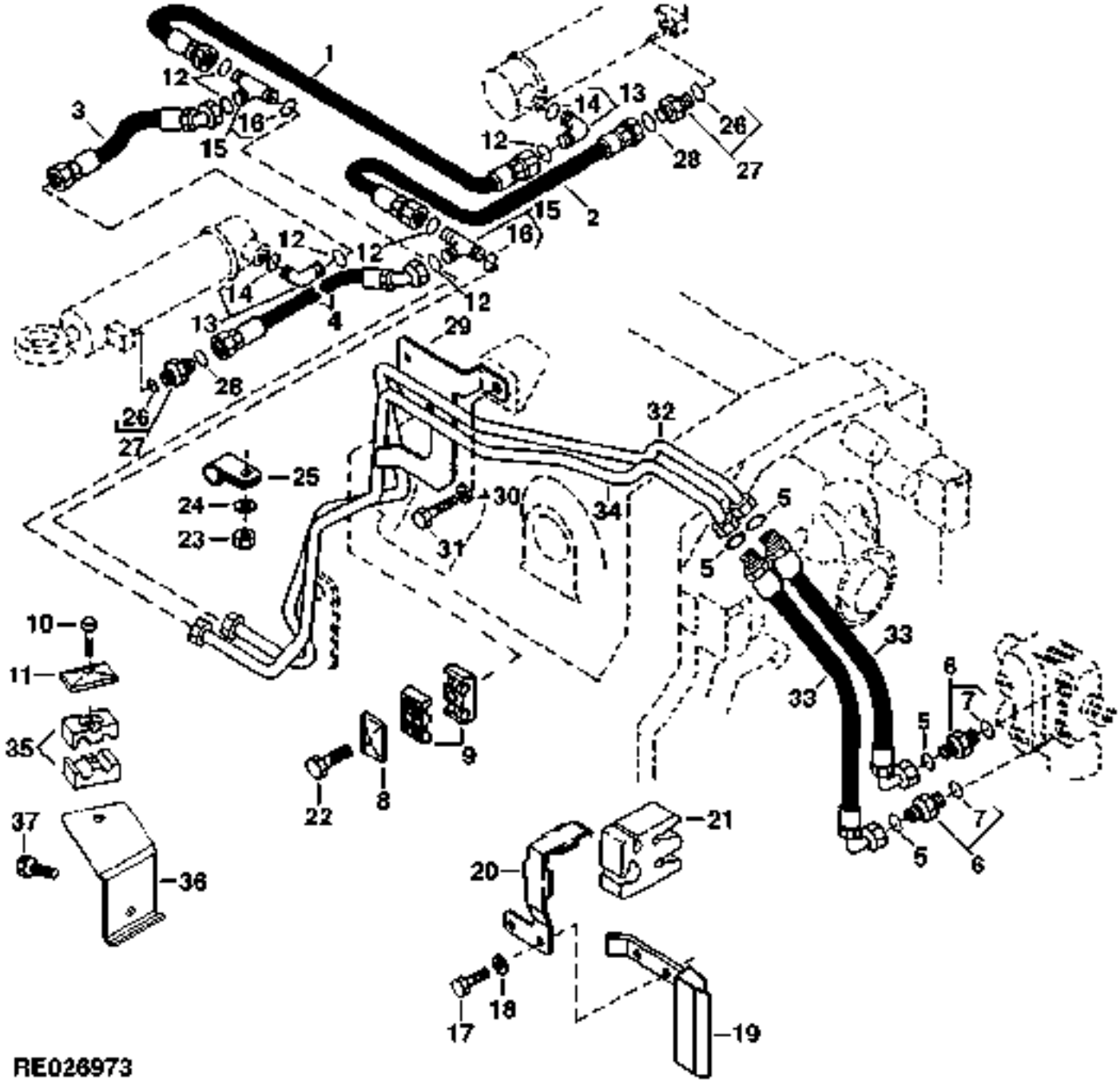

https://www.truck-manuals.net/

KEY	PART NO.	PART NAME	QTY	TRACTOR SERIAL NO.	8100	8200	8300	REMARKS
1	RE61746	HYDRAULIC HOSE	1		X	X	X	
2	RE61745	HYDRAULIC HOSE	1		X	X	X	
3	RE61576	HYDRAULIC HOSE	1		X	X	X	
4	RE61578	HYDRAULIC HOSE	1		X	X	X	
5	T77857	O-RING	4		X	X	X	
6	38H5003	ADAPTER	2		X	X	X	
7	51M7043	O-RING	2		X	X	X	15.300 X 2.200 MM
8	H121168	PLATE	1		X	X	X	
9	H135156	CLAMP	2		X	X	X	
10	19M7185	CAP SCREW	1		X	X	X	M8 X 60
11	H112567	PLATE	1		X	X	X	
12	T77857	O-RING	6		X	X	X	
13	38H5017	ELBOW FITTING	2		X	X	X	
14	51M7043	O-RING	2		X	X	X	15.300 X 2.200 MM
15	38H5031	TEE FITTING	2		X	X	X	
16	R77857	RING	2		X	X	X	
17	19M7167	CAP SCREW	2		X	X	X	M10 X 25
18	24M7346	WASHER	2		X	X	X	11 X 20 X 2 MM
19	RE62562	BRACKET	1		X	X	X	
20	R121776	BRACKET	1	-XXXXXX	X	X	X	
	R151216	BRACKET	1	XXXXXX-	X	X	X	
21	R126381	CLAMP	1		X	X	X	(SUB FOR R121777)
22	19M8318	SCREW	1		X	X	X	M8 X 45, HS 10.9
23	14M7275	NUT	2		X	X	X	M12
24	24M7240	WASHER	2		X	X	X	13 X 25 X 3 MM
25	R125461	CLAMP	2		X	X	X	
26	51M7041	O-RING	4		X	X	X	11.300 X 2.200 MM
27	38H5002	ADAPTER	2		X	X	X	
28	T77613	O-RING	2		X	X	X	
29	R135811	BRACKET	1		X	X	X	(SUB FOR R124824)
30	24M7240	WASHER	1		X	X	X	13 X 25 X 3 MM
31	19M7872	CAP SCREW	1		X	X	X	M12 X 25, HS 10.9
32	RE65254	OIL LINE	1		X	X	X	
33	RE62783	HYDRAULIC HOSE - FABRICATE	2		X	X	X	
34	RE65255	OIL LINE	1		X	X	X	
35	H141510	CLAMP	2		X	X	X	
36	RE65330	BRACKET	1		X	X	X	
37	19M7162	CAP SCREW	1		X	X	X	M8 X 16

https://www.truck-manuals.net/

STEERING PUMP/CHARGE PUMP
POMPE DE DIRECTION/POMPE DE GAVAGE
LENKPUMPE/LADEPUMPE
POMPA DELLO STERZO/POMPA DI CARICA
BOMBA DE DIRECCION/BOMBA DE CARGA
STYRPUMP/LADDNINGSPUMP
RXP021645 -UN-30JUL96

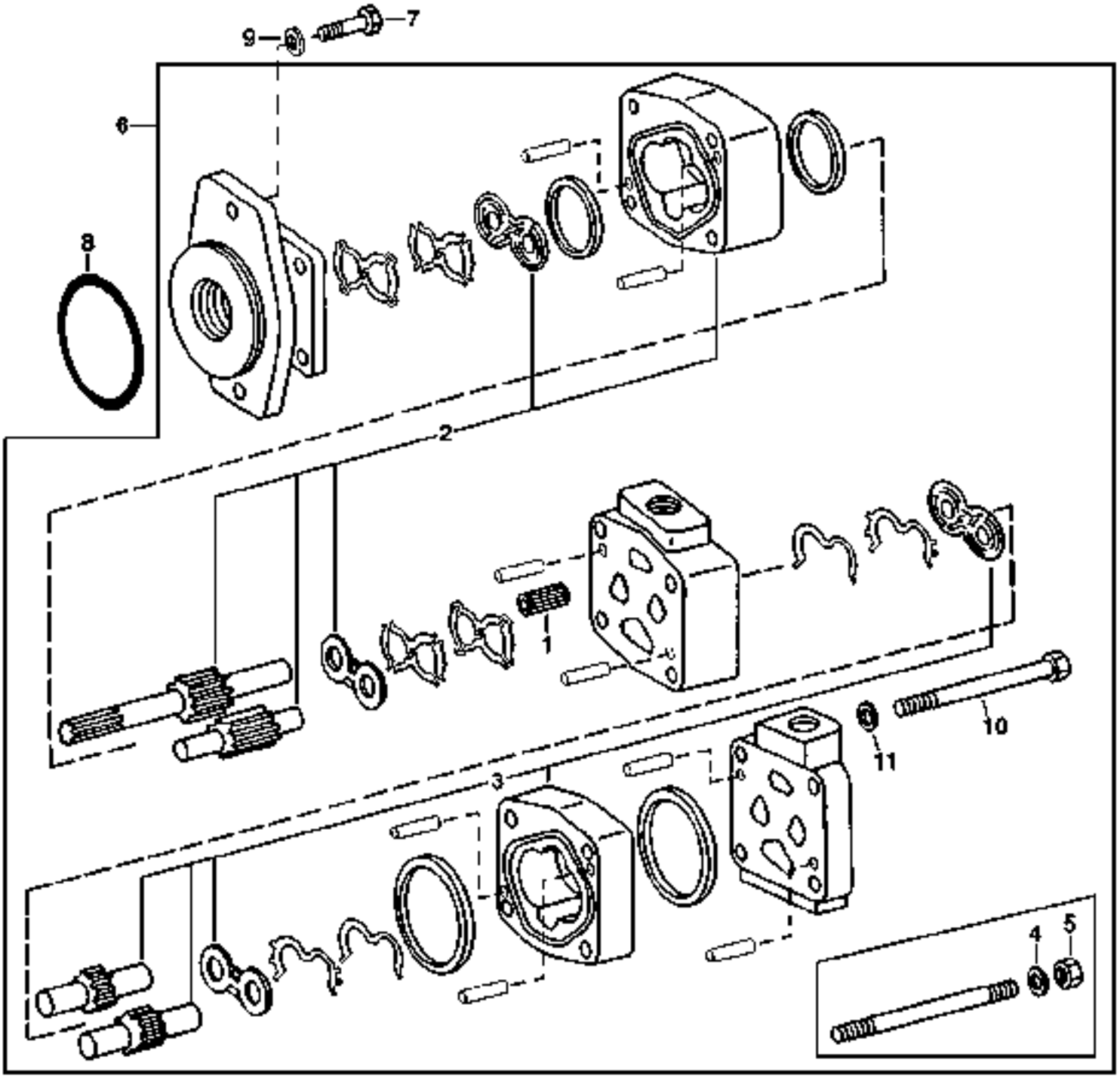

RXP021645

https://www.truck-manuals.net/

KEY	PART NO.	PART NAME	QTY	TRACTOR SERIAL NO.	ALL	REMARKS
1	R114224	EXTERNAL HALF COUPLER	1		X	
2	RE58978	GEAR	1	-XXXXXX	X	(A) (C) (USE WITH RE58979)
	RE64237	GEAR	1	XXXXXX-	X	(A) (D) (USE WITH RE64236)
3	RE58976	GEAR	1		X	(B)
4	24M7240	WASHER	4	-XXXXXX	X	13 X 25 X 3 MM
5	14H1040	NUT	4	-XXXXXX	X	1/2"
6	RE60323	HYDRAULIC PUMP	1		X	
7	19M7285	CAP SCREW	2		X	M12 X 30
8	T42302	O-RING	1		X	
9	24M7240	WASHER	2		X	13 X 25 X 3 MM
10	19H3339	CAP SCREW	1	XXXXXX-	X	1/2" X 9-1/2", HS, SAE 8
11	R135088	WASHER	1	XXXXXX-	X	

(A) CHARGE PUMP
POMPE DE GAVAGE
LADEPUMPE
POMPA DI CARICA
BOMBA DE CARGA
LADDNINGSPUMP

(B) STEERING PUMP
POMPE DE DIRECTION
LENKPUMPE
POMPA DELLO STERZO
BOMBA DE DIRECCION
STYRPUMP

(C) (-XXXXXX) 8100-002227; 8200-001921; 8300-003409; 8400-002192
(D) (XXXXXX-) 8100-002228; 8200-001922; 8300-003410; 8400-002193

https://www.truck-manuals.net/

GEAR PUMP SEAL KIT
JEU D'ETANCHEITE DE LA POMPE A ENGRENAGES
ZAHNRADPUMPEN-DICHTUNGSSATZ
KIT DI TENUTA DELLA POMPA AD INGRANAGGI
CONJUNTO DE SELLOS DE BOMBA DE ENGRANAJES
TAETNINGSSATS FOER KUGGHJULSPUMP
RE026667 -UN-19DEC95

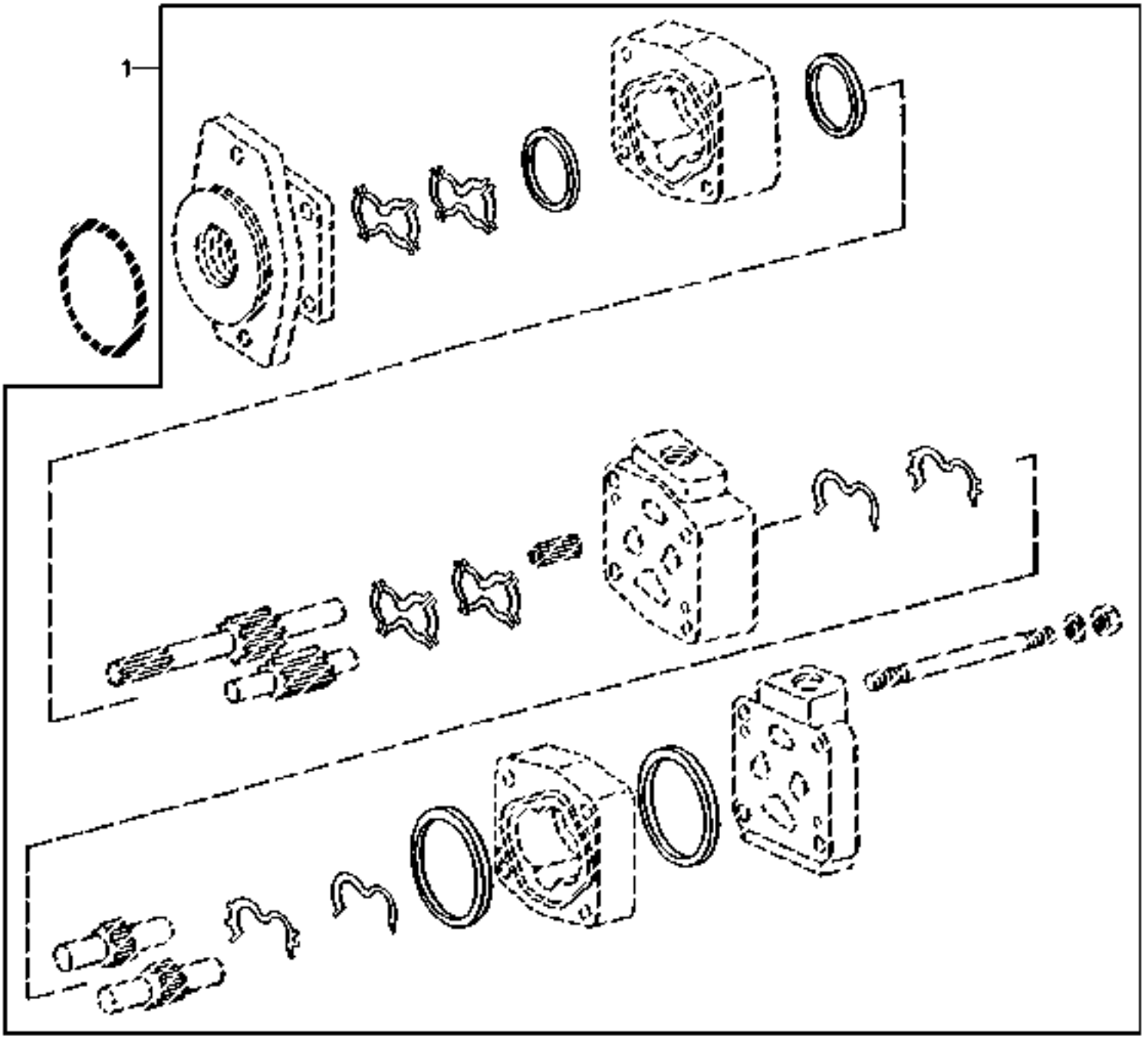

RE026667

https://www.truck-manuals.net/

KEY	PART NO.	PART NAME	QTY	TRACTOR SERIAL NO.	ALL	REMARKS
1	RE58979	SEAL	1	-XXXXXX	X	(A) (USE WITH RE58978)
	RE64236	SEAL KIT	1	XXXXXX-	X	(B) (USE WITH RE64237)

(A) (-XXXXXX) 8100-002227; 8200-001921; 8300-003409; 8400-002192
(B) (XXXXXX-) 8100-002228; 8200-001922; 8300-003410; 8400-002193

https://www.truck-manuals.net/

STEERING PUMP REAR LINES/CHARGE PUMP REAR LINES
POMPE DE DIRECTION, CONDUITES ARRIERE/POMPE DE GAVAGE, CONDUITES ARRIERE
LENPUMPE, HINTERE LEITUNGEN/LADEPUMPE, HINTERE LEITUNGEN
POMPA DELLO STERZO, TUBI POSTERIORI/POMPA DI CARICAMENTO, TUBI POSTERIORI
BOMBA DE DIRECCION, LINEAS TRASERAS/BOMBA DE CARGA, LINEAS TRASERAS
STYRPUMP, BAKRE LEDNINGAR/LADDNINGSPUMP, BAKRE LEDNINGAR
RE027006 -UN-20JUN96

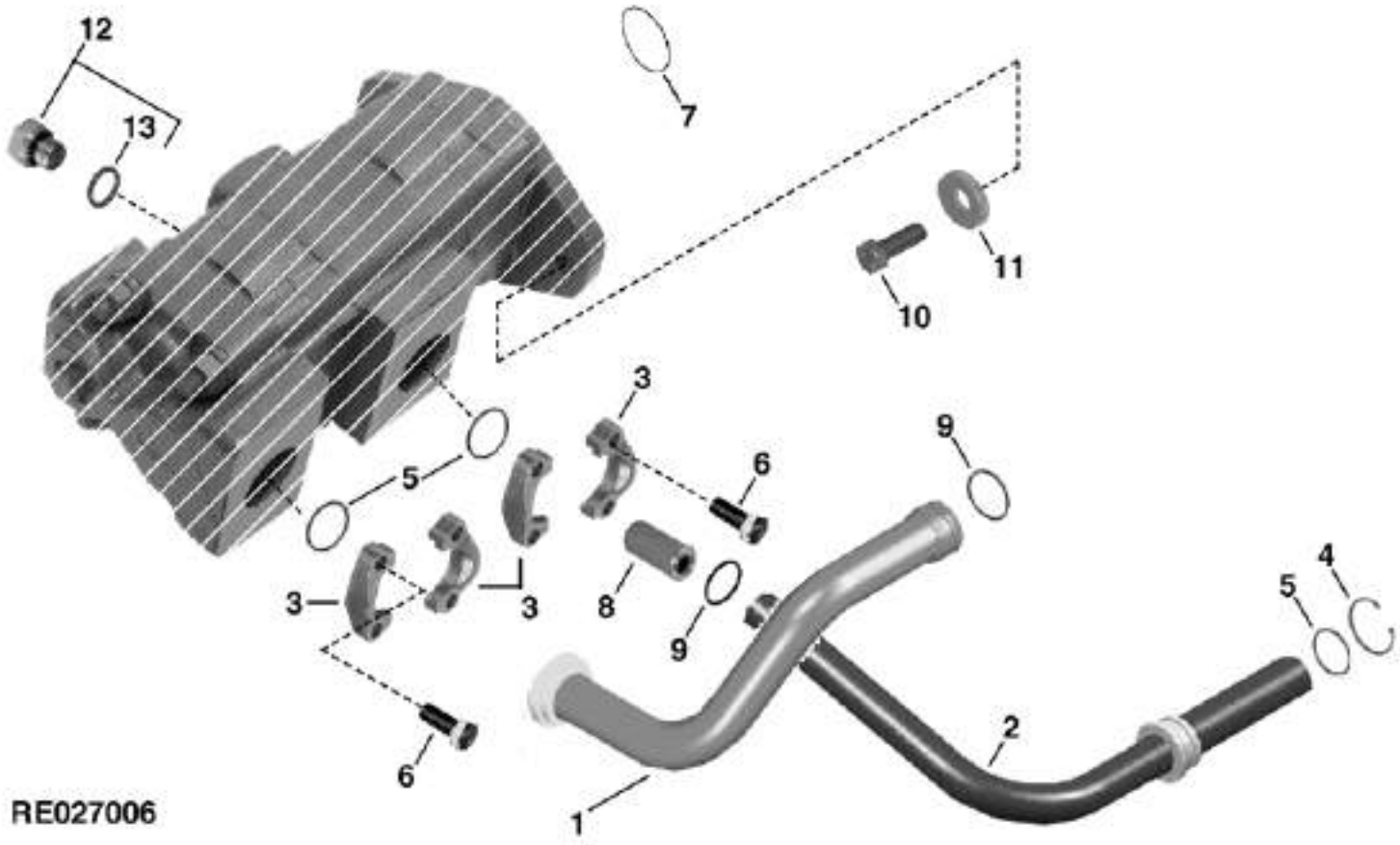

https://www.truck-manuals.net/

KEY	PART NO.	PART NAME	QTY	TRACTOR SERIAL NO.	ALL	REMARKS
1	RE44747	OIL LINE	1		X	
2	RE56319	LINE	1		X	
3	T47649	FLANGE FITTING	4		X	
4	M70619	SNAP RING	1		X	
5	B3690R	O-RING	3		X	
6	19M8011	CAP SCREW	8		X	M12 X 30, HS 10.9
7	T42302	O-RING	1		X	
8	R116598	CONNECTOR	1		X	
9	U10289	O-RING	2		X	
10	19M7789	SCREW	4		X	M12 X 30, HS 10.9
11	24M7240	WASHER	4		X	13 X 25 X 3 MM, (SUB FOR R106714) (ALSO ORDER 19M7789)
12	RE46684	PLUG	2		X	
13	51M7041	O-RING	2		X	11.300 X 2.200 MM

https://www.truck-manuals.net/

STEERING PUMP FRONT LINES
POMPE DE DIRECTION, CONDUITES AVANT
LENKPUMPE, VORDERE LEITUNGEN
POMPA DELLO STERZO, TUBI ANTERIORI
BOMBA DE DIRECCION, LINEAS DELANTERAS
STYRPUMP, FRAEMRE LEDNINGAR
RXP010879 -UN-01JAN94

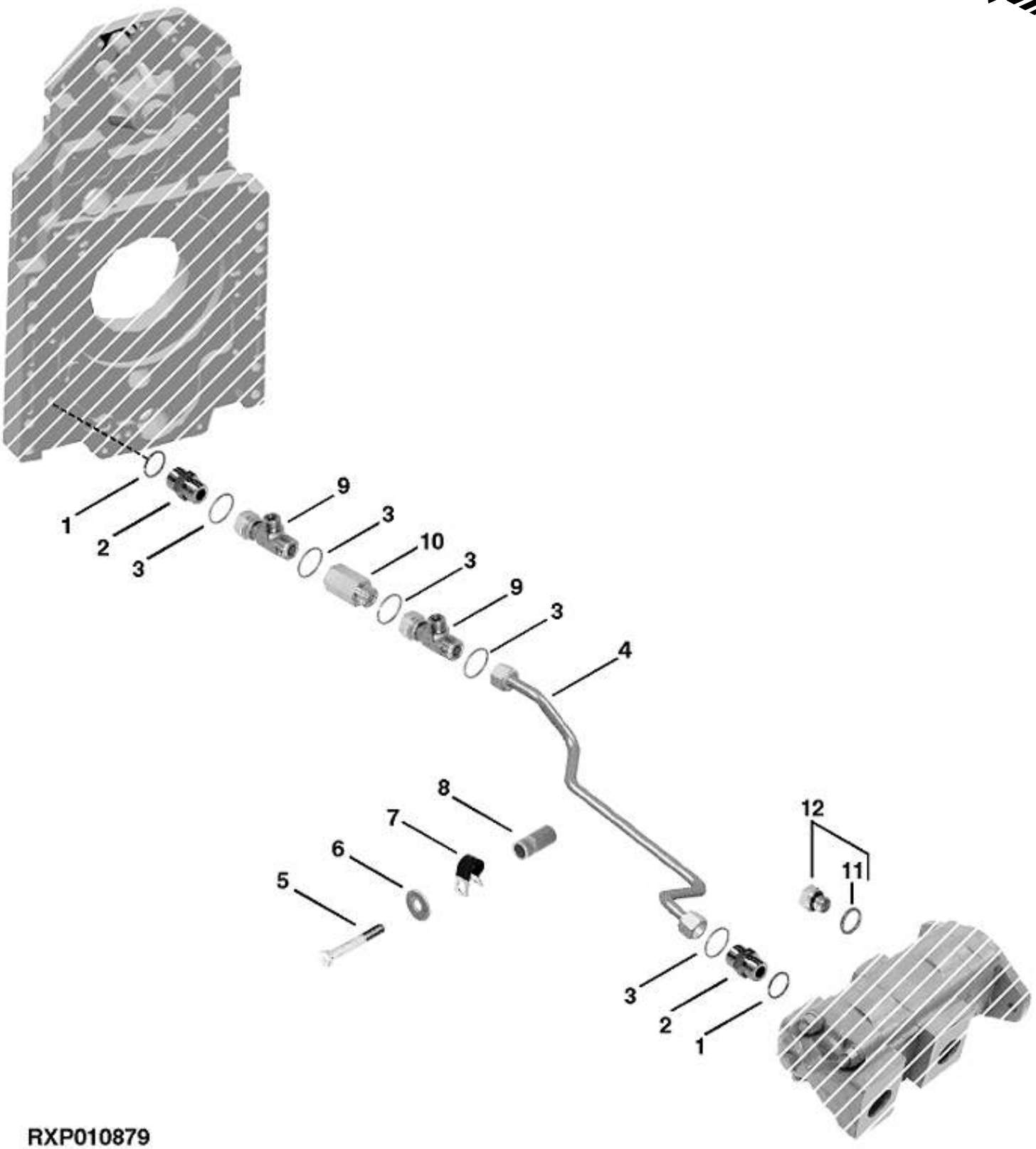

RXP010879

https://www.truck-manuals.net/

KEY	PART NO.	PART NAME	QTY	TRACTOR SERIAL NO.	ALL	REMARKS
1	51M7047	O-RING	2		X	23.600 X 2.900 MM
2	38H5005	ADAPTER	2		X	
3	T77858	O-RING	5		X	
4	RE65442	OIL LINE	1		X	(SUB FOR RE44752 OR RE64438)
5	37M7262	SCREW	1		X	M10 X 50
6	24M7178	WASHER	1	-XXXXXX	X	10.500 X 30 X 2.500 MM
7	R73291	CLAMP	1		X	
8	28H1497	BUSHING	1		X	0.493" X 0.675" X 1-1/2"
9	38H5136	TEE FITTING	2		X	
10	RE51573	FITTING	1		X	
11	51M7041	O-RING	2		X	11.300 X 2.200 MM
12	RE46684	PLUG	2		X	

https://www.truck-manuals.net/

BRAKE VALVE BRACKET
MAITRE-CYLINDRE
BREMSVENTIL
VALVOLA FRENO
VALVULA DE MANDO DEL FRENO
BROMSVENTIL
RE028254 -UN-27AUG97

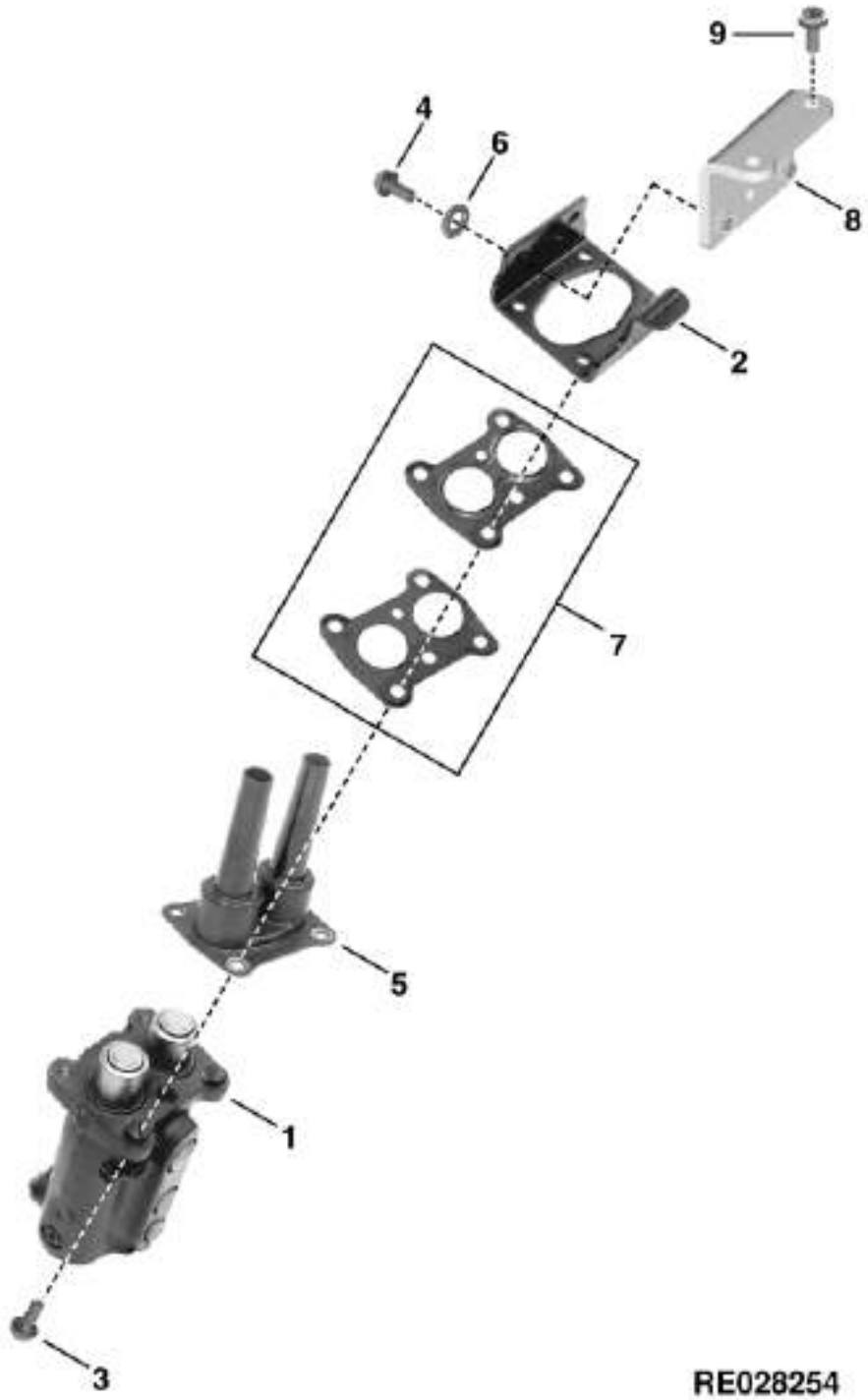

https://www.truck-manuals.net/

KEY	PART NO.	PART NAME	QTY	TRACTOR SERIAL NO.	ALL	REMARKS
1	RE60815	VALVE	1	-009999	X	(SUB RE67965 OR RE158282)
	RE158282	VALVE	1	010000-XXXXXX	X	(B) (SUB FOR RE67965)
	RE158282	VALVE	1	XXXXXX-	X	(C)
2	R119869	BRACKET	1		X	
3	19M7166	CAP SCREW	4		X	M10 X 20
4	19M7402	CAP SCREW	2		X	M10 X 25, HS 10.9
5	R126571	BOOT	1		X	
6	24M7028	WASHER	2		X	10.500 X 20 X 2 MM
7	RE60531	KIT	1		X	
8	RE66712	SUPPORT	1	XXXXXX-	X	(A)
9	37M7087	SCREW	1	XXXXXX-	X	(A) M10 X 25

(A) (XXXXXX-) 8100-010372; 8200-010238; 8300-010415; 8400-010421
(B) (-XXXXXX) 8100-024289; 8200-024284; 8300-024310; 8400-024306
(C) (XXXXXX-) 8100-024290; 8200-024285; 8300-024311; 8400-024307

https://www.truck-manuals.net/

BRAKE VALVE
MAITRE-CYLINDRE
BREMSVENTIL
VALVOLA FRENO
VALVULA DE MANDO DEL FRENO
BROMSVENTIL
RE030238 -UN-21DEC98

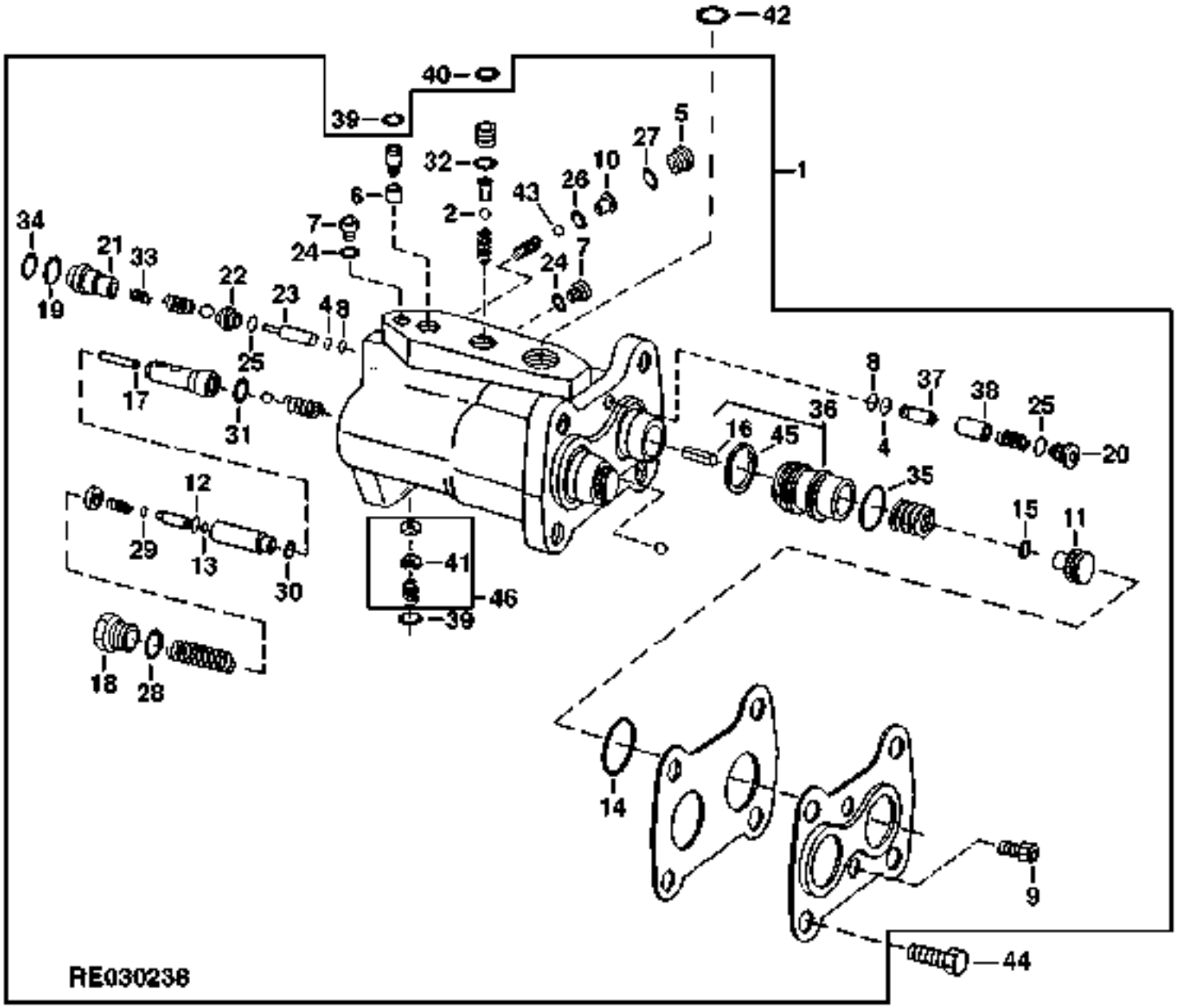

https://www.truck-manuals.net/

KEY	PART NO.	PART NAME	QTY	TRACTOR SERIAL NO.	ALL	REMARKS
1	RE60815	VALVE	1	-009999	X	(SUB RE67965 OR RE158282)
	RE158282	VALVE	1	010000-XXXXXX	X	(B) (SUB FOR RE67965)
	RE158282	VALVE	1	XXXXXX-	X	(C)
2	R26552	BALL	1		X	
3	R124462	O-RING	2		X	
4	T42571	BACK-UP RING	2		X	
5	R108037	PLUG	1		X	
6	N191770	ORIFICE	1		X	
7	R108038	PLUG	2		X	
8	R108066	O-RING	2		X	
9	19M8493	SCREW	2		X	M8 X 12, HS 10.9
10	R108045	VALVE SEAT INSERT	1		X	
11	R124478	SHEAR PIN	2		X	
12	R108042	BACK-UP RING	2		X	
13	R108067	SEAL	2		X	
14	R108041	SEAL	2		X	
15	R124464	SEAL	2		X	
16	34M7102	SPRING PIN	2	-XXXXXX	X	(B) 5 X 26 MM
	25M7039	GROOVE PIN	1	XXXXXX-	X	(C) 5 X 24 MM
17	R60755	NEEDLE ROLLER	2		X	
18	R108062	PLUG	2		X	
19	T77932	O-RING	1		X	
20	R107799	PLUG	2		X	
21	R108049	PLUG	1	-009999	X	
	R132840	PLUG	1	010000-	X	
22	R113056	VALVE SEAT INSERT	1	-009999	X	(SUB R132841)
	R132841	VALVE SEAT INSERT	1	010000-	X	
23	R108051	PISTON	1		X	
24	R30903	O-RING	2		X	
25	R113057	PACKING	2		X	
26	R26287	O-RING	1		X	
27	R26448	O-RING	1		X	
28	U17409	O-RING	2		X	
29	A4365R	O-RING	2		X	
30	R10093	O-RING	2		X	
31	T77932	O-RING	2		X	
32	R28776	O-RING	1		X	
33	R132843	SPRING	1		X	
34	R113054	BACK-UP RING	1	-009999	X	
35	R124463	SEAL	2		X	
36	RE159217	KIT	1	-XXXXXX	X	(A) (C) (SUB FOR RE60534)
	RE159217	KIT	1	XXXXXX-	X	(B)
37	R159216	PISTON	1	-XXXXXX	X	(A) (SUB FOR R124477)
	R159216	PISTON	1	XXXXXX-	X	(B)
38	R124475	SPOOL	1		X	
39	51M7041	O-RING	3		X	11.300 X 2.200 MM
40	51M7043	O-RING	1		X	15.300 X 2.200 MM
41	R127771	SPRING	2		X	
42	51M7045	O-RING	1		X	19.300 X 2.200 MM
43	R113061	BALL	1		X	
44	19M7166	CAP SCREW	4		X	M10 X 20
45	R124462	O-RING	1	XXXXXX-	X	(B)
46	RE69092	KIT	1		X	

(A) RING NOT INCLUDED

(B) (-XXXXXX) 8100-024289; 8200-024284; 8300-024310; 8400-024306
(C) (XXXXXX-) 8100-024290; 8200-024285; 8300-024311; 8400-024307

https://www.truck-manuals.net/

BRAKE VALVE OVERHAUL KIT
JEU DE PIECES DE REMPLACEMENT DE SOUPAPE DE FREIN
BREMSVENTILUEBERHOLSATZ
KIT SOSTITUZIONE VALVOLA FRENO
JUEGO DE REVISION DEL FRENO DE VALVULA
RENOVERINGSSATS FOER BROMSVENTIL
RE028256 -UN-27AUG97

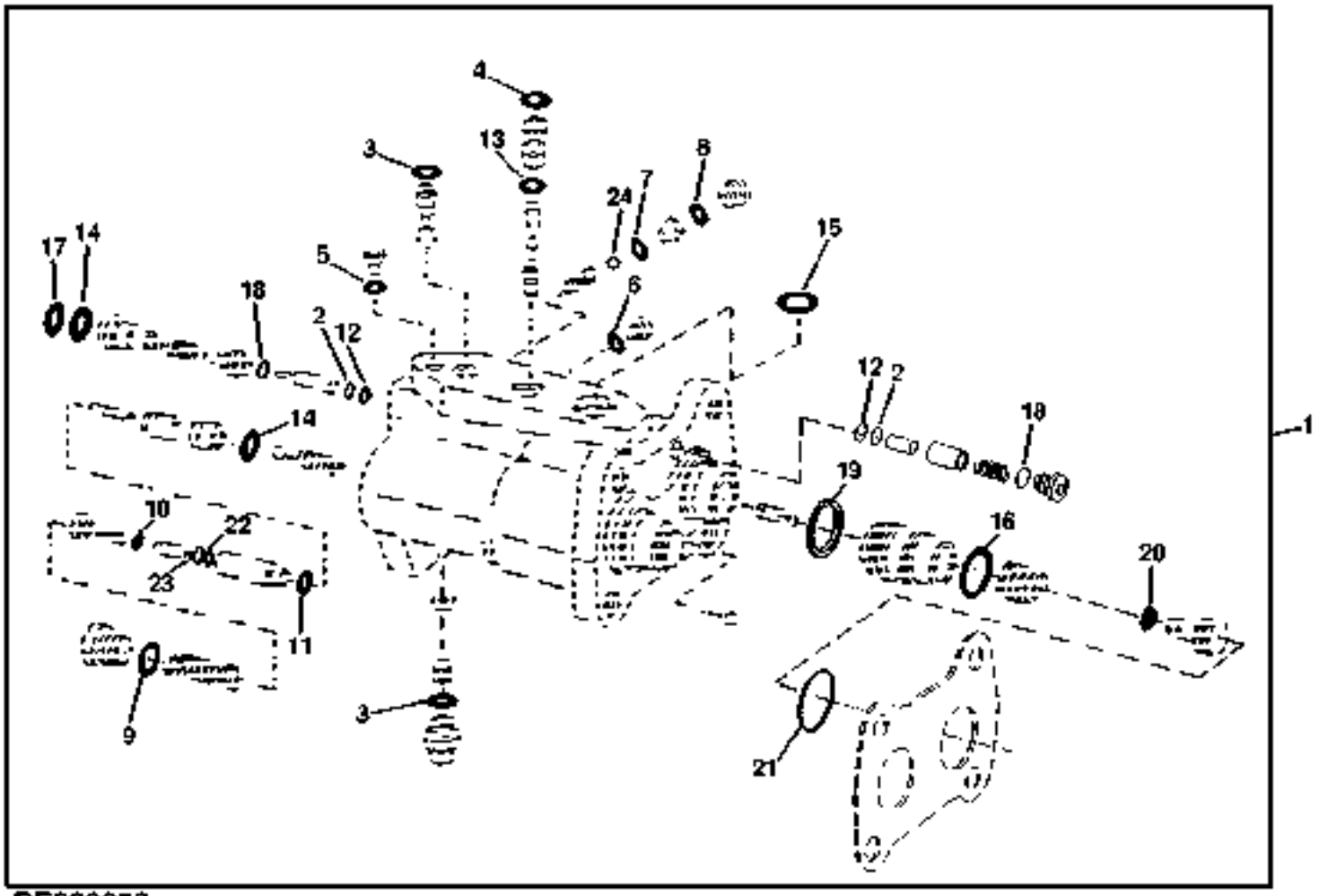

RE028256

https://www.truck-manuals.net/

KEY	PART NO.	PART NAME	QTY	TRACTOR SERIAL NO.	ALL	REMARKS
1	RE60529	KIT	1	-009999	X	(SUB RE68237)
	RE68237	KIT	1	010000-XXXXXX	X	(A)
	RE157111	KIT	1	XXXXXX-	X	(B)
2	T42571	BACK-UP RING	1		X	
3	51M7041	O-RING	3		X	11.300 X 2.200 MM
4	51M7043	O-RING	1		X	15.300 X 2.200 MM
5	R30903	O-RING	1		X	
6	R30903	O-RING	4		X	
7	R26287	O-RING	1		X	
8	R26448	O-RING	1		X	
9	U17409	O-RING	2		X	
10	A4365R	O-RING	2		X	
11	R10093	O-RING	2		X	
12	R108066	O-RING	2		X	
13	R28776	O-RING	1		X	
14	T77932	O-RING	3		X	
15	51M7045	O-RING	1		X	19.300 X 2.200 MM
16	R124463	SEAL	2		X	
17	R113054	BACK-UP RING	1	-009999	X	
18	R113057	PACKING	2		X	
19	R124462	O-RING	2		X	
20	R124464	SEAL	2		X	
21	R108041	SEAL	2		X	
22	R108067	SEAL	2		X	
23	R108042	BACK-UP RING	2		X	
24	R113061	BALL	1		X	

(A) (-XXXXXX) 8100-024289; 8200-024284; 8300-024310; 8400-024306
(B) (XXXXXX-) 8100-024290; 8200-024285; 8300-024311; 8400-024307

https://www.truck-manuals.net/

BRAKE VALVE HARDWARE KIT
JEU DE BOULONNERIE DE SOUPAPE DE FREIN
BREMSVENTIL-BEFESTIGUNGSTEILESATZ
KIT BULLONERIA DELLA VALVOLA DI RITENUTA DEL FRENO
CONJUNTO DE SUJETADORES DE LA VALVULA DEL FRENO
FAESTELEMENT FOER BROMSVENTIL
RE028257 -UN-27AUG97

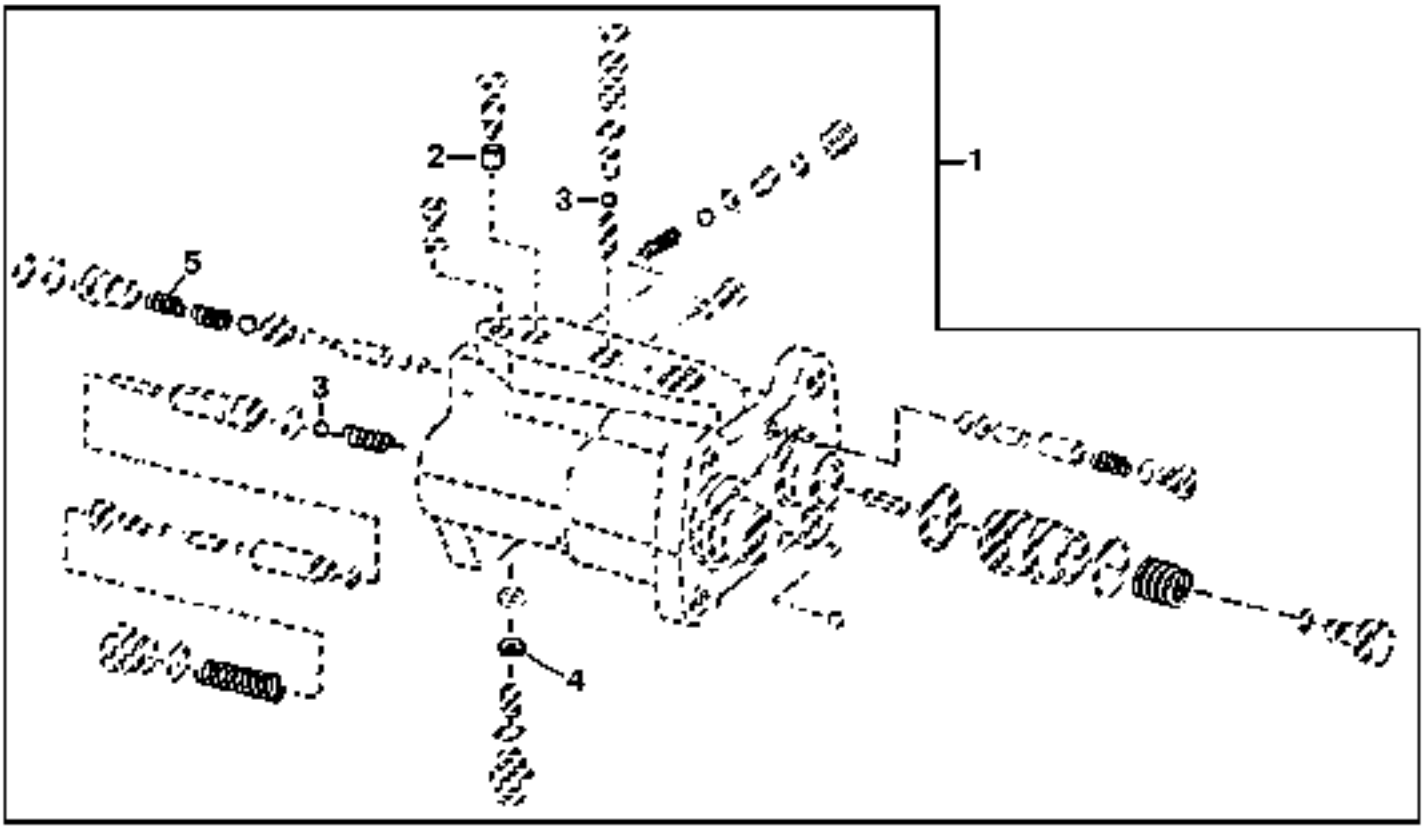

RE028257

https://www.truck-manuals.net/

KEY	PART NO.	PART NAME	QTY	TRACTOR SERIAL NO.	ALL	REMARKS
1	RE66140	KIT	1	-009999	X	(SUB FOR RE60535) (SUB RE67963)
	RE67963	KIT	1	010000-	X	
2	N191770	ORIFICE	1		X	
3	R26552	BALL	3		X	
4	R127771	SPRING	2	-009999	X	
5	R132843	SPRING	1	010000-	X	

https://www.truck-manuals.net/

BRAKE MAKE-UP CHECK VALVE KIT
JEU DE CLAPET DE RETENUE DE COMPENSATION DE FREIN
BREMSAUSGLEICH-RUECHSCHLAGVENTILSATZ
KIT VALVOLA DI RITENUTA COMPENSAZIONE DEI FRENI
CONJUNTO DE VALVULA DE RETENCION DE COMPENSACION DEL FRENO
REDUCERVENTILSATS FOER BROMSUTJAEMNING
RE028150 -UN-02JUL97

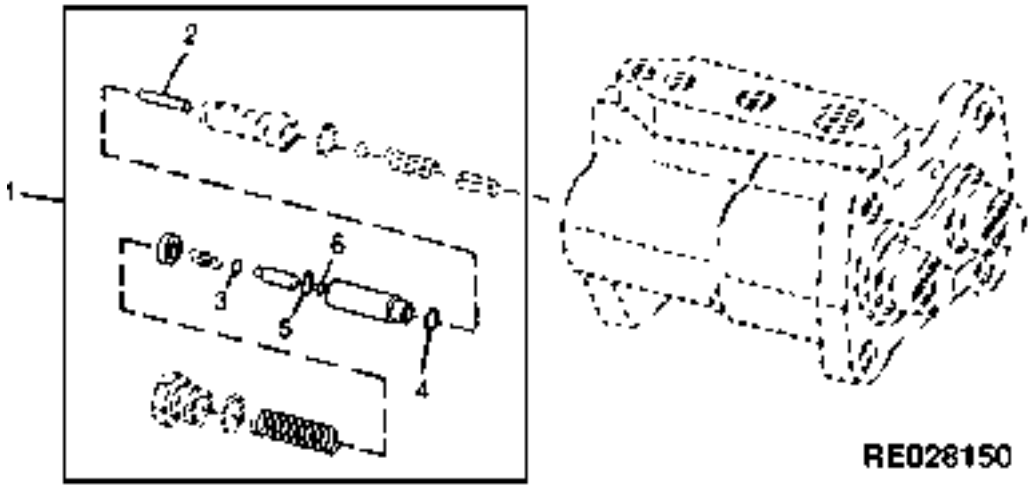

KEY	PART NO.	PART NAME	QTY	TRACTOR SERIAL NO.	ALL	REMARKS
1	RE60708	KIT	1		X	
2	R60755	NEEDLE ROLLER	1		X	
3	A4365R	O-RING	1		X	
4	R10093	O-RING	1		X	
5	R108042	BACK-UP RING	1		X	
6	R108067	SEAL	1		X	

https://www.truck-manuals.net/

BRAKE PRESSURE INLET CHECK VALVE KIT
JEU DE CLAPET DE RETENUE D'ORIFICE D'ENTREE DE PRESSION DE FREIN
BREMSDRUCKEINLASS-RUECKSCHLAGVENTILSATZ
KIT VALVOLA DI RITENUTA ENTRATA DELLA PRESSIONE DEI FRENI
CONJUNTO DE VALVULA DE RETENCION DE ENTRADA DE PRESION DEL FRENO
REDUCERVENTILSATS FOR BROMSTRYCKSINLOPP
RE030179 -UN-19NOV98

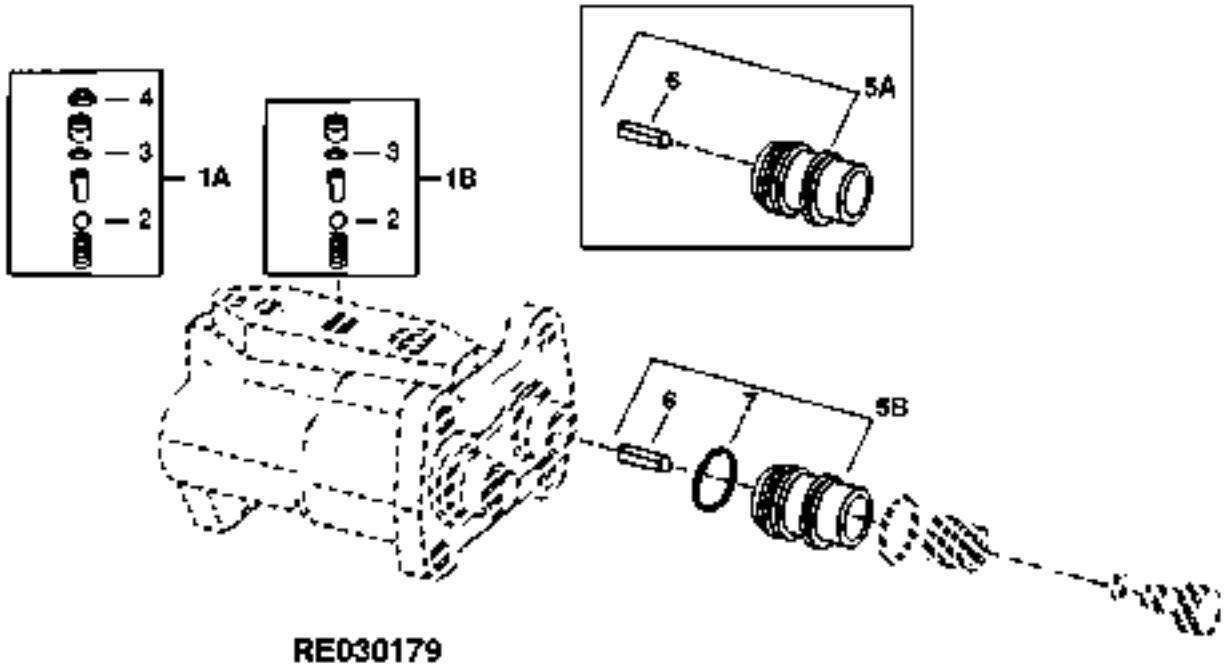

RE030179

KEY	PART NO.	PART NAME	QTY	TRACTOR SERIAL NO.	ALL	REMARKS
1A	RE60532	KIT	1	-009999	X	(SUB RE68243)
	RE155450	KIT	1	010000-XXXXXX	X	(A) (SUB FOR RE68243)
1B	RE155450	KIT	1	XXXXXX-	X	(B)
2	R26552	BALL	1		X	
3	R28776	O-RING	1		X	
4	R113058	FILTER	1	-XXXXXX	X	(A)
5A	RE159217	KIT	2	-XXXXXX	X	(A) (SUB FOR RE60534)
5B	RE159217	KIT	2	XXXXXX-	X	(B)
6	34M7102	SPRING PIN	2	-XXXXXX	X	(A) 5 X 26 MM
	25M7039	GROOVE PIN	2	XXXXXX-	X	(B) 5 X 24 MM
7	R124462	O-RING	2		X	

(A) (-XXXXXX) 8100-024289; 8200-024284; 8300-024310; 8400-024306
(B) (XXXXXX-) 8100-024290; 8200-024285; 8300-024311; 8400-024307

https://www.truck-manuals.net/

BRAKE PEDALS
PEDALE DE FREIN
BREMSFUSSHEBEL
PEDALI FRENO
PEDAL DE FRENO
BROMSPEDALER
RE028297 -UN-05SEP97

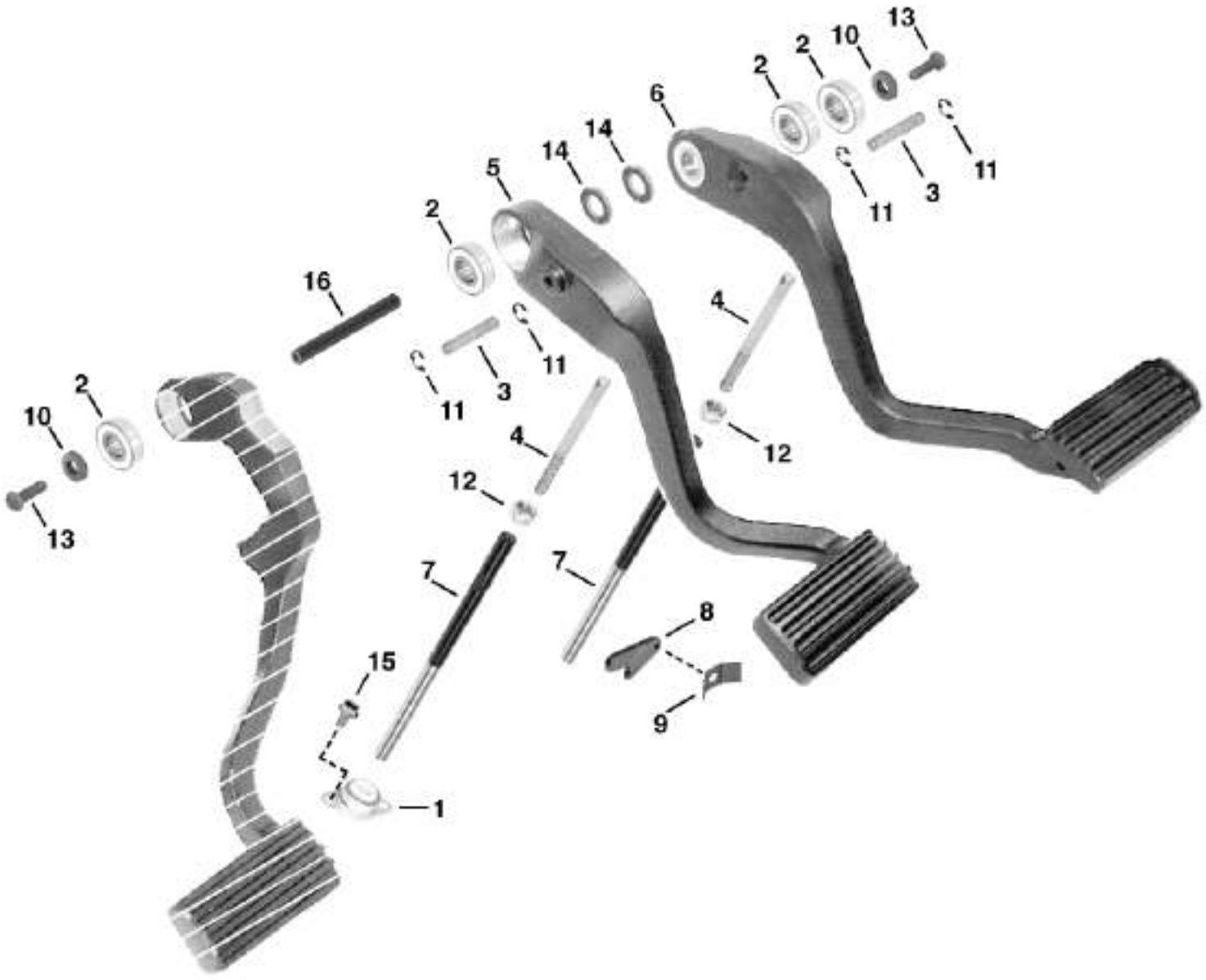

https://www.truck-manuals.net/

KEY	PART NO.	PART NAME	QTY	TRACTOR SERIAL NO.	ALL	REMARKS
1	AH129236	BEARING	2	-XXXXXX	X	(A)
	RE65233	BEARING	2	XXXXXX-	X	(B)
2	JD8535	BALL BEARING	4		X	
3	R53226	PIN	2		X	
4	R126384	END	2		X	
5	R124312	PEDAL	1		X	
6	R124313	PEDAL	1		X	
7	R125999	ROD	2		X	
8	R50879	ARM	1		X	
9	R50034	LEAF SPRING	1		X	
10	R56397	WASHER	2		X	
11	R72653	SNAP RING	4		X	
12	14M7275	NUT	2		X	M12
13	19M7932	CAP SCREW	2		X	M8 X 16, HS 10.9
14	24M7053	WASHER	2		X	17 X 30 X 3 MM
15	37M7089	SCREW	4		X	M6 X 12
16	R124430	SHAFT	1		X	

(A) (-XXXXXX) 8100-002963; 8200-002331; 8300-004077; 8400-002645
(B) (XXXXXX-) 8100-002964; 8200-002332; 8300-004078; 8400-002646

https://www.truck-manuals.net/

MEMORANDA
MEMORANDA
MEMORANDA
MEMORANDA
MEMORANDA
MEMORANDA

https://www.truck-manuals.net/

BRAKE DISK
DISQUE DE FREIN
BREMSSCHEIBE
DISCO FRENO
DISCO DEL FRENO
BROMSENHET
RXP010803 -UN-01JAN94

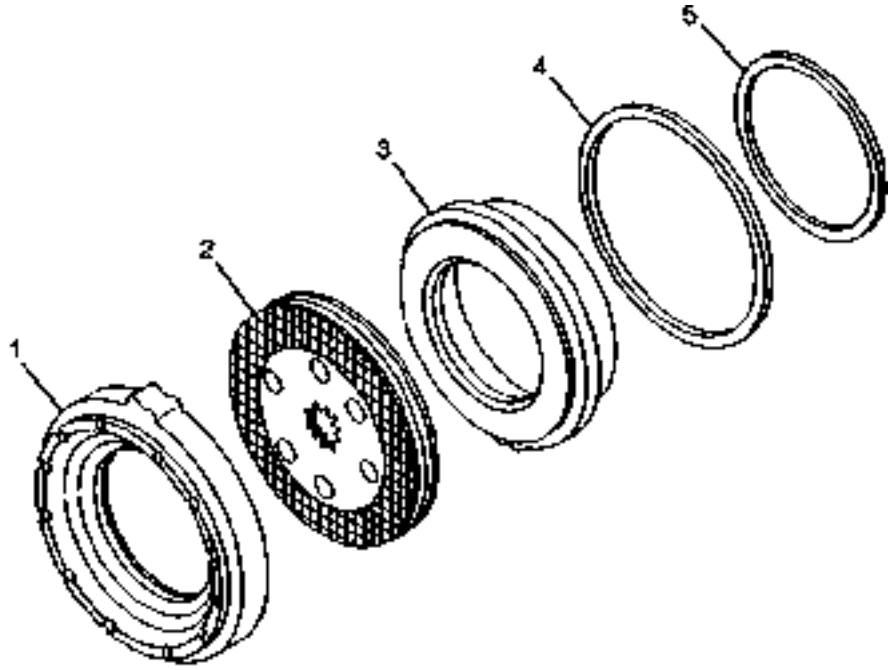

RXP010803

KEY	PART NO.	PART NAME	QTY	TRACTOR SERIAL NO.	ALL	REMARKS
1	R124067	PLATE	2		X	
2	RE154280	BRAKE DISK	2		X	(SUB FOR RE46460)
3	R124815	PISTON	2		X	
4	R125667	RING	2		X	
5	R125666	RING	2		X	

https://www.truck-manuals.net/

BRAKE OIL LINES
CONDUITES D'HUILE DE FREIN
BREMSOELLEITUNGEN
TUBAZIONI FRENO
TUBERIAS DE ACEITE DEL FRENO
BROMSOLJELEDNINGAR
RE028462 -UN-24OCT97

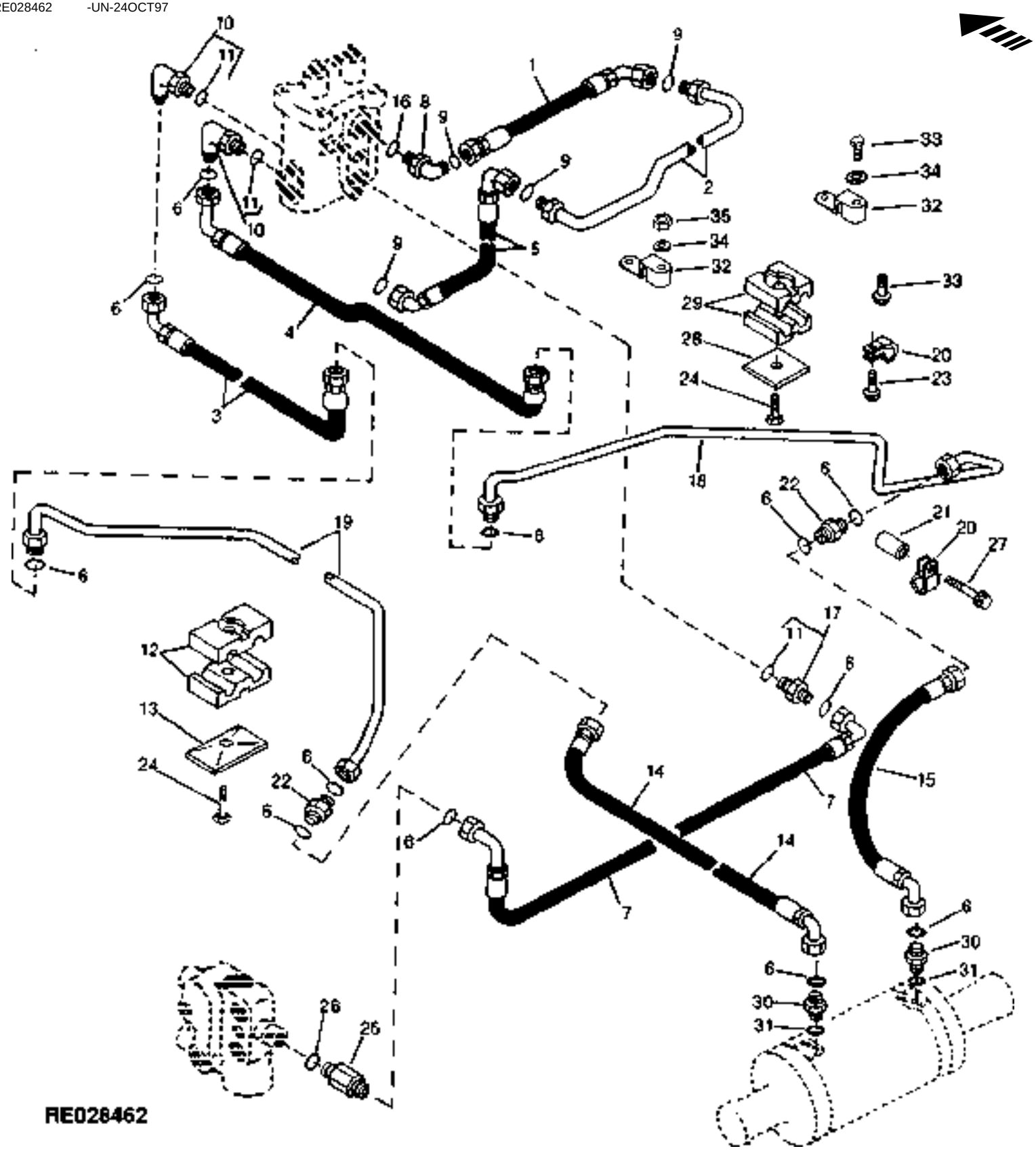

https://www.truck-manuals.net/

KEY	PART NO.	PART NAME	QTY	TRACTOR SERIAL NO.	ALL	REMARKS
1	RE60675	HYDRAULIC HOSE - FABRICATE	1	-009999	X	
2	RE58581	OIL LINE	1	-009999	X	
3	RE44778	HYDRAULIC HOSE - FABRICATE	1		X	
4	RE44738	HYDRAULIC HOSE - FABRICATE	1		X	
5	RE60676	HYDRAULIC HOSE - FABRICATE	1	-009999	X	
6	T77613	O-RING	4	-009999	X	
	T77613	O-RING	8		X	
7	RE62188	HYDRAULIC HOSE - FABRICATE	1		X	
8	38H5018	ELBOW FITTING	1		X	
9	T77932	O-RING	3	-009999	X	
	T77932	O-RING	1		X	
10	38H5016	ELBOW FITTING	2		X	
11	51M7041	O-RING	3		X	11.300 X 2.200 MM
12	H108291	CLAMP	4	-009999	X	
13	H121168	PLATE	2	-009999	X	
14	RE61577	HYDRAULIC HOSE - FABRICATE	1	-009999	X	
15	RE61300	HYDRAULIC HOSE - FABRICATE	1	-009999	X	
16	51M7045	O-RING	1		X	19.300 X 2.200 MM
17	38H5002	ADAPTER	1		X	
18	RE44727	HYDRAULIC LINE	1	-009999	X	
19	RE61135	HYDRAULIC LINE	1	-009999	X	
	.....	HOSE	1		X	47 MM (1.85") (MAKE FROM T57822)
20	T13814	CLAMP	2	-009999	X	
21	28H3390	SPACER	2	-009999	X	0.364" X 0.540" X 1"
22	38H5060	UNION FITTING	2	-009999	X	
23	37M7058	SCREW	3	-009999	X	M8 X 20
24	37M7103	SCREW	3	-009999	X	M8 X 45
25	RE60969	FITTING	1		X	
26	51M7040	O-RING	1		X	9.300 X 2.200 MM
27	37M7108	SCREW	1	-009999	X	M8 X 60
28	H121163	COVER	1	-009999	X	
29	H128515	CLAMP	2	-009999	X	
30	38H1160	ADAPTER	2		X	
31	R26448	O-RING	2		X	
32	H112162	CLAMP	2	-009999	X	
33	19M7298	CAP SCREW	1	-009999	X	M8 X 35
34	24M7055	WASHER	2	-009999	X	8.400 X 16 X 1.600 MM
35	14M7273	NUT	1	-009999	X	M8

https://www.truck-manuals.net/

BRAKE VALVE ATTENUATOR
AMORTISSEUR HUILE HYDRAULIQUE
HYDRAULIKOELDAEMPFER
AMORTIZZATORE OLIO IDRAULICO
AMORTIGUADOR DE ACEITE HIDRAULICO
HYDRAULOLJEDAMPARE
RE028261 -UN-12SEP97

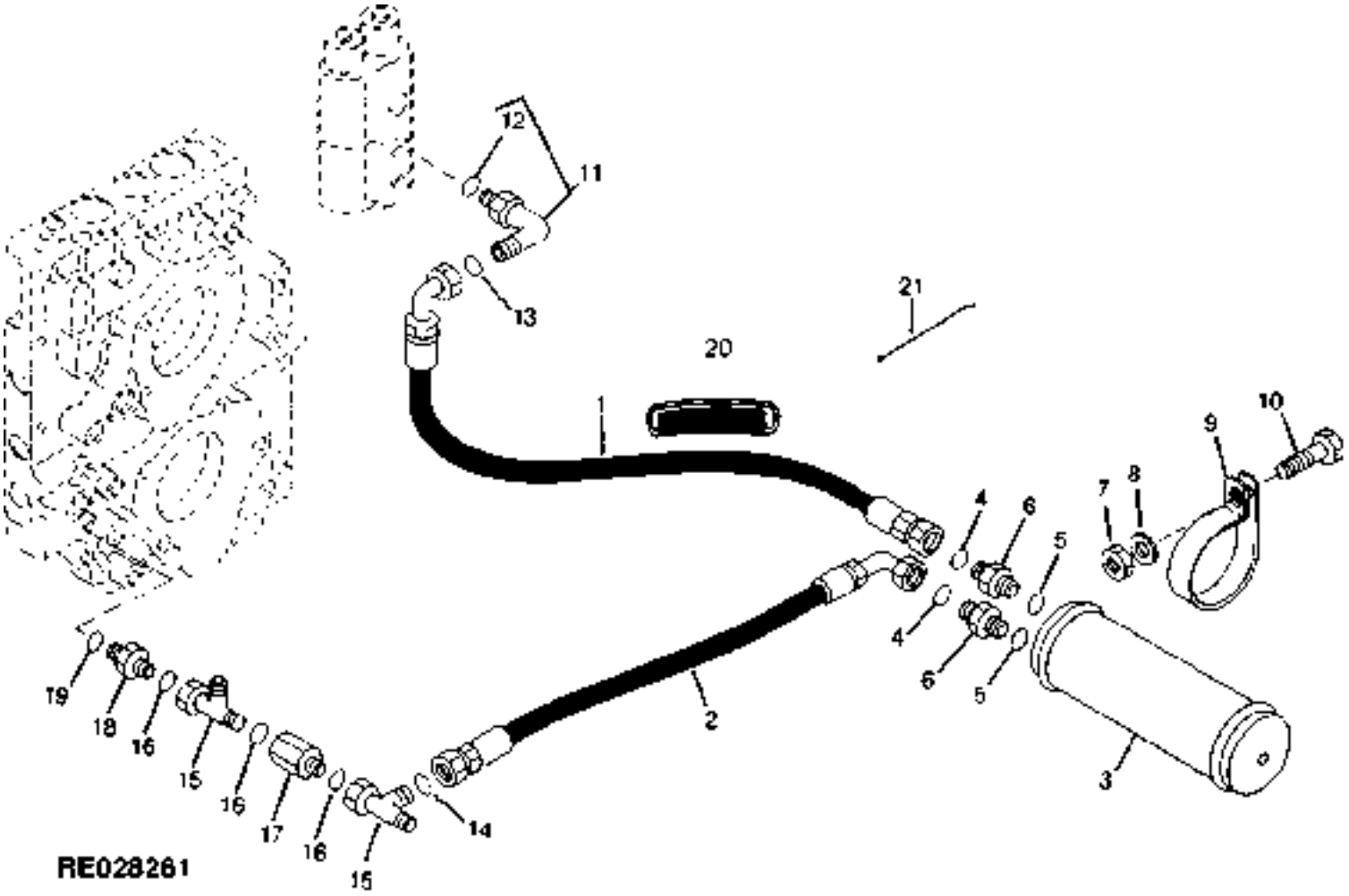

https://www.truck-manuals.net/

KEY	PART NO.	PART NAME	QTY	TRACTOR SERIAL NO.	ALL	REMARKS
1	RE60677	HYDRAULIC HOSE	1	-XXXXXX	X	(A) (SUB RE151968)
	RE70846	HOSE	1	XXXXXX-XXXXXX	X	(B) (C) (SUB RE151968)
	RE151968	HYDRAULIC HOSE - FABRICATE	1	XXXXXX-	X	(D)
2	RE60678	HYDRAULIC HOSE - FABRICATE	1		X	
3	AR75693	ATTENUATOR	1		X	(SUB FOR AR150551)
4	T77857	O-RING	2		X	
5	R26448	O-RING	2		X	
6	38H1173	ADAPTER	2		X	
7	14M7273	NUT	2		X	M8
8	24M7336	WASHER	2		X	9 X 16 X 1.600 MM
9	R35794	CLAMP	2		X	
10	03M7187	BOLT	2		X	M8 X 35
11	38H5017	ELBOW FITTING	1		X	
12	51M7043	O-RING	1		X	15.300 X 2.200 MM
13	T77857	O-RING	1		X	
14	T77932	O-RING	1		X	
15	38H5136	TEE FITTING	2		X	
16	T77858	O-RING	3		X	
17	RE51573	FITTING	1		X	
18	38H5005	ADAPTER	1		X	
19	51M7047	O-RING	1		X	23.600 X 2.900 MM
20	T21959	ISOLATOR	1	-XXXXXX	X	(A)
21	R44302	TIE BAND	1	-XXXXXX	X	(A)

(A) (-XXXXXX) 8100-011074; 8200-011042; 8300-011076; 8400-011098
(B) (XXXXXX-) 8100-011075; 8200-011043; 8300-011077; 8400-011099
(C) (-XXXXXX) 8100-012738; 8300-012227; 8300-013121; 8400-013079
(D) (XXXXXX-) 8100-012739; 8200-012228; 8300-013122; 8400-013080

https://www.truck-manuals.net/

BRAKE OIL LINES (REAR) (TRAILER BRAKE) (8100,8200,8300,8400 010000-)
CONDUITES D'HUILE DE FREIN (ARRIERE) (W/ FREIN DE REMARQUE HYDR.) (8100,8200,8300,8400 010000-)
BREMSOELLEITUNGEN (HINTEN) (W/ HYDR. ANHAENGERBREMSE) (8100,8200,8300,8400 010000-)
TUBAZIONI FRENO (POSTERIORE) (W/ FRENO IDRAUL RIMORCHIO) (8100,8200,8300,8400 010000-)
TUBERIAS DE ACEITE DEL FRENO (TRASERO) (W/ FRENO HIDRAULREMOLQUE) (8100,8200,8300,8400 010000-)
BROMSOLJELEDNINGAR (BAK,BAKRE) (W/ SL'PVAGNSBROMS) (8100,8200,8300,8400 010000-)
RE026943 -UN-18JUL96

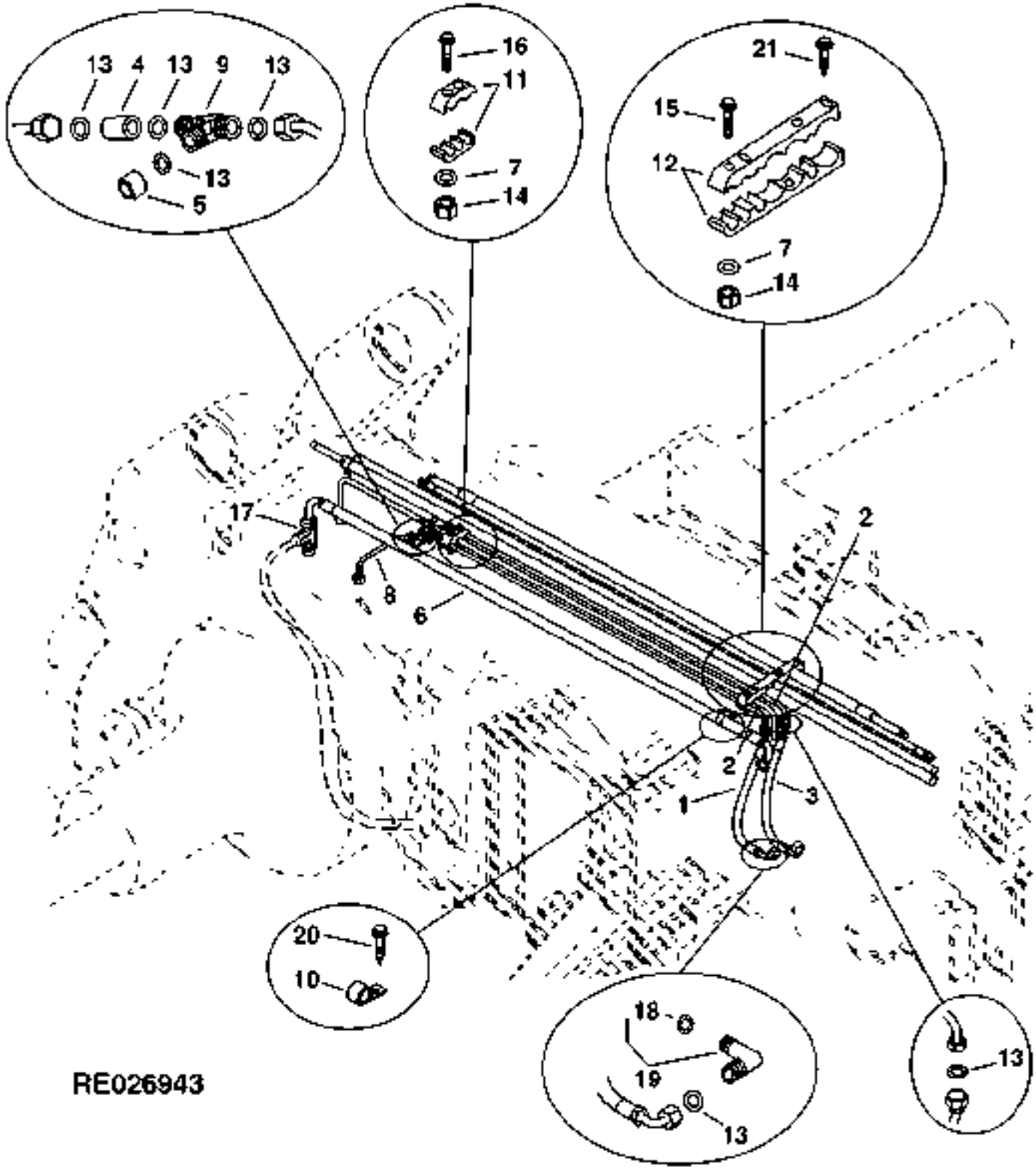

https://www.truck-manuals.net/

KEY	PART NO.	PART NAME	QTY	TRACTOR SERIAL NO.	ALL	REMARKS
1	RE66670	HYDRAULIC HOSE - FABRICATE	1		X	R.H.
2	RE67653	OIL LINE	2		X	
3	RE68018	HYDRAULIC HOSE - FABRICATE	1		X	L.H.
4	RE68257	CHECK VALVE	1		X	
5	RE68259	CAP	2		X	
6	RE68686	HYDRAULIC HOSE - FABRICATE	1		X	
7	24M7055	WASHER	4		X	8.400 X 16 X 1.600 MM
8	RE69074	OIL LINE	1		X	R.H.
	RE69075	OIL LINE	1		X	L.H.
9	38H5127	TEE FITTING	2		X	
10	R109479	CLAMP	1		X	
11	R131196	HALF CLAMP	1		X	
12	R131197	HALF CLAMP	2		X	
13	T77613	O-RING	4		X	
14	14M7273	NUT	4		X	M8
15	19M7801	SCREW	2		X	M8 X 60, HS 10.9
16	19M7868	SCREW	2		X	M8 X 30, HS 10.9
17	38H5170	TEE FITTING	1		X	
18	51M7041	O-RING	2		X	11.300 X 2.200 MM
19	38H5016	ELBOW FITTING	2		X	
20	37M7084	SCREW	1		X	M8 X 25
21	37M7108	SCREW	2		X	M8 X 60
..	R76477	TIE BAND	AR		X	

https://www.truck-manuals.net/

BRAKE OIL LINES (REAR) (W/O TRAILER BRAKE) (8100,8200,8300,8400 010000-)
CONDUITES D'HUILE DE FREIN (ARRIERE) (W/O FREIN DE REMARQUE HYDR.) (8100,8200,8300,8400 010000-)
BREMSOELLEITUNGEN (HINTEN) (W/O HYDR. ANHAENGERBREMSE) (8100,8200,8300,8400 010000-)
TUBAZIONI FRENO (POSTERIORE) (W/O FRENO IDRAUL. RIMORCHIO) (8100,8200,8300,8400 010000-)
TUBERIAS DE ACEITE DEL FRENO (TRASERO) (W/O FRENO HIDRAULREMOLQUE)(8100,8200,8300,8400 010000-)
BROMSOLJELEDNINGAR (BAK,BAKRE) (W/O SL'PVAGNSBROMS) (8100,8200,8300,8400 010000-)
RE026944 -UN-18JUL96

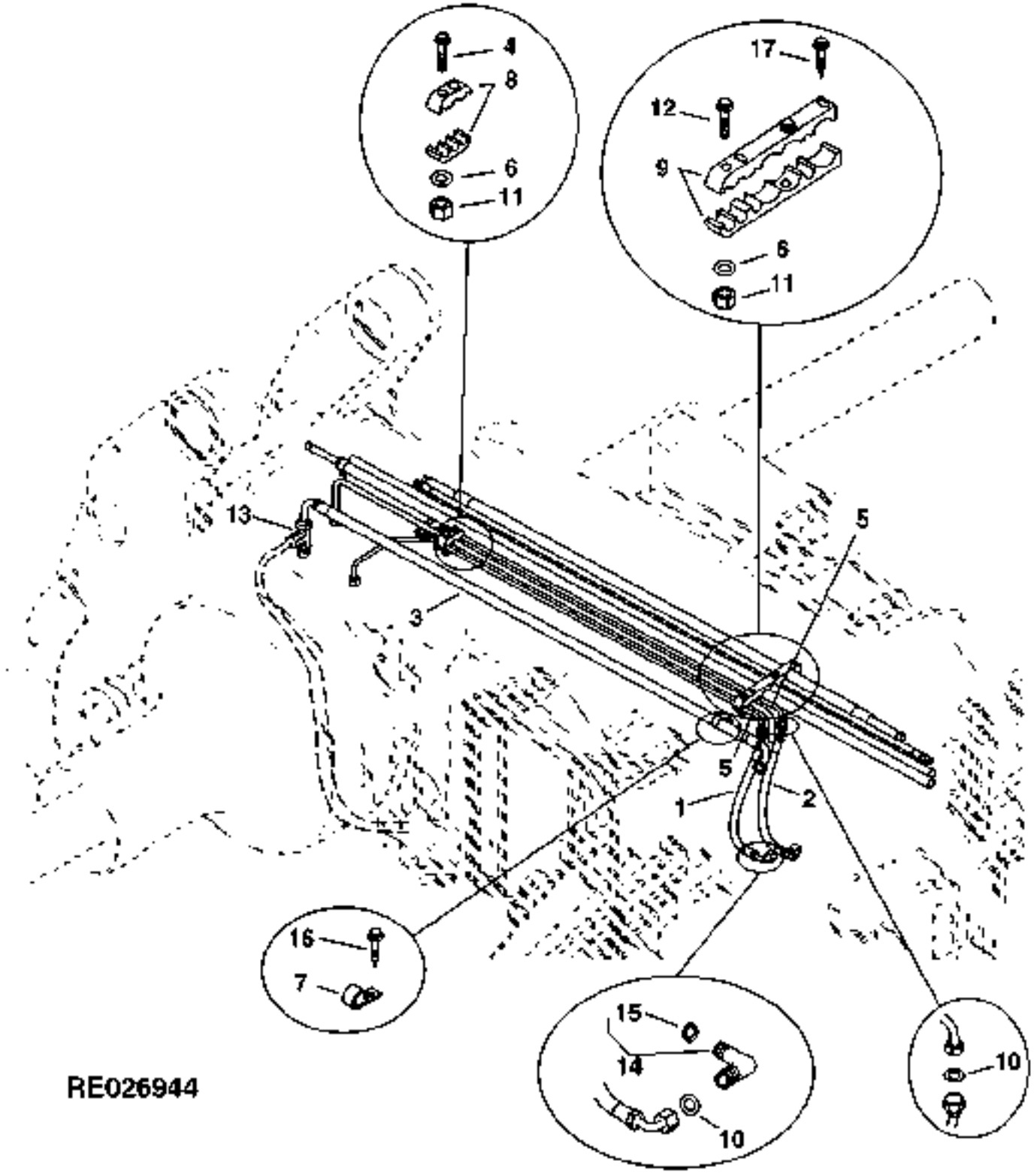

https://www.truck-manuals.net/

KEY	PART NO.	PART NAME	QTY	TRACTOR SERIAL NO.	ALL	REMARKS
1	RE66670	HYDRAULIC HOSE - FABRICATE	1		X	R.H.
2	RE68018	HYDRAULIC HOSE - FABRICATE	1		X	L.H.
3	RE68686	HYDRAULIC HOSE - FABRICATE	1		X	
4	19M7868	SCREW	2		X	M8 X 30, HS 10.9
5	RE69072	BRAKE LINE	1		X	R.H.
	RE69073	BRAKE LINE	1		X	L.H.
6	24M7055	WASHER	4		X	8.400 X 16 X 1.600 MM
7	R109479	CLAMP	1		X	
8	R131196	HALF CLAMP	1		X	
9	R131197	HALF CLAMP	2		X	
10	T77613	O-RING	4		X	
11	14M7273	NUT	4		X	M8
12	19M7801	SCREW	2		X	M8 X 60, HS 10.9
13	38H5170	TEE FITTING	1		X	
14	38H5016	ELBOW FITTING	2		X	
15	51M7041	O-RING	2		X	11.300 X 2.200 MM
16	37M7084	SCREW	1		X	M8 X 25
17	37M7108	SCREW	2		X	M8 X 60
..	R76477	TIE BAND	AR		X	

https://www.truck-manuals.net/

SECONDARY BRAKE LEVER (EUROPEAN VERSION)(8100 -002255;8200 -001938;8300 -003429;8400 -002236)
FREINS A AIR COMPRIME, LEVIER(VERSION EUROPEENNE)(8100 -02255;8200 -01938;8300 -03429;8400 -02236)
DRUCKLUFTBREMSE, HEBEL (EUROPAEISCHE AUSFUEHRUNG) (8100 -2255;8200 -1938;8300 -3429;8400 -2236)
FRENO AD ARIA COMPRESSA, LEVA (VERSIONE EUROPEA) (8100 -02255;8200 01938;8300 -03429;8400 -02236)
FRENO NEUMATICO, PALANCA (VERSION EUROPEA) (8100 -02255;8200 -01938;8300 -03429;8400 -02236)
TRYCKLUFTSBROMS, SPAK (EUROPEISK VERSION) (8100 -02255;8200 -01938;8300 -03429;8400 -02236)
RE027007 -UN-30MAY96

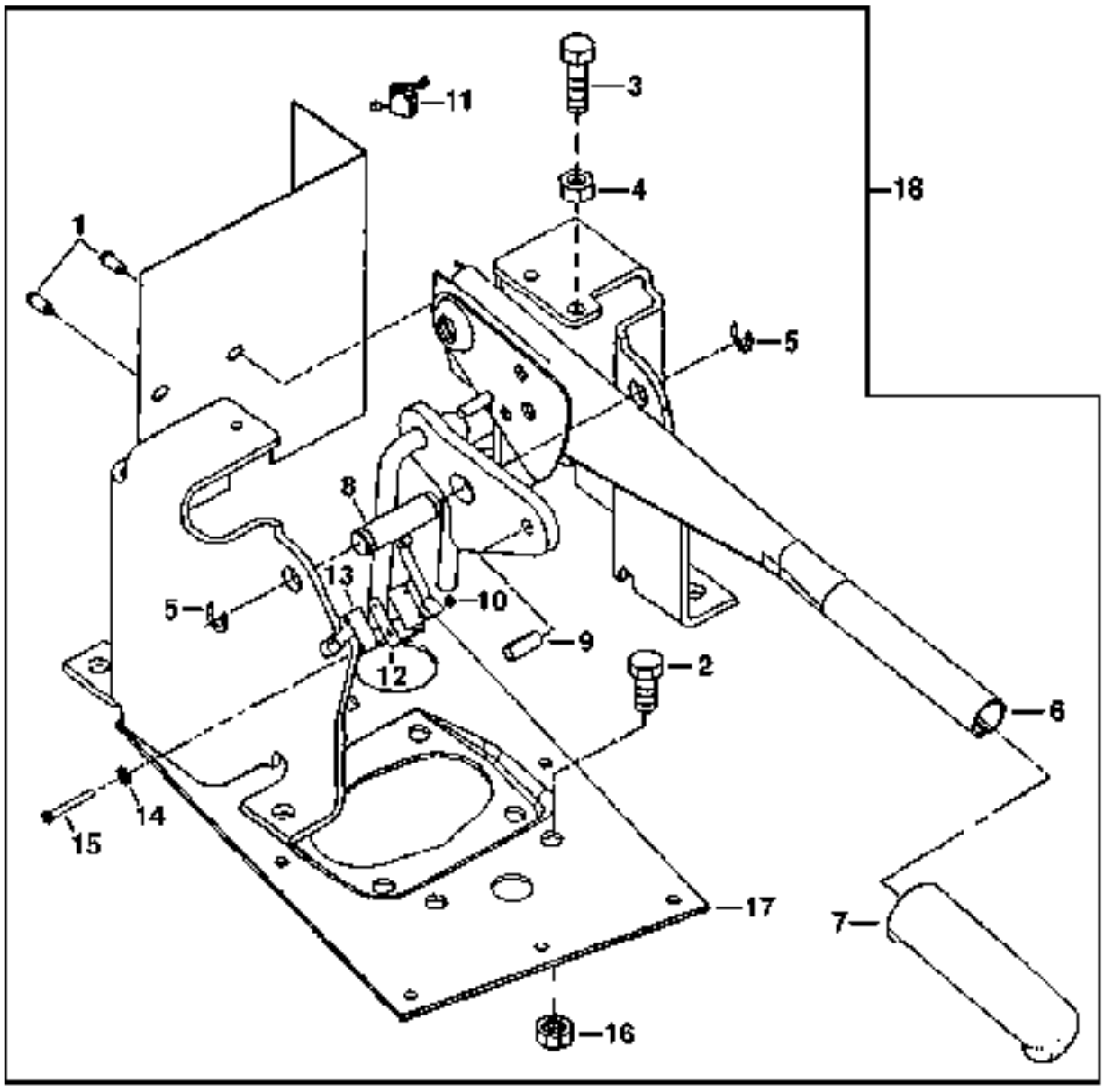

RE027007

https://www.truck-manuals.net/

KEY	PART NO.	PART NAME	QTY	TRACTOR SERIAL NO.	ALL	REMARKS
1	37M7090	SCREW	2		X	M6 X 16
2	19M7166	CAP SCREW	4		X	M10 X 20
3	19M7550	CAP SCREW	1		X	M10 X 35, HS 10.9
4	14M7274	NUT	1		X	M10
5	40M7030	SNAP RING	2		X	
6	AL78581	HANDBRAKE LEVER	1		X	
7	R119972	GRIP	1		X	
8	R124282	PIN	1		X	
9	34M7061	SPRING PIN	1		X	8 X 20 MM
10	14M7354	LOCK NUT	2		X	M3
11	RE30714	SWITCH	1		X	
12	R93849	STRAP	1		X	
13	R126503	SPACER	1		X	(SUB FOR R125512)
14	12M7084	LOCK WASHER	2		X	4.300 MM
15	21M7357	SCREW	2		X	M3 X 30
16	14M7274	NUT	4		X	M10
17	R124344	SUPPORT	1		X	
18	RE62250	LEVER	1		X	(SUB RE63888)

https://www.truck-manuals.net/

SECONDARY BRAKE LEVER(E.V.)(8100 02256-09999;8200 01939-09999;8300 03430-09999;8400 02237-09999)
FREINS A AIR COMPRIME, LEVIER(V.E.)(8100 2256-9999;8200 1938-9999;8300 3430-9999;8400 2237-9999)
DRUCKLUFTBREMSE, HEBEL (E. A.) (8100 2256-9999; 8200 1938-9999; 8300 3430-9999; 8400 2237-9999)
FRENO AD ARIA COMPRESSA, LEVA (V. E.)(8100 2256-9999;8200 1938-9999;8300 3430-9999;8400 2237-9999)
FRENO NEUMATICO, PALANCA (V.E.)(8100 2256-9999;8200 1938-9999;8300 3430-9999;8400 2237-9999)
TRYCKLUFTSBROMS, SPAK (E.V.)(8100 2256-9999; 8200 1938-9999; 8300 3430-9999; 8400 2237-9999)
RE026579 -UN-21DEC95

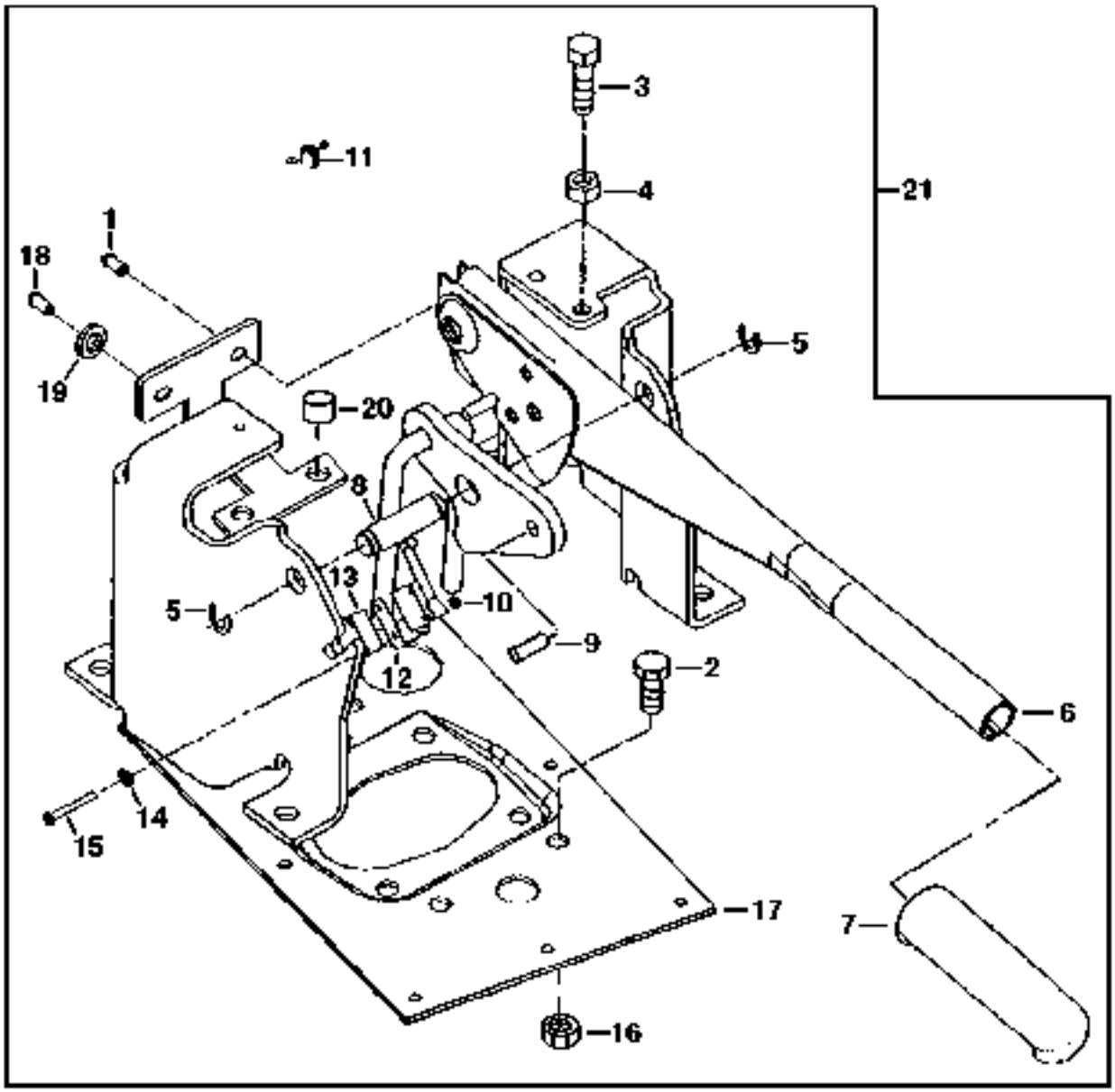

RE026579

https://www.truck-manuals.net/

KEY	PART NO.	PART NAME	QTY	TRACTOR SERIAL NO.	ALL	REMARKS
1	37M7104	SCREW	1		X	M6 X 30
2	19M7166	CAP SCREW	4		X	M10 X 20
3	19M7550	CAP SCREW	1		X	M10 X 35, HS 10.9
4	14M7274	NUT	1		X	M10
5	40M7030	SNAP RING	2		X	
6	AL78581	HANDBRAKE LEVER	1		X	
7	R119972	GRIP	1		X	
8	R124282	PIN	1		X	
9	34M7061	SPRING PIN	1		X	8 X 20 MM
10	14M7354	LOCK NUT	2		X	M3
11	RE30714	SWITCH	1		X	
12	R93849	STRAP	1		X	
13	R126503	SPACER	1		X	
14	12M7084	LOCK WASHER	2		X	4.300 MM
15	21M7290	SCREW	2		X	M3 X 35
16	14M7274	NUT	4		X	M10
17	R124344	SUPPORT	1		X	
18	37M7090	SCREW	1		X	M6 X 16
19	24M7139	WASHER	4		X	6.400 X 18 X 1.600 MM
20	R41076	GROMMET	2		X	
21	RE63888	LEVER	1		X	

https://www.truck-manuals.net/

SECONDARY BRAKE KIT (EUROPEAN VERSION) (8100,8200,8300,8400 -009999)
KIT DE FREIN AUXILIAIRE (VERSION EUROPEENNE) (8100,8200,8300,8400 -009999)
HANDBREMSEN-TEILESATZ (EUROPAEISCHE AUSFUEHRUNG) (8100,8200,8300,8400 -009999)
KIT DEL FRENO SECONDARIO (VERSIONE EUROPEA) (8100,8200,8300,8400 -009999)
JUEGO DE FRENO AUXILIAR (VERSION EUROPEA) (8100,8200,8300,8400 -009999)
HANDBROMSSATS (EUROPEISK VERSION) (8100,8200,8300,8400 -009999)
RE027041 -UN-17JUN96

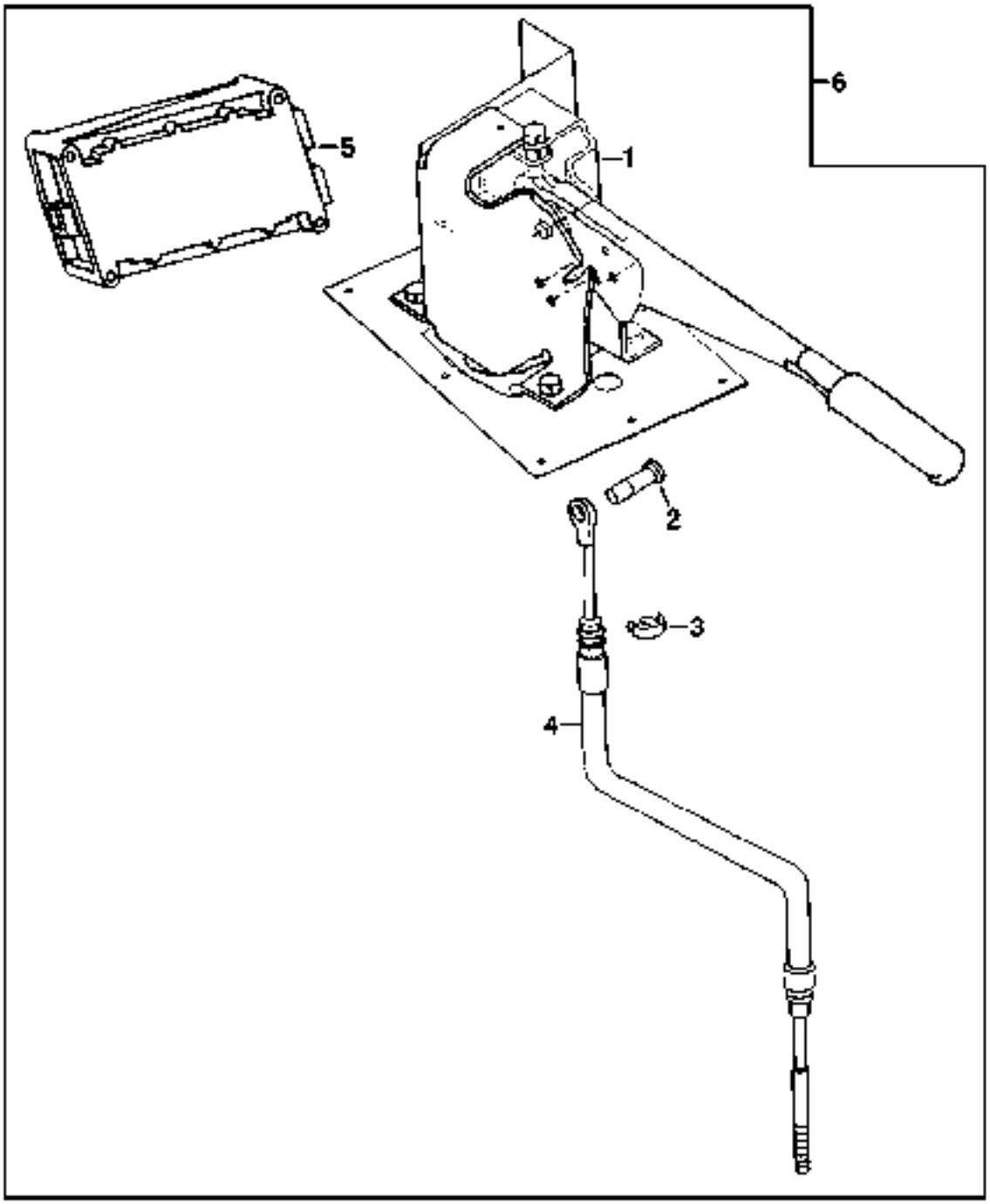

RE027041

https://www.truck-manuals.net/

KEY	PART NO.	PART NAME	QTY	TRACTOR SERIAL NO.	ALL	REMARKS
1	RE68604	SUPPORT	1		X	
2	R135786	PIN	1		X	(SUB FOR R133546)
3	R112612	CLIP	2		X	
4	RE68777	PUSH PULL CABLE	1		X	
5	RE165401	VEHICLE CONTROLLER	1		X	40 K, (SUB FOR RE69214 OR RE152005)
	RE165402	VEHICLE CONTROLLER	1		X	30 K, (SUB FOR RE69215 OR RE152006)
6	RE69597	KIT	1		X	40 K

https://www.truck-manuals.net/

SECONDARY BRAKE LEVER (EUROPEAN VERSION) (8100,8200,8300,8400 010000-)
FREINS A AIR COMPRIME, LEVIER (VERSION EUROPEENNE) (8100,8200,8300,8400 010000-)
DRUCKLUFTBREMSE, HEBEL (EUROPAEISCHE AUSFUEHRUNG) (8100,8200,8300,8400 010000-)
FRENO AD ARIA COMPRESSA, LEVA (VERSIONE EUROPEA) (8100,8200,8300,8400 010000-)
FRENO NEUMATICO, PALANCA (VERSION EUROPEA) (8100,8200,8300,8400 010000-)
TRYCKLUFTSBROMS, SPAK (EUROPEISK VERSION) (8100,8200,8300,8400 010000-)
RE029050 -UN-25FEB98

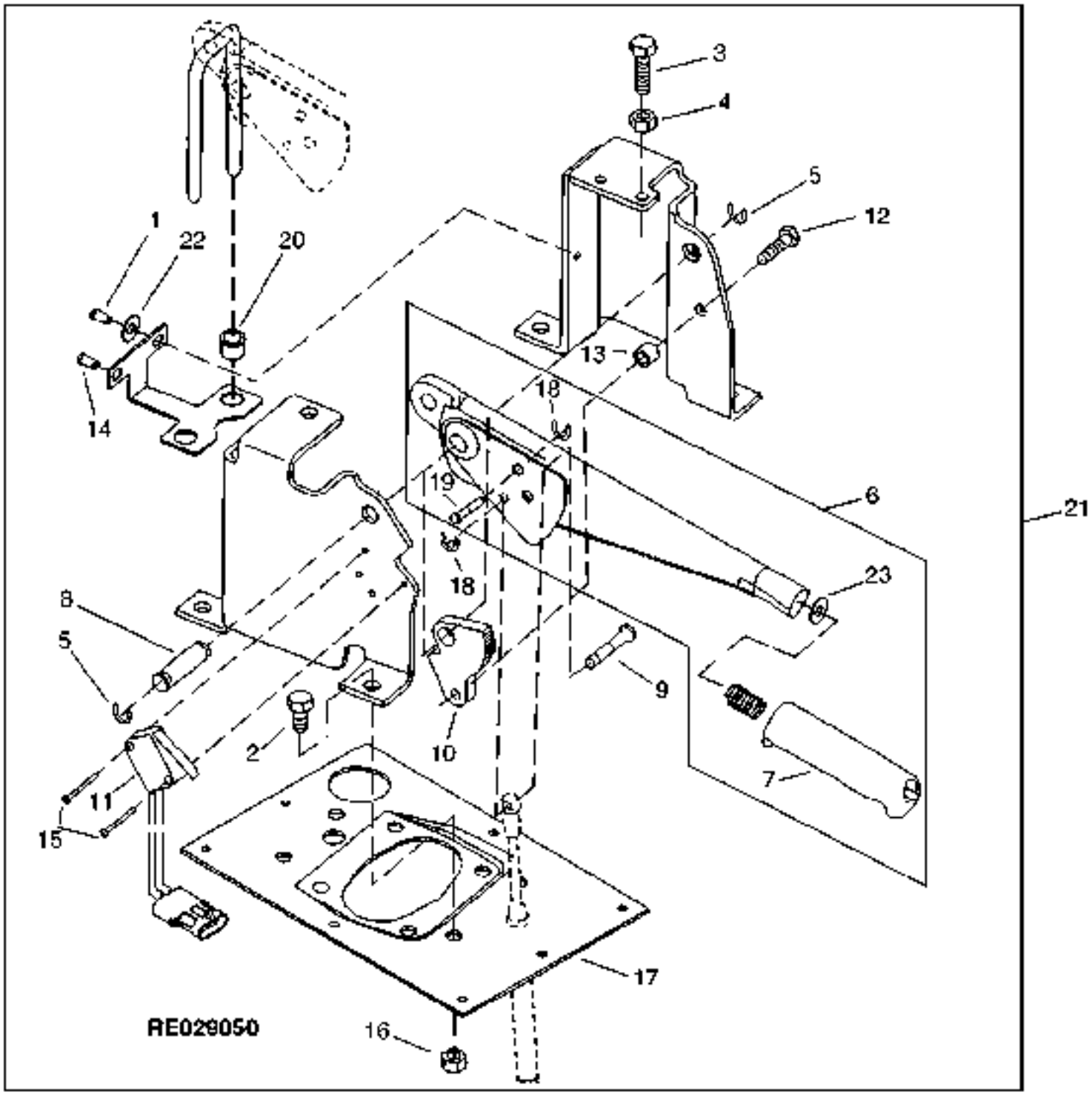

https://www.truck-manuals.net/

KEY	PART NO.	PART NAME	QTY	TRACTOR SERIAL NO.	ALL	REMARKS
1	37M7090	SCREW	1		X	M6 X 16
2	19M7166	CAP SCREW	4		X	M10 X 20
3	19M7550	CAP SCREW	1		X	M10 X 35, HS 10.9
4	14M7274	NUT	1		X	M10
5	40M7030	SNAP RING	2		X	
6	RE68586	HANDBRAKE LEVER	1		X	
7	R133517	GRIP	1		X	
8	R124282	PIN	1		X	
9	R135786	PIN	1		X	(SUB FOR R133546)
10	R133497	SECTOR	1		X	
11	RE48234	SWITCH	1		X	
12	19M7407	CAP SCREW	1		X	M8 X 25, HS 10.9
13	28H3405	BUSHING	1		X	0.364" X 0.540" X 7/16"
14	37M7104	SCREW	1		X	M6 X 30
15	21M7216	SCREW	2		X	M4 X 20
16	14M7274	NUT	4		X	M10
17	R133544	SUPPORT	1		X	
18	40M7040	SNAP RING	2		X	
19	L79404	PIN	1		X	
20	R41076	GROMMET	2		X	
21	RE68604	SUPPORT	1		X	
22	24M7139	WASHER	1		X	6.400 X 18 X 1.600 MM
23	24M7238	WASHER	1		X	8.700 X 17 X 2 MM

https://www.truck-manuals.net/

SECONDARY BRAKE RESERVOIR (EUROPEAN VERSION)
FREIN SECONDAIRE, CLAPET (VERSION EUROPEENNE)
NOTBREMSVENTIL (EUROPAEISCHE AUSFUEHRUNG)
VALVOLA DEL FRENO SECONDARIO (VERSIONE EUROPEA)
VALVULA DEL FRENO AUXILIAR (VERSION EUROPEA)
HANDBROMSVENTIL (EUROPEISK VERSION)
RE030387 -UN-22APR99

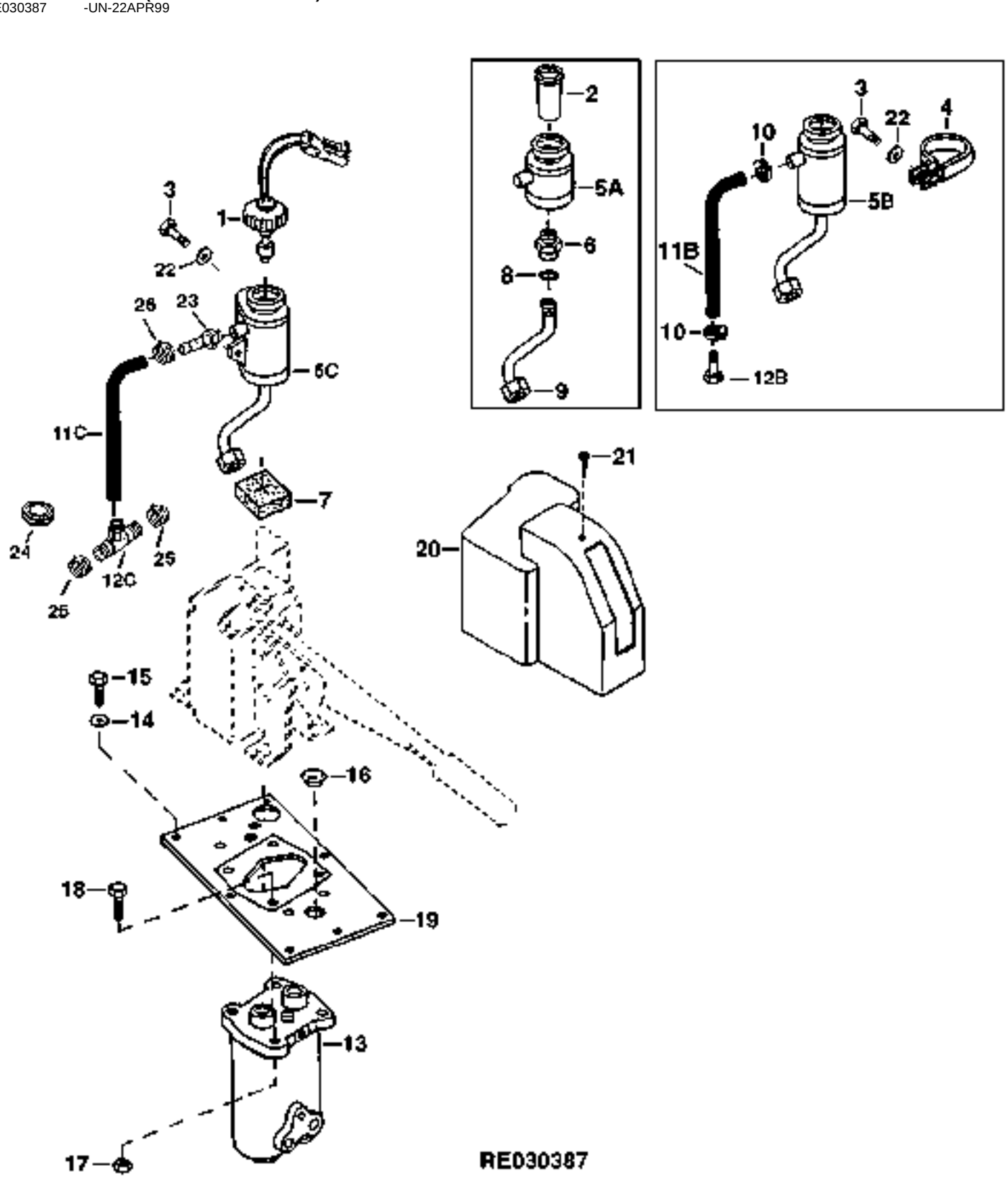

https://www.truck-manuals.net/

KEY	PART NO.	PART NAME	QTY	TRACTOR SERIAL NO.	ALL	REMARKS
1	RE63427	FILLER CAP	1	-XXXXXX	X	(A) (SUB FOR RE60446) (SUB RE63981)
	RE63981	FILLER CAP	1	XXXXXX-	X	(B)
2	L40799	STRAINER	1	-XXXXXX	X	(A)
3	37M7090	SCREW	2		X	M6 X 16
4	F1451R	CLAMP	1	-026820	X	
5A	RE56629	RESERVOIR	1	-XXXXXX	X	(A) (SUB RE155637)
5B	RE64161	RESERVOIR	1	XXXXXX-026820	X	(B) (SUB RE155637)
5C	RE155637	RESERVOIR	1	026821-	X	
6	38H5004	ADAPTER	1	-XXXXXX	X	(A)
	51M7045	O-RING	1	-XXXXXX	X	(A) 19.300 X 2.200 MM
7	R125547	SEAL	1	-026820	X	(SUB R157334)
	R157334	SEAL	1	026821-	X	
8	B2762R	O-RING	1	-026820	X	
9	RE61689	OIL LINE	1	-XXXXXX	X	(A) (SUB RE64161)
	T77932	O-RING	1	-XXXXXX	X	(A)
10	TY22462	CLAMP	2	-026820	X	
11B	R122493	HOSE	1	-026820	X	
11C	R163173	HOSE	1	026821-	X	
12B	19M7382	CAP SCREW	1	-026820	X	M10 X 40
12C	M87795	TEE FITTING	1	026821-	X	
13	RE60468	VALVE	1		X	
14	24M7040	WASHER	4		X	11 X 20 X 2 MM
15	19M7167	CAP SCREW	4		X	M10 X 25
16	R117237	PLUG	1	-009999	X	
	B2982R	PLUG	1	010000-	X	
17	14M7274	NUT	4		X	M10
18	19M7166	CAP SCREW	4		X	M10 X 20
19	R124344	SUPPORT	1	-009999	X	
	R133544	SUPPORT	1	010000-	X	
20	R124338	COVER	1	-XXXXXX	X	(C) (SUB R128164)
	R128164	COVER	1	XXXXXX-026820	X	(D)
	R154539	COVER	1	026821-	X	
21	37M7090	SCREW	1	-XXXXXX	X	(C) M6 X 16, (USE WITH R124338)
	37M7257	SCREW	1	XXXXXX-	X	(D) M8 X 16, (USE WITH R128164 OR R154539)
22	24M7139	WASHER	1		X	6.400 X 18 X 1.600 MM
23	R65785	FITTING	1	026821-	X	
24	R165034	GROMMET	1	026821-	X	
25	R56101	CLIP	2	026821-	X	
26	TY22464	CLAMP	1	026821-	X	
..	R44302	TIE BAND	1		X	
..	.....	SEAL	1		X	800 MM (31.5") (MAKE FROM R83066)

(A) (-XXXXXX) 8100-002003; 8200-001785; 8300-003183; 8400-001883
(B) (XXXXXX-) 8100-002004; 8200-001786; 8300-003184; 8400-001884
(C) (-XXXXXX) 8100-002255; 8200-001938; 8300-003429; 8400-002236
(D) (XXXXXX-) 8100-002256; 8200-001939; 8300-003430; 8400-002237

https://www.truck-manuals.net/

SECONDARY BRAKE VALVE (EUROPEAN VERSION) (TSN -025704)
FREIN SECONDAIRE, CLAPET (VERSION EUROPEENNE) (TSN -025704)
NOTBREMSVENTIL (EUROPAEISCHE AUSFUEHRUNG) (TSN -025704)
VALVOLA DEL FRENO SECONDARIO (VERSIONE EUROPEA) (TSN -025704)
VALVULA DEL FRENO AUXILIAR (VERSION EUROPEA) (TSN -025704)
HANDBROMSVENTIL (EUROPEISK VERSION) (TSN -025704)
RE030335 -UN-16FEB99

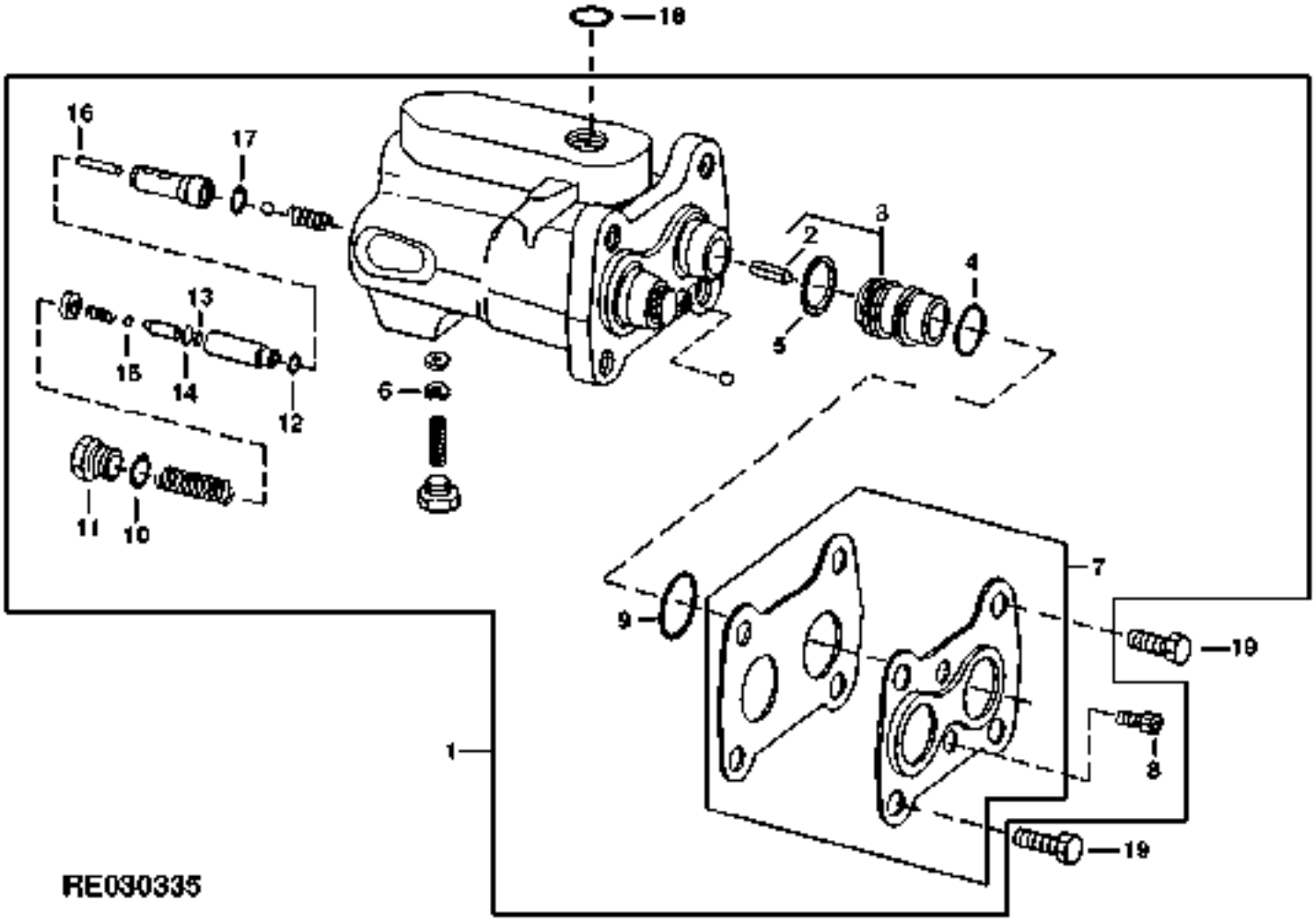

https://www.truck-manuals.net/

KEY	PART NO.	PART NAME	QTY	TRACTOR SERIAL NO.	ALL	REMARKS
1	RE60468	VALVE	1		X	
2	34M7102	SPRING PIN	2		X	5 X 26 MM
3	RE60880	PISTON	2		X	
4	R124463	SEAL	2		X	
5	R124462	O-RING	2		X	
6	R127771	SPRING	1		X	
7	RE60531	KIT	1		X	
8	19M8493	SCREW	4		X	M8 X 12, HS 10.9
9	R108041	SEAL	2		X	
10	U17409	O-RING	2		X	
11	R108062	PLUG	2		X	
12	R10093	O-RING	2		X	
13	R108067	SEAL	2		X	
14	R108042	BACK-UP RING	2		X	
15	A4365R	O-RING	2		X	
16	R60755	NEEDLE ROLLER	2		X	
17	T77932	O-RING	2		X	
18	T57246	O-RING	1		X	
19	19M7166	CAP SCREW	4		X	
20	T57246	O-RING	1		X	
..	RE60529	KIT	1	-009999	X	(A)
..	RE68237	KIT	1	010000-	X	(A)
..	RE60708	KIT	1		X	(B)

(A) OVERHAUL
JEU DE REMISE EN ETAT
UEBERHOLUNGSSATZ
KIT DI REVISIONE
CONJUNTO PARA REACONDICIONAMIENTO
OEVERSYNSSATS

(B) MAKE-UP CHECK VALVE
JEU DE CLAPET ANTI-RETOUR D'APPOINT
ZUSATZ-RUECKSCHLAGVENTIL
KIT DELLA VALVOLA DI NON RITORNO DI
CONJUNTO DE VALVULA DE RETENCION DE
SATS MED TILLSATSBACKVENTIL

https://www.truck-manuals.net/

SECONDARY BRAKE VALVE HARDWARE KIT (EUROPEAN VERSION)
JEU DE BOULONNERIE DE SOUPAPE DE FREIN SECONDAIRE (VERSION EUROPEENNE)
HANDBREMSVENTIL-BEFESTIGUNGSTEILSATZ (EUROPAEISCHE AUSFUEHRUNG)
KIT DI MINUTERIA DELLA VALVOLA DEL FRENO SECONDARIO (VERSIONE EUROPEA)
JUEGO DE TORNILLERIA DE VALVULA DE FRENO SECUNDARIO (VERSION EUROPEA)
FAESTELEMENTSATS FOER HANDBROMSVENTIL (EUROPEISK VERSION)
RE026612 -UN-07DEC95

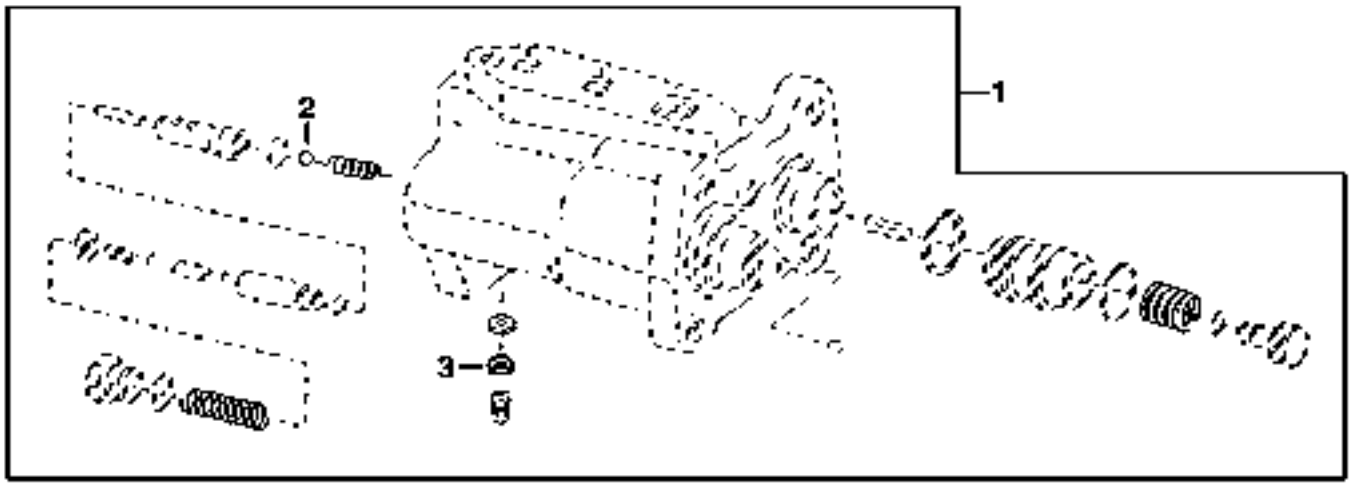

RE026612

KEY	PART NO.	PART NAME	QTY	TRACTOR SERIAL NO.	ALL	REMARKS
1	RE66141	VALVE	1		X	(SUB FOR RE60882)
2	R26552	BALL	2		X	
3	R127771	SPRING	2		X	

https://www.truck-manuals.net/

SECONDARY BRAKE (EUROPEAN VERSION) ASN(800001-)
FREIN SECONDAIRE (VERSION EUROPEENNE) ASN(800001-)
ZWEITBREMSE (EUROPAEISCHE AUSFUEHRUNG) ASN(800001-)
FRENO SECONDARIO (VERSIONE EUROPEA) ASA(800001-)
FRENO SECUNDARIO (VERSION EUROPEA) ASA(800001-)
PARKERINGSBROMS (EUROPEISK VERSION) ASN(800001-)
RE030380 -UN-22MAR99

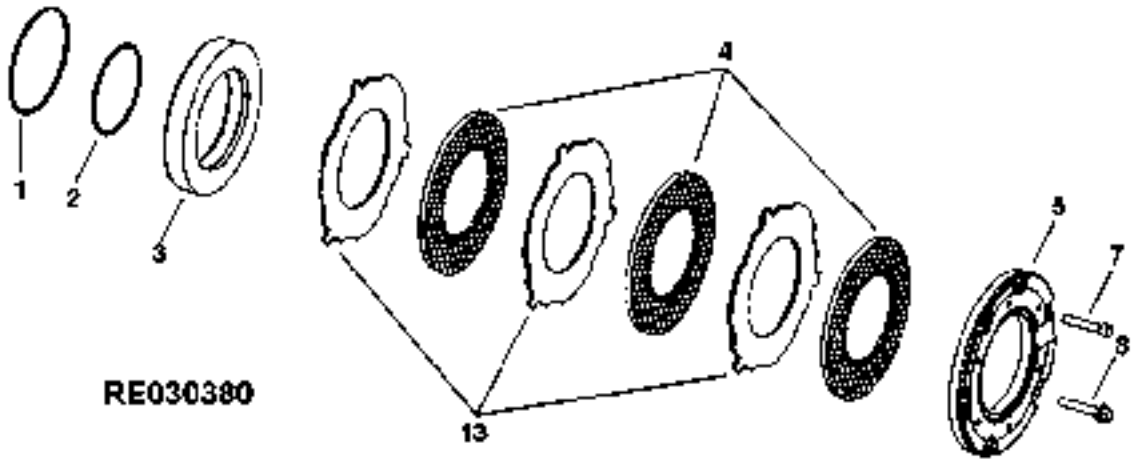

KEY	PART NO.	PART NAME	QTY	AXLE SERIAL NO.	ALL	REMARKS
1	R158630	SEAL	1		X	
2	R158631	SEAL	1		X	
3	R150222	PISTON	1		X	
4	RE159560	DISK, WITH INNER SPLINE	3		X	
5	R136355	BRAKE DISK	1		X	
6	R150350	BRAKE DISK	3		X	

https://www.truck-manuals.net/

SECONDARY BRAKE VALVE (EUROPEAN VERSION) (TSN 025705-)
FREIN SECONDAIRE, CLAPET (VERSION EUROPEENNE) (TSN 025705-)
NOTBREMSVENTIL (EUROPAEISCHE AUSFUEHRUNG) (TSN 025705-)
VALVOLA DEL FRENO SECONDARIO (VERSIONE EUROPEA) (TSN 025705-)
VALVULA DEL FRENO AUXILIAR (VERSION EUROPEA) (TSN 025705-)
HANDBROMSVENTIL (EUROPEISK VERSION) (TSN 025705-)
RE030368 -UN-16FEB99

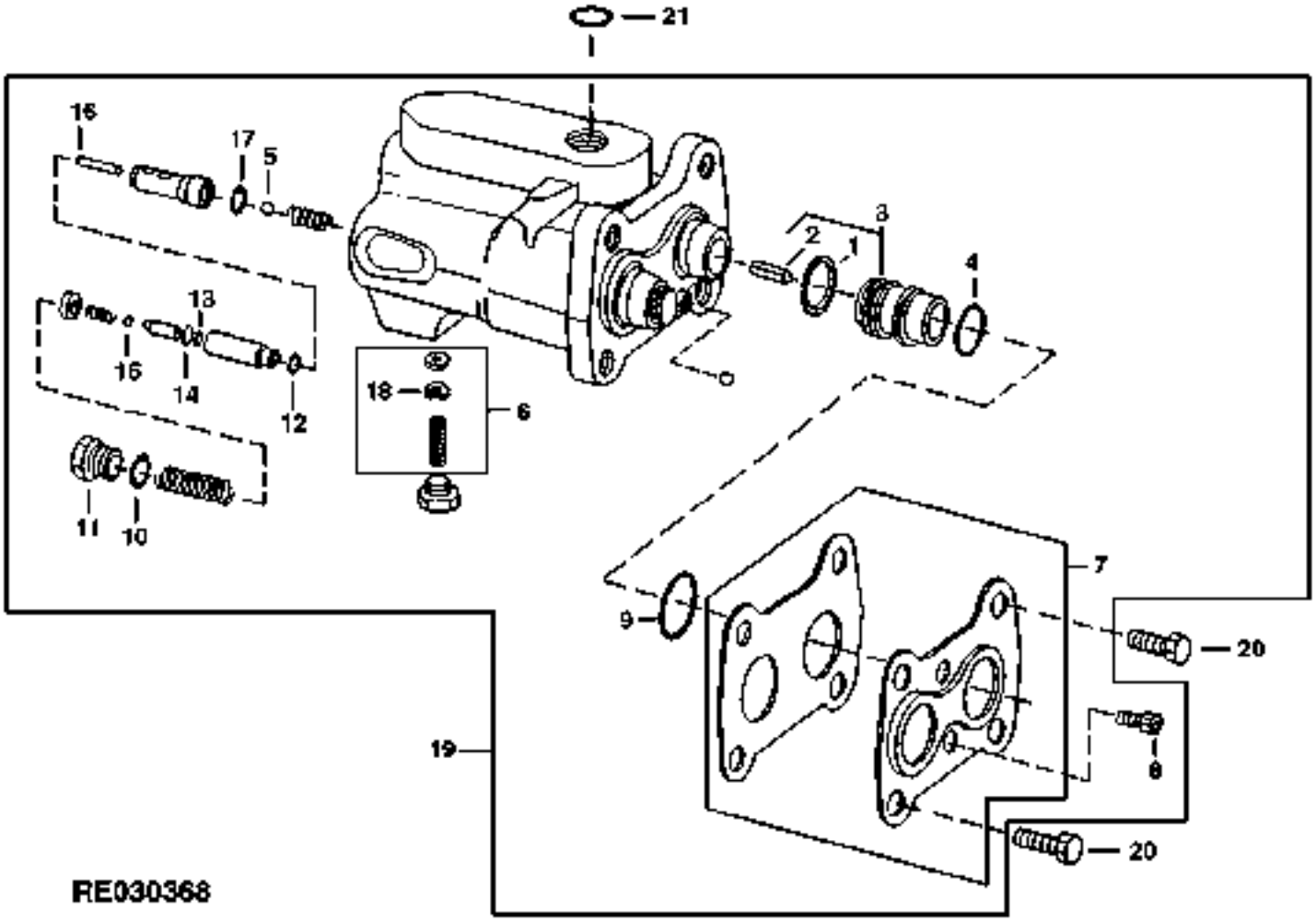

https://www.truck-manuals.net/

KEY	PART NO.	PART NAME	QTY	TRACTOR SERIAL NO.	ALL	REMARKS
1	R124462	O-RING	2		X	
2	25M7039	GROOVE PIN	1		X	5 X 24 MM
3	RE159108	PISTON	2		X	
4	R124463	SEAL	2		X	
5	R26552	BALL	2		X	
6	RE69092	KIT	1		X	(A)
7	RE60531	KIT	1		X	
8	19M8493	SCREW	4		X	M8 X 12, HS 10.9
9	R108041	SEAL	2		X	
10	U17409	O-RING	2		X	
11	R108062	PLUG	2		X	
12	R10093	O-RING	2		X	
13	R108067	SEAL	2		X	
14	R108042	BACK-UP RING	2		X	
15	A4365R	O-RING	2		X	
16	R60755	NEEDLE ROLLER	2		X	
17	T77932	O-RING	2		X	
18	R127771	SPRING	2		X	
19	RE154766	VALVE	1		X	
20	19M7166	CAP SCREW	4		X	M10 X 20
21	B2762R	O-RING	1		X	

(A) PREFILL PISTON KIT
JEU DE PISTON DE PRE-REMPLISSAGE DES FREIN
BREMS-VORFUELLKOLBENSATZ
KIT DEL PISTONE DI PRERIEMPIMENTO DEI FRENI
CONJUNTO DE PISTON DE PRELLENADO DEL FRENO
KOLVSATS FOER FOERFYLLNING AV BROMSSYSTEM

https://www.truck-manuals.net/

BRAKE VALVE OVERHAUL KIT (SECONDARY BRAKE) (TSN 025705-)
JEU DE PIECES DE REMPLACEMENT DE SOUPAPE DE FREIN (FREIN SCONDAIRE) (TSN 025705-)
BREMSVENTILUEBERHOLSATZ (ZWEITBREMSE) (TSN 025705-)
KIT SOSTITUZIONE VALVOLA FRENO (FRENO SECONDARIO) (TSN 025705-)
JUEGO DE REVISION DEL FRENO DE VALVULA (FRENO SECUNDARIO) (TSN 025705-)
RENOVERINGSSATS FOER BROMSVENTIL (PARKERINGSBROMS) (TSN 025705-)
RE030369 -UN-16FEB99

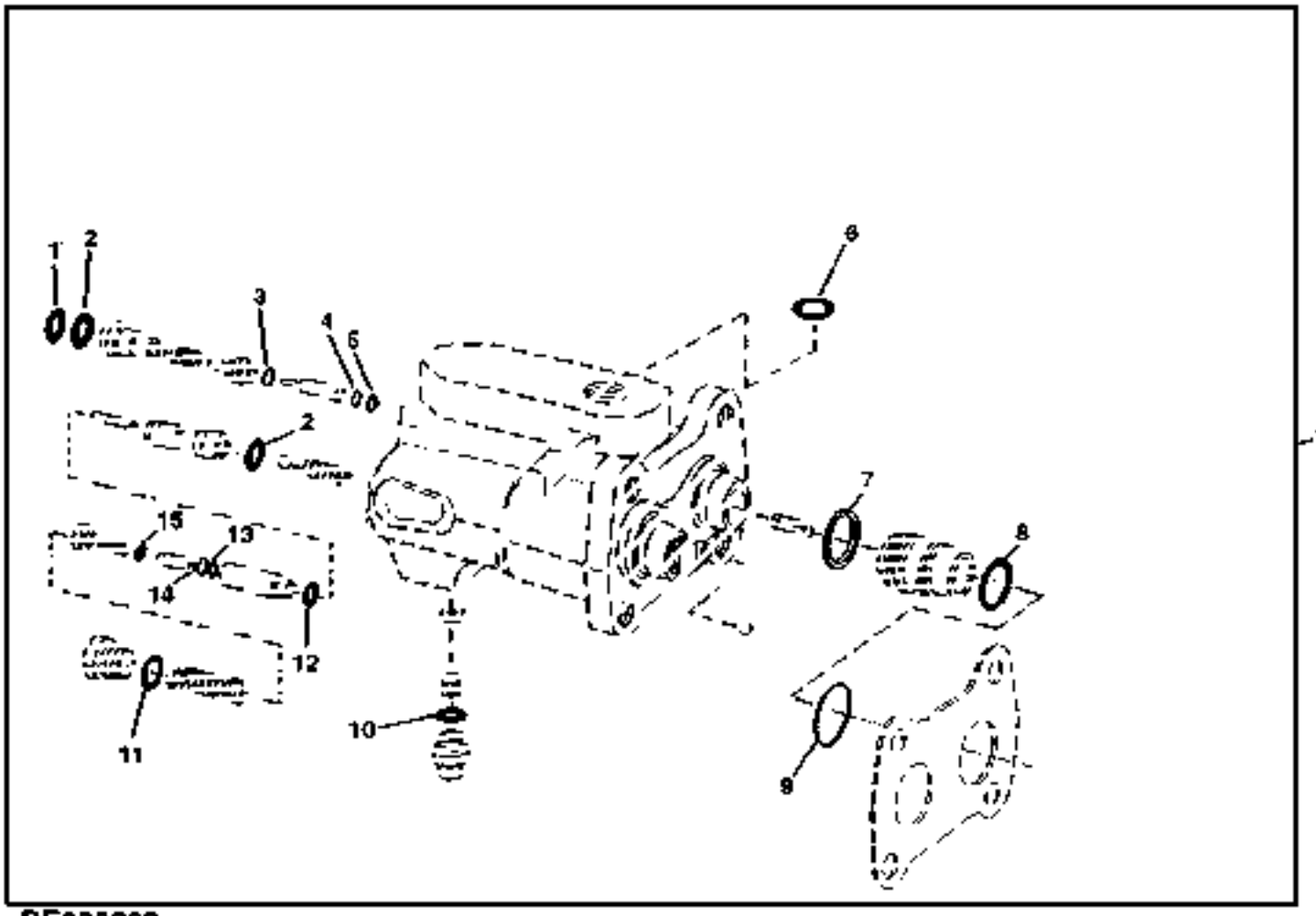

RE030369

https://www.truck-manuals.net/

KEY	PART NO.	PART NAME	QTY	TRACTOR SERIAL NO.	ALL	REMARKS
1	R113054	BACK-UP RING	1		X	
2	T77932	O-RING	3		X	
3	R113057	PACKING	2		X	
4	T42571	BACK-UP RING	2		X	
5	R108066	O-RING	2		X	
6	B2762R	O-RING	1		X	
7	R124462	O-RING	2		X	
8	R124463	SEAL	2		X	
9	R108041	SEAL	2		X	
10	51M7041	O-RING	3		X	11.300 X 2.200 MM
11	U17409	O-RING	2		X	
12	R10093	O-RING	2		X	
13	R28776	O-RING	1		X	
14	R108042	BACK-UP RING	2		X	
15	A4365R	O-RING	2		X	
16	RE157111	KIT	1		X	

https://www.truck-manuals.net/

MEMORANDA
MEMORANDA
MEMORANDA
MEMORANDA
MEMORANDA
MEMORANDA

https://www.truck-manuals.net/

SECONDARY BRAKE VALVE HARDWARE KIT (EUROPEAN VERSION) (TSN 025705-)
JEU DE BOULONNERIE DE SOUPAPE DE FREIN SECONDAIRE (VERSION EUROPEENNE) (TSN 025705-)
HANDBREMSVENTIL-BEFESTIGUNGSTEILSATZ (EUROPAEISCHE AUSFUEHRUNG) (TSN 025705-)
KIT DI MINUTERIA DELLA VALVOLA DEL FRENO SECONDARIO (VERSIONE EUROPEA) (TSN 025705-)
JUEGO DE TORNILLERIA DE VALVULA DE FRENO SECUNDARIO (VERSION EUROPEA) (TSN 025705-)
FAESTELEMENTSATS FOER HANDBROMSVENTIL (EUROPEISK VERSION) (TSN 025705-)
RE030370 -UN-16FEB99

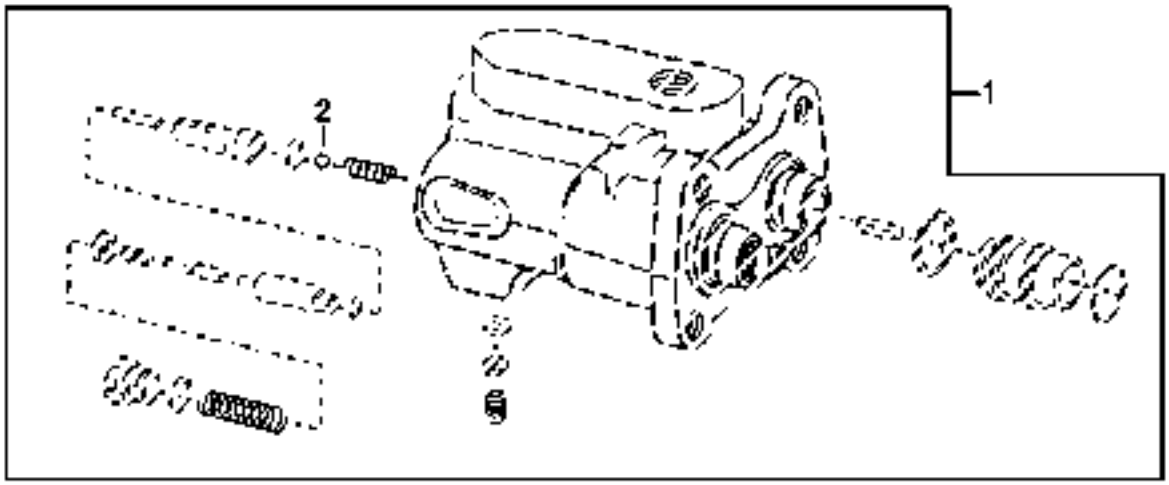

RE030370

KEY	PART NO.	PART NAME	QTY	TRACTOR SERIAL NO.	ALL	REMARKS
1	RE67963	KIT	1		X	
2	R26552	BALL	2		X	

https://www.truck-manuals.net/

SECONDARY BRAKE LINES (EUROPEAN VERSION) (8100 -004722;8200 -003490;8300 -005814;8400 -006583)
FREIN SECONDAIRE, CONDUITES (VERSION EUROPEENNE)(8100 -4722;8200 -3490;8300 -5814;8400 -6583)
NOTBREMSLEITUNGEN (EUROPAEISCHE AUSFUEHRUNG)(8100 -04722;8200 -03490;8300 -05814;8400 -06583)
CONDOTTI DEL FRENO SECONDARIO(VERSION EUROPEA)(8100 -4722;8200 -3490;8300 -5814;8400 -6583)
LINEAS DEL FRENO AUXILIAR (VERSION EUROPEA) (8100 -04722;8200 -03490;8300 -05814;8400 -06583)
HANDBROMSLEDNINGAR (EUROPEISK VERSION) (8100 -04722; 8200 -03490; 8300 -05814; 8400 -06583)
RE026148 -UN-22MAR95

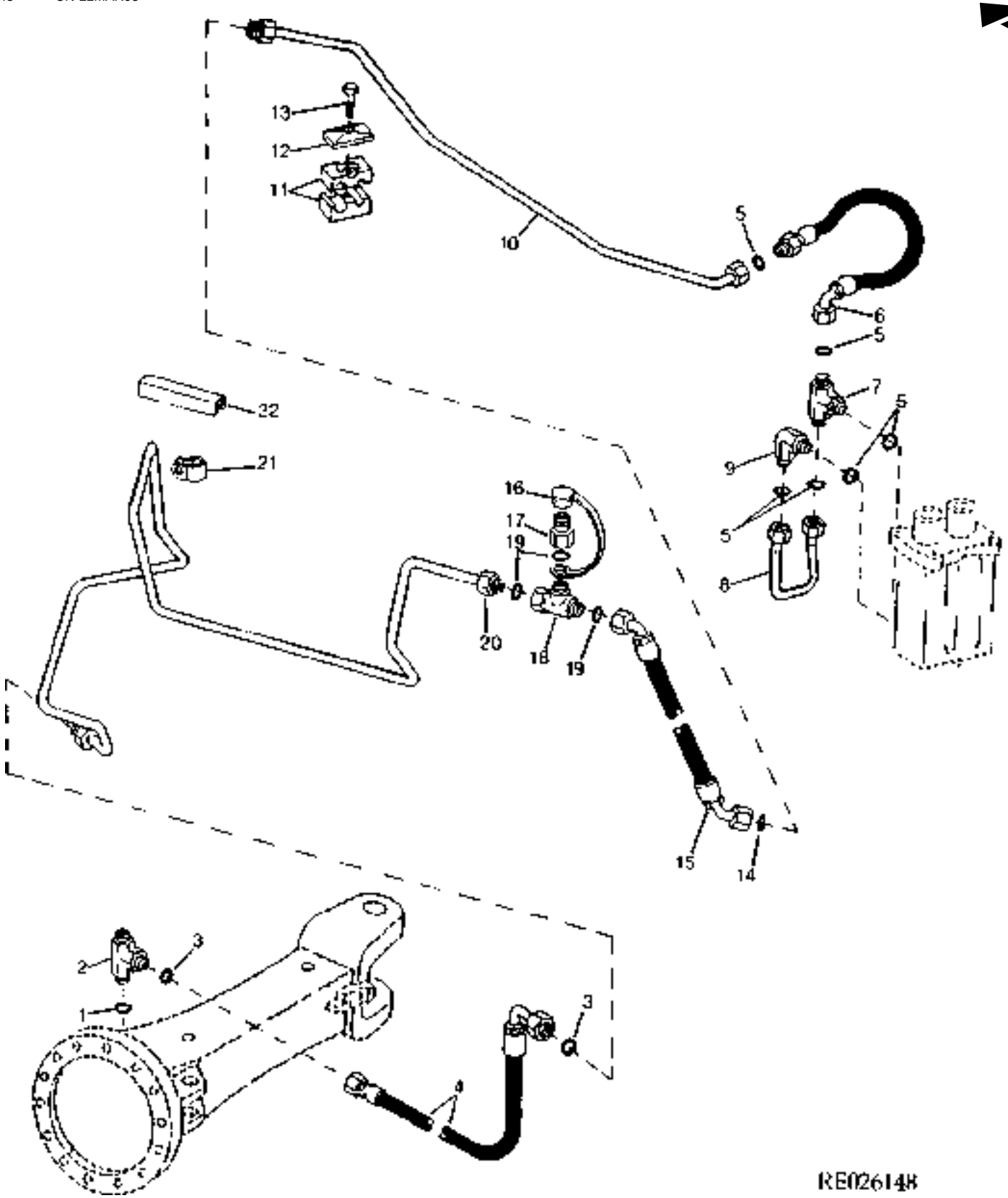

https://www.truck-manuals.net/

KEY	PART NO.	PART NAME	QTY	TRACTOR SERIAL NO.	ALL	REMARKS
1	R26448	O-RING	1		X	
2	38H1023	TEE FITTING	1		X	
3	T77613	O-RING	2		X	
4	RE60674	HYDRAULIC HOSE	1		X	
5	T77613	O-RING	6		X	
6	RE48579	HYDRAULIC HOSE	1		X	
7	38H5123	TEE FITTING	1		X	
8	RE48610	OIL LINE	1		X	
9	38H5016	ELBOW FITTING	1		X	
10	RE62678	OIL LINE	1		X	(SUB FOR RE48609)
11	H114865	CLAMP	4		X	
12	H112567	PLATE	1		X	
13	37M7108	SCREW	2		X	M8 X 60
14	T77613	O-RING	1		X	
15	RE60848	HYDRAULIC HOSE	1		X	
16	R77175	COVER	1		X	
17	RE43774	FITTING	1		X	
18	38H5069	TEE FITTING	1		X	
19	T77857	O-RING	3		X	
20	RE62626	OIL LINE	1		X	(SUB FOR RE61623) (SUB RE66231, RE66235, RE66236, T13814, H121168, (2) H125156 AND 19M8318)
21	T13814	CLAMP	2		X	
22	RE54810	ISOLATOR	1		X	

https://www.truck-manuals.net/

SECONDARY BRAKE LINES (E.V.)(8100 04723-09999;8200 03491-09999;8300 05815-09999;8400 06584-09999)
FREIN SECONDAIRE, CONDUITES (V. E.) (8100 4723-9999;8200 3491-9999;8300 5815-9999;8400 6584-9999)
NOTBREMSLEITUNGEN (E. A.) (8100 04723-09999;8200 03491-09999;8300 -05815-09999; 8400 06584-09999)
CONDOTTI DEL FRENO SECONDARIO (V. E.)(8100 4723-9999;8200 3491-9999;8300 5815-9999;8400 6584-9999)
LINEAS DEL FRENO AUXILIAR (V. E.) (8100 4723-9999;8200 3491-9999;8300 5815-9999;8400 6584-9999)
HANDBROMSLEDNINGAR (E. V.) (8100 04723-09999;8200 03491-09999;8300 -05815-09999; 8400 06584-09999)
RE026979 -UN-31JUL96

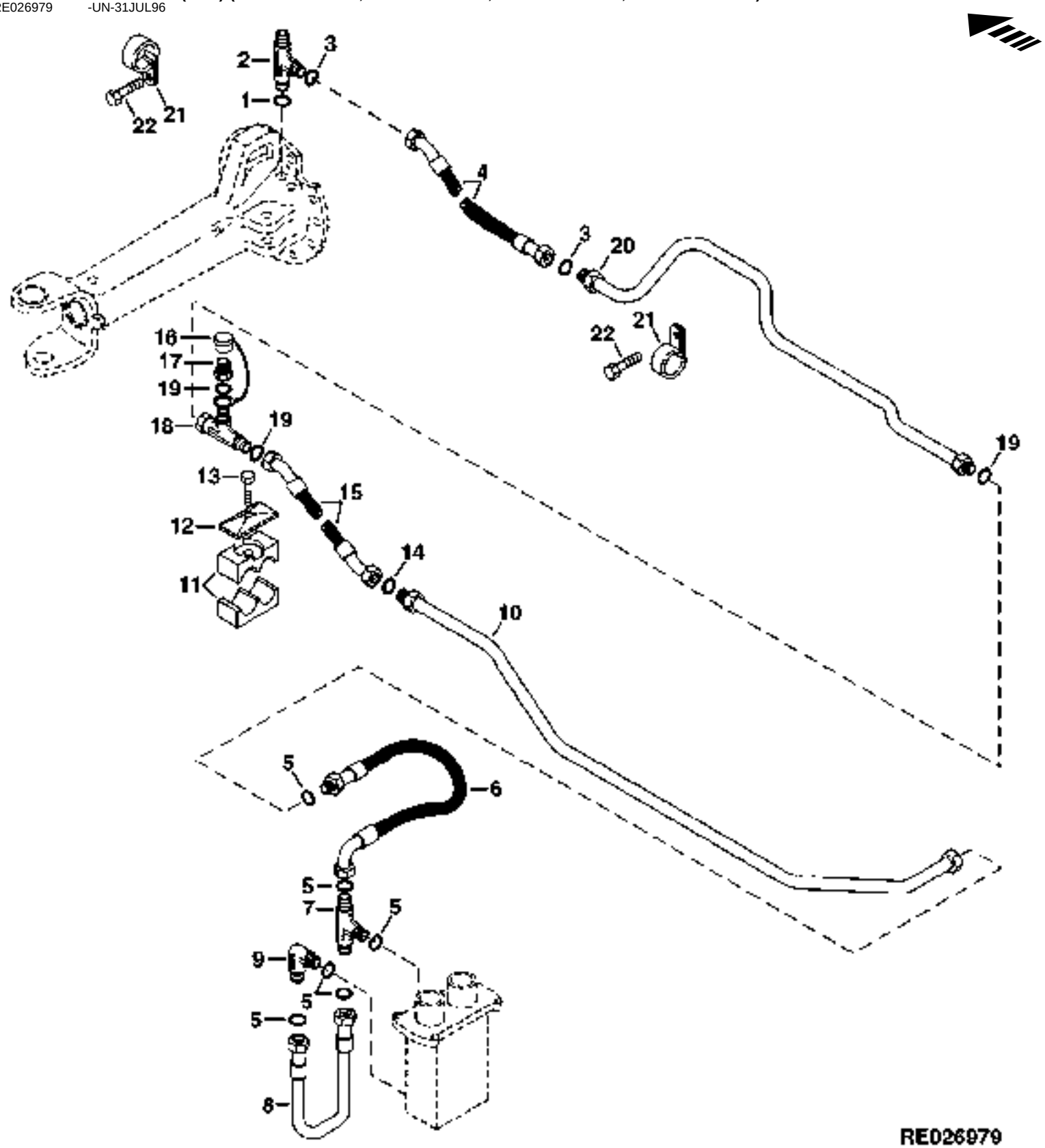

https://www.truck-manuals.net/

KEY	PART NO.	PART NAME	QTY	TRACTOR SERIAL NO.	ALL	REMARKS
1	R26448	O-RING	1		X	
2	38H1023	TEE FITTING	1		X	
3	T77613	O-RING	2		X	
4	RE68298	HYDRAULIC HOSE	1		X	
5	T77613	O-RING	6		X	
6	RE48579	HYDRAULIC HOSE	1		X	
7	38H5123	TEE FITTING	1		X	
8	RE48610	OIL LINE	1		X	
9	38H5016	ELBOW FITTING	1		X	
10	RE62678	OIL LINE	1		X	
11	H114865	CLAMP	4		X	
12	H112567	PLATE	1		X	
13	37M7108	SCREW	2		X	M8 X 60
14	T77613	O-RING	1		X	
15	RE60868	CYLINDER	1		X	
16	R77175	COVER	1		X	
17	RE43774	FITTING	1		X	
18	38H5069	TEE FITTING	1		X	
19	T77857	O-RING	3		X	
20	RE66231	OIL LINE	1		X	
21	T13814	CLAMP	3		X	
22	19M8318	SCREW	3		X	M8 X 45, HS 10.9

https://www.truck-manuals.net/

SECONDARY BRAKE LINES (EUROPEAN VERSION) (8100,8200,8300,8400 010000-)
FREIN SECONDAIRE, CONDUITES (VERSION EUROPEENNE) (8100,8200,8300,8400 010000-)
NOTBREMSLEITUNGEN (EUROPAEISCHE AUSFUEHRUNG) (8100,8200,8300,8400 010000-)
CONDOTTI DEL FRENO SECONDARIO (VERSIONE EUROPEA) (8100,8200,8300,8400 010000-)
LINEAS DEL FRENO AUXILIAR (VERSION EUROPEA) (8100,8200,8300,8400 010000-)
HANDBROMSLEDNINGAR (EUROPEISK VERSION) (8100,8200,8300,8400 010000-)
RE030367 -UN-16FEB99

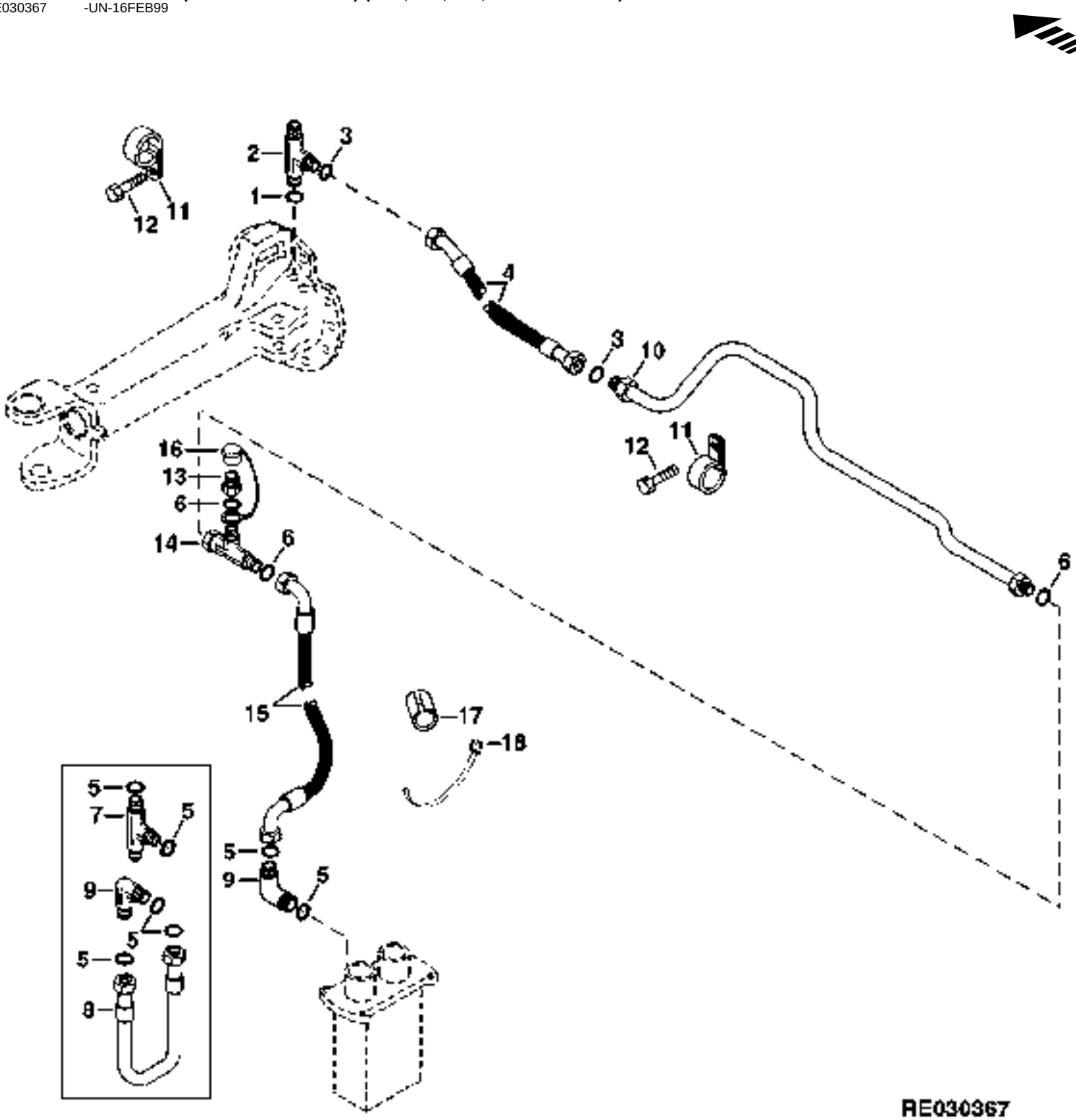

https://www.truck-manuals.net/

KEY	PART NO.	PART NAME	QTY	TRACTOR SERIAL NO.	ALL	REMARKS
1	R26448	O-RING	1		X	
2	38H1023	TEE FITTING	1		X	
3	T77613	O-RING	2		X	
4	RE68298	HYDRAULIC HOSE	1		X	
5	T77613	O-RING	2		X	
6	T77857	O-RING	3		X	
7	38H5123	TEE FITTING	1	-025704	X	
8	RE48610	OIL LINE	1	-025704	X	
9	38H5016	ELBOW FITTING	1		X	
10	RE68209	OIL LINE	1		X	
11	T13814	CLAMP	3		X	
12	19M8318	SCREW	3		X	M8 X 45, HS 10.9
13	RE60701	DIAGNOSTIC RECEPTACLE	1		X	
14	38H5127	TEE FITTING	1		X	
15	RE67784	HYDRAULIC HOSE	1		X	
16	R77175	COVER	1		X	
17	N32491	ISOLATOR	1		X	
18	R76477	TIE BAND	1		X	

https://www.truck-manuals.net/

TRAILER BRAKE VALVE KIT (EUROPEAN VERSION)
JEU DE SOUPAPE DE FREIN DE REMORQUE (VERSION EUROPEENNE)
ANHAENGERBREMSENVENTIL-BAUSATZ (EUROPAEISCHE AUSFUEHRUNG)
KIT DELLA VALVOLA DEL FRENO DEL RIMORCHIO (VERSIONE EUROPEA)
JUEGO DE VALVULAS DEL FRENO DEL REMOLQUE (VERSION EUROPEA)
VENTILASTS FOER SLAEPVAGNSBROMS (EUROPEISK VERSION)
RE028478 -UN-04NOV97

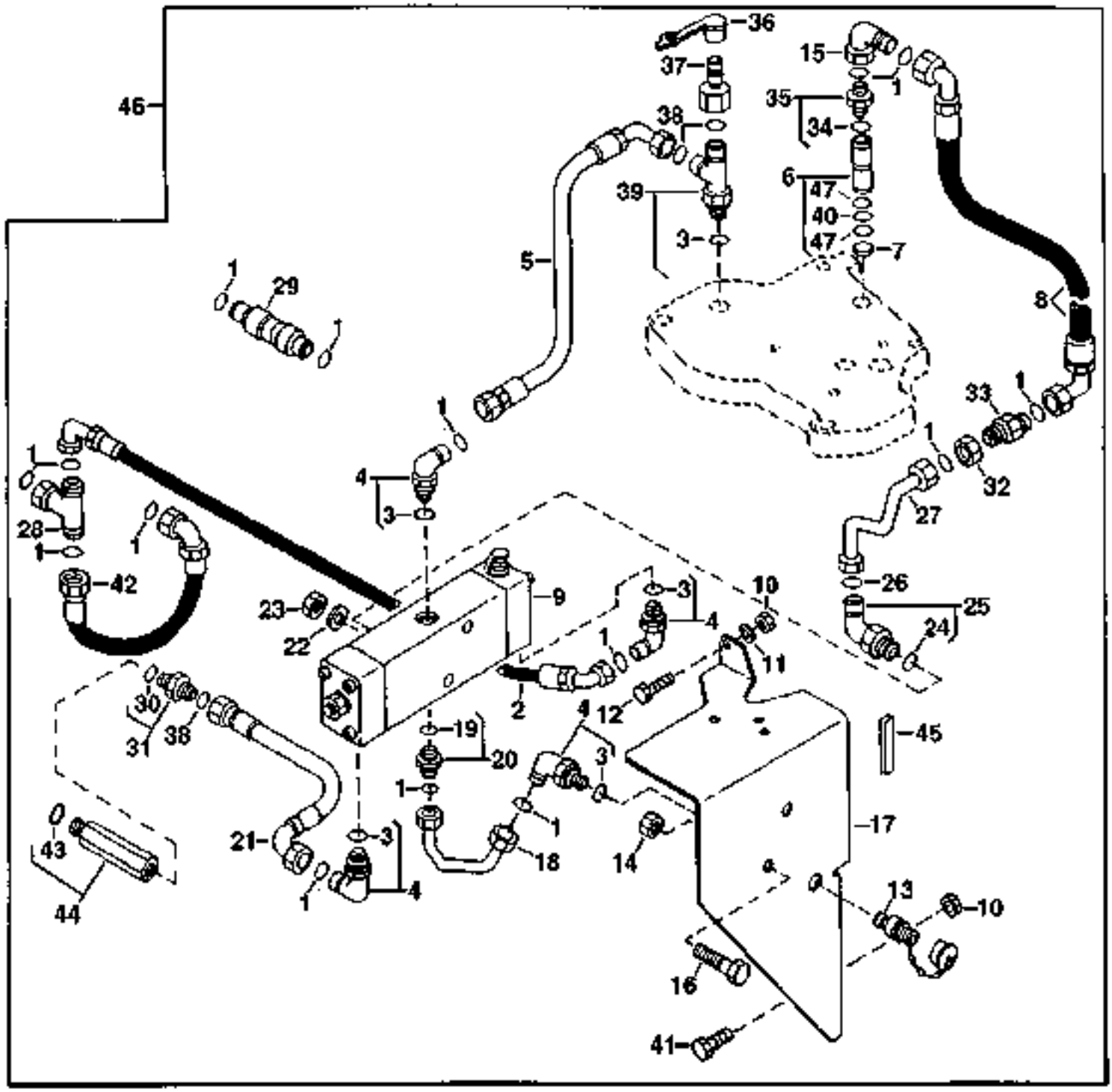

https://www.truck-manuals.net/

KEY	PART NO.	PART NAME	QTY	TRACTOR SERIAL NO.	ALL	REMARKS
1	T77613	O-RING	17		X	
2	RE48580	HYDRAULIC HOSE	1	-009999	X	
	RE68808	HYDRAULIC HOSE	1	010000-	X	
3	51M7041	O-RING	5		X	11.300 X 2.200 MM
4	38H5016	ELBOW FITTING	4		X	
5	RE60849	OIL LINE	1		X	
6	RE58763	SPACER	1		X	
7	R122147	CHECK VALVE	1		X	
8	RE61336	HYDRAULIC HOSE	1	-XXXXXX	X	
	RE62555	HYDRAULIC HOSE	1	XXXXXX-	X	
9	AL78795	VALVE	1		X	
10	14M7274	NUT	2		X	M10
11	24M7040	WASHER	1		X	11 X 20 X 2 MM
12	19M7168	CAP SCREW	1		X	M10 X 30
13	AL39859	INTERNAL HALF COUPLER	1		X	
14	14M7257	NUT	1		X	M20
15	38H5145	ELBOW FITTING	1		X	
16	19M7295	CAP SCREW	2		X	M8 X 45
17	R124441	BRACKET	1	-XXXXXX	X	
	R150365	BRACKET	1	XXXXXX-	X	
18	RE44766	HYDRAULIC LINE	1		X	
19	51M7041	O-RING	1		X	11.300 X 2.200 MM
20	38H5002	ADAPTER	1		X	
21	RE48637	HOSE	1		X	(SUB RE62872 AND RE61791)
	RE62872	OIL LINE	1		X	
22	24M7036	WASHER	2		X	9 X 16 X 1.600 MM
23	14M7273	NUT	2		X	M8
24	51M7040	O-RING	1		X	9.300 X 2.200 MM
25	38H5015	ELBOW FITTING	1		X	
26	T77814	O-RING	1		X	
27	RE48638	HYDRAULIC LINE	1		X	
28	38H5144	TEE FITTING	1		X	
29	RE55955	CHECK VALVE	2		X	
30	51M7045	O-RING	1		X	19.300 X 2.200 MM
31	38H5076	ADAPTER	1		X	
32	38H5091	NUT	1		X	
33	38H5100	UNION FITTING	1		X	
34	51M7045	O-RING	1		X	19.300 X 2.200 MM
35	RE49091	FITTING	1		X	
36	R77175	COVER	1		X	
37	RE43774	FITTING	1		X	
38	T77857	O-RING	3		X	
39	38H5065	TEE FITTING	1		X	
40	T11899	O-RING	1		X	
41	R153676	SCREW	1		X	HS 10.9
42	RE61395	HYDRAULIC HOSE	1		X	
43	51M7045	O-RING	1		X	19.300 X 2.200 MM
44	RE61791	FITTING	1		X	(USE WITH RE62872)
45	RE62489	MOLDING	1		X	
46	**AR113759**	**KIT**	**1**		**X**	**(FI)**
47	R133794	BACK-UP RING	2		X	

https://www.truck-manuals.net/

TRAILER BRAKE VALVE (EUROPEAN VERSION)
SOUPAPE DE FREIN DE REMORQUE (VERSION EUROPEENNE)
ANHAENGERBREMSENVENTIL (EUROPAEISCHE AUSFUEHRUNG)
VALVOLA DEL FRENO DEL RIMORCHIO (VERSIONE EUROPEA)
VALULA DEL FRENO DEL REMOLQUE (VERSION EUROPEA)
SLAEPVAGNSBROMSVENTIL (EUROPEISK VERSION)
RXP020755 -UN-01JAN94

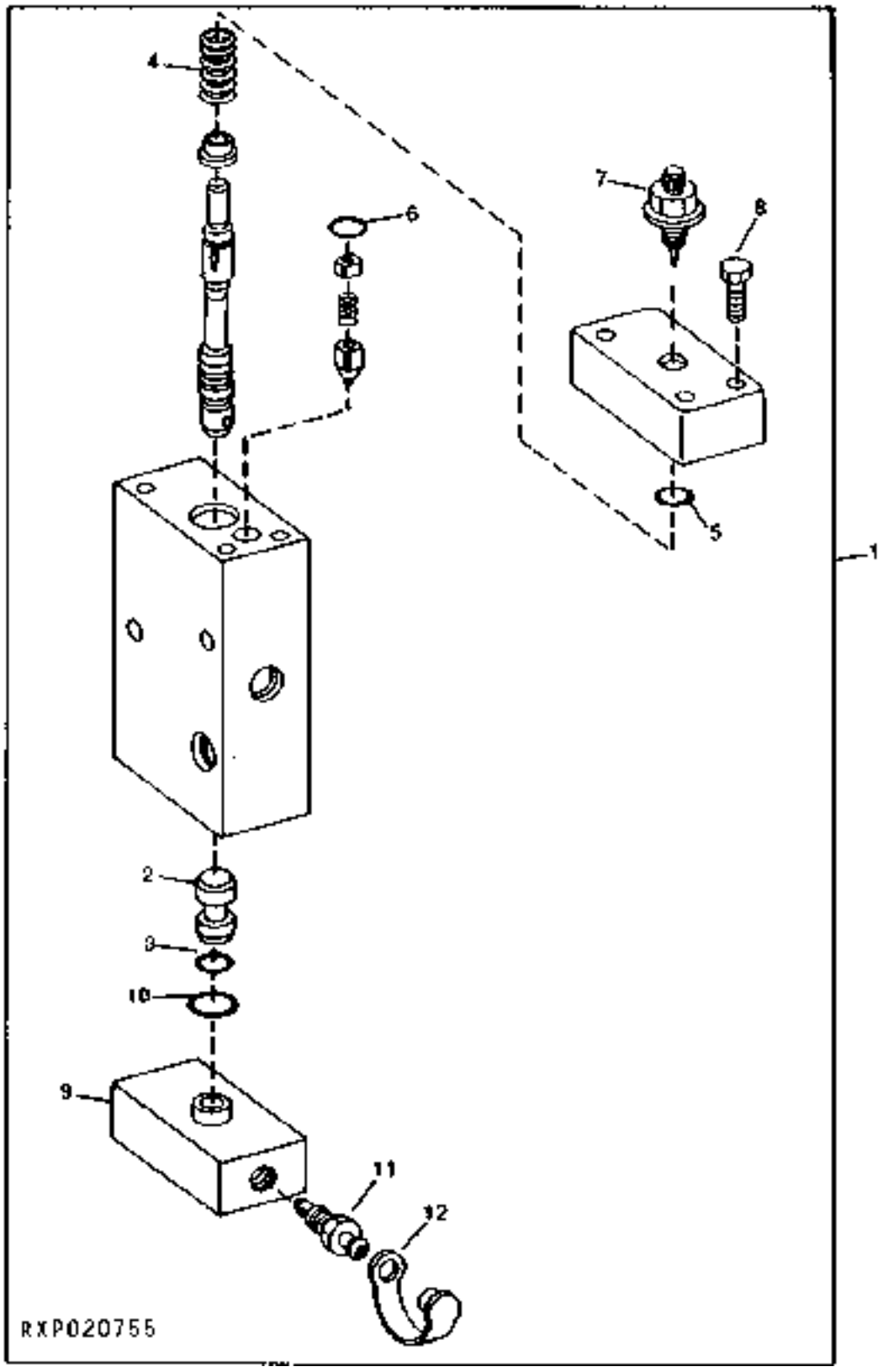

https://www.truck-manuals.net/

KEY	PART NO.	PART NAME	QTY	TRACTOR SERIAL NO.	ALL	REMARKS
1	AL78795	VALVE	1		X	
2	L30706	CYLINDER	1		X	
3	L53826	O-RING	1		X	
4	L62682	COMPRESSION SPRING	1		X	
5	R28776	O-RING	1		X	
6	L53976	O-RING	1		X	
7	AL63927	SCREW	1		X	
8	19M8263	SCREW	5		X	M6 X 30
9	L78625	COVER	1		X	
10	R28776	O-RING	1		X	
11	L102453	BLEED SCREW	1		X	(SUB FOR L77569)
12	R47862	CAP	1		X	

https://www.truck-manuals.net/

AIR BRAKE PRESSURE REGULATING VALVE(E.V.) (8100 -12327;8200 -11933;8300 -12566;8400 -12683)
FREINS A AIR COMPRIME,REGUALTEUR DE PRESSION(V.E.)(81 -12327;82 -11933;83 -12566;84 -12683)
DRUCKLUFTBREMSE, DRUCKREGULIERVENTIL (E. A.)(8100 -12327;8200 -11933;8300 -12566;8400 -12683)
VALVOLA DI REGOLAZIONE DELLA PRESSIONE(V.E.)(81 -012327;82 -011933;83 -012566;84 -012683)
FRENO NEUMATICO,VALVULA REGULADORA DE PRESION(V.E.)(81 -12327;82 -11933;83 -12566;8400 -12683)
TRYCKLUFTSBROMS, TRYCKREGLERVENTIL (E. V.) (8100 -12327;8200 -11933;8300 -12566;8400 - 12683)
RXP010658 -UN-01JAN94

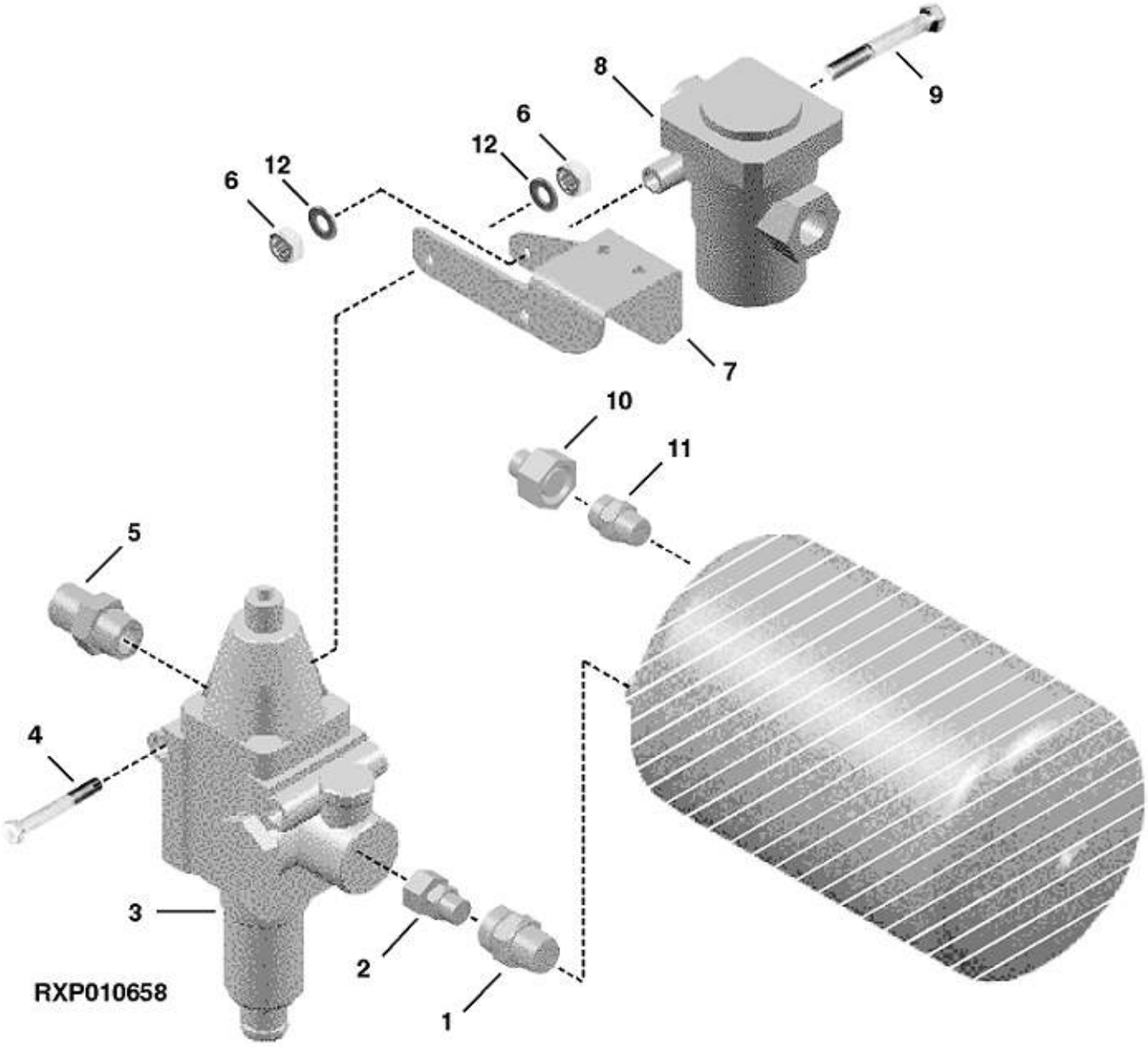

https://www.truck-manuals.net/

KEY	PART NO.	PART NAME	QTY	TRACTOR SERIAL NO.	ALL	REMARKS
1	RE54602	CONNECTOR	1		X	
2	RE54582	CONNECTOR	1		X	
3	AL78941	VALVE	1		X	
4	19M7663	CAP SCREW	2		X	M8 X 70
5	RE58382	FITTING	1		X	
6	14M7273	NUT	2		X	M8
7	R124525	BRACKET	1		X	
8	AL67648	VALVE	1		X	
9	19M7274	CAP SCREW	1		X	M8 X 70
10	RE54575	REDUCER	1		X	
11	RE54602	CONNECTOR	1		X	
12	24M7238	WASHER	3		X	8.700 X 17 X 2 MM

https://www.truck-manuals.net/

AIR BRAKE CONTROL VALVE (EUROPEAN VERSION) (8100 -012327;8200 -011933; 8300 -012566; 8400 -012683)
FREINS A AIR COMPRIME, SOUPAPE DE COMMANDE (V.E.)(8100 -12327;8200 -11933;8300 -12566;8400 -12683)
DRUCKLUFTBREMSE, STEUERVENTIL (E. A.) (8100 -12327; 8200 -11933; 8300 -12566; 8400 -12683)
FRENO AD ARIA COMPRESSA, VALVOLA DI COMANDO(V.E.)(8100 -12327;8200 -11933;8300 -12566;8400 -12683)
FRENO NEUMATICO, VALVULA DE CONTROL (V. E.) (8100 -12327; 8200 -11933; 8300 -12566; 8400 -12683)
TRYCKLUFTSBROMS, MANOEVERVENTIL (E. V.) (8100 -12327; 8200 -11933; 8300 -12566; 8400 -12683)
RXP010659 -UN-01JAN94

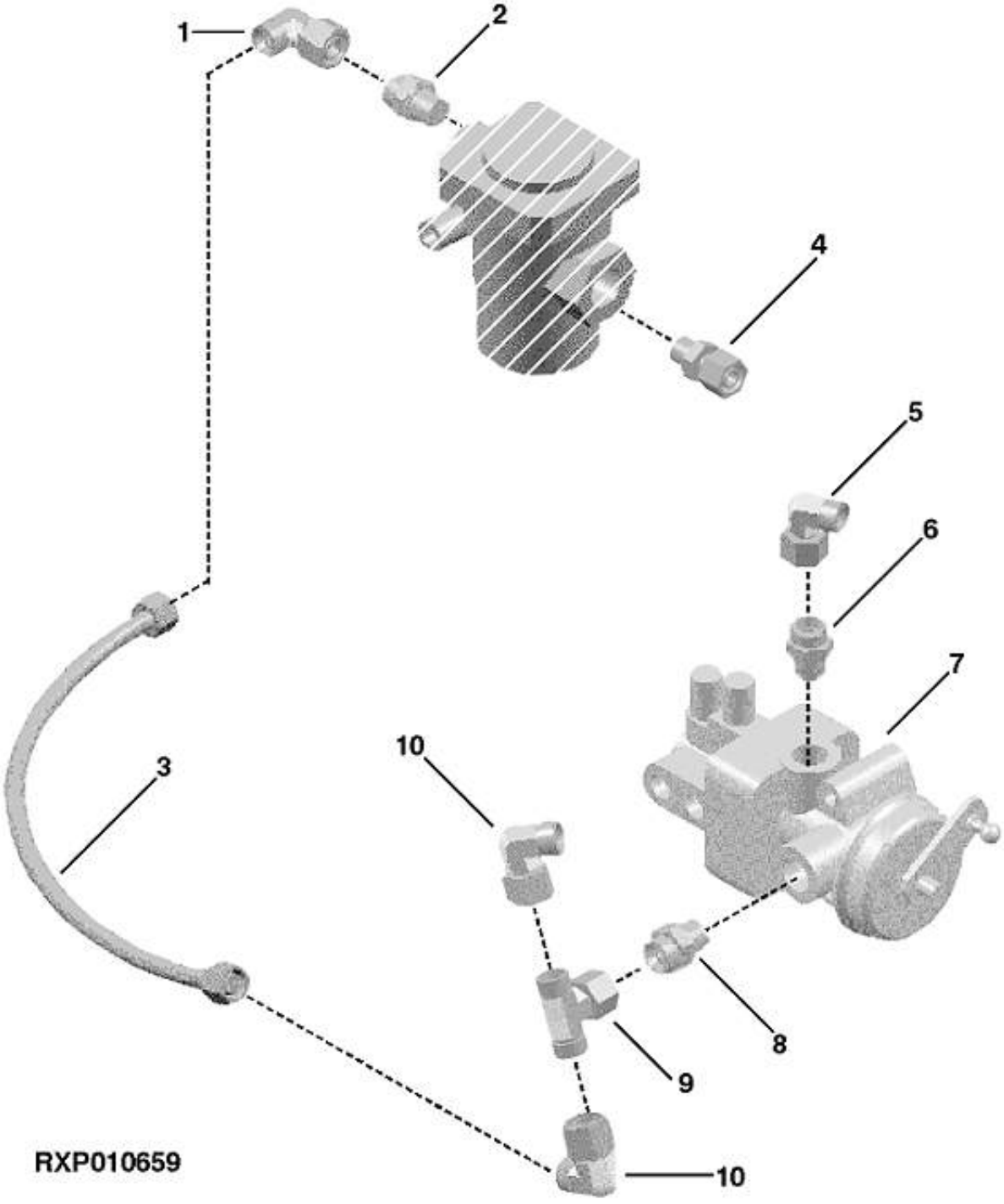

https://www.truck-manuals.net/

KEY	PART NO.	PART NAME	QTY	TRACTOR SERIAL NO.	ALL	REMARKS
1	RE54579	ELBOW FITTING	1		X	
2	RE54601	CONNECTOR	1		X	
3	RE57553	LINE	1		X	
4	RE54583	CONNECTOR	1		X	
5	RE54579	ELBOW FITTING	1		X	
6	RE54601	CONNECTOR	1		X	
7	AL81937	CONTROL VALVE	1		X	
8	RE54601	CONNECTOR	1		X	
9	RE54578	TEE FITTING	1		X	
10	RE54579	ELBOW FITTING	2		X	

https://www.truck-manuals.net/

AIR BRAKE CONTROL VALVE(EUROPEAN VERSION)(8100 012328- ;8200 011934- ;8300 012567- ;8400 012684-)
FREINS A AIR COMPRIME,SOUPAPE DE COMMANDE(V.E.)(8100 12328-;8200 11934-;8300 12567-;8400 12684-)
DRUCKLUFTBREMSE, STEUERVENTIL (E. A.) (8100 012328- ;8200 011934- ;8300 012567- ;8400 012684-)
FRENO AD ARIA COMPRESSA,VALVOLA DI COMANDO(V.E.)(8100 12328-;8200 11934-;8300 12567-;8400 012684-)
FRENO NEUMATICO, VALVULA DE CONTROL (V.E.)(8100 012328- ;8200 011934- ;8300 012567- ;8400 012684-)
TRYCKLUFTSBROMS, MANOEVERVENTIL (E. V.) (8100 012328- ;8200 011934- ;8300 012567- ;8400 012684-)
RE028237 -UN-11SEP97

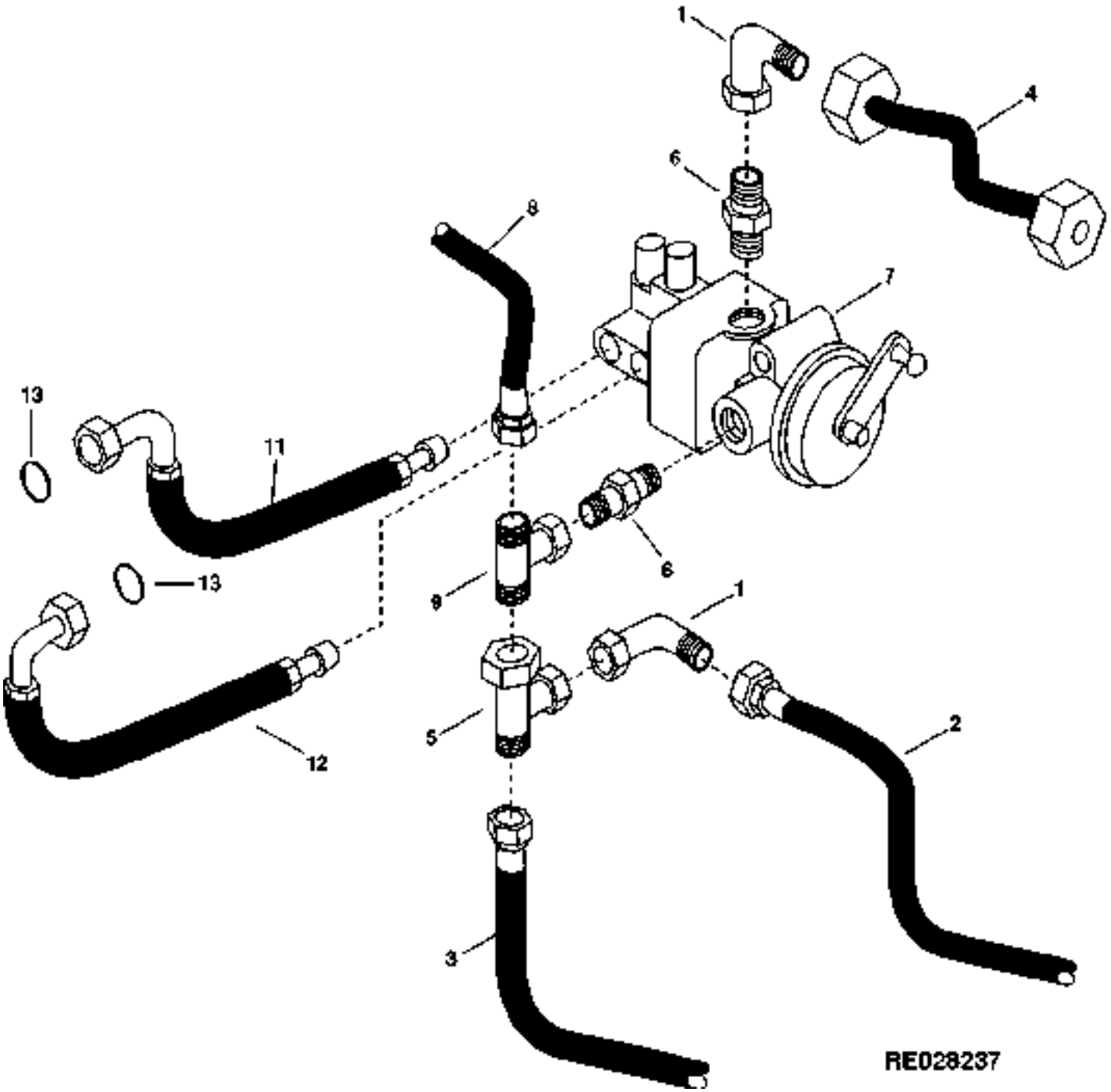

https://www.truck-manuals.net/

KEY	PART NO.	PART NAME	QTY	TRACTOR SERIAL NO.	ALL	REMARKS
1	RE54579	ELBOW FITTING	2		X	
2	RE150842	HOSE	1		X	
3	RE150843	HOSE	1		X	
4	RE150841	HOSE	1		X	
5	RE54577	TEE FITTING	1		X	
6	RE54601	CONNECTOR	2		X	
7	AL81937	CONTROL VALVE	1		X	
8	RE150840	LINE	1		X	
9	RE54578	TEE FITTING	1		X	
10	RE150903	REDUCER	1		X	
11	RE67781	HYDRAULIC HOSE	1		X	
12	RE67782	HYDRAULIC HOSE	1		X	
13	T77613	O-RING	2		X	

https://www.truck-manuals.net/

AIR BRAKE CONTROL VALVE BRACKETS(EUROPEAN VERSION)(8100 -12327;8200 -11933;8300 -12566;8400 -12683
FREINS A AIR COMPRIME,SUPPORTS DE SOUPAPE DE COMMANDE(V.E.)(81 -12327;82 -11933;83 -12566;84-12683
DRUCKLUFTBREMSE, STEUERVENTILHALTERUNGEN (E.A.)(8100 -12327;8200 -11933;8300 -12566;8400 -12683)
FRENO AD ARIA COMPRESSA,STAFFE DELLA VALVOLA DI COM.(V.E.)(81 -12327;82 -11933;83 -12566;84 -12683
FRENO NEUMATICO,SOPORTES DE VALVULA DE CONTROL(V.E.)(81 -12327;82 -11933;8300 -12566;84 -12683)
TRYCKLUFTSBROMS, MANOEVERVENTILFAESTE (E.V.)(8100 -12327;8200 -11933;8300 -12566;8400 -12683)
RXP010660 -UN-01JAN94

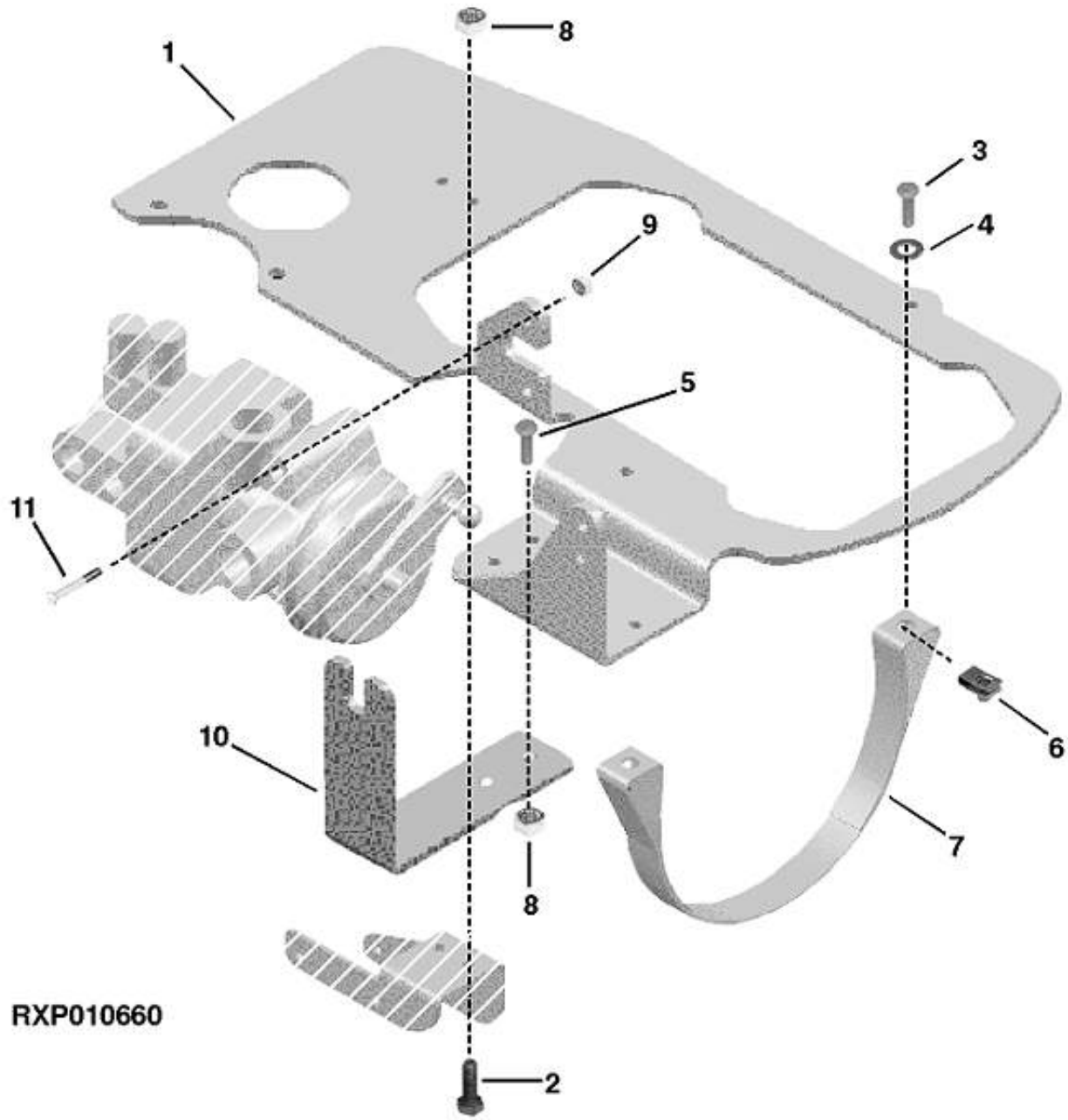

https://www.truck-manuals.net/

KEY	PART NO.	PART NAME	QTY	TRACTOR SERIAL NO.	ALL	REMARKS
1	R121257	BRACKET	1		X	
2	19M7163	CAP SCREW	2		X	M8 X 25
3	19M7295	CAP SCREW	2		X	M8 X 45
4	24M7055	WASHER	2		X	8.400 X 16 X 1.600 MM
5	19M7163	CAP SCREW	2		X	M8 X 25
6	M84971	NUT	2		X	
7	R124163	STRAP	1		X	
8	14M7273	NUT	4		X	M8
9	14M7273	NUT	2		X	M8
10	R121260	ANGLE	1		X	
11	19M7185	CAP SCREW	2		X	M8 X 60

https://www.truck-manuals.net/

AIR BRAKE CONTROL VALVE BRACKETS(E.V.) (8100 12328- ;8200 11934- ;8300 12567- ;8400 12684-)
AIR COMPRIME, SUPPORTS DE SOUPAPE DE COMMANDE (V. E.)(81 12328- ;82 11934- ;83 12567- ;84 12684-)
DRUCKLUFTBREMSE, STEUERVENTILHALTERUNGEN(E.A.)(81 12328- ;82 11934- ;83 12567- ;84 12684-)
FRENO AD ARIA COMPRESSA,STAFFE DELLA VALVOLA DI COM.(V.E.)(81 12328-;82 11934-;83 12567-;84 12684-
FRENO NEUMATICO, SOPORTES DE VALVULA DE CONTROL(V.E.)(81 12328- ;82 11934- ;83 12567- ;84 12684-)
TRYCKLUFTSBROMS, MANOEVERVENTILFAESTE(E.V.)(81 12328- ;82 11934- ;83 12567- ;84 12684-)
RE028239 -UN-11SEP97

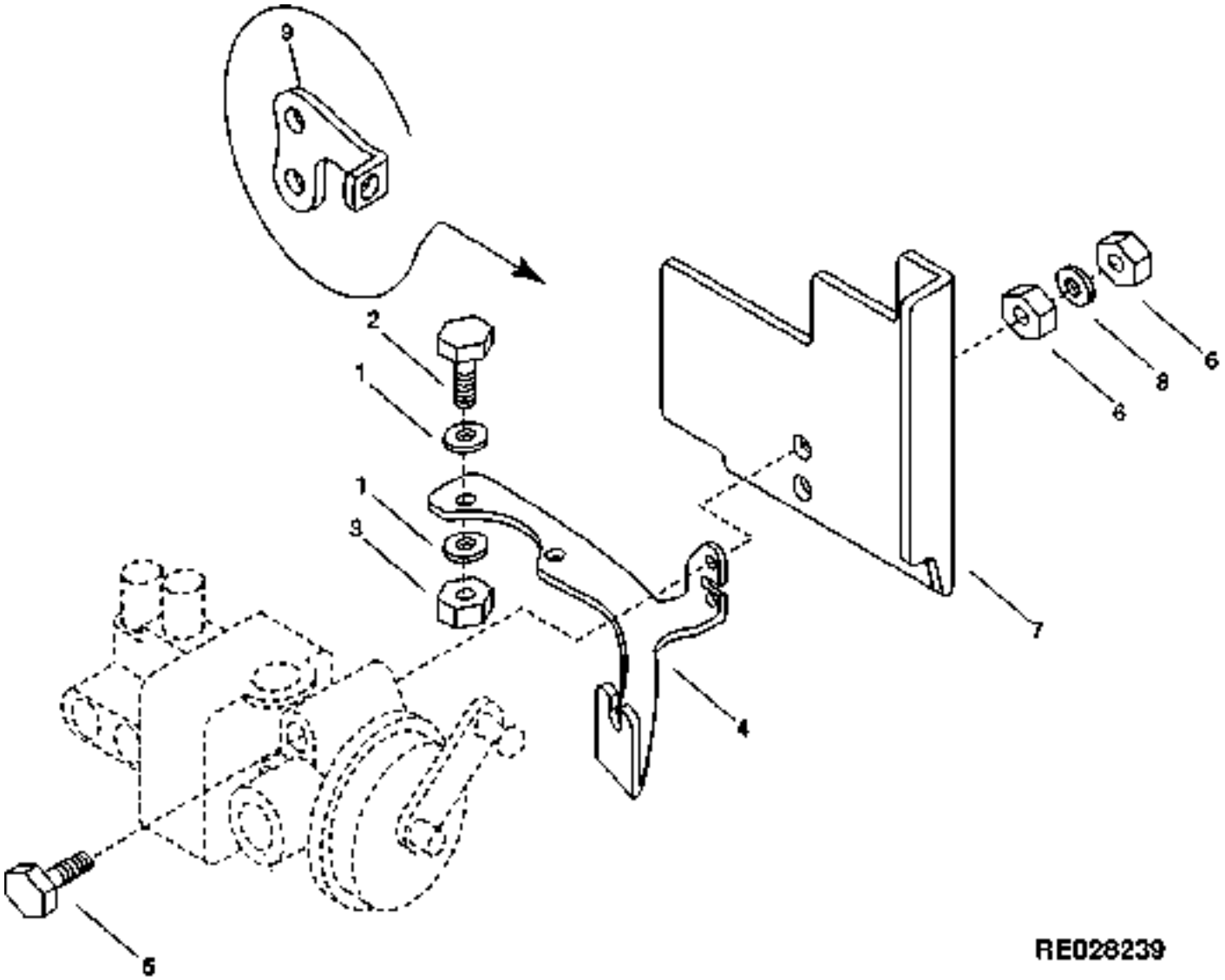

https://www.truck-manuals.net/

KEY	PART NO.	PART NAME	QTY	TRACTOR SERIAL NO.	ALL	REMARKS
1	24M7346	WASHER	4		X	11 X 20 X 2 MM
2	19M7550	CAP SCREW	2		X	M10 X 35, HS 10.9
3	14M7274	NUT	2		X	M10
4	R150538	BRACKET	1		X	
5	19M7274	CAP SCREW	2		X	M8 X 70
6	14M7273	NUT	4		X	M8
7	R150815	SHIELD	1		X	
8	24M7238	WASHER	2		X	8.700 X 17 X 2 MM
9	R150539	STOP	1		X	(A)

(A) LESS SECONDARY BRAKE
W/O FREIN SECONDAIRE
W/O ZWEITBREMSE
W/O FRENO SECONDARIO
W/O FRENO SECUNDARIO
W/O PARKERINGSBROMS

https://www.truck-manuals.net/

AIR BRAKE CONTROL VALVE LINES (EUROPEAN VERSION) (8100,8200,8300,8400 -009999)
FREINS A AIR COMPRIME, CONDUITES DE SOUPAPE DE COMMANDE (V. E.) (8100,8200,8300,8400 -009999)
DRUCKLUFTBREMSE, STEUERVENTILLEITUNGEN(EUROPAEISCHE AUSFUEHRUNG)(8100,8200,8300,8400 -009999)
FRENO AD ARIA COMPRESSA, TUBI DELLA VALVOLA DI COMANDO (V. E.) (8100,8200,8300,8400 -009999)
FRENO NEUMATICO, LINEAS DE VALVULA DE CONTROL (VERSION EUROPEA)(8100,8200,8300,8400 -009999)
TRYCKLUFTSBROMS, MANOEVERVENTILLEDNINGAR (EUROPEISK VERSION) (8100,8200,8300,8400 -009999)
RE026143 -UN-13MAR95

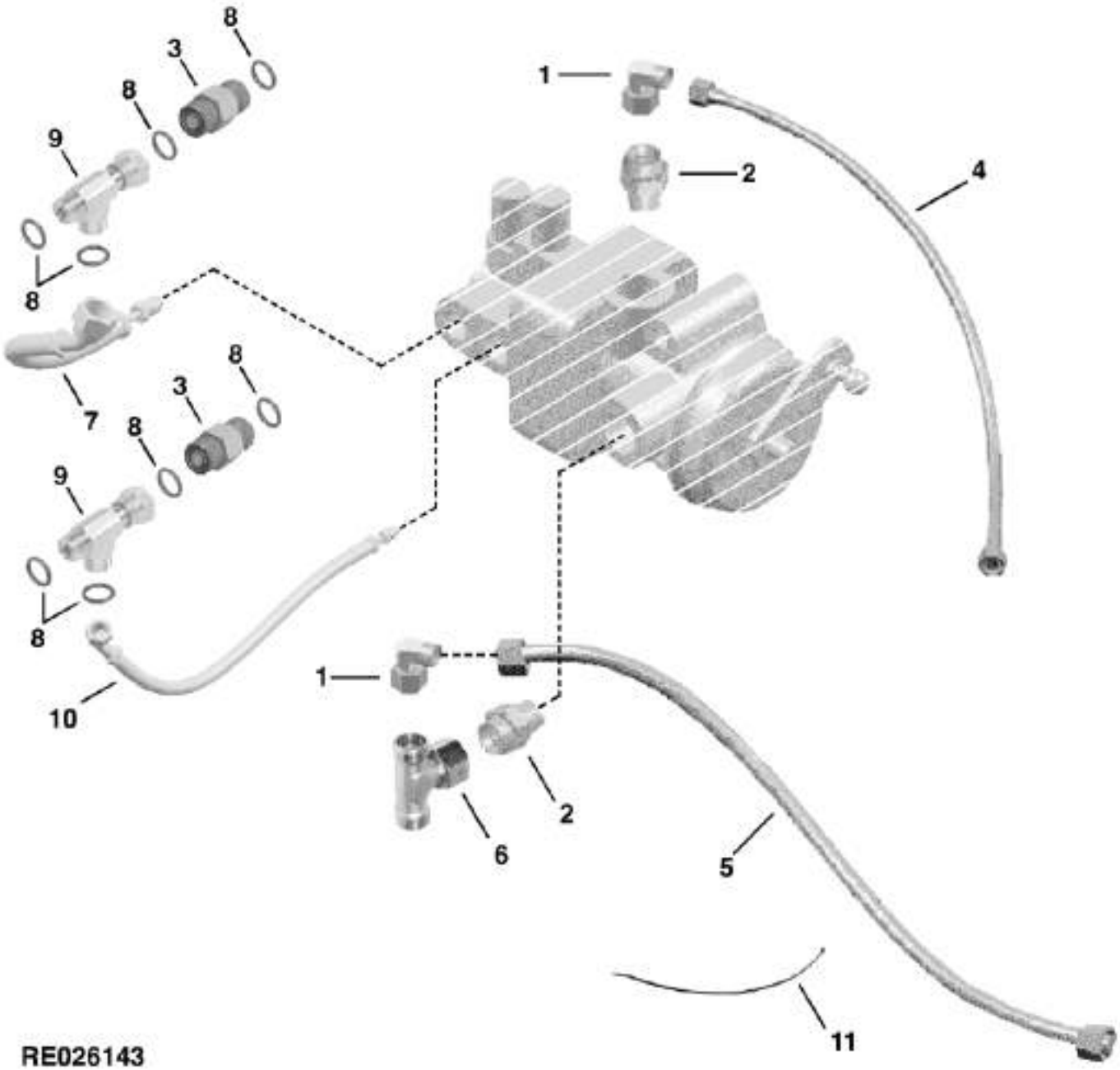

https://www.truck-manuals.net/

KEY	PART NO.	PART NAME	QTY	TRACTOR SERIAL NO.	ALL	REMARKS
1	RE54579	ELBOW FITTING	2		X	
2	RE54601	CONNECTOR	2		X	
3	RE55955	CHECK VALVE	2		X	
4	RE57554	LINE	1		X	
5	RE57555	LINE	1		X	
6	RE54578	TEE FITTING	1		X	
7	RE61391	HYDRAULIC HOSE	1		X	
8	T77613	O-RING	8		X	
9	38H5105	TEE FITTING	2		X	
10	RE61388	HYDRAULIC HOSE	1		X	
11	R44302	TIE BAND	1		X	

https://www.truck-manuals.net/

AIR BRAKE CONTROL VALVE LINES (EUROPEAN VERSION)(8100 010000-012327;8200 010000-011933)
FREINS A AIR COMPRIME,CONDUITES DE SOUPAPE DE COMMANDE(V.E.)(8100 10000-12327;8200 10000-119933)
DRUCKLUFTBREMSE, STEUERVENTILLEITUNGEN (E.A.) (8100 010000-012327;8200 010000-011933)
FRENO AD ARIA COMPRESSA,TUBI DELLA VALVOLA DI COMANDO(V.E.)(8100 010000-012327;8200 010000-011933)
FRENO NEUMATICO, LINEAS DE VALVULA DE CONTROL (V. E.) (8100 010000-012327;8200 010000-011933)
TRYCKLUFTSBROMS, MANOEVERVENTILLEDNINGAR (E. V.) (8100 010000-012327;8200 010000-011933)
RE026980 -UN-20JUN96

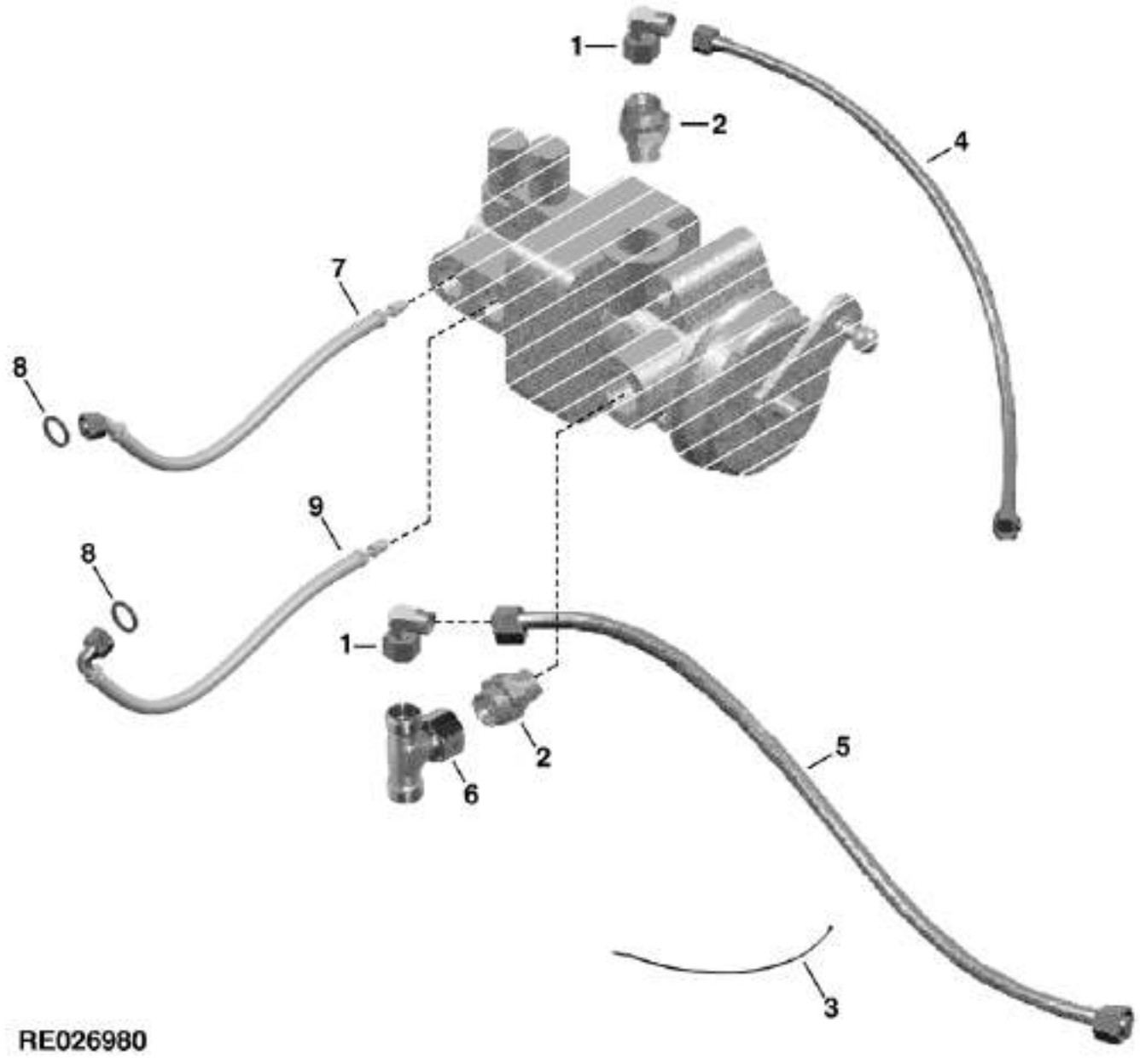

https://www.truck-manuals.net/

KEY	PART NO.	PART NAME	QTY	TRACTOR SERIAL NO.	8100	8200	REMARKS
1	RE54579	ELBOW FITTING	2		X	X	
2	RE54601	CONNECTOR	2		X	X	
3	R44302	TIE BAND	1		X	X	
4	RE57554	LINE	1		X	X	
5	RE57555	LINE	1		X	X	
6	RE54578	TEE FITTING	1		X	X	
7	RE67781	HYDRAULIC HOSE	1		X	X	R.H.
8	T77613	O-RING	2		X	X	
9	RE67782	HYDRAULIC HOSE	1		X	X	L.H.

https://www.truck-manuals.net/

AIR BRAKE CONTROL VALVE LINES(EUROPEAN VERSION)(8300 010000-012566;8400 010000-012683)
FREINS A AIR COMPRIME,CONDUITES DE SOUPAPE DE COMMANDE(V.E.)(8300 10000-12566;8400 10000-12683)
DRUCKLUFTBREMSE, STEUERVENTILLEITUNGEN (E.A.) (8300 010000-012566; 8400 010000-012683)
FRENO AD ARIA COMPRESSA,TUBI DELLA VALVOLA DI COMANDO(V.E.)(8300 10000-12566;8400 10000-12683)
FRENO NEUMATICO, LINEAS DE VALVULA DE CONTROL (V. E.) (8300 010000-012566; 8400 010000-012683)
TRYCKLUFTSBROMS, MANOEVERVENTILLEDNINGAR (E. V.) (8300 010000-012566; 8400 010000-012683)
RE026980 -UN-20JUN96

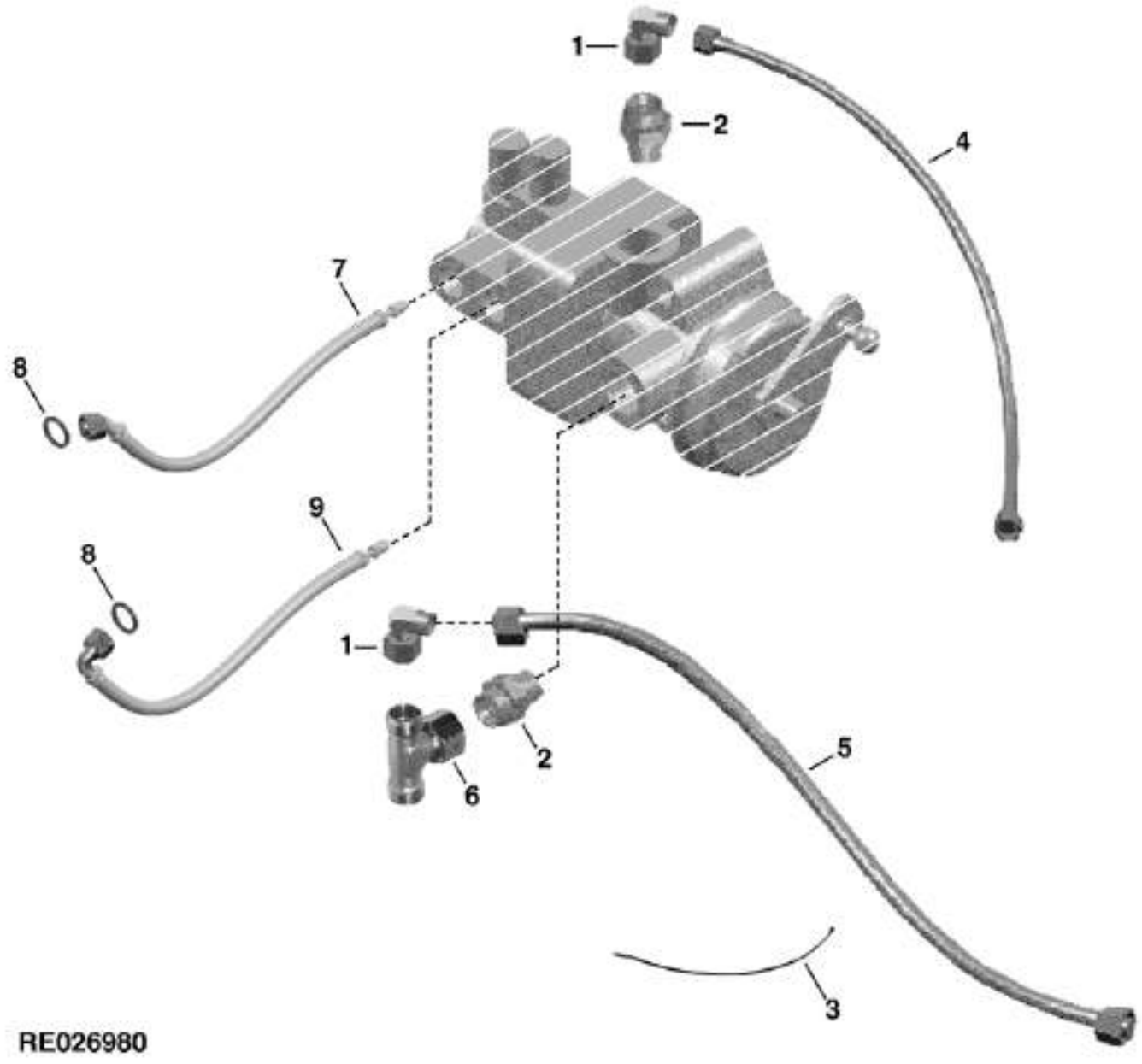

https://www.truck-manuals.net/

KEY	PART NO.	PART NAME	QTY	TRACTOR SERIAL NO.	8 3 0 0 8 4 0 0	REMARKS
1	RE54579	ELBOW FITTING	2		X X	
2	RE54601	CONNECTOR	2		X X	
3	R44302	TIE BAND	1		X X	
4	RE57554	LINE	1		X X	
5	RE57555	LINE	1		X X	
6	RE54578	TEE FITTING	1		X X	
7	RE67782	HYDRAULIC HOSE	1		X X	L.H.
8	T77613	O-RING	2		X X	
9	RE67781	HYDRAULIC HOSE	1		X X	R.H.

https://www.truck-manuals.net/

MEMORANDA
MEMORANDA
MEMORANDA
MEMORANDA
MEMORANDA
MEMORANDA

https://www.truck-manuals.net/

AIR BRAKE PRESSURE SWITCH MANIFOLD(E.V.)(8100 -12327;8200 -11933;8300 -12566;8400 -12683)
FREINS A AIR COMPRIME,COLLECTEUR DE MANOSTAT(V.E.)(8100 -12327;8200 -11933;8300 -12566;8400 -12683
DRUCKLUFTBREMSE, DRUCKSCHALTERVERTEILER (E.A.)(8100 -12327;8200 -11933;8300 -12566;8400 -12683)
FRENO AD ARIA COMPRESSA,COLLETTORE DEL PRESSOSTATO(V.E.)(81 -12327;82 -11933;83 -12566;84 -12683)
FRENO NEUMATICO,MULTIPLE DEL INTERRUPTOR DE PRESION(V.E.)(81 -12327;82 -11933;83 -12566;84 -12683)
TRYCKLUFTSBROMS,KOMMUTATOR FOER TRYCKKONTAKT(E.V.)(8100 -12327;8200 -11933;8300 -12566;8400 -12683
RE028286 -UN-05SEP97

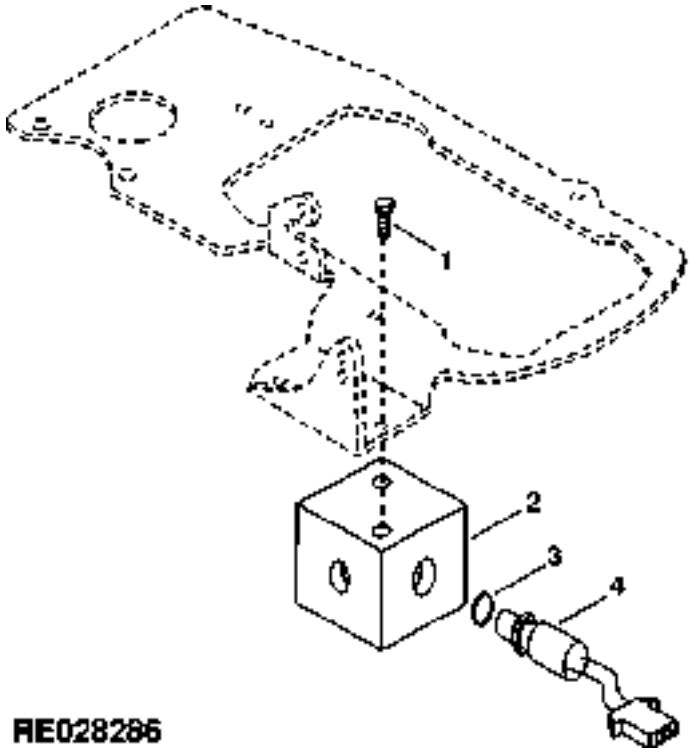

KEY	PART NO.	PART NAME	QTY	TRACTOR SERIAL NO.	ALL	REMARKS
1	19M7163	CAP SCREW	2		X	M8 X 25
2	RE58479	VALVE	1		X	
3	51M7039	O-RING	1		X	8.100 X 1.600 MM
4	RE55363	PRESSURE SWITCH	1		X	

https://www.truck-manuals.net/

AIR BRAKE AIR TANK (EUROPEAN VERSION)(8100 -012327;8200 -011933;8300 -012566;8400 -012683)
FREINS A AIR COMPRIME RESERVOIR(VERSION EUROPEENNE)(81 -12327;82 -11933;83 -12566;84 -12683)
DRUCKLUFTBREMSE, LUFTBEHAELTER(EUROPAEISCHE AUSFUEHRUNG)(81 -12327;82 -11933;83 -12566;84 -12683)
FRENO AD ARIA COMPRESSA,SERBATOIO DELL'ARIA(V.E.)(81 -12327;82 -11933;83 -12566;84 -12683)
FRENO NEUMATICO, DEPOSITO DE AIRE (VERSION EUROPEA)(81 -12327;82 -11933;83 -12566;84 -12683)
TRYCKLUFTSBROMS, LUFTBEHAALLARE (EUROPEISK VERSION)(81 -12327;82 -11933;83 -12566;84 -12683)
RXP010663 -UN-01JAN94

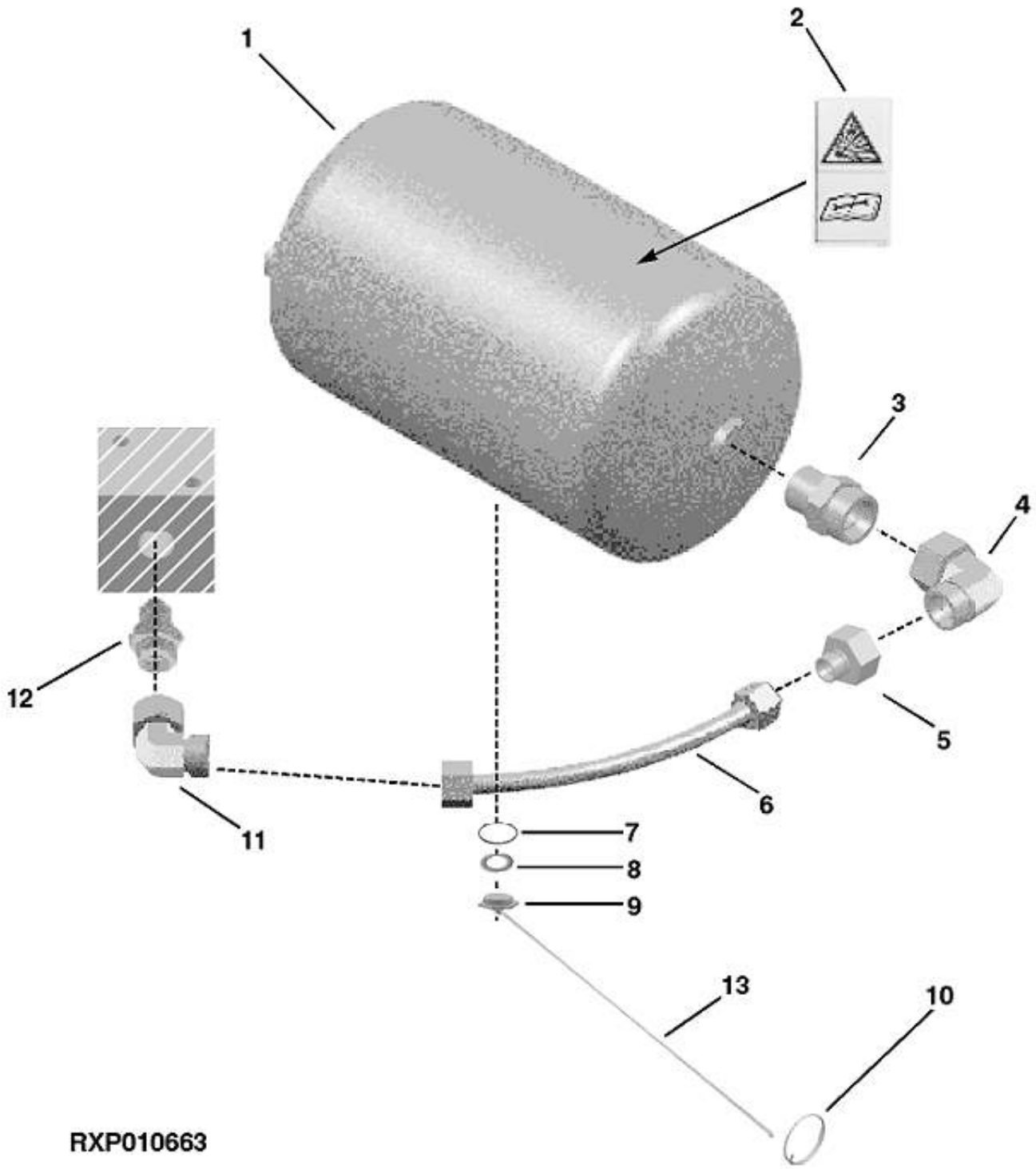

https://www.truck-manuals.net/

KEY	PART NO.	PART NAME	QTY	TRACTOR SERIAL NO.	ALL	REMARKS
1	L64185	RESERVOIR	1		X	
2	L113583	LABEL	1		X	(SUB FOR L65043)
3	RE54602	CONNECTOR	1		X	
4	RE54581	ELBOW FITTING	1		X	
5	RE54575	REDUCER	1		X	
6	RE57556	OIL LINE	1		X	
7	L62893	O-RING	1		X	
8	L63816	WASHER	1		X	
9	AL68589	VALVE	1		X	
10	R80436	RING	1		X	
11	RE54579	ELBOW FITTING	1		X	
12	RE54601	CONNECTOR	1		X	
13	RE63899	CABLE	1		X	(SUB FOR RE60931)

https://www.truck-manuals.net/

AIR BRAKE AIR TANK (EUROPEAN VERSION)(8100 012328- ;8200 011934- ;8300 012567- ;8400 012684-)
FREINS A AIR COMPRIME RESERVOIR (VERSION EUROPEENNE)(81 12328- ;82 11934;83 12567- ;84 12684-)
DRUCKLUFTBREMSE,LUFTBEHAELTER(EUROPAEISCHE AUSFUEHRUNG)(81 12328- ;82 11934- ;83 12567- ;84 12684-
FRENO AD ARIA COMPRESSA, SERBATOIO DELL'ARIA (V.E.)(81 12328- ;82 11934- ;83 12567- ;84 12684-)
FRENO NEUMATICO,DEPOSITO DE AIRE (VERSION EUROPEA)(81 12328- ;82 11934- ;83 12567- ;84 12684-)
TRYCKLUFTSBROMS, LUFTBEHAALLARE (EUROPEISK VERSION)(81 12328- ;82 11934- ;83 12567- ;8400 12684-)
RE030273 -UN-27JAN99

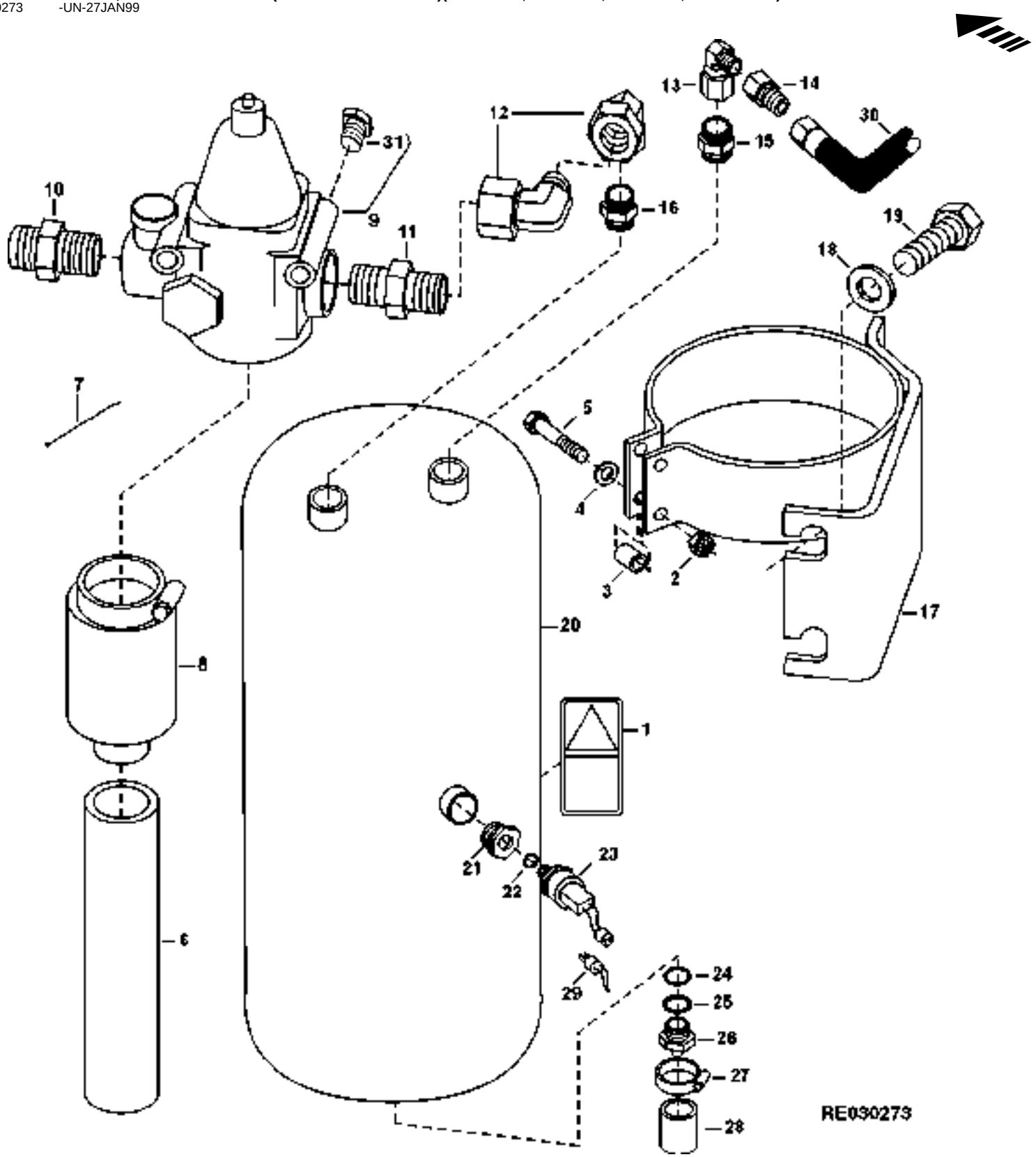

https://www.truck-manuals.net/

KEY	PART NO.	PART NAME	QTY	TRACTOR SERIAL NO.	ALL	REMARKS
1	L113583	LABEL	1		X	(SUB FOR L65043)
2	14M7275	NUT	2		X	M12
3	28H3457	BUSHING	2		X	0.546" X 0.840" X 1-1/16"
4	24M7240	WASHER	4		X	13 X 25 X 3 MM
5	19M7361	CAP SCREW	2		X	M12 X 50, HS 10.9
6	R150664	HOSE	1		X	
7	R44302	TIE BAND	1		X	
8	AL111719	ABSORBER	1		X	
9	AL112538	REGULATOR	1	-XXXXXX	X	
	L41079	PIPE PLUG	1		X	
	L64173	O-RING	1		X	
	L64413	SEAL	1		X	
	RE159802	CONTROL VALVE	1	XXXXXX-	X	
10	RE58382	FITTING	1		X	
11	RE54582	CONNECTOR	1		X	
12	RE54581	ELBOW FITTING	2		X	
13	RE54579	ELBOW FITTING	1		X	
14	RE150903	REDUCER	1		X	
15	RE150839	CONNECTOR	1		X	
16	RE54602	CONNECTOR	1		X	
17	RE150778	BRACKET	1		X	
18	24M7344	WASHER	2		X	22 X 37 X 3 MM
19	19M7946	CAP SCREW	2		X	M20 X 40, HS 10.9
20	AL111802	RESERVOIR	1		X	
21	RE150663	CONNECTOR	1		X	
22	51M7040	O-RING	1		X	9.300 X 2.200 MM
23	RE150606	SWITCH	1		X	
24	L62893	O-RING	1		X	
25	L63816	WASHER	1		X	
26	AL68589	VALVE	1		X	
27	TY22467	CLAMP	1		X	
28	R150662	HOSE	1		X	
29	RE150545	WIRING HARNESS	1		X	
30	RE150840	LINE	1		X	
31	RE159805	PLUG	1	XXXXXX-	X	

https://www.truck-manuals.net/

AIR BRAKE COUPLERS (EUROPEAN VERSION)(8100 -012327;8200 -011933;8300 -012566; 8400 -012683)
FREINS A AIR COMPRIME, RACCORDS (VERSION EUROPEENNE)(81 -12327;82 -11933;83 -12566;8400 -12683)
DRUCKLUFTBREMSE, KUPPLUNGEN (EUROPAEISCHE AUSFUEHRUNG) (81 -12327;82 -11933;83 -12566;84 -12683)
FRENO AD ARIA COMPRESSA,RACCORDI(VERSIONE EUROPEA)(81 -12327;82 -11933;83 -12566;84 -12683)
FRENO NEUMATICO, ACOPLADORES(VERSION EUROPEA)(8100 -12327;8200 -11933;8300 -12566;8400 -12683)
TRYCKLUFTSBROMS, KOPPLINGAR (EUROPEISK VERSION) (81 -12327;82 -11933;83 -12566;8400 -12683)
RE026144 -UN-13MAR95

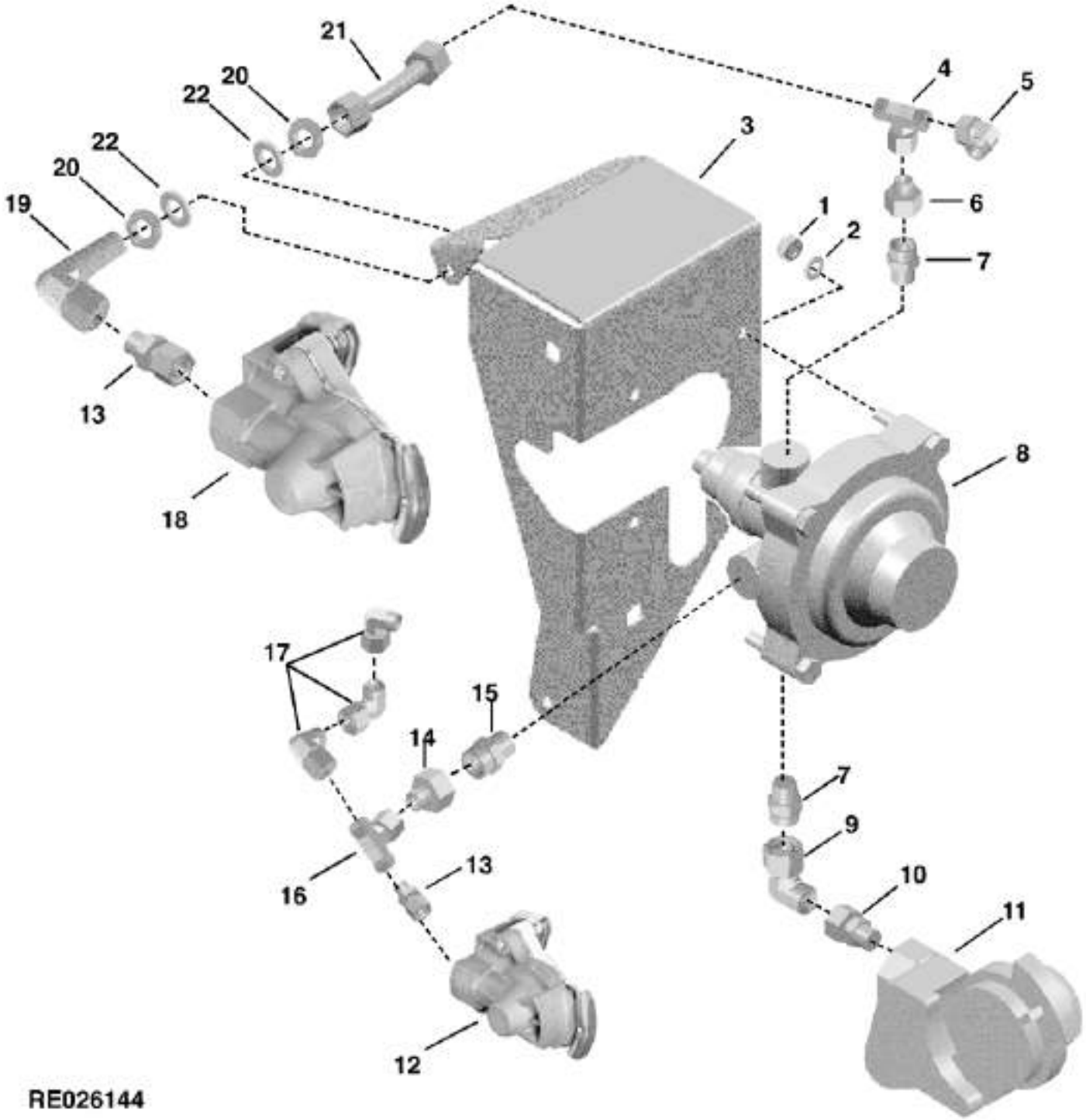

https://www.truck-manuals.net/

KEY	PART NO.	PART NAME	QTY	TRACTOR SERIAL NO.	ALL	REMARKS
1	14M7274	NUT	4		X	M10
2	24M7028	WASHER	4		X	10.500 X 20 X 2 MM
3	R125324	SUPPORT	1		X	
4	RE54578	TEE FITTING	1		X	
5	RE54579	ELBOW FITTING	1		X	
6	RE54575	REDUCER	1		X	
7	RE150839	CONNECTOR	2		X	
8	AL68577	VALVE	1		X	
9	RE54581	ELBOW FITTING	1		X	
10	RE54582	CONNECTOR	1		X	
11	AL68573	HITCH COUPLING	1		X	(A)
12	AL68572	HITCH COUPLING	1		X	(B)
13	RE54583	CONNECTOR	2		X	
14	RE54575	REDUCER	1		X	
15	RE54602	CONNECTOR	1		X	
16	RE54578	TEE FITTING	1		X	
17	RE54579	ELBOW FITTING	2		X	
18	AL68571	HITCH COUPLING	1		X	(C)
19	RE54573	ELBOW FITTING	1		X	
20	14M7209	NUT	2		X	M18
21	RE60934	HOSE	1		X	
22	R63667	WASHER	2		X	

(A) BLACK
NOIR
SCHWARZ
NERO
NEGRO
SVART

(B) YELLOW
JAUNE
GELB
GIALLO
AMARILLO
GUL

(C) RED
ROUGE
ROT
ROSSO
ROJO
ROED

https://www.truck-manuals.net/

AIR BRAKE COUPLERS (EUROPEAN VERSION)(8100 012328- ;8200 011934- ;8300 012567- ; 8400 012684-)
FREINS A AIR COMPRIME, RACCORDS (VERSION EUROPEENNE)(81 12328- ;82 11934- ;83 12567- ;84 12684-)
DRUCKLUFTBREMSE, KUPPLUNGEN (EUROPAEISCHE AUSFUEHRUNG)(81 12328- ;82 11934- ;83 12567- ;84 12684-)
FRENO AD ARIA COMPRESSA, RACCORDI (VERSIONE EUROPEA)(81 12328- ;82 11934- ;83 12567- ;84 12684-)
FRENO NEUMATICO, ACOPLADORES (VERSION EUROPEA) (81 12328- ;82 11934- ;83 12567- ;84 12684-)
TRYCKLUFTSBROMS, KOPPLINGAR (EUROPEISK VERSION) (81 12328- ;82 11934- ;83 12567- ;84 12684-)
RE028238 -UN-11SEP97

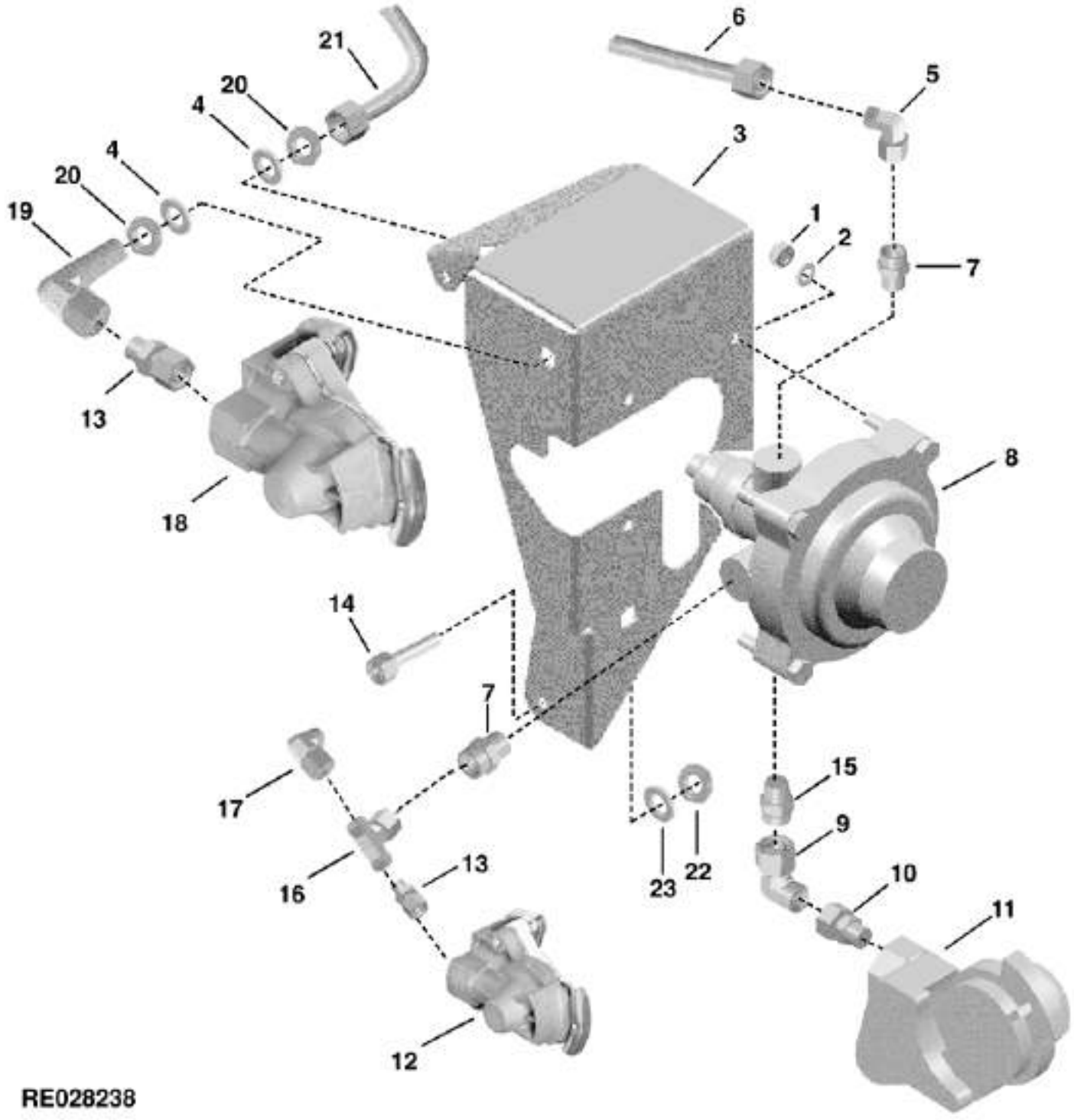

https://www.truck-manuals.net/

KEY	PART NO.	PART NAME	QTY	TRACTOR SERIAL NO.	ALL	REMARKS
1	14M7274	NUT	4		X	M10
2	24M7028	WASHER	4		X	10.500 X 20 X 2 MM
3	R125324	SUPPORT	1		X	
4	R63667	WASHER	2		X	
5	RE54579	ELBOW FITTING	1		X	
6	RE150843	HOSE	1		X	
7	RE150839	CONNECTOR	2		X	
8	AL68577	VALVE	1		X	
9	RE54581	ELBOW FITTING	1		X	
10	RE54582	CONNECTOR	1		X	
11	AL68573	HITCH COUPLING	1		X	(A)
12	AL68572	HITCH COUPLING	1		X	(B)
13	RE54583	CONNECTOR	2		X	
14	19M7550	CAP SCREW	2		X	M10 X 35, HS 10.9
15	RE54602	CONNECTOR	1		X	
16	RE54578	TEE FITTING	1		X	
17	RE54579	ELBOW FITTING	2		X	
18	AL68571	HITCH COUPLING	1		X	(C)
19	RE54573	ELBOW FITTING	1		X	
20	14M7209	NUT	2		X	M18
21	RE150842	HOSE	1		X	
22	14M7274	NUT	2		X	M10
23	24M7346	WASHER	4		X	11 X 20 X 2 MM

(A) BLACK
NOIR
SCHWARZ
NERO
NEGRO
SVART

(B) YELLOW
JAUNE
GELB
GIALLO
AMARILLO
GUL

(C) RED
ROUGE
ROT
ROSSO
ROJO
ROED

https://www.truck-manuals.net/

AIR BRAKE AIR COMPRESSOR (EUROPEAN VERSION)
FREINS A AIR COMPRIME, COMPRESSEUR (VERSION EUROPEENNE)
DRUCKLUFTBREMSE, KOMPRESSOR (EUROPAEISCHE AUSFUEHRUNG)
FRENO AD ARIA COMPRESSA, COMPRESSORE (VERSIONE EUROPEA)
FRENO NEUMATICO, COMPRESOR DE AIRE (VERSION EUROPEA)
TRYCKLUFTSBROMS, KOMPRESSOR (EUROPEISK VERSION)
RE028274 -UN-27AUG97

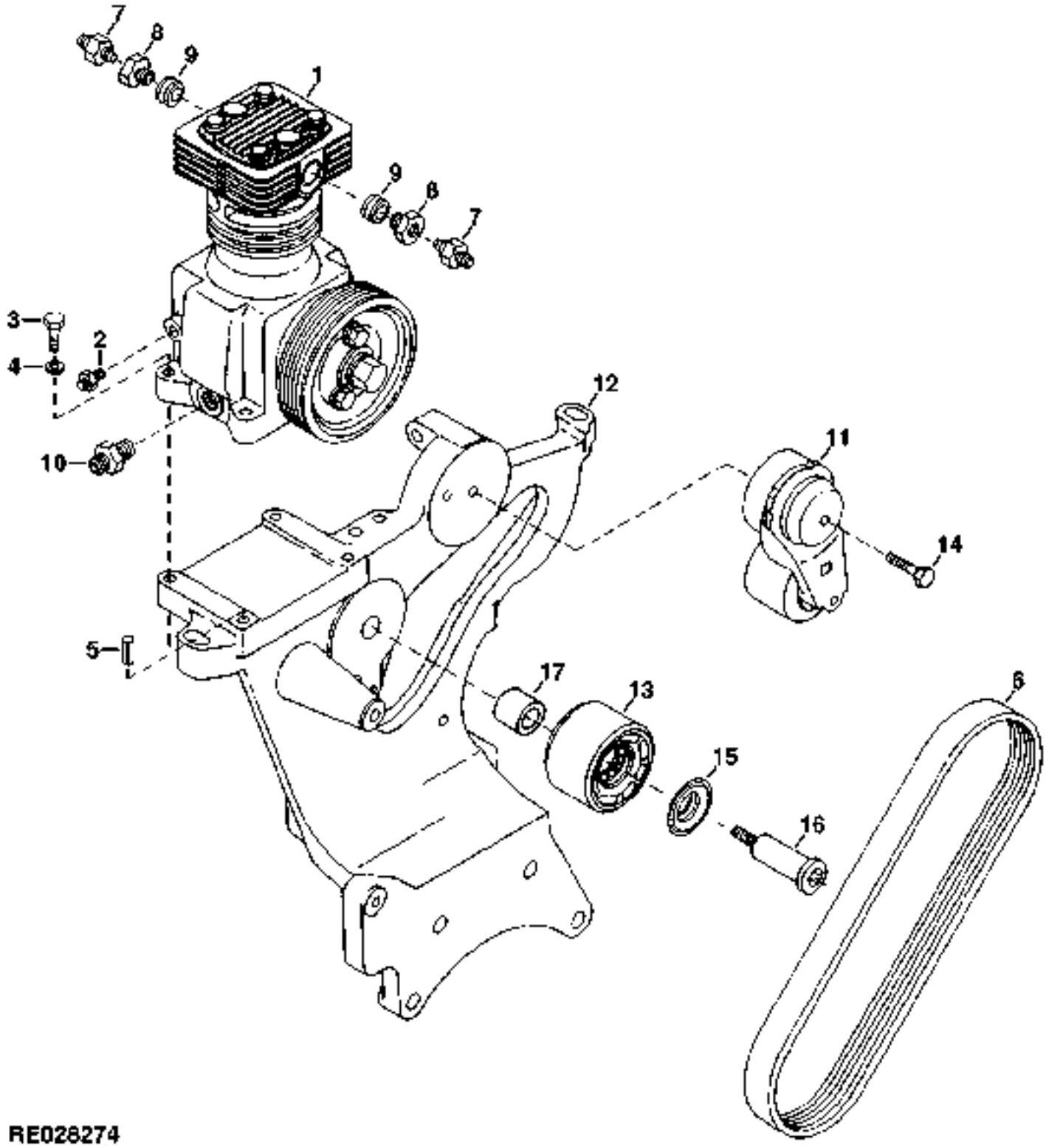

https://www.truck-manuals.net/

KEY	PART NO.	PART NAME	QTY	TRACTOR SERIAL NO.	ALL	REMARKS
1	RE58386	COMPRESSOR	1		X	
	AL113954	GASKET KIT	1		X	
2	RE54603	CONNECTOR	1		X	
3	19M8300	SCREW	4		X	M8 X 40
4	24M7336	WASHER	4		X	9 X 16 X 1.600 MM
5	34M7189	SPRING PIN	2		X	11 X 8 MM
6	R124786	BELT	1		X	
7	N112193	ADAPTER	2		X	
8	R117153	ADAPTER	2		X	
9	R117307	RING	2		X	
10	RE58382	FITTING	1		X	
11	RE57498	TIGHTENER	1		X	
12	R121379	SUPPORT	1		X	
13	RE68722	PULLEY	1		X	(SUB FOR RE51281)
14	19M7810	SCREW	1		X	M10 X 80, HS 10.9
15	R114837	DUST SHIELD	1		X	
16	R120143	BOLT	1		X	
17	T14386	BUSHING	1		X	

https://www.truck-manuals.net/

GASKET KIT FOR AIR COMPRESSOR (TRAILER AIR BRAKE)
JEU DE JOINTS POUR COMPRESSEUR (FREIN PNEUMATIQUE DE REMORQUE)
DICHTUNGSSATZ FUER LUFTKOMPRESSOR (DRUCKLUFT-ANHAENGERBREMSE)
SERIE GUARNIZIONI PER COMPRESSORE ARIA (FRENATURA PNEUMATICA RIMORCHIO)
JUEGO DE JUNTAS PARA COMPRESOR DE AIRE (FRENO NEUMATICO PARA REMOLQUE)
PACKNINGSSATS FOR LUFTKOMPRESSOR (TRYCKLUFTVAGNSBROMS)
LX016556 -UN-24JUL97

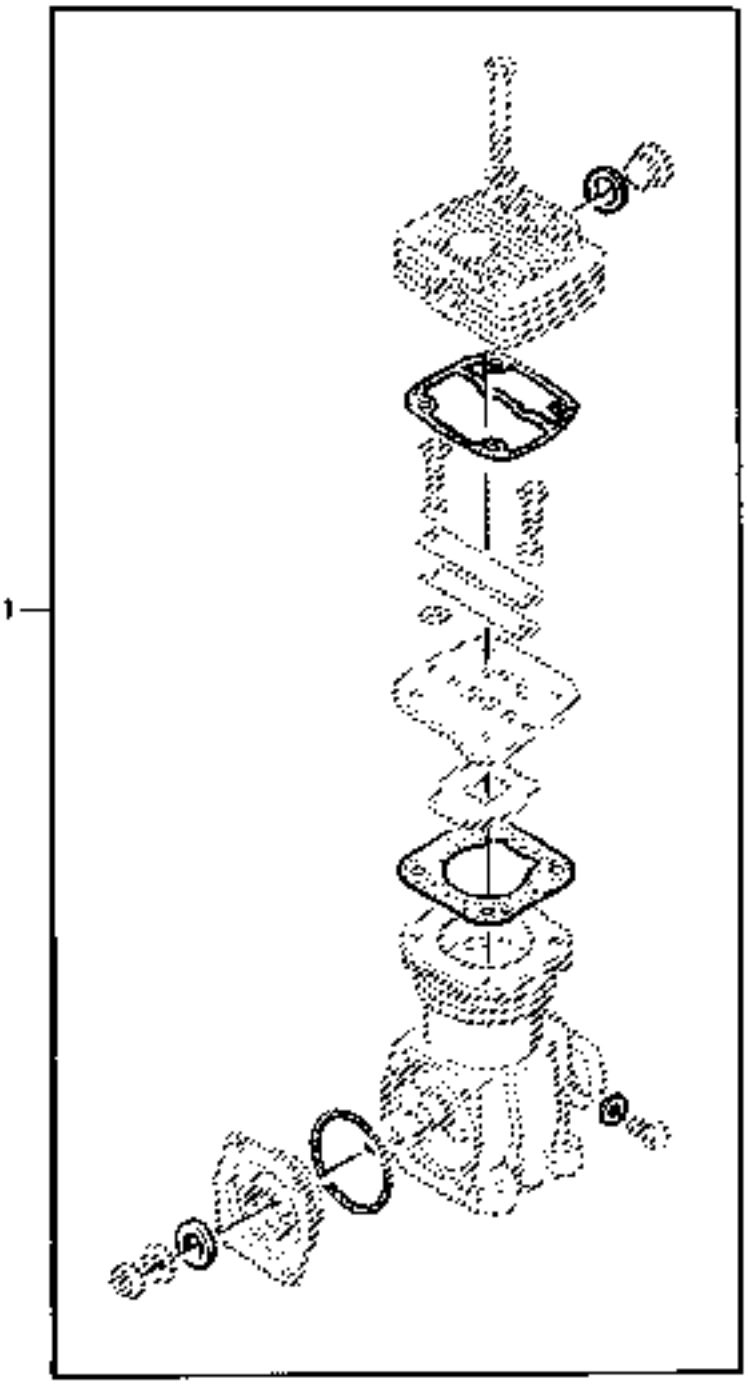

LX016556

https://www.truck-manuals.net/

KEY	PART NO.	PART NAME	QTY	TRACTOR SERIAL NO.	ALL	REMARKS
1	AL113954	GASKET KIT	1		X	

https://www.truck-manuals.net/

AIR BRAKE LINES (FRONT) (EUROPEAN VERSION) (8100,8200,8300 -009999)
CONDUITE DE FREIN A AIR COMPRIME (AVANT) (VERSION EUROPEENNE) (8100,8200,8300 -009999)
DRUCKLUFTBREMSLEITUNG (VORN) (EUROPAEISCHE AUSFUEHRUNG) (8100,8200,8300 -009999)
LINEA DEL FRENO AD ARIA COMPRESSA (ANTERIORE) (VERSIONE EUROPEA) (8100,8200,8300 -009999)
LINEA DE FRENOS NEUMATICOS (FRENTE) (VERSION EUROPEA) (8100,8200,8300 -009999)
TRYCKLUFTSBROMSLEDNING (FRAM) (EUROPEISK VERSION) (8100,8200,8300 -009999)
RXP011238 -UN-01JAN94

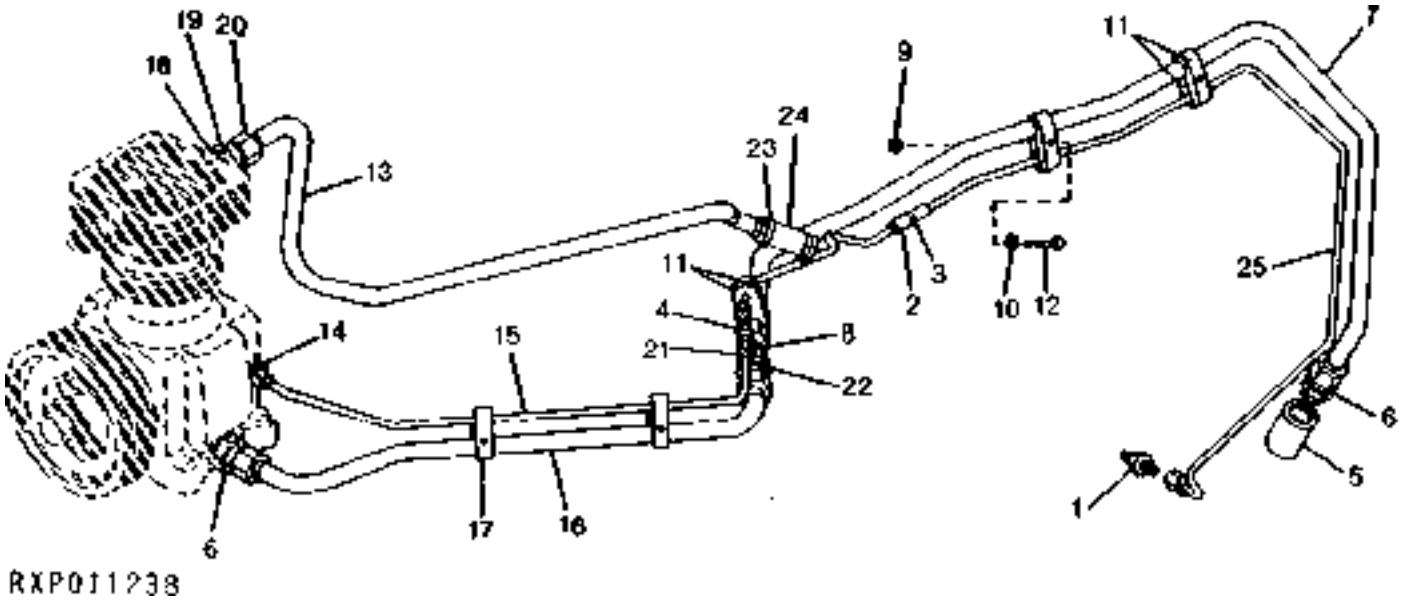

https://www.truck-manuals.net/

KEY	PART NO.	PART NAME	QTY	TRACTOR SERIAL NO.	8 8 8 1 2 3 0 0 0 0 0 0	REMARKS
1	R35352	FITTING	1		X X X	
2	H23941	ISOLATOR	1		X X X	
3	R44302	TIE BAND	1		X X X	
4	H33795	UNION FITTING	1		X X X	
5	R121835	ADAPTER	1		X X X	
6	RE58382	FITTING	2		X X X	
7	RE60886	LINE	1		X X X	
8	R35717	FITTING	1		X X X	
9	14M7272	NUT	2		X X X	M6
10	24M7088	WASHER	2		X X X	6.600 X 12 X 1.600 MM
11	R122318	CLAMP	4		X X X	
12	19M7833	SCREW	2		X X X	M6 X 35, HS 10.9
13	RE60872	LINE	1		X X X	
14	RE54603	CONNECTOR	1		X X X	
15	RE60885	LINE	1		X X X	
16	RE60883	LINE	1		X X X	
17	R122318	CLAMP	6		X X X	
	24M7088	WASHER	3		X X X	6.600 X 12 X 1.600 MM
	14M7272	NUT	3		X X X	M6
	19M7833	SCREW	3		X X X	M6 X 35, HS 10.9
18	R117307	RING	1		X X X	
19	R117153	ADAPTER	1		X X X	
20	N112193	ADAPTER	1		X X X	
21	H33795	UNION FITTING	1		X X X	
22	R35717	FITTING	1		X X X	
23	TY22465	CLAMP	2		X X X	(SUB FOR AR21837)
24	R122611	HOSE	1		X X X	
25	RE60876	LINE	1		X X X	

https://www.truck-manuals.net/

AIR BRAKE LINES (FRONT) (EUROPEAN VERSION) (8100,8200,8300 010000- ; 8400 001000-)
CONDUITE DE FREIN A AIR COMPRIME(AVANT)(VERSION EUROPEENE)(8100,8200,8300 010000- ;8400 001000-)
DRUCKLUFTBREMSLEITUNG (VORN) (EUROPAEISCHE AUSFUEHRUNG) 8100,8200,8300 010000- ;8400 001000-)
LINEA DEL FRENO AD ARIA COMPRESSA(ANTERIORE)(VERSIONE EUROPEA)8100,8200,8300 010000- ;8400 001000-
LINEA DE FRENOS NEUMATICOS (FRENTE) (VERSIONE EUROPEA) (8100,8200,8300 010000- ;8400 001000-)
TRYCKLUFTSBROMSLEDNING (FRAM) (EUROPEISK VERSION) 8100,8200,8300 010000- ; 8400 001000-)
RE026982 -UN-21JUN96

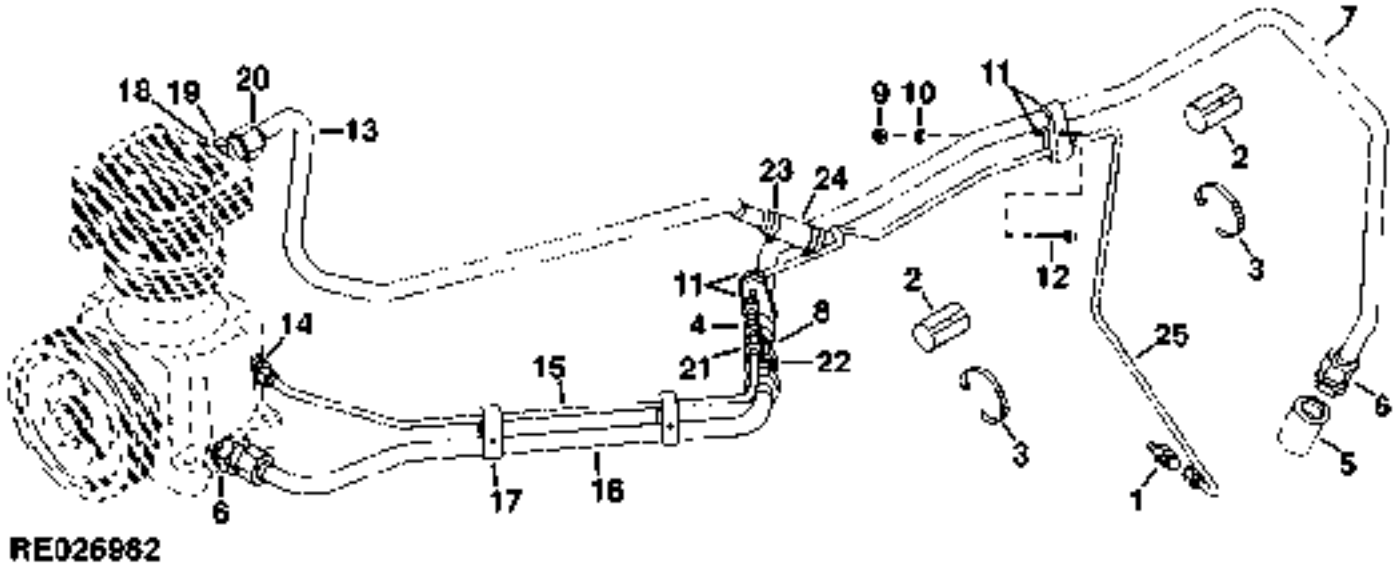

RE026982

https://www.truck-manuals.net/

KEY	PART NO.	PART NAME	QTY	TRACTOR SERIAL NO.	ALL	REMARKS
1	R35352	FITTING	1		X	
2	H23941	ISOLATOR	2		X	
3	R44302	TIE BAND	2		X	
4	H33795	UNION FITTING	1		X	
5	R121835	ADAPTER	1		X	
6	RE58382	FITTING	2		X	
7	RE60886	LINE	1		X	(B)
8	R35717	FITTING	1		X	
9	14M7272	NUT	2		X	M6
10	24M7088	WASHER	2		X	6.600 X 12 X 1.600 MM
11	R122318	CLAMP	4		X	
12	19M7833	SCREW	2		X	M6 X 35, HS 10.9
13	RE60872	LINE	1		X	
14	RE54603	CONNECTOR	1		X	
15	RE60885	LINE	1		X	
16	RE60883	LINE	1		X	
17	R122318	CLAMP	4		X	
	24M7088	WASHER	2		X	6.600 X 12 X 1.600 MM
	14M7272	NUT	2		X	M6
	19M7833	SCREW	2		X	M6 X 35, HS 10.9
18	R117307	RING	1		X	
19	R117153	ADAPTER	1		X	
20	N112193	ADAPTER	1		X	
21	H33795	UNION FITTING	1		X	
22	R35717	FITTING	1		X	
23	TY22465	CLAMP	2		X	(SUB FOR AR21837)
24	R122611	HOSE	1		X	(SUB FOR RE61919)
25	RE153099	LINE	1		X	(A)
26	H23941	ISOLATOR	1		X	

(A) PRESSURE
PRESSION
DRUCK
PRESSIONE
PRESION
TRYCK

(B) RETURN
RETOUR
RUECKLAUF
RETORNO
RITORNO
RETUR

https://www.truck-manuals.net/

AIR BRAKE LINES (REAR) (EUROPEAN VERSION) (8100,8200,8300,8400 -009999)
CONDUITE DE FREIN A AIR COMPRIME (ARRIERE) (VERSION EUROPEENNE) (8100,8200,8300,8400 -009999)
DRUCKLUFTBREMSLEITUNG (HINTEN) (EUROPAEISCHE AUSFUEHRUNG) (8100,8200,8300,8400 -009999)
LINEA DEL FRENO AD ARIA COMPRESSA (POSTERIORE) (VERSIONE EUROPEA) (8100,8200,8300,8400 -009999)
LINEA DE FRENOS NEUMATICOS (TRASERO) (VERSION EUROPEA) (8100,8200,8300,8400 -009999)
TRYCKLUFTSBROMSLEDNING (BAK) (EUROPEISK VERSION) (8100,8200,8300,8400 -009999)
RXP011240 -UN-01JAN94

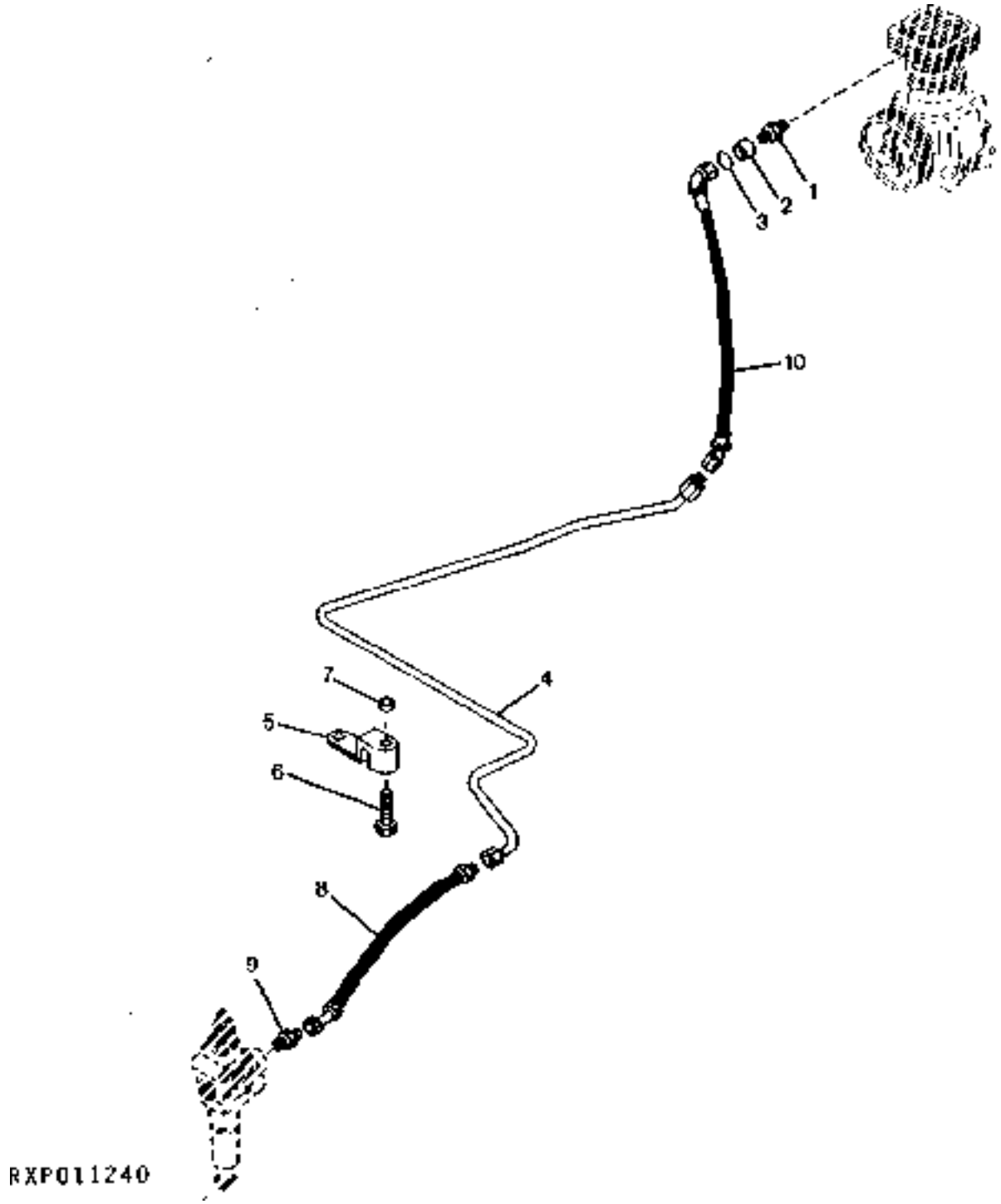

https://www.truck-manuals.net/

KEY	PART NO.	PART NAME	QTY	TRACTOR SERIAL NO.	ALL	REMARKS
1	N112193	ADAPTER	1		X	
2	R117153	ADAPTER	1		X	
3	R117307	RING	1		X	
4	RE60889	LINE	1		X	
5	H112162	CLAMP	1		X	
6	37M7103	SCREW	1		X	M8 X 45
7	T131169	SPACER	1		X	
8	RE66566	HOSE	1		X	(SUB FOR RE60932)
9	RE58382	FITTING	1		X	
10	RE60937	HOSE	1		X	

https://www.truck-manuals.net/

AIR BRAKE LINE (REAR) (EUROPEAN VERSION) (8100,8200,8300,8400 010000-)
CONDUITE DE FREIN A AIR COMPRIME (ARRIERE) (VERSION EUROPEENNE) (8100,8200,8300,8400 010000-)
DRUCKLUFTBREMSLEITUNG (HINTEN) (EUROPAEISCHE AUSFUEHRUNG) (8100,8200,8300,8400 010000-)
LINEA DEL FRENO AD ARIA COMPRESSA (POSTERIORE) (VERSIONE EUROPEA) (8100,8200,8300,8400 010000-)
LINEA DE FRENOS NEUMATICOS (TRASERO) (VERSION EUROPEA) (8100,8200,8300,8400 010000-)
TRYCKLUFTSBROMSLEDNING (BAK) (EUROPEISK VERSION) (8100,8200,8300,8400 010000-)
RE026968 -UN-19JUN96

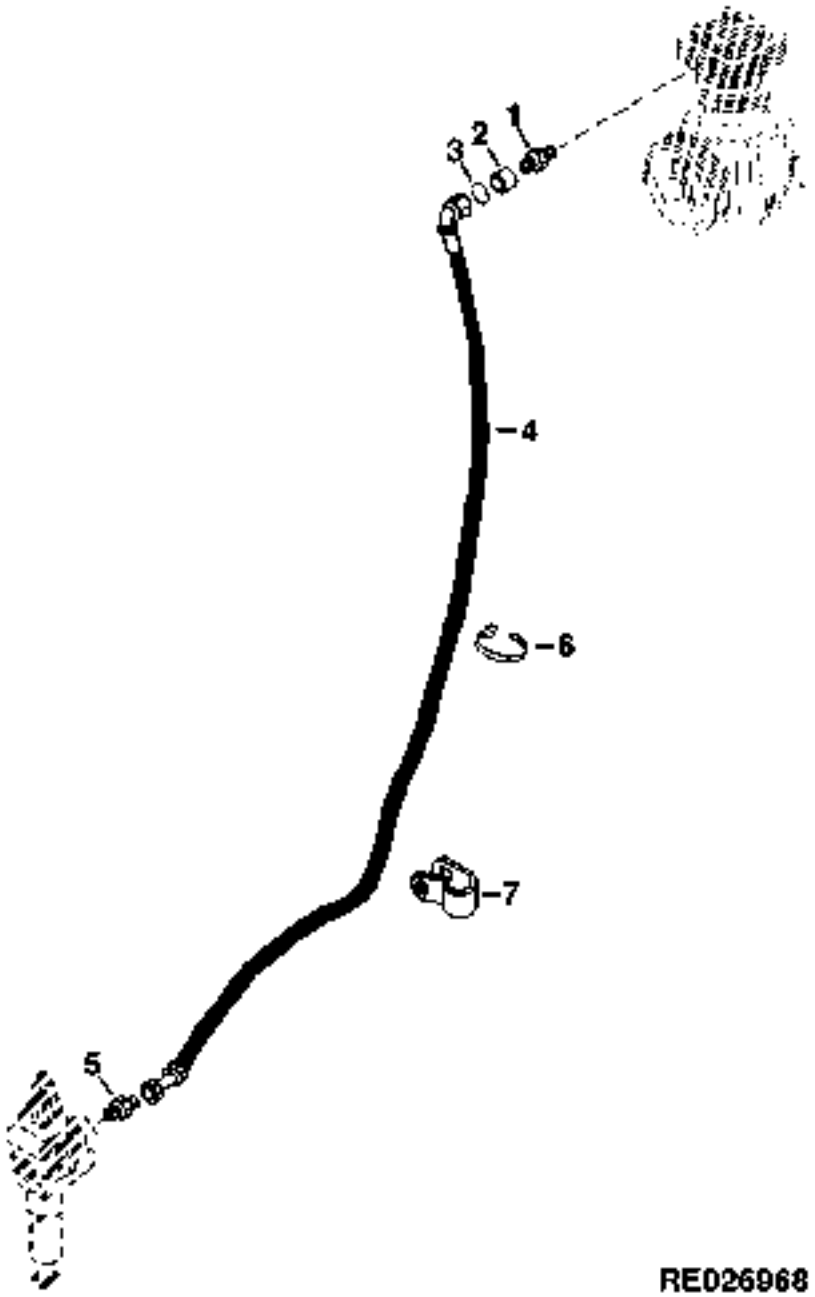

https://www.truck-manuals.net/

KEY	PART NO.	PART NAME	QTY	TRACTOR SERIAL NO.	ALL	REMARKS
1	N112193	ADAPTER	1		X	
2	R117153	ADAPTER	1		X	
3	R117307	RING	1		X	
4	RE68214	HOSE	1		X	
5	RE58382	FITTING	1		X	
6	R44302	TIE BAND	AR		X	
7	R46414	CLAMP	1		X	

https://www.truck-manuals.net/

AIR BRAKE CABLE (EUROPEAN VERSION)
CABLE DE FREIN A AIR COMPRIME (VERSION EUROPEENNE)
DRUCKLUFTBREMSKABEL (EUROPAEISCHE AUSFUEHRUNG)
CAVO DEL FRENO AD ARIA COMPRESSA (VERSIONE EUROPEA)
CABLE DE FRENOS NEUMATICOS (VERSION EUROPEA)
TRYCKLUFTSBROMSKABEL (EUROPEISK VERSION)
RE026969 -UN-31MAY96

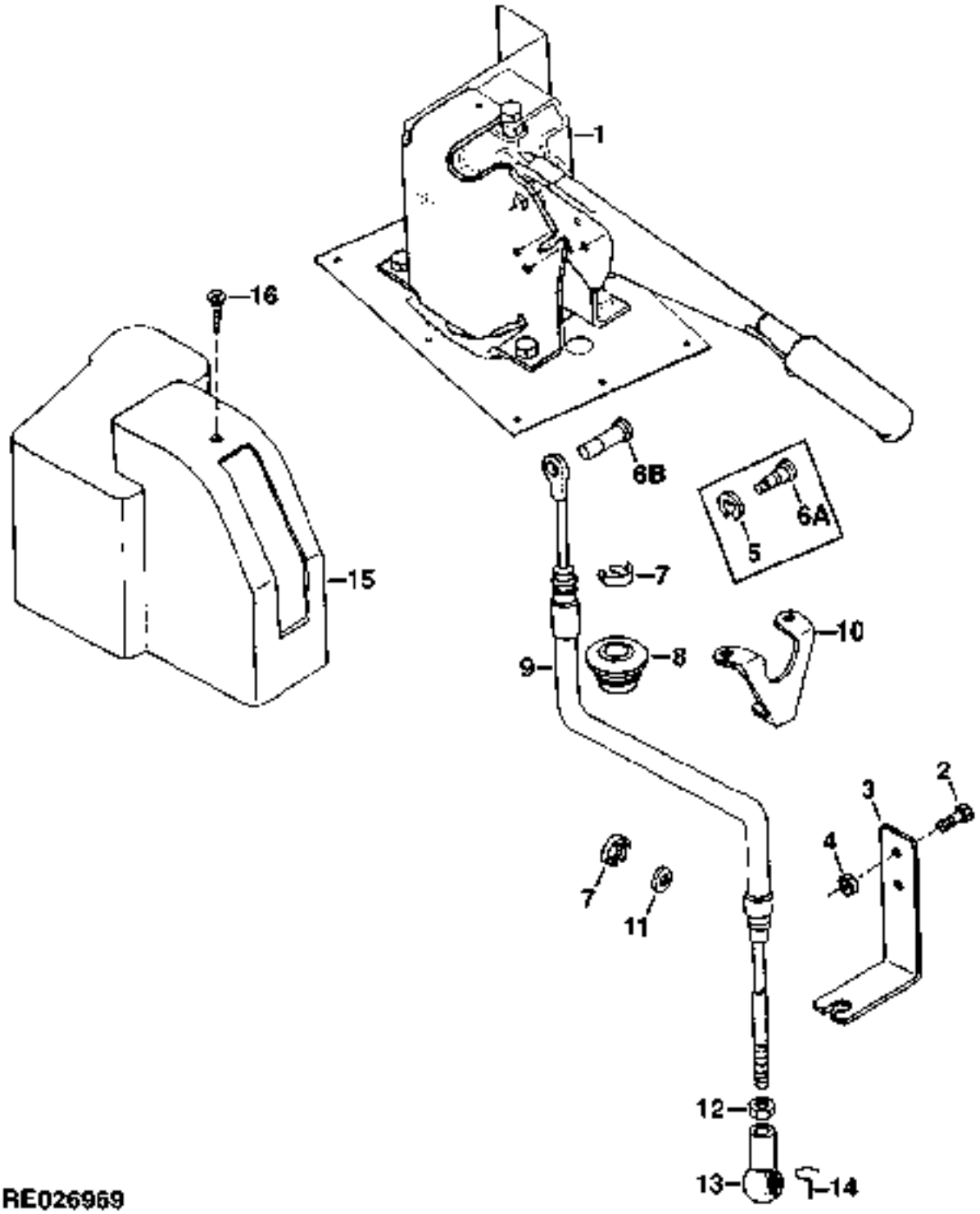

https://www.truck-manuals.net/

KEY	PART NO.	PART NAME	QTY	TRACTOR SERIAL NO.	ALL	REMARKS
1	RE62250	LEVER	1		X	(SUB RE63888)
2	19M7163	CAP SCREW	1	-XXXXXX	X	(A) M8 X 25
3	R121260	ANGLE	1	-XXXXXX	X	(A)
4	14M7273	NUT	1	-XXXXXX	X	(A) M8
5	R72655	SNAP RING	1	-XXXXXX	X	
	40M7041	SNAP RING	1	XXXXXX-009999	X	
6A	R124493	PIN	1	-XXXXXX	X	(SUB L79404)
	R127179	PIN	1	XXXXXX-009999	X	(SUB L79404)
6B	R135786	PIN	1	010000-	X	(SUB R133546)
7	R112612	CLIP	2		X	
8	L76801	GROMMET	1	-009999	X	(SUB FOR L76711)
9	RE60898	PUSH PULL CABLE	1	-009999	X	
	RE68777	PUSH PULL CABLE	1	010000-	X	
10	R107455	BRACKET	1	-009999	X	
11	24H1363	WASHER	1		X	41/64" X 1-1/16" X 0.105"
12	14M7274	NUT	4		X	M10
13	56M7006	BALL JOINT SOCKET	1		X	
14	56M7007	BALL JOINT RETAINER	1		X	
15	R124338	COVER	1		X	
16	37M7090	SCREW	1		X	M6 X 16

(A) (-XXXXXX) 8100-012327; 8200-011933; 8300-012566; 8400-012683

https://www.truck-manuals.net/

MEMORANDA
MEMORANDA
MEMORANDA
MEMORANDA
MEMORANDA
MEMORANDA

https://www.truck-manuals.net/

SECTIONAL INDEX
INDEX DE SECTION
GRUPPENINDEX
INDICE DELLA SEZIONE
INDICE DE SECCION
GRUPPSFORTECKNING

RE029166 -UN-10MAY99

1 -	7D10
2 -	7D14
3 -	7E1
4 -	7E6
5 -	7E8
6 -	7E12
7 -	7E14
8 -	7F5
9 -	7F7
10 -	7F9
11 -	7F11
12 -	7F17
13 -	7F23
14 -	7G3
15 -	7G23
16 -	7H3
17 -	7H19

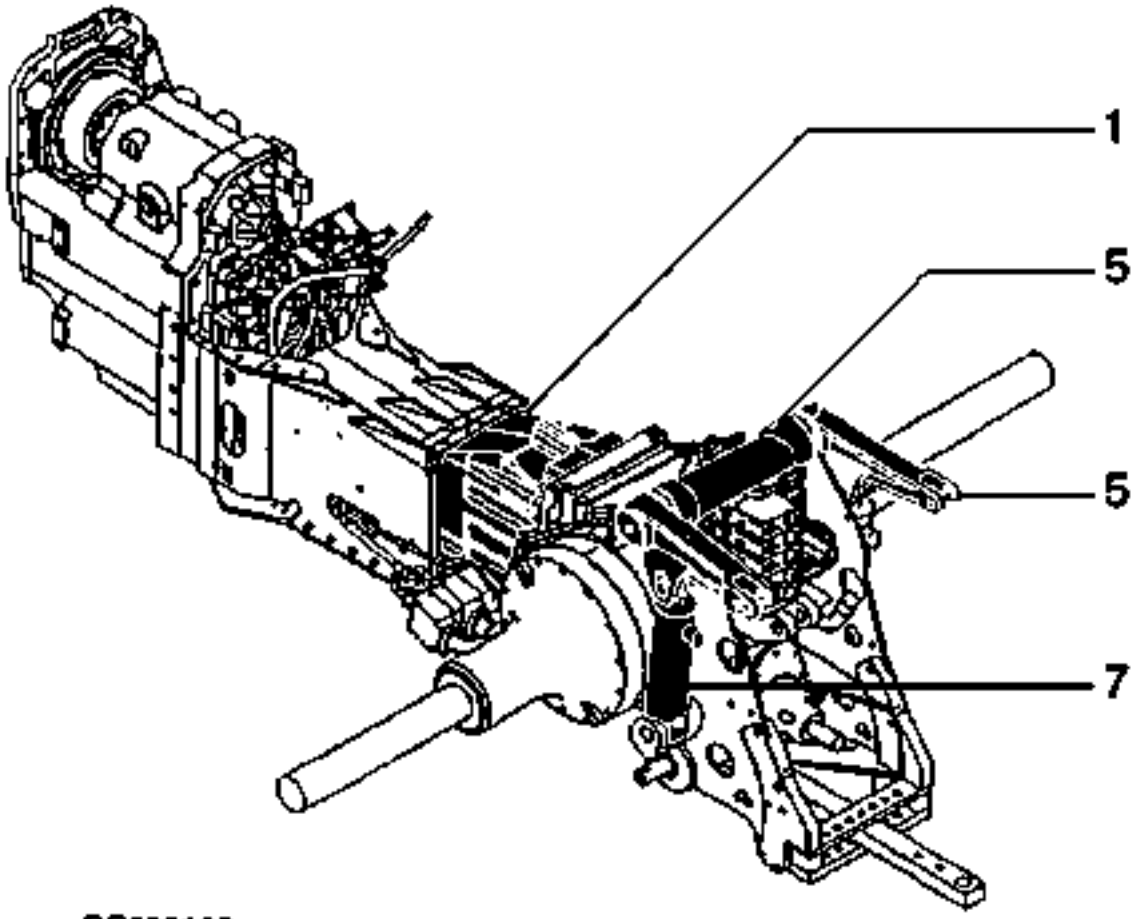

RE029166

https://www.truck-manuals.net/

SECTIONAL INDEX
INDEX DE SECTION
GRUPPENINDEX
SECTIONAL INDEX
INDICE DE SECCION
GRUPPSFORTECKNING

RE029167 -UN-10MAY99

1 -	7D10
2 -	7D14
3 -	7E1
4 -	7E6
5 -	7E8
6 -	7E12
7 -	7E14
8 -	7F5
9 -	7F7
10 -	7F9
11 -	7F11
12 -	7F17
13 -	7F23
14 -	7G3
15 -	7G23
16 -	7H3
17 -	7H19

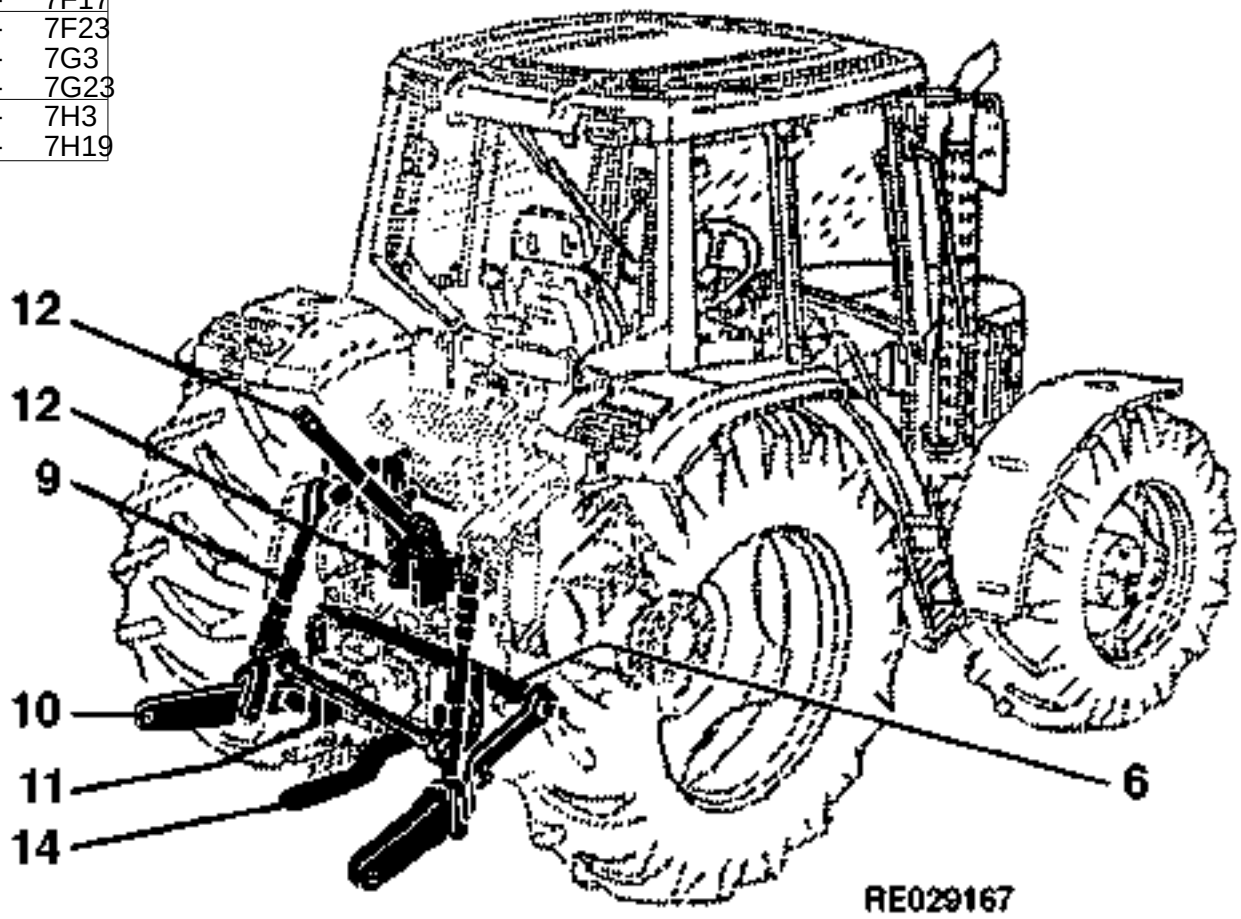

https://www.truck-manuals.net/

SECTIONAL INDEX
INDEX DE SECTION
GRUPPENINDEX
SECTIONAL INDEX
INDICE DE SECCION
GRUPPSFORTECKNING

RE029168 -UN-10MAY99

1 -	7D10
2 -	7D14
3 -	7E1
4 -	7E6
5 -	7E8
6 -	7E12
7 -	7E14
8 -	7F5
9 -	7F7
10 -	7F9
11 -	7F11
12 -	7F17
13 -	7F23
14 -	7G3
15 -	7G23
16 -	7H3
17 -	7H19

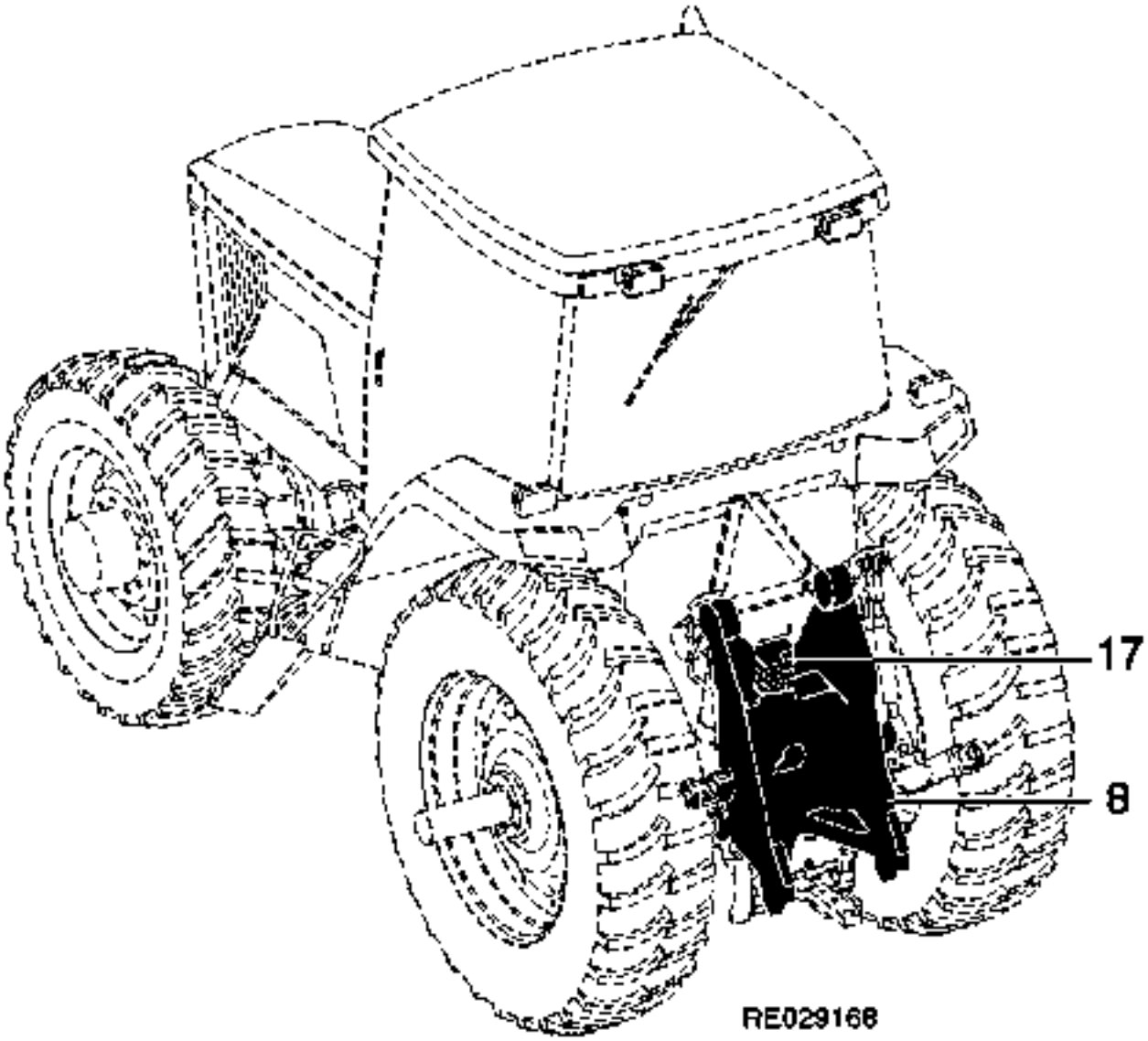

https://www.truck-manuals.net/

SECTIONAL INDEX
INDEX DE SECTION
GRUPPENINDEX
SECTIONAL INDEX
INDICE DE SECCION
GRUPPSFORTECKNING

RE029169 -UN-10MAY99

1 -	7D10
2 -	7D14
3 -	7E1
4 -	7E6
5 -	7E8
6 -	7E12
7 -	7E14
8 -	7F5
9 -	7F7
10 -	7F9
11 -	7F11
12 -	7F17
13 -	7F23
14 -	7G3
15 -	7G23
16 -	7H3
17 -	7H19

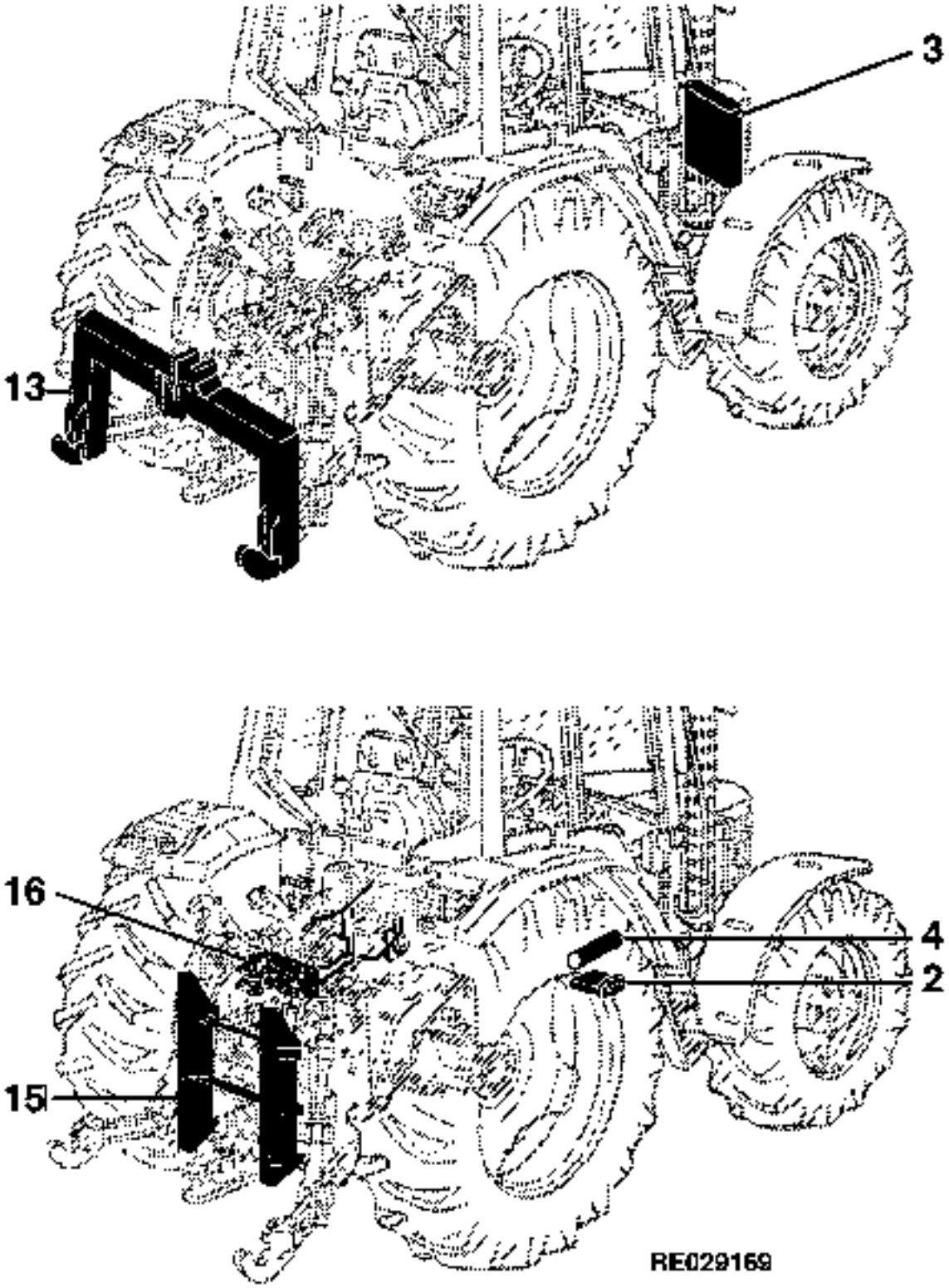

https://www.truck-manuals.net/

TRANSMISSION AND HYDRAULIC OIL
HUILE DE TRANSMISSION ET HUILE HYDRAULIQUE
GETRIEBE- UND HYDRAULIK-OEL
OLIO PER TRASMISSIONE E IDRAULICO
ACEITE DE TRANSMISION E HIDRAULICO
VAEXELLAADS- OCH HYDRAULOLJA
RE026740 -UN-20FEB96



RE026740

KEY	PART NO.	PART NAME	QTY	TRACTOR SERIAL NO.	ALL	REMARKS
1	AR69444	HY-GARD	1		X	19 L (5 GAL)
	AR69445	HY-GARD	1		X	208 L (55 GAL)
2	TY22043	OIL	1		X	(1 GAL.)
	TY22044	OIL	1		X	19 L (5 GAL.)
	TY22063	OIL	1		X	208 L (55 GAL.)

https://www.truck-manuals.net/

HYDRAULIC PUMP DRIVE
ELEMENTS D'ENTRAINEMENT DE LA POMPE HYDRAULIQUE
ANTRIEBSTEILE FUER HYDRALIKPUMPE
COMANDO PER POMPA IDRAULICA
MANDOS DE LA BOMBA HIDRAULICA
DRIVNING FOR HYDRAULPUMP
RE026647 -UN-08DEC95

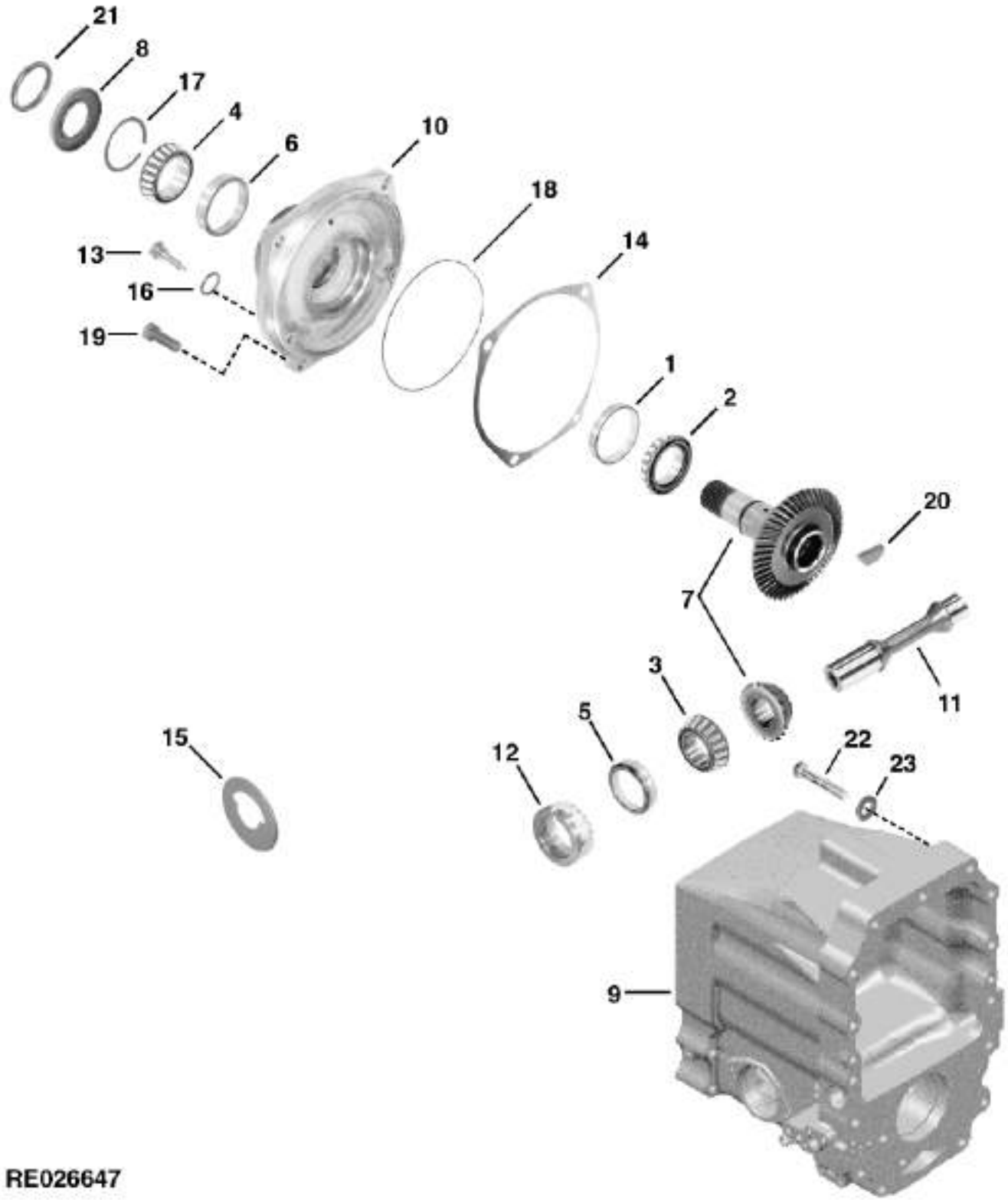

https://www.truck-manuals.net/

KEY	PART NO.	PART NAME	QTY	AXLE SERIAL NO.	ALL	REMARKS
1	JD7425	BEARING CUP	1		X	
2	RE62066	BEARING CONE	1		X	(SUB FOR JD8147, THIS APPLICATION)
3	JD9043	BEARING CONE	2		X	
4	JD9049	BEARING CONE	1		X	
5	JD9109	BEARING CUP	2		X	
6	JD9114	BEARING CUP	1		X	
7	RE50178	GEAR	1		X	
8	RE52341	SEAL	1	-009985	X	(SUB RE151144, THIS APPLICATION)
	RE151144	SEAL	1	009986-	X	(SUB FOR RE64427)
9	RE164598	HOUSING	1		X	(SUB FOR R122901)
10	R122903	QUILL	1		X	
11	R122902	SHAFT	1		X	
12	R113445	QUILL	2		X	
13	R113555	PLUG	2		X	
14	RE57520	KIT	3		X	(A)
15	24M7242	WASHER	15		X	21.400 X 42 X 5 MM
16	51M7041	O-RING	2		X	11.300 X 2.200 MM
17	R64234	SNAP RING	1		X	
	R64235	SNAP RING	1		X	
	R64236	SNAP RING	1		X	
	R64237	SNAP RING	1		X	
	T49616	SNAP RING	1		X	
18	U42016	O-RING	1		X	
19	R153676	SCREW	4		X	HS 10.9
20	26H85	SHAFT KEY	1		X	1/4" X 1"
21	T121280	SEAL	1		X	
22	19M7969	CAP SCREW	14		X	M20 X 110, HS 10.9
	19M8389	CAP SCREW	1		X	M20 X 280, HS 10.9

(A) SHIM
CALE D'EPAISSEUR
DISTANZSCHEIBE
SPESSORE
SUPLEMENTO
SHIMS

https://www.truck-manuals.net/

PUMP DRIVE LINES
POMPE, CONDUITES D'ENTRAINEMENT
PUMPE, ANTRIEBSLEITUNGEN
LINEE DI COMANDO DELLA POMPA
LINEAS DE MANDO DE LA BOMBA
PUMP, DRIVLEDNINGAR
RXP025106 -UN-01JAN94

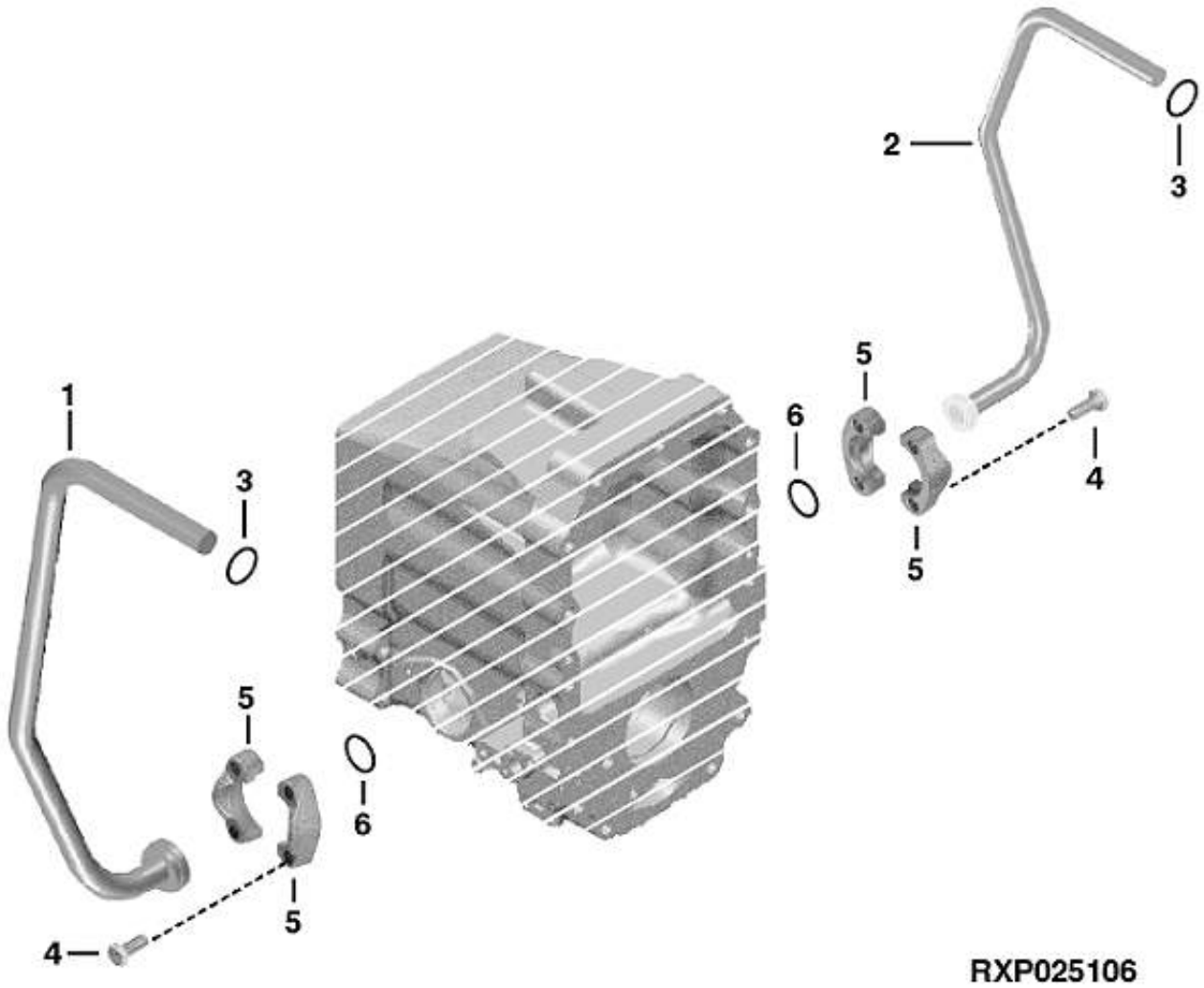

https://www.truck-manuals.net/

KEY	PART NO.	PART NAME	QTY	TRACTOR SERIAL NO.	ALL	REMARKS
1	RE50172	OIL TUBE	1		X	
2	RE50173	OIL TUBE	1		X	
3	R495R	O-RING	2		X	
4	R153676	SCREW	8		X	HS 10.9
5	H61354	FLANGE FITTING	4		X	
6	T78313	O-RING	2		X	

https://www.truck-manuals.net/

HYDRAULIC PUMP (45 CM3 (2.75 IN3))
POMPE HYDRAULIQUE (45 CM3 (2.75 IN.3))
HYDRAULIKPUMPE (45 CM3 (2.75 IN.3))
POMPE IDRAULICA (45 CM3 (2.75 IN.3))
BOMBA HIDRAULICA (45 CM3 (2.75 IN.3))
HYDRAULPUMP (45 CM3 (2.75 IN.3))
RXP020023 -UN-01JAN94

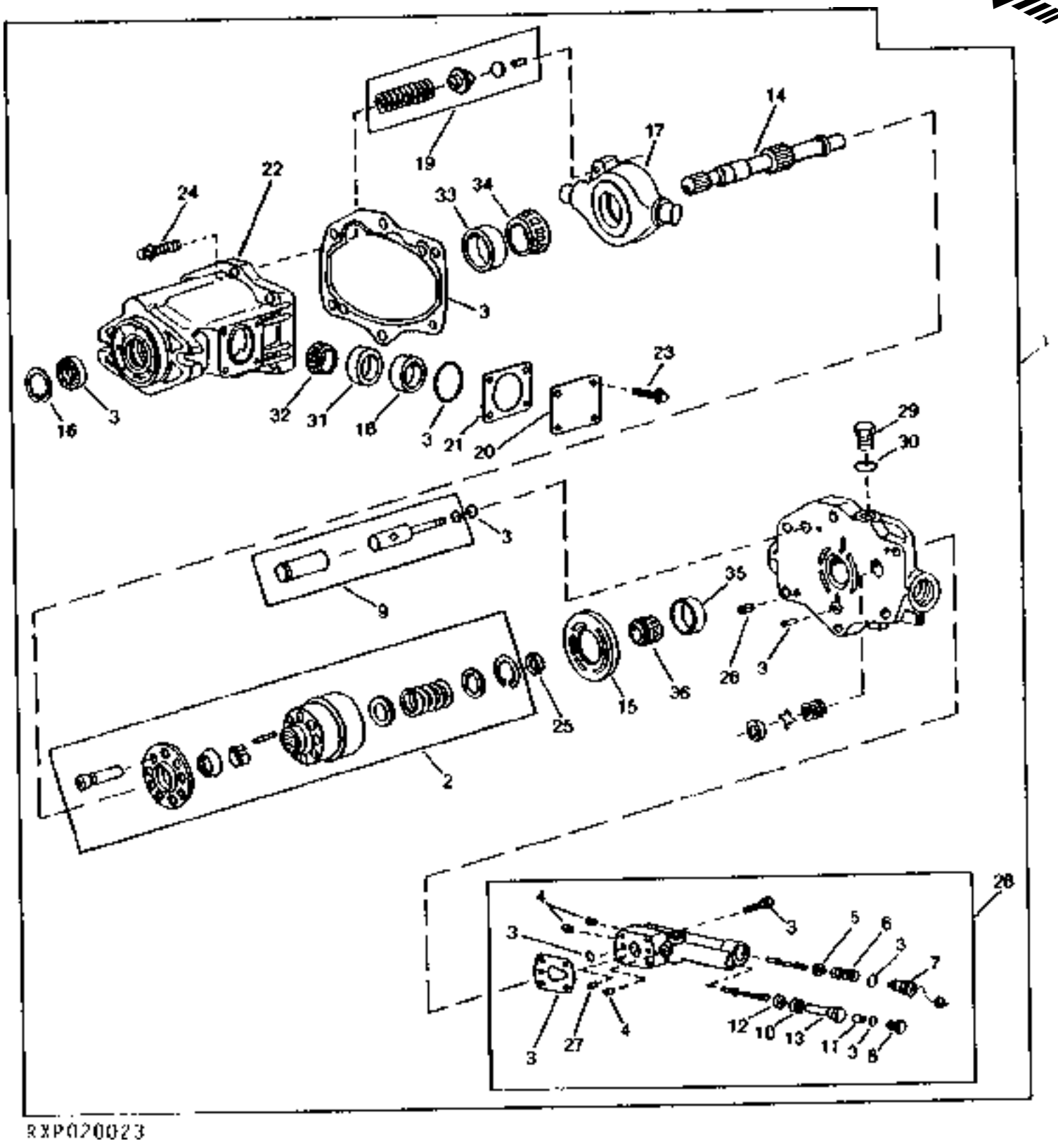

https://www.truck-manuals.net/

KEY	PART NO.	PART NAME	QTY	PUMP SERIAL NO.	ALL	REMARKS
1	RE60267	PUMP	1		X	
2	RE60275	PUMP	1		X	
3	.....	KIT	1		X	(ORDER RE43836)
4	R107795	PLUG	3		X	
5	R107796	SEAT	1		X	
6	R107797	SPRING	1		X	
7	R107798	PLUG	1		X	
8	R107799	PLUG	1		X	
9	RE43837	PISTON REPLACEMENT KIT	1		X	(SUB RE67354)
10	R107800	SPRING	1		X	
11	R107801	SCREW	1		X	
12	R107802	SEAT	1		X	
13	R107803	SEAT	1		X	
14	R123962	SHAFT	1		X	
15	R123963	PLATE	1		X	
16	R107810	SNAP RING	1		X	
17	R107811	YOKE	1		X	
18	R107814	SPACER	2		X	
19	RE49136	KIT	1		X	
20	R107816	COVER	2		X	
21	RE52579	SHIM KIT	1		X	(A)
22	R107818	HOUSING	1		X	
23	R108015	CAP SCREW	8		X	
24	R108016	BOLT	6		X	
25	RE52580	KIT	1		X	
26	R108019	SPRING PIN	2		X	
27	RE46648	CHECK VALVE	1		X	
28	RE60276	COMPENSATOR	1		X	
29	RE46684	PLUG	1		X	
30	51M7041	O-RING	1		X	11.300 X 2.200 MM
31	JD8253	BEARING CUP	2		X	
32	JD8935	BEARING CONE	2		X	
33	JD7449	BEARING CUP	1		X	
34	JD8118	BEARING CONE	1		X	
35	JD8239	BEARING CUP	1		X	
36	JD8905	BEARING CONE	1		X	

(A) SHIM
CALE D'EPAISSEUR
DISTANZSCHEIBE
SPESSORE
SUPLEMENTO
SHIMS

https://www.truck-manuals.net/

HYDRAULIC PUMP SEAL KIT (45 CM3 (2.75 IN3))
JEU DE JOINTS D-ETANCHEITE DE LA POMPE HYDRAULIQUE (45 CM3 (2.75 IN3))
HYDRAULIKPUMPEN-DICHTRINGSATZ (45 CM3 (2.75 IN3))
KIT DI TENUTA DELLA POMPA IDRAULICA (45 CM3 (2.75 IN3))
JUEGO DE SELLOS DE LA BOMBA HIDRAULICA (45 CM3 (2.75 IN3))
TAETNINGSSATS FOER HYDRAULPUMP (45 CM3 (2.75 IN3))
RE026741 -UN-14MAY96

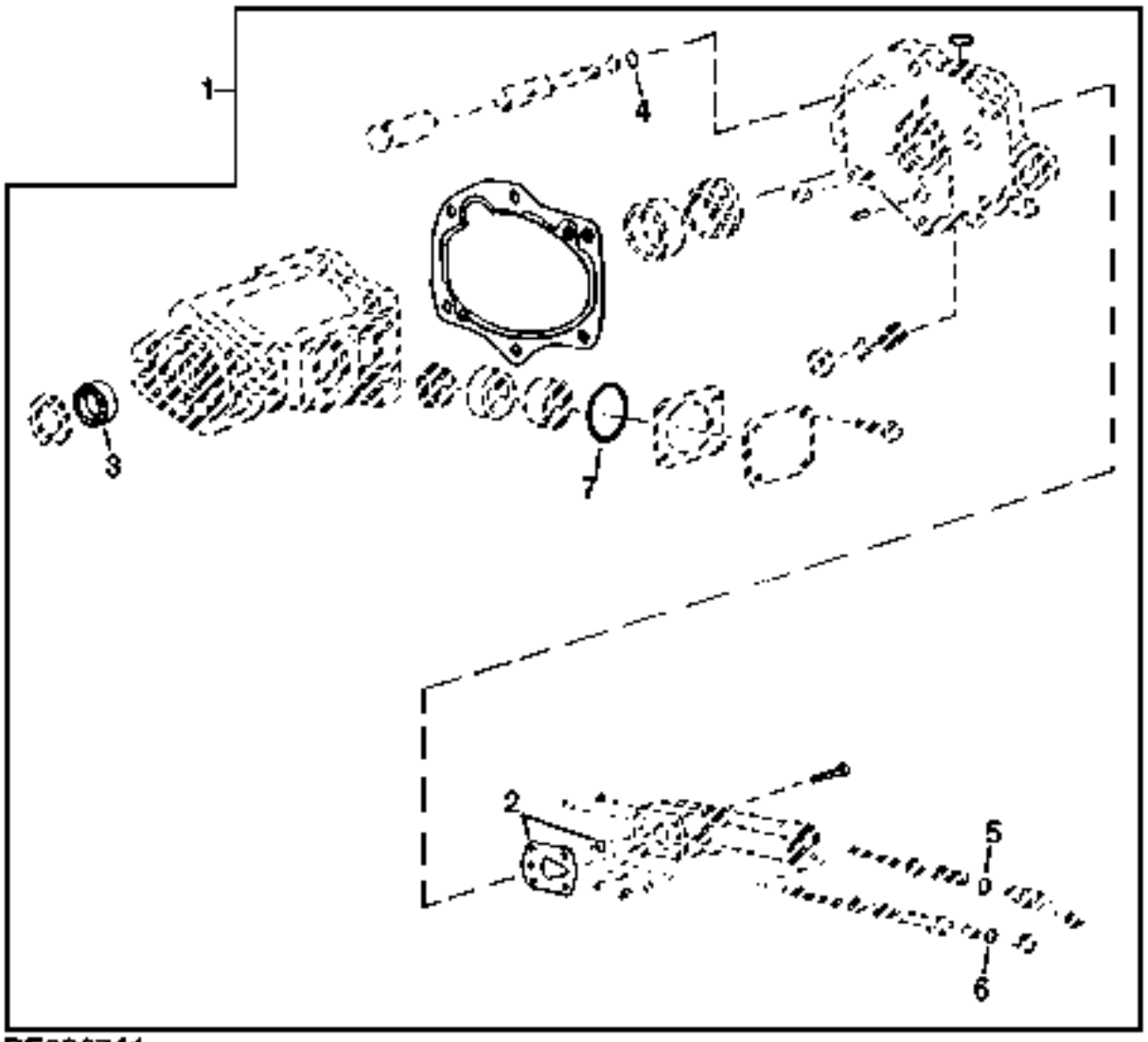

RE026741

https://www.truck-manuals.net/

KEY	PART NO.	PART NAME	QTY	PUMP SERIAL NO.	ALL	REMARKS
1	RE43836	SEAL KIT	1		X	
2	RE66529	GASKET	1		X	
3	R131148	SEAL	1		X	
4	R131149	O-RING	1		X	
5	L60365	O-RING	1		X	
6	R26286	O-RING	1		X	
7	U40708	O-RING	1		X	

https://www.truck-manuals.net/

HYDRAULIC PUMP (57 CM3 (3.5 IN3))
POMPE HYDRAULIQUE (57 CM3 (3.5 IN3))
HYDRAULIKPUMPE (57 CM3 (3.5 IN3))
POMPE IDRAULICA (57 CM3 (3.5 IN3))
BOMBA HIDRAULICA (57 CM3 (3.5 IN3))
HYDRAULPUMP (57 CM3 (3.5 IN3))
RE028075 -UN-27AUG97

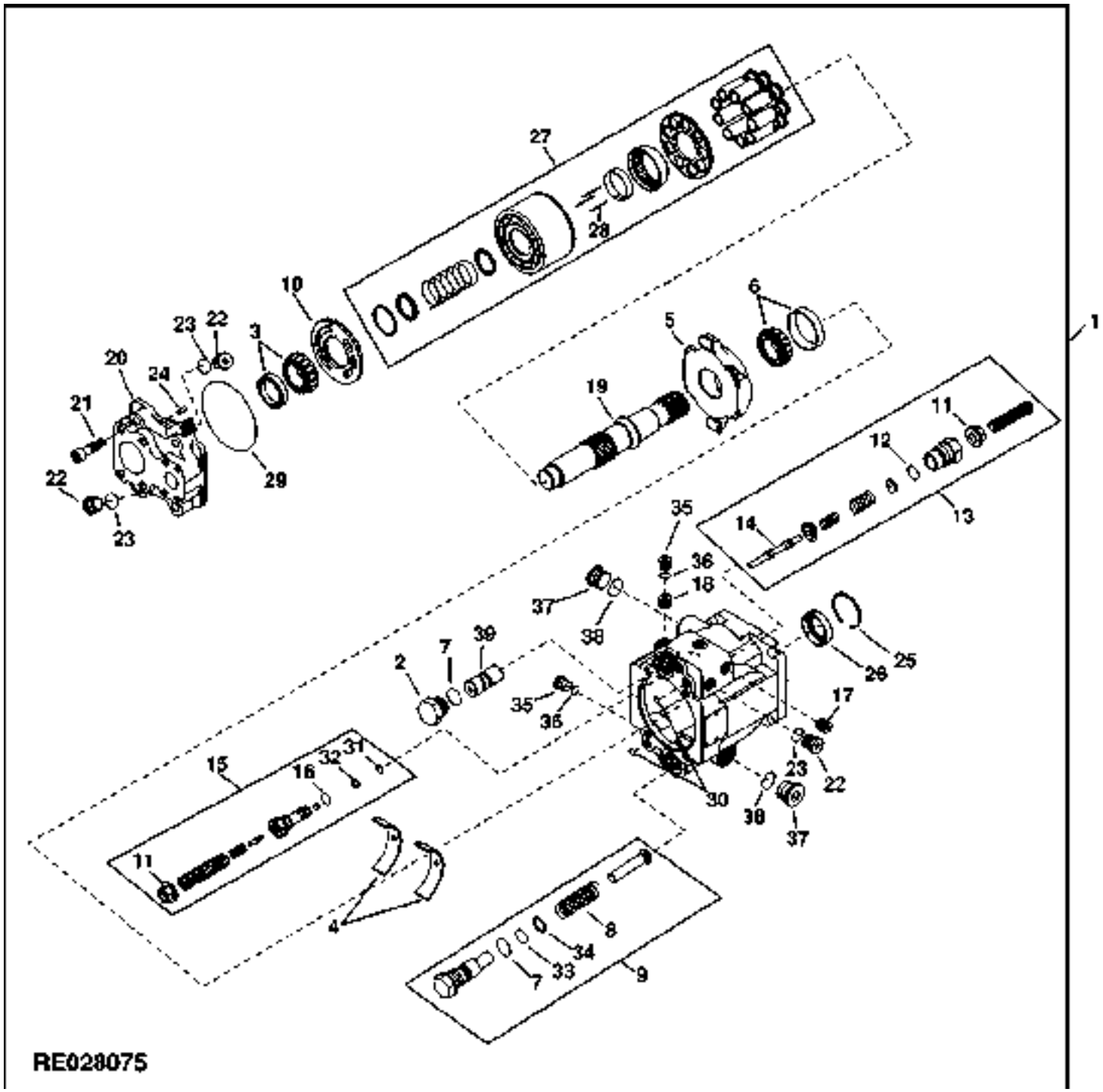

https://www.truck-manuals.net/

KEY	PART NO.	PART NAME	QTY	TRACTOR SERIAL NO.	ALL	REMARKS
1	RE65337	PUMP	1	010000-	X	
2	R136576	PLUG	1		X	
3	RE71649	BEARING KIT	1		X	
4	RE71650	BEARING KIT	2		X	
5	RE71651	SWASH PLATE	1		X	
6	RE71652	BEARING KIT	1		X	
7	R56751	O-RING	2		X	
8	R136564	SPRING	1		X	
9	RE71653	PISTON REPLACEMENT KIT	1		X	
10	R136565	PLATE	1		X	
11	R136566	NUT	1		X	
12	M45379	O-RING	1		X	
13	RE71654	KIT	1		X	
14	R136567	SPOOL	1		X	
15	RE71655	KIT	1		X	
16	M74600	O-RING	1		X	
17	R136568	ORIFICE	1		X	
18	R136569	ORIFICE	1		X	
19	R136570	SHAFT	1		X	
20	R136571	CAP	1		X	
21	19M8341	SCREW	4		X	M12 X 45 HS 12.9
22	T54904	FITTING PLUG	3		X	
23	R28782	O-RING	3		X	
24	R136572	PIN	1		X	
25	M44677	SNAP RING	1		X	
26	R136573	SEAL	1		X	
27	RE151898	KIT	1		X	
28	R136574	PIN	3		X	
29	T60657	O-RING	1		X	
30	T72280	O-RING	2		X	
31	T77814	O-RING	1		X	
32	R151641	BACK-UP RING	1		X	
33	N203491	O-RING	1		X	
34	R151642	BACK-UP RING	1		X	
35	R90584	FITTING PLUG	2		X	
36	51M7041	O-RING	2		X	11.300 X 2.200 MM
37	R95065	FITTING	2		X	
38	51M7045	O-RING	2		X	19.300 X 2.200 MM
39	R136575	PISTON	1		X	

https://www.truck-manuals.net/

HYDRAULIC PUMP SEAL KIT (57 CM3 (3.5 IN3))
JEU DE JOINTS D'ETANCHEITE DE LA POMPE HYDRAULIQUE (57 CM3 (3.5 IN3))
HYDRAULIKPUMPEN-DICHTRINGSATZ (57 CM3 (3.5 IN3))
KIT DI TENUTA DELLA POMPA IDRAULICA (57 CM3 (3.5 IN3))
JUEGO DE SELLOS DE LA BOMBA HIDRAULICA (57 CM3 (3.5 IN3))
TAETNINGSSATS FOER HYDRAULPUMP (57 CM3 (3.5 IN3))
RE028082 -UN-27AUG97

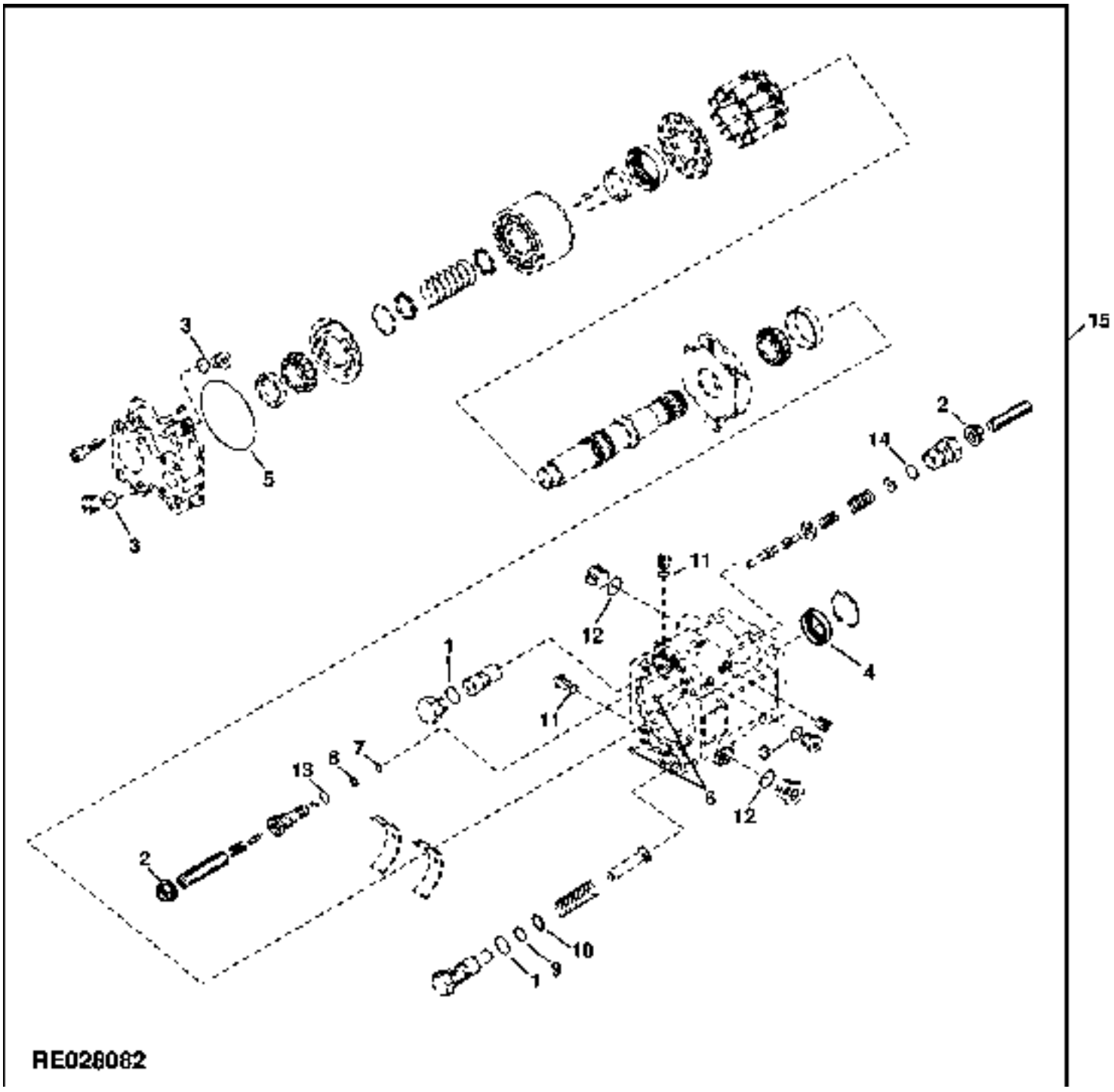

https://www.truck-manuals.net/

KEY	PART NO.	PART NAME	QTY	TRACTOR SERIAL NO.	ALL	REMARKS
1	R56751	O-RING	2		X	
2	R136566	NUT	2		X	
3	R28782	O-RING	2		X	
4	R136573	SEAL	1		X	
5	T60657	O-RING	1		X	
6	T72280	O-RING	2		X	
7	T77814	O-RING	1		X	
8	R151641	BACK-UP RING	1		X	
9	N203491	O-RING	1		X	
10	R151642	BACK-UP RING	1		X	
11	51M7041	O-RING	2		X	11.300 X 2.200 MM
12	51M7045	O-RING	2		X	19.300 X 2.200 MM
13	M74600	O-RING	1		X	
14	M45379	O-RING	1		X	
15	RE71657	SEAL KIT	1	010000-	X	

https://www.truck-manuals.net/

HYDRAULIC PUMP LINES (45 CM3 (2.75 IN3))
TUYAUTERIES HYDRAULIQUES (45 CM3 (2.75 IN3))
HYDRAULIKOELLEITUNGEN (45 CM3 (2.75 IN3))
LINEE IDRAULICHE (45 CM3 (2.75 IN3))
TUBERIAS DE ACEITE HYDRAULICO (45 CM3 (2.75 IN3))
HYDRAULLEDNINGAR (45 CM3 (2.75 IN3))
RE026956 -UN-15JUL97

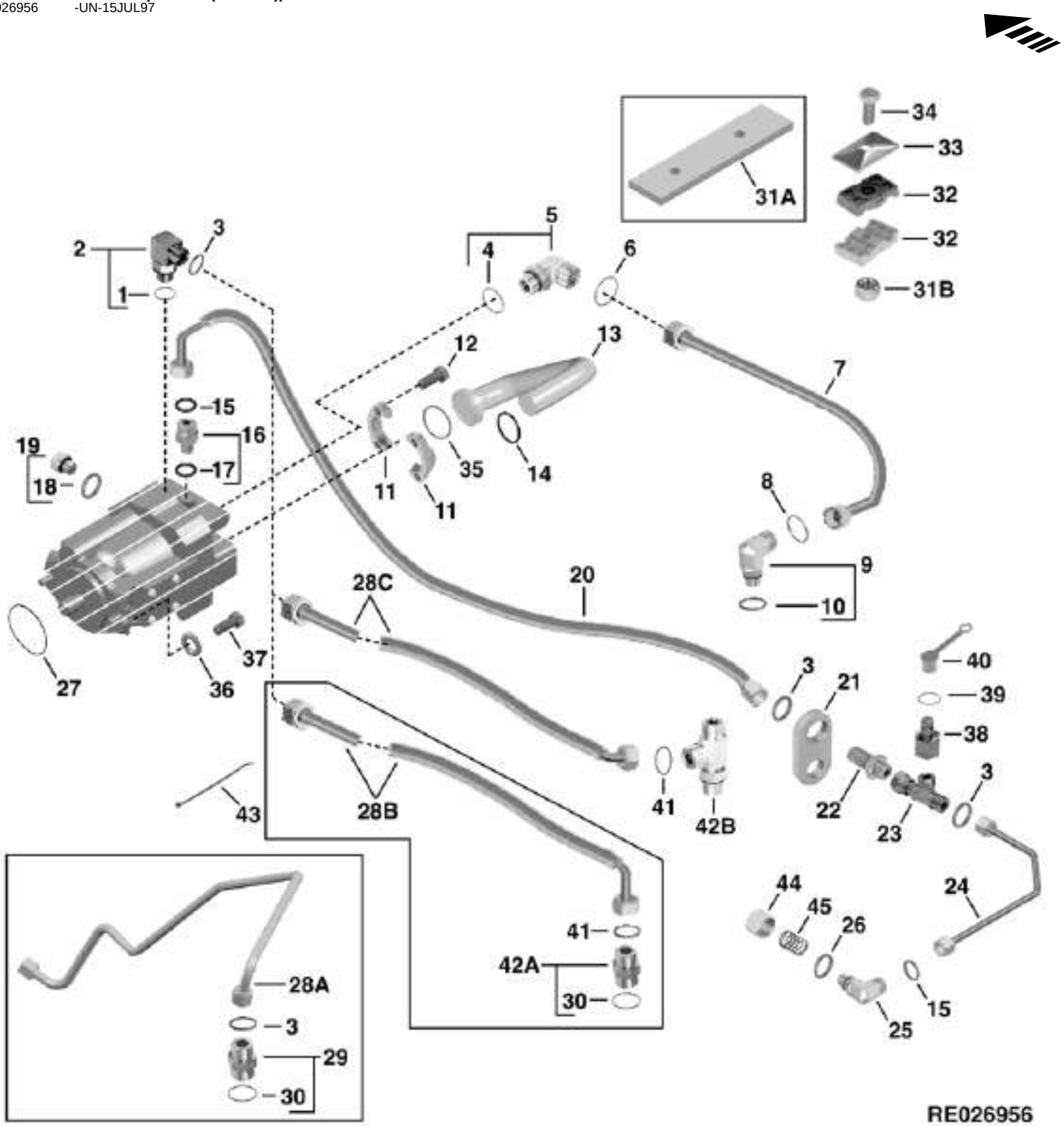

https://www.truck-manuals.net/

KEY	PART NO.	PART NAME	QTY	TRACTOR SERIAL NO.	ALL	REMARKS
1	51M7043	O-RING	1		X	15.300 X 2.200 MM
2	38H5017	ELBOW FITTING	1		X	
3	T77857	O-RING	4		X	
4	51M7047	O-RING	1		X	23.600 X 2.900 MM
5	38H5019	ELBOW FITTING	1		X	
6	T77858	O-RING	1		X	
7	RE61133	HYDRAULIC HOSE - FABRICATE	1		X	
8	T77858	O-RING	1		X	
9	38H5019	ELBOW FITTING	1		X	
10	51M7047	O-RING	1		X	23.600 X 2.900 MM
11	T47649	FLANGE FITTING	2		X	
12	19M8011	CAP SCREW	4		X	M12 X 30, HS 10.9
13	RE60590	OIL LINE	1	-XXXXXX	X	
	RE65441	OIL LINE	1	XXXXXX-	X	
14	U10289	O-RING	1		X	
15	T77613	O-RING	2		X	
16	38H5008	ADAPTER	1		X	
17	51M7040	O-RING	2		X	9.300 X 2.200 MM
18	51M7041	O-RING	2		X	11.300 X 2.200 MM
19	RE46684	PLUG	2		X	
20	RE61134	HYDRAULIC HOSE - FABRICATE	1		X	
21	R125963	PLATE	1		X	
22	38H5073	ADAPTER	1		X	
23	38H5069	TEE FITTING	1		X	
24	RE56716	OIL LINE	1	-XXXXXX	X	(SUB RE65564)
	RE65564	OIL LINE	1	XXXXXX-	X	
25	38H5016	ELBOW FITTING	2		X	
26	51M7041	O-RING	1		X	11.300 X 2.200 MM
27	T42302	O-RING	1		X	
28A	RE61622	OIL LINE	1	-XXXXXX	X	(B) (SUB RE65566, 38H5010, T77932 AND (2) R44302)
28B	RE65566	HYDRAULIC HOSE	1	XXXXXX-009999	X	(C)
28C	RE68757	HYDRAULIC HOSE - FABRICATE	1	010000-	X	
29	38H5003	ADAPTER	1	-XXXXXX	X	(B)
30	51M7043	O-RING	1		X	15.300 X 2.200 MM
31A	RE61652	PLATE	1	-XXXXXX	X	
31B	14M7273	NUT	1	XXXXXX-	X	M8
32	R125346	CLAMP	2		X	
33	R125347	PLATE	1		X	
34	19H1901	CAP SCREW	1		X	5/16" X 2", (USE WITH RE61652)
	19M7185	CAP SCREW	1		X	M8 X 60, (USE WITH 14M7273)
35	B3690R	O-RING	1		X	
36	24M7240	WASHER	2		X	13 X 25 X 3 MM, (SUB FOR R106714) (ALSO ORDER 19M7789)
37	19M7789	SCREW	2		X	M12 X 30, HS 10.9
38	RE43774	FITTING	1		X	
39	T77857	O-RING	1		X	
40	R77175	COVER	1		X	
41	T77932	O-RING	1	XXXXXX-009999	X	(C)
42A	38H5010	ADAPTER	1	XXXXXX-009999	X	(C)
	RE65746	FITTING	1	-009999	X	(A)
42B	38H5170	TEE FITTING	1	010000-	X	
43	R44302	TIE BAND	2	XXXXXX-	X	(C)
44	R111296	POPPET	1		X	
45	R111297	SPRING	1		X	

(A) AIR BRAKE
FREINS A AIR COMPRIME
DRUCKLUFTBREMSE
FRENO AD ARIA COMPRESSA
FRENO NEUMATICO
TRYCKLUFTSBROMS

(B) (-XXXXXX) 8100-003506; 8200-002706; 8300-004597; 8400-003057
(C) (XXXXXX-) 8100-003507; 8200-002707; 8300-004598; 8400-003058

https://www.truck-manuals.net/

HYDRAULIC PUMP LINES(57 CM3(3.5 IN3))(8100 012675- ;8200 012154- ;8300 012874- ;8400 012647-)
TUYAUTERIES HYDRAULIQUES(57 CM3(3.5 IN3))
HYDRAULIKOELLEITUNGEN (57 CM3 (3.5 IN3))
LINEE IDRAULICHE (57 CM3 (3.5 IN3))
TUBERIAS DE ACEITE HYDRAULICO(57 CM3(3.5 IN3))
HYDRAULLEDNINGAR (57 CM3 (3.5 IN3))
RE028172 -UN-12SEP97

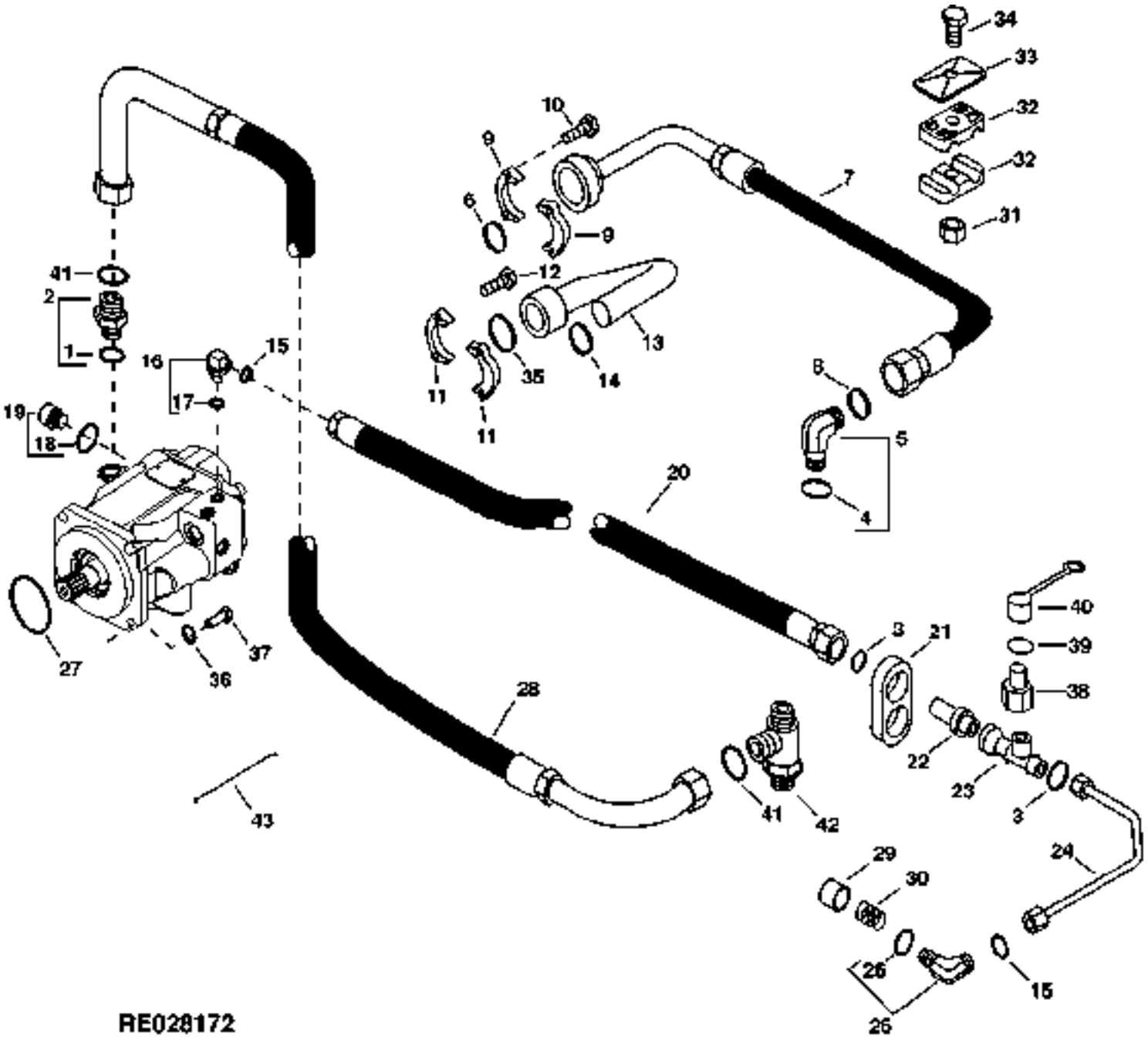

https://www.truck-manuals.net/

KEY	PART NO.	PART NAME	QTY	TRACTOR SERIAL NO.	ALL	REMARKS
1	51M7045	O-RING	1		X	19.300 X 2.200 MM
2	38H5004	ADAPTER	1		X	
3	T77857	O-RING	2		X	
4	51M7047	O-RING	1		X	23.600 X 2.900 MM
5	38H5019	ELBOW FITTING	1		X	
6	T78313	O-RING	1		X	
7	RE66252	HYDRAULIC HOSE - FABRICATE	1		X	
8	T77858	O-RING	1		X	
9	H61354	FLANGE FITTING	2		X	
10	R153676	SCREW	4		X	HS 10.9
11	R37023	FLANGE FITTING	2		X	
12	19M7403	CAP SCREW	4		X	M12 X 35, HS 10.9
13	RE66251	OIL LINE	1		X	
14	U10289	O-RING	1		X	
15	T77613	O-RING	2		X	
16	38H5022	ELBOW FITTING	1		X	
17	51M7040	O-RING	2		X	9.300 X 2.200 MM
18	51M7041	O-RING	2		X	11.300 X 2.200 MM
19	RE46684	PLUG	2		X	
20	RE66253	HYDRAULIC HOSE - FABRICATE	1		X	
21	R125963	PLATE	1		X	
22	38H5073	ADAPTER	1		X	
23	38H5069	TEE FITTING	1		X	
24	RE65564	OIL LINE	1		X	
25	38H5016	ELBOW FITTING	2		X	
26	51M7041	O-RING	1		X	11.300 X 2.200 MM
27	T42302	O-RING	1		X	
28	RE66254	HYDRAULIC HOSE - FABRICATE	1		X	
29	R111296	POPPET	1		X	
30	R111297	SPRING	1		X	
31	14M7273	NUT	1		X	M8
32	R125346	CLAMP	2		X	
33	R125347	PLATE	1		X	
34	19M7185	CAP SCREW	1		X	M8 X 60
35	F1870R	O-RING	1		X	
36	24M7240	WASHER	2		X	13 X 25 X 3 MM
37	N275960	CAP SCREW	2		X	M12 X 30, HS 10.9
38	RE43774	FITTING	1		X	
39	T77857	O-RING	1		X	
40	R77175	COVER	1		X	
41	T77932	O-RING	2		X	
42	38H5170	TEE FITTING	1		X	
43	R44302	TIE BAND	2		X	

https://www.truck-manuals.net/

MEMORANDA
MEMORANDA
MEMORANDA
MEMORANDA
MEMORANDA
MEMORANDA

https://www.truck-manuals.net/

HYDRAULIC OIL COOLER
REFROIDISSEUR D'HUILE
OELKUEHLER
RADIATORE ALIO
REFRIGERADOR DE ACEITE
OLJEKYLARE
RXP025133 -UN-01JAN94

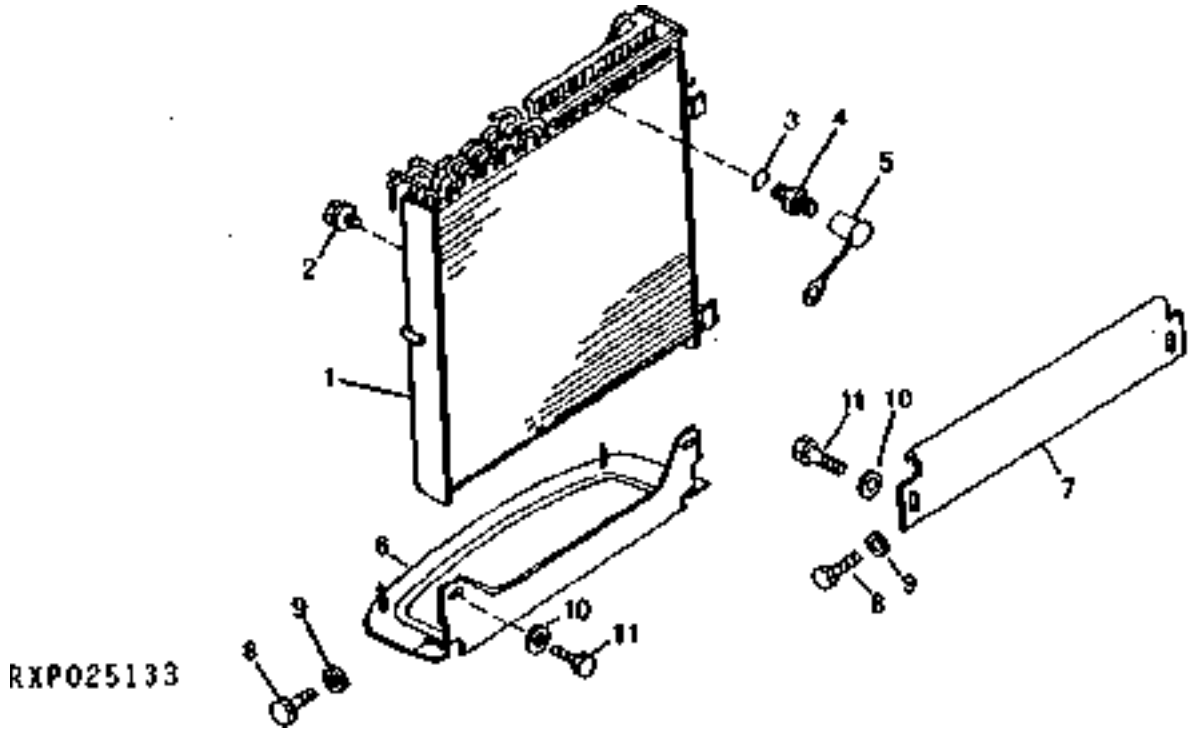

KEY	PART NO.	PART NAME	QTY	TRACTOR SERIAL NO.	ALL	REMARKS
1	RE61071	OIL COOLER	1	-XXXXXX	X	(A) (SUB RE63468)
	RE63468	OIL COOLER	1	XXXXXX-009999	X	(B)
	RE66573	OIL COOLER	1	010000-	X	
2	19M7783	SCREW	4		X	M10 X 16, HS 10.9
3	R26448	O-RING	1		X	
4	RE12187	RECEPTACLE	1		X	
5	R77175	COVER	1		X	
6	RE70714	SUPPORT	1		X	(SUB FOR RE54930)
7	R63647	SUPPORT	1		X	
8	19M7932	CAP SCREW	4		X	M8 X 16, HS 10.9
9	24M7336	WASHER	4		X	9 X 16 X 1.600 MM
10	24M7336	WASHER	4		X	9 X 16 X 1.600 MM
11	19M7932	CAP SCREW	4		X	M8 X 16, HS 10.9

(A) (-XXXXXX) 8100-001801; 8200-001721; 8300-002987; 8400-001703
(B) (XXXXXX-) 8100-001802; 8200-001722; 8300-002988; 8400-001704

https://www.truck-manuals.net/

HYDRAULIC OIL COOLER LINES
CONDUITES DE REFROIDISSEUR D'HUILE HYDRAULIQUE
HYDRAULIKOELKUEHLER-LEITUNGEN
TUBI DEL REFRIGERANTE OLIO IDRAULICO
LINEAS DEL ENFRIADOR DE ACEITE HIDRAULICO
LEDNINGAR FOER HYDRAULOLJEKYLARE
RXP025166 -UN-01JAN94

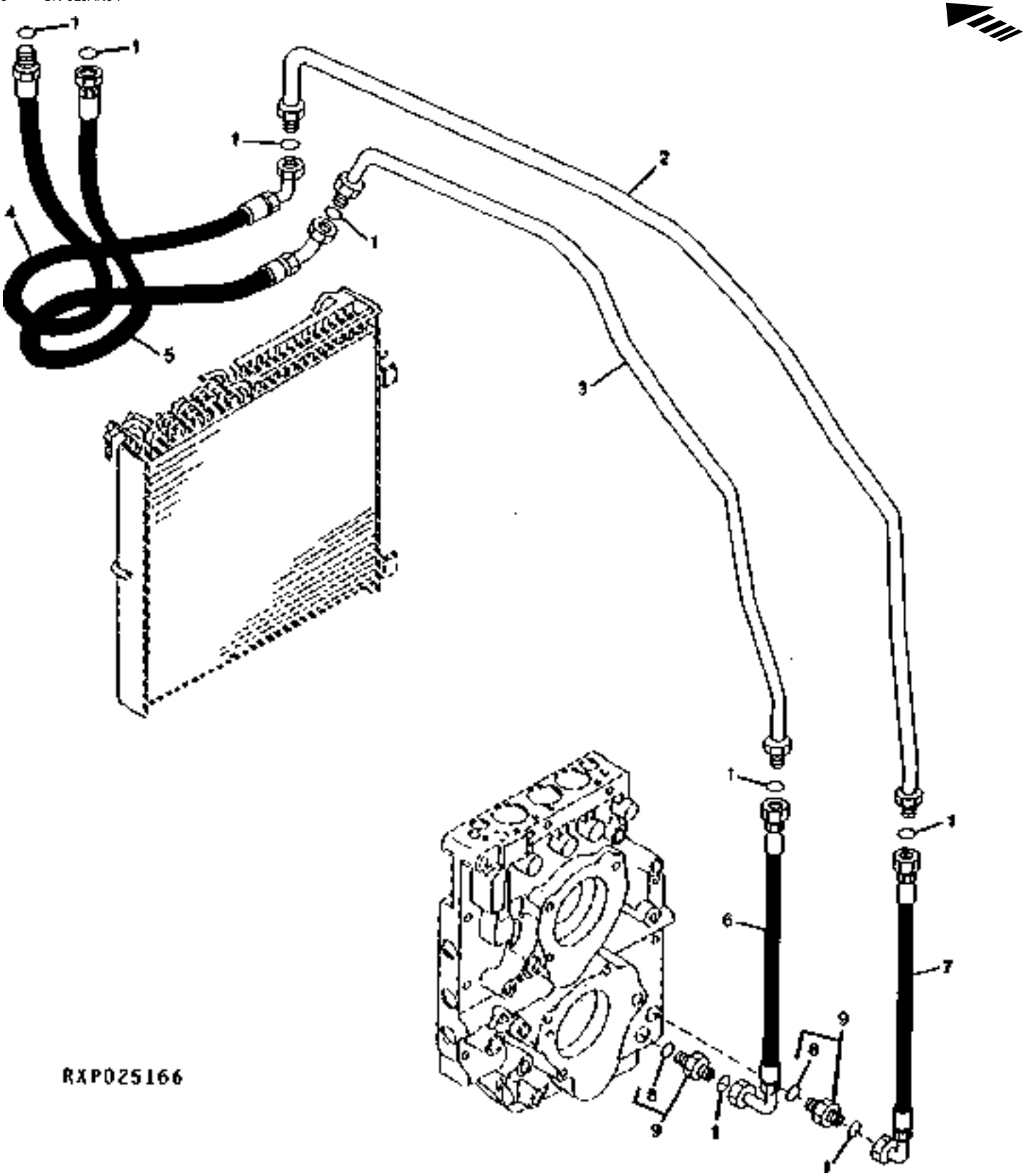

https://www.truck-manuals.net/

KEY	PART NO.	PART NAME	QTY	TRACTOR SERIAL NO.	ALL	REMARKS
1	T77858	O-RING	8		X	
2	RE61144	PIPE	1		X	(B)
3	RE61145	PIPE	1		X	(A)
4	RE61139	HYDRAULIC HOSE - FABRICATE	1		X	(B)
5	RE61140	HYDRAULIC HOSE - FABRICATE	1		X	(A)
6	RE57843	HYDRAULIC HOSE - FABRICATE	1		X	(A)
7	RE60680	HYDRAULIC HOSE - FABRICATE	1		X	(B)
8	51M7045	O-RING	2		X	19.300 X 2.200 MM
9	38H5121	ADAPTER	2		X	

(A) PRESSURE
PRESSION
DRUCK
PRESSIONE
PRESION
TRYCK

(B) RETURN
RETOUR
RUECKLAUF
RITORNO
RETORNO
RETUR

https://www.truck-manuals.net/

OIL COOLER LINE CLAMPS AND BRACKETS
RADIATOR D'HUILE, COLLIERS ET SUPPORTS DE CONDUITE
OELKUEHLER, LEITUNGSSCHELLEN UND -HALTERUNGEN
RADIATOR DELL'OLIO, STAFFE E MORSETTI DELLE LINEE
ENFRIADOR DE ACEITE, ABRAZADERAS Y PINZAS DE LINEAS
OLJEKYLARE, LEDNINGSKLAEMMOR OCH FAESTEN
RE029179 -UN-20MAR98

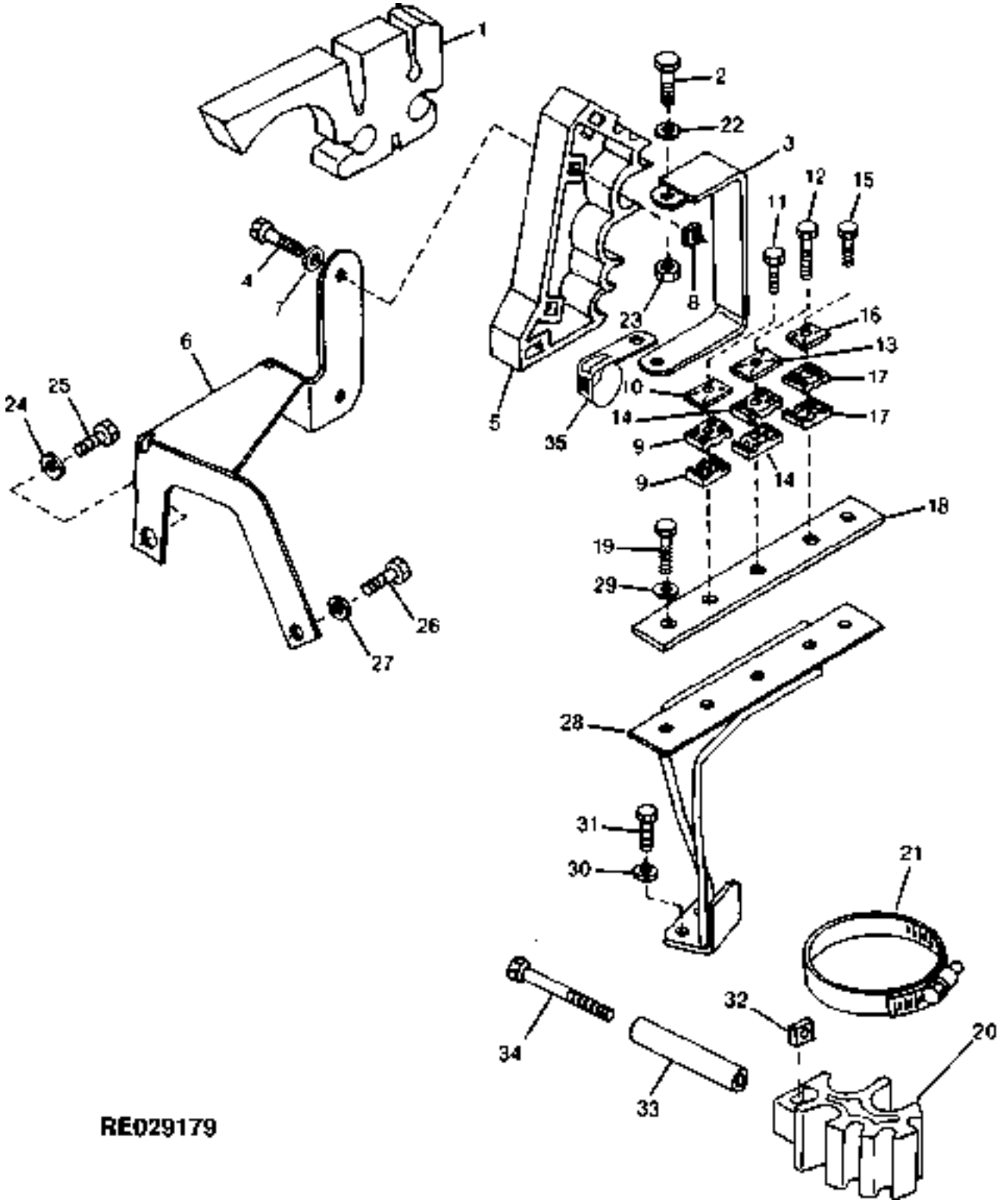

RE029179

https://www.truck-manuals.net/

KEY	PART NO.	PART NAME	QTY	TRACTOR SERIAL NO.	ALL	REMARKS
1	R124681	BARRIER	1		X	
2	19M7881	SCREW	2		X	M8 X 20, HS 10.9
3	R120759	CLAMP	1		X	
4	19M7881	SCREW	2		X	M8 X 20, HS 10.9
5	R120733	CLAMP	1		X	
6	R122424	RAIL	1		X	
7	24M7336	WASHER	2		X	9 X 16 X 1.600 MM
8	14M7098	NUT	2		X	M8
9	H109046	CLAMP	2		X	
10	H121168	PLATE	1		X	
11	19M8317	SCREW	1		X	M8 X 40, HS 10.9
12	19M8319	SCREW	1		X	M8 X 50, HS 10.9
13	H112567	PLATE	1		X	
14	H115379	CLAMP	2		X	
15	19M7868	SCREW	1		X	M8 X 30, HS 10.9
16	H121163	COVER	1		X	
17	H128515	CLAMP	4		X	
18	R122547	STRAP	1		X	
19	19M7513	CAP SCREW	2		X	M8 X 30, HS 10.9
20	R121967	CLAMP	1		X	
21	TY22473	CLAMP	1	-XXXXXX	X	(SUB FOR AR62936)
	TY22472	CLAMP	1	XXXXXX-	X	(SUB FOR RE41991)
22	24M7036	WASHER	2		X	9 X 16 X 1.600 MM
23	14M7098	NUT	2		X	M8
24	24M7242	WASHER	1		X	21.400 X 42 X 5 MM
25	R121794	SCREW	1		X	
26	19H1936	CAP SCREW	1		X	3/8" X 3/4"
27	24M7346	WASHER	1		X	11 X 20 X 2 MM
28	RE58680	SUPPORT	1		X	
29	24M7336	WASHER	2		X	9 X 16 X 1.600 MM
30	24M7336	WASHER	2		X	9 X 16 X 1.600 MM
31	19M7881	SCREW	2		X	M8 X 20, HS 10.9
32	14M7098	NUT	1		X	M8
33	R124828	FUEL LINE	1		X	
34	19M8404	CAP SCREW	1		X	M8 X 130, HS 10.9
35	R122472	CLIP	1		X	

https://www.truck-manuals.net/

HYDRAULIC OIL FILTER
FILTRE A HUILE HYDRAULIQUE
HYDRAULIKOELFILTER
FILTRO OLIO IDRAULICO
FILTRO P.ACEITE HIDRAULICO
HYDRAULOLJEFILTER
RE028800 -UN-18FEB98

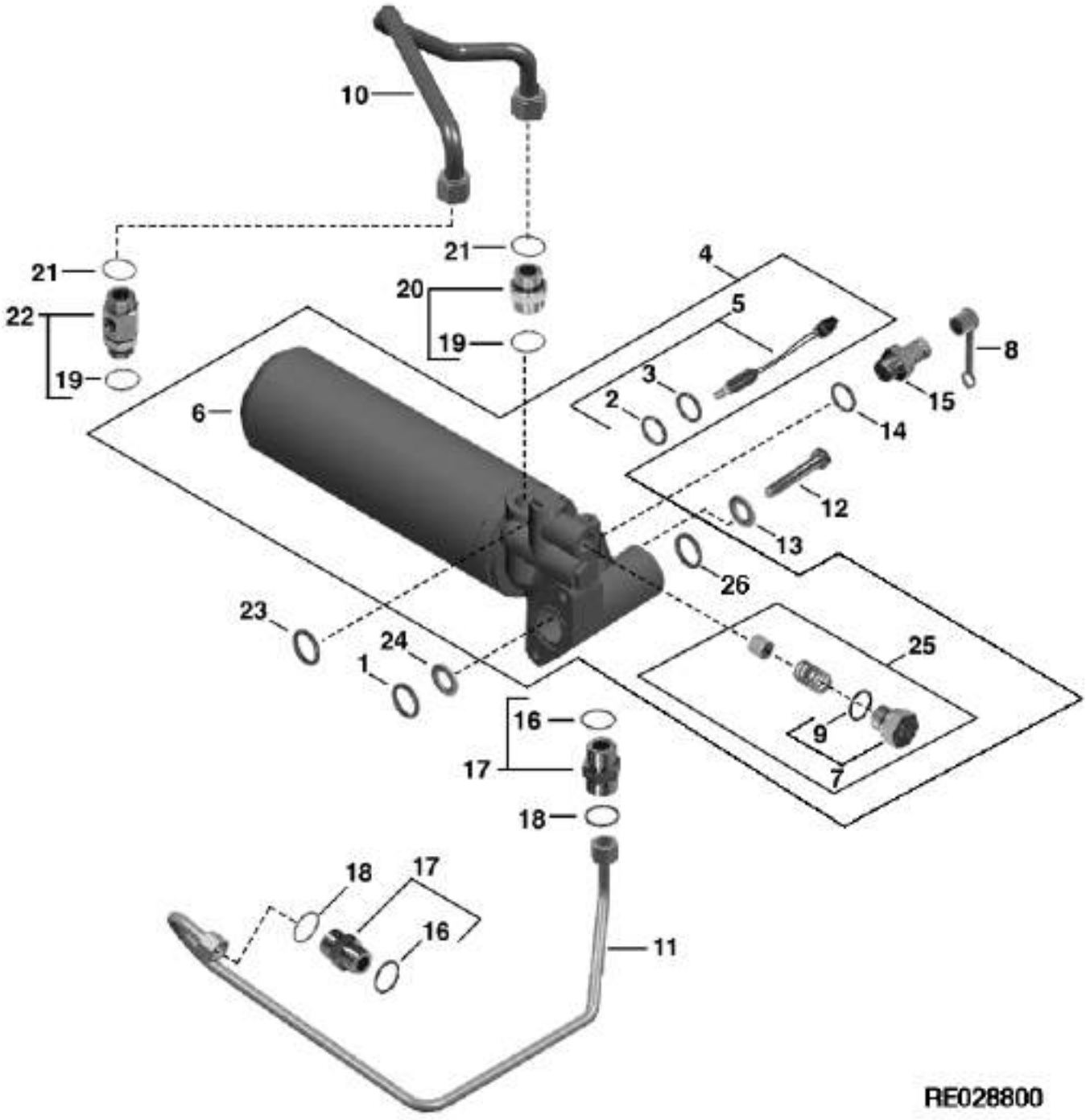

https://www.truck-manuals.net/

KEY	PART NO.	PART NAME	QTY	TRACTOR SERIAL NO.	ALL	REMARKS
1	B3690R	O-RING	1		X	
2	R27976	O-RING	1		X	
3	51M7041	O-RING	1		X	11.300 X 2.200 MM
4	RE152110	HOUSING	1	-XXXXXX	X	(C) (SUB FOR RE51570)
	RE152110	HOUSING	1	XXXXXX-	X	(D)
5	RE43508	SENSOR	1		X	
6	RE51797	OIL FILTER	1		X	
7	RE46684	PLUG	1		X	
8	R77175	COVER	2		X	
9	51M7041	O-RING	1		X	11.300 X 2.200 MM
10	RE61132	OIL LINE	1	-XXXXXX	X	
	RE69881	OIL LINE	1	XXXXXX-	X	
11	RE60851	OIL LINE	1		X	
12	19M8528	SCREW	2		X	M10 X 55, HS 10.9
13	24M7346	WASHER	2		X	(B) 11 X 20 X 2 MM
14	51M7041	O-RING	1		X	11.300 X 2.200 MM
15	RE12187	RECEPTACLE	2		X	
16	51M7047	O-RING	2		X	23.600 X 2.900 MM
17	38H5005	ADAPTER	2		X	
18	T77858	O-RING	2		X	
19	51M7048	O-RING	2		X	29.600 X 2.900 MM
20	38H5006	ADAPTER	1		X	
21	T76938	O-RING	2		X	
22	RE58409	CONNECTOR	1		X	
23	L57084	O-RING	1		X	
24	24H1648	WASHER	1		X	25/32" X 1-3/4" X 0.060"
25	RE58974	VALVE	1		X	(A)
26	U10289	O-RING	1	XXXXXX-	X	(D)

(A) VALVE BYPASS
DERIVATION DE SOUPAPE
VENTIL-UEBERBRUECKUNG
BYPASS DELLE VALVOLE
DERIVACION DE LA VALVULA
VENTILSHUNT

(B) NO LONGER REQUIRED
N'EST PLUS NECESSAIRE
NICHT MEHR NOTWENDIG
NON PIU' NECESSARIO
AHORA NO SE REQUIERA
EJ LAENGRE NOEDVAENDIG

(C) (-XXXXXX) 8100-020534; 8200-020364; 8300-020769; 8400-020676
(D) (XXXXXX-) 8100-020535; 8200-020365; 8300-020770; 8400-020677

https://www.truck-manuals.net/

MEMORANDA
MEMORANDA
MEMORANDA
MEMORANDA
MEMORANDA
MEMORANDA

https://www.truck-manuals.net/

MEMORANDA
MEMORANDA
MEMORANDA
MEMORANDA
MEMORANDA
MEMORANDA

https://www.truck-manuals.net/

ROCKSHAFT (8100 -025513; 8200 -025493; 8300 -025500; 8400 -025519)
ARBRE DE RELEVAGE (8100-025513; 8200-025493; 8300-025500; 8400-025519)
MIT KRAFTHEBER (8100-025513; 8200-025493; 8300-025500; 8400-025519)
EJE OSCILANTE (8100-025513; 8200-025493; 8300-025500; 8400-025519)
ALBERO OSCILLANTE (8100-025513; 8200-025493; 8300-025500; 8400-025519)
LYFTARMSAXEL (8100-025513; 8200-025493; 8300-025500; 8400-025519)
RXP025091 -UN-01JAN94

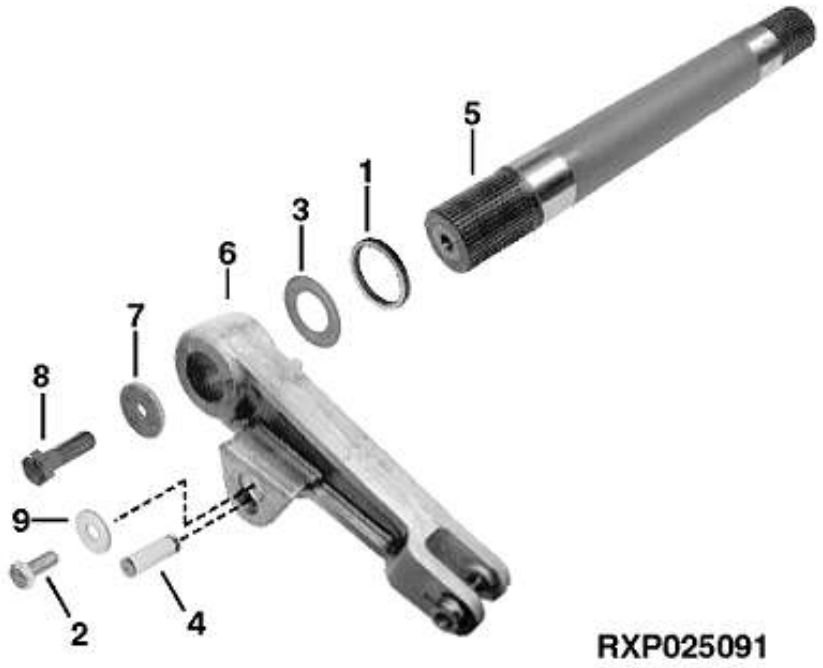

KEY	PART NO.	PART NAME	QTY	TRACTOR SERIAL NO.	ALL	REMARKS
1	L75841	SEAL	2		X	
2	19M7938	CAP SCREW	2		X	M10 X 20, HS 10.9
3	R106463	THRUST WASHER	2		X	
4	R122313	PIN	2		X	
5	R113686	ROCKSHAFT	1		X	
6	R113688	LIFT ARM	1		X	R.H.
	R113689	LIFT ARM	1		X	L.H.
7	R33877	WASHER	2		X	
8	19M8638	CAP SCREW	2		X	M20 X 65
9	R124347	WASHER	2		X	

https://www.truck-manuals.net/

ROCKSHAFT (8100 025514- ; 8200 025494- ; 8300 025501- ; 8400 025520-)
ARBRE DE RELEVAGE (8100 025514- ; 8200 025494- ; 8300 025501- ; 8400 025520-)
MIT KRAFTHEBER (8100 025514- ; 8200 025494- ; 8300 025501- ; 8400 025520-)
EJE OSCILANTE (8100 025514- ; 8200 025494- ; 8300 025501- ; 8400 025520-)
ALBERO OSCILLANTE (8100 025514- ; 8200 025494- ; 8300 025501- ; 8400 025520-)
LYFTARMSAXEL (8100 025514- ; 8200 025494- ; 8300 025501- ; 8400 025520-)
RE030272 -UN-18DEC98

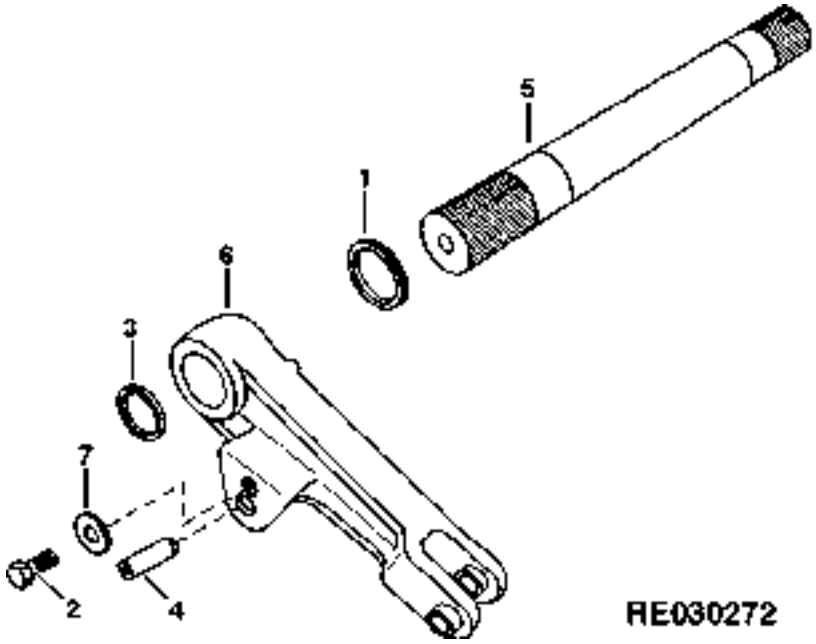

KEY	PART NO.	PART NAME	QTY	TRACTOR SERIAL NO.	ALL	REMARKS
1	R135001	SEAL	2		X	
2	19M7938	CAP SCREW	2		X	M10 X 20, HS 10.9
3	R53658	SNAP RING	2		X	
4	R122313	PIN	2		X	
5	R134705	ROCKSHAFT	1		X	
6	R113688	LIFT ARM	1		X	R.H.
	R113689	LIFT ARM	1		X	L.H.
7	R124347	WASHER	2		X	

https://www.truck-manuals.net/

ROCKSHAFT POSITION SENSOR
CAPTEUR DE POSITION DE L'ARBRE DE RELEVAGE
REGELHYDRAULIKSTELLUNG-MESSWERTGEBER
SENSORE DI POSIZIONE DELL'ALBERO OSCILLANTE
SENSOR DE POSICION DEL EJE OSCILANTE
POSITIONSGIVARE FOER LYFTARMSAXEL
RXP025078 -UN-01JAN94

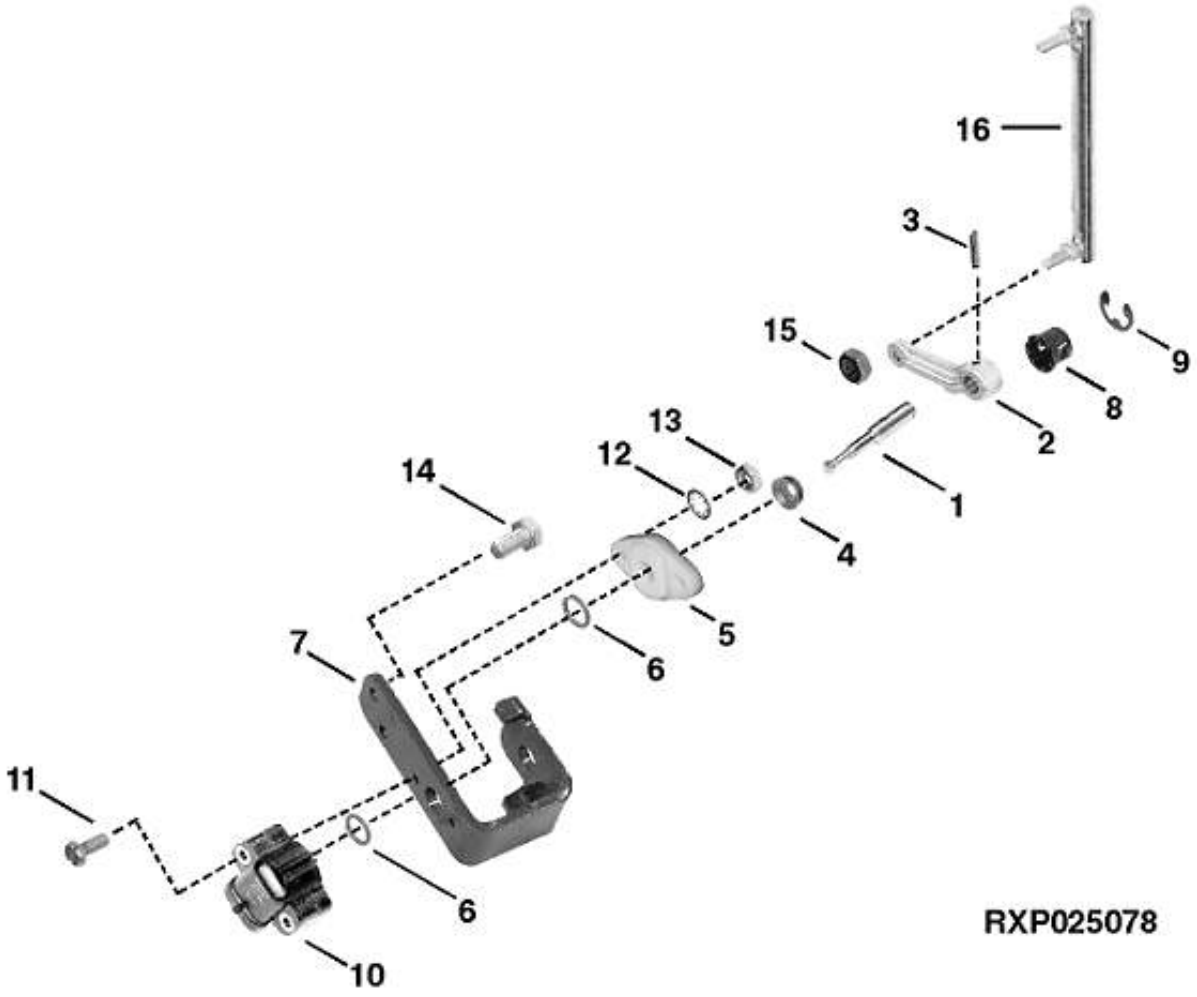

https://www.truck-manuals.net/

KEY	PART NO.	PART NAME	QTY	TRACTOR SERIAL NO.	ALL	REMARKS
1	R111692	SHAFT	1		X	
2	R40915	LEVER	1		X	
3	R56504	SPRING PIN	1		X	
4	R112679	SEAL	1		X	
5	R86457	SUPPORT	1		X	
6	P48347	O-RING	2		X	
7	R111691	BRACKET	1		X	
8	R41076	GROMMET	1		X	
9	R26871	SNAP RING	1		X	
10	RE56165	SENSOR	1		X	(SUB FOR RE24467)
11	21H1390	SCREW	2		X	0.190" X 1-3/4"
12	12M7060	WASHER	2		X	5.300 MM
13	14H631	NUT	2		X	0.190"
14	19M7932	CAP SCREW	2		X	M8 X 16, HS 10.9
15	14H860	NUT	1		X	1/4"
16	RE54029	BALL JOINT	1		X	

https://www.truck-manuals.net/

DRAFT LINK SUPPORT
SUPPORT DE BARRE DE TRACTION
UNTERLENKERSTUETZE
SUPPORTO DEL TIRANTE DI TRAZIONE
SOPORTE DEL BRAZO DE TIRO
DRAGARMSSTOED
RE030269 -UN-18DEC98

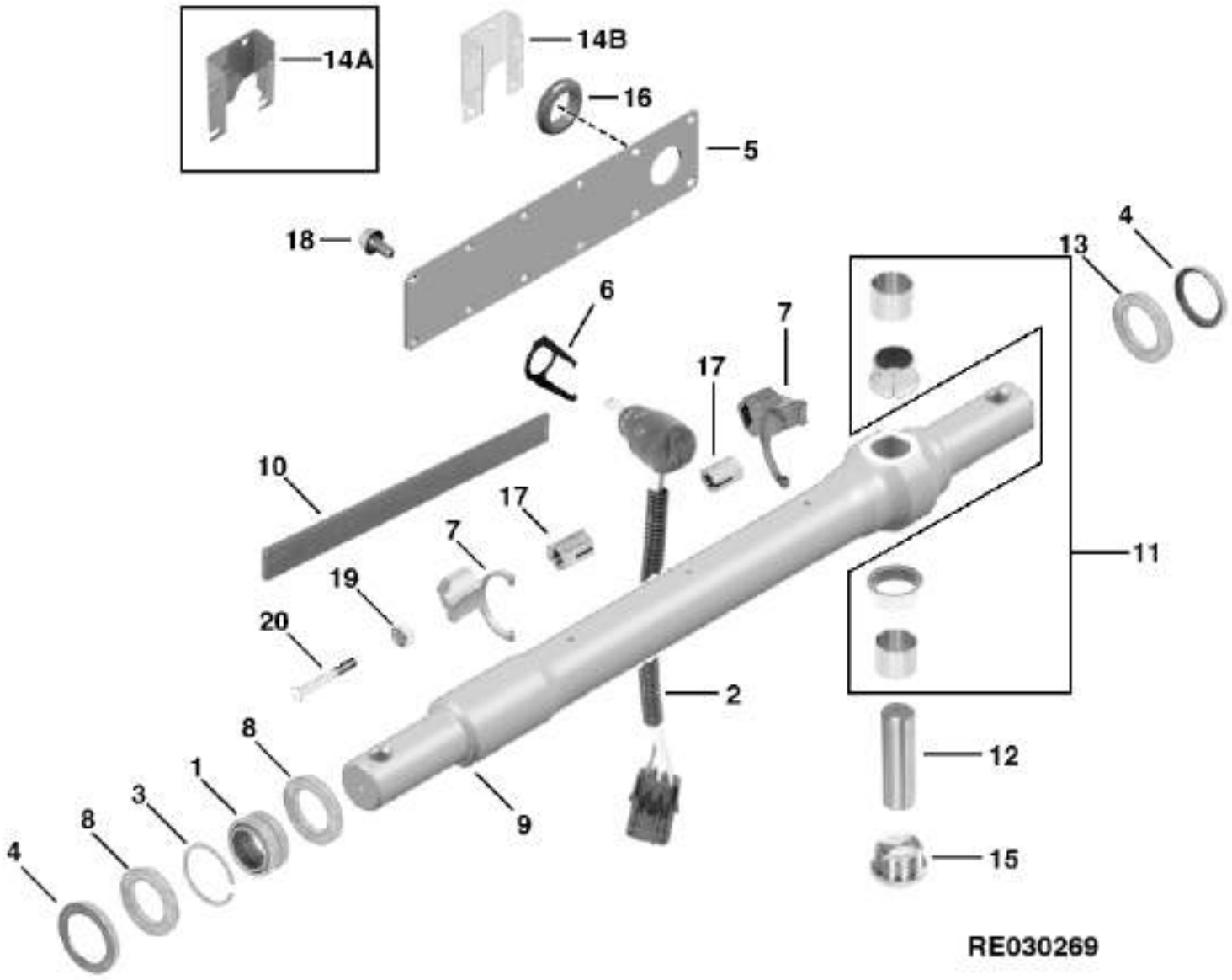

https://www.truck-manuals.net/

KEY	PART NO.	PART NAME	QTY	AXLE SERIAL NO.	ALL	REMARKS
1	AT128774	SELF-ALIGNING BUSHING	1		X	
2	RE43738	HITCH DRAFT SENSOR	1		X	
3	40M1873	SNAP RING	1		X	
4	R107316	RETAINER	2		X	
5	R124043	COVER	1	-010585	X	
	R128044	COVER	1	010586-XXXXXX	X	
	R160281	COVER	1	XXXXXX-	X	
6	R107491	CLIP	1		X	
7	R107495	CLIP	2		X	
8	R107657	SEAL	2		X	
9	R108290	SHAFT	1		X	
10	R108303	REINFORCEMENT	1		X	
11	RE68295	KIT	2		X	
12	R108305	PIN	1		X	
13	R108306	SEAL	1		X	
14A	R124042	COVER	1		X	(SUB R126408)
14B	R126408	COVER	1		X	
15	R133691	PLUG	1		X	(SUB FOR R122158)
16	R120048	GROMMET	1		X	
	R111792	PLUG	1		X	(A)
17	R132852	NUT	2		X	(SUB FOR R120166)
18	19M7783	SCREW	12	-XXXXXX	X	M10 X 16, HS 10.9
	19M7783	SCREW	7	XXXXXX-	X	
19	14M7273	NUT	1		X	M8
20	19M7513	CAP SCREW	1		X	M8 X 30, HS 10.9
..	RE62967	ADHESIVE	1		X	

(A) W/O HITCH
W/O ATTELAGE
W/O ANHAENGEVORRICHTUNG
W/O SOLLEVATORE
W/O ENGANCHE
W/O LIFT

https://www.truck-manuals.net/

LIFT CYLINDER KIT (NORTH AMERICAN VERSION)
JEU DE VERIN DE RELEVAGE (VERSION NORD AMERICAINE)
HUBZYLINDERSATZ (NORDAMERIKANISCHE AUSFUEHRUNG)
KIT DEL CILINDRO DI SOLLEVAMENTO (VERSIONE NORDAMERICANA)
JUEGO DE CILINDRO ELEVADOR (VERSION NORTEAMERICANA)
LYFTCYLINDERSATS (NORDAMERIKANSK VERSION)
RXP025084 -UN-01JAN94

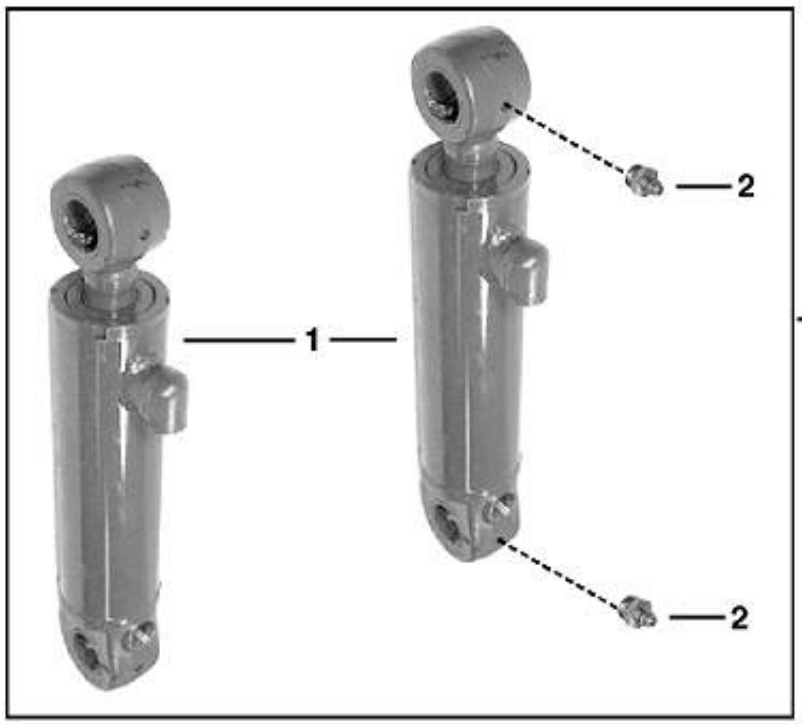

KEY	PART NO.	PART NAME	QTY	TRACTOR SERIAL NO.	8 8 1 2 0 0 0 0	REMARKS
1	AH144351	HYDRAULIC CYLINDER	1	-XXXXXX	X X	(B) 80 MM, (SUB AH149420)
	AH149420	HYDRAULIC CYLINDER	1	XXXXXX-	X X	(C) 80 MM
	AH149422	HYDRAULIC CYLINDER	1	-XXXXXX	X X	(B) 90 MM, (SUB FOR AH144352)
	AH149422	HYDRAULIC CYLINDER	1	XXXXXX-	X X	(C) 90 MM
2	JD7798	LUBRICATION FITTING	1		X X	
3	**AR114068**	**KIT**	**1**		**X X**	**(A) (FI)**

(A) 1 - AH149420, 1 - AH149422 = 10,400 LBS
(B) (-XXXXXX) 8100-011595; 8200-011401
(C) (XXXXXX-) 8100-011596; 8200-011402

https://www.truck-manuals.net/

LIFT CYLINDER (NORTH AMERICAN HIGH-LIFT HITCH)
VERIN DE RELEVAGE (NORD AMERICAINE ATTELAGE HIGH-LIFT)
HUBZYLINDER (NORDAMERIKANISCHE HIGH-LIFT-ANHAENGEVORRICHTUNG)
CILINDRO DI SOLLEVAMENTO (NORD AMERICANA ATTACCO HIGH-LIFT)
CILINDRO ELEVADOR (NORTEAMERICANA ENGANCHE HIGH-LIFT)
LYFTCYLINDER (NORDAMERIKANSK HIGH-LIFT-LYFT)
RE026376 -UN-13MAR97

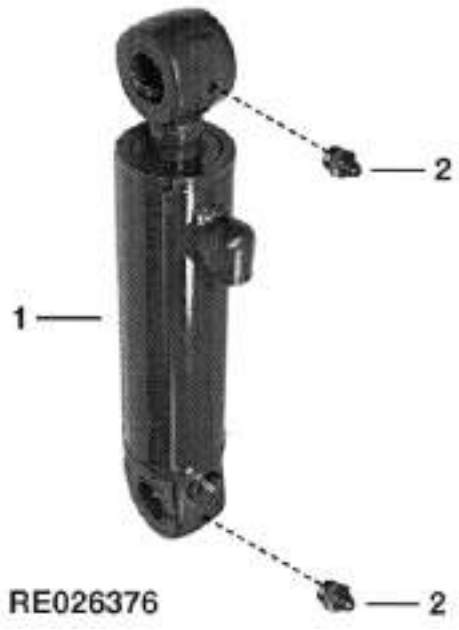

KEY	PART NO.	PART NAME	QTY	TRACTOR SERIAL NO.	8 1 0 0	8 2 0 0	REMARKS
1	AH149422	HYDRAULIC CYLINDER	1	-XXXXXX	X	X	(B) 90 MM, (SUB FOR AH144352)
	AH149422	HYDRAULIC CYLINDER	1	XXXXXX-	X	X	(A) (C) 90 MM
	AH141063	HYDRAULIC CYLINDER	1	-XXXXXX	X	X	(B) 100 MM, (SUB AH148711)
	AH148711	HYDRAULIC CYLINDER	1	XXXXXX-	X	X	(A) (C) 100 MM
2	JD7798	LUBRICATION FITTING	4		X	X	

(A) 1 - AH 149422, 1 - AH148711 = 14,165 LBS
(B) (-XXXXXX) 8100-011595; 8200-011401
(C) (XXXXXX-) 8100-011596; 8200-011402

https://www.truck-manuals.net/

LIFT CYLINDER KIT (NORTH AMERICAN VERSION)
JEU DE VERIN DE RELEVAGE (VERSION NORD AMERICAINE)
HUBZYLINDERSATZ (NORDAMERIKANISCHE AUSFUEHRUNG)
KIT DEL CILINDRO DI SOLLEVAMENTO (VERSIONE NORDAMERICANA)
JUEGO DE CILINDRO ELEVADOR (VERSION NORTEAMERICANA)
LYFTCYLINDERSATS (NORDAMERIKANSK VERSION)
RXP025084 -UN-01JAN94

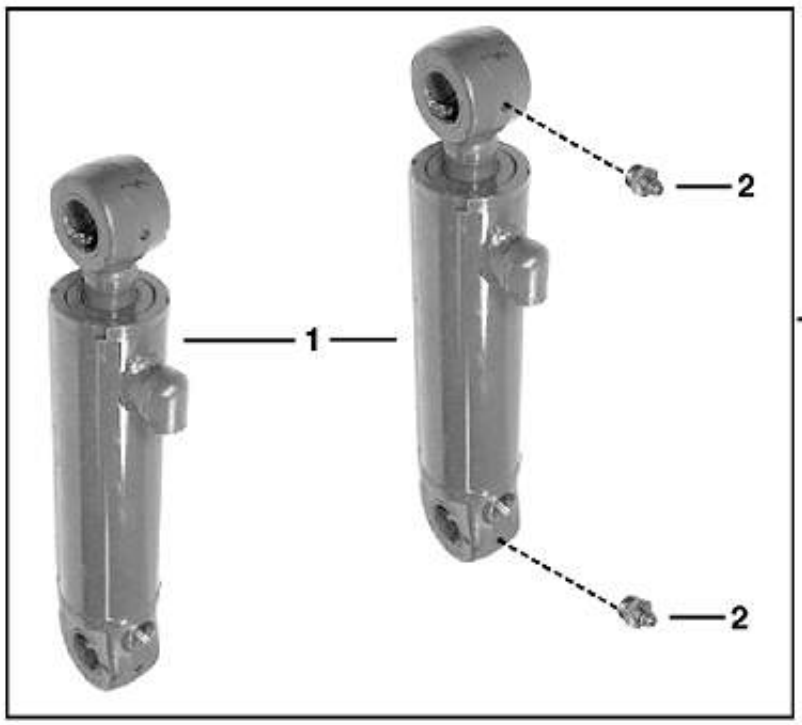

KEY	PART NO.	PART NAME	QTY	TRACTOR SERIAL NO.	8 8 3 4 0 0 0 0	REMARKS
1	AH149422	HYDRAULIC CYLINDER	2	-XXXXXX	X X	(B) 90 MM, (SUB FOR AH144352)
	AH149422	HYDRAULIC CYLINDER	2	XXXXXX-	X X	(C) 90 MM
2	JD7798	LUBRICATION FITTING	4		X X	
3	**AR114069**	**KIT**	**1**		**X X**	**(A) (FI)**

(A) 2 - AH149422 = 11,700 LBS
(B) (-XXXXXX) 8300-011703; 8400-011727
(C) (XXXXXX-) 8300-011704; 8400-011728

https://www.truck-manuals.net/

LIFT CYLINDER (NORTH AMERICAN HIGH-LIFT HITCH)
VERIN DE RELEVAGE (NORD AMERICAINE ATTELAGE HIGH-LIFT)
HUBZYLINDER (NORDAMERIKANISCHE HIGH-LIFT-ANHAENGEVORRICHTUNG)
CILINDRO DI SOLLEVAMENTO (NORDAMERICANA ATTACCO HIGH-LIFT)
CILINDRO ELEVADOR (NORTEAMERICANA ENGANCHE HIGH-LIFT)
LYFTCYLINDER (NORDAMERIKANSK HIGH-LIFT-LYFT)
RE026376 -UN-13MAR97

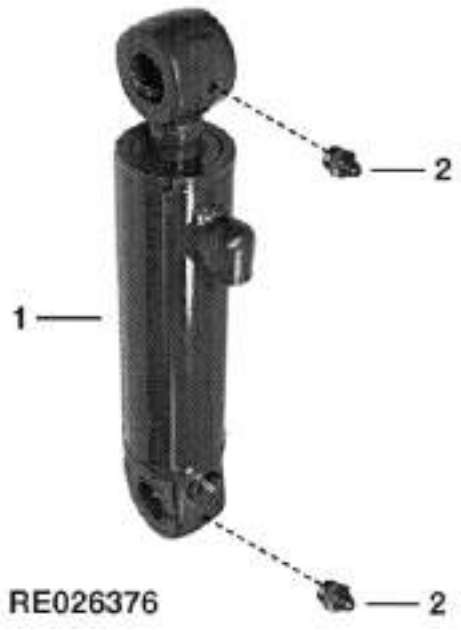

KEY	PART NO.	PART NAME	QTY	TRACTOR SERIAL NO.	8 8 3 4 0 0 0 0	REMARKS
1	AH141063	HYDRAULIC CYLINDER	1	-XXXXXX	X X	(B) 100 MM, (SUB AH148711)
	AH148711	HYDRAULIC CYLINDER	1	XXXXXX-	X X	(A) (C) 100 MM
2	JD7798	LUBRICATION FITTING	4		X X	

(A) 2 - AH148711 = 15,650 LBS
(B) (-XXXXXX) 8300-011703; 8400-011727
(C) (XXXXXX-) 8300-011704; 8400-011728

https://www.truck-manuals.net/

LIFT CYLINDER (EUROPEAN VERSION)
VERIN DE RELEVAGE (VERSION EUROPEENNE)
HUBZYLINDER (EUROPAEISCHE AUSFUEHRUNG)
CILINDRO DI SOLLEVAMENTO (VERSIONE EUROPEA)
CILINDRO ELEVADOR (VERSION EUROPEA)
LYFTCYLINDER (EUROPEISK VERSION)
RE026376 -UN-13MAR97

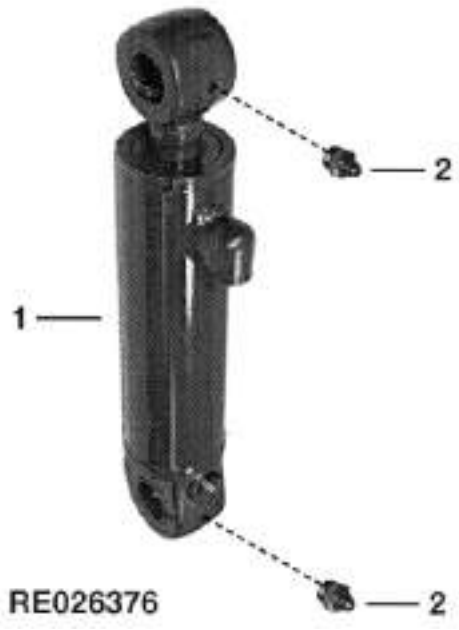

KEY	PART NO.	PART NAME	QTY	TRACTOR SERIAL NO.	8 8 1 2 0 0 0 0	REMARKS
1	AH149422	HYDRAULIC CYLINDER	1	-XXXXXX	X X	(B) 90 MM, (SUB FOR AH144352)
	AH149422	HYDRAULIC CYLINDER	1	XXXXXX-	X X	(A) (C) 90 MM
	AH141063	HYDRAULIC CYLINDER	1	-XXXXXX	X X	(B) 100 MM, (SUB AH148711)
	AH148711	HYDRAULIC CYLINDER	1	XXXXXX-	X X	(A) (C) 100 MM
2	JD7798	LUBRICATION FITTING	1		X X	

(A) 1 - AH149422, 1 - AH149811 = 14,165 LBS
(B) (-XXXXXX) 8100-011595; 8200-011401
(C) (XXXXXX-) 8100-011596; 8200-011402

https://www.truck-manuals.net/

LIFT CYLINDER (EUROPEAN VERSION)
VERIN DE RELEVAGE (VERSION EUROPEENNE)
HUBZYLINDER (EUROPAEISCHE AUSFUEHRUNG)
CILINDRO DI SOLLEVAMENTO (VERSIONE EUROPEA)
CILINDRO ELEVADOR (VERSION EUROPEA)
LYFTCYLINDER (EUROPEISK VERSION)
RE026376 -UN-13MAR97

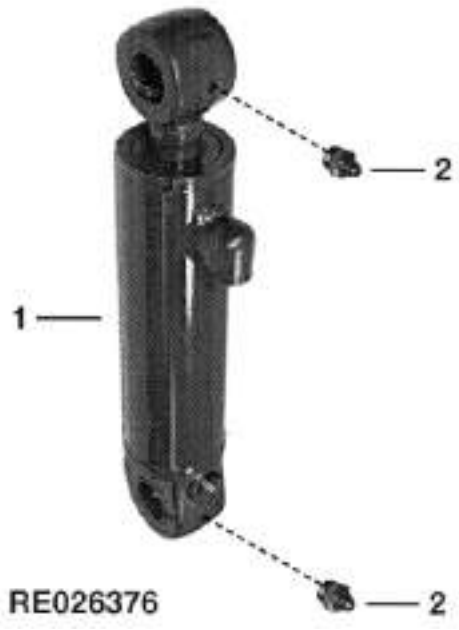

KEY	PART NO.	PART NAME	QTY	TRACTOR SERIAL NO.	8 8 3 4 0 0 0 0	REMARKS
1	AH141063	HYDRAULIC CYLINDER	2	-XXXXXX	X X	(B) 100 MM, (SUB AH148711)
	AH148711	HYDRAULIC CYLINDER	2	XXXXXX-	X X	(A) (C) 100 MM
2	JD7798	LUBRICATION FITTING	4		X X	

(A) 2 - AH148711 = 15,650 LBS
(B) (-XXXXXX) 8300-011703; 8400-011727
(C) (XXXXXX-) 8300-011704; 8400-011728

https://www.truck-manuals.net/

LIFT CYLINDER (80 MM) (8100 -011595; 8200 -011401)
VERIN DE RELEVAGE (80 MM) (8100 -011595; 8200 -011401)
HUBZYLINDER (80 MM) (8100 -011595; 8200 -011401)
CILINDRO DI SOLLEVAMENTO (80 MM) (8100 -011595; 8200 -011401)
CILINDRO DE ELEVACION (80 MM) (8100 -011595; 8200 -011401)
LYFTCYLINDER (80 MM) (8100 -011595; 8200 -011401)
RXP010858 -UN-01JAN94

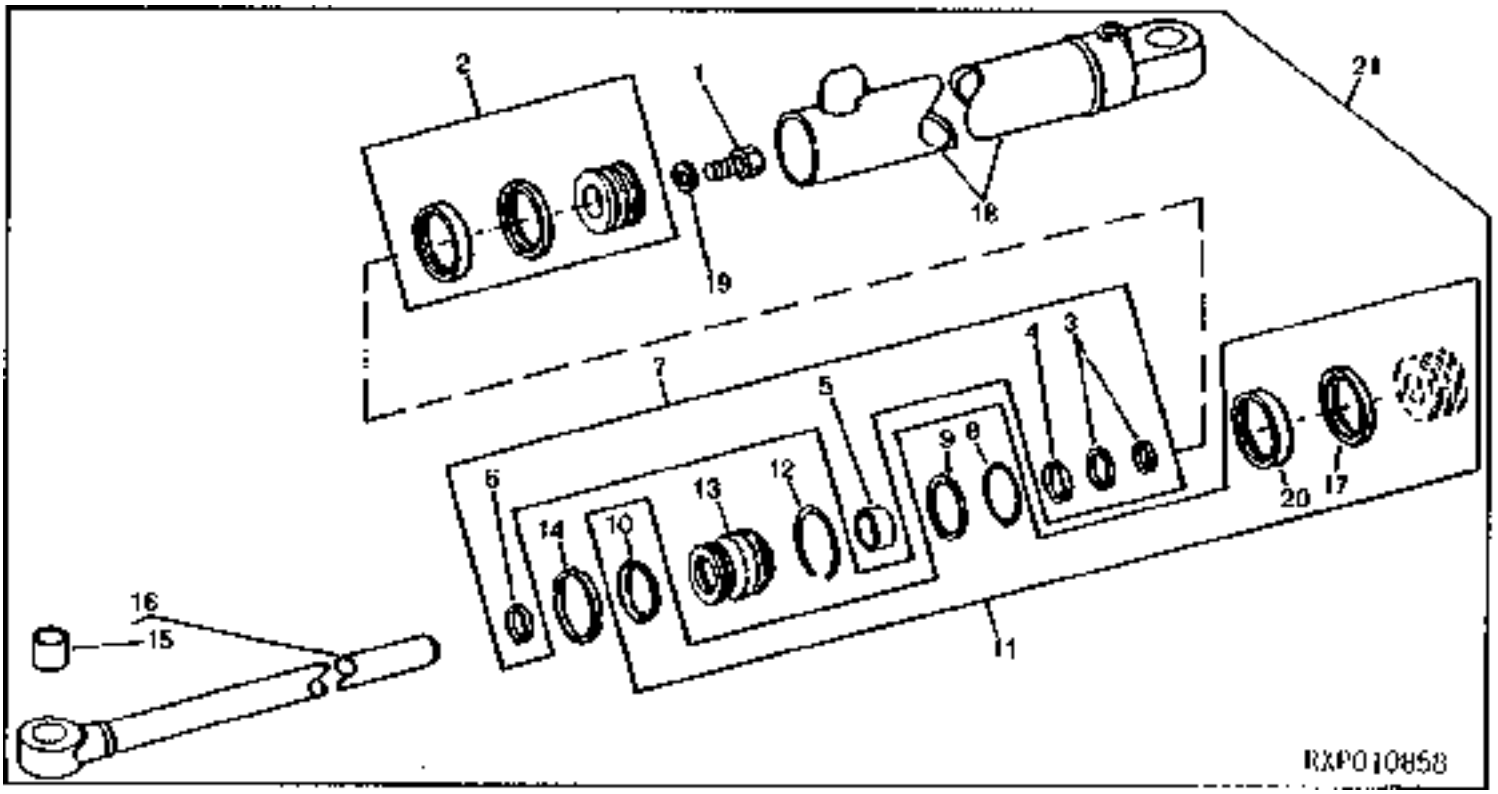

KEY	PART NO.	PART NAME	QTY	TRACTOR SERIAL NO.	8 8 1 2 0 0 0 0	REMARKS
1	19H3632	CAP SCREW	1		X X	1" X 3", HS SAE 8
2	RE33968	PISTON	1		X X	
3	RE20491	SEAL	1		X X	
4	R81856	SEAL	1		X X	
5	R81779	WEAR RING	1		X X	
6	RE24535	SEAL	1		X X	
7	RE20434	HYDRAULIC CYLINDER KIT	1		X X	
8	R83575	O-RING	1		X X	
9	R81864	BACK-UP RING	1		X X	
10	R91729	RING	1		X X	
11	RE37003	HYDRAULIC CYLINDER KIT	1		X X	
12	R81789	RING	1		X X	
13	R81767	HYDR. CYLINDER ROD GUIDE	1		X X	(A) (SUB H152347 AND AH149813)
14	R81795	NUT	1		X X	
15	R89940	BUSHING	1		X X	
16	AH137764	ROD	1		X X	
17	R98322	SEAL	1		X X	
18	AH144349	HYDRAULIC CYLINDER BARREL	1		X X	
19	H145176	WASHER	1		X X	
20	R98323	SEAL	1		X X	
21	AH144351	HYDRAULIC CYLINDER	1		X X	(SUB AH149420)

W/O V GROOVE
SANS RAINURE EN V
OHNE V-RILLE
SENZA SCANALATURA A V
SIN RANURA EN V
UTAN V-SKAARA

https://www.truck-manuals.net/

LIFT CYLINDER (80 MM) (8100 011595- ; 8200 011401-)
VERIN DE RELEVAGE (80 MM) (8100 011595- ; 8200 011401-)
HUBZYLINDER (80 MM) (8100 011595- ; 8200 011401-)
CILINDRO DI SOLLEVAMENTO (80 MM) (8100 011595- ; 8200 011401-)
CILINDRO DE ELEVACION (80 MM) (8100 011595- ; 8200 011401-)
LYFTCYLINDER (80 MM) (8100 011595- ; 8200 011401-)
RXP010858 -UN-01JAN94

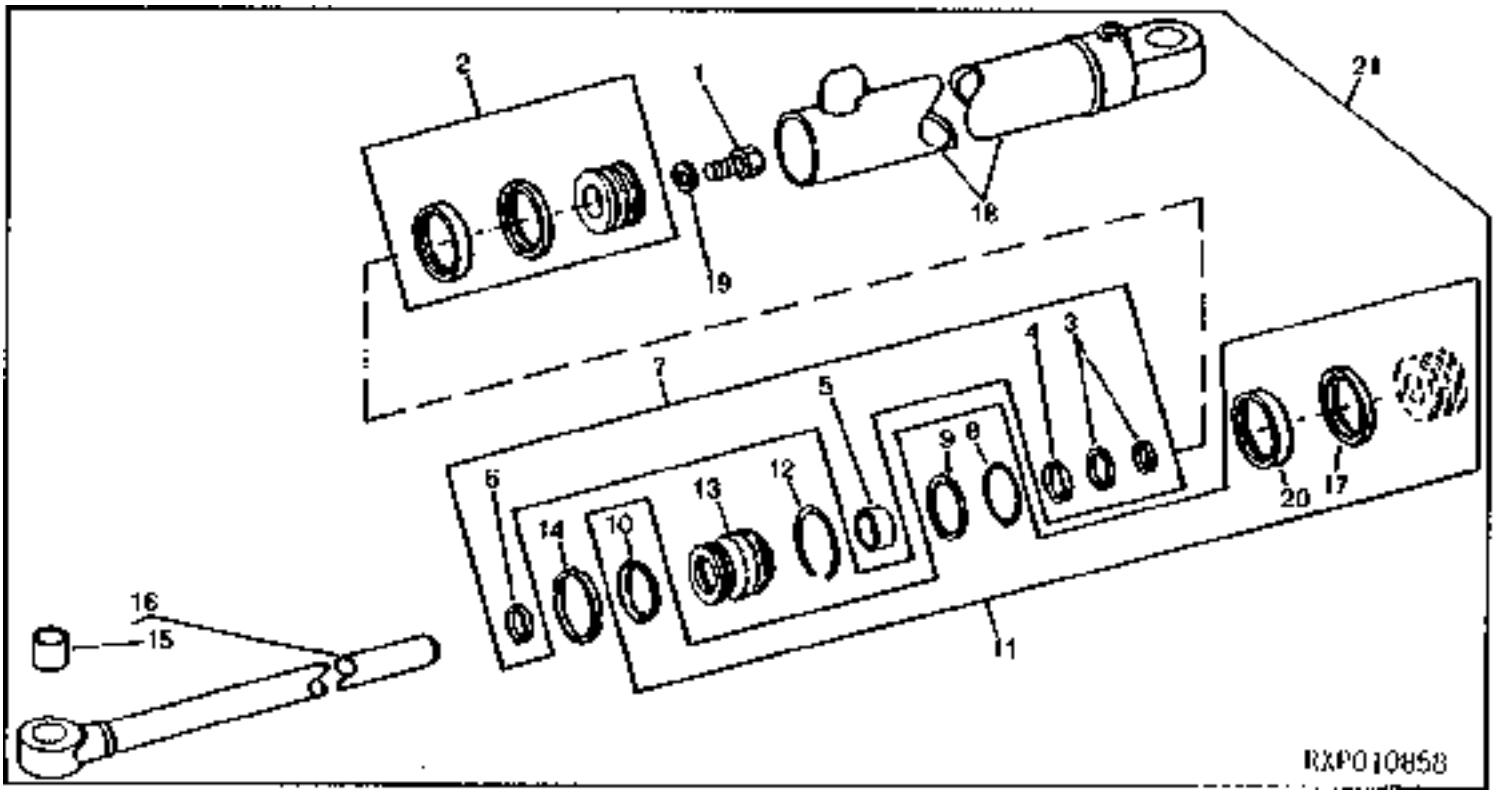

KEY	PART NO.	PART NAME	QTY	TRACTOR SERIAL NO.	8 8 1 2 0 0 0 0	REMARKS
1	19H3632	CAP SCREW	1		X X	1" X 3", HS SAE 8
2	RE33968	PISTON	1		X X	
3	AH146460	SEAL	1		X X	
4	H152202	SEAL	1		X X	
5	H152793	BACK-UP RING	1		X X	
6	AH146556	SEAL	1		X X	
7	AH149813	HYDRAULIC CYLINDER KIT	1		X X	
8	R83575	O-RING	1		X X	
9	R81864	BACK-UP RING	1		X X	
10	R91729	RING	1		X X	
11	RE37003	HYDRAULIC CYLINDER KIT	1		X X	
12	R81789	RING	1		X X	
13	H152347	HYDR. CYLINDER ROD GUIDE	1		X X	(A)
14	R81795	NUT	1		X X	
15	R89940	BUSHING	1		X X	
16	AH137764	ROD	1		X X	
17	R98322	SEAL	1		X X	
18	AH144349	HYDRAULIC CYLINDER BARREL	1		X X	
19	H145176	WASHER	1		X X	
20	R98323	SEAL	1		X X	
21	AH149420	HYDRAULIC CYLINDER	1		X X	

WITH V GROOVE
AVEC RAINURE EN U
MIT V-RILLE
CON SCANALATURA A V
CON RANURA EN V
MED V-SKAARA

https://www.truck-manuals.net/

LIFT CYLINDER (90 MM) (8100 -011595; 8200 -011401; 8300 -011703; 8400 -011727)
VERIN DE RELEVAGE (90 MM) (8100 -011595; 8200 -011401; 8300 -011703; 8400 -011727)
HUBZYLINDER (90 MM) (8100 -011595; 8200 -011401; 8300 -011703; 8400 -011727)
CILINDRO DI SOLLEVAMENTO (90 MM) (8100 -011595; 8200 -011401; 8300 -011703; 8400 -011727)
CILINDRO DE ELEVACION (90 MM) (8100 -011595; 8200 -011401; 8300 -011703; 8400 -011727)
LYFTCYLINDER (90 MM) (8100 -011595; 8200 -011401; 8300 -011703; 8400 -011727)
RXP011263 -UN-01JAN94

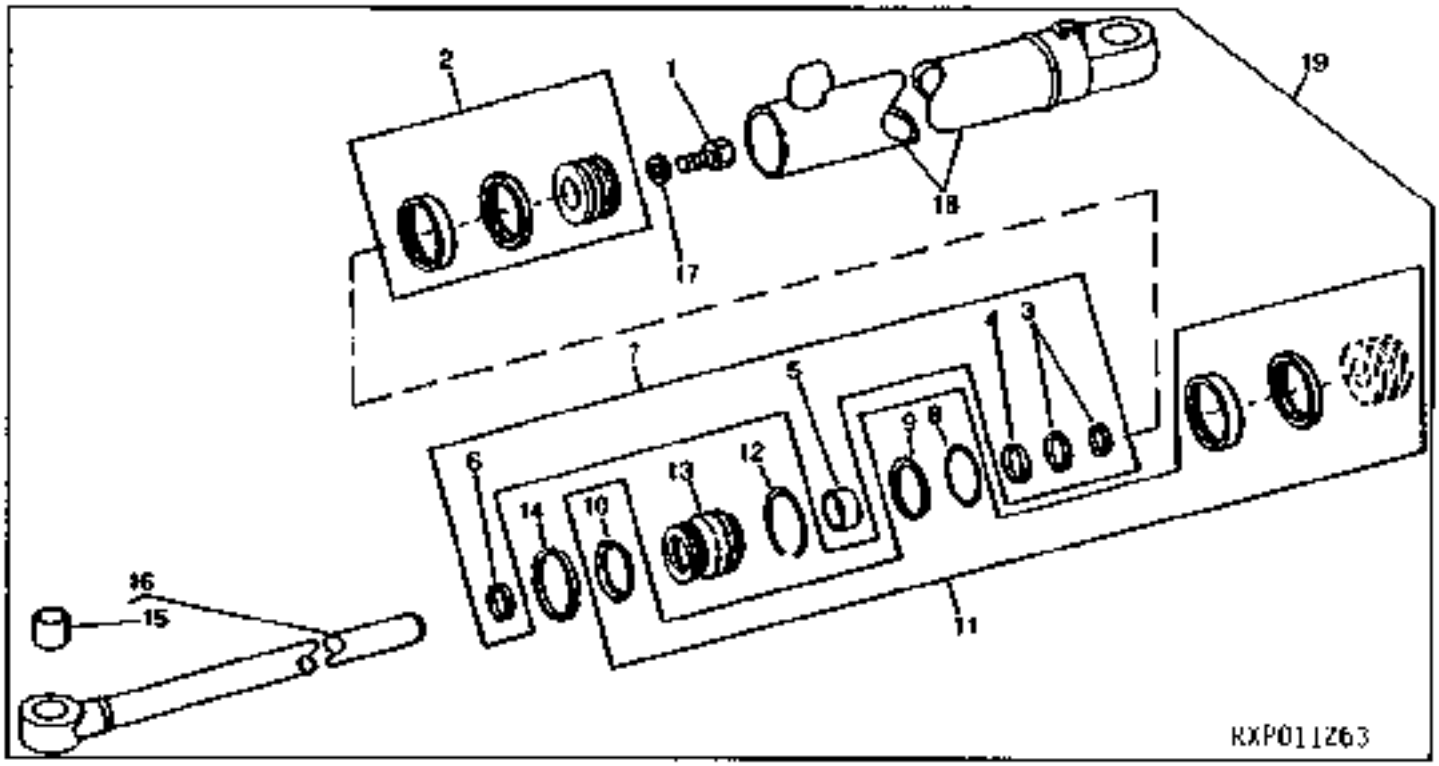

KEY	PART NO.	PART NAME	QTY	TRACTOR SERIAL NO.	ALL	REMARKS
1	19H3632	CAP SCREW	1		X	1" X 3", HS SAE 8
2	AH136453	PISTON	1		X	
3	RE20491	SEAL	1		X	
4	R81856	SEAL	1		X	
5	R81779	WEAR RING	1		X	
6	RE24535	SEAL	1		X	
7	RE20434	HYDRAULIC CYLINDER KIT	1		X	
8	R83576	O-RING	1		X	
9	R79101	BACK-UP RING	1		X	
10	R91730	RING	1		X	
11	AH134955	HYDRAULIC CYLINDER KIT	1		X	
12	R81788	RING	1		X	
13	R81766	HYDR. CYLINDER ROD GUIDE	1		X	(A) (SUB H157642 AND AH149813)
14	R81794	NUT	1		X	
15	R89940	BUSHING	1		X	
16	AH137764	ROD	1		X	
17	H145176	WASHER	1		X	
18	AH144350	HYDRAULIC CYLINDER BARREL	1		X	
19	AH149422	HYDRAULIC CYLINDER	1		X	(SUB FOR AH144352)

W/O V GROOVE
SANS RAINURE EN V
OHNE V-RILLE
SENZA SCANALATURA A V
SIN RANURA EN V
UTAN V-SKAARA

https://www.truck-manuals.net/

LIFT CYLINDER (90 MM) (8100 011596- ; 8200 011401- ; 8300 011703- ; 8400 011727-)
VERIN DE RELEVAGE (90 MM) (8100 011596- ; 8200 011401- ; 8300 011703- ; 8400 011727-)
HUBZYLINDER (90 MM) (8100 011596- ; 8200 011401- ; 8300 011703- ; 8400 011727-)
CILINDRO DI SOLLEVAMENTO (90 MM) (8100 11596- ;8200 11401- ;8300 11703- ;8400 11727-)
CILINDRO DE ELEVACION (90 MM) (8100 11596- ; 8200 11401- ; 8300 11703- ; 8400 11727-)
LYFTCYLINDER (90 MM) (8100 011596- ; 8200 011401- ; 8300 011703- ; 8400 011727-)
RXP011263 -UN-01JAN94

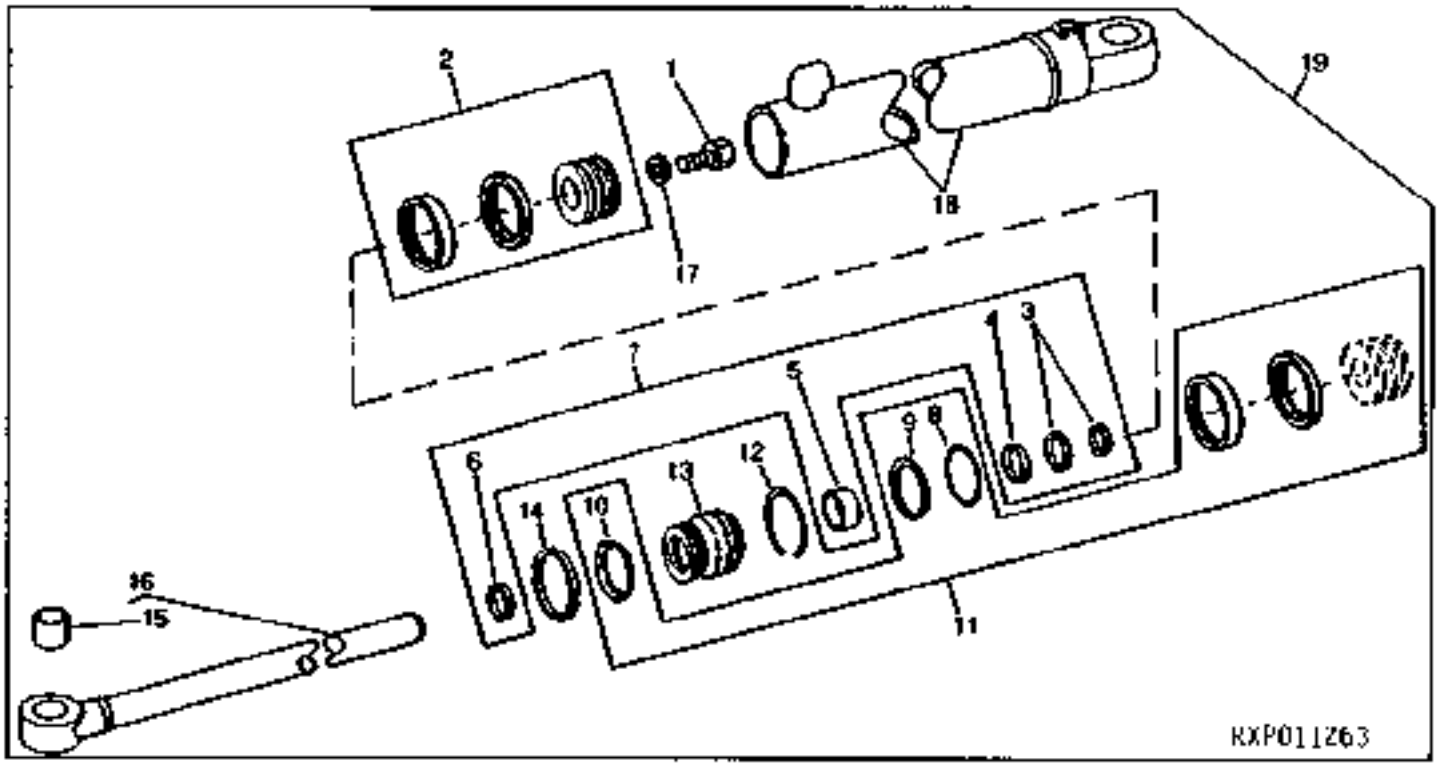

KEY	PART NO.	PART NAME	QTY	TRACTOR SERIAL NO.	ALL	REMARKS
1	19H3632	CAP SCREW	1		X	1" X 3", HS SAE 8
2	AH136453	PISTON	1		X	
3	AH146560	SEAL	1		X	
4	H152202	SEAL	1		X	
5	H152793	BACK-UP RING	1		X	
6	AH146556	SEAL	1		X	
7	AH149813	HYDRAULIC CYLINDER KIT	1		X	
8	R83576	O-RING	1		X	
9	R79101	BACK-UP RING	1		X	
10	R91730	RING	1		X	
11	AH134955	HYDRAULIC CYLINDER KIT	1		X	
12	R81788	RING	1		X	
13	H157642	HYDR. CYLINDER ROD GUIDE	1		X	(A)
14	R81794	NUT	1		X	
15	R89940	BUSHING	1		X	
16	AH137764	ROD	1		X	
17	H145176	WASHER	1		X	
18	AH144350	HYDRAULIC CYLINDER BARREL	1		X	
19	AH149422	HYDRAULIC CYLINDER	1		X	

WITH V GROOVE
AVEC RAINURE EN U
MIT V-RILLE
CON SCANALATURA A V
CON RANURA EN V
MED V-SKAARA

https://www.truck-manuals.net/

LIFT CYLINDER (N.A.HIGH LIFT HITCH) (100 MM) (8100 -011595;8200 -011401;8300 -011703;8400 -011727)
VERIN DE RELEVAGE (N.A.ATTELAGE HIGH-LIFT)(81 -11595;82 -11401;83 -11703;8400 -11727)
HUBZYLINDER (NORDAMERIKANISCHE HIGH-LIFT) (81 -011595;82 -011401;8300 -011703;8400 -011727)
CILINDRO DI SOLLEVAMENTO(N.A.ATTACCO HIGH-LIFT)(81 -11595;82 -11401;83 -11703;84 -11727)
CILINDRO DE ELEVACION (N.A. ENGANCHE HIGH-LIFT)(81 -11595;82 -11401;83 -11703;84 -11727)
LYFTCYLINDER (NORDAMERIKANSK HIGH-LIFT-LYFT) (81 -011595;82 -011401;83 -011703;8400 -011727)
RE026083 -UN-22MAR95

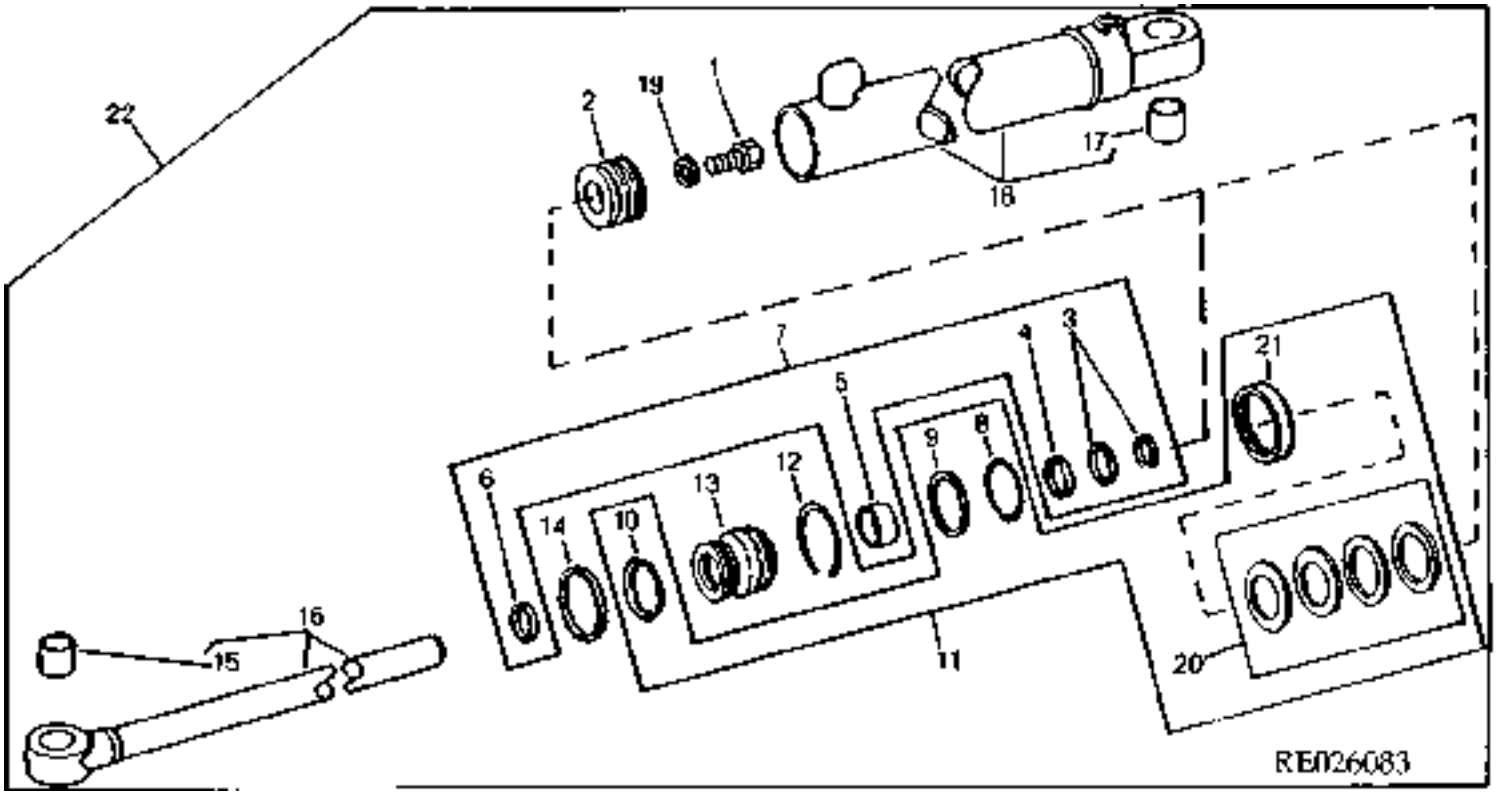

KEY	PART NO.	PART NAME	QTY	TRACTOR SERIAL NO.	ALL	REMARKS
1	19M8353	CAP SCREW	1		X	M30 X 80, HS 10.9
2	H145456	PISTON	1		X	
3	RE20757	SEAL	1		X	
4	R81973	SEAL	1		X	
5	R81975	WEAR RING	1		X	
6	RE24536	SEAL	1		X	
7	RE20595	HYDRAULIC CYLINDER KIT	1		X	
8	R83577	O-RING	1		X	
9	R81862	BACK-UP RING	1		X	
10	R91731	RING	1		X	
11	AH137687	HYDRAULIC CYLINDER KIT	1		X	(SUB AH149844)
12	R81787	RING	1		X	
13	R81972	HYDR. CYLINDER ROD GUIDE	1		X	(A) (SUB H157978 AND AH148164)
14	R81793	NUT	1		X	
15	R89940	BUSHING	1		X	
16	AH142570	ROD	1		X	
17	R89940	BUSHING	1		X	
18	AH142569	HYDRAULIC CYLINDER BARREL	1		X	
19	H145175	WASHER	1		X	
20	RE20343	SEAL	1		X	
21	R81775	WEAR RING	1		X	
22	AH141063	HYDRAULIC CYLINDER	1		X	(100 MM) (SUB AH148711)

W/O V GROOVE
SANS RAINURE EN V
OHNE V-RILLE
SENZA SCANALATURA A V
SIN RANURA EN V
UTAN V-SKAARA

https://www.truck-manuals.net/

LIFT CYLINDER (N.A.HIGH LIFT HITCH) (100 MM) (8100 11596- ;8200 11402- ;8300 11704- ;8400 11728-)
VERIN DE RELEVAGE(N.A.ATTELAGE HIGH-LIFT)(100 MM)(81 11596- ;82 11402- ;83 11704- ;84 11728-)
HUBZYLINDER (NORD AMERIKANISCHE HIGH-LIFT)(81 11596- ;82 11402- ;83 11704- ;8400 11728-)
CILINDRO DI SOLLEVAMENTO (N.A.ATTACCO HIGH-LIFT)(81 11596- ;82 11402- ;83 11704- ;84 11728-)
CILINDRO DE ELEVACION (N.A.ENGANCHE HIGH-LIFT)(81 11596- ;82 11402- ;83 11704- ;84 11728-)
LYFTCYLINDER(NORDAMERIKANSK HIGH-LIFT-LYFT)(8100 11596- ;8200 11402- ;8300 11704- ;8400 11728-)
RE026083 -UN-22MAR95

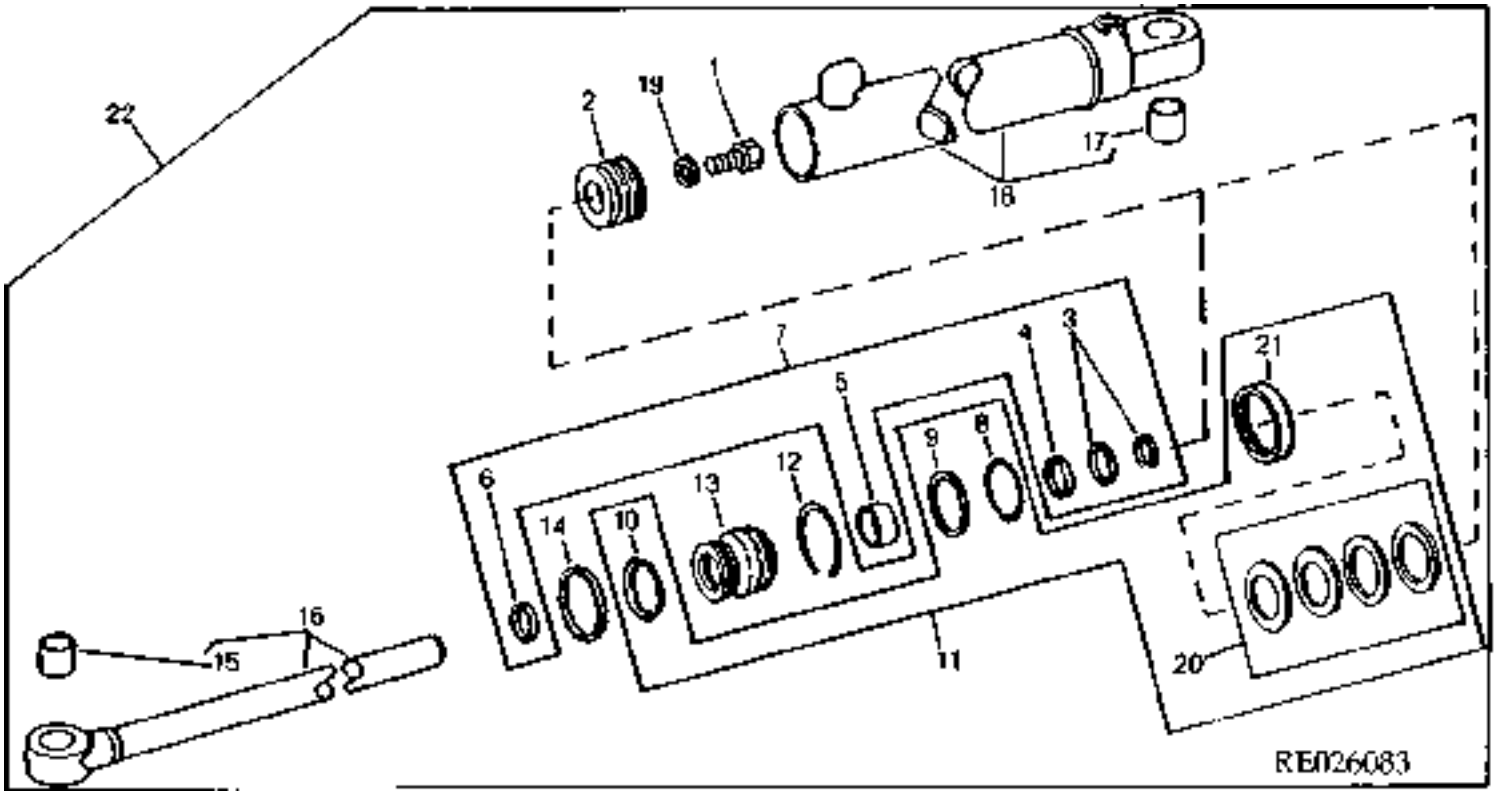

KEY	PART NO.	PART NAME	QTY	TRACTOR SERIAL NO.	ALL	REMARKS
1	19M8353	CAP SCREW	1		X	M30 X 80, HS 10.9
2	H145456	PISTON	1		X	
3	AH146561	SEAL	1		X	
4	H152203	SEAL	1		X	
5	H152794	WEAR RING	1		X	
6	AH146557	SEAL	1		X	
7	AH148164	HYDRAULIC CYLINDER KIT	1		X	
8	R83577	O-RING	1		X	
9	R81862	BACK-UP RING	1		X	
10	R91731	RING	1		X	
11	AH149844	KIT	1		X	
12	R81787	RING	1		X	
13	H157978	HYDR. CYLINDER ROD GUIDE	1		X	(A)
14	R81793	NUT	1		X	
15	R89940	BUSHING	1		X	
16	AH142570	ROD	1		X	
17	R89940	BUSHING	1		X	
18	AH142569	HYDRAULIC CYLINDER BARREL	1		X	
19	H145175	WASHER	1		X	
20	RE20343	SEAL	1		X	
21	R81775	WEAR RING	1		X	
22	AH148711	HYDRAULIC CYLINDER	1		X	(100 MM)

WITH V GROOVE
AVEC RAINURE EN U
MIT V-RILLE
CON SCANALATURA A V
CON RANURA EN V
MED V-SKAARA

https://www.truck-manuals.net/

LIFT CYLINDER LINES (NORTH AMERICAN VERSION)
CONDUITES DE VERIN DE RELEVAGE (VERSION NORD AMERICAINE)
HUBZYLINDERLEITUNGEN (NORDAMERIKANISCHE AUSFUEHRUNG)
TUBI DEL CILINDRO DI SOLLEVAMENTO (VERSIONE NORDAMERICANA)
LINEAS DEL CILINDRO DE ELEVACION (VERSION NORTEAMERICANA)
LYFTCYLINDERLEDNINGAR (NORDAMERIKANSK VERSION)
RE026088 -UN-13MAR95

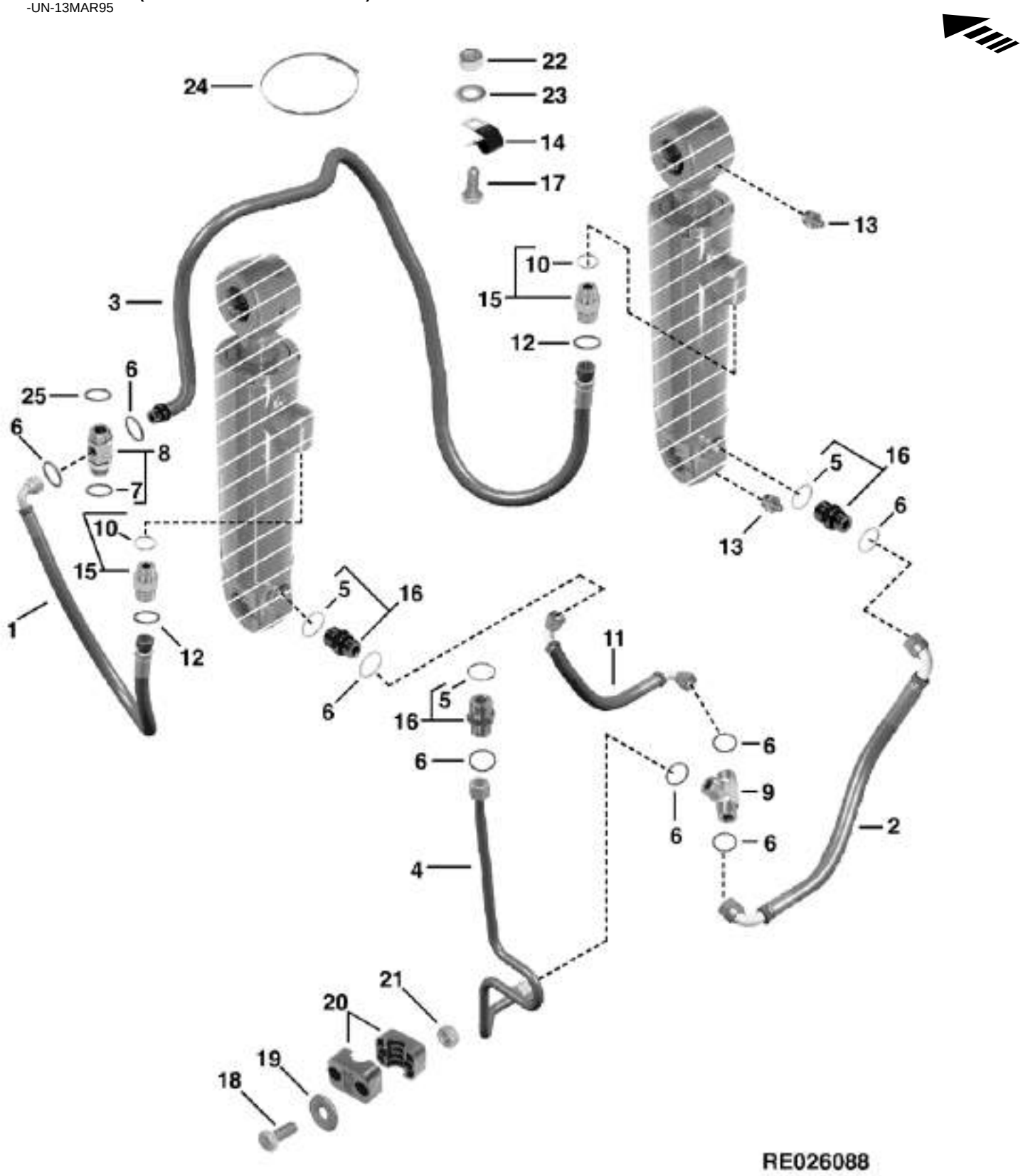

https://www.truck-manuals.net/

KEY	PART NO.	PART NAME	QTY	TRACTOR SERIAL NO.	ALL	REMARKS
1	RE44743	HYDRAULIC HOSE	1		X	
2	RE60619	HYDRAULIC HOSE - FABRICATE	1		X	
3	RE44774	HYDRAULIC HOSE	1		X	
4	RE60852	OIL LINE	1	-XXXXXX	X	
	RE62507	OIL LINE	1	XXXXXX-	X	
5	51M7045	O-RING	3		X	19.300 X 2.200 MM
6	T77932	O-RING	8		X	
7	51M7048	O-RING	1		X	29.600 X 2.900 MM
	51M7043	O-RING	1		X	(A) 15.300 X 2.200 MM
8	RE58409	CONNECTOR	1		X	
	RE46685	PLUG	1		X	(A)
9	38H5112	TEE FITTING	1		X	
10	51M7045	O-RING	2		X	19.300 X 2.200 MM
11	RE60623	HYDRAULIC HOSE	1	-XXXXXX	X	(SUB RE62785)
	RE62785	HYDRAULIC HOSE - FABRICATE	1	XXXXXX-	X	
12	T77857	O-RING	2		X	
13	JD7798	LUBRICATION FITTING	4		X	
14	T70659	CLAMP	1		X	
15	38H5076	ADAPTER	2		X	
16	38H5004	ADAPTER	2		X	
17	19M7167	CAP SCREW	1		X	M10 X 25
18	19M7834	SCREW	2		X	M6 X 45, HS 10.9
19	24M7139	WASHER	2		X	6.400 X 18 X 1.600 MM
20	H115533	CLAMP	2		X	
21	14M7272	NUT	2		X	M6
22	14M7274	NUT	1		X	M10
23	24M7207	WASHER	1		X	8.400 X 24 X 2 MM
24	R76477	TIE BAND	AR		X	
25	T76938	O-RING	1		X	

(A) W/O HITCH
SANS ATTELAGE
OHNE DREIPUNKTAUFHAENGUNG
SENZA ATTACCO
SENZA ENCANCHE
UTAN DRAGKOPPLING

https://www.truck-manuals.net/

LIFT CYLINDER LINES (EUROPEAN VERSION)
CONDUITES DE VERIN DE RELEVAGE (VERSION EUROPEENNE)
HUBZYLINDERLEITUNGEN (EUROPAEISCHE AUSFUEHRUNG)
TUBI DEL CILINDRO DI SOLLEVAMENTO (VERSIONE EUROPEA)
LINEAS DEL CILINDRO DE ELEVACION (VERSION EUROPEA)
LYFTCYLINDERLEDNINGAR (EUROPEISK VERSION)
RE026088 -UN-13MAR95

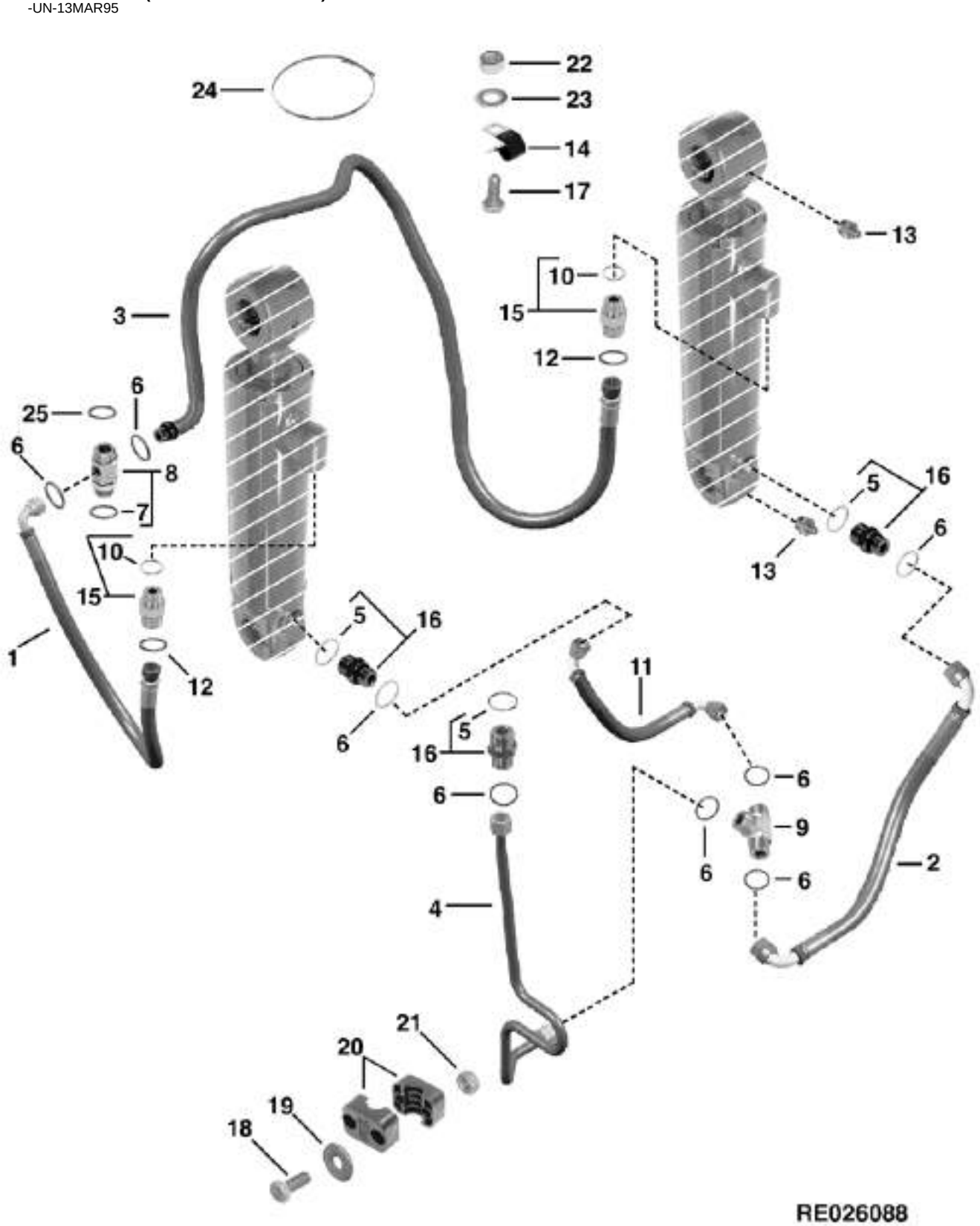

https://www.truck-manuals.net/

KEY	PART NO.	PART NAME	QTY	TRACTOR SERIAL NO.	ALL	REMARKS
1	RE44743	HYDRAULIC HOSE	1		X	
2	RE60619	HYDRAULIC HOSE - FABRICATE	1		X	
3	RE44774	HYDRAULIC HOSE	1		X	
4	RE60852	OIL LINE	1	-XXXXXX	X	
	RE62507	OIL LINE	1	XXXXXX-	X	
5	51M7045	O-RING	3		X	19.300 X 2.200 MM
6	T77932	O-RING	8		X	
7	51M7048	O-RING	1		X	29.600 X 2.900 MM
	51M7043	O-RING	1		X	(A) 15.300 X 2.200 MM
8	RE58409	CONNECTOR	1		X	
	RE46685	PLUG	1		X	(A)
9	38H5112	TEE FITTING	1		X	
10	51M7045	O-RING	2		X	19.300 X 2.200 MM
11	RE60623	HYDRAULIC HOSE	1	-XXXXXX	X	(SUB RE62785)
	RE62785	HYDRAULIC HOSE - FABRICATE	1	XXXXXX-	X	
12	T77857	O-RING	2		X	
13	JD7798	LUBRICATION FITTING	4		X	
14	T70659	CLAMP	1		X	
15	38H5076	ADAPTER	2		X	
16	38H5004	ADAPTER	2		X	
17	19M7167	CAP SCREW	1		X	M10 X 25
18	19M7834	SCREW	2		X	M6 X 45, HS 10.9
19	24M7139	WASHER	2		X	6.400 X 18 X 1.600 MM
20	H115533	CLAMP	2		X	
21	14M7272	NUT	2		X	M6
22	14M7274	NUT	1		X	M10
23	24M7207	WASHER	1		X	8.400 X 24 X 2 MM
24	R76477	TIE BAND	AR		X	
25	T76938	O-RING	1		X	

(A) W/O HITCH
SANS ATTELAGE
OHNE DREIPUNKTAUFHAENGUNG
SENZA ATTACCO
SENZA ENCANCHE
UTAN DRAGKOPPLING

https://www.truck-manuals.net/

HITCH FRAME
BATI D'ATTELAGE
RAHMEN DER ANHAENGEVORRICHTUNG
TELAIO DEL SOLLEVATORE
BASTIDOR DEL ENGANCHE
LYFTRAM
RE026614 -UN-08DEC95

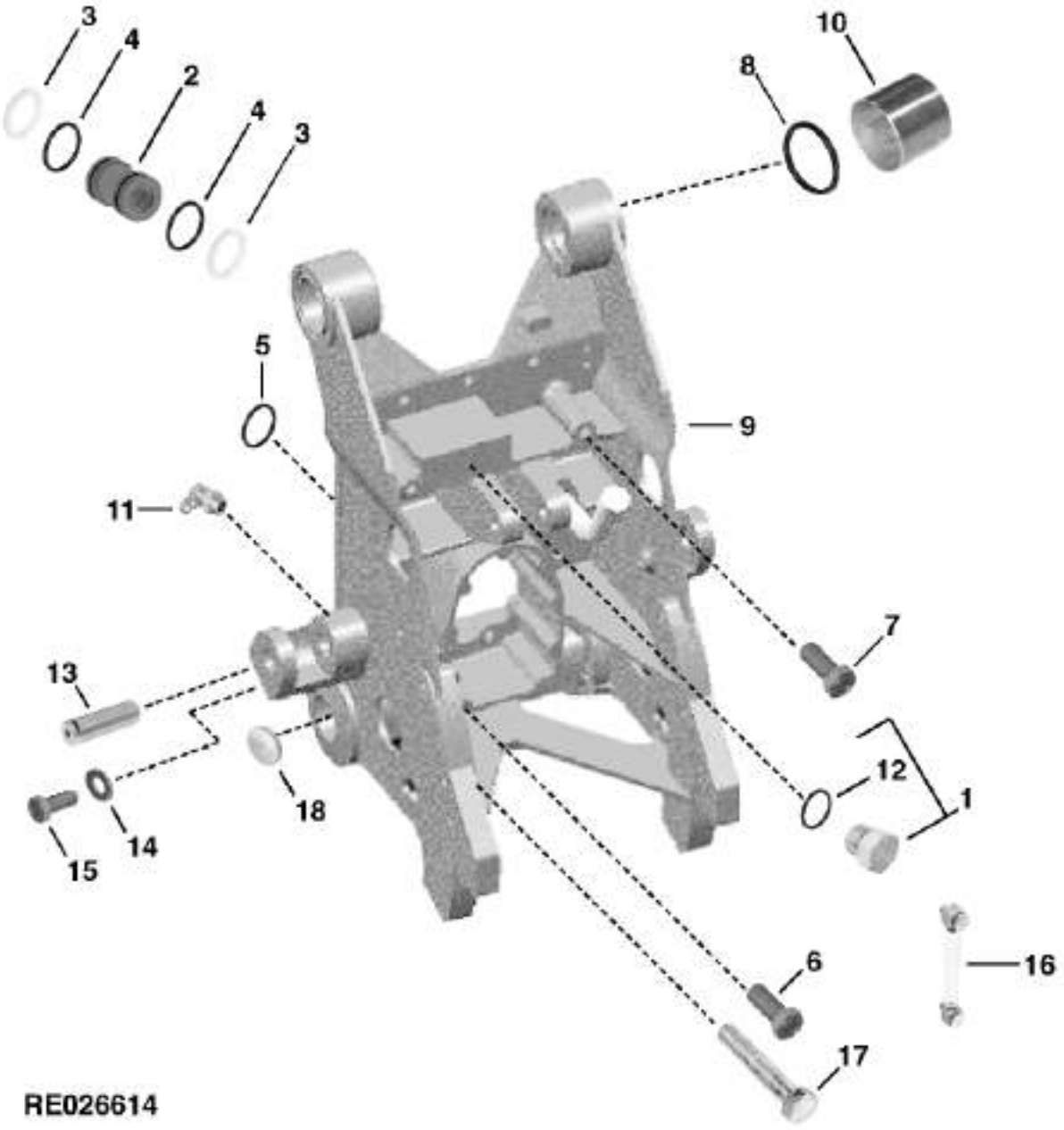

https://www.truck-manuals.net/

KEY	PART NO.	PART NAME	QTY	AXLE SERIAL NO.	ALL	REMARKS
1	RE46687	FITTING	3		X	
2	R114349	TUBE	1		X	(B)
3	R26485	BACK-UP RING	2		X	
4	U11647	O-RING	2		X	
5	T74425	O-RING	1		X	(C)
6	19M7597	CAP SCREW	11		X	M20 X 50, HS 10.9
7	19M8026	CAP SCREW	2		X	M20 X 170, HS 10.9
8	A5598R	O-RING	2	-XXXXXX	X	(D)
	R135000	PACKING	2	XXXXXX-	X	(E)
9	R122866	FRAME	1	-010585	X	(SUB R128134, R128044 AND R126408)
	R128134	FRAME	1	010586-XXXXXX	X	(D)
	R134737	FRAME	1	XXXXXX-	X	(E)
	JD7781	LUBRICATION FITTING	2	XXXXXX-	X	(E)
10	R107755	BUSHING	2		X	
11	JD7799	LUBRICATION FITTING	4		X	
	N158796	PLUG	1		X	(A)
12	51M7045	O-RING	3		X	19.300 X 2.200 MM
13	R122313	PIN	2		X	
14	R124347	WASHER	2		X	
15	19M7938	CAP SCREW	2		X	M10 X 20, HS 10.9
16	RE57519	GAUGE	1		X	
17	19M7969	CAP SCREW	2		X	M20 X 110
18	R111793	PLUG	1		X	(A) R.H.
	R111794	PLUG	1		X	(A) L.H.
..	TY16021	SEALANT	1		X	

(A) W/O HITCH
W/O ATTELAGE
W/O ANHAENGEVORRICHTUNG
W/O ATTACCO
W/O ENGANCHE
W/O LYFT

(B) PRESSURE
PRESSION
DRUCK
PRESSIONE
PRESION
TRYCK

(C) RETURN
RETOUR
RUECKLAUF
RETORNO
RITORNO
RETUR

(D) (-XXXXXX) 8100-025513; 8200-025493; 8300-025500; 8400-025519
(E) (XXXXXX-) 8100-025514; 8200-025494; 8300-025501; 8400-025520

https://www.truck-manuals.net/

LIFT LINK
BIELLES DE RELEVAGE
HUBSPINDELN
TIRANTI DI SOLLEVAMENTO
BRAZOS DE ELEVACION
LYFTARMAR
RXP025099 -UN-01JAN94

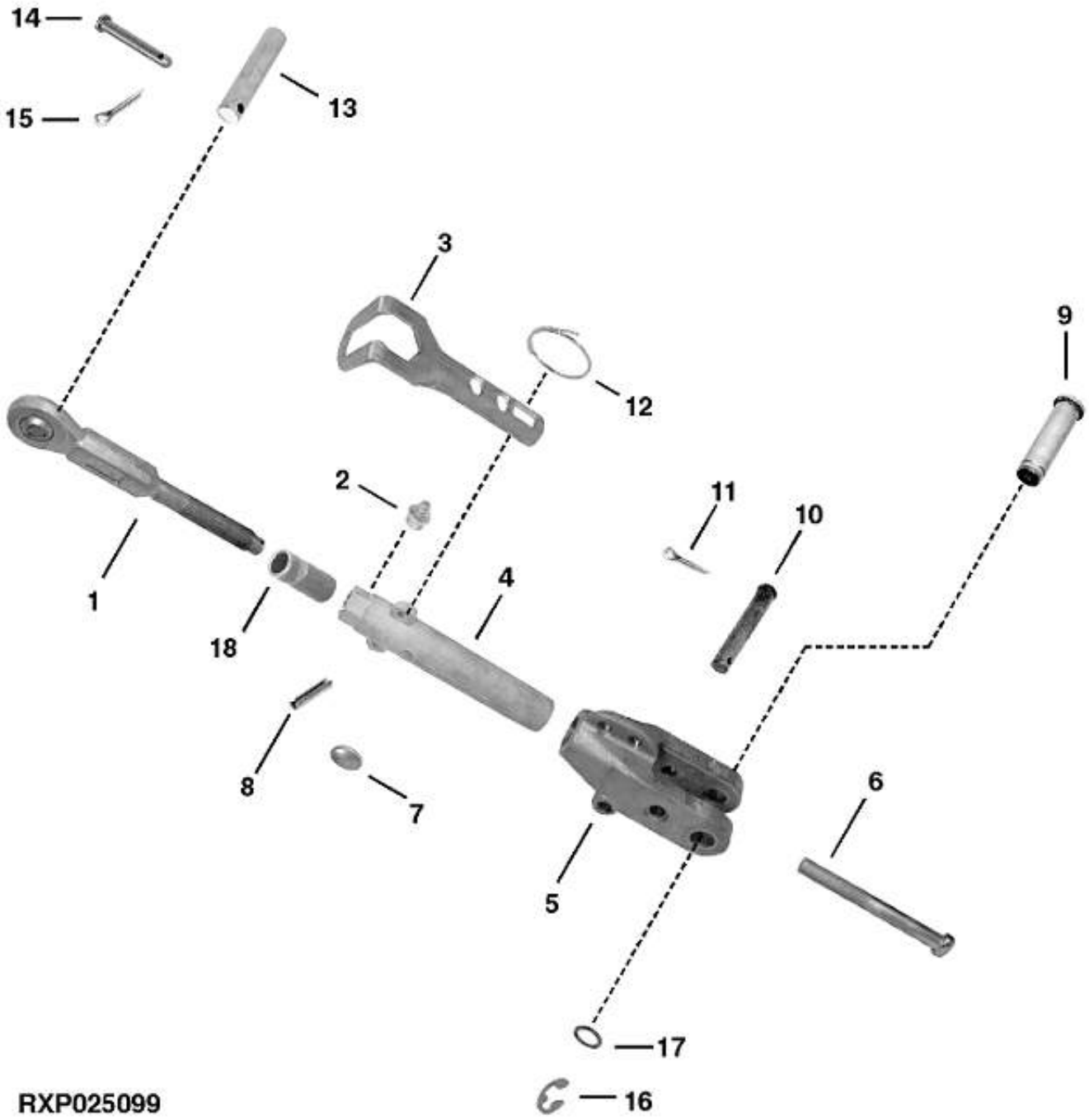

https://www.truck-manuals.net/

KEY	PART NO.	PART NAME	QTY	TRACTOR SERIAL NO.	ALL	REMARKS
1	RE39700	END	1		X	
2	JD7798	LUBRICATION FITTING	2		X	
3	R96295	LOCK	1		X	
4	R96293	LINK BODY	1		X	
5	R117872	YOKE	1		X	
6	R107759	LIFT LINK	1		X	
7	30H6	PLUG	1		X	9/16"
8	34M7102	SPRING PIN	1		X	5 X 26 MM
9	R65239	PIN	2		X	
10	R63737	PIN	1		X	
11	11M7021	COTTER PIN	1		X	4 X 25 MM
12	R80436	RING	2		X	
13	R79916	DOWEL PIN	2		X	
14	R69166	PIN	2		X	
15	11M7059	COTTER PIN	2		X	3.200 X 20 MM
16	A602R	SNAP RING	2		X	
17	R65240	WASHER	2		X	
18	28H407	SPACER	1		X	0.824" X 1.050" X 3-1/4"

https://www.truck-manuals.net/

DRAFT LINK (NORTH AMERICAN VERSION)
BARRES DE TRACTION (VERSION NORD AMERICAINE)
UNTERLENKER (NORDAMERIKANISCHE AUSFUEHRUNG)
TIRANTI DI TRAZIONE (VERSIONE NORDAMERICANA)
BRAZOS DE TIRO (VERSION NORTEAMERICANA)
DRAGARMAR (NORDAMERIKANSK VERSION)
RE026382 -UN-14JUL95

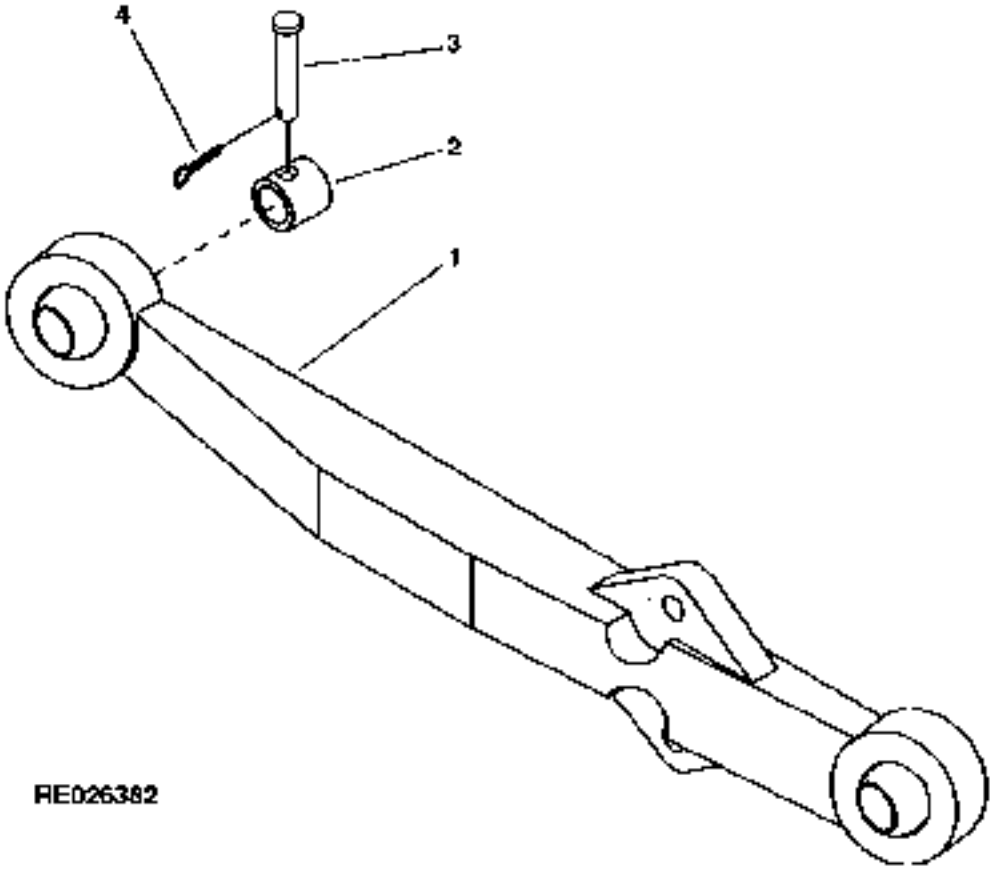

https://www.truck-manuals.net/

KEY	PART NO.	PART NAME	QTY	TRACTOR SERIAL NO.	ALL	REMARKS
1	RE68475	DRAFT LINK	2		X	(SUB FOR RE44872)
2	R108270	LOCKING COLLAR	2		X	
3	R108282	PIN	2		X	
4	11M7028	COTTER PIN	2		X	5 X 32 MM

https://www.truck-manuals.net/

SWAY BLOCK
CALE STABILISATRICE
STABILISIERUNGSANSCHLAG
BLOCCO STABILIZZATORE
BLOQUE ESTABILIZADOR
STABILISERINGSBLOCK
RE026615 -UN-08DEC95

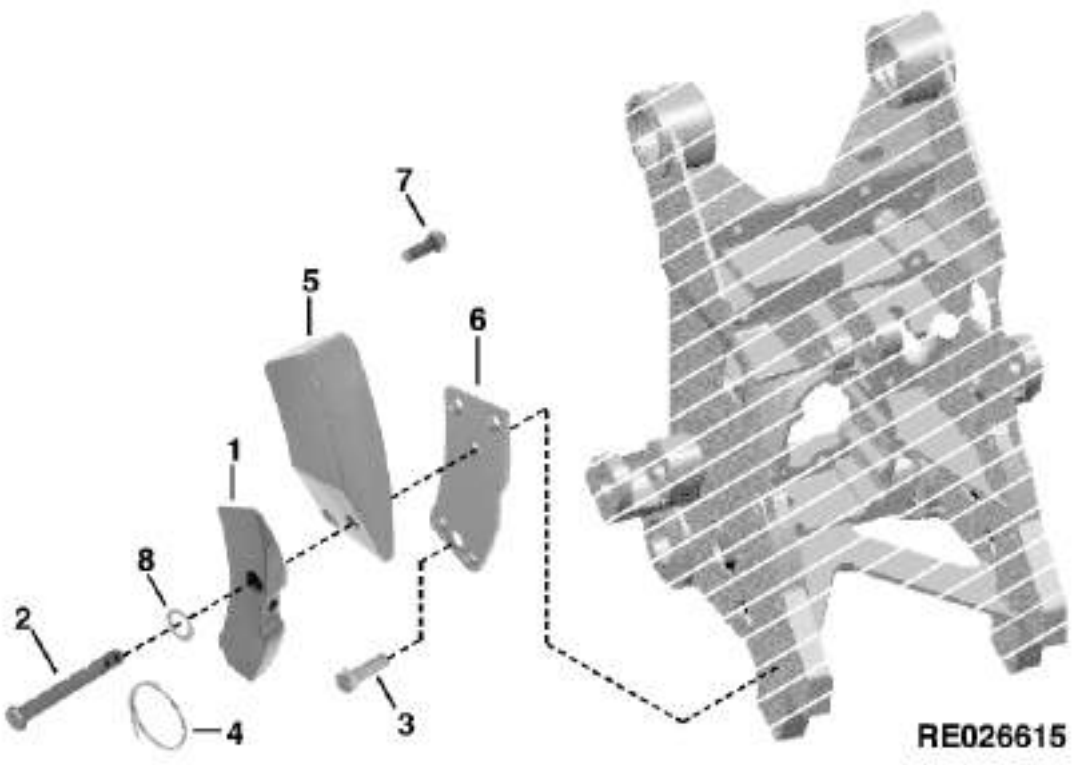

KEY	PART NO.	PART NAME	QTY	TRACTOR SERIAL NO.	ALL	REMARKS
1	R122794	SWAY BLOCK	1		X	R.H.
	R122795	SWAY BLOCK	1		X	L.H.
2	R57528	PIN	2		X	
3	R134232	BOLT	8		X	(SUB FOR R121564)
4	R80436	RING	2		X	(SUB FOR AR62151)
5	R108277	EXTENSION	1		X	R.H.
	R108278	EXTENSION	1		X	L.H.
6	R122792	WEAR PLATE	1		X	R.H.
	R122793	WEAR PLATE	1		X	L.H.
7	19M8639	CAP SCREW	4		X	M20 X 70, HS 10.9
8	24H1658	WASHER	AR		X	21/32" X 1" X 0.060"

https://www.truck-manuals.net/

DRAFT LINK BUMPER
BUTOIR DE BARRE DE TRACTION
UNTERLENKER-PUFFR
PARAURTI DEL TIRANTE DE TRAZIONE
PARAGOLPE DEL BRAZO DE TIRO
GUMMIBUFFERT FOER DRAGARM
RXP025125 -UN-01JAN94

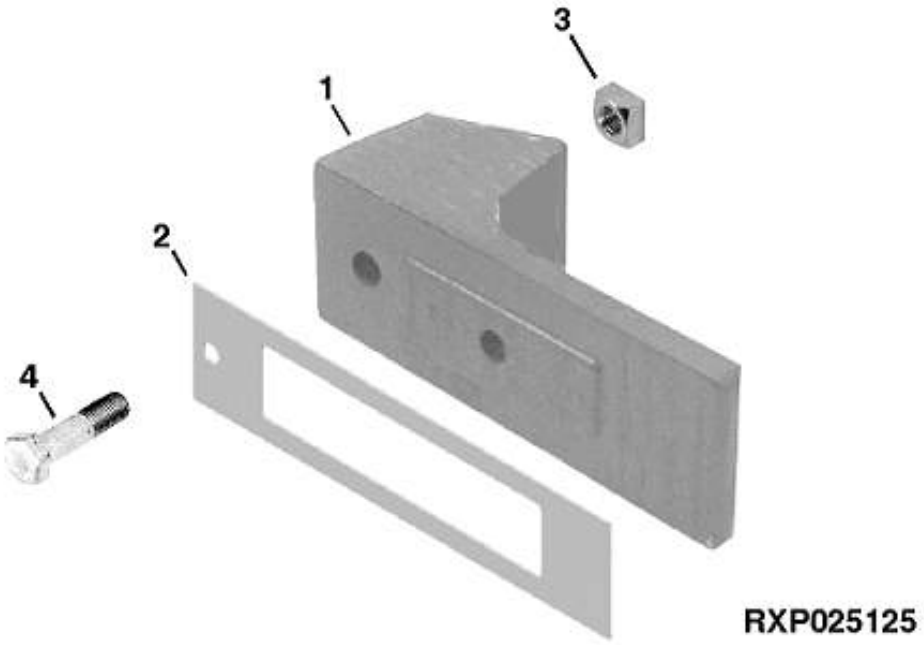

KEY	PART NO.	PART NAME	QTY	TRACTOR SERIAL NO.	ALL	REMARKS
1	R108285	BUMPER	2		X	
	R124819	BUMPER	2		X	(A) (B) (C) (D)
	28H3382	BUSHING	2		X	(A) (B) (C) (D) 0.546" X 0.840" X 5/8"
2	R124780	SHIM	AR		X	
3	14M7191	NUT	4		X	M12
4	19M8122	CAP SCREW	4		X	M12 X 85, HS 10.9

(A) EUROPEAN VERSION
VERSION EUROPEENNE
EUROPAEISCHE AUSFUEHRUNG
VERSIONE EUROPEA
VERSION EUROPEA
EUROPEISK VERSION

(B) W/ CATEGORY II
W/ CATEGORIE II
W/ KATEGORIE II
W/ CATEGORIA II
W/ CATEGORIA II
W/ KATEGORI II

(C) W/ PICK-UP HITCH
W/ ATTELAGE TELESCOPIQUE
W/ PICK-UP ANHAENGEVORRICHTUNG
W/ ATTACCO TELESCOPICO
W/ ENGANCHE EXTENSIBLE
W/ UTSKJUTBAR DRAGANORDNING

(D) W/ SWAY BLOCKS
W/ CALE STABILISATRICE
W/ STABILISIERUNGSANSCHLAG
W/ BLOCCO STABILIZZATORE
W/ BLOQUE ESTABILIZADOR
W/ STABILISERINGSBLOCK

https://www.truck-manuals.net/

DRAFT LINK (EUROPEAN VERSION)
BARRES DE TRACTION (VERSION EUROPEENNE)
UNTERLENKER (EUROPAEISCHE AUSFUEHRUNG)
TIRANTI DI TRAZIONE (VERSIONE EUROPEA)
BRAZOS DE TIRO (VERSION EUROPEA)
DRAGARMAR (EUROPEISK VERSION)
RE026084 -UN-13MAR95

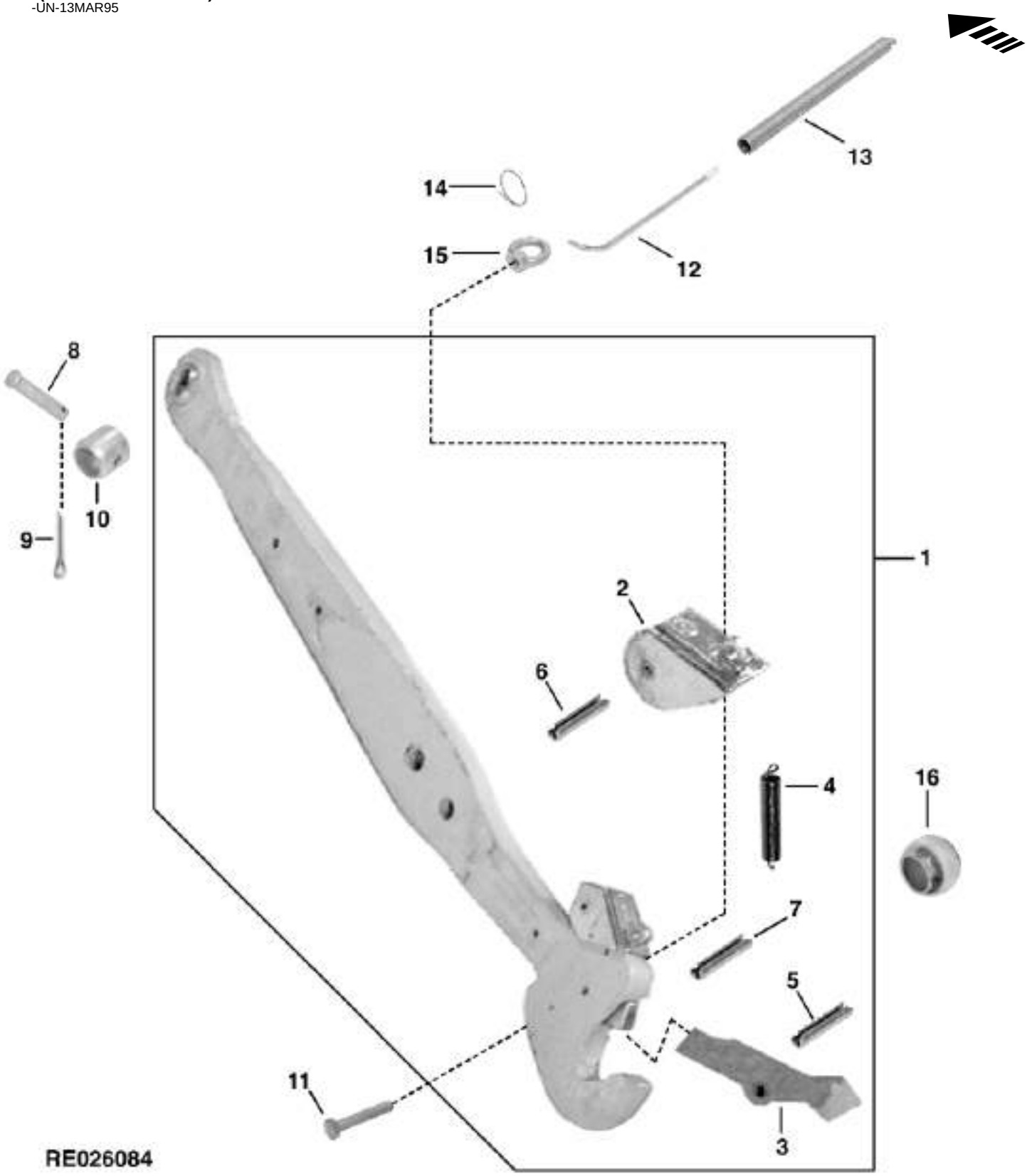

https://www.truck-manuals.net/

KEY	PART NO.	PART NAME	QTY	TRACTOR SERIAL NO.	ALL	REMARKS
1	RE61514	DRAFT LINK	1	-XXXXXX	X	R.H. (SUB RE68597)
	RE68597	DRAFT LINK	1	XXXXXX-	X	R.H.
	RE61515	DRAFT LINK	1	-XXXXXX	X	L.H.
	RE68598	DRAFT LINK	1	XXXXXX-	X	L.H.
2	AL38684	LEVER	2		X	
3	L40811	PAWL	2		X	
4	L35036	SPRING	2		X	
5	34M7216	SPRING PIN	2		X	6 X 35 MM
6	34M7067	SPRING PIN	2		X	13 X 50 MM
7	34M7220	SPRING PIN	2		X	13 X 35 MM
8	R108282	PIN	2		X	
9	11M7028	COTTER PIN	2		X	5 X 32 MM
10	R108270	LOCKING COLLAR	2		X	
11	19M7378	CAP SCREW	2		X	M8 X 45
12	AL76943	ROD	1		X	
13	L32997	SPRING	1		X	
14	R80436	RING	1		X	
15	14M7284	NUT	2		X	M8
16	L40829	BALL	2		X	

https://www.truck-manuals.net/

CENTER LINK HOOK (EUROPEAN VERSION)
CROCHET DE BIELLE CENTRALE (VERSION EUROPEENNE)
OBERLENKERHAKEN (EUROPAEISCHE AUSFUEHRUNG)
GANCIO DEL TIRANTE CENTRALE (VERSIONE EUROPEA)
GANCHO DEL BRAZO CENTRAL (VERSION EUROPEA)
TOPPSTAANGSKROK (EUROPEISK VERSION)
RE026655 -UN-19DEC95

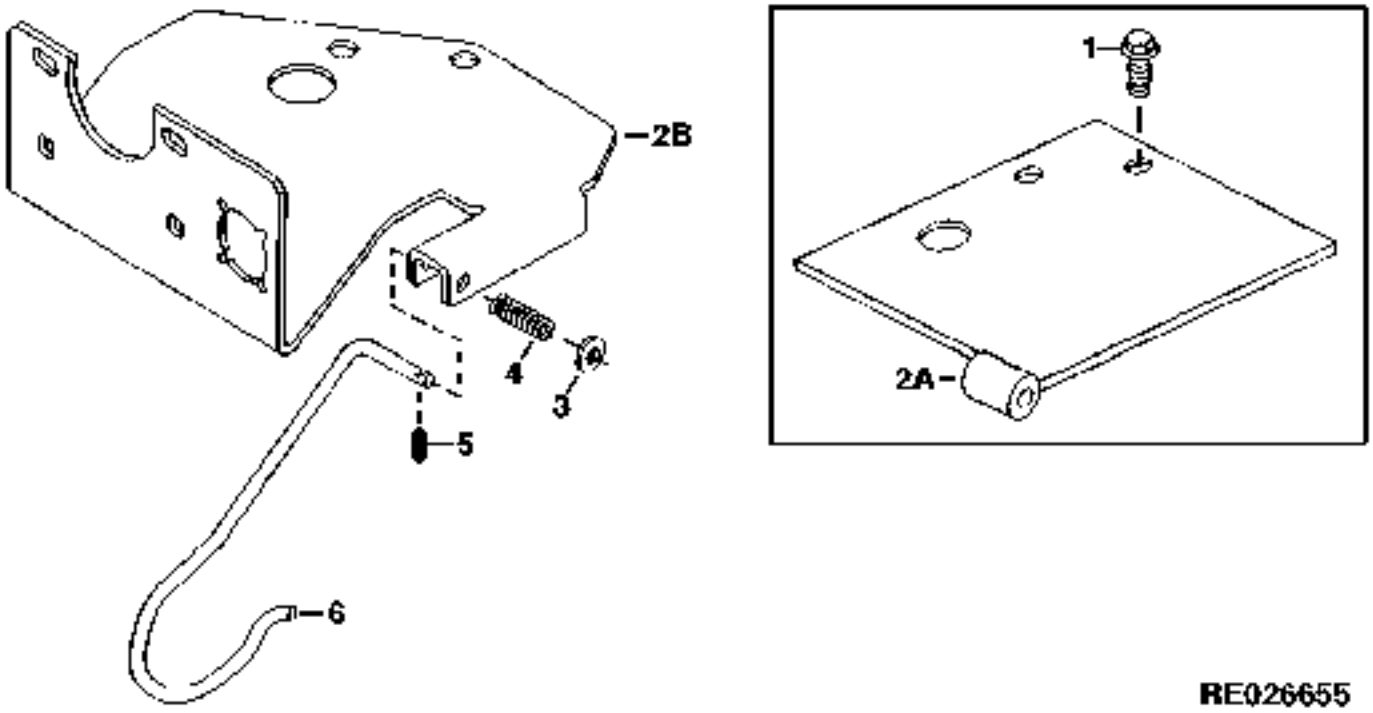

KEY	PART NO.	PART NAME	QTY	TRACTOR SERIAL NO.	ALL	REMARKS
1	19M7787	SCREW	2	-XXXXXX	X	M12 X 20, HS 10.9
2A	RE61207	RETAINER	1	-XXXXXX	X	(SUB R128387)
2B	R128387	BRACKET	1	XXXXXX-	X	
3	24M7055	WASHER	1		X	8.400 X 16 X 1.600 MM
4	L41880	COMPRESSION SPRING	1		X	
5	34M7091	SPRING PIN	1		X	3.500 X 16 MM
6	L55431	HOOK	1		X	

https://www.truck-manuals.net/

DRAFT LINK RELEASE CABLE (EUROPEAN VERSION)
CABLE DE RELACHEMENT DE BARRE DE TRACTION (VERSION EUROPEENNE)
UNTERLENKER-AUSRUECKKABEL (EUROPAEISCHE AUSFUEHRUNG)
CAVO DI SGANCIO DEL TIRANTE DI TRAZIONE (VERSIONE EUROPEA)
CABLE SOLTADOR DEL BRAZO DE TIRO (VERSION EUROPEA)
UTLOESNINGSKABEL FOER DRAGARM (EUROPEISK VERSION)
RXP011242 -UN-01JAN94

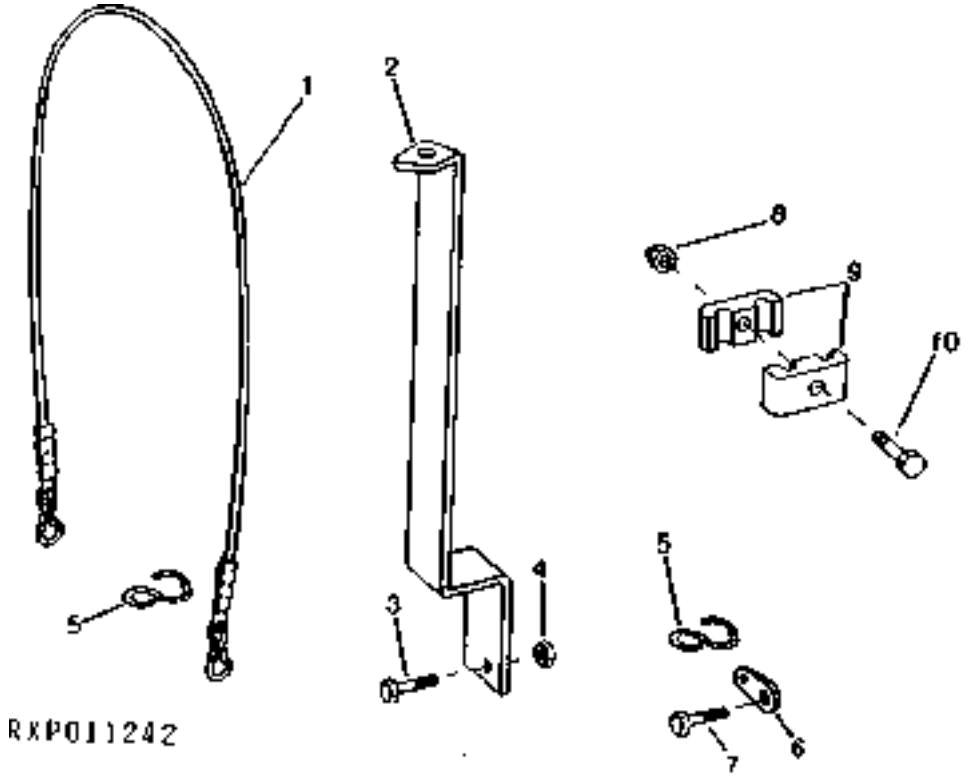

KEY	PART NO.	PART NAME	QTY	TRACTOR SERIAL NO.	ALL	REMARKS
1	AL75785	CABLE	1		X	
2	R121775	SUPPORT	1		X	
3	19M7550	CAP SCREW	2		X	M10 X 35, HS 10.9
4	14M7274	NUT	2		X	M10
5	R121884	HOOK	4		X	
6	R122135	STRAP	2		X	
7	19M7550	CAP SCREW	2		X	M10 X 35, HS 10.9
8	14M7376	LOCK NUT	1		X	M6
9	L39978	CLAMP	2		X	
10	21M7296	SCREW	1		X	M6 X 20

https://www.truck-manuals.net/

CENTER LINK (REGULAR HITCH) (NORTH AMERICAN VERSION)
BIELLE CENTRALE (ATTELAGE STANDARD) (VERSION NORD AMERICAINE)
OBERLENKER (NORMALE ANHAENGEVORRICHTUNG) (NORDAMERIKANISCHE AUSFUEHRUNG)
TIRANTE CENTRALE (ATTACCO REGOLARE) (VERSIONE NORDAMERICANA)
BRAZO CENTRAL (ENGANCHE REGULAR) (VERSION NORTEAMERICANA)
TOPPSTAANG (STANDARDLYFT) (NORDAMERIKANSK VERSION)
RE026085 -UN-22MAR95

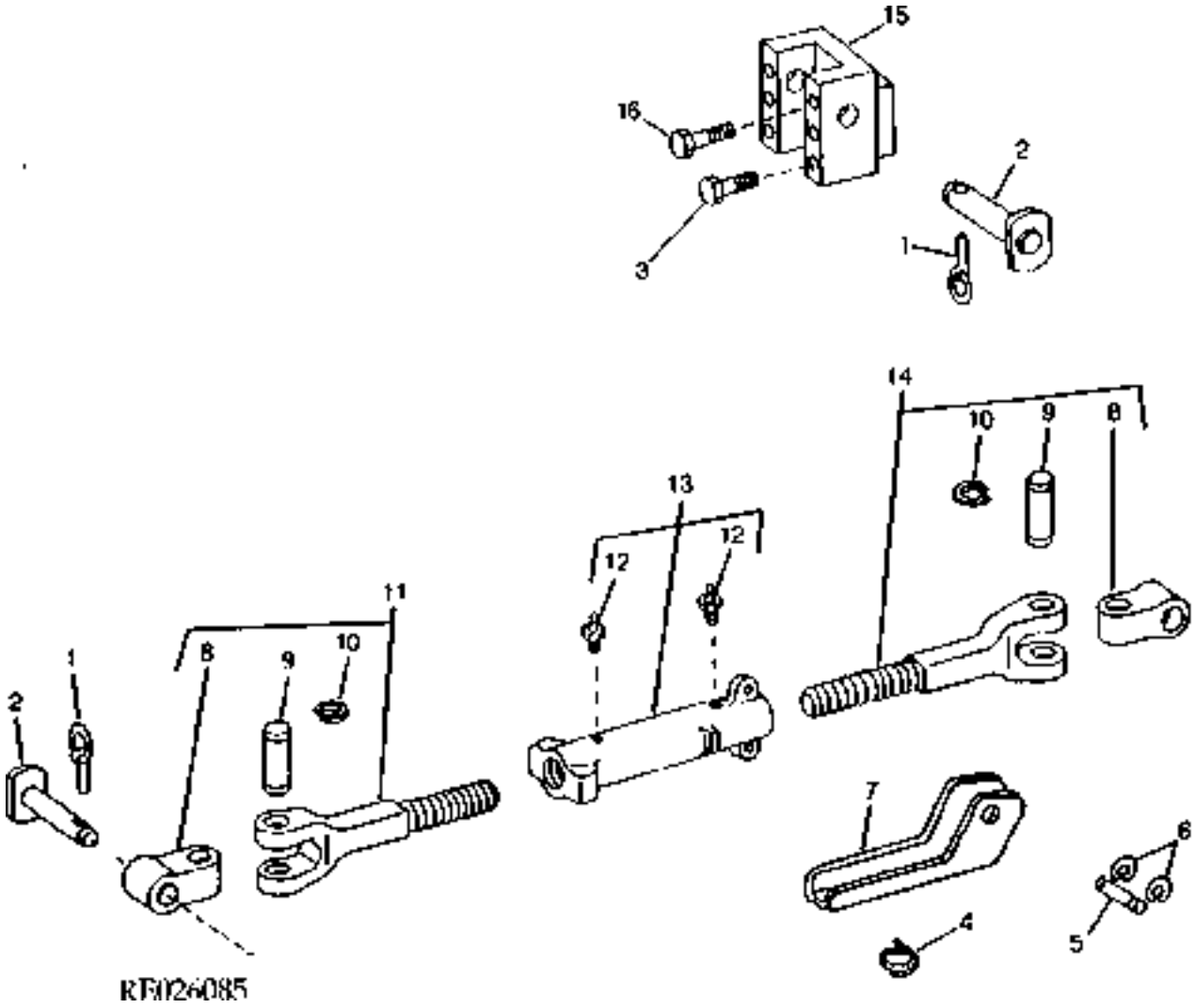

https://www.truck-manuals.net/

KEY	PART NO.	PART NAME	QTY	TRACTOR SERIAL NO.	ALL	REMARKS
1	M115827	QUICK LOCK PIN	2		X	(SUB FOR AR62151)
2	R125450	PIN	2		X	
3	19M8503	CAP SCREW	6		X	M20 X 160, HS 10.9
4	R80436	RING	1		X	
5	R64085	PIN	1		X	
6	F3396R	SNAP RING	2		X	
7	R64084	YOKE	1		X	
8	R106911	PIVOT	2		X	
9	R67477	PIN	2		X	
10	R26643	SNAP RING	4		X	
11	RE44561	CENTER LINK END	1		X	
12	JD7798	LUBRICATION FITTING	2		X	
13	RE50533	DRAG LINK	1		X	
14	RE44559	CENTER LINK END	1		X	
15	R125449	BRACKET	1		X	
16	R126510	CAP SCREW	1		X	HS 12.9

https://www.truck-manuals.net/

CENTER LINK (HIGH-LIFT HITCH) (NORTH AMERICAN VERSION)
BIELLE CENTRALE (ATTELAGE HIGH-LIFT) (VERSION NORD AMERICAINE)
OBERLENKER (ANHAENGEVORRICHTUNG HIGH-LIFT) (NORDAMERIKANISCHE AUSFUEHRUNG)
TIRANTE CENTRALE (ATTACCO HIGH-LIFT) (VERSIONE NORDAMERICANA)
BRAZO CENTRAL (ENGANCHE HIGH-LIFT) (VERSION NORTEAMERICANA)
TOPPSTAANG (HIGH-LIFT-LYFT) (NORDAMERIKANSK VERSION)) (NORDAMERIKANSK VERSION)
RE026086 -UN-22MAR95

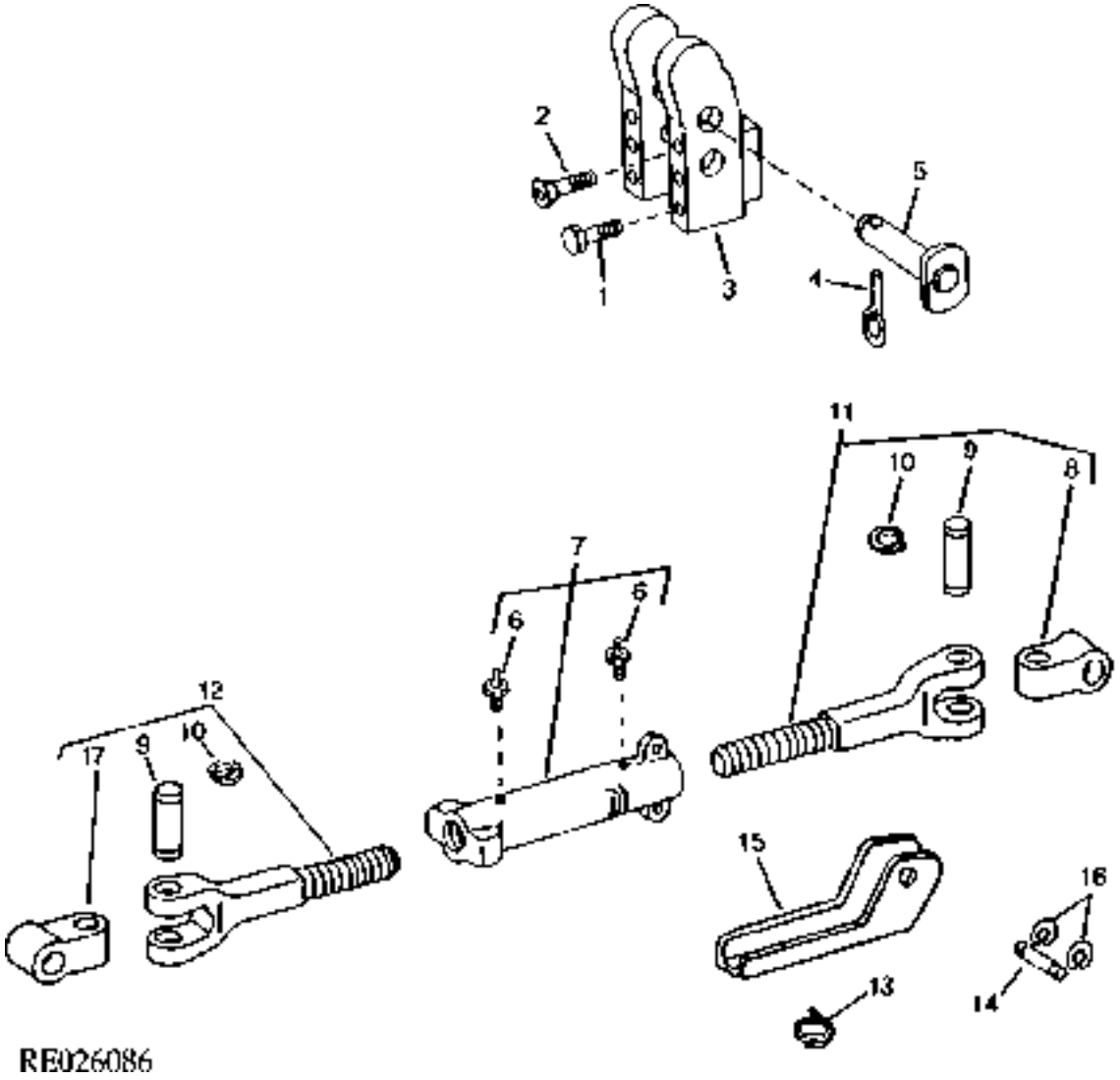

https://www.truck-manuals.net/

KEY	PART NO.	PART NAME	QTY	TRACTOR SERIAL NO.	ALL	REMARKS
1	19M8503	CAP SCREW	6		X	M20 X 160, HS 10.9
2	R126510	CAP SCREW	1		X	HS 10.9
3	R125390	BRACKET	1		X	
4	AA21292	QUICK LOCK PIN	1		X	
5	R124045	PIN	1		X	
6	JD7798	LUBRICATION FITTING	2		X	
7	RE50533	DRAG LINK	1		X	
8	R127581	PIVOT	1		X	
9	R67619	PIN	2		X	
10	F534R	SNAP RING	4		X	
11	RE63411	CENTER LINK END	1		X	(SUB FOR RE58508)
12	RE63412	CENTER LINK END	1		X	(SUB FOR RE58509)
13	R80436	RING	1		X	
14	R64085	PIN	1		X	
15	R64084	YOKE	1		X	
16	F3396R	SNAP RING	2		X	
17	R127582	PIVOT	1		X	

https://www.truck-manuals.net/

CENTER LINK (EUROPEAN VERSION)
BIELLE CENTRALE (VERSION EUROPEENNE)
OBERLENKER (EUROPAEISCHE AUSFUEHRUNG)
TIRANTE CENTRALE (VERSIONE EUROPEA)
BRAZO CENTRAL (VERSION EUROPEA)
TOPPSTAANG (EUROPEISK VERSION)
RE027052 -UN-21JUN96

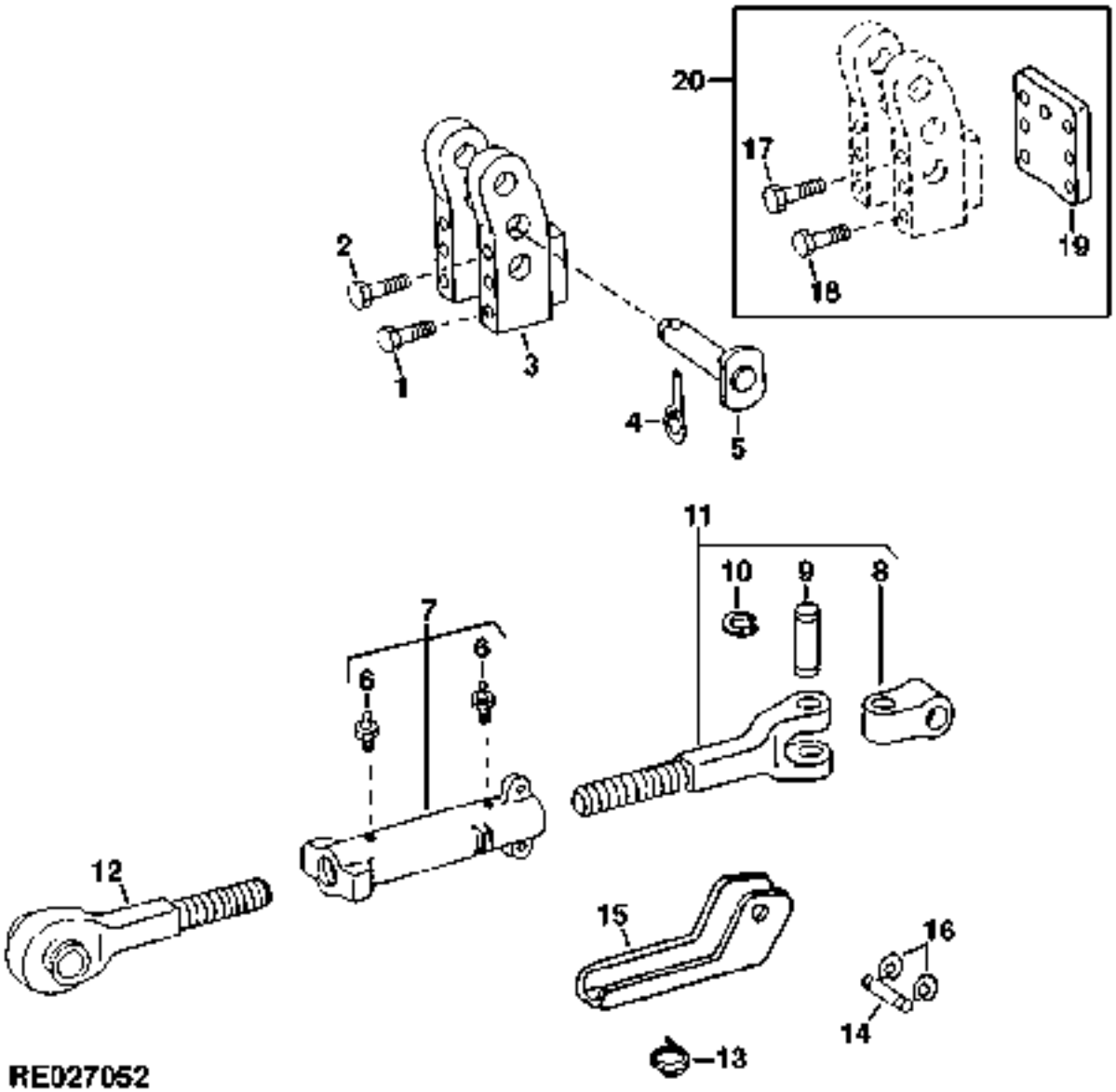

https://www.truck-manuals.net/

KEY	PART NO.	PART NAME	QTY	TRACTOR SERIAL NO.	ALL	REMARKS
1	19M8503	CAP SCREW	6		X	M20 X 160, HS 10.9
2	R126510	CAP SCREW	1		X	M20 X 85, HS 10.9
3	R124044	BRACKET	1		X	
4	AA21292	QUICK LOCK PIN	1		X	
5	R124045	PIN	1		X	
6	JD7798	LUBRICATION FITTING	2		X	
7	RE50533	DRAG LINK	1		X	
8	R127581	PIVOT	1		X	
9	R67619	PIN	1		X	
10	F534R	SNAP RING	2		X	
11	RE63411	CENTER LINK END	1		X	(SUB FOR RE58508)
12	RE61501	CENTER LINK END	1		X	
13	R80436	RING	1		X	
14	R64085	PIN	1		X	
15	R64084	YOKE	1		X	
16	F3396R	SNAP RING	2		X	
17	R134682	CAP SCREW	1		X	M20 X 95, HS 10.9
18	19M8026	CAP SCREW	6		X	M20 X 170, HS 10.9
19	R134667	SPACER	1		X	
20	RE69708	KIT	1		X	

https://www.truck-manuals.net/

IMPLEMENT QUICK COUPLER (CATEGORY III/IIIN)
ACCOUPLEMENT RAPIDE (CATEGORIE III/IIIN)
SCHNELLANSCHLUSS FUER ANBAUGERAETE (KATEGORIE III/IIIN)
ATTACCO RAPIDO PER EQUIPAGGIAMENTO (CATEGORIA III/IIIN)
EJECUTE ENGANCHE RAPIDO (CATEGORIA III/IIIN)
SNABBKOPPLING FOER REDSKAP (KATEGORI III/IIIN)
RE027320 -UN-18OCT96

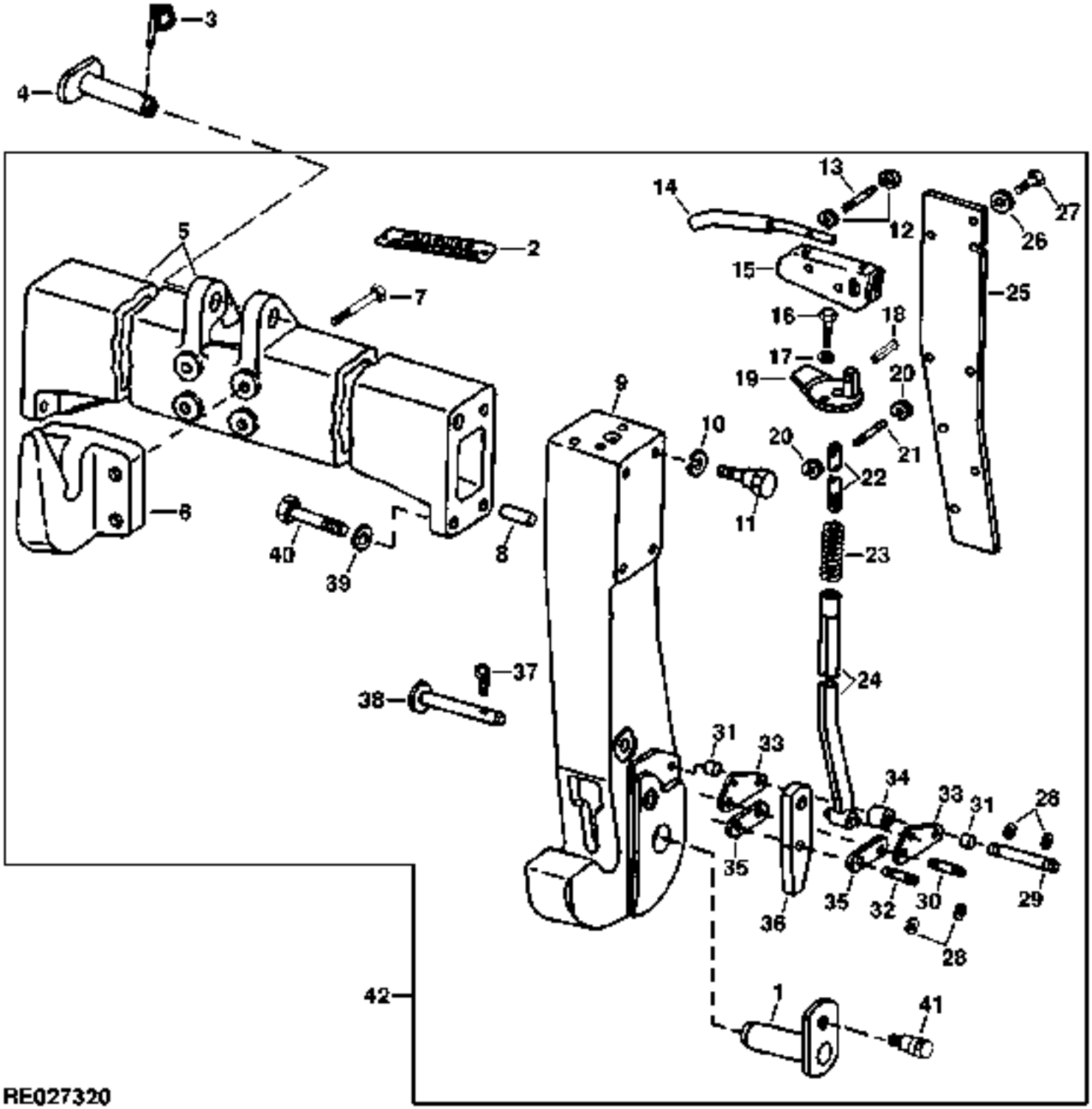

https://www.truck-manuals.net/

KEY	PART NO.	PART NAME	QTY	TRACTOR SERIAL NO.	ALL	REMARKS
1	AR89303	PIN	2		X	
2	R122428	LABEL	1		X	(ENGLISH) (SUB FOR R83531 OR R120103)
	R120104	LABEL	1		X	(ESPANOL) (SUB FOR R83532)
	R120105	LABEL	1		X	(FRANCAIS) (SUB FOR R83533)
	R83534	LABEL	1		X	(DEUTSCH)
3	M115827	QUICK LOCK PIN	1		X	(SUB FOR AR62151)
4	R125450	PIN	1		X	(SUB FOR AR89302 OR R121569)
5	R69571	CROSSBAR	1		X	
6	R59478	HOOK	1		X	
7	19H2174	CAP SCREW	4		X	3/4" X 4-1/4"
8	A776R	PIN	4		X	
9	R65815	QUICK COUPLER	1		X	R.H. (SUB FOR R65815) (MARKED R127704)
	R65816	QUICK COUPLER	1		X	L.H. (SUB FOR R65816) (MARKED R127705)
10	12H294	LOCK WASHER	2		X	5/8"
11	19H3353	CAP SCREW	2		X	5/8" X 5", HS SAE 8
12	R72654	SNAP RING	4		X	
13	R66901	SPRING PIN	2		X	
14	R48163	HANDLE	2		X	
15	R48164	LEVER	2		X	
16	19H2284	CAP SCREW	4		X	3/8" X 7/8"
17	12H304	LOCK WASHER	4		X	3/8"
18	34H311	SPRING PIN	2		X	1/4" X 7/8"
19	AR50374	BRACKET	2		X	
20	R72654	SNAP RING	4		X	
21	R66901	SPRING PIN	2		X	
22	R47578	STUD	2		X	
23	R43444	SPRING	2		X	
24	AR50377	BAR	2		X	
25	R58617	SHIELD	2		X	
26	12H302	LOCK WASHER	14		X	1/4"
27	19H1227	CAP SCREW	14		X	1/4" X 1/2"
28	F2208R	SNAP RING	12		X	
29	R65082	PIN	2		X	
30	R119275	PIN	2		X	
31	F2206R	WASHER	4		X	
32	R119276	PIN	2		X	
33	R65243	LINK	4		X	
34	28H1919	BUSHING	2		X	0.622" X 0.840" X 15/16"
35	R65242	STRAP	4		X	
36	R36441	LATCH	2		X	
37	11M7087	COTTER PIN	2		X	4 X 40 MM
38	R28556	PIN	2		X	
39	12H294	LOCK WASHER	2		X	5/8"
40	19H2588	CAP SCREW	2		X	5/8" X 1-7/8"
41	AR78289	CAP SCREW	2		X	
42	**RE60512**	**COUPLING**	**1**		**X**	**(FI) (SUB FOR AR98479)**

https://www.truck-manuals.net/

HITCH KIT (W/O LIFT CYLINDERS)
JEU D'ATTELAGE (SANS VERIN DE RELEVAGE)
ANHAENGEVORRICHTUNGS-BAUSATZ (OHNE HUBZYLINDER)
KIT ATTACCO (SENZA CILINDRO DI SOLLEVAMENTO)
CONJUNTO DE ENGANCHE (SIN CILINDRO DE ELEVACION)
LYFTSATS (UTAN LYFTCYLINDER)
RXP010852 -UN-01JAN94

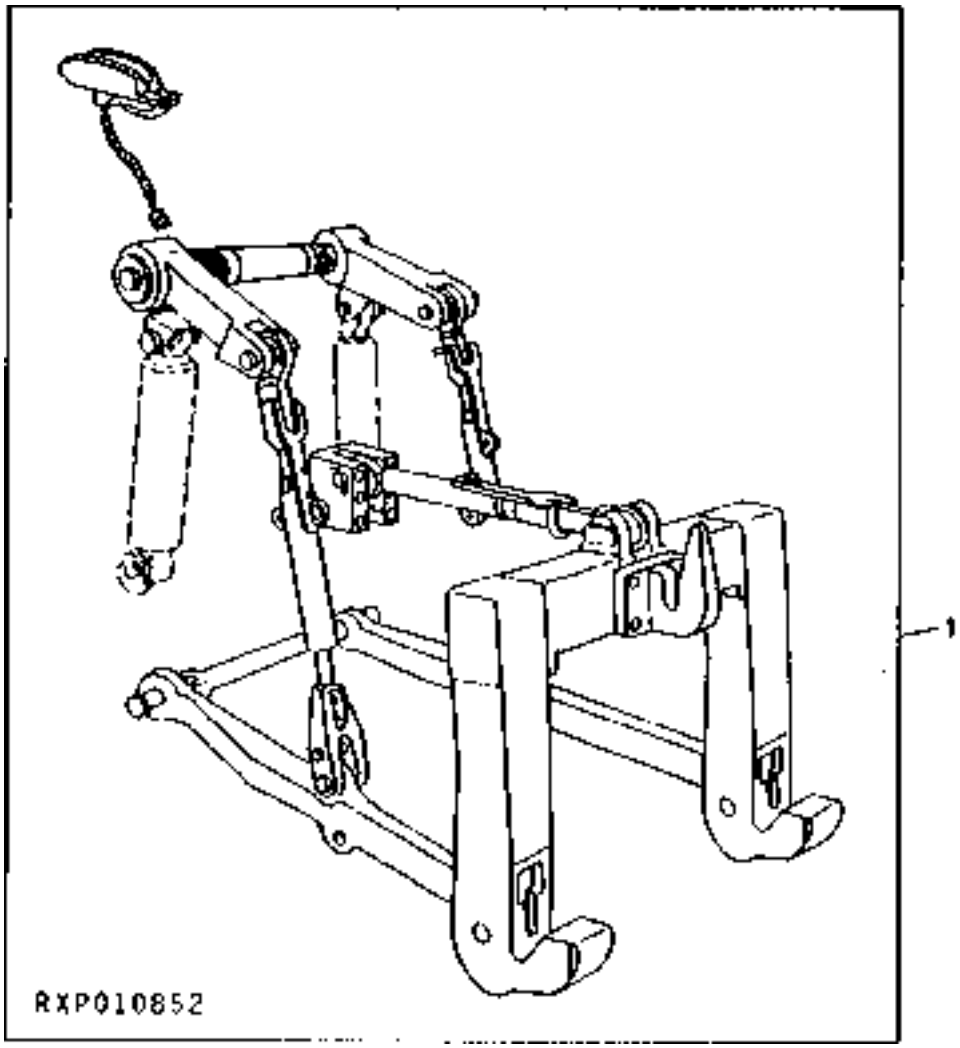

https://www.truck-manuals.net/

KEY	PART NO.	PART NAME	QTY	TRACTOR SERIAL NO.	ALL	REMARKS
1	**AR113519**	**KIT**	**1**	**-XXXXXX**	**X**	**(A) (FI)**
	RE160333	**KIT**	**1**	**XXXXXX-**	**X**	**(B) (FI)**

(A) (-XXXXXX) 8100-025513; 8200-025493; 8300-025500; 8400-025519
(B) (XXXXXX-) 8100-025514; 8200-025494; 8300-025501; 8400-025520

https://www.truck-manuals.net/

REGULAR DRAWBAR (NORTH AMERICAN VERSION)
BARRE D'ATTELAGE COURANTE (VERSION NORD AMERICAINE)
REGULAERES ZUGPENDEL (NORDAMERIKANISCHE AUSFUEHRUNG)
BARRA DI TRAINO REGOLARE (VERSIONE NORDAMERICANA)
BARRA DE TIRO REGULAR (VERSION NORTEAMERICANA)
STANDARDDRAGBOM (NORDAMERIKANSK VERSION)
RE028262 -UN-27AUG97

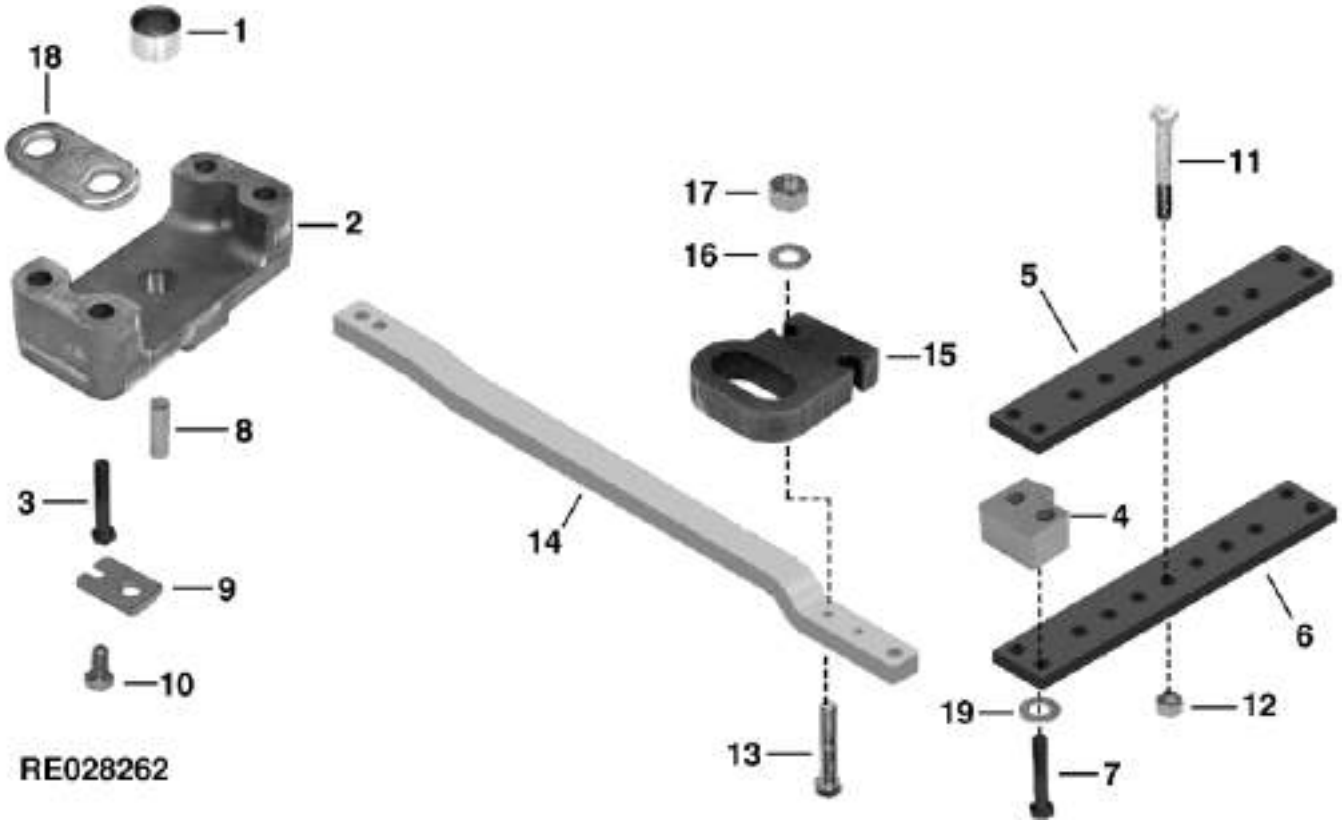

https://www.truck-manuals.net/

KEY	PART NO.	PART NAME	QTY	TRACTOR SERIAL NO.	8 8 8 1 2 3 0 0 0 0 0 0	REMARKS
1	R107760	BUSHING	1	-009999	X X X	
	R130953	BUSHING	1	010000-	X X X	
2	R108298	SUPPORT	1		X X X	
3	19M7963	CAP SCREW	4	-009999	X X X	M20 X 100, HS 10.9
	19M7883	SCREW	4	010000-	X X X	M20 X 120, HS 10.9
4	R108301	SPACER	2	-009999	X X X	
	R115454	SPACER	2	010000-	X X X	
5	R108299	STRAP	1		X X X	
6	R108300	STRAP	1		X X X	
7	19M7968	CAP SCREW	4	-XXXXXX	X X X	(D) M20 X 130, HS 10.9
	19M7907	SCREW	4	XXXXXX-	X X X	(E) M20 X 140, HS 10.9
	19M7597	CAP SCREW	4		X X X	(A) M20 X 50, HS 10.9
8	R108291	PIN	1	-009999	X X X	
	R130982	PIN	1	010000-	X X X	
9	R115453	STRAP	1		X X X	
10	19M7784	SCREW	1		X X X	M10 X 20, HS 10.9
11	19M7968	CAP SCREW	2		X X X	M20 X 130, HS 10.9
12	14M7277	NUT	2		X X X	M20
13	19M7969	CAP SCREW	2	-009999	X X X	M20 X 110, HS 10.9
	R106661	CAP SCREW	2	010000-	X X X	(C) M22 X 120, HS 10.9
14	R122790	DRAWBAR	1	-009999	X X X	(SUB RE69232) (ALSO ORDER (2) R115454)
	R130638	DRAWBAR	1	010000-	X X X	(B)
15	R105479	RETAINER	1	-009999	X X X	
	R130806	RETAINER	1	010000-024937	X X X	(SUB R156615)
	R156615	RETAINER	1	024938-	X X X	
	R105479	RETAINER	1	010000-	X X X	(C)
16	24M7242	WASHER	2	-009999	X X X	21.400 X 42 X 5 MM
	R52006	WASHER	2	010000-	X X X	(C)
17	14M7277	NUT	2	-009999	X X X	M20
	R114125	NUT	2	010000-	X X X	(C)
18	R121788	SPACER	6	010000-	X X X	
19	24M7344	WASHER	4	XXXXXX-	X X X	(E) 22 X 37 X 3 MM

(A) W/O DRAWBAR
W/O BARRE D'ATTELAGE
W/O ZUGPENDEL
W/O BARRA DI TRAINO
W/O BARRA DE TIRO
W/O DRAGBOM

(B) REVERSIBLE
REVERSIBLE
UMKEHRBAR
AD INVERSIONE
REVERSIBLE
VAENDBAR

(C) NOT USED NORTH AMERICAN VERSION
PAS UTILISE SUR LA VERSION NORD-AMERICAINE
NICHT VERWENDET IN DER NORDAMERIKANISCHEN
NON IN USO NELLA VERSIONE NORDAMERICANA
NO SE USA EN LA VERSION NORTEAMERICANA
ANVAENDS EJ PAA DEN NORDAMERIKANSKA

(D) (-XXXXXX) 8100-012951; 8200-012423; 8300-013427
(E) (XXXXXX-) 8100-012952; 8200-012424; 8300-013428

https://www.truck-manuals.net/

DRAWBAR CLEVIS (NORTH AMERICAN VERSION) (8100,8200,8300 -009999)
BARRE D'ATTELAGE, ETRIER (VERSION NORD AMERICAINE) (8100, 8200, 8300 -009999)
ZUGPENDEL-GABELKOPF (NORDAMERIKANISCHE AUSFUEHRUNG) (8100, 8200, 8300 -009999)
CAVALLOTTO DELLA BARRA DI TRAINO (VERSIONE NORDAMERICANA) (8100, 8200, 8300 -009999)
HORQUILLA DE LA BARRA DE TIRO (VERSION NORTEAMERICANA) (8100, 8200, 8300 -009999)
DRAGBOM, U-BYGEL (NORDAMERIKANSK VERSION) (8100, 8200, 8300 -009999)
RE027025 -UN-20JUN96

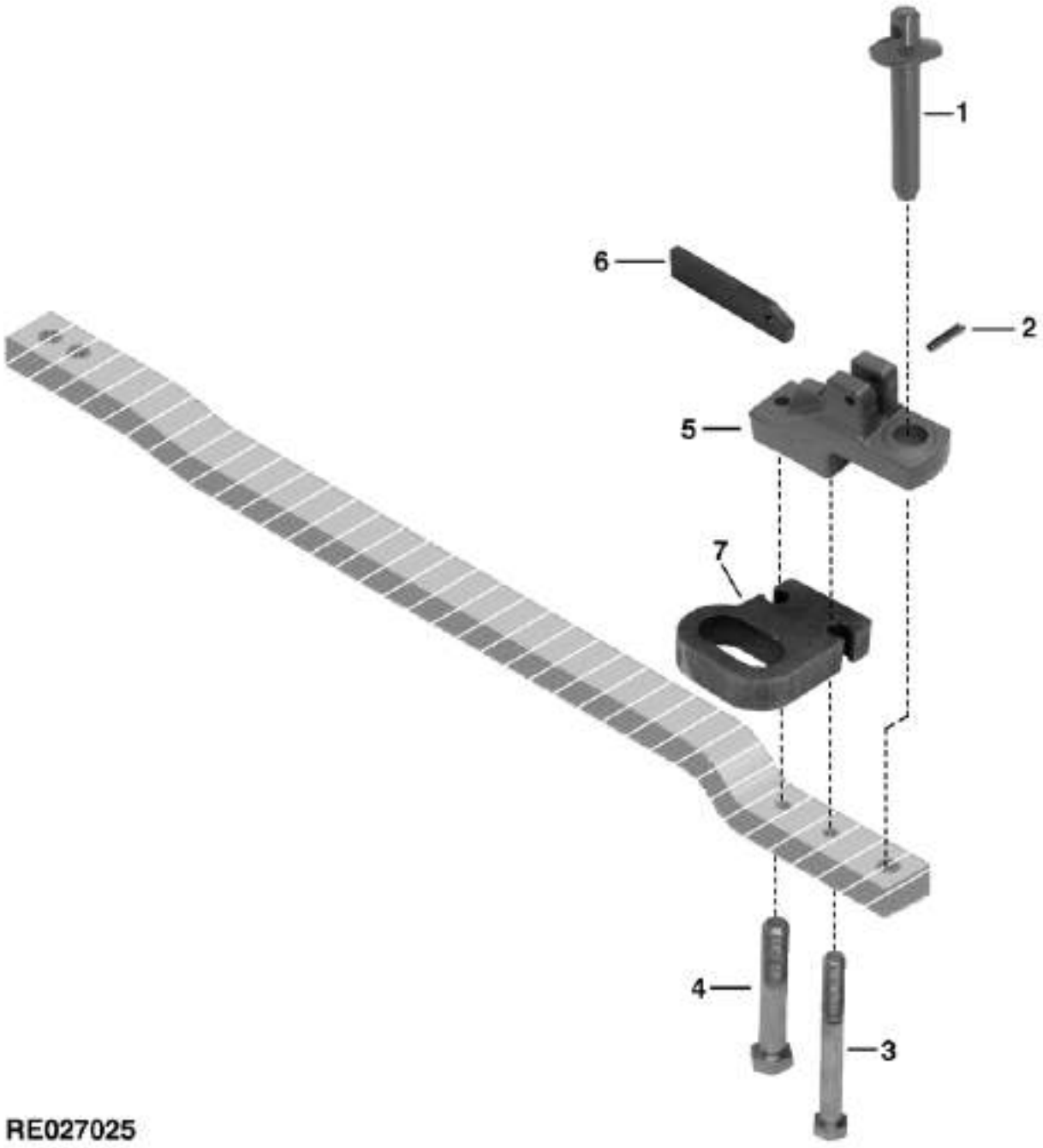

https://www.truck-manuals.net/

KEY	PART NO.	PART NAME	QTY	TRACTOR SERIAL NO.	8 8 8 1 2 3 0 0 0 0 0 0	REMARKS
1	R119133	PIN	1		X X X	1 3/8" DIA.
2	H100795	SPRING PIN	1		X X X	(SUB FOR 34H374)
3	19M8026	CAP SCREW	1		X X X	M20 X 170, HS 10.9
4	19M7968	CAP SCREW	1		X X X	M20 X 130, HS 10.9
5	R119682	STRAP	1		X X X	(SUB RE161727)
6	R110309	PLATE	1		X X X	
7	R105479	RETAINER	1		X X X	

https://www.truck-manuals.net/

DRAWBAR CLEVIS (NORTH AMERICAN VERSION)
BARRE D'ATTELAGE, ETRIER (VERSION NORD AMERICAINE)
ZUGPENDEL-GABELKOPF (NORDAMERIKANISCHE AUSFUEHRUNG)
CAVALLOTTO DELLA BARRA DI TRAINO (VERSIONE NORDAMERICANA)
HORQUILLA DE LA BARRA DE TIRO (VERSION NORTEAMERICANA)
DRAGBOM, U-BYGEL (NORDAMERIKANSK VERSION)
RE030232 -UN-19NOV98

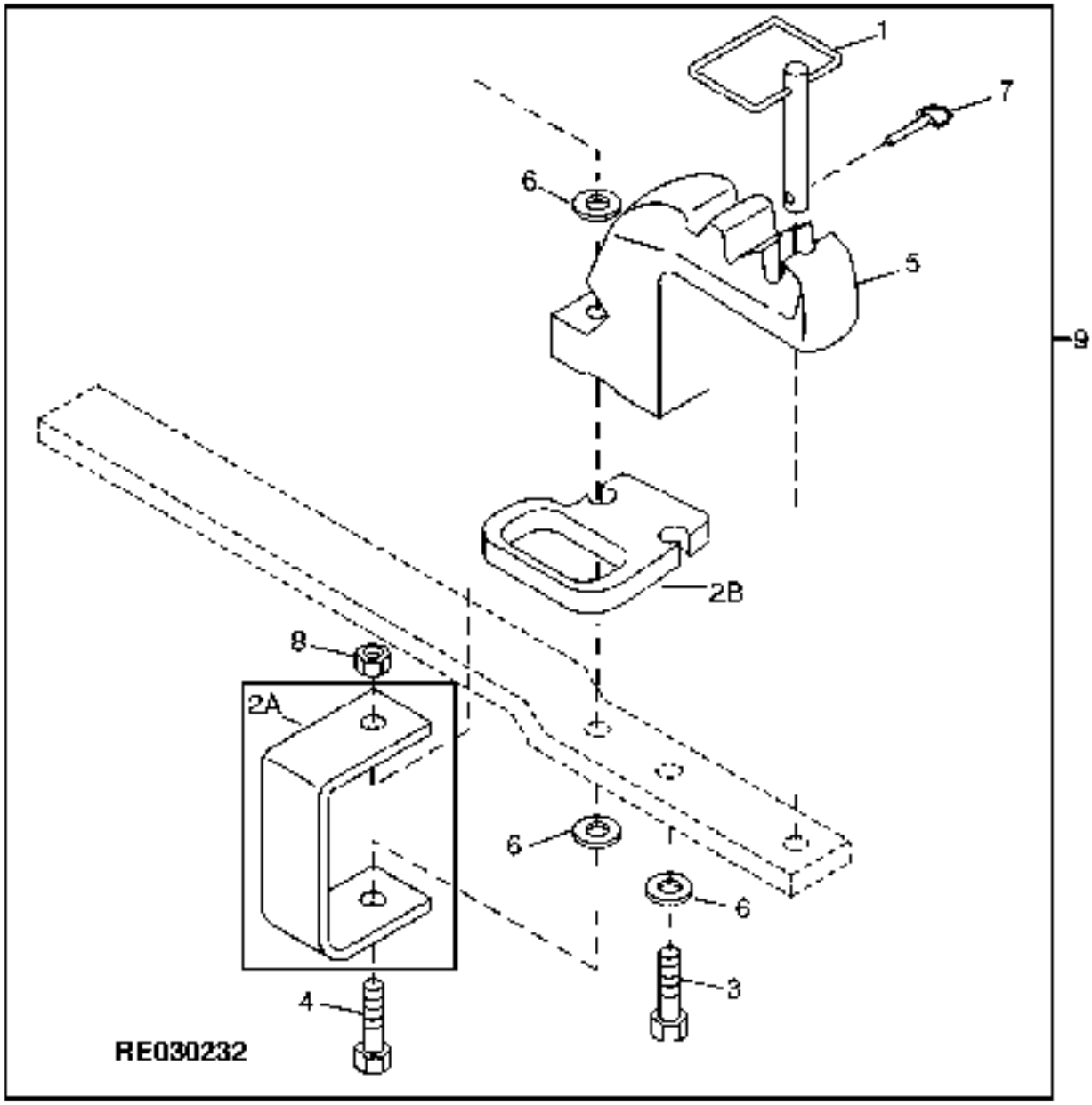

https://www.truck-manuals.net/

KEY	PART NO.	PART NAME	QTY	TRACTOR SERIAL NO.	8 8 8 1 2 3 0 0 0 0 0 0	REMARKS
1	RE150874	PIN	1		X X X	1 3/8" DIA, (SUB FOR RE66101)
2A	R130806	RETAINER	1		X X X	(SUB R156615)
2B	R156615	RETAINER	1		X X X	
3	19M7883	SCREW	1		X X X	M20 X 120, HS 10.9, (USE WITH R130806)
	19M9015	CAP SCREW	1		X X X	M20 X 160, HS 12.9, (USE WITH R156615)
4	19M7907	SCREW	1		X X X	M20 X 140, HS 10.9, (USE WITH R130806)
	19M9015	CAP SCREW	1		X X X	M20 X 160, HS 12.9, (USE WITH R156615)
5	R132545	STRAP	1		X X X	
6	24M7242	WASHER	AR		X X X	21.400 X 42 X 5 MM, (USE WITH R130806)
	T151797	WASHER	AR		X X X	(USE WITH R156615)
7	AR62150	QUICK LOCK PIN	1		X X X	(SUB FOR AA23627, THIS APPLICATION)
8	14M7277	NUT	1		X X X	M20
9	RE150873	CLEVIS	1	-009999	X X X	(SUB FOR RE69189) (SUB RE161727)

https://www.truck-manuals.net/

REGULAR DRAWBAR (NORTH AMERICAN VERSION)
BARRE D'ATTELAGE COURANTE (VERSION NORD AMERICAINE)
REGULAERES ZUGPENDEL (NORDAMERIKANISCHE AUSFUEHRUNG)
BARRA DI TRAINO REGOLARE (VERSIONE NORDAMERICANA)
BARRA DE TIRO REGULAR (VERSION NORTEAMERICANA)
STANDARDDRAGBOM (NORDAMERIKANSK VERSION)
RE028262 -UN-27AUG97

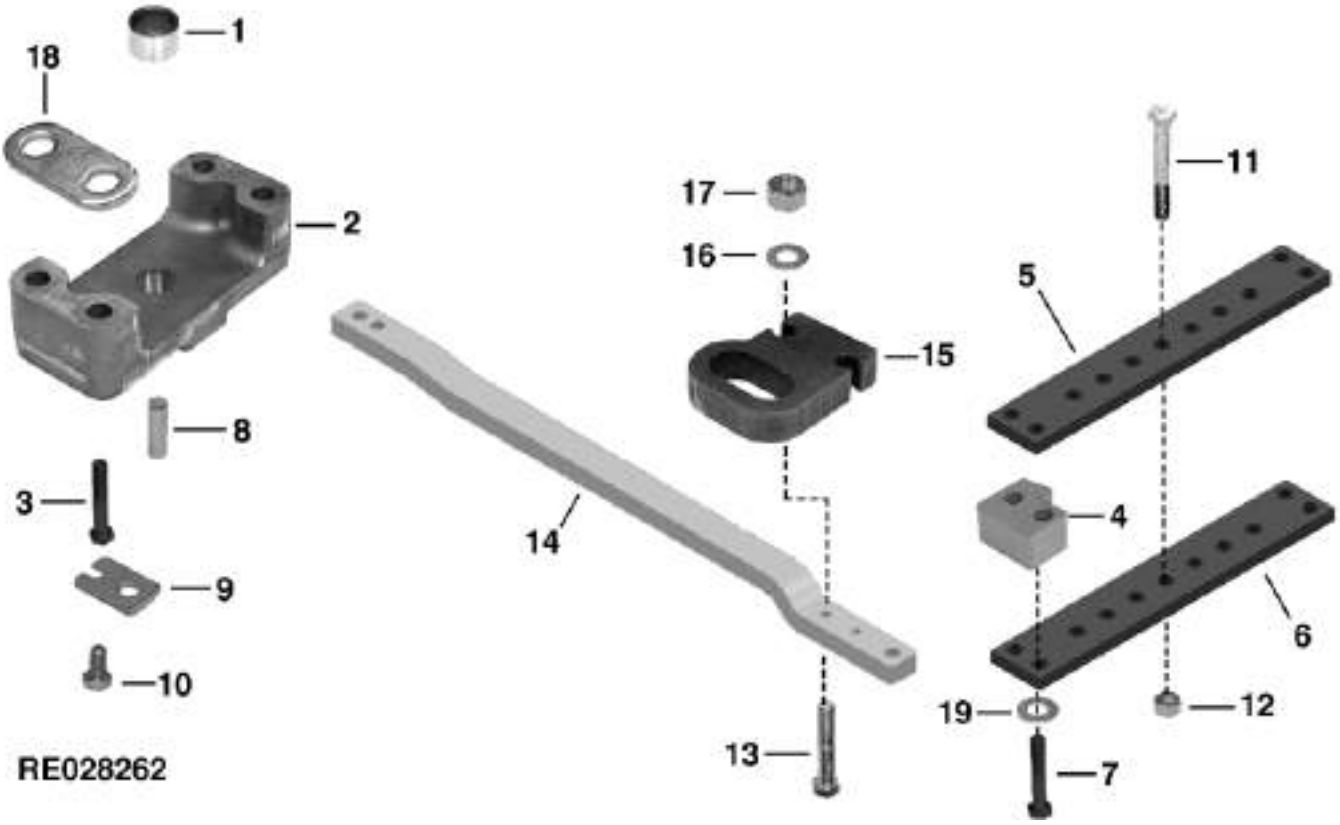

https://www.truck-manuals.net/

KEY	PART NO.	PART NAME	QTY	TRACTOR SERIAL NO.	8400	REMARKS
1	R107760	BUSHING	1	-009999	X	
	R130953	BUSHING	1	010000-	X	
2	R108298	SUPPORT	1		X	
3	19M7963	CAP SCREW	4	-009999	X	M20 X 100, HS 10.9
	19M7883	SCREW	4	010000-	X	M20 X 120, HS 10.9
4	R115454	SPACER	2		X	
5	R108299	STRAP	1		X	
6	R108300	STRAP	1		X	
7	19M7968	CAP SCREW	4	-013366	X	M20 X 130, HS 10.9
	19M7907	SCREW	4	013367-	X	M20 X 140, HS 10.9
	19M7597	CAP SCREW	4		X	(A) M20 X 50, HS 10.9
8	R116002	PIN	1	-009999	X	
	R130982	PIN	1	010000-	X	
9	R115453	STRAP	1		X	
10	19M7784	SCREW	1		X	M10 X 20, HS 10.9
11	19M7968	CAP SCREW	2		X	M20 X 130, HS 10.9
12	14M7277	NUT	2		X	M20
13	R106661	CAP SCREW	2	-009999	X	M22 X 120, HS 10.9
	R106661	CAP SCREW	2	010000-	X	(C) M22 X 120, HS 10.9
14	R126895	DRAWBAR	1	-009999	X	(SUB FOR R122791) (SUB RE69232) (ALSO ORDER (2) R115454)
	R130638	DRAWBAR	1	010000-	X	(B)
15	R115192	RETAINER	1	-009999	X	
	R130806	RETAINER	1	010000-024937	X	(SUB R156615)
	R156615	RETAINER	1	024938-	X	
	R115192	RETAINER	1	010000-	X	(C)
16	R52006	WASHER	2	-009999	X	
	R52006	WASHER	2	010000-	X	(C)
17	R114125	NUT	2	-009999	X	
	R114125	NUT	2	010000-	X	(C)
18	R121788	SPACER	2	-009999	X	
	R121788	SPACER	6	010000-	X	
19	24M7344	WASHER	4	013367-	X	22 X 37 X 3 MM

(A) W/O DRAWBAR
W/O BARRE D'ATTELAGE
W/O ZUGPENDEL
W/O BARRA DI TRAINO
W/O BARRA DE TIRO
W/O DRAGBOM

(B) REVERSIBLE
REVERSIBLE
UMKEHRBAR
AD INVERSIONE
REVERSIBLE
VAENDBAR

(C) NOT USED NORTH AMERICAN VERSION
PAS UTILISE SUR LA VERSION NORD-AMERICAINE
NICHT VERWENDET IN DER NORDAMERIKANISCHEN
NON IN USO NELLA VERSIONE NORDAMERICANA
NO SE USA EN LA VERSION NORTEAMERICANA
ANVAENDS EJ PAA DEN NORDAMERIKANSKA

https://www.truck-manuals.net/

REVERSIBLE DRAWBAR KIT (NORTH AMERICAN VERSION)
KIT DE BARRE DE TRACTION REVERSIBLE (VERSION NORD AMERICAINE)
UMKEHRBARER ZUGPENDEL-TEILESATZ (NORDAMERIKANISCHE AUSFUEHRUNG)
KIT DELLA BARRA DI TRAINO AD INVERSIONE (VERSIONE NORDAMERICANA)
JUEGO DE BARRA DE TIRO REVERSIBLE (VERSION NORTEAMERICANA)
SATS MED VAENDBAR DRAGBOM (NORDAMERIKANSK VERSION)
RE027015 -UN-20JUN96

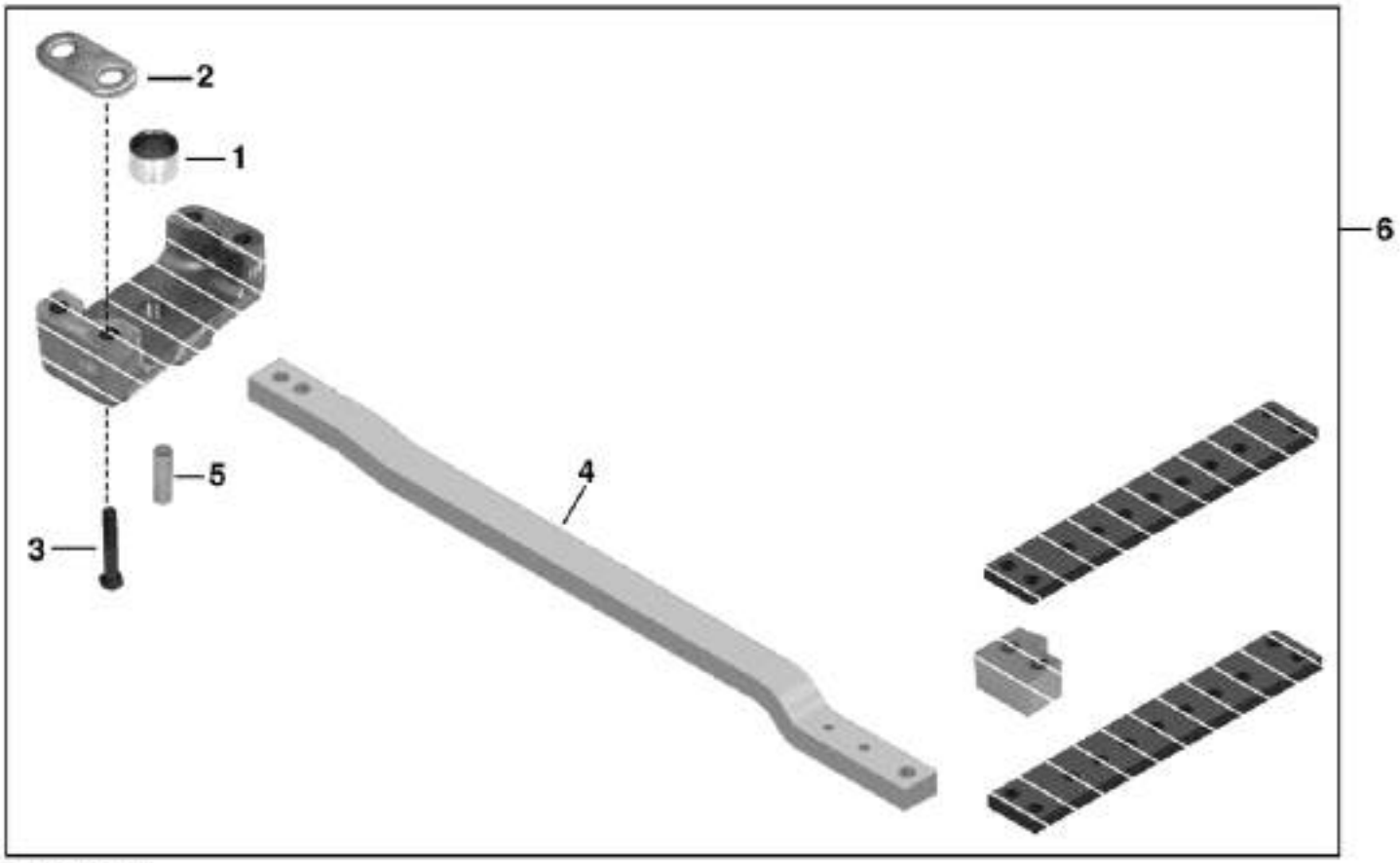

RE027015

https://www.truck-manuals.net/

KEY	PART NO.	PART NAME	QTY	TRACTOR SERIAL NO.	ALL	REMARKS
1	R130953	BUSHING	1		X	
2	R121788	SPACER	6		X	
3	19M7883	SCREW	4		X	M20 X 120, HS 10.9
4	R130638	DRAWBAR	1		X	
5	R130982	PIN	1		X	
6	RE69232	DRAWBAR	1	-009999	X	(ALSO ORDER (2) R115454)

https://www.truck-manuals.net/

DRAWBAR CLEVIS (NORTH AMERICAN VERSION) (8400 -009999)
BARRE D'ATTELAGE, ETRIER (VERSION NORD AMERICAINE) (8400 -009999)
ZUGPENDEL-GABELKOPF (NORDAMERIKANISCHE AUSFUEHRUNG) (8400 -009999)
CAVALLOTTO DELLA BARRA DI TRAINO (VERSIONE NORDAMERICANA) (8400 -009999)
HORQUILLA DE LA BARRA DE TIRO (VERSION NORTEAMERICANA) (8400 -009999)
DRAGBOM, U-BYGEL (NORDAMERIKANSK VERSION) (8400 -009999)
RE027025 -UN-20JUN96

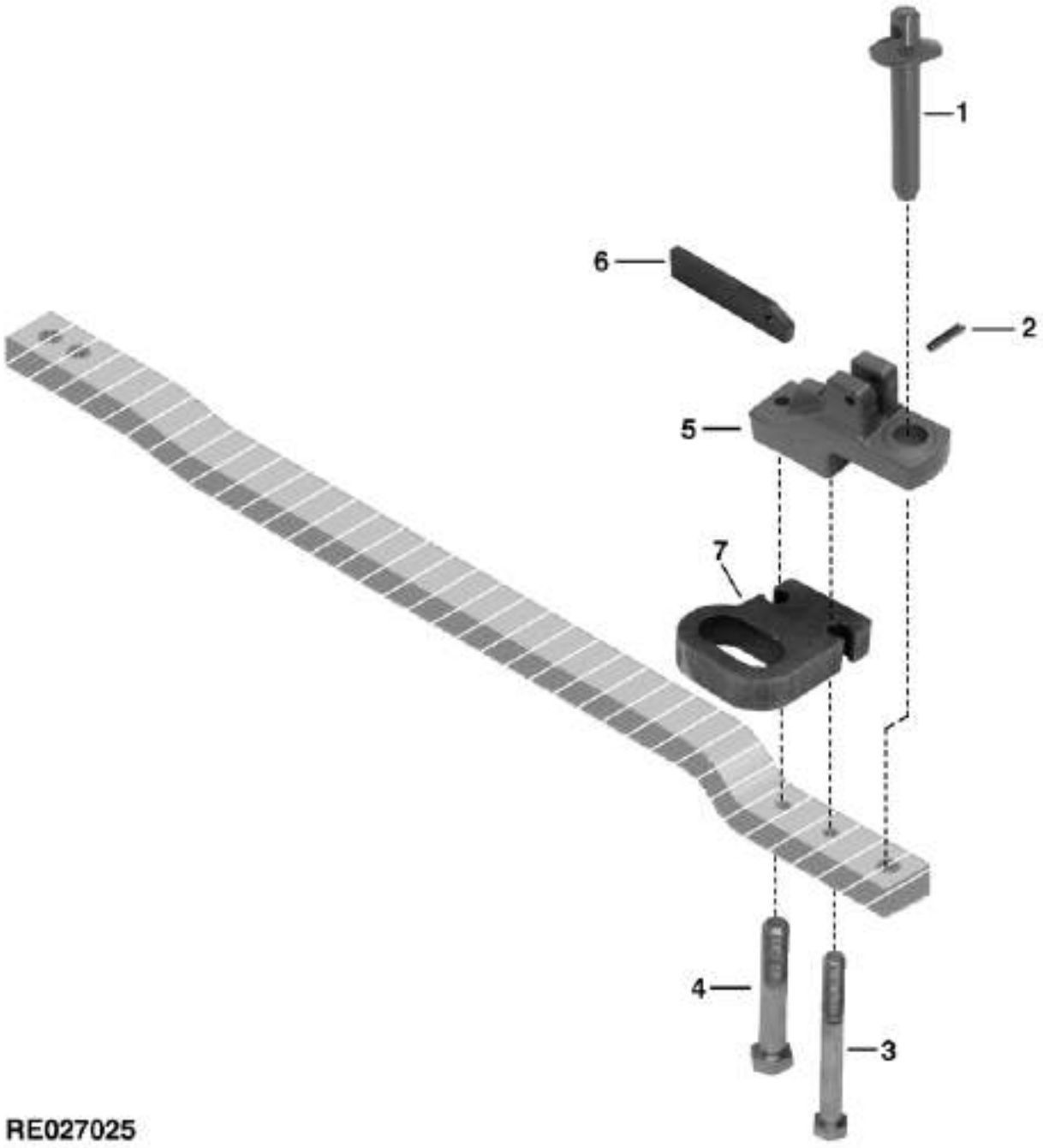

https://www.truck-manuals.net/

KEY	PART NO.	PART NAME	QTY	TRACTOR SERIAL NO.	8400	REMARKS
1	R115536	PIN	1		X	1 1/2"
2	H100795	SPRING PIN	1		X	(SUB FOR 34H374)
3	R115172	CAP SCREW	1		X	M22 X 180, HS 10.9
4	R111434	CAP SCREW	1		X	M22 X 130, HS 10.9
5	R126822	STRAP	1		X	(SUB FOR R119681) (SUB RE159503)
6	R110309	PLATE	1		X	
7	R115192	RETAINER	1		X	

https://www.truck-manuals.net/

DRAWBAR CLEVIS (NORTH AMERICAN VERSION)
BARRE D'ATTELAGE, ETRIER (VERSION NORD AMERICAINE)
ZUGPENDEL-GABELKOPF (NORDAMERIKANISCHE AUSFUEHRUNG)
CAVALLOTTO DELLA BARRA DI TRAINO (VERSIONE NORDAMERICANA)
HORQUILLA DE LA BARRA DE TIRO (VERSION NORTEAMERICANA)
DRAGBOM, U-BYGEL (NORDAMERIKANSK VERSION)
RE030232 -UN-19NOV98

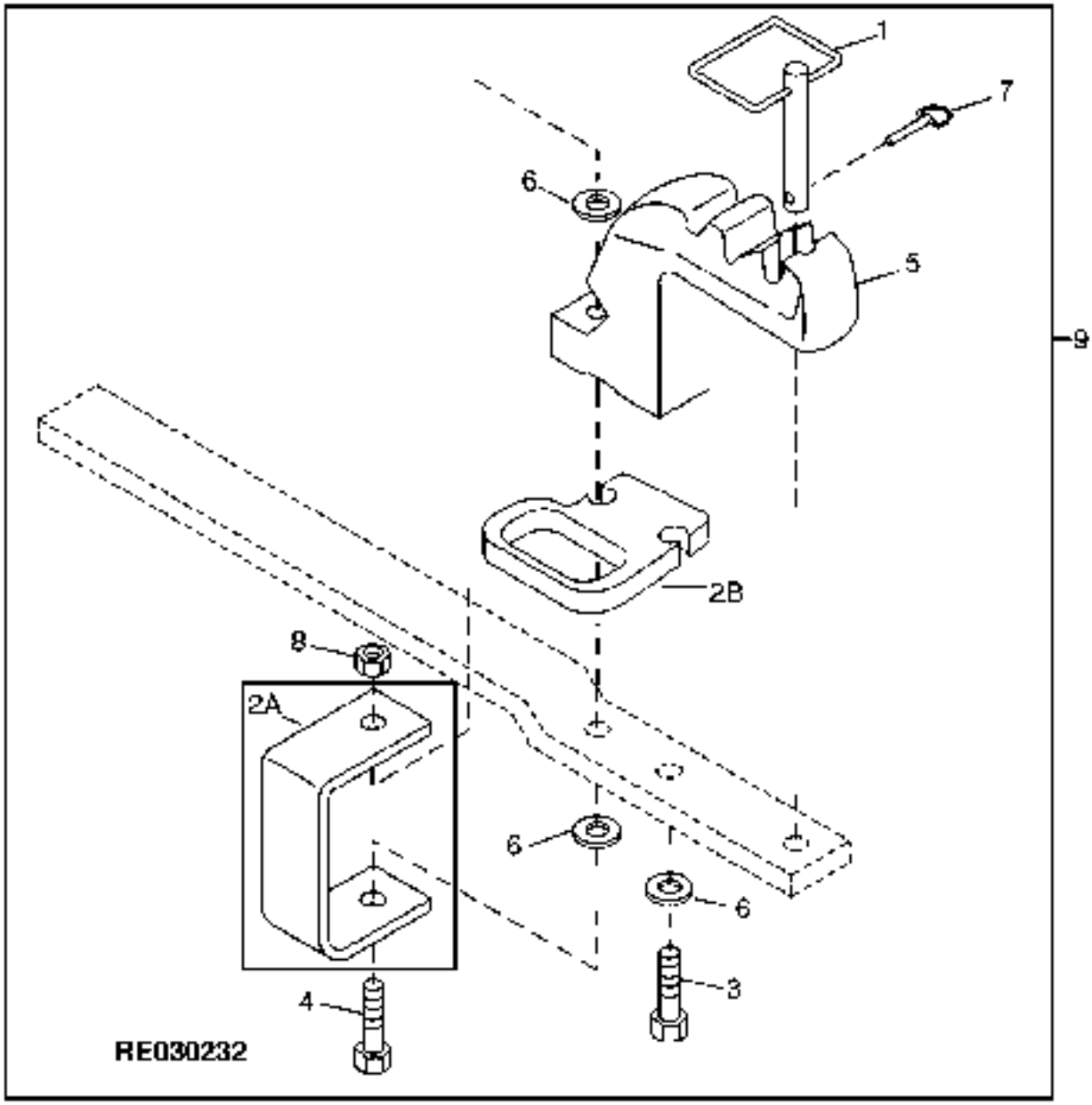

https://www.truck-manuals.net/

KEY	PART NO.	PART NAME	QTY	TRACTOR SERIAL NO.	ALL	REMARKS
1	RE150871	PIN	1		X	1 1/2" DIA
2A	R130806	RETAINER	1		X	(SUB R156615)
2B	R156615	RETAINER	1		X	
3	R134070	CAP SCREW	1		X	HS 10.9, (USE WITH R130806)
	R156614	CAP SCREW	1		X	(USE WITH R156615)
4	R134071	CAP SCREW	1		X	HS 10.9, (USE WITH R130806)
	R156614	CAP SCREW	1		X	(USE WITH R156615)
5	R132544	STRAP	1		X	
6	R52006	WASHER	AR		X	
7	AR62150	QUICK LOCK PIN	1		X	(SUB FOR AA23627)
8	R114125	NUT	1		X	
9	RE150870	CLEVIS	1		X	(SUB RE159503)

https://www.truck-manuals.net/

MEMORANDA
MEMORANDA
MEMORANDA
MEMORANDA
MEMORANDA
MEMORANDA

https://www.truck-manuals.net/

MEMORANDA
MEMORANDA
MEMORANDA
MEMORANDA
MEMORANDA
MEMORANDA

https://www.truck-manuals.net/

REGULAR DRAWBAR (EUROPEAN VERSION)
BARRE D'ATTELAGE COURANTE (VERSION EUROPEENNE)
REGULAERES ZUGPENDEL (EUROPAEISCHE AUSFUEHRUNG)
BARRA DI TRAINO REGOLARE (VERSIONE EUROPEA)
BARRA DE TIRO REGULAR (VERSION EUROPEA)
STANDARDDRAGBOM (EUROPEISK VERSION)
RE027018 -UN-20JUN96

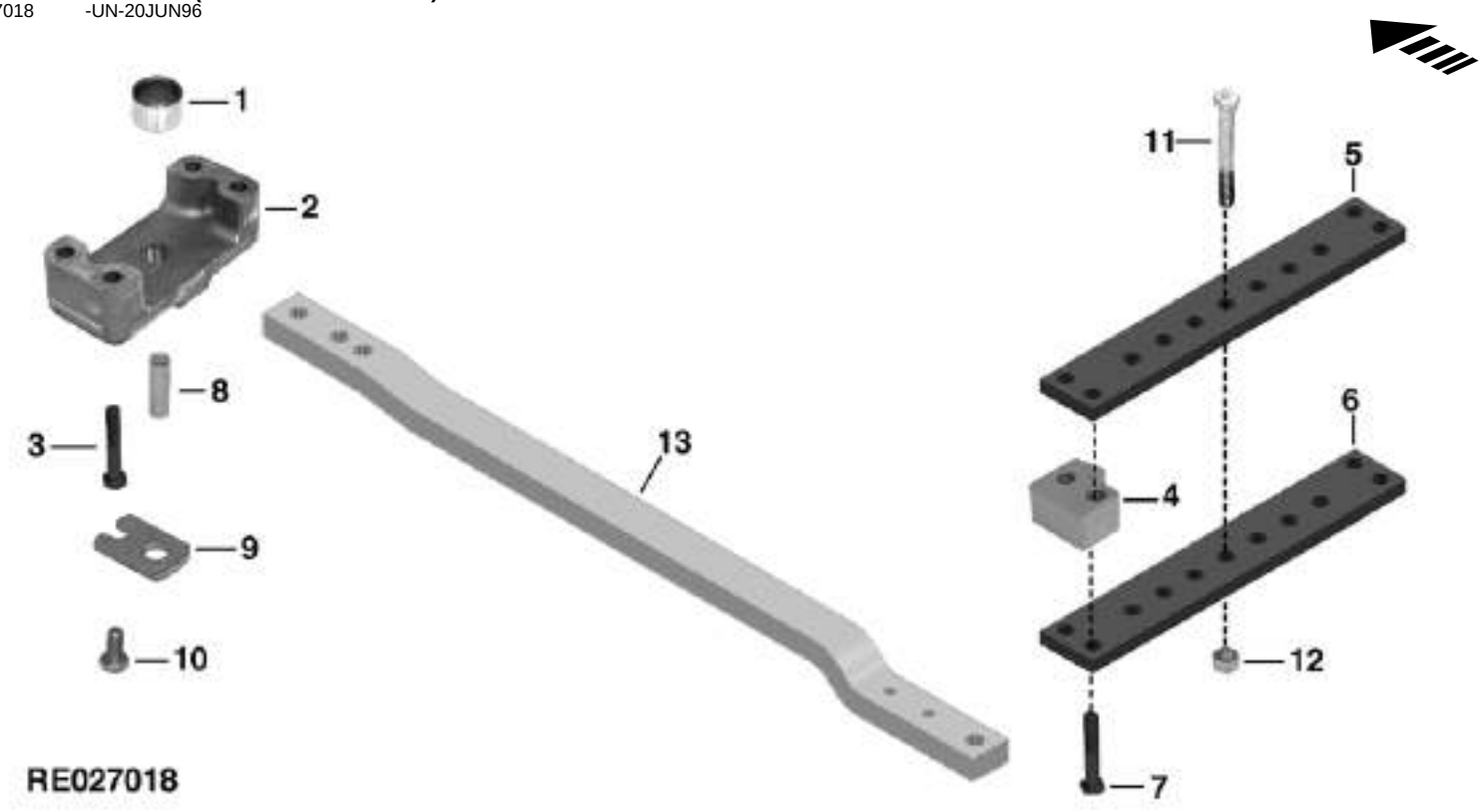

KEY	PART NO.	PART NAME	QTY	TRACTOR SERIAL NO.	ALL	REMARKS
1	R107760	BUSHING	1		X	
2	R108298	SUPPORT	1		X	
3	19M7963	CAP SCREW	4		X	M20 X 100, HS 10.9
4	R108301	SPACER	2		X	
5	R108299	STRAP	1		X	
6	R108300	STRAP	1		X	
7	19M7968	CAP SCREW	4		X	M20 X 130, HS 10.9
	19M7597	CAP SCREW	4		X	(A) M20 X 50, HS 10.9
8	R108291	PIN	1		X	
9	R115453	STRAP	1		X	
10	19M7784	SCREW	1		X	M10 X 20, HS 10.9
11	19M7968	CAP SCREW	2		X	M20 X 130, HS 10.9
12	14M7277	NUT	2		X	M20
13	R122752	DRAWBAR	1	-XXXXXX	X	(C)
	R133415	DRAWBAR	1	XXXXXX-	X	(B) (D)

(A) W/O DRAWBAR
W/O BARRE D'ATTELAGE
W/O ZUGPENDEL
W/O BARRA DI TRAINO
W/O BARRA DE TIRO
W/O DRAGBOM

(B) REVERSIBLE
REVERSIBLE
UMKEHRBAR
AD INVERSIONE
REVERSIBLE
VAENDBAR

(C) (-XXXXXX) 8100-012473; 8200-012019; 8300-012731; 8400-012705
(D) (XXXXXX-) 8100-012474; 8200-012020; 8300-012732; 8400-012706

https://www.truck-manuals.net/

IMPLEMENT SAFETY CHAIN
CHAINE DE VERROUILLAGE
GERAETE-SICHERUNGSKETTE
CATENA DI SICUREZZA PER EQUIPAGGIAMENTO
INSTALE LA CADENA DE SEGURIDAD
SAEKERHETSKEDJA, REDSKAP
RWP5796 -UN-01JAN94

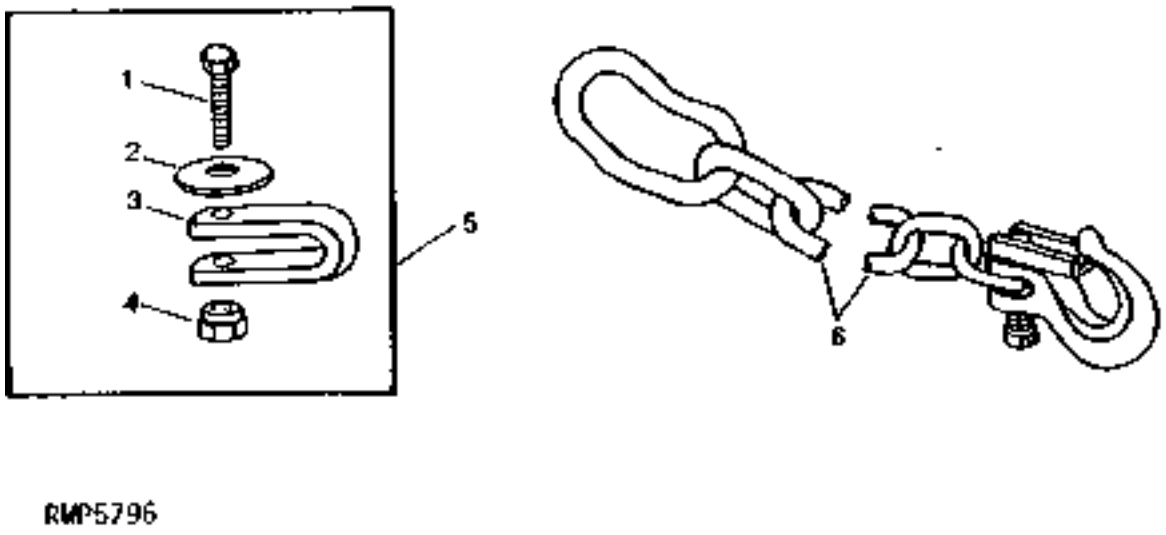

RWP5796

KEY	PART NO.	PART NAME	QTY	TRACTOR SERIAL NO.	ALL	REMARKS
1	19H1768	CAP SCREW	1		X	3/4" X 2"
	19H2084	CAP SCREW	1		X	3/4" X 4-1/2"
	19H2174	CAP SCREW	1		X	3/4" X 4-1/4"
2	R36402	WASHER	1		X	
3	R69408	CLEVIS	1		X	
	R69409	CLEVIS	1		X	
4	T25879	NUT	2		X	
5	AR90577	SAFETY CHAIN ADAPTER KIT	1		X	(A)
	AR90578	CHAIN KIT	1		X	(B)
6	RE26739	LINK CHAIN	1		X	6.4 MM (1/4") 2722 KG (6,000 LB)
	AR90581	LINK CHAIN	1		X	6.4 MM (1/4") 4536 KG (10,000 LB)
	AR90579	LINK CHAIN	1		X	9.5 MM (3/8")
	AR90583	LINK CHAIN	1		X	11.1 MM (7/16")
	AN212996	LINK CHAIN	1		X	12.7 MM (1/2") (SUB FOR RE26740)

(A) CATEGORY IV
CATEGORIE IV
KATEGORIE IV
CATEGORIA IV
CATEGORIA IV
KATEGORI IV

(B) CATEGORY III
CATEGORIE III
KATEGORIE III
CATEGORIA III
CATEGORIA III
KATEGORI III

https://www.truck-manuals.net/

REVERSIBLE DRAWBAR KIT (EUROPEAN VERSION)
KIT DE BARRE DE TRACTION REVERSIBLE (VERSION EUROPEENNE)
UMKEHRBARER ZUGPENDEL-TEILESATZ (EUROPAEISCHE AUSFUEHRUNG)
KIT DELLA BARRA DI TRAINO AD INVERSIONE (VERSIONE EUROPEA)
JUEGO DE BARRA DE TIRO REVERSIBLE (VERSION EUROPEA)
SATS MED VAENDBAR DRAGBOM (EUROPEISK VERSION)
RE027010 -UN-20JUN96

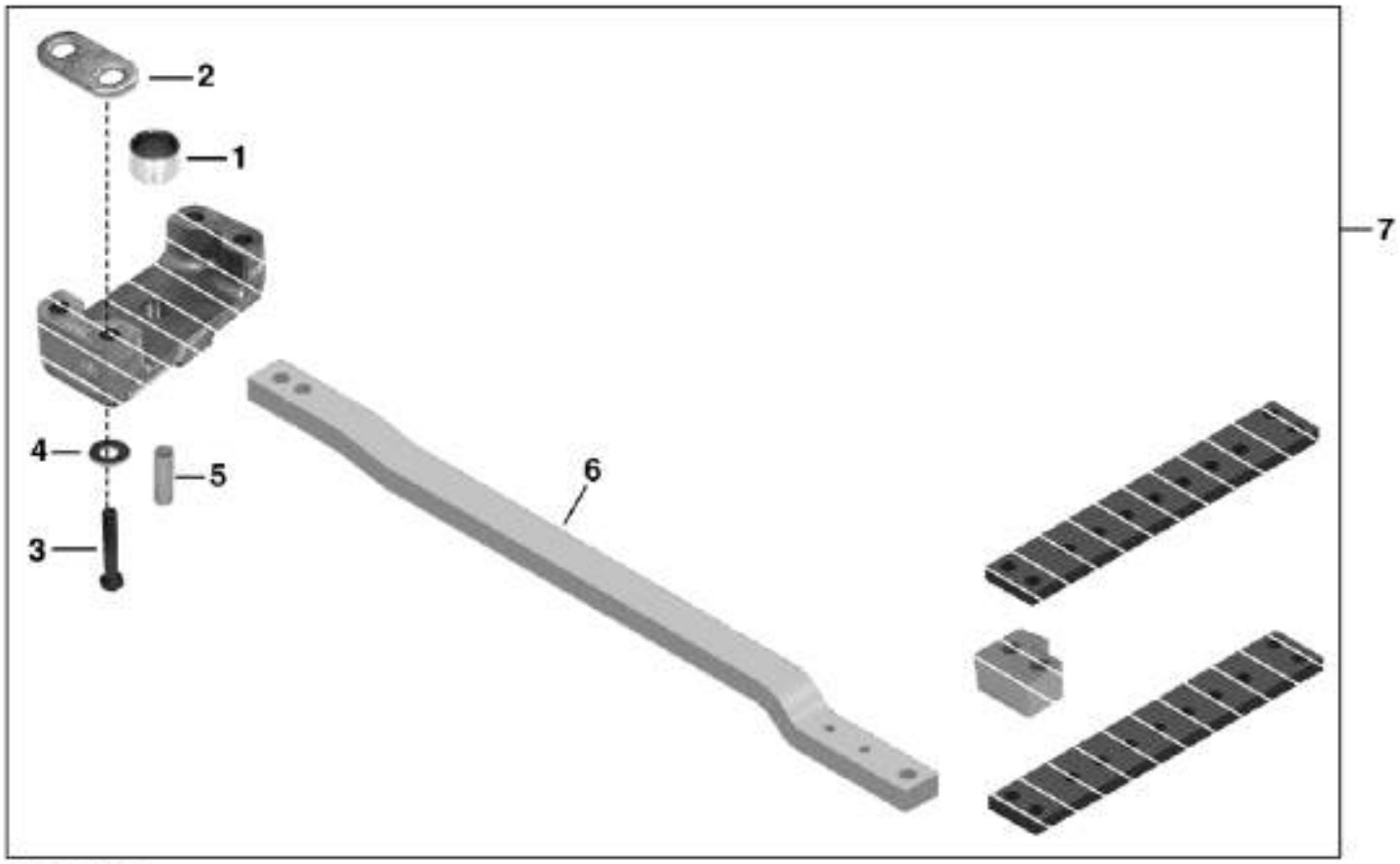

RE027010

https://www.truck-manuals.net/

KEY	PART NO.	PART NAME	QTY	TRACTOR SERIAL NO.	ALL	REMARKS
1	R130953	BUSHING	1		X	
2	R121788	SPACER	4		X	
3	19M7969	CAP SCREW	4		X	M20 X 110, HS 10.9
4	24M7242	WASHER	4		X	21.400 X 42 X 5 MM, (NLR)
5	R130981	PIN	1		X	
6	R133415	DRAWBAR	1		X	
7	RE69233	DRAWBAR	1	-009999	X	

https://www.truck-manuals.net/

DRAWBAR CLEVIS (EUROPEAN VERSION)
BARRE D'ATTELAGE, ETRIER (VERSION EUROPEENNE)
ZUGPENDEL-GABELKOPF (EUROPAEISCHE AUSFUEHRUNG)
CAVALLOTTO DELLA BARRA DI TRAINO (VERSIONE EUROPEA)
HORQUILLA DE LA BARRA DE TIRO (VERSION EUROPEA)
DRAGBOM, U-BYGEL (EUROPEISK VERSION)
RE027019 -UN-31JUL96

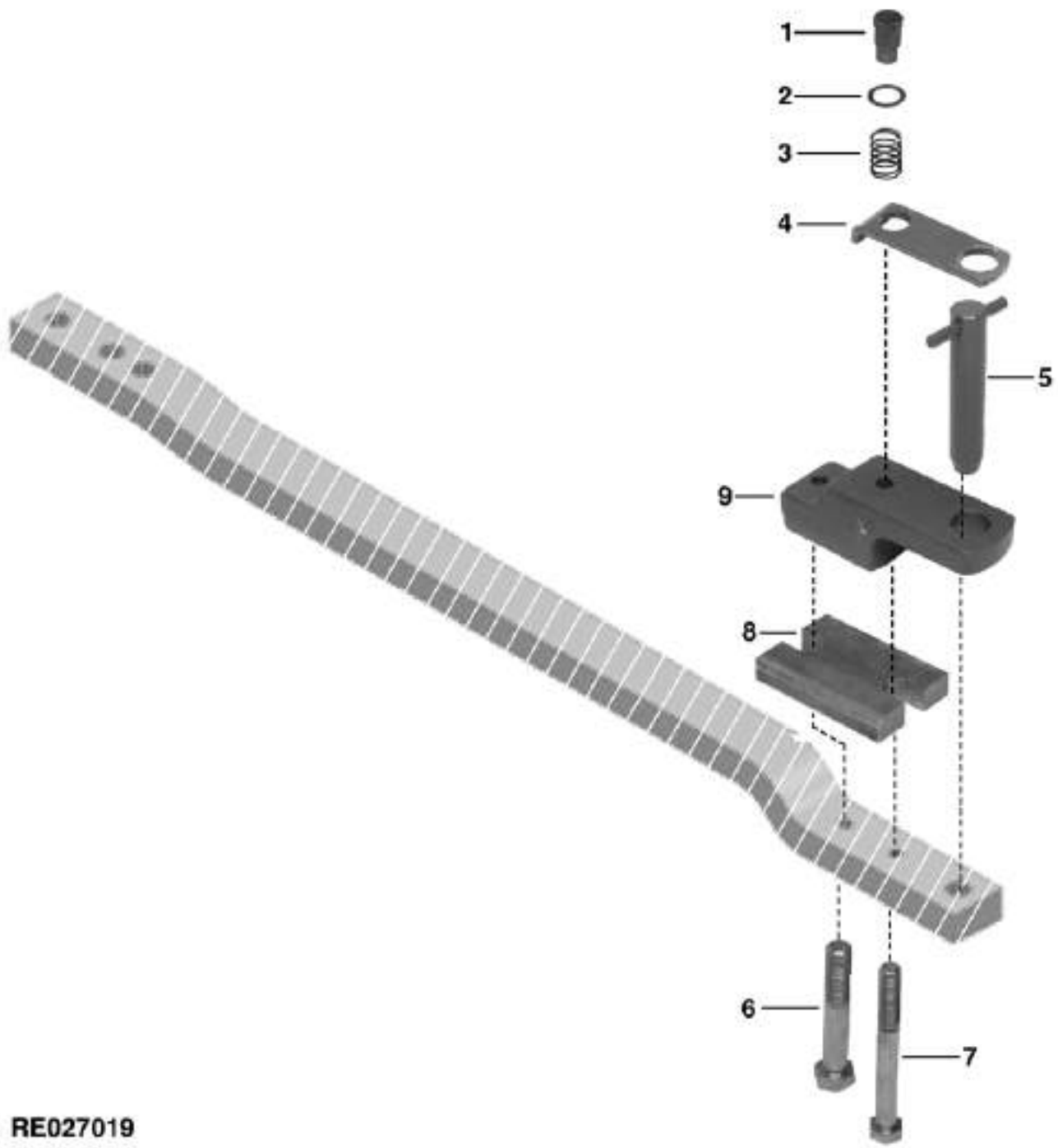

https://www.truck-manuals.net/

KEY	PART NO.	PART NAME	QTY	TRACTOR SERIAL NO.	ALL	REMARKS
1	R88667	NUT	1		X	
2	24H1513	WASHER	1		X	1-13/32" X 2" X 0.060"
3	F304R	SPRING	1		X	
4	R54064	RETAINER	1		X	
5	AR69988	PIN	1		X	
6	19M7969	CAP SCREW	1		X	M20 X 110, HS 10.9
7	19M8503	CAP SCREW	1		X	M20 X 160, HS 10.9
8	N218581	PLATE	1	-009999	X	(SUB FOR R119438)
	R134668	PLATE	1	010000-	X	
9	R88665	STRAP	1		X	
..	R119439	LABEL	1		X	

https://www.truck-manuals.net/

WAGON HITCH BRACKETS (EUROPEAN VERSION) (81 -012473;82 -012012;83 -012704;84 -012683)
SUPPORTS D'ATTELAGE DE CHARIOT (V.E.) (8100 -012473;8200 -012012;8300 -012704;8400 -012683)
ANHAENGEVORRICHTUNGS-HALTERUNGEN (E.A.) (8100 -012473;8200 -012012;8300 -012704;8400 -012683)
STAFFE DI ATTACCO DEL CARRO (EUROPEA)(8100 -012473;8200 -012012;8300 -012704;8400 -012683)
SOPORTES DEL ENGANCHE DEL CARRO (EUROPEA) (8100 -012473;8200 -012012;8300 012704;8400 -012683)
DRAGANORDNINGSFAASTEN (EUROPEAN VERSION)(8100 -012473;8200 -012012;8300 -012704;8400 -012683)
RXP010859 -UN-01JAN94

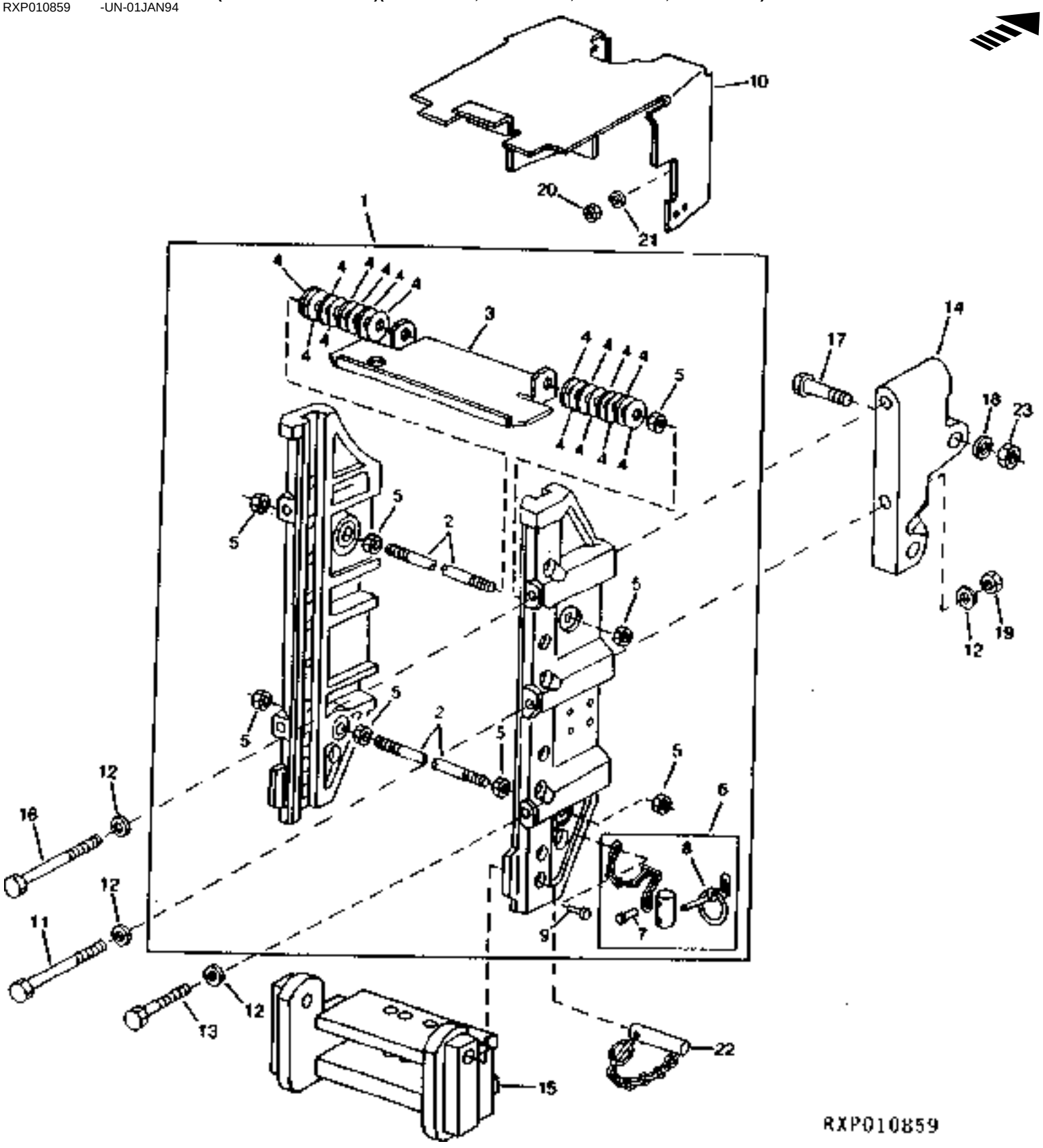

https://www.truck-manuals.net/

KEY	PART NO.	PART NAME	QTY	TRACTOR SERIAL NO.	ALL	REMARKS
1	AL80747	BRACKET	1		X	(SUB RE68408)
2	L59320	STUD	2		X	
3	L79447	SHIELD	1		X	
4	L79449	DISK SPRING	16		X	
5	14M7277	NUT	8		X	M20
6	AL61032	STOP	1		X	
7	25M7032	GROOVE PIN	1		X	5 X 20 MM
8	99M7085	QUICK LOCK PIN	1		X	
9	25M7032	GROOVE PIN	1		X	5 X 20 MM
10	RE61282	SHIELD	1		X	
11	19M7779	CAP SCREW	2		X	M20 X 240, HS 10.9
12	24M7242	WASHER	8		X	21.400 X 42 X 5 MM
13	19M8100	CAP SCREW	2		X	M20 X 180, HS 10.9
14	R124423	HITCH	2		X	
15	RE60265	RAIL	1		X	(B)
16	19M8389	CAP SCREW	2		X	M20 X 280, HS 10.9
17	19M7968	CAP SCREW	4		X	M20 X 130, HS 10.9
18	24M7242	WASHER	4		X	(A) 21.400 X 42 X 5 MM
19	14M7277	NUT	2		X	M20
20	14M7274	NUT	4		X	M10
21	24M7346	WASHER	4		X	11 X 20 X 2 MM
22	AL61072	PIN	2		X	(B)
23	14M7277	NUT	4		X	(A) M20

(A) W/O SWAY BLOCK
W/O CALE STABILISATRICE
W/O STABILISIERUNGSANSCHLAG
W/O BLOCCO STABILIZZATORE
W/O BLOQUE ESTABILIZADOR
W/O STABILISERINGSBLOCK

(B) W/ DRAWBAR
W/ BARRE D'ATTELAGE
W/ ZUGPENDEL
W/ BARRA DI TRAINO
W/ BARRA DE TIRO
W/ DRAGBOM

https://www.truck-manuals.net/

WAGON HITCH BRACKETS (EUROPEAN VERSION) (81 012474- ;82 012013- ;83 012705- ;84 012684-)
SUPPORTS D'ATTELAGE DE CHARIOT (V.E.) (8100 012474- ;8200 012013- ;8300 012705- ;8400 012684-)
ANHAENGEVORRICHTUNGS-HALTERUNGEN (E.V.) (8100 012474- ;8200 012013- ;8300 012705- ;8400 012684-)
STAFFE DI ATTACCO DEL CARRO (EUROPEA) (8100 012474- ;8200 012013- ;8300 012705- ;8400 012684-)
SOPORTES DEL ENGANCHE DEL CARRO (EUROPEA)(8100 012474- ;8200 012013- ;8300 012705- ;8400 012684-)
DRAGANORDNINGSFAASTEN (EUROPEISK VERSION)(8100 012474- ;8200 012013- ;8300 012705- ;8400 012684-)
RE027032 -UN-17JUL96

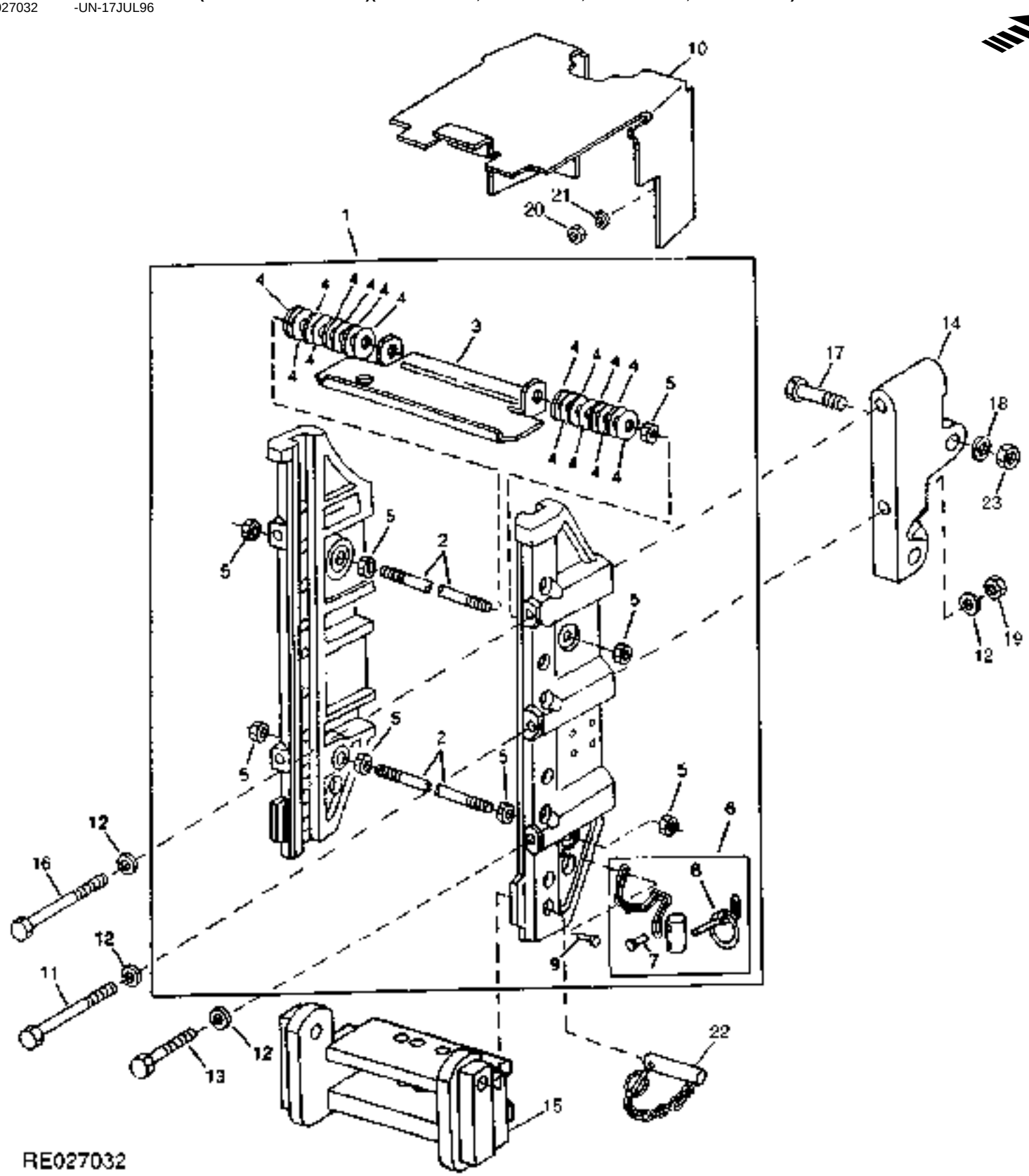

https://www.truck-manuals.net/

KEY	PART NO.	PART NAME	QTY	TRACTOR SERIAL NO.	ALL	REMARKS
1	RE68408	BRACKET	1		X	
2	L59320	STUD	2		X	
3	L111699	SHIELD	1		X	
4	L79449	DISK SPRING	16		X	
5	14M7277	NUT	8		X	M20
6	AL61032	STOP	1		X	
7	25M7032	GROOVE PIN	1		X	5 X 20 MM
8	99M7085	QUICK LOCK PIN	1		X	
9	25M7032	GROOVE PIN	1		X	5 X 20 MM
10	RE66328	SHIELD	1		X	
11	19M7779	CAP SCREW	2		X	M20 X 240, HS 10.9
12	24M7242	WASHER	8		X	21.400 X 42 X 5 MM
13	19M8100	CAP SCREW	2		X	M20 X 180, HS 10.9
14	R124423	HITCH	2		X	
15	RE60265	RAIL	1		X	(B)
16	19M8389	CAP SCREW	2		X	M20 X 280, HS 10.9
17	19M7968	CAP SCREW	4		X	M20 X 130, HS 10.9
18	24M7242	WASHER	4		X	(A) 21.400 X 42 X 5 MM
19	14M7277	NUT	2		X	M20
20	14M7274	NUT	4		X	M10
21	24M7346	WASHER	4		X	11 X 20 X 2 MM
22	AL61072	PIN	2		X	(B)
23	14M7277	NUT	4		X	(A) M20

(A) W/O SWAY BLOCK
W/O CALE STABILISATRICE
W/O STABILISIERUNGSANSCHLAG
W/O BLOCCO STABILIZZATORE
W/O BLOQUE ESTABILIZADOR
W/O STABILISERINGSBLOCK

(B) W/ DRAWBAR
W/ BARRE D'ATTELA
W/ ZUGPENDEL
W/ BARRA DI TRAINO
W/ BARRA DE TIRO
W/ DRAGBOM

https://www.truck-manuals.net/

WAGON HITCH COUPLING (EUROPEAN VERSION)
ACCOUPLEMENT D'ATTELAGE DE CHARIOT (VERSION EUROPEENNE)
ANHAENGEVORRICHTUNGS-KUPPLUNG (EUROPAEISCHE AUSFUEHRUNG)
ACCOPPIAMENTO DELL'ATTACCO DEL CARRO (VERSIONE EUROPEA)
ACOPLAMIENTO DEL ENGANCHE DEL CARRO (VERSION EUROPEA)
DRAGANORDNINGSKOPPLING (EUROPEISK VERSION)
RXP020397 -UN-01JAN94

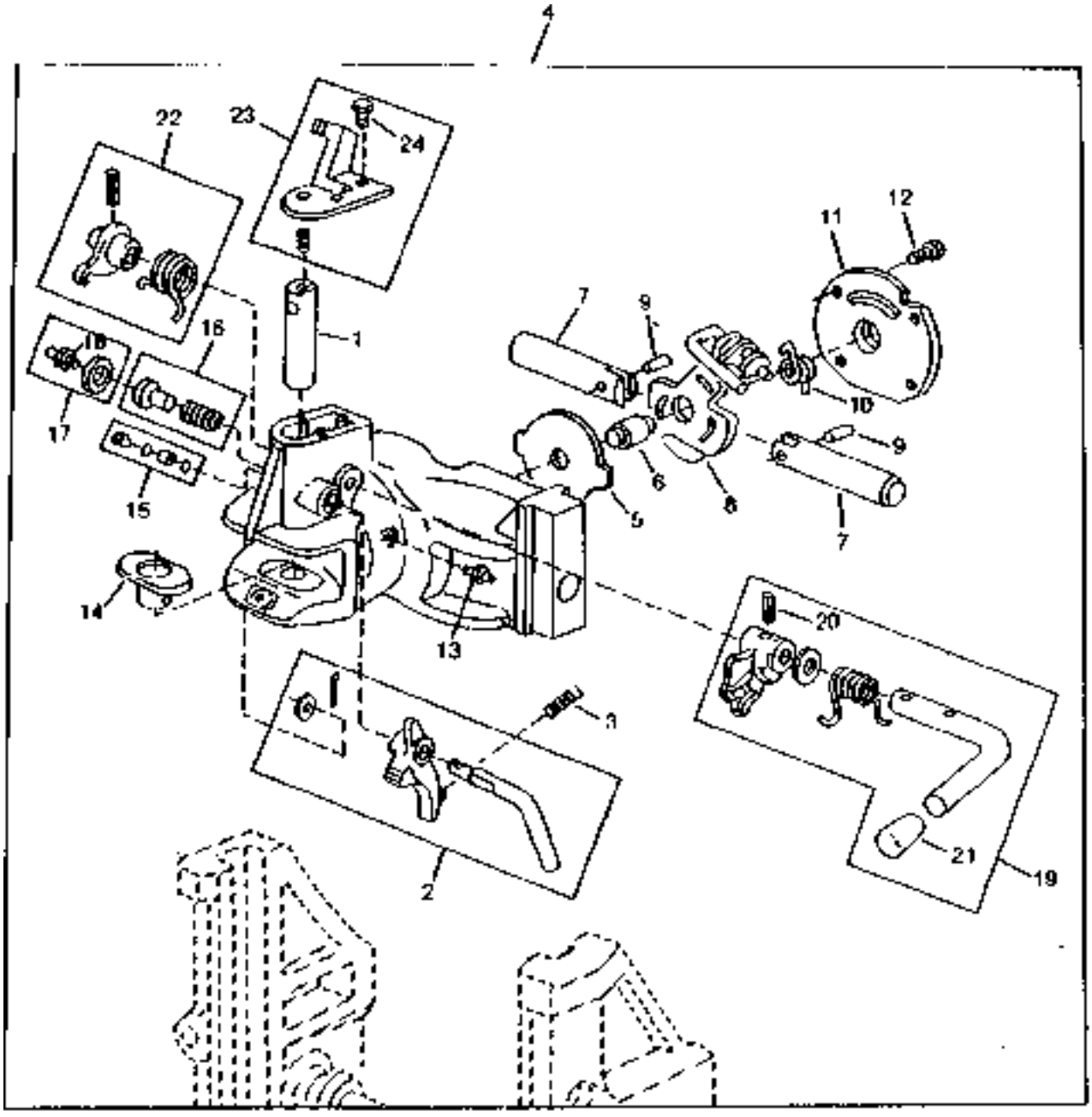

https://www.truck-manuals.net/

KEY	PART NO.	PART NAME	QTY	TRACTOR SERIAL NO.	ALL	REMARKS
1	AL78607	PIN	1		X	
2	AL78608	LEVER	1		X	
3	AL78609	COMPRESSION SPRING	1		X	
4	AL78820	HITCH COUPLING	1		X	(SUB AL81736)
5	L59336	WASHER	1		X	
6	L59343	PIN	1		X	
7	L59344	PIN	2		X	
8	AL61062	PLATE	1		X	
9	25M7084	PIN	2		X	
10	L59342	TORSION SPRING	1		X	
11	L59345	COVER	1		X	
12	19M7923	CAP SCREW	4		X	M6 X 12, HS 10.9
13	58M5575	LUBRICATION FITTING	1		X	
14	AL35990	BUSHING	1		X	
15	AL78489	SET SCREW	1		X	
16	AL78490	PIN	1		X	
17	AL35991	BUSHING	1		X	
18	58M5575	LUBRICATION FITTING	1		X	
19	AL78491	LEVER	1		X	
20	34M7124	SPRING PIN	1		X	8 X 30 MM
21	L38296	KNOB	1		X	
22	AL78499	LEVER	1		X	
23	AL78487	COVER	1		X	
24	19M7560	CAP SCREW	3		X	M6 X 16

https://www.truck-manuals.net/

WAGON HITCH COUPLING (EUROPEAN VERSION) (TSN -025682)
ACCOUPLEMENT D'ATTELAGE DE CHARIOT (VERSION EUROPEENNE) (TSN -025682)
ANHAENGEVORRICHTUNGS-KUPPLUNG (EUROPAEISCHE AUSFUEHRUNG) (TSN -025682)
ACCOPPIAMENTO DELL'ATTACCO DEL CARRO (VERSIONE EUROPEA) (TSN -025682)
ACOPLAMIENTO DEL ENGANCHE DEL CARRO (VERSION EUROPEA) (TSN -025682)
DRAGANORDNINGSKOPPLING (EUROPEISK VERSION) (TSN -025682)
LX008730 -UN-01JAN94

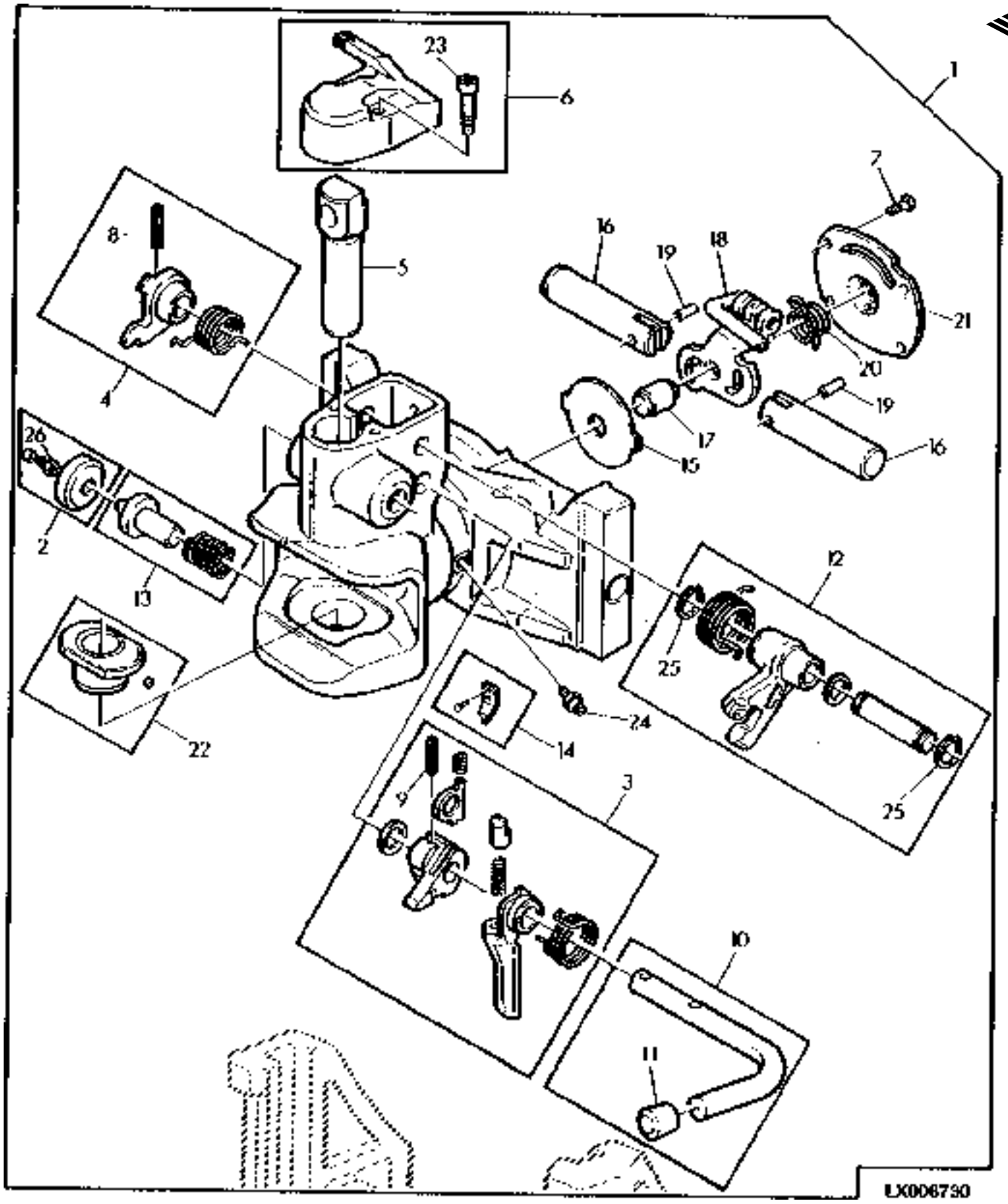

https://www.truck-manuals.net/

KEY	PART NO.	PART NAME	QTY	TRACTOR SERIAL NO.	ALL	REMARKS
1	AL81736	HITCH	1		X	
2	AL82107	COVER	1		X	
3	AL82095	LEVER	1		X	
4	AL82101	LEVER	1		X	
5	L101966	PIN	1		X	
6	AL82102	COVER	1		X	
7	19M7923	CAP SCREW	4		X	M6 X 12, HS 10.9
8	34M7047	SPRING PIN	1		X	8 X 40 MM
9	34M7124	SPRING PIN	1		X	8 X 30 MM
10	AL82092	LEVER	1		X	(A)
11	L38296	KNOB	1		X	
12	AL82096	CAM	1		X	
13	AL82100	PIN	1		X	
14	AL82103	RETAINER	1		X	
15	L59336	WASHER	1		X	
16	L59344	PIN	2		X	
17	L59343	PIN	1		X	
18	AL82106	PLATE	1		X	
19	25M7084	PIN	2		X	
20	L59342	TORSION SPRING	1		X	
21	L59345	COVER	1		X	
22	AL82098	BUSHING	1		X	
23	19M8123	SCREW	2		X	M8 X 45, HS 12.9
24	58M5575	LUBRICATION FITTING	1		X	
25	40M7188	SNAP RING	2		X	
26	58M5574	LUBRICATION FITTING	1		X	

(A) INCLUDES SPRING PINS
GOUPILLES-RESSORT INCLUSES
EINSCHLIESSLICH SPANNSTIFTE
COMPRENDE SPINE ELASTICHE
INLUYE PASADORES DE RESORTE
INKLUDERAR FJAEDERSTIFT

https://www.truck-manuals.net/

WAGON HITCH COUPLING (EUROPEAN VERSION) (TSN 025683-)
ACCOUPLEMENT D'ATTELAGE DE CHARIOT (VERSION EUROPEENNE) (TSN 025683-)
ANHAENGEVORRICHTUNGS-KUPPLUNG (EUROPAEISCHE AUSFUEHRUNG) (TSN 025683-)
ACCOPPIAMENTO DELL'ATTACCO DEL CARRO (VERSIONE EUROPEA) (TSN 025683-)
ACOPLAMIENTO DEL ENGANCHE DEL CARRO (VERSION EUROPEA) (TSN 025683-)
DRAGANORDNINGSKOPPLING (EUROPEISK VERSION) (TSN 025683-)
RE030378 -UN-26FEB99

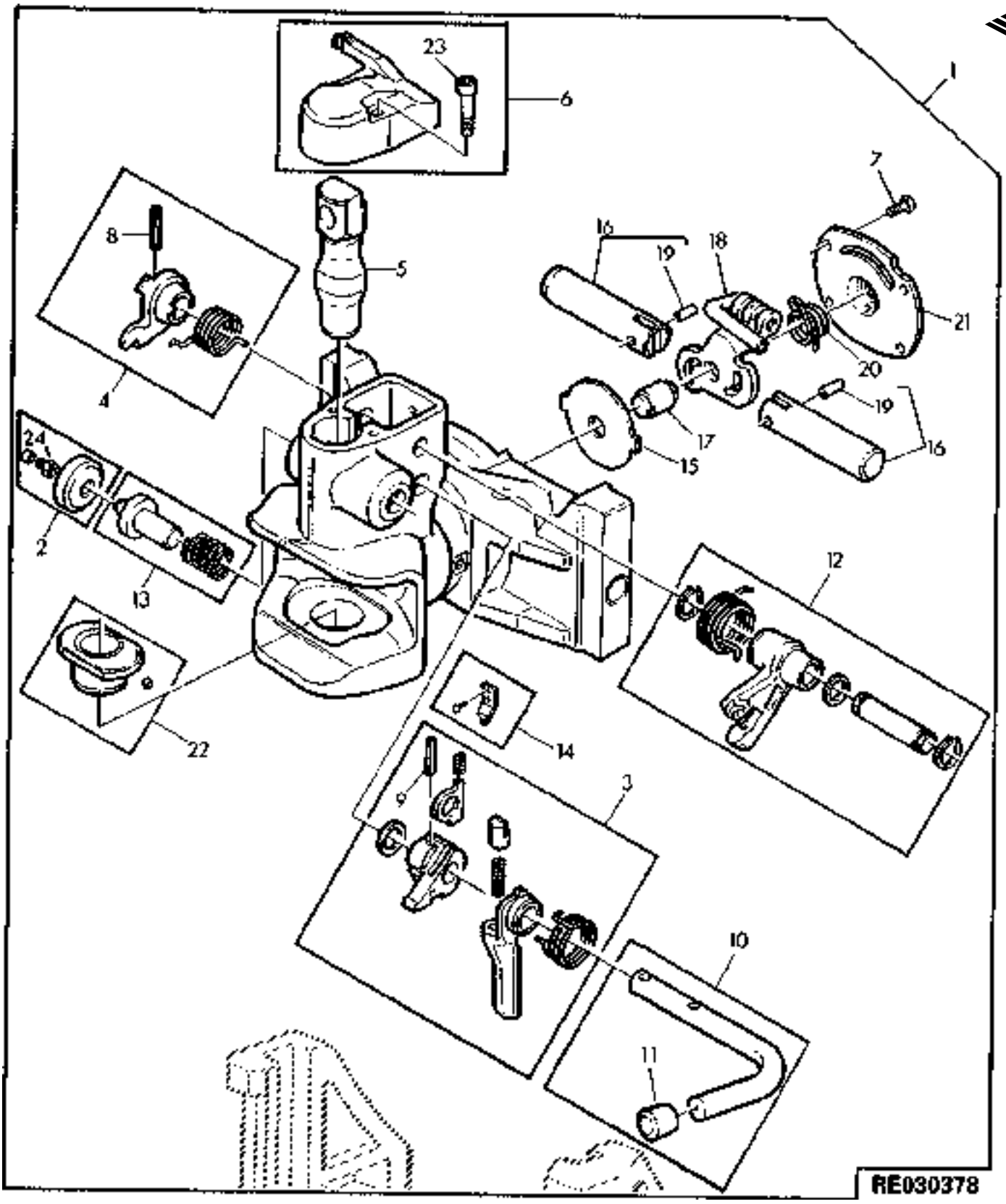

https://www.truck-manuals.net/

KEY	PART NO.	PART NAME	QTY	TRACTOR SERIAL NO.	ALL	REMARKS
1	AL116738	HITCH	1		X	
2	AL82107	COVER	1		X	
3	AL82095	LEVER	1		X	
4	AL82101	LEVER	1		X	
5	L115420	PIN	1		X	
6	AL82102	COVER	1		X	
7	19M7923	CAP SCREW	4		X	M6 X 12, HS 10.9
8	34M7047	SPRING PIN	1		X	8 X 40 MM
9	34M7124	SPRING PIN	1		X	8 X 30 MM
10	AL82092	LEVER	1		X	(A)
11	L38296	KNOB	1		X	
12	AL118059	CAM	1		X	
13	AL118060	PIN	1		X	
14	AL82103	RETAINER	1		X	
15	L59336	WASHER	1		X	
16	AL118001	PIN	2		X	
17	L59343	PIN	1		X	
18	AL118000	PLATE	1		X	
19	44M7070	DOWEL PIN	2		X	
20	L59342	TORSION SPRING	1		X	
21	L59345	COVER	1		X	
22	L115419	BUSHING	1		X	
23	19M8123	SCREW	2		X	M8 X 45, HS 12.9
24	58M5574	LUBRICATION FITTING	1		X	

(A) INCLUDES SPRING PINS
GOUPILLES-RESSORT INCLUSES
EINSCHLIESSLICH SPANNSTIFTE
COMPRENDE SPINE ELASTICHE
INLUYE PASADORES DE RESORTE
INKLUDERAR FJAEDERSTIFT

https://www.truck-manuals.net/

WAGON HITCH CONTROLS (EUROPEAN VERSION)
COMMANDES D'ATTELAGE DU CHARIOT (VERSION EUROPEENNE)
ANHAENGEVORRICHTUNG, STEUERUNGEN (EUROPAEISCHE AUSFUEHRUNG)
COMANDI DI ATTACCO DEL CARRO (VERSIONE EUROPEA)
CONTROLES DEL ENGANCHE (VERSION EUROPEA)
DRAGANORDNING, REGLAGE (EUROPEISK VERSION)
RXP011280 -UN-01JAN94

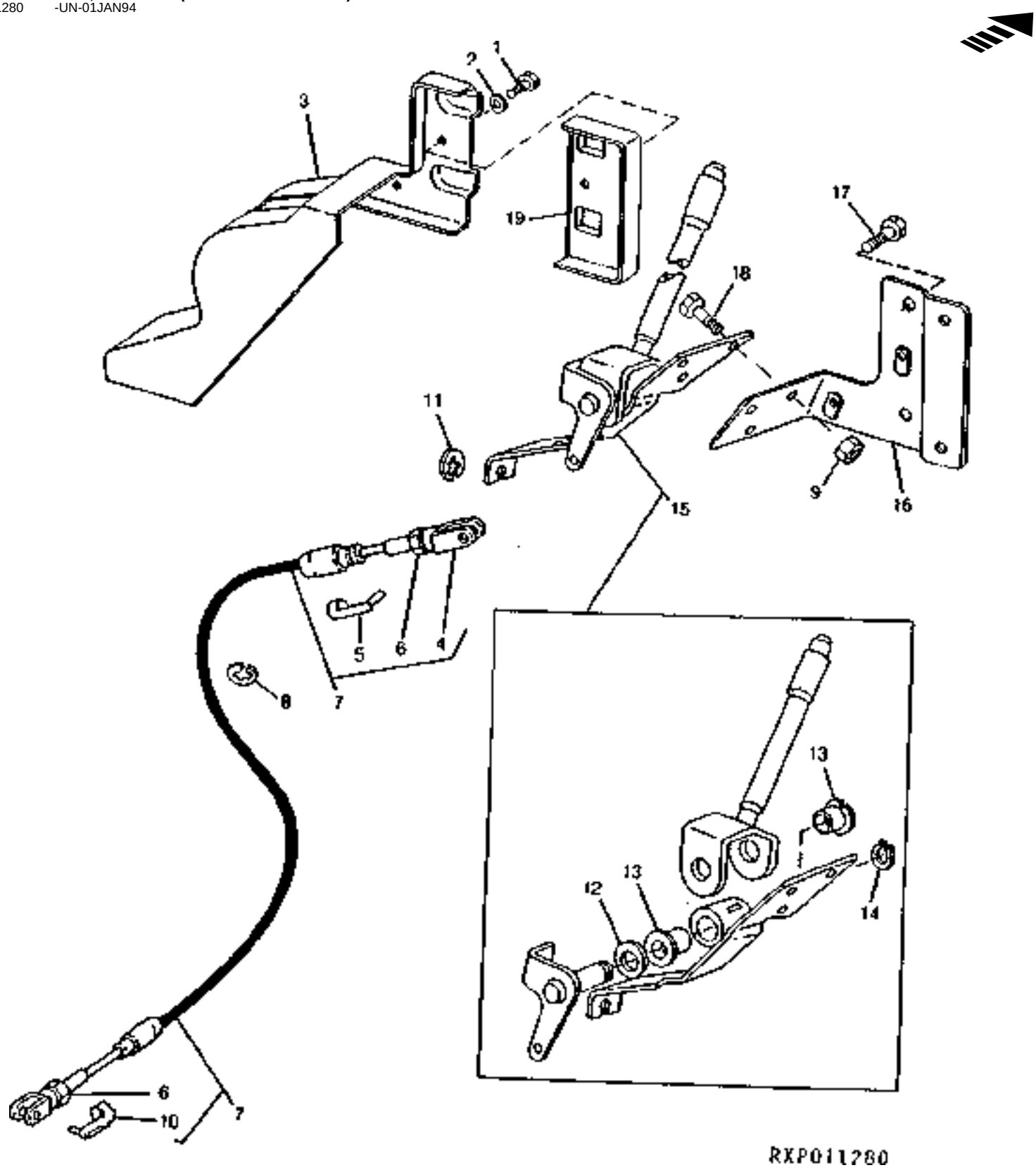

https://www.truck-manuals.net/

KEY	PART NO.	PART NAME	QTY	TRACTOR SERIAL NO.	ALL	REMARKS
1	21M7292	SCREW	2		X	M6 X 16
2	24M7088	WASHER	2	-XXXXXX	X	6.600 X 12 X 1.600 MM
3	R115909	COVER	1		X	
4	L80052	YOKE	1		X	(SUB FOR 54M7004)
5	45M7080	SPRING LOCKING PIN	1		X	
6	14M7272	NUT	2		X	M6
7	RE61052	PUSH PULL CABLE	1		X	
8	L76801	GROMMET	1		X	(SUB FOR L76711)
9	14M7273	NUT	2		X	M8
	14M7274	NUT	1		X	M10
10	45M7101	SPRING LOCKING PIN	1		X	
11	L80465	CLIP	1		X	
12	24M7318	WASHER	1		X	19 X 34 X 3 MM
13	L79672	BUSHING	2		X	
14	40M7051	SNAP RING	1		X	
15	AL78708	CONTROL	1		X	
16	RE61155	BRACKET	1		X	
17	19M7938	CAP SCREW	2		X	M10 X 20, HS 10.9
18	19M7139	CAP SCREW	2		X	M8 X 20
	19M7550	CAP SCREW	1		X	M10 X 35, HS 10.9
19	R125140	COVER	1		X	

https://www.truck-manuals.net/

PICK-UP HITCH (EUROPEAN VERSION)
ATTELAGE TELESCOPIQUE (VERSION EUROPEENNE)
PICK-UP ANHAENGEVORRICHTUNG (EUROPAEISCHE AUSFUEHRUNG)
ATTACCO TELESCOPICO (VERSIONE EUROPEA)
ENGANCHE EXTENSIBLE (VERSION EUROPEA)
UTSKJUTBAR DRAGANORDNING (EUROPEISK VERSION)
RE028250 -UN-05SEP97

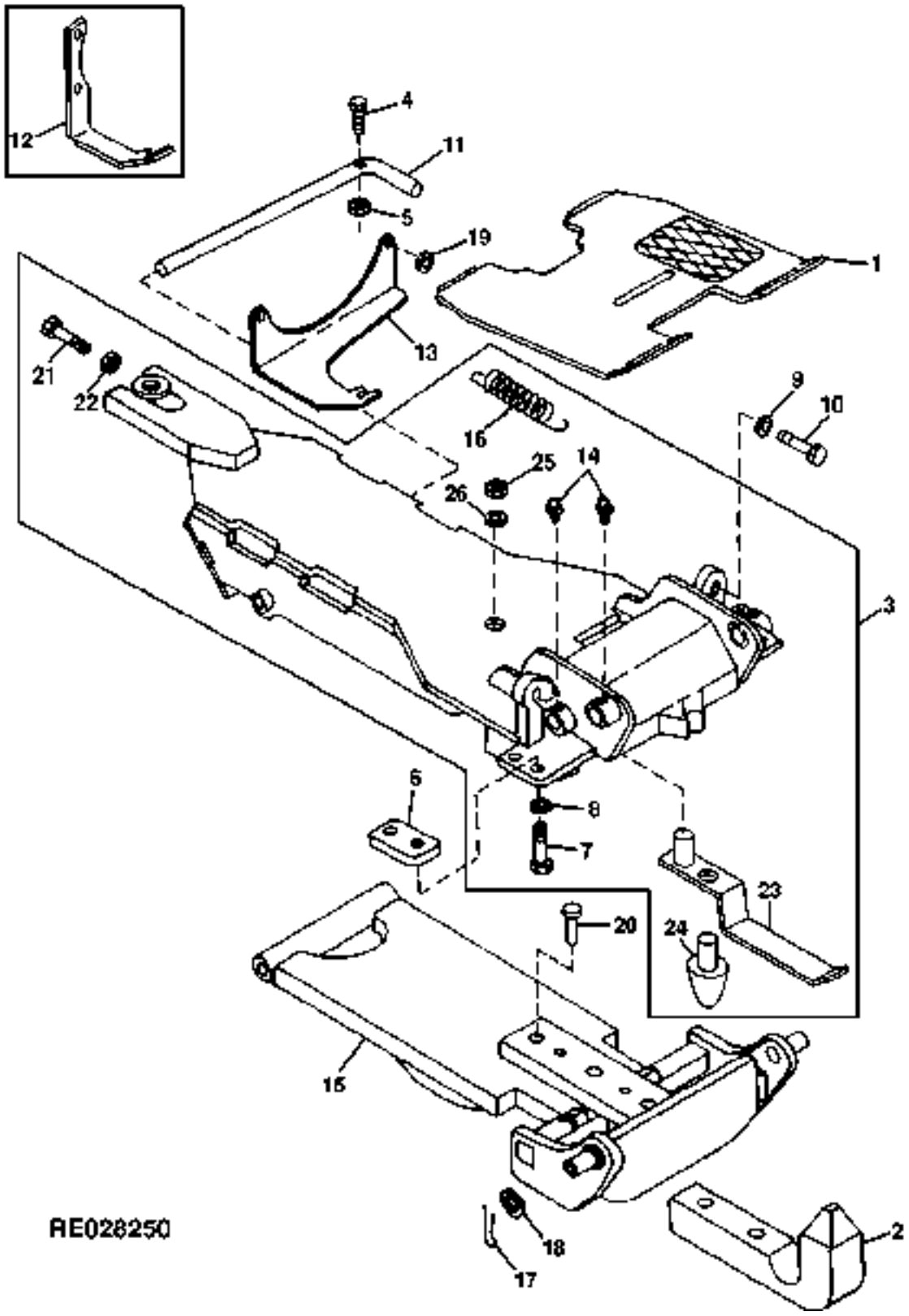

https://www.truck-manuals.net/

KEY	PART NO.	PART NAME	QTY	TRACTOR SERIAL NO.	ALL	REMARKS
1	RE61156	SHIELD	1	-XXXXXX	X	(SUB RE63207)
	RE63207	SHIELD	1	XXXXXX-	X	
2	L100303	HOOK	1		X	
3	RE61511	SUPPORT	1		X	(SUB FOR RE58869)
4	19M8397	CAP SCREW	1		X	
5	14M7452	LOCK NUT	1		X	M8
6	R125092	BUSHING	AR		X	18 MM (.708")
	R125093	BUSHING	AR		X	18.5 MM (.728")
	R125094	BUSHING	AR		X	19 MM (.748")
	R125095	BUSHING	AR		X	19.5 MM (.768")
	R125096	BUSHING	AR		X	20 MM (.787")
7	19M8224	CAP SCREW	4		X	M20 X 60, HS 10.9
8	24M7242	WASHER	4		X	21.400 X 42 X 5 MM
9	24M7242	WASHER	2		X	21.400 X 42 X 5 MM
10	19M7597	CAP SCREW	2		X	M20 X 50, HS 10.9
11	RE61513	PIN	1		X	
12	R124511	SUPPORT	1	-XXXXXX	X	(SUB R126532)
13	R126532	BRACKET	1	XXXXXX-	X	
14	58M7006	LUBRICATION FITTING	5		X	
15	RE61512	SUPPORT	1		X	(SUB FOR RE58869)
16	L100304	EXTENSION SPRING	1		X	
17	11M7071	COTTER PIN	2		X	8 X 40 MM
18	24M7243	WASHER	2		X	25.400 X 50 X 6 MM
19	24M7346	WASHER	2		X	11 X 20 X 2 MM
20	L101222	PIN	2		X	
21	19M8249	CAP SCREW	1		X	M24 X 100
22	14M7278	NUT	1		X	M24
23	RE71008	BRACKET	1		X	
24	AL80049	DASHPOT	1		X	
25	14M7452	LOCK NUT	1		X	M8
26	24M7096	WASHER	1		X	10.500 X 18 X 1.600 MM

https://www.truck-manuals.net/

PICK-UP HITCH CYLINDERS (EUROPEAN VERSION)
ATTELAGE TELESCOPIQUE, VERINS (VERSION EUROPEENNE)
PICK-UP-ANHAENGEVORRICHTUNGSZYLINDER (EUROPAEISCHE AUSFUEHRUNG)
CILINDRI DELL'ATTACCO TELESCOPICO (VERSIONE EUROPEA)
CILINDROS DEL ENGANCHE EXTENSIBLE (VERSION EUROPEA)
UTSKJUTBAR DRAGANORDNING, CYLINDRAR (EUROPEISK VERSION)
RE027057 -UN-30JUL96

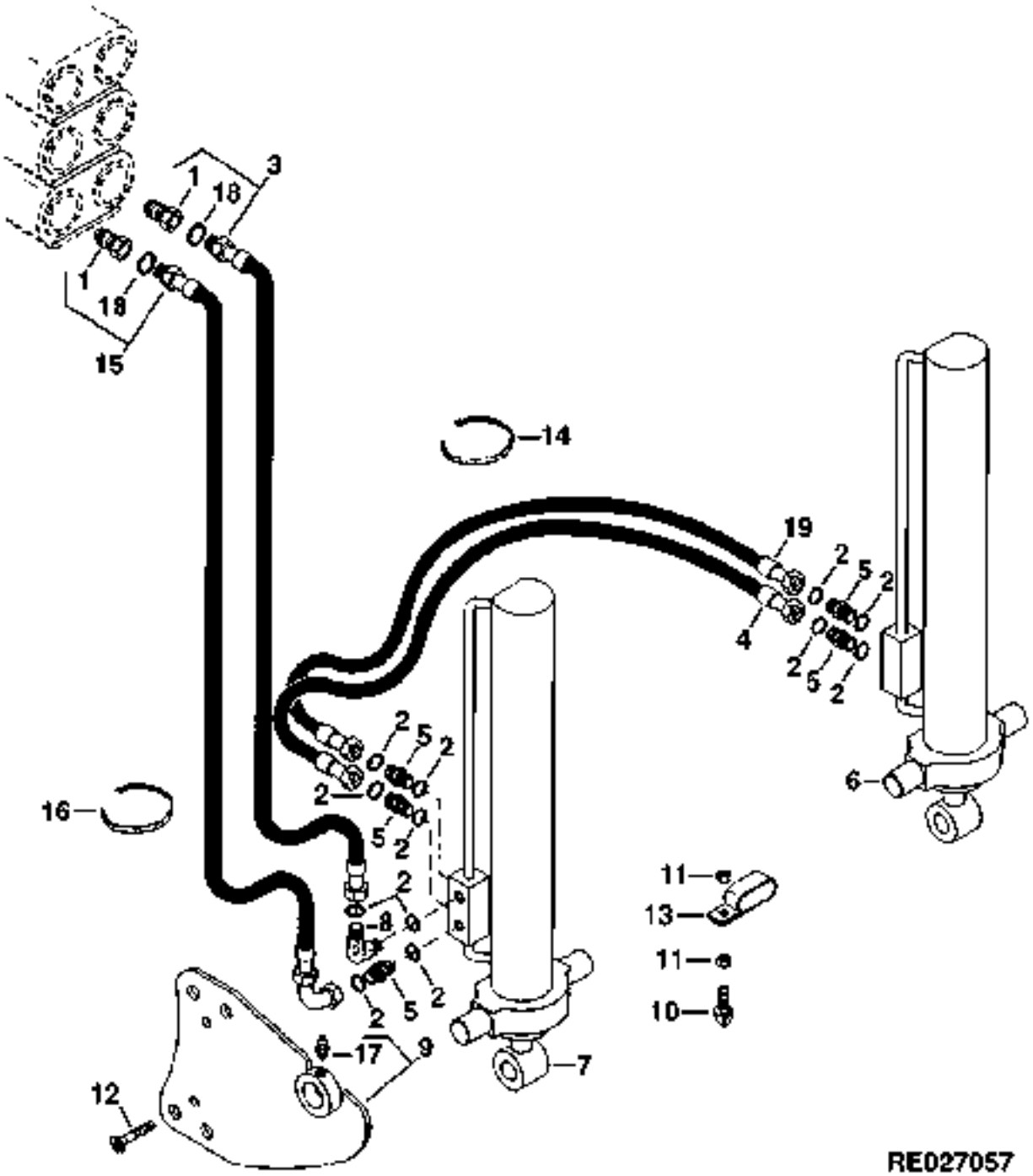

https://www.truck-manuals.net/

KEY	PART NO.	PART NAME	QTY	TRACTOR SERIAL NO.	ALL	REMARKS
1	AR94522	INTERNAL HALF COUPLER	2		X	
2	T77613	O-RING	10		X	
3	RE60918	HYDRAULIC HOSE	1		X	
4	RE60916	HYDRAULIC HOSE	2	-XXXXXX	X	
	RE60916	HYDRAULIC HOSE	1	XXXXXX-	X	
5	38H5037	ADAPTER	5		X	
6	RE63209	CYLINDER	1		X	(SUB FOR RE60902)
7	RE63210	CYLINDER	1		X	(SUB FOR RE60903)
8	38H5035	ELBOW FITTING	1		X	
9	RE63206	SUPPORT	1		X	L.H. (SUB FOR RE60913)
	RE63205	SUPPORT	1		X	R.H. (SUB FOR RE60911)
10	AL80049	DASHPOT	1		X	
11	14M7152	NUT	2		X	M10
12	R134232	BOLT	8		X	(SUB FOR R121564)
13	R53524	CLAMP	1		X	
14	R76477	TIE BAND	2		X	
15	RE60919	HYDRAULIC HOSE	1		X	
16	R44302	TIE BAND	1		X	
17	58M7006	LUBRICATION FITTING	2		X	
18	R26375	O-RING	2		X	
19	RE61507	HYDRAULIC HOSE	1	XXXXXX-	X	
..	RE157515	KIT	1		X	

https://www.truck-manuals.net/

PICK-UP HITCH CONTROLS (EUROPEAN VERSION)
ATTELAGE TELESCOPIUE, COMMANDES (VERSION EUROPEENNE)
PICK-UP ANHAENGEVORRICHTUNG, STEUERUNGEN (EUROPAEISCHE AUSFUEHRUNG)
COMANDI DI ATTACCO TELESCOPICO (VERSIONE EUROPEA)
CONTROLES DEL ENGANCHE EXTENSIBLE (VERSION EUROPEA)
UTSKJUTBAR DRAGANORDNING, REGLAGE (EUROPEISK VERSION)
RE027026 -UN-17JUL96

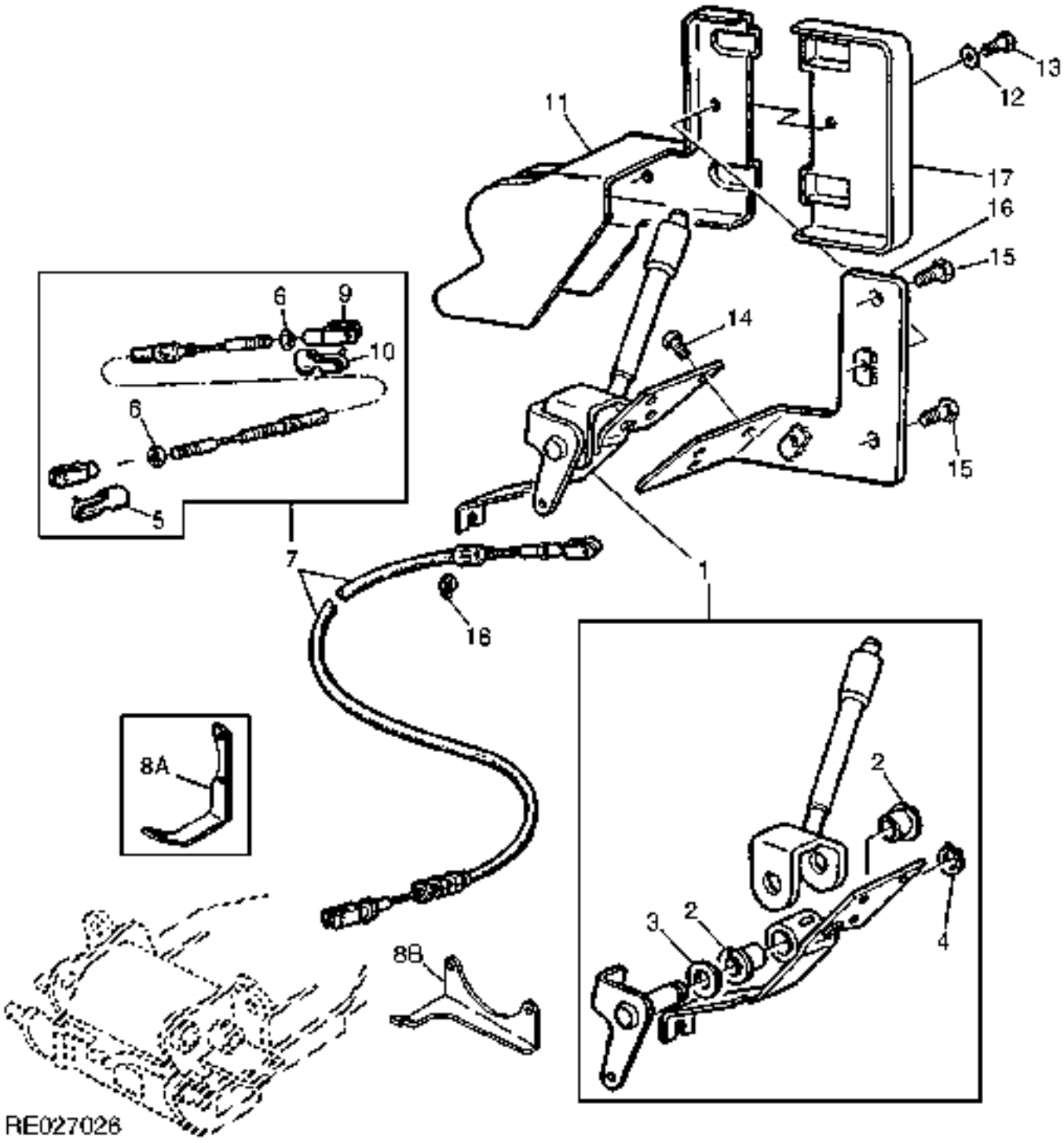

https://www.truck-manuals.net/

KEY	PART NO.	PART NAME	QTY	TRACTOR SERIAL NO.	ALL	REMARKS
1	AL78708	CONTROL	1		X	
2	L79672	BUSHING	2		X	
3	24M7318	WASHER	1		X	19 X 34 X 3 MM
4	40M7051	SNAP RING	1		X	
5	45M7080	SPRING LOCKING PIN	1		X	
6	14M7272	NUT	2		X	M6
7	RE54058	PUSH PULL CABLE	1	-XXXXXX	X	2950 MM (116")
	RE62792	PUSH PULL CABLE	1	XXXXXX-	X	3200 MM (126")
8A	R124511	SUPPORT	1	-XXXXXX	X	(SUB R126532)
8B	R126532	BRACKET	1	XXXXXX-	X	
	24M7346	WASHER	1		X	11 X 20 X 2 MM
9	L80052	YOKE	1		X	(SUB FOR 54M7004)
10	45M7101	SPRING LOCKING PIN	1		X	
11	R115909	COVER	1		X	
12	24M7088	WASHER	2	-XXXXXX	X	6.600 X 12 X 1.600 MM
13	21M7292	SCREW	2		X	M6 X 16
14	19M7139	CAP SCREW	2		X	M8 X 20
15	19M7938	CAP SCREW	2		X	M10 X 20, HS 10.9
16	RE61155	BRACKET	1		X	
17	R125140	COVER	1		X	
18	L80465	CLIP	1		X	

https://www.truck-manuals.net/

PICK-UP HITCH DRAWBAR (EUROPEAN VERSION)
BARRE D'ATTELAGE TELESCOPIQUE (VERSION EUROPEENNE)
PICK-UP-ANHAENGE VORRICHTUNG, ZUGPENDEL (EUROPAEISCHE AUSFUEHRUNG)
BARRA DI TRAINO DELL'ATTACCO DI TRAINO (VERSIONE EUROPEA)
BARRA DE TIRO DEL ENGANCHE EXTENSIBLE (VERSION EUROPEA)
UTSKJUTBAR DRAGANORDNING, DRAGBOM (EUROPEISK VERSION)
RXP011316 -UN-01JAN94

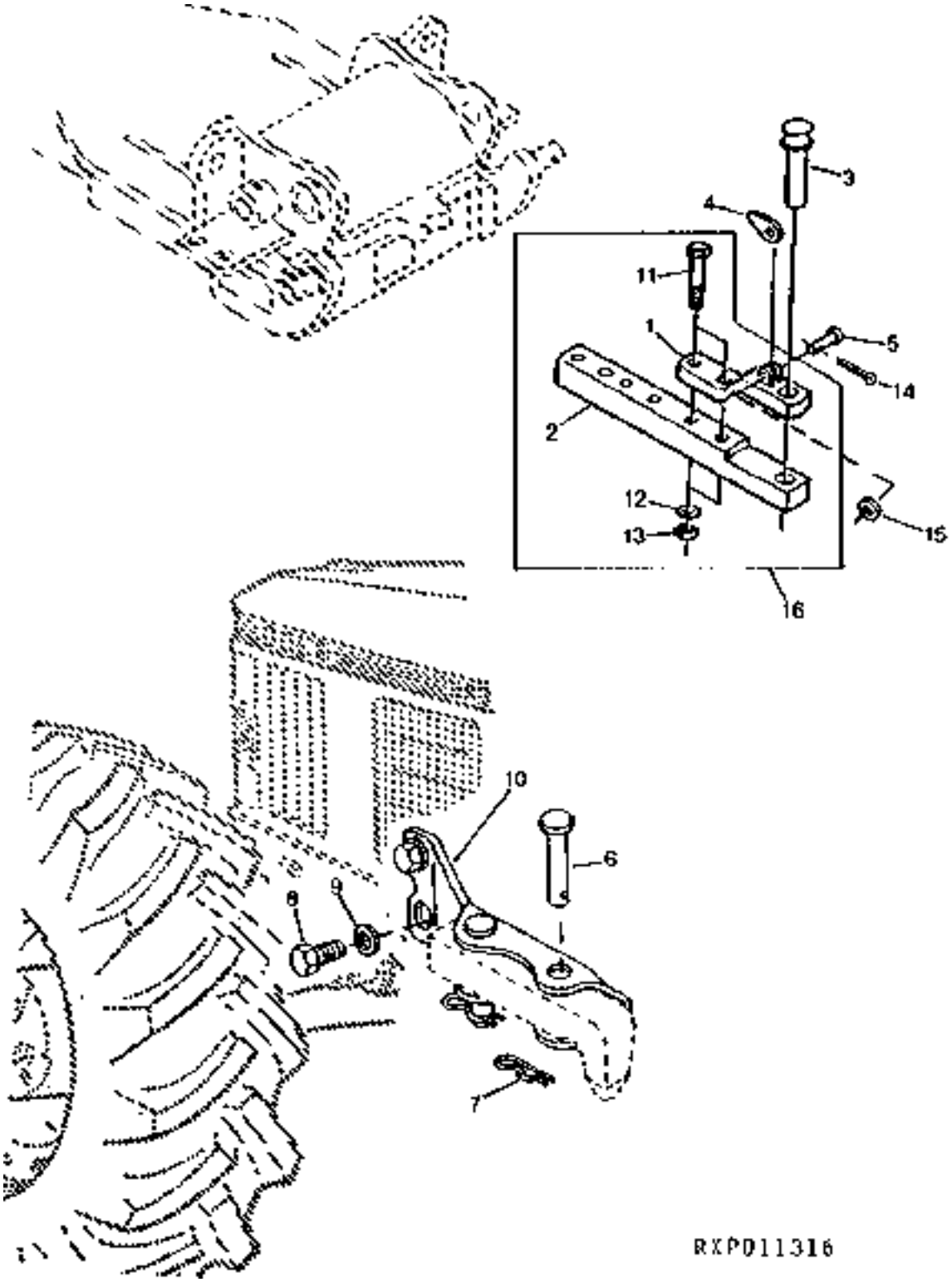

https://www.truck-manuals.net/

KEY	PART NO.	PART NAME	QTY	TRACTOR SERIAL NO.	ALL	REMARKS
1	AL80062	CLEVIS	1		X	
2	L100300	DRAWBAR	1		X	
3	L63825	PIN	1		X	
4	L63826	LATCH	1		X	
5	R52107	PIN	1		X	
6	L100309	PIN	2		X	
7	Z27858	COTTER PIN	2		X	
8	19M7946	CAP SCREW	2		X	M20 X 40, HS 10.9
9	24M7242	WASHER	2		X	21.400 X 42 X 5 MM
10	RE62635	BRACKET	1		X	(SUB FOR R125091)
11	19M7884	CAP SCREW	2		X	M16 X 110, HS 10.9
12	24M7097	WASHER	2		X	17 X 28 X 2.500 MM
13	14M7276	NUT	2		X	M16
14	11M7008	COTTER PIN	1		X	2 X 14 MM
15	24M7055	WASHER	1		X	8.400 X 16 X 1.600 MM
16	AL80061	DRAWBAR	1		X	

https://www.truck-manuals.net/

MEMORANDA
MEMORANDA
MEMORANDA
MEMORANDA
MEMORANDA
MEMORANDA

https://www.truck-manuals.net/

END COVER (SELECTIVE CONTROL VALVE)
EMBOUT (DISTRIBUTEUR SELECTIF)
ENDABDECKUNG (ZUSATZSTEUERGERAET)
COPERCHIO TERMINALE (VALVOLA DI CONTROLLO SELETTIVO)
TAPA TERMINAL (VALVULA DE CONTROL SELECTIVO)
AENDSKYDD (SELEKTIV MANOEVERVENTIL)
RXP020770 -UN-16MAR95

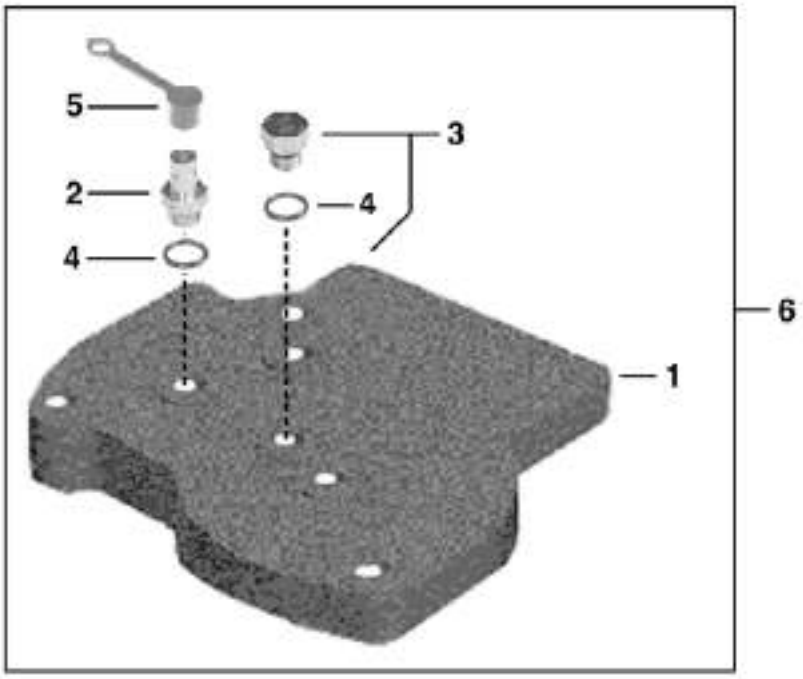

RXP020770

KEY	PART NO.	PART NAME	QTY	TRACTOR SERIAL NO.	ALL	REMARKS
1	R124673	COVER	1	-XXXXXX	X	
	R136185	VALVE COVER	1	XXXXXX-	X	
2	RE12187	RECEPTACLE	3		X	
3	RE46684	PLUG	1		X	
4	51M7041	O-RING	4		X	11.300 X 2.200 MM
5	R77175	COVER	3		X	
6	RE61321	END	1	-XXXXXX	X	

https://www.truck-manuals.net/

SELECTIVE CONTROL VALVE
DISTRIBUTEUR SELECTIF
ZUSATZSTEUERGERAET
VALVOLA DI CONTROLLO SELETTIVO
VALVULA DE CONTROL SELECTIVO
SELEKTIV MANOEVERVENTIL
RXP022339 -UN-23OCT97

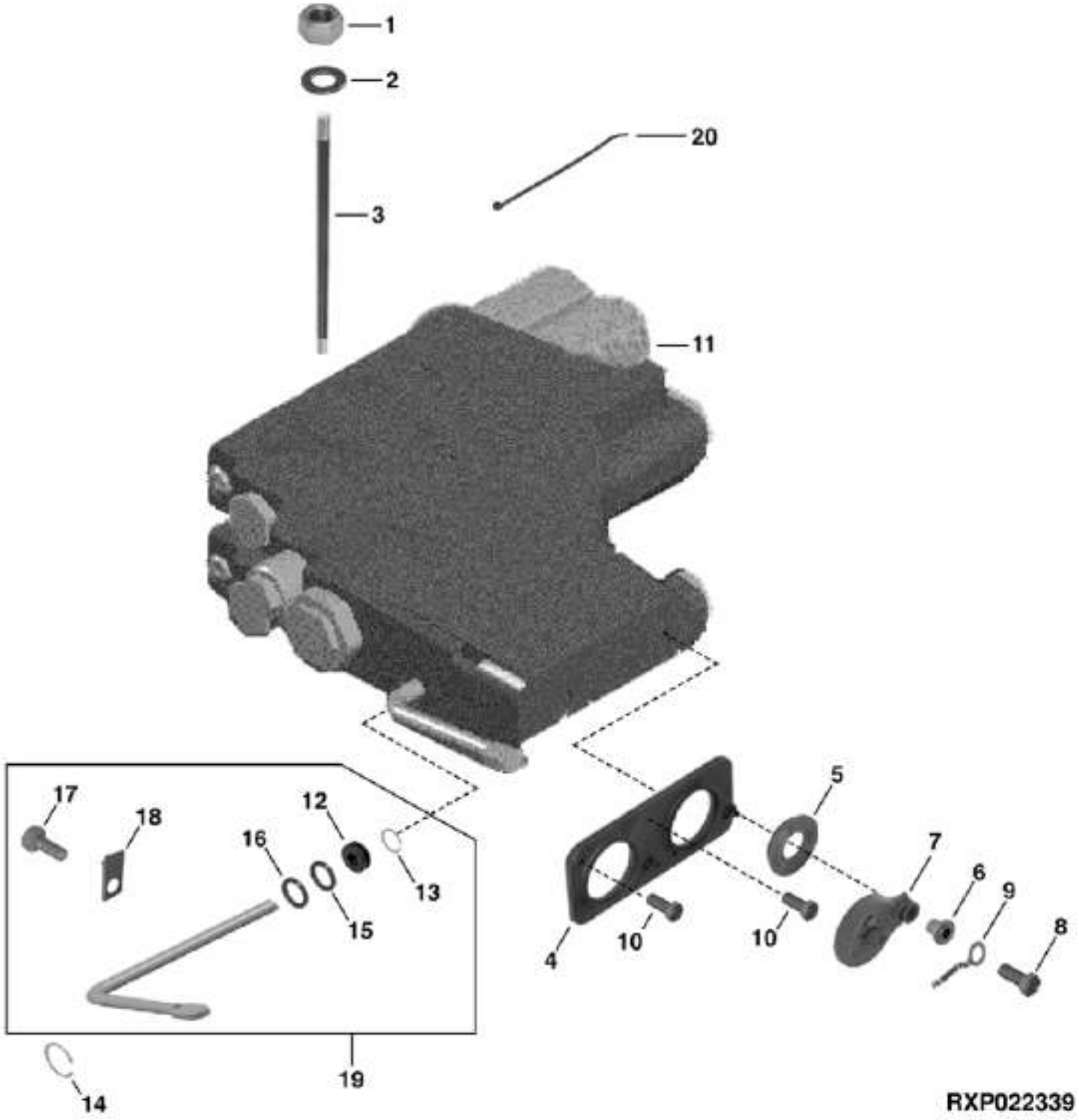

https://www.truck-manuals.net/

KEY	PART NO.	PART NAME	QTY	TRACTOR SERIAL NO.	ALL	REMARKS
1	E69392	NUT	3		X	
2	24M7240	WASHER	3		X	13 X 25 X 3 MM
3	R112300	BOLT	3		X	(3RD SCV)
	R112442	BOLT	3		X	(4TH SCV)
	R122148	BOLT	3		X	(5TH SCV)
4	R124006	RETAINER	AR		X	
5	R126556	SEAL	AR		X	(SUB FOR R81053)
6	R124009	BUSHING	AR		X	
7	R124007	COVER	AR		X	
8	19M7796	SCREW	AR		X	M6 X 30, HS 10.9
9	R124008	SPRING	AR		X	
10	19M6614	CAP SCREW	AR		X	M6 X 12
11	RE61121	CONTROL VALVE	AR		X	(A)
12	.....	COVER	1		X	(ORDER RE70119)
13	R121981	SNAP RING	2		X	
14	R52876	SNAP RING	AR		X	
15	R27564	O-RING	1		X	
16	R10093	O-RING	1		X	
17	19M7702	SCREW	2		X	M4 X 10, HS 10.9
18	R117076	CAM	2		X	
19	RE70119	LEVER	AR		X	(SUB FOR RE54400)
20	R44302	TIE BAND	3		X	
..	57M7281	CONNECTOR	2		X	
..	57M7259	ELECTRICAL PLUG	8		X	

(A) REPLACEMENT
REMPLACEMENT
ERSATZ
RICAMBIO
REPUESTO
UTBYTESHYTT

https://www.truck-manuals.net/

SELECTIVE CONTROL VALVE COUPLER
RACCORD DE DISTRIBUTEUR SELECTIF
ZUSATZSTEUERGERAET-KUPPLUNG
ACCOPPIATORE DELLA VALVOLA A CONTROLLO SELECTTIVO
ACOPLADOR DE LA VALVULA DE CONTROL SELECTIVO
KOPPLING FOER SELEKTIV MANOEVERVENTIL
RE030062 -UN-27OCT98

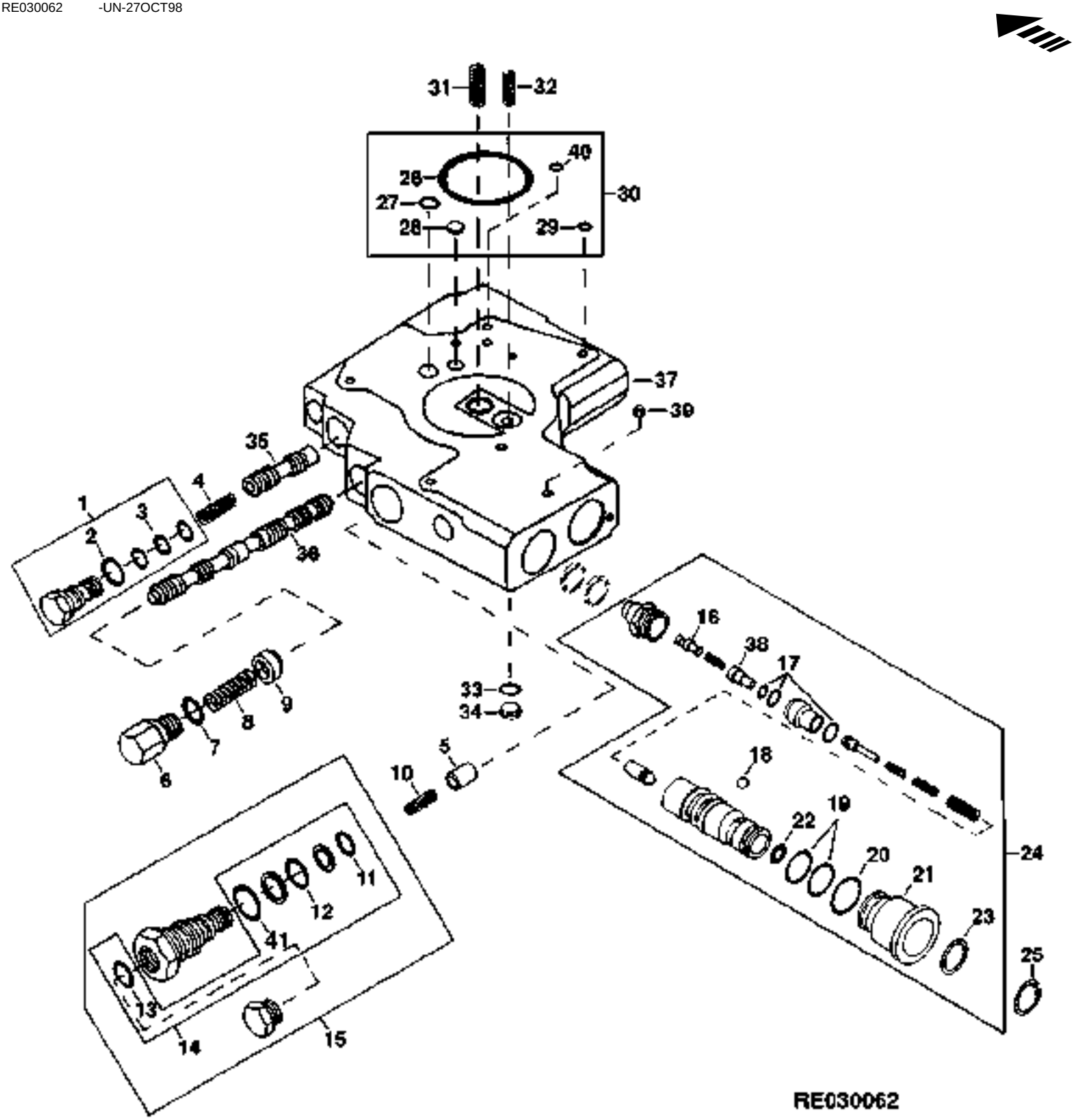

https://www.truck-manuals.net/

KEY	PART NO.	PART NAME	QTY	TRACTOR SERIAL NO.	ALL	REMARKS
1	RE60874	PLUG	1		X	
2	U12547	O-RING	1		X	
3	A3190R	O-RING	1		X	
4	R124482	SPRING ASSEMBLY	1		X	
5	R124454	POPPET	2		X	
6	R124456	PLUG	2		X	
	R134778	PLUG	1		X	(A) (1ST SCV)
	R124456	PLUG	1		X	(A) (1ST SCV)
7	U17409	O-RING	2		X	
8	R124457	SPRING	2		X	
9	R124458	VALVE SEAT INSERT	2		X	
10	R111238	SPRING	2		X	(SUB FOR R124455)
11	T107035	O-RING	1		X	
12	U15974	O-RING	1		X	
13	R29936	O-RING	1		X	
14	RE61181	KIT	1		X	
15	RE60873	VALVE	2		X	
16	RE60866	SPOOL	2	-XXXXXX	X	(SUB RE66981 AND R131677)
	RE66981	VALVE SPOOL	1	XXXXXX-	X	(ALSO ORDER R131677)
17	RE43892	SEAL KIT	1		X	
18	R107859	BALL	20		X	
19	.....	SEAL KIT	1		X	(ORDER RE43889)
20	R124447	SEAL	2		X	
21	R124445	BUSHING	2		X	
22	R83630	O-RING	2		X	+0°C (32°F)
	R115714	PACKING	2		X	-0°C (32°F)
23	R124446	RING	2		X	
24	RE52981	HYD. QUICK-CONNECT COUPLER	2		X	
25	N107859	SNAP RING	2		X	
26	F2573R	O-RING	1		X	
27	R61871	O-RING	2		X	
28	R122147	CHECK VALVE	1		X	
29	R28776	O-RING	7		X	
30	RE60933	SEAL KIT	1		X	
31	R124461	SPRING	1		X	
32	R124460	SPRING	1		X	
33	U11326	O-RING	2		X	
34	R124459	PLUG	2		X	
35	.....	SPOOL	1		X	(ORDER RE60892)
36	.....	SPOOL	1		X	(ORDER RE60892)
37	.....	HOUSING	1		X	(ORDER RE60892)
38	R131677	GUIDE	1	XXXXXX-	X	(USE WITH RE66981)
39	R122396	PLUG	2		X	(B) UP
40	R33259	O-RING	1		X	
41	R151439	O-RING	1		X	

(A) W/O HITCH
W/O ATTELAGE
W/O ANHAENGEVORRICHTUNG
W/O ATTACCO
W/O ENGANCHE
W/O DRAG

(B) TOP SCV ONLY
DISTRIBUTEUR SELECTIF SUPERIEUR UNIQUEMENT
MUR OBERES ZUSATZSTEUERVENTIL
SOLO DISTRIBUTORE IDRAULICO SUPERIORE
VCS SUPERIOR SOLAMENTE
ENDAST DEN OEVRE HYDRAULOLJEVENTILEN

https://www.truck-manuals.net/

SELECTIVE CONTROL VALVE OVERHAUL KIT
JEU DE PIECES DE RECHANGE DE DISTRIBUTEUR SELECTIF
UEBERHOLSATZ FUER STEUERGERAET
SERIE PEZZI DI SOSTITUZIONE DISTRIBUTORE SELETTIVO
JUEGO DE REPARACION SELECTIVO DE LA VALVULA DE CONTROL
RENOVERINGSSATS FOER VAELJARVENTIL
RE030395 -UN-11MAY99

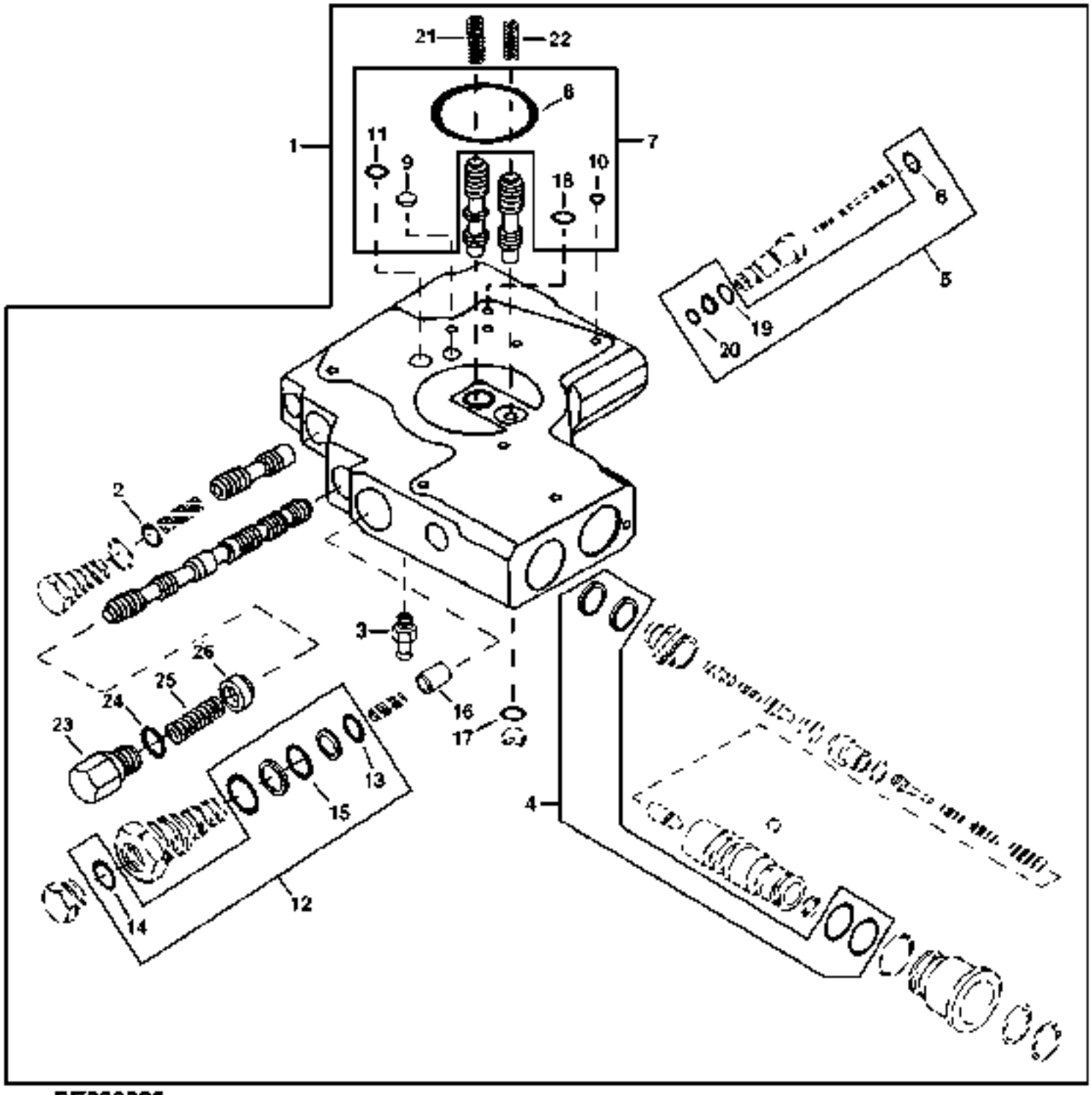

RE030395

https://www.truck-manuals.net/

KEY	PART NO.	PART NAME	QTY	TRACTOR SERIAL NO.	ALL	REMARKS
1	RE60892	KIT	1		X	
2	A3190R	O-RING	1		X	
3	M84313	HOSE FITTING	3		X	
4	RE43889	SEAL KIT	1		X	
5	RE60894	SEAL KIT	2		X	
6	R116031	O-RING	1		X	
7	RE60933	SEAL KIT	1		X	
8	F2573R	O-RING	1		X	
9	R122147	CHECK VALVE	1		X	
10	R28776	O-RING	7		X	
11	R61871	O-RING	2		X	
12	RE61181	KIT	2		X	
13	T107035	O-RING	1		X	
14	R29936	O-RING	1		X	
15	U15974	O-RING	1		X	
16	R124454	POPPET	2		X	
17	U11326	O-RING	2		X	
18	R33259	O-RING	1		X	
19	T15712	O-RING	1		X	
20	T81686	O-RING	1		X	
21	R124461	SPRING	1		X	
22	R124460	SPRING	1		X	
23	R124456	PLUG	1		X	
24	U17409	O-RING	1		X	
25	R124457	SPRING	1		X	
26	R124458	VALVE SEAT INSERT	1		X	

https://www.truck-manuals.net/

PILOT VALVE / SOLENOID
DISTRIBUTEUR SELECTIF, SOLENOIDE
ZUSATZSTEUERGERAET-MAGNETSCHALTER
SOLENOIDE DEL DISTRIBUTORE IDRAULICO
SOLENOIDE DE LA VALVULA DE CONTROL SELECTIVO
SELEKTIV MANOEVERVENTIL, SOLENOID
RE026957 -UN-19JUN96

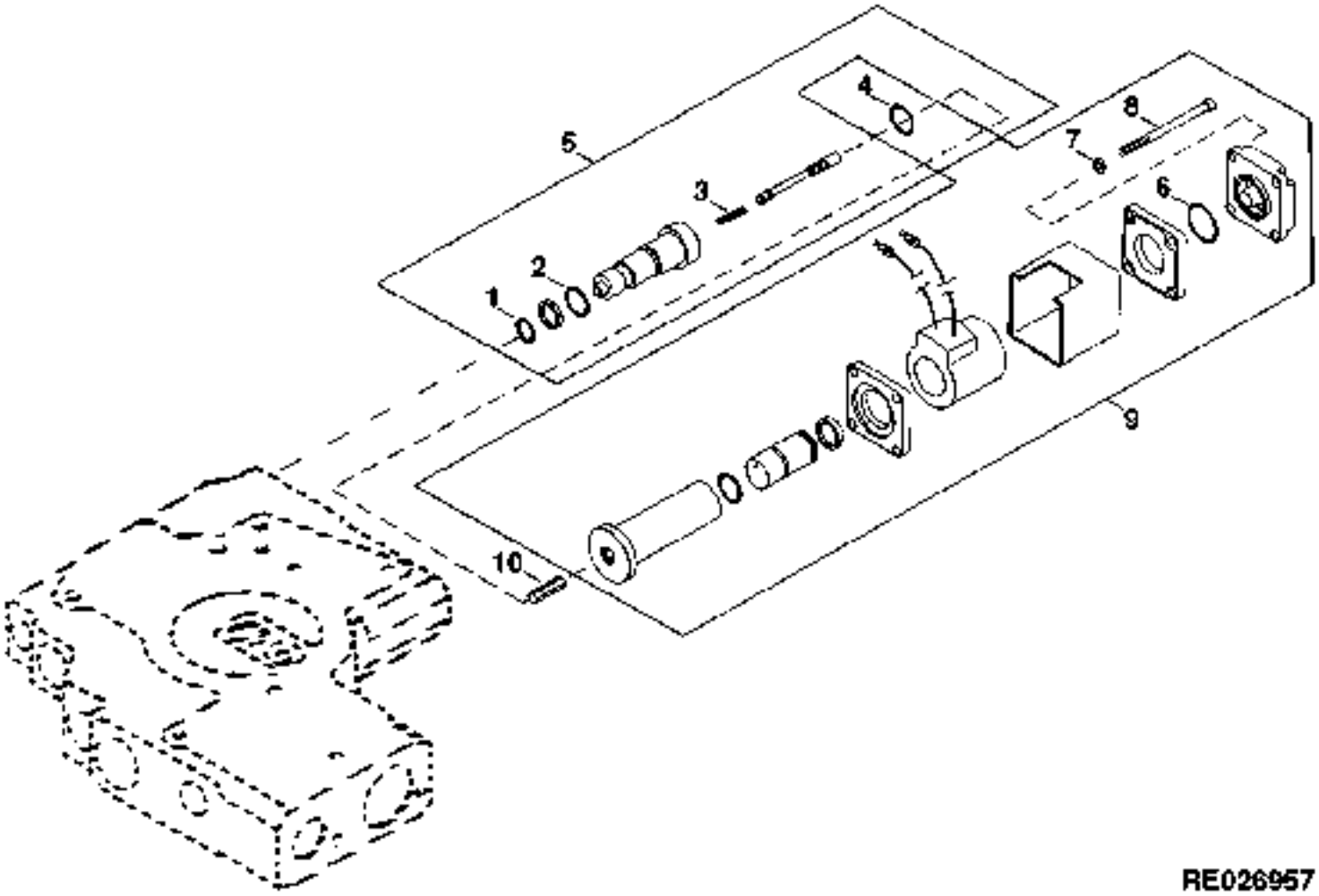

RE026957

https://www.truck-manuals.net/

KEY	PART NO.	PART NAME	QTY	TRACTOR SERIAL NO.	ALL	REMARKS
1	T81686	O-RING	1		X	
2	T15712	O-RING	1		X	
3	R127416	SPRING	1		X	(SUB FOR R124480)
4	R116031	O-RING	3		X	
5	RE60893	KIT	AR	-XXXXXX	X	(SUB RE67113)
	RE67113	KIT	AR	XXXXXX-	X	
6	T142419	O-RING	1		X	
7	12H315	LOCK WASHER	4		X	0.164"
8	19M8842	SCREW	4		X	M4 X 60, HS 12.9
9	RE61119	SOLENOID	AR		X	
10	R129049	PUSH PIN	1		X	

https://www.truck-manuals.net/

PILOT VALVE SEAL KIT
DISTRIBUTEUR SELECTIF, SOLENOIDE
ZUSATZSTEUERGERAET-MAGNETSCHALTER
SOLENOIDE DEL DISTRIBUTORE IDRAULICO
SOLENOIDE DE LA VALVULA DE CONTROL SELECTIVO
SELEKTIV MANOEVERVENTIL, SOLENOID
RE026958 -UN-21JUN96

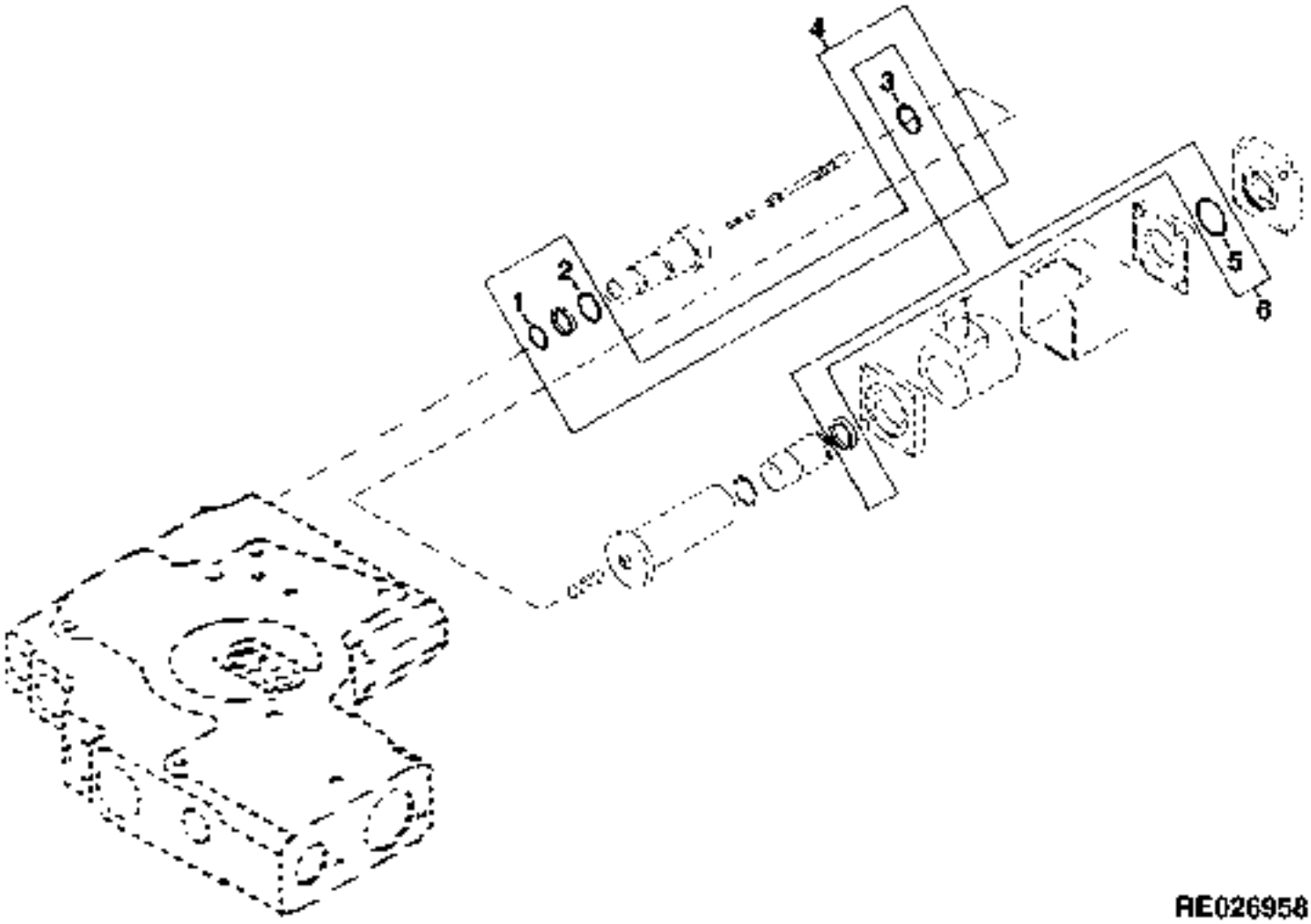

https://www.truck-manuals.net/

KEY	PART NO.	PART NAME	QTY	TRACTOR SERIAL NO.	ALL	REMARKS
1	T81686	O-RING	1		X	
2	T15712	O-RING	1		X	
3	R116031	O-RING	1		X	
4	RE60894	SEAL KIT	AR		X	
5	T142419	O-RING	2		X	
6	RE62904	O-RING KIT	AR		X	

https://www.truck-manuals.net/

REMOTE CYLINDER CONTROL KIT
JEU DE CYLINDRE A DISTANCE
FERNSEUERZYLINDERSATZ
KIT DI CILINDRO A DISTANZA
JUEGO DE CILINDRO REMOTO
SEPARATMOTERAD CYLINDERSATS
RE026651 -UN-13DEC95

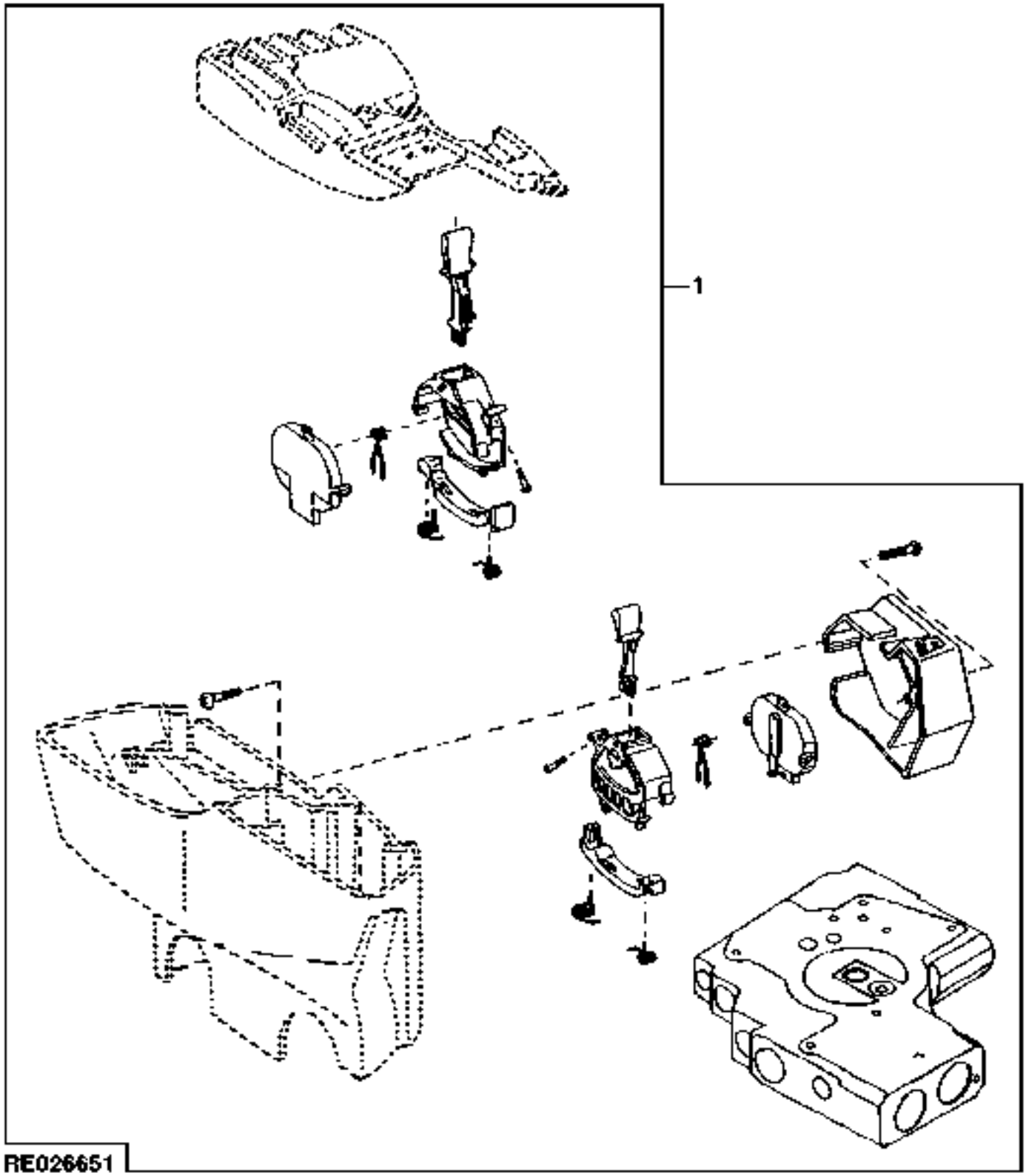

https://www.truck-manuals.net/

KEY	PART NO.	PART NAME	QTY	TRACTOR SERIAL NO.	ALL	REMARKS
1	**AR116485**	**KIT**	**1**		**X**	**4TH SCV, (SUB FOR AR115121) (FI)**
	AR114034	**KIT**	**1**		**X**	**5TH SCV, (FI)**

https://www.truck-manuals.net/

HITCH VALVE / MANIFOLD
SOUPAPE D'ATTELAGE
ANHAENGEVORRICHTUNGSVENTIL
VALVOLA DEL SOLLEVATORE
VALVULA DEL ENGANCHE
LYFT, VENTIL
RXP025147 -UN-01JAN94

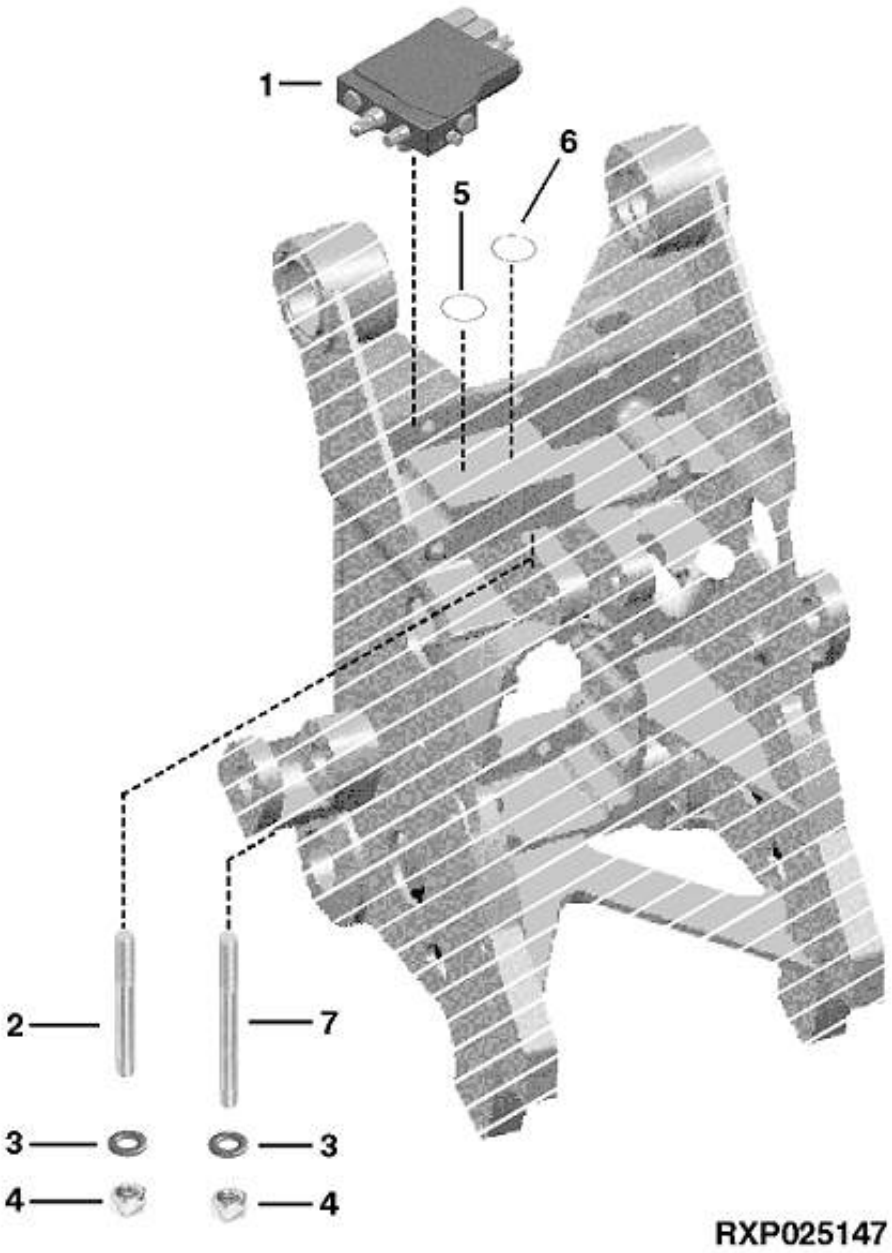

https://www.truck-manuals.net/

KEY	PART NO.	PART NAME	QTY	TRACTOR SERIAL NO.	ALL	REMARKS
1	RE61318	VALVE	1		X	(A)
	RE61322	MANIFOLD	1		X	(B)
2	42M7061	STUD	1		X	
3	24M7240	WASHER	2		X	13 X 25 X 3 MM
4	14M7275	NUT	2		X	M12
5	T122075	O-RING	2		X	
6	R73599	O-RING	2		X	
7	42M7062	STUD	1		X	

(A) W/ HITCH
W/ ATTELAGE
W/ ANHAENGEVORRICHTUNG
W/ ATTACCO
W/ ENGANCHE
W/ DRAG

(B) W/O HITCH
W/O ATTELAGE
W/O ANHAENGEVORRICHTUNG
W/O ATTACCO
W/O ENGANCHE
W/O DRAG

https://www.truck-manuals.net/

HITCH VALVE
SOUPAPE D'ATTELAGE
ANHAENGEVORRICHTUNGSVENTIL
VALVOLA DEL SOLLEVATORE
VALVULA DEL ENGANCHE
LYFT, VENTIL
RE029201 -UN-27MAR98

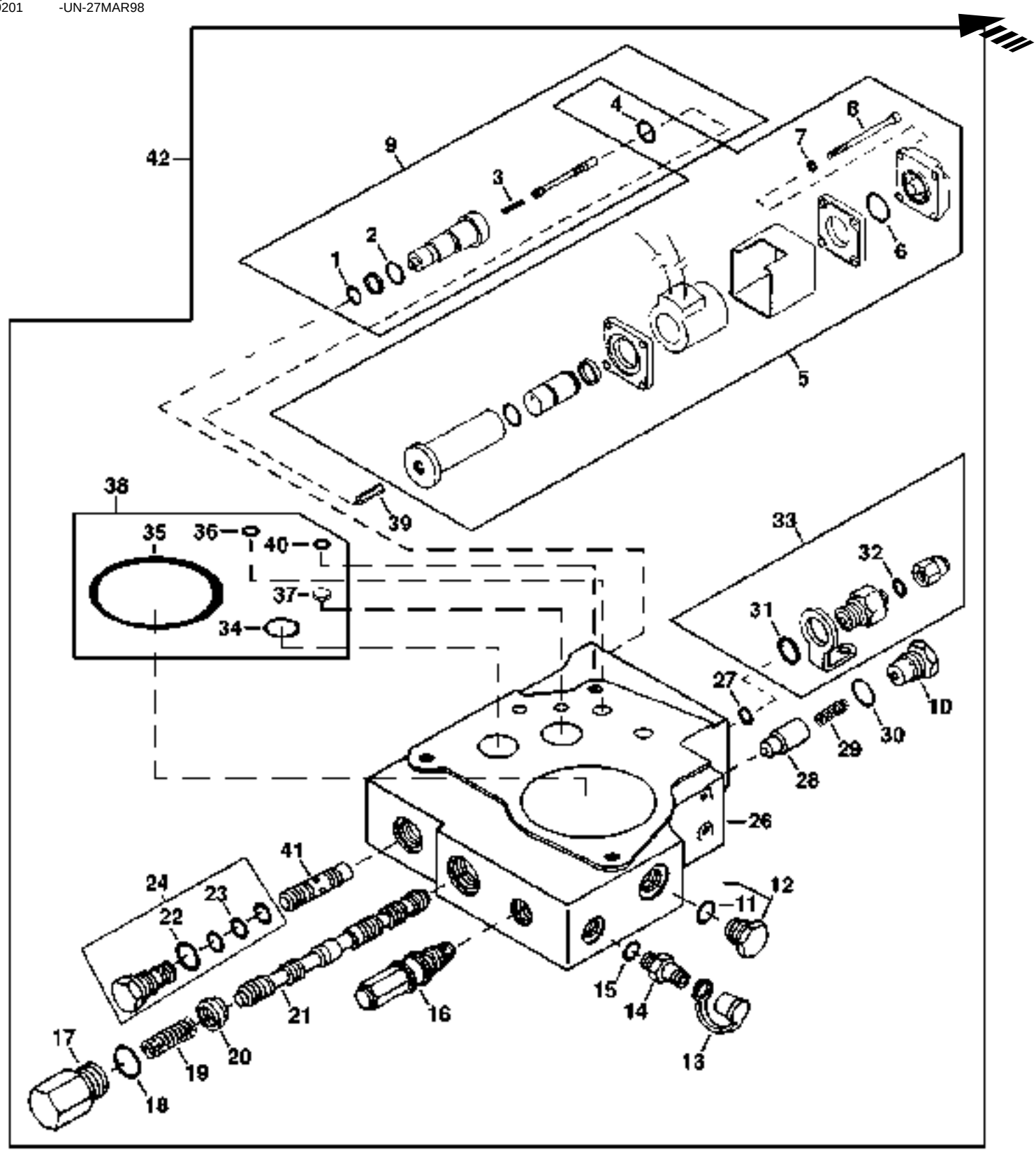

RE029201

https://www.truck-manuals.net/

KEY	PART NO.	PART NAME	QTY	TRACTOR SERIAL NO.	ALL	REMARKS
1	T81686	O-RING	2		X	
2	T15712	O-RING	2		X	
3	R127416	SPRING	2		X	(SUB FOR R124480)
4	R116031	O-RING	2		X	
5	RE61119	SOLENOID	AR		X	
6	T142419	O-RING	1		X	
7	12H315	LOCK WASHER	8		X	4.166 MM
8	19M8842	SCREW	8		X	M4 X 60
9	RE60893	KIT	AR	-XXXXXX	X	(SUB RE67113)
	RE67113	KIT	AR	XXXXXX-	X	
10	R124476	PLUG	1		X	
11	51M7045	O-RING	1		X	19.300 X 2.200 MM
12	RE46687	FITTING	1		X	
13	R77175	COVER	1		X	
14	RE12187	RECEPTACLE	1		X	
15	51M7041	O-RING	1		X	11.300 X 2.200 MM
16	RE39396	RELIEF VALVE	1		X	
17	R124456	PLUG	1		X	
18	U17409	O-RING	2		X	
19	R124457	SPRING	1		X	
20	R124458	VALVE SEAT INSERT	2		X	
21	.....	SPOOL	1		X	(ORDER RE60891)
22	U12547	O-RING	1		X	
23	A3190R	O-RING	1		X	
24	RE60874	PLUG	1		X	
25	R124482	SPRING ASSEMBLY	1		X	
26	.....	HOUSING	1		X	(ORDER RE60891)
27	R33259	O-RING	1		X	
28	R124454	POPPET	1		X	
29	R111238	SPRING	1		X	(SUB FOR R124455)
30	U12547	O-RING	1		X	
31	U17409	O-RING	1		X	
32	R33259	O-RING	1		X	
33	RE61120	KIT	1		X	(A)
34	R61871	O-RING	2		X	
35	F2573R	O-RING	1		X	
36	R28776	O-RING	3		X	
37	R122147	CHECK VALVE	1		X	
38	RE60933	SEAL KIT	1		X	
39	R129049	PUSH PIN	2		X	
40	R33259	O-RING	1		X	
41	.....	SPOOL	1		X	(ORDER RE60891)
42	RE61318	VALVE	1		X	

(A) MANUAL LOWER
ABAISSEMENT MANUEL
HAND-ABSENKUNG
ABBASSAMENTO MANUALE
BAJADA MANUAL
MANUELL SAENKNING

https://www.truck-manuals.net/

HITCH VALVE OVERHAUL KIT
JEU DE REFECTION DE SOUPAPE D'ATTELAGE
ANHAENGEVORRICHTUNGSVENTIL-UEBERHOLSATZ
KIT DI REVISIONE DELLA VALVOLA DELLL'ATTACCO
JUEGO DE REACONDICIONAMIENTO DE LA VALVULA DE ENGANCHE
REPARATIONSSATS FOER DRAGANORDNINGSVENTIL
RE028266 -UN-12SEP97

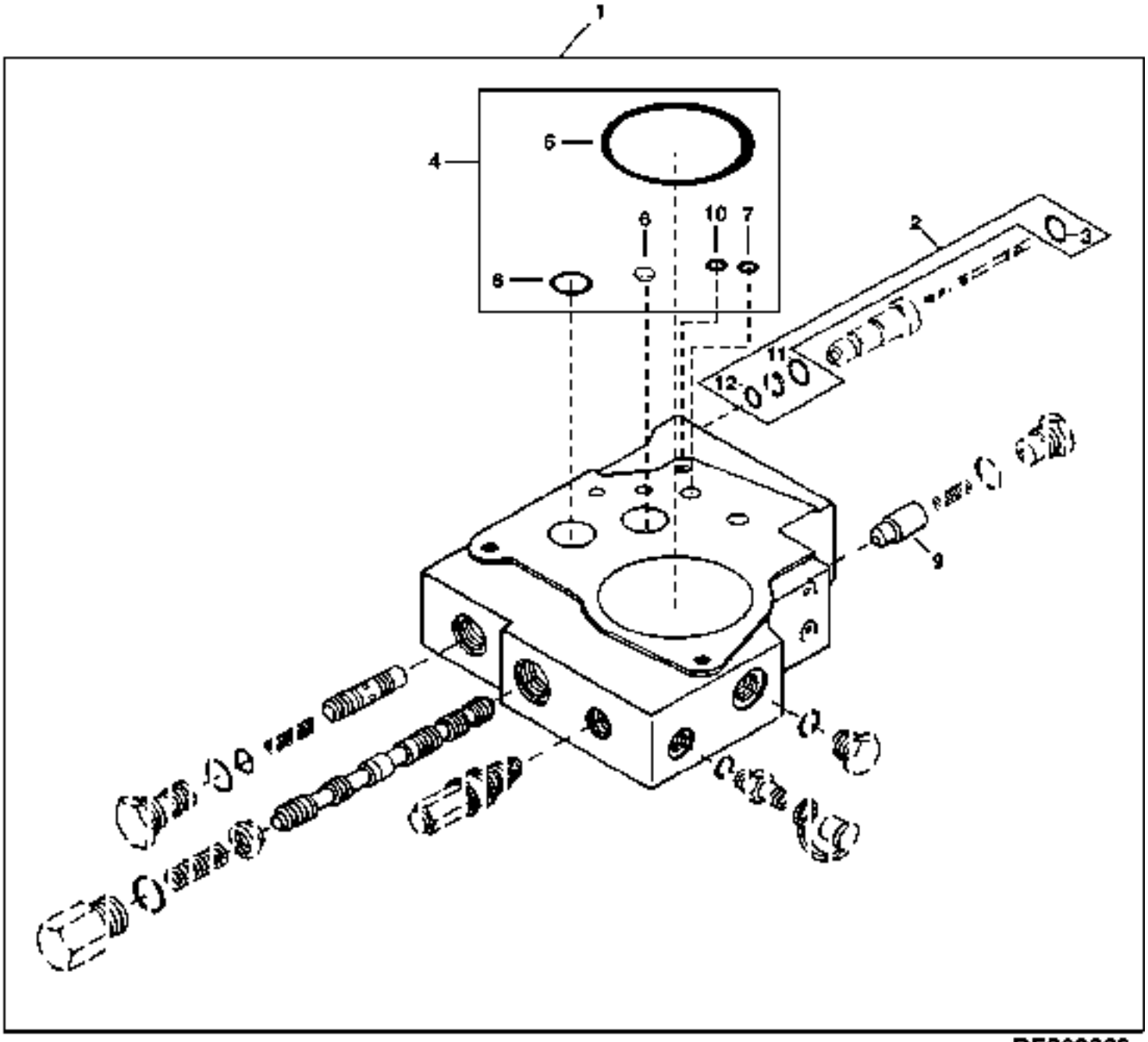

https://www.truck-manuals.net/

KEY	PART NO.	PART NAME	QTY	TRACTOR SERIAL NO.	ALL	REMARKS
1	RE60891	HITCH VALVE OVERHAUL KIT	1		X	
2	RE60894	SEAL KIT	2		X	
3	R116031	O-RING	2		X	
4	RE60933	SEAL KIT	1		X	
5	F2573R	O-RING	1		X	
6	R122147	CHECK VALVE	1		X	
7	R28776	O-RING	7		X	
8	R61871	O-RING	2		X	
9	R124454	POPPET	1		X	
10	R33259	O-RING	1		X	
11	T15712	O-RING	1		X	
12	T81686	O-RING	1		X	

https://www.truck-manuals.net/

HITCH VALVE RELIEF VALVE
CLAPET DE DECHARGE DE DISTRIBUTERU D'ATTELAGE
REGELHYDARULIKVENTIL-UEBERDRUCKVENTIL
VALVOLA DI SICUREZZA DELLA VALVOLA DEL SOLLEVATORE
VALVULA DE ALIVIO DE VALVULA DEL ENGANCHE
SAEKERHETSVENTIL FOER LYFTVENTIL
RE026152 -UN-28MAR95

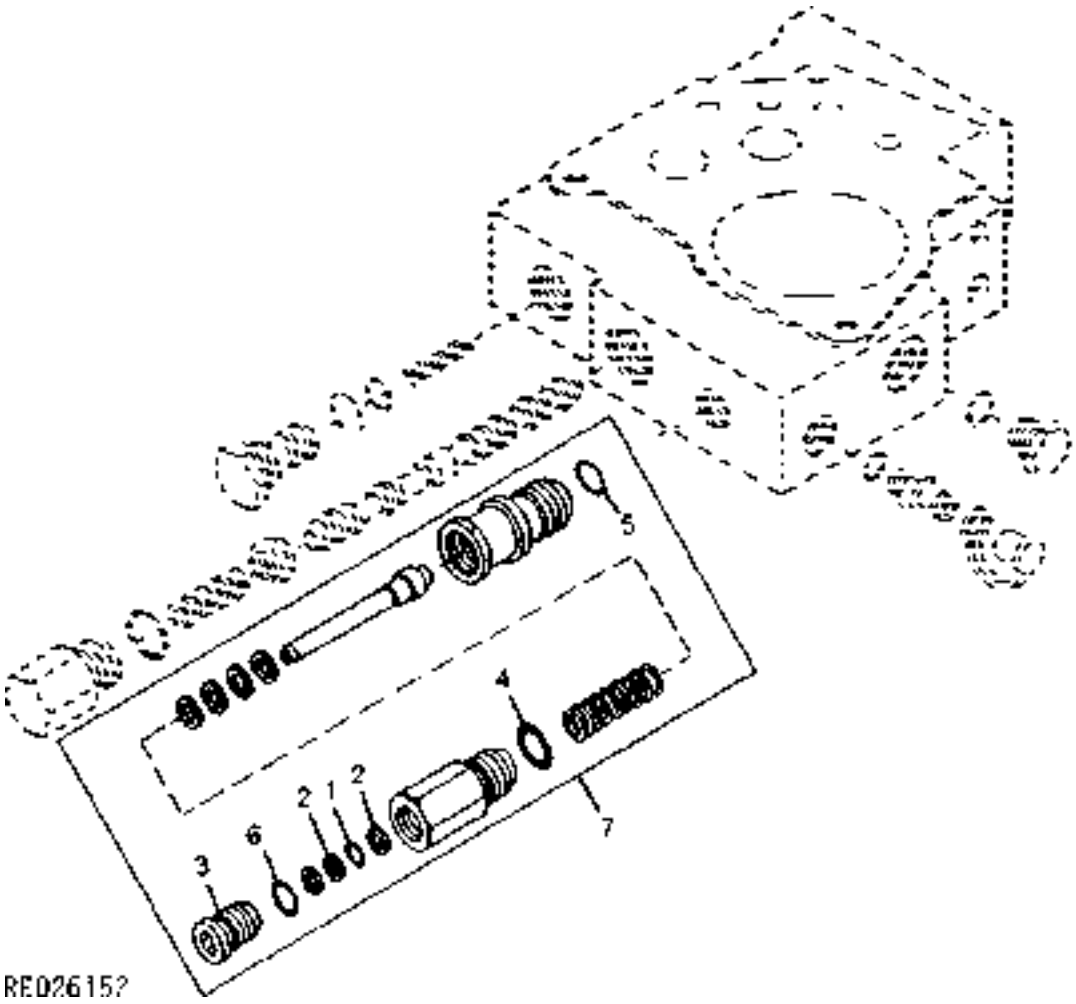

https://www.truck-manuals.net/

KEY	PART NO.	PART NAME	QTY	TRACTOR SERIAL NO.	ALL	REMARKS
1	R111234	O-RING	1		X	
2	R111235	BACK-UP RING	2		X	
3	R111493	FITTING PLUG	1		X	
4	R47150	O-RING	1		X	
5	R63548	O-RING	1		X	
6	T70177	O-RING	1		X	
7	RE39396	RELIEF VALVE	1		X	

https://www.truck-manuals.net/

SELECTIVE CONTROL VALVE LINE
CONDUITES DE DISTRIBUTEUR SELECTIF
STEUERGERAETLETTUNGEN
TUBAZIONI PER DISTRIBUTORE SELETTIVO
TUBERIAS DE LA VALVULA DE CONTROL SELECTIVO
VAELJARVENTILLEDNINGAR
RXP025170 -UN-01JAN94

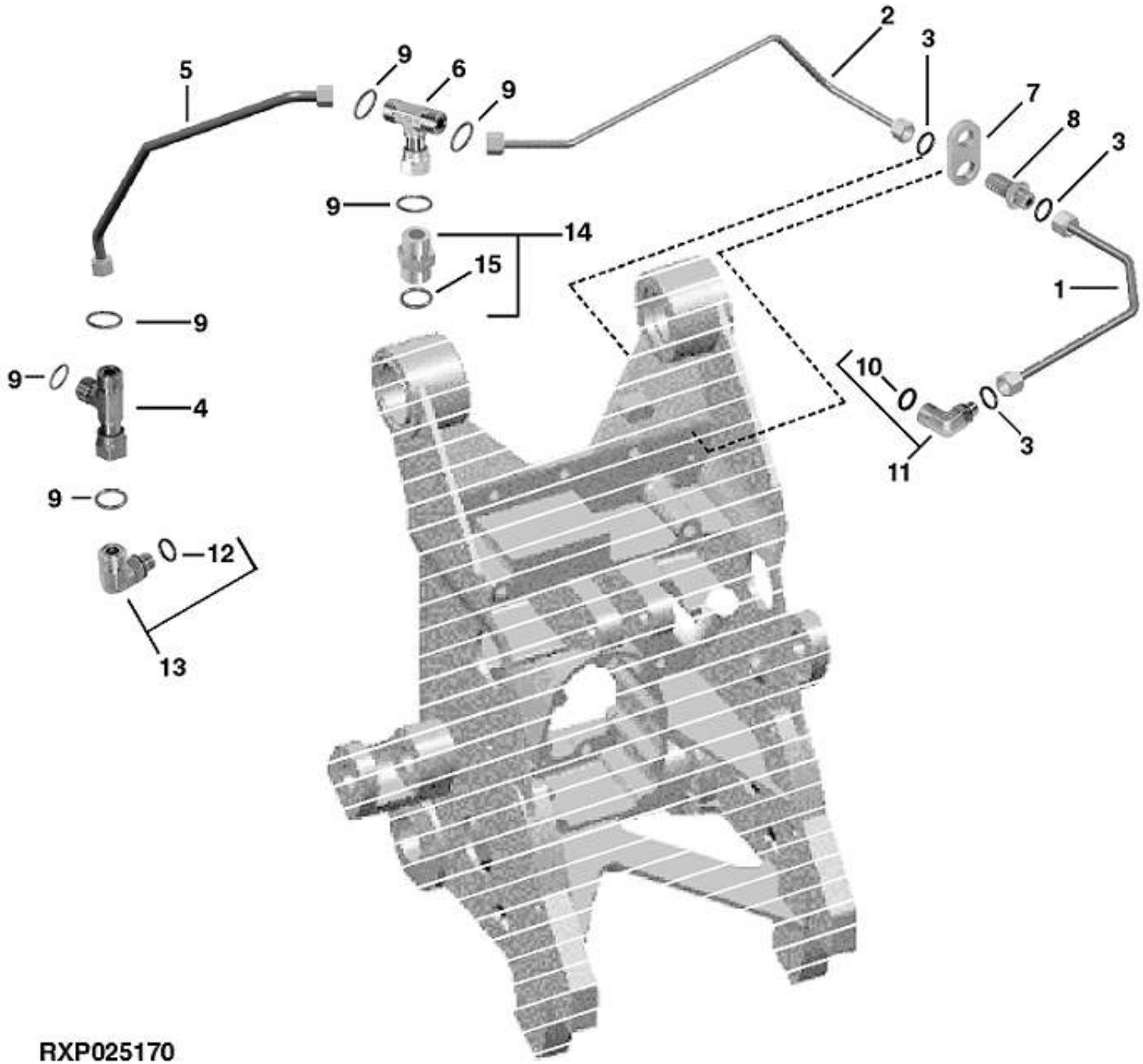

https://www.truck-manuals.net/

KEY	PART NO.	PART NAME	QTY	TRACTOR SERIAL NO.	ALL	REMARKS
1	RE56717	OIL LINE	1		X	
2	RE62508	OIL LINE	1		X	(SUB FOR RE44733)
3	T77613	O-RING	3		X	
4	38H5069	TEE FITTING	1		X	
5	RE44735	OIL LINE	1		X	
6	38H5059	TEE FITTING	1		X	
7	R125963	PLATE	1		X	
8	38H5100	UNION FITTING	1		X	
9	T77857	O-RING	6		X	
10	51M7040	O-RING	1		X	9.300 X 2.200 MM
11	38H5016	ELBOW FITTING	1		X	
12	51M7041	O-RING	1		X	11.300 X 2.200 MM
13	38H5023	ELBOW FITTING	1		X	
14	38H5003	ADAPTER	1		X	
15	51M7043	O-RING	1		X	15.300 X 2.200 MM

https://www.truck-manuals.net/

SELECTIVE CONTROL VALVE DRAIN LINES
DISTRIBUTEUR SELECTIF, CONDUITE D'EVACUATION
ZUSATZSTEUERGERAET-ABLASSLEITUNG
DISTRIBUTORE IDRAULICO, LINEA DI DRENAGGIO
LINEA DE VACIADO DE VALVULA DE CONTROL SELECTIVO
SELEKTIV MANOEVERVENTIL, DRAENERINGSLEDNING
RE026072 -UN-13MAR95

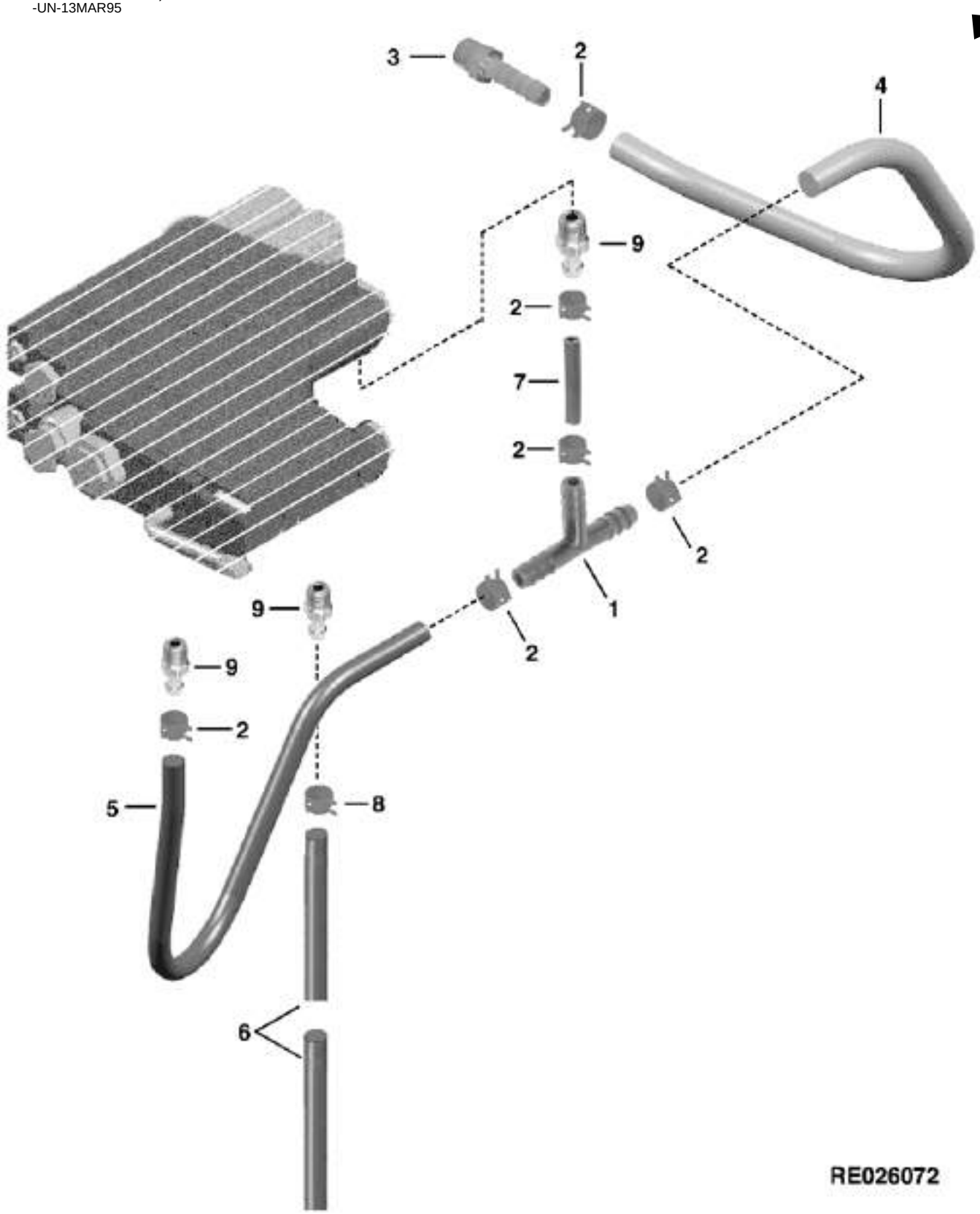

https://www.truck-manuals.net/

KEY	PART NO.	PART NAME	QTY	TRACTOR SERIAL NO.	ALL	REMARKS
1	N154080	TEE FITTING	1		X	
2	TY22462	CLAMP	6		X	(SUB FOR R56101)
3	R126620	FITTING	1		X	(SUB FOR R112395)
4	.....	HOSE	1		X	225 MM (9") (MAKE FROM T79477)
5	.....	HOSE	1		X	370 MM (15") (MAKE FROM T79477)
6	R154668	LINE	1		X	(SUB FOR R80623)
7	.....	HOSE	1		X	94 MM (3.7") (MAKE FROM T79477)
8	N194814	CLAMP	1		X	
9	M84313	HOSE FITTING	3		X	
..	R44302	TIE BAND	AR		X	

https://www.truck-manuals.net/

POWER BEYOND COUPLER KIT (W/O TRAILER BRAKE)
JEU DE RACCORD DE SORTIE POUR OUTIL (SANS FREIN DE REMARQUE HYDR.)
ANBAUGERAETANSCHLUSS-KUPPLUNGSSATZ (OHNE HYDR. ANHAENGERBREMSE)
KIT DELL'ACCOPPIATORE PER L'UTENSILE (SENZA FRENO IDRAUL. RIMORCHIO)
CONJUNTO DE ACOPLADOR DE SALIDA (SIN FRENO HIDRAULREMOLQUE)
KOPPLINGSSATS FOER REDSKAP (UTAN SL'PVAGNSBROMS)
RE029650 -UN-16JUN98

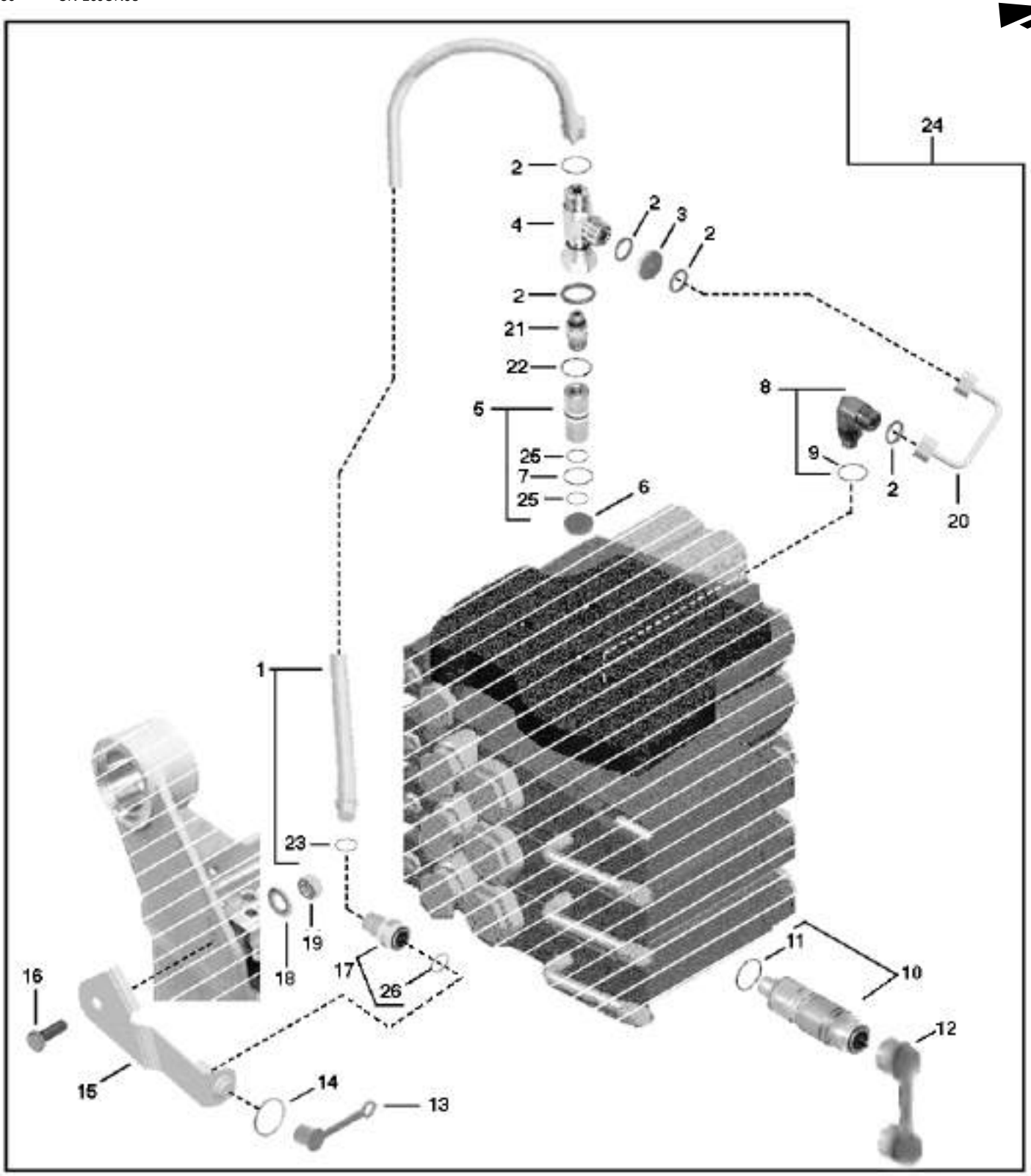

RE029650

https://www.truck-manuals.net/

KEY	PART NO.	PART NAME	QTY	TRACTOR SERIAL NO.	ALL	REMARKS
1	RE61323	HOSE	1		X	
2	T77613	O-RING	5		X	
3	N202662	ORIFICE	1		X	
4	38H5105	TEE FITTING	1		X	
5	RE58763	SPACER	1		X	
6	R122147	CHECK VALVE	1		X	
7	T11899	O-RING	1		X	
8	38H5016	ELBOW FITTING	1		X	
9	51M7041	O-RING	1		X	11.300 X 2.200 MM
10	RE55859	HYD. QUICK-CONNECT COUPLER	2		X	
11	51M7045	O-RING	2		X	19.300 X 2.200 MM
12	R124807	CAP	1		X	(A)
	R125531	COVER	1		X	(B)
13	AH83821	CAP	1		X	
14	R118245	SNAP RING	1		X	
15	R112397	BRACKET	1		X	
16	19M7168	CAP SCREW	1		X	M10 X 30
17	RE61319	HYD. QUICK-CONNECT COUPLER	1		X	
18	24M7040	WASHER	1		X	11 X 20 X 2 MM
19	14M7274	NUT	1		X	M10
20	RE61308	OIL LINE	1		X	
21	RE49091	FITTING	1		X	
22	51M7041	O-RING	1		X	11.300 X 2.200 MM
23	51M7041	O-RING	1		X	11.300 X 2.200 MM
24	**AR112613**	**KIT**	**1**		**X**	**(FI)**
25	R133794	BACK-UP RING	2		X	
26	R152879	PACKING	1		X	
..	AH15939	HYD. QUICK-CONNECT COUPLER	1		X	
..	AR94522	INTERNAL HALF COUPLER	1		X	

(A) RETURN
RETOUR
RUECKLAUF
RETORNO
RITORNO
RETUR

(B) PRESSURE
PRESSION
DRUCK
PRESSIONE
PRESION
TRYCK

https://www.truck-manuals.net/

POWER BEYOND COUPLER KIT (W/ TRAILER BRAKE) (EUROPEAN VERSION)
JEU DE RACCORD DE SORTIE POUR OUTIL (W/ FREIN DE REMARQUE HYDR.) (VERSION EUROPEENNE)
ANBAUGERAETANSCHLUSS-KUPPLUNGSSATZ (W/ HYDR. ANHAENGERBREMSE) (EUROPAEISCHE AUSFUEHRUNG)
KIT DELL'ACCOPPIATORE PER L'UTENSILE (W/ FRENO IDRAUL RIMORCHIO) (VERSIONE EUROPEA)
CONJUNTO DE ACOPLADOR DE SALIDA (W/ FRENO HIDRAULREMOLQUE) (VERSION EUROPEA)
KOPPLINGSSATS FOER REDSKAP (W/ SL'PVAGNSBROMS) (EUROPEISK VERSION)
RE030058 -UN-18SEP98

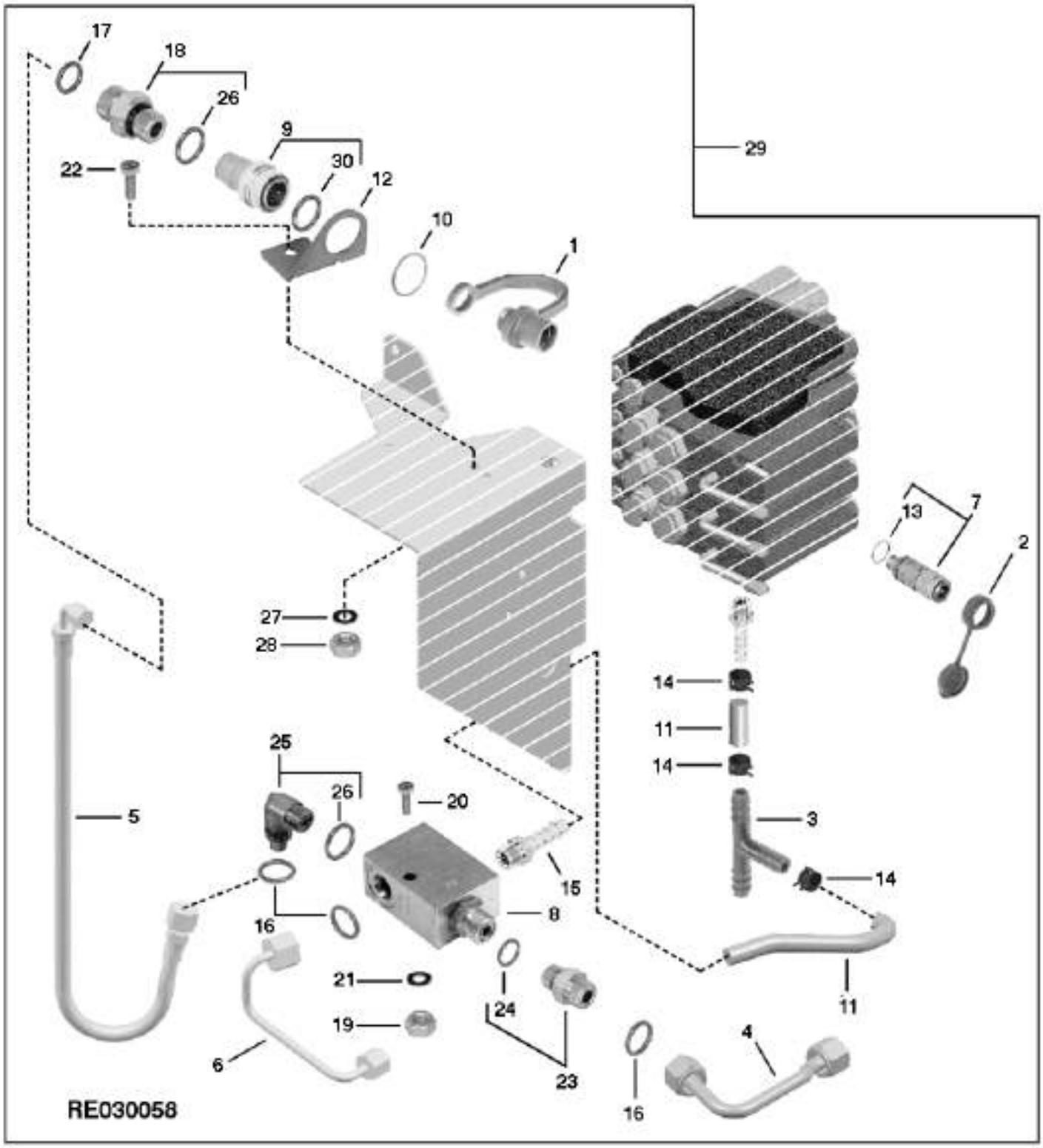

https://www.truck-manuals.net/

KEY	PART NO.	PART NAME	QTY	TRACTOR SERIAL NO.	ALL	REMARKS
1	AH83821	CAP	1		X	
2	R124807	CAP	2		X	
3	N154080	TEE FITTING	1		X	
4	RE44731	OIL LINE	1		X	
5	RE61340	HYDRAULIC HOSE	1		X	
6	RE48636	HYDRAULIC LINE	1		X	
7	RE55859	HYD. QUICK-CONNECT COUPLER	2		X	
8	RE55941	VALVE	1		X	
9	RE61319	HYD. QUICK-CONNECT COUPLER	1		X	
10	R118245	SNAP RING	1		X	
11	.....	HOSE	1		X	225 MM (9") (MAKE FROM T79477) (SUB FOR R112861)
12	R117724	BRACKET	1		X	
13	51M7045	O-RING	2		X	19.300 X 2.200 MM
14	R56101	CLIP	4		X	
15	R65785	FITTING	1		X	
16	T77613	O-RING	3		X	
17	T77613	O-RING	1		X	
18	38H5002	ADAPTER	1		X	
19	14M7272	NUT	1		X	M6
20	19M8477	CAP SCREW	1		X	M6 X 40, HS 10.9
21	24M7088	WASHER	1		X	6.600 X 12 X 1.600 MM
22	19M7560	CAP SCREW	2		X	M6 X 16
23	38H5002	ADAPTER	1		X	
24	51M7041	O-RING	1		X	11.300 X 2.200 MM
25	38H5016	ELBOW FITTING	1		X	
26	51M7041	O-RING	2		X	11.300 X 2.200 MM
27	24M7088	WASHER	2		X	6.600 X 12 X 1.600 MM
28	14M7272	NUT	2		X	M6
29	**RE58858**	**KIT**	**1**		**X**	**(FI)**
30	R152879	PACKING	1		X	

https://www.truck-manuals.net/

HYDRAULIC MOTOR RETURN OR SUMP KIT
JEU DE RETOUR OU CARTER DE MOTEUR HYDRAULIQUE
HYDRAULIKMOTOR-RUECKLAUF-ODER-WANNENSATZ
KIT DELLA COPPA O DEL RITORNO DEL MOTORE IDRAULICO
JEUGO DE RETORNO O SUMIDERO DEL MOTOR HIDRAULICO
SATS FOER HYDRAULMOTORRETUR ELLER SUMP
RE026074 -UN-22MAR95

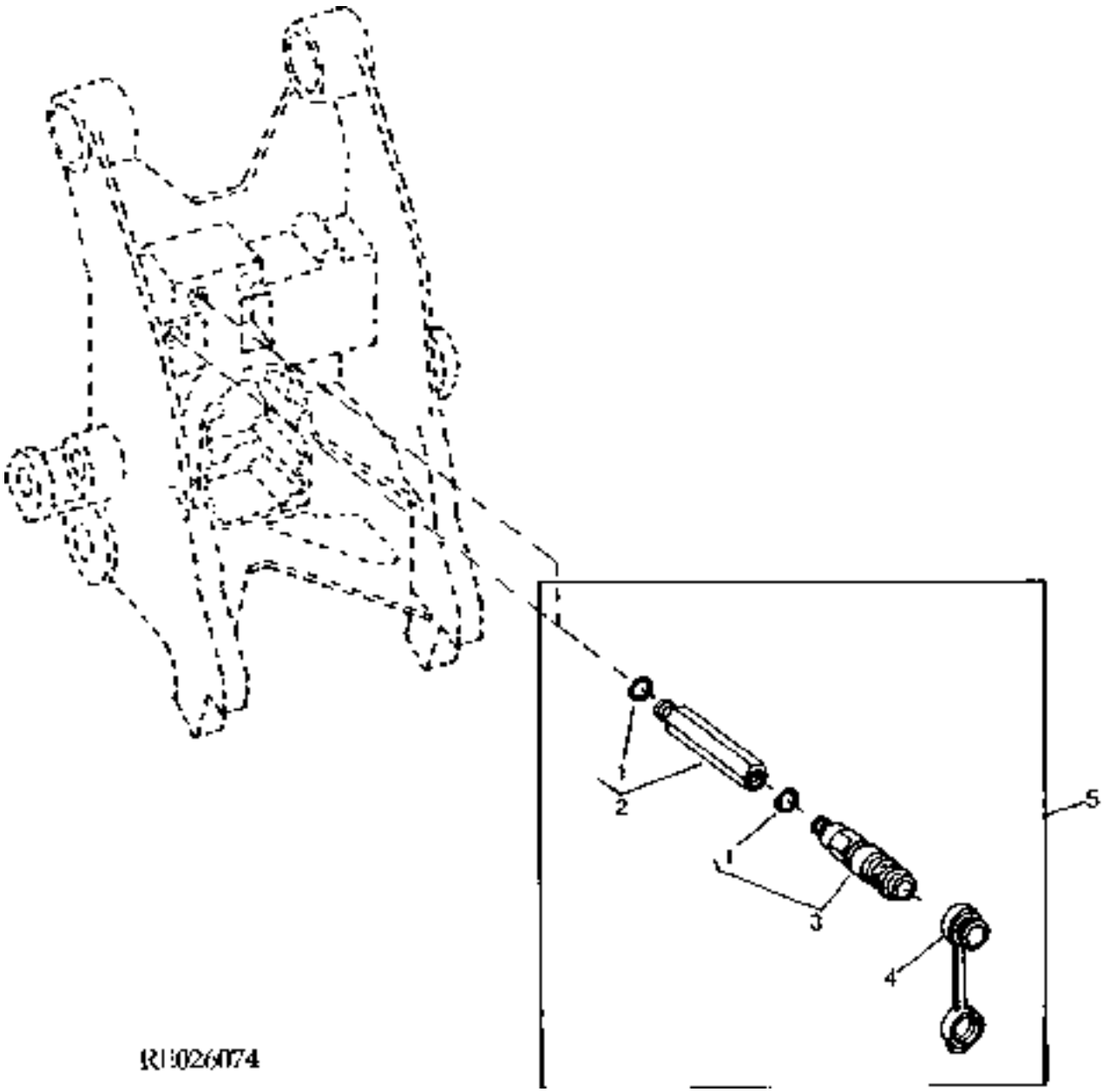

https://www.truck-manuals.net/

KEY	PART NO.	PART NAME	QTY	TRACTOR SERIAL NO.	ALL	REMARKS
1	51M7045	O-RING	2		X	19.300 X 2.200 MM
2	RE61791	FITTING	1		X	
3	RE55859	HYD. QUICK-CONNECT COUPLER	1		X	
4	R124807	CAP	1		X	
5	**AR114664**	**KIT**	**1**		**X**	**(FI)**

https://www.truck-manuals.net/

MULTIPLE HYDRAULIC MOTOR RETURN KIT
KIT DE RACCORDS DE RETOUR MULTIPLES POUR MOTEURS HYDRAULIQUE
MEHRFACH-HYDRAULIKMOTOR-RUECKLAUFSATZ
KIT DELLA LINEA DI RITORNO MULTIPLA DEL MOTORE IDRAULICO
JUEGO DE RETORNOS MULTIPLES PARA MOTOR HIDRAULICO
SATS MED FLERA RETURANSLUTNINGAR FOER HYDRAULMOTOR
RE026665 -UN-21DEC95

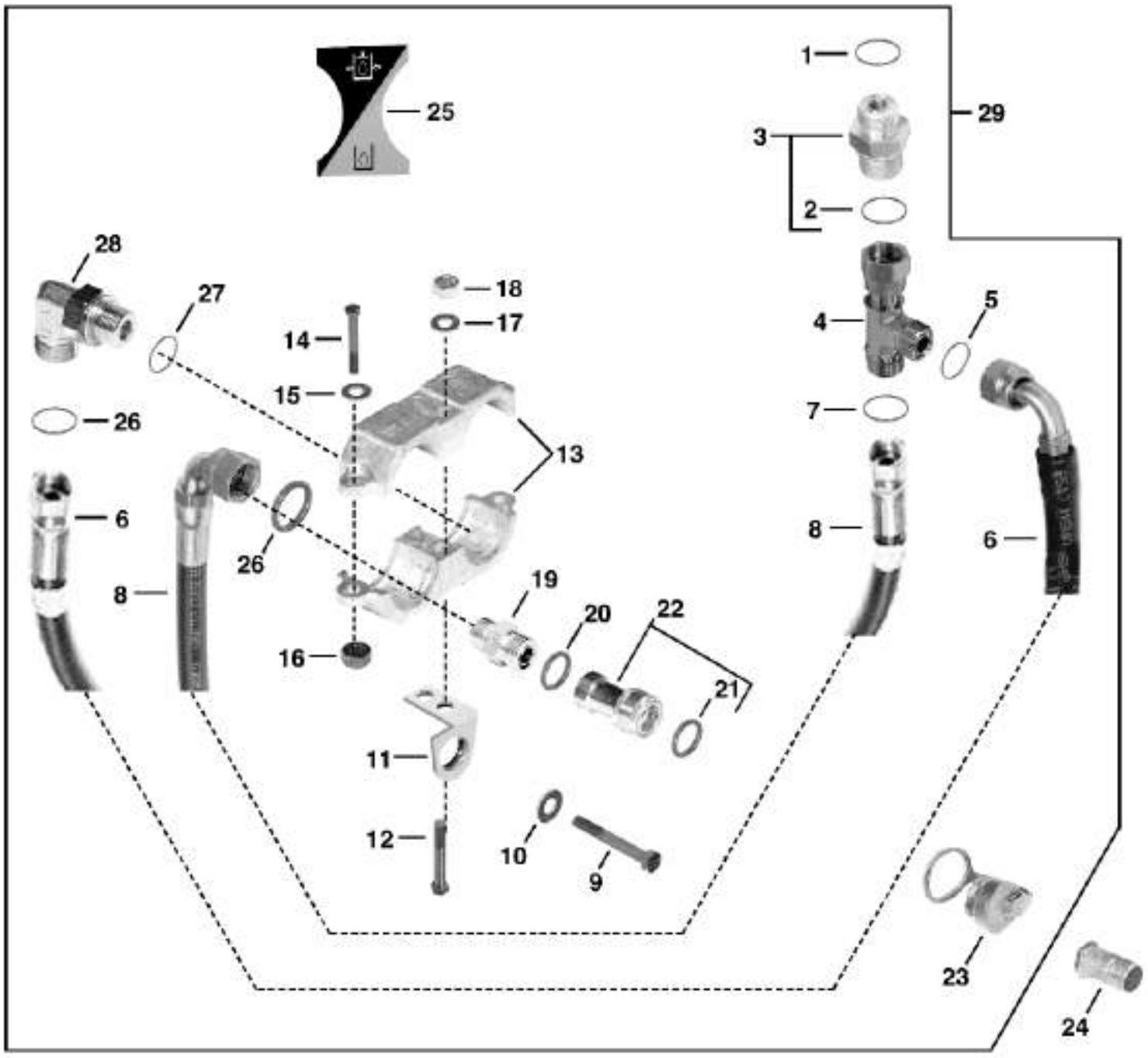

RE026665

https://www.truck-manuals.net/

KEY	PART NO.	PART NAME	QTY	TRACTOR SERIAL NO.	ALL	REMARKS
1	T77857	O-RING	1		X	
2	51M7045	O-RING	1		X	19.300 X 2.200 MM
3	38H5076	ADAPTER	1		X	
4	38H5069	TEE FITTING	1		X	
5	T77857	O-RING	1		X	
6	RE67181	HYDRAULIC HOSE	1		X	
7	T77857	O-RING	1		X	
8	RE67181	HYDRAULIC HOSE	1		X	
9	19M7730	CAP SCREW	1		X	M20 X 30
10	24M7051	WASHER	1		X	21 X 37 X 3 MM
11	R117724	BRACKET	1		X	
12	19M7185	CAP SCREW	2		X	M8 X 60
13	R113148	BRACKET	2		X	
14	19M7077	CAP SCREW	2		X	M6 X 20
15	24M7054	WASHER	2		X	6.400 X 12 X 1.600 MM
16	14M7272	NUT	2		X	M6
17	24M7055	WASHER	2		X	8.400 X 16 X 1.600 MM
18	14M7151	NUT	2		X	M8
19	38H1161	ADAPTER	1		X	
20	R26375	O-RING	1		X	
21	R21722	O-RING	2		X	
22	RE58243	HYD. QUICK-CONNECT COUPLER	2		X	
23	A15899	CAP	2		X	
24	AR94522	INTERNAL HALF COUPLER	2		X	ISO, 3/4" - 16UNF
25	R113305	DECAL	1		X	
26	T77857	O-RING	2		X	
27	R26375	O-RING	1		X	
28	38H1005	ELBOW FITTING	1		X	
29	**RE67182**	**KIT**	**1**		**X**	**(FI)**

https://www.truck-manuals.net/

WAGON TILT KIT
KIT D'INCLINAISON DE CHARIOT
ANHAENGER-KIPPVORRICHTUNGSSATZ
KIT INCLINAZIONE RIMORCHIO
JUEGO DE INCLINACION DE REMOLQUE
VAGNTIPPNINGSSATS
RE028544 -UN-26NOV97

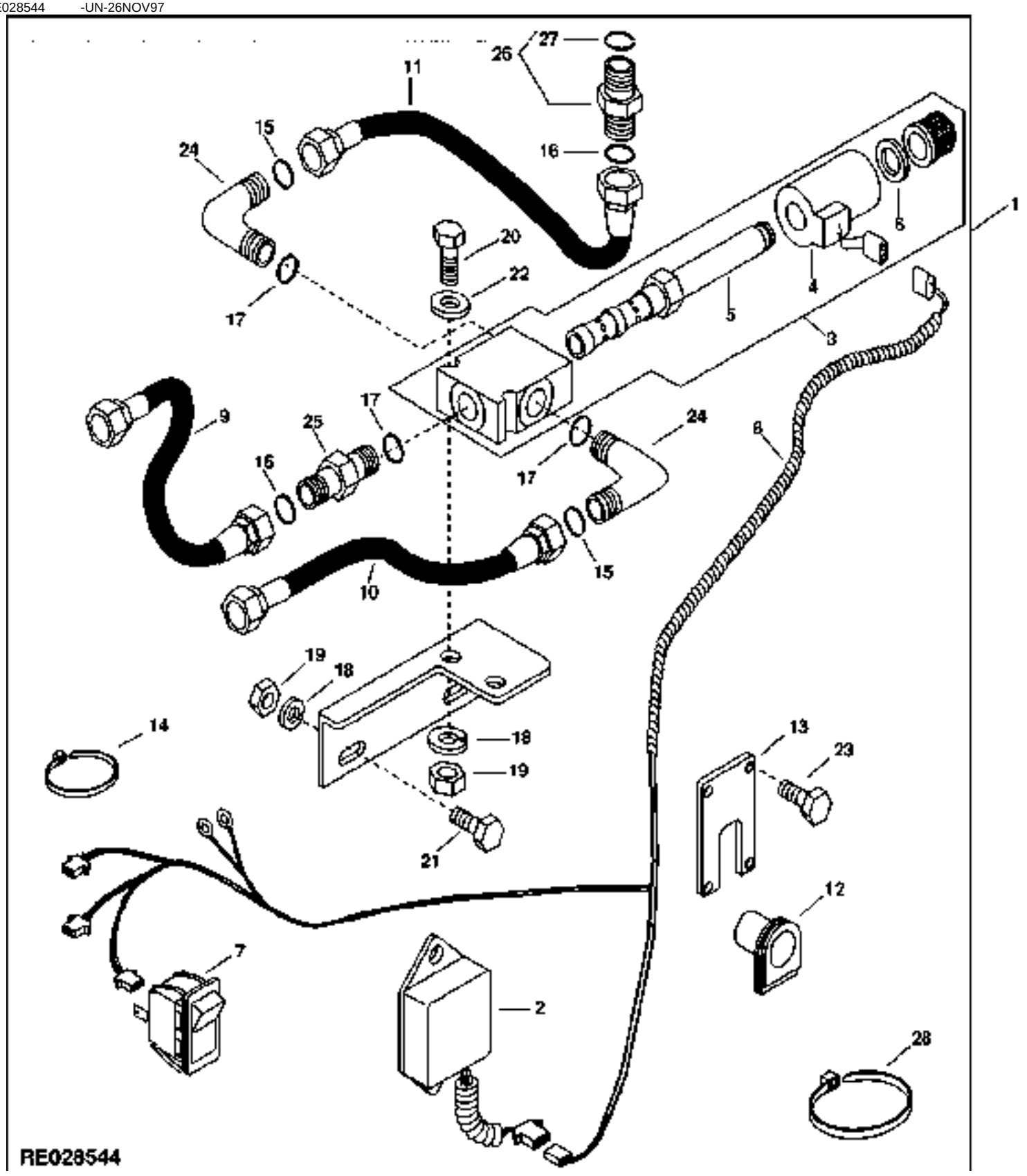

https://www.truck-manuals.net/

KEY	PART NO.	PART NAME	QTY	TRACTOR SERIAL NO.	ALL	REMARKS
1	RE70488	KIT	1		X	
2	RE70004	TIMER	1		X	
3	RE70210	VALVE	1		X	
4	RE71559	ELECTRICAL COIL	1		X	
5	RE71560	RELIEF VALVE	1		X	
6	.....	SEAL KIT	1		X	(ORDER RE71561)
7	RE70464	ROCKER SWITCH	1		X	
8	RE70555	WIRING HARNESS	1		X	
9	RE70609	HYDRAULIC LINE	1		X	
10	RE70610	HYDRAULIC LINE	1		X	
11	RE70611	HYDRAULIC LINE	1		X	
12	R112653	GROMMET	1		X	
13	R130962	PLATE	1		X	
14	R44302	TIE BAND	6		X	
15	T77858	O-RING	3		X	
16	T77932	O-RING	1		X	
17	U12547	O-RING	3		X	
18	12M7066	LOCK WASHER	4		X	10.200 MM
19	14M7274	NUT	4		X	M10
20	19M7156	CAP SCREW	2		X	M10 X 60
21	19M7662	CAP SCREW	2		X	M10 X 30, HS 10.9
22	24M7028	WASHER	2		X	10.500 X 20 X 2 MM
23	37M7162	SCREW	4		X	
24	38H1007	ELBOW FITTING	2		X	
25	38H1163	ADAPTER	1		X	
26	38H5004	ADAPTER	1		X	
27	51M7045	O-RING	1		X	19.300 X 2.200 MM
28	R76477	TIE BAND	4		X	
..	RE71561	SEAL KIT	1		X	

https://www.truck-manuals.net/

HITCH STABILIZER (EUROPEAN VERSION)
STABILISATEUR D'ATTELAGE (VERSION EUROPEENNE)
ANHAENGEVORRICHTUNG-STABILISATOR (EUROPAEISCHE AUSFUEHRUNG)
STABILIZZATORE DELL'ATTACCO (VERSIONE EUROPEA)
ESTABILIZADOR DEL ENGANCHE (VERSION EUROPEA)
LYFTSTABILISATOR (EUROPEISK VERSION)
RE027020 -UN-19JUN96

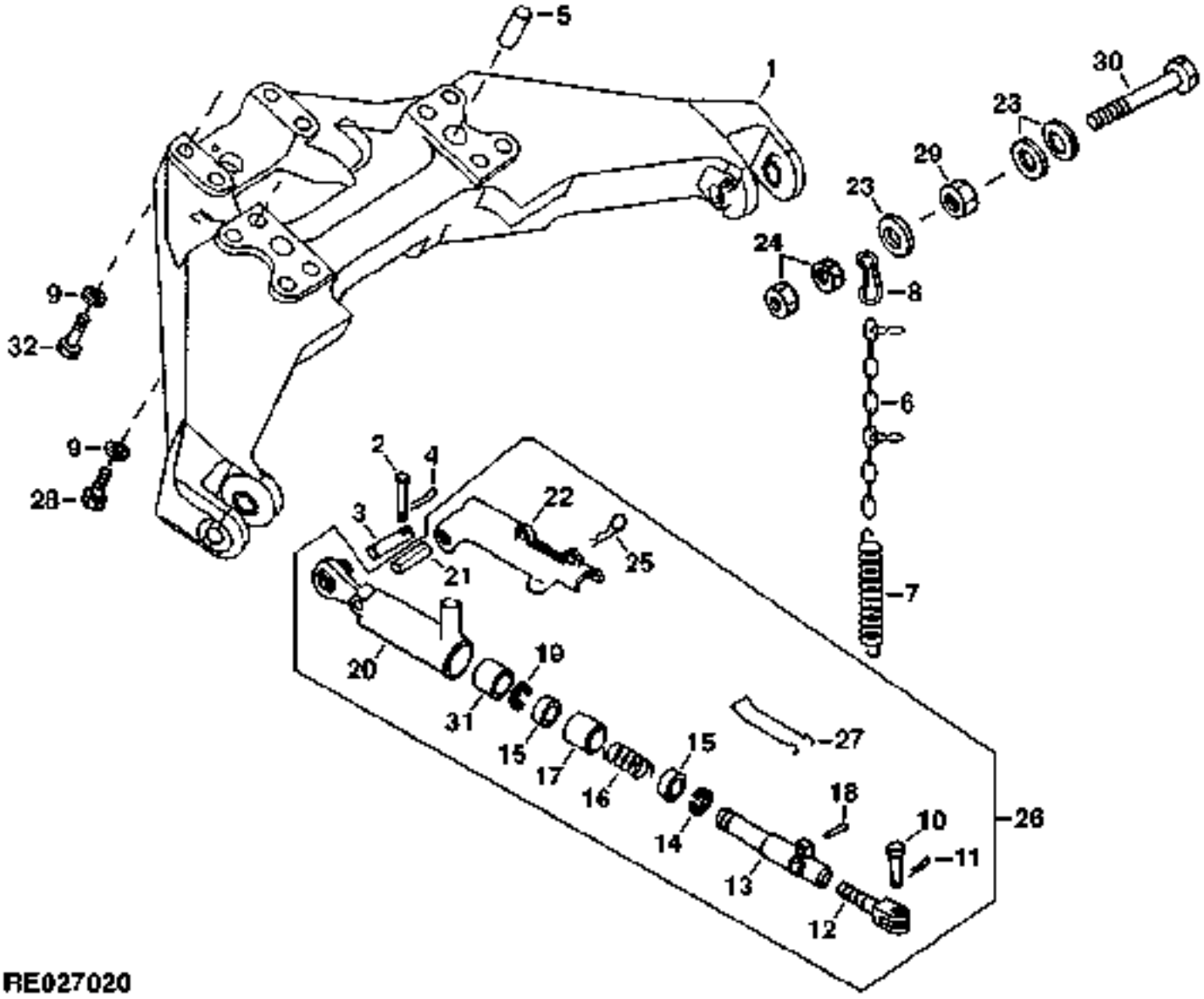

https://www.truck-manuals.net/

KEY	PART NO.	PART NAME	QTY	TRACTOR SERIAL NO.	ALL	REMARKS
1	R121253	SUPPORT	1	-XXXXXX	X	(SUB R134168, R130981, (8) R51156, (4) 19M7883, (4) 24M7242 AND (2) 19M8100)
	R126616	SUPPORT	1	XXXXXX-	X	(A) (SUB R130981, R134168, (8) R51156, (4) 19M7883, (4) 24M7242)
2	R69166	PIN	2		X	
3	R121525	PIN	2		X	
4	11M7059	COTTER PIN	2		X	3.200 X 20 MM
5	T112635	PIN	2	XXXXXX-	X	
6	RE57548	LINK CHAIN	2		X	
7	L59573	EXTENSION SPRING	2		X	
8	L59572	HOOK	2		X	
9	24M7242	WASHER	12		X	21.400 X 42 X 5 MM
10	R125399	PIN	1		X	
11	11M7037	COTTER PIN	1		X	6.300 X 36 MM
12	R125397	UNIVERSAL JOINT	1		X	
13	L102193	TUBE	1		X	
14	40M7149	RING	1		X	
15	L102196	RING	2		X	
16	L102198	COMPRESSION SPRING	1		X	
17	R125398	BUSHING	1		X	
18	34M7071	SPRING PIN	1		X	
19	40M7159	SNAP RING	1		X	
20	RE63826	UNIVERSAL JOINT	1		X	(SUB FOR RE61699)
21	34M7238	SPRING PIN	1		X	20 X 85 MM
22	R125396	LATCH	1		X	
23	24M7047	WASHER	AR		X	13 X 24 X 2.500 MM
24	14M7275	NUT	4		X	M12
25	99M7080	SPRING LOCKING PIN	1		X	
26	RE48400	SUPPORT	2		X	(SUB RE63545)
27	L102199	HANDLE	1		X	
28	19M8503	CAP SCREW	8		X	M20 X 160, HS 10.9
	19M8100	CAP SCREW	2	XXXXXX-	X	M20 X 180, HS 10.9
29	14M7275	NUT	2		X	M12
30	19M7361	CAP SCREW	2		X	M12 X 50
31	L102195	BUSHING	1		X	
32	19M7963	CAP SCREW	4		X	M20 X 100, HS 10.9

(A) ILLUSTRATED
ILLUSTRE
DARGESTELLT
ILLUSTRATO
ILUSTRADO
ILLUSTRERAD

https://www.truck-manuals.net/

HITCH STABILIZER (EUROPEAN VERSION)
STABILISATEUR D'ATTELAGE (VERSION EUROPEENNE)
ANHAENGEVORRICHTUNG-STABILISATOR (EUROPAEISCHE AUSFUEHRUNG)
STABILIZZATORE DELL'ATTACCO (VERSIONE EUROPEA)
ESTABILIZADOR DEL ENGANCHE (VERSION EUROPEA)
LYFTSTABILISATOR (EUROPEISK VERSION)
RE026742 -UN-05JUN96

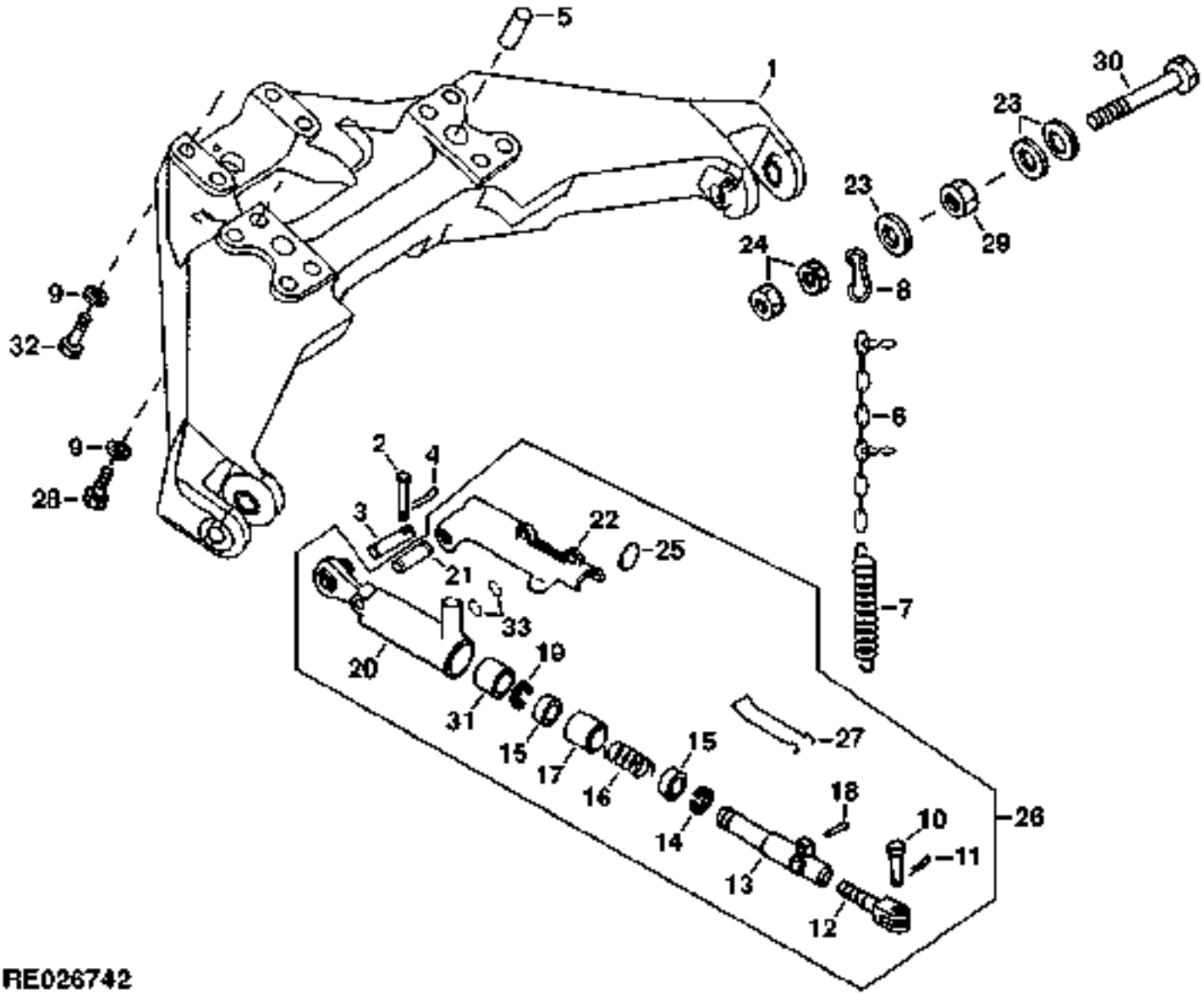

https://www.truck-manuals.net/

KEY	PART NO.	PART NAME	QTY	TRACTOR SERIAL NO.	ALL	REMARKS
1	R121253	SUPPORT	1	-XXXXXX	X	(SUB R134168, R130981, (4) 19M7883, (4) 24M7242, (2) 19M8100 AND (8) R51156)
	R126616	SUPPORT	1	XXXXXX-009999	X	(A) (SUB R134168, R130981, (4) 19M7883, (4) 24M7242 AND (8) R51156)
	R134168	SUPPORT	1	010000-	X	
2	R69166	PIN	2		X	
3	R121525	PIN	2		X	
4	11M7059	COTTER PIN	2		X	3.200 X 20 MM
5	T112635	PIN	2	XXXXXX-	X	
6	RE57548	LINK CHAIN	2		X	
7	L59573	EXTENSION SPRING	2		X	
8	L59572	HOOK	2		X	
9	24M7242	WASHER	12		X	21.400 X 42 X 5 MM
10	R125399	PIN	1		X	
11	11M7037	COTTER PIN	1		X	6.300 X 36 MM
12	R125397	UNIVERSAL JOINT	1		X	
13	L102193	TUBE	1		X	
14	40M7149	RING	1		X	
15	L102196	RING	2		X	
16	L102198	COMPRESSION SPRING	1		X	
17	R129727	BUSHING	1		X	(B)
	R125398	BUSHING	1		X	(C)
18	34M7071	SPRING PIN	1		X	
19	40M7159	SNAP RING	1		X	
20	RE63826	UNIVERSAL JOINT	1		X	
21	R128043	PIN	1		X	
22	R127727	CATCH	1		X	
23	24M7047	WASHER	AR		X	13 X 24 X 2.500 MM
24	14M7275	NUT	4		X	M12
25	R128093	RING	1		X	
26	RE63545	SUPPORT	2		X	
27	L102199	HANDLE	1		X	
28	19M8503	CAP SCREW	8		X	M20 X 160, HS 10.9
	19M8100	CAP SCREW	2	XXXXXX-	X	M20 X 180, HS 10.9
29	14M7275	NUT	2		X	M12
30	19M7361	CAP SCREW	2		X	M12 X 50
31	L102195	BUSHING	1		X	
32	19M7963	CAP SCREW	4	-009999	X	M20 X 100, HS 10.9
	19M7883	SCREW	4	010000-	X	M20 X 120, HS 10.9
33	40M7080	SNAP RING	2		X	

(A) ILLUSTRATED
ILLUSTRE
DARGESTELLT
ILLUSTRATO
ILUSTRADO
ILLUSTRERAD

(B) CATEGORY III
CATEGORIE III
KATEGORIE III
CATEGORIA III
CATEGORIA III
KATEGORI III

(C) UNRESTRICTED SWAY
OSCILLATION LIBRE
UNEINGESCHRAENKTES PENDELN
SPOSTAMENTO ILLIMITATO
OSCILACION NO RESTRINGIDA
OHAEMMAD PENDLING

https://www.truck-manuals.net/

IMPLEMENT HYDRAULIC OIL LINES AND FITTINGS
RACCORDS ET FLEXIBLES HYDRAULIQUES
OELLEITUNGEN UND FITTINGS FUER GERAETE
TUBI FLESSIBILI IDRAULICI E RACCORDI PER EQUIPAGGIAMENTO
INSTALE MANGUERAS HIDRAULICAS Y CONEXIONES
HYDRAULOLJEL EDNINGAR OCH ANSLUTNINGAR, REDSKAP
RWP3748 -UN-01JAN94

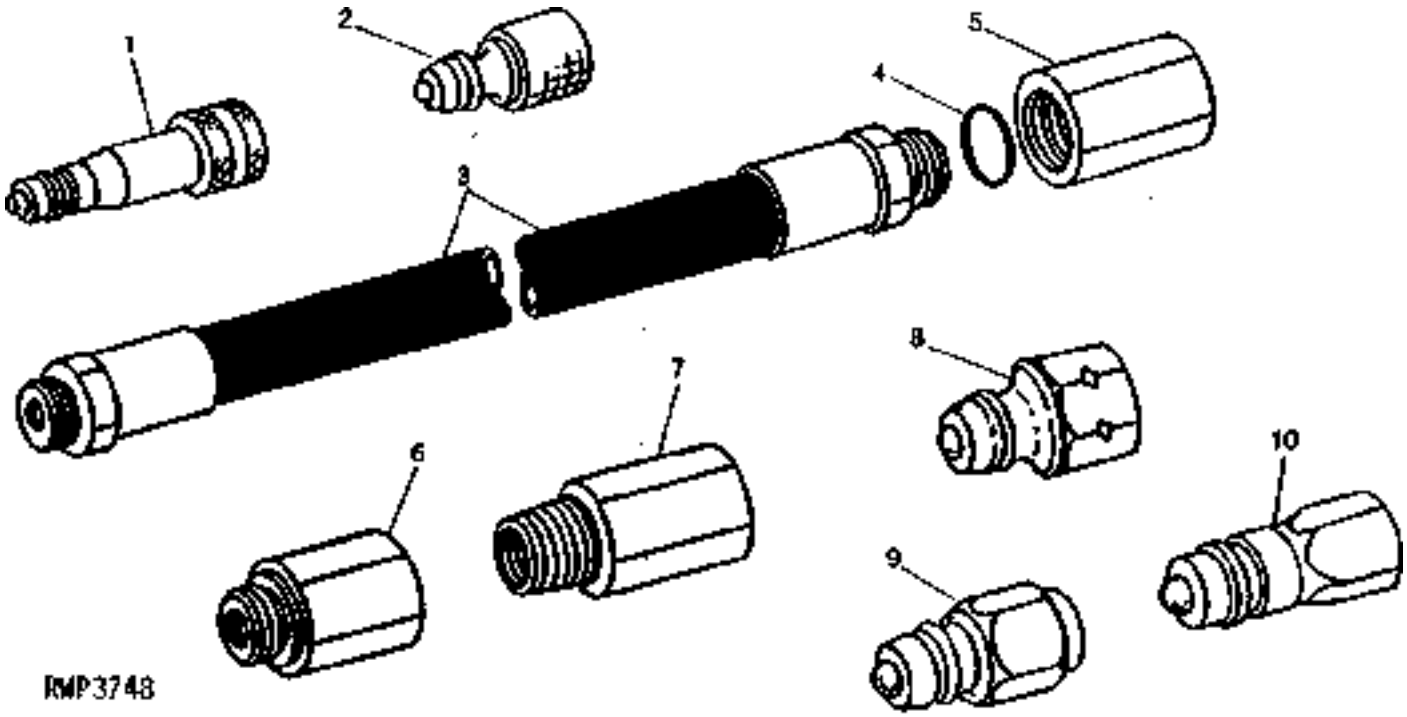

KEY	PART NO.	PART NAME	QTY	TRACTOR SERIAL NO.	ALL	REMARKS
1	AR98202	HYD. QUICK-CONNECT COUPLER	1		X	JOHN DEERE/ISO (W/ R21722)
	R21722	O-RING	1		X	
	RE11457	ADAPTER	1		X	IHC/ISO (W/ U11647)
	U11647	O-RING	1		X	
2	AR98201	HYD. QUICK-CONNECT COUPLER	1		X	ISO/JOHN DEERE (W/ R21722 / R71387)
	RE11456	ADAPTER	1		X	IHC/JOHN DEERE
	RE11458	ADAPTER	1		X	JOHN DEERE/IHC (W/ R21722)
	RE11463	ADAPTER	1		X	ISO/IHC (W/ R21722)
	R21722	O-RING	1		X	
	R71387	WASHER	1		X	
3	TY3018	HYDRAULIC HOSE	1		X	10 X 610 MM (3/8" X 24")
	TY3019	HYDRAULIC HOSE	1		X	10 X 914 MM (3/9" X 36") (SUB FOR AR28755)
	R36658	HYDRAULIC HOSE - FABRICATE	1		X	13 X 610 MM (1/2" X 24")
	R36659	HYDRAULIC HOSE - FABRICATE	1		X	13 X 914 MM (1/2" X 36")
4	R26375	O-RING	1		X	
5	R30815	FITTING	1		X	(A) 19.05 MM (3/4")
6	R30817	ADAPTER	1		X	3/4"-16UNF (B) X 1/2"-14NPT (C)
7	R30816	ADAPTER	1		X	1/2"-14NPT (B) X 3/4"-UNF (C)
8	AR93820	FITTING	1		X	JOHN DEERE, 3/4"-16 UNF
9	RE11447	FITTING	1		X	(B) JOHN DEERE, 1/2"-14 NPT
10	AR94522	INTERNAL HALF COUPLER	1		X	(B) ISO, 3/4"-16 UNF
	C14618	INTERNAL HALF COUPLER	1		X	(B) ISO, 1/2"-14 NPSF

(A) THREAD	(B) MALE	(C) FEMALE
PAS DE VIS	MALE	FEMELLE
GEWINDE	AUSSENGEWINDE	INNENGEWINDE
FILO	MASCHIO	FEMMINA
ROSCA	MACHO	HEMBRA
GAENGA	HANKONTAKT	HONKONTAKT

https://www.truck-manuals.net/

O-RING KIT
JEU DE PIECES DE JOINT TORIQUE
O-RINGSATZ
SERIE PEZZI ANELLI O-R
JUEGO DE ANILLO TORICO
O-RINGSATS
RP1528 -UN-01JAN94

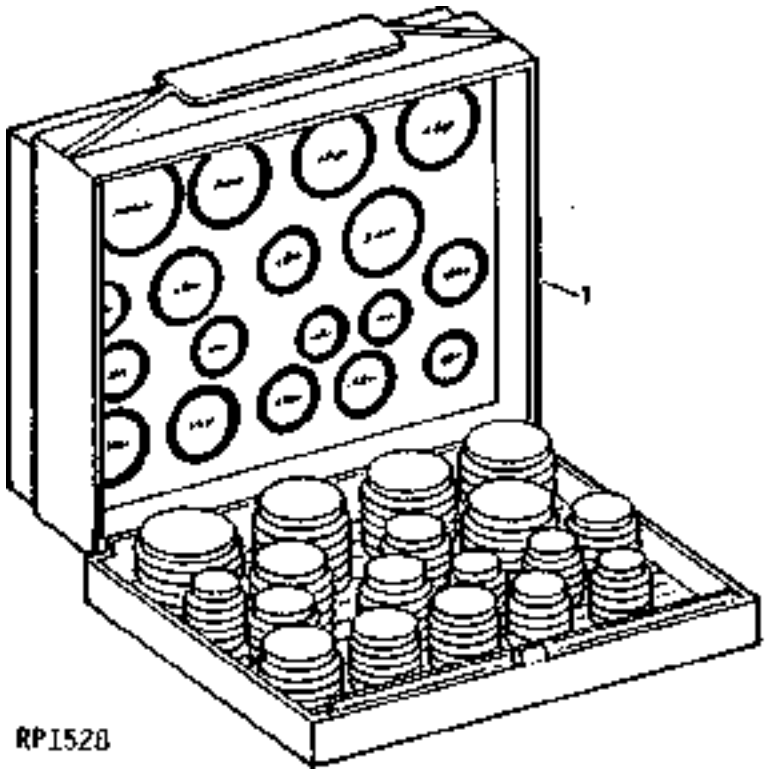

KEY	PART NO.	PART NAME	QTY	TRACTOR SERIAL NO.	ALL	REMARKS
1	AR73500	KIT	1		X	(A)
2	TY15939	O-RING KIT	1		X	(B)
3	AT85197	O-RING KIT	1		X	(C)

(A) HYDRAULIC
SYSTEMES HYDRAULIQUES
HYDRAULISCHE ANLAGE
IDRAULICI
HIDRAULICO
HYDRAUL

(B) AIR CONDITIONING
JOINT TORIQUE D'AIR CONDITIONNE
O-RING FUER KLIMAANLAGE
ANELLO DI GUARNIZIONE ARIA CONDIZIONATA
ANILLO TORICA PARA ACONDICIONADOR DE
LUFTKONDITIONERING O-RING

(C) FLAT FACE
FACE PLATE
FLACHE STIRNFLAECHE
SUPERFICIE PIATTA
CARA PLANA
PLAN YTA

https://www.truck-manuals.net/

HOSE IDENTIFICATION KIT
KIT D'IDENTIFICATION DE FLEXIBLES
SCHLAUCHKENNSATZ
KIT DI IDENTIFICAZIONE TUBO FLESSIBILE
JUEGO DE IDENTIFICACION DE MANGUERAS
SLANGIDENTIFIERINGSSATS
RWP3713 -UN-01JAN94

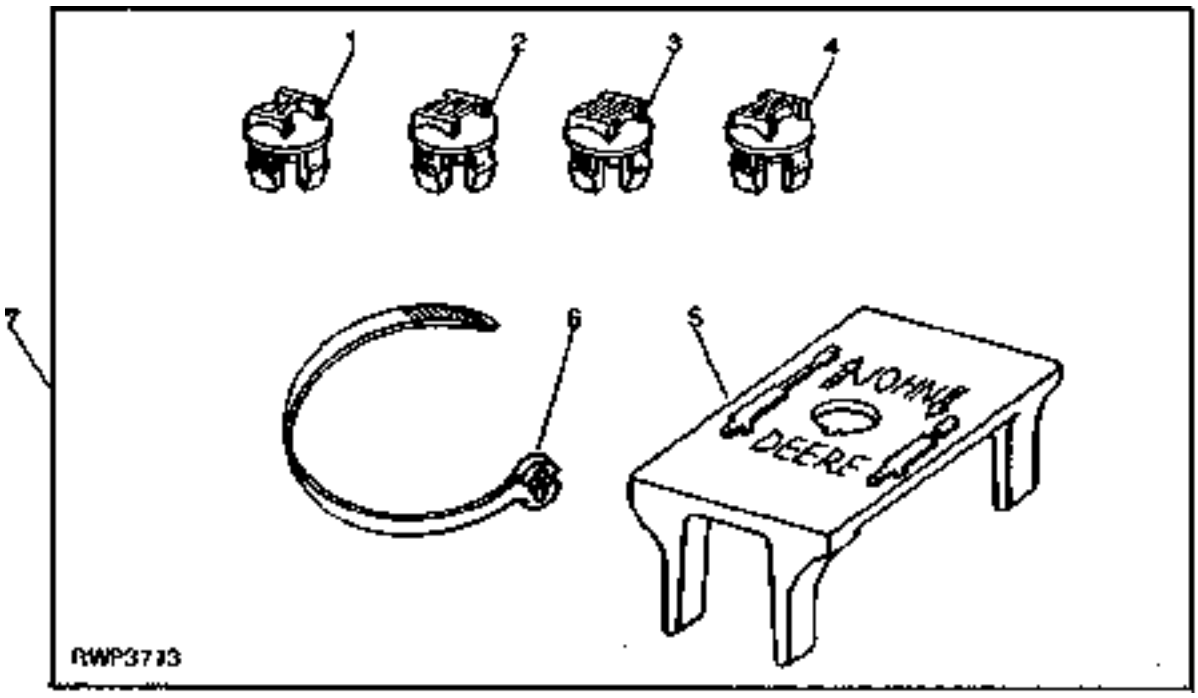

KEY	PART NO.	PART NAME	QTY	TRACTOR SERIAL NO.	ALL	REMARKS
1	R74242	PLUG	1		X	
2	R74243	PLUG	1		X	
3	R74244	PLUG	1		X	
4	R74246	PLUG	1		X	
5	R76459	TAG	1		X	
6	R76477	TIE BAND	2		X	
7	AR103808	KIT	1		X	

https://www.truck-manuals.net/

SECTIONAL INDEX
INDEX DE SECTION
GRUPPENINDEX
INDICE DELLA SEZIONE
INDICE DE SECCION
GRUPPSFORTECKNING

RE029170 -UN-10MAY99

1 -	8D6
2 -	8D12
3 -	8D14
4 -	8D18

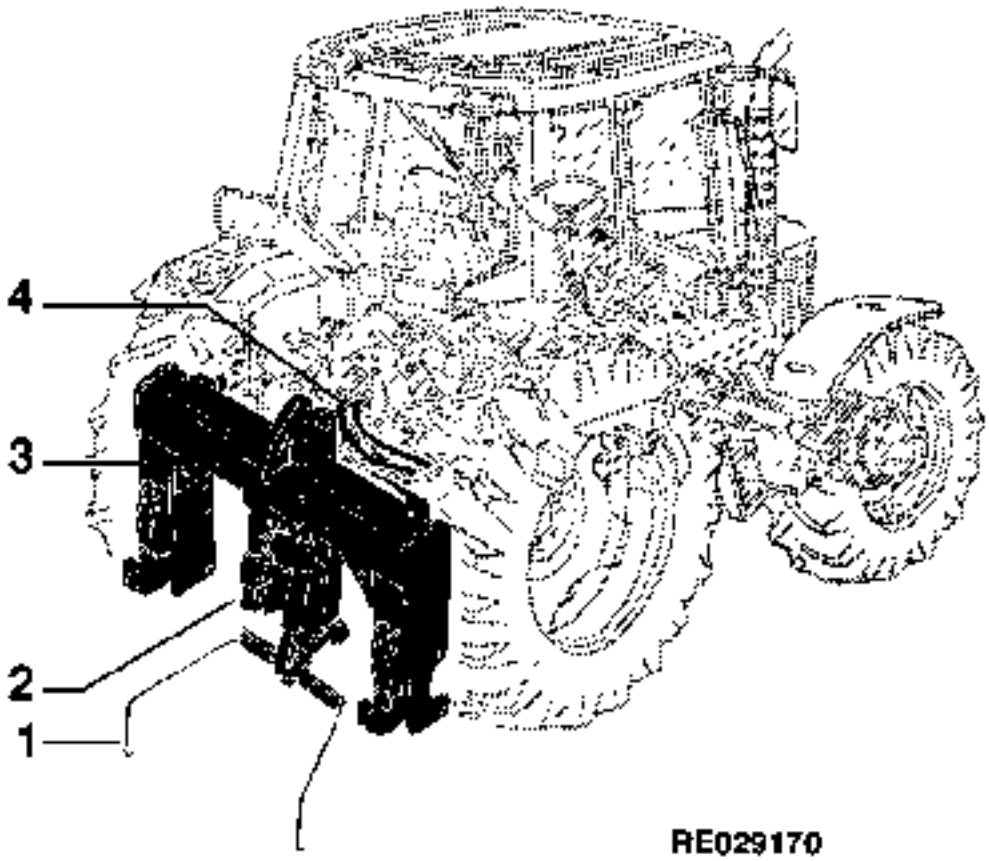

https://www.truck-manuals.net/

SECTIONAL INDEX
INDEX DE SECTION
GRUPPENINDEX
INDICE DELLA SEZIONE
INDICE DE SECCION
GRUPPSFORTECKNING

https://www.truck-manuals.net/

MEMORANDA
MEMORANDA
MEMORANDA
MEMORANDA
MEMORANDA
MEMORANDA

https://www.truck-manuals.net/

ROW-TRAK KIT
JEU DE ROW-TRAK
ROW-TRAK SATZ
KIT DEL ROW-TRAK
JUEGO DE ROW-TRAK
SATS MED ROW-TRAK
RE026123 -UN-04MAR95

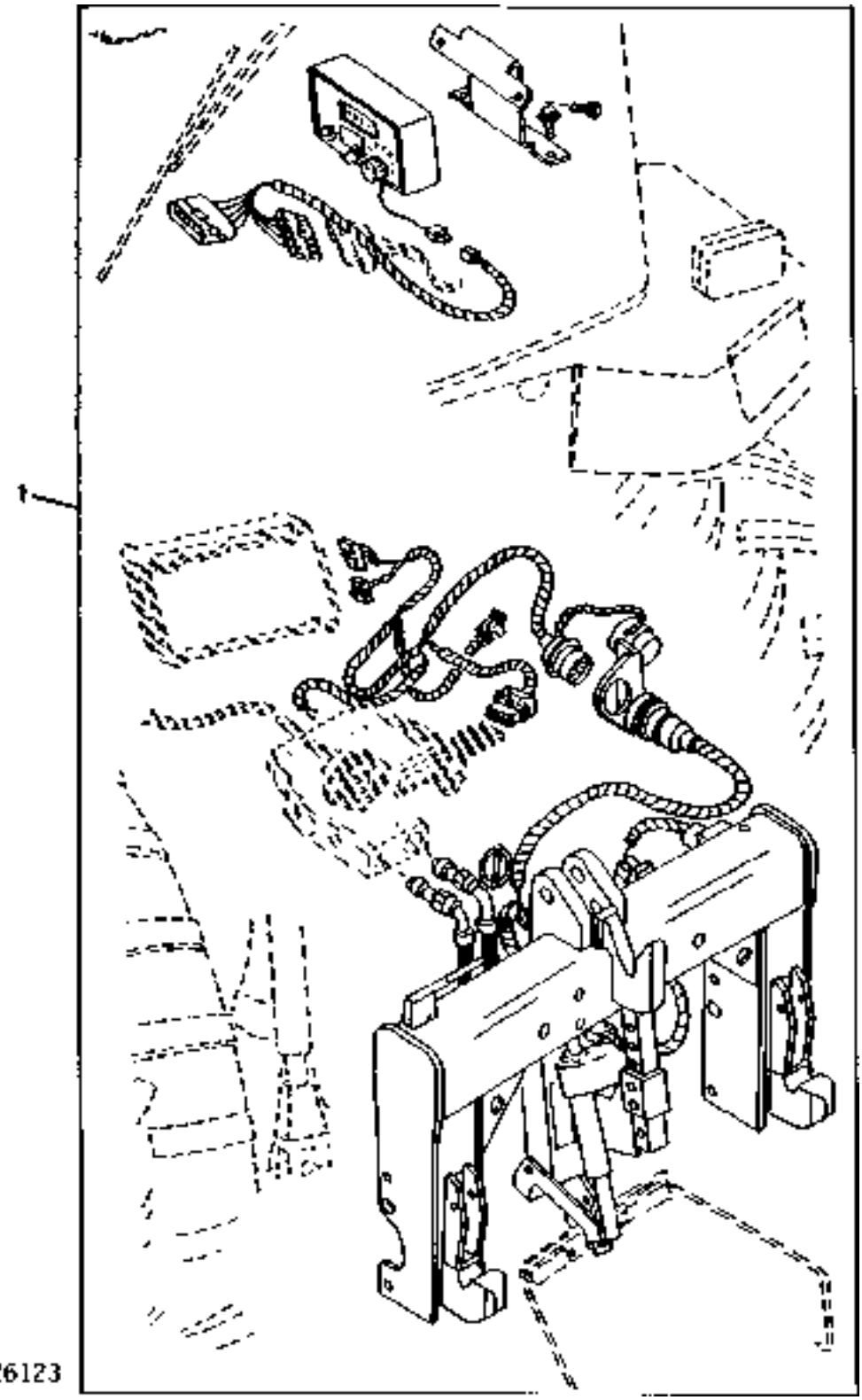

https://www.truck-manuals.net/

KEY	PART NO.	PART NAME	QTY	TRACTOR SERIAL NO.	ALL	REMARKS
1	**AR114631**	**KIT**	**1**		**X**	**(A) (NLA)**
	AR114633	KIT	1		X	(B) (NLA)

(A) CATEGORY III
CATEGORIE III
KATEGORIE III
CATEGORIA III
CATEGORIA III
KATEGORI III

(B) CATEGORY IIIN
CATEGORIE IIIN
KATEGORIE IIIN
CATEGORIA IIIN
CATEGORIA IIIN
KATEGORI IIIN

https://www.truck-manuals.net/

ROW-TRAK 3 BALL PROBE KIT
JEU DE SONDE A 3 BILLES ROW-TRAK
ROW-TRAK 3 KUGELSONDENSATZ
KIT DELLA SONDA A DOPPIA SFERA ROW-TRAK
JUEGO DE SONDA (3 BOLAS) ROW-TRAK
SATS MED SOND (3 KULOR) FOER ROW-TRAK
RE030266 -UN-18DEC98

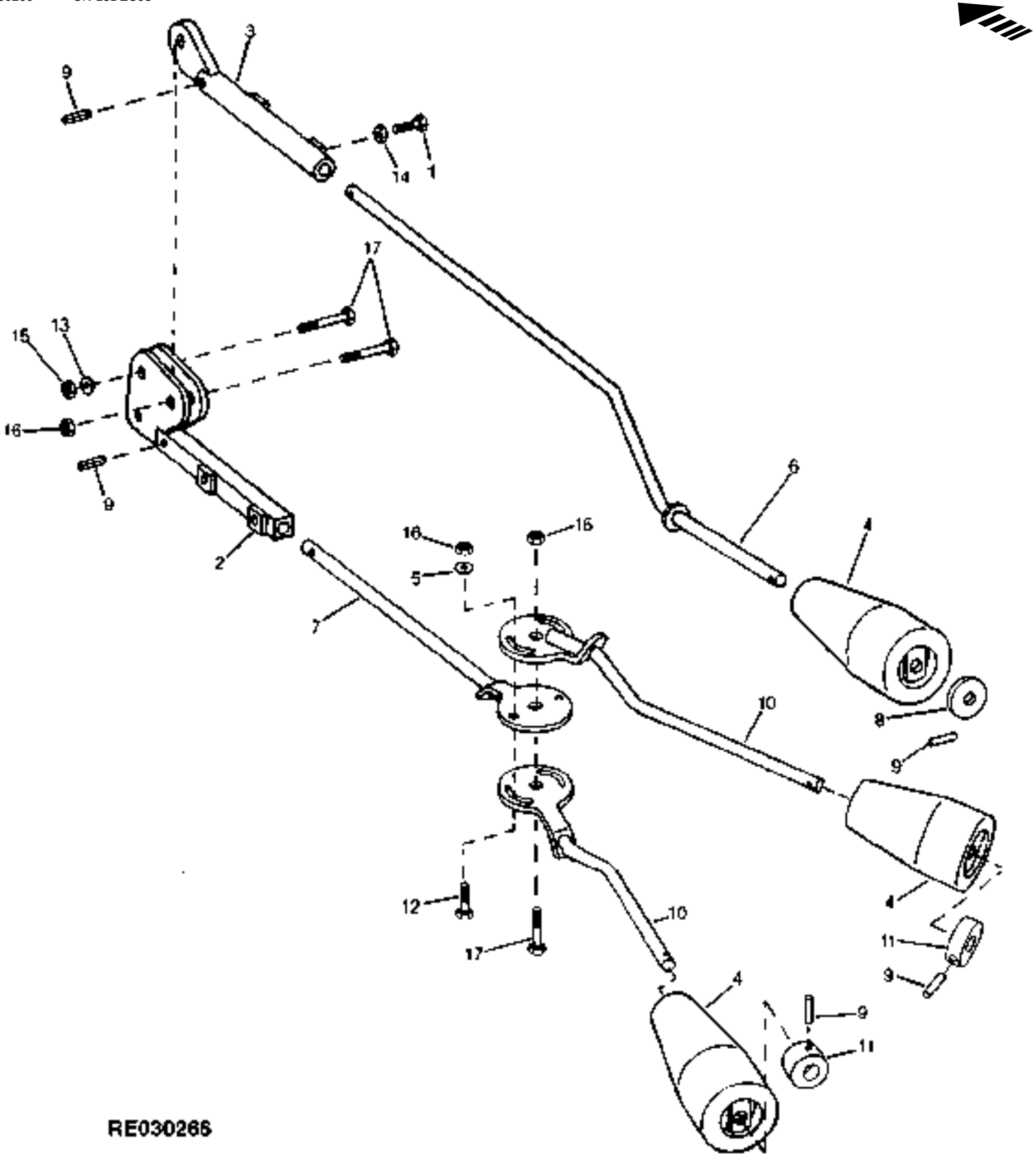

https://www.truck-manuals.net/

KEY	PART NO.	PART NAME	QTY	TRACTOR SERIAL NO.	ALL	REMARKS
1	22H818	SET SCREW	4		X	5/16" X 3/4"
2	RE62952	MOUNTING PARTS	1		X	
3	RE62954	GRIP	1		X	
4	RE62956	BALL	3		X	
5	24M7028	WASHER	2		X	10.500 X 20 X 2 MM
6	RE62959	ROD	1		X	
7	RE62960	ROD	1		X	
8	24H1338	WASHER	1		X	33/64" X 7/8" X 0.048"
9	34H282	SPRING PIN	5		X	3/16" X 1"
10	RE62961	ROD	2		X	
11	R126891	STOP	2		X	
12	03M7194	BOLT	2		X	M10 X 40
13	12M7033	LOCK WASHER	2		X	10.500 MM
14	14H611	NUT	4		X	5/16"
15	14M7274	NUT	2		X	M10
16	14M7517	LOCK NUT	4		X	M10
17	19M8637	CAP SCREW	4		X	M10 X 40

https://www.truck-manuals.net/

ROW-TRAK 2 BALL PROBE KIT
JEU DE SONDE A 2 BILLES ROW-TRAK
ROW-TRAK 2 KUGELSONDENSATZ
KIT DELLA SONDA A DOPPIA SFERA ROW-TRAK
JUEGO DE SONDA (2 BOLAS) ROW-TRAK
SATS MED SOND (2 KULOR) FOER ROW-TRAK
RE030267 -UN-27JAN99

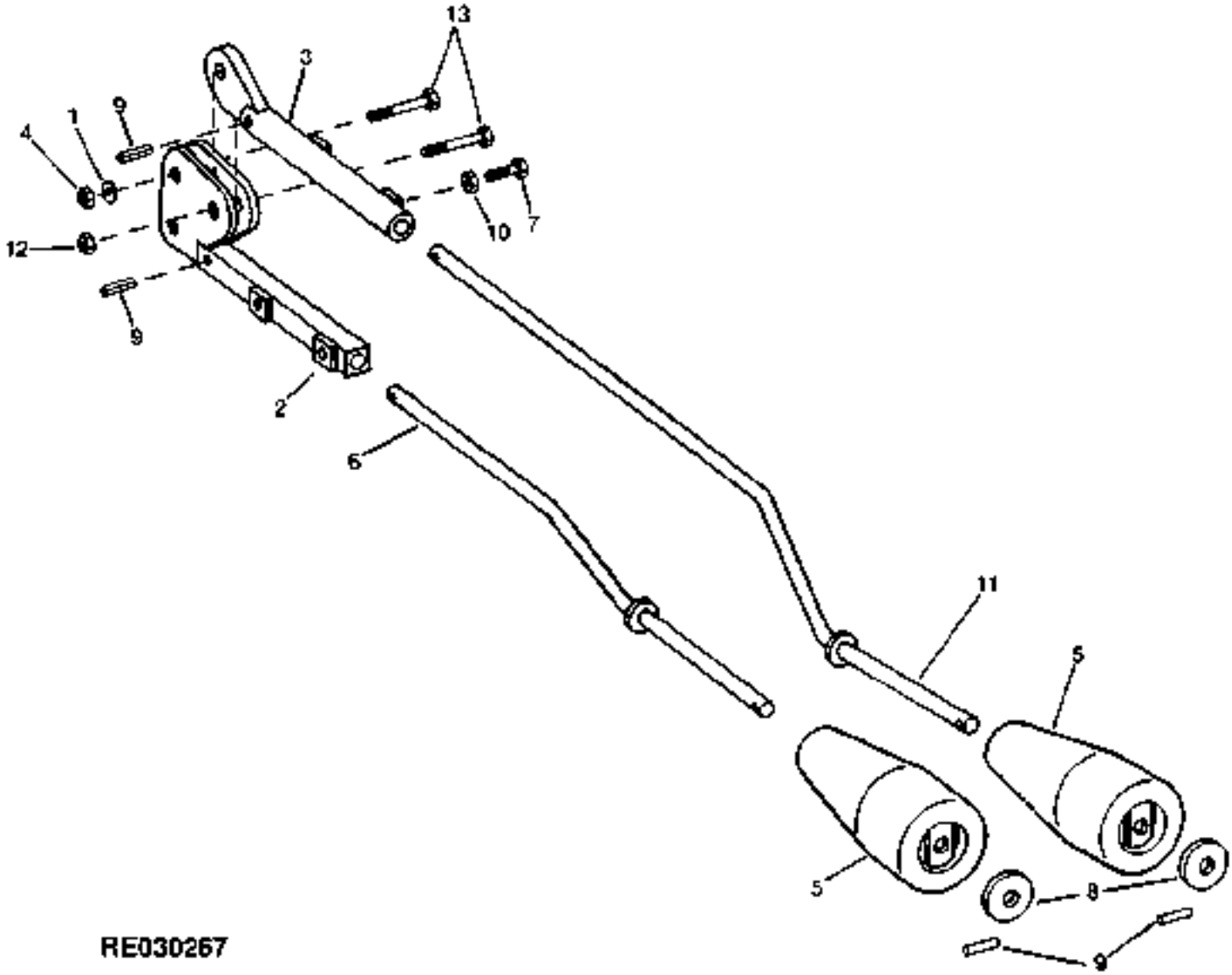

https://www.truck-manuals.net/

KEY	PART NO.	PART NAME	QTY	TRACTOR SERIAL NO.	ALL	REMARKS
1	12M7033	LOCK WASHER	2		X	10.500 MM
2	RE62952	MOUNTING PARTS	1		X	
3	RE62954	GRIP	1		X	
4	14M7274	NUT	2		X	M10
5	RE62956	BALL	2		X	
6	RE62957	ROD	1		X	
7	22H818	SET SCREW	4		X	5/16" X 3/4"
8	24H1338	WASHER	2		X	33/64" X 7/8" X 0.048"
9	34H282	SPRING PIN	2		X	3/16" X 1"
10	14H611	NUT	4		X	5/16"
11	RE62959	ROD	1		X	
12	14M7517	LOCK NUT	1		X	M10
13	19M8637	CAP SCREW	3		X	M10 X 40

https://www.truck-manuals.net/

ROW-TRAK WAND PROBE KIT
JEU DE SONDE A PLONGEUR ROW-TRAK
ROW-TRAK STABSONDENSATZ
KIT DELLA SONDA A BACCHETTA ROW-TRAK
JUEGO DE SONDA (VARILLA) ROW-TRAK
SATS MED SOND (STAV) FOER ROW-TRAK
RE030268 -UN-27JAN99

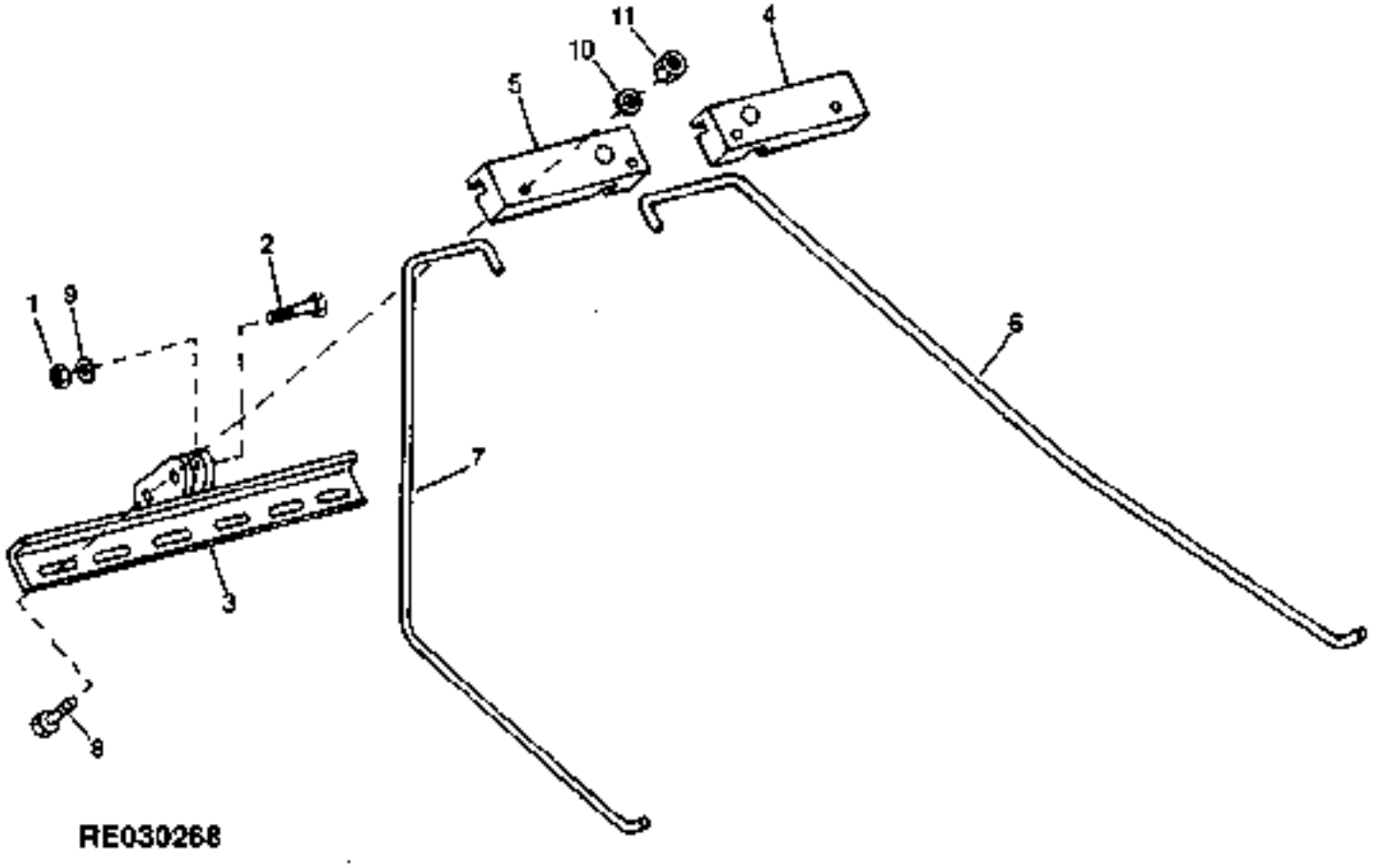

https://www.truck-manuals.net/

KEY	PART NO.	PART NAME	QTY	TRACTOR SERIAL NO.	ALL	REMARKS
1	14M7274	NUT	2		X	M10
2	19M7550	CAP SCREW	2		X	M10 X 35
3	RE62951	ROD	1		X	
4	R126868	BLOCK CLAMP	1		X	
5	R126870	BLOCK CLAMP	1		X	
6	R126873	ROD	1		X	
7	R126874	ROD	1		X	
8	19M7933	CAP SCREW	4		X	M6 X 25
9	12M7033	LOCK WASHER	2		X	10.500 MM
10	12M7081	LOCK WASHER	4		X	6.400 MM
11	14M7272	NUT	4		X	M6

https://www.truck-manuals.net/

ROW-TRAK PROBE BOX
JEU DE BOITIER DE CAPTEUR ROW-TRAK
ROW-TRAK-SONDENKASTENSATZ
KIT DELLA SCATOLA DELLA SONDA ROW-TRAK
JUEGO DE CAJA DE SONDA DE ROW-TRAK
SATS MED SONDERINGSBOX FOER ROW-TRAK
RE027445 -UN-13NOV96

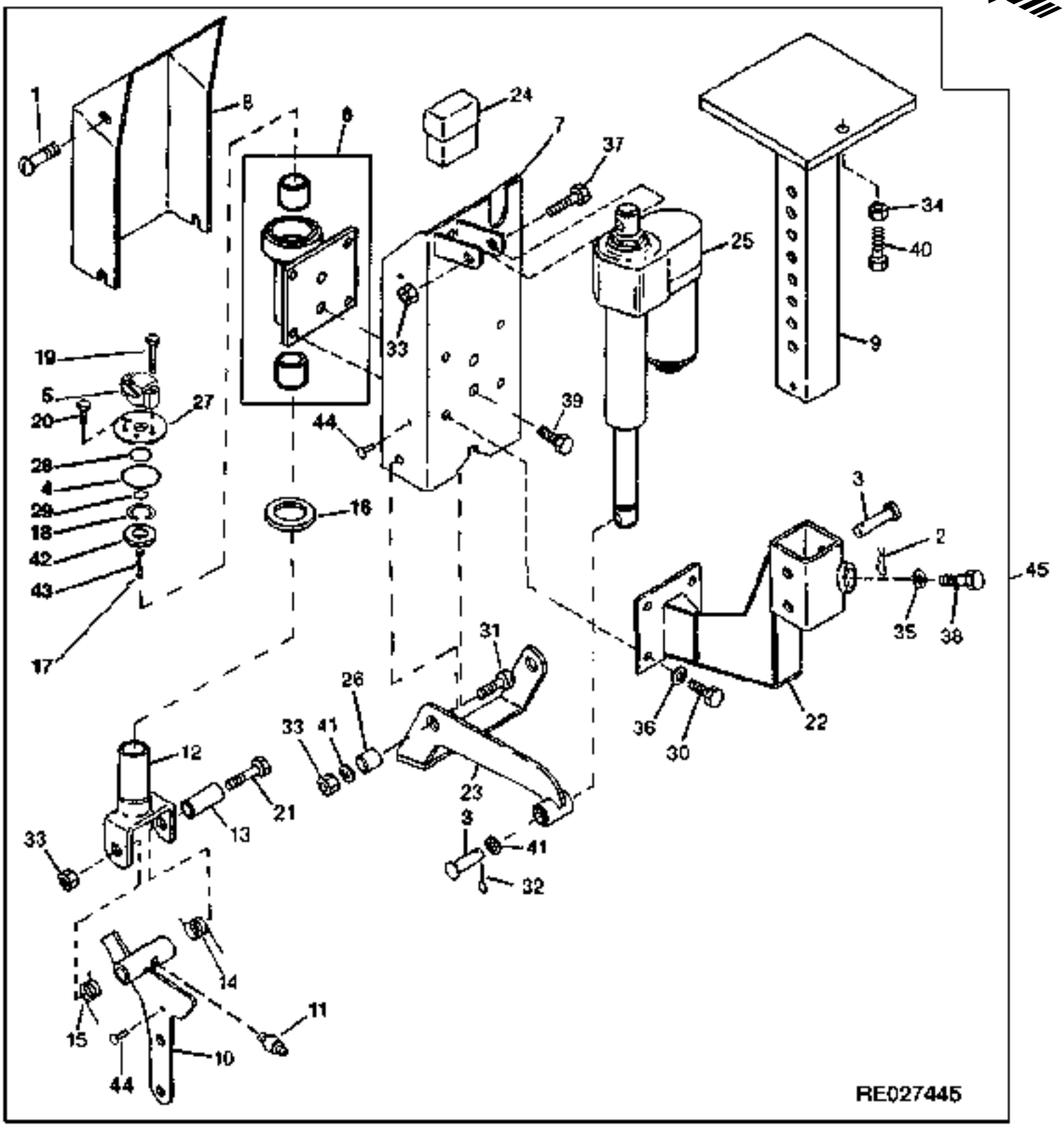

https://www.truck-manuals.net/

KEY	PART NO.	PART NAME	QTY	TRACTOR SERIAL NO.	ALL	REMARKS
1	37M7089	SCREW	2		X	M6 X 12
2	A15147	SPRING LOCKING PIN	1		X	
3	M90097	PIN	2		X	
4	N260556	O-RING	1		X	
5	RE53380	SENSOR	1		X	
6	RE63801	HOUSING	1		X	
7	RE62816	BRACKET	1		X	
8	R126721	COVER	1		X	
9	RE62817	SUPPORT	1		X	
10	RE62823	SUPPORT	1		X	
11	JD7797	LUBRICATION FITTING	2		X	
12	RE62827	SENSOR	1		X	
13	R126747	BUSHING	1		X	
14	R126927	SPRING	1		X	
15	R126928	SPRING	1		X	
16	R127172	BEARING	1		X	
17	25H1192	GROOVE PIN	1		X	1/16" X 3/4"
18	R127214	SNAP RING	1		X	
19	37M7034	SCREW	2		X	
20	37M7036	SCREW	1		X	
21	19M8122	CAP SCREW	1		X	M12 X 85, HS 10.9
22	RE62820	SUPPORT	1		X	
23	RE62824	LIFT ARM	1		X	
24	RE63063	RELAY	1		X	
25	RE63065	ACTUATOR	1		X	
26	R126748	BUSHING	1		X	
27	R126929	PLATE	1		X	
28	R127213	SNAP RING	1		X	
29	R56465	O-RING	1		X	
30	03M7184	BOLT	4		X	M8 X 20
31	03M7353	BOLT	2		X	M12 X 30
32	11M7087	COTTER PIN	1		X	4 X 40 MM
33	14M7313	LOCK NUT	4		X	M12
34	14M7335	NUT	1		X	M20
35	14M7415	NUT	1		X	M12
36	14M7426	LOCK NUT	4		X	M8
37	19M7361	CAP SCREW	1		X	M12 X 50, HS 10.9
38	19M7493	CAP SCREW	1		X	M12 X 40, HS 10.9
39	19M7783	SCREW	2		X	M10 X 16, HS 10.9
40	19M7946	CAP SCREW	1		X	M20 X 40, HS 10.9
41	24M7047	WASHER	3		X	13 X 24 X 2.500 MM
42	E11077	WASHER	1		X	
43	R126814	DRIVE SHAFT	1		X	
44	16H672	RIVET	4		X	1/4" X 3/4"
45	RE58318	MODULE	1		X	

https://www.truck-manuals.net/

ROW-TRAK QUICK COUPLER
ACCOUPLEMENT RAPIDE ROW-TRAK
ROW-TRAK-SCHNELLKUPPLUNG
ATTACCO RAPIDO ROW-TRAK
ACOPLADOR RAPIDO DE ROW-TRAK
ROW-TRAK SNABBKOPPLING
RXP011180 -UN-23MAR95

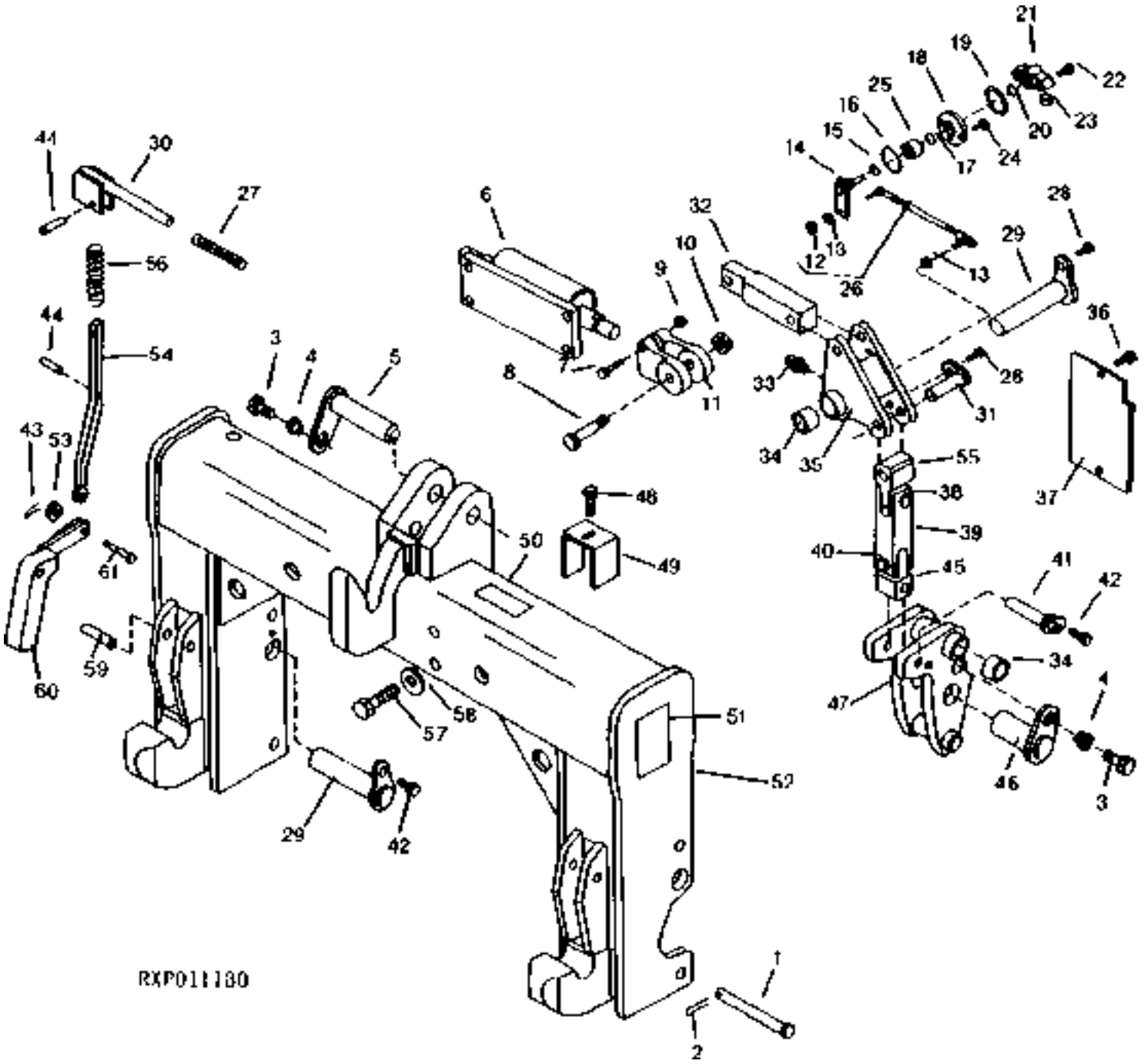

https://www.truck-manuals.net/

KEY	PART NO.	PART NAME	QTY	TRACTOR SERIAL NO.	ALL	REMARKS
1	R125051	PIN	2		X	
2	11M7087	COTTER PIN	2		X	4 X 40 MM
3	19M8029	CAP SCREW	8		X	M16 X 30, HS 10.9
4	R125149	BUSHING	3		X	
5	RE61452	PIN	1		X	
6	RE61451	CYLINDER	1		X	
	RE63794	KIT	1		X	
7	19M7979	SCREW	2		X	M8 X 55, HS 10.9
8	R125050	PIN	2		X	
9	14M7426	LOCK NUT	2		X	M8
10	K40014	LOCK NUT	4		X	1/2"
11	R125053	CLEVIS	1		X	
12	14H860	NUT	3		X	1/4"
13	12H302	LOCK WASHER	2		X	1/4"
14	RE61449	ARM	1		X	
15	R28776	O-RING	1		X	
16	N260556	O-RING	1		X	
17	R32507	SNAP RING	1		X	
18	R126929	PLATE	1		X	
19	R127213	SNAP RING	1		X	
20	R56465	O-RING	1		X	
21	RE53380	SENSOR	1		X	
22	37M7034	SCREW	2		X	
23	RE63036	CAP	1		X	
24	37M7036	SCREW	1		X	
25	R125055	BEARING	1		X	
26	RE61456	TURNBUCKLE	1		X	
27	W27358	GRIP	2		X	
28	19M8242	SCREW	6		X	M12 X 16, HS 10.9
29	RE63026	PIN	4		X	
30	RE61463	HANDLE	2		X	
31	RE61450	PIN	4		X	
32	R125056	LINK	2		X	(A)
	R125090	LINK	2		X	(B)
33	JD7797	LUBRICATION FITTING	4		X	
34	R125062	BEARING	8		X	
35	RE63524	CRANK	1		X	R.H.
	RE63525	CRANK	1		X	L.H.
36	19M7865	SCREW	4		X	M8 X 16, HS 10.9
37	R125054	COVER	2		X	
38	M40514	SNAP RING	4		X	
39	R125057	LINK	2		X	
40	R125060	PIN	2		X	
41	RE61460	PIN	2		X	
42	19M7787	SCREW	4		X	M12 X 20, HS 10.9
43	11M7081	COTTER PIN	2		X	2.500 X 20 MM
44	34H329	SPRING PIN	4		X	5/16" X 1-1/4"
45	R125059	LINK	2		X	
46	RE61447	PIN	2		X	
47	RE63528	PIVOT	1		X	R.H.
	RE63527	PIVOT	1		X	L.H.
	JD7797	LUBRICATION FITTING	2		X	
48	37M7089	SCREW	1		X	M6 X 12
49	RE61464	SHIELD	1		X	
50	R122428	LABEL	1		X	
51	R126470	MEDALLION	2		X	
52	RE61453	FRAME	1		X	(A)
	RE61498	FRAME	1		X	(B)
53	24H1122	WASHER	2		X	3/8" X 7/8" X 0.083"
54	R125061	LINK	2		X	
55	R125058	LINK	2		X	
56	R125046	SPRING	2		X	
57	19M7946	CAP SCREW	4		X	M20 X 40, HS 10.9
58	24M7242	WASHER	4		X	21.400 X 42 X 5 MM
59	N137598	SPRING PIN	2		X	
60	RE61454	LATCH	1		X	R.H.
	RE61455	LATCH	1		X	L.H.
61	BP13811	PIN	2		X	

(A) CATEGORY IIIN
CATEGORIE IIIN
KATEGORIE IIIN
CATEGORIA IIIN
CATEGORIA IIIN
KATEGORI IIIN

(B) CATEGORY III
CATEGORIE III
KATEGORIE III
CATEGORIA III
CATEGORIA III
KATEGORI III

https://www.truck-manuals.net/

ROW-TRAK PROBE BOX MOUNTING RAIL
RAIL DE MONTAGE DE BOITIER DE CAPTEUR ROW-TRAK
ROW-TRAK-SONDENKASTEN-BEFESTIGUNGSSCHIENE
BINARIO DI MONTAGGIO DELLA SCATOLA DELLA SONDA ROW-TRAK
RIEL DE MONTAJE DE CAJA DE SONDA ROW-TRAK
MONTERINGSSKENA FOER ROW-TRAK SONDERINGSBOX
RE030177 -UN-17NOV98

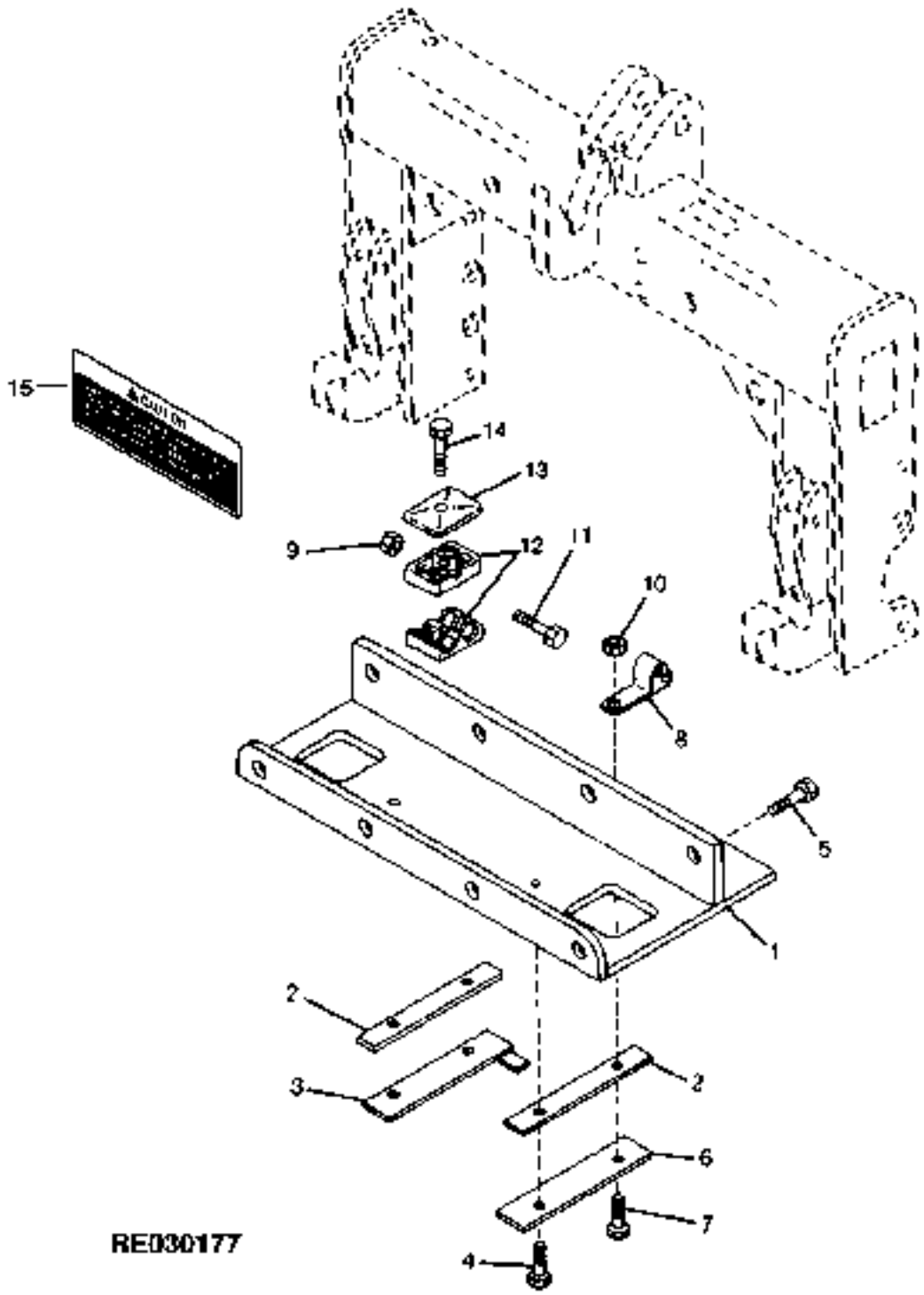

https://www.truck-manuals.net/

KEY	PART NO.	PART NAME	QTY	TRACTOR SERIAL NO.	ALL	REMARKS
1	RE63037	SUPPORT	1		X	(A)
	RE63038	SUPPORT	1		X	(B)
2	R127150	MOUNTING PARTS	2		X	
3	RE63039	MOUNTING PARTS	1		X	
4	19M7550	CAP SCREW	3		X	M10 X 35, HS 10.9
5	19M8029	CAP SCREW	8		X	M16 X 30, HS 10.9
6	R128036	MOUNTING PARTS	1		X	
7	19M8320	SCREW	1		X	M10 X 45
8	R107991	CLAMP	1		X	
9	K40014	LOCK NUT	4		X	
10	14M7517	LOCK NUT	1		X	M10
11	R125050	PIN	2		X	
12	H120847	CLAMP	2		X	
13	H121168	PLATE	1		X	
14	19M8359	CAP SCREW	1		X	M8 X 45
15	R161282	LABEL	1		X	

(A) CATEGORY IIIN
CATEGORIE IIIN
KATEGORIE IIIN
CATEGORIA IIIN
CATEGORIA IIIN
KATEGORI IIIN

(B) CATEGORY III
CATEGORIE III
KATEGORIE III
CATEGORIA III
CATEGORIA III
KATEGORI III

https://www.truck-manuals.net/

ROW-TRAK QUICK COUPLER CYLINDER LINES
CONDUITES DE VERIN D'ACCOUPLEMENT RAPIDE ROW-TRAK
ROW-TRAK-SCHNELLKUPPLUNG-ZYLINDERLEITUNGEN
LINEE DEL CILINDRO DELL'ATTACCO RAPIDO ROW-TRAK
LINEAS DE CILINDRO CON ACOPLADORES RAPIDOS PARA ROW-TRAK
CYLINDERLEDNINGAR TILL ROW-TRAK SNABBKOPPLING
RE026136 -UN-17MAR97

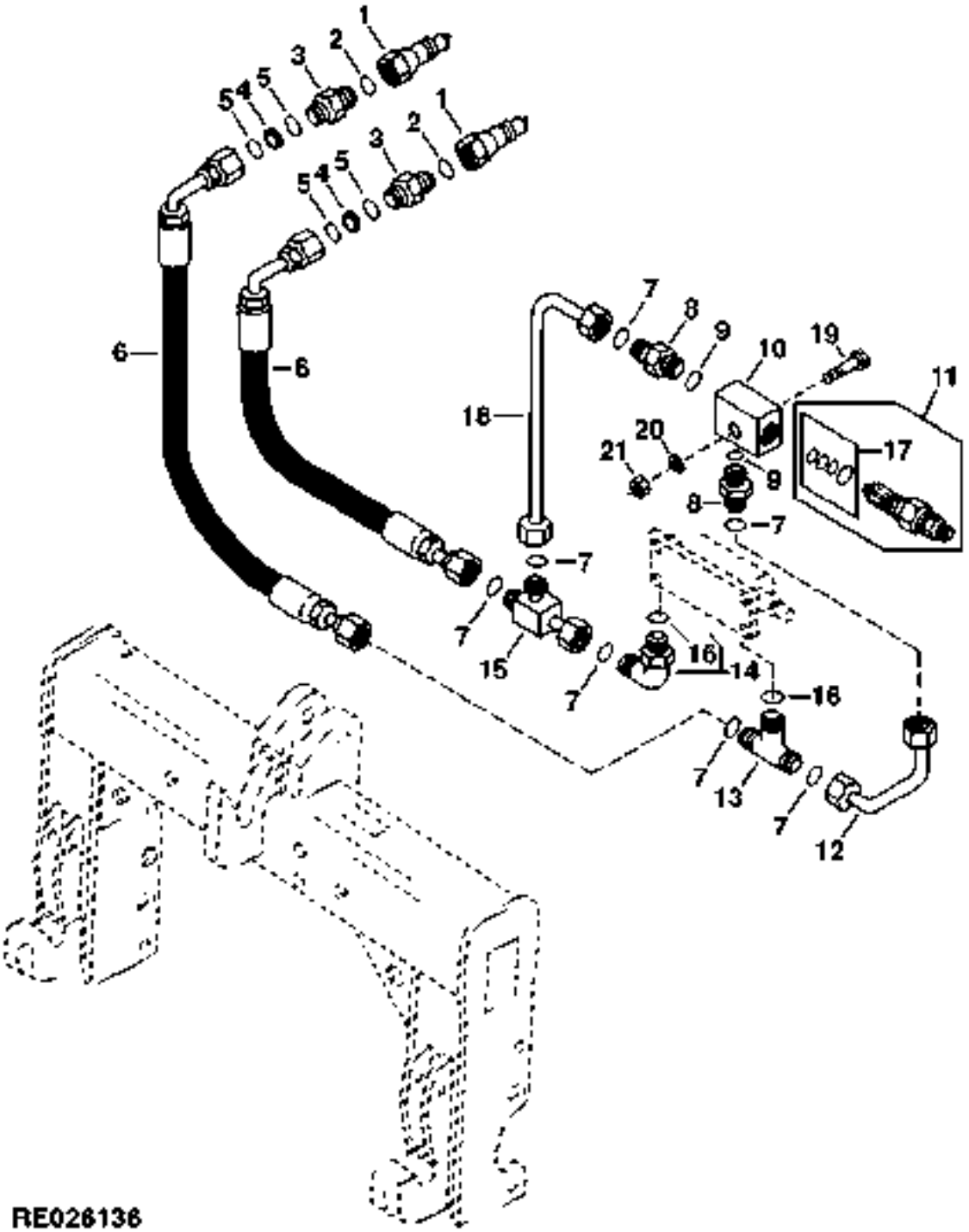

https://www.truck-manuals.net/

KEY	PART NO.	PART NAME	QTY	TRACTOR SERIAL NO.	ALL	REMARKS
1	AR94522	INTERNAL HALF COUPLER	2		X	
2	R26375	O-RING	2		X	
3	38H1171	ADAPTER	2		X	
4	R126588	PLATE	2		X	
5	T77613	O-RING	4		X	
6	RE58324	HYDRAULIC HOSE	2		X	
7	T77613	O-RING	11		X	
8	38H1160	ADAPTER	2		X	
9	R26448	O-RING	2		X	
10	R127877	MANIFOLD	1		X	
11	RE63686	RELIEF VALVE	1		X	
12	RE63599	OIL LINE	1		X	
13	38H5123	TEE FITTING	1		X	
14	38H5016	ELBOW FITTING	1		X	
15	38H1030	TEE FITTING	1		X	
16	51M7041	O-RING	2		X	11.300 X 2.200 MM
17	RE63795	SEAL KIT	1		X	(A)
18	RE63600	OIL LINE	1		X	
19	19M8069	SCREW	1		X	M6 X 55
20	24M7088	WASHER	1		X	6.600 X 12 X 1.600 MM
21	14M7272	NUT	1		X	M6

(A) RELIEF VALVE
CLAPET DE DECHARGE
UEBERDRUCKVENTIL
VALVOLA DI SICUREZZA
VALVULA DE ALIVIO
SAEKERHETSVENTIL

https://www.truck-manuals.net/

MEMORANDA
MEMORANDA
MEMORANDA
MEMORANDA
MEMORANDA
MEMORANDA

https://www.truck-manuals.net/

SECTIONAL INDEX
INDEX DE SECTION
GRUPPENINDEX
INDICE DELLA SEZIONE
INDICE DE SECCION
GRUPPSFORTECKNING

RE029106 -UN-10MAY99

1 -	8E8
2 -	8E9
3 -	8E13
4 -	8E15
5 -	8E17
6 -	8E21
7 -	8F1
8 -	8F2
9 -	8F5
10 -	8F7
11 -	8F9
12 -	8F10
13 -	8F11
14 -	8F13
15 -	8F14
16 -	8F15
17 -	8F17
18 -	8F18
19 -	8F19
20 -	8F21
21 -	8F23
22 -	8G2
23 -	8G3
24 -	8G4
25 -	8G5
26 -	8G6
27 -	8G7

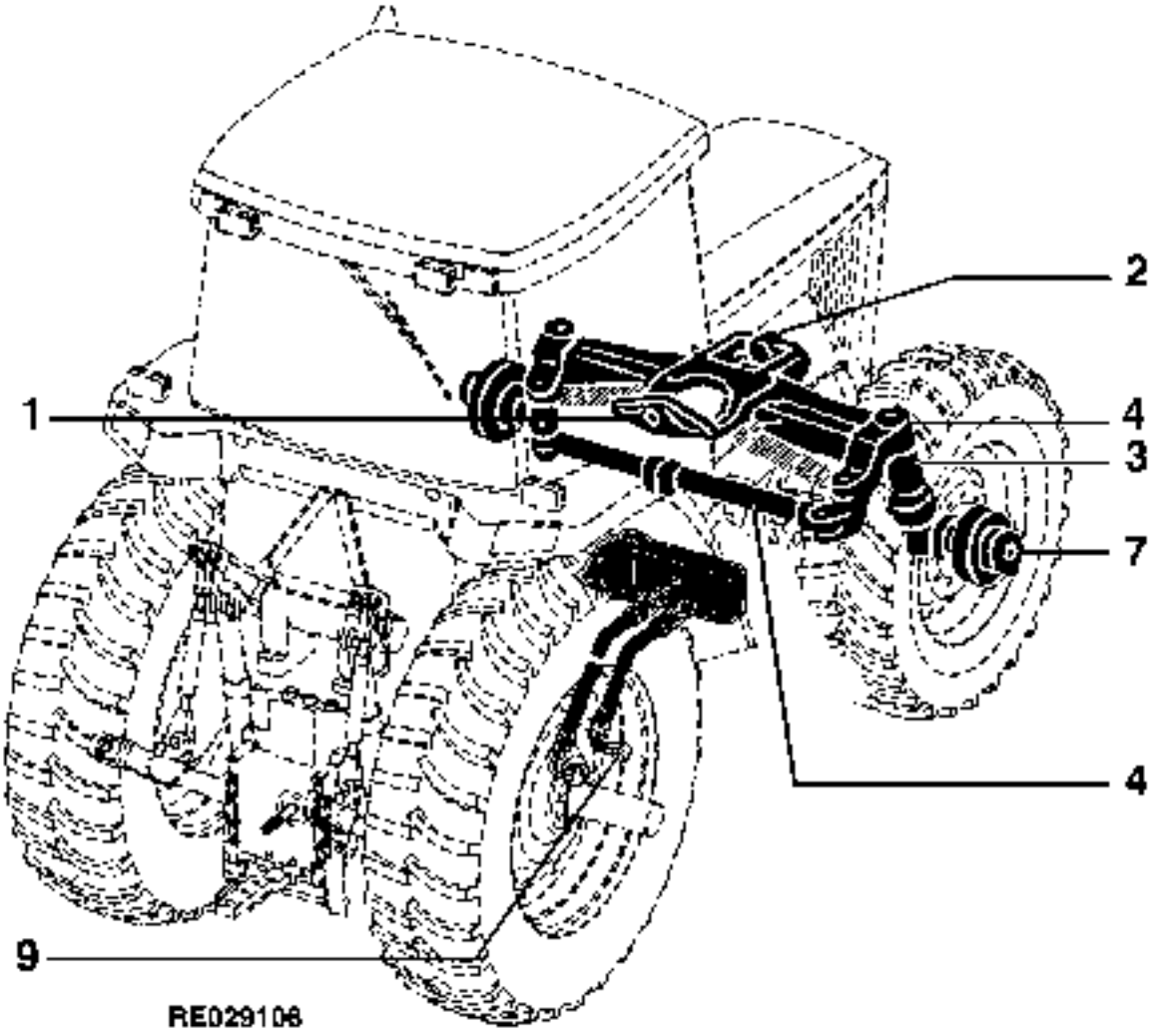

https://www.truck-manuals.net/

SECTIONAL INDEX
INDEX DE SECTION
GRUPPENINDEX
INDICE DELLA SEZIONE
INDICE DE SECCION
GRUPPSFORTECKNING

RE029107 -UN-10MAY99

1 -	8E8
2 -	8E9
3 -	8E13
4 -	8E15
5 -	8E17
6 -	8E21
7 -	8F1
8 -	8F2
9 -	8F5
10 -	8F7
11 -	8F9
12 -	8F10
13 -	8F11
14 -	8F13
15 -	8F14
16 -	8F15
17 -	8F17
18 -	8F18
19 -	8F19
20 -	8F21
21 -	8F23
22 -	8G2
23 -	8G3
24 -	8G4
25 -	8G5
26 -	8G6
27 -	8G7

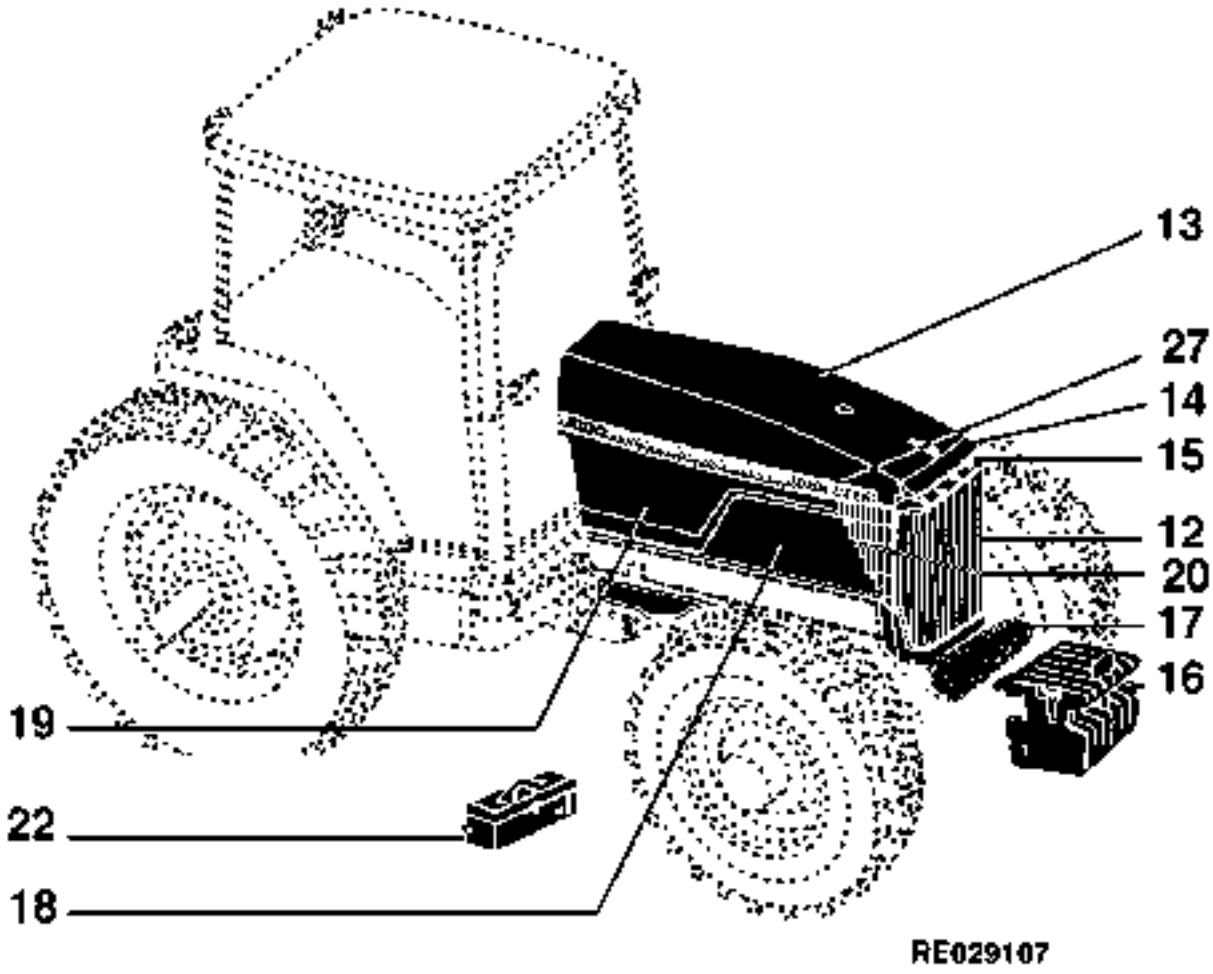

https://www.truck-manuals.net/

SECTIONAL INDEX
INDEX DE SECTION
GRUPPENINDEX
INDICE DELLA SEZIONE
INDICE DE SECCION
GRUPPSFORTECKNING

RE029108 -UN-10MAY99

1 -	8E8
2 -	8E9
3 -	8E13
4 -	8E15
5 -	8E17
6 -	8E21
7 -	8F1
8 -	8F2
9 -	8F5
10 -	8F7
11 -	8F9
12 -	8F10
13 -	8F11
14 -	8F13
15 -	8F14
16 -	8F15
17 -	8F17
18 -	8F18
19 -	8F19
20 -	8F21
21 -	8F23
22 -	8G2
23 -	8G3
24 -	8G4
25 -	8G5
26 -	8G6
27 -	8G7

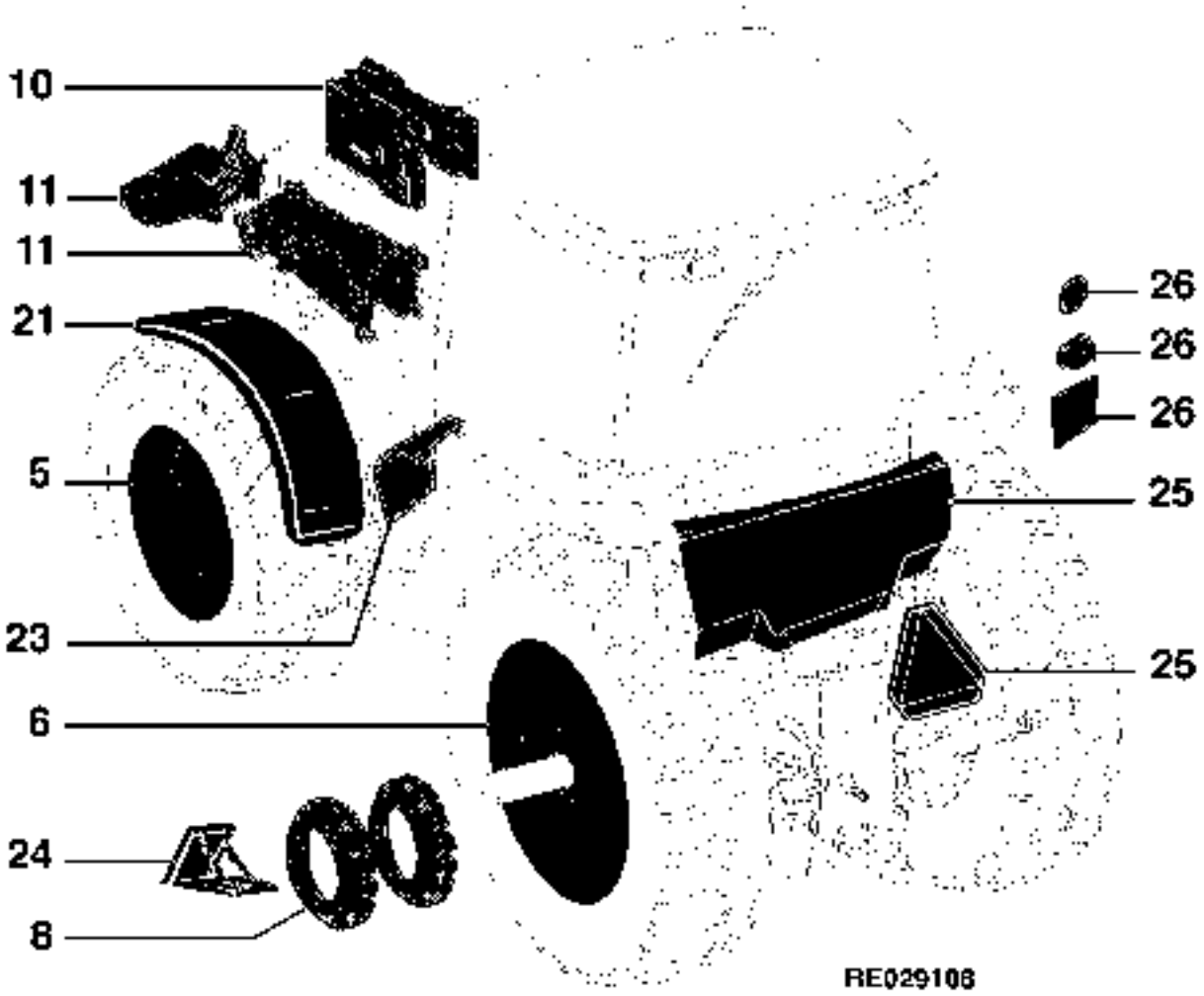

https://www.truck-manuals.net/

SECTIONAL INDEX
INDEX DE SECTION
GRUPPENINDEX
INDICE DELLA SEZIONE
INDICE DE SECCION
GRUPPSFORTECKNING

https://www.truck-manuals.net/

FRONT AXLE CENTER
PARTIE INTERMEDIAIRE D'ESSIEU AVANT
VORDERACHS-MITTELSTRUECK
ASSALE CENTRALE ANTERIORE
PUENTE CENTRAL DEL EJE DELANTERO
MITTSEKTION AV FRAMAXELN
RXP010798 -UN-01JAN94

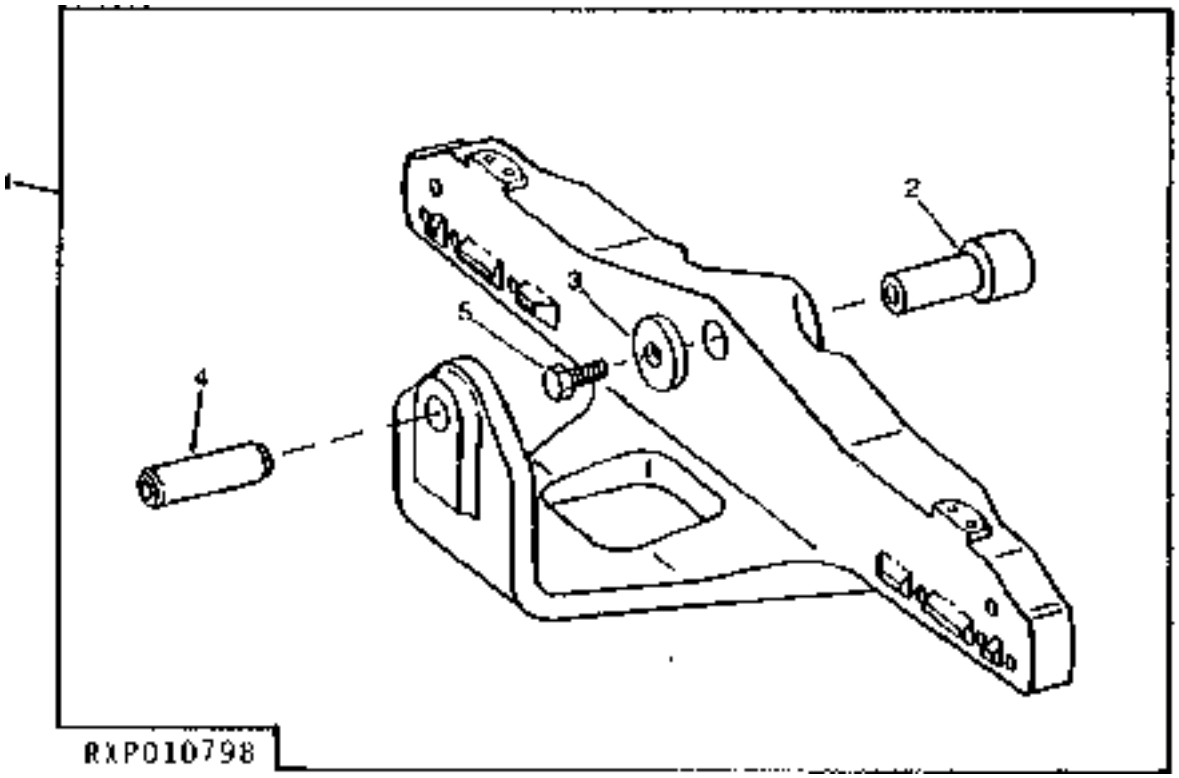

KEY	PART NO.	PART NAME	QTY	TRACTOR SERIAL NO.	8 8 8 1 2 3 0 0 0 0 0 0	REMARKS
1	RE49988	FRONT AXLE	1		X X X	(MARKED R111397, R128226 OR R132030) (SUB RE67366)
2	R111398	PIN	1		X X X	
3	R116440	WASHER	1		X X X	
4	R73635	BUSHING	1		X X X	REAR
5	19M8639	CAP SCREW	1		X X X	M20 X 70, HS 10.9

https://www.truck-manuals.net/

FRONT AXLE REAR PIVOT SUPPORT
SUPPORT DE PIVOT ARRIERE D'ESSIEU AVANT
HINTERE VORDERACHS-GELENKZAPFENLAGER
SUPPORTO DELL'ARTICOLAZIONE POST.DELL'ASSALE ANT.
SOPORTE DEL PIVOTE TRASERO DEL EJE DELANTERO
FRAMAXELNS BAKRE LEDSTOED
RE029815 -UN-20AUG98

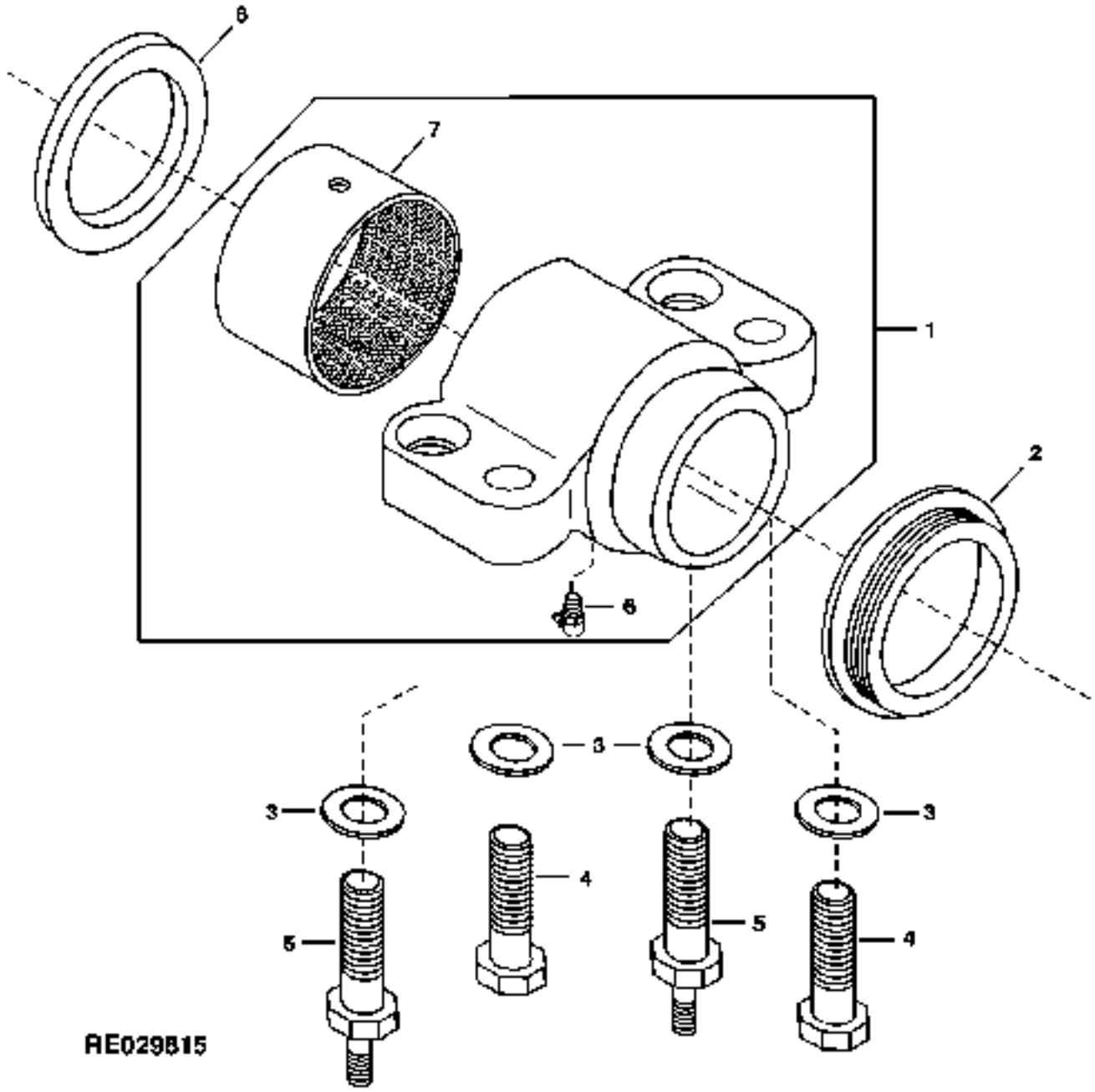

https://www.truck-manuals.net/

KEY	PART NO.	PART NAME	QTY	TRACTOR SERIAL NO.	8 8 8 1 2 3 0 0 0 0 0 0	REMARKS
1	RE53180	SUPPORT	1	-XXXXXX	X X X	(A) W/MFWD, (SUB RE62205)
	RE62205	SUPPORT	1	XXXXXX-	X X X	(B) W/MFWD
	RE53046	SUPPORT	1		X X X	W/O MFWD
2	R116353	SEAL	1		X X X	W/MFWD
3	24M7242	WASHER	4		X X X	21.400 X 42 X 5 MM
4	19M7892	CAP SCREW	4		X X X	M20 X 80
5	R113329	ANCHOR	2		X X X	W/O MFWD
6	JD7798	LUBRICATION FITTING	1		X X X	
7	R109639	BUSHING	1	-XXXXXX	X X X	(A) W/MFWD
	R125974	BUSHING	1	XXXXXX-	X X X	(B) W/MFWD
	R109808	BUSHING	1		X X X	W/O MFWD
8	R107466	SEAL	1		X X X	MFWD

(A) (-XXXXXX) 8100-001490; 8200-001460; 8300-002510; 8400-001120
(B) (XXXXXX-) 8100-001491; 8200-001461; 8300-002511; 8400-001121

https://www.truck-manuals.net/

FRONT AXLE FRONT PIVOT FRONT SUPPORT (MFWD)
SUPPORT DE PIVOT AVANT D'ESSIEU AVANT (MFWD)
VORDERES VORDERACHS-GELENKZAPFENLAGER (MFWD)
SUPPORTO DELL'ARTICOLAZIONE ANT.DELL'ASSALE ANT (MFWD)
SOPORTE DEL PIVOTE DELANTERO DEL EJE DELANTERO (MFWD)
FRAMAXELNS FRAEMRE LEDSTOED (MFWD)
RE029816 -UN-18AUG98

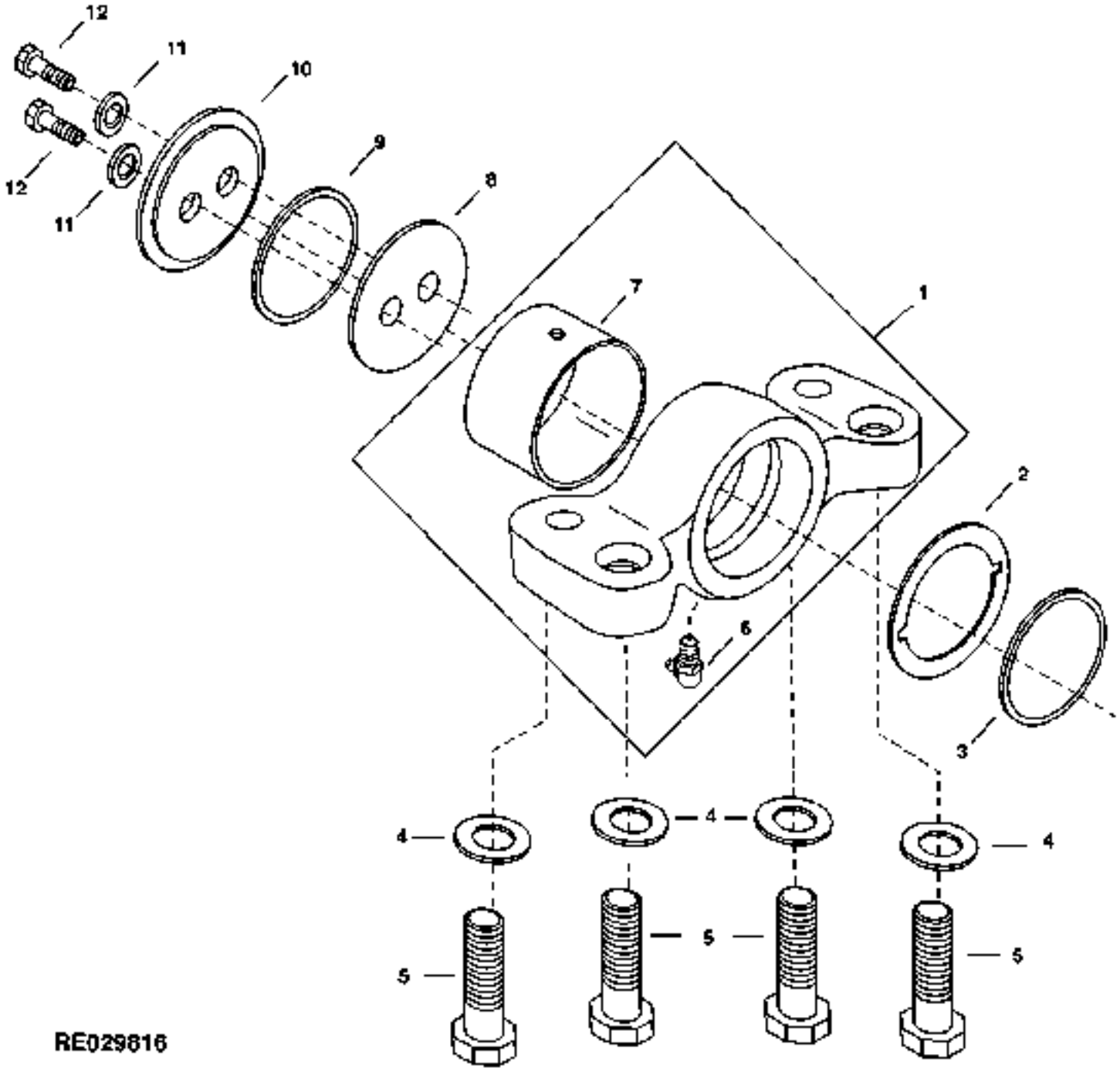

https://www.truck-manuals.net/

KEY	PART NO.	PART NAME	QTY	TRACTOR SERIAL NO.	ALL	REMARKS
1	RE61477	SUPPORT	1	-XXXXXX	X	(A) (SUB FOR R107230) (SUB RE62204)
	RE62204	SUPPORT	1	XXXXXX-	X	(B)
2	R124958	THRUST WASHER	1		X	MFWD
3	R134224	PACKING	2		X	MFWD, (SUB FOR R124959)
4	24M7242	WASHER	4		X	21.400 X 42 X 5 MM
5	19M7892	CAP SCREW	4		X	M20 X 80 HS 10.9
6	JD7798	LUBRICATION FITTING	1		X	
7	R109639	BUSHING	1	-XXXXXX	X	(A)
	R125974	BUSHING	1	XXXXXX-	X	(B)
8	R124961	THRUST WASHER	1		X	W/ MFWD
	R107448	WASHER	1		X	W/O MFWD
9	R134224	PACKING	1		X	W/ MFWD, (SUB FOR R124959)
10	R124962	RETAINER	1		X	W/ MFWD
11	24M7241	WASHER	2		X	17 X 34 X 4 MM
12	19M7488	CAP SCREW	2		X	M16 X 40 HS 10.9

(A) (-XXXXXX) 8100-001543; 8200-001499; 8300-002563; 8400-001174
(B) (XXXXXX-) 8100-001544; 8200-001500; 8300-002564; 8400-001175

https://www.truck-manuals.net/

FRONT AXLE KNEE SPINDLE KNUCKLE
PORTE-FUSEE/FUSEE
VORDERACHSARM/ACHSSCHENKEL
MONTANTE ASSALE ANTERIORE/FUSELLO
EXTENSION DEL EJE DELANTERO/MANGUETA
FRAMAXELARM/SPINDELTAPP
RE029555 -UN-12MAY98

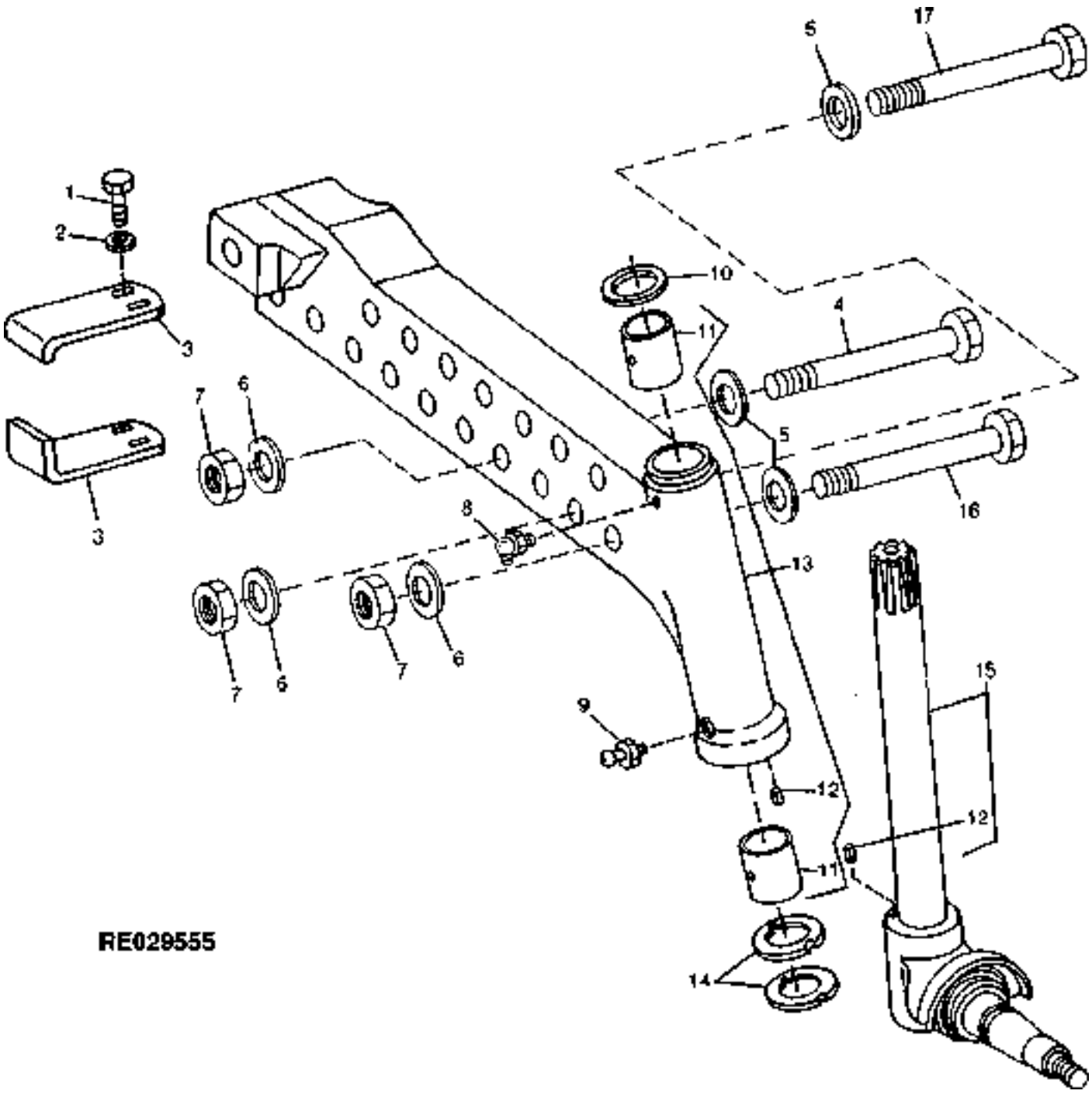

https://www.truck-manuals.net/

KEY	PART NO.	PART NAME	QTY	TRACTOR SERIAL NO.	8 8 8 1 2 3 0 0 0 0 0 0	REMARKS
1	19M7167	CAP SCREW	4		X X X	M10 X 25
2	24M7040	WASHER	4		X X X	11 X 20 X 2 MM
3	L75859	CLAMP	2	-XXXXXX	X X X	(C)
	R136359	CLAMP	2	XXXXXX-	X X X	(D)
4	19M7645	SCREW	1		X X X	M20 X 200 HS 10.9, (NLR)
	19M7921	CAP SCREW	6	XXXXXX-	X X X	(D) M20 X 150
5	24M7242	WASHER	4	-XXXXXX	X X X	(A) 21.400 X 42 X 5 MM
	24M7344	WASHER	4	XXXXXX-	X X X	(B) 22 X 37 X 3 MM
6	24M7242	WASHER	4	-XXXXXX	X X X	(A) 21.400 X 42 X 5 MM
	24M7344	WASHER	4	XXXXXX-	X X X	(B)
7	14M7277	NUT	4		X X X	M20
8	JD7799	LUBRICATION FITTING	1		X X X	UP
9	JD7798	LUBRICATION FITTING	1		X X X	LOW
10	R31251	WASHER	6		X X X	
11	R52188	BUSHING	2		X X X	
12	34H308	SPRING PIN	1		X X X	1/4" X 1/2"
13	RE58605	AXLE KNEE	1		X X X	(MARKED R122354) RH
	RE58606	AXLE KNEE	1		X X X	(MARKED R122355) LH
14	R30398	WASHER	2		X X X	
15	RE57644	KNUCKLE	1		X X X	(SUB FOR RE71370) (INCLUDES 14M7519 AND 34H308)
16	19M8503	CAP SCREW	2		X X X	M20 X 160, HS 10.9
17	19M8100	CAP SCREW	2	-XXXXXX	X X X	(C) M20 X 180
	19M8503	CAP SCREW	2	XXXXXX-	X X X	(D) M20 X 160

(A) (-XXXXXX) 8100-001092; 8200-001096; 8300-001309; 8400-001042
(B) (XXXXXX-) 8100-001093; 8200-001097; 8300-001310; 8400-001043

(C) (-XXXXXX) 8100-020954; 8200-020801; 8300-021482
(D) (XXXXXX-) 8100-020955; 8200-020802; 8300-021483

https://www.truck-manuals.net/

TIE ROD
BARRE D'ACCOUPLEMENT
SPURSTANGE
BARRA D'ACCOPPIAMENTO
VARILLA TENSORA
PARALLELSTAG
RXP010799 -UN-01JAN94

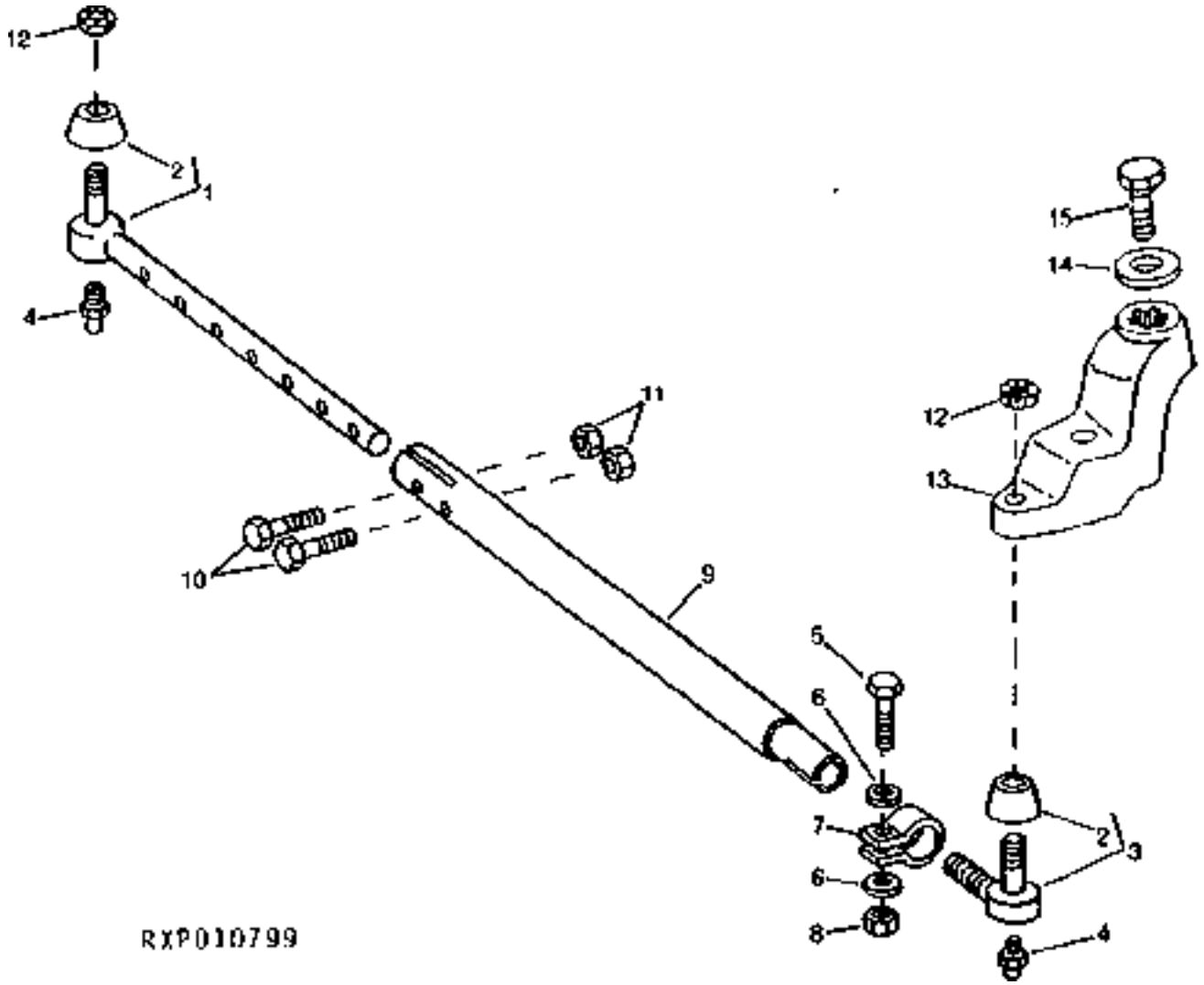

https://www.truck-manuals.net/

KEY	PART NO.	PART NAME	QTY	TRACTOR SERIAL NO.	8 8 8 1 2 3 0 0 0 0 0 0	REMARKS
1	RE58495	TIE ROD END	1		X X X	L.H.
2	R78027	COVER	2		X X X	
3	RE58693	TIE ROD END	1		X X X	R.H.
4	JD7797	LUBRICATION FITTING	2		X X X	
5	19M7214	CAP SCREW	1		X X X	M12 X 70
6	24M7047	WASHER	2		X X X	13 X 24 X 2.500 MM
7	R66307	CLAMP	1		X X X	
8	14M7313	LOCK NUT	1		X X X	(A) M12
	B30434	LOCK NUT	1		X X X	(B)
9	R125162	TUBE	1		X X X	
10	19H3704	CAP SCREW	2		X X X	3/8" X 2-1/4"
11	K40003	LOCK NUT	2		X X X	3/8"
12	R125532	LOCK NUT	2		X X X	
13	R125163	STEERING ARM	1		X X X	R.H.
	R125164	STEERING ARM	1		X X X	L.H.
14	R121183	WASHER	2		X X X	
15	19M8002	CAP SCREW	2		X X X	M20 X 55, HS 10.9

(A) (-XXXXXX) 8100-020954; 8200-020801; 8300-021482
(B) (XXXXXX-) 8100-020955; 8200-020802; 8300-021483

https://www.truck-manuals.net/

FRONT WHEEL
ROUES AVANT
VORDERRAEDER
ROUTE ANTERIORI
RUEDAS DELANTERAS
FRAMHJUL
RXP010834 -UN-01JAN94

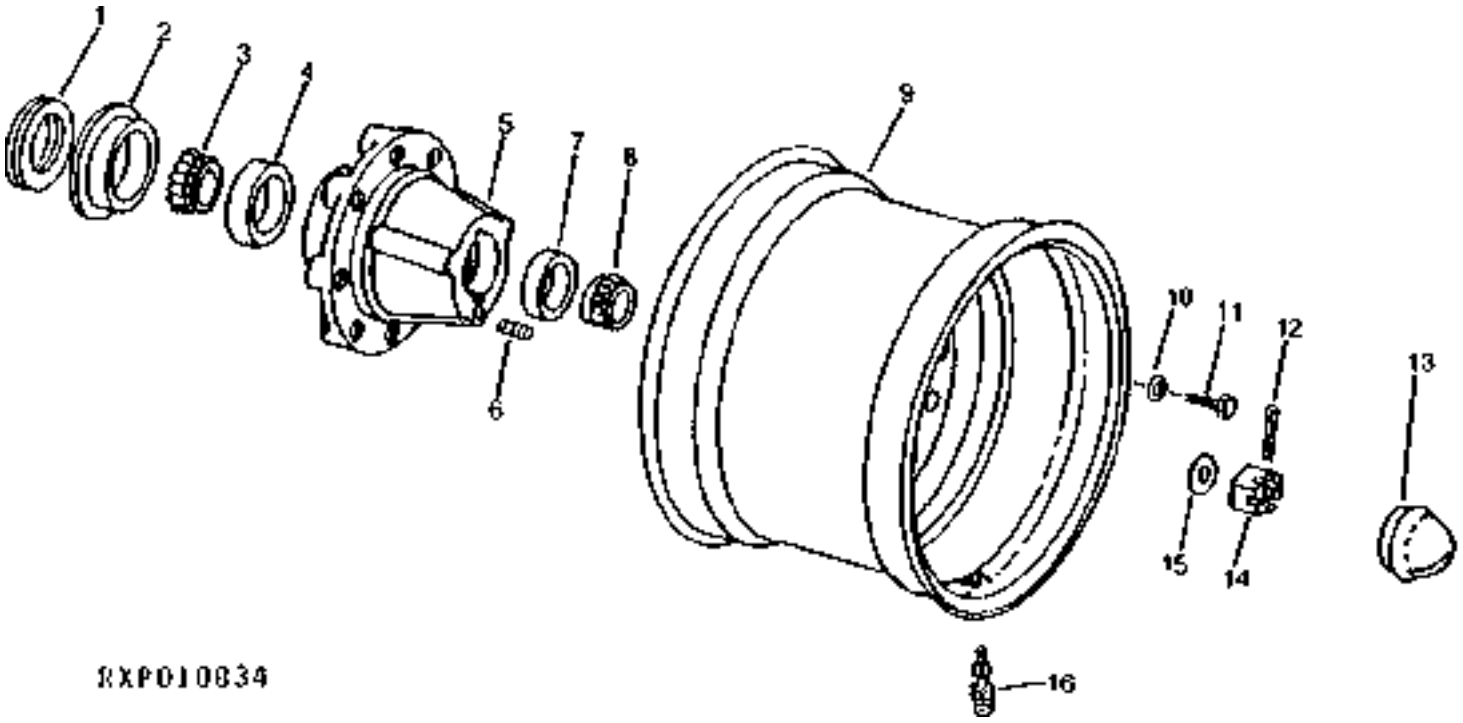

https://www.truck-manuals.net/

KEY	PART NO.	PART NAME	QTY	TRACTOR SERIAL NO.	ALL	REMARKS
1	AR27806	SEAL	1		X	
2	R28574	SEAL	1		X	
3	JD8131	BEARING CONE	1		X	
4	JD7439	BEARING CUP	1		X	
5	R113716	HUB	1		X	
6	22H841	SET SCREW	1		X	1/4" X 1/4"
7	JD7266	BEARING CUP	1		X	
8	JD10190	BEARING CONE	1		X	
9	RE58702	WHEEL	1	-XXXXXX	X	(A) (C) (10.00-20")
	RE70776	WHEEL	1	XXXXXX-	X	(A) (D) (10.00-20")
	RE51672	WHEEL	1	-XXXXXX	X	(A) (E) (SUB FOR RE14519) (11.00-16")
	RE70784	WHEEL	1	XXXXXX-	X	(A) (F) (11.00-16")
	RE70785	WHEEL	1		X	(A) (H) (14.00-16")
	RE50184	WHEEL	1	-XXXXXX	X	(A) (G) (10.00-24")
	RE70777	WHEEL	1	XXXXXX-	X	(A) (H) (10.00-24")
	RE50183	WHEEL	1	-XXXXXX	X	(A) (G) (10.00-16")
	RE70775	WHEEL	1	XXXXXX-	X	(A) (H) (10.00-16")
10	24M7241	WASHER	8		X	17 X 34 X 4 MM
11	19M7488	CAP SCREW	8		X	M16 X 40
12	11M7030	COTTER PIN	1		X	0.197" X 1.575"
13	DT2127W	CAP	1		X	
14	14M7519	NUT	1		X	M24
15	24M7243	WASHER	1		X	25.400 X 50 X 6 MM
16	AT25226	TIRE VALVE STEM	1		X	(A) (14L-16.1, 16.5L-16.1, 11.00-20, OR 11.00-24)
	AM30347	TIRE VALVE STEM	1		X	(A) (B) (USE WITH RE50183)
17	RE54816	BEARING KIT	1		X	

(A)FOR TIRE SIZE
POUR PNEUMATIQUES
FUER BEREIFUNG
PER PNEUMATICI
PARA NEUMATICOS
FOR DACKSDIMENSION

(B)ALL MODELS
TOUS MODELES
ALLE MODELLE
TUTTI I MODELLI
TODOS LOS MODELOS
ALLA MODELLER

(C)(-XXXXXX) 8100-020954; 8200-021802; 8300-021420; 8400-021559
(D)(XXXXXX-) 8100-020955; 8200-021803; 8300-021421; 8400-021560

(E)(-XXXXXX) 8100-020966; 8200-020806; 8300-021420; 8400-021559
(F)(XXXXXX-) 8100-020967; 8200-020807; 8300-021421; 8400-021560

(G)(-XXXXXX) 8100-021009; 8200-021802; 8300-021420; 8400-021559
(H)(XXXXXX-) 8100-021010; 8200-021803; 8300-021421; 8400-021560

https://www.truck-manuals.net/

FRONT WHEELS (MECHANICAL FRONT WHEEL DRIVE)
ROUSES AVANT (TRACTION AVANT MECANIQUE)
VORDERRAEDER (MECHANISCHER FRONTANTRIEB)
RUOTE ANTERIORI (TRAZIONE ANTERIORE MECANNICA)
RUEDAS DELANTERAD (TRACCION DELANTERA)
FRAMHJUL (MEKANISK FRAMHJULSDRIVNING)
RXP9500 -UN-01JAN94

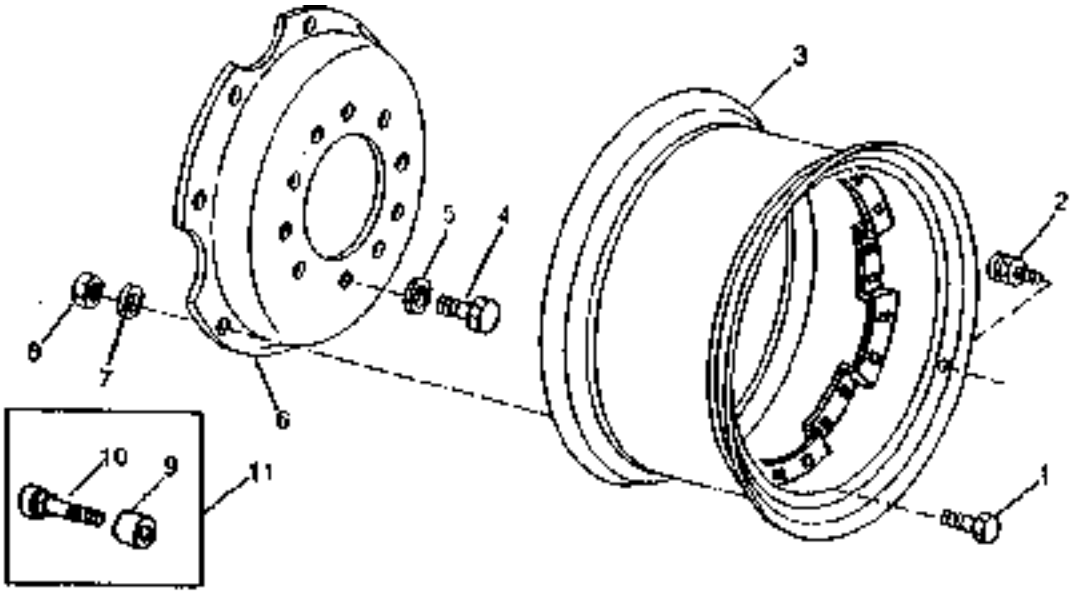

RXP9500

https://www.truck-manuals.net/

KEY	PART NO.	PART NAME	QTY	TRACTOR SERIAL NO.	ALL	REMARKS
1	R112424	BOLT	12		X	M16 X 50
2	AT25226	TIRE VALVE STEM	1		X	
3	RE156605	RIM	1		X	(A) (SUB FOR RE49474) (16.9-28, 480/70R28) (18.4R28)
	RE156606	RIM	1		X	(A) (SUB FOR RE67191 OR RE51658) (600/65R28)
	RE156607	RIM	1		X	(A) (SUB FOR RE49475) (14.9-30)
	RE156608	RIM	1		X	(A) (SUB FOR RE49476) (16.9-30) (480/70R30)
	RE156610	RIM	1		X	(A) (SUB FOR RE67190, RE51657) (14.9-34) (385/85R34)
	RE156609	RIM	1		X	(A) (320/85R34)(290/195R34) (SUB FOR RE51656)
4	19M8224	CAP SCREW	12		X	M20 X 60, M20 X 60, HS 10.9
5	24M7242	WASHER	12		X	21.400 X 42 X 5 MM, 21.400 X 42 X 5 MM
6	R156497	WHEEL CENTER	1		X	(C) (SUB FOR R112951) 28" & 30"
	R156499	WHEEL CENTER	1		X	(C) (SUB FOR R112953) 34"
	R156498	WHEEL CENTER	1		X	(A) (D) (SUB FOR R116336) (600/65R28), 28" & 30"
7	24M7241	WASHER	12		X	17 X 34 X 4 MM
8	14M7276	NUT	12		X	M16, M16
9	R115277	SPACER	16		X	
10	R115278	BOLT	16		X	
11	RE52128	KIT	1		X	(B) (SUB (16) R115277 AND (16) R115278)

(A)FOR TIRE SIZE
POUR PNEUMATIQUES
FUER BEREIFUNG
PER PNEUMATICI
PARA NEUMATICOS
FOR DACKSDIMENSION

(B)66" TREAD SETTING
VOIE DE ROUE DE 1,68 M (66 IN.)
1,68 M (66 IN.) SPUREINSTELLUNG
CAREGGIATA DA 1.68 M (66 IN.)
AJUSTE DE ANCHO DE VIA DE 1,66 M (66
1,68 M (66 IN.) SPAARVIDD

(C)101.6 MM FLANGE OFFSET
101.6 MM REGLAGE DE BRIDE
101.6 MM GEKROPFTER FLANSCH
101.6 COMPENSACION DE BRIDA
101.6 MM DISASSAMENTO FLANGIA
101.6 MM JUSTERINGSAVST NO FLANS

(D)75 MM FLANGE OFFSET
75 MM REGLAGE DE BRIDE
75 MM GEKROPFTER FLANSCH
75 MM COMPENSACION DE BRIDA
75 MM DISASSAMENTO FLANGIA
75 MM JUSTERINGSAVST NO FLANS

(E)FOR TUBELESS TIRES
DE PNEUS SANS CHAMBRE A AIR
FUER SCHLAUCHLOSE BEREIFUNGEN
PER PNEUMATICI SENZA CAMERA D'ARIA
PARA NEUMATICOS SIN CAMARA DE AIRE
FOR SLANGLOSA DACK

https://www.truck-manuals.net/

CAST REAR WHEELS
ROUES ARRIERE FONTE
GUSS-HINTERRAEDER
RUOTE POSTERIORI GHISI
RUEDAS TRASERAS DE FUNDICION
GJUTNA BAKHJULER
RXP011523 -UN-06JAN95

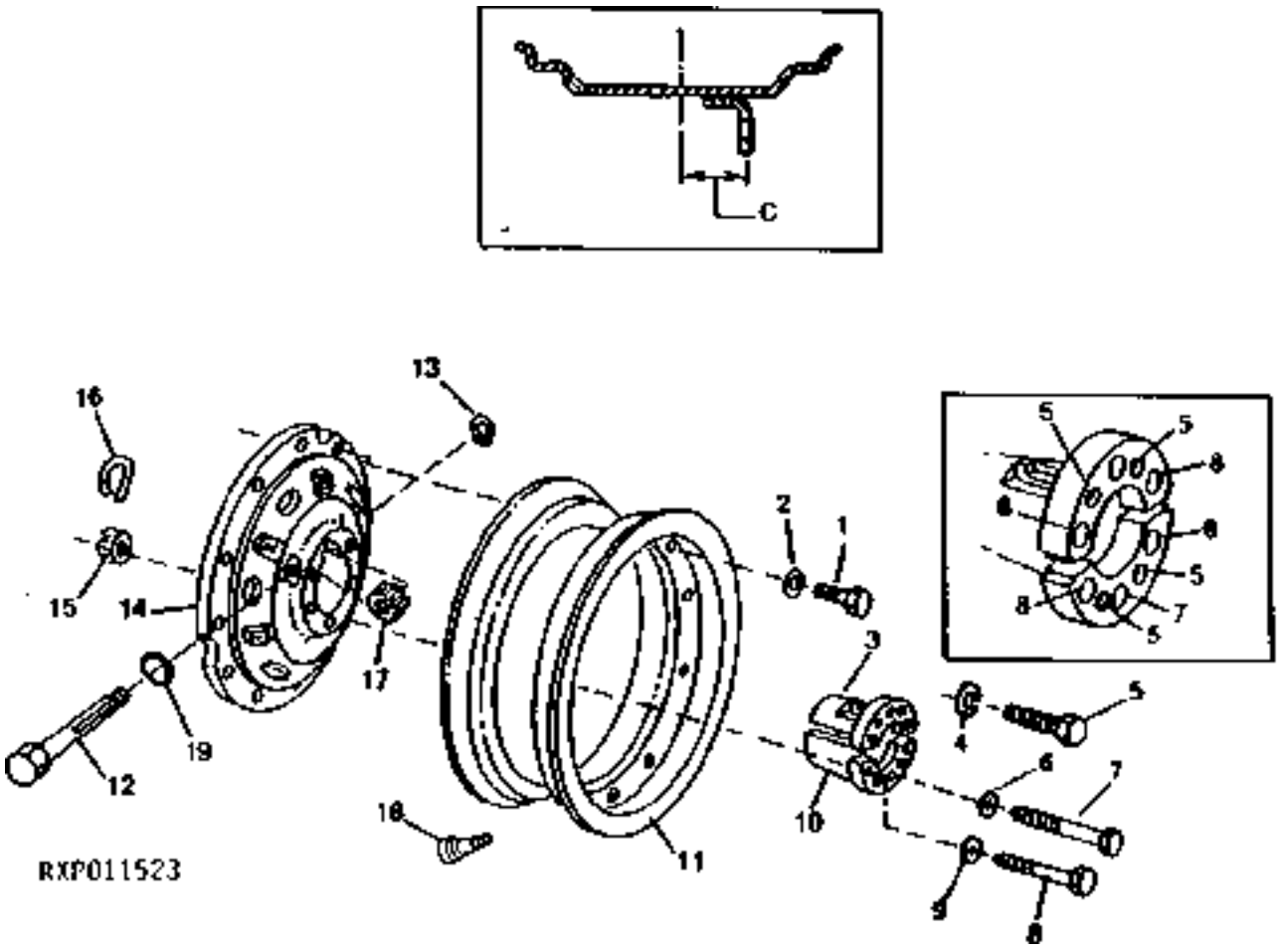

https://www.truck-manuals.net/

KEY	PART NO.	PART NAME	QTY	TRACTOR SERIAL NO.	ALL	REMARKS
1	R105572	CAP SCREW	12		X	
2	R52006	WASHER	12		X	
3	R126587	SLEEVE	1		X	(E) (SUB FOR R124250)
	R124249	SLEEVE	1		X	(D)
4	A4883R	RING	4		X	
5	R109147	CAP SCREW	4		X	
6	R52006	WASHER	1		X	
7	R111009	CAP SCREW	1		X	
8	R109823	CAP SCREW	4		X	
9	R99437	WASHER	4		X	
	R111103	SLEEVE	1		X	(B) (D)
10	R111104	SLEEVE	1		X	(B) (E)
11	RE55071	RIM	1		X	(A) (C) (320/90R50)
	RE48142	RIM	1		X	(A) (C) (20.8-38)
	RE50750	RIM	1		X	(A) (C) (18.4-42)
	RE50749	RIM	1		X	(A) (C) (20.8-42)
	RE48145	RIM	1		X	(A) (C) (14.9-46 OR 420/80R46)
	RE50699	RIM	1		X	(A) (C) (18.4-46)
	RE44260	RIM	1		X	(A) (C) (710/70R38)
	RE66601	RIM	1		X	(A) (620/70R42)
	RE150852	RIM	1		X	(A) (308/90R50)
12	R124256	PINION SHAFT	1		X	
13	R125475	PIN	1		X	
14	R124162	WHEEL	1		X	
15	R111010	NUT	1		X	
16	R125475	PIN	1		X	
17	R124102	PINION	1		X	(D)
	R58865	PINION	1		X	(E)
18	AT25226	TIRE VALVE STEM	1		X	
19	R74210	O-RING	1		X	

(A)FOR TIRE SIZE
POUR PNEUMATIQUES
FUER BEREIFUNG
PER PNEUMATICI
PARA NEUMATICOS
FOR DACKSDIMENSION

(B)KEY HALF
CLAVETTE
KEILHALFTE
ROTEN DE LLAVE
CHIAVETTA
KONSPRINT

(C)76.2 MM FLANGE OFFSET
76.2 MM REGLAGE DE BRIDE
76.2 MM GEKROPFTER FLANSCH
76.2 MM COMPENSACION DE BRIDA
76.2 MM DISASSAMENTO FLANGIA
76.2 MM JUSTERINGSAVST ND FLANS

(D)100 MM AXLE
100 MM ESSIEU
100 MM ACHSE
100 MM ASSALE
100 MM EJE
100 MM AXEL

(E)110 MM AXLE
110 MM ESSIEU
110 MM ACHSE
110 MM ASSALE
110 MM EJE
110 MM AXEL

https://www.truck-manuals.net/

STEEL DISK REAR WHEELS (10-BOLT HUB)
ROUES ARRIERE ACIER (ROUE A 10 BOULONS UNIQUEMENT)
STAHL-HINTERRAEDER (NUR FUER 10-SCHRAUBEN-NABE)
RUOTE POSTERIORI ACCIAO (10-BULLONE A COLONNETTA SOLTANTO)
RUEDAS TRASERAS CON DISCO DE ACERO (CUBO DE 10 BULONES SOLAMENTE)
BAKHJUL MED STALDISK (ENDAST NAV MED 10 BULTAR)
RXP9409 -UN-01JAN94

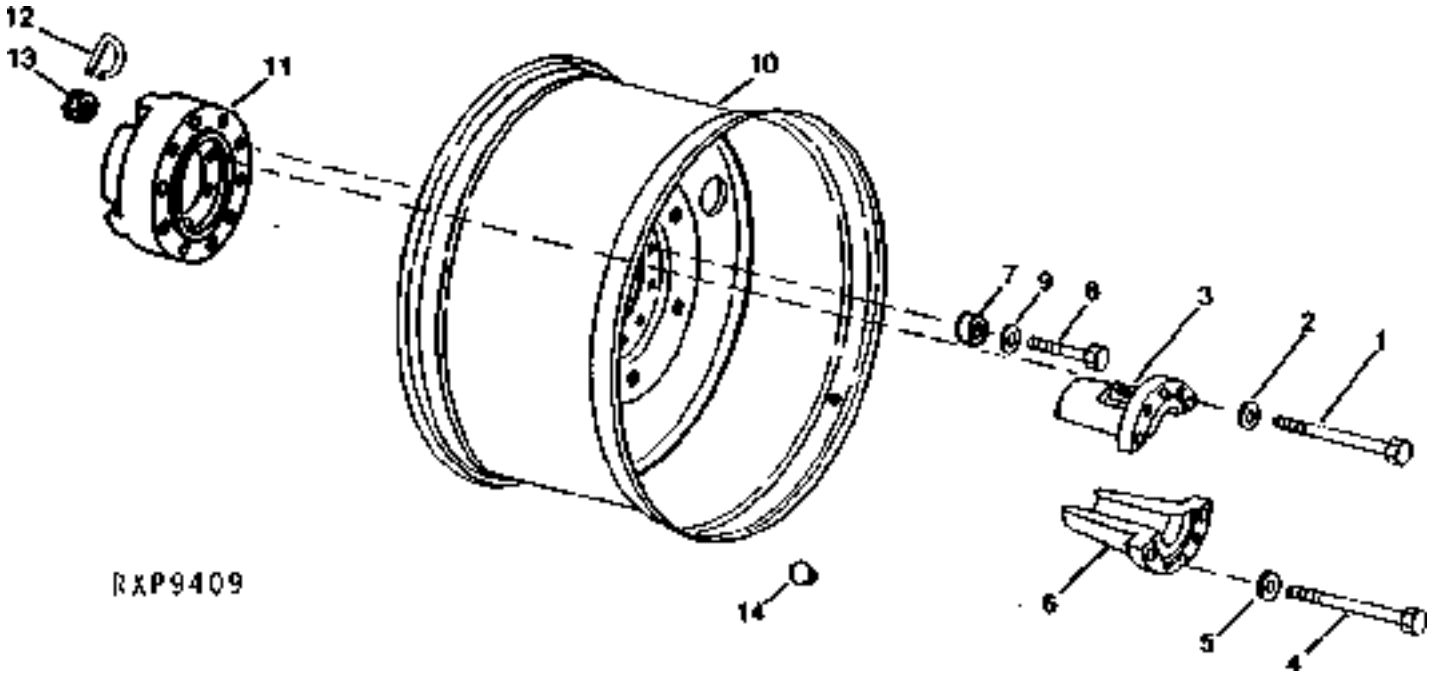

https://www.truck-manuals.net/

KEY	PART NO.	PART NAME	QTY	TRACTOR SERIAL NO.	ALL	REMARKS
1	R111009	CAP SCREW	2		X	
2	R52006	WASHER	2		X	
3	R124249	SLEEVE	1		X	(F) (8100 & 8200)
	R126587	SLEEVE	1		X	(G) (SUB FOR R124250)
4	R109823	CAP SCREW	4		X	
5	R99437	WASHER	4		X	
6	R111103	SLEEVE	1		X	(A) (F) (8100 & 8200)
	R111104	SLEEVE	1		X	(A) (G)
7	R113692	SPACER	10		X	(B) (C) (20.8-38, 20.8-42)
	R113692	SPACER	10		X	(B) (D) (E) (650-34)
8	R111434	CAP SCREW	10	-XXXXXX	X	(B) (D) (H) (650-34, 710-38)
	R111437	CAP SCREW	10	XXXXXX-	X	(B) (D) (I) (650-34, 710-38)
	R111434	CAP SCREW	10	-XXXXXX	X	(B) (C) (H) (20.8-38, 20.8-42)
	R111437	CAP SCREW	10	XXXXXX-	X	(B) (C) (I) (20.8-38, 20.8-42)
	R111434	CAP SCREW	10	-XXXXXX	X	(B) (E) (H) M22 X 130, HS 10.9 (650-34)
	R111437	CAP SCREW	10	XXXXXX-	X	(B) (E) (I) M22 X 100, HS 10.9 (650-34)
	R111437	CAP SCREW	10	-XXXXXX	X	(B) (D) (H) (20.8-38, 18.4-42, 20.8-42, 18.4-46)
	R131667	CAP SCREW	10	XXXXXX-	X	(B) (D) (I) M22 X 70-8.8 (20.8-38, 18.4-42, 20.8-42, 18.4-46)
9	R52006	WASHER	10		X	
10	RE56317	WHEEL	1		X	(B) (E) (650-34)
	RE51962	WHEEL	1		X	(B) (C) (20.8-38)
	RE50911	WHEEL	1		X	(B) (18.4-42)
	RE51963	WHEEL	1		X	(B) (C) (20.8-42)
	RE50928	WHEEL	1		X	(B) (D) (650-34)
	RE51017	WHEEL	1		X	(B) (18.4-46)
	RE155994	WHEEL	1		X	(B) (710-38) (SUB FOR RE57050 OR RE65232)
	RE66602	WHEEL	1		X	(B) (620/70R42)
	RE150854	RIM	1		X	(B) (380/90R50)
11	R108955	HUB	1	-XXXXXX	X	(B) (D) (H) (J) (20.8-38, 18.4-42, 20.8-42, 18.4-46, 650-34, 710-38)
	R127282	HUB	1	XXXXXX-	X	(B) (D) (I) (K) (20.8-38, 18.4-42, 20.8-42, 18.4-46, 650-34,710-38)
	R111007	HUB	1		X	(B) (E) (650-34)
	R135866	HUB	1		X	(B)
12	R125475	PIN	2		X	
13	R111010	NUT	2		X	
14	R55151	PLUG	1		X	
15	AT25226	TIRE VALVE STEM	1		X	

(A)KEY HALF
CLAVETTE
KEILHALFTE
ROTEN DE LLOVE
CHIAVETTA
KONSPRINT

(B)FOR TIRE SIZE
POUR PNEUMATIQUES
FUER BEREIFUNG
PER PNEUMATICIA
PARA NEUMATICOS
FOR DACKSDIMENSION

(C)HEAVY-DUTY DUALS
ROUES JUMELEES POUR USAGE
HOCHLEISTUNGS-ZWILLINGSRA
GOMME GEMELLATE PER IMPIEGHI
RUEDAS DOBLES PARA SERVICIO
EXTRA KRAFTIGA DUBBELHJUL

(D)DUAL POSITION
POSITION DOUBLE
DOPPELSTELLUNG
POSIZIONE A RUOTE GEMELLATE
POSICION DOBLE
DUBBELINSTAELLNING

(E)DRIVE POSITION
POSITION D'ENTRAINEMENT
FAHRSTELLUNG
POSIZIONE A RUOTE SINGOLE
POSICION DE IMPULSION
DRIVINSTAELLNING

(F)100 MM AXLE
100 MM ESSIEU
100 MM ACHSE
100 MM ASSALE
100 MM EJE
100 MM AXEL

(G)110 MM AXLE
110 MM ESSIEU
110 MM ACHSE
110 MM ASSALE
110 MM EJE
110 MM AXEL

(J)BOLT TO HUB
BOULONNEE AU MOYEU
AN DER NABE GESCHRAUBT
FISSATO AL MOZZO
EMPERNADO A CUBO
FASTSATT PAA NAVET

(K)BOLT TO RIM
BOULONNEE A JANTE
AN DER NABE FELGE
FISSATO AL CERCHIONE
EMPERNADO A LLANTA
FASTSATT PAA FAELG

(H)(-XXXXXX) 8100-005032; 8200-003652; 8300-006115; 8400-006888
(I)(XXXXXX-) 8100-005033; 8200-003653; 8300-006116; 8400-006889

https://www.truck-manuals.net/

MULTI-POSITION (DUALS)
POSITIONS MULTIPLES (DOUBLES)
MULTIPOSITION (DOPPEL RAEDERS)
MULTIPOSIZIONE (DOPPIOS)
MULTIPOSICION (DOBLES)
MULTIPOSITION (DUBBLAS)
RXP010402 -UN-01JAN94

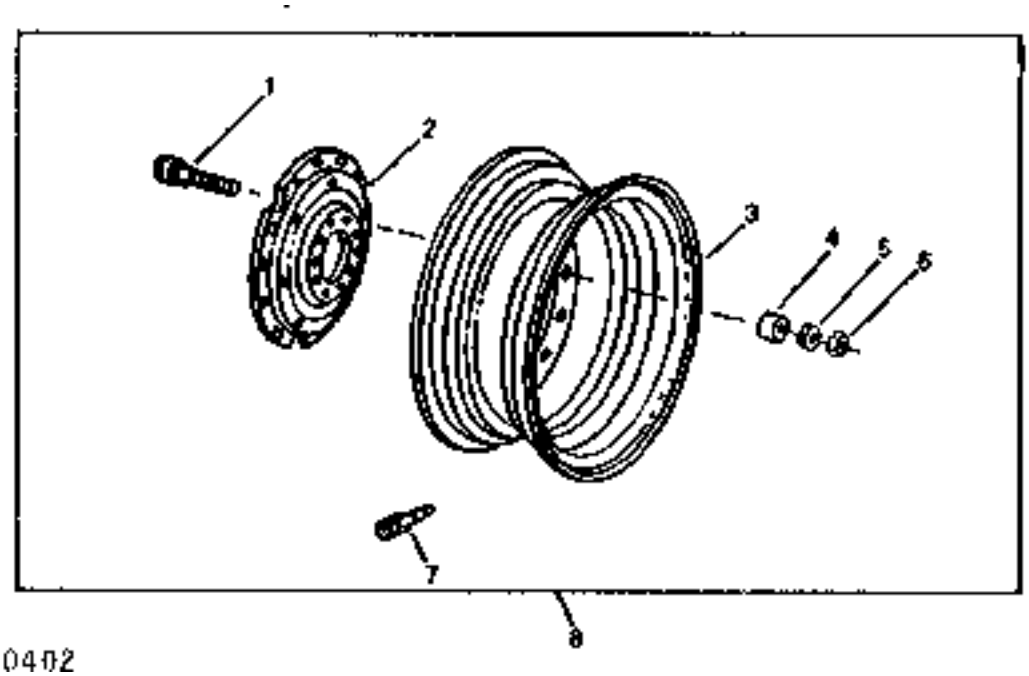

KEY	PART NO.	PART NAME	QTY	TRACTOR SERIAL NO.	ALL	REMARKS
1	R116570	BOLT	12		X	M22
2	R113459	DISK	1		X	(A) (14.9R46) (420/80R46) (320/90R50)
3	RE48145	RIM	1		X	(A) (14.9R46) (420/80R46)
	RE55071	RIM	1		X	(A) (320/90R50)
4	R113692	SPACER	12		X	(23.5 X 50 X 25.4 MM)
5	R113500	WASHER	12		X	(23 X 45 X 7.5 MM)
6	R114125	NUT	12		X	M22
7	AT25226	TIRE VALVE STEM	1		X	
8	RE51018	WHEEL	1		X	(A) (14.9R46)(420/80R46)

(A)FOR TIRE SIZE
POUR PNEUMATIQUES
FUER BERFEIFUNG
PER PNEUMATICIA
PARA NEUMATICOS
FOR DACKSDIMENSION

https://www.truck-manuals.net/

DUAL HUB EXTENSION (10-BOLT HUB ONLY)
RALLONGE DE MOYEU DOUBLE (ROUE A 10 BOULONS UNIQUEMENT)
NABENVERLAENGERUNG FUER DOPPELRAEDER (NUR FUER 10-SCHRAUBEN-NABE)
ESTENSIONE PER DOPPIO MOZZO (10-BULLONE A COLONNETTA SOLTANTO)
EXTENSION DE CUBO DOBLE (CUBO DE 10 BULONES SOLAMENTE)
NAVFOERLAENGARE FOER DUBBLA HJUL (ENDAST NAV MED 10 BULTAR)
RXP8048 -UN-01JAN94

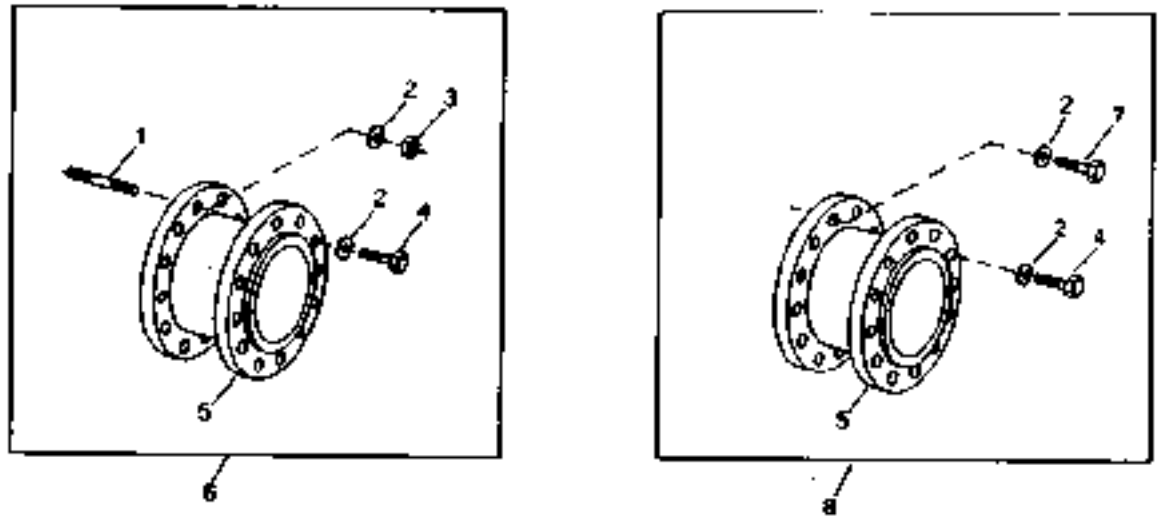

RXP8048

KEY	PART NO.	PART NAME	QTY	TRACTOR SERIAL NO.	ALL	REMARKS
1	R104533	STUD	10	-XXXXXX	X	(A) M22, 5"
	R129605	STUD	10	XXXXXX-	X	(B) M22, 5"
2	R52006	WASHER	10		X	(USE WITH 14M7481)
	R77869	WASHER	10		X	(USE WITH R105572)
3	14M7481	FLANGE NUT	10		X	M22, M22, 5"
4	R105572	CAP SCREW	10		X	M22 X 50, HS 10.9
5	R89974	EXTENSION	1		X	5"
	R89973	EXTENSION	1		X	10"
	R105619	EXTENSION	1		X	13"
	R90917	EXTENSION	1		X	15"
6	**RW26739**	**EXTENSION**	**2**	**-XXXXXX**	**X**	**(A) 5", KIT (FI)**
	AR116387	**EXTENSION**	**2**	**XXXXXX-**	**X**	**(B) 5" KIT (FI)**
7	R106661	CAP SCREW	10	-XXXXXX	X	(A) 10", 13" & 15", M22 X 120, HS 10.9
	R111437	CAP SCREW	10	XXXXXX-	X	(B) 10", 13" & 15", M22 X 100, HS 10.9
8	**RW27069**	**EXTENSION**	**2**	**-XXXXXX**	**X**	**(A) 10" KIT (FI)**
	AR116388	**EXTENSION**	**2**	**XXXXXX-**	**X**	**(B) 10" KIT (FI)**
	AR109313	**EXTENSION**	**2**	**-XXXXXX**	**X**	**(A) 13" KIT (FI)**
	AR116389	**EXTENSION**	**2**	**XXXXXX-**	**X**	**(B) 13" KIT (FI)**
	RW27070	**EXTENSION**	**2**	**-XXXXXX**	**X**	**(A) 15" KIT (FI)**
	AR116390	**EXTENSION**	**2**	**XXXXXX-**	**X**	**(B) 15" KIT (FI)**

(A) (-XXXXXX) 8100-005032; 8200-003652; 8300-006115; 8400-006888
(B) (XXXXXX-) 8100-005033; 8200-003653; 8300-006116; 8400-006889

https://www.truck-manuals.net/

WEIGHTS FOR CAST AND HEAVY CAST REAR WHEELS
MASSELOTTES D'EQUILIRAGE POUR ROUES ARRIERES EN ALLIAGE ET ALLIAGE RENFORCE
GEWICHTE FUER GUSSEISEN-RAEDER IN NORMALER UND SCHWERER AUSFUEHRUNG
PESI PER RUOTE POSTERIORI IN METALO FUSO E METALLO FUSO PESANTE
PESA PARA RUEDAS POSTERIORES DE FUNDICION Y FUNDICION PESADA
VIKTER TILL GJUTNA OCH TUNGA, GJUTNA BAKHJUL
RE029097 -UN-11MAR98

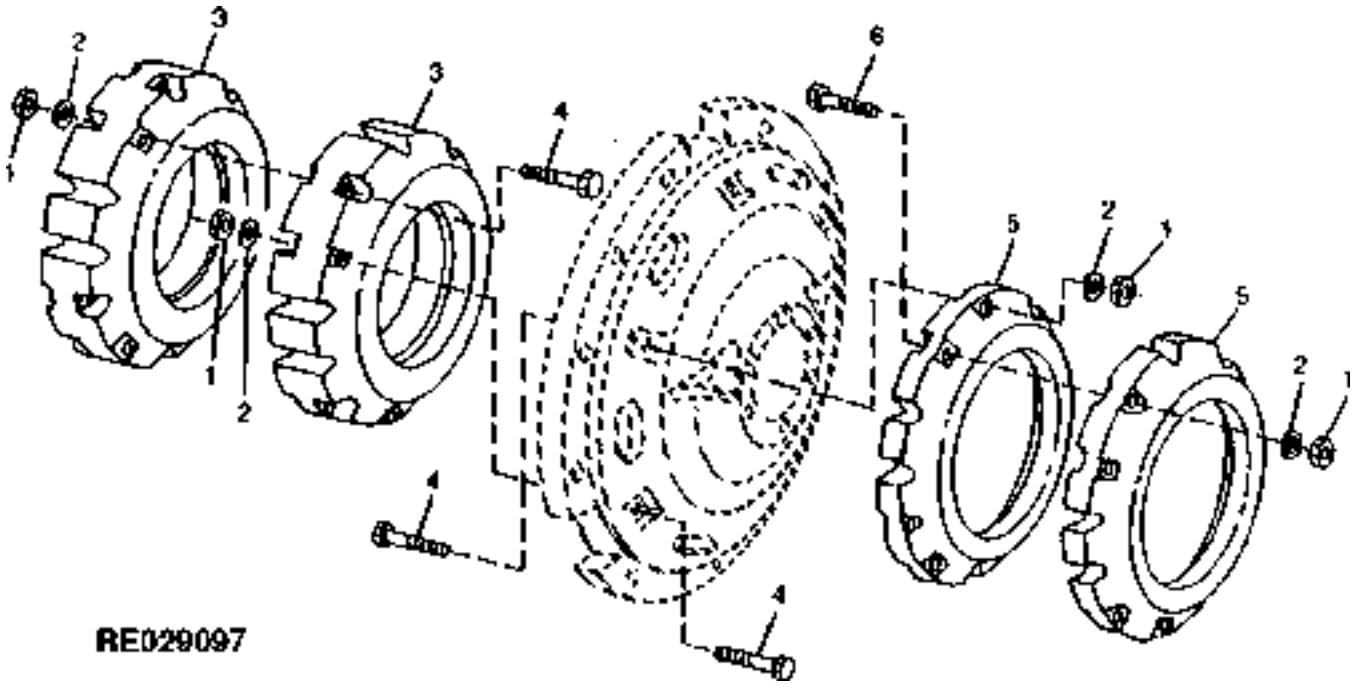

KEY	PART NO.	PART NAME	QTY	TRACTOR SERIAL NO.	ALL	REMARKS
1	14M7276	NUT	3		X	M16
2	24M7241	WASHER	3		X	17 X 34 X 4 MM
3	R111012	WEIGHT	1		X	205 KG (452 LBS)
	R111013	WEIGHT	1	-XXXXXX	X	(A) 680 KG (1500 LBS)
	R152116	WEIGHT	1	XXXXXX-	X	(B) 625 KG (1420 LBS)
4	R116179	BOLT	3		X	M16 X 160-10.9
5	R111011	WEIGHT	1		X	75 KG (165 LBS)
6	19M8019	CAP SCREW	3		X	M16 X 160

(A) (-XXXXXX) (8100-020594; 8200-020398; 8300-020822; 8400-020705)
(B) (XXXXXX-) (8100-020595; 8200-020399; 8300-020823; 8400-020706)

https://www.truck-manuals.net/

WEIGHTS FOR CAST WHEELS
MASSES D'ALOURDISSEMENT POUR ROUES EN FONTE
GEWICHTE FUER GUSSRAEDER
PESI PER RUOTE IN GHISA
PESOS PARA RUEDAS FUNDIDAS
VIKTER FOER GJUTNA HJUL
RE027262 -UN-03OCT96

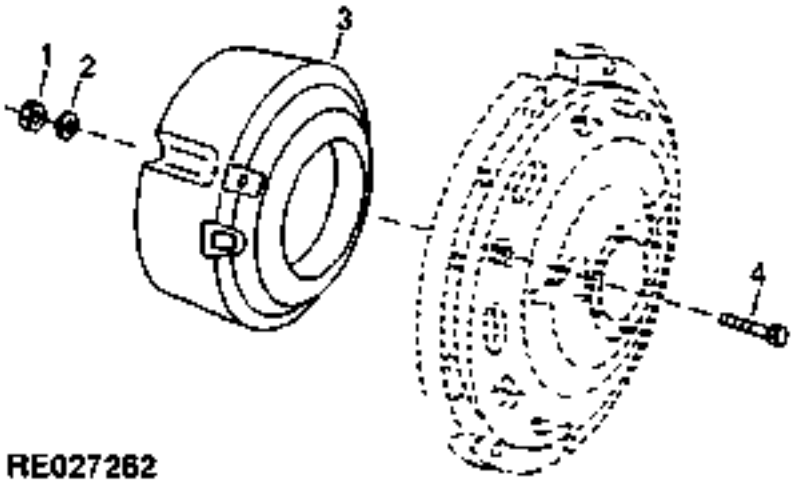

KEY	PART NO.	PART NAME	QTY	TRACTOR SERIAL NO.	ALL	REMARKS
1	14M7276	NUT	3		X	M16
2	24M7241	WASHER	3		X	17 X 34 X 4 MM
3	R111013	WEIGHT	1	-XXXXXX	X	(A) 680 KG (1420 LBS)
	R152116	WEIGHT	1	XXXXXX-	X	(B) 625 KG (1421 LBS)
4	R116179	BOLT	3		X	M16 X 160-10.9

(A)(-XXXXXX) 8100-020594; 8200-020398; 8300-020822; 8400-020705
(B)(XXXXXX-) 8100-020595; 8200-020399; 8300-020823; 8400-020706

https://www.truck-manuals.net/

STEEL DISK REAR WHEEL WEIGHTS (10-BOLT HUB ONLY)(34",38",42",46" OR 50")(DUAL WHEELS)
ROUES ARRIERE ACIER (ROUE A 10 BOULONS UNIQUEMENT)(34",38",42",46" OR 50")(DOUBLES)
STAHL-HINTERRAEDER (NUR FUER 10-SCHRAUBEN-NABE)(34",38",42",46" OR 50")(DOPPEL RAEDERS)
RUOTE POSTERIORI ACCIAO (10-BULLONE A COLONNETTA SOLTANTO)(34",38",42",46" OR 50")(DOPPIOS)
RUEDAS TRASERAS CON DISCO DE ACERO (CUBO DE 10 BULONES SOLAMENTE)(34",38",42",46" OR 50")(DOBLES)
BAKHJUL MED STALDISK (ENDAST NAV MED 10 BULTAR)(34",38",42",46" OR 50")(DUBBLAS)
RXP025115 -UN-01JAN94

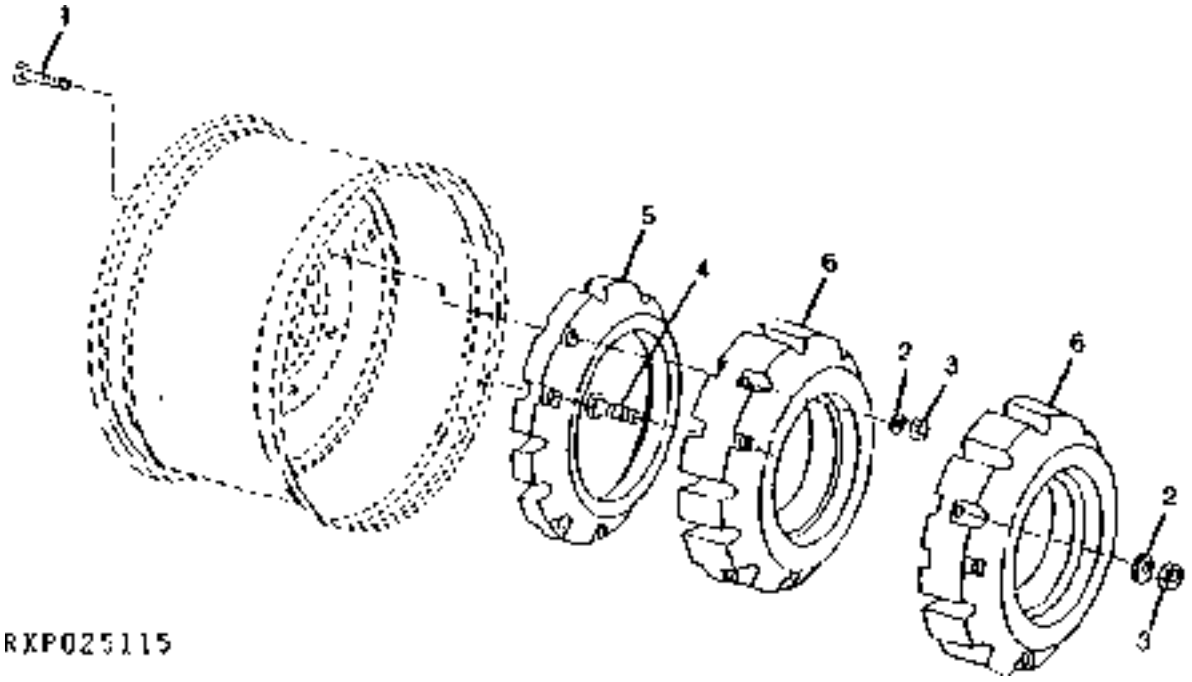

KEY	PART NO.	PART NAME	QTY	TRACTOR SERIAL NO.	ALL	REMARKS
1	R116180	BOLT	3		X	M16 X 180
2	24M7241	WASHER	3		X	17 X 34 X 4 MM
3	14M7276	NUT	3		X	M16
4	R116179	BOLT	3		X	M16 X 160
5	R111011	WEIGHT	1		X	75KG (165 LB)
6	R111012	WEIGHT	1		X	205KG (450 LB)

https://www.truck-manuals.net/

MEMORANDA
MEMORANDA
MEMORANDA
MEMORANDA
MEMORANDA
MEMORANDA

https://www.truck-manuals.net/

EXTENSION, ADJUSTABLE FRONT AXLE (8100, 8200, 8300)
EXTENSION, ESSIEU AVANT REGLABLE (8100, 8200, 8300)
VERLAENGERUNG, EINSTELLBARE VORDERACHSE (8100, 8200, 8300)
ESTENSIONE, ASSALE ANTERIORE REGOLABILE (8100, 8200, 8300)
EXTENSION DEL EJE DELANTERO AJUSTABLE (8100, 8200, 8300)
SKARVSTYCKE, REGLERBAR FRAMAXEL (8100, 8200, 8300)
RXP011305 -UN-01JAN94

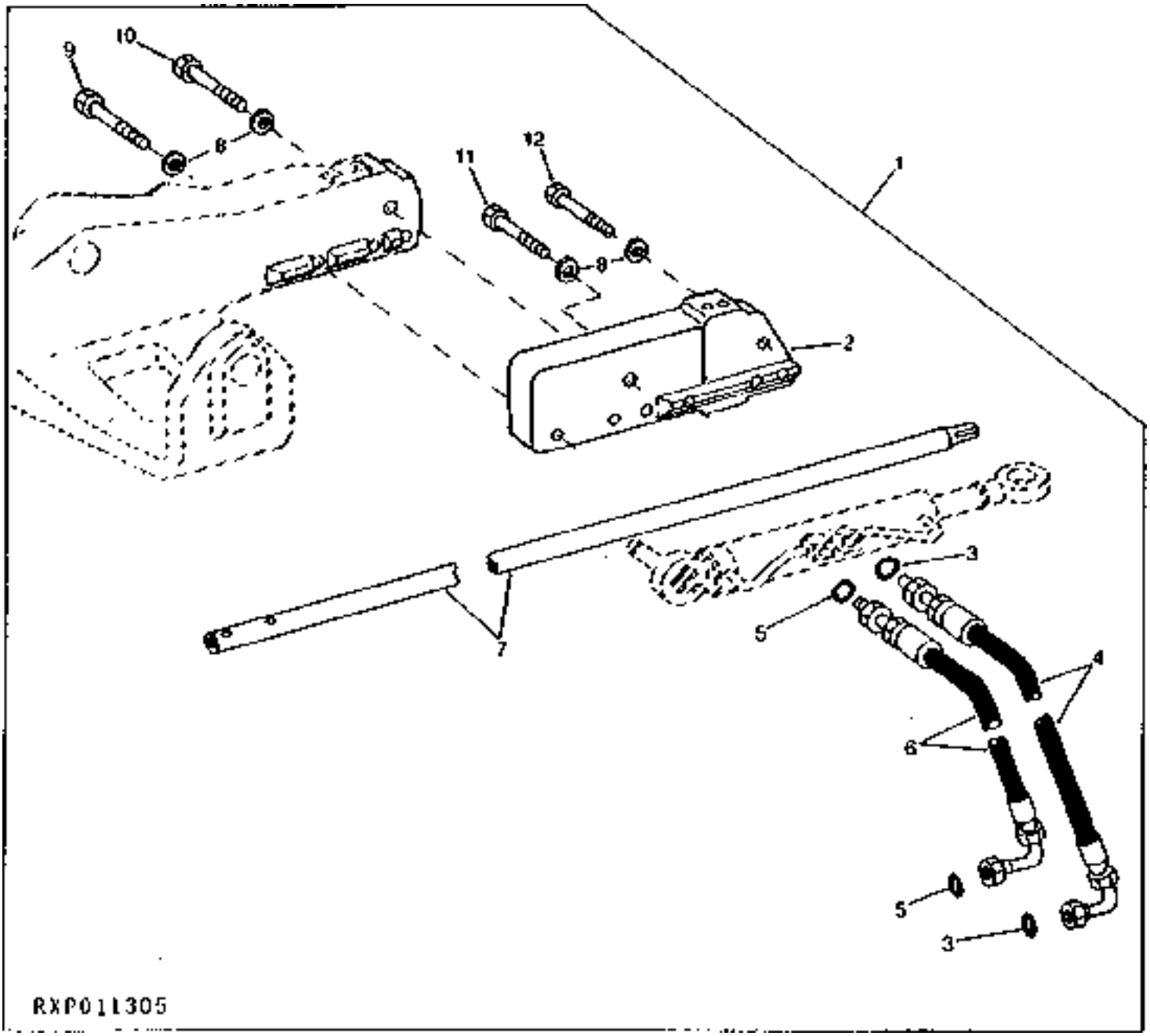

https://www.truck-manuals.net/

KEY	PART NO.	PART NAME	QTY	TRACTOR SERIAL NO.	8 8 8 1 2 3 0 0 0 0 0 0	REMARKS
1	RE58533	EXTENSION	1		X X X	(FI)
2	L76619	EXTENSION	1		X X X	R.H.
	L76620	EXTENSION	1		X X X	L.H.
3	T77613	O-RING	4		X X X	
4	RE61755	HYDRAULIC HOSE	2		X X X	
5	T77857	O-RING	4		X X X	
6	RE61754	HYDRAULIC HOSE	2		X X X	
7	R122359	TUBE	1		X X X	
8	24M7242	WASHER	8		X X X	21.400 X 42 X 5 MM
9	19M7883	SCREW	4		X X X	M20 X 120
10	19M8503	CAP SCREW	4		X X X	M20 X 160
11	19M7969	CAP SCREW	2		X X X	M20 X 110
12	19M7907	SCREW	2		X X X	M20 X 140

https://www.truck-manuals.net/

MIDFRAME ASSEMBLY
ENSEMBLE DE CHASSIS CENTRAL
MITTELRAHMEN-EINHEIT
COMPLESSO A META' TELAIO
CONJUNTO DEL BASTIDOR CENTRAL
MITTENRAMENHET
RE029712 -UN-13JUL98

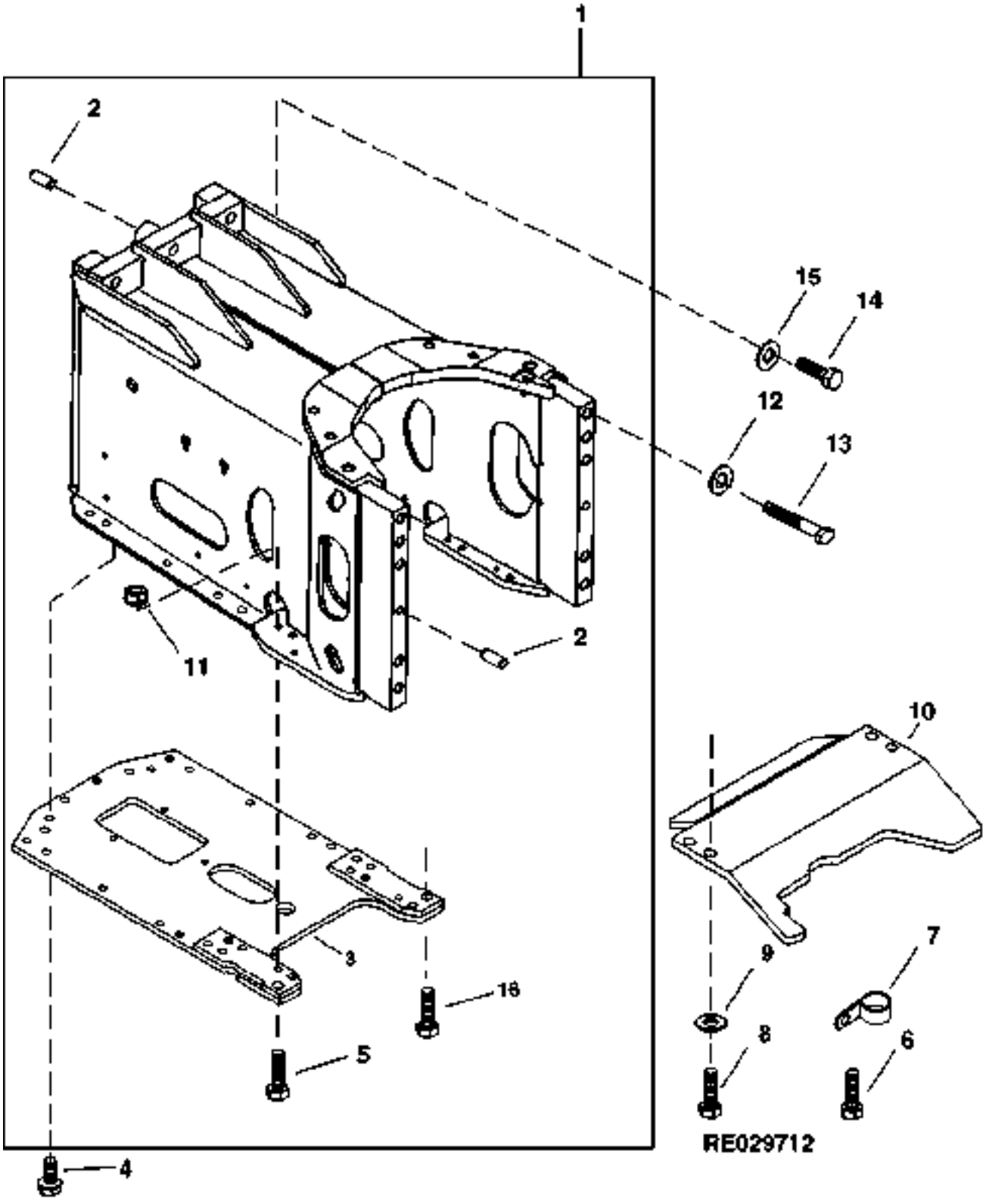

https://www.truck-manuals.net/

KEY	PART NO.	PART NAME	QTY	TRACTOR SERIAL NO.	ALL	REMARKS
1	RE63215	FRAME	1	-XXXXXX	X	(A) (SUB FOR RE61043)
	RE64475	FRAME	1	XXXXXX-XXXXXX	X	(B) (C)
	RE67617	FRAME	1	XXXXXX-XXXXXX	X	(D) (E) (SUB RE155953 AND R157605)
	RE155953	FRAME	1	XXXXXX-	X	(F)
2	R54380	DOWEL PIN	4		X	
3	R112855	PLATE	1	-XXXXXX	X	(C) (SUB R132322) LOW
	R132322	PLATE	1	XXXXXX-XXXXXX	X	(D) (E) LOW
	RE156238	PLATE	1	XXXXXX-	X	(F) (ALSO ORDER (6) 19M7789, (6) 14M7299, (12) 19M7791, (2) 19M7950 AND (2) 24M7242)
4	19M7789	SCREW	14		X	M12 X 30, HS 10.9
	19M7787	SCREW	2		X	
5	19M7787	SCREW	10	-XXXXXX	X	(E) M12 X 20, HS 10.9
	19M7790	SCREW	8	XXXXXX-	X	(F) M12 X 35, (SUB FOR 19M7791)
6	37M7087	SCREW	1	-XXXXXX	X	(A) M10 X 25
	37M7086	SCREW	1	XXXXXX-XXXXXX	X	(B) (C) M10 X 20
	37M7087	SCREW	1	XXXXXX-	X	(D) M10 X 25
7	R109479	CLAMP	1		X	
8	19M7386	CAP SCREW	24		X	M12 X 20
9	24M7047	WASHER	24		X	13 X 24 X 2.500 MM
10	R124353	SHIELD	1	-XXXXXX	X	(E)
	R157605	SHIELD	1	XXXXXX-	X	(F)
11	14M7299	FLANGE NUT	10	-XXXXXX	X	(E) M12
	14M7299	FLANGE NUT	14	XXXXXX-	X	(F) M12
12	24M7242	WASHER	10		X	21.400 X 42 X 5 MM
13	19M8100	CAP SCREW	10		X	M20 X 180
14	19M7969	CAP SCREW	13		X	M20 X 110, HS 10.9
15	24M7242	WASHER	13		X	21.400 X 42 X 5 MM
16	19M7950	CAP SCREW	2	XXXXXX-	X	(F) M20 X 45

(A) (-XXXXXX) 8100-002991; 8200-002359; 8300-004107; 8400-002672
(B) (XXXXXX-) 8100-002992; 8200-002360; 8300-004108; 8400-002673

(C) (-XXXXXX) 8100-005812; 8200-004066; 8300-006829; 8400-007527
(D) (XXXXXX-) 8100-005813; 8200-004067; 8300-006830; 8400-007528

(E) (-XXXXXX) 8100-021430; 8200-021231; 8300-022158; 8400-022732
(F) (XXXXXX-) 8100-021431; 8200-021232; 8300-022159; 8400-022733

https://www.truck-manuals.net/

FRONT FRAME AND FRONT SUPPORT
CHASSIS AVANT ET AVANT
VORDERRAHMEN UND VORDERE STUETZE
TELAIO ANTERIORE SUPPORTO ANTERIORE
BASTIDOR DELANTERO SOPORTE DELANTERO
FRAEMRE RAM, STOED FRAM
RE030434 -UN-08MAR99

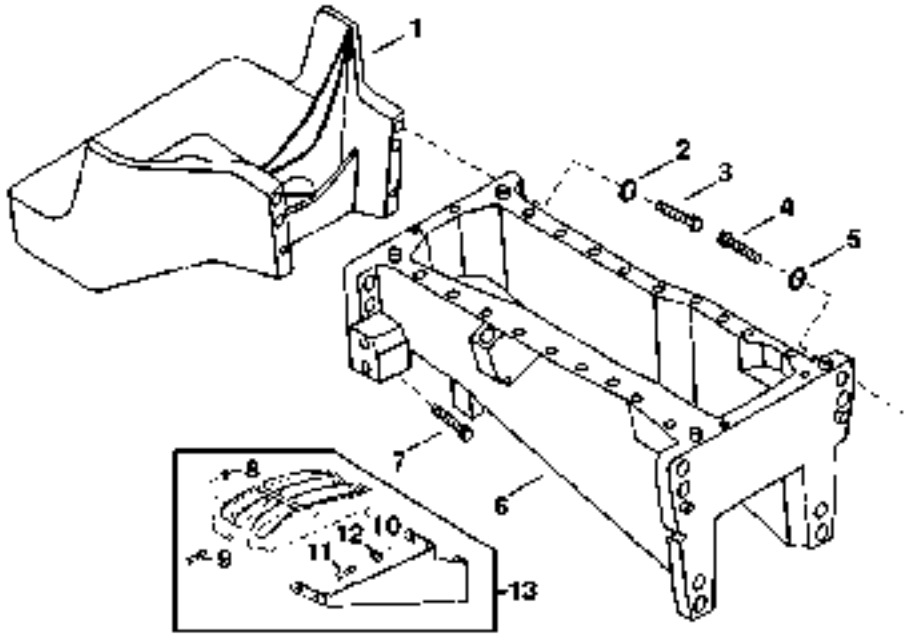

RE030434

KEY	PART NO.	PART NAME	QTY	TRACTOR SERIAL NO.	ALL	REMARKS
1	R124715	SUPPORT	1	-XXXXXX	X	(A) (SUB R127240) (ALSO ORDER (4) 19M7402)
	R127240	SUPPORT	1	XXXXXX-	X	(B)
2	24M7242	WASHER	6		X	21.400 X 42 X 5 MM
3	19M7963	CAP SCREW	4	-XXXXXX	X	(C) M20 X 100, HS 10.9
	19M7963	CAP SCREW	6	XXXXXX-	X	(D)
4	19M7963	CAP SCREW	10		X	M20 X 100, HS 10.9
5	24M7242	WASHER	10		X	21.400 X 42 X 5 MM
6	RE71509	OIL PAN	1		X	(SUB FOR RE50889)
7	19M7969	CAP SCREW	2	-XXXXXX	X	(C) M20 X 110
	19M7969	CAP SCREW	4	XXXXXX-	X	(D) M20 X 110
8	K40003	LOCK NUT	4		X	
9	19H2676	CAP SCREW	4		X	3/8" X 1"
10	R151799	STEP	1		X	
11	19M7946	CAP SCREW	2		X	M20 X 40
12	24M7344	WASHER	2		X	22 X 37 X 3 MM
13	RE162261	STEP	1		X	

(A) (-XXXXXX) 8100-002318; 8200-001994; 8300-003485; 8400-002321
(B) (XXXXXX-) 8100-002319; 8200-001995; 8300-003486; 8400-002322

(C) (-XXXXXX) 8100-020918; 8200-020739; 8300-021348; 8400-021416
(D) (XXXXXX-) 8100-020919; 8200-020740; 8300-021349; 8400-021417

https://www.truck-manuals.net/

GRILLE SCREEN
GRILLE DE CALANDRE
KUEHLERGITTER
GRIGLIA
REJILLA DE LA PARRILLA
KYLARGALLERSKAERM
RE026095 -UN-13MAR95

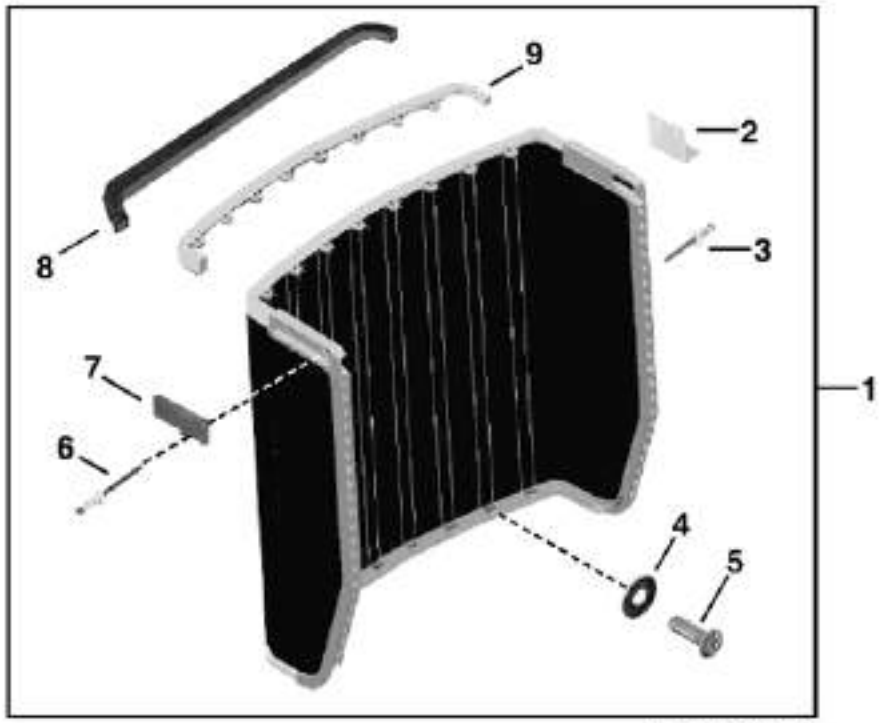

KEY	PART NO.	PART NAME	QTY	TRACTOR SERIAL NO.	ALL	REMARKS
1	RE58883	SCREEN	1		X	
2	R124304	SUPPORT	2		X	
3	R125955	RIVET	14		X	(SUB FOR R55427)
4	24M7146	WASHER	16		X	4.300 X 12 X 1 MM, (NLR)
5	37H47	SCREW	16		X	
6	AT56660	RIVET	4		X	
7	RE55737	LATCH	2		X	
8	R122030	SEAL	1		X	
9	R127887	DEFLECTOR	1		X	(SUB FOR RE55737)

https://www.truck-manuals.net/

HOOD
CAPOT
HAUBE
COFANO
CAPO
HUV
RE029101 -UN-10MAR98

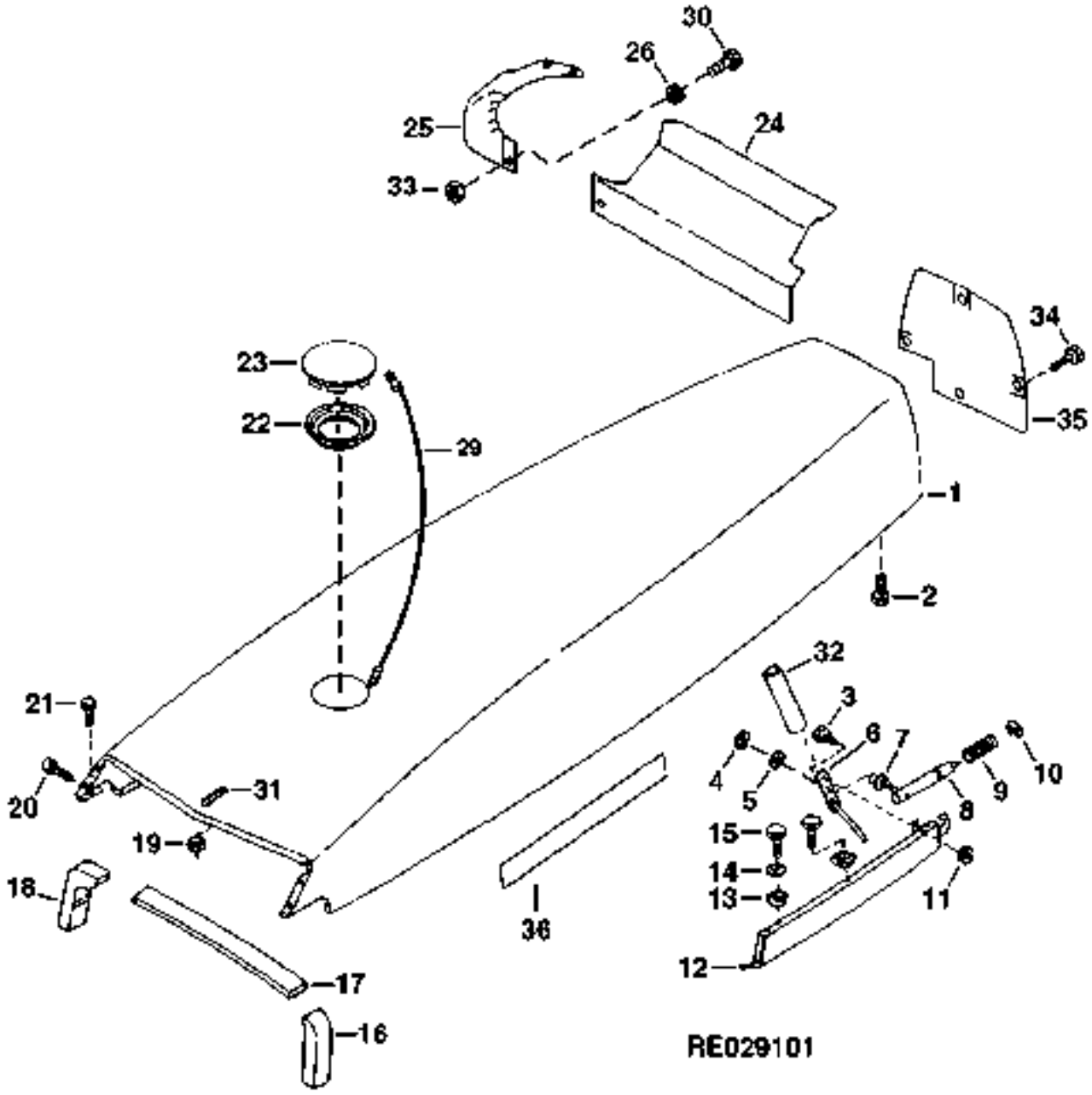

https://www.truck-manuals.net/

KEY	PART NO.	PART NAME	QTY	TRACTOR SERIAL NO.	ALL	REMARKS
1	RE44353	HOOD	1	-009999	X	
	RE66577	HOOD	1	010000-	X	
2	19M8300	SCREW	2		X	M8 X 40
3	R113221	SCREW	2		X	
4	40M7042	SNAP RING	2		X	(SUB FOR R72655) (SUB R31935)
5	24H1283	WASHER	2		X	7/32" X 1/2" X 0.049"
6	RE61062	HANDLE	1	-XXXXXX	X	(A) R.H.
	RE63580	HANDLE	1	XXXXXX-	X	(B) R.H.
	RE61063	HANDLE	1	-XXXXXX	X	(A) L.H.
	RE63581	HANDLE	1	XXXXXX-	X	(B) L.H.
7	R124782	BUSHING	2		X	
8	RE63551	PIN	2		X	(SUB FOR RE61064)
9	R124781	SPRING	2		X	
10	R72655	SNAP RING	2		X	
11	14M7303	FLANGE NUT	2		X	M6
12	RE71343	PANEL	1		X	(SUB FOR RE61060) R.H.
	RE71341	PANEL	1		X	(SUB FOR RE61061) L.H.
13	M84972	NUT	4		X	
14	24M7088	WASHER	4		X	6.600 X 12 X 1.600 MM
15	19M7560	CAP SCREW	4		X	M6 X 16
16	R124758	FOAM PAD	1		X	L.H.
17	R124756	FOAM PAD	1		X	
18	R124757	FOAM PAD	1		X	R.H.
19	R107957	NUT	2		X	
20	19M6614	CAP SCREW	4		X	M6 X 12
21	19M7297	CAP SCREW	4		X	M8 X 12
22	R124515	GROMMET	1		X	
23	R121715	FILLER CAP	1		X	
24	R124419	SHIELD	1		X	UP
25	R124418	SHIELD	1		X	
26	24M7088	WASHER	5		X	6.600 X 12 X 1.600 MM
27	19M8827	SCREW	1		X	M6 X 130
28	28H3403	BUSHING	1		X	0.269" X 0.405" X 4.090"
29	R121762	CABLE	1		X	(ALSO ORDER (2) R55427)
30	19M7560	CAP SCREW	5		X	M6 X 16
31	R95654	MOLDING	1		X	(ALSO ORDER R150800)
32	R126490	HOSE	1	-XXXXXX	X	(F)
33	R120332	NUT	1		X	
34	37H209	SCREW	3	010000-	X	0.190" X 1/2"
35	R131226	REINFORCEMENT	1	010000-XXXXXX	X	(C)
	R136111	REINFORCEMENT	1	XXXXXX-	X	(D)
36	R150005	INSULATOR	1	XXXXXX-	X	(E)

(A) (-XXXXXX) 8100-001621; 8200-001566; 8300-002743; 8400-001325
(B) (XXXXXX-) 8100-001622; 8200-001567; 8300-002744; 8400-001326

(C) (-XXXXXX) 8100-012304; 8200-011925; 8300-012560; 8400-012539
(D) (XXXXXX-) 8100-012305; 8200-011926; 8300-012561; 8400-012540

(E) (XXXXXX-) 8100-012825; 8200-012302; 8300-013246; 8400-013221

(F) (-XXXXXX) 8100-02197; 8200-021497; 8300-022748; 8400-023358

https://www.truck-manuals.net/

HOOD EXTENSION
RALLONGE DE CAPOT
HAUBENVERLAENGERUNG
PROLUNGA DEL COFANO
EXTENSION DEL CAPO
HUVFOERLAENGNING
RE026391 -UN-07JUL95

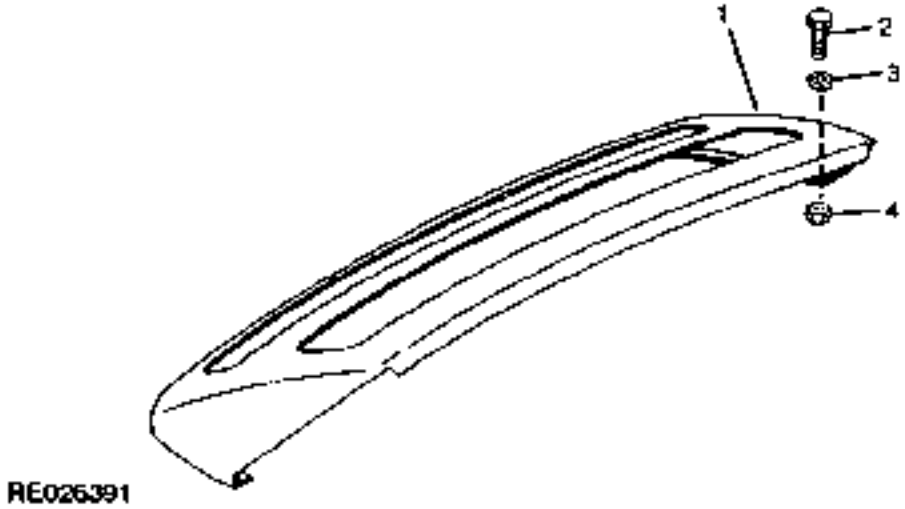

KEY	PART NO.	PART NAME	QTY	TRACTOR SERIAL NO.	ALL	REMARKS
1	RE62107	EXTENSION	1		X	
2	19M7560	CAP SCREW	9		X	M6 X 16
3	24M7088	WASHER	9		X	6.600 X 12 X 1.600 MM
4	M84972	NUT	9		X	

https://www.truck-manuals.net/

HEADLIGHT HOUSING
LOGEMENT DE PHARE
SCHEINWERFERGEHAEUSE
ALLOGGIAMENTO DEI FARI
CAJA DEL FARO
STRAALKASTERHUS
RE029896 -UN-29SEP98

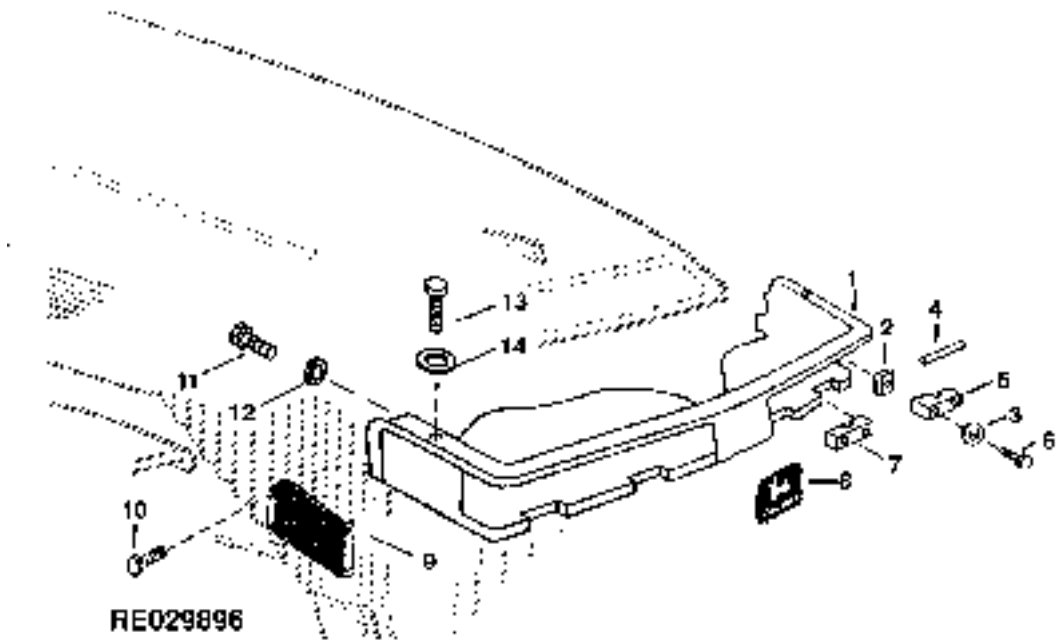

KEY	PART NO.	PART NAME	QTY	TRACTOR SERIAL NO.	ALL	REMARKS
1	R126777	HOUSING	1		X	(SUB FOR R114561)
2	R106529	NUT	8		X	(USE WITH R126777)
	14M7360	LOCK NUT	8		X	M5, (USE WITH R114561)
3	24M7117	WASHER	8		X	4.300 X 9 X 0.800 MM
4	R43244	NEEDLE ROLLER	4		X	
5	R124557	SUPPORT	1		X	R.H.
	R124559	SUPPORT	1		X	L.H.
6	21M7022	SCREW	8		X	M5 X 20
7	R124556	SUPPORT	1		X	R.H.
	R124558	SUPPORT	1		X	L.H.
8	RE65579	LABEL	1		X	(SUB FOR RE34995, RE65218 OR RE67664)
9	R124754	REFLECTOR	1		X	R.H.
	R124755	REFLECTOR	1		X	L.H.
10	37M7033	SCREW	4		X	
11	M117141	SCREW	2		X	
12	24M7088	WASHER	2		X	6.600 X 12 X 1.600 MM
13	19M7768	SCREW	4		X	M6 X 16
14	24M7088	WASHER	4		X	6.600 X 12 X 1.600 MM

https://www.truck-manuals.net/

FRAME WEIGHTS (EUROPEAN VERSION)
MASSES D'ALOURDISSEMENT (VERSION EUROPEENE)
RAHMENGEWICHTE (EUROPAEISCHE AUSFUEHRUNG)
ZAVORRE ANTERIOR (VERSIONE EUROPEA)
CONTRAPESOS PARA EL BASTIDOR (VERSION EUROPEA)
FRONTVIKTER (EUROPEISK VERSION)
LX010644 -UN-24JAN96

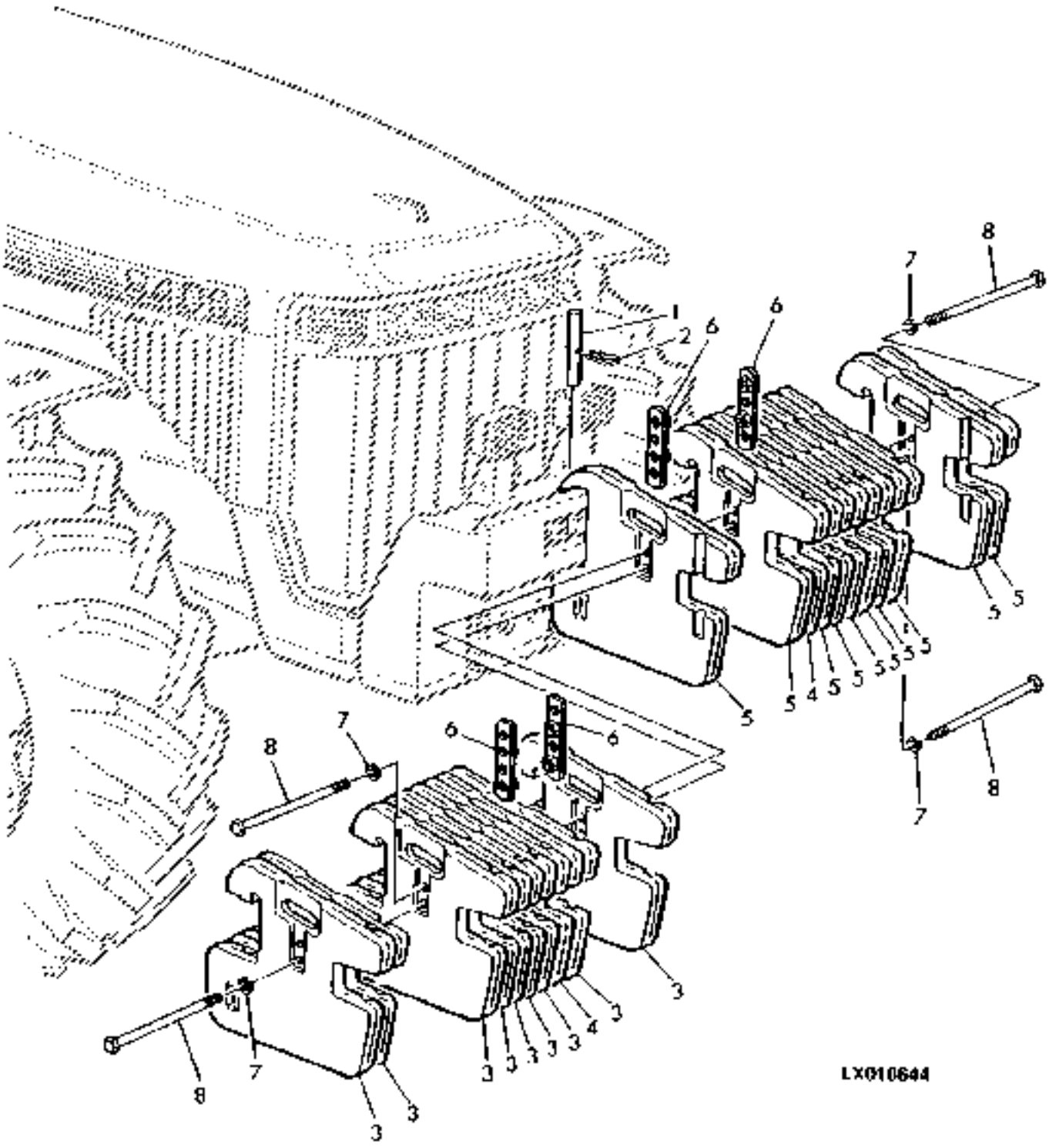

https://www.truck-manuals.net/

KEY	PART NO.	PART NAME	QTY	TRACTOR SERIAL NO.	ALL	REMARKS
1	T32146	PIN	1		X	
2	L12491	SPRING LOCKING PIN	1		X	
3	L38450	WEIGHT	9		X	
4	L38451	WEIGHT	2		X	
5	L38449	WEIGHT	9		X	(NLA)
6	AR68801	RETAINER	4		X	
7	12M7044	LOCK WASHER	4		X	18.500 MM
8	08H4482	CAP SCREW	4		X	(A) 5/8" X 12"

(A)20 WEIGHTS
20 MASSE ADDITIONNELLE
20 GEWICHT
20 ZAVORRA
20 LASTRE
20 VIKT

https://www.truck-manuals.net/

FRAME WEIGHTS/FRONT WEIGHT SUPPORT
MASSES D'ALOURDISSEMENT/SUPPORT DE MASSES AVANT
RAHMENGEWICHTE/FRONTGEWICHTSTUETZE
ZAVORRE ANTERIOR/SUPPORTO ANTERIORE DEL PESO
CONTRAPESOS PARA EL BASTIDOR/SOPORTE DEL PESO DELANTERO
FRONTVIKTER/STOED FOER FRAMVIKTER
RE029897 -UN-09SEP98

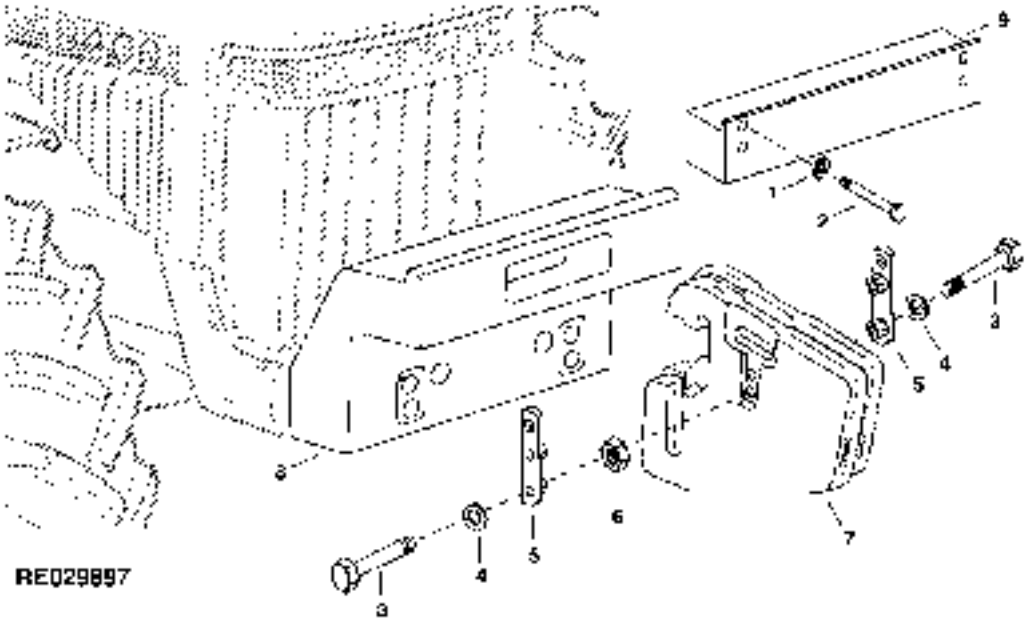

KEY	PART NO.	PART NAME	QTY	TRACTOR SERIAL NO.	ALL	REMARKS
1	24M7344	WASHER	4		X	0.866" X 1.457" X 0.118"
2	19M7892	CAP SCREW	4	-XXXXXX	X	M20 X 80
	19M7921	CAP SCREW	4	XXXXXX-	X	M20 X 150
3	08H4248	CAP SCREW	2	-XXXXXX	X	(C) 5/8" X 8-1/2"
	R59761	CAP SCREW	2	-XXXXXX	X	(D)
	R161069	CAP SCREW	2	XXXXXX-	X	(D) 5/8" X 19"
	08H4225	CAP SCREW	2	XXXXXX-	X	(C) 5/8" X 11-1/2"
4	24M7241	WASHER	4		X	17 X 34 X 4 MM
5	AR68801	RETAINER	2		X	
6	R82549	SUPPORT	1		X	(B)
7	R127764	WEIGHT	20		X	(SUB FOR R116262)
8	R124518	SUPPORT	1		X	(A)

(A)EUROPEAN VERSION
VERSION EUROPEENNE
EUROPAEISCHE AUSFUEHRUNG
VERSIONE EUROPEA
VERSION EUROPEA
EUROPEISK VERSION

(B)NORTH AMERCIAN VERSION
VERSION NORD AMERICAINE
NORDAMERIKANISCHE
VERSIONE NORDAMERICANA
VERSION NORTEAMERICANA
NORDAMERIKANSK VERSION

(C)8-12 WEIGHTS
8-12 MASSE ADDITIONNELLE
8-12 GEWICHT
8-12 ZAVORRA
8-12 LASTRE
8-12 VIKA

(D) 16-20 WEIGHTS
16-20 MASSE ADDITIONNELLE
16-20 GEWICHT
16-20 ZAVORRA
16-20 LASTRE
16-20 VIKA

https://www.truck-manuals.net/

FRONT FRAME COVER (8100, 8200, 8300)
COUVERTURE DE CHASSIS AVANT (8100, 8200, 8300)
VORDERE RAHMENABDECKUNG (8100, 8200, 8300)
COPERTURA DEL TELAIO ANTERIORE (8100, 8200, 8300)
CUBIERTA DEL BASTIDOR DELANTERO (8100, 8200, 8300)
FRAEMRE RAMKAAPA (8100, 8200, 8300)
RXP025085 -UN-01JAN94

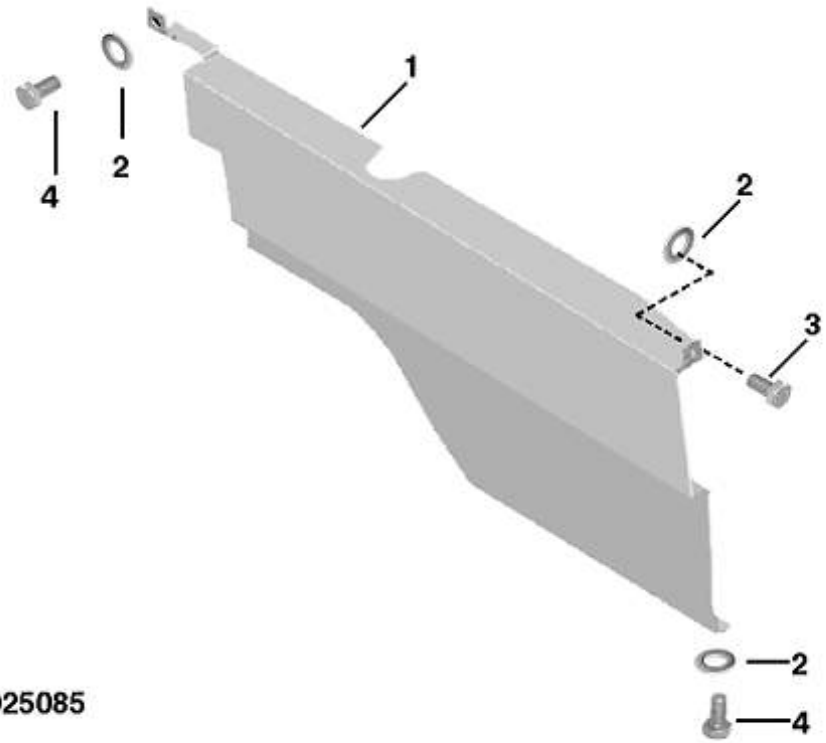

RXP025085

KEY	PART NO.	PART NAME	QTY	TRACTOR SERIAL NO.	8 8 8 1 2 3 0 0 0 0 0 0	REMARKS
1	RE61795	COVER	1		X X X	R.H.
	RE61796	COVER	1		X X X	L.H.
2	24M7028	WASHER	6		X X X	10.500 X 20 X 2 MM
3	19M7167	CAP SCREW	2		X X X	M10 X 25
4	19M7166	CAP SCREW	4		X X X	M10 X 20

https://www.truck-manuals.net/

ENGINE SIDE SHIELDS
PANNEAUX LATERAUX DU MOTEUR
MOTORSEITENBLECHE
SCHERMI LATERALI DEL MOTORE
ESCUDOS LATERALES DEL MOTOR
MOTORNS SIDSKYDDSPLAATAR
RE030159 -UN-17NOV98

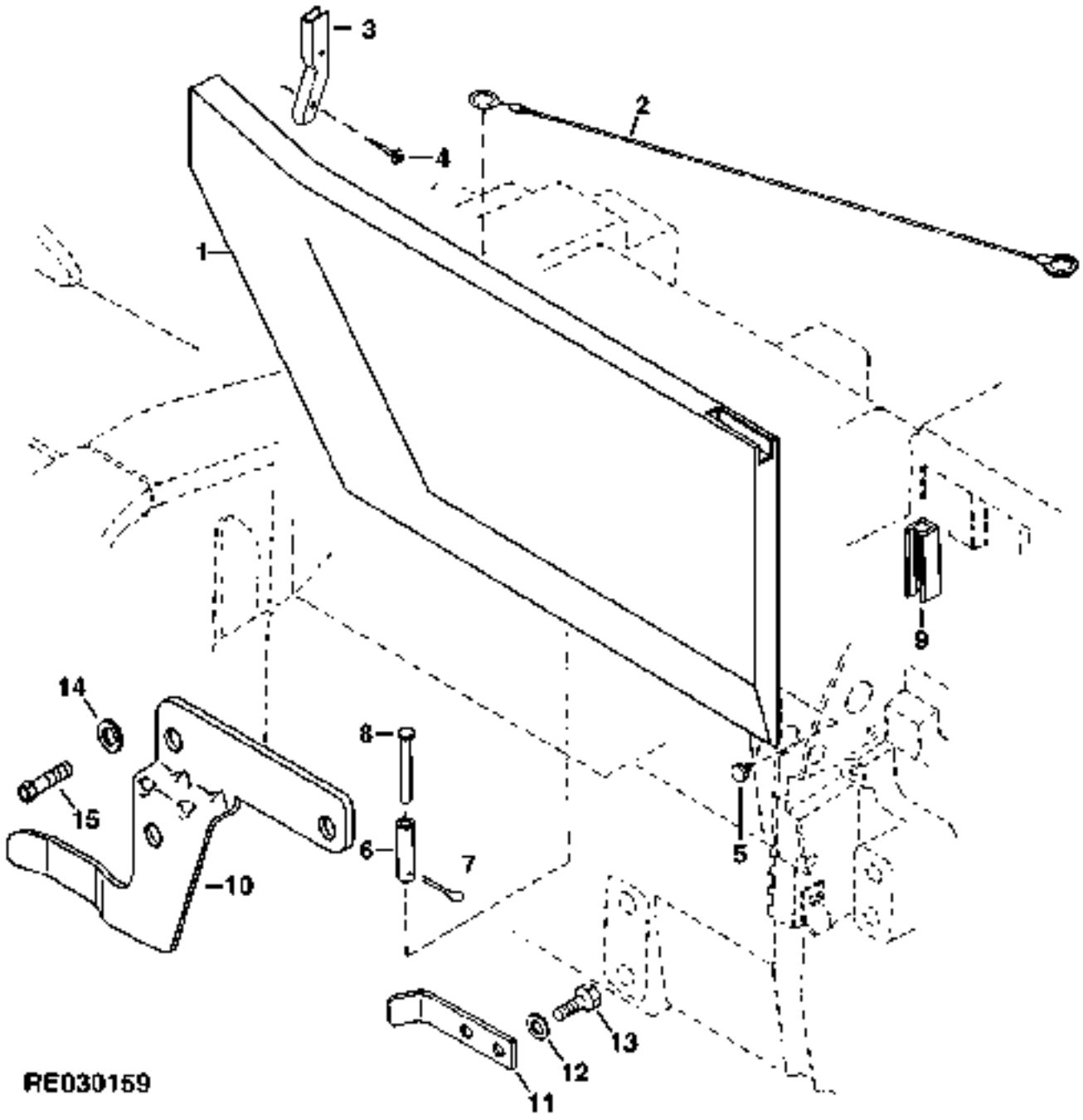

https://www.truck-manuals.net/

KEY	PART NO.	PART NAME	QTY	TRACTOR SERIAL NO.	ALL	REMARKS
1	RE61088	SHIELD	1	-009999	X	R.H. (SUB RE69078)
	RE71219	SHIELD	1	010000-	X	R.H. (SUB FOR RE69078)
	RE71218	SHIELD	1		X	L.H. (SUB FOR RE61089)
2	R121626	CABLE	1		X	
3	R126805	COVER	1		X	(SUB FOR R124951)
4	AT56660	RIVET	2		X	
5	T22085T	BUMPER	1		X	
6	R120134	SPACER	2		X	
7	11M7012	COTTER PIN	2		X	3.200 X 16 MM
8	R121660	PIN	2		X	
9	RE62489	MOLDING	1		X	
10	R136260	BRACKET	1	-XXXXXX	X	(A) (SUB FOR R124823) R.H., FRONT
	R135810	BRACKET	1	XXXXXX-	X	(B) R.H., FRONT
	R124824	BRACKET	1	-XXXXXX	X	(A) (SUB R135811) L.H., FRONT
	R135811	BRACKET	1	XXXXXX-	X	(B) L.H., FRONT
11	R120133	SUPPORT	1		X	R.H., REAR
12	24M7346	WASHER	2		X	11 X 20 X 2 MM
13	19M7167	CAP SCREW	2		X	M10 X 25
14	24M7240	WASHER	2		X	13 X 25 X 3 MM
15	19M7872	CAP SCREW	2		X	M12 X 25

(A) (-XXXXXX) 8100-013009; 8200-012469; 8300-013491; 8400-013415
(B) (XXXXXX-) 8100-013010; 8200-012470; 8300-013492; 8400-013416

https://www.truck-manuals.net/

SIDE PANEL (8100, 8200, 8300)
PANNEAUX LATERAUX (8100, 8200, 8300)
SEITENVERKLEIDUNGEN (8100, 8200, 8300)
PANNELLI LATERALI (8100, 8200, 8300)
PANELES LATERALES (8100, 8200, 8300)
SIDBEKLAEDNAD (8100, 8200, 8300)
RE028463 -UN-27OCT97

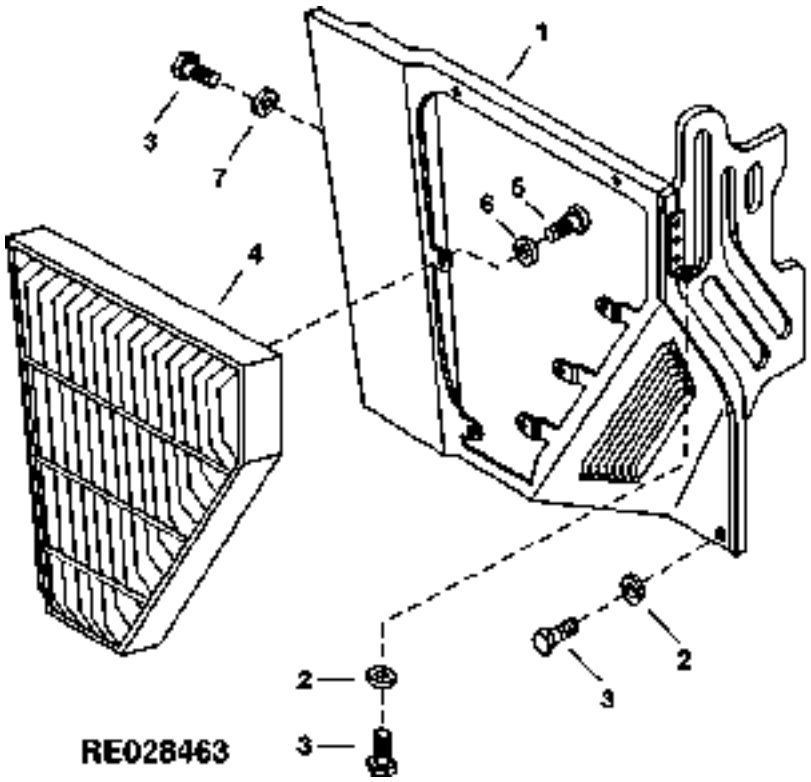

KEY	PART NO.	PART NAME	QTY	TRACTOR SERIAL NO.	8 8 8 1 2 3 0 0 0 0 0 0	REMARKS
1	RE69771	PANEL	1	-009999	X X X	(SUB FOR RE60821) R.H.
	RE69037	PANEL	1	010000-	X X X	R.H.
	RE69795	PANEL	1	-009999	X X X	(SUB FOR RE60822) L.H.
	RE69036	PANEL	1	010000-	X X X	L.H.
2	24M7055	WASHER	2		X X X	8.400 X 16 X 1.600 MM
3	19M7881	SCREW	3		X X X	M8 X 20
4	R120157	LOUVER	1	-009999	X X X	R.H.
	R131807	LOUVER	1	010000-	X X X	R.H.
	R120158	LOUVER	1	-009999	X X X	L.H.
	R131808	LOUVER	1	010000-	X X X	L.H.
5	24M7146	WASHER	7		X X X	4.300 X 12 X 1 MM
6	37M7033	SCREW	7		X X X	
7	24M7298	WASHER	2		X X X	8.400 X 25 X 2 MM

https://www.truck-manuals.net/

SIDE PANEL (8400)
PANNEAUX LATERAUX (8400)
SEITENVERKLEIDUNGEN (8400)
PANNELLI LATERALI (8400)
PANELES LATERALES (8400)
SIDBEKLAEDNAD (8400)
RE028463 -UN-27OCT97

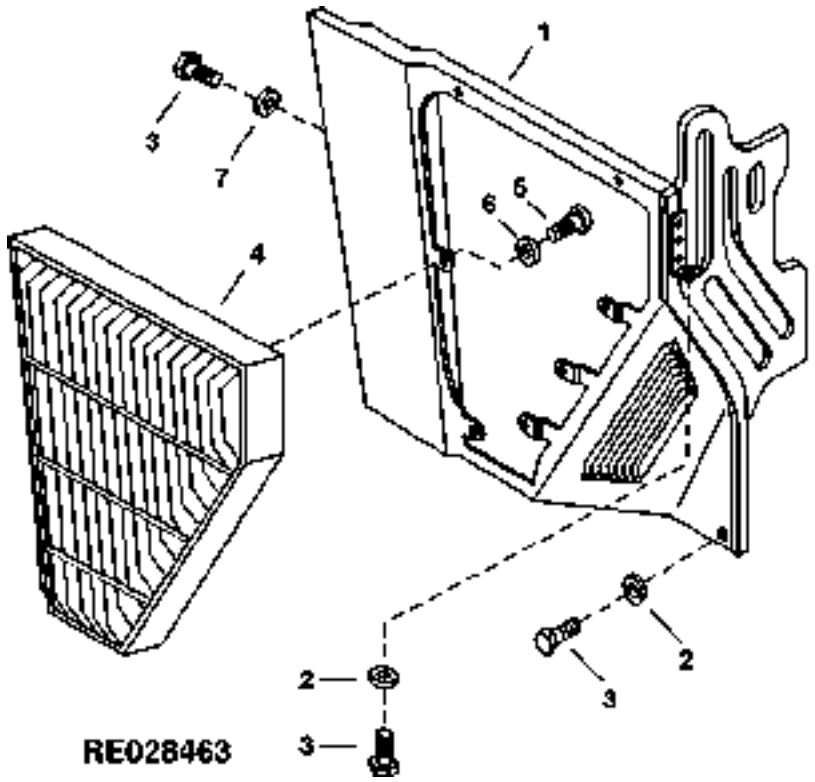

KEY	PART NO.	PART NAME	QTY	TRACTOR SERIAL NO.	8400	REMARKS
1	RE69037	PANEL	1		X	R.H. (SUB FOR RE60823 OR RE65609)
	RE69036	PANEL	1		X	L.H. (SUB FOR RE60824 OR RE65608)
2	24M7055	WASHER	1		X	8.400 X 16 X 1.600 MM
3	19M7881	SCREW	3		X	M8 X 20
4	R131807	LOUVER	1		X	R.H. (SUB FOR R120157)
	R131808	LOUVER	1		X	L.H. (SUB FOR R120158)
5	24M7146	WASHER	7		X	4.300 X 12 X 1 MM
6	37M7194	SCREW	7		X	
7	24M7055	WASHER	2		X	8.400 X 16 X 1.600 MM

https://www.truck-manuals.net/

FRONT FENDER ASSEMBLY (MECHANICAL FRONT WHEEL DRIVE)
JEU DE PIECES DE GARDE-BOUE AVANT (TRACTION AVANT MECANIQUE)
FRONT-KOTSHUETZERSATZ (MECHANISCHER FRONTANTRIEB)
SERIE PEZZI PER GUARDIA PARAFANGO ANTERIORE (TRAZIONE ANTERIORE MECANNICA)
JUEGO DE FALDON DE GUARDABARRO DELANTERO (TRACCION DELANTERA)
FOERLAENGARE TILL FRAEMRE STAENKSKAERM, SATS (MEKANISK FRAMHJULSDRIVNING)
RE026587 -UN-21JUN96

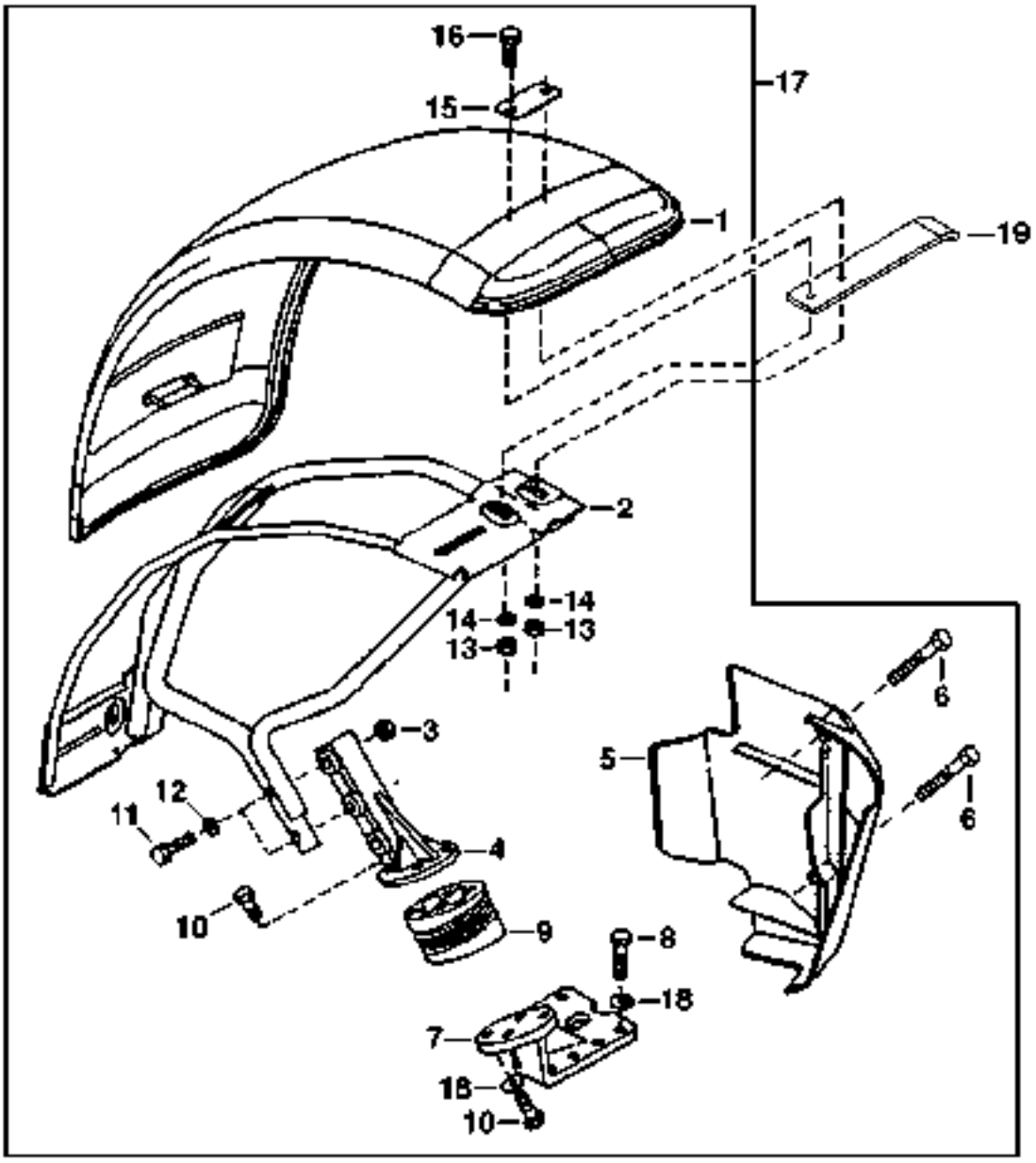

RE026587

https://www.truck-manuals.net/

KEY	PART NO.	PART NAME	QTY	TRACTOR SERIAL NO.	ALL	REMARKS
1	R154936	FENDER	2		X	(SUB FOR R122786)
	R121950	FENDER	2		X	FOR 600/65 R28 TIRES/MFWD
2	RE63578	SUPPORT	1		X	(SUB FOR RE61255) R.H.
	RE63579	SUPPORT	1		X	(SUB FOR RE61254) L.H.
3	14M7291	FLANGE NUT	4		X	M16
4	R126003	SUPPORT	2	-XXXXXX	X	(C)
	R154655	SUPPORT	2	XXXXXX-	X	(D)
5	R124616	PANEL	1	-XXXXXX	X	(A) R.H.
	R134562	PANEL	1	XXXXXX-	X	(B) R.H.
	R124617	PANEL	1	-XXXXXX	X	(A) L.H.
	R134563	PANEL	1	XXXXXX-	X	(B) L.H.
6	21M7442	SCREW	2		X	M10 X 20, UP
	21M7443	SCREW	2		X	M10 X 35, LOW
7	R124671	PANEL	1		X	R.H.
	R124670	PANEL	1		X	L.H.
8	19M7790	SCREW	8		X	M12 X 35
9	RE60938	ISOLATOR	2		X	
10	19M8011	CAP SCREW	16		X	M12 X 30
11	19M7719	CAP SCREW	4		X	M16 X 70
	24M7338	WASHER	4		X	17 X 30 X 3 MM
12	R125085	WASHER	4		X	
13	14M7296	FLANGE NUT	8		X	M10
14	24M7239	WASHER	16		X	10.700 X 21 X 2.500 MM
15	R117977	STRAP	4	-026354	X	
	R117977	STRAP	4	026355-	X	
16	03M7356	BOLT	8	-026354	X	M10 X 45
	03M7355	BOLT	8	026355-	X	FOR 600/65 R28 TIRES/MFWD
17	**RE61798**	**KIT**	**1**		**X**	**(FI)**
	RE61799	**KIT**	**1**		**X**	**(FI) FOR 600/65 R28 TIRES/MFWD**
18	24M7047	WASHER	8		X	13 X 24 X 2.500 MM
19	R125391	BRACE	2		X	(A)

(A)(-XXXXXX) 8100-011682; 8200-011453; 8300-011784; 8400-011816
(B)(XXXXXX-) 8100-011683; 8200-011454; 8300-011785; 8400-011817

(C)(-XXXXXX) 8100-020386; 8200-020244; 8300-020519; 8400-020411
(D)(XXXXXX-) 8100-020387; 8200-020245; 8300-020520; 8400-020412

https://www.truck-manuals.net/

FENDER SUPPORT KIT
KIT DE SUPPORT D'AILE
KOTFLUEGELSTUETZENSATZ
KIT DE SOSTEGNO DEL PARAFANGO
JUEGO DE SPORTE DE GUARDABARROS
SATS MED STAENKSKAERMSTOED
RE028220 -UN-25AUG97

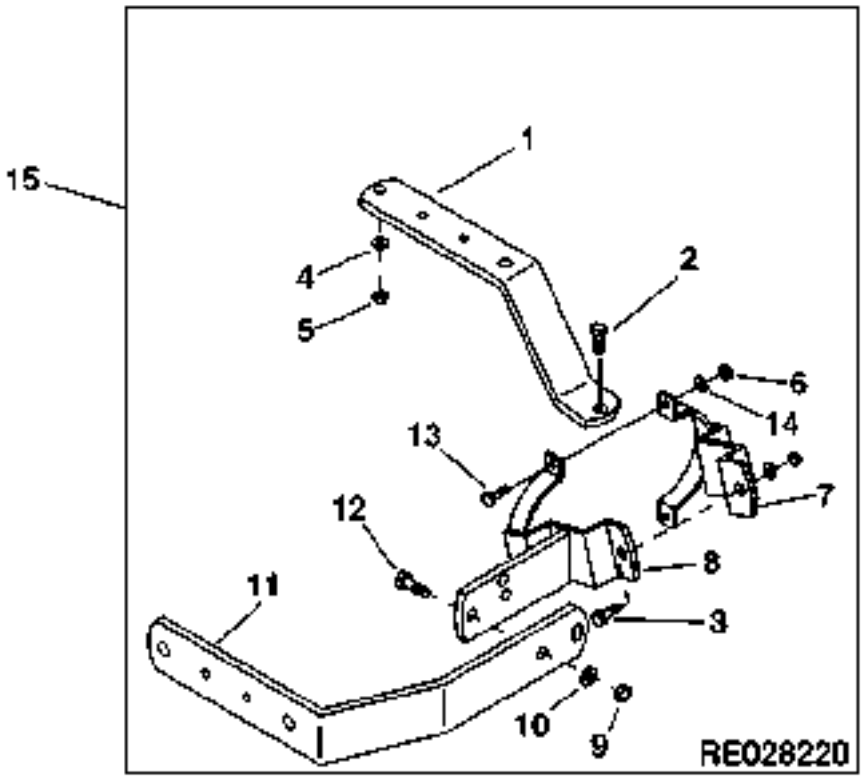

KEY	PART NO.	PART NAME	QTY	TRACTOR SERIAL NO.	ALL	REMARKS
1	R132823	SUPPORT	2		X	
2	19H2969	CAP SCREW	2		X	5/8" X 3-1/2"
3	19M7892	CAP SCREW	2		X	M20 X 80
4	12H304	LOCK WASHER	8		X	3/8"
5	14H1076	NUT	8		X	3/8"
6	K40002	LOCK NUT	4		X	
7	R133728	CLAMP	1		X	
	R133729	CLAMP	1		X	
8	R133726	BRACKET	1		X	
	R133727	BRACKET	1		X	
9	14H1076	NUT	8		X	3/8"
10	12H304	LOCK WASHER	8		X	3/8"
11	R132824	SUPPORT	2		X	
12	E57351	SELF-LOCKING SCREW	4		X	
13	19H1901	CAP SCREW	4		X	5/16" X 2"
14	12H293	LOCK WASHER	4		X	7/16"
15	RE68882	KIT	1		X	

https://www.truck-manuals.net/

MEMORANDA
MEMORANDA
MEMORANDA
MEMORANDA
MEMORANDA
MEMORANDA

https://www.truck-manuals.net/

FRONT FENDER ASSEMBLY (2WD)
JEU DE PIECES DE GARDE-BOU AVANT (2WD)
FRONT-KOTSHUETZERSATZ (2WD)
SERIE PEZZI PER GUARDIA PARAFANGO ANTERIORE (2WD)
JUEGO DE FALDON DE GUARDABARRO DELANTERO (2WD)
FOERLAENGARE TILL FRAEMRE STAENKSKAERM, SATS (2WD)
RE027855 -UN-22APR97

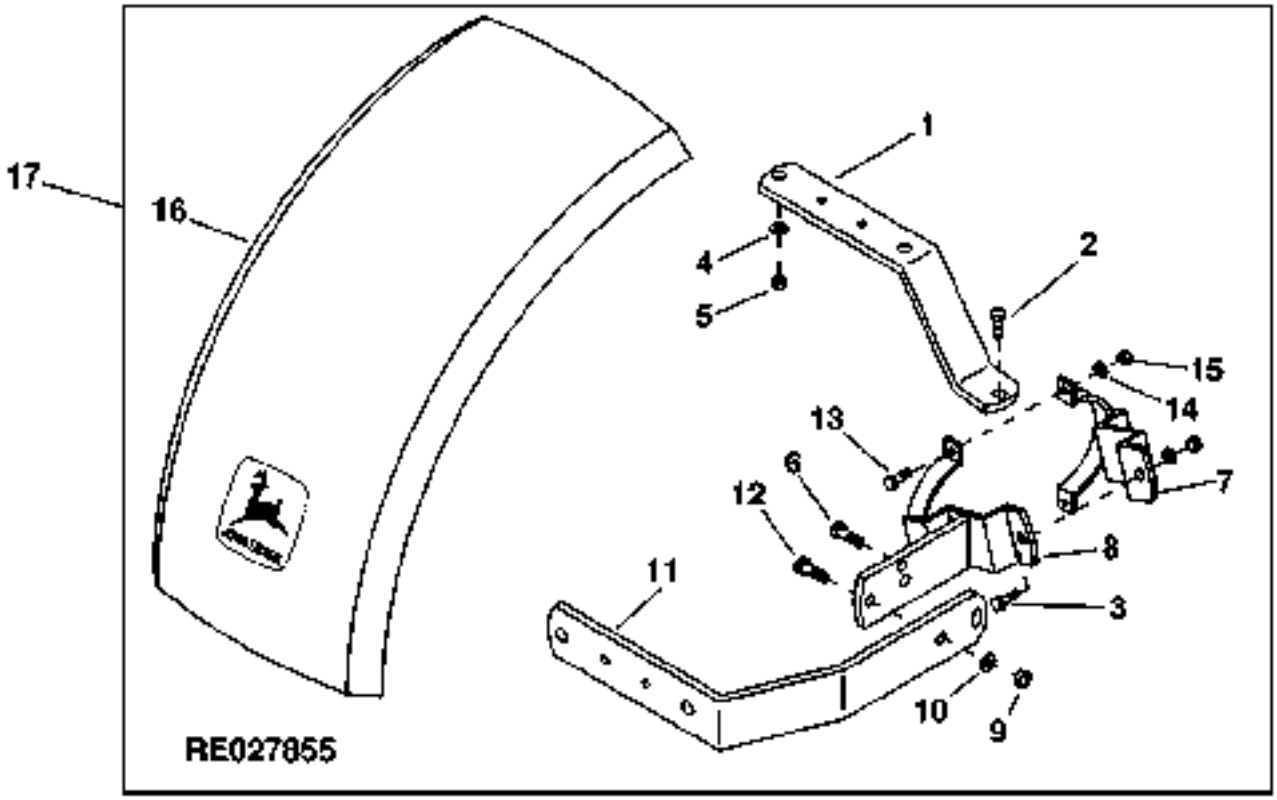

KEY	PART NO.	PART NAME	QTY	TRACTOR SERIAL NO.	ALL	REMARKS
1	R132823	SUPPORT	2		X	
2	19H2969	CAP SCREW	2		X	5/8" X 3-1/2"
3	19M7892	CAP SCREW	2		X	M20 X 80
4	12H304	LOCK WASHER	8		X	3/8"
5	14H1076	NUT	8		X	3/8"
6	19H2735	CAP SCREW	2		X	1/2" X 2"
7	RE150011	CLAMP	1		X	R.H. (SUB FOR R133728)
	RE150013	CLAMP	1		X	L.H. (SUB FOR R133729)
8	RE150008	BRACKET	1		X	(SUB FOR R133726) R.H.
	RE150010	BRACKET	1		X	(SUB FOR R133727) L.H.
9	14H1076	NUT	8		X	3/8"
10	12H304	LOCK WASHER	8		X	3/8"
11	R132824	SUPPORT	2		X	LOW
12	E57351	SELF-LOCKING SCREW	4		X	
13	19H1901	CAP SCREW	4		X	5/16" X 2"
14	12H293	LOCK WASHER	4		X	7/16"
15	K40002	LOCK NUT	4		X	
16	AR86406	FENDER	2		X	(A) 11.00X16, 14LX16, 9.50X20, 16.5LX16.1
17	**RE67851**	**KIT**	**1**		**X**	**(FI)**

(A)FOR TIRE SIZE
POUR PNEUMATIQUES
FUER BEREIFUNG
PER PNEUMATICI
PARA NEUMATICOS
FOR DACKSDIMENSION

https://www.truck-manuals.net/

TOOL BOX
BOITE A OUTILS
WERKEUGKASTEN
CAJA DE HERRAMIENTAS
CASSETTA DEGLI ATTREZZI
VERKTYGSLAADA
RE029056 -UN-03MAR98

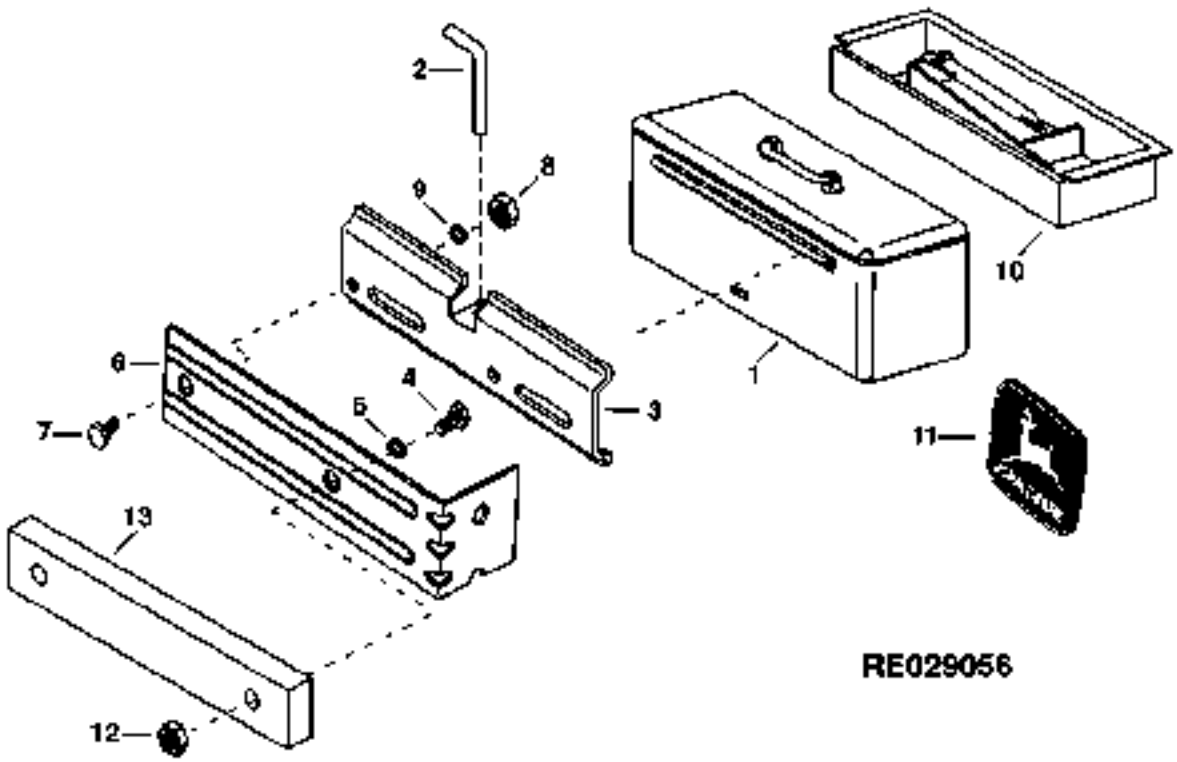

KEY	PART NO.	PART NAME	QTY	TRACTOR SERIAL NO.	ALL	REMARKS
1	AT22070	TOOLBOX	1		X	
2	T23027	PIN	1		X	
3	T23033	BRACKET	1		X	
4	19M7719	CAP SCREW	2		X	M16 X 70
5	24M7242	WASHER	2		X	21.400 X 42 X 5 MM
6	R125192	BRACKET	1		X	
7	19M8035	CAP SCREW	2		X	M16 X 35
8	14M7276	NUT	2		X	M16
9	24M7338	WASHER	2		X	17 X 30 X 3 MM
10	AT22073	HOLDER	1		X	
11	RE65579	LABEL	1		X	(SUB FOR RE34995 OR RE65218)
12	28H3433	SPACER	2		X	0.742" X 1.050" X 1-1/2"
13	R135703	FOAM PAD	1		X	

https://www.truck-manuals.net/

BATTERY BOX COVER
COFFRE A BATTERIE
BATTERIEKASTEN
VANO BATTERIA
CAJA DE BATERIA
BATTERILAADA
RE026090 -UN-31JUL96

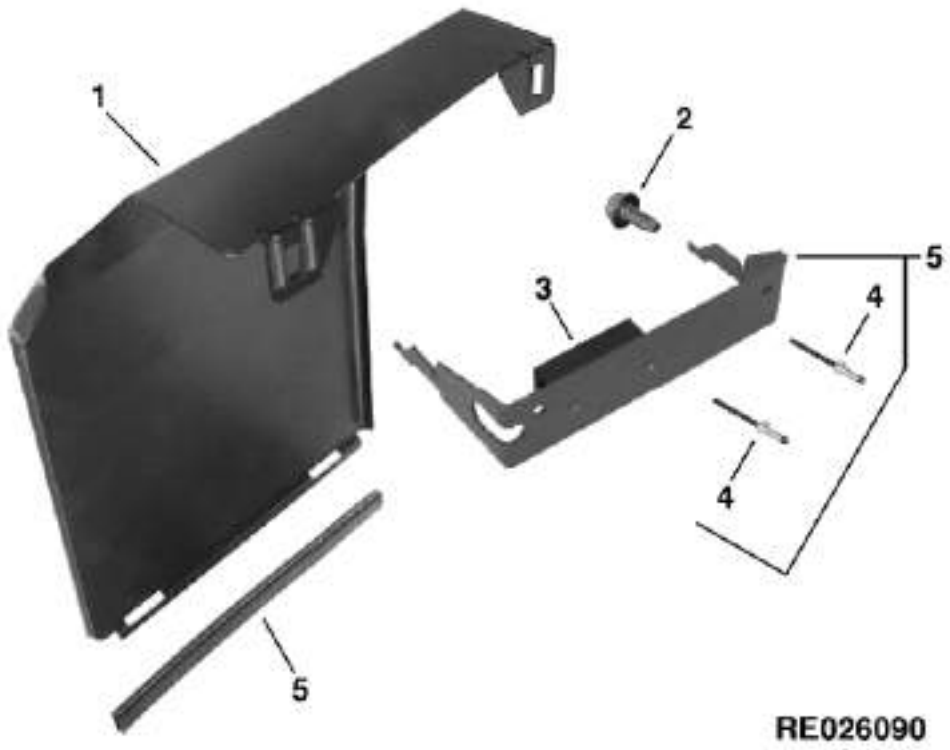

KEY	PART NO.	PART NAME	QTY	TRACTOR SERIAL NO.	ALL	REMARKS
1	R151467	COVER	1		X	(SUB FOR R124686)
2	37M7087	SCREW	2		X	M10 X 25
3	RE48867	JUNCTION BLOCK	1		X	
4	M83725	RIVET	2		X	
5	RE61152	STEEL	1		X	
6	RE57962	BUMPER	1		X	

https://www.truck-manuals.net/

CHOCK BLOCK HOLDER
SUPPORT DE CALE
BREMSKLOTZHALTER
SUPPORTO ZEPPA
PORTABLOQUE INMOVILIZADOR
BROMSKLOSSHAALLARE
RE026961 -UN-13MAY96

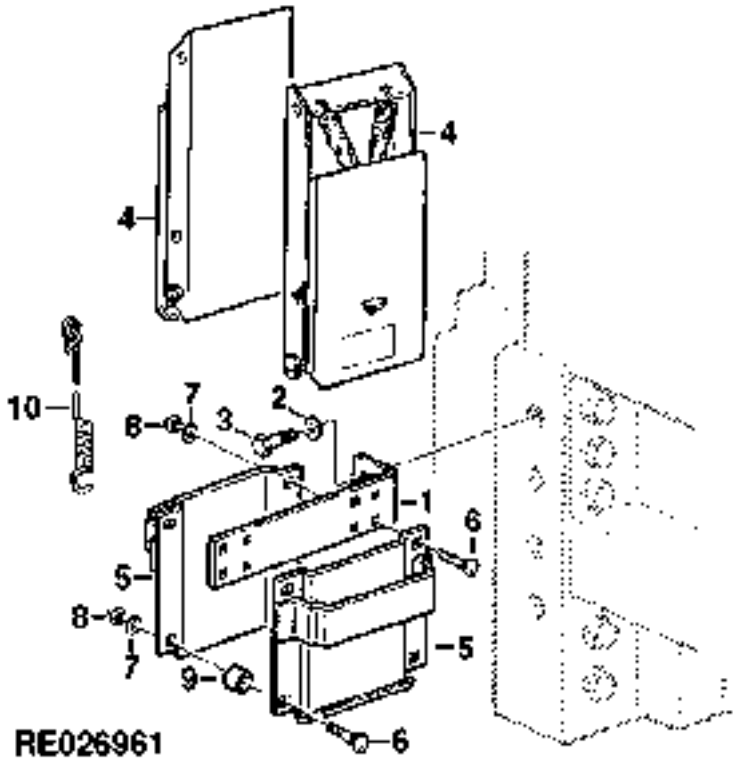

KEY	PART NO.	PART NAME	QTY	TRACTOR SERIAL NO.	ALL	REMARKS
1	L79302	BRACKET	1		X	
2	24M7344	WASHER	1		X	22 X 37 X 3 MM
3	19M7946	CAP SCREW	1		X	M20 X 40
4	AL26777	CHOCK BLOCK	2		X	
5	AL26778	SUPPORT	2		X	
6	03M7191	BOLT	4		X	M10 X 25
7	24M7346	WASHER	4		X	11 X 20 X 2 MM
	24M7346	WASHER	4		X	(A) 11 X 20 X 2 MM
8	14M7274	NUT	4		X	M10
9	L111038	SPACER	2		X	(SUB FOR L33629)
10	AL41725	EXTENSION SPRING	2		X	

(A)EUROPEAN VERSION
VERSION EUROPEENNE
EUROPAEISCHE AUSFUEHRUNG
VERSIONE EUROPEA
VERSIONE EURPOPEA
EUROPEISK VERSION

https://www.truck-manuals.net/

CAB REAR COVER
COFFRE A BATTERIE
BATTERIEKASTEN
VANO BATTERIA
CAJA DE BATERIA
BATTERILAADA
RE030427 -UN-16FEB99

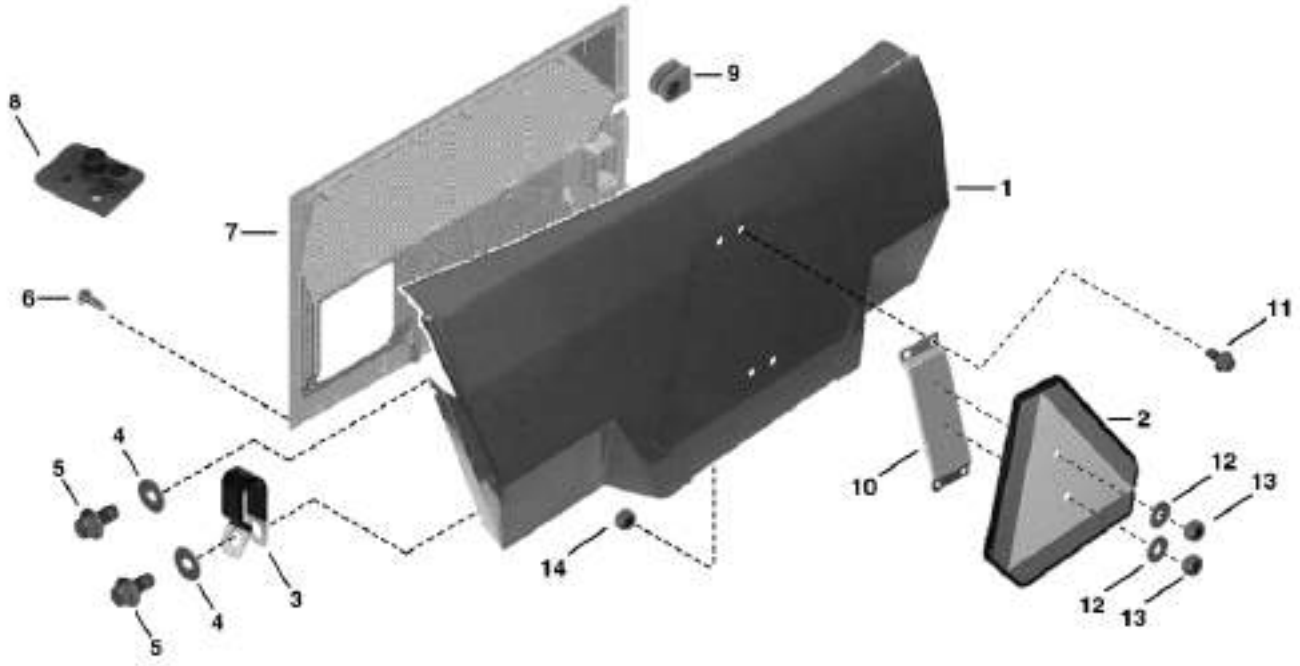

RE030427

KEY	PART NO.	PART NAME	QTY	TRACTOR SERIAL NO.	ALL	REMARKS
1	R124887	COVER	1	-XXXXXX	X	(B)
	R126387	COVER	1	-XXXXXX	X	(A) (B)
	R163837	COVER	1	XXXXXX-	X	(C)
2	JD5929	SMV EMBLEM	1		X	(SUB JD5927 OR JD5400)
3	R124829	CLAMP	2		X	LOW
4	24M7298	WASHER	4		X	8.400 X 25 X 2 MM
5	37M7084	SCREW	4		X	M8 X 25
6	37M7147	SCREW	4		X	
7	R136348	COVER	1		X	(SUB FOR R124231 OR R133529)
8	R124377	GROMMET	1		X	
9	L76331	GROMMET	2		X	
10	RE163839	BRACKET	1	XXXXXX-	X	(C)
11	21M7185	SCREW	2	XXXXXX-	X	(C) M5 X 16
12	24M7139	WASHER	2	XXXXXX-	X	(C) 6.400 X 18 X 1.600 MM
13	14M7265	LOCK NUT	2	XXXXXX-	X	(C) M5
14	14M7397	LOCK NUT	2	XXXXXX-	X	(C) M6

(A)EUROPEAN VERSION
VERSION EURPOEENNE
EUROPAEISCHE AUSFUEHRUNG
VERSIONE EUROPEA
VERSION EUROPEA
EUROPEISK VERSION

https://www.truck-manuals.net/

LICENSE PLATE AND LAMP (EUROPEAN VERSION)
PLAQUE MINERALOGIQUE ET FEU (VERSION EUROPEENNE)
KENNZEICHENHALTER UND LAMPE (EUROPAEISCHE AUSFUEHRUNG)
SUPPOTO TARGA E LAMPADINA (VERSIONE EUROPEA)
PLACA DE CIRCULACION Y LUZ (VERSION EUROPEA)
REGISTRERINGSSKYLT MED BELYSNING (EUROPEISK VERSION)
RE026076 -UN-13MAR95

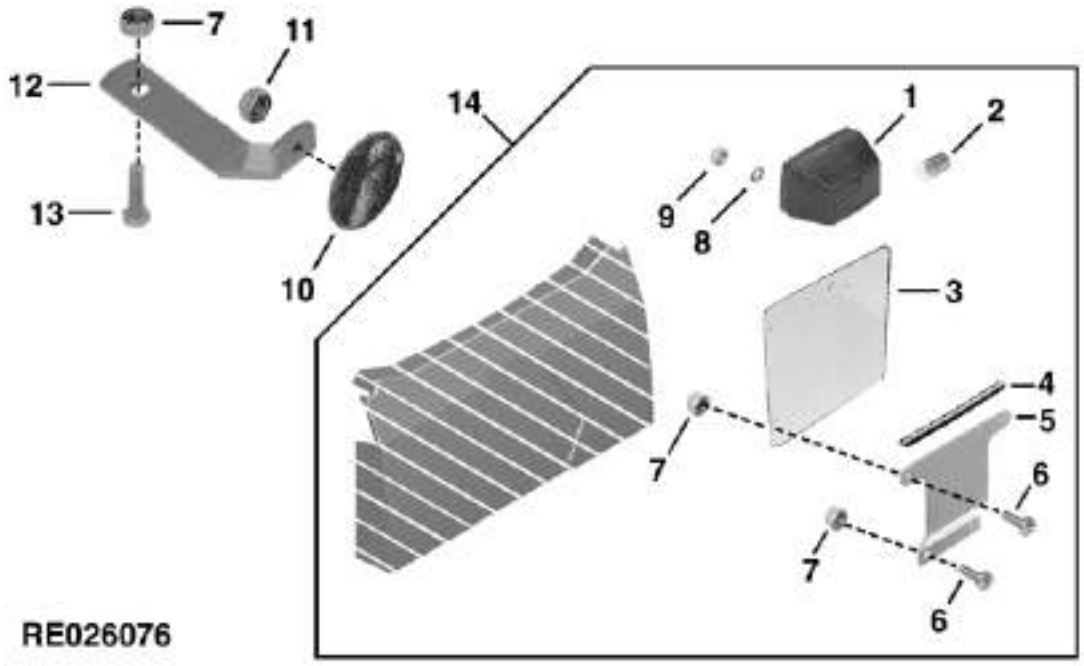

KEY	PART NO.	PART NAME	QTY	TRACTOR SERIAL NO.	ALL	REMARKS
1	AL33161	FLOODLAMP	1		X	
2	57M7013	BULB	1		X	
3	R125408	PLATE	1		X	
4	R128326	GASKET	1		X	(SUB FOR RE56284)
5	R127177	SUPPORT	1		X	(SUB FOR L79087)
6	21M7185	SCREW	4		X	M5 X 16
7	14M7265	LOCK NUT	5		X	M5
8	12M7084	LOCK WASHER	2		X	4.300 MM
9	14M7100	NUT	2		X	M4
10	L39871	REFLECTOR	1		X	
	AL30794	REFLECTOR	2		X	(A) (NLR)
11	14M7297	NUT	1		X	M5
12	R128500	BRACKET	1		X	(SUB FOR R125168, R125169 AND R127837)
13	19M7550	CAP SCREW	1		X	M10 X 35
14	**RE63328**	**PLATE**	**1**		**X**	**(INCLUDES RE62300) (FI)**

(A)SWEDEN
SUEDE
SCHWEDEN
SVEZIA
SUECIA
SVERIGE

https://www.truck-manuals.net/

DECALS (8100, 8200)(-009999)
DECALCOMANIES (8100, 8200) (-009999)
AUFKLEBER (8100, 8200) (-009999)
CALCOMANIE (8100, 8200) (-009999)
CALCOMANIAS (8100, 8200) (-009999)
DEKALER (8100, 8200) (-009999)
RXP011215 -UN-13MAY96

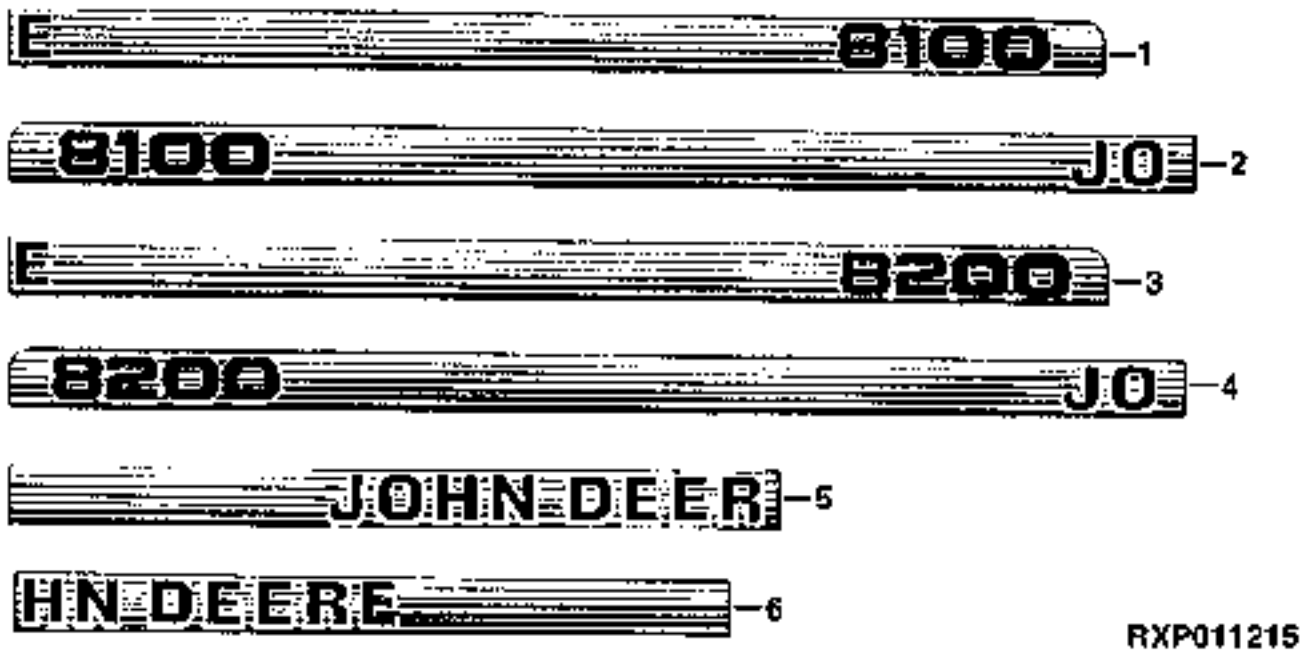

KEY	PART NO.	PART NAME	QTY	CAB SERIAL NO.	8100	8200	REMARKS
1	R107070	LABEL	1	-001748	X		R.H.
	R126946	LABEL	1	001749-	X		R.H.
2	R107071	LABEL	1	-001748	X		L.H.
	R126947	LABEL	1	001749-	X		L.H.
3	R107072	LABEL	1	-001631		X	R.H.
	R126948	LABEL	1	001632-		X	R.H.
4	R107073	LABEL	1	-001631		X	L.H.
	R126949	LABEL	1	001632-		X	L.H.
5	R126944	LABEL	1		X	X	(SUB FOR R120784) R.H.
6	R126945	LABEL	1		X	X	(SUB FOR R120785) L.H.

https://www.truck-manuals.net/

DECALS (8300, 8400)(-009999)
DECALCOMANIES (8300, 8400) (-009999)
AUFKLEBER (8300, 8400) (-009999)
CALCOMANIE (8300, 8400) (-009999)
CALCOMANIAS (8300, 8400) (-009999)
DEKALER (8300, 8400) (-009999)
RXP011214 -UN-13MAY96

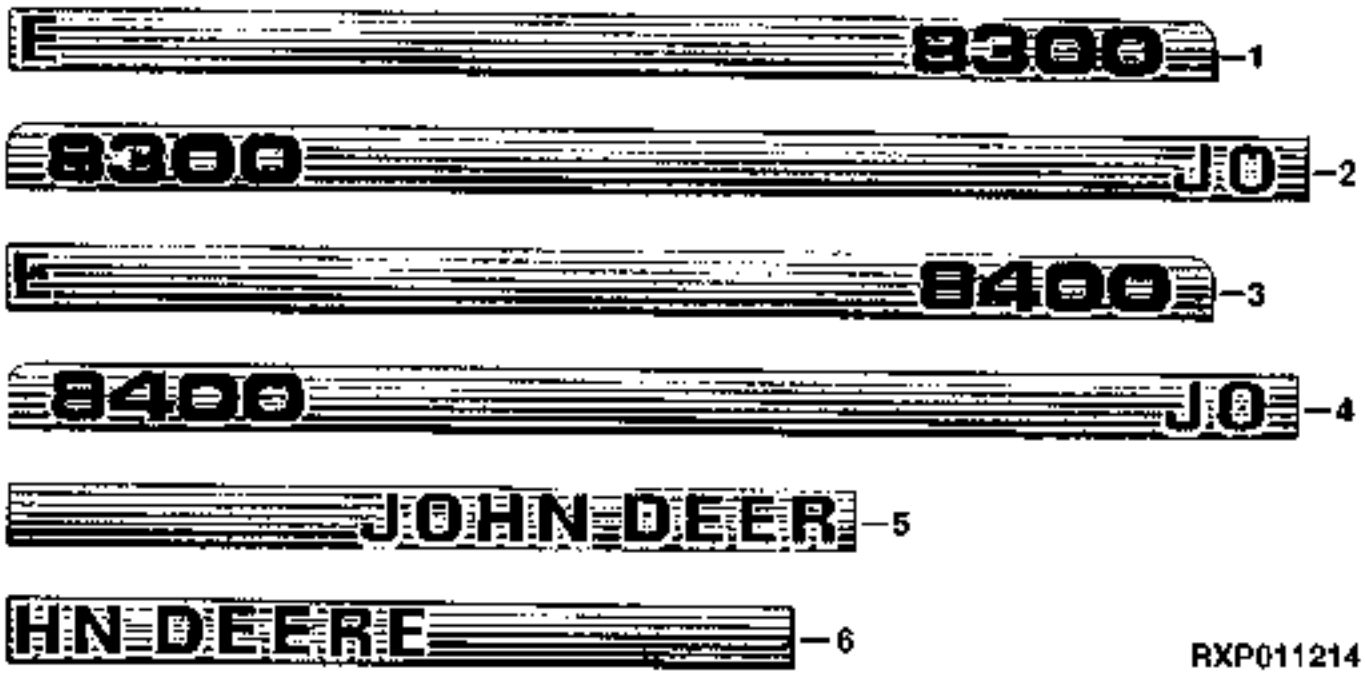

KEY	PART NO.	PART NAME	QTY	CAB SERIAL NO.	8300	8400	REMARKS
1	R107074	LABEL	1	-002860	X		R.H.
	R126950	LABEL	1	002861-	X		R.H.
2	R107075	LABEL	1	-002860	X		L.H.
	R126951	LABEL	1	002861-	X		L.H.
3	R114570	LABEL	1	-001481		X	R.H.
	R126952	LABEL	1	001482-		X	R.H.
4	R114571	LABEL	1	-001481		X	L.H.
	R126953	LABEL	1	001482-		X	L.H.
5	R126944	LABEL	1		X	X	(SUB FOR R120784) R.H.
6	R126945	LABEL	1		X	X	(SUB FOR R120785) L.H.

https://www.truck-manuals.net/

DECALS (8100, 8200)(010000-)
DECALCOMANIES(8100, 8200)(010000-)
AUFKLEBER (8100, 8200)(010000-)
CALCOMANIE (8100, 8200)(010000-)
CALCOMANIAS (8100, 8200)(010000-)
DEKALER (8100, 8200)(010000-)
RE026950 -UN-09MAY96



RE026950

KEY	PART NO.	PART NAME	QTY	TRACTOR SERIAL NO.	8100	8200	REMARKS
1	R132015	LABEL	1		X		R.H.
2	R132016	LABEL	1		X		L.H.
3	R132017	LABEL	1			X	R.H.
4	R132018	LABEL	1			X	L.H.

https://www.truck-manuals.net/

DECALS (8300, 8400)(010000-)
DECALCOMANIES (8300, 8400) (010000-)
AUFKLEBER (8300, 8400) (010000-)
CALCOMANIE (8300, 8400) (010000-)
CALCOMANIAS (8300, 8400) (010000-)
DEKALER (8300, 8400) (010000-)
RE026951 -UN-09MAY96

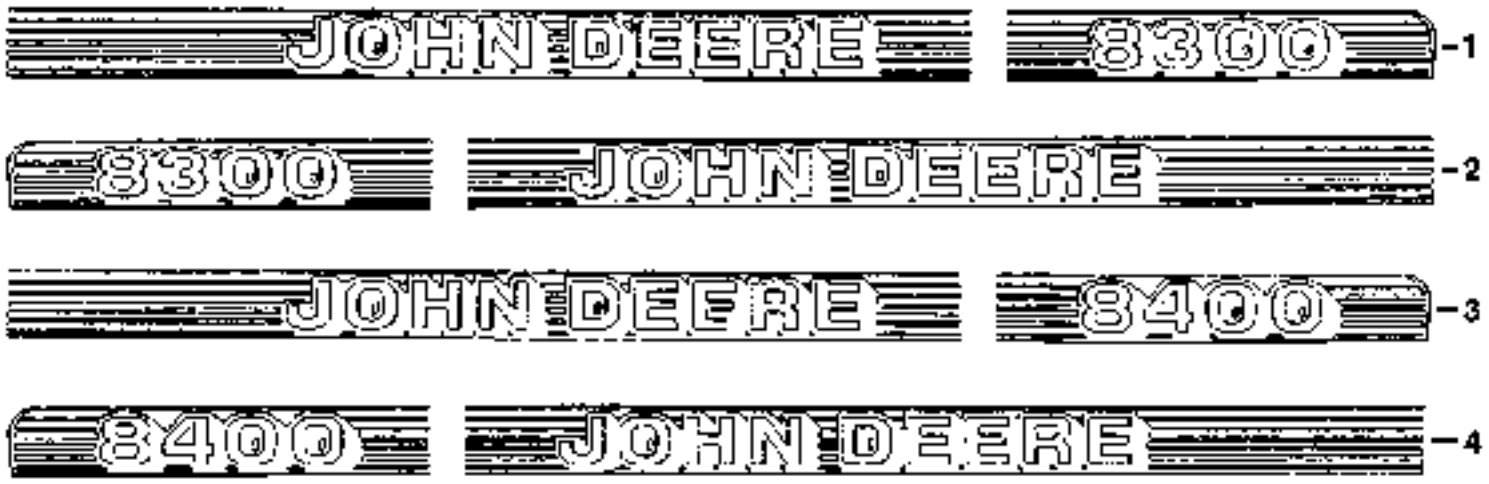

RE026951

KEY	PART NO.	PART NAME	QTY	TRACTOR SERIAL NO.	8300	8400	REMARKS
1	R132019	LABEL	1		X		R.H.
2	R132020	LABEL	1		X		L.H.
3	R132021	LABEL	1			X	R.H.
4	R132022	LABEL	1			X	L.H.

https://www.truck-manuals.net/

DECALS
DECALCOMANIES
AUFKLEBER
CALCOMANIE
CALCOMANIAS
DEKALER
RXP010802 -UN-01JAN94

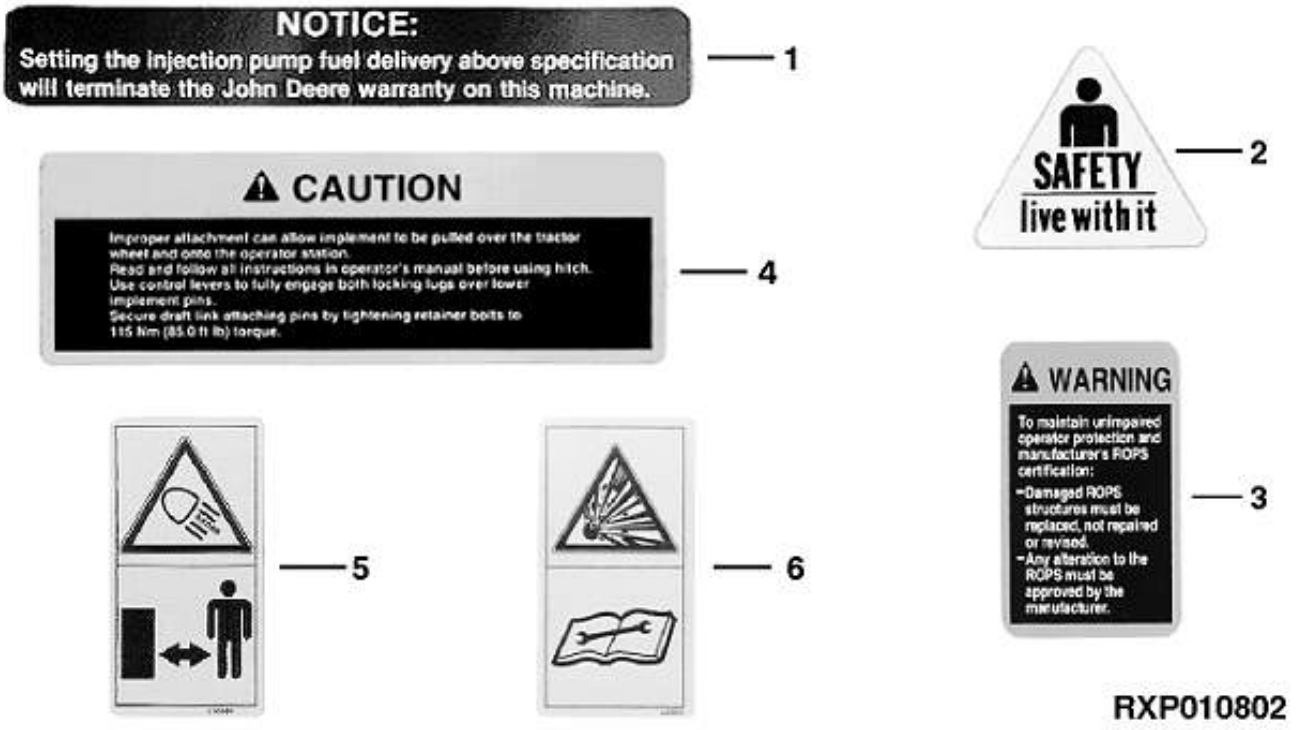

KEY	PART NO.	PART NAME	QTY	TRACTOR SERIAL NO.	ALL	REMARKS
1	R77715	DECAL	1		X	
2	H138955	LABEL	1		X	
3	R135987	LABEL	1		X	(SUB FOR R120124)
4	R122428	LABEL	1		X	
5	L65000	LABEL	1		X	
6	L113583	LABEL	1		X	(SUB FOR L65043)

https://www.truck-manuals.net/

DECALS
DECALCOMANIES
AUFKLEBER
CALCOMANIE
CALCOMANIAS
DEKALER
RXP011216 -UN-01JAN94

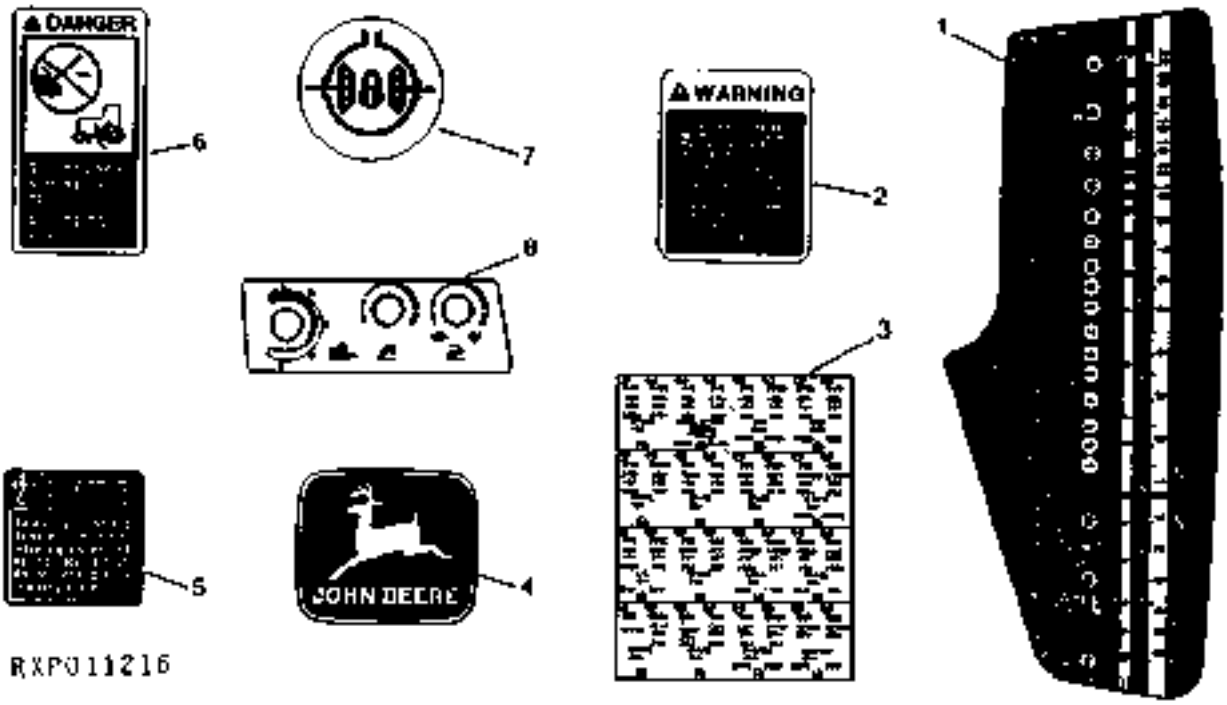

KEY	PART NO.	PART NAME	QTY	TRACTOR SERIAL NO.	ALL	REMARKS
1	R125189	LABEL	1		X	
	R125190	LABEL	1		X	(B)
2	R135987	LABEL	1		X	(SUB FOR R120124)
3	R111807	LABEL	1		X	
4	RE65579	LABEL	1		X	(SUB FOR RE34995 OR RE65218)
5	R120107	LABEL	1		X	
6	T146102	LABEL	1		X	
7	L80302	LABEL	1		X	
8	R124530	LABEL	1		X	(A)
	R110680	LABEL	1		X	(C)

(A)W/3 SCV W/HITCH W/PTO
W/3 SCV W/ATTELAGE W/PTO
W/3 SCV W/ANHAENGEVORRICHTUNG W/PTO
W/3 SCV W/ATTACCO W/ PTO
W/3 SCV W/ENGANCHE W/ PTO
W/3 SCV W/ DRAG W/PTO

(B)EUROPEAN VERSION
VERSION EUROPEENNE
EROPAEISCHE AUSFUEHRUNG
VERSIONE EUROPEA
VERSION EUROPEA
EUROPEISK VERSION

(C)W/3 SCV W/O HITCH W/PTO
W/3 SCV W/O ATTELAGE W/PTO
W/3 SCV W/O ANHAENGEVORRICHTUNG W/PTO
W/3 SCV W/O ATTACCO W/PTO
W/3 SCV W/O ENGANCHE W/PTO
W/3 SCV W/O DRAG W/PTO

https://www.truck-manuals.net/

DECALS
DECALCOMANIES
AUFKLEBER
CALCOMANIE
CALCOMANIAS
DEKALER
RE030290 -UN-21JAN99

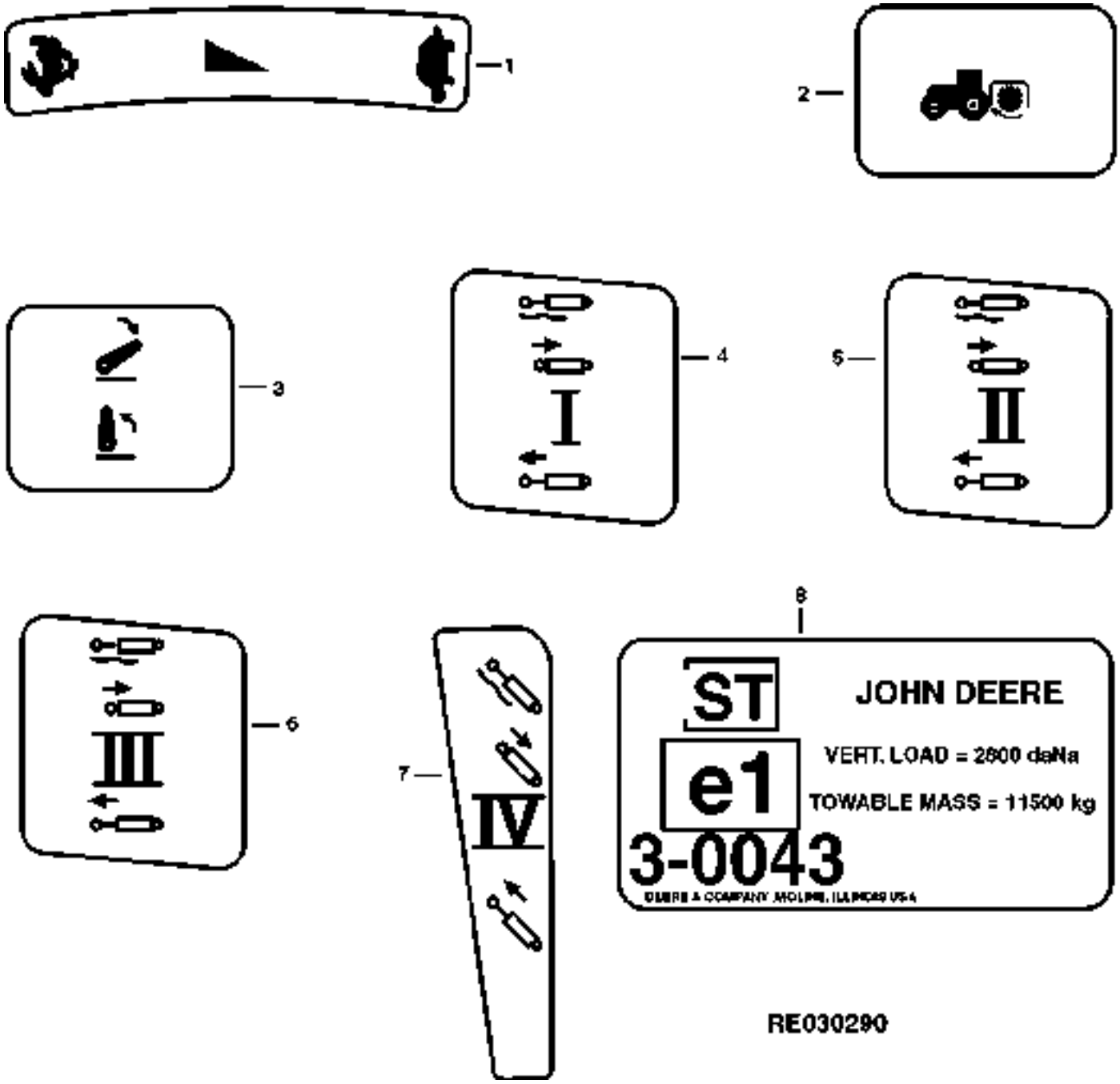

https://www.truck-manuals.net/

KEY	PART NO.	PART NAME	QTY	TRACTOR SERIAL NO.	ALL	REMARKS
1	R126466	LABEL	1		X	
2	R126467	LABEL	1	-XXXXXX	X	(A)
	R133057	LABEL	1	XXXXXX-	X	(B)
3	R126468	LABEL	1	-XXXXXX	X	(A)
	R133058	LABEL	1	XXXXXX-	X	(B)
4	R126463	LABEL	1	-XXXXXX	X	(A)
	R133053	LABEL	1	XXXXXX-	X	(B)
5	R126464	LABEL	1	-XXXXXX	X	(A)
	R133054	LABEL	1	XXXXXX-	X	(B)
6	R126465	LABEL	1	-XXXXXX	X	(A)
	R133055	LABEL	1	XXXXXX-	X	(B)
7	R122656	LABEL	1	-XXXXXX	X	(A)
	R133056	LABEL	1	XXXXXX-	X	(B)
8	R119439	LABEL	1		X	

(A)(-XXXXXX) 8100-005847; 8200-004093; 8300-006873; 8400-007568
(B)(XXXXXX-) 8100-005848; 8200-004094; 8300-006874; 8400-007569

https://www.truck-manuals.net/

DECALS
DECALCOMANIES
AUFKLEBER
CALCOMANIE
CALCOMANIAS
DEKALER
RE026100 -UN-27FEB95

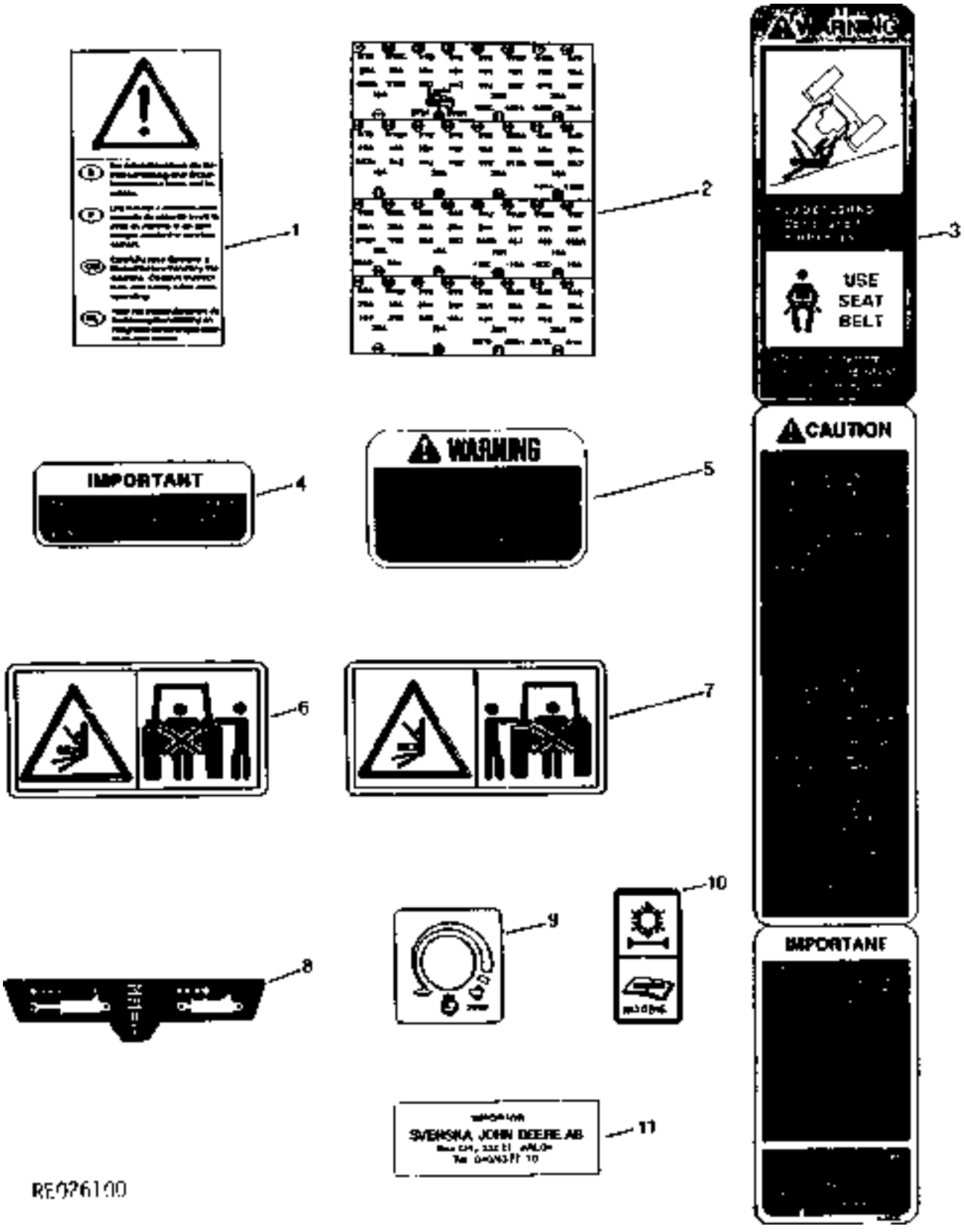

https://www.truck-manuals.net/

KEY	PART NO.	PART NAME	QTY	TRACTOR SERIAL NO.	ALL	REMARKS
1	CC40740	DECAL	1		X	(A) (SUB FOR L64991)
2	R134324	LABEL	1		X	(SUB FOR R111807 OR R132098)
	R134325	LABEL	1		X	(A) (SUB FOR R111808 OR R132099)
3	R135987	LABEL	1		X	(A) (SUB FOR R124563)
	L79601	LABEL	1		X	(A)
4	R68682	LABEL	1		X	
5	R132720	LABEL	1		X	(SUB FOR R120111)
6	R135481	LABEL	1		X	(A) (SUB FOR L65070) R.H.
7	R135480	LABEL	1		X	(A) (SUB FOR L65071) L.H.
8	R95866	DECAL	1		X	
9	R116580	LABEL	1		X	
10	R125345	DECAL	1		X	
11	L35850	LABEL	1		X	(A) NLR

(A)EUROPEAN VERSION
VERSION EUROPEENNE
EROPAEISCHE AUSFUEHRUNG
VERSIONE EUROPEA
VERSION EUROPEA
EUROPEISK VERSION

https://www.truck-manuals.net/

DECALS
DECALCOMANIES
AUFKLEBER
CALCOMANIE
CALCOMANIAS
DEKALER
RXP011233 -UN-01JAN94

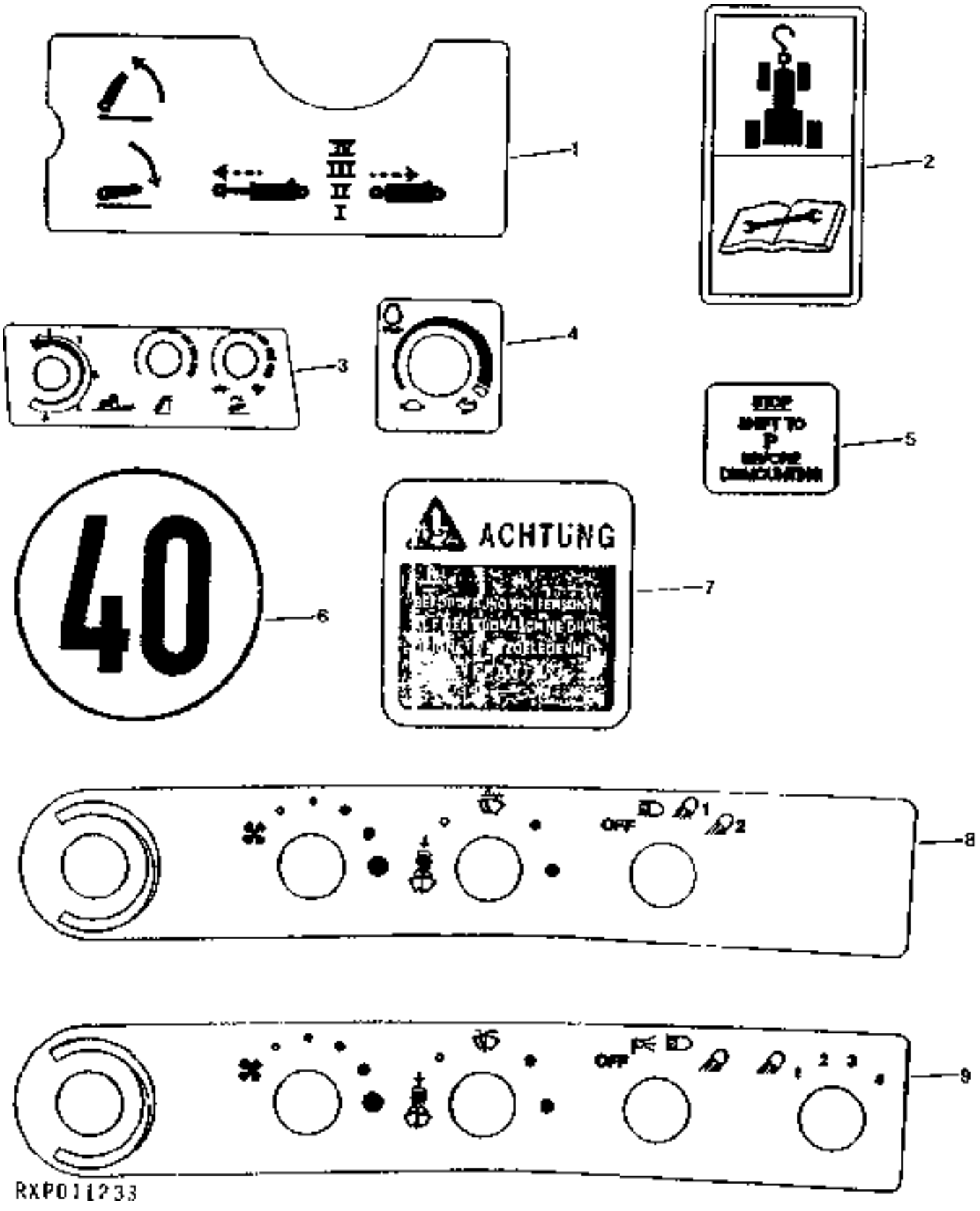

https://www.truck-manuals.net/

KEY	PART NO.	PART NAME	QTY	TRACTOR SERIAL NO.	ALL	REMARKS
1	R128894	LABEL	1		X	(SUB FOR R123139)
2	R124693	LABEL	1		X	(A)
3	R124530	LABEL	1		X	
4	R133632	LABEL	1		X	(SUB FOR R125138)
5	R114802	LABEL	1		X	
6	L63262	LABEL	1		X	(A)
7	L79474	LABEL	1		X	(A)
8	R126009	DECAL	1		X	
9	R126010	DECAL	1		X	(A)
..	R126585	SIGN	1		X	NLR

(A)EUROPEAN VERSION
VERSION EUROPEENNE
EROPAEISCHE AUSFUEHRUNG
VERSIONE EUROPEA
VERSION EUROPEA
EUROPEISK VERSION

https://www.truck-manuals.net/

DECALS KIT (SPANISH)
JEU D'AUTOCOLLANTS (ESPAGNOL)
AUFKLEBERSATZ (SPANISCH)
KIT TARGHETTE (SPAGNOLO)
JUEGO DE ETIQUETAS (ESPANOL)
DEKALSATS (SPANSK)
RXP010856 -UN-01JAN94

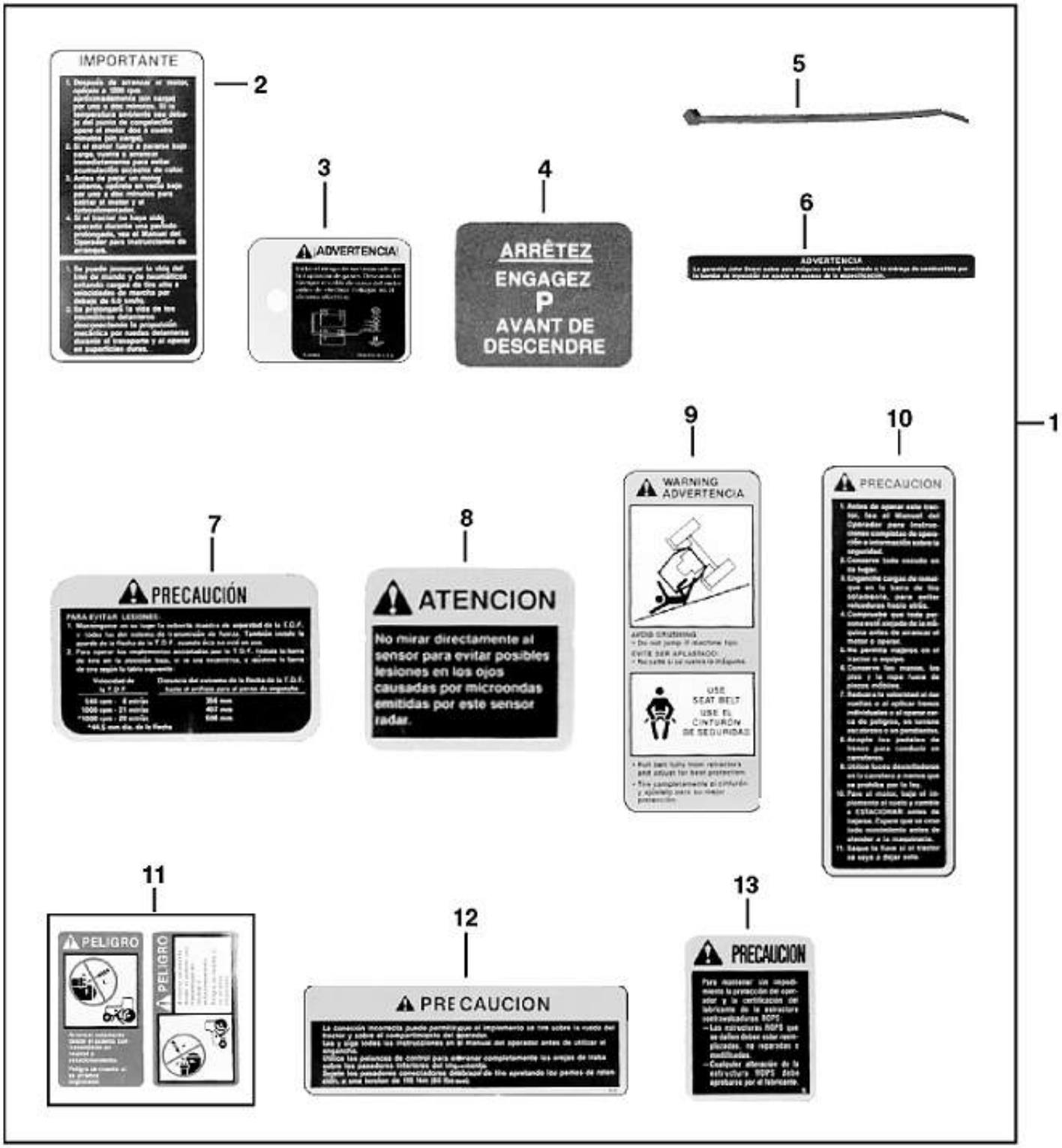

RXP010856

https://www.truck-manuals.net/

KEY	PART NO.	PART NAME	QTY	TRACTOR SERIAL NO.	ALL	REMARKS
1	**RE58989**	**LABEL**	**1**		**X**	**(FI)**
2	R100410	LABEL	1		X	(ESPANOL)
3	R125474	TAG	1		X	(ESPANOL)
4	R122889	LABEL	1		X	(ESPANOL)(NLR)
5	R44302	TIE BAND	1		X	
6	R81374	DECAL	1		X	(ESPANOL)
7	R120113	LABEL	1		X	(ESPANOL)
8	R120108	LABEL	1		X	(ESPANOL)
9	R120123	LABEL	1		X	(ESPANOL/ENGLISH)
10	R120130	LABEL	1		X	(ESPANOL)
11	T146106	SAFETY SIGN	1		X	(ESPANOL)
12	R120104	LABEL	1		X	(ESPANOL)
13	R120126	LABEL	1		X	(ESPANOL)

https://www.truck-manuals.net/

DECALS KIT (CANADA)
JEU D'AUTOCOLLANTS (CANADA)
AUFKLEBERSATZ (KANADA)
KIT TARGHETTE (CANADA)
JUEGO DE ETIQUETAS (CANADA)
DEKALSATS (KANADA)
RXP010857 -UN-01JAN94

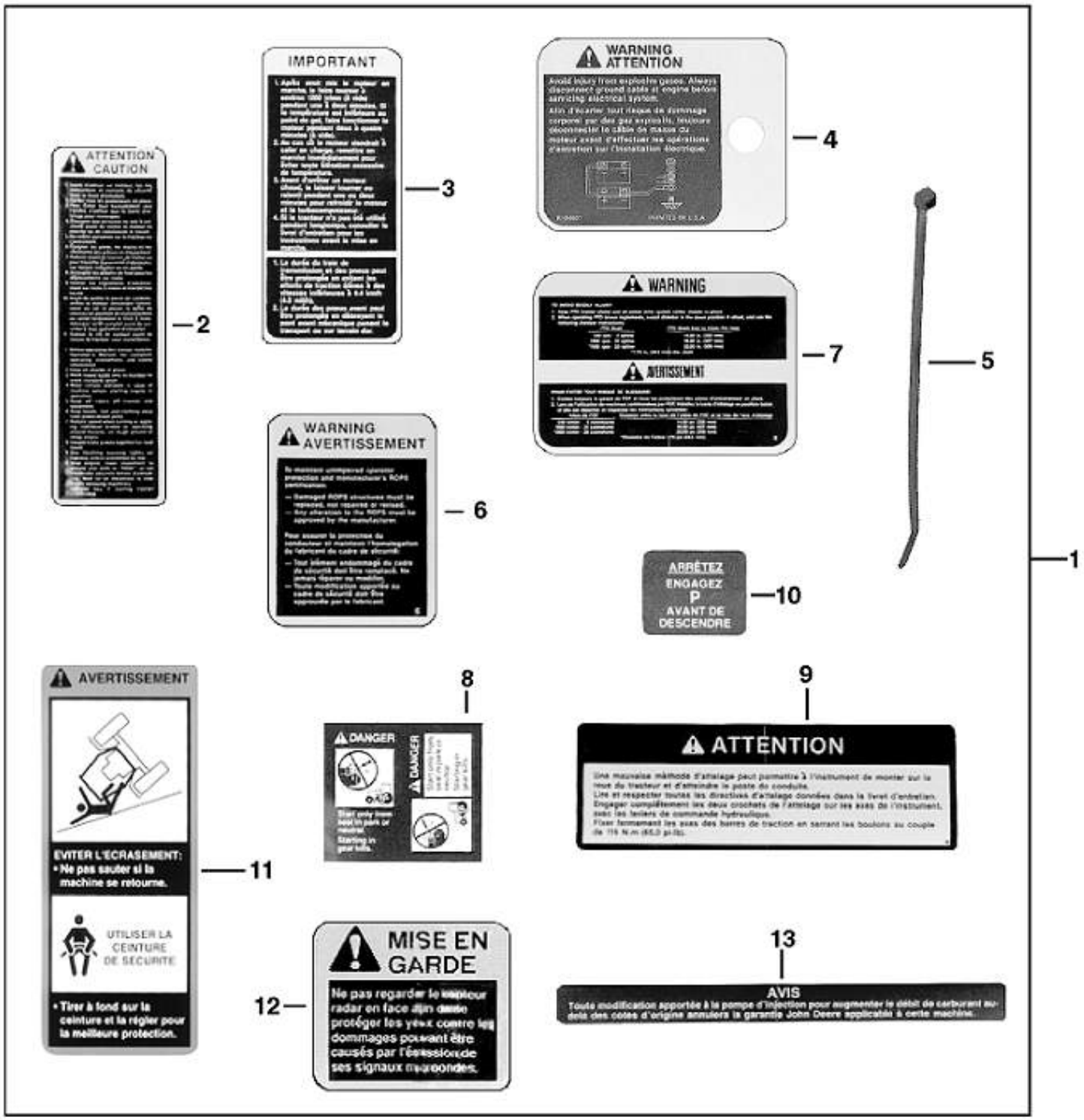

RXP010857

https://www.truck-manuals.net/

KEY	PART NO.	PART NAME	QTY	TRACTOR SERIAL NO.	ALL	REMARKS
1	**RE58988**	**LABEL**	**1**		**X**	**(FI)**
2	R120129	LABEL	1		X	(FRANCAIS/ENGLISH)
3	R100412	LABEL	1		X	(FRANCAIS)
4	R125473	TAG	1		X	(FRANCAIS)
	R120119	TAG	1		X	(FRANCAIS/ENGLISH)
5	R44302	TIE BAND	1		X	
6	R120125	LABEL	1		X	(FRANCAIS/ENGLISH)
7	R120112	LABEL	1		X	(FRANCAIS/ENGLISH)
8	T146104	SAFETY SIGN	1		X	(FRANCAIS)
9	R120105	LABEL	1		X	(FRANCAIS)
10	R122890	LABEL	1		X	(FRANCAIS)(NLR)
11	R120122	LABEL	1		X	(FRANCAIS)
12	R120106	LABEL	1		X	(FRANCAIS)
13	R81372	DECAL	1		X	(FRANCAIS)

https://www.truck-manuals.net/

MEMORANDA
MEMORANDA
MEMORANDA
MEMORANDA
MEMORANDA
MEMORANDA

https://www.truck-manuals.net/

SECTIONAL INDEX
GRUPPENINDEX
INDEX DE SECTION
INDICE DELLA SEZIONE
INDICE DE SECCION
GRUPPSFORTECKNING

RE029128 -UN-11MAY99

1 -	8H5
3 -	8H9
4 -	8H15
5 -	8H17
6 -	8H19
7 -	8H21
5 -	8H22

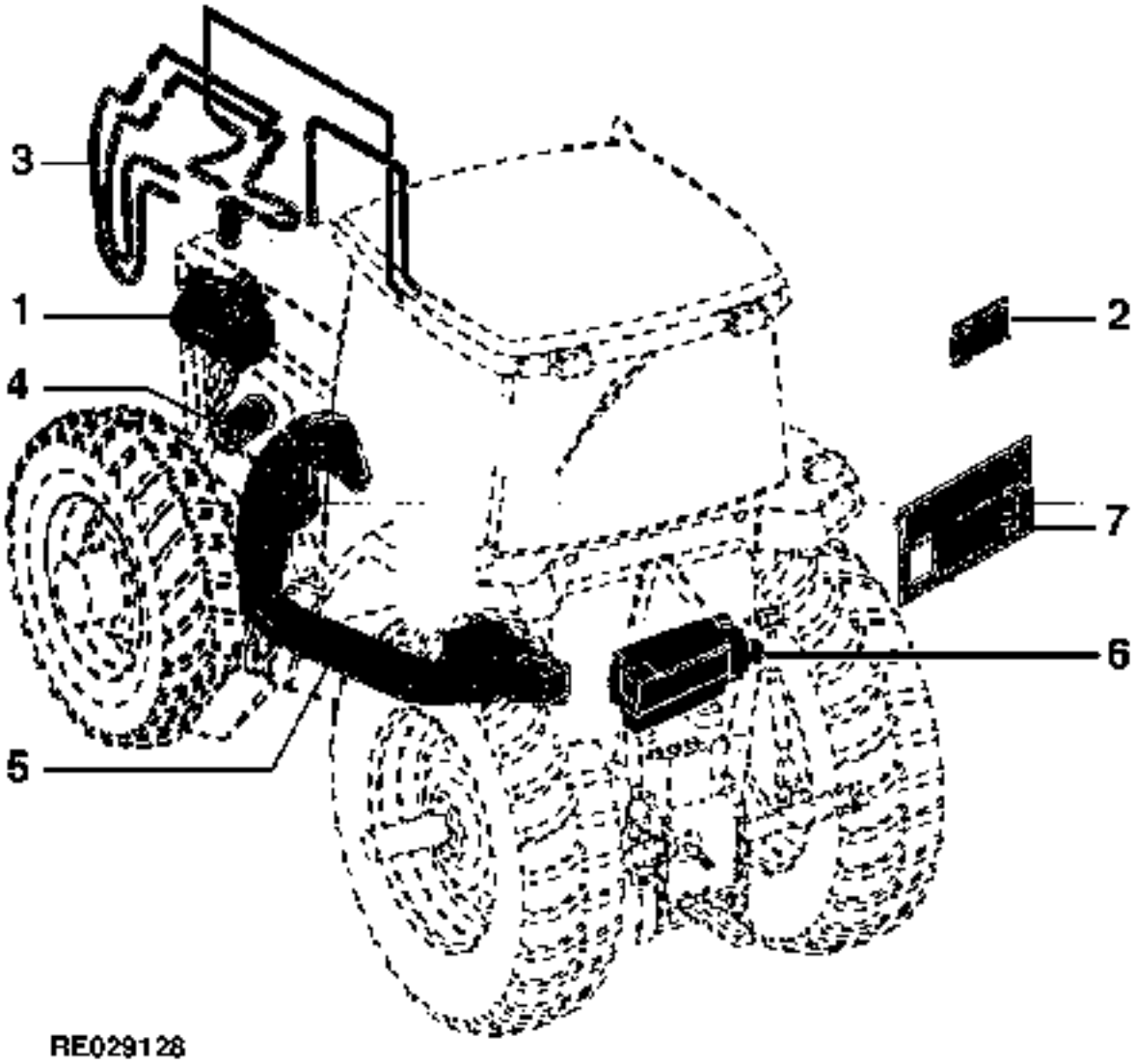

https://www.truck-manuals.net/

SECTIONAL INDEX
GRUPPENINDEX
INDEX DE SECTION
INDICE DELLA SEZIONE
INDICE DE SECCION
GRUPPSFORTECKNING

https://www.truck-manuals.net/

AIR CONDITIONING COMPRESSOR
COMPRESSEUR DE CLIMATISATION
KLIMAANLAGE-KOMPRESSOR
COMPRESSORE DELL'ARIA CONDIZIONATA
COMPRESOR DEL ACONDICIONADOR DE AIRE
LUFTKONDITIONERINGSKOMPRESSOR
RXP011236 -UN-01JAN94

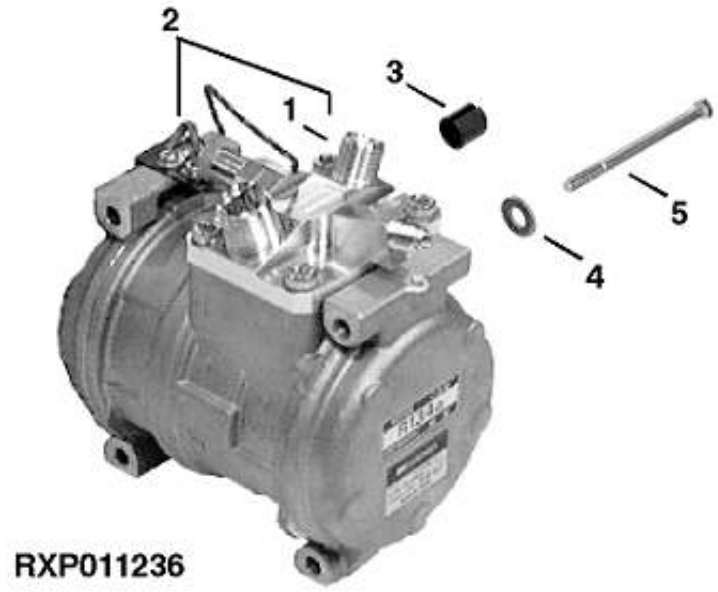

KEY	PART NO.	PART NAME	QTY	TRACTOR SERIAL NO.	ALL	REMARKS
1	RE51052	MANIFOLD	1		X	
2	RE46609	COMPRESSOR	1		X	(NIPPONDENSO 447200-3350) (INCLUDES RE51052, RE52454, RE52507, RE52508, RE52509, RE52510 AND R115743)
	RE52454	COMPRESSOR	1		X	(C)
	TY6764	COMPRESSOR	1		X	(A)
3	34M7189	SPRING PIN	2		X	11 X 8 MM
4	24M7055	WASHER	3		X	(B) 8.400 X 16 X 1.600 MM
5	19M8539	CAP SCREW	3		X	M8 X 90
..	R115742	SEAL	1		X	
..	TY15949	REFRIGERANT	1		X	12 OZ
..	TY15950	REFRIGERANT	1		X	15 LBS (NLA)
..	TY15951	REFRIGERANT	1		X	30 LBS

(A)REMANUFACTURED
ECHNGE STANDARD
GENERALUEBERHOLT
RAFATTO
REFARICADO POR
RENOVERAD

(B)HARDENED
TREMPE
GEHAERTET
TEMPRATO
TEMPLADO
HAERDAD

(C)COMPRESSOR ONLY
COMPRESSEUR SEULEMENT
NUR KOMPRESSOR
SOLAMENTE IL COMPRESSORE
SOLO COMLPRESOR
ENDAST KOMPRESSOR

https://www.truck-manuals.net/

COMPRESSOR PARTS
PIECES DE COMPRESSEUR
KOMPRESSORTEILE
COMPONENTI DEL COMPRESSORE
COMPONENTES DEL COMPRESOR
KOMPRESSORDELAR
RXP9436 -UN-01JAN94

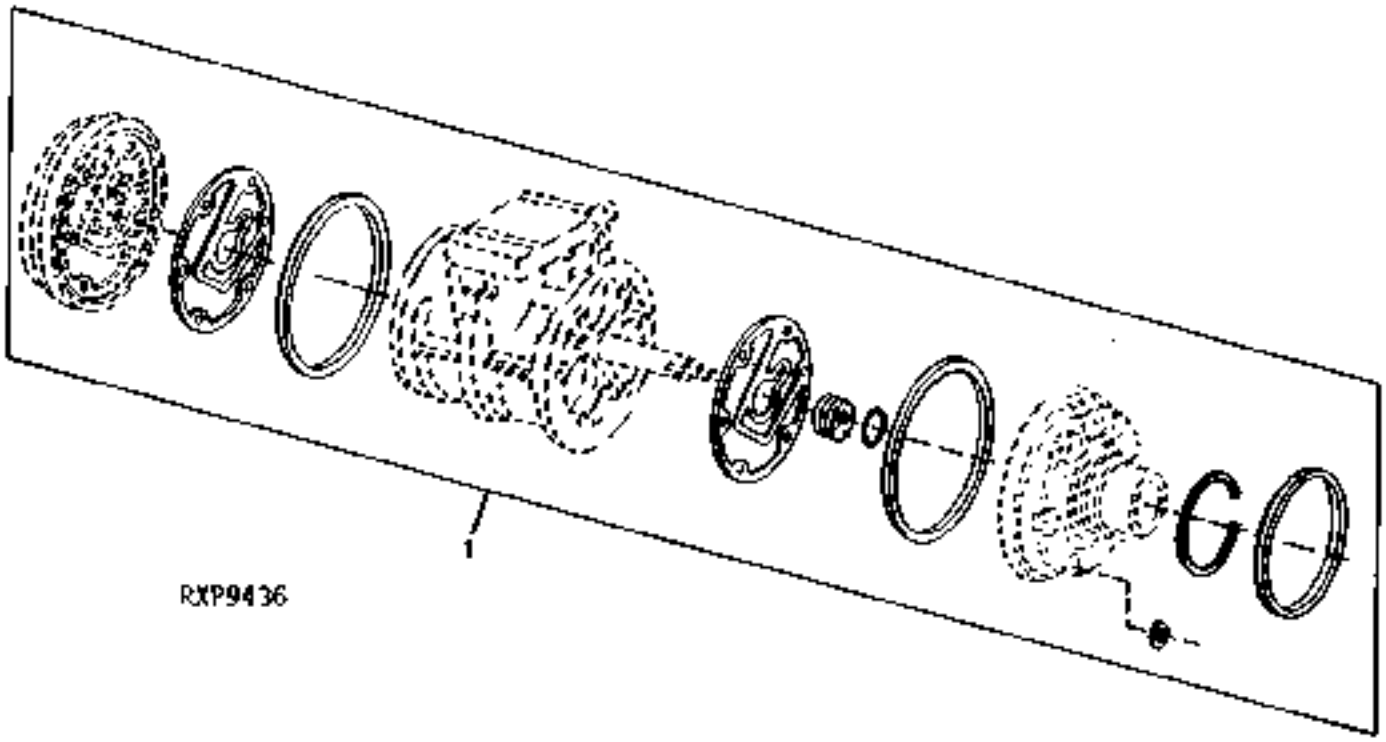

KEY	PART NO.	PART NAME	QTY	TRACTOR SERIAL NO.	ALL	REMARKS
1	RE52509	SEAL KIT	1		X	

https://www.truck-manuals.net/

COMPRESSOR HARDWARE SET
COLIS DE PIECES DE COMPRESSEUR
KOMPRESSOR ANBAUSATZ
SET APPARATO DI COMPRESSIONE
JUEGO DE DE PIEZAS DEL COMPRESOR
KOMPRESSOR, MONTERINGSDETALJER
RXP010449 -UN-01JAN94

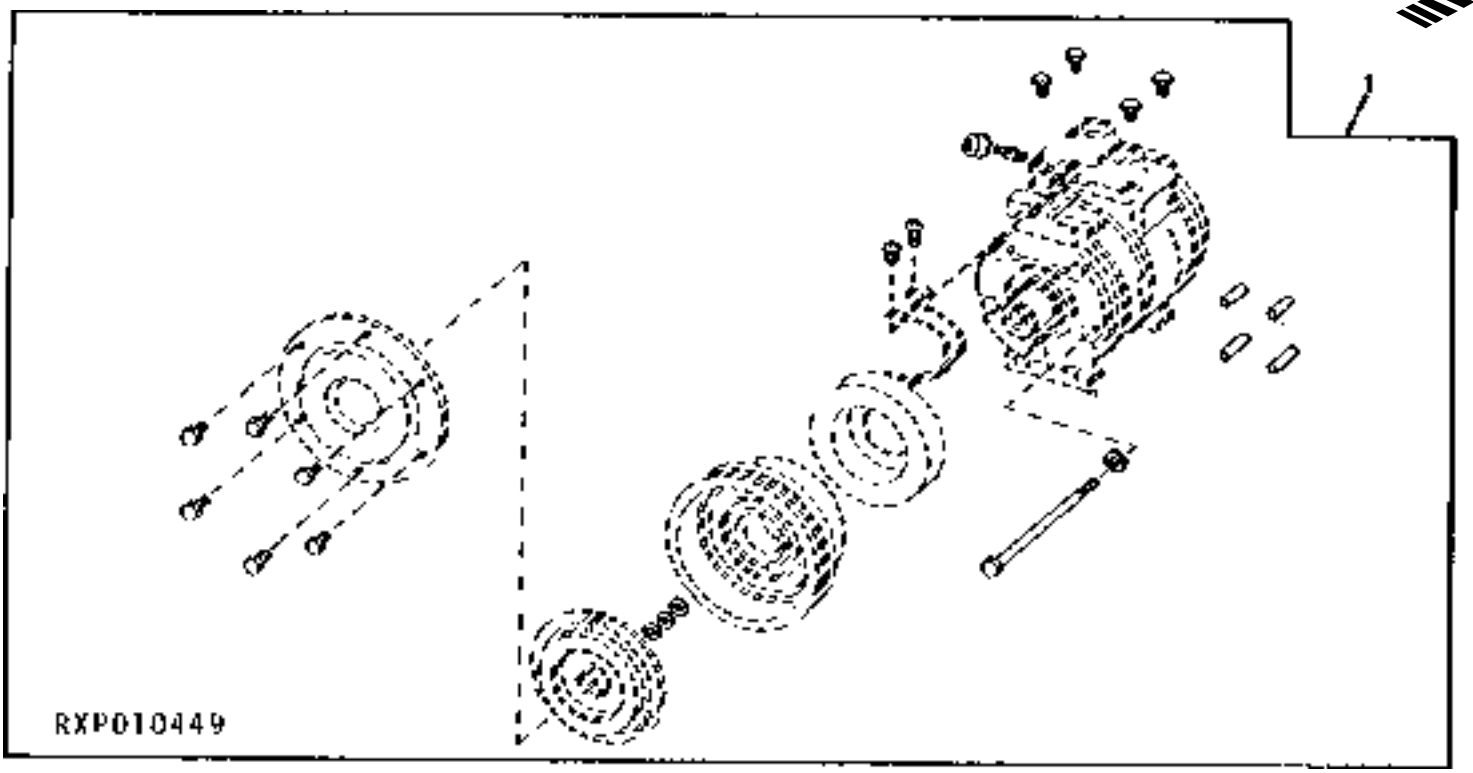

KEY	PART NO.	PART NAME	QTY	TRACTOR SERIAL NO.	ALL	REMARKS
1	RE52507	KIT	1		X	

https://www.truck-manuals.net/

COMPRESSOR CLUTCH/STATOR/DUST COVER
EMBRAYAGE DE COMPRESSEUR/STATOR/CACHE-POUSSIERE
KOMPRESSORKUPPLUNG/STAENDER/STAUBKAPPE
REIZIONE DEL COMPRESSORE/STATORE/PARAPOLVERE
CUBIERTA GUARDAPOLVO/ESTATOR/EMBRAGUE DEL COMPRESOR
KOMPRESSORKOPPLING/STATOR/DAMMSKYDD
RXP011046 -UN-01JAN94

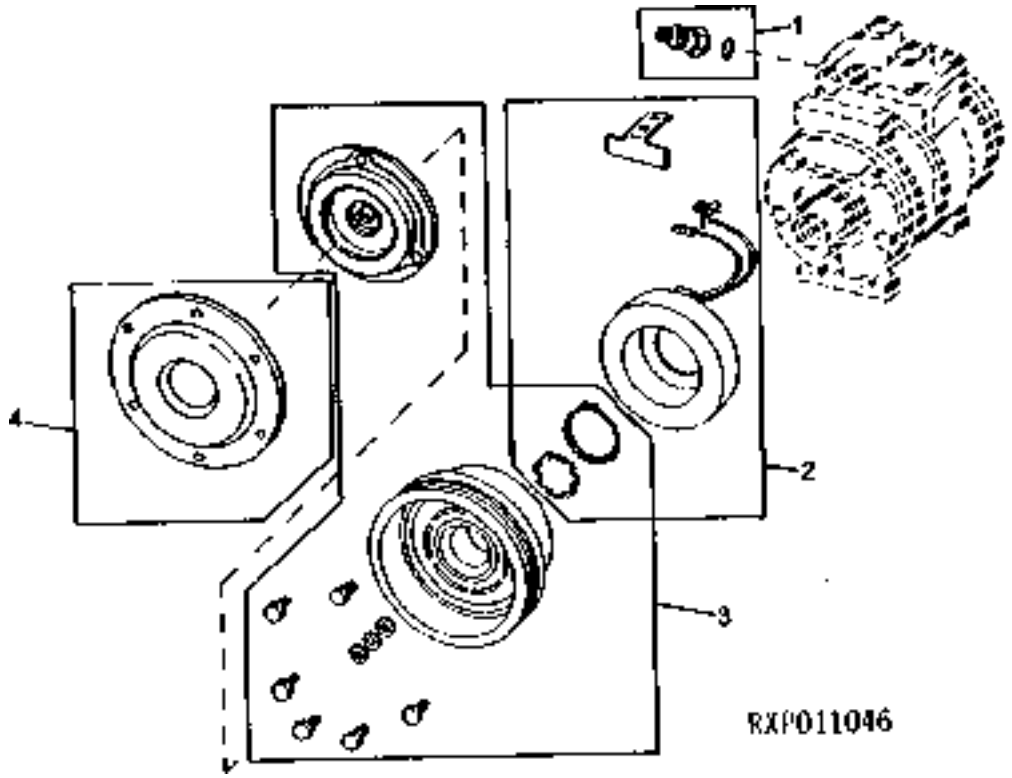

KEY	PART NO.	PART NAME	QTY	TRACTOR SERIAL NO.	ALL	REMARKS
1	RE52506	VALVE	1		X	
2	RE52510	STATOR	1		X	
3	RE52508	KIT	1		X	
4	R115743	COVER	1		X	

https://www.truck-manuals.net/

MEMORANDA
MEMORANDA
MEMORANDA
MEMORANDA
MEMORANDA
MEMORANDA

https://www.truck-manuals.net/

CONDENSOR LINES AND BRACKETS
CONDUITES DE CONDENSEUR ET SUPPORTS
KONDENSATORLEITUNGEN UND HALTER
STAFFE E TUBI DEL CONDENSATORE
TUBERIAS Y SOPORTES DEL CONDENDADOR
KONDENSORLEDNINGAR OCH HAALLARE
RE030461 -UN-24MAR99

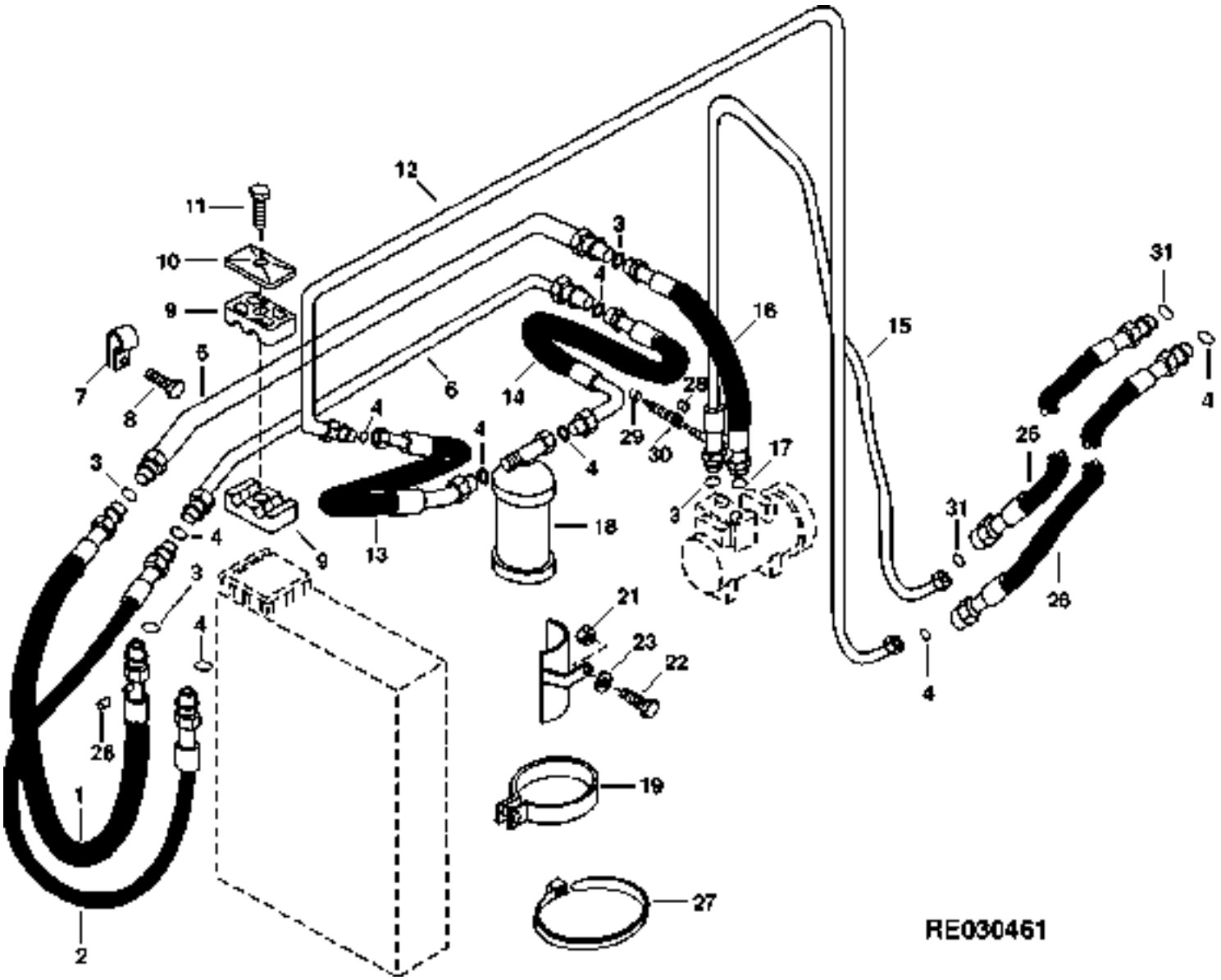

https://www.truck-manuals.net/

KEY	PART NO.	PART NAME	QTY	TRACTOR SERIAL NO.	ALL	REMARKS
1	RE61138	HOSE	1		X	
2	RE61137	LINE	1		X	
3	R33259	O-RING	AR		X	
4	R10093	O-RING	AR		X	
5	RE61146	LINE	1		X	LOW
6	RE61147	LINE	1		X	
7	R125484	CLAMP	1		X	(SUB T74416 AND 24M7238)
8	19M8008	CAP SCREW	1		X	M8 X 35
9	H114865	CLAMP	6		X	
10	H112567	PLATE	3		X	
11	37M7108	SCREW	3		X	M8 X 60
12	RE58706	LINE	1		X	
13	RE58828	HOSE	1		X	
14	RE58729	HOSE	1		X	
15	RE60685	LINE	1	-009999	X	
	RE69062	LINE	1	010000-	X	
	RE69063	LINE	1	010000-	X	(A)
16	RE155218	HOSE	1		X	(SUB FOR RE60684)
17	R113050	RING	1		X	
18	AT162848	RECEIVER-DRYER	1		X	(SUB FOR AT125596)
19	TY22474	CLAMP	1		X	
20	R122591	RAIL	1		X	
21	14M7273	NUT	1		X	M8
22	19M8539	CAP SCREW	1		X	M8 X 90
23	24M7055	WASHER	1		X	8.400 X 16 X 1.600 MM
24	T143169	O-RING	2		X	
25	RE66552	HOSE	1		X	(ALSO ORDER RE67291)
26	RE66553	HOSE	1		X	(ALSO ORDER RE67290)
27	R44302	TIE BAND	1		X	
28	R120955	CAP	1		X	LOW
29	R120956	CAP	1		X	HI
30	R124578	VALVE	3		X	
31	T77613	O-RING	2		X	
..	TY15939	O-RING KIT	1		X	

(A)W/ PNEUMATIC TRAILER BRAKE
W/ FREIN DE REMARQUE HYDR.
W/ HYDR, ANHAENGERBREMSE
W/ FRENO IDRAUL RIMORCHIO
W/ FRENO HIDRAULREMOLQUE
W/ SL'RVAGNSBROMS

https://www.truck-manuals.net/

REFRIGERANT LINES
CONDUITES DE REFRIGERANT
KUEHLMITTEL LEITUNG
TUBAZIONE DEL REFRIGERANTE
TUBERIAS YDE REFRIGERANTE
KYLMEDELEDNING
RE030432 -UN-25FEB99

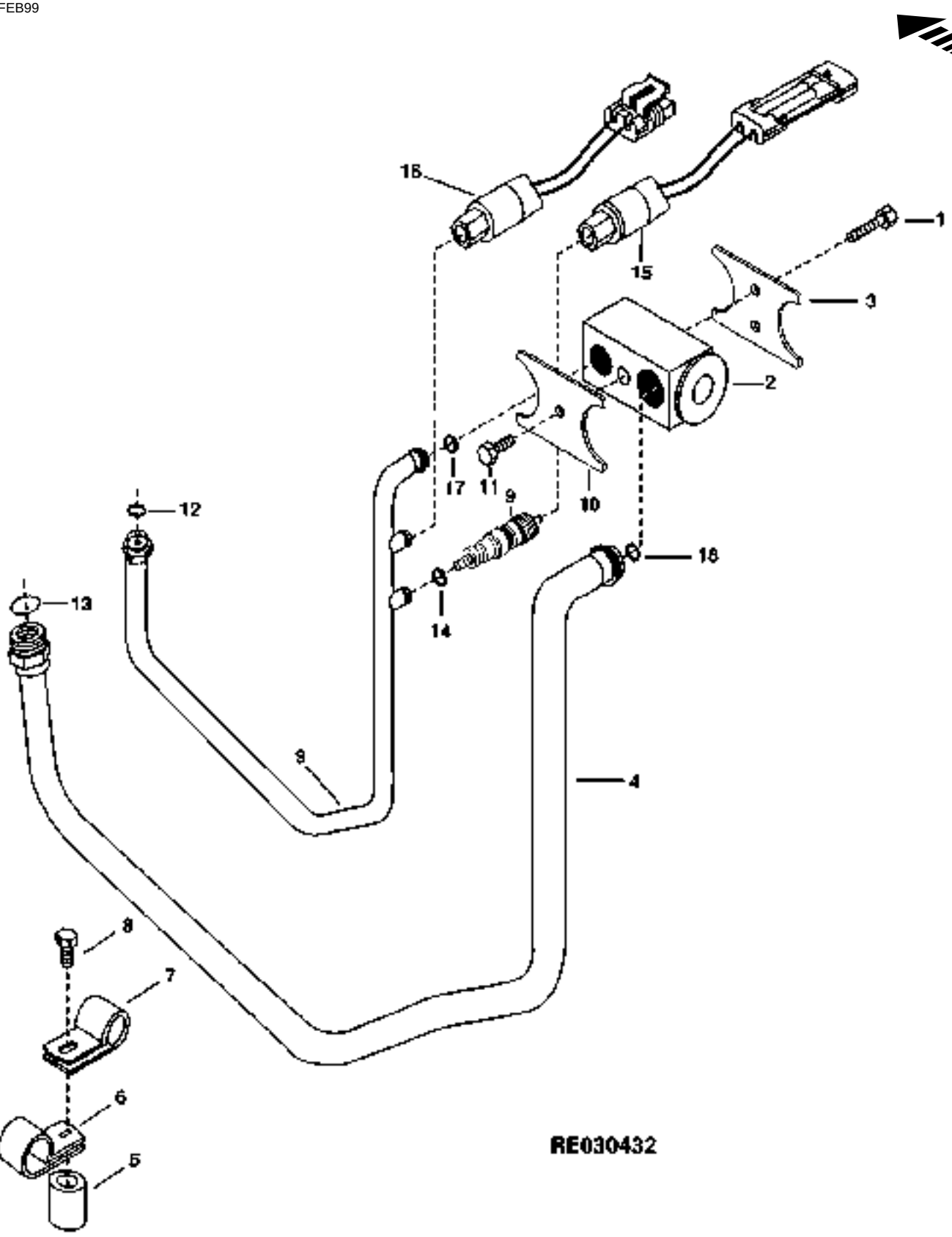

https://www.truck-manuals.net/

KEY	PART NO.	PART NAME	QTY	TRACTOR SERIAL NO.	ALL	REMARKS
1	PT11778	BOLT	2		X	
2	RE57575	VALVE	1		X	
3	L77943	PLATE	1		X	
4	RE61158	LINE	1	-009999	X	LOW
	RE67291	LINE	1	010000-	X	LOW
5	28H3390	SPACER	1		X	
6	AH78237	CLAMP	1		X	
7	H75541	CLAMP	1		X	
8	37M7108	SCREW	1		X	M8 X 60
9	RE69034	LINE	1	-009999	X	HI, (SUB FOR RE61157)
	RE67290	LINE	1	010000-	X	HI
10	R125223	PLATE	1		X	
11	19M8553	SCREW	1		X	M6 X 16
12	R10093	O-RING	1		X	
13	R33259	O-RING	1		X	
14	R10093	O-RING	2		X	
15	RE60888	AC HIGH PRESSURE SWITCH	1		X	HI
16	RE155938	AC LOW PRESSURE SWITCH	1		X	(SUB FOR RE60887) LOW
17	R10093	O-RING	1		X	
18	T143169	O-RING	1		X	
19	R124578	VALVE	1		X	(SUB FOR R60170)

https://www.truck-manuals.net/

HEATER HOSES
FLEXIBLE DE CHAUFFAGE
HEIZUNGSSCHLAUCH
TUBO DEL RISCALDATORE
MANGUERA DEL CALEFACTOR
SLANG FOER VAERMEAPPARAT
RE030145 -UN-09NOV98

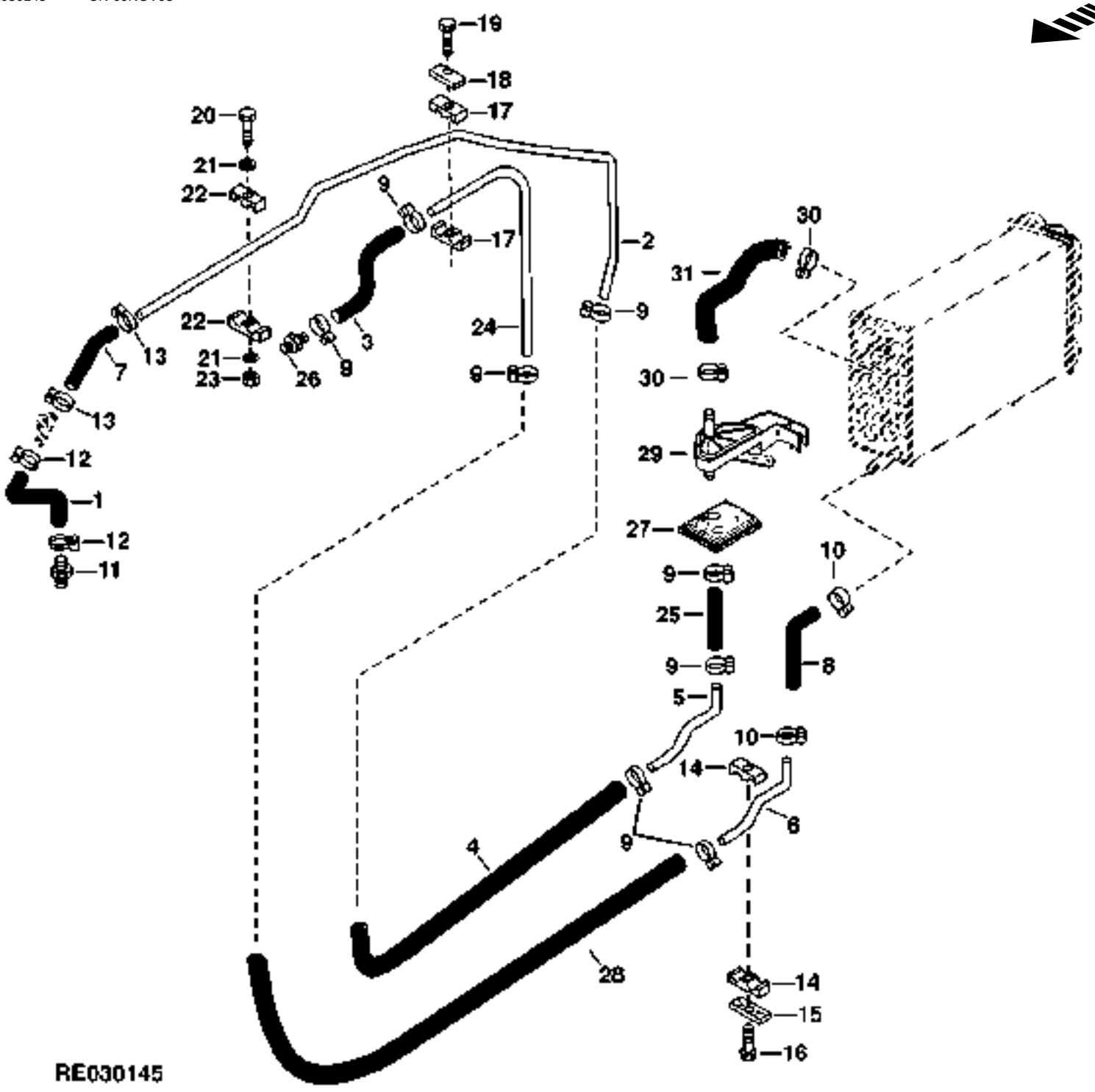

https://www.truck-manuals.net/

KEY	PART NO.	PART NAME	QTY	TRACTOR SERIAL NO.	ALL	REMARKS
1	R107666	HOSE	1		X	
	R125175	HOSE	1		X	(8400 ONLY)
2	R108312	LINE	1		X	(A)
3	.....	HOSE	1		X	15.88 X 710 MM, (MAKE FROM TY22328)
4	R121965	HOSE	2	-009999	X	
	R131192	HOSE	2	010000-	X	
5	R122608	TUBE	1	-009999	X	(SUB R134885)
	R134886	LINE	1	010000-	X	
6	R122610	TUBE	1	-009999	X	(A) (SUB FOR R122610) REAR
	R134887	LINE	1	010000-	X	
7	R121969	HOSE	1		X	(MAKE FROM TY22413)
8	R151720	HOSE	1	-009999	X	(SUB FOR R124374)
	R154075	HOSE	1	010000-	X	(SUB FOR R132027 OR R151333)
9	R117721	CLAMP	AR		X	(SUB FOR AR21837 OR TY22465)
10	AT18904	CLAMP	2		X	(SUB FOR AR21837 OR TY22465)
11	R41985	FITTING	1		X	
12	TY22465	CLAMP	2		X	(SUB FOR AR21837)
13	TY22465	CLAMP	2		X	(SUB FOR AR21837)
14	H120847	CLAMP	4		X	
15	H121168	PLATE	2		X	
16	37M7103	SCREW	1		X	M8 X 45, FRONT
	37M7108	SCREW	1		X	M8 X 60, REAR
17	H114865	CLAMP	2		X	
18	H112567	PLATE	1		X	
19	37M7108	SCREW	1		X	M8 X 60
20	19M7922	CAP SCREW	1		X	M8 X 40
21	24M7207	WASHER	2		X	8.400 X 24 X 2 MM
22	H120362	CLAMP	2		X	
23	14M7273	NUT	1		X	M8
24	R130835	LINE	1		X	(SUB FOR R122034)
25	R134646	HOSE	1		X	
26	R41071	FITTING	1		X	
27	R124377	GROMMET	1		X	(SUB FOR R120321)
28	R122610	TUBE	1	-009999	X	
	R131193	HOSE	1	010000-	X	
29	RE47070	VALVE	1		X	
30	TY22467	CLAMP	2		X	
31	R125454	HOSE	1		X	

(A) RETURN
RETOUR
RUECKLAUF
RITORNO
RETORNO
RETUR

https://www.truck-manuals.net/

FRESH AIR FILTER HOUSING
FILTRE A AIR FRAIS, BOITIER
FRISCHLUFT-FILTERGEHAEUSE
ALLOGGIAMENTO DEL FILTRO ANTINQUINAMENTO
CAJA DE FILTRO DE AIRE FRESCO
FRISKLUFTFILTERDOSA
RE026561 -UN-29NOV95

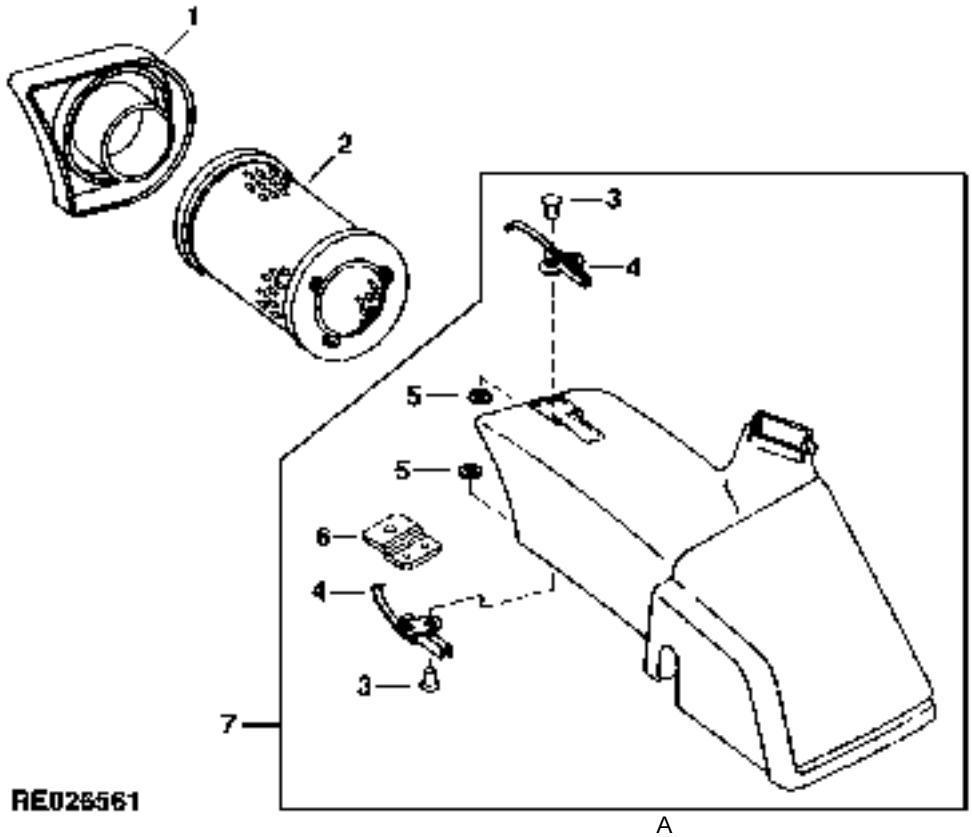

KEY	PART NO.	PART NAME	QTY	CAB SERIAL NO.	ALL	REMARKS
1	R116975	COVER	1		X	
2	R119168	AIR FILTER	1		X	
	RE67828	AIR FILTER	1		X	(A)
3	M96130	RIVET	4		X	
4	R121465	LATCH	2		X	
5	24M7138	WASHER	6		X	5.300 X 15 X 1.200 MM, (SUB FOR R124433)
6	R127647	BRACKET	1		X	
7	RE63563	AIR DUCT	1		X	(INCLUDES (2) M68628)

(A) HIGH EFFICIENCY
HAUT RENDEMENT
HOCHLEISTUNGSFAEHIG
ALTA EFFICIENZA
ALTA EFICIENCIA
HOEG EFFEKTIVITET

https://www.truck-manuals.net/

PRESSURIZER BLOWER MOTOR
MOTEUR DE SOFFLANTE PRESSURISEE
DRUCKGEBLAESEMOTOR
MOTORINO DEL VENTILATORE DEL PRESSURIZZATORE
MOTOR DEL PRESURIZADOR
TRYCKFLAEKTSMOTOR
RE028247 -UN-25AUG97

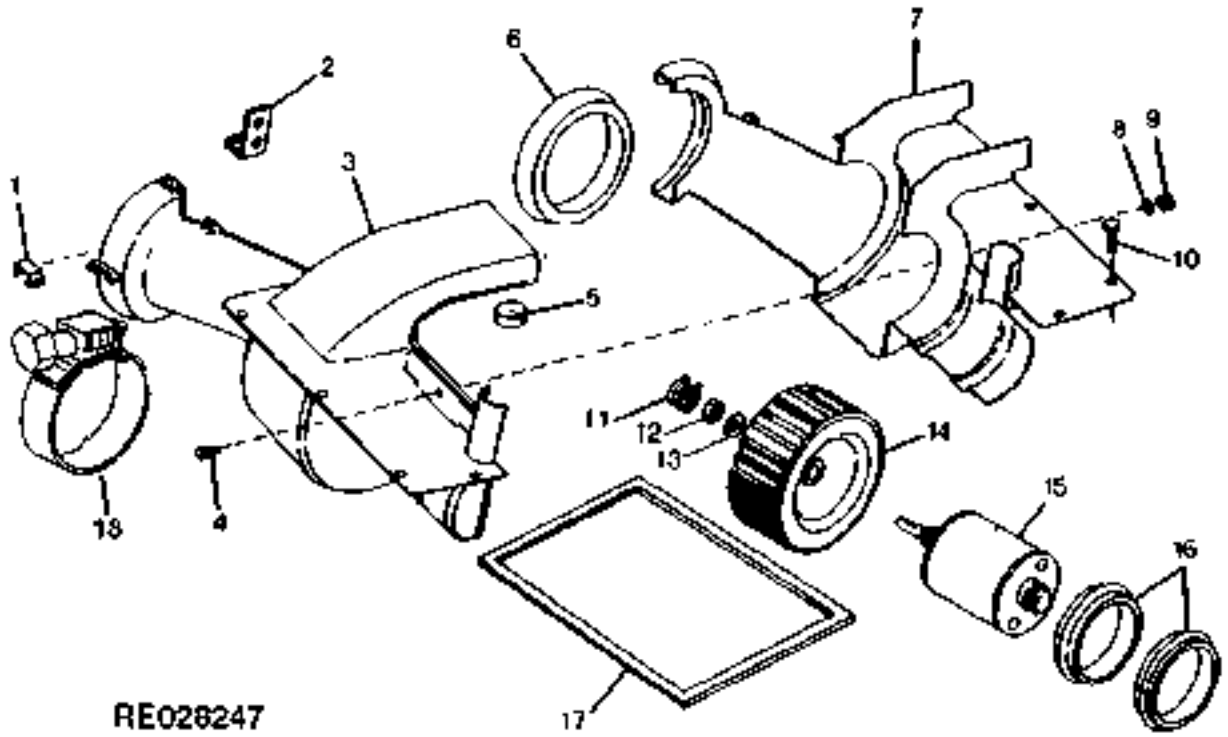

KEY	PART NO.	PART NAME	QTY	CAB SERIAL NO.	ALL	REMARKS
1	R96248	CLIP	6		X	
2	R124209	BRACKET	1		X	
3	R116976	AIR DUCT	1		X	FRONT
4	19M7775	SCREW	1		X	M6 X 16
5	R125467	SEAL	1		X	
6	R119171	AIR DUCT	1		X	
7	R116977	AIR DUCT	1		X	(SUB FOR R97332)
8	24M7139	WASHER	1		X	6.400 X 18 X 1.600 MM, REAR
9	14M7272	NUT	1		X	M6
10	37M7089	SCREW	10		X	M6 X 12
11	R126547	CLIP	1		X	(SUB FOR R97332)
12	14M7139	NUT	1		X	M4
13	24M7146	WASHER	1		X	4.300 X 12 X 1 MM
14	R93175	IMPELLER	1		X	
15	RE61419	BLOWER	1		X	
16	H115521	ISOLATOR	2		X	
17	.....	SEAL	1		X	(MAKE FROM (4) R83066)
18	AC15595	CLAMP	1		X	

https://www.truck-manuals.net/

AIR CIRCULATION DUCTS
CONDUITS DE CIRCULATION D'AIR
LUFTUMWAELZ-KANAELE
CONDOTTI DI CIRCOLAZIONE DELL'ARIA
CONDUCTOS DE CIRCULACION DE AIRE
LUFTCIRKULATIONSKANALER
RE026066 -UN-18OCT96

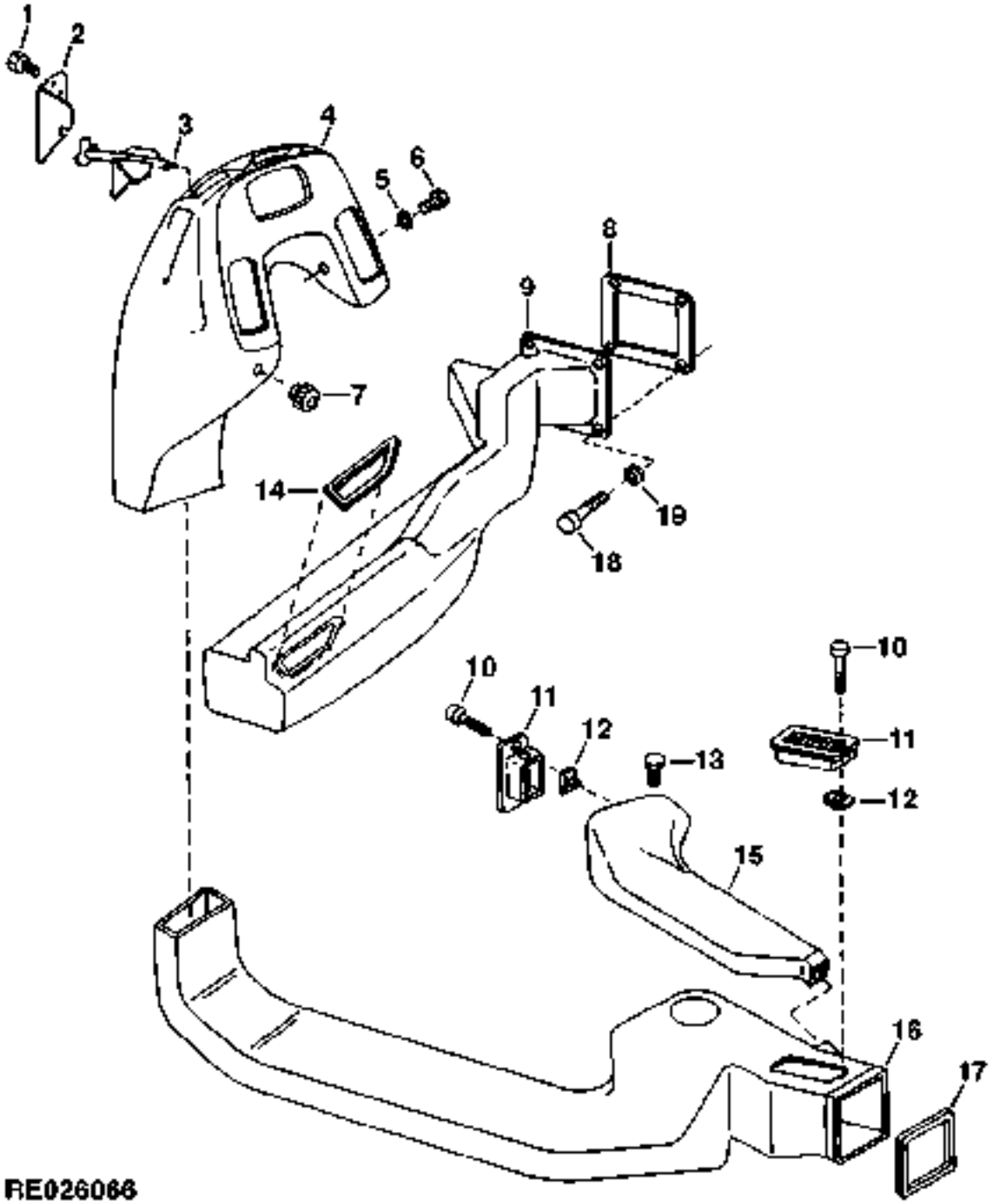

https://www.truck-manuals.net/

KEY	PART NO.	PART NAME	QTY	CAB SERIAL NO.	ALL	REMARKS
1	R55326	RIVET	4		X	
2	R122798	COVER	1		X	
3	R124210	DOOR	1		X	
4	RE60302	AIR DUCT	1		X	
5	24M7139	WASHER	2		X	6.400 X 18 X 1.600 MM
6	37M7089	SCREW	2		X	M6 X 12
7	R111632	KNOB	1		X	
8	R124495	SEAL	1		X	
9	R124378	AIR DUCT	1		X	
10	37H203	SCREW	1		X	
11	RE157244	LOUVER	1		X	(SUB FOR RE45293)
12	R64822	NUT	1		X	
13	37M7089	SCREW	1		X	M6 X 12
14	.....	SEAL	AR		X	(MAKE FROM R83066)
15	R124238	AIR DUCT	1		X	
16	R108314	AIR DUCT	1		X	
17	.....	SEAL	AR		X	(MAKE FROM R83066)

https://www.truck-manuals.net/

HEATER/AIR CONDITIONING MODULE ASSEMBLY
MODULE CHAUFFAGE/CLIMATISATION
HEIZUNG/KLIMAANLAGEN-MODUL
MODULO DEL RISCALDATORE/ARIA CONDIZIONATA
MODULO DE CALEFACCION/ACONDICIONAMIENTO DE AIRE
VAERMEAPPARAT/LUFTKONDITIONERING,MODUL
RE028637 -UN-09DEC97

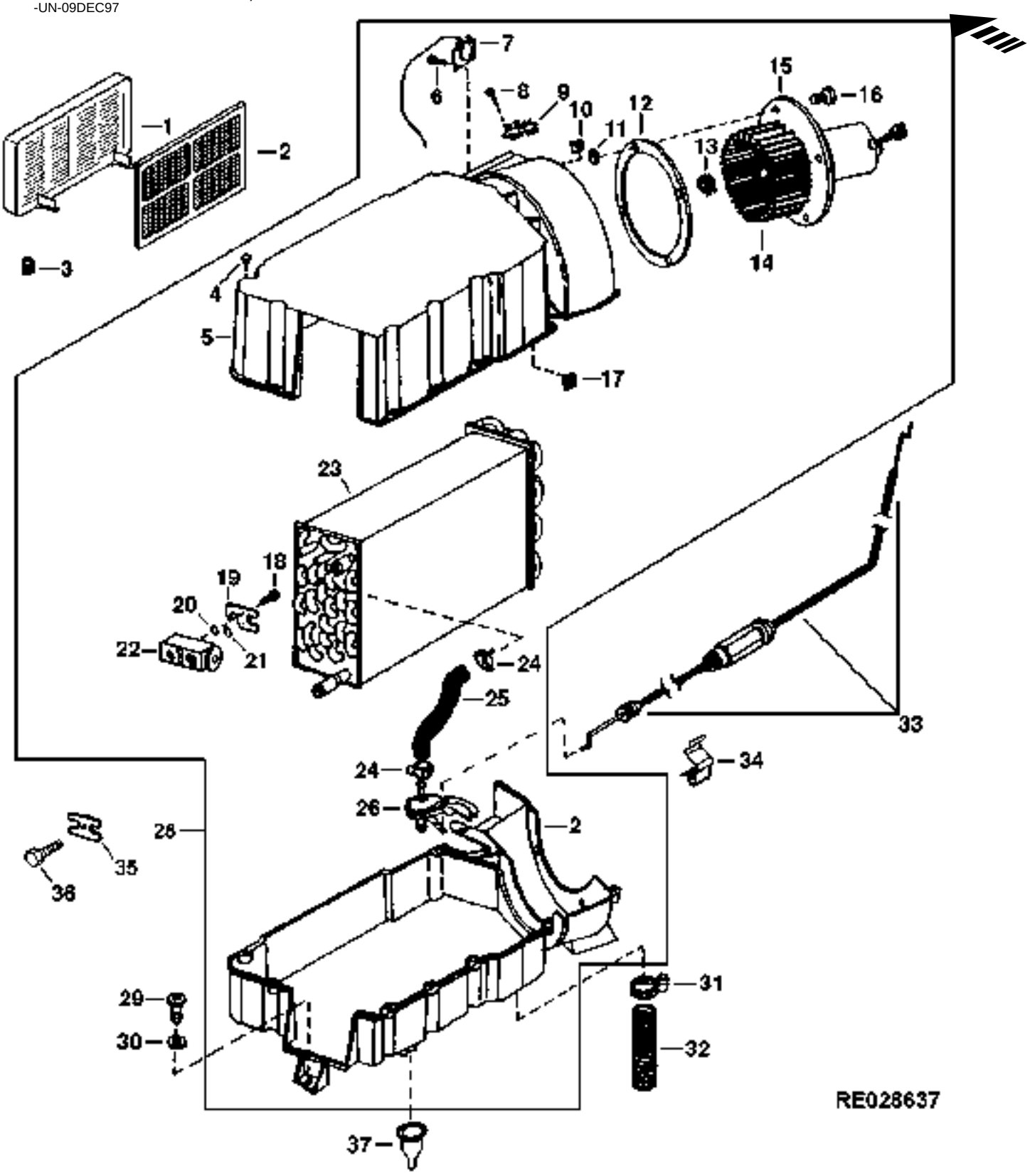

https://www.truck-manuals.net/

KEY	PART NO.	PART NAME	QTY	CAB SERIAL NO.	ALL	REMARKS
1	R124332	BEZEL	1		X	
2	R120501	AIR FILTER	1	-XXXXXX	X	(C)
	RE70742	AIR FILTER	1	XXXXXX-	X	(D)
3	R135944	NUT	4		X	(SUB FOR R120160)
4	19M6614	CAP SCREW	13		X	M6 X 12
5	R121668	HOUSING	1	-XXXXXX	X	(C) (SUB FOR R136131) (ALSO ORDER R136350, R135753, RE152291, R153024, RE156958, (2) R135944, (2) 37M7088, R150307 AND R83066)
	R151326	HOUSING	1	XXXXXX-	X	(D)
6	H85092	SCREW	2		X	
7	AH144020	THERMOSTAT	1		X	
8	37M7073	SCREW	2		X	4.8 X 19 MM
9	RE49636	RESISTOR	1		X	
10	M74782	NUT	2		X	
11	M84972	NUT	4		X	
12	R121664	SEAL	1		X	
13	R126547	CLIP	1		X	(SUB FOR R97332)
14	R121666	IMPELLER	1		X	
15	RE67645	MOTOR	1		X	(SUB FOR RE57571 OR RE62653) (ALSO ORDER R121666 AND R126547)
16	19M7077	CAP SCREW	4		X	M6 X 20
17	R52130	LOCK NUT	2		X	
18	PT11778	BOLT	2		X	
19	L77943	PLATE	1		X	
20	R113050	RING	1		X	10.820 X 1.778 MM (0.426" X 0.070") 1/2"
21	R33259	O-RING	1		X	13.995 X 1.778 MM (0.551" X 0.070") 5/8"
22	RE57575	VALVE	1		X	
23	RE57574	EVAPORATOR	1		X	(INCLUDES RE57575)
24	R117721	CLAMP	2	-XXXXXX	X	(A)
	TY22467	CLAMP	2	XXXXXX-	X	(B)
25	R125454	HOSE	1		X	
26	RE47070	VALVE	1		X	
27	R121667	HOUSING	1	-XXXXXX	X	(C) (SUB R151326, R136350, R135753 AND RE152291)
	R136350	HOUSING	1	XXXXXX-	X	(D)
28	RE67665	MODULE	1	-XXXXXX	X	(C) (SUB RE71433)
	RE71433	MODULE	1	XXXXXX-	X	(D)
29	37M7090	SCREW	3		X	M6 X 16
30	24M7100	WASHER	3		X	6.600 X 22 X 2 MM
31	TY22462	CLAMP	1		X	(SUB FOR AR48236)
32	R88529	HOSE	1	-XXXXXX	X	(E)
	RE156958	HOSE	1	XXXXXX-	X	(F)
33	RE58614	CABLE	1		X	
34	L57881	CLIP	1		X	
35	R125223	PLATE	1		X	
36	19M7753	CAP SCREW	1		X	M12 X 70
37	R135753	TERMINAL NIPPLE	1	XXXXXX-	X	(D)

(A) (-XXXXXX) 8100-011126; 8200-011069; 8300-011136; 8400-011166
(B) (XXXXXX-) 8100-011127; 8200-011070; 8300-011137; 8400-011167

(C) (-XXXXXX) 8100-013076; 8200-012539; 8300-013594; 8400-013482 TSN
(D) (XXXXXX-) 8100-013077; 8200-012540; 8300-013595; 8400-013483 TSN

(E) (-XXXXXX) 8100-021347; 8200-021124; 8300-021975
(F) (XXXXXX-) 8100-021348; 8200-021125; 8300-021976

https://www.truck-manuals.net/

HEATER/AIR CONDITIOINING COMPARTMENT COVER
COUVERCLE DE COMPARTIMENT CHAFFAGE/CLIMATISATION
HEIZUNG/KLIMAALAGEN-RAUMABDECKUNG
COPERCHIO DEL COMPARTIMENTO DEL RISCALDATORE/ARIA CONDIZIONATA
TAPA DEL COMPARTIMENTO DE CALEFACCION/ACONDICIONAMIENTO DE AIRE
VAERMEAPPARAT/LUFTKONDITIONERING,SKYDD FOER UTRYMME
RE026562 -UN-29NOV95

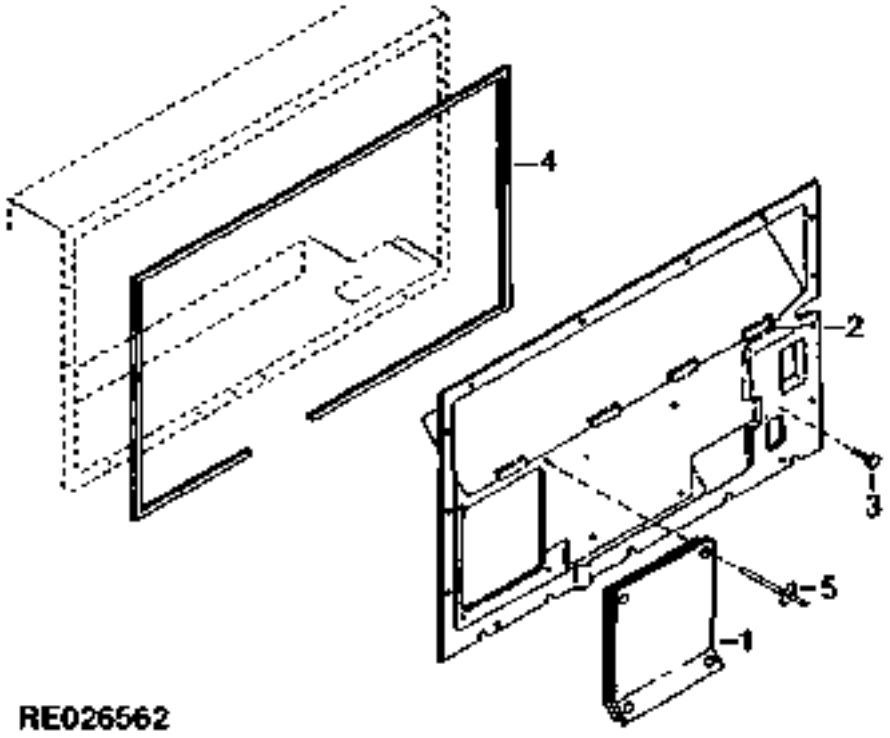

KEY	PART NO.	PART NAME	QTY	CAB SERIAL NO.	ALL	REMARKS
1	RE61802	COVER	1	-XXXXXX	X	(A)
	RE65502	COVER	1	XXXXXX-	X	(B)
2	R133529	COVER	1		X	(SUB FOR R124231)
3	37M7089	SCREW	20		X	M6 X 12
4	.....	SEAL	AR		X	(MAKE FROM (4) R83066)
5	37M7218	SCREW	4	-XXXXXX	X	(A)
	L39134	RIVET	4	XXXXXX-	X	(B)

(A) (-XXXXXX) 8100-003083; 8200-002438; 8300-004190; 8400-002748
(B) (XXXXXX-) 8100-003084; 8200-002439; 8300-004191; 8400-002749

https://www.truck-manuals.net/

ULTRA GUARD FILTER INSTALLATION KIT(81 -013076;82 -012539;83 -013594;84 -013482)(TSN)
INSTALLATION DE FILTRE ULTRA A SERVICE INTENSIF(81 -013076;82 -012539;83 -013594;84 -013482)TSN
VERSTAKRKTER ULTRA GUARD FILTEREINBAU-TEILESATZ(81 -013076;82 -012539;83 -013594;84 -013482)TSN
INSTALLAZIONE FILTRO ULTRA PER SERVIZIO PESANTE(81 -013076;82 -012539;83 -013594;84 -013482)TSN
INSTALACION DE FILTRO ULTRA PARA SEVICIO SEVERO(81 -013076;82 -012539;83 -013594;84 -013482)TSN
INSTALLATIONSSATS MED EXTRA KRAFTIGT ULTRA FILTER(81 -013076;82 -012539;83 -013594;84 -013482)TSN
RE028623 -UN-25NOV97

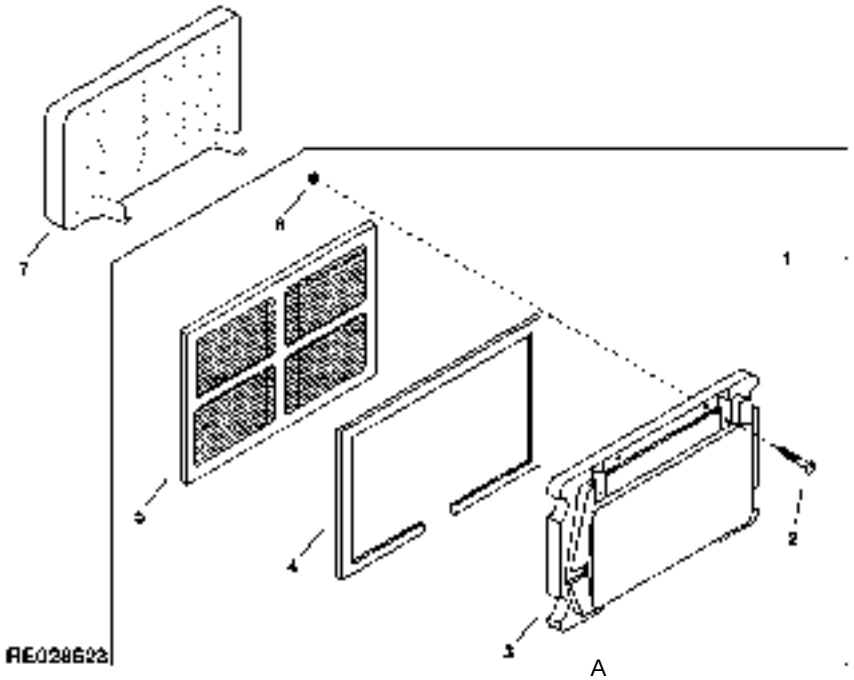

KEY	PART NO.	PART NAME	QTY	TRACTOR SERIAL NO.	ALL	REMARKS
1	RE152291	KIT	1		X	
2	37M7088	SCREW	2		X	(A)
3	R150307	HOUSING	1		X	
4	R83066	ISOLATOR	1		X	(ALSO ORDER R153026)
5	RE70742	AIR FILTER	1		X	
6	R135944	NUT	2		X	
7	R124332	BEZEL	1		X	

(A) HIGH EFFICIENCY
HAUT RENDEMENT
HOCHLEISTUNGSFAEHIG
ALTA EFFICIENZA
ALTA EFICIENCIA
HOEG EFFEKTIVITET

https://www.truck-manuals.net/

MEMORANDA
MEMORANDA
MEMORANDA
MEMORANDA
MEMORANDA
MEMORANDA

https://www.truck-manuals.net/

SECTIONAL INDEX
INDEX DE SECTION
GRUPPENINDEX
INDICE DELLA SEZIONE
INDICE DE SECCION
GRUPPSFORTECKNING

RE029408 -UN-10MAY99

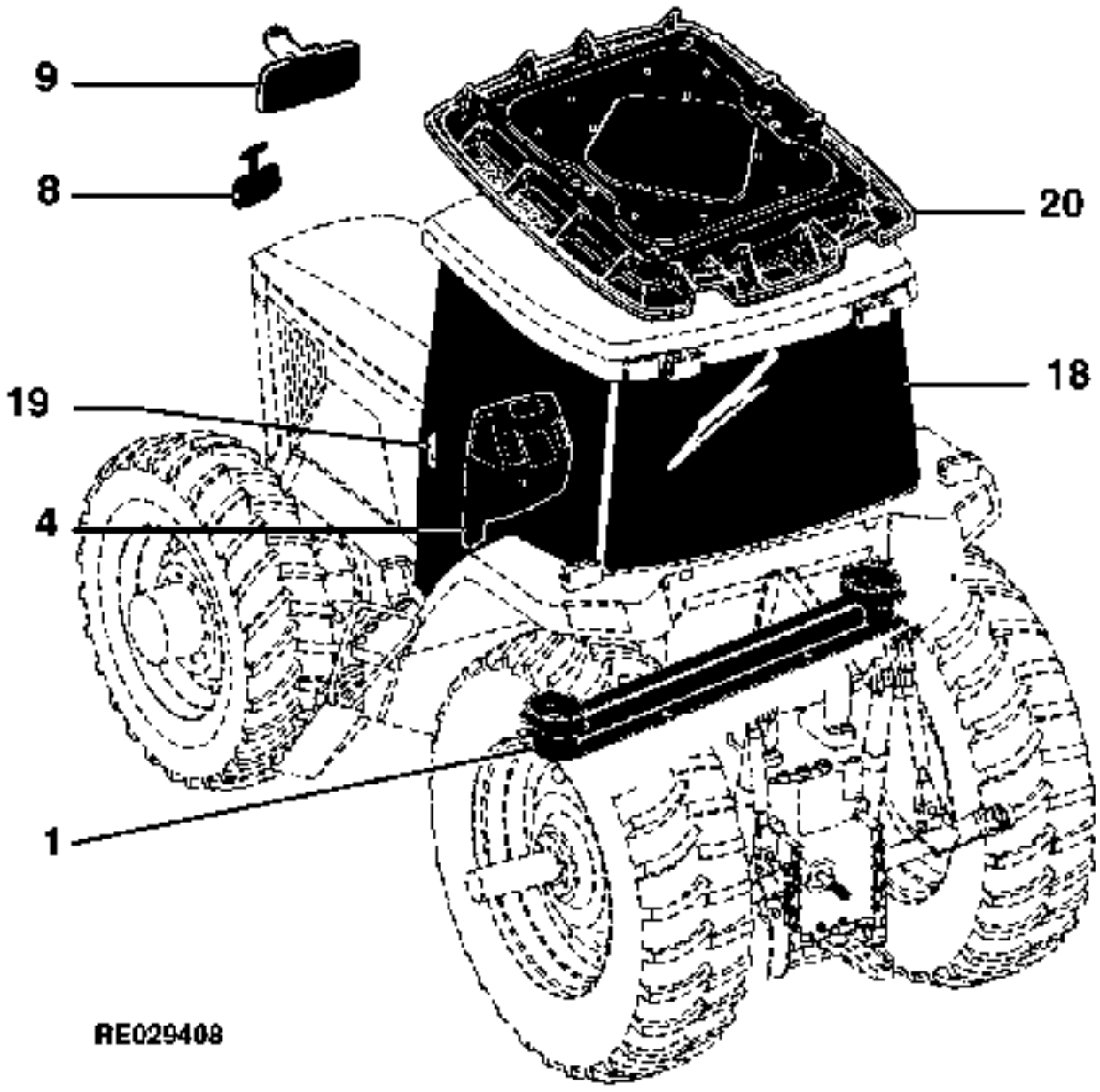

1 -	9D9
2 -	9D13
3 -	9D15
4 -	9D17
5 -	9D21
6 -	9D23
9 -	9D25
7 -	9E3
8 -	9E4
9 -	9E5
10 -	9E6
11 -	9E9
12 -	9E11
13 -	9E13
14 -	9E15
15 -	9E22
16 -	9E24
17 -	9F1
18 -	9F4
19 -	9F6
20 -	9F12
21 -	9F13

https://www.truck-manuals.net/

SECTIONAL INDEX
INDEX DE SECTION
GRUPPENINDEX
INDICE DELLA SEZIONE
INDICE DE SECCION
GRUPPSFORTECKNING

RE029409 -UN-10MAY99

1 -	9D9
2 -	9D13
3 -	9D15
4 -	9D17
5 -	9D21
6 -	9D23
9 -	9D25
7 -	9E3
8 -	9E4
9 -	9E5
10 -	9E6
11 -	9E9
12 -	9E11
13 -	9E13
14 -	9E15
15 -	9E22
16 -	9E24
17 -	9F1
18 -	9F4
19 -	9F6
20 -	9F12
21 -	9F13

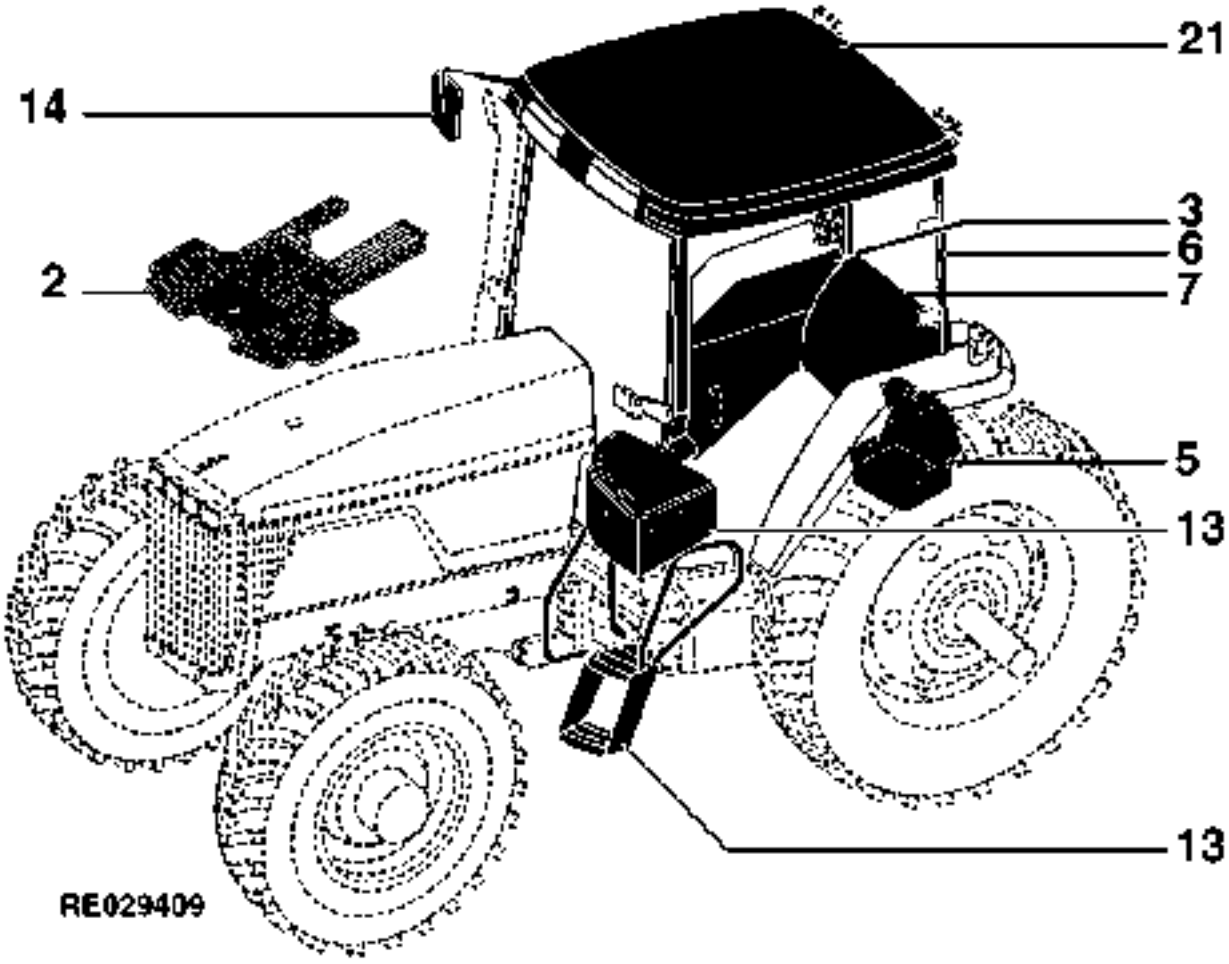

https://www.truck-manuals.net/

SECTIONAL INDEX
INDEX DE SECTION
GRUPPENINDEX
INDICE DELLA SEZIONE
INDICE DE SECCION
GRUPPSFORTECKNING

RE029410 -UN-10MAY99

1 -	9D9
2 -	9D13
3 -	9D15
4 -	9D17
5 -	9D21
6 -	9D23
9 -	9D25
7 -	9E3
8 -	9E4
9 -	9E5
10 -	9E6
11 -	9E9
12 -	9E11
13 -	9E13
14 -	9E15
15 -	9E22
16 -	9E24
17 -	9F1
18 -	9F4
19 -	9F6
20 -	9F12
21 -	9F13

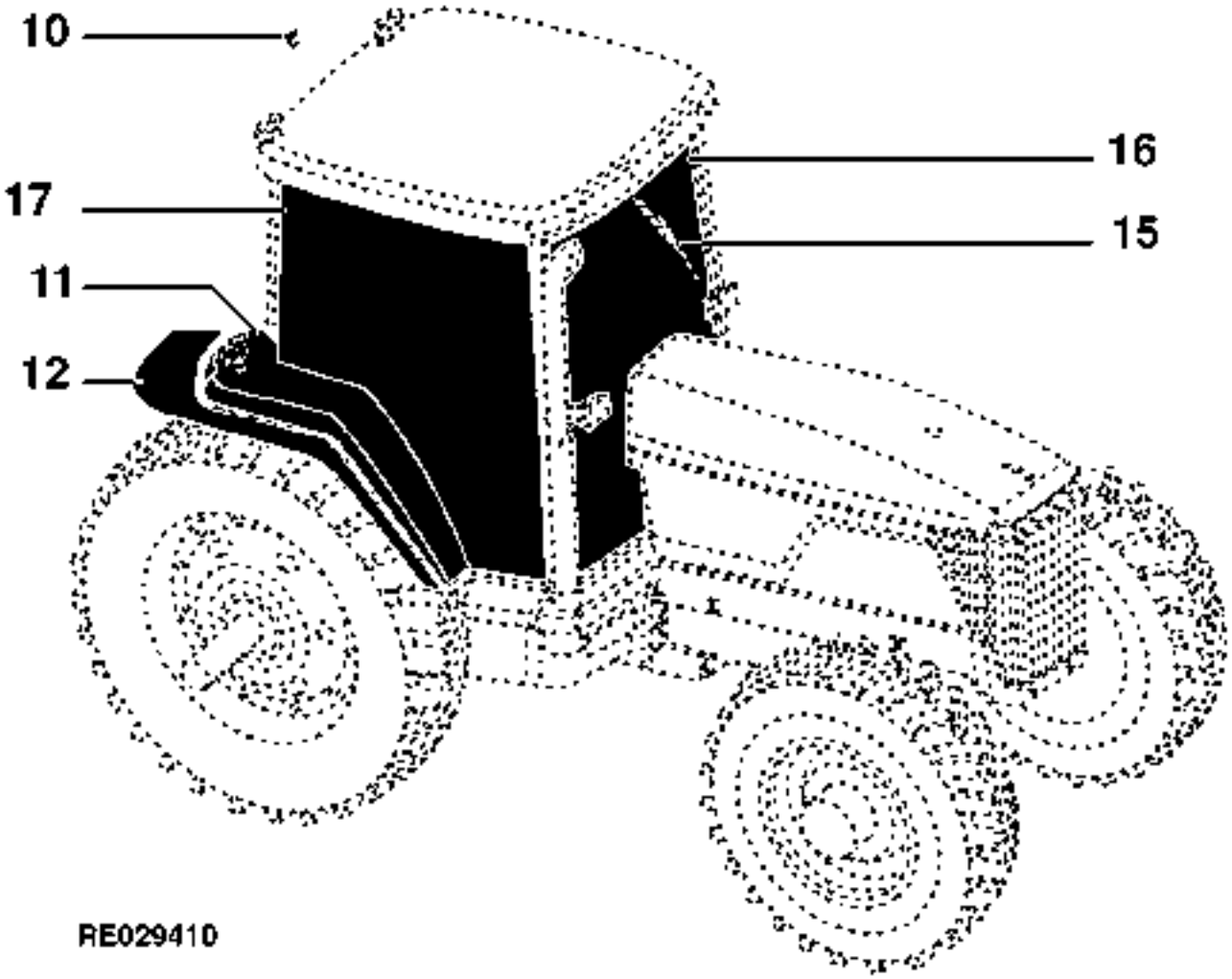

https://www.truck-manuals.net/

SECTIONAL INDEX
INDEX DE SECTION
GRUPPENINDEX
INDICE DELLA SEZIONE
INDICE DE SECCION
GRUPPSFORTECKNING

https://www.truck-manuals.net/

MEMORANDA
MEMORANDA
MEMORANDA
MEMORANDA
MEMORANDA
MEMORANDA

https://www.truck-manuals.net/

CAB (BASIC UNIT OR FULLY TRIMMED)
CABINE (UNITE DE BASE OU COMLPLETEMENT EQUIPEE)
FAHRERKABINE (STANDARD ODER VOLL AUSGESTATET)
CABINA (UNITA DI BASE OPPURE CON ACCESSORI)
CABINA (UNIDAD BASICA O COMPLETAMENTE EQUIPADO)
HYTT (UTAN LOESA DETALJER ELLER KOMPLETT)
RXP011268 -UN-01JAN94



RXP011268

https://www.truck-manuals.net/

KEY	PART NO.	PART NAME	QTY	TRACTOR SERIAL NO.	ALL	REMARKS
1	.....	CAB	1		X	(A) (B)

(A)ORDER THROUGH BRANCH SERVICE MANAGER OR COMPLETE GOODS MANAGER.
COMMANDER PAR L'INTERMEDIAIRE DU RESPONSABLE DU SERVICE SPRES VENTE
DURCH FILIALKUNDENDIENSTLEITER ODER VERKAUFSABTEILUNG BESTELLEN
ORDINAZIONE PRESSO DIRETTORE FILLIALE DI ASSISTENZA O DIRETTORE PRODOTTI FINITI
PIDALO A TRAVAES DEL GERENTE DE SERVICIO DE SUCURSAL O IL GERENTE DE PRODUCTOS COMPLETOS
BESTAELL GENOM PILIALENS SERVICECHEF ELLER LEVRANSCHEF

(B)REPLACEMENT CAB SERVICE PARTS CAN BE FOUND IN THE CATALOG FOR CURRENTLY BUILT TRACTOR.
LES PIECES DE RECHANGE DE CABINE SE TROUVENT DANS LE CATALOGUE DU TRACTEUR FABRIQUE
KABINEN-ERSATZTEILE WERDEN IM KATALOG FUER AKTUELL IN PRODUKTION BEFINDLICHE TRAKTOREN
LE PARTI DI RICAMBIO PER LA CABINA SONO REPERIBILI NEL CATALOGO DEL TRATTORE DI FABBRICAZIONE
LOS REPUESTOS PARA LA CABINA PUEDEN HALLARSE EN EL CATALOGO CORRESPONDIENTE AL TRACTOR EN
UTBYTESDELAR FOER HYTTEN FINNS I KATALOGEN FOER AKTUELLT PRODUCERADE TRAKTORER.

https://www.truck-manuals.net/

CAB MOUNTS
MONTURES CABINE
BEFESTIGUNGEN FAHRERKABINE
SUPPORTI E STAFFE CABINA
CABINA MONTAJES
UNDERLAG OCH FAESTEN HYTT
RE026621 -UN-08DEC95

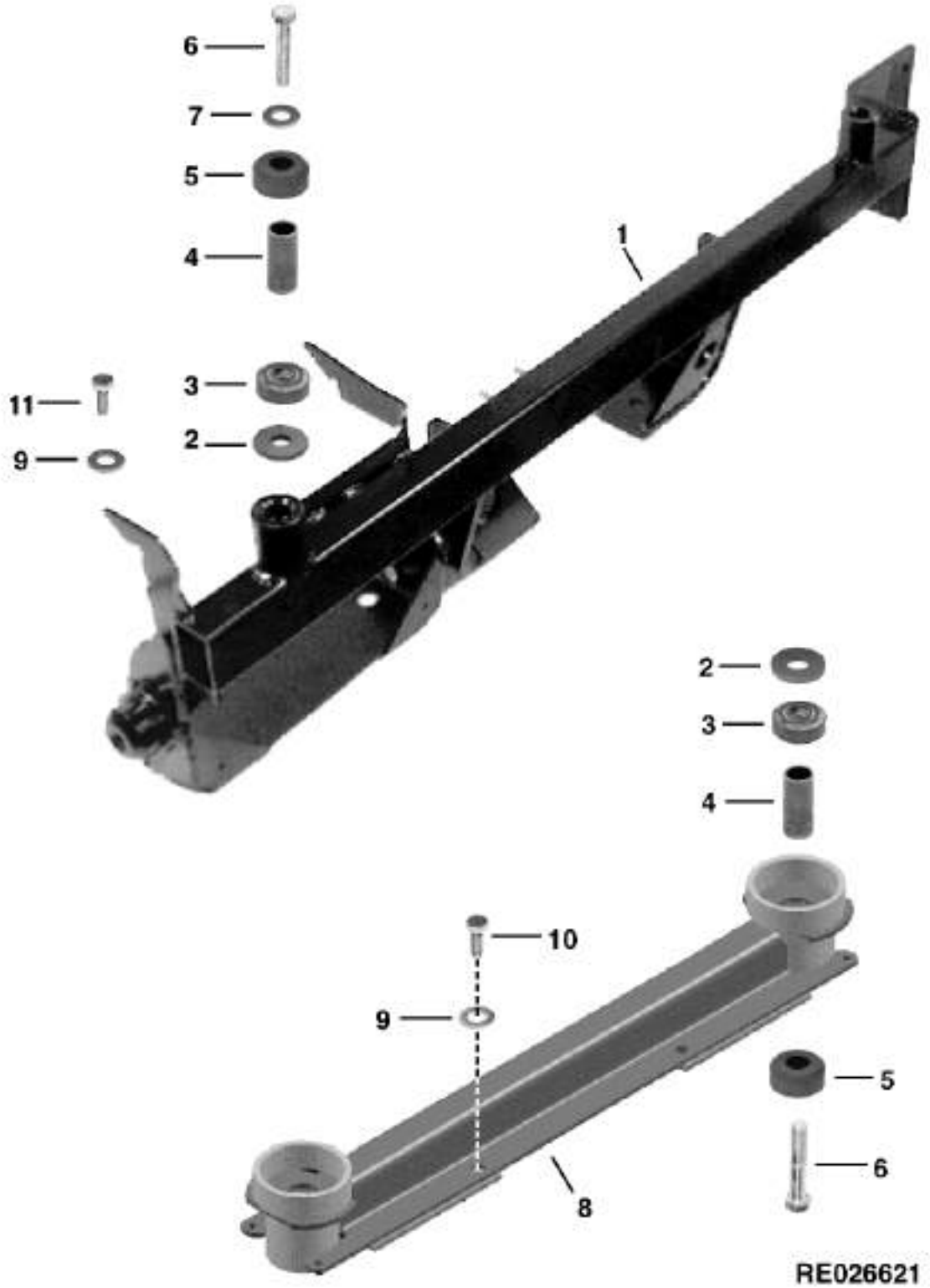

https://www.truck-manuals.net/

KEY	PART NO.	PART NAME	QTY	TRACTOR SERIAL NO.	ALL	REMARKS
1	RE63494	MOUNTING PARTS	1	-009999	X	(SUB FOR RE44818) FRONT
	RE71382	MOUNTING PARTS	1	010000-	X	(SUB FOR RE69102 OR RE67508) FRONT
2	R87656	WASHER	4		X	
3	R88167	RUBBER MOUNT	4	-XXXXXX	X	(A) LOW
	RE62910	RUBBER MOUNT	4	XXXXXX-	X	(B) LOW
4	R122570	SLEEVE	4	-XXXXXX	X	(C)
	R128179	SLEEVE	4	XXXXXX-	X	(D)
5	RE58723	RUBBER MOUNT	1	-XXXXXX	X	(A) UP
	RE62901	RUBBER MOUNT	1	XXXXXX-	X	(B) (INCLUDES R122846) UP
6	19M7903	CAP SCREW	2		X	M24 X 120
7	R128829	SHIM	1		X	(G)
	R128779	WASHER	AR		X	(H)
8	RE49931	CAB MOUNT	1	-XXXXXX	X	(E) (INCLUDES R59575) REAR
	RE63452	CAB MOUNT	1	XXXXXX-	X	(F) (INCLUDES R59575) REAR
9	24M7338	WASHER	8		X	17 X 30 X 3 MM
10	19M7489	CAP SCREW	8		X	M16 X 45
11	19M7488	CAP SCREW	2		X	M16 X 40

(A) (-XXXXXX) 8100-001112; 8200-001116; 8300-001395; 8400-001051
(B) (XXXXXX-) 8100-001113; 8200-001117; 8300-001396; 8400-001052

(C) (-XXXXXX) 8100-001606; 8200-001545; 8300-002692; 8400-001271
(D) (XXXXXX-) 8100-001607; 8200-001546; 8300-002693; 8400-001272

(E) (-XXXXXX) 8100-001515; 8200-001474; 8300-002539; 8400-001129
(F) (XXXXXX-) 8100-001516; 8200-001475; 8300-002540; 8400-001130

(G) STIFFER RIDE
SUSPENSION PLUS FERME
HAERTERE FEDRUNG
GUIDA PIU RIGIDA
SUSPENSION MAS FIRME
HAARDARE FJADRING

(H) LOOSER RIDE
SUSPENSION PLUS DOUCE
WEICHERE FEDERUNG
GUIDA PIU MORBIDA
SUSPENSION MAS SUAVE
MJUKARE FJAEDRING

https://www.truck-manuals.net/

FLOOR
PLANCHER
FUSSBODEN
PAVIMENTO
PISO
GOLV
RE029785 -UN-20JUL98

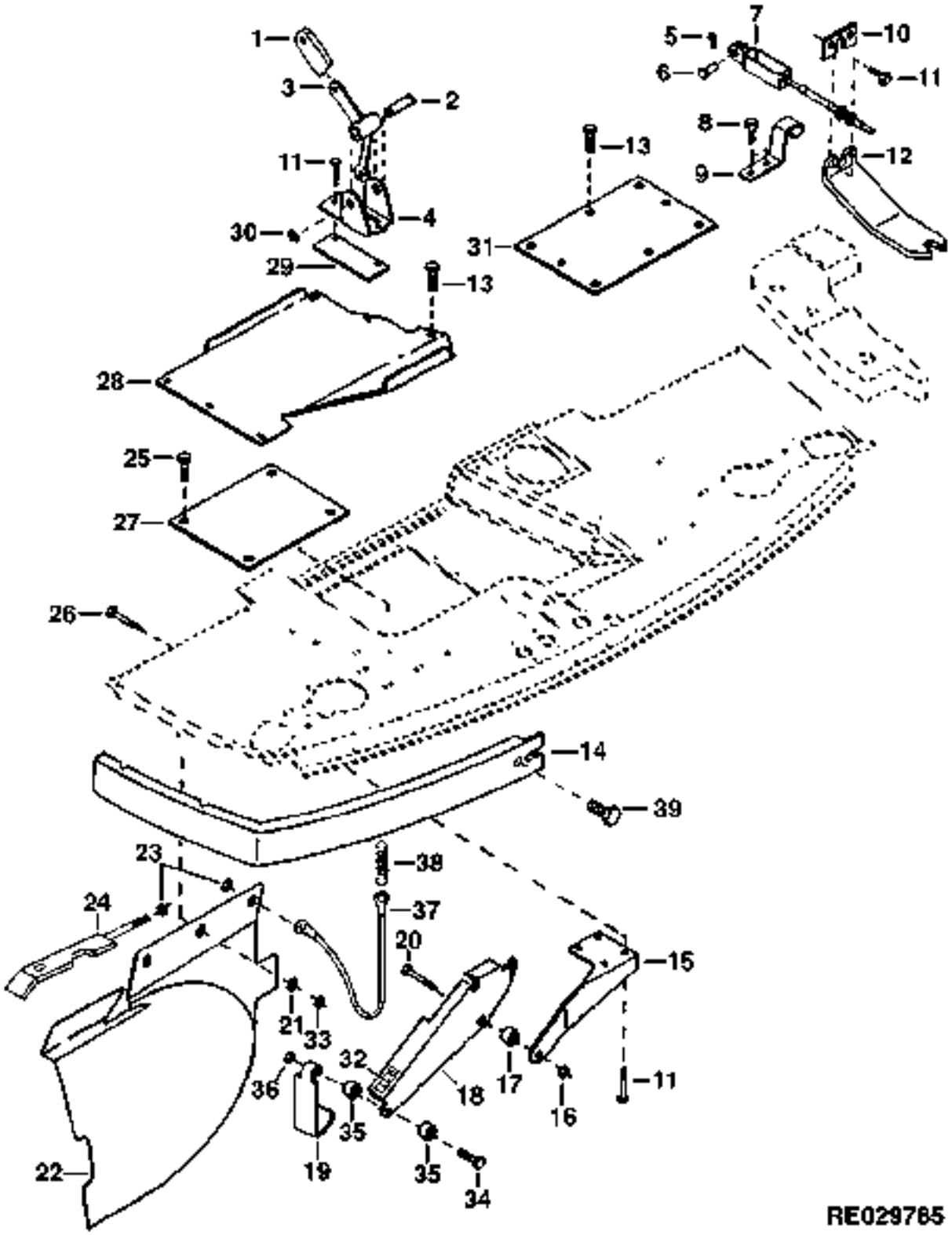

https://www.truck-manuals.net/

KEY	PART NO.	PART NAME	QTY	CAB SERIAL NO.	ALL	REMARKS
1	L55210	GRIP	1		X	
2	AT127547	PIN	9		X	
3	RE60644	BELLCRANK	1		X	
4	R121926	PIVOT	1		X	
5	A5067R	SPRING LOCKING PIN	1		X	
6	J19366	PIN	1		X	
7	RE61051	CABLE	1		X	
8	37M7089	SCREW	4		X	M6 X 12
9	R119604	BRACKET	1		X	
10	R125144	CLIP	1		X	
11	37M7089	SCREW	16		X	M6 X 12
12	R124005	BRACKET	1		X	
13	37M7089	SCREW	18		X	M6 X 12
14	R116292	RISER	1		X	R.H.
	R116290	RISER	1		X	L.H.
15	R124841	PIVOT	1		X	
16	14M7397	LOCK NUT	1		X	M6
17	R126776	WASHER	2		X	(SUB FOR R40685)
18	R124839	LEVER	1		X	
19	R124840	LATCH	1		X	
20	R119203	SCREW	1		X	
21	24M7139	WASHER	6		X	6.400 X 18 X 1.600 MM
22	R127248	FENDER	1		X	R.H. LOW, (SUB FOR R120568)
	R133598	EXTENSION	1	025617-	X	(L) (.) (H) (.) L.H.
23	14M7298	FLANGE NUT	3		X	M8
24	RE60694	BRACKET	1	-025616	X	
	RE153152	BRACKET	2	025617-	X	L.H. LOW
25	37M7079	SCREW	4		X	
26	19M7862	SCREW	6		X	M6 X 20
27	R120515	PLATE	1		X	
28	R124255	FOOTREST	1		X	
29	R122015	PLATE	1		X	
	R121162	SEAL	1		X	(A)
30	R108214	CLIP	1		X	
31	R121977	PLATE	1		X	
32	R125345	DECAL	1		X	
33	14M7272	NUT	3		X	M6, R.H.
	R151387	NUT	3	025617-	X	L.H.
34	19M7796	SCREW	1		X	M6 X 30
35	R126776	WASHER	3		X	
36	14M7397	LOCK NUT	1		X	M6
37	R111289	CABLE	1		X	
38	R125024	SPRING	1		X	

(A)W/TOW DISCONNECT
W/REMORQUE, DISPOSITIF DE DESACCOUPLEMENT
W/ABSCHLEPP-AUSRUECKUNG
W/DISINSERIMENTO DEL TRAINO
W/DESCONEXION PARA REMOLCAR
W/BOGSERINGSURKOPPLING

https://www.truck-manuals.net/

FLOOR MAT
TAPIS
FUSSMATTE
TAPPETINO
FELPUDO
DURKMATTA
RXP011177 -UN-01JAN94

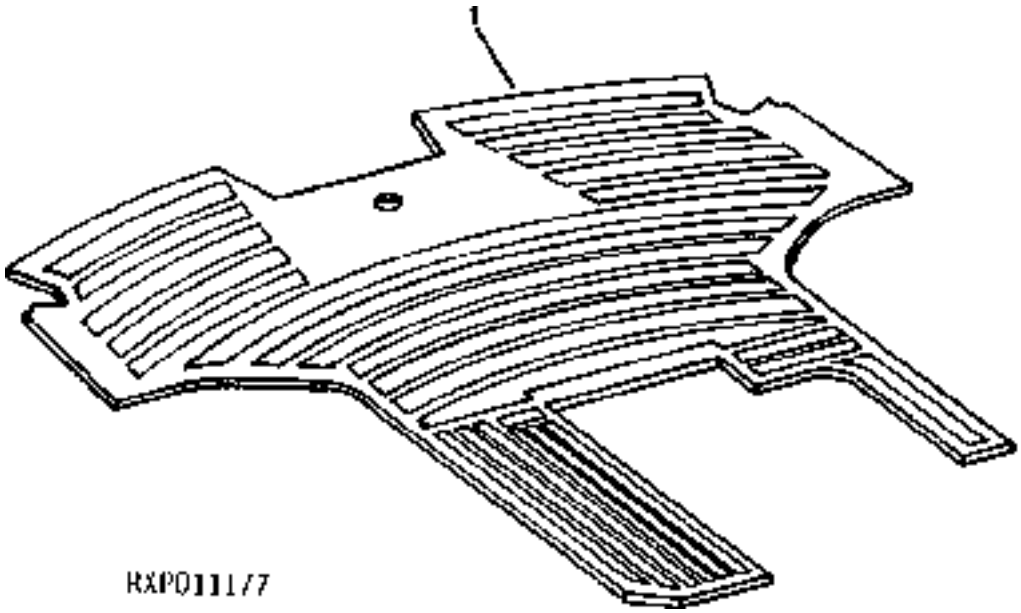

KEY	PART NO.	PART NAME	QTY	CAB SERIAL NO.	ALL	REMARKS
1	R155817	MAT	1		X	(SUB FOR R124650)
	R124858	MAT	1		X	(A)

(A)EUROPEAN VERSION
VERSION EUROPEENNE
EUROPAEISCHE AUSFUEHRUNG
VERSIONE EUROPEA
VERSION EUROPEA
EUROPEISK VERSION

https://www.truck-manuals.net/

ASHTRAY AND LIGHTER
CENDRIER ET ALLUME-CIGARE
ASCHENBECHER UND ZIGARRENANZUENDER
PORTACENERE E ACCENDISIGARI
CENICERO Y ENCENDEDOR
ASKKOPP OCH TAENDARE
RE028826 -UN-16FEB98

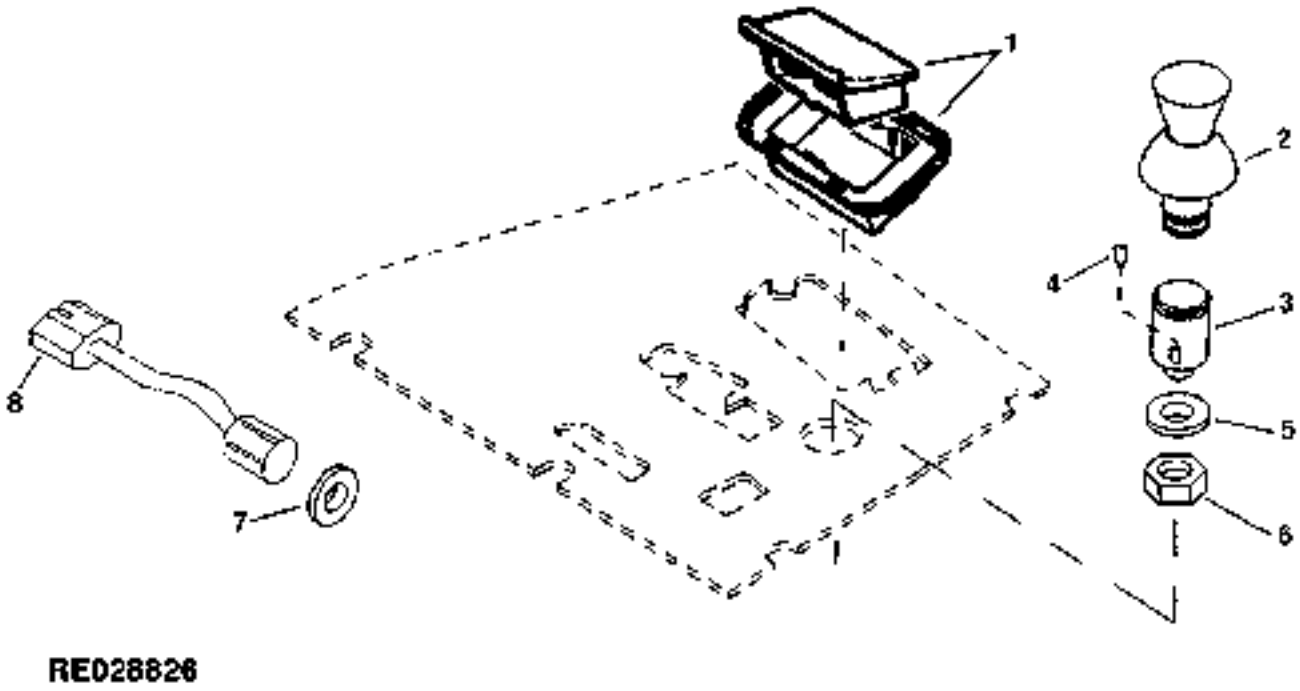

RE028826

KEY	PART NO.	PART NAME	QTY	CAB SERIAL NO.	ALL	REMARKS
1	AH104259	ASHTRAY	1		X	
2	AR60937	LIGHTER	1		X	
3	AR56766	HOUSING	1		X	
4	57M7102	BULB	1		X	
5	12M7084	LOCK WASHER	1		X	4.300 MM
6	14H605	NUT	2		X	0.164"
7	24H1691	WASHER	2		X	7/8" X 1-23/64" X 0.048"
8	RE67014	ADAPTER	1		X	

https://www.truck-manuals.net/

CONTROL CONSOLE
CONSOLE DE COMMANDE
BEDIENUNGSKONSOLE
CUADRO DI COMANDO
CONSOLA DE CONTROL
MANOEVERENHET
RE029786 -UN-15JUL98

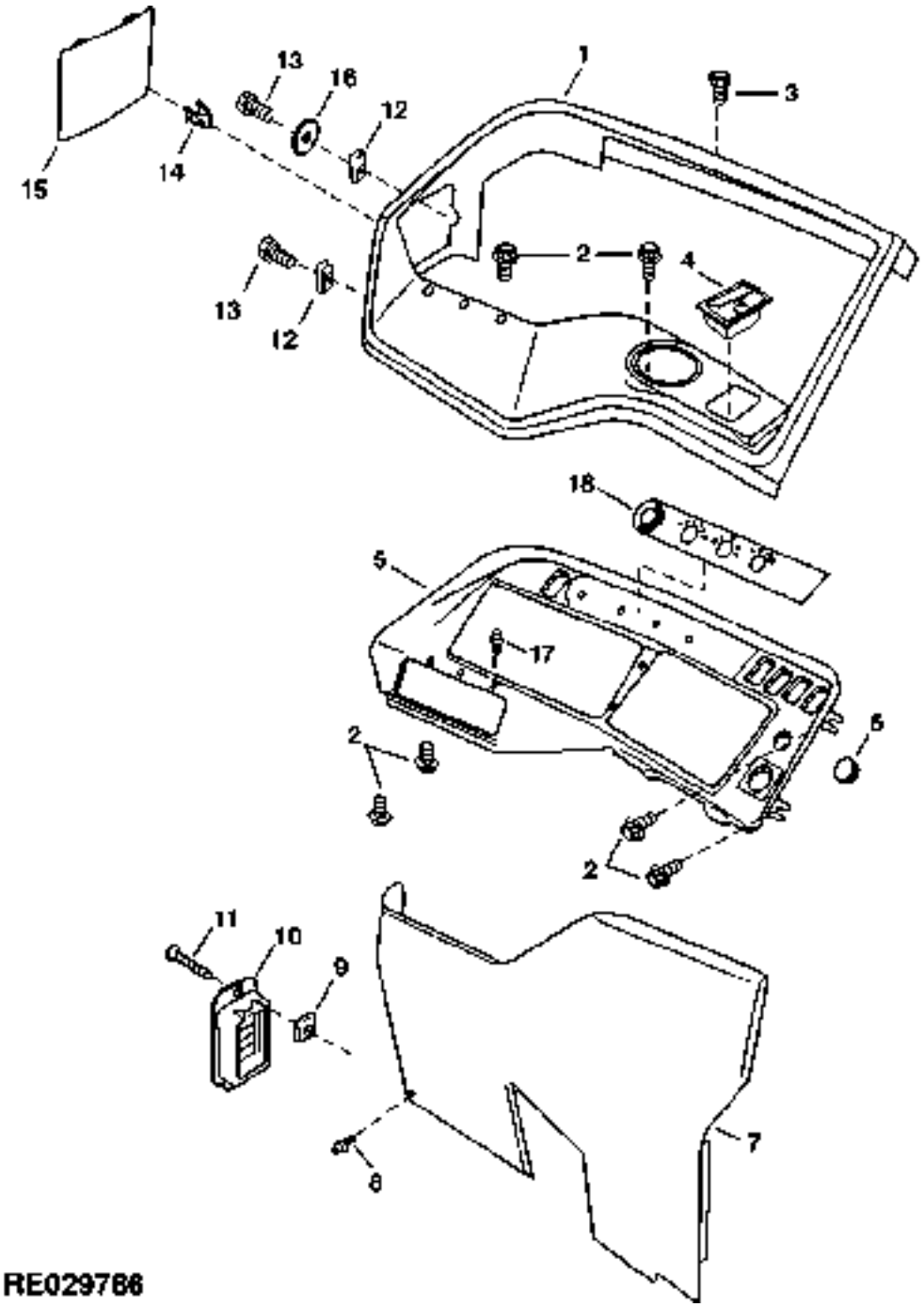

https://www.truck-manuals.net/

KEY	PART NO.	PART NAME	QTY	CAB SERIAL NO.	ALL	REMARKS
1	R124564	CONSOLE	1		X	
	R124800	CONSOLE	1		X	(A)
2	37M7089	SCREW	8		X	M6 X 12
3	19M8751	SCREW	4		X	M10 X 16
4	AH104259	ASHTRAY	1		X	
5	R133631	INSERT	1		X	(SUB FOR R124565) (SUB R159353, R159609, (4) M73135) (ALSO ORDER R159607)
6	RE61418	KNOB	1		X	
7	R124207	ACOUSTICAL UPHOLSTERY	1	-009999	X	
	R132149	ACOUSTICAL UPHOLSTERY	1	010000-	X	
8	L39134	RIVET	3		X	
9	R64822	NUT	1		X	
10	RE157244	LOUVER	1		X	(SUB FOR RE45293)
11	37H203	SCREW	1		X	
12	M84972	NUT	2		X	
	M73135	NUT	4		X	
13	21M7334	SCREW	2		X	M6 X 25
14	R120160	CLIP	3		X	
15	R119678	COVER	1		X	UP
16	24M7100	WASHER	1		X	6.600 X 22 X 2 MM
17	L39134	RIVET	3		X	
18	R126009	DECAL	1		X	

(A)EUROPEAN VERSION
VERSION EUROPEENNE
EROPAEISCHE AUSFUEHRUNG
VERSIONE EUROPEA
VERSION EUROPEA
EUROPEISK VERSION

https://www.truck-manuals.net/

COWL ASSEMBLY
ENSEMBLE DE CAPOTAGE
VERKLEIDUNG-BAUGRUPPE
GRUPPO DEL COFANO
CONJUNTO DE CUBIERTA DEL MOTOR
SKYDDSHUVSSATS
RE029818 -UN-18AUG98

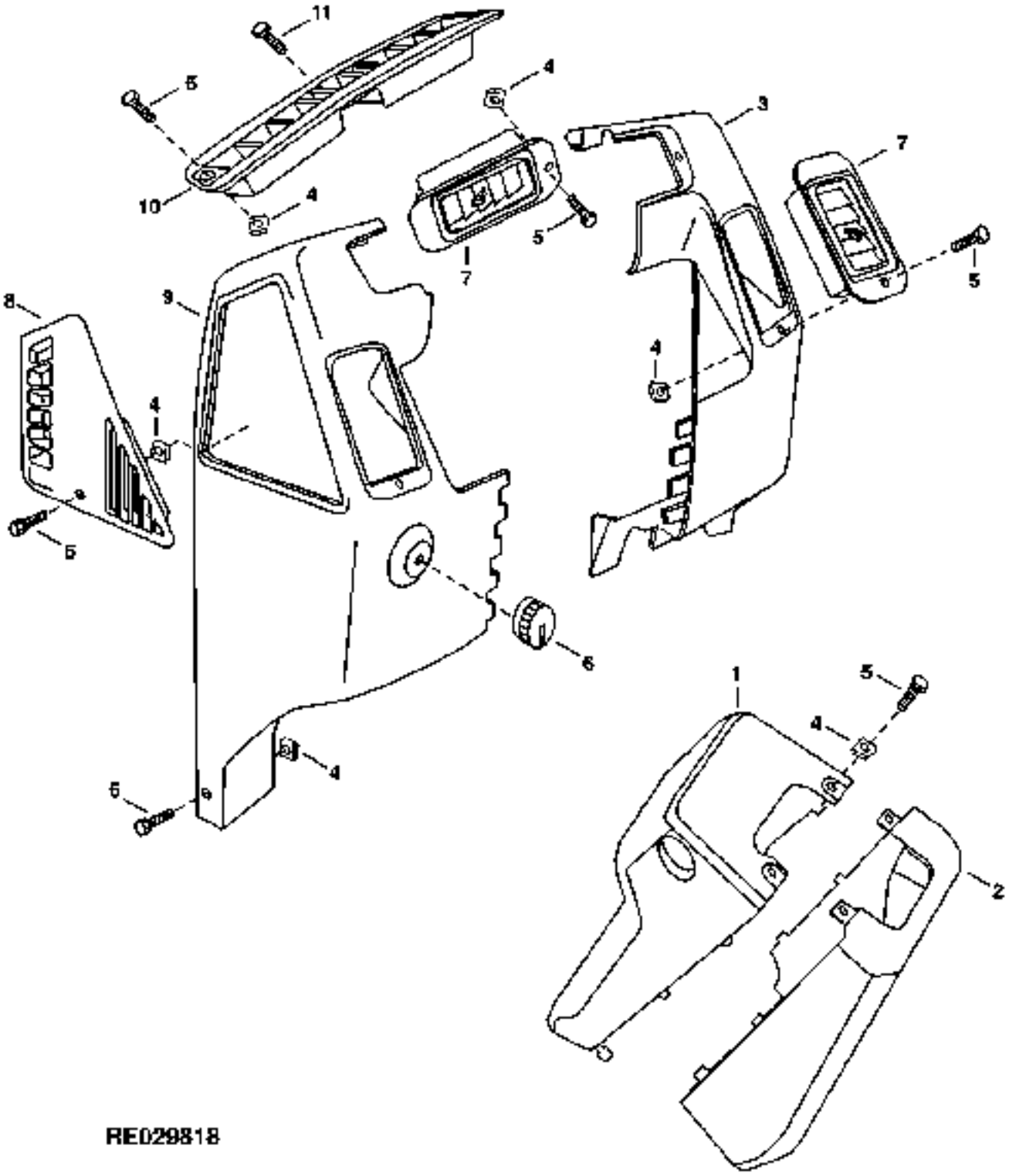

https://www.truck-manuals.net/

KEY	PART NO.	PART NAME	QTY	CAB SERIAL NO.	ALL	REMARKS
1	R154889	COVER	1		X	(SUB FOR R126025)
2	R126026	COVER	1		X	
3	R123973	COVER	1		X	R.H.
4	R64822	NUT	18		X	
5	37H203	SCREW	18		X	
6	R111632	KNOB	1		X	
7	RE157244	LOUVER	3		X	(SUB FOR RE45293)
8	R123975	LOUVER	1		X	R.H.
	R123976	LOUVER	1		X	L.H.
9	R123974	COVER	1		X	L.H.
10	R116913	LOUVER	1		X	
11	37H203	SCREW	2		X	

https://www.truck-manuals.net/

FENDER UPHOLSTERY (CAB)
SELLERIE-GARNITURE DE GARDE-BOUE (CABINE)
KOTFLUEGEL-POLSTERUNG (FAHRERKABINE)
SELLERIA DEL PARAFANGO (CABINA)
TAPIZADO DEL GUARDABARRO (CABINA)
STAENKSKAERMSKLAEDSEL (HYTT)
RE028214 -UN-25AUG97

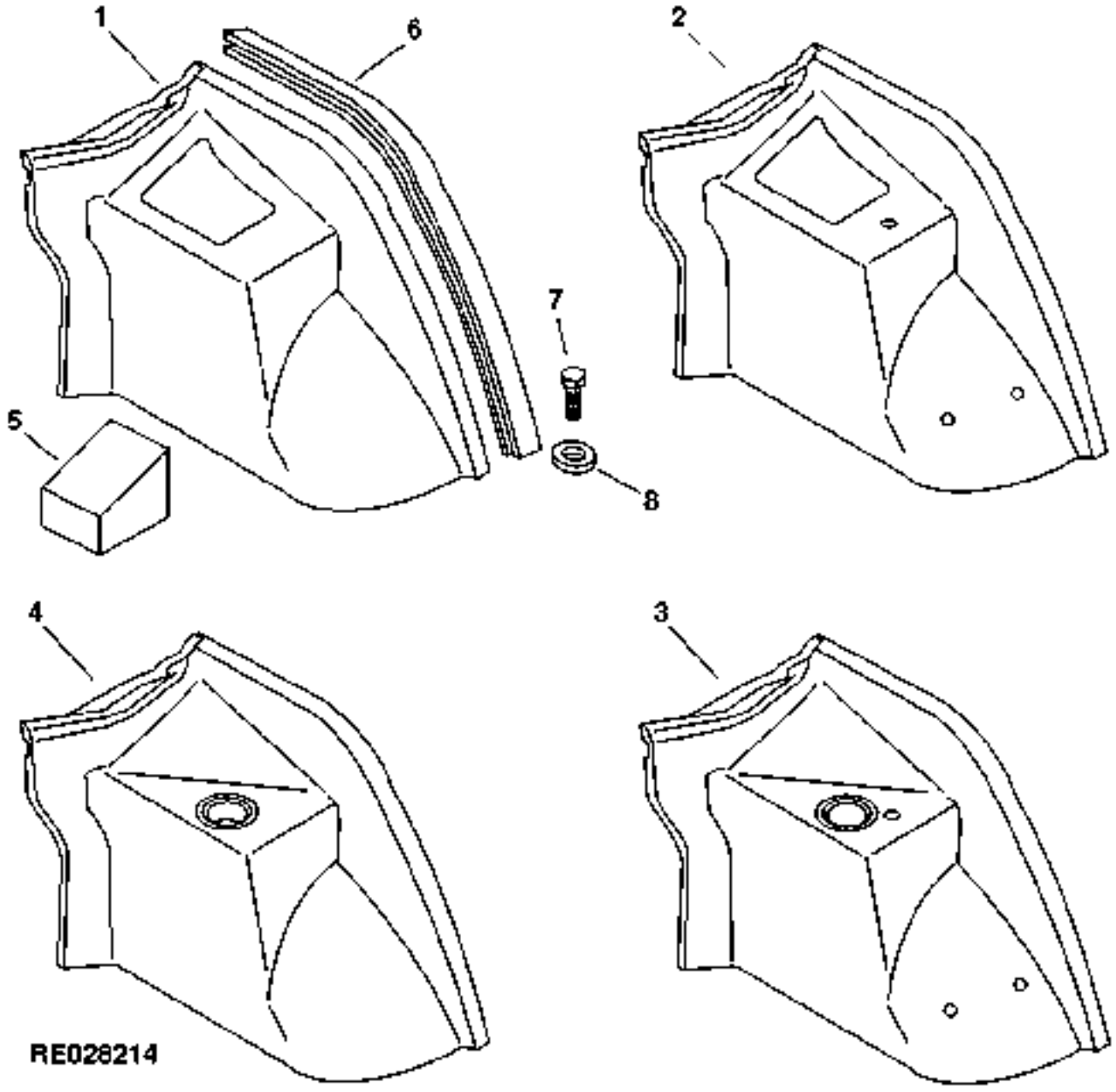

https://www.truck-manuals.net/

KEY	PART NO.	PART NAME	QTY	TRACTOR SERIAL NO.	ALL	REMARKS
1	R134173	ACOUSTICAL UPHOLSTERY	1	010000-	X	(B)
2	R127714	ACOUSTICAL UPHOLSTERY	1	-009999	X	(A) (B) (C)
	R134402	ACOUSTICAL UPHOLSTERY	1	010000-	X	(A) (B) (C)
3	R134174	ACOUSTICAL UPHOLSTERY	1	-009999	X	(A) (SUB FOR R129746)
	R134401	ACOUSTICAL UPHOLSTERY	1	010000-	X	(A) (C)
4	R126032	ACOUSTICAL UPHOLSTERY	1	-009999	X	
	R134174	ACOUSTICAL UPHOLSTERY	1	010000-	X	
5	R131334	FOAM PAD	1		X	
6	RE55367	MOLDING	1		X	
7	37M7089	SCREW	2		X	M6 X 12
8	24M7136	WASHER	4		X	10.500 X 27 X 2 MM

(A)EUROPEAN VERSION
VERSION EUROPEENNE
EUROPAEISCHE AUSFUEHRUNG
VERSIONE EUROPEA
VERSION EUROPEA
EUROPEISK VERSION

(B)W/FIELD OFFICE
W/BUREAU MOBILE
W/BORD-BUERO
W/URRICIO MOBILE
W/OFICINA PORTATIL
W/TRAKTORKONTOR

(C)W/PASSENGER SEAT
W/SIEGE PASSAGER
W/MITFAHRERSITZ
W/SEDILE PASSEGGERO
W/ASIENTO DEL PASAJERO
W/PASSAGERARSITS

https://www.truck-manuals.net/

FIELD OFFICE
BUREAU MOBILE
BORD-BUERO
UFFICIO MOBILE
OFICINA PORTATIL
TRAKTORKONTOR
RE028213 -UN-25AUG97

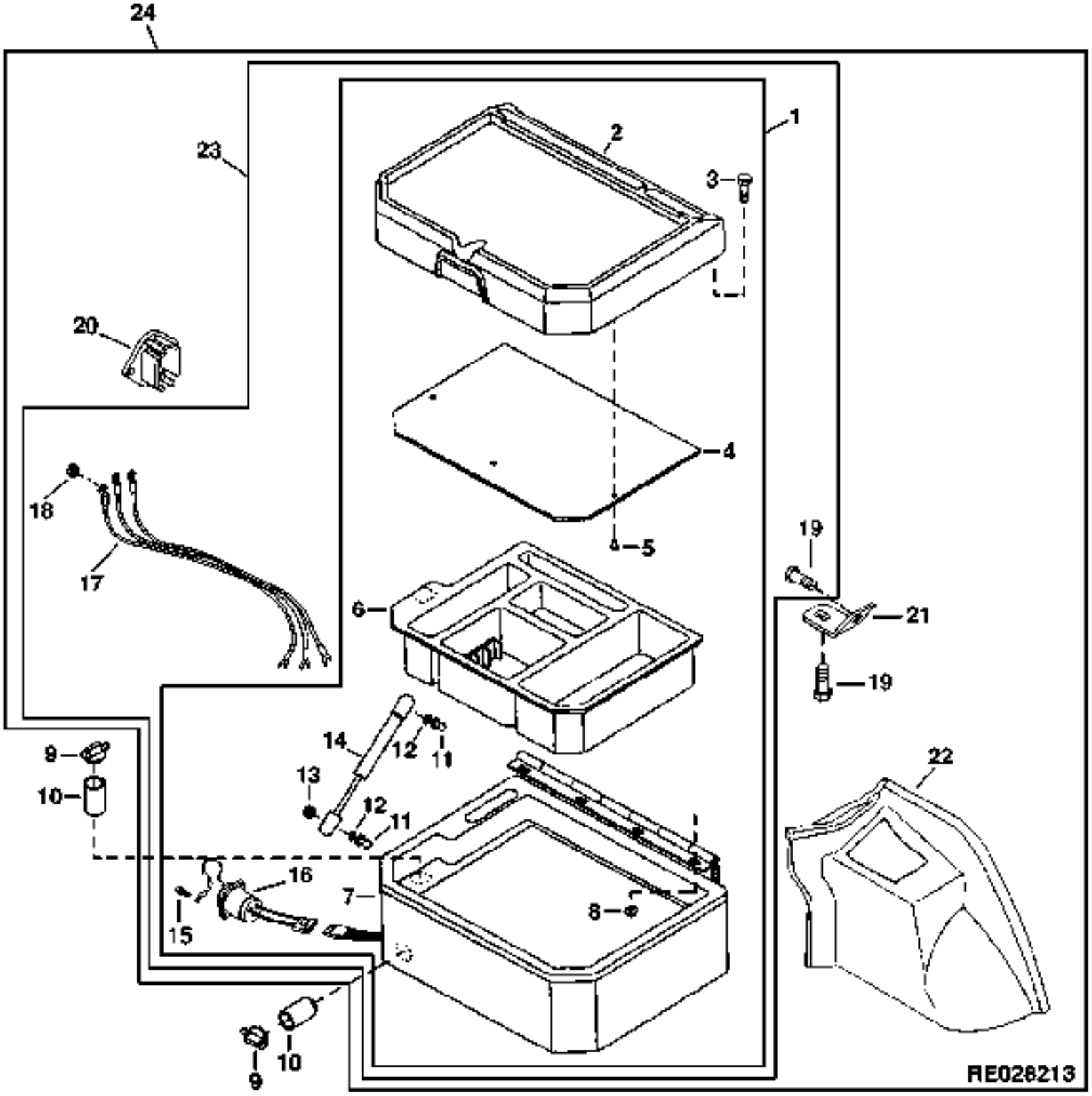

https://www.truck-manuals.net/

KEY	PART NO.	PART NAME	QTY	CAB SERIAL NO.	ALL	REMARKS
1	RE69150	TRAY	1		X	
2	RE64874	COVER	1		X	
3	03M7251	BOLT	8		X	M6 X 12
4	R134152	INSERT	1		X	
5	R132143	SCREW	3		X	
6	RE67459	TRAY	1		X	
7	RE69149	BASE	1		X	
8	14M7303	FLANGE NUT	6		X	M6
9	R131671	PLUG	2		X	
10	AR56766	HOUSING	2		X	
11	R131499	BALL STUD	2		X	
12	24M7088	WASHER	2		X	6.600 X 12 X 1.600 MM
13	14H378	NUT	2		X	1/4"
14	R131498	CYLINDER	1		X	
15	R133192	RIVET	8		X	
16	RE37640	SOCKET OUTLET	1		X	
17	RE67821	WIRING HARNESS	1		X	
18	14H778	NUT	1		X	0.190"
19	37M7090	SCREW	9		X	M6 X 16
20	R111931	JUNCTION BLOCK	1		X	
21	R131751	BRACKET	1		X	
22	R134173	ACOUSTICAL UPHOLSTERY	1		X	
23	**AR116863**	**KIT**	**1**	**010000-**	**X**	**(FI)**
24	**AR116514**	**KIT**	**1**	**-009999**	**X**	**(FI)**

https://www.truck-manuals.net/

POST UPHOLSTERY (CAB)
SELLERIE-GARNITURE DES MONTANTS (CABINE)
STANGENPOLSTERUNG (FAHRERKABINE)
SELLERIA DEGLI COLONNE (CABINA)
TAPIZADO DEL POSTE (CABINA)
STOLPKLAEDSEL (HYTT)
RE027736 -UN-17MAR97

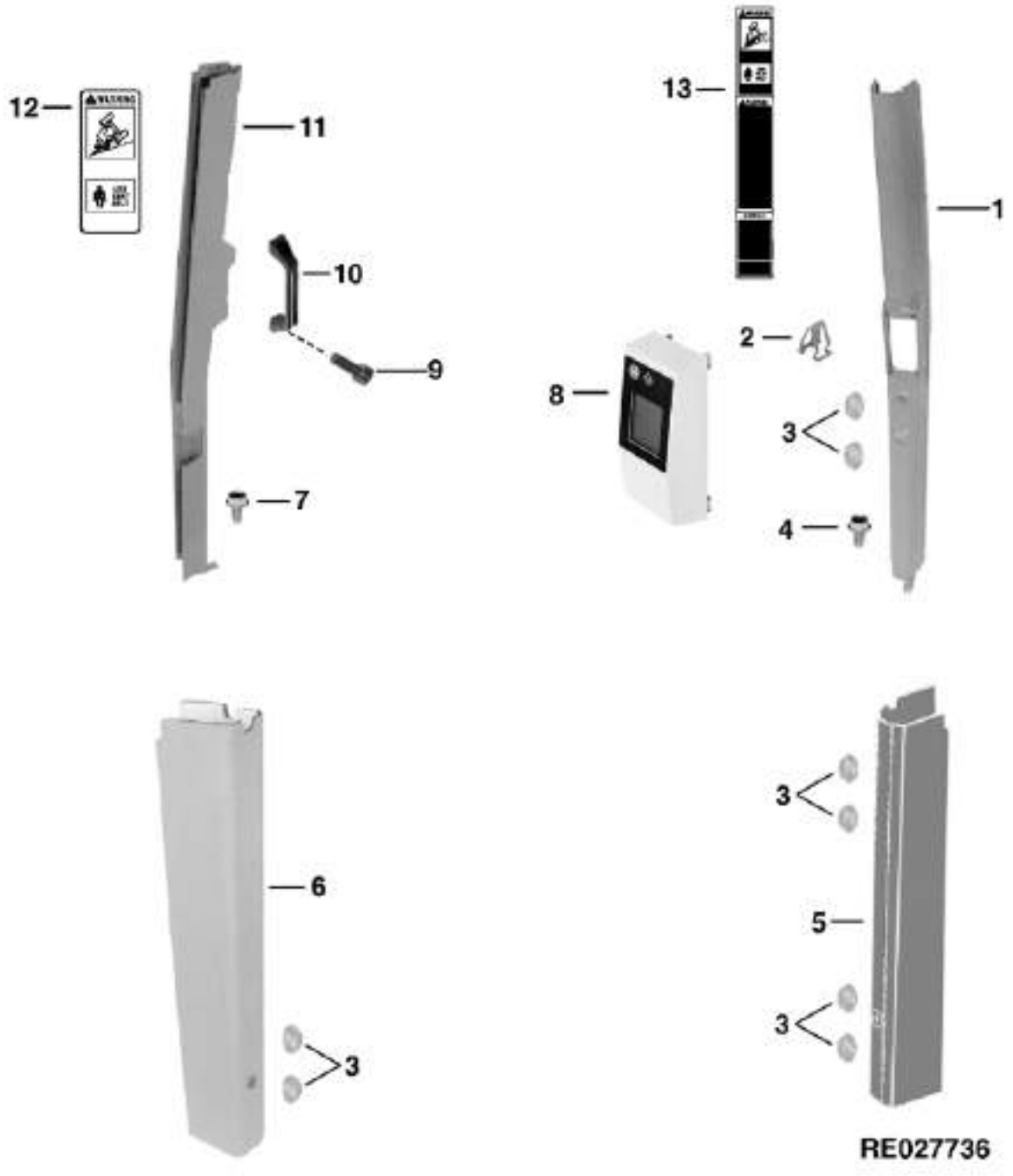

https://www.truck-manuals.net/

KEY	PART NO.	PART NAME	QTY	TRACTOR SERIAL NO.	ALL	REMARKS
1	R124432	COVER	1		X	R.H. FRONT
	R124577	COVER	1		X	(A) R.H. FRONT
2	R120160	CLIP	4		X	
3	R110408	CAP	8		X	
4	37M7089	SCREW	1		X	M6 X 12
5	R124311	COVER	1	-009999	X	R.H. REAR
	R127858	ACOUSTICAL UPHOLSTERY	1	010000-	X	(SUB FOR R124311) R.H. REAR
6	R124310	COVER	1	-009999	X	L.H. REAR
	R127857	ACOUSTICAL UPHOLSTERY	1	010000-	X	(SUB FOR R124310) L.H. REAR
7	37M7089	SCREW	1		X	M6 X 12
8	RE63458	MODULE	1		X	(SUB FOR RE60929)
9	19M8666	SCREW	2		X	M6 X 16
10	L57250	HANDLE	1		X	
11	R124330	COVER	1		X	L.H. FRONT
12	R120124	LABEL	1		X	
13	R151789	LABEL	1		X	(SUB FOR R126174)

(A)EUROPEAN VERSION
VERSION EUROPEENNE
EUROPAEISCHE AUSFUEHRUNG
VERSIONE EUROPEA
VERSION EUROPEA
EUROPEISK VERSION

https://www.truck-manuals.net/

UTILITY TRAY/BEVERAGE HOLDER KIT
KIT DE PIVOT DE FUSEE D'ESSIEU A USAGE INTENSIF
SATZ MIT VERSTAERKTEM ACHSSCHENKELBOLZEN
KIT PERNI DEI FUSI PER PRESTAZIONI PESANTI
JUEGO DE PIVOTE DE DIRECCION PARA SERVICIO SEVERO
SATS MED EXTRA KRAFTIG HJULSPINDELBULT
RE030433 -UN-18FEB99

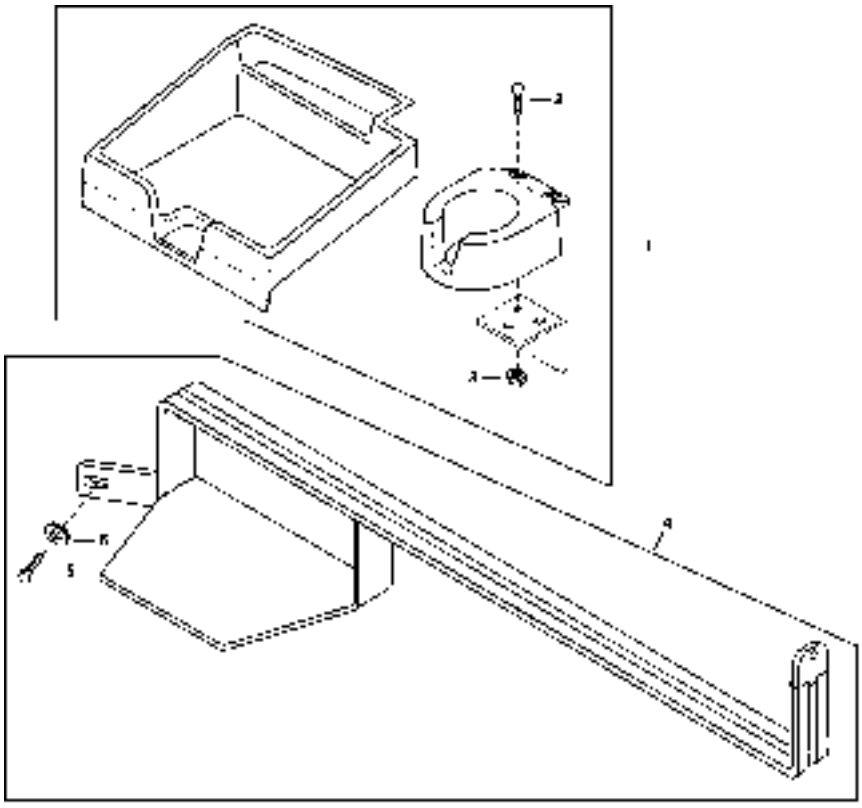

RE030433

KEY	PART NO.	PART NAME	QTY	TRACTOR SERIAL NO.	ALL	REMARKS
1	RE162644	BRACKET	1		X	
2	19M7168	CAP SCREW	1		X	M10 X 30
3	14M7274	NUT	1		X	M10
4	RE162262	BRACKET	1		X	
5	19M7166	CAP SCREW	3		X	M10 X 20
6	24M7178	WASHER	3		X	10.500 X 30 X 2.500 MM

https://www.truck-manuals.net/

MEMORANDA
MEMORANDA
MEMORANDA
MEMORANDA
MEMORANDA
MEMORANDA

https://www.truck-manuals.net/

HEADLINER
PLAFOND DE CABINE
KABINENDACHVERKLEIDUNG
RIVESTIMENTO DEL TETTO
GUARNICION DE TECHO
HYTTBEKLAEDNAD
RXP025174 -UN-01JAN94

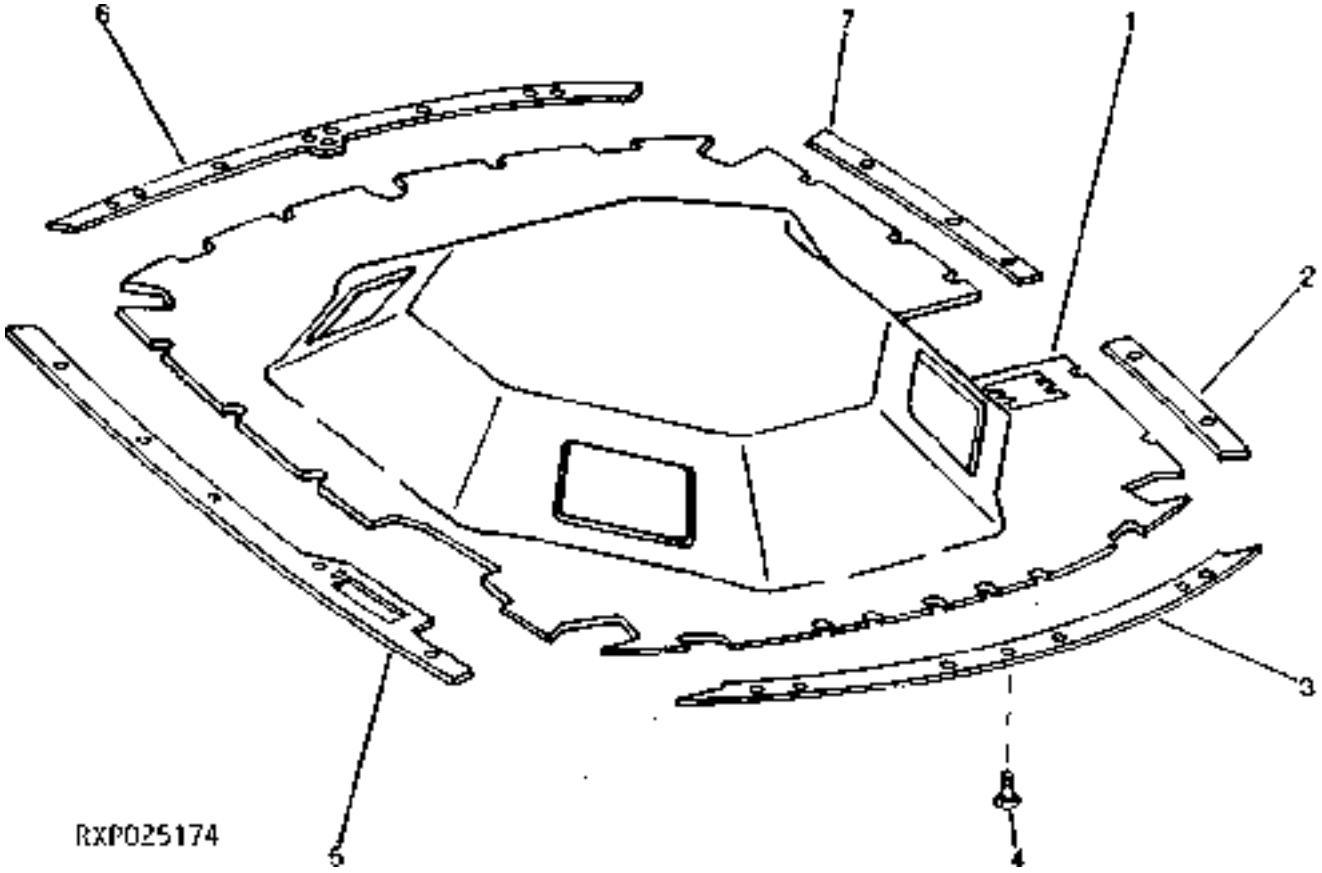

https://www.truck-manuals.net/

KEY	PART NO.	PART NAME	QTY	TRACTOR SERIAL NO.	ALL	REMARKS
1	R124252	HEADLINER	1	-009999	X	
	R134109	HEADLINER	1	010000-	X	
2	R127703	SUPPORT	1		X	(SUB FOR R124661) R.H. REAR
3	R127700	SUPPORT	1		X	(SUB FOR R124658) REAR
4	21M7292	SCREW	19	-009999	X	M6 X 16
	R126355	SCREW	19	010000-	X	
5	R127701	SUPPORT	1		X	(SUB FOR R124659) L.H.
6	R127699	SUPPORT	1		X	(SUB FOR R124657) FRONT
7	R127702	SUPPORT	1		X	(SUB FOR R124660) R.H. FRONT
8	24H1318	WASHER	2		X	7/16" X 2" X 0.134", W/O MIRRORS

https://www.truck-manuals.net/

REAR UPHOLSTERY (CAB)
SELLERIE-GARNITURE ARRIERE (CABINE)
HECKPOLSTERIORE (FAHRERKABINE)
SELLERIA POSTERIORE (CABINA)
TAPIZADO TRASERO (CABINA)
BAKRE KLAEDSEL (HYTT)
RE027697 -UN-12MAR97

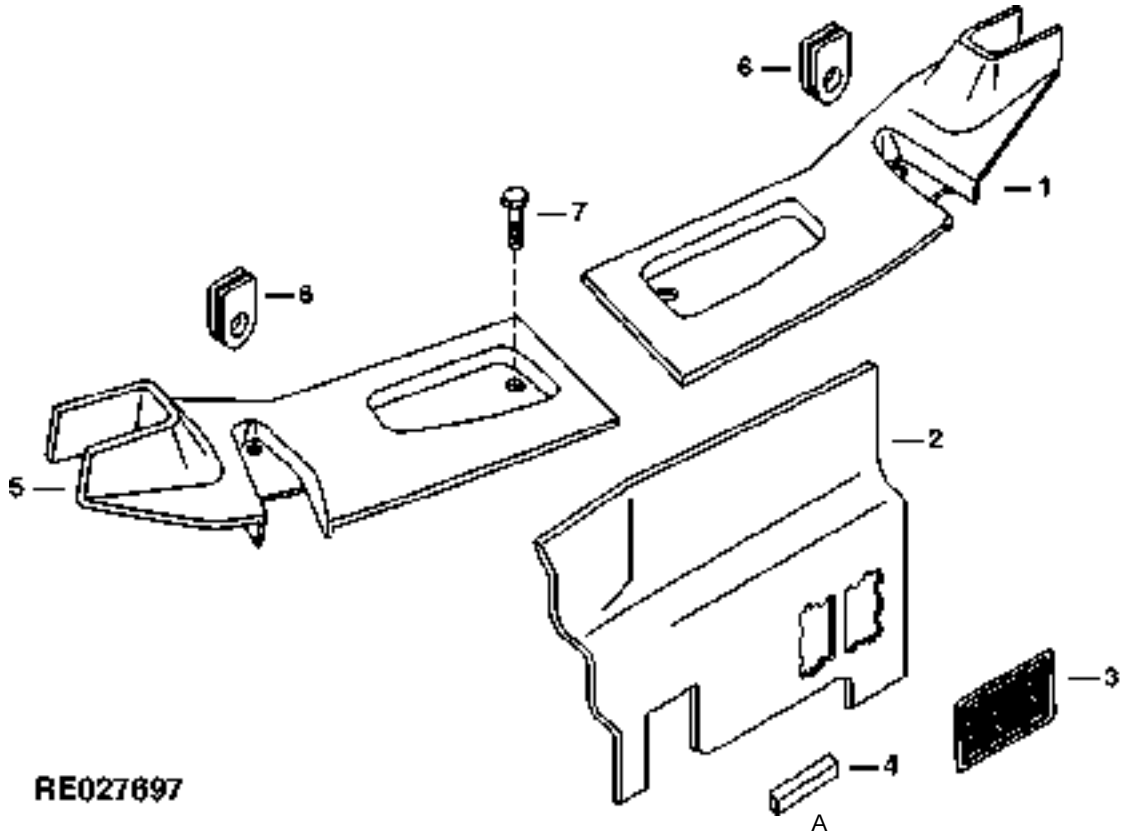

KEY	PART NO.	PART NAME	QTY	CAB SERIAL NO.	ALL	REMARKS
1	R134755	COVER	1		X	L.H.
2	R124191	ACOUSTICAL UPHOLSTERY	1	-XXXXXX	X	(A)
	R151327	ACOUSTICAL UPHOLSTERY	1	XXXXXX-	X	(B) (ALSO ORDER (6) R125147)
3	R124332	BEZEL	1		X	
4	R134287	FOAM PAD	1		X	
5	R124235	COVER	1		X	R.H.
6	L76331	GROMMET	2		X	
7	R114820	SCREW	4		X	

(A) (-XXXXXX) 8100-01376; 8200-012539; 8300-013594; 8400-013482
(B) (XXXXXX-) 8100-13077; 8200-012540; 8300-013595; 8400-013483

https://www.truck-manuals.net/

INSIDE REAR VIEW MIRROR
RETROVISEUR INTERIEUR
INNEN-RUECKSPIEGEL
RETROVISORE INTERIORE
ESPEJO RETROVISOR INTERIOR
INNEN/BACKSPEGEL
RE028235 -UN-25AUG97

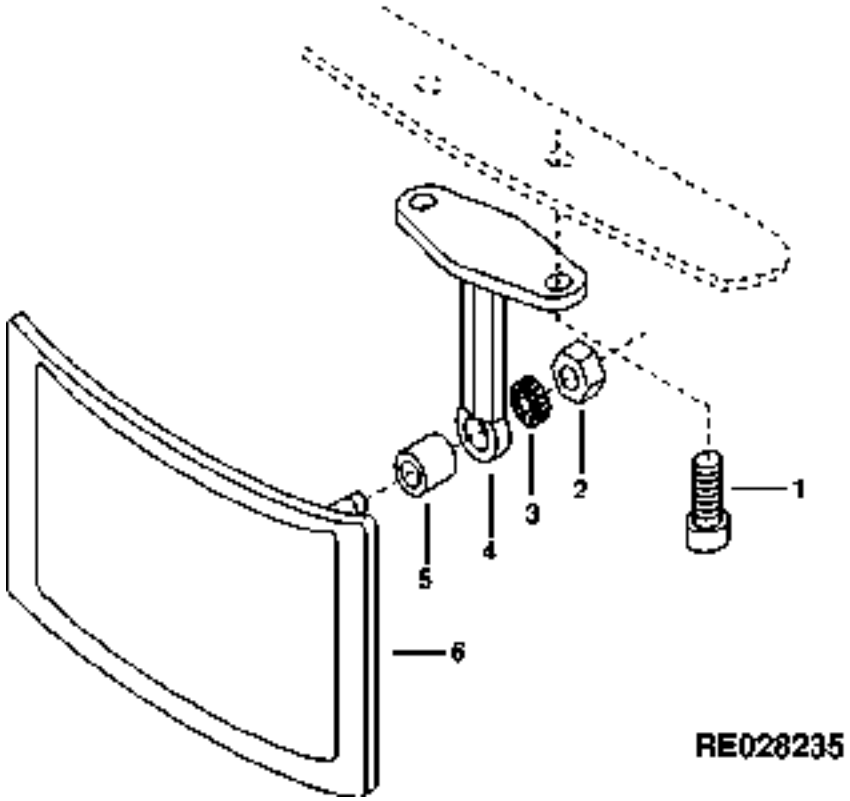

KEY	PART NO.	PART NAME	QTY	TRACTOR SERIAL NO.	ALL	REMARKS
1	21M7438	SCREW	2		X	(A) M6 X 25, (SUB FOR (2) R128728)
	R126355	SCREW	2		X	
2	14H785	NUT	1		X	5/16"
3	12M7065	LOCK WASHER	1		X	8.100 MM
4	L75379	RETAINER	1		X	(SUB FOR L75379)
5	R54701	SPACER	1		X	(SUB FOR R54701)
6	RE52660	REAR VIEW MIRROR	1		X	
..	R109419	PLUG	AR		X	

(A)EUROPEAN VERSION
VERSION EUROPEENE
EUROPAEISCHE AUSFUEHRUNG
VERSIONE EUROPEA
VERSION EUROPEA
EUROPEISK VERSION

https://www.truck-manuals.net/

SUN VISOR
PARA-SOLEIL
SONNENBLENDE
PARASOLE
PARASOL
SOLSKYDD
RXP025138 -UN-01JAN94

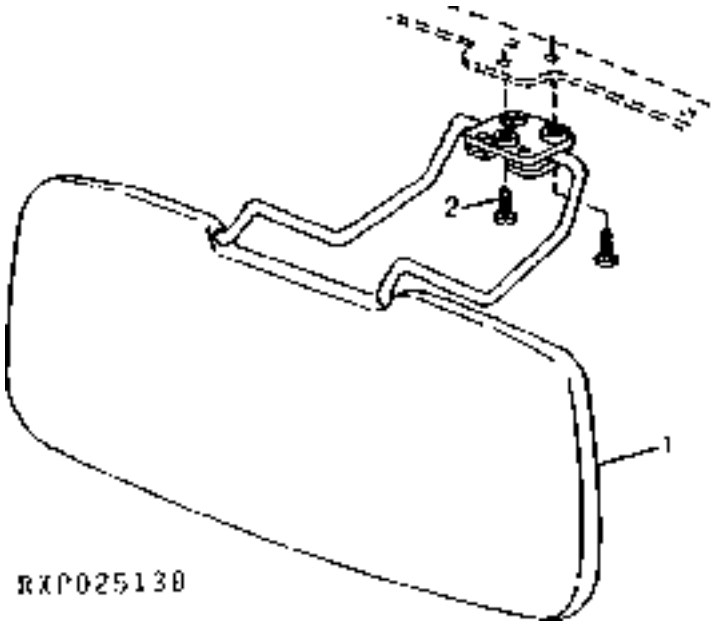

KEY	PART NO.	PART NAME	QTY	TRACTOR SERIAL NO.	ALL	REMARKS
1	RE43540	SUN VISOR	1		X	
2	21M7310	SCREW	3	-009999	X	M6 X 25
	R128728	SCREW	3	010000-	X	

https://www.truck-manuals.net/

CLOTHES HOOK
CROCHET A VETEMENTS
KLEIDERHAKEN
GANCIO APPENDIABITI
GANCHO PARA ROPA
KLAEDKROK
LX001422 -UN-01JAN94

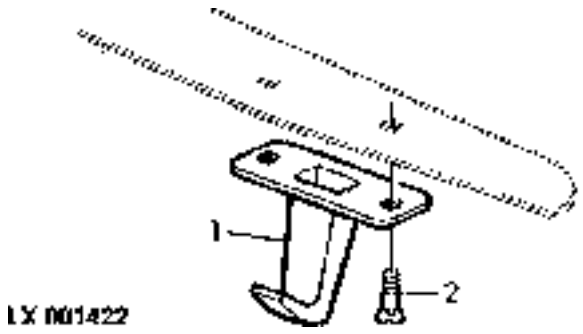

KEY	PART NO.	PART NAME	QTY	TRACTOR SERIAL NO.	ALL	REMARKS
1	L102023	HOOK	1		X	(SUB FOR R106252)
2	21M7310	SCREW	2	-009999	X	M6 X 25
	R128728	SCREW	2	010000-	X	

https://www.truck-manuals.net/

REAR FENDER REAR EXTENSION
EXTENSION ARRIERE DU GARDE-BOUE ARRIERE
HINTERKOTFLUEGEL-HECKVERLAENGERUNG
ESTENSIONE POSTERIORE DEL PARAFANGO POSTERIORE
EXTENSION TRASERA DEL GUARDABARRO TRASERO
BAKRE FOERLAENGNING FOER BAKSTAENKSKAERM
RE030550 -UN-11MAY99

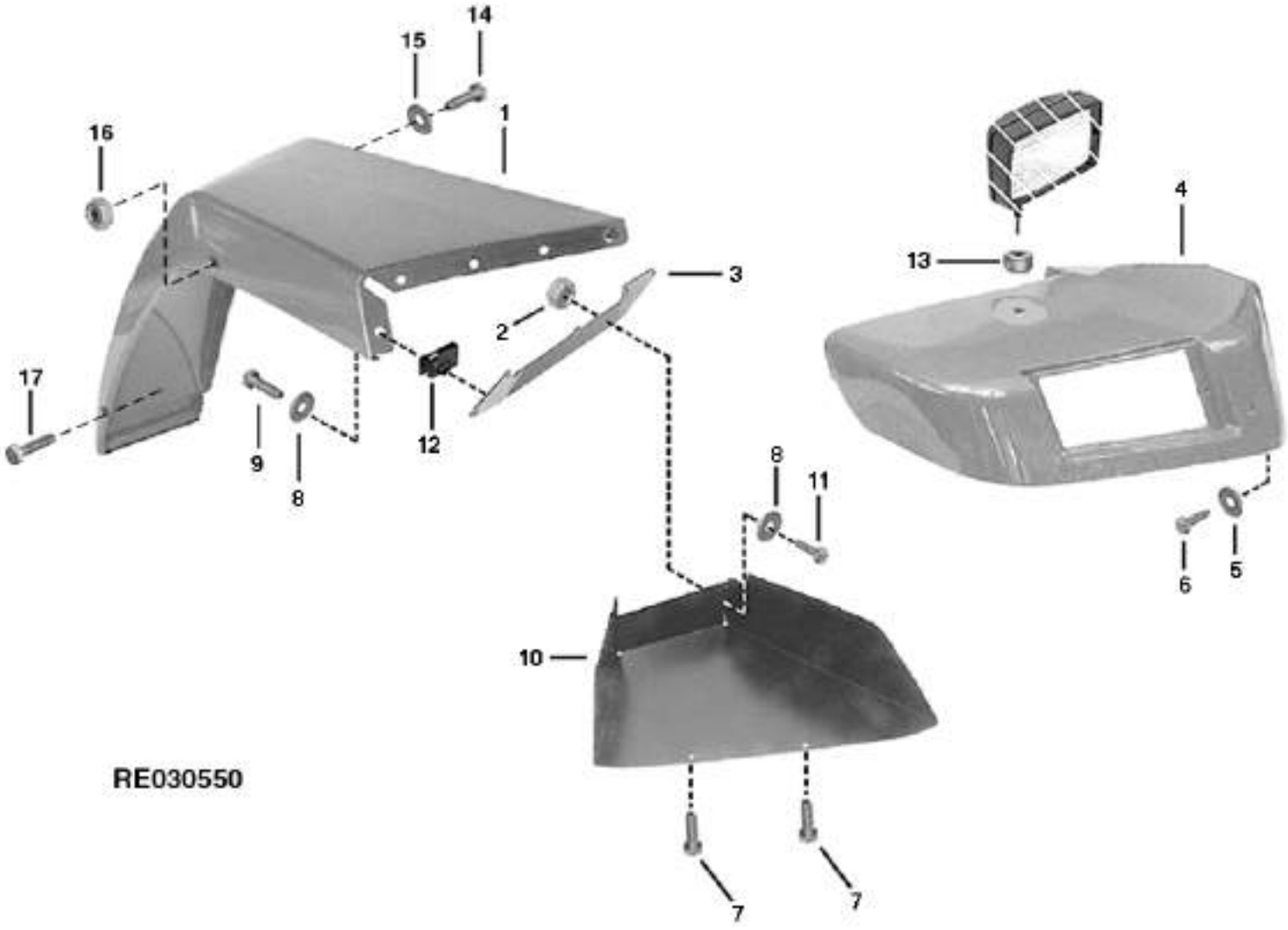

https://www.truck-manuals.net/

KEY	PART NO.	PART NAME	QTY	CAB SERIAL NO.	ALL	REMARKS
1	R157016	FENDER	1		X	(SUB FOR R114686) R.H.
	R157015	FENDER	1		X	(SUB FOR R114685) L.H.
2	14M7165	LOCK NUT	10		X	M6
3	R107431	BRACE	1	-XXXXXX	X	(A) R.H.
	R157024	REINFORCEMENT	1	XXXXXX-	X	(B) R.H. (SUB FOR R132561)
	R107430	BRACE	1	-XXXXXX	X	(A) L.H.
	R157023	REINFORCEMENT	1	XXXXXX-	X	(B) L.H. (SUB FOR R132562)
4	R157032	FLAP	1	-XXXXXX	X	(C) R.H. (SUB FOR R124272 OR R133439)
	R157032	FLAP	1	XXXXXX-	X	(D) R.H. (SUB FOR R124270)
	R133440	FLAP	1	-XXXXXX	X	(C) L.H.
	R157031	FLAP	1	XXXXXX-	X	(D) L.H.
5	24M7207	WASHER	6		X	8.400 X 24 X 2 MM
6	37M7084	SCREW	6		X	M8 X 25
7	37M7304	SCREW	4		X	
8	24M7139	WASHER	10		X	6.400 X 18 X 1.600 MM
9	R131432	SCREW	2		X	(SUB FOR R115908)
10	R110805	SHIELD	1		X	R.H.
	R110806	SHIELD	1		X	L.H.
11	19M7077	CAP SCREW	10		X	M6 X 20
12	14M7265	LOCK NUT	1		X	M5
13	T65643	GROMMET	1		X	
14	19M7513	CAP SCREW	6		X	M8 X 30
15	12M7065	LOCK WASHER	6		X	8.100 MM
16	14M7298	FLANGE NUT	6		X	M8
17	37M7058	SCREW	14		X	M8 X 20

(A) (-XXXXXX) 8100-011052; 8200-011032; 8300-011125; 8400-011068
(B) (XXXXXX-) 8200-011053; 8200-011033; 8300-011126; 8400-011069

(C) (-XXXXXX) 8100-021464; 8200-021249; 8300-022188; 8400-022769
(D) (XXXXXX-) 8100-021465; 8200-021250; 8300-022189; 8400-022770

https://www.truck-manuals.net/

REAR FENDER REAR EXENSION
EXTENSION ARRIERE DU GARDE-BOUE ARRIERE
HINTERKOTFLUEGEL-HECKVERLAENGERUNG
ESTENSIONE POSTERIORE DEL PARAFANGO POSTERIORE
EXTENSION TRASERA DEL GUARDABARRO TRASERO
BAKRE FOERLAENGNING FOER BAKSTAENKSKAERM
RE030074 -UN-27OCT98

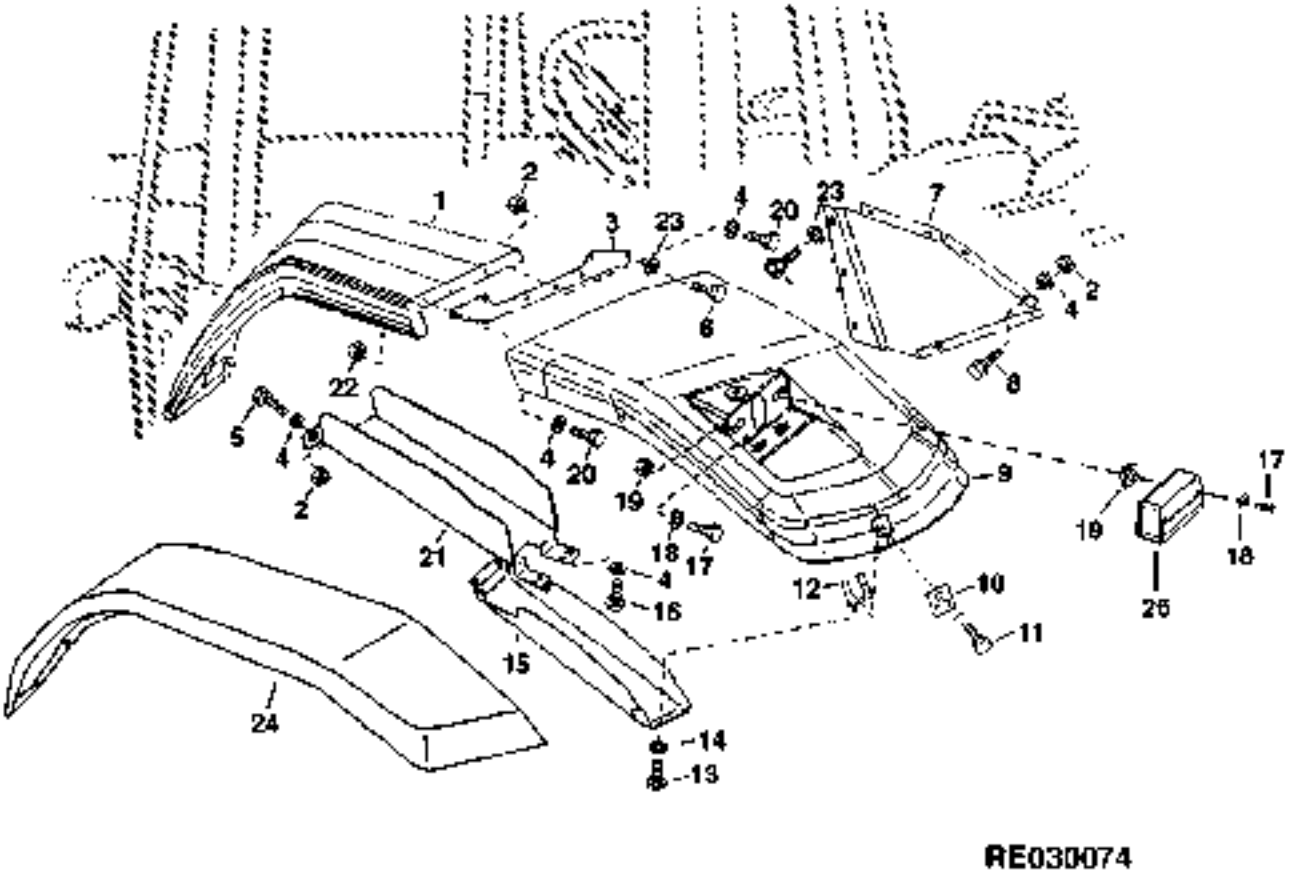

https://www.truck-manuals.net/

KEY	PART NO.	PART NAME	QTY	TRACTOR SERIAL NO.	ALL	REMARKS
1	R157016	FENDER	1	-009999	X	(SUB FOR R114686) R.H.
	R130509	FENDER	1	010000-	X	(SUB R157018) R.H.
	R114685	FENDER	1	-009999	X	L.H.
	R130510	FENDER	1	010000-	X	(SUB R157017) L.H.
2	14M7272	NUT	9		X	M6
3	R127697	BRACE	1	-009999	X	R.H.
	R132561	REINFORCEMENT	1	010000-XXXXXX	X	R.H.
	R157023	REINFORCEMENT	1	XXXXXX-	X	L.H.
	R127696	BRACE	1	-009999	X	L.H.
	R132562	REINFORCEMENT	1	010000-XXXXXX	X	L.H.
	R157024	REINFORCEMENT	1	XXXXXX-	X	R.H.
4	24M7139	WASHER	8		X	6.400 X 18 X 1.600 MM
5	19M7862	SCREW	4		X	M6 X 20
6	37M7084	SCREW	6		X	M8 X 25
7	R124194	SHIELD	1	-009999	X	R.H.
	R150920	SHIELD	1	010000-	X	R.H. (SUB FOR R131970)
	R124193	SHIELD	1	-009999	X	L.H.
	R150921	SHIELD	1	010000-	X	L.H. (SUB FOR R131971)
8	03M7232	BOLT	4		X	M6 X 25
9	R111888	FLAP	1	-009999	X	R.H.
	R131966	FLANGE	1	010000-	X	R.H.
	R111887	FLAP	1	-009999	X	L.H.
	R131967	FLANGE	1	010000-	X	L.H.
10	R115675	PLATE	2	010000-	X	(A)
	R153485	PLATE	1		X	(B)
11	H132899	SCREW	2		X	
12	R126716	PLATE	2	010000-	X	
13	37M7165	SCREW	8		X	
14	24M7027	WASHER	8		X	5.300 X 10 X 1 MM
15	R124721	SHIELD	1	-009999	X	R.H.
	R131977	SHIELD	1	010000-	X	R.H.
	R124720	SHIELD	1	-009999	X	L.H.
	R131978	SHIELD	1	010000-	X	L.H.
16	M117141	SCREW	4		X	
17	21M7452	SCREW	4	010000-	X	M6 X 90
18	24M7244	WASHER	2	010000-	X	6.400 X 12 X 1.600 MM
19	R134098	NUT	2		X	
20	19M7286	CAP SCREW	5		X	M6 X 25
21	R124352	SHIELD	1	-009999	X	R.H.
	R135658	SHIELD	1	010000-	X	R.H. (SUB FOR R131975)
	R124351	SHIELD	1	-009999	X	L.H.
	R135659	SHIELD	1	010000-	X	L.H. (SUB FOR R131976)
22	24H1923	WASHER	10		X	9/32" X 3/4" X 0.120"
23	24M7207	WASHER	6		X	8.400 X 24 X 2 MM
24	R130503	EXTENSION	1	010000-	X	2.3 M, R.H.
	R130504	EXTENSION	1	010000-	X	2.3 M, L.H.
	R130505	EXTENSION	1	010000-	X	2.48 M, R.H.
	R130506	EXTENSION	1	010000-	X	2.48 M, L.H.
25	RE150894	TAIL LAMP	1		X	
26	19M7513	CAP SCREW	6	010000-	X	M8 X 30
27	12M7065	LOCK WASHER	6	010000-	X	8.100 MM
28	14M7298	FLANGE NUT	6	010000-	X	M8
29	37M7058	SCREW	8	010000-	X	M8 X 20

(A) W/HITCH
W/ATTELAGE
W/ANHAENGEVORRICHTUNG
W/SOLLEVATORE
W/ENGANCE
W/LYFT

(B) W/O HITCH
W/O ATTELAGE
W/O ANHAENGEVORRICHTUNG
W/O SOLLEVATORE
W/O ENGANCE
W/O LYFT

https://www.truck-manuals.net/

REAR FENDER SIDE EXTENSION AND MUD GUARD KIT
AILE ARRIERE, RALLONGE LATERALE ET GARDE-BOUE JEU DE PIECES
HINTERE KOTFLUEGEL-VERLAENGERUNG UND SCHMUTZFAENGER TEILESATZ
PARASPRUZZI E PROLUNGA LATERALE DEL PARAFANGO POSTERIORE SERIE PEZZI
EXTENSION LATERAL DEL GUARDABARROS TRASERO Y PARAFANGO JUEGO
STAENKSKAERM BAK, SIDFOERLAENGNING OCH STAENKSKYDD SATS
RE026566 -UN-24JAN97

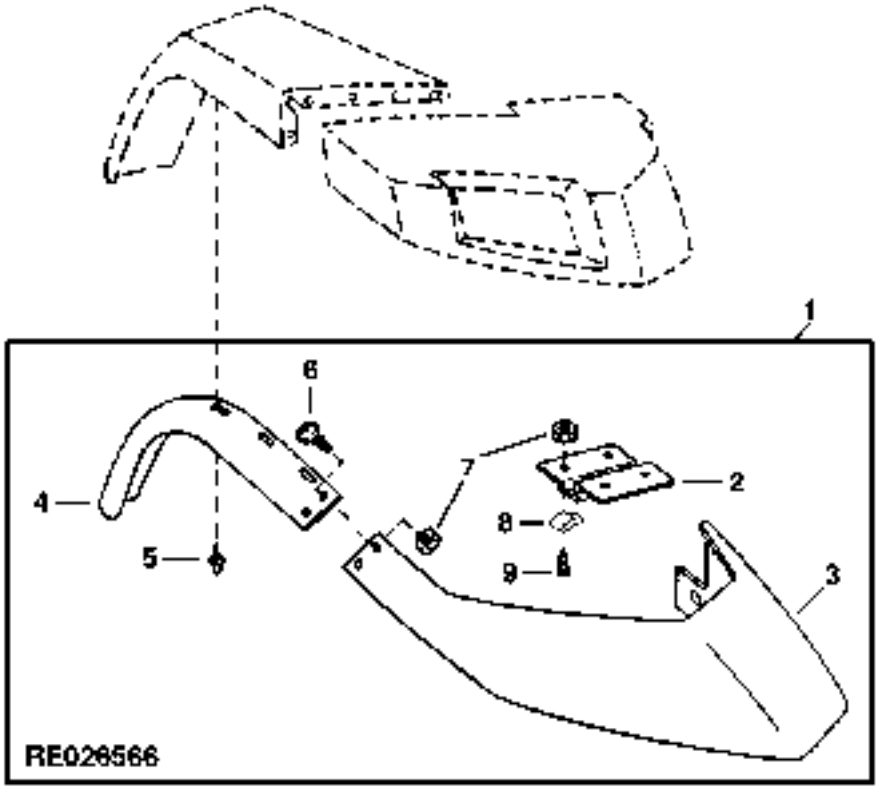

KEY	PART NO.	PART NAME	QTY	TRACTOR SERIAL NO.	ALL	REMARKS
1	**AR113538**	**KIT**	**1**		**X**	**(FI)**
2	R118188	SUPPORT	2	-009000	X	
	R131351	SUPPORT	2	010000-	X	
3	R122010	SPLASH GUARDS	1		X	R.H.
	R122009	SPLASH GUARDS	1		X	L.H.
4	R118147	EXTENSION	1		X	R.H.
	R118146	EXTENSION	1		X	L.H.
5	R55326	RIVET	22		X	
6	37M7165	SCREW	4		X	
7	14M7165	LOCK NUT	8		X	M6
8	R127698	CLIP	8		X	
9	21M7292	SCREW	8		X	M6 X 16

https://www.truck-manuals.net/

REAR FENDER SIDE EXTENSION (EUROPEAN VERSION) (-009999)
EXTENSION LATERALE DU GARDE-BOUE ARRIERE (VERSION EUROPEENNE) (-009999)
HINTERKOTFLUEGEL-SEITENVERLAENGERUNG (ERUOPAEISCHE AUSFUEHRUNG) (-009999)
ESTENSIONE LATERALE DEL PARAFANGO POSTERIORE (VERSIONE EUROPEA) (-009999)
EXTENSION LATERAL DEL GUARDABARRO TRASERO (VERSION EUROPEA) (-009999)
SIDFOERLAENGNING FOER BAKSTAENKSKAERM (EUROPEISK VERSION) (-009999)
RE029893 -UN-24SEP98

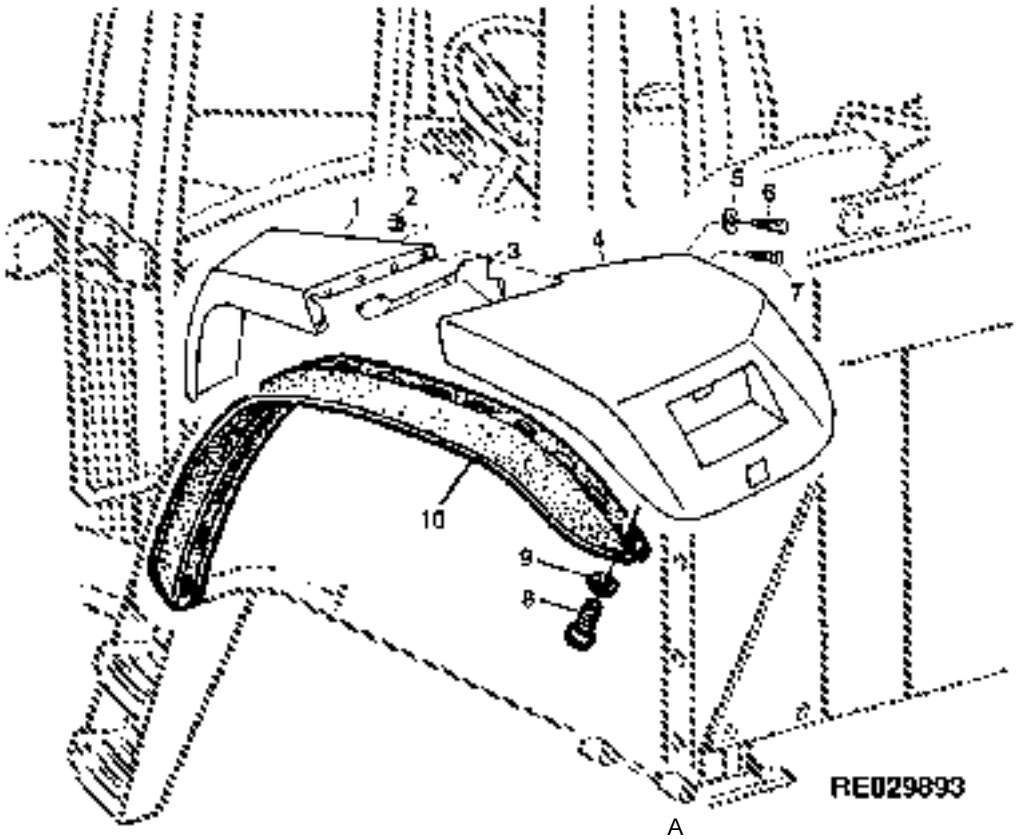

KEY	PART NO.	PART NAME	QTY	TRACTOR SERIAL NO.	ALL	REMARKS
1	R157016	FENDER	1		X	(SUB FOR R114686) R.H.
	R157015	FENDER	1		X	(SUB FOR R114685) L.H.
2	14M7272	NUT	4		X	M6
3	R127697	BRACE	1		X	R.H.
	R127696	BRACE	1		X	L.H.
4	R111888	FLAP	1		X	R.H.
	R111887	FLAP	1		X	L.H.
5	24M7139	WASHER	14	XXXXXX-	X	(A) 6.400 X 18 X 1.600 MM
6	19M7077	CAP SCREW	1		X	M6 X 20
7	19M7286	CAP SCREW	3		X	M6 X 25
8	21M7310	SCREW	4		X	M6 X 25
9	24M7207	WASHER	6		X	8.400 X 24 X 2 MM
10	R122008	EXTENSION	1		X	R.H.
	R122007	EXTENSION	1		X	L.H.

(A) (XXXXXX-) 8100-011053; 8200-011033; 8300-011126; 8400-011069

https://www.truck-manuals.net/

LEFT HAND STEP
MARCHEPIED GAUCHE
LINKE STUFEN
GRADINI DI SINISTRA
PELDANOS DEL LADO
VAENSTER FOTSTEG
RE029233 -UN-20MAR98

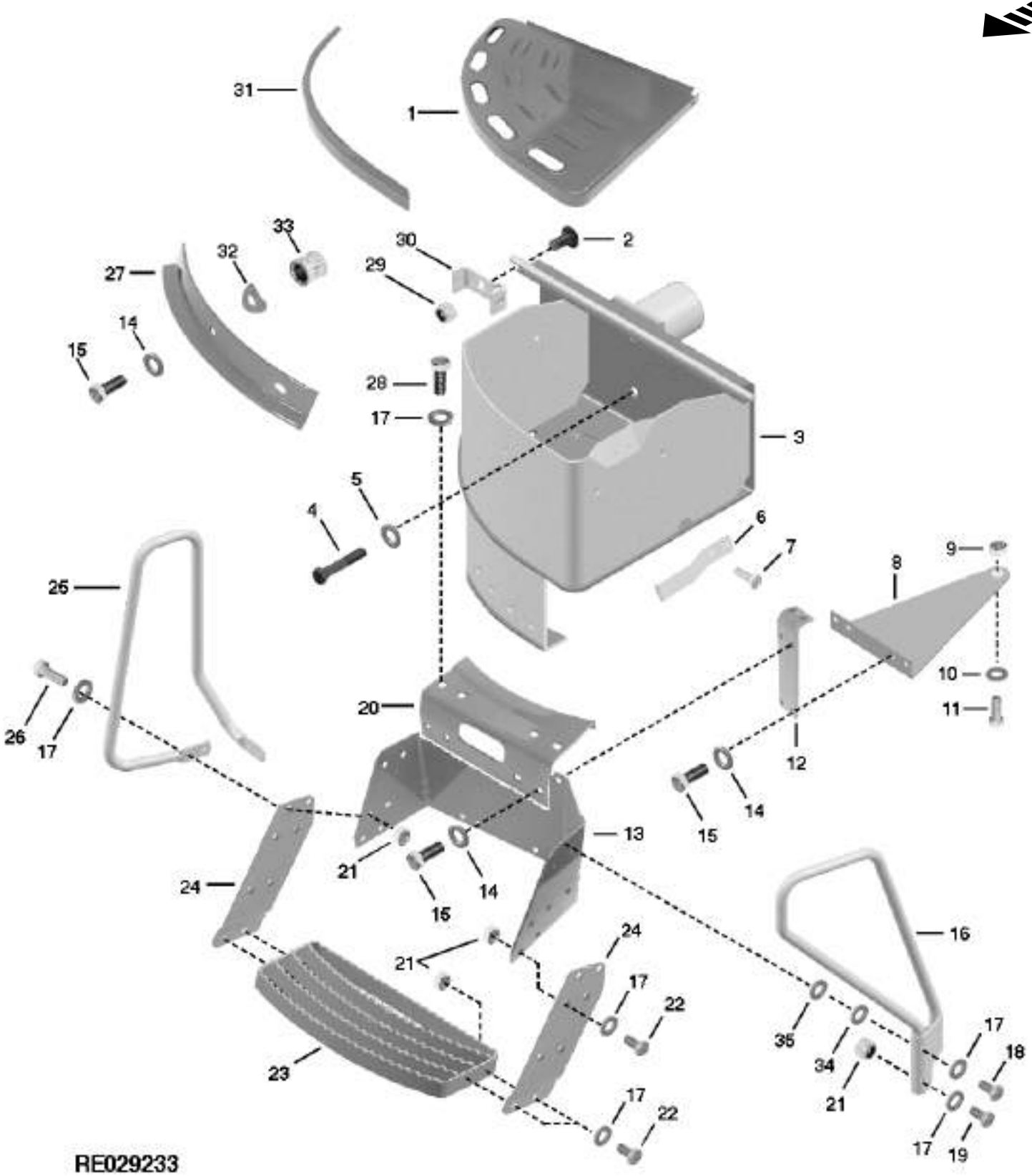

https://www.truck-manuals.net/

KEY	PART NO.	PART NAME	QTY	CAB SERIAL NO.	ALL	REMARKS
1	R124688	PLATFORM	1		X	
2	03M7190	BOLT	2		X	M10 X 20
3	RE60857	SUPPORT	1		X	
4	19M8485	CAP SCREW	1		X	M16 X 90, HS 10.9
5	24M7338	WASHER	1		X	17 X 30 X 3 MM
6	R124691	LATCH	1		X	
7	M63200	RIVET	2		X	
8	RE44687	BRACKET	1		X	
9	R125363	GASKET	1		X	
10	24H1226	WASHER	1		X	1/2" X 1-1/4" X 0.083"
11	19M7872	CAP SCREW	1		X	M12 X 25, HS 10.9
12	R121545	SUPPORT	2		X	
13	R134670	SUPPORT	2		X	(SUB FOR R124689)
14	24M7028	WASHER	4		X	10.500 X 20 X 2 MM
	24M7240	WASHER	4		X	(A) 13 X 25 X 3 MM
15	03M7193	BOLT	4		X	M10 X 35
	19M7361	CAP SCREW	4		X	(A) M12 X 50
16	RE61127	HANDRAIL	1	-XXXXXX	X	(B)
	R134647	HANDRAIL	1	XXXXXX-	X	(C)
	R131074	HANDRAIL	1		X	(A) (SUB FOR RE60865)
17	24M7028	WASHER	22		X	10.500 X 20 X 2 MM
	R28024	CLAMP	22		X	(A)
18	03M7195	BOLT	1		X	M10 X 45
	19M7935	CAP SCREW	1		X	(A) M10 X 55
19	19M8499	CAP SCREW	2		X	M10 X 60
	19M8499	CAP SCREW	2		X	(A) M10 X 60, HS 10.9
20	R124690	PLATE	1		X	
21	14M7517	LOCK NUT	4		X	M10
22	19M7938	CAP SCREW	12		X	M10 X 20, HS 10.9
23	RE49428	STEP	2	-XXXXXX	X	(D)
	R151799	STEP	1	XXXXXX-	X	(E)
24	R123987	PLATE	1	-XXXXXX	X	(B) INNER
	R151855	PLATE	1	XXXXXX-	X	(C) INNER
	R151764	PLATE	1	-XXXXXX	X	(B) (SUB FOR R123986) OUTER
	R151764	PLATE	1	XXXXXX-	X	(C) OUTER
25	R124770	HANDRAIL	1		X	INNER
26	19M7662	CAP SCREW	1		X	M10 X 30, HS 10.9
	03M7195	BOLT	2		X	(A) M10 X 45
27	R116390	LOCK PLATE	1		X	
28	03M7191	BOLT	4		X	M10 X 25
29	14M7517	LOCK NUT	2		X	M10
30	R116389	BRACKET	1		X	
31	RE44786	MOLDING	1		X	
32	R112480	WASHER	1		X	
33	M82714	SPACER	1		X	
34	24H1886	WASHER	1		X	15/32" X 1-1/8" X 0.180"
35	R111382	WASHER	1		X	

(A)EUROPEAN VERSION
VERSION EUROPEENNE
EROPAEISCHE AUSFUEHRUNG
VERSIONE EUROPEA
VERSION EUROPEA
EUROPEISK VERSION

(B)(-XXXXXX) 8100-013158; 8200-012600; 8300-013736; 8400-013565
(C)(XXXXXX-) 8100-013159; 8200-012601; 8300-013737; 8400-013566

(D)(-XXXXXX) 8100-024464; 8200-024467; 8300-024453; 8400-024471
(E)(XXXXXX-) 8100-024465; 8200-024468; 8300-024454; 8400-024472

https://www.truck-manuals.net/

OUTER MIRRORS KIT
JEU DE RETROVISEURS EXTERIEURS
AUSSENSPIEGEL-BAUSATZ
KIT DEGLI SPECCHIETTI ESTERNI
JUEGO DE ESPEJOS EXTERIORES
UTSIDES BACKSPEGELSATS
RE029788 -UN-21JUL98

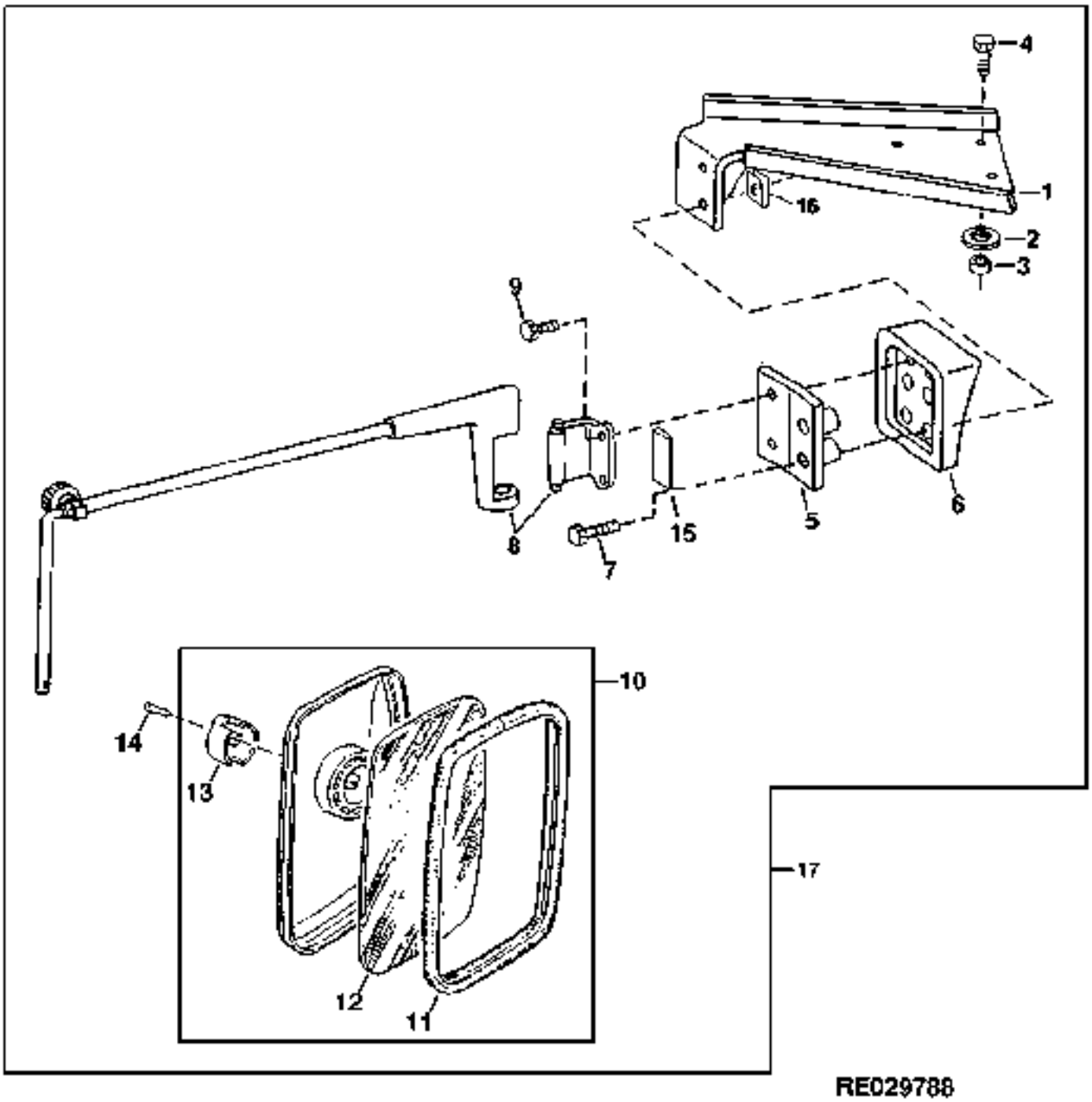

https://www.truck-manuals.net/

KEY	PART NO.	PART NAME	QTY	CAB SERIAL NO.	ALL	REMARKS
1	RE61100	BRACKET	2		X	
2	R127769	SEAL	4		X	(SUB FOR R115705)
3	24H1309	WASHER	4		X	13/32" X 1-1/16" X 0.120"
4	19M7808	SCREW	4		X	M10 X 65
5	R151448	SUPPORT	1		X	(SUB FOR RE52677) R.H.
	R151449	SUPPORT	1		X	(SUB FOR RE52678) L.H.
6	R111894	SEAL	2		X	
7	19M7875	CAP SCREW	4		X	M10 X 70
8	RE52668	ARM	1		X	(INCLUDES R129377) R.H.
	RE52669	ARM	1		X	(INCLUDES R129377) L.H.
9	19M7660	SCREW	4		X	M8 X 20
10	AL78021	REAR VIEW MIRROR	2		X	
11	L79777	GASKET	1		X	
12	L79776	REAR VIEW MIRROR GLASS	1		X	
13	L79778	HOLDER	1		X	
14	21M7248	SCREW	2		X	M6 X 30
15	R129377	SPACER	2	XXXXXX-	X	(A)
16	R153826	NUT	1		X	(FI)
17	AR112841	KIT	1		X	

(A)(XXXXXX-) 8100-002914; 8200-002293; 8300-004034; 8400-002592

https://www.truck-manuals.net/

REMOTE MIRROR (EUROPEAN VERSION)
RETROVISEUR EXTERIEURS (VERSION EUROPEENNE)
AUSSENSPIEGEL (EUROPAEISCHE AUSFUEHRUNG)
DEGLI SPECCHIETTI ESTERNI (VERSIONE EUROPEA)
ESPEJOS EXTERIORES (VERSION EUROPEA)
UTSIDES BACKSPEGEL (EUROPEISK VERSION)
RE029714 -UN-13JUL98

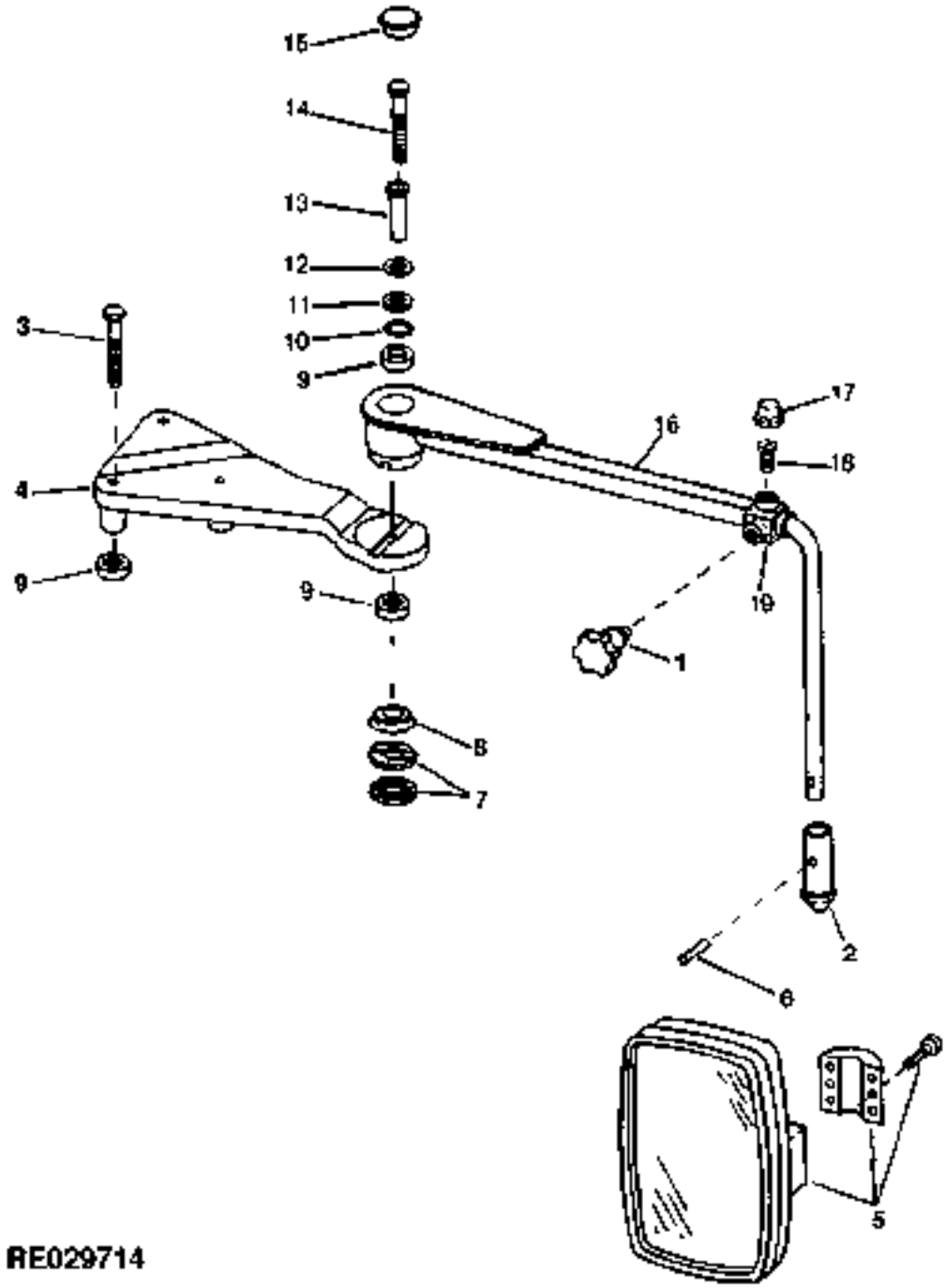

https://www.truck-manuals.net/

KEY	PART NO.	PART NAME	QTY	CAB SERIAL NO.	ALL	REMARKS
1	L78176	KNOB	2		X	
2	R129077	ADAPTER	2		X	R.H. (SUB FOR R126161)
	L79784	ADAPTER	2		X	L.H.
3	37M7108	SCREW	6		X	M8 X 60
4	R125905	BRACKET	1		X	L.H.
	R125906	BRACKET	1		X	R.H.
5	AL78021	REAR VIEW MIRROR	2		X	
6	34H312	SPRING PIN	2		X	
7	R125634	CAM	2		X	
8	R125713	SEAL	4		X	
9	R127769	SEAL	14		X	
10	51M7042	O-RING	2		X	13.300 X 2.200 MM
11	R48450	WASHER	2		X	
12	12M6601	DISK SPRING	18		X	14.200 X 28 X 1.500 MM
13	R125844	SPACER	2		X	
14	19M7875	CAP SCREW	2		X	M10 X 70
15	R71080	PLUG	2		X	
16	RE154994	SUPPORT	2		X	(INCLUDES (2) L79784 AND (2) 21M7292) (SUB FOR RE62025)
17	L38797	CAP	2		X	
18	21M7216	SCREW	2		X	M4 X 20
19	L78174	TUBE	2		X	

https://www.truck-manuals.net/

REMOTE POWER MIRROR (EUROPEAN VERSION)
RETROVISEUR TELECOMMANDE (VERSION EUROPEENNE)
FERNGESTEUERTER ELEKTRISCHER SPIEGEL (EUROPAEISCHE AUSFUEHRUNG)
SPECHIETTO MOTORIZZATO CON COMANDO A DISTANZA (VERSIONE EUROPEA)
ESPAJO CON MOTOR A CONTROL REMOTO (VERSION EUROPEA)
FJAERRKONTROLLERAD ELEKTRISK BACKSPEGEL (EUROPEISK VERSION)
RE029442 -UN-20APR98

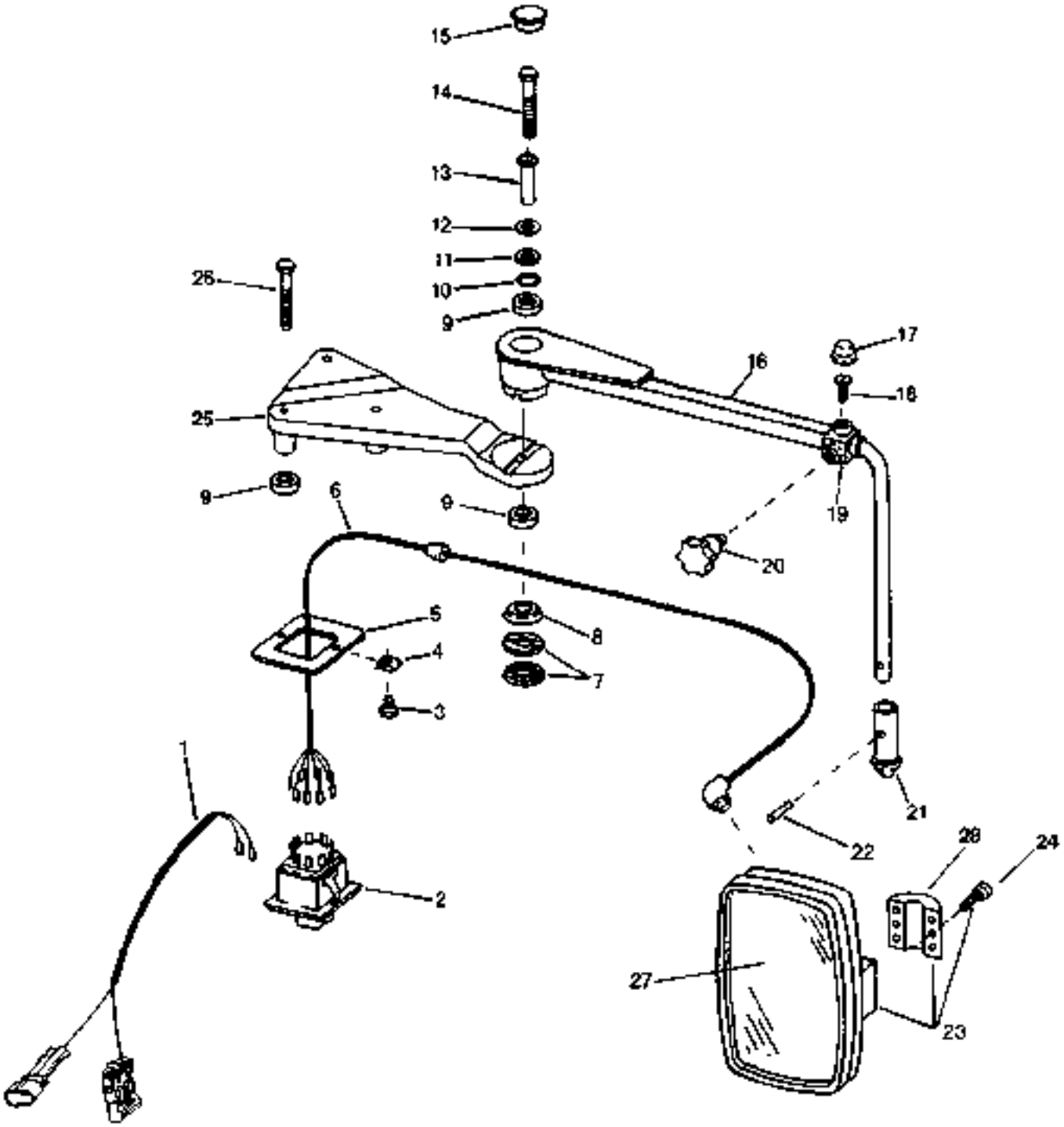

RE029442

https://www.truck-manuals.net/

KEY	PART NO.	PART NAME	QTY	CAB SERIAL NO.	ALL	REMARKS
1	RE62312	WIRING HARNESS	2		X	
2	AZ47908	SWITCH	2		X	
3	37M7185	SCREW	2		X	
4	R52130	LOCK NUT	2		X	
5	R134482	PLATE	2		X	(SUB FOR R125981)
6	AZ47788	WIRING HARNESS	2		X	
7	R125634	CAM	2		X	
8	R125713	SEAL	2		X	
9	R127769	SEAL	14		X	(SUB FOR R115705)
10	51M7042	O-RING	2		X	13.300 X 2.200 MM
11	R48450	WASHER	2		X	
12	12M6601	DISK SPRING	18		X	14.200 X 28 X 1.500 MM
13	R125844	SPACER	2		X	
14	19M7875	CAP SCREW	2		X	M10 X 70
15	R155065	PLUG	2		X	
16	RE62025	SUPPORT	2		X	
17	L38797	CAP	2		X	
18	21M7216	SCREW	2		X	M4 X 20
19	L78174	TUBE	2		X	
20	L78176	KNOB	2		X	
21	R129077	ADAPTER	2		X	R.H. (SUB FOR R126161)
	L79784	ADAPTER	1		X	L.H.
22	34H312	SPRING PIN	2		X	
23	RE65319	REAR VIEW MIRROR	2		X	(SUB FOR RE62297)
24	19M7603	SCREW	2		X	M6 X 20
25	R125906	BRACKET	1		X	R.H.
	R125905	BRACKET	1		X	L.H.
26	37M7108	SCREW	6		X	M8 X 60
27	R134059	REAR VIEW MIRROR	1		X	
28	R134060	HALF CLAMP	1		X	
..	R44302	TIE BAND	AR		X	

https://www.truck-manuals.net/

WINDSHIELD AND REAR WASHER KIT
JEU DE LAVE-GLAVE AVANT ET ARRIERE
SCHEIBEN-WASCHANLAGENSATZ VORNE UND HINTEN
KIT LAVACRISTALLI ANTERIORE E POSTERIORE
CONJUNTO DE LAVAPARABRISAS DELANTERO Y TRASERO
VINDRUTESPOLARE FRAM OCH BAK
RE029895 -UN-24SEP98

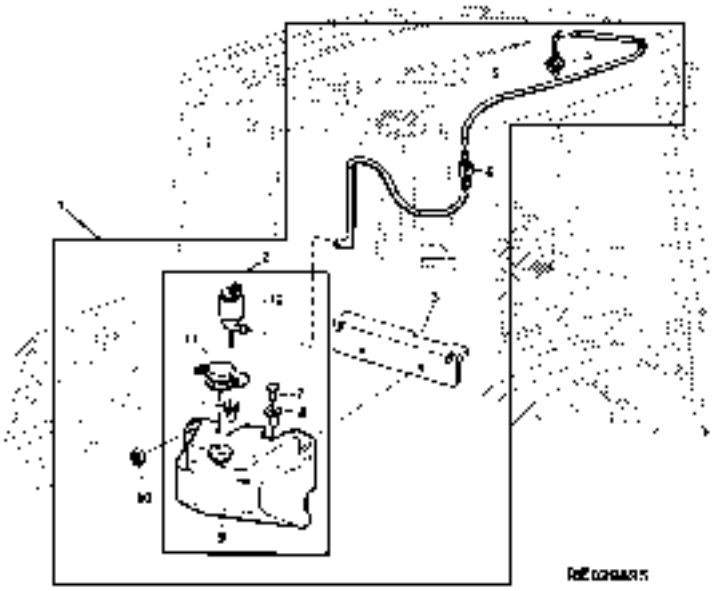

KEY	PART NO.	PART NAME	QTY	CAB SERIAL NO.	ALL	REMARKS
1	**AR112601**	**WINDSHIELD WASHER**	**1**		**X**	**(FI)**
2	AL77711	RESERVOIR	1		X	
3	RE55999	BRACKET	1		X	
4	AL35642	NOZZLE	2		X	
5	R120653	HOSE	2		X	
6	AL114275	CHECK VALVE	2		X	(SUB FOR AL39108)
7	L80015	PLUG	2		X	
8	L80014	GROMMET	2		X	
9	L78422	RESERVOIR	1		X	
10	14M7298	FLANGE NUT	2		X	M8
11	L80013	FILLER CAP	1		X	
12	AL79013	PUMP	2		X	

https://www.truck-manuals.net/

MEMORANDA
MEMORANDA
MEMORANDA
MEMORANDA
MEMORANDA
MEMORANDA

https://www.truck-manuals.net/

FRONT AND REAR WINDSHIELD WIPER
ESSUIE-GLACE AVANT/ARRIERE
VORN/HINTERER SCHEIBENWISCHER
SPAZZOLA PARABREZZA ANTERIORE/POSTERIORE
LIMPIADOR DE PARABRISAS FRONTE/TRASERO
FRAM/BAKRE VINDRUTETORKARE
RE026110 -UN-22MAR95

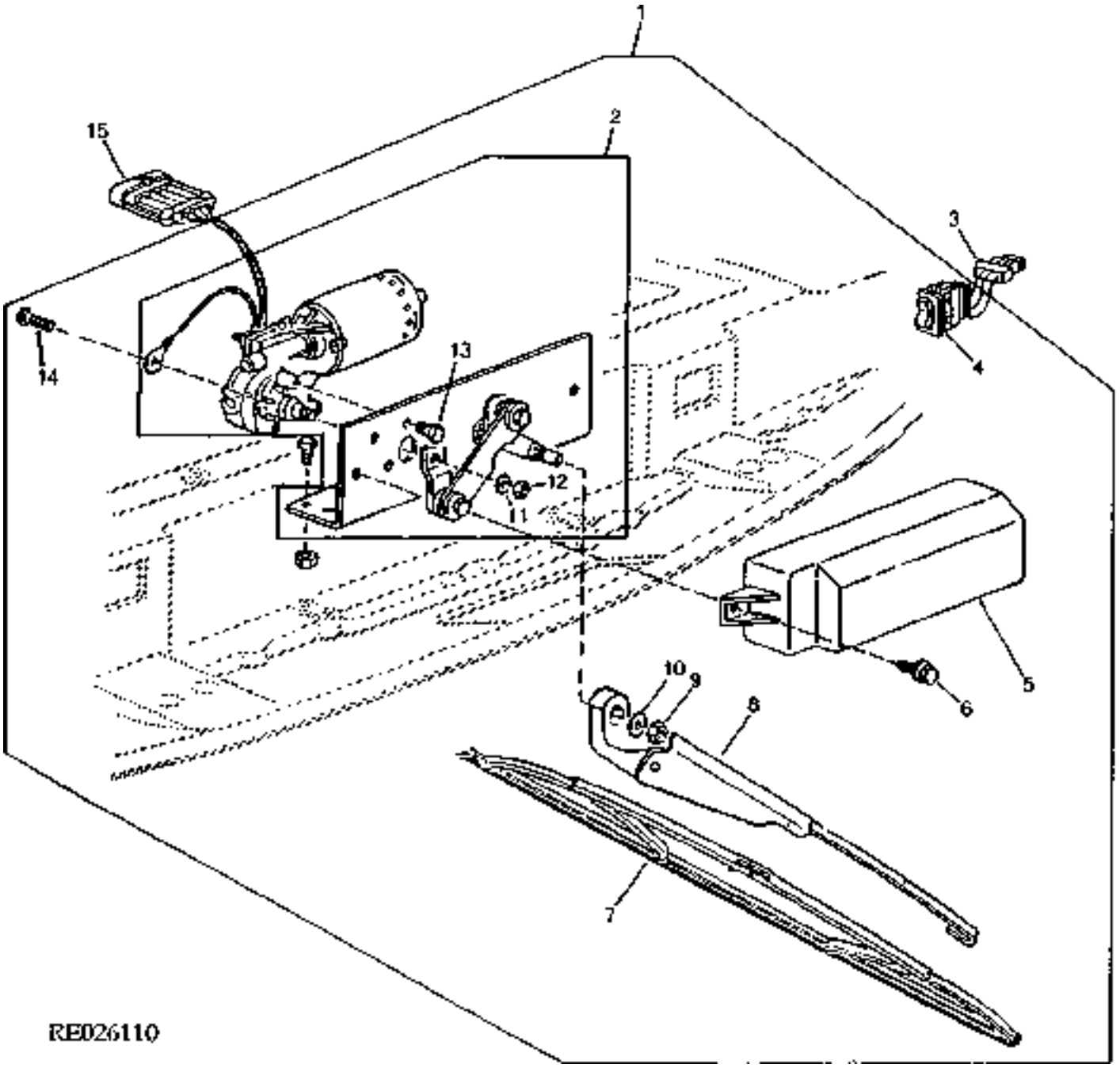

https://www.truck-manuals.net/

KEY	PART NO.	PART NAME	QTY	CAB SERIAL NO.	ALL	REMARKS
1	**AR112621**	**WINDSHIELD WIPER**	**1**		**X**	**(ALSO ORDER (3) 19M7923 AND 12M7006 AND 14M7272) (FI)**
2	RE151494	WIPER MOTOR	1		X	(SUB FOR AL76686)
3	57M7255	RECEPTACLE CONNECTOR BODY	1		X	
	R104846	SOCKET CONTACT	3		X	
	57M7258	ELECTRICAL PLUG	3		X	
	57M7290	CONNECTOR	1		X	
4	RE55476	WIPER/WASHER SWITCH	1		X	
5	R161356	SHIELD	1		X	(SUB FOR R120705) REAR
	R106231	SHIELD	1		X	(SUB R120705) FRONT
6	37M7089	SCREW	2		X	M6 X 12
7	TY16306	WIPER BLADE	1		X	(SUB FOR RE24201)
8	RE151496	WIPER ARM	1		X	(SUB FOR AL75527)
9	14M7273	NUT	1		X	M8
10	24M7036	WASHER	1		X	9 X 16 X 1.600 MM
11	12M7006	LOCK WASHER	1		X	6.100 MM
12	14M7272	NUT	1		X	M6
13	19M7923	CAP SCREW	3		X	M6 X 12
14	37M7059	SCREW	3		X	M5 X 12
15	57M7244	PIN CONTACT CONNECTOR BODY	1		X	
	R104919	PIN CONTACT	4		X	
	57M7258	ELECTRICAL PLUG	4		X	
	57M7318	CONNECTOR	1		X	

https://www.truck-manuals.net/

WINDSHIELD
PARA-BRISE
WINDSCHUTZSCHEIBE
PARABREZZA
PARABRISAS
VINDRUTA
RXP010878 -UN-17MAR97

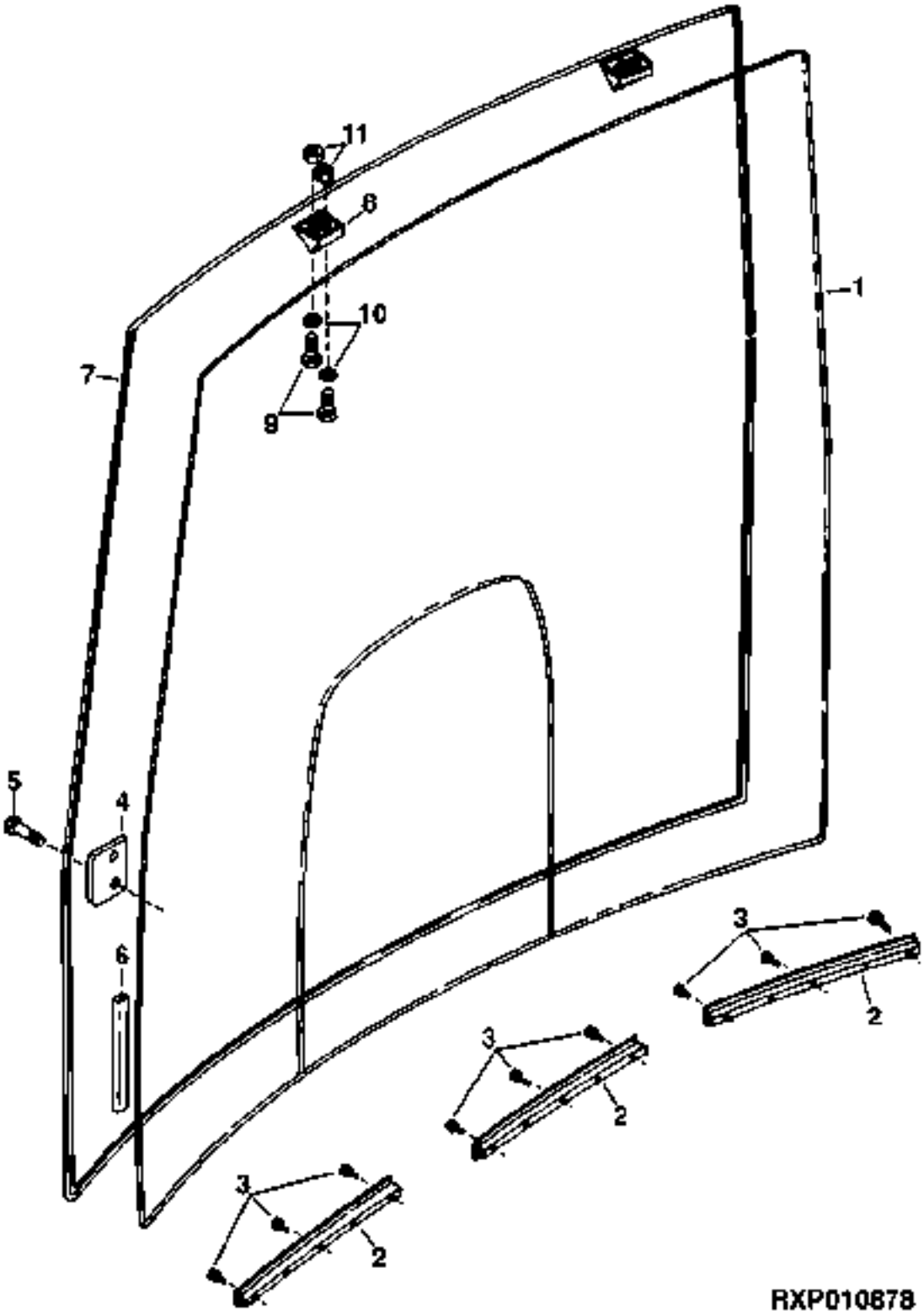

https://www.truck-manuals.net/

KEY	PART NO.	PART NAME	QTY	CAB SERIAL NO.	ALL	REMARKS
1	R135976	WINDOWPANE	1		X	(SUB FOR R124663, R119890 OR R128990)
	R135977	WINDOWPANE	1		X	(A) (SUB FOR R124664 OR R128991)
2	R119890	SUPPORT	3		X	
3	R81456	SCREW	15		X	
4	R115367	ADJUSTING STRAP	2		X	
5	37M7092	SCREW	2		X	M8 X 16
6	RE54810	ISOLATOR	1		X	
7	R115196	SEAL	1		X	
8	R151139	SUPPORT	2		X	(SUB FOR R96214) UP
9	21M7448	SCREW	4		X	(C)
10	24M7036	WASHER	4		X	9 X 16 X 1.600 MM
11	14M7166	LOCK NUT	4		X	M8

(A)EUROPEAN VERSION
VERSION EUROPEENNE
EUROPAEISCHE AUSFUEHRUNG
VERSIONE EURPEA
VERSION EUROPEA
EUROPEISK VERSION

https://www.truck-manuals.net/

STATIONARY RIGHT-HAND GLASS
VITRE FIXE COTE DROIT
FESTSTEHENDE RECHTE GLASSCHEIBE
VETRO STAZIONARIO DESTRO
CRISTAL DERECHO FIJO
FAST HOEGER RUTA
RE029790 -UN-14JUL98

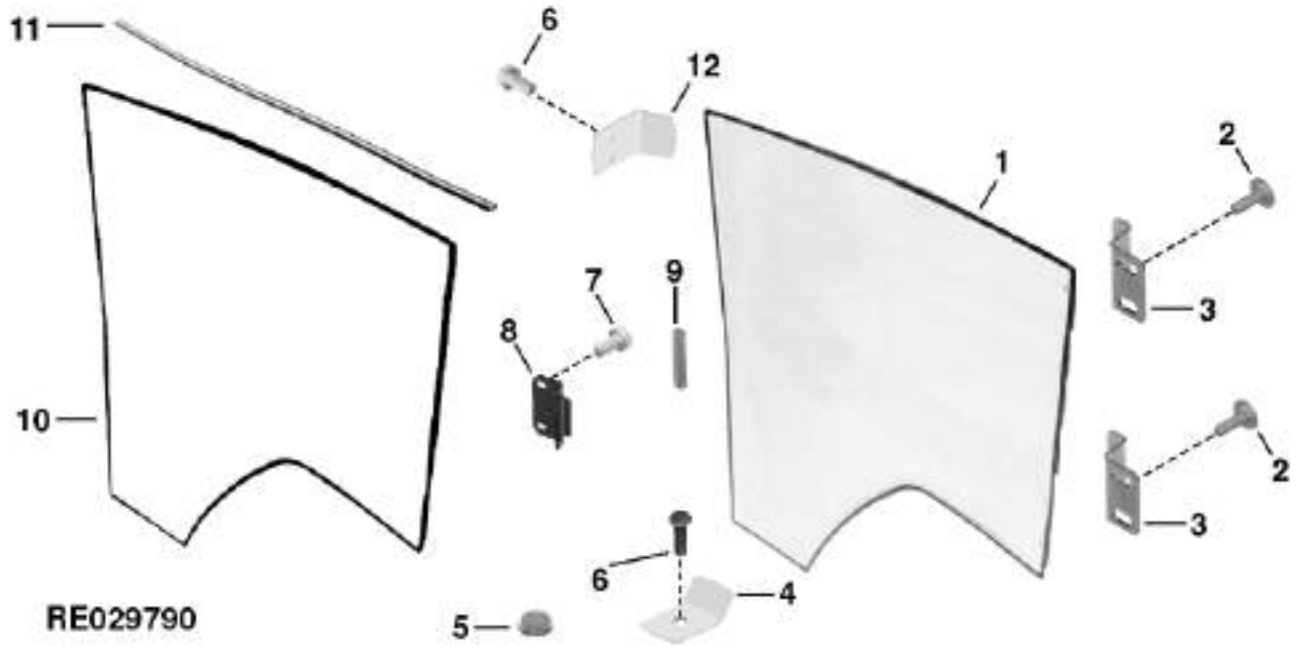

KEY	PART NO.	PART NAME	QTY	CAB SERIAL NO.	ALL	REMARKS
1	R124665	WINDOWPANE	1		X	
2	37M7257	SCREW	4		X	M8 X 16
3	R121790	CLAMP	2		X	
4	R133596	RETAINER	1		X	
5	R114059	SPACER	1		X	(SUB FOR R96753)
6	37M7121	SCREW	3		X	
7	37M7265	SCREW	2		X	M8 X 25
8	R119676	CLAMP	1		X	
9	RE54810	ISOLATOR	1		X	
10	RE54802	SEAL	1		X	
11	R83066	ISOLATOR	1		X	
12	R127718	RETAINER	1		X	(SUB FOR R125098)

https://www.truck-manuals.net/

RIGHT-HAND OPENING DOOR (EUROPEAN VERSION)
PORTE DROITE OUVRABLE (VERSION EUROPEENNE)
AUFMACHBARE RECHTE TUER (EUROPAEISCHE AUSFUEHRUNG)
PORTA DESTRA APRIBILE (VERSIONE EUROPEA)
PUERTA DERECHA ABRIBLE (VERSION EUROPEA)
OEPPNINGSBAR HOEGER DOERR (EUROPEISK VERSION)
RE028218 -UN-25AUG97

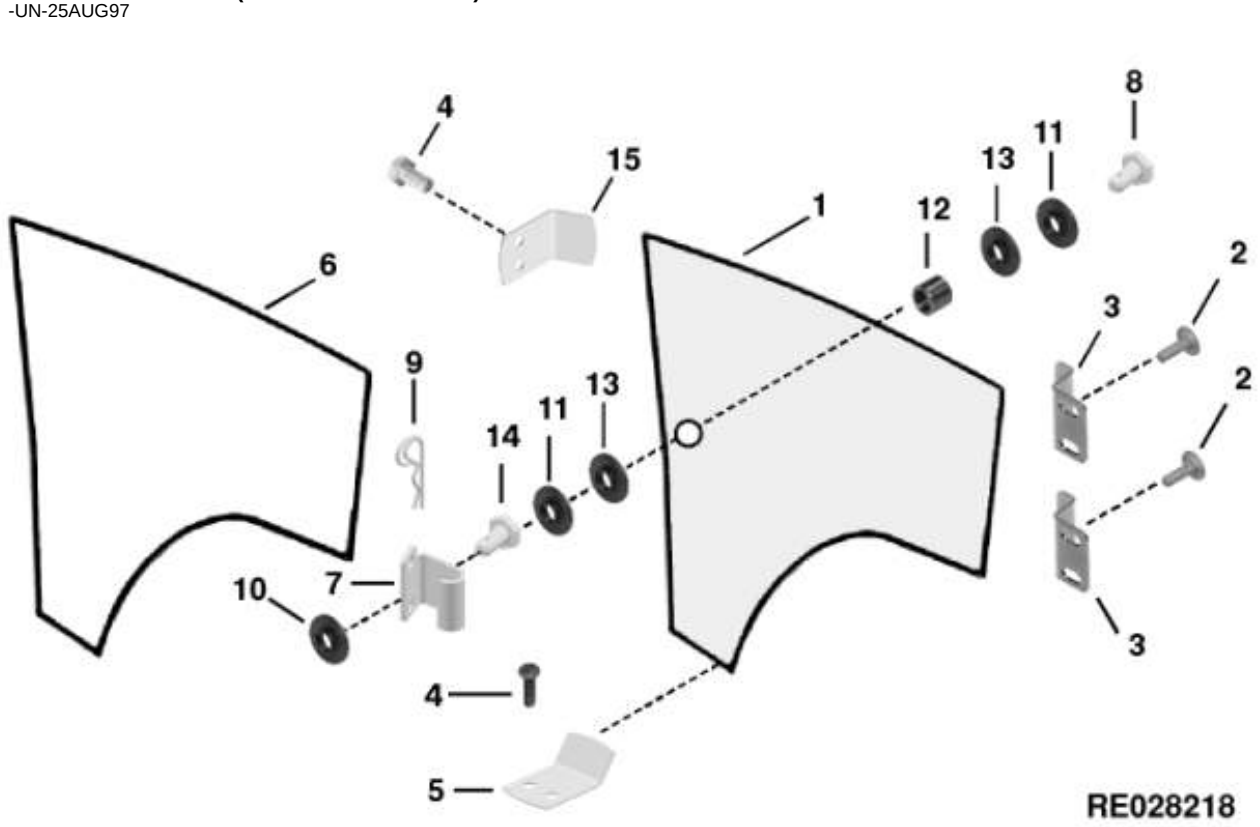

KEY	PART NO.	PART NAME	QTY	CAB SERIAL NO.	ALL	REMARKS
1	R124666	DOOR	1		X	
2	37M7257	SCREW	4		X	M8 X 16
3	R121790	CLAMP	2		X	
4	37M7121	SCREW	2		X	M6 X 12
5	R133596	RETAINER	1		X	
6	RE54802	SEAL	1		X	
7	R133868	PLATE	1		X	(SUB FOR R121785)
8	19M7162	CAP SCREW	2		X	M8 X 16
9	R121787	SPRING LOCKING PIN	1		X	
10	24M7036	WASHER	2		X	9 X 16 X 1.600 MM
11	L58890	WASHER	2		X	
	24H1375	WASHER	1		X	11/16" X 1-1/8" X 0.060"
12	H25220	BUSHING	1		X	
13	R108077	SEALING WASHER	2		X	
14	R124733	PIN	1		X	
15	R127718	RETAINER	1		X	(SUB FOR R125098)

https://www.truck-manuals.net/

DOOR HANDLE (OPENING RIGHT-HAND DOOR)(EUROPEAN VERSION)
MANCHE (PORTE DROITE OUVRABLE)(VERSION EUROPEENNE)
TUER GRIFF (AUFMACHBARE RECHTE TUER)(EUROPAEISCHE AUSFUEHRUNG)
MANICO (PORTA DESTRA APRIBILE)(VERSIONE EUROPEA)
MANGO (PUERTA DERECHA ABRIBLE)(VERSION EUROPEA)
DOERR HANDTAG (OEPPNINGSBAR HOEGER DOERR)(EUROPEISK VERSION)
RE030022 -UN-23SEP98

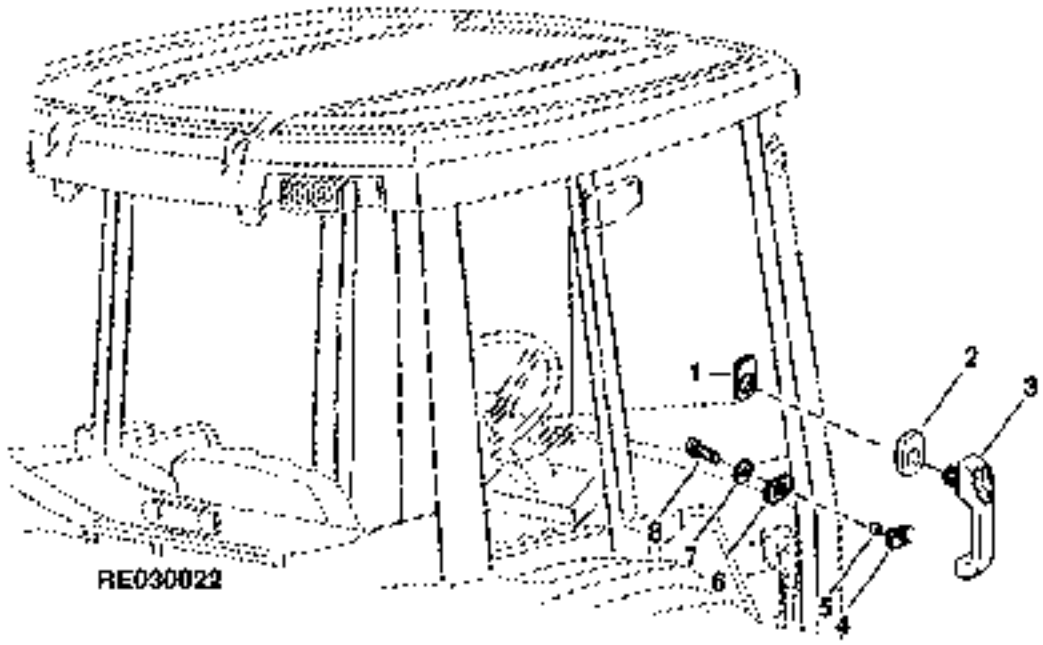

KEY	PART NO.	PART NAME	QTY	CAB SERIAL NO.	7 7 7 6 7 8 0 0 0 0 0 0	REMARKS
1	L76190	SEALING WASHER	1		X X X	R.H. (SUB FOR RE64177)
2	L113908	SEALING WASHER	1		X X X	
3	AL113174	HANDLE	1		X X X	
4	L113907	SEALING WASHER	1		X X X	L.H.
5	L78691	BUSHING	1		X X X	
6	L76189	SEALING WASHER	1		X X X	
7	L58890	WASHER	1		X X X	
8	19M7868	SCREW	1		X X X	

https://www.truck-manuals.net/

MEMORANDA
MEMORANDA
MEMORANDA
MEMORANDA
MEMORANDA
MEMORANDA

https://www.truck-manuals.net/

REAR WINDOW
LUNETTE
HECKFENSTER
FINESTRINO POSTERIORE
VENTANA TRASERA
BAKFONSTER
RE028282 -UN-15SEP97

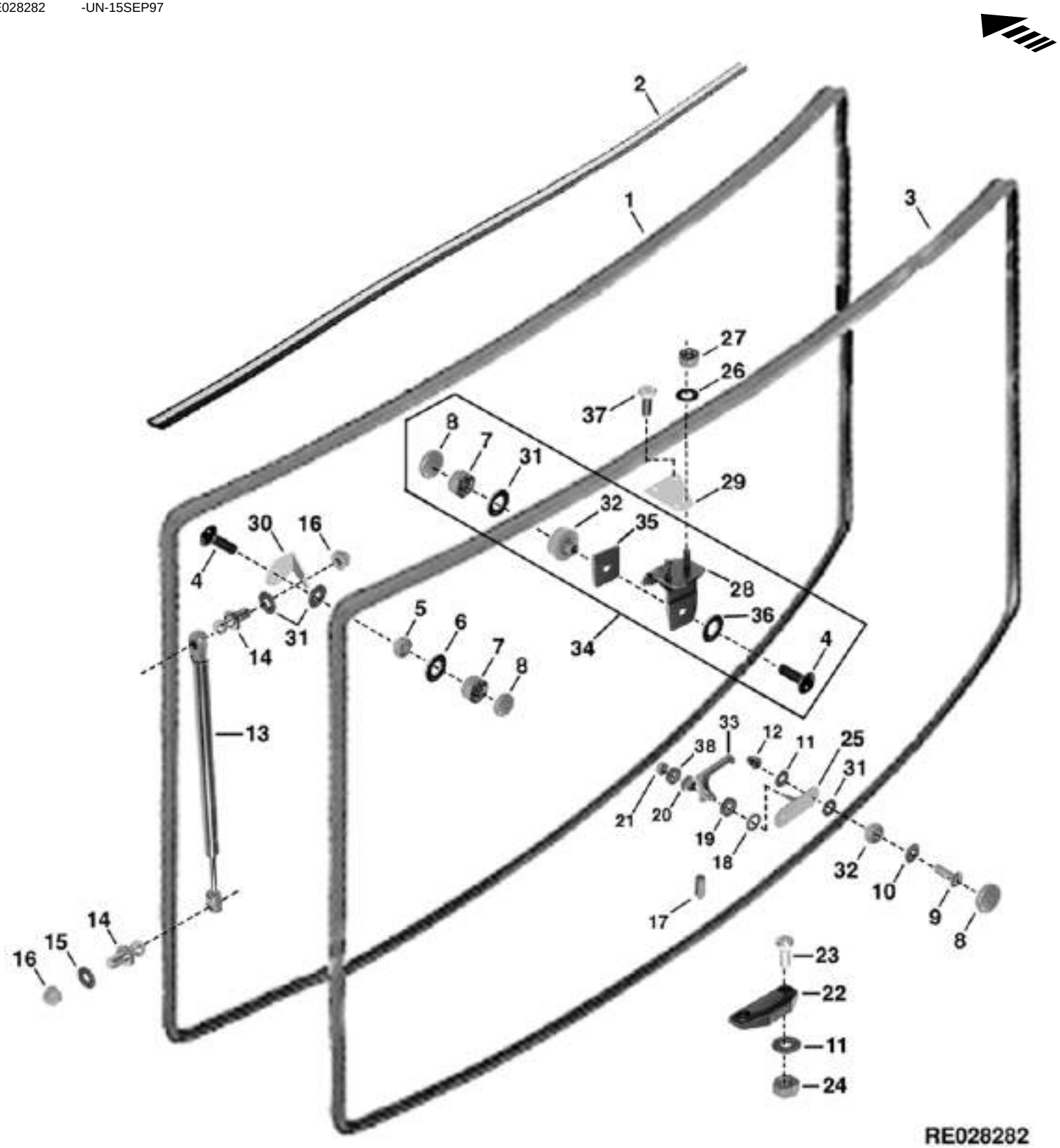

https://www.truck-manuals.net/

KEY	PART NO.	PART NAME	QTY	TRACTOR SERIAL NO.	ALL	REMARKS
1	RE54802	SEAL	1		X	
2	R117033	SEAL	1		X	UP
3	R124694	WINDOWPANE	1	-XXXXXX	X	(B) (SUB R130518)
	R130518	WINDOWPANE	1	XXXXXX-XXXXXX	X	(C) (F)
	R127903	WINDOWPANE	1	XXXXXX-	X	(G)
	R130522	WINDOWPANE	1	XXXXXX-XXXXXX	X	(A) (D) (SUB FOR R124695)
	R130522	WINDOWPANE	1	XXXXXX-XXXXXX	X	(A) (E) (F)
	R131208	WINDOWPANE	1	XXXXXX-	X	(A) (G)
4	03M7309	BOLT	2		X	M8 X 25
	03M7331	BOLT	1		X	
5	L78851	BUSHING	4		X	
6	24M7207	WASHER	4		X	8.400 X 24 X 2 MM
7	14M7166	LOCK NUT	4		X	M8
8	L78703	CAP	10		X	
9	21M7310	SCREW	8		X	M6 X 25
10	24M7100	WASHER	6		X	6.600 X 22 X 2 MM
11	24M7251	WASHER	3		X	6.400 X 18 X 1.600 MM
12	14M7376	LOCK NUT	2		X	M6
13	RE51083	GAS OPERATED CYLINDER	2	-XXXXXX	X	(F)
	RE66665	GAS OPERATED CYLINDER	2	XXXXXX-	X	(G)
14	R97588	BALL STUD	4		X	
15	24M7036	WASHER	2		X	9 X 16 X 1.600 MM
16	14M7478	LOCK NUT	2		X	M8
17	34M7126	SPRING PIN	1		X	5 X 12 MM
18	T27260	WASHER	2		X	
19	24M7044	WASHER	2		X	13 X 20 X 2 MM
20	99M7070	PLUG	1		X	(USE WITH RE50374)
	99M7109	PLUG	1		X	(USE WITH R133450)
21	14M7272	NUT	1		X	M6, (USE WITH RE50374)
	14M7165	LOCK NUT	1		X	M6, (USE WITH R133450)
22	R111570	LATCH	1		X	
23	R114820	SCREW	4		X	
24	24H1287	WASHER	1		X	9/32" X 5/8" X 0.065"
25	AL77794	FULCRUM	1		X	
26	24M7238	WASHER	2		X	8.700 X 17 X 2 MM
27	14M7273	NUT	2		X	M8
28	AL78062	HINGE	1	-XXXXXX	X	(H) (SUB RE155975) R.H.
	AL110724	HINGE	1	XXXXXX-	X	(I) R.H.
	AL78063	HINGE	1	-XXXXXX	X	(H) (SUB RE155975) L.H. (NLA)
	AL110725	HINGE	1	XXXXXX-	X	(I) L.H.
29	R126184	PLATE	1		X	
30	R107444	LATCH	2	-XXXXXX	X	(F)
	R127904	LATCH	2	XXXXXX-	X	(G)
31	L78704	SEALING WASHER	2		X	
32	L78705	BUSHING	8		X	
33	R133450	HANDLE	1		X	(SUB FOR RE50374 OR L75768)
34	RE155975	KIT	2	XXXXXX-	X	(I) (SUB FOR RE69919)
35	L111419	GASKET	2		X	
36	24M7036	WASHER	2		X	9 X 16 X 1.600 MM
37	19M7555	SCREW	2		X	M8 X 30
38	24H1287	WASHER	1		X	(USE WITH R133450)

(A)EUROPEAN VERSION
VERSION EUROPEENNE
EUROPAEISCHE AUSFUEHRUNG
VERSIONE EUROPEA
VERSION EUROPEA
EUROPEISK VERSION

(B)(-XXXXXX) 8100-003436; 8200-002653; 8300-004510; 8400-003001
(C)(XXXXXX-) 8100-003437; 8200-002654; 8300-004511; 8400-003002
(D)(-XXXXXX) 8100-004154; 8200-003107; 8300-005210; 8400-006127
(E)(XXXXXX-) 8100-004155; 8200-003108; 8300-005211; 8400-006128
(F)(-XXXXXX) 8100-005156; 8200-003732; 8300-006254; 8400-007009
(G)(XXXXXX-) 8100-005157; 8200-003733; 8300-006255; 8400-007010
(H)(-XXXXXX) 8100-012505; 8200-012062; 8300-012803; 8400-012768
(I)(XXXXXX-) 8100-012506; 8200-012063; 8300-012804; 8400-012769

https://www.truck-manuals.net/

LEFT-HAND DOOR (8100 -001277; 8200 -001282; 8300 -001971)
PORTE GAUCHE (8100 -001277; 8200 -001282; 8300 -001971)
LINKE TUER (8100 -001277; 8200 -001282; 8300 -001971)
PORTIERA SINISTRA (8100 -001277; 8200 -001282; 8300 -001971)
PUERTA IZQUIERDA (8100 -001277; 8200 -001282; 8300 -001971)
VAENSTER DOERR (8100 -001277; 8200 -001282; 8300 -001971)
RE028221 -UN-25AUG97

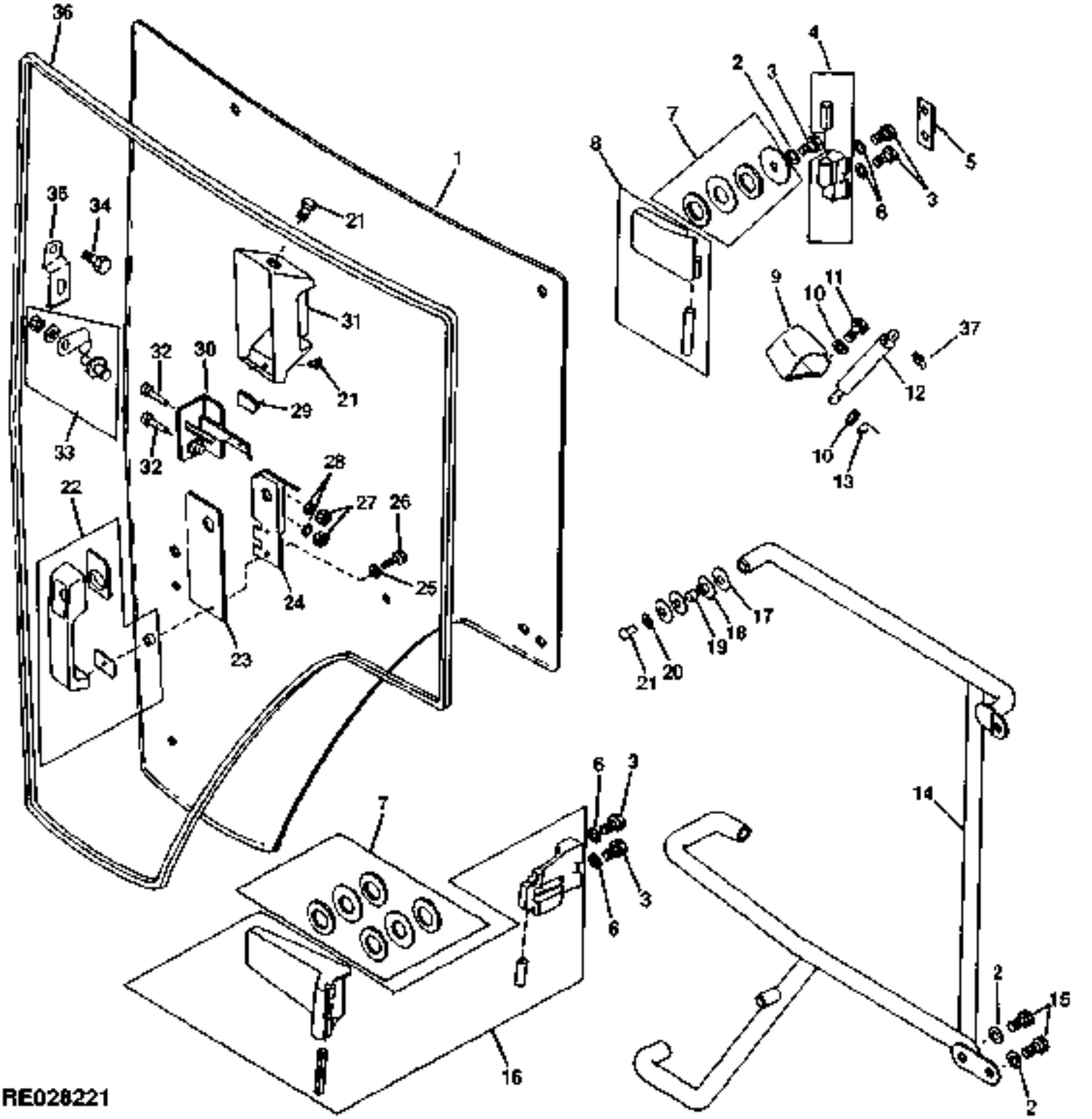

https://www.truck-manuals.net/

KEY	PART NO.	PART NAME	QTY	CAB SERIAL NO.	ALL	REMARKS
1	R107274	WINDOWPANE	1		X	
	R120202	WINDOWPANE	1		X	(A)
2	12M7032	LOCK WASHER	4		X	
3	19M7647	SCREW	1		X	M8 X 16
4	RE46588	HINGE	1		X	UP
5	R122180	STRAP	2		X	
6	24M7055	WASHER	3		X	8.400 X 16 X 1.600 MM
7	RE50378	KIT	3		X	
8	RE46587	HINGE	1		X	UP
9	R124309	COVER	1		X	
10	24M7362	WASHER	2		X	8.400 X 16 X 1.600 MM
11	37H80	SCREW	1		X	0.190" X 1/2"
12	RE44680	GAS OPERATED CYLINDER	1		X	(ALSO ORDER (2) R97588)
13	R84529	RETAINER	1		X	
14	RE160005	HANDLE	1		X	(SUB FOR RE60998)
15	19M7881	SCREW	6		X	M8 X 20
16	RE46589	HINGE	1		X	
17	L58890	WASHER	8		X	
18	R108077	SEALING WASHER	8		X	
19	H25220	BUSHING	4		X	
20	24M7036	WASHER	4		X	9 X 16 X 1.600 MM
21	21M7392	SCREW	4		X	M8 X 30
22	RE50376	KIT	1		X	
23	R124360	PLATE	1		X	
24	R125242	ANGLE	1		X	
25	24M7088	WASHER	1		X	
26	21M7310	SCREW	1	-XXXXXX	X	(B) M6 X 25
	19M7286	CAP SCREW	1	XXXXXX-	X	(C) M6 X 25
27	14M7327	LOCK NUT	2		X	M8
28	24M7055	WASHER	2		X	
29	L76191	HANDLE	1		X	
30	AL75638	LOCK	1	-009000	X	(SUB AL83131)
	RE64525	KIT	1	010000-	X	
31	R124268	COVER	1		X	(SUB R126274)
32	21M7381	SCREW	2		X	M8 X 35
33	RE50379	KIT	1		X	(ALSO ORDER 24H1756 AND A31867)
34	19M7162	CAP SCREW	2		X	M8 X 16
35	R124593	PLATE	1		X	
36	RE54802	SEAL	1		X	
37	R97588	BALL STUD	2		X	

(A)EUROPEAN VERSION
VERSION EUROPEENNE
EUROPAEISCHE AUSFUEHRUNG
VERSIONE EUROPEA
VERSION EUROPEA
EUROPEISK VERSION

(B)(-XXXXXX) 8100-001541; 8200-001494; 8300-002559; 8400-001158
(C)(XXXXXX-) 8100-001542; 8200-001495; 8300-002560; 8400-001159

https://www.truck-manuals.net/

LEFT-HAND DOOR (8100 001278- ; 8200 001283- ; 8300 001972- ; 8400 000001-)
PORTE GAUCHE (8100 001278- ; 8200 001283- ; 8300 001972- ; 8400 000001-)
LINKE TUER (8100 001278- ; 8200 001283- ; 8300 001972- ; 8400 000001-)
PORTIERA SINISTRA (8100 001278- ; 8200 001283- ; 8300 001972- ; 8400 000001-)
PUERTA IZQUIERDA (8100 001278- ; 8200 001283- ; 8300 001972- ; 8400 000001-)
VAENSTER DOERR (8100 001278- ; 8200 001283- ; 8300 001972- ; 8400 000001-)
RE029825 -UN-20AUG98

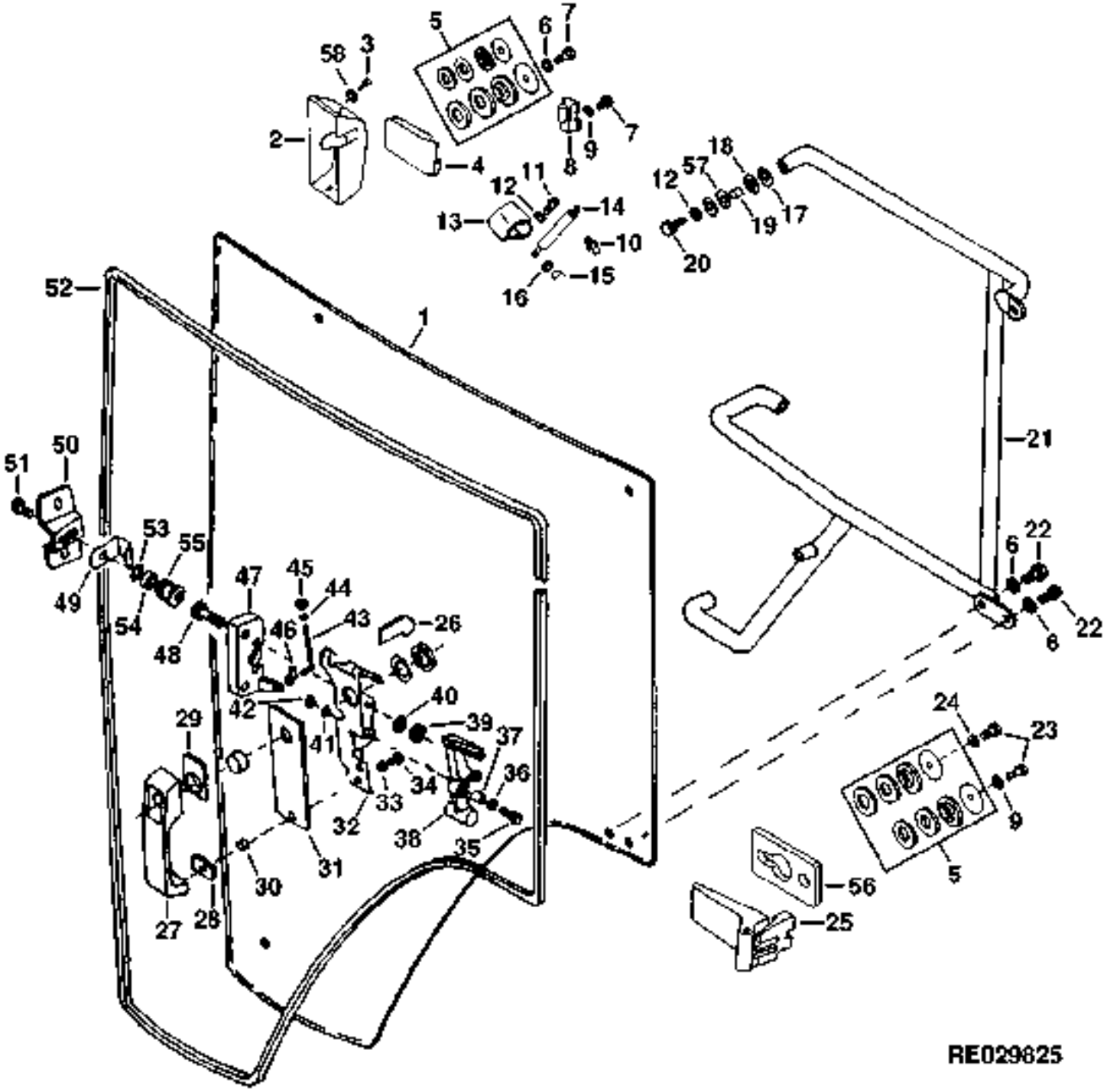

https://www.truck-manuals.net/

KEY	PART NO.	PART NAME	QTY	CAB SERIAL NO.	ALL	REMARKS
1	R107274	WINDOWPANE	1	-009999	X	
	R131166	WINDOWPANE	1	010000-	X	(SUB R156054)
	R120202	WINDOWPANE	1	-009999	X	(A)
	R131165	WINDOWPANE	1	010000-	X	(A) (SUB R157210)
2	R126274	COVER	1		X	
3	37M7277	SCREW	4		X	
4	RE46587	HINGE	1		X	
5	RE50378	KIT	3		X	
6	12M7032	LOCK WASHER	3		X	8.400 MM
7	19M7163	CAP SCREW	2		X	M8 X 25
8	RE46588	HINGE	1		X	UP
9	24M7055	WASHER	2		X	8.400 X 16 X 1.600 MM
10	R97588	BALL STUD	1		X	
11	37H80	SCREW	1		X	0.190" X 1/2"
12	24M7036	WASHER	1		X	9 X 16 X 1.600 MM
13	R124309	COVER	1		X	
14	RE44680	GAS OPERATED CYLINDER	1		X	(ALSO ORDER (2) R97588)
	RE58715	GAS OPERATED CYLINDER	1		X	(A) (ALSO ORDER (2) R97588)
15	R84529	RETAINER	2		X	
16	24M7362	WASHER	2		X	8.400 X 16 X 1.600 MM
17	L58890	WASHER	1		X	
18	L78703	CAP	1		X	
19	L78851	BUSHING	1		X	
20	19M8323	SCREW	1		X	M8 X 40
21	RE160005	HANDLE	1	-XXXXXX	X	(B) (SUB FOR RE60998)
	RE160005	HANDLE	1	XXXXXX-	X	(C)
22	19M7881	SCREW	6		X	M8 X 20
23	19M7288	CAP SCREW	2		X	M8 X 30
24	24M7055	WASHER	2		X	8.400 X 16 X 1.600 MM
25	RE46589	HINGE	1		X	
26	L76191	HANDLE	1		X	
27	RE64646	KIT	1		X	(NLA) (ORDER COMPONENT PARTS)
	RE64525	KIT	1	-025209	X	(INCLUDES M112442, RE50874, R126271, R131356, R126365, R127216, R82272, R82444, R82445)
	AL113174	HANDLE	1	025210-	X	
28	L76189	SEALING WASHER	1	-025209	X	(ORDER RE64525)
	L113907	SEALING WASHER	1	025210-	X	
29	L76190	SEALING WASHER	1	-025209	X	(ORDER RE64525)
	L113908	SEALING WASHER	1	025210-	X	
30	L78691	BUSHING	1		X	(ORDER RE64525)
31	R126282	PLATE	1		X	
32	R131356	ANGLE	1		X	(SUB FOR R131356)

(A) EUROPEAN VERSION
VERSION EUROPEENNE
EUROPAEISCHE AUSFUEHRUNG
VERSIONE EUROPEA
VERSION EUROPEA
EUROPEISK VERSION

(B) (-XXXXXX) 8100-025225; 8200-022223; 8300-025216; 8400-025209
(C) (XXXXXX-) 8100-025226; 8200-022224; 8300-025217; 8400-025210

https://www.truck-manuals.net/

LEFT-HAND DOOR (8100 001278- ; 8200 001283- ; 8300 001972- ; 8400 000001-)
PORTE GAUCHE (8100 001278- ; 8200 001283- ; 8300 001972- ; 8400 000001-)
LINKE TUER (8100 001278- ; 8200 001283- ; 8300 001972- ; 8400 000001-)
PORTIERA SINISTRA (8100 001278- ; 8200 001283- ; 8300 001972- ; 8400 000001-)
PUERTA IZQUIERDA (8100 001278- ; 8200 001283- ; 8300 001972- ; 8400 000001-)
VAENSTER DOERR (8100 001278- ; 8200 001283- ; 8300 001972- ; 8400 000001-)
RE029825 -UN-20AUG98

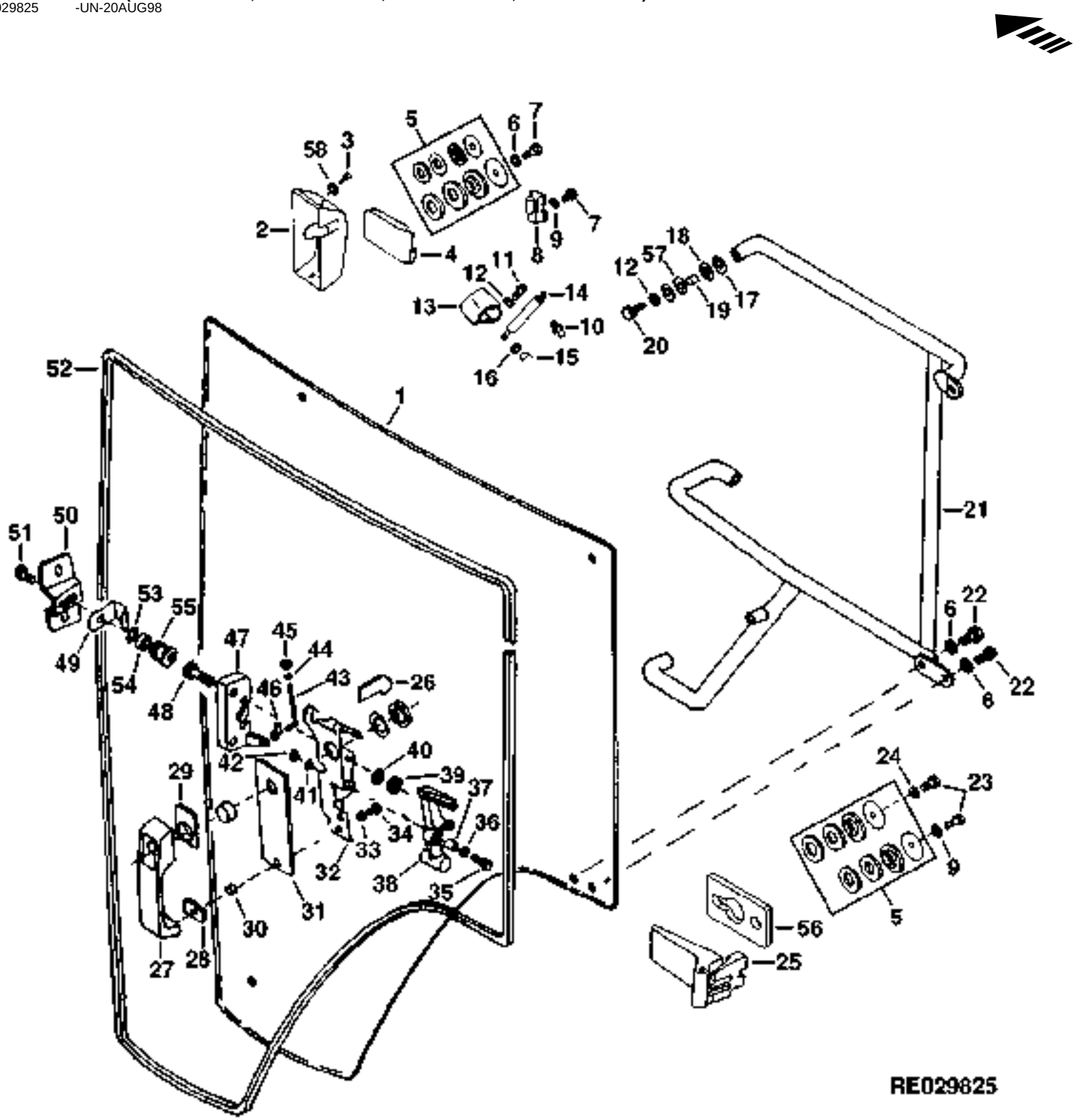

https://www.truck-manuals.net/

KEY	PART NO.	PART NAME	QTY	CAB SERIAL NO.	ALL	REMARKS
33	24M7088	WASHER	2		X	6.600 X 12 X 1.600 MM
34	19M7286	CAP SCREW	1		X	M6 X 25
35	19M7866	SCREW	1		X	M8 X 20
36	24M7207	WASHER	1		X	8.400 X 24 X 2 MM
37	M112442	BUSHING	1		X	
38	R127216	BELLCRANK	1		X	
39	14M7272	NUT	4		X	M6
40	12M7006	LOCK WASHER	4		X	6.100 MM
41	12M7065	LOCK WASHER	2		X	8.100 MM
42	14M7273	NUT	2		X	M8
43	R82444	HOOK BOLT	1		X	
44	U45916	LOCK NUT	1		X	
45	24H1283	WASHER	1		X	
46	R82445	RETAINER	1		X	
47	RE50874	LATCH	1	-025209	X	
	RE65760	LATCH	1	025210-	X	
48	19M7874	CAP SCREW	4		X	M6 X 30
49	R126271	SHIELD	1		X	
50	R128695	SUPPORT	1		X	(SUB FOR R126275)
51	03M7192	BOLT	1		X	M10 X 30
52	RE54802	SEAL	1		X	
53	24H1219	WASHER	1		X	7/16" X 1" X 0.083"
54	24H1781	WASHER	1		X	13/32" X 7/8" X 1/4"
55	R134619	STRIKER	1		X	(SUB FOR R82272)
56	R124417	RETAINER	1		X	
57	R131261	WASHER	2		X	
58	24M7419	WASHER	3		X	

(A) EUROPEAN VERSION
VERSION EUROPEENNE
EUROPAEISCHE AUSFUEHRUNG
VERSIONE EUROPEA
VERSION EUROPEA
EUROPEISK VERSION

(B) (-XXXXXX) 8100-025225; 8200-022223; 8300-025216; 8400-025209
(C) (XXXXXX-) 8100-025226; 8200-022224; 8300-025217; 8400-025210

https://www.truck-manuals.net/

INNER ROOF
TOIT INTERIEUR
INNENDACH
TETTO INTERNO
TECHO INTERNO
INNERTAK
RE026598 -UN-04DEC95

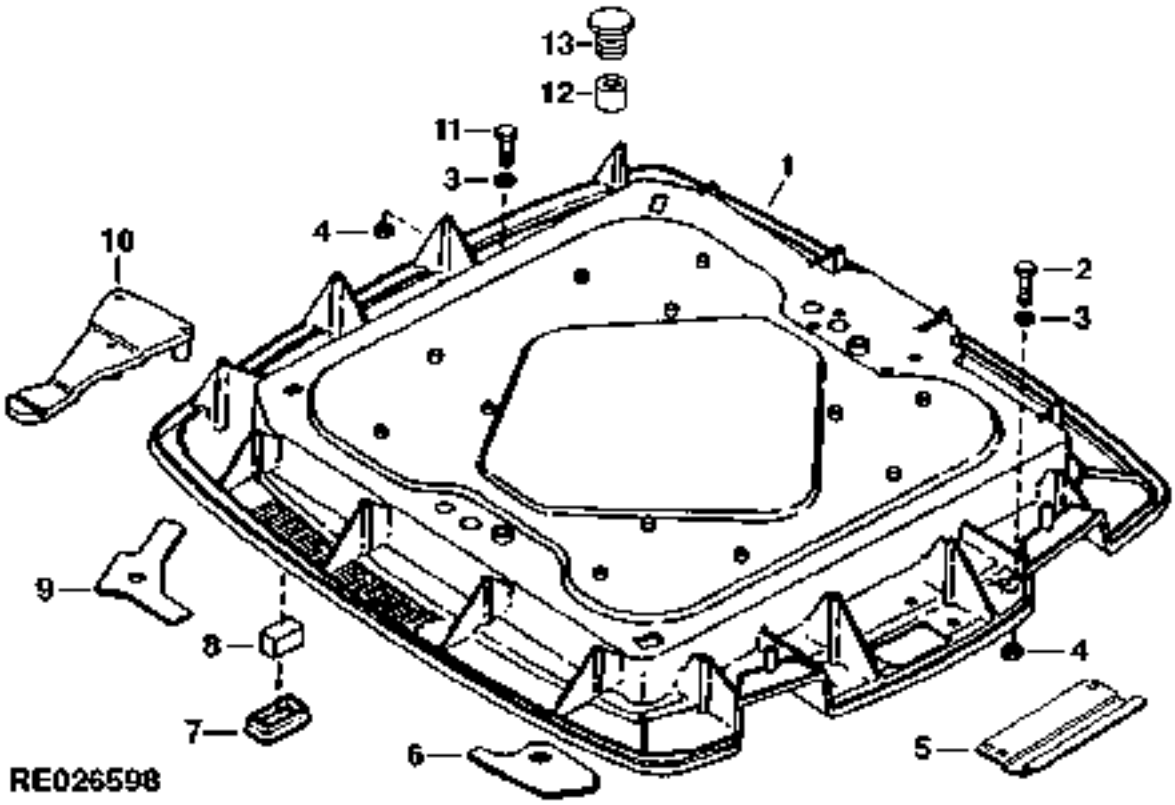

KEY	PART NO.	PART NAME	QTY	CAB SERIAL NO.	ALL	REMARKS
1	R124154	ROOF	1	-XXXXXX	X	(B) (SUB R130318 AND (4) 37M7084)
	R130318	ROOF	1	XXXXXX-	X	(C)
2	19M7163	CAP SCREW	4	-XXXXXX	X	(B) M8 X 25
	37M7084	SCREW	4	XXXXXX-	X	(C) M8 X 25
3	24M7207	WASHER	8		X	8.400 X 24 X 2 MM
4	14M7273	NUT	8		X	M8
5	R125078	COVER	1		X	
6	R120358	SEAL	2		X	(SUB RE71267) REAR
7	R112828	SEAL	3		X	
8	R55327	ISOLATOR	2		X	
9	R120357	SEAL	2		X	(SUB RE71267) FRONT
10	R125906	BRACKET	1		X	(A) (SUB FOR R126105) R.H.
	R125905	BRACKET	1		X	(SUB FOR R126103) L.H.
11	19M7979	SCREW	4		X	M8 X 55
12	R127767	GROMMET	2		X	
13	R129433	INSERT	1		X	

(A)EUROPEAN VERSION
VERSION EUROPEENNE
EUROPAEISCHE AUSFUEHRUNG
VERSIONE EUROPEA
VERSION EUROPEA
EUROPEISK VERSION

(B)(-XXXXXX) 8100-003000; 8200-002366; 8300-004116; 8400-002678
(C)(XXXXXX-) 8100-003001; 8200-002367; 8300-004117; 8400-002679

https://www.truck-manuals.net/

OUTER ROOF
TOIT EXTERIEUR
AUSSENDACH
TETTO ESTERNO
TECHO EXTERNO
YTTERTAK
RE030458 -UN-24MAR99

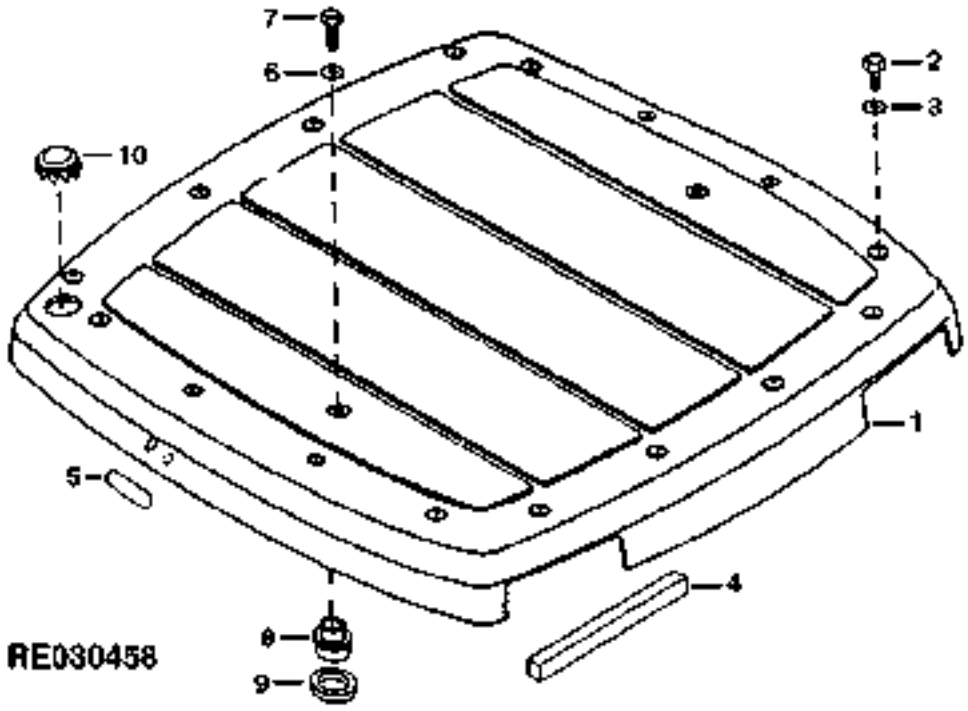

KEY	PART NO.	PART NAME	QTY	TRACTOR SERIAL NO.	ALL	REMARKS
1	RE150587	ROOF	1	-XXXXXX	X	(B) (SUB FOR RE60667 AND RE67377) (ALSO ORDER R28473)
	RE152556	ROOF	1	XXXXXX-	X	(C)
	RE150589	ROOF	1	-XXXXXX	X	(A) (B) (SUB FOR RE62192 OR RE67618)
	RE152557	ROOF	1	XXXXXX-	X	(A) (C)
2	R117569	SCREW	16		X	
3	24M7100	WASHER	16		X	6.600 X 22 X 2 MM
4	R125869	FOAM PAD	5		X	
5	R81207	COVER	2		X	
6	24M7338	WASHER	2	-XXXXXX	X	(B) 17 X 30 X 3 MM
	24M7315	WASHER	2	XXXXXX-	X	(C) 17 X 50 X 3 MM
7	19M7394	CAP SCREW	2		X	M16 X 25
8	R152119	SPACER	2	XXXXXX-	X	(C)
9	R152120	SEAL	2	XXXXXX-	X	(C)
10	R28473	PLUG	2		X	

(A)EUROPEAN VERSION
VERSION EUROPEENNE
EUROPAEISCHE AUSFUEHRUNG
VERSIONE EUROPEA
VERSION EUROPEA
EUROPEISK VERSION

(B) (-XXXXXX) 8100-013075; 8200-012538; 8200-013580; 8400-013476
(C) (XXXXXX-) 8100-013076; 8200-012539; 8300-013581; 8400-013477

https://www.truck-manuals.net/

MEMORANDA
MEMORANDA
MEMORANDA
MEMORANDA
MEMORANDA
MEMORANDA

https://www.truck-manuals.net/

SECTIONAL INDEX
INDEX DE SECTION
GRUPPENINDEX
INDICE DELLA SEZIONE
INDICE DE SECCION
GRUPPSFORTECKNING

RE029132 -UN-10MAY99

1 -	9F17
2 -	9F24
3 -	9G1
4 -	9G3
5 -	9G5
6 -	9G7
7 -	9G9
8 -	9G13

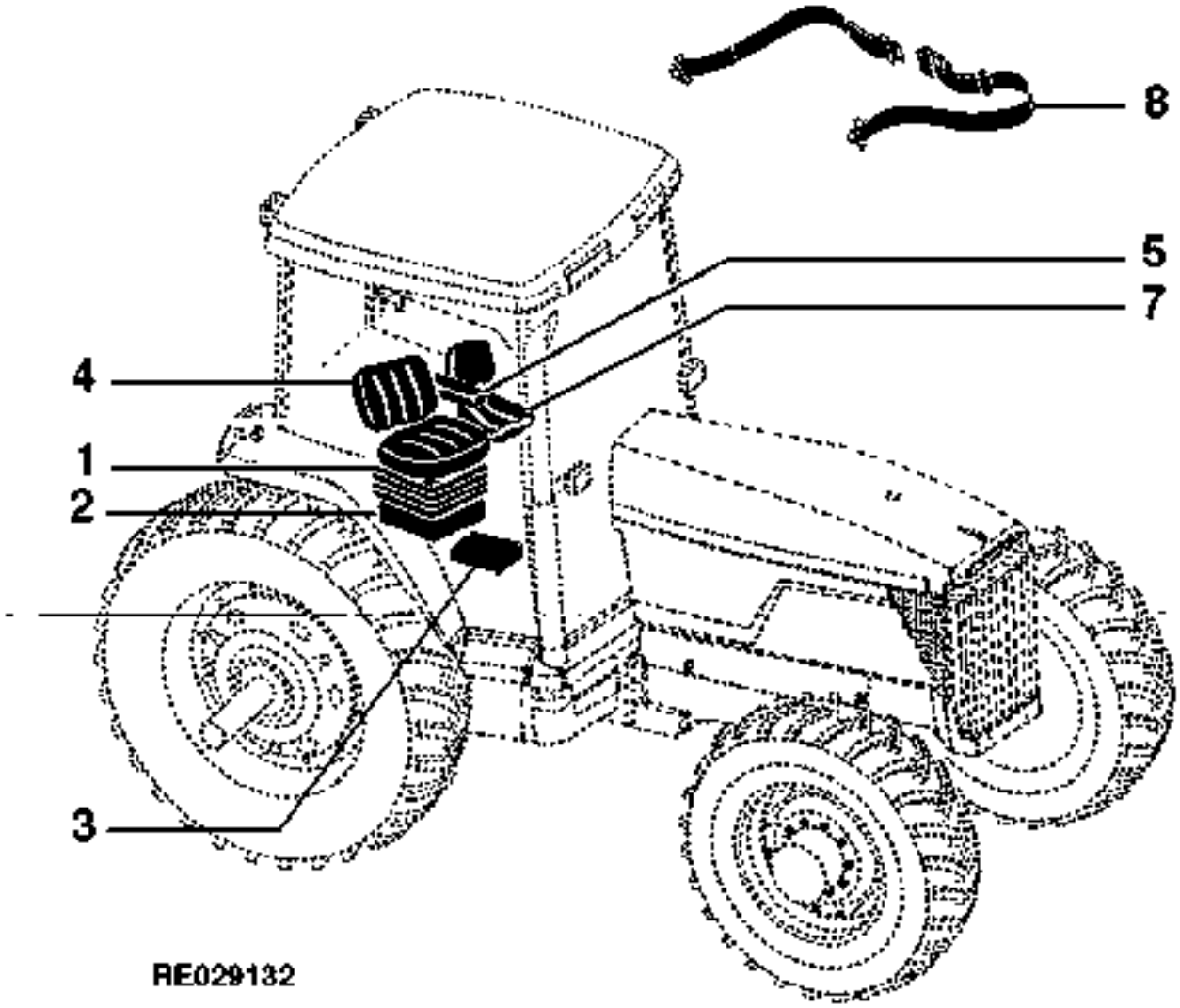

https://www.truck-manuals.net/

SECTIONAL INDEX
INDEX DE SECTION
GRUPPENINDEX
INDICE DELLA SEZIONE
INDICE DE SECCION
GRUPPSFORTECKNING

RE029133 -UN-10MAY99

1 -	9F17
2 -	9F24
3 -	9G1
4 -	9G3
5 -	9G5
6 -	9G7
7 -	9G9
8 -	9G13

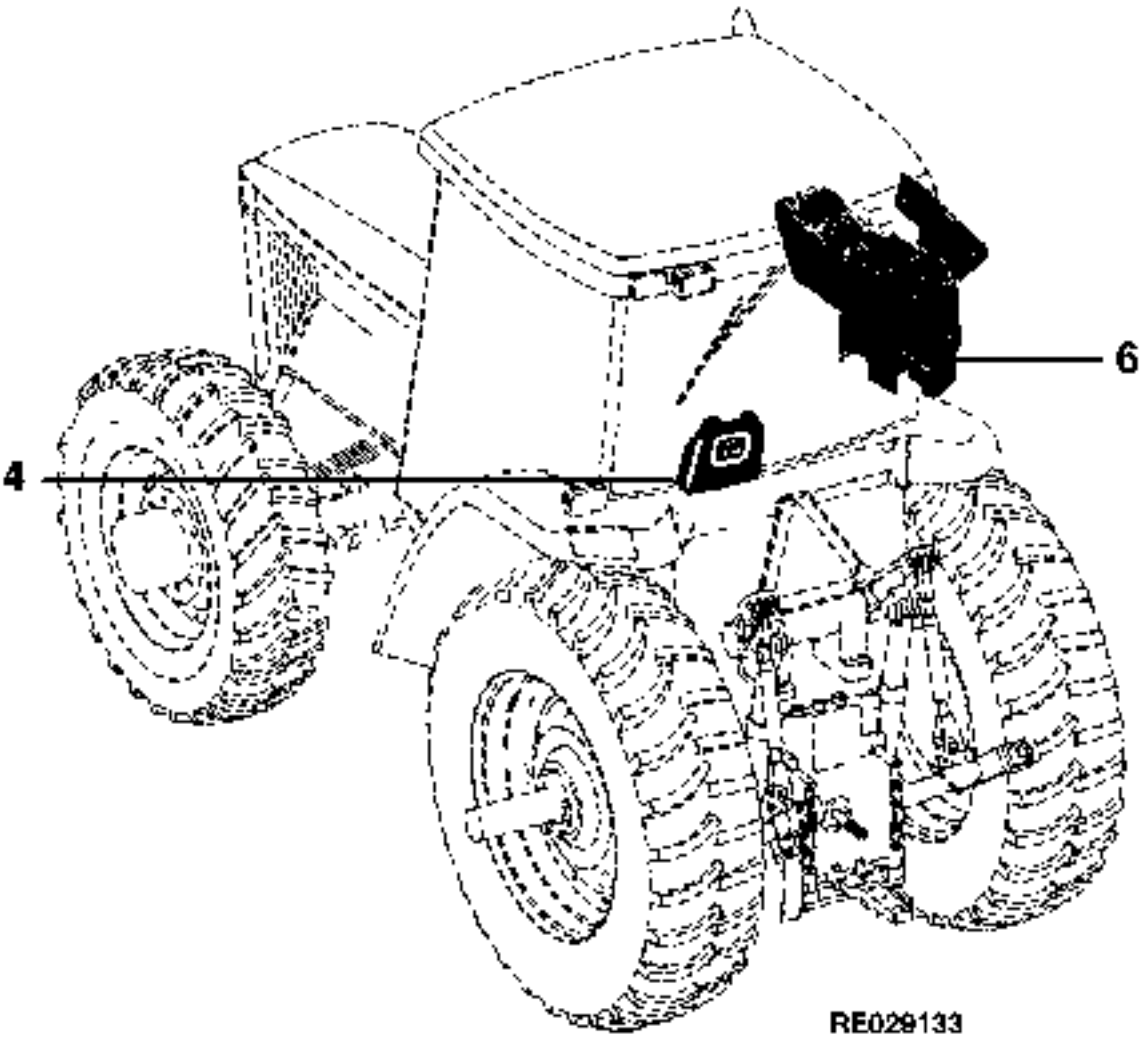

https://www.truck-manuals.net/

MEMORANDA
MEMORANDA
MEMORANDA
MEMORANDA
MEMORANDA
MEMORANDA

https://www.truck-manuals.net/

AIR SEAT SUSPENSION
SUSPENSION PNEUMATIQUE DE SIEGE
SITZ MIT LUFTFEDERUNG
SEDILE CON PNEUMOSOSPENSIONE
SUSPENSION DE ASIENTO NEUMATICO
SITS MED LUFTFJAEDRING
RE030573 -UN-12MAY99

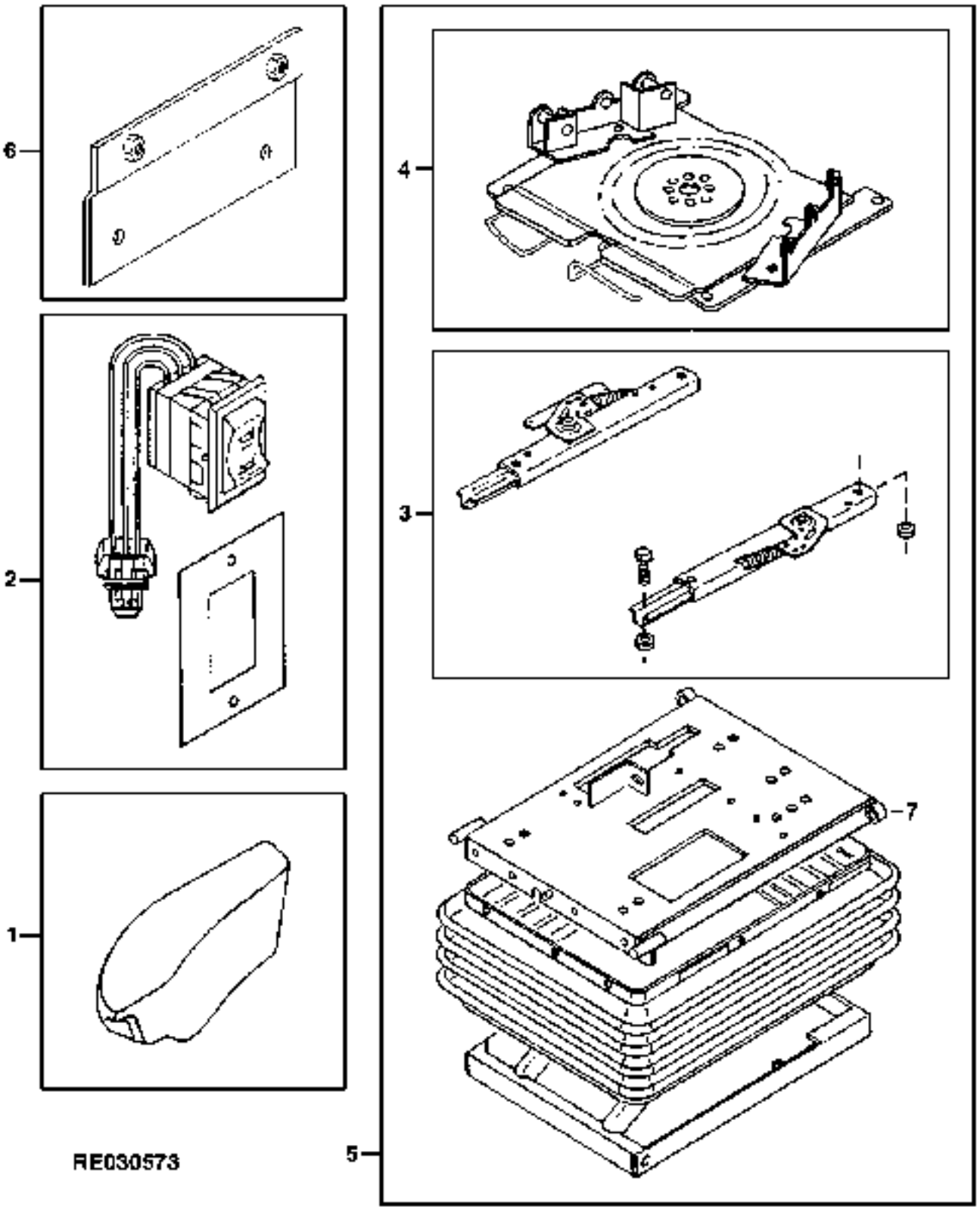

https://www.truck-manuals.net/

KEY	PART NO.	PART NAME	QTY	CAB SERIAL NO.	ALL	REMARKS
1	RE52564	ARMREST KIT	1		X	(A) L.H. (ALSO ORDER RE58084)
	RE52566	ARMREST KIT	1		X	(B) L.H.
2	RE52562	SEAT HEIGHT SWITCH KIT	1		X	
	RE43451	ROCKER SWITCH	1		X	
3	RE52563	SEAT SLIDE TRACK KIT	1		X	
4	RE60601	KIT	1		X	
5	RE60602	SEAT SUSPENSION	1		X	
6	AR72055	ADAPTER	1		X	
7	RE58025	HOUSING	1		X	

(A)TILT-UP
INCLINAISON VERS LE HAUT
HICHKIPP
RIBALTAMENTO
INCLINAR HACIA ARRIBA
TIPPBAR

(B)ADJUSTABLE
REGLABLE
EINSTELLBAR
REGOLABILE
ADJUSTABLE
REGLERBAR

https://www.truck-manuals.net/

MEMORANDA
MEMORANDA
MEMORANDA
MEMORANDA
MEMORANDA
MEMORANDA

https://www.truck-manuals.net/

AIR SEAT SUSPENSION ARM
BRAS DE SUSPENSION PNEUMATIQUE DE SIEGE
ARM FUER LUFTGEFEDERTEN FAHRERSITZ
BRACCIO SOSPENSIONE PNEUMATICA SEDILE
BRAZO DE SUSPENSION DE ASIENTO NEUMATICO
ARM FOER LUFTFJAEDRAT SAETE
RE026998 -UN-17MAR97

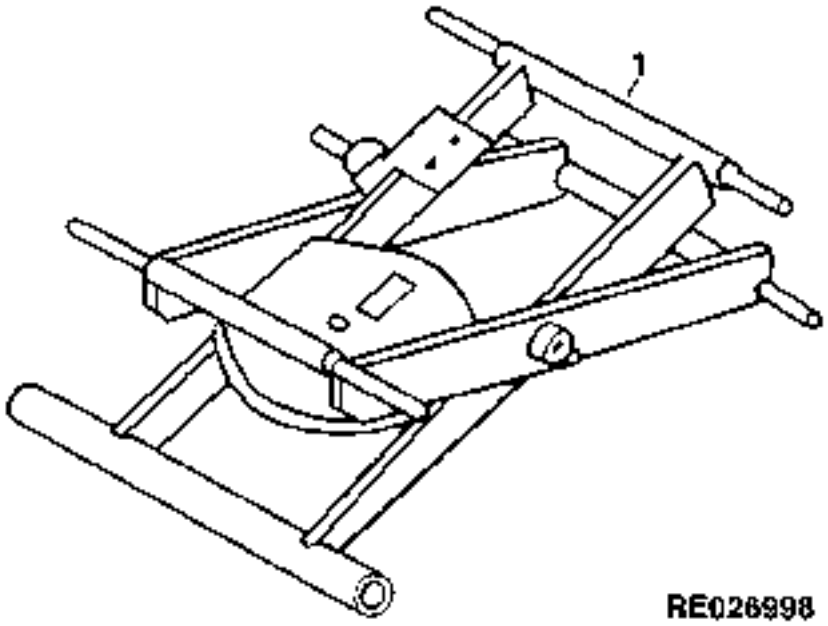

KEY	PART NO.	PART NAME	QTY	CAB SERIAL NO.	ALL	REMARKS
1	RE69069	SEAT SUSPENSION	1		X	

https://www.truck-manuals.net/

AIR SEAT SUSPENSION
SUSPENSION PNEUMATIQUE DE SIEGE
SITZ MIT LUFTFEDERUNG
SEDILE CON PNEUMOSOSPENSIONE
SUSPENSION DE ASIENTO NEUMATICO
SITS MED LUFTFJAEDRING
RE027978 -UN-22MAY97

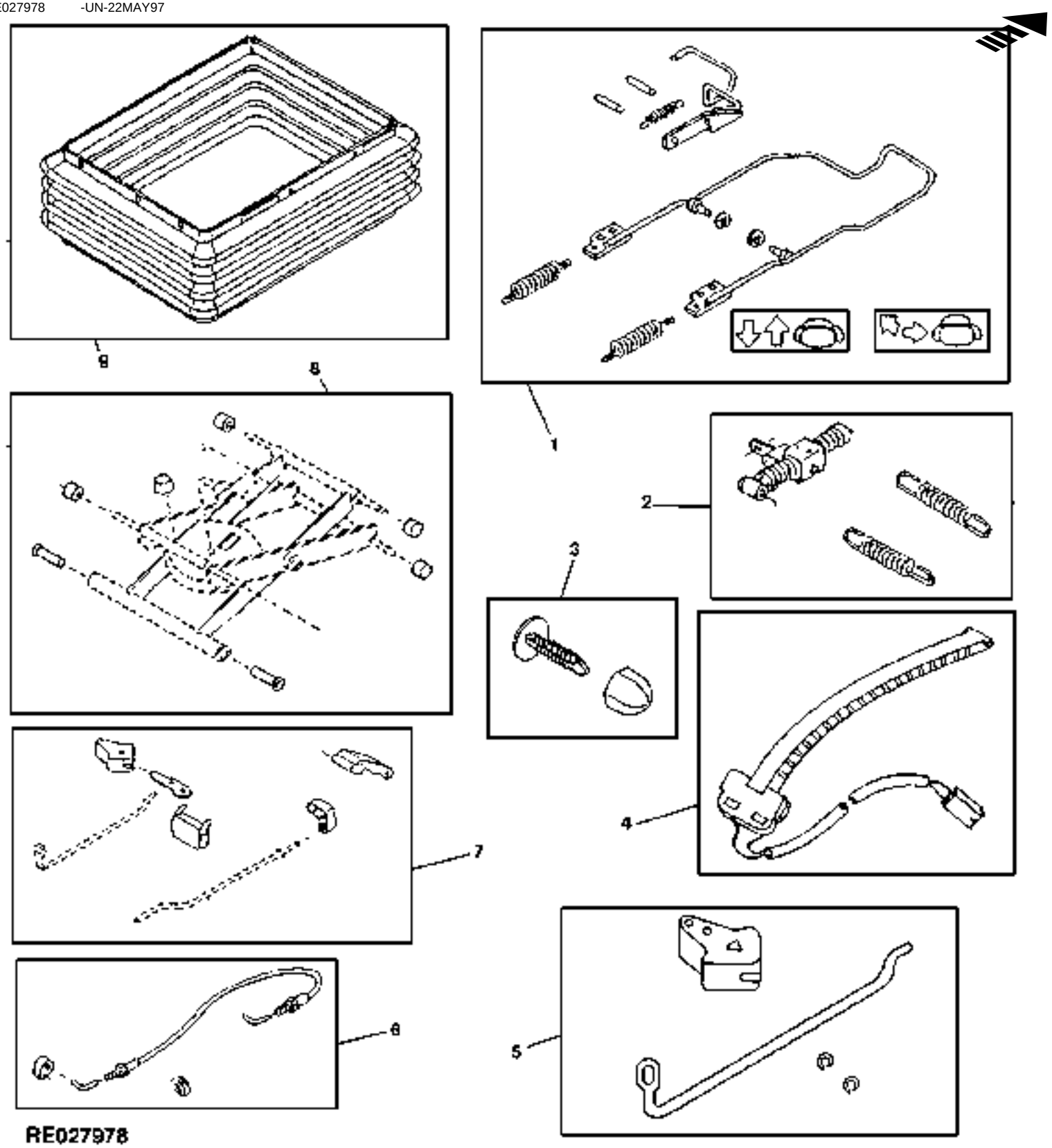

https://www.truck-manuals.net/

KEY	PART NO.	PART NAME	QTY	CAB SERIAL NO.	ALL	REMARKS
1	RE52557	SEAT CONTROL LEVER KIT	1		X	
2	RE65696	SEAT ATTENUATOR SPRING KIT	1		X	(SUB FOR RE52558)
3	RE56116	SEAT KIT	1		X	
4	RE52561	OPR PRESENCE SWITCH KIT	1		X	
	RE43526	SWITCH	1		X	
5	RE70276	KIT	1		X	
6	RE52560	SEAT ADJUSTMENT CABLE KIT	1		X	
7	RE52559	SEAT KNOB KIT	1		X	
8	RE63832	SEAT BEARING ROLLER KIT	1		X	(SUB FOR RE58032)
9	RE52555	SEAT SUSPENSION BOOT KIT	1		X	

https://www.truck-manuals.net/

AIR SEAT RIDE KITS
JEUX DE SIEGE PNEUMATIQUE
LUFTSITZ-BAUSAETZE
KIT DEL SEDILE PNEUMATICO
CONJUNTOS DE SUSPENSION NEUMATICA DEL ASIENTO
DELAR FOER PNEUMATISK SITS
RE026467 -UN-10SEP95

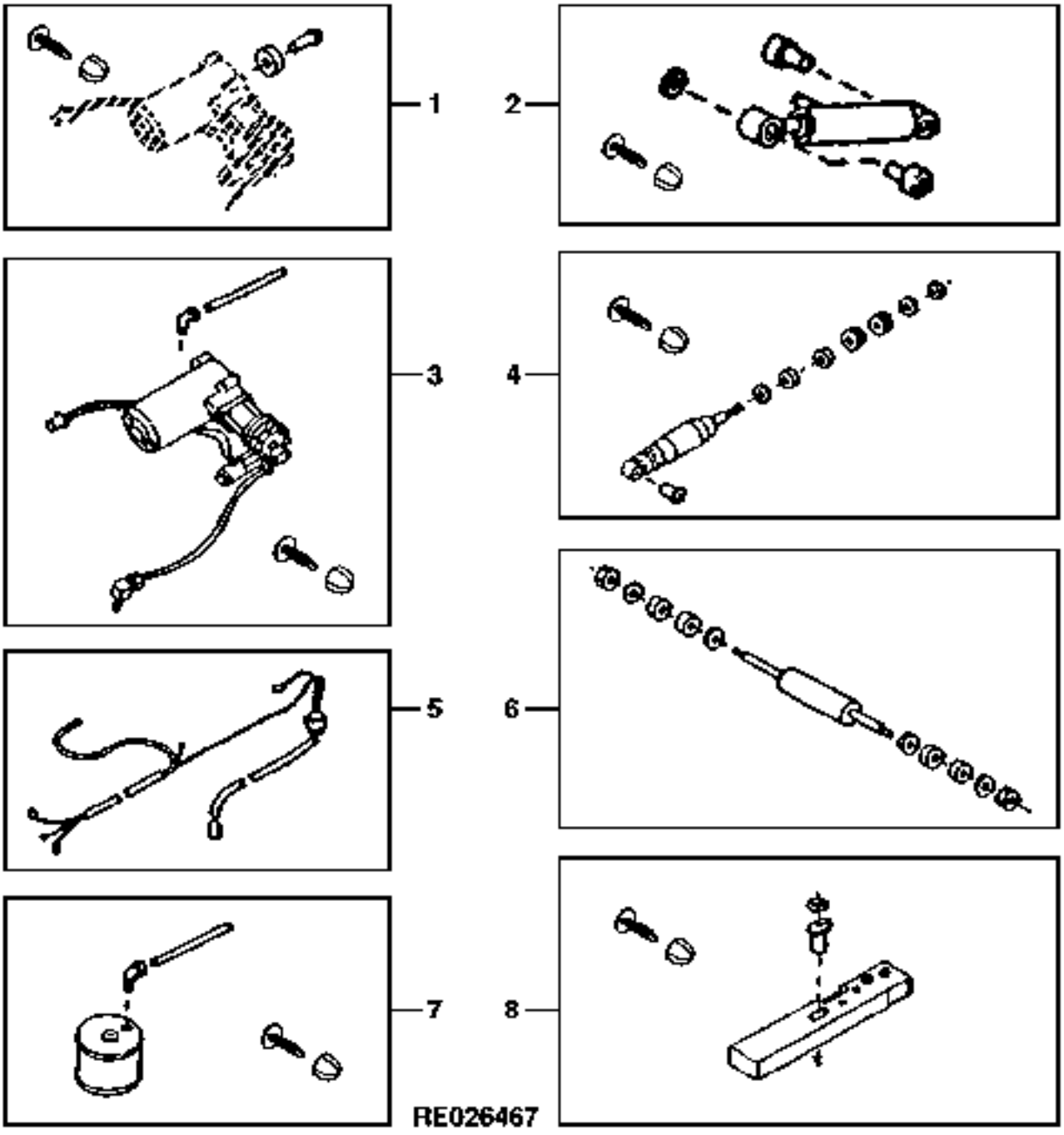

https://www.truck-manuals.net/

KEY	PART NO.	PART NAME	QTY	CAB SERIAL NO.	ALL	REMARKS
1	RE65693	COMPRESSOR FILTER KIT	1		X	(SUB FOR RE52548)
2	RE65695	SEAT SHOCK ABSORBER KIT	1		X	(A) (SUB FOR RE52552)
3	RE52549	COMPRESSOR VALVE KIT	1		X	
4	RE52553	SEAT SHOCK ABSORBER KIT	1		X	(B)
5	RE52550	WIRING HARNESS	1		X	
6	RE52554	SEAT SHOCK ABSORBER KIT	1		X	(C)
7	RE65694	AIR SPRING SEAT KIT	1		X	(SUB FOR RE52551)
8	RE60717	RIDE ZONE PROTECTOR KIT	1		X	(D)

(A)SEAT SUSPENSION
SUSPENSION DE SIEGE
SITZFEDERUNG
SOSPENSIONE DEL SEDILE
SUSPENSION DEL ASIENTO
SITSFJAEDRING

(B)FORE-AFT ATTENUATOR
ATTENUATEUR
LAENGSDAEMPFER
COMPENSATORE
ATENUADOR DE MOVIMIENTO
DAEMPARE I

(C)LATERAL ATTENUATOR
ATTENUATEUR LATERAL
SEITENDAEMPFER
COMPENSATORE LATERALE
ATENUADOR DE MOVIMIENTO
DAEMPARE I SIDLED

(D)RIDE ZONE PROTECTION KIT
KIT DE LIMITEUR DE SUSPENSION
SITZDAEMPFUNGSZONENSATZ
KIT PROTEZIONE SOSPENSIONE SEDILE
JUEGO DE PROTECCION DE ZONA DEL OPERADOR
SATS MED FJAEDRINGSSKYDDSENHET

https://www.truck-manuals.net/

SEAT SUPPORT
SUPPORT DE SIEGE
SITZSTUETZE
SUPPORTO DEL SEDILE
SOPORTE DEL ASIENTO
SITSSTOED
RE026132 -UN-23MAR95

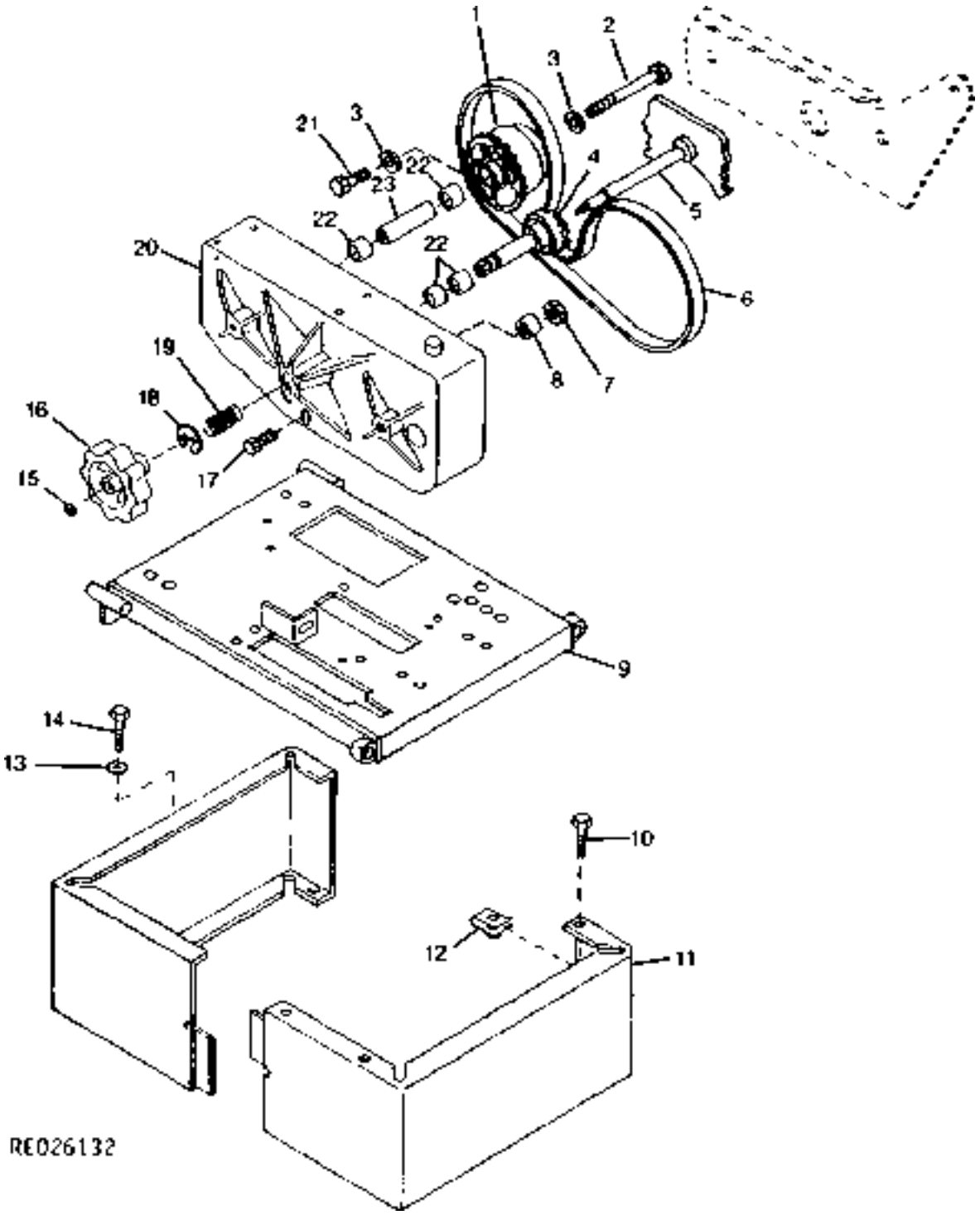

https://www.truck-manuals.net/

KEY	PART NO.	PART NAME	QTY	TRACTOR SERIAL NO.	ALL	REMARKS
1	R124893	CAM	2	-XXXXXX	X	(C) (SUB R130989 AND (3) R130988)
	R130989	CAM	2	XXXXXX-	X	(D)
2	19M7875	CAP SCREW	2		X	M10 X 70
3	24M7028	WASHER	4		X	10.500 X 20 X 2 MM
4	RE61790	GEAR	1		X	(SUB RE62063 AND R137592)
	RE62063	DRIVER	1	-020868	X	(SUB R150659 AND R150660)
	R150659	DRIVER	1	020869-	X	
5	RE61789	PAWL	1		X	(SUB RE62064)
	RE62064	PAWL	1	-020868	X	(SUB R150659 AND R150660)
	R150660	PAWL	1	020869-	X	
6	R124898	BELT	1		X	
7	14M7416	FLANGE NUT	1	XXXXXX-	X	(B) M8
8	R128232	BUSHING	1	XXXXXX-	X	(B)
9	RE58025	HOUSING	1		X	UP
10	19M7166	CAP SCREW	4		X	M10 X 20
11	R124254	SUPPORT	2		X	UP
12	M84971	NUT	4		X	
13	24M7207	WASHER	10		X	
14	19M7932	CAP SCREW	10		X	M8 X 16
15	40M7088	SNAP RING	1		X	
16	R124897	KNOB	1	-XXXXXX	X	(SUB RE62063 AND R127592)
	R127592	KNOB	1	XXXXXX-XXXXXX	X	(C)
	R127224	KNOB	1	XXXXXX-	X	(D)
17	19M7799	SCREW	1		X	M8 X 45
18	R73094	SPRING	1		X	
19	F2863	RING	1		X	
20	R124896	HOUSING	1	-XXXXXX	X	(A) (SUB R128323)
	R128323	HOUSING	1	XXXXXX-XXXXXX	X	(B) (C) (SUB R130990 AND (2) R130988)
	R130990	HOUSING	1	XXXXXX-	X	(D)
21	21M7442	SCREW	2		X	M10 X 20
22	JD9960	ROLLER BEARING	10	-XXXXXX	X	(C)
	R130988	BUSHING	10	XXXXXX-	X	(D)
23	R124903	SHAFT	2		X	

(A) (-XXXXXX) 8100-001654; 8200-001573; 8300-002763; 8400-001331
(B) (XXXXXX-) 8100-001655; 8200-001574; 8300-002764; 8400-001332

(C) (-XXXXXX) 8100-011084; 8200-011048; 8300-011091; 8400-011110
(D) (XXXXXX-) 8100-011085; 8200-011049; 8300-011092; 8400-011111

https://www.truck-manuals.net/

DRAWER
TIROIR
SCHUBLADE
CASSETTO
CAJONCITO
LAADA
RXP010781 -UN-01JAN94

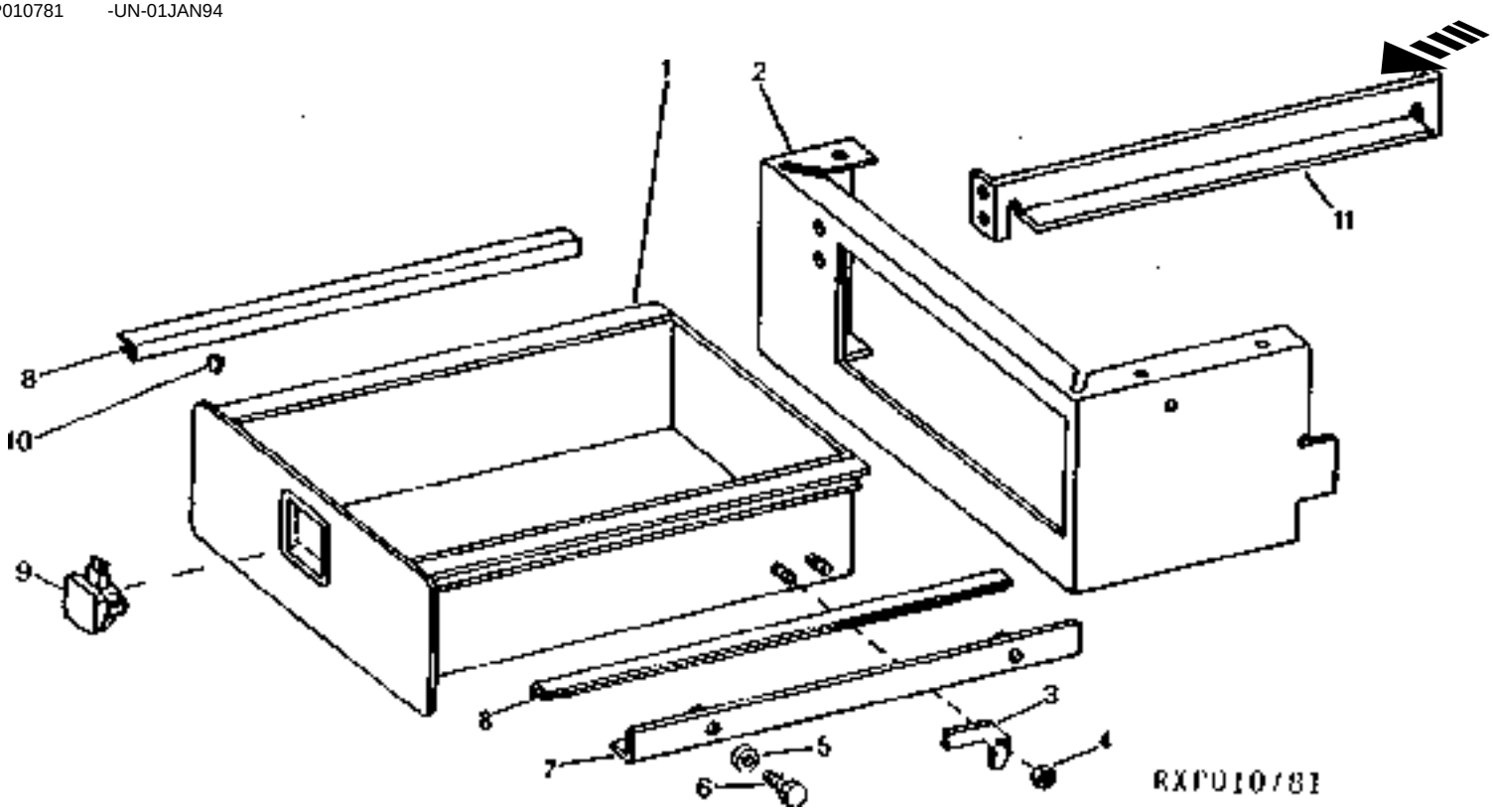

KEY	PART NO.	PART NAME	QTY	CAB SERIAL NO.	ALL	REMARKS
1	RE57818	DRAWER	1		X	
2	R124254	SUPPORT	1		X	(A)
	R124184	SUPPORT	1		X	
3	R120352	STOP	1		X	
4	14M7165	LOCK NUT	2		X	M6
5	24M7238	WASHER	4		X	8.700 X 17 X 2 MM
6	19M7139	CAP SCREW	4		X	M8 X 20
7	RE57819	RAIL	1		X	L.H.
8	R121938	STRIP	2	-XXXXXX	X	(B)
	R130921	STRIP	2	XXXXXX-	X	(C)
9	RE53662	LATCH	1		X	
10	R120453	WASHER	4		X	
11	RE57820	RAIL	1		X	R.H.

(A)EUROPEAN VERSION
VERSION EUROPEENNE
EROPAEISCHE AUSFUEHRUNG
VERSIONE EUROPEA
VERSION EUROPEA
EUROPEISK VERSION

(B)(-XXXXXX) 8100-004454; 8200-003320; 8300-005547; 8400-006364
(C)(XXXXXX-) 8100-004455; 8200-003321; 8300-005548; 8400-006365

https://www.truck-manuals.net/

SEAT BACKREST SUPPORTS
APPUIS DE DOSSIERS DE SIEGE
STUETZEN FUER RUECKENLEHNE
SUPPORTI LOMBARI PER SEDILE
APOYOS DEL RESPALDO DEL ASIENTO
FOERARSAETETS RYGGSTOEDSHAALLARE
RXP9415 -UN-01JAN94

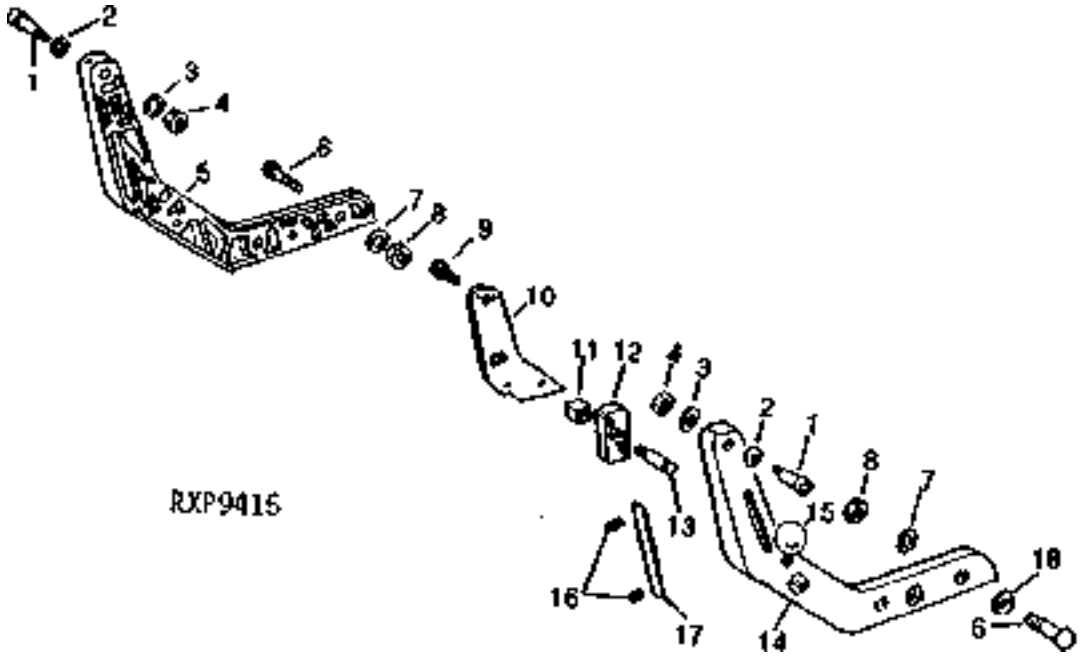

KEY	PART NO.	PART NAME	QTY	CAB SERIAL NO.	ALL	REMARKS
1	R59019	SCREW	2		X	
2	T519T	WASHER	2		X	
3	R53665	WASHER	2		X	
4	K40003	LOCK NUT	2		X	
5	R89143	SUPPORT	1		X	L.H.
6	T72350	BOLT	4		X	
7	R53665	WASHER	4		X	
8	14H1087	NUT	4		X	3/8"
9	37H47	SCREW	3		X	
10	R59011	PLATE	1		X	
11	R59018	BUSHING	1		X	
12	R105581	ADJUSTER	1		X	
13	R59012	WELD STUD	1		X	
14	R89142	SUPPORT	1		X	R.H.
15	R60458	KNOB	1		X	
16	R31890	SPRING	2		X	
17	R59009	REINFORCEMENT	1		X	
18	R53668	THRUST WASHER	2		X	

https://www.truck-manuals.net/

SEAT CUSHIONS AND SEAT BELT
COUSSINS DE SIEGE ET CEINTURE DE SECURITE
SITZPOLSTER UND SICHERHEITSGURT
CUSCINO PER SEDILE E CINTURA DI SICUREZZA
COJINES DE ASIENTO Y CINTURON DE SEGURIDAD
SITTDYNA OCH BAELTE
RE026135 -UN-23MAR95

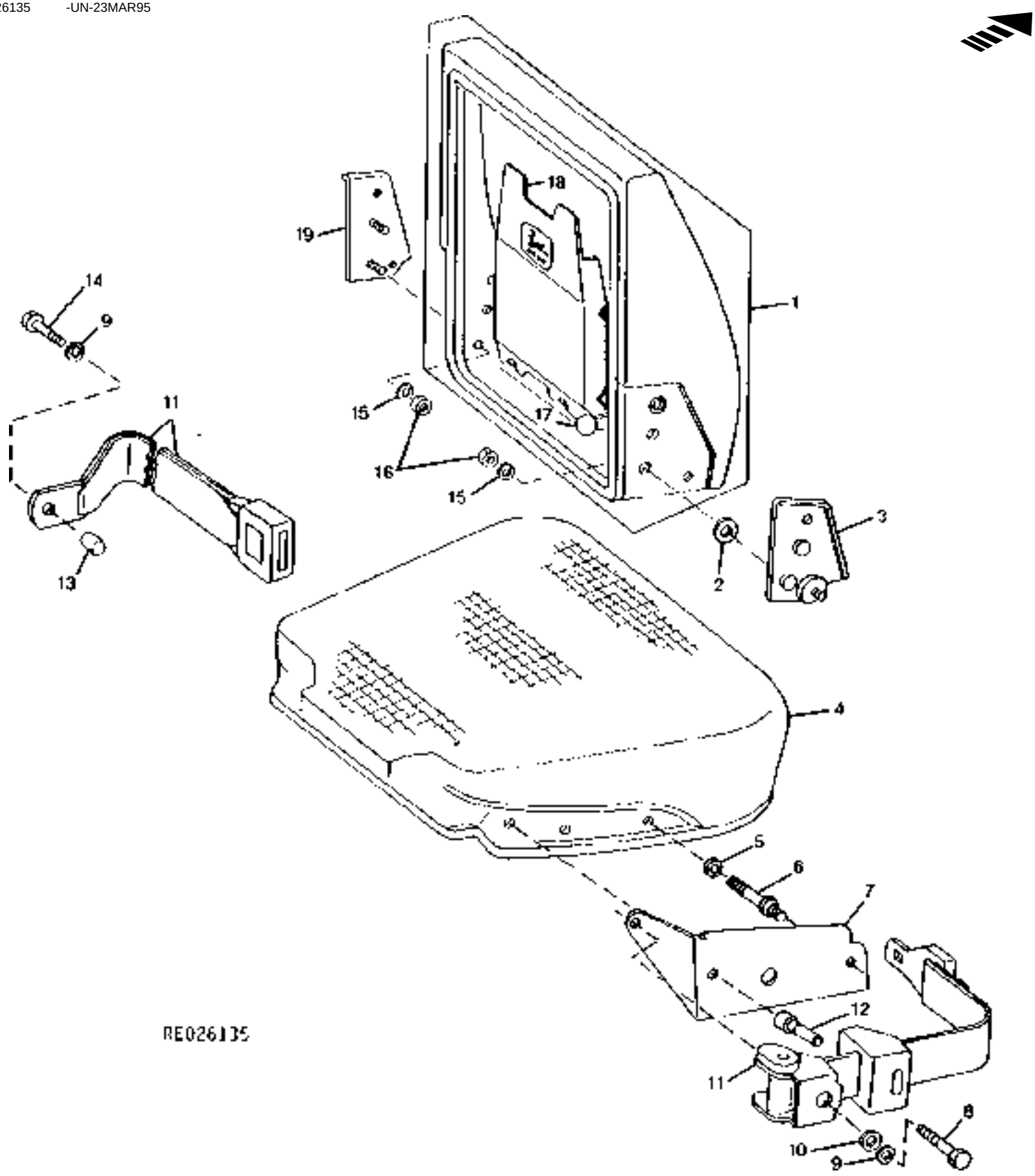

https://www.truck-manuals.net/

KEY	PART NO.	PART NAME	QTY	CAB SERIAL NO.	ALL	REMARKS
1	RE12049	CUSHION	1		X	
2	24H1305	WASHER	2		X	13/32" X 13/16" X 0.065"
3	AR71108	PLATE	1		X	R.H.
4	RE43446	CUSHION	1		X	
5	24H1308	WASHER	2		X	13/32" X 1" X 0.134"
6	R124900	SUPPORT	2	-XXXXXX	X	(B)
	R134352	SUPPORT	2	XXXXXX-	X	(C)
7	R125933	BRACKET	1	-XXXXXX	X	(B)
	R134605	BRACKET	1	XXXXXX-	X	(C) R.H.
8	R125899	SCREW	1		X	
9	R59897	LOCK WASHER	2		X	
10	28H3394	BUSHING	1		X	0.493" X 0.675" X 1/2"
11	RE19989	SEAT BELT	1		X	
12	R124902	SHAFT	2	-XXXXXX	X	(B)
	R134351	SUPPORT	2	XXXXXX-	X	(C)
13	R81560	CAP	1		X	
14	R59030	CAP SCREW	1		X	
15	R53668	THRUST WASHER	4		X	
16	14H812	NUT	4		X	3/8"
17	R52691	GRIP	1		X	SINGLE SCV, (SUB FOR R41387)
	R52690	GRIP	1		X	DUAL SCV, (SUB FOR R41387)
18	RE13541	KIT	1		X	(A)
19	AR71109	PLATE	1		X	L.H.

(A)OPERATOR'S MANUAL HOLDER
SUPPORT DE LIVRET
BETRIEBSANLEITUNGSHALTER
SUPPORTO PER MANUALE
PORTADOR DEL MANUAL DEL
HAALLARE FOER

(B)(-XXXXXX) 8100-011944; 8200-011636; 8300-012100; 8400-012165
(C)(XXXXXX-) 8100-011945; 8200-011637; 8300-012101; 8400-012166

https://www.truck-manuals.net/

LEFT-HAND ARMREST
ACCOUDOIR GAUCHE
LINKE SINISTRA
BRAACCIOLO
REPOSABRAZOS DEL LADO
VAENSTER ARMSTOED
RXP010498 -UN-01JAN94

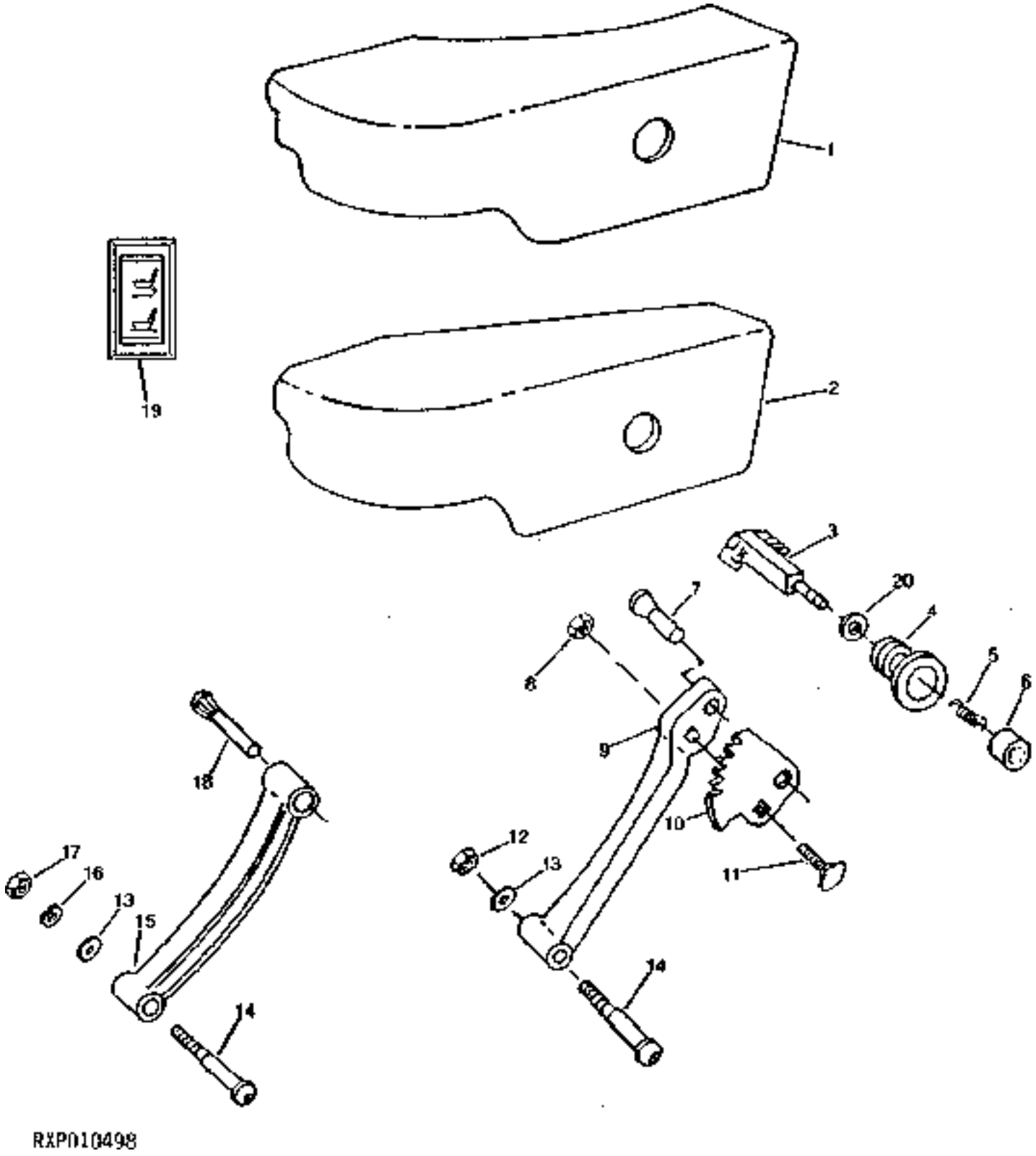

https://www.truck-manuals.net/

KEY	PART NO.	PART NAME	QTY	CAB SERIAL NO.	ALL	REMARKS
1	RE52564	ARMREST KIT	1		X	(A)
	RE52566	ARMREST KIT	1		X	(B)
2	R107823	ARMREST	1		X	
3	R59070	SHAFT KEY	1		X	
4	R59028	BUSHING	2		X	
	R59029	KNOB	1		X	
5	A4741R	SPRING	2		X	
6	R60458	KNOB	2		X	
7	R59021	PIN	1		X	
8	14H732	NUT	2		X	3/8"
9	R59020	LINK	2		X	
10	R61862	PLATE	2		X	
11	03H2275	BOLT	1		X	3/8" X 5/8"
12	K40003	LOCK NUT	2		X	
13	R27441	WASHER	4		X	
14	R59022	SCREW	2		X	
	19H1813	CAP SCREW	2		X	5/16" X 5/8"
15	R59013	LINK	2		X	
16	R53668	THRUST WASHER	2		X	
17	K40003	LOCK NUT	2		X	
18	R59023	PIN	2		X	
19	RE43451	ROCKER SWITCH	1		X	
20	R117675	WASHER	1		X	

(A)TILT-UP
INCLINAISON VERS LE HAUT
HICHKIPP
RIBALTAMENTO
INCLINAR HACIA ARRIBA
TIPPBAR

(B)ADJUSTABLE
REGLABLE
EINSTELLBAR
REGOLABILE
ADJUSTABLE
REGLERBAR

https://www.truck-manuals.net/

ARMREST CONTROL HOUSING
ACCOUDOIR, LOGEMENT DES COMMANDES
ARMLEHNE-STEUERUNGSGEHAEUSE
ALLOGGIAMENTO DI COMANDO DEL BRACCIOLO
CAJA DE CONTROLES EN EL APOYABRAZOS
ARMSTOED, REGLAGEKAAPA
RE030429 -UN-16FEB99

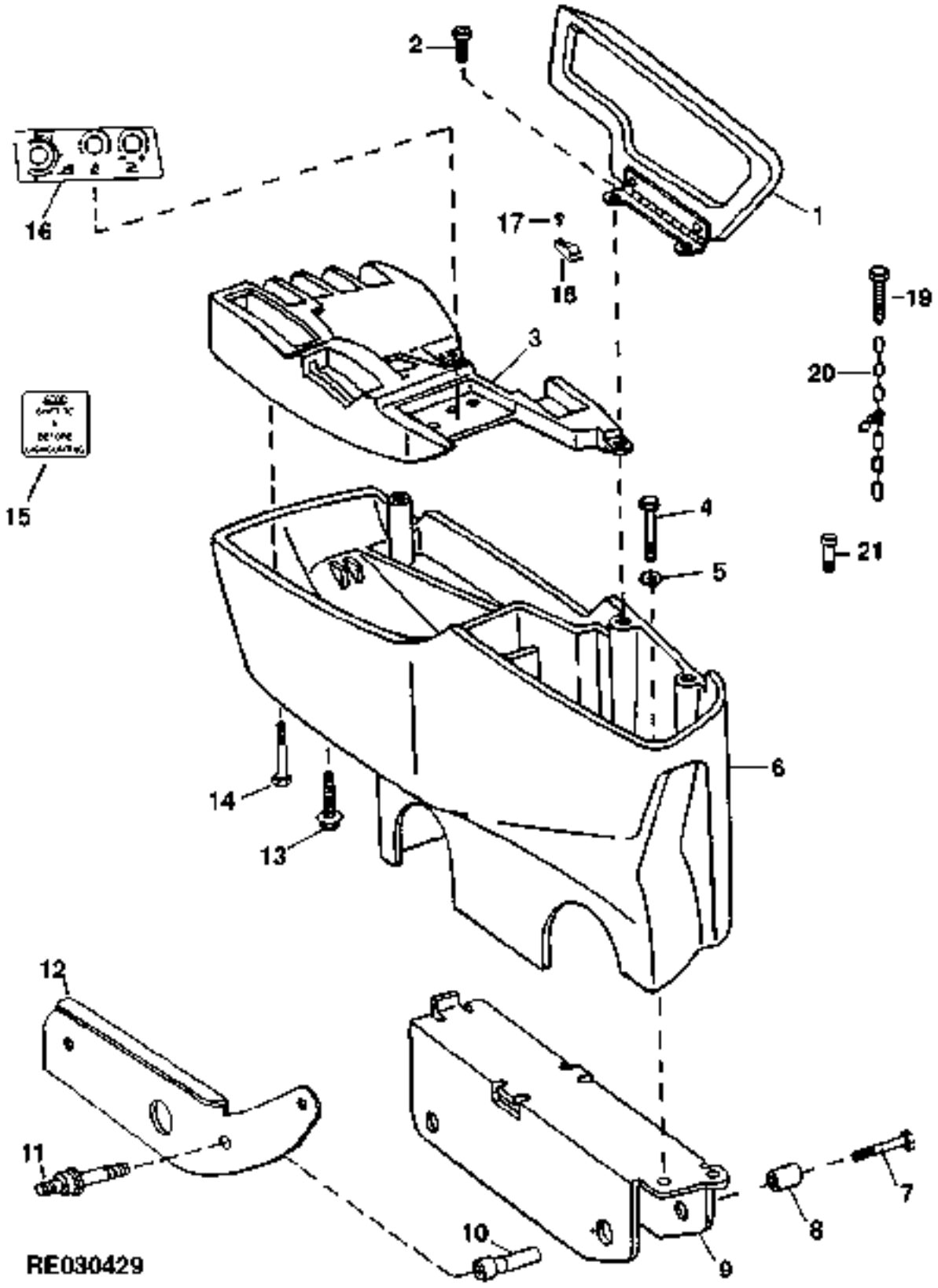

https://www.truck-manuals.net/

KEY	PART NO.	PART NAME	QTY	CAB SERIAL NO.	ALL	REMARKS
1	RE61346	CUSHION	1	-XXXXXX	X	(G) (SUB RE158037, 37M7181 AND 24M7117)
	RE158037	CUSHION	1	XXXXXX-	X	(H)
2	R126355	SCREW	2		X	
3	R124202	COVER	1	-XXXXXX	X	(A)
	R129794	COVER	1	XXXXXX-	X	(B) (SUB R153146) (ALSO ORDER M115279)
4	19M7407	CAP SCREW	4		X	M8 X 25
5	24M7055	WASHER	4		X	8.400 X 16 X 1.600 MM
6	R124155	HOUSING	1	-XXXXXX	X	(C)
	R126561	HOUSING	1	XXXXXX-	X	(D)
7	19M7550	CAP SCREW	2		X	M10 X 35
8	R117718	BUSHING	2		X	(SUB FOR R124908)
9	RE61740	BRACKET	1		X	(SUB R135942, (2) R117718 AND (2) 19M7382)
10	R124902	SHAFT	2	-XXXXXX	X	(E) (SUB RE150889)
	R134351	SUPPORT	2	XXXXXX-	X	(F)
11	R124900	SUPPORT	2	-XXXXXX	X	(E) (SUB RE150889)
	R134352	SUPPORT	2	XXXXXX-	X	(F)
12	R125933	BRACKET	1	-XXXXXX	X	(E) (SUB RE150889)
	R134605	BRACKET	1	XXXXXX-	X	(F)
13	R124859	SCREW	1		X	
14	R117569	SCREW	5		X	
15	R114802	LABEL	1		X	
16	R124530	LABEL	1		X	
17	R115850	SCREW	1		X	
18	R107562	COVER	1		X	
19	R126473	RIVET	1	-XXXXXX	X	(G)
	37M7181	SCREW	1	XXXXXX-	X	(H) (ALSO ORDER 24M7117)
20	AR27940	LINK CHAIN	1		X	
21	R124859	SCREW	1		X	

(A) (-XXXXXX) 8100-002954; 8200-002324; 8300-004071; 8400-002641
(B) (XXXXXX-) 8100-002955; 8200-002325; 8300-004072; 8400-002642

(C) (-XXXXXX) 8100-001766; 8200-001644; 8300-002881; 8400-001526
(D) (XXXXXX-) 8100-001767; 8200-001645; 8300-002882; 8400-001527

(E) (-XXXXXX) 8100-011944; 8200-011636; 8300-012100; 8400-012165
(F) (XXXXXX-) 8100-011945; 8200-011637; 8300-012101; 8400-012166

(G) (-XXXXXX) 8100-025624; 8200-025618; 8300-025612; 8400-025598
(H) (XXXXXX-) 8100-025625; 8200-025619; 8300-25613; 8400-025599

https://www.truck-manuals.net/

PASSENGER SEAT (EUROPEAN VERSION)
SIEGE PASSAGER (VERSION EUROPEENNE)
MITFAHRERSITZ (EUROPAEISCHE AUSFUEHRUNG)
SEDILE PASSEGGERO (VERSIONE EUROPEA)
ASIENTO DEL PASAJERO (VERSION EUROPEA)
PASSAGERARSITS (EUROPEISK VERSION)
RXP011504 -UN-05JAN95

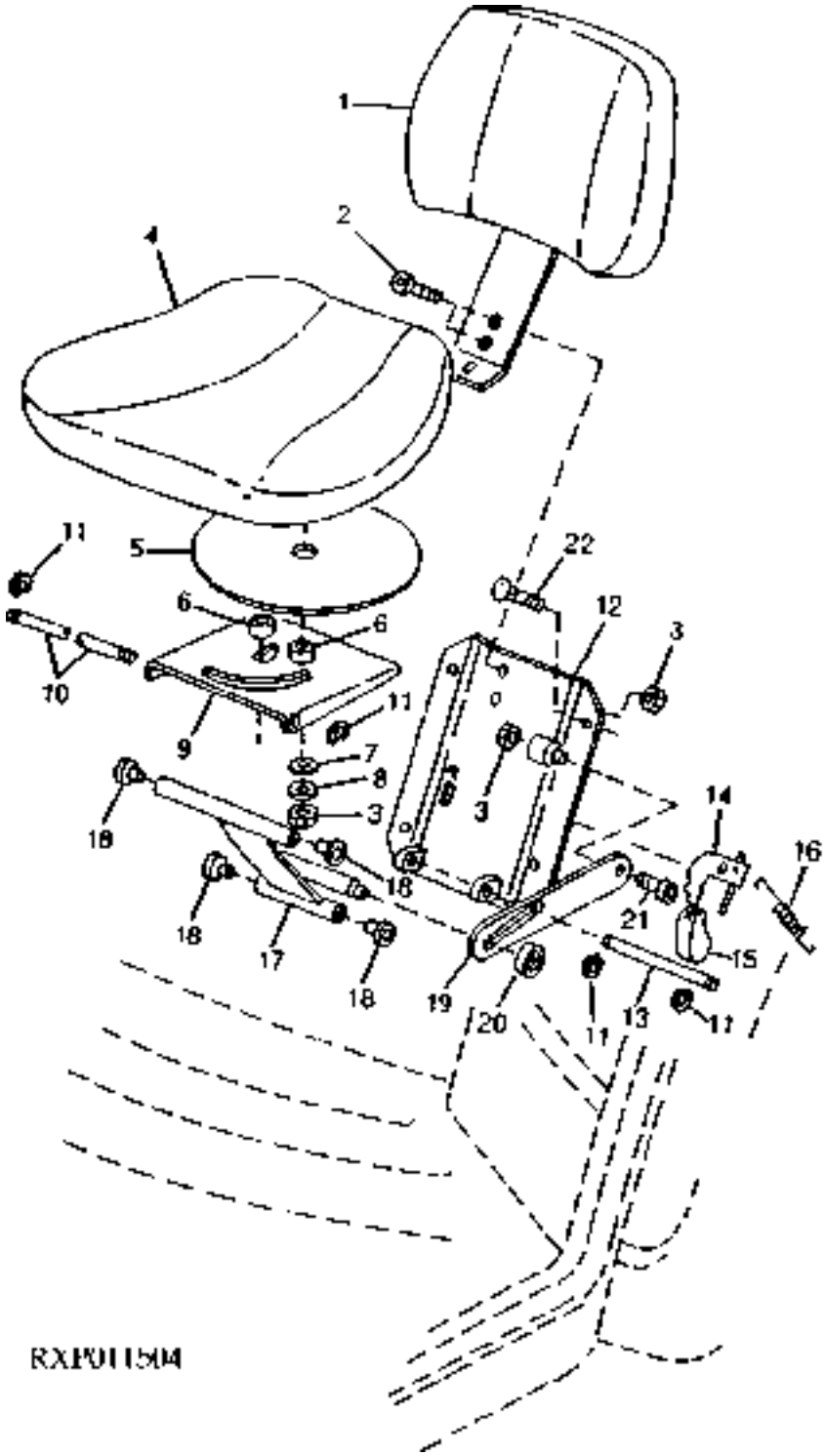

https://www.truck-manuals.net/

KEY	PART NO.	PART NAME	QTY	CAB SERIAL NO.	ALL	REMARKS
1	AL75439	CUSHION	1		X	(SUB AL114945 OR AL114946)
2	19M7931	SCREW	2		X	M8 X 16
3	14M7426	LOCK NUT	5		X	M8
4	AL77699	CUSHION	1		X	(SUB AL114945 OR AL114946)
	AR112620	SEAT	1		X	
5	L79499	PLATE	1		X	
6	L79497	TUBE	2		X	
7	L79498	SHIM	2		X	
8	L79500	WASHER	2		X	
9	AL117531	ROTATOR	1		X	(SUB FOR L79496)
10	L79501	PIN	1		X	
11	40M7059	SNAP RING	4		X	
12	AL77683	BRACKET	1		X	
13	L79503	PIN	1		X	
14	AL78642	LEVER	1		X	
15	L56933	GRIP	1		X	
16	L75631	SPRING	1		X	
17	AL77684	SUPPORT	1		X	
18	L79502	BUSHING	4		X	
19	L79504	STRAP	1		X	
20	L57470	RETAINING WASHER	1		X	
21	19M8274	SCREW	1		X	M8 X 35
22	03M7191	BOLT	4		X	M10 X 25

https://www.truck-manuals.net/

PASSENGER SEAT MOUNTING KIT (EUROPEAN VERSION)
SIEGE PASSAGER (VERSION EUROPEENNE)
MITFAHRERSITZ (EUROPAEISCHE AUSFUEHRUNG)
SEDILE PASSEGGERO (VERSIONE EUROPEA)
ASIENTO DEL PASAJERO (VERSION EUROPEA)
PASSAGERARSITS (EUROPEISK VERSION)
RE029500 -UN-28APR98

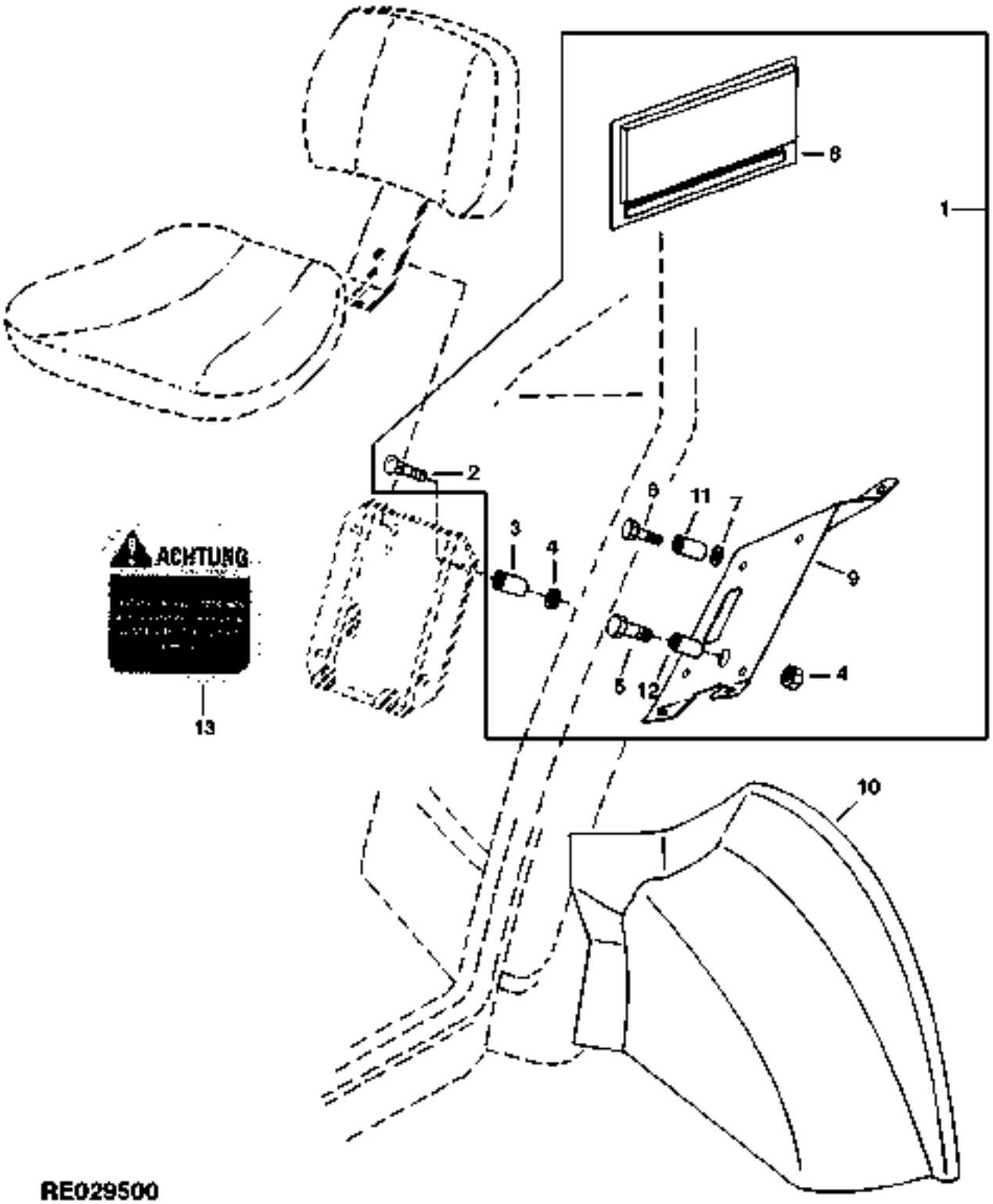

https://www.truck-manuals.net/

KEY	PART NO.	PART NAME	QTY	CAB SERIAL NO.	ALL	REMARKS
1	**AR113039**	**SEAT KIT**	**1**	**-009999**	**X**	**(FI)**
	AR116858	**SEAT KIT**	**1**	**010000-**	**X**	**(FI)**
2	03M7191	BOLT	4		X	M10 X 25
3	28H3383	BUSHING	2		X	0.493" X 0.675" X 3/4", (ALSO ORDER 28H1532)
4	14M7274	NUT	4		X	M10
5	19M7156	CAP SCREW	2		X	M10 X 60
6	37M7096	SCREW	1		X	M8 X 35, (SUB FOR 19M7179)
7	24M7136	WASHER	6		X	10.500 X 27 X 2 MM
8	R122000	PAD	1		X	L.H.
9	R127712	BRACKET	1	-009999	X	(SUB FOR R120728)
	R134250	BRACKET	1	010000-	X	
10	R127714	ACOUSTICAL UPHOLSTERY	1		X	(A) L.H. (SUB FOR R124333)
	R134401	ACOUSTICAL UPHOLSTERY	1		X	
11	28H3383	BUSHING	1		X	
12	28H1495	SPACER	1		X	
13	L79474	LABEL	1		X	

(A) W/FIELD OFFICE
W/BUREAU MOBILE
W/BORD BUERO
W/URRICIO MOBILE
W/OFICINA PORTATIL
W/TRAKTORKONTOR

https://www.truck-manuals.net/

SEAT BELT
CEINTURE DE SECURITE
SICHERHEITSGURT
CINTURA DE SICUREZZA
CINTURON DE SEGURIDAD
SAEKERHETSBAELTE
RXP6316 -UN-01JAN94

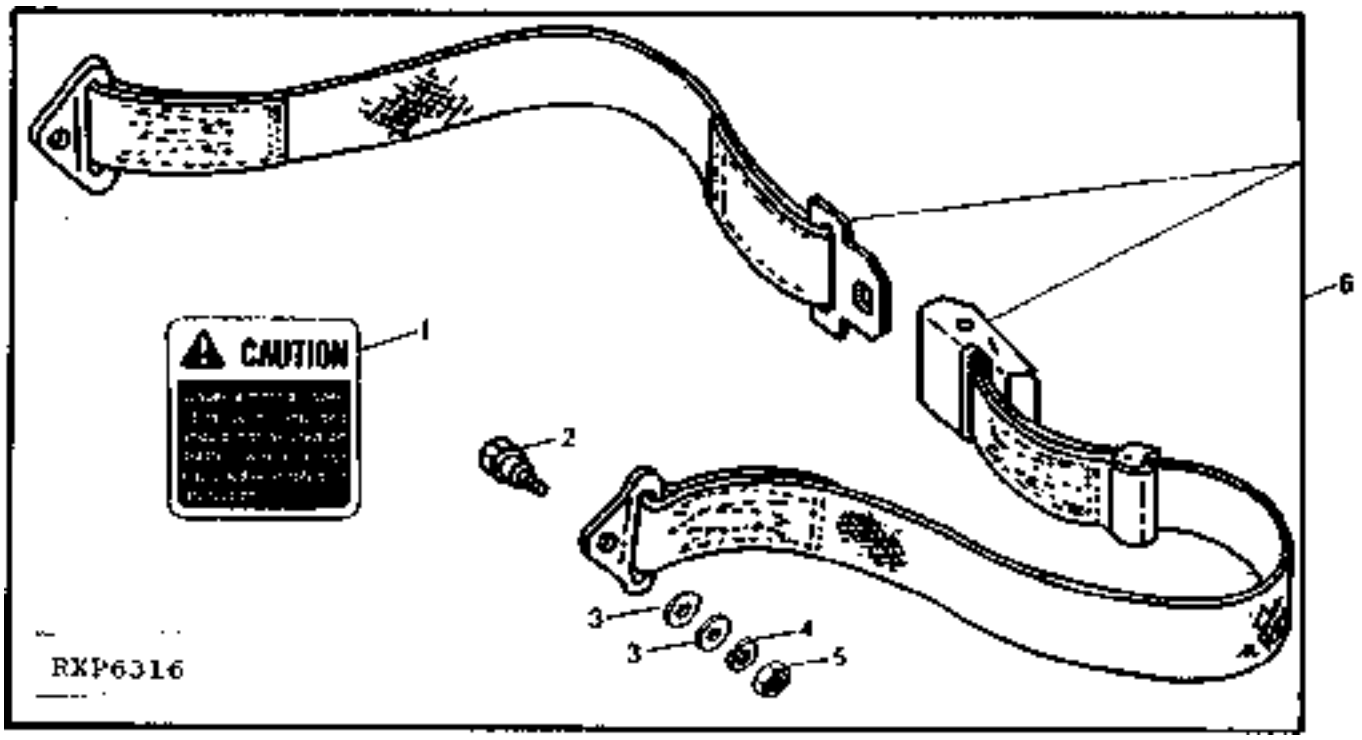

KEY	PART NO.	PART NAME	QTY	CAB SERIAL NO.	ALL	REMARKS
1	R81424	LABEL	1		X	
2	R41778	BOLT	2		X	
3	24H1226	WASHER	4		X	1/2" X 1-1/4" X 0.083"
4	12H293	LOCK WASHER	2		X	7/16"
5	14H807	NUT	2		X	7/16"
6	**AR41761**	**SEAT BELT**	**1**		**X**	**(FI)**

https://www.truck-manuals.net/

NUMERICAL INDEX

PART NO.	GRID	KEY	PAGE
AA21292	7F20	4	70 - 65
AA21292	7F22	4	70 - 67
AA23627	7G8	7	70 - 77
AA23627	7G16	7	70 - 85
AA27536	3F20	3	40 - 52
AC15595	8H16	18	90 - 13
AD2062R	4D25	1	42 - 21
AD2062R	4E2	18	42 - 23
AE44632	3E24	14	40 - 29
AE44929	3F15	4	40 - 46
AE44976	3E24	17	40 - 29
AH104259	9D14	1	91 - 9
AH104259	9D16	4	91 - 11
AH107416	1I13	17	20 - 115
AH117301	3G16	18	40 - 72A
AH129236	6F3	1	60 - 47
AH134955	7E22	11	70 - 42
AH134955	7E23	11	70 - 43
AH135155	2G9	5	30 - 73
AH135787	3G12	5	40 - 69
AH136453	7E22	2	70 - 42
AH136453	7E23	2	70 - 43
AH137687	7E24	11	70 - 44
AH137764	7E20	16	70 - 40
AH137764	7E21	16	70 - 41
AH137764	7E22	16	70 - 42
AH137764	7E23	16	70 - 43
AH141063	7E15	1	70 - 35
AH141063	7E17	1	70 - 37
AH141063	7E18	1	70 - 38
AH141063	7E19	1	70 - 39
AH141063	7E24	22	70 - 44
AH142569	7E24	18	70 - 44
AH142569	7E25	18	70 - 45
AH142570	7E24	16	70 - 44
AH142570	7E25	16	70 - 45
AH144020	3E10	8	40 - 15
AH144020	3E12	8	40 - 17
AH144020	3E14	9	40 - 19
AH144020	3E16	9	40 - 21
AH144020	3E18	8	40 - 23
AH144020	8H20	7	90 - 17
AH144349	7E20	18	70 - 40
AH144349	7E21	18	70 - 41
AH144350	7E22	18	70 - 42
AH144350	7E23	18	70 - 43
AH144351	7E14	1	70 - 34
AH144351	7E20	21	70 - 40
AH144352	7E14	1	70 - 34
AH144352	7E15	1	70 - 35
AH144352	7E16	1	70 - 36
AH144352	7E18	1	70 - 38
AH144352	7E22	19	70 - 42
AH146050	6D23	7	60 - 18
AH146050	6D25	5	60 - 21
AH146052	6D25	7	60 - 21
AH146052	6E1	7	60 - 21A
AH146443	6D25	4	60 - 21
AH146443	6E1	4	60 - 21A
AH146460	7E21	3	70 - 41
AH146556	7E21	6	70 - 41
AH146556	7E23	6	70 - 43
AH146557	7E25	6	70 - 45
AH146560	7E23	3	70 - 43
AH146561	7E25	3	70 - 45
AH148164	7E24	13	70 - 44
AH148164	7E25	7	70 - 45
AH148711	7E15	1	70 - 35
AH148711	7E17	1	70 - 37
AH148711	7E18	1	70 - 38
AH148711	7E19	1	70 - 39
AH148711	7E24	22	70 - 44
AH148711	7E25	22	70 - 45
AH149420	7E14	1	70 - 34
AH149420	7E20	21	70 - 40
AH149420	7E21	21	70 - 41
AH149422	7E14	1	70 - 34
AH149422	7E15	1	70 - 35
AH149422	7E16	1	70 - 36
AH149422	7E18	1	70 - 38
AH149422	7E22	19	70 - 42
AH149422	7E23	19	70 - 43
AH149813	7E20	13	70 - 40
AH149813	7E21	7	70 - 41
AH149813	7E22	13	70 - 42
AH149813	7E23	7	70 - 43
AH149844	7E24	11	70 - 44
AH149844	7E25	11	70 - 45
AH149964	6E1	5	60 - 21A
AH149964	6E2	7	60 - 21B
AH158827	6D22	14	60 - 17B
AH15939	7I20	..	70 - 139
AH160036	6D22	2	60 - 17B
AH162914	2G9	5	30 - 73
AH163057	6E1	5	60 - 21A
AH163057	6E2	7	60 - 21B
AH163058	6D23	7	60 - 18
AH163058	6D25	5	60 - 21
AH78237	8H12	6	90 - 9
AH83821	7I20	13	70 - 139
AH83821	7I22	1	70 - 141
AH87142	2G7	6	30 - 71
AH89023	4F18	6	51 - 21
AH89023	4G12	1	51 - 41
AH89023	4H20	6	51 - 73
AH89023	4I16	1	51 - 93
AH89486	2D19	5	30 - 11
AH89557	1E17	12	20 - 23
AH93625	3F12	1	40 - 43
AH94661	4F21	1	51 - 24
AH94661	4H23	1	51 - 76
AL110724	9F5	28	91 - 49
AL110725	9F5	28	91 - 49
AL111719	6H13	8	60 - 101
AL111802	3F5	9	40 - 35
AL111802	6H13	20	60 - 101
AL112011	4D6	4	42 - 2
AL112012	3E14	16	40 - 19
AL112012	4D6	10	42 - 2
AL112474	4D6	2	42 - 2
AL112538	6H13	9	60 - 101
AL112964	3E14	14	40 - 19
AL112964	3E14	16	40 - 19
AL112964	4D6	8	42 - 2
AL112964	4D6	10	42 - 2
AL113022	3E14	14	40 - 19
AL113022	4D6	8	42 - 2
AL113174	9F3	3	91 - 47A
AL113174	9F9	27	91 - 53
AL113954	6H19	1	60 - 107
AL113954	6H21	1	60 - 107B
AL114275	9E21	6	91 - 40
AL114945	9G10	1	92 - 21
AL114945	9G10	4	92 - 21
AL114946	9G10	1	92 - 21
AL114946	9G10	4	92 - 21
AL116738	7H8	1	70 - 101B
AL117531	9G10	9	92 - 21
AL118000	7H8	18	70 - 101B
AL118001	7H8	16	70 - 101B
AL118059	7H8	12	70 - 101B
AL118060	7H8	13	70 - 101B
AL26777	8G4	4	80 - 51
AL26778	8G4	5	80 - 51
AL30794	8G6	10	80 - 53
AL32891	3E14	8	40 - 19
AL32891	3E16	8	40 - 21
AL32891	3F17	27	40 - 49
AL32891	3F19	28	40 - 51
AL33161	3E14	36	40 - 19
AL33161	3E16	37	40 - 21
AL33161	3E25	2	40 - 30
AL33161	8G6	1	80 - 53
AL35642	9E21	4	91 - 40
AL35990	7H4	14	70 - 99
AL35991	7H4	17	70 - 99
AL36529	3E10	23	40 - 15
AL36529	3E12	23	40 - 17
AL36529	3E14	26	40 - 19
AL36529	3E14	27	40 - 19
AL36529	3E16	26	40 - 21
AL36529	3E16	27	40 - 21
AL36529	3E18	23	40 - 23
AL36529	3F17	9	40 - 49
AL36529	3F17	10	40 - 49
AL36529	3F19	9	40 - 51
AL36529	3F19	10	40 - 51
AL38684	7F14	2	70 - 59
AL39108	9E21	6	91 - 40
AL39859	6G14	13	60 - 77
AL41725	8G4	10	80 - 51
AL56092	3E2	29	40 - 9
AL56092	3E4	29	40 - 9B
AL56092	3E8	29	40 - 13
AL56092	4D16	6	42 - 12
AL61032	7G24	6	70 - 95
AL61032	7H2	6	70 - 97
AL61062	7H4	8	70 - 99
AL61072	7G24	22	70 - 95
AL61072	7H2	22	70 - 97
AL63927	6G16	7	60 - 79
AL67648	6G18	8	60 - 81
AL68571	6H15	18	60 - 103
AL68571	6H17	18	60 - 105
AL68572	6H15	12	60 - 103
AL68572	6H17	12	60 - 105
AL68573	6H15	11	60 - 103
AL68573	6H17	11	60 - 105
AL68577	6H15	8	60 - 103
AL68577	6H17	8	60 - 105
AL68589	6H11	9	60 - 99
AL68589	6H13	26	60 - 101
AL75405	4D6	4	42 - 2
AL75439	9G10	1	92 - 21
AL75527	9E23	8	91 - 43
AL75638	9F7	30	91 - 51
AL75642	3E14	45	40 - 19
AL75642	3E16	46	40 - 21
AL75642	4D14	12	42 - 10
AL75721	6D20	2	60 - 16
AL75785	7F16	1	70 - 61

https://www.truck-manuals.net/

NUMERICAL INDEX - CONTINUED

PART NO.	GRID	KEY	PAGE
AL76568	3F17	7	40 - 49
AL76568	3F17	13	40 - 49
AL76568	3F19	7	40 - 51
AL76568	3F19	13	40 - 51
AL76686	3E20	3	40 - 25
AL76686	3E20	7	40 - 25
AL76686	9E23	2	91 - 43
AL76943	7F14	12	70 - 59
AL77138	3E14	16	40 - 19
AL77138	4D6	10	42 - 2
AL77683	9G10	12	92 - 21
AL77684	9G10	17	92 - 21
AL77699	9G10	4	92 - 21
AL77711	9E21	2	91 - 40
AL77794	9F5	25	91 - 49
AL78021	9E16	10	91 - 35
AL78021	9E18	5	91 - 37
AL78062	9F5	28	91 - 49
AL78063	9F5	28	91 - 49
AL78137	4D6	2	42 - 2
AL78487	7H4	23	70 - 99
AL78489	7H4	15	70 - 99
AL78490	7H4	16	70 - 99
AL78491	7H4	19	70 - 99
AL78499	7H4	22	70 - 99
AL78581	6F14	6	60 - 57
AL78581	6F16	6	60 - 59
AL78607	7H4	1	70 - 99
AL78608	7H4	2	70 - 99
AL78609	7H4	3	70 - 99
AL78642	9G10	14	92 - 21
AL78708	7H10	15	70 - 103
AL78708	7H16	1	70 - 109
AL78795	6G14	9	60 - 77
AL78795	6G16	1	60 - 79
AL78820	7H4	4	70 - 99
AL78941	6G18	3	60 - 81
AL78989	3E14	10	40 - 19
AL78989	3E16	10	40 - 21
AL78989	3F17	30	40 - 49
AL78989	3F19	31	40 - 51
AL78989	3H3	1	40 - 83
AL79013	3E2	9	40 - 9
AL79013	3E8	9	40 - 13
AL79013	9E21	12	91 - 40
AL80049	7H12	24	70 - 105
AL80049	7H14	10	70 - 107
AL80061	7H18	16	70 - 111
AL80062	7H18	1	70 - 111
AL80747	7G24	1	70 - 95
AL81736	7H4	4	70 - 99
AL81736	7H6	1	70 - 101
AL81937	6G20	7	60 - 83
AL81937	6G22	7	60 - 85
AL82092	7H6	10	70 - 101
AL82092	7H8	10	70 - 101B
AL82095	7H6	3	70 - 101
AL82095	7H8	3	70 - 101B
AL82096	7H6	12	70 - 101
AL82098	7H6	22	70 - 101
AL82100	7H6	13	70 - 101
AL82101	7H6	4	70 - 101
AL82101	7H8	4	70 - 101B
AL82102	7H6	6	70 - 101
AL82102	7H8	6	70 - 101B
AL82103	7H6	14	70 - 101
AL82103	7H8	14	70 - 101B
AL82106	7H6	18	70 - 101
AL82107	7H6	2	70 - 101
AL82107	7H8	2	70 - 101B
AL83131	9F7	30	91 - 51
AM30347	8E18	16	80 - 11
AM38104	2G7	20	30 - 71
AN212996	7G18	6	70 - 89
AR100124	1D19	1	20 - 6
AR100124	1F12	1	20 - 42
AR100124	1G24	1	20 - 78
AR101212	2E17	4	30 - 31B
AR101212	2F18	4	30 - 55
AR103220	2G7	11	30 - 71
AR103807	1F1	2	20 - 32
AR103807	1F1	3	20 - 32
AR103807	1F1	5	20 - 32
AR103808	7J11	7	70 - 154
AR103873	4F2	4	51 - 5
AR103873	4F4	7	51 - 7
AR103873	4H4	4	51 - 57
AR103873	4H6	7	51 - 59
AR104516	3H19	7	40 - 99
AR104516	3H22	1	40 - 103
AR109313	8F1	8	80 - 21
AR112601	9E21	1	91 - 40
AR112611	4D8	11	42 - 4
AR112613	7I20	24	70 - 139
AR112618	2E15	13	30 - 31
AR112620	9G10	4	92 - 21
AR112621	9E23	1	91 - 43
AR112622	3H19	11	40 - 99
AR112623	3H19	11	40 - 99
AR112626	3H11	16	40 - 91
AR112841	9E16	17	91 - 35
AR113039	9G12	1	92 - 23
AR113048	3F17	26	40 - 49
AR113519	7G2	1	70 - 71
AR113536	4D10	13	42 - 6
AR113538	9E11	1	91 - 30
AR113759	6G14	46	60 - 77
AR113795	3I2	2	40 - 107
AR113819	3G17	4	40 - 73
AR114034	3E24	18	40 - 29
AR114034	7I6	1	70 - 125
AR114068	7E14	3	70 - 34
AR114069	7E16	3	70 - 36
AR114073	3H5	18	40 - 85
AR114073	3H9	13	40 - 89
AR114074	3H5	18	40 - 85
AR114074	3H9	13	40 - 89
AR114555	3H11	16	40 - 91
AR114564	3H20	3	40 - 100
AR114631	8D5	1	71 - 3
AR114633	8D5	1	71 - 3
AR114664	7I24	5	70 - 143
AR115121	7I6	1	70 - 125
AR115337	4D11	16	42 - 7
AR115340	4D8	11	42 - 4
AR115340	4D9	11	42 - 5
AR115540	3H7	18	40 - 87
AR115540	3H9	13	40 - 89
AR115541	3H7	18	40 - 87
AR115541	3H9	13	40 - 89
AR116387	8F1	6	80 - 21
AR116388	8F1	8	80 - 21
AR116389	8F1	8	80 - 21
AR116390	8F1	8	80 - 21
AR116475	3H19	11	40 - 99
AR116476	3H19	11	40 - 99
AR116485	7I6	1	70 - 125
AR116514	9D22	24	91 - 17
AR116858	9G12	1	92 - 23
AR116863	9D22	23	91 - 17
AR116902	2E17	..	30 - 31B
AR150551	6F8	3	60 - 51B
AR152577	3G17	4	40 - 73
AR21837	6H23	23	60 - 109
AR21837	6H25	23	60 - 111
AR21837	8H14	9	90 - 11
AR21837	8H14	10	90 - 11
AR21837	8H14	12	90 - 11
AR21837	8H14	13	90 - 11
AR21839	2D19	9	30 - 11
AR21841	3H15	6	40 - 95
AR21969	1D15	..	20 - 2
AR27806	8E18	1	80 - 11
AR27940	9G8	20	92 - 19
AR28755	7J9	3	70 - 152
AR31790	1D19	..	20 - 6
AR31790	1F12	..	20 - 42
AR31790	1G24	..	20 - 78
AR41761	9G13	6	92 - 24
AR41785	1D16	..	20 - 3
AR44402	1D15	1	20 - 2
AR48015	3G23	4	40 - 79
AR48236	1I11	3	20 - 113
AR48236	2G7	1	30 - 71
AR48236	8H20	31	90 - 17
AR48675	1F5	7	20 - 37
AR48675	1F6	6	20 - 37A
AR48675	1G19	7	20 - 73
AR48675	1I7	7	20 - 109
AR49025	1E6	1	20 - 13D
AR49025	1E17	1	20 - 23
AR49025	1G8	1	20 - 60
AR49025	1H20	1	20 - 98
AR50374	7F24	19	70 - 69
AR50377	7F24	24	70 - 69
AR50411	1E25	1	20 - 31
AR54749	1D15	4	20 - 2
AR55394	1G14	16	20 - 66
AR55394	1I4	16	20 - 107
AR56766	3F2	1	40 - 32
AR56766	3F3	1	40 - 33
AR56766	3F17	40	40 - 49
AR56766	3F19	41	40 - 51
AR56766	9D14	3	91 - 9
AR56766	9D22	10	91 - 17
AR58952	1G14	15	20 - 66
AR58952	1G21	36	20 - 75
AR58952	1I4	15	20 - 107
AR58952	1I9	36	20 - 111
AR60937	3E10	16	40 - 15
AR60937	3E12	16	40 - 17
AR60937	3E14	20	40 - 19
AR60937	3E16	20	40 - 21
AR60937	3E18	16	40 - 23
AR60937	3F17	39	40 - 49
AR60937	3F19	40	40 - 51
AR60937	9D14	2	91 - 9
AR61533	1D24	13	20 - 11
AR61533	1F18	17	20 - 47
AR61533	1H5	17	20 - 83
AR61589	1D24	15	20 - 11

https://www.truck-manuals.net/

NUMERICAL INDEX - CONTINUED

PART NO.	GRID	KEY	PAGE
AR61589	1F18	19	20 - 47
AR61589	1H5	19	20 - 83
AR62150	7G8	7	70 - 77
AR62150	7G16	7	70 - 85
AR62151	7F11	4	70 - 56
AR62151	7F18	1	70 - 63
AR62151	7F24	3	70 - 69
AR62399	1E25	7	20 - 31
AR62492	1E25	8	20 - 31
AR62936	7E5	21	70 - 23
AR63218	1D14	1	20 - 1
AR63219	1D14	1	20 - 1
AR63222	1D14	1	20 - 1
AR63979	1D14	1	20 - 1
AR68801	8F16	6	80 - 37
AR68801	8F17	5	80 - 38
AR69444	7D9	1	70 - 1
AR69445	7D9	1	70 - 1
AR69988	7G22	5	70 - 93
AR71108	9G4	3	92 - 15
AR71109	9G4	19	92 - 15
AR72055	9F18	6	92 - 3
AR73277	1E14	7	20 - 20
AR73278	1E14	7	20 - 20
AR73279	1E6	1	20 - 13D
AR73279	1E14	7	20 - 20
AR73280	1E14	7	20 - 20
AR73281	1E14	7	20 - 20
AR73500	7J10	1	70 - 153
AR74814	1E15	3	20 - 21
AR74815	1E15	3	20 - 21
AR74816	1E6	1	20 - 13D
AR74816	1E15	3	20 - 21
AR74817	1E15	3	20 - 21
AR74818	1E15	3	20 - 21
AR75693	6F8	3	60 - 51B
AR75695	3E10	13	40 - 15
AR75695	3E12	13	40 - 17
AR75695	3E18	13	40 - 23
AR75695	3F12	3	40 - 43
AR77747	1E15	1	20 - 21
AR77748	1E15	2	20 - 21
AR77749	1E15	2	20 - 21
AR77750	1E6	1	20 - 13D
AR77750	1E15	2	20 - 21
AR77751	1E15	2	20 - 21
AR77752	1E15	2	20 - 21
AR77753	1E6	1	20 - 13D
AR77753	1E15	1	20 - 21
AR78289	7F24	41	70 - 69
AR85519	2E23	21	30 - 37
AR85519	2F8	19	30 - 47
AR85519	2F20	21	30 - 57
AR86406	8G1	16	80 - 48
AR86745	2E21	11	30 - 35
AR86745	2F6	7	30 - 45
AR86745	2G3	13	30 - 67
AR86745	2G5	7	30 - 69
AR86745	2G10	4	30 - 74
AR87079	1F1	1	20 - 32
AR87079	3I4	3	40 - 109
AR88903	1F9	19	20 - 39A
AR88903	2E25	19	30 - 39
AR88903	2F12	19	30 - 49B
AR88903	2F22	19	30 - 59
AR89302	7F24	4	70 - 69
AR89303	7F24	1	70 - 69
AR89543	5E8	1	53 - 31
AR90577	7G18	5	70 - 89
AR90578	7G18	5	70 - 89
AR90579	7G18	6	70 - 89
AR90581	7G18	6	70 - 89
AR90583	7G18	6	70 - 89
AR93341	1E14	6	20 - 20
AR93820	7J9	8	70 - 152
AR94516	4F23	11	51 - 27
AR94516	4F23	23	51 - 27
AR94516	4F25	35	51 - 29
AR94516	4G2	16	51 - 31
AR94516	4G2	28	51 - 31
AR94516	4G12	17	51 - 41
AR94516	5D6	7	53 - 3
AR94516	5D8	7	53 - 5
AR94522	7H14	1	70 - 107
AR94522	7I20	..	70 - 139
AR94522	7J2	24	70 - 145
AR94522	7J9	10	70 - 152
AR94522	8D19	1	71 - 17
AR94761	5F2	8	54 - 15
AR94761	5F4	10	54 - 17
AR94761	5F6	2	54 - 17B
AR94761	5F25	4	54 - 37
AR98201	7J9	2	70 - 152
AR98202	7J9	1	70 - 152
AR98479	7F24	42	70 - 69
AR98850	1E14	9	20 - 20
AR98850	1G6	9	20 - 58
AR98850	1H17	9	20 - 95
AT107509	1D18	11	20 - 5
AT107509	1F11	11	20 - 41
AT107509	1G23	11	20 - 77
AT107509	4G12	23	51 - 41
AT107509	4H22	..	51 - 75
AT107509	4I16	23	51 - 93
AT107509	5D16	12	53 - 13
AT116162	3H9	8	40 - 89
AT116162	6D13	6	60 - 9
AT125596	8H10	18	90 - 7
AT127547	9D12	2	91 - 7
AT128774	7E13	1	70 - 33
AT130104	4D8	1	42 - 4
AT130104	4D10	1	42 - 6
AT130104	4D12	3	42 - 8
AT130104	4D12	15	42 - 8
AT130104	4D20	3	42 - 16
AT130104	4D22	1	42 - 18
AT13740	1D24	1	20 - 11
AT13740	1F3	13	20 - 35
AT13740	1F18	4	20 - 47
AT13740	1G18	13	20 - 71
AT13740	1H5	4	20 - 83
AT13740	1I6	13	20 - 108A
AT13740	1I15	11	20 - 117
AT13740	1I17	11	20 - 119
AT139776	1I15	14	20 - 117
AT139776	1I17	14	20 - 119
AT140957	3G22	5	40 - 78
AT162848	8H10	18	90 - 7
AT18904	2G7	30	30 - 71
AT18904	8H14	10	90 - 11
AT22070	8G2	1	80 - 49
AT22073	8G2	10	80 - 49
AT25226	8E18	16	80 - 11
AT25226	8E20	2	80 - 15
AT25226	8E22	18	80 - 17
AT25226	8E24	15	80 - 19
AT25226	8E25	7	80 - 20
AT56660	8F10	6	80 - 31
AT56660	8F20	4	80 - 41
AT66865	1D15	4	20 - 2
AT68973	3E2	6	40 - 9
AT68973	3E8	7	40 - 13
AT68973	3F9	1	40 - 40
AT78534	3I6	7	40 - 111
AT85197	7J10	3	70 - 153
AZ47788	9E20	6	91 - 39
AZ47908	9E20	2	91 - 39
A15147	8D13	2	71 - 11
A15899	7J2	23	70 - 145
A31867	9F7	33	91 - 51
A3190R	7H23	3	70 - 117
A3190R	7H25	2	70 - 119
A3190R	7I10	23	70 - 129
A364R	6D9	19	60 - 5
A3815R	6D9	20	60 - 5
A4365R	1D24	14	20 - 11
A4365R	1F18	18	20 - 47
A4365R	1H5	18	20 - 83
A4365R	6E20	29	60 - 39
A4365R	6E22	10	60 - 41
A4365R	6E25	3	60 - 44
A4365R	6F24	15	60 - 67
A4365R	6G3	15	60 - 69B
A4365R	6G5	15	60 - 69D
A4540R	5E16	5	54 - 3
A4540R	5F13	5	54 - 25
A4741R	9G6	5	92 - 17
A4827R	3F21	8	40 - 53
A4883R	8E22	4	80 - 17
A5067R	4F16	14	51 - 19
A5067R	4H18	14	51 - 71
A5067R	9D12	5	91 - 7
A5518R	6D20	3	60 - 16
A5598R	7F6	8	70 - 51
A602R	7F8	16	70 - 53
A776R	7F24	8	70 - 69
BP13811	8D15	61	71 - 13
B2762R	6F22	8	60 - 65
B2762R	6G3	21	60 - 69B
B2762R	6G5	6	60 - 69D
B2982R	6F22	16	60 - 65
B30434	8E16	8	80 - 9
B30667	4D25	13	42 - 21
B3690R	6D7	8	60 - 3
B3690R	6E14	5	60 - 33
B3690R	7D23	35	70 - 15
B3690R	7E7	1	70 - 25
CC40740	8G16	1	80 - 63
CE15294	4D16	9	42 - 12
CE15294	4D17	2	42 - 13
CH12638	4D25	1	42 - 21
CH12639	4D25	1	42 - 21
CH12713	4D25	1	42 - 21
CH14887	1I20	10	20 - 123
CH14887	1I24	10	20 - 127
CH17453	4G12	22	51 - 41
CH17453	5E16	1	54 - 3
CH17453	5E16	2	54 - 3
CH17453	5E16	21	54 - 3
CH17453	5F13	1	54 - 25
C14618	7J9	10	70 - 152

https://www.truck-manuals.net/

NUMERICAL INDEX - CONTINUED

PART NO.	GRID	KEY	PAGE
C16054	3H15	6	40 - 95
C16054	5F11	3	54 - 22
C19243	5D6	9	53 - 3
C19243	5D8	9	53 - 5
DS0251	1D15	..	20 - 2
DS0557	1D15	..	20 - 2
DT2127W	8E18	13	80 - 11
D2361	4F4	3	51 - 7
D2361	4F6	15	51 - 9
D2361	4F8	25	51 - 11
D2361	4F12	9	51 - 15
D2361	4H6	3	51 - 59
D2361	4H8	15	51 - 61
D2361	4H14	9	51 - 67
D2361R	4F10	19	51 - 13
D2361R	4F18	24	51 - 21
D2361R	4H10	25	51 - 63
D2361R	4H12	19	51 - 65
D2361R	4H20	24	51 - 73
ET14521	1E9	7	20 - 15
ET14521	1F23	7	20 - 52
ET14521	1H12	7	20 - 90
ET15766	3F4	2	40 - 34
E11077	8D13	42	71 - 11
E1343FN	1E6	1	20 - 13D
E1343FN	1E14	1	20 - 20
E1343FN	1G6	1	20 - 58
E1343FN	1H17	1	20 - 95
E48764	1I11	29	20 - 113
E55662	1F9	16	20 - 39A
E55662	2E25	16	30 - 39
E55662	3I14	4	41 - 4
E55662	3I15	4	41 - 4A
E55662	3I16	3	41 - 5
E55662	3I21	1	41 - 11
E57351	8F25	12	80 - 46
E57351	8G1	12	80 - 48
E69392	7H21	1	70 - 115
F1451R	6F22	4	60 - 65
F1743R	1D24	8	20 - 11
F1743R	1F18	11	20 - 47
F1743R	1H5	11	20 - 83
F1870R	7D25	35	70 - 17
F2206R	7F24	31	70 - 69
F2208R	7F24	28	70 - 69
F2380R	5D18	18	53 - 15
F2380R	5D20	19	53 - 17
F2380R	5D22	19	53 - 19
F2573R	7H23	26	70 - 117
F2573R	7H25	8	70 - 119
F2573R	7I10	35	70 - 129
F2573R	7I12	5	70 - 131
F2863	9F25	19	92 - 11
F304R	7G22	3	70 - 93
F3171	5D10	4	53 - 7
F3171	5D10	5	53 - 7
F3171R	1E9	10	20 - 15
F3171R	1F23	10	20 - 52
F3171R	1H12	10	20 - 90
F3171R	4G10	29	51 - 39
F3171R	4I14	29	51 - 91
F3171R	5D14	4	53 - 11
F3171R	5D18	25	53 - 15
F3171R	5D20	26	53 - 17
F3171R	5D22	26	53 - 19
F3353R	4F23	5	51 - 27
F3353R	4F25	45	51 - 29
F3353R	4G14	18	51 - 43
F3353R	4I2	5	51 - 79
F3353R	4I4	45	51 - 81
F3353R	4I18	18	51 - 95
F3396R	7F18	6	70 - 63
F3396R	7F20	16	70 - 65
F3396R	7F22	16	70 - 67
F534R	7F20	10	70 - 65
F534R	7F22	10	70 - 67
H100795	7G6	2	70 - 75
H100795	7G14	2	70 - 83
H108291	4G22	4	51 - 51
H108291	6F6	12	60 - 51
H109046	7E5	9	70 - 23
H111706	3F23	10	40 - 55
H111706	3F23	14	40 - 55
H112162	6F6	32	60 - 51
H112162	6I2	5	60 - 113
H112567	6E6	10	60 - 25
H112567	6E6	11	60 - 25
H112567	6E6	32	60 - 25
H112567	6E6	34	60 - 25
H112567	6E8	11	60 - 27
H112567	6G8	12	60 - 71
H112567	6G10	12	60 - 73
H112567	7E5	13	70 - 23
H112567	8H10	10	90 - 7
H112567	8H14	18	90 - 11
H113196	3I14	7	41 - 4
H113196	3I15	9	41 - 4A
H113196	3I16	5	41 - 5
H113196	3I19	2	41 - 8
H114865	6G8	11	60 - 71
H114865	6G10	11	60 - 73
H114865	8H10	9	90 - 7
H114865	8H14	17	90 - 11
H115379	7E5	14	70 - 23
H115521	8H16	16	90 - 13
H115533	7F2	20	70 - 47
H115533	7F4	20	70 - 49
H117239	3H17	12	40 - 97
H120362	8H14	22	90 - 11
H120847	8D17	12	71 - 15
H120847	8H14	14	90 - 11
H121163	6F6	28	60 - 51
H121163	7E5	16	70 - 23
H121168	4G22	6	51 - 51
H121168	6E4	8	60 - 23
H121168	6E4	10	60 - 23
H121168	6E4	11	60 - 23
H121168	6E4	24	60 - 23
H121168	6E4	25	60 - 23
H121168	6E6	8	60 - 25
H121168	6E8	8	60 - 27
H121168	6F6	13	60 - 51
H121168	6G8	20	60 - 71
H121168	7E5	10	70 - 23
H121168	8D17	13	71 - 15
H121168	8H14	15	90 - 11
H123995	3G10	2	40 - 67
H123995	3H17	3	40 - 97
H123995	3H18	6	40 - 98
H125156	6G8	20	60 - 71
H128515	6F6	29	60 - 51
H128515	7E5	17	70 - 23
H132795	3H17	13	40 - 97
H132899	3G19	7	40 - 75
H132899	9E10	11	91 - 29
H134624	6D13	1	60 - 9
H135156	6E4	9	60 - 23
H135156	6E4	10	60 - 23
H135156	6E4	11	60 - 23
H135156	6E4	24	60 - 23
H135156	6E4	25	60 - 23
H135156	6E6	9	60 - 25
H135156	6E8	9	60 - 27
H136110	4E2	11	42 - 23
H138955	8G11	2	80 - 58
H141510	6E6	10	60 - 25
H141510	6E6	11	60 - 25
H141510	6E6	32	60 - 25
H141510	6E6	34	60 - 25
H141510	6E8	35	60 - 27
H143834	2G9	..	30 - 73
H145175	7E24	19	70 - 44
H145175	7E25	19	70 - 45
H145176	7E20	19	70 - 40
H145176	7E21	19	70 - 41
H145176	7E22	17	70 - 42
H145176	7E23	17	70 - 43
H145456	7E24	2	70 - 44
H145456	7E25	2	70 - 45
H150411	6D22	10	60 - 17B
H151629	6D22	3	60 - 17B
H151674	6D25	6	60 - 21
H151674	6E1	6	60 - 21A
H152104	6D25	2	60 - 21
H152104	6E1	2	60 - 21A
H152202	7E21	4	70 - 41
H152202	7E23	4	70 - 43
H152203	7E25	4	70 - 45
H152347	7E20	13	70 - 40
H152347	7E21	13	70 - 41
H152793	7E21	5	70 - 41
H152793	7E23	5	70 - 43
H152794	7E25	5	70 - 45
H153659	6D22	4	60 - 17B
H153834	6D22	1	60 - 17B
H153834	6D25	3	60 - 21
H153834	6E1	3	60 - 21A
H157642	7E22	13	70 - 42
H157642	7E23	13	70 - 43
H157978	7E24	13	70 - 44
H157978	7E25	13	70 - 45
H158942	6D22	6	60 - 17B
H161618	4E2	10	42 - 23
H164359	6D22	8	60 - 17B
H164360	6D22	11	60 - 17B
H168109	6D22	5	60 - 17B
H169509	6D22	12	60 - 17B
H23941	6H23	2	60 - 109
H23941	6H25	2	60 - 111
H23941	6H25	26	60 - 111
H25220	9F2	12	91 - 47
H25220	9F7	19	91 - 51
H33795	6H23	4	60 - 109
H33795	6H23	21	60 - 109
H33795	6H25	4	60 - 111
H33795	6H25	21	60 - 111
H36256	5E24	10	54 - 13
H61354	7D13	5	70 - 5
H61354	7D25	9	70 - 17
H63262	4G10	17	51 - 39
H63262	4I14	17	51 - 91

https://www.truck-manuals.net/

NUMERICAL INDEX - CONTINUED

PART NO.	GRID	KEY	PAGE
H75541	4G22	9	51 - 51
H75541	8H12	7	90 - 9
H79910	1D24	20	20 - 11
H80128	6D11	9	60 - 7
H85092	8H20	6	90 - 17
H86981	4G10	21	51 - 39
IPSKIT1	1D15	..	20 - 2
JD10116	4G10	10	51 - 39
JD10116	4I14	10	51 - 91
JD10134	5D20	4	53 - 17
JD10134	5D22	4	53 - 19
JD10135	5D20	5	53 - 17
JD10135	5D22	5	53 - 19
JD10181	4E24	12	51 - 3
JD10181	4H2	12	51 - 55
JD10190	8E18	8	80 - 11
JD10226	5E16	8	54 - 3
JD10226	5E17	3	54 - 4
JD10226	5F13	8	54 - 25
JD10226	5F19	10	54 - 31
JD10227	5E16	9	54 - 3
JD10227	5E17	3	54 - 4
JD10227	5F13	9	54 - 25
JD10227	5F19	9	54 - 31
JD10353	5E16	8	54 - 3
JD10354	5E16	9	54 - 3
JD10527	5E4	25	53 - 27
JD5400	8G5	2	80 - 52
JD5801	1I20	12	20 - 123
JD5801	1I24	12	20 - 127
JD5801	5E24	18	54 - 13
JD5920	4E2	16	42 - 23
JD5921	4E2	14	42 - 23
JD5922	4E2	15	42 - 23
JD5927	8G5	2	80 - 52
JD5929	8G5	2	80 - 52
JD7242	5G2	1	54 - 39
JD7242	5G2	15	54 - 39
JD7242	5G4	1	54 - 41
JD7242	5G4	15	54 - 41
JD7266	8E18	7	80 - 11
JD7292	5E4	11	53 - 27
JD7292	5E21	18	54 - 9
JD7292	5F19	4	54 - 31
JD7292	5F19	11	54 - 31
JD7292	5F21	2	54 - 33
JD7297	5E2	4	53 - 25
JD7297	5E6	6	53 - 29
JD7370	5E2	5	53 - 25
JD7370	5E6	5	53 - 29
JD7378	5E4	2	53 - 27
JD7386	5E21	19	54 - 9
JD7424	5E4	29	53 - 27
JD7425	5E21	3	54 - 9
JD7425	7D11	1	70 - 3
JD7439	8E18	4	80 - 11
JD7449	7D15	33	70 - 7
JD7759	5F25	2	54 - 37
JD7781	5F2	5	54 - 15
JD7781	5F4	5	54 - 17
JD7781	7F6	9	70 - 51
JD7797	8D13	11	71 - 11
JD7797	8D15	33	71 - 13
JD7797	8D15	47	71 - 13
JD7797	8E16	4	80 - 9
JD7798	7E14	2	70 - 34
JD7798	7E15	2	70 - 35
JD7798	7E16	2	70 - 36
JD7798	7E17	2	70 - 37
JD7798	7E18	2	70 - 38
JD7798	7E19	2	70 - 39
JD7798	7F2	13	70 - 47
JD7798	7F4	13	70 - 49
JD7798	7F8	2	70 - 53
JD7798	7F18	12	70 - 63
JD7798	7F20	6	70 - 65
JD7798	7F22	6	70 - 67
JD7798	8E10	6	80 - 3
JD7798	8E12	6	80 - 5
JD7798	8E14	9	80 - 7
JD7799	7F6	11	70 - 51
JD7799	8E14	8	80 - 7
JD8100	5E4	28	53 - 27
JD8118	7D15	34	70 - 7
JD8131	8E18	3	80 - 11
JD8147	7D11	2	70 - 3
JD8177	5D6	24	53 - 3
JD8177	5D8	24	53 - 5
JD8191	5D16	28	53 - 13
JD8213	5D6	23	53 - 3
JD8213	5D8	23	53 - 5
JD8214	5D16	27	53 - 13
JD8239	7D15	35	70 - 7
JD8247	5E4	24	53 - 27
JD8248	5D18	8	53 - 15
JD8252	5F19	15	54 - 31
JD8252	5F21	6	54 - 33
JD8253	7D15	31	70 - 7
JD8255	5D12	4	53 - 9
JD8535	4E24	3	51 - 3
JD8535	4H2	3	51 - 55
JD8535	6F3	2	60 - 47
JD8537	5E16	3	54 - 3
JD8537	5F13	3	54 - 25
JD8568	4G10	13	51 - 39
JD8568	4I14	13	51 - 91
JD8870	5D6	4	53 - 3
JD8870	5D8	4	53 - 5
JD8905	7D15	36	70 - 7
JD8930	5F25	8	54 - 37
JD8935	7D15	32	70 - 7
JD8941	5D12	5	53 - 9
JD9018	5D18	9	53 - 15
JD9043	5E16	16	54 - 3
JD9043	5F13	16	54 - 25
JD9043	7D11	3	70 - 3
JD9049	7D11	4	70 - 3
JD9050	5F10	18	54 - 21
JD9050	5F23	13	54 - 35
JD9050	5F23	19	54 - 35
JD9069	5D16	7	53 - 13
JD9069	5D20	10	53 - 17
JD9069	5D22	10	53 - 19
JD9075	5D6	14	53 - 3
JD9075	5D8	14	53 - 5
JD9109	5E16	15	54 - 3
JD9109	5F13	15	54 - 25
JD9109	7D11	5	70 - 3
JD9114	7D11	6	70 - 3
JD9115	5F10	17	54 - 21
JD9115	5F23	14	54 - 35
JD9115	5F23	18	54 - 35
JD9127	5D16	8	53 - 13
JD9127	5D20	9	53 - 17
JD9127	5D22	9	53 - 19
JD9132	5D6	20	53 - 3
JD9132	5D8	20	53 - 5
JD9279	5E16	1	54 - 3
JD9346	5F25	15	54 - 37
JD9833	4F2	5	51 - 5
JD9833	4H4	5	51 - 57
JD9960	9F25	22	92 - 11
J19366	4F16	13	51 - 19
J19366	4H18	13	51 - 71
J19366	9D12	6	91 - 7
J4216H	4E24	11	51 - 3
J4216H	4H2	11	51 - 55
K40002	8F25	6	80 - 46
K40002	8G1	15	80 - 48
K40003	8E16	11	80 - 9
K40003	8F9	8	80 - 30
K40003	9G2	4	92 - 13
K40003	9G6	12	92 - 17
K40003	9G6	17	92 - 17
K40014	8D15	10	71 - 13
K40014	8D17	9	71 - 15
L100300	7H18	2	70 - 111
L100303	7H12	2	70 - 105
L100304	7H12	16	70 - 105
L100309	7H18	6	70 - 111
L100436	6D7	10	60 - 3
L100496	4F4	18	51 - 7
L100496	4H6	18	51 - 59
L101222	7H12	20	70 - 105
L101966	7H6	5	70 - 101
L102023	9E6	1	91 - 25
L102193	7J6	13	70 - 149
L102193	7J8	13	70 - 151
L102195	7J6	31	70 - 149
L102195	7J8	31	70 - 151
L102196	7J6	15	70 - 149
L102196	7J8	15	70 - 151
L102198	7J6	16	70 - 149
L102198	7J8	16	70 - 151
L102199	7J6	27	70 - 149
L102199	7J8	27	70 - 151
L102453	6G16	11	60 - 79
L111038	8G4	9	80 - 51
L111419	9F5	35	91 - 49
L111699	7H2	3	70 - 97
L113561	4D10	10	42 - 6
L113561	4D10	12	42 - 6
L113561	4D11	13	42 - 7
L113561	4D11	15	42 - 7
L113583	6H11	2	60 - 99
L113583	6H13	1	60 - 101
L113583	8G11	6	80 - 58
L113907	9F3	4	91 - 47A
L113907	9F9	28	91 - 53
L113908	9F3	2	91 - 47A
L113908	9F9	29	91 - 53
L115419	7H8	22	70 - 101B
L115420	7H8	5	70 - 101B
L12491	8F16	2	80 - 37
L12807	4D16	14	42 - 12
L12807	4D17	5	42 - 13
L1610N	4G12	8	51 - 41
L1610N	4I16	8	51 - 93
L2646N	2G7	28	30 - 71
L30706	6G16	2	60 - 79
L32997	7F14	13	70 - 59

https://www.truck-manuals.net/

NUMERICAL INDEX - CONTINUED

PART NO.	GRID	KEY	PAGE
L33035	5E4	5	53 - 27
L33629	8G4	9	80 - 51
L35036	7F14	4	70 - 59
L35850	8G16	11	80 - 63
L37975	4D9	7	42 - 5
L37975	4D13	6	42 - 9
L37975	4D21	4	42 - 17
L37975	4D21	7	42 - 17
L38296	7H4	21	70 - 99
L38296	7H6	11	70 - 101
L38296	7H8	11	70 - 101B
L38416	4D16	12	42 - 12
L38449	8F16	5	80 - 37
L38450	8F16	3	80 - 37
L38451	8F16	4	80 - 37
L38797	9E18	17	91 - 37
L38797	9E20	17	91 - 39
L39134	8H21	5	90 - 18
L39134	9D16	8	91 - 11
L39134	9D16	17	91 - 11
L39871	8G6	10	80 - 53
L39978	7F16	9	70 - 61
L40799	6F22	2	60 - 65
L40811	7F14	3	70 - 59
L40829	7F14	16	70 - 59
L41079	6H13	9	60 - 101
L41880	7F15	4	70 - 60
L53826	6G16	3	60 - 79
L53976	6G16	6	60 - 79
L55210	9D12	1	91 - 7
L55431	7F15	6	70 - 60
L55980	4D16	5	42 - 12
L56933	9G10	15	92 - 21
L57084	7E7	23	70 - 25
L57250	9D24	10	91 - 19
L57470	9G10	20	92 - 21
L57881	8H20	34	90 - 17
L58890	9F2	11	91 - 47
L58890	9F3	7	91 - 47A
L58890	9F7	17	91 - 51
L58890	9F9	17	91 - 53
L59320	7G24	2	70 - 95
L59320	7H2	2	70 - 97
L59336	7H4	5	70 - 99
L59336	7H6	15	70 - 101
L59336	7H8	15	70 - 101B
L59342	7H4	10	70 - 99
L59342	7H6	20	70 - 101
L59342	7H8	20	70 - 101B
L59343	7H4	6	70 - 99
L59343	7H6	17	70 - 101
L59343	7H8	17	70 - 101B
L59344	7H4	7	70 - 99
L59344	7H6	16	70 - 101
L59345	7H4	11	70 - 99
L59345	7H6	21	70 - 101
L59345	7H8	21	70 - 101B
L59572	7J6	8	70 - 149
L59572	7J8	8	70 - 151
L59573	7J6	7	70 - 149
L59573	7J8	7	70 - 151
L60365	7D17	5	70 - 9
L62682	6G16	4	60 - 79
L62893	6H11	7	60 - 99
L62893	6H13	24	60 - 101
L63262	8G18	6	80 - 65
L63816	6H11	8	60 - 99
L63816	6H13	25	60 - 101
L63825	7H18	3	70 - 111
L63826	7H18	4	70 - 111
L64173	6H13	9	60 - 101
L64185	6H11	1	60 - 99
L64413	6H13	9	60 - 101
L64456	5E4	32	53 - 27
L64991	8G16	1	80 - 63
L65000	3H5	6	40 - 85
L65000	3H7	6	40 - 87
L65000	3H9	12	40 - 89
L65000	8G11	5	80 - 58
L65043	6H11	2	60 - 99
L65043	6H13	1	60 - 101
L65043	8G11	6	80 - 58
L65070	8G16	6	80 - 63
L65071	3G19	11	40 - 75
L65071	8G16	7	80 - 63
L75379	9E4	4	91 - 23
L75631	9G10	16	92 - 21
L75768	9F5	33	91 - 49
L75841	7E8	1	70 - 28
L75859	8E14	3	80 - 7
L76189	9F3	6	91 - 47A
L76189	9F9	28	91 - 53
L76190	9F3	1	91 - 47A
L76190	9F9	29	91 - 53
L76191	6D11	10	60 - 7
L76191	9F7	29	91 - 51
L76191	9F9	26	91 - 53
L76331	8G5	9	80 - 52
L76331	9E3	6	91 - 22
L76619	8F6	2	80 - 27
L76620	8F6	2	80 - 27
L76711	6I6	8	60 - 117
L76711	7H10	8	70 - 103
L76801	6I6	8	60 - 117
L76801	7H10	8	70 - 103
L77569	6G16	11	60 - 79
L77943	8H12	3	90 - 9
L77943	8H20	19	90 - 17
L78174	9E18	19	91 - 37
L78174	9E20	19	91 - 39
L78176	9E18	1	91 - 37
L78176	9E20	20	91 - 39
L78422	9E21	9	91 - 40
L78625	6G16	9	60 - 79
L78691	9F3	5	91 - 47A
L78691	9F9	30	91 - 53
L78703	9F5	8	91 - 49
L78703	9F9	18	91 - 53
L78704	9F5	31	91 - 49
L78705	9F5	32	91 - 49
L78851	9F5	5	91 - 49
L78851	9F9	19	91 - 53
L79087	8G6	5	80 - 53
L79302	8G4	1	80 - 51
L79404	6F20	19	60 - 63
L79404	6I6	6A	60 - 117
L79447	7G24	3	70 - 95
L79449	7G24	4	70 - 95
L79449	7H2	4	70 - 97
L79474	8G18	7	80 - 65
L79474	9G12	13	92 - 23
L79496	9G10	9	92 - 21
L79497	9G10	6	92 - 21
L79498	9G10	7	92 - 21
L79499	9G10	5	92 - 21
L79500	9G10	8	92 - 21
L79501	9G10	10	92 - 21
L79502	9G10	18	92 - 21
L79503	9G10	13	92 - 21
L79504	9G10	19	92 - 21
L79568	4D10	12	42 - 6
L79568	4D11	15	42 - 7
L79601	8G16	3	80 - 63
L79672	7H10	13	70 - 103
L79672	7H16	2	70 - 109
L79690	4D6	3	42 - 2
L79776	9E16	12	91 - 35
L79777	9E16	11	91 - 35
L79778	9E16	13	91 - 35
L79784	9E18	2	91 - 37
L79784	9E18	16	91 - 37
L79784	9E20	21	91 - 39
L80013	9E21	11	91 - 40
L80014	9E21	8	91 - 40
L80015	9E21	7	91 - 40
L80052	7H10	4	70 - 103
L80052	7H16	9	70 - 109
L80302	3G24	1	40 - 80
L80302	8G12	7	80 - 59
L80465	7H10	11	70 - 103
L80465	7H16	18	70 - 109
L83677	3E14	18	40 - 19
L83677	3E16	18	40 - 21
L83677	3F13	2	40 - 44
M112442	9F9	27	91 - 53
M112442	9F11	37	91 - 53B
M115279	3F17	1	40 - 49
M115279	3F19	1	40 - 51
M115279	3G2	3	40 - 59
M115279	9G8	3	92 - 19
M115827	3E24	19	40 - 29
M115827	7F18	1	70 - 63
M115827	7F24	3	70 - 69
M117141	8F14	11	80 - 35
M117141	9E10	16	91 - 29
M40514	8D15	38	71 - 13
M44677	7D19	25	70 - 11
M45379	7D19	12	70 - 11
M45379	7D21	14	70 - 13
M63200	9E14	7	91 - 33
M67889	1I15	24	20 - 117
M67889	1I17	24	20 - 119
M68628	8H15	7	90 - 12
M70619	6E14	4	60 - 33
M71107	3I22	5	41 - 12
M72490	1F9	15	20 - 39A
M72490	2E25	15	30 - 39
M72490	2F12	15	30 - 49B
M72490	2F22	15	30 - 59
M73135	9D16	5	91 - 11
M73135	9D16	12	91 - 11
M74600	7D19	16	70 - 11
M74600	7D21	13	70 - 13
M74782	8H20	10	90 - 17
M82714	9E14	33	91 - 33
M83725	8G3	4	80 - 50
M84313	7H25	3	70 - 119
M84313	7I18	9	70 - 137
M84971	1J7	12	20 - 135
M84971	1J9	14	20 - 137
M84971	6G24	6	60 - 87

https://www.truck-manuals.net/

NUMERICAL INDEX - CONTINUED

PART NO.	GRID	KEY	PAGE
M84971	9F25	12	92 - 11
M84972	8F12	13	80 - 33
M84972	8F13	4	80 - 34
M84972	8H20	11	90 - 17
M84972	9D16	12	91 - 11
M87795	6F22	12C	60 - 65
M90097	8D13	3	71 - 11
M96130	8H15	3	90 - 12
N107859	7H23	25	70 - 117
N112193	6H19	7	60 - 107
N112193	6H23	20	60 - 109
N112193	6H25	20	60 - 111
N112193	6I2	1	60 - 113
N112193	6I4	1	60 - 115
N137598	4G6	22	51 - 35
N137598	4I12	57	51 - 89
N137598	8D15	59	71 - 13
N153493	4G10	30	51 - 39
N153493	4I14	30	51 - 91
N154080	7I18	1	70 - 137
N154080	7I22	3	70 - 141
N158796	7F6	11	70 - 51
N191770	6E20	6	60 - 39
N191770	6E24	2	60 - 43
N194814	1I11	30	20 - 113
N194814	7I18	8	70 - 137
N202662	7I20	3	70 - 139
N202894	3G2	1	40 - 59
N203491	7D19	33	70 - 11
N203491	7D21	9	70 - 13
N218581	7G22	8	70 - 93
N260556	8D13	4	71 - 11
N260556	8D15	16	71 - 13
N275960	7D25	37	70 - 17
N30256	3G22	1	40 - 78
N30405	2G7	27	30 - 71
N32491	6E4	22	60 - 23
N32491	6G12	17	60 - 75
N34349	6D25	8	60 - 21
N34349	6E1	8	60 - 21A
PM797NA	4E6	1	43 - 1
PT11362	3G2	11	40 - 59
PT11778	8H12	1	90 - 9
PT11778	8H20	18	90 - 17
P40098	5E24	18	54 - 13
P42061	3D20	2	40 - 3
P42061	3D20	10	40 - 3
P42061	3D22	1	40 - 5
P42061	4F4	13	51 - 7
P42061	4F4	14	51 - 7
P42061	4F18	2	51 - 21
P42061	4F18	29	51 - 21
P42061	4H6	13	51 - 59
P42061	4H20	2	51 - 73
P42061	4H20	29	51 - 73
P42061	5D10	10	53 - 7
P42894	5E17	7	54 - 4
P46770	4G16	6	51 - 45
P46770	5D12	14	53 - 9
P47889	4G14	10	51 - 43
P47889	4I18	10	51 - 95
P47889	5E17	9	54 - 4
P47889	5F10	2	54 - 21
P47889	5F17	3	54 - 29
P47889	5F23	22	54 - 35
P47889	6E2	9	60 - 21B
P48347	7E11	6	70 - 31
P50631	4G16	9	51 - 45
P50631	5D12	15	53 - 9
P50635	6D25	9	60 - 21
P50635	6E1	9	60 - 21A
RE10258	2F2	4	30 - 41
RE10258	2F14	4	30 - 51
RE10258	2F24	4	30 - 61
RE10901	1I11	12	20 - 113
RE10901	2D15	15	30 - 7
RE11410	1D18	3	20 - 5
RE11447	7J9	9	70 - 152
RE11456	7J9	2	70 - 152
RE11457	7J9	1	70 - 152
RE11458	7J9	2	70 - 152
RE11463	7J9	2	70 - 152
RE12049	9G4	1	92 - 15
RE12176	2D11	9	30 - 3
RE12176	3E2	12	40 - 9
RE12176	3E8	12	40 - 13
RE12187	4F8	16	51 - 11
RE12187	4H10	16	51 - 63
RE12187	5D10	7	53 - 7
RE12187	6D19	2	60 - 15
RE12187	7E1	4	70 - 19
RE12187	7E7	15	70 - 25
RE12187	7H19	2	70 - 113
RE12187	7I10	14	70 - 129
RE12330	4E8	14	43 - 3
RE12331	4E8	12	43 - 3
RE12332	4E8	18	43 - 3
RE12333	4E8	21	43 - 3
RE12334	4E8	8	43 - 3
RE12362	4E8	4	43 - 3
RE12363	3E14	32	40 - 19
RE12363	3E16	32	40 - 21
RE12363	3H15	11	40 - 95
RE12363	3H15	14	40 - 95
RE12363	4D25	17	42 - 21
RE12363	4E8	11	43 - 3
RE12363	4E8	12	43 - 3
RE12364	4E8	16	43 - 3
RE12365	4E8	20	43 - 3
RE12366	3E24	3	40 - 29
RE12366	4E8	25	43 - 3
RE13181	4F23	3	51 - 27
RE13181	4G14	4	51 - 43
RE13181	4I2	3	51 - 79
RE13181	4I18	4	51 - 95
RE13541	9G4	18	92 - 15
RE14439	5E2	6	53 - 25
RE14519	8E18	9	80 - 11
RE150008	8G1	8	80 - 48
RE150010	8G1	8	80 - 48
RE150011	8G1	7	80 - 48
RE150013	8G1	7	80 - 48
RE150316	5F4	14	54 - 17
RE150316	5F8	2	54 - 19
RE150317	5F4	17	54 - 17
RE150317	5F8	5	54 - 19
RE150318	5F4	28	54 - 17
RE150318	5F8	7	54 - 19
RE150319	5F8	9	54 - 19
RE150319	5F10	14	54 - 21
RE150320	5F2	21	54 - 15
RE150320	5F8	9	54 - 19
RE150419	4D21	10	42 - 17
RE150420	3E10	44	40 - 15
RE150420	3E12	45	40 - 17
RE150420	3E18	45	40 - 23
RE150421	3E10	12	40 - 15
RE150421	3E12	12	40 - 17
RE150421	3E14	17	40 - 19
RE150421	3E14	44	40 - 19
RE150421	3E16	17	40 - 21
RE150421	3E16	45	40 - 21
RE150421	3E18	12	40 - 23
RE150421	4D11	9	42 - 7
RE150421	4D23	9	42 - 19
RE150422	3E2	27	40 - 9
RE150422	3E4	27	40 - 9B
RE150422	3E8	27	40 - 13
RE150422	4D15	2	42 - 11
RE150423	3E2	28	40 - 9
RE150423	3E4	28	40 - 9B
RE150423	3E8	28	40 - 13
RE150423	4D15	2	42 - 11
RE150424	3E20	2	40 - 25
RE150424	4D21	11	42 - 17
RE150425	3E10	37	40 - 15
RE150425	3E12	38	40 - 17
RE150425	3E18	38	40 - 23
RE150425	4D9	10	42 - 5
RE150426	3E2	14	40 - 9
RE150426	3E8	14	40 - 13
RE150426	4D13	14	42 - 9
RE150428	3E2	5	40 - 9
RE150428	3E8	6	40 - 13
RE150428	4D13	9	42 - 9
RE150544	3E18	15	40 - 23
RE150544	3F7	10	40 - 37
RE150545	3F5	4	40 - 35
RE150545	6H13	29	60 - 101
RE150587	9F13	1	91 - 55
RE150589	9F13	1	91 - 55
RE150606	3F5	6	40 - 35
RE150606	6H13	23	60 - 101
RE150608	4G6	5	51 - 35
RE150608	4I10	5	51 - 87
RE150629	5D14	1	53 - 11
RE150663	3F5	8	40 - 35
RE150663	6H13	21	60 - 101
RE150778	6H13	17	60 - 101
RE150781	4G6	5	51 - 35
RE150781	4I10	5	51 - 87
RE150839	6H13	15	60 - 101
RE150839	6H15	7	60 - 103
RE150839	6H17	7	60 - 105
RE150840	6G22	8	60 - 85
RE150840	6H13	30	60 - 101
RE150841	6G22	4	60 - 85
RE150842	6G22	2	60 - 85
RE150842	6H17	21	60 - 105
RE150843	6G22	3	60 - 85
RE150843	6H17	6	60 - 105
RE150852	8E22	11	80 - 17
RE150854	8E24	10	80 - 19
RE150870	7G16	9	70 - 85
RE150871	7G16	1	70 - 85
RE150873	7G8	9	70 - 77
RE150874	7G8	1	70 - 77
RE150889	9G8	10	92 - 19
RE150889	9G8	11	92 - 19
RE150889	9G8	12	92 - 19
RE150894	9E10	25	91 - 29

https://www.truck-manuals.net/

NUMERICAL INDEX - CONTINUED

PART NO.	GRID	KEY	PAGE
RE150903	6G22	10	60 - 85
RE150903	6H13	14	60 - 101
RE150945	3D22	1	40 - 5
RE150945	4H20	2	51 - 73
RE150945	5D10	10	53 - 7
RE150946	3D22	7	40 - 5
RE150946	4H6	14	51 - 59
RE151144	4G10	16	51 - 39
RE151144	7D11	8	70 - 3
RE151345	3E20	2	40 - 25
RE151345	4D21	11	42 - 17
RE151346	3E10	12	40 - 15
RE151346	3E12	12	40 - 17
RE151346	3E14	17	40 - 19
RE151346	3E14	44	40 - 19
RE151346	3E16	17	40 - 21
RE151346	3E16	45	40 - 21
RE151346	3E18	12	40 - 23
RE151346	4D11	9	42 - 7
RE151346	4D23	9	42 - 19
RE151433	1F5	16	20 - 37
RE151433	1F6	15	20 - 37A
RE151433	1G19	16	20 - 73
RE151433	1I7	16	20 - 109
RE151433	3E2	22	40 - 9
RE151433	3E4	22	40 - 9B
RE151433	3E8	22	40 - 13
RE151465	2G9	9	30 - 73
RE151494	3E20	3	40 - 25
RE151494	3E20	7	40 - 25
RE151494	9E23	2	91 - 43
RE151496	9E23	8	91 - 43
RE151728	2E7	4	30 - 25
RE151774	6D7	2	60 - 3
RE151801	4H12	9	51 - 65
RE151898	7D19	27	70 - 11
RE151968	6F8	1	60 - 51B
RE151986	4G4	1	51 - 33
RE152005	3G14	10	40 - 71
RE152005	6F18	5	60 - 61
RE152006	3G14	10	40 - 71
RE152006	6F18	5	60 - 61
RE152110	7E7	4	70 - 25
RE152147	3F17	16	40 - 49
RE152147	3F19	16	40 - 51
RE152291	8H20	5	90 - 17
RE152291	8H20	27	90 - 17
RE152291	8H22	1	90 - 19
RE152380	3G14	10	40 - 71
RE152382	3G14	10	40 - 71
RE152556	9F13	1	91 - 55
RE152557	9F13	1	91 - 55
RE152877	3E8	5	40 - 13
RE152877	3H9	9	40 - 89
RE152880	3E8	5	40 - 13
RE152880	3H9	9	40 - 89
RE153022	4G4	1	51 - 33
RE153099	6H25	25	60 - 111
RE153152	9D12	24	91 - 7
RE153242	6D16	1	60 - 12
RE153289	3I2	3	40 - 107
RE153329	3D22	1	40 - 5
RE153329	4H20	2	51 - 73
RE153330	3D22	7	40 - 5
RE153330	4H6	14	51 - 59
RE153333	3E2	7	40 - 9
RE153333	3H5	5	40 - 85
RE153333	3H5	18	40 - 85
RE153333	3H7	5	40 - 87
RE153333	3H7	18	40 - 87
RE153333	3H9	13	40 - 89
RE153334	3E2	7	40 - 9
RE153334	3H5	5	40 - 85
RE153334	3H5	18	40 - 85
RE153334	3H7	5	40 - 87
RE153334	3H7	18	40 - 87
RE153334	3H9	13	40 - 89
RE153902	3G16	19	40 - 72A
RE154099	5D14	39	53 - 11
RE154280	6F4	2	60 - 49
RE154389	1I11	16	20 - 113
RE154411	4H8	29	51 - 61
RE154412	4H8	22	51 - 61
RE154488	3G2	5	40 - 59
RE154628	6D19	8	60 - 15
RE154766	6G3	19	60 - 69B
RE154869	5F4	16	54 - 17
RE154869	5F8	4	54 - 19
RE154869	5F10	19	54 - 21
RE154869	5F25	6	54 - 37
RE154994	9E18	16	91 - 37
RE155037	4G12	16	51 - 41
RE155037	4I16	16	51 - 93
RE155218	8H10	16	90 - 7
RE155450	6F1	1A	60 - 45
RE155450	6F1	1B	60 - 45
RE155581	1I22	31	20 - 125
RE155581	1J2	31	20 - 129
RE155637	6F22	5A	60 - 65
RE155637	6F22	5B	60 - 65
RE155637	6F22	5C	60 - 65
RE155825	5F6	7	54 - 17B
RE155826	5F6	7	54 - 17B
RE155938	3E10	21	40 - 15
RE155938	3E12	21	40 - 17
RE155938	3E14	25	40 - 19
RE155938	3E16	25	40 - 21
RE155938	3E18	21	40 - 23
RE155938	8H12	16	90 - 9
RE155953	8F8	1	80 - 29
RE155966	3D22	1	40 - 5
RE155966	4H20	2	51 - 73
RE155966	5D10	10	53 - 7
RE155967	3D22	7	40 - 5
RE155967	4H6	14	51 - 59
RE155975	9F5	28	91 - 49
RE155975	9F5	34	91 - 49
RE155987	3E10	2	40 - 15
RE155987	3E12	2	40 - 17
RE155987	3E14	2	40 - 19
RE155987	3E16	2	40 - 21
RE155987	3E18	2	40 - 23
RE155987	3G17	1	40 - 73
RE155987	3G17	2	40 - 73
RE155989	6D20	1	60 - 16
RE155989	6D22	13	60 - 17B
RE155989	6D22	14	60 - 17B
RE155994	8E24	10	80 - 19
RE156219	3G14	4	40 - 71
RE156220	3G14	4	40 - 71
RE156238	8F8	3	80 - 29
RE156605	8E20	3	80 - 15
RE156606	8E20	3	80 - 15
RE156607	8E20	3	80 - 15
RE156608	8E20	3	80 - 15
RE156609	8E20	3	80 - 15
RE156610	8E20	3	80 - 15
RE156751	5F6	7	54 - 17B
RE156939	3G14	10	40 - 71
RE156940	3G14	10	40 - 71
RE156958	8H20	5	90 - 17
RE156958	8H20	32	90 - 17
RE157111	6E22	1	60 - 41
RE157111	6G5	16	60 - 69D
RE157244	8H18	11	90 - 15
RE157244	9D16	10	91 - 11
RE157244	9D18	7	91 - 13
RE157354	3G14	3	40 - 71
RE157515	7H14	..	70 - 107
RE157613	2E7	2	30 - 25
RE157739	5F25	17	54 - 37
RE158037	9G8	1	92 - 19
RE158047	5F25	3	54 - 37
RE158048	5F25	3	54 - 37
RE158066	4F23	3	51 - 27
RE158066	4G14	4	51 - 43
RE158066	4I2	3	51 - 79
RE158066	4I18	4	51 - 95
RE15807	2E23	26	30 - 37
RE15807	2F8	24	30 - 47
RE15807	2F20	26	30 - 57
RE15808	2E23	27	30 - 37
RE15808	2F8	25	30 - 47
RE15808	2F20	27	30 - 57
RE158282	6E18	1	60 - 37
RE158282	6E20	1	60 - 39
RE158815	3E12	15	40 - 17
RE158815	3E18	15	40 - 23
RE158815	3F7	10	40 - 37
RE158815	3F12	9	40 - 43
RE158816	3E16	19	40 - 21
RE158816	3F7	10	40 - 37
RE158816	3F13	9	40 - 44
RE158817	3E6	12	40 - 11
RE158817	3E8	1	40 - 13
RE158819	3D22	3	40 - 5
RE159108	6G3	3	60 - 69B
RE159217	6E20	36	60 - 39
RE159217	6F1	5A	60 - 45
RE159217	6F1	5B	60 - 45
RE159503	7G14	5	70 - 83
RE159503	7G16	9	70 - 85
RE159541	1I15	1	20 - 117
RE159541	1I17	1	20 - 119
RE159560	5F15	4	54 - 27
RE159560	6G1	4	60 - 69
RE159620	3G14	3	40 - 71
RE159622	3G14	4	40 - 71
RE159623	3G14	3	40 - 71
RE159624	3G14	4	40 - 71
RE159625	3G14	3	40 - 71
RE159626	3G14	4	40 - 71
RE159802	6H13	9	60 - 101
RE159805	6H13	31	60 - 101
RE159897	3E2	25	40 - 9
RE159897	3E8	25	40 - 13
RE159897	3H1	1	40 - 82
RE159897	3H2	1	40 - 82A
RE160005	9F7	14	91 - 51
RE160005	9F9	21	91 - 53
RE160333	7G2	1	70 - 71

https://www.truck-manuals.net/

NUMERICAL INDEX - CONTINUED

PART NO.	GRID	KEY	PAGE
RE160680	3D20	7	40 - 3
RE160680	3D20	11	40 - 3
RE160680	3D20	12	40 - 3
RE160680	3D22	10	40 - 5
RE160680	3D22	11	40 - 5
RE160680	4F8	19	51 - 11
RE160680	4H10	19	51 - 63
RE160770	3E12	15	40 - 17
RE160770	3E18	15	40 - 23
RE160770	3F7	10	40 - 37
RE160770	3F12	9	40 - 43
RE160903	3G18	2	40 - 74
RE160903	3G18	6	40 - 74
RE160903	3G19	1	40 - 75
RE160903	3G19	5	40 - 75
RE160963	3G2	5	40 - 59
RE161017	6E1	1	60 - 21A
RE161017	6E2	1	60 - 21B
RE161018	6E1	1	60 - 21A
RE161018	6E2	1	60 - 21B
RE161437	3F7	8	40 - 37
RE161626	4E2	23	42 - 23
RE161680	1E9	2	20 - 15
RE161680	1F23	2	20 - 52
RE161680	1H12	2	20 - 90
RE161727	7G6	5	70 - 75
RE161727	7G8	9	70 - 77
RE161844	3E10	14	40 - 15
RE161844	3E12	14	40 - 17
RE161844	3E14	15	40 - 19
RE161844	3E16	15	40 - 21
RE161844	3E18	14	40 - 23
RE161844	3G18	2	40 - 74
RE161844	3G18	6	40 - 74
RE161844	3G19	1	40 - 75
RE161844	3G19	5	40 - 75
RE162261	8F9	13	80 - 30
RE162262	9D25	4	91 - 19A
RE162644	9D25	1	91 - 19A
RE162764	3G14	3	40 - 71
RE162766	3G14	3	40 - 71
RE162767	3G14	4	40 - 71
RE162770	3G14	4	40 - 71
RE162773	3G14	3	40 - 71
RE162774	3G14	4	40 - 71
RE163458	2D13	3	30 - 5
RE163725	3E12	15	40 - 17
RE163725	3E18	15	40 - 23
RE163725	3F7	10	40 - 37
RE163725	3F12	9	40 - 43
RE163804	4E2	29	42 - 23
RE163839	8G5	10	80 - 52
RE164116	4E2	2	42 - 23
RE164117	4E2	2	42 - 23
RE164175	4E2	2	42 - 23
RE164176	4E2	2	42 - 23
RE164286	2D13	1	30 - 5
RE164598	5D6	19	53 - 3
RE164598	5D8	19	53 - 5
RE164598	5D10	1	53 - 7
RE164598	7D11	9	70 - 3
RE165401	3G14	10	40 - 71
RE165401	6F18	5	60 - 61
RE165402	6F18	5	60 - 61
RE166045	4E2	17	42 - 23
RE19989	9G4	11	92 - 15
RE20343	7E24	20	70 - 44
RE20343	7E25	20	70 - 45
RE20434	7E20	7	70 - 40
RE20434	7E22	7	70 - 42
RE20491	7E20	3	70 - 40
RE20491	7E22	3	70 - 42
RE20595	7E24	7	70 - 44
RE20757	7E24	3	70 - 44
RE21099	3H15	12	40 - 95
RE21117	3H15	2	40 - 95
RE21519	3H15	13	40 - 95
RE21790	2E9	6	30 - 27
RE21790	2E9	8	30 - 27
RE21790	2E10	3	30 - 28
RE22336	5E21	13	54 - 9
RE22337	5E21	11	54 - 9
RE22764	1E6	1	20 - 13D
RE22764	1E16	5	20 - 22
RE22764	1G7	5	20 - 59
RE22764	1H19	5	20 - 97
RE23182	1D15	2	20 - 2
RE24045	1D21	11	20 - 8
RE24045	1F15	11	20 - 44
RE24045	1H2	11	20 - 80
RE24046	1D21	13	20 - 8
RE24046	1F15	13	20 - 44
RE24046	1H2	13	20 - 80
RE24201	9E23	7	91 - 43
RE24467	3D24	9	40 - 7
RE24467	7E11	10	70 - 31
RE24535	7E20	6	70 - 40
RE24535	7E22	6	70 - 42
RE24536	7E24	6	70 - 44
RE24975	1E11	3	20 - 17
RE24975	1F25	3	20 - 54
RE25253	2E23	17	30 - 37
RE25253	2F4	11	30 - 43
RE26739	7G18	6	70 - 89
RE26740	7G18	6	70 - 89
RE27091	2E19	13	30 - 33
RE27091	2E21	11	30 - 35
RE28217	1F9	23	20 - 39A
RE28217	2E25	23	30 - 39
RE28217	2F12	23	30 - 49B
RE28217	2F22	23	30 - 59
RE28217	3E2	19	40 - 9
RE28217	3E8	19	40 - 13
RE28320	2E25	1	30 - 39
RE28320	2F10	1	30 - 49
RE28320	2F12	1	30 - 49B
RE28320	2F22	1	30 - 59
RE28320	3G16	15	40 - 72A
RE28429	5E10	1	53 - 33
RE29859	1F8	19	20 - 39
RE30159	2E23	17	30 - 37
RE30159	2F4	11	30 - 43
RE30714	3E14	32	40 - 19
RE30714	6F14	11	60 - 57
RE30714	6F16	11	60 - 59
RE30833	1F9	5	20 - 39A
RE30833	2E25	5	30 - 39
RE30833	2F12	5	30 - 49B
RE30833	2F22	5	30 - 59
RE30920	1F9	3	20 - 39A
RE30920	2E25	3	30 - 39
RE30920	2F12	3	30 - 49B
RE30920	2F22	3	30 - 59
RE32042	3E10	14	40 - 15
RE32042	3E12	14	40 - 17
RE32042	3E14	15	40 - 19
RE32042	3E16	15	40 - 21
RE32042	3E18	14	40 - 23
RE32042	3G18	1	40 - 74
RE32042	3G18	2	40 - 74
RE32042	3G19	1	40 - 75
RE32361	4G22	8	51 - 51
RE32442	4G3	5	51 - 32
RE32442	4I7	5	51 - 84
RE33636	2E9	12	30 - 27
RE33778	3E14	32	40 - 19
RE33778	3E16	32	40 - 21
RE33968	7E20	2	70 - 40
RE33968	7E21	2	70 - 41
RE34128	2F14	4	30 - 51
RE34128	2F24	4	30 - 61
RE34995	8F14	8	80 - 35
RE34995	8G2	11	80 - 49
RE34995	8G12	4	80 - 59
RE35684	1F9	8	20 - 39A
RE35684	2E25	8	30 - 39
RE35684	2F12	8	30 - 49B
RE35684	2F22	8	30 - 59
RE35992	1D15	3	20 - 2
RE36151	2F1	8	30 - 40
RE36151	2F13	8	30 - 50
RE36151	2F23	8	30 - 60
RE36282	5F2	15	54 - 15
RE36367	1E23	2	20 - 29
RE36421	2E23	28	30 - 37
RE36421	2F8	26	30 - 47
RE36421	2F20	28	30 - 57
RE37003	7E20	11	70 - 40
RE37003	7E21	11	70 - 41
RE37448	1D19	2	20 - 6
RE37448	1F12	2	20 - 42
RE37448	1G24	2	20 - 78
RE37450	3E20	6	40 - 25
RE37450	4D19	3	42 - 15
RE37640	3F2	3	40 - 32
RE37640	3F3	3	40 - 33
RE37640	9D22	16	91 - 17
RE37651	3F15	6	40 - 46
RE37651	3F17	25	40 - 49
RE37651	3F17	37	40 - 49
RE37651	3F19	38	40 - 51
RE38310	2D16	4	30 - 8
RE38310	2D21	4	30 - 13
RE38310	2D25	4	30 - 17
RE38310	3E2	21	40 - 9
RE38310	3E4	21	40 - 9B
RE38310	3E8	21	40 - 13
RE38391	3E2	6	40 - 9
RE38391	3E8	7	40 - 13
RE38391	3F9	1	40 - 40
RE38725	5E4	12	53 - 27
RE39121	1F3	15	20 - 35
RE39121	1F4	6	20 - 36
RE39134	1G18	8	20 - 71
RE39134	1I6	8	20 - 108A
RE39243	3I18	9	41 - 7
RE39245	3I18	10	41 - 7
RE39247	3I18	14	41 - 7
RE39249	3I18	3	41 - 7
RE39250	3I18	11	41 - 7
RE39251	3I18	1	41 - 7

https://www.truck-manuals.net/

NUMERICAL INDEX - CONTINUED

PART NO.	GRID	KEY	PAGE
RE39396	7I10	16	70 - 129
RE39396	7I14	7	70 - 133
RE39476	1F1	8	20 - 32
RE39659	3I23	5	41 - 13
RE39700	7F8	1	70 - 53
RE39719	6D7	11	60 - 3
RE39890	1E23	10	20 - 29
RE39967	3F7	7	40 - 37
RE40296	5D12	7	53 - 9
RE40588	3I11	3	41 - 1
RE41223	4D25	4	42 - 21
RE41758	3I14	10	41 - 4
RE41949	4E10	15	43 - 5
RE41973	5E22	8	54 - 10
RE41991	7E5	21	70 - 23
RE42192	4E10	2	43 - 5
RE42193	3H5	15	40 - 85
RE42193	3H7	15	40 - 87
RE42193	3H9	3	40 - 89
RE42193	3H13	9	40 - 93
RE42193	4E13	14	43 - 8
RE42195	4E10	10	43 - 5
RE42196	3E24	16	40 - 29
RE42196	3F14	1	40 - 45
RE42196	4E10	9	43 - 5
RE42306	2F16	10	30 - 53
RE42306	2F25	10	30 - 62
RE42777	3I18	6	41 - 7
RE42777	3I19	7	41 - 8
RE42809	1E19	2	20 - 25
RE43025	3E2	7	40 - 9
RE43025	3E2	8	40 - 9
RE43025	3H5	5	40 - 85
RE43025	3H7	5	40 - 87
RE43058	5E21	13	54 - 9
RE43058	5G4	6	54 - 41
RE43059	5E21	11	54 - 9
RE43059	5G2	4	54 - 39
RE43059	5G4	5	54 - 41
RE43166	1F3	20	20 - 35
RE43166	3I14	..	41 - 4
RE43166	3I16	8	41 - 5
RE43166	3I19	5	41 - 8
RE43266	3I14	10	41 - 4
RE43369	1F9	21	20 - 39A
RE43369	2E25	21	30 - 39
RE43446	9G4	4	92 - 15
RE43451	3F1	2	40 - 31
RE43451	9F18	2	92 - 3
RE43451	9G6	19	92 - 17
RE43462	3H13	2	40 - 93
RE43492	3F21	11	40 - 53
RE43497	3E10	25	40 - 15
RE43497	3E12	25	40 - 17
RE43497	3E14	29	40 - 19
RE43497	3E16	29	40 - 21
RE43497	3E18	25	40 - 23
RE43497	3F17	12	40 - 49
RE43497	3F19	12	40 - 51
RE43508	3D24	18	40 - 7
RE43508	3E6	17	40 - 11
RE43508	7E7	5	70 - 25
RE43511	1E18	1	20 - 24
RE43511	1G9	2	20 - 61
RE43511	1H21	2	20 - 99
RE43511	3D24	10	40 - 7
RE43511	3D24	16	40 - 7
RE43511	3E2	23	40 - 9
RE43511	3E4	23	40 - 9B
RE43511	3E6	10	40 - 11
RE43511	3E6	15	40 - 11
RE43511	3E8	23	40 - 13
RE43511	5D10	15	53 - 7
RE43511	5E4	33	53 - 27
RE43526	3F1	3	40 - 31
RE43526	9F21	4	92 - 7
RE43540	9E5	1	91 - 24
RE43593	1I11	5	20 - 113
RE43637	3G24	2	40 - 80
RE43737	3E10	1	40 - 15
RE43737	3E12	1	40 - 17
RE43737	3E14	1	40 - 19
RE43737	3E16	1	40 - 21
RE43737	3E18	1	40 - 23
RE43737	3F7	2	40 - 37
RE43737	4E14	1	43 - 9
RE43738	3D24	12	40 - 7
RE43738	3E6	11	40 - 11
RE43738	7E13	2	70 - 33
RE43774	6G8	17	60 - 71
RE43774	6G10	17	60 - 73
RE43774	6G14	37	60 - 77
RE43774	7D23	38	70 - 15
RE43774	7D25	38	70 - 17
RE43836	7D15	3	70 - 7
RE43836	7D17	1	70 - 9
RE43837	7D15	9	70 - 7
RE43889	7H23	19	70 - 117
RE43889	7H25	4	70 - 119
RE43892	7H23	17	70 - 117
RE44118	1H24	15	20 - 103
RE44260	8E22	11	80 - 17
RE44353	8F12	1	80 - 33
RE44559	7F18	14	70 - 63
RE44561	7F18	11	70 - 63
RE44581	3E22	12	40 - 27
RE44581	3I23	1	41 - 13
RE44582	3I23	2	41 - 13
RE44590	3E10	33	40 - 15
RE44590	3E12	34	40 - 17
RE44590	3E14	40	40 - 19
RE44590	3E16	41	40 - 21
RE44590	3E18	34	40 - 23
RE44590	3G20	2	40 - 76
RE44632	1E13	4	20 - 19
RE44632	1G4	4	20 - 56
RE44632	1H16	4	20 - 94
RE44680	9F7	12	91 - 51
RE44680	9F9	14	91 - 53
RE44687	9E14	8	91 - 33
RE44688	4D13	8	42 - 9
RE44688	4D13	10	42 - 9
RE44688	4D15	1	42 - 11
RE44688	4D21	9	42 - 17
RE44716	2E7	3	30 - 25
RE44718	2G7	23	30 - 71
RE44727	6F6	18	60 - 51
RE44731	7I22	4	70 - 141
RE44733	7I16	2	70 - 135
RE44735	7I16	5	70 - 135
RE44737	6E4	1	60 - 23
RE44738	6F6	4	60 - 51
RE44743	7F2	1	70 - 47
RE44743	7F4	1	70 - 49
RE44747	6E14	1	60 - 33
RE44752	6E16	4	60 - 35
RE44757	4G22	1	51 - 51
RE44766	6G14	18	60 - 77
RE44769	4G22	5	51 - 51
RE44774	7F2	3	70 - 47
RE44774	7F4	3	70 - 49
RE44778	6F6	3	60 - 51
RE44784	2E7	6	30 - 25
RE44786	9E14	31	91 - 33
RE44818	9D10	1	91 - 5
RE44831	5E18	1	54 - 5
RE44871	5E7	1	53 - 30
RE44872	7F10	1	70 - 55
RE45293	8H18	11	90 - 15
RE45293	9D16	10	91 - 11
RE45293	9D18	7	91 - 13
RE45329	3I14	10	41 - 4
RE45329	3I14	11	41 - 4
RE45329	3I15	5	41 - 4A
RE45329	3I15	12	41 - 4A
RE45329	3I15	13	41 - 4A
RE45329	3I16	4	41 - 5
RE45329	3I16	9	41 - 5
RE45329	3I19	1	41 - 8
RE45329	3I19	6	41 - 8
RE45330	3I19	8	41 - 8
RE45337	1F3	10	20 - 35
RE45337	1F4	3	20 - 36
RE45368	4F20	3	51 - 23
RE45369	4G14	8	51 - 43
RE45369	4I18	8	51 - 95
RE45370	4G6	14	51 - 35
RE45370	4G6	30	51 - 35
RE45370	4G8	40	51 - 37
RE45374	4F23	15	51 - 27
RE45374	4F25	27	51 - 29
RE45374	4F25	39	51 - 29
RE45374	4G2	12	51 - 31
RE45374	4G2	24	51 - 31
RE45374	4I2	15	51 - 79
RE45374	4I4	27	51 - 81
RE45374	4I4	39	51 - 81
RE45374	4I6	12	51 - 83
RE45374	4I6	24	51 - 83
RE45374	5D6	11	53 - 3
RE45374	5D8	11	53 - 5
RE45382	1J5	1	20 - 132
RE45388	4F18	13	51 - 21
RE45388	4F20	14	51 - 23
RE45388	4H20	13	51 - 73
RE45388	4H22	14	51 - 75
RE45391	4G16	4	51 - 45
RE45392	4G16	13	51 - 45
RE45393	4G12	21	51 - 41
RE45393	4I16	21	51 - 93
RE45397	4G6	10	51 - 35
RE45397	4G6	26	51 - 35
RE45397	4G8	44	51 - 37
RE45399	4F20	5	51 - 23
RE45399	4G2	5	51 - 31
RE45399	4G2	38	51 - 31
RE45399	4H22	5	51 - 75
RE45399	4I6	5	51 - 83
RE45399	4I6	38	51 - 83
RE45400	4F25	44	51 - 29
RE45400	4G2	7	51 - 31

https://www.truck-manuals.net/

NUMERICAL INDEX - CONTINUED

PART NO.	GRID	KEY	PAGE
RE45406	4G3	8	51 - 32
RE45406	4I7	8	51 - 84
RE45407	4F18	12	51 - 21
RE45407	4H20	12	51 - 73
RE45409	4F23	16	51 - 27
RE45409	4F25	28	51 - 29
RE45409	4F25	40	51 - 29
RE45409	4G2	11	51 - 31
RE45409	4G2	23	51 - 31
RE45410	4G8	47	51 - 37
RE45410	4I12	47	51 - 89
RE45415	4F20	12	51 - 23
RE45415	4H22	12	51 - 75
RE46252	1F9	17	20 - 39A
RE46252	2E25	17	30 - 39
RE46252	2F2	6	30 - 41
RE46252	2F12	17	30 - 49B
RE46252	2F14	6	30 - 51
RE46365	5F4	16	54 - 17
RE46365	5F8	4	54 - 19
RE46365	5F10	19	54 - 21
RE46375	2F22	17	30 - 59
RE46375	2F24	6	30 - 61
RE46460	6F4	2	60 - 49
RE46534	3D20	18	40 - 3
RE46534	3D22	12	40 - 5
RE46534	3E10	40	40 - 15
RE46534	3E12	41	40 - 17
RE46534	3E14	48	40 - 19
RE46534	3E16	49	40 - 21
RE46534	3E18	41	40 - 23
RE46534	3G24	4	40 - 80
RE46534	4F8	5	51 - 11
RE46534	4H10	5	51 - 63
RE46587	9F7	8	91 - 51
RE46587	9F9	4	91 - 53
RE46588	9F7	4	91 - 51
RE46588	9F9	8	91 - 53
RE46589	9F7	16	91 - 51
RE46589	9F9	25	91 - 53
RE46608	3E2	10	40 - 9
RE46608	3E8	10	40 - 13
RE46608	3I11	2	41 - 1
RE46608	3I13	8	41 - 3
RE46608	3I13	11	41 - 3
RE46609	8H5	2	90 - 1
RE46648	7D15	27	70 - 7
RE46684	3D22	14	40 - 5
RE46684	4F2	20	51 - 5
RE46684	4F6	19	51 - 9
RE46684	4F8	34	51 - 11
RE46684	4F8	40	51 - 11
RE46684	4H4	20	51 - 57
RE46684	4H8	19	51 - 61
RE46684	4H10	8	51 - 63
RE46684	4H10	10	51 - 63
RE46684	4H10	14	51 - 63
RE46684	4H14	10	51 - 67
RE46684	5D10	6	53 - 7
RE46684	6E14	12	60 - 33
RE46684	6E16	12	60 - 35
RE46684	7D15	29	70 - 7
RE46684	7D23	19	70 - 15
RE46684	7D25	19	70 - 17
RE46684	7E7	7	70 - 25
RE46684	7H19	3	70 - 113
RE46685	4F12	13	51 - 15
RE46685	4H14	13	51 - 67
RE46685	5D14	25	53 - 11
RE46685	5D14	28	53 - 11
RE46685	5E17	11	54 - 4
RE46685	7F2	8	70 - 47
RE46685	7F4	8	70 - 49
RE46687	1I20	17	20 - 123
RE46687	1I24	17	20 - 127
RE46687	7F6	1	70 - 51
RE46687	7I10	12	70 - 129
RE46717	3E10	24	40 - 15
RE46717	3E12	24	40 - 17
RE46717	3E14	28	40 - 19
RE46717	3E16	28	40 - 21
RE46717	3E18	24	40 - 23
RE46717	3F17	11	40 - 49
RE46717	3F19	11	40 - 51
RE46734	4E14	3	43 - 9
RE46735	4E14	4	43 - 9
RE46736	3F21	7	40 - 53
RE46736	4E14	5	43 - 9
RE46742	3F17	14	40 - 49
RE46742	3F19	14	40 - 51
RE46800	5D16	1	53 - 13
RE46890	4D25	14	42 - 21
RE46957	5F2	21	54 - 15
RE47070	8H14	29	90 - 11
RE47070	8H20	26	90 - 17
RE47095	3G20	5	40 - 76
RE47120	2E23	12	30 - 37
RE47120	2F20	12	30 - 57
RE47328	5E4	36	53 - 27
RE47336	1D18	19	20 - 5
RE47336	1F8	18	20 - 39
RE47392	4F4	19	51 - 7
RE47392	4G17	7	51 - 46
RE47392	4H6	19	51 - 59
RE47426	2E23	7	30 - 37
RE47426	2F8	7	30 - 47
RE47427	2E23	5	30 - 37
RE47427	2F8	6	30 - 47
RE47428	2E23	4	30 - 37
RE47428	2F8	5	30 - 47
RE47429	2E23	3	30 - 37
RE47429	2F8	3	30 - 47
RE47430	2E23	2	30 - 37
RE47430	2F8	2	30 - 47
RE47431	2E23	1	30 - 37
RE47431	2F8	1	30 - 47
RE47501	2E19	4	30 - 33
RE47501	2E21	4	30 - 35
RE47635	2G3	6	30 - 67
RE47635	2G3	7	30 - 67
RE47635	2G3	10	30 - 67
RE47758	5F2	18	54 - 15
RE47959	4G10	24	51 - 39
RE47959	4I14	24	51 - 91
RE48028	3F15	5	40 - 46
RE48029	3F15	3	40 - 46
RE48031	3F15	4	40 - 46
RE48048	2F2	1	30 - 41
RE48048	2F14	1	30 - 51
RE48048	2F24	1	30 - 61
RE48073	1F5	16	20 - 37
RE48073	1F6	15	20 - 37A
RE48073	1G19	16	20 - 73
RE48073	1I7	16	20 - 109
RE48073	3E2	22	40 - 9
RE48073	3E4	22	40 - 9B
RE48073	3E8	22	40 - 13
RE48142	8E22	11	80 - 17
RE48145	8E22	11	80 - 17
RE48145	8E25	3	80 - 20
RE48234	3E16	32	40 - 21
RE48234	6F20	11	60 - 63
RE48310	2E9	11	30 - 27
RE48310	3E2	16	40 - 9
RE48310	3E8	16	40 - 13
RE48321	2E9	11	30 - 27
RE48345	5F2	28	54 - 15
RE48345	5F4	7	54 - 17
RE48400	7J6	26	70 - 149
RE48579	6G8	6	60 - 71
RE48579	6G10	6	60 - 73
RE48580	6G14	2	60 - 77
RE48609	6G8	10	60 - 71
RE48610	6G8	8	60 - 71
RE48610	6G10	8	60 - 73
RE48610	6G12	8	60 - 75
RE48636	7I22	6	70 - 141
RE48637	6G14	21	60 - 77
RE48638	6G14	27	60 - 77
RE48761	5D12	1	53 - 9
RE48838	3E10	34	40 - 15
RE48838	3E12	35	40 - 17
RE48838	3E14	41	40 - 19
RE48838	3E16	42	40 - 21
RE48838	3E18	35	40 - 23
RE48838	3G20	1	40 - 76
RE48867	3E22	10	40 - 27
RE48867	8G3	3	80 - 50
RE48875	3E2	11	40 - 9
RE48875	3E8	11	40 - 13
RE48875	3E10	4	40 - 15
RE48875	3E12	4	40 - 17
RE48875	3E14	4	40 - 19
RE48875	3E16	4	40 - 21
RE48875	3E18	4	40 - 23
RE48875	3E22	1	40 - 27
RE48876	3F4	3	40 - 34
RE48876	3F7	8	40 - 37
RE48876	3I6	4	40 - 111
RE48954	3E10	11	40 - 15
RE48954	3E12	11	40 - 17
RE48954	3E18	11	40 - 23
RE48954	4D5	1	42 - 1
RE48955	3E10	29	40 - 15
RE48955	3E12	30	40 - 17
RE48955	3E18	30	40 - 23
RE48955	4D5	1	42 - 1
RE48985	3E10	44	40 - 15
RE48985	4D8	4	42 - 4
RE48986	3E10	37	40 - 15
RE48986	4D8	4	42 - 4
RE48989	3E10	12	40 - 15
RE48989	3E14	44	40 - 19
RE48989	4D10	6	42 - 6
RE48989	4D22	6	42 - 18
RE49011	3G10	16	40 - 67
RE49091	6G14	35	60 - 77
RE49091	7I20	21	70 - 139
RE49136	7D15	19	70 - 7
RE49242	3H15	2	40 - 95
RE49256	5D24	10	53 - 21

https://www.truck-manuals.net/

NUMERICAL INDEX - CONTINUED

PART NO.	GRID	KEY	PAGE
RE49315	5E16	4	54 - 3
RE49315	5F13	4	54 - 25
RE49315	5F19	7	54 - 31
RE49428	9E14	23	91 - 33
RE49444	2E19	11	30 - 33
RE49444	2G3	11	30 - 67
RE49445	2E19	6	30 - 33
RE49445	2G3	6	30 - 67
RE49445	2G3	7	30 - 67
RE49446	2E19	7	30 - 33
RE49446	2F1	..	30 - 40
RE49446	2F13	..	30 - 50
RE49446	2F23	..	30 - 60
RE49446	2G3	7	30 - 67
RE49474	8E20	3	80 - 15
RE49475	8E20	3	80 - 15
RE49476	8E20	3	80 - 15
RE49540	1F3	15	20 - 35
RE49540	1F4	6	20 - 36
RE49636	3E10	9	40 - 15
RE49636	3E12	9	40 - 17
RE49636	3E14	11	40 - 19
RE49636	3E16	11	40 - 21
RE49636	3E18	9	40 - 23
RE49636	8H20	9	90 - 17
RE49639	3G2	6	40 - 59
RE49661	1I13	14	20 - 115
RE49724	3E10	3	40 - 15
RE49724	3E12	3	40 - 17
RE49724	3E14	3	40 - 19
RE49724	3E16	3	40 - 21
RE49724	3E18	3	40 - 23
RE49724	3F7	6	40 - 37
RE49724	4E14	2	43 - 9
RE49726	3F7	3	40 - 37
RE49727	3E10	5	40 - 15
RE49727	3E12	5	40 - 17
RE49727	3E14	5	40 - 19
RE49727	3E16	5	40 - 21
RE49727	3E18	5	40 - 23
RE49727	3F17	21	40 - 49
RE49727	3F19	21	40 - 51
RE49736	3E22	9	40 - 27
RE49778	4D5	2	42 - 1
RE49778	4D18	3	42 - 14
RE49931	9D10	8	91 - 5
RE49988	8E8	1	80 - 1
RE500157	2D19	13B	30 - 11
RE500161	2E15	5	30 - 31
RE500209	1E10	1	20 - 16
RE500209	1F24	1	20 - 53
RE500209	1H13	1	20 - 91
RE500214	1F3	10	20 - 35
RE500214	1F3	15	20 - 35
RE500214	1F4	3	20 - 36
RE500214	1F4	6	20 - 36
RE500280	2E19	6	30 - 33
RE500280	2E19	10	30 - 33
RE500280	2E19	11	30 - 33
RE500280	2E21	6	30 - 35
RE500280	2F6	2	30 - 45
RE500280	2G3	11	30 - 67
RE500280	2G5	2	30 - 69
RE500769	2F22	1	30 - 59
RE500769	3G16	15	40 - 72A
RE500772	2F10	1	30 - 49
RE500772	3G16	15	40 - 72A
RE500773	2F10	1	30 - 49
RE500773	3G16	15	40 - 72A
RE500774	2F10	1	30 - 49
RE500774	3G16	15	40 - 72A
RE501270	2D19	10	30 - 11
RE501270	2D19	13A	30 - 11
RE501270	2D19	13B	30 - 11
RE50172	7D13	1	70 - 5
RE501723	2F10	1	30 - 49
RE50173	7D13	2	70 - 5
RE501731	2E25	1	30 - 39
RE501731	2F10	1	30 - 49
RE501731	2F12	1	30 - 49B
RE501731	2F22	1	30 - 59
RE501731	3G16	15	40 - 72A
RE50178	7D11	7	70 - 3
RE501823	2F22	1	30 - 59
RE501823	3G16	15	40 - 72A
RE501824	2E25	1	30 - 39
RE501824	2F12	1	30 - 49B
RE501824	3G16	15	40 - 72A
RE501825	2E25	1	30 - 39
RE501825	2F12	1	30 - 49B
RE501825	3G16	15	40 - 72A
RE501826	2E25	1	30 - 39
RE501826	2F12	1	30 - 49B
RE501826	3G16	15	40 - 72A
RE501828	3G16	15	40 - 72A
RE50183	8E18	9	80 - 11
RE50183	8E18	16	80 - 11
RE501834	2F10	1	30 - 49
RE501835	2F10	1	30 - 49
RE50184	8E18	9	80 - 11
RE501847	2F10	1	30 - 49
RE501847	3G16	15	40 - 72A
RE501848	2F10	1	30 - 49
RE501849	2F10	1	30 - 49
RE501849	3G16	15	40 - 72A
RE501938	5D10	16	53 - 7
RE501938	5E4	27	53 - 27
RE501940	3G16	15	40 - 72A
RE502104	3G16	15	40 - 72A
RE502110	2E25	1	30 - 39
RE502110	2F12	1	30 - 49B
RE502110	3G16	15	40 - 72A
RE502111	2E25	1	30 - 39
RE502111	2F12	1	30 - 49B
RE502111	3G16	15	40 - 72A
RE502112	2E25	1	30 - 39
RE502112	2F12	1	30 - 49B
RE502112	3G16	15	40 - 72A
RE502121	2F10	1	30 - 49
RE502121	3G16	15	40 - 72A
RE502122	2F10	1	30 - 49
RE502122	3G16	15	40 - 72A
RE502123	2F10	1	30 - 49
RE502123	3G16	15	40 - 72A
RE502124	2F22	1	30 - 59
RE502124	3G16	15	40 - 72A
RE502125	2E25	1	30 - 39
RE502125	2F10	1	30 - 49
RE502125	2F12	1	30 - 49B
RE502125	2F22	1	30 - 59
RE502125	3G16	15	40 - 72A
RE502135	2E25	1	30 - 39
RE502135	2F12	1	30 - 49B
RE502135	2F22	1	30 - 59
RE502147	3G16	15	40 - 72A
RE502154	1G18	5	20 - 71
RE502154	1G18	7	20 - 71
RE502154	1I6	5	20 - 108A
RE502154	1I6	7	20 - 108A
RE502259	1F9	10	20 - 39A
RE502259	1F9	11	20 - 39A
RE502259	1F9	13	20 - 39A
RE502259	2E25	10	30 - 39
RE502259	2E25	11	30 - 39
RE502259	2E25	13	30 - 39
RE502404	2F10	1	30 - 49
RE502425	2F22	1	30 - 59
RE502425	3G16	15	40 - 72A
RE502426	2F10	1	30 - 49
RE502426	3G16	15	40 - 72A
RE502427	2F10	1	30 - 49
RE502427	3G16	15	40 - 72A
RE502428	2F10	1	30 - 49
RE502428	3G16	15	40 - 72A
RE502429	2F22	1	30 - 59
RE502697	2F12	10	30 - 49B
RE502698	2F12	10	30 - 49B
RE502824	2F12	1	30 - 49B
RE503177	2E25	1	30 - 39
RE503177	2F12	1	30 - 49B
RE503178	2E25	1	30 - 39
RE503178	2F12	1	30 - 49B
RE503179	2E25	1	30 - 39
RE503179	2F12	1	30 - 49B
RE503182	2F10	1	30 - 49
RE503183	2F10	1	30 - 49
RE503184	2F22	1	30 - 59
RE503260	1F3	15	20 - 35
RE503340	2F22	1	30 - 59
RE50374	9F5	20	91 - 49
RE50374	9F5	21	91 - 49
RE50374	9F5	33	91 - 49
RE50376	9F7	22	91 - 51
RE50378	9F7	7	91 - 51
RE50378	9F9	5	91 - 53
RE50379	9F7	33	91 - 51
RE50401	6D14	4	60 - 10
RE50401	6D15	4	60 - 11
RE504071	2F10	1	30 - 49
RE504071	3G16	15	40 - 72A
RE50467	2E17	1	30 - 31B
RE50467	2F18	1	30 - 55
RE50533	7F18	13	70 - 63
RE50533	7F20	7	70 - 65
RE50533	7F22	7	70 - 67
RE50699	8E22	11	80 - 17
RE50747	5D6	16	53 - 3
RE50747	5D8	16	53 - 5
RE50749	8E22	11	80 - 17
RE50750	8E22	11	80 - 17
RE50752	2E15	..	30 - 31
RE50752	2E17	2	30 - 31B
RE50752	2E17	..	30 - 31B
RE50752	2F18	2	30 - 55
RE50782	4G17	4	51 - 46
RE50803	5F2	7	54 - 15
RE50803	5F4	9	54 - 17
RE50803	5F6	1	54 - 17B
RE50803	5F19	3	54 - 31
RE50803	5F21	5	54 - 33
RE50874	9F9	27	91 - 53

https://www.truck-manuals.net/

NUMERICAL INDEX - CONTINUED

PART NO.	GRID	KEY	PAGE
RE50874	9F11	47	91 - 53B
RE50889	1E9	2	20 - 15
RE50889	1F23	2	20 - 52
RE50889	1H12	2	20 - 90
RE50889	8F9	6	80 - 30
RE50911	8E24	10	80 - 19
RE50928	8E24	10	80 - 19
RE50957	5D18	4	53 - 15
RE51017	8E24	10	80 - 19
RE51018	8E25	8	80 - 20
RE51052	8H5	1	90 - 1
RE51052	8H5	2	90 - 1
RE51083	9F5	13	91 - 49
RE51091	3F15	1	40 - 46
RE51091	3F17	25	40 - 49
RE51091	3F17	37	40 - 49
RE51091	3F19	38	40 - 51
RE51234	3E10	28	40 - 15
RE51234	3E12	29	40 - 17
RE51234	3E14	34	40 - 19
RE51234	3E16	35	40 - 21
RE51234	3E18	29	40 - 23
RE51234	3G21	1	40 - 77
RE51239	3E10	37	40 - 15
RE51239	3E10	44	40 - 15
RE51239	3E12	38	40 - 17
RE51239	3E12	45	40 - 17
RE51239	3E18	38	40 - 23
RE51239	3E18	45	40 - 23
RE51239	4D9	10	42 - 5
RE51240	3E10	12	40 - 15
RE51240	3E12	12	40 - 17
RE51240	3E14	17	40 - 19
RE51240	3E14	44	40 - 19
RE51240	3E16	17	40 - 21
RE51240	3E16	45	40 - 21
RE51240	3E18	12	40 - 23
RE51240	4D11	9	42 - 7
RE51240	4D23	9	42 - 19
RE51266	3G22	7	40 - 78
RE51267	3G22	2	40 - 78
RE51281	1J9	10	20 - 137
RE51281	6H19	13	60 - 107
RE51297	3I13	4	41 - 3
RE51298	3I13	5	41 - 3
RE51299	3I13	7	41 - 3
RE51300	3I13	9	41 - 3
RE51519	2G9	1	30 - 73
RE51519	3E2	2	40 - 9
RE51519	3E8	2	40 - 13
RE51570	7E7	4	70 - 25
RE51573	4F8	14	51 - 11
RE51573	4H10	31	51 - 63
RE51573	6D19	19	60 - 15
RE51573	6E16	10	60 - 35
RE51573	6F8	17	60 - 51B
RE51629	2D11	6	30 - 3
RE51629	2G10	1	30 - 74
RE51630	2D11	5	30 - 3
RE51630	2G10	2	30 - 74
RE51631	2D13	1	30 - 5
RE51649	2E15	5	30 - 31
RE51649	2E17	9	30 - 31B
RE51649	2F18	9	30 - 55
RE51650	2E15	9	30 - 31
RE51650	2E17	10	30 - 31B
RE51650	2F18	10	30 - 55
RE51656	8E20	3	80 - 15
RE51657	8E20	3	80 - 15
RE51658	8E20	3	80 - 15
RE51672	8E18	9	80 - 11
RE51797	2G10	7	30 - 74
RE51797	7E7	6	70 - 25
RE51962	8E24	10	80 - 19
RE51963	8E24	10	80 - 19
RE52026	3I13	1	41 - 3
RE52028	3I13	3	41 - 3
RE52087	2E7	17	30 - 25
RE52109	2E23	17	30 - 37
RE52109	2F4	11	30 - 43
RE52110	2F4	8	30 - 43
RE52113	2E23	17	30 - 37
RE52113	2F4	11	30 - 43
RE52114	2F4	8	30 - 43
RE52128	8E20	11	80 - 15
RE52228	5D8	13	53 - 5
RE52242	1I20	22	20 - 123
RE52242	1I24	22	20 - 127
RE52242	4G10	27	51 - 39
RE52242	4I14	27	51 - 91
RE52277	1E21	9	20 - 27
RE52319	3D20	4	40 - 3
RE52319	3D20	6	40 - 3
RE52319	3D22	2	40 - 5
RE52319	3D22	5	40 - 5
RE52319	3D24	5	40 - 7
RE52319	3E6	6	40 - 11
RE52319	4F4	10	51 - 7
RE52319	4F4	12	51 - 7
RE52319	4G17	2	51 - 46
RE52319	4G17	6	51 - 46
RE52319	4H6	10	51 - 59
RE52319	4H6	25	51 - 59
RE52319	5D14	7	53 - 11
RE52321	5E17	3	54 - 4
RE52341	4G10	16	51 - 39
RE52341	4I14	16	51 - 91
RE52341	7D11	8	70 - 3
RE52427	3I2	3	40 - 107
RE52434	4D12	5	42 - 8
RE52454	8H5	2	90 - 1
RE52504	2G9	2	30 - 73
RE52506	8H8	1	90 - 4
RE52507	8H5	2	90 - 1
RE52507	8H7	1	90 - 3
RE52508	8H5	2	90 - 1
RE52508	8H8	3	90 - 4
RE52509	8H5	2	90 - 1
RE52509	8H6	1	90 - 2
RE52510	3E2	3	40 - 9
RE52510	3E8	3	40 - 13
RE52510	8H5	2	90 - 1
RE52510	8H8	2	90 - 4
RE52548	9F23	1	92 - 9
RE52549	9F23	3	92 - 9
RE52550	3F1	1	40 - 31
RE52550	9F23	5	92 - 9
RE52551	9F23	7	92 - 9
RE52552	9F23	2	92 - 9
RE52553	9F23	4	92 - 9
RE52554	9F23	6	92 - 9
RE52555	9F21	9	92 - 7
RE52557	9F21	1	92 - 7
RE52558	9F21	2	92 - 7
RE52559	9F21	7	92 - 7
RE52560	9F21	6	92 - 7
RE52561	9F21	4	92 - 7
RE52562	9F18	2	92 - 3
RE52563	9F18	3	92 - 3
RE52564	9F18	1	92 - 3
RE52564	9G6	1	92 - 17
RE52566	9F18	1	92 - 3
RE52566	9G6	1	92 - 17
RE52579	7D15	21	70 - 7
RE52580	7D15	25	70 - 7
RE52633	3E14	35	40 - 19
RE52633	3E16	36	40 - 21
RE52633	3E25	1	40 - 30
RE52645	3E2	8	40 - 9
RE52645	3E8	8	40 - 13
RE52645	3H5	16	40 - 85
RE52645	3H7	16	40 - 87
RE52645	3H9	2	40 - 89
RE52660	9E4	6	91 - 23
RE52668	9E16	8	91 - 35
RE52669	9E16	8	91 - 35
RE52677	9E16	5	91 - 35
RE52678	9E16	5	91 - 35
RE52702	2D15	1	30 - 7
RE52702	2D15	2	30 - 7
RE52702	2D15	3	30 - 7
RE52702	2D15	4	30 - 7
RE52703	2D11	1	30 - 3
RE52719	3E8	5	40 - 13
RE52719	3H9	9	40 - 89
RE52722	3D24	17	40 - 7
RE52722	3E6	16	40 - 11
RE52866	1E8	2	20 - 14
RE52866	3E2	13	40 - 9
RE52866	3E2	15	40 - 9
RE52866	3E8	15	40 - 13
RE52868	3D20	1	40 - 3
RE52868	3D20	16	40 - 3
RE52868	4F8	34	51 - 11
RE52868	4F12	10	51 - 15
RE52868	4H14	10	51 - 67
RE52981	7H23	24	70 - 117
RE53000	1G6	10	20 - 58
RE53046	8E10	1	80 - 3
RE53049	5E24	17	54 - 13
RE53050	5E24	17	54 - 13
RE53089	4G17	6	51 - 46
RE53154	1G6	6	20 - 58
RE53154	1H17	6	20 - 95
RE53180	8E10	1	80 - 3
RE53199	1E12	5	20 - 18
RE53199	1E12	8	20 - 18
RE53282	2E7	16	30 - 25
RE53380	8D13	5	71 - 11
RE53380	8D15	21	71 - 13
RE53662	9G1	9	92 - 12
RE54017	3E8	5	40 - 13
RE54017	3H9	9	40 - 89
RE54029	7E11	16	70 - 31
RE54058	7H16	7	70 - 109
RE54077	2E15	5	30 - 31
RE54077	2E17	4	30 - 31B
RE54077	2E17	11	30 - 31B
RE54077	2F18	3	30 - 55
RE54077	2F18	4	30 - 55
RE54077	2F18	11	30 - 55

https://www.truck-manuals.net/

NUMERICAL INDEX - CONTINUED

PART NO.	GRID	KEY	PAGE
RE54077	2F18	12	30 - 55
RE54244	2E19	2	30 - 33
RE54244	2E21	2	30 - 35
RE54244	2F6	10	30 - 45
RE54244	2G3	2	30 - 67
RE54244	2G5	10	30 - 69
RE54245	2E19	3	30 - 33
RE54245	2E21	3	30 - 35
RE54245	2F6	12	30 - 45
RE54245	2G3	3	30 - 67
RE54245	2G5	12	30 - 69
RE54368	1F13	3	20 - 42A
RE54368	1G25	3	20 - 78A
RE54400	7H21	19	70 - 115
RE54416	3I14	11	41 - 4
RE54416	3I18	..	41 - 7
RE54453	5D25	1	53 - 22
RE54573	6H15	19	60 - 103
RE54573	6H17	19	60 - 105
RE54575	6G18	10	60 - 81
RE54575	6H11	5	60 - 99
RE54575	6H15	6	60 - 103
RE54575	6H15	14	60 - 103
RE54577	6G22	5	60 - 85
RE54578	6G20	9	60 - 83
RE54578	6G22	9	60 - 85
RE54578	6H4	6	60 - 91
RE54578	6H6	6	60 - 93
RE54578	6H8	6	60 - 95
RE54578	6H15	4	60 - 103
RE54578	6H15	16	60 - 103
RE54578	6H17	16	60 - 105
RE54579	6G20	1	60 - 83
RE54579	6G20	5	60 - 83
RE54579	6G20	10	60 - 83
RE54579	6G22	1	60 - 85
RE54579	6H4	1	60 - 91
RE54579	6H6	1	60 - 93
RE54579	6H8	1	60 - 95
RE54579	6H11	11	60 - 99
RE54579	6H13	13	60 - 101
RE54579	6H15	5	60 - 103
RE54579	6H15	17	60 - 103
RE54579	6H17	5	60 - 105
RE54579	6H17	17	60 - 105
RE54581	6H11	4	60 - 99
RE54581	6H13	12	60 - 101
RE54581	6H15	9	60 - 103
RE54581	6H17	9	60 - 105
RE54582	6G18	2	60 - 81
RE54582	6H13	11	60 - 101
RE54582	6H15	10	60 - 103
RE54582	6H17	10	60 - 105
RE54583	6G20	4	60 - 83
RE54583	6H15	13	60 - 103
RE54583	6H17	13	60 - 105
RE54601	6G20	2	60 - 83
RE54601	6G20	6	60 - 83
RE54601	6G20	8	60 - 83
RE54601	6G22	6	60 - 85
RE54601	6H4	2	60 - 91
RE54601	6H6	2	60 - 93
RE54601	6H8	2	60 - 95
RE54601	6H11	12	60 - 99
RE54602	6G18	1	60 - 81
RE54602	6G18	11	60 - 81
RE54602	6H11	3	60 - 99
RE54602	6H13	16	60 - 101
RE54602	6H15	15	60 - 103
RE54602	6H17	15	60 - 105
RE54603	6H19	2	60 - 107
RE54603	6H23	14	60 - 109
RE54603	6H25	14	60 - 111
RE54802	9F1	10	91 - 46
RE54802	9F2	6	91 - 47
RE54802	9F5	1	91 - 49
RE54802	9F7	36	91 - 51
RE54802	9F11	52	91 - 53B
RE54810	3E22	..	40 - 27
RE54810	6G8	22	60 - 71
RE54810	9E25	6	91 - 45
RE54810	9F1	9	91 - 46
RE54816	8E18	17	80 - 11
RE54925	1I15	3	20 - 117
RE54925	1I17	3	20 - 119
RE54927	1I15	4	20 - 117
RE54927	1I17	4	20 - 119
RE54928	1I15	5	20 - 117
RE54928	1I17	5	20 - 119
RE54930	1I15	15	20 - 117
RE54930	1I17	15	20 - 119
RE54930	7E1	6	70 - 19
RE54979	2D17	1	30 - 9
RE54979	2D19	2	30 - 11
RE55025	5D6	13	53 - 3
RE55036	3E10	19	40 - 15
RE55036	3E12	19	40 - 17
RE55036	3E14	23	40 - 19
RE55036	3E16	23	40 - 21
RE55036	3E18	19	40 - 23
RE55036	3F17	6	40 - 49
RE55036	3F19	6	40 - 51
RE55071	8E22	11	80 - 17
RE55071	8E25	3	80 - 20
RE55150	3E20	1	40 - 25
RE55150	4D18	2	42 - 14
RE55151	3E20	4	40 - 25
RE55151	4D18	2	42 - 14
RE55358	2D13	3	30 - 5
RE55363	6H9	4	60 - 97
RE55367	9D20	6	91 - 15
RE55461	5D10	10	53 - 7
RE55468	3E10	39	40 - 15
RE55468	3E14	46	40 - 19
RE55468	3G25	1	40 - 81
RE55475	1F11	19	20 - 41
RE55475	1G21	11	20 - 75
RE55475	1G23	19	20 - 77
RE55475	1I9	11	20 - 111
RE55476	3E10	17	40 - 15
RE55476	3E12	17	40 - 17
RE55476	3E14	21	40 - 19
RE55476	3E16	21	40 - 21
RE55476	3E18	17	40 - 23
RE55476	3F17	2	40 - 49
RE55476	3F19	2	40 - 51
RE55476	9E23	4	91 - 43
RE55477	3E10	18	40 - 15
RE55477	3E12	18	40 - 17
RE55477	3E14	22	40 - 19
RE55477	3E16	22	40 - 21
RE55477	3E18	18	40 - 23
RE55477	3F17	4	40 - 49
RE55477	3F19	4	40 - 51
RE55478	3E10	26	40 - 15
RE55478	3E12	26	40 - 17
RE55478	3E14	30	40 - 19
RE55478	3E16	30	40 - 21
RE55478	3E18	26	40 - 23
RE55478	3F17	15	40 - 49
RE55478	3F19	15	40 - 51
RE55516	3D24	15	40 - 7
RE55516	3E6	14	40 - 11
RE55522	1G1	2	20 - 55
RE55522	1G1	6	20 - 55
RE55522	1H15	2	20 - 93
RE55522	1H15	6	20 - 93
RE55542	2D23	9	30 - 15
RE55542	2E2	9	30 - 19
RE55580	4F23	5	51 - 27
RE55581	4G2	6	51 - 31
RE55581	4I6	6	51 - 83
RE55662	2F8	11	30 - 47
RE55737	8F10	7	80 - 31
RE55737	8F10	9	80 - 31
RE55859	7I20	10	70 - 139
RE55859	7I22	7	70 - 141
RE55859	7I24	3	70 - 143
RE55891	3I2	1	40 - 107
RE55941	7I22	8	70 - 141
RE55955	6G14	29	60 - 77
RE55955	6H4	3	60 - 91
RE55976	3I4	1	40 - 109
RE55992	1I6	5	20 - 108A
RE55999	3I22	2	41 - 12
RE55999	9E21	3	91 - 40
RE56009	1E8	1	20 - 14
RE56009	3E2	15	40 - 9
RE56009	3E8	15	40 - 13
RE56009	3F20	4	40 - 52
RE56014	5E22	11	54 - 10
RE56053	3E2	20	40 - 9
RE56053	3I14	11	41 - 4
RE56053	3I18	..	41 - 7
RE56053	3I19	6	41 - 8
RE56053	3I19	7	41 - 8
RE56053	3I19	8	41 - 8
RE56053	3I23	5	41 - 13
RE56098	1I11	34	20 - 113
RE56116	9F21	3	92 - 7
RE56165	3D24	9	40 - 7
RE56165	3E6	9	40 - 11
RE56165	7E11	10	70 - 31
RE56234	3I2	14	40 - 107
RE56235	3I4	8	40 - 109
RE56237	2D19	2	30 - 11
RE56273	3E22	6	40 - 27
RE56284	4D8	5	42 - 4
RE56284	4D14	1	42 - 10
RE56284	8G6	4	80 - 53
RE56317	8E24	10	80 - 19
RE56319	6E14	2	60 - 33
RE56362	3F25	11	40 - 57
RE56400	3F23	12	40 - 55
RE56488	2E2	4	30 - 19
RE56493	1E10	1	20 - 16
RE56493	1F24	1	20 - 53
RE56493	1H13	1	20 - 91
RE56629	6F22	5A	60 - 65
RE56716	7D23	24	70 - 15
RE56717	7I16	1	70 - 135

https://www.truck-manuals.net/

NUMERICAL INDEX - CONTINUED

PART NO.	GRID	KEY	PAGE
RE56773	3G2	12	40 - 59
RE56950	3D24	7	40 - 7
RE56950	3E6	7	40 - 11
RE56950	4G18	1	51 - 47
RE56950	5D14	20	53 - 11
RE57050	8E24	10	80 - 19
RE57054	1D22	3	20 - 9
RE57054	1F16	3	20 - 45
RE57054	1H3	3	20 - 81
RE57073	2G3	13	30 - 67
RE57146	2F20	7	30 - 57
RE57147	2F20	5	30 - 57
RE57148	2F20	4	30 - 57
RE57149	2F20	3	30 - 57
RE57150	2F20	2	30 - 57
RE57151	2F20	1	30 - 57
RE57152	2F8	14	30 - 47
RE57152	2F16	5	30 - 53
RE57152	2F16	13	30 - 53
RE57153	2F16	10	30 - 53
RE57154	1G18	9	20 - 71
RE57154	1I6	9	20 - 108A
RE57165	1G6	7	20 - 58
RE57165	1H17	7	20 - 95
RE57167	1G3	7	20 - 55B
RE57170	1G3	3	20 - 55B
RE57170	1G5	3	20 - 57
RE57170	1H18	3	20 - 96
RE57172	1G2	3	20 - 55A
RE57172	1H18	3	20 - 96
RE57173	1H18	3	20 - 96
RE57175	1G3	5	20 - 55B
RE57175	1G5	2	20 - 57
RE57175	1H18	2	20 - 96
RE57177	1G2	5	20 - 55A
RE57177	1H18	2	20 - 96
RE57178	1H18	2	20 - 96
RE57181	1H7	1	20 - 85
RE57184	2E2	4	30 - 19
RE57184	2E3	1	30 - 20
RE57185	2E3	1	30 - 20
RE57186	1G21	19	20 - 75
RE57186	1I9	19	20 - 111
RE57187	1G21	38	20 - 75
RE57187	1I9	38	20 - 111
RE57188	1G6	8	20 - 58
RE57188	1H17	8	20 - 95
RE57189	1H17	10	20 - 95
RE57190	1G18	1	20 - 71
RE57190	1I6	1	20 - 108A
RE57372	1F9	10	20 - 39A
RE57372	1F9	11	20 - 39A
RE57372	1F9	12	20 - 39A
RE57372	1F9	13	20 - 39A
RE57372	2E25	10	30 - 39
RE57372	2E25	11	30 - 39
RE57372	2E25	12	30 - 39
RE57372	2E25	13	30 - 39
RE57373	2F22	10	30 - 59
RE57394	1E23	13	20 - 29
RE57394	1G16	9	20 - 69
RE57394	1I2	9	20 - 105
RE57394	2G10	3	30 - 74
RE57402	4F23	1	51 - 27
RE57402	4G14	1	51 - 43
RE57420	1D24	..	20 - 11
RE57483	3I16	10	41 - 5
RE57483	3I18	..	41 - 7
RE57498	1J7	1	20 - 135
RE57498	1J9	1	20 - 137
RE57498	6H19	11	60 - 107
RE57501	2F22	1	30 - 59
RE57501	3G16	15	40 - 72A
RE57512	1E14	8	20 - 20
RE57512	1E14	10	20 - 20
RE57517	1E14	8	20 - 20
RE57519	5E10	3	53 - 33
RE57519	7F6	16	70 - 51
RE57520	7D11	14	70 - 3
RE57524	2E25	1	30 - 39
RE57524	2F12	1	30 - 49B
RE57524	3G16	15	40 - 72A
RE57525	2E25	1	30 - 39
RE57525	2F12	1	30 - 49B
RE57525	3G16	15	40 - 72A
RE57526	2E25	1	30 - 39
RE57526	2F12	1	30 - 49B
RE57526	3G16	15	40 - 72A
RE57530	2D23	2	30 - 15
RE57530	2E2	2	30 - 19
RE57548	7J6	6	70 - 149
RE57548	7J8	6	70 - 151
RE57553	6G20	3	60 - 83
RE57554	6H4	4	60 - 91
RE57554	6H6	4	60 - 93
RE57554	6H8	4	60 - 95
RE57555	6H4	5	60 - 91
RE57555	6H6	5	60 - 93
RE57555	6H8	5	60 - 95
RE57556	6H11	6	60 - 99
RE57571	3E14	13	40 - 19
RE57571	8H20	15	90 - 17
RE57574	8H20	23	90 - 17
RE57575	8H12	2	90 - 9
RE57575	8H20	22	90 - 17
RE57575	8H20	23	90 - 17
RE57594	6D9	12	60 - 5
RE57603	1F25	3	20 - 54
RE57603	1H14	3	20 - 92
RE57632	1F13	1	20 - 42A
RE57632	1G25	1	20 - 78A
RE57644	8E14	15	80 - 7
RE57653	4G10	2	51 - 39
RE57653	4I14	2	51 - 91
RE57696	3F17	16	40 - 49
RE57696	3F19	16	40 - 51
RE57697	3E14	6	40 - 19
RE57697	3F17	19	40 - 49
RE57697	3F19	19	40 - 51
RE57744	3E24	1	40 - 29
RE57744	3H13	3	40 - 93
RE57750	1F11	18	20 - 41
RE57750	1G23	18	20 - 77
RE57815	6D17	1	60 - 13
RE57817	6D14	2	60 - 10
RE57817	6D15	2	60 - 11
RE57818	9G1	1	92 - 12
RE57819	9G1	7	92 - 12
RE57820	9G1	11	92 - 12
RE57843	7E3	6	70 - 21
RE57849	2G7	16	30 - 71
RE57850	2G7	14	30 - 71
RE57892	3E10	31	40 - 15
RE57892	3E12	32	40 - 17
RE57892	3E14	38	40 - 19
RE57892	3E16	39	40 - 21
RE57892	3E18	32	40 - 23
RE57892	3G23	2	40 - 79
RE57962	8G3	6	80 - 50
RE58025	9F18	7	92 - 3
RE58025	9F25	9	92 - 11
RE58029	3G10	16	40 - 67
RE58032	9F21	8	92 - 7
RE58084	9F18	1	92 - 3
RE58224	3F25	16	40 - 57
RE58243	7J2	22	70 - 145
RE58267	5E21	11	54 - 9
RE58294	1G16	1	20 - 69
RE58294	1I2	1	20 - 105
RE58294	2D23	13	30 - 15
RE58294	2E2	13	30 - 19
RE58311	3E24	9	40 - 29
RE58311	3G14	14	40 - 71
RE58312	3E24	5	40 - 29
RE58312	3H13	11	40 - 93
RE58318	8D13	45	71 - 11
RE58324	8D19	6	71 - 17
RE58350	1F4	6	20 - 36
RE58356	1F4	6	20 - 36
RE58362	1I15	1	20 - 117
RE58362	1I17	1	20 - 119
RE58376	2E15	8	30 - 31
RE58376	2E17	3	30 - 31B
RE58376	2F18	3	30 - 55
RE58376	2F18	11	30 - 55
RE58382	6G18	5	60 - 81
RE58382	6H13	10	60 - 101
RE58382	6H19	10	60 - 107
RE58382	6H23	6	60 - 109
RE58382	6H25	6	60 - 111
RE58382	6I2	9	60 - 113
RE58382	6I4	5	60 - 115
RE58386	6H19	1	60 - 107
RE58409	5D14	30	53 - 11
RE58409	7E7	22	70 - 25
RE58409	7F2	8	70 - 47
RE58409	7F4	8	70 - 49
RE58479	6H9	2	60 - 97
RE58495	8E16	1	80 - 9
RE58508	7F20	11	70 - 65
RE58508	7F22	11	70 - 67
RE58509	7F20	12	70 - 65
RE58516	1D18	18	20 - 5
RE58516	1F6	19	20 - 37A
RE58533	8F6	1	80 - 27
RE58548	3E24	17	40 - 29
RE58563	2D17	1	30 - 9
RE58581	6F6	2	60 - 51
RE58592	3E2	7	40 - 9
RE58592	3E2	8	40 - 9
RE58592	3H5	5	40 - 85
RE58592	3H7	5	40 - 87
RE58593	3E8	14	40 - 13
RE58593	4D13	14	42 - 9
RE58598	3E2	14	40 - 9
RE58605	8E14	13	80 - 7
RE58606	8E14	13	80 - 7
RE58614	3F17	14	40 - 49
RE58614	3F19	14	40 - 51
RE58614	8H20	33	90 - 17
RE58619	4D11	6	42 - 7

https://www.truck-manuals.net/

NUMERICAL INDEX - CONTINUED

PART NO.	GRID	KEY	PAGE
RE58619	4D13	13	42 - 9
RE58619	4D23	6	42 - 19
RE58639	5F2	19	54 - 15
RE58639	5F4	23	54 - 17
RE58646	5F2	17	54 - 15
RE58680	7E5	28	70 - 23
RE58689	4D25	18	42 - 21
RE58693	8E16	3	80 - 9
RE58702	8E18	9	80 - 11
RE58706	8H10	12	90 - 7
RE58715	9F9	14	91 - 53
RE58718	3I6	3	40 - 111
RE58719	3I6	5	40 - 111
RE58723	9D10	5	91 - 5
RE58729	8H10	14	90 - 7
RE58763	6G14	6	60 - 77
RE58763	7I20	5	70 - 139
RE58780	1G3	9	20 - 55B
RE58781	1G2	9	20 - 55A
RE58782	3D24	6	40 - 7
RE58782	3E6	5	40 - 11
RE58782	3G14	14	40 - 71
RE58827	3F14	7	40 - 45
RE58828	8H10	13	90 - 7
RE58858	7I22	29	70 - 141
RE58869	7H12	3	70 - 105
RE58869	7H12	15	70 - 105
RE58873	2G9	3	30 - 73
RE58878	6D16	2	60 - 12
RE58881	2E15	12	30 - 31
RE58883	8F10	1	80 - 31
RE58974	7E7	25	70 - 25
RE58976	6E10	3	60 - 29
RE58978	6E10	2	60 - 29
RE58978	6E12	1	60 - 31
RE58979	6E10	2	60 - 29
RE58979	6E12	1	60 - 31
RE58988	8G22	1	80 - 69
RE58989	8G20	1	80 - 67
RE59589	3I14	11	41 - 4
RE59589	3I18	..	41 - 7
RE60265	7G24	15	70 - 95
RE60265	7H2	15	70 - 97
RE60267	7D15	1	70 - 7
RE60275	7D15	2	70 - 7
RE60276	7D15	28	70 - 7
RE60294	1E6	1	20 - 13D
RE60294	1E14	10	20 - 20
RE60302	8H18	4	90 - 15
RE60319	3F25	13	40 - 57
RE60319	3F25	14	40 - 57
RE60320	4F16	3	51 - 19
RE60320	4H18	3	51 - 71
RE60321	2G9	9	30 - 73
RE60323	6E10	6	60 - 29
RE60328	1G6	8	20 - 58
RE60328	1H17	10	20 - 95
RE60349	5E10	2	53 - 33
RE60389	3H11	1	40 - 91
RE60446	6F22	1	60 - 65
RE60458	1E2	1	20 - 13
RE60467	5E6	3	53 - 29
RE60468	6F22	13	60 - 65
RE60468	6F24	1	60 - 67
RE60476	3E10	27	40 - 15
RE60476	3F17	32	40 - 49
RE60476	3F19	33	40 - 51
RE60476	3F20	6	40 - 52
RE60477	3E10	27	40 - 15
RE60477	3F17	32	40 - 49
RE60477	3F19	33	40 - 51
RE60477	3F20	6	40 - 52
RE60504	1I15	8	20 - 117
RE60504	1I17	8	20 - 119
RE60512	7F24	42	70 - 69
RE60529	6E22	1	60 - 41
RE60529	6F24	..	60 - 67
RE60531	6E18	7	60 - 37
RE60531	6F24	7	60 - 67
RE60531	6G3	7	60 - 69B
RE60532	6F1	1A	60 - 45
RE60534	6E20	36	60 - 39
RE60534	6F1	5A	60 - 45
RE60535	6E24	1	60 - 43
RE60537	3E10	15	40 - 15
RE60537	3F7	10	40 - 37
RE60537	3F7	..	40 - 37
RE60537	3F12	9	40 - 43
RE60538	3E14	19	40 - 19
RE60538	3F7	10	40 - 37
RE60538	3F13	9	40 - 44
RE60540	3H11	12	40 - 91
RE60541	3D20	19	40 - 3
RE60541	3D24	13	40 - 7
RE60541	3E2	1	40 - 9
RE60541	4D13	8	42 - 9
RE60541	4D13	10	42 - 9
RE60542	3D20	1	40 - 3
RE60546	1G12	2	20 - 64
RE60546	1H22	2	20 - 101
RE60559	2E15	1	30 - 31
RE60561	6D15	3	60 - 11
RE60562	6D14	3	60 - 10
RE60577	2F12	21	30 - 49B
RE60577	2F22	21	30 - 59
RE60586	3G2	1	40 - 59
RE60587	3G2	5	40 - 59
RE60588	3E10	42	40 - 15
RE60588	6D7	1	60 - 3
RE60589	3E14	50	40 - 19
RE60589	6D7	1	60 - 3
RE60590	7D23	13	70 - 15
RE60601	9F18	4	92 - 3
RE60602	9F18	5	92 - 3
RE60619	7F2	2	70 - 47
RE60619	7F4	2	70 - 49
RE60622	1G11	15	20 - 63
RE60622	1H24	15	20 - 103
RE60623	7F2	11	70 - 47
RE60623	7F4	11	70 - 49
RE60627	4D8	6	42 - 4
RE60628	4D8	6	42 - 4
RE60629	3G12	4	40 - 69
RE60630	3G6	11	40 - 63
RE60631	3G8	12	40 - 65
RE60632	3E2	26	40 - 9
RE60632	3E4	26	40 - 9B
RE60632	3E8	26	40 - 13
RE60633	3E2	24	40 - 9
RE60633	3E4	24	40 - 9B
RE60633	3E8	24	40 - 13
RE60633	4D16	23	42 - 12
RE60633	4D17	14	42 - 13
RE60634	3F8	2	40 - 39
RE60644	9D12	3	91 - 7
RE60647	3E20	5	40 - 25
RE60647	4D18	5	42 - 14
RE60647	4D19	1	42 - 15
RE60649	1I11	6	20 - 113
RE60658	3G10	20	40 - 67
RE60659	3G6	10	40 - 63
RE60659	3G8	10	40 - 65
RE60667	9F13	1	91 - 55
RE60674	6G8	4	60 - 71
RE60675	6F6	1	60 - 51
RE60676	6F6	5	60 - 51
RE60677	6F8	1	60 - 51B
RE60678	6F8	2	60 - 51B
RE60679	6D19	22	60 - 15
RE60680	7E3	7	70 - 21
RE60681	6D19	21	60 - 15
RE60684	8H10	16	90 - 7
RE60685	8H10	15	90 - 7
RE60686	4G22	3	51 - 51
RE60687	4E24	7	51 - 3
RE60687	4H2	7	51 - 55
RE60694	9D12	24	91 - 7
RE60701	6G12	13	60 - 75
RE60708	6E25	1	60 - 44
RE60708	6F24	..	60 - 67
RE60717	9F23	8	92 - 9
RE60726	3H17	5	40 - 97
RE60765	4D8	3	42 - 4
RE60765	4D10	5	42 - 6
RE60765	4D12	2	42 - 8
RE60765	4D12	11	42 - 8
RE60765	4D20	1	42 - 16
RE60765	4D22	3	42 - 18
RE60815	6E18	1	60 - 37
RE60815	6E20	1	60 - 39
RE60821	8F21	1	80 - 42
RE60822	8F21	1	80 - 42
RE60823	8F22	1	80 - 43
RE60824	8F22	1	80 - 43
RE60825	2E5	5	30 - 23
RE60826	2E5	3	30 - 23
RE60827	2E5	6	30 - 23
RE60828	2E5	7	30 - 23
RE60847	6E4	3	60 - 23
RE60848	6G8	15	60 - 71
RE60849	6G14	5	60 - 77
RE60850	2G7	26	30 - 71
RE60851	7E7	11	70 - 25
RE60852	7F2	4	70 - 47
RE60852	7F4	4	70 - 49
RE60857	9E14	3	91 - 33
RE60861	5E7	2	53 - 30
RE60862	5E7	3	53 - 30
RE60865	9E14	16	91 - 33
RE60866	7H23	16	70 - 117
RE60867	6D23	1	60 - 18
RE60867	6D23	7	60 - 18
RE60868	6D23	1	60 - 18
RE60868	6D23	7	60 - 18
RE60868	6G10	15	60 - 73
RE60872	6H23	13	60 - 109
RE60872	6H25	13	60 - 111
RE60873	7H23	15	70 - 117
RE60874	7H23	1	70 - 117
RE60874	7I10	24	70 - 129
RE60876	6H23	25	60 - 109

https://www.truck-manuals.net/

NUMERICAL INDEX - CONTINUED

PART NO.	GRID	KEY	PAGE
RE60880	6F24	3	60 - 67
RE60882	6F25	1	60 - 68
RE60883	6H23	16	60 - 109
RE60883	6H25	16	60 - 111
RE60885	6H23	15	60 - 109
RE60885	6H25	15	60 - 111
RE60886	6H23	7	60 - 109
RE60886	6H25	7	60 - 111
RE60887	3E10	21	40 - 15
RE60887	3E12	21	40 - 17
RE60887	3E14	25	40 - 19
RE60887	3E16	25	40 - 21
RE60887	3E18	21	40 - 23
RE60887	8H12	16	90 - 9
RE60888	3E10	20	40 - 15
RE60888	3E12	20	40 - 17
RE60888	3E14	24	40 - 19
RE60888	3E16	24	40 - 21
RE60888	3E18	20	40 - 23
RE60888	8H12	15	90 - 9
RE60889	6I2	4	60 - 113
RE60891	7I10	21	70 - 129
RE60891	7I10	26	70 - 129
RE60891	7I10	41	70 - 129
RE60891	7I12	1	70 - 131
RE60892	7H23	35	70 - 117
RE60892	7H23	36	70 - 117
RE60892	7H23	37	70 - 117
RE60892	7H25	1	70 - 119
RE60893	7I2	5	70 - 121
RE60893	7I10	9	70 - 129
RE60894	7H25	5	70 - 119
RE60894	7I4	4	70 - 123
RE60894	7I12	2	70 - 131
RE60897	4F16	4	51 - 19
RE60897	4H18	4	51 - 71
RE60898	6I6	9	60 - 117
RE60902	7H14	6	70 - 107
RE60903	7H14	7	70 - 107
RE60911	7H14	9	70 - 107
RE60913	7H14	9	70 - 107
RE60916	7H14	4	70 - 107
RE60918	7H14	3	70 - 107
RE60919	7H14	15	70 - 107
RE60927	3E10	27	40 - 15
RE60927	3F17	32	40 - 49
RE60927	3F19	33	40 - 51
RE60927	3F20	6	40 - 52
RE60928	3E10	22	40 - 15
RE60928	3E14	12	40 - 19
RE60928	3F17	36	40 - 49
RE60928	3F20	13	40 - 52
RE60929	3E10	36	40 - 15
RE60929	3E14	43	40 - 19
RE60929	3H12	2	40 - 92
RE60929	9D24	8	91 - 19
RE60931	6H11	13	60 - 99
RE60932	6I2	8	60 - 113
RE60933	7H23	30	70 - 117
RE60933	7H25	7	70 - 119
RE60933	7I10	38	70 - 129
RE60933	7I12	4	70 - 131
RE60934	6H15	21	60 - 103
RE60937	6I2	10	60 - 113
RE60938	8F24	9	80 - 45
RE60955	3E14	31	40 - 19
RE60955	3F17	32	40 - 49
RE60955	3F19	33	40 - 51
RE60955	3F20	6	40 - 52
RE60956	3G14	3	40 - 71
RE60957	3G14	4	40 - 71
RE60959	3G14	3	40 - 71
RE60959	3G14	4	40 - 71
RE60969	6F6	25	60 - 51
RE60974	3G14	10	40 - 71
RE60998	9F7	14	91 - 51
RE60998	9F9	21	91 - 53
RE61043	8F8	1	80 - 29
RE61046	6D14	1	60 - 10
RE61047	6D15	1	60 - 11
RE61051	4F16	5	51 - 19
RE61051	4H18	5	51 - 71
RE61051	9D12	7	91 - 7
RE61052	7H10	7	70 - 103
RE61060	8F12	12	80 - 33
RE61061	8F12	12	80 - 33
RE61062	8F12	6	80 - 33
RE61063	8F12	6	80 - 33
RE61064	8F12	8	80 - 33
RE61071	2G1	1	30 - 65
RE61071	7E1	1	70 - 19
RE61087	3E2	20	40 - 9
RE61087	3I16	10	41 - 5
RE61087	3I16	12	41 - 5
RE61088	8F20	1	80 - 41
RE61089	8F20	1	80 - 41
RE61100	9E16	1	91 - 35
RE61107	3G6	4	40 - 63
RE61119	3D24	8	40 - 7
RE61119	3E6	8	40 - 11
RE61119	7I2	9	70 - 121
RE61119	7I10	5	70 - 129
RE61120	7I10	33	70 - 129
RE61121	7H21	11	70 - 115
RE61127	9E14	16	91 - 33
RE61132	7E7	10	70 - 25
RE61133	7D23	7	70 - 15
RE61134	7D23	20	70 - 15
RE61135	6F6	19	60 - 51
RE61136	4G20	1	51 - 49
RE61137	8H10	2	90 - 7
RE61138	8H10	1	90 - 7
RE61139	7E3	4	70 - 21
RE61140	7E3	5	70 - 21
RE61141	6E4	10	60 - 23
RE61141	6E6	10	60 - 25
RE61142	6E4	11	60 - 23
RE61142	6E6	11	60 - 25
RE61144	7E3	2	70 - 21
RE61145	7E3	3	70 - 21
RE61146	8H10	5	90 - 7
RE61147	8H10	6	90 - 7
RE61148	2G7	9	30 - 71
RE61152	8G3	5	80 - 50
RE61155	7H10	16	70 - 103
RE61155	7H16	16	70 - 109
RE61156	7H12	1	70 - 105
RE61157	8H12	9	90 - 9
RE61158	8H12	4	90 - 9
RE61164	3E2	5	40 - 9
RE61164	4D12	6	42 - 8
RE61165	3E2	14	40 - 9
RE61165	4D12	17	42 - 8
RE61167	2D11	3	30 - 3
RE61168	2D11	3	30 - 3
RE61175	2E7	4	30 - 25
RE61181	7H23	14	70 - 117
RE61181	7H25	12	70 - 119
RE61183	3E10	2	40 - 15
RE61183	3E12	2	40 - 17
RE61183	3E14	2	40 - 19
RE61183	3E16	2	40 - 21
RE61183	3E18	2	40 - 23
RE61183	3G17	2	40 - 73
RE61184	3F20	5	40 - 52
RE61185	3F20	4	40 - 52
RE61186	3F20	2	40 - 52
RE61187	3F20	5	40 - 52
RE61188	3F20	4	40 - 52
RE61189	3F20	2	40 - 52
RE61201	3E20	2	40 - 25
RE61201	4D20	5	42 - 16
RE61207	7F15	2A	70 - 60
RE61217	5E24	8	54 - 13
RE61217	5G6	..	54 - 43
RE61220	1I15	19A	20 - 117
RE61220	1I17	19A	20 - 119
RE61236	1I20	33	20 - 123
RE61236	1I24	33	20 - 127
RE61239	5E19	1	54 - 6
RE61243	3E2	27	40 - 9
RE61243	3E4	27	40 - 9B
RE61243	3E8	27	40 - 13
RE61243	4D15	2	42 - 11
RE61244	3E2	28	40 - 9
RE61244	3E4	28	40 - 9B
RE61244	3E8	28	40 - 13
RE61244	4D15	2	42 - 11
RE61248	5F2	16	54 - 15
RE61249	5F2	22	54 - 15
RE61253	1G3	4	20 - 55B
RE61253	1G5	1	20 - 57
RE61253	1H18	1	20 - 96
RE61254	8F24	2	80 - 45
RE61255	8F24	2	80 - 45
RE61267	1G3	9	20 - 55B
RE61268	1G2	9	20 - 55A
RE61274	4F8	21	51 - 11
RE61274	4H10	21	51 - 63
RE61282	7G24	10	70 - 95
RE61300	6F6	15	60 - 51
RE61305	1I15	1	20 - 117
RE61305	1I17	1	20 - 119
RE61306	1I17	1	20 - 119
RE61307	1I15	2	20 - 117
RE61307	1I17	2	20 - 119
RE61307	2D15	8	30 - 7
RE61308	7I20	20	70 - 139
RE61318	7I8	1	70 - 127
RE61318	7I10	42	70 - 129
RE61319	7I20	17	70 - 139
RE61319	7I22	9	70 - 141
RE61321	7H19	6	70 - 113
RE61322	7I8	1	70 - 127
RE61323	7I20	1	70 - 139
RE61332	2D11	7	30 - 3
RE61336	6G14	8	60 - 77
RE61340	7I22	5	70 - 141
RE61344	3D20	7	40 - 3
RE61344	3D20	11	40 - 3
RE61344	3D20	12	40 - 3

https://www.truck-manuals.net/

NUMERICAL INDEX - CONTINUED

PART NO.	GRID	KEY	PAGE
RE61346	9G8	1	92 - 19
RE61388	6H4	10	60 - 91
RE61391	6H4	7	60 - 91
RE61394	1I13	5	20 - 115
RE61395	6G14	42	60 - 77
RE61401	5E24	4	54 - 13
RE61401	5G6	3	54 - 43
RE61401	5G6	..	54 - 43
RE61402	5E24	3	54 - 13
RE61402	5G6	3	54 - 43
RE61402	5G6	..	54 - 43
RE61403	3F4	4	40 - 34
RE61404	3F14	2	40 - 45
RE61409	1I20	9	20 - 123
RE61409	1I24	9	20 - 127
RE61418	9D16	6	91 - 11
RE61419	3E10	38	40 - 15
RE61419	3E12	39	40 - 17
RE61419	3E14	47	40 - 19
RE61419	3E16	48	40 - 21
RE61419	3E18	39	40 - 23
RE61419	8H16	15	90 - 13
RE61441	1I20	24	20 - 123
RE61441	1I24	24	20 - 127
RE61447	8D15	46	71 - 13
RE61449	8D15	14	71 - 13
RE61450	8D15	31	71 - 13
RE61451	8D15	6	71 - 13
RE61452	8D15	5	71 - 13
RE61453	8D15	52	71 - 13
RE61454	8D15	60	71 - 13
RE61455	8D15	60	71 - 13
RE61456	8D15	26	71 - 13
RE61460	8D15	41	71 - 13
RE61463	8D15	30	71 - 13
RE61464	8D15	49	71 - 13
RE61477	8E12	1	80 - 5
RE61498	8D15	52	71 - 13
RE61501	7F22	12	70 - 67
RE61507	7H14	19	70 - 107
RE61511	7H12	3	70 - 105
RE61512	7H12	15	70 - 105
RE61513	7H12	11	70 - 105
RE61514	7F14	1	70 - 59
RE61515	7F14	1	70 - 59
RE61516	3I14	11	41 - 4
RE61520	4D25	19	42 - 21
RE61543	6D24	1	60 - 19
RE61545	3E10	35	40 - 15
RE61545	3E12	36	40 - 17
RE61545	3E14	42	40 - 19
RE61545	3E16	43	40 - 21
RE61545	3E18	36	40 - 23
RE61545	3H18	2	40 - 98
RE61545	3H19	6	40 - 99
RE61546	3E10	32	40 - 15
RE61546	3E12	33	40 - 17
RE61546	3E14	39	40 - 19
RE61546	3E16	40	40 - 21
RE61546	3E18	33	40 - 23
RE61546	3H18	2	40 - 98
RE61546	3H19	6	40 - 99
RE61546	3H20	2	40 - 100
RE61558	1I20	25	20 - 123
RE61558	1I24	25	20 - 127
RE61568	3D24	11	40 - 7
RE61576	6E6	3	60 - 25
RE61576	6E8	3	60 - 27
RE61577	6F6	14	60 - 51
RE61578	6E6	4	60 - 25
RE61578	6E8	4	60 - 27
RE61593	2F8	14	30 - 47
RE61593	2F16	5	30 - 53
RE61593	2F16	13	30 - 53
RE61593	2F20	17	30 - 57
RE61593	2F25	11	30 - 62
RE61593	2F25	12	30 - 62
RE61593	2F25	13	30 - 62
RE61600	3H11	1	40 - 91
RE61622	7D23	28A	70 - 15
RE61623	6G8	20	60 - 71
RE61648	3H22	5	40 - 103
RE61650	3H22	10	40 - 103
RE61651	3H19	9	40 - 99
RE61651	3H22	3	40 - 103
RE61652	7D23	31A	70 - 15
RE61652	7D23	34	70 - 15
RE61658	2F22	10	30 - 59
RE61659	1I11	2	20 - 113
RE61660	2G7	20	30 - 71
RE61665	2E15	11	30 - 31
RE61673	1I11	42	20 - 113
RE61674	1I11	42	20 - 113
RE61675	3G14	10	40 - 71
RE61689	6F22	9	60 - 65
RE61693	2F6	13	30 - 45
RE61693	2G3	4	30 - 67
RE61693	2G5	13	30 - 69
RE61699	7J6	20	70 - 149
RE61717	3E10	41	40 - 15
RE61717	3E12	42	40 - 17
RE61717	3E14	49	40 - 19
RE61717	3E16	50	40 - 21
RE61717	3E18	42	40 - 23
RE61717	3F21	10	40 - 53
RE61740	9G8	9	92 - 19
RE61744	4D17	6	42 - 13
RE61745	6E6	2	60 - 25
RE61745	6E8	2	60 - 27
RE61746	6E6	1	60 - 25
RE61746	6E8	1	60 - 27
RE61754	8F6	6	80 - 27
RE61755	8F6	4	80 - 27
RE61760	3I2	9	40 - 107
RE61760	3I2	10	40 - 107
RE61760	3I4	2	40 - 109
RE61760	3I4	4	40 - 109
RE61764	6D21	1	60 - 17
RE61779	3I6	10	40 - 111
RE61786	3E2	29	40 - 9
RE61786	3E4	29	40 - 9B
RE61786	3E8	29	40 - 13
RE61786	4D17	2	42 - 13
RE61786	4D17	3	42 - 13
RE61789	9F25	5	92 - 11
RE61790	9F25	4	92 - 11
RE61791	6G14	21	60 - 77
RE61791	6G14	44	60 - 77
RE61791	7I24	2	70 - 143
RE61795	8F18	1	80 - 39
RE61796	8F18	1	80 - 39
RE61797	6D16	1	60 - 12
RE61798	8F24	17	80 - 45
RE61799	8F24	17	80 - 45
RE61802	8H21	1	90 - 18
RE61813	2G7	10	30 - 71
RE61814	2G7	12	30 - 71
RE61851	1G2	4	20 - 55A
RE61851	1H18	1	20 - 96
RE61879	1I11	16	20 - 113
RE61919	6H25	24	60 - 111
RE62025	9E18	16	91 - 37
RE62025	9E20	16	91 - 39
RE62060	6D20	1	60 - 16
RE62060	6D21	1	60 - 17
RE62063	9F25	4	92 - 11
RE62063	9F25	16	92 - 11
RE62064	9F25	5	92 - 11
RE62066	5E21	2	54 - 9
RE62066	7D11	2	70 - 3
RE62107	8F13	1	80 - 34
RE62130	6D9	2	60 - 5
RE62145	4D16	10	42 - 12
RE62146	4D16	13	42 - 12
RE62163	3E10	7	40 - 15
RE62163	3E12	7	40 - 17
RE62163	3E14	6	40 - 19
RE62163	3E16	6	40 - 21
RE62163	3E18	7	40 - 23
RE62163	3F17	19	40 - 49
RE62163	3F19	19	40 - 51
RE62188	6F6	7	60 - 51
RE62191	6D19	8	60 - 15
RE62192	9F13	1	91 - 55
RE62204	8E12	1	80 - 5
RE62205	8E10	1	80 - 3
RE62250	6F14	18	60 - 57
RE62250	6I6	1	60 - 117
RE62255	2D19	7	30 - 11
RE62297	9E20	23	91 - 39
RE62300	3E25	1	40 - 30
RE62300	8G6	14	80 - 53
RE62312	9E20	1	91 - 39
RE62341	4G22	1	51 - 51
RE62345	2E19	7	30 - 33
RE62345	2F1	..	30 - 40
RE62345	2G3	7	30 - 67
RE62358	4G6	18	51 - 35
RE62358	4G8	36	51 - 37
RE62399	3F25	13	40 - 57
RE62399	3F25	14	40 - 57
RE62423	2E15	8	30 - 31
RE62423	2F18	3	30 - 55
RE62423	2F18	11	30 - 55
RE62489	6G14	45	60 - 77
RE62489	8F20	9	80 - 41
RE62507	7F2	4	70 - 47
RE62507	7F4	4	70 - 49
RE62508	7I16	2	70 - 135
RE62529	3H5	10	40 - 85
RE62529	3H7	10	40 - 87
RE62555	6G14	8	60 - 77
RE62561	3F25	5	40 - 57
RE62561	3G4	3	40 - 61
RE62562	4G14	16	51 - 43
RE62562	4I18	16	51 - 95
RE62562	6E4	19B	60 - 23
RE62562	6E6	19B	60 - 25
RE62562	6E8	19	60 - 27
RE62607	3G14	3	40 - 71
RE62609	3G14	4	40 - 71

https://www.truck-manuals.net/

NUMERICAL INDEX - CONTINUED

PART NO.	GRID	KEY	PAGE
RE62610	3G14	3	40 - 71
RE62611	3G14	4	40 - 71
RE62615	2F20	17	30 - 57
RE62615	2F25	5	30 - 62
RE62615	2F25	13	30 - 62
RE62626	6G8	20	60 - 71
RE62635	7H18	10	70 - 111
RE62640	1G6	8	20 - 58
RE62640	1H17	10	20 - 95
RE62645	2F12	10	30 - 49B
RE62649	3E10	27	40 - 15
RE62649	3E12	27	40 - 17
RE62649	3F17	32	40 - 49
RE62649	3F19	33	40 - 51
RE62649	3F20	6	40 - 52
RE62650	3E10	27	40 - 15
RE62650	3E12	27	40 - 17
RE62650	3F17	32	40 - 49
RE62650	3F19	33	40 - 51
RE62650	3F20	6	40 - 52
RE62651	3E10	27	40 - 15
RE62651	3E12	27	40 - 17
RE62651	3F17	32	40 - 49
RE62651	3F19	33	40 - 51
RE62651	3F20	6	40 - 52
RE62652	3E14	31	40 - 19
RE62652	3E16	31	40 - 21
RE62652	3E18	27	40 - 23
RE62652	3F17	32	40 - 49
RE62652	3F19	33	40 - 51
RE62652	3F20	6	40 - 52
RE62653	3E10	10	40 - 15
RE62653	3E14	13	40 - 19
RE62653	8H20	15	90 - 17
RE62677	5E18	1	54 - 5
RE62678	6G8	10	60 - 71
RE62678	6G10	10	60 - 73
RE62723	1E21	9	20 - 27
RE62765	5D14	1	53 - 11
RE62776	1F8	8	20 - 39
RE62776	1G21	3	20 - 75
RE62776	1I9	3	20 - 111
RE62776	2D20	7	30 - 12
RE62776	2D24	7	30 - 16
RE62776	2E4	7	30 - 21
RE62777	1F8	10	20 - 39
RE62777	1G21	4	20 - 75
RE62777	1I9	4	20 - 111
RE62777	2D20	8	30 - 12
RE62777	2D24	8	30 - 16
RE62777	2E4	8	30 - 21
RE62778	3F25	16	40 - 57
RE62779	6E4	24	60 - 23
RE62779	6E6	34	60 - 25
RE62780	6E4	25	60 - 23
RE62780	6E6	32	60 - 25
RE62783	6E4	10	60 - 23
RE62783	6E4	11	60 - 23
RE62783	6E4	15	60 - 23
RE62783	6E6	10	60 - 25
RE62783	6E6	11	60 - 25
RE62783	6E6	32	60 - 25
RE62783	6E6	33	60 - 25
RE62783	6E6	34	60 - 25
RE62783	6E8	33	60 - 27
RE62785	7F2	11	70 - 47
RE62785	7F4	11	70 - 49
RE62791	1H11	1	20 - 89
RE62791	1H17	10	20 - 95
RE62792	7H16	7	70 - 109
RE62794	2D19	13A	30 - 11
RE62794	2D19	13B	30 - 11
RE62807	3G14	10	40 - 71
RE62816	8D13	7	71 - 11
RE62817	8D13	9	71 - 11
RE62820	8D13	22	71 - 11
RE62823	8D13	10	71 - 11
RE62824	8D13	23	71 - 11
RE62827	8D13	12	71 - 11
RE62840	2G7	23	30 - 71
RE62872	6G14	21	60 - 77
RE62872	6G14	44	60 - 77
RE62901	9D10	5	91 - 5
RE62904	7I4	6	70 - 123
RE62910	9D10	3	91 - 5
RE62929	3D20	7	40 - 3
RE62929	3D20	11	40 - 3
RE62929	3D20	12	40 - 3
RE62951	8D11	3	71 - 9
RE62952	8D7	2	71 - 5
RE62952	8D9	2	71 - 7
RE62954	8D7	3	71 - 5
RE62954	8D9	3	71 - 7
RE62956	8D7	4	71 - 5
RE62956	8D9	5	71 - 7
RE62957	8D9	6	71 - 7
RE62959	8D7	6	71 - 5
RE62959	8D9	11	71 - 7
RE62960	8D7	7	71 - 5
RE62961	8D7	10	71 - 5
RE62967	7E13	..	70 - 33
RE62976	4D17	3	42 - 13
RE62976	4D17	6	42 - 13
RE62977	4D16	13	42 - 12
RE62981	5E24	18	54 - 13
RE63002	1I20	35	20 - 123
RE63003	1I24	35	20 - 127
RE63007	3F25	5	40 - 57
RE63007	3G4	3	40 - 61
RE63026	8D15	29	71 - 13
RE63036	8D15	23	71 - 13
RE63037	8D17	1	71 - 15
RE63038	8D17	1	71 - 15
RE63039	8D17	3	71 - 15
RE63063	8D13	24	71 - 11
RE63065	8D13	25	71 - 11
RE63090	2E19	10	30 - 33
RE63115	1E21	9	20 - 27
RE63115	1E21	11	20 - 27
RE63182	2E15	5	30 - 31
RE63182	2E17	3	30 - 31B
RE63182	2E17	4	30 - 31B
RE63182	2F18	3	30 - 55
RE63182	2F18	4	30 - 55
RE63182	2F18	11	30 - 55
RE63182	2F18	12	30 - 55
RE63183	2E15	5	30 - 31
RE63183	2E17	4	30 - 31B
RE63183	2F18	3	30 - 55
RE63183	2F18	4	30 - 55
RE63183	2F18	9	30 - 55
RE63183	2F18	12	30 - 55
RE63194	1I13	14	20 - 115
RE63205	7H14	9	70 - 107
RE63206	7H14	9	70 - 107
RE63207	7H12	1	70 - 105
RE63209	7H14	6	70 - 107
RE63210	7H14	7	70 - 107
RE63211	3E10	39	40 - 15
RE63211	3E14	46	40 - 19
RE63211	3G25	1	40 - 81
RE63215	8F8	1	80 - 29
RE63229	4F18	1	51 - 21
RE63229	4F20	4	51 - 23
RE63236	4F4	2	51 - 7
RE63236	4F6	1	51 - 9
RE63236	4F8	1	51 - 11
RE63236	4F10	1	51 - 13
RE63236	4F12	1	51 - 15
RE63236	4F14	8	51 - 17
RE63289	1E8	2	20 - 14
RE63289	3E2	13	40 - 9
RE63289	3E2	15	40 - 9
RE63289	3E8	13	40 - 13
RE63289	3E8	15	40 - 13
RE63306	3E24	17	40 - 29
RE63312	2E17	13	30 - 31B
RE63313	2E17	6	30 - 31B
RE63313	2F14	4	30 - 51
RE63313	2F18	6	30 - 55
RE63313	2F24	4	30 - 61
RE63328	8G6	14	80 - 53
RE63350	3G14	10	40 - 71
RE63351	5E17	3	54 - 4
RE63376	3H15	15	40 - 95
RE63382	5F2	6	54 - 15
RE63382	5F4	8	54 - 17
RE63411	7F20	11	70 - 65
RE63411	7F22	11	70 - 67
RE63412	7F20	12	70 - 65
RE63413	2E21	9	30 - 35
RE63413	2G5	5	30 - 69
RE63414	2E21	6	30 - 35
RE63414	2F6	2	30 - 45
RE63414	2G5	2	30 - 69
RE63422	6D7	1	60 - 3
RE63427	3E14	33	40 - 19
RE63427	6F22	1	60 - 65
RE63440	3E10	22	40 - 15
RE63440	3E14	12	40 - 19
RE63440	3F17	36	40 - 49
RE63440	3F20	13	40 - 52
RE63452	9D10	8	91 - 5
RE63455	4F2	1	51 - 5
RE63455	4F4	2	51 - 7
RE63455	4F6	1	51 - 9
RE63455	4F8	1	51 - 11
RE63455	4F10	1	51 - 13
RE63455	4F12	1	51 - 15
RE63455	4F14	8	51 - 17
RE63458	3E10	36	40 - 15
RE63458	3E12	37	40 - 17
RE63458	3E14	43	40 - 19
RE63458	3E16	44	40 - 21
RE63458	3E18	37	40 - 23
RE63458	3H12	2	40 - 92
RE63458	9D24	8	91 - 19
RE63465	4G3	1	51 - 32
RE63465	4I7	1	51 - 84
RE63468	2G1	1	30 - 65
RE63468	7E1	1	70 - 19

https://www.truck-manuals.net/

NUMERICAL INDEX - CONTINUED

PART NO.	GRID	KEY	PAGE
RE63494	9D10	1	91 - 5
RE63512	3E10	42	40 - 15
RE63512	3E12	43	40 - 17
RE63512	3E18	43	40 - 23
RE63512	6D7	1	60 - 3
RE63513	3E14	50	40 - 19
RE63513	3E16	51	40 - 21
RE63513	6D7	1	60 - 3
RE63514	1F9	10	20 - 39A
RE63514	1F9	11	20 - 39A
RE63514	1F9	12	20 - 39A
RE63514	1F9	13	20 - 39A
RE63514	2E25	10	30 - 39
RE63514	2E25	11	30 - 39
RE63514	2E25	12	30 - 39
RE63514	2E25	13	30 - 39
RE63524	8D15	35	71 - 13
RE63525	8D15	35	71 - 13
RE63527	8D15	47	71 - 13
RE63528	8D15	47	71 - 13
RE63545	7J6	26	70 - 149
RE63545	7J8	26	70 - 151
RE63551	8F12	8	80 - 33
RE63563	8H15	7	90 - 12
RE63575	5E16	8	54 - 3
RE63575	5E16	9	54 - 3
RE63578	8F24	2	80 - 45
RE63579	8F24	2	80 - 45
RE63580	8F12	6	80 - 33
RE63581	8F12	6	80 - 33
RE63599	8D19	12	71 - 17
RE63600	8D19	18	71 - 17
RE63638	3F12	4	40 - 43
RE63638	3G18	10	40 - 74
RE63683	5D24	13	53 - 21
RE63686	8D19	11	71 - 17
RE63687	3F25	5	40 - 57
RE63687	3F25	10	40 - 57
RE63687	3F25	13	40 - 57
RE63687	3G4	3	40 - 61
RE63708	3G6	4	40 - 63
RE63708	3G6	5	40 - 63
RE63708	3G8	4	40 - 65
RE63751	4F4	2	51 - 7
RE63751	4F6	1	51 - 9
RE63751	4F6	13	51 - 9
RE63751	4F8	1	51 - 11
RE63751	4F8	27	51 - 11
RE63751	4F10	1	51 - 13
RE63751	4F10	22	51 - 13
RE63751	4F12	1	51 - 15
RE63751	4F12	7	51 - 15
RE63751	4F14	8	51 - 17
RE63751	4H8	13	51 - 61
RE63751	4H10	27	51 - 63
RE63751	4H12	22	51 - 65
RE63751	4H14	7	51 - 67
RE63763	3E24	17	40 - 29
RE63794	8D15	6	71 - 13
RE63795	8D19	17	71 - 17
RE63801	8D13	6	71 - 11
RE63826	7J6	20	70 - 149
RE63826	7J8	20	70 - 151
RE63832	9F21	8	92 - 7
RE63888	6F14	18	60 - 57
RE63888	6F16	21	60 - 59
RE63888	6I6	1	60 - 117
RE63895	3G14	4	40 - 71
RE63896	3G14	4	40 - 71
RE63899	6H11	13	60 - 99
RE63957	3E2	5	40 - 9
RE63957	4D13	9	42 - 9
RE63958	3E20	2	40 - 25
RE63958	4D21	11	42 - 17
RE63981	3E14	33	40 - 19
RE63981	3E16	33	40 - 21
RE63981	6F22	1	60 - 65
RE64004	5D16	1	53 - 13
RE64004	5D16	20	53 - 13
RE64012	3F25	5	40 - 57
RE64012	3F25	10	40 - 57
RE64012	3G4	3	40 - 61
RE64060	5E17	3	54 - 4
RE64060	5E18	1	54 - 5
RE64161	6F22	5B	60 - 65
RE64161	6F22	9	60 - 65
RE64170	1G6	10	20 - 58
RE64170	1H17	10	20 - 95
RE64177	9F3	1	91 - 47A
RE64206	1F8	37	20 - 39
RE64212	1E6	1	20 - 13D
RE64215	2E7	4	30 - 25
RE64225	5F4	28	54 - 17
RE64225	5F8	7	54 - 19
RE64236	6E10	2	60 - 29
RE64236	6E12	1	60 - 31
RE64237	6E10	2	60 - 29
RE64237	6E12	1	60 - 31
RE64278	3G2	12	40 - 59
RE64279	3G10	20	40 - 67
RE64309	4F2	1	51 - 5
RE64309	4F4	2	51 - 7
RE64309	4F6	1	51 - 9
RE64309	4F8	1	51 - 11
RE64309	4F10	1	51 - 13
RE64309	4F12	1	51 - 15
RE64309	4F14	8	51 - 17
RE64323	3E24	5	40 - 29
RE64323	3H13	11	40 - 93
RE64376	3E10	30	40 - 15
RE64376	3E12	31	40 - 17
RE64376	3E14	37	40 - 19
RE64376	3E16	38	40 - 21
RE64376	3E18	31	40 - 23
RE64376	3H17	4	40 - 97
RE64376	3H19	1	40 - 99
RE64377	3E10	30	40 - 15
RE64377	3E12	31	40 - 17
RE64377	3E14	37	40 - 19
RE64377	3E16	38	40 - 21
RE64377	3E18	31	40 - 23
RE64377	3H17	4	40 - 97
RE64377	3H19	1	40 - 99
RE64391	2F8	14	30 - 47
RE64391	2F16	5	30 - 53
RE64391	2F16	13	30 - 53
RE64392	2F16	10	30 - 53
RE64427	4G10	16	51 - 39
RE64427	4I14	16	51 - 91
RE64427	7D11	8	70 - 3
RE64438	6E16	4	60 - 35
RE64475	8F8	1	80 - 29
RE64509	1F22	1	20 - 51
RE64509	1G6	10	20 - 58
RE64509	1H11	1	20 - 89
RE64509	1H17	10	20 - 95
RE64509	1H17	..	20 - 95
RE64525	9F7	30	91 - 51
RE64525	9F9	27	91 - 53
RE64525	9F9	28	91 - 53
RE64525	9F9	29	91 - 53
RE64525	9F9	30	91 - 53
RE64583	3E10	22	40 - 15
RE64583	3E12	22	40 - 17
RE64583	3E14	12	40 - 19
RE64583	3E16	12	40 - 21
RE64583	3E18	22	40 - 23
RE64583	3F17	36	40 - 49
RE64583	3F19	37	40 - 51
RE64583	3F20	13	40 - 52
RE64626	3E10	15	40 - 15
RE64626	3F7	10	40 - 37
RE64626	3F7	..	40 - 37
RE64626	3F12	9	40 - 43
RE64627	3E14	19	40 - 19
RE64627	3F7	10	40 - 37
RE64627	3F13	9	40 - 44
RE64628	3D20	19	40 - 3
RE64628	3D24	13	40 - 7
RE64628	3E2	1	40 - 9
RE64628	3E6	12	40 - 11
RE64628	3E8	1	40 - 13
RE64629	3E20	5	40 - 25
RE64629	4D18	5	42 - 14
RE64629	4D19	1	42 - 15
RE64646	9F9	27	91 - 53
RE64765	2D23	4	30 - 15
RE64806	5D16	13	53 - 13
RE64874	9D22	2	91 - 17
RE64907	1H11	1	20 - 89
RE64936	2D23	4	30 - 15
RE65049	1F20	1	20 - 49
RE65049	1H7	1	20 - 85
RE65049	1H9	1	20 - 87
RE65081	1E2	1	20 - 13
RE65081	1E4	1	20 - 13B
RE65081	1E5	1	20 - 13C
RE65100	3E2	20	40 - 9
RE65100	3E8	20	40 - 13
RE65100	3I15	13	41 - 4A
RE65100	3I16	10	41 - 5
RE65100	3I18	..	41 - 7
RE65103	3E2	20	40 - 9
RE65103	3E8	20	40 - 13
RE65103	3I15	13	41 - 4A
RE65103	3I16	10	41 - 5
RE65103	3I18	..	41 - 7
RE65103	3I19	6	41 - 8
RE65103	3I19	7	41 - 8
RE65103	3I19	8	41 - 8
RE65103	3I21	7	41 - 11
RE65103	3I23	5	41 - 13
RE65123	2G7	23	30 - 71
RE65126	3F25	5	40 - 57
RE65126	3G4	3	40 - 61
RE65176	3E2	20	40 - 9
RE65176	3I14	11	41 - 4
RE65176	3I18	..	41 - 7
RE65176	3I19	6	41 - 8
RE65176	3I19	7	41 - 8
RE65176	3I19	8	41 - 8

https://www.truck-manuals.net/

NUMERICAL INDEX - CONTINUED

PART NO.	GRID	KEY	PAGE
RE65176	3I23	5	41 - 13
RE65218	8F14	8	80 - 35
RE65218	8G2	11	80 - 49
RE65218	8G12	4	80 - 59
RE65232	8E24	10	80 - 19
RE65233	6F3	1	60 - 47
RE65254	6E6	10	60 - 25
RE65254	6E6	11	60 - 25
RE65254	6E6	32	60 - 25
RE65254	6E6	34	60 - 25
RE65254	6E8	32	60 - 27
RE65255	6E6	10	60 - 25
RE65255	6E6	11	60 - 25
RE65255	6E6	32	60 - 25
RE65255	6E6	34	60 - 25
RE65255	6E8	34	60 - 27
RE65265	2F2	1	30 - 41
RE65265	2F14	1	30 - 51
RE65265	2F24	1	30 - 61
RE65289	1G6	10	20 - 58
RE65289	1H17	10	20 - 95
RE65292	6D23	1	60 - 18
RE65292	6D23	7	60 - 18
RE65292	6D25	1	60 - 21
RE65293	6D23	1	60 - 18
RE65293	6D23	7	60 - 18
RE65293	6D25	1	60 - 21
RE65319	9E20	23	91 - 39
RE65320	2G9	10	30 - 73
RE65330	6E6	10	60 - 25
RE65330	6E6	11	60 - 25
RE65330	6E6	32	60 - 25
RE65330	6E6	34	60 - 25
RE65330	6E8	36	60 - 27
RE65337	7D19	1	70 - 11
RE65350	3D20	7	40 - 3
RE65350	3D20	11	40 - 3
RE65350	3D20	12	40 - 3
RE65350	4F8	19	51 - 11
RE65407	1H17	10	20 - 95
RE65431	2E15	8	30 - 31
RE65431	2E17	3	30 - 31B
RE65431	2E17	11	30 - 31B
RE65431	2F18	3	30 - 55
RE65431	2F18	11	30 - 55
RE65431	2G10	5	30 - 74
RE65432	2E17	14	30 - 31B
RE65432	2F18	13	30 - 55
RE65441	7D23	13	70 - 15
RE65442	6E16	4	60 - 35
RE65457	1I13	5	20 - 115
RE65458	1I13	5	20 - 115
RE65502	8H21	1	90 - 18
RE65537	5E22	19	54 - 10
RE65538	5E22	19	54 - 10
RE65564	7D23	24	70 - 15
RE65564	7D25	24	70 - 17
RE65566	7D23	28A	70 - 15
RE65566	7D23	28B	70 - 15
RE65579	8F14	8	80 - 35
RE65579	8G2	11	80 - 49
RE65579	8G12	4	80 - 59
RE65591	5F25	13	54 - 37
RE65592	5F25	12	54 - 37
RE65595	5F25	17	54 - 37
RE65596	5F25	21	54 - 37
RE65603	5F2	21	54 - 15
RE65608	8F22	1	80 - 43
RE65609	8F22	1	80 - 43
RE65610	1I22	15	20 - 125
RE65610	1J2	15	20 - 129
RE65621	5F2	18	54 - 15
RE65621	5F4	21	54 - 17
RE65621	5F25	18	54 - 37
RE65651	1I22	17	20 - 125
RE65651	1J2	17	20 - 129
RE65689	3H5	10	40 - 85
RE65689	3H7	10	40 - 87
RE65690	3H5	10	40 - 85
RE65690	3H7	7	40 - 87
RE65693	9F23	1	92 - 9
RE65694	9F23	7	92 - 9
RE65695	9F23	2	92 - 9
RE65696	9F21	2	92 - 7
RE65746	7D23	42A	70 - 15
RE65760	9F11	47	91 - 53B
RE65787	2E19	6	30 - 33
RE65787	2E19	10	30 - 33
RE65787	2E19	11	30 - 33
RE65787	2E21	9	30 - 35
RE65787	2F6	5	30 - 45
RE65787	2F14	4	30 - 51
RE65787	2F24	4	30 - 61
RE65787	2G3	11	30 - 67
RE65787	2G5	5	30 - 69
RE65891	1I22	31	20 - 125
RE65891	1J2	31	20 - 129
RE66000	2F12	31	30 - 49B
RE66000	2F22	31	30 - 59
RE66007	3E2	5	40 - 9
RE66007	3E8	6	40 - 13
RE66007	4D13	9	42 - 9
RE66101	7G8	1	70 - 77
RE66140	6E24	1	60 - 43
RE66141	6F25	1	60 - 68
RE66231	6E4	10	60 - 23
RE66231	6E4	11	60 - 23
RE66231	6E4	24	60 - 23
RE66231	6E4	25	60 - 23
RE66231	6E6	10	60 - 25
RE66231	6E6	11	60 - 25
RE66231	6E6	32	60 - 25
RE66231	6E6	34	60 - 25
RE66231	6G8	20	60 - 71
RE66231	6G10	20	60 - 73
RE66235	6E4	10	60 - 23
RE66235	6E4	11	60 - 23
RE66235	6E4	24	60 - 23
RE66235	6E4	25	60 - 23
RE66235	6G8	20	60 - 71
RE66236	6E4	10	60 - 23
RE66236	6E4	11	60 - 23
RE66236	6E4	24	60 - 23
RE66236	6E4	25	60 - 23
RE66236	6G8	20	60 - 71
RE66251	7D25	13	70 - 17
RE66252	7D25	7	70 - 17
RE66253	7D25	20	70 - 17
RE66254	7D25	28	70 - 17
RE66277	3E10	39	40 - 15
RE66277	3E12	40	40 - 17
RE66277	3E14	46	40 - 19
RE66277	3E16	47	40 - 21
RE66277	3E18	40	40 - 23
RE66277	3G25	1	40 - 81
RE66328	7H2	10	70 - 97
RE66337	1I17	19B	20 - 119
RE66338	1I22	29	20 - 125
RE66338	1J2	29	20 - 129
RE66342	1I15	2	20 - 117
RE66342	2D15	8	30 - 7
RE66529	7D17	2	70 - 9
RE66537	6D19	8	60 - 15
RE66552	8H10	25	90 - 7
RE66553	8H10	26	90 - 7
RE66566	6I2	8	60 - 113
RE66573	2G1	1	30 - 65
RE66573	7E1	1	70 - 19
RE66577	8F12	1	80 - 33
RE66601	8E22	11	80 - 17
RE66602	8E24	10	80 - 19
RE66614	2E25	1	30 - 39
RE66614	2F10	1	30 - 49
RE66614	2F12	1	30 - 49B
RE66614	2F22	1	30 - 59
RE66614	3G16	15	40 - 72A
RE66665	9F5	13	91 - 49
RE66667	4G24	6	51 - 53
RE66670	6F10	1	60 - 53
RE66670	6F12	1	60 - 55
RE66671	2G7	9	30 - 71
RE66672	2G7	14	30 - 71
RE66710	6D13	10	60 - 9
RE66712	6E18	8	60 - 37
RE66784	1E6	1	20 - 13D
RE66785	1E6	1	20 - 13D
RE66801	1I11	37	20 - 113
RE66845	3E2	8	40 - 9
RE66875	3G14	10	40 - 71
RE66876	3G14	10	40 - 71
RE66880	3G14	10	40 - 71
RE66881	3D20	7	40 - 3
RE66881	3D20	11	40 - 3
RE66881	3D20	12	40 - 3
RE66881	3D22	10	40 - 5
RE66881	3D22	11	40 - 5
RE66881	4F8	19	51 - 11
RE66881	4H10	19	51 - 63
RE66981	7H23	16	70 - 117
RE66981	7H23	38	70 - 117
RE67009	3G14	3	40 - 71
RE67013	3F11	1	40 - 42
RE67014	3F11	3	40 - 42
RE67014	9D14	8	91 - 9
RE67015	3F11	2	40 - 42
RE67016	3F11	2	40 - 42
RE67019	3F11	5	40 - 42
RE67022	3G14	3	40 - 71
RE67113	7I2	5	70 - 121
RE67113	7I10	9	70 - 129
RE67116	3G14	4	40 - 71
RE67117	3G14	3	40 - 71
RE67181	7J2	6	70 - 145
RE67181	7J2	8	70 - 145
RE67182	7J2	29	70 - 145
RE67190	8E20	3	80 - 15
RE67191	8E20	3	80 - 15
RE67208	1F3	20	20 - 35
RE67242	5F2	10	54 - 15
RE67242	5F8	9	54 - 19
RE67242	5F10	14	54 - 21

https://www.truck-manuals.net/

NUMERICAL INDEX - CONTINUED

PART NO.	GRID	KEY	PAGE
RE67263	4F8	19	51 - 11
RE67285	3E16	16	40 - 21
RE67285	4D7	2	42 - 3
RE67290	8H10	26	90 - 7
RE67290	8H12	9	90 - 9
RE67291	8H10	25	90 - 7
RE67291	8H12	4	90 - 9
RE67354	7D15	9	70 - 7
RE67355	3G12	4	40 - 69
RE67366	8E8	1	80 - 1
RE67377	9F13	1	91 - 55
RE67440	4F23	1	51 - 27
RE67440	4G14	1	51 - 43
RE67457	4G6	14	51 - 35
RE67457	4G6	30	51 - 35
RE67457	4G8	40	51 - 37
RE67457	4I10	14	51 - 87
RE67457	4I10	30	51 - 87
RE67457	4I12	40	51 - 89
RE67458	4F23	11	51 - 27
RE67458	4F23	23	51 - 27
RE67458	4F25	35	51 - 29
RE67458	4G2	16	51 - 31
RE67458	4G2	28	51 - 31
RE67458	4G12	17	51 - 41
RE67458	4I2	11	51 - 79
RE67458	4I2	23	51 - 79
RE67458	4I4	35	51 - 81
RE67458	4I6	16	51 - 83
RE67458	4I6	28	51 - 83
RE67458	4I16	17	51 - 93
RE67458	5D6	7	53 - 3
RE67458	5D8	7	53 - 5
RE67459	9D22	6	91 - 17
RE67483	4F23	5	51 - 27
RE67483	4I2	5	51 - 79
RE67505	4F25	48	51 - 29
RE67505	4G14	21	51 - 43
RE67508	9D10	1	91 - 5
RE67610	2G9	9	30 - 73
RE67617	8F8	1	80 - 29
RE67618	9F13	1	91 - 55
RE67645	3E10	10	40 - 15
RE67645	3E12	10	40 - 17
RE67645	3E14	13	40 - 19
RE67645	3E16	13	40 - 21
RE67645	3E18	10	40 - 23
RE67645	8H20	15	90 - 17
RE67653	6F10	2	60 - 53
RE67664	8F14	8	80 - 35
RE67665	8H20	28	90 - 17
RE67677	1F22	1	20 - 51
RE67677	1H11	1	20 - 89
RE67677	1H17	..	20 - 95
RE67747	2D11	2	30 - 3
RE67771	2F12	10	30 - 49B
RE67781	6G22	11	60 - 85
RE67781	6H6	7	60 - 93
RE67781	6H8	9	60 - 95
RE67782	6G22	12	60 - 85
RE67782	6H6	9	60 - 93
RE67782	6H8	7	60 - 95
RE67784	6G12	15	60 - 75
RE67820	3H24	7	40 - 105
RE67821	3F2	5	40 - 32
RE67821	3F3	5	40 - 33
RE67821	9D22	17	91 - 17
RE67828	2G10	6	30 - 74
RE67828	8H15	2	90 - 12
RE67851	8G1	17	80 - 48
RE67866	3G14	3	40 - 71
RE67868	3G14	4	40 - 71
RE67869	3G14	3	40 - 71
RE67870	3G14	4	40 - 71
RE67898	2D11	4	30 - 3
RE67924	5G2	13	54 - 39
RE67924	5G4	13	54 - 41
RE67934	2F12	33	30 - 49B
RE67934	2F22	33	30 - 59
RE67948	4F20	1	51 - 23
RE67948	4F23	4	51 - 27
RE67948	4F23	19	51 - 27
RE67948	4F25	31	51 - 29
RE67948	4F25	42	51 - 29
RE67948	4G2	20	51 - 31
RE67948	4G2	32	51 - 31
RE67948	4G12	6	51 - 41
RE67948	4H22	1	51 - 75
RE67948	4I2	4	51 - 79
RE67948	4I2	19	51 - 79
RE67948	4I4	31	51 - 81
RE67948	4I4	42	51 - 81
RE67948	4I6	20	51 - 83
RE67948	4I6	32	51 - 83
RE67948	4I16	6	51 - 93
RE67949	4G6	10	51 - 35
RE67949	4G6	26	51 - 35
RE67949	4G8	44	51 - 37
RE67949	4I10	10	51 - 87
RE67949	4I10	26	51 - 87
RE67949	4I12	44	51 - 89
RE67963	6E24	1	60 - 43
RE67963	6G6	1	60 - 69F
RE67965	6E18	1	60 - 37
RE67965	6E20	1	60 - 39
RE68018	6F10	3	60 - 53
RE68018	6F12	2	60 - 55
RE68209	6G12	10	60 - 75
RE68214	6I4	4	60 - 115
RE68229	1F3	15	20 - 35
RE68229	1F4	6	20 - 36
RE68237	6E22	1	60 - 41
RE68237	6F24	..	60 - 67
RE68243	6F1	1A	60 - 45
RE68257	6F10	4	60 - 53
RE68259	6F10	5	60 - 53
RE68290	3F23	5	40 - 55
RE68291	4F2	18	51 - 5
RE68291	4H4	18	51 - 57
RE68292	4F10	8	51 - 13
RE68293	5E2	3	53 - 25
RE68295	7E13	11	70 - 33
RE68298	6G10	4	60 - 73
RE68298	6G12	4	60 - 75
RE68315	1F4	6	20 - 36
RE68327	3F4	3	40 - 34
RE68327	3F7	8	40 - 37
RE68327	3F7	..	40 - 37
RE68408	7G24	1	70 - 95
RE68408	7H2	1	70 - 97
RE68475	7F10	1	70 - 55
RE68495	3F11	6	40 - 42
RE68495	3F19	25	40 - 51
RE68586	6F20	6	60 - 63
RE68597	7F14	1	70 - 59
RE68598	7F14	1	70 - 59
RE68604	6F18	1	60 - 61
RE68604	6F20	21	60 - 63
RE68622	6E1	1	60 - 21A
RE68622	6E2	1	60 - 21B
RE68623	6E1	1	60 - 21A
RE68623	6E2	1	60 - 21B
RE68686	6F10	6	60 - 53
RE68686	6F12	3	60 - 55
RE68722	1J9	10	20 - 137
RE68722	6H19	13	60 - 107
RE68757	7D23	28C	70 - 15
RE68777	6F18	4	60 - 61
RE68777	6I6	9	60 - 117
RE68808	6G14	2	60 - 77
RE68882	8F25	15	80 - 46
RE69034	8H12	9	90 - 9
RE69036	8F21	1	80 - 42
RE69036	8F22	1	80 - 43
RE69037	8F21	1	80 - 42
RE69037	8F22	1	80 - 43
RE69062	8H10	15	90 - 7
RE69063	8H10	15	90 - 7
RE69069	9F19	1	92 - 5
RE69071	4G24	4	51 - 53
RE69072	6F12	5	60 - 55
RE69073	6F12	5	60 - 55
RE69074	6F10	8	60 - 53
RE69075	6F10	8	60 - 53
RE69078	8F20	1	80 - 41
RE69082	1I15	19B	20 - 117
RE69082	1I17	19B	20 - 119
RE69083	1I22	11	20 - 125
RE69083	1J2	11	20 - 129
RE69092	6E20	46	60 - 39
RE69092	6G3	6	60 - 69B
RE69102	9D10	1	91 - 5
RE69103	3H9	13	40 - 89
RE69104	3H9	13	40 - 89
RE69122	4G12	20	51 - 41
RE69122	4I16	20	51 - 93
RE69133	1I15	3	20 - 117
RE69133	1I17	3	20 - 119
RE69134	1I15	5	20 - 117
RE69134	1I17	5	20 - 119
RE69135	1I15	1	20 - 117
RE69136	1I17	1	20 - 119
RE69149	9D22	7	91 - 17
RE69150	9D22	1	91 - 17
RE69159	3E12	15	40 - 17
RE69159	3F7	10	40 - 37
RE69159	3F12	9	40 - 43
RE69160	3E16	19	40 - 21
RE69160	3F7	10	40 - 37
RE69160	3F13	9	40 - 44
RE69189	7G8	9	70 - 77
RE69214	3G14	10	40 - 71
RE69214	6F18	5	60 - 61
RE69215	3G14	10	40 - 71
RE69215	6F18	5	60 - 61
RE69232	7G4	14	70 - 73
RE69232	7G10	14	70 - 79
RE69232	7G12	6	70 - 81
RE69233	7G20	7	70 - 91
RE69329	4G8	32	51 - 37
RE69341	3E16	14	40 - 21

https://www.truck-manuals.net/

NUMERICAL INDEX - CONTINUED

PART NO.	GRID	KEY	PAGE
RE69341	4D7	7	42 - 3
RE69474	3F2	8	40 - 32
RE69550	2F22	1	30 - 59
RE69550	3G16	15	40 - 72A
RE69551	2F10	1	30 - 49
RE69551	3G16	15	40 - 72A
RE69552	2F10	1	30 - 49
RE69552	3G16	15	40 - 72A
RE69553	2F10	1	30 - 49
RE69553	3G16	15	40 - 72A
RE69597	6F18	6	60 - 61
RE69669	3E2	2	40 - 9
RE69669	3E8	2	40 - 13
RE69704	3E8	20	40 - 13
RE69704	3I14	11	41 - 4
RE69704	3I15	13	41 - 4A
RE69704	3I21	7	41 - 11
RE69708	7F22	20	70 - 67
RE69771	8F21	1	80 - 42
RE69795	8F21	1	80 - 42
RE69802	5D6	22	53 - 3
RE69802	5D8	22	53 - 5
RE69839	1F3	10	20 - 35
RE69839	1F4	3	20 - 36
RE69844	1G18	5	20 - 71
RE69844	1G18	..	20 - 71
RE69844	1I6	5	20 - 108A
RE69844	1I6	..	20 - 108A
RE69881	7E7	10	70 - 25
RE69919	9F5	34	91 - 49
RE70004	7J4	2	70 - 147
RE70019	3H24	4	40 - 105
RE70023	1F13	6	20 - 42A
RE70023	1G25	6	20 - 78A
RE70026	2F10	1	30 - 49
RE70026	3G16	15	40 - 72A
RE70027	2F10	1	30 - 49
RE70027	3G16	15	40 - 72A
RE70028	2F10	1	30 - 49
RE70028	3G16	15	40 - 72A
RE70044	3E2	14	40 - 9
RE70044	3E8	14	40 - 13
RE70044	4D13	14	42 - 9
RE70054	4D13	9	42 - 9
RE70062	3D20	16	40 - 3
RE70062	3D22	14	40 - 5
RE70062	4F8	34	51 - 11
RE70062	4F12	10	51 - 15
RE70062	4H10	8	51 - 63
RE70062	4H14	10	51 - 67
RE70072	2F10	1	30 - 49
RE70088	4F23	5	51 - 27
RE70088	4I2	5	51 - 79
RE70119	7H21	12	70 - 115
RE70119	7H21	19	70 - 115
RE70206	4F23	5	51 - 27
RE70206	4I2	1	51 - 79
RE70206	4I2	5	51 - 79
RE70206	4I18	1	51 - 95
RE70210	7J4	3	70 - 147
RE70276	9F21	5	92 - 7
RE70389	4H22	3	51 - 75
RE70449	3D20	19	40 - 3
RE70449	3E6	12	40 - 11
RE70449	3E8	1	40 - 13
RE70464	7J4	7	70 - 147
RE70486	3I21	12	41 - 11
RE70487	3I21	10	41 - 11
RE70488	7J4	1	70 - 147
RE70555	7J4	8	70 - 147
RE70609	7J4	9	70 - 147
RE70610	7J4	10	70 - 147
RE70611	7J4	11	70 - 147
RE70714	1I15	15	20 - 117
RE70714	1I17	15	20 - 119
RE70714	7E1	6	70 - 19
RE70715	1I15	4	20 - 117
RE70715	1I17	4	20 - 119
RE70738	5F2	21	54 - 15
RE70738	5F4	26	54 - 17
RE70738	5F8	9	54 - 19
RE70742	8H20	2	90 - 17
RE70742	8H22	5	90 - 19
RE70756	3I21	6	41 - 11
RE70775	8E18	9	80 - 11
RE70776	8E18	9	80 - 11
RE70777	8E18	9	80 - 11
RE70784	8E18	9	80 - 11
RE70785	8E18	9	80 - 11
RE70833	4I2	16	51 - 79
RE70833	4I4	28	51 - 81
RE70833	4I4	40	51 - 81
RE70833	4I6	11	51 - 83
RE70833	4I6	23	51 - 83
RE70834	4F2	1	51 - 5
RE70834	4F4	2	51 - 7
RE70834	4F6	1	51 - 9
RE70834	4F8	1	51 - 11
RE70834	4F10	1	51 - 13
RE70834	4F12	1	51 - 15
RE70834	4F14	8	51 - 17
RE70834	4H4	1	51 - 57
RE70834	4H6	2	51 - 59
RE70834	4H8	1	51 - 61
RE70834	4H10	1	51 - 63
RE70834	4H12	1	51 - 65
RE70834	4H14	1	51 - 67
RE70834	4H16	8	51 - 69
RE70838	4I10	18	51 - 87
RE70838	4I12	32	51 - 89
RE70838	4I12	36	51 - 89
RE70844	6D19	8	60 - 15
RE70845	6D19	22	60 - 15
RE70846	6F8	1	60 - 51B
RE70957	3E2	20	40 - 9
RE70957	3E8	20	40 - 13
RE70957	3I14	11	41 - 4
RE70957	3I15	13	41 - 4A
RE70957	3I16	10	41 - 5
RE70957	3I18	..	41 - 7
RE70957	3I21	7	41 - 11
RE70957	3I23	5	41 - 13
RE70976	4F23	1	51 - 27
RE70976	4G14	1	51 - 43
RE70991	3E6	12	40 - 11
RE70991	3E8	1	40 - 13
RE70992	3D22	3	40 - 5
RE71008	7H12	23	70 - 105
RE71084	3F25	5	40 - 57
RE71084	3F25	13	40 - 57
RE71084	3G4	3	40 - 61
RE71121	1E18	1	20 - 24
RE71121	1G9	2	20 - 61
RE71121	1H21	2	20 - 99
RE71121	3D24	10	40 - 7
RE71121	3D24	16	40 - 7
RE71121	3E2	23	40 - 9
RE71121	3E4	23	40 - 9B
RE71121	3E6	10	40 - 11
RE71121	3E6	15	40 - 11
RE71121	3E8	23	40 - 13
RE71121	5D10	15	53 - 7
RE71121	5E4	33	53 - 27
RE71181	5F19	14	54 - 31
RE71181	5F21	8	54 - 33
RE71218	8F20	1	80 - 41
RE71219	8F20	1	80 - 41
RE71246	3E16	14	40 - 21
RE71246	4D7	7	42 - 3
RE71260	3F7	..	40 - 37
RE71267	9F12	6	91 - 54
RE71267	9F12	9	91 - 54
RE71268	3E2	29	40 - 9
RE71268	3E4	29	40 - 9B
RE71268	3E8	29	40 - 13
RE71268	4D17	3	42 - 13
RE71323	4F23	5	51 - 27
RE71323	4F25	48	51 - 29
RE71323	4I2	5	51 - 79
RE71323	4I4	48	51 - 81
RE71323	4I18	21	51 - 95
RE71341	8F12	12	80 - 33
RE71343	8F12	12	80 - 33
RE71368	4F18	1	51 - 21
RE71368	4F20	4	51 - 23
RE71368	4H20	1	51 - 73
RE71368	4H22	4	51 - 75
RE71370	8E14	15	80 - 7
RE71379	1I22	31	20 - 125
RE71379	1J2	31	20 - 129
RE71382	9D10	1	91 - 5
RE71393	3D20	19	40 - 3
RE71393	3E6	12	40 - 11
RE71393	3E8	1	40 - 13
RE71420	3E10	37	40 - 15
RE71420	3E10	44	40 - 15
RE71420	3E12	38	40 - 17
RE71420	3E12	45	40 - 17
RE71420	3E18	38	40 - 23
RE71420	3E18	45	40 - 23
RE71420	4D9	10	42 - 5
RE71421	3E10	12	40 - 15
RE71421	3E12	12	40 - 17
RE71421	3E14	17	40 - 19
RE71421	3E14	44	40 - 19
RE71421	3E16	17	40 - 21
RE71421	3E16	45	40 - 21
RE71421	3E18	12	40 - 23
RE71421	4D11	9	42 - 7
RE71421	4D23	9	42 - 19
RE71422	3E2	27	40 - 9
RE71422	3E4	27	40 - 9B
RE71422	3E8	27	40 - 13
RE71422	4D15	2	42 - 11
RE71423	3E2	28	40 - 9
RE71423	3E4	28	40 - 9B
RE71423	3E8	28	40 - 13
RE71423	4D15	2	42 - 11
RE71424	3E20	2	40 - 25
RE71424	4D21	11	42 - 17
RE71427	3E2	14	40 - 9

https://www.truck-manuals.net/

NUMERICAL INDEX - CONTINUED

PART NO.	GRID	KEY	PAGE
RE71427	3E8	14	40 - 13
RE71427	4D13	14	42 - 9
RE71429	3E2	5	40 - 9
RE71429	3E8	6	40 - 13
RE71429	4D13	9	42 - 9
RE71433	8H20	28	90 - 17
RE71437	5F25	9	54 - 37
RE71489	3D20	10	40 - 3
RE71489	3D24	14	40 - 7
RE71489	3E6	13	40 - 11
RE71489	4F4	14	51 - 7
RE71489	5D10	10	53 - 7
RE71490	3D20	2	40 - 3
RE71490	4F18	2	51 - 21
RE71509	1E9	2	20 - 15
RE71509	1E9	12	20 - 15
RE71509	1F23	2	20 - 52
RE71509	1F23	12	20 - 52
RE71509	1H12	2	20 - 90
RE71509	1H12	12	20 - 90
RE71509	8F9	6	80 - 30
RE71543	3I23	1	41 - 13
RE71557	3F21	11	40 - 53
RE71559	7J4	4	70 - 147
RE71560	7J4	5	70 - 147
RE71561	7J4	6	70 - 147
RE71561	7J4	..	70 - 147
RE71566	5F4	18	54 - 17
RE71566	5F8	9	54 - 19
RE71649	7D19	3	70 - 11
RE71650	7D19	4	70 - 11
RE71651	7D19	5	70 - 11
RE71652	7D19	6	70 - 11
RE71653	7D19	9	70 - 11
RE71654	7D19	13	70 - 11
RE71655	7D19	15	70 - 11
RE71657	7D21	15	70 - 13
RG22248	1F8	19	20 - 39
RG23426	1E7	1	20 - 13E
RG23551	1E12	2	20 - 18
RG23551	1E12	5	20 - 18
RG23551	1E12	8	20 - 18
RG24026	1D18	..	20 - 5
RG24026	1F11	..	20 - 41
RG24026	1G23	..	20 - 77
RG27880	1F8	19	20 - 39
RG27881	1E6	1	20 - 13D
RG27881	1F8	37	20 - 39
RG27914	1E6	1	20 - 13D
RG27920	1E6	1	20 - 13D
RG27921	1E6	1	20 - 13D
RG28370	1F3	10	20 - 35
RG28370	1F3	15	20 - 35
RG28370	1F4	3	20 - 36
RG28370	1F4	6	20 - 36
RW26739	8F1	6	80 - 21
RW27069	8F1	8	80 - 21
RW27070	8F1	8	80 - 21
R100122	5E22	2	54 - 10
R100122	5E24	16	54 - 13
R100122	5F15	11	54 - 27
R100246	5F10	12	54 - 21
R100364	1F3	12	20 - 35
R100367	1F3	11	20 - 35
R100367	1F4	4	20 - 36
R100367	1F8	26	20 - 39
R100369	1F3	9	20 - 35
R100369	1F4	2	20 - 36
R100410	8G20	2	80 - 67
R100412	8G22	3	80 - 69
R100499	1E23	5	20 - 29
R100508	3I18	13	41 - 7
R100509	3I18	8	41 - 7
R100511	3I18	7	41 - 7
R100512	3I18	12	41 - 7
R100513	3I18	5	41 - 7
R100569	1E19	1	20 - 25
R100569	1E21	10	20 - 27
R100569	1F8	34	20 - 39
R100569	1G11	10	20 - 63
R100569	1G12	1	20 - 64
R100569	1G21	31	20 - 75
R100569	1H22	1	20 - 101
R100569	1H24	10	20 - 103
R100569	1I9	31	20 - 111
R100774	5F10	11	54 - 21
R100774	5F23	8	54 - 35
R100911	1F8	2	20 - 39
R100911	1G21	2	20 - 75
R100911	1I9	2	20 - 111
R10093	6E20	30	60 - 39
R10093	6E22	11	60 - 41
R10093	6E25	4	60 - 44
R10093	6F24	12	60 - 67
R10093	6G3	12	60 - 69B
R10093	6G5	12	60 - 69D
R10093	7H21	16	70 - 115
R10093	8H10	4	90 - 7
R10093	8H12	12	90 - 9
R10093	8H12	14	90 - 9
R10093	8H12	17	90 - 9
R101042	1F3	2	20 - 35
R101042	1F4	1	20 - 36
R101042	1F8	25	20 - 39
R101085	5D10	16	53 - 7
R102839	5E21	7	54 - 9
R102844	1E23	7	20 - 29
R102844	1G16	14	20 - 69
R102844	1I2	14	20 - 105
R102882	1D18	5	20 - 5
R102882	1F11	5	20 - 41
R102882	1G23	5	20 - 77
R102944	4D25	7	42 - 21
R104425	4E13	1	43 - 8
R104533	8F1	1	80 - 21
R104534	1F11	3	20 - 41
R104534	1G23	3	20 - 77
R104570	4E13	10	43 - 8
R104571	4E13	13	43 - 8
R104572	4E13	11	43 - 8
R104587	1E12	4	20 - 18
R104587	1G1	4	20 - 55
R104587	1G2	2	20 - 55A
R104587	1G3	2	20 - 55B
R104587	1H15	4	20 - 93
R104589	1D22	6	20 - 9
R104589	1F16	6	20 - 45
R104589	1H3	6	20 - 81
R104590	1F9	11	20 - 39A
R104590	2E25	11	30 - 39
R104591	1F3	1	20 - 35
R104592	1D24	16	20 - 11
R104592	1F18	12	20 - 47
R104592	1G16	20	20 - 69
R104592	1H5	12	20 - 83
R104592	1I2	2	20 - 105
R104592	1I2	20	20 - 105
R104592	2D16	2	30 - 8
R104592	2D21	2	30 - 13
R104592	2D25	2	30 - 17
R104621	1E23	11	20 - 29
R104621	1G16	18	20 - 69
R104621	1I2	18	20 - 105
R104623	1E17	2	20 - 23
R104623	1F8	22	20 - 39
R104628	1E19	3	20 - 25
R104628	1E21	8	20 - 27
R104628	1G11	14	20 - 63
R104628	1G12	3	20 - 64
R104628	1H22	3	20 - 101
R104628	1H24	14	20 - 103
R104646	3I14	6	41 - 4
R104646	3I15	7	41 - 4A
R104656	1D22	5	20 - 9
R104656	1E17	15	20 - 23
R104656	1F16	5	20 - 45
R104656	1G8	12	20 - 60
R104656	1H3	5	20 - 81
R104656	1H20	12	20 - 98
R104676	3I14	5	41 - 4
R104676	3I15	6	41 - 4A
R104677	3I15	8	41 - 4A
R104700	4E10	14	43 - 5
R104701	3D20	3	40 - 3
R104701	3D20	5	40 - 3
R104701	3G14	1	40 - 71
R104701	3G14	2	40 - 71
R104701	3G14	5	40 - 71
R104701	3G14	6	40 - 71
R104701	3G14	8	40 - 71
R104701	3G14	9	40 - 71
R104701	3G14	11	40 - 71
R104701	4E10	1	43 - 5
R104701	4E10	13	43 - 5
R104745	4F10	14	51 - 13
R104745	4H12	3	51 - 65
R104755	5F10	3	54 - 21
R104755	5F23	7	54 - 35
R104756	5F10	21	54 - 21
R104814	4F10	2	51 - 13
R104814	4F10	4	51 - 13
R104814	4F12	5	51 - 15
R104814	4H12	13	51 - 65
R104814	4H14	5	51 - 67
R104846	3D20	9	40 - 3
R104846	3D20	15	40 - 3
R104846	3D20	17	40 - 3
R104846	3D20	19	40 - 3
R104846	3D22	9	40 - 5
R104846	3D22	13	40 - 5
R104846	3D22	16	40 - 5
R104846	3D24	13	40 - 7
R104846	3E2	1	40 - 9
R104846	3E10	15	40 - 15
R104846	3E14	19	40 - 19
R104846	3F5	1	40 - 35
R104846	3F7	10	40 - 37
R104846	3F12	9	40 - 43
R104846	3F13	9	40 - 44
R104846	3F17	3	40 - 49
R104846	3F17	5	40 - 49

https://www.truck-manuals.net/

NUMERICAL INDEX - CONTINUED

PART NO.	GRID	KEY	PAGE
R104846	3F17	20	40 - 49
R104846	3F17	22	40 - 49
R104846	3F19	3	40 - 51
R104846	3F19	5	40 - 51
R104846	3F19	20	40 - 51
R104846	3F19	22	40 - 51
R104846	3G14	13	40 - 71
R104846	3G18	6	40 - 74
R104846	3G19	5	40 - 75
R104846	3G24	5	40 - 80
R104846	3H3	3	40 - 83
R104846	4D6	7	42 - 2
R104846	4D16	22	42 - 12
R104846	4D17	13	42 - 13
R104846	4E2	20	42 - 23
R104846	4E2	28	42 - 23
R104846	4E10	11	43 - 5
R104846	4E12	3	43 - 7
R104846	9E23	3	91 - 43
R104859	1E17	4	20 - 23
R104859	1G8	5	20 - 60
R104859	1H20	5	20 - 98
R104861	1E17	5	20 - 23
R104861	1F3	6	20 - 35
R104861	1G8	10	20 - 60
R104861	1H20	10	20 - 98
R104862	1E23	16	20 - 29
R104919	3D20	8	40 - 3
R104919	3D20	14	40 - 3
R104919	3D22	8	40 - 5
R104919	3D22	15	40 - 5
R104919	3E24	16	40 - 29
R104919	3F5	2	40 - 35
R104919	3F5	5	40 - 35
R104919	3F17	31	40 - 49
R104919	3F19	32	40 - 51
R104919	3G12	2	40 - 69
R104919	3G20	3	40 - 76
R104919	3H3	2	40 - 83
R104919	3H5	17	40 - 85
R104919	3H7	17	40 - 87
R104919	3H9	1	40 - 89
R104919	4D6	9	42 - 2
R104919	4D8	2	42 - 4
R104919	4D10	4	42 - 6
R104919	4D11	8	42 - 7
R104919	4D12	4	42 - 8
R104919	4D12	16	42 - 8
R104919	4D14	10	42 - 10
R104919	4D16	21	42 - 12
R104919	4D17	12	42 - 13
R104919	4D20	4	42 - 16
R104919	4D22	5	42 - 18
R104919	4D23	8	42 - 19
R104919	4E10	8	43 - 5
R104919	4E12	6	43 - 7
R104919	9E23	15	91 - 43
R104920	4E10	4	43 - 5
R104921	4E10	6	43 - 5
R104922	4E10	5	43 - 5
R104923	4E10	3	43 - 5
R104926	4E13	2	43 - 8
R104927	4E13	3	43 - 8
R104928	4E13	4	43 - 8
R104929	4E13	5	43 - 8
R104930	4E13	7	43 - 8
R104931	4E13	8	43 - 8
R104932	4E13	6	43 - 8
R104933	4E13	13	43 - 8
R104934	4E13	12	43 - 8
R104936	4E10	16	43 - 5
R104937	4E10	16	43 - 5
R104938	4E10	16	43 - 5
R105346	1F8	5	20 - 39
R105346	1G21	14	20 - 75
R105346	1I9	14	20 - 111
R105346	2D19	14	30 - 11
R105346	2D23	7	30 - 15
R105346	2E2	7	30 - 19
R105388	1F9	..	20 - 39A
R105388	2E25	..	30 - 39
R105388	2F22	..	30 - 59
R105388	3G16	15	40 - 72A
R105479	7G4	15	70 - 73
R105479	7G6	7	70 - 75
R105572	8E22	1	80 - 17
R105572	8F1	2	80 - 21
R105572	8F1	4	80 - 21
R105581	9G2	12	92 - 13
R105619	8F1	5	80 - 21
R105732	1E17	13	20 - 23
R105732	1F3	19	20 - 35
R105833	4F14	11	51 - 17
R105833	4H16	11	51 - 69
R105942	3H5	6	40 - 85
R105942	3H7	6	40 - 87
R106231	9E23	5	91 - 43
R106252	9E6	1	91 - 25
R106463	7E8	3	70 - 28
R106529	8F14	2	80 - 35
R106661	7G4	13	70 - 73
R106661	7G10	13	70 - 79
R106661	8F1	7	80 - 21
R106663	3D20	2	40 - 3
R106663	3D20	10	40 - 3
R106663	3D22	1	40 - 5
R106663	3D22	7	40 - 5
R106663	4F4	14	51 - 7
R106663	4F4	21	51 - 7
R106663	4F18	2	51 - 21
R106663	4F18	25	51 - 21
R106663	4H6	14	51 - 59
R106663	4H6	21	51 - 59
R106663	4H20	2	51 - 73
R106663	4H20	25	51 - 73
R106663	5D10	10	53 - 7
R106674	5F2	6	54 - 15
R106714	6E14	11	60 - 33
R106714	7D23	36	70 - 15
R106789	5F15	10	54 - 27
R106839	5E4	21	53 - 27
R106843	5E4	20	53 - 27
R106879	5F2	11	54 - 15
R106911	7F18	8	70 - 63
R106952	3F17	32	40 - 49
R106952	3F19	33	40 - 51
R106952	3F20	6	40 - 52
R107070	8G7	1	80 - 54
R107071	8G7	2	80 - 54
R107072	8G7	3	80 - 54
R107073	8G7	4	80 - 54
R107074	8G8	1	80 - 55
R107075	8G8	2	80 - 55
R107078	1J7	3	20 - 135
R107078	1J9	3	20 - 137
R107138	2G9	8	30 - 73
R107229	1E9	2	20 - 15
R107229	1F23	2	20 - 52
R107229	1H12	2	20 - 90
R107230	8E12	1	80 - 5
R107242	5D18	23	53 - 15
R107242	5D20	24	53 - 17
R107242	5D22	24	53 - 19
R107242	5D24	8	53 - 21
R107274	9F7	1	91 - 51
R107274	9F9	1	91 - 53
R107316	7E13	4	70 - 33
R107336	4D14	2	42 - 10
R107339	1E13	4	20 - 19
R107339	1G4	4	20 - 56
R107339	1H16	4	20 - 94
R107343	1E9	1	20 - 15
R107343	1H12	1	20 - 90
R107357	3F20	8	40 - 52
R107414	3H18	3	40 - 98
R107430	9E8	3	91 - 27
R107431	9E8	3	91 - 27
R107444	9F5	30	91 - 49
R107448	8E12	8	80 - 5
R107454	5E7	4	53 - 30
R107455	6I6	10	60 - 117
R107466	8E10	8	80 - 3
R107477	4D19	4	42 - 15
R107478	4D19	2	42 - 15
R107491	7E13	6	70 - 33
R107495	7E13	7	70 - 33
R107548	6D11	13	60 - 7
R107551	6D12	1	60 - 8
R107552	6D12	2	60 - 8
R107554	6D11	2	60 - 7
R107554	6D11	16	60 - 7
R107555	6D13	3	60 - 9
R107556	6D13	4	60 - 9
R107561	6D9	8	60 - 5
R107562	3G2	10	40 - 59
R107562	3G8	3	40 - 65
R107562	9G8	18	92 - 19
R107563	6D11	3	60 - 7
R107567	6D9	13	60 - 5
R107583	3F25	14	40 - 57
R107583	3F25	15	40 - 57
R107588	3F25	2	40 - 57
R107588	3G4	5	40 - 61
R107598	3F21	5	40 - 53
R107598	6D9	4	60 - 5
R107601	2G7	19	30 - 71
R107603	2G9	6	30 - 73
R107628	3F25	20	40 - 57
R107629	3F23	7	40 - 55
R107657	7E13	8	70 - 33
R107666	1I11	26	20 - 113
R107666	8H14	1	90 - 11
R107710	5E18	1	54 - 5
R107718	5E16	13	54 - 3
R107718	5F13	13	54 - 25
R107718	5F17	1	54 - 29
R107719	5E17	4	54 - 4
R107719	5F17	5	54 - 29
R107755	7F6	10	70 - 51
R107759	7F8	6	70 - 53
R107760	7G4	1	70 - 73

https://www.truck-manuals.net/

NUMERICAL INDEX - CONTINUED

PART NO.	GRID	KEY	PAGE
R107760	7G10	1	70 - 79
R107760	7G17	1	70 - 88
R107795	7D15	4	70 - 7
R107796	7D15	5	70 - 7
R107797	7D15	6	70 - 7
R107798	7D15	7	70 - 7
R107799	6E20	20	60 - 39
R107799	7D15	8	70 - 7
R107800	7D15	10	70 - 7
R107801	7D15	11	70 - 7
R107802	7D15	12	70 - 7
R107803	7D15	13	70 - 7
R107810	7D15	16	70 - 7
R107811	7D15	17	70 - 7
R107814	7D15	18	70 - 7
R107816	7D15	20	70 - 7
R107818	7D15	22	70 - 7
R107823	9G6	2	92 - 17
R107859	7H23	18	70 - 117
R107890	3F20	1	40 - 52
R107890	3F20	7	40 - 52
R107890	3H11	1	40 - 91
R107890	3H11	4	40 - 91
R107890	3H12	1	40 - 92
R107890	3H12	2	40 - 92
R107890	3H13	4	40 - 93
R107890	6D7	1	60 - 3
R107957	8F12	19	80 - 33
R107991	3E24	..	40 - 29
R107991	8D17	8	71 - 15
R108015	7D15	23	70 - 7
R108016	7D15	24	70 - 7
R108019	7D15	26	70 - 7
R108024	5E24	19	54 - 13
R108037	6E20	5	60 - 39
R108038	6E20	7	60 - 39
R108041	6E20	14	60 - 39
R108041	6E22	21	60 - 41
R108041	6F24	9	60 - 67
R108041	6G3	9	60 - 69B
R108041	6G5	9	60 - 69D
R108042	6E20	12	60 - 39
R108042	6E22	23	60 - 41
R108042	6E25	5	60 - 44
R108042	6F24	14	60 - 67
R108042	6G3	14	60 - 69B
R108042	6G5	14	60 - 69D
R108045	6E20	10	60 - 39
R108049	6E20	21	60 - 39
R108051	6E20	23	60 - 39
R108062	6E20	18	60 - 39
R108062	6F24	11	60 - 67
R108062	6G3	11	60 - 69B
R108066	6E20	8	60 - 39
R108066	6E22	12	60 - 41
R108066	6G5	5	60 - 69D
R108067	6E20	13	60 - 39
R108067	6E22	22	60 - 41
R108067	6E25	6	60 - 44
R108067	6F24	13	60 - 67
R108067	6G3	13	60 - 69B
R108077	9F2	13	91 - 47
R108077	9F7	18	91 - 51
R108166	3F15	2	40 - 46
R108166	3F17	24	40 - 49
R108166	3F17	38	40 - 49
R108166	3F19	39	40 - 51
R108214	4E24	8	51 - 3
R108214	4H2	8	51 - 55
R108214	9D12	30	91 - 7
R108270	7F10	2	70 - 55
R108270	7F14	10	70 - 59
R108277	7F11	5	70 - 56
R108278	7F11	5	70 - 56
R108282	7F10	3	70 - 55
R108282	7F14	8	70 - 59
R108285	7F12	1	70 - 57
R108290	7E13	9	70 - 33
R108291	7G4	8	70 - 73
R108291	7G17	8	70 - 88
R108298	7G4	2	70 - 73
R108298	7G10	2	70 - 79
R108298	7G17	2	70 - 88
R108299	7G4	5	70 - 73
R108299	7G10	5	70 - 79
R108299	7G17	5	70 - 88
R108300	7G4	6	70 - 73
R108300	7G10	6	70 - 79
R108300	7G17	6	70 - 88
R108301	7G4	4	70 - 73
R108301	7G17	4	70 - 88
R108303	7E13	10	70 - 33
R108305	7E13	12	70 - 33
R108306	7E13	13	70 - 33
R108312	8H14	2	90 - 11
R108314	8H18	16	90 - 15
R108384	4G12	22	51 - 41
R108384	5E16	21	54 - 3
R108437	4G2	2	51 - 31
R108437	4I6	2	51 - 83
R108438	4G6	11	51 - 35
R108446	4G6	19	51 - 35
R108447	4F23	17	51 - 27
R108447	4G2	9	51 - 31
R108447	4I2	17	51 - 79
R108447	4I6	9	51 - 83
R108448	4F23	8	51 - 27
R108448	4G2	19	51 - 31
R108449	4G6	24	51 - 35
R108449	4I10	24	51 - 87
R108450	4G2	22	51 - 31
R108451	4F23	20	51 - 27
R108453	4G2	31	51 - 31
R108454	4F21	2	51 - 24
R108454	4H23	2	51 - 76
R108455	4F21	3	51 - 24
R108455	4H23	3	51 - 76
R108456	4G6	27	51 - 35
R108457	4G8	35	51 - 37
R108458	4G8	45	51 - 37
R108459	4G2	36	51 - 31
R108459	4I6	36	51 - 83
R108460	4G2	34	51 - 31
R108460	4I6	34	51 - 83
R108461	4F25	32	51 - 29
R108465	4F18	1	51 - 21
R108465	4F20	4	51 - 23
R108466	4F2	1	51 - 5
R108466	4F4	2	51 - 7
R108466	4F6	1	51 - 9
R108466	4F8	1	51 - 11
R108466	4F10	1	51 - 13
R108466	4F12	1	51 - 15
R108466	4F14	8	51 - 17
R108468	4F14	6	51 - 17
R108468	4H16	6	51 - 69
R108469	4G8	51	51 - 37
R108469	4I12	51	51 - 89
R108471	4G10	5	51 - 39
R108471	4I14	5	51 - 91
R108472	4F20	8	51 - 23
R108472	4H22	8	51 - 75
R108473	4G8	48	51 - 37
R108473	4I12	48	51 - 89
R108474	4F20	9	51 - 23
R108474	4H22	9	51 - 75
R108478	4G8	46	51 - 37
R108478	4I12	46	51 - 89
R108480	4G14	7	51 - 43
R108481	4F18	11	51 - 21
R108481	4H20	11	51 - 73
R108482	4F18	14	51 - 21
R108482	4H20	14	51 - 73
R108484	4G10	7	51 - 39
R108484	4I14	7	51 - 91
R108485	4G10	8	51 - 39
R108485	4I14	8	51 - 91
R108486	4G3	7	51 - 32
R108486	4I7	7	51 - 84
R108488	4F10	15	51 - 13
R108488	4H12	2	51 - 65
R108489	4F4	8	51 - 7
R108489	4H6	8	51 - 59
R108491	4F6	12	51 - 9
R108491	4H8	12	51 - 61
R108492	4F10	13	51 - 13
R108492	4H12	18	51 - 65
R108496	4F23	7	51 - 27
R108496	4F23	18	51 - 27
R108496	4F25	30	51 - 29
R108496	4G2	21	51 - 31
R108496	4G2	33	51 - 31
R108496	4G6	9	51 - 35
R108496	4G6	25	51 - 35
R108496	4G8	43	51 - 37
R108496	4G12	7	51 - 41
R108496	4I2	7	51 - 79
R108496	4I2	18	51 - 79
R108496	4I4	30	51 - 81
R108496	4I6	21	51 - 83
R108496	4I6	33	51 - 83
R108496	4I10	9	51 - 87
R108496	4I10	25	51 - 87
R108496	4I12	43	51 - 89
R108496	4I16	7	51 - 93
R108499	4F2	3	51 - 5
R108499	4H4	3	51 - 57
R108500	4F2	6	51 - 5
R108500	4H4	6	51 - 57
R108501	4F12	8	51 - 15
R108501	4H14	8	51 - 67
R108502	4F6	14	51 - 9
R108502	4F8	26	51 - 11
R108502	4F10	20	51 - 13
R108502	4H8	14	51 - 61
R108502	4H10	26	51 - 63
R108502	4H12	20	51 - 65
R108503	4G14	15	51 - 43
R108503	4I18	15	51 - 95
R108507	4F23	12	51 - 27
R108507	4F23	24	51 - 27

https://www.truck-manuals.net/

NUMERICAL INDEX - CONTINUED

PART NO.	GRID	KEY	PAGE
R108507	4F25	36	51 - 29
R108507	4G2	15	51 - 31
R108507	4G2	27	51 - 31
R108507	4G12	18	51 - 41
R108507	4I2	12	51 - 79
R108507	4I2	24	51 - 79
R108507	4I4	36	51 - 81
R108507	4I6	15	51 - 83
R108507	4I6	27	51 - 83
R108507	4I16	18	51 - 93
R108507	5D6	8	53 - 3
R108507	5D8	8	53 - 5
R108508	4G10	6	51 - 39
R108508	4I14	6	51 - 91
R108509	4G6	15	51 - 35
R108509	4G6	31	51 - 35
R108509	4I10	15	51 - 87
R108509	4I10	31	51 - 87
R108510	4G8	39	51 - 37
R108510	4I12	39	51 - 89
R108511	4G6	13	51 - 35
R108511	4G6	29	51 - 35
R108511	4G8	41	51 - 37
R108511	4I10	13	51 - 87
R108511	4I10	29	51 - 87
R108511	4I12	41	51 - 89
R108512	4G6	12	51 - 35
R108512	4G6	28	51 - 35
R108512	4G8	42	51 - 37
R108512	4I10	12	51 - 87
R108512	4I10	28	51 - 87
R108512	4I12	42	51 - 89
R108514	4G6	2	51 - 35
R108517	4G12	20	51 - 41
R108517	4I16	20	51 - 93
R108518	4G12	2	51 - 41
R108519	4G12	11	51 - 41
R108519	4I16	11	51 - 93
R108520	4G12	16	51 - 41
R108520	4I16	16	51 - 93
R108521	4G12	15	51 - 41
R108521	4I16	15	51 - 93
R108525	4G12	14	51 - 41
R108525	4I16	14	51 - 93
R108526	4G12	12	51 - 41
R108526	4I16	12	51 - 93
R108528	4G6	23	51 - 35
R108528	4I10	23	51 - 87
R108530	4F23	10	51 - 27
R108530	4F23	22	51 - 27
R108530	4F25	34	51 - 29
R108530	4G2	17	51 - 31
R108530	4G2	29	51 - 31
R108530	4I2	10	51 - 79
R108530	4I2	22	51 - 79
R108530	4I4	34	51 - 81
R108530	4I6	17	51 - 83
R108530	4I6	29	51 - 83
R108530	5D6	6	53 - 3
R108530	5D8	6	53 - 5
R108531	4G10	4	51 - 39
R108531	4I14	4	51 - 91
R108533	4G12	13	51 - 41
R108533	4I16	13	51 - 93
R108534	4G8	49	51 - 37
R108534	4I12	49	51 - 89
R108535	4G3	1	51 - 32
R108537	4G10	11	51 - 39
R108537	4I14	11	51 - 91
R108546	4G6	6	51 - 35
R108546	4G6	21	51 - 35
R108546	4G8	55	51 - 37
R108546	4I10	6	51 - 87
R108546	4I10	21	51 - 87
R108546	4I12	55	51 - 89
R108547	4F14	1	51 - 17
R108547	4G6	4	51 - 35
R108547	4G6	21	51 - 35
R108547	4G8	54	51 - 37
R108547	4H16	1	51 - 69
R108547	4I10	4	51 - 87
R108547	4I10	21	51 - 87
R108547	4I12	54	51 - 89
R108551	4F2	9	51 - 5
R108551	4H4	9	51 - 57
R108555	4G16	2	51 - 45
R108558	4G16	7	51 - 45
R108558	5D12	16	53 - 9
R108559	4G16	11	51 - 45
R108562	4F4	6	51 - 7
R108562	4H6	6	51 - 59
R108565	4F2	2	51 - 5
R108565	4H4	2	51 - 57
R108568	5E2	8	53 - 25
R108569	4G12	2	51 - 41
R108569	4G14	12	51 - 43
R108569	4I8	2	51 - 85
R108569	4I16	2	51 - 93
R108569	4I18	12	51 - 95
R108573	4G2	8	51 - 31
R108573	4G2	37	51 - 31
R108573	4I6	8	51 - 83
R108573	4I6	37	51 - 83
R108576	4F14	2	51 - 17
R108576	4H16	2	51 - 69
R108580	5D6	2	53 - 3
R108580	5D8	2	53 - 5
R108582	4F20	2	51 - 23
R108582	4H22	2	51 - 75
R108583	4F20	6	51 - 23
R108583	4H22	6	51 - 75
R108584	4F25	29	51 - 29
R108584	4I4	29	51 - 81
R108699	2F16	7	30 - 53
R108699	2F25	7	30 - 62
R108700	2F16	8	30 - 53
R108700	2F25	8	30 - 62
R108701	2F16	9	30 - 53
R108701	2F25	9	30 - 62
R108867	1E23	14	20 - 29
R108867	1G14	5	20 - 66
R108867	1G16	3	20 - 69
R108867	1I2	3	20 - 105
R108867	1I4	5	20 - 107
R108955	8E24	11	80 - 19
R109147	8E22	5	80 - 17
R109419	9E4	..	91 - 23
R109479	6F10	10	60 - 53
R109479	6F12	7	60 - 55
R109479	8F8	7	80 - 29
R109480	5D16	16	53 - 13
R109481	5D16	4	53 - 13
R109483	5D16	3	53 - 13
R109486	5D16	2	53 - 13
R109487	5D16	13	53 - 13
R109488	5D16	20	53 - 13
R109489	5D16	18	53 - 13
R109528	5D14	1	53 - 11
R109625	1G13	1	20 - 65
R109625	1G21	32	20 - 75
R109625	1I3	1	20 - 106
R109625	1I9	32	20 - 111
R109639	8E10	7	80 - 3
R109639	8E12	7	80 - 5
R109690	4G17	5	51 - 46
R109690	5D14	7	53 - 11
R109691	4G17	3	51 - 46
R109808	8E10	7	80 - 3
R109822	5D16	14	53 - 13
R109823	8E22	8	80 - 17
R109823	8E24	4	80 - 19
R109830	5E24	24	54 - 13
R109831	5E24	23	54 - 13
R109840	5D20	25	53 - 17
R109840	5D22	25	53 - 19
R109840	5D24	11	53 - 21
R109842	5D20	11	53 - 17
R109842	5D22	11	53 - 19
R109843	5D20	1	53 - 17
R109843	5D22	1	53 - 19
R109845	5D20	1	53 - 17
R109845	5D22	1	53 - 19
R109846	5D18	10	53 - 15
R109847	5D18	1	53 - 15
R109848	5D18	1	53 - 15
R109849	5D18	1	53 - 15
R110039	5F2	29	54 - 15
R110039	5F4	34	54 - 17
R110061	5E2	7	53 - 25
R110126	1D21	15	20 - 8
R110126	1D22	2	20 - 9
R110126	1F15	15	20 - 44
R110126	1F16	2	20 - 45
R110126	1H2	15	20 - 80
R110126	1H3	2	20 - 81
R110303	5D18	20	53 - 15
R110309	7G6	6	70 - 75
R110309	7G14	6	70 - 83
R110386	4D14	6	42 - 10
R110387	4D14	7	42 - 10
R110408	9D24	3	91 - 19
R110680	8G12	8	80 - 59
R110682	3F23	4	40 - 55
R110710	2E11	1	30 - 29
R110710	2E13	1	30 - 29B
R110805	9E8	10	91 - 27
R110806	9E8	10	91 - 27
R11086	1G8	6	20 - 60
R11086	1G18	4	20 - 71
R11086	1H20	6	20 - 98
R11086	1I6	4	20 - 108A
R111007	8E24	11	80 - 19
R111009	8E22	7	80 - 17
R111009	8E24	1	80 - 19
R111010	8E22	15	80 - 17
R111010	8E24	13	80 - 19
R111011	8F2	5	80 - 22
R111011	8F4	5	80 - 24
R111012	8F2	3	80 - 22
R111012	8F4	6	80 - 24
R111013	8F2	3	80 - 22

https://www.truck-manuals.net/

NUMERICAL INDEX - CONTINUED

PART NO.	GRID	KEY	PAGE
R111013	8F3	3	80 - 23
R111103	8E22	9	80 - 17
R111103	8E24	6	80 - 19
R111104	8E22	10	80 - 17
R111104	8E24	6	80 - 19
R111156	2D15	10	30 - 7
R111234	7I14	1	70 - 133
R111235	7I14	2	70 - 133
R111238	7H23	10	70 - 117
R111238	7I10	29	70 - 129
R111289	9D12	37	91 - 7
R111296	7D23	44	70 - 15
R111296	7D25	29	70 - 17
R111297	7D23	45	70 - 15
R111297	7D25	30	70 - 17
R111382	9E14	35	91 - 33
R111397	8E8	1	80 - 1
R111398	8E8	2	80 - 1
R111410	5D16	29	53 - 13
R111434	7G14	4	70 - 83
R111434	8E24	8	80 - 19
R111437	8E24	8	80 - 19
R111437	8F1	7	80 - 21
R111449	5D20	20	53 - 17
R111449	5D22	20	53 - 19
R111450	5D18	24	53 - 15
R111467	5D18	19	53 - 15
R111493	7I14	3	70 - 133
R111570	9F5	22	91 - 49
R111632	8H18	7	90 - 15
R111632	9D18	6	91 - 13
R111691	7E11	7	70 - 31
R111692	7E11	1	70 - 31
R111774	6D11	14	60 - 7
R111774	6D12	4	60 - 8
R111792	7E13	16	70 - 33
R111793	7F6	18	70 - 51
R111794	7F6	18	70 - 51
R111807	3F7	9	40 - 37
R111807	8G12	3	80 - 59
R111807	8G16	2	80 - 63
R111808	3F7	9	40 - 37
R111808	8G16	2	80 - 63
R111887	9E10	9	91 - 29
R111887	9E12	4	91 - 31
R111888	9E10	9	91 - 29
R111888	9E12	4	91 - 31
R111894	9E16	6	91 - 35
R111904	5D20	2	53 - 17
R111904	5D22	2	53 - 19
R111931	3E10	6	40 - 15
R111931	3E12	6	40 - 17
R111931	3E12	28	40 - 17
R111931	3E14	7	40 - 19
R111931	3E16	7	40 - 21
R111931	3E16	34	40 - 21
R111931	3E18	6	40 - 23
R111931	3E18	28	40 - 23
R111931	3F2	7	40 - 32
R111931	3F2	9	40 - 32
R111931	3F3	7	40 - 33
R111931	3F4	1	40 - 34
R111931	3F10	6	40 - 41
R111931	3F11	9	40 - 42
R111931	3F17	29	40 - 49
R111931	3F19	30	40 - 51
R111931	3H24	8	40 - 105
R111931	9D22	20	91 - 17
R111932	1I11	31	20 - 113
R111975	3F12	4	40 - 43
R111975	3G18	10	40 - 74
R111982	3I6	8	40 - 111
R112053	1D22	7	20 - 9
R112053	1F16	7	20 - 45
R112053	1H3	7	20 - 81
R112071	5D18	3	53 - 15
R112267	1E17	9	20 - 23
R112267	1F3	5	20 - 35
R112268	1E17	8	20 - 23
R112268	1F3	14	20 - 35
R112268	1G8	9	20 - 60
R112268	1H20	9	20 - 98
R112269	1E17	6	20 - 23
R112273	1E17	10	20 - 23
R112300	7H21	3	70 - 115
R112313	5D6	18	53 - 3
R112313	5D8	18	53 - 5
R112314	5D6	12	53 - 3
R112314	5D8	12	53 - 5
R112315	5D6	15	53 - 3
R112315	5D8	15	53 - 5
R112316	5D10	2	53 - 7
R112395	7I18	3	70 - 137
R112397	7I20	15	70 - 139
R112424	8E20	1	80 - 15
R112442	7H21	3	70 - 115
R112477	2G9	12	30 - 73
R112480	9E14	32	91 - 33
R112513	3F23	6	40 - 55
R112513	3G10	6	40 - 67
R112514	3G10	7	40 - 67
R112515	3G10	9	40 - 67
R112526	3G10	8	40 - 67
R112551	3G10	17	40 - 67
R112553	3G10	12	40 - 67
R112586	4D10	10	42 - 6
R112586	4D11	13	42 - 7
R112612	6F18	3	60 - 61
R112612	6I6	7	60 - 117
R112653	7J4	12	70 - 147
R112679	7E11	4	70 - 31
R11278	3H1	3	40 - 82
R112828	9F12	7	91 - 54
R112855	8F8	3	80 - 29
R112857	4G16	12	51 - 45
R112861	7I22	11	70 - 141
R112888	5F10	9	54 - 21
R112888	5F23	1	54 - 35
R112893	1I20	28	20 - 123
R112893	1I24	28	20 - 127
R112906	5D12	3	53 - 9
R112951	8E20	6	80 - 15
R112953	8E20	6	80 - 15
R112954	6D23	10	60 - 18
R112954	6E2	10	60 - 21B
R112975	2F12	13	30 - 49B
R112975	2F22	13	30 - 59
R113023	4E24	9	51 - 3
R113023	4H2	9	51 - 55
R113042	3H17	8	40 - 97
R113042	3H19	2	40 - 99
R113050	8H10	17	90 - 7
R113050	8H20	20	90 - 17
R113054	6E20	34	60 - 39
R113054	6E22	17	60 - 41
R113054	6G5	1	60 - 69D
R113056	6E20	22	60 - 39
R113057	6E20	25	60 - 39
R113057	6E22	18	60 - 41
R113057	6G5	3	60 - 69D
R113058	6F1	4	60 - 45
R113061	6E20	43	60 - 39
R113061	6E22	24	60 - 41
R113066	6D24	2	60 - 19
R113148	7J2	13	70 - 145
R113164	3F9	8	40 - 40
R113221	8F12	3	80 - 33
R113246	3F25	1	40 - 57
R113246	3F25	26	40 - 57
R113246	3G4	4	40 - 61
R113246	3G10	1	40 - 67
R113305	7J2	25	70 - 145
R113329	8E10	5	80 - 3
R113435	5D6	10	53 - 3
R113435	5D8	10	53 - 5
R113445	7D11	12	70 - 3
R113459	8E25	2	80 - 20
R113486	5E22	5	54 - 10
R113500	8E25	5	80 - 20
R113547	5D12	6	53 - 9
R113555	7D11	13	70 - 3
R113668	5D12	10	53 - 9
R113686	7E8	5	70 - 28
R113688	7E8	6	70 - 28
R113688	7E9	6	70 - 29
R113689	7E8	6	70 - 28
R113689	7E9	6	70 - 29
R113692	8E24	7	80 - 19
R113692	8E25	4	80 - 20
R113716	8E18	5	80 - 11
R114022	2G9	13	30 - 73
R114023	2G9	14	30 - 73
R114059	9F1	5	91 - 46
R114108	4G10	18	51 - 39
R114108	4I14	18	51 - 91
R114123	5E19	1	54 - 6
R114125	7G4	17	70 - 73
R114125	7G10	17	70 - 79
R114125	7G16	8	70 - 85
R114125	8E25	6	80 - 20
R114130	1D24	26	20 - 11
R114130	1F9	14	20 - 39A
R114130	1F18	2	20 - 47
R114130	1H5	2	20 - 83
R114130	2E25	14	30 - 39
R114130	2F12	14	30 - 49B
R114130	2F22	14	30 - 59
R114130	3I14	2	41 - 4
R114130	3I15	2	41 - 4A
R114130	3I16	1	41 - 5
R114130	3I21	13	41 - 11
R114219	4G3	3	51 - 32
R114219	4I7	3	51 - 84
R114224	6E10	1	60 - 29
R114238	5D14	1	53 - 11
R114345	4G6	1	51 - 35
R114345	4G6	8	51 - 35
R114345	4G6	20	51 - 35
R114345	4G8	52	51 - 37
R114345	4G12	19	51 - 41
R114345	4I10	1	51 - 87

https://www.truck-manuals.net/

NUMERICAL INDEX - CONTINUED

PART NO.	GRID	KEY	PAGE
R114345	4I10	8	51 - 87
R114345	4I10	20	51 - 87
R114345	4I12	52	51 - 89
R114345	4I16	19	51 - 93
R114347	5D18	2	53 - 15
R114347	5D20	3	53 - 17
R114347	5D22	3	53 - 19
R114349	7F6	2	70 - 51
R114561	8F14	1	80 - 35
R114561	8F14	2	80 - 35
R114569	6D9	16	60 - 5
R114570	8G8	3	80 - 55
R114571	8G8	4	80 - 55
R114685	9E8	1	91 - 27
R114685	9E10	1	91 - 29
R114685	9E12	1	91 - 31
R114686	9E8	1	91 - 27
R114686	9E10	1	91 - 29
R114686	9E12	1	91 - 31
R114802	8G18	5	80 - 65
R114802	9G8	15	92 - 19
R114820	9E3	7	91 - 22
R114820	9F5	23	91 - 49
R114837	1J9	11	20 - 137
R114837	6H19	15	60 - 107
R114841	6D7	3	60 - 3
R114844	3I13	10	41 - 3
R114899	3G10	5	40 - 67
R114917	4D18	4	42 - 14
R115037	2D15	6	30 - 7
R115093	5E24	22	54 - 13
R115129	1G8	3	20 - 60
R115129	1H20	3	20 - 98
R115171	4F23	6	51 - 27
R115171	4F25	41	51 - 29
R115171	4G2	1	51 - 31
R115171	4G2	10	51 - 31
R115171	4G2	35	51 - 31
R115171	4I2	6	51 - 79
R115171	4I4	41	51 - 81
R115171	4I6	1	51 - 83
R115171	4I6	10	51 - 83
R115171	4I6	35	51 - 83
R115172	7G14	3	70 - 83
R115192	7G10	15	70 - 79
R115192	7G14	7	70 - 83
R115196	9E25	7	91 - 45
R115233	4G10	9	51 - 39
R115233	4I14	9	51 - 91
R115277	8E20	9	80 - 15
R115277	8E20	11	80 - 15
R115278	8E20	10	80 - 15
R115278	8E20	11	80 - 15
R115289	3I13	2	41 - 3
R115331	4G6	7	51 - 35
R115331	4G8	53	51 - 37
R115331	4I10	7	51 - 87
R115331	4I12	53	51 - 89
R115350	3H11	13	40 - 91
R115367	9E25	4	91 - 45
R115368	2F4	5	30 - 43
R115369	2F4	3	30 - 43
R115403	5D6	1	53 - 3
R115403	5D8	1	53 - 5
R115413	5D22	20	53 - 19
R115413	5D24	1	53 - 21
R115433	5E22	6	54 - 10
R115434	5E22	4	54 - 10
R115436	5E17	1	54 - 4
R115438	5F2	12	54 - 15
R115450	5D6	21	53 - 3
R115450	5D8	21	53 - 5
R115451	5D6	25	53 - 3
R115451	5D8	25	53 - 5
R115453	7G4	9	70 - 73
R115453	7G10	9	70 - 79
R115453	7G17	9	70 - 88
R115454	7G4	4	70 - 73
R115454	7G4	14	70 - 73
R115454	7G10	4	70 - 79
R115454	7G10	14	70 - 79
R115454	7G12	6	70 - 81
R115501	4F2	11	51 - 5
R115501	4H4	11	51 - 57
R115504	4F2	15	51 - 5
R115504	4H4	15	51 - 57
R115507	4G8	56	51 - 37
R115507	4I12	56	51 - 89
R115508	4F25	43	51 - 29
R115508	4G2	39	51 - 31
R115508	4G10	12	51 - 39
R115508	4I4	43	51 - 81
R115508	4I6	39	51 - 83
R115508	4I14	12	51 - 91
R115536	7G14	1	70 - 83
R115566	5D16	25	53 - 13
R115567	5D16	26	53 - 13
R115609	3I13	6	41 - 3
R115675	3G19	8	40 - 75
R115675	9E10	10	91 - 29
R115676	3G19	6	40 - 75
R115705	9E16	2	91 - 35
R115705	9E20	9	91 - 39
R115714	7H23	22	70 - 117
R115742	8H5	..	90 - 1
R115743	8H5	2	90 - 1
R115743	8H8	4	90 - 4
R115828	3G22	3	40 - 78
R115850	3G4	2	40 - 61
R115850	3G6	6	40 - 63
R115850	3G8	2	40 - 65
R115850	3G8	6	40 - 65
R115850	9G8	17	92 - 19
R115881	5F2	31	54 - 15
R115881	5F4	6	54 - 17
R115908	4D5	3	42 - 1
R115908	9E8	9	91 - 27
R115909	7H10	3	70 - 103
R115909	7H16	11	70 - 109
R115945	3H17	2	40 - 97
R115945	4D8	7	42 - 4
R115968	3H22	14	40 - 103
R116002	7G10	8	70 - 79
R116031	7H25	6	70 - 119
R116031	7I2	4	70 - 121
R116031	7I4	3	70 - 123
R116031	7I10	4	70 - 129
R116031	7I12	3	70 - 131
R116081	1G2	7	20 - 55A
R116081	1G6	7	20 - 58
R116081	1H17	7	20 - 95
R116082	1G5	3	20 - 57
R116082	1H18	3	20 - 96
R116083	1G5	3	20 - 57
R116083	1H18	3	20 - 96
R116084	1G3	4	20 - 55B
R116084	1G5	2	20 - 57
R116084	1H18	2	20 - 96
R116085	1G3	4	20 - 55B
R116085	1G3	5	20 - 55B
R116085	1G5	2	20 - 57
R116085	1H18	2	20 - 96
R116086	5E2	11	53 - 25
R116115	4F2	17	51 - 5
R116115	4F6	4	51 - 9
R116115	4F10	6	51 - 13
R116115	4F10	10	51 - 13
R116115	4F12	2	51 - 15
R116115	4H4	17	51 - 57
R116115	4H8	4	51 - 61
R116115	4H12	15	51 - 65
R116115	4H12	23	51 - 65
R116115	4H14	2	51 - 67
R116179	8F2	4	80 - 22
R116179	8F3	4	80 - 23
R116179	8F4	4	80 - 24
R116180	8F4	1	80 - 24
R116206	6D23	8	60 - 18
R116231	1I2	10	20 - 105
R116231	1I2	16	20 - 105
R116233	1G13	2	20 - 65
R116233	1I3	2	20 - 106
R116237	1G14	4	20 - 66
R116237	1I4	4	20 - 107
R116262	8F17	7	80 - 38
R116290	9D12	14	91 - 7
R116292	9D12	14	91 - 7
R116311	1E11	2	20 - 17
R116311	1E12	7	20 - 18
R116311	1F25	2	20 - 54
R116311	1G1	5	20 - 55
R116311	1G2	8	20 - 55A
R116311	1G3	8	20 - 55B
R116311	1H14	2	20 - 92
R116311	1H15	5	20 - 93
R116336	8E20	6	80 - 15
R116340	1G6	6	20 - 58
R116340	1H17	6	20 - 95
R116353	5F11	2	54 - 22
R116353	8E10	2	80 - 3
R116389	9E14	30	91 - 33
R116390	9E14	27	91 - 33
R116402	5D12	13	53 - 9
R116440	8E8	3	80 - 1
R116464	1I2	2	20 - 105
R116536	5F2	10	54 - 15
R116537	5F2	10	54 - 15
R116570	8E25	1	80 - 20
R116580	8G16	9	80 - 63
R116598	6E14	8	60 - 33
R116713	4G16	8	51 - 45
R116713	5D12	17	53 - 9
R116718	1G11	12	20 - 63
R116718	1G13	6	20 - 65
R116718	1H24	12	20 - 103
R116718	1I3	6	20 - 106
R116719	1I3	5	20 - 106
R116726	4F2	13	51 - 5
R116726	4H4	13	51 - 57
R116727	2D16	1	30 - 8
R116727	2D21	1	30 - 13

https://www.truck-manuals.net/

NUMERICAL INDEX - CONTINUED

PART NO.	GRID	KEY	PAGE
R116727	2D25	1	30 - 17
R116913	9D18	10	91 - 13
R116932	1F13	2	20 - 42A
R116932	1G25	2	20 - 78A
R116933	2G9	19	30 - 73
R116948	5E7	6	53 - 30
R116975	8H15	1	90 - 12
R116976	8H16	3	90 - 13
R116977	8H16	7	90 - 13
R117033	9F5	2	91 - 49
R117060	1G14	17	20 - 66
R117060	1G21	37	20 - 75
R117060	1I4	17	20 - 107
R117060	1I9	37	20 - 111
R117073	1G16	6	20 - 69
R117073	1I2	6	20 - 105
R117074	1I2	16	20 - 105
R117076	7H21	18	70 - 115
R117153	6H19	8	60 - 107
R117153	6H23	19	60 - 109
R117153	6H25	19	60 - 111
R117153	6I2	2	60 - 113
R117153	6I4	2	60 - 115
R117185	3I2	7	40 - 107
R117237	6F22	16	60 - 65
R117260	3I2	6	40 - 107
R117307	6H19	9	60 - 107
R117307	6H23	18	60 - 109
R117307	6H25	18	60 - 111
R117307	6I2	3	60 - 113
R117307	6I4	3	60 - 115
R117432	6D7	6	60 - 3
R117569	3H22	21	40 - 103
R117569	9F13	2	91 - 55
R117569	9G8	14	92 - 19
R117675	9G6	20	92 - 17
R117718	9G8	8	92 - 19
R117718	9G8	9	92 - 19
R117721	1I11	18	20 - 113
R117721	8H14	9	90 - 11
R117721	8H20	24	90 - 17
R117724	7I22	12	70 - 141
R117724	7J2	11	70 - 145
R117872	7F8	5	70 - 53
R117977	8F24	15	80 - 45
R118146	9E11	4	91 - 30
R118147	9E11	4	91 - 30
R118188	9E11	2	91 - 30
R118245	7I20	14	70 - 139
R118245	7I22	10	70 - 141
R118453	3F23	8	40 - 55
R118453	3G10	10	40 - 67
R118453	3G10	11	40 - 67
R119118	5F2	27	54 - 15
R119118	5F4	22	54 - 17
R119126	5D16	9	53 - 13
R119132	1F11	12	20 - 41
R119132	1G23	12	20 - 77
R119133	7G6	1	70 - 75
R119168	2G10	6	30 - 74
R119168	8H15	2	90 - 12
R119171	8H16	6	90 - 13
R119203	9D12	20	91 - 7
R119207	1I22	8	20 - 125
R119207	1J2	8	20 - 129
R119207	4G3	6	51 - 32
R119207	4I7	6	51 - 84
R119211	5D16	6	53 - 13
R119221	5E16	2	54 - 3
R119222	5E16	11	54 - 3
R119223	2E19	1	30 - 33
R119223	2E21	1	30 - 35
R119223	2F6	11	30 - 45
R119223	2G3	1	30 - 67
R119223	2G5	11	30 - 69
R119275	7F24	30	70 - 69
R119276	7F24	32	70 - 69
R119381	1G8	4	20 - 60
R119381	1H20	4	20 - 98
R119383	1G18	3	20 - 71
R119383	1G21	20	20 - 75
R119383	1I6	3	20 - 108A
R119383	1I9	20	20 - 111
R119384	1G8	2	20 - 60
R119384	1G21	22	20 - 75
R119384	1H20	2	20 - 98
R119384	1I9	22	20 - 111
R119397	1I20	7	20 - 123
R119397	1I24	7	20 - 127
R119438	7G22	8	70 - 93
R119439	7G22	..	70 - 93
R119439	8G14	8	80 - 61
R119442	5D25	1	53 - 22
R119443	5D25	1	53 - 22
R119489	1J7	9	20 - 135
R119527	5D6	3	53 - 3
R119527	5D8	3	53 - 5
R119596	6D9	9	60 - 5
R119604	4F16	6	51 - 19
R119604	4H18	6	51 - 71
R119604	9D12	9	91 - 7
R119676	9F1	8	91 - 46
R119678	9D16	15	91 - 11
R119681	7G14	5	70 - 83
R119682	7G6	5	70 - 75
R119847	1G16	12	20 - 69
R119847	1G21	28	20 - 75
R119847	1I2	12	20 - 105
R119847	1I9	28	20 - 111
R119869	6E18	2	60 - 37
R119890	9E25	1	91 - 45
R119890	9E25	2	91 - 45
R119972	6F14	7	60 - 57
R119972	6F16	7	60 - 59
R119989	3I22	6	41 - 12
R120022	1G19	18	20 - 73
R120022	1I7	18	20 - 109
R120032	1F20	1	20 - 49
R120032	1H7	1	20 - 85
R120032	1H9	1	20 - 87
R120048	7E13	16	70 - 33
R120055	6D11	4	60 - 7
R120103	7F24	2	70 - 69
R120104	7F24	2	70 - 69
R120104	8G20	12	80 - 67
R120105	7F24	2	70 - 69
R120105	8G22	9	80 - 69
R120106	3H5	6	40 - 85
R120106	3H7	6	40 - 87
R120106	8G22	12	80 - 69
R120107	3H5	6	40 - 85
R120107	3H7	6	40 - 87
R120107	8G12	5	80 - 59
R120108	3H5	6	40 - 85
R120108	3H7	6	40 - 87
R120108	8G20	8	80 - 67
R120111	8G16	5	80 - 63
R120112	8G22	7	80 - 69
R120113	8G20	7	80 - 67
R120119	3I22	..	41 - 12
R120119	8G22	4	80 - 69
R120120	3I22	..	41 - 12
R120122	8G22	11	80 - 69
R120123	8G20	9	80 - 67
R120124	8G11	3	80 - 58
R120124	8G12	2	80 - 59
R120124	9D24	12	91 - 19
R120125	8G22	6	80 - 69
R120126	8G20	13	80 - 67
R120129	8G22	2	80 - 69
R120130	8G20	10	80 - 67
R120133	4G14	16	51 - 43
R120133	4I18	16	51 - 95
R120133	6E4	19A	60 - 23
R120133	6E6	19A	60 - 25
R120133	8F20	11	80 - 41
R120134	8F20	6	80 - 41
R120138	2D23	8	30 - 15
R120138	2E2	8	30 - 19
R120143	1J9	11	20 - 137
R120143	6H19	16	60 - 107
R120147	4F20	15	51 - 23
R120147	4H22	15	51 - 75
R120151	3G10	14	40 - 67
R120152	3G10	21	40 - 67
R120157	8F21	4	80 - 42
R120157	8F22	4	80 - 43
R120158	8F21	4	80 - 42
R120158	8F22	4	80 - 43
R120160	3H12	3	40 - 92
R120160	3H18	4	40 - 98
R120160	8H20	3	90 - 17
R120160	9D16	14	91 - 11
R120160	9D24	2	91 - 19
R120166	7E13	17	70 - 33
R120181	2F8	4	30 - 47
R120182	2F8	4	30 - 47
R120183	2F8	8	30 - 47
R120183	2F8	9	30 - 47
R120183	2F8	10	30 - 47
R120184	2F8	8	30 - 47
R120184	2F8	9	30 - 47
R120185	2F8	4	30 - 47
R120185	2F8	10	30 - 47
R120186	2F8	8	30 - 47
R120186	2F8	9	30 - 47
R120187	2D23	11	30 - 15
R120187	2E2	11	30 - 19
R120201	4D8	10	42 - 4
R120202	9F7	1	91 - 51
R120202	9F9	1	91 - 53
R120213	2G9	15	30 - 73
R120233	2G9	20	30 - 73
R120235	4F6	9	51 - 9
R120235	4H8	9	51 - 61
R120252	1J4	2	20 - 131
R120256	4G18	5	51 - 47
R120283	4D8	10	42 - 4
R120321	8H14	27	90 - 11
R120332	2E7	4	30 - 25
R120332	2E7	8	30 - 25

https://www.truck-manuals.net/

NUMERICAL INDEX - CONTINUED

PART NO.	GRID	KEY	PAGE
R120332	4D13	2	42 - 9
R120332	8F12	33	80 - 33
R120352	9G1	3	92 - 12
R120357	9F12	9	91 - 54
R120358	9F12	6	91 - 54
R120412	1E23	10	20 - 29
R120432	3F20	12	40 - 52
R120453	9G1	10	92 - 12
R120467	1F13	5	20 - 42A
R120467	1G25	5	20 - 78A
R120501	8H20	2	90 - 17
R120515	9D12	27	91 - 7
R120522	1I15	12	20 - 117
R120522	1I17	12	20 - 119
R120523	1G18	2	20 - 71
R120523	1I6	2	20 - 108A
R120568	9D12	22	91 - 7
R120578	4F18	16	51 - 21
R120578	4H8	24	51 - 61
R120578	4H20	16	51 - 73
R120644	2D20	6	30 - 12
R120644	2D24	6	30 - 16
R120644	2E4	6	30 - 21
R120645	2D20	1	30 - 12
R120645	2D24	1	30 - 16
R120645	2E4	1	30 - 21
R120646	1F8	9	20 - 39
R120646	1G21	13	20 - 75
R120646	1I9	13	20 - 111
R120646	2D16	5	30 - 8
R120646	2D21	5	30 - 13
R120646	2D25	5	30 - 17
R120653	9E21	5	91 - 40
R120667	2G7	18	30 - 71
R120705	9E23	5	91 - 43
R120723	2D13	5	30 - 5
R120728	9G12	9	92 - 23
R120733	7E5	5	70 - 23
R120752	1E12	3	20 - 18
R120752	1G1	3	20 - 55
R120752	1G2	1	20 - 55A
R120752	1G3	1	20 - 55B
R120752	1H15	3	20 - 93
R120759	7E5	3	70 - 23
R120784	8G7	5	80 - 54
R120784	8G8	5	80 - 55
R120785	8G7	6	80 - 54
R120785	8G8	6	80 - 55
R120801	1D24	25	20 - 11
R120801	1E10	2	20 - 16
R120801	1F24	2	20 - 53
R120864	1F18	3	20 - 47
R120864	1F20	1	20 - 49
R120864	1H5	3	20 - 83
R120864	1H7	1	20 - 85
R120864	1H9	1	20 - 87
R120864	1H13	2	20 - 91
R120872	1D22	2	20 - 9
R120872	1D22	3	20 - 9
R120872	1F16	3	20 - 45
R120872	1H3	3	20 - 81
R120946	4G6	17	51 - 35
R120946	4G8	34	51 - 37
R120946	4G8	37	51 - 37
R120953	1F18	21	20 - 47
R120953	1H5	21	20 - 83
R120954	1F18	21	20 - 47
R120954	1H5	21	20 - 83
R120955	8H10	28	90 - 7
R120956	8H10	29	90 - 7
R121022	5E24	5	54 - 13
R121022	5G6	2	54 - 43
R121022	5G6	..	54 - 43
R121023	5E24	6	54 - 13
R121023	5G6	2	54 - 43
R121023	5G6	..	54 - 43
R121162	9D12	29	91 - 7
R121163	1G14	8	20 - 66
R121163	1I4	8	20 - 107
R121164	1F9	10	20 - 39A
R121164	1F9	11	20 - 39A
R121164	2E25	10	30 - 39
R121164	2E25	11	30 - 39
R121164	2F12	11	30 - 49B
R121164	2F22	11	30 - 59
R121183	8E16	14	80 - 9
R121193	1F11	13	20 - 41
R121193	1G23	13	20 - 77
R121195	1F9	10	20 - 39A
R121195	1F9	13	20 - 39A
R121195	2E25	10	30 - 39
R121195	2E25	13	30 - 39
R121195	2F12	13	30 - 49B
R121195	2F22	13	30 - 59
R121200	1G14	11	20 - 66
R121200	1I4	11	20 - 107
R121233	3F17	17	40 - 49
R121233	3F19	17	40 - 51
R121233	3G2	7	40 - 59
R121234	3G18	3	40 - 74
R121234	3G19	2	40 - 75
R121235	3F17	18	40 - 49
R121235	3F19	18	40 - 51
R121235	3G2	8	40 - 59
R121236	3G18	4	40 - 74
R121236	3G19	3	40 - 75
R121239	5D18	12	53 - 15
R121239	5D20	13	53 - 17
R121239	5D22	13	53 - 19
R121239	5D24	5	53 - 21
R121253	7J6	1	70 - 149
R121253	7J8	1	70 - 151
R121257	6G24	1	60 - 87
R121260	6G24	10	60 - 87
R121260	6I6	3	60 - 117
R121282	5F10	7	54 - 21
R121282	5F23	3	54 - 35
R121283	5F10	5	54 - 21
R121283	5F23	5	54 - 35
R121316	1G18	6	20 - 71
R121316	1I6	6	20 - 108A
R121320	1D18	8	20 - 5
R121320	1F11	8	20 - 41
R121320	1G23	8	20 - 77
R121338	1G3	7	20 - 55B
R121342	1G2	3	20 - 55A
R121342	1H18	3	20 - 96
R121343	1H18	3	20 - 96
R121346	1G2	3	20 - 55A
R121346	1H18	3	20 - 96
R121347	1H18	3	20 - 96
R121350	1G2	5	20 - 55A
R121350	1H18	2	20 - 96
R121351	1H18	2	20 - 96
R121354	1G2	5	20 - 55A
R121354	1H18	2	20 - 96
R121355	1H18	2	20 - 96
R121362	5F10	6	54 - 21
R121362	5F23	4	54 - 35
R121379	1J9	9	20 - 137
R121379	6H19	12	60 - 107
R121395	1E9	4	20 - 15
R121395	1F23	4	20 - 52
R121395	1H12	4	20 - 90
R121435	3H17	1	40 - 97
R121465	8H15	4	90 - 12
R121466	6D11	8	60 - 7
R121489	1D18	21	20 - 5
R121489	1F11	21	20 - 41
R121489	1G23	21	20 - 77
R121490	1D18	7	20 - 5
R121490	1F11	7	20 - 41
R121490	1G23	7	20 - 77
R121491	1D18	6	20 - 5
R121491	1F11	6	20 - 41
R121491	1G23	6	20 - 77
R121525	7J6	3	70 - 149
R121525	7J8	3	70 - 151
R121545	9E14	12	91 - 33
R121564	7F11	3	70 - 56
R121564	7H14	12	70 - 107
R121569	7F24	4	70 - 69
R121603	4G10	3	51 - 39
R121603	4I14	3	51 - 91
R121609	4F10	23	51 - 13
R121626	8F20	2	80 - 41
R121660	8F20	8	80 - 41
R121664	8H20	12	90 - 17
R121666	3E14	13	40 - 19
R121666	8H20	14	90 - 17
R121666	8H20	15	90 - 17
R121667	8H20	27	90 - 17
R121668	8H20	5	90 - 17
R121714	1I15	18	20 - 117
R121714	1I17	18	20 - 119
R121715	8F12	23	80 - 33
R121738	1I11	22	20 - 113
R121741	4F20	16	51 - 23
R121741	4H22	16	51 - 75
R121759	1I13	10	20 - 115
R121762	1I13	..	20 - 115
R121762	8F12	29	80 - 33
R121764	1D24	25	20 - 11
R121764	1E10	2	20 - 16
R121764	1F24	2	20 - 53
R121765	1D24	25	20 - 11
R121765	1E10	2	20 - 16
R121765	1F24	2	20 - 53
R121775	7F16	2	70 - 61
R121776	6E4	20	60 - 23
R121776	6E6	20	60 - 25
R121776	6E8	20	60 - 27
R121777	6E6	21	60 - 25
R121777	6E8	21	60 - 27
R121785	9F2	7	91 - 47
R121787	9F2	9	91 - 47
R121788	7G4	18	70 - 73
R121788	7G10	18	70 - 79
R121788	7G12	2	70 - 81
R121788	7G20	2	70 - 91
R121790	9F1	3	91 - 46

https://www.truck-manuals.net/

NUMERICAL INDEX - CONTINUED

PART NO.	GRID	KEY	PAGE
R121790	9F2	3	91 - 47
R121794	7E5	25	70 - 23
R121796	3F20	11	40 - 52
R121797	3F20	10	40 - 52
R121798	3F20	9	40 - 52
R121810	3F17	33	40 - 49
R121810	3F19	34	40 - 51
R121823	4E24	13	51 - 3
R121823	4H2	13	51 - 55
R121827	3F13	6	40 - 44
R121835	6H23	5	60 - 109
R121835	6H25	5	60 - 111
R121884	7F16	5	70 - 61
R121915	3F25	3	40 - 57
R121917	3F25	15	40 - 57
R121918	3F25	21	40 - 57
R121919	3F25	20	40 - 57
R121920	3F25	12	40 - 57
R121920	3F25	26	40 - 57
R121922	3F23	3	40 - 55
R121926	9D12	4	91 - 7
R121938	9G1	8	92 - 12
R121950	8F24	1	80 - 45
R121965	8H14	4	90 - 11
R121967	7E5	20	70 - 23
R121969	1I11	19	20 - 113
R121969	8H14	7	90 - 11
R121977	9D12	31	91 - 7
R121981	7H21	13	70 - 115
R121990	1F5	18	20 - 37
R122000	9G12	8	92 - 23
R122007	9E12	10	91 - 31
R122008	9E12	10	91 - 31
R122009	9E11	3	91 - 30
R122010	9E11	3	91 - 30
R122015	9D12	29	91 - 7
R122029	1I15	10	20 - 117
R122029	1I17	10	20 - 119
R122030	8F10	8	80 - 31
R122034	8H14	24	90 - 11
R122112	1D18	18	20 - 5
R122120	5E17	10	54 - 4
R122120	5F17	2	54 - 29
R122134	1I20	8	20 - 123
R122134	1I24	8	20 - 127
R122135	7F16	6	70 - 61
R122147	6G14	7	60 - 77
R122147	7H23	28	70 - 117
R122147	7H25	9	70 - 119
R122147	7I10	37	70 - 129
R122147	7I12	6	70 - 131
R122147	7I20	6	70 - 139
R122148	7H21	3	70 - 115
R122158	7E13	15	70 - 33
R122173	6D9	17	60 - 5
R122180	9F7	5	91 - 51
R122195	1F5	11	20 - 37
R122195	1F6	10	20 - 37A
R122195	1G19	11	20 - 73
R122195	1I7	11	20 - 109
R122196	1F5	9	20 - 37
R122196	1F6	8	20 - 37A
R122196	1G19	9	20 - 73
R122196	1I7	9	20 - 109
R122197	4F10	24	51 - 13
R122197	4H12	26	51 - 65
R122199	2G7	22	30 - 71
R122225	3H13	5	40 - 93
R122236	4F20	10	51 - 23
R122266	1I15	7	20 - 117
R122266	1I17	7	20 - 119
R122267	1I15	6	20 - 117
R122267	1I17	6	20 - 119
R122268	1I15	1	20 - 117
R122268	1I17	1	20 - 119
R122269	1I15	1	20 - 117
R122269	1I17	1	20 - 119
R122313	7E8	4	70 - 28
R122313	7E9	4	70 - 29
R122313	7F6	13	70 - 51
R122318	6H23	11	60 - 109
R122318	6H23	17	60 - 109
R122318	6H25	11	60 - 111
R122318	6H25	17	60 - 111
R122354	8E14	13	80 - 7
R122355	8E14	13	80 - 7
R122359	8F6	7	80 - 27
R122364	1F18	20	20 - 47
R122364	1H5	20	20 - 83
R122371	2G7	21	30 - 71
R122374	4G8	50	51 - 37
R122374	4I12	50	51 - 89
R122390	4G8	57	51 - 37
R122390	4I10	22	51 - 87
R122396	7H23	39	70 - 117
R122419	1F11	18	20 - 41
R122419	1G23	18	20 - 77
R122424	2D15	14	30 - 7
R122424	7E5	6	70 - 23
R122428	7F24	2	70 - 69
R122428	8D15	50	71 - 13
R122428	8G11	4	80 - 58
R122429	2G9	33	30 - 73
R122430	1G18	7	20 - 71
R122430	1I6	7	20 - 108A
R122469	4D13	3	42 - 9
R122472	3D24	13	40 - 7
R122472	3E6	12	40 - 11
R122472	7E5	35	70 - 23
R122473	1I15	23	20 - 117
R122473	1I17	23	20 - 119
R122474	1E9	3	20 - 15
R122474	1F23	3	20 - 52
R122474	1H12	3	20 - 90
R122475	1E9	8	20 - 15
R122475	1F23	8	20 - 52
R122475	1H12	8	20 - 90
R122476	1E9	6	20 - 15
R122476	1F23	6	20 - 52
R122476	1H12	6	20 - 90
R122477	1E9	5	20 - 15
R122477	1F23	5	20 - 52
R122477	1H12	5	20 - 90
R122487	4D9	6	42 - 5
R122487	4D13	5	42 - 9
R122487	4D21	6	42 - 17
R122488	4D9	9	42 - 5
R122488	4D11	1	42 - 7
R122488	4D23	1	42 - 19
R122491	1D18	18	20 - 5
R122492	1F11	18	20 - 41
R122493	6F22	11B	60 - 65
R122502	2D20	3	30 - 12
R122502	2D24	3	30 - 16
R122502	2E4	3	30 - 21
R122503	1F8	8	20 - 39
R122503	1I9	3	20 - 111
R122503	2D20	7	30 - 12
R122503	2D24	7	30 - 16
R122503	2E4	7	30 - 21
R122504	1F8	10	20 - 39
R122504	1I9	4	20 - 111
R122504	2D20	8	30 - 12
R122504	2D24	8	30 - 16
R122504	2E4	8	30 - 21
R122537	3I2	12	40 - 107
R122537	3I4	6	40 - 109
R122547	7E5	18	70 - 23
R122550	1I15	9	20 - 117
R122550	1I17	9	20 - 119
R122550	2D13	8	30 - 5
R122557	6D24	5	60 - 19
R122570	9D10	4	91 - 5
R122591	8H10	20	90 - 7
R122595	2D20	2	30 - 12
R122595	2D24	2	30 - 16
R122595	2E4	2	30 - 21
R122608	8H14	5	90 - 11
R122610	8H14	6	90 - 11
R122610	8H14	28	90 - 11
R122611	6H23	24	60 - 109
R122611	6H25	24	60 - 111
R122613	3H13	1	40 - 93
R122618	2D19	12	30 - 11
R122618	2D23	10	30 - 15
R122618	2E2	10	30 - 19
R122653	1G3	9	20 - 55B
R122654	1G2	9	20 - 55A
R122656	8G14	7	80 - 61
R122741	1E2	1	20 - 13
R122741	1E4	1	20 - 13B
R122741	1E5	1	20 - 13C
R122750	5E4	10	53 - 27
R122752	7G17	13	70 - 88
R122754	2G9	4	30 - 73
R122783	4E24	4	51 - 3
R122784	4E24	5	51 - 3
R122786	8F24	1	80 - 45
R122789	2E15	4	30 - 31
R122790	7G4	14	70 - 73
R122791	7G10	14	70 - 79
R122792	7F11	6	70 - 56
R122793	7F11	6	70 - 56
R122794	7F11	1	70 - 56
R122795	7F11	1	70 - 56
R122798	8H18	2	90 - 15
R122846	9D10	5	91 - 5
R122866	7F6	9	70 - 51
R122886	4G16	1	51 - 45
R122889	8G20	4	80 - 67
R122890	8G22	10	80 - 69
R122901	5D6	19	53 - 3
R122901	5D8	19	53 - 5
R122901	5D10	1	53 - 7
R122901	7D11	9	70 - 3
R122902	7D11	11	70 - 3
R122903	7D11	10	70 - 3
R122904	5E4	15	53 - 27
R122905	5E2	8	53 - 25
R122906	5E4	26	53 - 27
R122907	5E4	23	53 - 27

https://www.truck-manuals.net/

NUMERICAL INDEX - CONTINUED

PART NO.	GRID	KEY	PAGE
R122908	5E4	1	53 - 27
R122909	5E6	8	53 - 29
R122910	5E4	13	53 - 27
R122912	5E4	18	53 - 27
R122914	5E6	7	53 - 29
R122915	5E6	9	53 - 29
R123139	3F12	4	40 - 43
R123139	3F13	6	40 - 44
R123139	3G18	9	40 - 74
R123139	8G18	1	80 - 65
R123962	7D15	14	70 - 7
R123963	7D15	15	70 - 7
R123973	9D18	3	91 - 13
R123974	9D18	9	91 - 13
R123975	9D18	8	91 - 13
R123976	9D18	8	91 - 13
R123986	9E14	24	91 - 33
R123987	9E14	24	91 - 33
R123988	6D23	7	60 - 18
R123988	6D24	7	60 - 19
R123993	2E9	3	30 - 27
R123999	3F25	23	40 - 57
R124004	4F16	1	51 - 19
R124004	4H18	1	51 - 71
R124005	4F16	7	51 - 19
R124005	4H18	7	51 - 71
R124005	9D12	12	91 - 7
R124006	7H21	4	70 - 115
R124007	7H21	7	70 - 115
R124008	7H21	9	70 - 115
R124009	7H21	6	70 - 115
R124011	2G9	10	30 - 73
R124012	2G9	11	30 - 73
R124030	1G21	..	20 - 75
R124030	1I9	..	20 - 111
R124042	7E13	14A	70 - 33
R124043	7E13	5	70 - 33
R124044	7F22	3	70 - 67
R124045	7F20	5	70 - 65
R124045	7F22	5	70 - 67
R124049	5E7	8	53 - 30
R124067	6F4	1	60 - 49
R124097	3G6	8	40 - 63
R124097	3G8	8	40 - 65
R124102	8E22	17	80 - 17
R124136	5E24	17	54 - 13
R124137	5E24	17	54 - 13
R124138	5E24	17	54 - 13
R124139	5E24	17	54 - 13
R124154	9F12	1	91 - 54
R124155	9G8	6	92 - 19
R124157	3F17	26	40 - 49
R124162	8E22	14	80 - 17
R124163	6G24	7	60 - 87
R124164	1I20	15	20 - 123
R124165	1I20	11	20 - 123
R124166	1I20	15	20 - 123
R124166	1I24	15	20 - 127
R124167	1I20	11	20 - 123
R124167	1I24	11	20 - 127
R124173	4F18	20	51 - 21
R124173	4H20	20	51 - 73
R124174	4F18	21	51 - 21
R124174	4H20	21	51 - 73
R124175	4F18	19	51 - 21
R124175	4H20	19	51 - 73
R124178	1E17	3	20 - 23
R124184	9G1	2	92 - 12
R124186	1E23	8	20 - 29
R124186	1G16	13	20 - 69
R124186	1I2	13	20 - 105
R124191	9E3	2	91 - 22
R124193	9E10	7	91 - 29
R124194	9E10	7	91 - 29
R124202	9G8	3	92 - 19
R124207	9D16	7	91 - 11
R124208	1G14	10	20 - 66
R124208	1I4	10	20 - 107
R124209	8H16	2	90 - 13
R124210	8H18	3	90 - 15
R124211	1F5	19	20 - 37
R124211	1F6	18	20 - 37A
R124211	1F8	37	20 - 39
R124211	1G19	19	20 - 73
R124211	1G21	8	20 - 75
R124211	1I7	19	20 - 109
R124211	1I9	8	20 - 111
R124225	3H11	2	40 - 91
R124231	8G5	7	80 - 52
R124231	8H21	2	90 - 18
R124235	9E3	5	91 - 22
R124238	8H18	15	90 - 15
R124241	3F25	6	40 - 57
R124242	6D11	6	60 - 7
R124249	8E22	3	80 - 17
R124249	8E24	3	80 - 19
R124250	8E22	3	80 - 17
R124250	8E24	3	80 - 19
R124252	9E2	1	91 - 21
R124254	9F25	11	92 - 11
R124254	9G1	2	92 - 12
R124255	9D12	28	91 - 7
R124256	8E22	12	80 - 17
R124261	4D25	8	42 - 21
R124262	4D25	12	42 - 21
R124263	4D25	12	42 - 21
R124264	4D25	8	42 - 21
R124268	9F7	31	91 - 51
R124270	9E8	4	91 - 27
R124272	9E8	4	91 - 27
R124274	3F25	25A	40 - 57
R124274	3F25	26	40 - 57
R124275	3G10	18	40 - 67
R124276	3G10	3	40 - 67
R124282	6F14	8	60 - 57
R124282	6F16	8	60 - 59
R124282	6F20	8	60 - 63
R124304	8F10	2	80 - 31
R124308	3E24	15	40 - 29
R124309	9F7	9	91 - 51
R124309	9F9	13	91 - 53
R124310	9D24	6	91 - 19
R124311	9D24	5	91 - 19
R124312	6F3	5	60 - 47
R124313	6F3	6	60 - 47
R124328	1G11	15	20 - 63
R124328	1H24	15	20 - 103
R124330	9D24	11	91 - 19
R124331	3H18	5	40 - 98
R124332	8H20	1	90 - 17
R124332	8H22	7	90 - 19
R124332	9E3	3	91 - 22
R124333	9G12	10	92 - 23
R124338	6F22	20	60 - 65
R124338	6F22	21	60 - 65
R124338	6I6	15	60 - 117
R124344	6F14	17	60 - 57
R124344	6F16	17	60 - 59
R124344	6F22	19	60 - 65
R124347	7E8	9	70 - 28
R124347	7E9	7	70 - 29
R124347	7F6	14	70 - 51
R124351	9E10	21	91 - 29
R124352	9E10	21	91 - 29
R124353	8F8	10	80 - 29
R124354	1I13	1	20 - 115
R124359	3G14	7	40 - 71
R124359	3G16	16	40 - 72A
R124360	9F7	23	91 - 51
R124362	2G7	2	30 - 71
R124363	2G7	3	30 - 71
R124374	8H14	8	90 - 11
R124377	8G5	8	80 - 52
R124377	8H14	27	90 - 11
R124378	8H18	9	90 - 15
R124379	5F2	2	54 - 15
R124380	5F2	2	54 - 15
R124381	1G5	1	20 - 57
R124381	1H18	1	20 - 96
R124404	5F10	14	54 - 21
R124404	5F23	10	54 - 35
R124417	9F11	56	91 - 53B
R124418	2E7	11	30 - 25
R124418	8F12	25	80 - 33
R124419	2E7	15	30 - 25
R124419	8F12	24	80 - 33
R124423	7G24	14	70 - 95
R124423	7H2	14	70 - 97
R124428	4E24	14	51 - 3
R124428	4H2	14	51 - 55
R124430	6F3	16	60 - 47
R124431	1I18	1	20 - 120
R124432	9D24	1	91 - 19
R124433	8H15	5	90 - 12
R124441	6G14	17	60 - 77
R124445	7H23	21	70 - 117
R124446	7H23	23	70 - 117
R124447	7H23	20	70 - 117
R124454	7H23	5	70 - 117
R124454	7H25	16	70 - 119
R124454	7I10	28	70 - 129
R124454	7I12	9	70 - 131
R124455	7H23	10	70 - 117
R124455	7I10	29	70 - 129
R124456	7H23	6	70 - 117
R124456	7H25	23	70 - 119
R124456	7I10	17	70 - 129
R124457	7H23	8	70 - 117
R124457	7H25	25	70 - 119
R124457	7I10	19	70 - 129
R124458	7H23	9	70 - 117
R124458	7H25	26	70 - 119
R124458	7I10	20	70 - 129
R124459	7H23	34	70 - 117
R124460	7H23	32	70 - 117
R124460	7H25	22	70 - 119
R124461	7H23	31	70 - 117
R124461	7H25	21	70 - 119
R124462	6E20	3	60 - 39
R124462	6E20	45	60 - 39
R124462	6E22	19	60 - 41

https://www.truck-manuals.net/

NUMERICAL INDEX - CONTINUED

PART NO.	GRID	KEY	PAGE
R124462	6F1	7	60 - 45
R124462	6F24	5	60 - 67
R124462	6G3	1	60 - 69B
R124462	6G5	7	60 - 69D
R124463	6E20	35	60 - 39
R124463	6E22	16	60 - 41
R124463	6F24	4	60 - 67
R124463	6G3	4	60 - 69B
R124463	6G5	8	60 - 69D
R124464	6E20	15	60 - 39
R124464	6E22	20	60 - 41
R124475	6E20	38	60 - 39
R124476	7I10	10	70 - 129
R124477	6E20	37	60 - 39
R124478	6E20	11	60 - 39
R124480	7I2	3	70 - 121
R124480	7I10	3	70 - 129
R124482	7H23	4	70 - 117
R124482	7I10	25	70 - 129
R124493	6I6	6A	60 - 117
R124495	8H18	8	90 - 15
R124511	7H12	12	70 - 105
R124511	7H16	8A	70 - 109
R124515	8F12	22	80 - 33
R124518	8F17	8	80 - 38
R124525	6G18	7	60 - 81
R124530	3G2	9	40 - 59
R124530	8G12	8	80 - 59
R124530	8G18	3	80 - 65
R124530	9G8	16	92 - 19
R124552	4D20	6	42 - 16
R124552	4D21	3	42 - 17
R124556	8F14	7	80 - 35
R124557	8F14	5	80 - 35
R124558	8F14	7	80 - 35
R124559	8F14	5	80 - 35
R124563	8G16	3	80 - 63
R124564	9D16	1	91 - 11
R124565	9D16	5	91 - 11
R124576	4G12	9	51 - 41
R124576	4I16	9	51 - 93
R124576	5F2	24	54 - 15
R124576	5F4	30	54 - 17
R124577	9D24	1	91 - 19
R124578	8H10	30	90 - 7
R124578	8H12	19	90 - 9
R124579	2D15	5	30 - 7
R124581	3I18	..	41 - 7
R124593	9F7	35	91 - 51
R124607	1F5	8	20 - 37
R124607	1F6	7	20 - 37A
R124607	1F8	17	20 - 39
R124607	1F8	37	20 - 39
R124607	1G19	8	20 - 73
R124607	1G21	7	20 - 75
R124607	1I7	8	20 - 109
R124607	1I9	7	20 - 111
R124616	8F24	5	80 - 45
R124617	8F24	5	80 - 45
R124619	6D13	2	60 - 9
R124622	1J4	1	20 - 131
R124629	5D18	14	53 - 15
R124629	5D20	15	53 - 17
R124629	5D22	15	53 - 19
R124630	5D22	15	53 - 19
R124630	5D24	6	53 - 21
R124631	5D18	11	53 - 15
R124632	5D20	12	53 - 17
R124632	5D22	12	53 - 19
R124632	5D24	12	53 - 21
R124650	9D13	1	91 - 8
R124657	9E2	6	91 - 21
R124658	9E2	3	91 - 21
R124659	9E2	5	91 - 21
R124660	9E2	7	91 - 21
R124661	9E2	2	91 - 21
R124663	9E25	1	91 - 45
R124664	9E25	1	91 - 45
R124665	9F1	1	91 - 46
R124666	9F2	1	91 - 47
R124670	8F24	7	80 - 45
R124671	8F24	7	80 - 45
R124673	7H19	1	70 - 113
R124675	3G8	15	40 - 65
R124679	2E7	4	30 - 25
R124681	7E5	1	70 - 23
R124686	8G3	1	80 - 50
R124688	9E14	1	91 - 33
R124689	9E14	13	91 - 33
R124690	9E14	20	91 - 33
R124691	9E14	6	91 - 33
R124693	8G18	2	80 - 65
R124694	9F5	3	91 - 49
R124695	9F5	3	91 - 49
R124701	5F2	26	54 - 15
R124701	5F4	32	54 - 17
R124711	3F25	24	40 - 57
R124712	3F25	4	40 - 57
R124715	8F9	1	80 - 30
R124716	3G25	2	40 - 81
R124719	4D8	12	42 - 4
R124720	9E10	15	91 - 29
R124721	9E10	15	91 - 29
R124725	4F20	7	51 - 23
R124725	4H22	7	51 - 75
R124733	9F2	14	91 - 47
R124745	5E24	7	54 - 13
R124745	5G6	1	54 - 43
R124745	5G6	..	54 - 43
R124746	1E21	11	20 - 27
R124754	8F14	9	80 - 35
R124755	8F14	9	80 - 35
R124756	8F12	17	80 - 33
R124757	8F12	18	80 - 33
R124758	8F12	16	80 - 33
R124759	1I15	15	20 - 117
R124759	1I17	15	20 - 119
R124770	9E14	25	91 - 33
R124771	3H11	5	40 - 91
R124780	7F12	2	70 - 57
R124781	8F12	9	80 - 33
R124782	8F12	7	80 - 33
R124785	1J7	8	20 - 135
R124786	1J9	8	20 - 137
R124786	6H19	6	60 - 107
R124800	9D16	1	91 - 11
R124804	3D24	13	40 - 7
R124807	7I20	12	70 - 139
R124807	7I22	2	70 - 141
R124807	7I24	4	70 - 143
R124812	3F23	9	40 - 55
R124815	6F4	3	60 - 49
R124816	4F14	5	51 - 17
R124819	7F12	1	70 - 57
R124823	2D13	12	30 - 5
R124823	8F20	10	80 - 41
R124824	6E4	16	60 - 23
R124824	6E6	29	60 - 25
R124824	6E8	29	60 - 27
R124824	8F20	10	80 - 41
R124826	2D13	12	30 - 5
R124828	7E5	33	70 - 23
R124829	8G5	3	80 - 52
R124838	1I17	2	20 - 119
R124838	2D15	..	30 - 7
R124839	9D12	18	91 - 7
R124840	9D12	19	91 - 7
R124841	9D12	15	91 - 7
R124842	1G2	4	20 - 55A
R124842	1H18	1	20 - 96
R124848	2D11	7	30 - 3
R124857	4F14	7	51 - 17
R124858	9D13	1	91 - 8
R124859	9G8	13	92 - 19
R124859	9G8	21	92 - 19
R124873	3G10	5	40 - 67
R124886	5F11	1	54 - 22
R124887	8G5	1	80 - 52
R124893	9F25	1	92 - 11
R124896	9F25	20	92 - 11
R124897	9F25	16	92 - 11
R124898	9F25	6	92 - 11
R124900	9G4	6	92 - 15
R124900	9G8	11	92 - 19
R124902	9G4	12	92 - 15
R124902	9G8	10	92 - 19
R124903	9F25	23	92 - 11
R124908	9G8	8	92 - 19
R124926	1I20	27	20 - 123
R124926	1I24	27	20 - 127
R124951	8F20	3	80 - 41
R124952	4G6	16	51 - 35
R124952	4G8	33	51 - 37
R124952	4G8	38	51 - 37
R124952	4I12	38	51 - 89
R124957	5E16	7	54 - 3
R124958	8E12	2	80 - 5
R124959	8E12	3	80 - 5
R124959	8E12	9	80 - 5
R124961	8E12	8	80 - 5
R124962	8E12	10	80 - 5
R125024	9D12	38	91 - 7
R125027	1E16	3	20 - 22
R125027	1G7	3	20 - 59
R125027	1H19	3	20 - 97
R125033	1I20	13	20 - 123
R125033	1I24	13	20 - 127
R125034	1I20	18	20 - 123
R125034	1I24	18	20 - 127
R125035	1I20	30	20 - 123
R125035	1I24	30	20 - 127
R125036	1I20	4	20 - 123
R125036	1I24	4	20 - 127
R125037	1I20	29	20 - 123
R125037	1I24	29	20 - 127
R125046	8D15	56	71 - 13
R125050	8D15	8	71 - 13
R125050	8D17	11	71 - 15
R125051	8D15	1	71 - 13
R125053	8D15	11	71 - 13
R125054	8D15	37	71 - 13

https://www.truck-manuals.net/

NUMERICAL INDEX - CONTINUED

PART NO.	GRID	KEY	PAGE
R125055	8D15	25	71 - 13
R125056	8D15	32	71 - 13
R125057	8D15	39	71 - 13
R125058	8D15	55	71 - 13
R125059	8D15	45	71 - 13
R125060	8D15	40	71 - 13
R125061	8D15	54	71 - 13
R125062	8D15	34	71 - 13
R125064	4F4	1	51 - 7
R125064	4F6	13	51 - 9
R125064	4F10	18	51 - 13
R125064	4F12	7	51 - 15
R125064	4G10	25	51 - 39
R125064	4H6	1	51 - 59
R125064	4H12	12	51 - 65
R125064	4I14	25	51 - 91
R125069	5D18	15	53 - 15
R125069	5D20	16	53 - 17
R125069	5D22	16	53 - 19
R125070	5D22	16	53 - 19
R125070	5D24	4	53 - 21
R125078	9F12	5	91 - 54
R125085	8F24	12	80 - 45
R125086	5E4	9	53 - 27
R125090	8D15	32	71 - 13
R125091	7H18	10	70 - 111
R125092	7H12	6	70 - 105
R125093	7H12	6	70 - 105
R125094	7H12	6	70 - 105
R125095	7H12	6	70 - 105
R125096	7H12	6	70 - 105
R125098	9F1	12	91 - 46
R125098	9F2	15	91 - 47
R125138	3F17	23	40 - 49
R125138	3F19	23	40 - 51
R125138	8G18	4	80 - 65
R125140	7H10	19	70 - 103
R125140	7H16	17	70 - 109
R125144	4F16	11	51 - 19
R125144	4H18	11	51 - 71
R125144	9D12	10	91 - 7
R125147	9E3	2	91 - 22
R125149	8D15	4	71 - 13
R125153	6D24	3	60 - 19
R125161	4D17	9	42 - 13
R125162	8E16	9	80 - 9
R125163	8E16	13	80 - 9
R125164	8E16	13	80 - 9
R125166	1I11	32	20 - 113
R125166	1I13	6	20 - 115
R125168	8G6	12	80 - 53
R125169	8G6	12	80 - 53
R125170	1I13	11	20 - 115
R125175	1I11	26	20 - 113
R125175	8H14	1	90 - 11
R125178	5E4	7	53 - 27
R125180	1I20	14	20 - 123
R125180	1I24	14	20 - 127
R125189	8G12	1	80 - 59
R125190	8G12	1	80 - 59
R125192	8G2	6	80 - 49
R125193	3H11	10	40 - 91
R125196	4G2	3	51 - 31
R125196	4I6	3	51 - 83
R125208	4F2	12	51 - 5
R125208	4H4	12	51 - 57
R125209	4F2	14	51 - 5
R125209	4H4	14	51 - 57
R125216	1I20	11	20 - 123
R125216	1I20	15	20 - 123
R125217	1I20	11	20 - 123
R125217	1I20	15	20 - 123
R125218	1I24	15	20 - 127
R125219	1I24	11	20 - 127
R125223	8H12	10	90 - 9
R125223	8H20	35	90 - 17
R125242	9F7	24	91 - 51
R125324	6H15	3	60 - 103
R125324	6H17	3	60 - 105
R125325	3H22	18	40 - 103
R125344	2G9	17	30 - 73
R125345	8G16	10	80 - 63
R125345	9D12	32	91 - 7
R125346	7D23	32	70 - 15
R125346	7D25	32	70 - 17
R125347	7D23	33	70 - 15
R125347	7D25	33	70 - 17
R125362	5D18	27	53 - 15
R125362	5D20	27	53 - 17
R125362	5D22	27	53 - 19
R125362	5D24	3	53 - 21
R125363	9E14	9	91 - 33
R125365	1I11	43	20 - 113
R125379	4F14	9	51 - 17
R125379	4H16	9	51 - 69
R125390	7F20	3	70 - 65
R125391	8F24	19	80 - 45
R125396	7J6	22	70 - 149
R125397	7J6	12	70 - 149
R125397	7J8	12	70 - 151
R125398	7J6	17	70 - 149
R125398	7J8	17	70 - 151
R125399	7J6	10	70 - 149
R125399	7J8	10	70 - 151
R125408	8G6	3	80 - 53
R125449	7F18	15	70 - 63
R125450	7F18	2	70 - 63
R125450	7F24	4	70 - 69
R125454	8H14	31	90 - 11
R125454	8H20	25	90 - 17
R125461	6E6	25	60 - 25
R125461	6E8	25	60 - 27
R125467	8H16	5	90 - 13
R125468	2D20	5	30 - 12
R125468	2D24	5	30 - 16
R125468	2E4	5	30 - 21
R125469	2D20	4	30 - 12
R125469	2D24	4	30 - 16
R125469	2E4	4	30 - 21
R125472	3I22	..	41 - 12
R125473	8G22	4	80 - 69
R125474	8G20	3	80 - 67
R125475	8E22	13	80 - 17
R125475	8E22	16	80 - 17
R125475	8E24	12	80 - 19
R125484	8H10	7	90 - 7
R125498	2F18	4	30 - 55
R125512	6F14	13	60 - 57
R125531	7I20	12	70 - 139
R125532	8E16	12	80 - 9
R125547	6F22	7	60 - 65
R125553	2G7	13	30 - 71
R125563	3I2	11	40 - 107
R125563	3I4	5	40 - 109
R125634	9E18	7	91 - 37
R125634	9E20	7	91 - 39
R125635	1I11	4	20 - 113
R125666	6F4	5	60 - 49
R125667	6F4	4	60 - 49
R125700	5D14	6	53 - 11
R125713	9E18	8	91 - 37
R125713	9E20	8	91 - 39
R125746	1J7	10	20 - 135
R125746	1J9	12	20 - 137
R125747	1J7	11	20 - 135
R125747	1J9	13	20 - 137
R125844	9E18	13	91 - 37
R125844	9E20	13	91 - 39
R125848	4F12	4	51 - 15
R125848	4H14	4	51 - 67
R125855	1E2	1	20 - 13
R125855	1E4	1	20 - 13B
R125855	1E5	1	20 - 13C
R125855	1E6	1	20 - 13D
R125855	1E7	1	20 - 13E
R125855	1E9	1	20 - 15
R125855	1F20	1	20 - 49
R125855	1F22	1	20 - 51
R125855	1F23	1	20 - 52
R125855	1H7	1	20 - 85
R125855	1H9	1	20 - 87
R125855	1H11	1	20 - 89
R125855	1H12	1	20 - 90
R125869	9F13	4	91 - 55
R125873	3F25	10	40 - 57
R125873	3F25	11	40 - 57
R125874	4D16	18	42 - 12
R125877	3G6	5	40 - 63
R125878	3G6	7	40 - 63
R125878	3G8	7	40 - 65
R125879	3G6	9	40 - 63
R125879	3G8	9	40 - 65
R125899	9G4	8	92 - 15
R125905	9E18	4	91 - 37
R125905	9E20	25	91 - 39
R125905	9F12	10	91 - 54
R125906	9E18	4	91 - 37
R125906	9E20	25	91 - 39
R125906	9F12	10	91 - 54
R125915	3G10	10	40 - 67
R125933	9G4	7	92 - 15
R125933	9G8	12	92 - 19
R125955	8F10	3	80 - 31
R125963	7D23	21	70 - 15
R125963	7D25	21	70 - 17
R125963	7I16	7	70 - 135
R125964	3F13	5	40 - 44
R125971	4F14	5	51 - 17
R125971	4H16	5	51 - 69
R125972	4F14	7	51 - 17
R125972	4H16	7	51 - 69
R125974	8E10	7	80 - 3
R125974	8E12	7	80 - 5
R125980	5E4	3	53 - 27
R125981	9E20	5	91 - 39
R125991	4F8	6	51 - 11
R125992	4F8	12	51 - 11
R125999	6F3	7	60 - 47
R126002	5D16	19	53 - 13
R126003	8F24	4	80 - 45
R126009	3F17	41	40 - 49

https://www.truck-manuals.net/

NUMERICAL INDEX - CONTINUED

PART NO.	GRID	KEY	PAGE
R126009	3F19	42	40 - 51
R126009	8G18	8	80 - 65
R126009	9D16	18	91 - 11
R126010	3F17	41	40 - 49
R126010	3F19	42	40 - 51
R126010	8G18	9	80 - 65
R126014	4F8	9	51 - 11
R126024	6D9	6	60 - 5
R126025	9D18	1	91 - 13
R126026	9D18	2	91 - 13
R126027	5E2	10	53 - 25
R126027	5E4	17	53 - 27
R126032	9D20	4	91 - 15
R126033	3H22	20	40 - 103
R126039	6D9	3	60 - 5
R126039	6D11	5	60 - 7
R126040	6D9	10	60 - 5
R126103	9F12	10	91 - 54
R126104	5E4	19	53 - 27
R126105	9F12	10	91 - 54
R126161	9E18	2	91 - 37
R126161	9E20	21	91 - 39
R126174	9D24	13	91 - 19
R126184	9F5	29	91 - 49
R126271	9F9	27	91 - 53
R126271	9F11	49	91 - 53B
R126274	9F7	31	91 - 51
R126274	9F9	2	91 - 53
R126275	9F11	50	91 - 53B
R126282	9F9	31	91 - 53
R126337	1G13	5	20 - 65
R126337	1I3	5	20 - 106
R126355	3H24	6	40 - 105
R126355	9E2	4	91 - 21
R126355	9E4	1	91 - 23
R126355	9G8	2	92 - 19
R126365	9F9	27	91 - 53
R126381	6E4	21	60 - 23
R126381	6E6	21	60 - 25
R126381	6E8	21	60 - 27
R126384	6F3	4	60 - 47
R126387	8G5	1	80 - 52
R126390	5F2	6	54 - 15
R126404	1I11	41	20 - 113
R126404	1I13	17	20 - 115
R126408	7E13	14A	70 - 33
R126408	7E13	14B	70 - 33
R126408	7F6	9	70 - 51
R126422	5E16	18	54 - 3
R126422	5F13	18	54 - 25
R126432	1F13	7	20 - 42A
R126432	1G25	7	20 - 78A
R126436	5F2	10	54 - 15
R126436	5F4	12	54 - 17
R126437	5F2	10	54 - 15
R126437	5F4	12	54 - 17
R126441	2G7	8	30 - 71
R126441	2G7	28	30 - 71
R126458	5E22	5	54 - 10
R126459	5E22	4	54 - 10
R126463	3G6	1	40 - 63
R126463	8G14	4	80 - 61
R126464	3G6	2	40 - 63
R126464	8G14	5	80 - 61
R126465	3G6	3	40 - 63
R126465	8G14	6	80 - 61
R126466	3G4	1	40 - 61
R126466	8G14	1	80 - 61
R126467	3G2	4	40 - 59
R126467	8G14	2	80 - 61
R126468	3G2	2	40 - 59
R126468	8G14	3	80 - 61
R126470	8D15	51	71 - 13
R126473	9G8	19	92 - 19
R126490	8F12	32	80 - 33
R126503	6F14	13	60 - 57
R126503	6F16	13	60 - 59
R126506	5D14	1	53 - 11
R126510	7F18	16	70 - 63
R126510	7F20	2	70 - 65
R126510	7F22	2	70 - 67
R126525	2G9	10	30 - 73
R126532	7H12	12	70 - 105
R126532	7H12	13	70 - 105
R126532	7H16	8A	70 - 109
R126532	7H16	8B	70 - 109
R126536	3F12	4	40 - 43
R126536	3G18	10	40 - 74
R126537	3F13	6	40 - 44
R126547	3E14	13	40 - 19
R126547	8H16	11	90 - 13
R126547	8H20	13	90 - 17
R126547	8H20	15	90 - 17
R126556	7H21	5	70 - 115
R126561	9G8	6	92 - 19
R126566	5E18	1	54 - 5
R126569	6D11	6	60 - 7
R126570	6D11	2	60 - 7
R126570	6D11	6	60 - 7
R126570	6D11	16	60 - 7
R126571	6E18	5	60 - 37
R126585	8G18	..	80 - 65
R126587	8E22	3	80 - 17
R126587	8E24	3	80 - 19
R126588	8D19	4	71 - 17
R126616	7J6	1	70 - 149
R126616	7J8	1	70 - 151
R126620	7I18	3	70 - 137
R126636	6D13	1	60 - 9
R126640	6D13	3	60 - 9
R126641	6D13	4	60 - 9
R126645	2D15	5	30 - 7
R126656	2G9	10	30 - 73
R126716	3G19	6	40 - 75
R126716	9E10	12	91 - 29
R126721	8D13	8	71 - 11
R126747	8D13	13	71 - 11
R126748	8D13	26	71 - 11
R126776	9D12	17	91 - 7
R126776	9D12	35	91 - 7
R126777	8F14	1	80 - 35
R126777	8F14	2	80 - 35
R126792	1I24	15	20 - 127
R126793	1I24	11	20 - 127
R126805	8F20	3	80 - 41
R126814	8D13	43	71 - 11
R126821	4I14	21	51 - 91
R126822	7G14	5	70 - 83
R126868	8D11	4	71 - 9
R126870	8D11	5	71 - 9
R126873	8D11	6	71 - 9
R126874	8D11	7	71 - 9
R126891	8D7	11	71 - 5
R126895	7G10	14	70 - 79
R126911	6D9	17	60 - 5
R126912	1E9	11	20 - 15
R126912	1F23	11	20 - 52
R126912	1H12	11	20 - 90
R126919	4D17	9	42 - 13
R126920	4D16	18	42 - 12
R126927	8D13	14	71 - 11
R126928	8D13	15	71 - 11
R126929	8D13	27	71 - 11
R126929	8D15	18	71 - 13
R126944	8G7	5	80 - 54
R126944	8G8	5	80 - 55
R126945	8G7	6	80 - 54
R126945	8G8	6	80 - 55
R126946	8G7	1	80 - 54
R126947	8G7	2	80 - 54
R126948	8G7	3	80 - 54
R126949	8G7	4	80 - 54
R126950	8G8	1	80 - 55
R126951	8G8	2	80 - 55
R126952	8G8	3	80 - 55
R126953	8G8	4	80 - 55
R127150	8D17	2	71 - 15
R127172	8D13	16	71 - 11
R127176	2F16	11	30 - 53
R127176	2F25	11	30 - 62
R127177	8G6	5	80 - 53
R127179	6I6	6A	60 - 117
R127181	2F25	11	30 - 62
R127194	4D9	2	42 - 5
R127195	4D9	2	42 - 5
R127196	4G2	22	51 - 31
R127196	4I6	22	51 - 83
R127197	4F14	6	51 - 17
R127213	8D13	28	71 - 11
R127213	8D15	19	71 - 13
R127214	8D13	18	71 - 11
R127216	9F9	27	91 - 53
R127216	9F11	38	91 - 53B
R127224	9F25	16	92 - 11
R127235	1I2	10	20 - 105
R127235	1I2	16	20 - 105
R127236	1I2	16	20 - 105
R127240	8F9	1	80 - 30
R127245	1I13	16	20 - 115
R127247	5D18	2	53 - 15
R127247	5D20	3	53 - 17
R127247	5D22	3	53 - 19
R127248	9D12	22	91 - 7
R127282	8E24	11	80 - 19
R127297	1G14	11	20 - 66
R127297	1I4	11	20 - 107
R127372	5E16	7	54 - 3
R127415	1I2	2	20 - 105
R127416	7I2	3	70 - 121
R127416	7I10	3	70 - 129
R127420	5E16	7	54 - 3
R127420	5E17	3	54 - 4
R127420	5F13	7	54 - 25
R127437	4D21	4	42 - 17
R127581	7F20	8	70 - 65
R127581	7F22	8	70 - 67
R127582	7F20	17	70 - 65
R127592	9F25	16	92 - 11
R127595	1F5	18	20 - 37
R127595	1F6	17	20 - 37A
R127595	2E19	6	30 - 33

https://www.truck-manuals.net/

NUMERICAL INDEX - CONTINUED

PART NO.	GRID	KEY	PAGE
R127595	2E19	10	30 - 33
R127595	2E19	11	30 - 33
R127647	8H15	6	90 - 12
R127660	5F2	2	54 - 15
R127660	5F4	2	54 - 17
R127661	5F2	2	54 - 15
R127661	5F4	2	54 - 17
R127696	9E10	3	91 - 29
R127696	9E12	3	91 - 31
R127697	9E10	3	91 - 29
R127697	9E12	3	91 - 31
R127698	9E11	8	91 - 30
R127699	9E2	6	91 - 21
R127700	9E2	3	91 - 21
R127701	9E2	5	91 - 21
R127702	9E2	7	91 - 21
R127703	9E2	2	91 - 21
R127704	7F24	9	70 - 69
R127705	7F24	9	70 - 69
R127712	9G12	9	92 - 23
R127714	9D20	2	91 - 15
R127714	9G12	10	92 - 23
R127715	5F2	12	54 - 15
R127718	9F1	12	91 - 46
R127718	9F2	15	91 - 47
R127727	7J8	22	70 - 151
R127764	8F17	7	80 - 38
R127767	9F12	12	91 - 54
R127769	9E16	2	91 - 35
R127769	9E18	9	91 - 37
R127769	9E20	9	91 - 39
R127771	6E20	41	60 - 39
R127771	6E24	4	60 - 43
R127771	6F24	6	60 - 67
R127771	6F25	3	60 - 68
R127771	6G3	18	60 - 69B
R127791	2D15	5	30 - 7
R127830	4E24	4	51 - 3
R127830	4H2	4	51 - 55
R127831	4E24	5	51 - 3
R127831	4H2	5	51 - 55
R127832	4E24	4	51 - 3
R127832	4E24	18	51 - 3
R127832	4H2	18	51 - 55
R127837	8G6	12	80 - 53
R127849	3F25	13	40 - 57
R127849	3F25	25B	40 - 57
R127857	9D24	6	91 - 19
R127858	9D24	5	91 - 19
R127877	8D19	10	71 - 17
R127879	3F25	5	40 - 57
R127879	3F25	10	40 - 57
R127879	3F25	13	40 - 57
R127879	3G4	3	40 - 61
R127887	8F10	9	80 - 31
R127893	3G6	5	40 - 63
R127893	3G8	5	40 - 65
R127903	9F5	3	91 - 49
R127904	9F5	30	91 - 49
R128036	8D17	6	71 - 15
R128043	7J8	21	70 - 151
R128044	7E13	5	70 - 33
R128044	7F6	9	70 - 51
R128093	7J8	25	70 - 151
R128134	7F6	9	70 - 51
R128164	6F22	20	60 - 65
R128164	6F22	21	60 - 65
R128179	9D10	4	91 - 5
R128226	8E8	1	80 - 1
R128232	9F25	8	92 - 11
R128323	9F25	20	92 - 11
R128326	4D9	1	42 - 5
R128326	4D14	1	42 - 10
R128326	8G6	4	80 - 53
R128328	5D16	1	53 - 13
R128328	5D16	20	53 - 13
R128359	5E16	11	54 - 3
R128359	5F13	11	54 - 25
R128360	5E16	23	54 - 3
R128360	5E17	3	54 - 4
R128360	5F13	12	54 - 25
R128387	3F13	6	40 - 44
R128387	7F15	2A	70 - 60
R128387	7F15	2B	70 - 60
R128397	4F18	23	51 - 21
R128397	4H20	23	51 - 73
R128490	2E11	1	30 - 29
R128490	2E12	1	30 - 29A
R128500	8G6	12	80 - 53
R128557	1E23	1	20 - 29
R128557	1F8	33	20 - 39
R128558	1E23	3	20 - 29
R128558	1F8	29	20 - 39
R128681	4F2	1	51 - 5
R128681	4F4	2	51 - 7
R128681	4F6	1	51 - 9
R128681	4F8	1	51 - 11
R128681	4F10	1	51 - 13
R128681	4F12	1	51 - 15
R128681	4F14	8	51 - 17
R128694	1G16	2	20 - 69
R128694	1I2	2	20 - 105
R128695	9F11	50	91 - 53B
R128728	9E4	1	91 - 23
R128728	9E5	2	91 - 24
R128728	9E6	2	91 - 25
R128775	4G6	2	51 - 35
R128775	4I10	2	51 - 87
R128779	9D10	7	91 - 5
R128829	9D10	7	91 - 5
R128894	3F12	4	40 - 43
R128894	3G18	9	40 - 74
R128894	8G18	1	80 - 65
R128990	9E25	1	91 - 45
R128991	9E25	1	91 - 45
R129049	7I2	10	70 - 121
R129049	7I10	39	70 - 129
R129054	1J4	1	20 - 131
R129077	9E18	2	91 - 37
R129077	9E20	21	91 - 39
R129090	5E17	1	54 - 4
R129090	5E17	3	54 - 4
R129108	5E18	1	54 - 5
R129108	5G2	13	54 - 39
R129108	5G4	13	54 - 41
R129245	1I22	24	20 - 125
R129245	1J2	24	20 - 129
R129377	9E16	8	91 - 35
R129377	9E16	15	91 - 35
R129433	9F12	13	91 - 54
R129518	3F23	7	40 - 55
R129557	5D16	19	53 - 13
R129605	8F1	1	80 - 21
R129727	7J8	17	70 - 151
R129746	9D20	3	91 - 15
R129794	9G8	3	92 - 19
R129820	1G16	10	20 - 69
R129820	1G16	16	20 - 69
R129820	1I2	10	20 - 105
R129820	1I2	16	20 - 105
R129821	1G16	16	20 - 69
R129821	1I2	10	20 - 105
R129821	1I2	16	20 - 105
R129839	1I20	30	20 - 123
R129839	1I24	30	20 - 127
R129869	4D14	2	42 - 10
R130024	3G10	18	40 - 67
R130025	3G10	15	40 - 67
R130026	3G10	14	40 - 67
R130069	5F19	1	54 - 31
R130069	5F21	10	54 - 33
R130078	5F23	9	54 - 35
R130135	1I22	14	20 - 125
R130135	1J2	14	20 - 129
R130141	1I22	20	20 - 125
R130141	1J2	20	20 - 129
R130318	9F12	1	91 - 54
R130503	9E10	24	91 - 29
R130504	9E10	24	91 - 29
R130505	9E10	24	91 - 29
R130506	9E10	24	91 - 29
R130509	9E10	1	91 - 29
R130510	9E10	1	91 - 29
R130518	9F5	3	91 - 49
R130522	9F5	3	91 - 49
R130547	5E24	17	54 - 13
R130548	5E24	17	54 - 13
R130549	5E24	17	54 - 13
R130550	5E24	17	54 - 13
R130561	1I22	19	20 - 125
R130561	1J2	19	20 - 129
R130561	4F23	2	51 - 27
R130561	4G14	3	51 - 43
R130561	4I2	2	51 - 79
R130561	4I18	3	51 - 95
R130562	4D8	12	42 - 4
R130599	5E22	6	54 - 10
R130638	7G4	14	70 - 73
R130638	7G10	14	70 - 79
R130638	7G12	4	70 - 81
R130639	4D13	3	42 - 9
R130753	5G2	14	54 - 39
R130753	5G4	14	54 - 41
R130806	7G4	15	70 - 73
R130806	7G8	2A	70 - 77
R130806	7G8	3	70 - 77
R130806	7G8	4	70 - 77
R130806	7G8	6	70 - 77
R130806	7G10	15	70 - 79
R130806	7G16	2A	70 - 85
R130806	7G16	3	70 - 85
R130806	7G16	4	70 - 85
R130835	8H14	24	90 - 11
R130848	2D15	5	30 - 7
R130894	4G12	22	51 - 41
R130894	5E16	2	54 - 3
R130894	5E16	21	54 - 3
R130894	5F13	2	54 - 25
R130895	4G12	22	51 - 41
R130895	4I16	22	51 - 93
R130895	5E16	2	54 - 3

https://www.truck-manuals.net/

NUMERICAL INDEX - CONTINUED

PART NO.	GRID	KEY	PAGE
R130895	5E16	21	54 - 3
R130895	5F13	21	54 - 25
R130921	9G1	8	92 - 12
R130953	7G4	1	70 - 73
R130953	7G10	1	70 - 79
R130953	7G12	1	70 - 81
R130953	7G20	1	70 - 91
R130962	7J4	13	70 - 147
R130981	7G20	5	70 - 91
R130981	7J6	1	70 - 149
R130981	7J8	1	70 - 151
R130982	7G4	8	70 - 73
R130982	7G10	8	70 - 79
R130982	7G12	5	70 - 81
R130988	9F25	1	92 - 11
R130988	9F25	20	92 - 11
R130988	9F25	22	92 - 11
R130989	9F25	1	92 - 11
R130990	9F25	20	92 - 11
R131047	3G10	7	40 - 67
R131047	3G10	8	40 - 67
R131074	9E14	16	91 - 33
R131135	3G10	7	40 - 67
R131135	3G10	8	40 - 67
R131148	7D17	3	70 - 9
R131149	7D17	4	70 - 9
R131165	9F9	1	91 - 53
R131166	9F9	1	91 - 53
R131192	8H14	4	90 - 11
R131193	8H14	28	90 - 11
R131196	6F10	11	60 - 53
R131196	6F12	8	60 - 55
R131197	6F10	12	60 - 53
R131197	6F12	9	60 - 55
R131208	9F5	3	91 - 49
R131213	1I22	5	20 - 125
R131213	1J2	5	20 - 129
R131221	2D13	5	30 - 5
R131222	1I22	12	20 - 125
R131222	1J2	12	20 - 129
R131224	1I18	1	20 - 120
R131226	8F12	35	80 - 33
R131261	9F11	57	91 - 53B
R131275	1I22	1	20 - 125
R131275	1J2	1	20 - 129
R131334	9D20	5	91 - 15
R131336	5G2	6	54 - 39
R131346	5G2	11	54 - 39
R131346	5G4	11	54 - 41
R131351	9E11	2	91 - 30
R131356	9F9	27	91 - 53
R131356	9F9	32	91 - 53
R131418	5G4	2	54 - 41
R131432	4D5	3	42 - 1
R131432	9E8	9	91 - 27
R131498	9D22	14	91 - 17
R131499	9D22	11	91 - 17
R131511	5G2	7	54 - 39
R131511	5G4	7	54 - 41
R131520	1I11	39	20 - 113
R131646	1I11	35	20 - 113
R131667	8E24	8	80 - 19
R131671	3F2	2	40 - 32
R131671	3F3	2	40 - 33
R131671	3F17	40	40 - 49
R131671	3F19	41	40 - 51
R131671	9D22	9	91 - 17
R131673	5F25	7	54 - 37
R131675	5F25	7	54 - 37
R131676	5F25	7	54 - 37
R131677	7H23	16	70 - 117
R131677	7H23	38	70 - 117
R131738	5F10	23	54 - 21
R131740	5F10	12	54 - 21
R131751	9D22	21	91 - 17
R131807	8F21	4	80 - 42
R131807	8F22	4	80 - 43
R131808	8F21	4	80 - 42
R131808	8F22	4	80 - 43
R131811	4G12	2	51 - 41
R131811	4I16	2	51 - 93
R131875	4E24	14	51 - 3
R131966	9E10	9	91 - 29
R131967	9E10	9	91 - 29
R131970	9E10	7	91 - 29
R131971	9E10	7	91 - 29
R131975	9E10	21	91 - 29
R131976	9E10	21	91 - 29
R131977	9E10	15	91 - 29
R131978	9E10	15	91 - 29
R131985	5F25	7	54 - 37
R131991	3H22	5	40 - 103
R131996	5F19	12	54 - 31
R131996	5F21	3	54 - 33
R131997	5F19	12	54 - 31
R131997	5F21	3	54 - 33
R131998	5F19	12	54 - 31
R131998	5F21	3	54 - 33
R131999	5F19	12	54 - 31
R131999	5F21	3	54 - 33
R132000	5F19	12	54 - 31
R132000	5F21	3	54 - 33
R132001	5F19	12	54 - 31
R132001	5F21	3	54 - 33
R132015	8G9	1	80 - 56
R132016	8G9	2	80 - 56
R132017	8G9	3	80 - 56
R132018	8G9	4	80 - 56
R132019	8G10	1	80 - 57
R132020	8G10	2	80 - 57
R132021	8G10	3	80 - 57
R132022	8G10	4	80 - 57
R132027	8H14	8	90 - 11
R132030	8E8	1	80 - 1
R132066	3H9	5	40 - 89
R132098	8G16	2	80 - 63
R132099	8G16	2	80 - 63
R132143	9D22	5	91 - 17
R132149	9D16	7	91 - 11
R132150	3F11	8	40 - 42
R132150	3F19	26	40 - 51
R132236	4F23	8	51 - 27
R132236	4G2	19	51 - 31
R132236	4I2	8	51 - 79
R132236	4I6	19	51 - 83
R132237	4F25	46	51 - 29
R132237	4G14	19	51 - 43
R132237	4I4	46	51 - 81
R132237	4I18	19	51 - 95
R132239	4F25	47	51 - 29
R132239	4G14	20	51 - 43
R132239	4I4	47	51 - 81
R132239	4I18	20	51 - 95
R132245	4F23	20	51 - 27
R132245	4I2	20	51 - 79
R132246	4G2	31	51 - 31
R132246	4I6	31	51 - 83
R132247	4F25	32	51 - 29
R132247	4I4	32	51 - 81
R132248	4G8	45	51 - 37
R132248	4I12	45	51 - 89
R132249	4G6	27	51 - 35
R132249	4I10	27	51 - 87
R132250	4G6	11	51 - 35
R132250	4I10	11	51 - 87
R132275	6D13	2	60 - 9
R132322	8F8	3	80 - 29
R132326	5D12	8	53 - 9
R132496	1J2	6	20 - 129
R132497	1I22	6	20 - 125
R132498	1I22	3	20 - 125
R132498	1J2	3	20 - 129
R132499	1J2	3	20 - 129
R132540	2G7	8	30 - 71
R132544	7G16	5	70 - 85
R132545	7G8	5	70 - 77
R132561	9E8	3	91 - 27
R132561	9E10	3	91 - 29
R132562	9E8	3	91 - 27
R132562	9E10	3	91 - 29
R132574	5D14	6	53 - 11
R132720	8G16	5	80 - 63
R132823	8F25	1	80 - 46
R132823	8G1	1	80 - 48
R132824	8F25	11	80 - 46
R132824	8G1	11	80 - 48
R132840	6E20	21	60 - 39
R132841	6E20	22	60 - 39
R132843	6E20	33	60 - 39
R132843	6E24	5	60 - 43
R132852	7E13	17	70 - 33
R132860	4G14	7	51 - 43
R132860	4I18	7	51 - 95
R132916	5G2	13	54 - 39
R132916	5G4	13	54 - 41
R132971	5E21	9	54 - 9
R132971	5G2	3	54 - 39
R132971	5G4	3	54 - 41
R133053	3G6	1	40 - 63
R133053	8G14	4	80 - 61
R133054	3G6	2	40 - 63
R133054	8G14	5	80 - 61
R133055	3G6	3	40 - 63
R133055	8G14	6	80 - 61
R133056	3G8	1	40 - 65
R133056	8G14	7	80 - 61
R133057	3G2	4	40 - 59
R133057	8G14	2	80 - 61
R133058	3G2	2	40 - 59
R133058	8G14	3	80 - 61
R133095	4I2	14	51 - 79
R133095	4I4	26	51 - 81
R133095	4I4	38	51 - 81
R133095	4I6	13	51 - 83
R133095	4I6	25	51 - 83
R133135	1G14	4	20 - 66
R133135	1I4	4	20 - 107
R133149	5G2	10	54 - 39
R133149	5G4	10	54 - 41
R133192	3F2	4	40 - 32
R133192	3F3	4	40 - 33

https://www.truck-manuals.net/

NUMERICAL INDEX - CONTINUED

PART NO.	GRID	KEY	PAGE
R133192	9D22	15	91 - 17
R133288	5F25	11	54 - 37
R133301	4D7	5	42 - 3
R133302	4D7	6	42 - 3
R133415	7G17	13	70 - 88
R133415	7G20	6	70 - 91
R133439	9E8	4	91 - 27
R133440	9E8	4	91 - 27
R133450	9F5	20	91 - 49
R133450	9F5	21	91 - 49
R133450	9F5	33	91 - 49
R133450	9F5	38	91 - 49
R133497	6F20	10	60 - 63
R133517	6F20	7	60 - 63
R133529	8G5	7	80 - 52
R133529	8H21	2	90 - 18
R133544	6F20	17	60 - 63
R133544	6F22	19	60 - 65
R133546	6F18	2	60 - 61
R133546	6F20	9	60 - 63
R133546	6I6	6B	60 - 117
R133564	6E2	3	60 - 21B
R133572	6E2	8	60 - 21B
R133596	9F1	4	91 - 46
R133596	9F2	5	91 - 47
R133598	9D12	22	91 - 7
R133631	9D16	5	91 - 11
R133632	8G18	4	80 - 65
R133691	7E13	15	70 - 33
R133726	8F25	8	80 - 46
R133726	8G1	8	80 - 48
R133727	8F25	8	80 - 46
R133727	8G1	8	80 - 48
R133728	8F25	7	80 - 46
R133728	8G1	7	80 - 48
R133729	8F25	7	80 - 46
R133729	8G1	7	80 - 48
R133794	6G14	47	60 - 77
R133794	7I20	25	70 - 139
R133867	5G2	2	54 - 39
R133868	9F2	7	91 - 47
R133871	5F19	2	54 - 31
R133871	5F21	9	54 - 33
R133966	1I22	14	20 - 125
R133966	1J2	14	20 - 129
R134052	2G7	8	30 - 71
R134054	4G3	1	51 - 32
R134054	4I7	1	51 - 84
R134058	1I15	26	20 - 117
R134058	1I17	26	20 - 119
R134059	9E20	27	91 - 39
R134060	9E20	28	91 - 39
R134070	7G16	3	70 - 85
R134071	7G16	4	70 - 85
R134075	4I10	17	51 - 87
R134075	4I12	34	51 - 89
R134075	4I12	37	51 - 89
R134098	9E10	19	91 - 29
R134109	9E2	1	91 - 21
R134152	9D22	4	91 - 17
R134168	7J6	1	70 - 149
R134168	7J8	1	70 - 151
R134173	9D20	1	91 - 15
R134173	9D22	22	91 - 17
R134174	9D20	3	91 - 15
R134174	9D20	4	91 - 15
R134224	8E12	3	80 - 5
R134224	8E12	9	80 - 5
R134232	7F11	3	70 - 56
R134232	7H14	12	70 - 107
R134250	9G12	9	92 - 23
R134287	9E3	4	91 - 22
R134324	3F7	9	40 - 37
R134324	8G16	2	80 - 63
R134325	3F7	9	40 - 37
R134325	8G16	2	80 - 63
R134326	3H24	5	40 - 105
R134351	9G4	12	92 - 15
R134351	9G8	10	92 - 19
R134352	9G4	6	92 - 15
R134352	9G8	11	92 - 19
R134390	4H22	10	51 - 75
R134391	4H22	18	51 - 75
R134401	9D20	3	91 - 15
R134401	9G12	10	92 - 23
R134402	9D20	2	91 - 15
R134449	3F25	19	40 - 57
R134482	9E20	5	91 - 39
R134562	8F24	5	80 - 45
R134563	8F24	5	80 - 45
R134581	4H12	25	51 - 65
R134582	4H12	7	51 - 65
R134583	4H12	24	51 - 65
R134584	4H12	10	51 - 65
R134605	9G4	7	92 - 15
R134605	9G8	12	92 - 19
R134619	9F11	55	91 - 53B
R134646	8H14	25	90 - 11
R134647	9E14	16	91 - 33
R134667	7F22	19	70 - 67
R134668	7G22	8	70 - 93
R134669	5D20	25	53 - 17
R134669	5D22	25	53 - 19
R134669	5D24	11	53 - 21
R134670	9E14	13	91 - 33
R134682	7F22	17	70 - 67
R134705	7E9	5	70 - 29
R134711	2G7	2	30 - 71
R134712	2G7	3	30 - 71
R134727	1E23	5	20 - 29
R134733	5D16	22	53 - 13
R134737	7F6	9	70 - 51
R134755	9E3	1	91 - 22
R134770	2G7	31	30 - 71
R134778	7H23	6	70 - 117
R134885	8H14	5	90 - 11
R134886	8H14	5	90 - 11
R134887	8H14	6	90 - 11
R134957	2E17	3	30 - 31B
R134957	2F18	3	30 - 55
R134957	2F18	4	30 - 55
R134986	4I10	19	51 - 87
R135000	7F6	8	70 - 51
R135001	7E9	1	70 - 29
R135088	6E10	11	60 - 29
R135096	4I4	37	51 - 81
R135218	5F4	13	54 - 17
R135218	5F8	1	54 - 19
R135247	5F4	27	54 - 17
R135247	5F8	6	54 - 19
R135349	4I2	16	51 - 79
R135349	4I4	28	51 - 81
R135349	4I4	40	51 - 81
R135359	2D20	3	30 - 12
R135359	2D20	4	30 - 12
R135359	2D20	5	30 - 12
R135359	2D20	9	30 - 12
R135359	2D24	3	30 - 16
R135359	2D24	4	30 - 16
R135359	2D24	5	30 - 16
R135359	2D24	9	30 - 16
R135359	2E4	3	30 - 21
R135359	2E4	4	30 - 21
R135359	2E4	5	30 - 21
R135359	2E4	9	30 - 21
R135364	4I10	16	51 - 87
R135364	4I12	33	51 - 89
R135380	4I12	35	51 - 89
R135480	3G19	11	40 - 75
R135480	8G16	7	80 - 63
R135481	3G19	11	40 - 75
R135481	8G16	6	80 - 63
R135509	3I21	11	41 - 11
R135510	3I21	9	41 - 11
R135516	4F18	1	51 - 21
R135516	4F20	4	51 - 23
R135516	4H20	1	51 - 73
R135516	4H22	4	51 - 75
R135537	4F20	13	51 - 23
R135537	4H22	13	51 - 75
R135543	5D16	5	53 - 13
R135543	5D18	6	53 - 15
R135543	5D20	7	53 - 17
R135543	5D22	7	53 - 19
R135621	4H22	..	51 - 75
R135658	9E10	21	91 - 29
R135659	9E10	21	91 - 29
R135703	8G2	13	80 - 49
R135753	8H20	5	90 - 17
R135753	8H20	27	90 - 17
R135753	8H20	37	90 - 17
R135758	4D21	4	42 - 17
R135786	6F18	2	60 - 61
R135786	6F20	9	60 - 63
R135786	6I6	6B	60 - 117
R135810	8F20	10	80 - 41
R135811	6E4	16	60 - 23
R135811	6E6	29	60 - 25
R135811	6E8	29	60 - 27
R135811	8F20	10	80 - 41
R135816	4H4	1	51 - 57
R135816	4H6	2	51 - 59
R135816	4H8	1	51 - 61
R135816	4H10	1	51 - 63
R135816	4H12	1	51 - 65
R135816	4H14	1	51 - 67
R135816	4H16	8	51 - 69
R135864	5F25	5	54 - 37
R135865	5F25	5	54 - 37
R135866	5F23	16	54 - 35
R135866	8E24	11	80 - 19
R135871	3I23	5	41 - 13
R135875	5G2	9	54 - 39
R135875	5G4	9	54 - 41
R135876	5G2	8	54 - 39
R135876	5G4	8	54 - 41
R135942	9G8	9	92 - 19
R135944	8H20	3	90 - 17
R135944	8H20	5	90 - 17
R135944	8H22	6	90 - 19
R135966	5D18	11	53 - 15

https://www.truck-manuals.net/

NUMERICAL INDEX - CONTINUED

PART NO.	GRID	KEY	PAGE
R135967	5D20	12	53 - 17
R135967	5D22	12	53 - 19
R135967	5D24	12	53 - 21
R135976	9E25	1	91 - 45
R135977	9E25	1	91 - 45
R135987	8G11	3	80 - 58
R135987	8G12	2	80 - 59
R135987	8G16	3	80 - 63
R135989	5F19	5	54 - 31
R135990	5F19	5	54 - 31
R135991	5F21	12	54 - 33
R136083	1D21	3	20 - 8
R136083	1F15	3	20 - 44
R136083	1H2	3	20 - 80
R136111	8F12	35	80 - 33
R136131	8H20	5	90 - 17
R136157	4G14	5	51 - 43
R136157	4I18	5	51 - 95
R136185	7H19	1	70 - 113
R136238	4D13	8	42 - 9
R136238	4D13	10	42 - 9
R136238	4D15	1	42 - 11
R136238	4D21	9	42 - 17
R136239	4D9	5	42 - 5
R136239	4D11	2	42 - 7
R136239	4D13	8	42 - 9
R136239	4D13	10	42 - 9
R136239	4D23	2	42 - 19
R136260	2D13	12	30 - 5
R136260	8F20	10	80 - 41
R136320	1F11	3	20 - 41
R136320	1G23	3	20 - 77
R136348	8G5	7	80 - 52
R136350	8H20	5	90 - 17
R136350	8H20	27	90 - 17
R136355	5F15	5	54 - 27
R136355	6G1	5	60 - 69
R136359	8E14	3	80 - 7
R136467	5F4	15	54 - 17
R136467	5F8	3	54 - 19
R136471	1E9	2	20 - 15
R136471	1F23	2	20 - 52
R136471	1H12	2	20 - 90
R136564	7D19	8	70 - 11
R136565	7D19	10	70 - 11
R136566	7D19	11	70 - 11
R136566	7D21	2	70 - 13
R136567	7D19	14	70 - 11
R136568	7D19	17	70 - 11
R136569	7D19	18	70 - 11
R136570	7D19	19	70 - 11
R136571	7D19	20	70 - 11
R136572	7D19	24	70 - 11
R136573	7D19	26	70 - 11
R136573	7D21	4	70 - 13
R136574	7D19	28	70 - 11
R136575	7D19	39	70 - 11
R136576	7D19	2	70 - 11
R137592	9F25	4	92 - 11
R150005	8F12	36	80 - 33
R150222	5F15	3	54 - 27
R150222	6G1	3	60 - 69
R150307	8H20	5	90 - 17
R150307	8H22	3	90 - 19
R150315	5F4	19	54 - 17
R150350	5F15	6	54 - 27
R150350	6G1	6	60 - 69
R150365	6G14	17	60 - 77
R150538	6H2	4	60 - 89
R150539	6H2	9	60 - 89
R150573	4F6	7	51 - 9
R150573	4H8	7	51 - 61
R150574	4F6	6	51 - 9
R150574	4H8	6	51 - 61
R150626	5D14	1	53 - 11
R150627	5D14	1	53 - 11
R150627	5D14	37	53 - 11
R150628	5D14	1	53 - 11
R150628	5D14	38	53 - 11
R150659	9F25	4	92 - 11
R150659	9F25	5	92 - 11
R150660	9F25	4	92 - 11
R150660	9F25	5	92 - 11
R150662	6H13	28	60 - 101
R150664	6H13	6	60 - 101
R150800	8F12	31	80 - 33
R150815	6H2	7	60 - 89
R150891	4F4	14	51 - 7
R150892	3D20	2	40 - 3
R150892	3D20	10	40 - 3
R150892	4F4	14	51 - 7
R150892	4F18	2	51 - 21
R150907	5F19	13	54 - 31
R150907	5F21	4	54 - 33
R150920	9E10	7	91 - 29
R150921	9E10	7	91 - 29
R151139	9E25	8	91 - 45
R151216	6E4	20	60 - 23
R151216	6E8	20	60 - 27
R151326	8H20	5	90 - 17
R151326	8H20	27	90 - 17
R151327	9E3	2	91 - 22
R151333	8H14	8	90 - 11
R151387	2E5	4	30 - 23
R151387	2E7	1	30 - 25
R151387	9D12	33	91 - 7
R151439	7H23	41	70 - 117
R151448	9E16	5	91 - 35
R151449	9E16	5	91 - 35
R151467	8G3	1	80 - 50
R151641	7D19	32	70 - 11
R151641	7D21	8	70 - 13
R151642	7D19	34	70 - 11
R151642	7D21	10	70 - 13
R151701	3D22	7	40 - 5
R151701	4H6	14	51 - 59
R151720	8H14	8	90 - 11
R151764	9E14	24	91 - 33
R151789	9D24	13	91 - 19
R151799	8F9	10	80 - 30
R151799	9E14	23	91 - 33
R151855	9E14	24	91 - 33
R151924	3H9	11	40 - 89
R152116	8F2	3	80 - 22
R152116	8F3	3	80 - 23
R152119	9F13	8	91 - 55
R152120	9F13	9	91 - 55
R152274	6E2	2	60 - 21B
R152283	3I2	3	40 - 107
R152709	1J2	6	20 - 129
R152879	7I20	26	70 - 139
R152879	7I22	30	70 - 141
R153024	8H20	5	90 - 17
R153026	8H22	4	90 - 19
R153146	9G8	3	92 - 19
R153160	6D23	3	60 - 18
R153184	3F25	15	40 - 57
R153185	3F23	3	40 - 55
R153306	5F25	22	54 - 37
R153307	5F25	23	54 - 37
R153485	9E10	10	91 - 29
R153676	4F14	3	51 - 17
R153676	4H16	3	51 - 69
R153676	5E2	1	53 - 25
R153676	5E2	9	53 - 25
R153676	5E4	16	53 - 27
R153676	6G14	41	60 - 77
R153676	7D11	19	70 - 3
R153676	7D13	4	70 - 5
R153676	7D25	10	70 - 17
R153826	9E16	16	91 - 35
R154075	8H14	8	90 - 11
R154392	3G18	1	40 - 74
R154539	6F22	20	60 - 65
R154539	6F22	21	60 - 65
R154655	8F24	4	80 - 45
R154668	7I18	6	70 - 137
R154889	9D18	1	91 - 13
R154936	8F24	1	80 - 45
R155065	9E20	15	91 - 39
R155817	9D13	1	91 - 8
R156054	9F9	1	91 - 53
R156497	8E20	6	80 - 15
R156498	8E20	6	80 - 15
R156499	8E20	6	80 - 15
R156614	7G16	3	70 - 85
R156614	7G16	4	70 - 85
R156615	7G4	15	70 - 73
R156615	7G8	2A	70 - 77
R156615	7G8	2B	70 - 77
R156615	7G8	3	70 - 77
R156615	7G8	4	70 - 77
R156615	7G8	6	70 - 77
R156615	7G10	15	70 - 79
R156615	7G16	2A	70 - 85
R156615	7G16	2B	70 - 85
R156615	7G16	3	70 - 85
R156615	7G16	4	70 - 85
R156627	5F6	5	54 - 17B
R156636	5F6	4	54 - 17B
R156637	5F6	4	54 - 17B
R156638	5F6	4	54 - 17B
R156639	5F6	4	54 - 17B
R156869	5F23	23	54 - 35
R157015	9E8	1	91 - 27
R157015	9E12	1	91 - 31
R157016	9E8	1	91 - 27
R157016	9E10	1	91 - 29
R157016	9E12	1	91 - 31
R157017	9E10	1	91 - 29
R157018	9E10	1	91 - 29
R157023	9E8	3	91 - 27
R157023	9E10	3	91 - 29
R157024	9E8	3	91 - 27
R157024	9E10	3	91 - 29
R157031	9E8	4	91 - 27
R157032	9E8	4	91 - 27
R157210	9F9	1	91 - 53
R157334	6F22	7	60 - 65
R157605	8F8	1	80 - 29
R157605	8F8	10	80 - 29

https://www.truck-manuals.net/

NUMERICAL INDEX - CONTINUED

PART NO.	GRID	KEY	PAGE
R157679	5F25	24	54 - 37
R157897	5F25	22	54 - 37
R158630	5F15	1	54 - 27
R158630	6G1	1	60 - 69
R158631	5F15	2	54 - 27
R158631	6G1	2	60 - 69
R158652	6D23	7	60 - 18
R158652	6D24	7	60 - 19
R159204	5F21	13	54 - 33
R159216	6E20	37	60 - 39
R159353	9D16	5	91 - 11
R159607	9D16	5	91 - 11
R159609	9D16	5	91 - 11
R159897	3E8	25	40 - 13
R160281	7E13	5	70 - 33
R161069	8F17	3	80 - 38
R1612R	1D24	7	20 - 11
R1612R	1F18	10	20 - 47
R1612R	1H5	10	20 - 83
R1612R	4I4	44	51 - 81
R1612R	4I6	7	51 - 83
R161279	4E2	26	42 - 23
R161280	4E2	26	42 - 23
R161282	8D17	15	71 - 15
R161356	9E23	5	91 - 43
R162459	4E2	19	42 - 23
R163157	1I22	6	20 - 125
R163157	1J2	6	20 - 129
R163158	1I22	3	20 - 125
R163158	1J2	3	20 - 129
R163173	6F22	11C	60 - 65
R163305	5D18	2	53 - 15
R163305	5D20	3	53 - 17
R163305	5D22	3	53 - 19
R163774	4E2	9	42 - 23
R163775	4E2	12	42 - 23
R163837	8G5	1	80 - 52
R164437	4E2	4	42 - 23
R165034	6F22	24	60 - 65
R21612	5E22	1	54 - 10
R21612	5E24	15	54 - 13
R21612	5F15	12	54 - 27
R21722	7J2	21	70 - 145
R21722	7J9	1	70 - 152
R21722	7J9	2	70 - 152
R26058	1E16	4	20 - 22
R26058	1F8	35	20 - 39
R26058	1G7	4	20 - 59
R26058	1G21	33	20 - 75
R26058	1H19	4	20 - 97
R26058	1I9	33	20 - 111
R26079	1D21	8	20 - 8
R26079	1F15	8	20 - 44
R26079	1H2	8	20 - 80
R26081	1D21	2	20 - 8
R26081	1F15	2	20 - 44
R26081	1H2	2	20 - 80
R26115	4F18	10	51 - 21
R26115	4H20	10	51 - 73
R26149	4F8	7	51 - 11
R26246	4F23	13	51 - 27
R26246	4F25	25	51 - 29
R26246	4F25	37	51 - 29
R26246	4G2	14	51 - 31
R26246	4G2	26	51 - 31
R26246	4I2	13	51 - 79
R26246	4I4	25	51 - 81
R26246	4I6	14	51 - 83
R26246	4I6	26	51 - 83
R26286	2E17	3	30 - 31B
R26286	2E17	4	30 - 31B
R26286	2E17	12	30 - 31B
R26286	2F18	3	30 - 55
R26286	2F18	4	30 - 55
R26286	2F18	9	30 - 55
R26286	2F18	12	30 - 55
R26286	7D17	6	70 - 9
R26287	6E20	26	60 - 39
R26287	6E22	7	60 - 41
R26333	1E11	4	20 - 17
R26333	1F25	4	20 - 54
R26333	1H14	4	20 - 92
R26333	5E16	18	54 - 3
R26375	7H14	18	70 - 107
R26375	7J2	20	70 - 145
R26375	7J2	27	70 - 145
R26375	7J9	4	70 - 152
R26375	8D19	2	71 - 17
R26448	2F2	3	30 - 41
R26448	2F14	3	30 - 51
R26448	2F24	3	30 - 61
R26448	5D14	9	53 - 11
R26448	5D14	34	53 - 11
R26448	5D14	36	53 - 11
R26448	5E22	15	54 - 10
R26448	5E24	14	54 - 13
R26448	5F15	9	54 - 27
R26448	6E20	27	60 - 39
R26448	6E22	8	60 - 41
R26448	6F6	31	60 - 51
R26448	6F8	5	60 - 51B
R26448	6G8	1	60 - 71
R26448	6G10	1	60 - 73
R26448	6G12	1	60 - 75
R26448	7E1	3	70 - 19
R26448	8D19	9	71 - 17
R26485	7F6	3	70 - 51
R26552	6E20	2	60 - 39
R26552	6E24	3	60 - 43
R26552	6F1	2	60 - 45
R26552	6F25	2	60 - 68
R26552	6G3	5	60 - 69B
R26552	6G6	2	60 - 69F
R26559	1D21	4	20 - 8
R26559	1F15	4	20 - 44
R26559	1H2	4	20 - 80
R26572	5D14	15	53 - 11
R26643	7F18	10	70 - 63
R26748	1D21	12	20 - 8
R26748	1F15	12	20 - 44
R26748	1H2	12	20 - 80
R26871	7E11	9	70 - 31
R26941	3F13	3	40 - 44
R27094	2E15	..	30 - 31
R27136	5D14	14	53 - 11
R27149	1D24	12	20 - 11
R27149	1F18	16	20 - 47
R27149	1H5	16	20 - 83
R27175	1E9	9	20 - 15
R27175	1F23	9	20 - 52
R27175	1H12	9	20 - 90
R27175	5D10	4	53 - 7
R27218	5E24	13	54 - 13
R27302	5D6	17	53 - 3
R27302	5D8	17	53 - 5
R27329	5E4	30	53 - 27
R27329	5E6	2	53 - 29
R27441	9G6	13	92 - 17
R27443	1D21	9	20 - 8
R27443	1F15	9	20 - 44
R27443	1H2	9	20 - 80
R27564	7H21	15	70 - 115
R27928	3D22	1	40 - 5
R27928	3D22	7	40 - 5
R27928	4F4	14	51 - 7
R27928	4F4	24	51 - 7
R27928	4F18	2	51 - 21
R27928	4F18	28	51 - 21
R27928	4H6	12	51 - 59
R27928	4H6	14	51 - 59
R27928	4H20	2	51 - 73
R27928	4H20	28	51 - 73
R27928	5D10	10	53 - 7
R27976	3D24	18	40 - 7
R27976	3E6	17	40 - 11
R27976	7E7	2	70 - 25
R28024	9E14	17	91 - 33
R28473	9F13	1	91 - 55
R28473	9F13	10	91 - 55
R28556	7F24	38	70 - 69
R28574	8E18	2	80 - 11
R28583	2E9	5	30 - 27
R28583	2E10	4	30 - 28
R28640	4G10	14	51 - 39
R28640	4I14	14	51 - 91
R28671	4G10	20	51 - 39
R28671	4I14	20	51 - 91
R28776	6E20	32	60 - 39
R28776	6E22	13	60 - 41
R28776	6F1	3	60 - 45
R28776	6G5	13	60 - 69D
R28776	6G16	5	60 - 79
R28776	6G16	10	60 - 79
R28776	7H23	29	70 - 117
R28776	7H25	10	70 - 119
R28776	7I10	36	70 - 129
R28776	7I12	7	70 - 131
R28776	8D15	15	71 - 13
R28782	7D19	23	70 - 11
R28782	7D21	3	70 - 13
R28811	1E13	3	20 - 19
R28811	1G4	3	20 - 56
R28811	1H16	3	20 - 94
R29936	7H23	13	70 - 117
R29936	7H25	14	70 - 119
R30319	5E10	4	53 - 33
R30398	8E14	14	80 - 7
R30815	7J9	5	70 - 152
R30816	7J9	7	70 - 152
R30817	7J9	6	70 - 152
R30903	6E20	24	60 - 39
R30903	6E22	5	60 - 41
R30903	6E22	6	60 - 41
R31251	8E14	10	80 - 7
R31890	9G2	16	92 - 13
R31935	8F12	4	80 - 33
R32176	2G9	7	30 - 73
R32214	5E21	8	54 - 9
R32507	8D15	17	71 - 13
R32588	4F8	8	51 - 11
R33259	4F4	9	51 - 7

https://www.truck-manuals.net/

NUMERICAL INDEX - CONTINUED

PART NO.	GRID	KEY	PAGE
R33259	4F10	12	51 - 13
R33259	4F12	6	51 - 15
R33259	4H6	9	51 - 59
R33259	4H12	17	51 - 65
R33259	4H14	6	51 - 67
R33259	7H23	40	70 - 117
R33259	7H25	18	70 - 119
R33259	7I10	27	70 - 129
R33259	7I10	32	70 - 129
R33259	7I10	40	70 - 129
R33259	7I12	10	70 - 131
R33259	8H10	3	90 - 7
R33259	8H12	13	90 - 9
R33259	8H20	21	90 - 17
R33877	7E8	7	70 - 28
R34222	5E22	3	54 - 10
R35352	6H23	1	60 - 109
R35352	6H25	1	60 - 111
R35717	6H23	8	60 - 109
R35717	6H23	22	60 - 109
R35717	6H25	8	60 - 111
R35717	6H25	22	60 - 111
R35794	4H8	25	51 - 61
R35794	6F8	9	60 - 51B
R36402	7G18	2	70 - 89
R36441	7F24	36	70 - 69
R36599	1D24	2	20 - 11
R36599	1F18	5	20 - 47
R36599	1H5	5	20 - 83
R36658	7J9	3	70 - 152
R36659	7J9	3	70 - 152
R37023	7D25	11	70 - 17
R37287	5E17	2	54 - 4
R37287	5F21	1	54 - 33
R375	3D24	7	40 - 7
R375	3E6	7	40 - 11
R375	4G18	2	51 - 47
R375R	2F16	2	30 - 53
R375R	2F25	2	30 - 62
R375R	5D14	21	53 - 11
R38221	5E4	14	53 - 27
R39208	5D14	13	53 - 11
R39503	2D19	11	30 - 11
R39554	2E9	2	30 - 27
R39554	3E10	43	40 - 15
R39554	3E12	44	40 - 17
R39554	3E14	51	40 - 19
R39554	3E16	52	40 - 21
R39554	3E18	44	40 - 23
R39554	3F21	3	40 - 53
R39741	1D24	3	20 - 11
R39741	1F18	6	20 - 47
R39741	1H5	6	20 - 83
R39741	1J3	1	20 - 130
R40236	1G13	4	20 - 65
R40236	1I3	4	20 - 106
R40685	9D12	17	91 - 7
R40687	3F25	17	40 - 57
R40687	3F25	22	40 - 57
R40915	7E11	2	70 - 31
R41049	1E13	1	20 - 19
R41071	8H14	26	90 - 11
R41076	6F16	20	60 - 59
R41076	6F20	20	60 - 63
R41076	7E11	8	70 - 31
R41285	1F3	7	20 - 35
R41387	9G4	17	92 - 15
R41440	3H24	7	40 - 105
R41778	9G13	2	92 - 24
R41934	1E12	1	20 - 18
R41934	1G1	1	20 - 55
R41934	1G2	6	20 - 55A
R41934	1G3	6	20 - 55B
R41934	1H15	1	20 - 93
R41985	1I11	27	20 - 113
R41985	8H14	11	90 - 11
R42057	5D10	3	53 - 7
R42340	1D24	6	20 - 11
R42340	1F18	9	20 - 47
R42340	1H5	9	20 - 83
R42365	1D24	17	20 - 11
R42849	5D14	12	53 - 11
R43244	4D15	3	42 - 11
R43244	8F14	4	80 - 35
R43409	1F18	1	20 - 47
R43409	1H5	1	20 - 83
R43444	7F24	23	70 - 69
R43621	1D24	9	20 - 11
R43621	1F18	13	20 - 47
R43621	1H5	13	20 - 83
R43660	1E23	12	20 - 29
R43660	1G16	9A	20 - 69
R43660	1I2	9A	20 - 105
R44097	3G18	5	40 - 74
R44097	3G19	4	40 - 75
R44097	3G21	2	40 - 77
R44165	3F17	8	40 - 49
R44165	3F19	8	40 - 51
R44302	2E9	7	30 - 27
R44302	3D20	13	40 - 3
R44302	3D24	12	40 - 7
R44302	3E6	11	40 - 11
R44302	3E24	14	40 - 29
R44302	3F5	4	40 - 35
R44302	3G2	12	40 - 59
R44302	3H13	8	40 - 93
R44302	3I6	2	40 - 111
R44302	3I14	9	41 - 4
R44302	3I15	11	41 - 4A
R44302	3I16	7	41 - 5
R44302	3I19	4	41 - 8
R44302	4D25	16	42 - 21
R44302	6E4	23	60 - 23
R44302	6F8	21	60 - 51B
R44302	6F22	..	60 - 65
R44302	6H4	11	60 - 91
R44302	6H6	3	60 - 93
R44302	6H8	3	60 - 95
R44302	6H13	7	60 - 101
R44302	6H23	3	60 - 109
R44302	6H25	3	60 - 111
R44302	6I4	6	60 - 115
R44302	7D23	28A	70 - 15
R44302	7D23	43	70 - 15
R44302	7D25	43	70 - 17
R44302	7H14	16	70 - 107
R44302	7H21	20	70 - 115
R44302	7I18	..	70 - 137
R44302	7J4	14	70 - 147
R44302	8G20	5	80 - 67
R44302	8G22	5	80 - 69
R44302	8H10	27	90 - 7
R44302	9E20	..	91 - 39
R44342	3F21	9	40 - 53
R44394	4F4	25	51 - 7
R44394	4F10	9	51 - 13
R44394	4H6	24	51 - 59
R44394	4H12	14	51 - 65
R46414	6I4	7	60 - 115
R46479	1F8	17	20 - 39
R47074	1E16	1	20 - 22
R47074	1G7	1	20 - 59
R47074	1H19	1	20 - 97
R47150	7I14	4	70 - 133
R47153	1G14	9	20 - 66
R47153	1G16	7	20 - 69
R47153	1G21	27	20 - 75
R47153	1I2	7	20 - 105
R47153	1I4	9	20 - 107
R47153	1I9	27	20 - 111
R47160	2E9	4	30 - 27
R47160	2E10	2	30 - 28
R47172	3H22	8	40 - 103
R47578	7F24	22	70 - 69
R47693	1E25	6	20 - 31
R47693	1F1	4	20 - 32
R47862	6G16	12	60 - 79
R47998	6D7	9	60 - 3
R48163	7F24	14	70 - 69
R48164	7F24	15	70 - 69
R48450	9E18	11	91 - 37
R48450	9E20	11	91 - 39
R48685	4F2	7	51 - 5
R48685	4G14	6	51 - 43
R48685	4H4	7	51 - 57
R48685	4I18	6	51 - 95
R48685	5E17	5	54 - 4
R48685	5F19	6	54 - 31
R48693	1F9	7	20 - 39A
R48693	2E25	7	30 - 39
R48693	2F12	7	30 - 49B
R48693	2F22	7	30 - 59
R49002	4F18	..	51 - 21
R49377	1G21	30	20 - 75
R49377	1I9	30	20 - 111
R495R	7D13	3	70 - 5
R49866	1D19	3	20 - 6
R49866	1F8	16	20 - 39
R49866	1F12	3	20 - 42
R49866	1G21	6	20 - 75
R49866	1G24	3	20 - 78
R49866	1I9	6	20 - 111
R500330	1E23	7	20 - 29
R500330	1G16	14	20 - 69
R500330	1I2	14	20 - 105
R50034	6F3	9	60 - 47
R500642	1D24	10	20 - 11
R500642	1E21	1	20 - 27
R500642	1F18	15	20 - 47
R500642	1G11	1	20 - 63
R500642	1H5	15	20 - 83
R500642	1H24	1	20 - 103
R50390	1G8	11	20 - 60
R50390	1G21	21	20 - 75
R50390	1H20	11	20 - 98
R50390	1I9	21	20 - 111
R50393	1G8	8	20 - 60
R50393	1H20	8	20 - 98
R50405	1F8	3	20 - 39
R50405	1G21	18	20 - 75
R50405	1I9	18	20 - 111

https://www.truck-manuals.net/

NUMERICAL INDEX - CONTINUED

PART NO.	GRID	KEY	PAGE
R50424	1G14	12	20 - 66
R50424	1G21	35	20 - 75
R50424	1I4	12	20 - 107
R50424	1I9	35	20 - 111
R50879	6F3	8	60 - 47
R50901	3I18	4	41 - 7
R50902	3I18	2	41 - 7
R51053	1G14	10	20 - 66
R51053	1I4	10	20 - 107
R51133	1E23	4	20 - 29
R51133	2D19	8	30 - 11
R51156	7J6	1	70 - 149
R51156	7J8	1	70 - 151
R51936	1F9	2	20 - 39A
R51936	2E23	25	30 - 37
R51936	2E25	2	30 - 39
R51936	2F8	23	30 - 47
R51936	2F12	2	30 - 49B
R51936	2F12	30	30 - 49B
R51936	2F20	25	30 - 57
R51936	2F22	2	30 - 59
R51936	2F22	30	30 - 59
R51937	2E23	20	30 - 37
R51937	2F8	18	30 - 47
R51937	2F20	20	30 - 57
R52006	7G4	16	70 - 73
R52006	7G10	16	70 - 79
R52006	7G16	6	70 - 85
R52006	8E22	2	80 - 17
R52006	8E22	6	80 - 17
R52006	8E24	2	80 - 19
R52006	8E24	9	80 - 19
R52006	8F1	2	80 - 21
R52107	7H18	5	70 - 111
R52130	3G22	4	40 - 78
R52130	3G23	3	40 - 79
R52130	8H20	17	90 - 17
R52130	9E20	4	91 - 39
R52188	8E14	11	80 - 7
R52389	5D18	16	53 - 15
R52634	1E13	1	20 - 19
R52665	4F10	3	51 - 13
R52665	4H12	6	51 - 65
R52690	9G4	17	92 - 15
R52691	9G4	17	92 - 15
R52725	3H1	2	40 - 82
R52876	7H21	14	70 - 115
R52931	3G22	6	40 - 78
R53108	1F8	36	20 - 39
R53108	1G21	34	20 - 75
R53108	1I9	34	20 - 111
R53226	6F3	3	60 - 47
R53292	1E14	5	20 - 20
R53292	1G6	5	20 - 58
R53292	1H17	5	20 - 95
R53524	7H14	13	70 - 107
R53658	7E9	3	70 - 29
R53665	9G2	3	92 - 13
R53665	9G2	7	92 - 13
R53668	9G2	18	92 - 13
R53668	9G4	15	92 - 15
R53668	9G6	16	92 - 17
R53884	2F1	3	30 - 40
R53884	2F13	3	30 - 50
R53884	2F23	3	30 - 60
R53899	1F8	27	20 - 39
R53899	1F9	26	20 - 39A
R53899	1G21	25	20 - 75
R53899	1I9	25	20 - 111
R53899	2E25	26	30 - 39
R53899	2F1	7	30 - 40
R53899	2F12	27	30 - 49B
R53899	2F13	7	30 - 50
R53899	2F22	27	30 - 59
R53899	2F23	7	30 - 60
R53901	1F8	27	20 - 39
R53901	1G21	25	20 - 75
R53901	1I9	25	20 - 111
R53901	2F1	9	30 - 40
R53901	2F13	9	30 - 50
R53901	2F23	9	30 - 60
R54025	2F2	2	30 - 41
R54025	2F14	2	30 - 51
R54025	2F24	2	30 - 61
R54064	7G22	4	70 - 93
R54123	1E25	4	20 - 31
R54123	1F1	7	20 - 32
R54380	5D14	2	53 - 11
R54380	5D14	5	53 - 11
R54380	5D18	7	53 - 15
R54380	5D20	8	53 - 17
R54380	5D22	8	53 - 19
R54380	8F8	2	80 - 29
R54500	2D19	15	30 - 11
R54500	2D23	5	30 - 15
R54500	2E2	5	30 - 19
R54510	1E25	2	20 - 31
R54510	1F1	2	20 - 32
R54511	1E25	3	20 - 31
R54511	1F1	3	20 - 32
R54565	1D21	1	20 - 8
R54565	1F15	1	20 - 44
R54565	1H2	1	20 - 80
R54701	9E4	5	91 - 23
R54856	1E18	2	20 - 24
R54856	1G21	24	20 - 75
R54856	1H21	3	20 - 99
R54856	1I9	24	20 - 111
R54856	3E2	23	40 - 9
R54856	3E4	23	40 - 9B
R54856	3E8	23	40 - 13
R55081	5D16	23	53 - 13
R55151	8E24	14	80 - 19
R55326	8H18	1	90 - 15
R55326	9E11	5	91 - 30
R55327	9F12	8	91 - 54
R55396	1F9	14	20 - 39A
R55396	2E25	14	30 - 39
R55396	3I14	2	41 - 4
R55427	8F10	3	80 - 31
R55427	8F12	29	80 - 33
R56101	2G9	16	30 - 73
R56101	6F22	25	60 - 65
R56101	7I18	2	70 - 137
R56101	7I22	14	70 - 141
R56397	4E24	2	51 - 3
R56397	4H2	2	51 - 55
R56397	6F3	10	60 - 47
R56465	8D13	29	71 - 11
R56465	8D15	20	71 - 13
R56504	7E11	3	70 - 31
R56751	7D19	7	70 - 11
R56751	7D21	1	70 - 13
R57158	1D24	19	20 - 11
R57159	1D24	19	20 - 11
R57528	7F11	2	70 - 56
R57583	1E14	7	20 - 20
R57584	1E15	3	20 - 21
R57696	1E21	5	20 - 27
R57696	1G11	5	20 - 63
R57696	1H24	5	20 - 103
R57771	1E6	1	20 - 13D
R57771	1E14	2	20 - 20
R57771	1G6	2	20 - 58
R57771	1H17	2	20 - 95
R58186	2E23	6	30 - 37
R58186	2E23	10	30 - 37
R58186	2F8	4	30 - 47
R58186	2F20	6	30 - 57
R58186	2F20	10	30 - 57
R58255	5D12	11	53 - 9
R58256	5D12	11	53 - 9
R58257	5D12	11	53 - 9
R58258	5D12	11	53 - 9
R58617	7F24	25	70 - 69
R58865	8E22	17	80 - 17
R59009	9G2	17	92 - 13
R59011	9G2	10	92 - 13
R59012	9G2	13	92 - 13
R59013	9G6	15	92 - 17
R59018	9G2	11	92 - 13
R59019	9G2	1	92 - 13
R59020	9G6	9	92 - 17
R59021	9G6	7	92 - 17
R59022	9G6	14	92 - 17
R59023	9G6	18	92 - 17
R59028	9G6	4	92 - 17
R59029	9G6	4	92 - 17
R59030	9G4	14	92 - 15
R59070	9G6	3	92 - 17
R59297	2E23	8	30 - 37
R59297	2E23	11	30 - 37
R59297	2F8	8	30 - 47
R59297	2F8	9	30 - 47
R59297	2F8	10	30 - 47
R59297	2F20	8	30 - 57
R59297	2F20	11	30 - 57
R59298	2E23	8	30 - 37
R59298	2E23	9	30 - 37
R59298	2E23	11	30 - 37
R59298	2F20	8	30 - 57
R59298	2F20	9	30 - 57
R59298	2F20	11	30 - 57
R59305	2E23	6	30 - 37
R59305	2E23	10	30 - 37
R59305	2F20	6	30 - 57
R59305	2F20	10	30 - 57
R59384	5D16	10	53 - 13
R59439	5D18	17	53 - 15
R59439	5D20	18	53 - 17
R59439	5D22	18	53 - 19
R59440	5D18	17	53 - 15
R59440	5D20	18	53 - 17
R59440	5D22	18	53 - 19
R59478	7F24	6	70 - 69
R59575	9D10	8	91 - 5
R59761	8F17	3	80 - 38
R59843	5D18	28	53 - 15
R59897	9G4	9	92 - 15
R60170	8H12	19	90 - 9
R60273	2F16	7	30 - 53

https://www.truck-manuals.net/

NUMERICAL INDEX - CONTINUED

PART NO.	GRID	KEY	PAGE
R60274	2F16	8	30 - 53
R60275	2F16	9	30 - 53
R60277	2F16	1	30 - 53
R60277	2F25	1	30 - 62
R60278	2F16	4	30 - 53
R60278	2F25	4	30 - 62
R60279	2F16	3	30 - 53
R60279	2F25	3	30 - 62
R60458	9G2	15	92 - 13
R60458	9G6	6	92 - 17
R60472	1E15	3	20 - 21
R60473	1E15	3	20 - 21
R60474	1E15	3	20 - 21
R60475	1E15	3	20 - 21
R60485	1E14	7	20 - 20
R60486	1E14	7	20 - 20
R60487	1E14	7	20 - 20
R60488	1E14	7	20 - 20
R60730	6D12	3	60 - 8
R60755	6E20	17	60 - 39
R60755	6E25	2	60 - 44
R60755	6F24	16	60 - 67
R60755	6G3	16	60 - 69B
R61144	2E23	6	30 - 37
R61144	2E23	10	30 - 37
R61144	2F20	6	30 - 57
R61144	2F20	10	30 - 57
R61145	2E23	9	30 - 37
R61145	2F20	9	30 - 57
R61288	1D24	23	20 - 11
R61288	1F18	24	20 - 47
R61288	1H5	24	20 - 83
R61289	1E15	3	20 - 21
R61461	5D18	17	53 - 15
R61461	5D20	18	53 - 17
R61461	5D22	18	53 - 19
R61497	1D20	1	20 - 7
R61497	1F14	1	20 - 43
R61497	1H1	1	20 - 79
R61608	1E15	3	20 - 21
R61609	1E15	3	20 - 21
R61610	1E15	3	20 - 21
R61611	1E15	3	20 - 21
R61775	3F12	7	40 - 43
R61862	9G6	10	92 - 17
R61871	7H23	27	70 - 117
R61871	7H25	11	70 - 119
R61871	7I10	34	70 - 129
R61871	7I12	8	70 - 131
R62070	3D20	2	40 - 3
R62070	3D20	10	40 - 3
R62070	3D22	1	40 - 5
R62070	3D22	7	40 - 5
R62070	4F4	14	51 - 7
R62070	4F4	23	51 - 7
R62070	4F18	2	51 - 21
R62070	4F18	27	51 - 21
R62070	4H6	14	51 - 59
R62070	4H6	23	51 - 59
R62070	4H20	2	51 - 73
R62070	4H20	27	51 - 73
R62070	5D10	10	53 - 7
R62129	5G2	12	54 - 39
R62129	5G4	12	54 - 41
R62930	1D24	10	20 - 11
R62930	1E21	1	20 - 27
R62930	1F18	15	20 - 47
R62930	1G11	1	20 - 63
R62930	1H5	15	20 - 83
R62930	1H24	1	20 - 103
R62938	1E21	2	20 - 27
R62938	1G11	2	20 - 63
R62938	1H24	2	20 - 103
R62986	1E15	1	20 - 21
R62987	1E15	2	20 - 21
R62988	1E15	2	20 - 21
R63002	1E15	2	20 - 21
R63003	1E15	2	20 - 21
R63004	1E15	2	20 - 21
R63005	1E15	2	20 - 21
R63006	1E15	2	20 - 21
R63007	1E15	2	20 - 21
R63008	1E15	2	20 - 21
R63009	1E15	2	20 - 21
R63010	1E15	1	20 - 21
R63016	2F1	10	30 - 40
R63016	2F13	10	30 - 50
R63016	2F23	10	30 - 60
R63237	5D20	17	53 - 17
R63237	5D22	17	53 - 19
R63326	1E12	2	20 - 18
R63326	1G1	2	20 - 55
R63326	1H15	2	20 - 93
R63548	7I14	5	70 - 133
R63575	5D20	14	53 - 17
R63575	5D22	14	53 - 19
R63575	5D24	7	53 - 21
R63604	2F12	32	30 - 49B
R63604	2F22	32	30 - 59
R63647	2G1	2	30 - 65
R63647	7E1	7	70 - 19
R63667	6H15	22	60 - 103
R63667	6H17	4	60 - 105
R63737	7F8	10	70 - 53
R63845	1F9	12	20 - 39A
R63845	2E25	12	30 - 39
R64084	7F18	7	70 - 63
R64084	7F20	15	70 - 65
R64084	7F22	15	70 - 67
R64085	7F18	5	70 - 63
R64085	7F20	14	70 - 65
R64085	7F22	14	70 - 67
R64234	7D11	17	70 - 3
R64235	7D11	17	70 - 3
R64236	7D11	17	70 - 3
R64237	7D11	17	70 - 3
R64700	3E2	25	40 - 9
R64700	3E4	25	40 - 9B
R64700	3E8	25	40 - 13
R64700	3H1	1	40 - 82
R64822	3F17	34	40 - 49
R64822	3F19	35	40 - 51
R64822	8H18	12	90 - 15
R64822	9D16	9	91 - 11
R64822	9D18	4	91 - 13
R65082	7F24	29	70 - 69
R65239	7F8	9	70 - 53
R65240	7F8	17	70 - 53
R65242	7F24	35	70 - 69
R65243	7F24	33	70 - 69
R65553	1D21	3	20 - 8
R65553	1F15	3	20 - 44
R65553	1H2	3	20 - 80
R65595	4E13	9	43 - 8
R65785	6F22	23	60 - 65
R65785	7I22	15	70 - 141
R65815	7F24	9	70 - 69
R65816	7F24	9	70 - 69
R66307	8E16	7	80 - 9
R66452	1E6	1	20 - 13D
R66452	1E14	4	20 - 20
R66452	1F22	1	20 - 51
R66452	1G6	4	20 - 58
R66452	1H11	1	20 - 89
R66452	1H17	4	20 - 95
R66477	4G18	4	51 - 47
R66477	5D14	18	53 - 11
R66492	1E6	1	20 - 13D
R66901	7F24	13	70 - 69
R66901	7F24	21	70 - 69
R67092	2D19	6	30 - 11
R67092	2D23	1	30 - 15
R67092	2E2	1	30 - 19
R67092	2E17	5	30 - 31B
R67092	2E19	5	30 - 33
R67092	2E21	5	30 - 35
R67092	2F6	1	30 - 45
R67092	2F18	5	30 - 55
R67092	2G3	5	30 - 67
R67092	2G5	1	30 - 69
R67092	2G7	12	30 - 71
R67092	2G7	14	30 - 71
R67264	1F9	20	20 - 39A
R67264	2E25	20	30 - 39
R67264	2F12	20	30 - 49B
R67264	2F12	34	30 - 49B
R67264	2F22	20	30 - 59
R67264	2F22	34	30 - 59
R67364	1F9	9	20 - 39A
R67364	2E25	9	30 - 39
R67364	2F1	11	30 - 40
R67364	2F12	9	30 - 49B
R67364	2F13	11	30 - 50
R67364	2F22	9	30 - 59
R67364	2F23	11	30 - 60
R67477	7F18	9	70 - 63
R67619	7F20	9	70 - 65
R67619	7F22	9	70 - 67
R67784	5D16	22	53 - 13
R67879	2F1	6	30 - 40
R67879	2F2	5	30 - 41
R67879	2F13	6	30 - 50
R67879	2F14	5	30 - 51
R67879	2F23	6	30 - 60
R67879	2F24	5	30 - 61
R68035	2F4	1	30 - 43
R68036	2F4	4	30 - 43
R68037	2F4	4	30 - 43
R68038	2F4	4	30 - 43
R68039	2F4	4	30 - 43
R68040	2F4	4	30 - 43
R68041	2F4	4	30 - 43
R68042	2F4	4	30 - 43
R68043	2F4	4	30 - 43
R68044	2F4	4	30 - 43
R68045	2F4	4	30 - 43
R68046	2F4	4	30 - 43
R68047	2F4	4	30 - 43
R68048	2F4	4	30 - 43
R68049	2F4	4	30 - 43
R68050	2F4	4	30 - 43

https://www.truck-manuals.net/

NUMERICAL INDEX - CONTINUED

PART NO.	GRID	KEY	PAGE
R68051	2F4	4	30 - 43
R68052	2F4	4	30 - 43
R68166	5D16	24	53 - 13
R68167	5D16	21	53 - 13
R68682	5E8	..	53 - 31
R68682	8G16	4	80 - 63
R69089	2F4	2	30 - 43
R69166	7F8	14	70 - 53
R69166	7J6	2	70 - 149
R69166	7J8	2	70 - 151
R69185	4G18	3	51 - 47
R69185	5D14	19	53 - 11
R69408	7G18	3	70 - 89
R69409	7G18	3	70 - 89
R69549	5D20	23	53 - 17
R69549	5D22	23	53 - 19
R69571	7F24	5	70 - 69
R70268	1D24	18	20 - 11
R70350	3E22	5	40 - 27
R70534	5D10	4	53 - 7
R70826	1D21	6	20 - 8
R70826	1F15	6	20 - 44
R70826	1H2	6	20 - 80
R71074	1E14	6	20 - 20
R71080	9E18	15	91 - 37
R71208	1D21	7	20 - 8
R71208	1F15	7	20 - 44
R71208	1H2	7	20 - 80
R71212	2E23	9	30 - 37
R71212	2F8	8	30 - 47
R71212	2F8	9	30 - 47
R71212	2F20	9	30 - 57
R71387	7J9	2	70 - 152
R71398	2E23	9	30 - 37
R71398	2E23	10	30 - 37
R71398	2F20	9	30 - 57
R71398	2F20	10	30 - 57
R71732	1G11	11	20 - 63
R71732	1G11	13	20 - 63
R71732	1G13	7	20 - 65
R71732	1H24	11	20 - 103
R71732	1H24	13	20 - 103
R71732	1I3	7	20 - 106
R71975	5D20	29	53 - 17
R71975	5D22	29	53 - 19
R72090	5F2	9	54 - 15
R72090	5F4	11	54 - 17
R72090	5F6	3	54 - 17B
R72090	5F21	7	54 - 33
R72328	1F3	3	20 - 35
R72328	1F5	17	20 - 37
R72328	1F6	16	20 - 37A
R72328	1F8	12	20 - 39
R72328	1F13	4	20 - 42A
R72328	1G19	17	20 - 73
R72328	1G21	9	20 - 75
R72328	1G25	4	20 - 78A
R72328	1I7	17	20 - 109
R72328	1I9	9	20 - 111
R72653	4F10	17	51 - 13
R72653	4H12	4	51 - 65
R72653	6F3	11	60 - 47
R72654	3F25	9	40 - 57
R72654	7F24	12	70 - 69
R72654	7F24	20	70 - 69
R72655	6I6	5	60 - 117
R72655	8F12	4	80 - 33
R72655	8F12	10	80 - 33
R72659	1F13	..	20 - 42A
R72659	1G25	..	20 - 78A
R72853	1E17	12	20 - 23
R72853	1E25	9	20 - 31
R72853	3E2	24	40 - 9
R72853	3E4	24	40 - 9B
R72853	3E8	24	40 - 13
R72853	4F6	16	51 - 9
R72853	4H8	16	51 - 61
R73040	5E2	2	53 - 25
R73094	9F25	18	92 - 11
R73291	4G20	5	51 - 49
R73291	6E16	7	60 - 35
R73380	6D11	15	60 - 7
R73498	2E9	10	30 - 27
R73599	7I8	6	70 - 127
R73635	8E8	4	80 - 1
R73858	1F9	18	20 - 39A
R73858	2E25	18	30 - 39
R73858	2F12	18	30 - 49B
R73858	2F22	18	30 - 59
R73858	2F22	26	30 - 59
R74008	1E6	1	20 - 13D
R74008	1E14	3	20 - 20
R74008	1G6	3	20 - 58
R74008	1H17	3	20 - 95
R74030	2E23	10	30 - 37
R74030	2F8	9	30 - 47
R74030	2F20	10	30 - 57
R74210	8E22	19	80 - 17
R74242	7J11	1	70 - 154
R74243	7J11	2	70 - 154
R74244	7J11	3	70 - 154
R74246	7J11	4	70 - 154
R74804	2E23	10	30 - 37
R74804	2F8	9	30 - 47
R74804	2F20	10	30 - 57
R75176	4F23	14	51 - 27
R75176	4F25	26	51 - 29
R75176	4F25	38	51 - 29
R75176	4G2	13	51 - 31
R75176	4G2	25	51 - 31
R76358	2F12	12	30 - 49B
R76358	2F22	12	30 - 59
R76459	7J11	5	70 - 154
R76477	3E10	15	40 - 15
R76477	3E12	15	40 - 17
R76477	3E14	19	40 - 19
R76477	3E16	19	40 - 21
R76477	3E18	15	40 - 23
R76477	6F10	..	60 - 53
R76477	6F12	..	60 - 55
R76477	6G12	18	60 - 75
R76477	7F2	24	70 - 47
R76477	7F4	24	70 - 49
R76477	7H14	14	70 - 107
R76477	7J4	28	70 - 147
R76477	7J11	6	70 - 154
R76491	1D18	15	20 - 5
R76491	1F11	15	20 - 41
R76491	1G23	15	20 - 77
R76695	3H22	9	40 - 103
R76822	1F9	22	20 - 39A
R76822	2E25	22	30 - 39
R77175	4F8	18	51 - 11
R77175	4H10	18	51 - 63
R77175	5D10	9	53 - 7
R77175	6D19	1	60 - 15
R77175	6G8	16	60 - 71
R77175	6G10	16	60 - 73
R77175	6G12	16	60 - 75
R77175	6G14	36	60 - 77
R77175	7D23	40	70 - 15
R77175	7D25	40	70 - 17
R77175	7E1	5	70 - 19
R77175	7E7	8	70 - 25
R77175	7H19	5	70 - 113
R77175	7I10	13	70 - 129
R77465	3G12	5	40 - 69
R77480	3F21	4	40 - 53
R77551	1F8	15	20 - 39
R77551	1G21	5	20 - 75
R77551	1I9	5	20 - 111
R77551	2E23	18	30 - 37
R77551	2E23	19	30 - 37
R77551	2F8	16	30 - 47
R77551	2F8	17	30 - 47
R77551	2F20	18	30 - 57
R77551	2F20	19	30 - 57
R77673	1F5	15	20 - 37
R77673	1F6	14	20 - 37A
R77673	1G19	15	20 - 73
R77673	1I7	15	20 - 109
R77673	2D11	8	30 - 3
R77673	2D16	3	30 - 8
R77673	2D21	3	30 - 13
R77673	2D25	3	30 - 17
R77673	3E2	12	40 - 9
R77673	3E2	21	40 - 9
R77673	3E2	22	40 - 9
R77673	3E4	21	40 - 9B
R77673	3E4	22	40 - 9B
R77673	3E8	12	40 - 13
R77673	3E8	21	40 - 13
R77673	3E8	22	40 - 13
R77715	8G11	1	80 - 58
R77857	6E8	16	60 - 27
R77869	8F1	2	80 - 21
R78027	5E24	26	54 - 13
R78027	5G6	4	54 - 43
R78027	5G6	..	54 - 43
R78027	8E16	2	80 - 9
R78047	4E8	3	43 - 3
R78048	3H15	11	40 - 95
R78048	3H15	14	40 - 95
R78048	4E8	10	43 - 3
R78049	4E8	15	43 - 3
R78050	4E8	19	43 - 3
R78051	4E8	24	43 - 3
R78052	4E8	5	43 - 3
R78053	3H15	10	40 - 95
R78053	4D25	15	42 - 21
R78053	4E2	30	42 - 23
R78053	4E8	13	43 - 3
R78054	4E8	17	43 - 3
R78055	4E8	22	43 - 3
R78056	3E24	2	40 - 29
R78056	4E8	26	43 - 3
R78057	3E14	32	40 - 19
R78057	3E16	32	40 - 21
R78057	3E24	3	40 - 29
R78057	3H5	15	40 - 85
R78057	3H7	15	40 - 87

https://www.truck-manuals.net/

NUMERICAL INDEX - CONTINUED

PART NO.	GRID	KEY	PAGE
R78057	3H9	3	40 - 89
R78057	4E8	2	43 - 3
R78058	3E24	2	40 - 29
R78058	3E24	6	40 - 29
R78058	3H9	4	40 - 89
R78058	3H13	9	40 - 93
R78058	4E2	30	42 - 23
R78058	4E8	23	43 - 3
R78059	3E14	32	40 - 19
R78059	3E16	32	40 - 21
R78059	4E8	1	43 - 3
R78059	4E12	30	43 - 7
R78060	3H15	11	40 - 95
R78060	3H15	14	40 - 95
R78060	4D25	17	42 - 21
R78060	4E8	2	43 - 3
R78060	4E8	9	43 - 3
R78060	4E8	12	43 - 3
R78061	3H13	10	40 - 93
R78061	3H15	10	40 - 95
R78061	4D25	15	42 - 21
R78061	4E8	6	43 - 3
R78061	4E8	23	43 - 3
R78062	4E8	1	43 - 3
R78063	3F14	1	40 - 45
R78063	3H13	10	40 - 93
R78063	3H15	10	40 - 95
R78063	3H15	11	40 - 95
R78063	3H15	14	40 - 95
R78063	4D25	15	42 - 21
R78063	4D25	17	42 - 21
R78063	4E8	1	43 - 3
R78063	4E8	7	43 - 3
R78063	4E8	12	43 - 3
R78063	4E10	7	43 - 5
R78063	4E10	12	43 - 5
R78063	4E12	28	43 - 7
R78064	4E8	27	43 - 3
R78064	4E12	34	43 - 7
R78066	3F14	1	40 - 45
R78425	4E24	6	51 - 3
R78425	4H2	6	51 - 55
R79060	1F9	18	20 - 39A
R79060	2E25	18	30 - 39
R79060	2F12	18	30 - 49B
R79060	2F22	18	30 - 59
R79101	7E22	9	70 - 42
R79101	7E23	9	70 - 43
R79117	6D22	7	60 - 17B
R79604	2E23	22	30 - 37
R79604	2F8	20	30 - 47
R79604	2F20	22	30 - 57
R79605	2E23	23	30 - 37
R79605	2F8	21	30 - 47
R79605	2F20	23	30 - 57
R79606	2E23	24	30 - 37
R79606	2F8	22	30 - 47
R79606	2F20	24	30 - 57
R79846	1E11	5	20 - 17
R79846	1F25	5	20 - 54
R79846	1H14	5	20 - 92
R79915	1F8	23	20 - 39
R79916	7F8	13	70 - 53
R79989	5D18	17	53 - 15
R79989	5D20	18	53 - 17
R79989	5D22	18	53 - 19
R80436	6H11	10	60 - 99
R80436	7F8	12	70 - 53
R80436	7F11	4	70 - 56
R80436	7F14	14	70 - 59
R80436	7F18	4	70 - 63
R80436	7F20	13	70 - 65
R80436	7F22	13	70 - 67
R80623	7I18	6	70 - 137
R81053	7H21	5	70 - 115
R81162	5D18	21	53 - 15
R81162	5D20	22	53 - 17
R81162	5D22	22	53 - 19
R81207	3F15	..	40 - 46
R81207	9F13	5	91 - 55
R81362	5D12	2	53 - 9
R81363	5D12	2	53 - 9
R81364	5D12	2	53 - 9
R81372	8G22	13	80 - 69
R81374	8G20	6	80 - 67
R81424	9G13	1	92 - 24
R81456	9E25	3	91 - 45
R81560	9G4	13	92 - 15
R81766	7E22	13	70 - 42
R81767	7E20	13	70 - 40
R81775	7E24	21	70 - 44
R81775	7E25	21	70 - 45
R81779	7E20	5	70 - 40
R81779	7E22	5	70 - 42
R81787	7E24	12	70 - 44
R81787	7E25	12	70 - 45
R81788	7E22	12	70 - 42
R81788	7E23	12	70 - 43
R81789	7E20	12	70 - 40
R81789	7E21	12	70 - 41
R81793	7E24	14	70 - 44
R81793	7E25	14	70 - 45
R81794	7E22	14	70 - 42
R81794	7E23	14	70 - 43
R81795	7E20	14	70 - 40
R81795	7E21	14	70 - 41
R81856	7E20	4	70 - 40
R81856	7E22	4	70 - 42
R81862	7E24	9	70 - 44
R81862	7E25	9	70 - 45
R81864	7E20	9	70 - 40
R81864	7E21	9	70 - 41
R81972	7E24	13	70 - 44
R81973	7E24	4	70 - 44
R81975	7E24	5	70 - 44
R82007	1D24	21	20 - 11
R82007	1F18	22	20 - 47
R82007	1H5	22	20 - 83
R82236	3H5	4	40 - 85
R82236	3H7	4	40 - 87
R82237	3H5	2	40 - 85
R82237	3H7	2	40 - 87
R82238	3H5	3	40 - 85
R82238	3H7	3	40 - 87
R82239	3H5	1	40 - 85
R82239	3H7	1	40 - 87
R82243	3H5	7	40 - 85
R82272	9F9	27	91 - 53
R82272	9F11	55	91 - 53B
R82355	3H5	14	40 - 85
R82355	3H7	14	40 - 87
R82444	9F9	27	91 - 53
R82444	9F11	43	91 - 53B
R82445	9F9	27	91 - 53
R82445	9F11	46	91 - 53B
R82549	8F17	6	80 - 38
R82719	2E17	3	30 - 31B
R82719	2E17	12	30 - 31B
R82719	2F18	3	30 - 55
R82719	2F18	9	30 - 55
R82719	2F18	12	30 - 55
R82908	5E21	12	54 - 9
R82908	5G2	5	54 - 39
R82908	5G4	4	54 - 41
R82982	5F2	13	54 - 15
R82982	5F2	23	54 - 15
R82982	5F4	29	54 - 17
R82982	5F8	8	54 - 19
R83020	1F8	8	20 - 39
R83021	1F8	10	20 - 39
R83035	5E21	14	54 - 9
R83036	5E21	16	54 - 9
R83059	5E16	10	54 - 3
R83060	5E16	10	54 - 3
R83061	5E16	10	54 - 3
R83066	6F22	..	60 - 65
R83066	8H16	17	90 - 13
R83066	8H18	14	90 - 15
R83066	8H18	17	90 - 15
R83066	8H20	5	90 - 17
R83066	8H21	4	90 - 18
R83066	8H22	4	90 - 19
R83066	9F1	11	91 - 46
R83119	5E21	17	54 - 9
R83120	5E21	1	54 - 9
R83121	5E21	15	54 - 9
R83148	5E19	1	54 - 6
R83150	5E16	10	54 - 3
R83150	5E17	3	54 - 4
R83150	5F19	8	54 - 31
R83151	5E16	10	54 - 3
R83151	5E17	3	54 - 4
R83151	5F19	8	54 - 31
R83152	5E16	10	54 - 3
R83152	5E17	3	54 - 4
R83152	5F19	8	54 - 31
R83474	5E16	14	54 - 3
R83474	5F13	14	54 - 25
R83489	1F8	27	20 - 39
R83489	1G21	25	20 - 75
R83489	1I9	25	20 - 111
R83489	2E19	6	30 - 33
R83489	2E19	8	30 - 33
R83489	2E21	7	30 - 35
R83489	2F1	..	30 - 40
R83489	2F6	4	30 - 45
R83489	2G3	8	30 - 67
R83489	2G5	4	30 - 69
R83490	1F8	27	20 - 39
R83490	1G21	25	20 - 75
R83490	1I9	25	20 - 111
R83531	7F24	2	70 - 69
R83532	7F24	2	70 - 69
R83533	7F24	2	70 - 69
R83534	7F24	2	70 - 69
R83559	5E21	9	54 - 9
R83559	5G2	3	54 - 39
R83559	5G4	3	54 - 41
R83560	5E21	10	54 - 9
R83560	5G2	3	54 - 39
R83560	5G4	3	54 - 41

https://www.truck-manuals.net/

NUMERICAL INDEX - CONTINUED

PART NO.	GRID	KEY	PAGE
R83562	3H15	1	40 - 95
R83575	7E20	8	70 - 40
R83575	7E21	8	70 - 41
R83576	7E22	8	70 - 42
R83576	7E23	8	70 - 43
R83577	7E24	8	70 - 44
R83577	7E25	8	70 - 45
R83630	7H23	22	70 - 117
R83720	2F16	6	30 - 53
R83720	2F25	6	30 - 62
R83721	2F16	6	30 - 53
R83721	2F25	6	30 - 62
R83722	2F16	6	30 - 53
R83722	2F25	6	30 - 62
R83723	2F16	6	30 - 53
R83723	2F25	6	30 - 62
R83724	2F16	6	30 - 53
R83724	2F25	6	30 - 62
R83725	2F16	6	30 - 53
R83725	2F25	6	30 - 62
R83726	2F16	6	30 - 53
R83726	2F25	6	30 - 62
R83727	2F16	6	30 - 53
R83727	2F25	6	30 - 62
R83728	2F16	6	30 - 53
R83728	2F25	6	30 - 62
R83729	2F16	6	30 - 53
R83729	2F25	6	30 - 62
R83730	2F16	6	30 - 53
R83730	2F25	6	30 - 62
R83731	2F16	6	30 - 53
R83731	2F25	6	30 - 62
R83732	2F16	6	30 - 53
R83732	2F25	6	30 - 62
R83733	2F16	6	30 - 53
R83733	2F25	6	30 - 62
R83734	2F16	6	30 - 53
R83734	2F25	6	30 - 62
R83735	2F16	6	30 - 53
R83735	2F25	6	30 - 62
R83736	2F16	6	30 - 53
R83736	2F25	6	30 - 62
R83737	2F16	6	30 - 53
R83737	2F25	6	30 - 62
R83738	2F16	6	30 - 53
R83738	2F25	6	30 - 62
R83739	2F16	6	30 - 53
R83739	2F25	6	30 - 62
R84015	5D14	16	53 - 11
R84262	5D14	3	53 - 11
R84472	1F8	14	20 - 39
R84472	1G21	10	20 - 75
R84472	1I9	10	20 - 111
R84472	2E23	16	30 - 37
R84472	2E23	17	30 - 37
R84472	2F4	10	30 - 43
R84472	2F4	11	30 - 43
R84472	2F8	15	30 - 47
R84472	2F16	12	30 - 53
R84472	2F20	16	30 - 57
R84472	2F25	12	30 - 62
R84529	9F7	13	91 - 51
R84529	9F9	15	91 - 53
R84570	5D16	15	53 - 13
R84609	5D16	11	53 - 13
R84618	1D18	16	20 - 5
R84618	1F11	16	20 - 41
R84618	1G23	16	20 - 77
R84619	1D18	17	20 - 5
R84619	1F11	17	20 - 41
R84619	1G23	17	20 - 77
R84976	1D18	12	20 - 5
R84977	1D18	13	20 - 5
R85027	1D21	14	20 - 8
R85027	1F15	14	20 - 44
R85027	1H2	14	20 - 80
R86061	1F5	3	20 - 37
R86061	1F6	3	20 - 37A
R86061	1G19	3	20 - 73
R86061	1I7	3	20 - 109
R86062	1F8	11	20 - 39
R86063	1G16	8	20 - 69
R86063	1I2	8	20 - 105
R86308	4F20	11	51 - 23
R86308	4H22	11	51 - 75
R86457	7E11	5	70 - 31
R86488	5F2	14	54 - 15
R86571	1D20	2	20 - 7
R86571	1F14	2	20 - 43
R86571	1H1	2	20 - 79
R86675	5D20	21	53 - 17
R86675	5D22	21	53 - 19
R86675	5D24	9	53 - 21
R86743	1F8	4	20 - 39
R86743	1G21	17	20 - 75
R86743	1I9	17	20 - 111
R87047	5F10	20	54 - 21
R87047	5F23	15	54 - 35
R87082	2E23	19	30 - 37
R87082	2F8	17	30 - 47
R87082	2F20	19	30 - 57
R87561	1D22	1	20 - 9
R87561	1D24	22	20 - 11
R87561	1E6	1	20 - 13D
R87561	1F16	1	20 - 45
R87561	1F18	23	20 - 47
R87561	1H3	1	20 - 81
R87561	1H5	23	20 - 83
R87656	9D10	2	91 - 5
R87682	2D19	10	30 - 11
R87907	2G7	17	30 - 71
R87907	2G7	25	30 - 71
R88167	9D10	3	91 - 5
R88246	5D16	15	53 - 13
R88246	5E4	22	53 - 27
R88397	1F5	4	20 - 37
R88397	1F6	4	20 - 37A
R88397	1F8	13	20 - 39
R88397	1G19	4	20 - 73
R88397	1G21	12	20 - 75
R88397	1I7	4	20 - 109
R88397	1I9	12	20 - 111
R88529	8H20	32	90 - 17
R88665	7G22	9	70 - 93
R88667	7G22	1	70 - 93
R88993	1F8	1	20 - 39
R88993	1G21	1	20 - 75
R88993	1I9	1	20 - 111
R89014	1F9	24	20 - 39A
R89014	2E25	24	30 - 39
R89014	2F12	24	30 - 49B
R89014	2F22	24	30 - 59
R89014	3E2	18	40 - 9
R89014	3E8	18	40 - 13
R89142	9G2	14	92 - 13
R89143	9G2	5	92 - 13
R89581	4F23	2	51 - 27
R89581	4G14	3	51 - 43
R89879	1F8	7	20 - 39
R89879	1G21	16	20 - 75
R89879	1I9	16	20 - 111
R89879	2D19	17	30 - 11
R89879	2D23	12	30 - 15
R89879	2E2	12	30 - 19
R89927	2E19	12	30 - 33
R89927	2E21	10	30 - 35
R89927	2F6	6	30 - 45
R89927	2G3	12	30 - 67
R89927	2G5	6	30 - 69
R89940	7E20	15	70 - 40
R89940	7E21	15	70 - 41
R89940	7E22	15	70 - 42
R89940	7E23	15	70 - 43
R89940	7E24	15	70 - 44
R89940	7E24	17	70 - 44
R89940	7E25	15	70 - 45
R89940	7E25	17	70 - 45
R89973	8F1	5	80 - 21
R89974	8F1	5	80 - 21
R90529	2F4	4	30 - 43
R90530	2F4	4	30 - 43
R90531	2F4	4	30 - 43
R90532	2F4	4	30 - 43
R90533	2F4	4	30 - 43
R90534	2F4	4	30 - 43
R90535	2F4	4	30 - 43
R90536	2F4	4	30 - 43
R90537	2F4	4	30 - 43
R90538	2F4	4	30 - 43
R90539	2F4	4	30 - 43
R90540	2F4	4	30 - 43
R90541	2F4	4	30 - 43
R90542	2F4	4	30 - 43
R90543	2F4	4	30 - 43
R90544	2F4	4	30 - 43
R90584	7D19	35	70 - 11
R90917	8F1	5	80 - 21
R91729	7E20	10	70 - 40
R91729	7E21	10	70 - 41
R91730	7E22	10	70 - 42
R91730	7E23	10	70 - 43
R91731	7E24	10	70 - 44
R91731	7E25	10	70 - 45
R91822	1D18	4	20 - 5
R91822	1F11	4	20 - 41
R91822	1G23	4	20 - 77
R91824	1F9	6	20 - 39A
R91824	2E25	6	30 - 39
R91824	2F12	6	30 - 49B
R91824	2F22	6	30 - 59
R91842	4G2	4	51 - 31
R91842	4G6	3	51 - 35
R91842	4I6	4	51 - 83
R91842	4I10	3	51 - 87
R91842	5F10	13	54 - 21
R91842	5F23	11	54 - 35
R92097	1F8	6	20 - 39
R92097	1G21	15	20 - 75
R92097	1I9	15	20 - 111
R92871	5F10	8	54 - 21
R92871	5F23	2	54 - 35

https://www.truck-manuals.net/

NUMERICAL INDEX - CONTINUED

PART NO.	GRID	KEY	PAGE
R92872	5F10	4	54 - 21
R92872	5F23	6	54 - 35
R93008	2E19	6	30 - 33
R93008	2E19	9	30 - 33
R93008	2E21	8	30 - 35
R93008	2F1	..	30 - 40
R93008	2F6	3	30 - 45
R93008	2F13	..	30 - 50
R93008	2F23	..	30 - 60
R93008	2G3	9	30 - 67
R93008	2G3	11	30 - 67
R93008	2G5	3	30 - 69
R93055	5F2	25	54 - 15
R93055	5F4	31	54 - 17
R93175	8H16	14	90 - 13
R93219	4E15	1	43 - 10
R93220	4E15	1	43 - 10
R93221	4E15	1	43 - 10
R93222	4E15	1	43 - 10
R93308	1D18	16	20 - 5
R93308	1F11	16	20 - 41
R93308	1G23	16	20 - 77
R93311	1D18	17	20 - 5
R93311	1F11	17	20 - 41
R93311	1G23	17	20 - 77
R93312	1D18	16	20 - 5
R93312	1F11	16	20 - 41
R93312	1G23	16	20 - 77
R93313	1D18	17	20 - 5
R93313	1F11	17	20 - 41
R93313	1G23	17	20 - 77
R93314	1D18	16	20 - 5
R93314	1F11	16	20 - 41
R93314	1G23	16	20 - 77
R93315	1D18	17	20 - 5
R93315	1F11	17	20 - 41
R93315	1G23	17	20 - 77
R93349	1D18	13	20 - 5
R93350	1D18	12	20 - 5
R93485	5E4	6	53 - 27
R93849	6F14	12	60 - 57
R93849	6F16	12	60 - 59
R93948	1E14	11	20 - 20
R93948	1G6	11	20 - 58
R93948	1H17	11	20 - 95
R94410	2F4	6	30 - 43
R94412	2F4	7	30 - 43
R94414	2F4	9	30 - 43
R94545	5D18	22	53 - 15
R94615	1E23	8	20 - 29
R94618	1E23	1	20 - 29
R94618	1F8	33	20 - 39
R94619	1E23	3	20 - 29
R94619	1F8	29	20 - 39
R94620	1E23	9	20 - 29
R94655	5D18	13	53 - 15
R94655	5D22	14	53 - 19
R95045	4F4	15	51 - 7
R95045	4F18	4	51 - 21
R95045	4H6	15	51 - 59
R95045	4H20	4	51 - 73
R95045	5D10	12	53 - 7
R95065	7D19	37	70 - 11
R95110	5E22	9	54 - 10
R95117	6D23	3	60 - 18
R95118	6D23	2	60 - 18
R95119	6D23	5	60 - 18
R95119	6E2	5	60 - 21B
R95250	6D23	9	60 - 18
R95430	2G9	18	30 - 73
R95654	8F12	31	80 - 33
R95784	5E4	4	53 - 27
R95800	3H17	9	40 - 97
R95866	8G16	8	80 - 63
R96066	3I23	4	41 - 13
R96214	9E25	8	91 - 45
R96248	8H16	1	90 - 13
R96293	7F8	4	70 - 53
R96295	7F8	3	70 - 53
R96606	1F3	17	20 - 35
R96616	1F3	18	20 - 35
R96616	1F4	5	20 - 36
R96616	1F8	28	20 - 39
R96622	1F3	16	20 - 35
R96703	3I21	5	41 - 11
R96753	9F1	5	91 - 46
R97061	1F9	4	20 - 39A
R97061	2E23	29	30 - 37
R97061	2E25	4	30 - 39
R97061	2F8	27	30 - 47
R97061	2F12	4	30 - 49B
R97061	2F20	29	30 - 57
R97061	2F22	4	30 - 59
R97116	4F4	4	51 - 7
R97116	4H6	4	51 - 59
R97332	8H16	7	90 - 13
R97332	8H16	11	90 - 13
R97332	8H20	13	90 - 17
R97549	5E21	5	54 - 9
R97588	9F5	14	91 - 49
R97588	9F7	12	91 - 51
R97588	9F7	37	91 - 51
R97588	9F9	10	91 - 53
R97588	9F9	14	91 - 53
R97605	5E24	9	54 - 13
R98012	4G14	9	51 - 43
R98012	4I18	9	51 - 95
R98012	5E17	8	54 - 4
R98012	5F10	1	54 - 21
R98012	5F17	4	54 - 29
R98012	5F23	21	54 - 35
R98064	1E23	15	20 - 29
R98064	1G14	6	20 - 66
R98064	1G16	4	20 - 69
R98064	1I2	4	20 - 105
R98064	1I4	6	20 - 107
R98322	7E20	17	70 - 40
R98322	7E21	17	70 - 41
R98323	7E20	20	70 - 40
R98323	7E21	20	70 - 41
R98412	2D15	7	30 - 7
R98412	2D15	9	30 - 7
R98500	1F9	25	20 - 39A
R98500	2E25	25	30 - 39
R98500	2F12	29	30 - 49B
R98500	2F22	29	30 - 59
R98500	3E2	19	40 - 9
R98500	3E8	19	40 - 13
R98527	1G8	13	20 - 60
R98527	1G18	..	20 - 71
R98527	1H20	13	20 - 98
R98527	1I6	..	20 - 108A
R98809	5E22	7	54 - 10
R98810	5E22	10	54 - 10
R98885	5E17	6	54 - 4
R99039	4G3	2	51 - 32
R99039	4I7	2	51 - 84
R99047	1F9	24	20 - 39A
R99047	2E25	24	30 - 39
R99047	2F12	28	30 - 49B
R99047	2F22	28	30 - 59
R99047	3E2	18	40 - 9
R99047	3E8	18	40 - 13
R99088	5E24	25	54 - 13
R99088	5F2	30	54 - 15
R99088	5F4	33	54 - 17
R99233	3H17	7	40 - 97
R99233	3H19	3	40 - 99
R99353	5F10	14	54 - 21
R99437	8E22	9	80 - 17
R99437	8E24	5	80 - 19
R99463	1E17	7	20 - 23
R99464	1E17	14	20 - 23
R99464	1F8	20	20 - 39
R99466	5D16	17	53 - 13
R99498	5F10	10	54 - 21
R99499	5F10	15	54 - 21
R99499	5F23	12	54 - 35
R99510	5E18	1	54 - 5
R99531	2F13	1	30 - 50
R99531	2F23	1	30 - 60
R99673	5F10	16	54 - 21
R99673	5F23	20	54 - 35
R99692	4F23	9	51 - 27
R99692	4F23	21	51 - 27
R99692	4F25	33	51 - 29
R99692	4G2	18	51 - 31
R99692	4G2	30	51 - 31
R99692	4I2	9	51 - 79
R99692	4I2	21	51 - 79
R99692	4I4	33	51 - 81
R99692	4I6	18	51 - 83
R99692	4I6	30	51 - 83
R99692	5D6	5	53 - 3
R99692	5D8	5	53 - 5
TY15939	7J10	2	70 - 153
TY15939	8H10	..	90 - 7
TY15949	8H5	..	90 - 1
TY15950	8H5	..	90 - 1
TY15951	8H5	..	90 - 1
TY16004	1D15	2	20 - 2
TY16005	1D15	3	20 - 2
TY16021	5D14	..	53 - 11
TY16021	5D22	..	53 - 19
TY16021	7F6	..	70 - 51
TY16306	9E23	7	91 - 43
TY16423	1D15	..	20 - 2
TY22007	1D14	2	20 - 1
TY22008	1D14	2	20 - 1
TY22009	1D14	1	20 - 1
TY22010	1D14	2	20 - 1
TY22011	1D14	2	20 - 1
TY22041	1D14	..	20 - 1
TY22042	1D14	..	20 - 1
TY22043	7D9	2	70 - 1
TY22044	7D9	2	70 - 1
TY22063	7D9	2	70 - 1
TY22064	1D14	1	20 - 1
TY22065	1D14	1	20 - 1
TY22066	1D14	1	20 - 1
TY22067	1D14	1	20 - 1

https://www.truck-manuals.net/

NUMERICAL INDEX - CONTINUED

PART NO.	GRID	KEY	PAGE
TY22068	1D14	1	20 - 1
TY22069	1D14	1	20 - 1
TY22070	1D14	1	20 - 1
TY22073	1D14	1	20 - 1
TY22074	1D14	1	20 - 1
TY22328	8H14	3	90 - 11
TY22413	1I11	19	20 - 113
TY22413	8H14	7	90 - 11
TY22425	2D19	10	30 - 11
TY22425	2D19	13A	30 - 11
TY22462	1I11	3	20 - 113
TY22462	1I11	33	20 - 113
TY22462	1I13	7	20 - 115
TY22462	1I13	15	20 - 115
TY22462	2G7	1	30 - 71
TY22462	6F22	10	60 - 65
TY22462	7I18	2	70 - 137
TY22462	8H20	31	90 - 17
TY22464	6F22	26	60 - 65
TY22465	2G7	29	30 - 71
TY22465	4G22	8	51 - 51
TY22465	4G24	5	51 - 53
TY22465	6H23	23	60 - 109
TY22465	6H25	23	60 - 111
TY22465	8H14	9	90 - 11
TY22465	8H14	10	90 - 11
TY22465	8H14	12	90 - 11
TY22465	8H14	13	90 - 11
TY22467	2D19	9	30 - 11
TY22467	6H13	27	60 - 101
TY22467	8H14	30	90 - 11
TY22467	8H20	24	90 - 17
TY22471	3I16	8	41 - 5
TY22471	3I19	5	41 - 8
TY22472	7E5	21	70 - 23
TY22473	3H15	6	40 - 95
TY22473	7E5	21	70 - 23
TY22474	8H10	19	90 - 7
TY22475	3H15	6	40 - 95
TY22475	5F11	3	54 - 22
TY22485	1I11	36	20 - 113
TY22486	1I11	1	20 - 113
TY22486	1I11	40	20 - 113
TY22486	2D13	4	30 - 5
TY24446	1D19	..	20 - 6
TY24446	1F12	..	20 - 42
TY24446	1G24	..	20 - 78
TY3018	7J9	3	70 - 152
TY3019	7J9	3	70 - 152
TY6128	3I22	1	41 - 12
TY6280	1D14	1	20 - 1
TY6297	1D14	1	20 - 1
TY6298	1D14	1	20 - 1
TY6300	1D14	1	20 - 1
TY6301	1D14	1	20 - 1
TY6311	1D14	1	20 - 1
TY6312	1D14	1	20 - 1
TY6313	1D14	1	20 - 1
TY6359	1D14	1	20 - 1
TY6360	1D14	1	20 - 1
TY6361	1D14	1	20 - 1
TY6364	1D14	1	20 - 1
TY6389	1D14	2	20 - 1
TY6390	1D14	2	20 - 1
TY6391	1D14	2	20 - 1
TY6392	1D14	2	20 - 1
TY6393	1D14	2	20 - 1
TY6394	1D14	2	20 - 1
TY6731	3I14	10	41 - 4
TY6762	3E2	10	40 - 9
TY6762	3E8	10	40 - 13
TY6762	3I11	2	41 - 1
TY6762	3I13	8	41 - 3
TY6762	3I13	..	41 - 3
TY6764	3E2	4	40 - 9
TY6764	3E8	4	40 - 13
TY6764	8H5	2	90 - 1
TY6781	3E2	20	40 - 9
TY6781	3I14	11	41 - 4
TY6781	3I18	..	41 - 7
TY6781	3I23	5	41 - 13
T107035	7H23	11	70 - 117
T107035	7H25	13	70 - 119
T11180	2D19	1	30 - 11
T11180	2D23	3	30 - 15
T11180	2E2	3	30 - 19
T112635	7J6	5	70 - 149
T112635	7J8	5	70 - 151
T116274	4D25	1	42 - 21
T116275	4D25	1	42 - 21
T11899	6G14	40	60 - 77
T11899	7I20	7	70 - 139
T121280	4G10	28	51 - 39
T121280	4I14	28	51 - 91
T121280	7D11	21	70 - 3
T122075	7I8	5	70 - 127
T12529	5E16	20	54 - 3
T12529	5F13	20	54 - 25
T131169	6I2	7	60 - 113
T13119	2E9	9	30 - 27
T13331	5E16	17	54 - 3
T13331	5F13	17	54 - 25
T13332	5E16	17	54 - 3
T13332	5F13	17	54 - 25
T13333	5E16	17	54 - 3
T13333	5F13	17	54 - 25
T13814	4F16	5	51 - 19
T13814	4H18	5	51 - 71
T13814	6E4	10	60 - 23
T13814	6E4	11	60 - 23
T13814	6E4	24	60 - 23
T13814	6E4	25	60 - 23
T13814	6E6	10	60 - 25
T13814	6E6	11	60 - 25
T13814	6E6	32	60 - 25
T13814	6E6	34	60 - 25
T13814	6F6	20	60 - 51
T13814	6G8	20	60 - 71
T13814	6G8	21	60 - 71
T13814	6G10	21	60 - 73
T13814	6G12	11	60 - 75
T138822	3E24	6	40 - 29
T138822	3H9	4	40 - 89
T138822	3H13	10	40 - 93
T142419	7I2	6	70 - 121
T142419	7I4	5	70 - 123
T142419	7I10	6	70 - 129
T143166	3D22	1	40 - 5
T143166	4H20	2	51 - 73
T143166	5D10	10	53 - 7
T143169	8H10	24	90 - 7
T143169	8H12	18	90 - 9
T14386	1J9	11	20 - 137
T14386	6H19	17	60 - 107
T146102	3I14	8	41 - 4
T146102	3I15	10	41 - 4A
T146102	3I16	6	41 - 5
T146102	3I19	3	41 - 8
T146102	3I21	4	41 - 11
T146102	8G12	6	80 - 59
T146104	3I14	12	41 - 4
T146104	3I15	15	41 - 4A
T146104	3I16	13	41 - 5
T146104	3I19	9	41 - 8
T146104	3I21	8	41 - 11
T146104	8G22	8	80 - 69
T146106	3I14	12	41 - 4
T146106	3I15	15	41 - 4A
T146106	3I16	13	41 - 5
T146106	3I19	9	41 - 8
T146106	3I21	8	41 - 11
T146106	8G20	11	80 - 67
T146515	3I14	12	41 - 4
T146515	3I15	15	41 - 4A
T146515	3I16	13	41 - 5
T146515	3I19	9	41 - 8
T146515	3I21	8	41 - 11
T146516	3I14	12	41 - 4
T146516	3I15	15	41 - 4A
T146516	3I16	13	41 - 5
T146516	3I19	9	41 - 8
T146516	3I21	8	41 - 11
T146517	3I14	12	41 - 4
T146517	3I15	15	41 - 4A
T146517	3I16	13	41 - 5
T146517	3I19	9	41 - 8
T146517	3I21	8	41 - 11
T151797	7G8	6	70 - 77
T155858	2E9	5	30 - 27
T155858	2E10	4	30 - 28
T15712	7H25	19	70 - 119
T15712	7I2	2	70 - 121
T15712	7I4	2	70 - 123
T15712	7I10	2	70 - 129
T15712	7I12	11	70 - 131
T15969	3F21	2	40 - 53
T17148	6D7	4	60 - 3
T18012	2F12	22	30 - 49B
T18012	2F22	22	30 - 59
T19935	4D17	15	42 - 13
T20077	1D18	2	20 - 5
T20077	1F11	2	20 - 41
T20077	1G23	2	20 - 77
T20129	1D18	1	20 - 5
T20129	1F11	1	20 - 41
T20129	1G23	1	20 - 77
T20328	1F8	21	20 - 39
T21242	1E21	3	20 - 27
T21242	1G11	3	20 - 63
T21242	1H24	3	20 - 103
T21959	6F8	20	60 - 51B
T22085T	8F20	5	80 - 41
T22828	6D22	9	60 - 17B
T23027	8G2	2	80 - 49
T23033	8G2	3	80 - 49
T23891	1E13	2	20 - 19
T23891	1G4	2	20 - 56
T23891	1H16	2	20 - 94
T24166	4E13	1	43 - 8
T24167	4E13	9	43 - 8
T24210	2F1	2	30 - 40

https://www.truck-manuals.net/

NUMERICAL INDEX - CONTINUED

PART NO.	GRID	KEY	PAGE
T24210	2F13	2	30 - 50
T24210	2F23	2	30 - 60
T25879	7G18	4	70 - 89
T26565	4F14	12	51 - 17
T26565	4F18	22	51 - 21
T26565	4H16	12	51 - 69
T26565	4H20	22	51 - 73
T27260	9F5	18	91 - 49
T27860	1E16	2	20 - 22
T27860	1G7	2	20 - 59
T27860	1H19	2	20 - 97
T28631	4D16	4	42 - 12
T30349	5E24	11	54 - 13
T32146	8F16	1	80 - 37
T34248	6D24	4	60 - 19
T35390	1D24	11	20 - 11
T35390	1F18	14	20 - 47
T35390	1H5	14	20 - 83
T39741	4G12	4	51 - 41
T39741	4G14	13	51 - 43
T39741	4I8	3	51 - 85
T39741	4I16	4	51 - 93
T39741	4I18	13	51 - 95
T42302	6E10	8	60 - 29
T42302	6E14	7	60 - 33
T42302	7D23	27	70 - 15
T42302	7D25	27	70 - 17
T42571	6E20	4	60 - 39
T42571	6E22	2	60 - 41
T42571	6G5	4	60 - 69D
T44824	4G12	5	51 - 41
T44824	4I16	5	51 - 93
T44931	5E6	4	53 - 29
T44932	5E6	4	53 - 29
T44933	5E6	4	53 - 29
T44934	5E6	4	53 - 29
T44935	5E6	4	53 - 29
T44936	5E6	4	53 - 29
T44937	5E6	4	53 - 29
T47649	6E14	3	60 - 33
T47649	7D23	11	70 - 15
T49616	7D11	17	70 - 3
T519T	9G2	2	92 - 13
T54904	7D19	22	70 - 11
T55585	2E9	1	30 - 27
T55585	3F21	1	40 - 53
T57246	6F24	18	60 - 67
T57246	6F24	20	60 - 67
T57822	6F6	19	60 - 51
T60657	7D19	29	70 - 11
T60657	7D21	5	70 - 13
T61226	5E16	12	54 - 3
T61226	5E17	3	54 - 4
T61226	5F13	10	54 - 25
T65643	9E8	13	91 - 27
T70177	7I14	6	70 - 133
T70659	7F2	14	70 - 47
T70659	7F4	14	70 - 49
T71307	4F8	11	51 - 11
T72280	7D19	30	70 - 11
T72280	7D21	6	70 - 13
T72350	9G2	6	92 - 13
T74416	8H10	7	90 - 7
T74425	7F6	5	70 - 51
T76938	7E7	21	70 - 25
T76938	7F2	25	70 - 47
T76938	7F4	25	70 - 49
T77613	4F8	4	51 - 11
T77613	4F12	20	51 - 15
T77613	4H8	21	51 - 61
T77613	4H10	13	51 - 63
T77613	4H14	20	51 - 67
T77613	5D14	11	53 - 11
T77613	5E22	14	54 - 10
T77613	5F15	7	54 - 27
T77613	6D19	15	60 - 15
T77613	6E4	4	60 - 23
T77613	6E6	28	60 - 25
T77613	6E8	28	60 - 27
T77613	6F6	6	60 - 51
T77613	6F10	13	60 - 53
T77613	6F12	10	60 - 55
T77613	6G8	3	60 - 71
T77613	6G8	5	60 - 71
T77613	6G8	14	60 - 71
T77613	6G10	3	60 - 73
T77613	6G10	5	60 - 73
T77613	6G10	14	60 - 73
T77613	6G12	3	60 - 75
T77613	6G12	5	60 - 75
T77613	6G14	1	60 - 77
T77613	6G22	13	60 - 85
T77613	6H4	8	60 - 91
T77613	6H6	8	60 - 93
T77613	6H8	8	60 - 95
T77613	7D23	15	70 - 15
T77613	7D25	15	70 - 17
T77613	7H14	2	70 - 107
T77613	7I16	3	70 - 135
T77613	7I20	2	70 - 139
T77613	7I22	16	70 - 141
T77613	7I22	17	70 - 141
T77613	8D19	5	71 - 17
T77613	8D19	7	71 - 17
T77613	8F6	3	80 - 27
T77613	8H10	31	90 - 7
T77814	6D19	6	60 - 15
T77814	6G14	26	60 - 77
T77814	7D19	31	70 - 11
T77814	7D21	7	70 - 13
T77857	2G7	15	30 - 71
T77857	4F8	2	51 - 11
T77857	4F12	14	51 - 15
T77857	4G20	9	51 - 49
T77857	4G22	2	51 - 51
T77857	4G24	3	51 - 53
T77857	4H10	2	51 - 63
T77857	4H14	14	51 - 67
T77857	5D14	24	53 - 11
T77857	5D14	29	53 - 11
T77857	5E22	17	54 - 10
T77857	6E4	5	60 - 23
T77857	6E6	5	60 - 25
T77857	6E6	12	60 - 25
T77857	6E6	16	60 - 25
T77857	6E8	5	60 - 27
T77857	6E8	12	60 - 27
T77857	6F8	4	60 - 51B
T77857	6F8	13	60 - 51B
T77857	6G8	19	60 - 71
T77857	6G10	19	60 - 73
T77857	6G12	6	60 - 75
T77857	6G14	38	60 - 77
T77857	7D23	3	70 - 15
T77857	7D23	39	70 - 15
T77857	7D25	3	70 - 17
T77857	7D25	39	70 - 17
T77857	7F2	12	70 - 47
T77857	7F4	12	70 - 49
T77857	7I16	9	70 - 135
T77857	7J2	1	70 - 145
T77857	7J2	5	70 - 145
T77857	7J2	7	70 - 145
T77857	7J2	26	70 - 145
T77857	8F6	5	80 - 27
T77858	4F6	10	51 - 9
T77858	4F8	15	51 - 11
T77858	4H8	10	51 - 61
T77858	4H10	15	51 - 63
T77858	4H10	30	51 - 63
T77858	6D19	16	60 - 15
T77858	6E16	3	60 - 35
T77858	6F8	16	60 - 51B
T77858	7D23	6	70 - 15
T77858	7D23	8	70 - 15
T77858	7D25	8	70 - 17
T77858	7E3	1	70 - 21
T77858	7E7	18	70 - 25
T77858	7J4	15	70 - 147
T77932	4F8	3	51 - 11
T77932	4F12	23	51 - 15
T77932	4H14	23	51 - 67
T77932	6D19	9	60 - 15
T77932	6E20	19	60 - 39
T77932	6E20	31	60 - 39
T77932	6E22	14	60 - 41
T77932	6F6	9	60 - 51
T77932	6F8	14	60 - 51B
T77932	6F22	9	60 - 65
T77932	6F24	17	60 - 67
T77932	6G3	17	60 - 69B
T77932	6G5	2	60 - 69D
T77932	7D23	28A	70 - 15
T77932	7D23	41	70 - 15
T77932	7D25	41	70 - 17
T77932	7F2	6	70 - 47
T77932	7F4	6	70 - 49
T77932	7J4	16	70 - 147
T78313	7D13	6	70 - 5
T78313	7D25	6	70 - 17
T79477	7I18	4	70 - 137
T79477	7I18	5	70 - 137
T79477	7I18	7	70 - 137
T79477	7I22	11	70 - 141
T81686	7H25	20	70 - 119
T81686	7I2	1	70 - 121
T81686	7I4	1	70 - 123
T81686	7I10	1	70 - 129
T81686	7I12	12	70 - 131
UN7189	5D14	..	53 - 11
U10289	4G12	10	51 - 41
U10289	4I16	10	51 - 93
U10289	6E14	9	60 - 33
U10289	7D23	14	70 - 15
U10289	7D25	14	70 - 17
U10289	7E7	26	70 - 25
U10624	5D12	9	53 - 9
U11326	3D20	2	40 - 3
U11326	3D20	10	40 - 3
U11326	3D22	7	40 - 5
U11326	4F4	14	51 - 7

https://www.truck-manuals.net/

NUMERICAL INDEX - CONTINUED

PART NO.	GRID	KEY	PAGE
U11326	4F4	22	51 - 7
U11326	4F18	2	51 - 21
U11326	4F18	26	51 - 21
U11326	4H6	14	51 - 59
U11326	4H6	22	51 - 59
U11326	4H20	26	51 - 73
U11326	5D10	10	53 - 7
U11326	7H23	33	70 - 117
U11326	7H25	17	70 - 119
U11647	7F6	4	70 - 51
U11647	7J9	1	70 - 152
U12547	7H23	2	70 - 117
U12547	7I10	22	70 - 129
U12547	7I10	30	70 - 129
U12547	7J4	17	70 - 147
U13639	1D24	4	20 - 11
U13639	1E25	5	20 - 31
U13639	1F1	6	20 - 32
U13639	1F8	24	20 - 39
U13639	1F18	7	20 - 47
U13639	1G21	23	20 - 75
U13639	1H5	7	20 - 83
U13639	1I9	23	20 - 111
U13639	1J3	2	20 - 130
U15974	7H23	12	70 - 117
U15974	7H25	15	70 - 119
U17409	1E23	6	20 - 29
U17409	1F8	30	20 - 39
U17409	1G14	7	20 - 66
U17409	1G16	5	20 - 69
U17409	1G16	15	20 - 69
U17409	1G21	26	20 - 75
U17409	1I2	5	20 - 105
U17409	1I2	15	20 - 105
U17409	1I4	7	20 - 107
U17409	1I9	26	20 - 111
U17409	6E20	28	60 - 39
U17409	6E22	9	60 - 41
U17409	6F24	10	60 - 67
U17409	6G3	10	60 - 69B
U17409	6G5	11	60 - 69D
U17409	7H23	7	70 - 117
U17409	7H25	24	70 - 119
U17409	7I10	18	70 - 129
U17409	7I10	31	70 - 129
U40708	7D17	7	70 - 9
U41966	3D20	2	40 - 3
U41966	3D20	10	40 - 3
U41966	3D22	1	40 - 5
U41966	3D22	7	40 - 5
U41966	3D24	14	40 - 7
U41966	3E6	13	40 - 11
U41966	4F4	14	51 - 7
U41966	4F4	20	51 - 7
U41966	4F18	2	51 - 21
U41966	4F18	3	51 - 21
U41966	4H6	14	51 - 59
U41966	4H6	20	51 - 59
U41966	4H20	2	51 - 73
U41966	4H20	3	51 - 73
U41966	5D10	10	53 - 7
U41966	5D10	11	53 - 7
U42016	7D11	18	70 - 3
U42111	5D12	12	53 - 9
U44496	4G16	3	51 - 45
U45916	9F11	44	91 - 53B
U46335	6D21	2	60 - 17
U4662	4E13	9	43 - 8
U46662	3F21	4	40 - 53
W27358	8D15	27	71 - 13
Z27858	7H18	7	70 - 111
Z44689	4D11	3	42 - 7
Z44689	4D23	3	42 - 19

https://www.truck-manuals.net/