INTRODUCTION AND CUSTOMER INFORMATION

T195451A -UN-08OCT03

OUTUBRO 2002

RUTHZIL TRATOR COMERCIAL DE PEÇAS LTDA 11 97083-6812 ROLANDO



RIGHT SIDE VIEW OF JOHN DEERE 824J LOADER
(MANUFACTURED 2002-)

TO THE CUSTOMER

THE PART NUMBERS IN THIS PARTS CATALOG WERE CORRECT AT THE TIME YOUR CATALOG WAS PUBLISHED. IT IS OUR POLICY TO CONSTANTLY IMPROVE OUR MACHINES, AND, THEREFORE, PART NUMBERS MAY CHANGE. WHEN ORDERING PARTS, VERIFY PART NUMBERS THROUGH YOUR DEALER.

(SPECIFICATIONS AND DESIGN SUBJECT TO CHANGE WITHOUT NOTICE)

COPYRIGHT © 2005 DEERE & COMPANY Moline, Illinois All rights reserved

SERIAL NUMBER LOCATION

EACH 824J LOADER MAY HAVE SIX SERIAL NUMBER PLATES: ONE FOR THE PRODUCT IDENTIFICATION NUMBER, ONE FOR THE TRANSMISSION, ONE FOR THE HYDRAULIC PUMP, ONE FOR THE ENGINE SERIAL NUMBER PLATE AND ONE FOR THE CAB.

THE PRODUCT IDENTIFICATION NUMBER PLATE IS LOCATED ON THE LEFT SIDE OF THE ENGINE FRAME NEAR THE HYDRAULIC OIL RESERVOIR.

THE TRANSMISSION SERIAL NUMBER PLATE IS LOCATED ON THE LOWER RIGHT-HAND SIDE OF THE REAR OF THE TRANSMISSION CASE.

THE HYDRAULIC PUMP SERIAL NUMBER PLATE IS LOCATED ON THE HYDRAULIC PUMP.

THE ENGINE SERIAL NUMBER PLATE IS LOCATED ON THE RIGHT SIDE OF THE ENGINE NEAR THE STARTER.

THE CAB SERIAL NUMBER IS LOCATED UNDER THE FLOORMAT INSIDE THE DOOR OF THE CAB.

THE AXLE SERIAL NUMBER PLATE IS LOCATED ON THE INPUT SIDE OF THE DIFFERENTIAL CASE.

LEFT SIDE AND RIGHT SIDE, FRONT AND REAR OF THE LOADER ARE VIEWED BY FACING IN THE DIRECTION OF LOADER FORWARD TRAVEL.

WHENEVER SERIAL NUMBERS ARE REQUIRED ON WARRANTY CLAIMS OR CORRESPONDENCE PERTAINING TO THIS PRODUCT, IT IS EXTREMELY IMPORTANT THAT ALL CHARACTERS BE FURNISHED. THIS POINT CANNOT BE OVEREMPHASIZED.

PRODUCT IDENTIFICATION NUMBER

T159799 -UN-26SEP02



1. DESIGNATES LOADER MANUFACTURER	DW - JOHN DEERE DAVENPORT WORKS
2. DESIGNATES LOADER MODEL	824J
3. DESIGNATES LOADER CONFIGURATION	X STANDARD LOADER ANYTHING ELSE IS DIFFERENT FROM STANDARD
4. DESIGNATES LOADER SERIAL NUMBER	123456
5. DESIGNATES UNIT TYPE	LOADER

TWO LINE BAR CODED ENGINE SERIAL NUMBER PLATE

(LOCATED ON STARTER SIDE OF ENGINE)

RGP3513 -UN-01JAN94

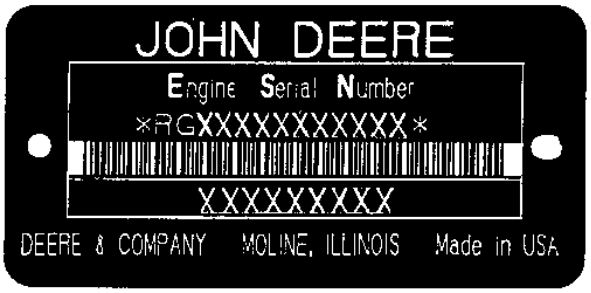

RGP3513

FIRST LINE	DEFINES
RG - WATERLOO ENGINE WORKS	DESIGNATES ENGINE MANUFACTURER
6	DESIGNATES NUMBER OF CYLINDERS
125 (12.5 LITERS)	DESIGNATES LITER DISPLACEMENT
H - AIR-TO-AIR	DESIGNATES TYPE OF AIR INTAKE SYSTEM
XXXXXX	DESIGNATES ENGINE SERIAL NUMBER
SECOND LINE	**APPLICATION**
6125HDW01	824J

SERIAL NUMBER LISTING INFORMATION

SERIAL NUMBER INFORMATION IS LISTED TO SHOW ON WHICH MACHINES EACH PART CAN BE USED; FOR EXAMPLE:

-	THE PART CAN BE USED ON ALL MACHINES.
000000-	THE PART CAN BE USED ON ALL MACHINES BEGINNING WITH THE SERIAL NUMBER LISTED.
-000000	THE PART CAN BE USED ON ALL MACHINES UP TO AND INCLUDING THE SERIAL NUMBER LISTED.
000000-000000	THE PART CAN BE USED ON ALL MACHINES BETWEEN AND INCLUDING THE SERIAL NUMBERS LISTED.

WHEN XXXXXX'S ARE LISTED IN PLACE OF A SERIAL NUMBER, A SERIAL NUMBER CHANGE WAS MADE BUT THE EXACT SERIAL NUMBER WAS NOT AVAILABLE WHEN THE CATALOG WAS PRODUCED.

DIRECTION ARROW

ARROWS ARE USED WITH ILLUSTRATIONS TO INDICATE THE FRONT OF THE UNIT. "RIGHT-HAND" AND "LEFT-HAND" SIDES ARE DETERMINED BY FACING IN THE DIRECTION OF MACHINE FORWARD TRAVEL.

EXCEPTION: FOR ALL BACKHOE PARTS, "RIGHT-HAND" AND "LEFT-HAND" SIDES, "FRONT" AND "REAR" ARE DETERMINED WHEN SEATED FOR BACKHOE OPERATION.

BOX-ENCLOSED ILLUSTRATIONS

A KEY NUMBER, SHOWN IN THE PARTS LIST, IS ASSIGNED TO A BOX ENCLOSING ALL PARTS SOLD AS A SERVICE ASSEMBLY.

COMPLETE GOODS LISTINGS

COMPLETE GOODS ARE LISTED IN BOLD FACE TYPE. ORDER SEPARATELY. DO NOT INCLUDE ON REPLACEMENT PARTS ORDER.

SI UNITS OF MEASURE

METRIC DIMENSIONS ARE GIVEN, WHERE APPLICABLE, THROUGHOUT THIS PARTS CATALOG.

CHANGE INDICATOR LINE

(MICROFICHE CATALOGS ONLY)

CHANGES AFFECTING THE ORDERING OF PARTS ARE IDENTIFIED BY VERTICAL LINES MARKED IN THE LEFT-HAND MARGIN OF REVISED PARTS LISTING IMAGES. A LINE IS ALSO AT THE LEFT-HAND EDGE OF THE SAME PART NUMBER IN THE NUMERICAL INDEX TO SHOW THE LOCATION OF REVISED INFORMATION.

SERIAL NUMBER LISTING INFORMATION

SERIAL NUMBER INFORMATION IS LISTED TO SHOW ON WHICH MACHINES EACH PART CAN BE USED; FOR EXAMPLE:

- THE PART CAN BE USED ON ALL MACHINES.
000000- THE PART CAN BE USED ON ALL MACHINES BEGINNING WITH THE SERIAL NUMBER LISTED.
-000000 THE PART CAN BE USED ON ALL MACHINES UP TO AND INCLUDING THE SERIAL NUMBER LISTED.
000000-000000 THE PART CAN BE USED ON ALL MACHINES BETWEEN AND INCLUDING THE SERIAL NUMBERS LISTED.

WHEN XXXXXX'S ARE LISTED IN PLACE OF A SERIAL NUMBER, A SERIAL NUMBER CHANGE WAS MADE BUT THE EXACT SERIAL NUMBER WAS NOT AVAILABLE WHEN THE CATALOG WAS PRODUCED.

DIRECTION ARROW

ARROWS ARE USED WITH ILLUSTRATIONS TO INDICATE THE FRONT OF THE UNIT. "RIGHT-HAND" AND "LEFT-HAND" SIDES ARE DETERMINED BY FACING IN THE DIRECTION OF MACHINE FORWARD TRAVEL.

EXCEPTION: FOR ALL BACKHOE PARTS, "RIGHT-HAND" AND "LEFT-HAND" SIDES, "FRONT" AND "REAR" ARE DETERMINED WHEN SEATED FOR BACKHOE OPERATION.

BOX-ENCLOSED ILLUSTRATIONS

A KEY NUMBER, SHOWN IN THE PARTS LIST, IS ASSIGNED TO A BOX ENCLOSING ALL PARTS SOLD AS A SERVICE ASSEMBLY.

COMPLETE GOODS LISTINGS

COMPLETE GOODS ARE LISTED IN BOLD FACE TYPE. ORDER SEPARATELY. DO NOT INCLUDE ON REPLACEMENT PARTS ORDER.

SI UNITS OF MEASURE

METRIC DIMENSIONS ARE GIVEN, WHERE APPLICABLE, THROUGHOUT THIS PARTS CATALOG.

CHANGE INDICATOR LINE

(MICROFICHE CATALOGS ONLY)

CHANGES AFFECTING THE ORDERING OF PARTS ARE IDENTIFIED BY VERTICAL LINES MARKED IN THE LEFT-HAND MARGIN OF REVISED PARTS LISTING IMAGES. A LINE IS ALSO AT THE LEFT-HAND EDGE OF THE SAME PART NUMBER IN THE NUMERICAL INDEX TO SHOW THE LOCATION OF REVISED INFORMATION.

ALPHABETICAL INDEX

GRID		PAGE
	A	
2H3	A/C AND HEATER THERMOSTAT SWITCH	1830 - 3A
2H3	A/C BLOWER MOTOR AND SWITCH	1830 - 3A
2H9	A/C COMPRESSOR	1830 - 10
2H9	A/C COMPRESSOR BRACKET	1830 - 10
2H9	A/C COMPRESSOR HOSES	1830 - 10
2H5	A/C COMPRESSOSR BELT (ADW)	1830 - 4
2H10	A/C CONDENSOR	1830 - 11
2H10	A/C CONDENSOR HOSES	1830 - 11
2H10	A/C RECEIVER DRYER	1830 - 11
2E11	ACCESS PANEL	1810 - 4
2G22	ACCESS PLATFORMS, HANDRAILS	1822 - 4
1J9	ACCUMULATOR, BRAKE	1064 - 6
3D14	ACCUMULATOR, RIDE CONTROL	3160 - 68
3F21	ACTUATOR, REPLACEMENT RETURN-TO-DIG	3166 - 3A
3F19	ACTUATOR, RETURN-TO-DIG	3166 - 2
3E3	ADD AUX. TO JOYSTICK CONVERSION KIT (SER. NO. 590068-)	3162 - 14
3E15	ADD AUX. TO TWO LEVER CONVERSION KIT (SER. NO. 590068-)	3162 - 28
2G8	ADJUSTER, LUMBAR	1821 - 3A
1H23	AIR CLEANER	0520 - 2
1H23	AIR CLEANER FILTER	0520 - 2
1H23	AIR CLEANER HOSE	0520 - 2
1H23	AIR CLEANER SENSOR	0520 - 2
1F4	AIR CONDITIONER COMPRESSOR MOUNTING (DENSO)	0402 - 5
1H23	AIR FILTER RESTRICTION INDICATOR SENSOR	0520 - 2
1H23	AIR FILTER RESTRICTION SENSOR, HARSH ENVIRONMENT	0520 - 2
1H8	AIR HEATER, ENGINE	0505 - 4
1G4	AIR INLET	0414 - 1
1G4	AIR TEMPERATURE SENSOR	0414 - 1
2J1	ALARM,BACK-UP	2004 - 6
1G17	ALTERNATOR ADJUSTING STRAP	0423 - 1
2B9	ALTERNATOR BELTS (80 AMP)	1672 - 2
2B13	ALTERNATOR KIT	1672 - 6
2B9	ALTERNATOR PULLEY (80 AMP)	1672 - 2
2B13	ALTERNATOR PULLEY (80 AMP) (FIELD KIT)	1672 - 6
2B11	ALTERNATOR REAR COVER (80 AMP)	1672 - 4
1G17	ALTERNATOR SUPPORT	0423 - 1
2B9	ALTERNATOR, ALTERNATOR BELTS AND PULLEYS (80 AMP)	1672 - 2
2B13	ALTERNATOR, ALTERNATOR PULLEYS (80 AMP) (FIELD KIT)	1672 - 6
2I16	ANTENNA, RADIO (SER. NO. -590067)	2001 - 2
2I18	ANTENNA, RADIO (SER.NO. 590068-)	2001 - 3A
3C12	ANTI-CAVITY VALVE BOOM SECTION	3160 - 12
2G6	ARM REST	1821 - 2
2G3	ARM REST (SER. NO. 590068-)	1816 - 3A
2G1	ARM REST (USE ONLY WITH TWO-LEVER CONTROLLERS)(SER. NO. -590067)	1816 - 2
2G3	ARM REST, WRIST (SER. NO. 590068-)	1816 - 3A
2F3	ARM, WIPER (FRONT)	1810 - 20
1F6	ARMS, ROCKER	0402 - 8
2J3	ASH TRAY	2006 - 2
3F1	AUX. CONTROLLER (FOR USE WITH SINGLE LEVER CONTROLLER (SER. NO. -590067)	3162 - 36
3E21	AUXILIARY CONTROLLER DETENT KIT	3162 - 34
3B8	AUXILIARY CUTTING EDGE,BUCKET	3102 - 1
3E7	AUXILIARY JOY STICK PILOT CONTROLLER COMPONENTS	3162 - 20
3E7	AUXILIARY JOY STICK PILOT CONTROLLER LEVER	3162 - 20
3E7	AUXILIARY JOY STICK PILOT CONTROLLER REPAIR KIT	3162 - 20
3E7	AUXILIARY JOY STICK PILOT CONTROLLER SEAL KIT	3162 - 20
3C18	AUXILIARY SECTION VALVE	3160 - 18
3C16	AUXILIARY SECTION, UNIVERSAL RELIEF VALVE	3160 - 16
3E5	AUXILIARY SINGLE LEVER CONTROLLER (SER. NO. -590067)	3162 - 16
3E21	AUXILIARY SINGLE LEVER CONTROLLER COMPONENTS	3162 - 34
3E5	AUXILIARY SINGLE LEVER CONTROLLER HOSE (SER. NO. -590067)	3162 - 16
3E5	AUXILIARY SINGLE LEVER CONTROLLER MOUNTING PLATE(SER. NO. -590067)	3162 - 16
3E21	AUXILIARY SINGLE LEVER CONTROLLER REPAIR KIT	3162 - 34
3E5	AUXILIARY SINGLE LEVER PILOT CONTROLLER FITTINGS (SER. NO. -590067)	3162 - 16
1C11	AXLE BREATHER KIT (NON -DIFF LOCK)	0263 - 3
1B24	AXLE HOUSING	0210 - 22
1H17	AXLE OIL RECIRCULATION KIT	0511 - 6
1H17	AXLE OIL RECIRCULATION PUMP AND MOTOR	0511 - 6
1H17	AXLE RECIRCULATION OIL COOLER	0511 - 6
1C3	AXLE STOP (8 DEGREE)	0240 - 2
1B5	AXLE, FRONT	0201 - 2
1B5	AXLE, REAR	0201 - 2
	B	
2J1	BACK-UP ALARM	2004 - 6
2G8	BACK, SEAT	1821 - 3A
2G6	BACKREST CUSHION	1821 - 2
3F15	BARREL, BOOM CYLINDER (REPLACEMENT) (SERIAL NO. -XXXXXX)	3165 - 4
3F17	BARREL, BOOM CYLINDER (REPLACEMENT) (SERIAL NO. XXXXXX-)	3165 - 5A
3F11	BARREL, BUCKET CYLINDER (REPLACEMENT) (SERIAL NO. -XXXXXX)	3165 - 2
3F13	BARREL, BUCKET CYLINDER (REPLACEMENT) (SERIAL NO. XXXXXX-)	3165 - 3A
1G13	BASE, FUEL FILTER	0421 - 2
2B5	BATTERIES, CABLES, CLAMPS AND GROUNDING STRAP (1000 CCA) (1400 CCA)	1671 - 2
2B6	BATTERIES, CABLES, CLAMPS AND GROUNDING STRAP (950 CCA)	1671 - 3
2B5	BATTERY CABLE (1000 CCA) (1400 CCA)	1671 - 2
2B6	BATTERY CABLE (950 CCA)	1671 - 3
2B5	BATTERY CLAMP (1000 CCA) (1400 CCA)	1671 - 2
2B6	BATTERY CLAMP (950 CCA)	1671 - 3
2H21	BATTERY COVERS	1913 - 4
2B7	BATTERY DISCONNECT	1671 - 4
2B5	BATTERY HOLD DOWN (1000 CCA) (1400 CCA)	1671 - 2

ALPHABETICAL INDEX - CONTINUED

GRID		PAGE
2B6	BATTERY HOLD DOWN (950 CCA)	1671 - 3
2B5	BATTERY INSTALLATION (1000 CCA) (1400 CCA)	1671 - 2
2B6	BATTERY INSTALLATION (950 CCA)	1671 - 3
1B11	BEARING FRONT INPUT (AXLE)	0210 - 6
1B19	BEARING QUILLS	0210 - 16
1J12	BEARING, DRIVELINE/PARKING BRAKE	1115 - 2
1E23	BEARINGS, MAIN	0401 - 3
1E23	BEARINGS, MAIN THRUST	0401 - 3
1G6	BEARINGS, WATER PUMP	0417 - 2
1G19	BELT TENSIONER BRACKET	0429 - 2
2H5	BELT, A/C COMPRESSOR (ADW)	1830 - 4
2B9	BELT, FAN	1672 - 2
2B9	BELT, FAN (HIGH AMBIENT)	1672 - 2
1H15	BELT, HIGH AMBIENT DRIVE	0511 - 4
2G5	BELT, SEAT, REPLACEMENT (THREE INCHES (76MM) WIDE)	1821 - 1
2B9	BELTS, ALTERNATOR (80 AMP)	1672 - 2
1H10	BLADE, FAN	0510 - 1
2F1	BLADE, WIPER	1810 - 18
2F3	BLADE, WIPER (FRONT)	1810 - 20
1F14	BLOCK, ENGINE SHORT (W/HEADBOLTS)	0404 - 4
2C1	BLOWER AND A/C WIRING HARNESS	1674 - 4
1H10	BLOWER FAN	0510 - 1
2H3	BLOWER MOTOR AND SWITCH, HEATER AND A/C	1830 - 3A
1F24	BOLTS, HEAD	0409 - 2
3F15	BOOM CYLINDER (REPLACEMENT) (SERIAL NO. -XXXXXX)	3165 - 4
3F17	BOOM CYLINDER (REPLACEMENT) (SERIAL NO. XXXXXX-)	3165 - 5A
3F15	BOOM CYLINDER BARREL (REPLACEMENT) (SERI AL NO. -XXXXXX)	3165 - 4
3F17	BOOM CYLINDER BARREL (REPLACEMENT) (SERI AL NO. XXXXXX-)	3165 - 5A
3B18	BOOM CYLINDER LOCK	3140 - 1
3B19	BOOM CYLINDER PIN	3141 - 2
3F15	BOOM CYLINDER REPAIR KIT (REPLACEMENT) (SERIAL NO. -XXXXXX)	3165 - 4
3F17	BOOM CYLINDER REPAIR KIT (REPLACEMENT) (SERIAL NO. XXXXXX-)	3165 - 5A
3F15	BOOM CYLINDER ROD (REPLACEMENT) (SERIAL NO. -XXXXXX)	3165 - 4
3F17	BOOM CYLINDER ROD (REPLACEMENT) (SERIAL NO. XXXXXX-)	3165 - 5A
3D12	BOOM KICKOUT	3160 - 66
3D12	BOOM KICKOUT SENSOR	3160 - 66
3C10	BOOM SECTION VALVE	3160 - 10
3B21	BOOM, LOADER, HIGH LIFT	3143 - 1
3B21	BOOM,LOADER	3143 - 1
3D24	BOOT, SINGLE LEVER CONTROLLER	3162 - 10
3E19	BOOT, TWO LEVER PILOT CONTROLLER	3162 - 32
2E1	BOTTOM GUARD	1746 - 4
2D24	BOTTOM GUARD, FUEL TANK	1746 - 2
2H9	BRACKET.A/C COMPRESSOR	1830 - 10
1G19	BRACKET, BELT TENSIONER	0429 - 2
1J5	BRACKET, BRAKE PEDAL	1062 - 2
1F21	BRACKET, DIPSTICK TUBE	0407 - 8
2I24	BRACKET, FIRE EXTINGUISHER	2003 - 2
2B22	BRACKET, LICENSE PLATE	1673 - 10
1I1	BRACKET, MUFFLER	0530 - 4
1I22	BRACKET, STEERING VALVE	0962 - 6
2H5	BRACKETS, COMPRESSOR (ADW)	1830 - 4
1I3	BRACKETS, ENGINE MOUNTING	0540 - 2
1G13	BRACKETS, FUEL FILTER	0421 - 2
1C16	BRACKETS, MOUNTING, TRANSMISSION	0342 - 2
2G6	BRACKETS, SEAT	1821 - 2
2F11	BRACKETS, WIPER MOUNTING	1810 - 24
1J9	BRAKE ACCUMULATOR	1064 - 6
1J5	BRAKE PEDAL	1062 - 2
1J5	BRAKE PEDAL BRACKET	1062 - 2
1J4	BRAKE PLATES	1011 - 2
1J5	BRAKE VALVE	1062 - 2
1J5	BRAKE VALVE FITTINGS	1062 - 2
1J7	BRAKE VALVE HYDRAULIC HOSE	1062 - 4
1J5	BRAKE VALVE SWITCH	1062 - 2
1J12	BRAKE, PARKING	1115 - 2
1J4	BRAKES	1011 - 2
2C17	BREAKER, CIRCUIT (S.N. -590067)	1674 - 17
1F6	BRIDGE, VALVE	0402 - 8
1G16	BRUSH HOLDER, STARTER (3008)	0422 - 2
1G16	BRUSH, STARTER (3008)	0422 - 2
3C16	BUCKET AND AUXILIARY SECTION, UNIVERSAL RELIEF VALVE	3160 - 16
3B8	BUCKET AUXILIARY CUTTING EDGE	3102 - 1
3B11	BUCKET CUTTING EDGE (BOLT-ON SPILLGUARD)	3102 - 4
3B9	BUCKET CUTTING EDGE (WELD-ON SPILLGUARD)	3102 - 2
3F11	BUCKET CYLINDER (REPLACEMENT) (SERIAL NO . -XXXXXX)	3165 - 2
3F13	BUCKET CYLINDER (REPLACEMENT) (SERIAL NO . XXXXXX-)	3165 - 3A
3F11	BUCKET CYLINDER BARREL (REPLACEMENT) (SE RIAL NO. -XXXXXX)	3165 - 2
3F13	BUCKET CYLINDER BARREL (REPLACEMENT) (SE RIAL NO. XXXXXX-)	3165 - 3A
3B19	BUCKET CYLINDER PIN	3141 - 2
3F11	BUCKET CYLINDER REPAIR KIT (REPLACEMENT) (SERIAL NO. -XXXXXX)	3165 - 2
3F13	BUCKET CYLINDER REPAIR KIT (REPLACEMENT) (SERIAL NO. XXXXXX-)	3165 - 3A
3F11	BUCKET CYLINDER ROD (REPLACEMENT) (SERIA L NO. -XXXXXX)	3165 - 2
3F13	BUCKET CYLINDER ROD (REPLACEMENT) (SERIA L NO. XXXXXX-)	3165 - 3A
3B19	BUCKET CYLINDER SEAL	3141 - 2
3B15	BUCKET EDGE (JAGZ)	3102 - 8
3B17	BUCKET PINS	3102 - 10
3C14	BUCKET SECTION VALVE	3160 - 14
3B13	BUCKET TEETH, LOADER	3102 - 6
3B11	BUCKETS, LOADER (BOLT-ON SPILLGUARD)	3102 - 4
3B9	BUCKETS, LOADER (WELD-ON SPILLGUARD)	3102 - 2
2D21	BUMPER STOP, RUBBER	1740 - 1
1E24	BUSHING, CAMSHAFT	0402 - 1
1E15	BYPASS VALVE LINES, TRANSMISSION	0360 - 10
1G10	BYPASS VALVE, ENGINE	0419 - 2

C

2E11	CAB	1810 - 4
2E23	CAB BACK PLATE	1810 - 16
2E17	CAB DOOR	1810 - 10
2E11	CAB DOOR HOLD OPEN LATCH	1810 - 4
2F22	CAB FLOOR MAT	1812 - 1
2E11	CAB FRAME	1810 - 4

ALPHABETICAL INDEX - CONTINUED

GRID		PAGE
2E19	CAB GLASS	1810 - 12
2E9	CAB ISOLATOR	1810 - 2
1J20	CAB LABELS AND DECALS (S.N. 590068-)	1320 - 3A
2H13	CAB MONITOR HOUSING (SER. NO. 590068-)	1830 - 15A
2E9	CAB MOUNTS (FRONT AND REAR)	1810 - 2
2E21	CAB PEDESTAL	1810 - 14
2F15	CAB REAR COVER	1810 - 30
2F21	CAB ROOF, PLASTIC	1810 - 36
2F23	CAB SHIELDS	1813 - 2
2F11	CAB SWITCH, WIPER	1810 - 24
2C5	CAB WIRING HARNESS (S.N. -590067)	1674 - 8
2C7	CAB WIRING HARNESS (S.N. 590068-)	1674 - 9A
2B5	CABLE, BATTERY (1000 CCA) (1400 CCA)	1671 - 2
2B6	CABLE, BATTERY (950 CCA)	1671 - 3
2H1	CABLE, HEATER CONTROL	1830 - 2
1F1	CAM COVER PLATE (HDW)	0402 - 2
1F1	CAM COVER PLATE GASKET (HDW)	0402 - 2
1E24	CAMSHAFT	0402 - 1
1E24	CAMSHAFT BUSHING	0402 - 1
1E24	CAMSHAFT GASKET	0402 - 1
1E24	CAMSHAFT GEAR	0402 - 1
1F6	CAMSHAFT OIL LINE	0402 - 8
1E24	CAMSHAFT PIN	0402 - 1
1E24	CAMSHAFT RING 0-RING	0402 - 1
2E21	CANOPY PEDESTAL	1810 - 14
2F21	CANOPY ROOF, PLASTIC	1810 - 36
1I5	CAP, FUEL TANK	0560 - 2
3F9	CAP, HYDRAULIC RESERVOIR	3164 - 2
2E13	CAP, WINDOW WASHER TANK	1810 - 6
1F12	CAPS, MAIN BEARING	0404 - 2
3F23	CARRY, RETURN TO	3166 - 4
1B14	CASE, DIFFERENTIAL	0210 - 10
1B15	CASE, DIFFERENTIAL	0210 - 11
1C24	CASE, TRANSMISSION	0350 - 10
2I16	CASSETTE PLAYER (SER. NO. -590067)	2001 - 2
2I18	CASSETTE PLAYER (SER.NO. 590068-)	2001 - 3A
2I16	CD PLAYER (SER. NO. -590067)	2001 - 2
2I18	CD PLAYER (SER.NO. 590068-)	2001 - 3A
2C16	CHASSIS COMPUTER UNIT (SER. NO. -590067)	1674 - 16
2C17	CIRCUIT BREAKERS (S.N. -590067)	1674 - 17
2B5	CLAMP, BATTERY (1000 CCA) (1400 CCA)	1671 - 2
2B6	CLAMP, BATTERY (950 CCA)	1671 - 3
1H23	CLEANER,AIR	0520 - 2
1D23	CLUTCH ASSEMBLY HIGH RANGE FORWARD	0350 - 40
1D15	CLUTCH ASSEMBLY (LOW RANGE FORWARD)	0350 - 32
1D17	CLUTCH ASSEMBLY (LOW RANGE FORWARD)	0350 - 34
1D19	CLUTCH ASSEMBLY (REVERSE AND K2)	0350 - 36
1D21	CLUTCH ASSEMBLY (REVERSE AND K2) (CONTINUED)	0350 - 38
1G16	CLUTCH, STARTER (3008)	0422 - 2
2E8	COAT HOOK	1810 - 1
3D3	COIL,PRESSURE REGULATOR VALVE (SER. NO. -590067)	3160 - 58
1I22	COLUMN, LOWER STEERING	0962 - 6
1I18	COLUMN, STEERING (SER. NO. -590067)	0962 - 2
1I20	COLUMN, STEERING (SER. NO. 590068-)	0962 - 4
2C7	COMPARTMENT, LOAD CENTER (S.N. 590068-)	1674 - 9A
2C12	COMPARTMENT, LOAD CENTER (SER. NO. -590067)	1674 - 12
2H3	COMPONENTS, HVAC MODULE	1830 - 3A
3D24	COMPONENTS, SINGLE LEVER CONTROLLER	3162 - 10
3D18	COMPONENTS, SINGLE LEVER PILOT CONTROLLER (SER. NO. -590067)	3162 - 4
3D20	COMPONENTS, SINGLE LEVER PILOT (CTD.) CONTROLLER (SER. NO. -590067)	3162 - 6
3C5	COMPONENTS, VALVE, PIN DISCONNECT	3160 - 4
3D5	COMPONENTS,HYDRAULIC OIL PRESSURE REGULATOR VALVE (SERIAL NO. 590068-)	3160 - 60
1F4	COMPRESSOR AIR CONDITIONER MOUNTING (DENSO)	0402 - 5
2H5	COMPRESSOR BELT, A/C (ADW)	1830 - 4
2H9	COMPRESSOR, A/C	1830 - 10
2H5	COMPRESSOR, BRACKETS AND HOSES (ADW)	1830 - 4
2H8	COMPRESSOR, MANIFOLD AND DUST COVER (R134A REFRIGERANT)	1830 - 9
2C16	COMPUTER UNIT, CHASSIS (SER. NO. -590067)	1674 - 16
2H10	CONDENSER,A/C	1830 - 11
1K14	CONDITIONER,COOLANT	1369 - 8
1F10	CONNECTING RODS	0403 - 2
2B23	CONNECTOR GROUND (SER. NO. -590067)	1674 - 2
2D9	CONNECTOR, HARSH ENVIRONMENT	1674 - 44
2H13	CONSOLE, CAB MONITOR (SER. NO. 590068-)	1830 - 15A
2H11	CONSOLE, CAB MONITOR (SER. NO. -590067)	1830 - 14
2F13	CONSOLE, LEFT HAND	1810 - 26
2F9	CONSOLE, RIGHT SIDE (SER. NO. 590068-)	1810 - 23C
2F7	CONSOLE, RIGHT SIDE (SINGLE LEVER CONTROLLERS)(SERIAL NO. -590067)	1810 - 23A
2F5	CONSOLE, RIGHT SIDE (TWO-LEVER) (SER. NO. -590067)	1810 - 22
3E21	CONTOLLER, AUXILIARY SINGLE LEVER	3162 - 34
2G8	CONTROL KNOB, SEAT	1821 - 3A
1G2	CONTROL UNIT, ELECTRONIC (ECU)	0413 - 2
2C7	CONTROL UNIT, TRANSMISSION (S.N. 590068-)	1674 - 9A
2C15	CONTROL UNIT, TRANSMISSION (SER. NO. -590067)	1674 - 15
3C6	CONTROL VALVE, LOADER (2 OR 3-SPOOL)	3160 - 6
1D11	CONTROL VALVE, TRANSMISSION	0350 - 26
2H1	CONTROL, TEMPERATURE	1830 - 2
2I16	CONTROL,RADIO REMOTE (SER. NO. -590067)	2001 - 2
2I18	CONTROL,RADIO REMOTE (SER.NO. 590068-)	2001 - 3A
3E7	CONTROLLER COMPONENTS, AUXILIARY JOY STICK PILOT	3162 - 20
3D24	CONTROLLER COMPONENTS, SINGLE LEVER	3162 - 10
3F1	CONTROLLER, AUX. (FOR USE WITH SINGLE LEVER CONTROLLER (SER. NO. -590067)	3162 - 36
3E17	CONTROLLER, PILOT, TWO LEVER WITH DUAL AUXILIARY CONTROLLERS(SER.NO. -590067)	3162 - 30
3D24	CONTROLLER, SINGLE LEVER	3162 - 10
3D18	CONTROLLER, SINGLE LEVER (SER. NO. -590067)	3162 - 4

ALPHABETICAL INDEX - CONTINUED

GRID		PAGE
3D20	CONTROLLER, SINGLE LEVER (CONTINUED) (SER. NO. -590067)	3162 - 6
3E19	CONTROLLER, TWO LEVER PILOT	3162 - 32
3E15	CONTROLLER, TWO LEVER PILOT WITH AUX. (SERIAL NO. 590068-)	3162 - 28
3E5	CONTROLLER,AUXILIARY SINGLE LEVER (SER. NO. -590067)	3162 - 16
3E3	CONVERSION KIT, ADD AUX. TO JOYSTICK (SER. NO. 590068-)	3162 - 14
3E15	CONVERSION KIT, ADD AUX. TO TWO LEVER (SER. NO. 590068-)	3162 - 28
3E23	CONVERSION KIT, JOYSTICK FNR	3162 - 35A
2C10	CONVERTER (10 AMP) (24 TO 12 VOLT)(SER. NO. 590068-)	1674 - 10A
2C11	CONVERTER (5 AMP)(24 VOLT TO 12 VOLT) (SER. NO. 590068-)	1674 - 10B
2C10	CONVERTER AND POWER PLUG (10 AMP) (24 TO 12 VOLT)(SER. NO. 590068-)	1674 - 10A
2C9	CONVERTER AND POWER PLUG (24 TO 12 VOLT) (SER. NO. -590067)	1674 - 10
2C11	CONVERTER AND POWER PLUG (5 AMP)(24 VOLT TO 12 VOLT)(SER. NO. 590068-)	1674 - 10B
2C9	CONVERTER HARNESS (24 TO 12 VOLT) (SER. NO. -590067)	1674 - 10
1C22	CONVERTER HOUSING	0350 - 8
1C20	CONVERTER HOUSING DRIVE PLATES	0350 - 4
1K14	COOLANT CONDITIONER	1369 - 8
1H17	COOLER, AXLE RECIRCULATION OIL	0511 - 6
1G10	COOLER, ENGINE OIL	0419 - 2
1H17	COOLER, OIL (AXLE COOLER)	0511 - 6
1K15	COOLING FLUID, ENGINE	1369 - 11
1K12	COOLSCAN PLUS TEST KIT, FLUID ANALYSIS PRODUCTS	1369 - 6
2E3	COUNTERWEIGHT	1749 - 2
2E4	COUNTERWEIGHT, INTERNAL	1749 - 3
2F15	COVER, CAB REAR	1810 - 30
1B16	COVER, DIFFERENTIAL CORE	0210 - 12
2H18	COVER, ENGINE SIDE	1911 - 4
2F15	COVER, FRESH AIR HOUSING	1810 - 30
1B9	COVER, FRONT DIFFERENTIAL CASE (AXLE)	0210 - 4
2H23	COVER, GRILLE HOUSING	1921 - 4
2F13	COVER, HVAC, LEFT HAND CAB	1810 - 26
1F5	COVER, ROCKER ARM	0402 - 6
1G15	COVER, SOLENOID STARTING MOTOR (12V-3008)	0422 - 1
1I24	COVER, STEERING COLUMN	0962 - 8
1F1	COVER, TIMING GEAR (HDW)	0402 - 2
1G8	COVER, WATER MANIFOLD	0418 - 2
1B11	COVER,REAR DIFFERENTIAL CASE (AXLE)	0210 - 6
1C20	COVERS. CONVERTER HOUSING	0350 - 4
2H21	COVERS, BATTERY	1913 - 4
2B9	CRANHSHAFT PULLEY	1672 - 2
1F5	CRANKCASE VENT	0402 - 6
1F5	CRANKCASE VENT HOSE	0402 - 6
1E21	CRANKSHAFT	0401 - 1
1G18	CRANKSHAFT DAMPER/PULLEY	0429 - 1
1E21	CRANKSHAFT GEAR	0401 - 1
2B9	CRANKSHAFT PULLEY (HIGH AMBIENT)	1672 - 2
1H15	CRANKSHAFT PULLEY, HIGH AMBIENT DRIVE	0511 - 4
1G21	CRANKSHAFT ROTATING TOOL PLUG	0433 - 2
1E21	CRANKSHAFT WHEEL	0401 - 1
1F10	CROWN, PISTON	0403 - 2
2F7	CUPHOLDER (SINGLE LEVER CONTROLLERS) (SERIAL NO. -590067)	1810 - 23A
2F5	CUPHOLDER (TWO-LEVER) (SER. NO. -590067)	1810 - 22
2F9	CUPHOLDER, RIGHT SIDE CONSOLE (SER. NO. 590068-)	1810 - 23C
2G6	CUSHION, BACKREST	1821 - 2
2G6	CUSHION, SEAT	1821 - 2
2D21	CUSHION, STEERING	1740 - 1
3B15	CUTTING EDGE (JAGZ)	3102 - 8
3B11	CUTTING EDGE,BUCKET (BOLT-ON SPILLGUARD)	3102 - 4
3B9	CUTTING EDGE,BUCKET (WELD-ON SPILLGUARD)	3102 - 2
3B11	CUTTING EDGE,LOADER EDGE (BOLT-ON SPILLGUARD)	3102 - 4
3B9	CUTTING EDGE,LOADER EDGE (WELD-ON SPILLGUARD)	3102 - 2
1F12	CYLINDER BLOCK FITTINGS	0404 - 2
1F24	CYLINDER HEAD	0409 - 2
1F24	CYLINDER HEAD GASKET	0409 - 2
1G23	CYLINDER HEAD REMOVAL GASKET SET	0452 - 2
3B18	CYLINDER LOCK, BOOM	3140 - 1
3F15	CYLINDER, BOOM (REPLACEMENT) (SERIAL NO. -XXXXXX)	3165 - 4
3F17	CYLINDER, BOOM (REPLACEMENT) (SERIAL NO. XXXXXX-)	3165 - 5A
1I14	CYLINDER, STEERING	0960 - 16
3F11	CYLINDER,BUCKET (REPLACEMENT) (SERIAL NO . -XXXXXX)	3165 - 2
3F13	CYLINDER,BUCKET (REPLACEMENT) (SERIAL NO . XXXXXX-)	3165 - 3A

D

1G18	DAMPER, CRANKSHAFT	0429 - 1
1J18	DECALS AND LABELS (S.N. -590067)	1320 - 2
1J22	DECALS AND LABELS (S.N. 590068-)	1320 - 3C
1K3	DECALS AND LABELS (FRENCH) (S.N. -590067)	1320 - 6
1K5	DECALS AND LABELS (FRENCH) (S.N. 590068-)	1320 - 7A
1J24	DECALS AND LABELS (SPANISH) (S.N. -590067)	1320 - 4
1K1	DECALS AND LABELS (SPANISH) (S.N. 590068-)	1320 - 5A
1J20	DECALS AND LABELS, CAB (S.N. 590068-)	1320 - 3A
2C3	DEFROST SWITCH, FRONT WINDOW (SER. NO. -590067)	1674 - 6
2C3	DEFROST SWITCH, REAR WINDOW (SER. NO. -590067)	1674 - 6
3E21	DETENT KIT, AUXILIARY CONTROLLER	3162 - 34
2D15	DEUTSCH TERMINALS	1674 - 53
1K13	DIESELSCAN TEST KIT, FLUID ANALYSIS PRODUCTS	1369 - 7
1B14	DIFFERENTIAL CASE	0210 - 10
1B15	DIFFERENTIAL CASE	0210 - 11
1B16	DIFFERENTIAL CORE COVER	0210 - 12
1B19	DIFFERENTIAL HOUSING	0210 - 16
1C5	DIFFERENTIAL LOCK LINES, FRONT	0260 - 2
1C7	DIFFERENTIAL LOCK LINES, FRONT AND REAR	0260 - 4
1C10	DIFFERENTIAL LOCK SWITCH	0263 - 2
1B22	DIFFERENTIAL SUPPORTS AND LUBE LINES	0210 - 20
1B17	DIFFERENTIAL, STANDARD	0210 - 14

ALPHABETICAL INDEX - CONTINUED

GRID		PAGE
2C18	DIODES, VEC (S.N. 590068-)	1674 - 18
1F21	DIPSTICK	0407 - 8
1F21	DIPSTICK TUBE	0407 - 8
1F21	DIPSTICK TUBE BRACKET	0407 - 8
1F21	DIPSTICK, OIL	0407 - 8
1G8	DIRECT COOLING RETURN LINE	0418 - 2
3C5	DISCONNECT VALVE, PIN	3160 - 4
2B7	DISCONNECT, BATTERY	1671 - 4
1J4	DISK, BRAKE	1011 - 2
2D19	DISPLAY UNIT, MONITOR	1676 - 2
2B21	DOME LIGHT	1673 - 9
2E15	DOMELIGHT HOUSING	1810 - 8
2D14	DOMELIGHT SWITCH, DOOR ACTIVATED	1674 - 52
2D18	DOMELIGHT SWITCH, DOOR ACTIVATED	1674 - 62
2E17	DOOR	1810 - 10
2D14	DOOR ACTIVATED DOMELIGHT SWITCH	1674 - 52
2D18	DOOR ACTIVATED DOMELIGHT SWITCH	1674 - 62
2E17	DOOR GLASS	1810 - 10
2B21	DOOR LIGHT SWITCH	1673 - 9
2E11	DOOR, ACCESS	1810 - 4
2H23	DOOR, FUEL FILL	1921 - 4
2H23	DOOR, RADIATOR FILL	1921 - 4
1K16	DRAIN KIT, ENVIRONMENTAL	1369 - 12A
2B15	DRIVE HI-BEAM LAMP (S.N. -587709)	1673 - 2
2B16	DRIVE HI-BEAM LAMP (S.N. 587710-)	1673 - 4
1C20	DRIVE PLATES, CONVERTER HOUSING	0350 - 4
1D7	DRIVE SHAFT, TRANSMISSION AND HYDRAULIC PUMP	0350 - 22
1C14	DRIVE SHAFTS, FRONT DIFFERENTIAL, TO TRANSMISSION	0325 - 2
1G19	DRIVE, FAN	0429 - 2
1F3	DRIVE, NO AUXILIARY	0402 - 4
1J12	DRIVELINE BEARING/PARKING BRAKE	1115 - 2
2I25	DUAL HORN	2004 - 2
3E5	DUAL SINGLE LEVER CONTROLLER (SERIAL NO. -590067)	3162 - 16
3E5	DUAL SINGLE LEVER CONTROLLER FITTINGS (SER. NO. -590067)	3162 - 16
3E5	DUAL SINGLE LEVER CONTROLLER MOUNTING PLATE AND HOSES (SER. NO. -590067)	3162 - 16
2H1	DUCT, FRESH AIR	1830 - 2

E

1G2	ECU	0413 - 2
3B15	EDGE, BUCKET (JAGZ)	3102 - 8
3B15	EDGE, CUTTING (JAGZ)	3102 - 8
2C18	ELECTRICAL CENTER, VEHICLE (S.N. 590068-)	1674 - 18
1G2	ELECTRONIC CONTROL UNIT (ECU)	0413 - 2
1G2	ELECTRONIC UNIT INJECTOR (EUI)	0413 - 2
2H1	ELEMENT, A/C FILTER	1830 - 2
1E11	ELEMENT,TRANSMISSION OIL FILTER (SER. NO. -590067)	0360 - 8
1E13	ELEMENT,TRANSMISSION OIL FILTER (SER. NO. 590068-)	0360 - 9A
2J5	EMBLEM, SLOW MOVING VEHICLE	2008 - 2
2J5	EMBLEM, SMV	2008 - 2
1E3	EMERGENCY STEERING PUMP	0350 - 46
1H8	ENGINE AIR HEATER	0505 - 4
2G20	ENGINE COMPARTMENT STEP	1822 - 2
1H5	ENGINE COOLANT HEATER	0505 - 1
1K15	ENGINE COOLING FLUID	1369 - 11
2D22	ENGINE FRAME	1741 - 2
2D22	ENGINE FRAME LOCK BAR	1741 - 2
2D22	ENGINE FRAME PIN	1741 - 2
2D1	ENGINE FRAME WIRING HARNESS (SERIAL NO. -590067)	1674 - 26
2D3	ENGINE FRAME WIRING HARNESS (SERIAL NO. 590068-)	1674 - 27A
1G23	ENGINE GASKET SET	0452 - 2
1F23	ENGINE LIFT	0409 - 1
1I3	ENGINE MOUNTING BRACKETS	0540 - 2
1G10	ENGINE OIL COOLER	0419 - 2
2D24	ENGINE OIL DRAIN HOSE	1746 - 2
2D24	ENGINE OIL DRAIN VALVE	1746 - 2
1F1	ENGINE OIL FILL (HDW)	0402 - 2
1F16	ENGINE OIL PUMP	0407 - 2
1F17	ENGINE OIL PUMP INTAKE	0407 - 4
1K7	ENGINE OIL,TORQ GARD	1369 - 1
1H1	ENGINE OVERHAUL KIT	0452 - 4
1F14	ENGINE SHORT BLOCK (W/HEADBOLTS)	0404 - 4
2H18	ENGINE SIDE COVER	1911 - 4
2H18	ENGINE SIDE SHIELD LATCH	1911 - 4
2H18	ENGINE SIDE SHIELD PLATE	1911 - 4
2H18	ENGINE SIDE SHIELDS	1911 - 4
1H21	ENGINE SPEED CONTROL PEDAL (SER. NO. 590068-)	0515 - 4
1H19	ENGINE SPEED CONTROL PEDAL (SERIAL NO. -590067)	0515 - 2
1H21	ENGINE SPEED CONTROL SENSOR (SER. NO. 590068-)	0515 - 4
1H19	ENGINE SPEED CONTROL SENSOR (SERIAL NO. -590067)	0515 - 2
2D1	ENGINE WIRING HARNESS (SERIAL NO. -590067)	1674 - 26
2D3	ENGINE WIRING HARNESS (SERIAL NO. 590068-)	1674 - 27A
1K16	ENVIRONMENTAL DRAIN KIT	1369 - 12A
1G2	EUI	0413 - 2
1G2	EUI WIRING HARNESS (ENGINE)	0413 - 2
1G1	EXHAUST MANIFOLD	0410 - 1
1G1	EXHAUST MANIFOLD GASKETS	0410 - 1
1I1	EXHAUST PIPE, BLACK	0530 - 4
1I1	EXHAUST PIPE, CHROME	0530 - 4
1F24	EXHAUST VALVES	0409 - 2
1E15	EXTERNAL OIL LINES, TRANSMISSION	0360 - 10
2I24	EXTINGUISHER, FIRE	2003 - 2

F

2B9	FAN BELT	1672 - 2
2B9	FAN BELT (HIGH AMBIENT)	1672 - 2
1H10	FAN BLADE	0510 - 1
1H11	FAN COVER	0510 - 4
1G19	FAN DRIVE	0429 - 2
1G19	FAN PULLEY	0429 - 2
1H11	FAN SHROUD	0510 - 4
1H10	FAN SPACER	0510 - 1
1H10	FAN, BLOWER	0510 - 1
1I9	FAST FILL FUEL INLET VALVE	0560 - 6
1I9	FAST FILL FUEL RECEIVER CAP	0560 - 6
1I9	FAST FILL FUEL SHUTOFF FLOAT	0560 - 6
1I9	FAST FILL FUEL TANK AND COMPONENTS	0560 - 6
2I1	FENDERS, FRONT (SERIAL NO. -588886)	1927 - 2
2I3	FENDERS, FRONT (SERIAL NO. 588887-)	1927 - 3A

ALPHABETICAL INDEX - CONTINUED

GRID		PAGE
2I5	FENDERS, FRONT (FULL COVERAGE)(GRAY) (SERIAL NO. 588887-)	1927 - 3C
2I9	FENDERS, MUD	1927 - 6
2I11	FENDERS, MUD (HARDWEAR)	1927 - 8
2I7	FENDERS, REAR	1927 - 4
2I13	FENDERS, REAR FULL COVERAGE (SERIAL NO. XXXXXX-)	1927 - 10
1E9	FILL TUBE, TRANSMISSION	0360 - 2
1F1	FILL, ENGINE OIL (HDW)	0402 - 2
1E11	FILTER RESTRICTION SWITCH, TRANSMISSION OIL (SER. NO. -590067)	0360 - 8
1E13	FILTER RESTRICTION SWITCH, TRANSMISSION OIL (SER. NO. 590068-)	0360 - 9A
1G10	FILTER, ENGINE OIL	0419 - 2
2H1	FILTER, FRESH AIR	1830 - 2
1G13	FILTER, FUEL	0421 - 2
2H3	FILTER, HVAC RECIRCULATION	1830 - 3A
1E5	FILTER, TRANSMISSION	0350 - 48
1E11	FILTER, TRANSMISSION OIL (SER. NO. -590067)	0360 - 8
1E13	FILTER, TRANSMISSION OIL (SER. NO. 590068-)	0360 - 9A
1G6	FILTER, WATER PUMP	0417 - 2
1H23	FILTER,AIR CLEANER	0520 - 2
3F9	FILTERS, HYDRAULIC RESERVOIR	3164 - 2
1C1	FINAL DRIVE RING GEAR	0210 - 24
2I24	FIRE EXTINGUISHER	2003 - 2
2I24	FIRE EXTINGUISHER BRACKET	2003 - 2
3E5	FITTINGS, AUXILIARY SINGLE LEVER CONTROLLER (SER. NO. -590067)	3162 - 16
1F12	FITTINGS, CYLINDER BLOCK	0404 - 2
1G12	FITTINGS, FUEL TRANSFER PUMP	0421 - 1
3F9	FITTINGS, HYDRAULIC RESERVOIR	3164 - 2
3D7	FITTINGS, PRESSURE REGULATOR VALVE (SER. NO. -590067)	3160 - 62
3D10	FITTINGS, PRESSURE REGULATOR VALVE (SER. NO. 590068-)	3160 - 64
2J10	FITTINGS, PRIORITY VALVE	2162 - 4
3D16	FITTINGS, SINGLE LEVER CONTROLLER (SER. NO. -590067)	3162 - 2
3E9	FITTINGS, SINGLE LEVER CONTROLLER (SER. NO. -590067)	3162 - 22
3D22	FITTINGS, SINGLE LEVER CONTROLLER (SER. NO. 590068-)	3162 - 8
3E1	FITTINGS, SINGLE LEVER CONTROLLER W/AUX (SER. NO. -590067)	3162 - 12
3E3	FITTINGS, SINGLE LEVER CONTROLLER W/AUX (SER. NO. 590068-)	3162 - 14
1C18	FITTINGS, TRANSMISSION	0350 - 2
3E11	FITTINGS, TWO LEVER CONTROLLER (SER. NO. 590068-)	3162 - 24
3E13	FITTINGS, TWO LEVER CONTROLLER W/AUX. (SER. NO. -590067)	3162 - 26
3E15	FITTINGS, TWO LEVER PILOT CONTROLLER WITH AUX.(SERIAL NO. 590068-)	3162 - 28
2I9	FLAPS, MUD	1927 - 6
2I11	FLAPS, MUD (HARDWEAR)	1927 - 8
2F22	FLOOR MAT,CAB	1812 - 1
1K12	FLUID ANALYSIS PRODUCTS (COOLSCAN PLUS TEST KIT)	1369 - 6
1K13	FLUID ANALYSIS PRODUCTS (DIESELSCAN TEST KIT)	1369 - 7
1K10	FLUID ANALYSIS PRODUCTS (OILSCAN PLUS TEST KIT)	1369 - 4
1K15	FLUID, ENGINE COOLING	1369 - 11
1H6	FLUID,STARTING AID	0505 - 2
1G21	FLYWHEEL	0433 - 2
1G21	FLYWHEEL HOUSING	0433 - 2
3E23	FNR CONVERSION KIT	3162 - 35A
2B23	FNR SELECTOR LEVER (SER. NO. -590067)	1674 - 2
2B25	FNR SELECTOR LEVER (SER. NO. 590068-)	1674 - 3A
1D15	FORWARD-LOW RANGE CLUTCH ASSEMBLY	0350 - 32
1D17	FORWARD-LOW RANGE CLUTCH ASSEMBLY	0350 - 34
2E11	FRAME, CAB	1810 - 4
2D22	FRAME, ENGINE	1741 - 2
3B19	FRAME, LOADER	3141 - 2
2H1	FRESH AIR DUCT	1830 - 2
2H1	FRESH AIR FILTER	1830 - 2
2H1	FRESH AIR FILTER ELEMENT	1830 - 2
2F15	FRESH AIR HOUSING COVER	1810 - 30
1C7	FRONT AND REAR DIFFERENTIAL LOCK LINES	0260 - 4
2E13	FRONT AND REAR WINDOW WASHER	1810 - 6
2B20	FRONT AND REAR WORK LAMP	1673 - 8
1B5	FRONT AXLE	0201 - 2
3B19	FRONT AXLE CAPSCREWS	3141 - 2
2B23	FRONT CONSOLE HARNESS (SER. NO. -590067)	1674 - 2
2B25	FRONT CONSOLE WIRING HARNESS (SER. NO. 590068-)	1674 - 3A
2B25	FRONT DASH MODULE WIRING (SER. NO. 590068-)	1674 - 3A
2B23	FRONT DASH MODULE WIRING HARNESS (SER. NO. -590067)	1674 - 2
1B9	FRONT DIFFERENTIAL CASE COVER (AXLE)	0210 - 4
1C5	FRONT DIFFERENTIAL LOCK LINES	0260 - 2
2I1	FRONT FENDER SUPPORT (SERIAL NO. -588886)	1927 - 2
2I3	FRONT FENDER SUPPORT (SERIAL NO. 588887-)	1927 - 3A
2I5	FRONT FENDER SUPPORT (FULL COVERAGE) (GRAY)(SERIAL NO. 588887-)	1927 - 3C
2I1	FRONT FENDERS (SERIAL NO. -588886)	1927 - 2
2I3	FRONT FENDERS (SERIAL NO. 588887-)	1927 - 3A
2I5	FRONT FENDERS (FULL COVERAGE) (SERIAL NO. 588887-)	1927 - 3C
2B16	FRONT LIGHT (S.N. 587710-)	1673 - 4
1F1	FRONT PLATE (HDW)	0402 - 2
1G18	FRONT SEAL	0429 - 1
2B16	FRONT TURN AND MARKER LIGHT	1673 - 4
2C3	FRONT WINDOW DEFROST SWITCH (SER. NO. -590067)	1674 - 6
2F3	FRONT WINDSHIELD WIPER	1810 - 20
2H23	FUEL FILL DOOR	1921 - 4
1I7	FUEL FILL STRAINER	0560 - 4
1G13	FUEL FILTER	0421 - 2
1G13	FUEL FILTER BASE	0421 - 2
1G13	FUEL FILTER BRACKETS	0421 - 2
1G13	FUEL HOSES	0421 - 2
1I5	FUEL HOSES FROM TANK	0560 - 2
1I5	FUEL TANK	0560 - 2
1I9	FUEL TANK AND COMPONENTS, FAST FILL	0560 - 6
2D24	FUEL TANK BOTTOM GUARD	1746 - 2
1I5	FUEL TANK CAP	0560 - 2
1I5	FUEL TANK FILLER HOSE	0560 - 2
1I5	FUEL TANK SENDER	0560 - 2
1G12	FUEL TRANSFER HOSE	0421 - 1
1G12	FUEL TRANSFER PUMP	0421 - 1

ALPHABETICAL INDEX - CONTINUED

GRID		PAGE
2I5	FULL COVERAGE FENDERS (GRAY) (SERIAL NO. 588887-)	1927 - 3C
2I13	FULL COVERAGE REAR FENDERS (SERIAL NO. XXXXXX-)	1927 - 10
2C17	FUSES (S.N. -590067)	1674 - 17
2C18	FUSES, VEC (S.N. 590068-)	1674 - 18

G

1G23	GASKET SET, ENGINE	0452 - 2
1G23	GASKET SET,CYLINDER HEAD REMOVAL	0452 - 2
1F1	GASKET, CAM COVER PLATE (HDW)	0402 - 2
1E24	GASKET, CAMSHAFT	0402 - 1
1F24	GASKET, CYLINDER HEAD	0409 - 2
1G4	GASKET, INTAKE MANIFOLD	0414 - 1
1G10	GASKET, OIL COOLER, ENGINE	0419 - 2
1G10	GASKET, OIL FILTER, ENGINE	0419 - 2
1E22	GASKET, REAR OIL SEAL	0401 - 2
1F5	GASKET, ROCKER ARM COVER	0402 - 6
1F1	GASKET, TIMING GEAR COVER (HDW)	0402 - 2
1G8	GASKET, WATER MANIFOLD	0418 - 2
1G6	GASKET, WATER PUMP	0417 - 2
1F19	GASKET,OIL PAN	0407 - 6
1G1	GASKETS, EXHAUST MANIFOLD	0410 - 1
1E24	GEAR, CAMSHAFT	0402 - 1
1E21	GEAR, CRANKSHAFT	0401 - 1
1F16	GEAR, ENGINE OIL PUMP	0407 - 2
1F1	GEAR, IDLER (HDW)	0402 - 2
1E1	GEAR, OUTPUT SHAFT	0350 - 44
1G21	GEAR, STARTER	0433 - 2
2E19	GLASS	1810 - 12
2H23	GRILLE	1921 - 4
2H23	GRILLE HOUSING	1921 - 4
2B5	GROUND STRAP (1000 CCA) (1400 CCA)	1671 - 2
2B6	GROUND STRAP (950 CCA)	1671 - 3
2B23	GROUND, CONNECTOR (SER. NO. -590067)	1674 - 2
2E1	GUARD, BOTTOM	1746 - 4
2D24	GUARD, BOTTOM, FUEL TANK	1746 - 2
3B11	GUARD,LOADER BUCKET (BOLT-ON SPILLGUARD)	3102 - 4
3B9	GUARD,LOADER BUCKET (WELD-ON SPILLGUARD)	3102 - 2
1F24	GUIDE, VALVE	0409 - 2

H

3D24	HANDLE, SINGLE LEVER CONTROLLER	3162 - 10
3E19	HANDLE, TWO LEVER PILOT CONTROLLER	3162 - 32
2G22	HANDRAILS	1822 - 4
2C9	HARNESS, CONVERTER (24 TO 12 VOLT) (SER. NO. -590067)	1674 - 10
2B23	HARNESS, FRONT CONSOLE (SER. NO. -590067)	1674 - 2
2C20	HARNESS, LICENSE PLATE LIGHT	1674 - 20
2C20	HARNESS, LICENSE PLATE LIGHT, HARSH ENVIORNMENT	1674 - 20
3B24	HARNESS, PIN DISCONNECT WIRING (SER. NO. -590067)	3160 - 2
3C1	HARNESS, PIN DISCONNECT WIRING (SER. NO. 590068-)	3160 - 3A
2C21	HARNESS, PIN DISCONNET	1674 - 21
2C14	HARNESS, RETURN TO DIG	1674 - 14
3D14	HARNESS, RIDE CONTROL WIRING	3160 - 68
1I12	HARNESS, SECONDARY STEERING	0930 - 2
2D17	HARNESS, SPIN CONTROL	1674 - 59
2C22	HARNESS, TRANSMISSION WIRING (HARSH ENVIRONMENT) (SER. NO.-590067)	1674 - 24
2C22	HARNESS, TRANSMISSION WIRING (SER. NO. -590067)	1674 - 24
2C24	HARNESS, TRANSMISSION WIRING (SERIAL NO. 590068-)	1674 - 25A
2C1	HARNESS, WIRING, BLOWER AND A/C	1674 - 4
2D1	HARNESS, WIRING, ENGINE (SERIAL NO. -590067)	1674 - 26
2D3	HARNESS, WIRING, ENGINE (SERIAL NO. 590068-)	1674 - 27A
2D1	HARNESS, WIRING, ENGINE FRAME (SERIAL NO. -590067)	1674 - 26
2D3	HARNESS, WIRING, ENGINE FRAME (SERIAL NO. 590068-)	1674 - 27A
1G2	HARNESS, WIRING, EUI (ENGINE)	0413 - 2
2D5	HARNESS, WIRING, LOADER FRAME (SER. NO. -590067)	1674 - 28
2D7	HARNESS, WIRING, LOADER FRAME (SERIAL NO. 590068-)	1674 - 29A
2D1	HARNESS, WIRING, REAR FRAME (SERIAL NO. -590067)	1674 - 26
2D3	HARNESS, WIRING, REAR FRAME (SERIAL NO. 590068-)	1674 - 27A
1H23	HARSH ENVIORNMENT AIR FILTER RESTRICTION SENSOR	0520 - 2
2D9	HARSH ENVIORNMENT HARNESS KIT	1674 - 44
2C20	HARSH ENVIORNMENT LICENSE PLATE LIGHT HARNESS	1674 - 20
2D9	HARSH ENVIORNMENT POTTING KIT	1674 - 44
2D9	HARSH ENVIORNMENT POTTING-GUN	1674 - 44
1I12	HARSH ENVIORNMENT SECONDARY STEERING SWITCH	0930 - 2
2C22	HARSH ENVIORNMENT, TRANSMISSION WIRING HARNESS (SER. NO.-590067)	1674 - 24
2D9	HARSH ENVIORNMENT CONNECTOR	1674 - 44
1F24	HEAD BOLTS	0409 - 2
1F24	HEAD, CYLINDER	0409 - 2
2E15	HEADLINER AND DOMELIGHT	1810 - 8
2G6	HEADREST	1821 - 2
2H3	HEATER BLOWER MOTOR AND SWITCH	1830 - 3A
2H1	HEATER CONTROL CABLE	1830 - 2
2H7	HEATER HOSES	1830 - 6
1H8	HEATER, ENGINE AIR	0505 - 4
1H5	HEATER, ENGINE COOLANT	0505 - 1
2H13	HEATING AND A/C LOUVERS (SER. NO. 590068-)	1830 - 15A
2H11	HEATING AND A/C LOUVERS (SER. NO. -590067)	1830 - 14
1H15	HIGH AMBIENT DRIVE BELT	0511 - 4
1H15	HIGH AMBIENT DRIVE PULLEY	0511 - 4
3B21	HIGH LIFT LOADER BOOM	3143 - 1
3B22	HIGH LIFT LOADER LINK	3145 - 2
1D23	HIGH RANGE FORWARD AND K3, CLUTCH ASSEMBLY	0350 - 40
2F17	HOLD OPEN LATCH (LEFT HAND DOOR)	1810 - 32
2F19	HOLD OPEN LATCH (RIGHT HAND DOOR)	1810 - 34
2H16	HOOD	1911 - 2
2E8	HOOK, COAT	1810 - 1
1I18	HORN SWITCH (SER. NO. -590067)	0962 - 2

ALPHABETICAL INDEX - CONTINUED

GRID		PAGE
1I20	HORN SWITCH (SER. NO. 590068-)	0962 - 4
2I25	HORN, DUAL	2004 - 2
1F5	HOSE, CRANKCASE VENT	0402 - 6
2D24	HOSE, ENGINE OIL DRAIN	1746 - 2
1I5	HOSE, FUEL TANK FILLER	0560 - 2
1G12	HOSE, FUEL TRANSFER	0421 - 1
3F9	HOSE, HYDRAULIC FILTER TO RESERVOIR	3164 - 2
3F9	HOSE, HYDRAULIC RESERVOIR TO FILTER	3164 - 2
3B24	HOSE, PIN DISCONNECT (SER. NO. -590067)	3160 - 2
3C1	HOSE, PIN DISCONNECT (SER. NO. 590068-)	3160 - 3A
1F22	HOSE, VENT	0408 - 1
1G8	HOSE, WATER MANIFOLD BYPASS	0418 - 2
1H23	HOSE,AIR CLEANER	0520 - 2
1I16	HOSE,STEERING CYLINDER HYDRAULIC	0960 - 18
1H11	HOSES RADIATOR	0510 - 4
2H10	HOSES, A/C CONDENSOR	1830 - 11
3E5	HOSES, DUAL SINGLE LEVER CONTROLLER (SER. NO. -590067)	3162 - 16
1K16	HOSES, ENVIRONMENTAL DRAIN	1369 - 12A
1G13	HOSES, FUEL	0421 - 2
1I5	HOSES, FUEL	0560 - 2
2H7	HOSES, HEATER	1830 - 6
3D16	HOSES, HYDRAULIC, SINGLE LEVER CONTROLLER (SER. NO. -590067)	3162 - 2
3D22	HOSES, HYDRAULIC, SINGLE LEVER CONTROLLER (SER. NO. 590068-)	3162 - 8
3E1	HOSES, HYDRAULIC, SINGLE LEVER CONTROLLER W/AUX (SER. NO. -590067)	3162 - 12
3E3	HOSES, HYDRAULIC, SINGLE LEVER CONTROLLER W/AUX (SER. NO. 590068-)	3162 - 14
3E11	HOSES, HYDRAULIC, TWO LEVER CONTROLLER (SER. NO. 590068-)	3162 - 24
3E9	HOSES, HYDRAULIC, TWO LEVER CONTROLLER (SERIAL NO. -590067)	3162 - 22
3E13	HOSES, HYDRAULIC, TWO LEVER CONTROLLER W/AUX (SER. NO. -590067)	3162 - 26
1J16	HOSES, PARKING BRAKE HYDRAULIC	1163 - 2
3D16	HOSES, SINGLE LEVER CONTROLLER (SER. NO. -590067)	3162 - 2
3D22	HOSES, SINGLE LEVER CONTROLLER (SER. NO. 590068-)	3162 - 8
3E3	HOSES, SINGLE LEVER CONTROLLER W/AUX (SER. NO. 590068-)	3162 - 14
3E1	HOSES, SINGLE LEVER CONTROLLER WITH AUX. (SER. NO. -590067)	3162 - 12
3F7	HOSES, THREE SPOOL HYDRAULIC VALVE	3163 - 4
3E9	HOSES, TWO LEVER CONTROLLER (SERIAL NO. -590067)	3162 - 22
3E13	HOSES, TWO LEVER CONTROLLER W/AUX. (SER. NO. -590067)	3162 - 26
3E11	HOSES, TWO LEVER CONTROLLER) (SER. NO. 590068-)	3162 - 24
3E15	HOSES, TWO LEVER PILOT CONTROLLER WITH AUX. (SERIAL NO. 590068-)	3162 - 28
3F5	HOSES, TWO SPOOL HYDRAULIC VALVE	3163 - 2
2H9	HOSES,A/C COMPRESSOR	1830 - 10
1E11	HOSES,TRANSMISSION OIL FILTER (SER. NO. -590067)	0360 - 8
1E13	HOSES,TRANSMISSION OIL FILTER (SER. NO. 590068-)	0360 - 9A
2E13	HOSES,WINDOW WASHER	1810 - 6
2E13	HOSES,WINDOW WASHER TANK	1810 - 6
2H13	HOUSING, CAB MONITOR (SER. NO. 590068-)	1830 - 15A
2H11	HOUSING, CAB MONITOR (SER. NO. -590067)	1830 - 14
1C22	HOUSING, CONVERTER	0350 - 8
1B19	HOUSING, DIFFERENTIAL	0210 - 16
1G21	HOUSING, FLYWHEEL	0433 - 2
2H23	HOUSING, GRILLE	1921 - 4
2H3	HOUSING, HVAC	1830 - 3A
1G10	HOUSING, OIL COOLER, ENGINE	0419 - 2
1G10	HOUSING, OIL FILTER, ENGINE	0419 - 2
1E22	HOUSING, REAR OIL SEAL	0401 - 2
1G8	HOUSING, THERMOSTAT	0418 - 2
1B9	HOUSING,FRONT INPUT (AXLE)	0210 - 4
1B11	HOUSING,REAR INPUT (AXLE)	0210 - 6
1C24	HOUSING,TRANSMISSION	0350 - 10
2H3	HVAC HOUSING	1830 - 3A
2H3	HVAC MODULE COMPONENTS	1830 - 3A
2H3	HVAC RECIRCULATION FILTER	1830 - 3A
3F9	HYDRAULIC FILTER HOSE TO RESERVOIR	3164 - 2
1J7	HYDRAULIC HOSE,BRAKE VALVE	1062 - 4
1J16	HYDRAULIC HOSES, PARKING BRAKE	1163 - 2
3D14	HYDRAULIC HOSES, RIDE CONTROL	3160 - 68
2J12	HYDRAULIC LINES	2163 - 2
3B24	HYDRAULIC LINES, PIN DISCONNECT (SER. NO. -590067)	3160 - 2
3C1	HYDRAULIC LINES, PIN DISCONNECT (SER. NO. 590068-)	3160 - 3A
1H13	HYDRAULIC OIL COOLER	0511 - 2
3D5	HYDRAULIC OIL PRESSURE REGULATOR VALVE (SERIAL NO. 590068-)	3160 - 60
3C22	HYDRAULIC OIL TEMERATURE SENSOR	3160 - 22
3D1	HYDRAULIC PUMP CONTROL VALVES, STEERING AND LOADER (130 PVG)	3160 - 26
1D9	HYDRAULIC PUMP DRIVE TRANSMISSION	0350 - 24
3C22	HYDRAULIC PUMP. STEERING	3160 - 22
3C22	HYDRAULIC PUMP, LOADER	3160 - 22
3C22	HYDRAULIC PUMP, LOADER AND STEERING	3160 - 22
3F9	HYDRAULIC RESERVOIR	3164 - 2
3F9	HYDRAULIC RESERVOIR CAP	3164 - 2
3F9	HYDRAULIC RESERVOIR FILTERS	3164 - 2
3F9	HYDRAULIC RESERVOIR FITTINGS	3164 - 2
3F9	HYDRAULIC RESERVOIR HOSE TO FILTER	3164 - 2

I

1F1	IDLER GEAR (HDW)	0402 - 2
1G19	IDLER PULLEY	0429 - 2
2C7	IGNITION SWITCH (S.N. 590068-)	1674 - 9A
2B23	IGNITION SWITCH (SER. NO. -590067)	1674 - 2
1G6	IMPELLER, WATER PUMP	0417 - 2
1G2	INJECTOR, ELECTRONIC UNIT (EUI)	0413 - 2
3C8	INLET SECTION VALVE WITH RELIEF VALVE	3160 - 8
1I9	INLET VALVE, FAST FILL FUEL	0560 - 6
1G4	INLET, AIR	0414 - 1
1B9	INPUT HOUSING,FRONT (AXLE)	0210 - 4
1B11	INPUT HOUSING,REAR (AXLE)	0210 - 6
1C22	INPUT SHAFT, HOUSING AND BEARING COVER	0350 - 8
1B6	INPUT YOKE	0210 - 1
1F24	INSERTS, VALVE SEAT	0409 - 2
2I23	INSIDE REAR VIEW MIRROR	2002 - 7

ALPHABETICAL INDEX - CONTINUED

GRID		PAGE
1G4	INTAKE MANIFOLD	0414 - 1
1G4	INTAKE MANIFOLD GASKET	0414 - 1
1F24	INTAKE VALVES	0409 - 2
1F17	INTAKE, ENGINE OIL PUMP	0407 - 4
2E4	INTERNAL COUNTERWEIGHT	1749 - 3
2E9	ISOLATOR, CAB	1810 - 2

J

3B15	JAGZ CUTTING EDGE	3102 - 8
1F12	JETS, PISTON COOLING	0404 - 2
3E23	JOYSTICK FNR CONVERSION KIT	3162 - 35A
3D24	JOYSTICK PILOT CONTROLLER	3162 - 10
3E11	JOYSTICK TO TWO LEVER CONVERSION KIT (SER. NO. 590068-)	3162 - 24
3E15	JOYSTICK WITH AUX. TO TWO LEVER WITH AUX. CONVERSION KIT (SER. NO. 590068-)	3162 - 28

K

3E19	KICKDOWN SWITCH, TWO LEVER PILOT CONTROLLER	3162 - 32
3D12	KICKOUT, BOOM	3160 - 66
3F23	KICKOUT,LOADER BOOM	3166 - 4
2B13	KIT ALTERNATOR, ALTERNATOR PULLEYS	1672 - 6
1H1	KIT ENGINE OVERHAUL	0452 - 4
3E3	KIT, ADD AUX. TO JOYSTICK (SER. NO. 590068-)	3162 - 14
3E7	KIT, AUXILIARY JOY STICK PILOT CONTROLLER SEAL	3162 - 20
1H17	KIT, AXLE OIL RECIRCULATION	0511 - 6
3F15	KIT, BOOM CYLINDER REPAIR (REPLACEMENT) (SERIAL NO. -XXXXXX)	3165 - 4
3F17	KIT, BOOM CYLINDER REPAIR (REPLACEMENT) (SERIAL NO. XXXXXX-)	3165 - 5A
1H8	KIT, ENGINE AIR HEATER	0505 - 4
1K16	KIT, ENVIRONMENTAL DRAIN	1369 - 12A
2D9	KIT, HARSH ENVIORNMENT HARNESS	1674 - 44
3E15	KIT, JOYSTICK WITH AUX. TO TWO LEVER WITH AUX. CONVERSION(SER. NO. 590068-)	3162 - 28
1K8	KIT, O-RING	1369 - 2
3B24	KIT, PIN DISCONNECT (SER. NO. -590067)	3160 - 2
3C1	KIT, PIN DISCONNECT (SER. NO. 590068-)	3160 - 3A
1F10	KIT, PISTON/LINER	0403 - 2
2C4	KIT, PROGRAMMING	1674 - 7
2G16	KIT, SEAT MOUNTING PARTS (MECHANICAL SUSPENSION)	1821 - 8
3E11	KIT, SINGLE LEVER TO TWO LEVER CONVERSION (SER. NO. 590068-)	3162 - 24
3D22	KIT, TWO LEVER TO SINGLE LEVER CONVERSION (SER. NO. 590068-)	3162 - 8
3E3	KIT, TWO LEVER WITH AUX. TO JOYSTICK WITH AUX. CONVERSION(SER. NO. 590068-)	3162 - 14
2D10	KIT, WIRE LEAD	1674 - 46
2D12	KIT, WIRE LEAD	1674 - 48
3E7	KIT,AUXILIARY JOY STICK REPAIR	3162 - 20
3E21	KIT,AUXILIARY SINGLE LEVER CONTROLLER REPAIR	3162 - 34
1C11	KIT,AXLE BREATHER (NON-DIFF LOCK)	0263 - 3
3F11	KIT,BUCKET CYLINDER REPAIR (REPLACEMENT) (SERIAL NO. -XXXXXX)	3165 - 2
3F13	KIT,BUCKET CYLINDER REPAIR (REPLACEMENT) (SERIAL NO. XXXXXX-)	3165 - 3A
1G23	KIT,COMPLETE ENGINE GASKET	0452 - 2
1G23	KIT,CYLINDER HEAD REMOVAL GASKET	0452 - 2
1C11	KIT,PARK BRAKE BREATHER (NON DIFF LOCK)	0263 - 3
3D20	KIT,SINGLE LEVER CONTROLLER REPAIR (CONTINUED)(SER. NO. -590067)	3162 - 6
3D18	KIT,SINGLE LEVER CONTROLLER REPAIR (SER. NO. -590067)	3162 - 4
1I14	KIT,STEERING CYLINDER REPAIR	0960 - 16
2G12	KITM SEAT KNOB (MECHANICAL SUSPENSION)	1821 - 4
3C24	KITS, REPAIR, LOADER AND STEERING HYDRAULIC PUMPS	3160 - 24
2G16	KITS, SEAT SPRING (MECHANICAL SUSPENSION)	1821 - 8
2G12	KITS, SEAT SUSPENSION (MECHANICAL SUSPENSION)	1821 - 4
2G16	KITS, SEAT SUSPENSION (MECHANICAL SUSPENSION)	1821 - 8
2G8	KNOB, CONTROL, SEAT	1821 - 3A
1D19	K2 AND REVERSE GEAR CLUTCHES	0350 - 36
1D21	K2 AND REVERSE GEAR CLUTCHES (CONTINUED)	0350 - 38

L

1J18	LABELS AND DECALS (S.N. -590067)	1320 - 2
1J22	LABELS AND DECALS (S.N. 590068-)	1320 - 3C
1K3	LABELS AND DECALS (FRENCH) (S.N. -590067)	1320 - 6
1K5	LABELS AND DECALS (FRENCH) (S.N. 590068-)	1320 - 7A
1J24	LABELS AND DECALS (SPANISH) (S.N. -590067)	1320 - 4
1K1	LABELS AND DECALS (SPANISH) (S.N. 590068-)	1320 - 5A
1J20	LABELS AND DECALS, CAB (S.N. 590068-)	1320 - 3A
2B15	LAMP, DRIVE, HI-BEAM (S.N. -587709)	1673 - 2
2B16	LAMP, HI-BEAM, DRIVE (S.N. 587710-)	1673 - 4
2B18	LAMP, STOP	1673 - 6
2B18	LAMP, TAIL	1673 - 6
2B18	LAMP, TURN	1673 - 6
2F17	LATCH HOLD OPEN (LEFT HAND DOOR)	1810 - 32
2F19	LATCH HOLD OPEN (RIGHT HAND DOOR)	1810 - 34
2E17	LATCH, DOOR	1810 - 10
2H18	LATCH, ENGINE SIDE SHIELD	1911 - 4
2E11	LATCH,CAB DOOR HOLD-OPEN	1810 - 4
1C24	LAYSHAFT	0350 - 10
1B21	LEAKAGE RETURN TUBE	0210 - 18
2F13	LEFT HAND COVER	1810 - 26
2F17	LEFT HAND DOOR, HOLD OPEN LATCH	1810 - 32
3B17	LESS BUCKET WITH PINS	3102 - 10
3E7	LEVER, AUXILIARY JOY STICK PILOT CONTROLLER	3162 - 20
3D18	LEVER, SINGLE LEVER PILOT CONTROLLER (SER. NO. -590067)	3162 - 4
2G10	LEVER,SEAT SLIDE CONTROL	1821 - 3C
2B22	LICENSE PLATE BRACKET	1673 - 10
2B22	LICENSE PLATE LIGHT	1673 - 10

ALPHABETICAL INDEX - CONTINUED

GRID		PAGE
2C20	LICENSE PLATE LIGHT HARNESS	1674 - 20
2C20	LICENSE PLATE LIGHT HARNESS, HARSH ENVIORNMENT	1674 - 20
1F23	LIFT, ENGINE	0409 - 1
2B21	LIGHT, DOME	1673 - 9
2B16	LIGHT, FRONT (S.N. 587710-)	1673 - 4
2B18	LIGHT, STOP	1673 - 6
2B18	LIGHT, TURN	1673 - 6
2B16	LIGHT, TURN AND MARKER	1673 - 4
2B22	LIGHT,LICENSE PLATE	1673 - 10
1F6	LINE, CAMSHAFT OIL	0402 - 8
1G8	LINE, DIRECT COOLING RETURN	0418 - 2
3D14	LINE, RIDE CONTROL OIL	3160 - 68
1F10	LINER SHIMS	0403 - 2
1F10	LINERS, PISTON	0403 - 2
1C5	LINES, DIFFERENTIAL LOCK, FRONT	0260 - 2
1C7	LINES, DIFFERENTIAL LOCK, FRONT AND REAR	0260 - 4
3B24	LINES, HYDRAULIC, PIN DISCONNECT (SER. NO. -590067)	3160 - 2
3C1	LINES, HYDRAULIC, PIN DISCONNECT (SER. NO. 590068-)	3160 - 3A
2J12	LINES, MAIN HYDRAULIC	2163 - 2
3F3	LINES, PILOT (ALL CONTROLLERS) (SER. NO. -590067)	3162 - 38
3D22	LINES, PILOT, SINGLE LEVER CONTROLLER (SER. NO. 590068-)	3162 - 8
3E3	LINES, PILOT, SINGLE LEVER CONTROLLER WITH AUX. (SER. NO. 590068-)	3162 - 14
3E11	LINES, PILOT, TWO LEVER CONTROLLER (SER. NO. 590068-)	3162 - 24
3E15	LINES, PILOT, TWO LEVER WITH AUX. (SERIAL NO. 590068-)	3162 - 28
3F7	LINES, THREE SPOOL HYDRAULIC VALVE	3163 - 4
1E15	LINES, TRANSMISSION EXTERNAL OIL	0360 - 10
1G5	LINES, TURBOCHARGER OIL	0416 - 1
3F5	LINES, TWO SPOOL HYDRAULIC VALVE	3163 - 2
3B22	LINK, LOADER, HIGHLIFT	3145 - 2
3B22	LINKAGE, LOADER	3145 - 2
1I18	LINKAGE, STEERING COLUMN (SER. NO. -590067)	0962 - 2
1I20	LINKAGE, STEERING COLUMN (SER. NO. 590068-)	0962 - 4
2C7	LOAD CENTER COMPARTMENT (S.N. 590068-)	1674 - 9A
2C12	LOAD CENTER COMPARTMENT (SER. NO. -590067)	1674 - 12
2C5	LOAD CENTER WIRING HARNESS (S.N. -590067)	1674 - 8
2C7	LOAD CENTER WIRING HARNESS (S.N. 590068-)	1674 - 9A
3B21	LOADER BOOM	3143 - 1
3F23	LOADER BOOM KICKOUT	3166 - 4
3F23	LOADER BOOM KICKOUT SENSOR	3166 - 4
3B21	LOADER BOOM PIN	3143 - 1
3B11	LOADER BUCKET CUTTING EDGE (BOLT-ON SPILLGUARD)	3102 - 4
3B9	LOADER BUCKET CUTTING EDGE (WELD-ON SPILLGUARD)	3102 - 2
3B11	LOADER BUCKET GUARD (BOLT-ON SPILLGUARD)	3102 - 4
3B9	LOADER BUCKET GUARD (WELD-ON SPILLGUARD)	3102 - 2
3B11	LOADER BUCKET PINS (BOLT-ON SPILLGUARD)	3102 - 4
3B9	LOADER BUCKET PINS (WELD-ON SPILLGUARD)	3102 - 2
3B13	LOADER BUCKET TEETH	3102 - 6
3B11	LOADER BUCKETS (BOLT-ON SPILLGUARD)	3102 - 4
3B9	LOADER BUCKETS (WELD-ON SPILLGUARD)	3102 - 2
3C6	LOADER CONTROL VALVE (2 OR 3-SPOOL)	3160 - 6
3B19	LOADER FRAME	3141 - 2
3B18	LOADER FRAME LOCK	3140 - 1
3B19	LOADER FRAME PIN	3141 - 2
2D5	LOADER FRAME WIRING HARNESS (SER. NO. -590067)	1674 - 28
2D7	LOADER FRAME WIRING HARNESS (SERIAL NO. 590068-)	1674 - 29A
3B22	LOADER LINK PIN	3145 - 2
3B22	LOADER LINK SEAL	3145 - 2
3B22	LOADER LINKAGE	3145 - 2
3B13	LOADER SHANKS	3102 - 6
2D22	LOCK BAR,ENGINE FRAME	1741 - 2
3B18	LOCK, BOOM CYLINDER	3140 - 1
3B18	LOCK, LOADER FRAME	3140 - 1
2H13	LOUVERS, HEATING AND A/C (SER. NO. 590068-)	1830 - 15A
2H11	LOUVERS, HEATING AND A/C (SER. NO. -590067)	1830 - 14
1D15	LOW RANGE CLUTCH ASSEMBLY, FORWARD	0350 - 32
1D17	LOW RANGE CLUTCH ASSEMBLY, FORWARD	0350 - 34
1I22	LOWER STEERING COLUMN	0962 - 6
1B22	LUBRICATION LINES, DIFFERENTIAL SUPPORTS	0210 - 20
2G8	LUMBAR ADJUSTER AND CONTROL KNOB	1821 - 3A

M

1G4	M.A.P. SENSOR	0414 - 1
1F8	MAGNETIC PICK-UP CRANK/CAM	0402 - 10
1F12	MAIN BEARING CAPS	0404 - 2
1E23	MAIN BEARINGS	0401 - 3
2E3	MAIN COUNTERWEIGHT	1749 - 2
2J12	MAIN HYDRAULIC LINES	2163 - 2
1E23	MAIN THRUST BEARINGS	0401 - 3
1G4	MANIFOLD ABSOLUTE PRESSURE SENSOR	0414 - 1
1G1	MANIFOLD, EXHAUST	0410 - 1
1G4	MANIFOLD, INTAKE	0414 - 1
1G8	MANIFOLD, WATER, FRONT	0418 - 2
1D13	MANIFOLD,TRANSMISSION CONTROL VALVE	0350 - 28
1F5	MEDALLION (ENGINE)	0402 - 6
2I20	MIRROR, OUTSIDE	2002 - 2
2I21	MIRROR, OUTSIDE	2002 - 4
2I23	MIRROR, REAR VIEW, INSIDE	2002 - 7
2H3	MODULE, HVAC	1830 - 3A
2H11	MONITOR CONSOLE CAB (SER. NO. -590067)	1830 - 14
2H13	MONITOR CONSOLE, CAB (SER. NO. 590068-)	1830 - 15A
2D19	MONITOR DISPLAY UNIT	1676 - 2
2H3	MOTOR AND SWITCH, HEATER AND A/C BLOWER	1830 - 3A
1H17	MOTOR, AXLE OIL RECIRCULATION	0511 - 6
1G15	MOTOR, STARTING WITH SOLENOID COVER (12V-3008)	0422 - 1
1I3	MOUNTING BRACKETS, ENGINE	0540 - 2
1C16	MOUNTING BRACKETS, TRANSMISSION	0342 - 2
2G16	MOUNTING PARTS KIT, SEAT (MECHANICAL SUSPENSION)	1821 - 8
1F4	MOUNTING, AIR CONDITIONER COMPRESSOR (DENSO)	0402 - 5
2E9	MOUNTS, CAB (FRONT AND REAR)	1810 - 2

ALPHABETICAL INDEX - CONTINUED

GRID		PAGE
2I9	MUD FENDERS	1927 - 6
2I11	MUD FENDERS (HARDWEAR)	1927 - 8
2I9	MUD FLAPS	1927 - 6
2I11	MUD FLAPS (HARDWEAR)	1927 - 8
1I1	MUFFLER	0530 - 4
1I1	MUFFLER BRACKET	0530 - 4

N

1D11	NEUTRAL SAFETY SWITCH	0350 - 26
1F3	NO AUXILIARY DRIVE	0402 - 4
1F24	NOZZLE SLEEVE, FUEL INJECTION	0409 - 2
2D9	NOZZLE, POTTING	1674 - 44

O

1K8	O-RING KIT	1369 - 2
1E24	O-RING, CAMSHAFT RING	0402 - 1
1H17	OIL COOLER (AXLE COOLER)	0511 - 6
1G10	OIL COOLER, ENGINE	0419 - 2
1H13	OIL COOLER,HYDRAULIC	0511 - 2
1H13	OIL COOLER,TRANSMISSION	0511 - 2
1F21	OIL DIPSTICK	0407 - 8
1F1	OIL FILL, ENGINE (HDW)	0402 - 2
1E9	OIL FILL, TRANSMISSION	0360 - 2
1E11	OIL FILTER RESTRICTION SWITCH, TRANSMISSION (SER. NO. -590067)	0360 - 8
1E13	OIL FILTER RESTRICTION SWITCH, TRANSMISSION (SER. NO. 590068-)	0360 - 9A
1G10	OIL FILTER, ENGINE	0419 - 2
1E11	OIL FILTER,TRANSMISSION (SER. NO. -590067)	0360 - 8
1E13	OIL FILTER,TRANSMISSION (SER. NO. 590068-)	0360 - 9A
1F6	OIL LINE, CAMSHAFT	0402 - 8
1D3	OIL LINES, TRANSMISSION	0350 - 14
1D1	OIL LINES, TRANSMISSION (CONTROL VALVE) (SER. NO. 586280-)	0350 - 12
1E15	OIL LINES, TRANSMISSION EXTERNAL	0360 - 10
1E15	OIL LINES, TRANSMISSION THERMAL BYPASS VALVE	0360 - 10
1G5	OIL LINES, TURBOCHARGER	0416 - 1
1F19	OIL PAN	0407 - 6
1F19	OIL PAN DRAIN VALVE	0407 - 6
1F19	OIL PAN GASKET	0407 - 6
1G10	OIL PRESSURE SENSOR (ENGINE)	0419 - 2
1F16	OIL PUMP GEAR, ENGINE	0407 - 2
1F17	OIL PUMP INTAKE, ENGINE	0407 - 4
1F16	OIL PUMP, ENGINE	0407 - 2
1D5	OIL PUMP,TRANSMISSION	0350 - 18
1K10	OILSCAN PLUS TEST KIT, FLUID ANALYSIS	1369 - 4
2G24	OPERATOR ACCESS PLATFORM	1822 - 6
2G24	OPERATOR ACCESS PLATFORM STEPS	1822 - 6
2E21	OPERATOR STATION FRONT PEDESTAL	1810 - 14
1G15	OPTION 3008 STARTING MOTOR (12V)	0422 - 1
1B22	OSCILLATING DIFFERENTIAL SUPPORT	0210 - 20
1B13	OSCILLATING DIFFERENTIAL SUPPORT, REAR	0210 - 8
3C20	OUTLET SECTION	3160 - 20
1E1	OUTPUT SHAFT	0350 - 44
2I20	OUTSIDE MIRROR	2002 - 2
2I21	OUTSIDE MIRROR	2002 - 4
1H1	OVERHAUL KIT, ENGINE	0452 - 4

GRID		PAGE
	P	
1F19	PAN, OIL	0407 - 6
2G8	PAN, SEAT BACK	1821 - 3A
1J14	PARK BRAKE SOLENOID VALVE	1162 - 2
2B23	PARK BRAKE SWITCH (SER. NO. -590067)	1674 - 2
1J16	PARKING BRAKE HYDRAULIC HOSES	1163 - 2
2B25	PARKING BRAKE SWITCH (SER. NO. 590068-)	1674 - 3A
1J12	PARKING BRAKE/DRIVELINE BEARING	1115 - 2
1J5	PEDAL, BRAKE	1062 - 2
1H19	PEDAL,ENGINE CONTROL (SERIAL NO. -590067)	0515 - 2
1H21	PEDAL,ENGINE SPEED CONTROL (SER. NO. 590068-)	0515 - 4
2E21	PEDESTAL, CAB	1810 - 14
2E21	PEDESTAL, CANOPY	1810 - 14
2E21	PEDESTAL, OPERATOR STATION FRONT	1810 - 14
1F8	PICK-UP, MAGNETIC CRANK/CAM	0402 - 10
3D24	PILOT CONTROL VALVE, SINGLE LEVER	3162 - 10
3E15	PILOT CONTROLLER, TWO LEVER WITH AUX. (SERIAL NO. 590068-)	3162 - 28
3E17	PILOT CONTROLLER, TWO LEVER WITH DUAL AUX. CONTROLLERS (SER.NO. -590067)	3162 - 30
3F3	PILOT LINES (ALL CONTROLLERS) (SER. NO. -590067)	3162 - 38
3D22	PILOT LINES, SINGLE LEVER CONTROLLER (SER. NO. XXXXXX-)	3162 - 8
3E3	PILOT LINES, SINGLE LEVER CONTROLLER WITH AUX. (SER. NO. 590068-)	3162 - 14
3E11	PILOT LINES, TWO LEVER CONTROLLER (SER. NO. 590068-)	3162 - 24
3E15	PILOT LINES, TWO LEVER WITH AUX. (SERIAL NO. 590068-)	3162 - 28
2C21	PIN DISCONNECT HARNESS	1674 - 21
3B24	PIN DISCONNECT HOSE (SER. NO. -590067)	3160 - 2
3C1	PIN DISCONNECT HOSE (SER. NO. 590068-)	3160 - 3A
3B24	PIN DISCONNECT KIT (SER. NO. -590067)	3160 - 2
3C1	PIN DISCONNECT KIT (SER. NO. 590068-)	3160 - 3A
3B24	PIN DISCONNECT LINES (SER. NO. -590067)	3160 - 2
3C1	PIN DISCONNECT LINES (SER. NO. 590068-)	3160 - 3A
3B24	PIN DISCONNECT SWITCH (SER. NO. -590067)	3160 - 2
3C1	PIN DISCONNECT SWITCH (SER. NO. 590068-)	3160 - 3A
3B24	PIN DISCONNECT VALVE (SER. NO. -590067)	3160 - 2
3C1	PIN DISCONNECT VALVE (SER. NO. 590068-)	3160 - 3A
3C3	PIN DISCONNECT VALVE (SERIAL NO. - 590067)	3160 - 3C
3C5	PIN DISCONNECT VALVE COMPONENTS	3160 - 4
3C3	PIN DISCONNECT VALVE COMPONENTS (SERIAL NO. - 590067)	3160 - 3C
3C3	PIN DISCONNECT VALVE SOLENOID (SERIAL NO. - 590067)	3160 - 3C
3B24	PIN DISCONNECT WIRING HARNESS (SER. NO. -590067)	3160 - 2
3C1	PIN DISCONNECT WIRING HARNESS (SER. NO. 590068-)	3160 - 3A

ALPHABETICAL INDEX - CONTINUED

GRID		PAGE
3B19	PIN.BUCKET CYLINDER	3141 - 2
1E24	PIN, CAMSHAFT	0402 - 1
3B21	PIN, LOADER BOOM	3143 - 1
3B18	PIN, LOADER FRAME LOCK	3140 - 1
3B22	PIN, LOADER LINK PIN	3145 - 2
3B19	PIN,BOOM CYLINDER	3141 - 2
2D22	PIN,ENGINE FRAME	1741 - 2
3B19	PIN,LOADER FRAME	3141 - 2
3B19	PIN,STEERING CYLINDER	3141 - 2
3B17	PINS, BUCKET	3102 - 10
3B11	PINS, LOADER BUCKET (BOLT-ON SPILLGUARD)	3102 - 4
3B9	PINS, LOADER BUCKET (WELD-ON SPILLGUARD)	3102 - 2
1F6	PINS, PUSH	0402 - 8
1I1	PIPE, EXHAUST, BLACK	0530 - 4
1I1	PIPE, EXHAUST, CHROME	0530 - 4
1F12	PISTON COOLING JETS	0404 - 2
1F10	PISTON CROWN	0403 - 2
1F10	PISTON LINERS	0403 - 2
1F10	PISTON RINGS	0403 - 2
1F10	PISTON SKIRT	0403 - 2
1F10	PISTON/LINER KIT	0403 - 2
1J4	PISTON, BRAKE	1011 - 2
1F10	PISTONS	0403 - 2
1C1	PLANET PINION CARRIER	0210 - 24
1C1	PLANETARY FINAL DRIVE	0210 - 24
3E5	PLATE, AUXILIARY SINGLE LEVER CNTLR. MTG. (SER. NO. -590067)	3162 - 16
1F1	PLATE, CAM COVER (HDW)	0402 - 2
2H18	PLATE, ENGINE SIDE SHIELD	1911 - 4
1F1	PLATE, FRONT (HDW)	0402 - 2
3D22	PLATE, SINGLE LEVER CONROLLER MOUNTING (SER. NO. 590068-)	3162 - 8
3D16	PLATE, SINGLE LEVER CONTROLLER MOUNTING (SER. NO. -590067)	3162 - 2
3E11	PLATE, SINGLE LEVER CONTROLLER MOUNTING (SER. NO. 590068-)	3162 - 24
3E1	PLATE, SINGLE LEVER CONTROLLER W/AUX MOUNTING (SER. NO. -590067)	3162 - 12
3E3	PLATE, SINGLE LEVER CONTROLLER W/AUX MOUNTING (SER. NO. 590068-)	3162 - 14
3D18	PLATE, SINGLE LEVER PILOT CONTROLLER (SER. NO. -590067)	3162 - 4
3D20	PLATE, SINGLE LEVER PILOT CONTROLLER MOUNTING (CONTINUED)(SER. NO. -590067)	3162 - 6
3E13	PLATE, TWO LEVER PILOT CONTROLLER MOUNTING(SER. NO. -590067)	3162 - 26
3E15	PLATE, TWO LEVER PILOT CONTROLLER WITH AUX. (SERIAL NO. 590068-)	3162 - 28
3E17	PLATE, TWO LEVER PILOT CONTROLLER WITH DUAL AUX. CONTROLLERS(SER.NO. -590067)	3162 - 30
2J10	PLATE,PRIORITY VALVE MOUNTING	2162 - 4
1J4	PLATES, BRAKE	1011 - 2
1C20	PLATES, CONVERTER HOUSING	0350 - 4
2G24	PLATFORM, OPERATOR ACCESS	1822 - 6
1G21	PLUG, CRANKSHAFT ROTATING TOOL	0433 - 2
1F12	PLUG, TIMING PIN (BLOCK)	0404 - 2
3F7	PLUMBING, THREE SPOOL HYDRAULIC VALVE	3163 - 4
3F5	PLUMBING, TWO SPOOL HYDRAULIC VALVE	3163 - 2
2D9	POTTING-GUN, HARSH ENVIORNMENT	1674 - 44
2C10	POWER PLUG AND CONVERTER (10 AMP) (24 TO 12 VOLT)(SER. NO. 590068-)	1674 - 10A
2C9	POWER PLUG AND CONVERTER (24 TO 12 VOLT) (SER. NO. -590067)	1674 - 10
2C11	POWER PLUG AND CONVERTER (5 AMP)(24 VOLT TO 12 VOLT)(SER. NO. 590068-)	1674 - 10B
1D7	POWER TAKE-OFF	0350 - 22
3D5	PRESSURE REDUCING VALVE, COMPONENTS (SERIAL NO. 590068-)	3160 - 60
1G10	PRESSURE REGULATING VALVE, ENGINE	0419 - 2
3D3	PRESSURE REGULATOR VALVE (SER. NO. -590067)	3160 - 58
3D3	PRESSURE REGULATOR VALVE COIL (SER. NO. -590067)	3160 - 58
3D7	PRESSURE REGULATOR VALVE FITTINGS (SER. NO. -590067)	3160 - 62
3D10	PRESSURE REGULATOR VALVE FITTINGS (SER. NO. 590068-)	3160 - 64
3D3	PRESSURE REGULATOR VALVE SOLENOID (SER. NO. -590067)	3160 - 58
3D5	PRESSURE REGULATOR VALVE, HYDRAULIC OIL (SERIAL NO. 590068-)	3160 - 60
2J8	PRIORITY VALVE	2162 - 2
2J10	PRIORITY VALVE FITTINGS	2162 - 4
2J10	PRIORITY VALVE MOUNTING PLATE	2162 - 4
2C4	PROGRAMMING KIT	1674 - 7
3D5	PRV VALVE COMPONENTS (SERIAL NO. 590068-)	3160 - 60
2B9	PULLEY, ALTERNATOR (80 AMP)	1672 - 2
2B13	PULLEY, ALTERNATOR (80 AMP) (FIELD KIT)	1672 - 6
1G18	PULLEY, CRANKSHAFT	0429 - 1
2B9	PULLEY, CRANKSHAFT	1672 - 2
2B9	PULLEY, CRANKSHAFT (HIGH AMBIENT)	1672 - 2
1H15	PULLEY, CRANKSHAFT, HIGH AMBIENT DRIVE	0511 - 4
1G19	PULLEY, FAN	0429 - 2
1H15	PULLEY, HIGH AMBIENT DRIVE	0511 - 4
1G19	PULLEY, IDLER	0429 - 2
1G6	PULLEY, WATER PUMP	0417 - 2
1H17	PUMP AND MOTOR RECIRCULATION, AXLE OIL	0511 - 6
2J12	PUMP HYDRAULIC LINES	2163 - 2
1H17	PUMP, AXLE OIL RECIRCULATION	0511 - 6
1F16	PUMP, ENGINE OIL	0407 - 2
1G12	PUMP, FUEL TRANSFER	0421 - 1
1D9	PUMP, HYDRAULIC PUMP DRIVE, TRANSMISSION	0350 - 24
3C22	PUMP, HYDRAULIC, LOADER	3160 - 22
3C22	PUMP, HYDRAULIC, STEERING	3160 - 22
1I12	PUMP, SECONDARY STEERING	0930 - 2
1G6	PUMP, WATER	0417 - 2
2E13	PUMP, WINDOW WASHER	1810 - 6
1D5	PUMP,TRANSMISSION OIL	0350 - 18
1F6	PUSH PINS	0402 - 8

R

1H13	RADIATOR	0511 - 2
2H23	RADIATOR FILL DOOR	1921 - 4
1H11	RADIATOR HOSES	0510 - 4
2I16	RADIO (SER. NO. -590067)	2001 - 2
2I18	RADIO (SER.NO. 590068-)	2001 - 3A
2I16	RADIO ANTENNA (SER. NO. -590067)	2001 - 2
2I18	RADIO ANTENNA (SER.NO. 590068-)	2001 - 3A
2I16	RADIO REMOTE CONTROL (SER. NO. -590067)	2001 - 2
2I18	RADIO REMOTE CONTROL (SER.NO. 590068-)	2001 - 3A
2I16	RADIO SPEAKER (SER. NO. -590067)	2001 - 2
2I18	RADIO SPEAKER (SER.NO. 590068-)	2001 - 3A
1B5	REAR AXLE	0201 - 2

ALPHABETICAL INDEX - CONTINUED

GRID		PAGE
2B11	REAR COVER, ALTERNATOR (80 AMP)	1672 - 4
1B11	REAR DIFFERENTIAL CASE COVER (AXLE)	0210 - 6
2I7	REAR FENDERS	1927 - 4
2I13	REAR FENDERS, FULL COVERAGE (SERIAL NO. XXXXXX-)	1927 - 10
2D1	REAR FRAME WIRING HARNESS (SERIAL NO. -590067)	1674 - 26
2D3	REAR FRAME WIRING HARNESS (SERIAL NO. 590068-)	1674 - 27A
1E22	REAR OIL SEAL	0401 - 2
1E22	REAR OIL SEAL GASKET	0401 - 2
1E22	REAR OIL SEAL HOUSING	0401 - 2
2C3	REAR WINDOW DEFROST SWITCH (SER. NO. -590067)	1674 - 6
2F1	REAR WINDSHIELD WIPER	1810 - 18
1I9	RECEIVER CAP, FAST FILL FUEL	0560 - 6
2H10	RECEIVER DRIER,A/C	1830 - 11
2H3	RECIRCULATION FILTER, HVAC	1830 - 3A
1H17	RECIRCULATION PUMP AND MOTOR, AXLE OIL	0511 - 6
3D5	REDUCING VALVE, COMPONENTS (SERIAL NO. 590068-)	3160 - 60
2C17	RELAY, TURN SIGNAL FLASHER (S.N. -590067)	1674 - 17
2C17	RELAYS (S.N. -590067)	1674 - 17
2C18	RELAYS, VEC (S.N. 590068-)	1674 - 18
3C8	RELIEF VALVE FOR INLET SECTION VALVE	3160 - 8
1G10	RELIEF VALVE, ENGINE	0419 - 2
1C18	REMANUFACTURED TRANSMISSION	0350 - 2
3C24	REPAIR KITS, PUMP, STEERING AND LOADER HYDRAULIC	3160 - 24
3F15	REPLACEMENT BOOM CYLINDER (SERIAL NO. -XXXXXX)	3165 - 4
3F17	REPLACEMENT BOOM CYLINDER (SERIAL NO. XX XXXX-)	3165 - 5A
3F15	REPLACEMENT BOOM CYLINDER AND REPAIR KITS (SERIAL NO. -XXXXXX)	3165 - 4
3F17	REPLACEMENT BOOM CYLINDER AND REPAIR KITS (SERIAL NO. XXXXXX-)	3165 - 5A
3F11	REPLACEMENT BUCKET CYLINDER (SERIAL NO. -XXXXXX)	3165 - 2
3F13	REPLACEMENT BUCKET CYLINDER (SERIAL NO. XXXXXX-)	3165 - 3A
3F11	REPLACEMENT BUCKET CYLINDER AND REPAIR KITS (SERIAL NO. -XXXXXX)	3165 - 2
3F13	REPLACEMENT BUCKET CYLINDER AND REPAIR KITS (SERIAL NO. XXXXXX-)	3165 - 3A
3F21	REPLACEMENT RETURN-TO-DIG ACTUATOR	3166 - 3A
3F21	REPLACEMENT RETURN-TO-DIG SENSOR	3166 - 3A
2G5	REPLACEMENT SEAT BELT (THREE INCHES (76MM) WIDE)	1821 - 1
1H11	RESERVOIR COOLER RECOVERY	0510 - 4
3F9	RESERVOIR, HYDRAULIC	3164 - 2
2G3	REST, ARM (SER. NO. 590068-)	1816 - 3A
2G1	REST, ARM (USE ONLY WITH TWO-LEVER CONTROLLERS)(SER. NO. -590067)	1816 - 2
1H23	RESTRICTION INDICATOR SENSOR, AIR FILTER	0520 - 2
1E11	RESTRICTION SWITCH, TRANSMISSION OIL FILTER (SER. NO. -590067)	0360 - 8
1E13	RESTRICTION SWITCH, TRANSMISSION OIL FILTER (SER. NO. 590068-)	0360 - 9A
3F23	RETURN TO CARRY SENSOR	3166 - 4
2C14	RETURN TO DIG HARNESS	1674 - 14
3F19	RETURN-TO-DIG ACTUATOR	3166 - 2
3F21	RETURN-TO-DIG ACTUATOR, REPLACEMENT	3166 - 3A
3F19	RETURN-TO-DIG SENSOR	3166 - 2
3F21	RETURN-TO-DIG SENSOR, REPLACEMENT	3166 - 3A
1D19	REVERSE AND K2 GEAR CLUTCHES	0350 - 36
1D21	REVERSE AND K2 GEAR CLUTCHES (CONTINUED)	0350 - 38
3D14	RIDE CONTROL	3160 - 68
3D14	RIDE CONTROL ACCUMULATOR	3160 - 68
3D14	RIDE CONTROL HYDRAULIC HOSES	3160 - 68
3D14	RIDE CONTROL OIL LINE	3160 - 68
3D8	RIDE CONTROL SOLENOID VALVE	3160 - 63A
3D14	RIDE CONTROL SWITCH	3160 - 68
3D8	RIDE CONTROL VALVE	3160 - 63A
3D8	RIDE CONTROL VALVE COMPONENTS	3160 - 63A
3D14	RIDE CONTROL WIRING HARNESS	3160 - 68
2F19	RIGHT HAND DOOR, HOLD OPEN LATCH	1810 - 34
2F9	RIGHT SIDE CONSOLE (SER. NO. 590068-)	1810 - 23C
2F7	RIGHT SIDE CONSOLE (SINGLE LEVER CONTROLLERS)(SERIAL NO. -590067)	1810 - 23A
2F5	RIGHT SIDE CONSOLE (TWO-LEVER) (SER. NO. -590067)	1810 - 22
1F10	RINGS, PISTON	0403 - 2
1F5	ROCKER ARM COVER	0402 - 6
1F5	ROCKER ARM COVER GASKET	0402 - 6
1F6	ROCKER ARM SHAFT	0402 - 8
1F6	ROCKER ARMS	0402 - 8
2C3	ROCKER SWITCHES AND PLUG ASSEMBLY (SER. NO. -590067)	1674 - 6
3F15	ROD, BOOM CYLINDER (REPLACEMENT) (SERIAL NO. -XXXXXX)	3165 - 4
3F17	ROD, BOOM CYLINDER (REPLACEMENT) (SERIAL NO. XXXXXX-)	3165 - 5A
3F11	ROD, BUCKET CYLINDER (REPLACEMENT) (SERI AL NO. -XXXXXX)	3165 - 2
3F13	ROD, BUCKET CYLINDER (REPLACEMENT) (SERI AL NO. XXXXXX-)	3165 - 3A
1F10	RODS, CONNECTING	0403 - 2
2F21	ROOF PLASTIC	1810 - 36
2E11	ROPS	1810 - 4

S

1E5	SCREEN, SUCTION, TRANSMISSION	0350 - 48
3E7	SEAL KIT, AUXILIARY JOY STICK PILOT CONTROLLER	3162 - 20
1G18	SEAL, FRONT	0429 - 1
3B22	SEAL, LOADER LINK	3145 - 2
1E22	SEAL, REAR OIL	0401 - 2
1G6	SEAL, WATER PUMP	0417 - 2
2G8	SEAT BACK	1821 - 3A
2G8	SEAT BACK PAN	1821 - 3A
2E23	SEAT BASE	1810 - 16
2G5	SEAT BELT, REPLACEMENT (THREE INCHES (76MM WIDE)	1821 - 1
2G6	SEAT BRACKETS	1821 - 2
2G6	SEAT CUSHION	1821 - 2
2E23	SEAT DECK	1810 - 16
2G12	SEAT KNOB KIT (MECHANICAL SUSPENSION)	1821 - 4
2G16	SEAT MOUNTING PARTS KIT (MECHANICAL SUSPENSION)	1821 - 8
2G10	SEAT SLIDE ASSEMBLY	1821 - 3C
2G10	SEAT SLIDE CONTROL LEVER	1821 - 3C
2G10	SEAT SLIDE LATCH KIT	1821 - 3C

ALPHABETICAL INDEX - CONTINUED

GRID		PAGE
2G16	SEAT SPRING KITS (MECHANICAL SUSPENSION)	1821 - 8
2G6	SEAT SUSPENSION	1821 - 2
2G18	SEAT SUSPENSION (AIR SUSPENSION)	1821 - 10
2G18	SEAT, SUSPENSION (AIR SUSPENSION)	1821 - 10
2G12	SEAT, SUSPENSION KITS (MECHANICAL SUSPENSION)	1821 - 4
2G14	SEAT, SUSPENSION KITS (MECHANICAL SUSPENSION)	1821 - 6
2G16	SEAT, SUSPENSION KITS (MECHANICAL SUSPENSION)	1821 - 8
1I12	SECONDARY STEERING	0930 - 2
1I12	SECONDARY STEERING SWITCH, HARSH ENVIORNMENT	0930 - 2
3C12	SECTION, BOOM, VALVE, ANTI-CAVITY	3160 - 12
3C18	SECTION, VALVE, AUXILIARY	3160 - 18
3C10	SECTION, VALVE, BOOM	3160 - 10
3C14	SECTION, VALVE, BUCKET	3160 - 14
3C8	SECTION, VALVE, INLET, WITH RELIEF VALVE	3160 - 8
1I5	SENDER, FUEL TANK	0560 - 2
1H23	SENSOR, AIR FILTER RESTRICTION INDICATOR	0520 - 2
1H23	SENSOR, AIR FILTER RESTRICTION, HARSH ENVIRONMENT	0520 - 2
1G4	SENSOR, AIR TEMPERATURE	0414 - 1
3D12	SENSOR, BOOM KICKOUT	3160 - 66
3F23	SENSOR, LOADER BOOM KICKOUT	3166 - 4
1F8	SENSOR, MAGNETIC PICK-UP CRANK/CAM	0402 - 10
1G4	SENSOR, MANIFOLD ABSOLUTE PRESSURE (M.A.P.)	0414 - 1
1G10	SENSOR, OIL PRESSURE (ENGINE)	0419 - 2
3F21	SENSOR, REPLACEMENT RETURN-TO-DIG	3166 - 3A
3F23	SENSOR, RETURN TO CARRY	3166 - 4
3F19	SENSOR, RETURN-TO-DIG	3166 - 2
1E3	SENSOR, SPEED, TRANSMISSION	0350 - 46
1G8	SENSOR, TEMPERATURE	0418 - 2
3C22	SENSOR, TEMPERATURE, HYDRAULIC OIL	3160 - 22
1D11	SENSOR, TRANSMISSION TEMPERATURE	0350 - 26
1H21	SENSOR,ENGINE SPEED CONTROL (SER. NO. 590068-)	0515 - 4
1H19	SENSOR,ENGINE SPEED CONTROL (SERIAL NO. -590067)	0515 - 2
1B7	SHAFT AND SPIRAL BEVEL GEAR, FRONT	0210 - 2
1B8	SHAFT AND SPIRAL BEVEL GEAR, REAR	0210 - 3
1B24	SHAFT, AXLE HOUSING	0210 - 22
1C1	SHAFT, FINAL DRIVE	0210 - 24
1E1	SHAFT, OUTPUT	0350 - 44
1F6	SHAFT, ROCKER ARM	0402 - 8
1G6	SHAFT, WATER PUMP	0417 - 2
1D9	SHAFTS AND GEARS, TRANSMISSION HYDRAULIC PUMP DRIVE	0350 - 24
3B13	SHANKS, LOADER	3102 - 6
2F23	SHIELDS, CAB	1813 - 2
2H20	SHIELDS, TRANSMISSION	1913 - 2
2B23	SHIFTER ASSEMBLY (SER. NO. -590067)	1674 - 2
2B25	SHIFTER ASSEMBLY (SER. NO. 590068-)	1674 - 3A
3E23	SHIFTER ASSEMBLY TO JOYSTICK FNR CONVERSION KIT	3162 - 35A
1F10	SHIMS, LINER	0403 - 2
1E1	SHIMS, OUTPUT SHAFT	0350 - 44
1F14	SHORT BLOCK, ENGINE (W/HEADBOLTS)	0404 - 4
1I9	SHUTOFF FLOAT, FAST FILL FUEL	0560 - 6
2H18	SIDE SHIELDS, ENGINE	1911 - 4
1E9	SIGHT GAUGE, TRANSMISSION	0360 - 2
3D22	SINGLE LEVER CONTROLL MOUNTING PLATE AND HOSES (SER. NO. 590068-)	3162 - 8
3D16	SINGLE LEVER CONTROLLER (SER. NO. -590067)	3162 - 2
3D22	SINGLE LEVER CONTROLLER (SERIAL NO. 590068-)	3162 - 8
3D24	SINGLE LEVER CONTROLLER COMPONENTS	3162 - 10
3D18	SINGLE LEVER CONTROLLER COMPONENTS (SER. NO. -590067)	3162 - 4
3D20	SINGLE LEVER CONTROLLER COMPONENTS (SER. NO. -590067)	3162 - 6
3D16	SINGLE LEVER CONTROLLER FITTINGS (SER. NO. -590067)	3162 - 2
3D22	SINGLE LEVER CONTROLLER FITTINGS (SER. NO. 590068-)	3162 - 8
3D24	SINGLE LEVER CONTROLLER HANDLE	3162 - 10
3D16	SINGLE LEVER CONTROLLER MOUNTING PLATE AND HOSES (SER. NO. -590067)	3162 - 2
3D20	SINGLE LEVER CONTROLLER REPAIR KIT (CONTINUED)(SER. NO. -590067)	3162 - 6
3D18	SINGLE LEVER CONTROLLER REPAIR KIT (SER. NO. -590067)	3162 - 4
3E3	SINGLE LEVER CONTROLLER W/AUX FITTINGS (SER. NO. 590068-)	3162 - 14
3E3	SINGLE LEVER CONTROLLER W/AUX MOUNTING PLATE AND HOSES (SER. NO. 590068-)	3162 - 14
3E1	SINGLE LEVER CONTROLLER W/AUX MTG. PLATE AND HOSES (SER. NO. -590067)	3162 - 12
3E1	SINGLE LEVER CONTROLLER WITH AUX. (SERIAL NO. -590067)	3162 - 12
3E3	SINGLE LEVER CONTROLLER WITH AUX.(SERIAL NO. 590068-)	3162 - 14
3D24	SINGLE LEVER PILOT CONTROL VALVE	3162 - 10
3D18	SINGLE LEVER PILOT CONTROLLER LEVER (SER. NO. -590067)	3162 - 4
3D20	SINGLE LEVER PILOT CONTROLLER MOUNTING PLATE (CONTINUED)(SER. NO. -590067)	3162 - 6
3E1	SINGLE-LEVER CONTROLLER WITH AUXILIARY FITTINGS (SER. NO. -590067)	3162 - 12
1F10	SKIRT, PISTON	0403 - 2
1F24	SLEEVE, FUEL INJECTION NOZZLE	0409 - 2
2G10	SLIDE LATCH KIT, SEAT	1821 - 3C
2G10	SLIDE PUCK KIT,SEAT	1821 - 3C
2G10	SLIDE,SEAT ASSEMBLY	1821 - 3C
2J5	SLOW MOVING VEHICLE EMBLEM	2008 - 2
2J5	SMV EMBLEM	2008 - 2
1G15	SOLENOID COVER, STARTING MOTOR (12V-3008)	0422 - 1
1J14	SOLENOID VALVE, PARK BRAKE	1162 - 2
3D8	SOLENOID VALVE, RIDE CONTROL	3160 - 63A
3C3	SOLENOID, PIN DISCONNECT VALVE (SERIAL NO. - 590067)	3160 - 3C
1G16	SOLENOID, STARTER (3008)	0422 - 2
3E19	SOLENOID, TWO LEVER PILOT CONTROLLER	3162 - 32
3D3	SOLENOID,PRESSURE REGULATOR VALVE (SER. NO. -590067)	3160 - 58
1H10	SPACER, FAN	0510 - 1
2I16	SPEAKER, RADIO (SER. NO. -590067)	2001 - 2
2I18	SPEAKER, RADIO (SER.NO. 590068-)	2001 - 3A
2D17	SPIN CONTROL WIRING HARNESS	1674 - 59
1B7	SPIRAL BEVEL GEAR AND SHAFT, FRONT	0210 - 2
1B8	SPIRAL BEVEL GEAR AND SHAFT, REAR	0210 - 3
2G16	SPRING KITS, SEAT (MECHANICAL SUSPENSION)	1821 - 8
2G12	SPRING SEAT SUSPENSION KIT (MECHANICAL SUSPENSION)	1821 - 4

ALPHABETICAL INDEX - CONTINUED

GRID		PAGE
2C7	SSM (S.N. 590068-)	1674 - 9A
1B17	STANDARD DIFFERENTIAL	0210 - 14
1G16	STARTER CLUTCH (3008)	0422 - 2
1G21	STARTER GEAR	0433 - 2
1G16	STARTER SHIELD (3008)	0422 - 2
1H6	STARTING AID FLUID	0505 - 2
1G15	STARTING MOTOR WITH SOLENOID COVER (12V-3008)	0422 - 1
3D1	STEERING AND LOADER HYDRAULIC PUMP CONTROL VALVES (130 PVG)	3160 - 26
3C24	STEERING AND LOADER HYDRAULIC PUMP REPAIR KITS	3160 - 24
1I18	STEERING COLUMN (SER. NO. -590067)	0962 - 2
1I20	STEERING COLUMN (SER. NO. 590068-)	0962 - 4
1I24	STEERING COLUMN COVER	0962 - 8
1I18	STEERING COLUMN LINKAGE (SER. NO. -590067)	0962 - 2
1I20	STEERING COLUMN LINKAGE (SER. NO. 590068-)	0962 - 4
1I22	STEERING COLUMN, LOWER	0962 - 6
2D21	STEERING CUSHION	1740 - 1
1I14	STEERING CYLINDER	0960 - 16
1I16	STEERING CYLINDER HYDRAULIC HOSE	0960 - 18
3B19	STEERING CYLINDER PIN	3141 - 2
1I14	STEERING CYLINDER REPAIR KIT	0960 - 16
1E3	STEERING PUMP, EMERGENCY	0350 - 46
1J1	STEERING VALVE	0962 - 10
1I22	STEERING VALVE BRACKET	0962 - 6
1J1	STEERING VALVE FITTINGS	0962 - 10
1I18	STEERING WHEEL (SER. NO. -590067)	0962 - 2
1I20	STEERING WHEEL (SER. NO. 590068-)	0962 - 4
1I12	STEERING, SECONDARY	0930 - 2
1B2	STEM, WHEEL VALVE	0110 - 1
2G20	STEP, ENGINE COMPARTMENT	1822 - 2
2G22	STEPS, HANDRAILS	1822 - 4
2G24	STEPS,OPERATOR ACCESS PLATFORM	1822 - 6
2B18	STOP LAMP	1673 - 6
2B18	STOP LIGHT	1673 - 6
2D21	STOP, RUBBER BUMPER	1740 - 1
1C3	STOP,AXLE (8 DEGREE)	0240 - 2
1I7	STRAINER, FUEL FILL	0560 - 4
1G17	STRAP, ALTERNATOR ADJUSTING	0423 - 1
2B5	STRAP, GROUND (1000 CCA) (1400 CCA)	1671 - 2
2B6	STRAP, GROUND (950 CCA)	1671 - 3
1E7	SUCTION SCREEN, TRANSMISSION	0350 - 50
2J4	SUN VISOR	2007 - 2
2D16	SUPPLEMENTARY TERMINALS, CONNECTORS AND REPAIR CONDUIT	1674 - 58
1G17	SUPPORT, ALTERNATOR	0423 - 1
1B13	SUPPORT, OSCILLATING DIFFERENTIAL, REAR	0210 - 8
2I1	SUPPORT,FRONT FENDER (SERIAL NO. -588886)	1927 - 2
2I3	SUPPORT,FRONT FENDER (SERIAL NO. 588887-)	1927 - 3A
2I5	SUPPORT,FRONT FENDER (FULL COVERAGE) (GRAY)(SERIAL NO. 588887-)	1927 - 3C
1B22	SUPPORTS, DIFFERERNTIAL	0210 - 20
2G18	SUSPENSION SEAT (AIR SUSPENSION)	1821 - 10
2G14	SUSPENSION SEAT KITS (MECHANICAL SUPENSION)	1821 - 6
2G12	SUSPENSION SEAT KITS (MECHANICAL SUSPENSION)	1821 - 4
2G16	SUSPENSION SEAT KITS (MECHANICAL SUSPENSION)	1821 - 8
2G12	SUSPENSION SEAT SPRING KIT (MECHANICAL SUSPENSION)	1821 - 4
2G6	SUSPENSION, SEAT	1821 - 2
2B25	SWITCH PARKING BRAKE (SER. NO. 590068-)	1674 - 3A
2F11	SWITCH WIPER	1810 - 24
2H3	SWITCH, A/C AND HEATER THERMOSTAT	1830 - 3A
2C3	SWITCH, AIR CONDITIONING SHUTOFF (SER. NO. -590067)	1674 - 6
2C3	SWITCH, AUTOMATIC TRANSMISSION (SER. NO. -590067)	1674 - 6
2C3	SWITCH, BOOM DOWN/PILOT ENABLE (SER. NO. -590067)	1674 - 6
1J5	SWITCH, BRAKE VALVE	1062 - 2
2C3	SWITCH, CAB WORK LIGHT (SER. NO. -590067)	1674 - 6
2C3	SWITCH, CLUTCH CUT-OFF (SER. NO. -590067)	1674 - 6
1C10	SWITCH, DIFFERENTIAL LOCK	0263 - 2
2D14	SWITCH, DOMELIGHT, DOOR ACTIVATED	1674 - 52
2D18	SWITCH, DOMELIGHT, DOOR ACTIVATED	1674 - 62
2B21	SWITCH, DOOR LIGHT	1673 - 9
2C3	SWITCH, DRIVE LIGHT (SER. NO. -590067)	1674 - 6
2C3	SWITCH, FOUR-WAY FLASHER (SER. NO. -590067)	1674 - 6
2C3	SWITCH, FRONT WINDOW DEFROST (SER. NO. -590067)	1674 - 6
2H3	SWITCH, HEATER AND A/C BLOWER MOTOR	1830 - 3A
1I18	SWITCH, HORN (SER. NO. -590067)	0962 - 2
1I20	SWITCH, HORN (SER. NO. 590068-)	0962 - 4
2C3	SWITCH, HYDRAULIC PILOT ENABLE/BOOM DOWN (SER. NO. -590067)	1674 - 6
2C7	SWITCH, IGNITION (S.N. 590068-)	1674 - 9A
2B23	SWITCH, IGNITION (SER. NO. -590067)	1674 - 2
3E19	SWITCH, KICKDOWN, TWO LEVER PILOT CONTROLLER	3162 - 32
1D11	SWITCH, NEUTRAL LOCK	0350 - 26
1D11	SWITCH, NEUTRAL SAFETY	0350 - 26
2B23	SWITCH, PARK BRAKE (SER. NO. -590067)	1674 - 2
2C3	SWITCH, PARK BRAKE RELEASE (SER. NO. -590067)	1674 - 6
2C3	SWITCH, PIN DISCONNECT (SER. NO. -590067)	1674 - 6
3B24	SWITCH, PIN DISCONNECT (SER. NO. -590067)	3160 - 2
3C1	SWITCH, PIN DISCONNECT (SER. NO. 590068-)	3160 - 3A
2C3	SWITCH, REAR WINDOW DEFROST (SER. NO. -590067)	1674 - 6
2C3	SWITCH, RETURN TO CARRY (SER. NO. -590067)	1674 - 6
1D11	SWITCH, REVERSE WARNING	0350 - 26
3D14	SWITCH, RIDE CONTROL	3160 - 68
2C3	SWITCH, RIDE CONTROL (SER. NO. -590067)	1674 - 6

ALPHABETICAL INDEX - CONTINUED

GRID		PAGE
2C3	SWITCH, ROTARY BEACON (SER. NO. -590067)	1674 - 6
1I12	SWITCH, SECONDARY STEERING	0930 - 2
1I12	SWITCH, SECONDARY STEERING, HARSH ENVIORNMENT	0930 - 2
2D17	SWITCH, SPIN CONTROL	1674 - 59
2C3	SWITCH, START AID (SER. NO. -590067)	1674 - 6
1E11	SWITCH,TRANSMISSION OIL FILTER RESTRICTION (SER. NO. -590067)	0360 - 8
1E13	SWITCH,TRANSMISSION OIL FILTER RESTRICTION (SER. NO. 590068-)	0360 - 9A

T

1I5	TANK, FUEL	0560 - 2
2E13	TANK, WINDOW WASHER	1810 - 6
2C7	TCU (S.N. 590068-)	1674 - 9A
2C15	TCU (SER. NO. -590067)	1674 - 15
3B13	TEETH, LOADER BUCKET	3102 - 6
2H1	TEMPERATURE CONTROL	1830 - 2
1G8	TEMPERATURE SENSOR	0418 - 2
3C22	TEMPERATURE SENSOR, HYDRAULIC OIL	3160 - 22
1D11	TEMPERATURE SENSOR, TRANSMISSION	0350 - 26
2D15	TERMINALS, DEUTSCH	1674 - 53
2D16	TERMINALS, SUPPLEMENTARY	1674 - 58
1K12	TEST KIT, FLUID ANALYSIS PRODUCTS (COOLSCAN)	1369 - 6
1K13	TEST KIT, FLUID ANALYSIS PRODUCTS (DIESELSCAN)	1369 - 7
1K10	TEST KIT, FLUID ANALYSIS PRODUCTS (OILSCAN)	1369 - 4
1E15	THERMAL BYPASS VALVE LINES, TRANSMISSION	0360 - 10
1E15	THERMAL BYPASS VALVE, TRANSMISSION	0360 - 10
1G8	THERMOSTAT HOUSING	0418 - 2
2H3	THERMOSTAT, A/C AND HEATER SWITCH	1830 - 3A
1G8	THERMOSTATS	0418 - 2
3F7	THREE SPOOL HYDRAULIC VALVE HOSES	3163 - 4
3F7	THREE SPOOL HYDRAULIC VALVE LINES	3163 - 4
3F7	THREE SPOOL HYDRAULIC VALVE PLUMBING	3163 - 4
3C6	THREE SPOOL LOADER CONTROL VALVE	3160 - 6
1E23	THRUST WASHERS	0401 - 3
1F1	TIMING GEAR COVER (HDW)	0402 - 2
1F1	TIMING GEAR COVER GASKET (HDW)	0402 - 2
1F12	TIMING PIN PLUG (BLOCK)	0404 - 2
1K7	TORQ-GARD ENGINE OIL	1369 - 1
1C18	TRANSMISSION	0350 - 2
1D7	TRANSMISSION AND HYDRULIC PUMP DRIVE SHAFT	0350 - 22
2C7	TRANSMISSION CONTROL UNIT (S.N. 590068-)	1674 - 9A
2C15	TRANSMISSION CONTROL UNIT (SER. NO. -590067)	1674 - 15
1D11	TRANSMISSION CONTROL VALVE	0350 - 26
1D13	TRANSMISSION CONTROL VALVE MANIFOLD	0350 - 28
1C18	TRANSMISSION EXTERNAL FITTINGS	0350 - 2
1E15	TRANSMISSION EXTERNAL OIL LINES	0360 - 10
1E7	TRANSMISSION FITTING SCREEN	0350 - 50
1C24	TRANSMISSION HOUSING	0350 - 10
1E15	TRANSMISSION LINES, THERMAL BYPASS VALVE	0360 - 10
1C16	TRANSMISSION MOUNTING BRACKETS	0342 - 2
1H13	TRANSMISSION OIL COOLER	0511 - 2
1E9	TRANSMISSION OIL FILL	0360 - 2
1E3	TRANSMISSION OIL FILL COVER	0350 - 46
1E5	TRANSMISSION OIL FILTER	0350 - 48
1E11	TRANSMISSION OIL FILTER (SER. NO. -590067)	0360 - 8
1E13	TRANSMISSION OIL FILTER (SER. NO. 590068-)	0360 - 9A
1E11	TRANSMISSION OIL FILTER ELEMENT (SER. NO. -590067)	0360 - 8
1E13	TRANSMISSION OIL FILTER ELEMENT (SER. NO. 590068-)	0360 - 9A
1E11	TRANSMISSION OIL FILTER HOSES (SER. NO. -590067)	0360 - 8
1E13	TRANSMISSION OIL FILTER HOSES (SER. NO. 590068-)	0360 - 9A
1E11	TRANSMISSION OIL FILTER RESTRICTION SWITCH (SER. NO. -590067)	0360 - 8
1E13	TRANSMISSION OIL FILTER RESTRICTION SWITCH (SER. NO. 590068-)	0360 - 9A
1D3	TRANSMISSION OIL LINES	0350 - 14
1D1	TRANSMISSION OIL LINES (CONTROL VALVE) (SER. NO. 586280-)	0350 - 12
1D5	TRANSMISSION OIL PUMP	0350 - 18
2H20	TRANSMISSION SHIELDS	1913 - 2
1E9	TRANSMISSION SIGHT GAUGE	0360 - 2
1E3	TRANSMISSION SPEED SENSOR	0350 - 46
1E5	TRANSMISSION SUCTION SCREEN	0350 - 48
1D11	TRANSMISSION TEMPERATURE SENSOR	0350 - 26
1E15	TRANSMISSION THERMAL BYPASS VALVE	0360 - 10
1C14	TRANSMISSION TO FRONT DIFFERENTIAL DRIVE SHAFTS	0325 - 2
2C22	TRANSMISSION WIRING HARNESS (SER. NO. -590067)	1674 - 24
2C24	TRANSMISSION WIRING HARNESS (SERIAL NO. 590068-)	1674 - 25A
2C22	TRANSMISSION WIRING HARNESS, HARSH ENVIRONMENT (SER. NO.-590067)	1674 - 24
1C18	TRANSMISSION, REMANUFACTURED	0350 - 2
2J3	TRAY, ASH	2006 - 2
1B21	TUBE, LEAKAGE RETURN	0210 - 18
1F1	TUBE, OIL FILL (HDW)	0402 - 2
1G5	TURBORCHARGER AND OIL LINES	0416 - 1
2B16	TURN AND MARKER LIGHT	1673 - 4
2B18	TURN LAMP	1673 - 6
2B18	TURN LIGHT	1673 - 6
2C17	TURN SIGNAL FLASHER RELAY (S.N. -590067)	1674 - 17
3E9	TWO LEVER CONTROLLER (SERIAL NO. - 590067)	3162 - 22
3E11	TWO LEVER CONTROLLER (SERIAL NO. 590068-	3162 - 24
3E9	TWO LEVER CONTROLLER FITTINGS (SER. NO. -590067)	3162 - 22
3E11	TWO LEVER CONTROLLER FITTINGS (SER. NO. 590068-)	3162 - 24
3E13	TWO LEVER CONTROLLER MOUNTING PLATE AND HOSES (SER. NO. -590067)	3162 - 26
3E11	TWO LEVER CONTROLLER MOUNTING PLATE AND HOSES (SER. NO. 590068-)	3162 - 24
3E9	TWO LEVER CONTROLLER MOUTING PLATE AND HOSES (SER. NO. -590067)	3162 - 22
3E13	TWO LEVER CONTROLLER WITH AUX. (SERIAL NO. -590067)	3162 - 26
3E13	TWO LEVER CONTROLLER WITH AUX. FITTINGS (SER. NO. -590067)	3162 - 26
3E15	TWO LEVER CONTROLLER WITH AUX.(SERIAL NO. 590068-)	3162 - 28
3E19	TWO LEVER PILOT CONTROLLER	3162 - 32
3E19	TWO LEVER PILOT CONTROLLER BOOT	3162 - 32
3E19	TWO LEVER PILOT CONTROLLER COMPONENTS	3162 - 32
3E19	TWO LEVER PILOT CONTROLLER SOLENOID	3162 - 32

ALPHABETICAL INDEX - CONTINUED

GRID		PAGE
3E15	TWO LEVER PILOT CONTROLLER WITH AUX. AND HYDRAULIC HOSES (SER. NO. 590068-)	3162 - 28
3E17	TWO LEVER PILOT CONTROLLER WITH DUAL AUX. CONTROLLERS (SER.NO. -590067)	3162 - 30
3E17	TWO LEVER PILOT CONTROLLER WITH DUAL AUX (SER. NO. -590067)	3162 - 30
3D22	TWO LEVER TO JOYSTICK CONVERSION KIT (SER. NO. 590068-)	3162 - 8
3E3	TWO LEVER WITH AUX. TO JOYSTICK WITH AUX. CONVERSION KIT (SER. NO. 590068-)	3162 - 14
3F5	TWO SPOOL HYDRAULIC VALVE HOSES	3163 - 2
3F5	TWO SPOOL HYDRAULIC VALVE LINES	3163 - 2
3F5	TWO SPOOL HYDRAULIC VALVE PLUMBING	3163 - 2
3C6	TWO SPOOL LOADER CONTROL VALVE	3160 - 6

U

3C16	UNIVERSAL RELIEF VALVE BUCKET AND AUXILIARY SECTION	3160 - 16

V

1F6	VALVE BRIDGE	0402 - 8
3C5	VALVE COMPONENTS, PIN DISCONNECT	3160 - 4
3C3	VALVE COMPONENTS, PIN DISCONNECT (SERIAL NO. - 590067)	3160 - 3C
3D8	VALVE COMPONENTS, RIDE CONTROL	3160 - 63A
1F24	VALVE GUIDE	0409 - 2
1E15	VALVE LINES, TRANSMISSION THERMAL BYPASS	0360 - 10
1F24	VALVE SEAT INSERTS	0409 - 2
3C12	VALVE, ANTI-CAVITY, BOOM SECTION	3160 - 12
3C18	VALVE, AUXILIARY SECTION	3160 - 18
3C10	VALVE, BOOM SECTION	3160 - 10
1J5	VALVE, BRAKE	1062 - 2
3C14	VALVE, BUCKET SECTION	3160 - 14
1G10	VALVE, BYPASS, ENGINE	0419 - 2
1D11	VALVE, CONTROL, TRANSMISSION	0350 - 26
2D24	VALVE, ENGINE OIL DRAIN	1746 - 2
1I9	VALVE, FAST FILL FUEL	0560 - 6
3C8	VALVE, INLET SECTION WITH RELIEF VALVE	3160 - 8
3C6	VALVE, LOADER CONTROL (2 OR 3-SPOOL)	3160 - 6
1F19	VALVE, OIL PAN DRAIN	0407 - 6
3B24	VALVE, PIN DISCONNECT (SER. NO. -590067)	3160 - 2
3C1	VALVE, PIN DISCONNECT (SER. NO. 590068-)	3160 - 3A
1G10	VALVE, PRESSURE REGULATING, ENGINE	0419 - 2
3D3	VALVE, PRESSURE REGULATOR (SER. NO. -590067)	3160 - 58
3D7	VALVE, PRESSURE REGULATOR FITTINGS (SER. NO. -590067)	3160 - 62
3D10	VALVE, PRESSURE REGULATOR FITTINGS (SER. NO. 590068-)	3160 - 64
2J8	VALVE, PRI0RITY	2162 - 2
1G10	VALVE, RELIEF, ENGINE	0419 - 2
3D8	VALVE, RIDE CONTROL	3160 - 63A
1J14	VALVE, SOLENOID, PARK BRAKE	1162 - 2
1J1	VALVE, STEERING	0962 - 10
1I22	VALVE, STEERING, BRACKET	0962 - 6
1E15	VALVE, TRANSMISSION THERMAL BYPASS	0360 - 10
3C16	VALVE, UNIVERSAL RELIEF, BUCKET AND AUXILIARY SECTION	3160 - 16
3C3	VALVE,PIN DISCONNECT (SERIAL NO. - 590067)	3160 - 3C
1K16	VALVES, ENVIRONMENTAL DRAIN	1369 - 12A
1F24	VALVES, EXHAUST	0409 - 2
1F24	VALVES, INTAKE	0409 - 2
2C18	VEHICLE ELECTRICAL CENTER (S.N. 590068-)	1674 - 18
1F22	VENT HOSE	0408 - 1
1F5	VENT, CRANKCASE	0402 - 6
2J4	VISOR, SUN	2007 - 2

W

1E23	WASHERS, THRUST	0401 - 3
1G8	WATER MANIFOLD	0418 - 2
1G8	WATER MANIFOLD BYPASS HOSE	0418 - 2
1G8	WATER MANIFOLD COVER	0418 - 2
1G8	WATER MANIFOLD GASKET	0418 - 2
1G6	WATER PUMP	0417 - 2
1G6	WATER PUMP BEARINGS	0417 - 2
1G6	WATER PUMP FILTER	0417 - 2
1G6	WATER PUMP GASKET	0417 - 2
1G6	WATER PUMP IMPELLER	0417 - 2
1G6	WATER PUMP PULLEY	0417 - 2
1G6	WATER PUMP REPAIR KIT	0417 - 2
1G6	WATER PUMP SEAL	0417 - 2
1B2	WHEEL	0110 - 1
1B2	WHEEL VALVE STEM	0110 - 1
1E21	WHEEL, CRANKSHAFT	0401 - 1
1I18	WHEEL, STEERING (SER. NO. -590067)	0962 - 2
1I20	WHEEL, STEERING (SER. NO. 590068-)	0962 - 4
2E13	WINDOW WASHER PUMP	1810 - 6
2E13	WINDOW WASHER TANK	1810 - 6
2E13	WINDOW WASHER TANK CAP	1810 - 6
2E13	WINDOW WASHER, FRONT AND REAR	1810 - 6
2E19	WINDOWS	1810 - 12
2F3	WINDSHIELD WIPER (FRONT)	1810 - 20
2F1	WINDSHIELD WIPER, REAR	1810 - 18
2F3	WIPER ARM (FRONT)	1810 - 20
2F1	WIPER BLADE	1810 - 18
2F3	WIPER BLADE (FRONT)	1810 - 20
2F11	WIPER CAB SWITCH	1810 - 24
2F11	WIPER MOUNTING BRACKETS	1810 - 24
2D10	WIRE LEAD KIT	1674 - 46
2D12	WIRE LEAD KIT	1674 - 48
2C1	WIRING HARNESS, BLOWER AND A/C	1674 - 4
2C5	WIRING HARNESS, CAB (S.N. -590067)	1674 - 8
2C7	WIRING HARNESS, CAB (S.N. 590068-)	1674 - 9A
2D1	WIRING HARNESS, ENGINE FRAME (SERIAL NO. -590067)	1674 - 26
2D3	WIRING HARNESS, ENGINE FRAME (SERIAL NO. 590068-)	1674 - 27A
1G2	WIRING HARNESS, EUI (ENGINE)	0413 - 2
2B25	WIRING HARNESS, FRONT CONSOLE (SER. NO. 590068-)	1674 - 3A
2C5	WIRING HARNESS, LOAD CENTER (S.N. -590067)	1674 - 8
2C7	WIRING HARNESS, LOAD CENTER (S.N. 590068-)	1674 - 9A
2D5	WIRING HARNESS, LOADER FRAME (SER. NO. -590067)	1674 - 28

ALPHABETICAL INDEX - CONTINUED

GRID		PAGE
2D7	WIRING HARNESS, LOADER FRAME (SERIAL NO. 590068-)	1674 - 29A
3B24	WIRING HARNESS, PIN DISCONNECT (SER. NO. -590067)	3160 - 2
3C1	WIRING HARNESS, PIN DISCONNECT (SER. NO. 590068-)	3160 - 3A
2D1	WIRING HARNESS, REAR FRAME (SERIAL NO. -590067)	1674 - 26
2D3	WIRING HARNESS, REAR FRAME (SERIAL NO. 590068-)	1674 - 27A
3D14	WIRING HARNESS, RIDE CONTROL	3160 - 68
2C22	WIRING HARNESS, TRANSMISSION (SER. NO. -590067)	1674 - 24
2C24	WIRING HARNESS, TRANSMISSION (SERIAL NO. 590068-)	1674 - 25A
2B25	WIRING, FRONT DASH MODULE (SER. NO. 590068-)	1674 - 3A
2B20	WORK LAMP, FRONT AND REAR	1673 - 8
2G3	WRIST ARM REST (SER. NO. 590068-)	1816 - 3A
2G1	WRIST ARM REST (USE ONLY WITH TWO-LEVER CONTROLLERS)(SER. NO. -590067)	1816 - 2

Y

1B6	YOKE, INPUT	0210 - 1

WHEEL ASSEMBLY

TP60504 -UN-23SEP98

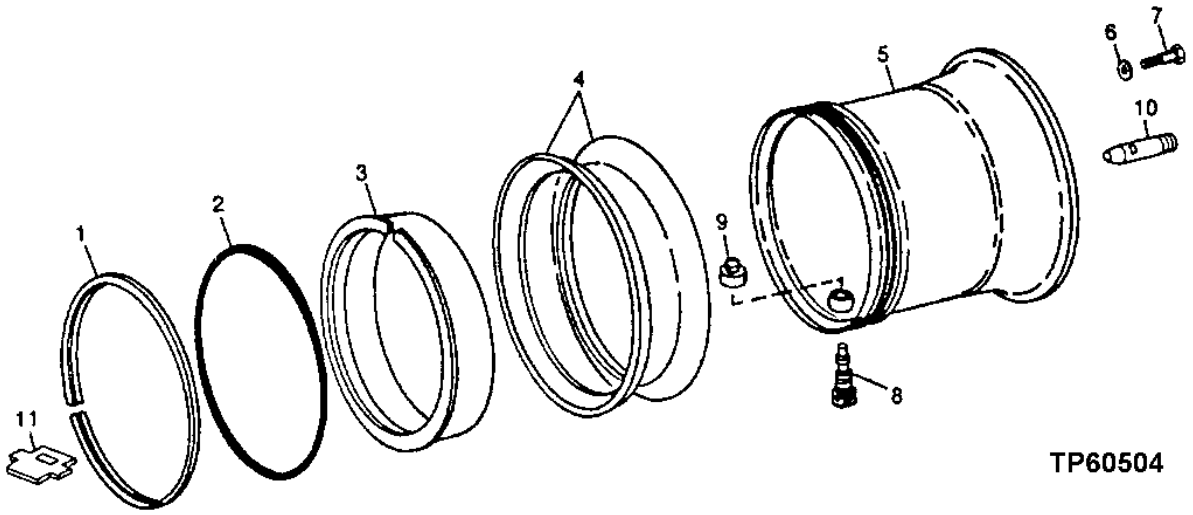

KEY	PART NO.	PART NAME	QTY	SERIAL NO.	REMARKS
1	T55258	WHEEL RING	1		LOCK
2	R29480	O-RING	1		
3	AT207399	RING	1		BEADED, (USE WITH AT207398)
	AT207308	RING	1		BEADED, (USE WITH AT207309 AND AT226603)
4	R29477	WHEEL RING	2		(SIDE RING) (USE WITH AT207398)
	T34960	WHEEL RING	2		(SIDE RING) (USE WITH AT207309)
	T71671	WHEEL RING	2		(SIDE RING) (USE WITH AT226603)
5	AT207398	WHEEL	1		25 X 19.5 RIM (23.5 INCH WIDE TIRE)
	AT207309	WHEEL	1		25 X 22 RIM (26.5 INCH WIDE TIRE)
	AT226603	WHEEL	1		25 X 25 RIM (29.5 INCH WIDE TIRE)
6	24M7243	WASHER	14		25.400 X 50 X 6 MM
7	19M8346	CAP SCREW	14		M24 X 70
8	AT67275	TIRE VALVE STEM	1		
9	15H709	FITTING	1		2"
10	T169835	STUD	3		(USE WITH AT207398 RIM)
	T169836	STUD	3		(USE WITH AT207309 AND AT207398 RIM)
11	T168523	KEY	1		

AXLES

TP33953 -UN-01JAN94

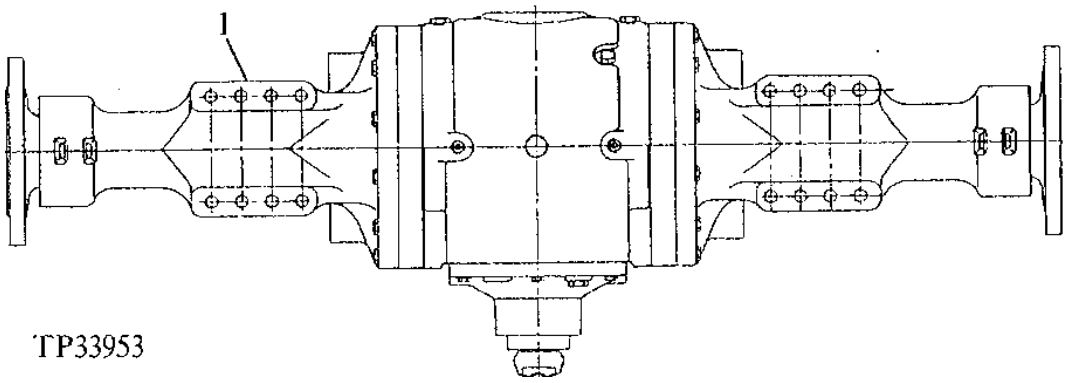

KEY	PART NO.	PART NAME	QTY	SERIAL NO.	REMARKS
1	**YZ18308**	**AXLE WITH DIFFERENTIAL**	**1**		**FRONT, ROAG252, STD DIFF, NON-OSC (CONVENIENCE ASSEMBLY)**
	YZ18343	**AXLE WITH DIFFERENTIAL**	**1**		**FRONT, ROAG252, DIFF LOCK, NON-OSC (CONVENIENCE ASSEMBLY)**
	YZ18790	**AXLE WITH DIFFERENTIAL**	**1**		**(SUB FOR YZ18344) REAR, ROAG252, STD DIFF, OSC (CONVENIENCE ASSEMBLY)**
	YZ18791	**AXLE WITH DIFFERENTIAL**	**1**		**(SUB FOR YZ18345) REAR, ROAG252, DIFF LOCK, OSC (CONVENIENCE ASSEMBLY)**

INPUT YOKE

(RE64270)
RXP6900 -UN-01JAN94

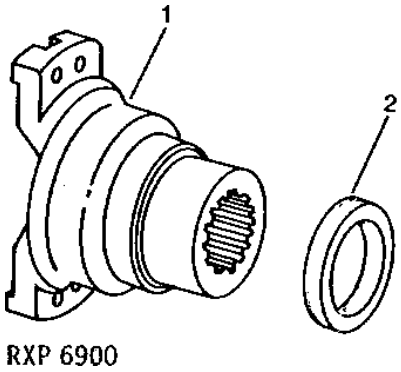

KEY	PART NO.	PART NAME	QTY	AXLE SERIAL NO.	REMARKS
1	R128665	YOKE	1		
2	AT314207	SEAL	1		(SUB FOR RE45315)
	R100500	SEAL	1		

FRONT SPIRAL BEVEL INPUT PINION AND RING GEAR SET

(YZ120347)
RXP6492 -UN-01JAN94

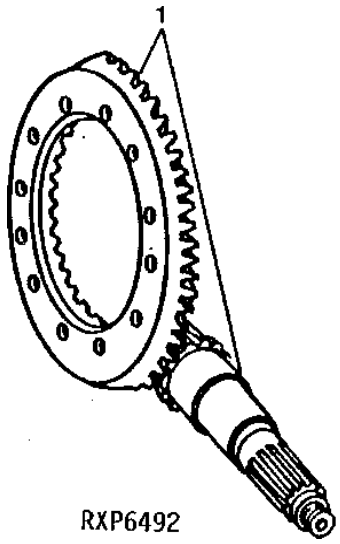

KEY	PART NO.	PART NAME	QTY	AXLE SERIAL NO.	REMARKS
1	YZ120411	GEAR	1		L.H. ASSEMBLY, (MARKED YZ120409 AND YZ120331) (ALSO ORDER RE50117)

REAR SPIRAL BEVEL INPUT PINION AND RING GEAR SET

(YZ120356)
RXP6492 -UN-01JAN94

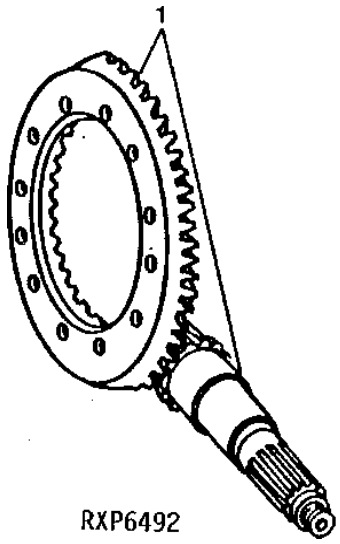

KEY	PART NO.	PART NAME	QTY	AXLE SERIAL NO.	REMARKS
1	YZ120412	GEAR	1		R.H. ASSEMBLY, (MARKED YZ120410 AND YZ120360) (ALSO ORDER RE50117)

FRONT INPUT BEARING AND COVER (NON OSCILLATING)

(RE53913)
RXP021421 -UN-24JAN96

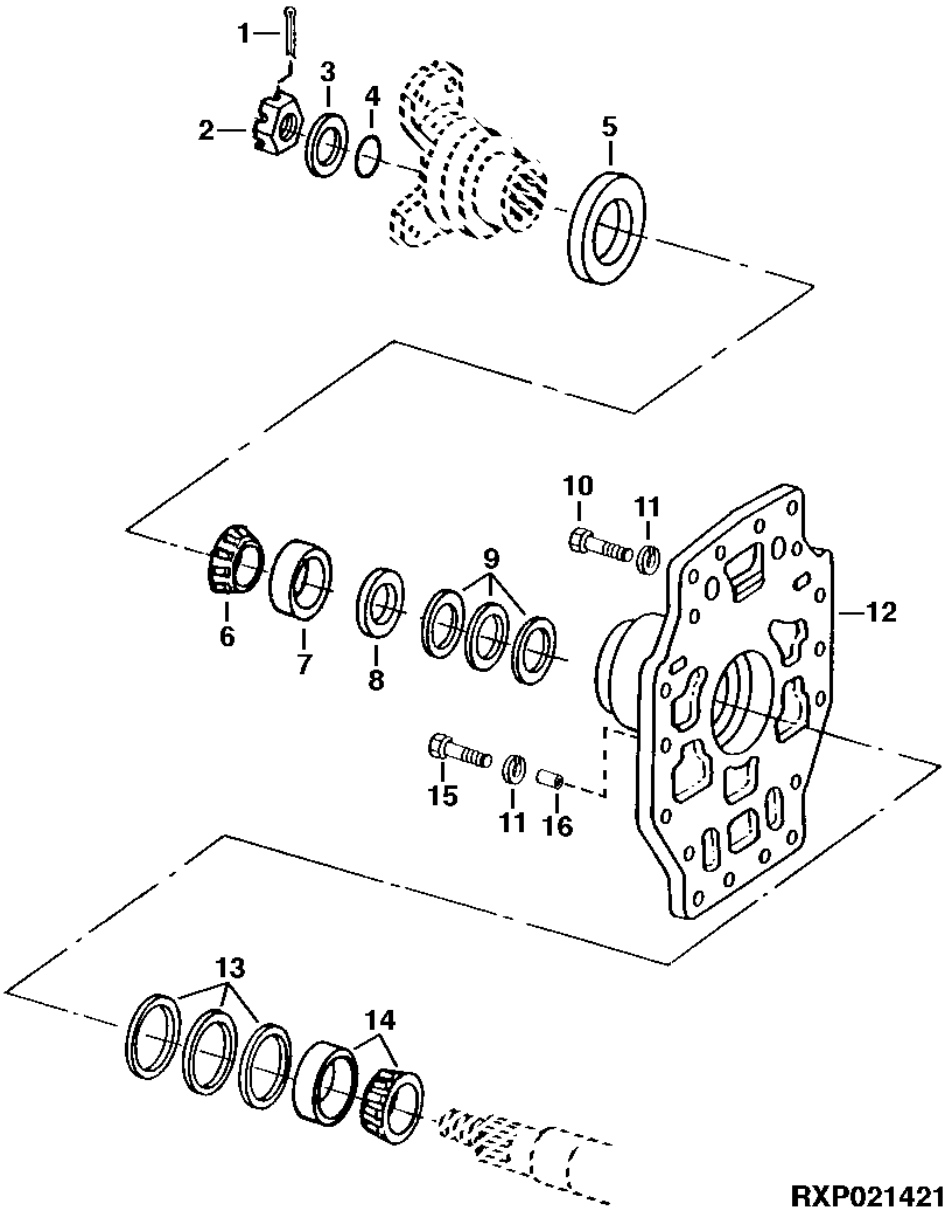

FRONT INPUT BEARING AND COVER (NON OSCILLATING)

KEY	PART NO.	PART NAME	QTY	AXLE SERIAL NO.	REMARKS
1	11M7085	COTTER PIN	1		0.248" X 2.480"
2	R47598	NUT	1		
3	R48629	SPACER	AR		14.224MM(0.56")
	R48630	SPACER	AR		14.224MM(0.56")
	R48631	SPACER	AR		14.224MM(0.56")
4	R44181	O-RING	1		
5	AR79581	SEAL	1		
6	JD8970	BEARING CONE	1		
7	JD8264	BEARING CUP	1		
8	R75639	WASHER	1		
9	R47593	SHIM	AR		0.178MM(0.007")
	R47594	SHIM	AR		0.254MM(0.010")
	R47595	SHIM	AR		0.305MM(0.012")
	R47596	SHIM	AR		0.381MM(0.015")
10	19M7409	CAP SCREW	16		M16 X 50
11	R135543	WASHER	18		
12	R119300	COVER	1		
13	R81362	SHIM	AR		0.076MM(0.003")
	R81363	SHIM	AR		0.127MM(0.005")
	R81364	SHIM	AR		0.254MM(0.010")
14	RE48761	TAPERED ROLLER BEARING	1		
15	19M7759	CAP SCREW	2		M16 X 60
16	T14386	BUSHING	2		
..	UN7189	SEALANT	AR		

REAR INPUT BEARING AND COVER (NON OSCILLATING)

(YZ120454)
YZ3502B -UN-01MAR05

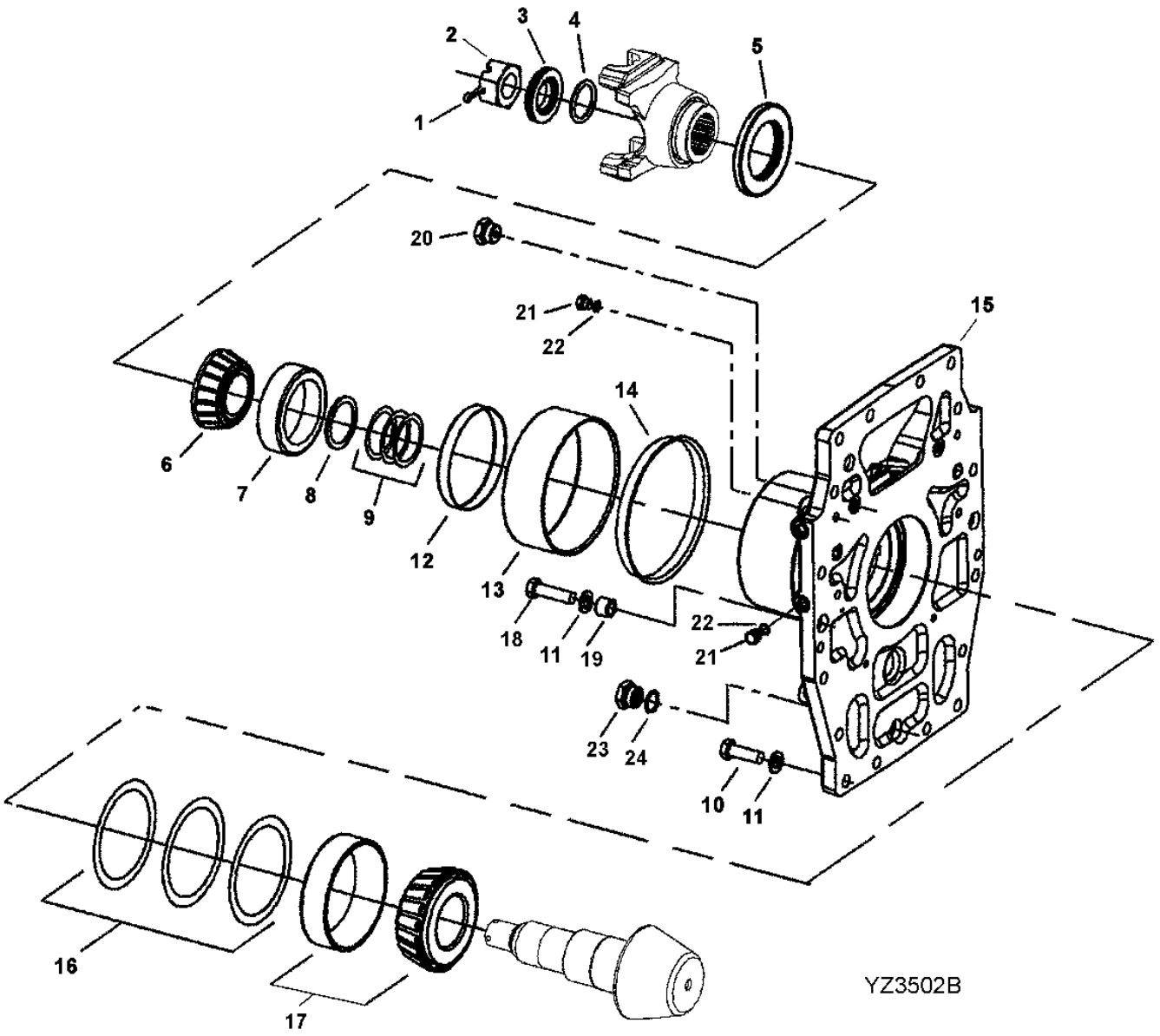

REAR INPUT BEARING AND COVER (NON OSCILLATING)

KEY	PART NO.	PART NAME	QTY	AXLE SERIAL NO.	REMARKS
1	11H250	COTTER PIN	1		1/4" X 2-1/2"
2	R47598	NUT	1		
3	R48629	SPACER	AR		
	R48630	SPACER	AR		
	R48631	SPACER	AR		
4	R44181	O-RING	1		
5	AR79581	SEAL	1		
6	JD8970	BEARING CONE	1		
7	JD8264	BEARING CUP	1		
8	R75639	WASHER	1		
9	R47593	SHIM	AR		
	R47594	SHIM	AR		
	R47595	SHIM	AR		
	R47596	SHIM	AR		
10	19M7409	CAP SCREW	16		M16 X 50
11	R135543	WASHER	18		
12	R68201	SLEEVE	1		
13	R65789	BUSHING	1		
14	YZ120340	SLEEVE	1		
15	YZ120441	COVER	1		(SUB FOR YZ120342)
16	R81362	SHIM	AR		
	R81363	SHIM	AR		
	R81364	SHIM	AR		
17	RE48761	TAPERED ROLLER BEARING	1		(SUB FOR R115117 AND R115118)
18	19M7369	CAP SCREW	2		
19	T14386	BUSHING	2		
	UN7348	SEALANT	2		
20	.....	FITTING	2		(SUB F3171R AND R27175)
21	R27218	FITTING PLUG	8		
22	R26448	O-RING	8		
23	R76653	DRAIN PLUG	1		
24	U17409	O-RING	1		

REAR OSCILLATING DIFFERENTIAL SUPPORT

(YZ120365)
T209577 -UN-15MAR05

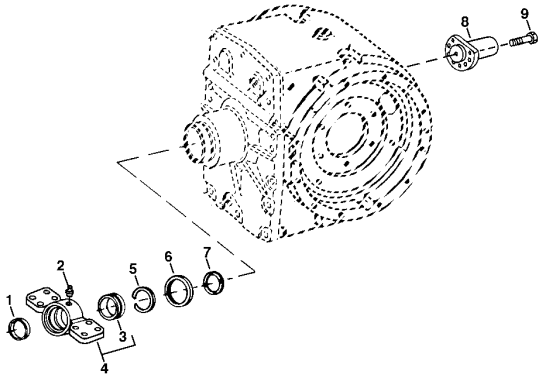

KEY	PART NO.	PART NAME T209577	QTY	AXLE SERIAL NO.	REMARKS
1	AR94929	SEAL	1		
2	JD7759	LUBRICATION FITTING	1		
3	R72162	BUSHING	1		
4	RE50039	SUPPORT	1		(MARKED R112777)
5	R65793	SNAP RING	1		
6	YZ120341	SEAL	1		
7	R65792	THRUST WASHER	1		
8	R121629	PIN	1		
9	19M8634	CAP SCREW	13		

MEMORANDA

DIFFERENTIAL CASE

(YZ120316)
YZ3901 -UN-07OCT02

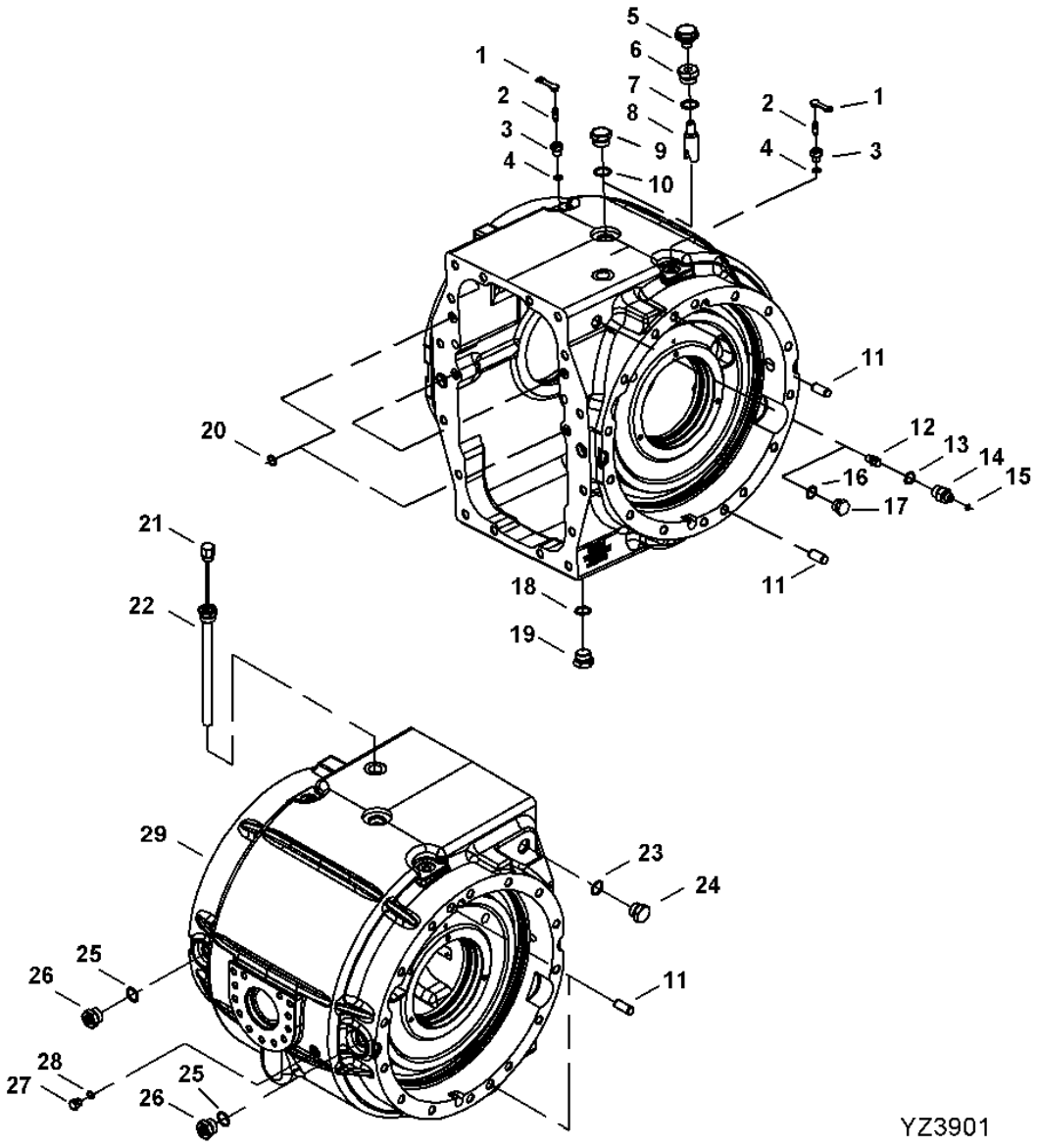

DIFFERENTIAL CASE

KEY	PART NO.	PART NAME	QTY	AXLE SERIAL NO.	REMARKS
1	YZ120455	PLUG	2		(SUB FOR (2) R100122)
2	R21612	BLEED VALVE	2		
3	R106789	BUSHING	2		
4	R26448	O-RING	2		
5	U43871	BREATHER	1		
6	R112210	ADAPTER	1		
7	U17409	O-RING	1		
8	R132574	STRUCTURAL TUBING	1		
9	R76653	DRAIN PLUG	1		
10	U17409	O-RING	1		
11	R54380	DOWEL PIN	4		
12	RE50431	CHECK VALVE	1		
13	T77814	O-RING	2		
14	R119239	ADAPTER	1		
15	R26906	O-RING	1		
16	R26906	O-RING	1		
17	R27474	DRAIN PLUG	1		
18	F3171R	O-RING	1		
19	R27175	DRAIN PLUG	1		(SUB FOR R84262)
20	R375R	O-RING	4		
21	YZ120145	DIPSTICK	1		
22	RE70328	DIPSTICK TUBE	1		
23	F3171R	O-RING	1		
24	R27175	DRAIN PLUG	1		
25	F3171R	O-RING	2		
26	R84262	FITTING PLUG	2		
27	R27218	FITTING PLUG	1		
28	R26448	O-RING	1		
29	YZ120314	CASE	1		

DIFFERENTIAL CASE COVER

RXP021464 -UN-20FEB96

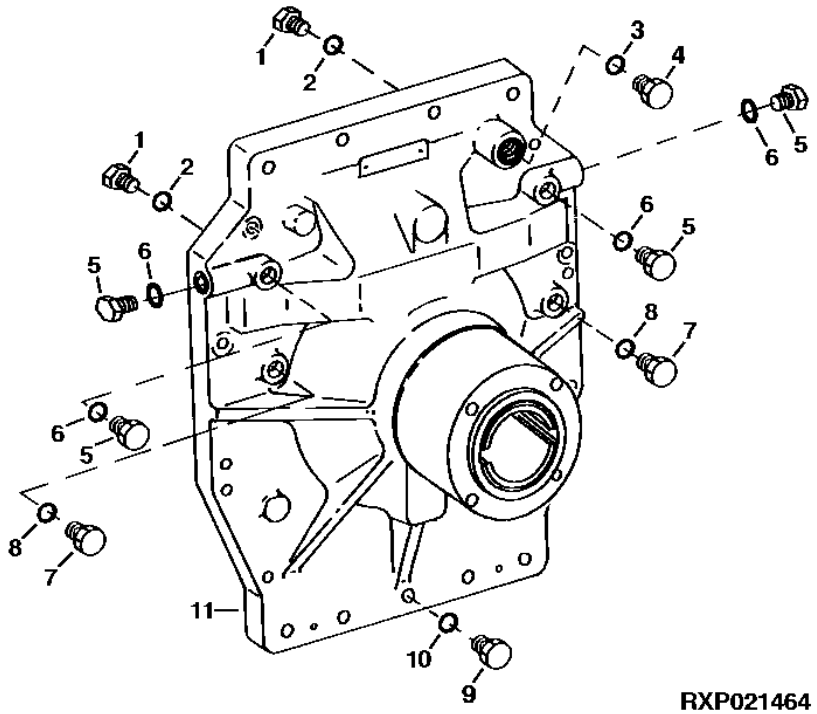

KEY	PART NO.	PART NAME	QTY	AXLE SERIAL NO.	REMARKS
1	R27218	FITTING PLUG	2		
2	R26448	O-RING	2		
3	F3171R	O-RING	1		
4	R27175	DRAIN PLUG	1		
5	R27218	FITTING PLUG	4		
6	R26448	O-RING	4		
7	R27218	FITTING PLUG	2		
8	R26448	O-RING	2		
9	R76653	DRAIN PLUG	1		
10	U17409	O-RING	1		
11	YZ120340	SLEEVE	1		(SUB FOR R119301) REAR
	YZ120341	SEAL	1		(SUB FOR R119301) REAR
	YZ120342	COVER	1		(SUB FOR R119301) REAR
	R119300	COVER	1		FRONT

MEMORANDA

STANDARD DIFFERENTIAL

(YZ120420)
YZ3505 -UN-01OCT02

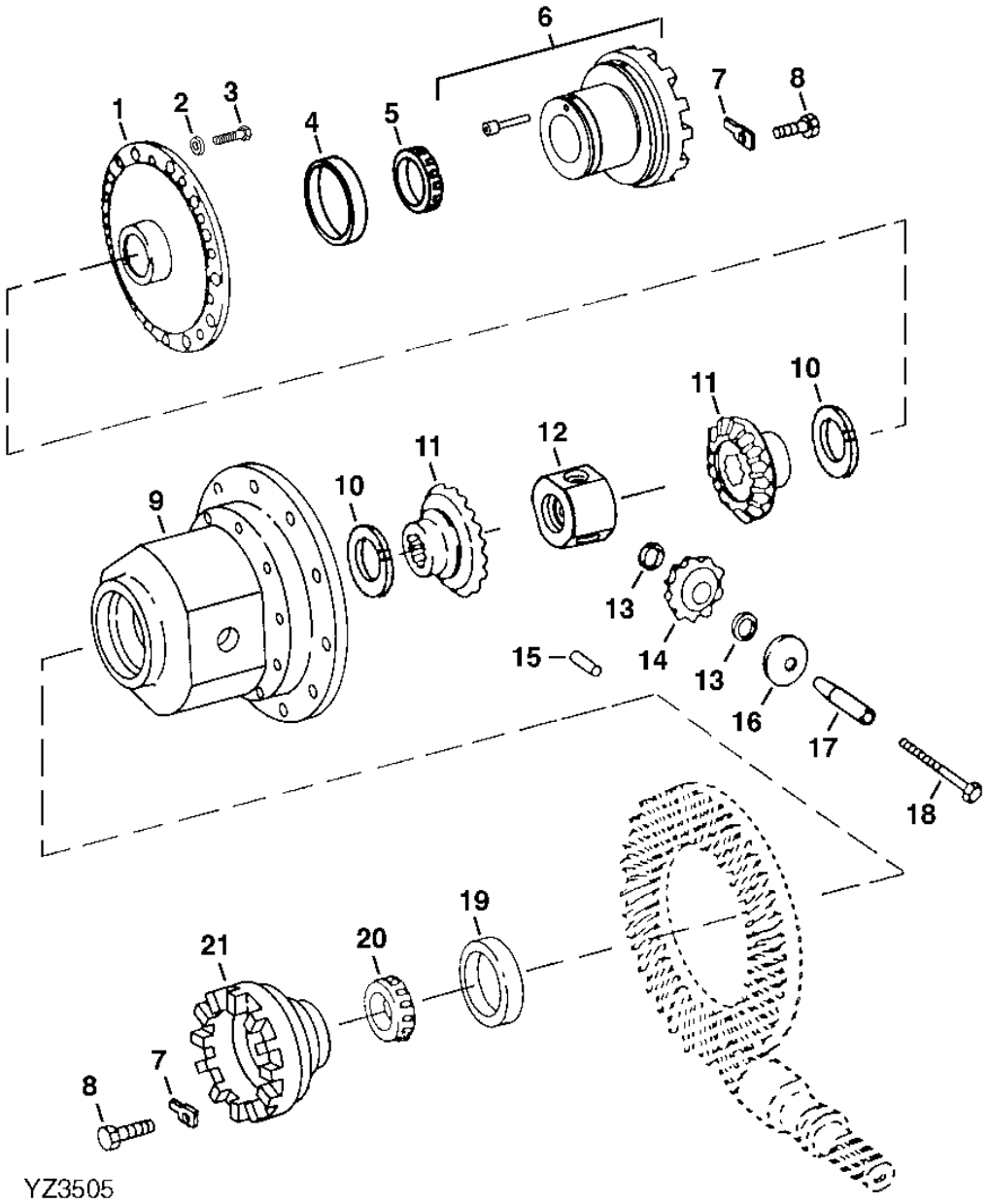

STANDARD DIFFERENTIAL

KEY	PART NO.	PART NAME	QTY	AXLE SERIAL NO.	REMARKS
1	YZ120407	COVER	1		
2	R135543	WASHER	18		
3	19H3707	CAP SCREW	18		
4	JD9127	BEARING CUP	1		
5	JD9069	BEARING CONE	1		
6	RE64806	BEARING HOUSING W/O BEARING	1		
7	R109822	LOCK PLATE	2		
8	R88246	CAP SCREW	2		
9	YZ120408	HOUSING	1		
10	R99466	THRUST WASHER	2		
11	R109489	BEVEL GEAR	2		
12	R129557	HUB	1		
13	R68167	WASHER	6		
14	R134733	PINION	3		
15	R55081	NEEDLE ROLLER	54		
16	R68166	THRUST WASHER	3		
17	R115566	SHAFT	3		
18	R115567	SCREW	3		
19	JD8214	BEARING CUP	1		
20	JD8191	BEARING CONE	1		
21	R111410	BEARING HOUSING W/O BEARING	1		

DIFFERENTIAL LOCK

(YZ120421)
YZ3506 -UN-02OCT02

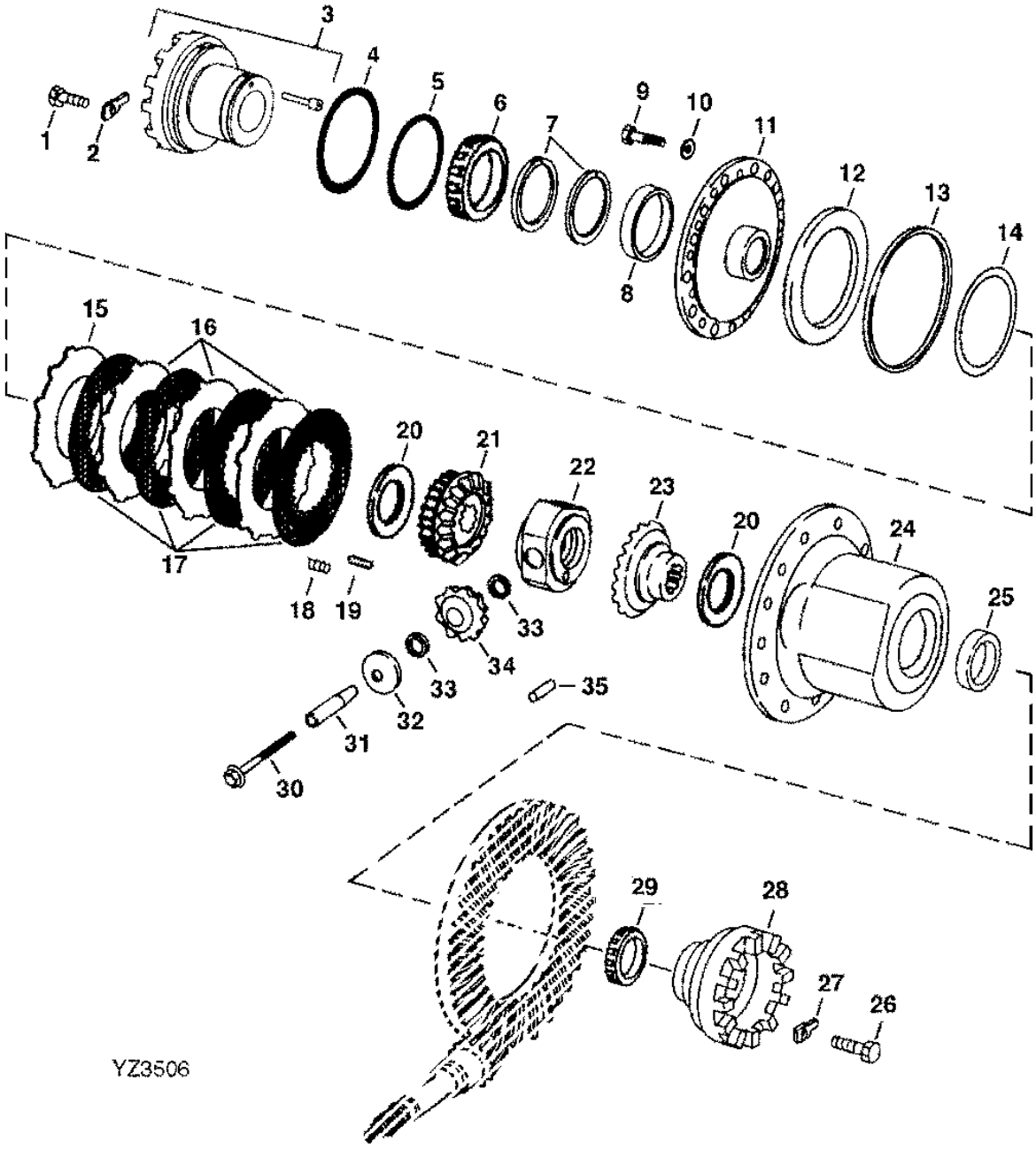

DIFFERENTIAL LOCK

KEY	PART NO.	PART NAME	QTY	AXLE SERIAL NO.	REMARKS
1	R88246	CAP SCREW	1		
2	R109822	LOCK PLATE	1		
3	RE64806	BEARING HOUSING W/O BEARING	1		
4	R59384	O-RING	1		
5	R84609	O-RING	1		
6	JD9069	BEARING CONE	1		
7	R109820	RING	2		
8	JD9127	BEARING CUP	1		
9	19H3707	CAP SCREW	18		(SUB FOR R135434)
10	R135543	WASHER	18		
11	YZ120417	COVER	1		
12	R67045	PISTON	1		
13	R67047	WASHER	1		
14	R67046	WASHER	1		
15	R109486	CLUTCH DISK	1		
16	R135183	CLUTCH DISK	3		
17	RE64004	DISK WITH INNER SPLINE	3		
18	34H100	SPRING PIN	3		
19	R41770	SPRING	3		
20	R99466	THRUST WASHER	1		(SUB FOR R126002)
21	R128328	GEAR	1		
22	R129557	HUB	1		
23	R109489	BEVEL GEAR	1		
24	YZ120418	HOUSING	1		
25	JD8214	BEARING CUP	1		
26	R88246	CAP SCREW	1		
27	R109822	LOCK PLATE	1		
28	R111410	BEARING HOUSING W/O BEARING	1		
29	JD8191	BEARING CONE	1		
30	R115567	SCREW	3		
31	R115566	SHAFT	3		
32	R68166	THRUST WASHER	3		
33	R68167	WASHER	6		
34	R134733	PINION	3		(SUB FOR R67784)
35	R55081	NEEDLE ROLLER	54		

LEAKAGE RETURN TUBE

(YZ120421)
YZ3508 -UN-04OCT02

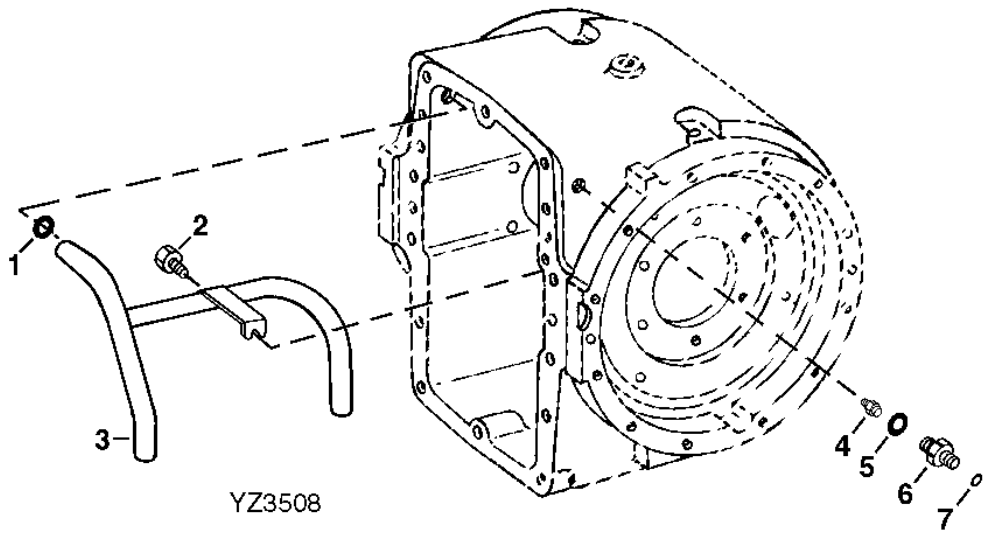

KEY	PART NO.	PART NAME	QTY	AXLE SERIAL NO.	REMARKS
1	R72328	O-RING	1		
2	T106596	SCREW	1		
3	RE54270	STRUCTURAL TUBING	1		
4	RE50431	CHECK VALVE	1		
5	T77814	O-RING	1		
6	R119239	ADAPTER	1		
7	R26906	O-RING	1		

MEMORANDA

DIFFERENTIAL SUPPORTS AND LUBRICATION LINES

T152922 -UN-22MAR02

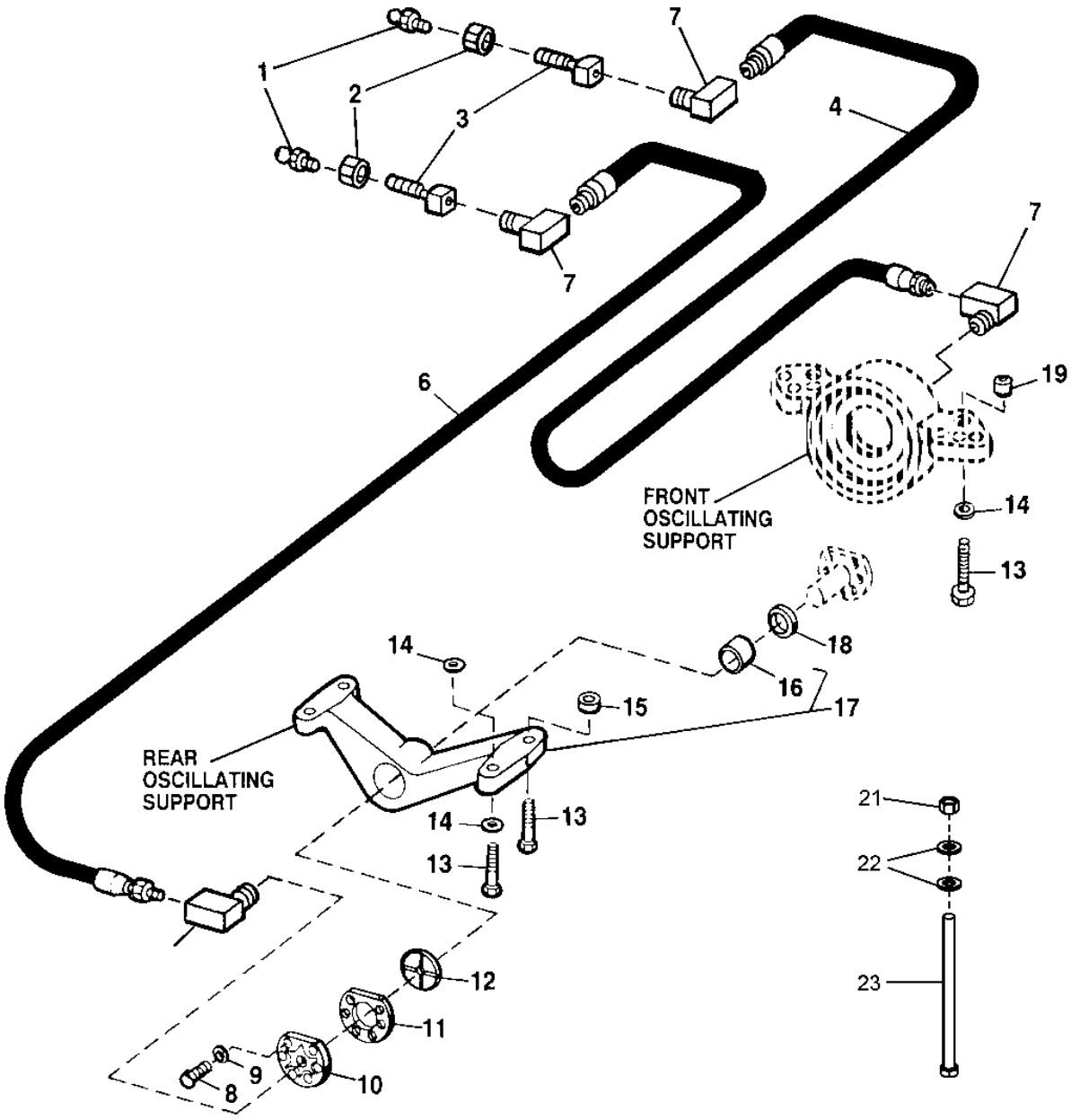

T152922

DIFFERENTIAL SUPPORTS AND LUBRICATION LINES

KEY	PART NO.	PART NAME	QTY	SERIAL NO.	REMARKS
1	JD7842	LUBRICATION FITTING	2		
2	E12379	NUT	2		
3	R36311	FITTING	2		
4	AT207022	HYDRAULIC HOSE	1		
6	AT64884	HYDRAULIC HOSE	1		1/8" X 2 000 MM (78-3/4") X 1/8"
7	T56112	ELBOW FITTING	3		
8	19M7791	BOLT	6		M12 X 40
9	24M7240	WASHER	6		13 X 25 X 3 MM
10	R97708	COVER	1		
11	R97709	SHIM	AR		0.13 MM (.005")
	R97711	SHIM	AR		0.25 MM(.010")
	R97712	SHIM	AR		1.00 MM (.040")
12	R97705	WASHER	1		
13	19M7968	CAP SCREW	12		M20 X 130
14	24M7242	WASHER	12		21.400 X 42 X 5 MM
15	30251	BUSHING	4		
16	R97707	BUSHING	1		
17	AT149818	SUPPORT	1		(MARKED T130527)
18	AT49859	SEAL	1		
19	T55738	BUSHING	2		
20	M45937	ELBOW FITTING	1		
21	14M7278	NUT	12		
22	24M7243	WASHER	24		
23	19M8961	CAP SCREW	12		

AXLE HOUSING AND SHAFT

(YZ120329 OR YZ120317)
YZ3900A -UN-10OCT03

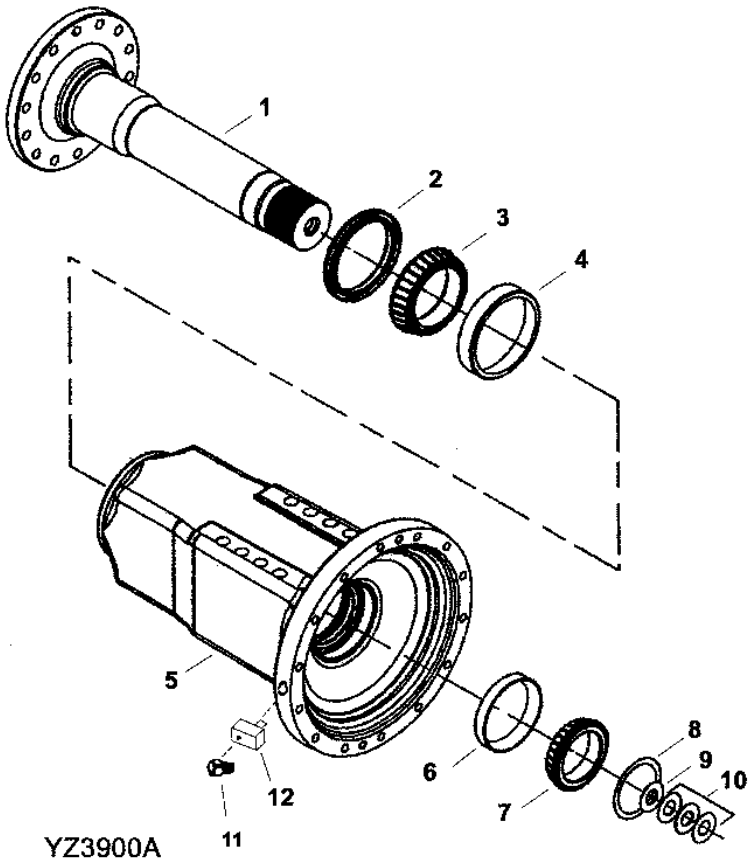

AXLE HOUSING AND SHAFT

KEY	PART NO.	PART NAME	QTY	AXLE SERIAL NO.	REMARKS
1	YZ120830	HALF AXLE	1		(SUB FOR YZ120343)
2	YZ120942	SEAL	1		(SUB FOR R121331)
3	JD9033	BEARING CONE	1		
4	JD8297	BEARING CUP	1		
5	R127806	HOUSING	1		(SUB FOR YZ120315)
6	JD9127	BEARING CUP	1		
7	JD9069	BEARING CONE	1		
8	R63237	SHIM	1		
9	R33330	WASHER	1		
10	R63247	SHIM	AR		
	R63248	SHIM	AR		
	R63246	SHIM	AR		
11	19M7560	CAP SCREW	1		
12	RE67831	PLUG	1		

PLANETARY FINAL DRIVE

(RE37954)
RXP021606 -UN-17JUN96

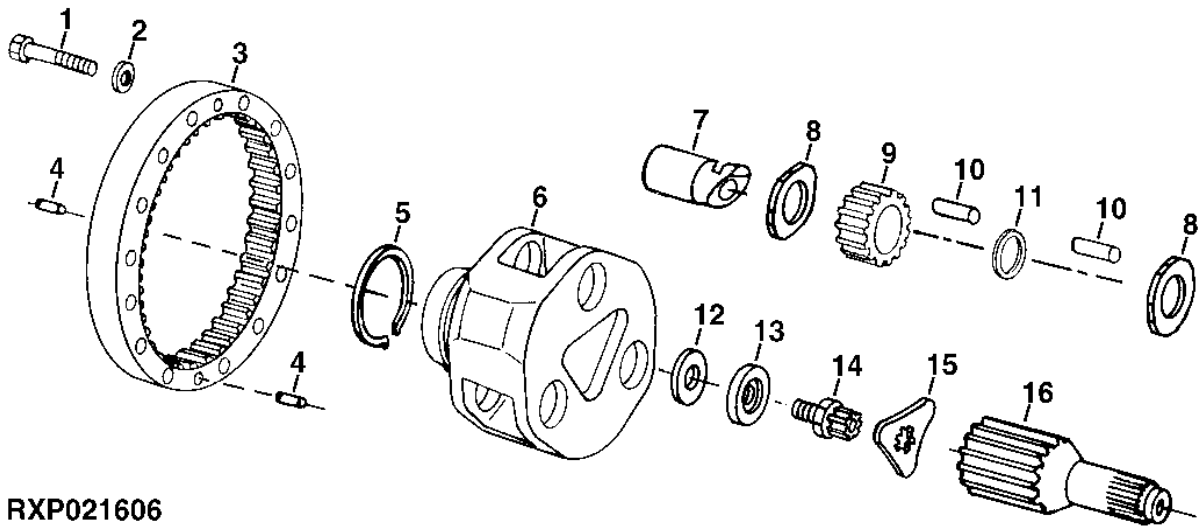

RXP021606

PLANETARY FINAL DRIVE

KEY	PART NO.	PART NAME	QTY	AXLE SERIAL NO.	REMARKS
1	19M8643	CAP SCREW	14		M16 X 130
2	R135543	WASHER	14		
3	R93321	GEAR	1		
4	R54380	DOWEL PIN	2		
5	R33029	SNAP RING	1		
6	R127376	PLANET PINION CARRIER	1		
7	R100283	PINION SHAFT	3		
8	R112080	THRUST WASHER	6		
9	R92335	PLANET PINION	3		
10	R94655	NEEDLE ROLLER	144		
11	R63576	THRUST WASHER	3		
12	R100256	SHIM	1		
13	R100257	WASHER	1		
14	R81910	BOLT	2		
15	R92510	LOCK PLATE	2		
16	R112839	SHAFT	1		
..	UN7189	SEALANT	1		

**AXLE STOP
(8 DEGEE)**

TP55712 -UN-24OCT97

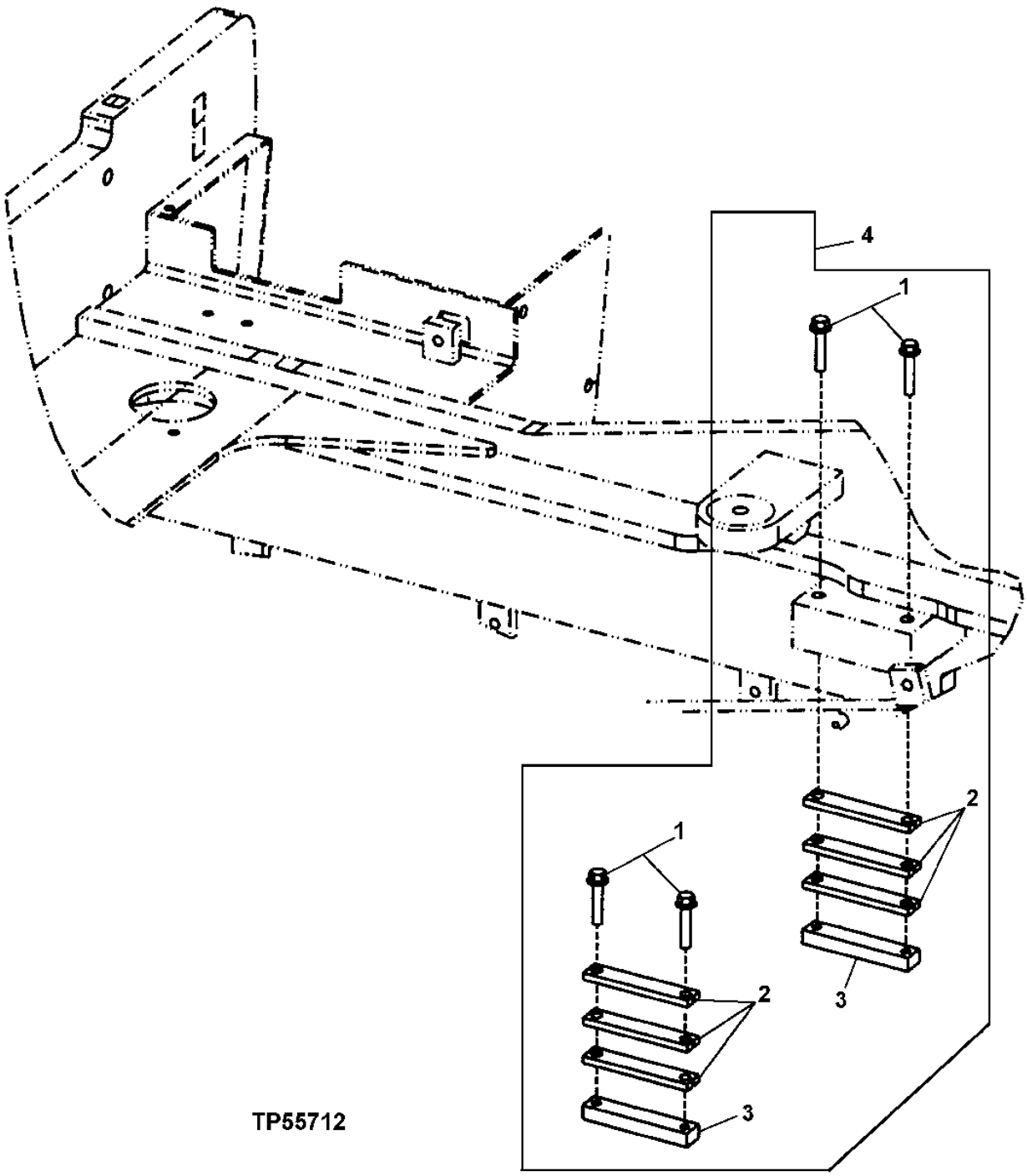

AXLE STOP
(8 DEGEE)

KEY	PART NO.	PART NAME	QTY	SERIAL NO.	REMARKS
1	19M7832	SCREW	4		M20 X 100
2	T172089	STRAP	6		
3	T172095	STRAP	2		
4	**AT209522**	**STOP**	**1**		**(AXLE STOP ASSEMBLY)**

DIFFERENTIAL LOCK LINES
(FRONT)

T145161 -UN-26SEP01

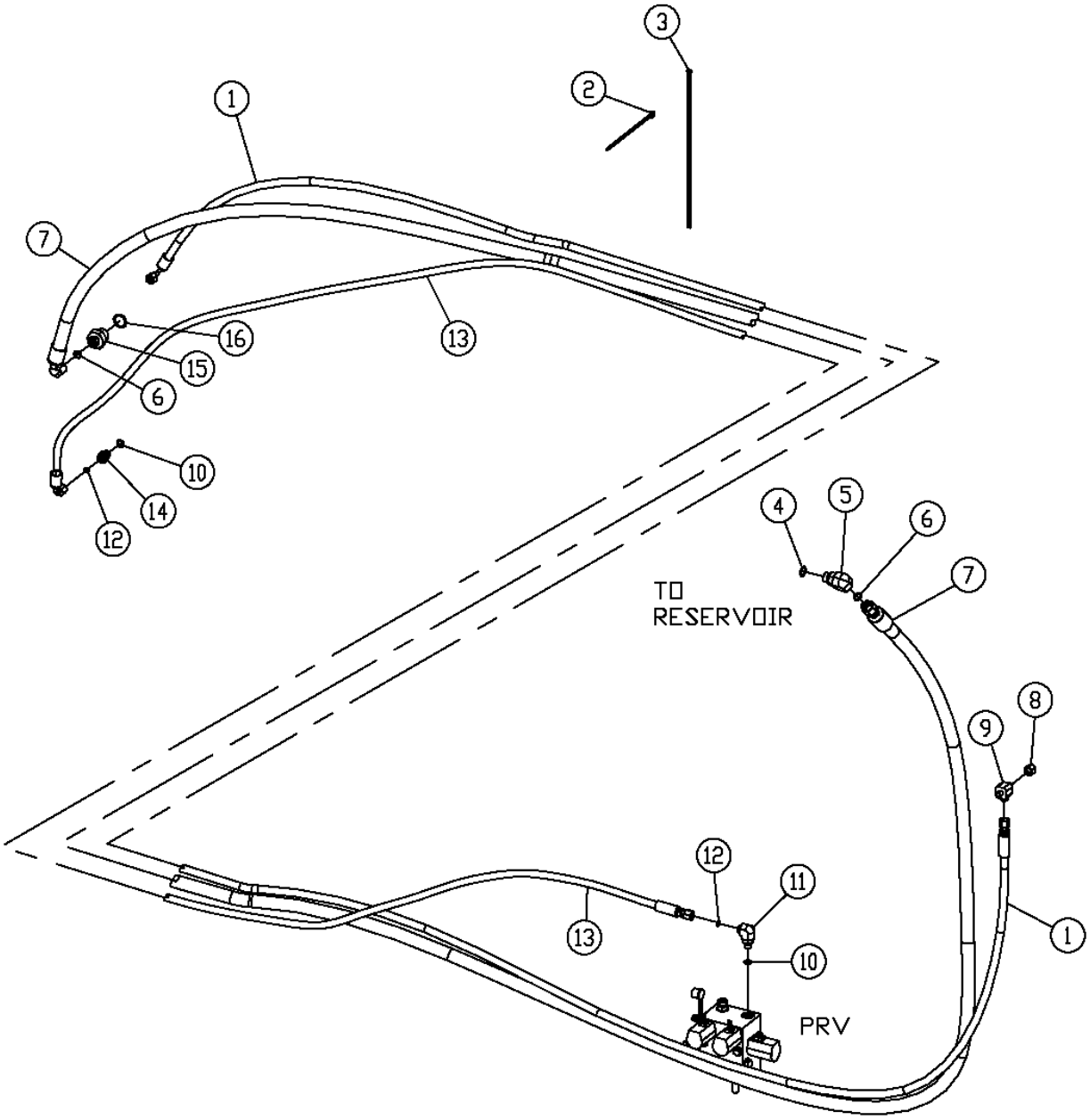

T145161

DIFFERENTIAL LOCK LINES
(FRONT)

KEY	PART NO.	PART NAME	QTY	SERIAL NO.	REMARKS
1	AT203001	HYDRAULIC HOSE - FABRICATE	1		
2	R44302	TIE BAND	1		
3	H77698	TIE BAND	1		
4	R26375	O-RING	1		
5	38H1005	ELBOW FITTING	1		
6	T77857	O-RING	2		
7	AT203003	HYDRAULIC HOSE - FABRICATE	1		
8	38H1414	FITTING	1		
9	AT313187	ORIFICE	1		(SUB FOR AT161752)
10	R26448	O-RING	2		
11	38H1009	ELBOW FITTING	1		
12	T77814	O-RING	2		
13	AT203000	HYDRAULIC HOSE - FABRICATE	1		
14	38H1168	ADAPTER	1		
15	38H1175	ADAPTER	1		
16	U12547	O-RING	1		

**DIFFERENTIAL LOCK LINES
(FRONT AND REAR)**

T145159 -UN-26SEP01

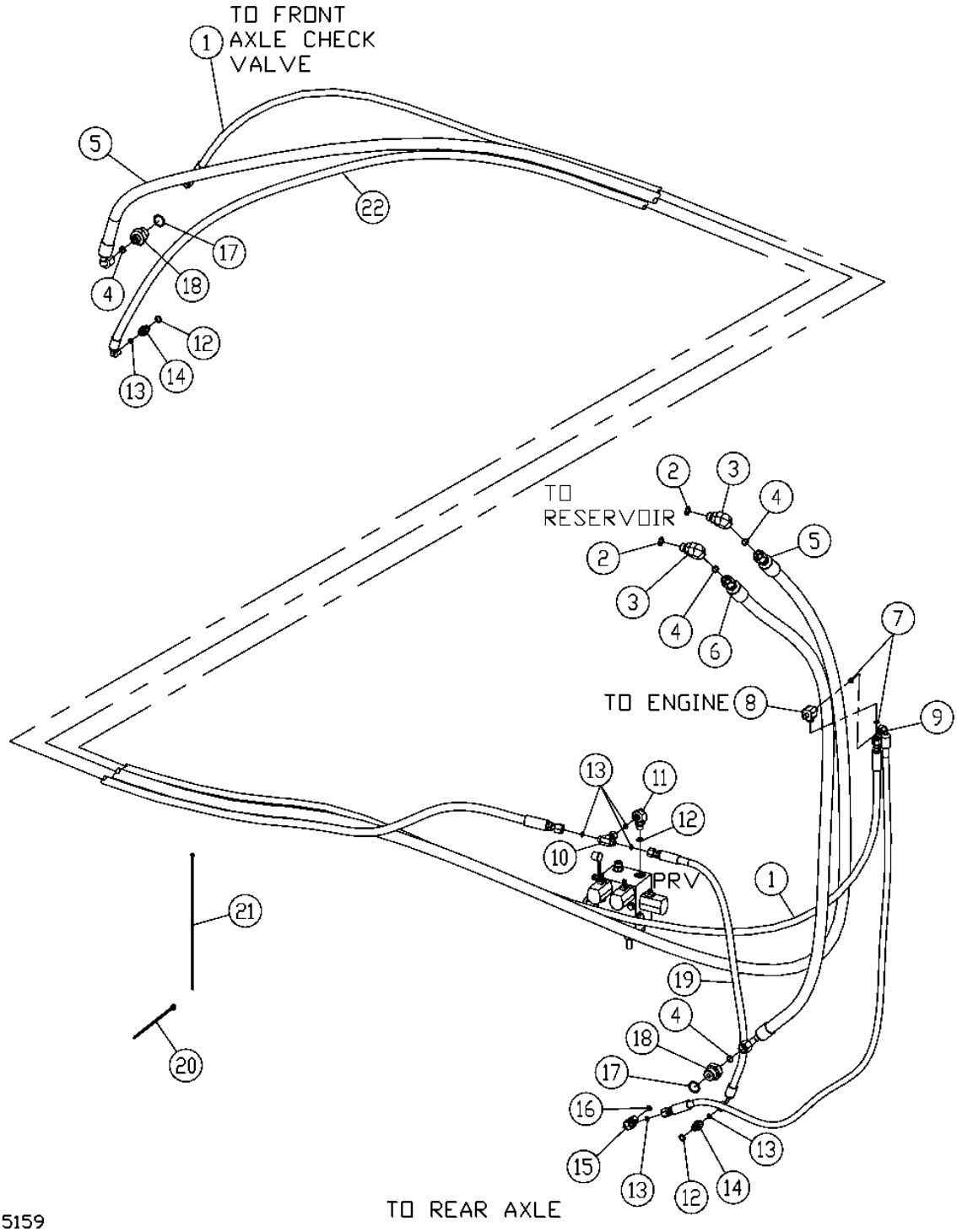

DIFFERENTIAL LOCK LINES
(FRONT AND REAR)

KEY	PART NO.	PART NAME	QTY	SERIAL NO.	REMARKS
1	AT203001	HYDRAULIC HOSE - FABRICATE	1		
2	R26375	O-RING	2		
3	38H1005	ELBOW FITTING	2		
4	T77857	O-RING	4		
5	AT203003	HYDRAULIC HOSE - FABRICATE	1		
6	AT203002	HYDRAULIC HOSE - FABRICATE	1		
7	R27976	O-RING	2		
8	AT313187	ORIFICE	1		(SUB FOR AT161752)
9	AT133593	HYDRAULIC HOSE - FABRICATE	1		
10	38H1036	TEE FITTING	1	-590067	
	38H1606	TEE FITTING	1	590068-	
11	38H1009	ELBOW FITTING	1	-590067	
12	R26448	O-RING	3		
13	T77814	O-RING	6		
14	38H1168	ADAPTER	2		
15	38H1093	ELBOW FITTING	1		
16	R28782	O-RING	1		
17	U12547	O-RING	2		
18	38H1175	ADAPTER	2		
19	AT202999	HYDRAULIC HOSE - FABRICATE	1		
20	R44302	TIE BAND	3		
21	H77698	TIE BAND	3		
22	AT203000	HYDRAULIC HOSE - FABRICATE	1		

BRAKE HARDWARE
OPTION CODE G2 OR G3 OR GA
RE53918 OR RE53917 OR RE53932
RXP021596 -UN-28OCT96

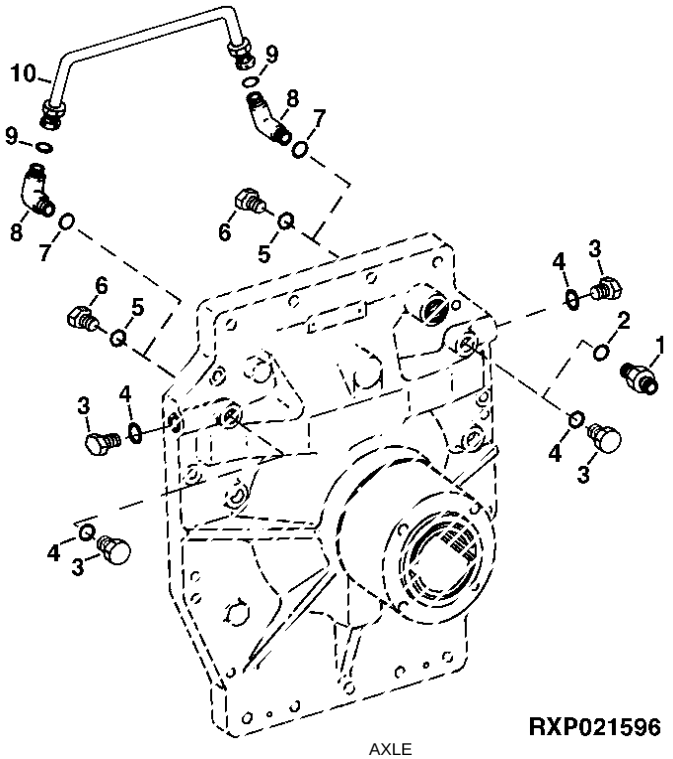

KEY	PART NO.	PART NAME	QTY	AXLE SERIAL NO.	REMARKS
1	38H1160	ADAPTER	1	(A)	
2	R26448	O-RING	1	(A)	
3	R27218	FITTING PLUG	3	(A)	
	R27218	FITTING PLUG	4	(B)	
4	R26448	O-RING	6	(B)	
5	R26448	O-RING	2	(B)	
6	R27218	FITTING PLUG	2	(B)	
7	R26448	O-RING	2	(A)	
8	38H1004	ELBOW FITTING	2	(A)	
9	T77613	O-RING	2	(A)	
10	RE33769	OIL LINE	1	(A)	

(A) DUAL

(B) INDEPENDENT

MEMORANDA

DIFFERENTIAL LOCK SWITCH

TP48545 -UN-07NOV96

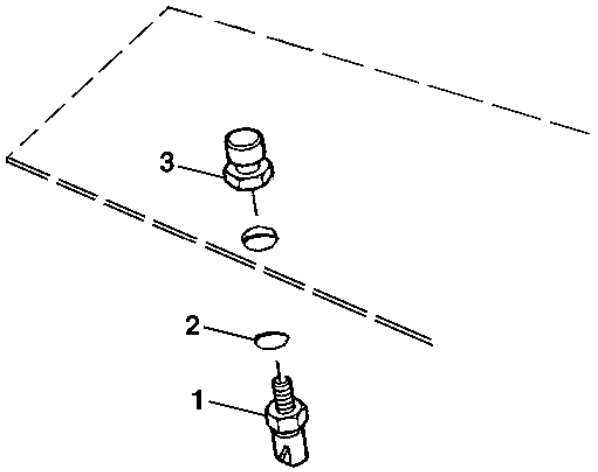

TP48545

KEY	PART NO.	PART NAME	QTY	SERIAL NO.	REMARKS
1	RE46534	SWITCH	1		
2	51M7042	O-RING	1		13.300 X 2.200 MM
3	RE43637	ACTUATOR	1		

NON-DIFF LOCK AXLE AND PARKING BRAKE BREATHER EXTENSION KIT

TP62640 -UN-13SEP99

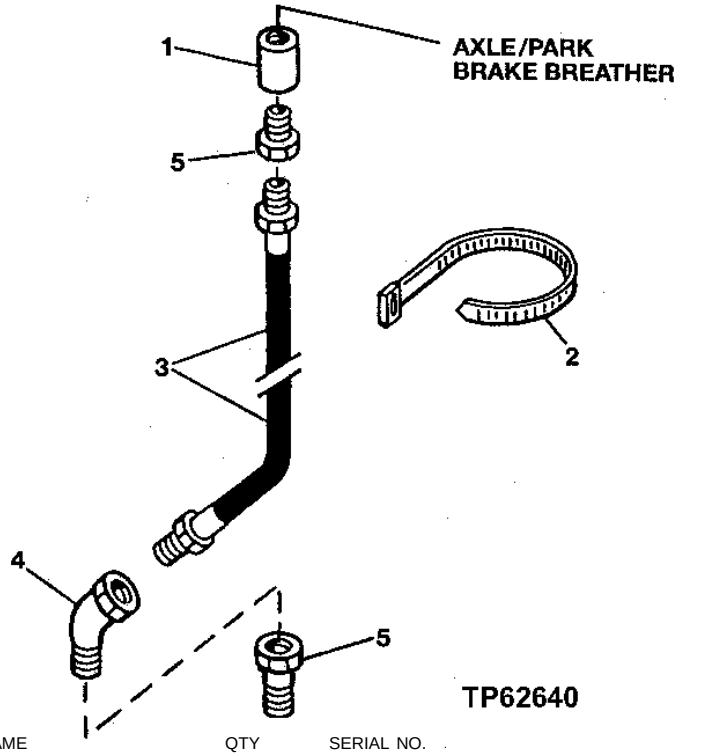

KEY	PART NO.	PART NAME	QTY	SERIAL NO.	REMARKS
1	15H597	COUPLING	3		3/8", (FRONT AND REAR AXLES)
	15H84	COUPLING	1		(PARK BRAKE)
2	H77698	TIE BAND	9		
3	AT207023	HYDRAULIC HOSE	3		
4	M45937	ELBOW FITTING	2		45 DEGREE (FRONT AXLE AND PARK BRAKE)
	JD7838	ADAPTER	1		90 DEGREE (REAR AXLE)
5	15H511	PIPE BUSHING	2		1/8", (FRONT AND REAR AXLES)

TRANSMISSION TO FRONT DIFFERENTIAL DRIVE SHAFTS

TP55714 -UN-31OCT97

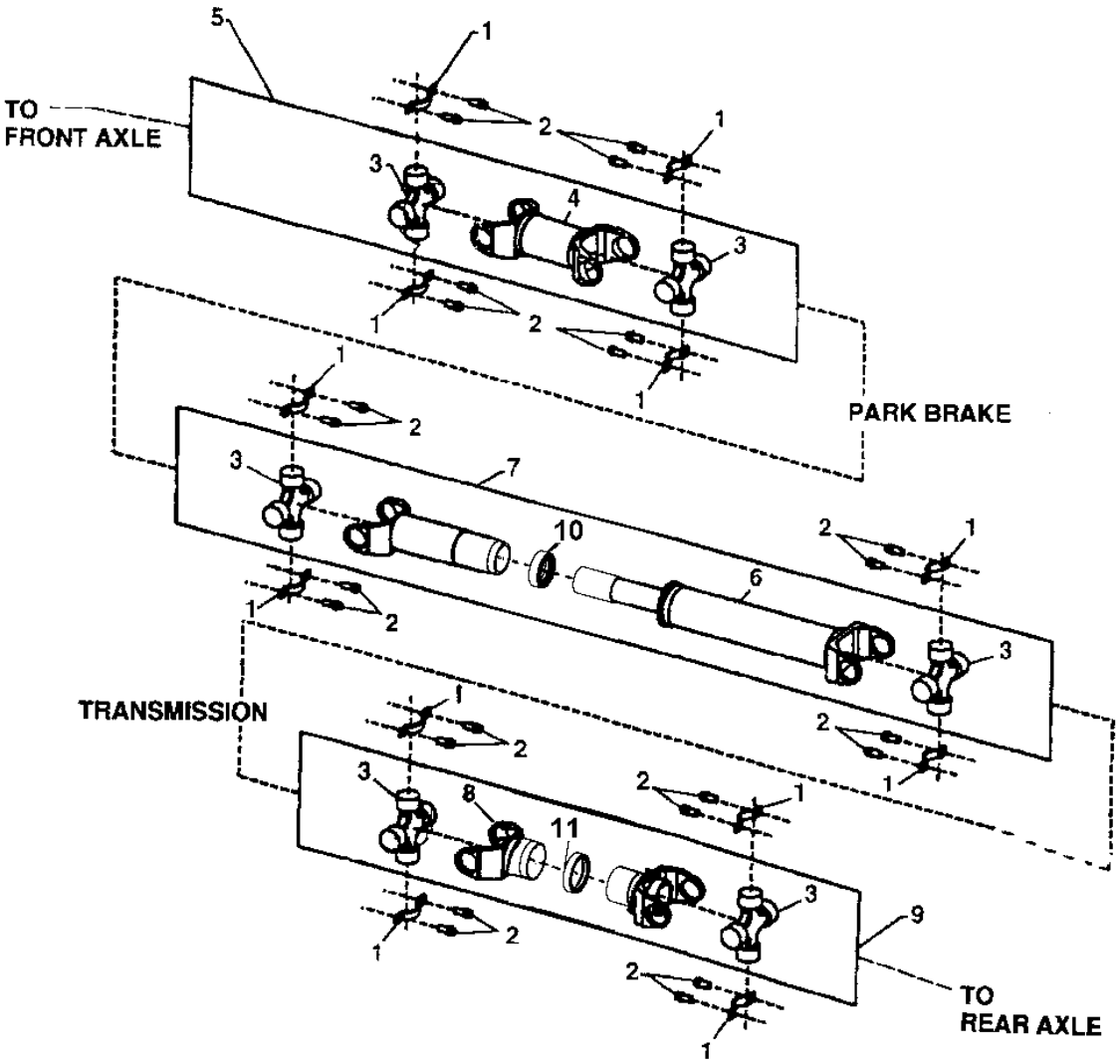

TP55714

TRANSMISSION TO FRONT DIFFERENTIAL DRIVE SHAFTS

KEY	PART NO.	PART NAME	QTY	SERIAL NO.	REMARKS
1	T203485	STRAP	12		(SUB FOR T156481)
2	T156480	BOLT	24		
3	AT207554	CROSS AND BEARING ASSEMBLY	6		
4	AT225069	DRIVE SHAFT	1		
5	AT323065	UNIVERSAL DRIVESHAFT	1		(SUB FOR AT225004)
6	.....	UNIVERSAL DRIVESHAFT	1		(SUB AT224191)
7	AT224191	UNIVERSAL DRIVESHAFT	1		
8	.....	UNIVERSAL DRIVESHAFT	1		(SUB AT203416)
9	AT203416	UNIVERSAL DRIVESHAFT	1		
10	AT211301	CAP	1		
11	AT211300	CAP	1		

TRANSMISSION MOUNTING BRACKETS

TP55713 -UN-31OCT97

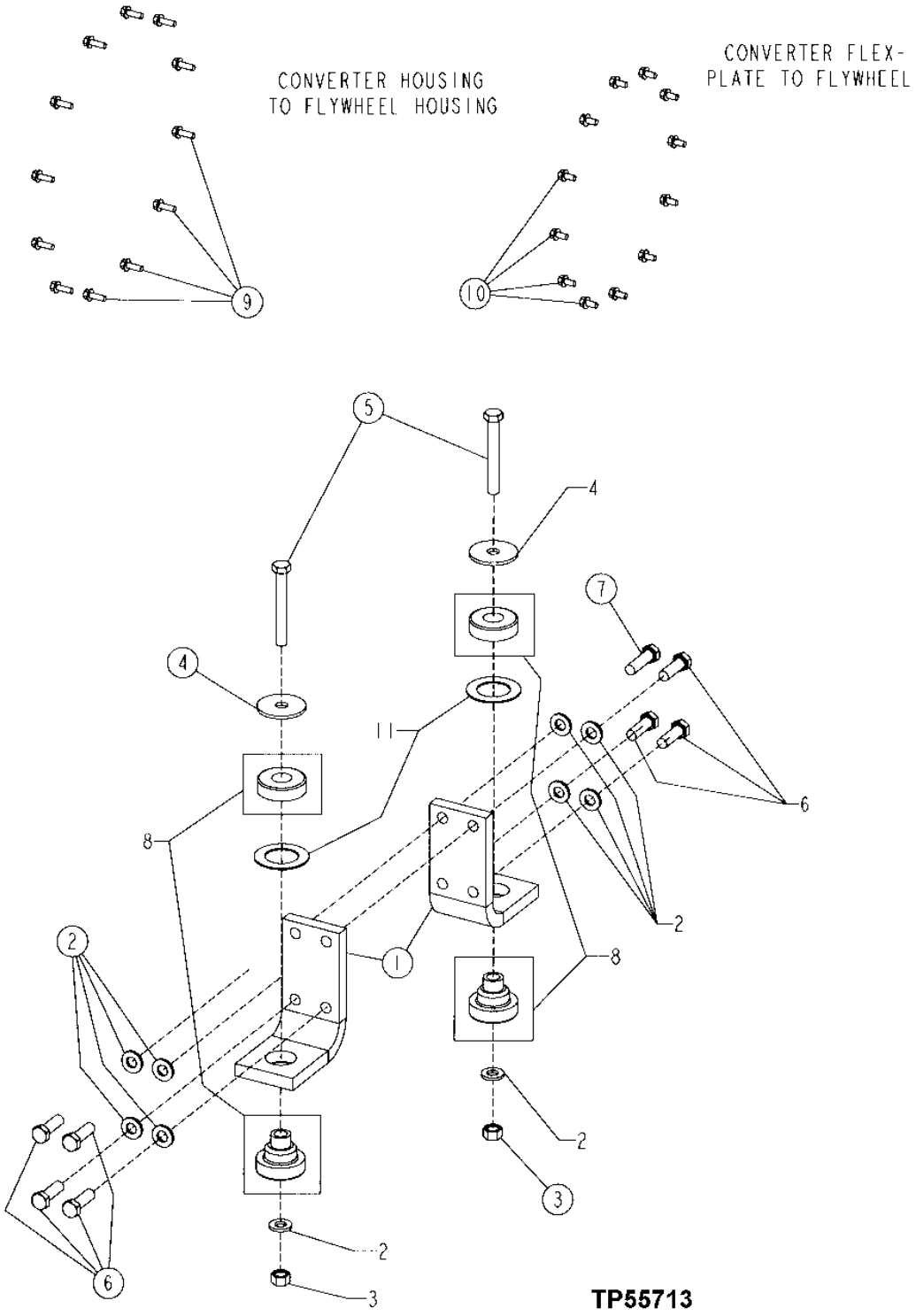

TRANSMISSION MOUNTING BRACKETS

KEY	PART NO.	PART NAME	QTY	SERIAL NO.	REMARKS
1	T156025	ANGLE	2		
2	24M7242	WASHER	10		21.400 X 42 X 5 MM
3	14M7277	NUT	2		M20
4	T42977	WASHER	2		
5	19M7921	CAP SCREW	2		M20 X 150
6	19M8639	CAP SCREW	7		M20 X 70, (SUB FOR 19M8224)
7	19M8639	CAP SCREW	1		M20 X 70
8	AT107738	ISOLATOR	2		
9	19M7786	SCREW	12		M10 X 30
10	19M7784	SCREW	12		M10 X 20
11	T54474	WASHER	4		

TRANSMISSION

T158197 -UN-30SEP02

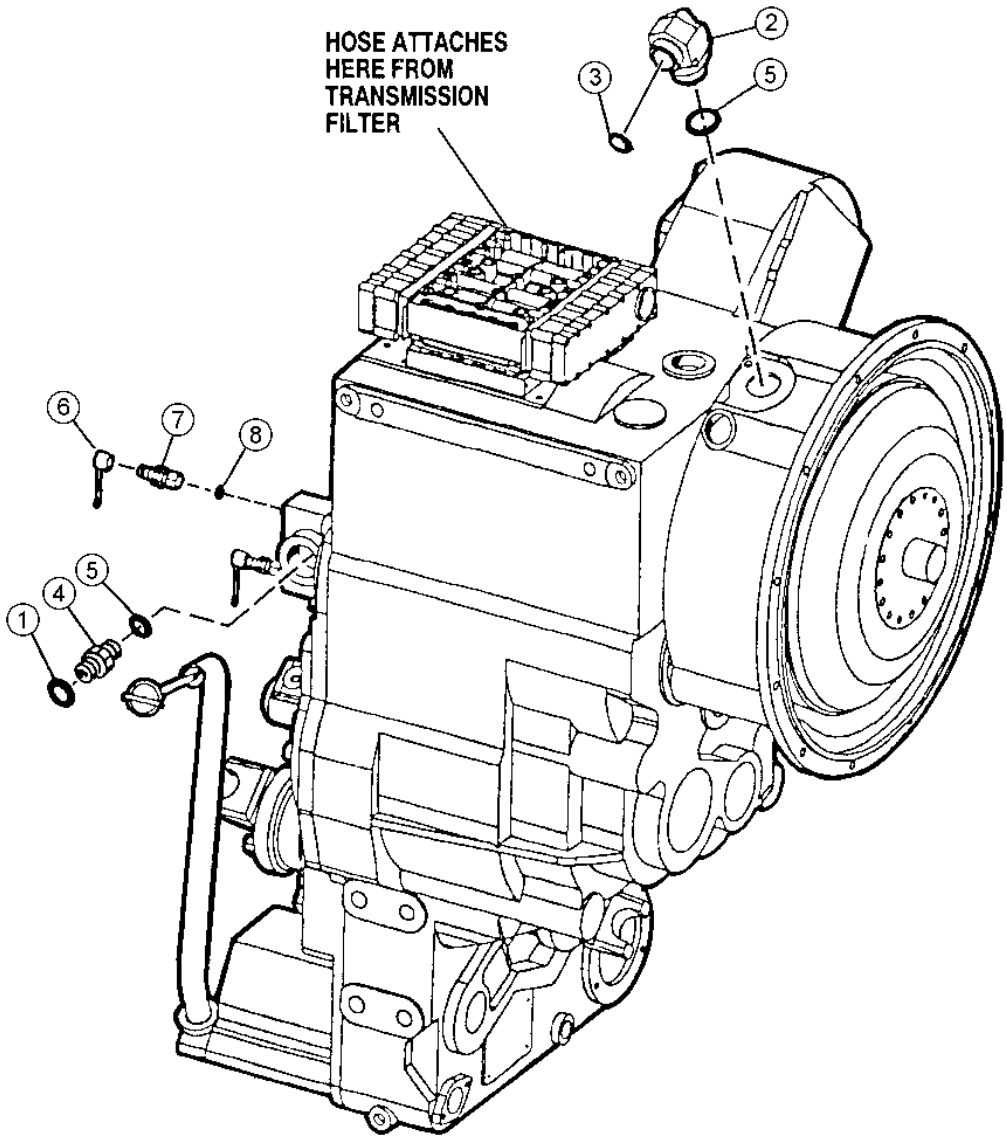

T158197

TRANSMISSION

KEY	PART NO.	PART NAME	QTY	SERIAL NO.	REMARKS
1	T76938	O-RING	1		
2	38H5021	ELBOW FITTING	1		
3	T78612	O-RING	1		
4	T168063	ADAPTER	1		
5	51M7049	O-RING	2		
6	R77175	COVER	1		
7	AT202955	DIAGNOSTIC COUPLING	4		
8	51M7039	O-RING	4		
..	AT227864	PART NOT CODED	1	-590069	(REMANUFACTURED)
..	AT307693	TRANSMISSION	1	590070-	(REMANUFACTURED)

CONVERTER HOUSING COVERS AND DRIVE PLATES

TP62713 -UN-03DEC99

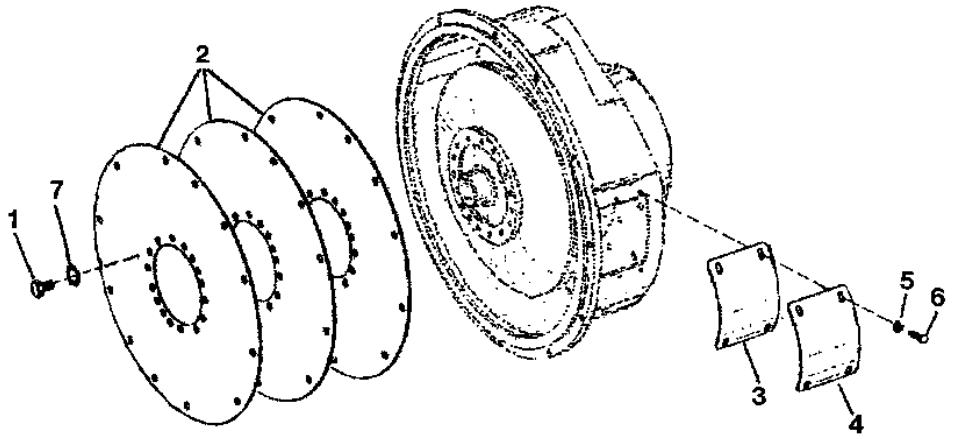

TP62713

CONVERTER HOUSING COVERS AND DRIVE PLATES

KEY	PART NO.	PART NAME	QTY	SERIAL NO.	REMARKS
1	19M7938	CAP SCREW	16		M10 X 20, (FLANGE HEAD)
2	T168736	PLATE	3		
3	T169742	COVER	1		
4	T169743	COVER	1		
5	T195080	WASHER	4		
6	AT259005	CAP SCREW	4		
7	24M7239	WASHER	16		10.700 X 21 X 2.500 MM

INPUT SHAFT, CONVERTER HOUSING AND BEARING COVER

T156437 -UN-25JUN02

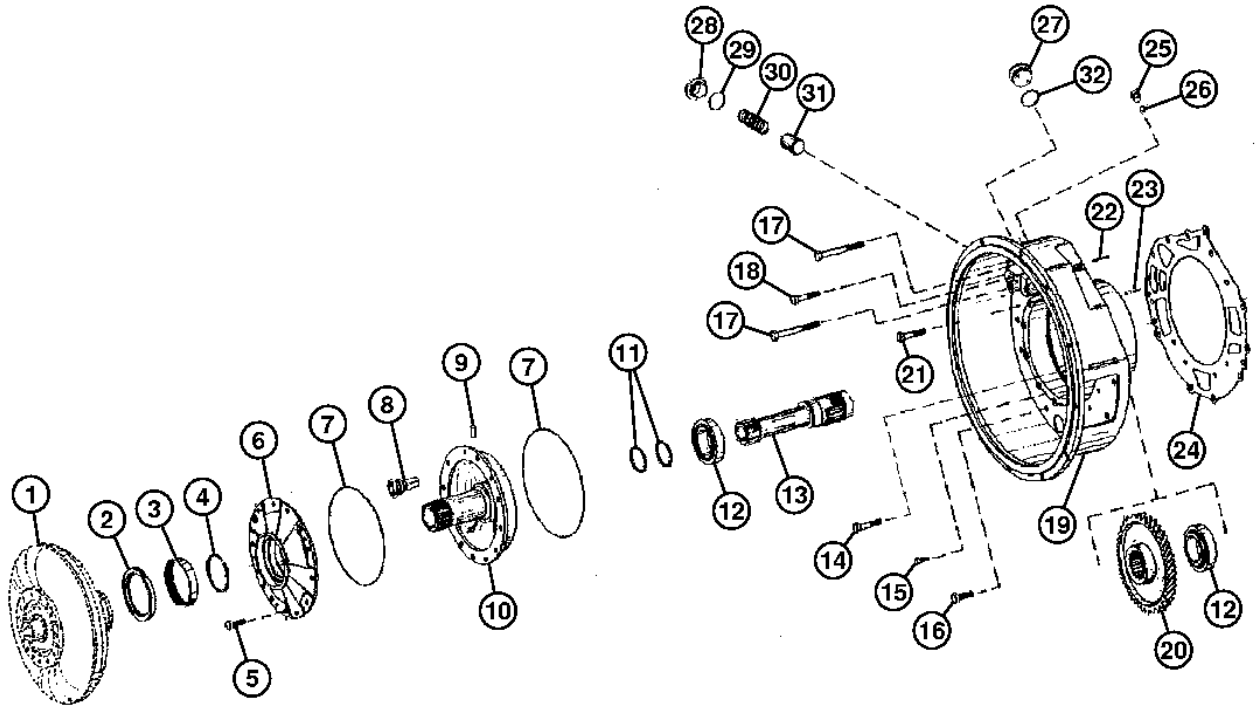

T156437

INPUT SHAFT, CONVERTER HOUSING AND BEARING COVER

KEY	PART NO.	PART NAME	QTY	SERIAL NO.	REMARKS
1	AT226261	CONVERTER	1		
2	T168903	SEAL	1		
3	T168905	NEEDLE BEARING	1		
4	T169020	PISTON RING	1		
5	19M7550	CAP SCREW	12		
6	T180463	COVER	1		
7	T181770	O-RING	2		
8	T182765	PRESSURE RELIEF VALVE	1		
9	T195081	PIN	1		
10	T182764	FLANGE	1		
11	T169019	PISTON RING	1		
12	T182761	BALL BEARING	2		
13	T182759	SHAFT	1		
14	J441295	SCREW	2		(SUB FOR AT136445)
15	19M7017	CAP SCREW	4		
16	19M7403	CAP SCREW	10		
17	19M7362	CAP SCREW	1		
18	19M7817	SCREW	1		(SUB FOR 19M7753)
19	T182762	HOUSING	1		
20	T179180	GEAR	1		
21	19M7363	CAP SCREW	1		
22	34M7044	SPRING PIN	1		6 X 50 MM
23	T182763	PLUG	3		
24	T180709	GASKET	1		
25	T175862	PLUG	1		
26	T116416	O-RING	1		
27	T168795	PLUG	2		
28	T169073	CAP SCREW	1		
29	L55580	O-RING	1		
30	T168894	SPRING	1		
31	T169739	PISTON	1		
32	T170119	O-RING	2		

TRANSMISSION HOUSING

T162029 -UN-22NOV02

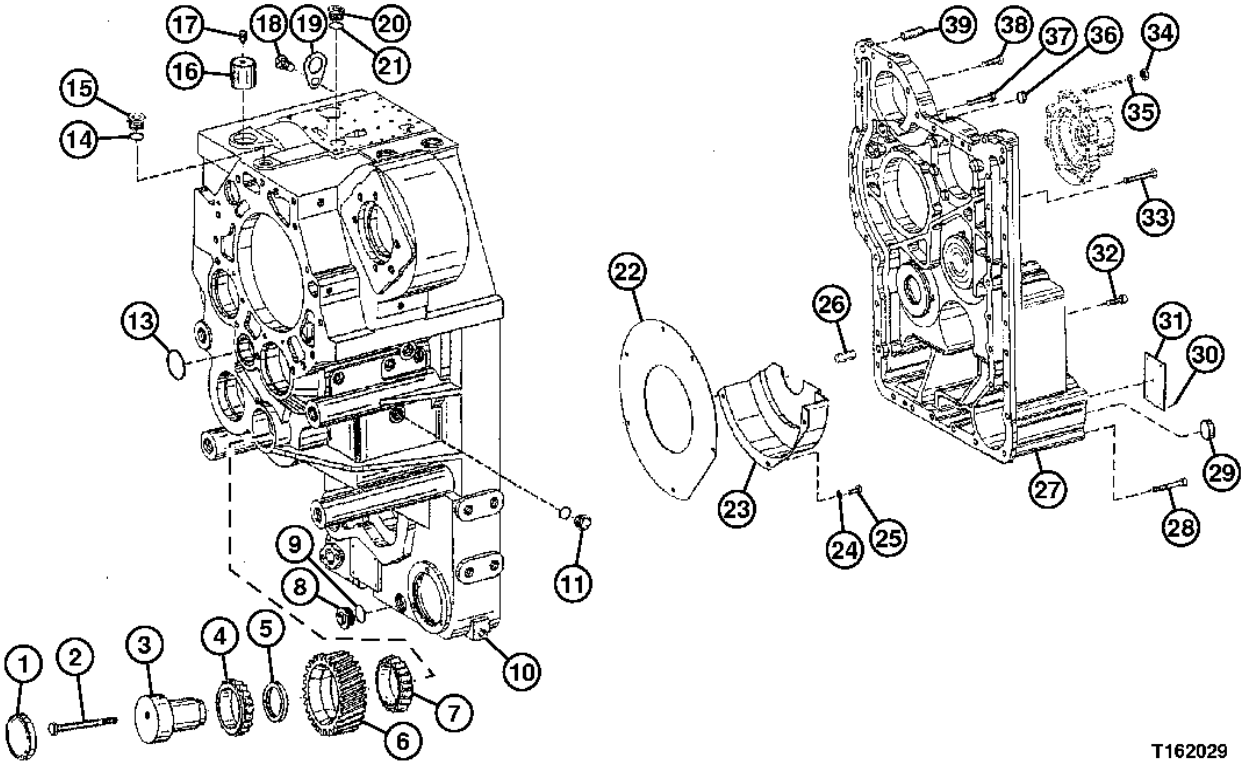

TRANSMISSION HOUSING

KEY	PART NO.	PART NAME	QTY	SERIAL NO.	REMARKS
1	T168734	COVER	1		
2	19M8343	CAP SCREW	1		
3	T182771	AXLE	1		
4	T182769	TAPERED ROLLER BEARING	1		
5	T182770	O-RING	1		
6	T182768	HELICAL GEAR	1		
7	T182769	TAPERED ROLLER BEARING	1		
8	T172094	DRAIN PLUG	1		
9	T174107	O-RING	1		
10	T182766	TRANSMISSION CASE	1		
11	T181463	PLUG	2		
13	T195079	O-RING	1		
14	L55601	O-RING	1		
15	15M7027	DRAIN PLUG	1		
16	T169061	PAN	1		
17	T116918	BREATHER	1		
18	19M7394	CAP SCREW	2		
19	T169729	PLATE	2		
20	T196980	PLUG	1		
21	L150867	O-RING	2		
22	T211408	COVER	1		(SUB FOR T168718)
23	T211409	COVER	1		(SUB FOR T195001)
24	24M7238	WASHER	4		
25	T196816	CAP SCREW	5		
26	T170115	DOWEL PIN	2		
27	T182767	COVER	1		
28	T195109	CAP SCREW	8		
29	30M7016	PLUG	1		
30	25M7021	GROOVE PIN	4		
31	.....	SERIAL NUMBER PLATE	1		
32	T196815	CAP SCREW	14		
33	T196817	CAP SCREW	8		
34	14M7274	NUT	2		
35	24M7239	WASHER	2		
36	T170720	CAP	1		
37	T195108	CAP SCREW	1		
38	T196818	CAP SCREW	8		
39	34M7122	SPRING PIN	1		

TRANSMISSION OIL LINES

T195237 -UN-10OCT03

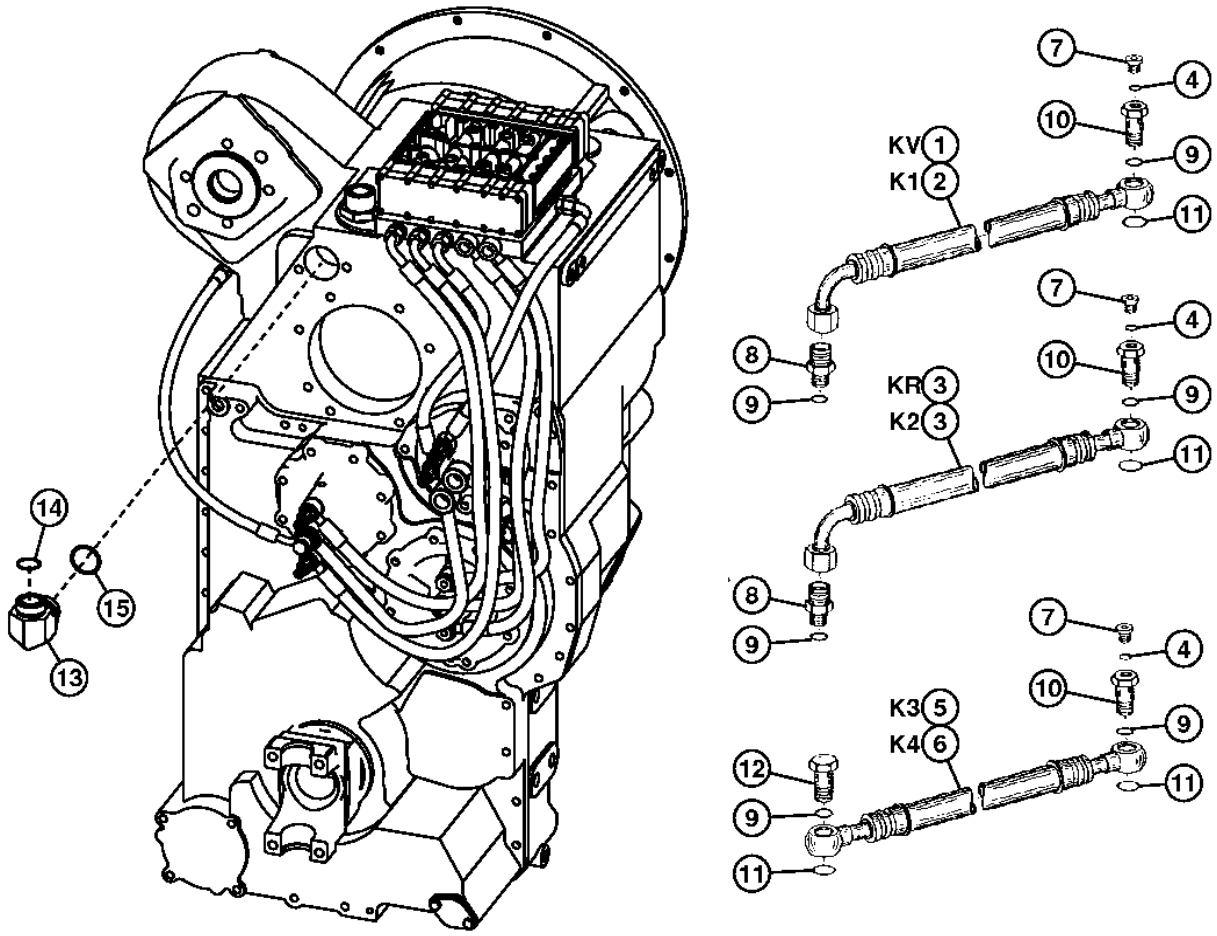

T195237

TRANSMISSION OIL LINES

KEY	PART NO.	PART NAME	QTY	SERIAL NO.	REMARKS
1	AT225695	HYDRAULIC HOSE	1		FORWARD GEAR HOSE
2	T169600	HYDRAULIC HOSE	1		FIRST GEAR HOSE
3	AT225691	HYDRAULIC HOSE	2		REVERSE GEAR HOSE, SECOND GEAR HOSE
4	T116416	O-RING	6		
5	AT225693	HYDRAULIC HOSE	1		THIRD GEAR HOSE
6	AT225694	HYDRAULIC HOSE	1		FOURTH GEAR HOSE
7	T175862	PLUG	6		
8	T169021	FITTING	4		
9	Z29864	O-RING	12		
10	T168902	HOLLOW SCREW	6		(SUB FOR (6) T206110)
11	T129611	O-RING	8		
12	T138140	UNION FITTING	2		
13	38H5021	ELBOW FITTING	1		
14	T78612	O-RING	1		
15	51M7048	O-RING	1		

TRANSMISSION OIL LINES

T157964 -UN-25JUL02

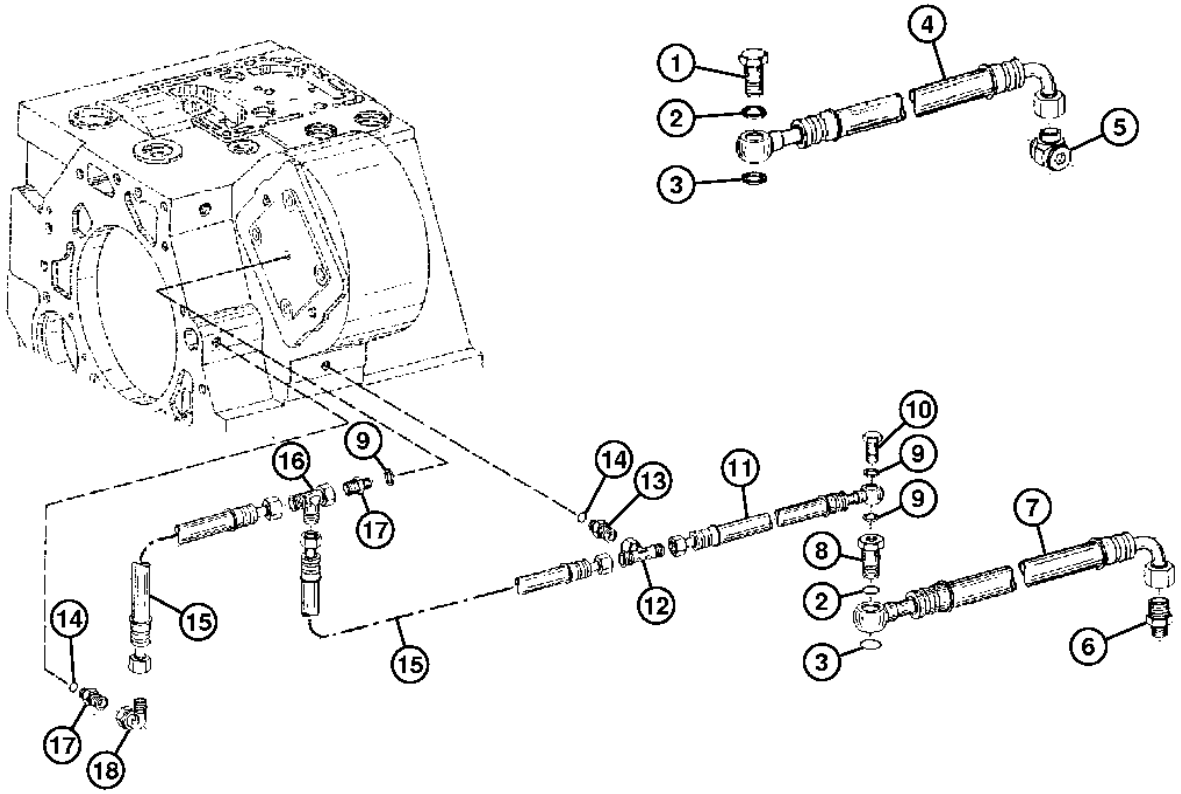

T157964

TRANSMISSION OIL LINES

KEY	PART NO.	PART NAME	QTY	SERIAL NO.	REMARKS
1	T196806	HOLLOW SCREW	1		
2	PE930685	RING	2		
3	T169031	RING	2		
4	AT225696	TUBE	1		
5	T196801	FITTING	1		
6	T169022	FITTING	1		
7	AT225697	TUBE	1		
8	T171900	FITTING	1		
9	51M4237	SEALING RING	3		
10	T171908	CAP SCREW	1		
11	T171899	HYDRAULIC HOSE	1		
12	T170255	SOCKET	1		
13	T170254	FITTING	1		
14	Z29864	O-RING	2		
15	T180937	HYDRAULIC HOSE	2		
16	T180054	SOCKET	1		
17	T170256	FITTING	2		
18	T180938	ELBOW FITTING	1		

TRANSMISSION OIL PUMP

T157952 -UN-25JUL02

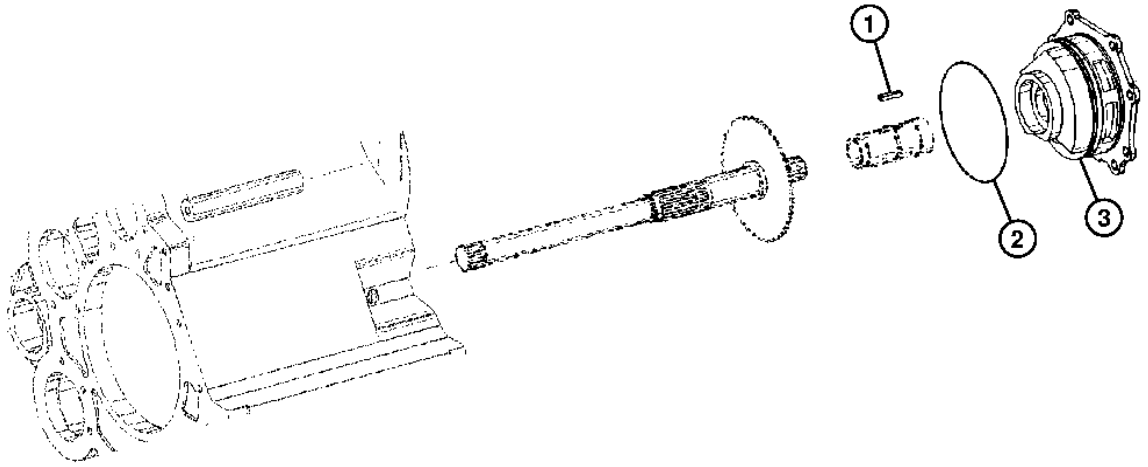

T157952

TRANSMISSION OIL PUMP

KEY	PART NO.	PART NAME	QTY	SERIAL NO.	REMARKS
1	T170247	KEY	1		
2	T173959	O-RING	1		
3	T211758	PUMP	1		(SUB FOR T195061)

TRANSMISSION AND HYDRAULIC PUMP DRIVE SHAFT

T201901 -UN-03AUG04

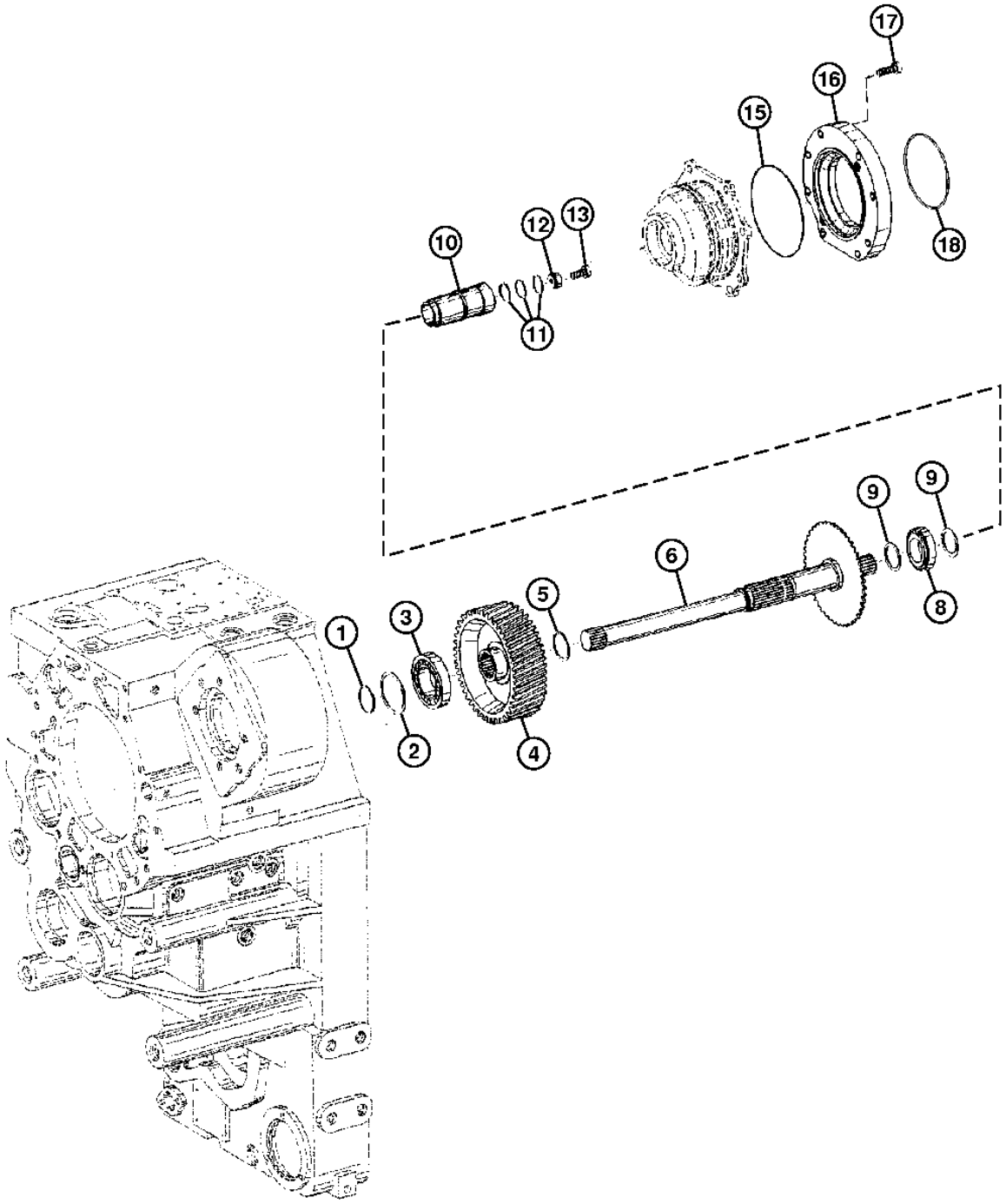

T201901

TRANSMISSION AND HYDRAULIC PUMP DRIVE SHAFT

KEY	PART NO.	PART NAME	QTY	SERIAL NO.	REMARKS
1	T168706	PISTON RING	1		SEAL
2	L41005	SHIM	1		0.10 MM
	T169663	SHIM	1		0.15 MM
	L41004	SHIM	1		0.20 MM
	T169664	SHIM	1		0.25 MM
	T169665	SHIM	1		0.35 MM
	L41002	SHIM	1		0.40 MM
	L101689	SHIM	1		0.45 MM
	L41001	SHIM	1		0.50 MM
	L101690	SHIM	1		0.55 MM
	L41000	SHIM	1		0.60 MM
	L112211	WASHER	1		0.65 MM
	L112212	WASHER	1		0.70 MM
	L112213	WASHER	1		0.75 MM
	L40999	WASHER	1		0.80 MM
	L112214	WASHER	1		0.85 MM
	L112215	WASHER	1		0.90 MM
	L112216	WASHER	1		0.95 MM
	L40998	WASHER	1		1.00 MM
	L112222	WASHER	1		1.05 MM
	L112217	WASHER	1		1.10 MM
	L112218	WASHER	1		1.15 MM
	L40997	WASHER	1		1.20 MM
	L112219	WASHER	1		1.25 MM
	L112220	WASHER	1		1.30 MM
	L112221	WASHER	1		1.35 MM
	L112210	WASHER	1		1.40 MM
	L112209	WASHER	1		1.45 MM
	T181388	SHIM	1		1.47 MM
	L112208	WASHER	1		1.50 MM
	L112207	WASHER	1		1.55 MM
	L112206	WASHER	1		1.60 MM
	T181389	SHIM	1		1.63 MM
	L112205	WASHER	1		1.65 MM
	T181390	SHIM	1		1.75 MM
	T181391	SHIM	1		1.70 MM
	T181392	SHIM	1		1.80 MM
	T181393	SHIM	1		1.85 MM
	T181394	SHIM	1		1.90 MM
	T181395	SHIM	1		1.95 MM
	L112198	WASHER	1		2.00 MM
3	T182370	BALL BEARING	1		
4	T169096	GEAR	1		
5	T170193	RING	1		
6	T196795	SHAFT	1		
8	T170190	BEARING	1		
9	T169100	WASHER	2		
10	T168758	COUPLING	1		
11	T169619	SEALING RING	3		
12	T168759	PLATE	1		
13	L31212	CAP SCREW	1		
15	T174398	O-RING	1		
16	T173741	FLANGE	1		
17	T169044	CAP SCREW	8		
18	T174529	O-RING	1		

TRANSMISSION HYDRAULIC PUMP DRIVE SHAFT AND GEARS

T157932 -UN-24JUL02

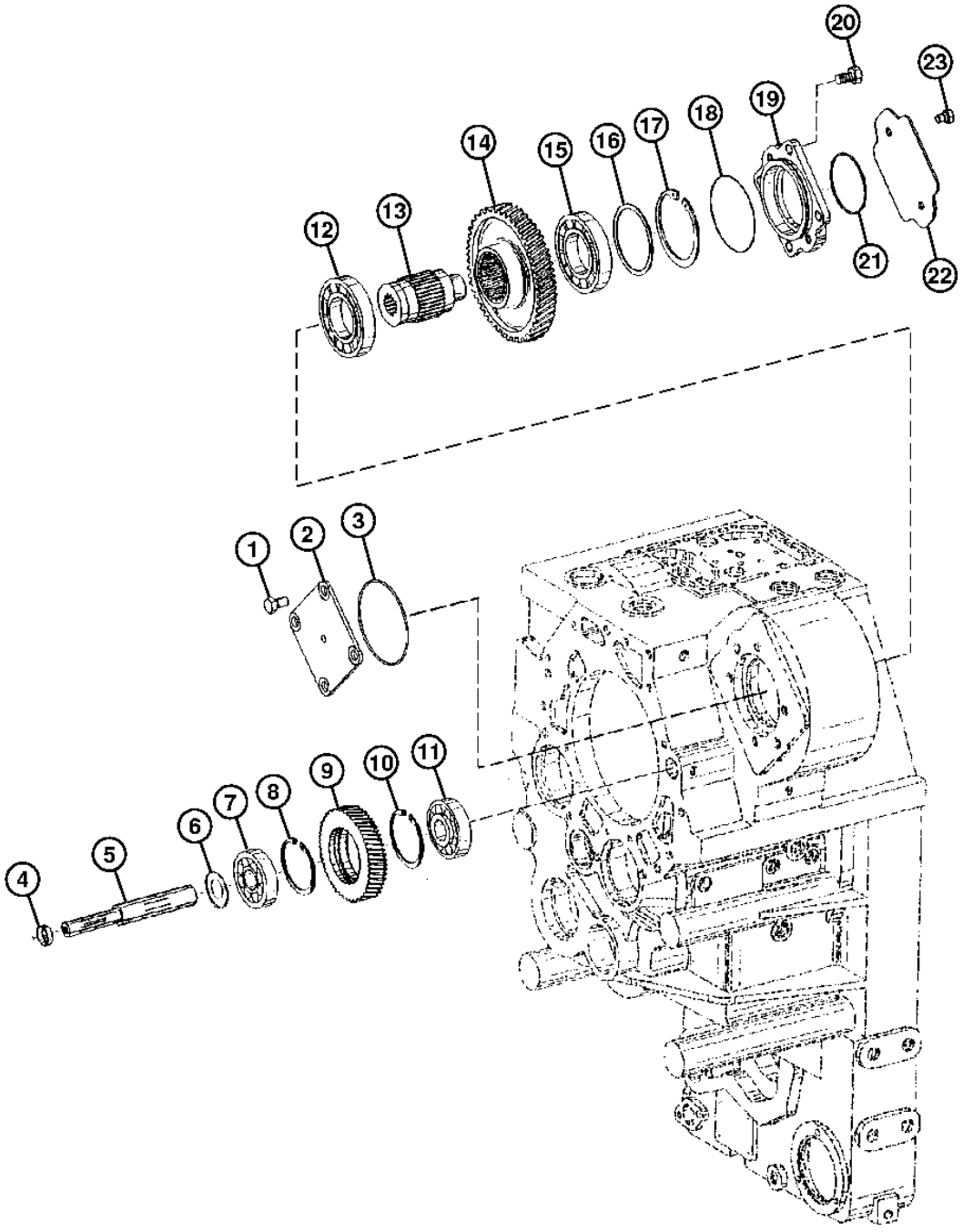

T157932

TRANSMISSION HYDRAULIC PUMP DRIVE SHAFT AND GEARS

KEY	PART NO.	PART NAME	QTY	SERIAL NO.	REMARKS
1	19M7646	CAP SCREW	4		
2	T179920	COVER	1		
3	T174529	O-RING	1		
4	T169028	COVER	1		
5	T195050	PIN	1		
6	T169685	SHIM	1	0.8 MM	
	T169587	SHIM	1	1.0 MM	
	T169689	SHIM	1	1.1 MM	
	T169686	SHIM	1	1.2 MM	
	T169687	SHIM	1	1.4 MM	
	T169688	SHIM	1	1.6 MM	
7	T168909	TAPERED ROLLER BEARING	1		
8	T169029	RING	1		
9	T169095	GEAR	1		
10	T169029	RING	1		
11	T168909	TAPERED ROLLER BEARING	1		
12	T168907	BALL BEARING	1		
13	T197126	SPLINED COUPLING	1		
14	T169097	GEAR	1		
15	T168907	BALL BEARING	1		
16	T169723	SHIM	1	1.0 MM	
	T169649	SHIM	1	1.1 MM	
	T169648	SHIM	1	1.2 MM	
	T169647	SHIM	1	1.3 MM	
	T169646	SHIM	1	1.4 MM	
	T116902	WASHER	1	1.5 MM	
	T116901	WASHER	1	1.6 MM	
	T116900	WASHER	1	1.7 MM	
	T116899	WASHER	1	1.8 MM	
17	40M5463	SNAP RING	1		
18	T170712	O-RING	1		
19	T156177	SPACER	1		
20	19M7877	CAP SCREW	4	M14 X 30	
21	T169035	RING	1		
22	T196661	PLATE	1		
23	T196662	CAP SCREW	2		

GEARSHIFT SYSTEM
(CONTROL VALVE)

T157942 -UN-08AUG02

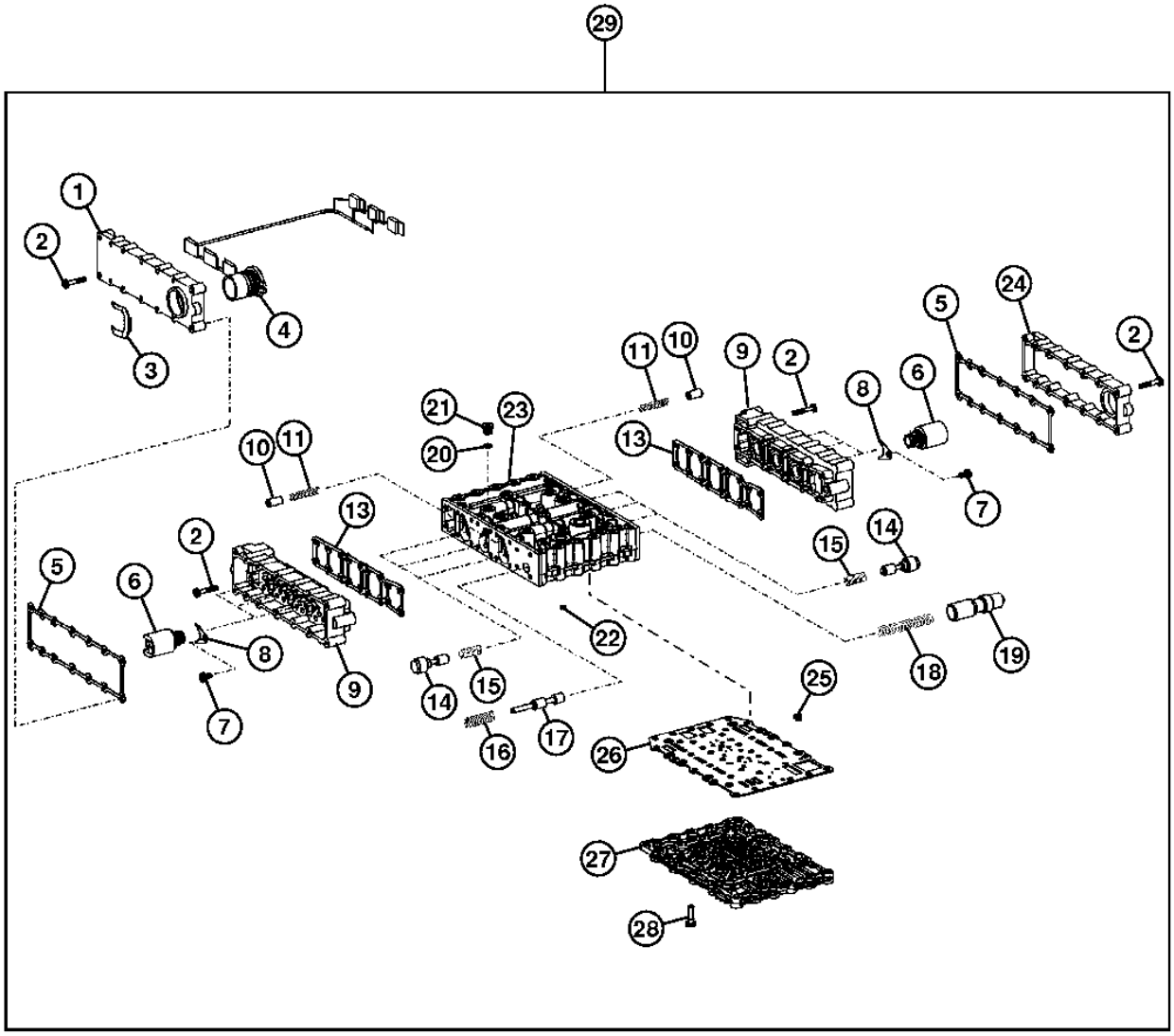

T157942

GEARSHIFT SYSTEM (CONTROL VALVE)

KEY	PART NO.	PART NAME	QTY	SERIAL NO.	REMARKS
1	T173139	COVER	1		
2	T173131	CAP SCREW	64		
3	T161207	CLAMP	1		
4	T179721	WIRING HARNESS	1		
5	T182254	GASKET	4		
6	T169607	SOLENOID VALVE	6		
	T170196	O-RING	6		
7	T159602	CAP SCREW	6		
8	T144486	PLATE	6		
9	T177221	HOUSING	2		
10	T169766	PIN FASTENER	6		
11	T169712	COMPRESSION SPRING	6		
13	T182196	GASKET	4		
14	T173511	PISTON	6		
15	T169711	COMPRESSION SPRING	6		
16	T173126	COMPRESSION SPRING	1		
17	T173125	PISTON	1		
18	T173128	COMPRESSION SPRING	1		
19	T205369	PISTON	1		(SUB FOR T179593)
20	T116416	O-RING	8		
21	T175862	PLUG	8		
22	T169707	ORIFICE	6		
23	T177219	FLOW CONTROL HYD. VALVE	1		
24	T173138	COVER	1		
25	T174396	SCREEN	6		
26	T195052	SHEET	1		
27	T203767	PLATE	1		
28	T195275	CAP SCREW	18		
29	AT220039	HYD ACTUATED CONTROL VALVE	1		

GEARSHIFT SYSTEM
(CONTROL VALVE MANIFOLD AND GASKETS)

T157935 -UN-24JUL02

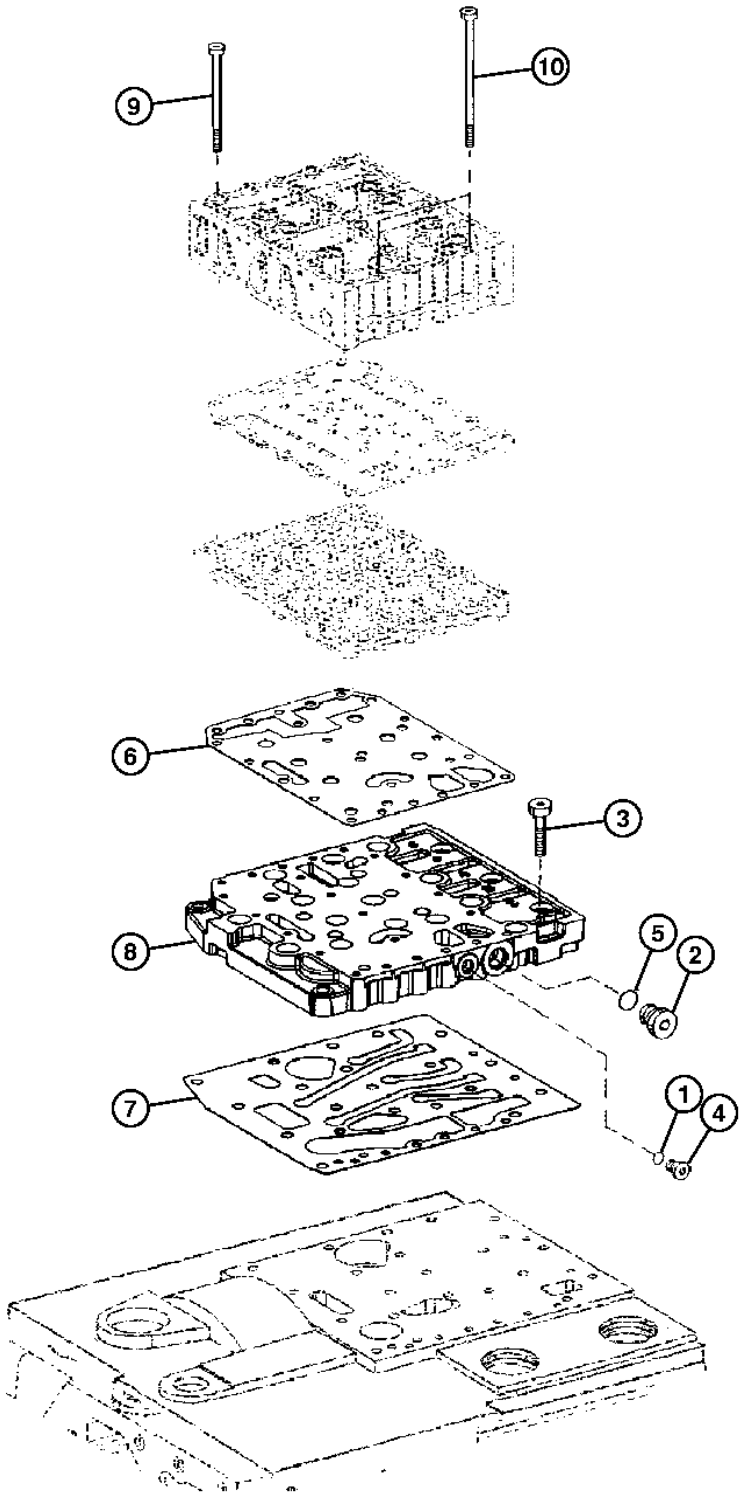

T157935

GEARSHIFT SYSTEM
(CONTROL VALVE MANIFOLD AND GASKETS)

KEY	PART NO.	PART NAME	QTY	SERIAL NO.	REMARKS
1	T116416	O-RING	1		
2	T122803	FITTING PLUG	1		
3	T174090	CAP SCREW	20		
4	T175862	PLUG	1		
5	T175864	O-RING	1		
6	T179557	GASKET	1		
7	T195053	GASKET	1		
8	T195054	MANIFOLD	1		
9	T195055	CAP SCREW	17		
10	T195056	CAP SCREW	6		

CLUTCH ASSEMBLY (LOW RANGE FORWARD) (CONTINUED)
(K1 & KV)

T156602 -UN-28JUN02

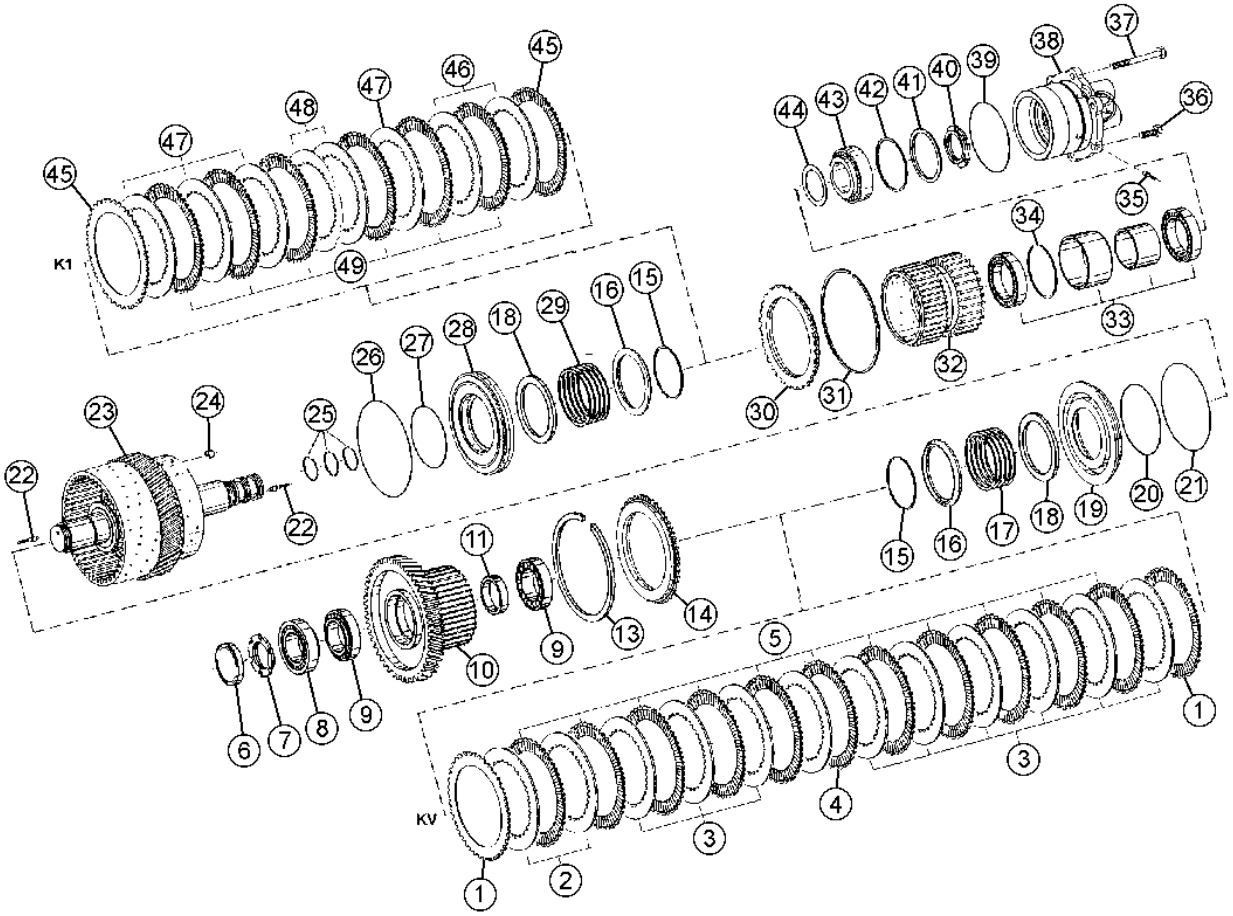

T156602

CLUTCH ASSEMBLY (LOW RANGE FORWARD) (CONTINUED)
(K1 & KV)

KEY	PART NO.	PART NAME	QTY	SERIAL NO.	REMARKS
1	T169604	DISK WITH OUTER SPLINE	2		
2	T169751	DISK WITH INNER SPLINE	2		
	T169752	DISK WITH INNER SPLINE	2		
	T169753	DISK WITH INNER SPLINE	2		
	T169754	DISK WITH INNER SPLINE	2		
3	T169753	DISK WITH INNER SPLINE	9		
4	T169754	DISK WITH INNER SPLINE	1		
5	T169603	CLUTCH DISK	11		
6	T182791	COVER	1		
7	T182790	NUT	1		
8	T182761	BALL BEARING	1		
9	T182761	BALL BEARING	2		
10	T182786	SPUR GEAR	1		
11	T182788	RING	1		
13	T169760	RING	1		
	T169759	RING	1		
	T169758	RING	1		
	T169089	SNAP RING	1		
	T169090	SNAP RING	1		
	T169091	SNAP RING	1		
	T169092	SNAP RING	1		
	T169093	SNAP RING	1		
	T169094	SNAP RING	1		
	T170706	SNAP RING	1		
	T179600	SNAP RING	1		
	T179601	SNAP RING	1		
	T179602	SNAP RING	1		
	T179603	SNAP RING	1		
	T169088	SNAP RING	1		
	T169087	SNAP RING	1		
	T169086	SNAP RING	1		
14	T181737	END PLATE	1		
15	T169618	SNAP RING	2		
16	T181434	RING	2		
17	T169709	COMPRESSION SPRING	1		
18	T181433	WASHER	2		
19	T182778	PISTON	1		
20	T169036	O-RING	1		
21	T169034	O-RING	1		
22	T182775	PLUG	3		
23	T182776	DRUM	1		
24	T176801	FLOW CONTROL HYD. VALVE	2		
25	T169017	PISTON RING	3		
26	T173959	O-RING	1		
27	T196822	O-RING	1		
28	T182779	PISTON	1		
29	T182781	COMPRESSION SPRING	1		
30	T182780	END PLATE	1		
31	T116909	SNAP RING	1		2.5MM
	T196826	SNAP RING	1		2.3 MM
	T196827	SNAP RING	1		2.4 MM
	T196828	SNAP RING	1		2.2 MM
	T196829	SNAP RING	1		2.1 MM
32	T182792	GEAR	1		
33	T182793	BALL BEARING	1		
34	T182774	SNAP RING	1		
35	T182775	PLUG	2		
36	19M7879	CAP SCREW	4		
37	19M2875	CAP SCREW	2		
38	T182789	COVER	1		
39	T196852	O-RING	1		
40	T182790	NUT	1		
41	T168743	RING	1		

CLUTCH ASSEMBLY (LOW RANGE FORWARD)
(K1 & KV) (CONTINUED)

T156602 -UN-28JUN02

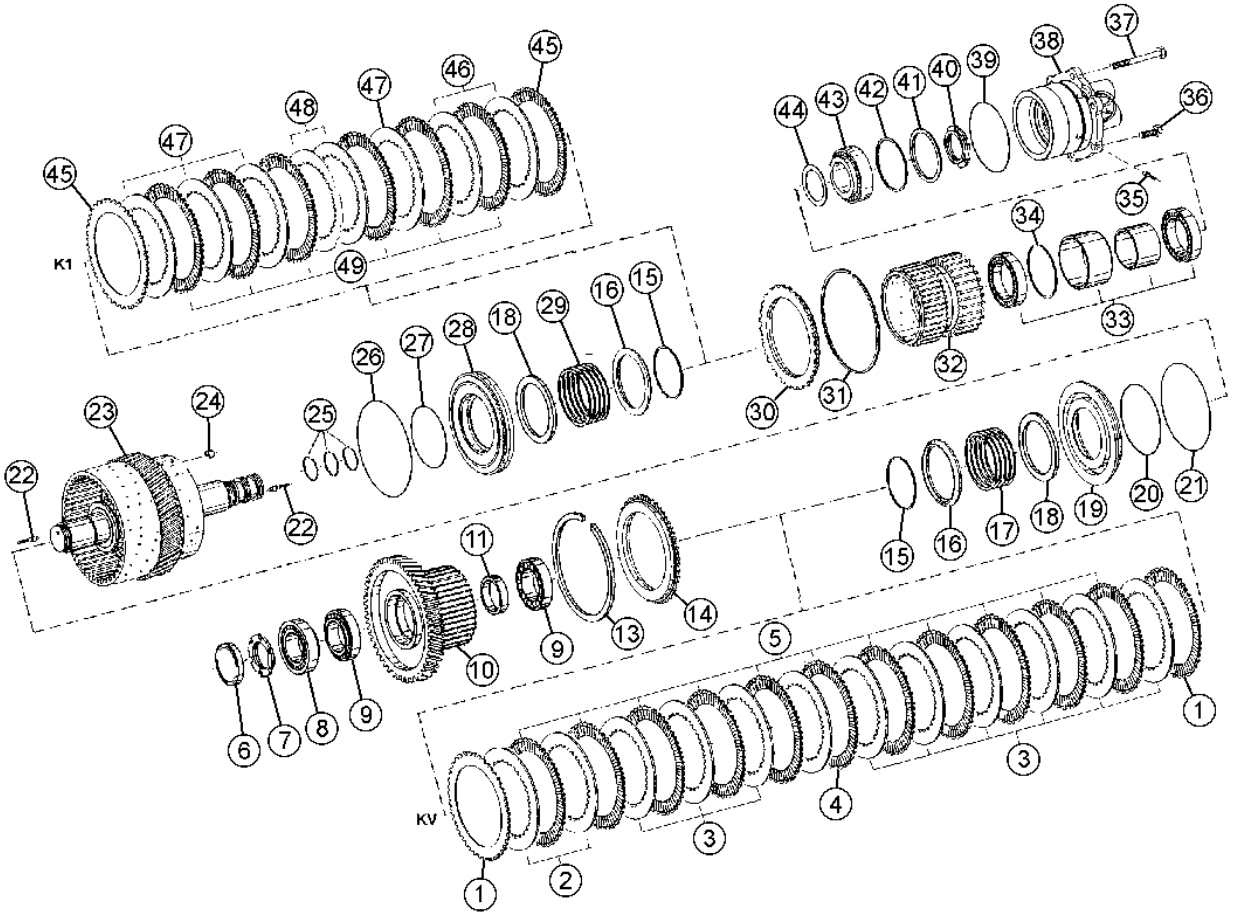

T156602

**CLUTCH ASSEMBLY (LOW RANGE FORWARD)
(K1 & KV) (CONTINUED)**

KEY	PART NO.	PART NAME	QTY	SERIAL NO.	REMARKS
42	T196756	SHIM	1		.75 MM
	T177395	SOLID SHIM	1		.85 MM
	T169054	SOLID SHIM	1		.9 MM
	T177394	SOLID SHIM	1		.95 MM
	T169053	SOLID SHIM	1		1.0 MM
	T169052	SOLID SHIM	1		1.2 MM
	T169641	SHIM	1		1.5 MM
	T169640	SHIM	1		2.0 MM
	T169049	SOLID SHIM	1		0.5 MM
	T169050	SOLID SHIM	1		0.3 MM
	T169051	SOLID SHIM	1		0.2 MM
43	T168776	BEARING	1		
44	T182777	WASHER	1		
45	T182785	DISK	2		
46	T196011	PLATE	2		35 MM
	T196012	PLATE	2		30 MM
47	T182782	PLATE	6		
48	T182783	PLATE	4		
49	T182784	DISK	6		

CLUTCH ASSEMBLY (REVERSE AND K2)

T156642 -UN-28JUN02

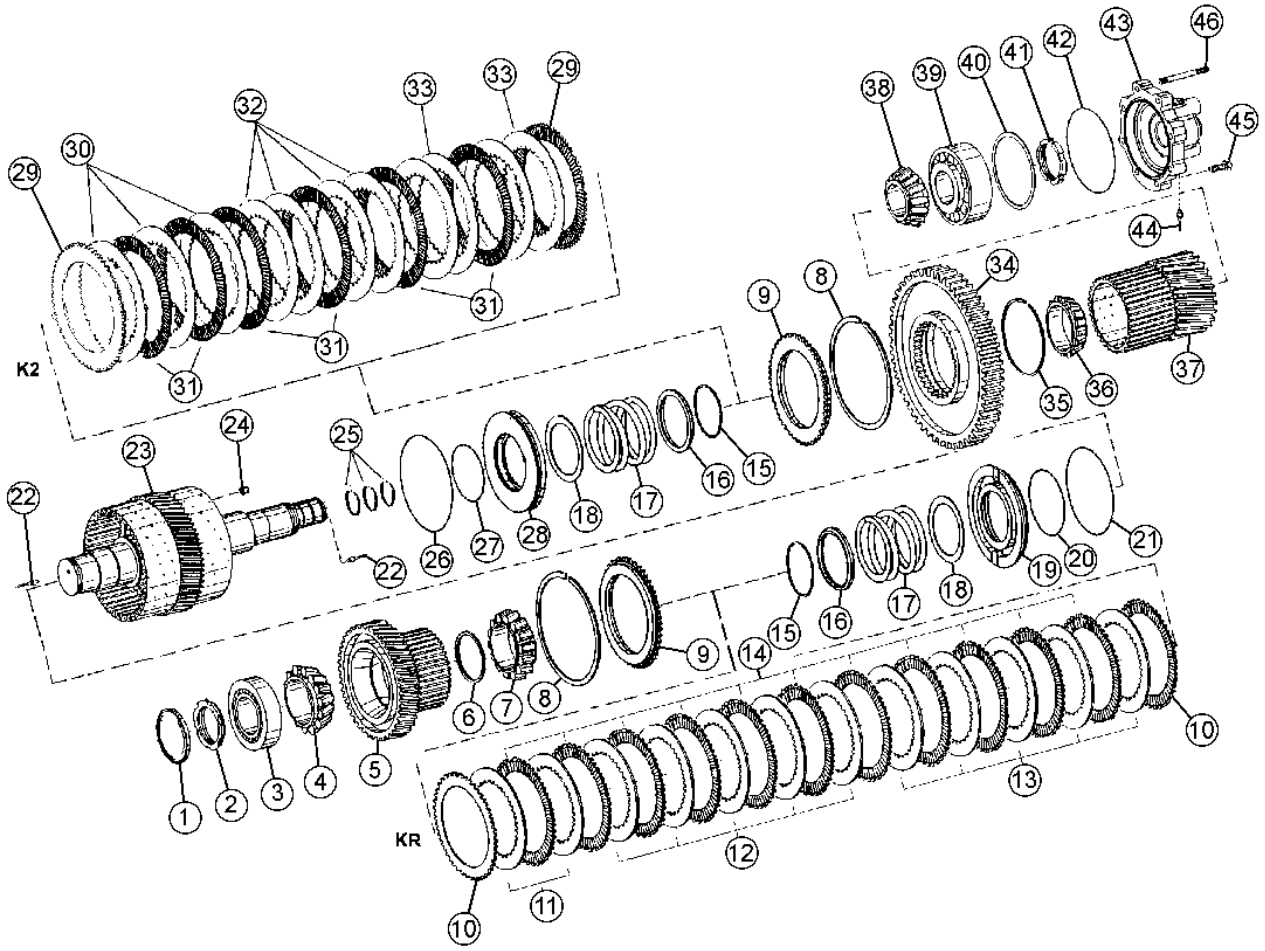

T156642

CLUTCH ASSEMBLY (REVERSE AND K2)

KEY	PART NO.	PART NAME	QTY	SERIAL NO.	REMARKS
1	T168754	COVER	1		
2	T195013	NUT	1		
3	T195012	BALL BEARING	1		
4	T195011	TAPERED ROLLER BEARING	1		
5	T195008	SPUR GEAR	1		
6	T195010	O-RING	1		
7	T195009	TAPERED ROLLER BEARING	1		
8	T169760	RING	2		
	T169759	RING	2		
	T169758	RING	2		
	T169089	SNAP RING	2		
	T169090	SNAP RING	2		
	T169091	SNAP RING	2		
	T169092	SNAP RING	2		
	T169093	SNAP RING	2		
	T169094	SNAP RING	2		
	T170706	SNAP RING	2		
	T179600	SNAP RING	2		
	T179601	SNAP RING	2		
	T179602	SNAP RING	2		
	T179603	SNAP RING	2		
	T169088	SNAP RING	2		
	T169087	SNAP RING	2		
	T169086	SNAP RING	2		
9	T181737	END PLATE	2		
10	T169604	DISK WITH OUTER SPLINE	2		
11	T205646	DISK WITH INNER SPLINE	2		(SUB FOR T195006)
	T205647	DISK WITH INNER SPLINE	2		(SUB FOR T195007)
12	T205647	DISK WITH INNER SPLINE	5		(SUB FOR T195007)
13	T205646	DISK WITH INNER SPLINE	5		(SUB FOR T195006)
14	T196794	DISK	11		
15	T169618	SNAP RING	2		
16	T181434	RING	2		
17	T169709	COMPRESSION SPRING	2		
18	T181433	WASHER	2		
19	T182778	PISTON	1		
20	T169036	O-RING	1		
21	T169034	O-RING	1		
22	T182775	PLUG	3		
23	T182800	DRUM	1		
24	T176801	FLOW CONTROL HYD. VALVE	2		
25	T169017	PISTON RING	3		
26	T168697	O-RING	1		
27	T168692	O-RING	1		
28	T195003	PISTON	1		
29	T169604	DISK WITH OUTER SPLINE	2		
30	T169754	DISK WITH INNER SPLINE	3		
31	T169603	CLUTCH DISK	6		
32	T169751	DISK WITH INNER SPLINE	6		
33	T169751	DISK WITH INNER SPLINE	2		
	T169752	DISK WITH INNER SPLINE	2		
	T169753	DISK WITH INNER SPLINE	2		
	T169754	DISK WITH INNER SPLINE	2		
34	T195014	SPUR GEAR	1		
35	T169030	SNAP RING	1		

CLUTCH ASSEMBLY (REVERSE AND K2) (CONTINUED)

T156642 -UN-28JUN02

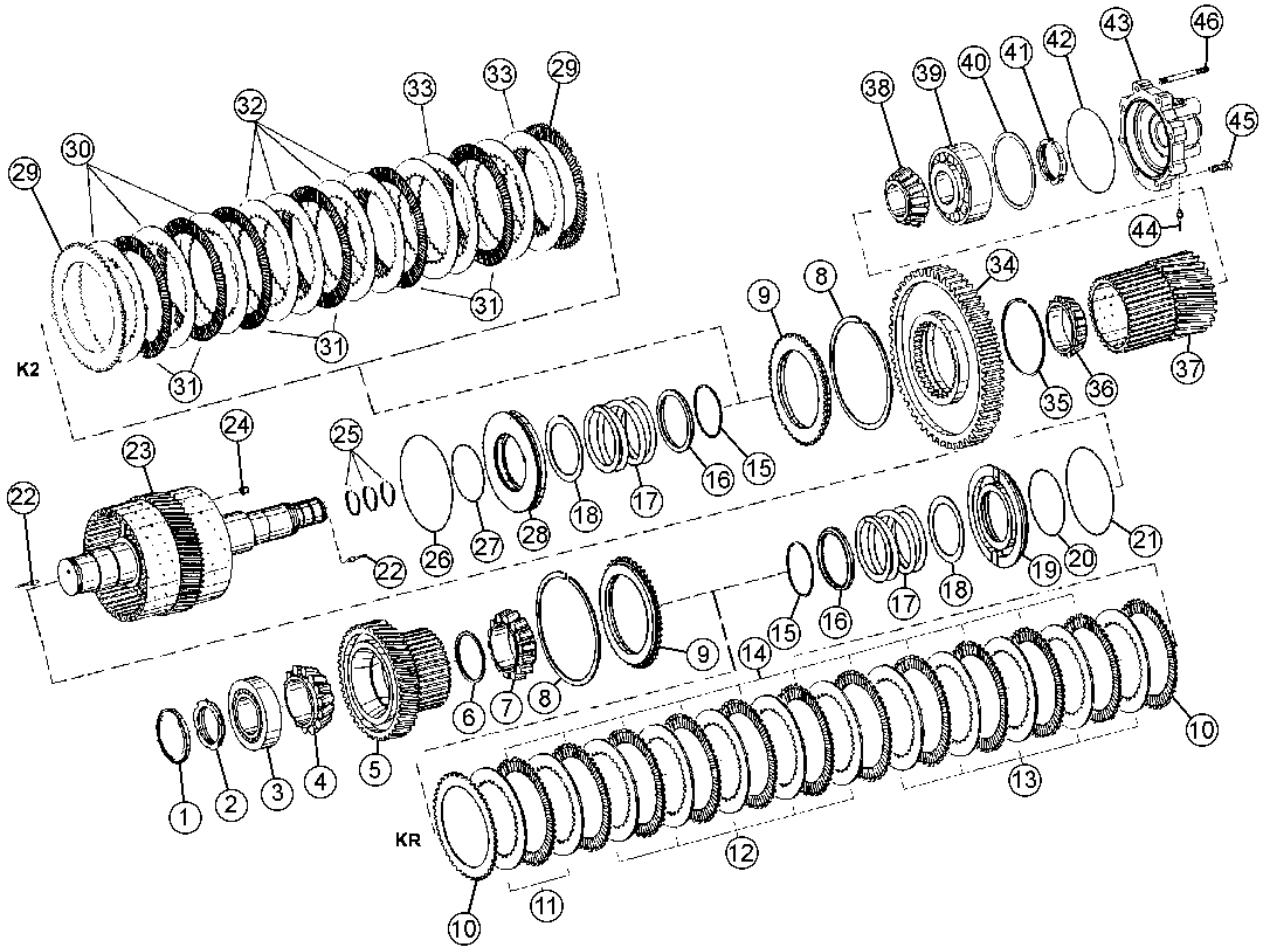

T156642

CLUTCH ASSEMBLY (REVERSE AND K2) (CONTINUED)

KEY	PART NO.	PART NAME	QTY	SERIAL NO.	REMARKS
36	T195016	TAPERED ROLLER BEARING	1		
37	T195015	GEAR	1		
38	T195017	TAPERED ROLLER BEARING	1		
39	T195018	BALL BEARING	1		
40	T168830	SOLID SHIM	1		
	T168831	SOLID SHIM	1		
	T168832	SOLID SHIM	1		
	T168833	SOLID SHIM	1		
	T168834	SOLID SHIM	1		
	T168835	SOLID SHIM	1		
	T168836	SOLID SHIM	1		
	T168837	SOLID SHIM	1		
	T168838	SOLID SHIM	1		
	T168839	SOLID SHIM	1		
	T168840	SOLID SHIM	1		
41	T195019	NUT	1		
42	T170126	O-RING	1		
43	T195022	COVER	1		
44	T182775	PLUG	2		
45	19M8637	CAP SCREW	6		M10 X 40
46	T195114	STUD	2		

CLUTCH ASSEMBLY (HIGH RANGE FORWARD AND K3)

T157194 -UN-15JUL02

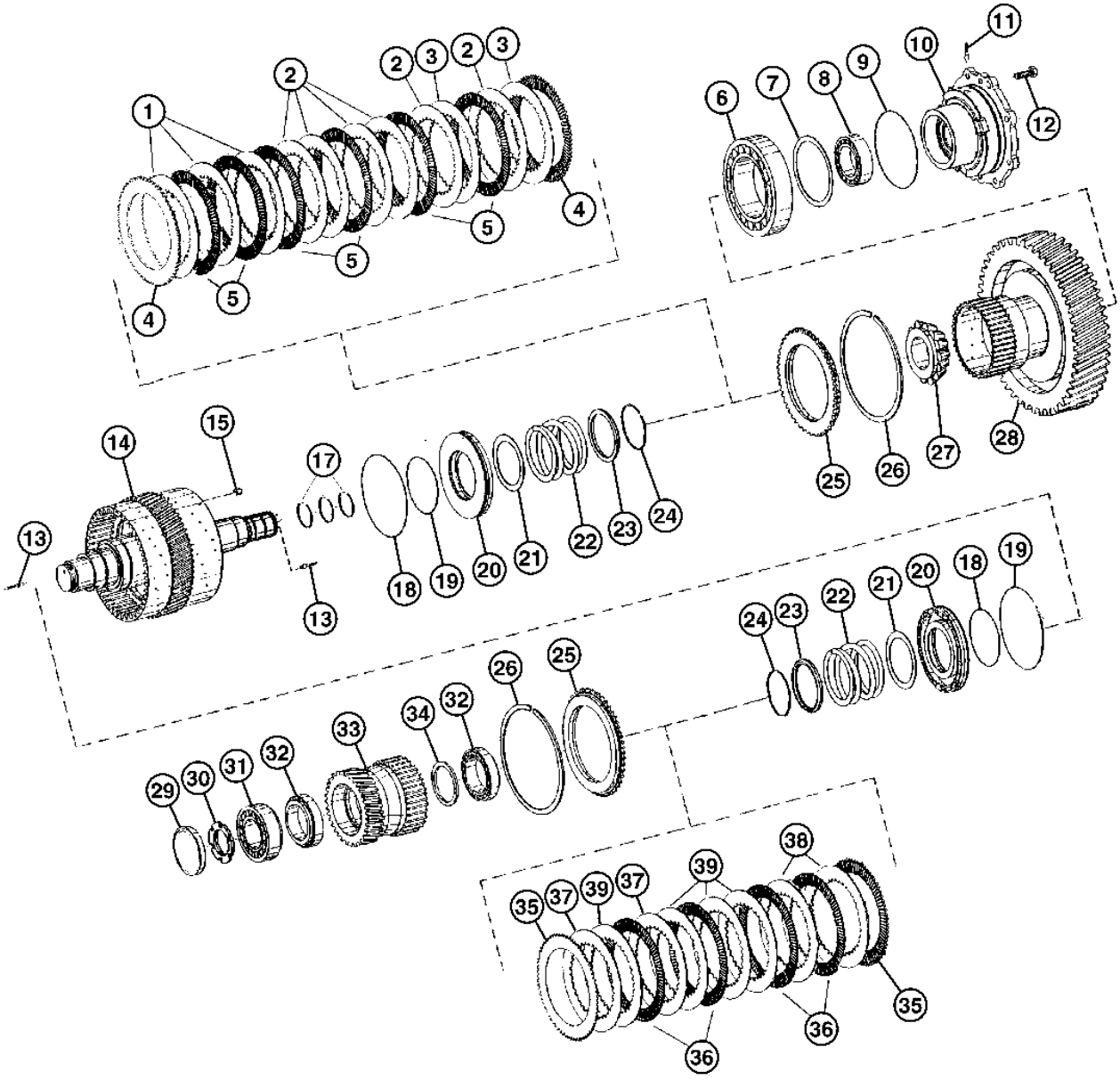

T157194

CLUTCH ASSEMBLY (HIGH RANGE FORWARD AND K3)

KEY	PART NO.	PART NAME	QTY	SERIAL NO.	REMARKS
1	T169754	DISK WITH INNER SPLINE	3		4.0 MM
2	T169751	DISK WITH INNER SPLINE	6		2.5 MM
3	T169751	DISK WITH INNER SPLINE	2		2.5 MM
	T169752	DISK WITH INNER SPLINE	2		3.0 MM
	T169753	DISK WITH INNER SPLINE	2		3.5 MM
	T169754	DISK WITH INNER SPLINE	2		4.0 MM
4	T169604	DISK WITH OUTER SPLINE	2		
5	T169603	CLUTCH DISK	6		
6	T195041	BALL BEARING	1		
7	T196823	WASHER	1		
	T196824	WASHER	1		
	T196836	WASHER	1		
	T196837	WASHER	1		
	T196838	WASHER	1		
8	T195042	BALL BEARING	1		
9	T195115	O-RING	1		
10	T195044	COVER	1		
11	T182775	PLUG	2		
12	19M7168	CAP SCREW	8		
13	T182775	PLUG	3		
14	T195024	DRUM	1		
15	T176801	FLOW CONTROL HYD. VALVE	2		
17	T169017	PISTON RING	3		
18	T168697	O-RING	2		
19	T168692	O-RING	2		
20	T195003	PISTON	2		
21	T181433	WASHER	2		
22	T169709	COMPRESSION SPRING	2		
23	T181434	RING	2		
24	T169618	SNAP RING	2		
25	T181737	END PLATE	2		
26	T169760	RING	2		2.95 MM
	T169759	RING	2		2.9 MM
	T169758	RING	2		2.85 MM
	T169089	SNAP RING	2		2.8 MM
	T169090	SNAP RING	2		2.75 MM
	T169091	SNAP RING	2		2.7 MM
	T169092	SNAP RING	2		2.65 MM
	T169093	SNAP RING	2		2.6 MM
	T169094	SNAP RING	2		2.55 MM
	T170706	SNAP RING	2		2.45 MM
	T179600	SNAP RING	2		2.1 MM
	T179601	SNAP RING	2		2.15 MM
	T179602	SNAP RING	2		2.25 MM
	T179603	SNAP RING	2		2.35 MM
	T169088	SNAP RING	2		3.0 MM
	T169087	SNAP RING	2		3.05 MM
	T169086	SNAP RING	2		3.10 MM
27	AT255577	TAPERED ROLLER BEARING	1		
28	T195040	SPUR GEAR	1		
29	T182791	COVER	1		
30	T182790	NUT	1		
31	T168916	BEARING	1		
32	T195036	TAPERED ROLLER BEARING	2		
33	T195023	HELICAL GEAR	1		
34	T205629	O-RING	1		(SUB FOR T195037, THIS APPLICATION)
35	T169604	DISK WITH OUTER SPLINE	2		
36	T169603	CLUTCH DISK	4		
37	T169751	DISK WITH INNER SPLINE	2		2.5 MM
	T169752	DISK WITH INNER SPLINE	2		3.0 MM
	T169753	DISK WITH INNER SPLINE	2		3.5 MM
	T169754	DISK WITH INNER SPLINE	2		4.0 MM
38	T169754	DISK WITH INNER SPLINE	2		4.0 MM
39	T169751	DISK WITH INNER SPLINE	4		2.5 MM

OUTPUT SHAFT

T213627 -UN-16AUG05

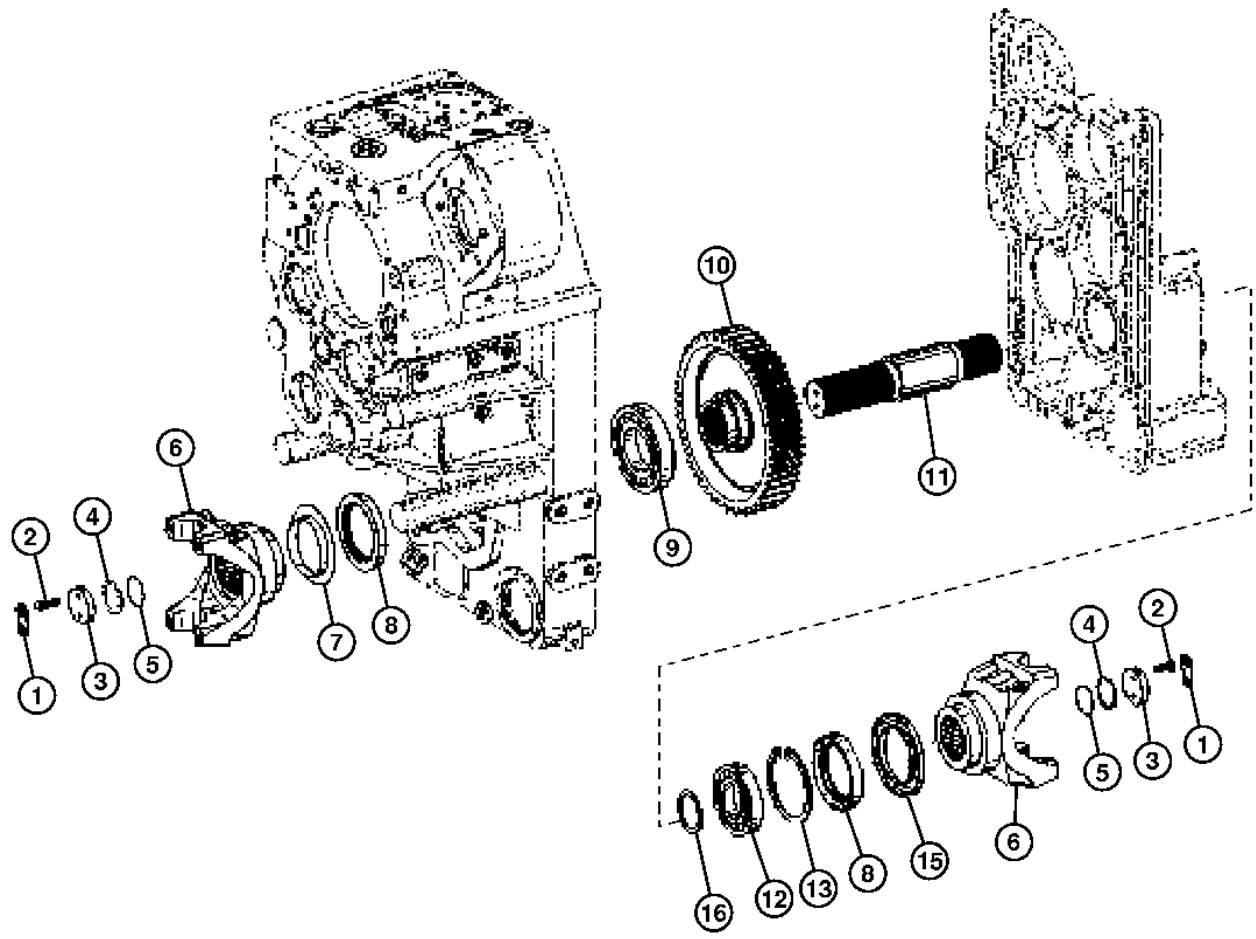

T213627

OUTPUT SHAFT

KEY	PART NO.	PART NAME	QTY	SERIAL NO.	REMARKS
1	T116928	WASHER	2		
2	19M7550	CAP SCREW	4		M10 X 35
3	T168920	WASHER	2		
4	T196846	WASHER	1		
	T196847	WASHER	1		
5	T195128	O-RING	2		
6	T180608	YOKE	2		
7	T195047	SHEET	1		
8	T168904	SEAL	2		
9	T176773	BEARING	1		
10	T195046	GEAR	1		
11	T195045	SHAFT	1		
12	T168907	BALL BEARING	1		
13	40M5463	SNAP RING	1		
15	T195048	SCREEN	1		
16	T168882	SOLID SHIM	1		1.0 MM
	T168883	SOLID SHIM	1		1.1 MM
	T168884	SOLID SHIM	1		1.2 MM
	T168885	SOLID SHIM	1		1.3 MM
	T168886	SOLID SHIM	1		1.4 MM
	T168887	SOLID SHIM	1		1.5 MM
	T168888	SOLID SHIM	1		1.6 MM
	T168889	SOLID SHIM	1		1.7 MM
	T168890	SOLID SHIM	1		1.8 MM
	T168891	SOLID SHIM	1		1.9 MM
	T168926	SOLID SHIM	1		2.0 MM
	T168930	SOLID SHIM	1		2.1 MM
	T169706	SHIM	1		2.2 MM
	T168928	SOLID SHIM	1		2.3 MM
	T168927	SOLID SHIM	1		2.4 MM
	T168924	SOLID SHIM	1		2.5 MM
	T168925	SOLID SHIM	1		3.0 MM

TRANSMISSION SPEED SENSOR

T157955 -UN-25JUL02

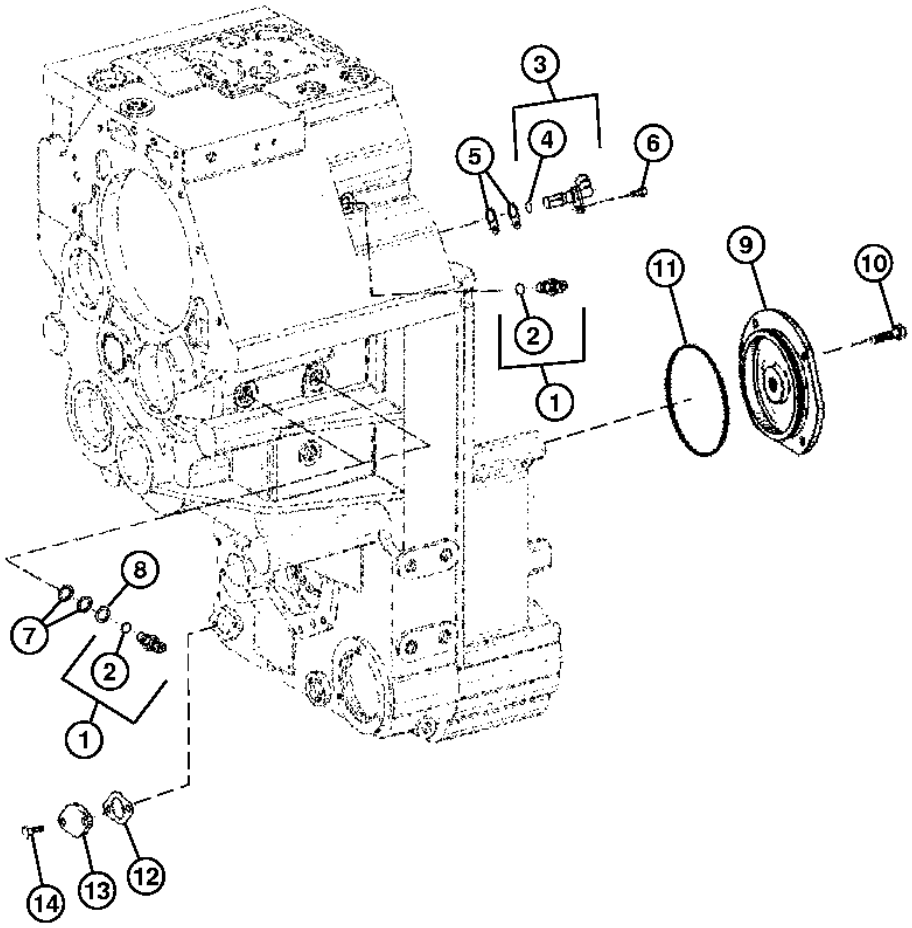

T157955

TRANSMISSION SPEED SENSOR

KEY	PART NO.	PART NAME	QTY	SERIAL NO.	REMARKS
1	AT210773	SENSOR	3		
2	R104558	O-RING	3		
3	T179510	SENSOR	1		
4	R73599	O-RING	1		
5	T169741	SOLID SHIM	2		
6	19M7647	SCREW	1		M8 X 16
7	T205863	SHIM	AR		(0.30 MM)
	T205864	SHIM	AR		(0.20 MM)
8	.....	SHIM	2		(T180421 NO LONGER AVAILABLE, SUB T205862, T205863, T205863 AS NEEDED)
	T205862	SHIM	AR		(1.00 MM)
9	T195068	COVER	1		
10	19M7139	CAP SCREW	4		M8 X 20
11	T195039	O-RING	1		
12	T116604	GASKET	2		
13	T144370	PLATE	2		
14	19M7162	CAP SCREW	4		M8 X 16

TRANSMISSION SUCTION SCREEN

T198034 -UN-23FEB04

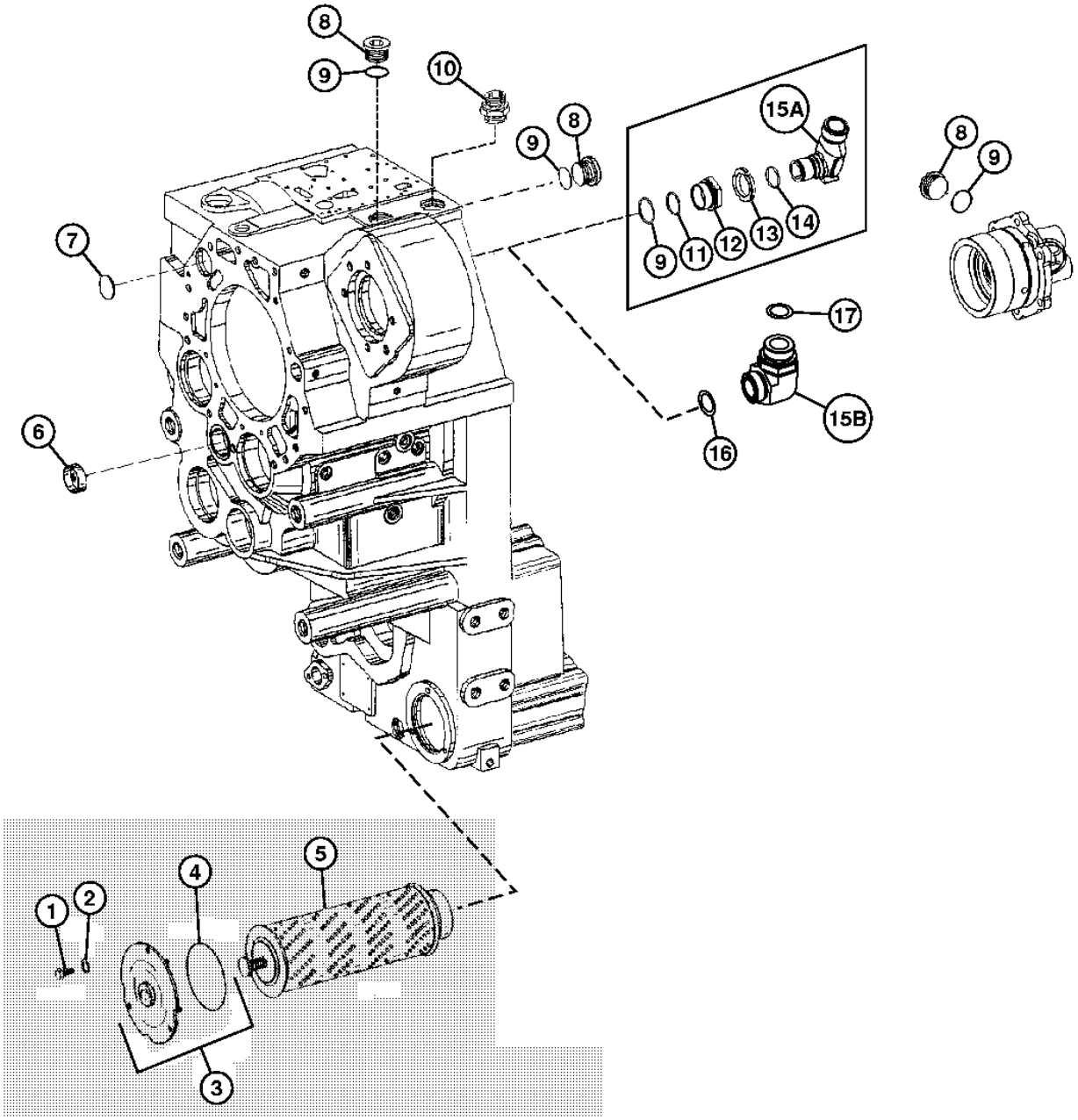

T198034

TRANSMISSION SUCTION SCREEN

KEY	PART NO.	PART NAME	QTY	SERIAL NO.	REMARKS
1	19M7162	CAP SCREW	3		M8 X 16, (19M7284 NOT USED FOR THIS APPLICATION)
2	24M7238	WASHER	3		8.700 X 17 X 2 MM
3	T181736	COVER	1		
4	T177737	O-RING	1		
5	AT307331	SCREEN	1		(SUB FOR T169590, THIS APPLICATION)
6	T170188	CAP	1		
7	30M7014	PLUG	1		52 MM
8	T168795	PLUG	3		
9	T170119	O-RING	3		
10	T169072	ADAPTER	1		
11	T195063	SNAP RING	1	-590069	
12	T195064	PIPE BUSHING	1	-590069	
13	T195025	NUT	1	-590069	
14	T196850	O-RING	1	-590069	
15A	T195062	ELBOW FITTING	1	-590069	
15B	38H5021	ELBOW FITTING	1	590070-	
16	T78612	O-RING	1	590070-	
17	51M7049	O-RING	1	590070-	

TRANSMISSION TEMPERATURE SENSOR

T157957 -UN-24JUL02

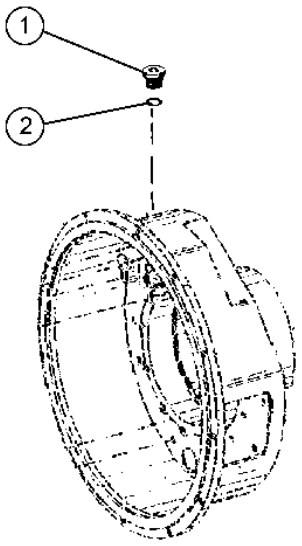

T157957

TRANSMISSION TEMPERATURE SENSOR

KEY	PART NO.	PART NAME	QTY	SERIAL NO.	REMARKS
1	AT112799	FITTING PLUG	1		(INCLUDES SEAL T107983)
2	T74553	O-RING	1		

TRANSMISSION OIL FILL

T193211 -UN-21JUL03

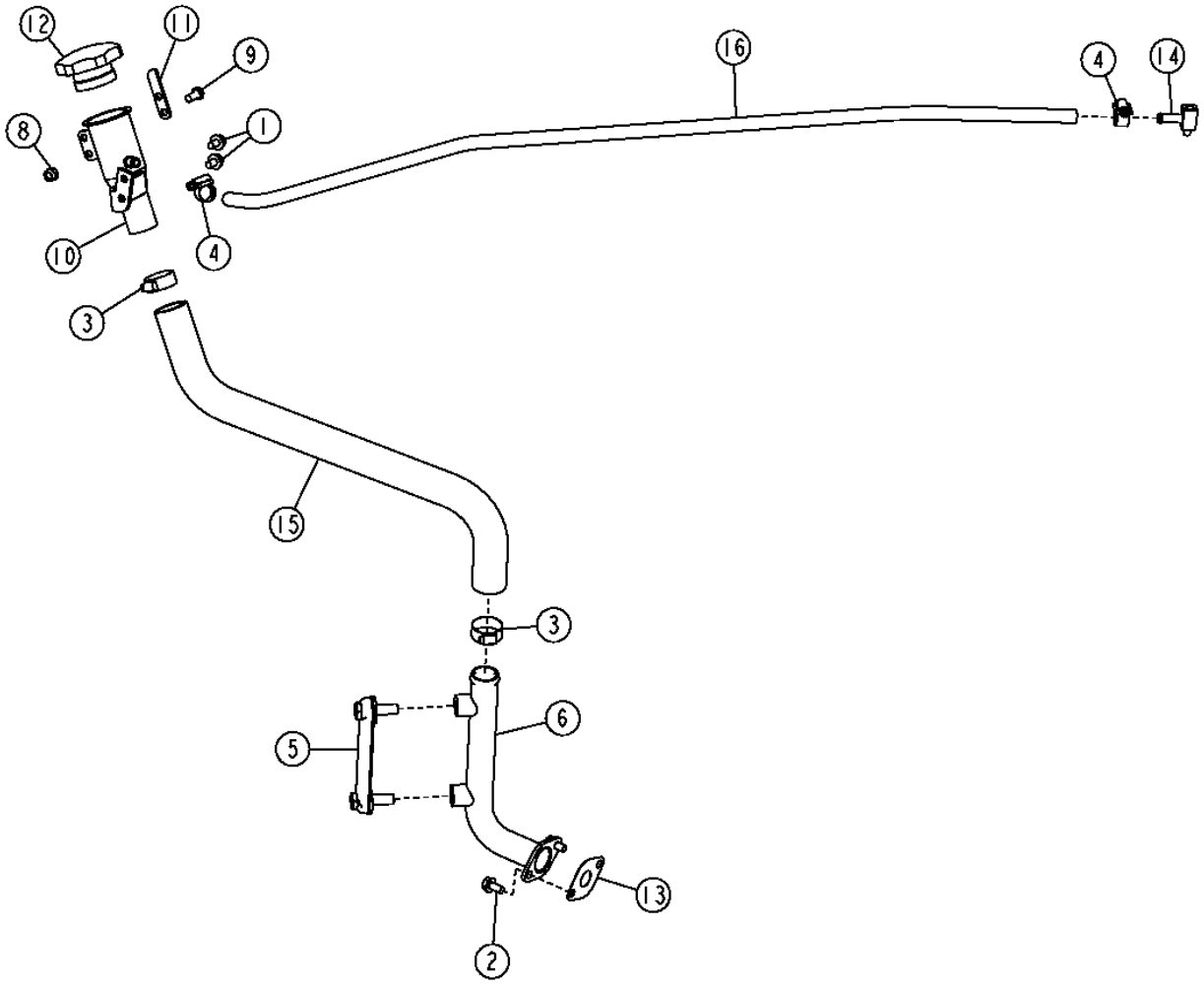

T193211

TRANSMISSION OIL FILL

KEY	PART NO.	PART NAME	QTY	SERIAL NO.	REMARKS
1	19M7864	SCREW	2		(SUB FOR AT227651)
2	19M7865	SCREW	2		
3	AR21839	CLAMP	2		
4	TY22464	CLAMP	2		(SUB FOR AR21836)
5	AT227279	LEVEL GAUGE	1		
6	AT315021	TUBE	1		
8	14M7426	LOCK NUT	1		
9	19M7162	CAP SCREW	1		
10	AT227248	TUBE	1		
11	T196464	STRAP	1		
12	RE500250	FILLER CAP	1		(FURNISH M87571 BULK MATERIAL, CUT TO 3.9 FT)
13	T116604	GASKET	1		
14	T196587	TEE FITTING	1		
15	T196985	HOSE	1		
16	.....	BULK HOSE	1		

TRANSMISSION OIL FILTER AND HOSES (SERIAL NO. -590067)

T156119 -UN-14JUN02

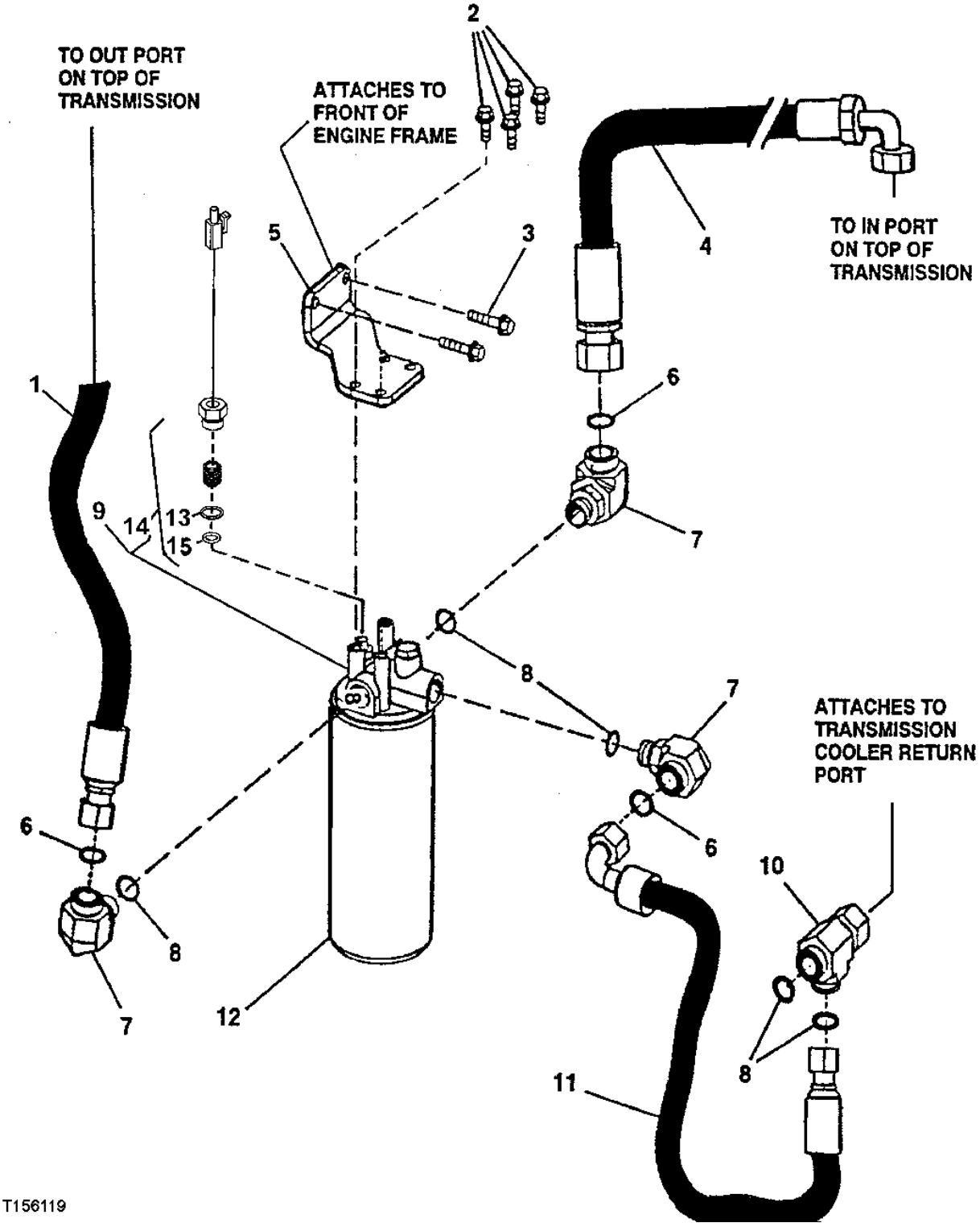

TRANSMISSION OIL FILTER AND HOSES (SERIAL NO. -590067)

KEY	PART NO.	PART NAME	QTY	SERIAL NO.	REMARKS
1	AT210222	HYDRAULIC HOSE - FABRICATE	1		
2	19M7785	SCREW	4		M10 X 25
3	19M7805	SCREW	2		M10 X 45
4	AT211014	HYDRAULIC HOSE - FABRICATE	1		
5	T172981	PLATE	1		
6	U12547	O-RING	3		
7	38H1305	ELBOW FITTING	3		
8	T76938	O-RING	5		
9	AT223684	FILTER	1		
10	38H1002	TEE FITTING	1		
11	AT203077	HYDRAULIC HOSE - FABRICATE	1		
12	AT147496	FILTER ELEMENT	1		
13	R26375	O-RING	1		
14	AT307045	PRESSURE SWITCH	1		(SUB FOR AT280924) (SUB FOR AT223672) OIL FILTER RESTRICTION INDICATOR (NEW SWITCH MAY REQUIRE PROFILE CUTS TO T172981)
15	P46051	O-RING	1		

TRANSMISSION OIL FILTER AND HOSES (SERIAL NO. 590068-)

T195221 -UN-29SEP03

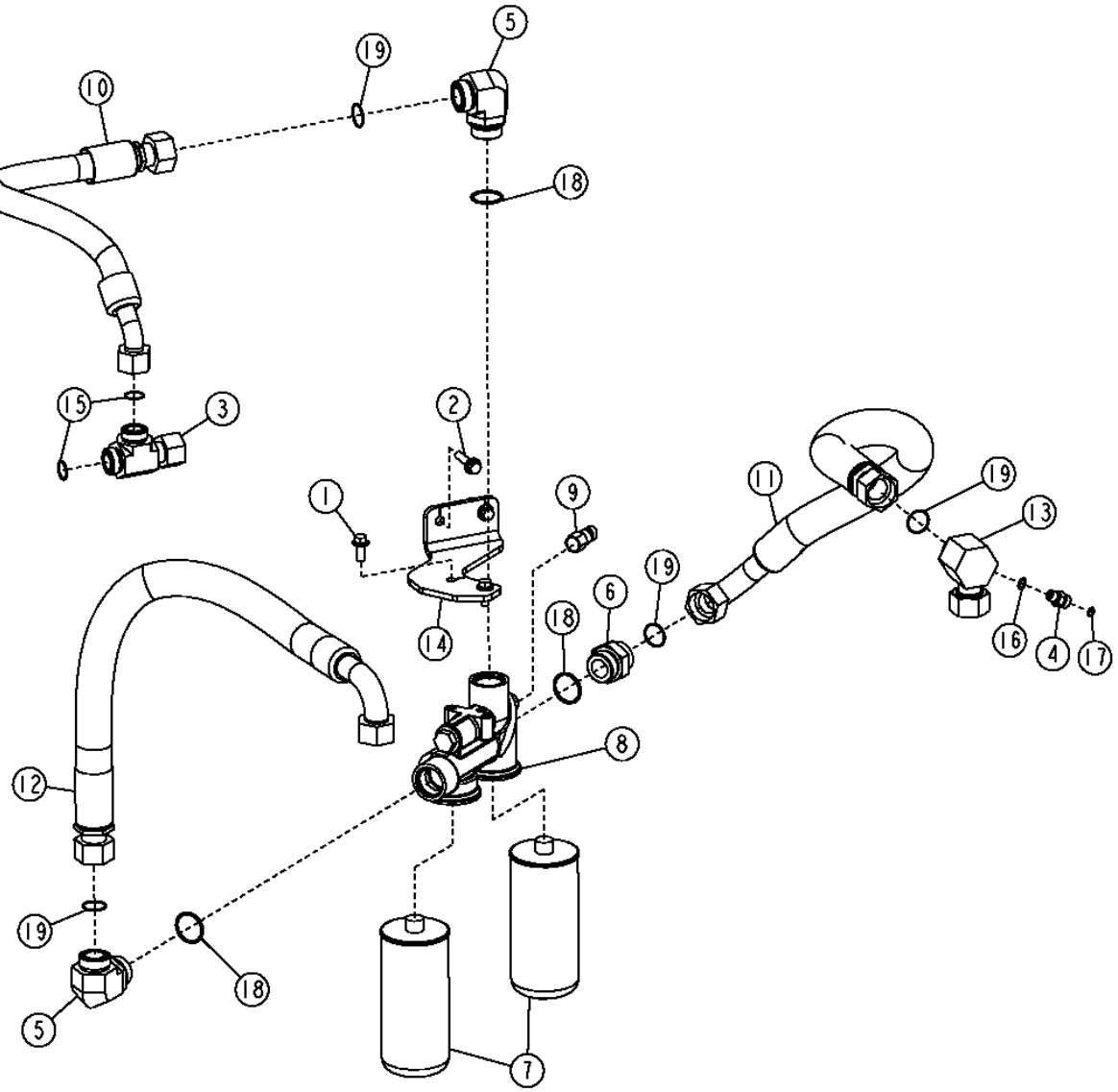

TRANSMISSION OIL FILTER AND HOSES (SERIAL NO. 590068-)

KEY	PART NO.	PART NAME	QTY	SERIAL NO.	REMARKS
1	19M7785	SCREW	2		M10 X 25
2	19M7805	SCREW	2		M10 X 45
3	38H1002	TEE FITTING	1		
4	38H1004	ELBOW FITTING	1		(SUB FOR 38H1160)
5	38H5021	ELBOW FITTING	2		
6	38H5189	ADAPTER	1		
7	AT222005	FILTER ELEMENT	2		
8	AT301540	FILTER HEAD	1		
9	T173873	PRESSURE SWITCH	1		(TRANSMISSION OIL FILTER RESTRICTION INDICATOR)
10	AT305318	HYDRAULIC HOSE - FABRICATE	1		
11	AT305357	HYDRAULIC HOSE - FABRICATE	1		
12	AT305417	HYDRAULIC HOSE - FABRICATE	1		
13	AT305275	ELBOW FITTING	1		
14	T203850	PLATE	1		
15	T76938	O-RING	2		
16	R26448	O-RING	1		
17	T77613	O-RING	1		
18	51M7049	O-RING	3		
19	T78612	O-RING	4		

TRANSMISSION HYDRAULICS

T160047 -UN-02OCT02

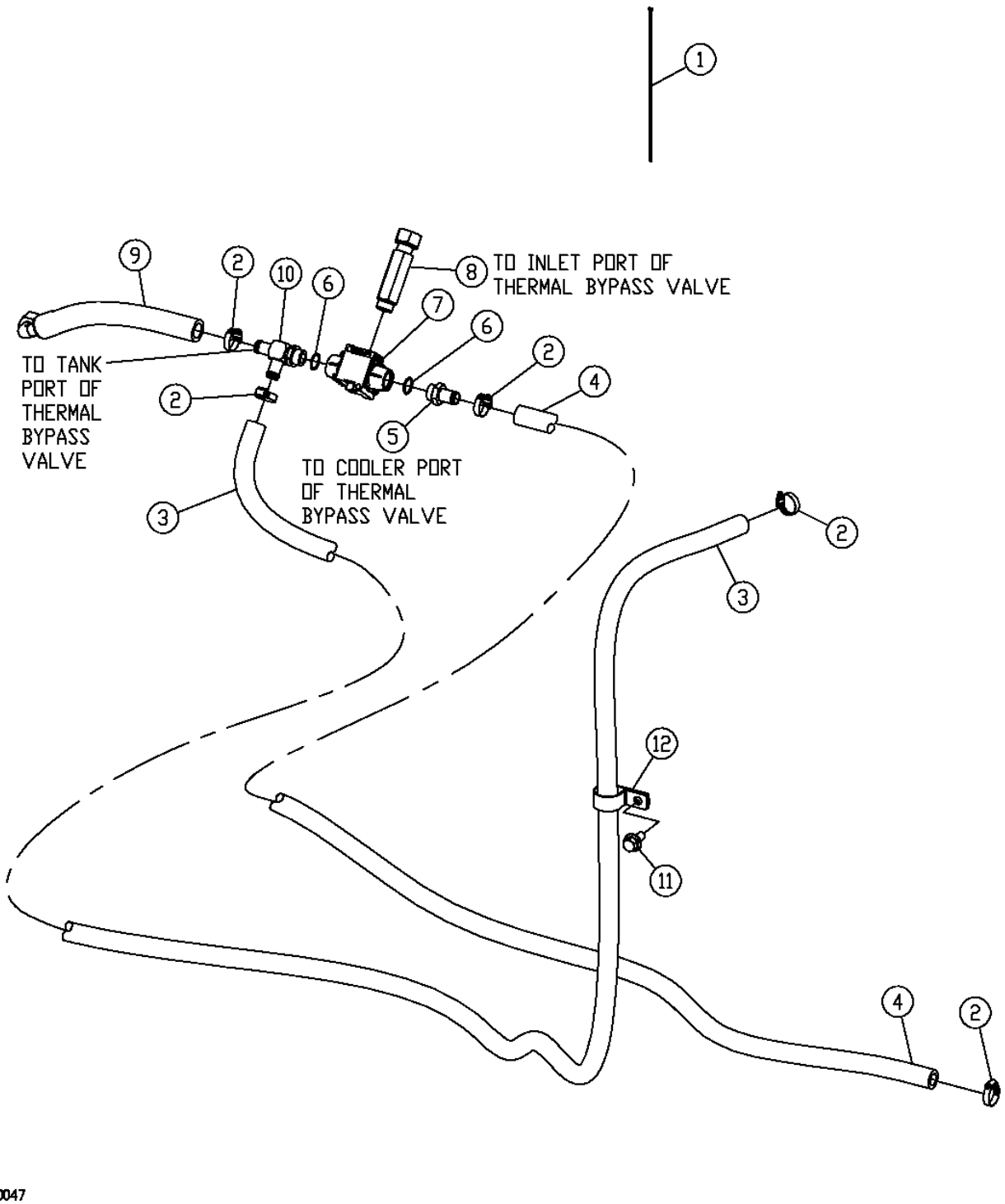

T160047

TRANSMISSION HYDRAULICS

KEY	PART NO.	PART NAME	QTY	SERIAL NO.	REMARKS
1	H77698	TIE BAND	1		
2	AR21839	CLAMP	5		
3	T180131	BULK HOSE	1		
4	T180132	HYDRAULIC HOSE - FABRICATE	1		
5	T29747	HOSE FITTING	1		
6	R29936	O-RING	2		
7	AT225189	THERMOSTATIC CONTROL VALVE	1		
8	AT223284	ADAPTER	1		
9	AT223580	HYDRAULIC HOSE - FABRICATE	1	-XXXXXX	
	AT310162	HYDRAULIC HOSE - FABRICATE	1	XXXXXX-	(SUB FOR AT307176)
10	AT223584	FITTING	1		
11	19M7784	SCREW	2		
12	T26955	CLAMP	2		

MEMORANDA

CRANKSHAFT

RGP4662 -UN-07AUG96

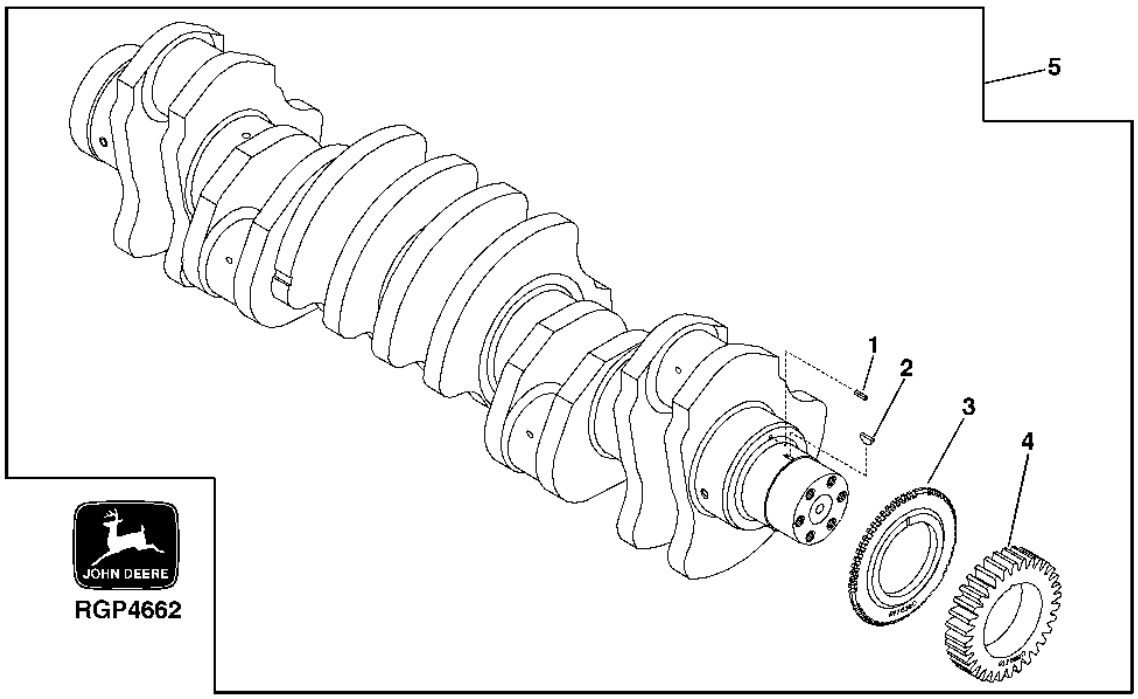

KEY	PART NO.	PART NAME	QTY	ENGINE SERIAL NO.	REMARKS
1	34M7129	SPRING PIN	1		3 X 16 MM
2	26M4224	SHAFT KEY	1		
3	R122377	WHEEL SPEED SENSOR	1		(MARKED NUMBER TO OUTSIDE)
4	R116330	GEAR	1		(MARKED NUMBER TO OUTSIDE)
5	RE51761	CRANKSHAFT	1		(MARKED R116068) (MACHINED THROWS)

REAR CRANKSHAFT OIL SEAL AND HOUSING

RGP4685 -UN-07AUG96

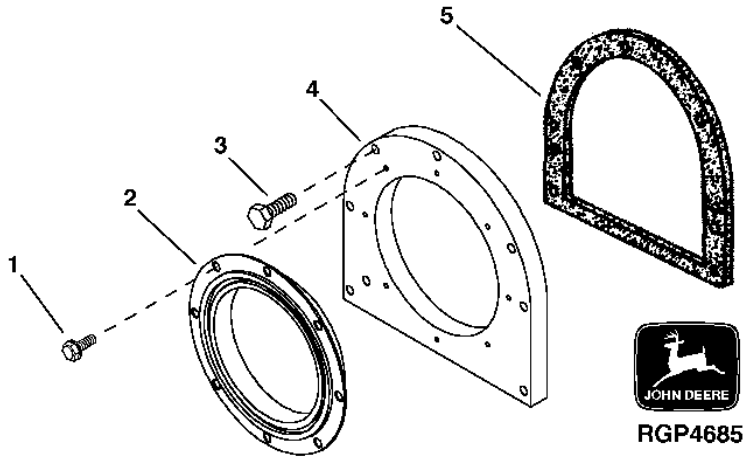

KEY	PART NO.	PART NAME	QTY	ENGINE SERIAL NO.	REMARKS
1	R130091	SCREW	8		
2	RE53687	SEAL	1		
3	19M7868	SCREW	7		M8 X 30
4	R116338	HOUSING	1		
5	R520512	GASKET	1		(SUB FOR R35043)

MAIN AND MAIN THRUST BEARINGS

RGP4715 -UN-07AUG96

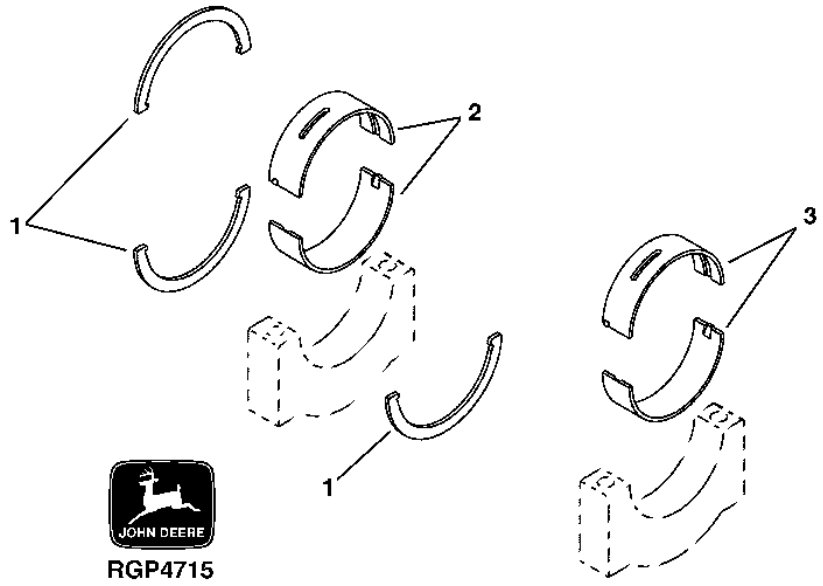

KEY	PART NO.	PART NAME	QTY	ENGINE SERIAL NO.	REMARKS
1	RE63906	THRUST WASHER	1		STD (PKG (3) R116299)
	RE68659	THRUST WASHER	1		0.18 MM (.007") OS FLANGE (PKG (2) R133599 AND R116299)
2	RE63905	THRUST BEARING	1		STD SIZE (PKG R129751 AND R129752)
	RE68663	THRUST BEARING	1		0.25 MM (.010") US (PKG R133606 AND R133607)
	RE68664	THRUST BEARING	1		0.50 MM (.020") US (PKG R133608 AND R133609)
3	RE63903	BEARING	AR		STD SIZE (PKG R129749 AND R129750)
	RE68655	BEARING	AR		0.25 MM (.010") US (PKG R133600 AND R133601)
	RE68656	BEARING	AR		0.50 MM (.020") US (PKG R133602 AND R133603)

MEMORANDA

CAMSHAFT AND GEAR (ADW)

RGP4747 -UN-20AUG96

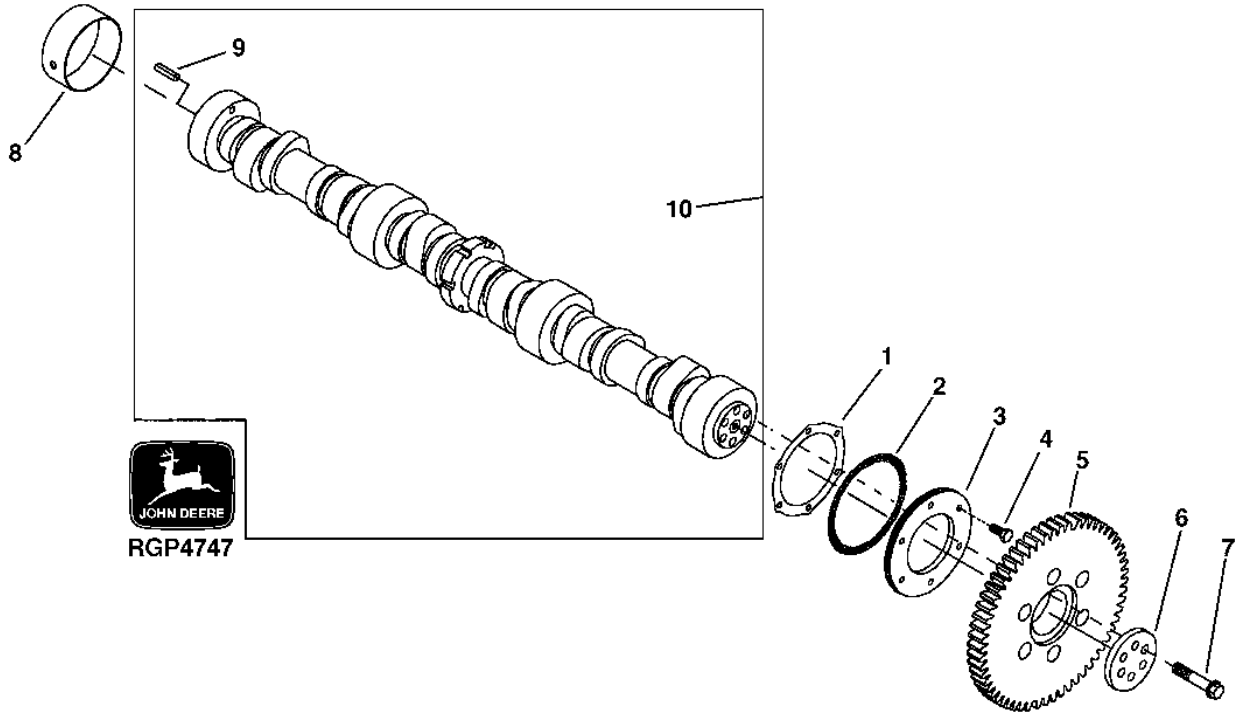

KEY	PART NO.	PART NAME	QTY	ENGINE SERIAL NO.	REMARKS
1	R500211	GASKET	1		(SUB FOR R119160)
2	R62976	O-RING	1		
3	R119158	RING	1		
4	19M7867	SCREW	6		M8 X 25
5	R116526	GEAR	1		
6	R119575	BUSHING	1		
7	R116911	CAP SCREW	6		
8	R134706	BUSHING	4		
9	R117020	PIN	1		
10	RE70146	KIT	1		(MARKED R125067)

TIMING GEAR COVER, IDLER GEAR, FRONT PLATE, AND OIL FILL

RGP7643 -UN-15AUG01

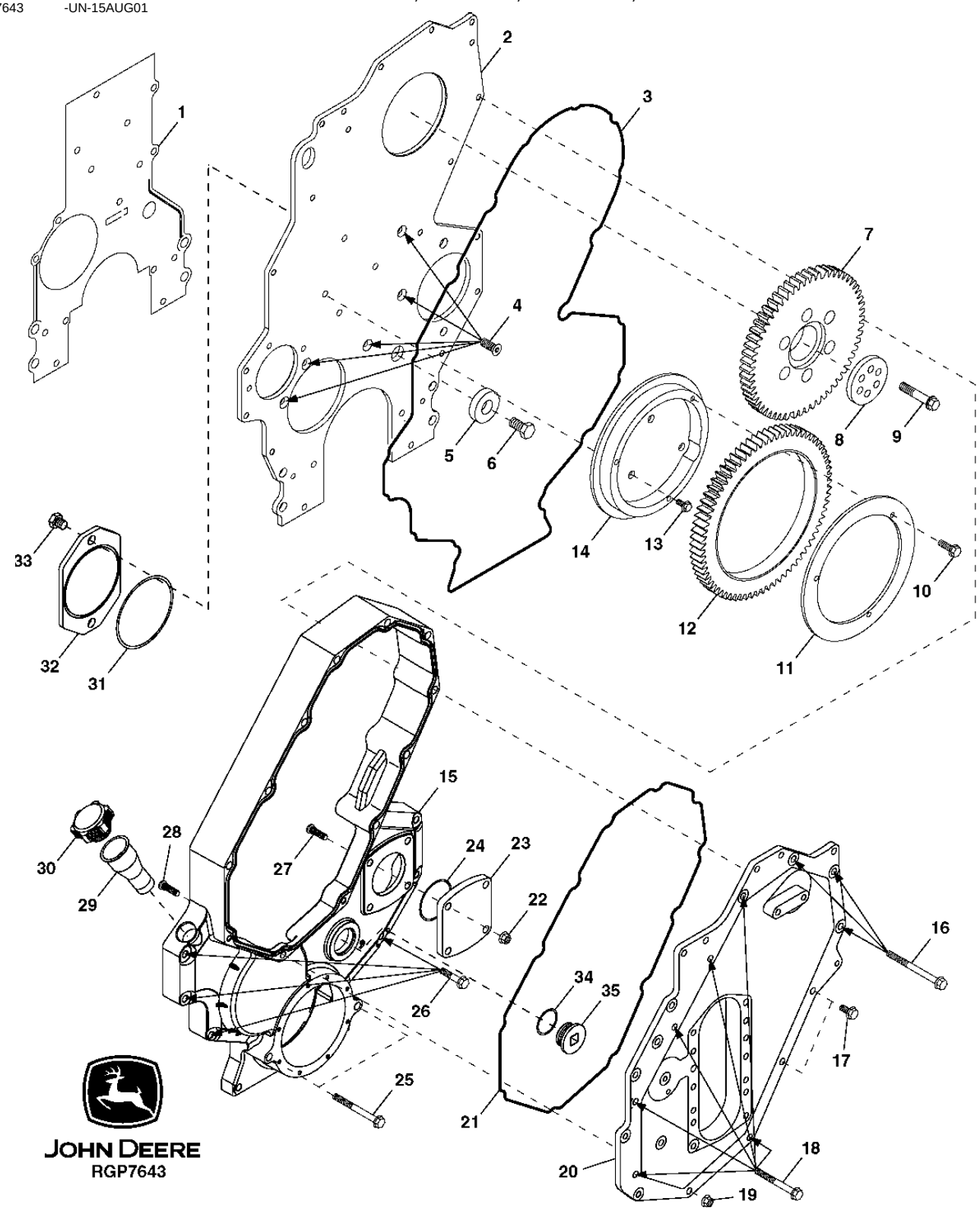

TIMING GEAR COVER, IDLER GEAR, FRONT PLATE, AND OIL FILL

KEY	PART NO.	PART NAME	QTY	ENGINE SERIAL NO.	REMARKS
1	R500212	GASKET	1		
2	RE501740	PLATE	1		(CONTAINS N102039) (MARKED R500117) (WITHOUT AUX DRIVE)
	N102039	PLUG	4		(CONTAINED IN RE501740)
3	R502026	V-RING SEAL	1		
4	19M8551	SCREW	5		M10 X 25
5	R26333	WASHER	1		
6	19M7488	CAP SCREW	1		M16 X 40
7	R116526	GEAR	1		(CAMSHAFT)
8	R119575	BUSHING	1		
9	R116911	CAP SCREW	6		
10	19M7867	SCREW	3		M8 X 25
11	R501309	PLATE	1		
12	RE53911	SPUR GEAR	1		(IDLER)
13	19M8738	CAP SCREW	3		
14	R119157	COVER	1		
15	R502530	COVER	1		
16	19M7836	SCREW	4		M10 X 110
17	19M7786	SCREW	2		M10 X 30
18	19M7812	SCREW	6		M10 X 100
19	14M7296	FLANGE NUT	1		M10
20	R129809	COVER	1		(CAMSHAFT)
21	R502441	V-RING SEAL	1		(USE WITH R502530)
22	14M7296	FLANGE NUT	4		M10
23	R130937	COVER	1		
24	R82459	O-RING	1		
25	19M7836	SCREW	2		M10 X 110
26	19M8528	SCREW	6		M10 X 55
	19M8114	SCREW	1		M10 X 70, (4TH HOLE UP)
27	R119159	BOLT	4		
28	R119159	BOLT	1		
29	R120801	DIPSTICK TUBE	1		
30	RE500250	FILLER CAP	1		
31	.....	RING	NA		
32	.....	COVER	NA		
33	.....	SCREW	NA		
34	T74492	O-RING	1		
35	R131660	PLUG	1		
36	R43696	WASHER	3		
..	R516898	BRACKET	1		(SUB FOR R128802)
..	19M7898	SCREW	2		M10 X 130

NO AUXILIARY DRIVE

RGP5916 -UN-22FEB00

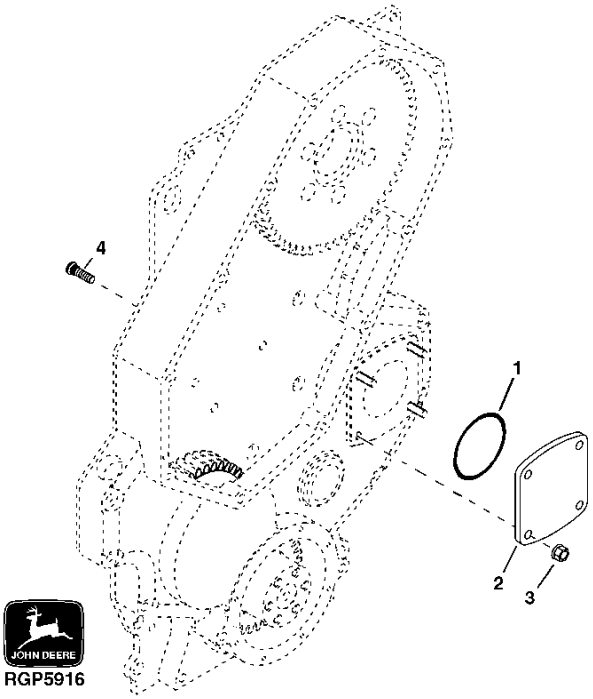

KEY	PART NO.	PART NAME	QTY	ENGINE SERIAL NO.	REMARKS
1	R82459	O-RING	1		
2	R130937	COVER	1		
3	14M7296	FLANGE NUT	4		M10
4	R119159	BOLT	4		

AIR CONDITIONER COMPRESSOR MOUNTING BRACKETS

RGP7173 -UN-13DEC00

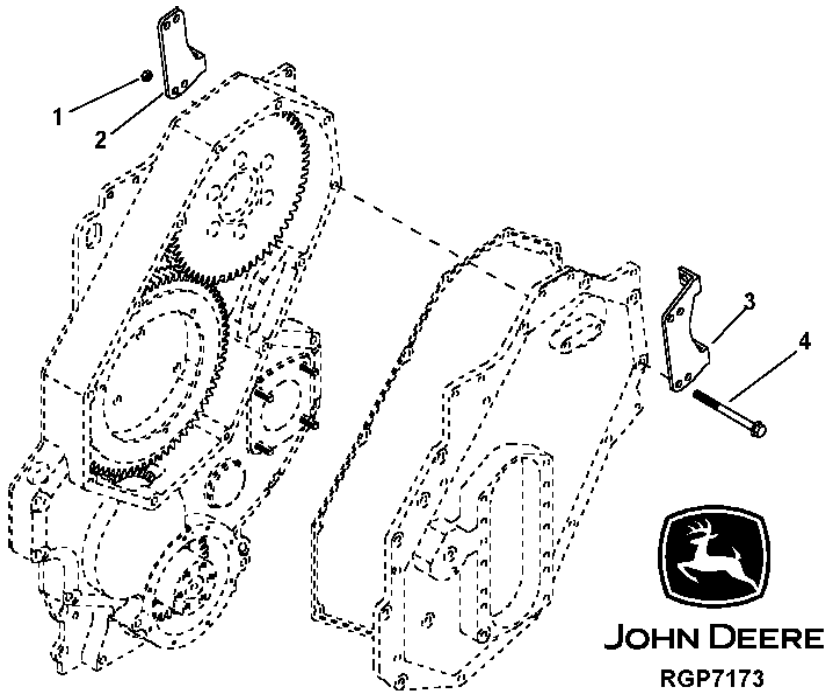

KEY	PART NO.	PART NAME	QTY	ENGINE SERIAL NO.	REMARKS
1	14M7296	FLANGE NUT	2		M10
2	R128858	BRACKET	1		
3	R516898	BRACKET	1		(SUB FOR R128802)
4	19M7898	SCREW	2		M10 X 130
..	R72853	CLAMP	1		(LOWER AIR CONDITIONER BRACKET)

CRANKCASE VENT, MEDALLION, AND ROCKER ARM COVER

RGP7308 -UN-24JAN01

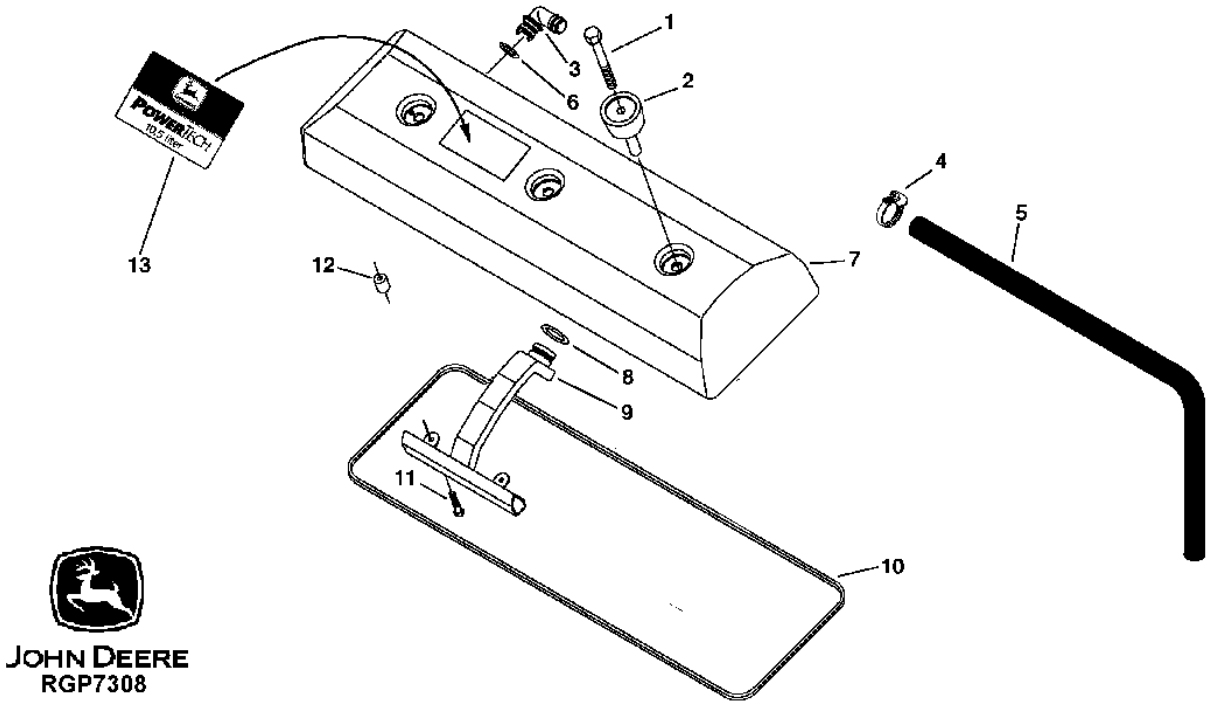

KEY	PART NO.	PART NAME	QTY	ENGINE SERIAL NO.	REMARKS
1	19M8039	SCREW	3		M8 X 80
2	RE71265	ISOLATOR	3		(SUB FOR RE55812)
3	R120467	ELBOW FITTING	1		
4	TY22467	CLAMP	1		(SUB FOR AR21839)
5	R134403	HOSE	1		(BULK)
6	R72328	O-RING	1		
7	R116843	VALVE COVER	1	-014582	(SUB R505450 AND R502124, THIS APPLICATION)
	R505450	VALVE COVER	1	014583-	(USE WITH R502124)
8	R63185	O-RING	1		
9	RE66329	DEFLECTOR	1		
10	R505677	GASKET	1	-014582	(USE WITH R116843) (SUB FOR R130738)
	R502124	GASKET	1	014583-	(USE WITH R505450) (SUB FOR R130738)
11	R130091	SCREW	2		
12	R501292	BUSHING	2		(SUB FOR R127451)
13	R132985	MEDALLION	1		(12.5 L)

MEMORANDA

ROCKER ARM SHAFT, PUSH RODS, AND ROCKER ARMS

RGP7162 -UN-05DEC00

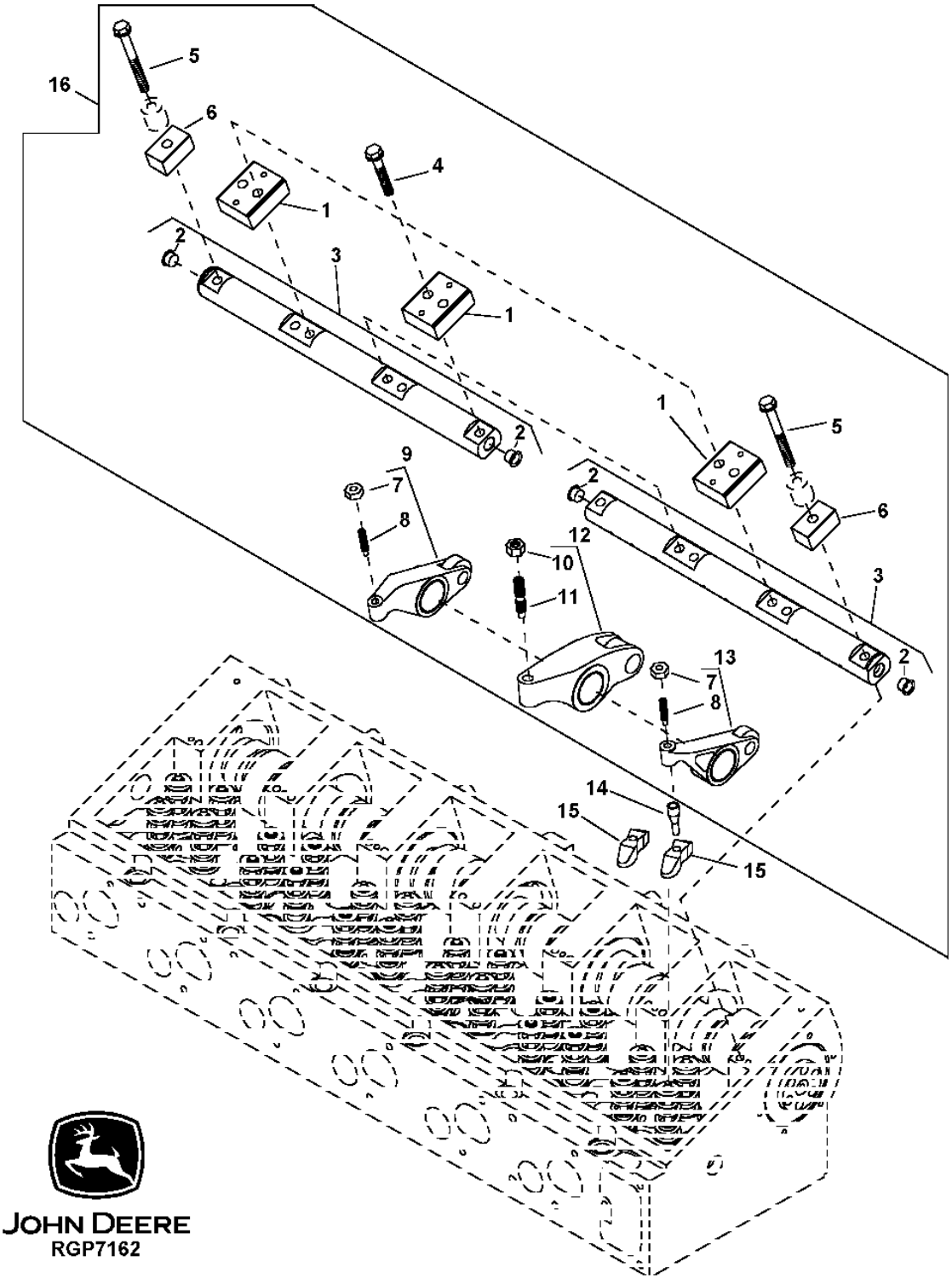

ROCKER ARM SHAFT, PUSH RODS, AND ROCKER ARMS

KEY	PART NO.	PART NAME	QTY	ENGINE SERIAL NO.	REMARKS
1	R130595	CLAMP	5		(ALSO ORDER (2) R136507)
2	30M7010	PLUG	4		
3	RE520808	ROCKER ARM SHAFT	2		
4	R136507	SCREW	10		
5	R136507	SCREW	2		
6	R130501	CLAMP	2		(ALSO ORDER R136507)
7	R500145	NUT	12		
8	R116556	SCREW	12		
9	RE53416	ROCKER ARM	6		(A)
10	R130643	NUT	6		
11	R115516	SCREW	6		
12	RE508660	ROCKER ARM	6		(B)
13	RE53420	ROCKER ARM	6		(C)
14	R117069	PUSH ROD	12		
15	R503824	CROSSBAR	12		
16	RE508659	ROCKER ARM	1		

(A) INTAKE

(B) INJECTOR

(C) EXHAUST

MAGNETIC PICK-UP

RGP4962 -UN-15OCT97

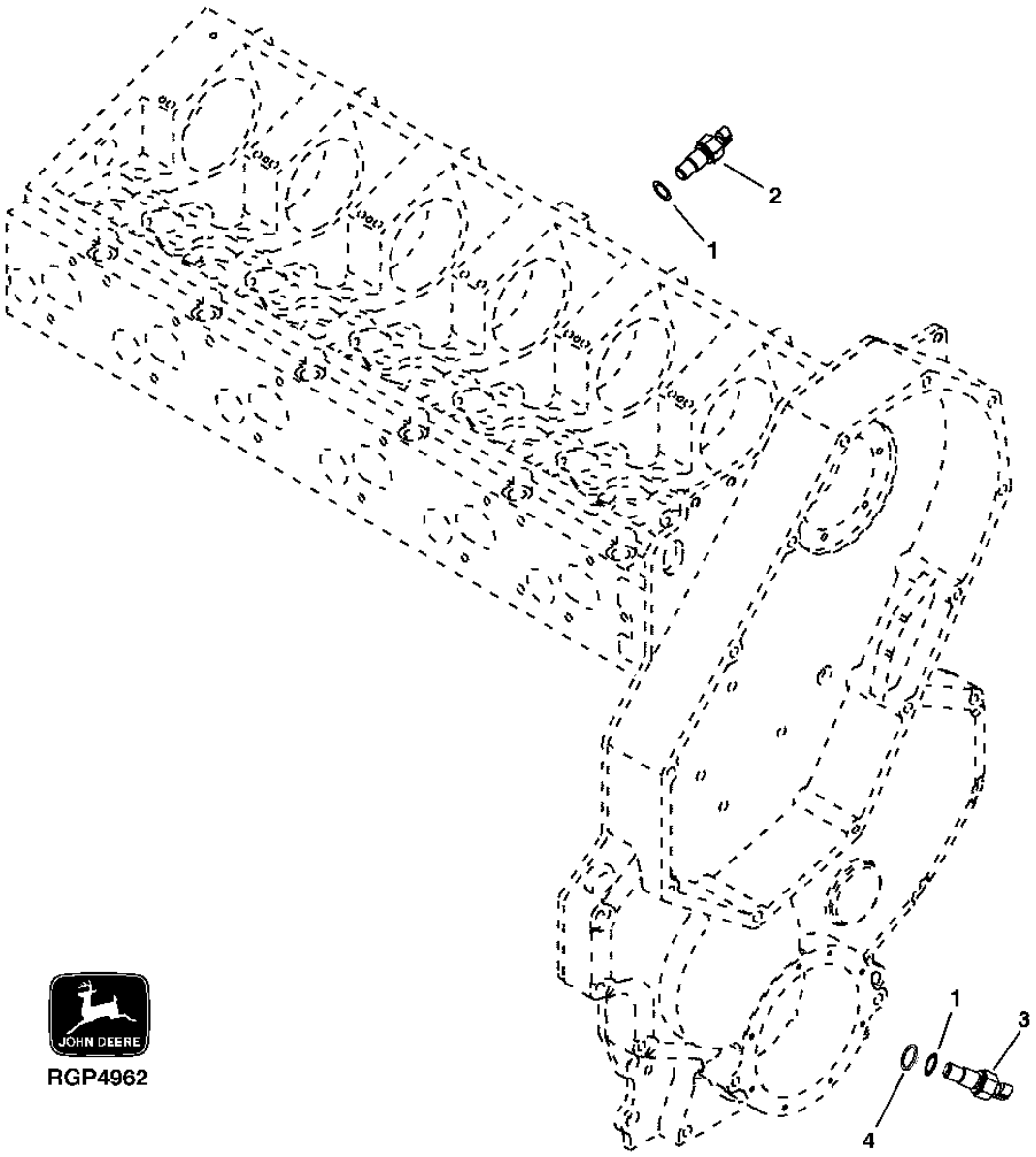

KEY	PART NO.	PART NAME	QTY	ENGINE SERIAL NO.	REMARKS
1	51M7044	O-RING	2		
2	RE519144	SENSOR	1		(A) (SUB FOR RE508195) (CRANKSHAFT POSITION SENSOR)
3	RE519144	SENSOR	1		(B) (SUB FOR RE508195) (CRANKSHAFT POSITION SENSOR)
4	R60756	WASHER	1		(C)

(A) CAMSHAFT

(B) CRANKSHAFT

(C) CRANKSHAFT SENSOR ONLY

PISTON, RINGS, LINERS AND CONNECTING RODS

RGP7222 -UN-20DEC00

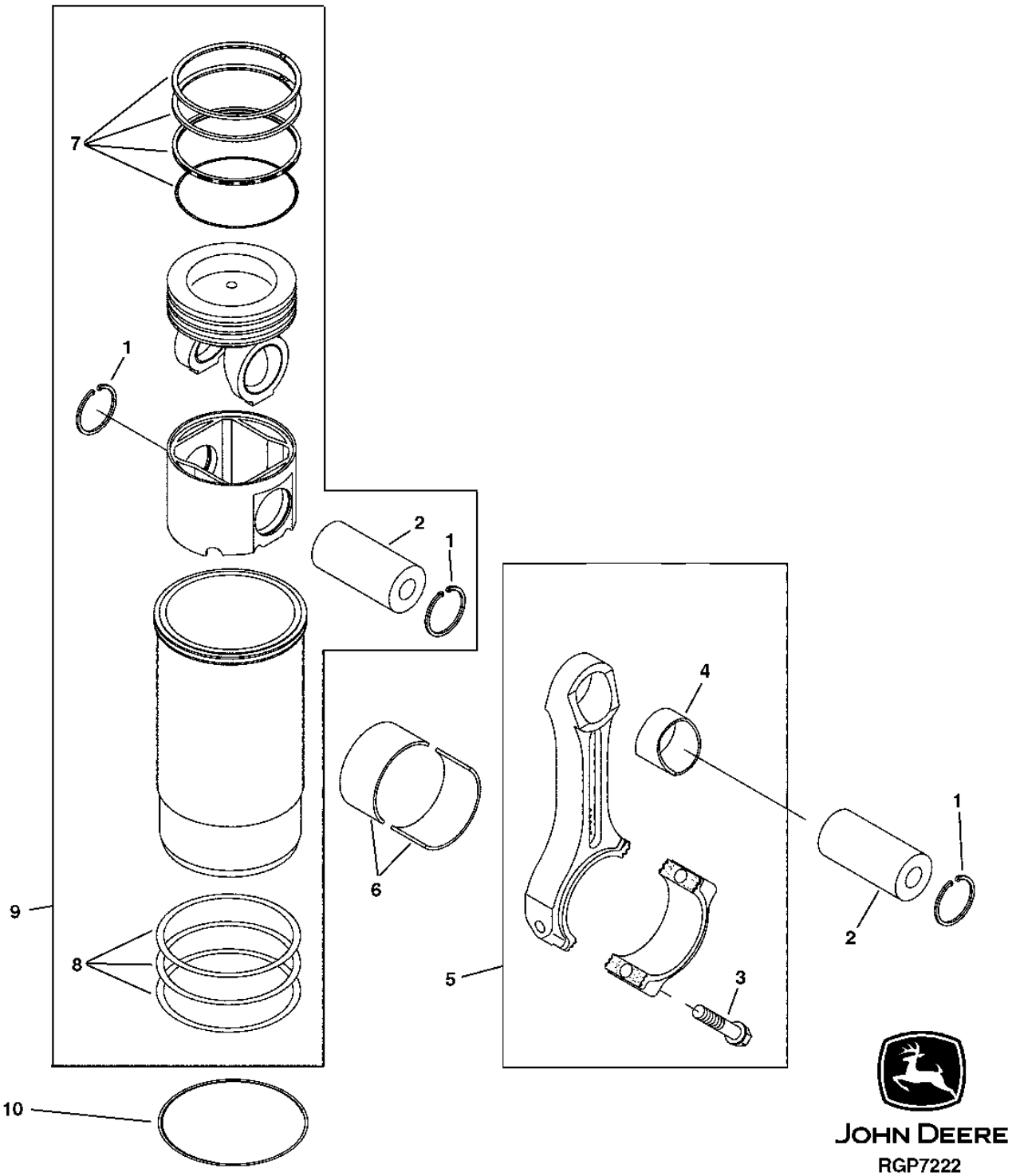

PISTON, RINGS, LINERS, AND CONNECTING RODS

KEY	PART NO.	PART NAME	QTY	ENGINE SERIAL NO.	REMARKS
1	N51168	SNAP RING	12		
2	R64451	PISTON PIN	6		
3	R501380	CAP SCREW	12		
4	R69045	BUSHING	6		(MARKED R63960)
5	RE502314	CONNECTING ROD	6		(MARKED R501566)
6	RE63811	BEARING	AR		STD (PKG (2) R134407)
7	RE504630	PISTON RING KIT	1		
8	AR72351	O-RING KIT	6		
9	RE506961	PISTON-LINER KIT	6		(MARKED RE505901)
10	R81276	SHIM	AR		0.05 MM
	R81277	SHIM	AR		0.10 MM

CYLINDER BLOCK FITTINGS AND MAIN BEARING CAPS

RGP5344 -UN-21JUL99

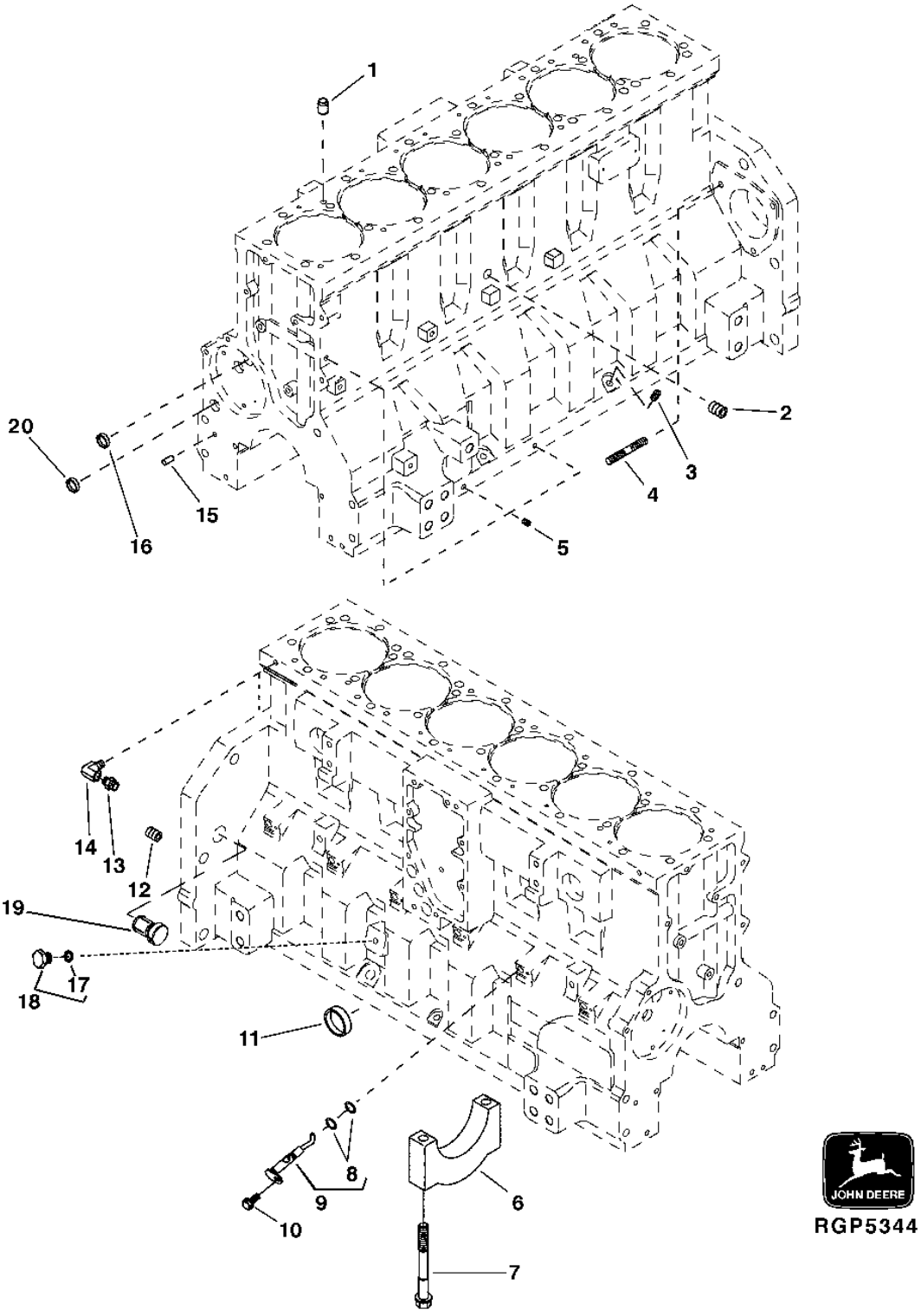

CYLINDER BLOCK FITTINGS AND MAIN BEARING CAPS - CONTINUED

KEY	PART NO.	PART NAME	QTY	ENGINE SERIAL NO.	REMARKS
1	R116716	BUSHING	2		
2	RE57836	PIPE PLUG	1		1/2" 1/2" X 2", (SUB RE57836)
3	15H685	PIPE PLUG	1		1/4"
4	42M7029	STUD	2		
5	R104592	PIPE PLUG	1		
	15H685	PIPE PLUG	1		(NO. 2 OIL GALLEY)
	R55233	PIPE PLUG	1		(NO. 6 OIL GALLEY)
6	R116638	BEARING CAP	6		(MAIN)
	R116639	BEARING CAP	1		(MAIN THRUST)
7	R116640	SCREW	14		
8	R63548	O-RING	12		
9	RE503567	JET	6		7/16" X 1-3/4", (PISTON COOLING)
10	R130091	SCREW	6		
11	R502753	PLUG	2		
12	15H690	PIPE PLUG	1		3/4"
13	R51133	FITTING	1		
14	T11370	ELBOW FITTING	1		
15	R1612R	DOWEL PIN	2		
16	T21937	PLUG	1		
17	51M7041	O-RING	1		11.300 X 2.200 MM
18	RE46684	PLUG	1		
19	AR61533	PLUG	1		
20	R116466	PLUG	1		
..	SE501081	DIESEL ENGINE	1		(A) (REMANUFACTURED)

FOR INVENTORY AVAILABILITY CALL 1-888-697-3626

**ENGINE SHORT BLOCK
(WITH HEADBOLTS)**

RGP4978 -UN-29JAN98

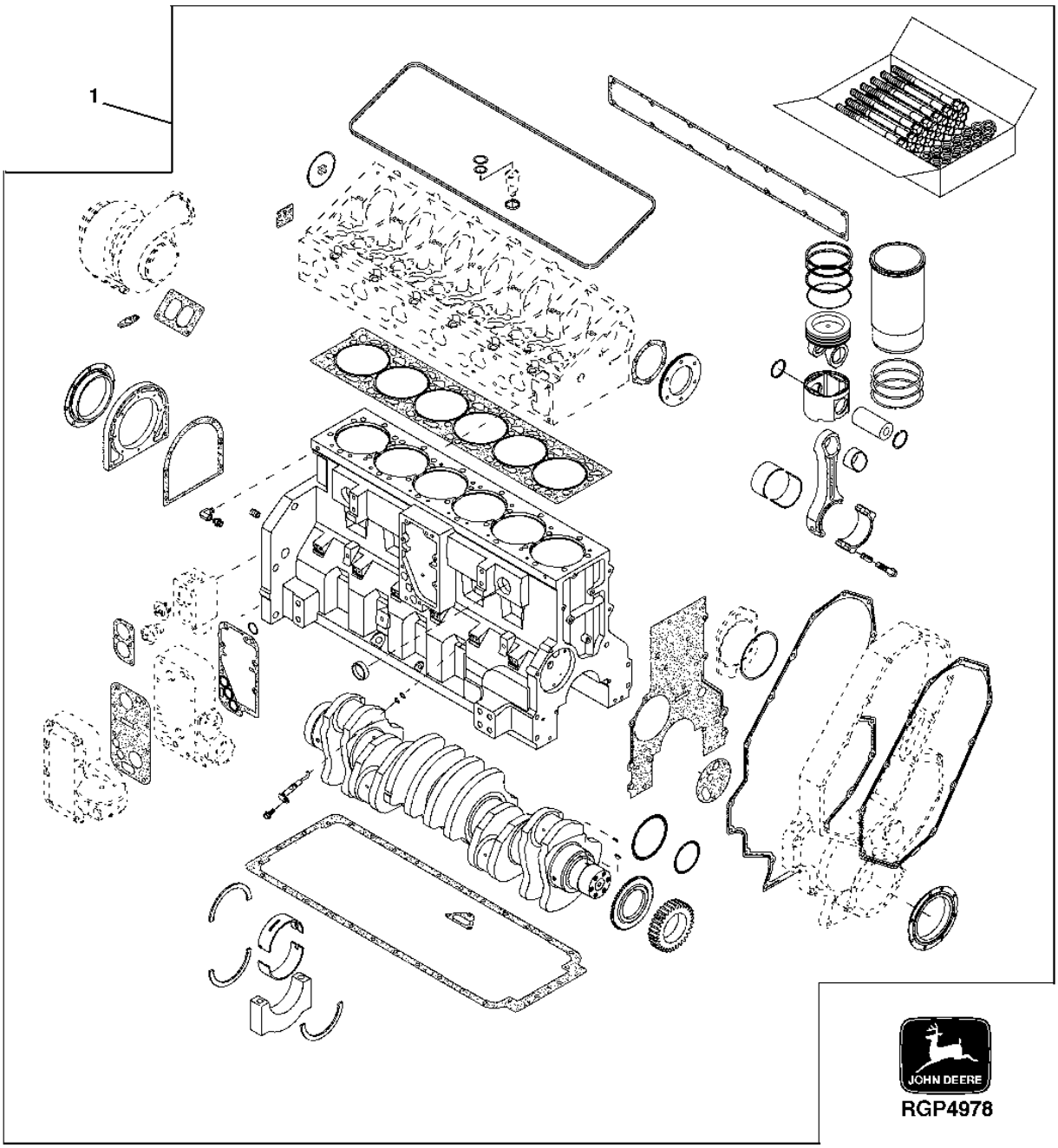

ENGINE SHORT BLOCK - CONTINUED
(WITH HEADBOLTS)

KEY	PART NO.	PART NAME	QTY	ENGINE SERIAL NO.	REMARKS
1	RE528462	SHORT BLOCK ASSEMBLY	1		(SUB FOR RE508141 OR RE524829)
..	SE501081	DIESEL ENGINE	1		(A) COMPLETE (REMANUFACTURED)

(A) FOR INVENTORY AVAILABILITY CALL 1-888-697-3626

ENGINE OIL PUMP

RGP4693 -UN-02JUL97

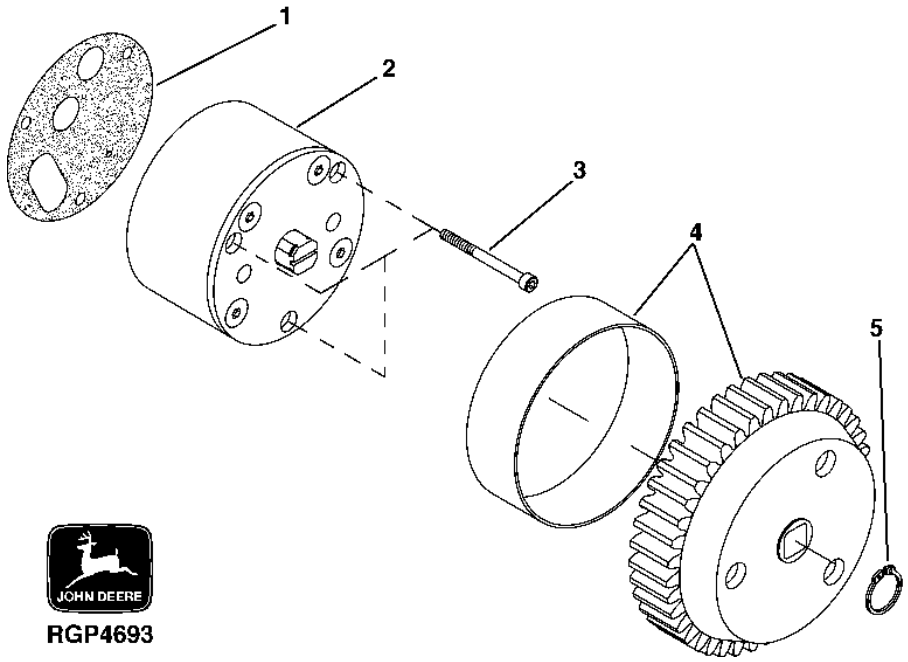

KEY	PART NO.	PART NAME	QTY	ENGINE SERIAL NO.	REMARKS
1	R500387	GASKET	1		(SUB FOR R120741)
2	RE502752	OIL PUMP	1		
3	19M8508	SCREW	3		M8 X 80
4	RE53654	GEAR	1		
5	40M7076	SNAP RING	1		

MEMORANDA

ENGINE OIL PUMP INTAKE

RGP4677 -UN-10AUG96

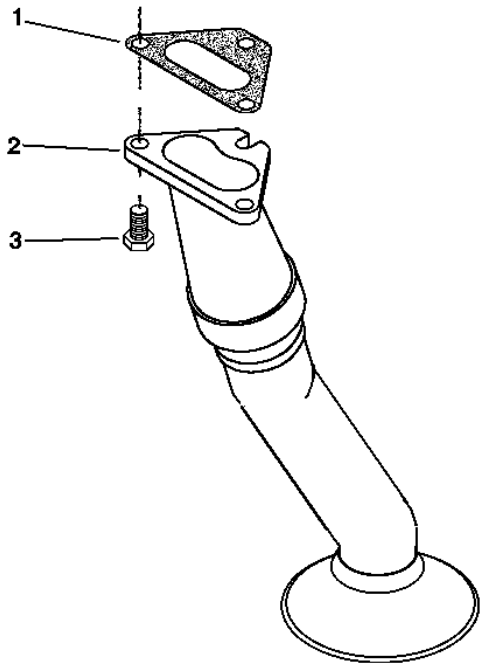

RGP4677

ENGINE OIL PUMP INTAKE - CONTINUED

KEY	PART NO.	PART NAME	QTY	ENGINE SERIAL NO.	REMARKS
1	R126783	GASKET	1		
2	RE62887	OIL PUMP INTAKE	1		
3	19M9312	SCREW	3		M8 X 25

OIL PAN

RGP10935 -UN-16MAR05

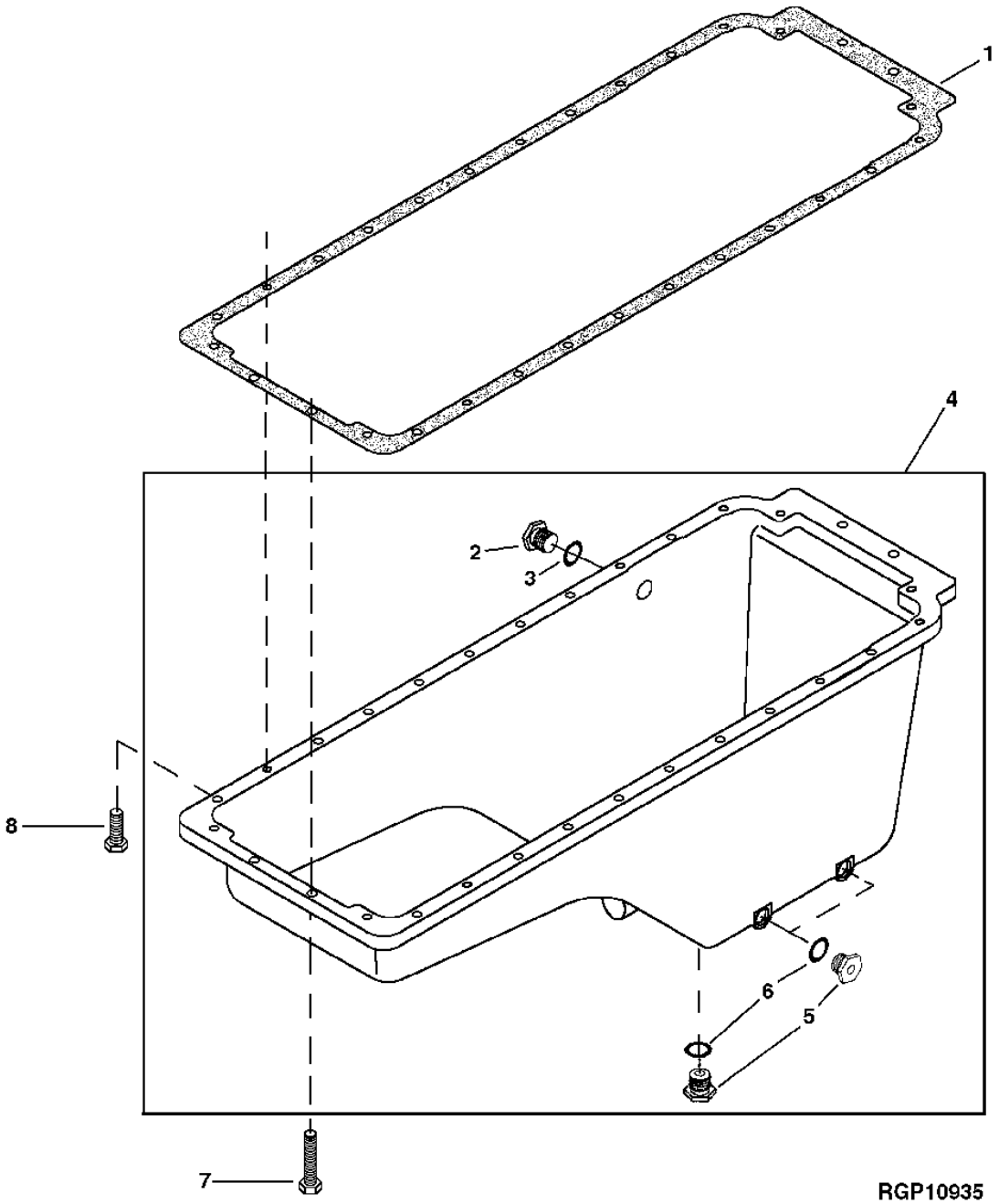

OIL PAN - CONTINUED

KEY	PART NO.	PART NAME	QTY	ENGINE SERIAL NO.	REMARKS
1	R116494	GASKET	1		
2	R27175	DRAIN PLUG	1		
3	R56751	O-RING	1		
4	RE522842	OIL PAN	1		(SUB FOR RE508329)
5	R27175	DRAIN PLUG	3		
6	R56751	O-RING	3		
7	19M8528	SCREW	8		M10 X 55
8	19M7835	SCREW	22		
..	R136110	BRACKET	1		

DIPSTICK

RGP9061 -UN-06SEP02

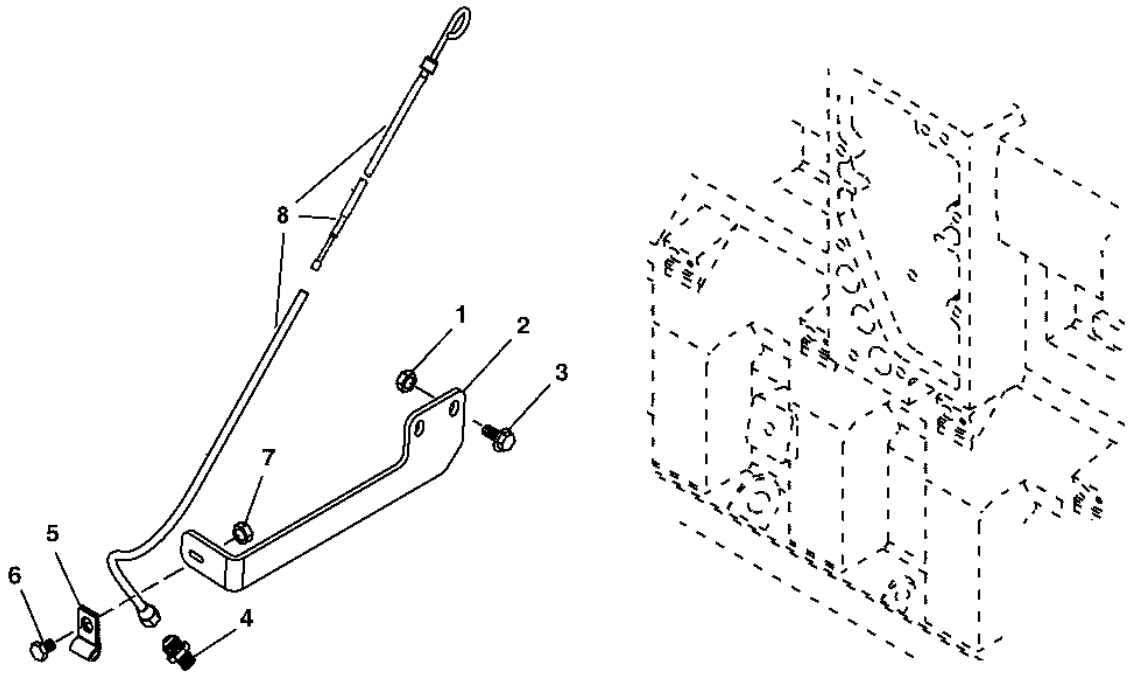

RGP9061

KEY	PART NO.	PART NAME	QTY	ENGINE SERIAL NO.	REMARKS
1	14M7298	FLANGE NUT	2		M8
2	R134747	BRACKET	1		
3	19M7867	SCREW	2		M8 X 25
4	A4925R	ADAPTER	1		
5	T13814	CLAMP	1		
6	19M7865	SCREW	1		
7	14M7298	FLANGE NUT	1		
8	RE509894	DIPSTICK TUBE	1		

ENGINE VENTILATING SYSTEM

T158158 -UN-08AUG02

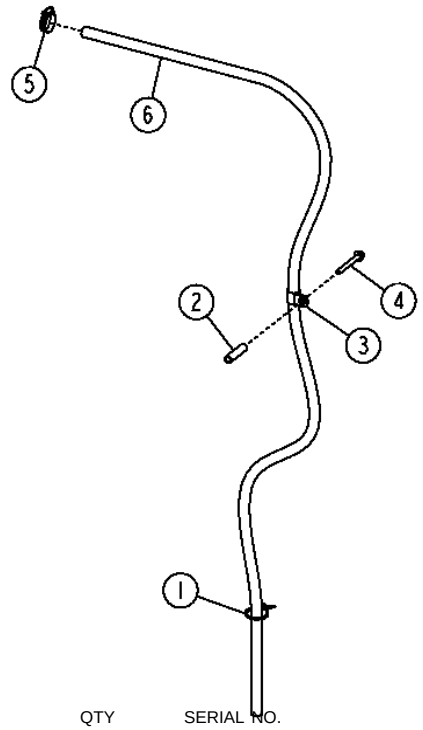

T158158

KEY	PART NO.	PART NAME	QTY	SERIAL NO.	REMARKS
1	R44302	TIE BAND	1		
2	28H3399	SPACER	1		0.493" X 0.675" X 2-3/4"
3	R72659	CLAMP	1		
4	19M7811	SCREW	1		M10 X 90
5	AR21839	CLAMP	1		
6	T148181	HOSE	1		(SUB FOR T60811, THIS APPLICATION)

MEMORANDA

ENGINE LIFT

RGP4669 -UN-10AUG96

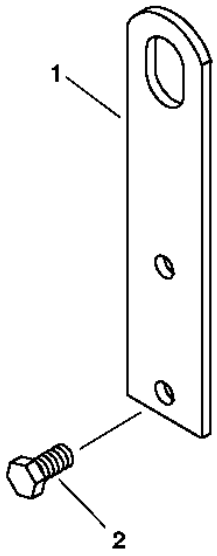

RGP4669

KEY	PART NO.	PART NAME	QTY	ENGINE SERIAL NO.	REMARKS
1	R128000	STRAP	1		(REAR)
	R128001	STRAP	1		(FRONT)
2	19M7789	SCREW	2		

CYLINDER HEAD AND VALVES

RGP7163 -UN-20DEC00

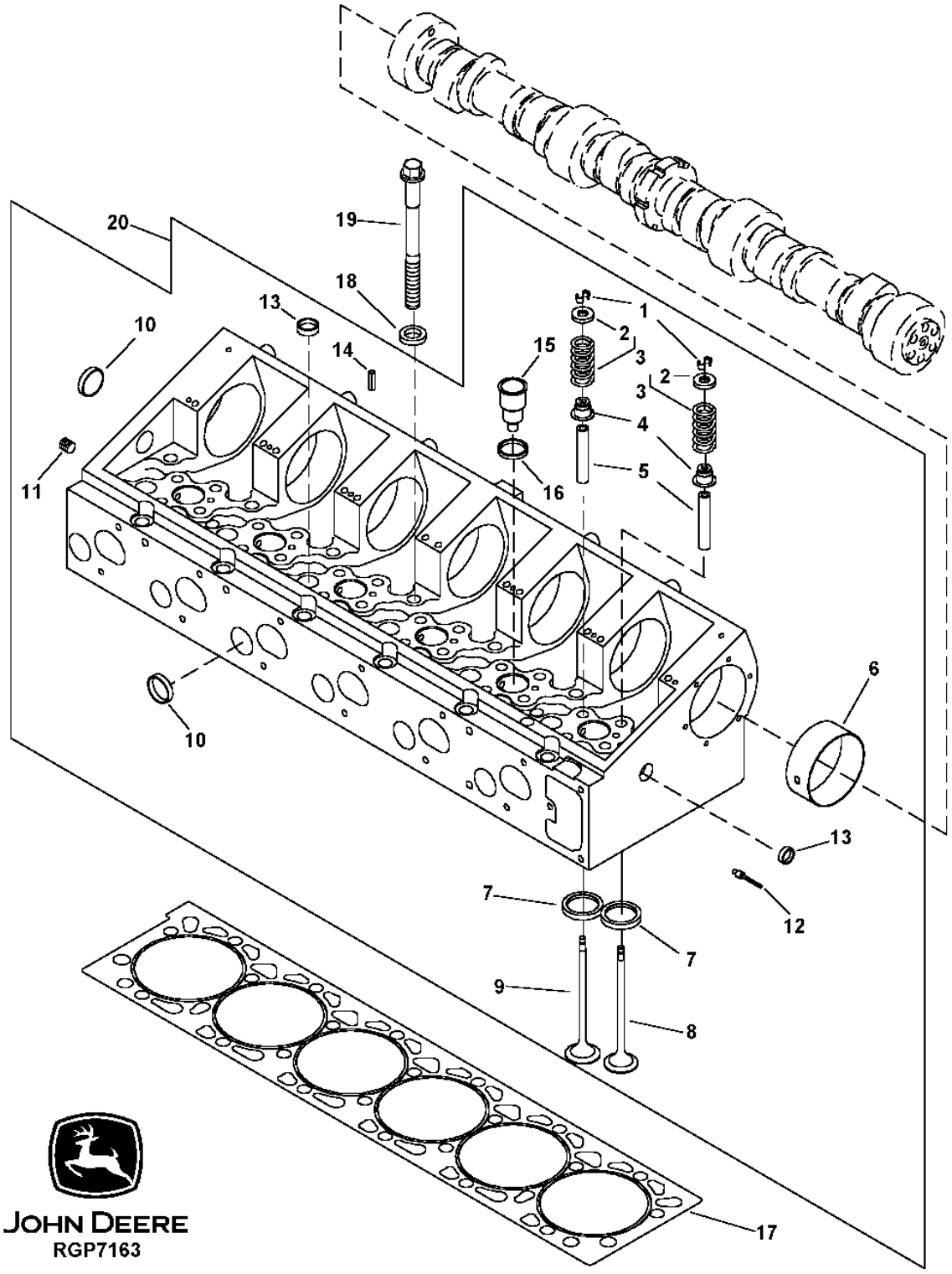

CYLINDER HEAD AND VALVES

KEY	PART NO.	PART NAME	QTY	ENGINE SERIAL NO.	REMARKS
1	R91889	RETAINER	48		
2	.....	SPRING	NA		
3	RE505499	KIT	24		
4	RE66635	SEAL	24		
5	R503971	GUIDE	24		
6	R134706	BUSHING	4		
7	R504713	VALVE SEAT INSERT	24		STD
8	R122035	VALVE	12		(A) STD
9	R122035	VALVE	12		(B) STD
10	M1206T	PLUG	7		(38 MM OD)
11	15H690	PIPE PLUG	5		3/4"
12	R504174	PLUG	4		
13	A3910R	PLUG	7		(25 MM OD)
14	34H309	SPRING PIN	4		1/4" X 5/8"
15	R504242	SLEEVE	6		
16	T122075	O-RING	6		
17	RE57784	ENGINE CYLINDER HEAD GASKET	1		
18	R129645	WASHER	26		
19	R132103	CAP SCREW	26		
	RG28087	KIT	1		(CONTAINS (26) R129645 AND (26) R132103) (RG28087 INCLUDES: 26 X R129645 AND 26 X R132103)
20	RE518554	CYLINDER HEAD	1		(MARKED R504243)

(C) EXHAUST

(D) INTAKE

MEMORANDA

EXHAUST MANIFOLDS

RGP4739 -UN-20AUG96

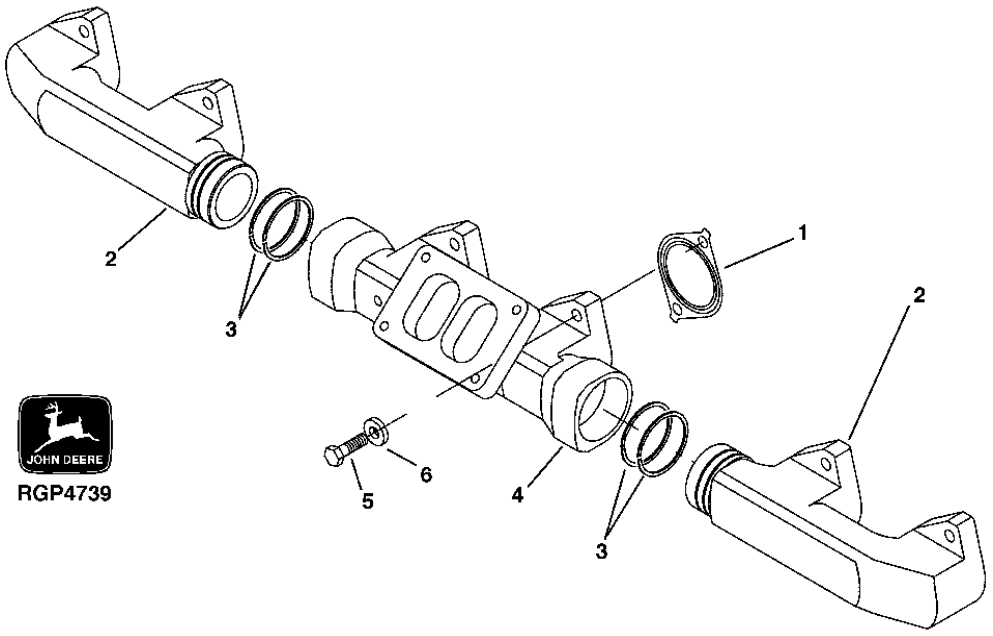

KEY	PART NO.	PART NAME	QTY	ENGINE SERIAL NO.	REMARKS
1	R131809	GASKET	6		
2	R135041	EXHAUST MANIFOLD	2		(SUB R504613)
	R504613	EXHAUST MANIFOLD	2		
3	R135482	RING	4		
4	R116838	EXHAUST MANIFOLD	1		
5	19M8637	CAP SCREW	12		M10 X 40
6	24M7346	WASHER	12		11 X 20 X 2 MM

ELECTRONIC UNIT INJECTOR/(EUI), WIRING HARNESS

RGP8241 -UN-01OCT01

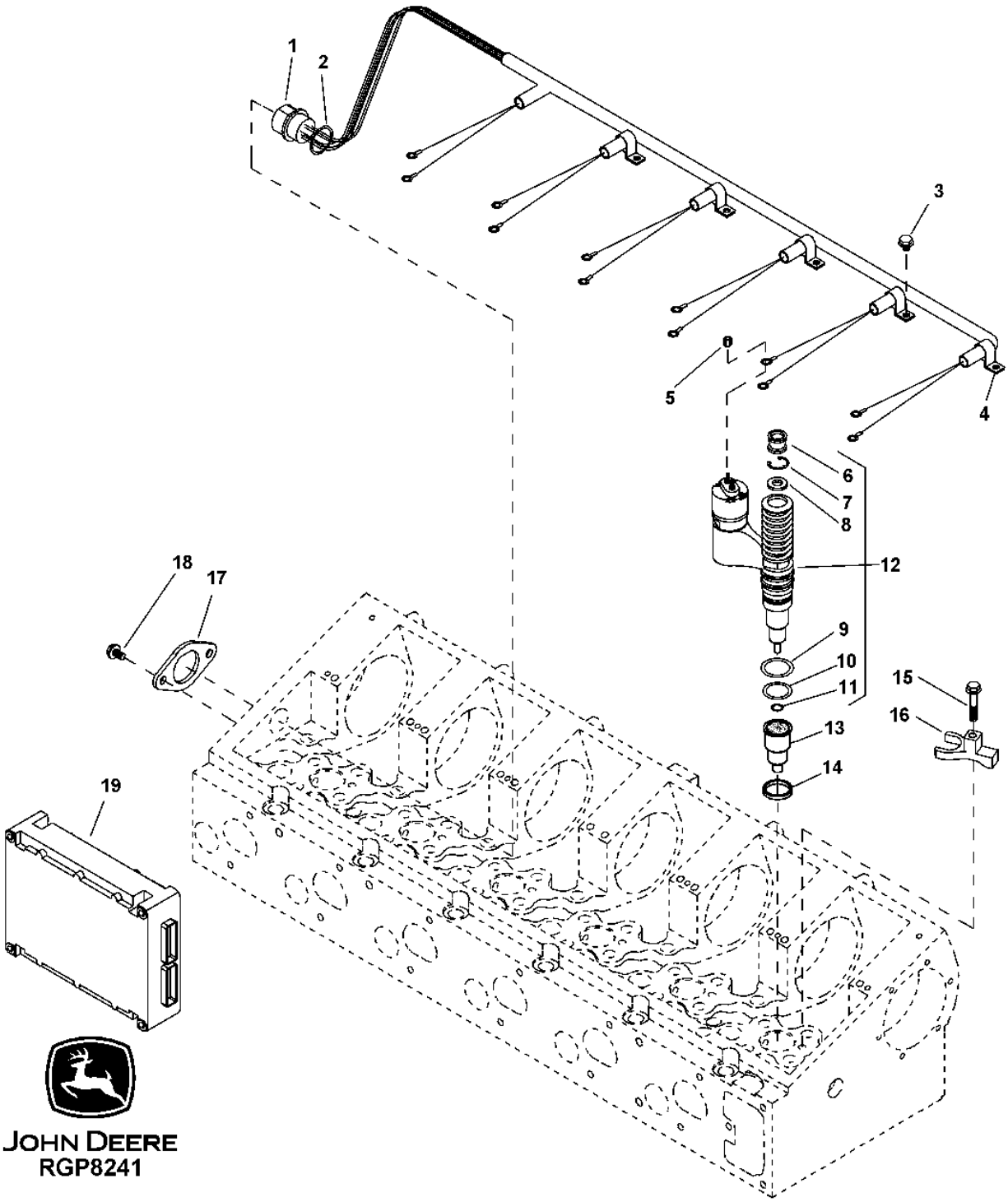

ELECTRONIC UNIT INJECTOR/(EUI), WIRING HARNESS - CONTINUED

KEY	PART NO.	PART NAME	QTY	ENGINE SERIAL NO.	REMARKS
1	RE508984	WIRING HARNESS	1		
2	R56461	O-RING	1		
3	19M7864	SCREW	5		
4	R128315	CLAMP	5		
5	R134920	NUT	12		
6	R502172	SOCKET	6		
7	R502173	SNAP RING	6		
8	R133655	PAD	6		
9	R133651	PACKING	6		
10	R502703	PACKING	6		
11	R502171	PACKING	6		
12	RG33966	ELECTRONIC UNIT INJECTOR	6		(MARKED RE517661) (A)
13	RE518339	SLEEVE	6		
14	T122075	O-RING	6		
15	R501390	SCREW	6		M8 X 50
16	R505747	CLAMP	6		
17	R124676	BRACKET	1		
18	19M7865	SCREW	2		
19	RE507981	ENGINE CONTROLLER	1		(24V)

(A) REMANUFACTURED

(B) THIS PART MUST BE ORDERED WITH ENGINE SERIAL NUMBER

MEMORANDA

INTAKE MANIFOLD (HDW)

RGP7357 -UN-06MAR01

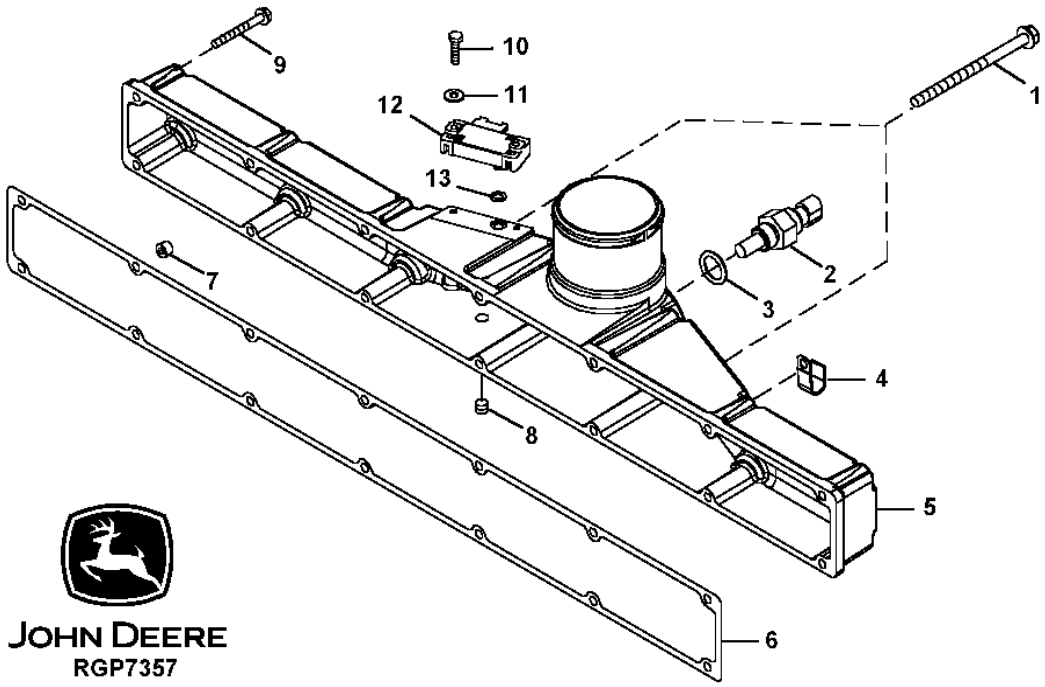

KEY	PART NO.	PART NAME	QTY	ENGINE SERIAL NO.	REMARKS
1	19M8006	SCREW	4		M8 X 120
2	RE61812	SENSOR	1		(AIR TEMPERATURE)
3	51M7041	O-RING	1		
4	R72853	CLAMP	1		
5	R502767	COVER	1		
6	R116830	GASKET	1		
7	15H666	PIPE PLUG	NA		3/8"
8	RE71255	PIPE PLUG	3		3.175 MM
9	19M7803	SCREW	10		
10	19M7317	SCREW	2		M5 X 30, (HARNESS)
11	24H1283	WASHER	2		7/32" X 1/2" X 0.049"
12	RE61408	SENSOR	1		(M.A.P.)
13	F3353R	O-RING	1		
..	AH89557	CLIP	1		

MEMORANDA

TURBOCHARGER AND OIL LINES

RGP7290 -UN-23JAN01

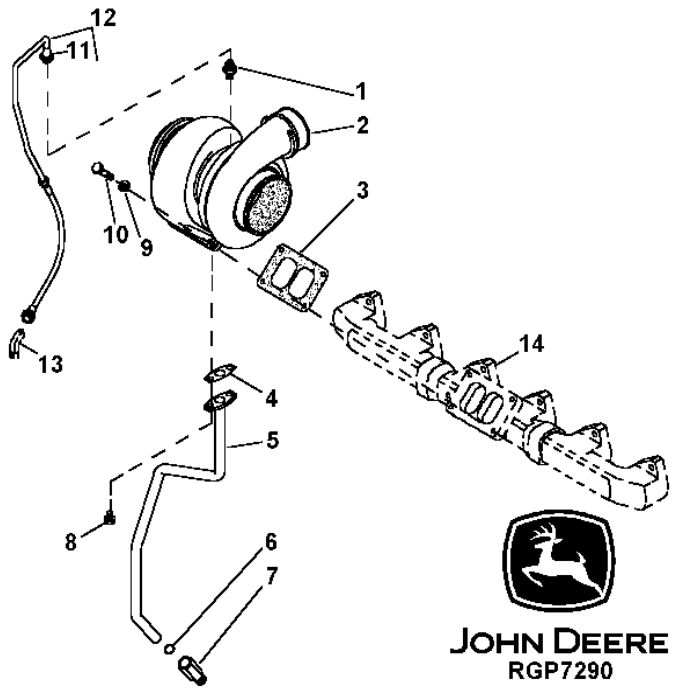

KEY	PART NO.	PART NAME	QTY	ENGINE SERIAL NO.	REMARKS
1	A4925R	ADAPTER	1		
2	RE524741	TURBOCHARGER	1		(A) (SUB FOR RE508021)
3	R49697	GASKET	1		
4	R105346	GASKET	1		
5	RE65198	OIL LINE	1		
6	R72328	O-RING	1		
7	R41285	ADAPTER	1		
8	CC22170	SCREW	2		
9	24M7239	WASHER	4		
10	R127941	CAP SCREW	4		
11	A4925R	ADAPTER	1		
12	RE66525	OIL LINE	1		
13	.....	ELBOW FITTING	1		
14	.....	EXHAUST MANIFOLD	1		

(A) REMANUFACTURED

WATER PUMP

RGP7293 -UN-22JAN01

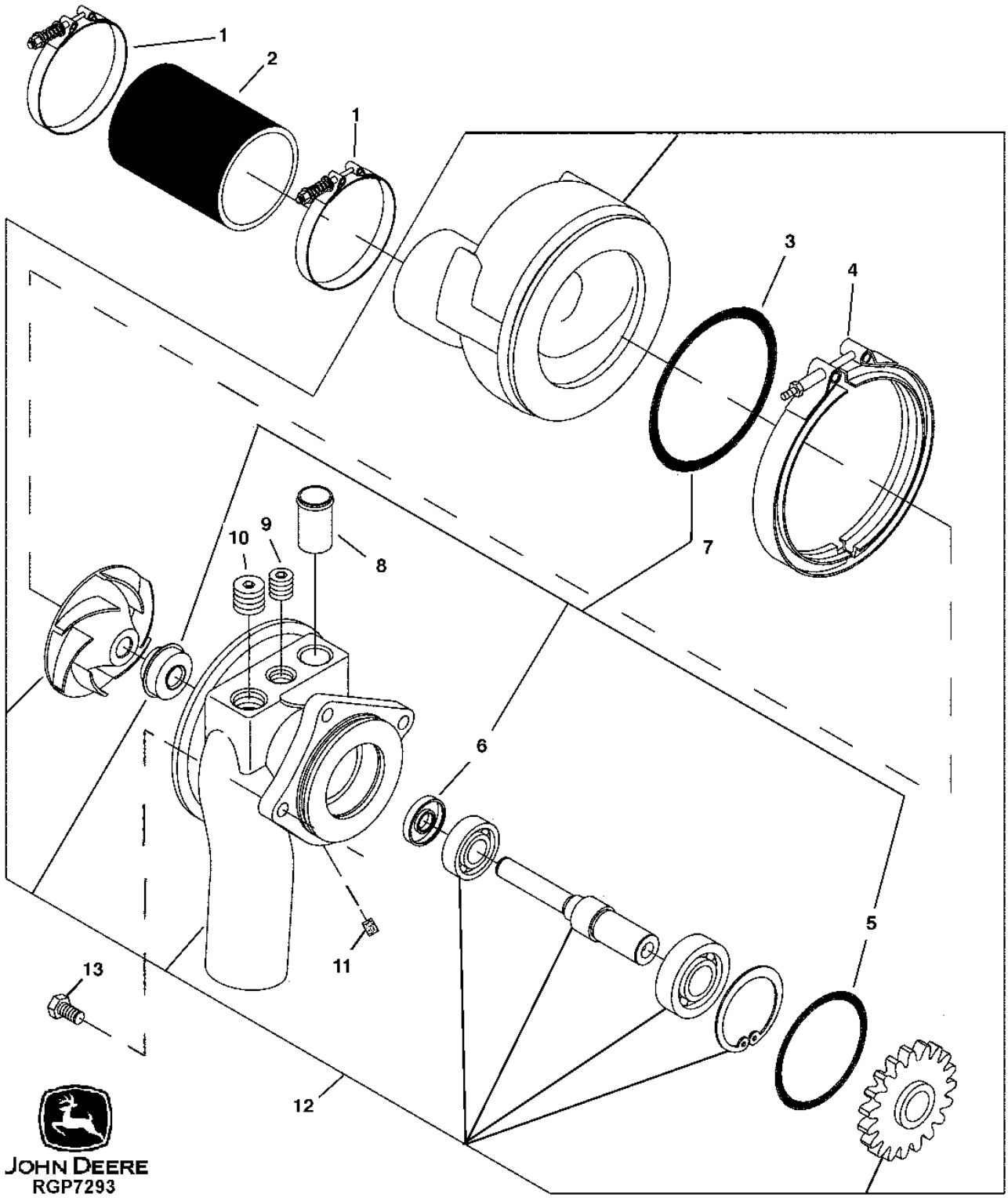

WATER PUMP

KEY	PART NO.	PART NAME	QTY	ENGINE SERIAL NO.	REMARKS
1	RE52702	CLAMP	2		
2	R117080	RADIATOR HOSE	1		
3	E52687	O-RING	1		
4	R121187	CLAMP	1		
5	R56757	O-RING	1		
6	RE39134	SEAL	1		
7	RE68707	SEAL KIT	1		
8	R57503	TUBE	1		
9	RE57836	PIPE PLUG	1		
10	15H690	PIPE PLUG	1		
11	R100369	FILTER	1		
12	RE503603	WATER PUMP	1		
13	19M7785	SCREW	3		
..	RE68708	KIT	1		

WATER MANIFOLD AND THERMOSTAT

T197240 -UN-08JAN04

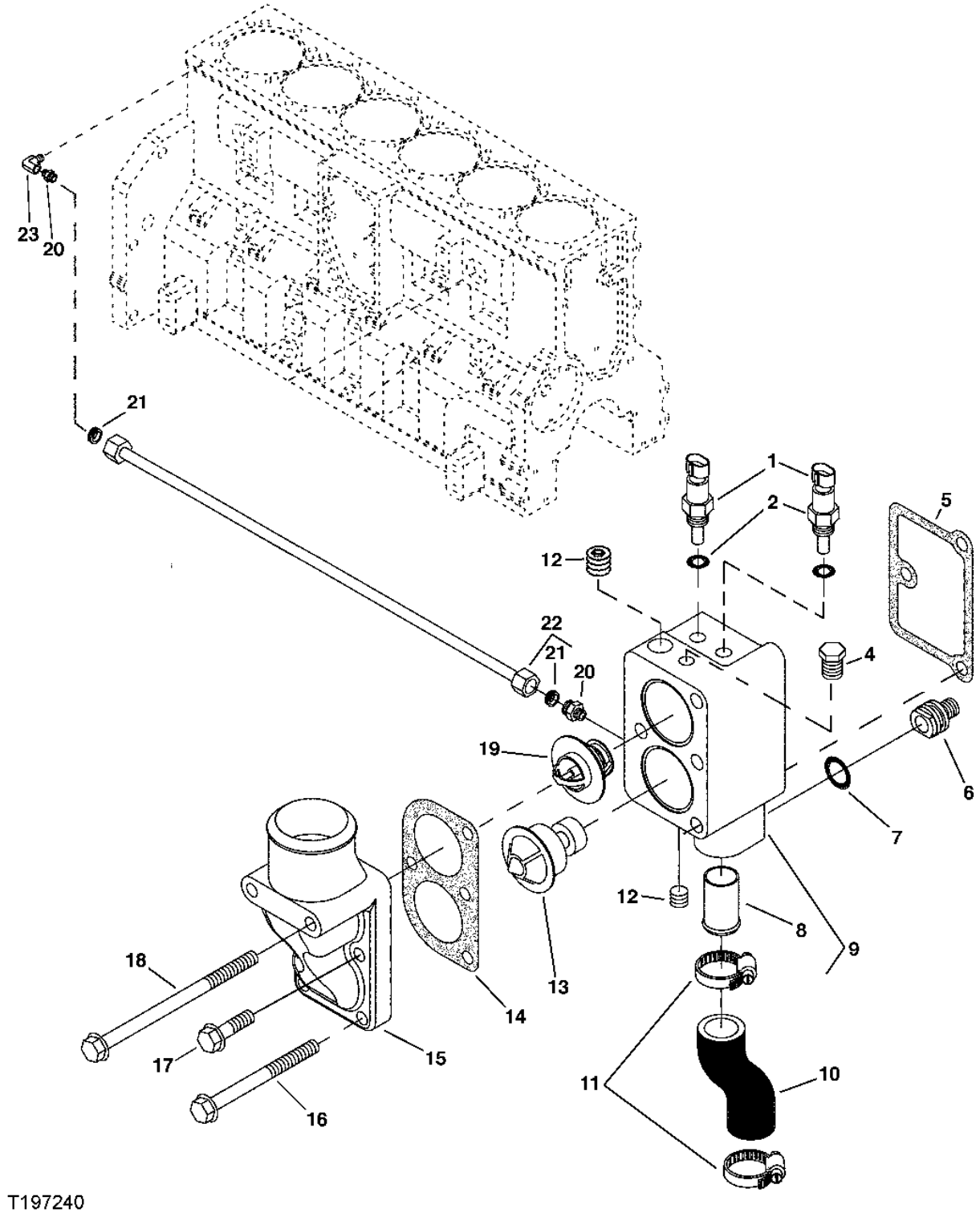

WATER MANIFOLD AND THERMOSTAT - CONTINUED

KEY	PART NO.	PART NAME	QTY	ENGINE SERIAL NO.	REMARKS
1	RE48419	SENSOR	2		
2	51M7041	O-RING	2		
4	R55233	PIPE PLUG	1		(.125")
5	R116205	GASKET	1		
6	R121443	ADAPTER	1		
7	R56464	O-RING	1		
8	R57503	TUBE	1		
9	RE501605	HOUSING	1		
10	R121427	RADIATOR HOSE	1		WATER BYPASS
11	TY22466	CLAMP	2		
12	RE57836	PIPE PLUG	2		1/2"
13	AR102258	THERMOSTAT	1		(LOWER) (BLOCKING TYPE) (180 DEGREES)
14	R133142	GASKET	1		
15	RE502571	COVER	1		
16	19M7944	SCREW	2		M10 X 120
17	19M7835	SCREW	1		M10 X 35
18	19M8598	SCREW	1		M10 X 170
19	RE522076	THERMOSTAT	1		(UPPER) (NON-BLOCKING TYPE) (SUB FOR RE506300)
20	R51133	FITTING	1		
21	R67092	SEALING WASHER	2		
22	RE58336	LINE	1		
23	T11370	ELBOW FITTING	1		

ENGINE OIL COOLER, OIL FILTER HOUSING, OIL FILTER

RGP8615 -UN-12MAR02

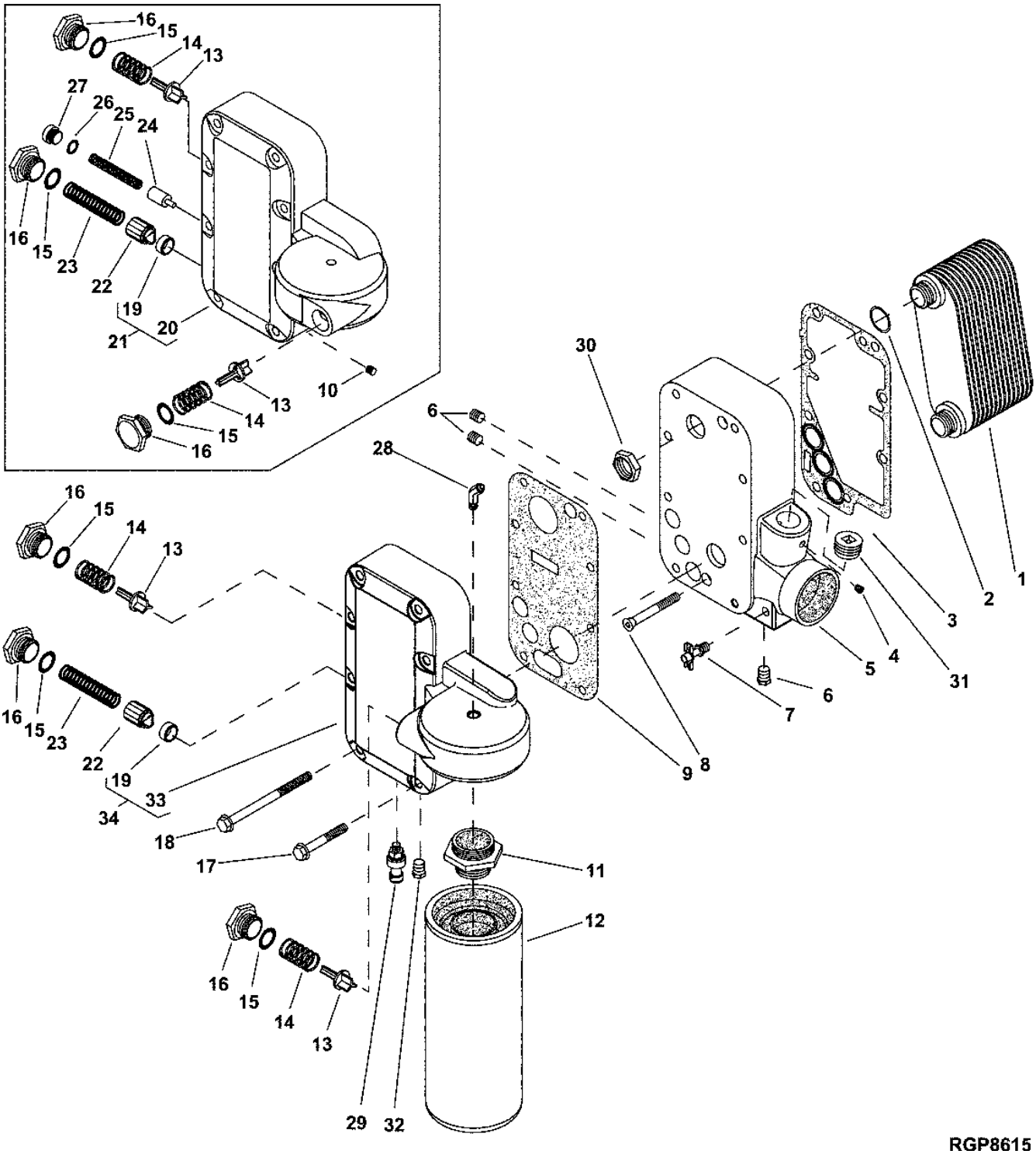

ENGINE OIL COOLER, OIL FILTER HOUSING, OIL FILTER

KEY	PART NO.	PART NAME	QTY	ENGINE SERIAL NO.	REMARKS
1	RE500657	OIL COOLER	1		(SUB FOR RE53722)
2	R134716	O-RING	2		
3	R500209	GASKET	1		(SUB FOR R116855)
4	RE71255	PIPE PLUG	1		
5	R116854	HOUSING	1		
6	15H639	PIPE BUSHING	3		1/8"
7	AT13740	DRAIN VALVE	1		
8	19M8574	SCREW	2		M10 X 85
9	R500210	GASKET	1		(SUB FOR R116864)
10	15H685	PIPE PLUG	2		1/4"
11	R127208	ADAPTER	1		
12	RE58935	OIL FILTER	1		
13	R500055	VALVE	2		(SUB FOR (2) R108867) (BYPASS VALVE)
14	R98064	SPRING	2		
15	U17409	O-RING	3		24 MM X 67 MM (1" X 2-5/8")
16	R500232	FITTING PLUG	3		(SUB FOR R134727)
17	19M7810	SCREW	1		
18	19M7958	SCREW	7		M10 X 150
19	R500283	BUSHING	1		(SUB FOR R94620) (SUB RE500473, THIS APPLICATION) (NLA) (ORDER RE505883)
	U40750	WASHER	AR		(REG. VALVE)
20	RE500473	HOUSING	1	-012401	(MARKED R126344) (SUB RE505883)
	R503400	HOUSING	1	012402-029118	(SUB RE515304)
21	RE505883	HOUSING	1	012402-029118	(MARKED R503400) (SUB RE515304)
22	R124186	PRESSURE RELIEF VALVE	1		(PRESS. REG. VALVE)
23	R130717	SPRING	1		
24	R63532	VALVE	1		(PRESS. RELIEF)
25	T31636	SPRING	1		
26	R26375	O-RING	1		
27	R33138	FITTING	1		
28	R116203	ELBOW FITTING	1		
29	AT222377	TRANSDUCER	1		(OIL PRESSURE) (SUB FOR RE56009 OR RE167207)
30	R136500	NUT	2		(SUB FOR R119149)
31	15H686	PIPE PLUG	1		1"
32	R55233	PIPE PLUG	1		
33	R503714	HOUSING	1	029119-	
34	RE515304	HOUSING	1	029119-	(MARKED R503714)

MEMORANDA

FUEL TRANSFER PUMP

RGP6453 -UN-21JUN01

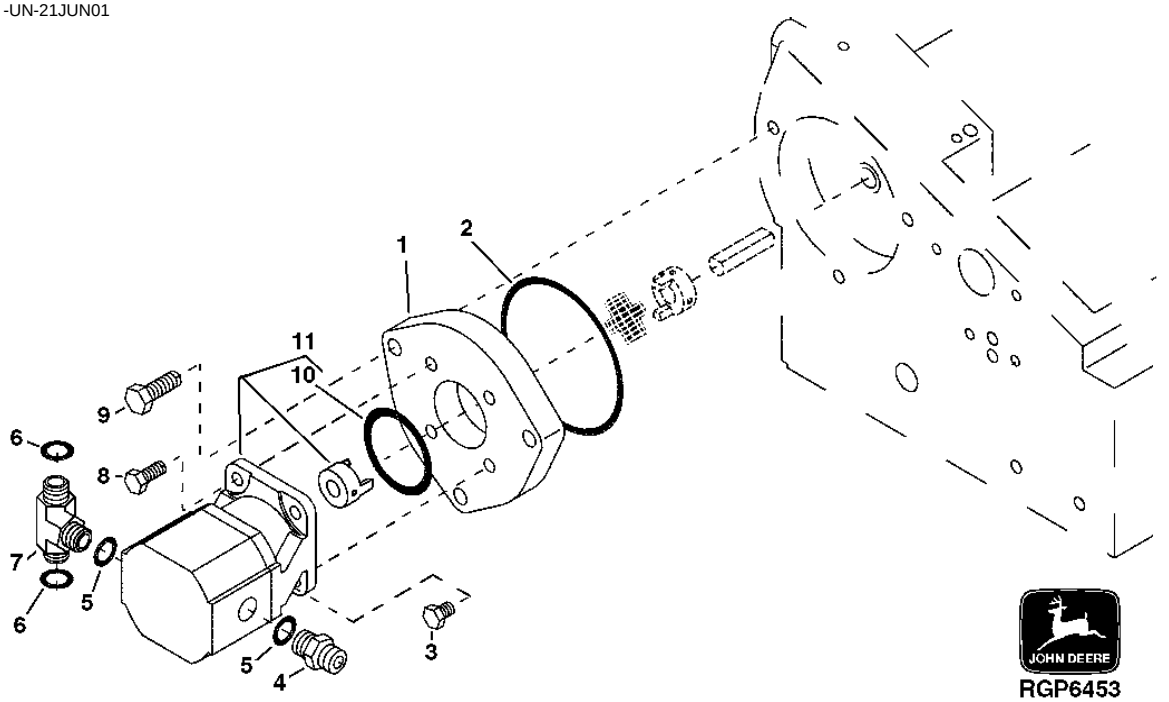

KEY	PART NO.	PART NAME	QTY	ENGINE SERIAL NO.	REMARKS
1	R117063	BRACKET	1		
2	R500318	O-RING	1		
3	19M7865	SCREW	2		M8 X 16, (LOW)
4	38H1160	ADAPTER	1		
5	R26448	O-RING	2		
6	T77613	O-RING	1		(OUTLET)
	T77857	O-RING	1		(INLET)
7	38H1173	ADAPTER	1		
8	19M7867	SCREW	2		M8 X 25, (UP)
9	19M7835	SCREW	1		M10 X 35
10	T35580	O-RING	1		
11	RE502974	FUEL PUMP	1		(SUB FOR RE66584)

FUEL FILTER

RGP8599 -UN-11MAR02

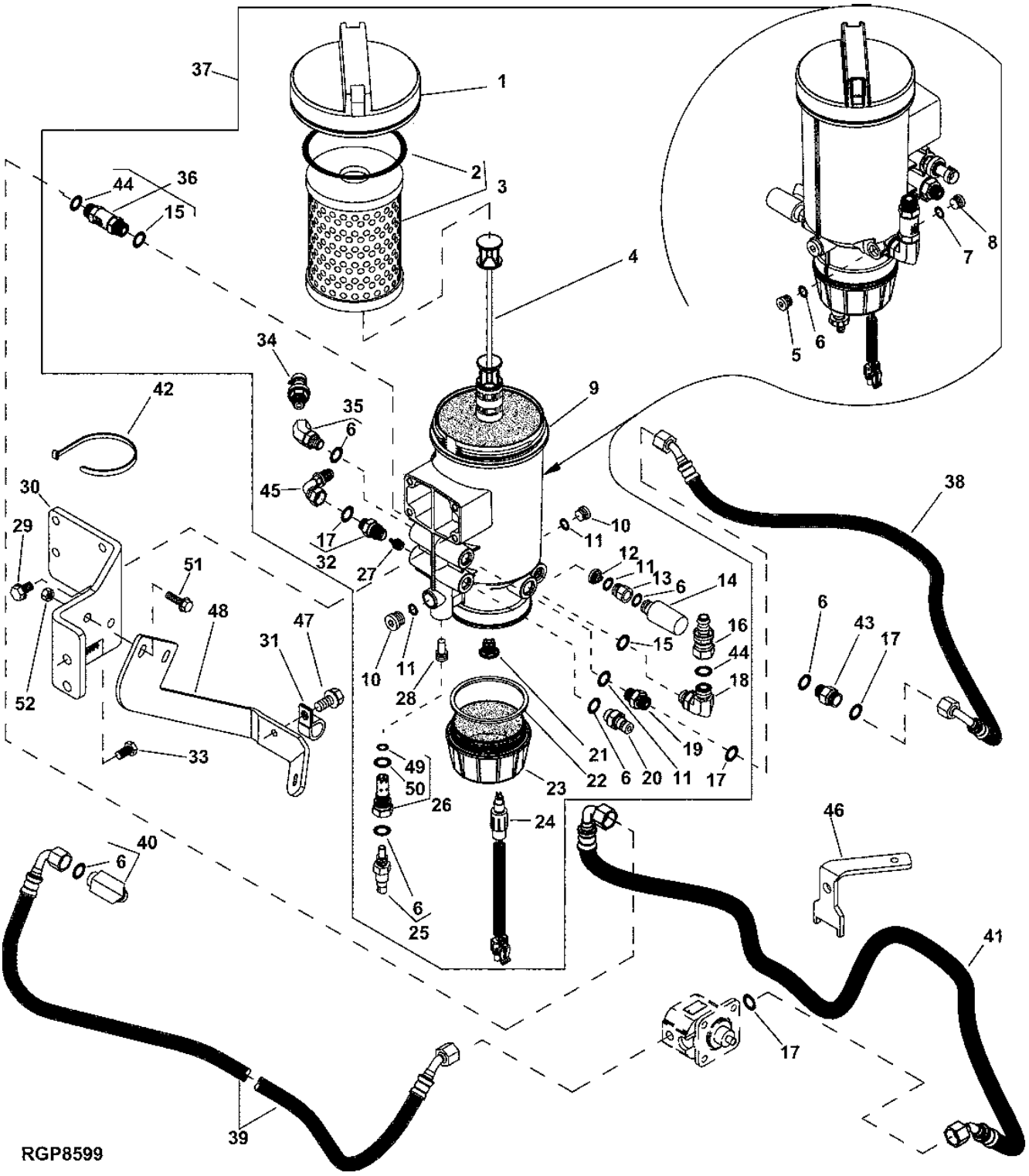

FUEL FILTER

KEY	PART NO.	PART NAME	QTY	ENGINE SERIAL NO.	REMARKS
1	R502490	CAP	2		
2	T12275	O-RING	1		
3	RE507284	FUEL FILTER	1		(CONTAINS T12275)
4	RE504938	TUBE	1		
5	L41709	PIPE PLUG	1		
6	51M7041	O-RING	6		
7	51M7040	O-RING	1		
8	L41079	PIPE PLUG	1		
9	RE504495	HOUSING	1		NLA, (ORDER RE504819)
10	T122803	FITTING PLUG	2		
11	51M7042	O-RING	4		
12	R502704	VALVE	1		
13	RE504939	ADAPTER	1		
14	RE65265	HAND PRIMER	1		
15	51M7043	O-RING	2		
16	RE506350	FITTING	1		
17	T77613	O-RING	1		
18	38H5017	ELBOW FITTING	1		
19	38H5037	ADAPTER	1		
20	RE190805	DIAGNOSTIC COUPLING	1		(SUB FOR RE12187)
21	RE504498	INTAKE VALVE	2		
22	R501632	PACKING	1		
23	RE502349	SEDIMENT BOWL	1		
24	RE503590	SENSOR	1		(A)
25	RE48419	SENSOR	1		(B)
26	RE506723	VALVE	1		(HIGH)
27	RE504500	VALVE	1		
28	R502705	INSERT	1		
29	19M7785	SCREW	4		
30	R502494	BRACKET	1		
31	T74416	CLAMP	1		
32	RE504503	ADAPTER	1		(LOW)
33	19M7788	SCREW	2		
34	RE154966	SWITCH	1		(C)
35	R504812	ELBOW FITTING	1		
36	RE504499	VALVE	1		
37	RE504819	FILTER	1		
38	RE504512	LINE	1		
39	RE503591	FUEL LINE	1		
40	38H5016	ELBOW FITTING	1		
41	RE504513	LINE	1		
42	R44302	TIE BAND	3		
43	38H5002	ADAPTER	1		
44	T77857	O-RING	2		
45	RE502954	ELBOW FITTING	1		
46	R504864	BRACKET	1		
47	19M7788	SCREW	2		
48	R505770	BRACKET	1		
49	R113050	O-RING	1		
50	R56465	O-RING	1		
51	19M7868	SCREW	2		M8 X 30
52	14M7298	FLANGE NUT	2		M8

(A)WATER IN FUEL

(B)FUEL TEMPERATURE

(C)FUEL PRESSURE SENSOR

MEMORANDA

STARTING MOTOR

RGP8386 -UN-07DEC01

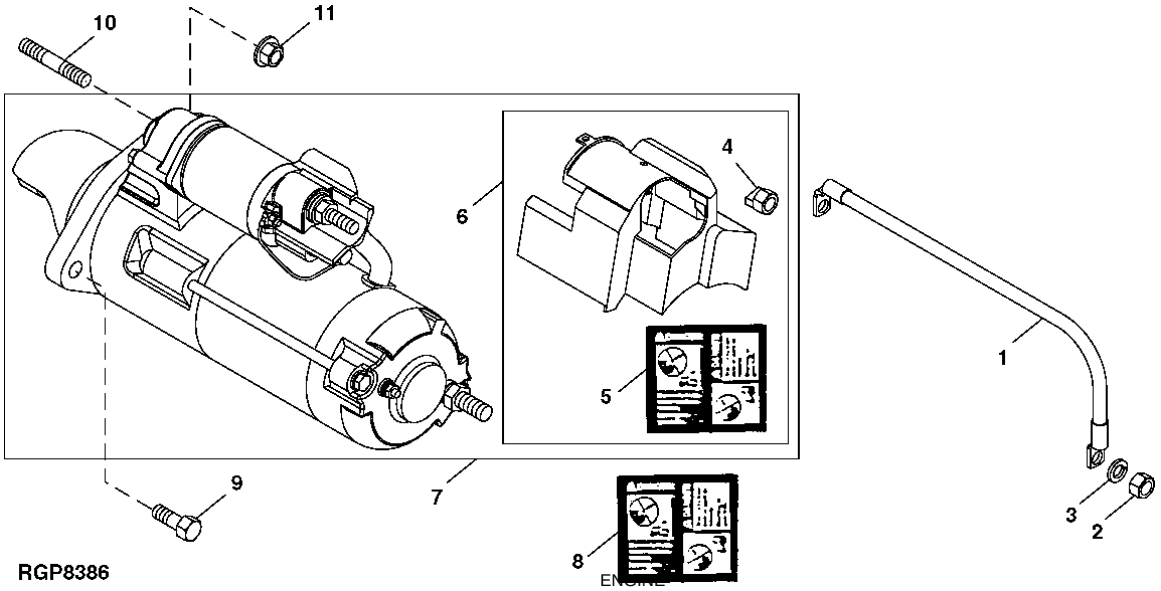

RGP8386

ENGINE

KEY	PART NO.	PART NAME	QTY	SERIAL NO.	REMARKS
1	AR67069	GROUND CABLE	1		
2	14H1040	NUT	2		1/2"
3	12H301	LOCK WASHER	2		1/2"
4	TY22471	CLAMP	1		
5	T146102	LABEL	1		(A)
6	RE515734	SHIELD	1		
7	RE515895	STARTER MOTOR KIT	1		(24V) DENSO, (MARKED RE506826) (CONTAINS RE515734)
8	T146106	SAFETY SIGN	1		(B)
	T146104	SAFETY SIGN	1		(C)
	T146515	SAFETY SIGN	1		(D)
	T146516	SAFETY SIGN	1		(E)
	T146517	SAFETY SIGN	1		(F)
9	19M7813	SCREW	2		M12 X 45
10	42M7029	STUD	1		

(A) ENGLISH (B) SPANISH (C) FRENCH

(D) GERMAN (E) ITALIAN (F) ENGLISH/FRENCH

STARTING MOTOR

RGP8387 -UN-07DEC01

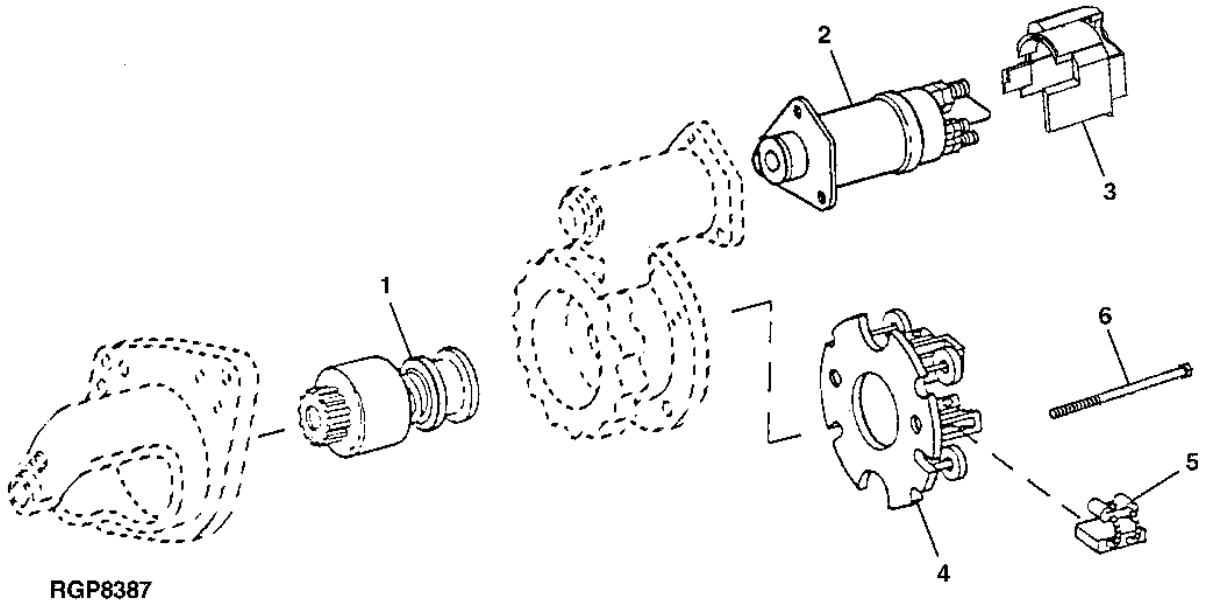

RGP8387

KEY	PART NO.	PART NAME	QTY	ENGINE SERIAL NO.	REMARKS
1	RE515729	CLUTCH	1		
2	RE515728	SWITCH	1		
3	.....	COVER	1		(SUB RE515734)
4	RE515731	CARBON BRUSH HOLDER	1		
5	RE515730	BRUSH	1		
6	R515283	SCREW	1		

ALTERNATOR SUPPORT AND ADJUSTING STRAP

RGP4754 -UN-16SEP96

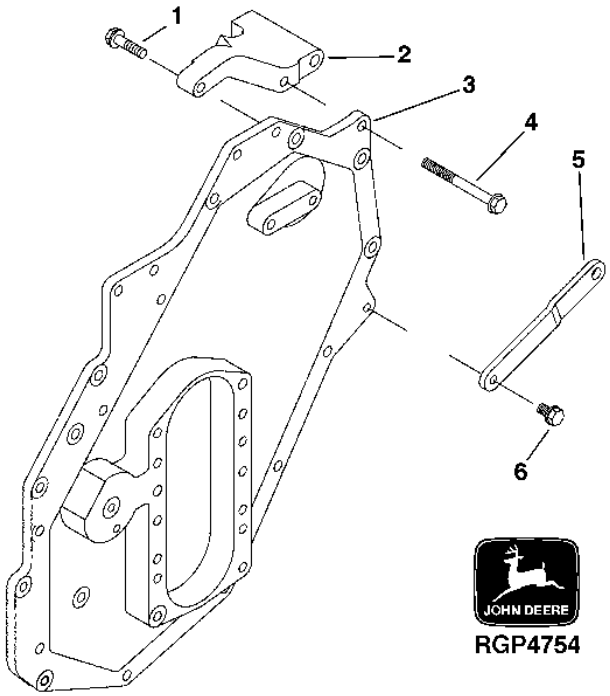

KEY	PART NO.	PART NAME	QTY	ENGINE SERIAL NO.	REMARKS
1	19M7836	SCREW	1		M10 X 110
2	R129947	BRACKET	1	-567056	
3	R129809	COVER	1		
4	19M8162	SCREW	1		M10 X 40
5	R130483	STRAP	1	-567056	
6	19M7785	SCREW	1		M10 X 25

MEMORANDA

CRANKSHAFT DAMPER PULLEY AND FRONT SEAL

RGP4744 -UN-10SEP96

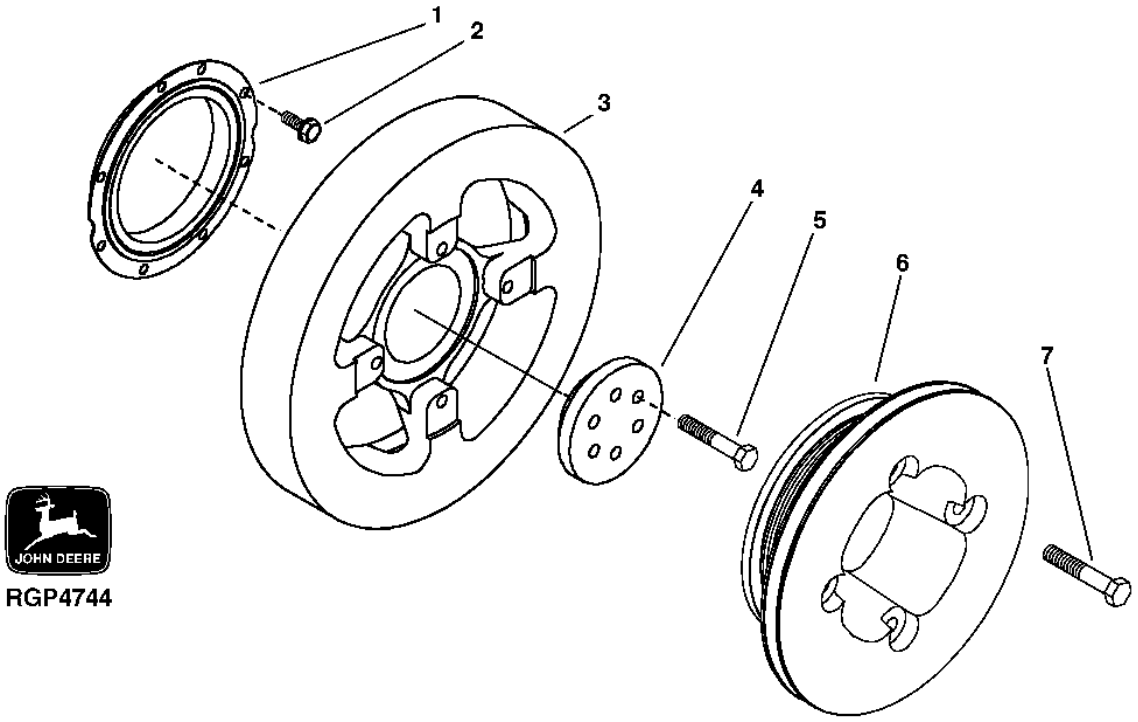

KEY	PART NO.	PART NAME	QTY	ENGINE SERIAL NO.	REMARKS
1	RE54073	SEAL	1		(FRONT)
2	R130091	SCREW	8		
3	RE65565	PULLEY WITH DAMPENER	1		
4	R501561	HUB	1		
5	19M7818	SCREW	6		M12 X 80
6	R133879	PULLEY	1		
7	19M7819	SCREW	4		M12 X 90, (USE WITH R128831 OR R133879)

FAN DRIVE PULLEY AND BELT TENSIONER BRACKET/PULLEY

RGP9055 -UN-03SEP02

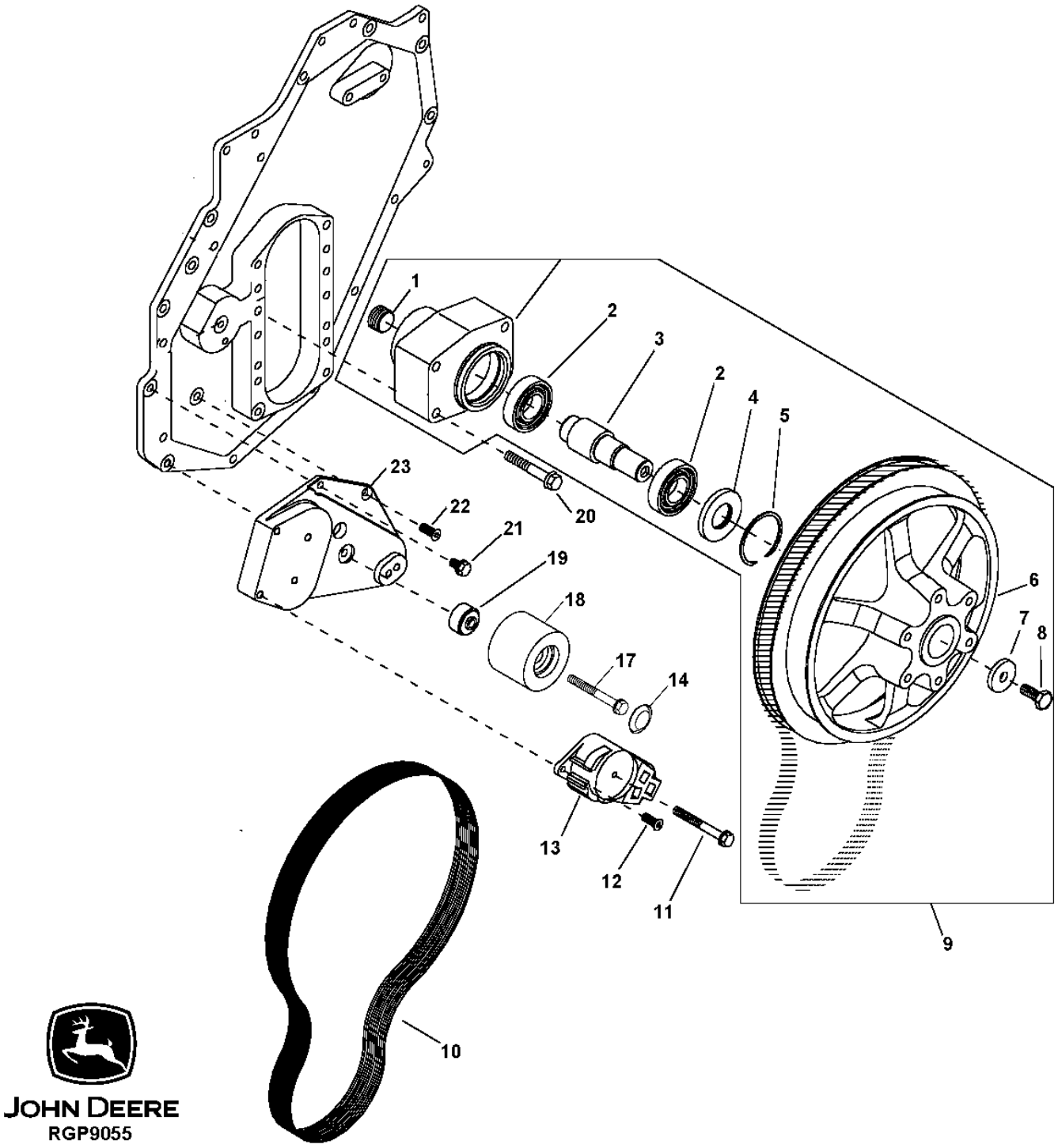

FAN DRIVE PULLEY AND BELT TENSIONER BRACKET/PULLEY

KEY	PART NO.	PART NAME	QTY	ENGINE SERIAL NO.	REMARKS
1	R116466	PLUG	1		
2	JD10329	BALL BEARING	2		
3	R63987	SHAFT	1		
4	RE20768	SEAL	1		
5	R62191	SNAP RING	AR		(RED)
	R62192	SNAP RING	AR		(GREEN)
	R62193	SNAP RING	AR		(BLUE)
	R62194	SNAP RING	AR		(WHITE)
6	R515405	PULLEY	1		(ADW)
7	T20217	WASHER	1		
8	19H1815	CAP SCREW	1		1/2" X 1-1/4"
9	RE516050	HOUSING	1		(ADW)
10	T196485	V-BELT	1		(FAN DRIVE)
11	19M7811	SCREW	1		M10 X 90
12	19M8551	SCREW	1		M10 X 25
13	RE515956	TIGHTENER	1		(ADW) (FAN DRIVE)
	R515409	SPACER	1		(HDW)
14	R99590	COVER	1		
17	19M8114	SCREW	1		
18	RE501133	IDLER	1		(FAN DRIVE)
19	R500320	SPACER	1		
20	19M7818	SCREW	4		M12 X 80
21	19M7785	SCREW	1		
	19M7785	SCREW	1		M10 X 25, (TAB ON SIDE)
22	19M8551	SCREW	1		M10 X 25
23	R130389	BRACKET	1		

FLYWHEEL AND HOUSING

RGP4732 -UN-10SEP96

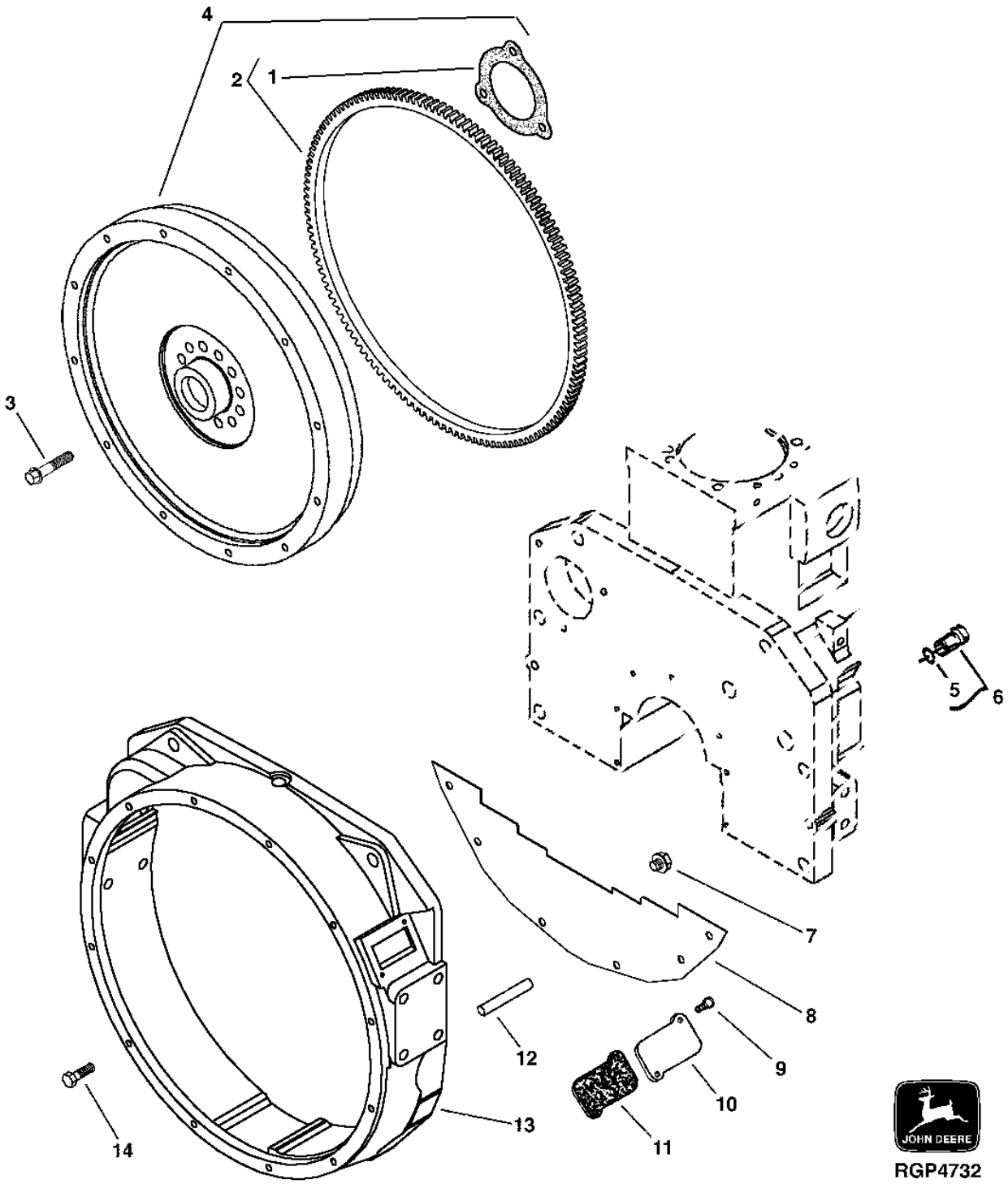

FLYWHEEL AND HOUSING - CONTINUED

KEY	PART NO.	PART NAME	QTY	ENGINE SERIAL NO.	REMARKS
1	R57480	GASKET	NA		
2	AR103044	KIT	1		
3	R116911	CAP SCREW	12		
4	RE64536	FLYWHEEL	1		(MARKED R128895)
5	R27149	O-RING	1		
6	AR61533	PLUG	1		(CRANKSHAFT ROTATING TOOL)
7	19M7784	SCREW	6		M10 X 20
8	R121972	COVER	1		
9	19M7700	CAP SCREW	2		M5 X 10
10	R31493	COVER	1		
11	R67989	GASKET	1		
12	H79910	DOWEL PIN	2		
13	R128311	HOUSING	1		
14	19M8638	CAP SCREW	6		M20 X 65

ENGINE GASKET KITS

RGP7074 -UN-05DEC00

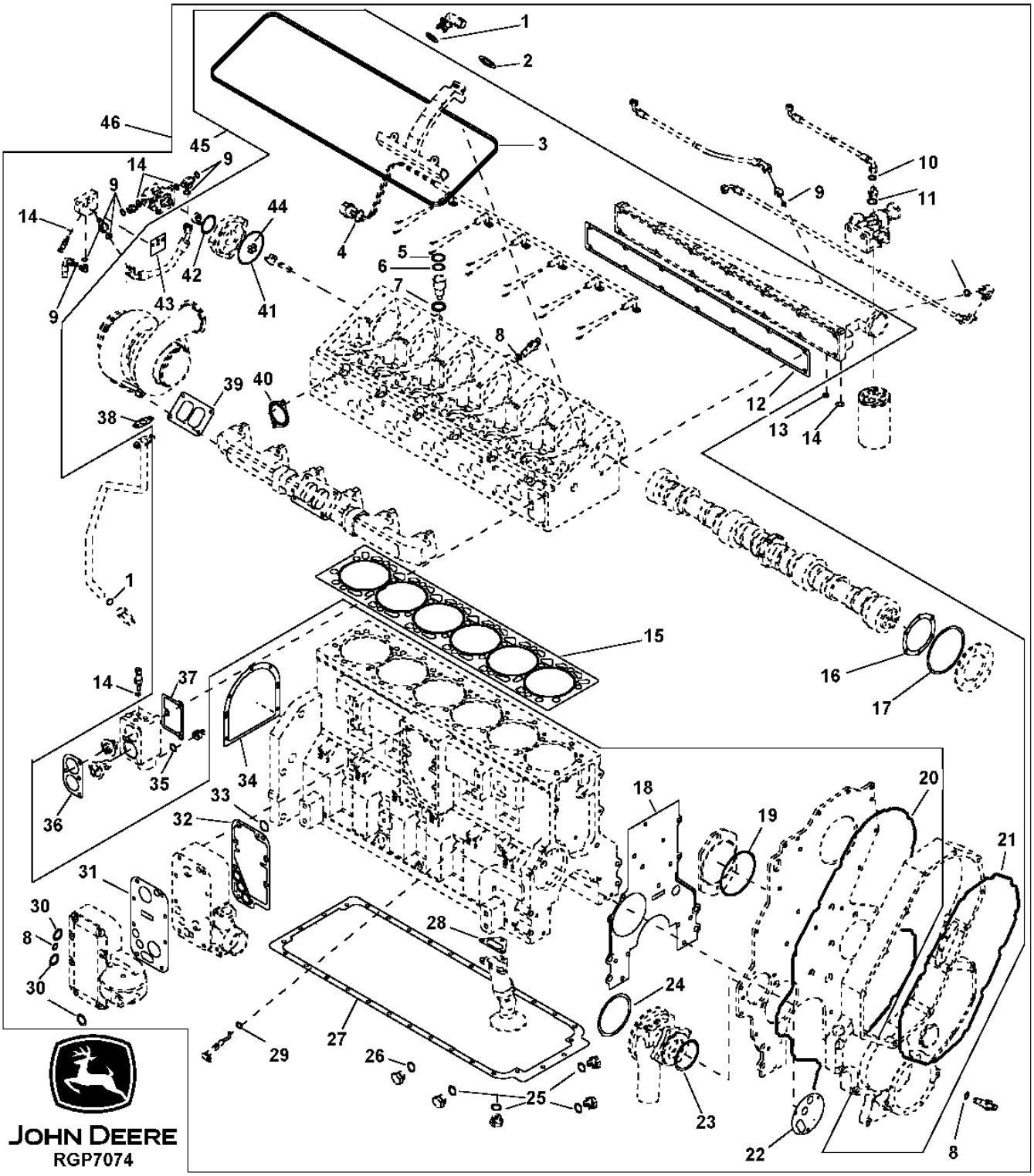

ENGINE GASKET KIT

KEY	PART NO.	PART NAME	QTY	ENGINE SERIAL NO.	REMARKS
1	R72328	O-RING	2		
2	R63185	O-RING	1		
3	R502124	GASKET	1		
4	R56461	O-RING	1		
5	R133651	PACKING	6		
6	R502703	PACKING	6		
	R133653	PACKING	6		
7	R130772	PACKING	6		
8	R26375	O-RING	3		
9	T77613	O-RING	7		
10	T77857	O-RING	1		
11	51M7045	O-RING	1		19.300 X 2.200 MM
12	R116830	GASKET	1		
13	51M7041	O-RING	1		11.300 X 2.200 MM
14	R26448	O-RING	6		
15	RE57784	ENGINE CYLINDER HEAD GASKET	1		
16	R500211	GASKET	1		
17	R62976	O-RING	1		
18	R500212	GASKET	1		(ALSO ORDER N102039)
19	T70176	O-RING	1		
	R82459	O-RING	1		
	T74492	O-RING	1		
20	R502026	V-RING SEAL	1		
21	R502441	V-RING SEAL	1		
22	R500387	GASKET	1		
23	R56757	O-RING	1		
24	E52687	O-RING	1		
25	R56751	O-RING	4		
26	R29936	O-RING	1		
27	R116494	GASKET	1		
28	R126783	GASKET	1		
29	R63548	O-RING	12		
30	U17409	O-RING	3		
31	R500210	GASKET	1		
32	R500209	GASKET	1		
33	R134716	O-RING	2		
34	R520512	GASKET	1		(SUB FOR R35043)
35	R56464	O-RING	1		
36	R133142	GASKET	1		
37	R116205	GASKET	1		
38	R105346	GASKET	1		
39	R49697	GASKET	1		
40	R131809	GASKET	6		
41	R500318	O-RING	1		
42	T35580	O-RING	1		
43	R119148	GASKET	1		
44	R502027	SPIDER	1		
45	RE507241	GASKET KIT	1		(CYLINDER HEAD)
46	RE507243	KIT	1		(SUB RE522632) (ENGINE REBUILD)
	RE522632	KIT	1		
..	N102039	PLUG	4		

ENGINE OVERHAUL KIT

RGP5134 -UN-28JAN99

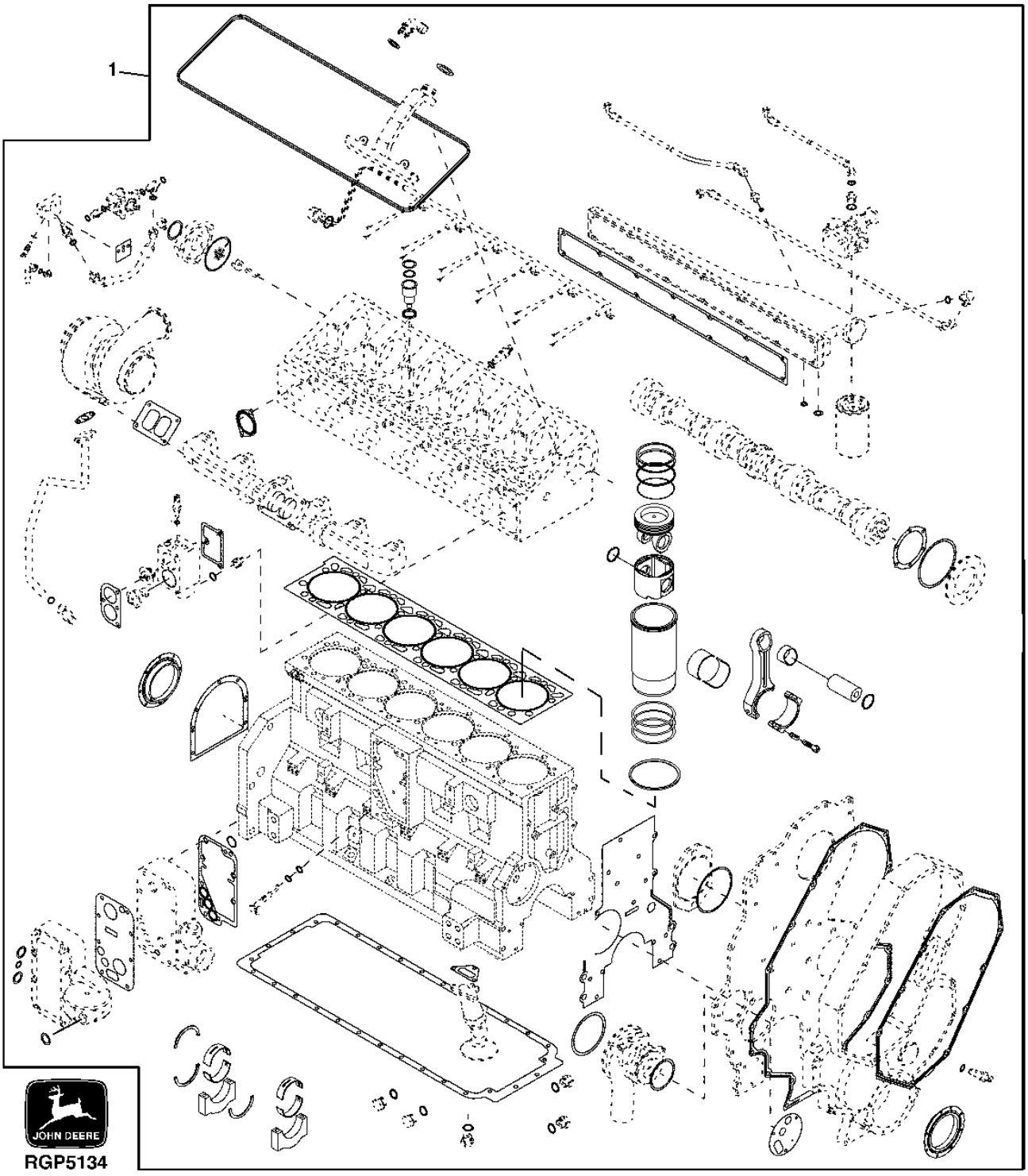

ENGINE OVERHAUL KIT

KEY	PART NO.	PART NAME	QTY	ENGINE SERIAL NO.	REMARKS
1	RG31337	ENGINE OVERHAUL KIT	1	(MARKED R502884)	

MEMORANDA

ENGINE COOLANT HEATER

T145391 -UN-12SEP01

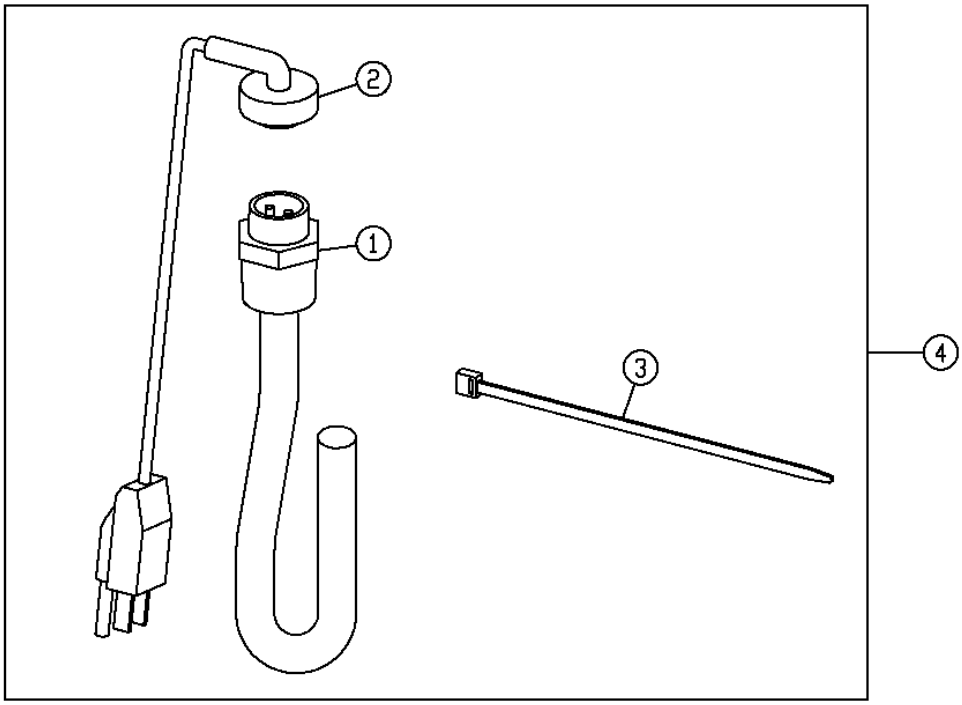

T145391

KEY	PART NO.	PART NAME	QTY	ENGINE SERIAL NO.	REMARKS
1	AR84185	HEATER	1		(110 VOLT)
2	AR87405	POWER CORD	1		
3	R44302	TIE BAND	2		
4	**AT196510**	**KIT**	**1**		**(WHOLEGOODS)**

COLD WEATHER STARTING AID

T157304 -UN-18JUL02

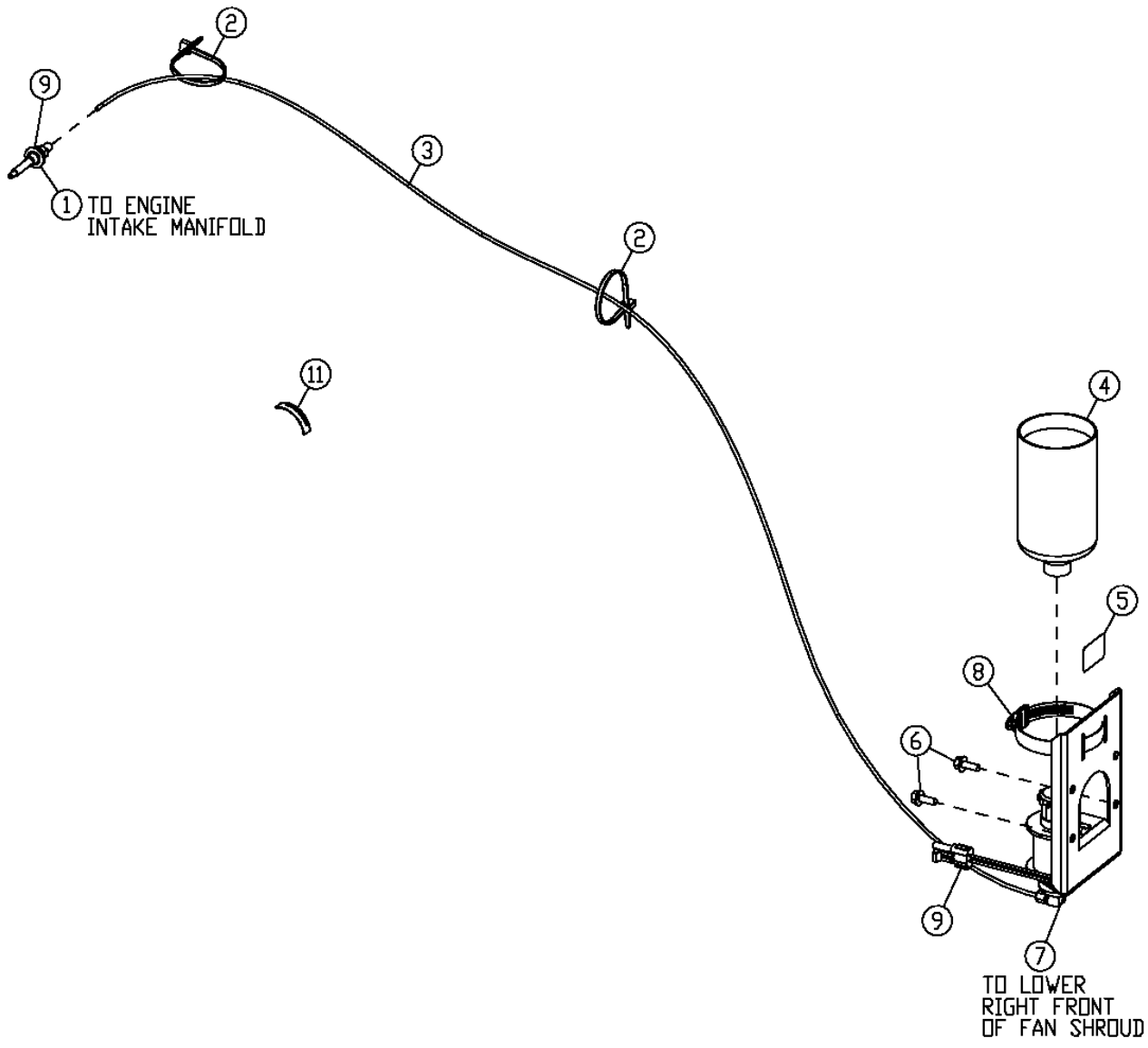

T157304

COLD WEATHER STARTING AID

KEY	PART NO.	PART NAME	QTY	SERIAL NO.	REMARKS
1	AT183222	NOZZLE	1		
2	R44302	TIE BAND	2		
3	.....	HOSE	1		(MAKE FROM T78593 BULK MATERIAL, CUT TO LENGTH)
4	AT171162	STARTING FLUID	1		
5	T42170	LABEL	1		
6	19M7863	SCREW	2		M6 X 25, (SUB FOR 19M7775)
7	AT170759	SOLENOID	1		
8	AR21999	HOSE CLAMP	1		
9	T164133	ADAPTER	1		
11	T174410	PLATE	1		
12	**AT223771**	**KIT**	**1**		**(WHOLEGOODS) (INCLUDES ALL COMPONENTS LISTED ON THIS PAGE AND AT202842 ROCKER SWITCH) (NOT ILLUSTRATED)**

ENGINE AIR HEATER

T158062 -UN-01OCT02

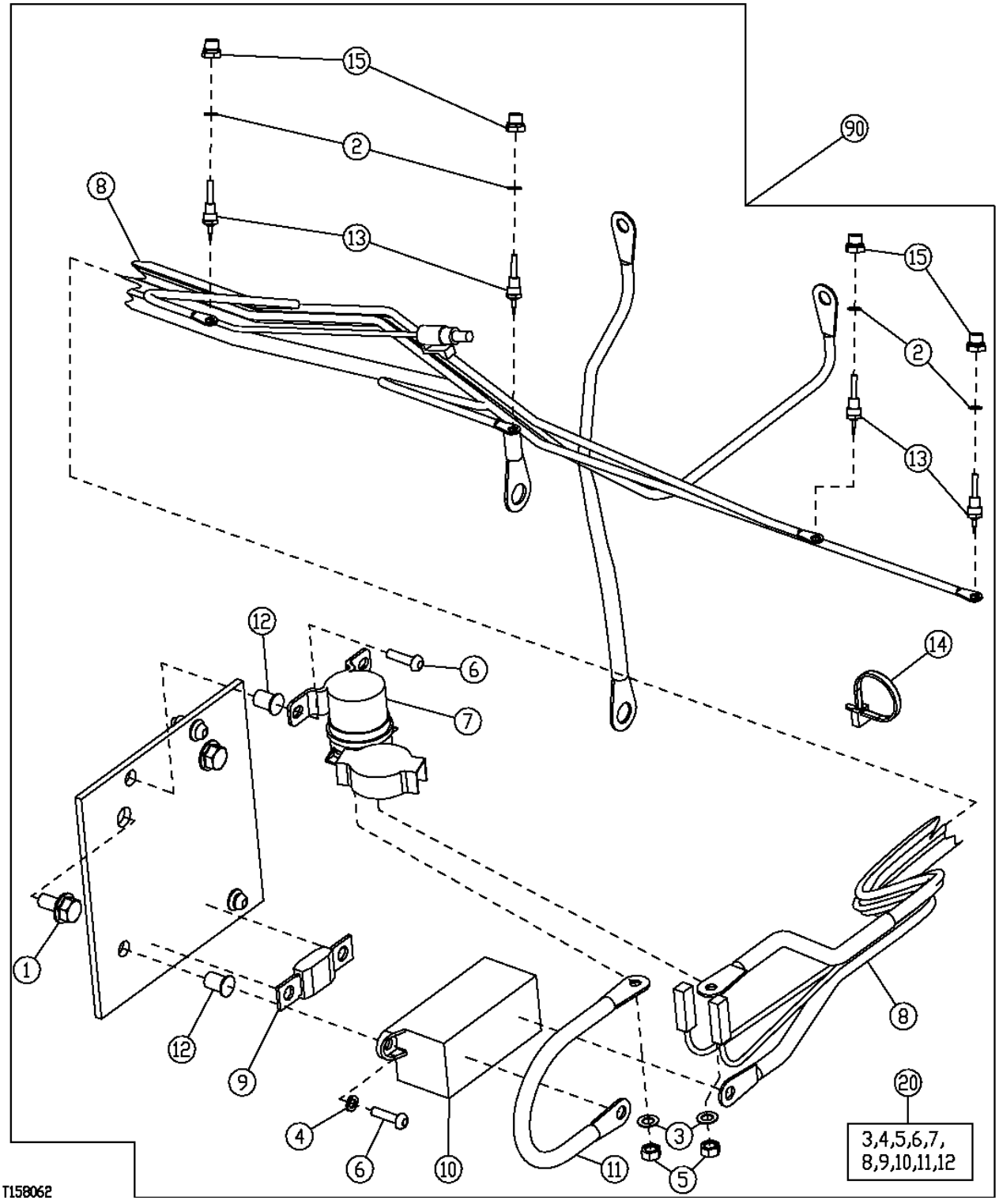

ENGINE AIR HEATER

KEY	PART NO.	PART NAME	QTY	ENGINE SERIAL NO.	REMARKS
1	19M7865	SCREW	2		M8 X 16
2	R64879	WASHER	4		
3	12H297	LOCK WASHER	2		1/4"
4	12M7064	LOCK WASHER	2		5 MM
5	14M7272	NUT	2		M6
6	21M7022	SCREW	4		M5 X 20
7	AT145341	RELAY	1		
8	AT203565	WIRING HARNESS	1		
	AT222439	WIRING HARNESS	1		(HARSH ENVIRONMENT)
	AT223526	WIRING HARNESS	1		(HARSH ENVIRONMENT ASSEMBLY)
9	AT203566	FUSE	1		
10	AT206818	FUSE HOLDER	1		
11	AT207082	CABLE	1		
12	T103238	NUT	4		
13	R134549	ADAPTER	4		
14	R44302	TIE BAND	3		
15	R134549	ADAPTER	4		
16	RE69295	GLOW PLUG	4		
17	15H666	PIPE PLUG	1		3/8"
18	AT162863	RELAY	1		
19	T208085	SAFETY SIGN	1		(NOT ILLUSTRATED) (SUB FOR T196474) (AIR HEATER LABEL)
20	AT206728	COOLANT HEATER	1		
90	AT223660	KIT	1		(WHOLEGOODS)(ENGINE AIR HEATER)

MEMORANDA

FAN BLADE, SPACER AND BELTS

T159758 -UN-23SEP02

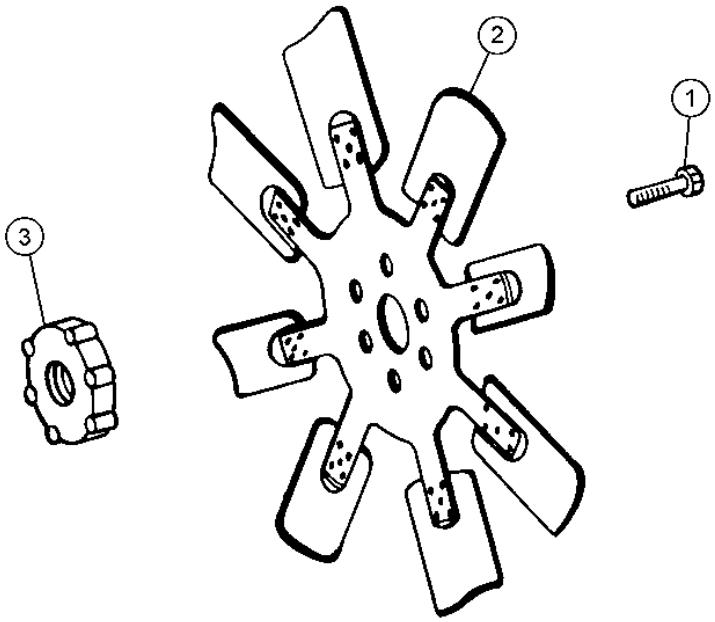

T159758

KEY	PART NO.	PART NAME	QTY	SERIAL NO.	REMARKS
1	19M7821	SCREW	6		
2	AT170438	BLOWER FAN	1		
3	T156117	SPACER	1		

SHROUD, RADIATOR HOSES AND RECOVERY BOTTLE

T160058 -UN-02OCT02

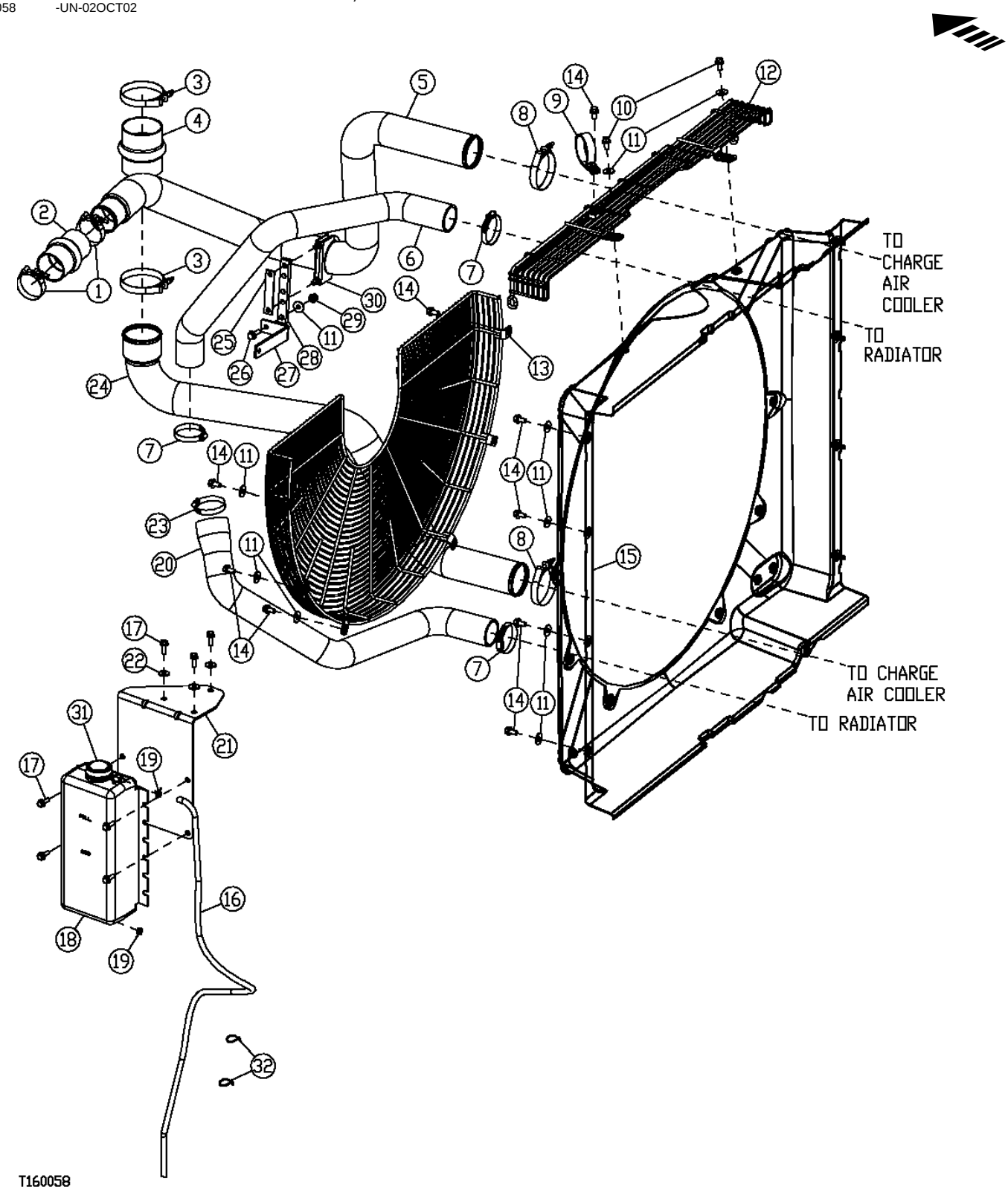

SHROUD, RADIATOR HOSES AND RECOVERY BOTTLE

KEY	PART NO.	PART NAME	QTY	SERIAL NO.	REMARKS
1	RE52702	CLAMP	2		(SUB FOR AT37478)
2	R164193	HOSE	1		
3	RE52703	HOSE CLAMP	2		(SUB FOR AT172135)
4	T179289	COMPRESSED AIR HOSE	1		
5	T179260	STRUCTURAL TUBING	1		
6	T180949	RADIATOR HOSE	1		
	T303674	RADIATOR HOSE	1		(HARSH ENVIRONMENT)
7	AH170895	CLAMP	3		(SUB FOR AR21999)
8	RE56859	CLAMP	2		(SUB FOR AT56659)
9	T162575	CLAMP	1		
10	19M7784	SCREW	2		M10 X 20
11	24M7296	WASHER	16		10.500 X 30 X 2.500 MM
12	AT223644	GUARD	1		
13	AT223778	GUARD	1		
14	19M7785	SCREW	15		M10 X 25
15	AT223971	SHROUD	1		
16	.....	HOSE	1		(MAKE FROM T79478 BULK MATERIAL, CUT TO LENGTH)
17	19M7867	SCREW	7		M8 X 25
18	AT223091	RESERVOIR	1		(RECOVERY)
19	PT9412	HOSE CLAMP	2		
20	T180950	RADIATOR HOSE	1		
21	AT222815	BRACKET	1		
22	24M7298	WASHER	3		8.400 X 25 X 2 MM
23	AR21841	CLAMP	1		
24	T179596	STRUCTURAL TUBING	1		
25	T181182	STRAP	1		
26	19M7835	SCREW	1		M10 X 35
27	T179642	ANGLE	1		
28	T182578	SUPPORT	1		(SUB FOR T175034)
29	14M7400	LOCK NUT	1		M10
30	AT116380	CLAMP	1		
31	AT106413	CAP	1		
32	R44302	TIE BAND	1		

RADIATOR, OIL COOLER AND CHARGE OIL COOLER

T163578 -UN-10JAN03

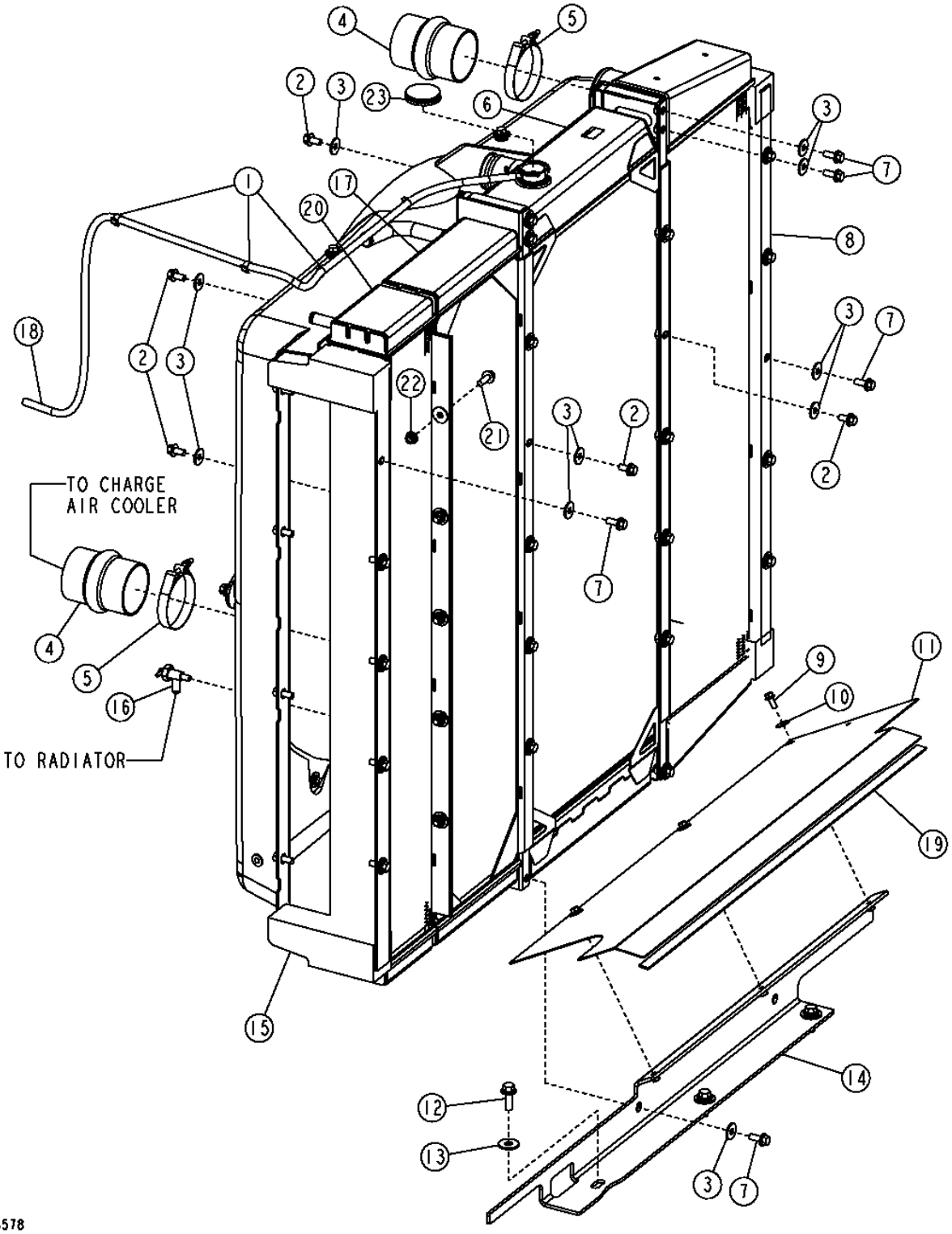

RADIATOR, OIL COOOLER AND CHARGE OIL COOLER

KEY	PART NO.	PART NAME	QTY	SERIAL NO.	REMARKS
1	T173168	HOLD-DOWN CLIP	4		
2	19M7784	SCREW	19		M10 X 20
3	24M7296	WASHER	53		10.500 X 30 X 2.500 MM
4	T179288	COMPRESSED AIR HOSE	2		
5	AT56659	HOSE CLAMP	2		
6	AT223776	RADIATOR	1		(INLINE)
	AT224152	RADIATOR	1		(STANDARD)
	AT300817	RADIATOR	1		(HARSH ENVIRONMENT)
7	19M7785	SCREW	16		M10 X 25
8	AT222750	AIR COOLER	1		(CHARGE AIR)
	AT300821	AIR COOLER	1		(HARSH ENVIRONMENT) (CHARGE AIR)
9	19M7866	BOLT	3		M8 X 20
10	24M7298	WASHER	3		8.400 X 25 X 2 MM
11	T180495	DEFLECTOR	1		
12	19M7790	SCREW	3		M12 X 35
13	24M7180	WASHER	3		13 X 37 X 3 MM
14	AT223826	SUPPORT	1		
15	T181151	ISOLATOR	4		
16	AT35831	DRAIN VALVE	1		
17	AT226286	OIL COOLER	1		TRANSMISSION OIL
	AT300819	OIL COOLER	1		(HARSH ENVIRONMENT) (TRANSMISSION OIL)
18	T181608	HYDRAULIC HOSE - FABRICATE	1		
19	.....	ISOLATOR	1		(MAKE FROM T66419 BULK MATERIAL, CUT TO LENGTH)
20	AT226287	OIL COOLER	1		(HYDRAULIC OIL)
	AT300820	OIL COOLER	1		(HARSH ENVIRONMENT) (HYDRAULIC OIL)
21	19M7786	SCREW	10		M10 X 30
22	14M7296	FLANGE NUT	10		M10
23	AT173610	FILLER CAP	1		

HIGH AMBIENT DRIVE PULLEY AND BELT

T145347 -UN-10SEP01

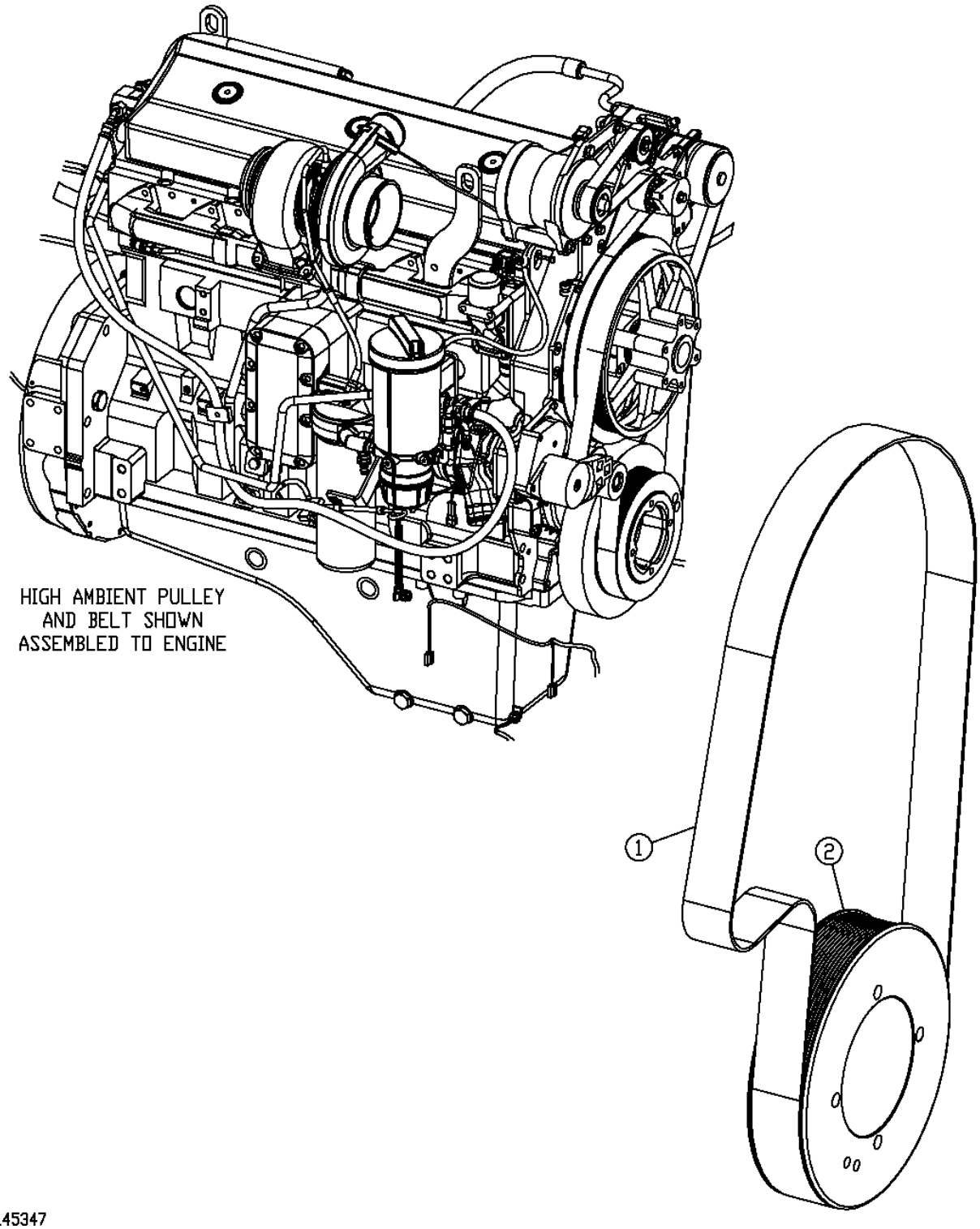

HIGH AMBIENT DRIVE PULLEY AND BELT

KEY	PART NO.	PART NAME	QTY	ENGINE SERIAL NO.	REMARKS
1	T182169	V-BELT	1		
2	R515410	PULLEY	1		

AXLE OIL RECIRCULATION PUMP, MOTOR AND LINES

T205042 -UN-12JAN05

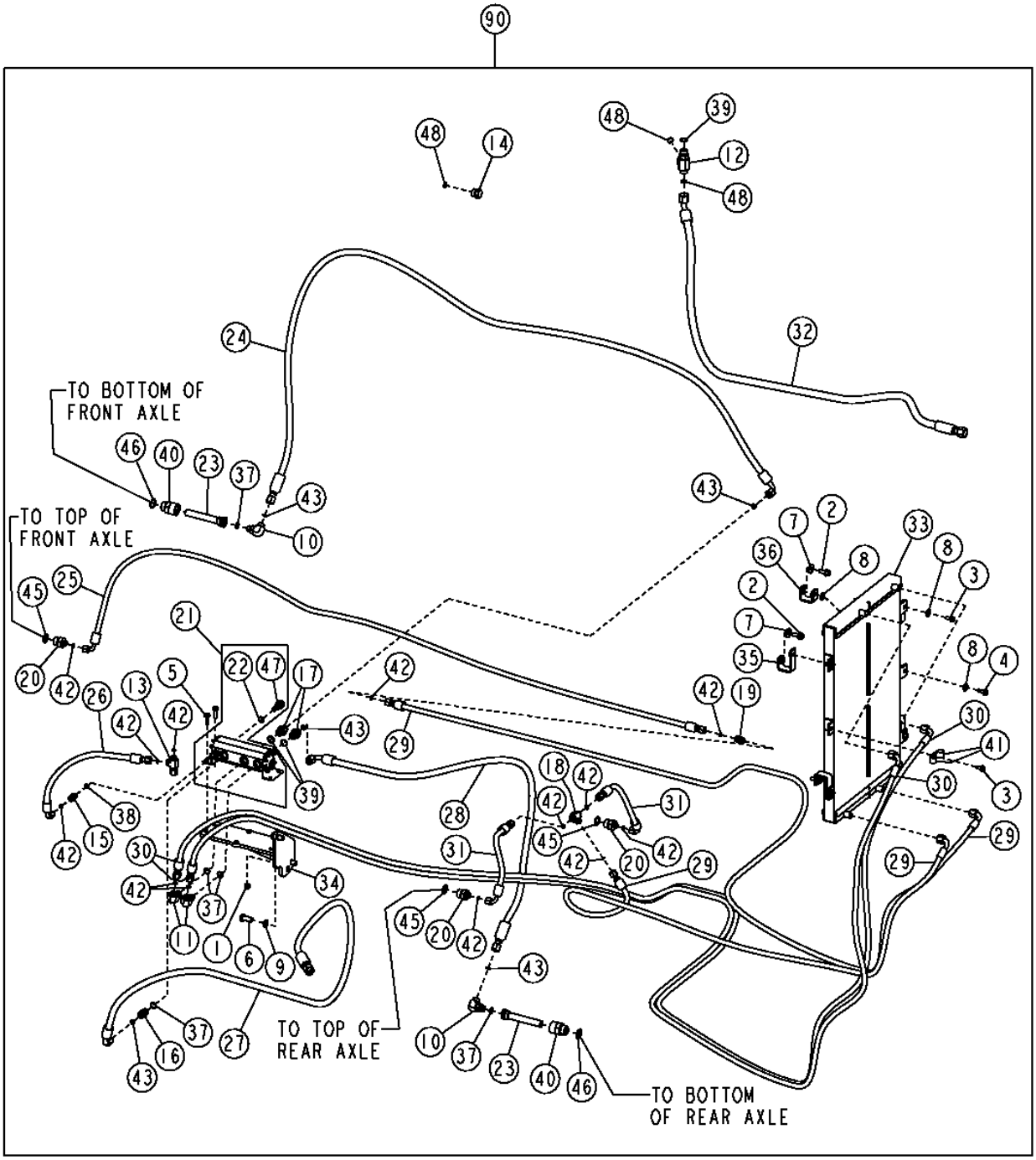

T205042

AXLE OIL RECIRCULATION PUMP,MOTOR AND LINES

KEY	PART NO.	PART NAME	QTY	SERIAL NO.	REMARKS
1	14M7396	LOCK NUT	4		M8
2	19M7785	SCREW	6		M10 X 25
3	19M7866	BOLT	5		M8 X 20
4	19M7867	SCREW	1		M8 X 25
5	19M7868	SCREW	4		M8 X 30
6	19M7877	CAP SCREW	3		M14 X 30
7	24M7296	WASHER	6		10.500 X 30 X 2.500 MM
8	24M7298	WASHER	8		8.400 X 25 X 2 MM
9	24M7406	WASHER	3		16 X 24 X 3 MM
10	38H1005	ELBOW FITTING	2		
11	38H1010	ELBOW FITTING	2		
12	38H1025	TEE FITTING	1		
13	38H1030	TEE FITTING	1		
14	38H1148	FITTING PLUG	1		
15	38H1160	ADAPTER	1		
16	38H1161	ADAPTER	1		
17	38H1174	ADAPTER	2		FLOW
18	38H1205	TEE FITTING	1		
19	38H1278	UNION FITTING	1		
20	38H1338	ADAPTER	3		
21	AT220832	PUMP	1		
22	R26375	O-RING	1		
23	AT220925	OIL FILTER	2		
24	AT221151	HYDRAULIC HOSE - FABRICATE	1		
25	AT221152	HYDRAULIC HOSE - FABRICATE	1		
26	AT221154	HYDRAULIC HOSE - FABRICATE	1		
27	AT221155	HYDRAULIC HOSE - FABRICATE	1		
28	AT221156	HYDRAULIC HOSE - FABRICATE	1		
29	AT221157	HYDRAULIC HOSE - FABRICATE	1		
30	AT221158	HYDRAULIC HOSE - FABRICATE	1		
31	AT221159	HYDRAULIC HOSE - FABRICATE	2		
32	AT221160	HYDRAULIC HOSE - FABRICATE	1		
33	AT221354	OIL COOLER	1		
34	AT223738	MOUNTING PARTS	1		
35	AT223777	BRACKET	4		
36	AT223784	BRACKET	2		
37	R26375	O-RING	5		
38	R26448	O-RING	1		
39	R26906	O-RING	3		
40	T176929	FITTING	2		
41	T74416	CLAMP	2		
42	T77613	O-RING	13		
43	T77857	O-RING	5		
45	U12547	O-RING	3		
46	U17409	O-RING	2		
47	AT223728	VALVE	1		
	AT223805	SEAL KIT	1		(PUMP SEAL KIT)
48	T77932	O-RING	3		
90	**AT223621**	**KIT**	**1**		**(WHOLEGOODS) (AXLE OIL COOLER)**

ENGINE SPEED CONTROL (SERIAL NO. -590067)

T195149 -UN-07OCT03

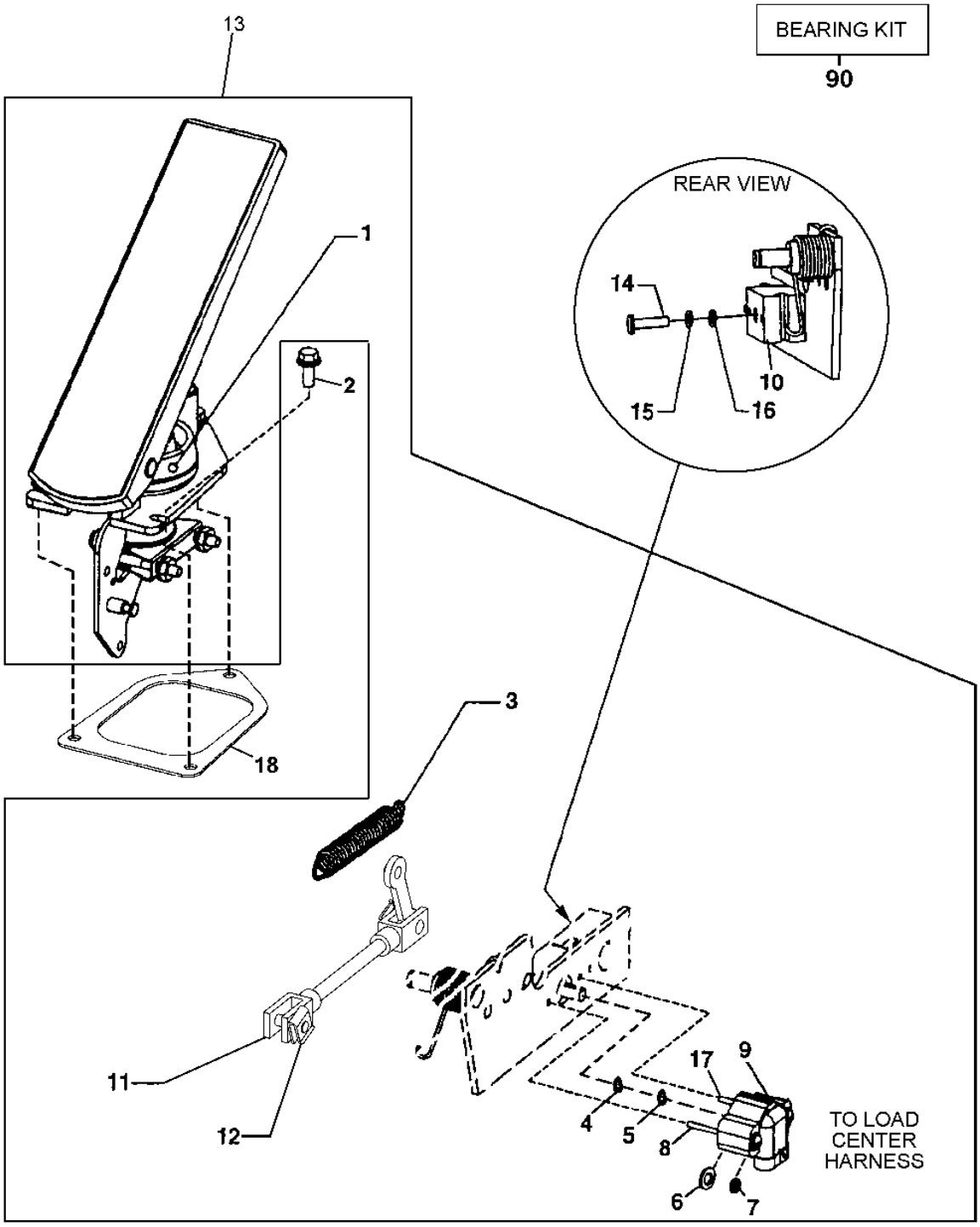

T195149

ENGINE SPEED CONTROL (SERIAL NO. -590067)

KEY	PART NO.	PART NAME	QTY	SERIAL NO.	REMARKS
1	T174634	BOOT	1		(SUB FOR T170938)
2	M113243	SCREW	3		M6 X 16
3	AT226683	KIT	1		THROTTLE SERVICE (INCLUDES SPRING T195691 AND MOUNTING PARTS) (SUB FOR AT224427)
	T195691	EXTENSION SPRING	1		(SUB FOR T181078)
4	L64884	O-RING	2		
5	T45298	O-RING	4		
6	24M7087	WASHER	4		
7	12H246	LOCK WASHER	4		
8	19H3390	SCREW	1		
9	RE30295	SENSOR	2		
10	AT209724	SHAFT	1		BLOCK AND SHAFT ASSEMBLY
11	AT211466	LINKAGE	1		
12	T170939	CLIP	6		
13	.....	ACCELERATOR	1		(AT226776 NO LONGER AVAILABLE) (SUB AT306702)
14	21H1391	SCREW	2		
15	12M7084	LOCK WASHER	2		
16	B1085R	WASHER	2		
17	21H1390	SCREW	3		4.826 X 44.450 MM
18	T172927	GASKET	1		
90	AT156748	BEARING KIT	1		INCLUDES BEARINGS, CLIPS, TORSION SPRING AND PUSH ROD ASSEMBLY (PEDAL ONLY)

ENGINE SPEED CONTROL (SERIAL NO. 590068-)

T195146 -UN-14OCT03

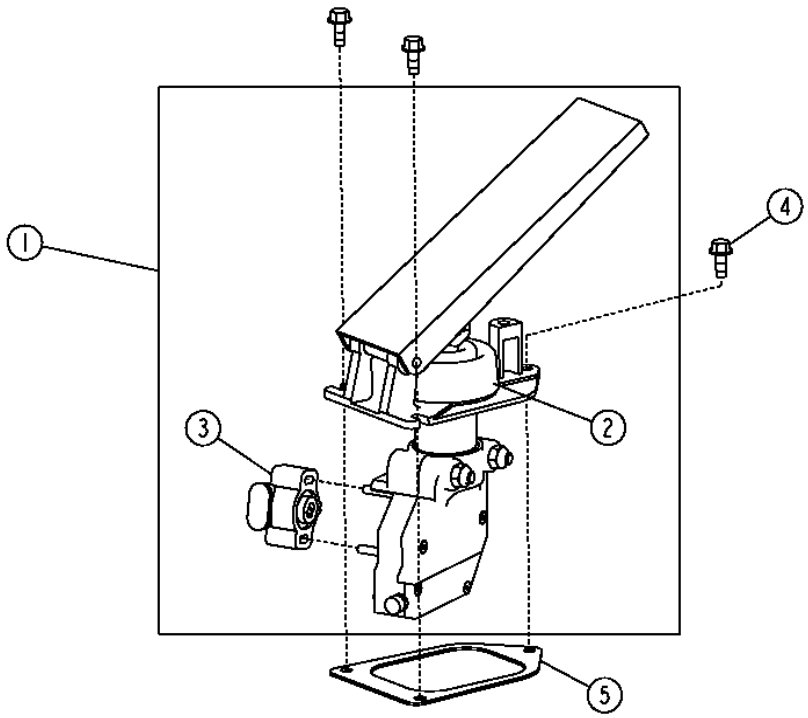

T195146

ENGINE SPEED CONTROL (SERIAL NO. 590068-)

KEY	PART NO.	PART NAME	QTY	SERIAL NO.	REMARKS
1	AT306702	ACCELERATOR	1		
2	T174634	BOOT	1		
3	AT323307	SENSOR	1		(SUB FOR AT306703)
4	M113243	SCREW	3		
5	T172927	GASKET	1		

AIR CLEANER, AIR CLEANER FILTERS AND AIR CLEANER HOSE

T163445 -UN-10JAN03

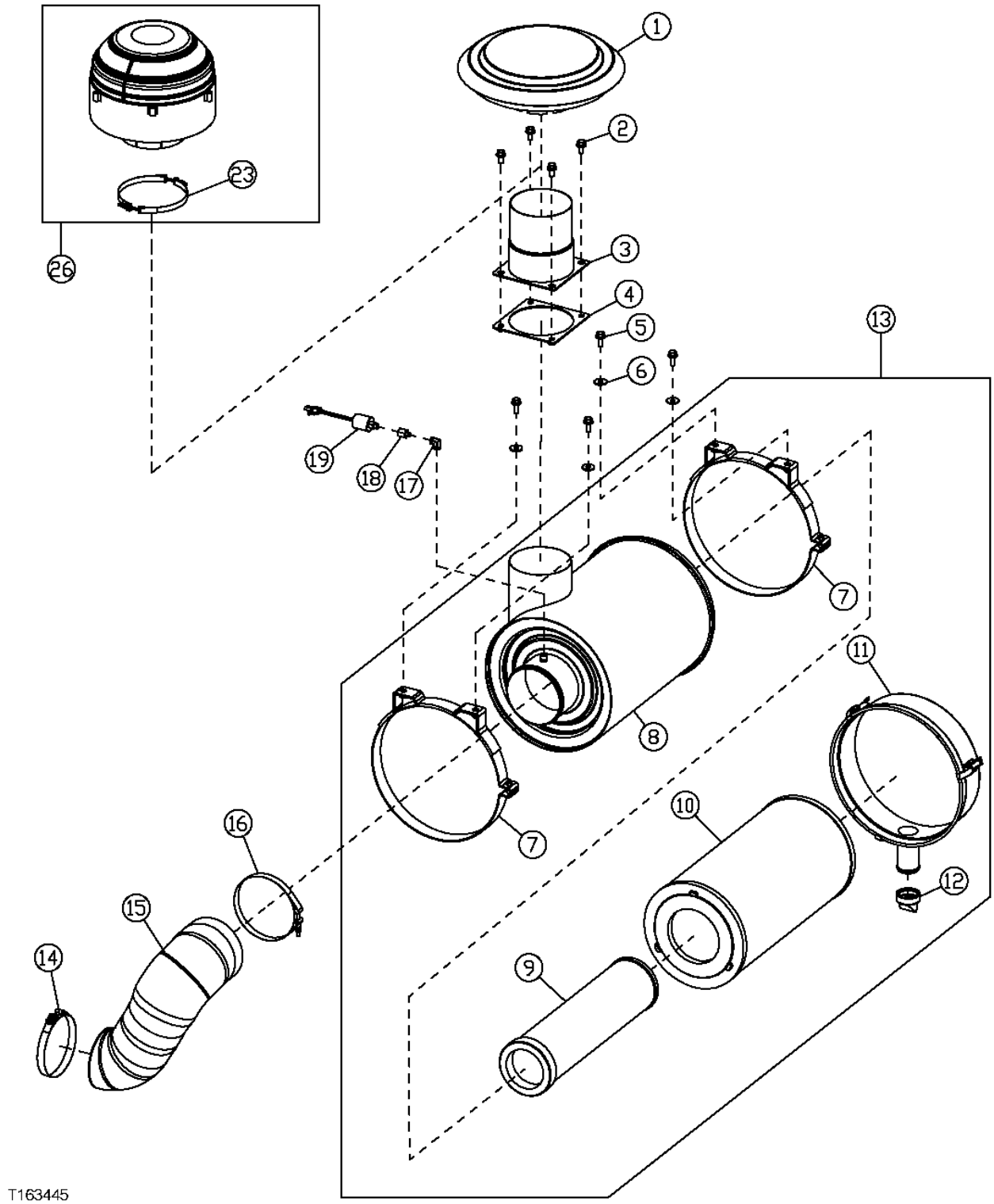

AIR CLEANER, AIR CLEANER FILTERS AND AIR CLEANER HOSE

KEY	PART NO.	PART NAME	QTY	SERIAL NO.	REMARKS
1	AR70105	CAP	1		
2	19M7784	SCREW	4		
3	AT223774	AIR INTAKE STACK	1		
4	AT223810	PLATE	1		
5	19M7785	SCREW	4		
6	24M7296	WASHER	4		
7	AT211206	BAND	2		
8	.....	AIR CLEANER	1		(SUB AT221880)
9	AT203051	FILTER ELEMENT	1		
10	AT220822	FILTER ELEMENT	1		
11	AT202908	COVER	1		
12	R48568	VALVE	1		
13	AT221880	AIR CLEANER	1		
14	AT226659	CLAMP	1		
	AT53440	CLAMP	1		(HARSH ENVIRONMENT)
15	T180213	HOSE	1		
	AT303595	HOSE	1		(HARSH ENVIRONMENT)
16	TT208828	CLAMP	1		(SUB FOR AT53440) (AIR INTAKE)
	AT53440	CLAMP	1		(HARSH ENVIRONMENT)
17	15H95	ELBOW FITTING	1		
18	T82907	ADAPTER	1	-596587	
19	RE12176	AIR RESTRICTION SENSOR	1	-596587	
	RE68255	SENSOR	1	596588-	
23	AT225330	CLAMP	1		
26	AT224833	PRECLEANER	1		

MUFFLER AND EXHAUST PIPE

T160042 -UN-01OCT02

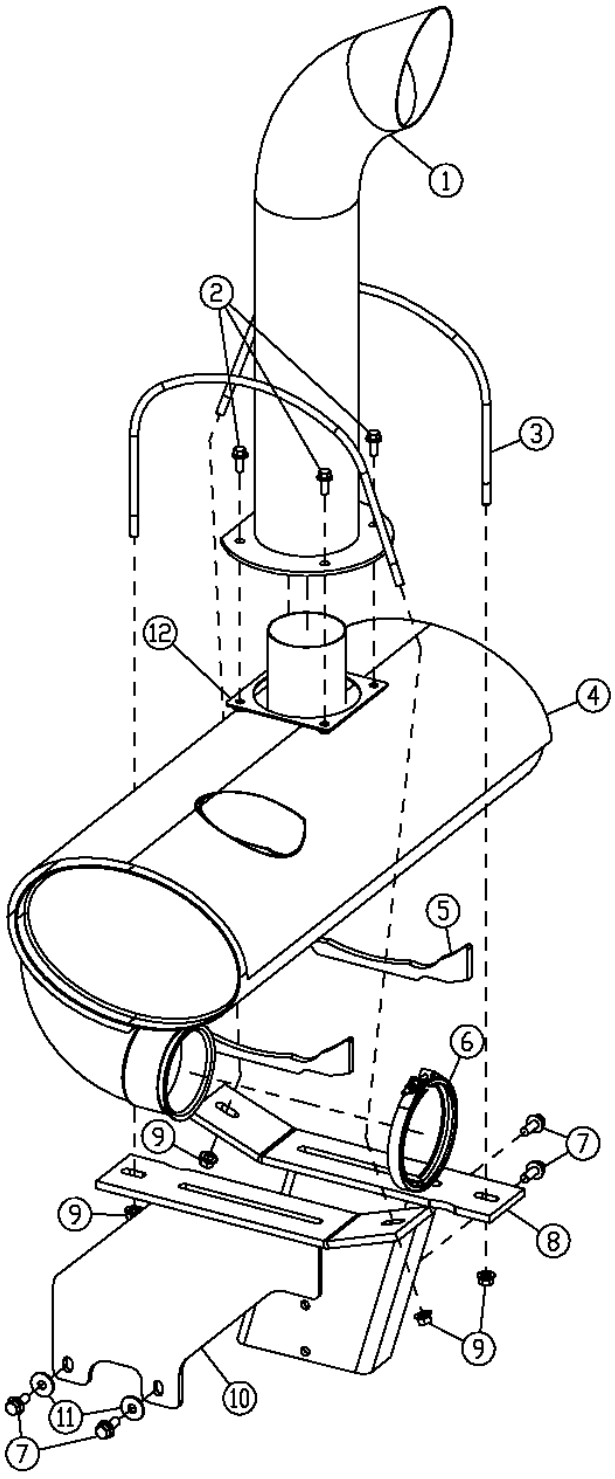

T160042

MUFFLER AND EXHAUST PIPE

KEY	PART NO.	PART NAME	QTY	SERIAL NO.	REMARKS
1	AT220962	EXHAUST PIPE	1		(BLACK)
	AT223888	EXHAUST PIPE	1		(CHROME)
2	19M7785	SCREW	4		M10 X 25
3	T177430	U-BOLT	2		
4	AT220823	MUFFLER	1		
5	T177340	CRADLE	2		
6	RE25566	CLAMP	1		
7	19M7789	SCREW	4		M12 X 30
8	AT220899	BRACKET	1		(RIGHT SIDE)
9	E80242	LOCK NUT	4		
10	AT223719	BRACKET	1		
11	24M7180	WASHER	2		13 X 37 X 3 MM
12	AT223810	PLATE	1		

ENGINE MOUNTING BRACKETS

TP55850 -UN-04FEB98

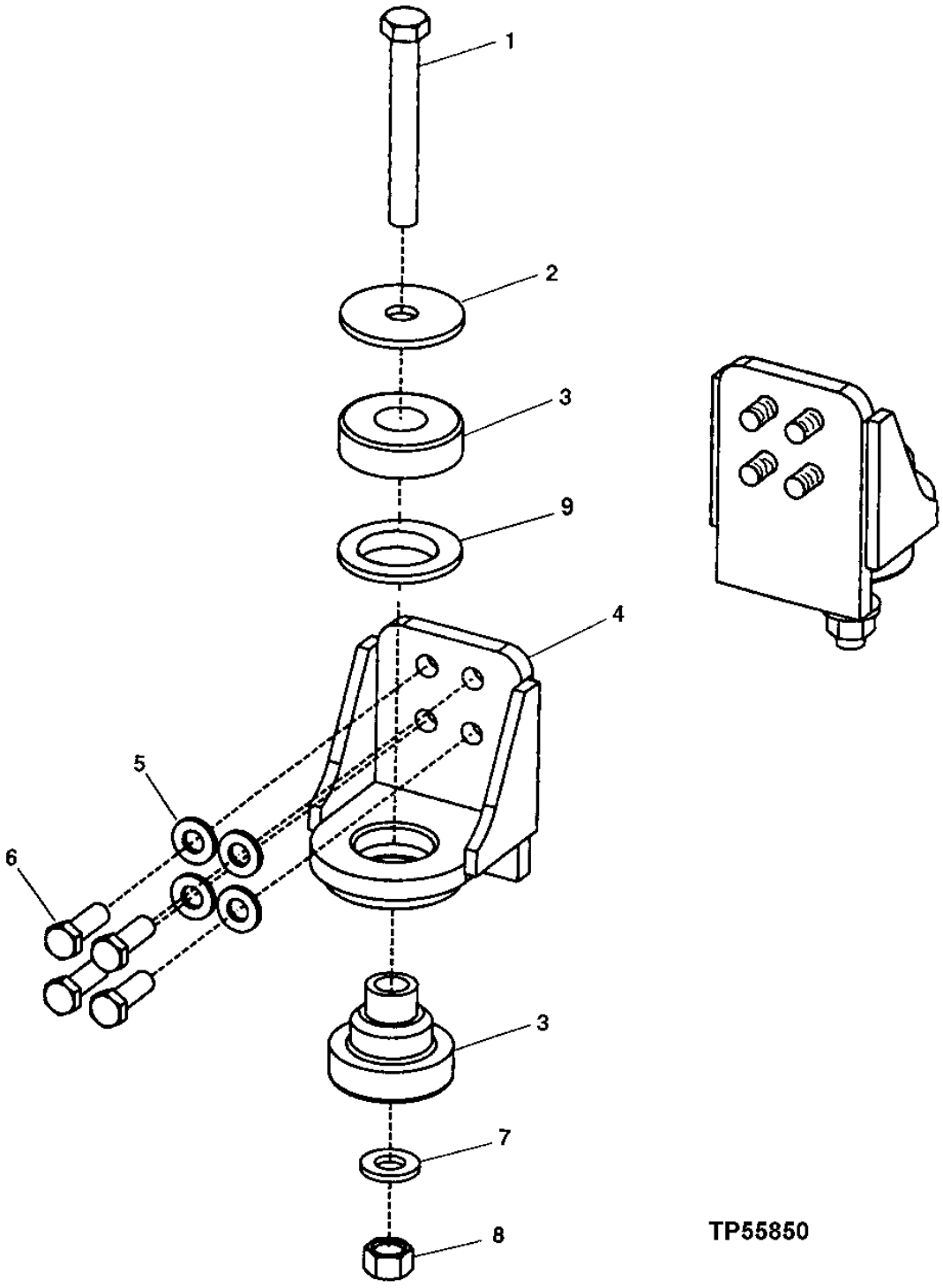

ENGINE MOUNTING BRACKETS

KEY	PART NO.	PART NAME	QTY	SERIAL NO.	REMARKS
1	19M7921	CAP SCREW	2		M20 X 150
2	T42977	WASHER	2		
3	AT107738	ISOLATOR	2		
4	AT210460	SUPPORT	2		RIGHT AND LEFT
5	24M7241	WASHER	8		17 X 34 X 4 MM
6	19M7489	CAP SCREW	8		M16 X 45
7	24M7242	WASHER	2		21.400 X 42 X 5 MM
8	14M7277	NUT	2		M20
9	T102171	WASHER	2		

FUEL TANK AND FUEL TANK HOSES

T156115 -UN-21JUN02

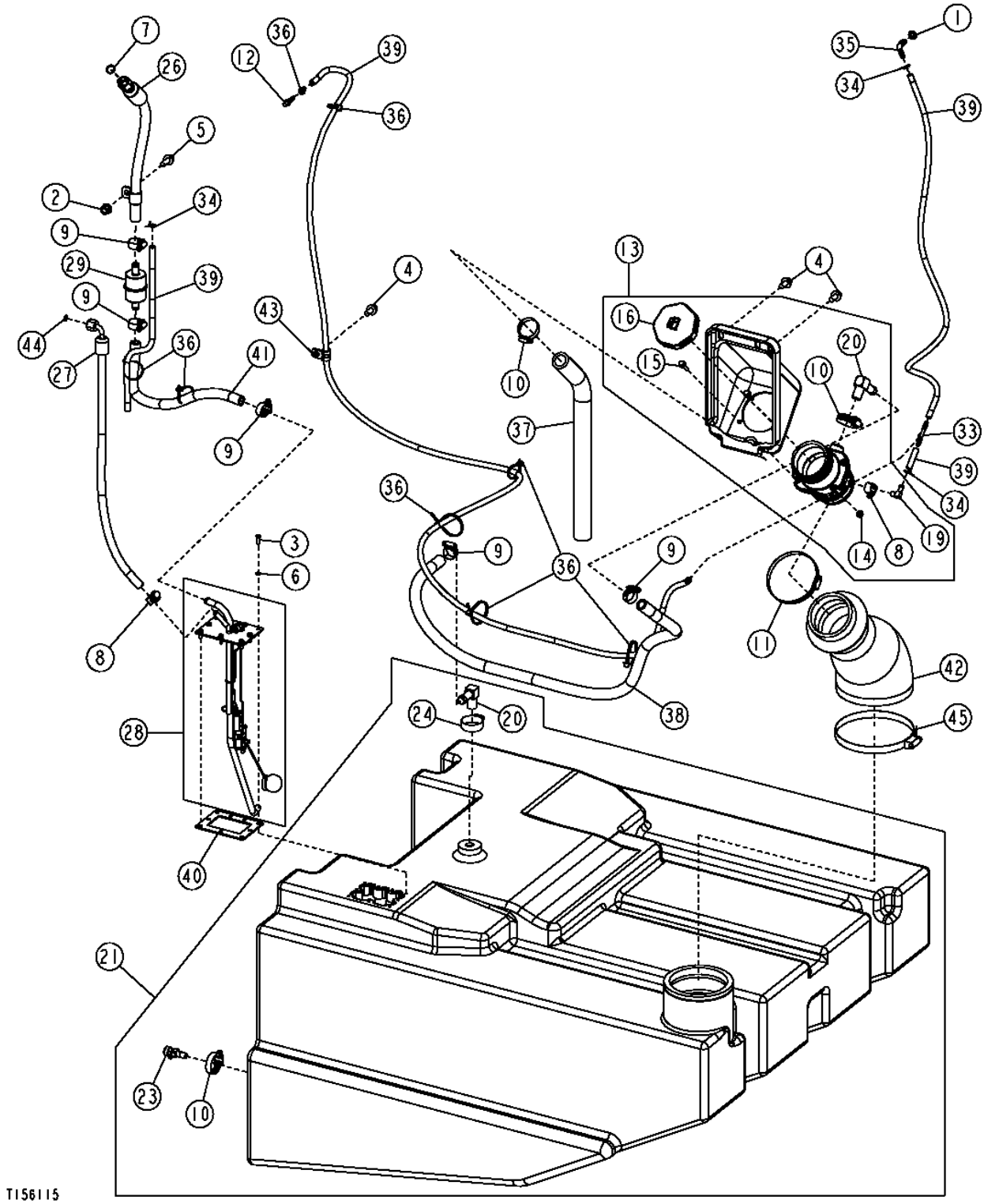

FUEL TANK AND FUEL TANK HOSES

KEY	PART NO.	PART NAME	QTY	SERIAL NO.	REMARKS
1	14M7152	NUT	1		M10
2	14M7400	LOCK NUT	1		M10
3	19M7372	CAP SCREW	9		M5 X 16
4	19M7784	SCREW	3		M10 X 20
5	19M7785	SCREW	1		M10 X 25
6	24M7027	WASHER	9		5.300 X 10 X 1 MM
7	51M7043	O-RING	1		15.300 X 2.200 MM
8	TY22464	CLAMP	2		(SUB FOR AR21836)
9	AR21837	CLAMP	5		
10	AR21839	CLAMP	3	-594293	
	AR21839	CLAMP	2	594294-	
11	AR21842	CLAMP	1		
12	AT18687	HOSE FITTING	1		
13	AT221930	HOUSING	1		
14	14M7303	FLANGE NUT	4		M6
15	19M7796	SCREW	4		M6 X 30
16	AMT1274	FILLER CAP	1		
19	E48497	HOSE FITTING	1		
20	T167934	ELBOW FITTING	2		
21	AT222715	FUEL TANK	1		
23	AT223133	HAND OPERATED VALVE	1	-594293	
24	RE52034	CLAMP	1		
26	AT222934	HYDRAULIC HOSE - FABRICATE	1		
27	AT222935	HYDRAULIC HOSE - FABRICATE	1		
28	AT222975	FUEL SENDER	1		
29	AT223493	FUEL FILTER	1		
33	N154080	TEE FITTING	1		
34	PT9412	HOSE CLAMP	3		
35	R61356	ELBOW FITTING	1		(SUB FOR R156318)
36	R44302	TIE BAND	1		
37	T178954	HOSE	1		
38	.....	HOSE	1		(FURNISH T60811 BULK MATERIAL, CUT TO LENGTH)
39	.....	HOSE	1		(FURNISH T79477 BULK MATERIAL, CUT TO LENGTH)
40	T179540	GASKET	1		
41	.....	HOSE	1		(FURNISH T168383 BULK MATERIAL, CUT TO LENGTH)
42	T195106	HOSE	1		
43	T74412	CLAMP	1		
44	T77613	O-RING	1		
45	TY22494	HOSE CLAMP	1		

FUEL FILL STRAINER

T145319 -UN-10SEP01

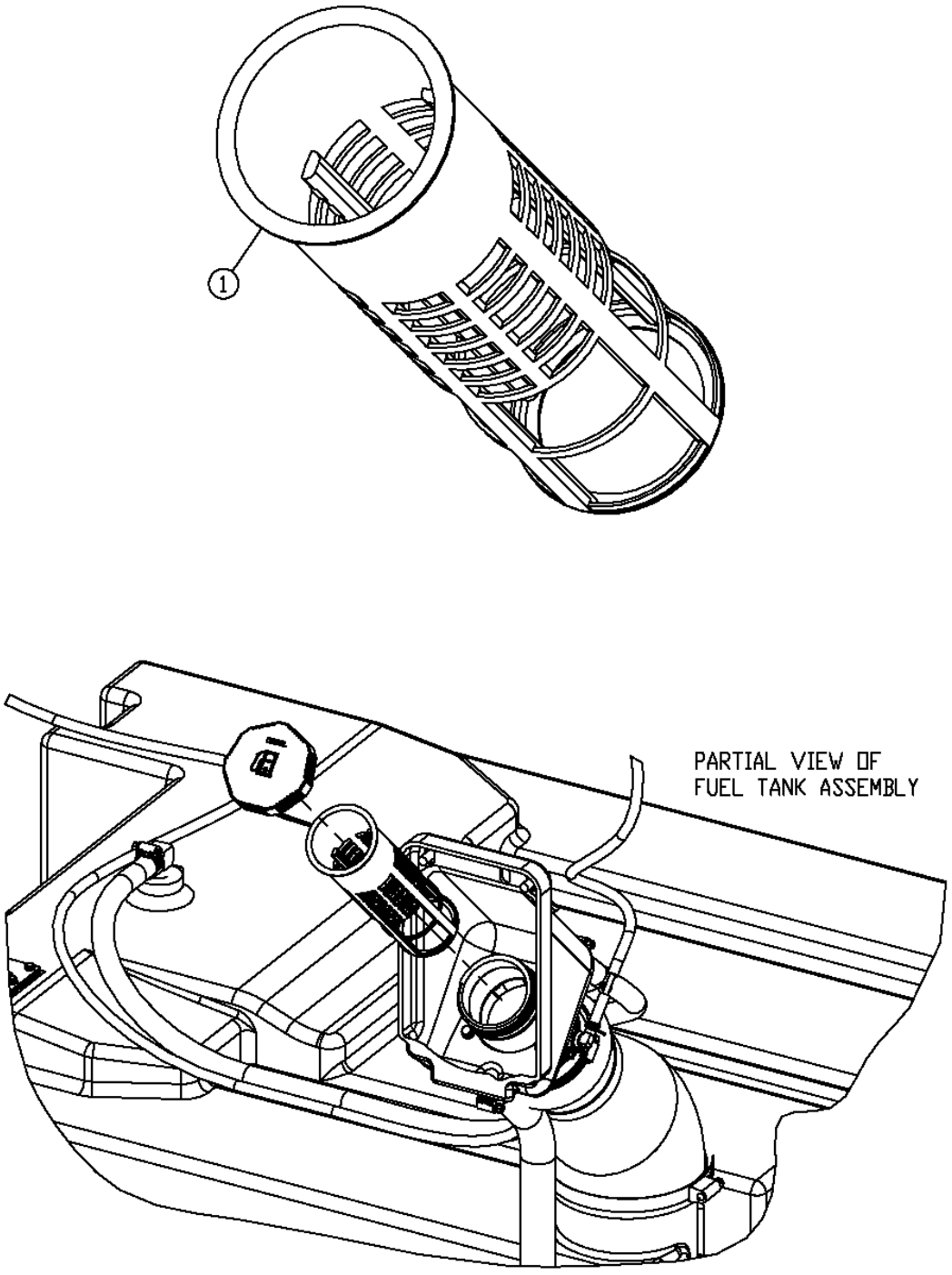

FUEL FILL STRAINER

KEY	PART NO.	PART NAME	QTY	SERIAL NO.	REMARKS
1	AH162914	STRAINER	1		

FAST FILL FUEL TANK AND COMPONENTS

T212834 -UN-31AUG05

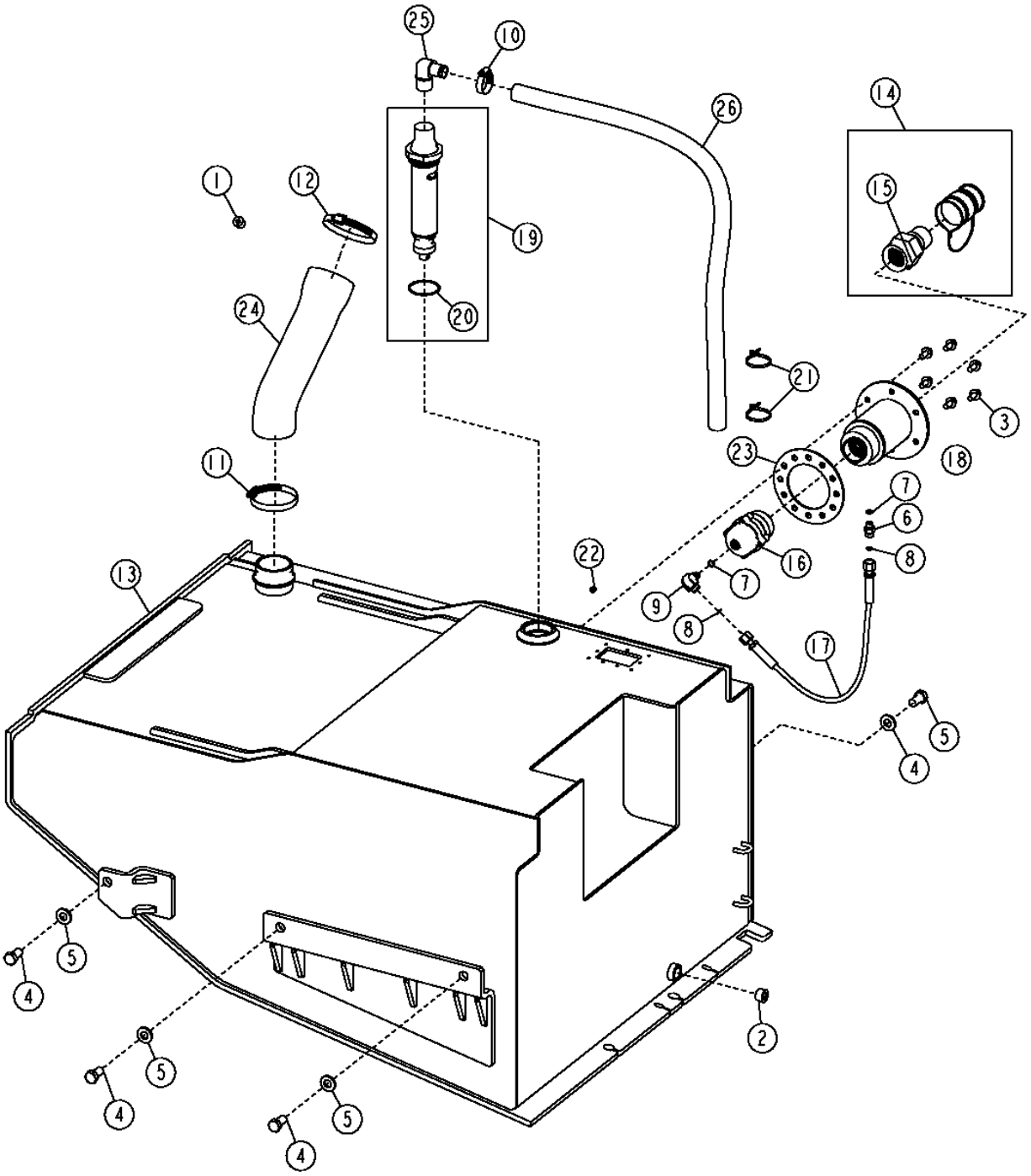

THIS PARTS LISTING IS CONTINUED

FAST FILL FUEL TANK AND COMPONENTS

KEY	PART NO.	PART NAME	QTY	SERIAL NO.	REMARKS
1	15H561	PIPE PLUG	1		
2	15H690	PIPE PLUG	1		
3	19M7784	SCREW	6		
4	19M8029	CAP SCREW	6		
5	24M7241	WASHER	6		
6	38H1170	ADAPTER	1		
7	R26286	O-RING	2		
8	T77613	O-RING	2		
9	38H1430	ELBOW FITTING	1		
10	AR21839	CLAMP	1		
11	AR21841	CLAMP	1		
12	AR21842	CLAMP	1		
13	AT306706	TANK	1		
14	AT311554	VALVE	1		
15	AT311176	CAP	1		
16	AT316520	VALVE	1		
17	AT318483	HOSE	1		
18	AT320169	RECEIVER	1		
19	AT320215	VALVE	1		
20	R43750	O-RING	1		
21	R44302	TIE BAND	2		
22	RE71255	PIPE PLUG	1		
23	T212430	GASKET	1		
24	T214122	HOSE	1		
25	T214877	HOSE FITTING	1		
26	.....	HOSE	1		(FURNISH T214147) (CUT TO LENGTH)

SECONDARY STEERING

TP62779 -UN-23MAR00

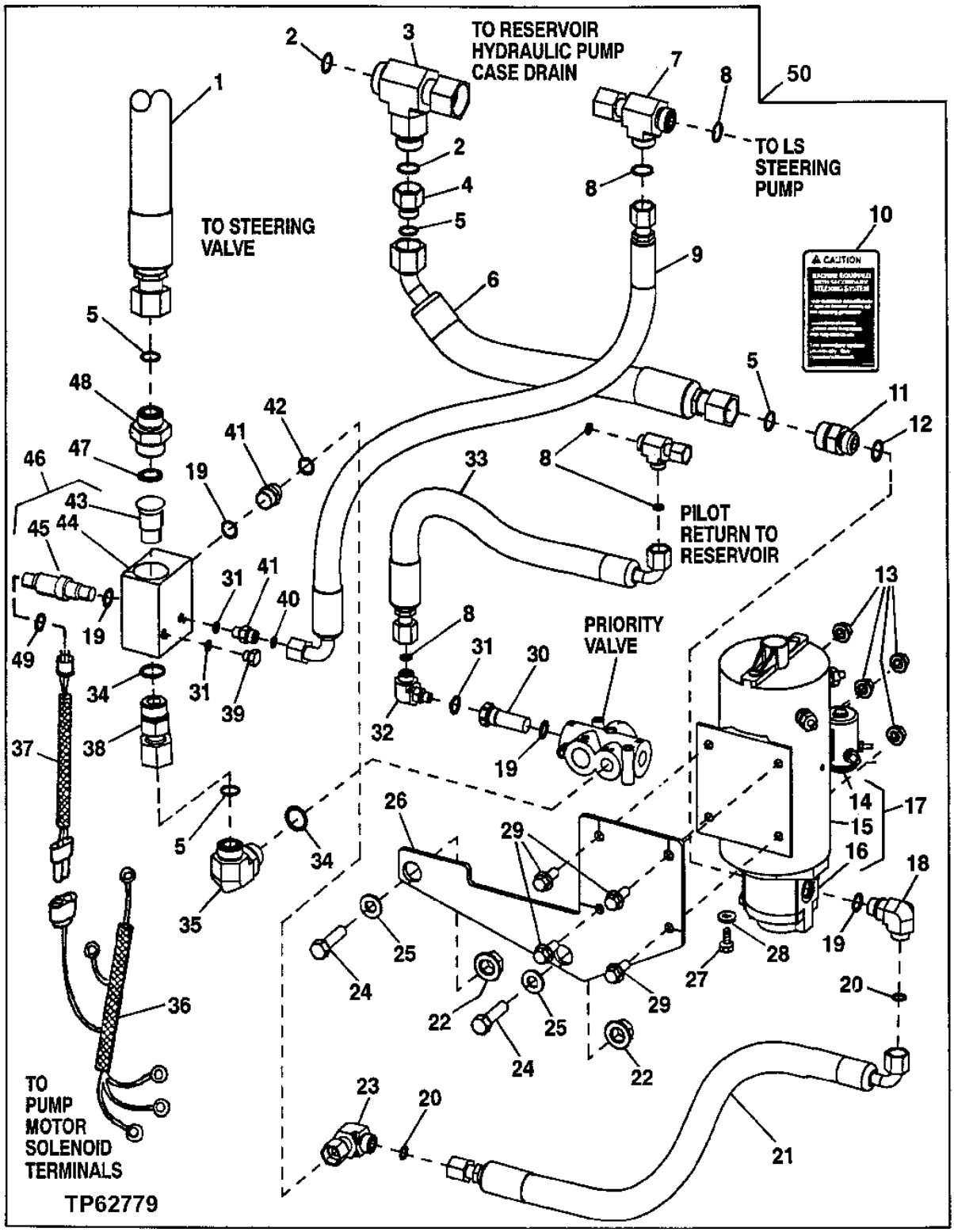

SECONDARY STEERING

KEY	PART NO.	PART NAME	QTY	SERIAL NO.	REMARKS
1	AT162859	HYDRAULIC HOSE - FABRICATE	1		
2	T76938	O-RING	2		
3	38H1002	TEE FITTING	1		
4	38H1483	REDUCER	1		
5	T77858	O-RING	4		
6	AT175133	HYDRAULIC HOSE - FABRICATE	1		1-3/16" X 572 MM (22-1/2") X 1-3/16"
7	38H1030	TEE FITTING	2		
8	T77613	O-RING	5		
9	AT81931	HYDRAULIC HOSE - FABRICATE	1		11/16" X 515 MM (20-1/4") X 11/16"
10	T146443	SAFETY SIGN	1		
11	38H1193	ADAPTER	1		
12	R26906	O-RING	1		
13	14M7296	FLANGE NUT	4		M10
14	AT210093	SOLENOID	1		
15	.....	MOTOR	1		(AT210094 NO LONGER AVAILABLE)
16	AT210092	PUMP	1		
17	AT209537	PUMP	1		
18	38H1005	ELBOW FITTING	1		
19	R26375	O-RING	4		
20	T77857	O-RING	2		
21	AT133599	HYDRAULIC HOSE - FABRICATE	1		13/16" X 1 829 MM (72") X 13/16"
22	14M7300	FLANGE NUT	2		M20
23	38H1095	ELBOW FITTING	1		
24	19M8840	CAP SCREW	2		M20 X 85
25	24M7242	WASHER	2		21.400 X 42 X 5 MM
26	T170854	BRACKET	1		
27	19H1900	CAP SCREW	2		5/16" X 3/4"
28	24M7095	WASHER	2		8.400 X 15 X 1.600 MM
29	19M7785	SCREW	4		M10 X 25
30	AT103925	PRESSURE RELIEF VALVE	1		
31	R28782	O-RING	3		
32	38H1435	ELBOW FITTING	1		
33	AT102553	HYDRAULIC HOSE - FABRICATE	1		
34	U12547	O-RING	2		
35	38H1007	ELBOW FITTING	1		
36	AT103311	WIRING HARNESS	1		
	AT222438	WIRING HARNESS	1		(HARSH ENVIRONMENT)
37	AT210056	WIRING HARNESS	1		
	AT222440	WIRING HARNESS	1		(HARSH ENVIRONMENT)
38	38H1070	FITTING	1		
39	AT223648	FITTING	1		(ASSEMBLY INCLUDES: R28782 O-RING)
40	T77814	O-RING	1		
41	38H1159	ADAPTER	1		
42	T77932	O-RING	1		
43	AT116373	CHECK VALVE	1		
44	T173324	JUNCTION BLOCK	1		
45	AT210399	SWITCH	1		
46	AT210207	SWITCH	1		
47	R29936	O-RING	1		
48	38H1194	ADAPTER	1		
49	R26448	O-RING	1		
50	**AT202997**	**KIT**	**1**		**(WHOLEGOODS) (SECONDARY STEERING KIT)**

STEERING CYLINDER

T210658 -UN-04MAY05

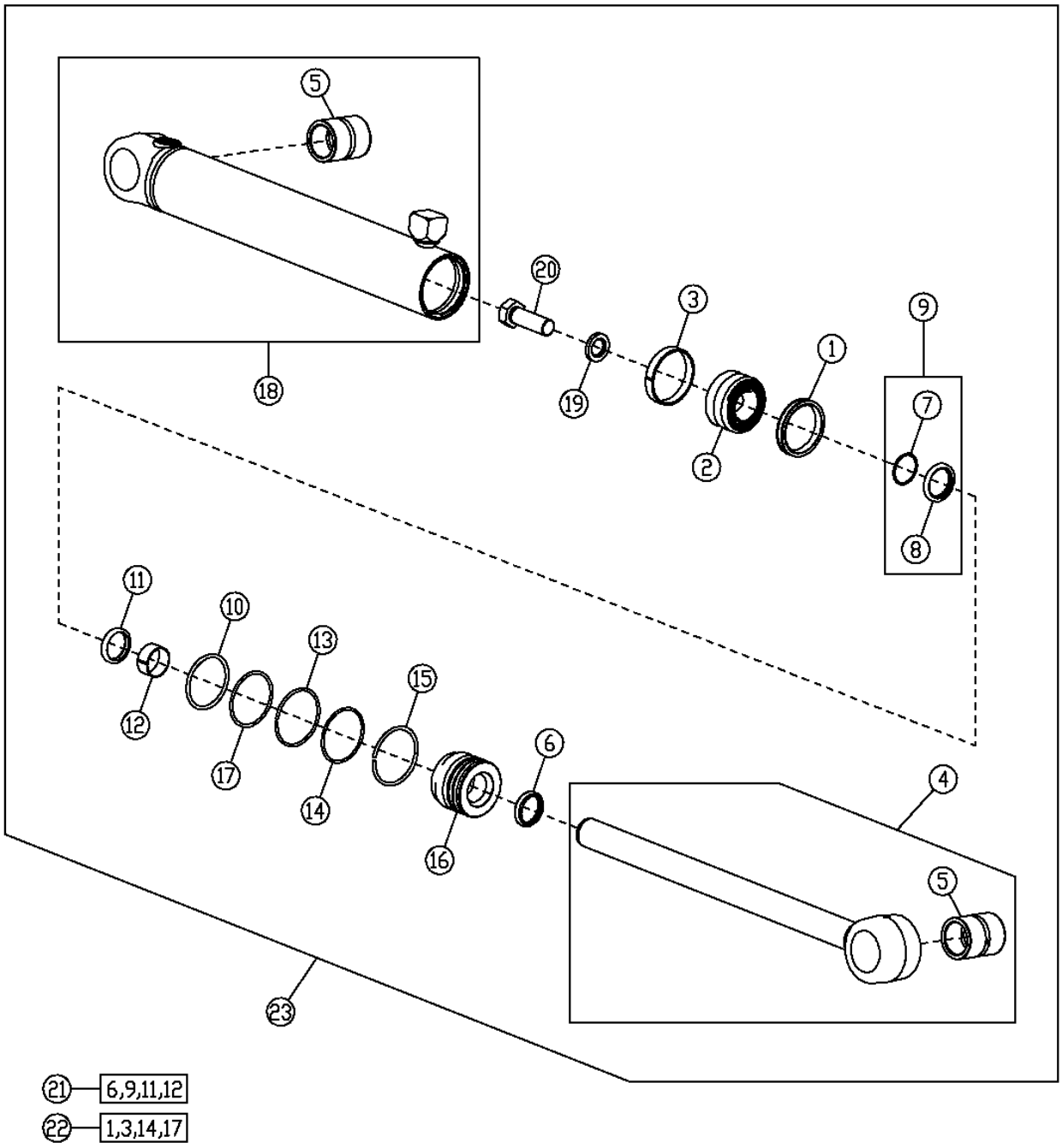

T210658

STEERING CYLINDER

KEY	PART NO.	PART NAME	QTY	SERIAL NO.	REMARKS
1	RE20344	SEAL	1		
2	R81771	PISTON	1		
3	R81776	WEAR RING	1		
4	AH151612	HYDRAULIC CYLINDER ROD	1		
5	H151594	BUSHING	1		
6	AH146556	SEAL	1		
7	.....	SEAL	1		(SUB AH146560)
8	.....	SEAL	1		(SUB AH146560)
9	AH146560	SEAL	1		
10	F1430R	O-RING	1		
11	H152202	SEAL	1		
12	H157898	WEAR RING	1		
13	H180103	SNAP RING	1		
14	H181114	O-RING	1		
15	H206859	SNAP RING	1		
16	H157642	HYDR. CYLINDER ROD GUIDE	1	-589889	
	H208999	HYDR. CYLINDER ROD GUIDE	1	589890-	
17	R79101	BACK-UP RING	1		
18	AH151611	HYDRAULIC CYLINDER BARREL	1	-589889	
	AH211045	HYDRAULIC CYLINDER BARREL	1	589890-	
19	H145176	WASHER	1		
20	19H3632	CAP SCREW	1		1" X 3"
21	AH149813	HYDRAULIC CYLINDER KIT	1		(ROD SEAL KIT)
22	AH212096	HYDRAULIC CYLINDER KIT	1		(BORE SEAL KIT)
23	.....	HYDRAULIC CYLINDER	1	-589889	(SUB AH211044) (AH148443 NO LONGER AVAILABLE)
	AH211044	HYDRAULIC CYLINDER	1	589890-	

STEERING CYLINDER HYDRAULIC HOSES

T146688 -UN-17OCT01

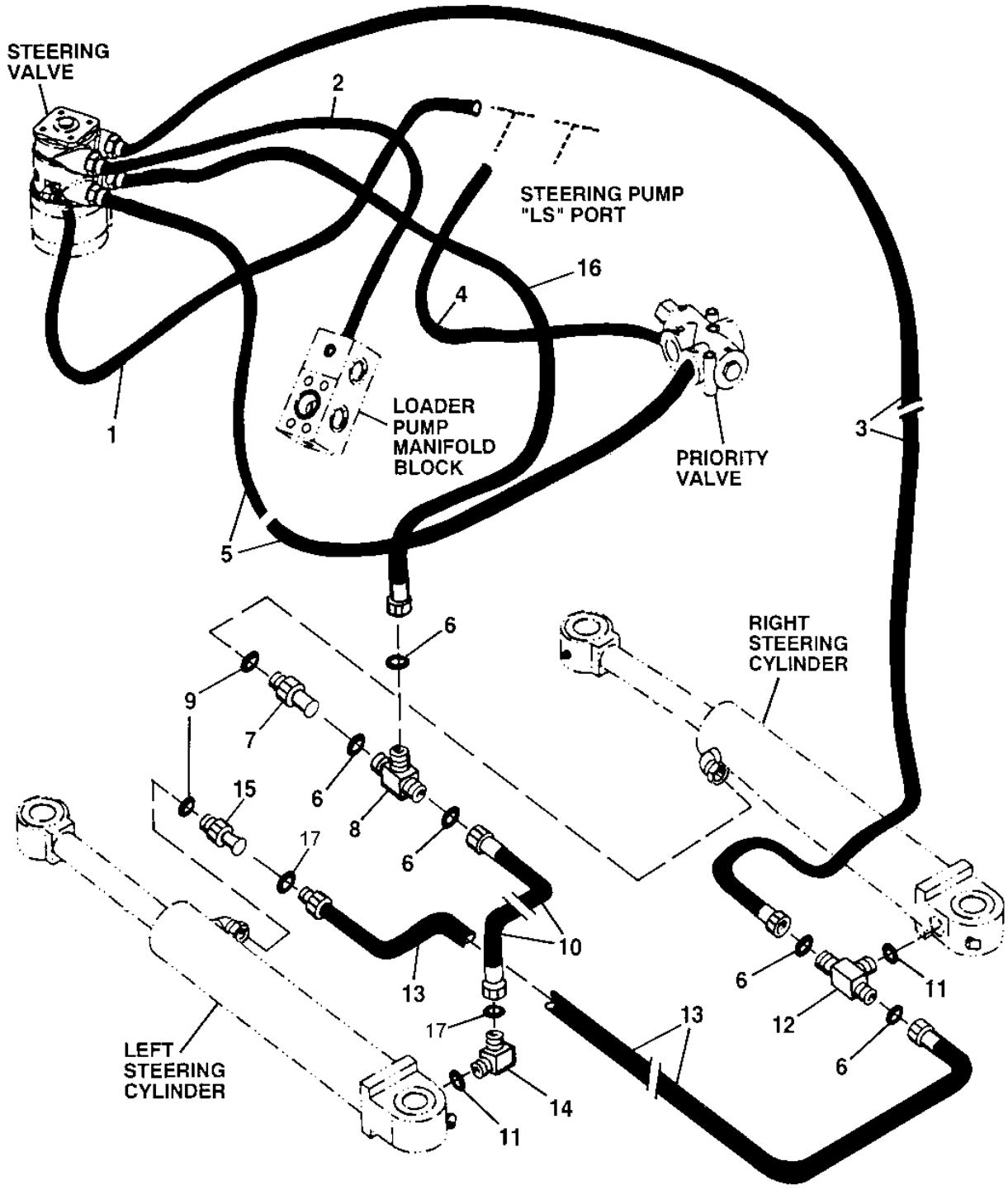

T146688

STEERING CYLINDER HYDRAULIC HOSES

KEY	PART NO.	PART NAME	QTY	SERIAL NO.	REMARKS
1	AT203179	HYDRAULIC HOSE - FABRICATE	1		
2	AT203178	HYDRAULIC HOSE - FABRICATE	1		
3	AT203181	HYDRAULIC HOSE - FABRICATE	1		
4	AT81931	HYDRAULIC HOSE - FABRICATE	1		
5	AT203180	HYDRAULIC HOSE - FABRICATE	1		
6	T77932	O-RING	7		
7	38H1329	ADAPTER	1		
8	38H1032	TEE FITTING	1		
9	U12547	O-RING	2		
10	AT223200	HYDRAULIC HOSE - FABRICATE	1		
11	R26906	O-RING	2		
12	38H1018	TEE FITTING	1		
13	AT223199	HYDRAULIC HOSE - FABRICATE	1		
14	38H1012	ELBOW FITTING	1		
15	38H1329	ADAPTER	1		
16	AT203182	HYDRAULIC HOSE - FABRICATE	1		
17	T77932	O-RING	2		

STEERING WHEEL, COLUMN AND LINKAGE (SERIAL NO. -590067)

TP68401 -UN-10SEP99

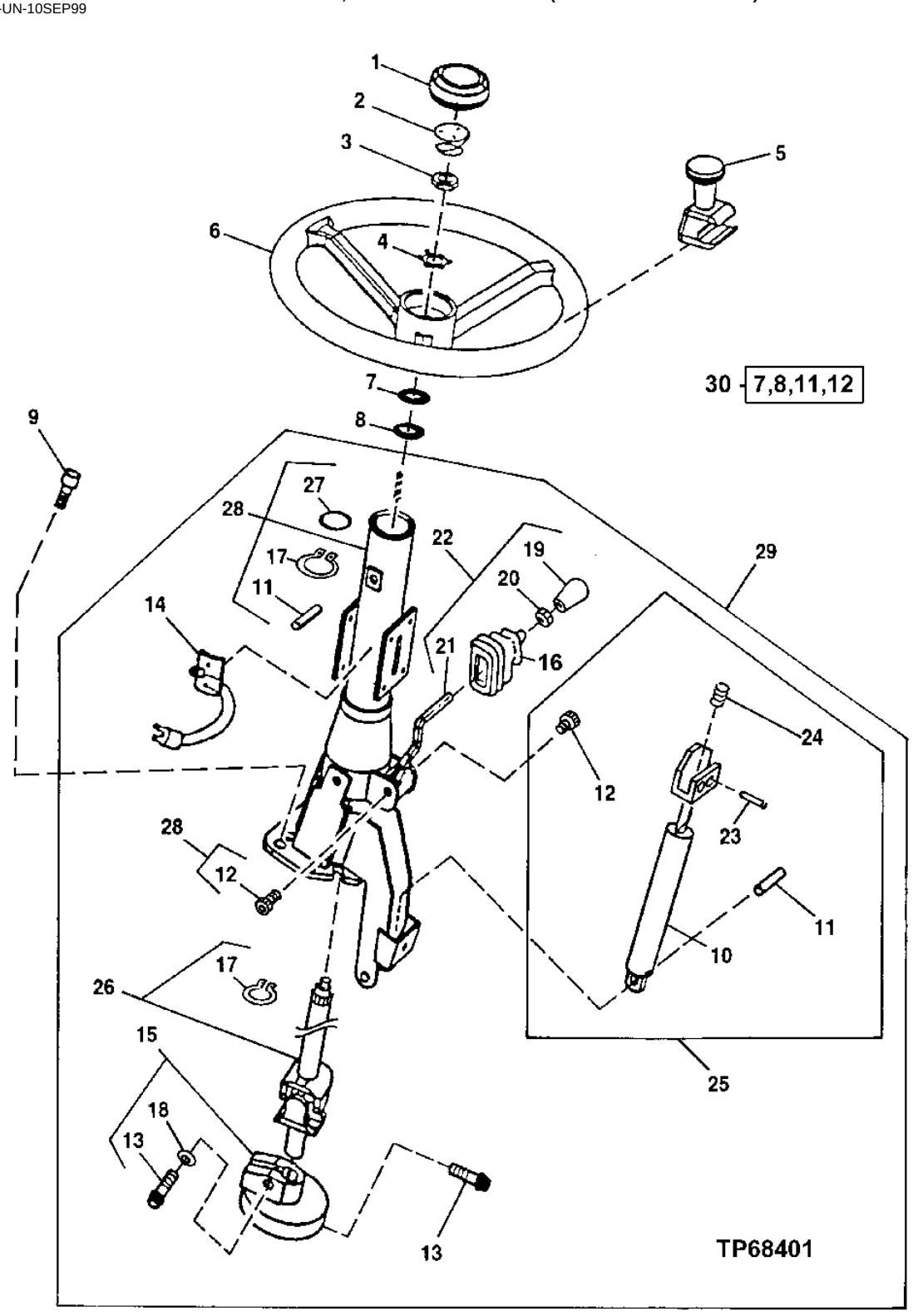

STEERING WHEEL, COLUMN AND LINKAGE (SERIAL NO. -590067)

KEY	PART NO.	PART NAME	QTY	SERIAL NO.	REMARKS
1	T154131	COVER	1		
2	AT222153	SWITCH	1		(HORN)
3	T13630	NUT	1		
4	T17148	LOCK WASHER	2		
5	AT169849	KNOB	1		
6	AT139694	STEERING WHEEL	1		
7	.....	SNAP RING	1		(SUB RE56109)
8	.....	SEAL	1		(SUB RE56109)
9	19M8328	SCREW	4		
10	.....	SPRING	1		(SUB AT160662)
11	.....	DOWEL PIN	1		(SUB RE56109)
12	.....	SCREW	2		(SUB RE56109)
13	T39049	SCREW	2		
14	AT162719	BRUSH SET	1		
15	AT220226	ISOLATOR	1		
16	AT191487	KIT	4		(SUB FOR T145701)
17	.....	SNAP RING	1		(SUB AT220225 OR AT220227)
18	.....	LOCK WASHER	1		(SUB AT220226)
19	AT220223	KIT	1		KNOB
20	.....	NUT	1		(SUB AT220224)
21	.....	LEVER	1		(SUB AT220224)
22	AT220224	KIT	1		TILT LEVER
23	.....	PIN	2		(SUB AT160662)
24	.....	SPRING	1		(SUB AT160662)
25	AT160662	KIT	1		GAS SPRING
26	.....	KIT	1		(SUB AT300524) SHAFT (AT220225 NO LONGER AVAILABLE)
27	.....	O-RING	1		(SUB AT220227)
28	.....	KIT	1		(SUB AT300524) (AT220227 NO LONGER AVAILABLE)
29	.....	STEERING COLUMN	1		(SUB AT300524) (AT202610 NO LONGER AVAILABLE)
30	RE56109	KIT	1		STEERING COLUMN REPAIR

STEERING WHEEL, COLUMN AND LINKAGE (SERIAL NO. 590068-)

T195299 -UN-21OCT03

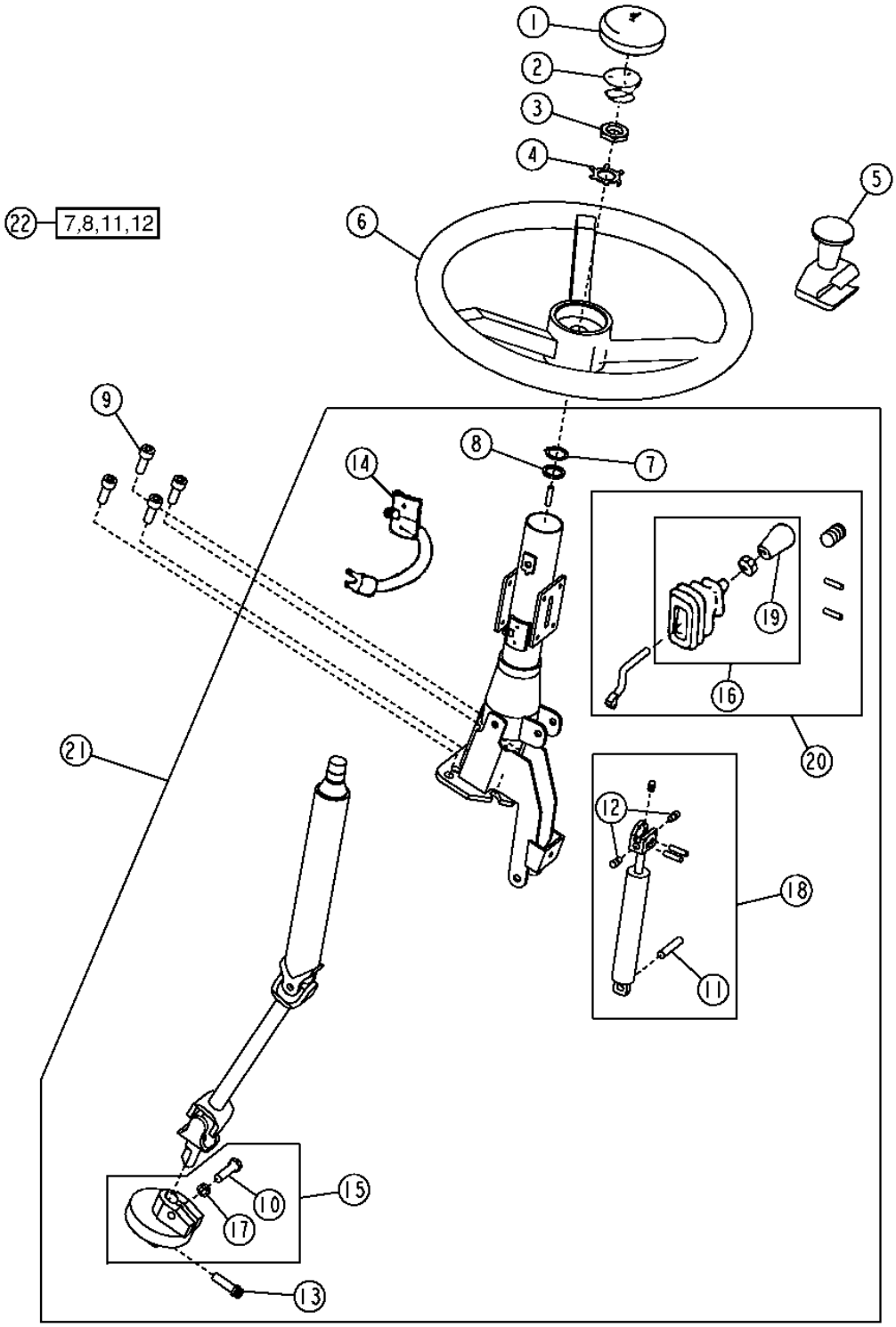

T195299

STEERING WHEEL, COLUMN AND LINKAGE (SERIAL NO. 590068-)

KEY	PART NO.	PART NAME	QTY	SERIAL NO.	REMARKS
1	T154131	COVER	1		
2	AT222153	SWITCH	1		
3	T13630	NUT	1		
4	T17148	LOCK WASHER	2		
5	AT169849	KNOB	1		
6	AT139694	STEERING WHEEL	1		
7	.....	SNAP RING	1		
8	.....	SEALING WASHER	1		
9	19M8328	SCREW	4		M10 X 25
10	19H2544	CAP SCREW	1		
11	.....	DOWEL PIN	1		
12	.....	SCREW	2		
13	T39049	SCREW	1		
14	AT162719	BRUSH SET	1		
15	AT220226	KIT	1		ISOLATOR KIT
16	AT191487	KIT	1		KNOB KIT
17	.....	WASHER	1		
18	AT160662	KIT	1		GAS CYLINDER ASSEMBLY
19	AT220223	KIT	1		KNOB KIT
20	AT220224	KIT	1		TILT LEVER KIT
21	AT300524	STEERING COLUMN	1		
22	RE56109	KIT	1		STEERING COLUMN KIT

LOWER STEERING COLUMN

TP47601 -UN-05SEP96

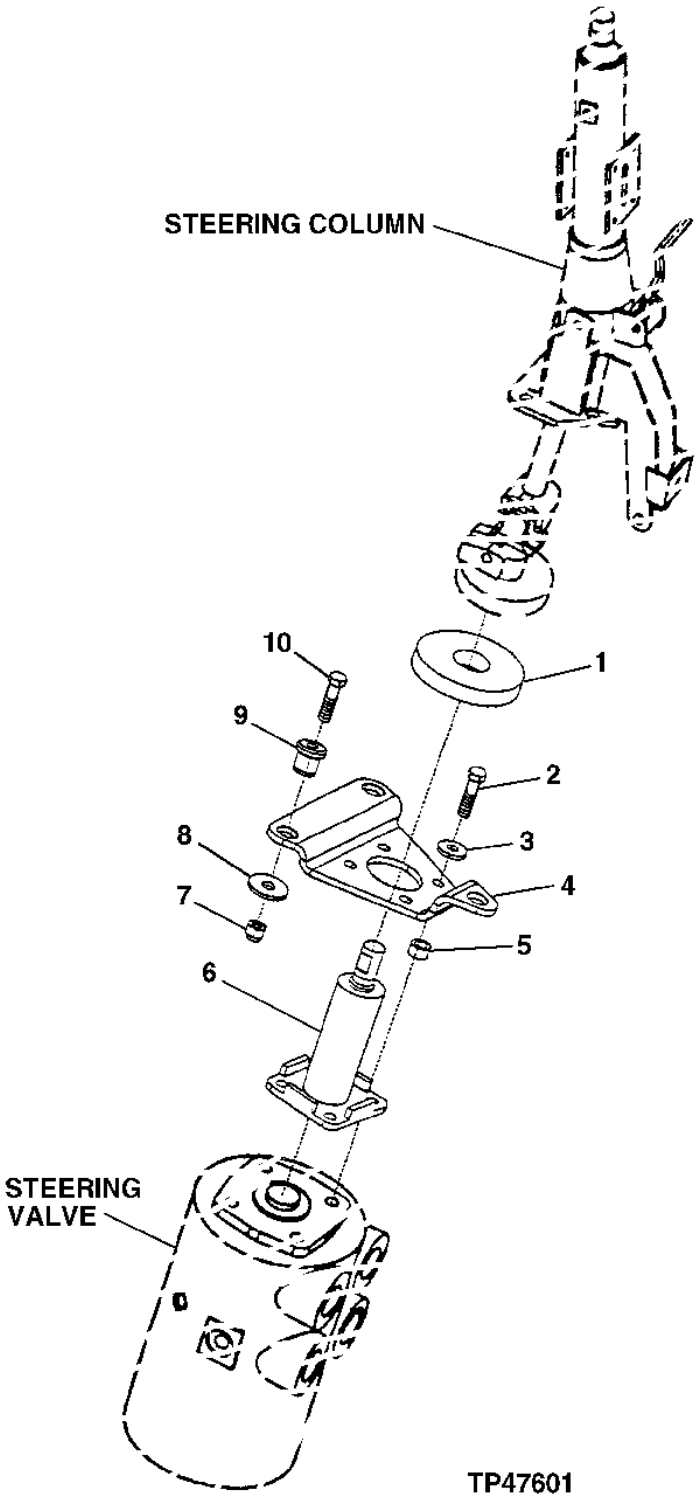

LOWER STEERING COLUMN

KEY	PART NO.	PART NAME	QTY	SERIAL NO.	REMARKS
1	T131980	ISOLATOR	1		
2	19M7550	CAP SCREW	4		
3	24H1308	WASHER	4		13/32" X 1" X 0.134"
4	T168276	BRACKET	1		TO CAB FLOOR
5	28H860	WASHER	4		0.423" X 0.675" X 3/8"
6	AT156896	STEERING COLUMN	1		LOWER
7	T11234	LOCK NUT	3		9.525 MM
8	24M7296	WASHER	3		10.500 X 30 X 2.500 MM
9	AT116162	ISOLATOR	3		
10	19H2633	CAP SCREW	3		

STEERING COLUMN COVERS

TP60362 -UN-27APR98

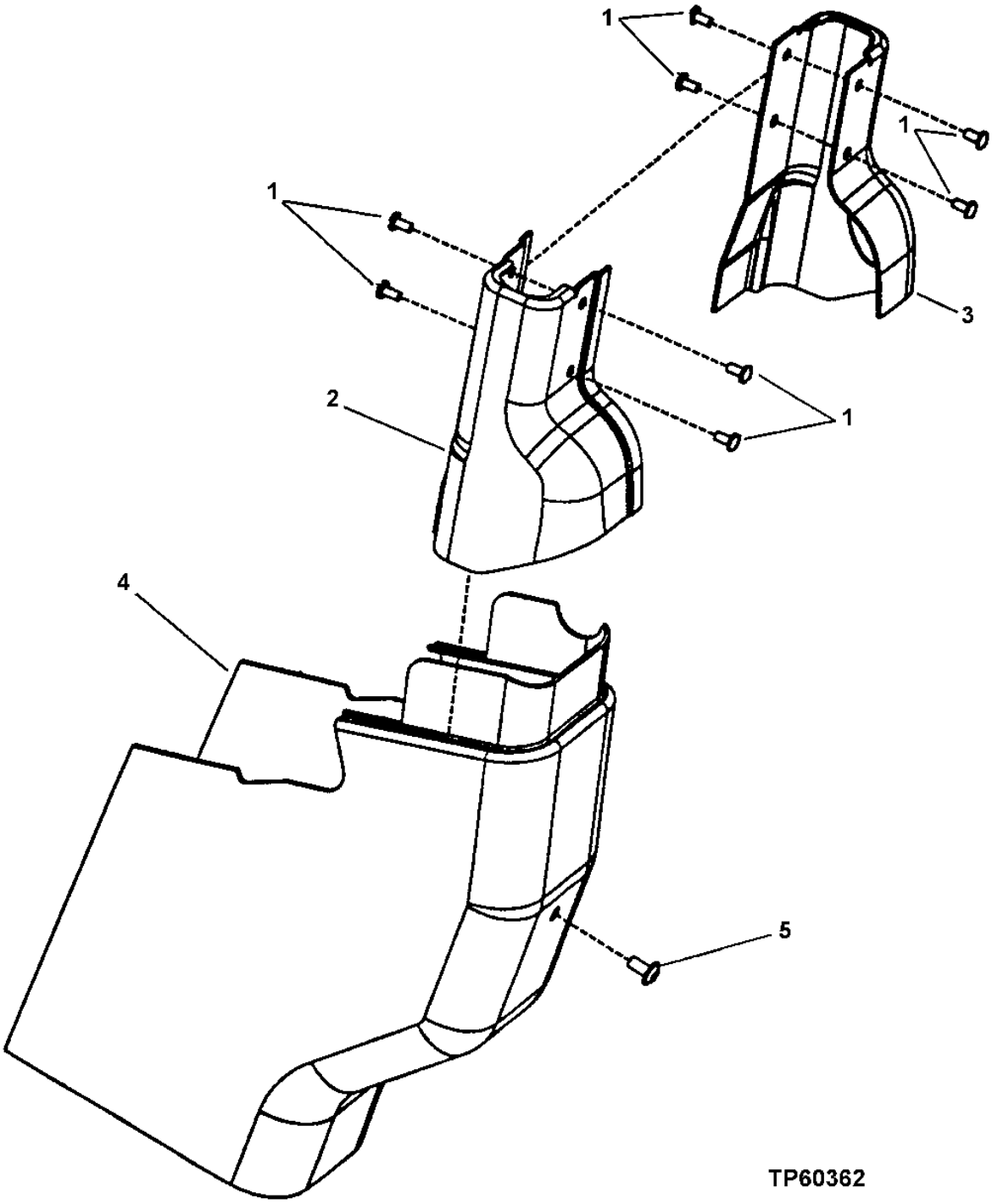

STEERING COLUMN COVERS

KEY	PART NO.	PART NAME	QTY	SERIAL NO.	REMARKS
1	21M7305	SCREW	8		M6 X 12
2	T173100	COVER	1		
	T211353	COVER	1		(FOR USE WITH JOYSTICK MOUNTED FNR)
3	T173099	COVER	1		
4	T156784	COVER	1		
5	19M8675	SCREW	1		M8 X 16

STEERING VALVE

TP62825 -UN-20JUN00

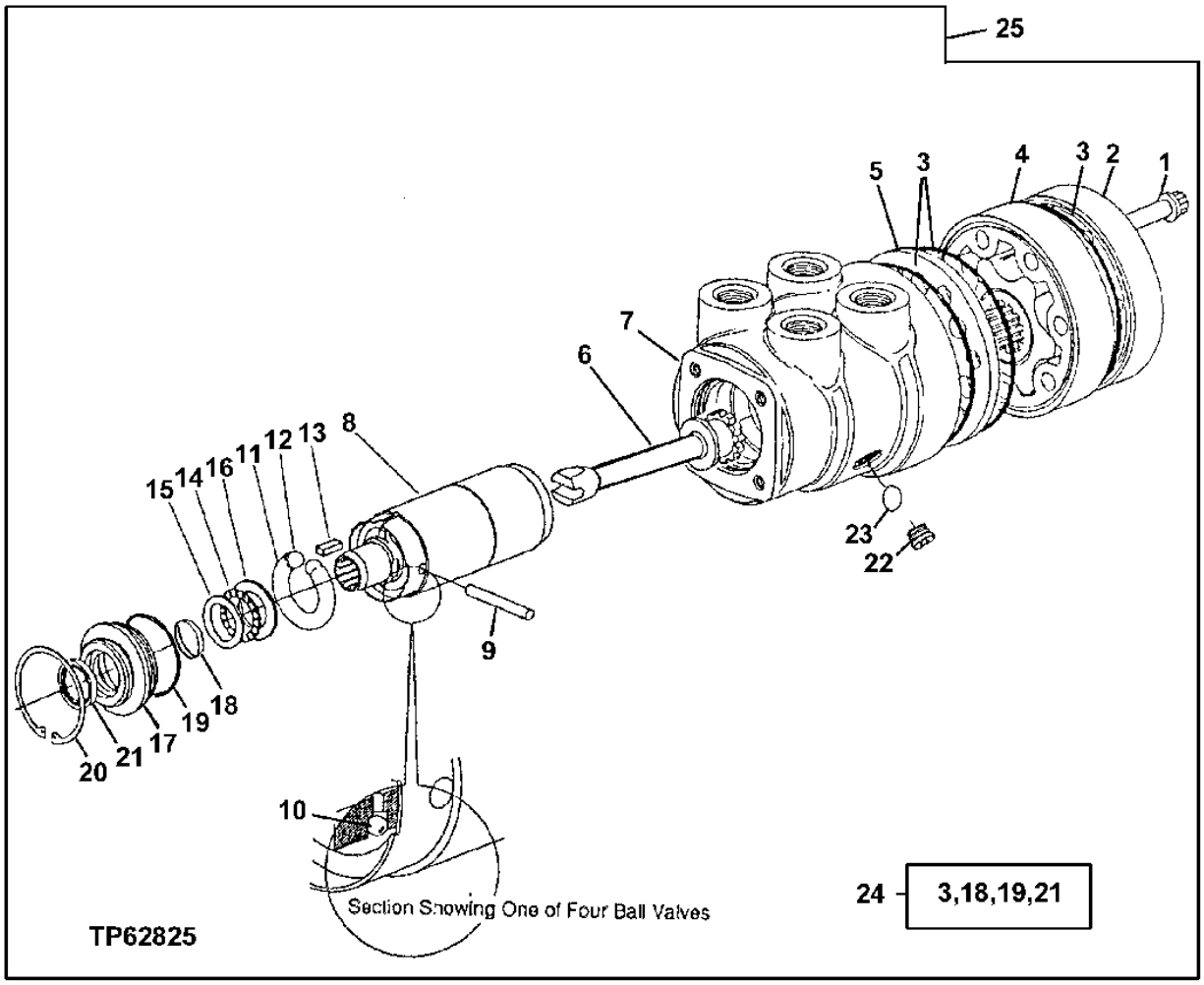

STEERING VALVE

KEY	PART NO.	PART NAME	QTY	SERIAL NO.	REMARKS
1	T101540	SCREW	7		
2	T102465	CAP	1		
3	.....	O-RING	3		(K) (SUB AT223440)
4	AT82167	ROTATOR	1		
5	T101551	WEAR PLATE	1		
6	T81018	DRIVE SHAFT	1		
7	.....	HOUSING	1		(SUB AT309163)
8	.....	SPOOL	1		(SUB AT309163)
9	T145413	PIN	1		
10	T146624	ASSEMBLY LINE PARTS	4		
11	T146625	SPRING	1		
12	R26552	BALL	2		
13	T146626	KEY	1		
14	JD8856	NEEDLE BEARING	1		
15	T41836	THRUST BEARING RACE	1		
16	T146620	BEARING RACE	1		
17	T146622	RETAINER	1		
18	T180289	SEAL	1		(K)
19	U42111	O-RING	1		(K)
20	R28557	SNAP RING	1		
21	C15104	SEAL	1		(K) (DUST)
22	X05HP-4	FITTING PLUG	1		
23	R28782	O-RING	1		
24	AT223440	SEAL KIT	1		INCLUDES ALL (K) PARTS
25	AT309163	FLOW CONTROL HYD. VALVE	1		(SUB FOR AT223391)

BRAKES

RXP021411 -UN-19DEC95

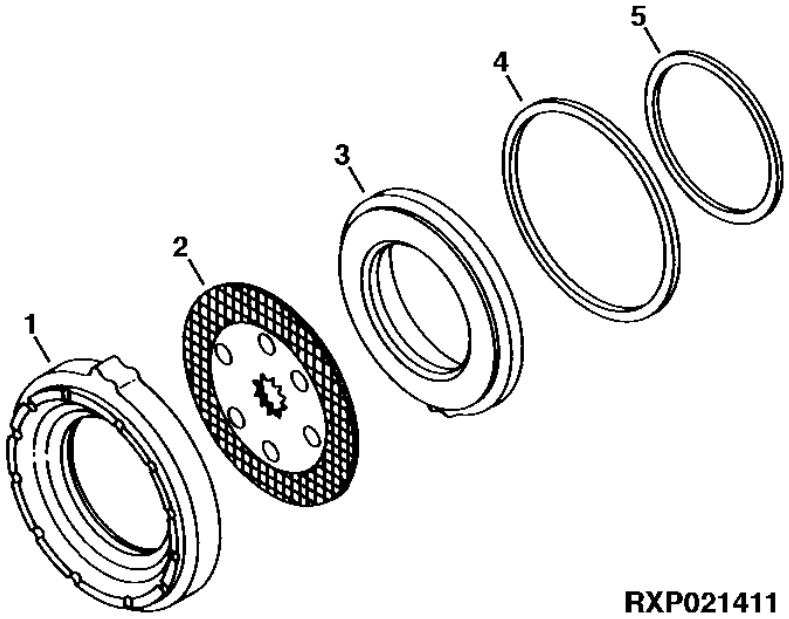

KEY	PART NO.	PART NAME	QTY	AXLE SERIAL NO.	REMARKS
1	R124067	PLATE	1		
2	RE62161	BRAKE DISK	1		USE WITH 5.143 FINAL DRIVE
3	R124815	PISTON	1		
4	R125667	RING	1		
5	R125666	RING	1		

MEMORANDA

BRAKE VALVE, PEDALS AND LINKAGE

T157290 -UN-03OCT02

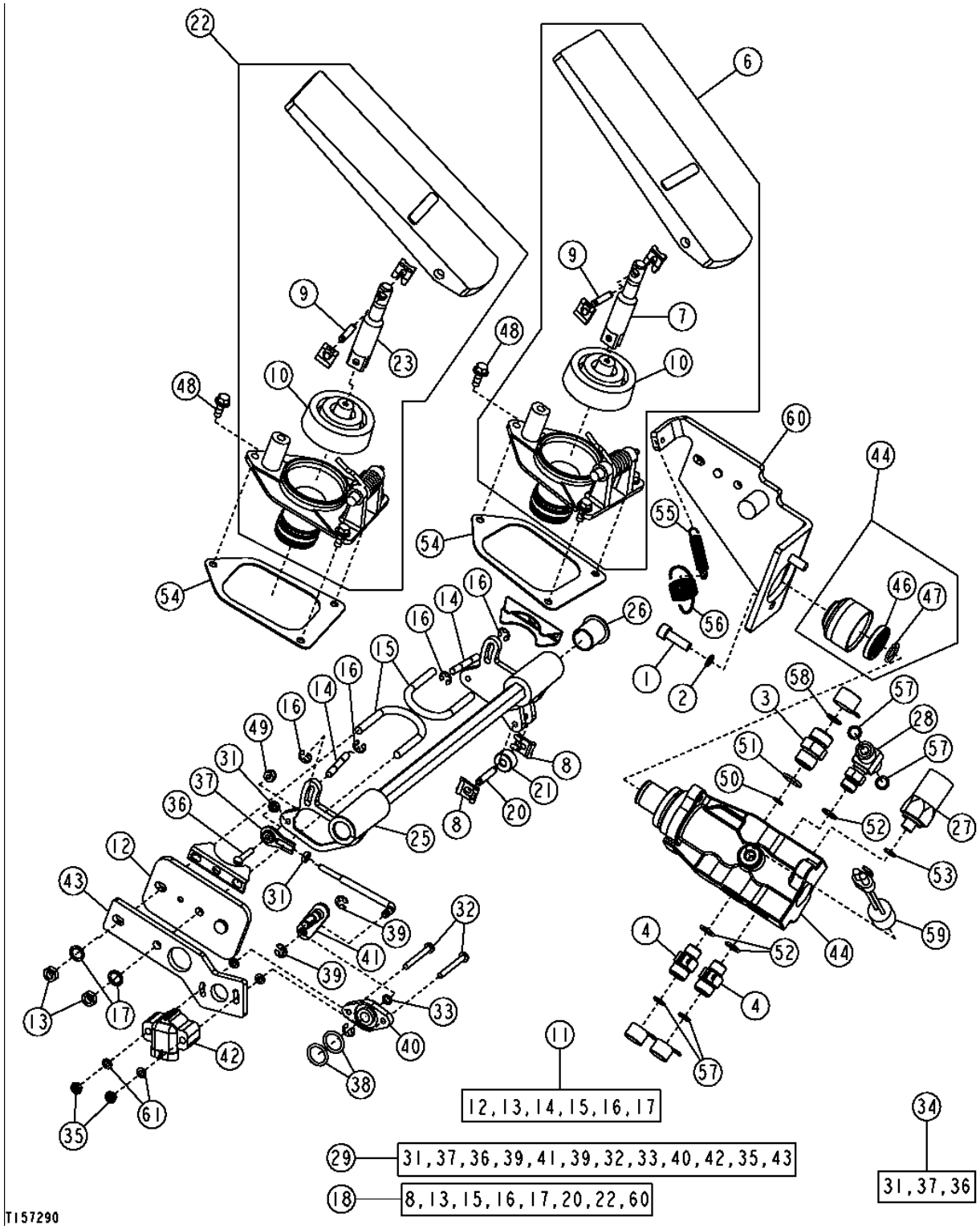

BRAKE VALVE, PEDALS AND LINKAGE

KEY	PART NO.	PART NAME	QTY	SERIAL NO.	REMARKS
1	19M7657	SCREW	2		
2	24M7313	WASHER	2		
3	38H1161	ADAPTER	1		
4	AT181313	CHECK VALVE	2		
5	AT202754	HYDRAULIC HOSE - FABRICATE	1		
6	AT203457	PEDAL	1		(RIGHT)
7	AT208088	PUSH ROD	1		
8	T157212	CLIP	6		
9	T157258	PIN	2		
10	T174634	BOOT	2		
11	AT208085	KIT	1		(LEFT PEDAL BRACKET)
12	AT314267	SUPPORT	1		(SUB FOR AT208167)
13	R53317	LOCK NUT	4		
14	T157211	PIN	2		
15	T157220	CLAMP	2		
16	T170180	SNAP RING	4		
17	T170181	LOCK WASHER	4		
18	AT208086	KIT	1		(RIGHT PEDAL BRACKET)
20	T157257	PIN	1		
21	T175236	ROLLER	1		
22	AT208087	PEDAL	1		(LEFT)
23	AT208163	PUSH ROD	1		
25	AT208089	ROCKER ARM	1		
26	T157223	BEARING	2		
27	AT206721	SWITCH	1		
	AT222371	SWITCH	1		(HARSH ENVIRONMENT)
28	AT207529	CHECK VALVE	1		
29	AT210291	CLUTCH KIT	1		(CLUTCH CUTOFF)
31	14H631	NUT	2		4.826 MM
32	21H1390	SCREW	2		
33	A4365R	O-RING	1		6.071 X 1.778 MM
34	AT210877	LINKAGE	1		
35	14H631	NUT	2		
36	21H985	SCREW	1		
37	AH108055	LINK END	1		
38	P48347	O-RING	2		
39	R72654	SNAP RING	2		
40	R86457	SUPPORT	1		
41	RE24468	SHAFT	1		
42	RE35704	SENSOR	1		
43	T172274	SUPPORT	1		
44	AT224696	FLOW CONTROL HYD. VALVE	1		
	AT207948	SEAL KIT	1		
46	AT207947	SEAL	1		
47	R26375	O-RING	1		
48	M113243	SCREW	6		
49	N203905	LOCK NUT	1		
50	R26287	O-RING	1		
51	R26375	O-RING	1		
52	R26448	O-RING	3		
53	R28782	O-RING	1		
54	T172927	GASKET	2		
55	T176108	SPRING	1		
56	T176111	SPRING	1		
57	T77613	O-RING	4		
58	T77857	O-RING	1		
59	AT223535	PRESSURE SWITCH	1		
	AT222372	SWITCH	1		(HARSH ENVIRONMENT)
60	AT314266	SUPPORT	1		(SUB FOR AT208166)
61	12H295	LOCK WASHER	4		0.190"

BRAKE VALVE HYDRAULIC HOSES

T195563 -UN-16OCT03

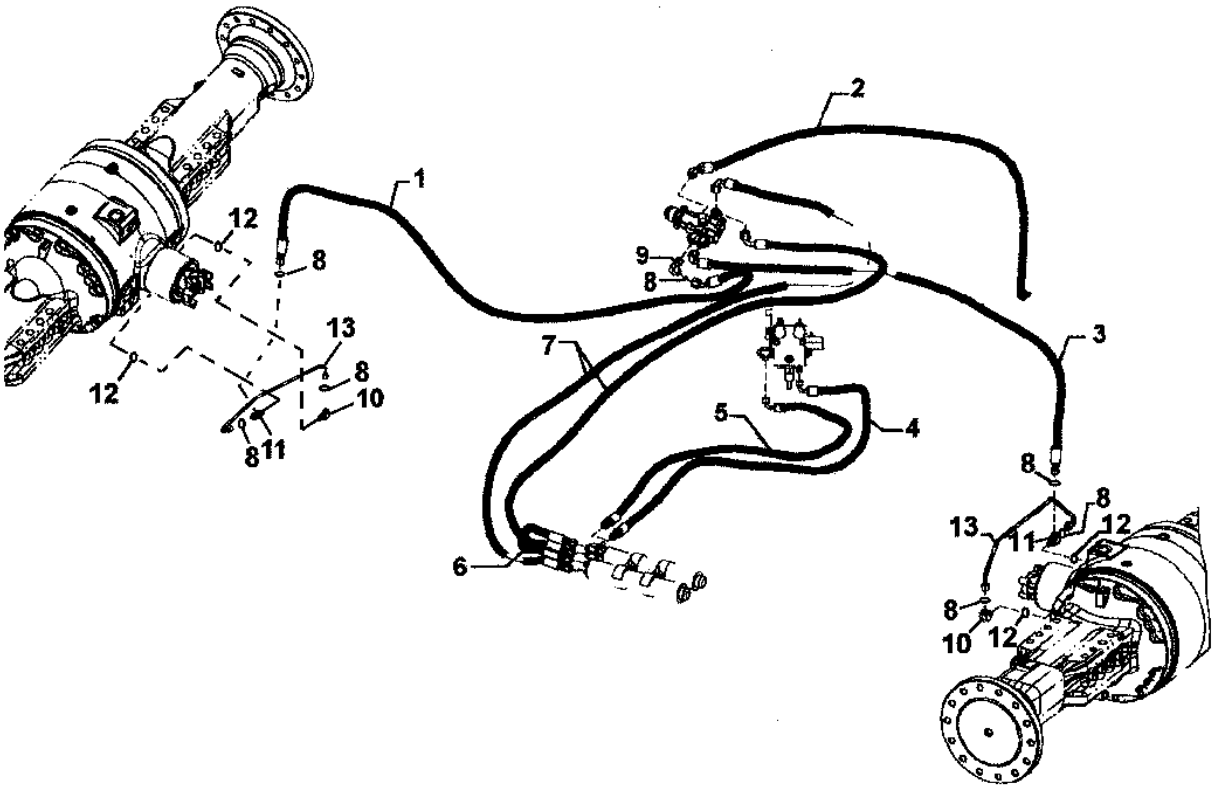

T195563

BRAKE VALVE HYDRAULIC HOSES

KEY	PART NO.	PART NAME	QTY	SERIAL NO.	REMARKS
1	AT203059	HYDRAULIC HOSE - FABRICATE	1		
2	AT202754	HYDRAULIC HOSE - FABRICATE	1		
3	AT79576	HYDRAULIC HOSE - FABRICATE	1		
4	AT222416	HYDRAULIC HOSE - FABRICATE	1	-590067	
5	AT203082	HYDRAULIC HOSE - FABRICATE	1	-590067	
	AT306046	HYDRAULIC HOSE - FABRICATE	1	590068-	
6	AT166148	HYDRAULIC HOSE - FABRICATE	1		
7	AT222414	HYDRAULIC HOSE - FABRICATE	2		
8	T77613	O-RING	7		
9	38H1094	ELBOW FITTING	1		
10	38H1004	ELBOW FITTING	2		
11	38H1023	TEE FITTING	2		
12	R26448	O-RING	4		
13	AT223698	OIL LINE	2		

BRAKE ACCUMULATOR

T195225 -UN-15OCT03

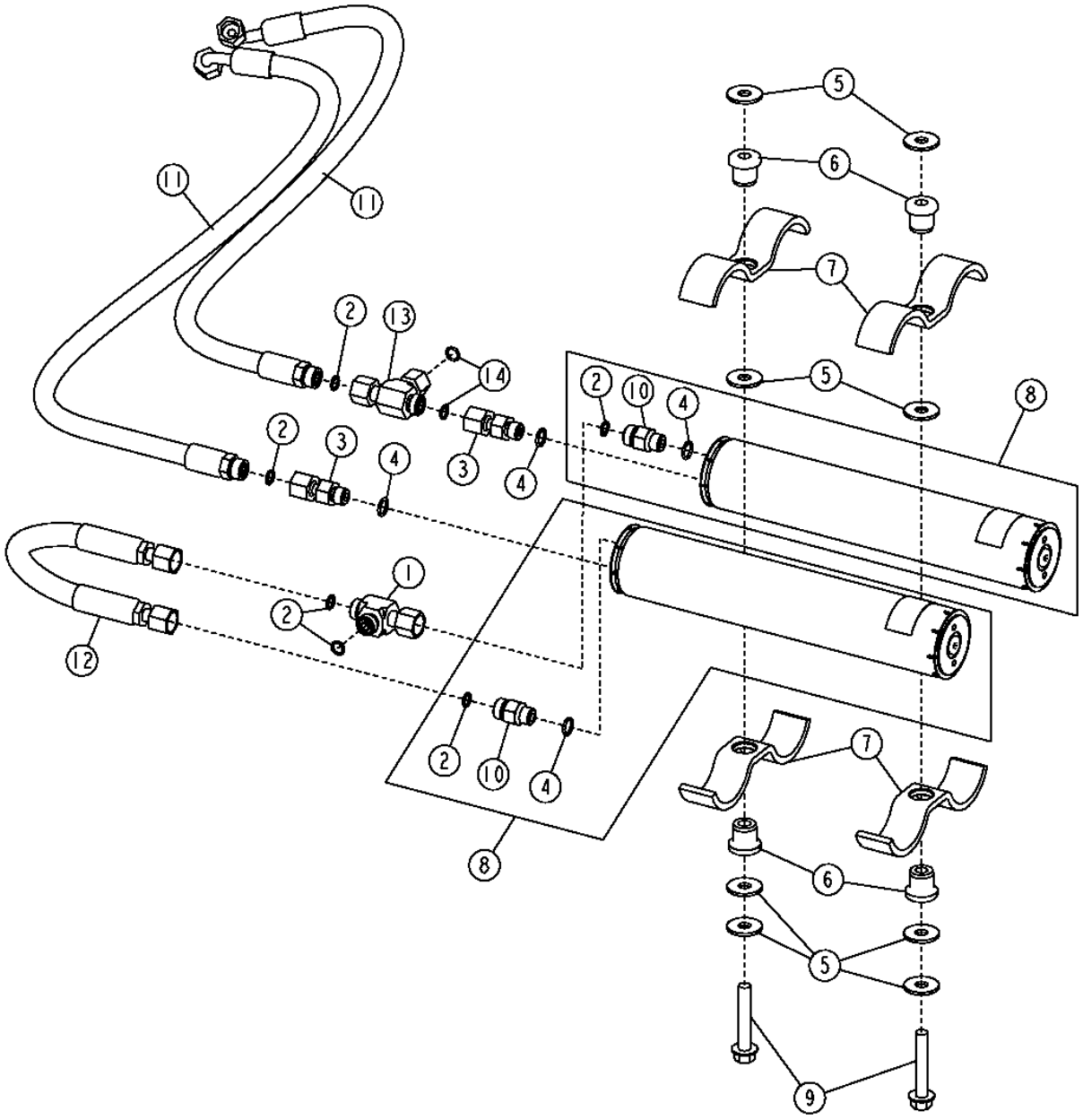

BRAKE ACCUMULATOR

KEY	PART NO.	PART NAME	QTY	SERIAL NO.	REMARKS
1	38H1030	TEE FITTING	1		
2	T77613	O-RING	6		
3	38H1067	ADAPTER	2		
4	R26448	O-RING	4		
5	24M7296	WASHER	8		10.500 X 30 X 2.500 MM
6	AT116162	ISOLATOR	4		
7	T168393	CLAMP	4		
8	AT224430	HYDRAULIC ACCUMULATOR	2		
9	19M7807	SCREW	2		M10 X 60
10	AT225573	CHECK VALVE	2		
11	AT222414	HYDRAULIC HOSE - FABRICATE	2		
12	AT223768	HYDRAULIC HOSE - FABRICATE	1		

DRIVELINE BEARING/PARKING BRAKE

T156434 -UN-26JUN02

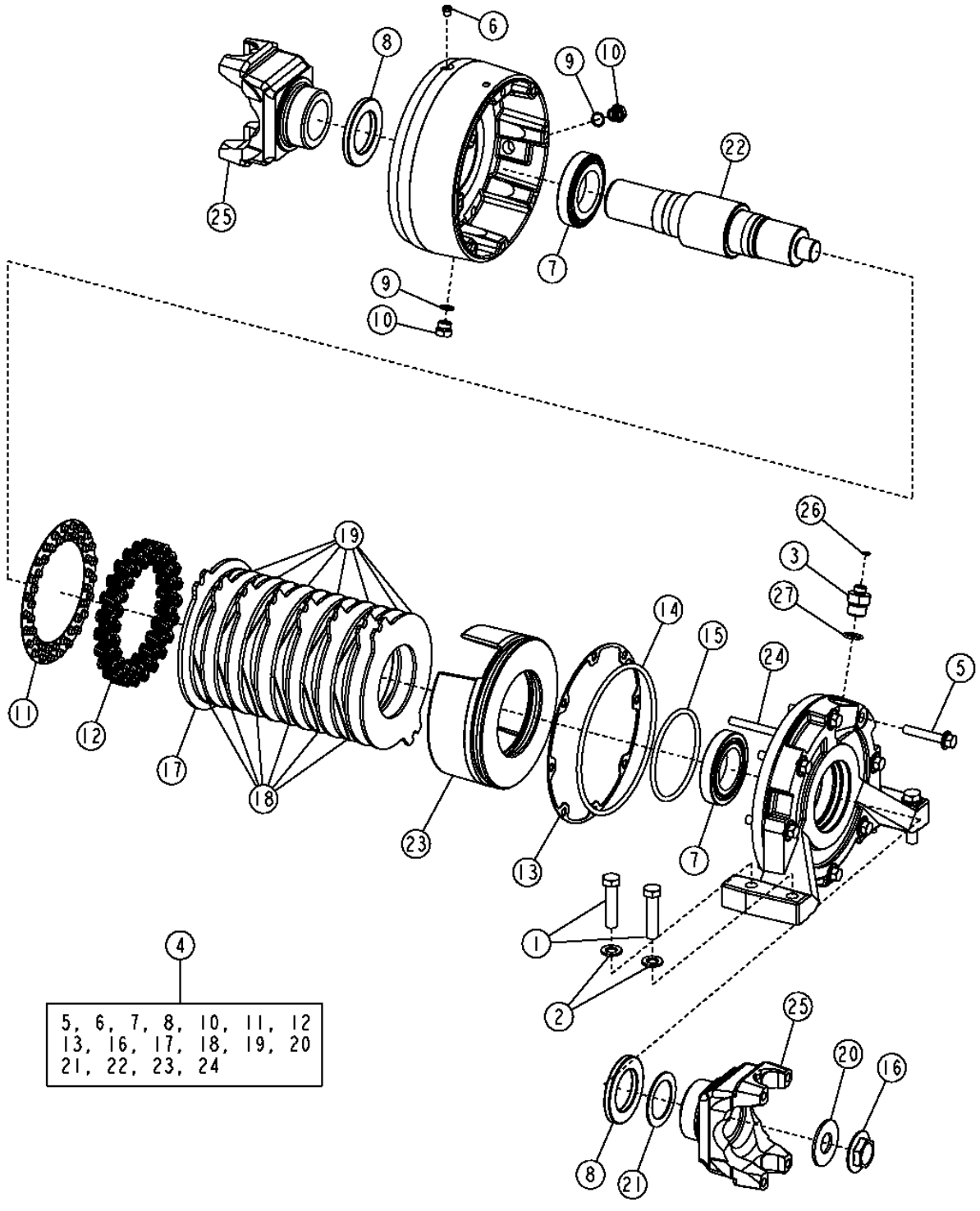

DRIVELINE BEARING/PARKING BRAKE

KEY	PART NO.	PART NAME	QTY	SERIAL NO.	REMARKS
1	19M7719	CAP SCREW	4		M16 X 70
2	24M7338	WASHER	4		17 X 30 X 3 MM
3	38H1338	ADAPTER	1		
4	AT224718	BRAKE	1		
5	19M7817	SCREW	8		
6	AT208411	PRESSURE RELIEF VALVE	1		
7	AT209495	BEARING	2		
8	AT225728	SEAL	2		
9	R26375	O-RING	2		
10	R39112	FITTING	2		
11	T167840	RETAINER	1		
12	T167841	COMPRESSION SPRING	46		
13	T167842	GASKET	1		
14	T167843	O-RING	1		
15	T167845	O-RING	1		
16	T167848	FLANGE NUT	1		
17	T167980	DISK WITH OUTER SPLINE	1		(PRIMARY)
18	T167981	DISK WITH INNER SPLINE	6		(ROTATING)
19	T167982	DISK WITH OUTER SPLINE	7		(STATIONARY)
20	T170582	WASHER	1		
21	T172221	WASHER	1		
22	T181697	SHAFT	1		
23	T181699	PISTON	1		
24	T181822	DOWEL PIN	2		
25	T172198	YOKE WITH SHAFT	1		
26	T77613	O-RING	1		9.246 X 1.778 MM
27	U12547	O-RING	1		

PARK BRAKE SOLENOID VALVE

T195176 -UN-15OCT03

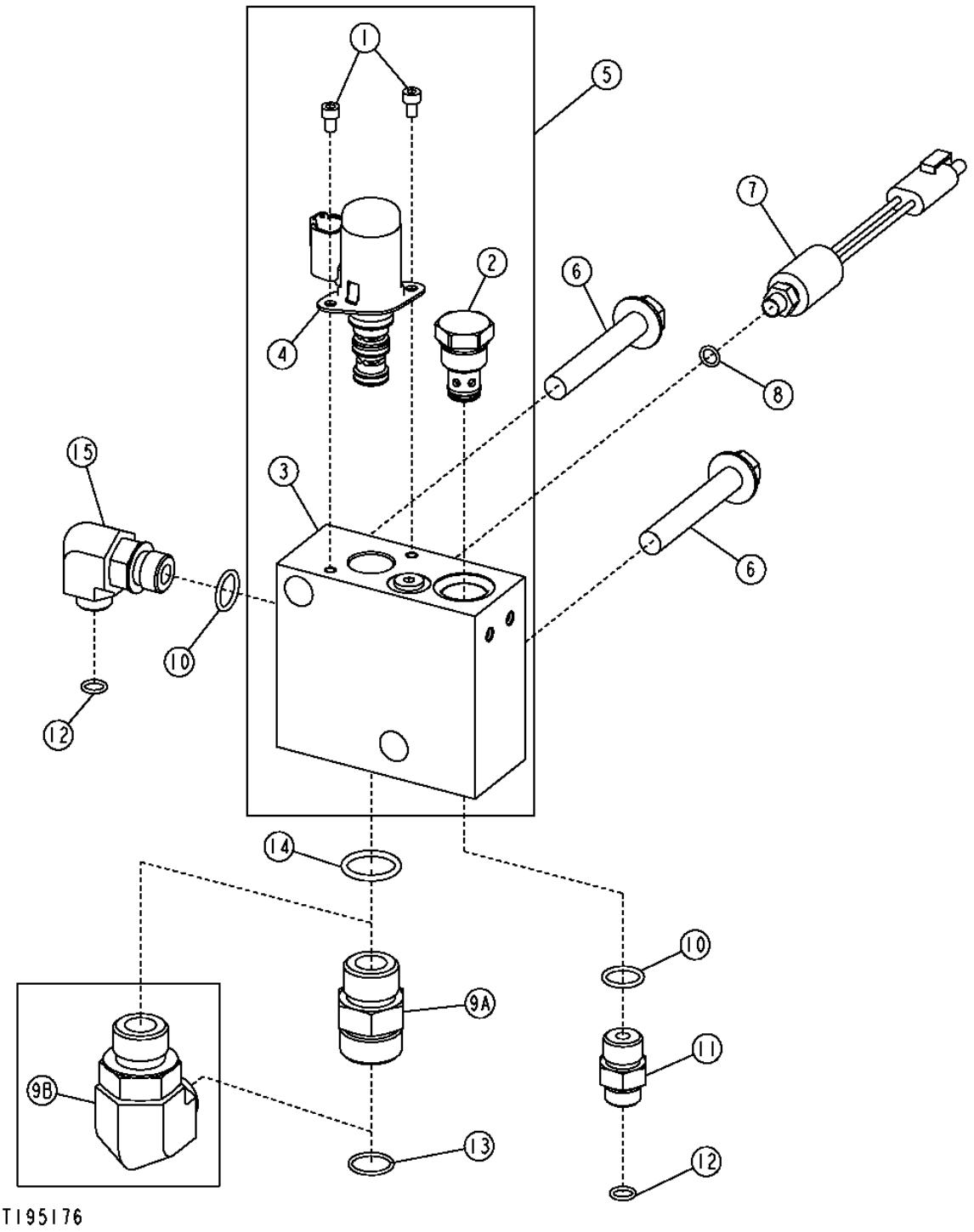

PARK BRAKE SOLENOID VALVE

KEY	PART NO.	PART NAME	QTY	SERIAL NO.	REMARKS
1	19M9150	SCREW	2		
2	AT224863	WASHER	1		
	AT224864	SEAL KIT	1		(NOT ILLUSTRATED)
3	.....	HOUSING	1		(SUB AT224497)
4	AT224576	SOLENOID VALVE	1		
	AT224873	SEAL KIT	1		(NOT ILLUSTRATED)
5	AT224497	FLOW CONTROL HYD. VALVE	1		
6	19M7818	SCREW	2		
7	AT223538	PRESSURE SWITCH	1		(STANDARD)
	AT222367	SWITCH	1		(HARSH ENVIRONMENT)
8	R26287	O-RING	1		
9A	38H1163	ADAPTER	1	-590067	
9B	38H1404	ELBOW FITTING	1	590068-	
10	R26375	O-RING	2		
11	38H1171	ADAPTER	1		
12	T77613	O-RING	2		
13	T77858	O-RING	1		
14	U12547	O-RING	1		
15	38H1010	ELBOW FITTING	1		

PARK BRAKE HYDRAULIC LINES

T157572 -UN-23JUL02

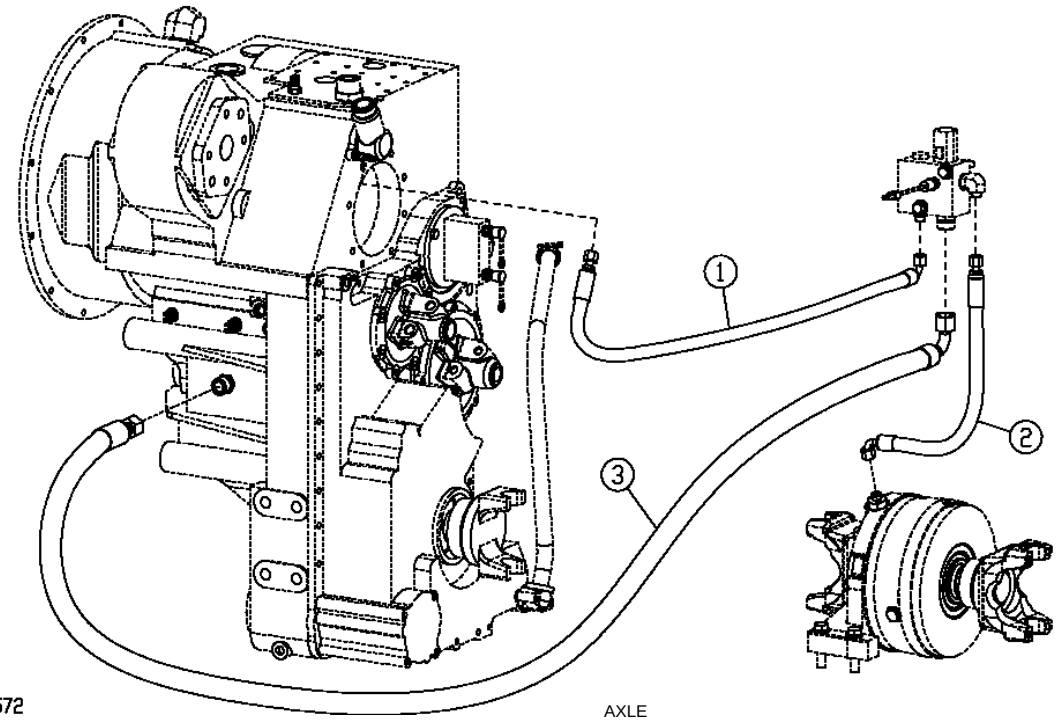

T157572

KEY	PART NO.	PART NAME	QTY	AXLE SERIAL NO.	REMARKS
1	AT161549	HYDRAULIC HOSE - FABRICATE	1		
2	AT167553	HYDRAULIC HOSE - FABRICATE	1		
3	AT207869	HYDRAULIC HOSE - FABRICATE	1		

MEMORANDA

DECALS AND LABELS (S.N. -590067)

T158055 -UN-20SEP02

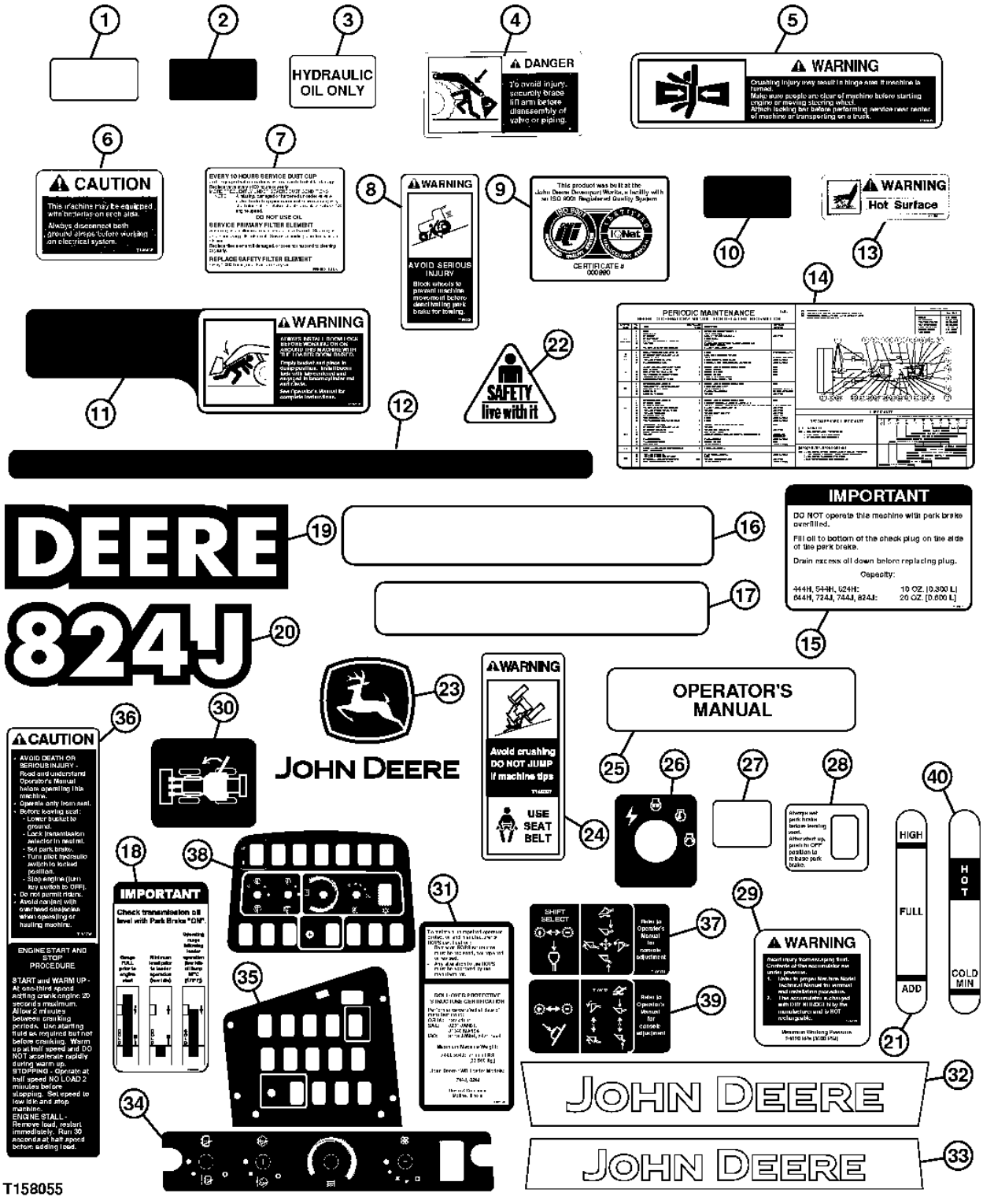

DECALS AND LABELS (S.N. -590067)

KEY	PART NO.	PART NAME	QTY	SERIAL NO.	REMARKS
1	H21259	MAT	5		OPERATOR'S DECK CLEAT
2	JD5902	REFLECTOR	2		REFLECTIVE MARKER (RED)
3	T101942	LABEL	1		
4	T146175	SAFETY SIGN	1		
5	T146436	SAFETY SIGN	2		
6	T146438	SAFETY SIGN	2		
7	T146605	LABEL	1		
8	T159028	LABEL	1		
9	T175744	LABEL	1		
10	JD5906	REFLECTOR	4		REFLECTIVE MARKER (AMBER)
11	T182191	LABEL	2		
12	T182192	SAFETY SIGN	2		ARTICULATION LOCK WARNING
13	M118611	LABEL	1		
14	T200068	LABEL	1		
15	T207741	LABEL	1		(SUB FOR T195710) (PARK BRAKE OVERFILL)
16	T196013	STRIP	4		ANTI SKID MAT
17	T103395	MAT	2		ANTI SKID MAT
18	T200055	LABEL	1		
19	T182414	LABEL	2		
20	T195148	LABEL	2		
21	T197300	LABEL	1		
22	H138955	LABEL	1		
23	JD5750	LABEL	2		
24	T146097	LABEL	1		
25	T148083	LABEL	1		
26	T157172	LABEL	1		
27	T171223	LABEL	1		DOOR RELEASE
28	T171228	LABEL	1		
29	T174298	LABEL	2	-598673	
	T215158	LABEL	2	598674-	
30	T174735	LABEL	1		
31	T200811	LABEL	1		(SUB FOR T182026) (ROPS)
32	T182183	LABEL	1		
33	T182184	LABEL	1		
34	T182630	LABEL	1		(USE WITH 2-LEVER CONTROLLER)
35	T182734	LABEL	1		(USE WITH 2-LEVER CONTROLLER)
36	T182795	SAFETY SIGN	1		
37	T200729	LABEL	1		(SUB FOR T195031) (USE WITH JOYSTICK CONTROLLER)
38	T181852	LABEL	1		(USE WITH JOYSTICK CONTROLLER)
39	T195032	LABEL	1		(USE WITH 2-LEVER CONTROLLER)
40	T202834	LABEL	1		(SUB FOR T200061)

CAB LABELS AND DECALS (S.N. 590068-)

T194856 -UN-15OCT03

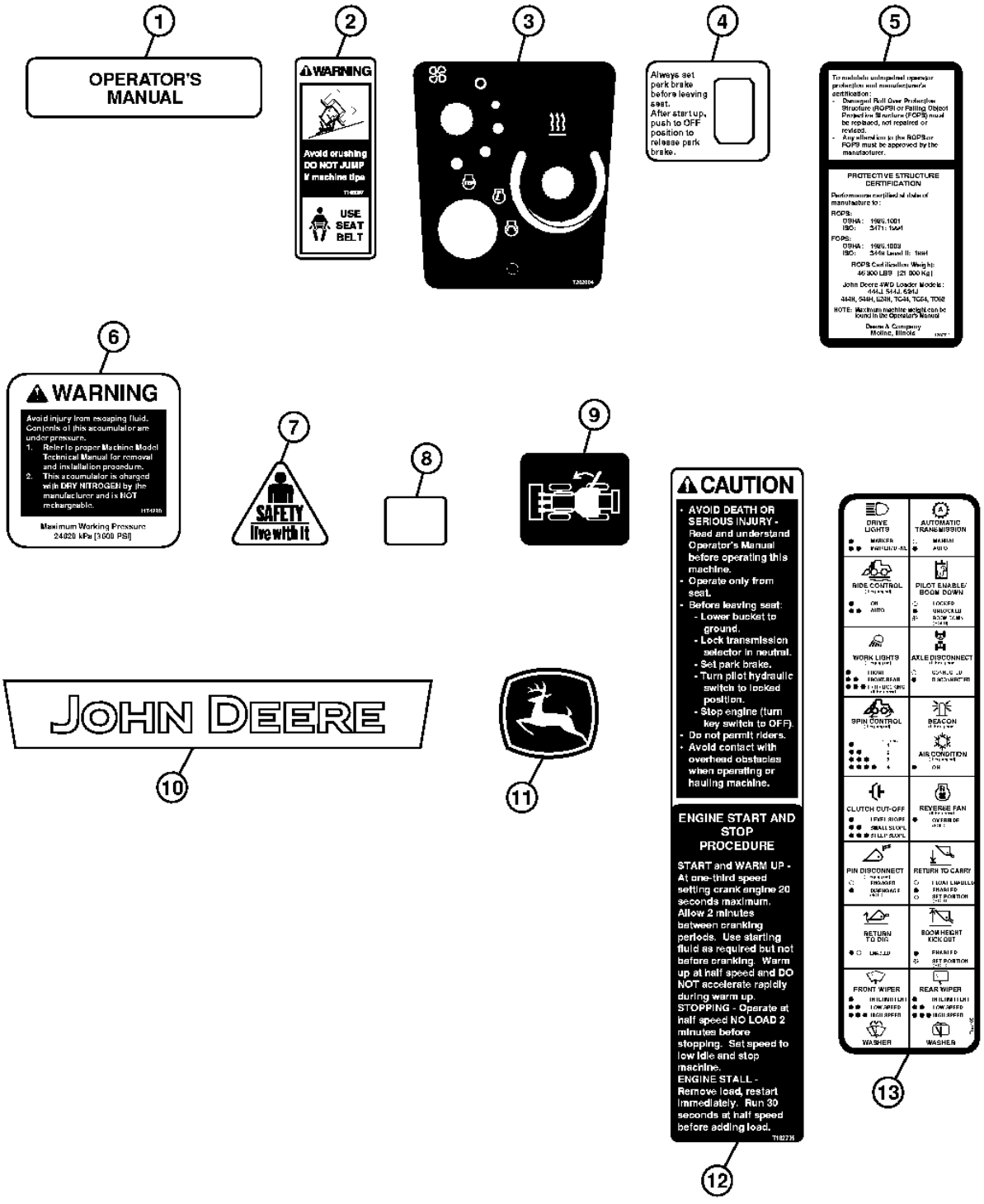

T194856

CAB LABELS AND DECALS (S.N. 590068-)

KEY	PART NO.	PART NAME	QTY	SERIAL NO.	REMARKS
1	T148083	LABEL	1		(OPERATOR'S MANUAL)
2	T146097	LABEL	1		(WARNING - USE SEAT BELT)
3	T202884	LABEL	1		(KEY START/HVAC PANEL)
4	T171228	LABEL	1		(ON/OFF PARK BRAKE SWITCH)
5	T200811	LABEL	1		(ROPS)
6	T174298	LABEL	2	-598673	(WARNING - ACCUMULATOR)
	T215158	LABEL	2	598674-	
7	H138955	LABEL	2		(CAUTION)
8	T171223	LABEL	1		(DOOR RELEASE - LEFT SIDE OF UNIT)
9	T174735	LABEL	1		(DOOR RELEASE - RIGHT SIDE OF UNIT)
10	T182183	LABEL	1		(JOHN DEERE)
11	JD5822	LABEL	2		(LEAPING DEER)
12	T182795	SAFETY SIGN	1		(CAUTION - ENGINE START/STOP)
13	T197186	LABEL	1		(SWITCH DESCRIPTION)

DECALS AND LABELS(S.N. 590068-)

T195301 -UN-08OCT03

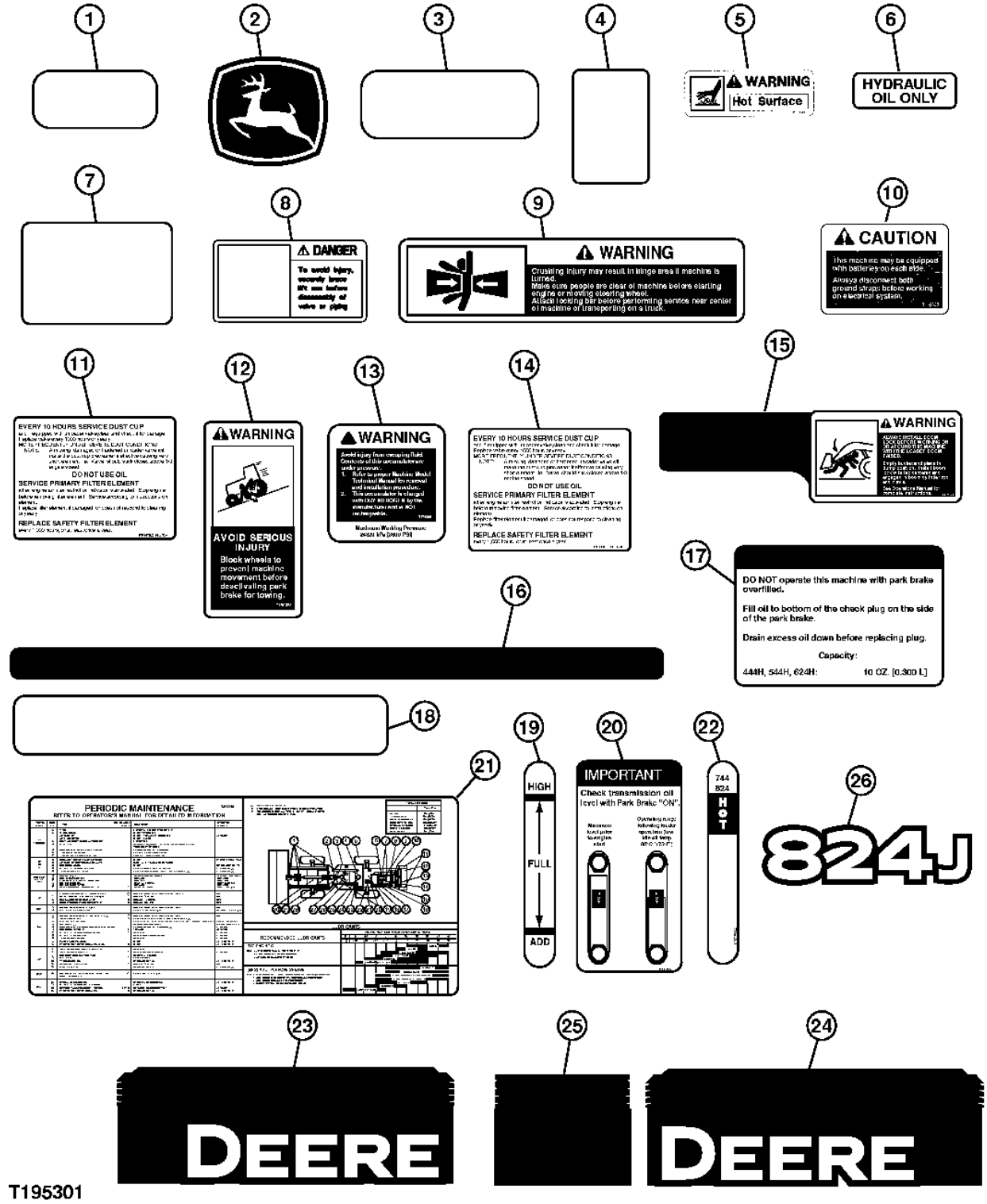

DECALS AND LABELS (S.N. 590068-)

KEY	PART NO.	PART NAME	QTY	SERIAL NO.	REMARKS
1	H21259	MAT	5		(ANTI-SKID)
2	JD5756	LABEL	1		(LEAPING DEERE)
3	JD5902	REFLECTOR	2		(RED REFLECTIVE)
4	JD5906	REFLECTOR	4		(AMBER REFLECTIVE)
5	M118611	LABEL	1		(HOT SURFACE)
6	T101942	LABEL	1		(HYDRAULIC OIL)
7	T103395	MAT	2		(ANTI-SKID)
8	T146175	SAFETY SIGN	1		(DANGER)
9	T146436	SAFETY SIGN	2		(WARNING-ARTICULATION)
10	T146438	SAFETY SIGN	2		(CAUTION)
11	T146605	LABEL	1		(AIR CLEANER)
12	T159028	LABEL	1		(PARK BRAKE)
13	T174298	LABEL	1	-598673	(WARNING-ACCUMULATOR)
	T215158	LABEL	1	598674-	
14	T175744	LABEL	1		(ISO 9001 REGISTERED)
15	T182191	LABEL	2		(BOOM LOCK)
16	T182192	SAFETY SIGN	2		(WARNING-ARTICULATION LOCK)
17	T207741	LABEL	1		(PARK BRAKE OVERFILL) (SUB FOR T195710)
18	T196013	STRIP	4		(ANTI-SKID MAT)
19	T197300	LABEL	1		(HYDRAULIC RESERVOIR SIGHT GAUGE)
20	T200055	LABEL	1		(TRANSMISSION OIL CHECK)
21	T200068	LABEL	1		(PERIODIC MAINTENANCE)
22	T202834	LABEL	1		(TRANSMISSION OIL LEVEL)
23	T203943	LABEL	1		(DEERE-LEFT ENGINE DOOR)
24	T203944	LABEL	1		(DEERE-RIGHT ENGINE DOOR)
25	T203945	LABEL	2		(HYDRAULIC RESERVOIR TOP-CHARCOAL)
26	T205311	LABEL	2		(MODEL DESIGNATION-824J)

DECALS AND LABELS (SPANISH)(S.N. -590067)

T158054 -UN-02OCT02

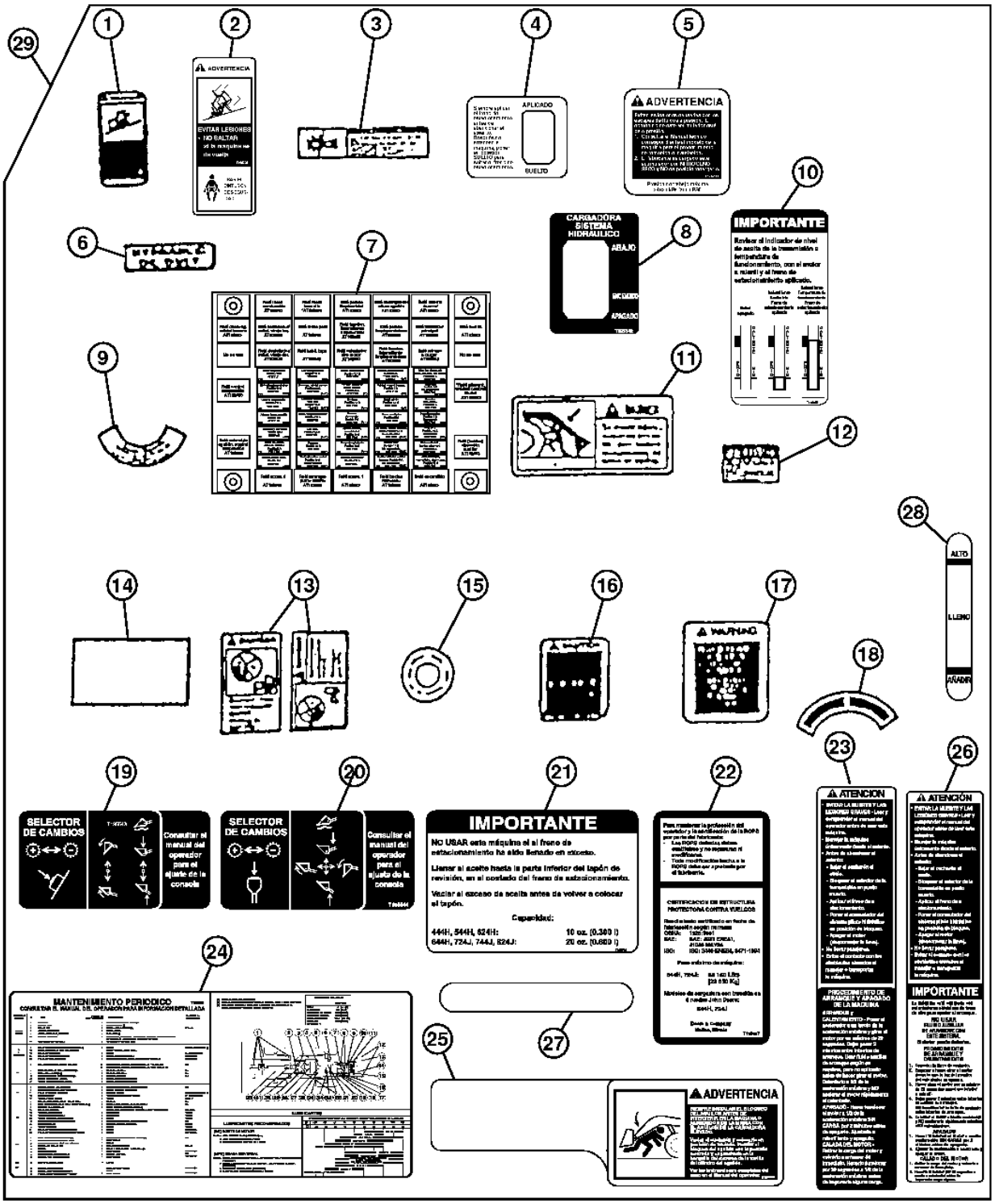

T158054

DECALS AND LABELS (SPANISH)(S.N. -590067)

KEY	PART NO.	PART NAME	QTY	SERIAL NO.	REMARKS
1	T160769	SAFETY SIGN	1		WARNING (PARK BRAKE)
2	T146098	SAFETY SIGN	1		WARNING SEAT BELT
3	T146504	SAFETY SIGN	2		WARNING ARTICULATION
4	T171751	LABEL	1		PARK BRAKE
5	T174299	LABEL	1		BRAKE ACCUMULATOR
6	T102620	LABEL	1		HYDRAULIC OIL
7	T177783	LABEL	1		FUSEBLOCK
8	T195542	LABEL	1		PILOT ENABLE
9	T64217	LABEL	1		OIL FILTER ELEMENT
10	T200057	LABEL	1		TRANSMISSION OIL CHECK
11	T146180	SAFETY SIGN	1		DANGER BOOM
12	T146503	SAFETY SIGN	1		CAUTION DUAL BATTERIES
13	T146106	SAFETY SIGN	1		BYPASS START
14	T146606	LABEL	1		AIR CLEANER UNLOADER VALVE
15	T171757	LABEL	1		RADIATOR CAP
16	T146502	SAFETY SIGN	1		CAUTION, SECONDARY STEERING
17	T146911	LABEL	1		WARNING, ACCUMULATOR
18	T63225	LABEL	1		BATTERY DISCONNECT
19	T195543	LABEL	1		STACKABLE CONTROLS
20	T195544	LABEL	1		JOYSTICK CONTROLS
21	T207751	LABEL	1		(SUB FOR T195760) PARK BRAKE
22	T200813	LABEL	1		(SUB FOR T182151) ROPS
23	T195559	LABEL	2		ENGINE START/STOP
24	T200070	LABEL	1		PERIODIC MAINTINANCE
25	T195858	LABEL	1		BOOM LOCK
26	T208086	SAFETY SIGN	1		(SUB FOR T196475)
27	T202835	LABEL	1		(SUB FOR T200063)
28	T197324	LABEL	1		
29	AT225834	LABEL KIT	1		

DECALS AND LABELS (SPANISH)(S.N. 590068-)

T194874 -UN-15OCT03

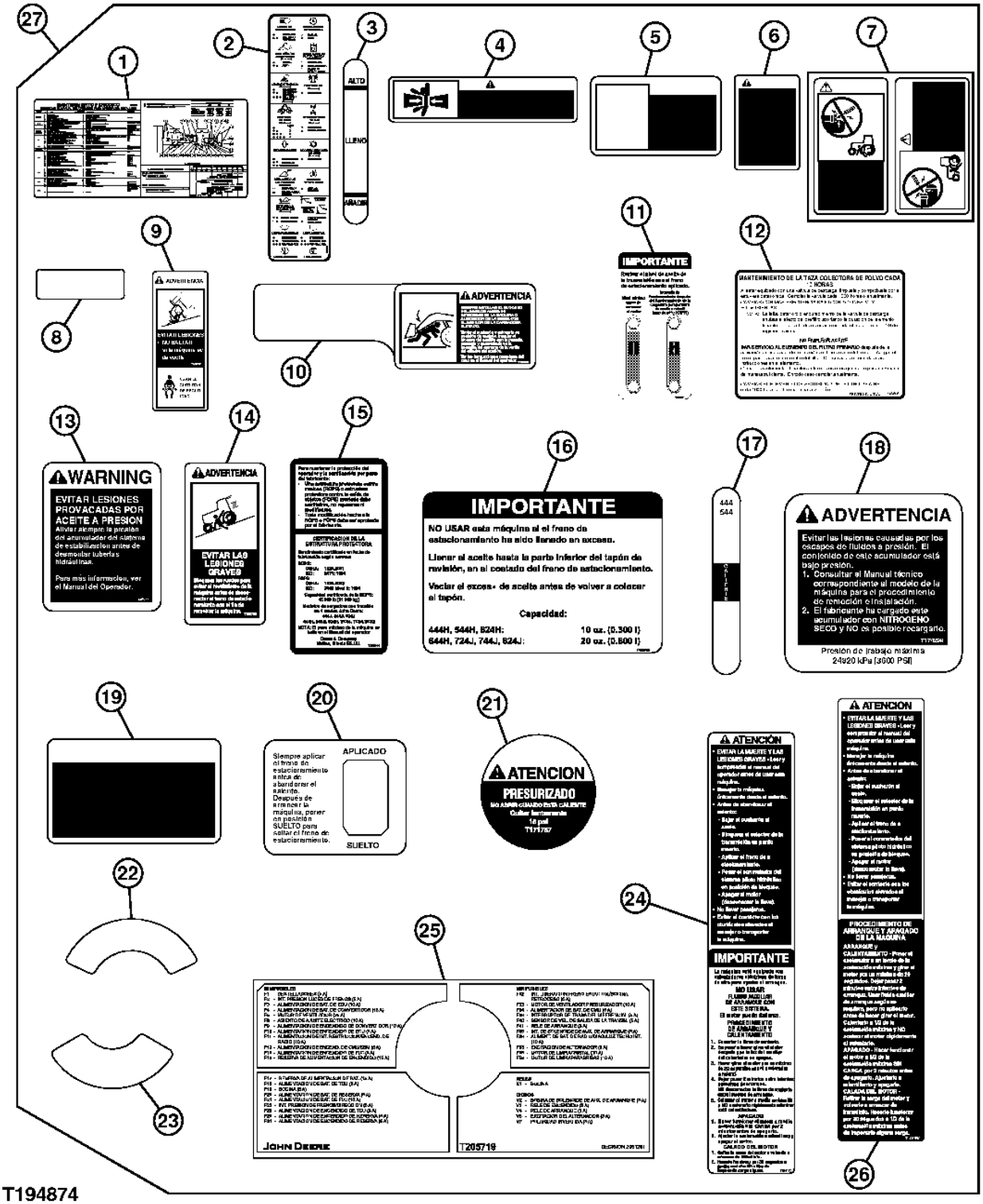

DECALS AND LABELS (SPANISH)(S.N. 590068-)

KEY	PART NO.	PART NAME	QTY	SERIAL NO.	REMARKS
1	T200070	LABEL	1		(PERIODIC MAINTENANCE)
2	T200818	LABEL	1		(START/STOP SWITCH PAD)
3	T197324	LABEL	1		(HYDRAULIC RESERVOIR SIGHT GAUGE)
4	T146504	SAFETY SIGN	1		(WARNING - ARTICULATION JOINT)
5	T146180	SAFETY SIGN	1		(DANGER - BOOM)
6	T146502	SAFETY SIGN	1		(CAUTION - SECONDARY STEERING)
7	T146106	SAFETY SIGN	1		(STARTER BYPASS START)
8	T102620	LABEL	1		(HYDRAULIC OIL)
9	T146098	SAFETY SIGN	1		(WARNING - SEAT BELT)
10	T195858	LABEL	1		(BOOM LOCK)
11	T200057	LABEL	1		(TRANSMISSION OIL CHECK)
12	T146606	LABEL	1		(AIR CLEANER)
13	T146911	LABEL	1		(WARNING - ACCUMULATOR)
14	T160769	SAFETY SIGN	1		(WARNING - PARK BRAKE)
15	T200813	LABEL	1		(ROPS)
16	T207751	LABEL	1		(SUB FOR T195760) (PARK BRAKE OVERFILL)
17	T202835	LABEL	1		(TRANSMISSION SIGHT GAUGE)
18	T174299	LABEL	1		(BRAKE ACCUMULATOR)
19	T146503	SAFETY SIGN	2		(CAUTION - DUAL BATTERIES)
20	T171751	LABEL	1		(PARK BRAKE SWITCH)
21	T171757	LABEL	1		(RADIATOR CAP)
22	T63225	LABEL	1		(BATTERY DISCONNECT)
23	T64217	LABEL	1		(OIL FILTER ELEMENT)
24	T208086	SAFETY SIGN	1		(SUB FOR T196475) (CAUTION - ENGINE AIR HEATER)
26	T195559	LABEL	1		(ENGINE START-STOP)
27	AT301097	LABEL KIT	1		(SPANISH) (IMPORTANT: MUST ALSO ORDER TRANSLATED OPERATOR'S MANUAL THROUGH YOUR AUTHORIZED DEALER)

DECALS AND LABELS (FRENCH)(S.N. -590067)

T158053 -UN-02OCT02

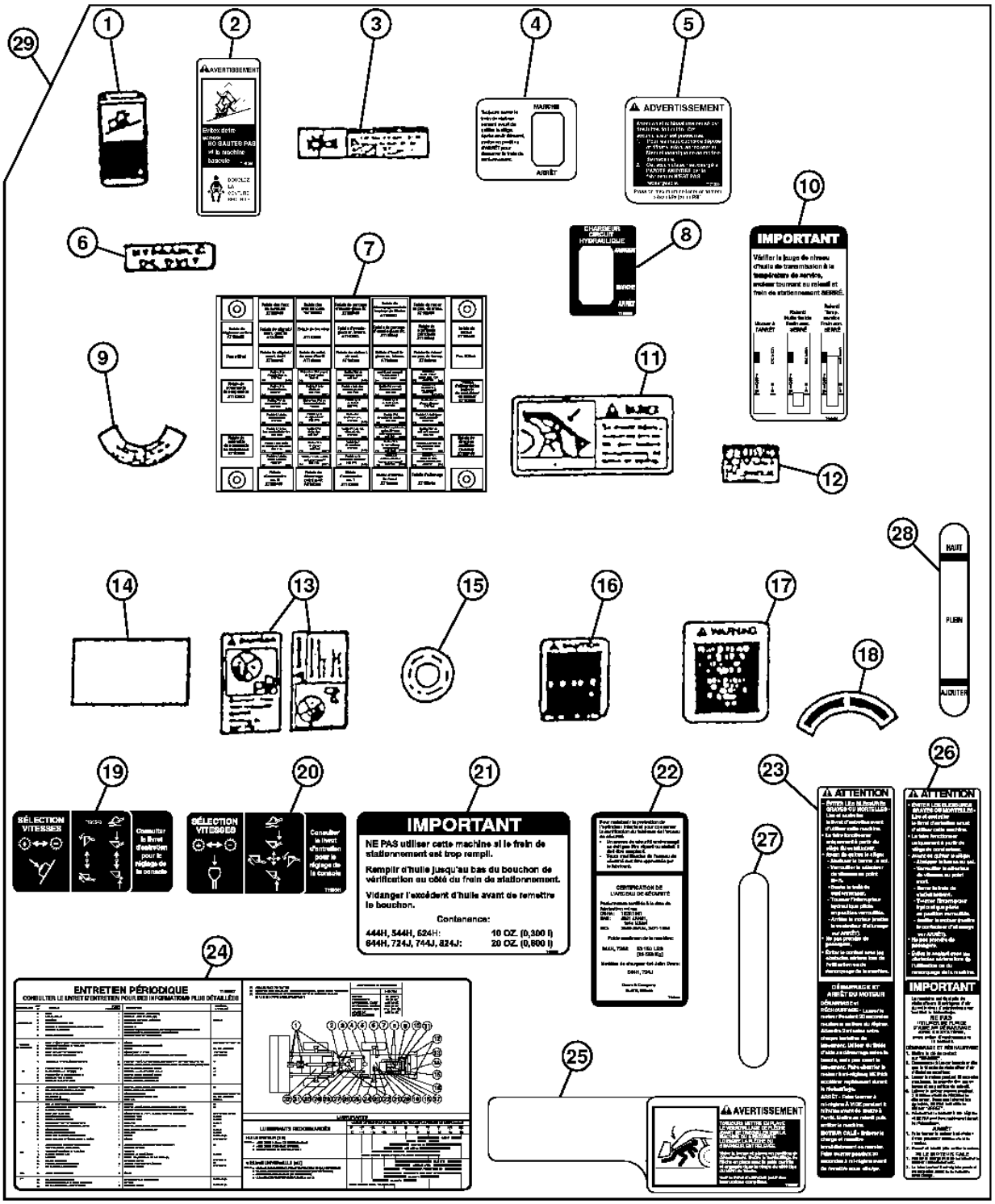

T158053

DECALS AND LABELS (FRENCH)(S.N. 590067-)

KEY	PART NO.	PART NAME	QTY	SERIAL NO.	REMARKS
1	T160762	LABEL	1		WARNING (PARK BRAKE)
2	T146099	SAFETY SIGN	1		WARNING SEAT BELT
3	T146496	SAFETY SIGN	2		WARNING ARTICULATION
4	T171750	LABEL	1		PARK BRAKE
5	T174300	LABEL	2		ACCUMULATOR
6	T102618	LABEL	1		HYDRAULIC OIL
7	T177785	LABEL	1		FUSEBLOCK
8	T195539	LABEL	1		PILOT ENABLE
9	CD12569	LABEL	1		OIL FILTER ELEMENT
10	T200056	LABEL	1		TRANSMISSION OIL CHECK
11	T146178	SAFETY SIGN	1		DANGER BOOM
12	T146495	SAFETY SIGN	2		CAUTION DUAL BATTERIES
13	T146104	SAFETY SIGN	1		BYPASS START
14	T146607	LABEL	1		AIR CLEANER UNLOADER VALVE
15	T171756	LABEL	1		RADIATOR CAP
16	T146494	SAFETY SIGN	1		CAUTION, SECONDARY STEERING
17	T146908	SAFETY SIGN	2		WARNING, ACCUMULATOR
18	T63224	LABEL	1		BATTERY DISCONNECT
19	T195540	LABEL	1		STACKABLE CONTROLS
20	T195541	LABEL	1		JOYSTICK CONTROLS
21	T207750	LABEL	1		(SUB FOR T195759) PARK BRAKE OVERFILL
22	T200812	LABEL	1		(SUB FOR T182150) ROPS
23	T195558	LABEL	1		ENGINE STOP/START
24	T200069	LABEL	1		PERIODIC MAINTENANCE
25	T195857	LABEL	2		BOOM LOCK
26	T208087	SAFETY SIGN	1		(SUB FOR T196476)
27	T202836	LABEL	1		(SUB FOR T200062)
28	T197323	LABEL	1		
29	AT225830	LABEL KIT	1		(SUB FOR AT226636)

DECALS AND LABELS (FRENCH) (S.N. 590068-)

T209761 -UN-22MAR05

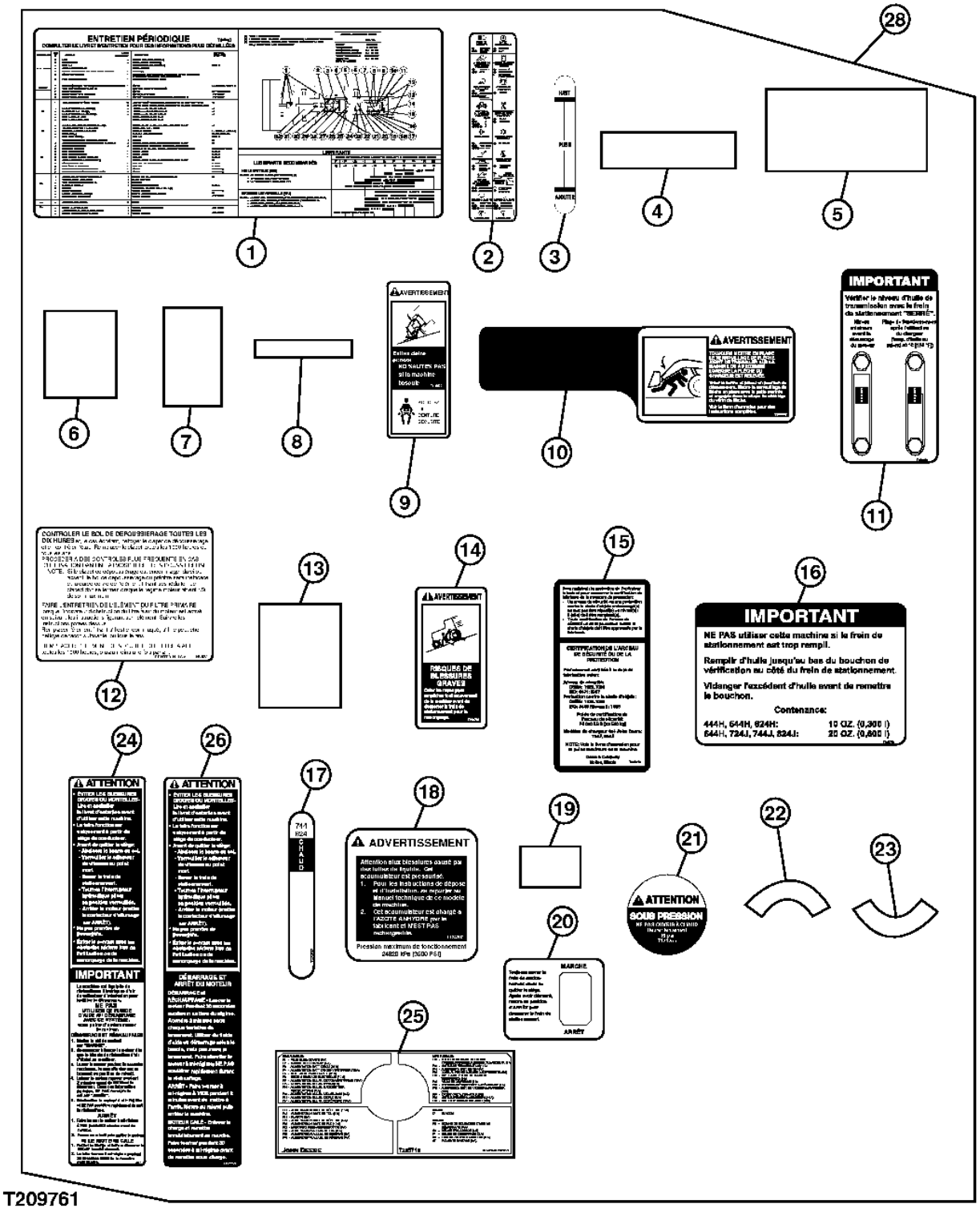

DECALS AND LABELS (FRENCH) (S.N. 590068-)

KEY	PART NO.	PART NAME	QTY	SERIAL NO.	REMARKS
1	T200069	LABEL	1		(PERIODIC MAINTENANCE)
2	T200791	LABEL	1		(START/STOP SWITCH PAD)
3	T197323	LABEL	1		(HYDRAULIC RESERVOIR SIGHT GAUGE)
4	T146496	SAFETY SIGN	2		(WARNING)
5	T146178	SAFETY SIGN	1		(DANGER)
6	T146494	SAFETY SIGN	1		(CAUTION - SECONDARY STEERING)
7	T146104	SAFETY SIGN	1		(BYPASS START)
8	T102618	LABEL	1		(HYDRAULIC OIL)
9	T146099	SAFETY SIGN	1		(WARNING - SEAT BELT)
10	T195857	LABEL	2		(BOOM LOCK)
11	T200056	LABEL	1		(TRANSMISSION OIL CHECK)
12	T146607	LABEL	1		(AIR CLEANER)
13	T146908	SAFETY SIGN	2		(WARNING - RIDE ACCUMULATOR)
14	T160762	LABEL	1		(WARNING - PARK BRAKE)
15	T200812	LABEL	1		(ROPS)
16	T207750	LABEL	1		(SUB FOR T195759) (PARK BRAKE OVERFILL)
17	T202836	LABEL	1		(TRANSMISSION SIGHT GAUGE)
18	T174300	LABEL	2		(ACCUMULATOR)
19	T146495	SAFETY SIGN	2		(CAUTION)
20	T171750	LABEL	1		(PARK BRAKE SWITCH)
21	T171756	LABEL	1		(RADIATOR CAP)
22	T63224	LABEL	1		(DISCONNECT)
23	CD12569	LABEL	1		(OIL FILTER ELEMENT)
24	T208087	SAFETY SIGN	1		(SUB FOR T196476) (CAUTION - ENGINE AIR HEATER)
25	T205718	LABEL	1		(VEHICLE INFORMATION)
26	T195558	LABEL	1		(ENGINE START/STOP)
28	AT301060	LABEL KIT	1		(FRENCH) (IMPORTANT: MUST ALSO ORDER TRANSLATED OPERATOR'S MANUAL THROUGH YOUR AUTHORIZED DEALER)

MEMORANDA

TORQ-GARD SUPREME AND PLUS-50 ENGINE OIL

RGP3291 -UN-31MAR04

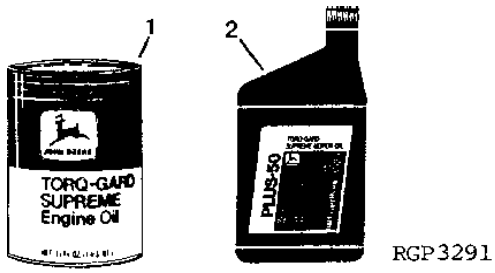

TORQ-GARD SUPREME

KEY	PART NO.	PART NAME	QTY	ENGINE SERIAL NO.	REMARKS
1	TY22064	TORQ-GARD SUPREME TM	1		(SAE 5W/30), 0.9L (1 QUART)
	TY22065	TORQ-GARD SUPREME TM	1		(SAE 5W/30), 19L (5 GALLON)
	TY22066	TORQ-GARD SUPREME TM	1		(SAE 5W/30), 208L (55 GALLON)
	TY6364	OIL	1		(SAE 10W/30), 0.9 L (1 QUART) (BREAKIN)
	TY6389	TORQ-GARD SUPREME PLUS-50TM	1		(SAE 15W/40, 0.9 L (1 QUART)
	TY6390	TORQ-GARD SUPREME PLUS-50TM	1		(SAE 15W/40), 19 L (5 GALLON)
	TY22010	TORQ-GARD SUPREME PLUS-50TM	1		(SAE 15W/40), 114 L (30 GALLON)
	TY6391	TORQ-GARD SUPREME PLUS-50TM	1		(SAE 15W/40), 208 L (55 GALLON)
	TY22067	TORQ-GARD SUPREME TM	1		(SAE 10W), .9L (1 GALLON)
	TY22068	TORQ-GARD SUPREME TM	1		(SAE 10W), 19L (5 GALLON)
	TY22069	TORQ-GARD SUPREME TM	1		(SAE 10W), 208L (55 GALLON)
	TY22070	TORQ-GARD SUPREME TM	1		(SAE 30W), 0.9L (1 GALLON)
	TY22073	TORQ-GARD SUPREME TM	1		(SAE 30W), 19L (5 GALLON)
	TY6280	OIL	1		(SAE 30W), 114 L (30 GALLON)
	TY22074	TORQ-GARD SUPREME TM	1		(SAE 30W), 208L (55 GALLON)

TORQ-GARD PLUS-50

KEY	PART NO.	PART NAME	QTY	ENGINE SERIAL NO.	REMARKS
2	TY6389	TORQ-GARD SUPREME PLUS-50TM	1		(SAE 15W/40), 0.9 L (1 QUART)
	TY22008	TORQ-GARD SUPREME PLUS-50TM	1		(SAE 15W/40), 3.8 L (1 GALLON)
	TY6390	TORQ-GARD SUPREME PLUS-50TM	1		(SAE 15W/40), 19 L (5 GALLON)
	TY22010	TORQ-GARD SUPREME PLUS-50TM	1		(SAE 15W/40), 113.6 L (30 GALLON)
	TY6391	TORQ-GARD SUPREME PLUS-50TM	1		(SAE 15W/40), 208 L (55 GALLON)
	TY6392	OIL	1		(SAE 30W), 0.9 L (1 QUART)
	TY22007	OIL	1		(SAE 30W), 3.8 L (1 GALLON)
	TY6393	OIL	1		(SAE 30W), 19 L (5 GALLON)
	TY22011	OIL	1		(SAE 30W), 113.6 L (30 GALLON)
	TY6394	OIL	1		(SAE 30W), 208 L (55 GALLON)
..	TY22041	ENGINE BREAK-IN OIL	1		(SAE 10W/30), 3.8 L (1 GALLON) (FACTORY SPEC BREAKIN)
..	TY22042	ENGINE BREAK-IN OIL	1		(SAE 10W/30), 208 L (55 GALLON) (FACTORY SPEC. BREAKIN)

O-RING KIT

TP70402 -UN-13JUL00

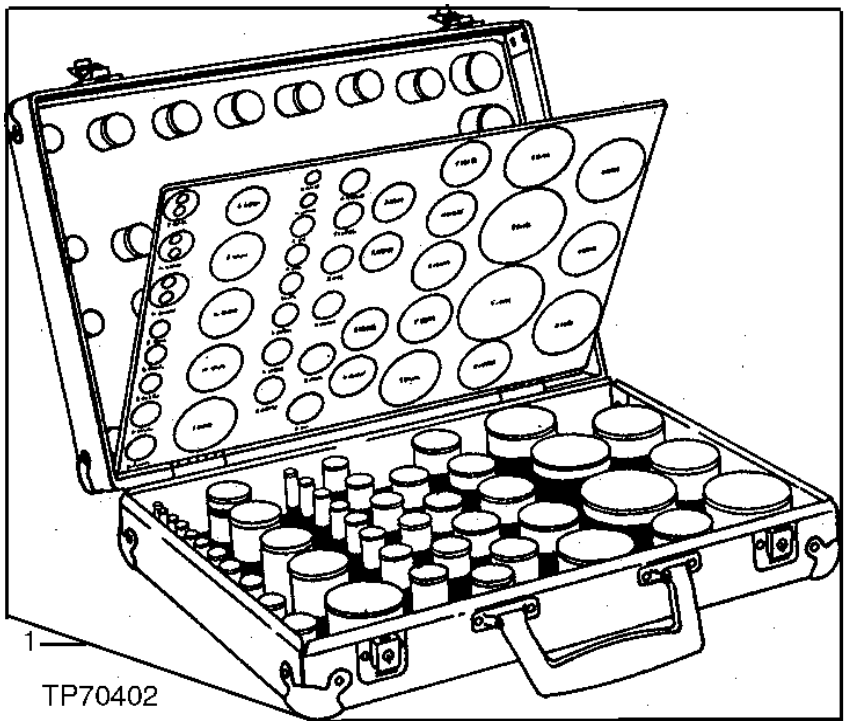

O-RING KIT-CONTINUED

KEY	PART NO.	PART NAME	QTY	SERIAL NO.	REMARKS
1	A3606R	O-RING	1		
	A3917R	O-RING	1		
	A4365R	O-RING	1		
	A4730R	O-RING	1		
	B2762R	O-RING	1		
	B3690R	O-RING	1		
	F1056R	O-RING	1		
	F1870R	O-RING	1		
	U12547	O-RING	1		
	F3353R	O-RING	1		
	H35244	RING	1		
	T78313	O-RING	1		
	M4237T	O-RING	1		
	N131838	O-RING	1		
	P46051	O-RING	1		
	P48403	O-RING	1		
	P50631	O-RING	1		
	R375R	O-RING	1		
	R394R	O-RING	1		
	R459R	O-RING	1		
	R460R	O-RING	1		
	R495R	O-RING	1		
	R10093	O-RING	1		
	R26286	O-RING	1		
	R26287	O-RING	1		
	R26375	O-RING	1		
	R26448	O-RING	1		

FLUID ANALYSIS PRODUCTS (OILSCAN PLUS TEST KIT)

T135474 -UN-15NOV00



T135474

FLUID ANALYSIS PRODUCTS (OILSCAN PLUS TEST KIT)

KEY	PART NO.	PART NAME	QTY	SERIAL NO.	REMARKS
1	.....	KIT	1		STANDARD ENGINE, SELF EXTRACTION (12 PER PACKAGE)(INCLUDES SPECTROCHEMICAL ANALYSIS, VISCOSITY, ° WATER, FUEL DILUTION, GLYCOL, FUEL SOOT) (AT178840 NO LONGER AVAILABLE FOR SERVICE - SUB AT180333)
	AT180333	KIT	1		STANDARD ENGINE, 4 OZ BOTTLE (10 PER PACKAGE) (SAME AS AT178840)
	.....	KIT	1		COMPREHENSIVE ENGINE W/TBN (EXTENDED DRAIN) (12 PER PACKAGE)(SAME AS AT178840 PLUS TBN) (AT178842 NO LONGER AVAILABLE FOR SERVICE - SUB AT180334)
	AT180334	KIT	1		COMPREHENSIVE ENGINE W/TBN (EXTENDED DRAIN) 4 OZ BOTTLE (10 PRT PACKAGE) (SAME AS AT178842)
	AT303189	KIT	1		COMPREHENSIVE HYDRAULIC & HYDROSTATIC SYSTEMS, 4 OZ BOTTLE (10 PER PACKAGE) (REQUIRES USE OF A SAMPLING VALVE FOR ACCURATE RESULTS) (SUB FOR AT178844)
	IPSKIT3	PUMP	1		OIL EXTRACTION (1 PER PACKAGE)(CAN BE USED WITH AT180333, AT180334, AND AT180335 KITS TO EXTRACT OIL SAMPLE)
	DS0345	TUBE	1		500'ROLL (USED WITH IPSKIT3 PUMP TO EXTRACT SAMPLE)
	DS0346	TUBE	1		100' ROLL (USED WITH IPSKIT3 PUMP TO EXTRACT SAMPLE)

FLUID ANALYSIS PRODUCTS (COOLSCAN PLUS TEST KIT)

T135475 -UN-15NOV00



T135475

KEY	PART NO.	PART NAME	QTY	SERIAL NO.	REMARKS
1	AT183016	KIT	1		COOLANT ANALYSIS (6 PER PACKAGE)(TESTS FREEZE POINT, ° ANTIFREEZE, PH, RESERVE ALKALINITY, NITRITE, MOLYBDATE, SILICATE, VISUAL ASSESSMENT & CORROSION METALS (IRON, COPPER, ALUMINUM & LEAD))

FLUID ANALYSIS PRODUCTS (DIESELSCAN TEST KIT)

T135476 -UN-15NOV00



T135476

KEY	PART NO.	PART NAME	QTY	SERIAL NO.	REMARKS
1	AT180344	KIT	1		DIESEL ANALYSIS (6 PER PACKAGE)(USED TO VERIFY TYPE, SUITABILITY FOR COLD TEMPERATURE OPERATIONS, CLEANLINESS, WATER CONTENT AND IF FUEL IS WITHIN ASTM SPECIFICATIONS. CHECKS API GRAVITY, VISCOSITY AT 40C, SULFUR, CETANE INDEX, DISTILLATION, CLOUD POINT, POUR POINT AND COLD FILTER PLUGGING POINT.

COOLANT CONDITIONER AND ENGINE PART LUBRICANTS

RGP4314 -UN-01JAN94

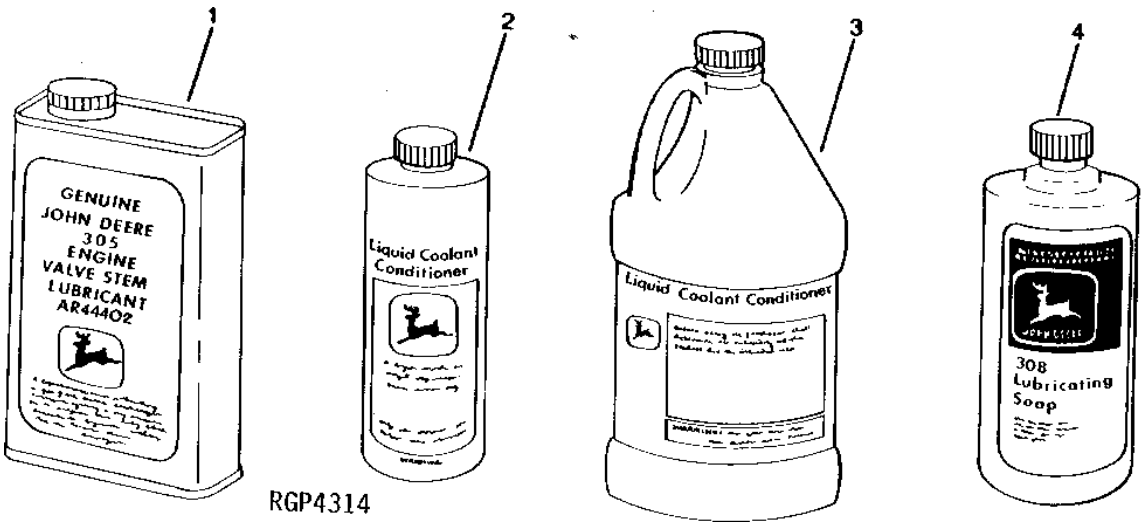

VALVE STEM LUBRICANT

KEY	PART NO.	PART NAME	QTY	SERIAL NO.	REMARKS
1	AR44402	OIL	1		0.9 L (1 QT.)

COOLANT CONDITIONER

KEY	PART NO.	PART NAME	QTY	SERIAL NO.	REMARKS
2	TY16004	ENGINE COOLANT CONDITIONER	1		0.472 L (16 OZ.) (PHOSPHATE - FREE)
3	TY16005	ENGINE COOLANT CONDITIONER	1		1.9 L (1/2 GAL.) (PHOSPHATE - FREE)

OTHER LUBRICANTS

KEY	PART NO.	PART NAME	QTY	ENGINE SERIAL NO.	REMARKS
4	AR54749	LUBRICANT	1		0.9 L (1 QT.)
	AT66865	LUBRICANT	1		(ELECTRICAL CONNECTIONS) (NOT SHOWN)

KITS (NOT ILLUSTRATED)

KEY	PART NO.	PART NAME	QTY	ENGINE SERIAL NO.	REMARKS
..	AR41785	KIT	1		CONTAINS 0.9 L (1 QT.) (OFF-SEASON STORAGE)
..	AR21969	KIT	1		(DUST CAP/COVER KIT)
..	DS0251	KIT	1		(COOLANT SCAN TEST)
..	IPSKIT1	KIT	1		(OIL SCAN TEST)
..	DS0557	VALVE	1		(SAMPLING SYSTEM)
..	TY16423	LEVEL GAUGE	1		(COOLANT EYE - FILL/FLUSHING)

ENGINE COOLING FLUID

TP6956 -UN-01JAN94



KEY	PART NO.	PART NAME	QTY	SERIAL NO.	REMARKS
1	DD14134	FLUID	1		(A) 5L, (1.3 GAL.)
	DD14345	FLUID	1		(A) 20L, (5.3 GAL.)
	DD14136	FLUID	1		(A) 60L, (15.9 GAL.)
	DD14346	FLUID	1		(A) 210L, (52.5 GAL.)

(A) EITHER PART ACCEPTABLE. CHECK LOCAL AVAILABILITY.

ENVIRONMENTAL DRAIN KIT

T202090 -UN-10AUG04

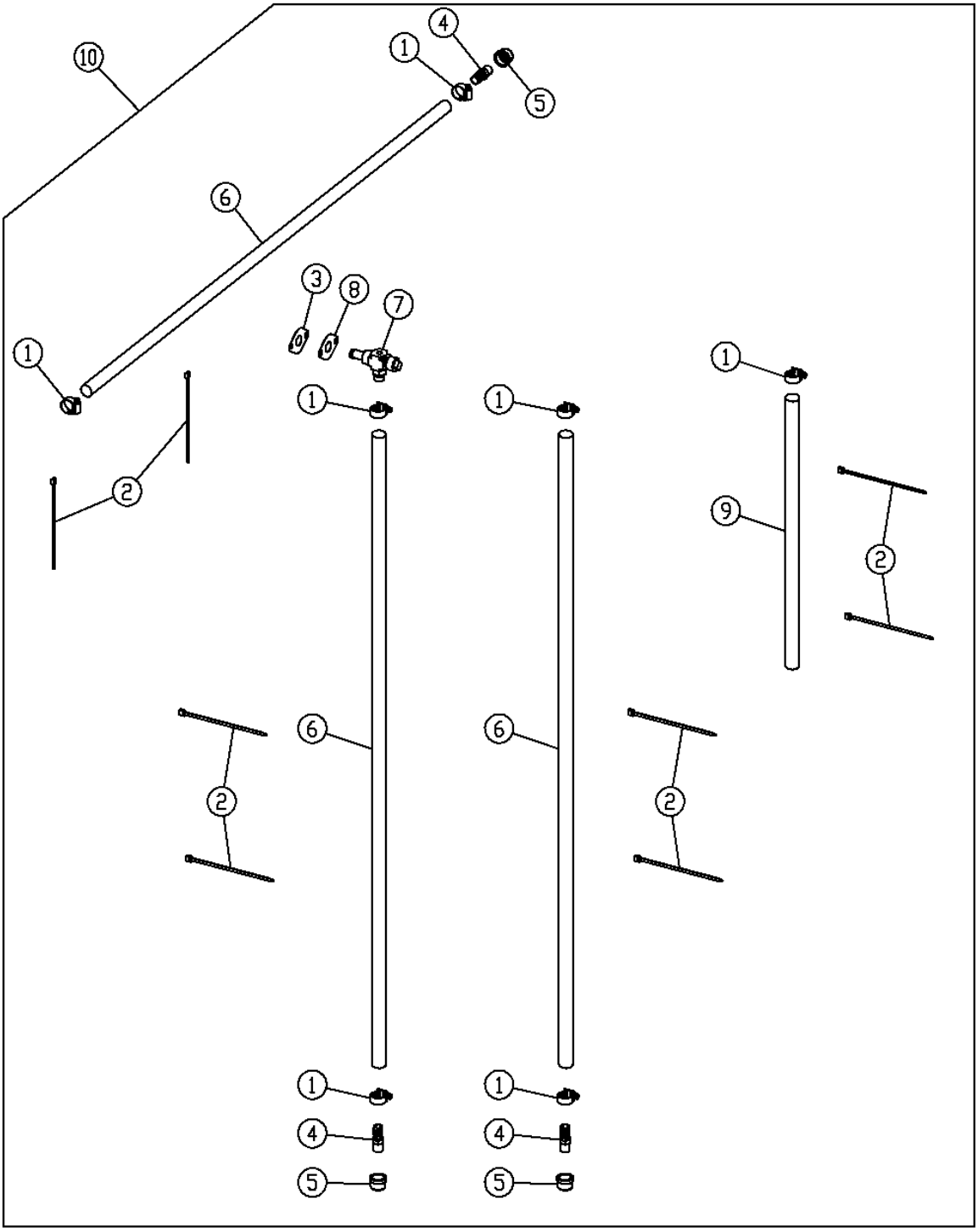

T202090

1K17

ENVIRONMENTAL DRAIN KIT

KEY	PART NO.	PART NAME	QTY	SERIAL NO.	REMARKS
1	AR21837	CLAMP	7		
2	R44302	TIE BAND	8		
3	T116604	GASKET	1		
4	H23196	FITTING	3		
5	15H3	FITTING	3		
6	.....	BULK HOSE	1		(MAKE FROM T60811 BULK MATERIAL, CUT TO LENGTH)
7	RE507950	DRAIN VALVE	1		
8	T196749	ADAPTER	1		(ALSO ORDER T116604)
9	.....	BULK HOSE	1		(MAKE FROM M87571 BULK MATERIAL, CUT TO LENGTH)
10	**AT210490**	**KIT**	**1**		**(WHOLEGOODS) (ENVIRONMENTAL DRAIN)**

BATTERIES, CABLES, CLAMPS AND GROUNDING STRAP
(1400 CCA)
(HIGH OUTPUT)

T152928 -UN-25MAR02

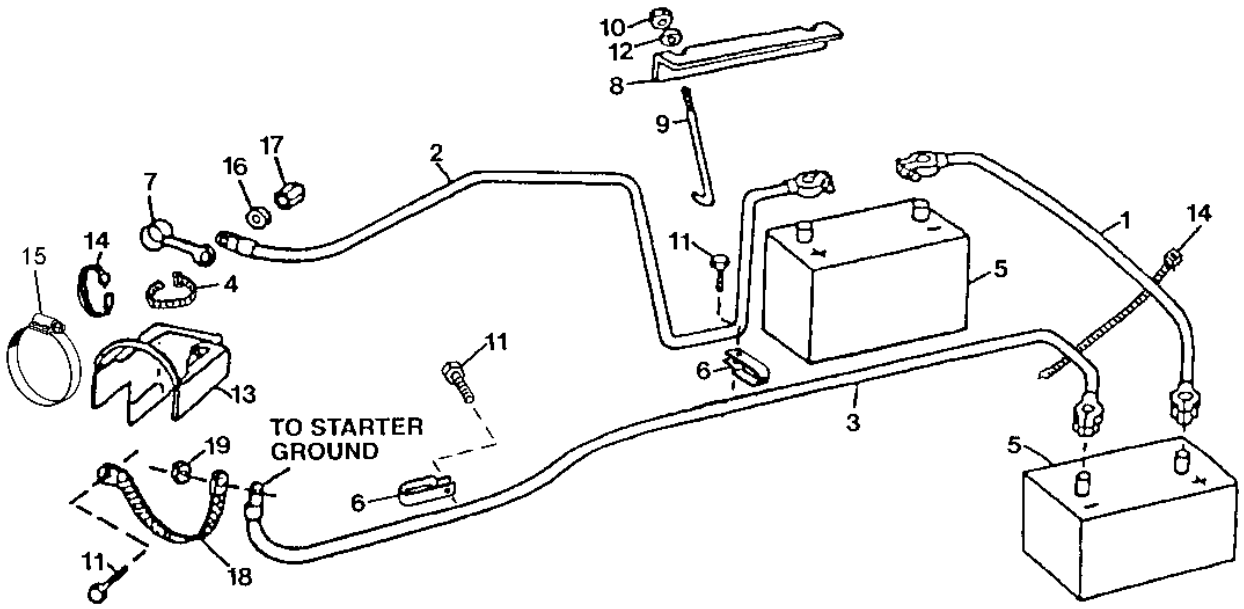

T152928

KEY	PART NO.	PART NAME	QTY	SERIAL NO.	REMARKS
1	AT209375	CABLE	1		(ALSO ORDER (2) TY15733)
2	AT209421	CABLE	1		
3	AT209376	CABLE	1		
4	R44302	TIE BAND	1		
5	TY23020	DRY CHARGED BATTERY	2		(1000 CCA) (USE IF AVAILABLE) (SUB TY23020)
6	AH77869	CLIP	2		
7	T134104	COVER	1		
8	T162019	CLAMP	2		(SUB FOR T173559)
9	T213611	HOOK BOLT	4		
10	14M7396	LOCK NUT	4		M8
11	19M7784	SCREW	3		M10 X 20
12	24M7298	WASHER	4		8.400 X 25 X 2 MM
13	R505679	COVER	1		
14	H77698	TIE BAND	2		
15	AR40418	HOSE CLAMP	1		(FASTEN R505679 TO STARTER SOLENOID)
16	24M7240	WASHER	1		
17	T134103	NUT	1		
18	AT38449	GROUND CABLE	1		24"
19	14H1040	NUT	1		1/2", (COMES WITH STARTER)

BATTERIES, CABLES, CLAMPS AND GROUNDING STRAP
(950 CCA)
(STANDARD)

T152928 -UN-25MAR02

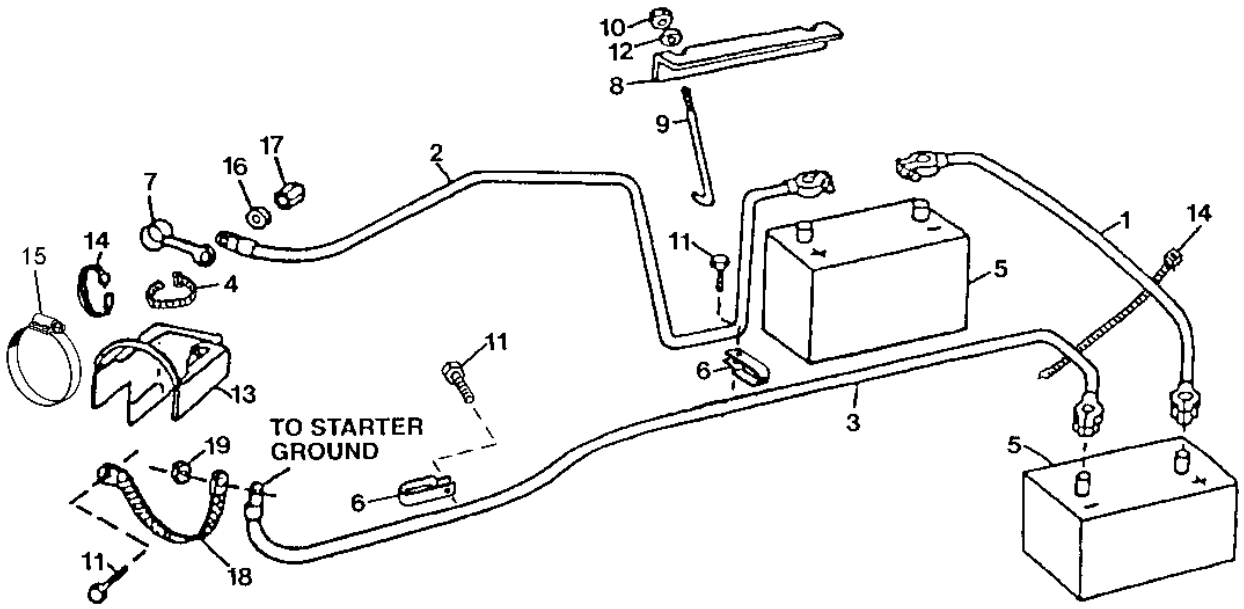

T152928

KEY	PART NO.	PART NAME	QTY	SERIAL NO.	REMARKS
1	AT209375	CABLE	1		(ALSO ORDER (2) TY15733) (SUB FOR AT202813)
2	AT209421	CABLE	1		(SUB FOR AT202812)
3	AT209376	CABLE	1		(SUB FOR AT202814)
4	R44302	TIE BAND	1		
5	TY6128	DRY CHARGED BATTERY	2		(950 CCA)
6	AH77869	CLIP	2		
7	T134104	COVER	1		
8	T162019	CLAMP	2		(SUB FOR T173559)
9	T79471	HOOK BOLT	4		
10	14M7396	LOCK NUT	4		M8
11	19M7784	SCREW	3		M10 X 20
12	24M7298	WASHER	4		8.400 X 25 X 2 MM
13	R505679	COVER	1		
14	H77698	TIE BAND	2		
15	AR40418	HOSE CLAMP	1		(FASTEN R505679 TO STARTER SOLENOID)
16	24M7240	WASHER	1		13 X 25 X 3 MM
17	T134103	NUT	1		
18	AT38449	GROUND CABLE	1		
19	14H1040	NUT	1		1/2", (COMES WITH STARTER)

BATTERY DISCONNECT

T160154 -UN-04OCT02

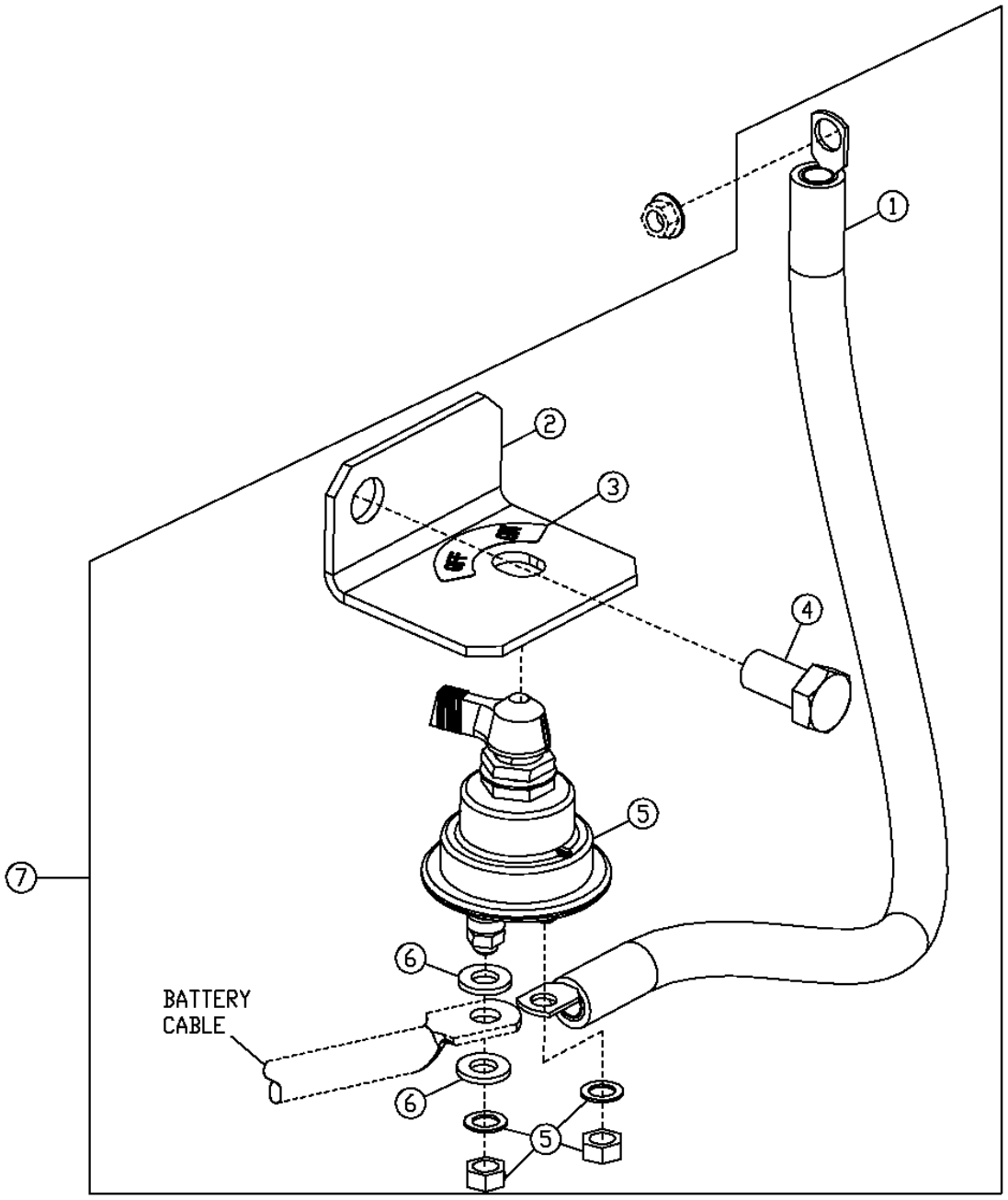

T160154

BATTERY DISCONNECT

KEY	PART NO.	PART NAME	QTY	SERIAL NO.	REMARKS
1	AT202815	CABLE	1		
2	T151139	BRACKET	1		
3	T42199	LABEL	1		
4	19M8029	CAP SCREW	1		M16 X 30
5	AT41188	SWITCH	1		(INCLUDES TWO WASHERS AND TWO NUTS SHOWN)
6	24M7239	WASHER	2		10.700 X 21 X 2.500 MM
7	**AT206659**	**KIT**	**1**		**(WHOLEGOODS)(BATTERY DISCONNECT)**

ALTERNATOR, ALTERNATOR BELTS AND PULLEYS

T152948 -UN-25MAR02

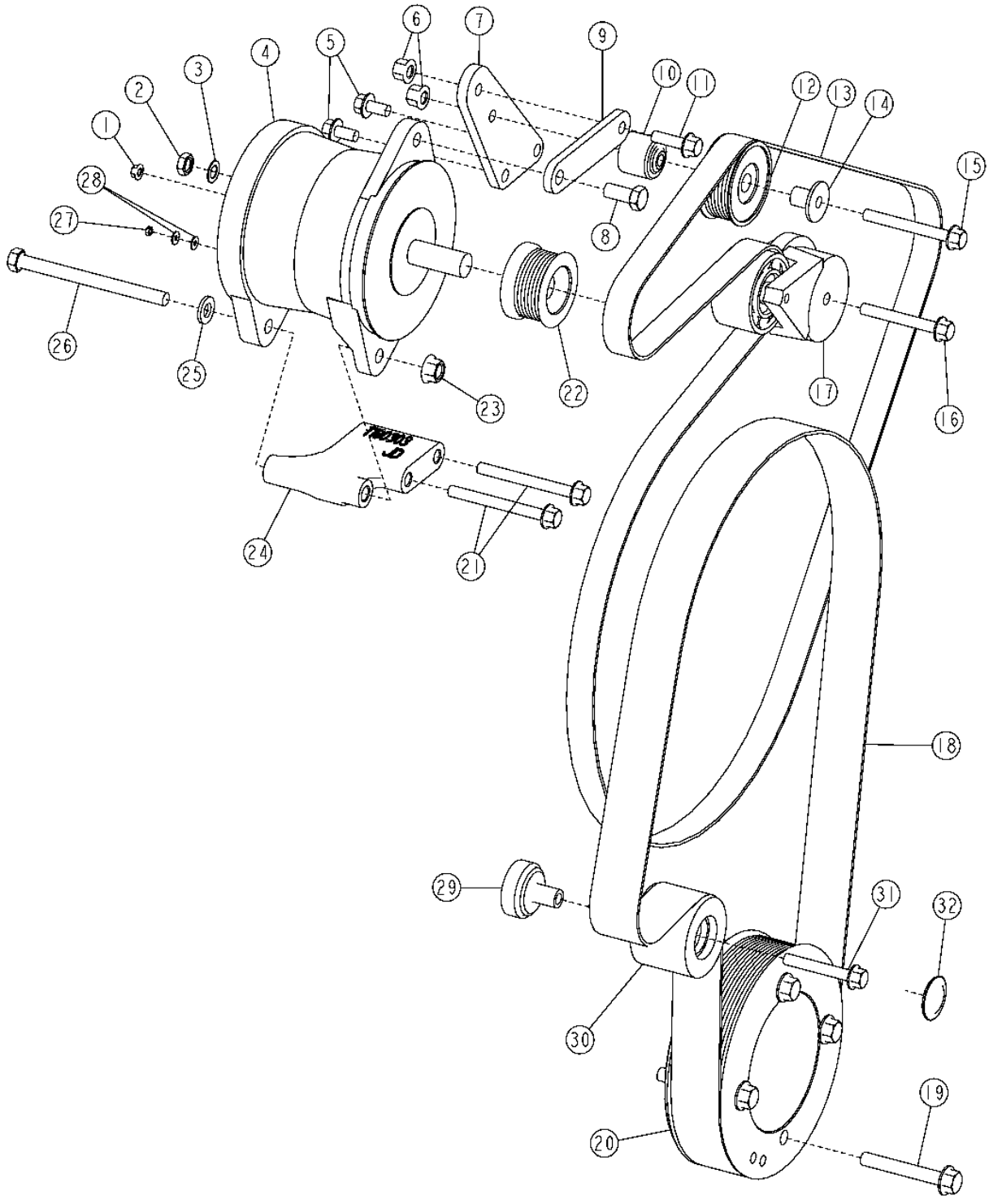

ALTERNATOR, ALTERNATOR BELTS AND PULLEYS

KEY	PART NO.	PART NAME	QTY	SERIAL NO.	REMARKS
1	14M7303	FLANGE NUT	1		M6
2	14H849	NUT	1		11.125 MM
3	12H325	LOCK WASHER	1		
4	AT208541	ALTERNATOR	1		(CONVENIENCE ASSEMBLY)
	AT226924	ALTERNATOR	1		(100 AMP) (HARSH ENVIRONMENT)
5	19M7784	SCREW	2		M10 X 20
6	14M7400	LOCK NUT	2		
7	T180422	BRACKET	1		
8	19H3385	CAP SCREW	1		
9	T180424	STRAP	1		
10	T196566	SPACER	1		
11	19M7835	SCREW	1		
12	AT211041	IDLER	1		
13	T180368	V-BELT	1		(ALTERNATOR)
	R500378	V-BELT	1		(HARSH ENVIRONMENT) (ALTERNATOR)
14	R502079	SLEEVE	1		
15	19M7811	SCREW	1		
16	19M7810	SCREW	1		
17	AT223788	PULLEY	1		
18	T196485	V-BELT	1		(FAN BELT)
	T182169	V-BELT	1		(HIGH AMBIENT FAN BELT)
19	19M9108	SCREW	4		
20	R505184	PULLEY	1		
	R515410	PULLEY	1		(HIGH AMBIENT)
21	19M7812	SCREW	2		
22	T181325	PULLEY	1		
	R128859	PULLEY	1		(HARSH ENVIRONMENT)
23	14M7299	FLANGE NUT	1		
24	T180303	BRACKET	1		
25	24M7240	WASHER	1		
26	19M7307	CAP SCREW	1		
27	14M7100	NUT	1		
28	24M7146	WASHER	2		
29	T195127	SPACER	1		
30	RE501133	IDLER	1		
31	19M7809	SCREW	1		
32	R99590	COVER	1		

ALTERNATOR REAR COVER
(80 AMP)

TP60231 -UN-11MAR98

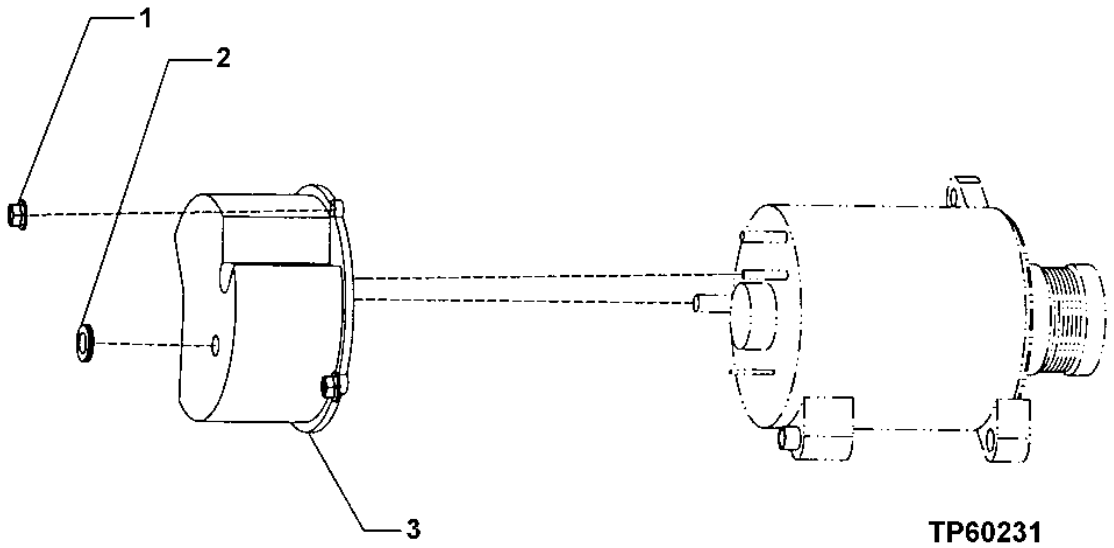

ALTERNATOR REAR COVER
(80 AMP)

KEY	PART NO.	PART NAME	QTY	SERIAL NO.	REMARKS
1	14M7375	FLANGE NUT	4		M5
2	R27180	GROMMET	1		
3	AT160704	SCREEN	1		

ALTERNATOR, AND ALTERNATOR PULLEYS

T158906 -UN-30AUG02

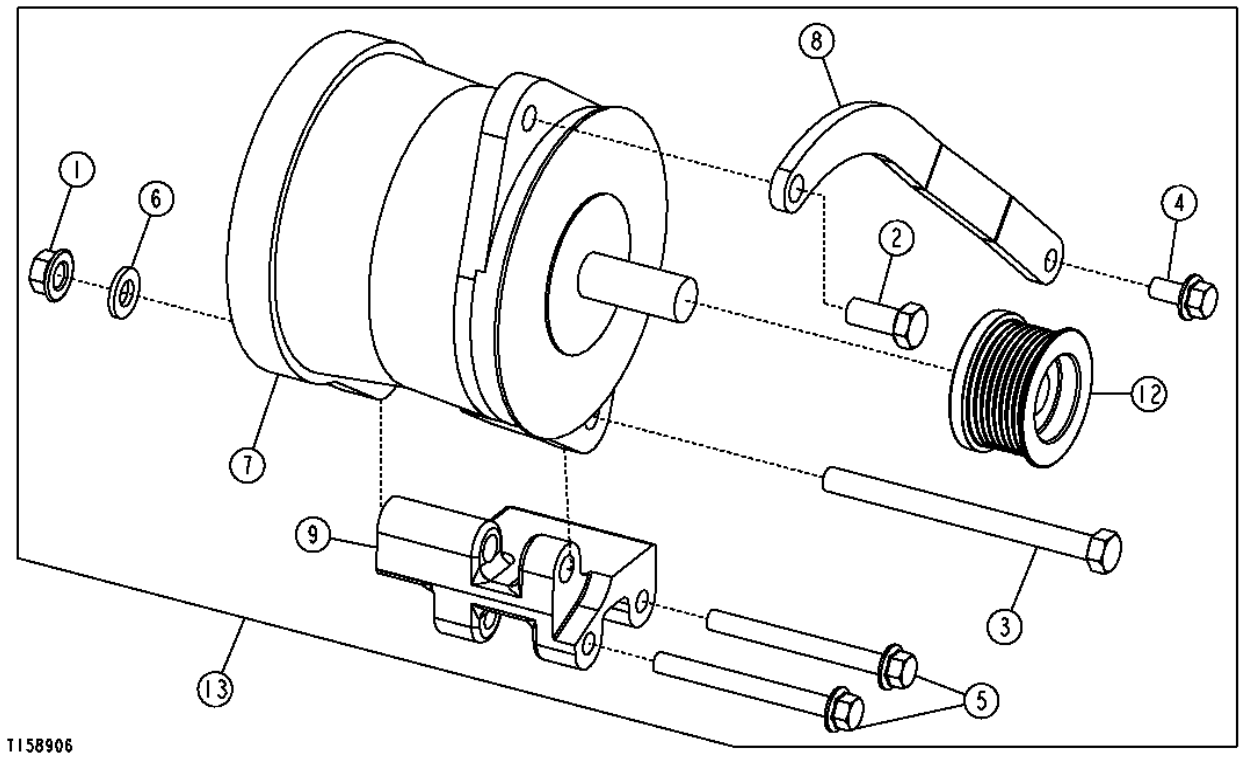

ALTERNATOR, AND ALTERNATOR PULLEYS

KEY	PART NO.	PART NAME	QTY	SERIAL NO.	REMARKS
1	14M7299	FLANGE NUT	1		M12
2	19H3385	CAP SCREW	1		1/2" X 1-1/8"
3	19M7307	CAP SCREW	1		M12 X 150
4	19M7784	SCREW	1		M10 X 20
5	19M7812	SCREW	2		M10 X 100
6	24M7240	WASHER	1		13 X 25 X 3 MM
7	AT208541	ALTERNATOR	1		
8	T174220	STRAP	1		
9	T174666	BRACKET	1		
12	T181325	PULLEY	1		
13	**AT203140**	**KIT**	**1**		

DRIVE HI-BEAM LAMP
(S.N. -587709)

TP35382 -UN-18MAR96

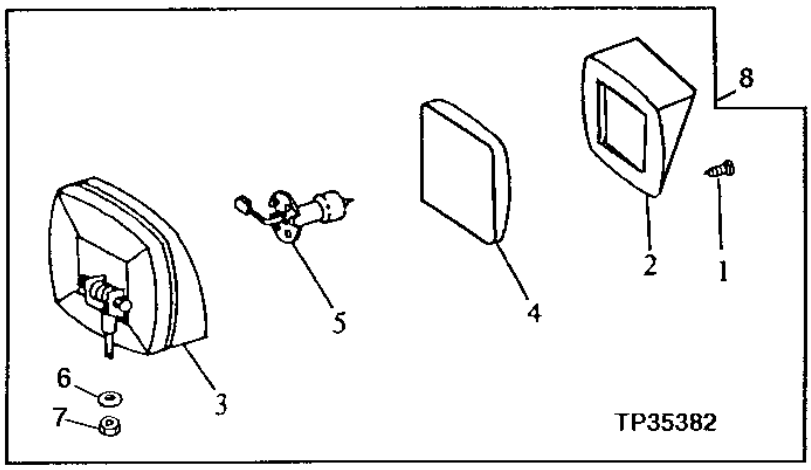

KEY	PART NO.	PART NAME	QTY	SERIAL NO.	REMARKS
1	T80394	SCREW	4		
2	.....	BEZEL	1		(SUB AT207542)
3	.....	HOUSING	1		(SUB AT207542)
4	T168872	LENS	1		
5	57M7198	BULB	1		HALOGEN (24-VOLT)
6	24M7238	WASHER	1		8.700 X 17 X 2 MM
7	14M7396	LOCK NUT	1		M8
8	AT207542	LAMP	1		

MEMORANDA

FRONT LIGHTS AND BRACKETS

T211032 -UN-09MAY05

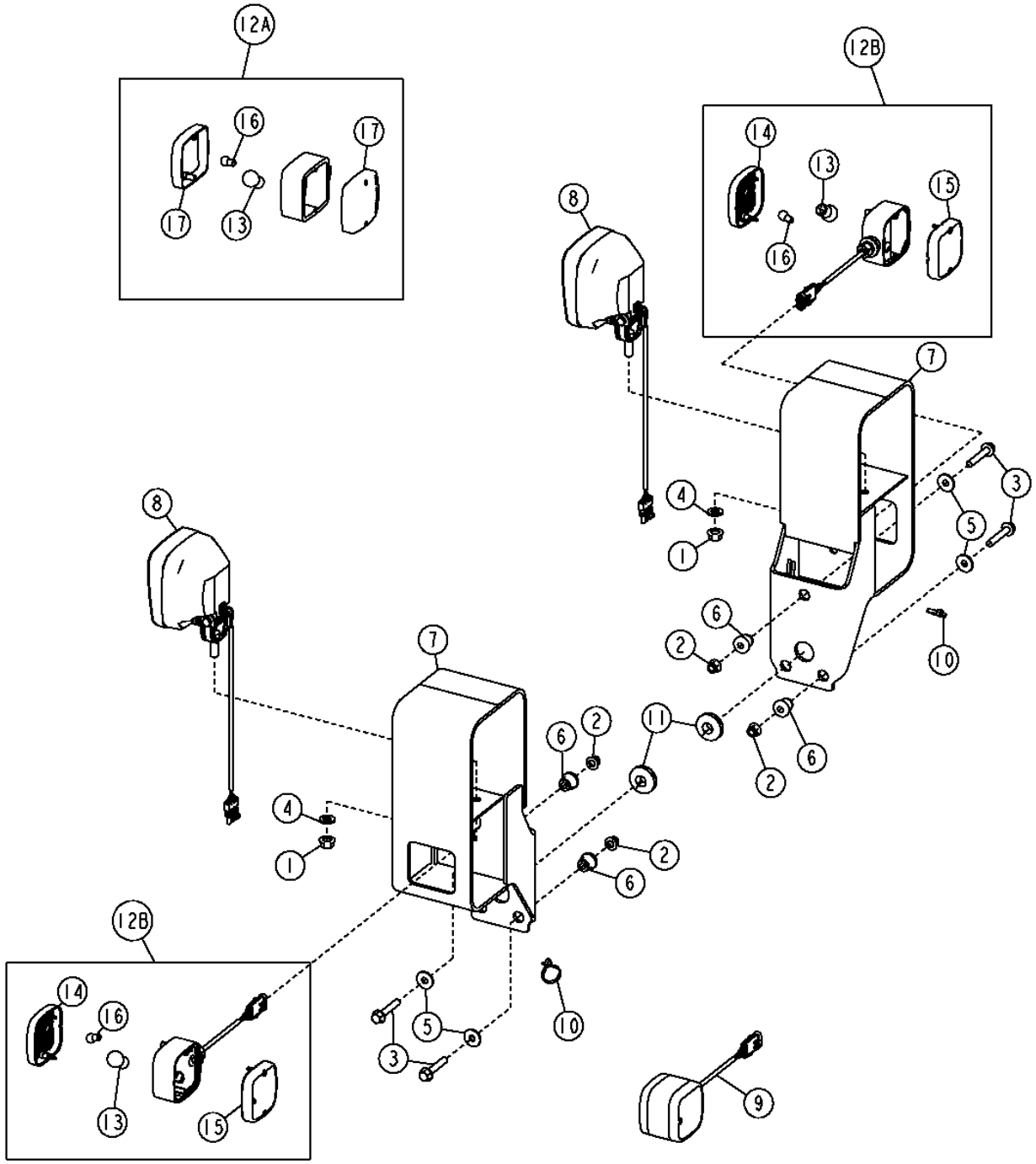

2B17

FRONT LIGHTS AND BRACKETS

KEY	PART NO.	PART NAME	QTY	SERIAL NO.	REMARKS
1	14M7299	FLANGE NUT	2		M12
2	14M7400	LOCK NUT	6		M10
3	19M7807	SCREW	6		M10 X 60
4	24M7240	WASHER	2		13 X 25 X 3 MM
5	24M7296	WASHER	6		10.500 X 30 X 2.500 MM
6	AT116162	ISOLATOR	6		
7	AT207710	BRACKET	2		
8	AT228238	HEADLIGHT	2	587710-	
	AT135758	BULB	1		
	AT222364	HEADLIGHT	2		(HARSH ENVIRONMENT)
9	AT307090	LAMP	2		(LED)
10	R44302	TIE BAND	2		
11	R45210	GROMMET	2		
12A	.....	LAMP	2	-597322	(SUB AT309550) (AT206878 NO LONGER AVAILABLE) (INCANDESCENT)
12B	AT309550	LAMP	2	597323-	(INCANDESCENT)
13	AT210333	BULB	1		
14	T208364	LENS	1	597323-	
15	T208365	LENS	1	597323-	
16	U44537	BULB	1		
17	.....	LENS	2	-597322	(SUB AT309550) (T176372 NO LONGER AVAILABLE)

STOP, TURN AND TAIL LIGHT

T137967 -UN-12FEB01

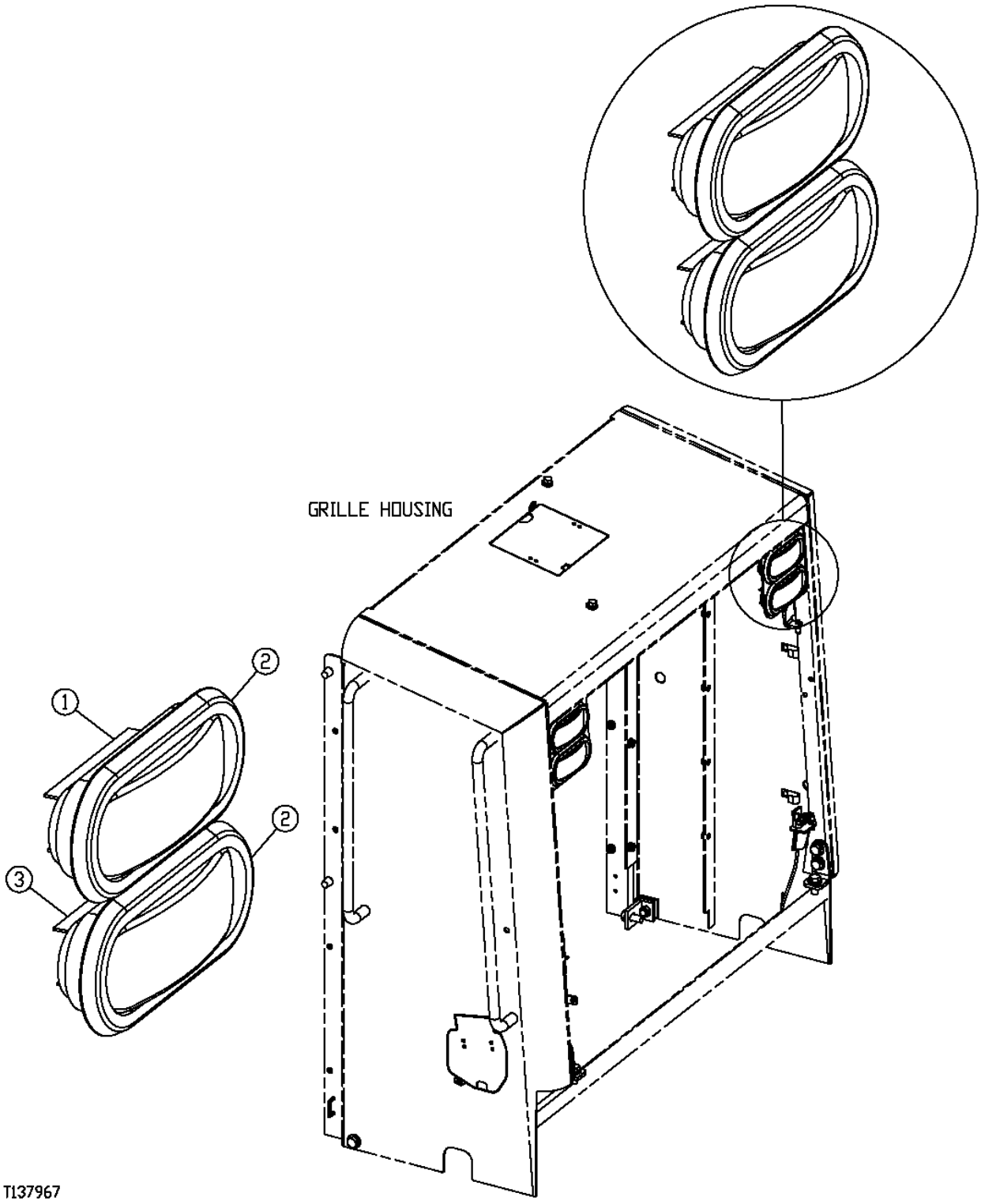

STOP, TURN AND TAIL LIGHT

KEY	PART NO.	PART NAME	QTY	SERIAL NO.	REMARKS
1	T178947	TURN SIGNAL LAMP	2		STANDARD
	T180074	TURN SIGNAL LAMP	2		HEAVY-DUTY
2	T178948	RETAINER	4		
3	T178946	TAIL LAMP	2		STANDARD, STOP
	T180075	TAIL LAMP	2		HEAVY-DUTY, STOP
4	AT223807	WIRING HARNESS	1		LED JUMPER (USE WITH HEAVY DUTY) (NOT ILLUSTRATED)

FRONT AND REAR WORK LAMP

TP62820 -UN-08JUN00

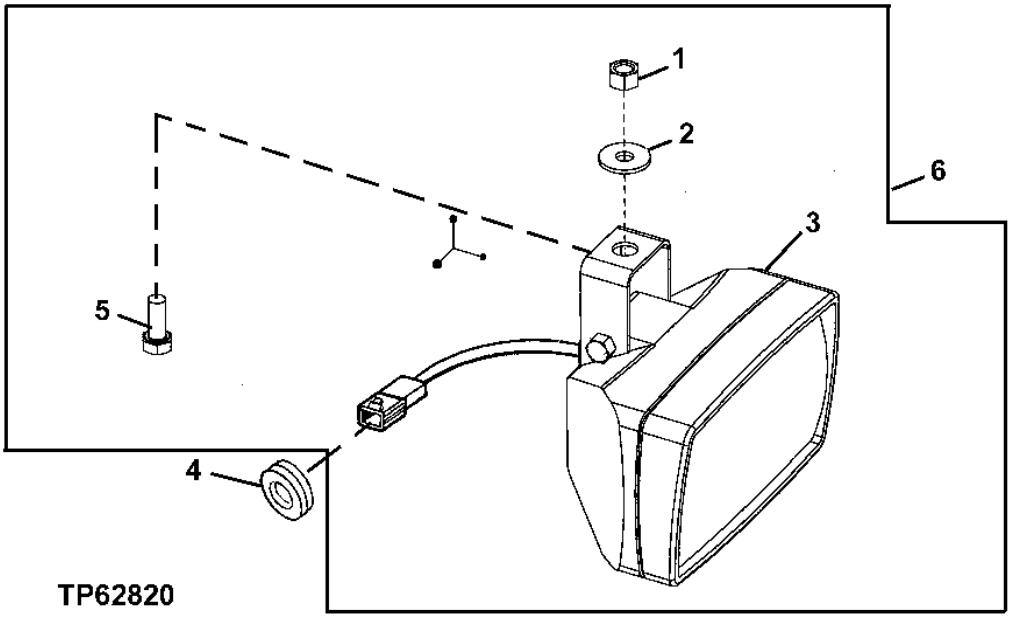

KEY	PART NO.	PART NAME	QTY	SERIAL NO.	REMARKS
1	14M7166	LOCK NUT	1		M8
2	24M7207	WASHER	1		8.400 X 24 X 2 MM
3	.....	LAMP	1		(SUB AT208435)
	AT135758	BULB	1		(NOT ILLUSTRATED)
4	T65643	GROMMET	1		
5	19M7139	CAP SCREW	1		M8 X 20
6	AT208435	LAMP	1		(STANDARD)
	AT226338	FLOODLAMP	1		(HARSH ENVIRONMENT)
7	R44302	TIE BAND	1		(NOT ILLUSTRATED)

DOME LIGHT AND DOOR LIGHT SWITCH

TP48466 -UN-14SEP96

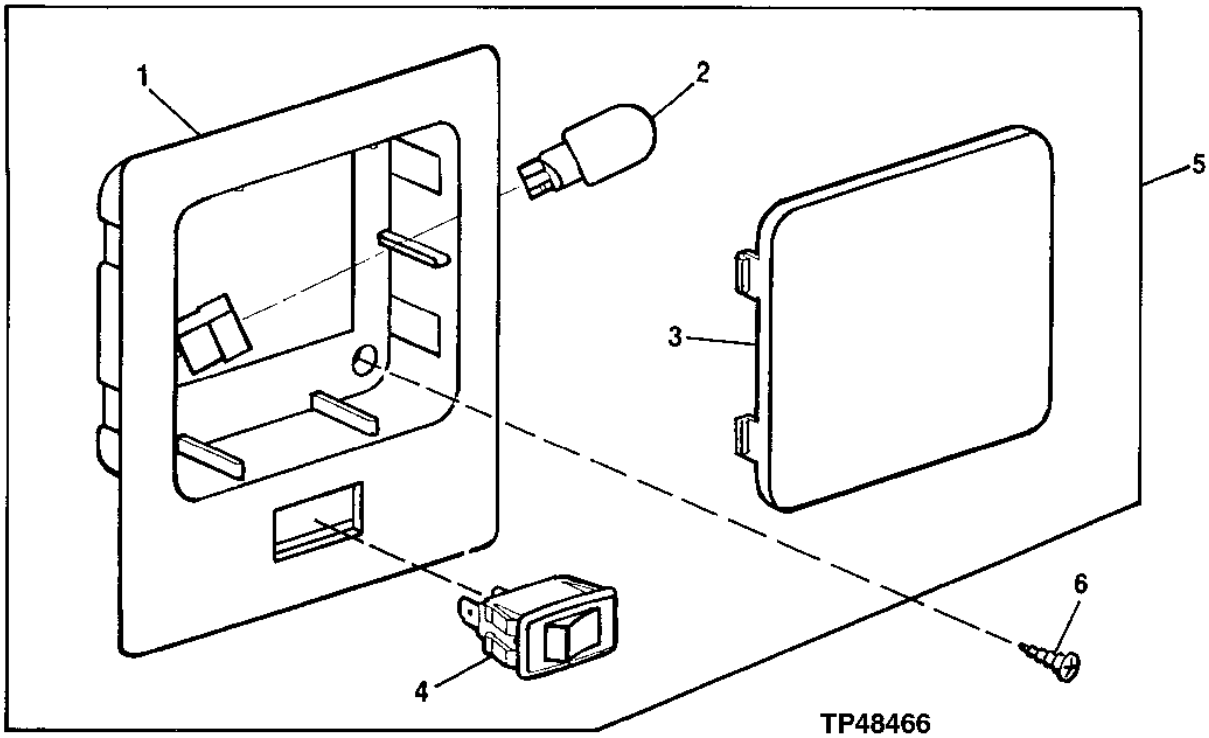

KEY	PART NO.	PART NAME	QTY	SERIAL NO.	REMARKS
1	.....	HOUSING	1		(SUB AT224923)
2	AT173355	BULB	1		
3	.....	LENS	1		(SUB AT224923)
4	RE48838	TOGGLE/ROCKER SWITCH	1		
5	AT224923	LAMP	1		
6	T134895	SELF-LOCKING SCREW	2		

LICENSE PLATE BRACKET AND LIGHT

TP48344 -UN-22AUG96

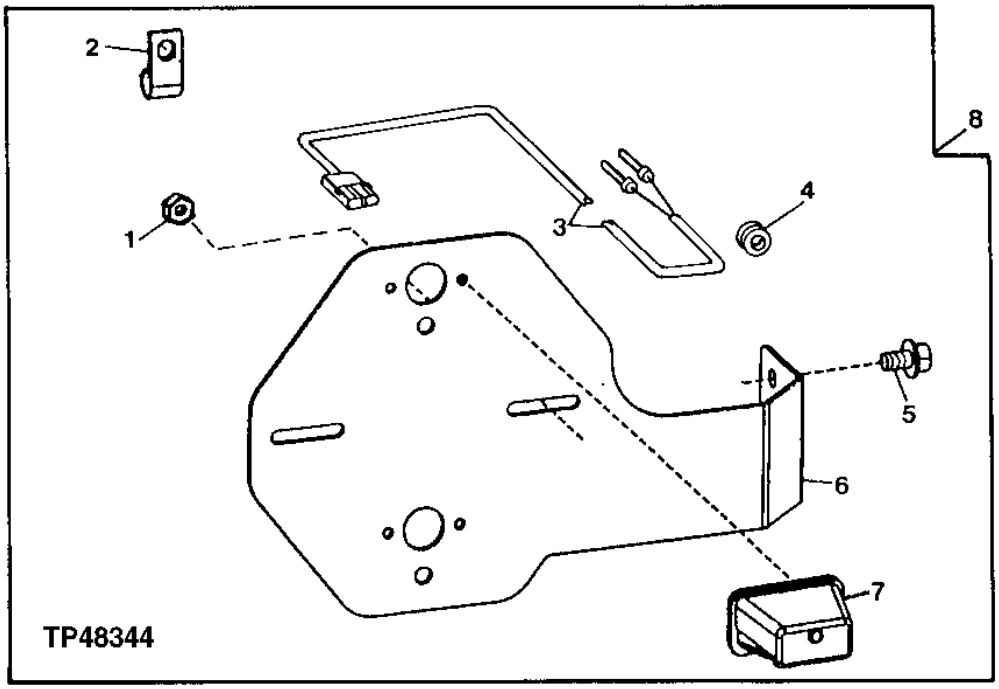

KEY	PART NO.	PART NAME	QTY	SERIAL NO.	REMARKS
1	14H605	NUT	2		0.164"
2	T75197	CLAMP	1		
3	AT203137	WIRING HARNESS	1		
4	R27583	GROMMET	1		
5	19M7784	SCREW	2		M10 X 20, (SUB FOR 19M7783)
6	T156693	BRACKET	1		
7	AT202789	LAMP	1		
	AT173354	BULB	1		(NOT ILLUSTRATED)
8	**AT206660**	**KIT**	**1**		**(WHOLEGOODS)**

MEMORANDA

FRONT DASH MODULE WIRING HARNESS (SERIAL NO. -590067)

T189892 -UN-28APR03

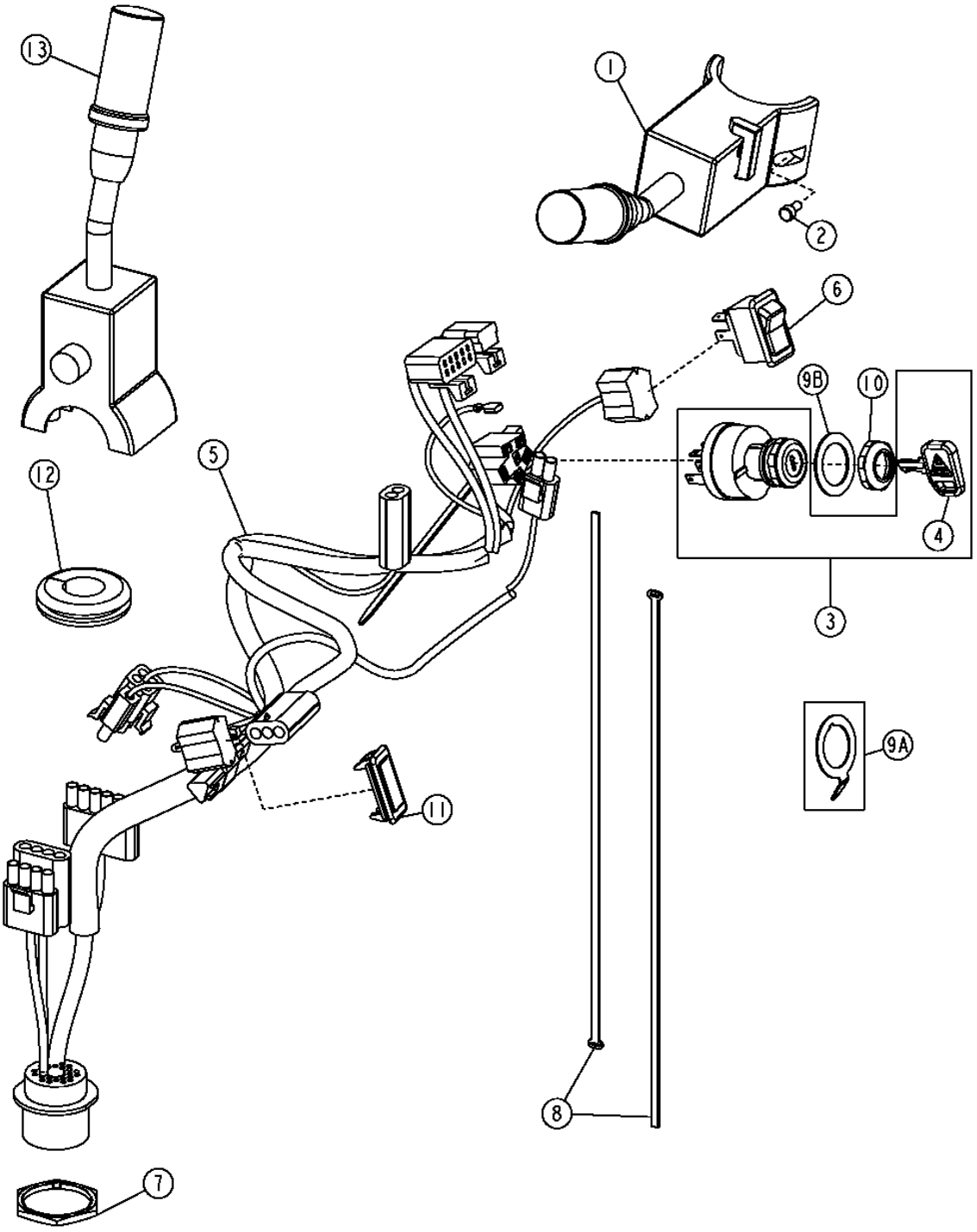

FRONT DASH MODULE WIRING HARNESS (SERIAL NO. -590067)

KEY	PART NO.	PART NAME	QTY	SERIAL NO.	REMARKS
1	AT176801	SWITCH	1		(ALSO ORDER (2) 19M8581)
2	19M7709	SCREW	2		M5 X 20, (SUB FOR 19M8146)
3	AT195301	SWITCH	1		
4	AT195302	KEY	1		
5	AT203128	WIRING HARNESS	1		
6	AT208630	SWITCH	1		
7	E73240	NUT	1		
8	H77698	TIE BAND	2		
	R44302	TIE BAND	1		
9A	R52725	ELECTRICAL CONNECTOR ASSY	1	-XXXXXX	
9B	24H1441	WASHER	1	XXXXXX-	
10	R44342	NUT	1		
11	M115279	PLUG	1		
12	T46876	GROMMET	1		
13	AT210334	SWITCH	1		(HIGH BEAM AND TURN SIGNAL)

FRONT DASH MODULE WIRING AND SHIFTER ASSEMBLY(SERIAL NO. 590068-)

T212822 -UN-19JUL05

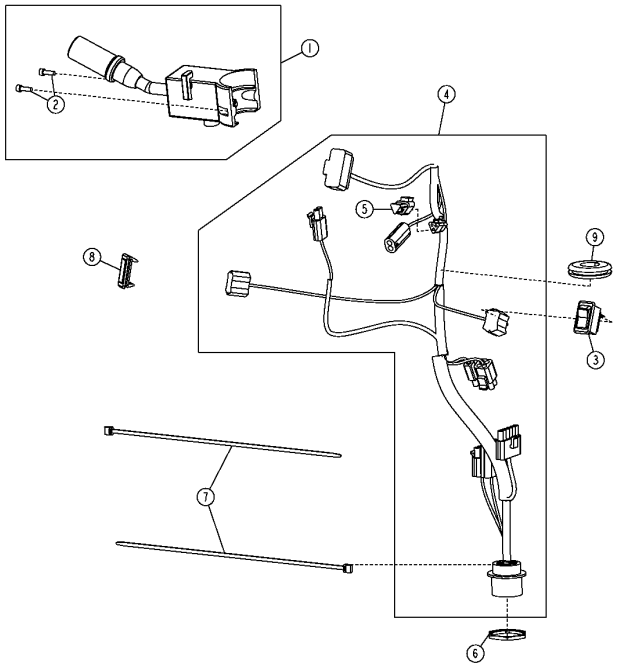

KEY	PART NO.	PART NAME T212822	QTY	SERIAL NO.	REMARKS
1	AT176801	SWITCH	1		(ALSO ORDER (2) 19M8581)
2	19M7709	SCREW	2		M5 X 20, (SUB FOR 19M8146)
3	AT208630	SWITCH	1		
4	AT227134	WIRING HARNESS	1		
5	57M8131	ELEC. CONNECTOR TERMINAL	1		
6	E73240	NUT	1		
7	H77698	TIE BAND	2		
8	M115279	PLUG	1		
9	T46876	GROMMET	1		

MEMORANDA

BLOWER AND AIR CONDITIONING WIRING HARNESS

TP48474 -UN-26SEP96

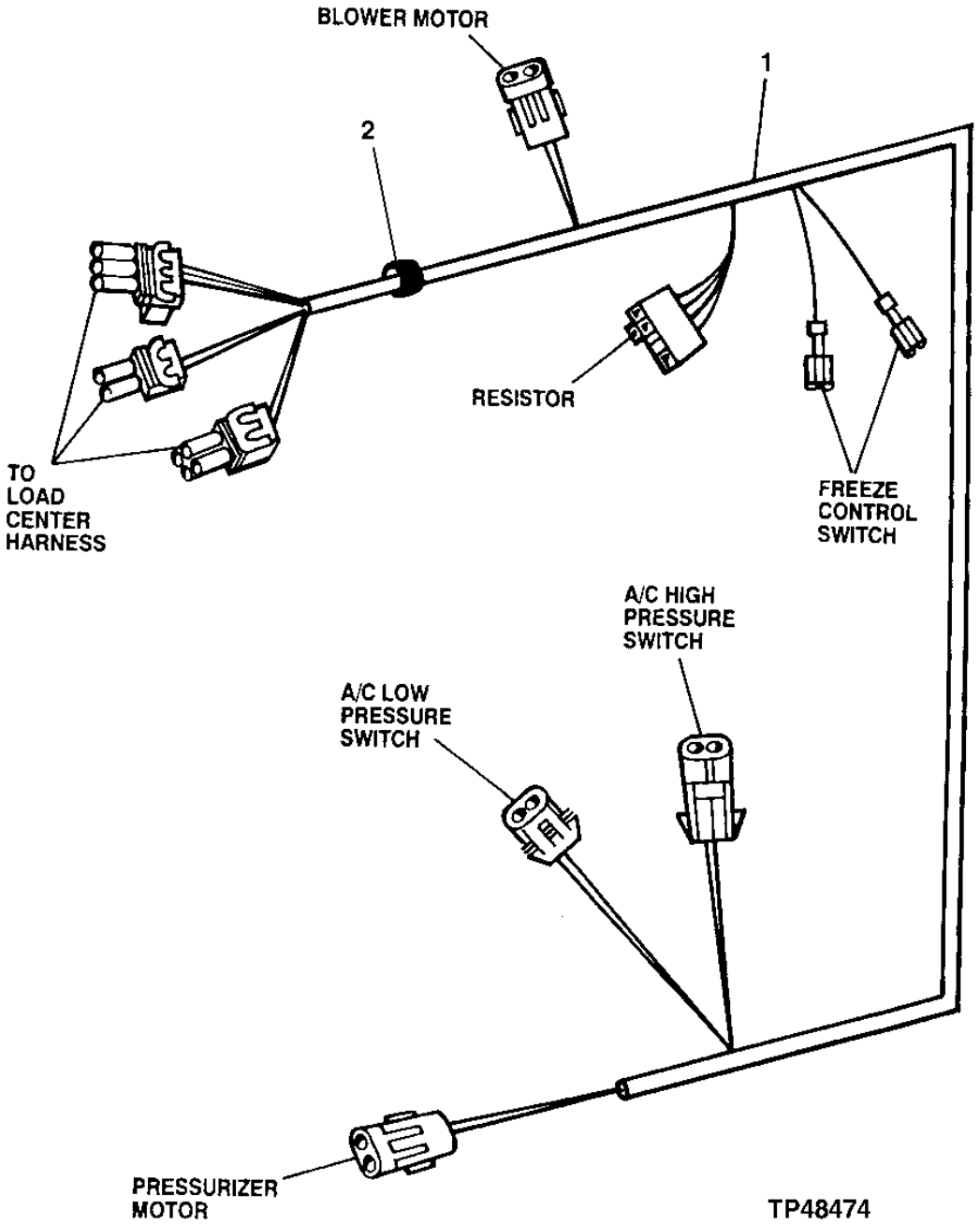

BLOWER AND AIR CONDITIONING WIRING HARNESS

KEY	PART NO.	PART NAME	QTY	SERIAL NO.	REMARKS
1	AT202934	WIRING HARNESS	1		
2	T182870	ISOLATOR	2		(SUB FOR N119177)

ROCKER SWITCHES AND PLUG ASSEMBLY (SERIAL NO. -590067)

TP55870 -UN-20FEB98

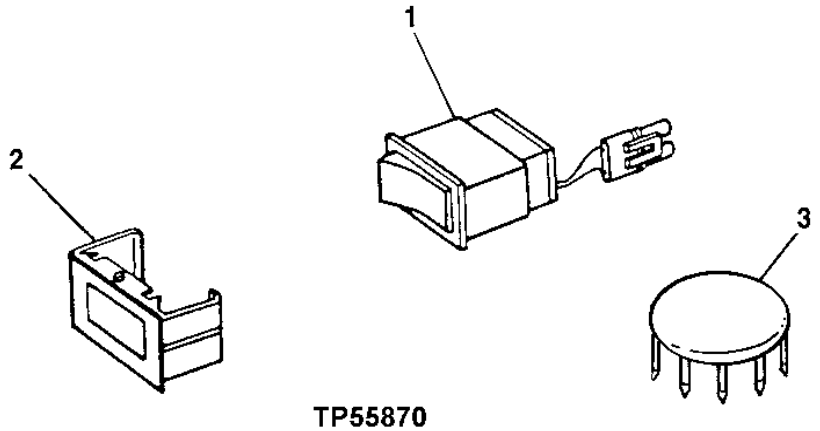

TP55870

KEY	PART NO.	PART NAME	QTY	SERIAL NO.	REMARKS
1	AT203500	TOGGLE/ROCKER SWITCH	1		CAB WORK LIGHT
	AT202786	SWITCH	1		FOUR-WAY FLASHER
	RE55478	TOGGLE/ROCKER SWITCH	1		AIR CONDITIONING SHUTOFF
	AT202787	SWITCH	1		DRIVE LIGHT
	AT208630	SWITCH	1		PARK BRAKE RELEASE
	AT202842	TOGGLE/ROCKER SWITCH	1		START AID
	AT202795	SWITCH	1		BOOM DOWN/PILOT ENABLE
	AT202796	SWITCH	1		CLUTCH CUTOFF
	AT202797	SWITCH	1		AUTOMATIC TRANSMISSION
	AT222825	SWITCH	1		RETURN TO CARRY
	AT202788	SWITCH	1		ROTARY BEACON
	AT225952	SWITCH	1		PIN DISCONNECT
	AT220517	SWITCH	1		RIDE CONTROL WITH SWITCH
	AT202800	SWITCH	1		
	AT207709	SWITCH	1		REAR WINDOW DEFROST
	AT209123	SWITCH	1		FRONT WINDOW DEFROST
	AT222824	SWITCH	1		RTD/BKO SELECT
2	M115279	PLUG	1		BEZEL AND PLUG ASSEMBLY
3	T152230	PLUG	4		(USED TO PLUG HOLES IN CAB ROOF WHEN WORKLIGHTS ARE NOT USED)
	H113924	PLUG	1		(USED TO PLUG ROTARY LPM SWITCH HOLE IN RIGHT PANEL)
	T182880	PLUG	1		(USED TO PLUG 12V POWER PLUG HOLE IN RIGHT-PANEL WALL)
	T182861	PLUG	1		
	T182862	PLUG	1		
	T182871	ISOLATOR	1		

PROGRAMMING KIT

T153485 -UN-03APR02

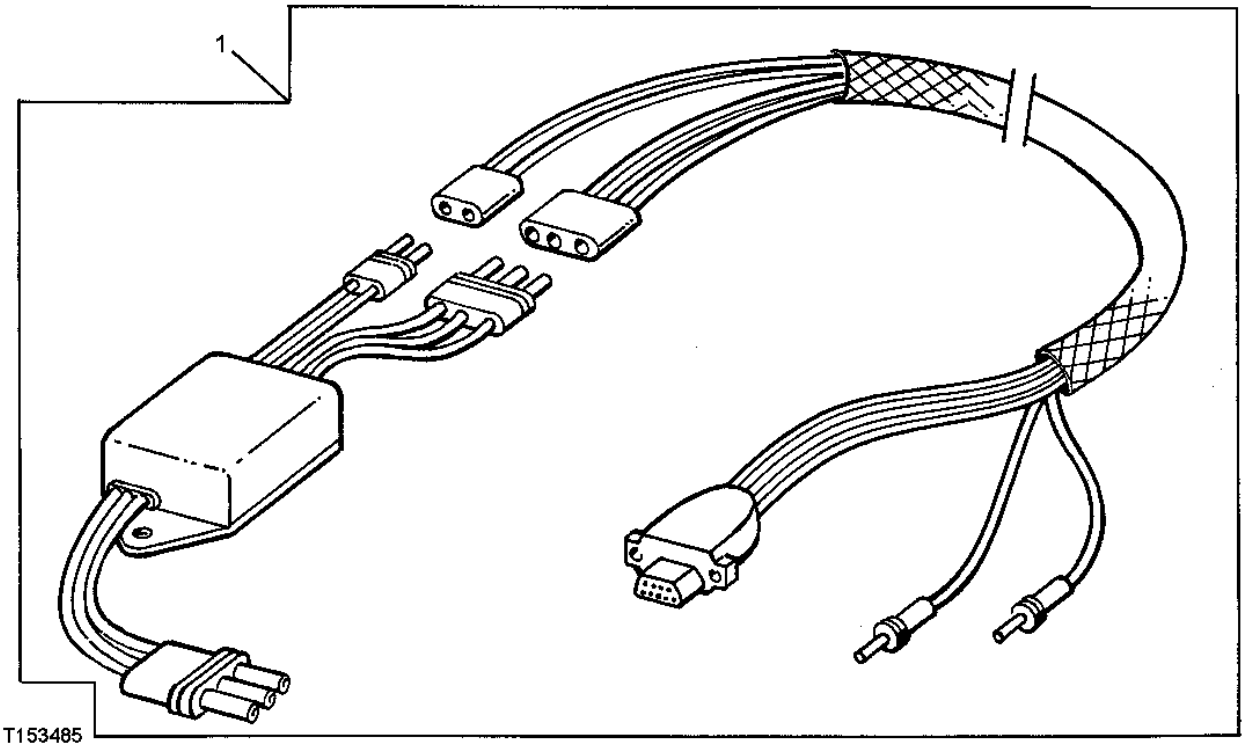

KEY	PART NO.	PART NAME	QTY	SERIAL NO.	REMARKS
1	**AT222678**	**KIT**	**1**		**(WHOLEGOODS)**

CAB WIRING HARNESS (S.N. -590067)

T159886 -UN-01OCT02

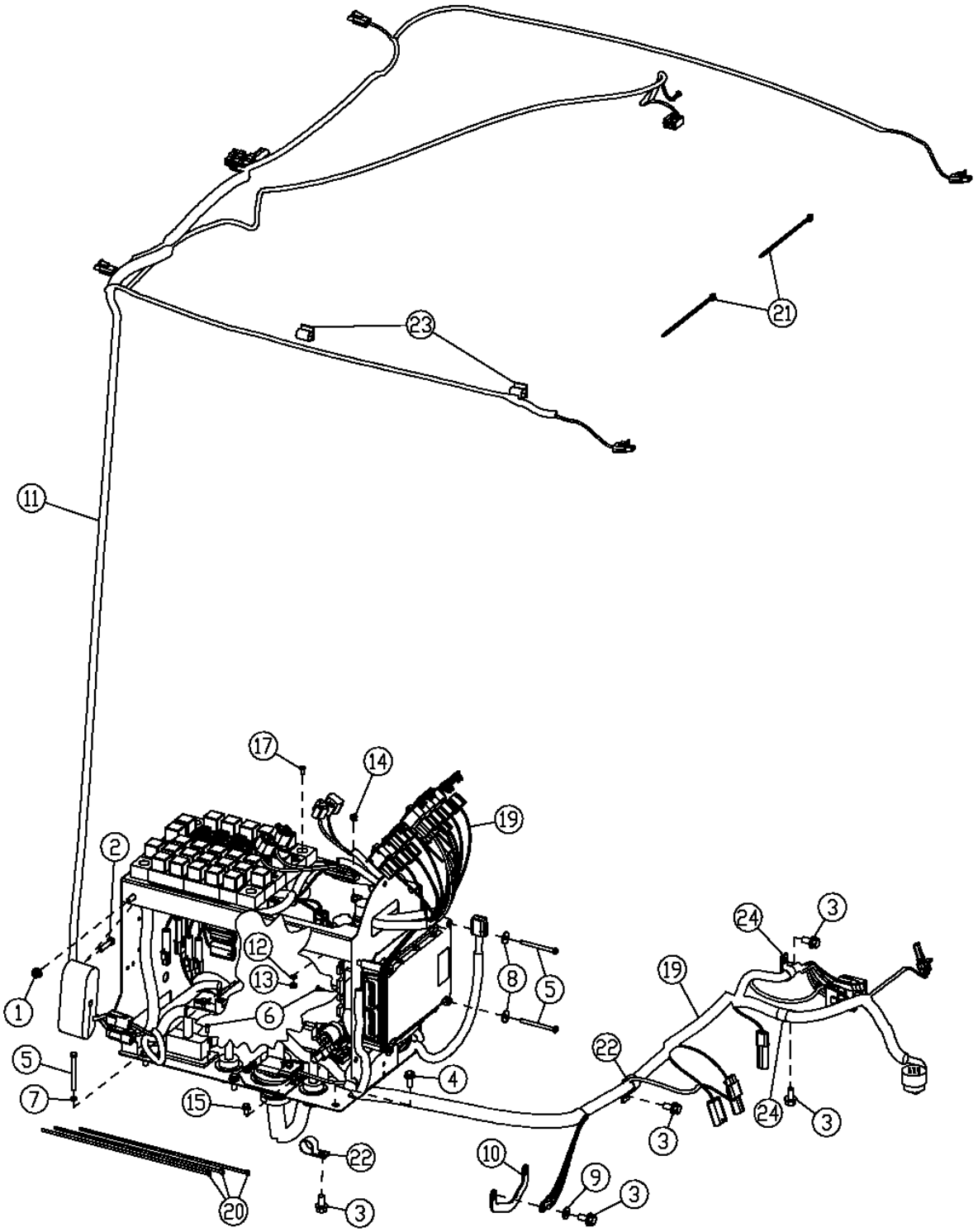

CAB WIRING HARNESS (S.N. -590067)

KEY	PART NO.	PART NAME	QTY	SERIAL NO.	REMARKS
1	14M7298	FLANGE NUT	1		M8
2	19M8008	CAP SCREW	1		M8 X 35, (SUB FOR 19M7298)
3	19M7784	SCREW	5		M10 X 20
4	19M7866	BOLT	3		M8 X 20
5	19M8786	SCREW	8		M6 X 70
6	21M7250	SCREW	6		M4 X 12
7	24M7054	WASHER	4		6.400 X 12 X 1.600 MM
8	24M7100	WASHER	4		6.600 X 22 X 2 MM
9	24M7239	WASHER	1		10.700 X 21 X 2.500 MM
10	AP22660	GROUND CABLE	1		
11	AT223869	WIRING HARNESS	1		(CAB ROOF)
	AT226339	CAB WIRING HARNESS	1		(CAB ROOF)(HARSH ENVIRONMENT)
12	12H297	LOCK WASHER	2		1/4"
13	14M7272	NUT	2		M6
14	14M7303	FLANGE NUT	2		M6
15	19M7774	SCREW	4		M6 X 12
17	21M7265	SCREW	4		M5 X 12
19	AT224755	WIRING HARNESS	1		(LOAD CENTER)
	AT300937	WIRING HARNESS	1		(LOAD CENTER)(HARSH ENVIRONMENT)
20	H77698	TIE BAND	6		
21	R44302	TIE BAND	4		
22	T102934	CLAMP	2		
23	T182909	CLIP	2		
24	T74416	CLAMP	2		

CAB WIRING HARNESS (S.N. 590068-)

T210760 -UN-27APR05

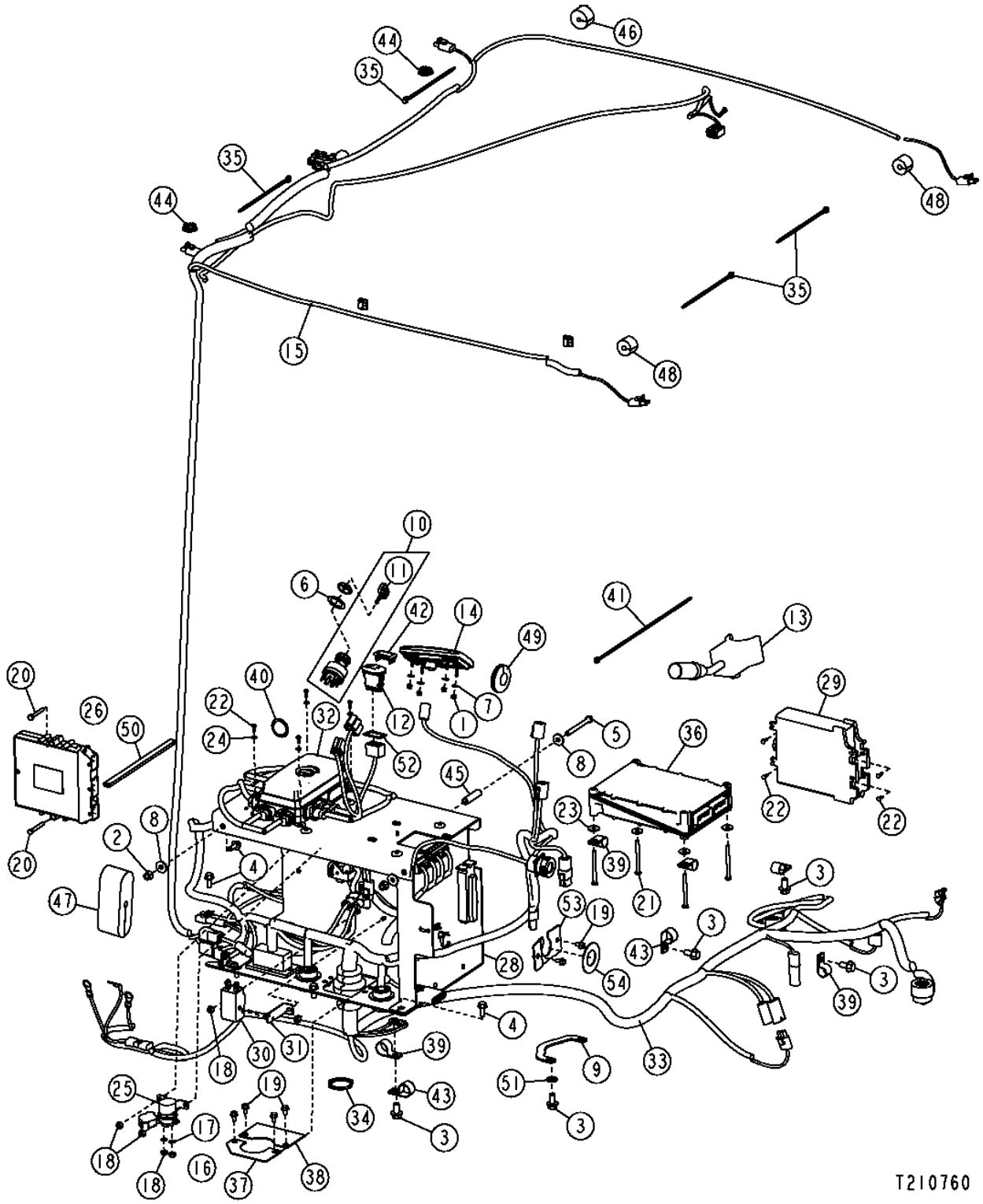

CAB WIRING HARNESS (S.N. 590068-)

KEY	PART NO.	PART NAME	QTY	SERIAL NO.	REMARKS
1	14M7360	LOCK NUT	4		M5
2	14M7396	LOCK NUT	2		M8
3	19M7784	SCREW	5		M10 X 20
4	19M7866	BOLT	6		M8 X 20
5	19M8504	CAP SCREW	1		M8 X 80
6	24H1441	WASHER	1		1-1/64" X 1-1/2" X 0.048"
7	24M7054	WASHER	4		6.400 X 12 X 1.600 MM
8	24M7298	WASHER	3		8.400 X 25 X 2 MM
9	AP22660	GROUND CABLE	1		215.900 MM
10	AT195301	SWITCH	1		(IGNITION KEYSWITCH)
11	AT195302	KEY	1		
12	AT202786	SWITCH	1	-595434	(FOUR-WAY FLASHER)
	AT304026	SWITCH	1	595435-	(FOUR-WAY FLASHER)
13	AT210334	SWITCH	1		(TURN SIGNAL SWITCH)
14	AT312110	PUSH SWITCH	1		(SSM) (SUB FOR AT310056)
15	AT300676	WIRING HARNESS	1		(CAB ROOF)
	AT308673	WIRING HARNESS	1		(CAB ROOF) (HARSH ENVIRONMENT)
16	12H297	LOCK WASHER	2		
17	14M7303	FLANGE NUT	2		M6
18	14M7303	FLANGE NUT	4		M6
19	19M7774	SCREW	4		M6 X 12
20	19M8538	CAP SCREW	2		M6 X 45
21	19M8786	SCREW	4		M6 X 70
22	21M7250	SCREW	6		M4 X 12
23	24M7100	WASHER	4		6.600 X 22 X 2 MM
25	AT145341	RELAY	1		(IGNITION RELAY)
26	AT314374	VEHICLE CONTROLLER	1		(FLC CONTROLLER) (SUB FOR AT311902, AT226495)
27	R44342	NUT	1		
28	T196129	BRACKET	1		
	T207717	BRACKET	1		(HARSH ENVIRONMENT)
29	AT316303	TRANSMISSION CONTROLLER	1		(TCU) (SUB FOR AT300098)
30	AT300537	RELAY	1		(STARTER RELAY)
31	T200363	BRACKET	2		
33	AT306006	WIRING HARNESS	1	-595434	(LOAD CENTER)
	AT314324	WIRING HARNESS	1	595435-597611	(LOAD CENTER)
	AT314324	WIRING HARNESS	1	597612-	(ALSO ORDER AT301498 AND 24H1500) (LOAD CENTER)
	AT308682	WIRING HARNESS	1		(HARSH ENVIRONMENT)
34	E73240	NUT	2		
35	R44302	TIE BAND	2		
36	RE507981	ENGINE CONTROLLER	1		(ECU)
37	T181604	PLATE	1		
38	T181605	PLATE	1		
39	T74416	CLAMP	3		
40	T206624	PLUG	2		(SUB FOR GX20510, THIS APPLICATION)
41	H77698	TIE BAND	3		
42	M115279	PLUG	1		
43	T102934	CLAMP	2		
44	T152230	PLUG	2		
45	T167775	BUSHING	1		
46	T182861	PLUG	1		
47	T182862	PLUG	1		
48	T182871	ISOLATOR	2		
49	T46876	GROMMET	1		
50	.....	SEALING TRIM	1		(MAKE FROM T180533 BULK MATERIAL, CUT TO 9.76 INCHES)
51	24M7239	WASHER	1		
52	T211678	SEAL	1	595435-	
53	AT301498	PLATE	1		
54	24H1500	WASHER	1		

CONVERTER, HARNESS, AND POWER PLUG (24 VOLT TO 12 VOLT)(SERIAL NO. -590067)

T158008 -UN-29JUL02

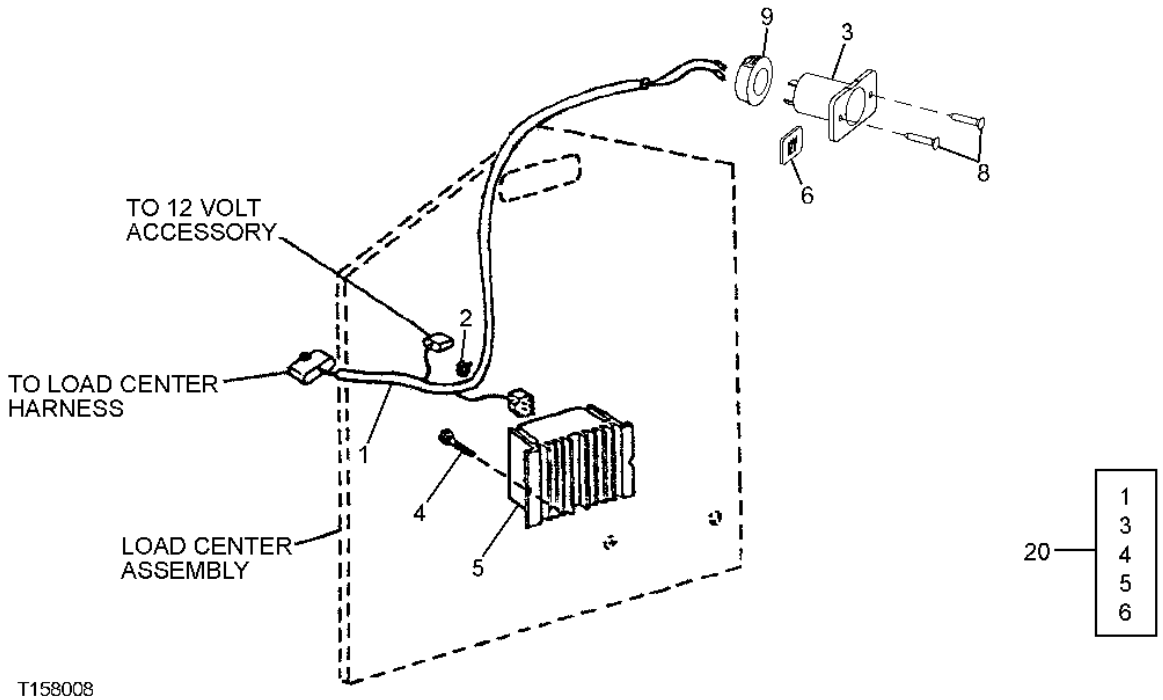

T158008

KEY	PART NO.	PART NAME	QTY	SERIAL NO.	REMARKS
1	AT202935	WIRING HARNESS	1		
2	R44302	TIE BAND	1		
3	AT202831	ELEC. CONNECTOR TERMINAL	1		POWER PLUG
4	21M7250	SCREW	4		M4 X 12
5	AT224894	CONVERTER	1		TEN AMP
	AT224893	CONVERTER	1		FIVE AMP
6	T168160	LABEL	1		TWELVE VOLT
8	37M7030	SCREW	2		
9	T182880	PLUG	1		
20	AT210394	KIT	1		(WHOLEGOODS)(10AMP CONVERTER KIT)

CONVERTER (10 AMP)(24 VOLT TO 12 VOLT)(SERIAL NO. 590068-)

T193985 -UN-22AUG03

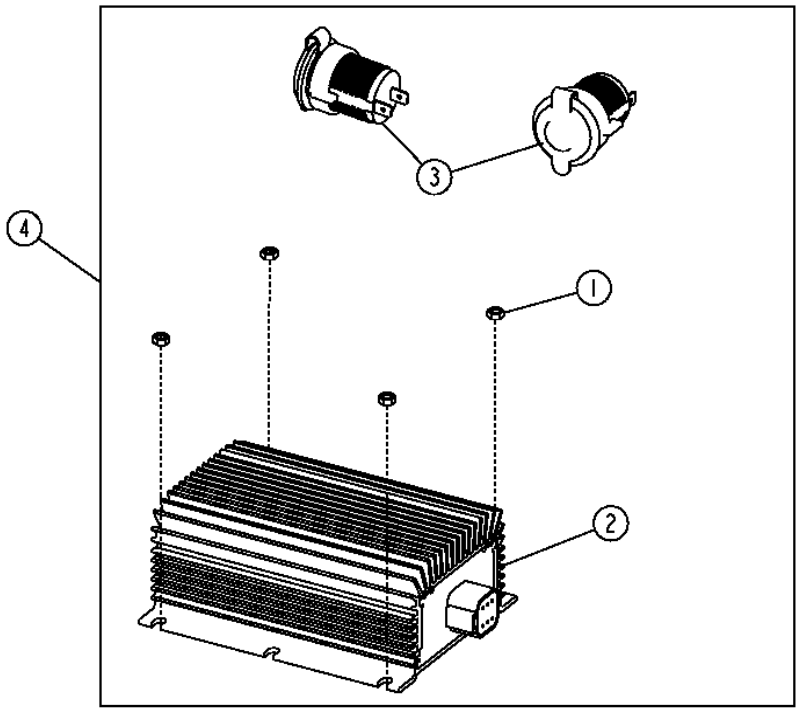

T193985

KEY	PART NO.	PART NAME	QTY	SERIAL NO.	REMARKS
1	14M7100	NUT	4		M4
2	AT224894	CONVERTER	1		(10 AMP)
3	GY20126	SOCKET OUTLET	2		POWER PLUG
4	**AT306828**	**CONVERTER**	**1**		

CONVERTER (5 AMP)(24 VOLT TO 12 VOLT)(SER. NO. 590068-)

T193986 -UN-22AUG03

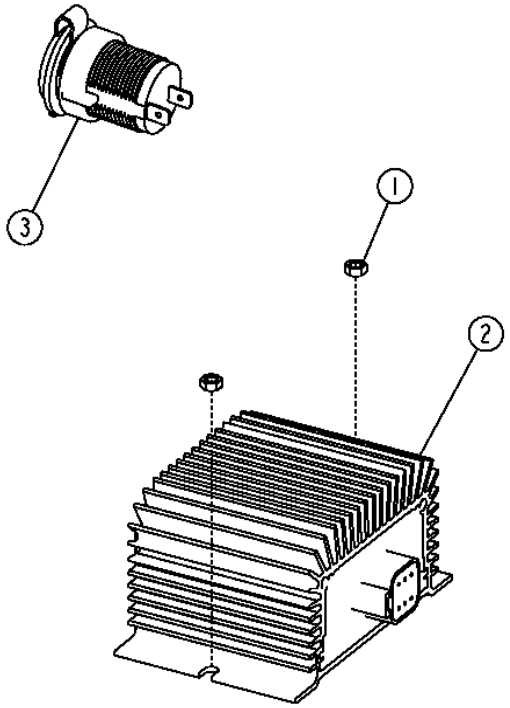

T193986

KEY	PART NO.	PART NAME	QTY	SERIAL NO.	REMARKS
1	14M7100	NUT	2		M4
2	AT224893	CONVERTER	1		(5 AMP)
3	GY20126	SOCKET OUTLET	1		

MEMORANDA

LOAD CENTER COMPARTMENT (SERIAL NO. -590067)

T142027 -UN-10MAY01

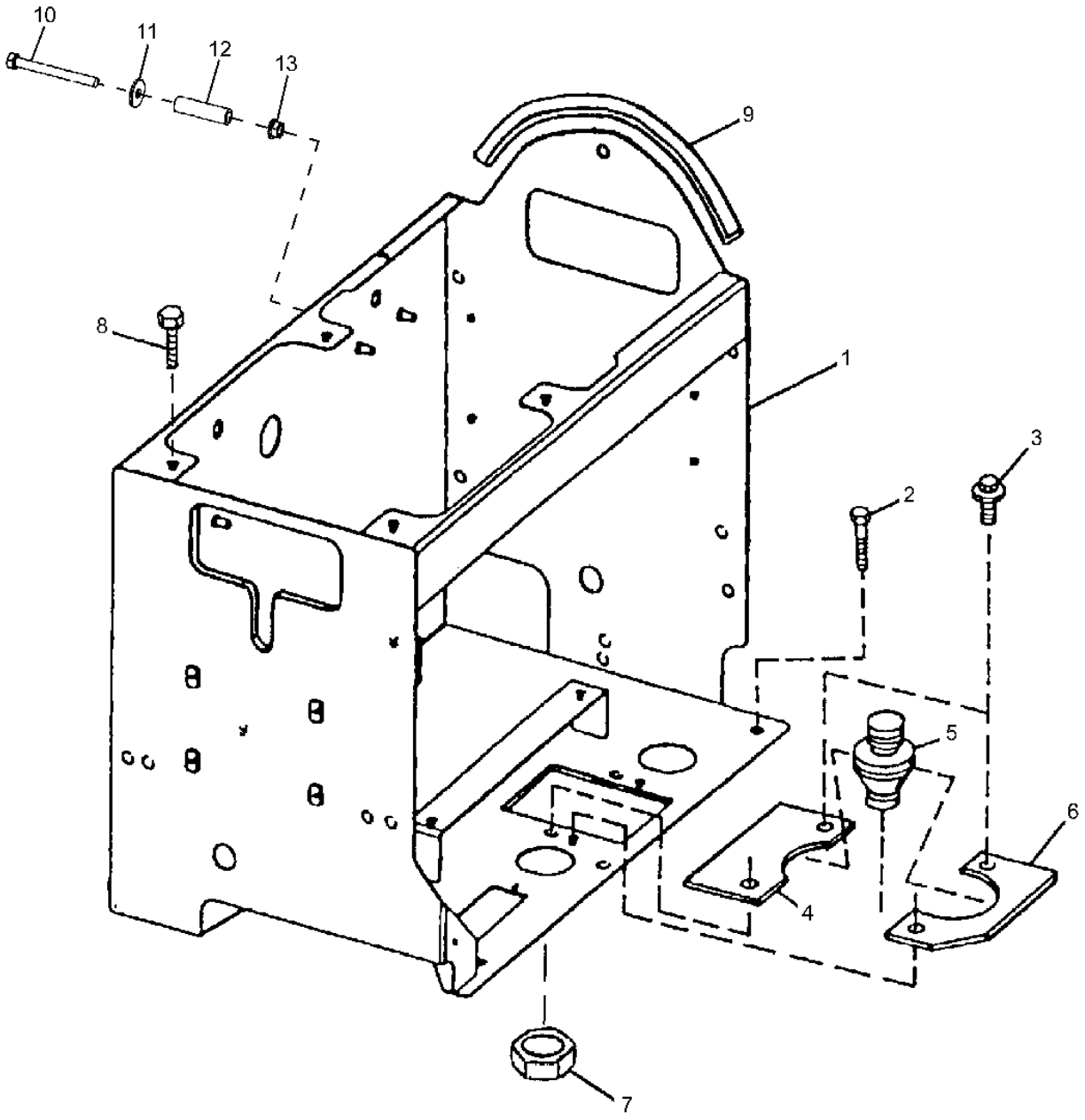

T142027

LOAD CENTER COMPARTMENT (SERIAL NO. -XXXXXX)

KEY	PART NO.	PART NAME	QTY	SERIAL NO.	REMARKS
1	AT224232	HOUSING	1		
2	19M7866	BOLT	3		M8 X 20
3	19M7774	SCREW	4		M6 X 12
4	T180920	PLATE	1		
5	T173648	GROMMET	1		
6	T180919	PLATE	1		
7	57M8035	NUT	3		
	E73240	NUT	1		
8	21M7265	SCREW	4		M5 X 12
9	.....	ISOLATOR	AR		(MAKE FROM T61798 BULK MATERIAL, CUT TO LENGTH)
10	19M8504	CAP SCREW	1		M8 X 80
11	24M7298	WASHER	1		8.400 X 25 X 2 MM
12	T167775	BUSHING	1		
13	14M7298	FLANGE NUT	1		M8

RETURN TO DIG HARNESS

TP48338 -UN-10MAY96

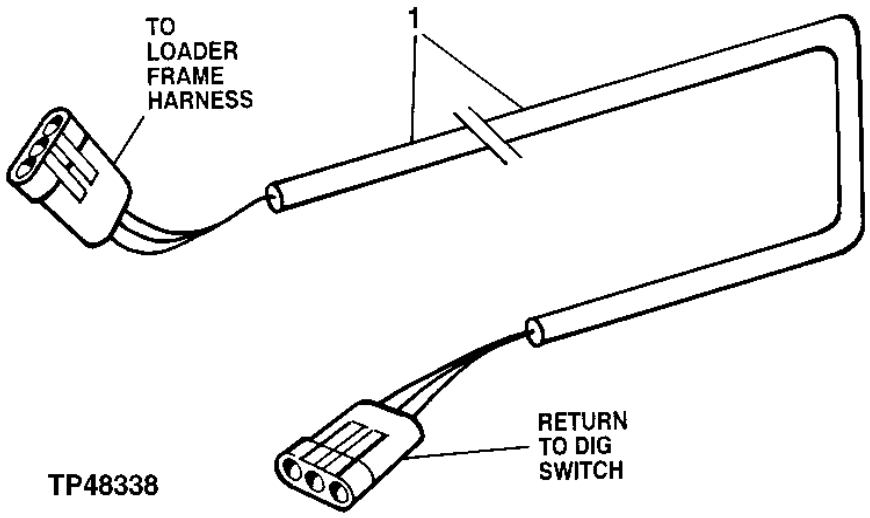

KEY	PART NO.	PART NAME	QTY	SERIAL NO.	REMARKS
1	AT202827	WIRING HARNESS	1		(RETURN-TO-DIG HARNESS)
	AT221628	WIRING HARNESS	1		(RETURN-TO-DIG HARNESS) (HARSH ENVIORNMENT)

TRANSMISSION CONTROL UNIT (SERIAL NO. -590067)

TP35396 -UN-07AUG96

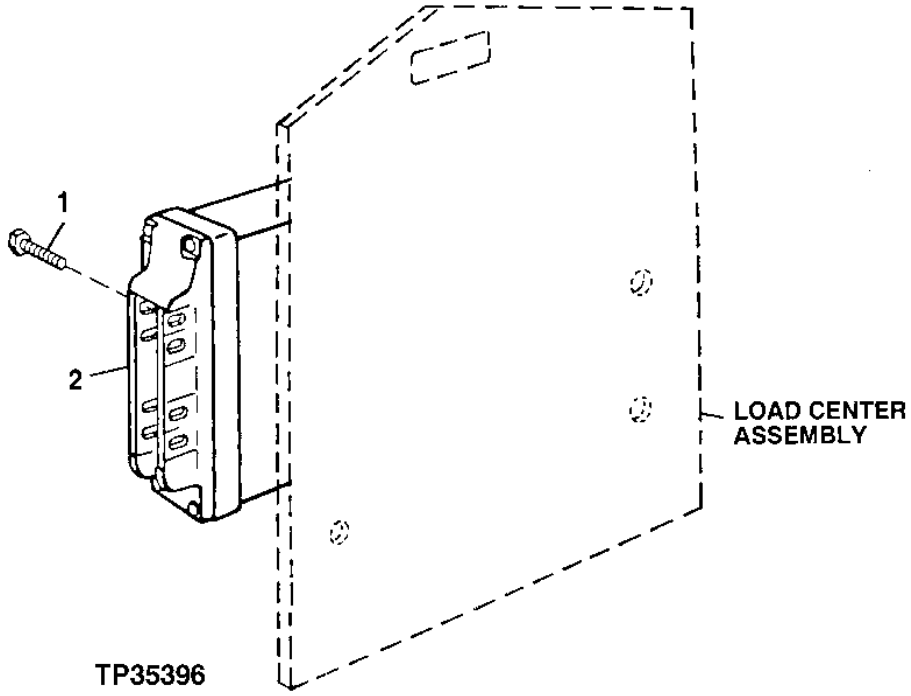

KEY	PART NO.	PART NAME	QTY	SERIAL NO.	REMARKS
1	21M7250	SCREW	4		M4 X 12
2	AT301722	TRANSMISSION CONTROLLER	1		

CHASSIS COMPUTER UNIT (SERIAL NO. -590067)

TP35394 -UN-11SEP96

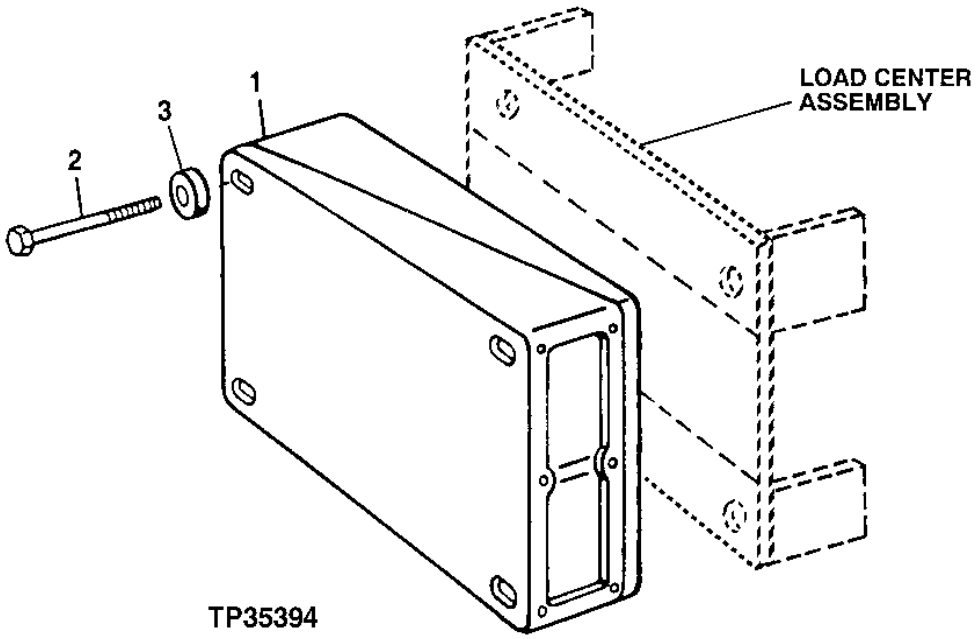

KEY	PART NO.	PART NAME	QTY	SERIAL NO.	REMARKS
1	AT227500	VEHICLE CONTROLLER	1		
2	19M8786	SCREW	4		M6 X 70
3	24M7088	WASHER	4		6.600 X 12 X 1.600 MM

FUSES, RELAYS AND CIRCUIT BREAKERS (S.N. -590067)

TP48427 -UN-17AUG96

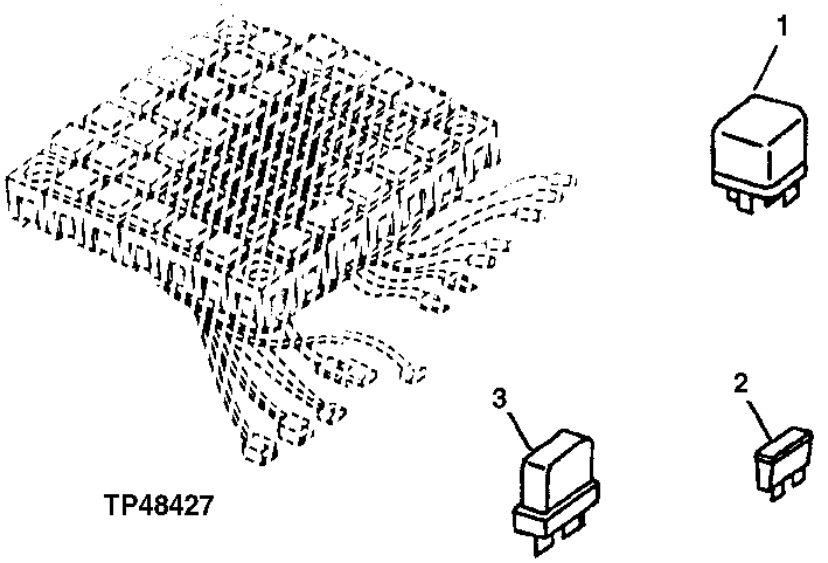

KEY	PART NO.	PART NAME	QTY	SERIAL NO.	REMARKS
1	AT162863	RELAY	23		
	AT206685	RELAY	2		TURN SIGNAL FLASHER
	AT145341	RELAY	1		
2	57M7688	FUSE	AR		5 AMP
	57M7689	FUSE	AR		10 AMP
	57M7690	FUSE	AR		15 AMP
	57M7691	FUSE	AR		20 AMP
	57M8623	FUSE	AR		25 AMP
	57M8163	FUSE	AR		30 AMP
	57M8175	FUSE	AR		35 AMP
3	T103463	CIRCUIT BREAKER	2		10 AMP CB

VEHICLE ELECTRICAL CENTER (VEC) (S.N. 590068-)

T209740 -UN-01APR05

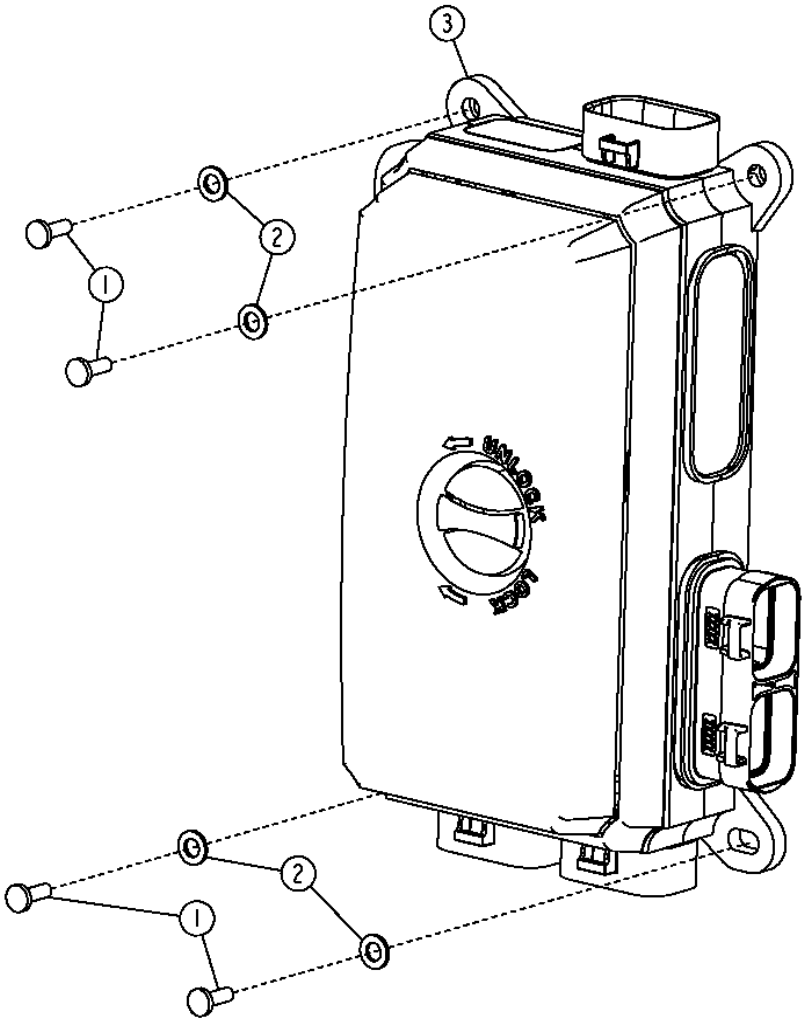

T209740

VEHICLE ELECTRICAL CENTER (VEC) (S.N. 590068-)

KEY	PART NO.	PART NAME	QTY	SERIAL NO.	REMARKS
1	21M7250	SCREW	4		M4 X 12
2	24M7087	WASHER	4		5.500 X 10 X 1 MM
3	AT301777	VEHICLE CONTROLLER	1		(VEC)(INCLUDES ALL FUSES, DIODES, AND RELAYS)
4	57M7688	FUSE	18		(NOT ILLUSTRATED) (5 AMP)
5	57M7689	FUSE	10		(NOT ILLUSTRATED) (10AMP)
6	57M7690	FUSE	3		(NOT ILLUSTRATED) (15AMP)
7	57M8623	FUSE	1		(NOT ILLUSTRATED) (25AMP)
8	57M8640	DIODE	5		(NOT ILLUSTRATED)
9	AT305389	RELAY	1		(NOT ILLUSTRATED) (24 VOLT)

LICENSE PLATE LIGHT HARNESS

TP48334 -UN-10MAY96

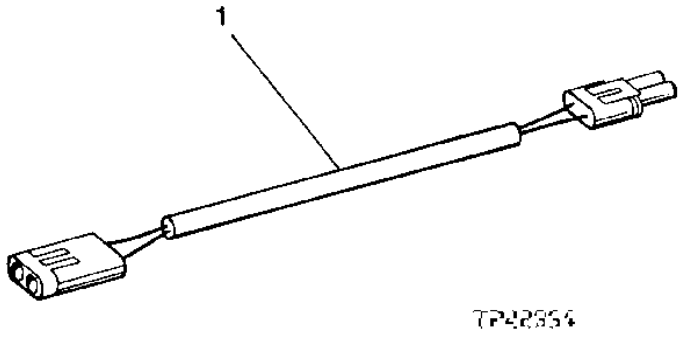

KEY	PART NO.	PART NAME	QTY	SERIAL NO.	REMARKS
1	AT203137	WIRING HARNESS	1		
	AT222436	WIRING HARNESS	1		(HARSH ENVIORNMENT)

PIN DISCONNECT HARNESS

TP48336 -UN-10MAY96

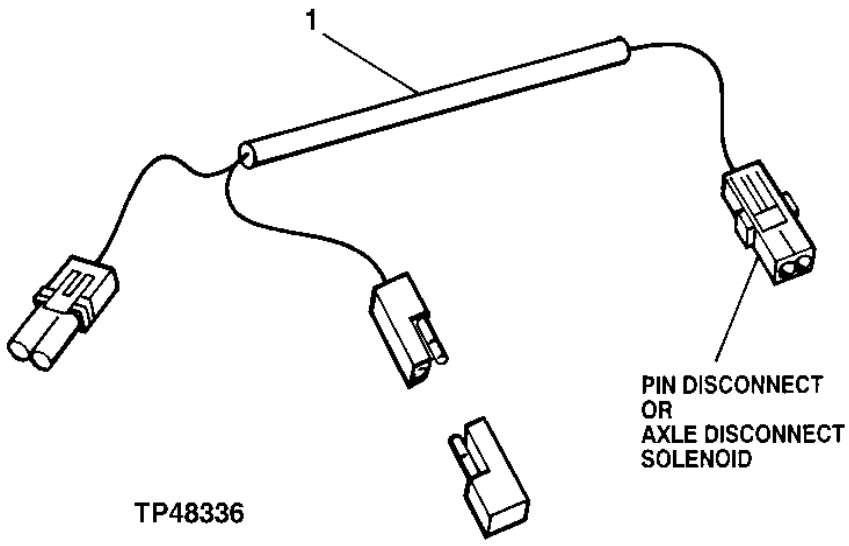

KEY	PART NO.	PART NAME	QTY	SERIAL NO.	REMARKS
1	AT202824	WIRING HARNESS	1		(INCLUDES AR94101 ONE AMP DIODE)
	AT221629	WIRING HARNESS	1		(HARSH ENVIRONMENT, SEALED CONNECTORS) (NOT ILLUSTRATED)

TRANSMISSION WIRING HARNESS (SERIAL NO. -590067)

TP55869 -UN-20FEB98

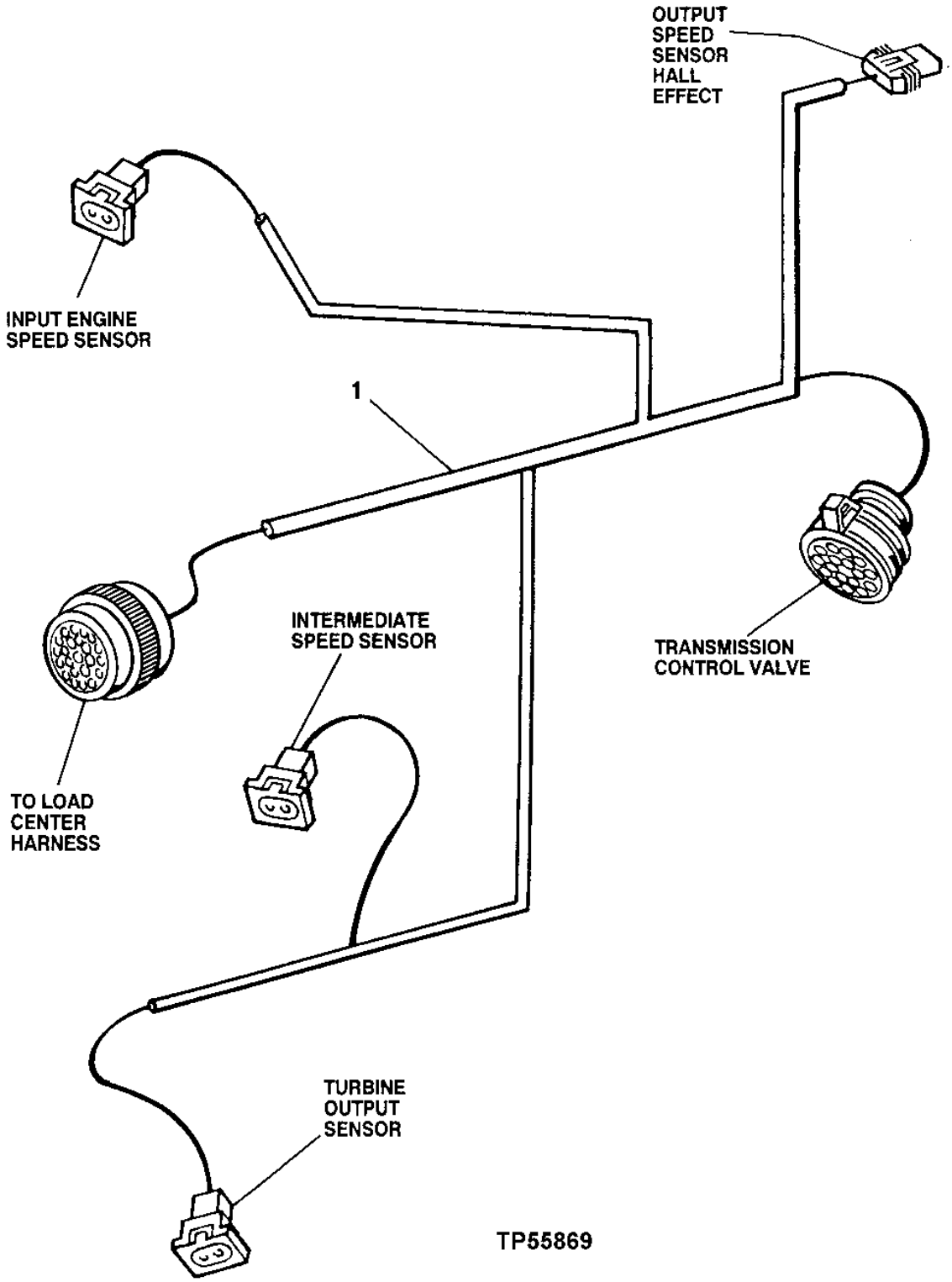

TRANSMISSION WIRING HARNESS (SERIAL NO. -590067)

KEY	PART NO.	PART NAME	QTY	SERIAL NO.	REMARKS
1	AT202942	WIRING HARNESS	1		
	AT222437	WIRING HARNESS	1		(HARSH ENVIORNMENT)

TRANSMISSION WIRING HARNESS (SERIAL NO. 590068-)

T195162 -UN-24OCT03

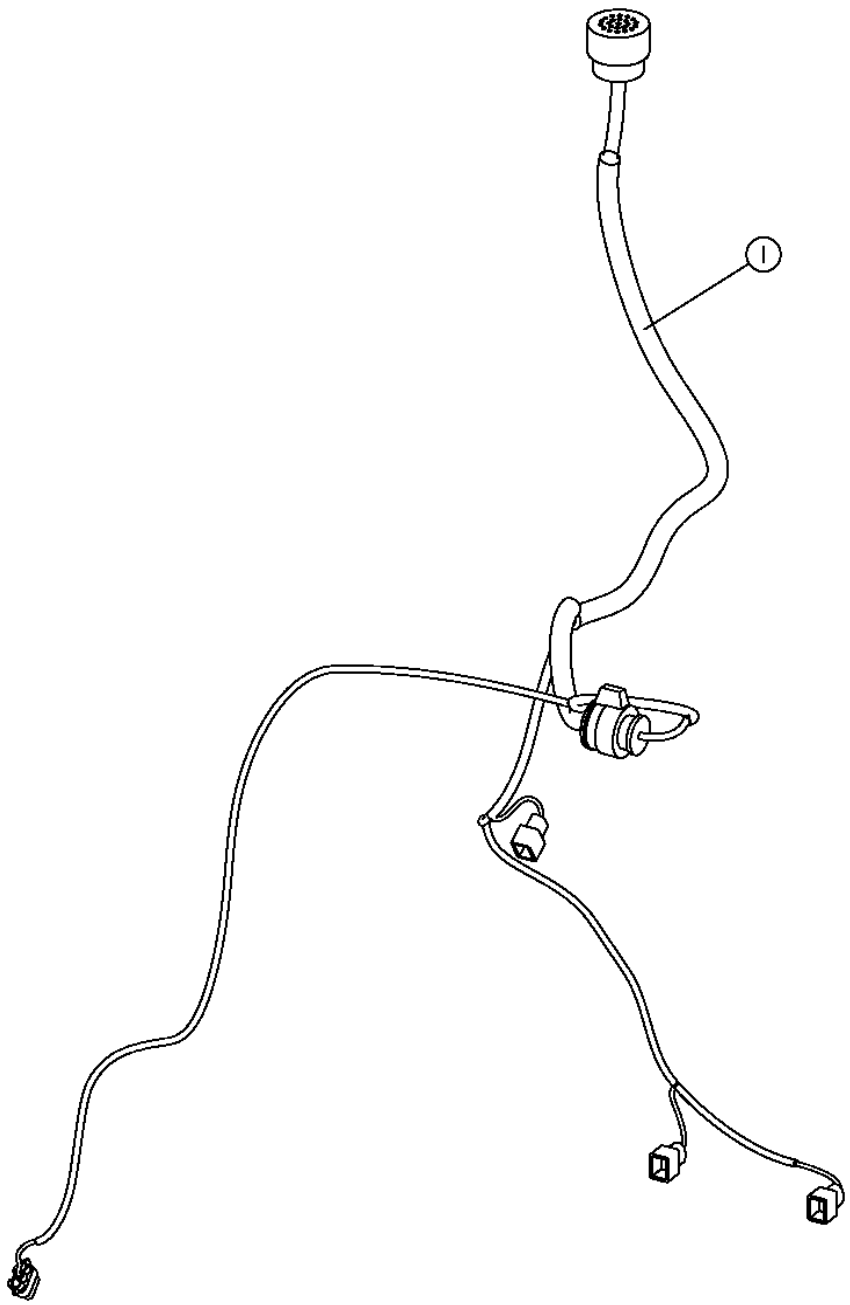

T195162

TRANSMISSION WIRING HARNESS (SERIAL NO. 590068-)

KEY	PART NO.	PART NAME	QTY	SERIAL NO.	REMARKS
1	AT305338	WIRING HARNESS	1		(TRANSMISSION HARNESS)
	AT308686	WIRING HARNESS	1		(TRANSMISSION HARNESS) (HARSH ENVIRONMENT)

ENGINE FRAME, ENGINE AND REAR FRAME HARNESSES (SERIAL NO. -590067)

T145423 -UN-20SEP01

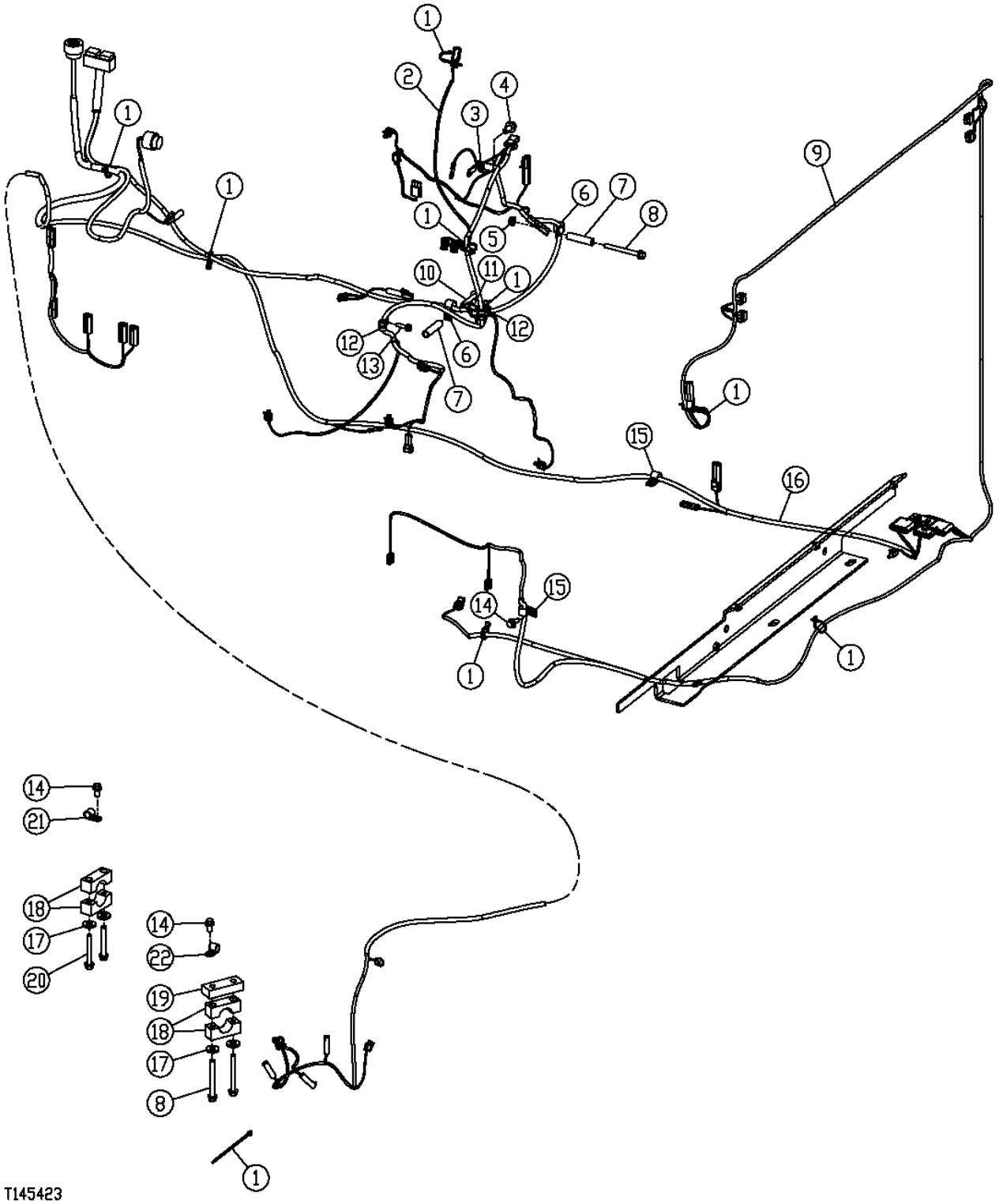

ENGINE FRAME, ENGINE AND REAR FRAME HARNESSES(SERIAL NO. -590067)

KEY	PART NO.	PART NAME	QTY	SERIAL NO.	REMARKS
1	R44302	TIE BAND	30		(USE IF AVAILABLE) (SUB AT223758)
2	AT222739	WIRING HARNESS	1		ENGINE
3	AH96317	CLIP	1		
4	19M7788	SCREW	1		M12 X 25
5	14M7296	FLANGE NUT	1		M10
6	T74416	CLAMP	2		(SUB FOR T78787, THIS APPLICATION)
7	28H3399	SPACER	3		0.493" X 0.675" X 2-3/4"
8	19M7812	SCREW	3		M10 X 100
9	AT222870	WIRING HARNESS	1		REAR FRAME
10	19M7811	SCREW	1		M10 X 90, (SUB FOR 19M7807, THIS APPLICATION)
11	19M7866	BOLT	1		M8 X 20
12	T74412	CLAMP	2		
13	19M7868	SCREW	1		M8 X 30
14	19M7784	SCREW	4		M10 X 20
15	T74416	CLAMP	2		
16	AT222745	WIRING HARNESS	1		ENGINE FRAME
17	T29342	WASHER	4		
18	T67995	CLAMP	4		
19	T178259	STRAP	1		SPACER
20	19M7810	SCREW	2		M10 X 80
21	T74416	CLAMP	1		(SUB FOR N191985, THIS APPLICATION)
22	T74416	CLAMP	1		(SUB FOR N191985, THIS APPLICATION)

ENGINE FRAME, ENGINE AND REAR FRAME HARNESSES (SERIAL NO. 590068-)

T195165 -UN-06OCT03

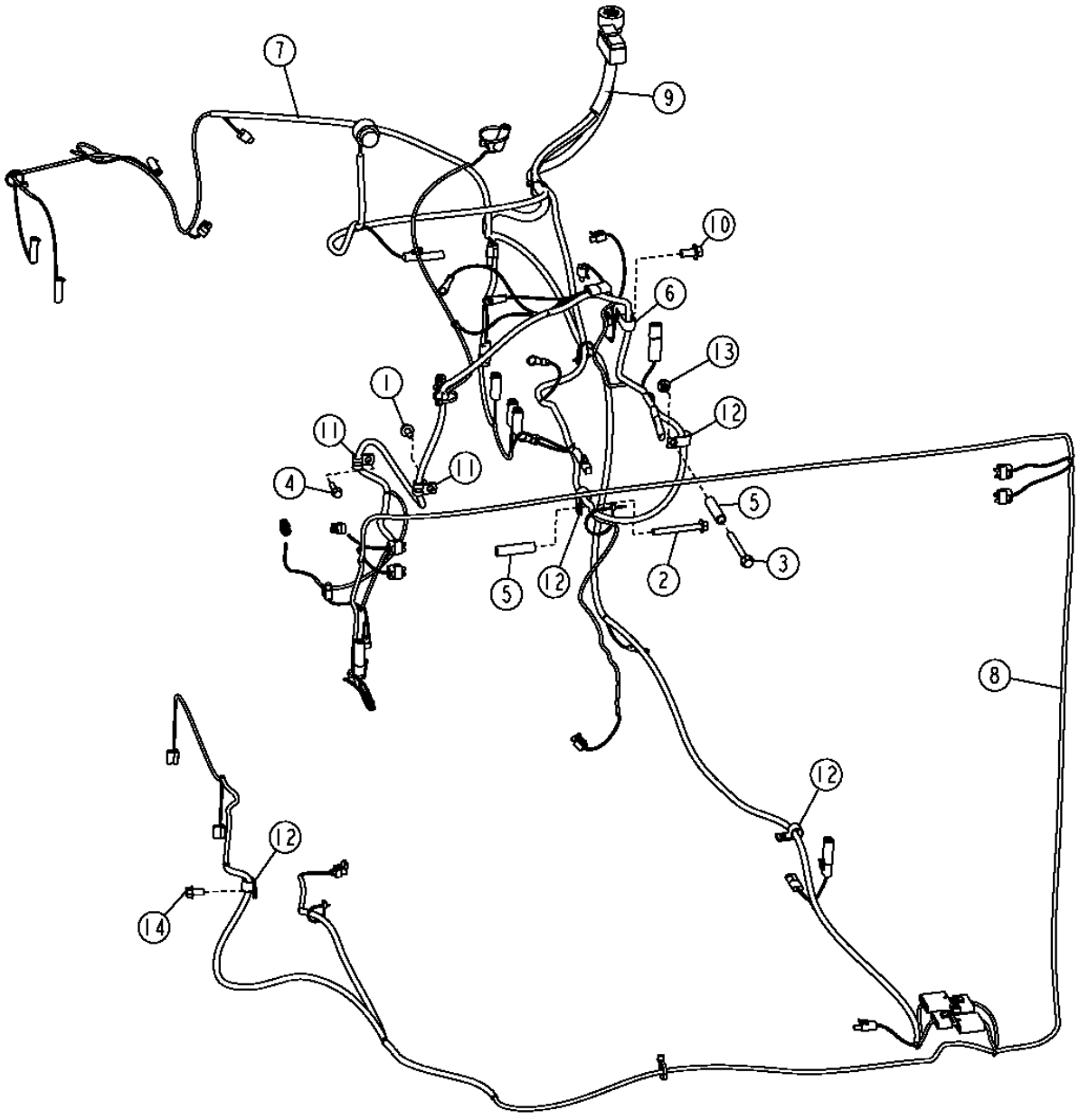

T195165

ENGINE FRAME, ENGINE AND REAR FRAME HARNESSES (SERIAL NO. 590068-)

KEY	PART NO.	PART NAME	QTY	SERIAL NO.	REMARKS
1	19M7784	SCREW	1		M10 X 20, (SUB FOR 19M7783)
2	19M7811	SCREW	1		M10 X 90
3	19M7812	SCREW	3		M10 X 100
4	19M7868	SCREW	1		M8 X 30
5	28H3399	SPACER	2		0.493" X 0.675" X 2-3/4"
6	AH96317	CLIP	1		
7	AT305312	WIRING HARNESS	1		(ENGINE FRAME)
	AT308689	WIRING HARNESS	1		(ENGINE FRAME) (HARSH ENVIRONMENT)
8	AT322894	WIRING HARNESS	1		(REAR FRAME) (SUB FOR AT305319)
	AT308684	WIRING HARNESS	1		(REAR FRAME) (HARSH ENVIRONMENT)
9	AT305337	WIRING HARNESS	1	-XXXXXX	(ENGINE)
	AT316061	WIRING HARNESS	1	XXXXXX-	(ENGINE) (HARSH ENVIRONMENT)
	AT308685	WIRING HARNESS	1		
10	T74416	CLAMP	2		(SUB FOR N191985, THIS APPLICATION)
11	T74412	CLAMP	2		
12	T74416	CLAMP	4		

LOADER FRAME WIRING HARNESS (SERIAL NO. -590067)

TP62633 -UN-13SEP99

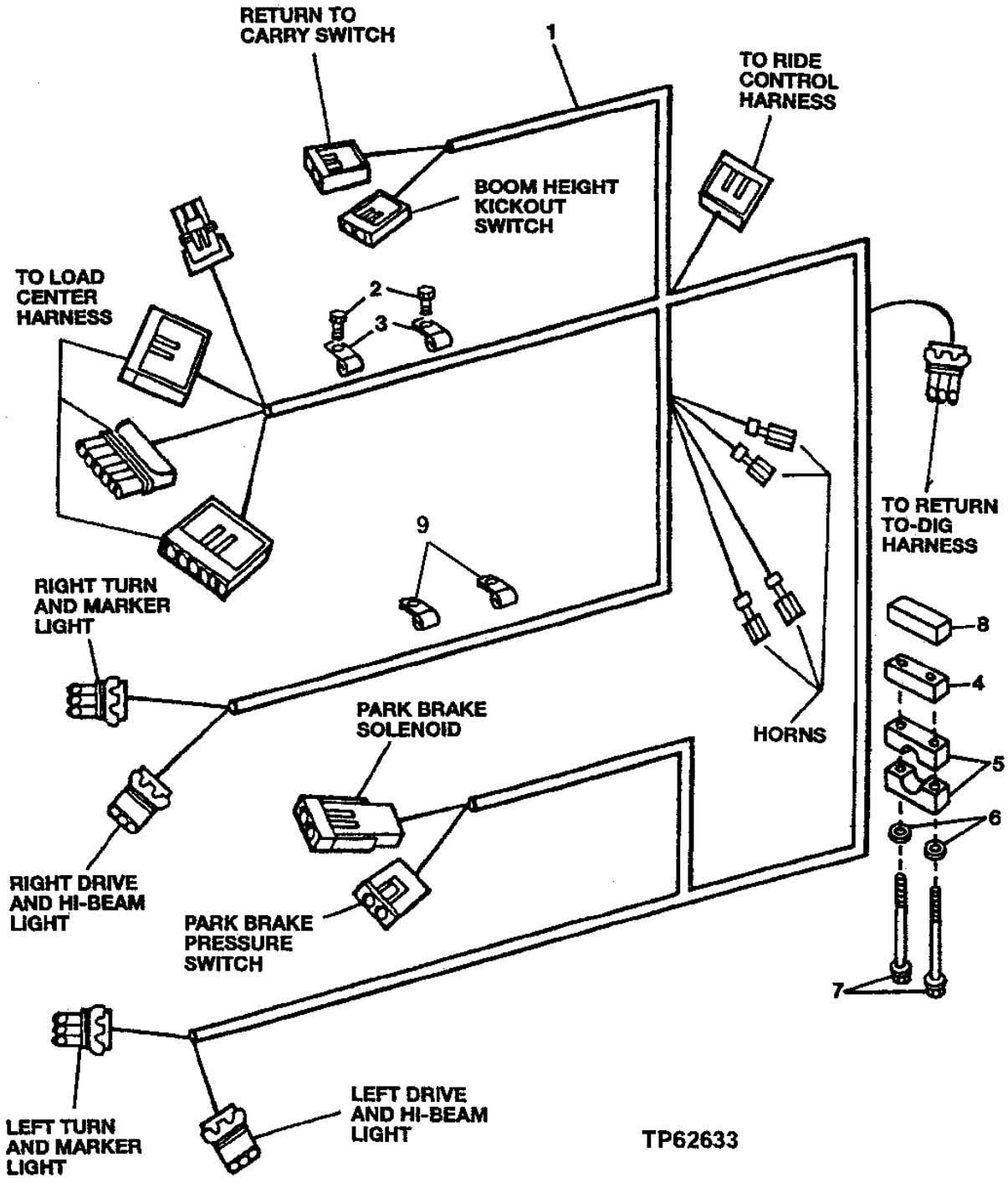

LOADER FRAME WIRING HARNESS (SERIAL NO. -590067)

KEY	PART NO.	PART NAME	QTY	SERIAL NO.	REMARKS
1	AT224749	WIRING HARNESS	1		
2	19M7784	SCREW	2		M10 X 20
3	T26955	CLAMP	2		
4	T178259	STRAP	1		
5	T67995	CLAMP	4		
6	T29342	WASHER	4		
7	19M7810	SCREW	2		M10 X 80
8	T133290	STRAP	2		
9	T74416	CLAMP	2		(SUB FOR N191985, THIS APPLICATION)
10	19M7812	SCREW	1		M10 X 100

LOADER FRAME WIRING HARNESS (SERIAL NO. 590068-)

T195166 -UN-07OCT03

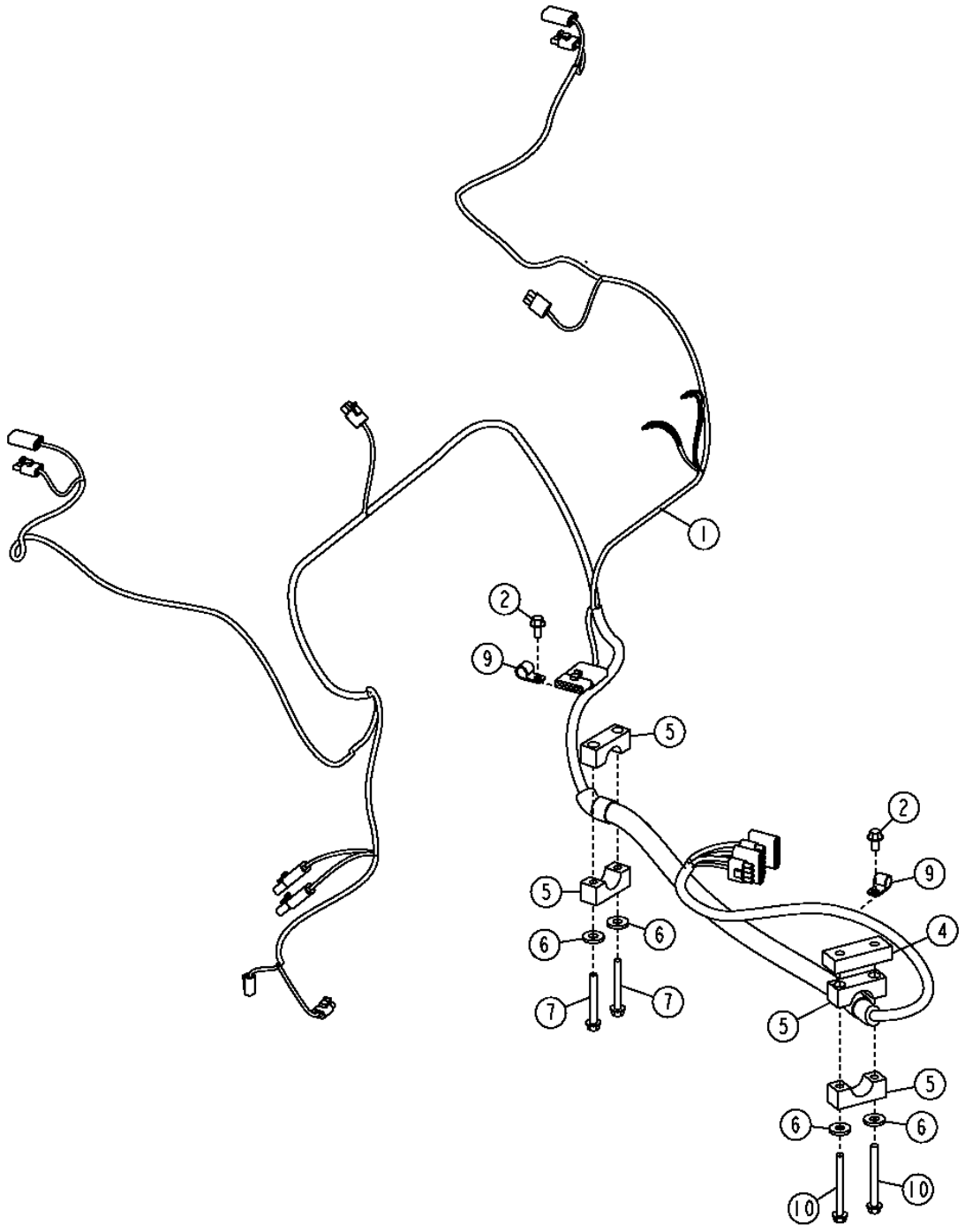

T195166

LOADER FRAME WIRING HARNESS (SERIAL NO. 590068-)

KEY	PART NO.	PART NAME	QTY	SERIAL NO.	REMARKS
1	AT305012	WIRING HARNESS	1		(LOADER FRAME)
	AT308683	WIRING HARNESS	1		(LOADER FRAME) (HARSH ENVIRONMENT)
2	19M7784	SCREW	4		M10 X 20
4	T178259	STRAP	1		
5	T67995	CLAMP	4		
6	T29342	WASHER	4		
7	19M7810	SCREW	2		M10 X 80
9	T74416	CLAMP	2		(SUB FOR N191985, THIS APPLICATION)

HARSH ENVIRONMENT CONNECTOR

TP62589 -UN-20JUL99

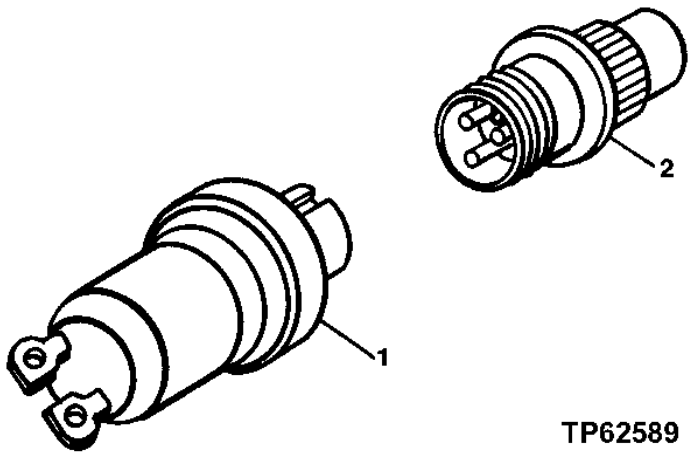

TP62589

KEY	PART NO.	PART NAME	QTY	SERIAL NO.	REMARKS
1	AT222375	ELECTRICAL CONNECTOR ASSY	1		SOCKET, 3-WAY
	AT222789	ELECTRICAL CONNECTOR ASSY	1		SOCKET, 5-WAY
	AT222791	ELECTRICAL CONNECTOR ASSY	1		SOCKET, 12-WAY
2	AT222376	ELECTRICAL CONNECTOR ASSY	1		PLUG, 3-WAY
	AT222790	ELECTRICAL CONNECTOR ASSY	1		PLUG, 5-WAY
	AT222792	ELECTRICAL CONNECTOR ASSY	1		PLUG, 12-WAY
4	AT222441	KIT	1		(HARSH ENVIORNMENT, POTTING) (NOT ILLUSTRATED)
5	AT222575	POWER CRIMP	1		(HARSH ENVIORNMENT) (NOT ILLUSTRATED)
6	T178552	ELECTRICAL CONNECTOR ASSY	1		(SIZE 1) (NOT ILLUSTRATED)
7	T178553	ELECTRICAL CONNECTOR ASSY	1		(SIZE 2) (NOT ILLUSTRATED)
8	T178554	ELECTRICAL CONNECTOR ASSY	1		(SIZE 3) (NOT ILLUSTRATED)
9	T178555	ELECTRICAL CONNECTOR ASSY	1		(SIZE 4) (NOT ILLUSTRATED)
10	T178556	ELECTRICAL CONNECTOR ASSY	1		(POTTING) (NOT ILLUSTRATED)
11	**AT300944**	**KIT**	**1**		**(HARSH ENVIRONMENT HARNESS)**

MEMORANDA

WIRE LEAD KIT

RWP3870 -UN-01JAN94

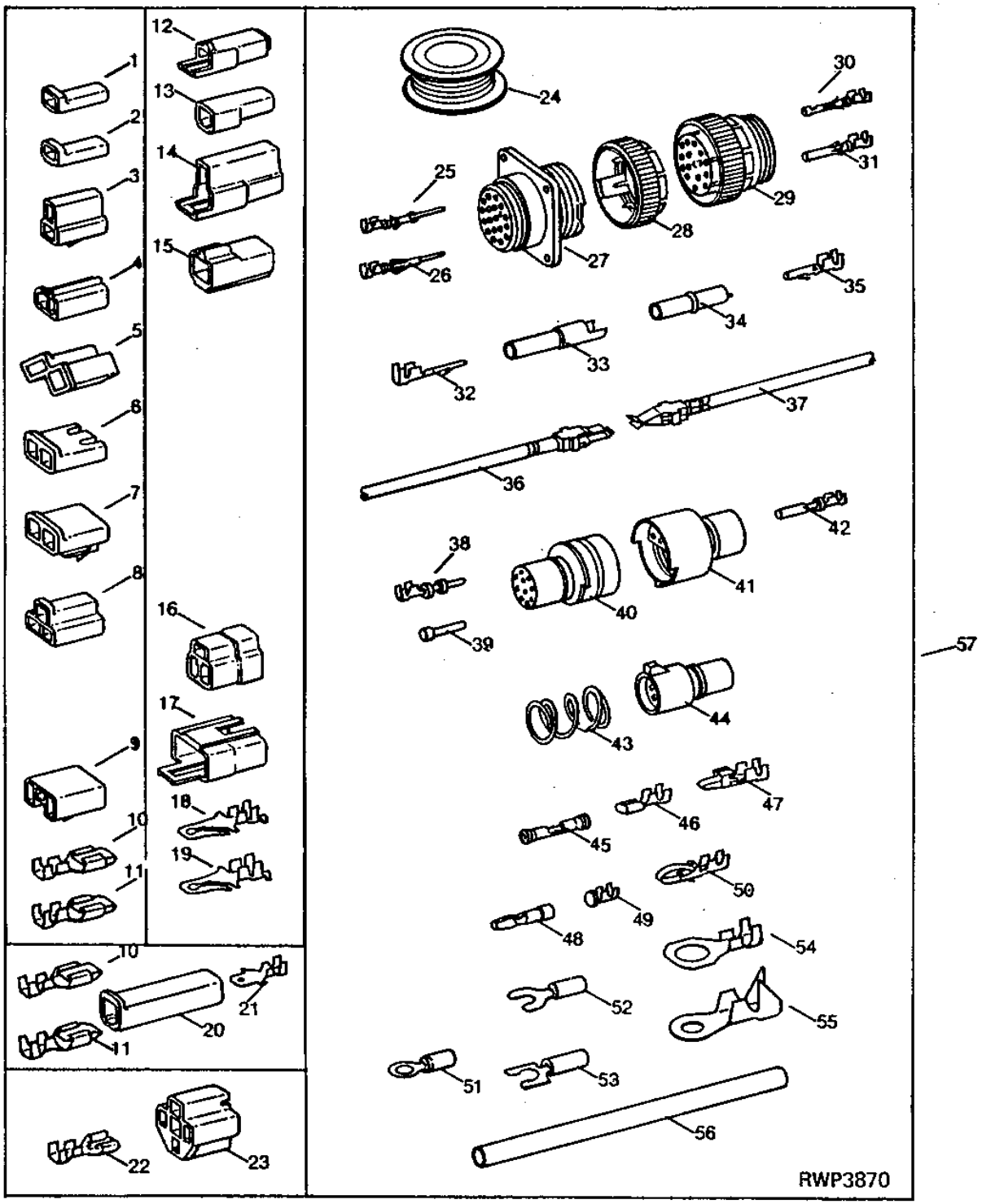

WIRE LEAD KIT

KEY	PART NO.	PART NAME	QTY	TRACTOR SERIAL NO.	REMARKS
1	T28583	ELEC. CONNECTOR HOUSING	1		(B)
2	M43835	ELECTRICAL CONNECTOR ASSY	1		(B)
3	R77476	ELECTRICAL CONNECTOR ASSY	1		(A)
4	R77477	ELEC. CONNECTOR HOUSING	1		(A)
5	R77479	ELECTRICAL CONNECTOR ASSY	1		(A)
6	R77480	ELECTRICAL CONNECTOR ASSY	1		(A)
7	R77481	ELECTRICAL CONNECTOR ASSY	1		(A)
8	R77482	ELECTRICAL CONNECTOR ASSY	1		
9	H104855	ELECTRICAL CONNECTOR ASSY	1		
10	U46662	ELEC. CONNECTOR TERMINAL	1		(E) (F)
11	N115096	TERMINAL	1		(G) (PKG. OF 15)
12	T28585	ELECTRICAL CONNECTOR ASSY	1		(B)
13	R77475	ELECTRICAL CONNECTOR ASSY	1		(B)
14	T28586	ELECTRICAL CONNECTOR ASSY	1		(A)
15	R77478	ELECTRICAL CONNECTOR ASSY	1		(A)
16	R77483	ELECTRICAL CONNECTOR ASSY	1		
17	R48887	ELECTRICAL CONNECTOR ASSY	1		
18	T34067	ELEC. CONNECTOR TERMINAL	1		(E) (F)
19	R77484	ELEC. CONNECTOR TERMINAL	1		(G) (PKG. OF 15)
20	U46370	ELECTRICAL CONNECTOR ASSY	1		(B)
21	R77485	ELEC. CONNECTOR TERMINAL	1		(C) (F)
22	R77486	ELEC. CONNECTOR TERMINAL	1		(E) (F)
23	R77487	ELECTRICAL CONNECTOR ASSY	1		(B)
24	R66321	WIRING LEAD	1		15M (50 FT.) 10 GA.
	R66320	WIRING LEAD	1		30.5M (100 FT.) 12 GA.
	R77501	WIRE	1		30.5M (100 FT.) 14 GA.
	R77500	WIRE	1		30.5M (100 FT.) 16 GA.
	R77499	WIRE	1		30.5M (100 FT.) 18 GA.
	R77498	WIRE	1		30.5M (100 FT.) 20 GA.
25	R77462	ELEC. CONNECTOR TERMINAL	1		(PKG. OF 40) (20-22 OR 24 GA. WIRE)
26	R77464	ELEC. CONNECTOR TERMINAL	1		(H) (PKG. OF 50)
27	R77456	ELEC. CONNECTOR TERMINAL	1		(37 WAY)
28	R77458	ELEC.CONNECT LOCKING DEVICE	1		(A) (SIZE 23)
	R77459	ELEC.CONNECT LOCKING DEVICE	1		(A) (SIZE 17)
	R77460	ELEC.CONNECT LOCKING DEVICE	1		(A) (SIZE 13)
	R77461	ELEC.CONNECT LOCKING DEVICE	1		(A) (SIZE 11)
29	R77457	ELEC. CONNECTOR TERMINAL	1		(37 WAY)
30	R77463	ELEC. CONNECTOR TERMINAL	1		(PKG. OF 40) (20-22 OR 24 GA. WIRE)
31	R77465	ELEC. CONNECTOR TERMINAL	1		(H) (PKG. OF 50)
32	R77468	ELEC. CONNECTOR TERMINAL	1		(PKG. OF 5)
33	R77466	ELECTRICAL CONNECTOR ASSY	1		(A)
34	R77467	ELECTRICAL CONNECTOR ASSY	1		(A)

(A) PKG. OF 2
(B) PKG. OF 3
(C) PKG. OF 10
(D) PKG. OF 20
(E) PKG. OF 25
(F) 14 OR 16 GA. WIRE
(G) 10 OR 12 GA. WIRE
(H) 14-16 OR 18 GA. WIRE

WIRE LEAD KIT

RWP3870 -UN-01JAN94

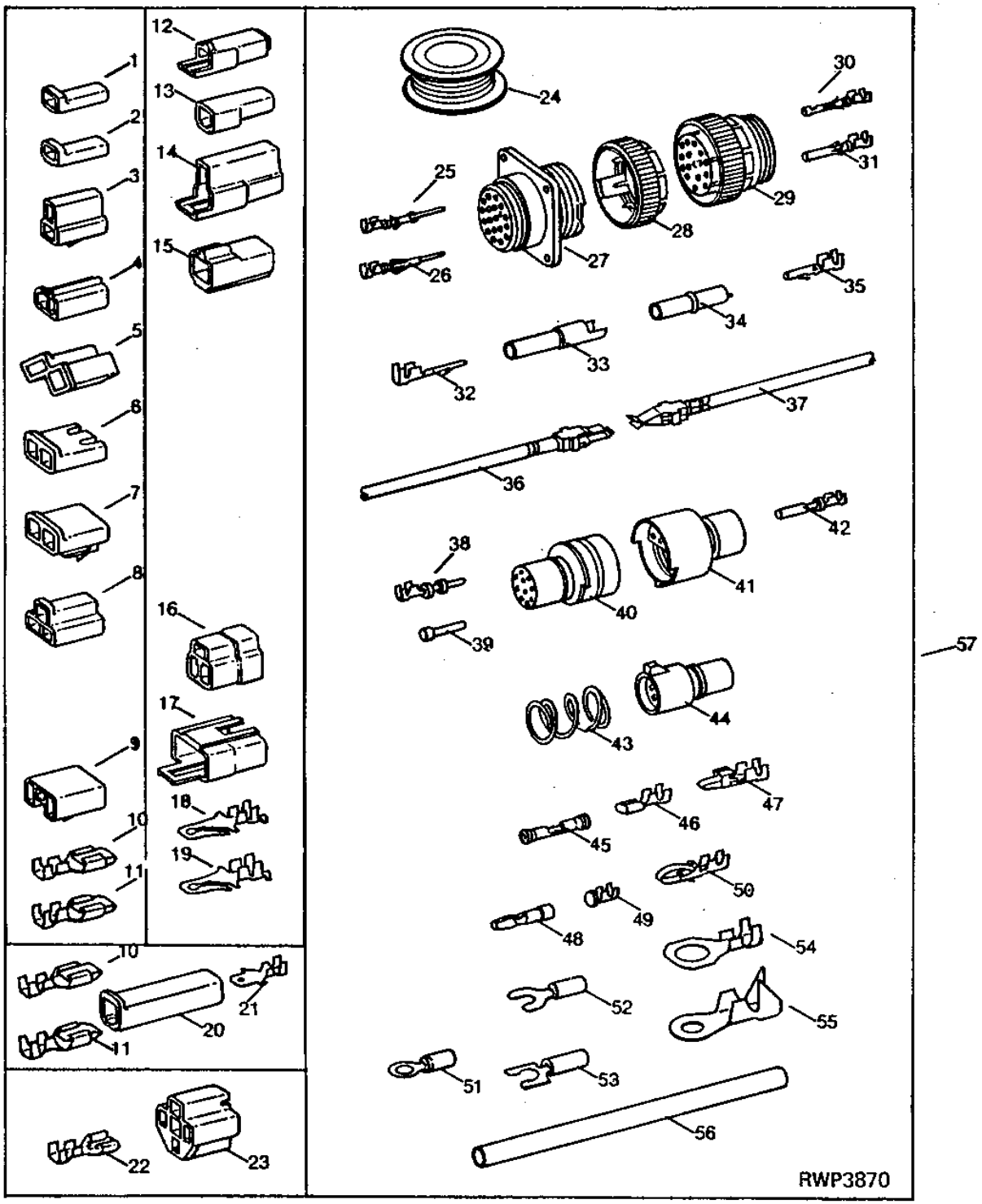

WIRE LEAD KIT

KEY	PART NO.	PART NAME	QTY	TRACTOR SERIAL NO.	REMARKS
35	R77469	ELEC. CONNECTOR TERMINAL	1		(PKG. OF 5)
36	RE11156	ELEC. CONNECTOR TERMINAL	1		(B) (MALE)
37	RE11157	ELEC. CONNECTOR TERMINAL	1		(B) (FEMALE)
38	R70222	ELEC. CONNECTOR TERMINAL	1		(D) (H)
39	R70221	ELEC. CONNECTOR TERMINAL	1		(E)
40	R70219	PLUG	1		(A) (10 WAY)
	R70217	PLUG	1		(A) (7 WAY)
	R70215	PLUG	1		(A) (4 WAY)
	R70213	ELEC. CONNECTOR HOUSING	1		(A) (3 WAY)
	R70211	ELECTRICAL CONNECTOR ASSY	1		(A) (2 WAY)
41	R70218	ELEC. CONNECTOR TERMINAL	1		(A) (10 WAY)
	R70216	ELEC. CONNECTOR TERMINAL	1		(A) (7 WAY)
	R70214	ELEC. CONNECTOR TERMINAL	1		(A) (4 WAY)
	R70212	ELEC. CONNECTOR TERMINAL	1		(A) (3 WAY)
	R70210	ELEC. CONNECTOR TERMINAL	1		(A) (2 WAY)
42	AR91793	ELEC. CONNECTOR TERMINAL	1		(D)
43	R30378	SPRING	1		(C)
44	R77474	ELECTRICAL CONNECTOR ASSY	1		(A) (6 WAY)
45	R77470	ELEC. CONNECTOR TERMINAL	1		SPLICE (PKG. OF 15) (16-18-20 OR 22 GA. WIRE)
	R77471	ELEC. CONNECTOR TERMINAL	1		(C) (G) SPLICE
	R77472	ELEC. CONNECTOR TERMINAL	1		(A) SPLICE (8 GA. WIRE)
	R77473	ELEC. CONNECTOR TERMINAL	1		(A) SPLICE (6 GA. WIRE)
46	R65607	ELEC. CONNECTOR TERMINAL	1		(C) (18 OR 20 GA. WIRE)
47	U46664	ELEC. CONNECTOR TERMINAL	1		(C) (F)
48	R32026	ELEC. CONNECTOR TERMINAL	1		(D) (F)
49	R65602	ELEC. CONNECTOR TERMINAL	1		(C) (16 OR 18 GA. WIRE)
50	R70220	ELEC. CONNECTOR TERMINAL	1		(C) (18 OR 20 GA. WIRE)
51	R77489	ELEC. CONNECTOR TERMINAL	1		(D) (14-16-18 OR 20 GA. WIRE) (NO. 10 EYELET)
	R77493	ELEC. CONNECTOR TERMINAL	1		(D) (G) (NO. 10 EYELET)
	R77488	ELEC. CONNECTOR TERMINAL	1		(D) (14-16-18 OR 20 GA. WIRE) (3/8" EYELET)
	R77490	ELEC. CONNECTOR TERMINAL	1		(D) (G) (1/2" EYELET)
52	R77496	ELEC. CONNECTOR TERMINAL	1		(D) (F) (NO. 8 SPADE)
	R77495	ELEC. CONNECTOR TERMINAL	1		(D) (18 GA. WIRE) (NO. 10 SPADE)
53	R77497	ELEC. CONNECTOR TERMINAL	1		(D) (F) (NO. 6 SPADE)
54	R77491	ELEC. CONNECTOR TERMINAL	1		(D) (G) (3/8" EYELET)
	R77492	ELEC. CONNECTOR TERMINAL	1		(D) (G) (1/4" EYELET)
55	R77494	ELEC. CONNECTOR TERMINAL	1		(D) (6 OR 8 GA. WIRE) (1/4" EYELET)
56	R77502	TUBE	1		(PKG. OF 8) 3/8" (HEAT SHRINK)
	R77503	TUBE	1		(PKG. OF 8) 3/16" (HEAT SHRINK)
57	PM797NA	KIT	1		

(A) PKG. OF 2
(B) PKG. OF 3
(C) PKG. OF 10
(D) PKG. OF 20
(E) PKG. OF 25
(F) 14 OR 16 GA. WIRE
(G) 10 OR 12 GA. WIRE
(H) 14-16 OR 18 GA. WIRE

DOOR-ACTIVATED DOMELIGHT SWITCH

T192974 -UN-13AUG03

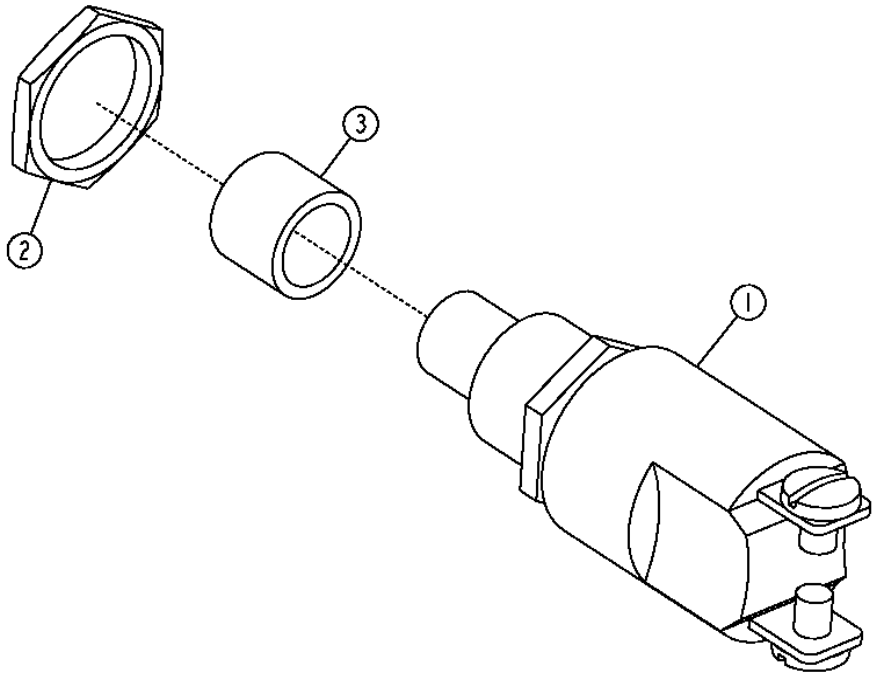

T192974

KEY	PART NO.	PART NAME	QTY	SERIAL NO.	REMARKS
1	RE51234	PUSH SWITCH	1		(CAB ONLY)
2	R44097	NUT	1		
3	T182914	CAP	1		(DOME SWITCH)

2D15

DEUTSCH TERMINALS

TP24540 -UN-01JAN94

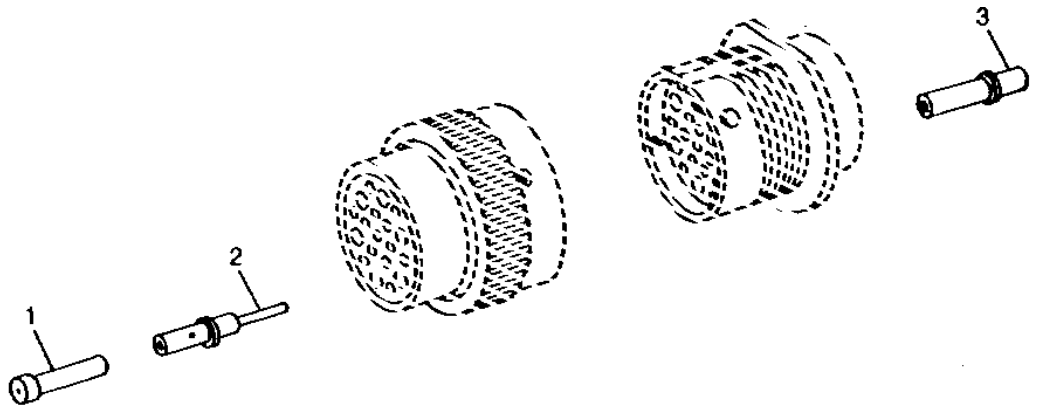

TP24540

KEY	PART NO.	PART NAME	QTY	SERIAL NO.	REMARKS
1	R78069	ELEC. CONNECTOR TERMINAL	1		(PKG OF 40)
2	R78066	ELEC. CONNECTOR TERMINAL	1		(PKG OF 40) (16 OR 18 GA WIRE)
3	R78065	ELEC. CONNECTOR TERMINAL	1		(PKG OF 40) (16 OR 18 GA WIRE)

SUPPLEMENTARY TERMINALS, CONNECTORS AND REPAIR CONDUIT

TP24539 -UN-01JAN94

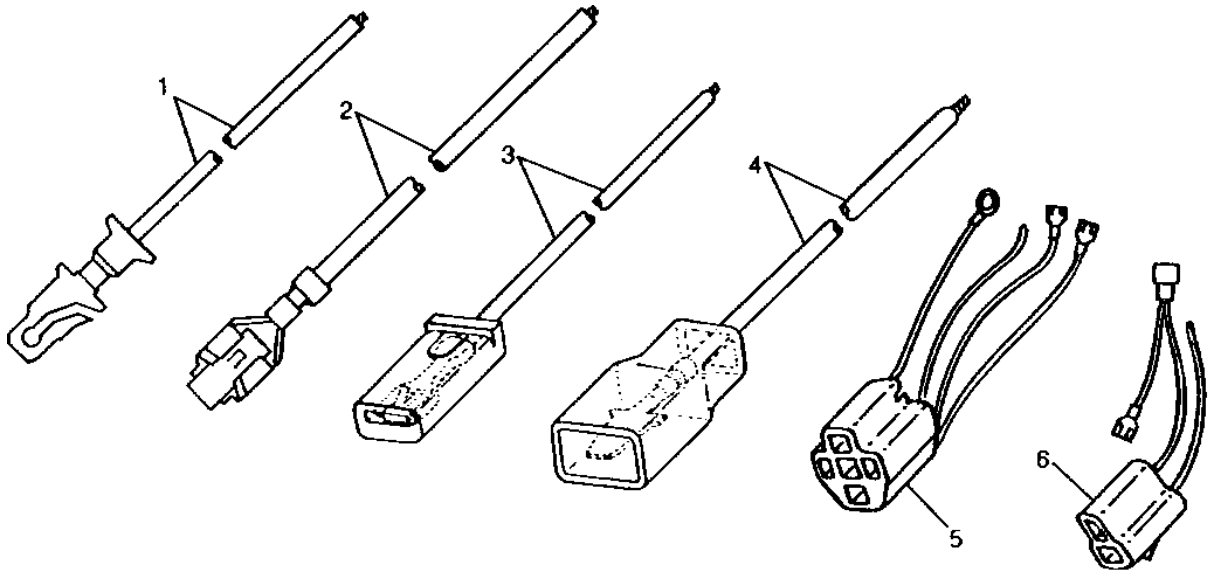

TP24539

KEY	PART NO.	PART NAME	QTY	SERIAL NO.	REMARKS
1	AR65005	ELEC. CONNECTOR TERMINAL	1		
2	AR65006	ELEC. CONNECTOR TERMINAL	1		
3	R32024	WIRING LEAD	1		
4	R32025	WIRING LEAD	1		
5	RE21730	ELECTRICAL CONNECTOR ASSY	1		(ILLUSTRATED)
	RE21731	ELECTRICAL CONNECTOR ASSY	1		
6	RE21732	ELECTRICAL CONNECTOR ASSY	1		
	R93219	CONDUIT	1		0.3 X 3048 MM (1/4" X 120")
	R93220	CONDUIT	1		10.4 X 2048 MM (13/32" X 120")
	R93221	CONDUIT	1		15.9 X 3048 MM (5/8" X 120")
	R93222	CONDUIT	1		25.4 X 3048 MM (1" X 120")

SPIN CONTROL WIRING HARNESS AND SWITCH

T203553 -UN-01OCT04

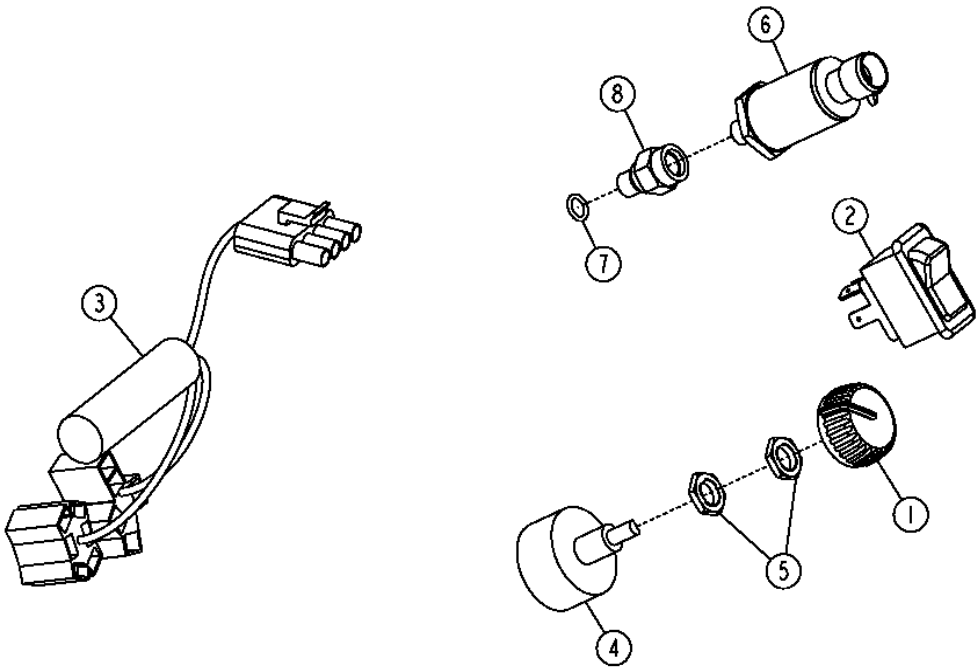

T203553

KEY	PART NO.	PART NAME	QTY	SERIAL NO.	REMARKS
1	AL76568	KNOB	1	-590067	
2	AT202800	SWITCH	1	-590067	
3	AT206912	WIRING HARNESS	1		
4	RE43497	ROTARY SWITCH	1	-590067	
5	R44165	LOCK NUT	2	-590067	
6	AT211362	TRANSDUCER	1		
7	R26287	O-RING	1		
8	T176338	ADAPTER	1		

DOOR-ACTIVATED DOMELIGHT SWITCH

T192974 -UN-13AUG03

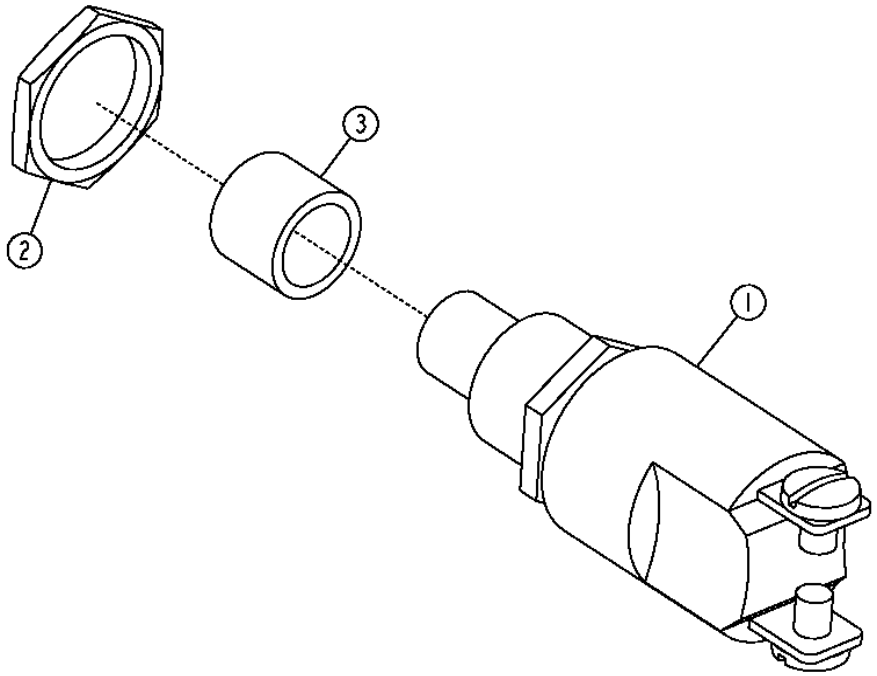

T192974

KEY	PART NO.	PART NAME	QTY	SERIAL NO.	REMARKS
1	RE51234	PUSH SWITCH	1		(CAB ONLY)
2	R44097	NUT	1		
3	T182914	CAP	1		(DOME SWITCH)

MEMORANDA

MONITOR DISPLAY UNIT

T195269 -UN-24OCT03

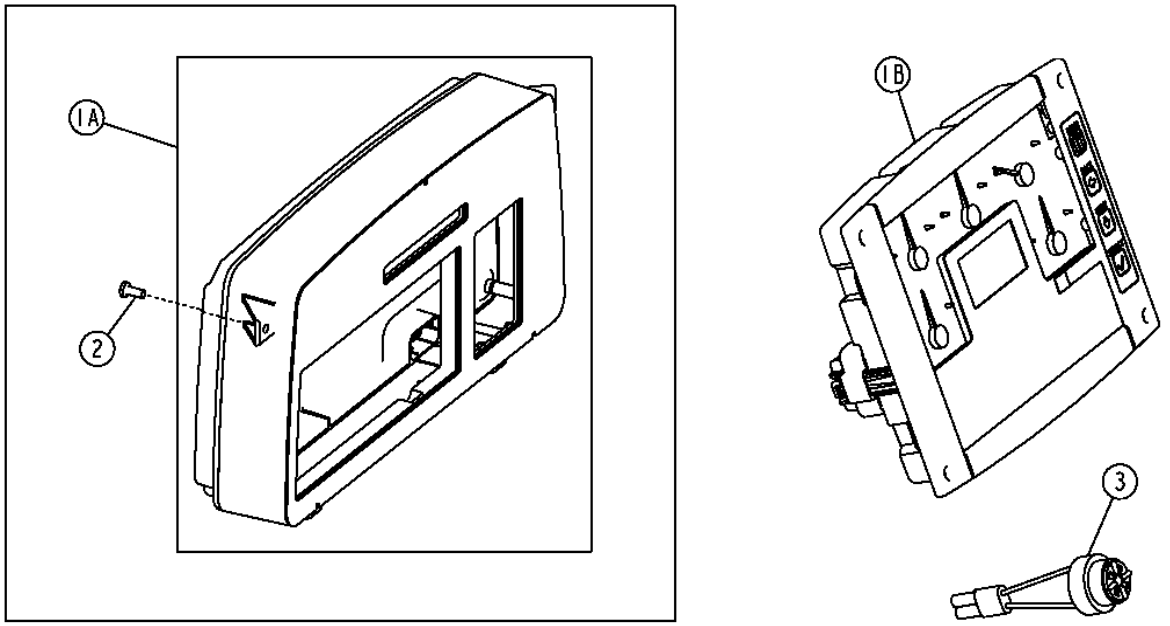

T195269

KEY	PART NO.	PART NAME	QTY	SERIAL NO.	REMARKS
1A	AT226162	MONITOR	1	-590067	
1B	AT313501	MONITOR	1	590068-	(SUB FOR AT226944)
2	21M7265	SCREW	4		M5 X 12, (MONITOR TO FRONT DASH)
3	AT160480	ALARM SYSTEM	1		
4	AT175424	BULB	29	-590067	(NOT ILLUSTRATED) (MONITOR ILLUMINATION)

STEERING CUSHION

TP34097 -UN-01JAN94

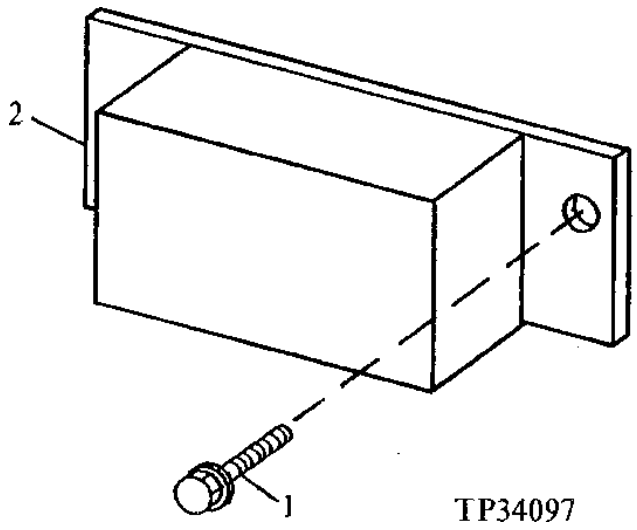

KEY	PART NO.	PART NAME	QTY	SERIAL NO.	REMARKS
1	19M7788	SCREW	2		M12 X 25, FLANGED
2	AT209971	BUMPER	1		
	AT311435	BUMPER	1		(HEAVY DUTY WITH REINFORCED STEEL PLATES)

ENGINE FRAME

T157596 -UN-16JUL02

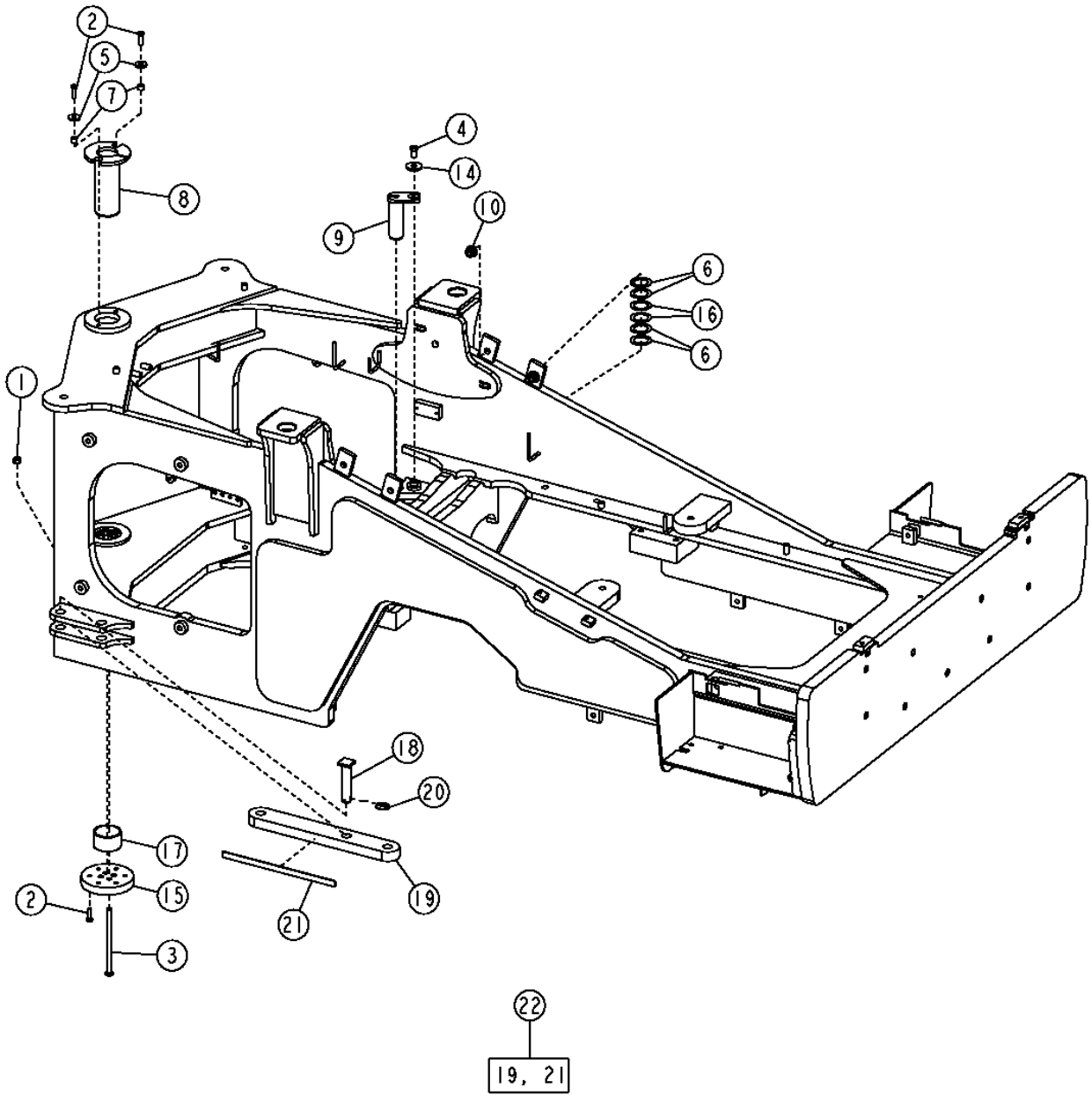

ENGINE FRAME

KEY	PART NO.	PART NAME	QTY	SERIAL NO.	REMARKS
1	14M7276	NUT	4		M16
2	19M7791	BOLT	8		M12 X 40, (SUB FOR 19M7493)
3	19M7697	CAP SCREW	2		M16 X 260
4	19M8029	CAP SCREW	2		M16 X 30
5	24H1344	WASHER	2		13.487 X 41.275 X 6.350 MM
6	24H1595	WASHER	8		2-1/16" X 3" X 0.075"
7	28H3382	BUSHING	2		0.546" X 0.840" X 5/8"
8	AT202860	FRAME	1		
9	AT202897	PIN	2		
10	14M7474	FLANGE NUT	4		
14	T146246	WASHER	2		
15	T156404	COVER	1		
16	T176928	WASHER	4		
17	T182261	BUSHING	1		
18	R125450	PIN	2		
19	AT226156	BAR	1		(SUB FOR T156258)
20	AA21292	QUICK LOCK PIN	2		
21	T182192	SAFETY SIGN	2		
22	AT226156	BAR	1		

FUEL TANK BOTTOM GUARD AND ENGINE OIL DRAIN HOSE

T156404 -UN-25JUN02

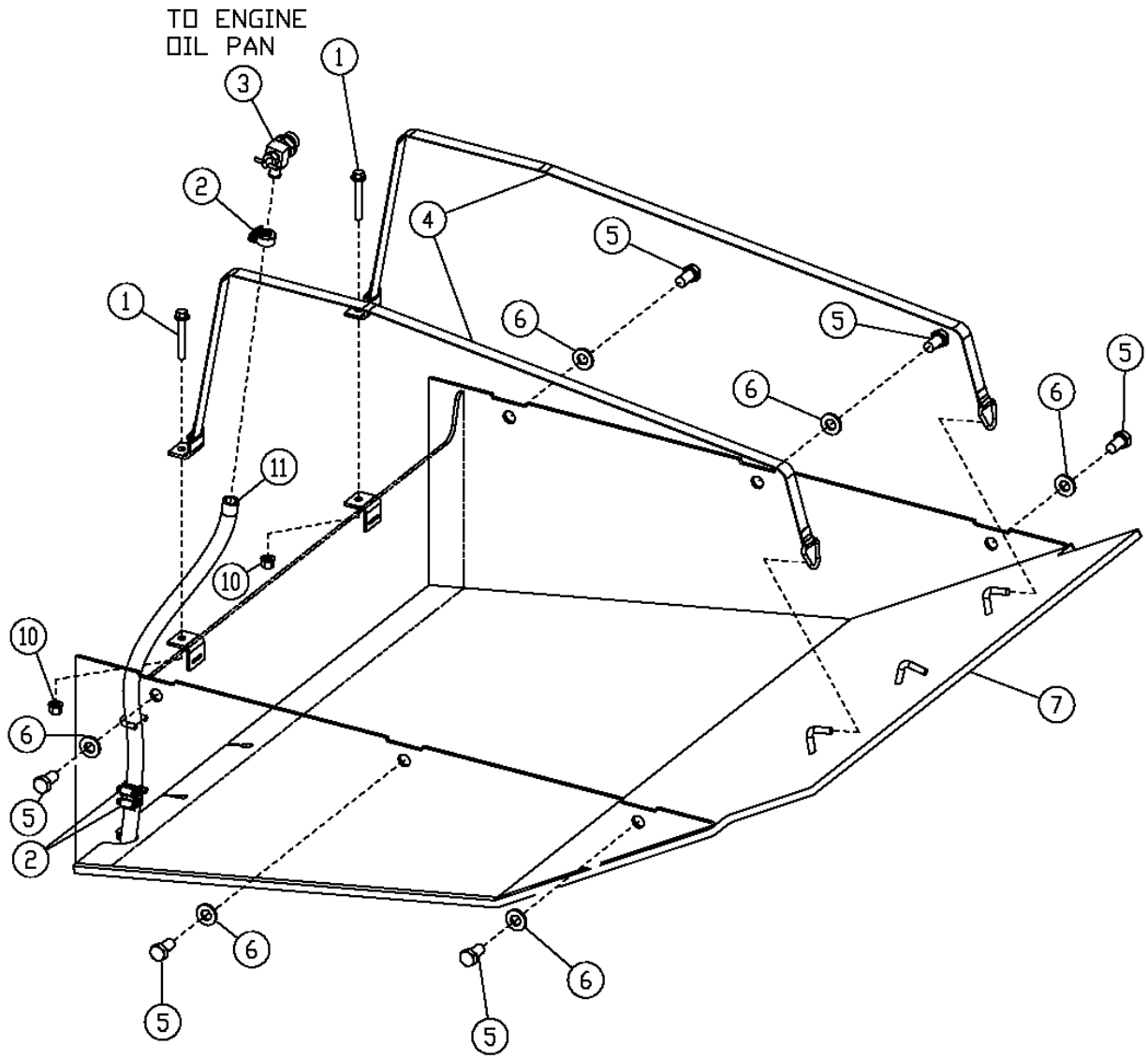

T156404

FUEL TANK BOTTOM GUARD AND ENGINE OIL DRAIN HOSE

KEY	PART NO.	PART NAME	QTY	SERIAL NO.	REMARKS
1	19M8114	SCREW	2		
2	AR21837	CLAMP	3		
3	RE68323	VALVE	1		
4	AT222717	STRAP	2		
5	19M8029	CAP SCREW	6		M16 X 30
6	24M7241	WASHER	6		17 X 34 X 4 MM
7	.....	GUARD	1	-594293	(SUB AT318511) (AT222709 NO LONGER AVAILABLE)
	AT318511	GUARD	1	594294-	
10	14M7400	LOCK NUT	2		
11	.....	BULK HOSE	1		MAKE FROM T60811 BULK MATERIAL CUT TO LENGTH

BOTTOM GUARDS

T157192 -UN-19SEP02

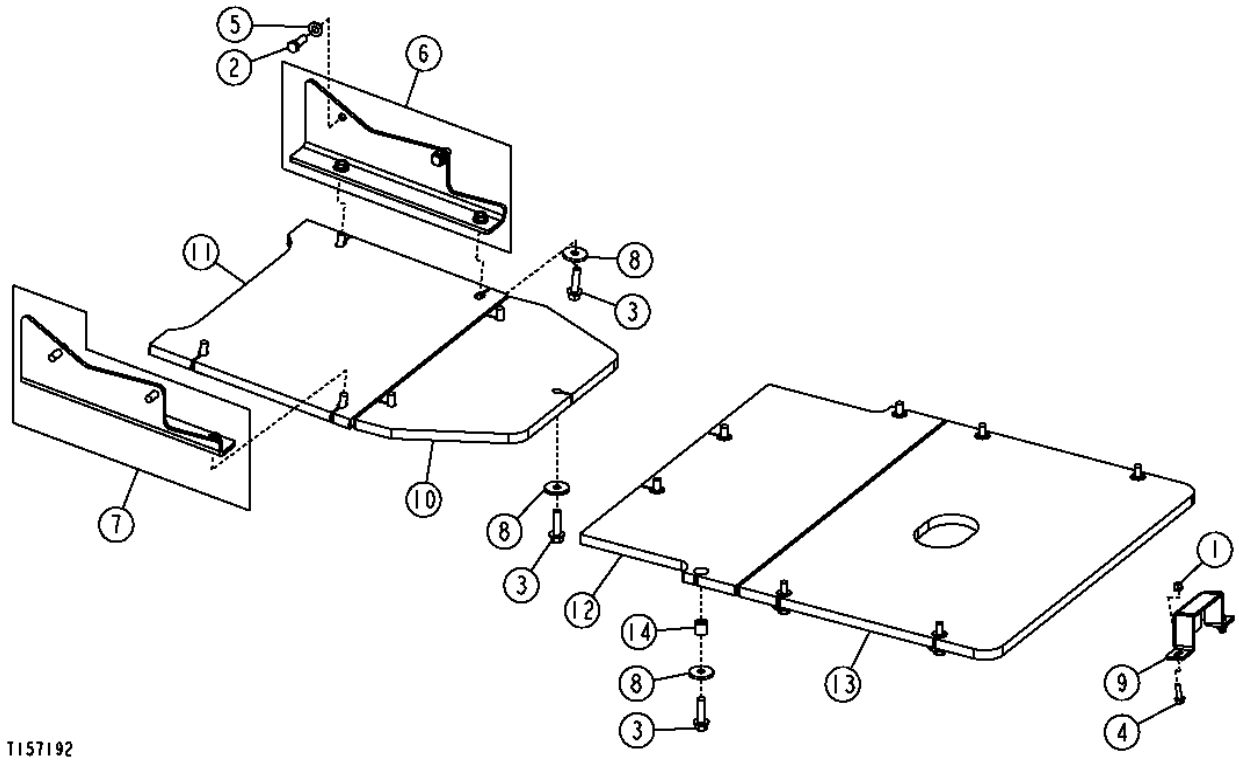

BOTTOM GUARDS

KEY	PART NO.	PART NAME	QTY	SERIAL NO.	REMARKS
1	14M7400	LOCK NUT	2		M10
2	19M7489	CAP SCREW	4		M16 X 45
3	19M7824	SCREW	15		M16 X 60
4	19M7804	SCREW	2		M10 X 40
5	24M7241	WASHER	4		17 X 34 X 4 MM
6	AT225596	BRACKET	1		
7	AT225597	BRACKET	1		
8	T146246	WASHER	15		
9	T180394	GUARD	1		
10	T181990	PLATE	1		
11	T181991	PLATE	1		
12	T181992	PLATE	1		
13	T181993	PLATE	1		
14	T197570	BUSHING	8		

COUNTERWEIGHT

T157840 -UN-24JUL02

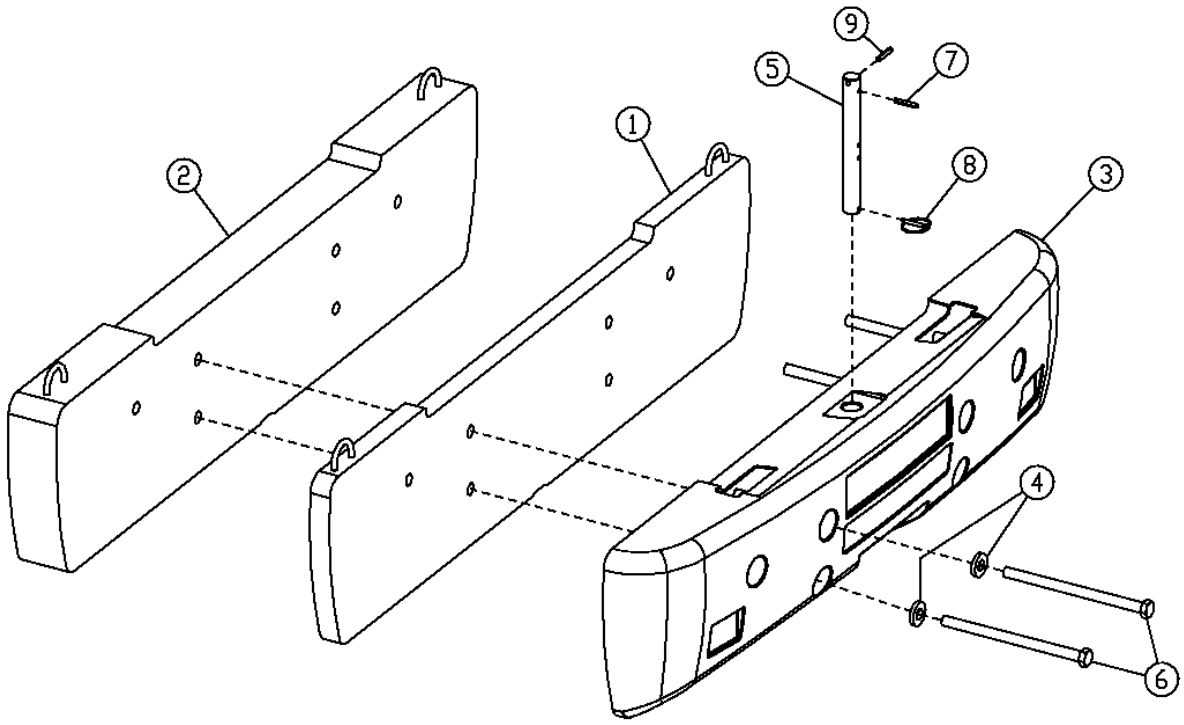

KEY	PART NO.	PART NAME	QTY	SERIAL NO.	REMARKS
1	.....	COUNTERWEIGHT	1		
2	AT207183	COUNTERWEIGHT	1		
3	T156135	COUNTERWEIGHT	1		
4	T152076	WASHER	6		
5	T156217	PIN FASTENER	1		
6	19M8961	CAP SCREW	6		M24 X 360
7	34H358	SPRING PIN	2		3/8" X 2-3/4"
8	AR83396	QUICK LOCK PIN	1		
9	34H363	SPRING PIN	1		3/8" X 4"

INTERNAL COUNTERWEIGHT

T158042 -UN-29JUL02

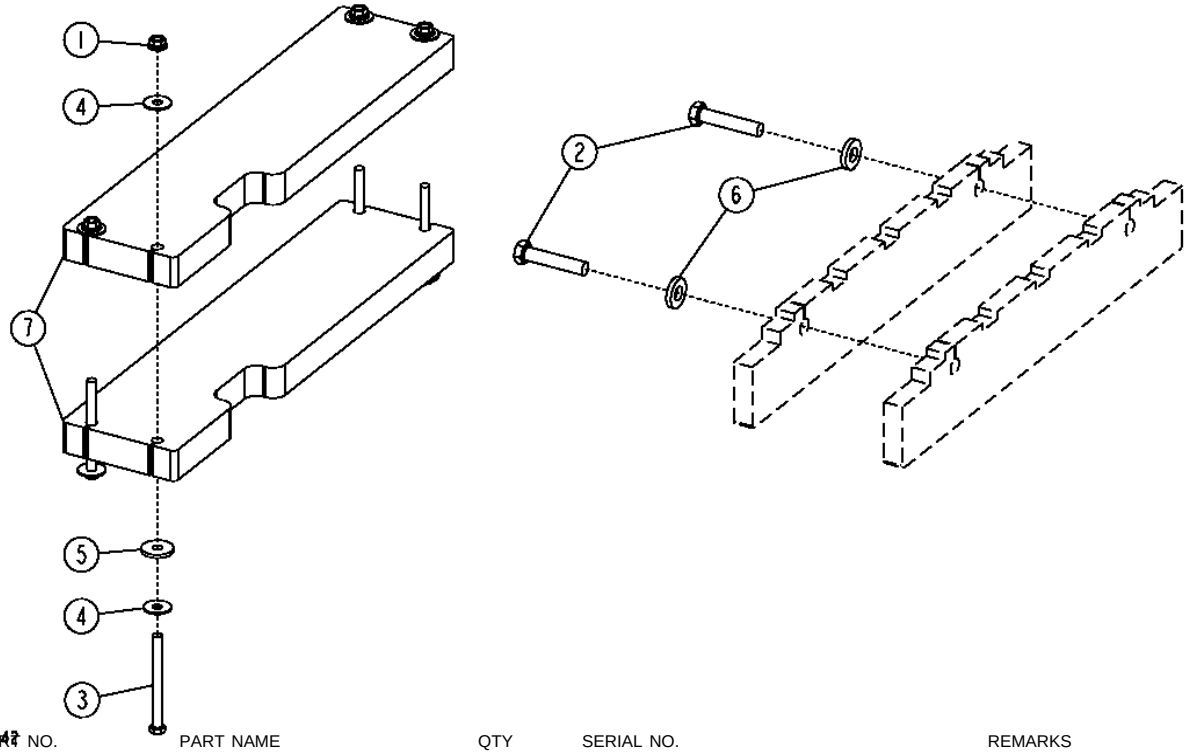

T158042

KEY	PART NO.	PART NAME	QTY	SERIAL NO.	REMARKS
1	14M7291	FLANGE NUT	4		M16
2	19M7903	CAP SCREW	2		M24 X 120
3	19M8486	CAP SCREW	4		M16 X 180
4	24M7241	WASHER	8		17 X 34 X 4 MM, (SUB FOR 24M7315)
5	T146246	WASHER	2		
6	T152076	WASHER	2		26 X 55 X 9.500 MM
7	T181634	PLATE	2		

MEMORANDA

COAT HOOK

TP60658 -UN-08MAR99

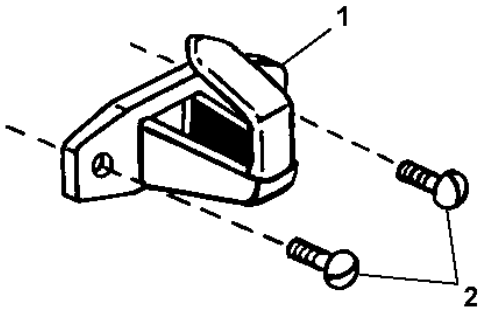

TP60658

KEY	PART NO.	PART NAME	QTY	SERIAL NO.	REMARKS
1	L102023	HOOK	2		
2	21M7305	SCREW	4		M6 X 12

CAB MOUNTS
(FRONT AND REAR)

T157374 -UN-16JUL02

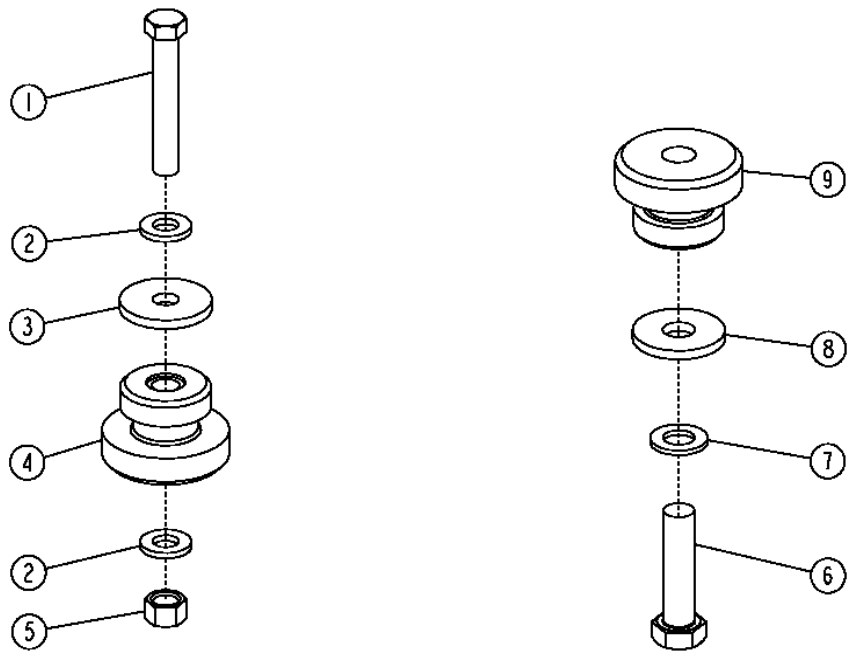

T157374

CAB MOUNTS
(FRONT AND REAR)

KEY	PART NO.	PART NAME	QTY	SERIAL NO.	REMARKS
1	19M7781	CAP SCREW	2		M24 X 150
2	24M7243	WASHER	4		25.400 X 50 X 6 MM
3	T153535	WASHER	2		
4	AT170005	ISOLATOR	2		
5	14M7278	NUT	2		M24
6	19M9191	CAP SCREW	2		M30 X 120
7	24M7455	WASHER	2		31 X 56 X 5 MM
8	T182420	WASHER	2		
9	AT225911	ISOLATOR	2		

CAB

T193727 -UN-16OCT03

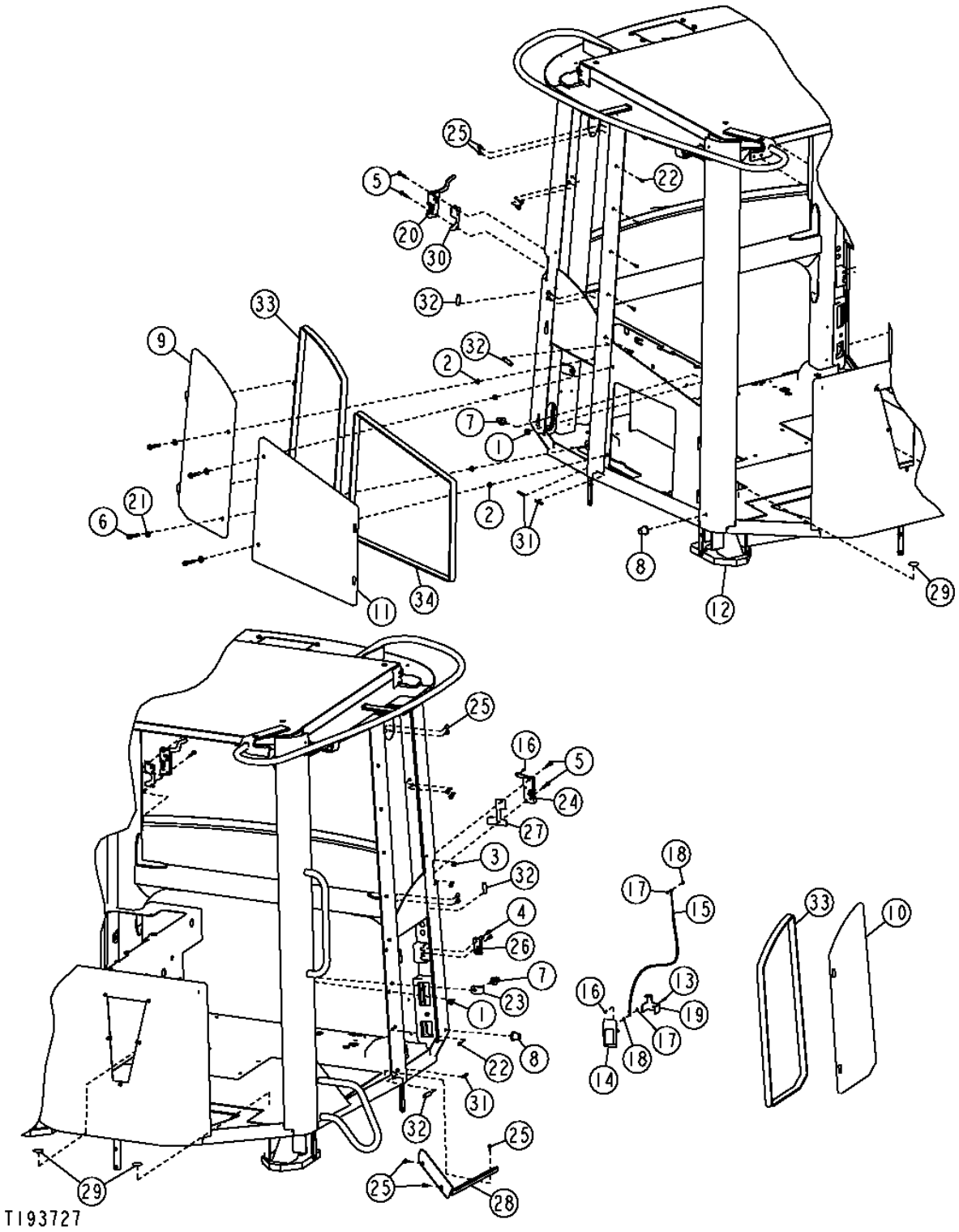

CAB

KEY	PART NO.	PART NAME	QTY	SERIAL NO.	REMARKS
1	14H813	NUT	2		7/16"
2	14M7298	FLANGE NUT	4		M8
3	14M7397	LOCK NUT	4		M6
4	19H1948	CAP SCREW	2		1/4" X 3/4"
5	19M7797	SCREW	4		M6 X 40
6	19M8318	SCREW	4		M8 X 45
7	AR91896	STRIKER	2		
8	AT211296	BUMPER	2		
9	AT224989	DOOR	1		
10	AT224990	DOOR	1		
11	AT224991	DOOR	1		
12	AT226372	CAB FRAME	1		
13	19H3370	CAP SCREW	1		0.190" X 5/8"
14	AT227544	LATCH	1		
15	AT227545	PUSH PULL CABLE	1		
16	T178112	PIN FASTENER	2		
17	T178113	CLIP	2		
18	T178114	SPACER	2		
19	T196309	BRACKET	1		
20	.....	LATCH	1	-XXXXXX	(AT303411 NO LONGER AVAILABLE)
	AT315290	LATCH	1	XXXXXX-	
21	H110232	WASHER	4		0.406" X 0.890" X 0.059"
22	M114063	SCREW	15		M6 X 16
23	T135583	GUARD	1		
24	.....	LATCH	1	-XXXXXX	(T167504 NO LONGER AVAILABLE)
	AT310702	LATCH	1	XXXXXX-	
25	TCU14336	SCREW	15		
26	T167658	LATCH	1		
27	T177505	BRACKET	1		
28	T180930	RETAINER	1		
29	T186793	LABEL	3		
30	T201708	PLATE	1		
31	T203614	ISOLATOR	3		
32	T203615	ISOLATOR	4		
33	.....	ISOLATOR	1		(FURNISH AT305130, CUT TO 75.5 IN.(1918 MM))
34	AT305130	ISOLATOR	1		

FRONT AND REAR WINDOW WASHER AND HOSES

TP60279 -UN-23MAR98

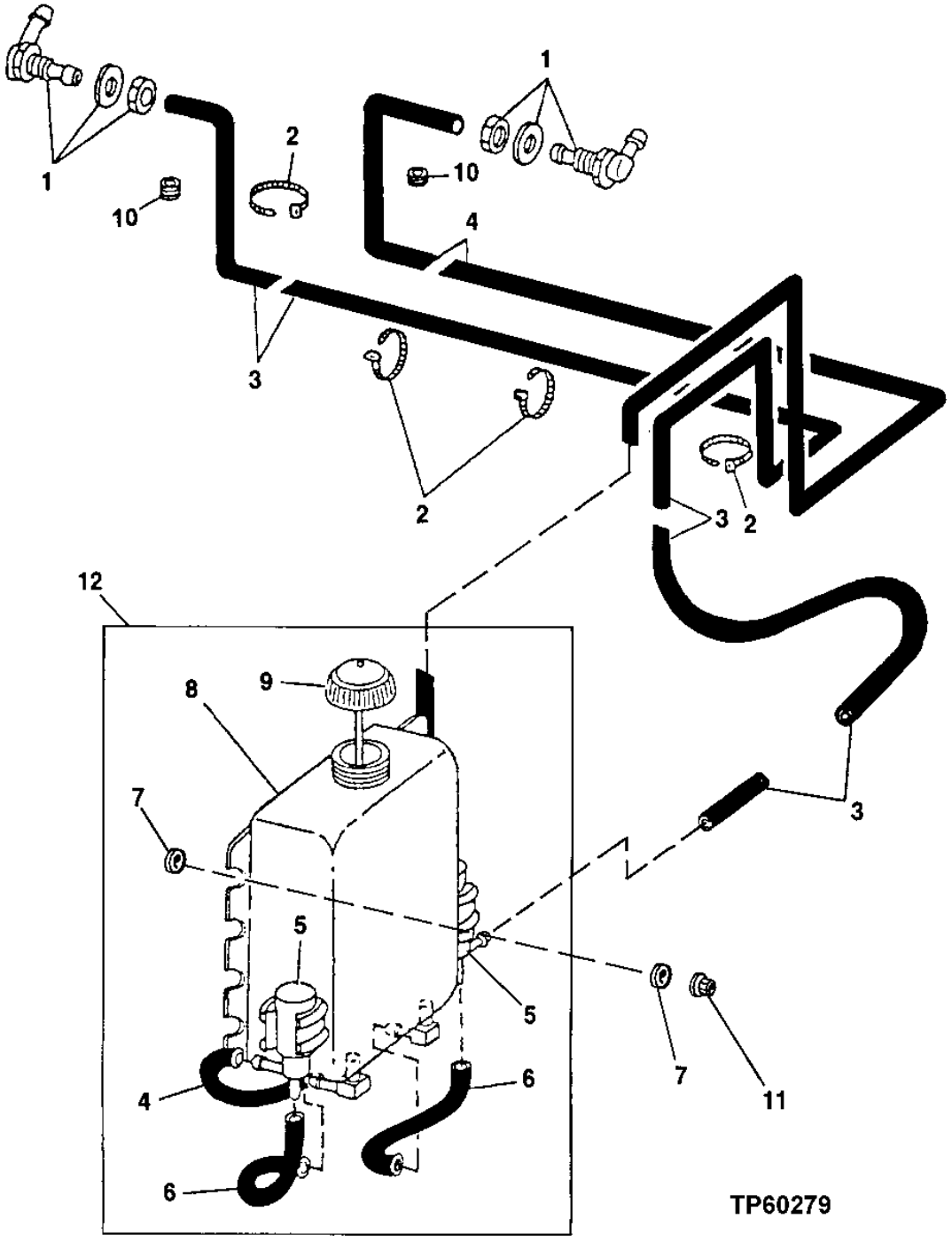

FRONT AND REAR WINDOW WASHER AND HOSES

KEY	PART NO.	PART NAME	QTY	SERIAL NO.	REMARKS
1	AT116970	ELBOW FITTING	2		
2	R44302	TIE BAND	AR		
3	.....	HOSE	AR		(MAKE FROM R120653 BULK MATERIAL, CUT TO LENGTH)
4	.....	HOSE	AR		(MAKE FROM R120653 BULK MATERIAL, CUT TO LENGTH)
5	AT106365	PUMP	2		
6	.....	HOSE	AR		(MAKE FROM R120653 BULK MATERIAL, CUT TO LENGTH)
7	24M7139	WASHER	4		6.400 X 18 X 1.600 MM, TO BOSSES ON ACCESS DOOR
8	T147618	TANK	1		
9	AT173193	CAP	1		
10	T70154	GROMMET	2		(BOTH CAB AND ROPS)
11	14M7303	FLANGE NUT	4		M6
12	AT209947	TANK	1		(WINDSHIELD WASHER)

HEADLINER AND DOMELIGHT

T192642 -UN-10JUL03

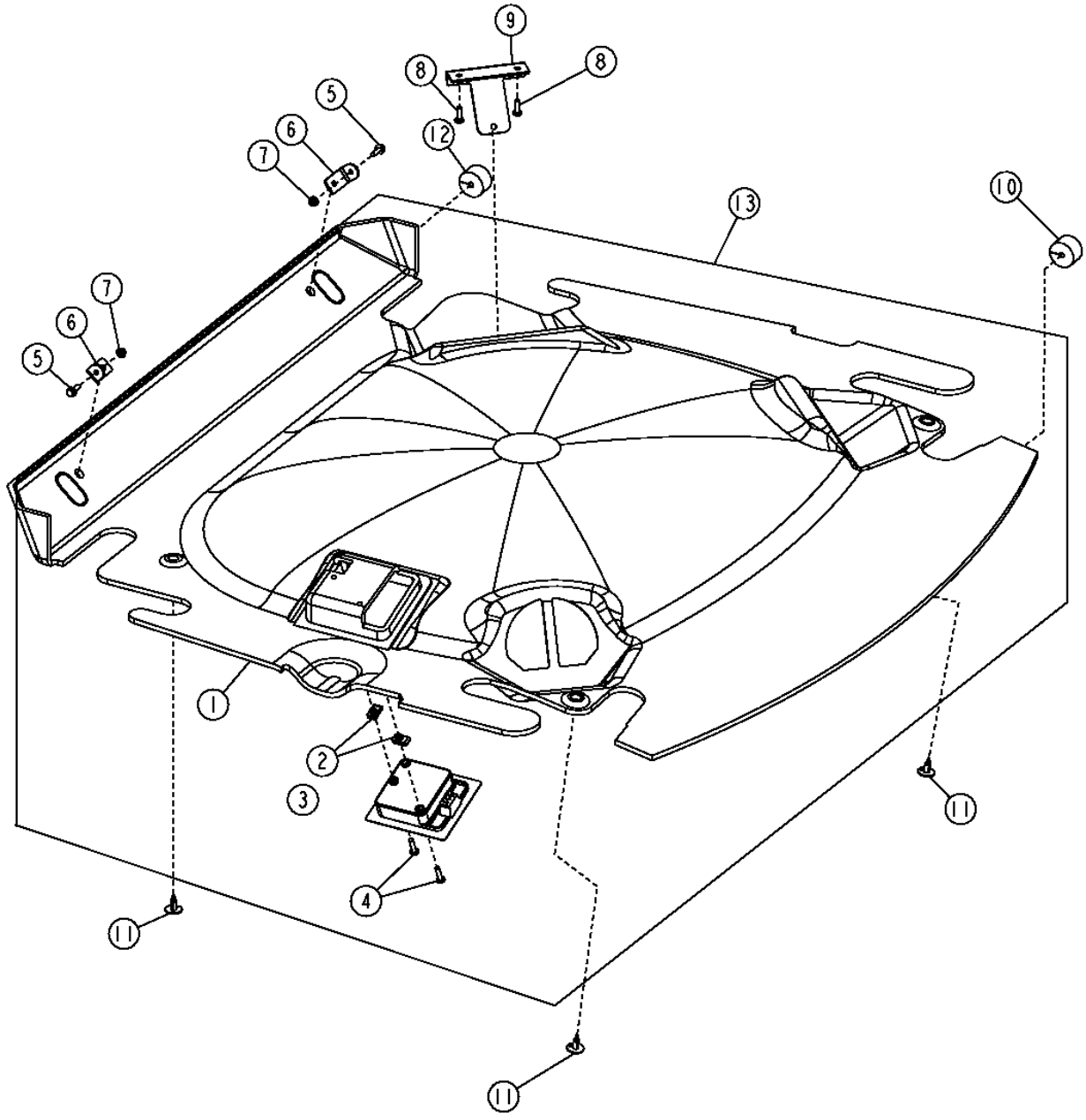

HEADLINER AND DOMELIGHT

KEY	PART NO.	PART NAME	QTY	SERIAL NO.	REMARKS
1	T181908	HEADLINER	1		WITHOUT RADIO
	T181520	HEADLINER	1		WITH RADIO
2	M84972	NUT	2		
3	AT224923	LAMP	1		
4	T134895	SELF-LOCKING SCREW	2		
5	19M7862	SCREW	2		
6	T181050	ANGLE	2		
7	14M7303	FLANGE NUT	2		
8	19H1948	CAP SCREW	2		
9	T180418	STRAP	1		(WITHOUT RADIO)
10	T182861	PLUG	1		(WITHOUT RADIO)
	T182870	ISOLATOR	1		(WITH RADIO)
11	T184892	RETAINER	4		
12	T182861	PLUG	1		(WITHOUT RADIO)
	T65643	GROMMET	1		(WITH RADIO) (SUB FOR T182871, THIS APPLICATION)
13	AT224233	HEADLINER	1		WITH RADIO
	AT224234	HEADLINER	1		WITHOUT RADIO

CAB DOOR

T193726 -UN-30SEP03

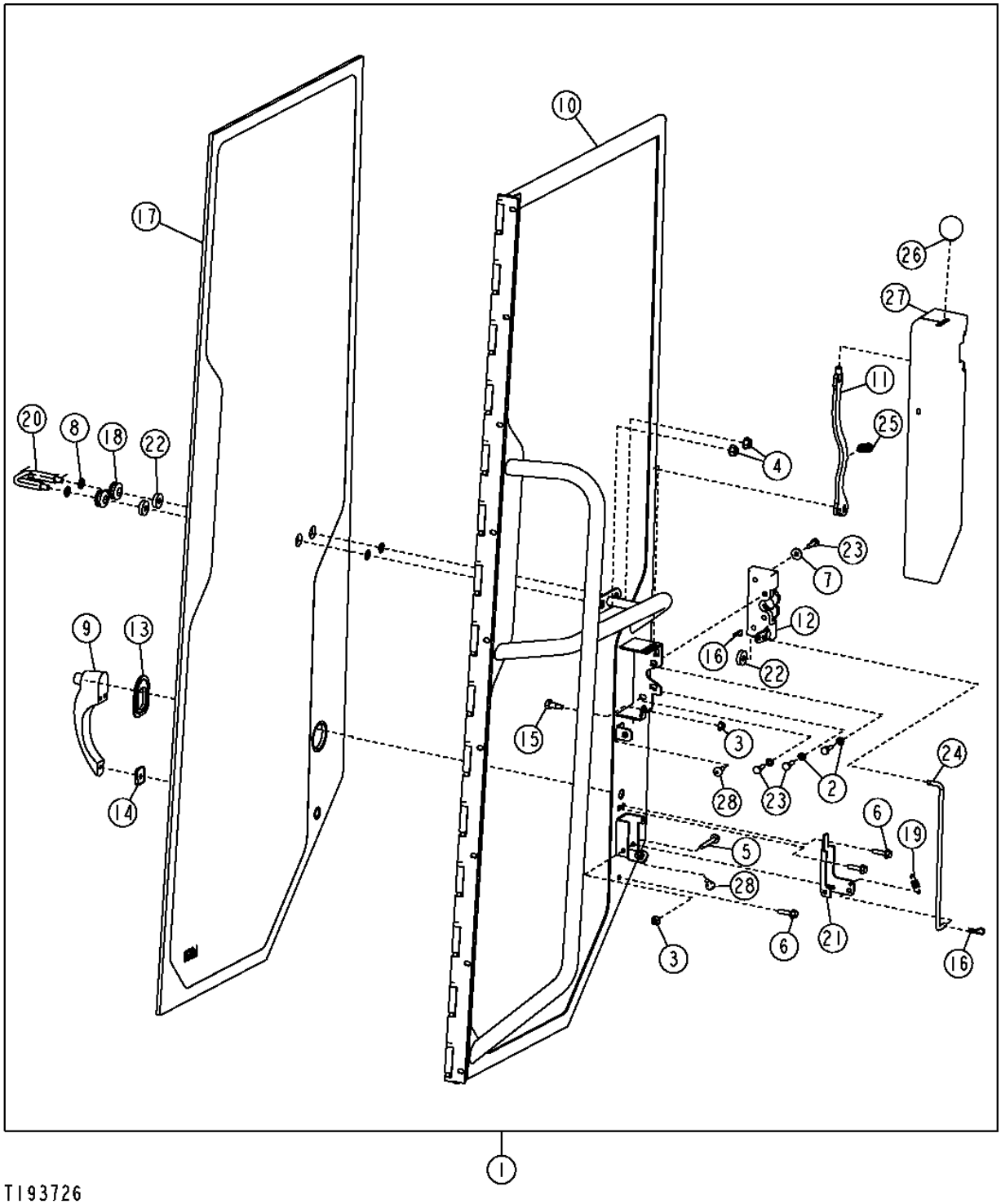

CAB DOOR

KEY	PART NO.	PART NAME	QTY	SERIAL NO.	REMARKS
1	AT224994	DOOR	1		
2	12M7006	LOCK WASHER	3		6 MM
3	14M7303	FLANGE NUT	2		M6
4	14M7424	FLANGE NUT	2		M8
5	19M7834	SCREW	1		M6 X 45
6	19M7863	SCREW	3		M6 X 25
7	24M7251	WASHER	1		6.400 X 18 X 1.600 MM
8	24M7362	WASHER	2		8.400 X 16 X 1.600 MM
9	AH121227	HANDLE	1		
10	AT224995	DOOR	1		
11	AT303493	CONTROL LEVER	1		
12	AT83105	LATCH	1		
13	H126081	BEZEL	1		
14	H126082	BEZEL	1		
15	.....	BOLT	1		(SUB 19M7077 AND T213560) (SUB FOR H131424)
16	H132922	COTTER PIN	2		
17	T167508	WINDOWPANE	1		
18	T167514	GROMMET	2		
19	T167530	SPRING	1		
20	T167546	STRIKER	1		
21	T167618	ARM	1		
22	T182899	WASHER	3		
23	T182963	SCREW	4		
24	T182967	ROD	1		
25	H95874	SPRING	1		
26	T182969	KNOB	1		
27	T182972	COVER	1		
28	TCU14336	SCREW	2		

CAB GLASS

T193725 -UN-30SEP03

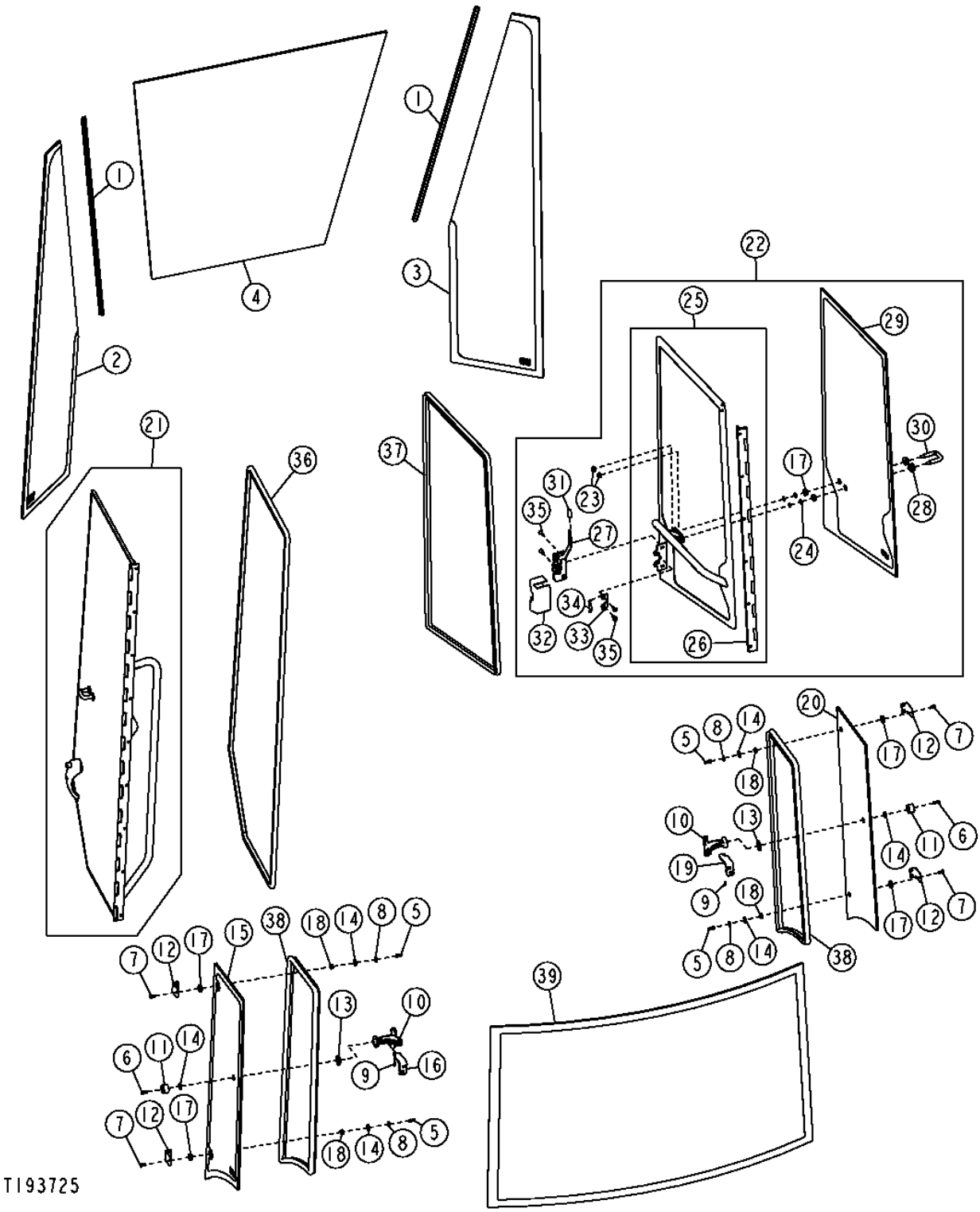

CAB GLASS

KEY	PART NO.	PART NAME	QTY	SERIAL NO.	REMARKS
1	T182903	SEAL	2		
2	T182927	WINDOWPANE	1		
3	T182928	WINDOWPANE	1		
4	T196237	WINDSHIELD	1		
5	14M7376	LOCK NUT	4		M6
6	19M7768	SCREW	2		M6 X 16
7	19M8648	SCREW	4		M6 X 16
8	24M7251	WASHER	4		6.400 X 18 X 1.600 MM
9	34H275	SPRING PIN	2		3/16" X 1/2"
10	AT226000	LATCH	2		
11	T184135	BUMPER	2		(SUB FOR T101090)
12	T167594	ANGLE	4		
	T167593	SCREW	8		(NOT ILLUSTRATED) (HINGE TO CAB FRAME)
13	T167659	WASHER	2		
14	T167683	WASHER	6		
15	T178221	WINDOWPANE	1		
16	T178534	BRACKET	1		
17	T182899	WASHER	6		
18	T182902	BUSHING	4		
19	T177827	BRACKET	1		
20	T178220	WINDOWPANE	1		
21	AT224994	DOOR	1		
22	AT226151	WINDOW	1		
23	14M7424	FLANGE NUT	2		M8
24	24M7362	WASHER	2		8.400 X 16 X 1.600 MM
25	AT226152	DOOR	1		
26	T167505	HINGE	1		
27	AT226176	LATCH	1		
28	T167514	GROMMET	2		
29	T167527	WINDOWPANE	1		
30	T167546	STRIKER	1		
31	T167630	GRIP	1		
32	T182695	COVER	1		
33	T197455	BRACKET	1		
34	T197456	EXTENSION SPRING	1		
35	TCU14336	SCREW	4		M6 X 16
36	AT305126	ISOLATOR	1		
37	.....	ISOLATOR	1		(FURNISH AT305126, CUT TO 120 IN.(3048 MM))
38	.....	ISOLATOR	1		(FURNISH AT305126, CUT TO 86 IN.(2184 MM))
39	T167519	WINDOW	1		

OPERATOR STATION FRONT PEDESTAL

T193670 -UN-20AUG03

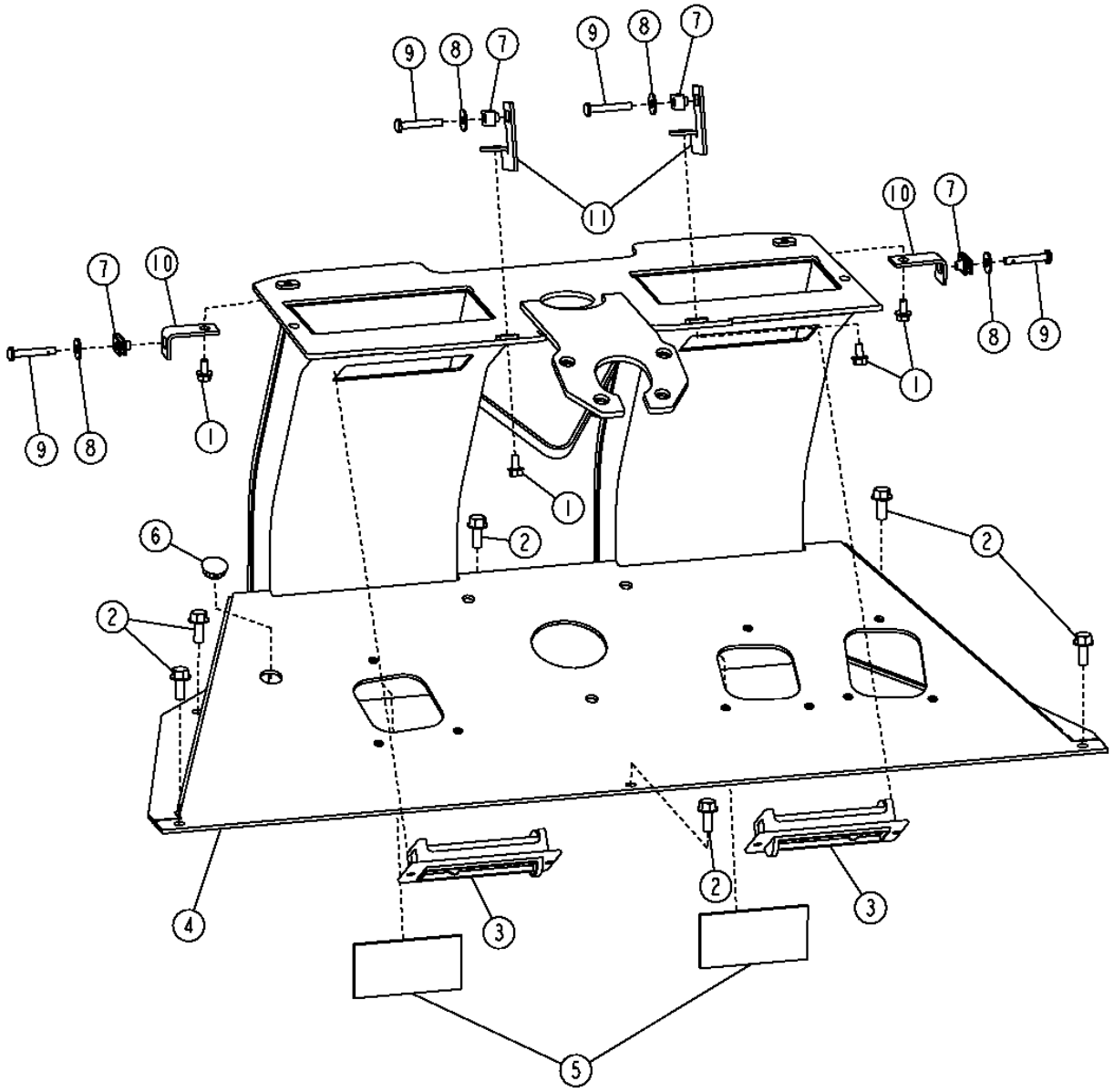

OPERATOR STATION FRONT PEDESTAL

KEY	PART NO.	PART NAME	QTY	SERIAL NO.	REMARKS
1	19M7774	SCREW	4		M6 X 12
2	19M7866	BOLT	6		M8 X 20
3	AH149228	LOUVER	2	-590067	
	AT227668	LOUVER	2	590068-	
4	AT227965	PEDESTAL	1		
5	T66418	ISOLATOR	1		
6	H34597	PLUG	1		
7	M84972	NUT	4		
8	24H1646	WASHER	4	590068-	(SUB FOR T134530)
9	T134874	SELF-LOCKING SCREW	4	590068-	(SUB FOR 21M7403)
10	T196711	ANGLE	2	590068-	(BACK)
11	T196712	BRACKET	2	590068-	(FRONT)

CAB TRIM AND SEAT BASE

T157489 -UN-11SEP02

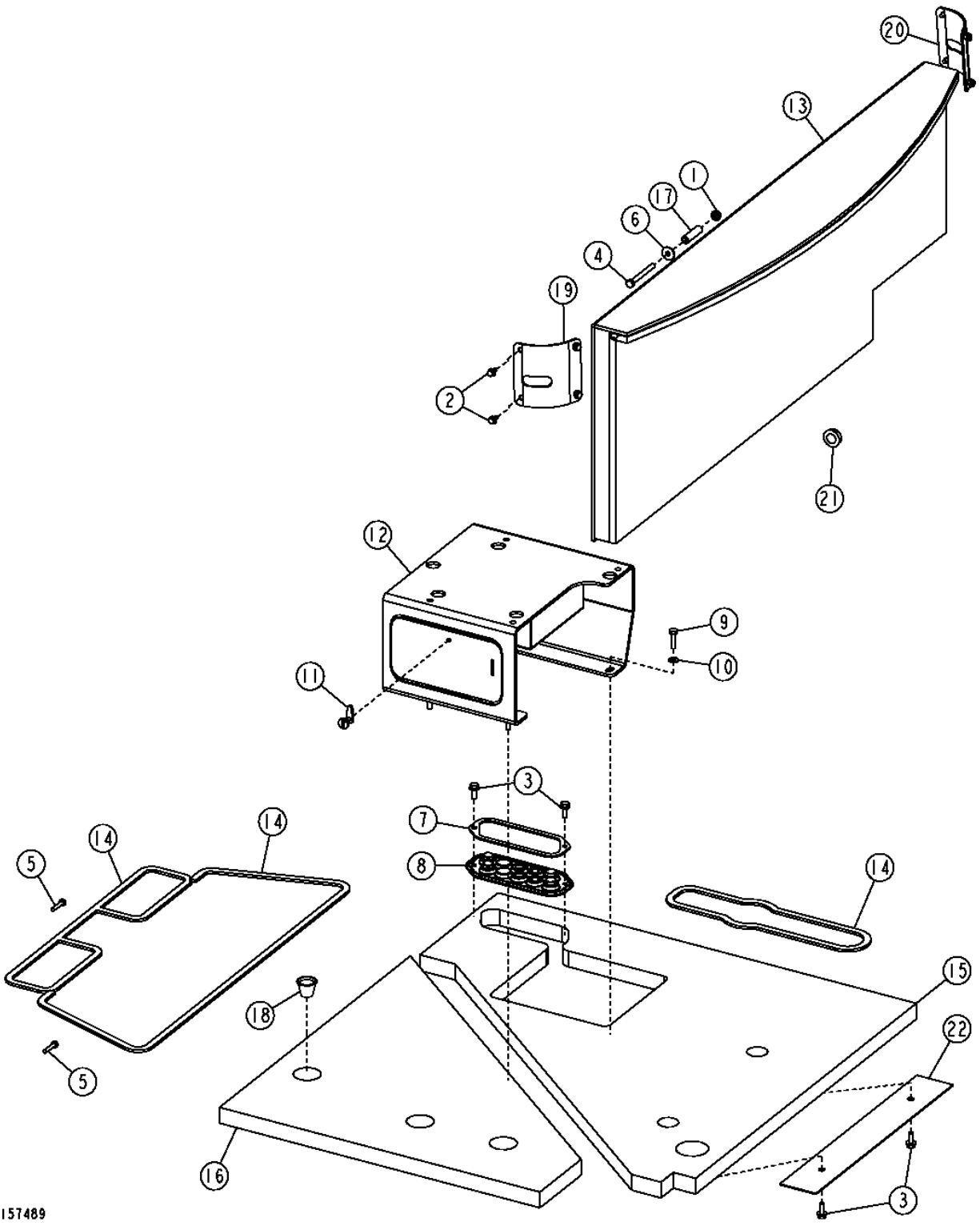

CAB TRIM AND SEAT BASE

KEY	PART NO.	PART NAME	QTY	SERIAL NO.	REMARKS
1	14M7298	FLANGE NUT	1	-590067	M8
2	19M7774	SCREW	8		M6 X 12
3	19M7866	BOLT	4		M8 X 20
4	19M8504	CAP SCREW	1	-590067	M8 X 80
5	21M7247	SCREW	2		M6 X 35
6	24M7298	WASHER	1	-590067	8.400 X 25 X 2 MM
7	T172991	PLATE	1		
8	T172992	GROMMET	1		
9	19M7513	CAP SCREW	5		M8 X 30
10	24M7238	WASHER	5		8.700 X 17 X 2 MM
11	AT151931	LATCH	1		
12	AT224235	FLOOR	1		
13	AT225706	PAD	1		
14	H81330	ISOLATOR	12		
15	T167770	ISOLATOR	1		
16	T167771	ISOLATOR	1		
17	T167775	BUSHING	1	-590067	
18	T180408	PLUG	1		
19	T205472	COVER	1	-590067	(SUB FOR T181603)
20	T205472	COVER	1	-590067	(SUB FOR T182389)
21	T182880	PLUG	1	-590067	
	T182860	ISOLATOR	1		
22	T182906	PLATE	1		

REAR WINDSHIELD WIPER

T153602 -UN-28JUN02

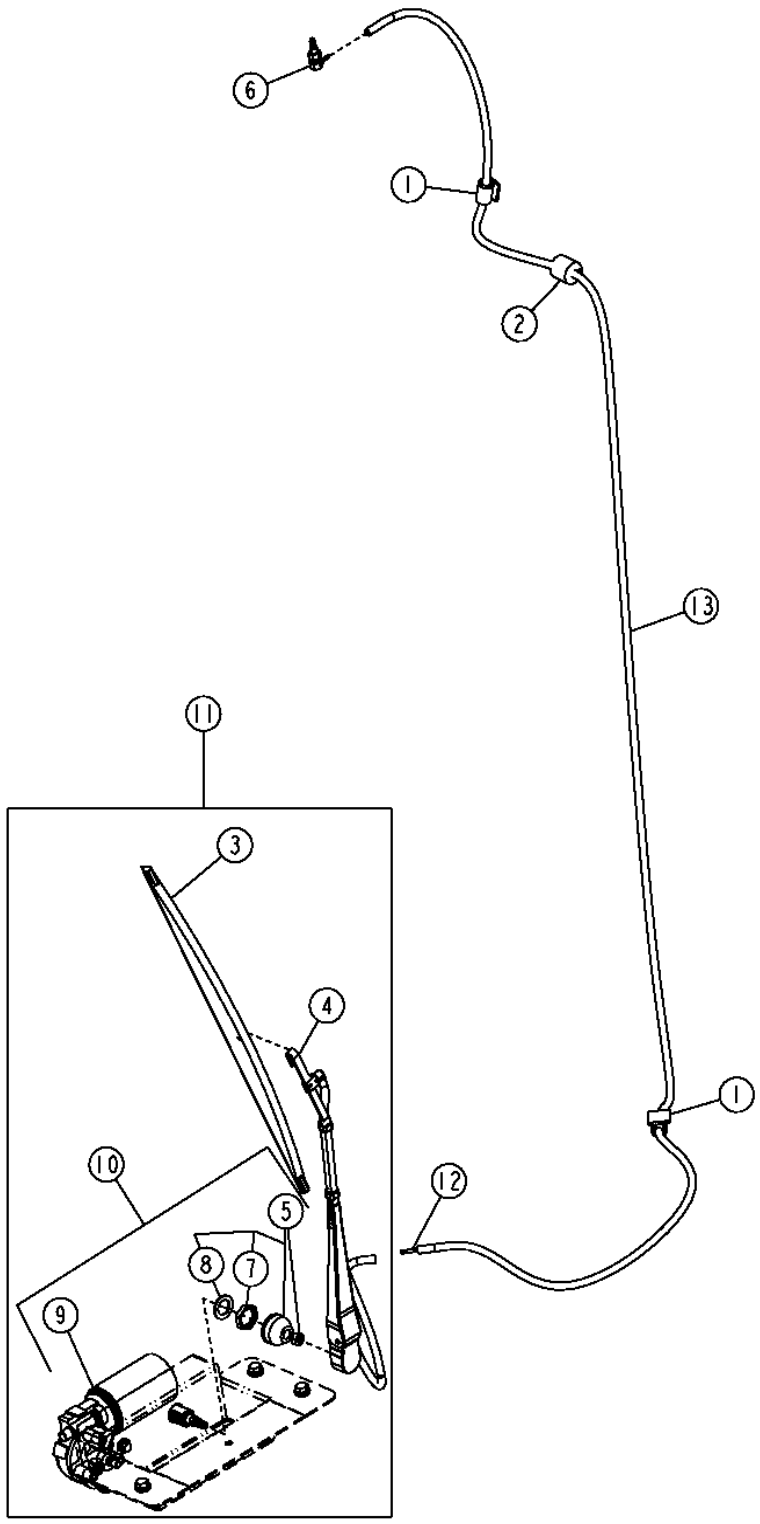

REAR WINDSHIELD WIPER

KEY	PART NO.	PART NAME	QTY	SERIAL NO.	REMARKS
1	T182909	CLIP	1		
2	T182860	ISOLATOR	1		
3	AL153660	WIPER BLADE	1		(SUB FOR AT209912)
4	AT209910	WIPER ARM	1		
5	RE40049	KIT	1		
6	AT116970	ELBOW FITTING	1		
7	AT138180	NUT	1		
8	R63667	WASHER	1		
9	AT209908	WIPER MOTOR	1		
10	AT224217	WIPER MOTOR	1		
11	.....	MOTOR	1		(AT202784 NO LONGER AVAILABLE) (FURNISH COMPONENTS)
12	T182919	FITTING	1		
13	.....	HYDRAULIC HOSE - FABRICATE	1		(MAKE FROM R120653, CUT TO 96 IN.)

FRONT WINDSHIELD WIPER

T153601 -UN-23JUL02

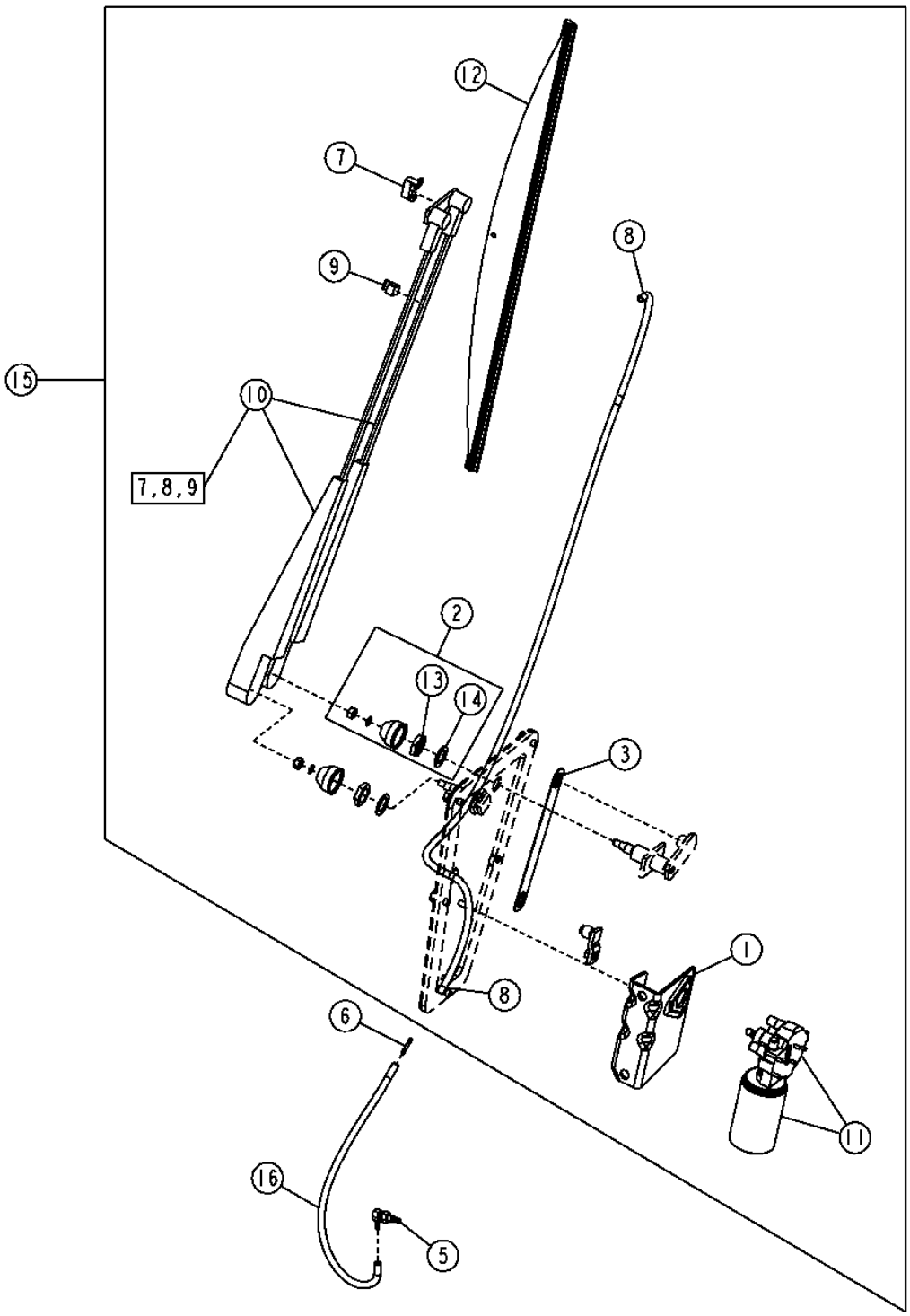

FRONT WINDSHIELD WIPER

KEY	PART NO.	PART NAME	QTY	SERIAL NO.	REMARKS
1	RE16879	BRACKET	1		
2	RE40049	KIT	2		
3	T172652	LINK	1		
5	AT116970	ELBOW FITTING	1		
6	T182919	FITTING	1		
7	AT137920	WINDSHIELD WASHER	1		
8	R54445	HOSE	1		
9	AT137921	CLIP	1		
10	AT209909	WIPER ARM	1		
11	AT209908	WIPER MOTOR	1		
12	AT138215	WIPER BLADE	1		
13	AT138180	NUT	2		
14	R63667	WASHER	2		
15	AT202726	WINDSHIELD WIPER	1		
16	.....	HYDRAULIC HOSE - FABRICATE	1		(MAKE FROM R120653, CUT TO 15 IN.)

RIGHT SIDE CONSOLE (TWO LEVER CONTROLLERS)(SERIAL NO. -590067)

T195636 -UN-23OCT03

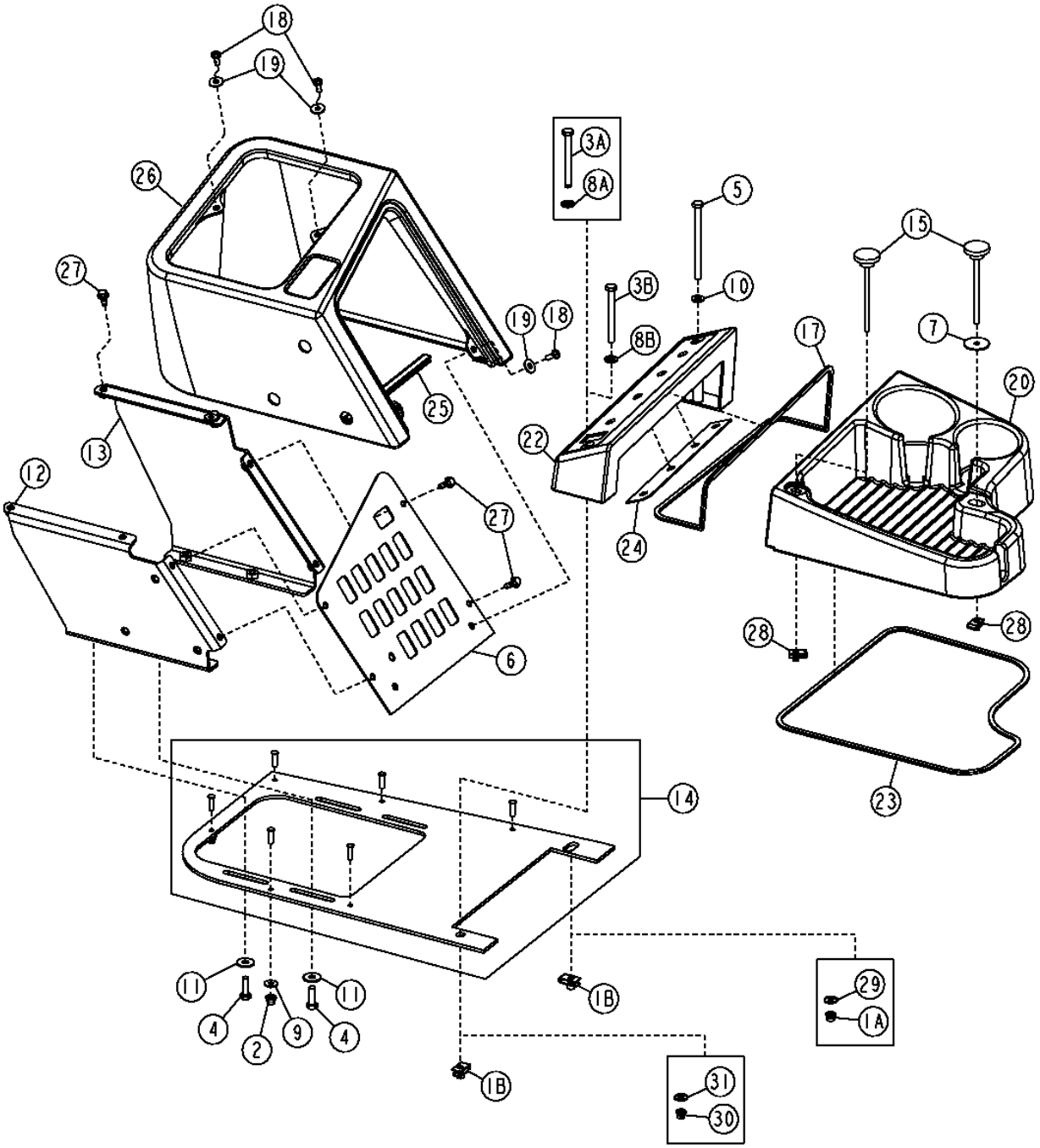

RIGHT SIDE CONSOLE (TWO LEVER CONTROLLERS)(SERIAL NO. -XXXXXX)

KEY	PART NO.	PART NAME	QTY	SERIAL NO.	REMARKS
1A	14M7396	LOCK NUT	1	-XXXXXX	
1B	H156360	NUT	1	XXXXXX-	
2	14M7397	LOCK NUT	7		
3A	19M7689	CAP SCREW	1	-XXXXXX	
3B	19M8504	CAP SCREW	1	XXXXXX-	
4	19M7407	CAP SCREW	4		
5	19M7997	CAP SCREW	1		
6	AT226269	INSTRUMENT PANEL	1		
7	24H1695	WASHER	1		
8A	24M7054	WASHER	1	-XXXXXX	
8B	24M7238	WASHER	1	XXXXXX-	
9	24M7139	WASHER	6		
10	24M7238	WASHER	1		
11	24M7298	WASHER	1		
12	AT226072	BRACKET	1		
13	AT226073	BRACKET	1		
14	AT226263	PLATE	1		
15	AT226334	KNOB	2		
17	.....	ISOLATOR	1		(MAKE FROM BULK MATERIAL T180533, CUT TO LENGTH)
18	T133674	SELF-LOCKING SCREW	4		(SUB FOR 21M7292)
19	24H1646	WASHER	4		(SUB FOR T134530)
20	T182612	COVER	1		
22	T182609	CONSOLE	1		
23	.....	ISOLATOR	1		(MAKE FROM T182629, CUT TO LENGTH)
24	T197457	PLATE	1		(FURNISH BULK MATERIAL DT5286, CUT TO LENGTH)
25	.....	ISOLATOR	1		(MAKE FROM T180533, CUT TO LENGTH)
26	T182607	COVER	1		
27	M113243	SCREW	1		
28	M84972	NUT	1		
29	24M7298	WASHER	1	-XXXXXX	
30	14M7397	LOCK NUT	1	-XXXXXX	
31	24M7139	WASHER	1	-XXXXXX	

RIGHT SIDE CONSOLE (SINGLE LEVER CONTROLLERS)(SERIAL NO. -590067)

T158501 -UN-11SEP02

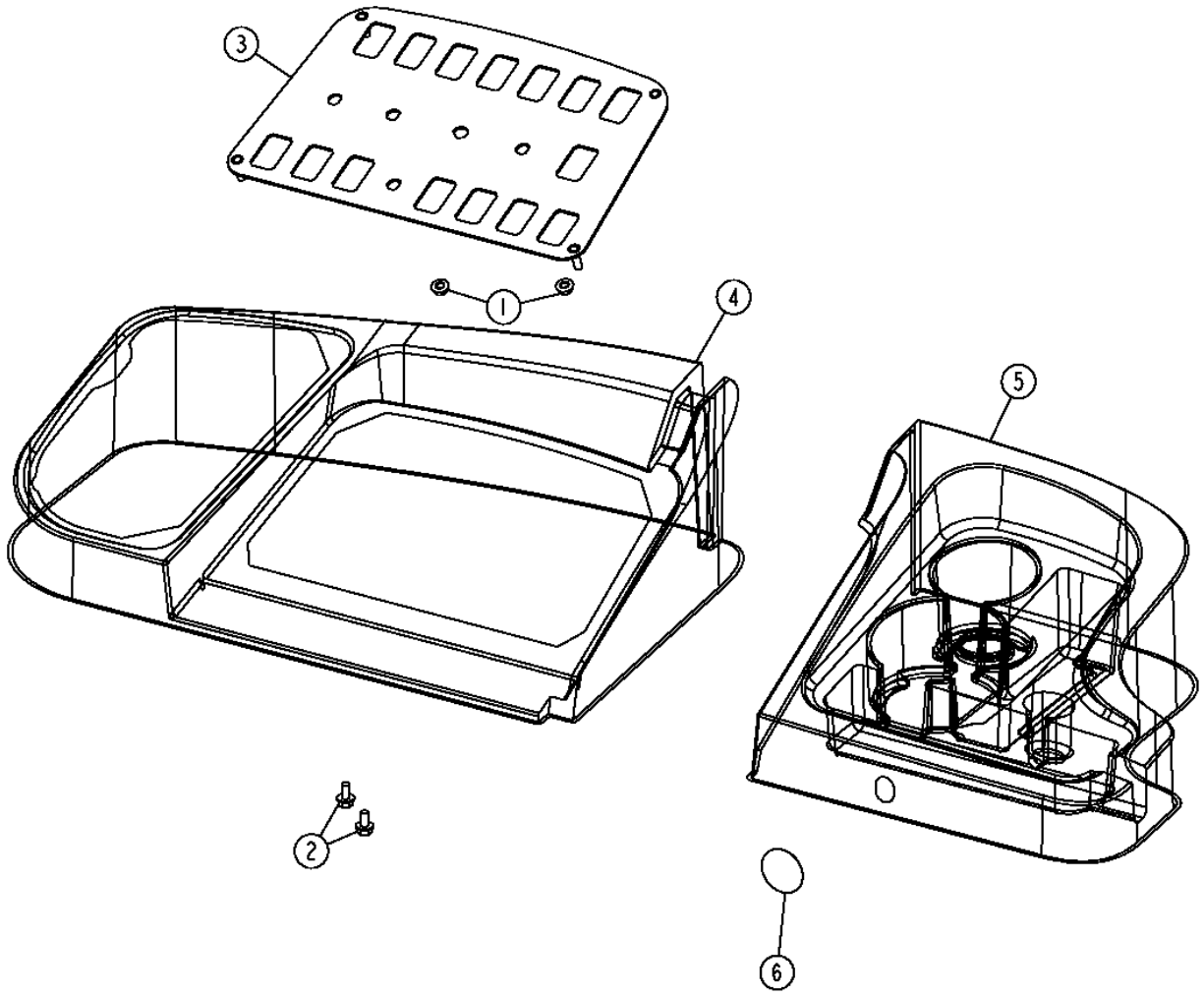

2F8

RIGHT SIDE CONSOLE (SINGLE LEVER CONTROLLERS)(SERIAL NO. -590067)

KEY	PART NO.	PART NAME	QTY	SERIAL NO.	REMARKS
1	14M7303	FLANGE NUT	4		
2	19M7774	SCREW	4		
3	AT207497	PLATE	1		
4	T180922	CONSOLE	1		
5	T180923	CONSOLE	1		
6	T186793	LABEL	1		

RIGHT SIDE CONSOLE (SERIAL NO. 590068-)

T197047 -UN-05JAN04

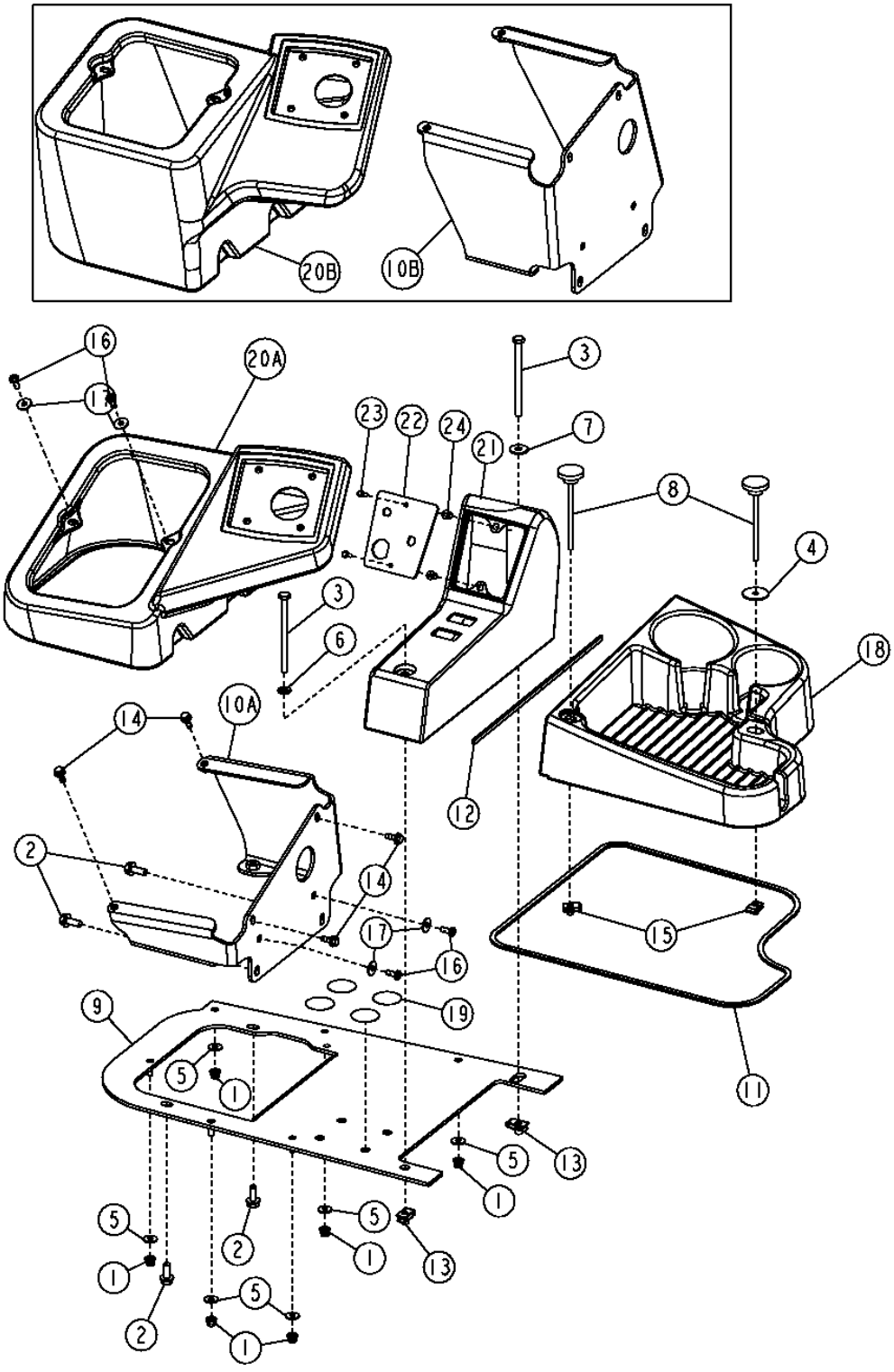

RIGHT SIDE CONSOLE (SERIAL NO. 590068-)

KEY	PART NO.	PART NAME	QTY	SERIAL NO.	REMARKS
1	14M7165	LOCK NUT	6		M6
2	19M7866	BOLT	4		M8 X 20
3	19M7997	CAP SCREW	2		M8 X 110
4	24H1695	WASHER	1		9/32" X 1-3/8" X 0.065"
5	24M7139	WASHER	6		6.400 X 18 X 1.600 MM
6	24M7238	WASHER	1		8.700 X 17 X 2 MM
7	24M7298	WASHER	1		8.400 X 25 X 2 MM
8	AT226334	KNOB	2		
9	AT310413	PLATE	1		(SUB FOR AT228253)
10A	AT310414	BRACKET	1		(SHORT) (SUB FOR AT300441)
10B	AT310412	BRACKET	1		(TALL) (SUB FOR AT227794)
11	T180533	SEALING TRIM	1		
12	.....	ISOLATOR	1		(FURNISH T207925 BULK MATERIAL, CUT TO 4.25 FT.)
13	H156360	NUT	2		
14	M113243	SCREW	4		
15	M84972	NUT	2		
16	T133674	SELF-LOCKING SCREW	4		(SUB FOR 21M7292)
17	24H1821	WASHER	4		
18	T182612	COVER	1		
19	T186793	LABEL	4		
20A	T200267	COVER	1		(SHORT)
20B	T196622	COVER	1		(TALL)
21	T202883	CONSOLE	1		
22	T203128	PLATE	1		
23	T82791	SCREW	2		
24	T82792	NUT	2		

WIPER MOUNTING BRACKETS AND WIPER CAB SWITCH

T153330 -UN-28JUN02

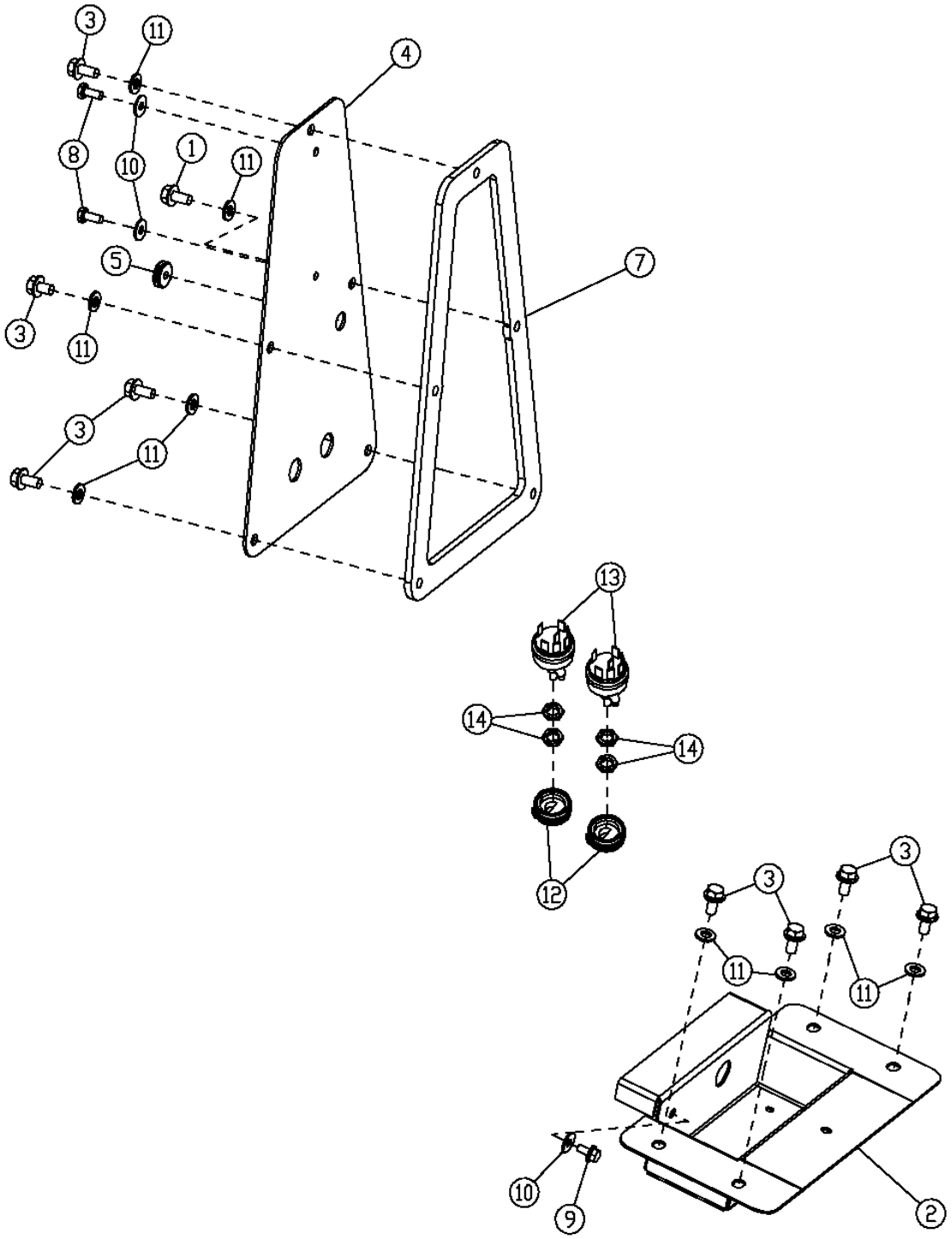

T153330

WIPER MOUNTING BRACKETS AND WIPER CAB SWITCH

KEY	PART NO.	PART NAME	QTY	SERIAL NO.	REMARKS
1	19M7865	SCREW	1		M8 X 16
2	T181412	TRAY	1		BRACKET, REAR WIPER MOUNTING
3	19M7865	SCREW	8		M8 X 16
4	T181413	PLATE	1		
5	T182874	GROMMET	1		
7	T167754	SEAL	1		
8	19H3138	CAP SCREW	2		
9	19M7774	SCREW	1		M6 X 12
10	24M7139	WASHER	3		6.400 X 18 X 1.600 MM
11	24M7238	WASHER	9		
12	AL76568	KNOB	2		
13	RE46634	SWITCH	4		
14	R44165	LOCK NUT	2		

**LEFT HAND COVER
(CAB)**

T164834 -UN-31JAN03

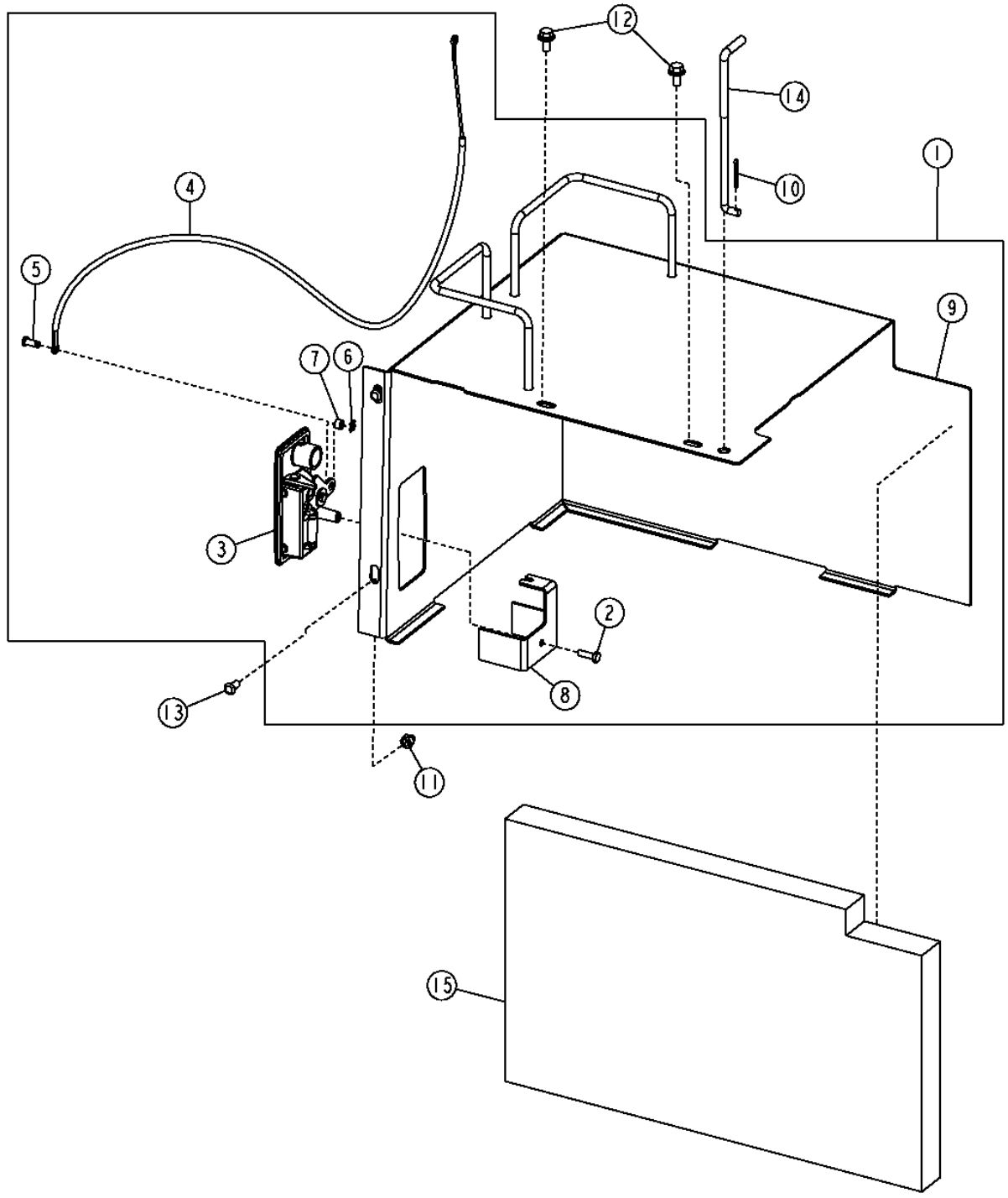

2F14

LEFT HAND COVER (CAB)

KEY	PART NO.	PART NAME	QTY	SERIAL NO.	REMARKS
1	AT227547	FIELD INSTALLATION KIT	1		
2	19H3370	CAP SCREW	1		
3	AT227544	LATCH	1		
4	AT227545	PUSH PULL CABLE	1		
5	T178112	PIN FASTENER	2		
6	T178113	CLIP	2		
7	T178114	SPACER	2		
8	T196309	BRACKET	1		
9	AT227549	COVER	1		
10	11M7081	COTTER PIN	1		
11	14M7376	LOCK NUT	2		
12	19M7774	SCREW	2		
13	T167593	SCREW	2		
14	T167764	ROD	1		
15	T171849	ISOLATOR	1		

FRESH AIR HOUSING COVER

TP60556 -UN-01DEC98

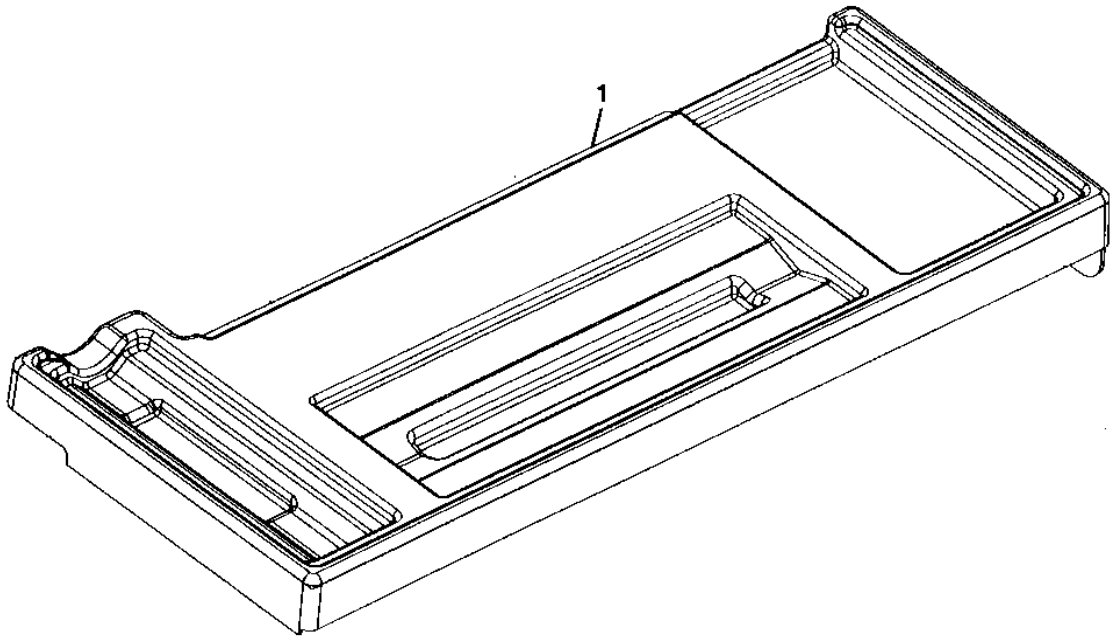

TP60556

2F16

FRESH AIR HOUSING COVER

KEY	PART NO.	PART NAME	QTY	SERIAL NO.	REMARKS
1	AT222402	COVER	1	-XXXXXX	
	AT311383	COVER	1	XXXXXX-	

HOLD OPEN LATCH
(LEFT HAND DOOR)

T158691 -UN-03SEP02

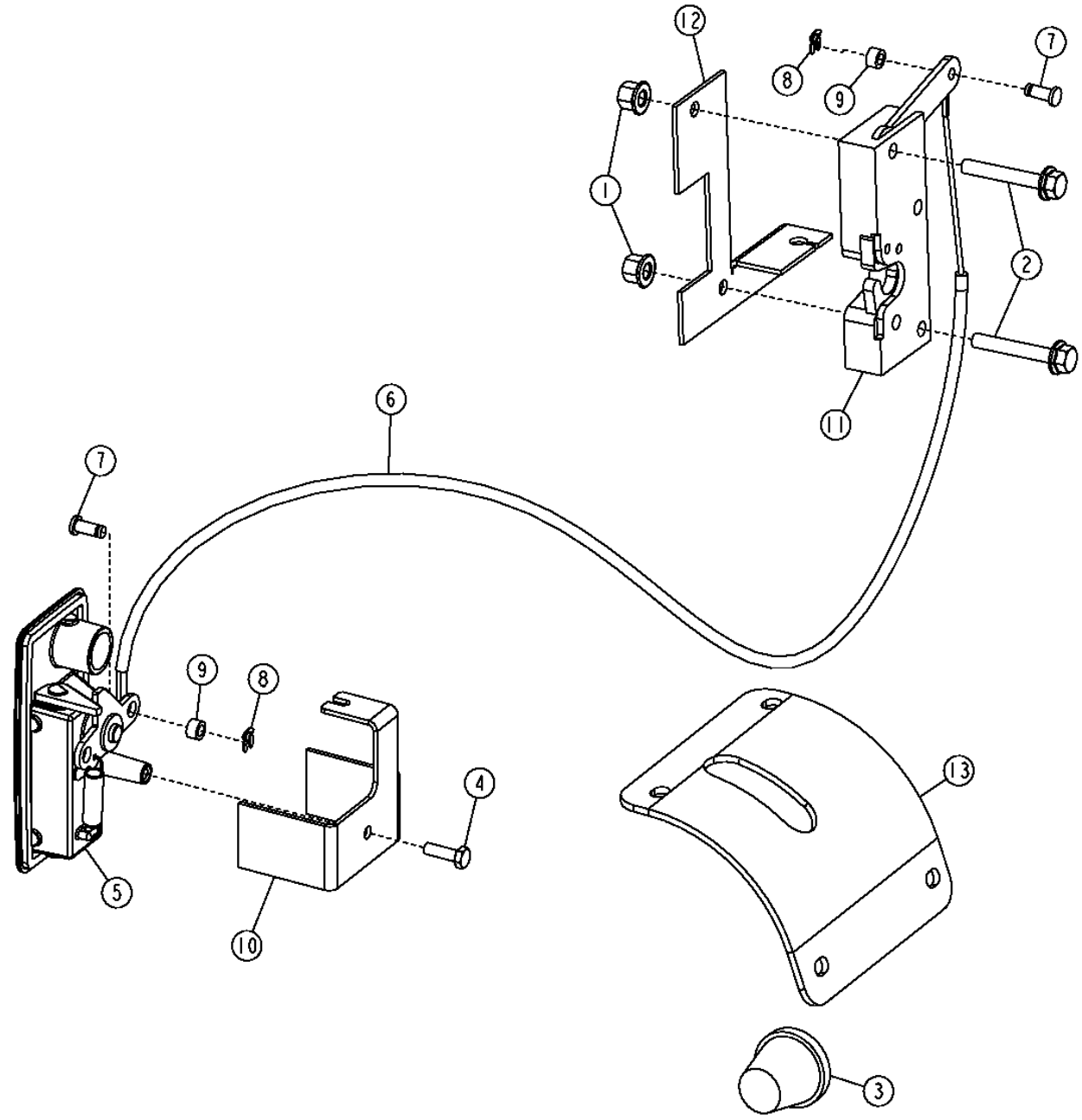

2F18

HOLD OPEN LATCH
(LEFT HAND DOOR)

KEY	PART NO.	PART NAME	QTY	SERIAL NO.	REMARKS
1	14M7397	LOCK NUT	2		
2	19M7797	SCREW	2		
3	AT211296	BUMPER	1		
4	21H1463	CAP SCREW	1		
5	AT227544	LATCH	1		
6	AT227545	PUSH PULL CABLE	1		
7	T178112	PIN FASTENER	2		
8	T178114	SPACER	2		
9	T178114	SPACER	2		
10	T196309	BRACKET	1		
11	.....	LATCH	1	-XXXXXX	(T167504 NO LONGER AVAILABLE)
	AT310702	LATCH	1	XXXXXX-	
12	T177505	BRACKET	1		
13	T205472	COVER	1		(SUB FOR T181603)

**HOLD OPEN LATCH
(RIGHT HAND DOOR)**

T158692 -UN-03SEP02

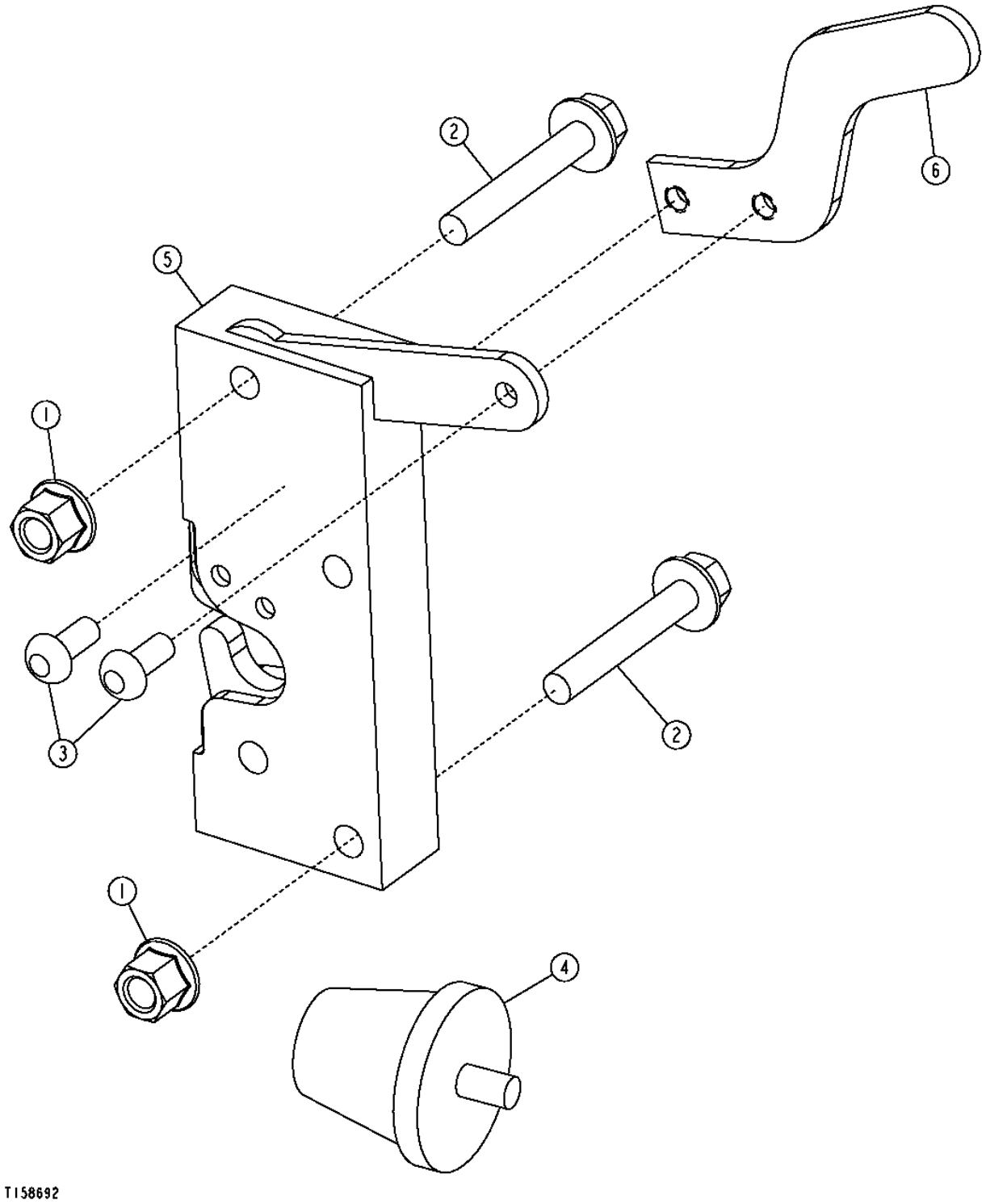

HOLD OPEN LATCH
(RIGHT HAND DOOR)

KEY	PART NO.	PART NAME	QTY	SERIAL NO.	REMARKS
1	14M7397	LOCK NUT	2		
2	19M7797	SCREW	2		
3	21M7265	SCREW	2		
4	AT211296	BUMPER	1		
5	.....	LATCH	1	-XXXXXX	(T167504 NO LONGER AVAILABLE)
	AT310702	LATCH	1	XXXXXX-	
6	T167574	LEVER	1		

ROOF

T193660 -UN-19AUG03

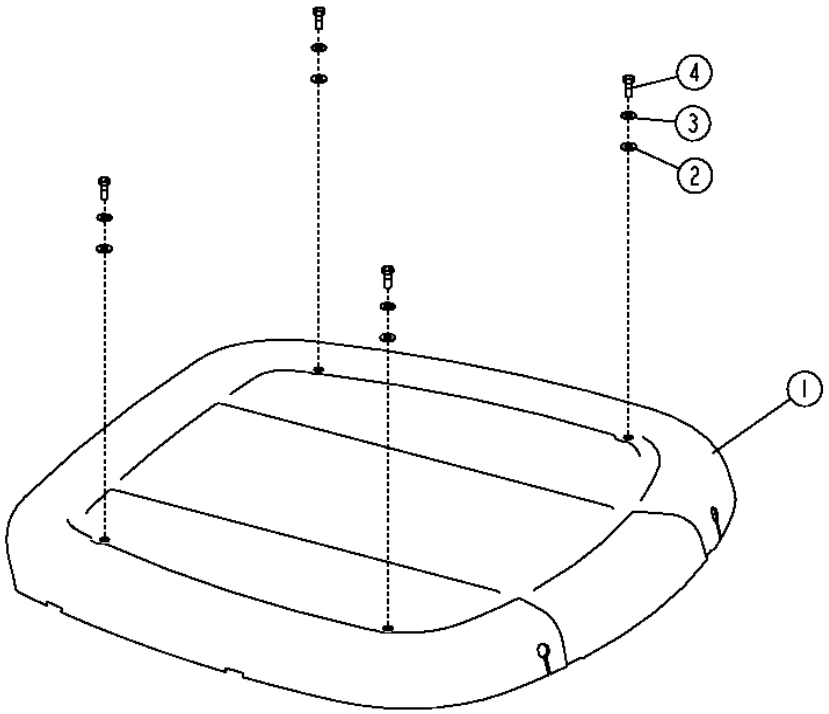

T193660

KEY	PART NO.	PART NAME	QTY	SERIAL NO.	REMARKS
1	AT227013	ROOF	1		(PAINTABLE)
	AT226578	ROOF	1		
2	T167659	WASHER	4		
3	24H1368	WASHER	4		
4	T182920	CAP SCREW	4		

CAB AND CANOPY FLOOR MAT

TP55529 -UN-13MAY97

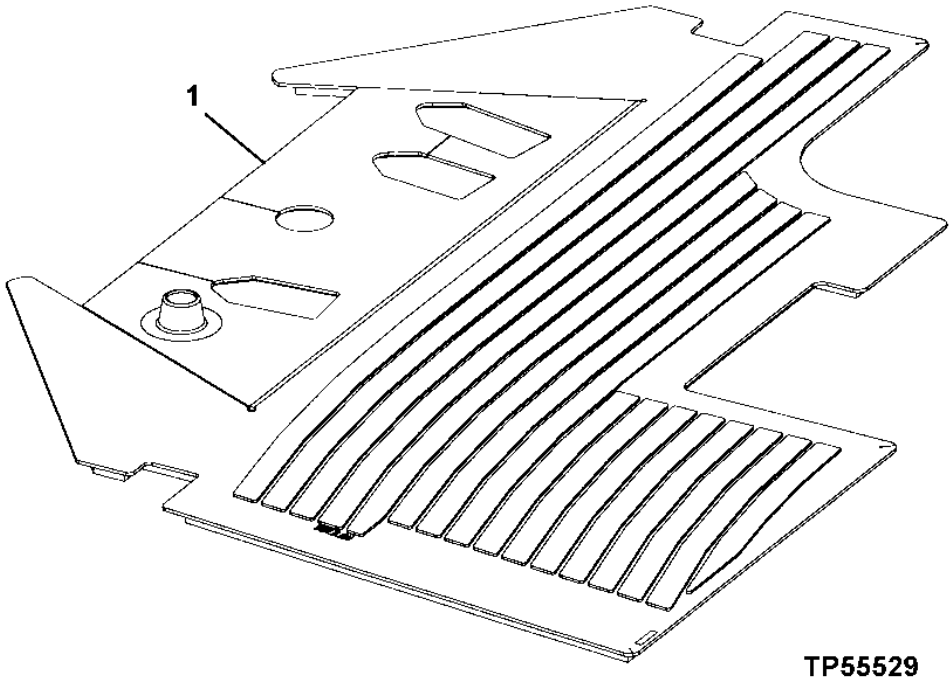

TP55529

KEY	PART NO.	PART NAME	QTY	SERIAL NO.	REMARKS
1	AT207144	MAT	1		FLOOR MAT - CAB, (SUB FOR AT202732)

CAB SHIELDS

T193264 -UN-07AUG03

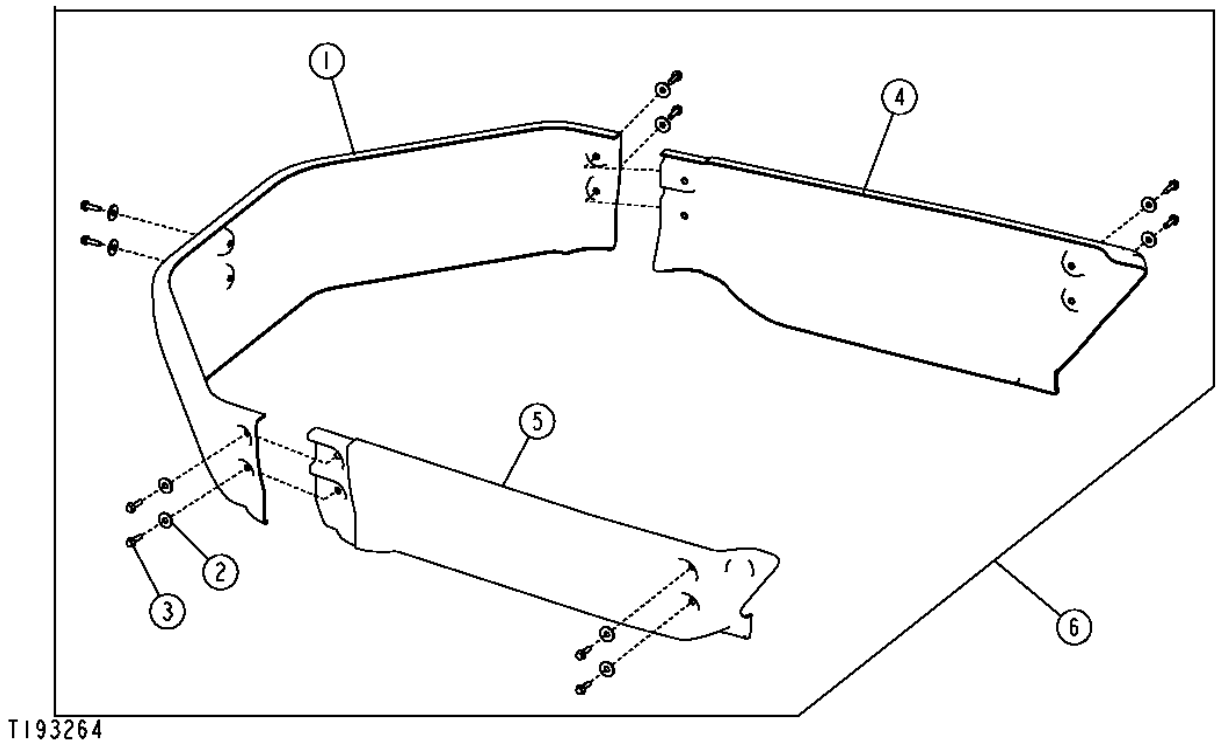

CAB SHIELDS

KEY	PART NO.	PART NAME	QTY	SERIAL NO.	REMARKS
1	.....	SHIELD	1		(SUB AT303757) (FRONT) (YELLOW)
	T168340	SHIELD	1		(FRONT) (GRAY)
	T209173	SHIELD	1		(FRONT) (YELLOW)
2	24M7296	WASHER	10		10.500 X 30 X 2.500 MM
3	19M7868	SCREW	10		M8 X 30
4	.....	SHIELD	1		(SUB AT303757) (RIGHT) (YELLOW)
	T175534	SHIELD	1		(RIGHT) (GRAY)
	T209184	SHIELD	1		(RIGHT) (YELLOW)
5	.....	SHIELD	1		(SUB AT303757) (LEFT) (YELLOW)
	T175533	SHIELD	1		(LEFT) (GRAY)
	T209183	SHIELD	1		(LEFT) (YELLOW)
6	.....	KIT	1		(AT303757 NOT AVAILABLE ORDER COMPONENTS)

WRIST-ARM REST(FOR USE WITH TWO-LEVER CONTROLLERS)(SERIAL NO. -590067)

T161170 -UN-31OCT02

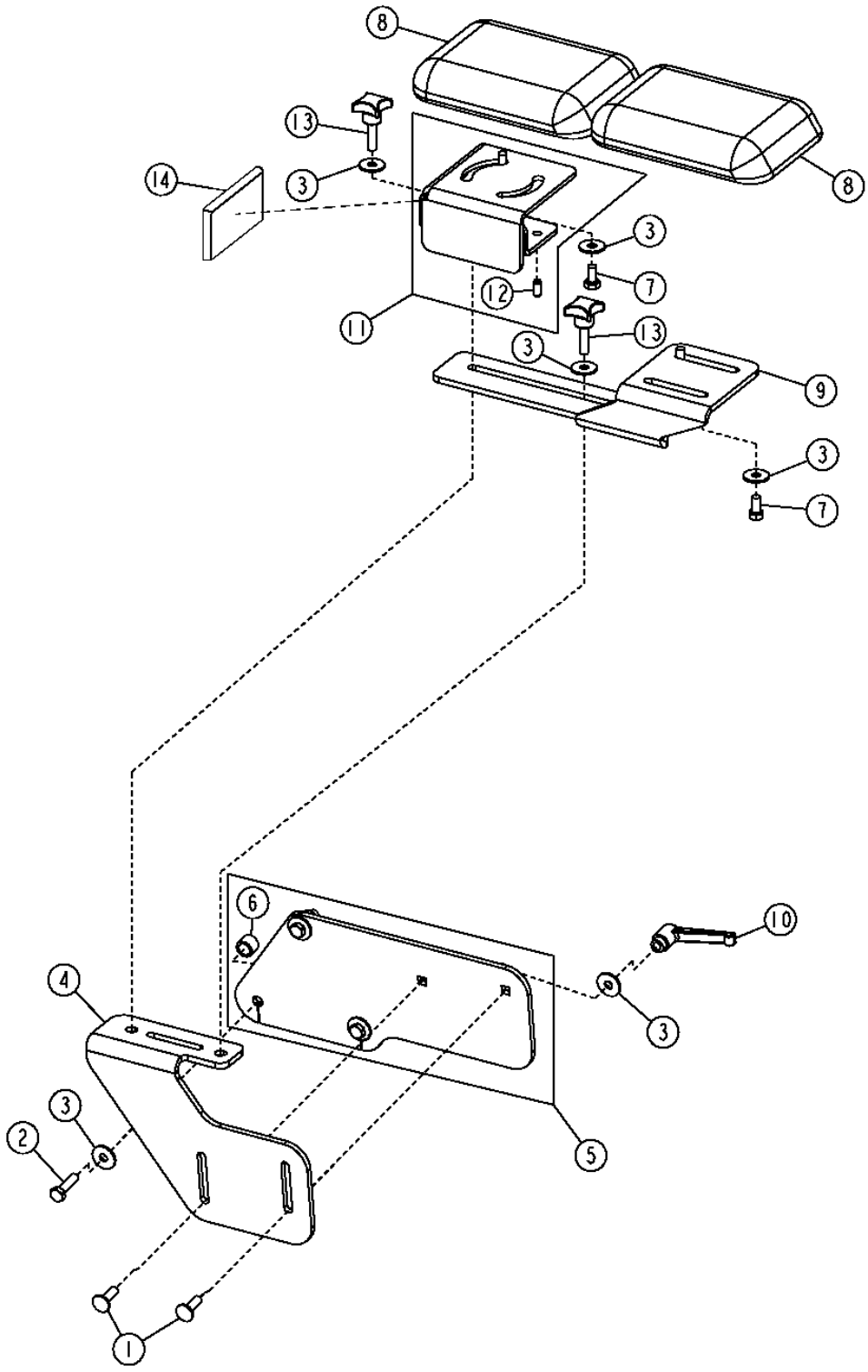

T161170

WRIST-ARM REST(FOR USE WITH TWO-LEVER CONTROLLERS)(SERIAL NO. -590067)

KEY	PART NO.	PART NAME	QTY	SERIAL NO.	REMARKS
1	03M7185	BOLT	2		
2	19M7513	CAP SCREW	3		M8 X 30
3	24M7298	WASHER	11		8.400 X 25 X 2 MM
4	AT226279	SUPPORT	1		
5	AT226421	SUPPORT	1		
6	28H1884	SPACER	3		
7	19M7932	CAP SCREW	4		M8 X 16
8	AT171679	CUSHION	2		
9	T195929	SUPPORT	1		
10	AT227063	LEVER	2		
11	AT226082	BRACKET	1		
12	44M7027	PIN	1		8 X 16 MM
13	AT227068	KNOB	2		
14	AT300104	MAGNET	1		

WRIST-ARM REST (SERIAL NO. 590068-)

T202072 -UN-10AUG04

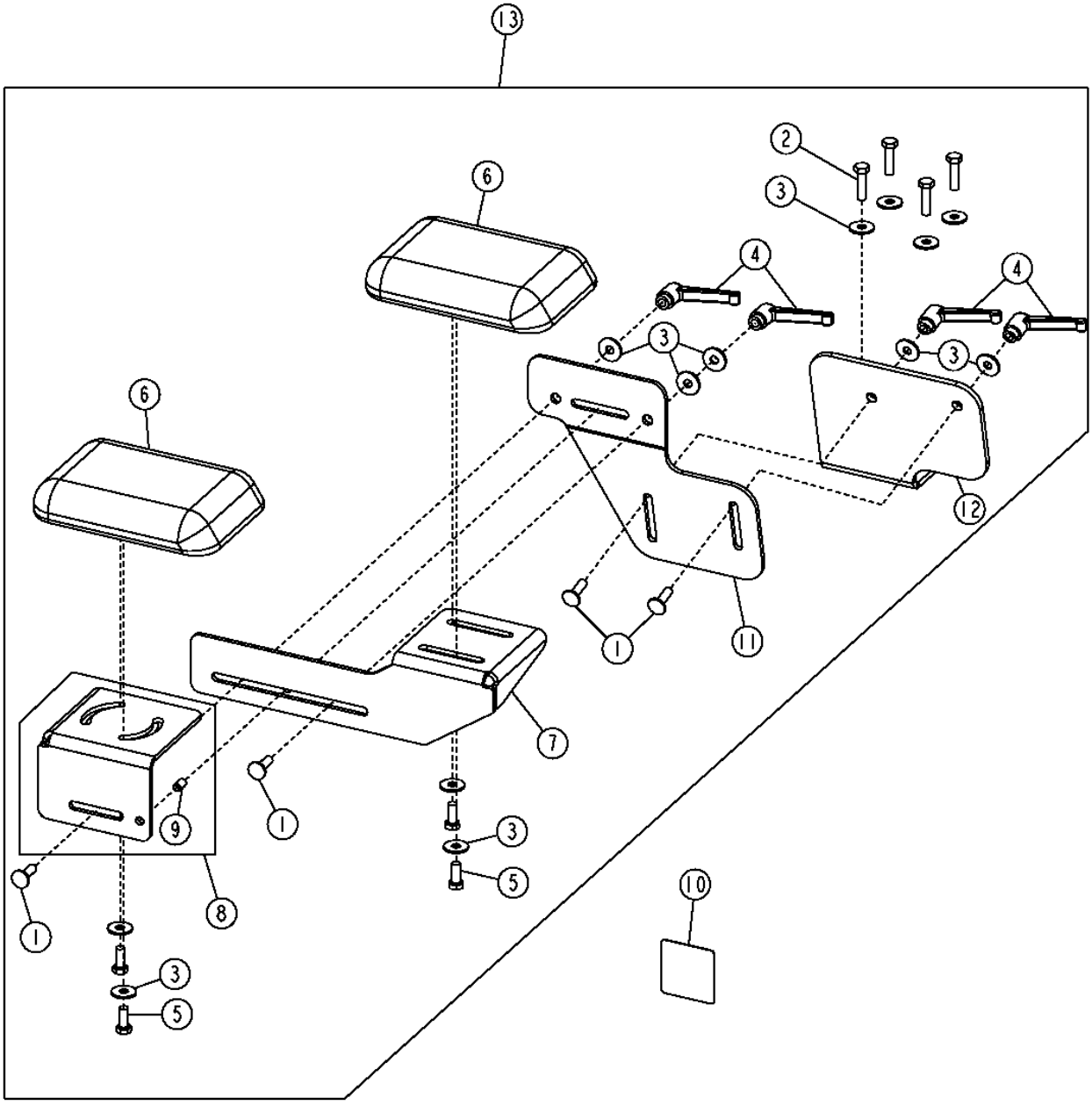

T202072

WRIST-ARM REST (SERIAL NO. 590068-)

KEY	PART NO.	PART NAME	QTY	SERIAL NO.	REMARKS
1	03M7185	BOLT	4		
2	19M7513	CAP SCREW	4		M8 X 30
3	24M7298	WASHER	13		8.400 X 25 X 2 MM
4	AT227063	LEVER	4		
5	19M7881	SCREW	4		M8 X 20
6	AT171679	CUSHION	2		
7	T200161	SUPPORT	1		
8	AT300115	BRACKET	1		
9	44M7027	PIN	1		8 X 16 MM
10	T200729	LABEL	1		(SUB FOR T195031)
11	T209601	SUPPORT	1		(SINGLE LEVER CONTROLLER) (SUB FOR T200158)
	T200158	SUPPORT	1		(TWO LEVER CONTROLLER)
12	T209602	SUPPORT	1		(SINGLE LEVER CONTROLLER) (SUB FOR T200159)
	T200159	SUPPORT	1		(TWO LEVER CONTROLLER)
13	**AT312158**	**ARMREST**	**1**		**(FIELD KIT FOR SINGLE LEVER CONTROLLER) (WRIST-ARM REST)**

MEMORANDA

REPLACEMENT SEAT BELT
76MM (3 IN.) WIDE

TP62743 -UN-19JAN00

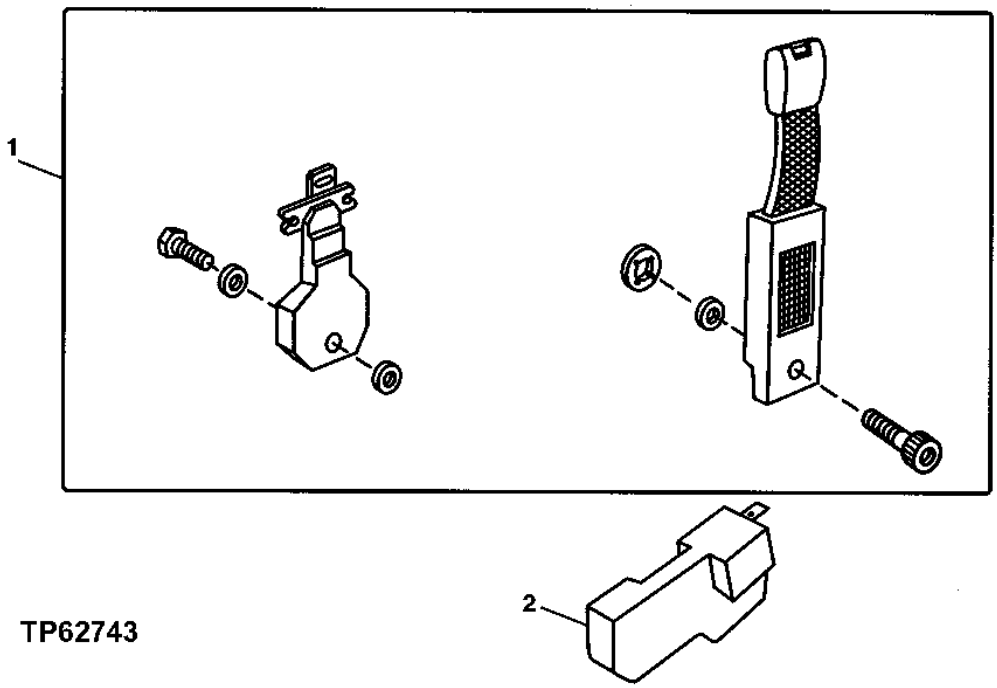

TP62743

KEY	PART NO.	PART NAME	QTY	SERIAL NO.	REMARKS
1	AT308199	SEAT BELT	1		(ALSO ORDER (4) T105740 AND (2) 19H2109) (SUB FOR AT178065)
2	T163962	COVER	1		

SEAT AND SEAT SUSPENSION

T155265 -UN-30MAY02

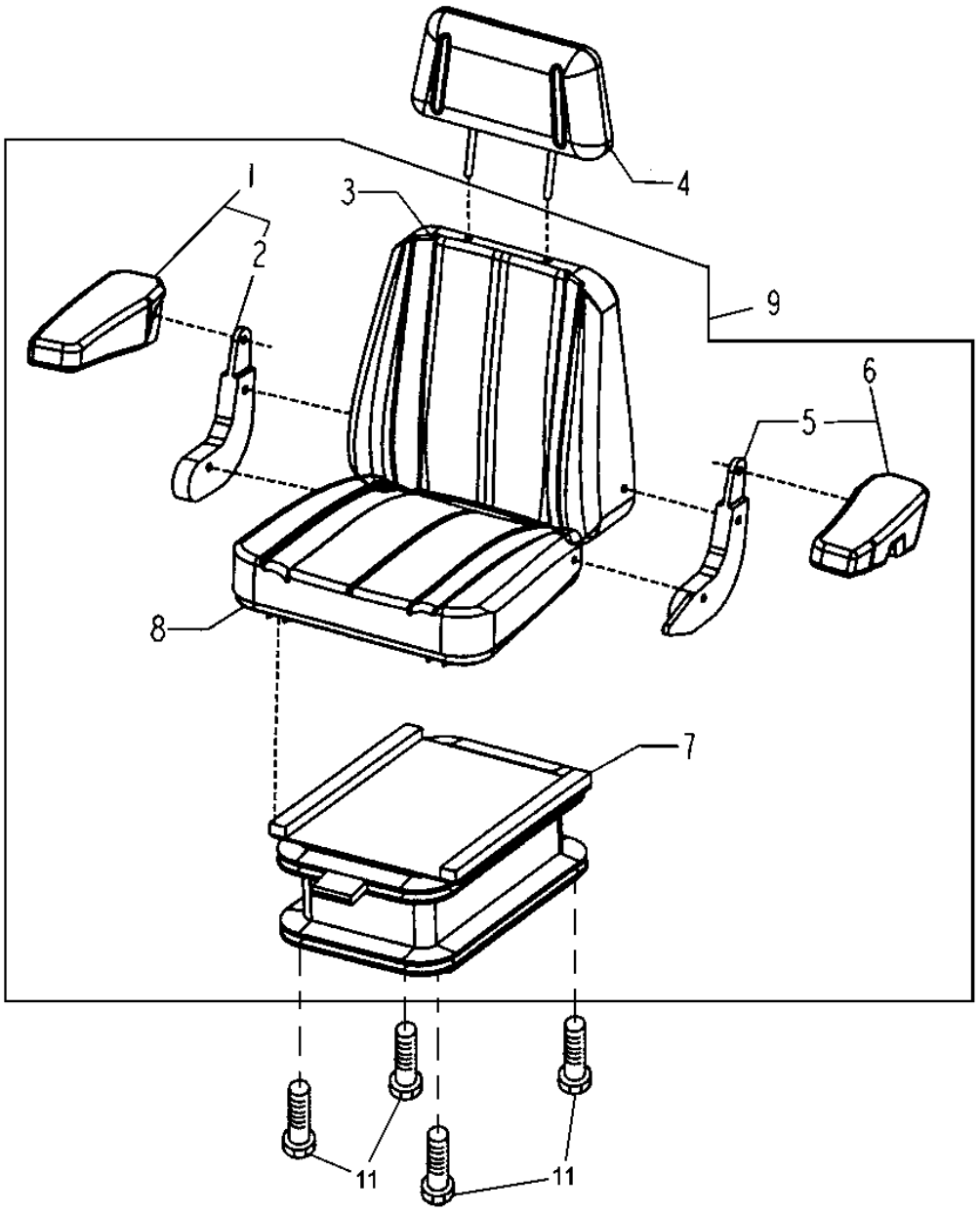

T155265

SEAT AND SEAT SUSPENSION

KEY	PART NO.	PART NAME	QTY	SERIAL NO.	REMARKS
1	AT195441	ARMREST KIT	1		RT. ARM REST (WITH MECHANICAL OR AIR SUSPENSION)
	AT315715	PAD	1		
2	.....	BRACKET	1		RT. BRACKET
3	AT308796	CUSHION	1		(SUB FOR AT221020) BACKREST CUSHION (CLOTH W/AIR OR MECHANICAL SUSPENSION)
4	AT308797	CUSHION	1		HEADREST (CLOTH W/AIR OR MECHANICAL, (SUB FOR AT221021) SUSPENSION)
5	.....	BRACKET	1		LT. BRACKET
6	AT195442	ARMREST KIT	1		GRAY
	AT315761	PAD	1		
7	AT208531	SEAT SUSPENSION	1	-592825	AIR SUSPENSION (CLOTH W/AIR SUSPENSION)
	AT311918	SEAT SUSPENSION	1	592826-	AIR SUSPENSION (CLOTH W/AIR SUSPENSION)
	AT209031	SEAT SUSPENSION	1		MECHANICAL SUSPENSION (CLOTH W/MECHANICAL SUSPENSION)
8	AT308795	CUSHION	1		(SUB FOR AT221019) SEAT CUSHION (CLOTH W/AIR OR MECHANICAL SUSPENSION)
9	AT224248	SEAT	1	-592825	GRAY(CLOTH WITH AIR SUSPENSION)
	AT310435	SEAT	1	592826-	(ALSO ORDER AT311383) GRAY(CLOTH WITH AIR SUSPENSION)
	.....	SEAT	1		GRAY(CLOTH WITH MECHANICAL SUSPENSION) (AT224247 NO LONGER AVAILABLE-FURNISH COMPONENTS)
	AT307474	SEAT	1	-592825	(VINYL W/ AIR SUSPENSION)
	AT311919	SEAT	1	592826-	(VINYL W/ AIR SUSPENSION) (ALSO ORDER AT311383)
10	AT209025	KIT	1		(NOT ILLUSTRATED) (RECLINER KNOB KIT)
	AT209225	KIT	1		(NOT ILLUSTRATED) (RECLINER SERVICE KIT) (INCLUDES (2) 19H1813, (3) 19H1914, (2) 24H1136 AND (6) 24H1287)
11	19M7866	BOLT	4		

LUMBAR ADJUSTER AND CONTROL KNOB

TP60417 -UN-17JUN98

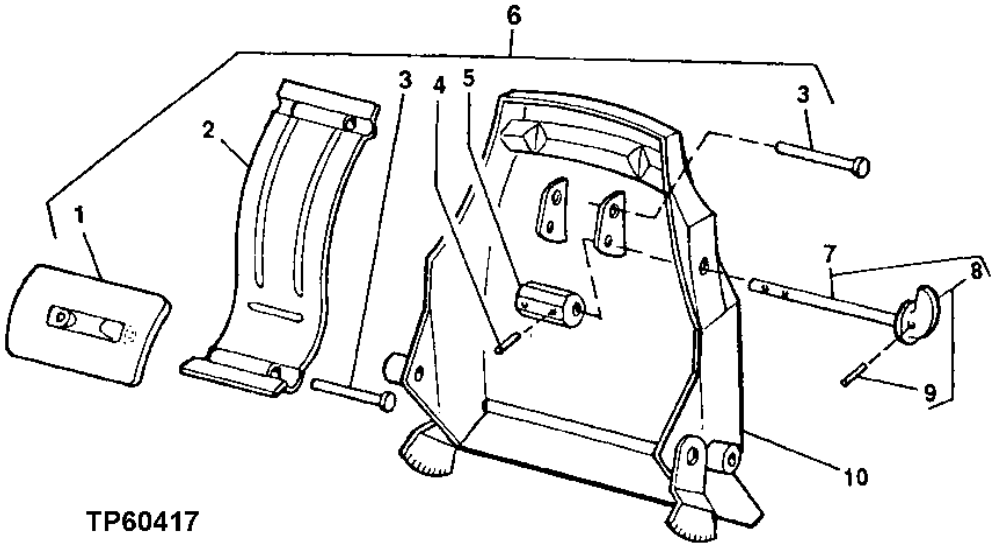

TP60417

LUMBAR ADJUSTER AND CONTROL KNOB

KEY	PART NO.	PART NAME	QTY	SERIAL NO.	REMARKS
1	.....	ISOLATOR	1		
2	.....	SUPPORT	1		
3	.....	NAIL	2		
4	34H387	SPRING PIN	2		3/16" X 3/4"
5	.....	CAM	1		
6	AT209026	KIT	1		(LUMBAR)
7	.....	KNOB	1		AND SHAFT
8	AT209024	KIT	1		(LUMBAR KNOB)
9	34H262	SPRING PIN	1		5/32" X 3/4"
10	AT280583	PAN	1		

SEAT SLIDE AND CONTROL LEVER

TP54391 -UN-19APR99

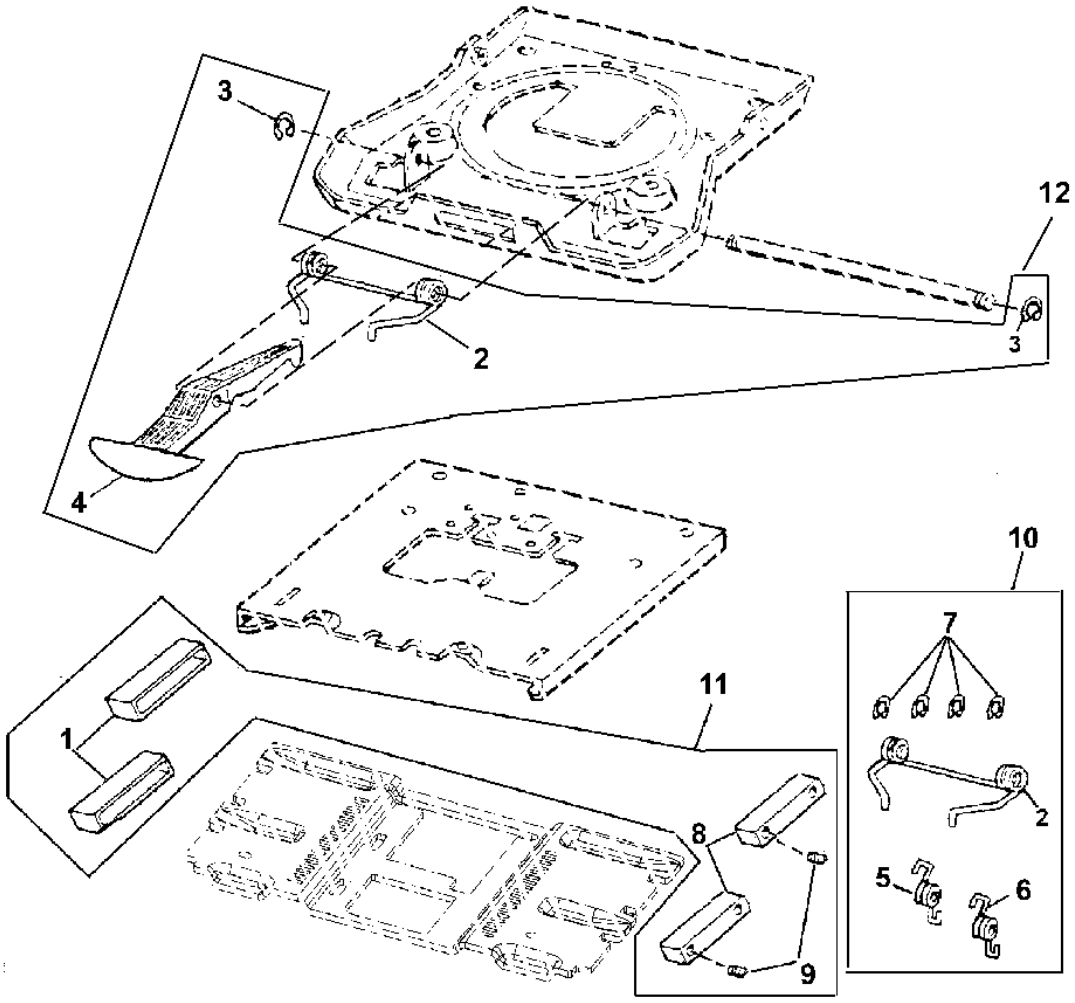

TP54391

SEAT SLIDE AND CONTROL LEVER

KEY	PART NO.	PART NAME	QTY	SERIAL NO.	REMARKS
1	.....	SLIDE SET	2		
2	T163336	TORSION SPRING	2		(DOUBLE TORSION)
3	R72655	SNAP RING	2		
4	.....	CONTROL LEVER	1		(ORDER AT209022) (FORE-AFT)
5	T163334	SPRING	1		SLIDE LATCH (RIGHT)
6	T163335	SPRING	1		SLIDE LATCH (LEFT)
7	R72655	SNAP RING	4		
8	.....	SLIDE SET	2		
9	.....	SET SCREW	4		SOCKET
10	AT209021	KIT	1		(SLIDE LATCH SPRING)
11	AT209020	KIT	1		(SLIDE PUCK)
12	AT209022	KIT	1		(SLIDE CONTROL)

SEAT SUSPENSION KITS
(MECHANICAL SUSPENSION)

T153225 -UN-03OCT02

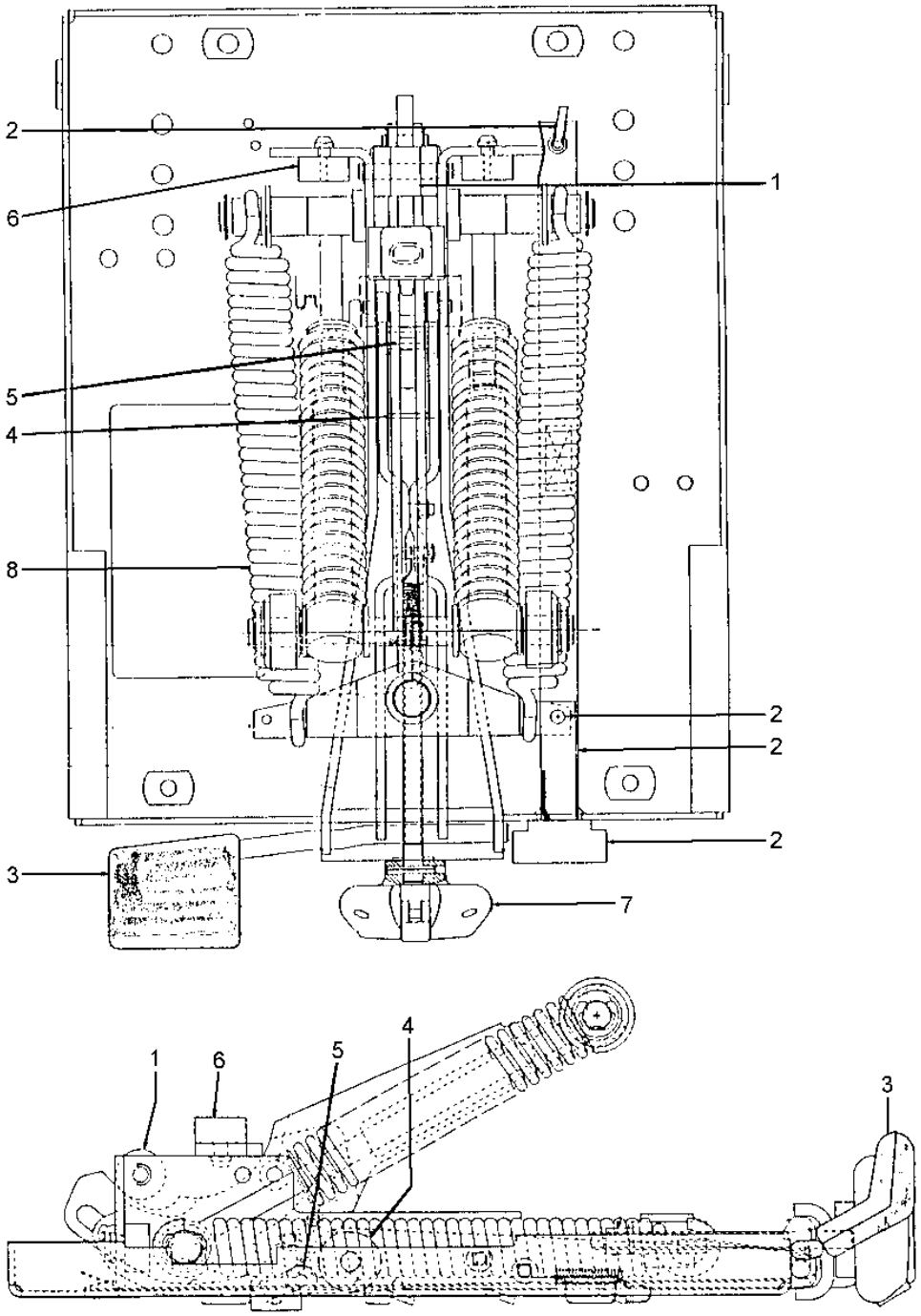

T153225

SEAT SUSPENSION KITS
(MECHANICAL SUSPENSION)

KEY	PART NO.	PART NAME	QTY	SERIAL NO.	REMARKS
1	AT173328	CAM	1		(KIT) (CAM FOLLOWER (SM))
2	AT173325	WEIGHT	1		(KIT) (WEIGHT IND.)
3	AT173323	SEAT KNOB KIT	1		(KIT) (SUSPENSION KNOB)
4	AT173326	CAM	1		(KIT) (CAM FOLLOWER (LG))
5	AT173327	ACTUATOR	1		(KIT) (ACTUATOR BEARING)
6	AT210549	BUMPER	1		(KIT)
7	AT173316	KNOB	1		(KIT) (WEIGHT ADJUSTMENT KNOB) (NOT ILLUSTRATED)
8	AT173319	SPRING	1		((2)BUSHINGS & (2)SPRINGS) (KIT)

SEAT SUSPENSION KITS
(MECHANICAL SUSPENSION)

T153224 -UN-03APR02

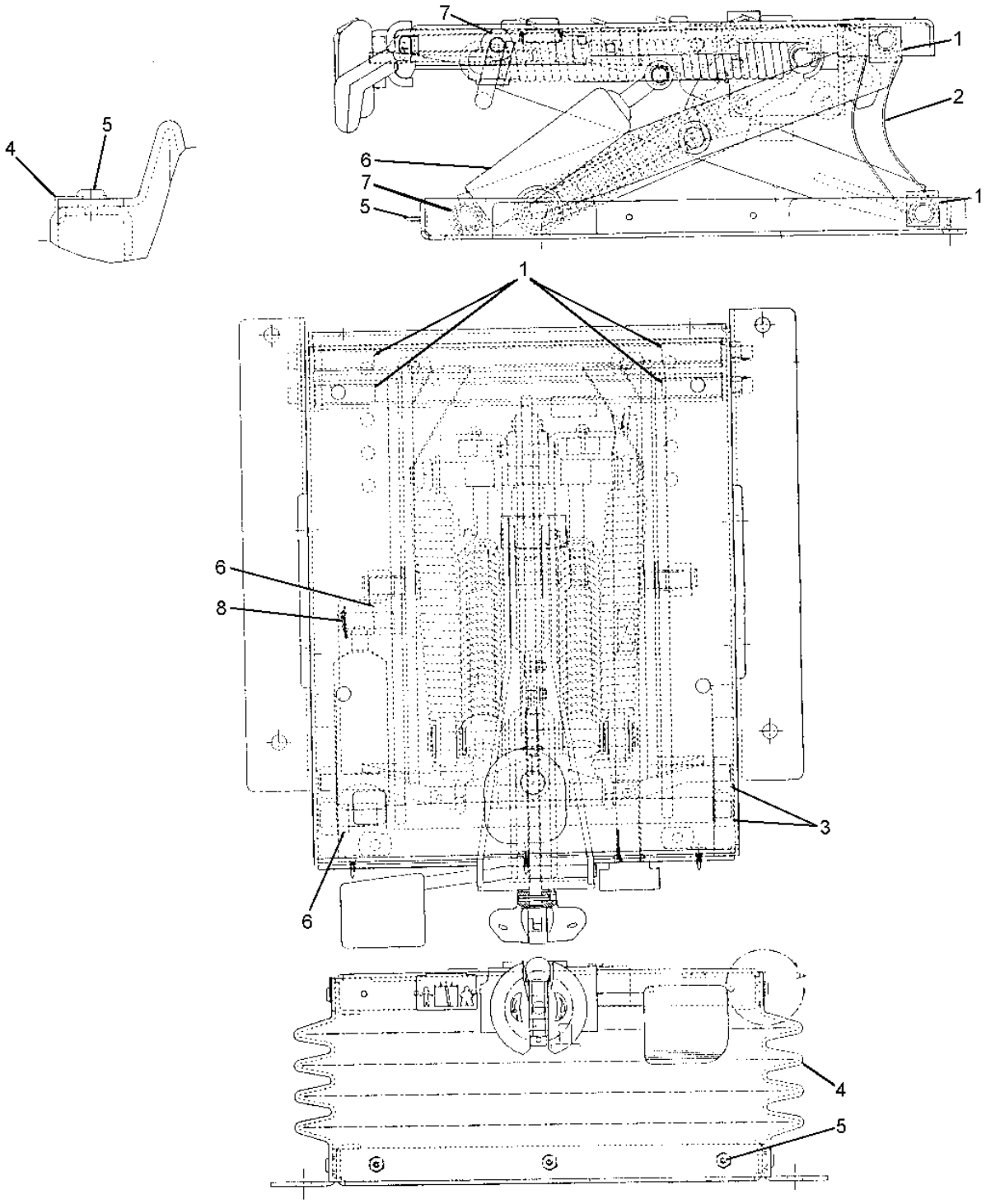

T153224

SEAT SUSPENSION KITS
(MECHANICAL SUSPENSION)

KEY	PART NO.	PART NAME	QTY	SERIAL NO.	REMARKS
1	AT173313	SHAFT	1		(KIT) (SUSPENSION SHAFT)
2	AT173315	KIT	1		(KIT) (TETHER BELT)
3	AT173314	SEAT BEARING ROLLER KIT	1		(KIT) (SUSPENSION ROLLER)
4	AT173317	BOOT	1		(KIT) (SUSPENSION BOOT) (INCLUDES AT173321)
5	AT173321	SEAT SUSPENSION BOOT KIT	1		(KIT)
6	AT173322	MOUNTING PARTS	1		(KIT) (SUSPENSION SHOCK)
7	.....	KIT	1		(NOT AVAILABLE)
8	AT173320	MOUNTING PARTS	1		(KIT) (HEIGHT ADJUSTMENT SPRING)

SEAT SUSPENSION KITS
(MECHANICAL SUSPENSION)

TP47400 -UN-07APR95

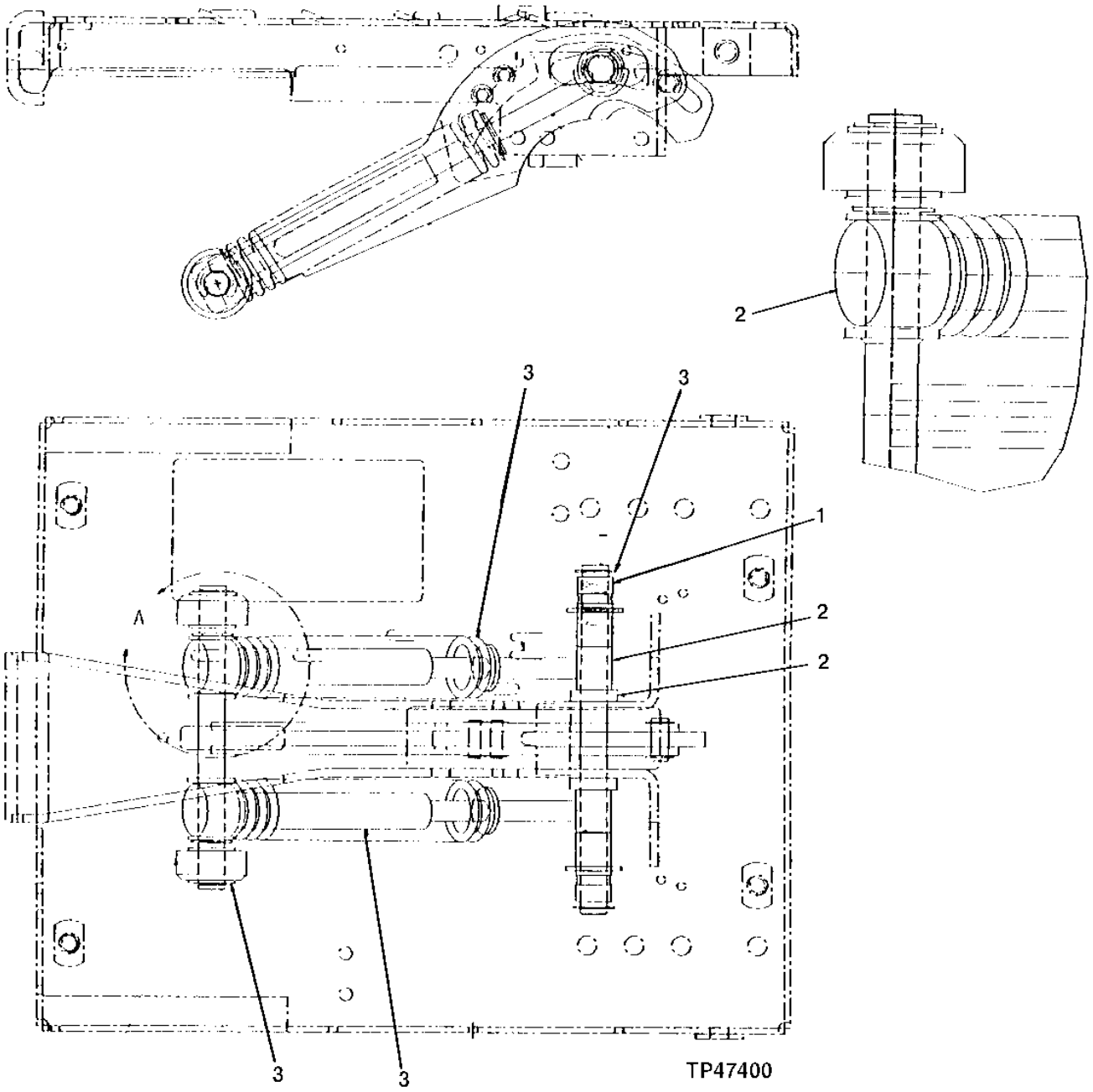

SEAT SUSPENSION KITS
(MECHANICAL SUSPENSION)

KEY	PART NO.	PART NAME	QTY	SERIAL NO.	REMARKS
1	AT173319	SPRING	1		((2)BUSHINGS & (2)SPRINGS) (KIT) (REQUIRES AT226123 INSTALLATION TOOL)
2	AT173318	SPRING	1		((2)BUSHINGS, (2)SPRINGS, (2)WEIGHT ADJUST CASTINGS & (2)SPACERS) (KIT) (REQUIRES AT226123 INSTALLATION TOOL)
3	AT173320	MOUNTING PARTS	1		(KIT) (HEIGHT ADJUSTMENT SPRING)
4	AT226123	SPECIAL SERVICE TOOL	1		SPRING COMPRESSION, (NOT ILLUSTRATED)

2G18

SEAT SUSPENSION

T195125 -UN-25SEP03

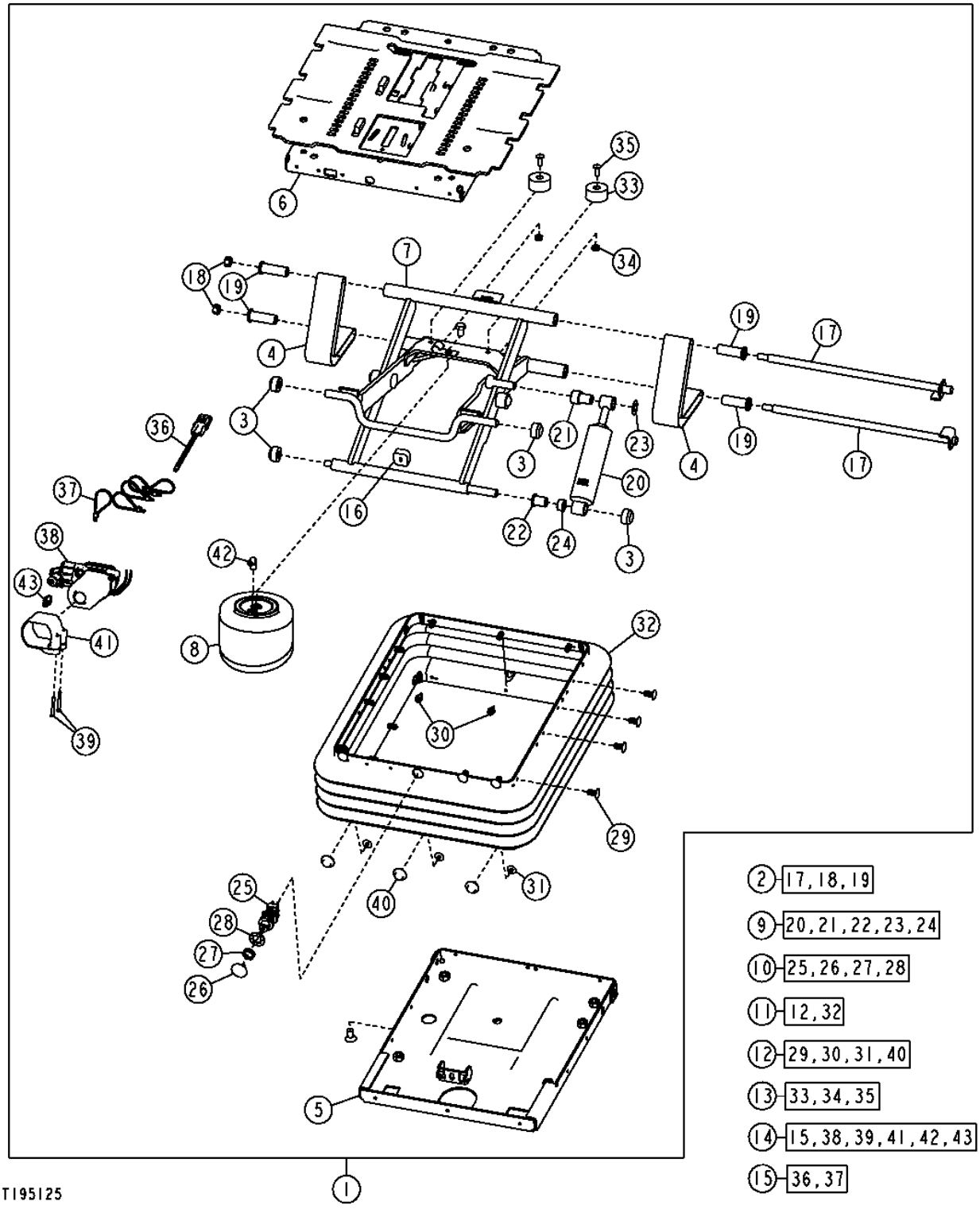

SEAT SUSPENSION

KEY	PART NO.	PART NAME	QTY	SERIAL NO.	REMARKS
1	AT208531	SEAT SUSPENSION	1	-592825	
	AT311918	SEAT SUSPENSION	1	592826-	
2	AT173313	SHAFT	1		
3	AT173314	SEAT BEARING ROLLER KIT	1		
4	AT173315	KIT	1		TETHER BELT SERVICE KIT
5	AT208483	HOUSING	1		
6	AT208484	HOUSING	1	-592825	
	AT313399	HOUSING	1	592826-	
7	AT208485	ARM	1		
8	AT208486	SPRING	1		(AIR BLADDER SPRING)
9	AT208487	KIT	1		SUSPENSION SHOCK SERVICE KIT
10	AT208490	SELECTIVE CONTROL VALVE	1		
11	AT208491	KIT	1		BOOT SERVICE KIT (INCLUDES AT173321)
12	AT173321	SEAT SUSPENSION BOOT KIT	1		
13	AT209469	KIT	1		BUMPER SERVICE KIT
14	AT226676	COMPRESSOR	1		
15	AT208488	WIRING HARNESS	1		
16	T55224	BUMPER	1		
17	.....	SHAFT	2		(SUB AT173313)
18	.....	LOCK NUT	2		(SUB AT173313)
19	.....	BUSHING	4		(SUB AT173313)
20	.....	SHOCK ABSORBER	1		(SUB AT208487)
21	.....	BEARING	1		(SUB AT208487)
22	.....	ECCENTRIC LOCKING COLLAR	1		(SUB AT208487)
23	.....	PUSH NUT	1		(SUB AT208487)
24	.....	SPACER	1		(SUB AT208487)
25	.....	HYD ACTUATED CONTROL VALVE	1		(SUB AT208490)
26	.....	KNOB	1		(SUB AT208490)
27	.....	NUT	1		(SUB AT208490)
28	.....	LOCK WASHER	1		(SUB AT208490)
29	.....	CLIP	23		(SUB AT173321)
30	.....	RIVET	3		(SUB AT173321)
31	.....	RIVET	3		(SUB AT173321)
32	.....	BOOT	1		(SUB AT208491)
33	.....	BUMPER	2		(SUB AT209469)
34	.....	LOCK NUT	2		(SUB AT209469)
35	.....	SCREW	2		(SUB AT209469)
36	.....	WIRING HARNESS	1		(SUB AT208488)
37	.....	TIE BAND	4		(SUB AT208488)
38	.....	COMPRESSOR	1		(SUB AT226676)
39	.....	SPRING PIN	2		(SUB AT226676)
40	.....	RIVET	6		(SUB AT173321)
41	.....	CLAMP	1		(SUB AT226676)
42	.....	PIPE ELBOW	1		(SUB AT226676)
43	.....	TAB CONNECTOR BODY	1		(SUB AT226676)

ENGINE COMPARTMENT STEP

T153219 -UN-03APR02

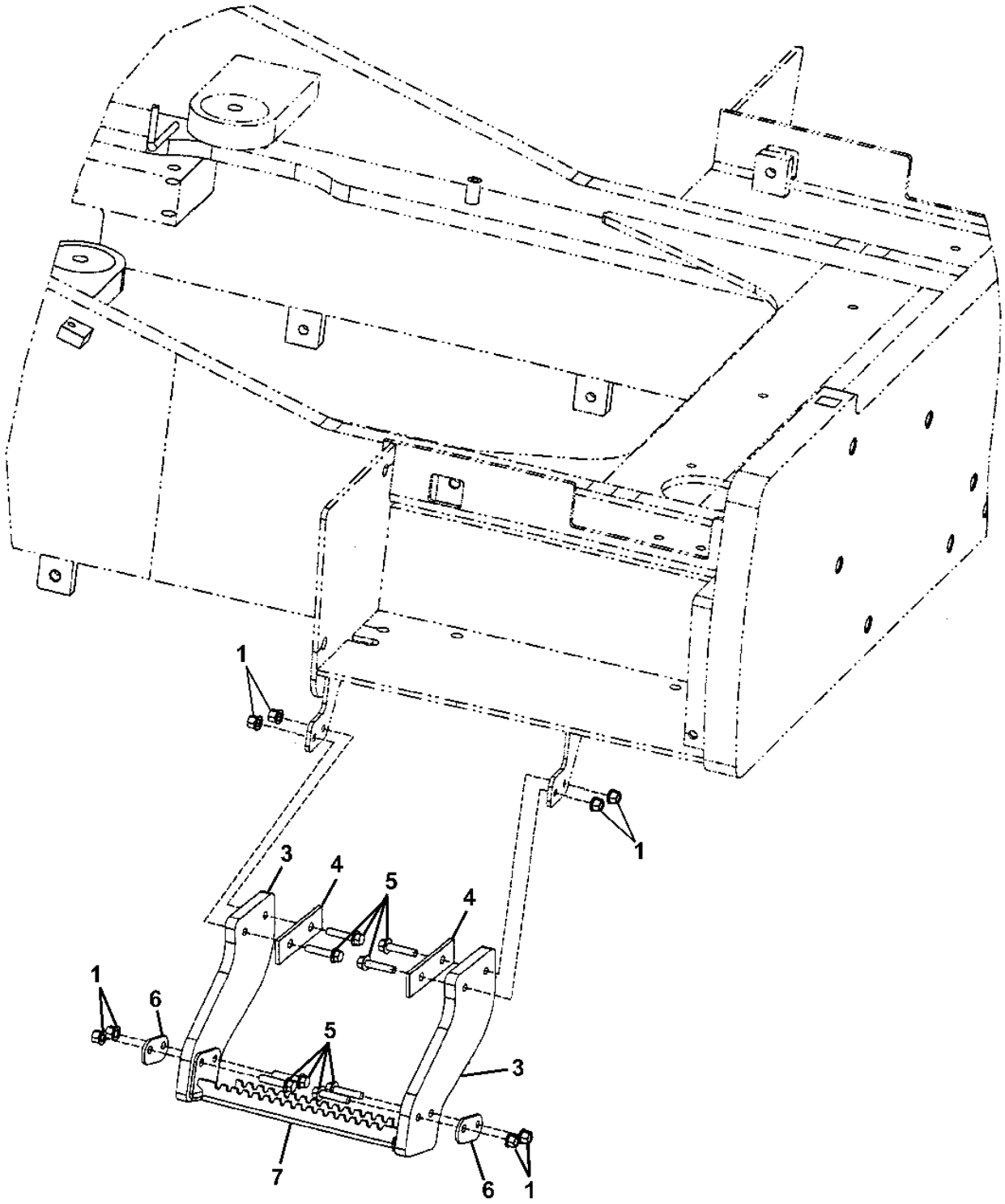

ENGINE COMPARTMENT STEP

KEY	PART NO.	PART NAME	QTY	SERIAL NO.	REMARKS
1	14M7400	LOCK NUT	16		M10
3	T177756	STRAP	4		(RUBBER)
4	T177753	STRAP	4		
5	19M7805	SCREW	16		M10 X 45
6	T173779	STRAP	4		
7	T176870	STEP	2		

HANDRAILS

T153290 -UN-03APR02

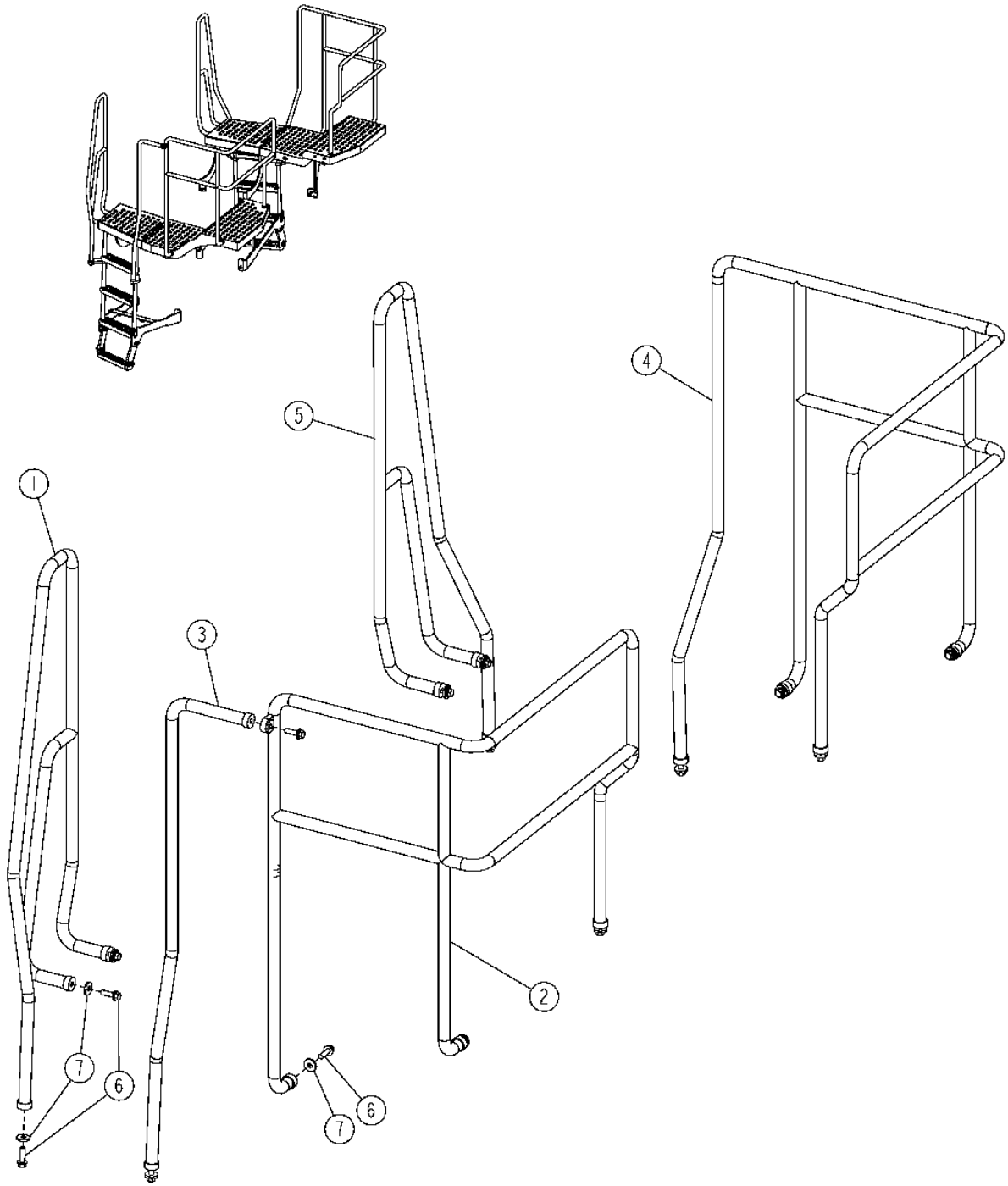

HANDRAILS

KEY	PART NO.	PART NAME	QTY	SERIAL NO.	REMARKS
1	AT223025	HANDRAIL	1		LEFT FRONT
2	AT223019	HANDRAIL	1		LEFT REAR
3	AT224948	HANDRAIL	1		LEFT STEP
4	AT223273	HANDRAIL	1		RIGHT REAR
5	AT223272	HANDRAIL	1		RIGHT FRONT
6	19M7791	BOLT	15		M12 X 40
7	24M7226	WASHER	15		13 X 35 X 5 MM

ACCESS PLATFORM AND STEPS

T155382 -UN-03JUN02

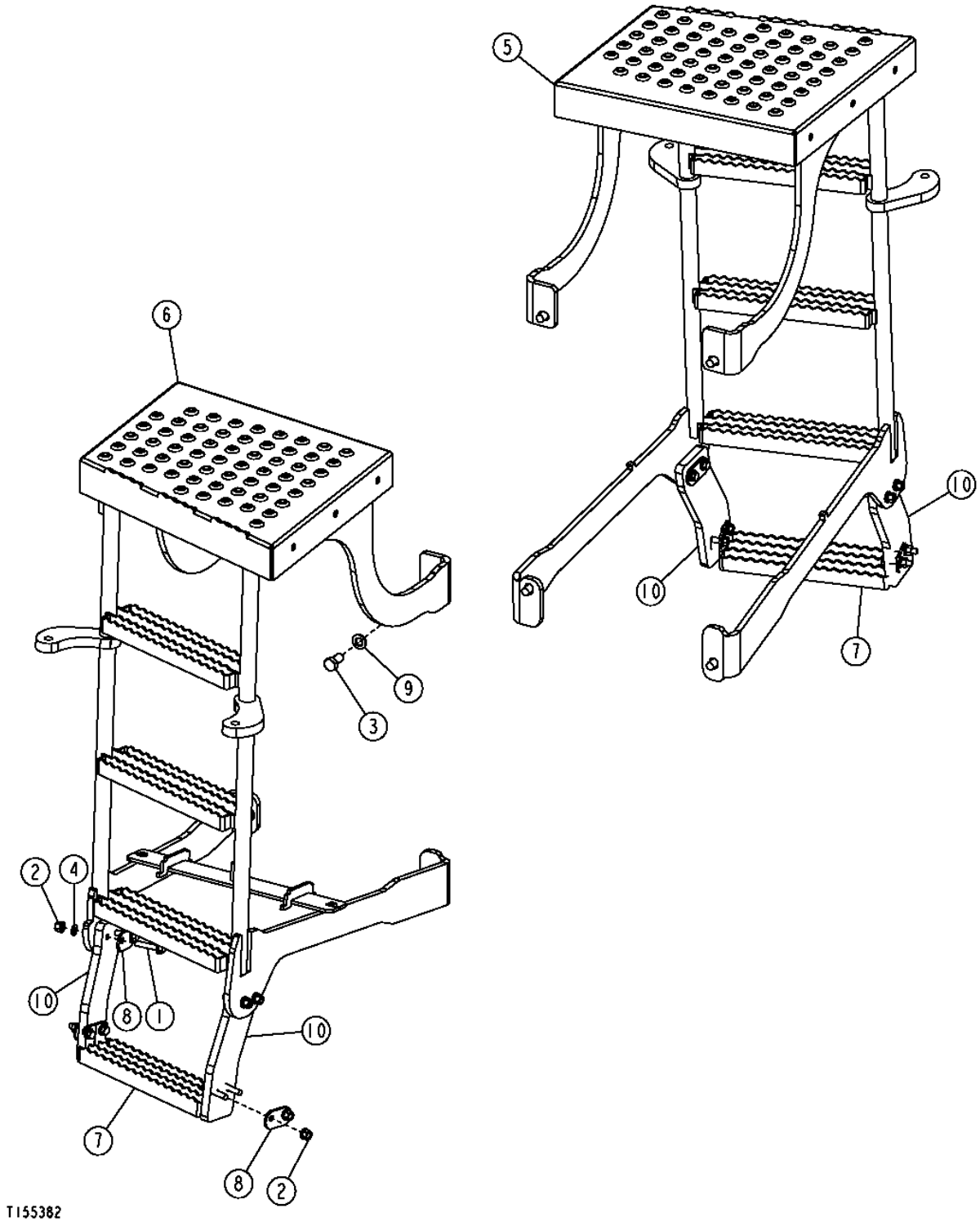

ACCESS PLATFORM AND STEPS

KEY	PART NO.	PART NAME	QTY	SERIAL NO.	REMARKS
1	19M7806	SCREW	16		M10 X 50
2	14M7400	LOCK NUT	16		M10
3	19M8029	CAP SCREW	8		M16 X 30
4	24M7239	WASHER	8		10.700 X 21 X 2.500 MM
5	AT223271	STEP	1		(RIGHT)
6	AT223381	STEP	1		(LEFT)
7	AT225618	STEP	2		(LOWER)
8	T173779	STRAP	8		
9	24M7338	WASHER	8		17 X 30 X 3 MM
10	T177503	STRAP	4		

HVAC MODULE

T193582 -UN-21AUG03

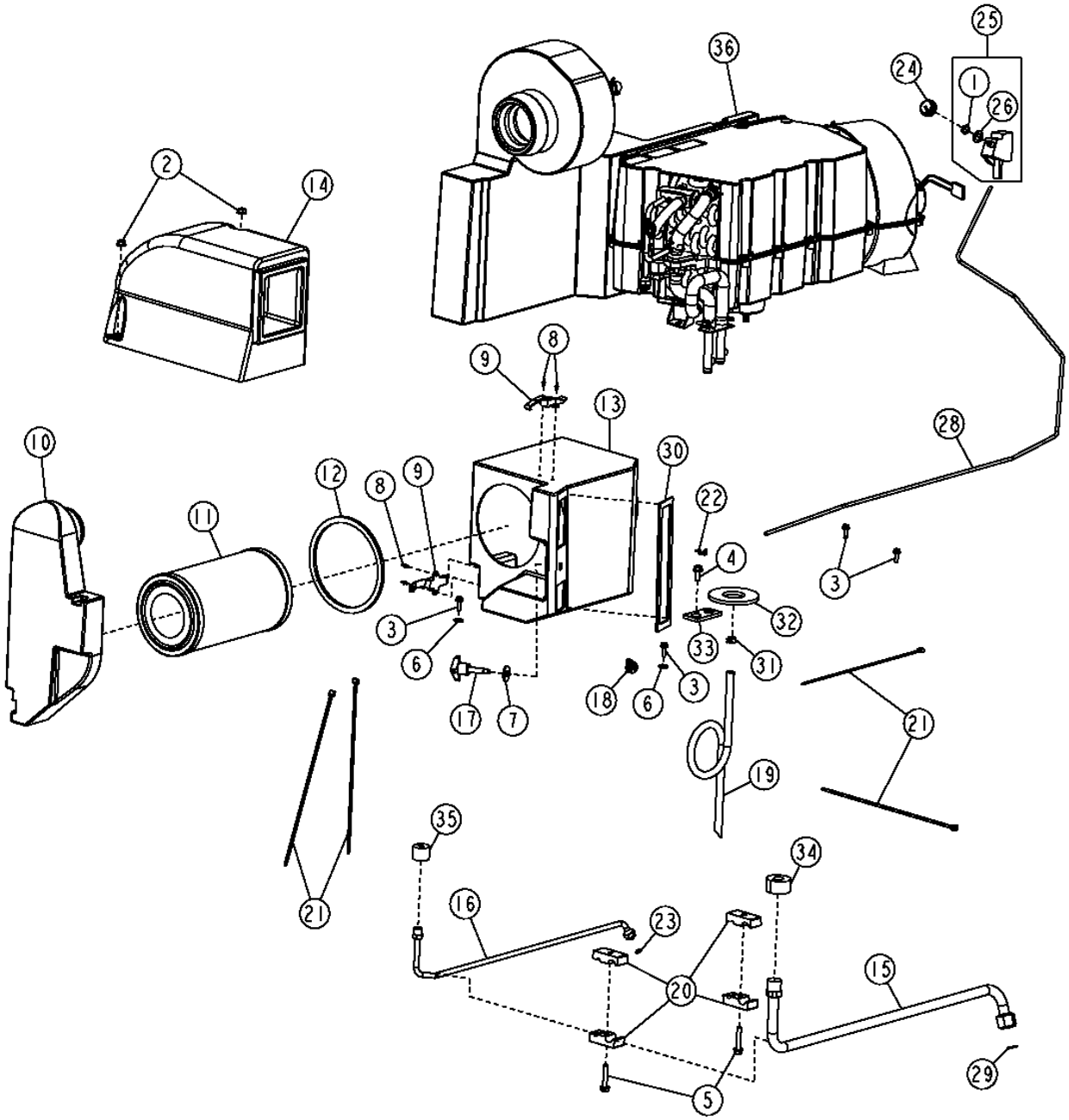

HVAC MODULE

KEY	PART NO.	PART NAME	QTY	SERIAL NO.	REMARKS
1	R203687	NUT	1		
2	14M7298	FLANGE NUT	2		M8
3	19M7862	SCREW	4		M6 X 20
4	19M7866	BOLT	3		M8 X 20
5	19M8318	SCREW	2		M8 X 45
6	24M7139	WASHER	2		6.400 X 18 X 1.600 MM
7	24M7296	WASHER	1		10.500 X 30 X 2.500 MM
8	H86981	RIVET	4		
9	R121465	LATCH	2		
10	T167945	AIR DUCT	1		
11	T168220	AIR FILTER	1		
12	T170053	SEAL	1		
13	T171459	AIR DUCT	1		
14	AT209668	AIR DUCT	1		
15	AT210561	LINE	1		(SUB FOR AT306912 AND AT310782)
16	AT306913	TUBE	1		
17	AT220953	KNOB	1		
18	AT226249	JUMPER	1		
19	Z59685	HOSE	1		(SUB FOR B14604) (4.5 LIN. FT.)
20	H114865	CLAMP	4		
21	H77698	TIE BAND	4		
22	L57881	CLIP	1		
23	R10093	O-RING	1		
24	R111632	KNOB	1	-590067	
	AL76568	KNOB	1	590068-	
25	RE46742	TEMPERATURE SWITCH	1		
26	12H292	LOCK WASHER	1		1/2"
27	14H934	NUT	1		7/16"
28	RE58614	PUSH PULL CABLE	1		
29	T143169	O-RING	1		
30	T167676	SEAL	1		
31	T174427	CLAMP	1		
32	T182852	SEALING WASHER	1		
33	T182858	GASKET	1		
34	T182870	ISOLATOR	1		
35	T182871	ISOLATOR	1		
36	T182906	PLATE	1		

HVAC MODULE COMPONENTS

T212763 -UN-25JUL05

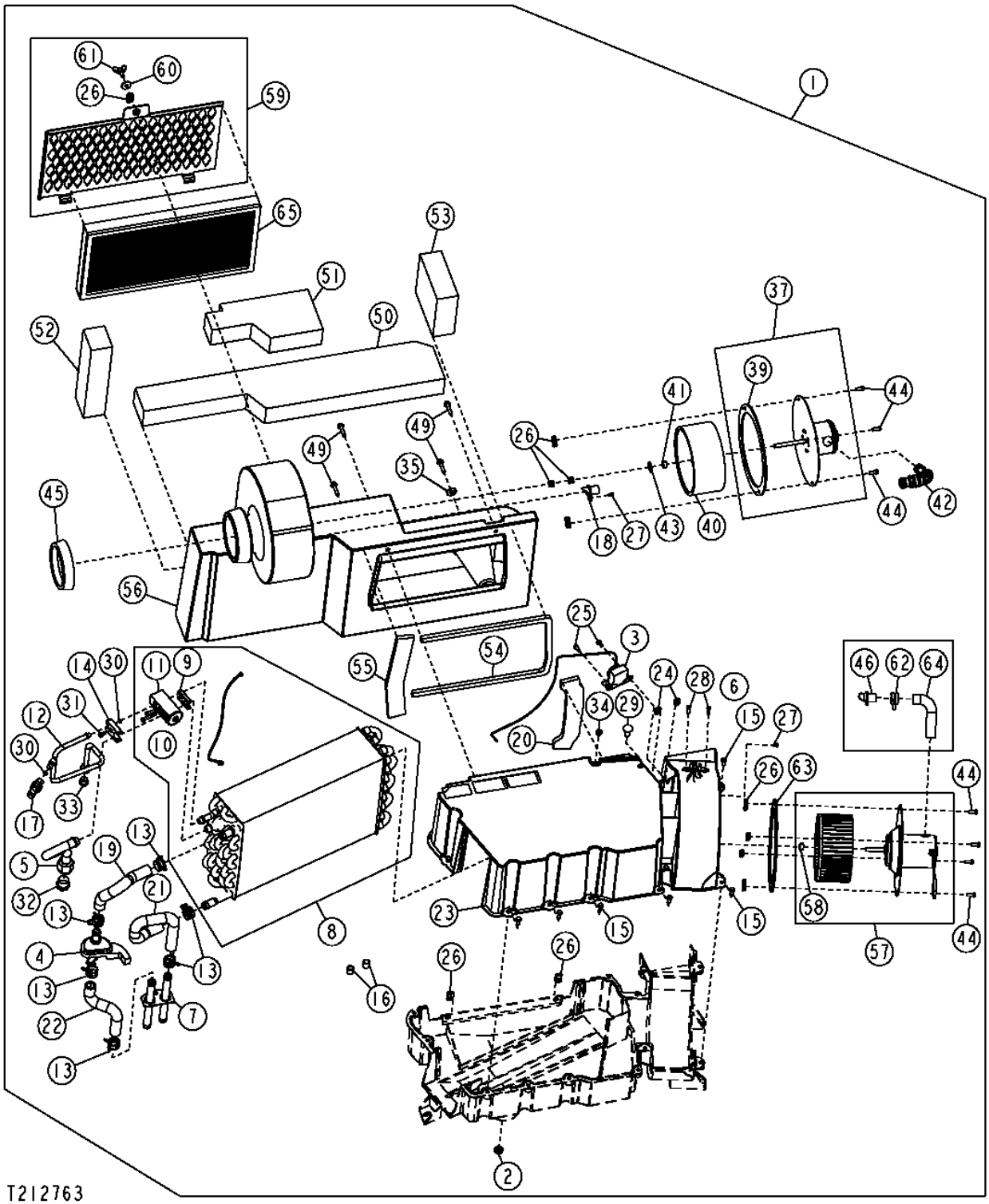

HVAC MODULE COMPONENTS

KEY	PART NO.	PART NAME	QTY	SERIAL NO.	REMARKS
1	AT223531	MODULE	1		
2	14H934	NUT	1		
3	RE198074	TEMPERATURE SWITCH	1		(SUB FOR AH144020)
4	AT193500	HAND OPERATED VALVE	1		
5	AT210086	STRUCTURAL TUBING	1		
6	.....	RESISTOR	1		(AT307197 NO LONGER AVAILABLE) (SUB AT318987)
7	AT219778	HOSE	1		
8	AT225899	HEAT EXCHANGER	1		
9	L77943	PLATE	1		
10	PT11778	BOLT	2		(SUB FOR M67176)
11	RE174764	VALVE	1		
12	AT226309	TUBE	1		
13	R117721	CLAMP	6		
14	R125223	PLATE	1		
15	R129110	SCREW	12		
16	R50770	CAP	2		
17	RE157329	SWITCH	1		
18	RE36133	TUBE	1		
19	T170133	HOSE	1		
20	T59937	ISOLATOR	1		
21	T172933	HOSE	1		
22	T172934	HOSE	1		
23	T174109	HOUSING	1		
24	T178115	CLEVIS	2		
25	T178116	CAP SCREW	2		
26	T178117	CLEVIS	13		
27	T178118	CAP SCREW	1		
28	T178119	CAP SCREW	2		
29	T178120	RIVET	1		
30	T178123	O-RING	2		
31	T178124	SCREW	1		
32	T178125	PLUG	1		
33	T178126	PLUG	1		
34	T178971	GROMMET	1		
35	24H1122	WASHER	1		
37	AT225451	BLOWER MOTOR	1		
38	R117721	CLAMP	1		
39	R121664	SEAL	1		
40	R121666	IMPELLER	1		
41	R97332	CLIP	1		
42	R97336	TUBE	1	-592249	
	T165169	HOSE	1	592250-	
43	T178127	PUSH NUT	1		
44	T178251	CAP SCREW	8		
45	R119171	SEAL	1		
46	RE36133	TUBE	1	-592249	
49	T178130	BOLT	4		
50	T178131	ISOLATOR	1		
51	T178132	ISOLATOR	1		
52	T178133	ISOLATOR	1		
53	T178134	ISOLATOR	1		
54	T178135	ISOLATOR	1		
55	T178136	ISOLATOR	1		
56	T180929	AIR PLENUM	1		
57	.....	KIT	1	-592249	(SUB AT313282) BLOWER SERVICE KIT (AT224930 NO LONGER AVAILABLE)
	AT313282	KIT	1	592250-	
58	R97332	CLIP	1		
59	AT305405	COVER	1		
60	24M7100	WASHER	1		
61	T181524	WING SCREW	1		
62	R117721	CLAMP	1	-592249	
63	R121664	SEAL	1		
64	R97336	TUBE	1	-592249	
65	T156471	AIR FILTER	1		(SUB FOR AT227170)

COMPRESSOR, BRACKETS AND HOSES (ADW)

TP62809 -UN-31MAY00

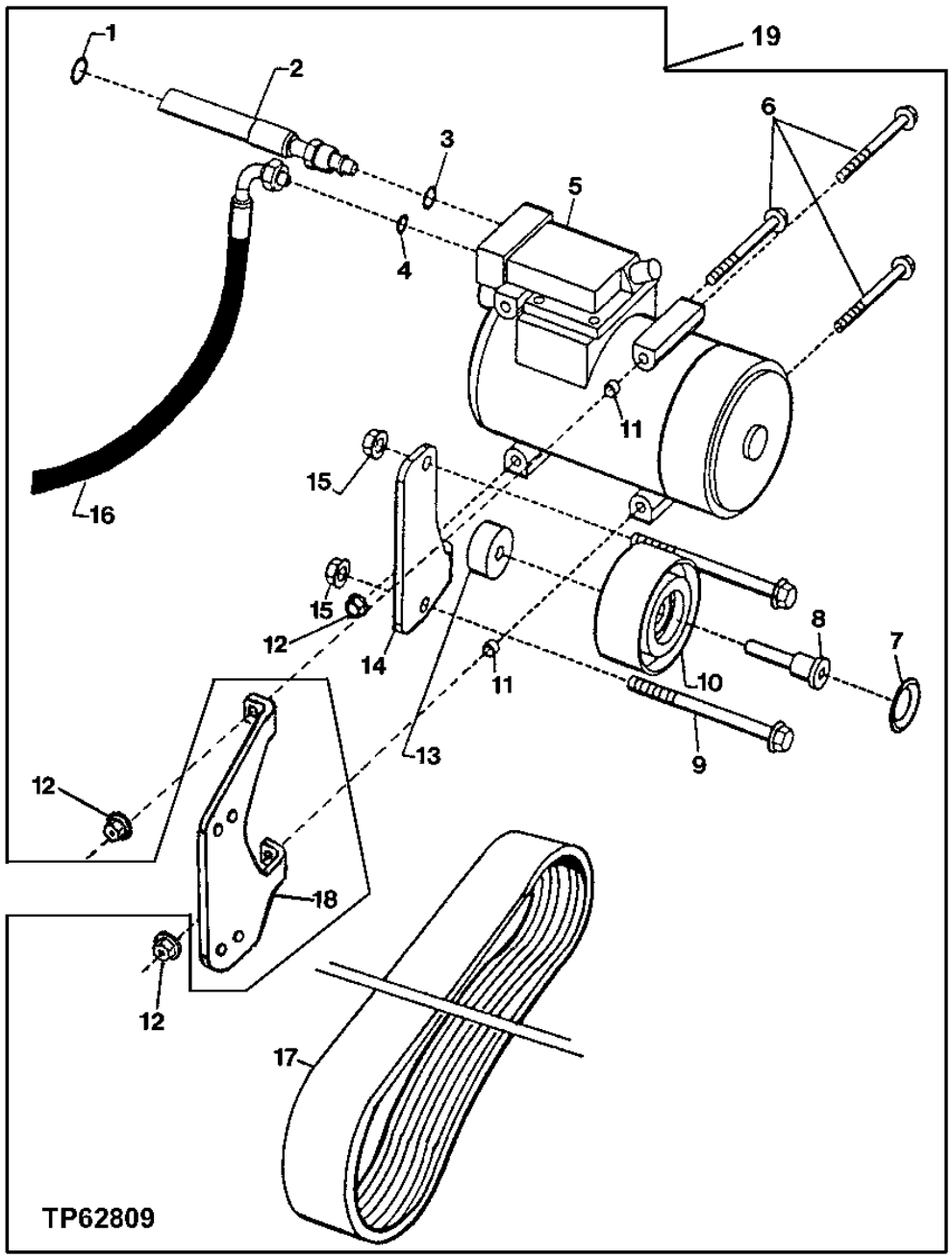

COMPRESSOR, BRACKETS AND HOSES (ADW)

KEY	PART NO.	PART NAME	QTY	SERIAL NO.	REMARKS
1	T143169	O-RING	1		
2	AT211480	HOSE	1		
3	R33259	O-RING	1		
4	R113050	O-RING	1		
5	AT211063	COMPRESSOR	1		
	AT221651	CLUTCH	1		AND PULLEY (NOT ILLUSTRATED)
	AT221652	MANIFOLD	1		(INCLUDES T177613 GASKET) (NOT ILLUSTRATED)
	AT221653	COMPRESSOR	1		(WITHOUT CLUTCH/PULLEY AND MANIFOLD) (NOT ILLUSTRATED)
	AT163872	KIT	1		(COIL AND CLAMP) (NOT ILLUSTRATED)
	T177613	GASKET	1		(USE WITH MANIFOLD AT221652) (NOT ILLUSTRATED)
6	19M7913	SCREW	3		M8 X 90
7	.....	COVER	1		(R99590 NO LONGER REQUIRED)
8	R130589	SCREW	1		
9	19M7898	SCREW	2		M10 X 130
10	RE505265	IDLER	1		
11	34M7189	SPRING PIN	2		11 X 8 MM
12	14M7298	FLANGE NUT	3		M8
13	R500230	SPACER	1		
14	T178433	BRACKET	1		
15	14M7296	FLANGE NUT	2		
16	AT219917	HOSE	1		
	T160938	CAP	1		FREON PORT (NOT ILLUSTRATED)
17	T178423	V-BELT	1		(USE WITH 80 AMP ALTERNATOR)
18	R516898	BRACKET	1		(SUB FOR R128802)
19	**AT222378**	**KIT**	**1**		**AIR CONDITIONER FIELD KIT (INCLUDES: RECEIVER-DRYER, CONDENSER, BELT-IDLER, EVAPORATOR, THERMOSTAT, HIGH-AND-LOW PRESSURE SWITCHES AND MISCELLANEOUS PARTS)**

HEATER HOSES AND FITTINGS

T156229 -UN-24JUN02

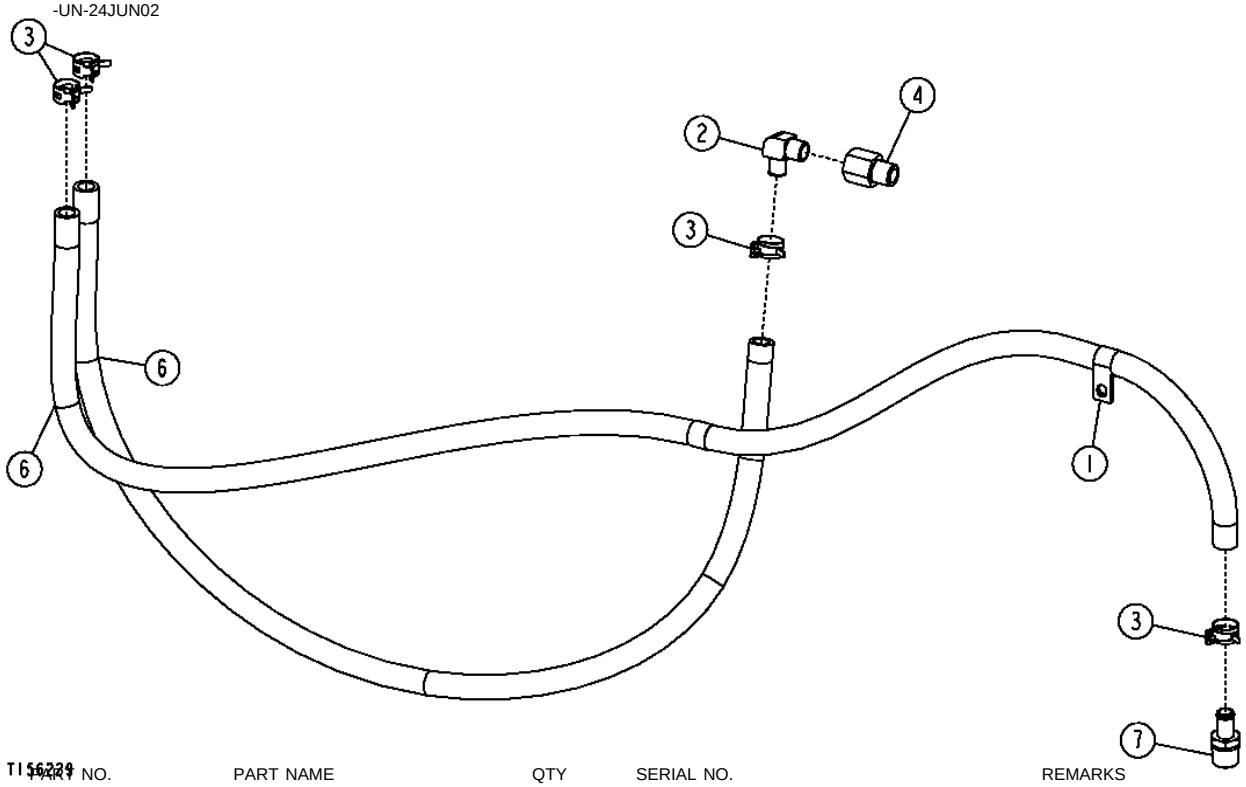

KEY	PART NO.	PART NAME	QTY	SERIAL NO.	REMARKS
1	T38377	CLAMP	2		
2	T27077	HOSE FITTING	1		(SUB FOR R117310)
3	T184924	HOSE CLAMP	4		
4	T177863	FITTING	1		
6	.....	HOSE	2		(MAKE FROM T60811 BULK MATERIAL, CUT TO LENGTH)
7	R41071	FITTING	1		

HEATING AND AIR CONDITIONING OUTLET DUCTS

TP62831 -UN-29JUN00

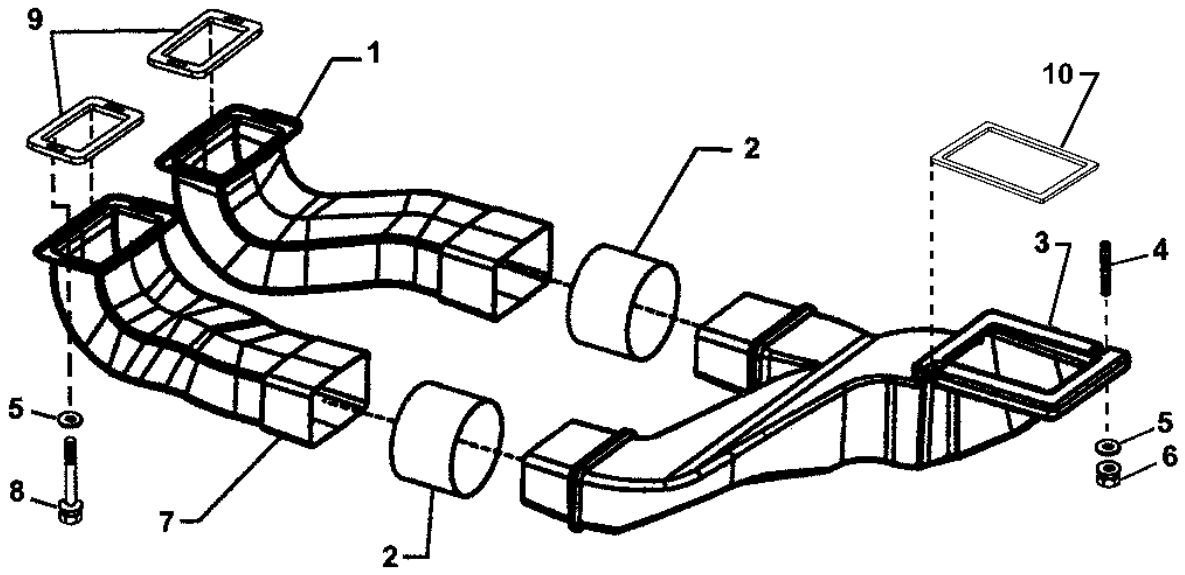

TP62831

KEY	PART NO.	PART NAME	QTY	SERIAL NO.	REMARKS
1	T173768	AIR DUCT	1		(RIGHT SIDE)
2	T171082	SEAL	2		
3	T175855	AIR DUCT	1		
4	T167759	STUD	2		
5	24M7298	WASHER	6		8.400 X 25 X 2 MM
6	14M7298	FLANGE NUT	2		M8
7	T156256	AIR DUCT	1		(LEFT SIDE)
8	19M7800	SCREW	4		M8 X 50
9	T182872	SEAL	2		
10	H94158	WEATHERSTRIP	1		(SUB FOR T167679)

AIR CONDITIONING COMPRESSOR, BRACKET,HOSES AND DRIVE BELT

T156242 -UN-24JUN02

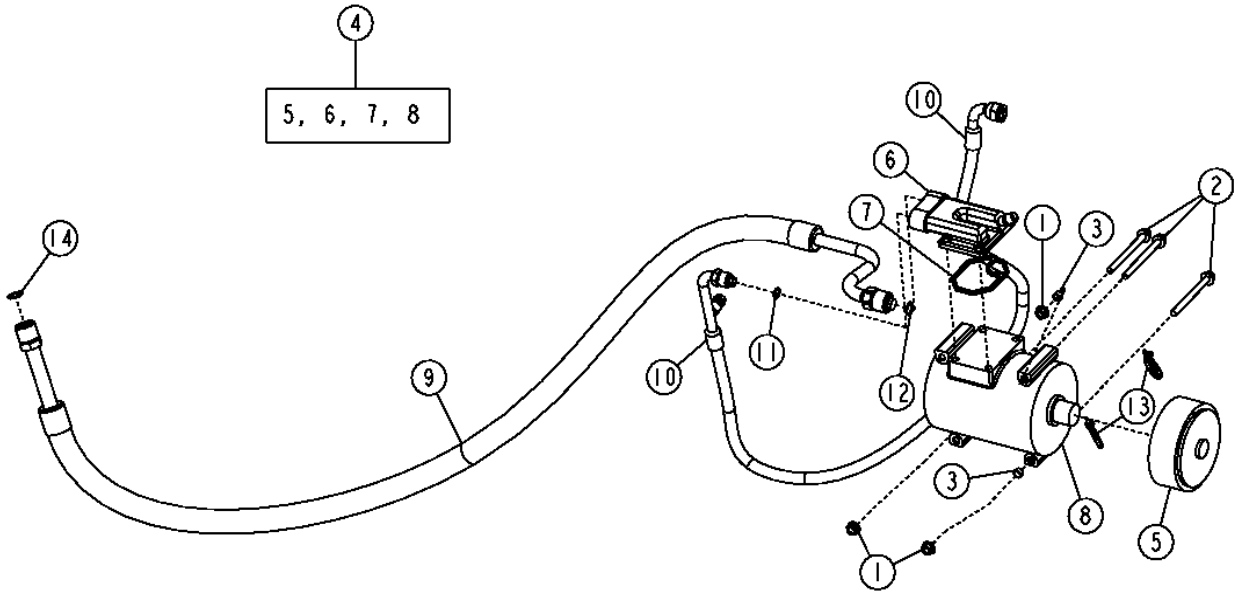

T156242

KEY	PART NO.	PART NAME	QTY	SERIAL NO.	REMARKS
1	14M7298	FLANGE NUT	3		M8
2	19M7913	SCREW	3		M8 X 90
3	34M7189	SPRING PIN	2		11 X 8 MM
4	AT211063	COMPRESSOR	1		
5	AT221651	PULLEY	1		
6	AT221652	MANIFOLD	1		
7	T177613	GASKET	1		
8	AT221653	COMPRESSOR	1		
9	AT211480	HOSE	1		
10	AT219917	HOSE	1		
11	R113050	O-RING	1		
12	R33259	O-RING	1		
13	R44302	TIE BAND	2		
14	T143169	O-RING	1		

A/C CONDENSOR,RECEIVER-DRIER AND HOSES

T156243 -UN-24JUN02

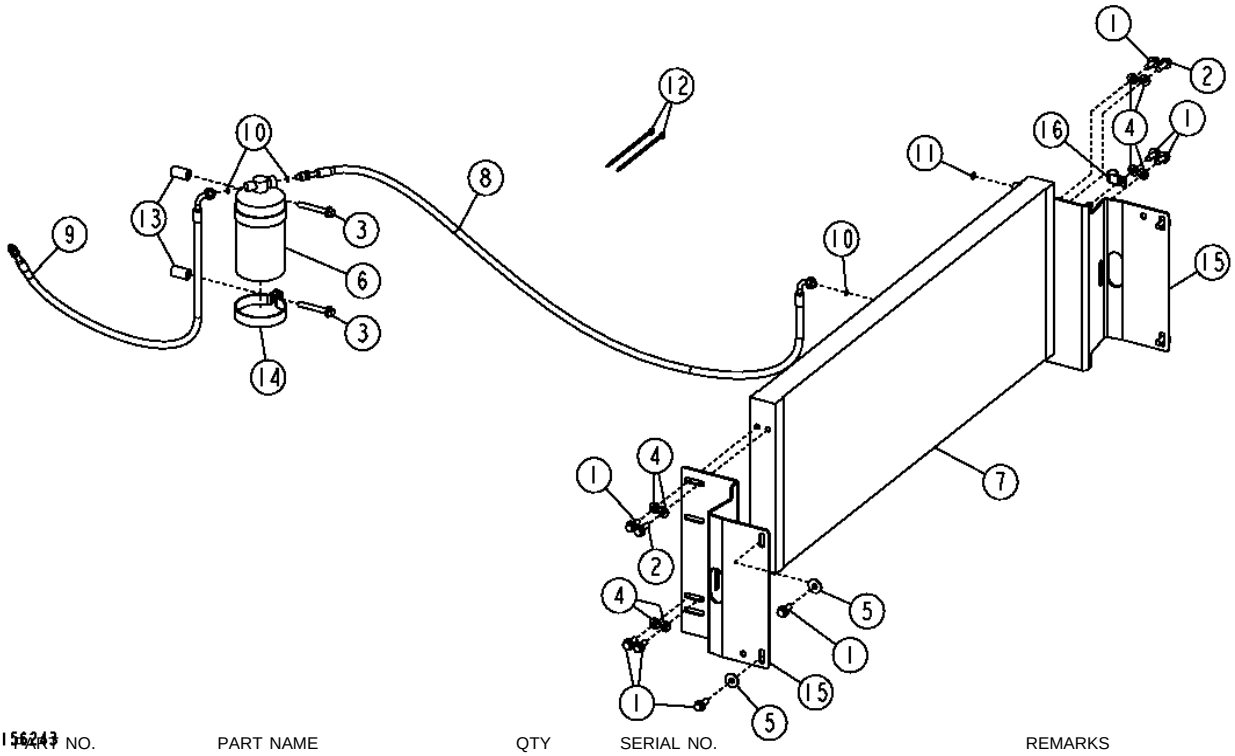

T156243

KEY	PART NO.	PART NAME	QTY	SERIAL NO.	REMARKS
1	19M7785	SCREW	10		M10 X 25
2	19M7786	SCREW	2		M10 X 30
3	19M7809	SCREW	2		M10 X 70
4	24H1682	WASHER	8		13/32" X 7/8" X 0.120"
5	24M7296	WASHER	4		10.500 X 30 X 2.500 MM
6	AT162848	RECEIVER-DRYER	1		
7	AT202962	VAPOR CONDENSER	1		
	AT300816	VAPOR CONDENSER	1		(HARSH ENVIRONMENT)
8	AT210781	HOSE	1		
9	AT220377	REFRIGERANT HOSE	1		
10	R10093	O-RING	3		
11	R113050	O-RING	1		
12	R44302	TIE BAND	2		
13	T153802	SPACER	2		
14	T190513	CLAMP	2		(SUB FOR T163597)
15	T180182	BRACKET	2		
16	T74416	CLAMP	1		

CAB MONITOR CONSOLE (SERIAL NO. -590067)

T151632 -UN-19FEB02

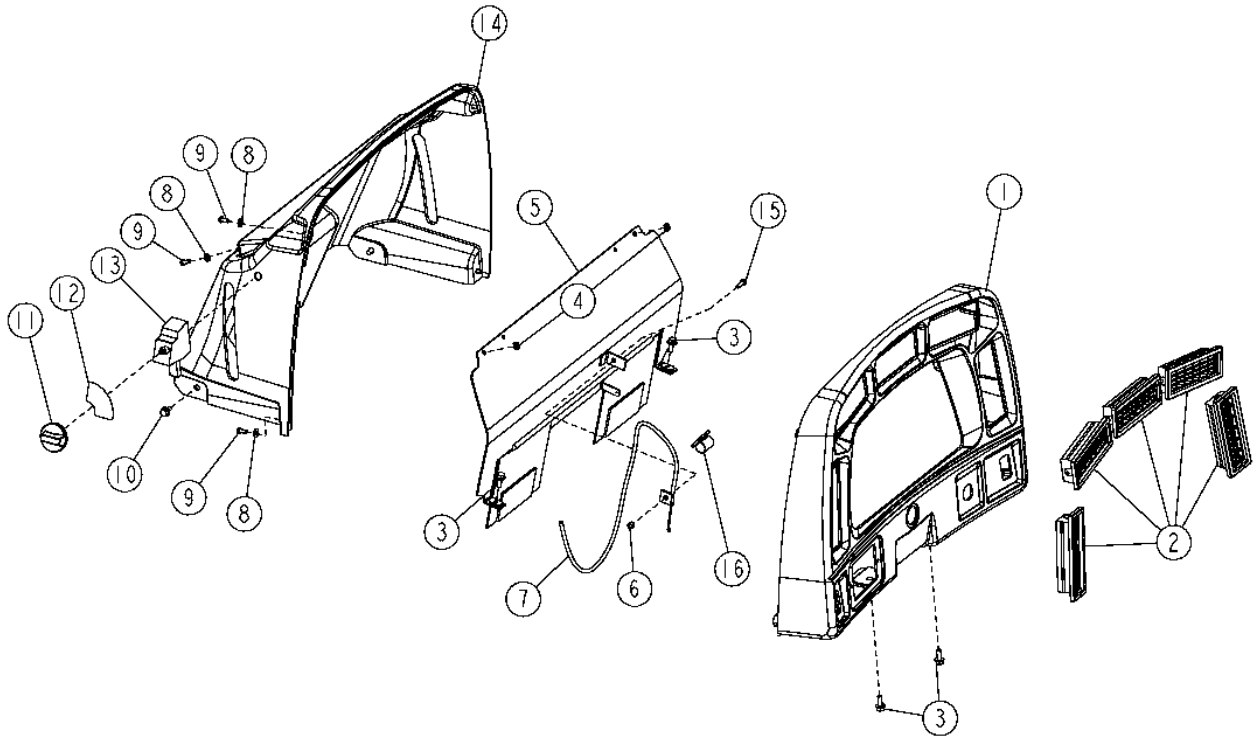

T151632

2H12

CAB MONITOR CONSOLE (SERIAL NO. -590067)

KEY	PART NO.	PART NAME	QTY	SERIAL NO.	REMARKS
1	T196729	COWL	1		
2	AH149228	LOUVER	5		
3	19M7775	SCREW	4		M6 X 16
4	14M7442	NUT	2		M5
5	AT223073	PARTITION	1		
6	14M7360	LOCK NUT	1		M5
7	AT223688	CABLE	1		
8	24M7054	WASHER	6		6.400 X 12 X 1.600 MM
9	21M7265	SCREW	6		M5 X 12
10	19M7774	SCREW	2		M6 X 12
11	AT223689	KNOB	1		
12	T182189	LABEL	1		
13	AT223687	CONTROL	1		
14	T180925	HOUSING	1		
15	19M7372	CAP SCREW	1		M5 X 16
16	T182909	CLIP	1		

CAB MONITOR CONSOLE (SER. NO. 590068-)

T193669 -UN-24OCT03

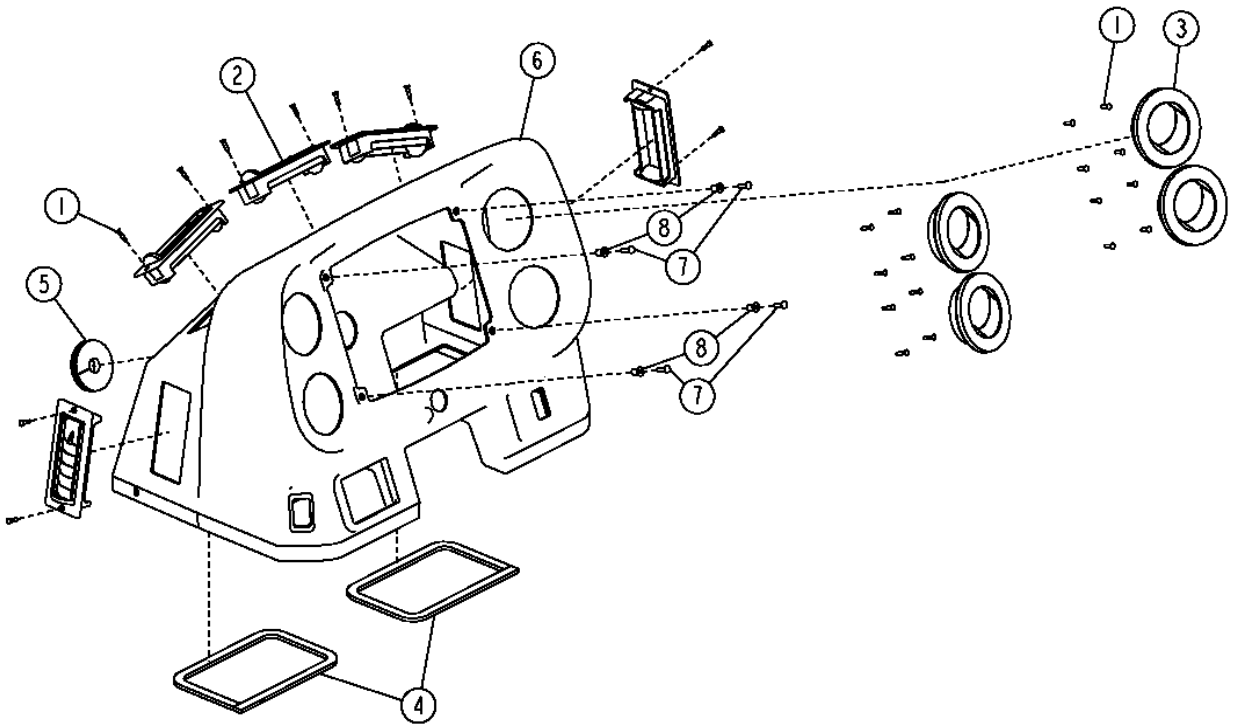

TI93669

2H14

CAB MONITOR CONSOLE (SER. NO. 590068-)

KEY	PART NO.	PART NAME	QTY	SERIAL NO.	REMARKS
1	37M7333	SCREW	26		
2	AT227668	LOUVER	5		
3	AT227669	LOUVER	4		
4	H81330	ISOLATOR	1		
5	R117845	GROMMET	1		
6	T196471	CONSOLE	1		
7	T82791	SCREW	4		
8	T82792	NUT	4		

HOOD

T145458 -UN-26SEP01

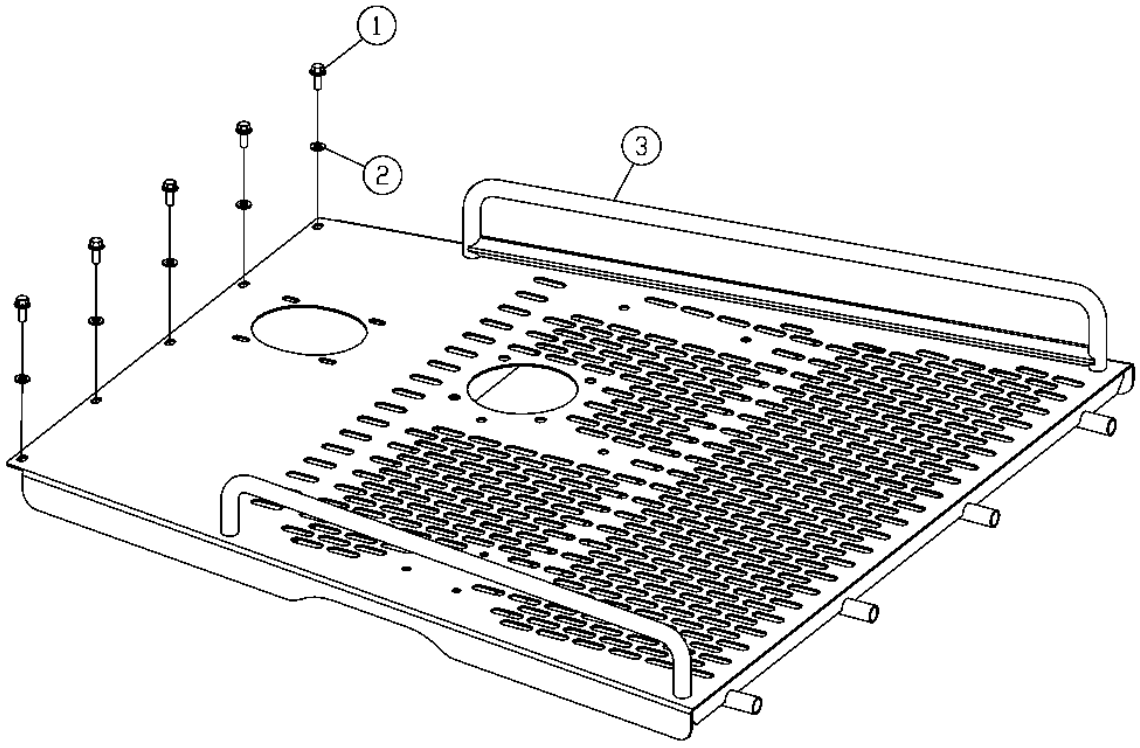

T145458

2H17

HOOD

KEY	PART NO.	PART NAME	QTY	SERIAL NO.	REMARKS
1	19M7785	SCREW	5		M10 X 25
2	24M7239	WASHER	5		10.700 X 21 X 2.500 MM
3	AT223551	HOOD	1	-590067	(YELLOW)
	AT305896	HOOD	1	590068-	(CHARCOAL)

2H18

ENGINE SIDE SHIELDS

T156259 -UN-24JUN02

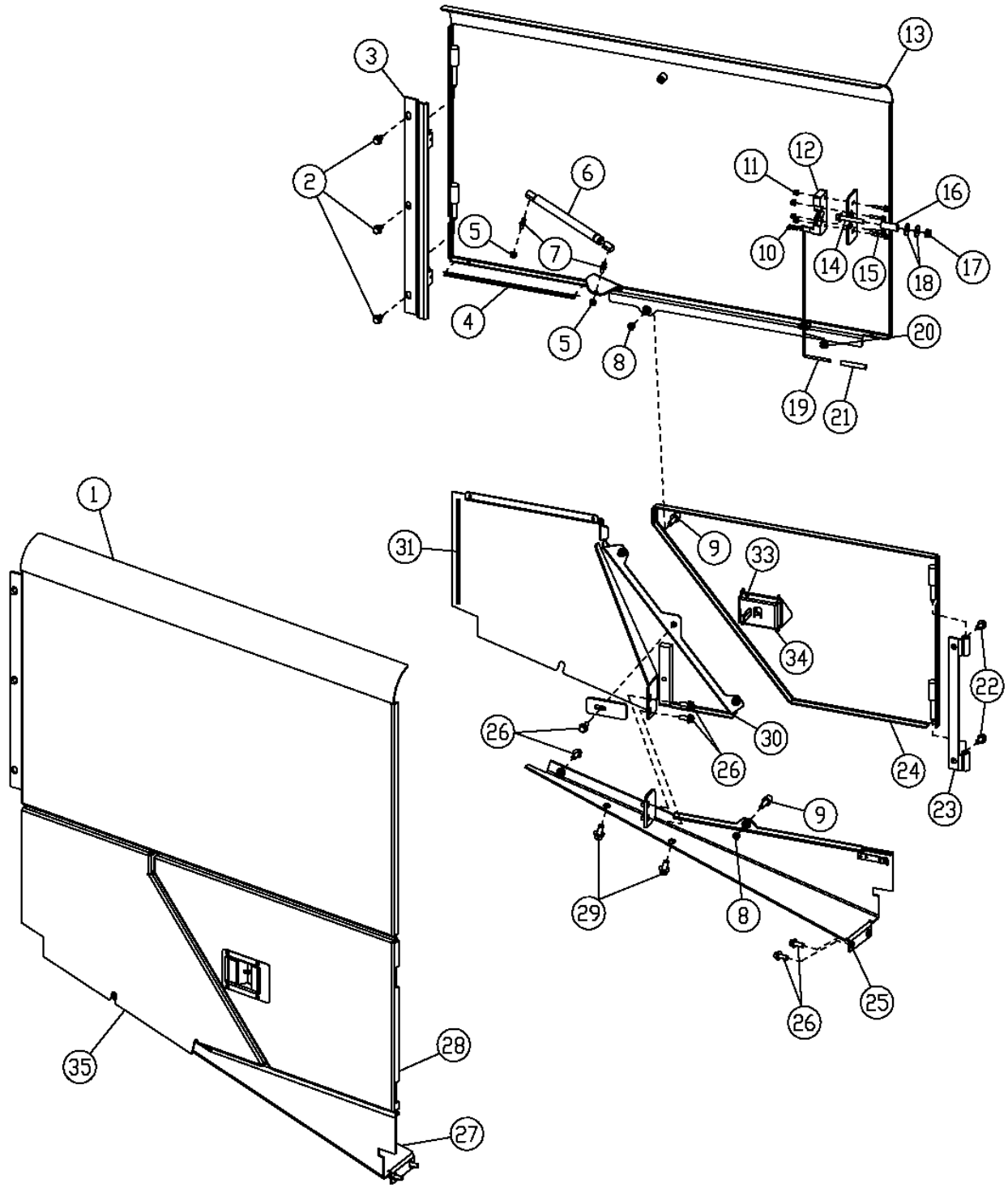

THIS PARTS LISTING IS CONTINUED

ENGINE SIDE SHIELDS

KEY	PART NO.	PART NAME	QTY	SERIAL NO.	REMARKS
1	AT222874	SHIELD	1		
2	19M7784	SCREW	6		M10 X 20, (SUB FOR 19M7783)
3	AT208159	HINGE	2		
4	.....	SEAL	2		
5	14M7298	FLANGE NUT	4		
6	AT226229	CYLINDER	2		
	T182758	CLIP	2		(NOT ILLUSTRATED) (DOOR CYLINDER)
7	T177909	BALL STUD	4		
8	14M7152	NUT	4		
9	AT219974	BUMPER	4		
10	R46528	SPRING LOCKING PIN	4		
11	14M7397	LOCK NUT	8		
12	AT106472	LATCH	1		
	AT106473	LATCH	1		
13	AT222876	SHIELD	1		
14	19M7808	SCREW	2		
15	19M7833	SCREW	8		
16	T101975	BUSHING	2		
17	14M7296	FLANGE NUT	2		
18	24M7296	WASHER	4		
19	T181316	ROD	2		
20	T70154	GROMMET	2		
21	.....	HYDRAULIC HOSE - FABRICATE	2		MAKE FROM T79477
22	19M7784	SCREW	4		
23	AT208440	HINGE	2		
24	AT203044	DOOR	1		RIGHT SIDE (INCLUDES (4) H85233 RIVETS AND (1) AT221696 LATCH)
25	AT222857	BRACKET	1		
26	19M7785	SCREW	12		
27	AT222858	BRACKET	1		
28	AT211138	DOOR	1		LEFT SIDE (INCLUDES (4) H85233 RIVETS AND (1) AT221696 LATCH)
29	19M7788	SCREW	4		
30	AT222877	COVER	1		
31	.....	ISOLATOR	2		
33	H85233	RIVET	8		
34	AT222874	SHIELD	2		
35	AT222875	COVER	1		

TRANSMISSION SHIELDS

T156459 -UN-26JUN02

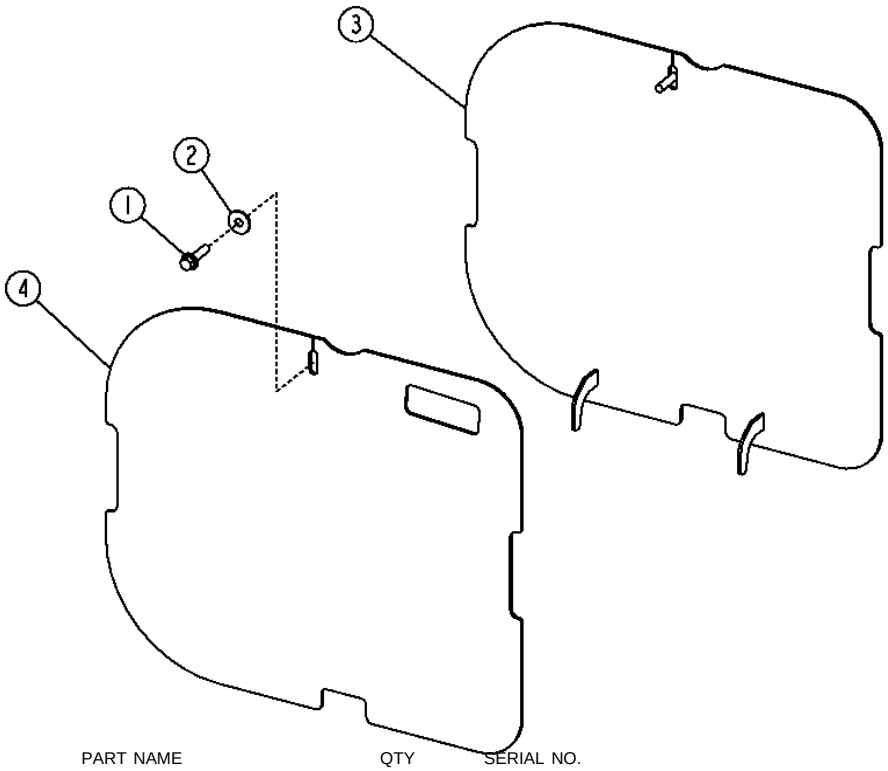

T156459

KEY	PART NO.	PART NAME	QTY	SERIAL NO.	REMARKS
1	19M7814	SCREW	2		M12 X 50
2	24M7180	WASHER	2		13 X 37 X 3 MM
3	AT208421	COVER	1		RIGHT SIDE
4	AT224987	COVER	1		LEFT SIDE

MEMORANDA

BATTERY COVERS

T145461 -UN-19SEP01

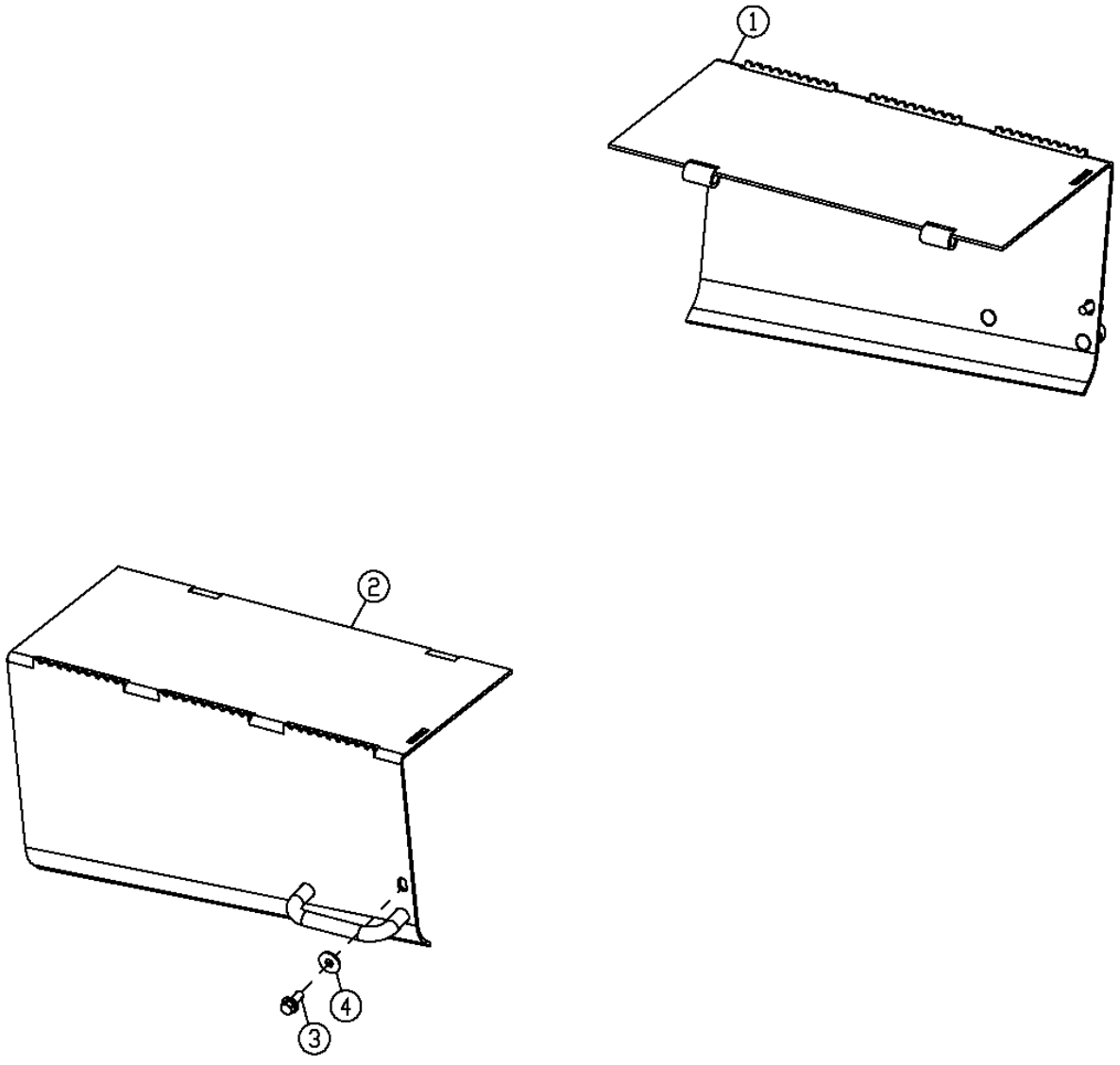

T145461

BATTERY COVERS

KEY	PART NO.	PART NAME	QTY	SERIAL NO.	REMARKS
1	AT302961	COVER	1		RIGHT, (SUB FOR AT222882)
2	AT302960	COVER	1		LEFT, (SUB FOR AT222602)
3	24M7296	WASHER	2		10.500 X 30 X 2.500 MM
4	19M7785	SCREW	2		(USE IF AVAILABLE) (SUB AT221658)

GRILLE AND GRILLE HOUSING

T195224 -UN-29SEP03

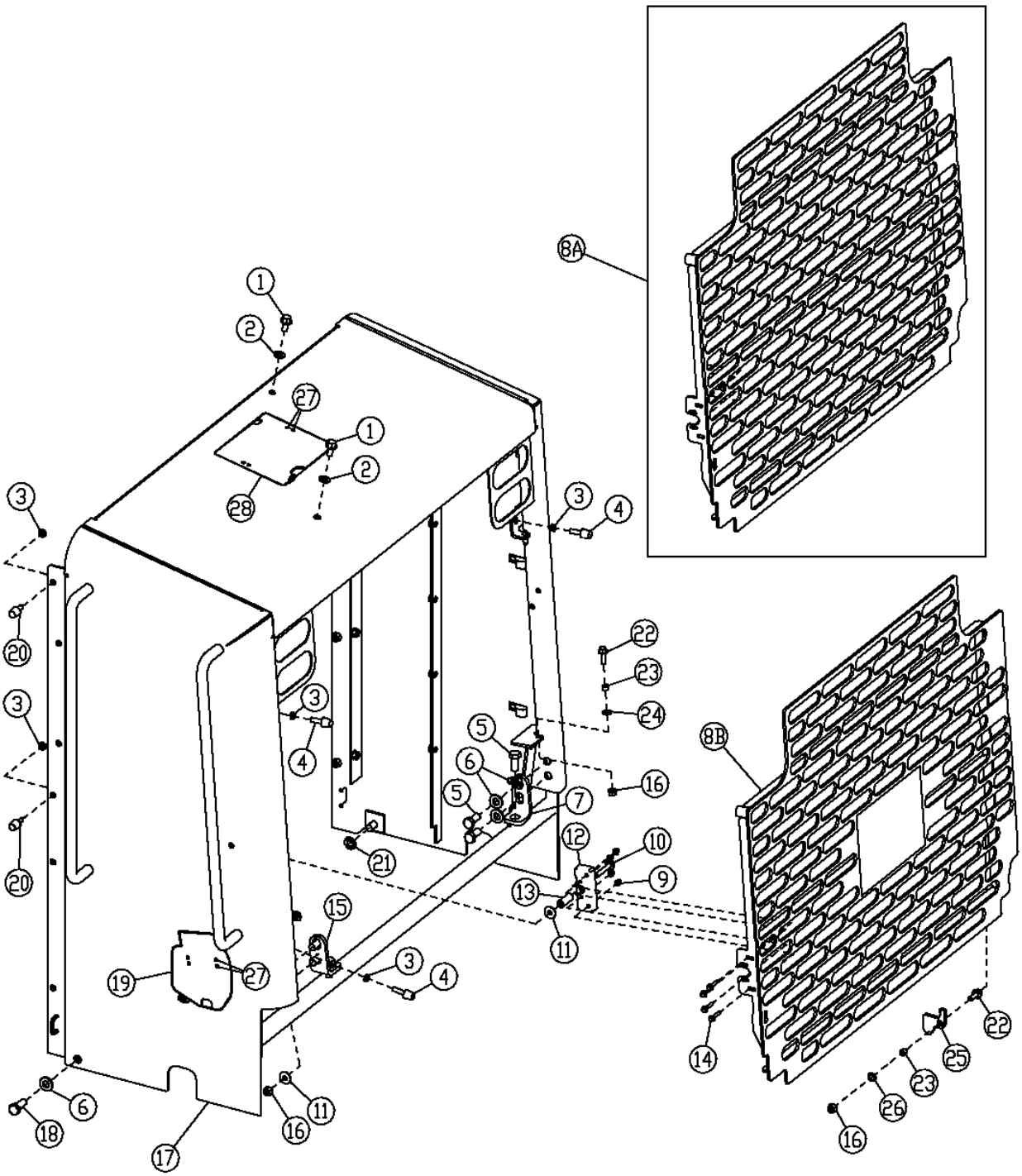

GRILLE AND GRILLE HOUSING

KEY	PART NO.	PART NAME	QTY	SERIAL NO.	REMARKS
1	19M7788	SCREW	2		
2	24M7240	WASHER	2		13 X 25 X 3 MM
3	14M7152	NUT	7		GRILLE
4	AT219974	BUMPER	3		RADIATOR FILL CAP
5	19M8035	CAP SCREW	6		
6	24M7241	WASHER	8		
7	T181489	BRACKET	1		
8A	AT223547	DOOR	1	-590067	
8B	AT305783	DOOR	1	590068-	
9	14M7397	LOCK NUT	4		
10	19M7808	SCREW	1		M10 X 65
11	24M7296	WASHER	2		10.500 X 30 X 2.500 MM
12	AT220015	LATCH	1		
13	T101975	BUSHING	1		(RUBBER)
14	19M7833	SCREW	4		M6 X 35
15	T181488	BRACKET	1		
16	14M7296	FLANGE NUT	3		
17	AT223546	GRILLE	1		
18	19M7488	CAP SCREW	2		
19	AT220993	DOOR	1		(FUEL FILL)
20	AT219974	BUMPER	4		(SUB FOR AT221273)
21	24M7053	WASHER	2		
22	19M7786	SCREW	2		
23	Z32264	SPACER	2		
24	24M7239	WASHER	1		
25	T180661	STRAP	1		
26	24M7228	WASHER	1		
27	AT44188	RIVET	8		
28	AT220994	COVER	1		

FRONT FENDERS AND FENDER SUPPORTS (SERIAL NO. -588886)(YELLOW)

T193267 -UN-25JUL03

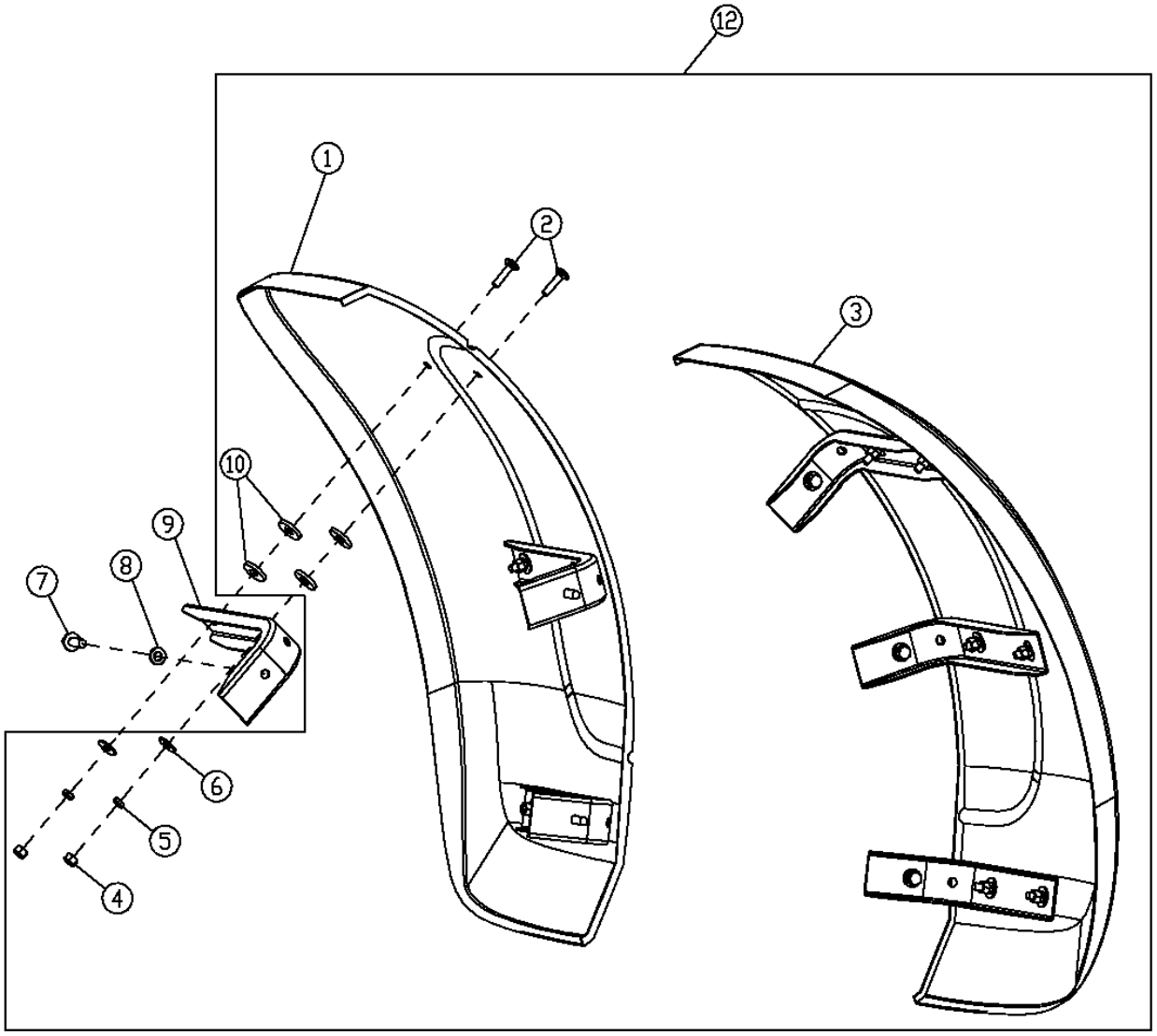

T193267

FRONT FENDERS AND FENDER SUPPORTS (SERIAL NO. -588886)(YELLOW)

KEY	PART NO.	PART NAME	QTY	SERIAL NO.	REMARKS
1	.....	FENDER	1	-588138	(RIGHT) (YELLOW) (SUB AT303753)
	T170595	FENDER	1	588139-	(RIGHT) (GRAY)
	T209177	FENDER	1	588139-	(RIGHT) (YELLOW)
2	03M7194	BOLT	12		M10 X 40
3	.....	FENDER	1	-588138	(LEFT) (YELLOW) (SUB AT303753)
	T169118	FENDER	1	588139-	(LEFT) (GRAY)
	T209174	FENDER	1	588139-	(LEFT) (YELLOW)
4	14M7167	LOCK NUT	12		M10
5	14M7152	NUT	12		M10
6	24M7296	WASHER	12		10.500 X 30 X 2.500 MM
7	19M7788	SCREW	6		M12 X 25
8	24M7240	WASHER	6		13 X 25 X 3 MM
9	T178368	SUPPORT	6		
10	T22381	WASHER	24		
12	.....	KIT	1		(AT303753 NOT AVAILABLE ORDER COMPONENTS)

FRONT FENDERS AND FENDER SUPPORTS (SERIAL NO. XXXXXX-)(TAN)

T190016 -UN-01MAY03

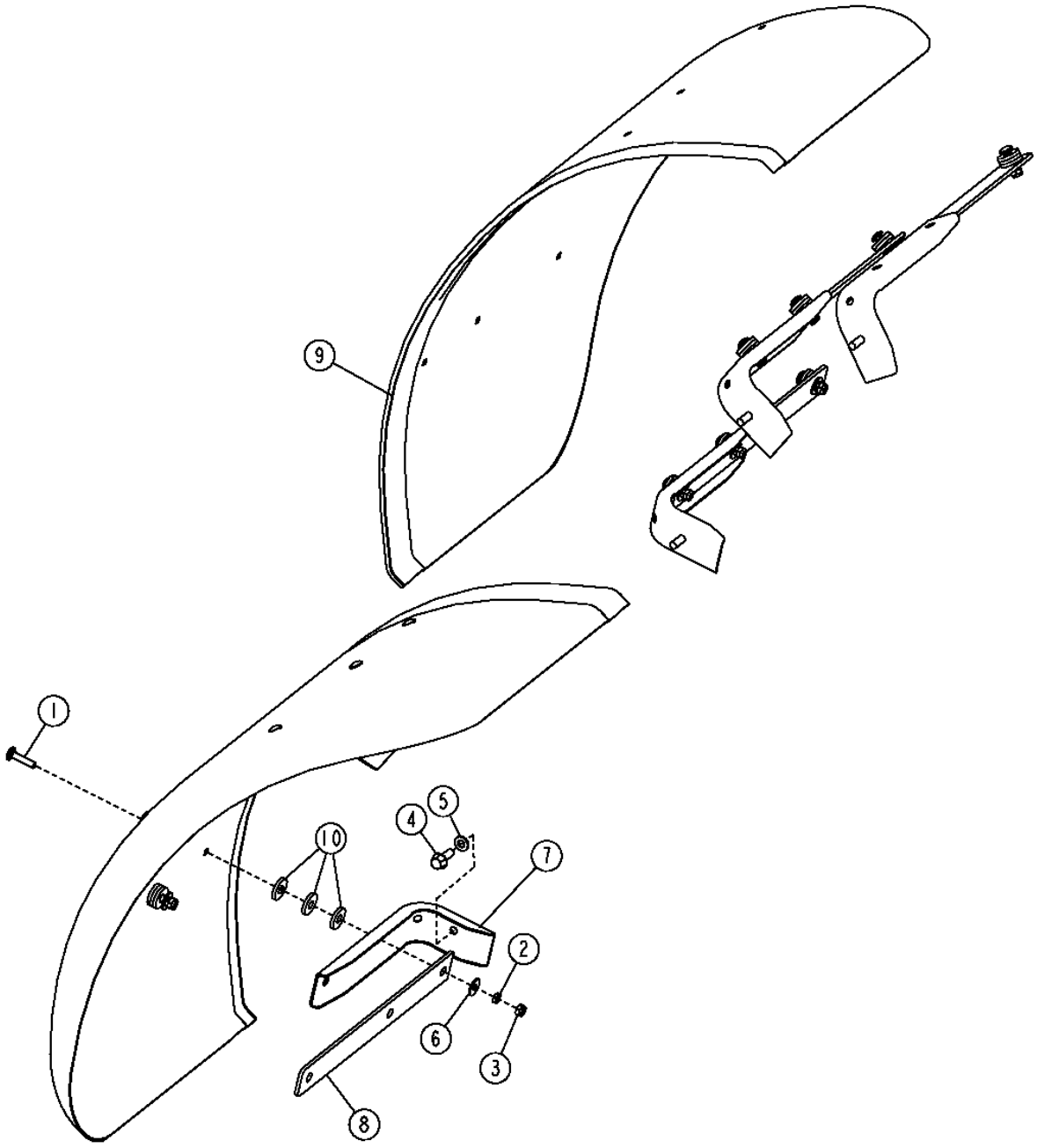

FRONT FENDERS AND FENDER SUPPORTS (SERIAL NO. XXXXXX-)(TAN)

KEY	PART NO.	PART NAME	QTY	SERIAL NO.	REMARKS
1	03M7195	BOLT	18		M10 X 45
2	14M7152	NUT	18		M10
3	14M7167	LOCK NUT	18		M10
4	19M7788	SCREW	6		M12 X 25
5	24M7240	WASHER	6		13 X 25 X 3 MM
6	24M7296	WASHER	18		10.500 X 30 X 2.500 MM
7	T178368	SUPPORT	6		
8	T200463	PLATE	6		
9	T201019	FENDER	2		
10	T22381	WASHER	54		

FRONT FENDERS AND FENDER SUPPORTS (SERIAL NO. 588887-)(GRAY)(FULL COVERAGE)

T196719 -UN-18DEC03

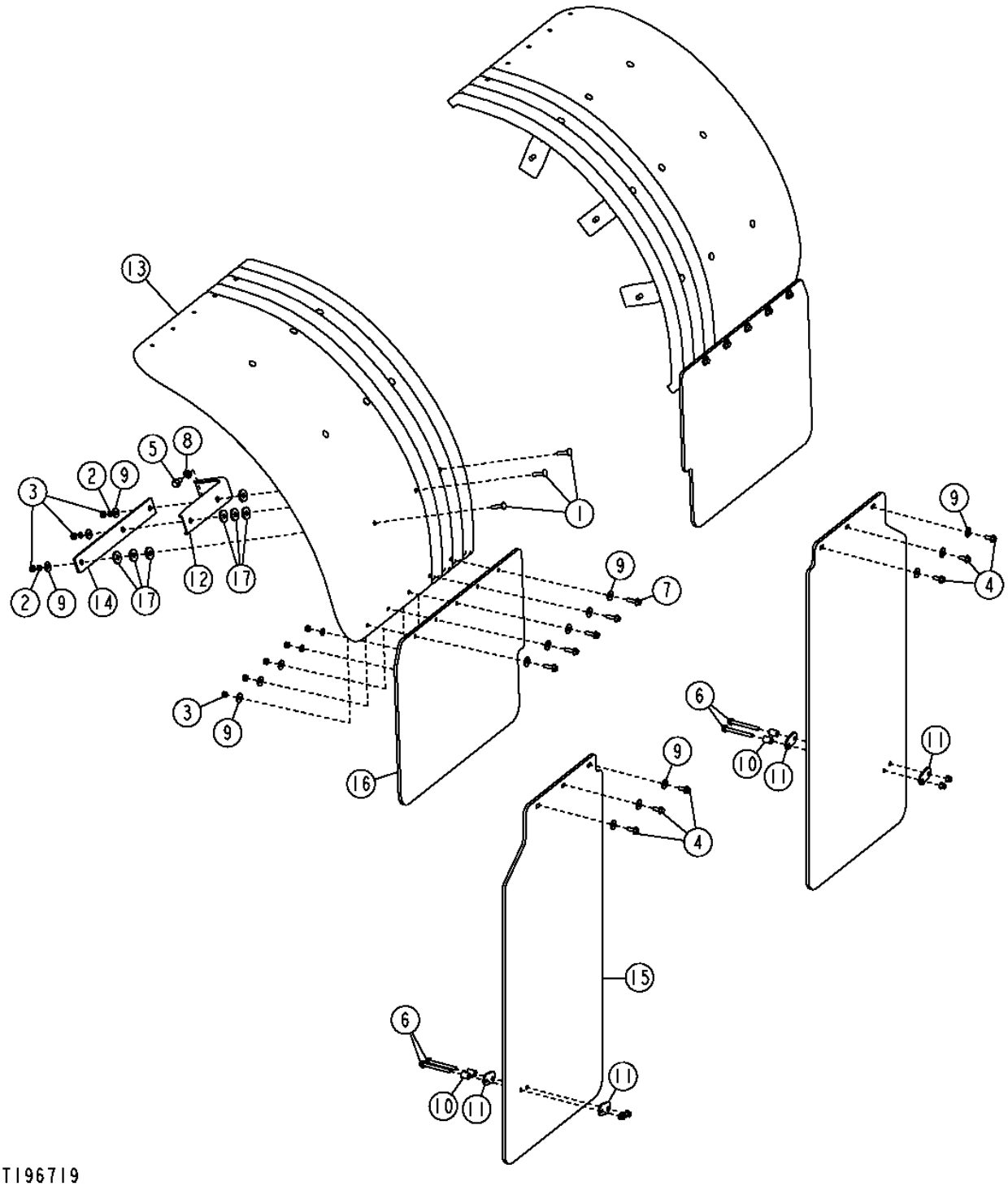

FRONT FENDERS AND FENDER SUPPORTS (SERIAL NO. 588887-)(GRAY)(FULL COVERAGE)

KEY	PART NO.	PART NAME	QTY	SERIAL NO.	REMARKS
1	03M7195	BOLT	18		M10 X 45
2	14M7152	NUT	18		M10
3	14M7167	LOCK NUT	28		M10
4	19M7785	SCREW	6		M10 X 25
5	19M7788	SCREW	6		M12 X 25
6	19M7812	SCREW	4		M10 X 100
7	19M7835	SCREW	10		M10 X 35
8	24M7240	WASHER	6		13 X 25 X 3 MM
9	24M7296	WASHER	40		10.500 X 30 X 2.500 MM
10	T147891	BUSHING	4		
11	T173779	STRAP	4		
12	T178368	SUPPORT	6		
13	T197173	FENDER	2		
14	T200463	PLATE	6		
15	T201375	SPLASH GUARDS	2		
16	T202206	SPLASH GUARDS	2		
17	T22381	WASHER	42		

REAR FENDERS AND FENDER SUPPORTS

T153328 -UN-02APR02

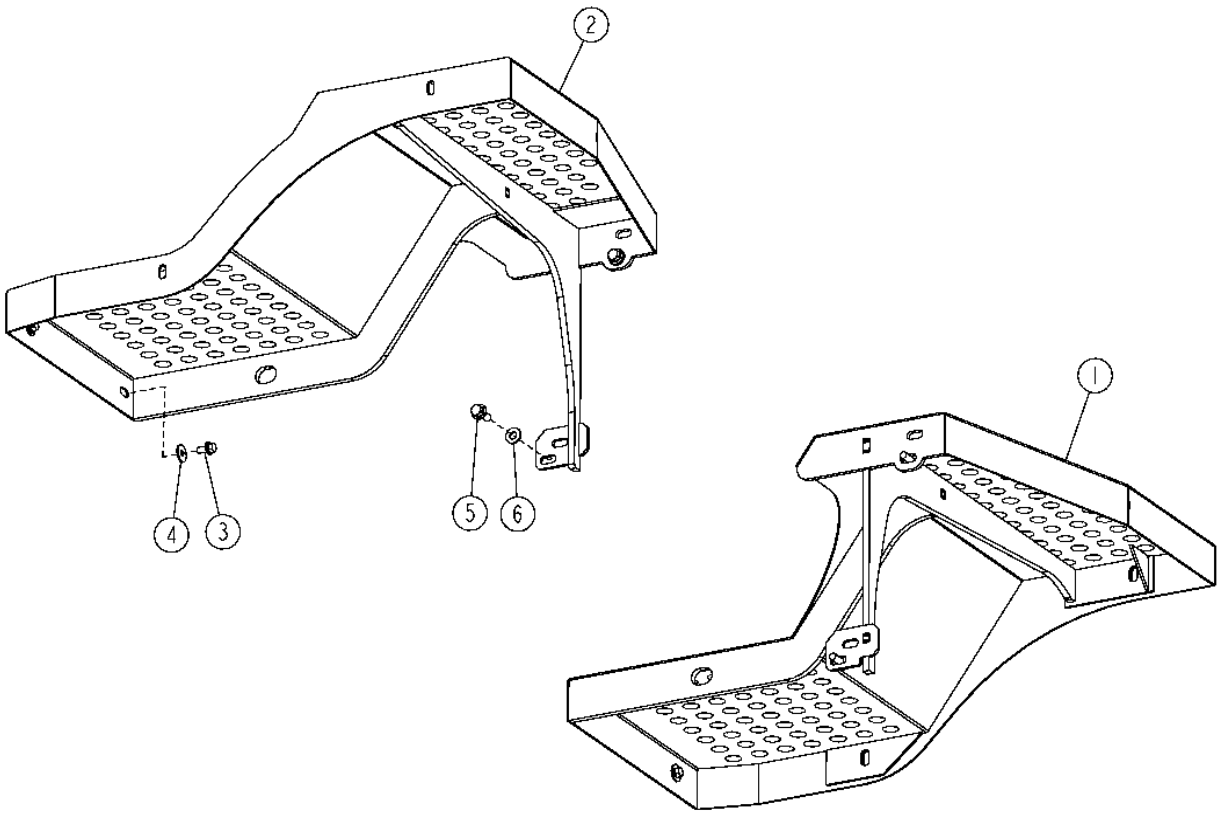

T153328

REAR FENDERS AND FENDER SUPPORTS

KEY	PART NO.	PART NAME	QTY	SERIAL NO.	REMARKS
1	AT310792	FENDER	1		(SUB FOR AT223274) (RIGHT)
2	AT310791	FENDER	1		(SUB FOR AT223011) (LEFT)
3	19M7784	SCREW	6		M10 X 20
4	24M7296	WASHER	6		10.500 X 30 X 2.500 MM
5	19M7789	SCREW	4		M12 X 30
6	T178063	WASHER	4		

MUD FLAPS AND MUD FENDERS

T160085 -UN-07OCT02

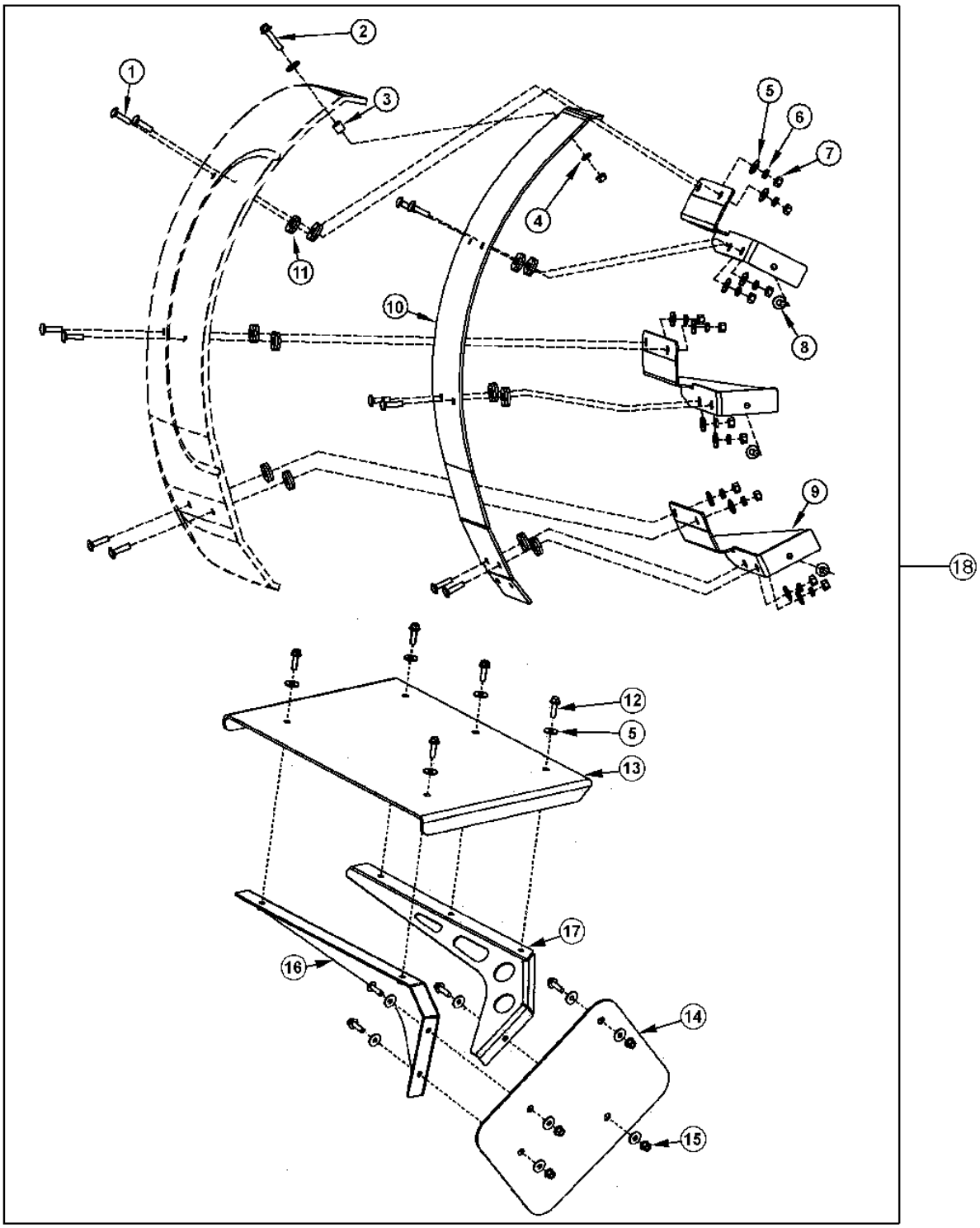

T160085

MUD FLAPS AND MUD FENDERS

KEY	PART NO.	PART NAME	QTY	SERIAL NO.	REMARKS
1	03M7194	BOLT	24		M10 X 40
2	19M7806	SCREW	2		M10 X 50
3	H148464	SPACER	2		
4	24M7239	WASHER	2		10.700 X 21 X 2.500 MM
5	24M7296	WASHER	52		10.500 X 30 X 2.500 MM
6	14M7152	NUT	24		M10
7	14M7167	LOCK NUT	26		M10
8	19M7789	SCREW	6		M12 X 30
9	AT220737	SUPPORT	3		(LEFT)
	AT221701	SUPPORT	3		(RIGHT)
10	T176279	FENDER	1		(EXTENSION) (LEFT)
	T176282	FENDER	1		(EXTENSION) (RIGHT)
11	T22381	WASHER	48		
12	19M7835	SCREW	16		
13	T176113	FENDER	2		
14	T176192	PLATE	2		
15	14M7400	LOCK NUT	8		M10
16	AT223323	SUPPORT	1		(LEFT)
	AT223331	SUPPORT	1		(RIGHT)
17	AT223324	SUPPORT	1		(LEFT)
	AT223332	SUPPORT	1		(RIGHT)
18	**AT220687**	**KIT**	**1**		**INCLUDES MUD FLAPS (SEE FOLLOWING TWO PAGES FOR ADDITIONAL COMPONENTS)**

MUD FLAPS AND MUD FENDERS

T136314 -UN-08DEC00

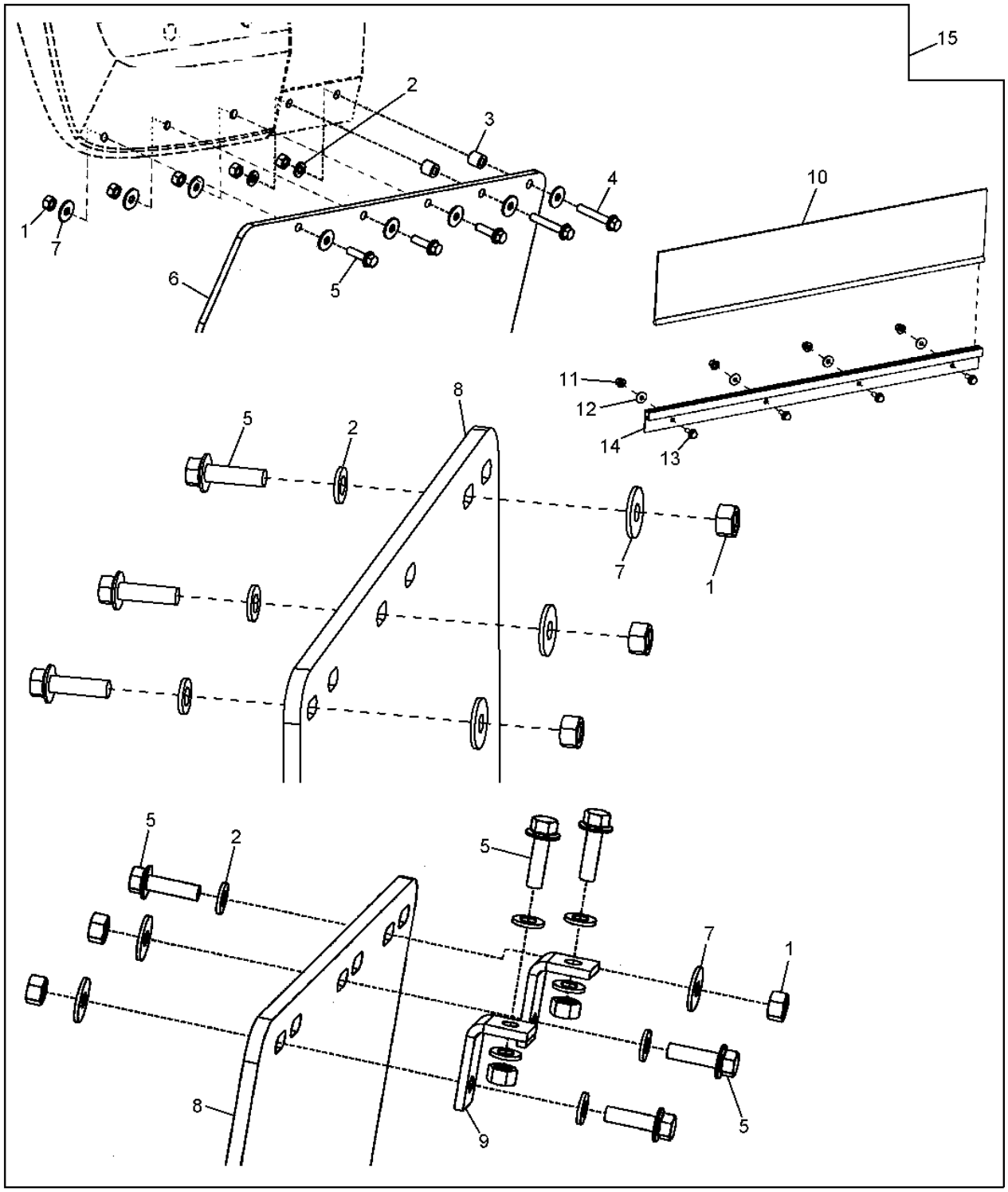

T136314

MUD FLAPS AND MUD FENDERS

KEY	PART NO.	PART NAME	QTY	SERIAL NO.	REMARKS
1	14M7167	LOCK NUT	18		M10
2	24M7239	WASHER	14		10.700 X 21 X 2.500 MM
3	H148464	SPACER	4		
4	19M7807	SCREW	4		
5	19M7835	SCREW	16		M10 X 35
6	T176341	SPLASH GUARDS	2		
7	24M7296	WASHER	22		10.500 X 30 X 2.500 MM
8	T176342	SPLASH GUARDS	2		
9	T176357	BRACKET	2		
10	T178275	LIMB RISER	2		
11	14M7397	LOCK NUT	8		M6
12	24M7139	WASHER	8		6.400 X 18 X 1.600 MM
13	19M7775	SCREW	8		M6 X 16
14	T178276	BRACKET	2		
15	**AT220687**	**KIT**	**1**		**INCLUDES MUD FENDERS (SEE PREVIOUS TWO PAGES FOR ADDITIONAL COMPONENTS)**

FULL COVERAGE REAR FENDERS (SERIAL NO. XXXXXX-)

T198849 -UN-06APR04

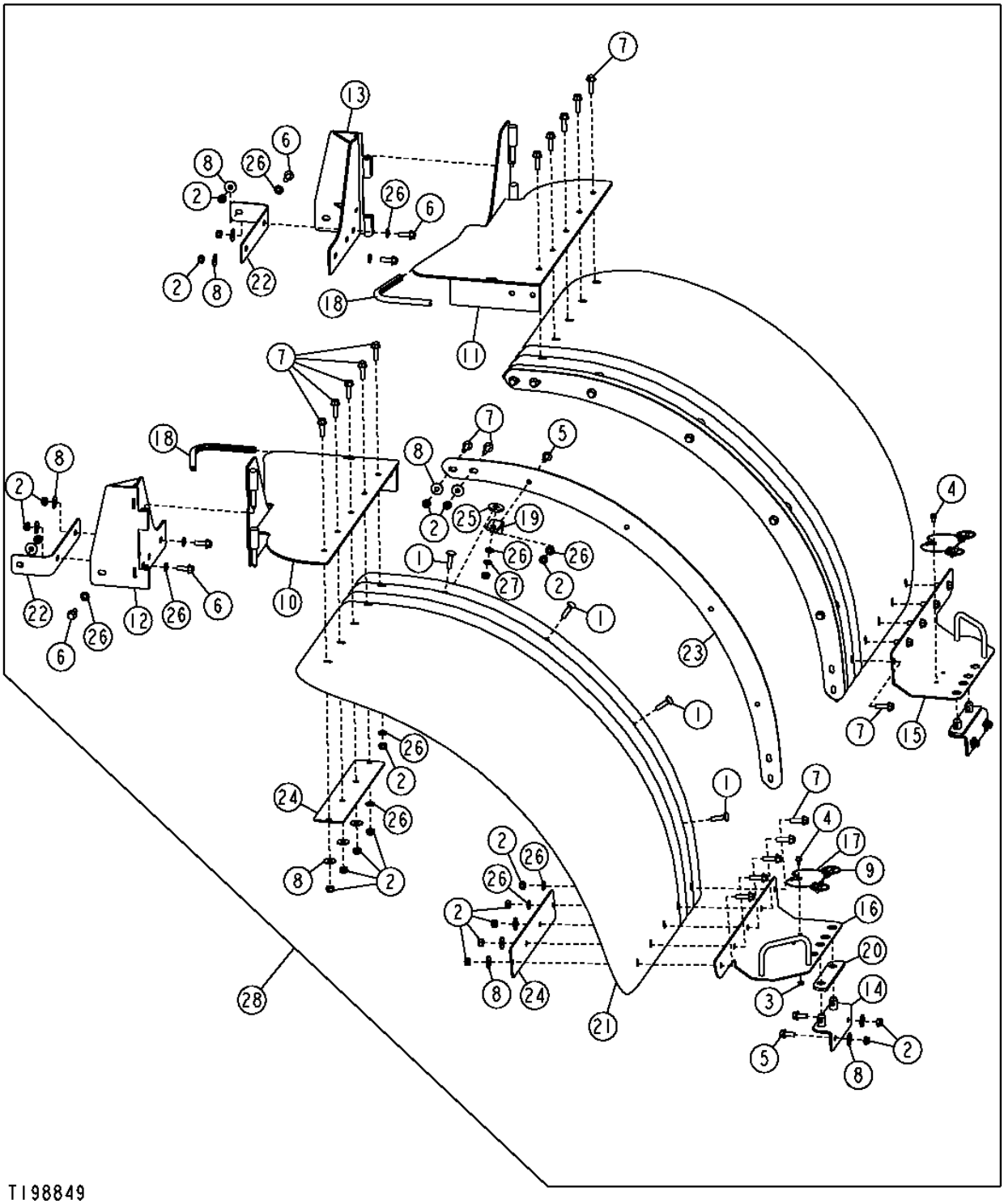

FULL COVERAGE REAR FENDERS (SERIAL NO. XXXXXX-)

KEY	PART NO.	PART NAME	QTY	SERIAL NO.	REMARKS
1	03M7194	BOLT	8		M10 X 40
2	14M7167	LOCK NUT	50		M10
3	14M7303	FLANGE NUT	2		M6
4	19M7774	SCREW	2		M6 X 12
5	19M7785	SCREW	12		M10 X 25
6	19M7786	SCREW	6		M10 X 30
7	19M7835	SCREW	24		M10 X 35
8	24M7296	WASHER	26		10.500 X 30 X 2.500 MM
9	AA21292	QUICK LOCK PIN	4		
10	AT301815	HINGE	1		
11	AT301816	HINGE	1		
12	AT301819	HINGE	1		
13	AT301820	HINGE	1		
14	AT304159	BRACKET	2		
15	AT305487	HANDLE	1		
16	AT305488	HANDLE	1		
17	AT305830	WIRE ROPE	2		
18	.....	ISOLATOR	1		(FURNISH T58056 BULK MATERIAL, CUT TO LENGTH)
19	T176357	BRACKET	8		
20	T201305	PAD	2		
21	T201327	FENDER	2		
22	.....	ANGLE	2		(T201328 NO LONGER AVAILABLE)
23	T201329	PLATE	2		
24	T201330	PLATE	4		
25	T22381	WASHER	8		
26	24M7239	WASHER	34		10.700 X 21 X 2.500 MM
27	14M7152	NUT	8		M10
28	**AT312171**	**KIT**	**1**		**(WHOLE GOODS) (FULL COVERAGE REAR FENDERS FIELD KIT)**

RADIO, RADIO SPEAKERS AND ANTENNA (SERIAL NO. -590067)

T192643 -UN-01JUL03

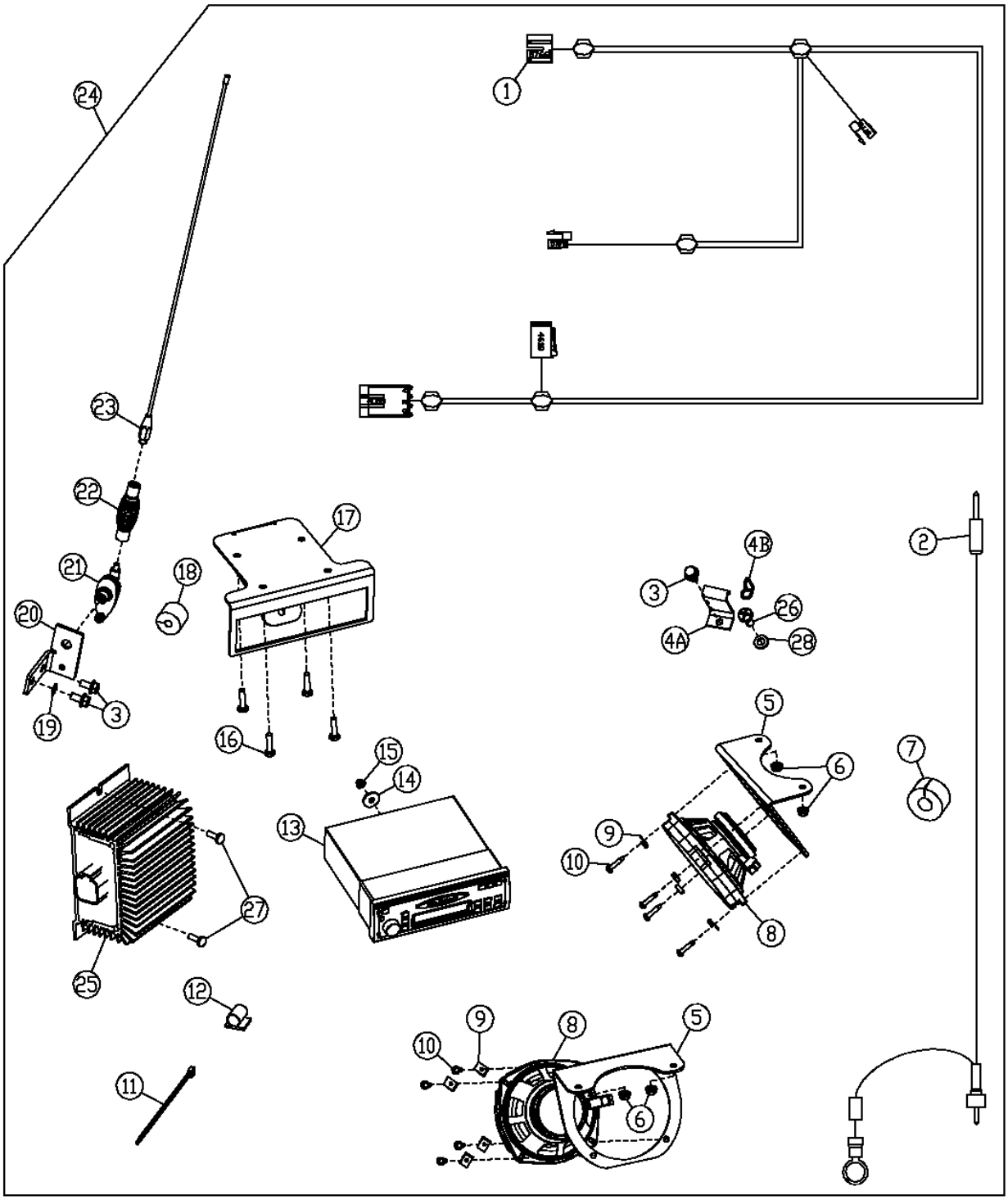

T192643

RADIO, RADIO SPEAKERS AND ANTENNA (SERIAL NO. -590067)

KEY	PART NO.	PART NAME	QTY	SERIAL NO.	REMARKS
1	AT223870	RADIO SPEAKER WRG HARNESS	1		
2	AT223897	CABLE	1		
3	19M7865	SCREW	3		M8 X 16
4A	T180573	BRACKET	1		(USE WITH 19M7865)
4B	R126033	HOOK	1		(USE WITH T133674 AND 24M7054)
5	T180338	BRACKET	2		
6	14M7303	FLANGE NUT	4		M6
7	T182870	ISOLATOR	1		
8	AT188759	SPEAKER	2		
9	R53528	NUT	8		
10	T182888	SCREW	8		(SUB FOR 37M7070)
11	R44302	TIE BAND	1		
12	T182909	CLIP	3		
13	AT192957	RADIO	1		(USE IF AVAILABLE) WITH CASETTE, (SUB RE190140)
	RE190139	RADIO	1		(SUB FOR AT192956)
	RE190140	RADIO	1		WITH CASETTE, (SUB FOR AT192957)
	.....	RADIO	1		WITH COMPACT DISC, (SUB RE227953) (SUB FOR AT192958) (RE190141 NO LONGER AVAILABLE)
14	24M7100	WASHER	1		6.600 X 22 X 2 MM
15	14M7375	FLANGE NUT	1		M5
16	19H1948	CAP SCREW	4		6.350 X 19.050 MM
17	T180420	BRACKET	1		
18	T182871	ISOLATOR	1		
19	12M7032	LOCK WASHER	1		8.400 MM
20	T180487	BRACKET	1		
21	RE168454	BASE	1		ANTENNA
22	RE61651	SPRING	1		
23	AR104516	ANTENNA	1		
24	**AT306829**	**KIT**	**1**		
	AT306830	**KIT**	**1**		**WITH CASSETTE**
	AT306831	**KIT**	**1**		**WITH COMPACT DISC**
25	AT224893	CONVERTER	1		
26	T133674	SELF-LOCKING SCREW	1		(SUB FOR 21M7292)
27	21M7250	SCREW	2		
28	24M7054	WASHER	1		
29	R76695	NUT	1		(NOT ILLUSTRATED)

RADIO, RADIO SPEAKERS AND ANTENNA (SER.NO. 590068-)

T193559 -UN-14AUG03

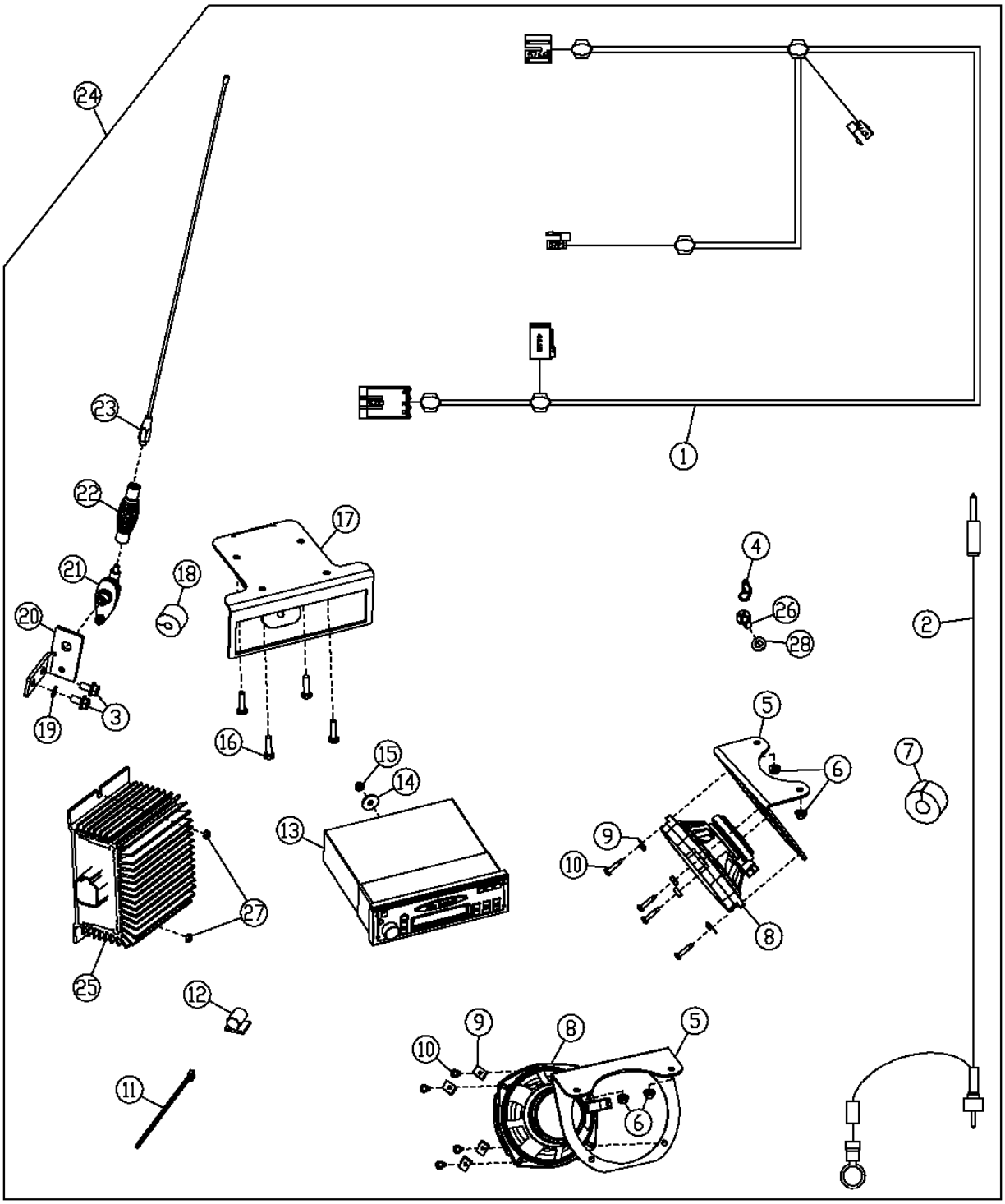

T193559

RADIO, RADIO SPEAKERS AND ANTENNA (SER.NO. 590068-)

KEY	PART NO.	PART NAME	QTY	SERIAL NO.	REMARKS
1	AT223870	RADIO SPEAKER WRG HARNESS	1		
2	AT223897	CABLE	1		
3	19M7865	SCREW	2		M8 X 16
4	R126033	HOOK	1		
5	T180338	BRACKET	2		
6	14M7303	FLANGE NUT	4		M6
7	T182870	ISOLATOR	1		
8	AT188759	SPEAKER	2		
9	R53528	NUT	8		
10	37M7070	SCREW	8		
11	R44302	TIE BAND	1		
12	.....	CLIP	3		
13	RE190139	RADIO	1		
	RE190140	RADIO	1		WITH CASETTE
	.....	RADIO	1		WITH COMPACT DISC, (SUB RE227953) (RE190141 NO LONGER AVAILABLE)
14	24M7100	WASHER	1		6.600 X 22 X 2 MM
15	14M7375	FLANGE NUT	1		
16	19H1948	CAP SCREW	4		6.350 X 19.050 MM
17	T180420	BRACKET	1		
18	T182871	ISOLATOR	1		
19	12M7032	LOCK WASHER	1		8.400 MM
20	T180487	BRACKET	1		
21	RE168454	BASE	1		ANTENNA
22	RE61651	SPRING	1		
23	AR104516	ANTENNA	1		
24	**AT306829**	**KIT**	**1**		**WITH WEATHERBAND**
	AT306830	**KIT**	**1**		**WITH CASETTE**
	AT306831	**KIT**	**1**		**WITH COMPACT DISC**
25	AT224893	CONVERTER	1		
26	T133674	SELF-LOCKING SCREW	1		(SUB FOR 21M7292)
27	14M7100	NUT	2		
28	24M7054	WASHER	1		

OUTSIDE MIRROR FOR CAB (SER. NO. -XXXXXX)

T165043 -UN-11FEB03

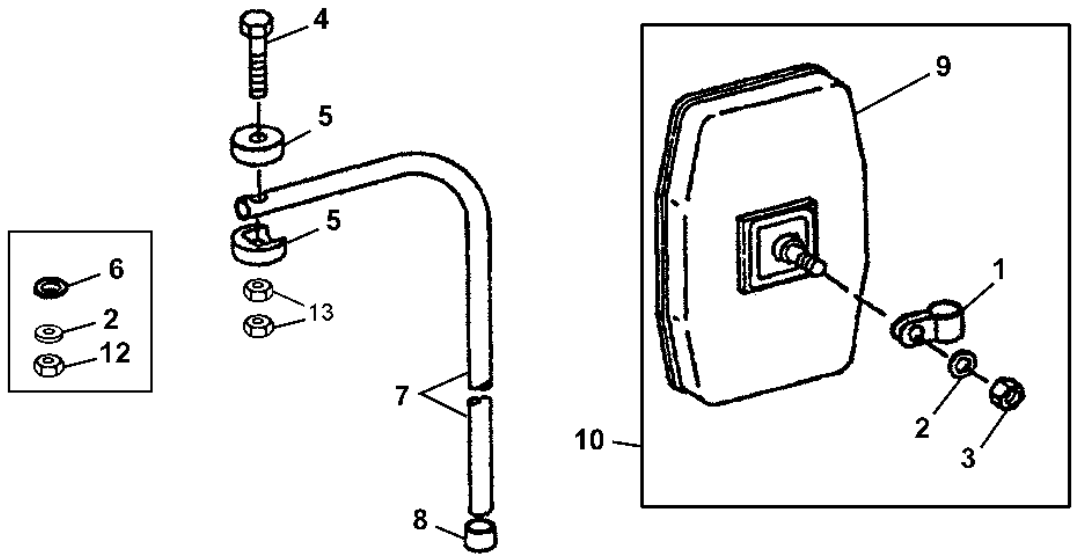

T165043

KEY	PART NO.	PART NAME	QTY	SERIAL NO.	REMARKS
1	T119564	CLAMP	1		
2	24M7239	WASHER	2	-585208	10.700 X 21 X 2.500 MM
	24M7239	WASHER	1	585209-	
3	T11234	LOCK NUT	1		
4	19H2791	CAP SCREW	1		3/8" X 1-3/4"
5	T115030	HALF CLAMP	2		
6	H110232	WASHER	1	-585208	(SUB FOR T60920)
7	T115031	RIB	1		
8	T128437	CAP	1		
9	AT157226	REAR VIEW MIRROR	1		
10	AT103919	REAR VIEW MIRROR	1		
12	U13184	LOCK NUT	1	-585208	3/8"
13	T11234	LOCK NUT	2	585209-	

MEMORANDA

OUTSIDE MIRROR FOR CAB (SER. NO. XXXXXX-)

T212558 -UN-15JUL05

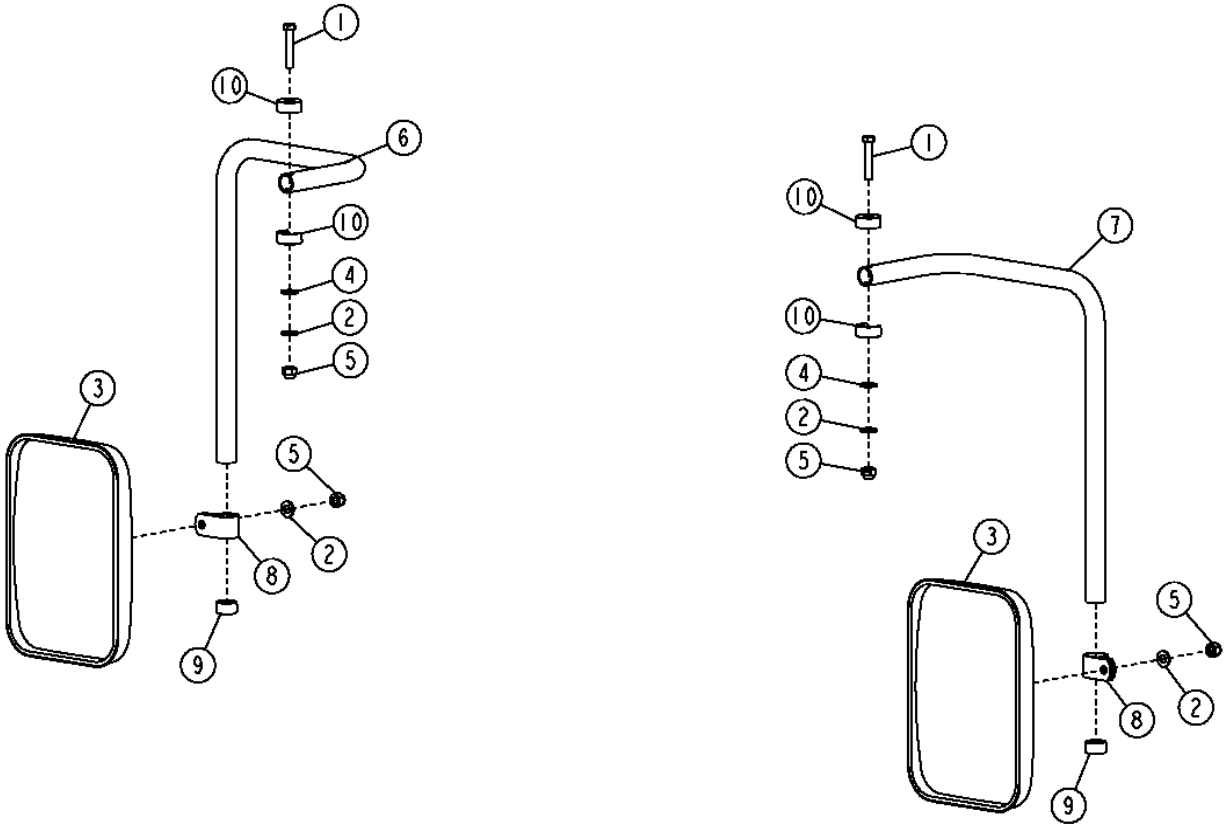

T212558

OUTSIDE MIRROR FOR CAB (SER. NO. XXXXXX-)

KEY	PART NO.	PART NAME	QTY	SERIAL NO.	REMARKS
1	19H3065	CAP SCREW	2		3/8" X 2"
2	24M7239	WASHER	4		10.700 X 21 X 2.500 MM
3	AT157226	REAR VIEW MIRROR	2		
4	H110232	WASHER	2		
5	T11234	LOCK NUT	4		
6	T174054	RIB	1		(LEFT MIRROR)
7	T174106	RIB	1		(RIGHT MIRROR)
8	T174200	CLAMP	2		
9	T174201	CAP	2		
10	T174203	HALF CLAMP	4		

MEMORANDA

INSIDE REAR VIEW MIRROR

TP62771 -UN-23FEB00

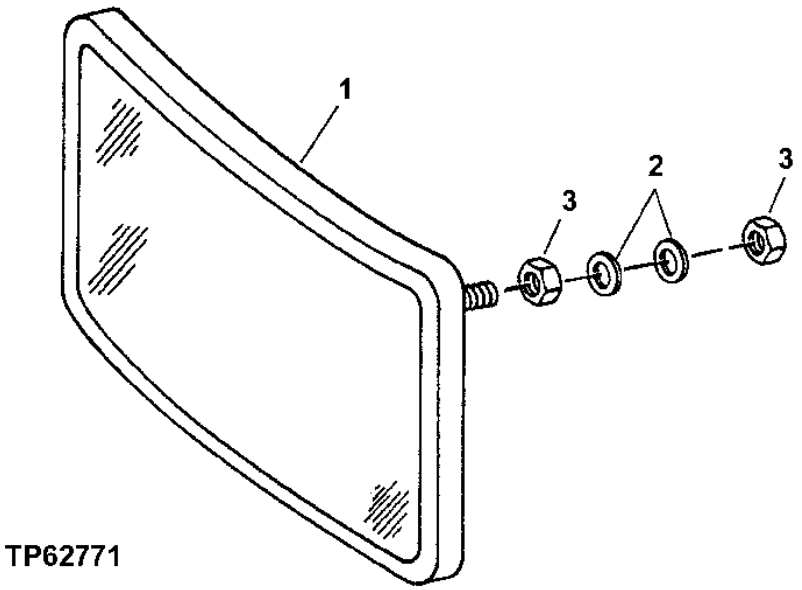

KEY	PART NO.	PART NAME	QTY	SERIAL NO.	REMARKS
1	AT196427	REAR VIEW MIRROR	1		
2	24M7036	WASHER	2		9 X 16 X 1.600 MM
3	14M7273	NUT	2		M8

FIRE EXTINGUISHER AND BRACKET

T155232 -UN-28MAY02

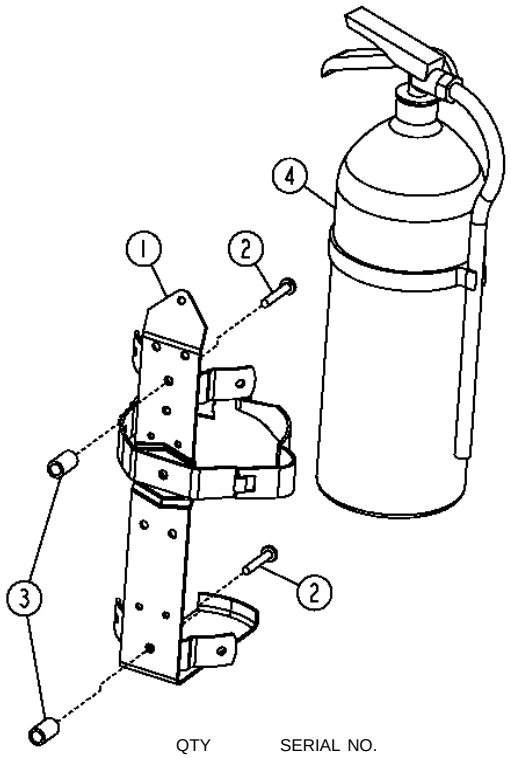

T155232

KEY	PART NO.	PART NAME	QTY	SERIAL NO.	REMARKS
1	AT189390	BRACKET	1		
2	21M7247	SCREW	2		M6 X 35
3	28H3423	BUSHING	2		0.364" X 0.540" X 7/8"
4	AT189487	FIRE EXTINGUISHER	1		

MEMORANDA

HORN

TP60387 -UN-13MAY98

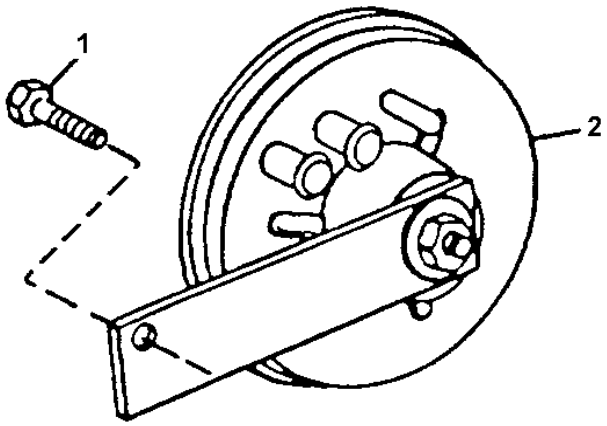

TP60387

KEY	PART NO.	PART NAME	QTY	SERIAL NO.	REMARKS
1	19M7865	SCREW	2	-XXXXXX	M8 X 16
	19M7864	SCREW	2	XXXXXX-	
2	AT226282	HORN	1		(SUB FOR AT64237 AND AT202779) (USE SINGLE NOTE HORN ((1) AT226282) IN REPLACEMENT OF DUAL NOTE HORNS)

MEMORANDA

BACK-UP ALARM

T134335 -UN-10OCT00

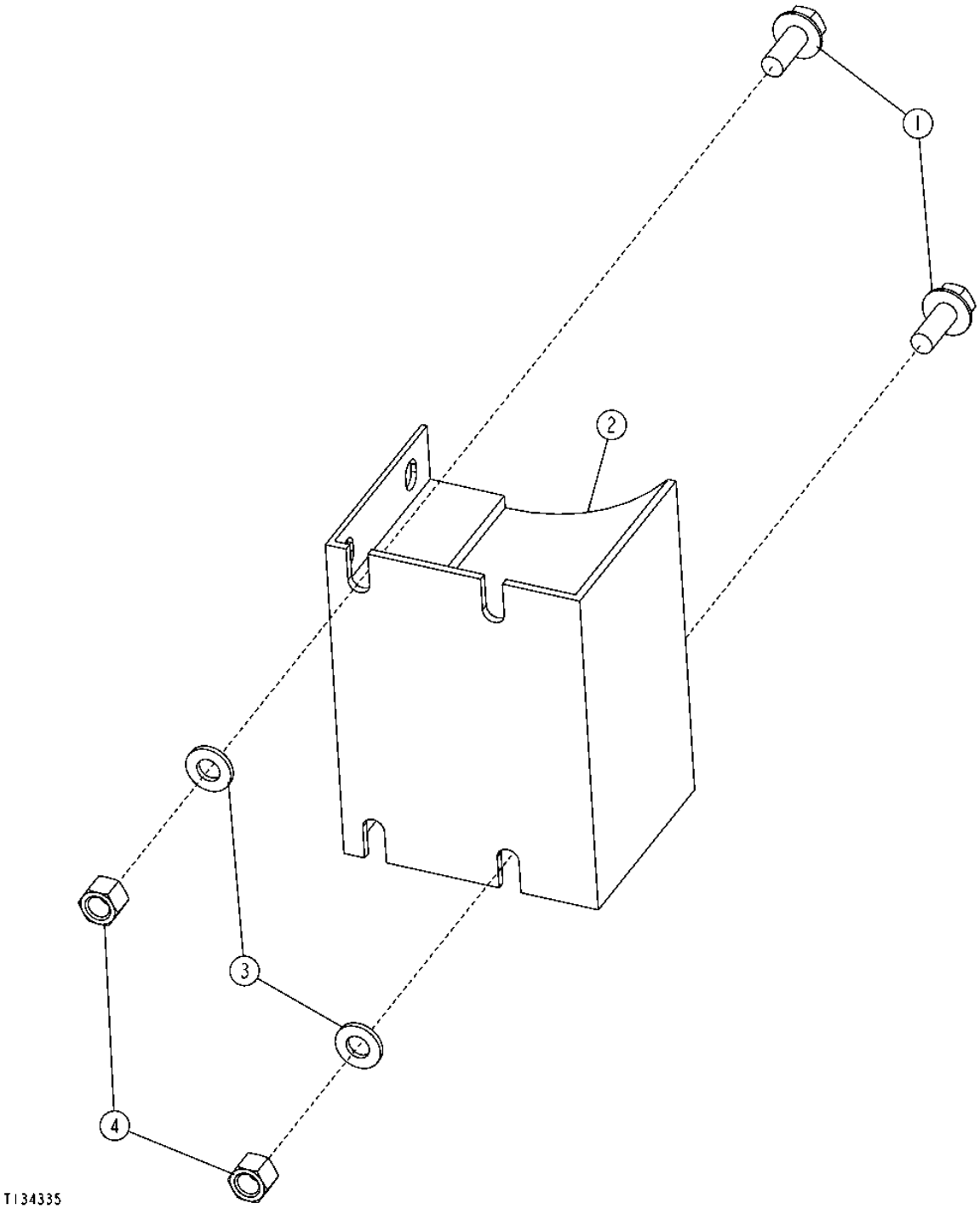

BACK-UP ALARM

KEY	PART NO.	PART NAME	QTY	SERIAL NO.	REMARKS
1	19M7867	SCREW	2		M8 X 25
2	AT120461	TRAVEL WARNING ALARM	1		
3	24M7238	WASHER	2		8.700 X 17 X 2 MM
4	14M7396	LOCK NUT	2		M8

ASH TRAY

TP33786 -UN-01JAN94

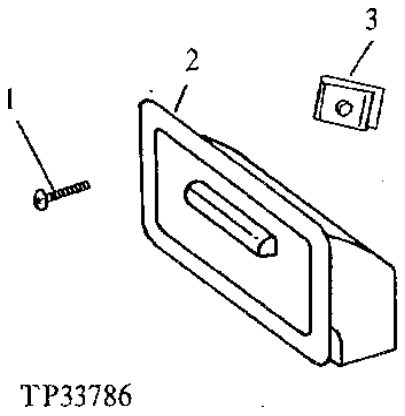

KEY	PART NO.	PART NAME	QTY	SERIAL NO.	REMARKS
1	21H1470	SCREW	2	0.164" X 3/4"	
2	AT59892	ASHTRAY	1		
3	R53528	NUT	2		

MEMORANDA

SUN VISOR

T141042 -UN-09APR01

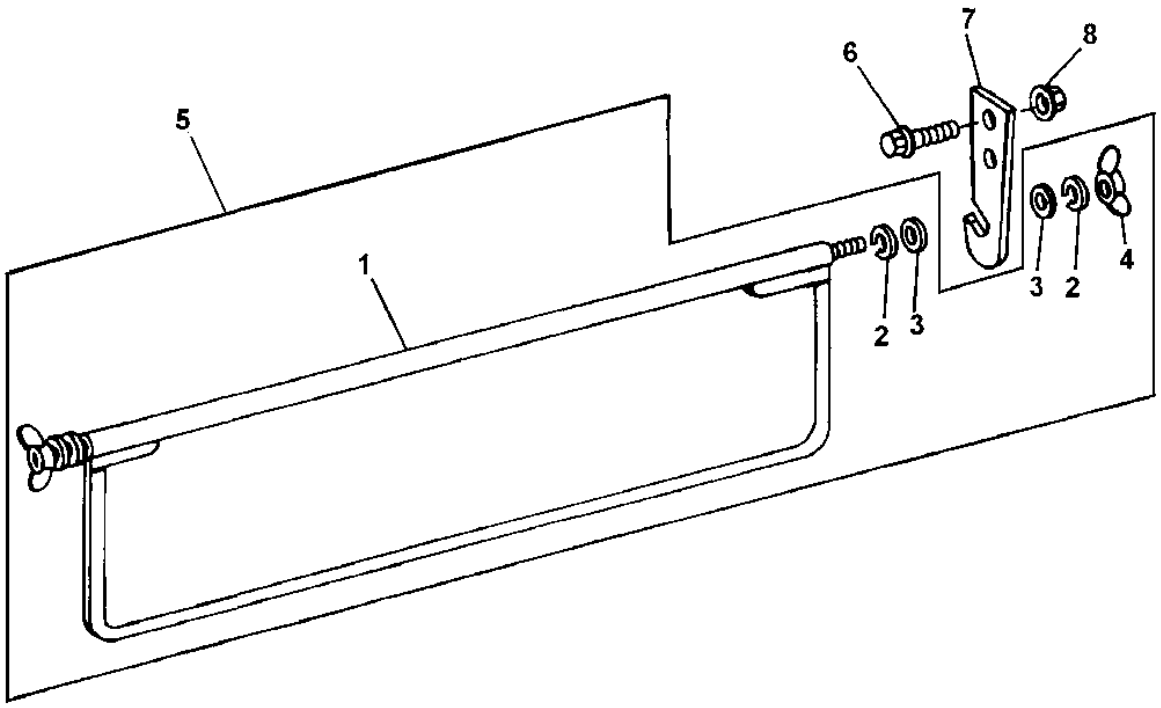

KEY	PART NO. T141042	PART NAME	QTY	SERIAL NO.	REMARKS
1	.....	SUN VISOR	1		(SUB AT217448)
2	24H1285	WASHER	4		17/64" X 7/16" X 0.065"
3	N218377	WASHER	4		
4	M47887	WING NUT	2		
5	AT217448	SUN VISOR	1		
6	19M7862	SCREW	2		M6 X 20
7	T181797	BRACKET	2		
8	14M7303	FLANGE NUT	2		M6

MEMORANDA

SLOW MOVING VEHICLE EMBLEM

T193231 -UN-07AUG03

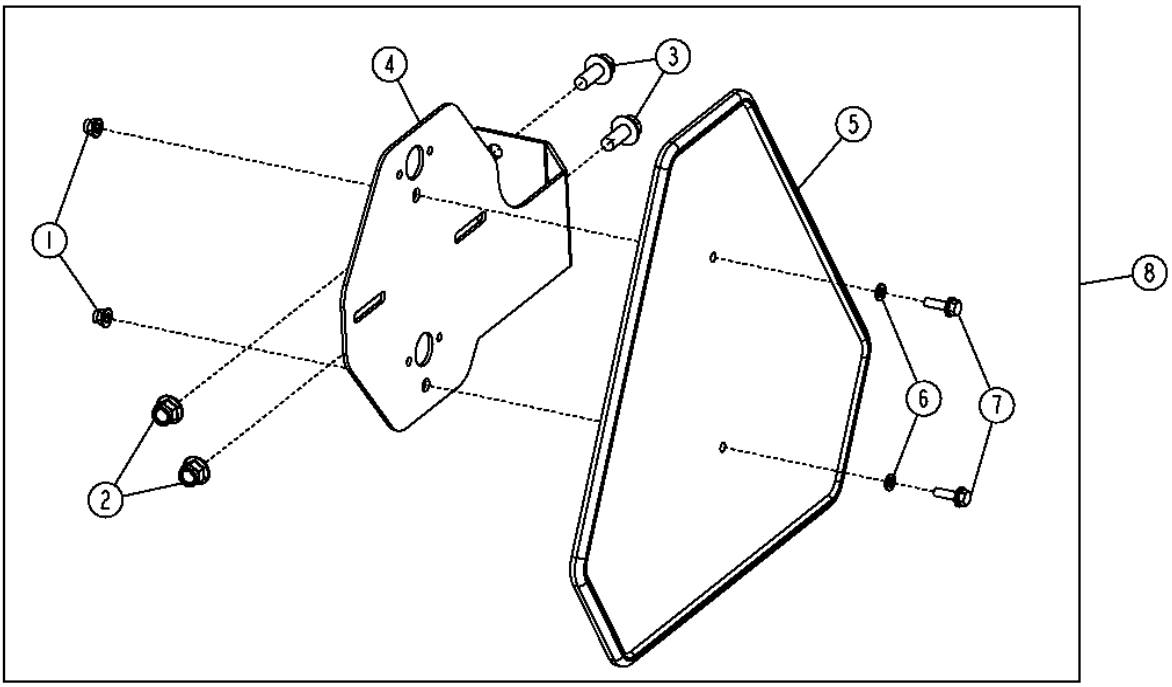

T193231

SLOW MOVING VEHICLE EMBLEM

KEY	PART NO.	PART NAME	QTY	SERIAL NO.	REMARKS
1	14M7397	LOCK NUT	2		M6
2	14M7400	LOCK NUT	2		M10
3	19M7785	SCREW	2		M10 X 25
4	T156693	BRACKET	1		
5	JD5929	SMV EMBLEM	1		
6	24M7088	WASHER	2		6.600 X 12 X 1.600 MM
7	19M7862	SCREW	2		M6 X 20
8	AT206923	SMV EMBLEM	1		

PRIORITY VALVE

TP55846 -UN-24FEB98

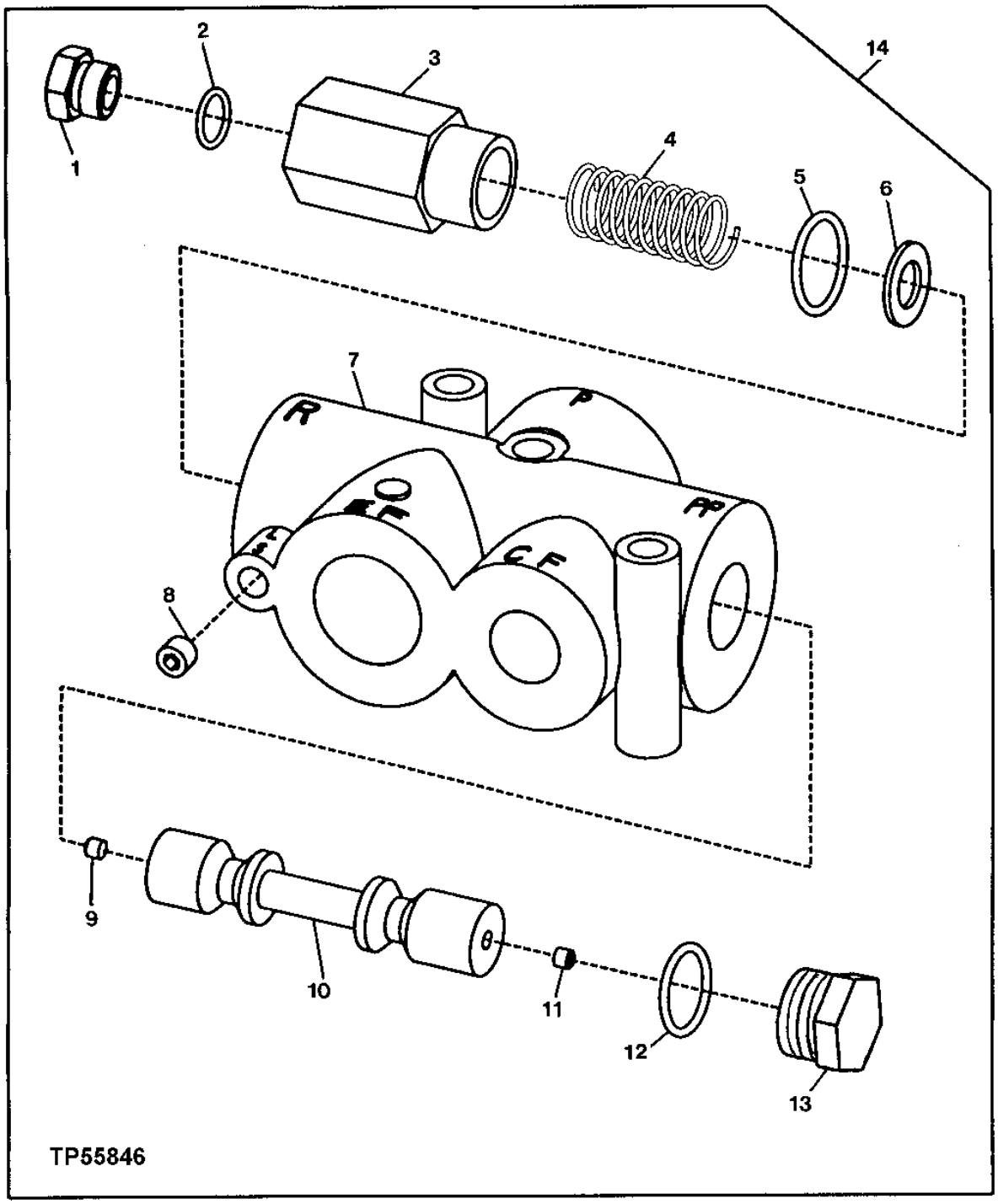

PRIORITY VALVE

KEY	PART NO.	PART NAME	QTY	SERIAL NO.	REMARKS
1	R39112	FITTING	1		
2	R26375	O-RING	1		
3	T101575	HOUSING	1		
4	T101572	COMPRESSION SPRING	1		
5	R29936	O-RING	1		
6	M46653	THRUST WASHER	1		
7	.....	HOUSING	1		
8	T107255	ORIFICE	1		
9	T101571	ORIFICE	1		
10	.....	SPOOL	1		
11	T107239	ORIFICE	1		
12	U17409	O-RING	1		
13	T54922	FITTING PLUG	1		
14	AT202830	FLOW CONTROL HYD. VALVE	1		

PRIORITY VALVE FITTINGS

T158208 -UN-12AUG02

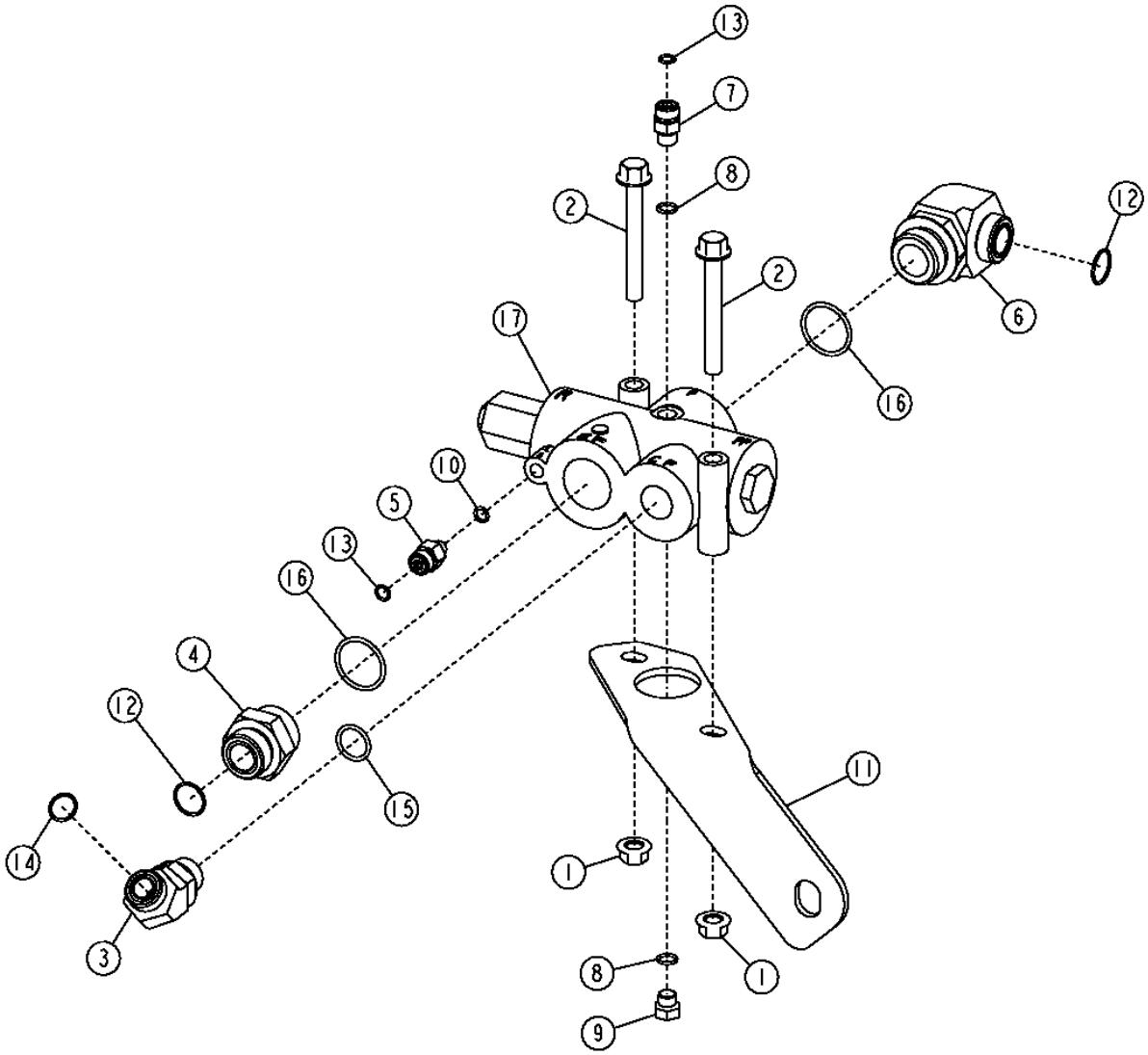

T158208

PRIORITY VALVE FITTINGS

KEY	PART NO.	PART NAME	QTY	SERIAL NO.	REMARKS
1	14M7299	FLANGE NUT	2		M12
2	19M7820	SCREW	2		
3	38H1048	ELBOW FITTING	1		
4	38H1180	ADAPTER	1		
5	38H1309	ADAPTER	1		
6	38H1325	ELBOW FITTING	1		
7	AT81867	CHECK VALVE	1		
8	R26448	O-RING	2		
9	R27218	FITTING PLUG	1		
10	R28782	O-RING	1		
11	T156544	BRACKET	1		
12	T76938	O-RING	2		
13	T77613	O-RING	2		
14	T77858	O-RING	1		
15	U12547	O-RING	1		
16	U13639	O-RING	2		
17	AT202830	FLOW CONTROL HYD. VALVE	1		

MAIN HYDRAULIC LINES

T202317 -UN-23AUG04

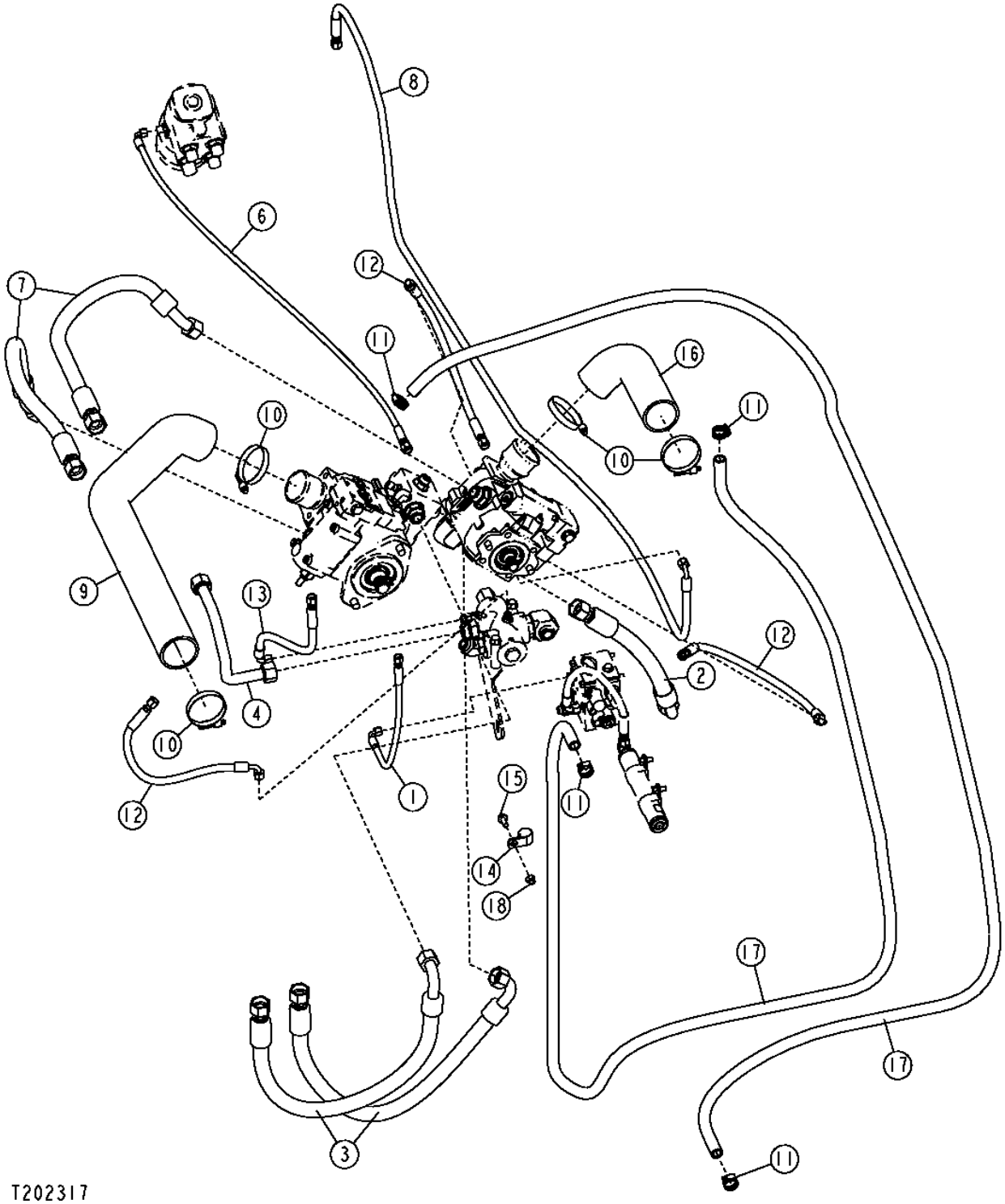

MAIN HYDRAULIC LINES

KEY	PART NO.	PART NAME	QTY	SERIAL NO.	REMARKS
1	AT133530	HYDRAULIC HOSE - FABRICATE	1	-590067	PRESSURE REDUCING VALVE TO RESERVOIR
	AT169886	HYDRAULIC HOSE - FABRICATE	1	590068-	PRESSURE REDUCING VALVE TO RESERVOIR
2	AT202112	HYDRAULIC HOSE - FABRICATE	1		STEERING PUMP TO PRIORITY VALVE
3	AT203077	HYDRAULIC HOSE - FABRICATE	2		MAIN PUMP TO FILTER & MAIN PUMP FROM FILTER
4	AT203144	OIL LINE	1		MAIN PUMP TO PRIORITY
6	AT203179	HYDRAULIC HOSE - FABRICATE	1		STEERING PUMP TO STEERING VALVE
7	AT203315	HYDRAULIC HOSE - FABRICATE	2		RESERVOIR TO MAIN PUMP & RESERVOIR TO STEERING PUMP
8	AT207094	HYDRAULIC HOSE - FABRICATE	1		STEERING PUMP TO CONTROL VALVE
9	AT207384	SUCTION HOSE	1		MAIN PUMP TO RESERVOIR
10	RE52702	CLAMP	4		
11	TY22467	CLAMP	4		(SUB FOR AT79195)
12	AT81931	HYDRAULIC HOSE - FABRICATE	3		MAIN PUMP TO PRIORITY, MAIN PUMP TO STEERING PUMP, STEERING PUMP TO PRIORITY,
13	AT167553	HYDRAULIC HOSE - FABRICATE	1		STEERING PUMP TO PRESSURE REDUCING VALVE
14	R46667	CLAMP	1		
15	19M7785	SCREW	1		
16	T156289	HOSE	1		STEERING PUMP TO RESERVOIR
17	.....	BULK HOSE	1		OIL COOLER TO FILTER, OIL COOLER TO RESERVOIR (MAKE FROM T148181 BULK MATERIAL, CUT TO LENGTH)
18	14M7400	LOCK NUT	1		

MEMORANDA

BUCKET AUXILIARY CUTTING EDGE

TP55659 -UN-15SEP97

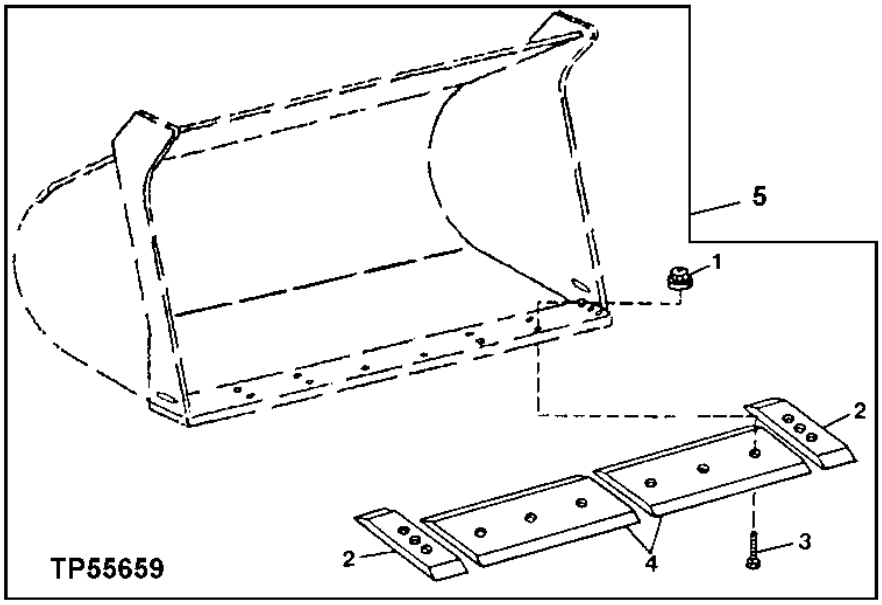

KEY	PART NO.	PART NAME	QTY	SERIAL NO.	REMARKS
1	14H824	NUT	12		1-1/4"
2	AT139622	CUTTING EDGE	2		
3	T79002	BOLT	12		
4	T156530	CUTTING EDGE	2		
	T209349	CUTTING EDGE	2		(HEAVY DUTY)
5	**AT206890**	**FIELD INSTALLATION KIT**	**1**		**(WHOLEGOODS) (FOR 6 YD AND 6.75 YD BUCKETS)**
	AT314301	**FIELD INSTALLATION KIT**	**1**		**(WHOLEGOODS) (FOR 6 YD AND 6.75 YD BUCKETS) (HEAVY DUTY)**

LOADER BUCKETS, BUCKET PINS AND CUTTING EDGE (WELD-ON SPILLGUARD)

T201708 -UN-22JUL04

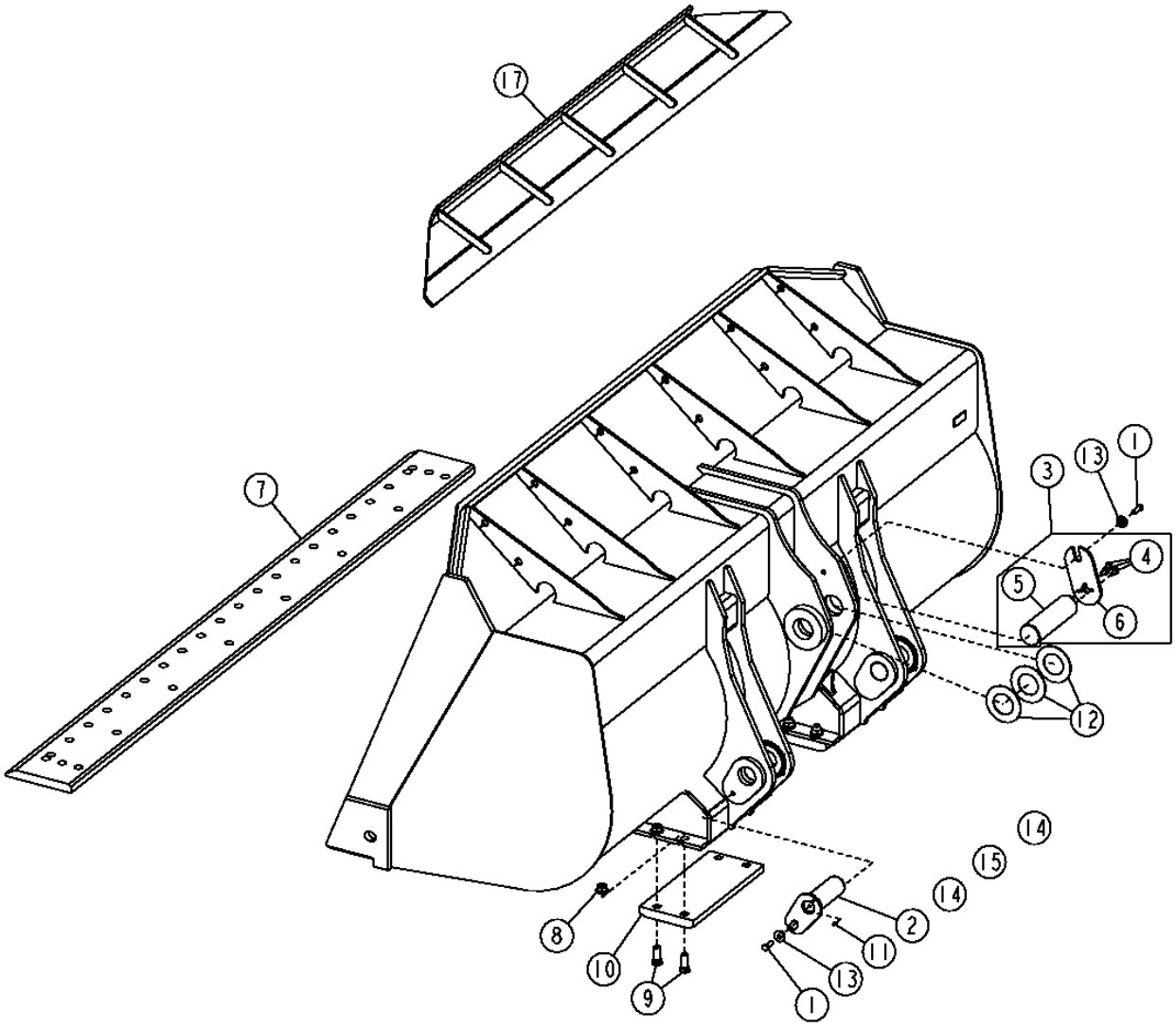

T201708

LOADER BUCKETS, BUCKET PINS AND CUTTING EDGE
(WELD-ON SPILLGUARD)

KEY	PART NO.	PART NAME	QTY	SERIAL NO.	REMARKS
1	19M7489	CAP SCREW	3		M16 X 45
2	AT206731	PIN FASTENER	2		
3	AT223926	PIN	1		
4	19M7789	SCREW	3		M12 X 30
5	.....	PIN	1		(T180595 NO LONGER AVAILABLE)
6	T180931	PLATE	1		
7	T156262	CUTTING EDGE	1		
8	T146932	NUT	8		
9	T146933	BOLT	8		
10	T156079	SHOE	2		
11	JD7759	LUBRICATION FITTING	2		
12	T101480	WASHER	3		
13	T176064	BUSHING	3		
14	T198213	WASHER	4		(2.5MM)
	T198214	WASHER	4		(2MM)
15	AT228893	RING	4		(INCLUDES 24M7027) (INCLUDES O-RING, CAP SCREWS, LOCK NUTS, AND WASHERS)
	24M7027	WASHER	8		5.300 X 10 X 1 MM, (FOR USE WITH AT228894)
17	**AT206671**	**PLATE**	**1**		**(SPILLGUARD) (WHOLEGOODS)**

LOADER BUCKETS, BUCKET PINS AND CUTTING EDGE (BOLT-ON SPILLGUARD)

T212721 -UN-15JUL05

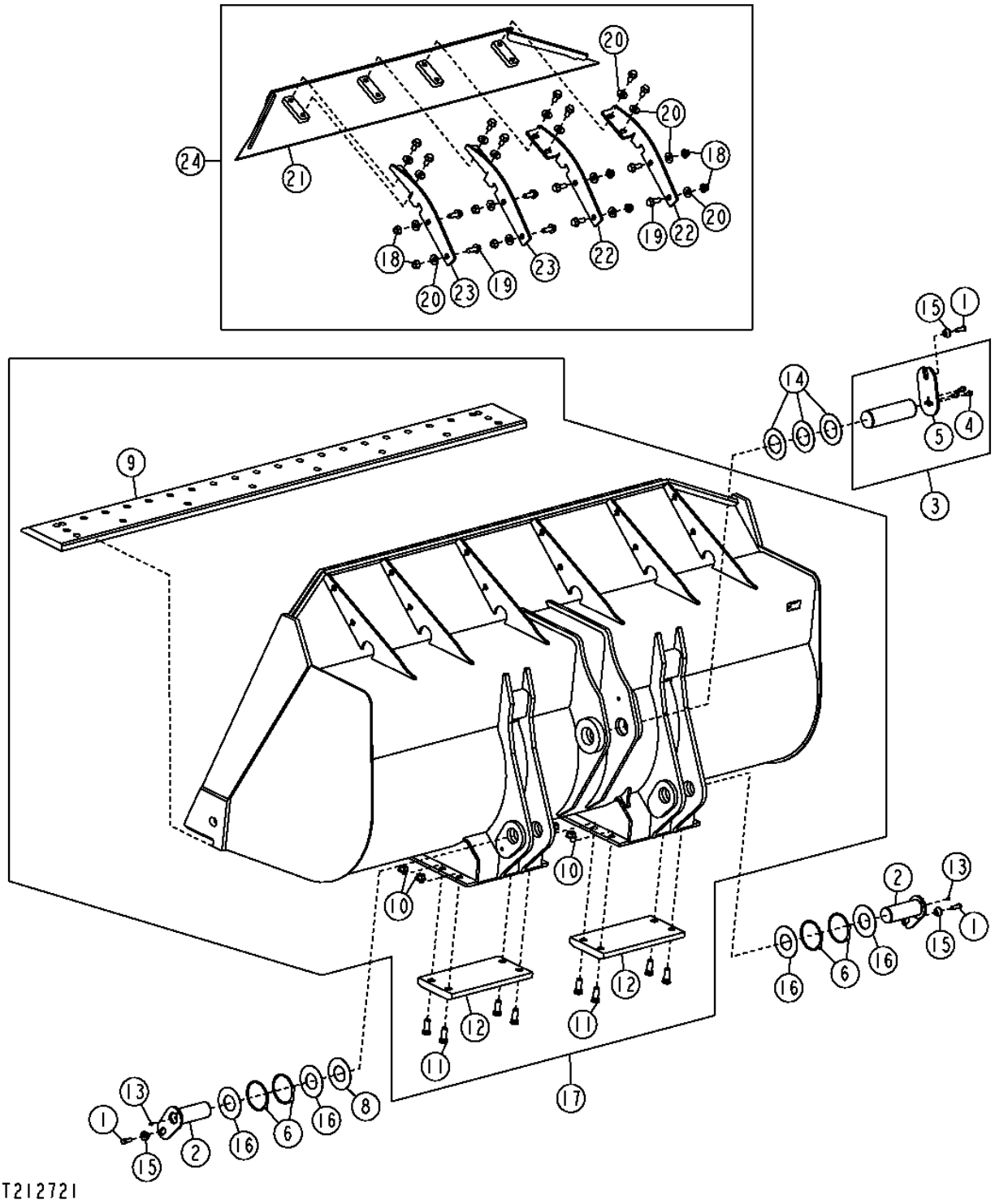

LOADER BUCKETS,BUCKET PINS AND CUTTING EDGE (BOLT-ON SPILLGUARD)

KEY	PART NO.	PART NAME	QTY	SERIAL NO.	REMARKS
1	19M7489	CAP SCREW	3		M16 X 45
2	AT206731	PIN FASTENER	2		
3	AT223926	PIN	1		
4	19M7789	SCREW	3		M12 X 30
5	T180931	PLATE	1		
6	AT228893	RING	1		(INCLUDES 24M7027) (INCLUDES O-RING, CAP SCREWS, LOCK NUTS, AND WASHERS)
	24M7027	WASHER	1		0.209" X 0.394" X 0.039", (FOR USE WITH AT228893)
8	T198214	WASHER	1		3.169" X 6.496" X 0.079", (2 MM)
9	T156262	CUTTING EDGE	1		
10	T146932	NUT	8		1"
11	T146933	BOLT	8		1" X 3"
12	T156079	SHOE	2		
13	JD7759	LUBRICATION FITTING	2		
14	T101480	WASHER	3		
15	T176064	BUSHING	3		
16	T198213	WASHER	4		(2.5 MM)
17	**AT305065**	**LOADER BUCKET**	**1**		**(6 YD) (CONVENIENCE ASSEMBLY)**
	AT317819	**LOADER BUCKET**	**1**		**(6.75 YD) (CONVENIENCE ASSEMBLY)**
18	14M7300	FLANGE NUT	8		M20
19	19M7795	SCREW	8		M20 X 55
20	24M7365	WASHER	16		21 X 50 X 6 MM
21	AT309139	SPILL SHEET	1		
22	T207204	STRAP	2		
23	T207205	STRAP	2		
24	**AT309138**	**SPILL SHEET**	**1**		**(WHOLEGOODS)**

LOADER BUCKET TEETH, SHANKS AND SEGMENTS

TP55858 -UN-09FEB98

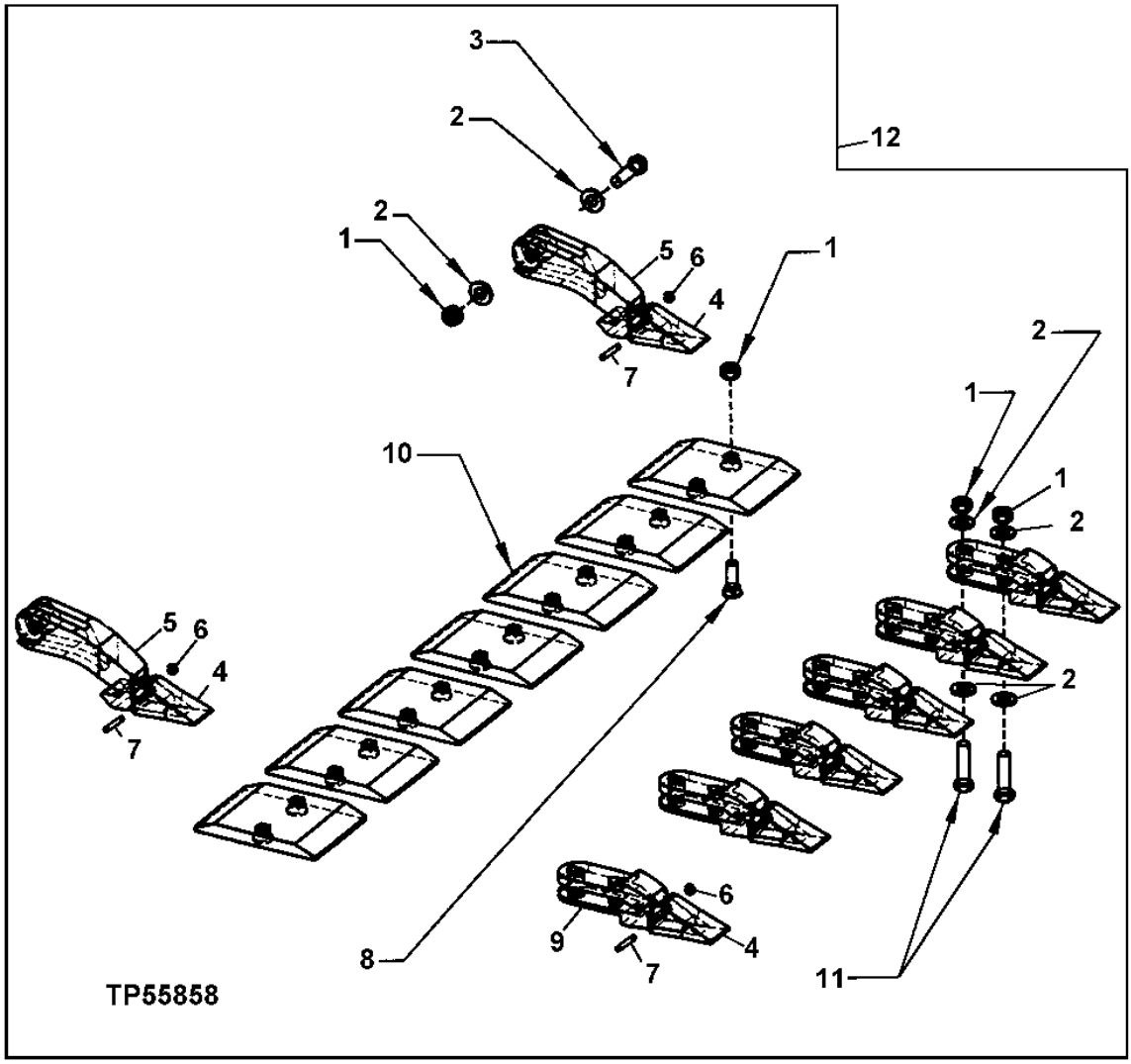

LOADER BUCKET TEETH, SHANKS AND SEGMENTS

KEY	PART NO.	PART NAME	QTY	SERIAL NO.	REMARKS
1	14H824	NUT	28		1-1/4"
2	T79096	WASHER	28		
3	08H4814	BOLT	2		1-1/4" X 4-1/2"
4	TF33L	TOOTH	8		
5	T79006	BUCKET TOOTH ADAPTER	2		
6	T3G9609	WASHER	8		
7	T9J2308	PIN FASTENER	8		
8	T79002	BOLT	14		PLOW
9	T123077	BUCKET TOOTH ADAPTER	6		
10	T156132	CUTTING EDGE	7		
11	08H4815	BOLT	12		1-1/4" X 5"
12	**AT206891**	**TOOTH**	**1**		**(WHOLEGOODS) (FOR 6 YD AND 6.75 YD BUCKETS)**

LOADER BUCKET, JAGZ CUTTING EDGES

T189247 -UN-04APR03

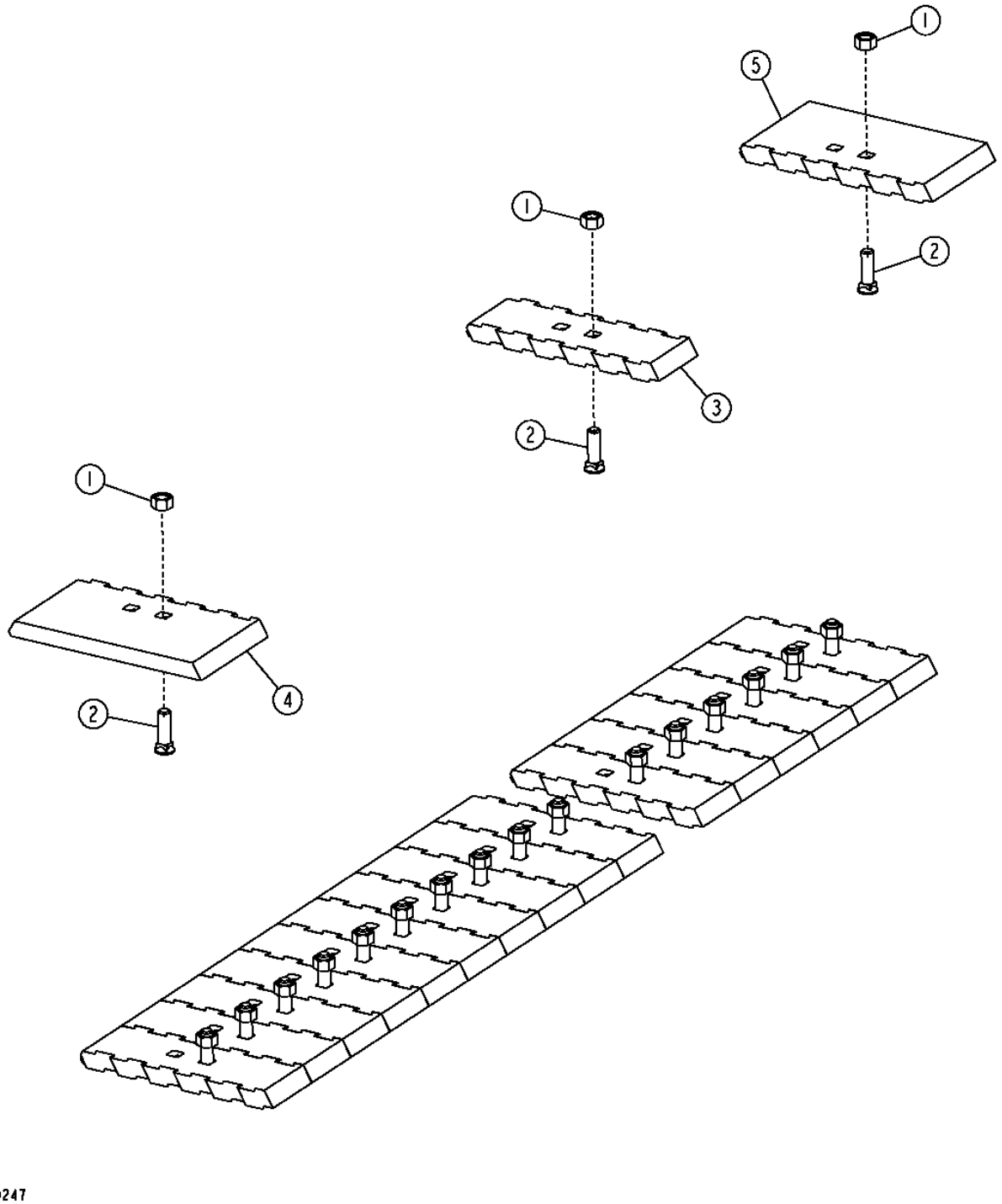

LOADER BUCKET, JAGZ CUTTING EDGES

KEY	PART NO.	PART NAME	QTY	SERIAL NO.	REMARKS
1	14H1048	NUT	20		
2	T101941	BOLT	20		
3	T835100	CUTTING EDGE	18		
4	T835107	CUTTING EDGE	1		
5	T835108	CUTTING EDGE	1		

LOADER BUCKETS LESS PINS

T158339 -UN-13AUG02

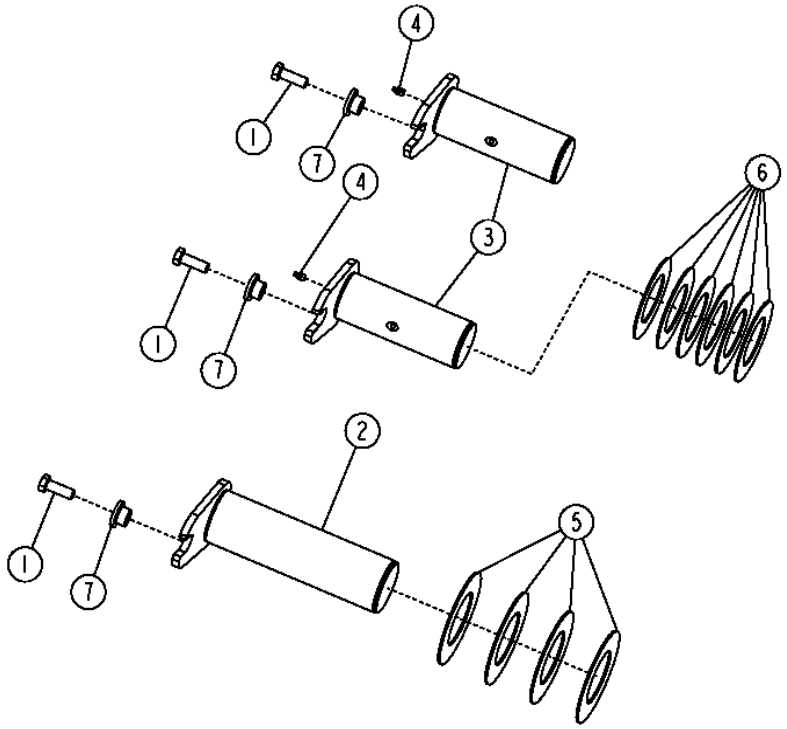

KEY	PART NO.	PART NAME	QTY	SERIAL NO.	REMARKS
1	19M7489	CAP SCREW	3		
2	AT202724	PIN	1		
3	AT206731	PIN FASTENER	2		
4	JD7759	LUBRICATION FITTING	2		
5	T101480	WASHER	4		
6	T171734	WASHER	6		
7	T176064	BUSHING	3		

BOOM CYINDER LOCK

TP60625 -UN-10MAR99

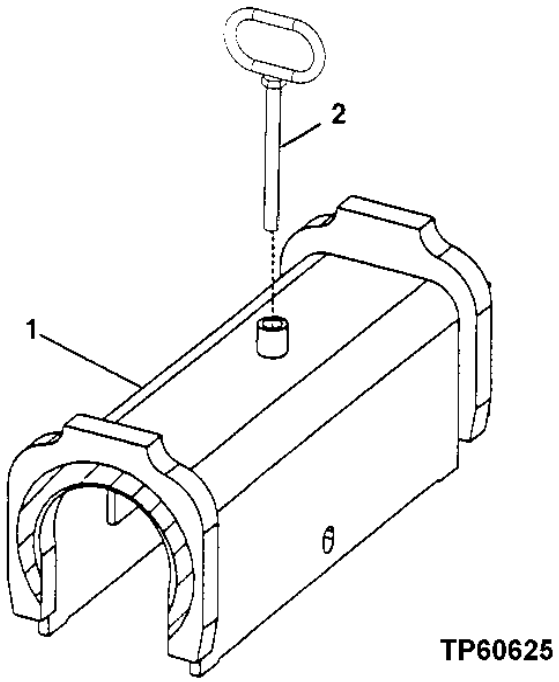

KEY	PART NO.	PART NAME	QTY	SERIAL NO.	REMARKS
1	AT225824	LOCK	1		(INCLUDES (2) T182191)
2	AT207287	HANDLE	1		

LOADER FRAME

T157458 -UN-12SEP02

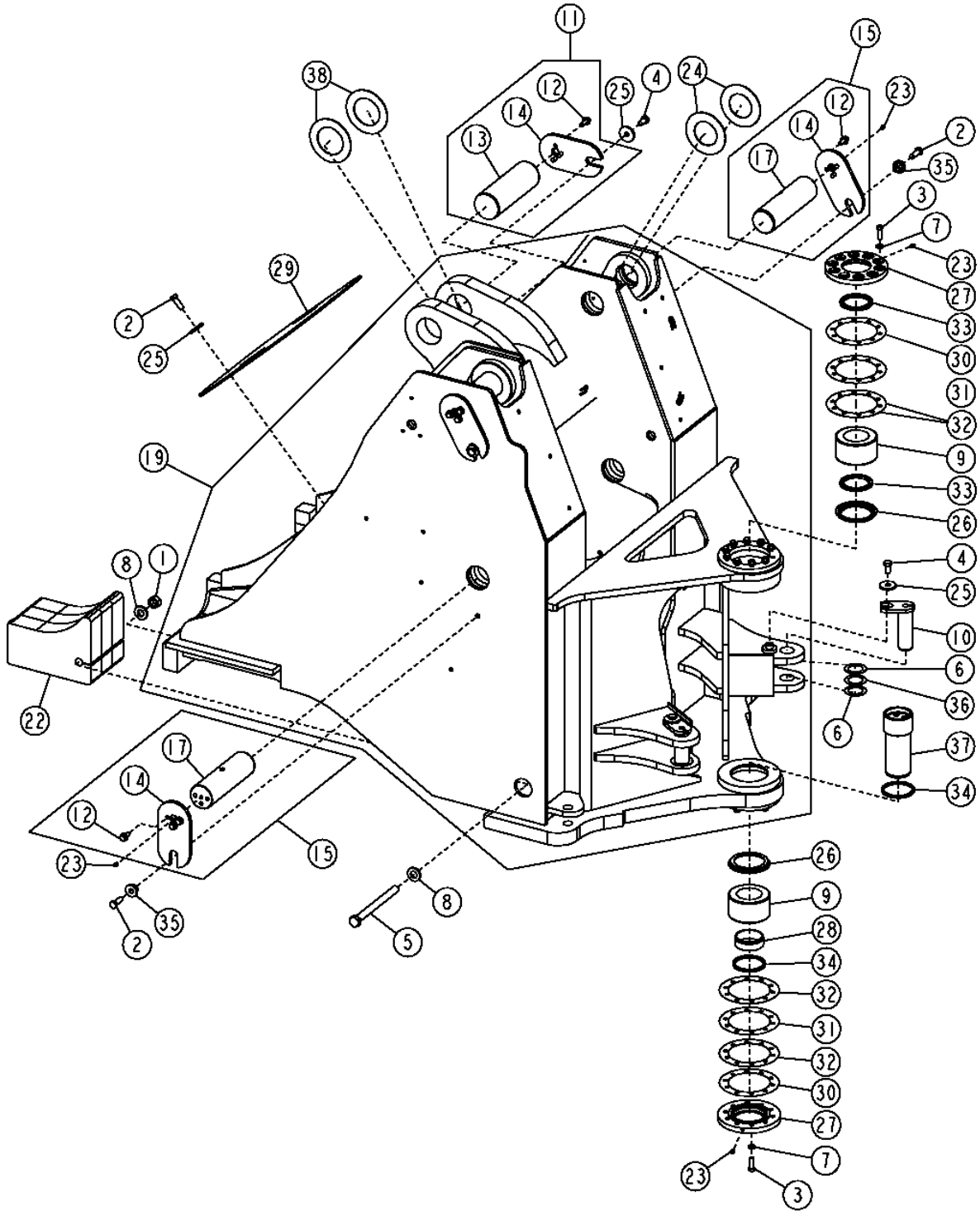

LOADER FRAME

KEY	PART NO.	PART NAME	QTY	SERIAL NO.	REMARKS
1	14M7278	NUT	2		M24
2	19M7489	CAP SCREW	8		M16 X 45
3	19M7493	CAP SCREW	20	-588394	M12 X 40
	19M7496	CAP SCREW	20	588395-	M12 X 45
4	19M8029	CAP SCREW	3		M16 X 30
5	19M8791	SCREW	2		M24 X 280
6	24H1595	WASHER	4		2-1/16" X 3" X 0.075"
7	24M7240	WASHER	20		13 X 25 X 3 MM
8	24M7243	WASHER	4		25.400 X 50 X 6 MM
9	AT202609	BEARING	2		
10	AT202897	PIN	2		
11	AT223927	PIN	1		
12	19M7789	SCREW	3		M12 X 30
13	.....	PIN	1		(T180597 NO LONGER AVAILABLE) (SUB AT223927)
14	T180931	PLATE	2		
15	AT223929	PIN	4		
17	.....	PIN	1		(T180592 NO LONGER AVAILABLE) (SUB AT223929)
19	AT225580	FRAME	1		
22	AT225585	COUNTERWEIGHT	2		
23	JD7759	LUBRICATION FITTING	6		
24	T101480	WASHER	4		
25	T146246	WASHER	7		
26	T156027	SPACER	2		
27	.....	COVER	2	-588394	(SUB (2) T200887 AND (20) 19M7496) (T156172 NO LONGER AVAILABLE)
	T200887	COVER	2	588395-	
28	T156174	LOCKING COLLAR	1		
29	T156190	COVER	1		
30	T156709	SHIM	2		
31	T156710	SHIM	2		
32	T156711	SHIM	4		
33	T156926	SEAL	2		
34	T156927	SEAL	2		
35	T176064	BUSHING	4		
36	T176928	WASHER	2		
37	T182260	PIN FASTENER	1		
38	T54188	THRUST WASHER	2		

MEMORANDA

LOADER BOOM

T158052 -UN-30JUL02

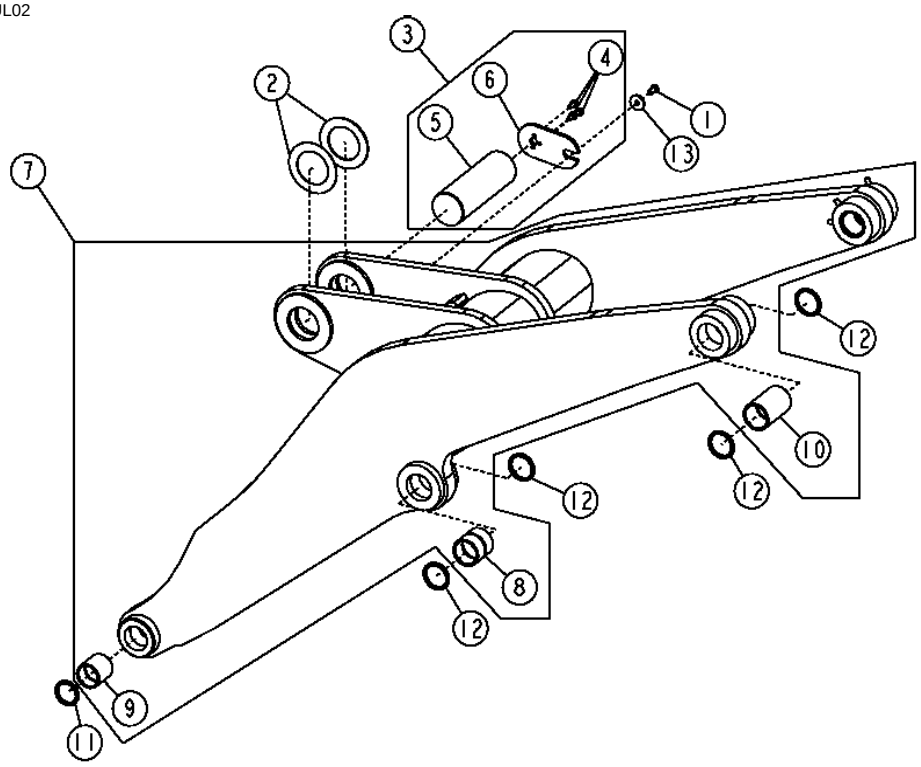

T158052

KEY	PART NO.	PART NAME	QTY	SERIAL NO.	REMARKS
1	19M8029	CAP SCREW	1		M16 X 30
2	AT137753	WASHER	3		BOOM
3	AT223928	PIN	1		STANDARD
4	19M7789	SCREW	3		M12 X 30
5	.....	PIN	1		(T180598 NO LONGER AVAILABLE)
6	T180931	PLATE	1		
7	**AT309442**	**LOADER BOOM**	**1**		**(CONVENIENCE ASSEMBLY) (SUB FOR AT224009)**
	AT308268	**LOADER BOOM**	**1**		**(CONVENIENCE ASSEMBLY) (HIGH LIFT)**
8	R85556	BUSHING	2		
9	T156059	BUSHING	2		
10	T156060	BUSHING	2		
11	T102137	SEAL	4		
12	T102138	SEAL	8		
13	T146246	WASHER	1		
14	T210796	LABEL	2		(SUB FOR (2) T179464) (NOT ILLUSTRATED)(HIGH LIFT ONLY)

LOADER LINKAGE

T158358 -UN-13AUG02

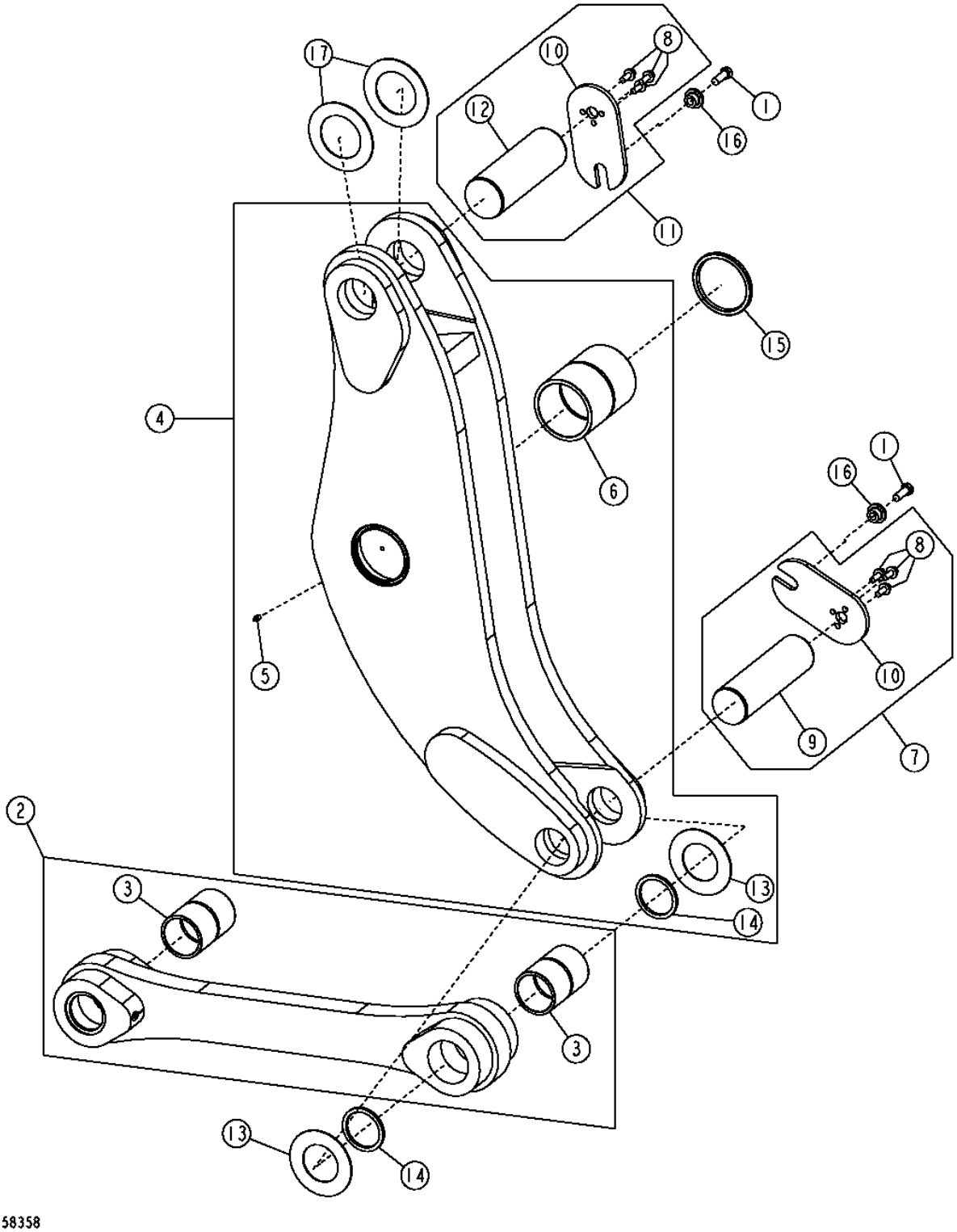

LOADER LINKAGE

KEY	PART NO.	PART NAME	QTY	SERIAL NO.	REMARKS
1	19M7489	CAP SCREW	2		M16 X 45
2	AT203478	LINK	1	-590067	(YELLOW)
	AT307563	LINK	1	590068-	(CHARCOAL)
	AT308566	LINK	1	590068-	(CHARCOAL)(HIGH LIFT ONLY)
3	T156346	BUSHING	2		
4	AT220380	BELLCRANK	1	-590067	(YELLOW)
	AT307558	BELLCRANK	1	590068-	(CHARCOAL)
5	JD7759	LUBRICATION FITTING	1		
6	T156278	BUSHING	1		
7	AT223926	PIN	1		
8	19M7789	SCREW	6		M12 X 30
9	.....	PIN	1		(T180595 NO LONGER AVAILABLE)
10	T180931	PLATE	2		
11	AT223927	PIN	1		
12	.....	PIN	1		(T180597 NO LONGER AVAILABLE)
13	T101480	WASHER	2		
14	T102138	SEAL	4		
15	T156473	SEAL	2		
16	T176064	BUSHING	2		
17	T54188	THRUST WASHER	2		

IN DISCONNECT VALVE, WIRING HARNESS, AND HYDRAULIC PLUMBING(SERIAL NO. -590067)

T157971 -UN-27AUG02

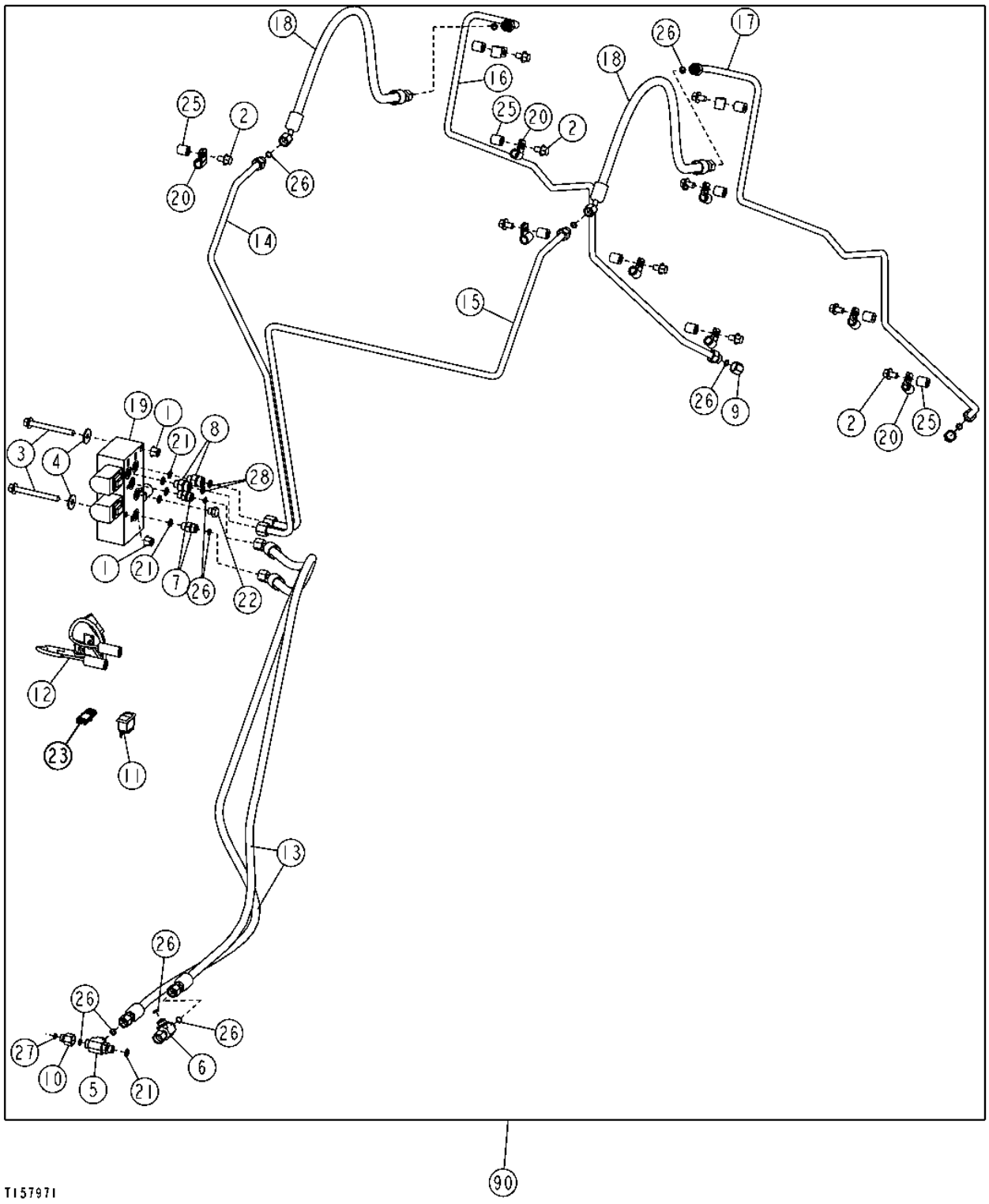

PIN DISCONNECT VALVE, WIRING HARNESS, AND HYDRAULIC PLUMBING(SERIAL NO. -590067)

KEY	PART NO.	PART NAME	QTY	SERIAL NO.	REMARKS
1	14M7400	LOCK NUT	2		M10
2	19M7784	SCREW	10		M10 X 20, (SUB FOR 19M7783)
3	19M7812	SCREW	2		M10 X 100
4	24M7296	WASHER	2		10.500 X 30 X 2.500 MM
5	38H1023	TEE FITTING	1		
6	38H1030	TEE FITTING	1		
7	38H1160	ADAPTER	2		
8	38H1173	ADAPTER	2		
9	38H1415	FITTING	2		
10	38H1480	REDUCER	1		
11	AT225952	SWITCH	1		(SUB FOR AT202805, THIS APPLICATION)
12	AT202824	WIRING HARNESS	1		
13	AT207096	HYDRAULIC HOSE - FABRICATE	1		
14	AT208762	OIL LINE	1		
15	AT208763	OIL LINE	1		
16	AT208999	OIL LINE	1		
17	AT209000	OIL LINE	1		
18	AT210667	HYDRAULIC HOSE - FABRICATE	1		
19	AT220192	HYD ACTUATED CONTROL VALVE	1		(SERVICE PARTS LISTED ON SEPARATE PAGE)
20	H75541	CLAMP	10		
21	R26448	O-RING	6		
22	R27218	FITTING PLUG	1		
23	R78053	ELECTRICAL CONNECTOR ASSY	1		
25	T72414	BUSHING	10		
26	T77613	O-RING	12		
27	T77814	O-RING	1		
28	T77857	O-RING	2		
90	.....	KIT	1		(AT206683 NO LONGER AVAILABLE) (FURNISH COMPONENTS) (PIN DISCONNECT PLUMBING, VALVE, AND HARNESS)

PIN DISCONNECT VALVE, WIRING HARNESS, AND HYDRAULIC PLUMBING (SERIAL NO. 590068-)

T201799 -UN-28JUL04

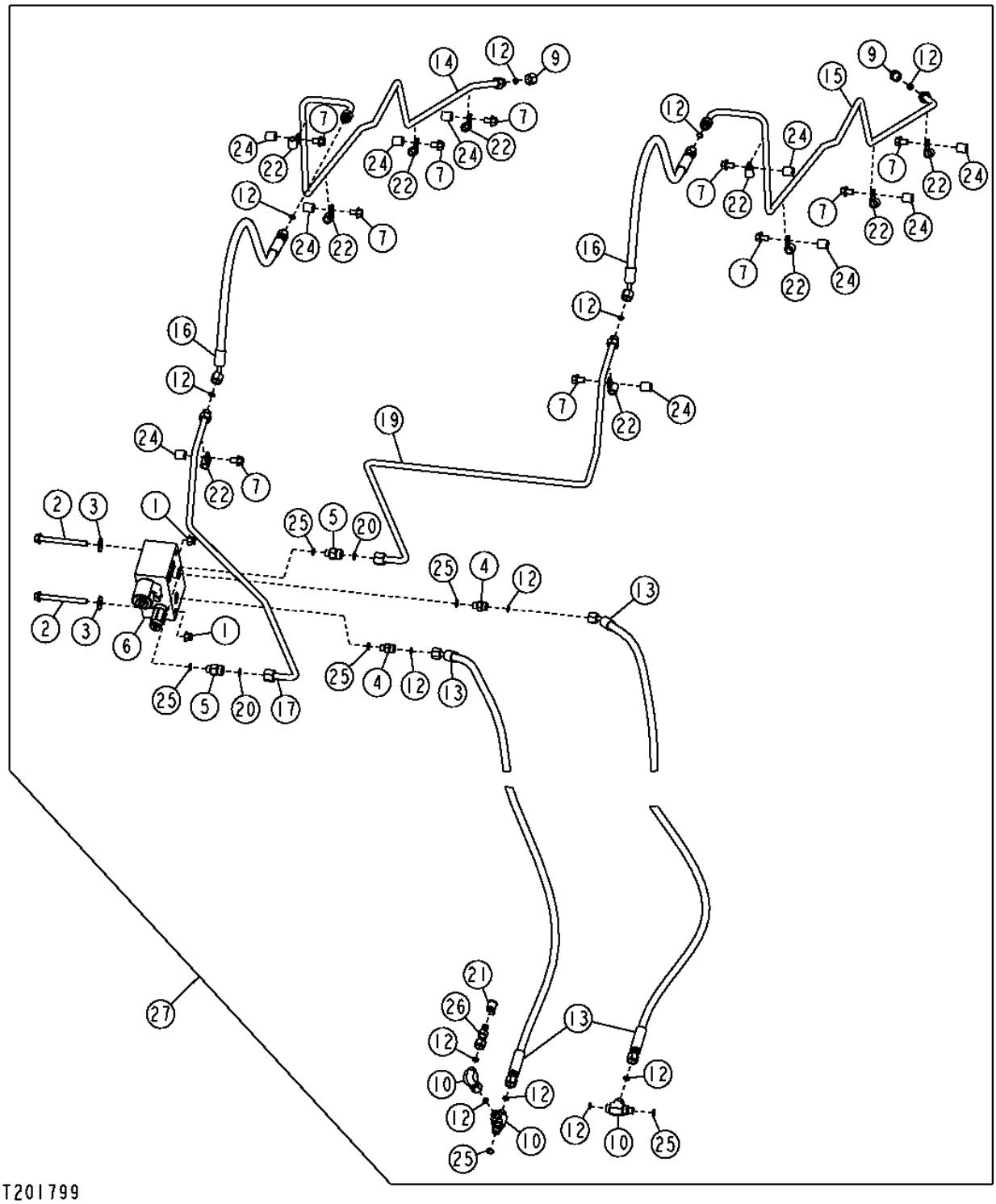

THIS PARTS LISTING IS CONTINUED

PIN DISCONNECT VALVE, WIRING HARNESS, AND HYDRAULIC PLUMBING (SERIAL NO. 590068-)

KEY	PART NO.	PART NAME	QTY	SERIAL NO.	REMARKS
1	14M7400	LOCK NUT	2		M10
2	19M7836	SCREW	2		M10 X 110
3	24M7296	WASHER	2		10.500 X 30 X 2.500 MM
4	38H1160	ADAPTER	2		
5	38H1173	ADAPTER	2		
6	AT225530	HYD ACTUATED CONTROL VALVE	1		
7	19M7784	SCREW	10		M10 X 20, (SUB FOR 19M7783)
8	38H1094	ELBOW FITTING	1		
9	38H1415	FITTING	2		
10	38H1023	TEE FITTING	2		
12	T77613	O-RING	13		
13	AT310912	HYDRAULIC HOSE	2		
14	AT208999	OIL LINE	1		
15	AT209000	OIL LINE	1		
16	AT210667	HYDRAULIC HOSE - FABRICATE	2		
17	AT307490	OIL LINE	1		
19	AT307491	OIL LINE	1		
20	T77857	O-RING	2		
21	R77175	COVER	1		
22	H75541	CLAMP	10		
23	R78053	ELECTRICAL CONNECTOR ASSY	1		(NOT ILLUSTRATED)
24	T72414	BUSHING	10		
25	R26448	O-RING	6		
26	RE60701	DIAGNOSTIC COUPLING	1		
27	**AT307593**	**KIT**	**1**		**(WHOLEGOODS)(QUICK COUPLER PIN DISCONNECT KIT)**

PIN DISCONNECT VALVE COMPONENTS (SERIAL NO. - 590067)

T197399 -UN-21JAN04

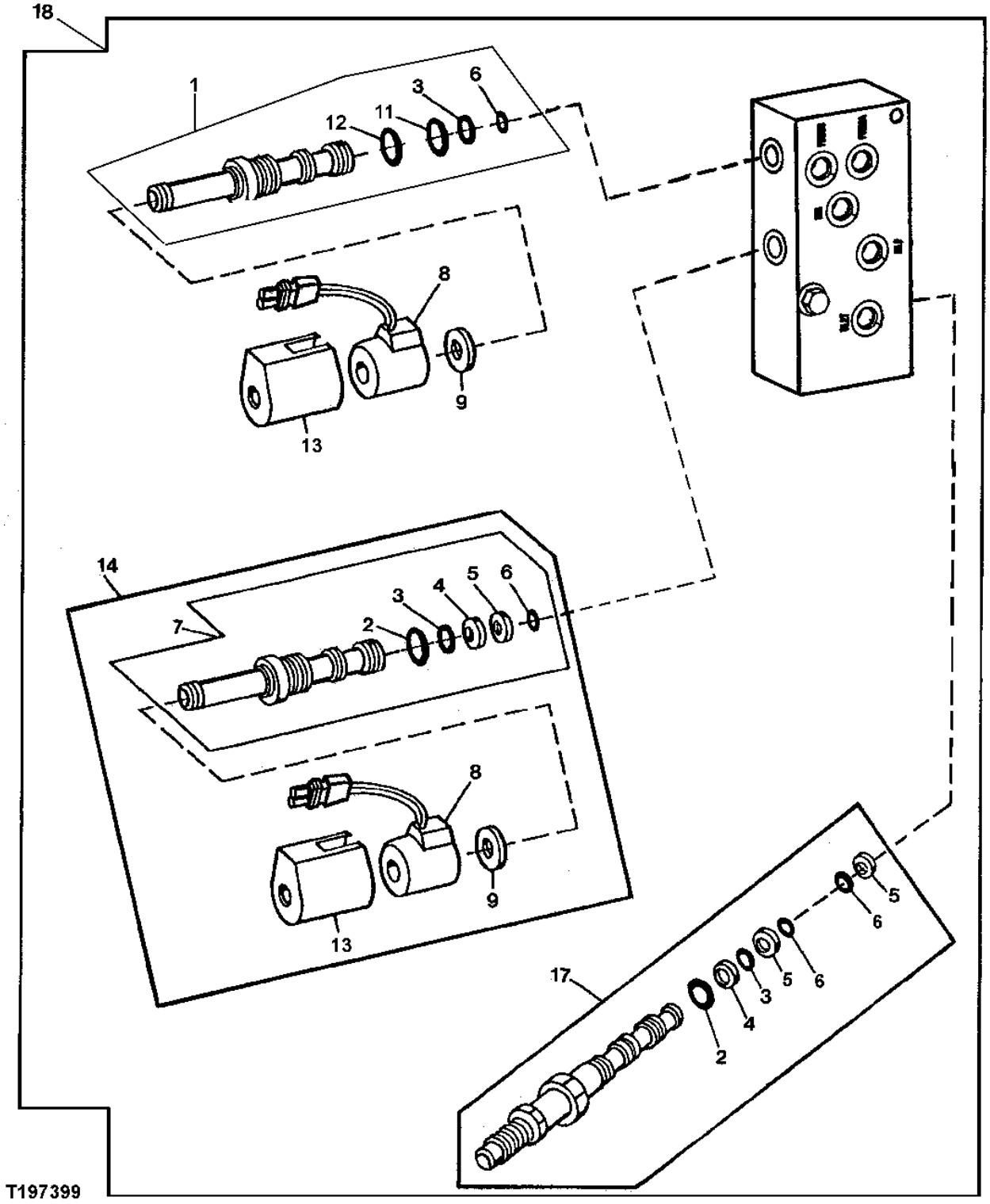

PIN DISCONNECT VALVE COMPONENTS (SERIAL NO. - 590067)

KEY	PART NO.	PART NAME	QTY	SERIAL NO.	REMARKS
1	AN280239	SOLENOID VALVE	1		
2	R47151	O-RING	2		
3	R33259	O-RING	3		
4	T81247	BACK-UP RING	2		
5	R42926	BACK-UP RING	3		
6	R28776	O-RING	4		
7	AT139432	HYD ACTUATED CONTROL VALVE	1		
8	AT139433	ELECTRICAL COIL	2		
9	T130847	PLATE	2		
11	R27166	O-RING	1		
12	R26906	O-RING	1		
13	AT139434	KIT	2		
14	AT139431	SOLENOID VALVE	2		
17	AT220788	PRESSURE RELIEF VALVE	1		
18	AT220192	HYD ACTUATED CONTROL VALVE	1		

PIN DISCONNECT VALVE COMPONENTS (SERIAL NO. 590068-)

T197202 -UN-07JAN04

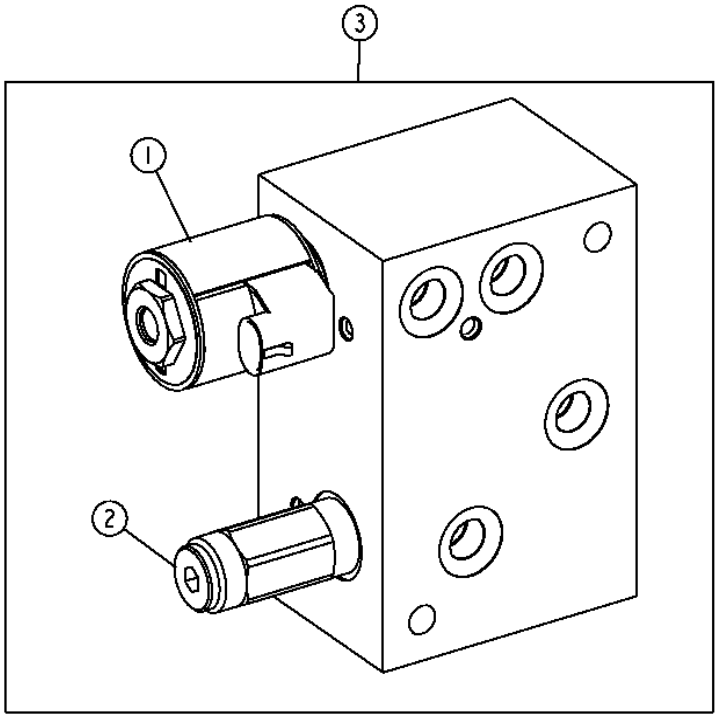

T197202

KEY	PART NO.	PART NAME	QTY	SERIAL NO.	REMARKS
1	AT224703	SOLENOID VALVE COIL	1		
	AT226266	SOLENOID VALVE	1		
	AT225083	SEAL KIT	1		SOLENOID VALVE SEAL KIT
2	AT226265	HYDRAULIC PRESSURE VALVE	1		
	AT225085	SEAL KIT	1		PRESSURE REDUCING VALVE SEAL KIT
3	AT225530	HYD ACTUATED CONTROL VALVE	1		

MEMORANDA

LOADER CONTROL VALVE
(TWO OR THREE-SPOOL)

T158561 -UN-16AUG02

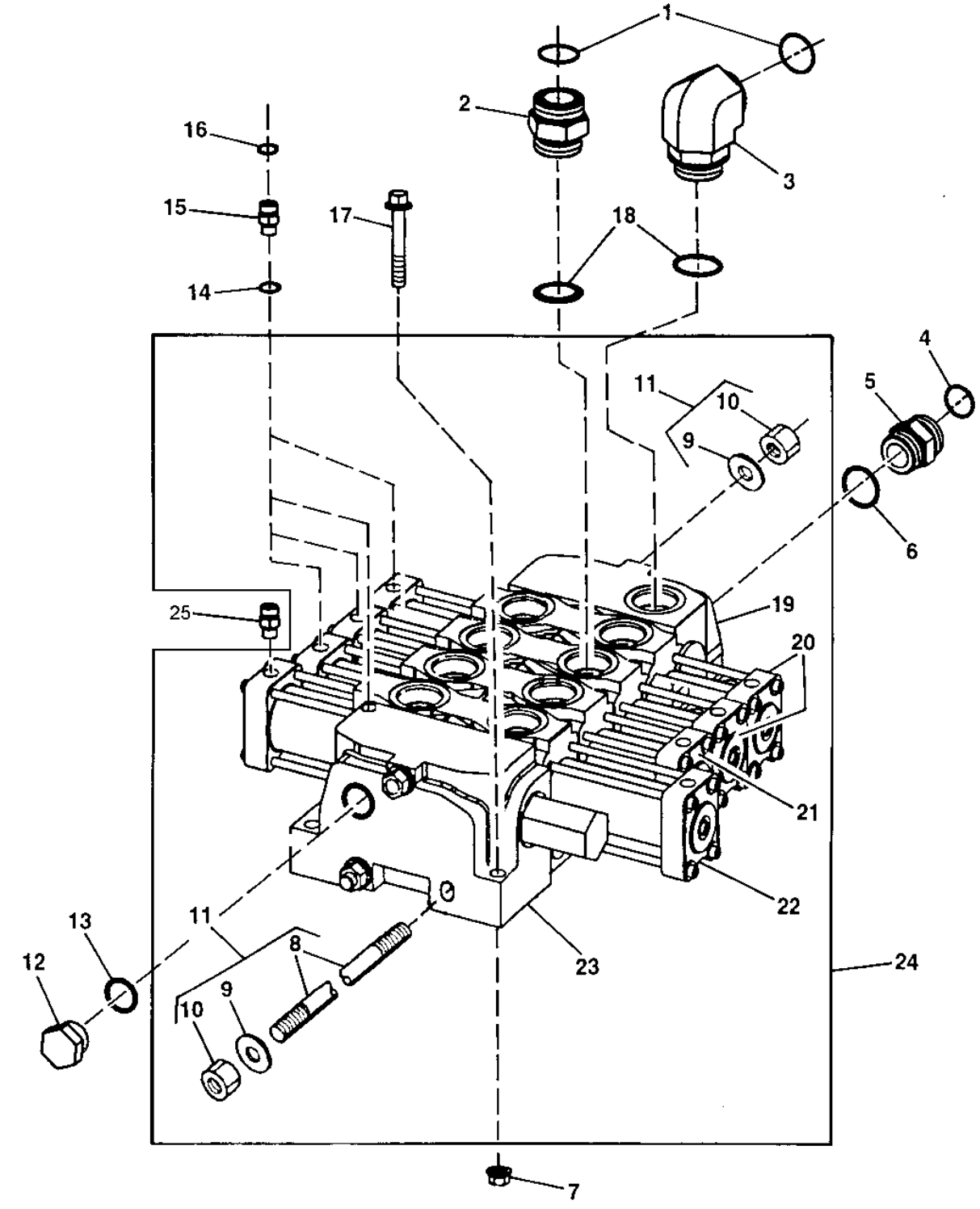

T158561

LOADER CONTROL VALVE
(TWO OR THREE-SPOOL)

KEY	PART NO.	PART NAME	QTY	SERIAL NO.	REMARKS
1	T78784	O-RING	7		
2	38H1191	ADAPTER	6		
3	38H1101	ELBOW FITTING	1		
4	T78612	O-RING	1		
5	38H1165	ADAPTER	1		
6	U13639	O-RING	1		
7	14M7401	LOCK NUT	4		M12
8	.....	STUD	1		(TWO-SP00L VALVE) (SUB AT207983)
	.....	STUD	1		(THREE-SPOOL VALVE) (SUB AT207984)
9	AT119372	WASHER	2		
10	T170067	NUT	2		
11	AT207983	STUD	3		(TWO-SPOOL VALVE)
	AT207984	STUD	3		(THREE-SPOOL VALVE)
12	R36636	FITTING PLUG	1		
13	R29936	O-RING	1		
14	R26448	O-RING	7		
15	38H1160	ADAPTER	3		(TWO-SPOOL VALVE)
	38H1160	ADAPTER	5		(THREE-SPOOL VALVE)
16	T77613	O-RING	7		
17	19M7818	SCREW	4		M12 X 80
18	R26773	O-RING	7		
19	.....	MANIFOLD	1		INLET
20	AT225955	SPOOL VALVE	1		AUXILARY (THREE-SPOOL ONLY)
21	AT225954	HYD ACTUATED CONTROL VALVE	1		BUCKET
22	AT207949	FLOW CONTROL HYD. VALVE	1		BOOM
23	AT207936	MANIFOLD	1		OUTLET
24	AT225819	HYD ACTUATED CONTROL VALVE	1		TWO-SP00L
	AT225820	HYD ACTUATED CONTROL VALVE	1		THREE-SPOOL
25	AT181313	CHECK VALVE	2		
..	AT210105	SEAL KIT	1		BETWEEN SECTION

INLET SECTION VALVE WITH RELIEF VALVE

TP48488 -UN-05OCT96

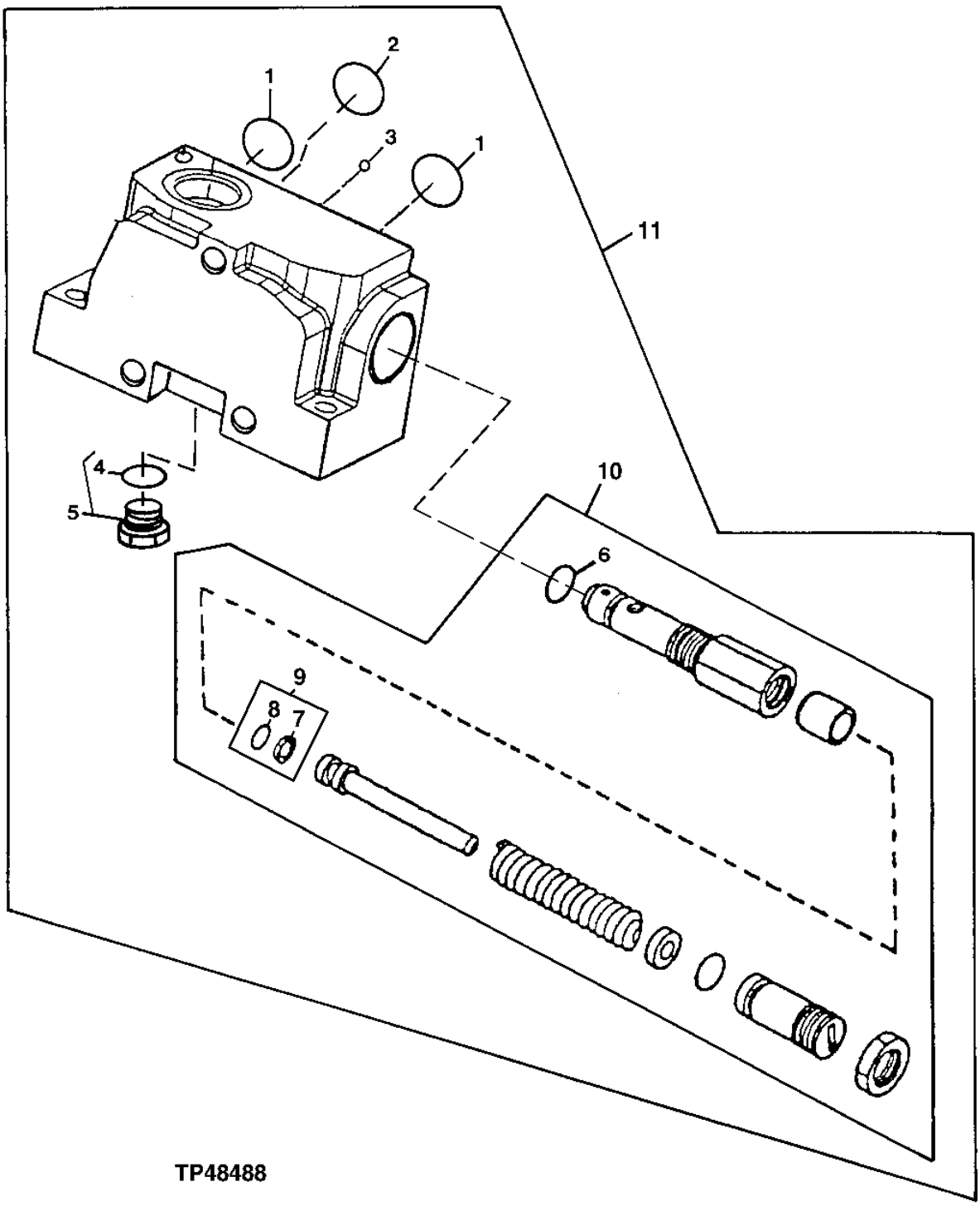

TP48488

INLET SECTION VALVE WITH RELIEF VALVE

KEY	PART NO.	PART NAME	QTY	SERIAL NO.	REMARKS
1	.....	O-RING	2		(K) (SUB AT210106)
2	.....	O-RING	1		(K) (SUB AT210106)
3	.....	O-RING	1		(K) (SUB AT210106)
4	R26375	O-RING	1		
5	AT63271	FITTING	1		
6	U12547	O-RING	1		
7	.....	BACK-UP RING	1		
8	U12547	O-RING	1		
9	AT169157	SEAL KIT	1		(INCLUDES U12547 O-RING)
10	AT209811	PRESSURE RELIEF VALVE	1		RELIEF
11	.....	VALVE	1		INLET SECTION
..	AT210106	SEAL KIT	1		(INCLUDES ALL (K))

BOOM SECTION VALVE

TP48599 -UN-21FEB97

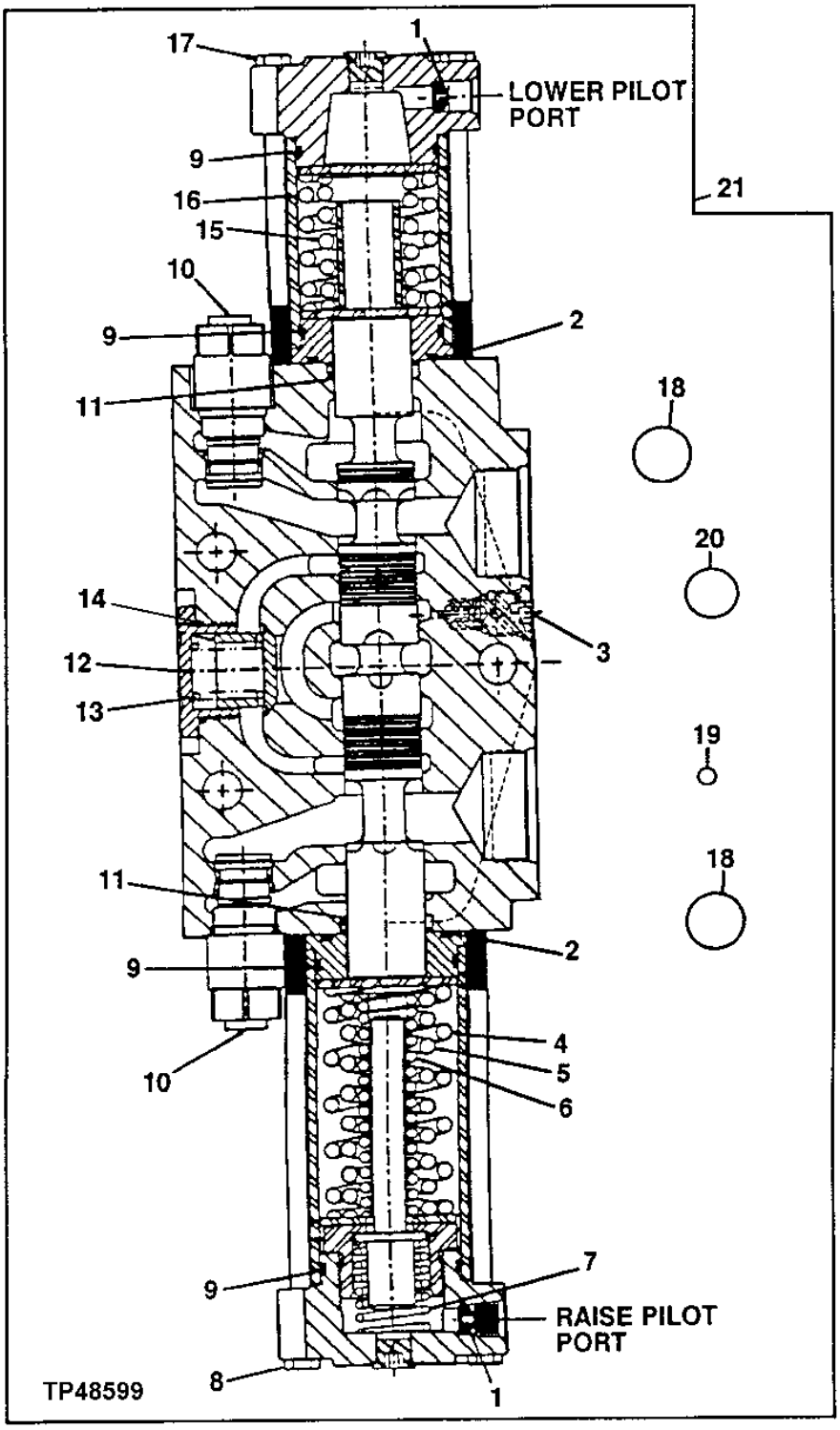

BOOM SECTION VALVE

KEY	PART NO.	PART NAME	QTY	SERIAL NO.	REMARKS
1	T169955	ORIFICE	2		(DO NOT USE WITH AT181313 CHECK VALVE)
2	.....	O-RING	2		
3	AT207941	CHECK VALVE	1		
4	T169882	SPRING	1		
5	T169869	SPRING	1		
6	T169868	SPRING	1		
7	T169867	SPRING	1		
8	T169881	BOLT	4		
9	.....	O-RING	4		
10	AT221506	HYD ACTUATED CONTROL VALVE	2		
	AT170991	KIT	1		(SEAL KIT FOR AT221506)
11	U45855	WASHER	2		
12	T169967	CAP	1		
13	T169969	SPRING	1		
14	.....	O-RING	1		
15	T169965	SPRING	1		
16	T169966	SPRING	1		
17	19H2345	CAP SCREW	4		
18	.....	O-RING	2		(SUB AT210107)
19	.....	O-RING	1		(SUB AT210107)
20	.....	O-RING	1		(SUB AT210107)
21	AT207949	FLOW CONTROL HYD. VALVE	1		BOOM SECTION
..	AT210107	SEAL KIT	1		(INTERFACE)

ANTI-CAVITY VALVE BOOM SECTION

TP55492 -UN-14MAY97

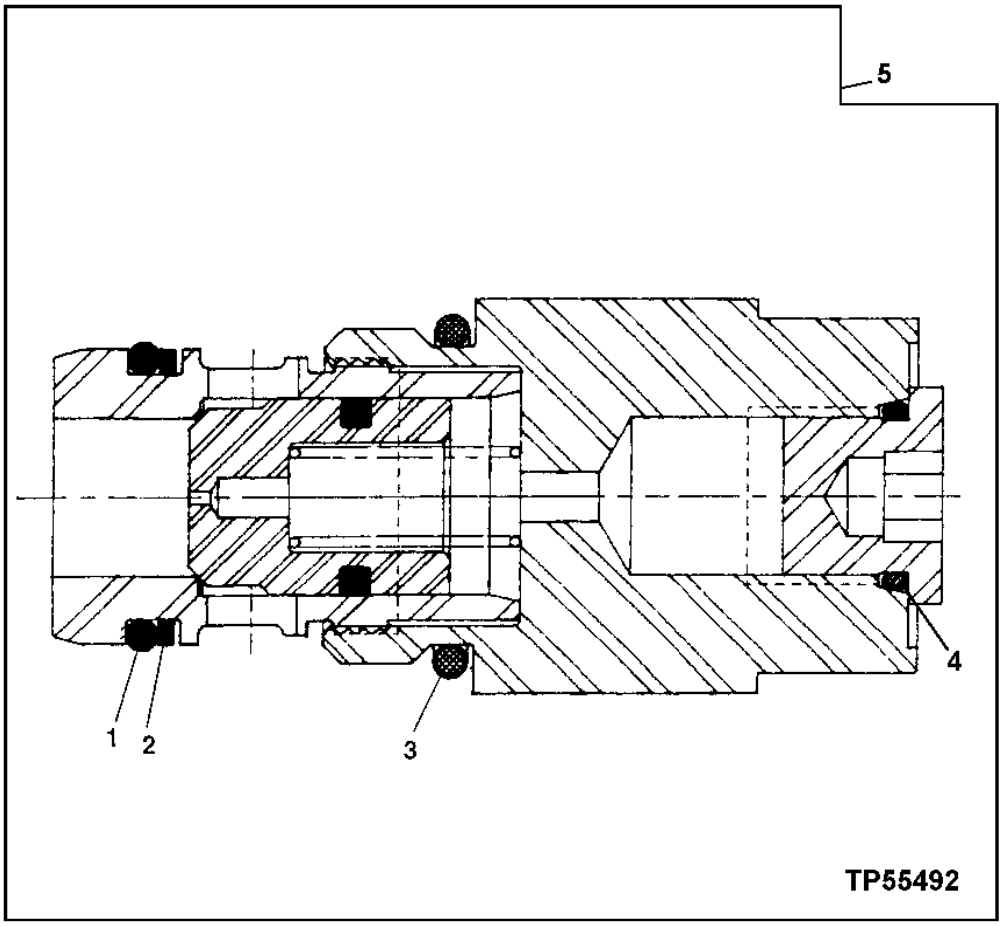

ANTI-CAVITY VALVE BOOM SECTION

KEY	PART NO.	PART NAME	QTY	SERIAL NO.	REMARKS
1	AT124574	O-RING	1		
2	T154187	BACK-UP RING	1		
3	U12547	O-RING	1		
4	.....		1		ANTI-CAVITY
5	AT221506	HYD ACTUATED CONTROL VALVE	1		
	AT170991	KIT	1		

BUCKET SECTION VALVE

TP48490 -UN-05OCT96

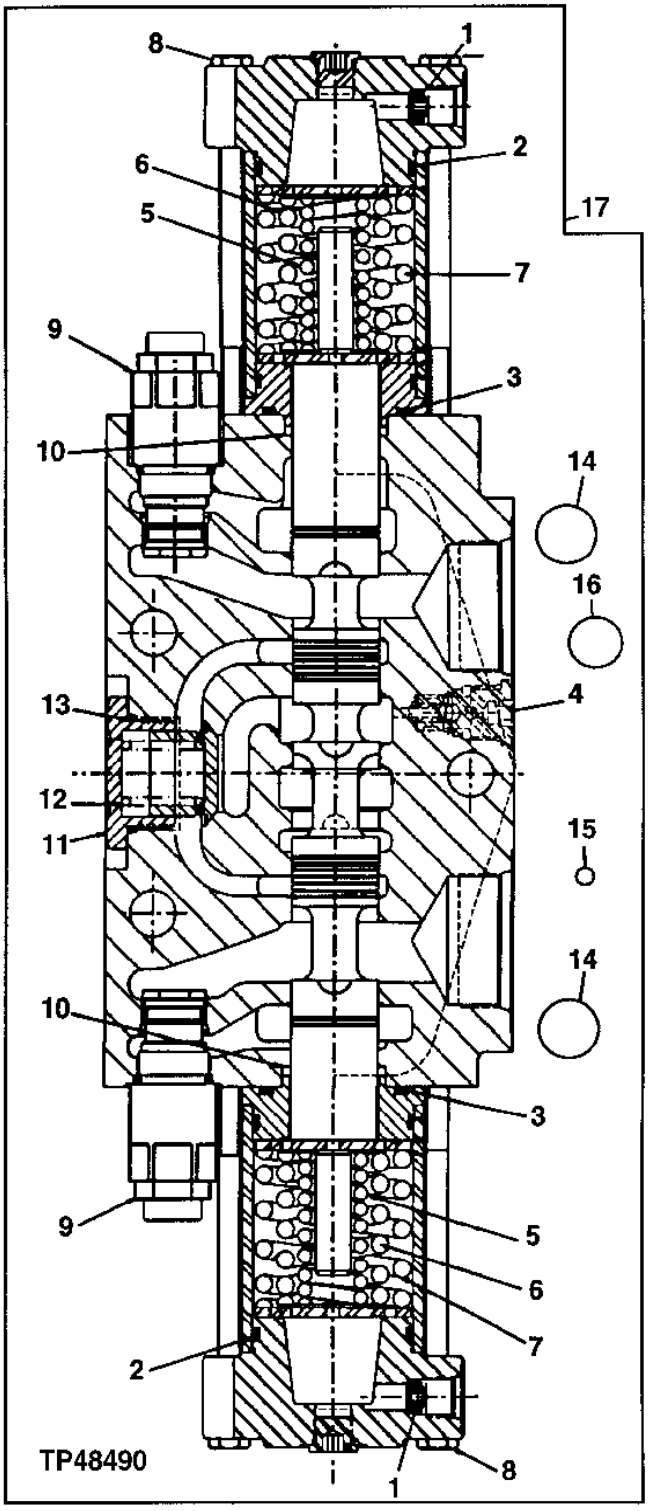

BUCKET SECTION VALVE

KEY	PART NO.	PART NAME	QTY	SERIAL NO.	REMARKS
1	T169893	ORIFICE	1		
2	.....	O-RING	1		
3	.....	O-RING	1		
4	AT207941	CHECK VALVE	1		(INCLUDES, R26375 AND T77613)
5	T169964	SPRING	1		
6	T169965	SPRING	1		
7	T169966	SPRING	1		
8	19H2345	CAP SCREW	4		
9	AT209750	PRESSURE RELIEF VALVE	1		
	AT209748	SEAL KIT	1		
10	U45855	WASHER	1		
11	T169967	CAP	1		
12	T169969	SPRING	1		
13	.....	O-RING	1		(SUB FOR AT210107)
14	.....	O-RING	2		(SUB FOR AT210107)
15	.....	O-RING	1		(SUB FOR AT210107)
16	.....	O-RING	1		(SUB FOR AT210107)
17	AT225954	HYD ACTUATED CONTROL VALVE	1		BUCKET
..	AT210107	SEAL KIT	1		(INTERFACE)

UNIVERSAL RELIEF VALVE BUCKET AND AUXILIARY SECTION

TP53733 -UN-22AUG96

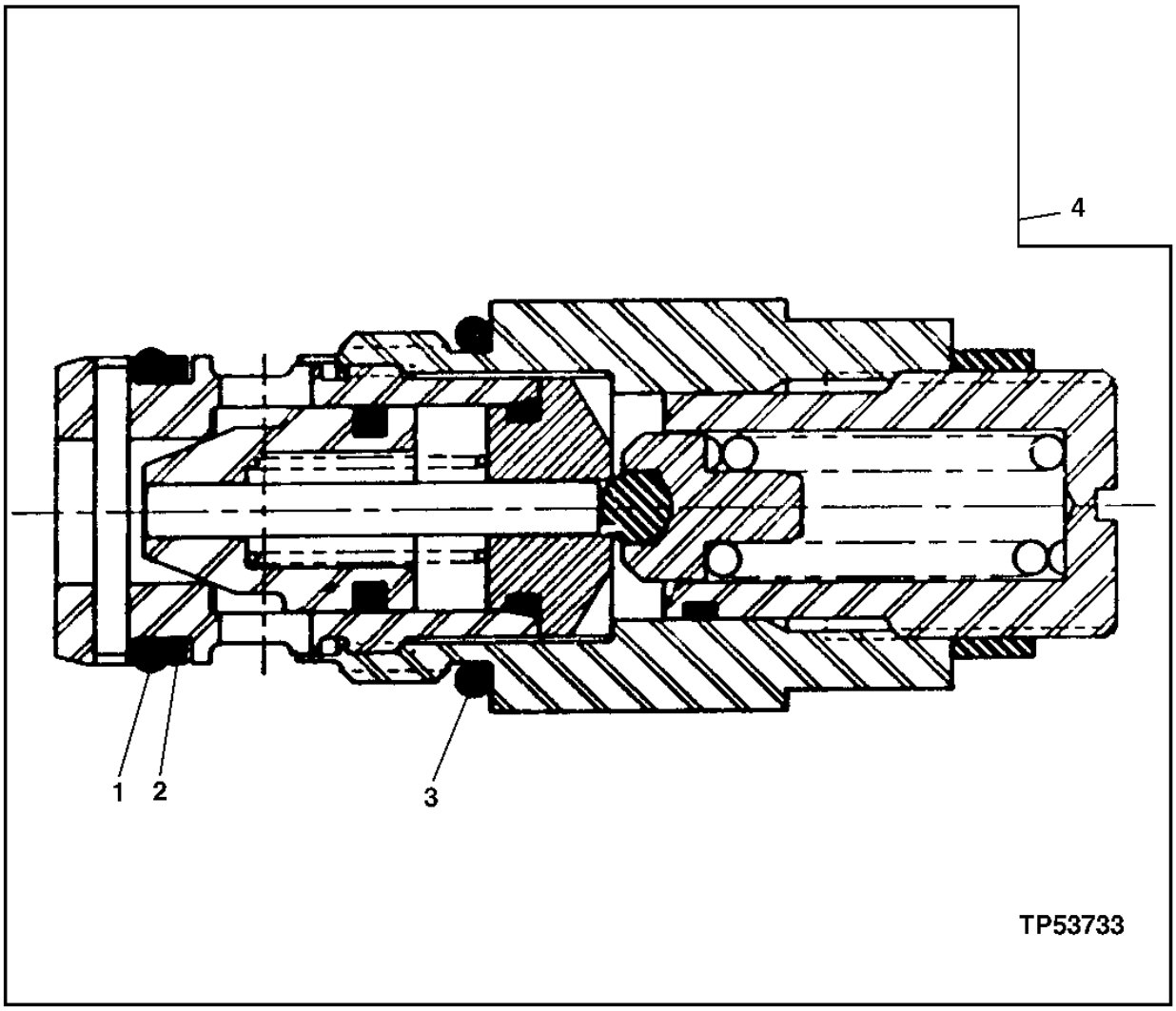

UNIVERSAL RELIEF VALVE BUCKET AND AUXILLARY SECTION

KEY	PART NO.	PART NAME	QTY	SERIAL NO.	REMARKS
1	AT124574	O-RING	1		(K)
2	T144698	BACK-UP RING	1		(K)
3	U12547	O-RING	1		(K)
4	AT209750	PRESSURE RELIEF VALVE	1		
..	AT209748	SEAL KIT	1		INCLUDES ALL (K) PARTS

AUXILIARY SECTION VALVE

TP48491 -UN-05OCT96

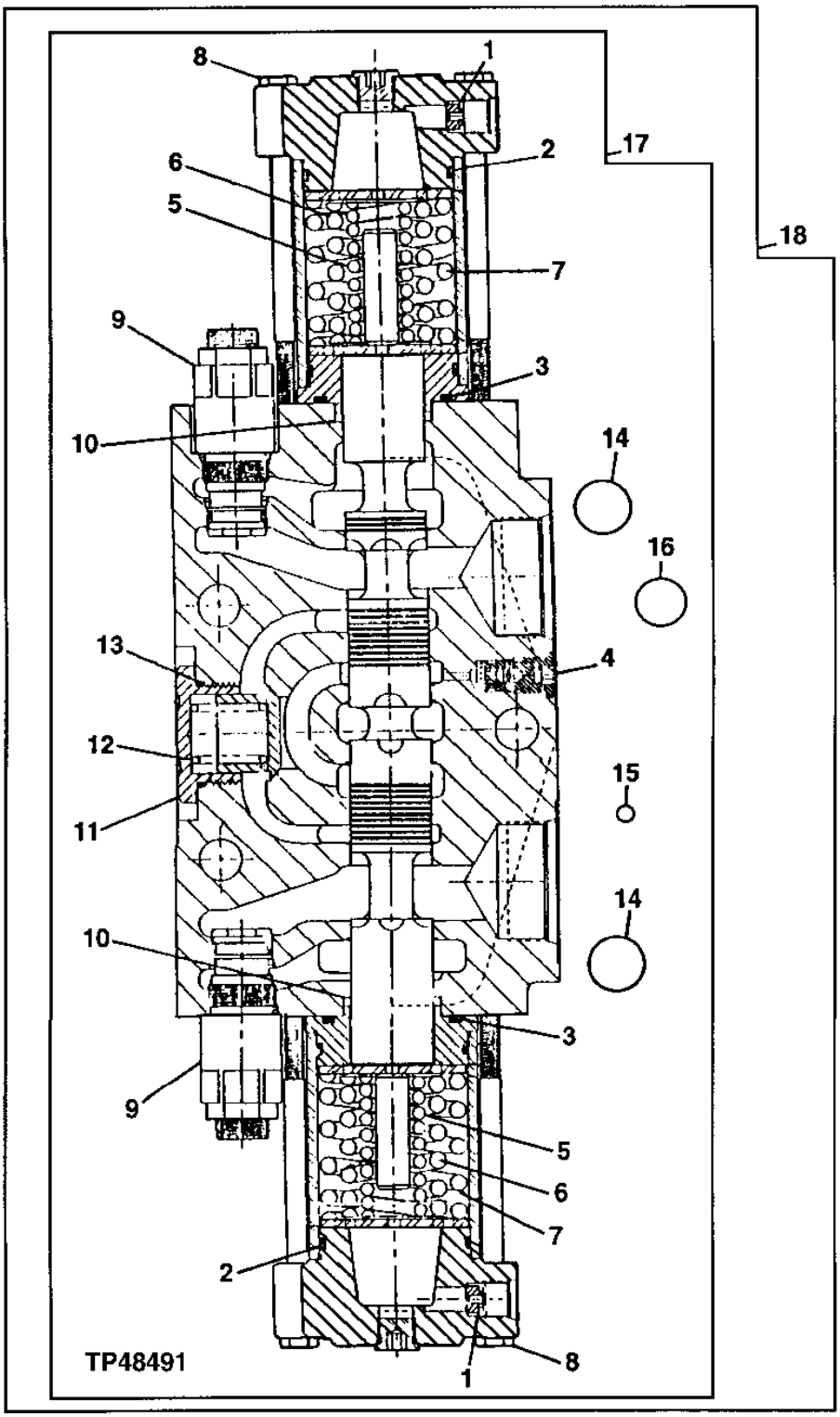

AUXILLARY SECTION VALVE

KEY	PART NO.	PART NAME	QTY	SERIAL NO.	REMARKS
1	T169955	ORIFICE	2		
2	.....	O-RING	2		
3	.....	O-RING	2		
4	AT207941	CHECK VALVE	1		(INCLUDES, R26375 AND T77613)
5	T169964	SPRING	2		
6	T169965	SPRING	2		
7	T169966	SPRING	2		
8	19H2345	CAP SCREW	8		
9	AT209750	PRESSURE RELIEF VALVE	1		
	AT209748	SEAL KIT	1		(RELIEF VALVE SEAL KIT)
10	U45855	WASHER	2		
11	T169967	CAP	1		
12	T169969	SPRING	1		
13	.....	O-RING	1		(K)
14	.....	O-RING	2		(K)
15	.....	O-RING	1		(K)
16	.....	O-RING	1		(K)
17	AT225955	SPOOL VALVE	1		AUXILIARY SECTION
18	**AT202879**	**KIT**	**1**		**THIRD FUNCTION SINGLE LEVER (ALSO INCLUDES HYDRAULIC HOSES, LOADER CONTROL VALVE SECTION AND MOUNTING PARTS)**
..	AT210107	SEAL KIT	1		INCLUDES ALL (K)

OUTLET SECTION

T165727 -UN-25FEB03

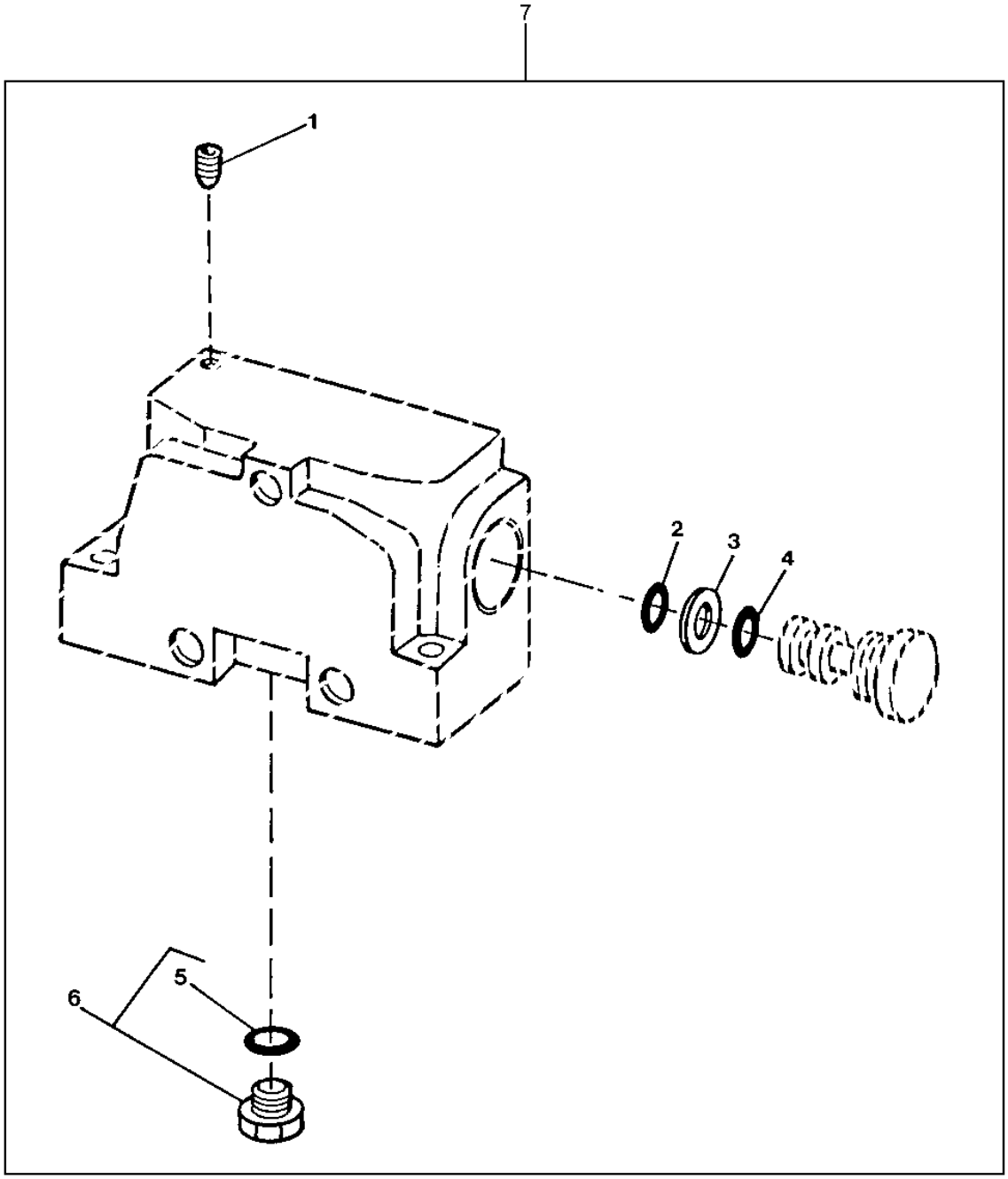

T165727

OUTLET SECTION

KEY	PART NO.	PART NAME	QTY	SERIAL NO.	REMARKS
1	T170005	ORIFICE	1		
2	.....	O-RING	1		(K)
3	H60815	BACK-UP RING	1		
4	.....	O-RING	1		(K)
5	R26375	O-RING	1		
6	AT63271	FITTING	1		
7	AT207936	MANIFOLD	1		
..	AT210108	SEAL KIT	1		INCLUDES ALL (K)

**HYDRAULIC PUMP
(STEERING AND LOADER)**

T195469 -UN-13OCT03

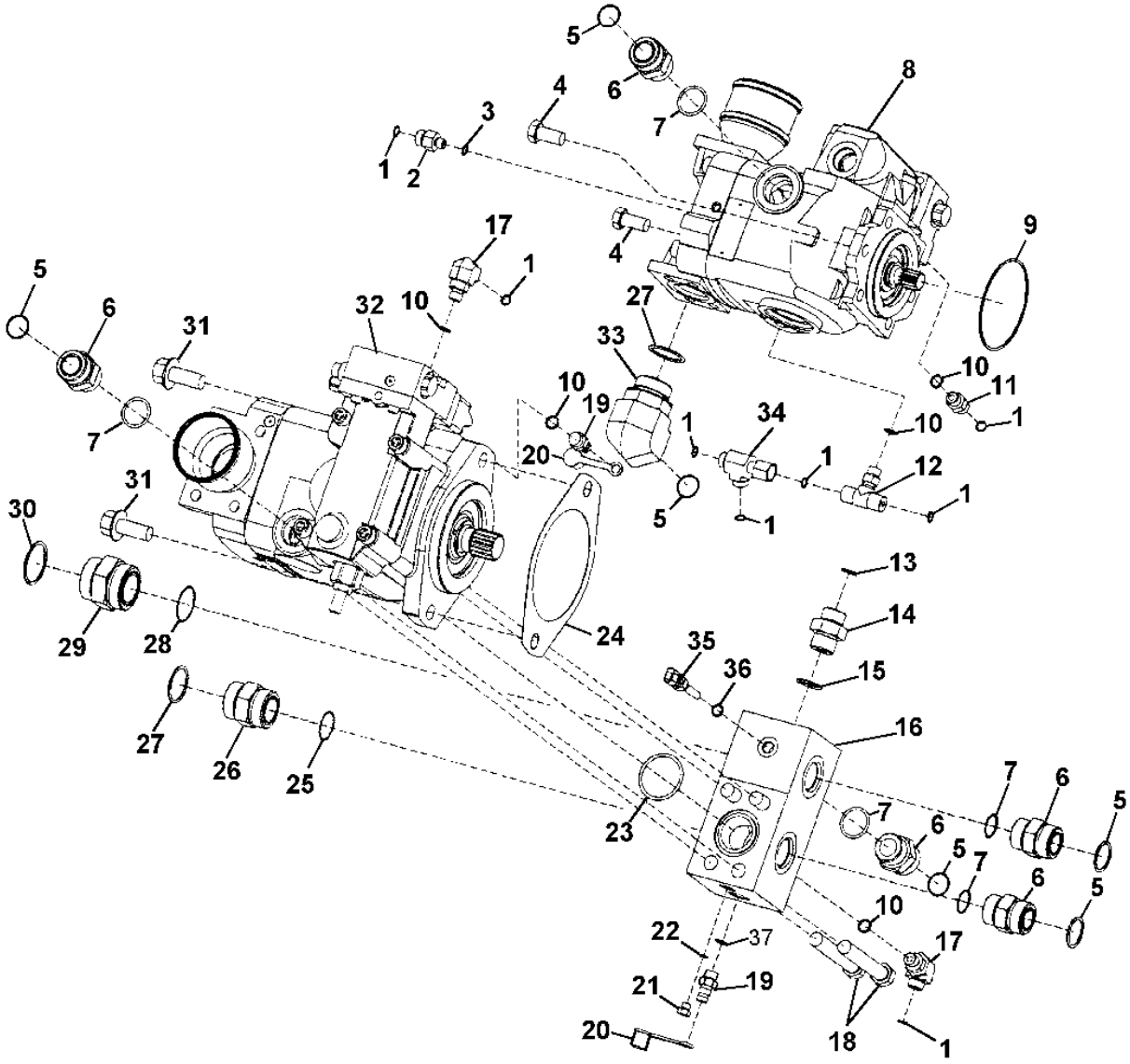

HYDRAULIC PUMP
(STEERING AND LOADER)

KEY	PART NO.	PART NAME	QTY	SERIAL NO.	REMARKS
1	T77613	O-RING	8		
2	38H1309	ADAPTER	1		
3	R28782	O-RING	1		
4	19M7877	CAP SCREW	2		M14 X 30
5	T76938	O-RING	6		
6	38H1164	ADAPTER	5		
7	R29936	O-RING	5		
8	AT227997	PUMP	1		(PVG75)
9	T169035	RING	1		
10	R26448	O-RING	5		
11	38H1160	ADAPTER	1		
12	AT207529	CHECK VALVE	1		
13	T77932	O-RING	1		
14	38H1329	ADAPTER	1		
15	U12547	O-RING	1		
16	.....	FITTING	1	-XXXXXX	(T156625 NO LONGER AVAILABLE) (SUB T204161, (4) 19H2718 AND AT306981)
	T204161	MANIFOLD	1	XXXXXX-	
17	38H1004	ELBOW FITTING	2		
18	19H3169	CAP SCREW	4	-XXXXXX	
	19H2718	CAP SCREW	4	XXXXXX-	
19	AH125760	HYD. QUICK-CONNECT COUPLER	2	-XXXXXX	
	AT306981	DIAGNOSTIC COUPLING	2	XXXXXX-	
20	R77175	COVER	2		
21	R27216	DRAIN PLUG	1		(NOT USED WITH HYDRAULIC PRESSURE TRANSDUCER)
22	R26287	O-RING	1		(NOT USED WITH HYDRAULIC PRESSURE TRANSDUCER)
23	T72221	O-RING	1		
24	T107883	O-RING	1		(SUB FOR T132071)
25	T78612	O-RING	1		
26	38H1165	ADAPTER	1		
27	U13639	O-RING	2		
28	T78784	O-RING	1		
29	38H1191	ADAPTER	1		
30	R26773	O-RING	1		
31	19M7488	CAP SCREW	2		M16 X 40
32	AT225616	HYDRAULIC PUMP	1		(PVG 130)
33	38H1325	ELBOW FITTING	1		
34	38H1030	TEE FITTING	1		
35	RE151433	COOLANT TEMPERATURE SENSOR	1		(HYDRAULIC OIL TEMPERATURE)
36	R26286	O-RING	1		
37	R26448	O-RING	1	-XXXXXX	
	R28782	O-RING	1	XXXXXX-	

STEERING AND LOADER HYDRAULIC PUMP REPAIR KITS

TP62599 -UN-10AUG99

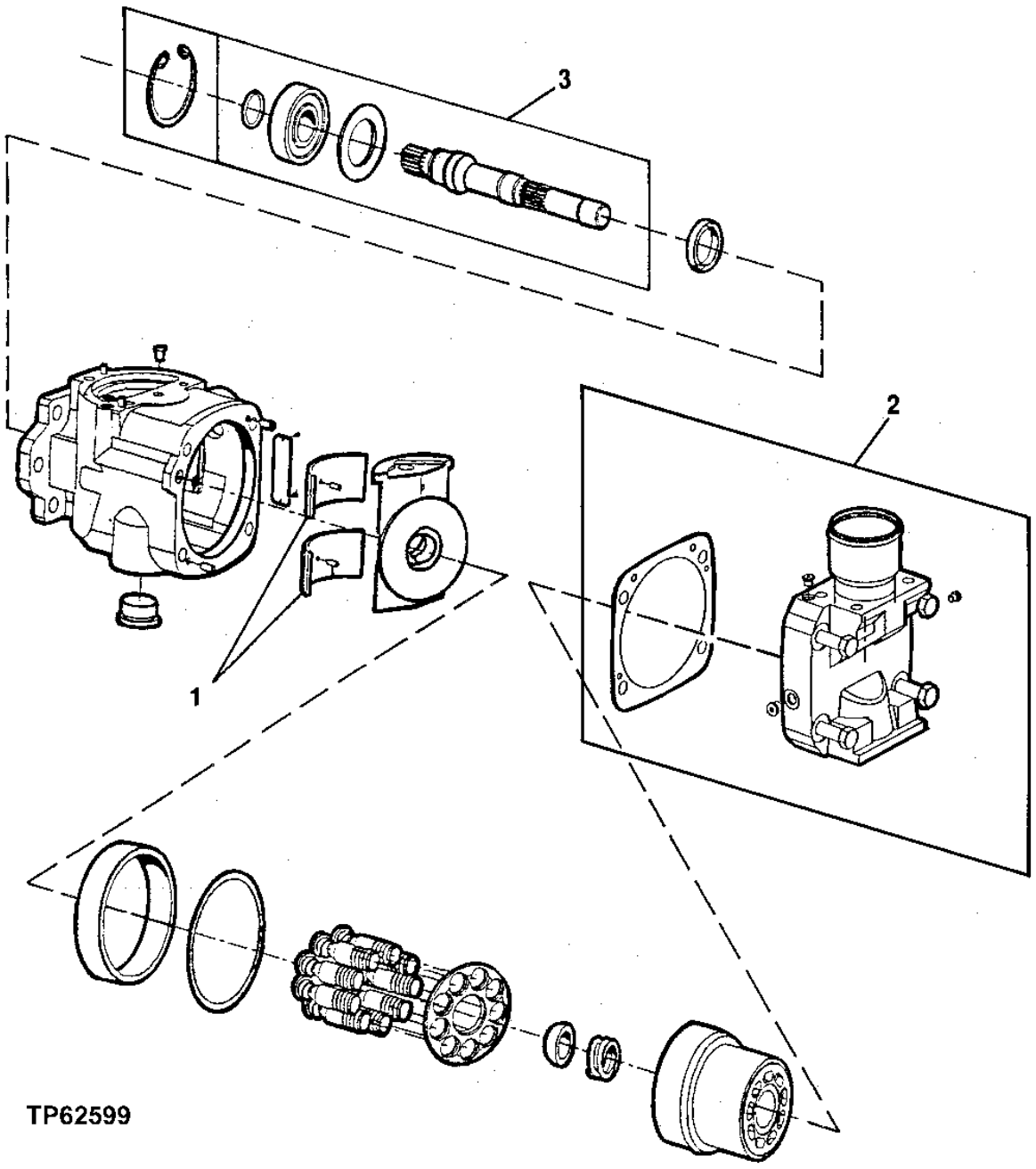

STEERING AND LOADER HYDRAULIC PUMP REPAIR KITS

KEY	PART NO.	PART NAME	QTY	SERIAL NO.	REMARKS
1	AT208644	BEARING KIT	1		SWASH BLOCK BEARING KIT (PVG75) (STEERING/LOADER PUMP)
	AT180692	BEARING	1		SWASH BLOCK BEARING KIT (PVG130) (LOADER PUMP)
2	AT184385	PLATE	1		VALVE PLATE WITH TUBE (PVG75) (STEERING/LOADER PUMP)
	AT208635	PLATE	1		VALVE PLATE WITH TUBE (PVG130) (LOADER PUMP)
3	AT179588	SHAFT	1		SHAFT AND BEARING KIT (PVG75) (STEERING/LOADER PUMP)
	AT208636	BEARING KIT	1		SHAFT AND BEARING KIT (PVG130) (LOADER PUMP)
..	AT208643	SEAL KIT	1		PUMP SEAL KIT(PVG75)(ALSO INCLUDES GASKET AND O-RING BETWEEN PUMP AND CONTROL ASSY).
..	AT208633	SEAL KIT	1		PUMP SEAL KIT (PVG130)(ALSO INCLUDES GASKET AND O-RING BETWEEN PUMP AND CONTROL ASSY).
..	AT208648	SEAL KIT	1		CONTROL VALVE SEAL KIT(PVG75)(ALSO INCLUDES GASKET AND O-RING BETWEEN PUMP AND CONTROL ASSEMBLY
..	AT208638	SEAL KIT	1		CONTROL VALVE SEAL KIT(PVG130)(INCLUDES GASKET AND O-RING BETWEEN PUMP AND CONTROL ASSEMBLY).

STEERING AND LOADER HYDRAULIC PUMP CONTROL VALVES

T201893 -UN-27JUL04

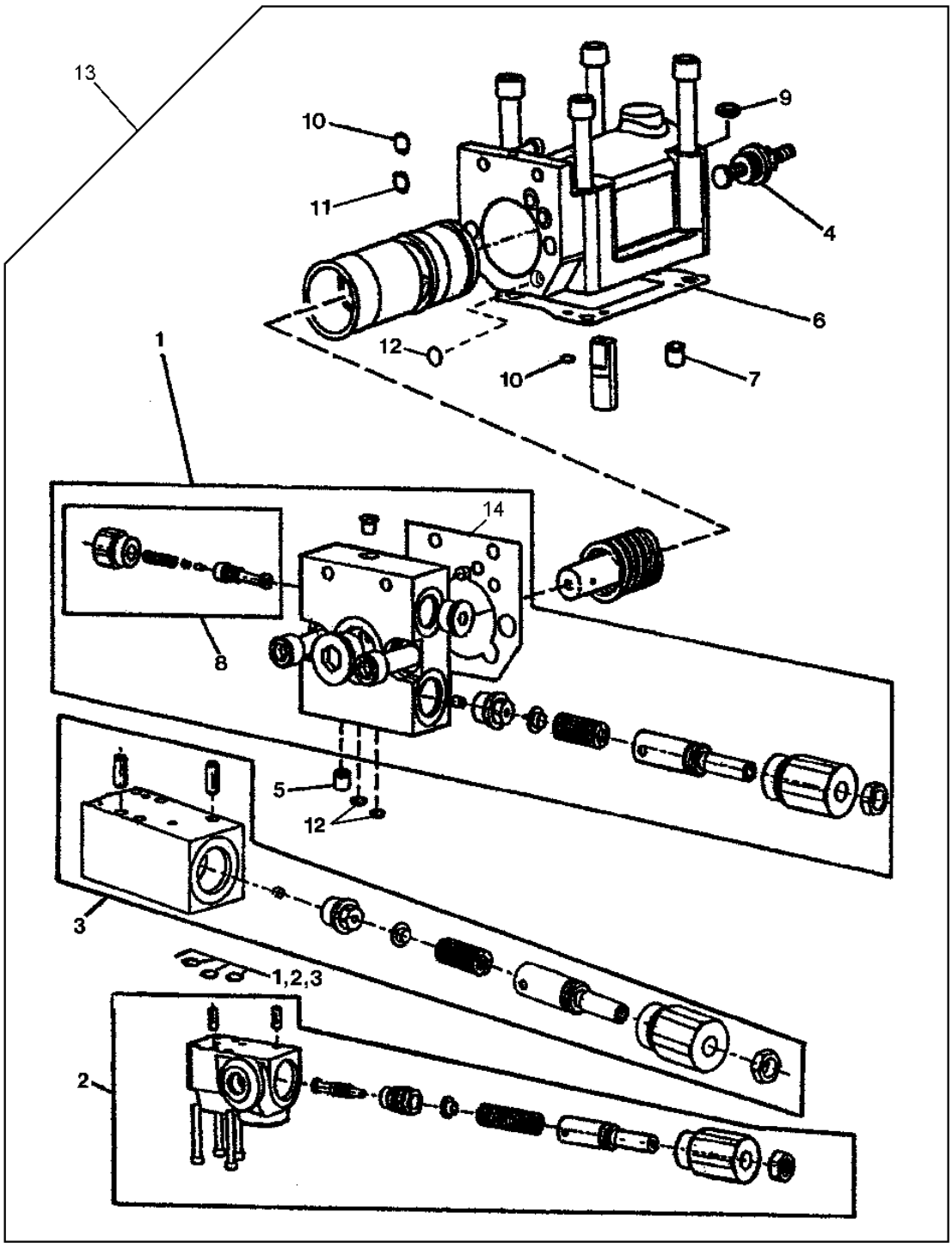

T201893

STEERING AND LOADER HYDRAULIC PUMP CONTROL VALVES

KEY	PART NO.	PART NAME	QTY	SERIAL NO.	REMARKS
1	AT208657	CAP	1		(PUMP CONTROL END CAP) (PVG75) (STEERING/LDR PUMP) (INCLUDES ALL SEALS, GASKETS AND O-RINGS NEEDED FOR INSTALLATION)
	AT208637	CONTROL	1		(PUMP CONTROL END CAP (PVG130) (LOADER PUMP) (INCLUDES ALL SEALS, GASKETS AND O-RINGS NEEDED FOR INSTALLATION)
	T118681	O-RING	1		(CENTER OF PUMP CONTROL END CAP)
2	AT208640	FLOW CONTROL HYD. VALVE	1		LOAD SENSING VALVE ASSEMBLY (PVG75 AND 130) (STEERING/LOADER PUMP AND LOADER PUMP) (INCLUDES ALL SEALS, GASKETS, AND O-RINGS NEEDED FOR INSTALLLATION)
3	AT208641	HYD ACTUATED CONTROL VALVE	1		LOAD SENSING PLUS VALVE ASSEMBLY (PVG75 AND 130) (STEERING/LOADER PUMP AND LOADER PUMP) (INCLUDES ALL SEALS, GASKETS AND O-RINGS NEEDED FOR INSTALLATION)
4	AT209881	STOP	1		STROKE LIMITER
5	T166400	ORIFICE	1		
6	T166279	GASKET	1		(USE WITH AT208647)
	T178707	GASKET	1		(USE WITH AT208637)
7	T166404	ORIFICE	1		(USE WITH AT208647)
	T178706	ORIFICE	1		(USE WITH AT208637)
8	AT186257	KIT	1		
9	T166395	WASHER	4		(USE WITH AT208647)
10	T166274	O-RING	2		
11	T40308	O-RING	1		
12	T166275	O-RING	3		
13	AT208647	CONTROL	1		PUMP CONTROL (PVG75) (STEERING/LOADER PUMP)
	AT208637	CONTROL	1		PUMP CONTROL (PVG130) (LOADER PUMP)
14	.....	GASKET	1		(SUB AT208638)
..	AT208643	SEAL KIT	1		(PUMP)(PVG75)INCLUDES GASKET AND O-RING BETWEEN PUMP AND CONTROL ASSY
..	AT208633	SEAL KIT	1		(PUMP)(PVG130)INCLUDES GASKET AND O-RING BETWEEN PUMP AND CONTROL ASSY
..	AT208648	SEAL KIT	1		(CONTROL VALVE)(PVG75)INCLUDES GASKET AND O-RING BETWEEN PUMP AND CONTROL ASSY
..	AT208638	SEAL KIT	1		(CONTROL VALVE)(PVG130)INCLUDES GASKET AND O-RING BETWEEN PUMP AND CONTROL ASSY

PRESSURE REGULATOR VALVE COMPONENTS (SERIAL NO. -590067)

TP62896 -UN-08SEP00

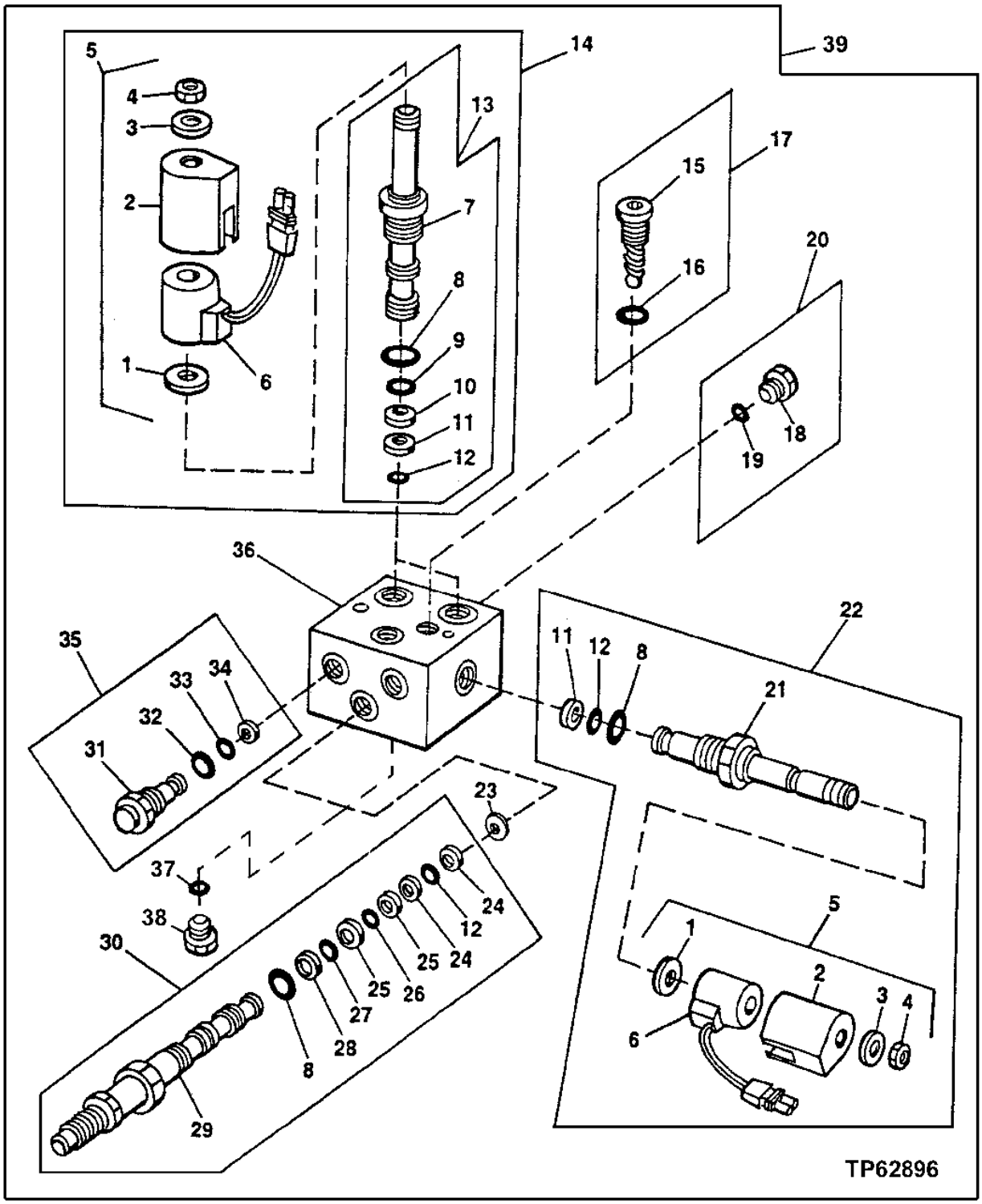

PRESSURE REGULATOR VALVE COMPONENTS (SERIAL NO. -590067)

KEY	PART NO.	PART NAME	QTY	SERIAL NO.	REMARKS
1	T130847	PLATE	3		
2	.....	COVER	3		(SUB AT139434)
3	.....	WASHER	3		(SUB AT139434)
4	.....	NUT	3		(SUB AT139434)
5	AT139434	KIT	3		(BOOM DOWN, DIFF LOCK AND PILOT ENABLE)
6	AT139433	ELECTRICAL COIL	3		
7	.....	SPOOL	2		(SUB AT139432)
8	R47151	O-RING	4		
9	R33259	O-RING	2		
10	T81247	BACK-UP RING	2		
11	R42926	BACK-UP RING	3		
12	R28776	O-RING	4		
13	AT139432	HYD ACTUATED CONTROL VALVE	2		
14	AT139431	SOLENOID VALVE	2		
15	.....	PLUG	1		(SUB AT159938)
16	R28782	O-RING	1		
17	AT159938	KIT	1		
18	.....	PLUG	1		(SUB AT49216)
19	R26448	O-RING	1		
20	AT49216	FITTING PLUG	1		(SUB AT208424)
21	.....	SPOOL	1		(SUB AT208424)
22	AT208424	SOLENOID VALVE	1		
23	T170615	WASHER	1		
24	A36431	BACK-UP RING	2		
25	A36432	BACK-UP RING	2		
26	R33259	O-RING	1		
27	R27166	O-RING	1		
28	T35985	BACK-UP RING	1		
29	.....	SPOOL	1		(SUB AT208426)
30	AT208426	HYD ACTUATED CONTROL VALVE	1		
31	.....	CHECK VALVE	2		(SUB AT208425)
32	R47150	O-RING	2		
33	A3917R	O-RING	2		
34	T106208	BACK-UP RING	2		
35	AT208425	CHECK VALVE	2		
36	.....	HOUSING	1		(SUB AT203487)
37	R30903	O-RING	2		
38	AT184869	PLUG	2		
39	AT203487	HYD ACTUATED CONTROL VALVE	1		

PRESSURE REGULATOR VALVE COMPONENTS (SERIAL NO. 590068-)

T196513 -UN-20NOV03

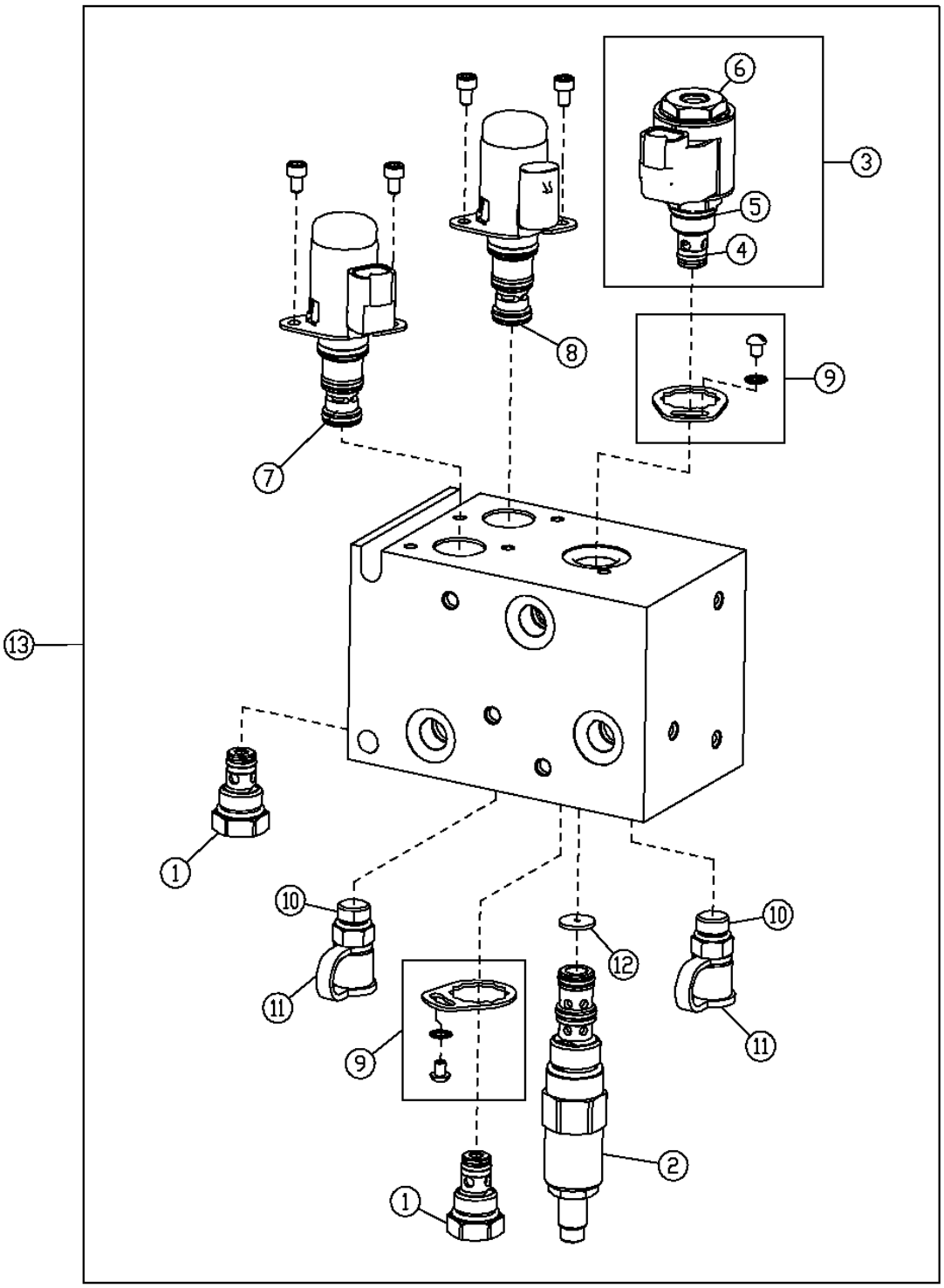

T196513

PRESSURE REGULATOR VALVE COMPONENTS (SERIAL NO. 590068-)

KEY	PART NO.	PART NAME	QTY	SERIAL NO.	REMARKS
1	AT224570	CHECK VALVE	2		
	AT224862	SEAL KIT	1		
2	AT313708	OIL PRESSURE REG. VALVE	1		(SUB FOR AT307314)
	AT196943	SEAL KIT	1		
3	AT309494	SOLENOID VALVE	1		
4	AT307315	SOLENOID VALVE	1		
5	AT224865	SOLENOID VALVE COIL	1		
6	T181306	NUT	1		
7	AT307302	FLOW CONTROL HYD. VALVE	1		(PILOT)
	AT224873	SEAL KIT	1		
8	AT307301	FLOW CONTROL HYD. VALVE	1		(DIFF)
	AT224873	SEAL KIT	1		
9	AT307304	KIT	2		
10	AH125760	HYD. QUICK-CONNECT COUPLER	2		
11	R77175	COVER	2		
12	T205670	ORIFICE	1		
13	AT228138	HYD ACTUATED CONTROL VALVE	1		

PRESSURE REGULATOR VALVE FITTINGS (SER. NO. -590067)

T157999 -UN-26JUL02

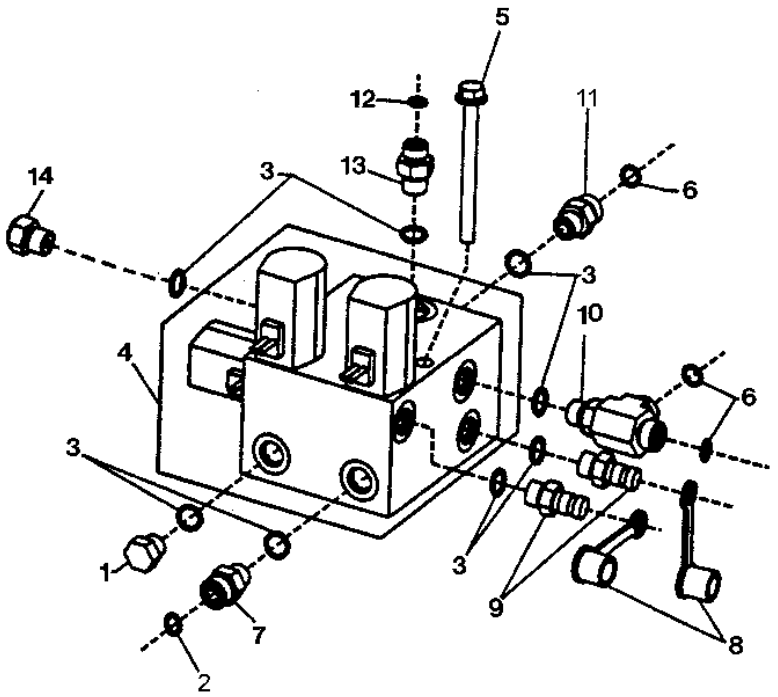

T157999

KEY	PART NO.	PART NAME	QTY	SERIAL NO.	REMARKS
1	R27218	FITTING PLUG	1		
2	T77814	O-RING	1		
3	R26448	O-RING	8		
4	AT203487	HYD ACTUATED CONTROL VALVE	1		
5	19M7913	SCREW	2		M8 X 90
6	T77613	O-RING	3		
7	38H1160	ADAPTER	1		
8	R77175	COVER	2		
9	AH125760	HYD. QUICK-CONNECT COUPLER	2		
10	38H1023	TEE FITTING	1		
11	38H1160	ADAPTER	1		
12	T77814	O-RING	1		
13	38H1168	ADAPTER	1		
14	R27218	FITTING PLUG	1		

MEMORANDA

RIDE CONTROL VALVE

T211709 -UN-16AUG05

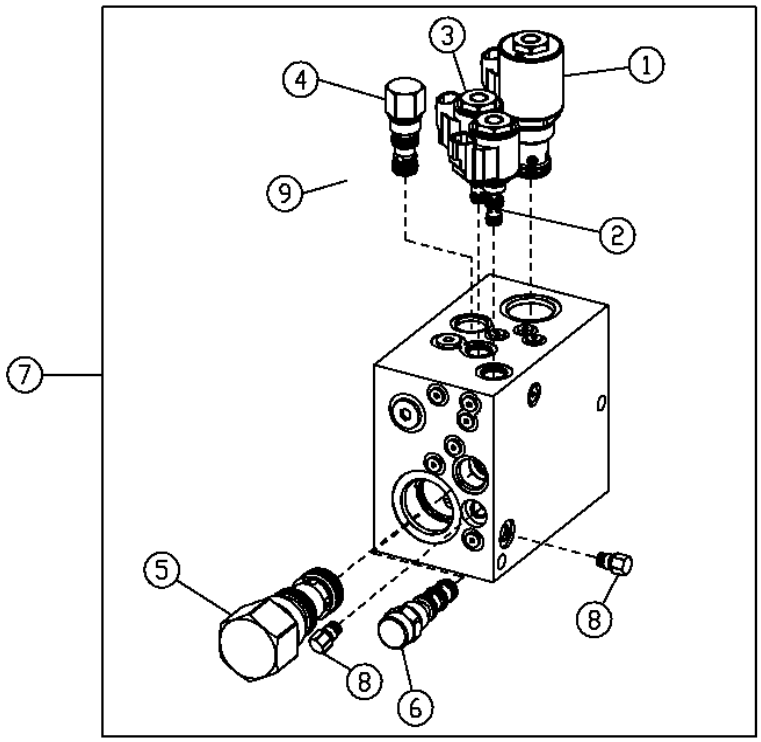

T211709

RIDE CONTROL VALVE

KEY	PART NO.	PART NAME	QTY	SERIAL NO.	REMARKS
1	AT224701	SOLENOID VALVE	1		
	AT224702	SEAL KIT	1		(NOT ILLUSTRATED)
	AT224703	SOLENOID VALVE COIL	1		
	T181306	NUT	1		
2	AT224866	FLOW CONTROL HYD. VALVE	1		CARTRIDGE
	AT224706	SEAL KIT	1		
	AT224865	SOLENOID VALVE COIL	1		
	T181306	NUT	1		
3	AT225249	FLOW CONTROL HYD. VALVE	1		
	AT224574	SOLENOID VALVE COIL	1		
	AT224706	SEAL KIT	1		(NOT ILLUSTRATED)
	T181306	NUT	1		
4	AT225084	FLOW CONTROL HYD. VALVE	1		
	AT225085	SEAL KIT	1		(NOT ILLUSTRATED)
5	AT224699	FLOW CONTROL HYD. VALVE	1		
	AT225698	SEAL KIT	1		(NOT ILLUSTRATED)
6	AT225082	FLOW CONTROL HYD. VALVE	1		
	AT225083	SEAL KIT	1		(NOT ILLUSTRATED)
7	AT223806	HYD ACTUATED CONTROL VALVE	1		
8	AN207183	CHECK VALVE	2		(SUB FOR AT307262)
	AN207184	SEAL KIT	1		(SUB FOR AT307265)
9	AT316532	KIT	1		(LOCKDOWN KIT) (NOT ILLUSTRATED)

PRESSURE REGULATOR VALVE FITTINGS (SERIAL NO. 590068-)

T195223 -UN-13OCT03

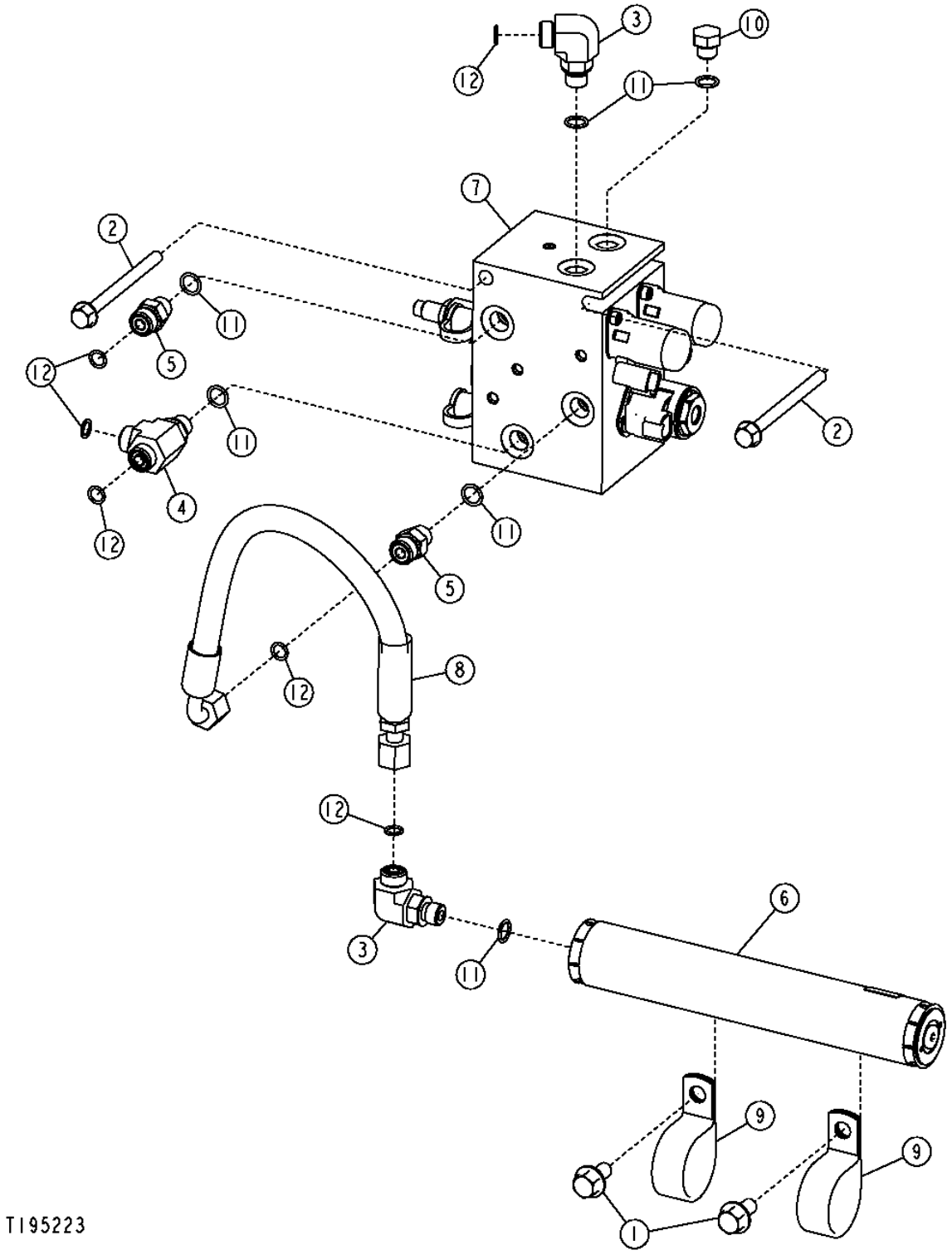

3D11

PRESSURE REGULATOR VALVE FITTINGS (SERIAL NO. 590068-)

KEY	PART NO.	PART NAME	QTY	SERIAL NO.	REMARKS
1	19M7784	SCREW	2		M10 X 20
2	19M7970	SCREW	2		
3	38H1004	ELBOW FITTING	1		
4	38H1023	TEE FITTING	1		
5	38H1160	ADAPTER	1		
6	AT225574	HYDRAULIC ACCUMULATOR	1		
7	AT228138	HYD ACTUATED CONTROL VALVE	1		
8	AT305399	HYDRAULIC HOSE - FABRICATE	1		
9	N205415	CLAMP	2		
10	R27218	FITTING PLUG	1		
11	R26448	O-RING	4		
12	T77613	O-RING	4		

BOOM KICKOUT AND SENSOR

TP48442 -UN-17AUG96

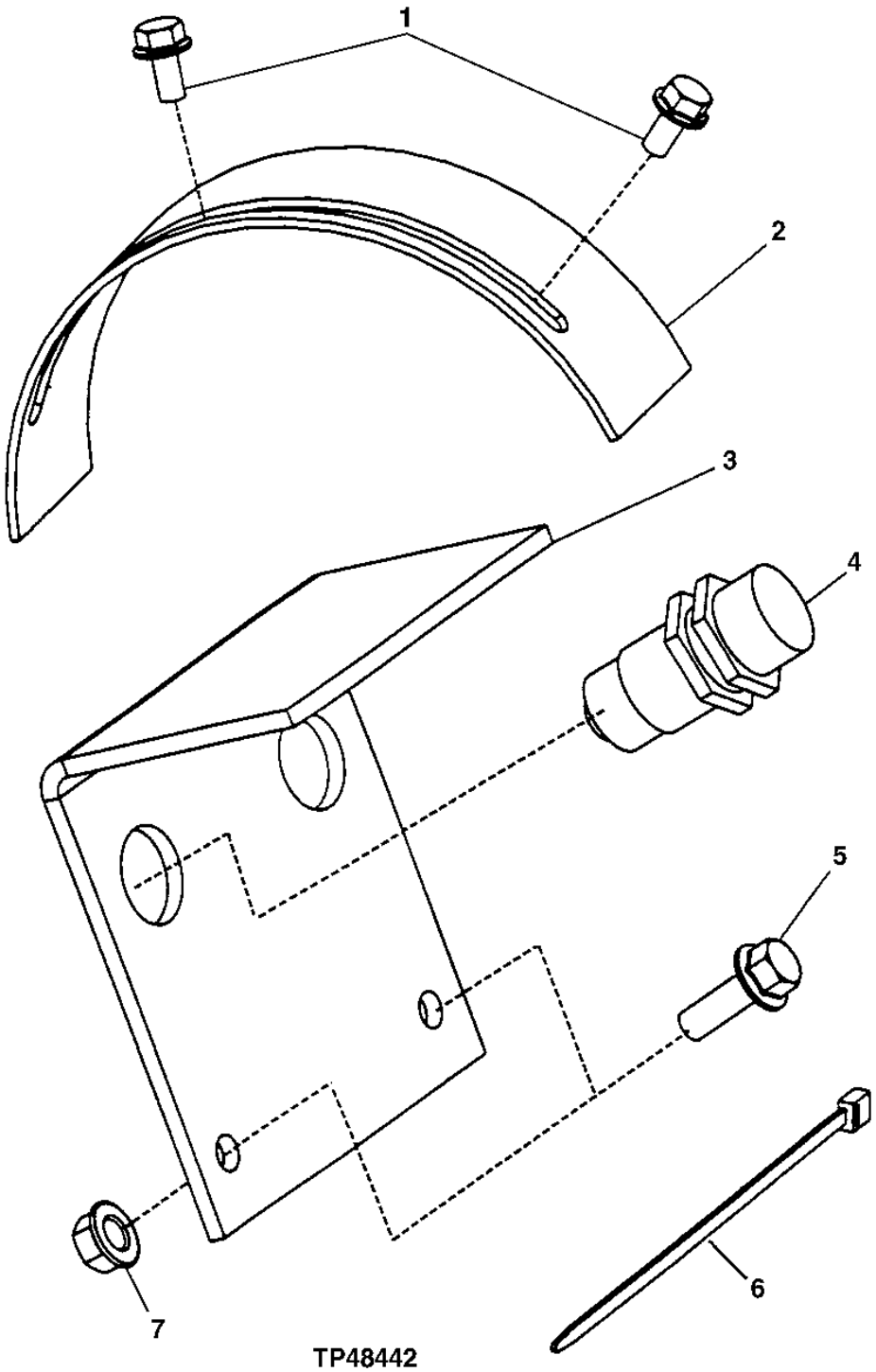

TP48442

3D13

BOOM KICK OUT AND SENSOR

KEY	PART NO.	PART NAME	QTY	SERIAL NO.	REMARKS
1	19M7865	SCREW	2		M8 X 16
2	T156672	PLATE	1		
3	T156652	ANGLE	1		
4	AT203130	SENSOR	1		
	AT222366	SWITCH	1		(HARSH ENVIORNMENT, SEALED CONNECTORS) (NOT ILLUSTRATED)
5	19M7786	SCREW	2		M10 X 30
6	R44302	TIE BAND	1		
7	14M7296	FLANGE NUT	2		M10

RIDE CONTROL ACCUMULATORS AND PLUMBING KIT

T156979 -UN-22JUL02

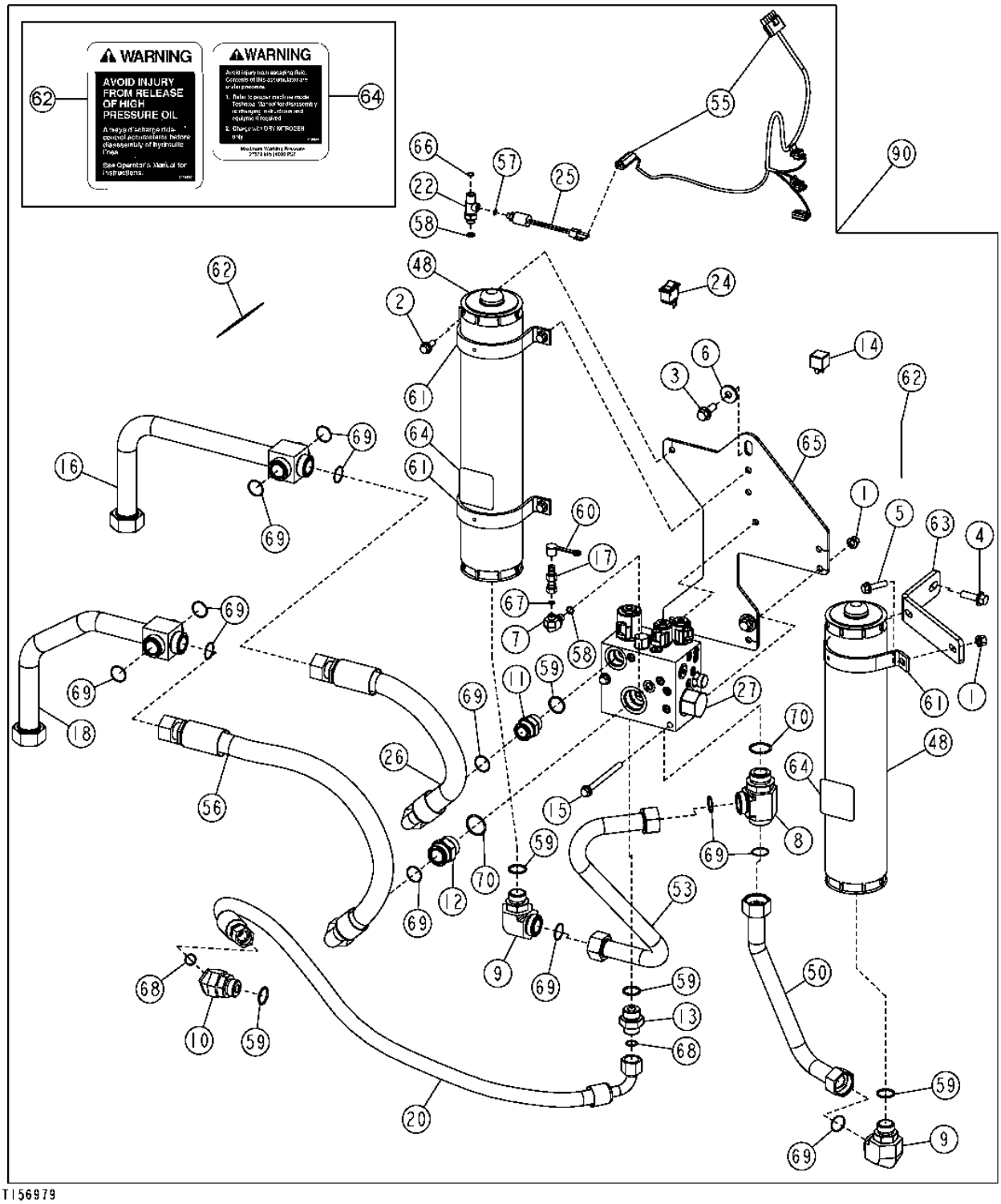

RIDE CONTROL ACCUMULATORS AND PLUMBING KIT

KEY	PART NO.	PART NAME	QTY	SERIAL NO.	REMARKS
1	14M7400	LOCK NUT	4		M10
2	19M7785	SCREW	4		M10 X 25
3	19M7790	SCREW	2		M12 X 35
4	19M7791	BOLT	1		M12 X 40
5	19M7804	SCREW	2		M10 X 40
6	24M7226	WASHER	2		13 X 35 X 5 MM
7	38H1009	ELBOW FITTING	1		
8	38H1028	TEE FITTING	1		
9	38H1053	ELBOW FITTING	3		
10	38H1073	ELBOW FITTING	1		
11	38H1164	ADAPTER	1		
12	38H1165	ADAPTER	1		
13	38H1194	ADAPTER	4		
14	AT162863	RELAY	2		
15	19M7898	SCREW	2		
16	AT203023	LINE	1		
17	RE60700	DIAGNOSTIC COUPLING	1		
18	AT203024	LINE	1		
20	AT203180	HYDRAULIC HOSE - FABRICATE	1		1-3/16" X 1 219 MM X 1-3/16"
22	AT206815	TEE FITTING	1		
24	AT220517	SWITCH	1	-590067	
25	AT223535	PRESSURE SWITCH	1		(STANDARD)
	AT222372	SWITCH	1		(HARSH ENVIRONMENT)
26	AT223783	HYDRAULIC HOSE - FABRICATE	1		1-11/16" X 620 MM (24-1/2") X 1-7/16"
27	AT223806	HYD ACTUATED CONTROL VALVE	1		(RIDE CONTROL VALVE)
	AT316532	KIT	1		
48	AT227717	HYDRAULIC ACCUMULATOR	2		(SUB FOR AT225053) (ALSO ORDER T180944 LABEL) (PRECHARGE TO 335 PSI)
	AT196760	KIT	1		(GAS VALVE REPAIR)
50	AT224591	OIL LINE	1		
53	AT224592	OIL LINE	1		
55	AT224600	WIRING HARNESS	1		(RIDE CONTROL HARNESS)
	AT225011	WIRING HARNESS	1		(RIDE CONTROL HARNESS) (HARSH ENVIRONMENT)
56	AT225420	HYDRAULIC HOSE	1		1-11/16" X 845 MM (33-1/4") X 1-11/16"
57	R26287	O-RING	1		
58	R26448	O-RING	2		
59	R29936	O-RING	5		
60	R77175	COVER	1		
61	T146490	CLAMP	3		
62	T146792	SAFETY SIGN	2		(RIDE CONTROL)
63	T173480	ANGLE	1		
64	T180944	LABEL	2		(ACCUMULATOR WARNING)
65	T181208	PLATE	1		
66	T77613	O-RING	1		
67	T77814	O-RING	1		
68	T77858	O-RING	2		
69	T78612	O-RING	12		
70	U13639	O-RING	2		
90	**AT206645**	**KIT**	**1**	**-590067**	**(WHOLEGOODS) (RIDE CONTROL) (WITH ROCKER SWITCH)**
	AT307767	**KIT**	**1**	**590068-**	**(WHOLE GOODS) (RIDE CONTROL) (WITHOUT ROCKER SWITCH)**

SINGLE LEVER CONTROLLER (SERIAL NO. -590067)

T159196 -UN-12SEP02

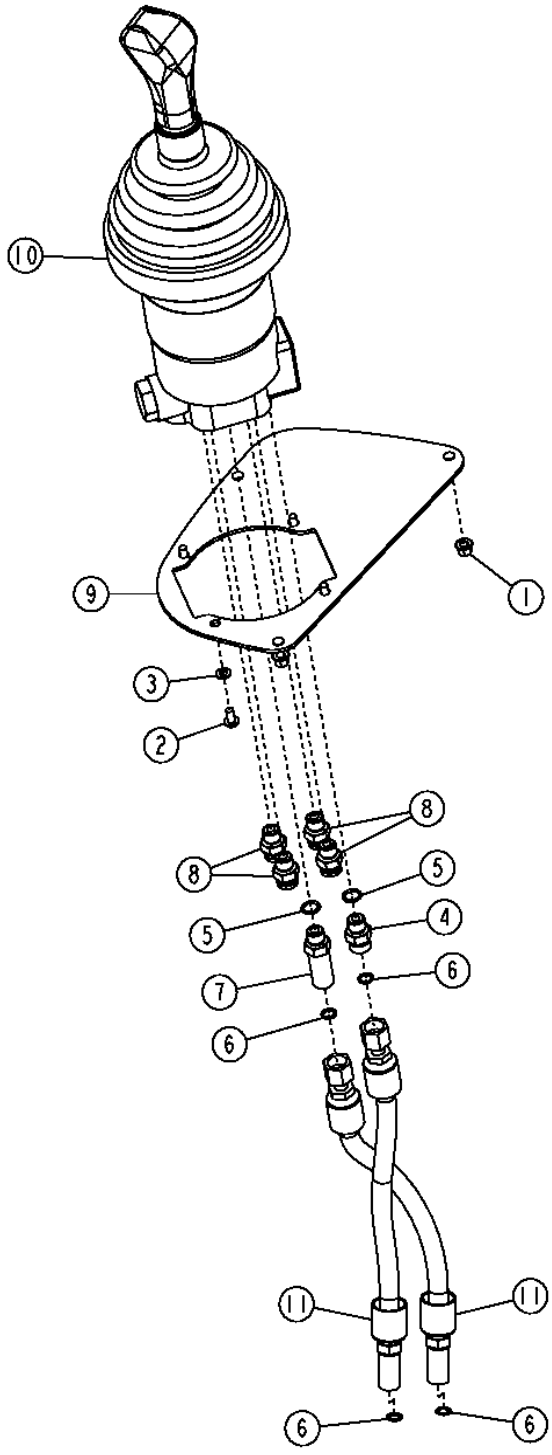

T159196

3D17

SINGLE LEVER CONTROLLER (SERIAL NO. -590067)

KEY	PART NO.	PART NAME	QTY	SERIAL NO.	REMARKS
1	14M7397	LOCK NUT	3		M6
2	21M7285	SCREW	4		M6 X 12, (K1)
3	24M7054	WASHER	4		6.400 X 12 X 1.600 MM
4	38H1160	ADAPTER	1		(K1)
5	R26448	O-RING	2		(ALSO ORDER AT208911)
6	T77613	O-RING	4		
7	38H1212	ADAPTER	1		
8	63H1001	FITTING	4		
9	AT224241	PLATE	1		
10	AT228702	HYDR./PILOT CONTROL VALVE	1		
11	AT228703	HYDRAULIC HOSE - FABRICATE	2		

SINGLE LEVER PILOT CONTROLLER COMPONENTS (SERIAL NO. -590067)

T159778 -UN-25SEP02

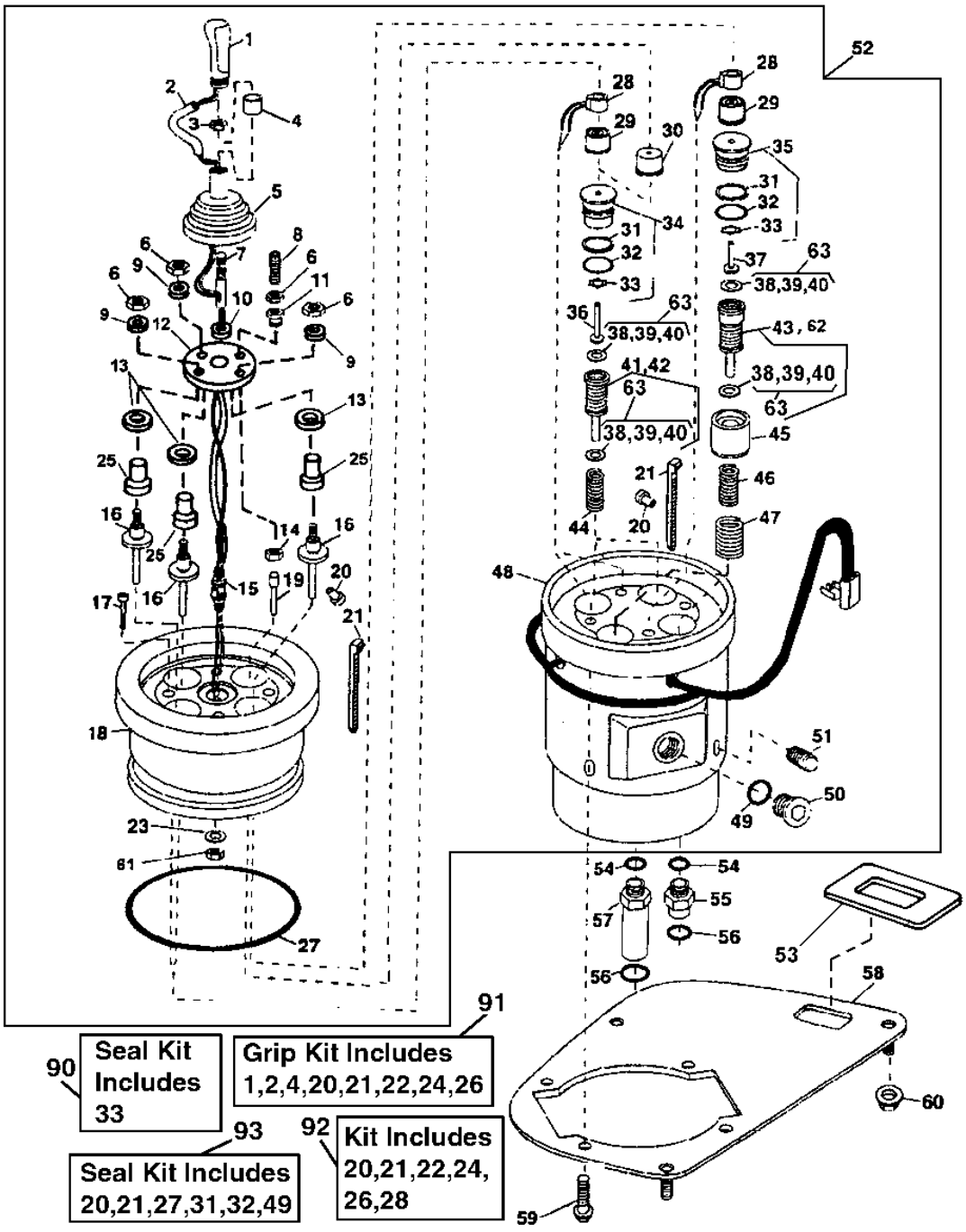

T159778

SINGLE LEVER PILOT CONTROLLER COMPONENTS (SERIAL NO. -590067)

KEY	PART NO.	PART NAME	QTY	SERIAL NO.	REMARKS
1	AT208188	GRIP	1		
2	.....	SLEEVE	1		(K1)
3	T170269	NUT	1		
4	AT208911	RETAINER	1		(K1)
5	T170293	BOOT	1		(ALSO ORDER AT208911)
6	T170275	NUT	4		
7	T173178	LEVER	1		
8	T172523	SET SCREW	1		
9	T173181	WASHER	3		
10	T173205	WASHER	1		
11	T170273	FITTING	1		
12	T173180	PLATE	1		
13	T173182	WASHER	3		
14	T170272	NUT	1		
15	AT210249	POST	1		
16	AT210250	BALL JOINT SOCKET	3		
17	T170263	CAP SCREW	4		
18	.....	HOUSING	1		(SUB AT228702)
19	T170274	PIN	1		
20	T170266	GROMMET	4		(K1) (K2) (K3)
21	H77698	TIE BAND	4		(K1) (K2) (K3)
23	T172522	WASHER	1		
25	T173179	NUT	1		

THIS PARTS LISTING IS CONTINUED

SINGLE LEVER PILOT CONTROLLER COMPONENTS (CONTINUED)(SERIAL NO. -590067)

T159778 -UN-25SEP02

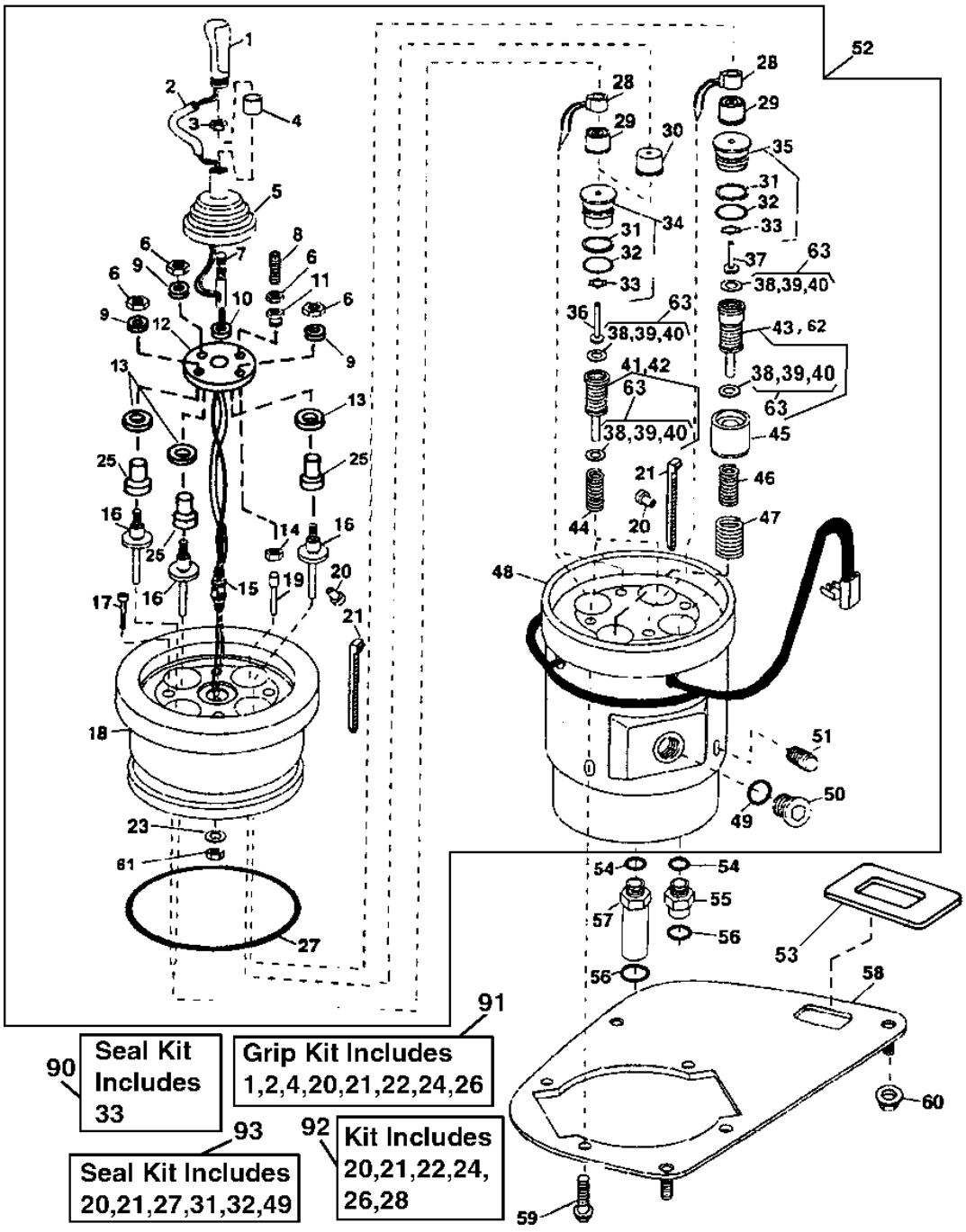

T159778

SINGLE LEVER PILOT CONTROLLER COMPONENTS (CONTINUED)(SERIAL NO. -590067)

KEY	PART NO.	PART NAME	QTY	SERIAL NO.	REMARKS
27	.....	O-RING	1		(SUB AT228702) (K3)
28	T170283	ELECTRICAL COIL	3		(K2)
29	T170284	RETAINER	3		
30	T170278	BUSHING	1		(BUCKET DUMP)
31	T170307	BACK-UP RING	1		(K3)
32	T170306	SEAL	1		(K3)
33	T131617	RING	2		(K)
34	AT208178	RETAINER	2		(BUCKET DUMP AND BOOM RAISE)
35	AT208179	RETAINER	2		(BOOM LOWER AND BUCKET ROLL-BACK)
36	T170285	PLUNGER	2		
37	T170286	PLUNGER	2		
38	T103092	SHIM	AR		0.1 MM (.004")
39	T103093	SHIM	AR		0.2 MM (.007")
40	T103094	SHIM	AR		0.4 MM (.015")
41	AT208182	SPOOL	1		(BUCKET DUMP)
42	AT208181	SPOOL	1		(BOOM RAISE)
43	AT208183	SPOOL	1		(BOOM LOWER)
44	T170288	SPRING	2		
45	AT208180	KIT	2		
46	T170289	SPRING	2		
47	T170287	SPRING	2		
48	.....	HOUSING	1		(SUB AT228702)
49	R26375	O-RING	2		(K3)
50	.....	PLUG	2		(SUB AT228702)
51	.....	PLUG	2		(SUB AT228702)
52	AT228702	HYDR./PILOT CONTROL VALVE	1		
53	T171587	LABEL	1		
54	R26448	O-RING	6		
55	38H1160	ADAPTER	5		
56	T77613	O-RING	6		
57	38H1212	ADAPTER	1		
58	AT224241	PLATE	1		
59	21M7285	SCREW	4		
60	14M7397	LOCK NUT	3		
61	14H849	NUT	1		7/16"
62	AT209789	SPOOL	1		(BUCKET ROLL-BACK(USE WITH TOOL CARRIER AND LOG LOADER)
63	AT210376	KIT	AR		
90	AT104041	SEAL KIT	1		INCLUDES ALL (K) PARTS (ALSO ORDER AT115876 TUBE OF GREASE)
91	AT209784	GRIP	1		INCLUDES ALL (K1) PARTS (GRIP WITH KICKDOWN PLATE)
92	AT209788	KIT	1		INCLUDES ALL (K3) PARTS (COIL)
93	AT209779	SEAL KIT	1		INCLUDES ALL(K4) PARTS(SINGLE LEVER SEAL KIT)

SINGLE LEVER CONTROLLER (SERIAL NO. 590068-)

T194485 -UN-22SEP03

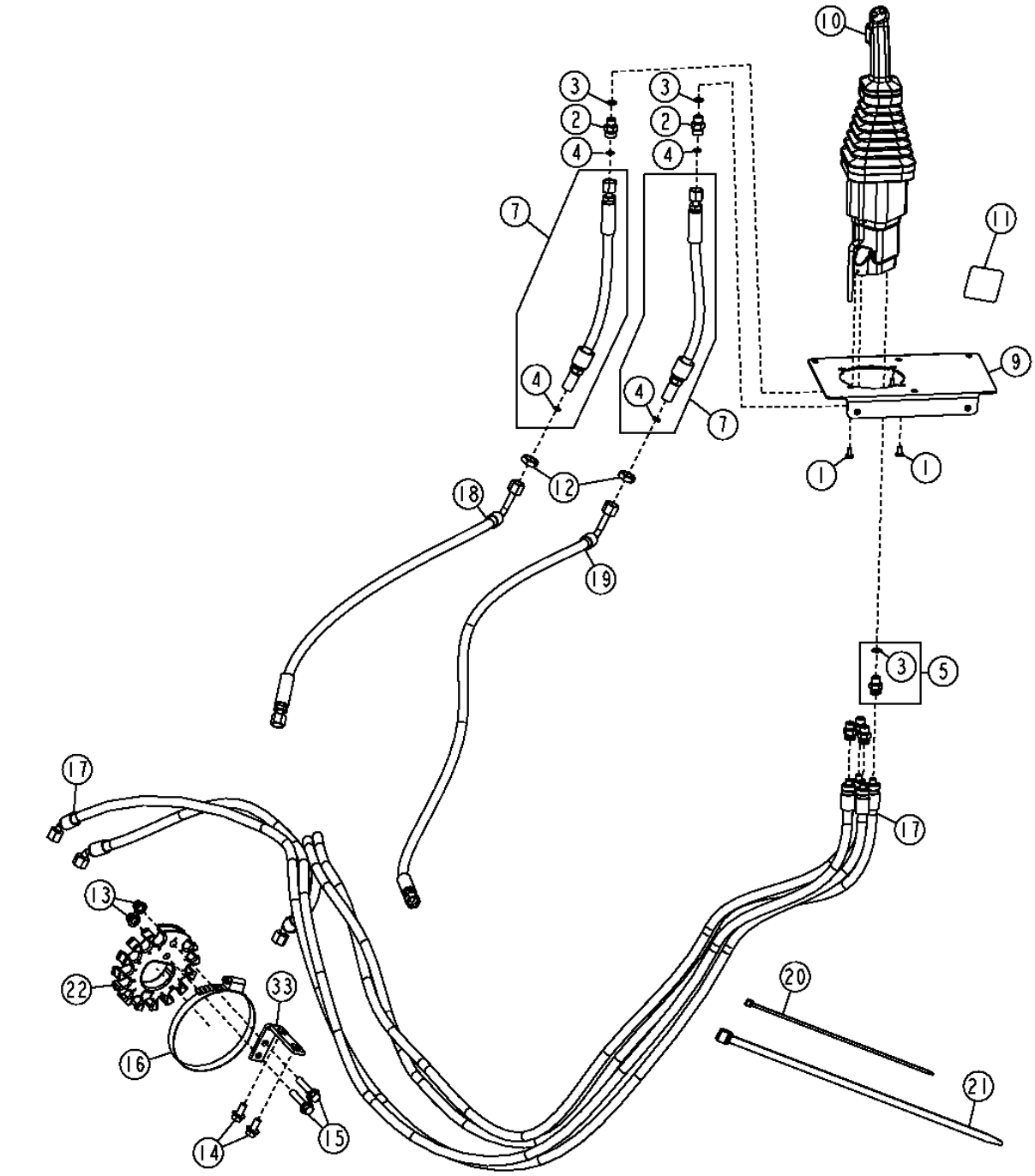

T194485

SINGLE LEVER CONTROLLER (SERIAL NO. 590068-)

KEY	PART NO.	PART NAME	QTY	SERIAL NO.	REMARKS
1	21M7285	SCREW	4		M6 X 12
2	38H1160	ADAPTER	2		
3	R26448	O-RING	6		
4	T77613	O-RING	4		
5	63H1001	FITTING	4		
7	AT228703	HYDRAULIC HOSE - FABRICATE	2		
9	AT300662	PLATE	1		
10	AT315847	HYDR./PILOT CONTROL VALVE	1		(SUB FOR AT301458) (WITHOUT FNR) (COMPONENTS ON SERPERATE PAGE)
	AT315846	HYDR./PILOT CONTROL VALVE	1		(SUB FOR AT300664) (WITH FNR) (COMPONENTS ON SERPERATE PAGE)
11	T203670	LABEL	1		(WITHOUT FNR)
	T197182	LABEL	1		(WITH FNR)
12	T81029	NUT	2		
13	14M7400	LOCK NUT	2		M10
14	19M7784	SCREW	2		M10 X 20
15	19M7806	SCREW	2		M10 X 50
16	TY22493	HOSE CLAMP	1		(SUB FOR AR89602)
17	AT226349	HYDRAULIC HOSE - FABRICATE	4		
18	AT226350	HYDRAULIC HOSE - FABRICATE	1		
19	AT301930	HYDRAULIC HOSE - FABRICATE	1		(SUB FOR AT226613)
20	H77698	TIE BAND	10		
21	N189220	TIE BAND	2		
22	T154342	RETAINER	1		
33	T157443	ANGLE	1		
34	AT309843	WIRING HARNESS	1		(KICKDOWN HARNESS FOR CONTROLLER WITHOUT FNR) (NOT ILLUSTRATED)
..	AT305690	FIELD INSTALLATION KIT	1		(TWO LEVER TO JOYSTICK CONVERSION KIT) (WITH FNR)
..	**AT311817**	**FIELD INSTALLATION KIT**	**1**		**(TWO LEVER TO JOYSTICK CONVERSION KIT) (WITH OUT FNR)**

SINGLE LEVER CONTROLLER COMPONENTS (SERIAL NO. 590068-)

T196147 -UN-13NOV03

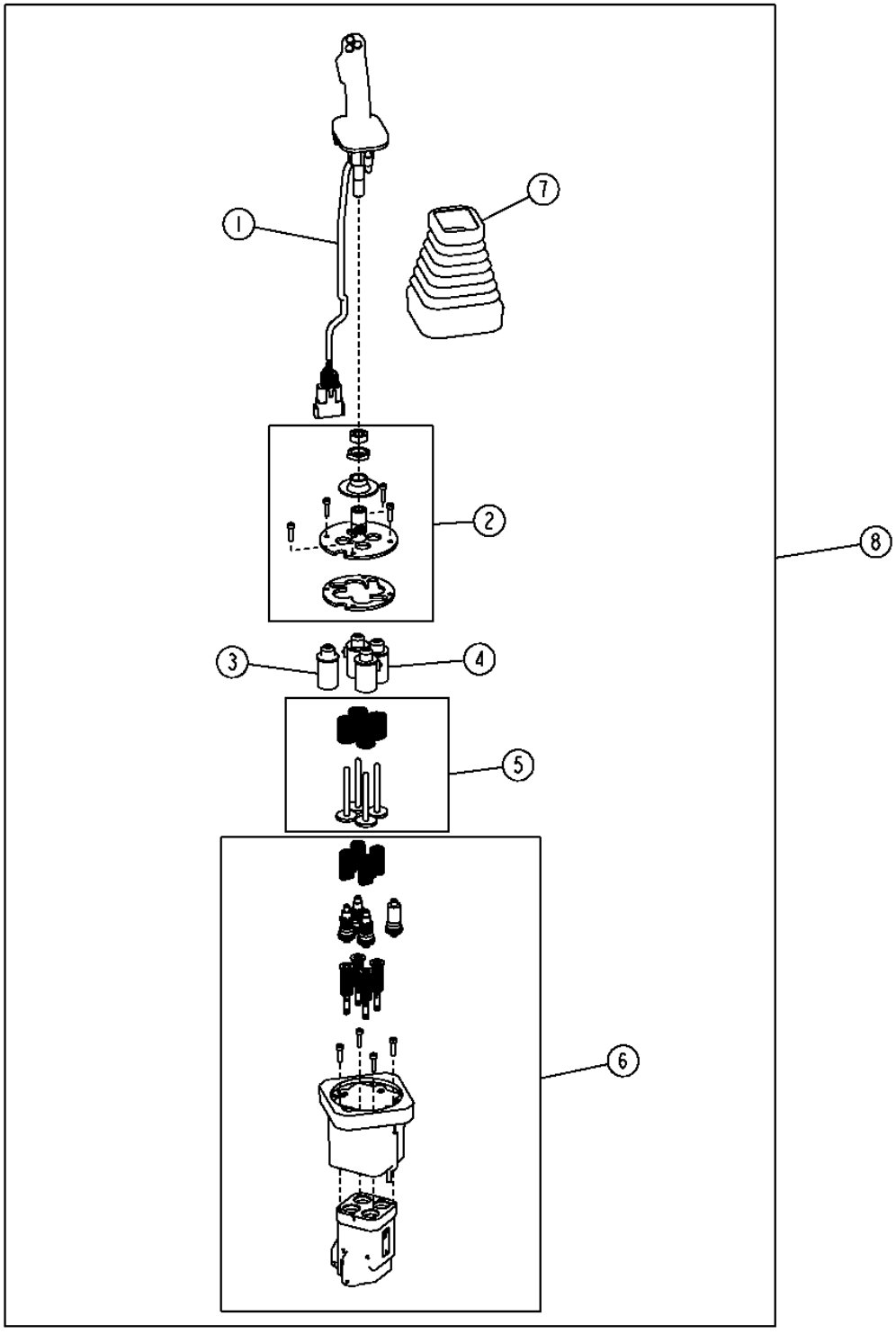

SINGLE LEVER CONTROLLER COMPONENTS (SERIAL NO. 590068-)

KEY	PART NO.	PART NAME	QTY	SERIAL NO.	REMARKS
1	AT315458	HANDLE	1		(SUB FOR AT302032) (WITHOUT FNR)
	AT315459	HANDLE	1		(SUB FOR AT302031) (WITH FNR)
2	AT307636	UNIVERSAL JOINT	1		
3	AT307638	GUIDE	1		
4	AT307637	SOLENOID	3		(THREE USES - ORDER AS REQUIRED)
5	AT307640	PIN	1		
6	AT307641	OIL PRESSURE REG. VALVE	1		
7	T205941	BOOT	1		
8	AT315847	HYDR./PILOT CONTROL VALVE	1		(SUB FOR AT301458) (WITHOUT FNR)
	AT315846	HYDR./PILOT CONTROL VALVE	1		(SUB FOR AT300664) (WITH FNR)
9	AT309843	WIRING HARNESS	1		(KICKDOWN HARNESS FOR CONTROLLER WITHOUT FNR) (NOT ILLUSTRATED)

SINGLE LEVER CONTROLLER WITH AUX.(SERIAL NO. -590067)

T159207 -UN-11SEP02

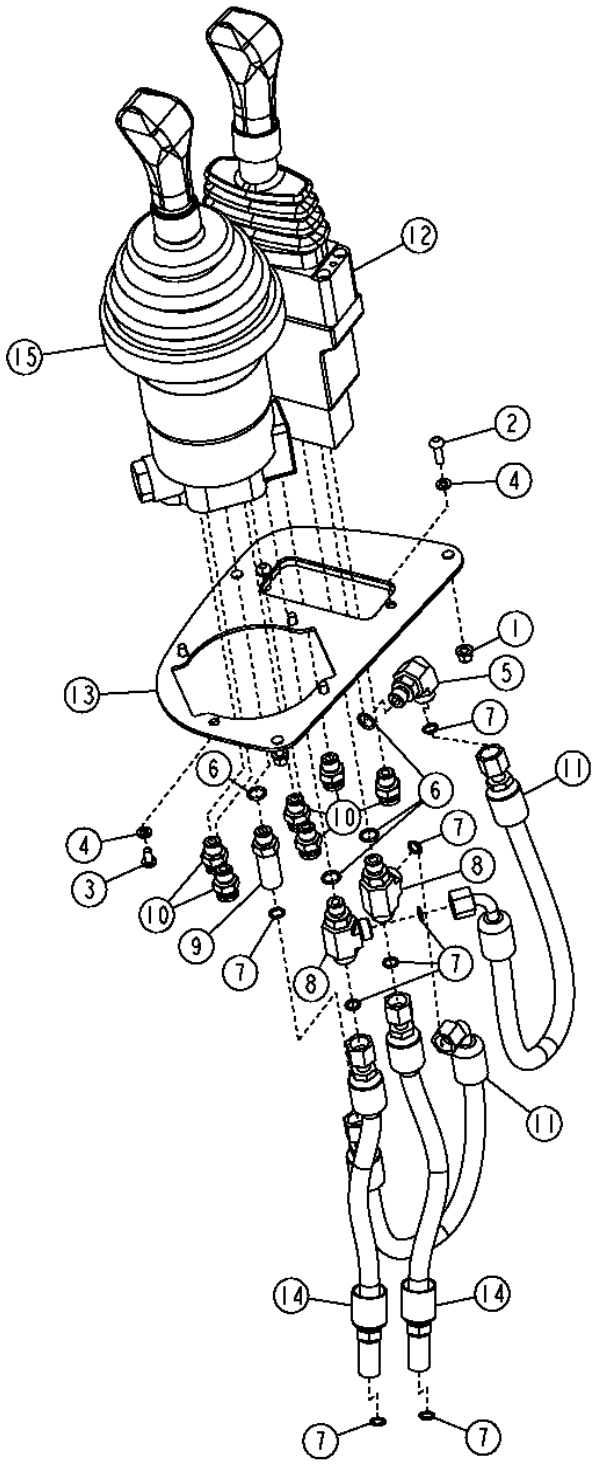

T159207

SINGLE LEVER CONTROLLER WITH AUX.(SERIAL NO. -590067)

KEY	PART NO.	PART NAME	QTY	SERIAL NO.	REMARKS
1	14M7397	LOCK NUT	3		M6
2	21M7267	SCREW	2		M6 X 20
3	21M7285	SCREW	4		M6 X 12
4	24M7054	WASHER	6		6.400 X 12 X 1.600 MM
5	38H1004	ELBOW FITTING	1		
6	R26448	O-RING	10		
7	T77613	O-RING	7		9.246 X 1.778 MM
8	38H1023	TEE FITTING	1		
9	38H1212	ADAPTER	1		
10	63H1001	FITTING	6		
11	AT133590	HYDRAULIC HOSE - FABRICATE	2		
12	AT210213	HYD ACTUATED CONTROL VALVE	2		
13	AT224242	PLATE	1		
14	AT228703	HYDRAULIC HOSE - FABRICATE	2		
15	AT228702	HYDR./PILOT CONTROL VALVE	1		

SINGLE LEVER CONTROLLER WITH AUX.(SERIAL NO. 590068-)

T194487 -UN-23SEP03

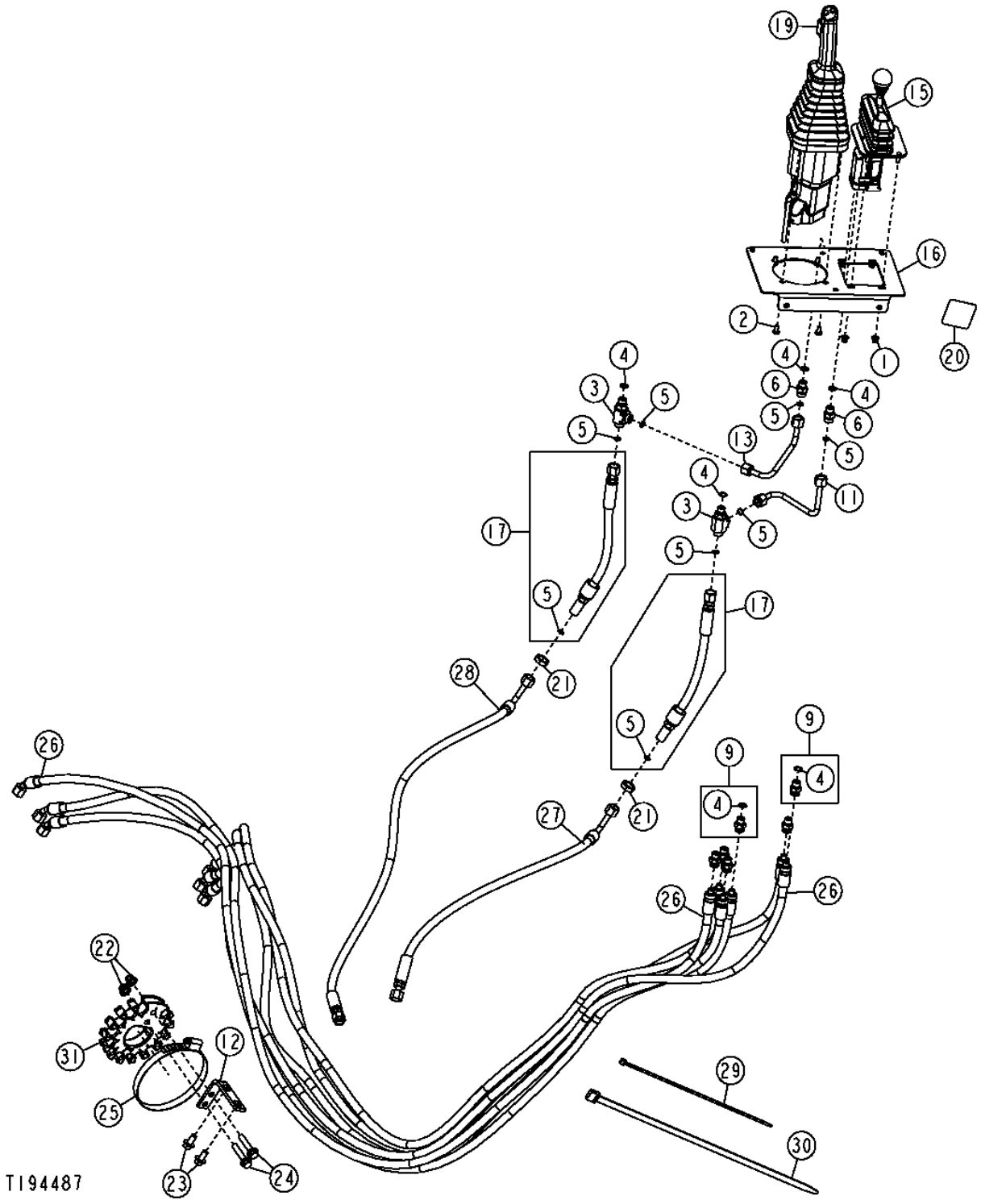

THIS PARTS LISTING IS CONTINUED

SINGLE LEVER CONTROLLER WITH AUX.(SERIAL NO. XXXXXX-)

KEY	PART NO.	PART NAME	QTY	SERIAL NO.	REMARKS
1	14M7397	LOCK NUT	4		M6
2	21M7285	SCREW	4		M6 X 12
3	38H1023	TEE FITTING	1		
4	R26448	O-RING	10		
5	T77613	O-RING	8		
6	38H1160	ADAPTER	2		
9	63H1001	FITTING	6		
11	AT226132	OIL LINE	1		(ALSO ORDER (2) 38H1353)
12	T157443	ANGLE	1		
13	AT226133	OIL LINE	1		(ALSO ORDER (2) 38H1353)
15	AT228250	HYDR./PILOT CONTROL VALVE	1		(COMPONENTS ON AUXILARY CONTROLLER PAGE)
16	AT228261	PLATE	1		
17	AT228703	HYDRAULIC HOSE - FABRICATE	2		
19	AT315847	HYDR./PILOT CONTROL VALVE	1		(SUB FOR AT301458) (WITHOUT FNR) (COMPONENTS ON JOYSTICK CONTROLLER PAGE)
	AT315846	HYDR./PILOT CONTROL VALVE	1		(SUB FOR AT300664) (WITH FNR) (COMPONENTS ON JOYSTICK CONTROLLER PAGE)
20	T203670	LABEL	1		(WITHOUT FNR)
	T197182	LABEL	1		(WITH FNR)
21	T81029	NUT	2		
22	14M7400	LOCK NUT	2		M10
23	19M7784	SCREW	2		M10 X 20
24	19M7806	SCREW	2		M10 X 50
25	TY22493	HOSE CLAMP	1		(SUB FOR AR89602)
26	AT226349	HYDRAULIC HOSE - FABRICATE	6		
27	AT226350	HYDRAULIC HOSE - FABRICATE	1		
28	AT301930	HYDRAULIC HOSE - FABRICATE	1		(SUB FOR AT226613)
29	H77698	TIE BAND	10		
30	N189220	TIE BAND	2		
31	T154342	RETAINER	1		
32	AT309843	WIRING HARNESS	1		(KICKDOWN HARNESS FOR CONTROLLER WITHOUT FNR) (NOT ILLUSTRATED)
..	**AT305693**	**FIELD INSTALLATION KIT**	**1**		**(WHOLE GOODS)(TWO LEVER WITH AUX. TO JOYSTICK WITH AUX. CONVERSION KIT WITH FNR)**
..	**AT311818**	**FIELD INSTALLATION KIT**	**1**		**(WHOLE GOODS)(TWO LEVER WITH AUX. TO JOYSTICK WITH AUX. CONVERSION KIT WITH OUT FNR)**
..	**AT307751**	**MOUNTING PARTS**	**1**		**(WHOLE GOODS) (ADD AUX. TO JOYSTICK CONVERSION KIT)**

DUAL SINGLE LEVER CONTROLLER (SERIAL NO. -590067)

T159216 -UN-11SEP02

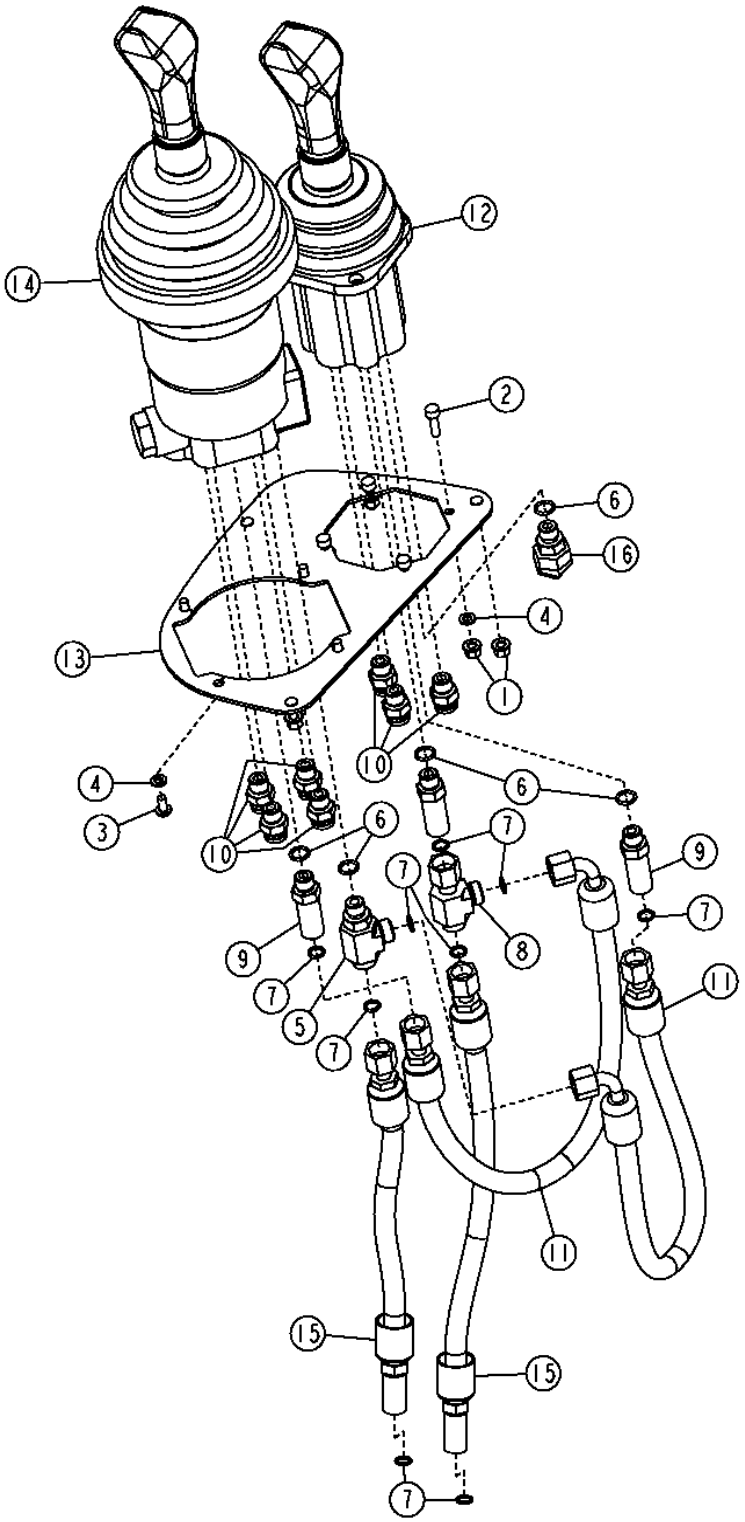

T159216

SINGLE LEVER CONTROLLER WITH AUX.(SERIAL NO. -590067)

KEY	PART NO.	PART NAME	QTY	SERIAL NO.	REMARKS
1	14M7397	LOCK NUT	7		M6
2	19M7603	SCREW	4		M6 X 20
3	21M7285	SCREW	4		M6 X 12
4	24M7054	WASHER	8		6.400 X 12 X 1.600 MM
5	38H1023	TEE FITTING	1		
6	R26448	O-RING	5		
7	T77613	O-RING	9		
8	38H1030	TEE FITTING	1		
9	38H1212	ADAPTER	2		
10	63H1001	FITTING	7		
11	AT133590	HYDRAULIC HOSE - FABRICATE	2		
12	AT208760	ELECTRONIC CONTROL UNIT	1		
13	AT224246	PLATE	1		
14	AT228702	HYDR./PILOT CONTROL VALVE	1		
15	AT228703	HYDRAULIC HOSE - FABRICATE	2		
16	AT226515	FITTING	1		

AUXILIARY SINGLE LEVER JOYSTICK CONTROLLER COMPONENTS

TP70478 -UN-12SEP00

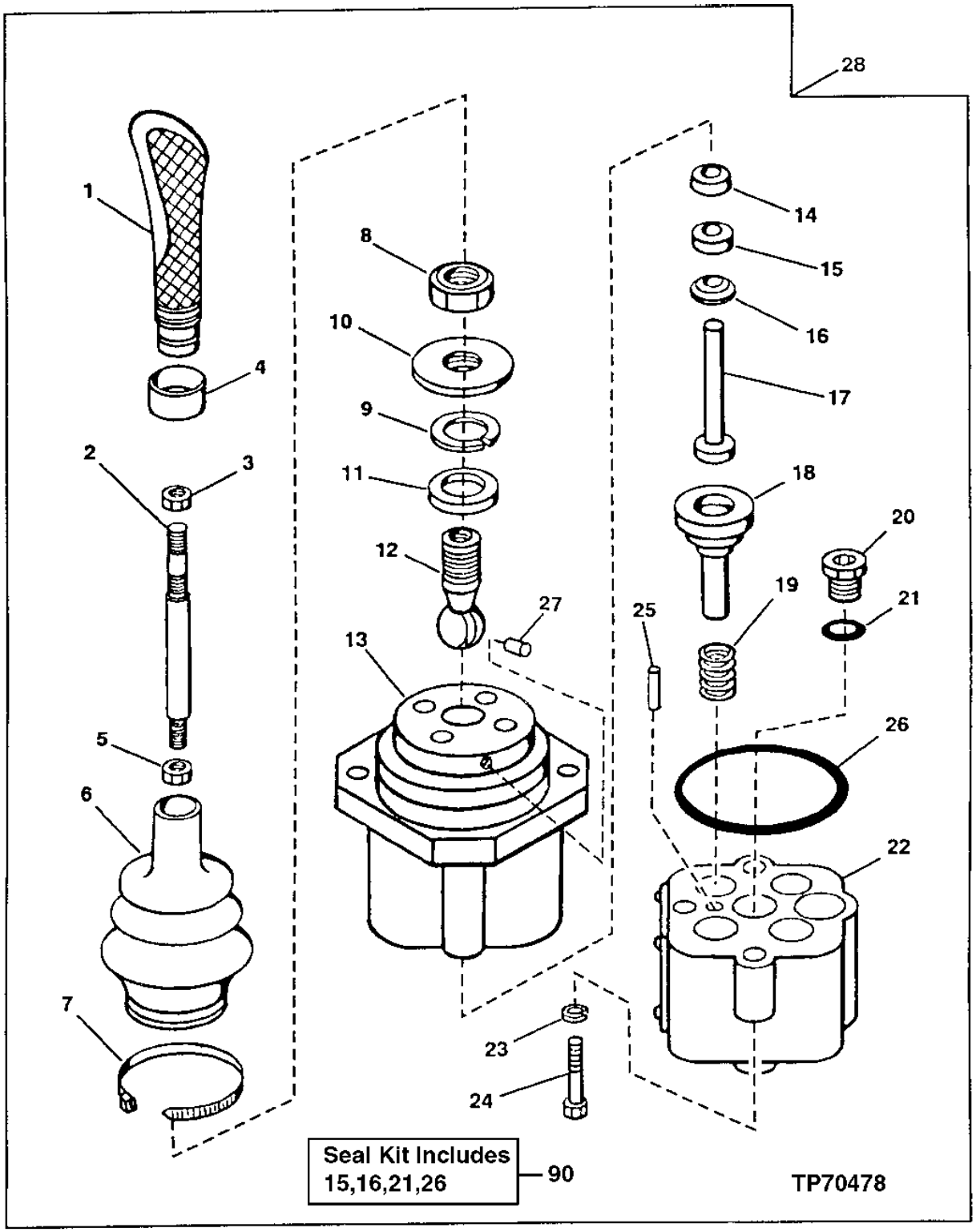

AUXILIARY SINGLE LEVER JOYSTICK CONTROLLER COMPONENTS

KEY	PART NO.	PART NAME	QTY	SERIAL NO.	REMARKS
1	AT172629	GRIP	1		(ALSO ORDER H77698 AND AT208911)
2	AT210145	LEVER	1		
3	T170269	NUT	1		
4	AT208911	RETAINER	1		
5	T172986	NUT	1		
6	T172988	BOOT	1		
7	H77698	TIE BAND	1		
8	T172985	NUT	1		
9	T172987	SNAP RING	1		
10	.....	PLATE	1		(AT119017 NO LONGER AVAILABLE)
11	AT119378	RETAINER	1		
12	.....	BALL	1		(AT119018 NO LONGER AVAILABLE)
13	.....	HOUSING	1		UPPER (SUB AT208760)
14	.....	SEAL	1		
15	.....	RETAINER	1		(K1)
16	.....	RING	1		(K1)
17	T102958	PLUNGER	4		
18	.....	SPOOL	4		(SUB AT208760)
19	T131624	SPRING	4		
20	AT49216	FITTING PLUG	1		
21	.....	O-RING	1		(K1)
22	.....	HOUSING	1		LOWER
23	12M7006	LOCK WASHER	4		6 MM
24	19M7966	SCREW	4		M6 X 25
25	T102961	DOWEL PIN	1		
26	.....	SEAL	1		(K1)
27	T102963	PIN FASTENER	1		ANTI-ROTATION
28	AT208760	ELECTRONIC CONTROL UNIT	2		
90	AT210247	SEAL KIT	1		INCLUDES ALL (K) PARTS (SEAL)

TWO LEVER CONTROLLER (SERIAL NO. -590067)

T159442 -UN-18SEP02

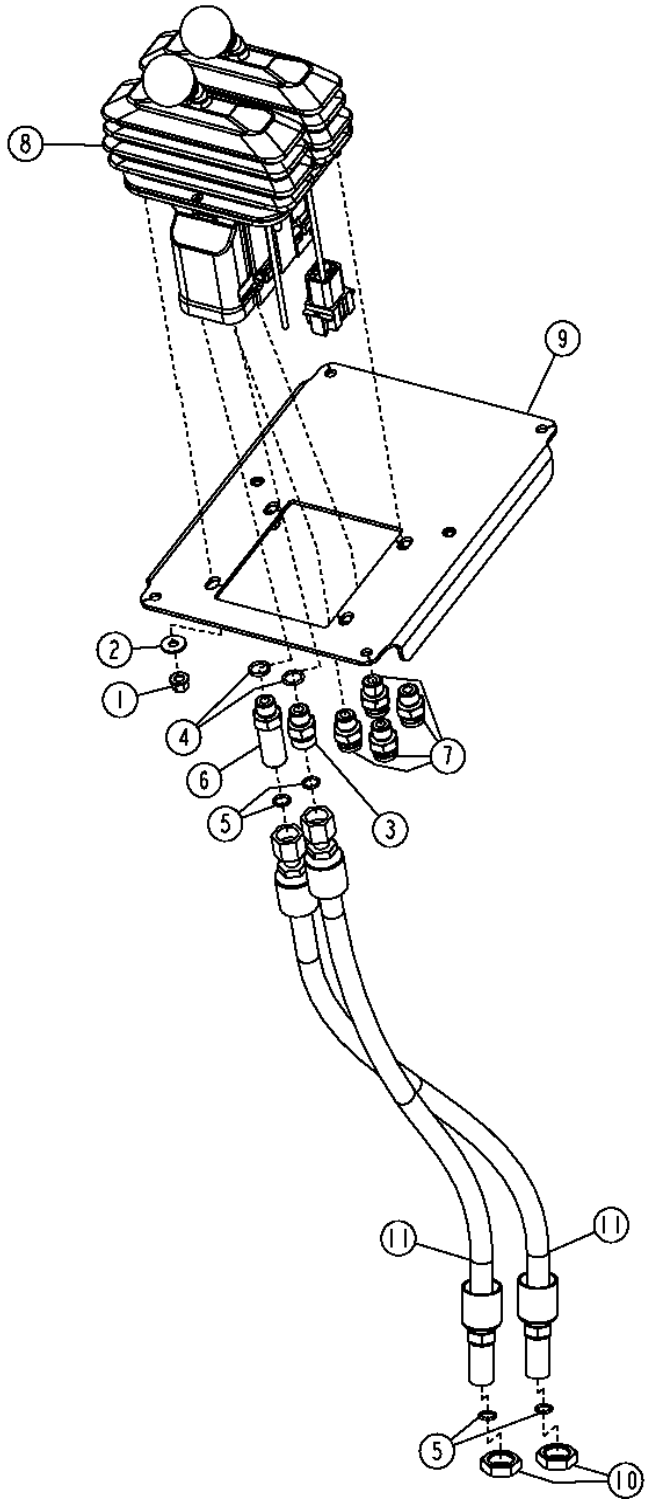

TWO LEVER CONTROLLER (SERIAL NO. -590067)

KEY	PART NO.	PART NAME	QTY	SERIAL NO.	REMARKS
1	14M7397	LOCK NUT	4		M6
2	24M7139	WASHER	4		6.400 X 18 X 1.600 MM
3	38H1160	ADAPTER	1		
4	R26448	O-RING	2		
5	T77613	O-RING	4		
6	38H1212	ADAPTER	1		
7	63H1001	FITTING	4		
8	AT225425	HYDR./PILOT CONTROL VALVE	1		(SERVICE PARTS LISTED ON SEPARATE PAGE)
	AT115146	SEAL KIT	1		PLUNGER PIN, (SUB FOR AT305841)
	AT305842	O-RING	4		BETWEEN STACKABLE SECTIONS (REQUIRES 2 O-RINGS PER CONTROLLER JOINT)
9	AT226302	PLATE	1		
10	T81029	NUT	2		
11	AT226454	HYDRAULIC HOSE - FABRICATE	2		

TWO LEVER CONTROLLER (SERIAL NO. 590068-)

T194468 -UN-22SEP03

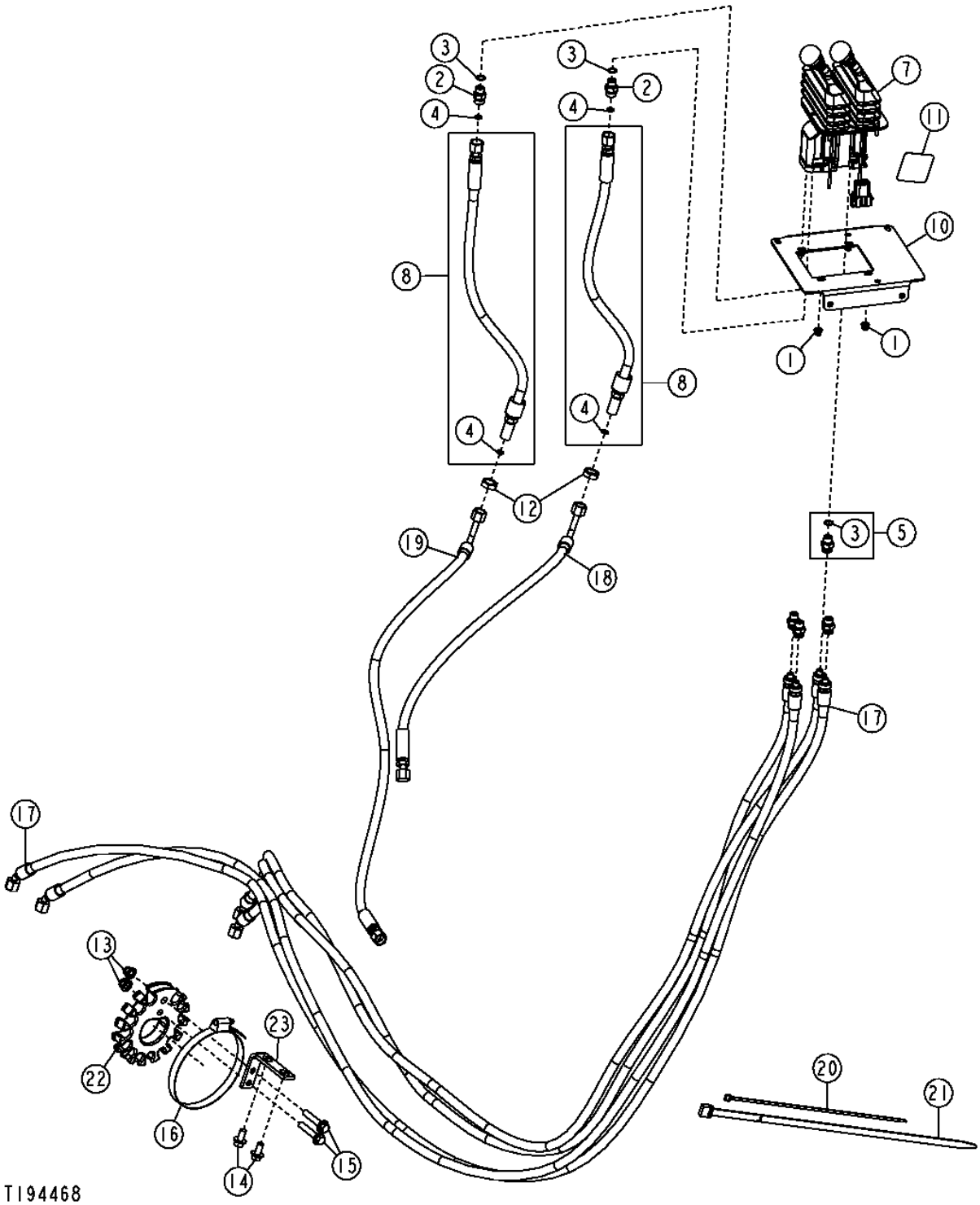

THIS PARTS LISTING IS CONTINUED

TWO LEVER CONTROLLER (SERIAL NO. 590068-)

KEY	PART NO.	PART NAME	QTY	SERIAL NO.	REMARKS
1	14M7397	LOCK NUT	4		M6
2	38H1160	ADAPTER	2		
3	R26448	O-RING	6		
4	T77613	O-RING	4		
5	63H1001	FITTING	4		
7	AT225425	HYDR./PILOT CONTROL VALVE	1		(COMPONENTS ON SEPERATE PAGE)
8	AT226454	HYDRAULIC HOSE - FABRICATE	2		
10	AT300936	PLATE	1		
11	T200729	LABEL	1		
12	T81029	NUT	2		
13	14M7400	LOCK NUT	2		M10
14	19M7784	SCREW	2		M10 X 20
15	19M7806	SCREW	2		M10 X 50
16	TY22493	HOSE CLAMP	1		(SUB FOR AR89602)
17	AT226349	HYDRAULIC HOSE - FABRICATE	4		
18	AT226350	HYDRAULIC HOSE - FABRICATE	1		
19	AT301930	HYDRAULIC HOSE - FABRICATE	1		(SUB FOR AT226613)
20	H77698	TIE BAND	10		
21	N189220	TIE BAND	2		
22	T154342	RETAINER	1		
23	T157443	ANGLE	1		
..	AT305687	FIELD INSTALLATION KIT	1		(JOYSTICK TO TWO LEVER CONVERSION KIT)

TWO LEVER CONTROLLER WITH AUX. (SERIAL NO. -590067)

T158352 -UN-12SEP02

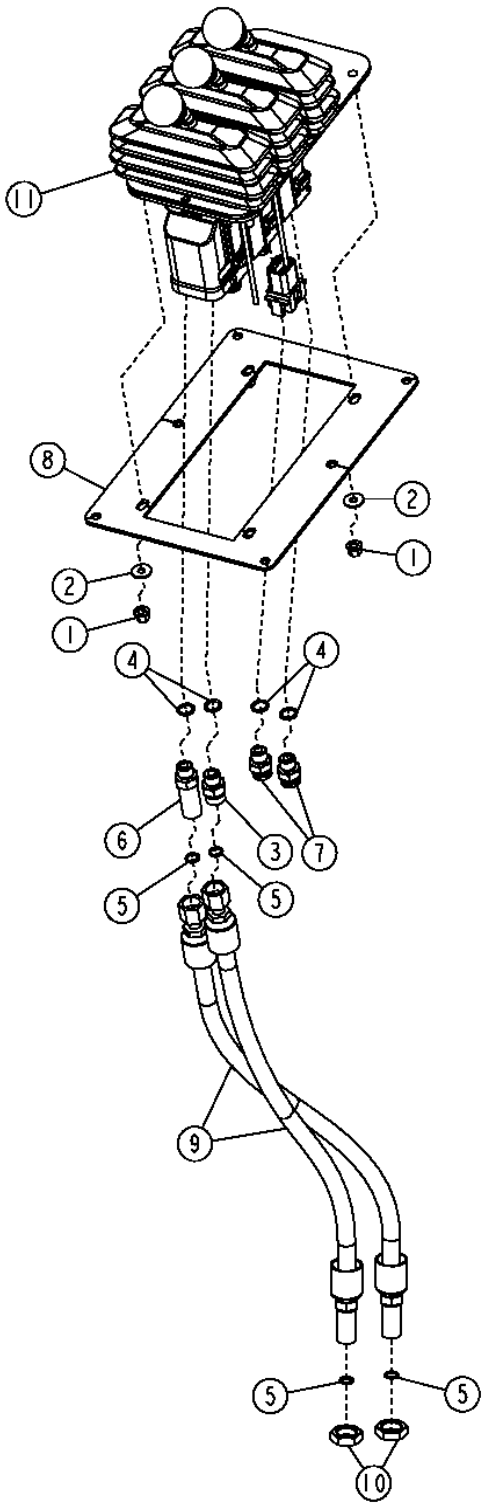

T158352

TWO LEVER CONTROLLER WITH AUX. (SERIAL NO. -590067)

KEY	PART NO.	PART NAME	QTY	SERIAL NO.	REMARKS
1	14M7397	LOCK NUT	4		M6
2	24M7139	WASHER	4		6.400 X 18 X 1.600 MM
3	38H1160	ADAPTER	1		
4	R26448	O-RING	2		
5	T77613	O-RING	4		
6	38H1212	ADAPTER	1		
7	63H1001	FITTING	6		
8	AT226303	PLATE	1		
9	AT226454	HYDRAULIC HOSE - FABRICATE	2		
10	T81029	NUT	2		
11	AT225430	HYDR./PILOT CONTROL VALVE	1		(SERVICE PARTS LISTED ON SEPARATE PAGE)
	AT115146	SEAL KIT	1		PLUNGER PIN, (SUB FOR AT305841)
	AT305842	O-RING	4		BETWEEN STACKABLE SECTIONS (REQUIRES 2 O-RINGS PER CONTROLLER JOINT)
..	**AT227953**	**FIELD INSTALLATION KIT**	**1**		**(SINGLE CONTROLLER WITH AUXILLARY TO THREE LEVER)**

TWO LEVER CONTROLLER WITH AUX.(SERIAL NO. 590068-)

T194479 -UN-19SEP03

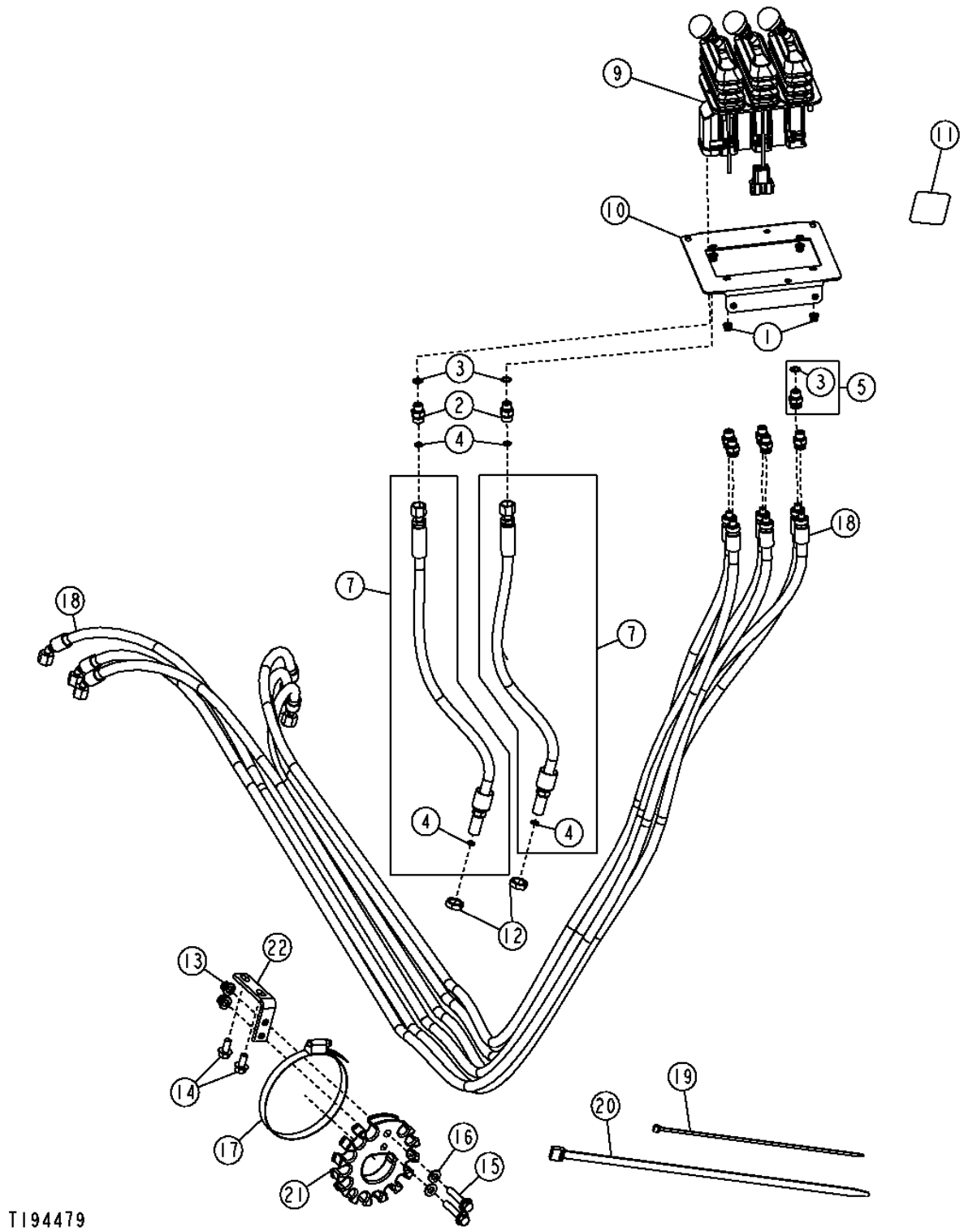

TWO LEVER CONTROLLER WITH AUX.(SERIAL NO. 590068-)

KEY	PART NO.	PART NAME	QTY	SERIAL NO.	REMARKS
1	14M7397	LOCK NUT	4		M6
2	38H1160	ADAPTER	2		
3	R26448	O-RING	8		
4	T77613	O-RING	4		
5	63H1001	FITTING	6		
7	AT226454	HYDRAULIC HOSE - FABRICATE	2		
9	AT300154	HYDR./PILOT CONTROL VALVE	1		(SERVICE PARTS LISTED ON SEPARATE PAGE)
10	AT300156	PLATE	1		
11	T200729	LABEL	1		
12	T81029	NUT	2		
13	14M7400	LOCK NUT	2		M10
14	19M7784	SCREW	2		M10 X 20
15	19M7806	SCREW	2		M10 X 50
16	24M7239	WASHER	2		10.700 X 21 X 2.500 MM
17	TY22493	HOSE CLAMP	1		(SUB FOR AR89602)
18	AT226349	HYDRAULIC HOSE - FABRICATE	6		
19	H77698	TIE BAND	10		
20	N189220	TIE BAND	2		
21	T154342	RETAINER	1		
22	T157443	ANGLE	1		
..	**AT305692**	**FIELD INSTALLATION KIT**	**1**		**(WHOLE GOODS)(JOYSTICK WITH AUX. TO TWO LEVER WITH AUX. CONVERSION KIT)**
..	**AT307736**	**MOUNTING PARTS**	**1**		**(WHOLE GOODS) (ADD AUX. TO TWO LEVER CONVERSION KIT)**

TWO LEVER PILOT CONTROLLER WITH DUAL AUX. (SERIAL NO. -590067)

T158370 -UN-12SEP02

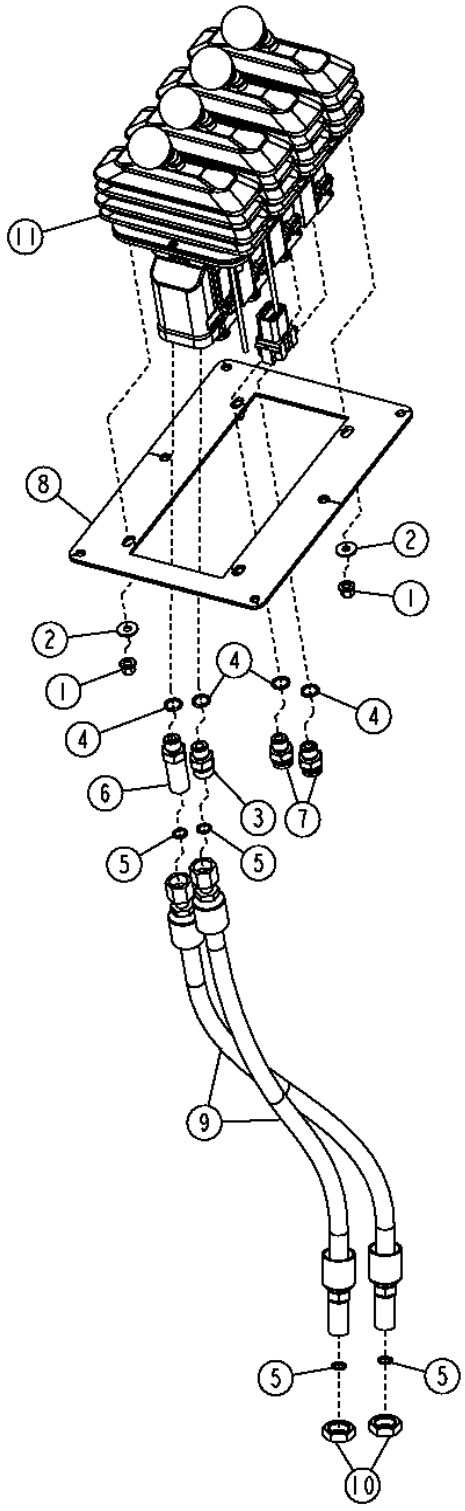

T158370

TWO LEVER PILOT CONTROLLER WITH DUAL AUX. (SERIAL NO. -590067)

KEY	PART NO.	PART NAME	QTY	SERIAL NO.	REMARKS
1	14M7397	LOCK NUT	4		M6
2	24M7139	WASHER	4		6.400 X 18 X 1.600 MM
3	38H1160	ADAPTER	1		
4	R26448	O-RING	10		
5	T77613	O-RING	4		
6	38H1212	ADAPTER	1		
7	63H1001	FITTING	8		
8	AT226303	PLATE	1		
9	AT226454	HYDRAULIC HOSE - FABRICATE	2		
10	T81029	NUT	2		
11	AT225432	HYDR./PILOT CONTROL VALVE	1		(SERVICE PARTS LISTED ON SEPARATE PAGE)
	AT115146	SEAL KIT	1		(SUB FOR AT305841) PLUNGER PIN
	AT305842	O-RING	4		BETWEEN STACKABLE SECTIONS (REQUIRES 2 O-RINGS PER CONTROLLER JOINT)
90	AT227955	FIELD INSTALLATION KIT	1		(WHOLEGOODS) (DUAL SINGLE LEVER CONTROLLER TO FOUR LEVER CONTROLLER)

TWO LEVER PILOT CONTROLLER COMPONENTS

T207529 -UN-01FEB05

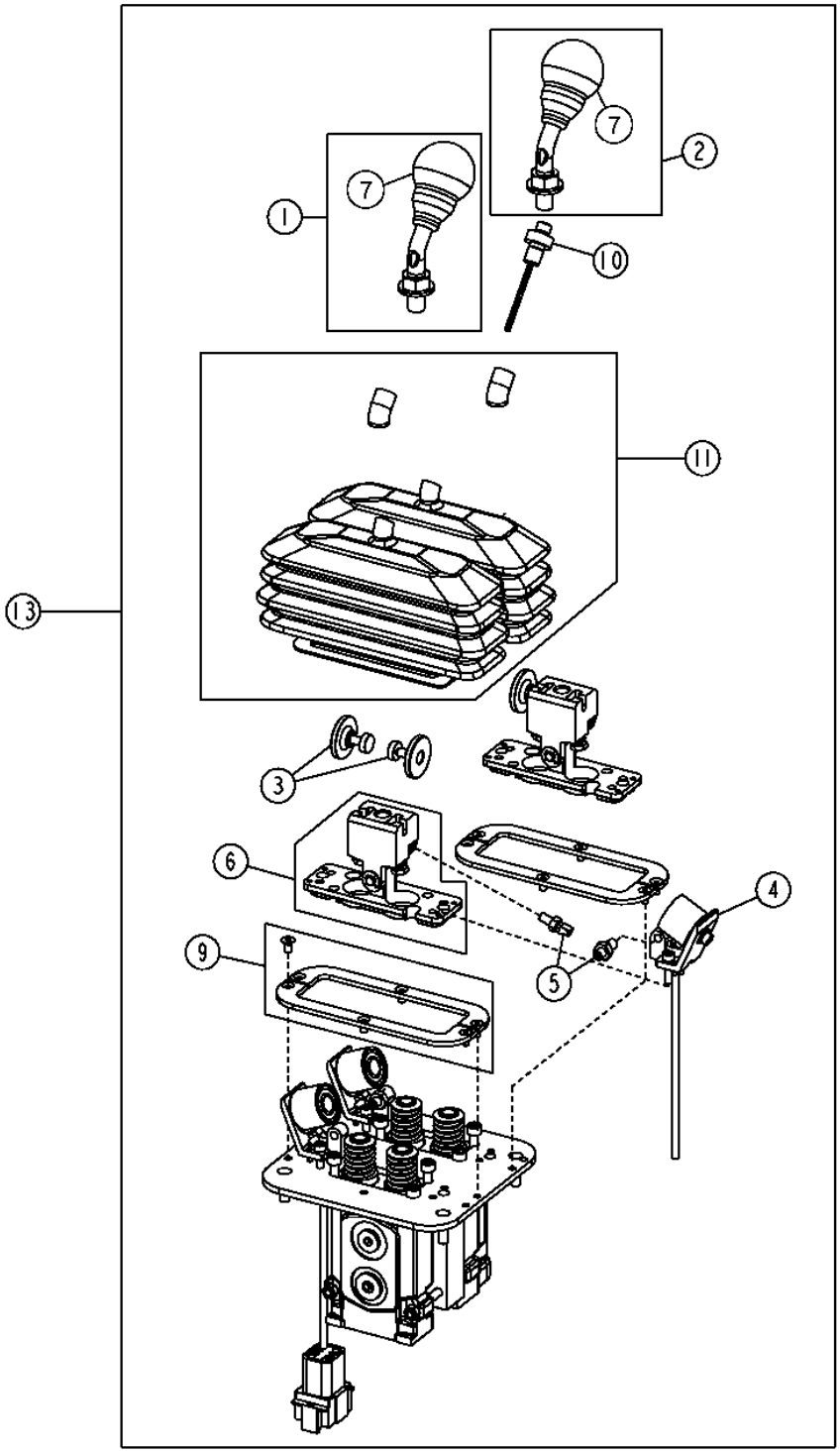

T207529

TWO LEVER PILOT CONTROLLER COMPONENTS

KEY	PART NO.	PART NAME	QTY	SERIAL NO.	REMARKS
1	AT227925	LEVER	1		
2	AT227926	LEVER	1		(FOR USE WITH KICKDOWN SWITCH)
3	AT227928	ARMATURE	2		
4	AT227927	SOLENOID	2		
5	AT227929	HYDR./PILOT CONTROL VALVE	4		
6	AT227930	PLATE	2		
7	AT318123	BOOT	2		(KNOB BOOT)
9	AT227933	PLATE	2		
10	AT226119	SWITCH	1		(KICKDOWN)
11	AT303619	KIT	1		(BOOT ASSEMBLY)
13	AT225425	HYDR./PILOT CONTROL VALVE	1		

SINGLE AND DUAL AUXILIARY CONTROLLER COMPONENTS

T212877 -UN-19JUL05

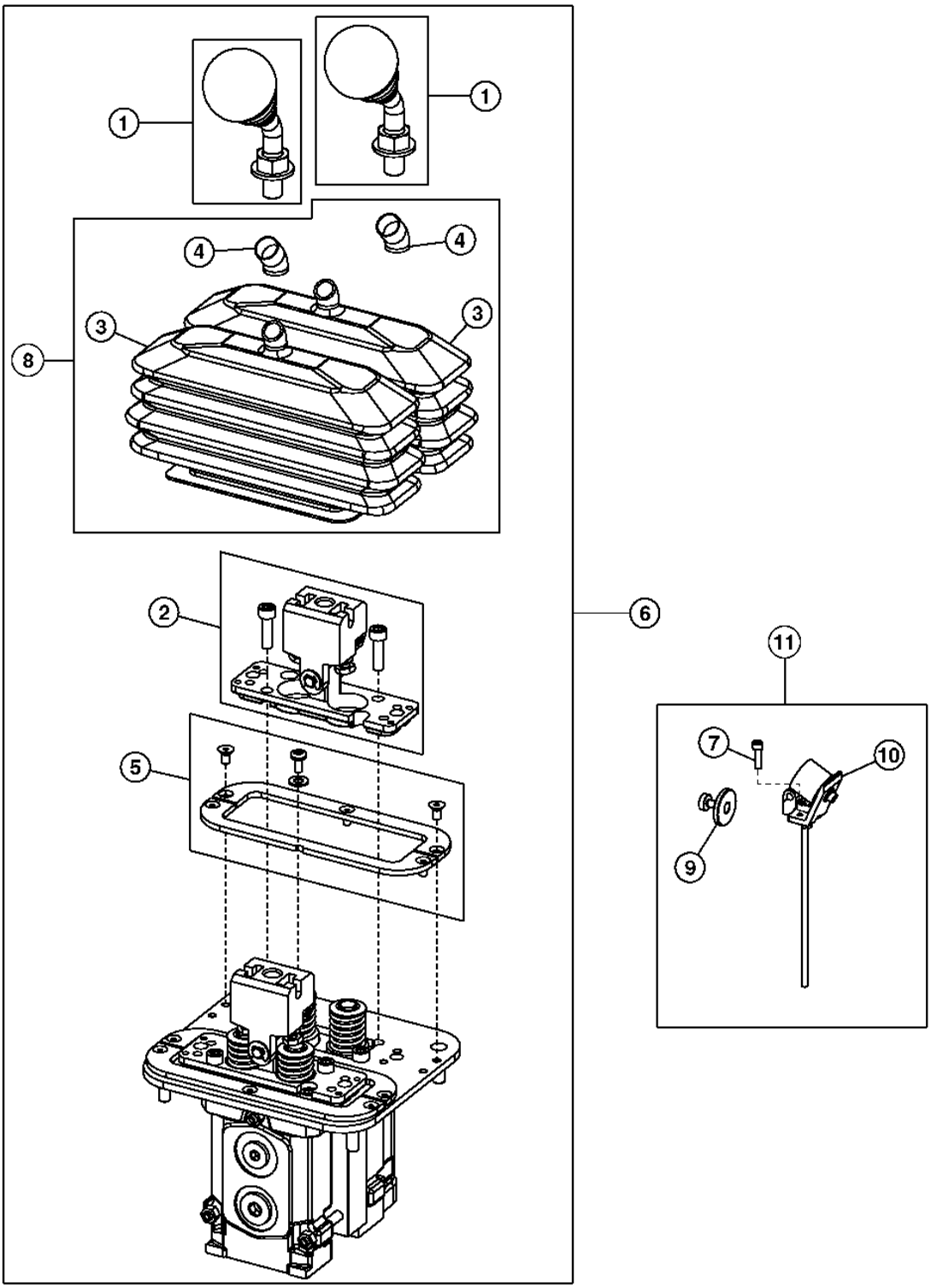

SINGLE AND DUAL AUXILIARY CONTROLLER COMPONENTS

KEY	PART NO.	PART NAME	QTY	SERIAL NO.	REMARKS
1	AT227925	LEVER	1		
2	AT227930	PLATE	1		
3	AT318123	BOOT	1		(T196859 NO LONGER AVAILABLE)
4	.....	COVER	1		(SUB AT303619) (T196860 NO LONGER AVAILABLE)
5	AT227933	PLATE	1		
6	AT225426	HYDR./PILOT CONTROL VALVE	1		
	AT226333	HYDR./PILOT CONTROL VALVE	1		
7	AT325612	BOLT	2		
8	AT303619	KIT	1		BOOT ASSEMBLY
9	AT227928	ARMATURE	1		
10	AT227927	SOLENOID	1		
11	.....	KIT	1		AUXILIARY CONTROLLER DETENT KIT (AT227957 NO LONGER AVAILABLE) (FURNISH AT305603)
..	**AT305603**	**FIELD INSTALLATION KIT**	**1**		**(INCLUDES AT227927, AT227928, (2) AT325612) (ADD DETENTS TO AUXILIARY KIT)**

JOYSTICK FNR CONVERSION KIT

T199696 -UN-05MAY04

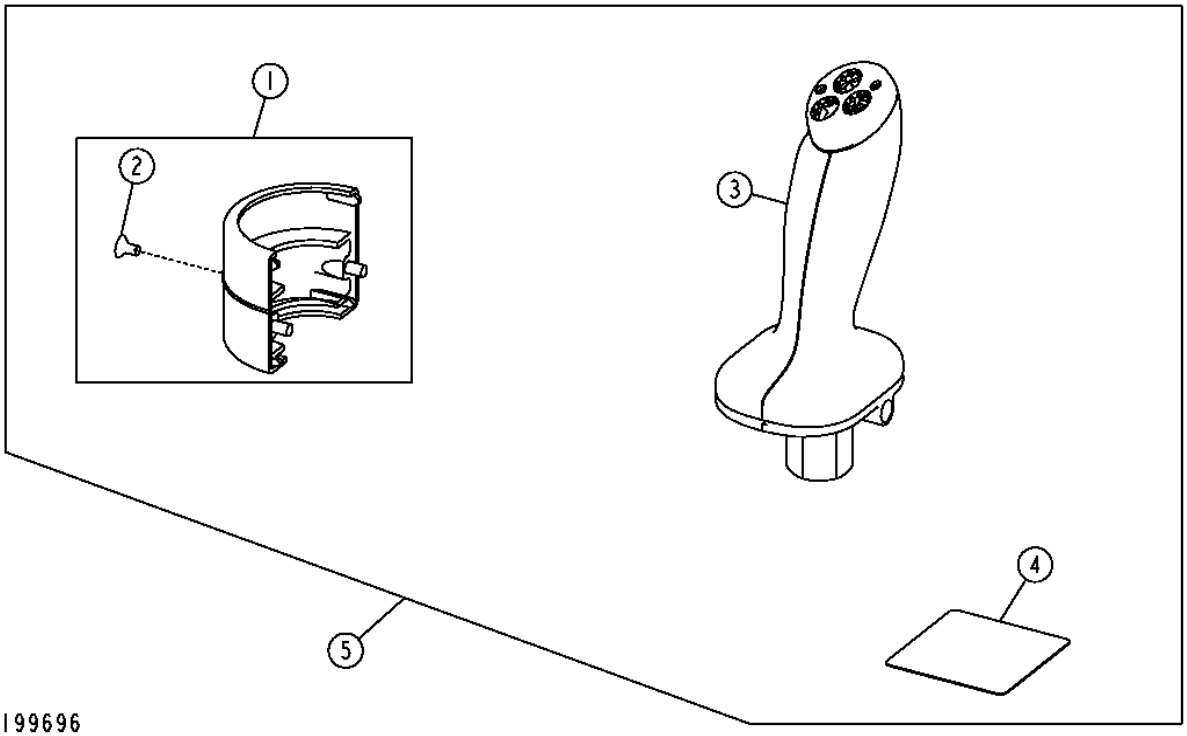

JOYSTICK FNR CONVERSION KIT

KEY	PART NO.	PART NAME	QTY	SERIAL NO.	REMARKS
1	AT300921	CLAMP	1		
2	21M7258	SCREW	1		
3	AT315459	HANDLE	1		(SUB FOR AT302031)
4	T197182	LABEL	1		
5	AT313087	FIELD INSTALLATION KIT	1		

AUXILIARY CONTROLLER SECTION (FOR USE WITH SINGLE LEVER CONTROLLER)(SERIAL NO. -590067)

T161049 -UN-29OCT02

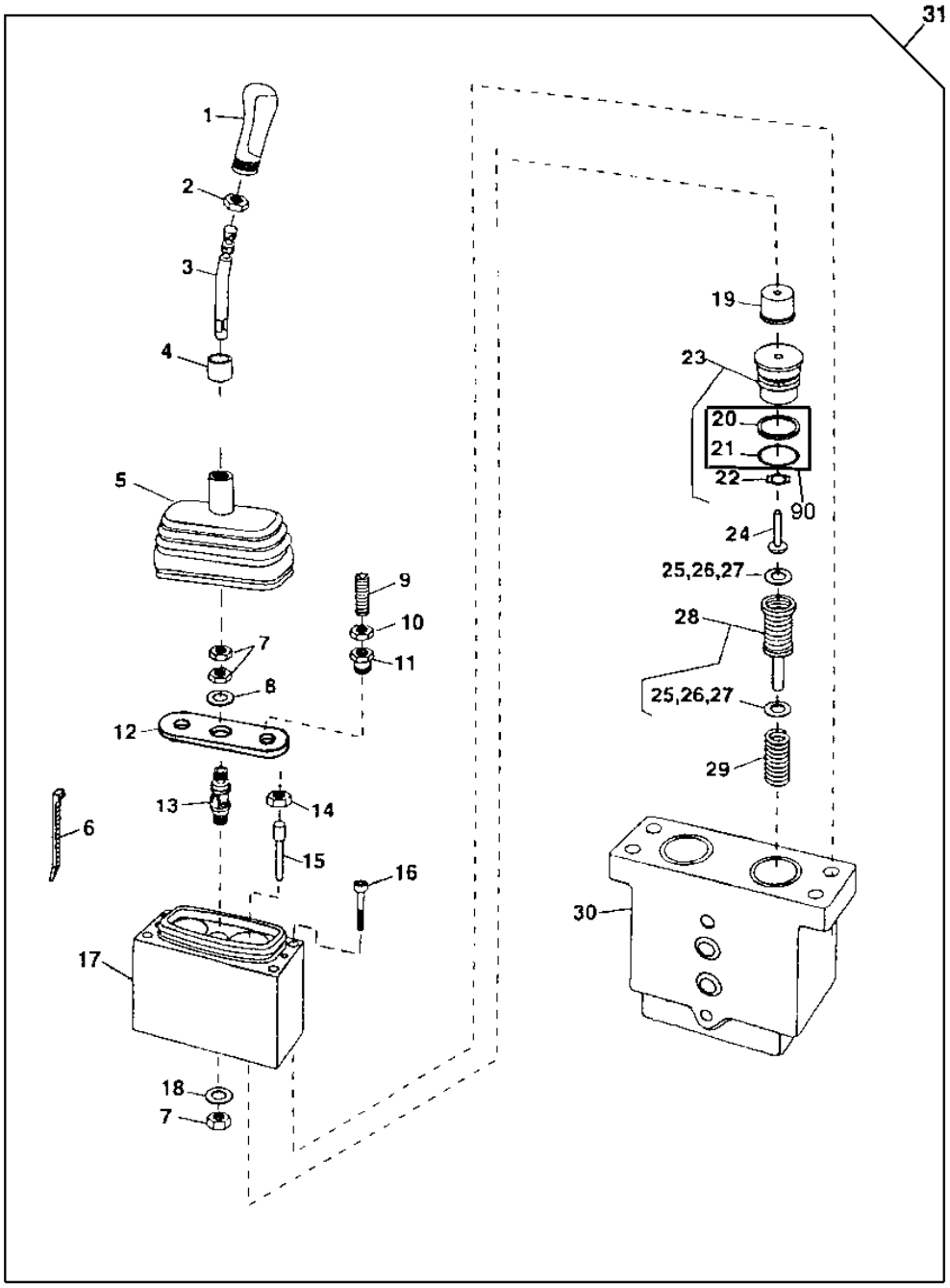

T161049

AUXILIARY CONTROLLER SECTION (FOR USE WITH SINGLE LEVER CONTROLLER)(SERIAL NO. -590067)

KEY	PART NO.	PART NAME	QTY	SERIAL NO.	REMARKS
1	AT172629	GRIP	1		
2	T170269	NUT	1		
3	T173229	LEVER	1		
4	AT208911	RETAINER	1		
5	T170295	BOOT	1		(ALSO ORDER AT208911)
6	H77698	TIE BAND	1		
7	T173219	NUT	3		
8	T173205	WASHER	1		
9	T172523	SET SCREW	2		
10	T170275	NUT	2		
11	T170273	FITTING	2		
12	T173210	PLATE	1		
13	AT210263	UNIVERSAL JOINT	1		
14	T170272	NUT	2		
15	T170274	PIN	2		
16	T170367	CAP SCREW	4		
17	.....	HOUSING	1		(SUB AT210213)
18	T172609	WASHER	1		
19	T170278	BUSHING	2		
20	T170307	BACK-UP RING	1		
21	T170306	SEAL	1		
22	T131617	RING	1		
23	AT208178	RETAINER	2		
24	T170285	PLUNGER	2		
25	T103092	SHIM	AR		0.1 MM (.004")
26	T103093	SHIM	AR		O.2 MM (.007")
27	T103094	SHIM	AR		0.4 MM (.015")
28	AT208182	SPOOL	2		
29	T170288	SPRING	2		
30	.....	HOUSING	1		(SUB AT210213)
31	AT210213	HYD ACTUATED CONTROL VALVE	1		(USE WITH SINGLE LEVER CONTROLLER)
32	T170381	CAP SCREW	2		(USE WITH AT210214)
34	**AT219909**	**KIT**	**1**		**(SUB FOR AT220357) AUXILIARY CONTROLLER DETENT KIT**
90	AT209783	SEAL KIT	1		INCLUDES ALL (K1) PARTS

PILOT LINES (SERIAL NO. -590067)

T158390 -UN-29AUG02

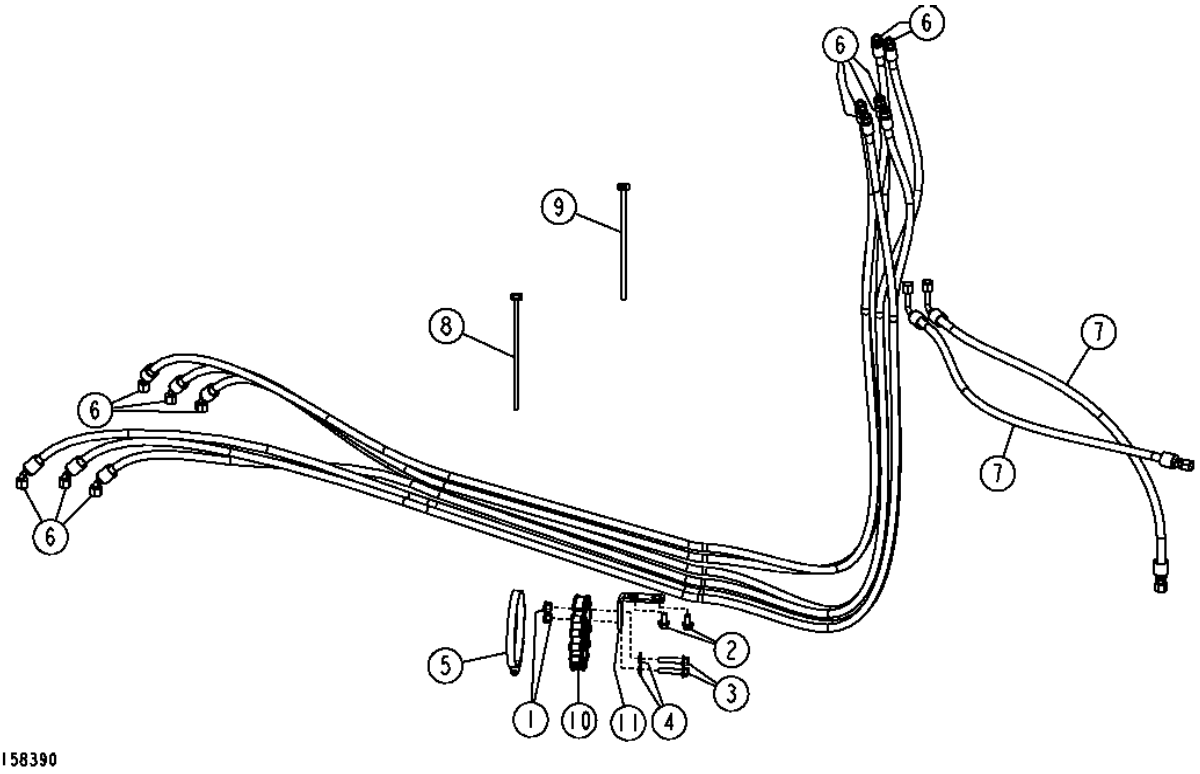

PILOT LINES (SERIAL NO. -590067)

KEY	PART NO.	PART NAME	QTY	SERIAL NO.	REMARKS
1	14M7400	LOCK NUT	2		M10
2	19M7784	SCREW	2		M10 X 20
3	19M7806	SCREW	2		
4	24M7239	WASHER	2		
5	TY22493	HOSE CLAMP	1		(SUB FOR AR89602)
6	AT226349	HYDRAULIC HOSE - FABRICATE	4		(WITHOUT AUXILIARY HYDRAULICS)
	AT226349	HYDRAULIC HOSE - FABRICATE	6		(WITH AUXILIARY HYDRAULICS)
7	AT226350	HYDRAULIC HOSE - FABRICATE	1		(927.1MM OR 36.5IN)
	AT301930	HYDRAULIC HOSE - FABRICATE	1		(SUB FOR AT226613) (965.2MM OR 38IN)
8	H77698	TIE BAND	10		
9	N189220	TIE BAND	2		
10	T154342	RETAINER	1		
11	T157443	ANGLE	1		

TWO SPOOL HYDRAULIC VALVE PLUMBING

T158156 -UN-01AUG02

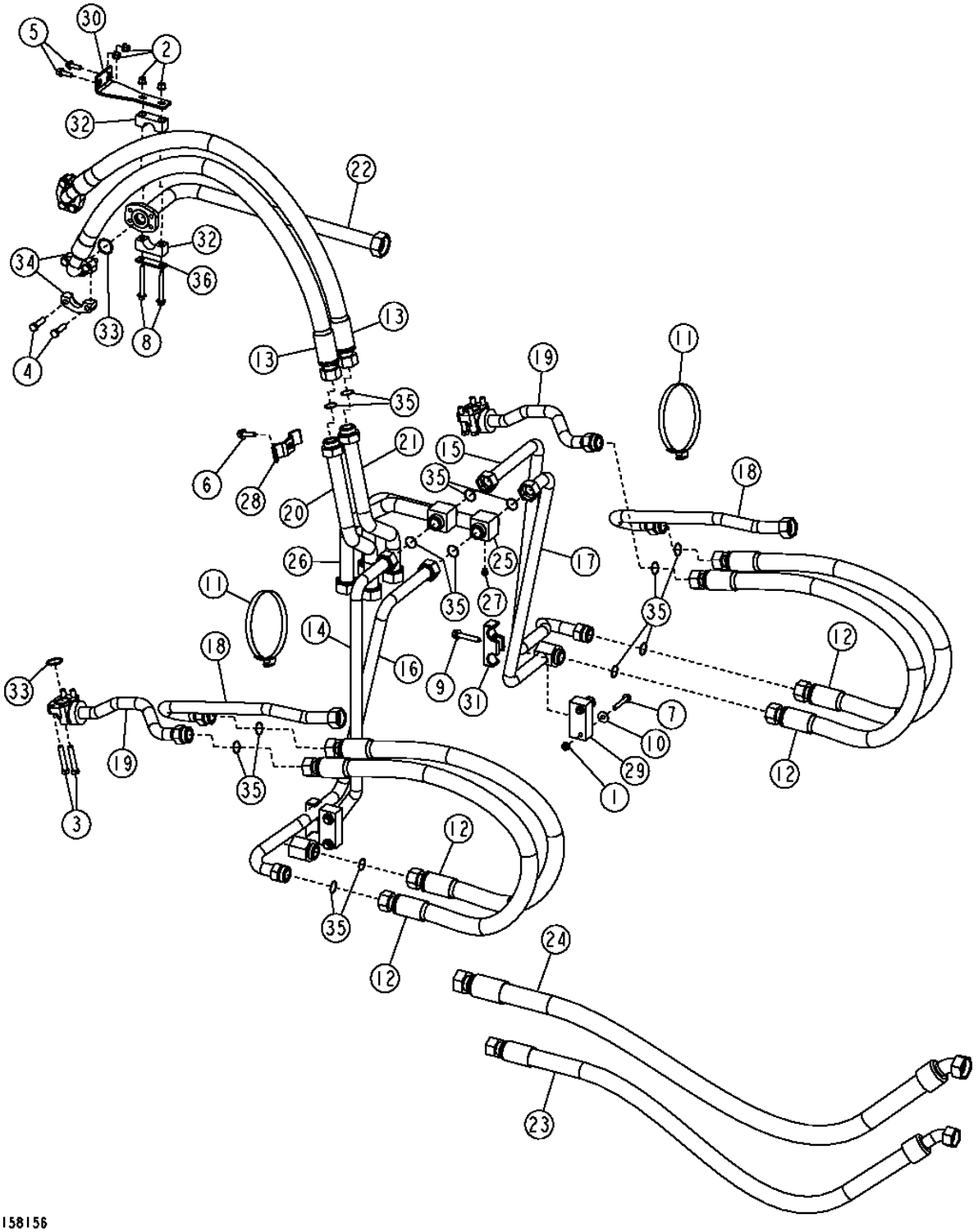

THIS PARTS LISTING IS CONTINUED

TWO SPOOL HYDRAULIC VALVE PLUMBING

KEY	PART NO.	PART NAME	QTY	SERIAL NO.	REMARKS
1	14M7296	FLANGE NUT	4		M10
2	14M7400	LOCK NUT	4		M10
3	19H3057	CAP SCREW	8		1/2" X 2-3/4"
4	19H3265	CAP SCREW	8		
5	19M7786	SCREW	2		M10 X 30
6	19M7790	SCREW	1		M12 X 35
7	19M7808	SCREW	4		M10 X 65
8	19M7811	SCREW	2		M10 X 90
9	19M7816	SCREW	2		M12 X 65
10	24M7296	WASHER	4		10.500 X 30 X 2.500 MM
11	AH130230	HOSE CLAMP	2		
12	AT203018	HYDRAULIC HOSE - FABRICATE	4		1-11/16" X 1 435 MM (56-1/2") X 1-11/16"
13	AT203019	HYDRAULIC HOSE	2		
14	AT203021	LINE	1		
15	AT203022	LINE	1		
16	AT203025	LINE	1		
17	AT203026	LINE	1		
18	AT203027	OIL LINE	2		
19	AT203028	OIL LINE	2		
20	AT203029	LINE	1		
21	AT203030	LINE	1		
22	AT203031	OIL LINE	1		
23	AT203033	HYDRAULIC HOSE - FABRICATE	1		
24	AT203317	HYDRAULIC HOSE - FABRICATE	1		
25	AT207213	LINE	1		(ALSO ORDER AT223648)
26	AT207214	OIL LINE	1		(ALSO ORDER AT223648)
27	AT223648	FITTING	2		
28	T156628	HALF CLAMP	1		
29	T156738	CLAMP	2		
30	T182223	BRACKET	1		
31	T52979	CLAMP	2		
32	T67995	CLAMP	2		
33	T72216	O-RING	4		
34	T72217	FLANGE FITTING	4		
35	T78612	O-RING	14		
36	U16466	STRAP	1		

THREE SPOOL HYDRAULIC VALVE PLUMBING

T158162 -UN-02AUG02

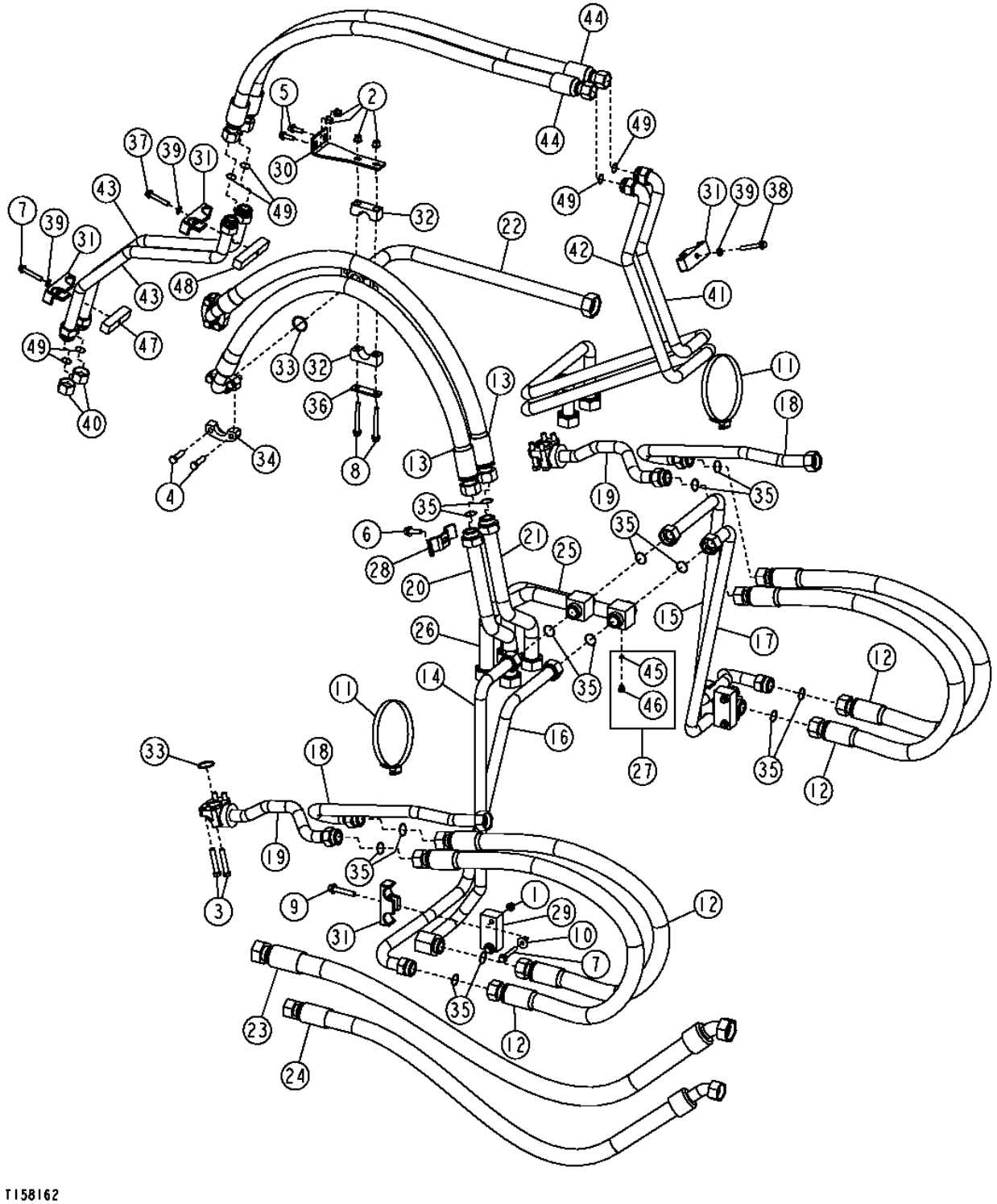

THREE SPOOL HYDRAULIC VALVE PLUMBING

KEY	PART NO.	PART NAME	QTY	SERIAL NO.	REMARKS
1	14M7296	FLANGE NUT	4		M10
2	14M7400	LOCK NUT	4		M10
3	19H3057	CAP SCREW	8		1/2" X 2-3/4"
4	19H3265	CAP SCREW	8		
5	19M7786	SCREW	2		M10 X 30
6	19M7790	SCREW	1		M12 X 35
7	19M7808	SCREW	4		M10 X 65
8	19M7811	SCREW	2		M10 X 90
9	19M7816	SCREW	2		M12 X 65
10	24M7296	WASHER	4		10.500 X 30 X 2.500 MM
11	AH130230	HOSE CLAMP	2		
12	AT203018	HYDRAULIC HOSE - FABRICATE	4		1-11/16" X 1 435 MM (56-1/2") X 1-11/16"
13	AT203019	HYDRAULIC HOSE	2		
14	AT203021	LINE	1		
15	AT203022	LINE	1		
16	AT203025	LINE	1		
17	AT203026	LINE	1		
18	AT203027	OIL LINE	2		
19	AT203028	OIL LINE	2		
20	AT203029	LINE	1		
21	AT203030	LINE	1		
22	AT203031	OIL LINE	1		
23	AT203032	HYDRAULIC HOSE - FABRICATE	1		
24	AT203071	HYDRAULIC HOSE - FABRICATE	1		
25	AT207213	LINE	1		(ALSO ORDER AT223648)
26	AT207214	OIL LINE	1		(ALSO ORDER AT223648)
27	AT223648	FITTING	2		
28	T156628	HALF CLAMP	1		
29	T156738	CLAMP	2		
30	T182223	BRACKET	1		
31	T52979	CLAMP	2		
32	T67995	CLAMP	2		
33	T72216	O-RING	4		
34	T72217	FLANGE FITTING	4		
35	T78612	O-RING	14		
36	U16466	STRAP	1		
37	19M7807	SCREW	1		M10 X 60
38	19M8114	SCREW	1		M10 X 70
39	24M7239	WASHER	3		10.700 X 21 X 2.500 MM
40	38H1419	FITTING	1		
41	AT203072	LINE	1		
42	AT203073	LINE	1		
43	AT203074	LINE	2		
44	AT206844	HYDRAULIC HOSE - FABRICATE	2		
45	R28782	O-RING	1		
46	R51031	FITTING	1		
47	T102058	BAR	1		
48	T122974	BAR	1		
49	T76938	O-RING	6		

HYDRAULIC OIL RESERVOIR

T204760 -UN-01FEB05

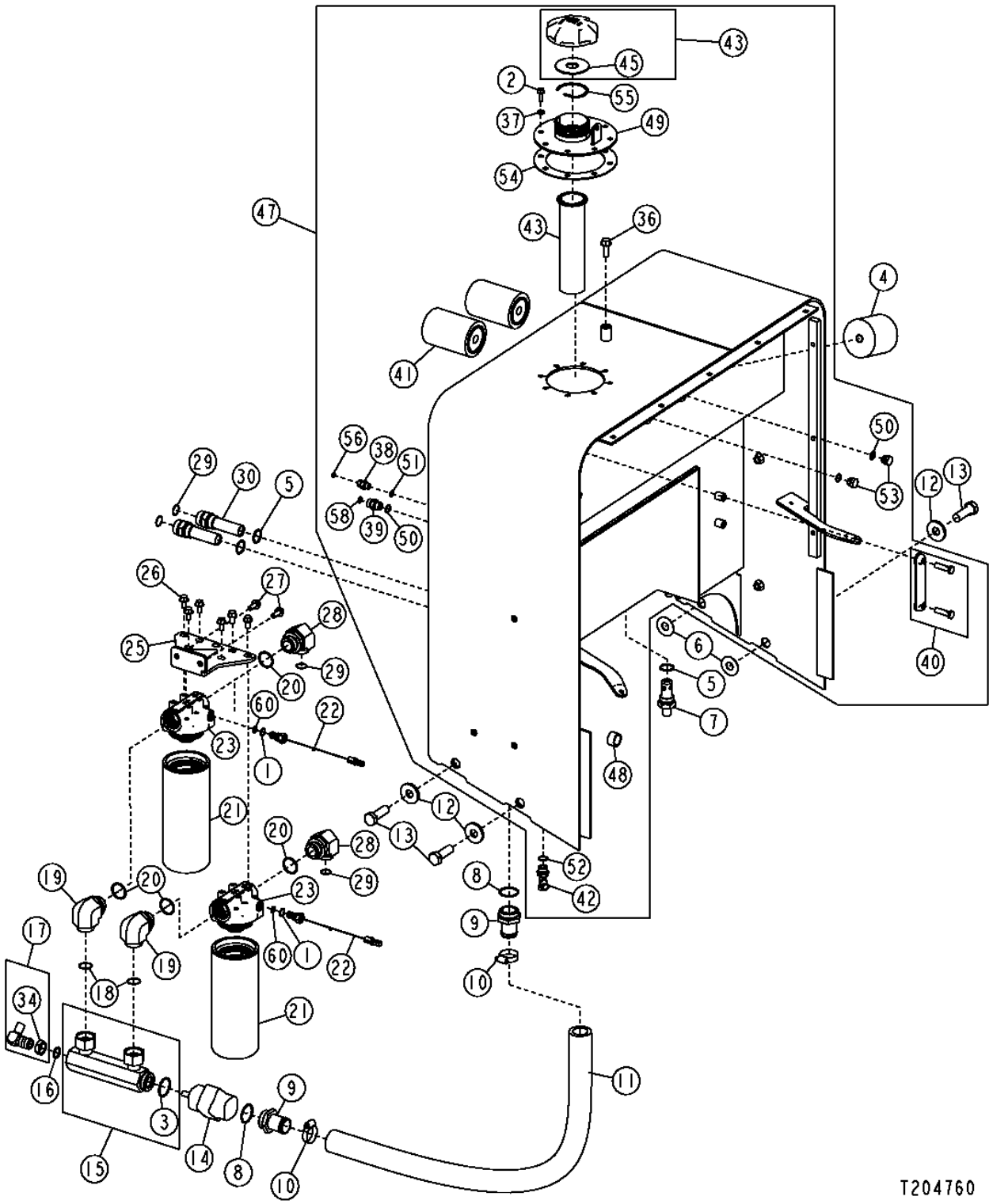

HYDRAULIC OIL RESERVOIR

KEY	PART NO.	PART NAME	QTY	SERIAL NO.	REMARKS
1	R26375	O-RING	2		
2	T81403	SCREW	8		
3	R26773	O-RING	1		
4	AM39653	OIL FILTER	1		
5	R29936	O-RING	3		
6	24H1407	WASHER	4		13/16" X 2" X 0.060"
7	AT221897	CHECK VALVE	1		
8	R26773	O-RING	2		
9	RE24025	FITTING	2		
10	AR65293	CLAMP	2		
11	T179748	HYDRAULIC HOSE - FABRICATE	1		
12	T128096	WASHER	4		
13	19M8639	CAP SCREW	4		(SUB FOR 19M8224)
14	AT202944	CHECK VALVE	1		
15	AT223322	MANIFOLD	1		
16	U12547	O-RING	1		
17	AT21574	FITTING	1		
18	T78612	O-RING	2		
19	38H1008	ELBOW FITTING	2		
20	U13639	O-RING	4		
21	AT310905	OIL FILTER	2		(SUB FOR AT228474)
22	AT307045	PRESSURE SWITCH	2		(SUB FOR AT280924 OR AT223672)
23	AT224105	FILTER HEAD	2		
25	AT223321	BRACKET	1		
26	19M7784	SCREW	6		
27	19M7785	SCREW	2		
28	38H1325	ELBOW FITTING	2		
29	T76938	O-RING	4		
30	AT219727	FITTING	2		
34	R27390	NUT	1		
36	19M7790	SCREW	1		M12 X 35
37	24H1136	WASHER	8		11/32" X 11/16" X 0.065"
38	38H1160	ADAPTER	1		
39	38H1161	ADAPTER	1		
40	AT227279	LEVEL GAUGE	1		
41	T19044	OIL FILTER	2		
42	AT152180	DRAIN VALVE	1		
43	AT161638	STRAINER	1		
44	AT177950	FILLER CAP	1		
45	H148166	WASHER	1		
47	AT227581	HYDRAULIC RESERVOIR	1		
48	28H1642	BUSHING	1		1.049" X 1.315" X 3/4"
49	AT225156	HOUSING	1		
50	R26375	O-RING	3		
51	R26448	O-RING	1		
52	R26906	O-RING	1		
53	R39112	FITTING	2		
54	T106595	GASKET	1		
55	T39155	SNAP RING	1		
56	T77613	O-RING	1		
58	T77857	O-RING	1		
60	P46051	O-RING	2		

BUCKET CYLINDER AND REPAIR KITS (SERIAL NO. -XXXXXX)

T188474 -UN-21MAR03

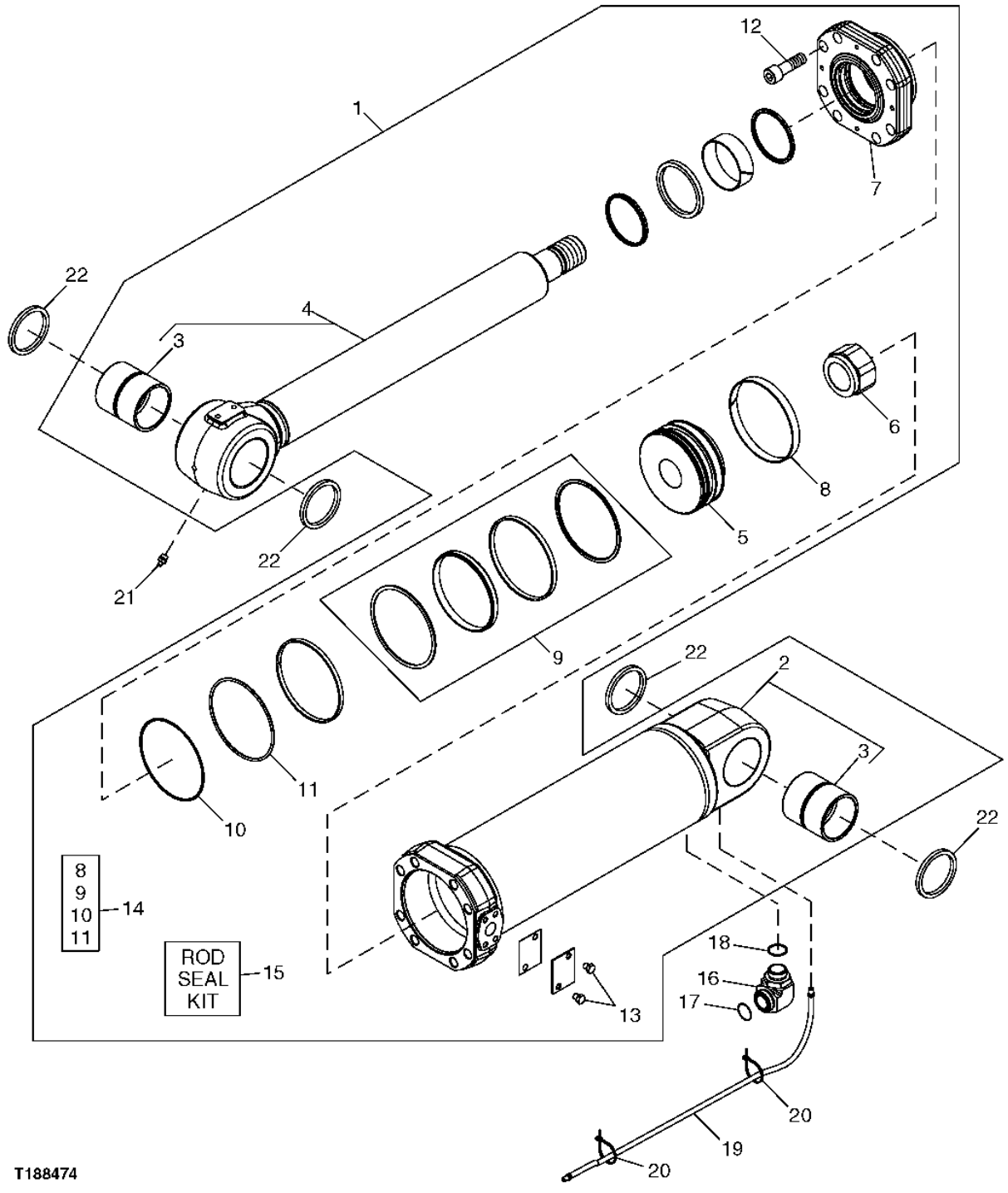

BUCKET CYLINDER AND REPAIR KITS (SERIAL NO. -XXXXXX)

KEY	PART NO.	PART NAME	QTY	SERIAL NO.	REMARKS
1	AH175986	HYDRAULIC CYLINDER	1		
2	AH176147	HYDRAULIC CYLINDER BARREL	1		
3	H152272	BUSHING	2		
4	AH207244	ROD	1		
5	H207265	PISTON	1		
6	H207262	NUT	1		M70
7	H180629	HYDR. CYLINDER ROD GUIDE	1		
8	H152121	SCRAPER RING	1		
9	AH146460	SEAL	1		
10	H171488	BACK-UP RING	1		
11	H152605	O-RING	1		
12	19M8630	SCREW	8		M24 X 80
13	19H2351	CAP SCREW	2		1/2" X 1/2"
14	AH151320	HYDRAULIC CYLINDER KIT	1		BUCKET CYLINDER BORE KIT
15	AH207243	HYDRAULIC CYLINDER KIT	1		BUCKET CYLINDER ROD KIT
16	38H1090	ELBOW FITTING	1		
17	T78784	O-RING	1		
18	U13639	O-RING	1		
19	AT103107	HYDRAULIC HOSE	1		
20	R44302	TIE BAND	2		
21	JD7759	LUBRICATION FITTING	1		STRAIGHT FITTING
	JD7763	LUBRICATION FITTING	2		ANGLE FITTING (45 DEGREE)
22	T102139	SEAL	4		

BUCKET CYLINDER AND REPAIR KITS (SERIAL NO. XXXXXX-)

T213481 -UN-22AUG05

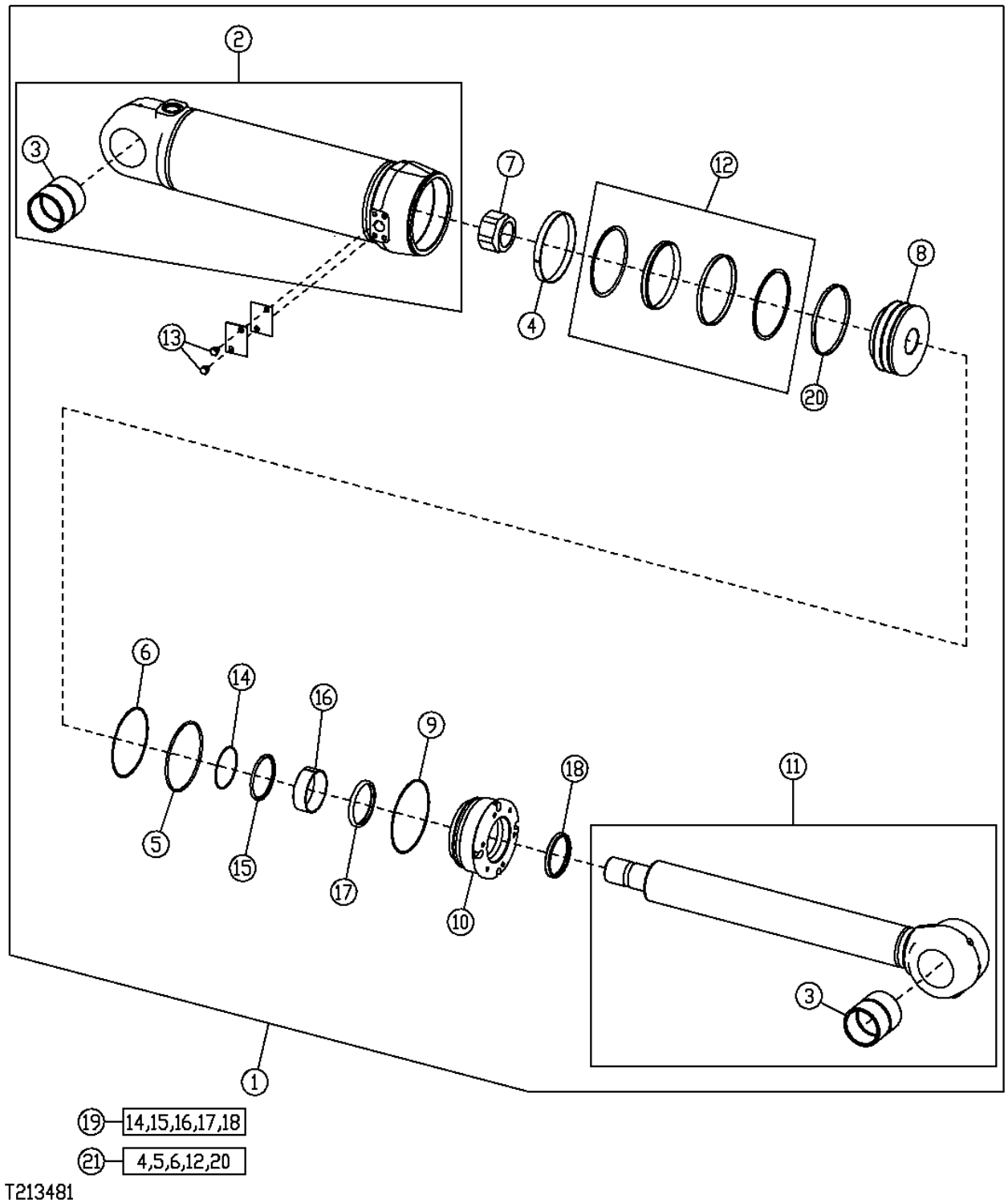

BUCKET CYLINDER AND REPAIR KITS (SERIAL NO. XXXXXX-)

KEY	PART NO.	PART NAME	QTY	SERIAL NO.	REMARKS
1	AH209533	HYDRAULIC CYLINDER	1		
2	AH209535	HYDRAULIC CYLINDER BARREL	1		
3	H152272	BUSHING	2		99.778 X 115.130 X 123 MM
4	H152121	SCRAPER RING	1		
5	H152605	O-RING	1		189.865 X 5.334 MM
6	H171488	BACK-UP RING	1		191.300 X 199.670 X 4.180 MM
7	H207262	NUT	1		M70
8	H207265	PISTON	1		
9	H210762	O-RING	1		202.790 X 3.530 MM
10	H209617	HYDR. CYLINDER ROD GUIDE	1		
11	AH207244	ROD	1		
12	AH146460	SEAL	1		
13	19H2351	CAP SCREW	2		12.700 X 12.700 MM
14	.....	SEAL	1		BUCKET CYLINDER BORE KIT
15	.....	SEAL	1		BUCKET CYLINDER ROD KIT
16	.....	WEAR RING	1		
17	.....	SEAL	1		
18	.....	SEAL	1		
19	AH207243	HYDRAULIC CYLINDER KIT	1		
20	.....	SCRAPER RING	1		
21	AH151320	HYDRAULIC CYLINDER KIT	1		STRAIGHT FITTING

REPLACEMENT BOOM CYLINDER AND REPAIR KITS (SERIAL NO. -XXXXXX)

T188475 -UN-19MAR03

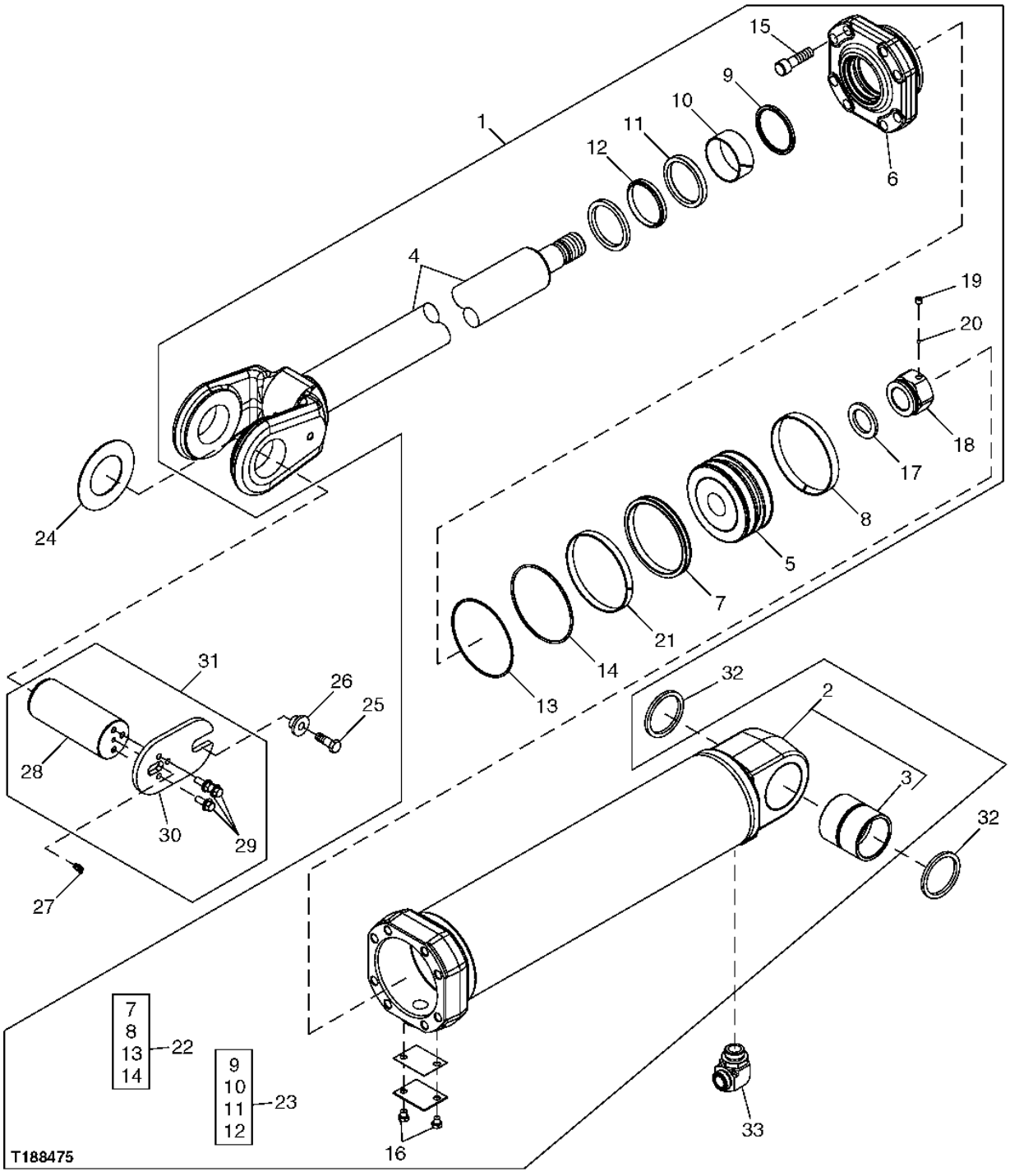

REPLACEMENT BOOM CYLINDER AND REPAIR KITS (SERIAL NO. -XXXXXX)

KEY	PART NO.	PART NAME	QTY	SERIAL NO.	REMARKS
1	.....	HYDRAULIC CYLINDER	1		(SUB AH209531) (AH175987 NO LONGER SERVICED)
2	AH176156	HYDRAULIC CYLINDER BARREL	1		
3	R85556	BUSHING	1		
4	AH176157	ROD	1		
5	H208240	PISTON	1		
6	H180232	HYDR. CYLINDER ROD GUIDE	1		
7	RE25147	SEAL	1		
8	R85229	WEAR RING	1		
9	AH157292	SEAL	1		
10	H163980	BUSHING	1		
11	H163979	SEAL	1		
12	AH157291	SEAL	1		
13	H171487	BACK-UP RING	1		
14	R89632	RING	1		
15	19M8629	SCREW	8		M20 X 70
16	19H2351	CAP SCREW	2		1/2" X 1/2"
17	AT264394	RING	1		(SUB FOR TH109378)
18	H158465	NUT	1		
19	22M7009	SET SCREW	1		
20	T13624	BALL	1		
21	H208241	SCRAPER RING	1		
22	AH137211	HYDRAULIC CYLINDER KIT	1		BOOM CYLINDER BORE KIT
	H142174	SEALING WASHER	1		
	R59384	O-RING	1		
23	AH159192	KIT	1		BOOM CYLINDER ROD KIT
	H165482	SEAL	1		
24	T101480	WASHER	2		
25	19M7489	CAP SCREW	2		M16 X 45
26	T176064	BUSHING	2		
27	JD7759	LUBRICATION FITTING	3		
28	.....	PIN	1		(T180596 NO LONGER AVAILABLE)
29	19M7789	SCREW	3		M12 X 30
30	T180932	PLATE	1		
31	AT223925	PIN	2		
32	T102138	SEAL	4		
33	38H1008	ELBOW FITTING	1		
	T78612	O-RING	1		
	U13639	O-RING	1		

REPLACEMENT BOOM CYLINDER AND REPAIR KITS (SERIAL NO. XXXXXX-)

T188475 -UN-19MAR03

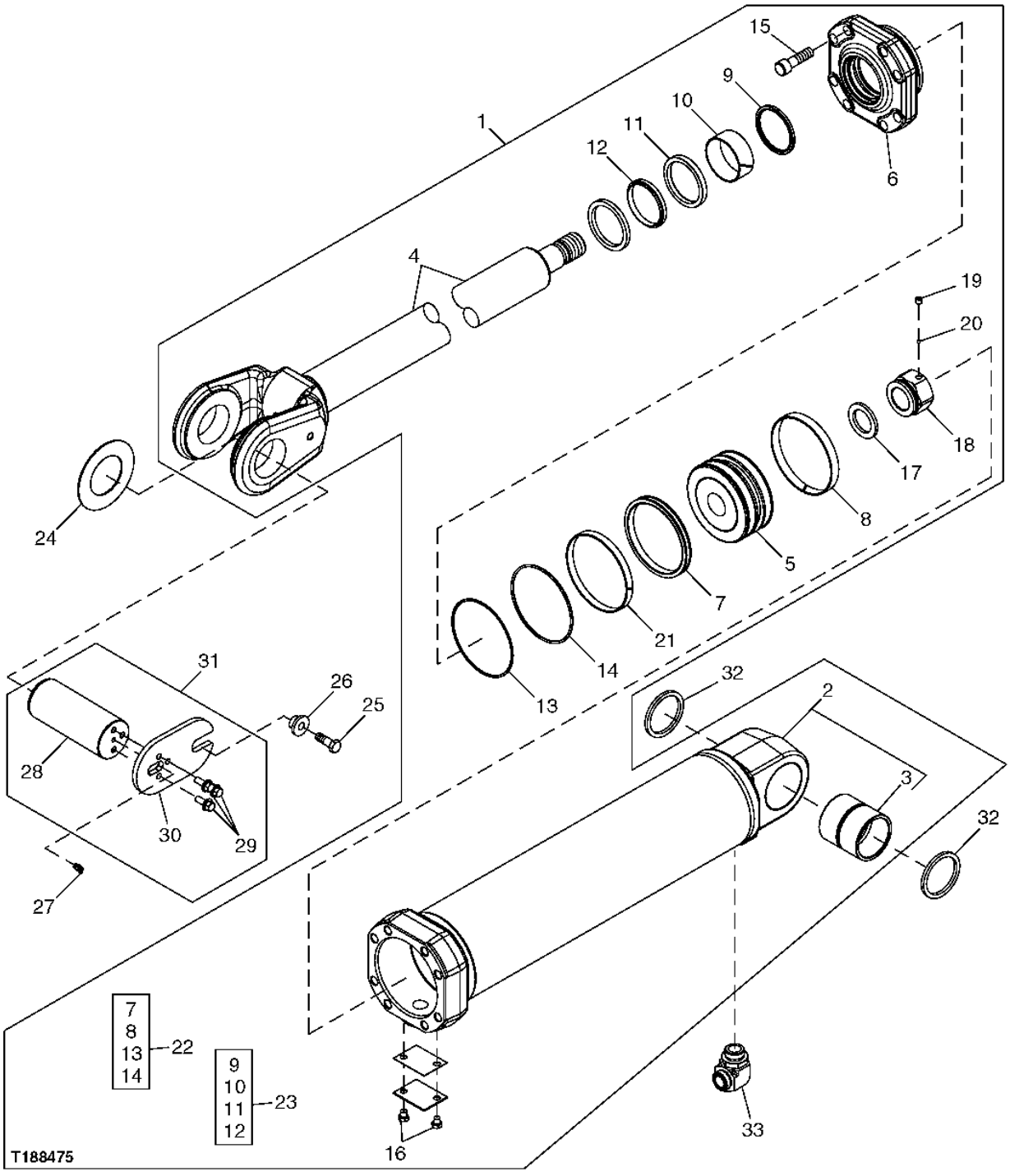

REPLACEMENT BOOM CYLINDER AND REPAIR KITS (SERIAL NO. XXXXXX-)

KEY	PART NO.	PART NAME	QTY	SERIAL NO.	REMARKS
1	AH209531	HYDRAULIC CYLINDER	1		
2	AH209532	HYDRAULIC CYLINDER BARREL	1		
3	R85556	BUSHING	1		
4	AH176157	ROD	1		
5	H208240	PISTON	1		
6	H209614	HYDR. CYLINDER ROD GUIDE	1		
7	RE25147	SEAL	1		
8	R85229	WEAR RING	1		
9	AH157292	SEAL	1		
10	H163980	BUSHING	1		
11	H163979	SEAL	1		
12	AH157291	SEAL	1		
13	H171487	BACK-UP RING	1		
14	R89632	RING	1		
15	19M8629	SCREW	8		M20 X 70
16	19H2351	CAP SCREW	2		1/2" X 1/2"
17	AT264394	RING	1		(SUB FOR TH109378)
18	H158465	NUT	1		
19	22M7009	SET SCREW	1		
20	T13624	BALL	1		
21	H208241	SCRAPER RING	1		
22	AH137211	HYDRAULIC CYLINDER KIT	1		BOOM CYLINDER BORE KIT
	H142174	SEALING WASHER	1		
	R59384	O-RING	1		
23	AH159192	KIT	1		BOOM CYLINDER ROD KIT
	H165482	SEAL	1		
24	T101480	WASHER	2		
25	19M7489	CAP SCREW	2		M16 X 45
26	T176064	BUSHING	2		
27	JD7759	LUBRICATION FITTING	3		
28	.....	PIN	1		(T180596 NO LONGER AVAILABLE)
29	19M7789	SCREW	3		M12 X 30
30	T180932	PLATE	1		
31	AT223925	PIN	2		
32	T102138	SEAL	4		
33	38H1008	ELBOW FITTING	1		
	T78612	O-RING	1		
	U13639	O-RING	1		

RETURN-TO-DIG ACTUATOR AND SENSOR

T156258 -UN-24JUN02

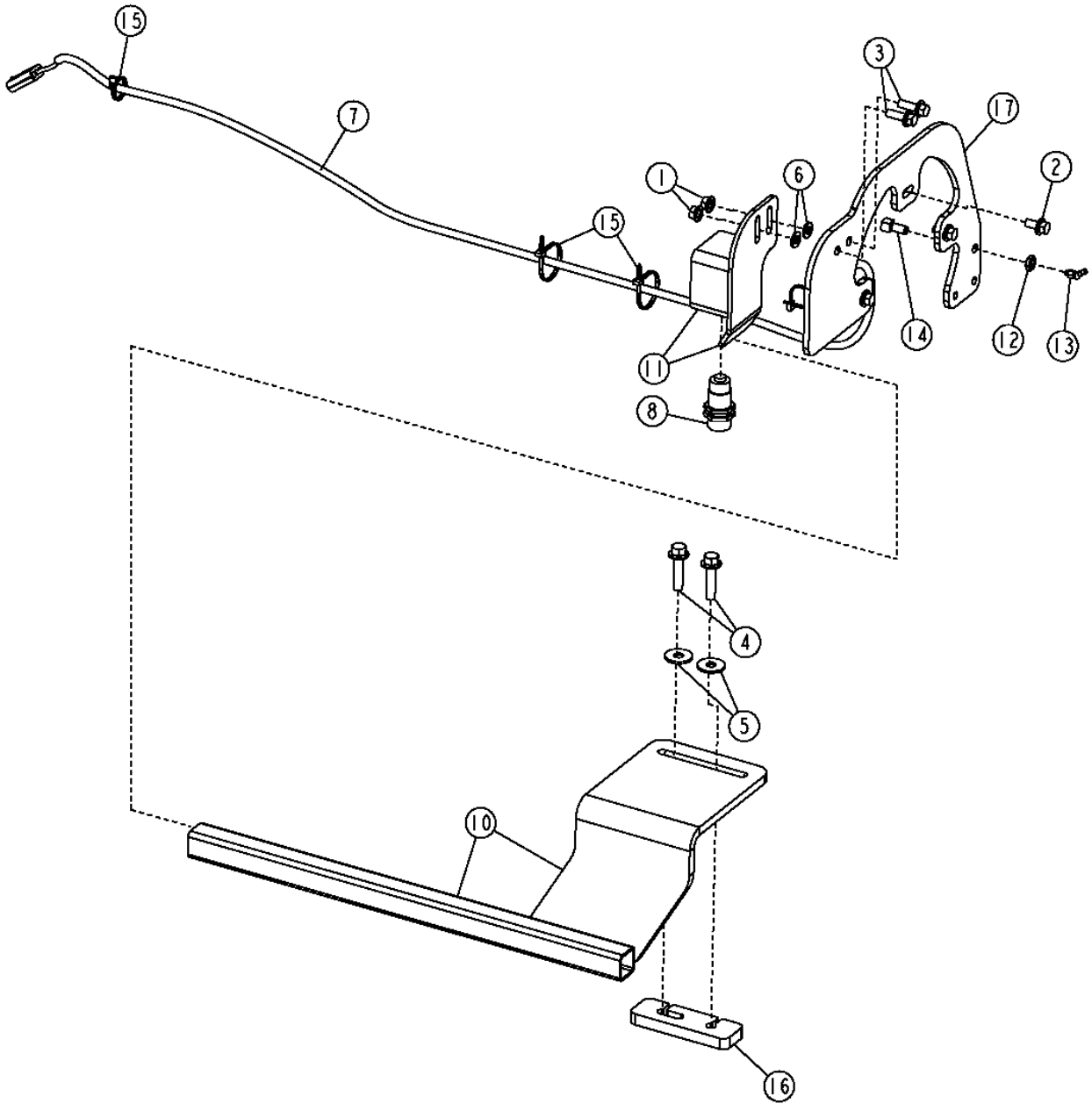

RETURN-TO-DIG ACTUATOR AND SENSOR

KEY	PART NO.	PART NAME	QTY	SERIAL NO.	REMARKS
1	14M7296	FLANGE NUT	2		M10
2	19M7784	SCREW	3		M10 X 20
3	19M7786	SCREW	2		M10 X 30
4	19M7814	SCREW	2		
5	24M7180	WASHER	2		13 X 37 X 3 MM
6	24M7239	WASHER	2		
7	AT202827	WIRING HARNESS	1		(RETURN-TO-DIG HARNESS)
	AT221628	WIRING HARNESS	1		(RETURN-TO-DIG HARNESS) (HARSH ENVIRONMENT)
8	AT203130	SENSOR	1		(STANDARD)
	AT222366	SWITCH	1		(HARSH ENVIRONMENT)
10	AT221093	ACTUATOR	1		
11	AT221350	BRACKET	1		
12	E12379	NUT	1		
13	JD7788	LUBRICATION FITTING	1		
14	R36311	FITTING	1		
15	R44302	TIE BAND	4		
16	T179609	SPACER	1		
17	T179953	PLATE	1		

REPLACEMENT RETURN-TO-DIG ACTUATOR AND SENSOR

T194864 -UN-28OCT03

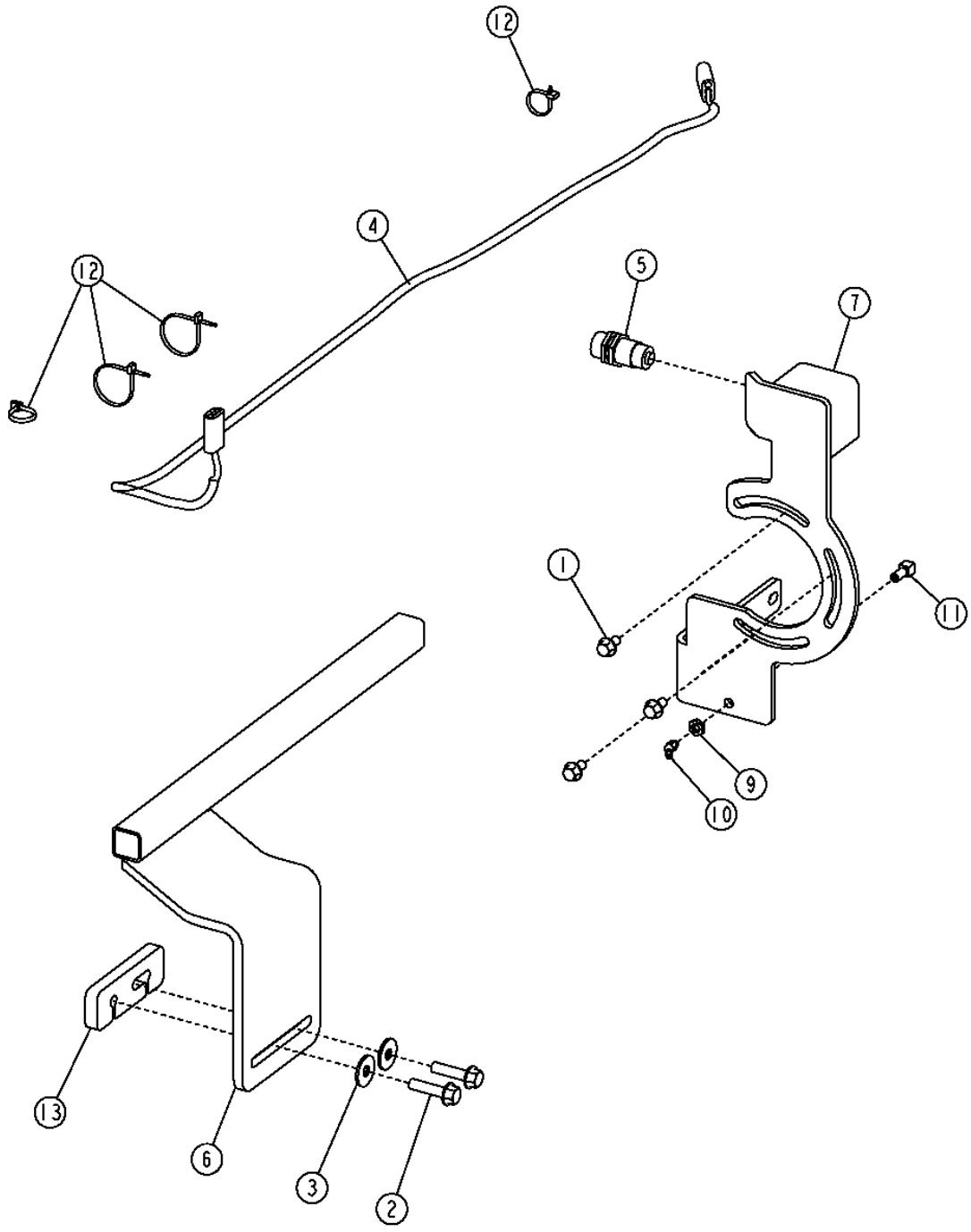

REPLACEMENT RETURN-TO-DIG ACTUATOR AND SENSOR

KEY	PART NO.	PART NAME	QTY	SERIAL NO.	REMARKS
1	19M7784	SCREW	3		M10 X 20
2	19M7814	SCREW	2		M12 X 50
3	24M7180	WASHER	2		13 X 37 X 3 MM (0.512" X 1.457" X 0.118")
4	AT202827	WIRING HARNESS	1		(RETURN-TO-DIG HARNESS)
	AT221628	WIRING HARNESS	1		(RETURN-TO-DIG HARNESS) (HARSH ENVIRONMENT)
5	AT203130	SENSOR	1		(STANDARD)
	AT222366	SWITCH	1		(HARSH ENVIRONMENT)
6	AT307896	ACTUATOR	1		
7	AT305273	BRACKET	1		
8	T203697	PLATE	1		
9	E12379	NUT	1		
10	JD7788	LUBRICATION FITTING	1		45° X 20.574 MM LONG (0.810" LONG)
11	R36311	FITTING	1		
12	R44302	TIE BAND	4		
13	T179609	SPACER	1		

LOADER BOOM KICK OUT/ RETURN TO CARRY SENSOR

T162059 -UN-22NOV02

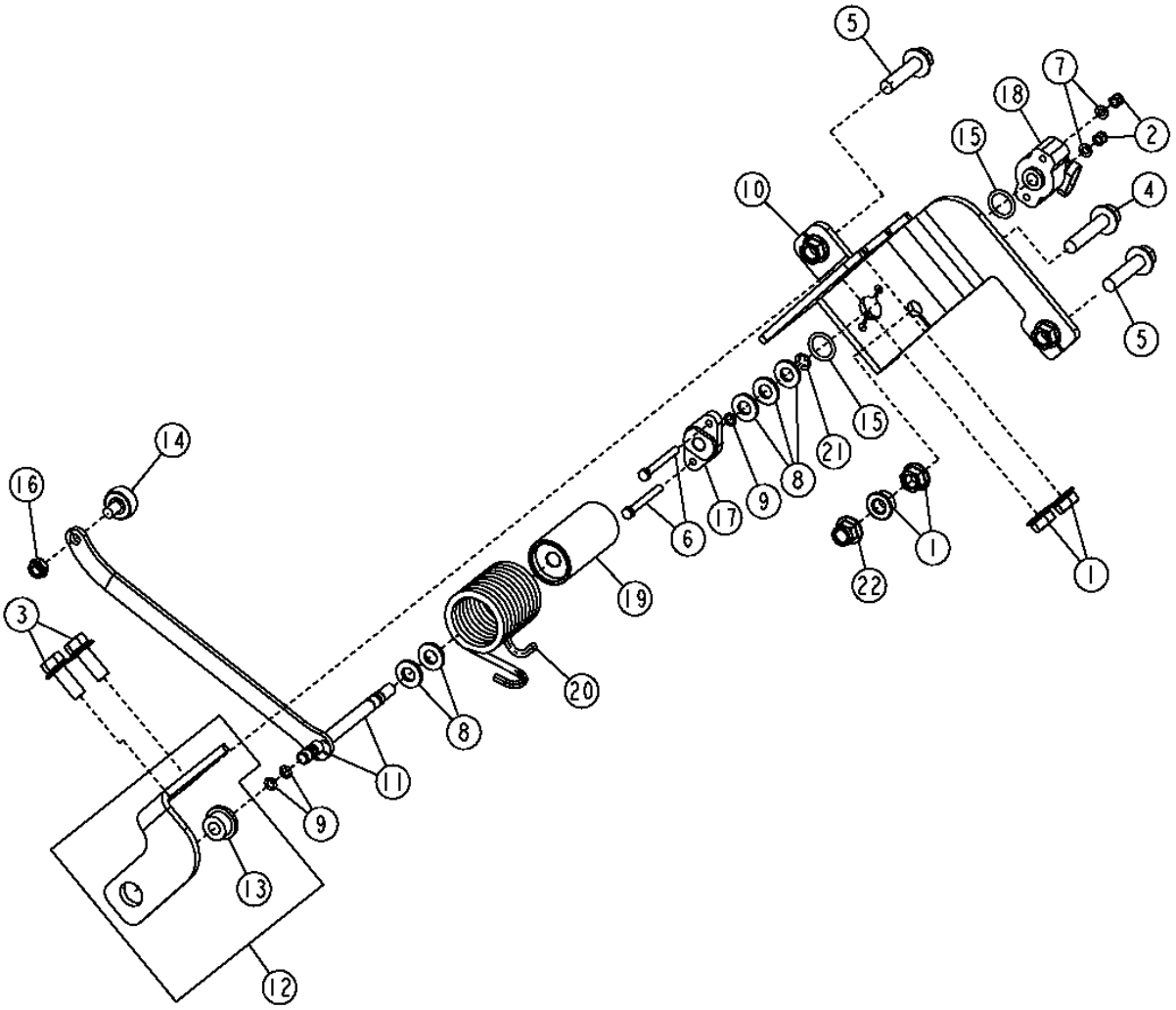

T162059

LOADER BOOM KICK OUT/ RETURN TO CARRY SENSOR

KEY	PART NO.	PART NAME	QTY	SERIAL NO.	REMARKS
1	14M7296	FLANGE NUT	4		M10
2	14M7360	LOCK NUT	2		M5, LOADER BOOM KICKOUT
3	19M7785	SCREW	2		M10 X 25
4	19M8292	SCREW	1		M10 X 50, (SUB FOR 19M7806)
5	19M7806	SCREW	2		M10 X 50
	24M7239	WASHER	2		
6	19M8834	CAP SCREW	2		(24M7239 NO LONGER REQUIRED)
7	24M7027	WASHER	2		
8	24M7239	WASHER	5		10.700 X 21 X 2.500 MM
9	A4365R	O-RING	3		6.071 X 1.778 MM
10	AT225256	BRACKET	1		
11	AT226301	ACTUATOR	1		
12	AT226542	BRACKET	1		
13	T82861	BUSHING	1		
14	AT45678	CAM FOLLOWER	1		
15	P48347	O-RING	2		
16	R11151	LOCK NUT	1		
17	R86457	SUPPORT	1		
18	RE56165	POTENTIOMETER	1		
19	T197144	BUSHING	1		
20	T195210	TORSION SPRING	1		
21	R72653	SNAP RING	1		
22	14M7440	LOCK NUT	1		M10

MEMORANDA

1L3

NUMERICAL INDEX

PART NO.	GRID	KEY	PAGE
AA21292	2D23	20	1741 - 3
AA21292	2I14	9	1927 - 11
AH108055	1J6	37	1062 - 3
AH121227	2E18	9	1810 - 11
AH125760	3C23	19	3160 - 23
AH125760	3D6	10	3160 - 61
AH125760	3D7	9	3160 - 62
AH130230	3F6	11	3163 - 3
AH130230	3F8	11	3163 - 5
AH137211	3F16	22	3165 - 5
AH137211	3F18	22	3165 - 5B
AH144020	2H4	3	1830 - 3B
AH146460	3F12	9	3165 - 3
AH146460	3F14	12	3165 - 3B
AH146556	1I15	6	0960 - 17
AH146560	1I15	7	0960 - 17
AH146560	1I15	8	0960 - 17
AH146560	1I15	9	0960 - 17
AH148443	1I15	23	0960 - 17
AH149228	2E22	3	1810 - 15
AH149228	2H12	2	1830 - 15
AH149813	1I15	21	0960 - 17
AH151320	3F12	14	3165 - 3
AH151320	3F14	21	3165 - 3B
AH151611	1I15	18	0960 - 17
AH151612	1I15	4	0960 - 17
AH157291	3F16	12	3165 - 5
AH157291	3F18	12	3165 - 5B
AH157292	3F16	9	3165 - 5
AH157292	3F18	9	3165 - 5B
AH159192	3F16	23	3165 - 5
AH159192	3F18	23	3165 - 5B
AH162914	1I8	1	0560 - 5
AH170895	1H12	7	0510 - 5
AH175986	3F12	1	3165 - 3
AH175987	3F16	1	3165 - 5
AH176147	3F12	2	3165 - 3
AH176156	3F16	2	3165 - 5
AH176157	3F16	4	3165 - 5
AH176157	3F18	4	3165 - 5B
AH207243	3F12	15	3165 - 3
AH207243	3F14	19	3165 - 3B
AH207244	3F12	4	3165 - 3
AH207244	3F14	11	3165 - 3B
AH209531	3F16	1	3165 - 5
AH209531	3F18	1	3165 - 5B
AH209532	3F18	2	3165 - 5B
AH209533	3F14	1	3165 - 3B
AH209535	3F14	2	3165 - 3B
AH211044	1I15	23	0960 - 17
AH211045	1I15	18	0960 - 17
AH212096	1I15	22	0960 - 17
AH77869	2B5	6	1671 - 2
AH77869	2B6	6	1671 - 3
AH89557	1G4	..	0414 - 1
AH96317	2D2	3	1674 - 27
AH96317	2D4	6	1674 - 27B
AL153660	2F2	3	1810 - 19
AL76568	2D17	1	1674 - 59
AL76568	2F12	12	1810 - 25
AL76568	2H2	24	1830 - 3
AMT1274	1I6	16	0560 - 3
AM39653	3F10	4	3164 - 3
AN207183	3D9	8	3160 - 63B
AN207184	3D9	8	3160 - 63B
AN280239	3C4	1	3160 - 3D
AP22660	2C6	10	1674 - 9
AP22660	2C8	9	1674 - 9B
AR102258	1G9	13	0418 - 3
AR103044	1G22	2	0433 - 3
AR104516	2I17	23	2001 - 3
AR104516	2I19	23	2001 - 3B
AR21836	1E10	4	0360 - 3
AR21836	1I6	8	0560 - 3
AR21837	1I6	9	0560 - 3
AR21837	1K17	1	1369 - 12B
AR21837	2D25	2	1746 - 3
AR21839	1E10	3	0360 - 3
AR21839	1E16	2	0360 - 11
AR21839	1F5	4	0402 - 6
AR21839	1F22	5	0408 - 1
AR21839	1I6	10	0560 - 3
AR21839	1I10	10	0560 - 7
AR21841	1H12	23	0510 - 5
AR21841	1I10	11	0560 - 7
AR21842	1I6	11	0560 - 3
AR21842	1I10	12	0560 - 7
AR21969	1K14	..	1369 - 8
AR21999	1H7	8	0505 - 3
AR21999	1H12	7	0510 - 5
AR40418	2B5	15	1671 - 2
AR40418	2B6	15	1671 - 3
AR41785	1K14	..	1369 - 8
AR44402	1K14	1	1369 - 8
AR54749	1K14	4	1369 - 8
AR61533	1F13	19	0404 - 3
AR61533	1G22	6	0433 - 3
AR65005	2D16	1	1674 - 58
AR65006	2D16	2	1674 - 58
AR65293	3F10	10	3164 - 3
AR67069	1G15	1	0422 - 1
AR70105	1H24	1	0520 - 3
AR72351	1F11	8	0403 - 3
AR79581	1B10	5	0210 - 5
AR79581	1B12	5	0210 - 7
AR83396	2E3	8	1749 - 2
AR84185	1H5	1	0505 - 1
AR87405	1H5	2	0505 - 1
AR89602	3D23	16	3162 - 9
AR89602	3E4	25	3162 - 15
AR89602	3E12	16	3162 - 25
AR89602	3E16	17	3162 - 29
AR89602	3F4	5	3162 - 39
AR91793	2D13	42	1674 - 49
AR91896	2E12	7	1810 - 5
AR94101	2C21	1	1674 - 21
AR94929	1B13	1	0210 - 8
AT102553	1I13	33	0930 - 3
AT103107	3F12	19	3165 - 3
AT103311	1I13	36	0930 - 3
AT103919	2I20	10	2002 - 2
AT103925	1I13	30	0930 - 3
AT104041	3D21	90	3162 - 7
AT106365	2E14	5	1810 - 7
AT106413	1H12	31	0510 - 5
AT106472	2H19	12	1911 - 5
AT106473	2H19	12	1911 - 5
AT107738	1C17	8	0342 - 3
AT107738	1I4	3	0540 - 3
AT112799	1E8	1	0350 - 51
AT115146	3E10	8	3162 - 23
AT115146	3E14	11	3162 - 27
AT115146	3E18	11	3162 - 31
AT116162	1I23	9	0962 - 7
AT116162	1J10	6	1064 - 7
AT116162	2B17	6	1673 - 5
AT116373	1I13	43	0930 - 3
AT116380	1H12	30	0510 - 5
AT116970	2E14	1	1810 - 7
AT116970	2F2	6	1810 - 19
AT116970	2F4	5	1810 - 21
AT119017	3E8	10	3162 - 21
AT119018	3E8	12	3162 - 21
AT119372	3C7	9	3160 - 7
AT119378	3E8	11	3162 - 21
AT120461	2J2	2	2004 - 7
AT124574	3C13	1	3160 - 13
AT124574	3C17	1	3160 - 17
AT133530	2J13	1	2163 - 3
AT133590	3E2	11	3162 - 13
AT133590	3E6	11	3162 - 17
AT133593	1C8	9	0260 - 5
AT133599	1I13	21	0930 - 3
AT135758	2B17	8	1673 - 5
AT135758	2B20	3	1673 - 8
AT136445	1C23	14	0350 - 9
AT13740	1G11	7	0419 - 3
AT137753	3B21	2	3143 - 1
AT137920	2F4	7	1810 - 21
AT137921	2F4	9	1810 - 21
AT138180	2F2	7	1810 - 19
AT138180	2F4	13	1810 - 21
AT138215	2F4	12	1810 - 21
AT139431	3C4	14	3160 - 3D
AT139431	3D4	14	3160 - 59
AT139432	3C4	7	3160 - 3D
AT139432	3D4	7	3160 - 59
AT139432	3D4	13	3160 - 59
AT139433	3C4	8	3160 - 3D
AT139433	3D4	6	3160 - 59
AT139434	3C4	13	3160 - 3D
AT139434	3D4	2	3160 - 59
AT139434	3D4	3	3160 - 59
AT139434	3D4	4	3160 - 59
AT139434	3D4	5	3160 - 59
AT139622	3B8	2	3102 - 1
AT139694	1I19	6	0962 - 3
AT139694	1I21	6	0962 - 5
AT145341	1H9	7	0505 - 5
AT145341	2C8	25	1674 - 9B
AT145341	2C17	1	1674 - 17
AT147496	1E12	12	0360 - 9
AT149818	1B23	17	0210 - 21
AT151931	2E24	11	1810 - 17
AT152180	3F10	42	3164 - 3
AT156748	1H20	90	0515 - 3
AT156896	1I23	6	0962 - 7
AT157226	2I20	9	2002 - 2
AT157226	2I22	3	2002 - 5
AT159938	3D4	15	3160 - 59
AT159938	3D4	17	3160 - 59
AT160480	2D19	3	1676 - 2
AT160662	1I19	10	0962 - 3
AT160662	1I19	23	0962 - 3
AT160662	1I19	24	0962 - 3
AT160662	1I19	25	0962 - 3
AT160662	1I21	18	0962 - 5
AT160704	2B12	3	1672 - 5
AT161549	1J16	1	1163 - 2
AT161638	3F10	43	3164 - 3
AT161752	1C6	9	0260 - 3

NUMERICAL INDEX - CONTINUED

PART NO.	GRID	KEY	PAGE
AT161752	1C8	8	0260 - 5
AT162719	1I19	14	0962 - 3
AT162719	1I21	14	0962 - 5
AT162848	2H10	6	1830 - 11
AT162859	1I13	1	0930 - 3
AT162863	1H9	18	0505 - 5
AT162863	2C17	1	1674 - 17
AT162863	3D15	14	3160 - 69
AT163872	2H6	5	1830 - 5
AT166148	1J8	6	1062 - 5
AT167553	1J16	2	1163 - 2
AT167553	2J13	13	2163 - 3
AT169157	3C9	9	3160 - 9
AT169849	1I19	5	0962 - 3
AT169849	1I21	5	0962 - 5
AT169886	2J13	1	2163 - 3
AT170005	2E10	4	1810 - 3
AT170438	1H10	2	0510 - 1
AT170759	1H7	7	0505 - 3
AT170991	3C11	10	3160 - 11
AT170991	3C13	5	3160 - 13
AT171162	1H7	4	0505 - 3
AT171679	2G2	8	1816 - 3
AT171679	2G4	6	1816 - 3B
AT172135	1H12	3	0510 - 5
AT172629	3E8	1	3162 - 21
AT172629	3F2	1	3162 - 37
AT173193	2E14	9	1810 - 7
AT173313	2G15	1	1821 - 7
AT173313	2G19	2	1821 - 11
AT173313	2G19	17	1821 - 11
AT173313	2G19	18	1821 - 11
AT173313	2G19	19	1821 - 11
AT173314	2G15	3	1821 - 7
AT173314	2G19	3	1821 - 11
AT173315	2G15	2	1821 - 7
AT173315	2G19	4	1821 - 11
AT173316	2G13	7	1821 - 5
AT173317	2G15	4	1821 - 7
AT173318	2G17	2	1821 - 9
AT173319	2G13	8	1821 - 5
AT173319	2G17	1	1821 - 9
AT173320	2G15	8	1821 - 7
AT173320	2G17	3	1821 - 9
AT173321	2G15	4	1821 - 7
AT173321	2G15	5	1821 - 7
AT173321	2G19	11	1821 - 11
AT173321	2G19	12	1821 - 11
AT173321	2G19	29	1821 - 11
AT173321	2G19	30	1821 - 11
AT173321	2G19	31	1821 - 11
AT173321	2G19	40	1821 - 11
AT173322	2G15	6	1821 - 7
AT173323	2G13	3	1821 - 5
AT173325	2G13	2	1821 - 5
AT173326	2G13	4	1821 - 5
AT173327	2G13	5	1821 - 5
AT173328	2G13	1	1821 - 5
AT173354	2B22	7	1673 - 10
AT173355	2B21	2	1673 - 9
AT173610	1H14	23	0511 - 3
AT175133	1I13	6	0930 - 3
AT175424	2D19	4	1676 - 2
AT176801	2B24	1	1674 - 3
AT176801	2B25	1	1674 - 3A
AT177950	3F10	44	3164 - 3
AT178065	2G5	1	1821 - 1
AT178840	1K11	1	1369 - 5
AT178842	1K11	1	1369 - 5
AT178844	1K11	1	1369 - 5
AT179588	3C25	3	3160 - 25
AT180333	1K11	1	1369 - 5
AT180334	1K11	1	1369 - 5
AT180335	1K11	1	1369 - 5
AT180344	1K13	1	1369 - 7
AT180692	3C25	1	3160 - 25
AT181313	1J6	4	1062 - 3
AT181313	3C7	25	3160 - 7
AT181313	3C11	1	3160 - 11
AT183016	1K12	1	1369 - 6
AT183222	1H7	1	0505 - 3
AT184385	3C25	2	3160 - 25
AT184869	3D4	38	3160 - 59
AT186257	3D2	8	3160 - 27
AT18687	1I6	12	0560 - 3
AT188759	2I17	8	2001 - 3
AT188759	2I19	8	2001 - 3B
AT189390	2I24	1	2003 - 2
AT189487	2I24	4	2003 - 2
AT191487	1I19	16	0962 - 3
AT191487	1I21	16	0962 - 5
AT192956	2I17	13	2001 - 3
AT192957	2I17	13	2001 - 3
AT192958	2I17	13	2001 - 3
AT193500	2H4	4	1830 - 3B
AT195301	2B24	3	1674 - 3
AT195301	2C8	10	1674 - 9B
AT195302	2B24	4	1674 - 3
AT195302	2C8	11	1674 - 9B
AT195441	2G7	1	1821 - 3
AT195442	2G7	6	1821 - 3
AT196427	2I23	1	2002 - 7
AT196510	1H5	4	0505 - 1
AT196760	3D15	48	3160 - 69
AT196943	3D6	2	3160 - 61
AT202112	2J13	2	2163 - 3
AT202609	3B20	9	3141 - 3
AT202610	1I19	29	0962 - 3
AT202724	3B17	2	3102 - 10
AT202726	2F4	15	1810 - 21
AT202732	2F22	1	1812 - 1
AT202754	1J6	5	1062 - 3
AT202754	1J8	2	1062 - 5
AT202779	2I25	2	2004 - 2
AT202784	2F2	11	1810 - 19
AT202786	2C3	1	1674 - 6
AT202786	2C8	12	1674 - 9B
AT202787	2C3	1	1674 - 6
AT202788	2C3	1	1674 - 6
AT202789	2B22	7	1673 - 10
AT202795	2C3	1	1674 - 6
AT202796	2C3	1	1674 - 6
AT202797	2C3	1	1674 - 6
AT202800	2C3	1	1674 - 6
AT202800	2D17	2	1674 - 59
AT202805	3B25	11	3160 - 3
AT202812	2B6	2	1671 - 3
AT202813	2B6	1	1671 - 3
AT202814	2B6	3	1671 - 3
AT202815	2B8	1	1671 - 5
AT202824	2C21	1	1674 - 21
AT202824	3B25	12	3160 - 3
AT202827	2C14	1	1674 - 14
AT202827	3F20	7	3166 - 3
AT202827	3F22	4	3166 - 3B
AT202830	2J9	14	2162 - 3
AT202830	2J11	17	2162 - 5
AT202831	2C9	3	1674 - 10
AT202842	1H7	12	0505 - 3
AT202842	2C3	1	1674 - 6
AT202860	2D23	8	1741 - 3
AT202879	3C19	18	3160 - 19
AT202897	2D23	9	1741 - 3
AT202897	3B20	10	3141 - 3
AT202908	1H24	11	0520 - 3
AT202934	2C2	1	1674 - 5
AT202935	2C9	1	1674 - 10
AT202942	2C23	1	1674 - 25
AT202944	3F10	14	3164 - 3
AT202955	1C19	7	0350 - 3
AT202962	2H10	7	1830 - 11
AT202997	1I13	50	0930 - 3
AT202999	1C8	19	0260 - 5
AT203000	1C6	13	0260 - 3
AT203000	1C8	22	0260 - 5
AT203001	1C6	1	0260 - 3
AT203001	1C8	1	0260 - 5
AT203002	1C8	6	0260 - 5
AT203003	1C6	7	0260 - 3
AT203003	1C8	5	0260 - 5
AT203018	3F6	12	3163 - 3
AT203018	3F8	12	3163 - 5
AT203019	3F6	13	3163 - 3
AT203019	3F8	13	3163 - 5
AT203021	3F6	14	3163 - 3
AT203021	3F8	14	3163 - 5
AT203022	3F6	15	3163 - 3
AT203022	3F8	15	3163 - 5
AT203023	3D15	16	3160 - 69
AT203024	3D15	18	3160 - 69
AT203025	3F6	16	3163 - 3
AT203025	3F8	16	3163 - 5
AT203026	3F6	17	3163 - 3
AT203026	3F8	17	3163 - 5
AT203027	3F6	18	3163 - 3
AT203027	3F8	18	3163 - 5
AT203028	3F6	19	3163 - 3
AT203028	3F8	19	3163 - 5
AT203029	3F6	20	3163 - 3
AT203029	3F8	20	3163 - 5
AT203030	3F6	21	3163 - 3
AT203030	3F8	21	3163 - 5
AT203031	3F6	22	3163 - 3
AT203031	3F8	22	3163 - 5
AT203032	3F8	23	3163 - 5
AT203033	3F6	23	3163 - 3
AT203044	2H19	24	1911 - 5
AT203051	1H24	9	0520 - 3
AT203059	1J8	1	1062 - 5
AT203071	3F8	24	3163 - 5
AT203072	3F8	41	3163 - 5
AT203073	3F8	42	3163 - 5
AT203074	3F8	43	3163 - 5
AT203077	1E12	11	0360 - 9
AT203077	2J13	3	2163 - 3
AT203082	1J8	5	1062 - 5
AT203128	2B24	5	1674 - 3
AT203130	3D13	4	3160 - 67
AT203130	3F20	8	3166 - 3
AT203130	3F22	5	3166 - 3B
AT203137	2B22	3	1673 - 10

NUMERICAL INDEX - CONTINUED

PART NO.	GRID	KEY	PAGE
AT203137	2C20	1	1674 - 20
AT203140	2B14	13	1672 - 7
AT203144	2J13	4	2163 - 3
AT203178	1I17	2	0960 - 19
AT203179	1I17	1	0960 - 19
AT203179	2J13	6	2163 - 3
AT203180	1I17	5	0960 - 19
AT203180	3D15	20	3160 - 69
AT203181	1I17	3	0960 - 19
AT203182	1I17	16	0960 - 19
AT203315	2J13	7	2163 - 3
AT203317	3F6	24	3163 - 3
AT203416	1C15	8	0325 - 3
AT203416	1C15	9	0325 - 3
AT203457	1J6	6	1062 - 3
AT203478	3B23	2	3145 - 3
AT203487	3D4	36	3160 - 59
AT203487	3D4	39	3160 - 59
AT203487	3D7	4	3160 - 62
AT203500	2C3	1	1674 - 6
AT203565	1H9	8	0505 - 5
AT203566	1H9	9	0505 - 5
AT206645	3D15	90	3160 - 69
AT206659	2B8	7	1671 - 5
AT206660	2B22	8	1673 - 10
AT206671	3B10	17	3102 - 3
AT206685	2C17	1	1674 - 17
AT206721	1J6	27	1062 - 3
AT206728	1H9	20	0505 - 5
AT206731	3B10	2	3102 - 3
AT206731	3B12	2	3102 - 5
AT206731	3B17	3	3102 - 10
AT206815	3D15	22	3160 - 69
AT206818	1H9	10	0505 - 5
AT206844	3F8	44	3163 - 5
AT206878	2B17	12A	1673 - 5
AT206890	3B8	5	3102 - 1
AT206891	3B14	12	3102 - 7
AT206912	2D17	3	1674 - 59
AT206923	2J6	8	2008 - 3
AT207022	1B23	4	0210 - 21
AT207023	1C11	3	0263 - 3
AT207082	1H9	11	0505 - 5
AT207094	2J13	8	2163 - 3
AT207096	3B25	13	3160 - 3
AT207144	2F22	1	1812 - 1
AT207183	2E3	2	1749 - 2
AT207213	3F6	25	3163 - 3
AT207213	3F8	25	3163 - 5
AT207214	3F6	26	3163 - 3
AT207214	3F8	26	3163 - 5
AT207287	3B18	2	3140 - 1
AT207308	1B2	3	0110 - 1
AT207309	1B2	4	0110 - 1
AT207309	1B2	5	0110 - 1
AT207309	1B2	10	0110 - 1
AT207384	2J13	9	2163 - 3
AT207398	1B2	3	0110 - 1
AT207398	1B2	4	0110 - 1
AT207398	1B2	5	0110 - 1
AT207398	1B2	10	0110 - 1
AT207399	1B2	3	0110 - 1
AT207497	2F8	3	1810 - 23B
AT207529	1J6	28	1062 - 3
AT207529	3C23	12	3160 - 23
AT207542	2B15	2	1673 - 2
AT207542	2B15	3	1673 - 2
AT207542	2B15	8	1673 - 2
AT207554	1C15	3	0325 - 3
AT207709	2C3	1	1674 - 6
AT207710	2B17	7	1673 - 5
AT207869	1J16	3	1163 - 2
AT207936	3C7	23	3160 - 7
AT207936	3C21	7	3160 - 21
AT207941	3C11	3	3160 - 11
AT207941	3C15	4	3160 - 15
AT207941	3C19	4	3160 - 19
AT207947	1J6	46	1062 - 3
AT207948	1J6	44	1062 - 3
AT207949	3C7	22	3160 - 7
AT207949	3C11	21	3160 - 11
AT207983	3C7	8	3160 - 7
AT207983	3C7	11	3160 - 7
AT207984	3C7	8	3160 - 7
AT207984	3C7	11	3160 - 7
AT208085	1J6	11	1062 - 3
AT208086	1J6	18	1062 - 3
AT208087	1J6	22	1062 - 3
AT208088	1J6	7	1062 - 3
AT208089	1J6	25	1062 - 3
AT208159	2H19	3	1911 - 5
AT208163	1J6	23	1062 - 3
AT208166	1J6	60	1062 - 3
AT208167	1J6	12	1062 - 3
AT208178	3D21	34	3162 - 7
AT208178	3F2	23	3162 - 37
AT208179	3D21	35	3162 - 7
AT208180	3D21	45	3162 - 7
AT208181	3D21	42	3162 - 7
AT208182	3D21	41	3162 - 7
AT208182	3F2	28	3162 - 37
AT208183	3D21	43	3162 - 7
AT208188	3D19	1	3162 - 5
AT208411	1J13	6	1115 - 3
AT208421	2H20	3	1913 - 2
AT208424	3D4	20	3160 - 59
AT208424	3D4	21	3160 - 59
AT208424	3D4	22	3160 - 59
AT208425	3D4	31	3160 - 59
AT208425	3D4	35	3160 - 59
AT208426	3D4	29	3160 - 59
AT208426	3D4	30	3160 - 59
AT208435	2B20	3	1673 - 8
AT208435	2B20	6	1673 - 8
AT208440	2H19	23	1911 - 5
AT208483	2G19	5	1821 - 11
AT208484	2G19	6	1821 - 11
AT208485	2G19	7	1821 - 11
AT208486	2G19	8	1821 - 11
AT208487	2G19	9	1821 - 11
AT208487	2G19	20	1821 - 11
AT208487	2G19	21	1821 - 11
AT208487	2G19	22	1821 - 11
AT208487	2G19	23	1821 - 11
AT208487	2G19	24	1821 - 11
AT208488	2G19	15	1821 - 11
AT208488	2G19	36	1821 - 11
AT208488	2G19	37	1821 - 11
AT208490	2G19	10	1821 - 11
AT208490	2G19	25	1821 - 11
AT208490	2G19	26	1821 - 11
AT208490	2G19	27	1821 - 11
AT208490	2G19	28	1821 - 11
AT208491	2G19	11	1821 - 11
AT208491	2G19	32	1821 - 11
AT208531	2G7	7	1821 - 3
AT208531	2G19	1	1821 - 11
AT208541	2B10	4	1672 - 3
AT208541	2B14	7	1672 - 7
AT208630	2B24	6	1674 - 3
AT208630	2B25	3	1674 - 3A
AT208630	2C3	1	1674 - 6
AT208633	3C25	..	3160 - 25
AT208633	3D2	..	3160 - 27
AT208635	3C25	2	3160 - 25
AT208636	3C25	3	3160 - 25
AT208637	3D2	1	3160 - 27
AT208637	3D2	6	3160 - 27
AT208637	3D2	7	3160 - 27
AT208637	3D2	13	3160 - 27
AT208638	3C25	..	3160 - 25
AT208638	3D2	14	3160 - 27
AT208638	3D2	..	3160 - 27
AT208640	3D2	2	3160 - 27
AT208641	3D2	3	3160 - 27
AT208643	3C25	..	3160 - 25
AT208643	3D2	..	3160 - 27
AT208644	3C25	1	3160 - 25
AT208647	3D2	6	3160 - 27
AT208647	3D2	7	3160 - 27
AT208647	3D2	9	3160 - 27
AT208647	3D2	13	3160 - 27
AT208648	3C25	..	3160 - 25
AT208648	3D2	..	3160 - 27
AT208657	3D2	1	3160 - 27
AT208760	3E6	12	3162 - 17
AT208760	3E8	13	3162 - 21
AT208760	3E8	18	3162 - 21
AT208760	3E8	28	3162 - 21
AT208762	3B25	14	3160 - 3
AT208763	3B25	15	3160 - 3
AT208911	3D17	5	3162 - 3
AT208911	3D19	4	3162 - 5
AT208911	3D19	5	3162 - 5
AT208911	3E8	1	3162 - 21
AT208911	3E8	4	3162 - 21
AT208911	3F2	4	3162 - 37
AT208911	3F2	5	3162 - 37
AT208999	3B25	16	3160 - 3
AT208999	3C2	14	3160 - 3B
AT209000	3B25	17	3160 - 3
AT209000	3C2	15	3160 - 3B
AT209020	2G11	11	1821 - 3D
AT209021	2G11	10	1821 - 3D
AT209022	2G11	4	1821 - 3D
AT209022	2G11	12	1821 - 3D
AT209024	2G9	8	1821 - 3B
AT209025	2G7	10	1821 - 3
AT209026	2G9	6	1821 - 3B
AT209031	2G7	7	1821 - 3
AT209123	2C3	1	1674 - 6
AT209225	2G7	10	1821 - 3
AT209375	2B5	1	1671 - 2
AT209375	2B6	1	1671 - 3
AT209376	2B5	3	1671 - 2
AT209376	2B6	3	1671 - 3
AT209421	2B5	2	1671 - 2
AT209421	2B6	2	1671 - 3
AT209469	2G19	13	1821 - 11
AT209469	2G19	33	1821 - 11
AT209469	2G19	34	1821 - 11

NUMERICAL INDEX - CONTINUED

PART NO.	GRID	KEY	PAGE
AT209469	2G19	35	1821 - 11
AT209495	1J13	7	1115 - 3
AT209522	1C4	4	0240 - 3
AT209537	1I13	17	0930 - 3
AT209668	2H2	14	1830 - 3
AT209724	1H20	10	0515 - 3
AT209748	3C15	9	3160 - 15
AT209748	3C17	..	3160 - 17
AT209748	3C19	9	3160 - 19
AT209750	3C15	9	3160 - 15
AT209750	3C17	4	3160 - 17
AT209750	3C19	9	3160 - 19
AT209779	3D21	93	3162 - 7
AT209783	3F2	90	3162 - 37
AT209784	3D21	91	3162 - 7
AT209788	3D21	92	3162 - 7
AT209789	3D21	62	3162 - 7
AT209811	3C9	10	3160 - 9
AT209881	3D2	4	3160 - 27
AT209908	2F2	9	1810 - 19
AT209908	2F4	11	1810 - 21
AT209909	2F4	10	1810 - 21
AT209910	2F2	4	1810 - 19
AT209912	2F2	3	1810 - 19
AT209947	2E14	12	1810 - 7
AT209971	2D21	2	1740 - 1
AT210056	1I13	37	0930 - 3
AT210086	2H4	5	1830 - 3B
AT210092	1I13	16	0930 - 3
AT210093	1I13	14	0930 - 3
AT210094	1I13	15	0930 - 3
AT210105	3C7	..	3160 - 7
AT210106	3C9	1	3160 - 9
AT210106	3C9	2	3160 - 9
AT210106	3C9	3	3160 - 9
AT210106	3C9	..	3160 - 9
AT210107	3C11	18	3160 - 11
AT210107	3C11	19	3160 - 11
AT210107	3C11	20	3160 - 11
AT210107	3C11	..	3160 - 11
AT210107	3C15	13	3160 - 15
AT210107	3C15	14	3160 - 15
AT210107	3C15	15	3160 - 15
AT210107	3C15	16	3160 - 15
AT210107	3C15	..	3160 - 15
AT210107	3C19	..	3160 - 19
AT210108	3C21	..	3160 - 21
AT210145	3E8	2	3162 - 21
AT210207	1I13	46	0930 - 3
AT210213	3E2	12	3162 - 13
AT210213	3F2	17	3162 - 37
AT210213	3F2	30	3162 - 37
AT210213	3F2	31	3162 - 37
AT210214	3F2	32	3162 - 37
AT210222	1E12	1	0360 - 9
AT210247	3E8	90	3162 - 21
AT210249	3D19	15	3162 - 5
AT210250	3D19	16	3162 - 5
AT210263	3F2	13	3162 - 37
AT210291	1J6	29	1062 - 3
AT210333	2B17	13	1673 - 5
AT210334	2B24	13	1674 - 3
AT210334	2C8	13	1674 - 9B
AT210376	3D21	63	3162 - 7
AT210394	2C9	20	1674 - 10
AT210399	1I13	45	0930 - 3
AT210460	1I4	4	0540 - 3
AT210490	1K17	10	1369 - 12B
AT210549	2G13	6	1821 - 5
AT210561	2H2	15	1830 - 3
AT210667	3B25	18	3160 - 3
AT210667	3C2	16	3160 - 3B
AT210773	1E4	1	0350 - 47
AT210781	2H10	8	1830 - 11
AT210877	1J6	34	1062 - 3
AT211014	1E12	4	0360 - 9
AT211041	2B10	12	1672 - 3
AT211063	2H6	5	1830 - 5
AT211063	2H9	4	1830 - 10
AT211138	2H19	28	1911 - 5
AT211206	1H24	7	0520 - 3
AT211296	2E12	8	1810 - 5
AT211296	2F18	3	1810 - 33
AT211296	2F20	4	1810 - 35
AT211300	1C15	11	0325 - 3
AT211301	1C15	10	0325 - 3
AT211362	2D17	6	1674 - 59
AT211466	1H20	11	0515 - 3
AT211480	2H6	2	1830 - 5
AT211480	2H9	9	1830 - 10
AT21574	3F10	17	3164 - 3
AT217448	2J4	1	2007 - 2
AT217448	2J4	5	2007 - 2
AT219727	3F10	30	3164 - 3
AT219778	2H4	7	1830 - 3B
AT219909	3F2	34	3162 - 37
AT219917	2H6	16	1830 - 5
AT219917	2H9	10	1830 - 10
AT219974	2H19	9	1911 - 5
AT219974	2H24	4	1921 - 5
AT219974	2H24	20	1921 - 5
AT220015	2H24	12	1921 - 5
AT220039	1D12	29	0350 - 27
AT220192	3B25	19	3160 - 3
AT220192	3C4	18	3160 - 3D
AT220223	1I19	19	0962 - 3
AT220223	1I21	19	0962 - 5
AT220224	1I19	20	0962 - 3
AT220224	1I19	21	0962 - 3
AT220224	1I19	22	0962 - 3
AT220224	1I21	20	0962 - 5
AT220225	1I19	17	0962 - 3
AT220225	1I19	26	0962 - 3
AT220226	1I19	15	0962 - 3
AT220226	1I19	18	0962 - 3
AT220226	1I21	15	0962 - 5
AT220227	1I19	17	0962 - 3
AT220227	1I19	27	0962 - 3
AT220227	1I19	28	0962 - 3
AT220357	3F2	34	3162 - 37
AT220377	2H10	9	1830 - 11
AT220380	3B23	4	3145 - 3
AT220517	2C3	1	1674 - 6
AT220517	3D15	24	3160 - 69
AT220687	2I10	18	1927 - 7
AT220687	2I12	15	1927 - 9
AT220737	2I10	9	1927 - 7
AT220788	3C4	17	3160 - 3D
AT220822	1H24	10	0520 - 3
AT220823	1I2	4	0530 - 5
AT220832	1H18	21	0511 - 7
AT220899	1I2	8	0530 - 5
AT220925	1H18	23	0511 - 7
AT220953	2H2	17	1830 - 3
AT220962	1I2	1	0530 - 5
AT220993	2H24	19	1921 - 5
AT220994	2H24	28	1921 - 5
AT221019	2G7	8	1821 - 3
AT221020	2G7	3	1821 - 3
AT221021	2G7	4	1821 - 3
AT221093	3F20	10	3166 - 3
AT221151	1H18	24	0511 - 7
AT221152	1H18	25	0511 - 7
AT221154	1H18	26	0511 - 7
AT221155	1H18	27	0511 - 7
AT221156	1H18	28	0511 - 7
AT221157	1H18	29	0511 - 7
AT221158	1H18	30	0511 - 7
AT221159	1H18	31	0511 - 7
AT221160	1H18	32	0511 - 7
AT221273	2H24	20	1921 - 5
AT221350	3F20	11	3166 - 3
AT221354	1H18	33	0511 - 7
AT221506	3C11	10	3160 - 11
AT221506	3C13	5	3160 - 13
AT221628	2C14	1	1674 - 14
AT221628	3F20	7	3166 - 3
AT221628	3F22	4	3166 - 3B
AT221629	2C21	1	1674 - 21
AT221651	2H6	5	1830 - 5
AT221651	2H9	5	1830 - 10
AT221652	2H6	5	1830 - 5
AT221652	2H9	6	1830 - 10
AT221653	2H6	5	1830 - 5
AT221653	2H9	8	1830 - 10
AT221658	2H22	4	1913 - 5
AT221701	2I10	9	1927 - 7
AT221880	1H24	8	0520 - 3
AT221880	1H24	13	0520 - 3
AT221897	3F10	7	3164 - 3
AT221930	1I6	13	0560 - 3
AT222005	1E14	7	0360 - 9B
AT222153	1I19	2	0962 - 3
AT222153	1I21	2	0962 - 5
AT222364	2B17	8	1673 - 5
AT222366	3D13	4	3160 - 67
AT222366	3F20	8	3166 - 3
AT222366	3F22	5	3166 - 3B
AT222367	1J15	7	1162 - 3
AT222371	1J6	27	1062 - 3
AT222372	1J6	59	1062 - 3
AT222372	3D15	25	3160 - 69
AT222375	2D9	1	1674 - 44
AT222376	2D9	2	1674 - 44
AT222377	1G11	29	0419 - 3
AT222378	2H6	19	1830 - 5
AT222402	2F16	1	1810 - 31
AT222414	1J8	7	1062 - 5
AT222414	1J10	11	1064 - 7
AT222416	1J8	4	1062 - 5
AT222436	2C20	1	1674 - 20
AT222437	2C23	1	1674 - 25
AT222438	1I13	36	0930 - 3
AT222439	1H9	8	0505 - 5
AT222440	1I13	37	0930 - 3
AT222441	2D9	4	1674 - 44
AT222575	2D9	5	1674 - 44
AT222602	2H22	2	1913 - 5
AT222678	2C4	1	1674 - 7
AT222709	2D25	7	1746 - 3
AT222715	1I6	21	0560 - 3

NUMERICAL INDEX - CONTINUED

PART NO.	GRID	KEY	PAGE
AT222717	2D25	4	1746 - 3
AT222739	2D2	2	1674 - 27
AT222745	2D2	16	1674 - 27
AT222750	1H14	8	0511 - 3
AT222789	2D9	1	1674 - 44
AT222790	2D9	2	1674 - 44
AT222791	2D9	1	1674 - 44
AT222792	2D9	2	1674 - 44
AT222815	1H12	21	0510 - 5
AT222824	2C3	1	1674 - 6
AT222825	2C3	1	1674 - 6
AT222857	2H19	25	1911 - 5
AT222858	2H19	27	1911 - 5
AT222870	2D2	9	1674 - 27
AT222874	2H19	1	1911 - 5
AT222874	2H19	34	1911 - 5
AT222875	2H19	35	1911 - 5
AT222876	2H19	13	1911 - 5
AT222877	2H19	30	1911 - 5
AT222882	2H22	1	1913 - 5
AT222934	1I6	26	0560 - 3
AT222935	1I6	27	0560 - 3
AT222975	1I6	28	0560 - 3
AT223011	2I8	2	1927 - 5
AT223019	2G23	2	1822 - 5
AT223025	2G23	1	1822 - 5
AT223073	2H12	5	1830 - 15
AT223091	1H12	18	0510 - 5
AT223133	1I6	23	0560 - 3
AT223199	1I17	13	0960 - 19
AT223200	1I17	10	0960 - 19
AT223271	2G25	5	1822 - 7
AT223272	2G23	5	1822 - 5
AT223273	2G23	4	1822 - 5
AT223274	2I8	1	1927 - 5
AT223284	1E16	8	0360 - 11
AT223321	3F10	25	3164 - 3
AT223322	3F10	15	3164 - 3
AT223323	2I10	16	1927 - 7
AT223324	2I10	17	1927 - 7
AT223331	2I10	16	1927 - 7
AT223332	2I10	17	1927 - 7
AT223381	2G25	6	1822 - 7
AT223391	1J2	25	0962 - 11
AT223440	1J2	3	0962 - 11
AT223440	1J2	24	0962 - 11
AT223493	1I6	29	0560 - 3
AT223526	1H9	8	0505 - 5
AT223531	2H4	1	1830 - 3B
AT223535	1J6	59	1062 - 3
AT223535	3D15	25	3160 - 69
AT223538	1J15	7	1162 - 3
AT223546	2H24	17	1921 - 5
AT223547	2H24	8A	1921 - 5
AT223551	2H17	3	1911 - 3
AT223580	1E16	9	0360 - 11
AT223584	1E16	10	0360 - 11
AT223621	1H18	90	0511 - 7
AT223644	1H12	12	0510 - 5
AT223648	1I13	39	0930 - 3
AT223648	3F6	25	3163 - 3
AT223648	3F6	26	3163 - 3
AT223648	3F6	27	3163 - 3
AT223648	3F8	25	3163 - 5
AT223648	3F8	26	3163 - 5
AT223648	3F8	27	3163 - 5
AT223660	1H9	90	0505 - 5
AT223672	1E12	14	0360 - 9
AT223672	3F10	22	3164 - 3
AT223684	1E12	9	0360 - 9
AT223687	2H12	13	1830 - 15
AT223688	2H12	7	1830 - 15
AT223689	2H12	11	1830 - 15
AT223698	1J8	13	1062 - 5
AT223719	1I2	10	0530 - 5
AT223728	1H18	47	0511 - 7
AT223738	1H18	34	0511 - 7
AT223758	2D2	1	1674 - 27
AT223768	1J10	12	1064 - 7
AT223771	1H7	12	0505 - 3
AT223774	1H24	3	0520 - 3
AT223776	1H14	6	0511 - 3
AT223777	1H18	35	0511 - 7
AT223778	1H12	13	0510 - 5
AT223783	3D15	26	3160 - 69
AT223784	1H18	36	0511 - 7
AT223788	2B10	17	1672 - 3
AT223805	1H18	47	0511 - 7
AT223806	3D9	7	3160 - 63B
AT223806	3D15	27	3160 - 69
AT223807	2B19	4	1673 - 7
AT223810	1H24	4	0520 - 3
AT223810	1I2	12	0530 - 5
AT223826	1H14	14	0511 - 3
AT223869	2C6	11	1674 - 9
AT223870	2I17	1	2001 - 3
AT223870	2I19	1	2001 - 3B
AT223888	1I2	1	0530 - 5
AT223897	2I17	2	2001 - 3
AT223897	2I19	2	2001 - 3B
AT223925	3F16	31	3165 - 5
AT223925	3F18	31	3165 - 5B
AT223926	3B10	3	3102 - 3
AT223926	3B12	3	3102 - 5
AT223926	3B23	7	3145 - 3
AT223927	3B20	11	3141 - 3
AT223927	3B20	13	3141 - 3
AT223927	3B23	11	3145 - 3
AT223928	3B21	3	3143 - 1
AT223929	3B20	15	3141 - 3
AT223929	3B20	17	3141 - 3
AT223971	1H12	15	0510 - 5
AT224009	3B21	7	3143 - 1
AT224105	3F10	23	3164 - 3
AT224152	1H14	6	0511 - 3
AT224191	1C15	6	0325 - 3
AT224191	1C15	7	0325 - 3
AT224217	2F2	10	1810 - 19
AT224232	2C13	1	1674 - 13
AT224233	2E16	13	1810 - 9
AT224234	2E16	13	1810 - 9
AT224235	2E24	12	1810 - 17
AT224241	3D17	9	3162 - 3
AT224241	3D21	58	3162 - 7
AT224242	3E2	13	3162 - 13
AT224246	3E6	13	3162 - 17
AT224247	2G7	9	1821 - 3
AT224248	2G7	9	1821 - 3
AT224427	1H20	3	0515 - 3
AT224430	1J10	8	1064 - 7
AT224497	1J15	3	1162 - 3
AT224497	1J15	5	1162 - 3
AT224570	3D6	1	3160 - 61
AT224574	3D9	3	3160 - 63B
AT224576	1J15	4	1162 - 3
AT224591	3D15	50	3160 - 69
AT224592	3D15	53	3160 - 69
AT224600	3D15	55	3160 - 69
AT224696	1J6	44	1062 - 3
AT224699	3D9	5	3160 - 63B
AT224701	3D9	1	3160 - 63B
AT224702	3D9	1	3160 - 63B
AT224703	3C5	1	3160 - 4
AT224703	3D9	1	3160 - 63B
AT224706	3D9	2	3160 - 63B
AT224706	3D9	3	3160 - 63B
AT224718	1J13	4	1115 - 3
AT224749	2D6	1	1674 - 29
AT224755	2C6	19	1674 - 9
AT224833	1H24	26	0520 - 3
AT224862	3D6	1	3160 - 61
AT224863	1J15	2	1162 - 3
AT224864	1J15	2	1162 - 3
AT224865	3D6	5	3160 - 61
AT224865	3D9	2	3160 - 63B
AT224866	3D9	2	3160 - 63B
AT224873	1J15	4	1162 - 3
AT224873	3D6	7	3160 - 61
AT224873	3D6	8	3160 - 61
AT224893	2C9	5	1674 - 10
AT224893	2C11	2	1674 - 10B
AT224893	2I17	25	2001 - 3
AT224893	2I19	25	2001 - 3B
AT224894	2C9	5	1674 - 10
AT224894	2C10	2	1674 - 10A
AT224923	2B21	1	1673 - 9
AT224923	2B21	3	1673 - 9
AT224923	2B21	5	1673 - 9
AT224923	2E16	3	1810 - 9
AT224930	2H4	57	1830 - 3B
AT224948	2G23	3	1822 - 5
AT224987	2H20	4	1913 - 2
AT224989	2E12	9	1810 - 5
AT224990	2E12	10	1810 - 5
AT224991	2E12	11	1810 - 5
AT224994	2E18	1	1810 - 11
AT224994	2E20	21	1810 - 13
AT224995	2E18	10	1810 - 11
AT225004	1C15	5	0325 - 3
AT225011	3D15	55	3160 - 69
AT225053	3D15	48	3160 - 69
AT225069	1C15	4	0325 - 3
AT225082	3D9	6	3160 - 63B
AT225083	3C5	1	3160 - 4
AT225083	3D9	6	3160 - 63B
AT225084	3D9	4	3160 - 63B
AT225085	3C5	2	3160 - 4
AT225085	3D9	4	3160 - 63B
AT225156	3F10	49	3164 - 3
AT225189	1E16	7	0360 - 11
AT225249	3D9	3	3160 - 63B
AT225256	3F24	10	3166 - 5
AT225330	1H24	23	0520 - 3
AT225420	3D15	56	3160 - 69
AT225425	3E10	8	3162 - 23
AT225425	3E12	7	3162 - 25
AT225425	3E20	13	3162 - 33
AT225426	3E22	6	3162 - 35
AT225430	3E14	11	3162 - 27
AT225432	3E18	11	3162 - 31
AT225451	2H4	37	1830 - 3B

NUMERICAL INDEX - CONTINUED

PART NO.	GRID	KEY	PAGE
AT225530	3C2	6	3160 - 3B
AT225530	3C5	3	3160 - 4
AT225573	1J10	10	1064 - 7
AT225574	3D11	6	3160 - 65
AT225580	3B20	19	3141 - 3
AT225585	3B20	22	3141 - 3
AT225596	2E2	6	1746 - 5
AT225597	2E2	7	1746 - 5
AT225616	3C23	32	3160 - 23
AT225618	2G25	7	1822 - 7
AT225691	1D2	3	0350 - 13
AT225693	1D2	5	0350 - 13
AT225694	1D2	6	0350 - 13
AT225695	1D2	1	0350 - 13
AT225696	1D4	4	0350 - 15
AT225697	1D4	7	0350 - 15
AT225698	3D9	5	3160 - 63B
AT225706	2E24	13	1810 - 17
AT225728	1J13	8	1115 - 3
AT225819	3C7	24	3160 - 7
AT225820	3C7	24	3160 - 7
AT225824	3B18	1	3140 - 1
AT225830	1K4	29	1320 - 7
AT225834	1J25	29	1320 - 5
AT225899	2H4	8	1830 - 3B
AT225911	2E10	9	1810 - 3
AT225952	2C3	1	1674 - 6
AT225952	3B25	11	3160 - 3
AT225954	3C7	21	3160 - 7
AT225954	3C15	17	3160 - 15
AT225955	3C7	20	3160 - 7
AT225955	3C19	17	3160 - 19
AT226000	2E20	10	1810 - 13
AT226072	2F6	12	1810 - 23
AT226073	2F6	13	1810 - 23
AT226082	2G2	11	1816 - 3
AT226119	3E20	10	3162 - 33
AT226123	2G17	4	1821 - 9
AT226132	3E4	11	3162 - 15
AT226133	3E4	13	3162 - 15
AT226151	2E20	22	1810 - 13
AT226152	2E20	25	1810 - 13
AT226156	2D23	19	1741 - 3
AT226156	2D23	22	1741 - 3
AT226162	2D19	1A	1676 - 2
AT226176	2E20	27	1810 - 13
AT226229	2H19	6	1911 - 5
AT226249	2H2	18	1830 - 3
AT226261	1C23	1	0350 - 9
AT226263	2F6	14	1810 - 23
AT226265	3C5	2	3160 - 4
AT226266	3C5	1	3160 - 4
AT226269	2F6	6	1810 - 23
AT226279	2G2	4	1816 - 3
AT226282	2I25	2	2004 - 2
AT226286	1H14	17	0511 - 3
AT226287	1H14	20	0511 - 3
AT226301	3F24	11	3166 - 5
AT226302	3E10	9	3162 - 23
AT226303	3E14	8	3162 - 27
AT226303	3E18	8	3162 - 31
AT226309	2H4	12	1830 - 3B
AT226333	3E22	6	3162 - 35
AT226334	2F6	15	1810 - 23
AT226334	2F10	8	1810 - 23D
AT226338	2B20	6	1673 - 8
AT226339	2C6	11	1674 - 9
AT226349	3D23	17	3162 - 9
AT226349	3E4	26	3162 - 15
AT226349	3E12	17	3162 - 25
AT226349	3E16	18	3162 - 29
AT226349	3F4	6	3162 - 39
AT226350	3D23	18	3162 - 9
AT226350	3E4	27	3162 - 15
AT226350	3E12	18	3162 - 25
AT226350	3F4	7	3162 - 39
AT226372	2E12	12	1810 - 5
AT226421	2G2	5	1816 - 3
AT226454	3E10	11	3162 - 23
AT226454	3E12	8	3162 - 25
AT226454	3E14	9	3162 - 27
AT226454	3E16	7	3162 - 29
AT226454	3E18	9	3162 - 31
AT226495	2C8	26	1674 - 9B
AT226515	3E6	16	3162 - 17
AT226542	3F24	12	3166 - 5
AT226578	2F21	1	1810 - 36
AT226603	1B2	5	0110 - 1
AT226613	3D23	19	3162 - 9
AT226613	3E4	28	3162 - 15
AT226613	3E12	19	3162 - 25
AT226613	3F4	7	3162 - 39
AT226636	1K4	29	1320 - 7
AT226659	1H24	14	0520 - 3
AT226676	2G19	14	1821 - 11
AT226676	2G19	38	1821 - 11
AT226676	2G19	39	1821 - 11
AT226676	2G19	41	1821 - 11
AT226676	2G19	42	1821 - 11
AT226676	2G19	43	1821 - 11
AT226683	1H20	3	0515 - 3
AT226776	1H20	13	0515 - 3
AT226924	2B10	4	1672 - 3
AT226944	2D19	1B	1676 - 2
AT227013	2F21	1	1810 - 36
AT227063	2G2	10	1816 - 3
AT227063	2G4	4	1816 - 3B
AT227068	2G2	13	1816 - 3
AT227134	2B25	4	1674 - 3A
AT227170	2H4	65	1830 - 3B
AT227248	1E10	10	0360 - 3
AT227279	1E10	5	0360 - 3
AT227279	3F10	40	3164 - 3
AT227500	2C16	1	1674 - 16
AT227544	2E12	14	1810 - 5
AT227544	2F14	3	1810 - 27
AT227544	2F18	5	1810 - 33
AT227545	2E12	15	1810 - 5
AT227545	2F14	4	1810 - 27
AT227545	2F18	6	1810 - 33
AT227547	2F14	1	1810 - 27
AT227549	2F14	9	1810 - 27
AT227581	3F10	47	3164 - 3
AT227651	1E10	1	0360 - 3
AT227668	2E22	3	1810 - 15
AT227668	2H14	2	1830 - 15B
AT227669	2H14	3	1830 - 15B
AT227717	3D15	48	3160 - 69
AT227794	2F10	10B	1810 - 23D
AT227864	1C19	..	0350 - 3
AT227925	3E20	1	3162 - 33
AT227925	3E22	1	3162 - 35
AT227926	3E20	2	3162 - 33
AT227927	3E20	4	3162 - 33
AT227927	3E22	10	3162 - 35
AT227927	3E22	..	3162 - 35
AT227928	3E20	3	3162 - 33
AT227928	3E22	9	3162 - 35
AT227928	3E22	..	3162 - 35
AT227929	3E20	5	3162 - 33
AT227930	3E20	6	3162 - 33
AT227930	3E22	2	3162 - 35
AT227933	3E20	9	3162 - 33
AT227933	3E22	5	3162 - 35
AT227953	3E14	..	3162 - 27
AT227955	3E18	90	3162 - 31
AT227957	3E22	11	3162 - 35
AT227965	2E22	4	1810 - 15
AT227997	3C23	8	3160 - 23
AT228138	3D6	13	3160 - 61
AT228138	3D11	7	3160 - 65
AT228238	2B17	8	1673 - 5
AT228250	3E4	15	3162 - 15
AT228253	2F10	9	1810 - 23D
AT228261	3E4	16	3162 - 15
AT228474	3F10	21	3164 - 3
AT228702	3D17	10	3162 - 3
AT228702	3D19	18	3162 - 5
AT228702	3D21	27	3162 - 7
AT228702	3D21	48	3162 - 7
AT228702	3D21	50	3162 - 7
AT228702	3D21	51	3162 - 7
AT228702	3D21	52	3162 - 7
AT228702	3E2	15	3162 - 13
AT228702	3E6	14	3162 - 17
AT228703	3D17	11	3162 - 3
AT228703	3D23	7	3162 - 9
AT228703	3E2	14	3162 - 13
AT228703	3E4	17	3162 - 15
AT228703	3E6	15	3162 - 17
AT228893	3B10	15	3102 - 3
AT228893	3B12	6	3102 - 5
AT228894	3B10	15	3102 - 3
AT255577	1D24	27	0350 - 41
AT259005	1C21	6	0350 - 5
AT264394	3F16	17	3165 - 5
AT264394	3F18	17	3165 - 5B
AT280583	2G9	10	1821 - 3B
AT280924	1E12	14	0360 - 9
AT280924	3F10	22	3164 - 3
AT300098	2C8	29	1674 - 9B
AT300104	2G2	14	1816 - 3
AT300115	2G4	8	1816 - 3B
AT300154	3E16	9	3162 - 29
AT300156	3E16	10	3162 - 29
AT300441	2F10	10A	1810 - 23D
AT300524	1I19	26	0962 - 3
AT300524	1I19	28	0962 - 3
AT300524	1I19	29	0962 - 3
AT300524	1I21	21	0962 - 5
AT300537	2C8	30	1674 - 9B
AT300662	3D23	9	3162 - 9
AT300664	3D23	10	3162 - 9
AT300664	3D25	8	3162 - 11
AT300664	3E4	19	3162 - 15
AT300676	2C8	15	1674 - 9B
AT300816	2H10	7	1830 - 11
AT300817	1H14	6	0511 - 3
AT300819	1H14	17	0511 - 3
AT300820	1H14	20	0511 - 3
AT300821	1H14	8	0511 - 3

NUMERICAL INDEX - CONTINUED

PART NO.	GRID	KEY	PAGE
AT300921	3E24	1	3162 - 35B
AT300936	3E12	10	3162 - 25
AT300937	2C6	19	1674 - 9
AT300944	2D9	11	1674 - 44
AT301060	1K6	28	1320 - 7B
AT301097	1K2	27	1320 - 5B
AT301458	3D23	10	3162 - 9
AT301458	3D25	8	3162 - 11
AT301458	3E4	19	3162 - 15
AT301498	2C8	33	1674 - 9B
AT301498	2C8	53	1674 - 9B
AT301540	1E14	8	0360 - 9B
AT301722	2C15	2	1674 - 15
AT301777	2C19	3	1674 - 19
AT301815	2I14	10	1927 - 11
AT301816	2I14	11	1927 - 11
AT301819	2I14	12	1927 - 11
AT301820	2I14	13	1927 - 11
AT301930	3D23	19	3162 - 9
AT301930	3E4	28	3162 - 15
AT301930	3E12	19	3162 - 25
AT301930	3F4	7	3162 - 39
AT302031	3D25	1	3162 - 11
AT302031	3E24	3	3162 - 35B
AT302032	3D25	1	3162 - 11
AT302960	2H22	2	1913 - 5
AT302961	2H22	1	1913 - 5
AT303189	1K11	1	1369 - 5
AT303411	2E12	20	1810 - 5
AT303493	2E18	11	1810 - 11
AT303595	1H24	15	0520 - 3
AT303619	3E20	11	3162 - 33
AT303619	3E22	4	3162 - 35
AT303619	3E22	8	3162 - 35
AT303753	2I2	1	1927 - 3
AT303753	2I2	3	1927 - 3
AT303757	2F24	1	1813 - 3
AT303757	2F24	4	1813 - 3
AT303757	2F24	5	1813 - 3
AT304026	2C8	12	1674 - 9B
AT304159	2I14	14	1927 - 11
AT305012	2D8	1	1674 - 29B
AT305065	3B12	17	3102 - 5
AT305126	2E20	36	1810 - 13
AT305126	2E20	37	1810 - 13
AT305126	2E20	38	1810 - 13
AT305130	2E12	33	1810 - 5
AT305130	2E12	34	1810 - 5
AT305273	3F22	7	3166 - 3B
AT305275	1E14	13	0360 - 9B
AT305312	2D4	7	1674 - 27B
AT305318	1E14	10	0360 - 9B
AT305319	2D4	8	1674 - 27B
AT305337	2D4	9	1674 - 27B
AT305338	2C25	1	1674 - 25B
AT305357	1E14	11	0360 - 9B
AT305389	2C19	9	1674 - 19
AT305399	3D11	8	3160 - 65
AT305405	2H4	59	1830 - 3B
AT305417	1E14	12	0360 - 9B
AT305487	2I14	15	1927 - 11
AT305488	2I14	16	1927 - 11
AT305603	3E22	11	3162 - 35
AT305603	3E22	..	3162 - 35
AT305687	3E12	..	3162 - 25
AT305690	3D23	..	3162 - 9
AT305692	3E16	..	3162 - 29
AT305693	3E4	..	3162 - 15
AT305783	2H24	8B	1921 - 5
AT305830	2I14	17	1927 - 11
AT305841	3E10	8	3162 - 23
AT305841	3E14	11	3162 - 27
AT305841	3E18	11	3162 - 31
AT305842	3E10	8	3162 - 23
AT305842	3E14	11	3162 - 27
AT305842	3E18	11	3162 - 31
AT305896	2H17	3	1911 - 3
AT306006	2C8	33	1674 - 9B
AT306046	1J8	5	1062 - 5
AT306702	1H20	13	0515 - 3
AT306702	1H22	1	0515 - 5
AT306703	1H22	3	0515 - 5
AT306706	1I10	13	0560 - 7
AT306828	2C10	4	1674 - 10A
AT306829	2I17	24	2001 - 3
AT306829	2I19	24	2001 - 3B
AT306830	2I17	24	2001 - 3
AT306830	2I19	24	2001 - 3B
AT306831	2I17	24	2001 - 3
AT306831	2I19	24	2001 - 3B
AT306912	2H2	15	1830 - 3
AT306913	2H2	16	1830 - 3
AT306981	3C23	16	3160 - 23
AT306981	3C23	19	3160 - 23
AT307045	1E12	14	0360 - 9
AT307045	3F10	22	3164 - 3
AT307090	2B17	9	1673 - 5
AT307176	1E16	9	0360 - 11
AT307197	2H4	6	1830 - 3B
AT307262	3D9	8	3160 - 63B
AT307265	3D9	8	3160 - 63B
AT307301	3D6	8	3160 - 61
AT307302	3D6	7	3160 - 61
AT307304	3D6	9	3160 - 61
AT307314	3D6	2	3160 - 61
AT307315	3D6	4	3160 - 61
AT307331	1E6	5	0350 - 49
AT307474	2G7	9	1821 - 3
AT307490	3C2	17	3160 - 3B
AT307491	3C2	19	3160 - 3B
AT307558	3B23	4	3145 - 3
AT307563	3B23	2	3145 - 3
AT307593	3C2	27	3160 - 3B
AT307636	3D25	2	3162 - 11
AT307637	3D25	4	3162 - 11
AT307638	3D25	3	3162 - 11
AT307640	3D25	5	3162 - 11
AT307641	3D25	6	3162 - 11
AT307693	1C19	..	0350 - 3
AT307736	3E16	..	3162 - 29
AT307751	3E4	..	3162 - 15
AT307767	3D15	90	3160 - 69
AT307896	3F22	6	3166 - 3B
AT308199	2G5	1	1821 - 1
AT308268	3B21	7	3143 - 1
AT308566	3B23	2	3145 - 3
AT308673	2C8	15	1674 - 9B
AT308682	2C8	33	1674 - 9B
AT308683	2D8	1	1674 - 29B
AT308684	2D4	8	1674 - 27B
AT308685	2D4	9	1674 - 27B
AT308686	2C25	1	1674 - 25B
AT308689	2D4	7	1674 - 27B
AT308795	2G7	8	1821 - 3
AT308796	2G7	3	1821 - 3
AT308797	2G7	4	1821 - 3
AT309138	3B12	24	3102 - 5
AT309139	3B12	21	3102 - 5
AT309163	1J2	7	0962 - 11
AT309163	1J2	8	0962 - 11
AT309163	1J2	25	0962 - 11
AT309442	3B21	7	3143 - 1
AT309494	3D6	3	3160 - 61
AT309550	2B17	12A	1673 - 5
AT309550	2B17	12B	1673 - 5
AT309550	2B17	17	1673 - 5
AT309843	3D23	34	3162 - 9
AT309843	3D25	9	3162 - 11
AT309843	3E4	32	3162 - 15
AT310056	2C8	14	1674 - 9B
AT310162	1E16	9	0360 - 11
AT310412	2F10	10B	1810 - 23D
AT310413	2F10	9	1810 - 23D
AT310414	2F10	10A	1810 - 23D
AT310435	2G7	9	1821 - 3
AT310702	2E12	24	1810 - 5
AT310702	2F18	11	1810 - 33
AT310702	2F20	5	1810 - 35
AT310782	2H2	15	1830 - 3
AT310791	2I8	2	1927 - 5
AT310792	2I8	1	1927 - 5
AT310905	3F10	21	3164 - 3
AT310912	3C2	13	3160 - 3B
AT311176	1I10	15	0560 - 7
AT311383	2F16	1	1810 - 31
AT311383	2G7	9	1821 - 3
AT311435	2D21	2	1740 - 1
AT311554	1I10	14	0560 - 7
AT311817	3D23	..	3162 - 9
AT311818	3E4	..	3162 - 15
AT311902	2C8	26	1674 - 9B
AT311918	2G7	7	1821 - 3
AT311918	2G19	1	1821 - 11
AT311919	2G7	9	1821 - 3
AT312110	2C8	14	1674 - 9B
AT312158	2G4	13	1816 - 3B
AT312171	2I14	28	1927 - 11
AT313087	3E24	5	3162 - 35B
AT313187	1C6	9	0260 - 3
AT313187	1C8	8	0260 - 5
AT313282	2H4	57	1830 - 3B
AT313399	2G19	6	1821 - 11
AT313501	2D19	1B	1676 - 2
AT313708	3D6	2	3160 - 61
AT314207	1B6	2	0210 - 1
AT314266	1J6	60	1062 - 3
AT314267	1J6	12	1062 - 3
AT314301	3B8	5	3102 - 1
AT314324	2C8	33	1674 - 9B
AT314374	2C8	26	1674 - 9B
AT315021	1E10	6	0360 - 3
AT315290	2E12	20	1810 - 5
AT315458	3D25	1	3162 - 11
AT315459	3D25	1	3162 - 11
AT315459	3E24	3	3162 - 35B
AT315715	2G7	1	1821 - 3
AT315761	2G7	6	1821 - 3
AT315846	3D23	10	3162 - 9
AT315846	3D25	8	3162 - 11
AT315846	3E4	19	3162 - 15
AT315847	3D23	10	3162 - 9

NUMERICAL INDEX - CONTINUED

PART NO.	GRID	KEY	PAGE
AT315847	3D25	8	3162 - 11
AT315847	3E4	19	3162 - 15
AT316061	2D4	9	1674 - 27B
AT316303	2C8	29	1674 - 9B
AT316520	1I10	16	0560 - 7
AT316532	3D9	9	3160 - 63B
AT316532	3D15	27	3160 - 69
AT317819	3B12	17	3102 - 5
AT318123	3E20	7	3162 - 33
AT318123	3E22	3	3162 - 35
AT318483	1I10	17	0560 - 7
AT318511	2D25	7	1746 - 3
AT318987	2H4	6	1830 - 3B
AT320169	1I10	18	0560 - 7
AT320215	1I10	19	0560 - 7
AT322894	2D4	8	1674 - 27B
AT323065	1C15	5	0325 - 3
AT323307	1H22	3	0515 - 5
AT325612	3E22	7	3162 - 35
AT325612	3E22	..	3162 - 35
AT35831	1H14	16	0511 - 3
AT37478	1H12	1	0510 - 5
AT38449	2B5	18	1671 - 2
AT38449	2B6	18	1671 - 3
AT41188	2B8	5	1671 - 5
AT44188	2H24	27	1921 - 5
AT45678	3F24	14	3166 - 5
AT49216	3D4	18	3160 - 59
AT49216	3D4	20	3160 - 59
AT49216	3E8	20	3162 - 21
AT49859	1B23	18	0210 - 21
AT53440	1H24	14	0520 - 3
AT53440	1H24	16	0520 - 3
AT56659	1H12	8	0510 - 5
AT56659	1H14	5	0511 - 3
AT59892	2J3	2	2006 - 2
AT63271	3C9	5	3160 - 9
AT63271	3C21	6	3160 - 21
AT64237	2I25	2	2004 - 2
AT64884	1B23	6	0210 - 21
AT66865	1K14	4	1369 - 8
AT67275	1B2	8	0110 - 1
AT79195	2J13	11	2163 - 3
AT79576	1J8	3	1062 - 5
AT81867	2J11	7	2162 - 5
AT81931	1I13	9	0930 - 3
AT81931	1I17	4	0960 - 19
AT81931	2J13	12	2163 - 3
AT82167	1J2	4	0962 - 11
AT83105	2E18	12	1810 - 11
A3606R	1K9	1	1369 - 3
A36431	3D4	24	3160 - 59
A36432	3D4	25	3160 - 59
A3910R	1F25	13	0409 - 3
A3917R	1K9	1	1369 - 3
A3917R	3D4	33	3160 - 59
A4365R	1J6	33	1062 - 3
A4365R	1K9	1	1369 - 3
A4365R	3F24	9	3166 - 5
A4730R	1K9	1	1369 - 3
A4925R	1F21	4	0407 - 8
A4925R	1G5	1	0416 - 1
A4925R	1G5	11	0416 - 1
B1085R	1H20	16	0515 - 3
B14604	2H2	19	1830 - 3
B2762R	1K9	1	1369 - 3
B3690R	1K9	1	1369 - 3
CC22170	1G5	8	0416 - 1
CD12569	1K4	9	1320 - 7
CD12569	1K6	23	1320 - 7B
C15104	1J2	21	0962 - 11
DD14134	1K15	1	1369 - 11
DD14136	1K15	1	1369 - 11
DD14345	1K15	1	1369 - 11
DD14346	1K15	1	1369 - 11
DS0251	1K14	..	1369 - 8
DS0345	1K11	1	1369 - 5
DS0346	1K11	1	1369 - 5
DS0557	1K14	..	1369 - 8
E12379	1B23	2	0210 - 21
E12379	3F20	12	3166 - 3
E12379	3F22	9	3166 - 3B
E48497	1I6	19	0560 - 3
E52687	1G7	3	0417 - 3
E52687	1G24	24	0452 - 3
E73240	2B24	7	1674 - 3
E73240	2B25	6	1674 - 3A
E73240	2C8	34	1674 - 9B
E73240	2C13	7	1674 - 13
E80242	1I2	9	0530 - 5
F1056R	1K9	1	1369 - 3
F1430R	1I15	10	0960 - 17
F1870R	1K9	1	1369 - 3
F3171R	1B12	20	0210 - 7
F3171R	1B15	18	0210 - 11
F3171R	1B15	23	0210 - 11
F3171R	1B15	25	0210 - 11
F3171R	1B16	3	0210 - 12
F3353R	1G4	13	0414 - 1
F3353R	1K9	1	1369 - 3
GX20510	2C8	40	1674 - 9B
GY20126	2C10	3	1674 - 10A
GY20126	2C11	3	1674 - 10B
H104855	2D11	9	1674 - 47
H110232	2E12	21	1810 - 5
H110232	2I20	6	2002 - 2
H110232	2I22	4	2002 - 5
H113924	2C3	3	1674 - 6
H114865	2H2	20	1830 - 3
H126081	2E18	13	1810 - 11
H126082	2E18	14	1810 - 11
H131424	2E18	15	1810 - 11
H132922	2E18	16	1810 - 11
H138955	1J19	22	1320 - 3
H138955	1J21	7	1320 - 3B
H142174	3F16	22	3165 - 5
H142174	3F18	22	3165 - 5B
H145176	1I15	19	0960 - 17
H148166	3F10	45	3164 - 3
H148464	2I10	3	1927 - 7
H148464	2I12	3	1927 - 9
H151594	1I15	5	0960 - 17
H152121	3F12	8	3165 - 3
H152121	3F14	4	3165 - 3B
H152202	1I15	11	0960 - 17
H152272	3F12	3	3165 - 3
H152272	3F14	3	3165 - 3B
H152605	3F12	11	3165 - 3
H152605	3F14	5	3165 - 3B
H156360	2F6	1B	1810 - 23
H156360	2F10	13	1810 - 23D
H157642	1I15	16	0960 - 17
H157898	1I15	12	0960 - 17
H158465	3F16	18	3165 - 5
H158465	3F18	18	3165 - 5B
H163979	3F16	11	3165 - 5
H163979	3F18	11	3165 - 5B
H163980	3F16	10	3165 - 5
H163980	3F18	10	3165 - 5B
H165482	3F16	23	3165 - 5
H165482	3F18	23	3165 - 5B
H171487	3F16	13	3165 - 5
H171487	3F18	13	3165 - 5B
H171488	3F12	10	3165 - 3
H171488	3F14	6	3165 - 3B
H180103	1I15	13	0960 - 17
H180232	3F16	6	3165 - 5
H180629	3F12	7	3165 - 3
H181114	1I15	14	0960 - 17
H206859	1I15	15	0960 - 17
H207262	3F12	6	3165 - 3
H207262	3F14	7	3165 - 3B
H207265	3F12	5	3165 - 3
H207265	3F14	8	3165 - 3B
H208240	3F16	5	3165 - 5
H208240	3F18	5	3165 - 5B
H208241	3F16	21	3165 - 5
H208241	3F18	21	3165 - 5B
H208999	1I15	16	0960 - 17
H209614	3F18	6	3165 - 5B
H209617	3F14	10	3165 - 3B
H210762	3F14	9	3165 - 3B
H21259	1J19	1	1320 - 3
H21259	1J23	1	1320 - 3D
H23196	1K17	4	1369 - 12B
H34597	2E22	6	1810 - 15
H35244	1K9	1	1369 - 3
H60815	3C21	3	3160 - 21
H75541	3B25	20	3160 - 3
H75541	3C2	22	3160 - 3B
H77698	1C6	3	0260 - 3
H77698	1C8	21	0260 - 5
H77698	1C11	2	0263 - 3
H77698	1E16	1	0360 - 11
H77698	2B5	14	1671 - 2
H77698	2B6	14	1671 - 3
H77698	2B24	8	1674 - 3
H77698	2B25	7	1674 - 3A
H77698	2C6	20	1674 - 9
H77698	2C8	41	1674 - 9B
H77698	2H2	21	1830 - 3
H77698	3D19	21	3162 - 5
H77698	3D23	20	3162 - 9
H77698	3E4	29	3162 - 15
H77698	3E8	1	3162 - 21
H77698	3E8	7	3162 - 21
H77698	3E12	20	3162 - 25
H77698	3E16	19	3162 - 29
H77698	3F2	6	3162 - 37
H77698	3F4	8	3162 - 39
H79910	1G22	12	0433 - 3
H81330	2E24	14	1810 - 17
H81330	2H14	4	1830 - 15B
H85233	2H19	33	1911 - 5
H86981	2H2	8	1830 - 3
H94158	2H8	10	1830 - 9
H95874	2E18	25	1810 - 11
IPSKIT1	1K14	..	1369 - 8
IPSKIT3	1K11	1	1369 - 5
JD10329	1G20	2	0429 - 3
JD5750	1J19	23	1320 - 3

NUMERICAL INDEX - CONTINUED

PART NO.	GRID	KEY	PAGE
JD5756	1J23	2	1320 - 3D
JD5822	1J21	11	1320 - 3B
JD5902	1J19	2	1320 - 3
JD5902	1J23	3	1320 - 3D
JD5906	1J19	10	1320 - 3
JD5906	1J23	4	1320 - 3D
JD5929	2J6	5	2008 - 3
JD7759	1B13	2	0210 - 8
JD7759	3B10	11	3102 - 3
JD7759	3B12	13	3102 - 5
JD7759	3B17	4	3102 - 10
JD7759	3B20	23	3141 - 3
JD7759	3B23	5	3145 - 3
JD7759	3F12	21	3165 - 3
JD7759	3F16	27	3165 - 5
JD7759	3F18	27	3165 - 5B
JD7763	3F12	21	3165 - 3
JD7788	3F20	13	3166 - 3
JD7788	3F22	10	3166 - 3B
JD7838	1C11	4	0263 - 3
JD7842	1B23	1	0210 - 21
JD8191	1B18	20	0210 - 15
JD8191	1B20	29	0210 - 17
JD8214	1B18	19	0210 - 15
JD8214	1B20	25	0210 - 17
JD8264	1B10	7	0210 - 5
JD8264	1B12	7	0210 - 7
JD8297	1B25	4	0210 - 23
JD8856	1J2	14	0962 - 11
JD8970	1B10	6	0210 - 5
JD8970	1B12	6	0210 - 7
JD9033	1B25	3	0210 - 23
JD9069	1B18	5	0210 - 15
JD9069	1B20	6	0210 - 17
JD9069	1B25	7	0210 - 23
JD9127	1B18	4	0210 - 15
JD9127	1B20	8	0210 - 17
JD9127	1B25	6	0210 - 23
J441295	1C23	14	0350 - 9
L101689	1D8	2	0350 - 23
L101690	1D8	2	0350 - 23
L102023	2E8	1	1810 - 1
L112198	1D8	2	0350 - 23
L112205	1D8	2	0350 - 23
L112206	1D8	2	0350 - 23
L112207	1D8	2	0350 - 23
L112208	1D8	2	0350 - 23
L112209	1D8	2	0350 - 23
L112210	1D8	2	0350 - 23
L112211	1D8	2	0350 - 23
L112212	1D8	2	0350 - 23
L112213	1D8	2	0350 - 23
L112214	1D8	2	0350 - 23
L112215	1D8	2	0350 - 23
L112216	1D8	2	0350 - 23
L112217	1D8	2	0350 - 23
L112218	1D8	2	0350 - 23
L112219	1D8	2	0350 - 23
L112220	1D8	2	0350 - 23
L112221	1D8	2	0350 - 23
L112222	1D8	2	0350 - 23
L150867	1C25	21	0350 - 11
L31212	1D8	13	0350 - 23
L40997	1D8	2	0350 - 23
L40998	1D8	2	0350 - 23
L40999	1D8	2	0350 - 23
L41000	1D8	2	0350 - 23
L41001	1D8	2	0350 - 23
L41002	1D8	2	0350 - 23
L41004	1D8	2	0350 - 23
L41005	1D8	2	0350 - 23
L41079	1G14	8	0421 - 3
L41709	1G14	5	0421 - 3
L55580	1C23	29	0350 - 9
L55601	1C25	14	0350 - 11
L57881	2H2	22	1830 - 3
L64884	1H20	4	0515 - 3
L77943	2H4	9	1830 - 3B
M113243	1H20	2	0515 - 3
M113243	1H22	4	0515 - 5
M113243	1J6	48	1062 - 3
M113243	2F6	27	1810 - 23
M113243	2F10	14	1810 - 23D
M114063	2E12	22	1810 - 5
M115279	2B24	11	1674 - 3
M115279	2B25	8	1674 - 3A
M115279	2C3	2	1674 - 6
M115279	2C8	42	1674 - 9B
M118611	1J19	13	1320 - 3
M118611	1J23	5	1320 - 3D
M1206T	1F25	10	0409 - 3
M4237T	1K9	1	1369 - 3
M43835	2D11	2	1674 - 47
M45937	1B23	20	0210 - 21
M45937	1C11	4	0263 - 3
M46653	2J9	6	2162 - 3
M47887	2J4	4	2007 - 2
M67176	2H4	10	1830 - 3B
M84972	2E16	2	1810 - 9
M84972	2E22	7	1810 - 15
M84972	2F6	28	1810 - 23
M84972	2F10	15	1810 - 23D
M87571	1E10	12	0360 - 3
M87571	1K17	9	1369 - 12B
N102039	1F2	2	0402 - 3
N102039	1G24	18	0452 - 3
N102039	1G24	..	0452 - 3
N115096	2D11	11	1674 - 47
N119177	2C2	2	1674 - 5
N131838	1K9	1	1369 - 3
N154080	1I6	33	0560 - 3
N189220	3D23	21	3162 - 9
N189220	3E4	30	3162 - 15
N189220	3E12	21	3162 - 25
N189220	3E16	20	3162 - 29
N189220	3F4	9	3162 - 39
N191985	2D2	21	1674 - 27
N191985	2D2	22	1674 - 27
N191985	2D4	10	1674 - 27B
N191985	2D6	9	1674 - 29
N191985	2D8	9	1674 - 29B
N203905	1J6	49	1062 - 3
N205415	3D11	9	3160 - 65
N218377	2J4	3	2007 - 2
N51168	1F11	1	0403 - 3
PE930685	1D4	2	0350 - 15
PM797NA	2D13	57	1674 - 49
PT11778	2H4	10	1830 - 3B
PT9412	1H12	19	0510 - 5
PT9412	1I6	34	0560 - 3
P46051	1E12	15	0360 - 9
P46051	1K9	1	1369 - 3
P46051	3F10	60	3164 - 3
P48347	1J6	38	1062 - 3
P48347	3F24	15	3166 - 5
P48403	1K9	1	1369 - 3
P50631	1K9	1	1369 - 3
RE11156	2D13	36	1674 - 49
RE11157	2D13	37	1674 - 49
RE12176	1H24	19	0520 - 3
RE12187	1G14	20	0421 - 3
RE151433	3C23	35	3160 - 23
RE154966	1G14	34	0421 - 3
RE157329	2H4	17	1830 - 3B
RE167207	1G11	29	0419 - 3
RE168454	2I17	21	2001 - 3
RE168454	2I19	21	2001 - 3B
RE16879	2F4	1	1810 - 21
RE174764	2H4	11	1830 - 3B
RE190139	2I17	13	2001 - 3
RE190139	2I19	13	2001 - 3B
RE190140	2I17	13	2001 - 3
RE190140	2I19	13	2001 - 3B
RE190141	2I17	13	2001 - 3
RE190141	2I19	13	2001 - 3B
RE190805	1G14	20	0421 - 3
RE198074	2H4	3	1830 - 3B
RE20344	1I15	1	0960 - 17
RE20768	1G20	4	0429 - 3
RE21730	2D16	5	1674 - 58
RE21731	2D16	5	1674 - 58
RE21732	2D16	6	1674 - 58
RE227953	2I17	13	2001 - 3
RE227953	2I19	13	2001 - 3B
RE24025	3F10	9	3164 - 3
RE24468	1J6	41	1062 - 3
RE25147	3F16	7	3165 - 5
RE25147	3F18	7	3165 - 5B
RE25566	1I2	6	0530 - 5
RE30295	1H20	9	0515 - 3
RE33769	1C9	10	0260 - 6
RE35704	1J6	42	1062 - 3
RE36133	2H4	18	1830 - 3B
RE36133	2H4	46	1830 - 3B
RE39134	1G7	6	0417 - 3
RE40049	2F2	5	1810 - 19
RE40049	2F4	2	1810 - 21
RE43497	2D17	4	1674 - 59
RE43637	1C10	3	0263 - 2
RE45315	1B6	2	0210 - 1
RE46534	1C10	1	0263 - 2
RE46634	2F12	13	1810 - 25
RE46684	1F13	18	0404 - 3
RE46742	2H2	25	1830 - 3
RE48419	1G9	1	0418 - 3
RE48419	1G14	25	0421 - 3
RE48761	1B10	14	0210 - 5
RE48761	1B12	17	0210 - 7
RE48838	2B21	4	1673 - 9
RE500250	1E10	12	0360 - 3
RE500250	1F2	30	0402 - 3
RE50039	1B13	4	0210 - 8
RE500473	1G11	19	0419 - 3
RE500473	1G11	20	0419 - 3
RE500657	1G11	1	0419 - 3
RE501133	1G20	18	0429 - 3
RE501133	2B10	30	1672 - 3
RE50117	1B7	1	0210 - 2
RE50117	1B8	1	0210 - 3
RE501605	1G9	9	0418 - 3
RE501740	1F2	2	0402 - 3

NUMERICAL INDEX - CONTINUED

PART NO.	GRID	KEY	PAGE
RE502314	1F11	5	0403 - 3
RE502349	1G14	23	0421 - 3
RE502571	1G9	15	0418 - 3
RE502752	1F16	2	0407 - 2
RE502954	1G14	45	0421 - 3
RE502974	1G12	11	0421 - 1
RE503567	1F13	9	0404 - 3
RE503590	1G14	24	0421 - 3
RE503591	1G14	39	0421 - 3
RE503603	1G7	12	0417 - 3
RE50431	1B15	12	0210 - 11
RE50431	1B21	4	0210 - 18
RE504495	1G14	9	0421 - 3
RE504498	1G14	21	0421 - 3
RE504499	1G14	36	0421 - 3
RE504500	1G14	27	0421 - 3
RE504503	1G14	32	0421 - 3
RE504512	1G14	38	0421 - 3
RE504513	1G14	41	0421 - 3
RE504630	1F11	7	0403 - 3
RE504819	1G14	9	0421 - 3
RE504819	1G14	37	0421 - 3
RE504938	1G14	4	0421 - 3
RE504939	1G14	13	0421 - 3
RE505265	2H6	10	1830 - 5
RE505499	1F25	3	0409 - 3
RE505883	1G11	19	0419 - 3
RE505883	1G11	20	0419 - 3
RE505883	1G11	21	0419 - 3
RE505901	1F11	9	0403 - 3
RE506300	1G9	19	0418 - 3
RE506350	1G14	16	0421 - 3
RE506723	1G14	26	0421 - 3
RE506826	1G15	7	0422 - 1
RE506961	1F11	9	0403 - 3
RE507241	1G24	45	0452 - 3
RE507243	1G24	46	0452 - 3
RE507284	1G14	3	0421 - 3
RE507950	1K17	7	1369 - 12B
RE507981	1G3	19	0413 - 3
RE507981	2C8	36	1674 - 9B
RE508021	1G5	2	0416 - 1
RE508141	1F15	1	0404 - 5
RE508195	1F9	2	0402 - 11
RE508195	1F9	3	0402 - 11
RE508329	1F20	4	0407 - 7
RE508659	1F7	16	0402 - 9
RE508660	1F7	12	0402 - 9
RE508984	1G3	1	0413 - 3
RE509894	1F21	8	0407 - 8
RE51234	2D14	1	1674 - 52
RE51234	2D18	1	1674 - 62
RE515304	1G11	20	0419 - 3
RE515304	1G11	21	0419 - 3
RE515304	1G11	34	0419 - 3
RE515728	1G16	2	0422 - 2
RE515729	1G16	1	0422 - 2
RE515730	1G16	5	0422 - 2
RE515731	1G16	4	0422 - 2
RE515734	1G15	6	0422 - 1
RE515734	1G15	7	0422 - 1
RE515734	1G16	3	0422 - 2
RE515895	1G15	7	0422 - 1
RE515956	1G20	13	0429 - 3
RE516050	1G20	9	0429 - 3
RE51761	1E21	5	0401 - 1
RE517661	1G3	12	0413 - 3
RE518339	1G3	13	0413 - 3
RE518554	1F25	20	0409 - 3
RE519144	1F9	2	0402 - 11
RE519144	1F9	3	0402 - 11
RE52034	1I6	24	0560 - 3
RE520808	1F7	3	0402 - 9
RE522076	1G9	19	0418 - 3
RE522632	1G24	46	0452 - 3
RE522842	1F20	4	0407 - 7
RE524741	1G5	2	0416 - 1
RE524829	1F15	1	0404 - 5
RE52702	1G7	1	0417 - 3
RE52702	1H12	1	0510 - 5
RE52702	2J13	10	2163 - 3
RE52703	1H12	3	0510 - 5
RE528462	1F15	1	0404 - 5
RE53416	1F7	9	0402 - 9
RE53420	1F7	13	0402 - 9
RE53654	1F16	4	0407 - 2
RE53687	1E22	2	0401 - 2
RE53722	1G11	1	0419 - 3
RE53911	1F2	12	0402 - 3
RE54073	1G18	1	0429 - 1
RE54270	1B21	3	0210 - 18
RE55478	2C3	1	1674 - 6
RE55812	1F5	2	0402 - 6
RE56009	1G11	29	0419 - 3
RE56109	1I19	7	0962 - 3
RE56109	1I19	8	0962 - 3
RE56109	1I19	11	0962 - 3
RE56109	1I19	12	0962 - 3
RE56109	1I19	30	0962 - 3
RE56109	1I21	22	0962 - 5
RE56165	3F24	18	3166 - 5
RE56859	1H12	8	0510 - 5
RE57784	1F25	17	0409 - 3
RE57784	1G24	15	0452 - 3
RE57836	1F13	2	0404 - 3
RE57836	1G7	9	0417 - 3
RE57836	1G9	12	0418 - 3
RE58336	1G9	22	0418 - 3
RE58614	2H2	28	1830 - 3
RE58935	1G11	12	0419 - 3
RE60700	3D15	17	3160 - 69
RE60701	3C2	26	3160 - 3B
RE61408	1G4	12	0414 - 1
RE61651	2I17	22	2001 - 3
RE61651	2I19	22	2001 - 3B
RE61812	1G4	2	0414 - 1
RE62161	1J4	2	1011 - 2
RE62887	1F18	2	0407 - 5
RE63811	1F11	6	0403 - 3
RE63903	1E23	3	0401 - 3
RE63905	1E23	2	0401 - 3
RE63906	1E23	1	0401 - 3
RE64004	1B20	17	0210 - 17
RE64536	1G22	4	0433 - 3
RE64806	1B18	6	0210 - 15
RE64806	1B20	3	0210 - 17
RE65198	1G5	5	0416 - 1
RE65265	1G14	14	0421 - 3
RE65565	1G18	3	0429 - 1
RE66329	1F5	9	0402 - 6
RE66525	1G5	12	0416 - 1
RE66584	1G12	11	0421 - 1
RE66635	1F25	4	0409 - 3
RE67831	1B25	12	0210 - 23
RE68255	1H24	19	0520 - 3
RE68323	2D25	3	1746 - 3
RE68655	1E23	3	0401 - 3
RE68656	1E23	3	0401 - 3
RE68659	1E23	1	0401 - 3
RE68663	1E23	2	0401 - 3
RE68664	1E23	2	0401 - 3
RE68707	1G7	7	0417 - 3
RE68708	1G7	..	0417 - 3
RE69295	1H9	16	0505 - 5
RE70146	1E24	10	0402 - 1
RE70328	1B15	22	0210 - 11
RE71255	1G4	8	0414 - 1
RE71255	1G11	4	0419 - 3
RE71255	1I10	22	0560 - 7
RE71265	1F5	2	0402 - 6
RG28087	1F25	19	0409 - 3
RG31337	1H2	1	0452 - 5
RG33966	1G3	12	0413 - 3
R100122	1B15	1	0210 - 11
R100256	1C2	12	0210 - 25
R100257	1C2	13	0210 - 25
R100283	1C2	7	0210 - 25
R100369	1G7	11	0417 - 3
R100500	1B6	2	0210 - 1
R10093	1K9	1	1369 - 3
R10093	2H2	23	1830 - 3
R10093	2H10	10	1830 - 11
R104558	1E4	2	0350 - 47
R104592	1F13	5	0404 - 3
R105346	1G5	4	0416 - 1
R105346	1G24	38	0452 - 3
R106789	1B15	3	0210 - 11
R108867	1G11	13	0419 - 3
R109486	1B20	15	0210 - 17
R109489	1B18	11	0210 - 15
R109489	1B20	23	0210 - 17
R109820	1B20	7	0210 - 17
R109822	1B18	7	0210 - 15
R109822	1B20	2	0210 - 17
R109822	1B20	27	0210 - 17
R111410	1B18	21	0210 - 15
R111410	1B20	28	0210 - 17
R11151	3F24	16	3166 - 5
R111632	2H2	24	1830 - 3
R112080	1C2	8	0210 - 25
R112210	1B15	6	0210 - 11
R112839	1C2	16	0210 - 25
R113050	1G14	49	0421 - 3
R113050	2H6	4	1830 - 5
R113050	2H9	11	1830 - 10
R113050	2H10	11	1830 - 11
R115117	1B12	17	0210 - 7
R115118	1B12	17	0210 - 7
R115516	1F7	11	0402 - 9
R115566	1B18	17	0210 - 15
R115566	1B20	31	0210 - 17
R115567	1B18	18	0210 - 15
R115567	1B20	30	0210 - 17
R116068	1E21	5	0401 - 1
R116203	1G11	28	0419 - 3
R116205	1G9	5	0418 - 3
R116205	1G24	37	0452 - 3
R116299	1E23	1	0401 - 3
R116330	1E21	4	0401 - 1
R116338	1E22	4	0401 - 2
R116466	1F13	20	0404 - 3

NUMERICAL INDEX - CONTINUED

PART NO.	GRID	KEY	PAGE
R116466	1G20	1	0429 - 3
R116494	1F20	1	0407 - 7
R116494	1G24	27	0452 - 3
R116526	1E24	5	0402 - 1
R116526	1F2	7	0402 - 3
R116556	1F7	8	0402 - 9
R116638	1F13	6	0404 - 3
R116639	1F13	6	0404 - 3
R116640	1F13	7	0404 - 3
R116716	1F13	1	0404 - 3
R116830	1G4	6	0414 - 1
R116830	1G24	12	0452 - 3
R116838	1G1	4	0410 - 1
R116843	1F5	7	0402 - 6
R116843	1F5	10	0402 - 6
R116854	1G11	5	0419 - 3
R116855	1G11	3	0419 - 3
R116864	1G11	9	0419 - 3
R116911	1E24	7	0402 - 1
R116911	1F2	9	0402 - 3
R116911	1G22	3	0433 - 3
R117020	1E24	9	0402 - 1
R117063	1G12	1	0421 - 1
R117069	1F7	14	0402 - 9
R117080	1G7	2	0417 - 3
R117310	2H7	2	1830 - 6
R117721	2H4	13	1830 - 3B
R117721	2H4	38	1830 - 3B
R117721	2H4	62	1830 - 3B
R117845	2H14	5	1830 - 15B
R119148	1G24	43	0452 - 3
R119149	1G11	30	0419 - 3
R119157	1F2	14	0402 - 3
R119158	1E24	3	0402 - 1
R119159	1F2	27	0402 - 3
R119159	1F2	28	0402 - 3
R119159	1F3	4	0402 - 4
R119160	1E24	1	0402 - 1
R119171	2H4	45	1830 - 3B
R119239	1B15	14	0210 - 11
R119239	1B21	6	0210 - 18
R119300	1B10	12	0210 - 5
R119300	1B16	11	0210 - 12
R119301	1B16	11	0210 - 12
R119575	1E24	6	0402 - 1
R119575	1F2	8	0402 - 3
R120467	1F5	3	0402 - 6
R120653	2E14	3	1810 - 7
R120653	2E14	4	1810 - 7
R120653	2E14	6	1810 - 7
R120741	1F16	1	0407 - 2
R120801	1F2	29	0402 - 3
R121187	1G7	4	0417 - 3
R121331	1B25	2	0210 - 23
R121427	1G9	10	0418 - 3
R121443	1G9	6	0418 - 3
R121465	2H2	9	1830 - 3
R121629	1B13	8	0210 - 8
R121664	2H4	39	1830 - 3B
R121664	2H4	63	1830 - 3B
R121666	2H4	40	1830 - 3B
R121972	1G22	8	0433 - 3
R122035	1F25	8	0409 - 3
R122035	1F25	9	0409 - 3
R122377	1E21	3	0401 - 1
R124067	1J4	1	1011 - 2
R124186	1G11	22	0419 - 3
R124676	1G3	17	0413 - 3
R124815	1J4	3	1011 - 2
R125067	1E24	10	0402 - 1
R125223	2H4	14	1830 - 3B
R125450	2D23	18	1741 - 3
R125666	1J4	5	1011 - 2
R125667	1J4	4	1011 - 2
R126002	1B20	20	0210 - 17
R126033	2I17	4B	2001 - 3
R126033	2I19	4	2001 - 3B
R126344	1G11	20	0419 - 3
R126783	1F18	1	0407 - 5
R126783	1G24	28	0452 - 3
R127208	1G11	11	0419 - 3
R127376	1C2	6	0210 - 25
R127451	1F5	12	0402 - 6
R127806	1B25	5	0210 - 23
R127941	1G5	10	0416 - 1
R128000	1F23	1	0409 - 1
R128001	1F23	1	0409 - 1
R128311	1G22	13	0433 - 3
R128315	1G3	4	0413 - 3
R128328	1B20	21	0210 - 17
R128665	1B6	1	0210 - 1
R128802	1F2	..	0402 - 3
R128802	1F4	3	0402 - 5
R128802	2H6	18	1830 - 5
R128831	1G18	7	0429 - 1
R128858	1F4	2	0402 - 5
R128859	2B10	22	1672 - 3
R128895	1G22	4	0433 - 3
R129110	2H4	15	1830 - 3B
R129557	1B18	12	0210 - 15
R129557	1B20	22	0210 - 17
R129645	1F25	18	0409 - 3
R129645	1F25	19	0409 - 3
R129749	1E23	3	0401 - 3
R129750	1E23	3	0401 - 3
R129751	1E23	2	0401 - 3
R129752	1E23	2	0401 - 3
R129809	1F2	20	0402 - 3
R129809	1G17	3	0423 - 1
R129947	1G17	2	0423 - 1
R130091	1E22	1	0401 - 2
R130091	1F5	11	0402 - 6
R130091	1F13	10	0404 - 3
R130091	1G18	2	0429 - 1
R130389	1G20	23	0429 - 3
R130483	1G17	5	0423 - 1
R130501	1F7	6	0402 - 9
R130589	2H6	8	1830 - 5
R130595	1F7	1	0402 - 9
R130643	1F7	10	0402 - 9
R130717	1G11	23	0419 - 3
R130738	1F5	10	0402 - 6
R130772	1G24	7	0452 - 3
R130937	1F2	23	0402 - 3
R130937	1F3	2	0402 - 4
R131660	1F2	35	0402 - 3
R131809	1G1	1	0410 - 1
R131809	1G24	40	0452 - 3
R132103	1F25	19	0409 - 3
R132574	1B15	8	0210 - 11
R132985	1F5	13	0402 - 6
R133142	1G9	14	0418 - 3
R133142	1G24	36	0452 - 3
R133599	1E23	1	0401 - 3
R133600	1E23	3	0401 - 3
R133601	1E23	3	0401 - 3
R133602	1E23	3	0401 - 3
R133603	1E23	3	0401 - 3
R133606	1E23	2	0401 - 3
R133607	1E23	2	0401 - 3
R133608	1E23	2	0401 - 3
R133609	1E23	2	0401 - 3
R133651	1G3	9	0413 - 3
R133651	1G24	5	0452 - 3
R133653	1G24	6	0452 - 3
R133655	1G3	8	0413 - 3
R133879	1G18	6	0429 - 1
R133879	1G18	7	0429 - 1
R134403	1F5	5	0402 - 6
R134407	1F11	6	0403 - 3
R134549	1H9	13	0505 - 5
R134549	1H9	15	0505 - 5
R134706	1E24	8	0402 - 1
R134706	1F25	6	0409 - 3
R134716	1G11	2	0419 - 3
R134716	1G24	33	0452 - 3
R134727	1G11	16	0419 - 3
R134733	1B18	14	0210 - 15
R134733	1B20	34	0210 - 17
R134747	1F21	2	0407 - 8
R134920	1G3	5	0413 - 3
R135041	1G1	2	0410 - 1
R135183	1B20	16	0210 - 17
R135434	1B20	9	0210 - 17
R135482	1G1	3	0410 - 1
R135543	1B10	11	0210 - 5
R135543	1B12	11	0210 - 7
R135543	1B18	2	0210 - 15
R135543	1B20	10	0210 - 17
R135543	1C2	2	0210 - 25
R136110	1F20	..	0407 - 7
R136500	1G11	30	0419 - 3
R136507	1F7	1	0402 - 9
R136507	1F7	4	0402 - 9
R136507	1F7	5	0402 - 9
R136507	1F7	6	0402 - 9
R156318	1I6	35	0560 - 3
R1612R	1F13	15	0404 - 3
R164193	1H12	2	0510 - 5
R203687	2H2	1	1830 - 3
R21612	1B15	2	0210 - 11
R26286	1I10	7	0560 - 7
R26286	1K9	1	1369 - 3
R26286	3C23	36	3160 - 23
R26287	1J6	50	1062 - 3
R26287	1J15	8	1162 - 3
R26287	1K9	1	1369 - 3
R26287	2D17	7	1674 - 59
R26287	3C23	22	3160 - 23
R26287	3D15	57	3160 - 69
R26333	1F2	5	0402 - 3
R26375	1C6	4	0260 - 3
R26375	1C8	2	0260 - 5
R26375	1E12	13	0360 - 9
R26375	1G11	26	0419 - 3
R26375	1G24	8	0452 - 3
R26375	1H18	22	0511 - 7
R26375	1H18	37	0511 - 7
R26375	1I13	19	0930 - 3
R26375	1J6	47	1062 - 3
R26375	1J6	51	1062 - 3

NUMERICAL INDEX - CONTINUED

PART NO.	GRID	KEY	PAGE
R26375	1J13	9	1115 - 3
R26375	1J15	10	1162 - 3
R26375	1K9	1	1369 - 3
R26375	2J9	2	2162 - 3
R26375	3C9	4	3160 - 9
R26375	3C15	4	3160 - 15
R26375	3C19	4	3160 - 19
R26375	3C21	5	3160 - 21
R26375	3D21	49	3162 - 7
R26375	3F10	1	3164 - 3
R26375	3F10	50	3164 - 3
R26448	1B12	22	0210 - 7
R26448	1B15	4	0210 - 11
R26448	1B15	28	0210 - 11
R26448	1B16	2	0210 - 12
R26448	1B16	6	0210 - 12
R26448	1B16	8	0210 - 12
R26448	1C6	10	0260 - 3
R26448	1C8	12	0260 - 5
R26448	1C9	2	0260 - 6
R26448	1C9	4	0260 - 6
R26448	1C9	5	0260 - 6
R26448	1C9	7	0260 - 6
R26448	1E14	16	0360 - 9B
R26448	1G12	5	0421 - 1
R26448	1G24	14	0452 - 3
R26448	1H18	38	0511 - 7
R26448	1I13	49	0930 - 3
R26448	1J6	52	1062 - 3
R26448	1J8	12	1062 - 5
R26448	1J10	4	1064 - 7
R26448	1K9	1	1369 - 3
R26448	2J11	8	2162 - 5
R26448	3B25	21	3160 - 3
R26448	3C2	25	3160 - 3B
R26448	3C7	14	3160 - 7
R26448	3C23	10	3160 - 23
R26448	3C23	37	3160 - 23
R26448	3D4	19	3160 - 59
R26448	3D7	3	3160 - 62
R26448	3D11	11	3160 - 65
R26448	3D15	58	3160 - 69
R26448	3D17	5	3162 - 3
R26448	3D21	54	3162 - 7
R26448	3D23	3	3162 - 9
R26448	3E2	6	3162 - 13
R26448	3E4	4	3162 - 15
R26448	3E6	6	3162 - 17
R26448	3E10	4	3162 - 23
R26448	3E12	3	3162 - 25
R26448	3E14	4	3162 - 27
R26448	3E16	3	3162 - 29
R26448	3E18	4	3162 - 31
R26448	3F10	51	3164 - 3
R26552	1J2	12	0962 - 11
R26773	3C7	18	3160 - 7
R26773	3C23	30	3160 - 23
R26773	3F10	3	3164 - 3
R26773	3F10	8	3164 - 3
R26906	1B15	15	0210 - 11
R26906	1B15	16	0210 - 11
R26906	1B21	7	0210 - 18
R26906	1H18	39	0511 - 7
R26906	1I13	12	0930 - 3
R26906	1I17	11	0960 - 19
R26906	3C4	12	3160 - 3D
R26906	3F10	52	3164 - 3
R27149	1G22	5	0433 - 3
R27166	3C4	11	3160 - 3D
R27166	3D4	27	3160 - 59
R27175	1B12	20	0210 - 7
R27175	1B15	19	0210 - 11
R27175	1B15	24	0210 - 11
R27175	1B16	4	0210 - 12
R27175	1F20	2	0407 - 7
R27175	1F20	5	0407 - 7
R27180	2B12	2	1672 - 5
R27216	3C23	21	3160 - 23
R27218	1B12	21	0210 - 7
R27218	1B15	27	0210 - 11
R27218	1B16	1	0210 - 12
R27218	1B16	5	0210 - 12
R27218	1B16	7	0210 - 12
R27218	1C9	3	0260 - 6
R27218	1C9	6	0260 - 6
R27218	2J11	9	2162 - 5
R27218	3B25	22	3160 - 3
R27218	3D7	1	3160 - 62
R27218	3D7	14	3160 - 62
R27218	3D11	10	3160 - 65
R27390	3F10	34	3164 - 3
R27474	1B15	17	0210 - 11
R27583	2B22	4	1673 - 10
R27976	1C8	7	0260 - 5
R28557	1J2	20	0962 - 11
R28776	3C4	6	3160 - 3D
R28776	3D4	12	3160 - 59
R28782	1C8	16	0260 - 5
R28782	1I13	31	0930 - 3
R28782	1I13	39	0930 - 3
R28782	1J2	23	0962 - 11
R28782	1J6	53	1062 - 3
R28782	2J11	10	2162 - 5
R28782	3C23	3	3160 - 23
R28782	3C23	37	3160 - 23
R28782	3D4	16	3160 - 59
R28782	3F8	45	3163 - 5
R29477	1B2	4	0110 - 1
R29480	1B2	2	0110 - 1
R29936	1E16	6	0360 - 11
R29936	1G24	26	0452 - 3
R29936	1I13	47	0930 - 3
R29936	2J9	5	2162 - 3
R29936	3C7	13	3160 - 7
R29936	3C23	7	3160 - 23
R29936	3D15	59	3160 - 69
R29936	3F10	5	3164 - 3
R30378	2D13	43	1674 - 49
R30903	3D4	37	3160 - 59
R31493	1G22	10	0433 - 3
R32024	2D16	3	1674 - 58
R32025	2D16	4	1674 - 58
R32026	2D13	48	1674 - 49
R33029	1C2	5	0210 - 25
R33138	1G11	27	0419 - 3
R33259	2H6	3	1830 - 5
R33259	2H9	12	1830 - 10
R33259	3C4	3	3160 - 3D
R33259	3D4	9	3160 - 59
R33259	3D4	26	3160 - 59
R33330	1B25	9	0210 - 23
R35043	1E22	5	0401 - 2
R35043	1G24	34	0452 - 3
R36311	1B23	3	0210 - 21
R36311	3F20	14	3166 - 3
R36311	3F22	11	3166 - 3B
R36636	3C7	12	3160 - 7
R375R	1B15	20	0210 - 11
R375R	1K9	1	1369 - 3
R39112	1J13	10	1115 - 3
R39112	2J9	1	2162 - 3
R39112	3F10	53	3164 - 3
R394R	1K9	1	1369 - 3
R41071	2H7	7	1830 - 6
R41285	1G5	7	0416 - 1
R41770	1B20	19	0210 - 17
R42926	3C4	5	3160 - 3D
R42926	3D4	11	3160 - 59
R43696	1F2	36	0402 - 3
R43750	1I10	20	0560 - 7
R44097	2D14	2	1674 - 52
R44097	2D18	2	1674 - 62
R44165	2D17	5	1674 - 59
R44165	2F12	14	1810 - 25
R44181	1B10	4	0210 - 5
R44181	1B12	4	0210 - 7
R44302	1C6	2	0260 - 3
R44302	1C8	20	0260 - 5
R44302	1F22	1	0408 - 1
R44302	1G14	42	0421 - 3
R44302	1H5	3	0505 - 1
R44302	1H7	2	0505 - 3
R44302	1H9	14	0505 - 5
R44302	1H12	32	0510 - 5
R44302	1I6	36	0560 - 3
R44302	1I10	21	0560 - 7
R44302	1K17	2	1369 - 12B
R44302	2B5	4	1671 - 2
R44302	2B6	4	1671 - 3
R44302	2B17	10	1673 - 5
R44302	2B20	7	1673 - 8
R44302	2B24	8	1674 - 3
R44302	2C6	21	1674 - 9
R44302	2C8	35	1674 - 9B
R44302	2C9	2	1674 - 10
R44302	2D2	1	1674 - 27
R44302	2E14	2	1810 - 7
R44302	2H9	13	1830 - 10
R44302	2H10	12	1830 - 11
R44302	2I17	11	2001 - 3
R44302	2I19	11	2001 - 3B
R44302	3D13	6	3160 - 67
R44302	3F12	20	3165 - 3
R44302	3F20	15	3166 - 3
R44302	3F22	12	3166 - 3B
R44342	2B24	10	1674 - 3
R44342	2C8	27	1674 - 9B
R45210	2B17	11	1673 - 5
R459R	1K9	1	1369 - 3
R460R	1K9	1	1369 - 3
R46528	2H19	10	1911 - 5
R46667	2J13	14	2163 - 3
R47150	3D4	32	3160 - 59
R47151	3C4	2	3160 - 3D
R47151	3D4	8	3160 - 59
R47593	1B10	9	0210 - 5
R47593	1B12	9	0210 - 7
R47594	1B10	9	0210 - 5
R47594	1B12	9	0210 - 7
R47595	1B10	9	0210 - 5
R47595	1B12	9	0210 - 7

NUMERICAL INDEX - CONTINUED

PART NO.	GRID	KEY	PAGE
R47596	1B10	9	0210 - 5
R47596	1B12	9	0210 - 7
R47598	1B10	2	0210 - 5
R47598	1B12	2	0210 - 7
R48568	1H24	12	0520 - 3
R48629	1B10	3	0210 - 5
R48629	1B12	3	0210 - 7
R48630	1B10	3	0210 - 5
R48630	1B12	3	0210 - 7
R48631	1B10	3	0210 - 5
R48631	1B12	3	0210 - 7
R48887	2D11	17	1674 - 47
R495R	1K9	1	1369 - 3
R49697	1G5	3	0416 - 1
R49697	1G24	39	0452 - 3
R500055	1G11	13	0419 - 3
R500117	1F2	2	0402 - 3
R500145	1F7	7	0402 - 9
R500209	1G11	3	0419 - 3
R500209	1G24	32	0452 - 3
R500210	1G11	9	0419 - 3
R500210	1G24	31	0452 - 3
R500211	1E24	1	0402 - 1
R500211	1G24	16	0452 - 3
R500212	1F2	1	0402 - 3
R500212	1G24	18	0452 - 3
R500230	2H6	13	1830 - 5
R500232	1G11	16	0419 - 3
R500283	1G11	19	0419 - 3
R500318	1G12	2	0421 - 1
R500318	1G24	41	0452 - 3
R500320	1G20	19	0429 - 3
R500378	2B10	13	1672 - 3
R500387	1F16	1	0407 - 2
R500387	1G24	22	0452 - 3
R501292	1F5	12	0402 - 6
R501309	1F2	11	0402 - 3
R501380	1F11	3	0403 - 3
R501390	1G3	15	0413 - 3
R501561	1G18	4	0429 - 1
R501566	1F11	5	0403 - 3
R501632	1G14	22	0421 - 3
R502026	1F2	3	0402 - 3
R502026	1G24	20	0452 - 3
R502027	1G24	44	0452 - 3
R502079	2B10	14	1672 - 3
R502124	1F5	7	0402 - 6
R502124	1F5	10	0402 - 6
R502124	1G24	3	0452 - 3
R502171	1G3	11	0413 - 3
R502172	1G3	6	0413 - 3
R502173	1G3	7	0413 - 3
R502441	1F2	21	0402 - 3
R502441	1G24	21	0452 - 3
R502490	1G14	1	0421 - 3
R502494	1G14	30	0421 - 3
R502530	1F2	15	0402 - 3
R502530	1F2	21	0402 - 3
R502703	1G3	10	0413 - 3
R502703	1G24	6	0452 - 3
R502704	1G14	12	0421 - 3
R502705	1G14	28	0421 - 3
R502753	1F13	11	0404 - 3
R502767	1G4	5	0414 - 1
R502884	1H2	1	0452 - 5
R503400	1G11	20	0419 - 3
R503400	1G11	21	0419 - 3
R503714	1G11	33	0419 - 3
R503714	1G11	34	0419 - 3
R503824	1F7	15	0402 - 9
R503971	1F25	5	0409 - 3
R504174	1F25	12	0409 - 3
R504242	1F25	15	0409 - 3
R504243	1F25	20	0409 - 3
R504613	1G1	2	0410 - 1
R504713	1F25	7	0409 - 3
R504812	1G14	35	0421 - 3
R504864	1G14	46	0421 - 3
R505184	2B10	20	1672 - 3
R505450	1F5	7	0402 - 6
R505450	1F5	10	0402 - 6
R505677	1F5	10	0402 - 6
R505679	2B5	13	1671 - 2
R505679	2B6	13	1671 - 3
R505747	1G3	16	0413 - 3
R505770	1G14	48	0421 - 3
R50770	2H4	16	1830 - 3B
R51031	3F8	46	3163 - 5
R51133	1F13	13	0404 - 3
R51133	1G9	20	0418 - 3
R515283	1G16	6	0422 - 2
R515405	1G20	6	0429 - 3
R515409	1G20	13	0429 - 3
R515410	1H16	2	0511 - 5
R515410	2B10	20	1672 - 3
R516898	1F2	..	0402 - 3
R516898	1F4	3	0402 - 5
R516898	2H6	18	1830 - 5
R520512	1E22	5	0401 - 2
R520512	1G24	34	0452 - 3
R52725	2B24	9A	1674 - 3
R53317	1J6	13	1062 - 3
R53528	2I17	9	2001 - 3
R53528	2I19	9	2001 - 3B
R53528	2J3	3	2006 - 2
R54380	1B15	11	0210 - 11
R54380	1C2	4	0210 - 25
R54445	2F4	8	1810 - 21
R55081	1B18	15	0210 - 15
R55081	1B20	35	0210 - 17
R55233	1F13	5	0404 - 3
R55233	1G9	4	0418 - 3
R55233	1G11	32	0419 - 3
R56461	1G3	2	0413 - 3
R56461	1G24	4	0452 - 3
R56464	1G9	7	0418 - 3
R56464	1G24	35	0452 - 3
R56465	1G14	50	0421 - 3
R56751	1F20	3	0407 - 7
R56751	1F20	6	0407 - 7
R56751	1G24	25	0452 - 3
R56757	1G7	5	0417 - 3
R56757	1G24	23	0452 - 3
R57480	1G22	1	0433 - 3
R57503	1G7	8	0417 - 3
R57503	1G9	8	0418 - 3
R59384	1B20	4	0210 - 17
R59384	3F16	22	3165 - 5
R59384	3F18	22	3165 - 5B
R60756	1F9	4	0402 - 11
R61356	1I6	35	0560 - 3
R62191	1G20	5	0429 - 3
R62192	1G20	5	0429 - 3
R62193	1G20	5	0429 - 3
R62194	1G20	5	0429 - 3
R62976	1E24	2	0402 - 1
R62976	1G24	17	0452 - 3
R63185	1F5	8	0402 - 6
R63185	1G24	2	0452 - 3
R63237	1B25	8	0210 - 23
R63246	1B25	10	0210 - 23
R63247	1B25	10	0210 - 23
R63248	1B25	10	0210 - 23
R63532	1G11	24	0419 - 3
R63548	1F13	8	0404 - 3
R63548	1G24	29	0452 - 3
R63576	1C2	11	0210 - 25
R63667	2F2	8	1810 - 19
R63667	2F4	14	1810 - 21
R63960	1F11	4	0403 - 3
R63987	1G20	3	0429 - 3
R64451	1F11	2	0403 - 3
R64879	1H9	2	0505 - 5
R65602	2D13	49	1674 - 49
R65607	2D13	46	1674 - 49
R65789	1B12	13	0210 - 7
R65792	1B13	7	0210 - 8
R65793	1B13	5	0210 - 8
R66320	2D11	24	1674 - 47
R66321	2D11	24	1674 - 47
R67045	1B20	12	0210 - 17
R67046	1B20	14	0210 - 17
R67047	1B20	13	0210 - 17
R67092	1G9	21	0418 - 3
R67784	1B20	34	0210 - 17
R67989	1G22	11	0433 - 3
R68166	1B18	16	0210 - 15
R68166	1B20	32	0210 - 17
R68167	1B18	13	0210 - 15
R68167	1B20	33	0210 - 17
R68201	1B12	12	0210 - 7
R69045	1F11	4	0403 - 3
R70210	2D13	41	1674 - 49
R70211	2D13	40	1674 - 49
R70212	2D13	41	1674 - 49
R70213	2D13	40	1674 - 49
R70214	2D13	41	1674 - 49
R70215	2D13	40	1674 - 49
R70216	2D13	41	1674 - 49
R70217	2D13	40	1674 - 49
R70218	2D13	41	1674 - 49
R70219	2D13	40	1674 - 49
R70220	2D13	50	1674 - 49
R70221	2D13	39	1674 - 49
R70222	2D13	38	1674 - 49
R72162	1B13	3	0210 - 8
R72328	1B21	1	0210 - 18
R72328	1F5	6	0402 - 6
R72328	1G5	6	0416 - 1
R72328	1G24	1	0452 - 3
R72653	3F24	21	3166 - 5
R72654	1J6	39	1062 - 3
R72655	2G11	3	1821 - 3D
R72655	2G11	7	1821 - 3D
R72659	1F22	3	0408 - 1
R72853	1F4	..	0402 - 5
R72853	1G4	4	0414 - 1
R73599	1E4	4	0350 - 47
R75639	1B10	8	0210 - 5
R75639	1B12	8	0210 - 7
R76653	1B12	23	0210 - 7

NUMERICAL INDEX - CONTINUED

PART NO.	GRID	KEY	PAGE
R76653	1B15	9	0210 - 11
R76653	1B16	9	0210 - 12
R76695	2I17	29	2001 - 3
R77175	1C19	6	0350 - 3
R77175	3C2	21	3160 - 3B
R77175	3C23	20	3160 - 23
R77175	3D6	11	3160 - 61
R77175	3D7	8	3160 - 62
R77175	3D15	60	3160 - 69
R77456	2D11	27	1674 - 47
R77457	2D11	29	1674 - 47
R77458	2D11	28	1674 - 47
R77459	2D11	28	1674 - 47
R77460	2D11	28	1674 - 47
R77461	2D11	28	1674 - 47
R77462	2D11	25	1674 - 47
R77463	2D11	30	1674 - 47
R77464	2D11	26	1674 - 47
R77465	2D11	31	1674 - 47
R77466	2D11	33	1674 - 47
R77467	2D11	34	1674 - 47
R77468	2D11	32	1674 - 47
R77469	2D13	35	1674 - 49
R77470	2D13	45	1674 - 49
R77471	2D13	45	1674 - 49
R77472	2D13	45	1674 - 49
R77473	2D13	45	1674 - 49
R77474	2D13	44	1674 - 49
R77475	2D11	13	1674 - 47
R77476	2D11	3	1674 - 47
R77477	2D11	4	1674 - 47
R77478	2D11	15	1674 - 47
R77479	2D11	5	1674 - 47
R77480	2D11	6	1674 - 47
R77481	2D11	7	1674 - 47
R77482	2D11	8	1674 - 47
R77483	2D11	16	1674 - 47
R77484	2D11	19	1674 - 47
R77485	2D11	21	1674 - 47
R77486	2D11	22	1674 - 47
R77487	2D11	23	1674 - 47
R77488	2D13	51	1674 - 49
R77489	2D13	51	1674 - 49
R77490	2D13	51	1674 - 49
R77491	2D13	54	1674 - 49
R77492	2D13	54	1674 - 49
R77493	2D13	51	1674 - 49
R77494	2D13	55	1674 - 49
R77495	2D13	52	1674 - 49
R77496	2D13	52	1674 - 49
R77497	2D13	53	1674 - 49
R77498	2D11	24	1674 - 47
R77499	2D11	24	1674 - 47
R77500	2D11	24	1674 - 47
R77501	2D11	24	1674 - 47
R77502	2D13	56	1674 - 49
R77503	2D13	56	1674 - 49
R78053	3B25	23	3160 - 3
R78053	3C2	23	3160 - 3B
R78065	2D15	3	1674 - 53
R78066	2D15	2	1674 - 53
R78069	2D15	1	1674 - 53
R79101	1I15	17	0960 - 17
R81276	1F11	10	0403 - 3
R81277	1F11	10	0403 - 3
R81362	1B10	13	0210 - 5
R81362	1B12	16	0210 - 7
R81363	1B10	13	0210 - 5
R81363	1B12	16	0210 - 7
R81364	1B10	13	0210 - 5
R81364	1B12	16	0210 - 7
R81771	1I15	2	0960 - 17
R81776	1I15	3	0960 - 17
R81910	1C2	14	0210 - 25
R82459	1F2	24	0402 - 3
R82459	1F3	1	0402 - 4
R82459	1G24	19	0452 - 3
R84262	1B15	19	0210 - 11
R84262	1B15	26	0210 - 11
R84609	1B20	5	0210 - 17
R85229	3F16	8	3165 - 5
R85229	3F18	8	3165 - 5B
R85556	3B21	8	3143 - 1
R85556	3F16	3	3165 - 5
R85556	3F18	3	3165 - 5B
R86457	1J6	40	1062 - 3
R86457	3F24	17	3166 - 5
R88246	1B18	8	0210 - 15
R88246	1B20	1	0210 - 17
R88246	1B20	26	0210 - 17
R89632	3F16	14	3165 - 5
R89632	3F18	14	3165 - 5B
R91889	1F25	1	0409 - 3
R92335	1C2	9	0210 - 25
R92510	1C2	15	0210 - 25
R93219	2D16	6	1674 - 58
R93220	2D16	6	1674 - 58
R93221	2D16	6	1674 - 58
R93222	2D16	6	1674 - 58
R93321	1C2	3	0210 - 25
R94620	1G11	19	0419 - 3
R94655	1C2	10	0210 - 25
R97332	2H4	41	1830 - 3B
R97332	2H4	58	1830 - 3B
R97336	2H4	42	1830 - 3B
R97336	2H4	64	1830 - 3B
R97705	1B23	12	0210 - 21
R97707	1B23	16	0210 - 21
R97708	1B23	10	0210 - 21
R97709	1B23	11	0210 - 21
R97711	1B23	11	0210 - 21
R97712	1B23	11	0210 - 21
R98064	1G11	14	0419 - 3
R99466	1B18	10	0210 - 15
R99466	1B20	20	0210 - 17
R99590	1G20	14	0429 - 3
R99590	2B10	32	1672 - 3
R99590	2H6	7	1830 - 5
SE501081	1F13	..	0404 - 3
SE501081	1F15	..	0404 - 5
TCU14336	2E12	25	1810 - 5
TCU14336	2E18	28	1810 - 11
TCU14336	2E20	35	1810 - 13
TF33L	3B14	4	3102 - 7
TH109378	3F16	17	3165 - 5
TH109378	3F18	17	3165 - 5B
TT208828	1H24	16	0520 - 3
TY15733	2B5	1	1671 - 2
TY15733	2B6	1	1671 - 3
TY16004	1K14	2	1369 - 8
TY16005	1K14	3	1369 - 8
TY16423	1K14	..	1369 - 8
TY22007	1K7	2	1369 - 1
TY22008	1K7	2	1369 - 1
TY22010	1K7	1	1369 - 1
TY22010	1K7	2	1369 - 1
TY22011	1K7	2	1369 - 1
TY22041	1K7	..	1369 - 1
TY22042	1K7	..	1369 - 1
TY22064	1K7	1	1369 - 1
TY22065	1K7	1	1369 - 1
TY22066	1K7	1	1369 - 1
TY22067	1K7	1	1369 - 1
TY22068	1K7	1	1369 - 1
TY22069	1K7	1	1369 - 1
TY22070	1K7	1	1369 - 1
TY22073	1K7	1	1369 - 1
TY22074	1K7	1	1369 - 1
TY22464	1E10	4	0360 - 3
TY22464	1I6	8	0560 - 3
TY22466	1G9	11	0418 - 3
TY22467	1F5	4	0402 - 6
TY22467	2J13	11	2163 - 3
TY22471	1G15	4	0422 - 1
TY22493	3D23	16	3162 - 9
TY22493	3E4	25	3162 - 15
TY22493	3E12	16	3162 - 25
TY22493	3E16	17	3162 - 29
TY22493	3F4	5	3162 - 39
TY22494	1I6	45	0560 - 3
TY23020	2B5	5	1671 - 2
TY6128	2B6	5	1671 - 3
TY6280	1K7	1	1369 - 1
TY6364	1K7	1	1369 - 1
TY6389	1K7	1	1369 - 1
TY6389	1K7	2	1369 - 1
TY6390	1K7	1	1369 - 1
TY6390	1K7	2	1369 - 1
TY6391	1K7	1	1369 - 1
TY6391	1K7	2	1369 - 1
TY6392	1K7	2	1369 - 1
TY6393	1K7	2	1369 - 1
TY6394	1K7	2	1369 - 1
T101090	2E20	11	1810 - 13
T101480	3B10	12	3102 - 3
T101480	3B12	14	3102 - 5
T101480	3B17	5	3102 - 10
T101480	3B20	24	3141 - 3
T101480	3B23	13	3145 - 3
T101480	3F16	24	3165 - 5
T101480	3F18	24	3165 - 5B
T101540	1J2	1	0962 - 11
T101551	1J2	5	0962 - 11
T101571	2J9	9	2162 - 3
T101572	2J9	4	2162 - 3
T101575	2J9	3	2162 - 3
T101941	3B16	2	3102 - 9
T101942	1J19	3	1320 - 3
T101942	1J23	6	1320 - 3D
T101975	2H19	16	1911 - 5
T101975	2H24	13	1921 - 5
T102058	3F8	47	3163 - 5
T102137	3B21	11	3143 - 1
T102138	3B21	12	3143 - 1
T102138	3B23	14	3145 - 3
T102138	3F16	32	3165 - 5
T102138	3F18	32	3165 - 5B
T102139	3F12	22	3165 - 3
T102171	1I4	9	0540 - 3
T102465	1J2	2	0962 - 11
T102618	1K4	6	1320 - 7

NUMERICAL INDEX - CONTINUED

PART NO.	GRID	KEY	PAGE
T102618	1K6	8	1320 - 7B
T102620	1J25	6	1320 - 5
T102620	1K2	8	1320 - 5B
T102934	2C6	22	1674 - 9
T102934	2C8	43	1674 - 9B
T102958	3E8	17	3162 - 21
T102961	3E8	25	3162 - 21
T102963	3E8	27	3162 - 21
T103092	3D21	38	3162 - 7
T103092	3F2	25	3162 - 37
T103093	3D21	39	3162 - 7
T103093	3F2	26	3162 - 37
T103094	3D21	40	3162 - 7
T103094	3F2	27	3162 - 37
T103238	1H9	12	0505 - 5
T103395	1J19	17	1320 - 3
T103395	1J23	7	1320 - 3D
T103463	2C17	3	1674 - 17
T105740	2G5	1	1821 - 1
T106208	3D4	34	3160 - 59
T106595	3F10	54	3164 - 3
T106596	1B21	2	0210 - 18
T107239	2J9	11	2162 - 3
T107255	2J9	8	2162 - 3
T107883	3C23	24	3160 - 23
T107983	1E8	1	0350 - 51
T11234	1I23	7	0962 - 7
T11234	2I20	3	2002 - 2
T11234	2I20	13	2002 - 2
T11234	2I22	5	2002 - 5
T11370	1F13	14	0404 - 3
T11370	1G9	23	0418 - 3
T115030	2I20	5	2002 - 2
T115031	2I20	7	2002 - 2
T116416	1C23	26	0350 - 9
T116416	1D2	4	0350 - 13
T116416	1D12	20	0350 - 27
T116416	1D14	1	0350 - 29
T116604	1E4	12	0350 - 47
T116604	1E10	13	0360 - 3
T116604	1K17	3	1369 - 12B
T116604	1K17	8	1369 - 12B
T116899	1D10	16	0350 - 25
T116900	1D10	16	0350 - 25
T116901	1D10	16	0350 - 25
T116902	1D10	16	0350 - 25
T116909	1D16	31	0350 - 33
T116918	1C25	17	0350 - 11
T116928	1E2	1	0350 - 45
T118681	3D2	1	3160 - 27
T119564	2I20	1	2002 - 2
T122075	1F25	16	0409 - 3
T122075	1G3	14	0413 - 3
T12275	1G14	2	0421 - 3
T12275	1G14	3	0421 - 3
T122803	1D14	2	0350 - 29
T122803	1G14	10	0421 - 3
T122974	3F8	48	3163 - 5
T123077	3B14	9	3102 - 7
T128096	3F10	12	3164 - 3
T128437	2I20	8	2002 - 2
T129611	1D2	11	0350 - 13
T130527	1B23	17	0210 - 21
T130847	3C4	9	3160 - 3D
T130847	3D4	1	3160 - 59
T131617	3D21	33	3162 - 7
T131617	3F2	22	3162 - 37
T131624	3E8	19	3162 - 21
T131980	1I23	1	0962 - 7
T132071	3C23	24	3160 - 23
T133290	2D6	8	1674 - 29
T133674	2F6	18	1810 - 23
T133674	2F10	16	1810 - 23D
T133674	2I17	4B	2001 - 3
T133674	2I17	26	2001 - 3
T133674	2I19	26	2001 - 3B
T134103	2B5	17	1671 - 2
T134103	2B6	17	1671 - 3
T134104	2B5	7	1671 - 2
T134104	2B6	7	1671 - 3
T134530	2E22	8	1810 - 15
T134530	2F6	19	1810 - 23
T134874	2E22	9	1810 - 15
T134895	2B21	6	1673 - 9
T134895	2E16	4	1810 - 9
T135583	2E12	23	1810 - 5
T13624	3F16	20	3165 - 5
T13624	3F18	20	3165 - 5B
T13630	1I19	3	0962 - 3
T13630	1I21	3	0962 - 5
T13814	1F21	5	0407 - 8
T138140	1D2	12	0350 - 13
T143169	2H2	29	1830 - 3
T143169	2H6	1	1830 - 5
T143169	2H9	14	1830 - 10
T14386	1B10	16	0210 - 5
T14386	1B12	19	0210 - 7
T144370	1E4	13	0350 - 47
T144486	1D12	8	0350 - 27
T144698	3C17	2	3160 - 17
T145413	1J2	9	0962 - 11
T145701	1I19	16	0962 - 3
T146097	1J19	24	1320 - 3
T146097	1J21	2	1320 - 3B
T146098	1J25	2	1320 - 5
T146098	1K2	9	1320 - 5B
T146099	1K4	2	1320 - 7
T146099	1K6	9	1320 - 7B
T146102	1G15	5	0422 - 1
T146104	1G15	8	0422 - 1
T146104	1K4	13	1320 - 7
T146104	1K6	7	1320 - 7B
T146106	1G15	8	0422 - 1
T146106	1J25	13	1320 - 5
T146106	1K2	7	1320 - 5B
T146175	1J19	4	1320 - 3
T146175	1J23	8	1320 - 3D
T146178	1K4	11	1320 - 7
T146178	1K6	5	1320 - 7B
T146180	1J25	11	1320 - 5
T146180	1K2	5	1320 - 5B
T146246	2D23	14	1741 - 3
T146246	2E2	8	1746 - 5
T146246	2E4	5	1749 - 3
T146246	3B20	25	3141 - 3
T146246	3B21	13	3143 - 1
T146436	1J19	5	1320 - 3
T146436	1J23	9	1320 - 3D
T146438	1J19	6	1320 - 3
T146438	1J23	10	1320 - 3D
T146443	1I13	10	0930 - 3
T146490	3D15	61	3160 - 69
T146494	1K4	16	1320 - 7
T146494	1K6	6	1320 - 7B
T146495	1K4	12	1320 - 7
T146495	1K6	19	1320 - 7B
T146496	1K4	3	1320 - 7
T146496	1K6	4	1320 - 7B
T146502	1J25	16	1320 - 5
T146502	1K2	6	1320 - 5B
T146503	1J25	12	1320 - 5
T146503	1K2	19	1320 - 5B
T146504	1J25	3	1320 - 5
T146504	1K2	4	1320 - 5B
T146515	1G15	8	0422 - 1
T146516	1G15	8	0422 - 1
T146517	1G15	8	0422 - 1
T146605	1J19	7	1320 - 3
T146605	1J23	11	1320 - 3D
T146606	1J25	14	1320 - 5
T146606	1K2	12	1320 - 5B
T146607	1K4	14	1320 - 7
T146607	1K6	12	1320 - 7B
T146620	1J2	16	0962 - 11
T146622	1J2	17	0962 - 11
T146624	1J2	10	0962 - 11
T146625	1J2	11	0962 - 11
T146626	1J2	13	0962 - 11
T146792	3D15	62	3160 - 69
T146908	1K4	17	1320 - 7
T146908	1K6	13	1320 - 7B
T146911	1J25	17	1320 - 5
T146911	1K2	13	1320 - 5B
T146932	3B10	8	3102 - 3
T146932	3B12	10	3102 - 5
T146933	3B10	9	3102 - 3
T146933	3B12	11	3102 - 5
T147618	2E14	8	1810 - 7
T147891	2I6	10	1927 - 3D
T148083	1J19	25	1320 - 3
T148083	1J21	1	1320 - 3B
T148181	1F22	6	0408 - 1
T148181	2J13	17	2163 - 3
T151139	2B8	2	1671 - 5
T152076	2E3	4	1749 - 2
T152076	2E4	6	1749 - 3
T152230	2C3	3	1674 - 6
T152230	2C8	44	1674 - 9B
T153535	2E10	3	1810 - 3
T153802	2H10	13	1830 - 11
T154131	1I19	1	0962 - 3
T154131	1I21	1	0962 - 5
T154187	3C13	2	3160 - 13
T154342	3D23	22	3162 - 9
T154342	3E4	31	3162 - 15
T154342	3E12	22	3162 - 25
T154342	3E16	21	3162 - 29
T154342	3F4	10	3162 - 39
T156025	1C17	1	0342 - 3
T156027	3B20	26	3141 - 3
T156059	3B21	9	3143 - 1
T156060	3B21	10	3143 - 1
T156079	3B10	10	3102 - 3
T156079	3B12	12	3102 - 5
T156117	1H10	3	0510 - 1
T156132	3B14	10	3102 - 7
T156135	2E3	3	1749 - 2
T156172	3B20	27	3141 - 3
T156174	3B20	28	3141 - 3
T156177	1D10	19	0350 - 25
T156190	3B20	29	3141 - 3

NUMERICAL INDEX - CONTINUED

PART NO.	GRID	KEY	PAGE
T156217	2E3	5	1749 - 2
T156256	2H8	7	1830 - 9
T156258	2D23	19	1741 - 3
T156262	3B10	7	3102 - 3
T156262	3B12	9	3102 - 5
T156278	3B23	6	3145 - 3
T156289	2J13	16	2163 - 3
T156346	3B23	3	3145 - 3
T156404	2D23	15	1741 - 3
T156471	2H4	65	1830 - 3B
T156473	3B23	15	3145 - 3
T156480	1C15	2	0325 - 3
T156481	1C15	1	0325 - 3
T156530	3B8	4	3102 - 1
T156544	2J11	11	2162 - 5
T156625	3C23	16	3160 - 23
T156628	3F6	28	3163 - 3
T156628	3F8	28	3163 - 5
T156652	3D13	3	3160 - 67
T156672	3D13	2	3160 - 67
T156693	2B22	6	1673 - 10
T156693	2J6	4	2008 - 3
T156709	3B20	30	3141 - 3
T156710	3B20	31	3141 - 3
T156711	3B20	32	3141 - 3
T156738	3F6	29	3163 - 3
T156738	3F8	29	3163 - 5
T156784	1I25	4	0962 - 9
T156926	3B20	33	3141 - 3
T156927	3B20	34	3141 - 3
T157172	1J19	26	1320 - 3
T157211	1J6	14	1062 - 3
T157212	1J6	8	1062 - 3
T157220	1J6	15	1062 - 3
T157223	1J6	26	1062 - 3
T157257	1J6	20	1062 - 3
T157258	1J6	9	1062 - 3
T157443	3D23	33	3162 - 9
T157443	3E4	12	3162 - 15
T157443	3E12	23	3162 - 25
T157443	3E16	22	3162 - 29
T157443	3F4	11	3162 - 39
T159028	1J19	8	1320 - 3
T159028	1J23	12	1320 - 3D
T159602	1D12	7	0350 - 27
T160762	1K4	1	1320 - 7
T160762	1K6	14	1320 - 7B
T160769	1J25	1	1320 - 5
T160769	1K2	14	1320 - 5B
T160938	2H6	16	1830 - 5
T161207	1D12	3	0350 - 27
T162019	2B5	8	1671 - 2
T162019	2B6	8	1671 - 3
T162575	1H12	9	0510 - 5
T163334	2G11	5	1821 - 3D
T163335	2G11	6	1821 - 3D
T163336	2G11	2	1821 - 3D
T163597	2H10	14	1830 - 11
T163962	2G5	2	1821 - 1
T164133	1H7	9	0505 - 3
T165169	2H4	42	1830 - 3B
T166274	3D2	10	3160 - 27
T166275	3D2	12	3160 - 27
T166279	3D2	6	3160 - 27
T166395	3D2	9	3160 - 27
T166400	3D2	5	3160 - 27
T166404	3D2	7	3160 - 27
T167504	2E12	24	1810 - 5
T167504	2F18	11	1810 - 33
T167504	2F20	5	1810 - 35
T167505	2E20	26	1810 - 13
T167508	2E18	17	1810 - 11
T167514	2E18	18	1810 - 11
T167514	2E20	28	1810 - 13
T167519	2E20	39	1810 - 13
T167527	2E20	29	1810 - 13
T167530	2E18	19	1810 - 11
T167546	2E18	20	1810 - 11
T167546	2E20	30	1810 - 13
T167574	2F20	6	1810 - 35
T167593	2E20	12	1810 - 13
T167593	2F14	13	1810 - 27
T167594	2E20	12	1810 - 13
T167618	2E18	21	1810 - 11
T167630	2E20	31	1810 - 13
T167658	2E12	26	1810 - 5
T167659	2E20	13	1810 - 13
T167659	2F21	2	1810 - 36
T167676	2H2	30	1830 - 3
T167679	2H8	10	1830 - 9
T167683	2E20	14	1810 - 13
T167754	2F12	7	1810 - 25
T167759	2H8	4	1830 - 9
T167764	2F14	14	1810 - 27
T167770	2E24	15	1810 - 17
T167771	2E24	16	1810 - 17
T167775	2C8	45	1674 - 9B
T167775	2C13	12	1674 - 13
T167775	2E24	17	1810 - 17
T167840	1J13	11	1115 - 3
T167841	1J13	12	1115 - 3
T167842	1J13	13	1115 - 3
T167843	1J13	14	1115 - 3
T167845	1J13	15	1115 - 3
T167848	1J13	16	1115 - 3
T167934	1I6	20	0560 - 3
T167945	2H2	10	1830 - 3
T167980	1J13	17	1115 - 3
T167981	1J13	18	1115 - 3
T167982	1J13	19	1115 - 3
T168063	1C19	4	0350 - 3
T168160	2C9	6	1674 - 10
T168220	2H2	11	1830 - 3
T168276	1I23	4	0962 - 7
T168340	2F24	1	1813 - 3
T168383	1I6	41	0560 - 3
T168393	1J10	7	1064 - 7
T168523	1B2	11	0110 - 1
T168692	1D20	27	0350 - 37
T168692	1D24	19	0350 - 41
T168697	1D20	26	0350 - 37
T168697	1D24	18	0350 - 41
T168706	1D8	1	0350 - 23
T168718	1C25	22	0350 - 11
T168734	1C25	1	0350 - 11
T168736	1C21	2	0350 - 5
T168743	1D16	41	0350 - 33
T168754	1D20	1	0350 - 37
T168758	1D8	10	0350 - 23
T168759	1D8	12	0350 - 23
T168776	1D18	43	0350 - 35
T168795	1C23	27	0350 - 9
T168795	1E6	8	0350 - 49
T168830	1D22	40	0350 - 39
T168831	1D22	40	0350 - 39
T168832	1D22	40	0350 - 39
T168833	1D22	40	0350 - 39
T168834	1D22	40	0350 - 39
T168835	1D22	40	0350 - 39
T168836	1D22	40	0350 - 39
T168837	1D22	40	0350 - 39
T168838	1D22	40	0350 - 39
T168839	1D22	40	0350 - 39
T168840	1D22	40	0350 - 39
T168872	2B15	4	1673 - 2
T168882	1E2	16	0350 - 45
T168883	1E2	16	0350 - 45
T168884	1E2	16	0350 - 45
T168885	1E2	16	0350 - 45
T168886	1E2	16	0350 - 45
T168887	1E2	16	0350 - 45
T168888	1E2	16	0350 - 45
T168889	1E2	16	0350 - 45
T168890	1E2	16	0350 - 45
T168891	1E2	16	0350 - 45
T168894	1C23	30	0350 - 9
T168902	1D2	10	0350 - 13
T168903	1C23	2	0350 - 9
T168904	1E2	8	0350 - 45
T168905	1C23	3	0350 - 9
T168907	1D10	12	0350 - 25
T168907	1D10	15	0350 - 25
T168907	1E2	12	0350 - 45
T168909	1D10	7	0350 - 25
T168909	1D10	11	0350 - 25
T168916	1D24	31	0350 - 41
T168920	1E2	3	0350 - 45
T168924	1E2	16	0350 - 45
T168925	1E2	16	0350 - 45
T168926	1E2	16	0350 - 45
T168927	1E2	16	0350 - 45
T168928	1E2	16	0350 - 45
T168930	1E2	16	0350 - 45
T169017	1D16	25	0350 - 33
T169017	1D20	25	0350 - 37
T169017	1D24	17	0350 - 41
T169019	1C23	11	0350 - 9
T169020	1C23	4	0350 - 9
T169021	1D2	8	0350 - 13
T169022	1D4	6	0350 - 15
T169028	1D10	4	0350 - 25
T169029	1D10	8	0350 - 25
T169029	1D10	10	0350 - 25
T169030	1D20	35	0350 - 37
T169031	1D4	3	0350 - 15
T169034	1D16	21	0350 - 33
T169034	1D20	21	0350 - 37
T169035	1D10	21	0350 - 25
T169035	3C23	9	3160 - 23
T169036	1D16	20	0350 - 33
T169036	1D20	20	0350 - 37
T169044	1D8	17	0350 - 23
T169049	1D18	42	0350 - 35
T169050	1D18	42	0350 - 35
T169051	1D18	42	0350 - 35
T169052	1D18	42	0350 - 35
T169053	1D18	42	0350 - 35
T169054	1D18	42	0350 - 35
T169061	1C25	16	0350 - 11
T169072	1E6	10	0350 - 49
T169073	1C23	28	0350 - 9

NUMERICAL INDEX - CONTINUED

PART NO.	GRID	KEY	PAGE
T169086	1D16	13	0350 - 33
T169086	1D20	8	0350 - 37
T169086	1D24	26	0350 - 41
T169087	1D16	13	0350 - 33
T169087	1D20	8	0350 - 37
T169087	1D24	26	0350 - 41
T169088	1D16	13	0350 - 33
T169088	1D20	8	0350 - 37
T169088	1D24	26	0350 - 41
T169089	1D16	13	0350 - 33
T169089	1D20	8	0350 - 37
T169089	1D24	26	0350 - 41
T169090	1D16	13	0350 - 33
T169090	1D20	8	0350 - 37
T169090	1D24	26	0350 - 41
T169091	1D16	13	0350 - 33
T169091	1D20	8	0350 - 37
T169091	1D24	26	0350 - 41
T169092	1D16	13	0350 - 33
T169092	1D20	8	0350 - 37
T169092	1D24	26	0350 - 41
T169093	1D16	13	0350 - 33
T169093	1D20	8	0350 - 37
T169093	1D24	26	0350 - 41
T169094	1D16	13	0350 - 33
T169094	1D20	8	0350 - 37
T169094	1D24	26	0350 - 41
T169095	1D10	9	0350 - 25
T169096	1D8	4	0350 - 23
T169097	1D10	14	0350 - 25
T169100	1D8	9	0350 - 23
T169118	2I2	3	1927 - 3
T169587	1D10	6	0350 - 25
T169590	1E6	5	0350 - 49
T169600	1D2	2	0350 - 13
T169603	1D16	5	0350 - 33
T169603	1D20	31	0350 - 37
T169603	1D24	5	0350 - 41
T169603	1D24	36	0350 - 41
T169604	1D16	1	0350 - 33
T169604	1D20	10	0350 - 37
T169604	1D20	29	0350 - 37
T169604	1D24	4	0350 - 41
T169604	1D24	35	0350 - 41
T169607	1D12	6	0350 - 27
T169618	1D16	15	0350 - 33
T169618	1D20	15	0350 - 37
T169618	1D24	24	0350 - 41
T169619	1D8	11	0350 - 23
T169640	1D18	42	0350 - 35
T169641	1D18	42	0350 - 35
T169646	1D10	16	0350 - 25
T169647	1D10	16	0350 - 25
T169648	1D10	16	0350 - 25
T169649	1D10	16	0350 - 25
T169663	1D8	2	0350 - 23
T169664	1D8	2	0350 - 23
T169665	1D8	2	0350 - 23
T169685	1D10	6	0350 - 25
T169686	1D10	6	0350 - 25
T169687	1D10	6	0350 - 25
T169688	1D10	6	0350 - 25
T169689	1D10	6	0350 - 25
T169706	1E2	16	0350 - 45
T169707	1D12	22	0350 - 27
T169709	1D16	17	0350 - 33
T169709	1D20	17	0350 - 37
T169709	1D24	22	0350 - 41
T169711	1D12	15	0350 - 27
T169712	1D12	11	0350 - 27
T169723	1D10	16	0350 - 25
T169729	1C25	19	0350 - 11
T169739	1C23	31	0350 - 9
T169741	1E4	5	0350 - 47
T169742	1C21	3	0350 - 5
T169743	1C21	4	0350 - 5
T169751	1D16	2	0350 - 33
T169751	1D20	32	0350 - 37
T169751	1D20	33	0350 - 37
T169751	1D24	2	0350 - 41
T169751	1D24	3	0350 - 41
T169751	1D24	37	0350 - 41
T169751	1D24	39	0350 - 41
T169752	1D16	2	0350 - 33
T169752	1D20	33	0350 - 37
T169752	1D24	3	0350 - 41
T169752	1D24	37	0350 - 41
T169753	1D16	2	0350 - 33
T169753	1D16	3	0350 - 33
T169753	1D20	33	0350 - 37
T169753	1D24	3	0350 - 41
T169753	1D24	37	0350 - 41
T169754	1D16	2	0350 - 33
T169754	1D16	4	0350 - 33
T169754	1D20	30	0350 - 37
T169754	1D20	33	0350 - 37
T169754	1D24	1	0350 - 41
T169754	1D24	3	0350 - 41
T169754	1D24	37	0350 - 41
T169754	1D24	38	0350 - 41
T169758	1D16	13	0350 - 33
T169758	1D20	8	0350 - 37
T169758	1D24	26	0350 - 41
T169759	1D16	13	0350 - 33
T169759	1D20	8	0350 - 37
T169759	1D24	26	0350 - 41
T169760	1D16	13	0350 - 33
T169760	1D20	8	0350 - 37
T169760	1D24	26	0350 - 41
T169766	1D12	10	0350 - 27
T169835	1B2	10	0110 - 1
T169836	1B2	10	0110 - 1
T169867	3C11	7	3160 - 11
T169868	3C11	6	3160 - 11
T169869	3C11	5	3160 - 11
T169881	3C11	8	3160 - 11
T169882	3C11	4	3160 - 11
T169893	3C15	1	3160 - 15
T169955	3C11	1	3160 - 11
T169955	3C19	1	3160 - 19
T169964	3C15	5	3160 - 15
T169964	3C19	5	3160 - 19
T169965	3C11	15	3160 - 11
T169965	3C15	6	3160 - 15
T169965	3C19	6	3160 - 19
T169966	3C11	16	3160 - 11
T169966	3C15	7	3160 - 15
T169966	3C19	7	3160 - 19
T169967	3C11	12	3160 - 11
T169967	3C15	11	3160 - 15
T169967	3C19	11	3160 - 19
T169969	3C11	13	3160 - 11
T169969	3C15	12	3160 - 15
T169969	3C19	12	3160 - 19
T170005	3C21	1	3160 - 21
T170053	2H2	12	1830 - 3
T170067	3C7	10	3160 - 7
T170115	1C25	26	0350 - 11
T170119	1C23	32	0350 - 9
T170119	1E6	9	0350 - 49
T170126	1D22	42	0350 - 39
T170133	2H4	19	1830 - 3B
T170180	1J6	16	1062 - 3
T170181	1J6	17	1062 - 3
T170188	1E6	6	0350 - 49
T170190	1D8	8	0350 - 23
T170193	1D8	5	0350 - 23
T170196	1D12	6	0350 - 27
T170247	1D6	1	0350 - 19
T170254	1D4	13	0350 - 15
T170255	1D4	12	0350 - 15
T170256	1D4	17	0350 - 15
T170263	3D19	17	3162 - 5
T170266	3D19	20	3162 - 5
T170269	3D19	3	3162 - 5
T170269	3E8	3	3162 - 21
T170269	3F2	2	3162 - 37
T170272	3D19	14	3162 - 5
T170272	3F2	14	3162 - 37
T170273	3D19	11	3162 - 5
T170273	3F2	11	3162 - 37
T170274	3D19	19	3162 - 5
T170274	3F2	15	3162 - 37
T170275	3D19	6	3162 - 5
T170275	3F2	10	3162 - 37
T170278	3D21	30	3162 - 7
T170278	3F2	19	3162 - 37
T170283	3D21	28	3162 - 7
T170284	3D21	29	3162 - 7
T170285	3D21	36	3162 - 7
T170285	3F2	24	3162 - 37
T170286	3D21	37	3162 - 7
T170287	3D21	47	3162 - 7
T170288	3D21	44	3162 - 7
T170288	3F2	29	3162 - 37
T170289	3D21	46	3162 - 7
T170293	3D19	5	3162 - 5
T170295	3F2	5	3162 - 37
T170306	3D21	32	3162 - 7
T170306	3F2	21	3162 - 37
T170307	3D21	31	3162 - 7
T170307	3F2	20	3162 - 37
T170367	3F2	16	3162 - 37
T170381	3F2	32	3162 - 37
T170582	1J13	20	1115 - 3
T170595	2I2	1	1927 - 3
T170615	3D4	23	3160 - 59
T170706	1D16	13	0350 - 33
T170706	1D20	8	0350 - 37
T170706	1D24	26	0350 - 41
T170712	1D10	18	0350 - 25
T170720	1C25	36	0350 - 11
T170854	1I13	26	0930 - 3
T170938	1H20	1	0515 - 3
T170939	1H20	12	0515 - 3
T171082	2H8	2	1830 - 9
T171223	1J19	27	1320 - 3
T171223	1J21	8	1320 - 3B
T171228	1J19	28	1320 - 3
T171228	1J21	4	1320 - 3B
T171459	2H2	13	1830 - 3

NUMERICAL INDEX - CONTINUED

PART NO.	GRID	KEY	PAGE
T17148	1I19	4	0962 - 3
T17148	1I21	4	0962 - 5
T171587	3D21	53	3162 - 7
T171734	3B17	6	3102 - 10
T171750	1K4	4	1320 - 7
T171750	1K6	20	1320 - 7B
T171751	1J25	4	1320 - 5
T171751	1K2	20	1320 - 5B
T171756	1K4	15	1320 - 7
T171756	1K6	21	1320 - 7B
T171757	1J25	15	1320 - 5
T171757	1K2	21	1320 - 5B
T171849	2F14	15	1810 - 27
T171899	1D4	11	0350 - 15
T171900	1D4	8	0350 - 15
T171908	1D4	10	0350 - 15
T172089	1C4	2	0240 - 3
T172094	1C25	8	0350 - 11
T172095	1C4	3	0240 - 3
T172198	1J13	25	1115 - 3
T172221	1J13	21	1115 - 3
T172274	1J6	43	1062 - 3
T172522	3D19	23	3162 - 5
T172523	3D19	8	3162 - 5
T172523	3F2	9	3162 - 37
T172609	3F2	18	3162 - 37
T172652	2F4	3	1810 - 21
T172927	1H20	18	0515 - 3
T172927	1H22	5	0515 - 5
T172927	1J6	54	1062 - 3
T172933	2H4	21	1830 - 3B
T172934	2H4	22	1830 - 3B
T172981	1E12	5	0360 - 9
T172981	1E12	14	0360 - 9
T172985	3E8	8	3162 - 21
T172986	3E8	5	3162 - 21
T172987	3E8	9	3162 - 21
T172988	3E8	6	3162 - 21
T172991	2E24	7	1810 - 17
T172992	2E24	8	1810 - 17
T173099	1I25	3	0962 - 9
T173100	1I25	2	0962 - 9
T173125	1D12	17	0350 - 27
T173126	1D12	16	0350 - 27
T173128	1D12	18	0350 - 27
T173131	1D12	2	0350 - 27
T173138	1D12	24	0350 - 27
T173139	1D12	1	0350 - 27
T173168	1H14	1	0511 - 3
T173178	3D19	7	3162 - 5
T173179	3D19	25	3162 - 5
T173180	3D19	12	3162 - 5
T173181	3D19	9	3162 - 5
T173182	3D19	13	3162 - 5
T173205	3D19	10	3162 - 5
T173205	3F2	8	3162 - 37
T173210	3F2	12	3162 - 37
T173219	3F2	7	3162 - 37
T173229	3F2	3	3162 - 37
T173324	1I13	44	0930 - 3
T173480	3D15	63	3160 - 69
T173511	1D12	14	0350 - 27
T173559	2B5	8	1671 - 2
T173559	2B6	8	1671 - 3
T173648	2C13	5	1674 - 13
T173741	1D8	16	0350 - 23
T173768	2H8	1	1830 - 9
T173779	2G21	6	1822 - 3
T173779	2G25	8	1822 - 7
T173779	2I6	11	1927 - 3D
T173873	1E14	9	0360 - 9B
T173959	1D6	2	0350 - 19
T173959	1D16	26	0350 - 33
T174054	2I22	6	2002 - 5
T174090	1D14	3	0350 - 29
T174106	2I22	7	2002 - 5
T174107	1C25	9	0350 - 11
T174109	2H4	23	1830 - 3B
T174200	2I22	8	2002 - 5
T174201	2I22	9	2002 - 5
T174203	2I22	10	2002 - 5
T174220	2B14	8	1672 - 7
T174298	1J19	29	1320 - 3
T174298	1J21	6	1320 - 3B
T174298	1J23	13	1320 - 3D
T174299	1J25	5	1320 - 5
T174299	1K2	18	1320 - 5B
T174300	1K4	5	1320 - 7
T174300	1K6	18	1320 - 7B
T174396	1D12	25	0350 - 27
T174398	1D8	15	0350 - 23
T174410	1H7	11	0505 - 3
T174427	2H2	31	1830 - 3
T174529	1D8	18	0350 - 23
T174529	1D10	3	0350 - 25
T174634	1H20	1	0515 - 3
T174634	1H22	2	0515 - 5
T174634	1J6	10	1062 - 3
T174666	2B14	9	1672 - 7
T174735	1J19	30	1320 - 3
T174735	1J21	9	1320 - 3B
T175034	1H12	28	0510 - 5
T175236	1J6	21	1062 - 3
T175533	2F24	5	1813 - 3
T175534	2F24	4	1813 - 3
T175744	1J19	9	1320 - 3
T175744	1J23	14	1320 - 3D
T175855	2H8	3	1830 - 9
T175862	1C23	25	0350 - 9
T175862	1D2	7	0350 - 13
T175862	1D12	21	0350 - 27
T175862	1D14	4	0350 - 29
T175864	1D14	5	0350 - 29
T176064	3B10	13	3102 - 3
T176064	3B12	15	3102 - 5
T176064	3B17	7	3102 - 10
T176064	3B20	35	3141 - 3
T176064	3B23	16	3145 - 3
T176064	3F16	26	3165 - 5
T176064	3F18	26	3165 - 5B
T176108	1J6	55	1062 - 3
T176111	1J6	56	1062 - 3
T176113	2I10	13	1927 - 7
T176192	2I10	14	1927 - 7
T176279	2I10	10	1927 - 7
T176282	2I10	10	1927 - 7
T176338	2D17	8	1674 - 59
T176341	2I12	6	1927 - 9
T176342	2I12	8	1927 - 9
T176357	2I12	9	1927 - 9
T176357	2I14	19	1927 - 11
T176372	2B17	17	1673 - 5
T176773	1E2	9	0350 - 45
T176801	1D16	24	0350 - 33
T176801	1D20	24	0350 - 37
T176801	1D24	15	0350 - 41
T176870	2G21	7	1822 - 3
T176928	2D23	16	1741 - 3
T176928	3B20	36	3141 - 3
T176929	1H18	40	0511 - 7
T177219	1D12	23	0350 - 27
T177221	1D12	9	0350 - 27
T177340	1I2	5	0530 - 5
T177394	1D18	42	0350 - 35
T177395	1D18	42	0350 - 35
T177430	1I2	3	0530 - 5
T177503	2G25	10	1822 - 7
T177505	2E12	27	1810 - 5
T177505	2F18	12	1810 - 33
T177613	2H6	5	1830 - 5
T177613	2H9	7	1830 - 10
T177737	1E6	4	0350 - 49
T177753	2G21	4	1822 - 3
T177756	2G21	3	1822 - 3
T177783	1J25	7	1320 - 5
T177785	1K4	7	1320 - 7
T177827	2E20	19	1810 - 13
T177863	2H7	4	1830 - 6
T177909	2H19	7	1911 - 5
T178063	2I8	6	1927 - 5
T178112	2E12	16	1810 - 5
T178112	2F14	5	1810 - 27
T178112	2F18	7	1810 - 33
T178113	2E12	17	1810 - 5
T178113	2F14	6	1810 - 27
T178114	2E12	18	1810 - 5
T178114	2F14	7	1810 - 27
T178114	2F18	8	1810 - 33
T178114	2F18	9	1810 - 33
T178115	2H4	24	1830 - 3B
T178116	2H4	25	1830 - 3B
T178117	2H4	26	1830 - 3B
T178118	2H4	27	1830 - 3B
T178119	2H4	28	1830 - 3B
T178120	2H4	29	1830 - 3B
T178123	2H4	30	1830 - 3B
T178124	2H4	31	1830 - 3B
T178125	2H4	32	1830 - 3B
T178126	2H4	33	1830 - 3B
T178127	2H4	43	1830 - 3B
T178130	2H4	49	1830 - 3B
T178131	2H4	50	1830 - 3B
T178132	2H4	51	1830 - 3B
T178133	2H4	52	1830 - 3B
T178134	2H4	53	1830 - 3B
T178135	2H4	54	1830 - 3B
T178136	2H4	55	1830 - 3B
T178220	2E20	20	1810 - 13
T178221	2E20	15	1810 - 13
T178251	2H4	44	1830 - 3B
T178259	2D2	19	1674 - 27
T178259	2D6	4	1674 - 29
T178259	2D8	4	1674 - 29B
T178275	2I12	10	1927 - 9
T178276	2I12	14	1927 - 9
T178368	2I2	9	1927 - 3
T178368	2I4	7	1927 - 3B
T178368	2I6	12	1927 - 3D
T178423	2H6	17	1830 - 5
T178433	2H6	14	1830 - 5
T178534	2E20	16	1810 - 13

NUMERICAL INDEX - CONTINUED

PART NO.	GRID	KEY	PAGE
T178552	2D9	6	1674 - 44
T178553	2D9	7	1674 - 44
T178554	2D9	8	1674 - 44
T178555	2D9	9	1674 - 44
T178556	2D9	10	1674 - 44
T178706	3D2	7	3160 - 27
T178707	3D2	6	3160 - 27
T178946	2B19	3	1673 - 7
T178947	2B19	1	1673 - 7
T178948	2B19	2	1673 - 7
T178954	1I6	37	0560 - 3
T178971	2H4	34	1830 - 3B
T179180	1C23	20	0350 - 9
T179260	1H12	5	0510 - 5
T179288	1H14	4	0511 - 3
T179289	1H12	4	0510 - 5
T179464	3B21	14	3143 - 1
T179510	1E4	3	0350 - 47
T179540	1I6	40	0560 - 3
T179557	1D14	6	0350 - 29
T179593	1D12	19	0350 - 27
T179596	1H12	24	0510 - 5
T179600	1D16	13	0350 - 33
T179600	1D20	8	0350 - 37
T179600	1D24	26	0350 - 41
T179601	1D16	13	0350 - 33
T179601	1D20	8	0350 - 37
T179601	1D24	26	0350 - 41
T179602	1D16	13	0350 - 33
T179602	1D20	8	0350 - 37
T179602	1D24	26	0350 - 41
T179603	1D16	13	0350 - 33
T179603	1D20	8	0350 - 37
T179603	1D24	26	0350 - 41
T179609	3F20	16	3166 - 3
T179609	3F22	13	3166 - 3B
T179642	1H12	27	0510 - 5
T179721	1D12	4	0350 - 27
T179748	3F10	11	3164 - 3
T179920	1D10	2	0350 - 25
T179953	3F20	17	3166 - 3
T180054	1D4	16	0350 - 15
T180074	2B19	1	1673 - 7
T180075	2B19	3	1673 - 7
T180131	1E16	3	0360 - 11
T180132	1E16	4	0360 - 11
T180182	2H10	15	1830 - 11
T180213	1H24	15	0520 - 3
T180289	1J2	18	0962 - 11
T180303	2B10	24	1672 - 3
T180338	2I17	5	2001 - 3
T180338	2I19	5	2001 - 3B
T180368	2B10	13	1672 - 3
T180394	2E2	9	1746 - 5
T180408	2E24	18	1810 - 17
T180418	2E16	9	1810 - 9
T180420	2I17	17	2001 - 3
T180420	2I19	17	2001 - 3B
T180421	1E4	8	0350 - 47
T180422	2B10	7	1672 - 3
T180424	2B10	9	1672 - 3
T180463	1C23	6	0350 - 9
T180487	2I17	20	2001 - 3
T180487	2I19	20	2001 - 3B
T180495	1H14	11	0511 - 3
T180533	2C8	50	1674 - 9B
T180533	2F6	17	1810 - 23
T180533	2F6	25	1810 - 23
T180533	2F10	11	1810 - 23D
T180573	2I17	4A	2001 - 3
T180608	1E2	6	0350 - 45
T180661	2H24	25	1921 - 5
T180709	1C23	24	0350 - 9
T180919	2C13	6	1674 - 13
T180920	2C13	4	1674 - 13
T180922	2F8	4	1810 - 23B
T180923	2F8	5	1810 - 23B
T180925	2H12	14	1830 - 15
T180929	2H4	56	1830 - 3B
T180930	2E12	28	1810 - 5
T180931	3B10	6	3102 - 3
T180931	3B12	5	3102 - 5
T180931	3B20	14	3141 - 3
T180931	3B21	6	3143 - 1
T180931	3B23	10	3145 - 3
T180932	3F16	30	3165 - 5
T180932	3F18	30	3165 - 5B
T180937	1D4	15	0350 - 15
T180938	1D4	18	0350 - 15
T180944	3D15	48	3160 - 69
T180944	3D15	64	3160 - 69
T180949	1H12	6	0510 - 5
T180950	1H12	20	0510 - 5
T181050	2E16	6	1810 - 9
T181078	1H20	3	0515 - 3
T181151	1H14	15	0511 - 3
T181182	1H12	25	0510 - 5
T181208	3D15	65	3160 - 69
T181306	3D6	6	3160 - 61
T181306	3D9	1	3160 - 63B
T181306	3D9	2	3160 - 63B
T181306	3D9	3	3160 - 63B
T181316	2H19	19	1911 - 5
T181325	2B10	22	1672 - 3
T181325	2B14	12	1672 - 7
T181388	1D8	2	0350 - 23
T181389	1D8	2	0350 - 23
T181390	1D8	2	0350 - 23
T181391	1D8	2	0350 - 23
T181392	1D8	2	0350 - 23
T181393	1D8	2	0350 - 23
T181394	1D8	2	0350 - 23
T181395	1D8	2	0350 - 23
T181412	2F12	2	1810 - 25
T181413	2F12	4	1810 - 25
T181433	1D16	18	0350 - 33
T181433	1D20	18	0350 - 37
T181433	1D24	21	0350 - 41
T181434	1D16	16	0350 - 33
T181434	1D20	16	0350 - 37
T181434	1D24	23	0350 - 41
T181463	1C25	11	0350 - 11
T181488	2H24	15	1921 - 5
T181489	2H24	7	1921 - 5
T181520	2E16	1	1810 - 9
T181524	2H4	61	1830 - 3B
T181603	2E24	19	1810 - 17
T181603	2F18	13	1810 - 33
T181604	2C8	37	1674 - 9B
T181605	2C8	38	1674 - 9B
T181608	1H14	18	0511 - 3
T181634	2E4	7	1749 - 3
T181697	1J13	22	1115 - 3
T181699	1J13	23	1115 - 3
T181736	1E6	3	0350 - 49
T181737	1D16	14	0350 - 33
T181737	1D20	9	0350 - 37
T181737	1D24	25	0350 - 41
T181770	1C23	7	0350 - 9
T181797	2J4	7	2007 - 2
T181822	1J13	24	1115 - 3
T181852	1J19	38	1320 - 3
T181908	2E16	1	1810 - 9
T181990	2E2	10	1746 - 5
T181991	2E2	11	1746 - 5
T181992	2E2	12	1746 - 5
T181993	2E2	13	1746 - 5
T182026	1J19	31	1320 - 3
T182150	1K4	22	1320 - 7
T182151	1J25	22	1320 - 5
T182169	1H16	1	0511 - 5
T182169	2B10	18	1672 - 3
T182183	1J19	32	1320 - 3
T182183	1J21	10	1320 - 3B
T182184	1J19	33	1320 - 3
T182189	2H12	12	1830 - 15
T182191	1J19	11	1320 - 3
T182191	1J23	15	1320 - 3D
T182191	3B18	1	3140 - 1
T182192	1J19	12	1320 - 3
T182192	1J23	16	1320 - 3D
T182192	2D23	21	1741 - 3
T182196	1D12	13	0350 - 27
T182223	3F6	30	3163 - 3
T182223	3F8	30	3163 - 5
T182254	1D12	5	0350 - 27
T182260	3B20	37	3141 - 3
T182261	2D23	17	1741 - 3
T182370	1D8	3	0350 - 23
T182389	2E24	20	1810 - 17
T182414	1J19	19	1320 - 3
T182420	2E10	8	1810 - 3
T182578	1H12	28	0510 - 5
T182607	2F6	26	1810 - 23
T182609	2F6	22	1810 - 23
T182612	2F6	20	1810 - 23
T182612	2F10	18	1810 - 23D
T182629	2F6	23	1810 - 23
T182630	1J19	34	1320 - 3
T182695	2E20	32	1810 - 13
T182734	1J19	35	1320 - 3
T182758	2H19	6	1911 - 5
T182759	1C23	13	0350 - 9
T182761	1C23	12	0350 - 9
T182761	1D16	8	0350 - 33
T182761	1D16	9	0350 - 33
T182762	1C23	19	0350 - 9
T182763	1C23	23	0350 - 9
T182764	1C23	10	0350 - 9
T182765	1C23	8	0350 - 9
T182766	1C25	10	0350 - 11
T182767	1C25	27	0350 - 11
T182768	1C25	6	0350 - 11
T182769	1C25	4	0350 - 11
T182769	1C25	7	0350 - 11
T182770	1C25	5	0350 - 11
T182771	1C25	3	0350 - 11
T182774	1D16	34	0350 - 33
T182775	1D16	22	0350 - 33
T182775	1D16	35	0350 - 33
T182775	1D20	22	0350 - 37

NUMERICAL INDEX - CONTINUED

PART NO.	GRID	KEY	PAGE
T182775	1D22	44	0350 - 39
T182775	1D24	11	0350 - 41
T182775	1D24	13	0350 - 41
T182776	1D16	23	0350 - 33
T182777	1D18	44	0350 - 35
T182778	1D16	19	0350 - 33
T182778	1D20	19	0350 - 37
T182779	1D16	28	0350 - 33
T182780	1D16	30	0350 - 33
T182781	1D16	29	0350 - 33
T182782	1D18	47	0350 - 35
T182783	1D18	48	0350 - 35
T182784	1D18	49	0350 - 35
T182785	1D18	45	0350 - 35
T182786	1D16	10	0350 - 33
T182788	1D16	11	0350 - 33
T182789	1D16	38	0350 - 33
T182790	1D16	7	0350 - 33
T182790	1D16	40	0350 - 33
T182790	1D24	30	0350 - 41
T182791	1D16	6	0350 - 33
T182791	1D24	29	0350 - 41
T182792	1D16	32	0350 - 33
T182793	1D16	33	0350 - 33
T182795	1J19	36	1320 - 3
T182795	1J21	12	1320 - 3B
T182800	1D20	23	0350 - 37
T182852	2H2	32	1830 - 3
T182858	2H2	33	1830 - 3
T182860	2E24	21	1810 - 17
T182860	2F2	2	1810 - 19
T182861	2C3	3	1674 - 6
T182861	2C8	46	1674 - 9B
T182861	2E16	10	1810 - 9
T182861	2E16	12	1810 - 9
T182862	2C3	3	1674 - 6
T182862	2C8	47	1674 - 9B
T182870	2C2	2	1674 - 5
T182870	2E16	10	1810 - 9
T182870	2H2	34	1830 - 3
T182870	2I17	7	2001 - 3
T182870	2I19	7	2001 - 3B
T182871	2C3	3	1674 - 6
T182871	2C8	48	1674 - 9B
T182871	2E16	12	1810 - 9
T182871	2H2	35	1830 - 3
T182871	2I17	18	2001 - 3
T182871	2I19	18	2001 - 3B
T182872	2H8	9	1830 - 9
T182874	2F12	5	1810 - 25
T182880	2C3	3	1674 - 6
T182880	2C9	9	1674 - 10
T182880	2E24	21	1810 - 17
T182888	2I17	10	2001 - 3
T182899	2E18	22	1810 - 11
T182899	2E20	17	1810 - 13
T182902	2E20	18	1810 - 13
T182903	2E20	1	1810 - 13
T182906	2E24	22	1810 - 17
T182906	2H2	36	1830 - 3
T182909	2C6	23	1674 - 9
T182909	2F2	1	1810 - 19
T182909	2H12	16	1830 - 15
T182909	2I17	12	2001 - 3
T182914	2D14	3	1674 - 52
T182914	2D18	3	1674 - 62
T182919	2F2	12	1810 - 19
T182919	2F4	6	1810 - 21
T182920	2F21	4	1810 - 36
T182927	2E20	2	1810 - 13
T182928	2E20	3	1810 - 13
T182963	2E18	23	1810 - 11
T182967	2E18	24	1810 - 11
T182969	2E18	26	1810 - 11
T182972	2E18	27	1810 - 11
T184135	2E20	11	1810 - 13
T184892	2E16	11	1810 - 9
T184924	2H7	3	1830 - 6
T186793	2E12	29	1810 - 5
T186793	2F8	6	1810 - 23B
T186793	2F10	19	1810 - 23D
T19044	3F10	41	3164 - 3
T190513	2H10	14	1830 - 11
T195001	1C25	23	0350 - 11
T195003	1D20	28	0350 - 37
T195003	1D24	20	0350 - 41
T195006	1D20	11	0350 - 37
T195006	1D20	13	0350 - 37
T195007	1D20	11	0350 - 37
T195007	1D20	12	0350 - 37
T195008	1D20	5	0350 - 37
T195009	1D20	7	0350 - 37
T195010	1D20	6	0350 - 37
T195011	1D20	4	0350 - 37
T195012	1D20	3	0350 - 37
T195013	1D20	2	0350 - 37
T195014	1D20	34	0350 - 37
T195015	1D22	37	0350 - 39
T195016	1D22	36	0350 - 39
T195017	1D22	38	0350 - 39
T195018	1D22	39	0350 - 39
T195019	1D22	41	0350 - 39
T195022	1D22	43	0350 - 39
T195023	1D24	33	0350 - 41
T195024	1D24	14	0350 - 41
T195025	1E6	13	0350 - 49
T195031	1J19	37	1320 - 3
T195031	2G4	10	1816 - 3B
T195032	1J19	39	1320 - 3
T195036	1D24	32	0350 - 41
T195037	1D24	34	0350 - 41
T195039	1E4	11	0350 - 47
T195040	1D24	28	0350 - 41
T195041	1D24	6	0350 - 41
T195042	1D24	8	0350 - 41
T195044	1D24	10	0350 - 41
T195045	1E2	11	0350 - 45
T195046	1E2	10	0350 - 45
T195047	1E2	7	0350 - 45
T195048	1E2	15	0350 - 45
T195050	1D10	5	0350 - 25
T195052	1D12	26	0350 - 27
T195053	1D14	7	0350 - 29
T195054	1D14	8	0350 - 29
T195055	1D14	9	0350 - 29
T195056	1D14	10	0350 - 29
T195061	1D6	3	0350 - 19
T195062	1E6	15A	0350 - 49
T195063	1E6	11	0350 - 49
T195064	1E6	12	0350 - 49
T195068	1E4	9	0350 - 47
T195079	1C25	13	0350 - 11
T195080	1C21	5	0350 - 5
T195081	1C23	9	0350 - 9
T195106	1I6	42	0560 - 3
T195108	1C25	37	0350 - 11
T195109	1C25	28	0350 - 11
T195114	1D22	46	0350 - 39
T195115	1D24	9	0350 - 41
T195127	2B10	29	1672 - 3
T195128	1E2	5	0350 - 45
T195148	1J19	20	1320 - 3
T195210	3F24	20	3166 - 5
T195275	1D12	28	0350 - 27
T195539	1K4	8	1320 - 7
T195540	1K4	19	1320 - 7
T195541	1K4	20	1320 - 7
T195542	1J25	8	1320 - 5
T195543	1J25	19	1320 - 5
T195544	1J25	20	1320 - 5
T195558	1K4	23	1320 - 7
T195558	1K6	26	1320 - 7B
T195559	1J25	23	1320 - 5
T195559	1K2	26	1320 - 5B
T195691	1H20	3	0515 - 3
T195710	1J19	15	1320 - 3
T195710	1J23	17	1320 - 3D
T195759	1K4	21	1320 - 7
T195759	1K6	16	1320 - 7B
T195760	1J25	21	1320 - 5
T195760	1K2	16	1320 - 5B
T195857	1K4	25	1320 - 7
T195857	1K6	10	1320 - 7B
T195858	1J25	25	1320 - 5
T195858	1K2	10	1320 - 5B
T195929	2G2	9	1816 - 3
T196011	1D18	46	0350 - 35
T196012	1D18	46	0350 - 35
T196013	1J19	16	1320 - 3
T196013	1J23	18	1320 - 3D
T196129	2C8	28	1674 - 9B
T196237	2E20	4	1810 - 13
T196309	2E12	19	1810 - 5
T196309	2F14	8	1810 - 27
T196309	2F18	10	1810 - 33
T196464	1E10	11	0360 - 3
T196471	2H14	6	1830 - 15B
T196474	1H9	19	0505 - 5
T196475	1J25	26	1320 - 5
T196475	1K2	24	1320 - 5B
T196476	1K4	26	1320 - 7
T196476	1K6	24	1320 - 7B
T196485	1G20	10	0429 - 3
T196485	2B10	18	1672 - 3
T196566	2B10	10	1672 - 3
T196587	1E10	14	0360 - 3
T196622	2F10	20B	1810 - 23D
T196661	1D10	22	0350 - 25
T196662	1D10	23	0350 - 25
T196711	2E22	10	1810 - 15
T196712	2E22	11	1810 - 15
T196729	2H12	1	1830 - 15
T196749	1K17	8	1369 - 12B
T196756	1D18	42	0350 - 35
T196794	1D20	14	0350 - 37
T196795	1D8	6	0350 - 23
T196801	1D4	5	0350 - 15
T196806	1D4	1	0350 - 15
T196815	1C25	32	0350 - 11
T196816	1C25	25	0350 - 11
T196817	1C25	33	0350 - 11

NUMERICAL INDEX - CONTINUED

PART NO.	GRID	KEY	PAGE
T196818	1C25	38	0350 - 11
T196822	1D16	27	0350 - 33
T196823	1D24	7	0350 - 41
T196824	1D24	7	0350 - 41
T196826	1D16	31	0350 - 33
T196827	1D16	31	0350 - 33
T196828	1D16	31	0350 - 33
T196829	1D16	31	0350 - 33
T196836	1D24	7	0350 - 41
T196837	1D24	7	0350 - 41
T196838	1D24	7	0350 - 41
T196846	1E2	4	0350 - 45
T196847	1E2	4	0350 - 45
T196850	1E6	14	0350 - 49
T196852	1D16	39	0350 - 33
T196980	1C25	20	0350 - 11
T196985	1E10	15	0360 - 3
T197126	1D10	13	0350 - 25
T197144	3F24	19	3166 - 5
T197173	2I6	13	1927 - 3D
T197182	3D23	11	3162 - 9
T197182	3E4	20	3162 - 15
T197182	3E24	4	3162 - 35B
T197186	1J21	13	1320 - 3B
T197300	1J19	21	1320 - 3
T197300	1J23	19	1320 - 3D
T197323	1K4	28	1320 - 7
T197323	1K6	3	1320 - 7B
T197324	1J25	28	1320 - 5
T197324	1K2	3	1320 - 5B
T197455	2E20	33	1810 - 13
T197456	2E20	34	1810 - 13
T197457	2F6	24	1810 - 23
T197570	2E2	14	1746 - 5
T198213	3B10	14	3102 - 3
T198213	3B12	16	3102 - 5
T198214	3B10	14	3102 - 3
T198214	3B12	8	3102 - 5
T200055	1J19	18	1320 - 3
T200055	1J23	20	1320 - 3D
T200056	1K4	10	1320 - 7
T200056	1K6	11	1320 - 7B
T200057	1J25	10	1320 - 5
T200057	1K2	11	1320 - 5B
T200061	1J19	40	1320 - 3
T200062	1K4	27	1320 - 7
T200063	1J25	27	1320 - 5
T200068	1J19	14	1320 - 3
T200068	1J23	21	1320 - 3D
T200069	1K4	24	1320 - 7
T200069	1K6	1	1320 - 7B
T200070	1J25	24	1320 - 5
T200070	1K2	1	1320 - 5B
T200158	2G4	11	1816 - 3B
T200159	2G4	12	1816 - 3B
T200161	2G4	7	1816 - 3B
T200267	2F10	20A	1810 - 23D
T200363	2C8	31	1674 - 9B
T200463	2I4	8	1927 - 3B
T200463	2I6	14	1927 - 3D
T200729	1J19	37	1320 - 3
T200729	2G4	10	1816 - 3B
T200729	3E12	11	3162 - 25
T200729	3E16	11	3162 - 29
T200791	1K6	2	1320 - 7B
T200811	1J19	31	1320 - 3
T200811	1J21	5	1320 - 3B
T200812	1K4	22	1320 - 7
T200812	1K6	15	1320 - 7B
T200813	1J25	22	1320 - 5
T200813	1K2	15	1320 - 5B
T200818	1K2	2	1320 - 5B
T200887	3B20	27	3141 - 3
T201019	2I4	9	1927 - 3B
T201305	2I14	20	1927 - 11
T201327	2I14	21	1927 - 11
T201328	2I14	22	1927 - 11
T201329	2I14	23	1927 - 11
T201330	2I14	24	1927 - 11
T201375	2I6	15	1927 - 3D
T201708	2E12	30	1810 - 5
T20217	1G20	7	0429 - 3
T202206	2I6	16	1927 - 3D
T202834	1J19	40	1320 - 3
T202834	1J23	22	1320 - 3D
T202835	1J25	27	1320 - 5
T202835	1K2	17	1320 - 5B
T202836	1K4	27	1320 - 7
T202836	1K6	17	1320 - 7B
T202883	2F10	21	1810 - 23D
T202884	1J21	3	1320 - 3B
T203128	2F10	22	1810 - 23D
T203485	1C15	1	0325 - 3
T203614	2E12	31	1810 - 5
T203615	2E12	32	1810 - 5
T203670	3D23	11	3162 - 9
T203670	3E4	20	3162 - 15
T203697	3F22	8	3166 - 3B
T203767	1D12	27	0350 - 27
T203850	1E14	14	0360 - 9B
T203943	1J23	23	1320 - 3D
T203944	1J23	24	1320 - 3D
T203945	1J23	25	1320 - 3D
T204161	3C23	16	3160 - 23
T205311	1J23	26	1320 - 3D
T205369	1D12	19	0350 - 27
T205472	2E24	19	1810 - 17
T205472	2E24	20	1810 - 17
T205472	2F18	13	1810 - 33
T205629	1D24	34	0350 - 41
T205646	1D20	11	0350 - 37
T205646	1D20	13	0350 - 37
T205647	1D20	11	0350 - 37
T205647	1D20	12	0350 - 37
T205670	3D6	12	3160 - 61
T205718	1K6	25	1320 - 7B
T205862	1E4	8	0350 - 47
T205863	1E4	7	0350 - 47
T205863	1E4	8	0350 - 47
T205864	1E4	7	0350 - 47
T205941	3D25	7	3162 - 11
T206110	1D2	10	0350 - 13
T206624	2C8	40	1674 - 9B
T207204	3B12	22	3102 - 5
T207205	3B12	23	3102 - 5
T207717	2C8	28	1674 - 9B
T207741	1J19	15	1320 - 3
T207741	1J23	17	1320 - 3D
T207750	1K4	21	1320 - 7
T207750	1K6	16	1320 - 7B
T207751	1J25	21	1320 - 5
T207751	1K2	16	1320 - 5B
T207925	2F10	12	1810 - 23D
T208085	1H9	19	0505 - 5
T208086	1J25	26	1320 - 5
T208086	1K2	24	1320 - 5B
T208087	1K4	26	1320 - 7
T208087	1K6	24	1320 - 7B
T208364	2B17	14	1673 - 5
T208365	2B17	15	1673 - 5
T209173	2F24	1	1813 - 3
T209174	2I2	3	1927 - 3
T209177	2I2	1	1927 - 3
T209183	2F24	5	1813 - 3
T209184	2F24	4	1813 - 3
T209349	3B8	4	3102 - 1
T209601	2G4	11	1816 - 3B
T209602	2G4	12	1816 - 3B
T210796	3B21	14	3143 - 1
T211353	1I25	2	0962 - 9
T211408	1C25	22	0350 - 11
T211409	1C25	23	0350 - 11
T211678	2C8	52	1674 - 9B
T211758	1D6	3	0350 - 19
T212430	1I10	23	0560 - 7
T213560	2E18	15	1810 - 11
T213611	2B5	9	1671 - 2
T214122	1I10	24	0560 - 7
T214147	1I10	26	0560 - 7
T214877	1I10	25	0560 - 7
T215158	1J19	29	1320 - 3
T215158	1J21	6	1320 - 3B
T215158	1J23	13	1320 - 3D
T21937	1F13	16	0404 - 3
T22381	2I2	10	1927 - 3
T22381	2I4	10	1927 - 3B
T22381	2I6	17	1927 - 3D
T22381	2I10	11	1927 - 7
T22381	2I14	25	1927 - 11
T26955	1E16	12	0360 - 11
T26955	2D6	3	1674 - 29
T27077	2H7	2	1830 - 6
T28583	2D11	1	1674 - 47
T28585	2D11	12	1674 - 47
T28586	2D11	14	1674 - 47
T29342	2D2	17	1674 - 27
T29342	2D6	6	1674 - 29
T29342	2D8	6	1674 - 29B
T29747	1E16	5	0360 - 11
T3G9609	3B14	6	3102 - 7
T303674	1H12	6	0510 - 5
T31636	1G11	25	0419 - 3
T34067	2D11	18	1674 - 47
T34960	1B2	4	0110 - 1
T35580	1G12	10	0421 - 1
T35580	1G24	42	0452 - 3
T35985	3D4	28	3160 - 59
T38377	2H7	1	1830 - 6
T39049	1I19	13	0962 - 3
T39049	1I21	13	0962 - 5
T39155	3F10	55	3164 - 3
T40308	3D2	11	3160 - 27
T41836	1J2	15	0962 - 11
T42170	1H7	5	0505 - 3
T42199	2B8	3	1671 - 5
T42977	1C17	4	0342 - 3
T42977	1I4	2	0540 - 3
T45298	1H20	5	0515 - 3
T46876	2B24	12	1674 - 3
T46876	2B25	9	1674 - 3A
T46876	2C8	49	1674 - 9B

NUMERICAL INDEX - CONTINUED

PART NO.	GRID	KEY	PAGE
T52979	3F6	31	3163 - 3
T52979	3F8	31	3163 - 5
T54188	3B20	38	3141 - 3
T54188	3B23	17	3145 - 3
T54474	1C17	11	0342 - 3
T54922	2J9	13	2162 - 3
T55224	2G19	16	1821 - 11
T55258	1B2	1	0110 - 1
T55738	1B23	19	0210 - 21
T56112	1B23	7	0210 - 21
T58056	2I14	18	1927 - 11
T59937	2H4	20	1830 - 3B
T60811	1F22	6	0408 - 1
T60811	1I6	38	0560 - 3
T60811	1K17	6	1369 - 12B
T60811	2D25	11	1746 - 3
T60811	2H7	6	1830 - 6
T60920	2I20	6	2002 - 2
T61798	2C13	9	1674 - 13
T63224	1K4	18	1320 - 7
T63224	1K6	22	1320 - 7B
T63225	1J25	18	1320 - 5
T63225	1K2	22	1320 - 5B
T64217	1J25	9	1320 - 5
T64217	1K2	23	1320 - 5B
T65643	2B20	4	1673 - 8
T65643	2E16	12	1810 - 9
T66418	2E22	5	1810 - 15
T67995	2D2	18	1674 - 27
T67995	2D6	5	1674 - 29
T67995	2D8	5	1674 - 29B
T67995	3F6	32	3163 - 3
T67995	3F8	32	3163 - 5
T70154	2E14	10	1810 - 7
T70154	2H19	20	1911 - 5
T70176	1G24	19	0452 - 3
T71671	1B2	4	0110 - 1
T72216	3F6	33	3163 - 3
T72216	3F8	33	3163 - 5
T72217	3F6	34	3163 - 3
T72217	3F8	34	3163 - 5
T72221	3C23	23	3160 - 23
T72414	3B25	25	3160 - 3
T72414	3C2	24	3160 - 3B
T74412	1I6	43	0560 - 3
T74412	2D2	12	1674 - 27
T74412	2D4	11	1674 - 27B
T74416	1G14	31	0421 - 3
T74416	1H18	41	0511 - 7
T74416	2C6	24	1674 - 9
T74416	2C8	39	1674 - 9B
T74416	2D2	6	1674 - 27
T74416	2D2	15	1674 - 27
T74416	2D2	21	1674 - 27
T74416	2D2	22	1674 - 27
T74416	2D4	10	1674 - 27B
T74416	2D4	12	1674 - 27B
T74416	2D6	9	1674 - 29
T74416	2D8	9	1674 - 29B
T74416	2H10	16	1830 - 11
T74492	1F2	34	0402 - 3
T74492	1G24	19	0452 - 3
T74553	1E8	2	0350 - 51
T75197	2B22	2	1673 - 10
T76938	1C19	1	0350 - 3
T76938	1E12	8	0360 - 9
T76938	1E14	15	0360 - 9B
T76938	1I13	2	0930 - 3
T76938	2J11	12	2162 - 5
T76938	3C23	5	3160 - 23
T76938	3F8	49	3163 - 5
T76938	3F10	29	3164 - 3
T77613	1C9	9	0260 - 6
T77613	1E14	17	0360 - 9B
T77613	1G12	6	0421 - 1
T77613	1G14	17	0421 - 3
T77613	1G24	9	0452 - 3
T77613	1H18	42	0511 - 7
T77613	1I6	44	0560 - 3
T77613	1I10	8	0560 - 7
T77613	1I13	8	0930 - 3
T77613	1J6	57	1062 - 3
T77613	1J8	8	1062 - 5
T77613	1J10	2	1064 - 7
T77613	1J13	26	1115 - 3
T77613	1J15	12	1162 - 3
T77613	2J11	13	2162 - 5
T77613	3B25	26	3160 - 3
T77613	3C2	12	3160 - 3B
T77613	3C7	16	3160 - 7
T77613	3C23	1	3160 - 23
T77613	3D7	6	3160 - 62
T77613	3D11	12	3160 - 65
T77613	3D15	66	3160 - 69
T77613	3D17	6	3162 - 3
T77613	3D21	56	3162 - 7
T77613	3D23	4	3162 - 9
T77613	3E2	7	3162 - 13
T77613	3E4	5	3162 - 15
T77613	3E6	7	3162 - 17
T77613	3E10	5	3162 - 23
T77613	3E12	4	3162 - 25
T77613	3E14	5	3162 - 27
T77613	3E16	4	3162 - 29
T77613	3E18	5	3162 - 31
T77613	3F10	56	3164 - 3
T77814	1B15	13	0210 - 11
T77814	1B21	5	0210 - 18
T77814	1C6	12	0260 - 3
T77814	1C8	13	0260 - 5
T77814	1I13	40	0930 - 3
T77814	3B25	27	3160 - 3
T77814	3D7	2	3160 - 62
T77814	3D7	12	3160 - 62
T77814	3D15	67	3160 - 69
T77857	1C6	6	0260 - 3
T77857	1C8	4	0260 - 5
T77857	1G12	6	0421 - 1
T77857	1G14	44	0421 - 3
T77857	1G24	10	0452 - 3
T77857	1H18	43	0511 - 7
T77857	1I13	20	0930 - 3
T77857	1J6	58	1062 - 3
T77857	3B25	28	3160 - 3
T77857	3C2	20	3160 - 3B
T77857	3F10	58	3164 - 3
T77858	1I13	5	0930 - 3
T77858	1J15	13	1162 - 3
T77858	2J11	14	2162 - 5
T77858	3D15	68	3160 - 69
T77932	1H18	48	0511 - 7
T77932	1I13	42	0930 - 3
T77932	1I17	6	0960 - 19
T77932	1I17	17	0960 - 19
T77932	3C23	13	3160 - 23
T78313	1K9	1	1369 - 3
T78593	1H7	3	0505 - 3
T78612	1C19	3	0350 - 3
T78612	1D2	14	0350 - 13
T78612	1E6	16	0350 - 49
T78612	1E14	19	0360 - 9B
T78612	3C7	4	3160 - 7
T78612	3C23	25	3160 - 23
T78612	3D15	69	3160 - 69
T78612	3F6	35	3163 - 3
T78612	3F8	35	3163 - 5
T78612	3F10	18	3164 - 3
T78612	3F16	33	3165 - 5
T78612	3F18	33	3165 - 5B
T78784	3C7	1	3160 - 7
T78784	3C23	28	3160 - 23
T78784	3F12	17	3165 - 3
T78787	2D2	6	1674 - 27
T79002	3B8	3	3102 - 1
T79002	3B14	8	3102 - 7
T79006	3B14	5	3102 - 7
T79096	3B14	2	3102 - 7
T79471	2B6	9	1671 - 3
T79477	1I6	39	0560 - 3
T79477	2H19	21	1911 - 5
T79478	1H12	16	0510 - 5
T80394	2B15	1	1673 - 2
T81018	1J2	6	0962 - 11
T81029	3D23	12	3162 - 9
T81029	3E4	21	3162 - 15
T81029	3E10	10	3162 - 23
T81029	3E12	12	3162 - 25
T81029	3E14	10	3162 - 27
T81029	3E16	12	3162 - 29
T81029	3E18	10	3162 - 31
T81247	3C4	4	3160 - 3D
T81247	3D4	10	3160 - 59
T81403	3F10	2	3164 - 3
T82791	2F10	23	1810 - 23D
T82791	2H14	7	1830 - 15B
T82792	2F10	24	1810 - 23D
T82792	2H14	8	1830 - 15B
T82861	3F24	13	3166 - 5
T82907	1H24	18	0520 - 3
T835100	3B16	3	3102 - 9
T835107	3B16	4	3102 - 9
T835108	3B16	5	3102 - 9
T9J2308	3B14	7	3102 - 7
UN7189	1B10	..	0210 - 5
UN7189	1C2	..	0210 - 25
UN7348	1B12	19	0210 - 7
U12547	1C6	16	0260 - 3
U12547	1C8	17	0260 - 5
U12547	1E12	6	0360 - 9
U12547	1H18	45	0511 - 7
U12547	1I13	34	0930 - 3
U12547	1I17	9	0960 - 19
U12547	1J13	27	1115 - 3
U12547	1J15	14	1162 - 3
U12547	1K9	1	1369 - 3
U12547	2J11	15	2162 - 5
U12547	3C9	6	3160 - 9
U12547	3C9	8	3160 - 9
U12547	3C9	9	3160 - 9
U12547	3C13	3	3160 - 13
U12547	3C17	3	3160 - 17

NUMERICAL INDEX - CONTINUED

PART NO.	GRID	KEY	PAGE
U12547	3C23	15	3160 - 23
U12547	3F10	16	3164 - 3
U13184	2I20	12	2002 - 2
U13639	2J11	16	2162 - 5
U13639	3C7	6	3160 - 7
U13639	3C23	27	3160 - 23
U13639	3D15	70	3160 - 69
U13639	3F10	20	3164 - 3
U13639	3F12	18	3165 - 3
U13639	3F16	33	3165 - 5
U13639	3F18	33	3165 - 5B
U16466	3F6	36	3163 - 3
U16466	3F8	36	3163 - 5
U17409	1B12	24	0210 - 7
U17409	1B15	7	0210 - 11
U17409	1B15	10	0210 - 11
U17409	1B16	10	0210 - 12
U17409	1G11	15	0419 - 3
U17409	1G24	30	0452 - 3
U17409	1H18	46	0511 - 7
U17409	2J9	12	2162 - 3
U40750	1G11	19	0419 - 3
U42111	1J2	19	0962 - 11
U43871	1B15	5	0210 - 11
U44537	2B17	16	1673 - 5
U45855	3C11	11	3160 - 11
U45855	3C15	10	3160 - 15
U45855	3C19	10	3160 - 19
U46370	2D11	20	1674 - 47
U46662	2D11	10	1674 - 47
U46664	2D13	47	1674 - 49
X05HP-4	1J2	22	0962 - 11
YZ120145	1B15	21	0210 - 11
YZ120314	1B15	29	0210 - 11
YZ120315	1B25	5	0210 - 23
YZ120331	1B7	1	0210 - 2
YZ120340	1B12	14	0210 - 7
YZ120340	1B16	11	0210 - 12
YZ120341	1B13	6	0210 - 8
YZ120341	1B16	11	0210 - 12
YZ120342	1B12	15	0210 - 7
YZ120342	1B16	11	0210 - 12
YZ120343	1B25	1	0210 - 23
YZ120360	1B8	1	0210 - 3
YZ120407	1B18	1	0210 - 15
YZ120408	1B18	9	0210 - 15
YZ120409	1B7	1	0210 - 2
YZ120410	1B8	1	0210 - 3
YZ120411	1B7	1	0210 - 2
YZ120412	1B8	1	0210 - 3
YZ120417	1B20	11	0210 - 17
YZ120418	1B20	24	0210 - 17
YZ120441	1B12	15	0210 - 7
YZ120455	1B15	1	0210 - 11
YZ120830	1B25	1	0210 - 23
YZ120942	1B25	2	0210 - 23
YZ18308	1B5	1	0201 - 2
YZ18343	1B5	1	0201 - 2
YZ18344	1B5	1	0201 - 2
YZ18345	1B5	1	0201 - 2
YZ18790	1B5	1	0201 - 2
YZ18791	1B5	1	0201 - 2
Z29864	1D2	9	0350 - 13
Z29864	1D4	14	0350 - 15
Z32264	2H24	23	1921 - 5
Z59685	2H2	19	1830 - 3
30251	1B23	15	0210 - 21

PART NO.	GRID	KEY	PAGE

PART NO.	GRID	KEY	PAGE