RUTHZIL TRATOR COMERCIAL DE PEÇAS LTDA 11 97083-6812 ROLANDO

CDS

PARTS CATALOG

840D 844D

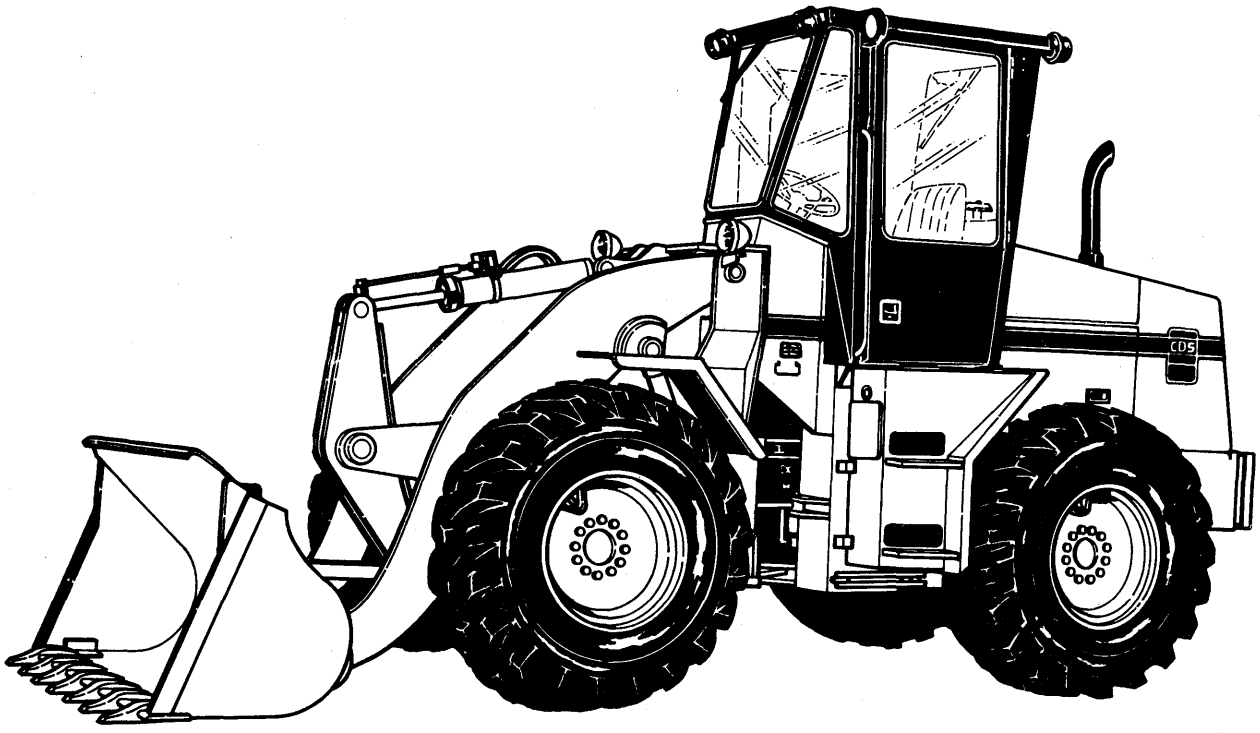

MODEL 840D WHEEL LOADER
MODEL 844D FORKLIFT

PART NO. 6800253

FORWARD

THIS PARTS CATALOGUE CONTAINS ALL SERVICE PARTS FOR THE CONTINENTAL DIVERSIFIED SALES, INC. MODEL 840D WHEEL LOADER AND 844D FORKLIFT.

THIS PARTS CATALOGUE APPLIES TO VEHICLE SERIAL NUMBER 1 AND BEYOND.

WARNING: This product contains parts dimensioned in the Metric Systems as well as in the U.S. Inch System. It is important to note that during any repair or maintenance procedures, replacement fasteners must have the same measurements and strength as those removed, whether metric or U.S. Inch System. Mismatched or incorrect fasteners can result in damage or malfunction, or possible personal injury. Therefore, fasteners removed from the machine should be saved for reuse in the same locations. Where the fasteners are not satisfactory for reuse, care should be taken to select a replacement that matches the original. For information and assistance, see your authorized dealer.

SERIAL NO. LOCATION

SERIAL NUMBER LOCATIONS

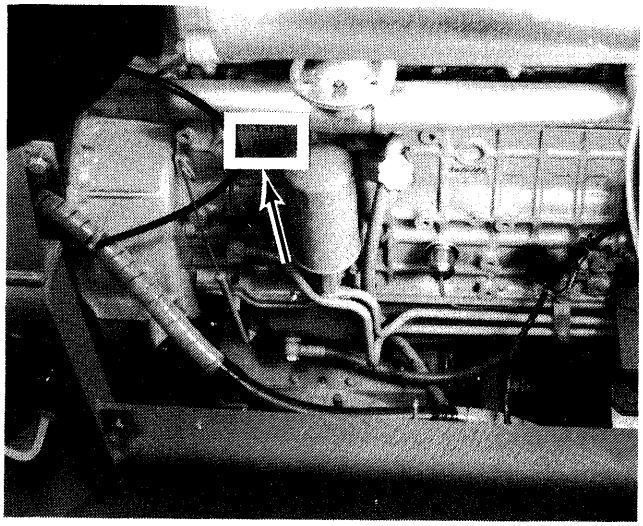

ENGINE SERIAL NUMBER

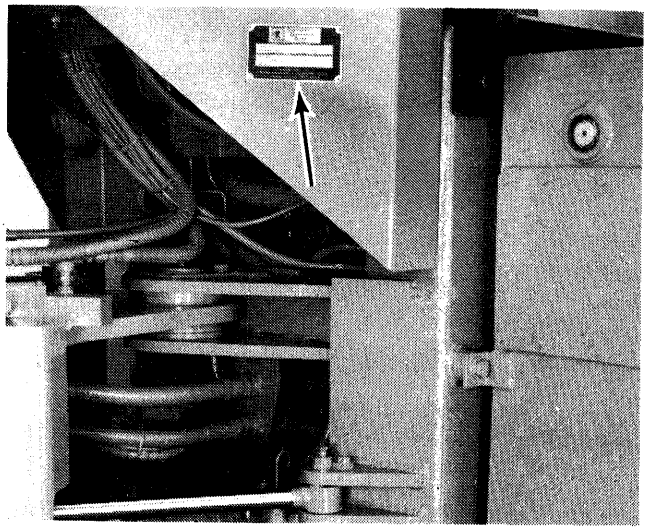

PRODUCT IDENTIFICATION NUMBER

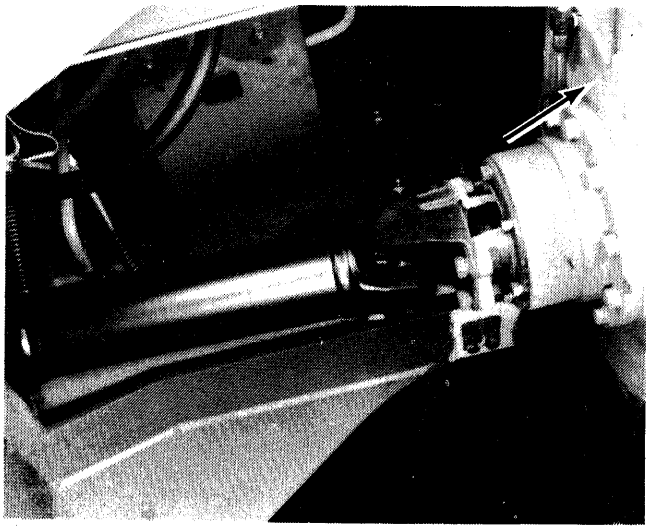

AXLE SERIAL NUMBER

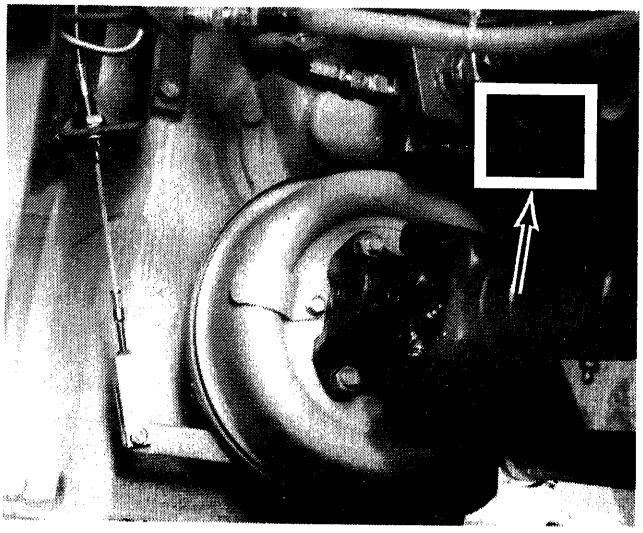

TRANSMISSION SERIAL NUMBER

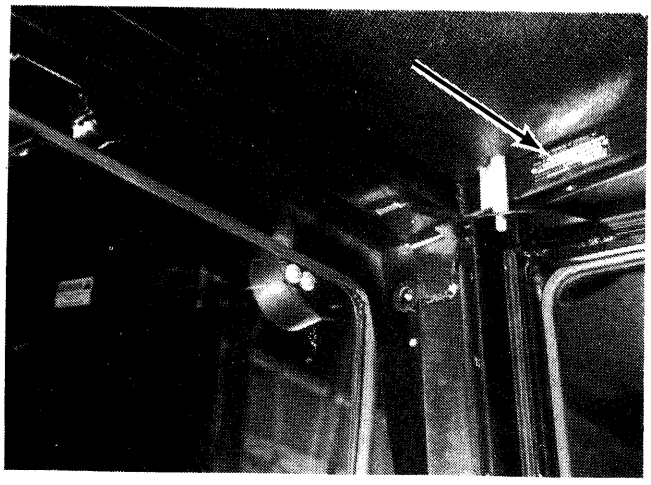

CAB SERIAL NUMBER
SIMILAR FOR ROPS CANOPY

LOCATION OF SERIAL NUMBERS

When you order parts or need information from your CDS dealer, you must give the model and serial number of your machine or equipment.

Basic machine - the Product Identification Number (PIN) is stamped on pin plate, left side front of rear module

Engine - on the left side of the engine

Transmission - above to the right of transmission brake drum

Axles - above to the right input shaft

ROPS cab - upper rear left surface of cab roof edge

ROPS canopy - on the upper rear surface of the canopy

Use this chart to keep a record of the machine model, serial numbers or part numbers.

	Make and Model	Serial Number
Basic machine	CDS	(PIN)
Engine	MITSUBISHI S6E2 MITSUBISHI S6E2-T (TURBO)	
Transmission and Torque Converter	OKAMURA Y50881B	
Front axle	DAIKIN	
Rear axle	DAIKIN	
ROPS cab	CUSTOM PRODUCTS	
ROPS canopy	CDS	

NUMERICAL INDEX

The numerical index appears at the rear of this publication. It indicates grid location, reference number and page number a part appears.

ILLUSTRATIONS

All illustrations are located on the left hand page with the text on the right. Except for some common hardware, all parts are identified with an item number which corresponds to the "item" column on the text page. This is followed by the part number, quantity and description.

ORDERING PARTS

Be sure to refer to both the text and the illustration to assure ordering the correct part. Also indicate the following information:

1. Part Numbers
2. Part Names
3. Quantity
4. Vehicle Serial Number

If an ordered part is obsolete a new substitutable part will be supplied.

RECOMMENDED DEALER STOCK

A recommended dealer stock listing appears at the end of this publication.

ABBREVIATIONS AND SYMBOLS ARE USED IN THIS PARTS CATALOGUE IN THE SENSE INDICATED.

ASSY	:	ASSEMBLY
AR	:	AS REQUIRED
SEL	:	SELECT
L.H.	:	LEFT HAND
R.H.	:	RIGHT HAND
U.S.	:	OVERSIZE
O.S.	:	UNDERSIZE
N.S.S.	:	NOT SERVICED SEPARATELY
PLTD	:	PLATED HARDWARE
GRD	:	HARDWARE GRADE RATING
M	:	METRIC
OPT.	:	OPTIONAL
QTY.	:	QUANTITY
STD.	:	STANDARD
t	:	THICKNESS
w/	:	WITH
w/o	:	WITHOUT
incl.	:	INCLUDES
S/N	:	SERIAL NO.

PARTS CATALOG INDEX

Section 01	Engine	1
Section 02	Loader - General Arrangement	102
Section 03	Electrical	144
Section 04	Hydraulics	156
Section 05	Attachments	198
section 06	Options	228
Section 07	Drive Train	256
Section 08	Miscellaneous Information	300

NOTES

SECTION 01 -ENGINE INDEX

Air Filter Assembly	55
Alternator - General Arrangement	97
Alternator	99
Cam Shaft	19
Connecting Rod	35
Cooling System	71
Crankcase Assembly	21
Crankcase Assembly - Turbo	23
Crank Case	25
Crank Shaft	37
Cylinder Head	11
Cylinder Head Turbo	13
Engine - General Arrangement	5
Engine w/o Turbo	7
Engine w/Turbo	9
Exhause System	45
Exhause System - Turbo	45
Flywheel Housing	31
Flywheel	39
Fuel Feed Pump	77
Fuel System	87
Fuel Nozzel	89
Fuel Filter Assembly	91
Governor	85
Injection Pump	81
Inlet and Exhause System (S/N 63-)	47
Inlet and Exhause System (S/N 1-62)	49
Inlet and Exhause System - Turbo (S/N 63-)	51
Inlet and Exhause System - Turbo (S/N 1-62)	53
Inlet System	43
Inlet System - Turbo	43
Injection Pump - General Arrangement	75
Main Bearing	27
Oil Cooler and Oil Pipe	65
Oil Filler and Oil Level Gauge	69
Oil Filter	67
Oil Pan	33
Oil Pipe and Breather - Turbo	63
Oil Pipe	61
Oil Pump assembly	57
Oil Pump and Strainer - Turbo	59
Oil Strainer Assembly	57
Piston	35
Radiator and Cooler Piping	73
Rocker Cover	17
Starter - General Arrangement	93
Starter	95
Timing Gear Cover	29
Timing Gear Cover - Turbo	29
Timing Gear	41
Turbo Charger	101
Valve Mechanism	15
Water Pump	71

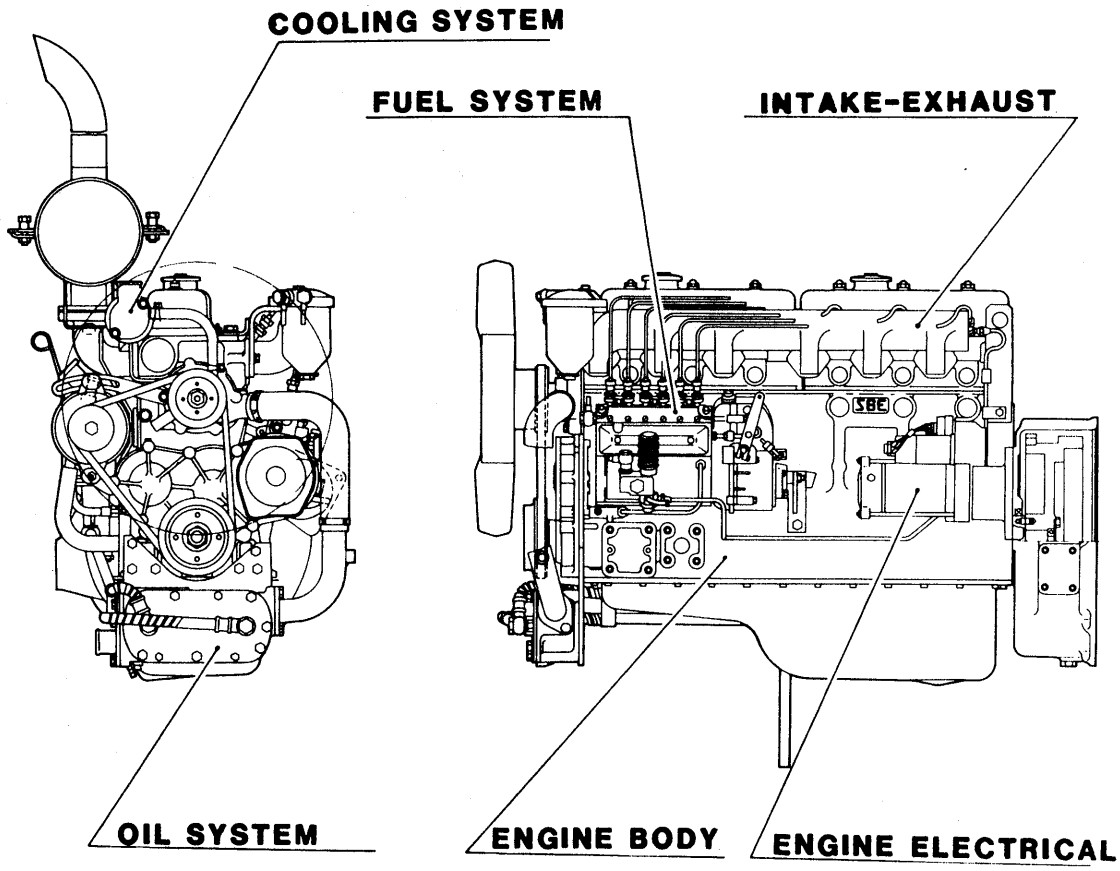
COOLING SYSTEM
FUEL SYSTEM
INTAKE-EXHAUST
OIL SYSTEM
ENGINE BODY
ENGINE ELECTRICAL

840D WHEEL LOADER

ENGINE

ENGINE W/TURBO

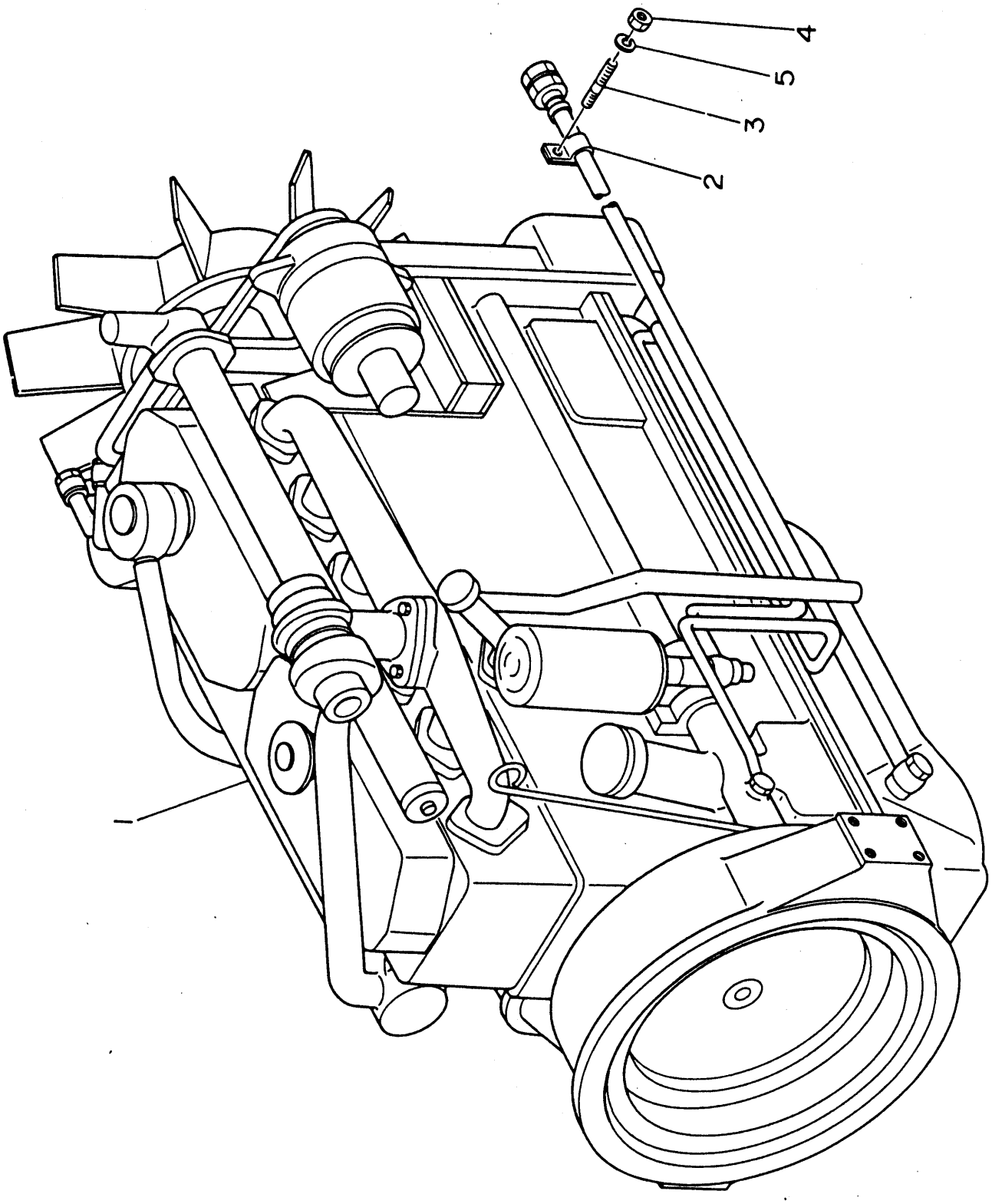

ENGINE W/TURBO

ITEM	NUMBER	QTY	DESCRIPTION
	6810408	1	ENGINE, w/turbo (incl. 1-5) (S/N 1-62)
1	6811151	1	ENGINE, w/turbo (S/N 1-18)
	6811152	1	ENGINE, w/turbo (S/N 19-62)
2	6811132	1	CLIP
3	6811123	1	BOLT, stud
4	950209	1	NUT, hex M6-1, PLTD.
5	950218	1	WASHER, lock M6, PLTD.

ENGINE

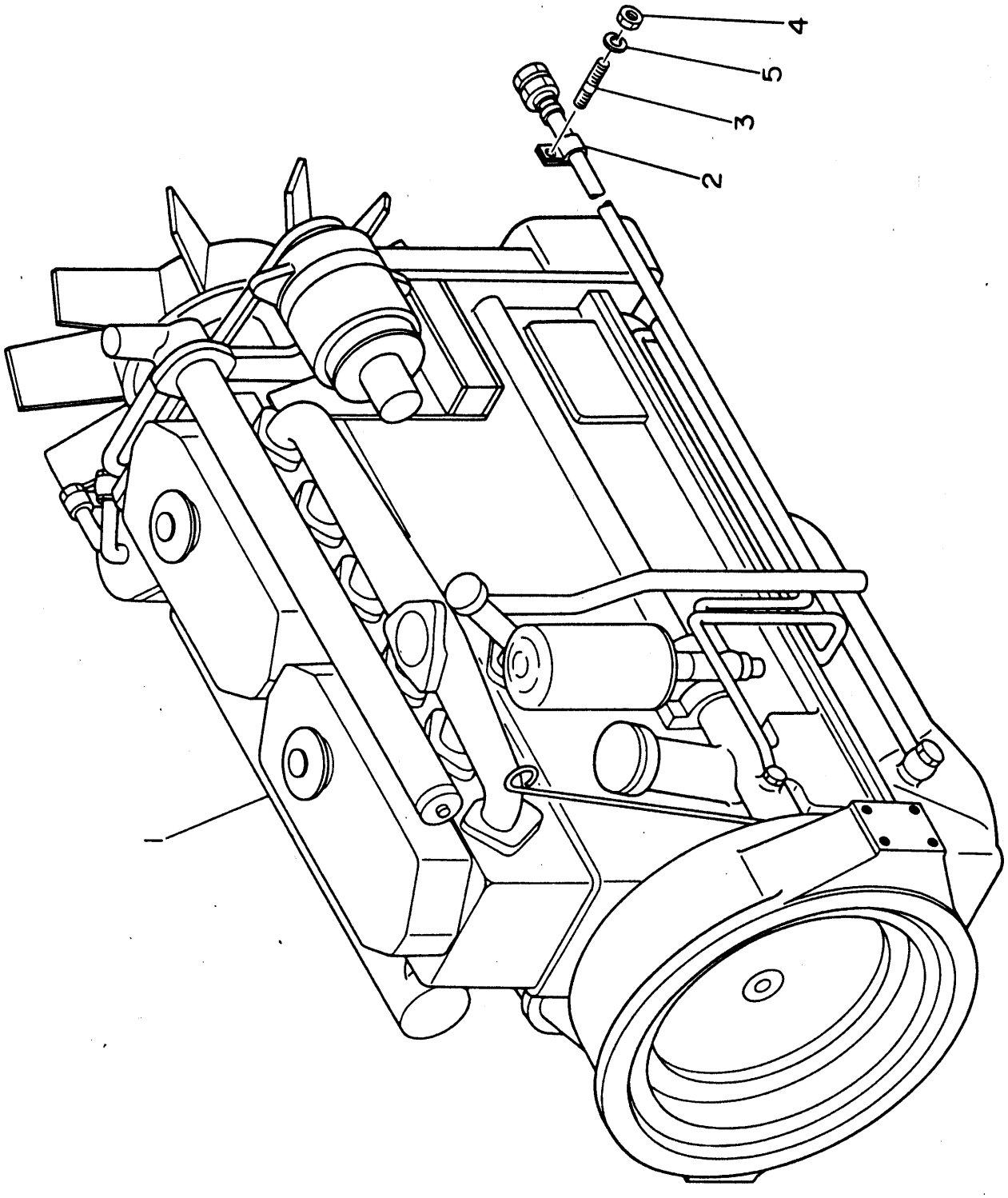

ENGINE

ITEM	NUMBER	QTY	DESCRIPTION
	6810409	1	ENGINE, w/o turbo (incl. 1-5)
1	6811154	1	ENGINE (S/N 1-18)
	6811155	1	ENGINE (S/N 19-62)
	681160	1	ENGINE (S/N 63-)
2	6811132	1	CLIP
3	6811156	1	BOLT, stud
4	950209	1	NUT, hex M6-1, PLTD.
5	950218	1	WASHER, lock M6, PLTD.

CYLINDER HEAD

ITEM	NUMBER	QTY	DESCRIPTION
1A	4530919	1	CYLINDER HEAD ASSY., front (incl. 2, 3, 8-11, 14-20)
1B	6800106	1	CYLINDER HEAD ASSY., rear (incl. 2, 3, 7, 9-11, 14 & 21)
2	4530142	24	CAP, sealing
3	4530159	12	GUIDE, valve
7	4531027	1	PLUG, expansion
8	N.S.S.	2	HEAD, cylinder
9	4920092	6	INSERT, valve seat, inlet
10	4920093	6	INSERT, valve seat, exhaust
11	4530885	6	JET, combustion
12	4530884	26	BOLT, cylinder head
13	4530917	2	GASKET, cylinder head
14	4921140	1	GASKET
15	6810189	1	PLATE
16	950219	2	WASHER, lock M6, PLTD.
17	950018	1	BOLT, hex M8-1.25 x 20mm, PLTD.
18	950210	2	NUT, hex M8-1.25, PLTD.
19	950219	1	WASHER, lock M6, PLTD.
20	6900122	1	STUD
21	6811165	1	PLUG

ENGINE

CYLINDER HEAD

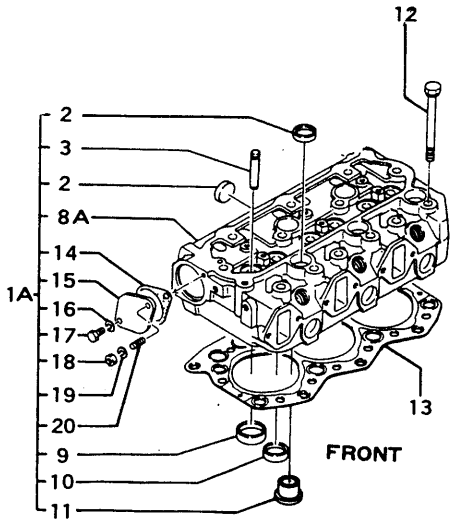

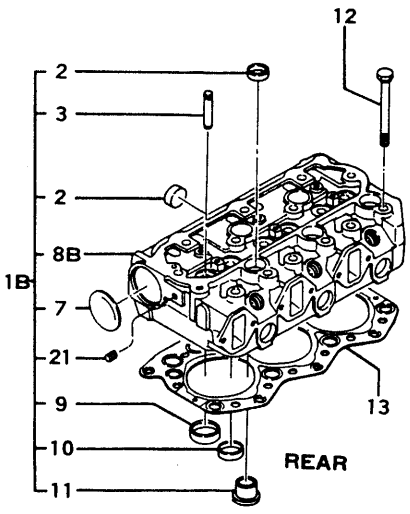

CYLINDER HEAD (TURBO)

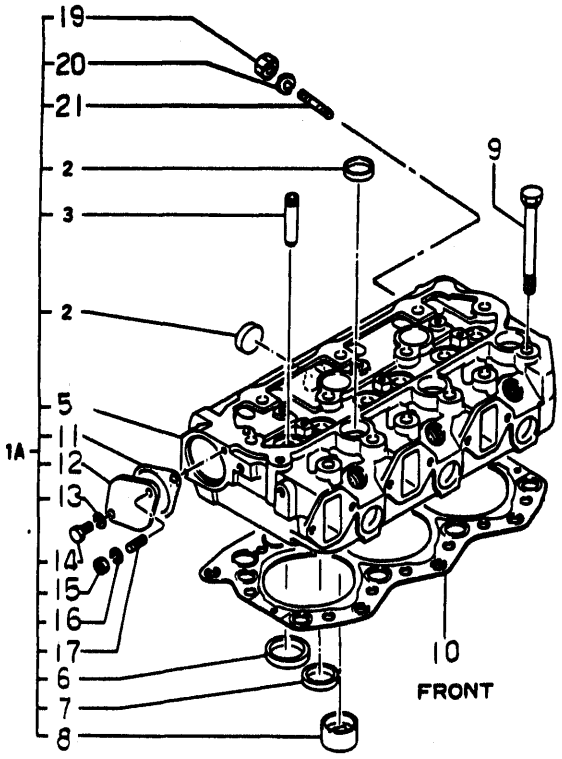

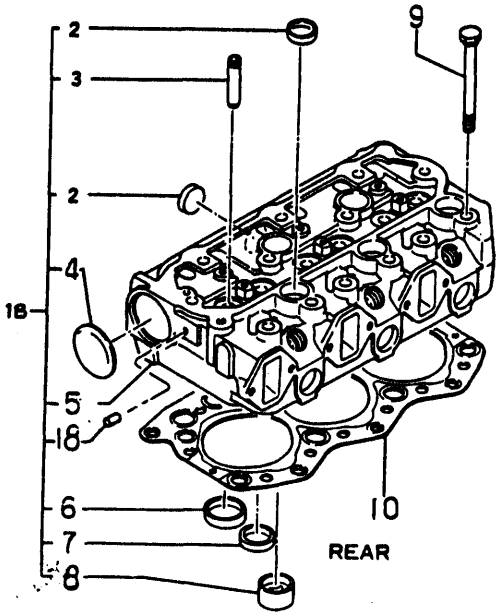

CYLINDER HEAD (TURBO)

ITEM	NUMBER	QTY	DESCRIPTION
1A	6810185	1	CYLINDER HEAD ASSY., front (incl. 2, 3, 5-8, 10-12, 14-17, 19-21)
1B	6810186	1	CYLINDER HEAD ASSY., rear (incl. 2-8, 10, 18)
2	4530142	24	CAP, sealing
3	4530159	12	GUIDE, valve
4	4531027	1	PLUG, expansion
5	N.S.S.	2	HEAD, cylinder
6	4920092	2	INSERT, valve seat, inlet
7	4920093	6	INSERT, valve seat, exhaust
8	6810187	6	JET, combustion
9	4530884	26	BOLT, cylinder head
10	6810188	2	GASKET, cylinder head
11	4921140	1	GASKET
12	6810189	1	PLATE
13	950219	2	WASHER, lock M8, PLTD.
14	950018	1	BOLT, hex M8-1.25 x 20mm, PLTD.
15	950210	1	NUT, hex M8-1.25, PLTD.
16	950219	1	WASHER, lock M6, PLTD.
17	6900122	1	STUD
18	N.S.S.	1	PLUG
19	950210	1	NUT, hex M8-1.25, PLTD.
20	950219	1	WASHER, lock M6, PLTD.
21	6900123	1	STUD

VALVE MECHANISM

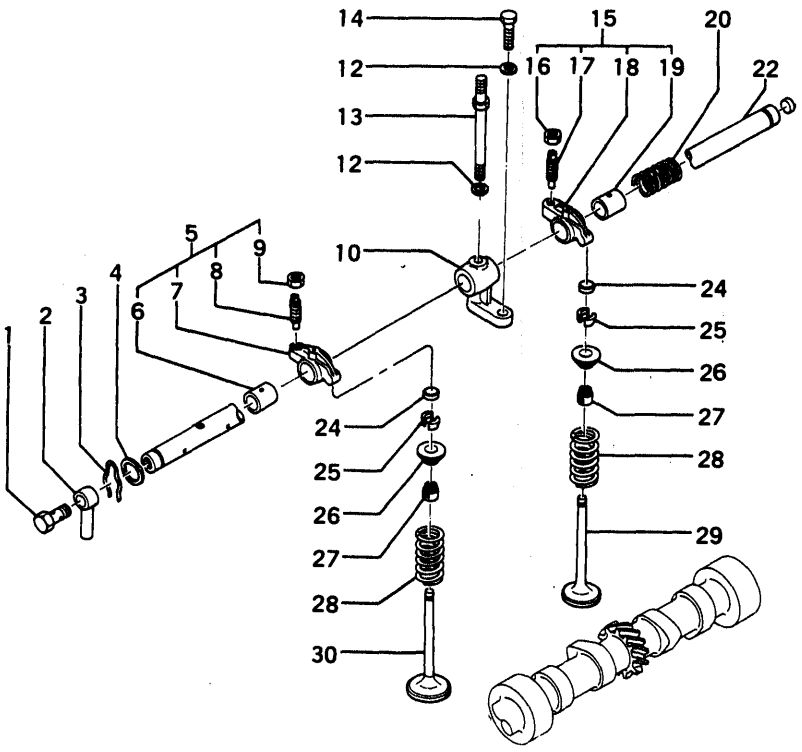

VALVE MECHANISM

ITEM	NUMBER	QTY	DESCRIPTION
1	4530515	2	BOLT, eye
2	4530437	2	PIPE, oil
3	4530151	4	RING, snap
4	4921110	4	WASHER
5	4530436	6	ROCKER ASSY., inlet (incl. 6-9)
6	4530199	6	BUSHING
7	N.S.S.	6	ROCKER, inlet
8	4530109	6	SCREW, adjusting
9	4920382	6	NUT, jam
10	4530253	6	BRACKET, rocker shaft
12	950219	12	WASHER, lock M6, PLTD.
13	4530396	6	BOLT, rocker
14	950018	6	BOLT, hex M8-1.25 x 20mm, PLTD.
15	6810190	6	ROCKER ASSY., exhaust (incl. 16-19)
16	4920382	6	NUT, jam
17	4530109	6	SCREW, adjusting
18	N.S.S.	6	ROCKER, exhaust
19	4530199	6	BUSHING
20	4921112	4	SPRING, rocker shaft
22	6810191	2	SHAFT, rocker
24	4530198	12	CAP
25	4530197	24	COTTER, valve
26	4530162	12	RETAINER, upper
27	4530164	12	SEAL, valve outer
28	4530160	12	SPRING, valve outer
29	4920108	6	VALVE, exhaust
30	4530725	6	VALVE, inlet

ROCKER COVER

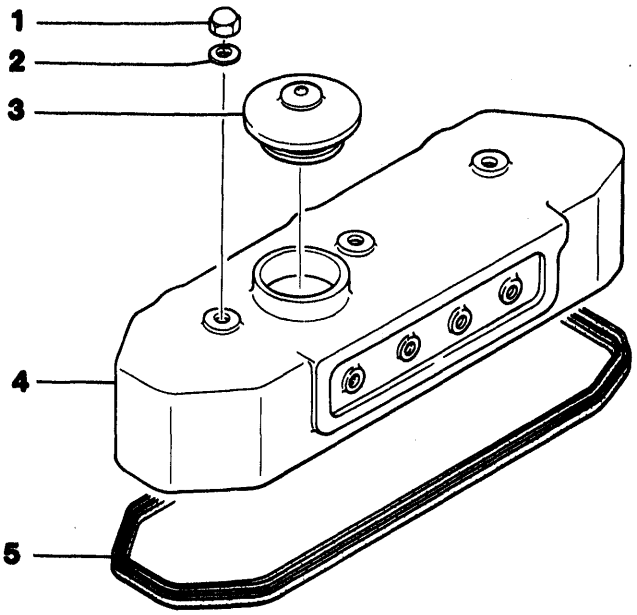

ROCKER COVER

ITEM	NUMBER	QTY	DESCRIPTION
1	6800112	6	NUT, cap
2	4530103	6	GASKET
3	4530100	2	CAP, oil filler
4	6810193	2	COVER, rocker case
5	4530921	2	GASKET, rocker cover

CAMSHAFT

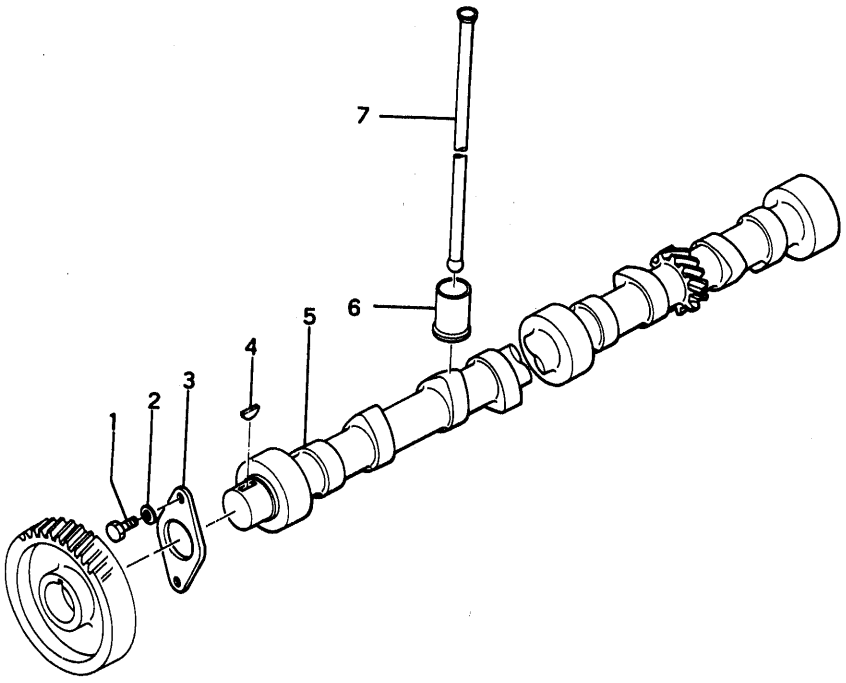

CAM SHAFT

ITEM	NUMBER	QTY	DESCRIPTION
1	950019	2	BOLT, hex
2	950210	2	WASHER, lock
3	6800157	1	PLATE, thrust
4	4530507	1	KEY, woodruff
5	4530923	1	CAMSHAFT
6	4530165	12	TAPPET
7	4530255	12	PUSHROD

ENGINE

CRANKCASE ASSEMBLY

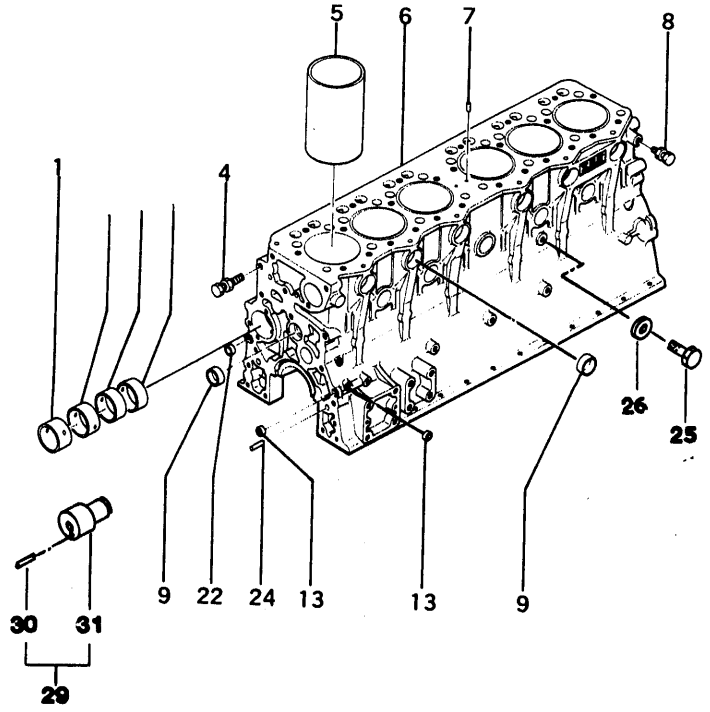

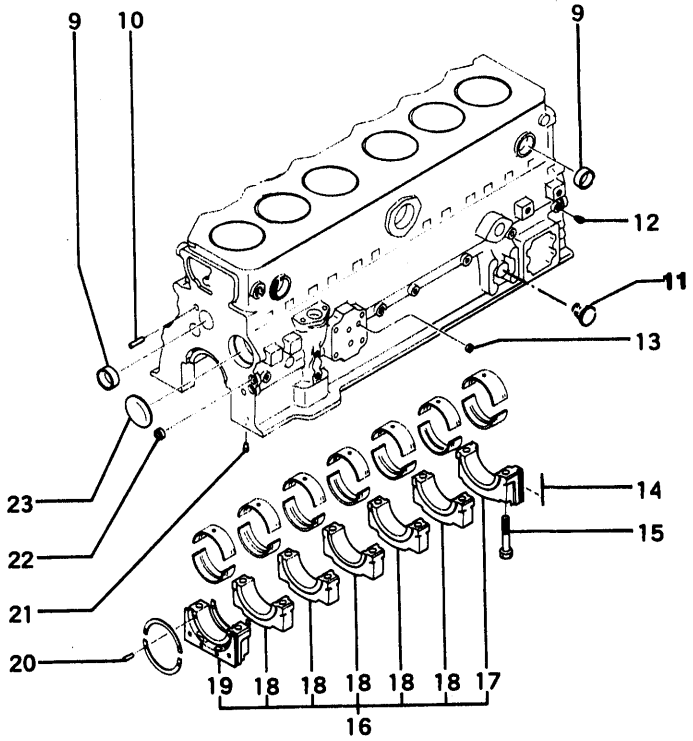

CRANKCASE ASSEMBLY

ITEM	NUMBER	QTY	DESCRIPTION
	6810332	1	CRANKCASE ASSY (incl 1-22, 24-31)
1	4530167	1	BUSHING, camshaft No. 1
2	4530153	2	BUSHING, camshaft No. 2
3	4530154	1	BUSHING, camshaft No. 3
4	4530891	1	HANGER
5	4530890	6	SLEEVE, cylinder
6	N.S.S.	1	CRANKCASE
7	4531021	2	PIN, dowel
8	4530862	1	HANGER
9	4530143	15	CAP, SEALING
10	4530505	2	PIN, dowel
11	6810194	1	PLUG, taper
12	4530524	5	PLUG, taper
13	4530140	5	CAP, sealing
14	4530262	4	SEAL, side
15	4530261	14	BOLT, bearing cap
16	6810333	1	BEARING CAP SET (incl. 17-19)
17	N.S.S.	1	CAP, bearing No. 1
18	N.S.S.	5	CAP, bearing No. 2, 3, 4
19	N.S.S.	1	CAP, bearing No. 5
20	950649	6	PIN, spring
21	4530171	3	PLUG
22	4530141	3	CAP, sealing
23	4530526	1	PLUG, expansion
24	6810197	2	PIN, dowel
25	950034	1	BOLT, hex M10-1.5 x 16mm, PLTD.
26	4530147	1	WASHER, sealing
29	4530866	1	IDLER, shaft assy. (incl. 30 & 31)
30	950649	1	PIN, spring
31	N.S.S.	1	SHAFT, idler

CRANKCASE ASSEMBLY(TURBO)

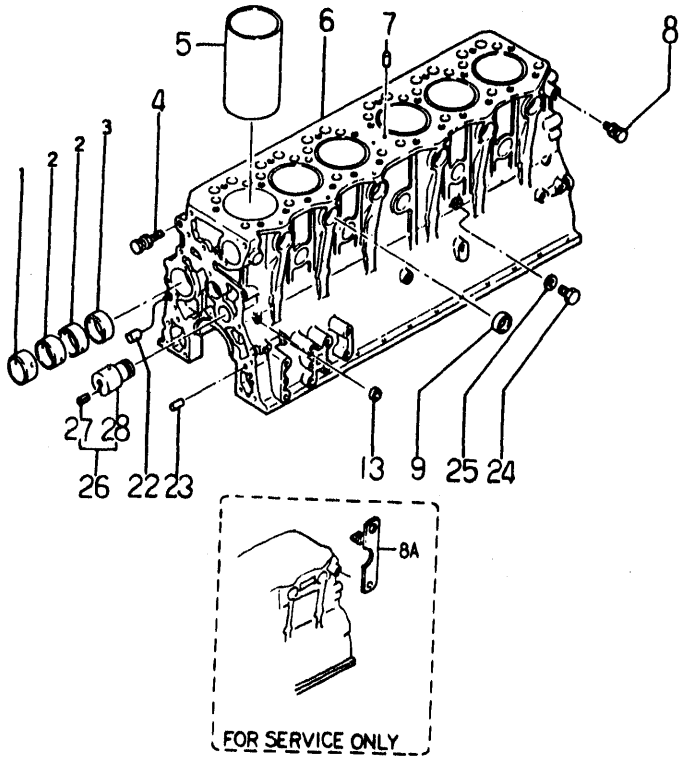

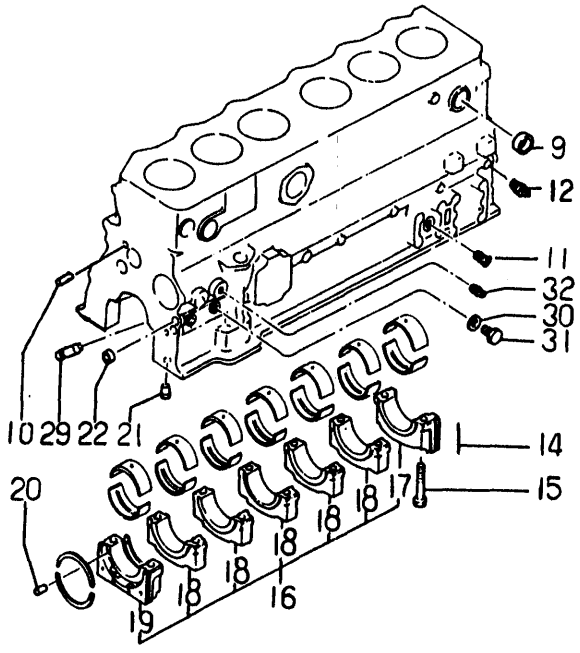

CRANKCASE ASSEMBLY (TURBO)

ITEM	NUMBER	QTY	DESCRIPTION
	6810233	1	CRANK CASE ASSY., (incl. 1-32)
1	4530167	1	BUSHING, camshaft No. 1
2	4530153	2	BUSHING, camshaft No. 2
3	4530154	1	BUSHING, camshaft No. 3
4	4530891	1	HANGER
5	4530890	6	SLEEVE, cylinder
6	N.S.S.	6	CRANKCASE
7	4531021	2	PIN, dowel
8	4530862	1	HANGER
8A	6810195	1	EYE, lifting (for service only)
9	4530143	15	CAP, sealing
10	4530505	2	PIN, dowel
11	6810194	1	PLUG, taper
12	4530524	4	PLUG, taper
13	4530140	5	CAP, sealing
14	4530262	4	SEAL, side
15	4530261	14	BOLT, bearing cap
16	6810196	1	BEARING CAP, set (incl. 17-19)
17	N.S.S.	1	CAP, bearing No. 1
18	N.S.S.	5	CAP, bearing No. 2, 3, 4
19	N.S.S.	1	CAP, bearing No. 5
20	950649	6	PIN, spring
21	4530171	3	PLUG
22	4530141	3	CAP, sealing
23	6810197	2	PIN, dowel
24	950034	1	BOLT, hex M10-1.5 x 16mm, PLTD.
25	4530147	1	WASHER, sealing
26	4530866	1	IDLER SHAFT, assy. (incl. 27 & 28)
27	950649	1	PIN, sealing
28	N.S.S.	1	SHAFT, idler
29	6810198	6	VALVE, check
30	4920042	1	GASKET
31	4920397	1	PLUG, drain
32	6810199	1	PLUG, taper

840D WHEEL LOADER

ENGINE

CRANKCASE

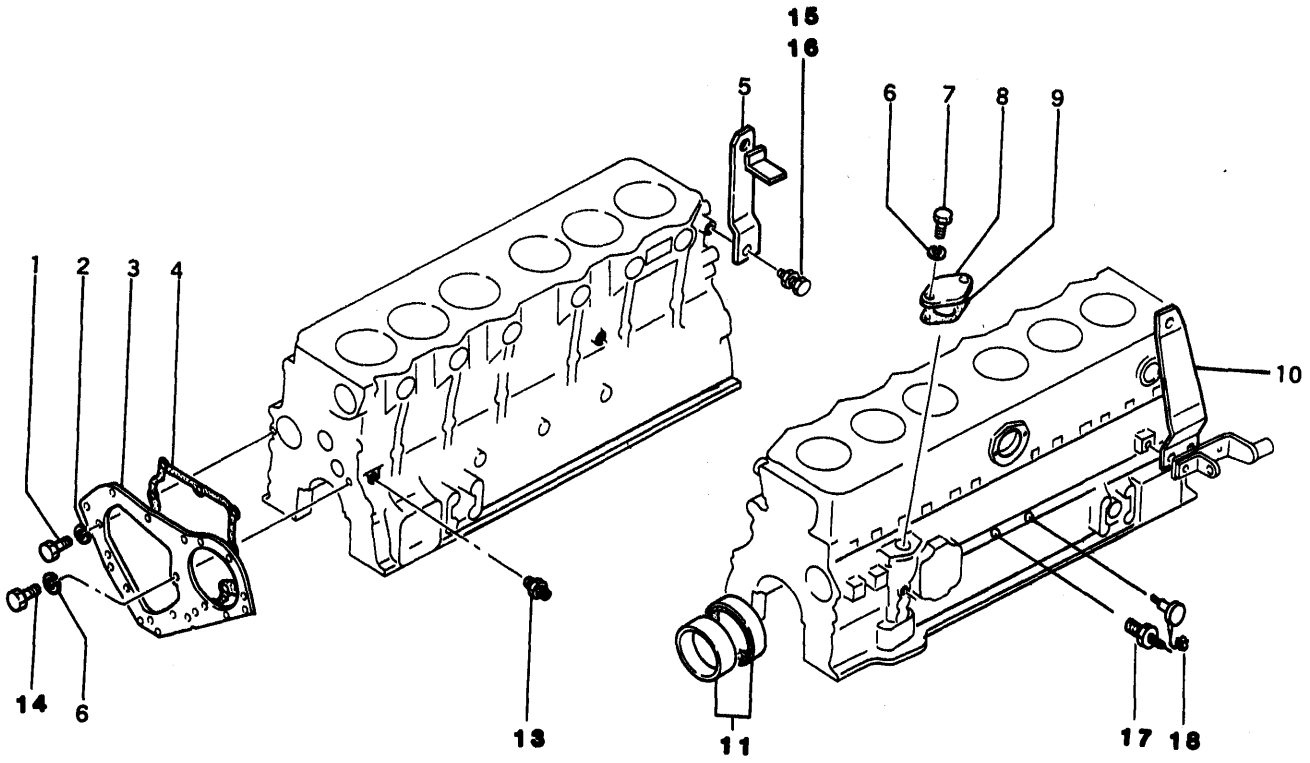

ITEM	NUMBER	QTY	DESCRIPTION
1	950035	1	BOLT, hex M10-1.5 x 20mm, PLTD.
2	950220	1	WASHER, lock M10, PLTD.
3	4530263	1	PLATE, front
4	4530264	1	GASKET, front plate
5	6810200	1	EYE, lifting
6	950219	3	WASHER, lock M8, PLTD.
7	950018	2	BOLT, hex M8-1.25 x 20mm, PLTD.
8	4530861	1	COVER
9	4530868	1	GASKET
10	6810201	1	EYE, lifting
11	4921117	1	OIL SEAL, assy.
13	4530527	1	CONNECTOR
14	950017	1	BOLT, hex M8-1.25 x 16mm, PLTD.
15	4920384	1	WASHER, lock M12, PLTD.
16	950050	1	BOLT, hex M12-1.75 x 20mm, PLTD.
17	4920128	1	SWITCH, oil pressure
18	4530851	1	SWITCH, oil pressure

MAIN BEARING

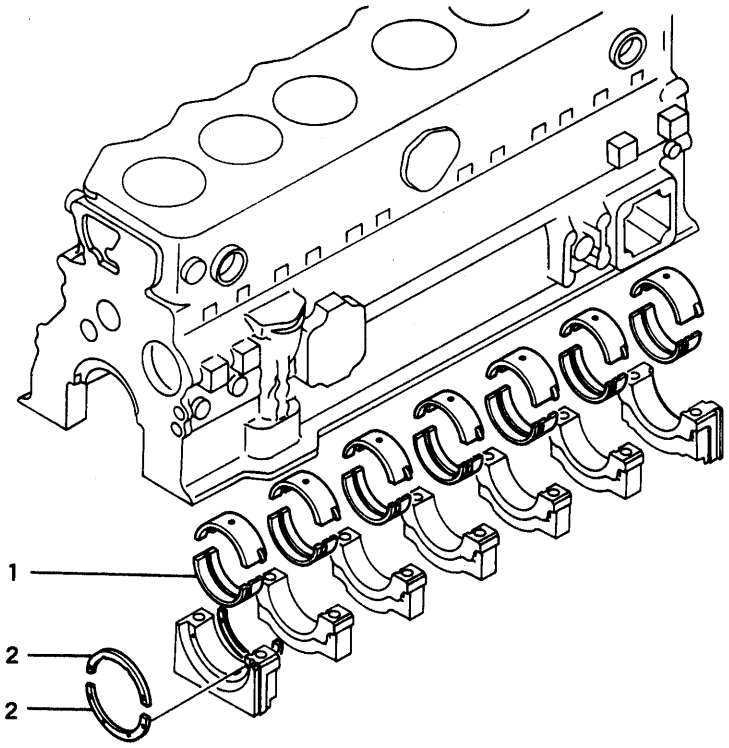

MAIN BEARING

ITEM	NUMBER	QTY	DESCRIPTION
1	4530268	14	BEARING, main, std.
2	4530271	3	PLATE, thrust, std.

ENGINE

TIMING GEAR COVER

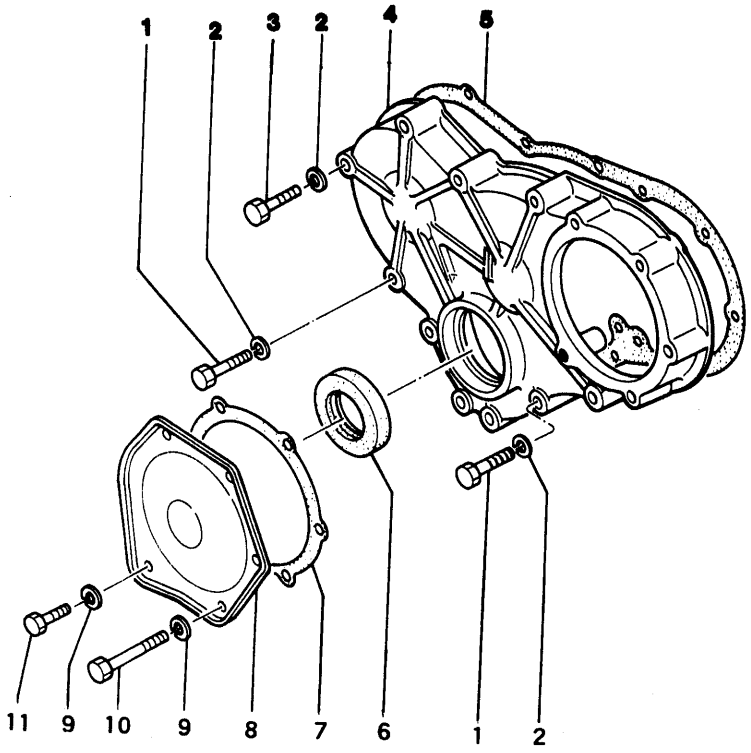

TIMING GEAR COVER (TURBO)

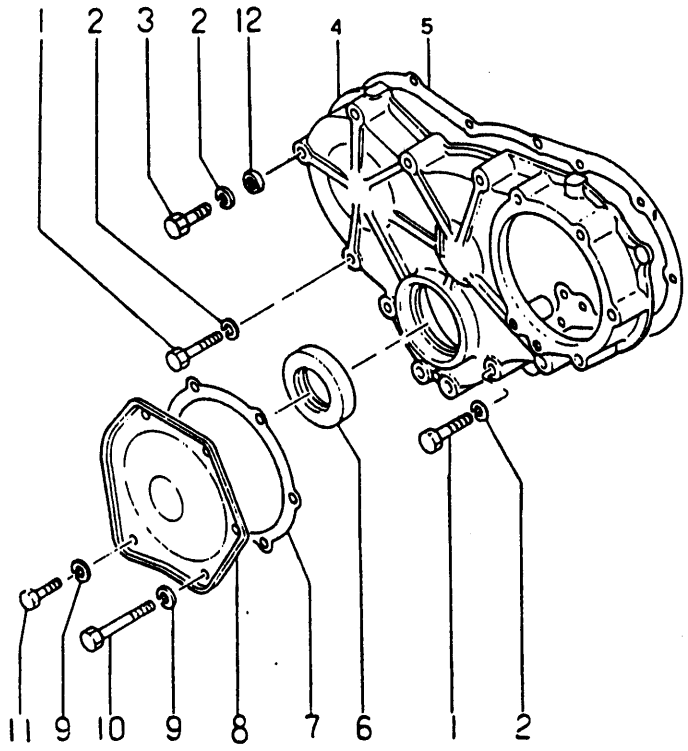

TIMING GEAR COVER

ITEM	NUMBER	QTY	DESCRIPTION
1	4530537	9	BOLT, hex
2	950220	10	WASHER, lock M10, PLTD.
3	950039	1	BOLT, hex M10-1.5 x 45mm, PLTD.
4	4531063	1	CASE, timing gear
5	4530273	1	GASKET, gear case
6	4921123	1	SEAL, oil
7	4530863	1	GASKET
8	4530864	1	COVER
9	950228	5	WASHER, lock M8, PLTD.
10	4920373	4	BOLT, hex
11	950019	1	BOLT, hex M8-1.25 x 25mm, PLTD.

TIMING GEAR COVER (TURBO)

ITEM	NUMBER	QTY	DESCRIPTION
1	4530587	9	BOLT, hex
2	950220	10	WASHER, lock M10, PLTD.
3	950039	1	BOLT, hex M10-1.5 x 45mm, PLTD.
4	4531063	1	CASE, timing gear
5	4530273	1	GASKET, gear case
6	4921123	1	SEAL, oil
7	4530863	1	GASKET
8	4530864	1	COVER
9	950219	5	WASHER, lock M8, PLTD.
10	4920373	4	BOLT, hex
11	950019	1	BOLT, hex M8-1.25, PLTD.
12	950229	1	WASHER, flat M10, PLTD.

FLYWHEEL HOUSING

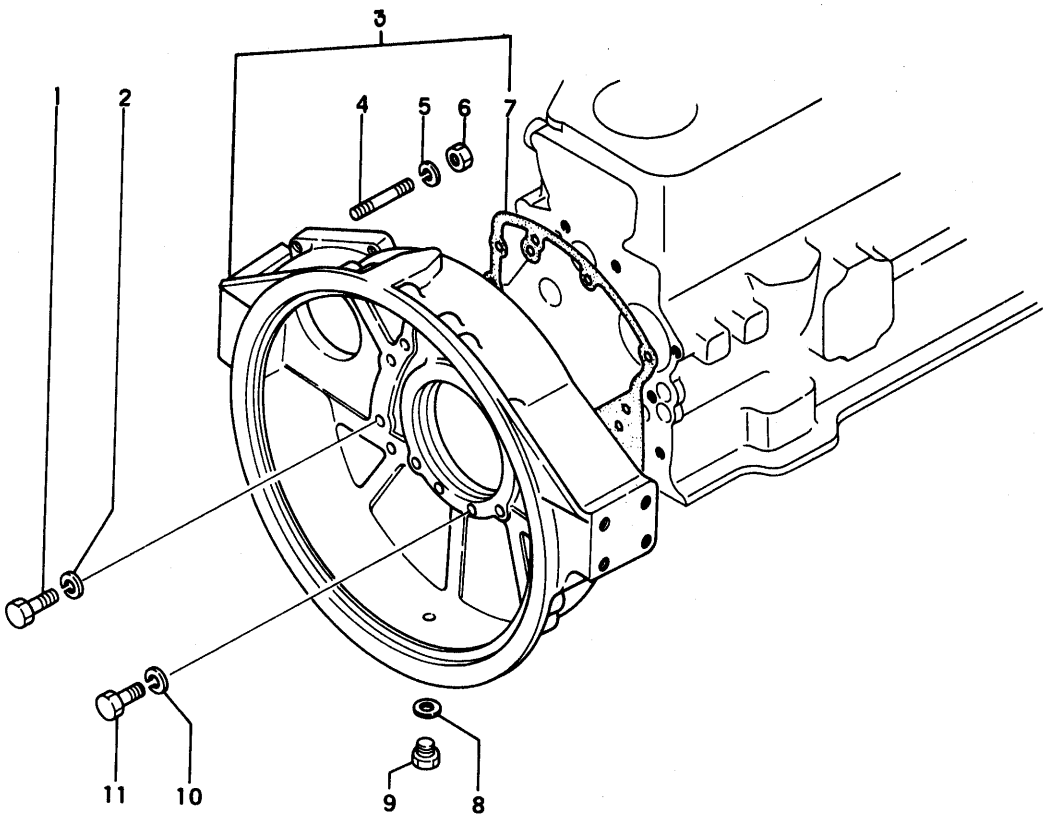

FLYWHEEL HOUSING

ITEM	NUMBER	QTY	DESCRIPTION
1	950036	11	BOLT, hex M10-1.5 x 25mm, PLTD.
2	950220	11	WASHER, lock M10, PLTD.
3	6810202	1	HOUSING, flywheel
	6810170	1	HOUSING, flywheel (turbo)
4	950052	3	STUD
5	4920385	3	WASHER, lock
6	4530539	3	NUT, hex
7	4530267	1	GASKET
8	4530123	1	WASHER, seal
9	4530134	1	PLUG, screw
10	950219	4	WASHER, lock M8, PLTD.
11	950018	4	BOLT, hex M8-1.25 x 20mm, PLTD.

OIL PAN

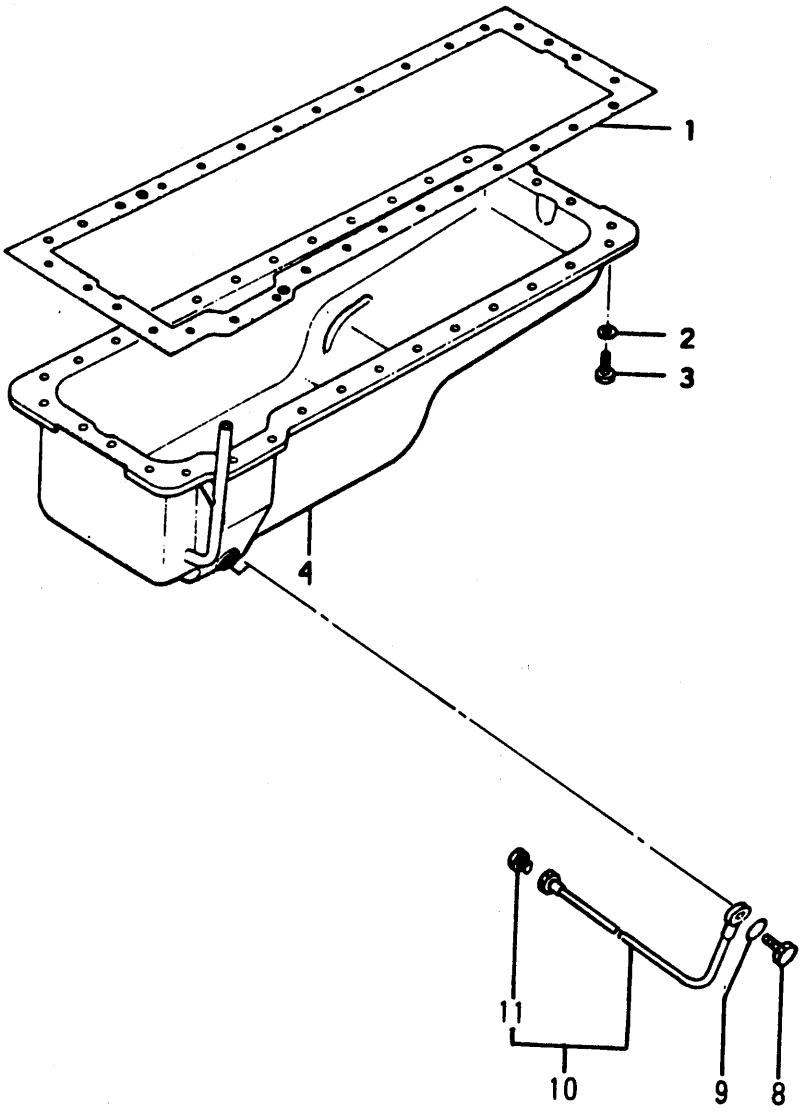

OIL PAN

ITEM	NUMBER	QTY	DESCRIPTION
1	6800175	1	GASKET, oil pan
2	950219	32	WASHER, lock M8, PLTD.
3	950018	27	BOLT, hex M8-1.25 x 20mm, PLTD.
	950019	1	BOLT, hex M8-1.25 x 25mm, PLTD.
4	6800121	1	OIL PAN, assy.
8	4530426	1	BOLT, joint
9	4530180	2	WASHER, seal
10	6810203	1	PIPE, oil
11	6800175	1	PLUG

PISTON

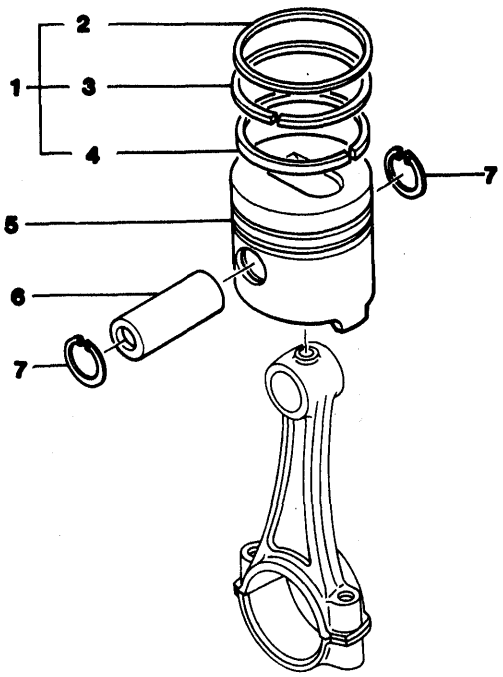

CONNECTING ROD

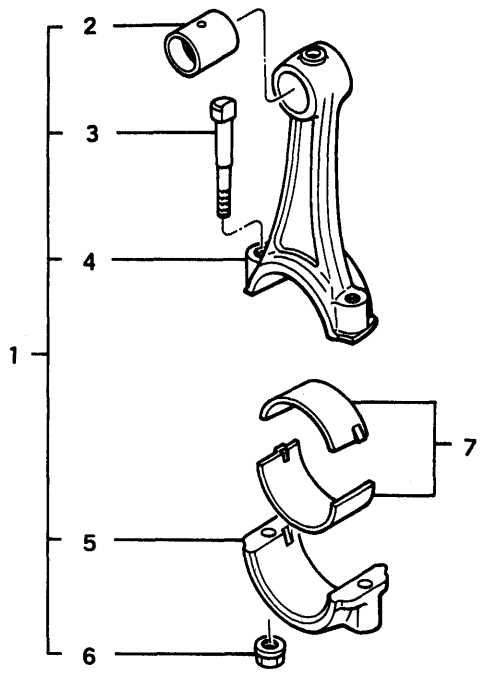

PISTON

ITEM	NUMBER	QTY	DESCRIPTION
1	6800122	6	PISTON RING SET, std. (incl. 2-4)
2	N.S.S.	6	RING, compression No. 1
3	N.S.S.	6	RING, compression No. 2
4	N.S.S.	6	RING, oil
5	6810171	6	PISTON, std.
	6800115	6	PISTON, std. (turbo)
6	4530214	6	PIN, piston
	6810172	6	PIN, piston (turbo)
7	4530511	12	RING, snap
	6810173	12	RING, snap (turbo)

CONNECTING ROD

ITEM	NUMBER	QTY	DESCRIPTION
1	4530292	6	CONNECTING ROD ASSY. (incl. 2-6)
	6800116	6	CONNECTING ROD ASSY. (turbo) (incl. 2-6)
2	4530215	6	BUSHING
	6800119	6	BUSHING (turbo)
3	4530104	12	BOLT
4	N.S.S.	6	ROD, connecting
5	N.S.S.	6	CAP, connecting rod
6	4530293	12	NUT
7	4530294	12	BEARING, connecting rod, std.

CRANKSHAFT

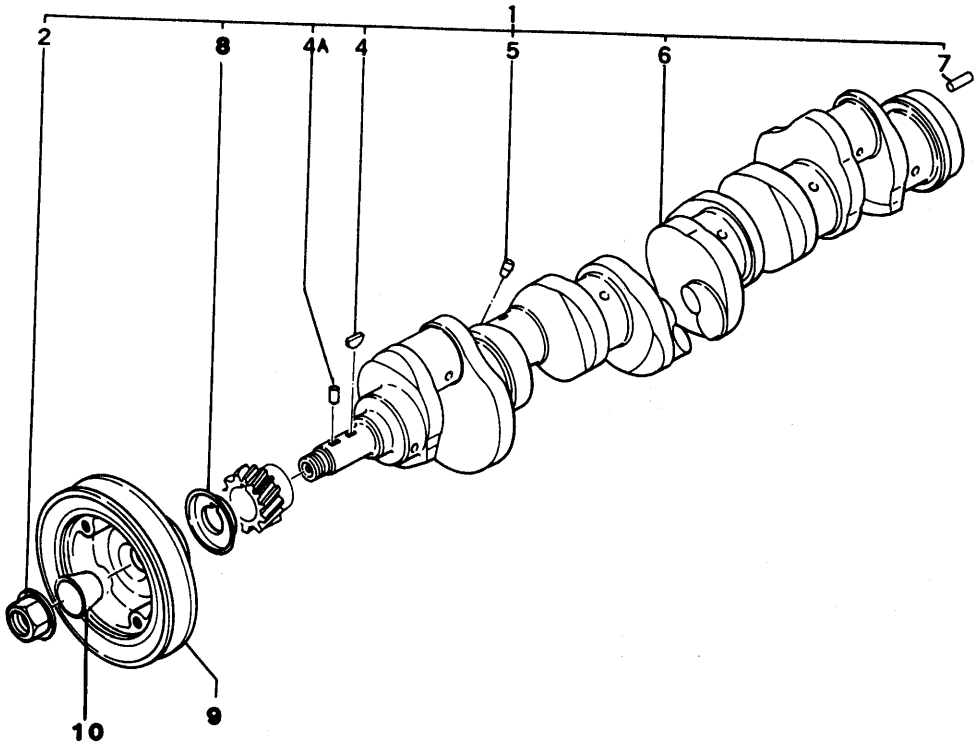

CRANKSHAFT

ITEM	NUMBER	QTY	DESCRIPTION
1	6800120	1	CRANKSHAFT ASSY. (incl. 1-10)
2	6800111	1	NUT
4	4530507	1	KEY, woodruff
4A	950649	1	PIN, spring
5	4530171	1	PLUG
6	N.S.S.	1	CRANKSHAFT
7	4530504	2	PIN, dowel
8	6810174	1	PLATE, baffle
9	6800166	1	PULLEY, crankshaft
	6810176	1	PULLEY, crankshaft (turbo)
10	6810204	1	CONE

FLYWHEEL

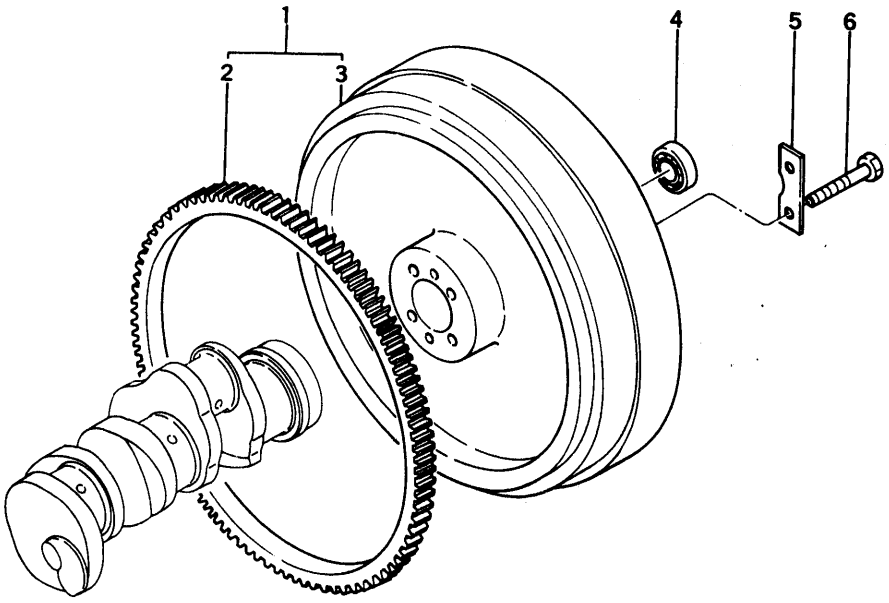

FLYWHEEL

ITEM	NUMBER	QTY	DESCRIPTION
1	6810331	1	FLYWHEEL ASSY. (incl. 2 & 3)
2	4530879	1	GEAR, ring
3	N.S.S.	1	FLYWHEEL
4	4530936	1	BEARING, ball
5	6810205	2	WASHER, lock
6	4531018	6	BOLT, hex

TIMING GEAR

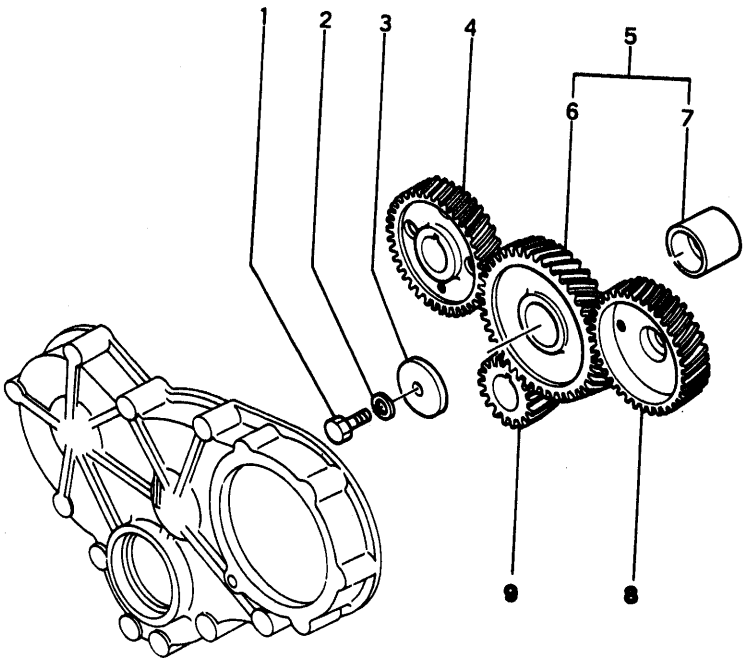

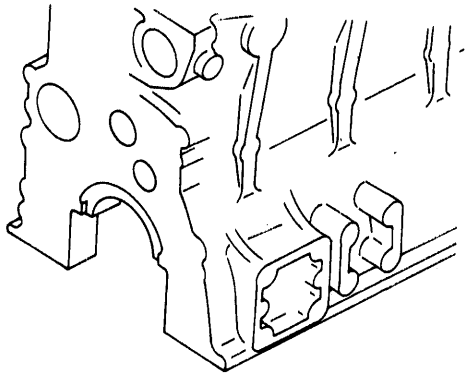

TIMING GEAR

ITEM	NUMBER	QTY	DESCRIPTION
1	4530536	1	BOLT, hex
2	950220	1	WASHER, lock
3	4530155	1	PLATE, thrust
4	6800124	1	GEAR, camshaft
5	6800126	1	IDLER, assy. (incl. 6 & 7)
6	N.S.S.	1	IDLER
7	4530175	1	BUSHING, idler
8	6800125	1	GEAR, injection pump
9	6800123	1	GEAR, crankshaft

INLET SYSTEM

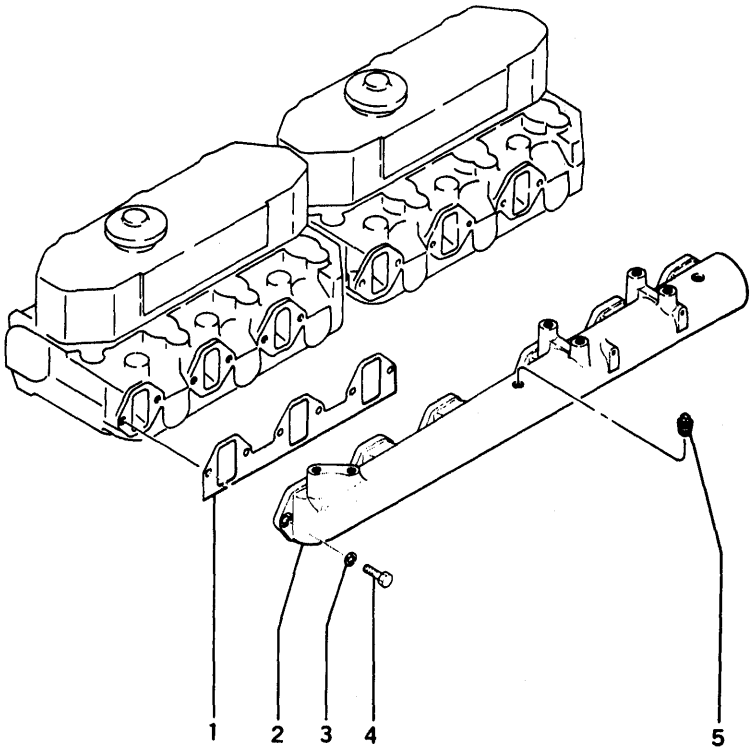

INLET SYSTEM (TURBO)

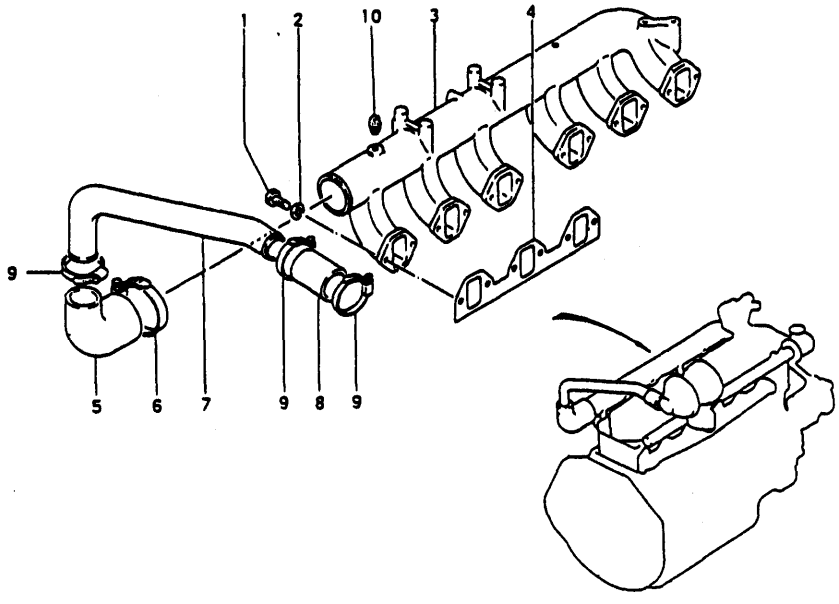

INLET SYSTEM

ITEM	NUMBER	QTY	DESCRIPTION
1	4530410	2	GASKET, inlet manifold
2	4530941	1	MANIFOLD
3	950219	12	WASHER, lock M8, PLTD.
4	950019	12	BOLT, hex M8-1.25 x 25mm, PLTD.
5	4530524	2	PLUG, taper

INLET SYSTEM (TURBO)

ITEM	NUMBER	QTY	DESCRIPTION
1	950019	12	BOLT, hex M8-1.25 x 25mm, PLTD.
2	950219	12	WASHER, lock M8, PLTD.
3	4530941	1	MANIFOLD, inlet
4	4530410	2	GASKET, inlet
5	6800161	1	HOSE, inlet
6	6810206	1	CLAMP, hose
7	6810207	1	PIPE, inlet
8	6800162	1	HOSE, rubber
9	6800142	3	CLAMP, hose
10	4530524	2	PLUG, taper

ENGINE

EXHAUST SYSTEM

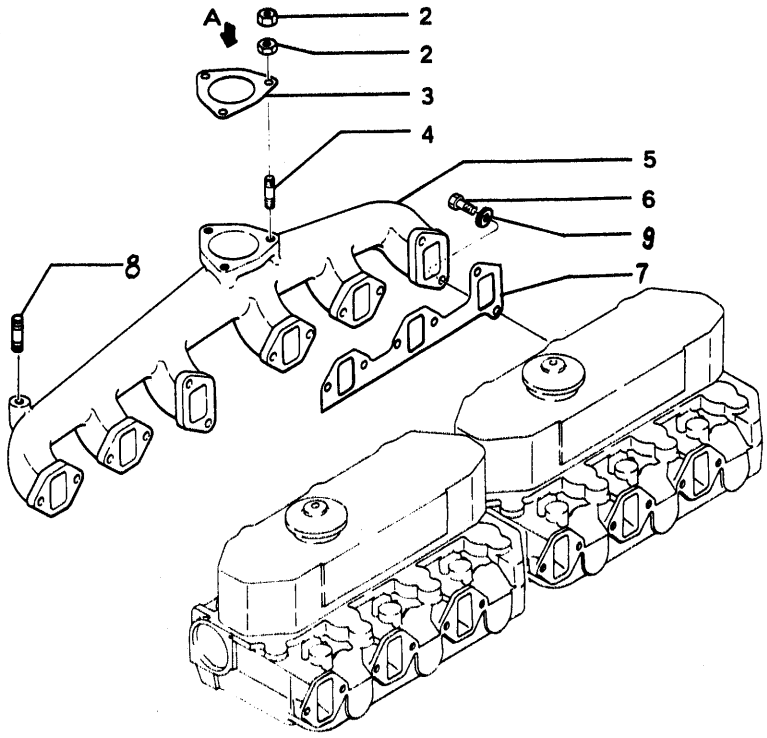

EXHAUST SYSTEM(TURBO)

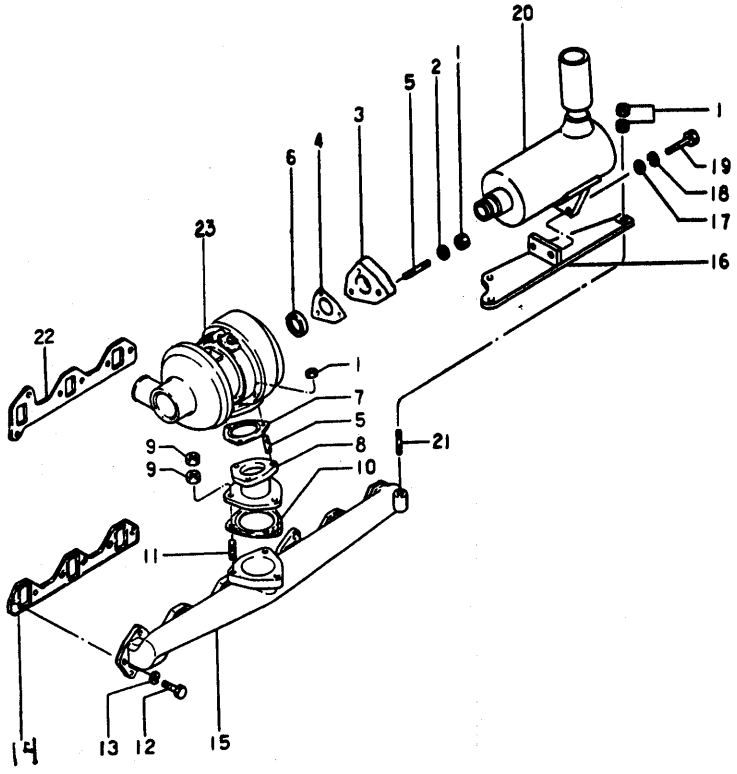

EXHAUST SYSTEM

ITEM	NUMBER	QTY	DESCRIPTION
1	4530222	8	NUT, lock
2	4530845	1	GASKET, muffler
3	4530501	3	STUD
4	6810209	1	MANIFOLD, exhaust (incl. 1, 3 & 6)
5	950019	12	BOLT, hex M8-1.25 x 25mm, PLTD.
6	6800177	2	GASKET, exhaust manifold
7	4530500	1	STUD
8	950219	6	WASHER, lock M8, PLTD.

EXHAUST SYSTEM (TURBO)

ITEM	NUMBER	QTY	DESCRIPTION
1	950210	8	NUT, hex M8-1.25, PLTD.
2	6810217	3	WASHER, lock M8
3	6810216	1	COUPLING (incl. 6)
4	6800200	1	GASKET
5	6810215	6	STUD
6	6810214	1	RING, seal
7	6800199	1	GASKET
8	6810213	1	PIPE, exhaust (incl. 1, 5, 7 & 9)
9	4530222	6	NUT
10	4530845	1	GASKET
11	6810212	3	STUD
12	950019	10	BOLT, hex M8-1.25 x 25mm, PLTD.
13	950219	10	WASHER, lock M8, PLTD.
14	6800177	1	GASKET, exhaust manifold
15	6810209	1	MANIFOLD, exhaust (incl. 9, 11, 14, 21-22)
16	6810211	1	BRACKET
17	950229	2	WASHER, plain M10, PLTD.
18	950220	2	WASHER, lock M10
19	950036	2	BOLT, hex M10-1.5 x 25mm, PLTD.
20	6810464	1	MUFFLER
21	4530501	1	STUD
22	6800177	1	GASKET, exhaust manifold
23	6800160	1	TURBOCHARGER ASSY. (incl. 6 & 7)

ENGINE

INTAKE & EXHAUST

S/N 63 & BEYOND

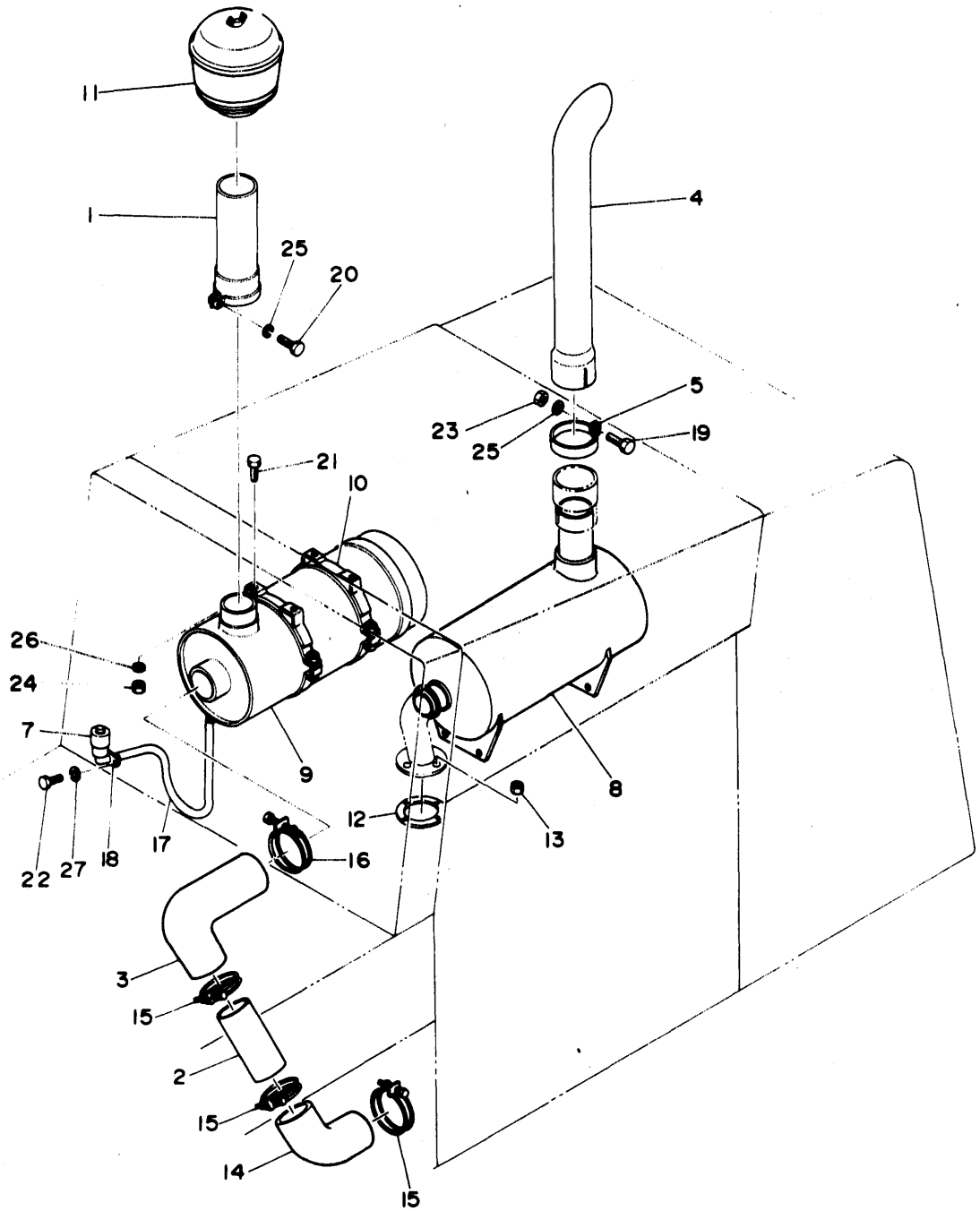

INTAKE & EXHAUST
S/N 63 & BEYOND

ITEM	NUMBER	QTY	DESCRIPTION
1	6810461	1	PIPE
2	6811090	1	PIPE (S/N 1-32)
	6811092	1	PIPE (S/N 33-)
3	6811091	1	ELBOW (S/N 1-32)
	6811088	1	ELBOW (S/N 33-)
4	6810462	1	PIPE, exhaust
5	6810019	1	CLAMP
6	6810463	1	CAP, rain
7	4021600	1	INDICATOR
8	6810464	1	MUFFLER (turbo)
9	4530937	1	AIR CLEANER, assy.
10	6811093	1	BAND
11	6811094	1	CAP
12	6811095	1	GASKET, exhaust
13	4530222	8	NUT, hex
14	6811097	1	HOSE, air inlet
15	6900014	1	CLAMP, hose (S/N 1-32)
	6900200	1	CLAMP, hose (S/N 33-)
16	6900015	2	CLAMP, hose
	6900200	1	CLAMP, hose (S/N 33-)
17	6811098	1	TUBE, indicator
18	6811099	1	BRACKET, indicator
19	950051	1	BOLT, hex M12-1.75 x 25mm, PLTD.
20	950036	1	BOLT, hex M10-1.5 x 25mm, PLTD.
21	950266	4	BOLT, hex M8-1.25 x 20mm, PLTD.
22	950262	2	BOLT, hex M6-1.0 x 16mm
23	950211	1	NUT, hex M10-1.5, PLTD.
24	950944	4	NUT, hex M8-1.25
25	950220	1	WASHER, lock M10, PLTD.
26	950219	4	WASHER, lock M8, PLTD.
27	950218	2	WASHER, lock M10, PLTD.
28	6811089	1	CLAMP, hose

840D WHEEL LOADER

ENGINE

INTAKE & EXHAUST ARRGMT.

S/N 1-62

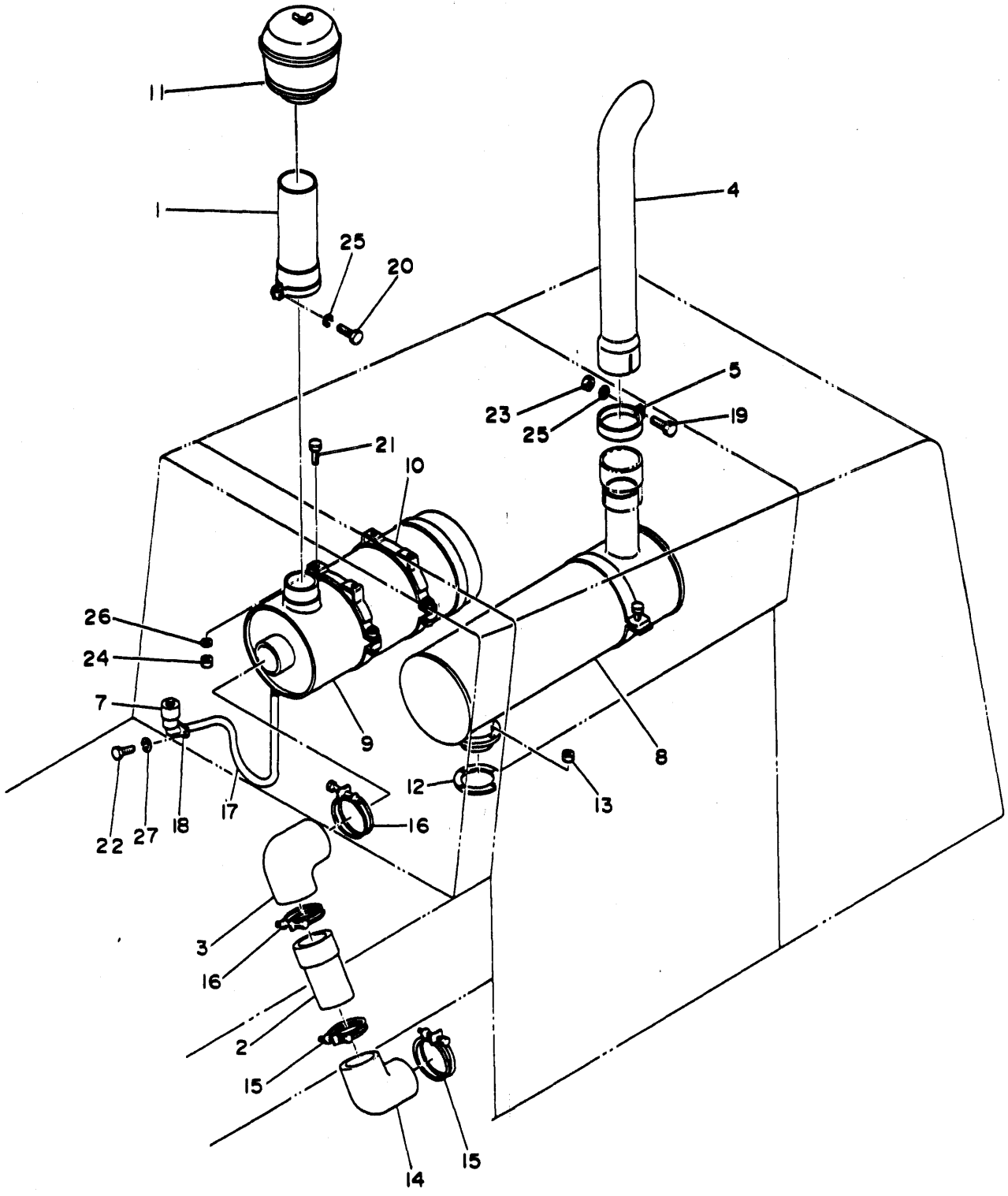

ENGINE

INTAKE & EXHAUST ARRGMT.
S/N 1-62

ITEM	NUMBER	QTY	DESCRIPTION
1	6810461	1	PIPE
2	6811090	1	PIPE (S/N 1-32)
	6811092	1	PIPE (S/N 33-)
3	6811091	1	ELBOW (S/N 1-32)
	6811088	1	ELBOW (S/N 33-)
4	6810462	1	PIPE, exhaust
5	6810019	1	CLAMP
6	6810463	1	CAP, rain
7	4021600	1	INDICATOR
8	6810627	1	MUFFLER (incl. 13) (S/N 1-62)
9	4530937	1	AIR CLEANER, assy.
10	6810466	1	BAND
11	6811094	1	CAP (S/N 1-62)
	6810607	1	CAP (S/N 63-)
12	6811095	1	GASKET, exhaust
13	4530222	6	NUT, hex
14	6811100	1	ELBOW (S/N 1-32)
	6810596	1	ELBOW (S/N 33-)
15	6900014	2	CLAMP, hose (S/N 1-32)
	6900020	2	CLAMP, hose (S/N 33-)
16	6900015	2	CLAMP, hose (S/N 1-32)
	6900200	1	CLAMP, hose (S/N 33-)
17	6811098	1	TUBE, indicator
18	6811099	1	BRACKET, indicator
19	950051	1	BOLT, hex M12-1.75 x 25mm, PLTD.
20	950036	1	BOLT, hex M10-1.5 x 25mm, PLTD.
21	950266	4	BOLT, hex M8-1.25 x 25mm
22	950262	2	BOLT, hex M6-1 x 16mm
23	950211	1	NUT, hex M10-1.5, PLTD.
24	950944	4	NUT, hex M8-1.25
25	950220	1	WASHER, lock M10, PLTD.
26	950219	4	WASHER, lock M8, PLTD.
27	950218	2	WASHER, lock M6, PLTD.

ENGINE

INTAKE & EXHAUST (TURBO)

S/N 63-BEYOND

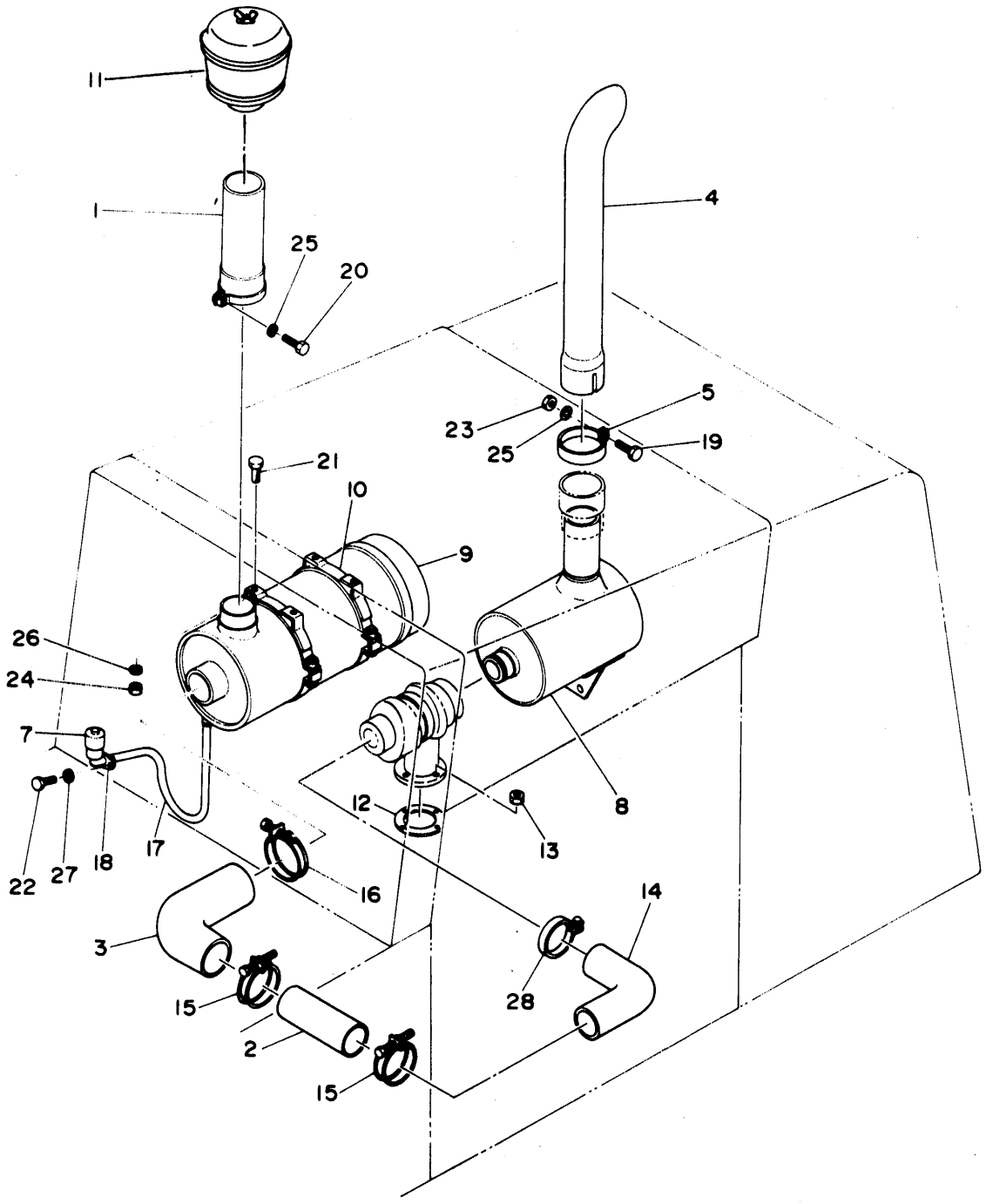

ENGINE

INTAKE & EXHAUST ARRGT. W/TURBO
S/N 63-BEYOND

ITEM	NUMBER	QTY	DESCRIPTION
1	6810461	1	PIPE
2	6811090	1	PIPE (S/N 1-32)
	6811092	1	PIPE (S/N 33-)
3	6811091	1	ELBOW (S/N 1-32)
	6811088	1	ELBOW (S/N 33-)
4	6810462	1	PIPE, exhaust
5	6810019	1	CLAMP
6	6810463	1	CAP, rain
7	4021600	1	INDICATOR
8	6810464	1	MUFFLER (turbo)
9	4530937	1	AIR CLEANER, assy.
10	6811093	1	BAND
11	6811094	1	CAP
12	6811095	1	GASKET, exhaust
13	4530222	8	NUT, hex
14	6811097	1	HOSE, air inlet
15	6900014	1	CLAMP, hose (S/N 1-32)
	6900200	1	CLAMP, hose (S/N 33-)
16	6900015	2	CLAMP, hose
	6900200	1	CLAMP, hose (S/N 33-)
17	6811098	1	TUBE, indicator
18	6811099	1	BRACKET, indicator
19	950051	1	BOLT, hex M12-1.75 x 25mm, PLTD.
20	950036	1	BOLT, hex M10-1.5 x 25mm, PLTD.
21	950266	4	BOLT, hex M8-1.25 x 20mm, PLTD.
22	950262	2	BOLT, hex M6-1.0 x 16mm
23	950211	1	NUT, hex M10-1.5, PLTD.
24	950944	4	NUT, hex M8-1.25
25	950220	1	WASHER, lock M10, PLTD.
26	950219	4	WASHER, lock M8, PLTD.
27	950218	2	WASHER, lock M10, PLTD.
28	6811089	1	CLAMP, hose

ENGINE

INTAKE & EXHAUST ARRGT. WITH TURBO

S/N 1-62

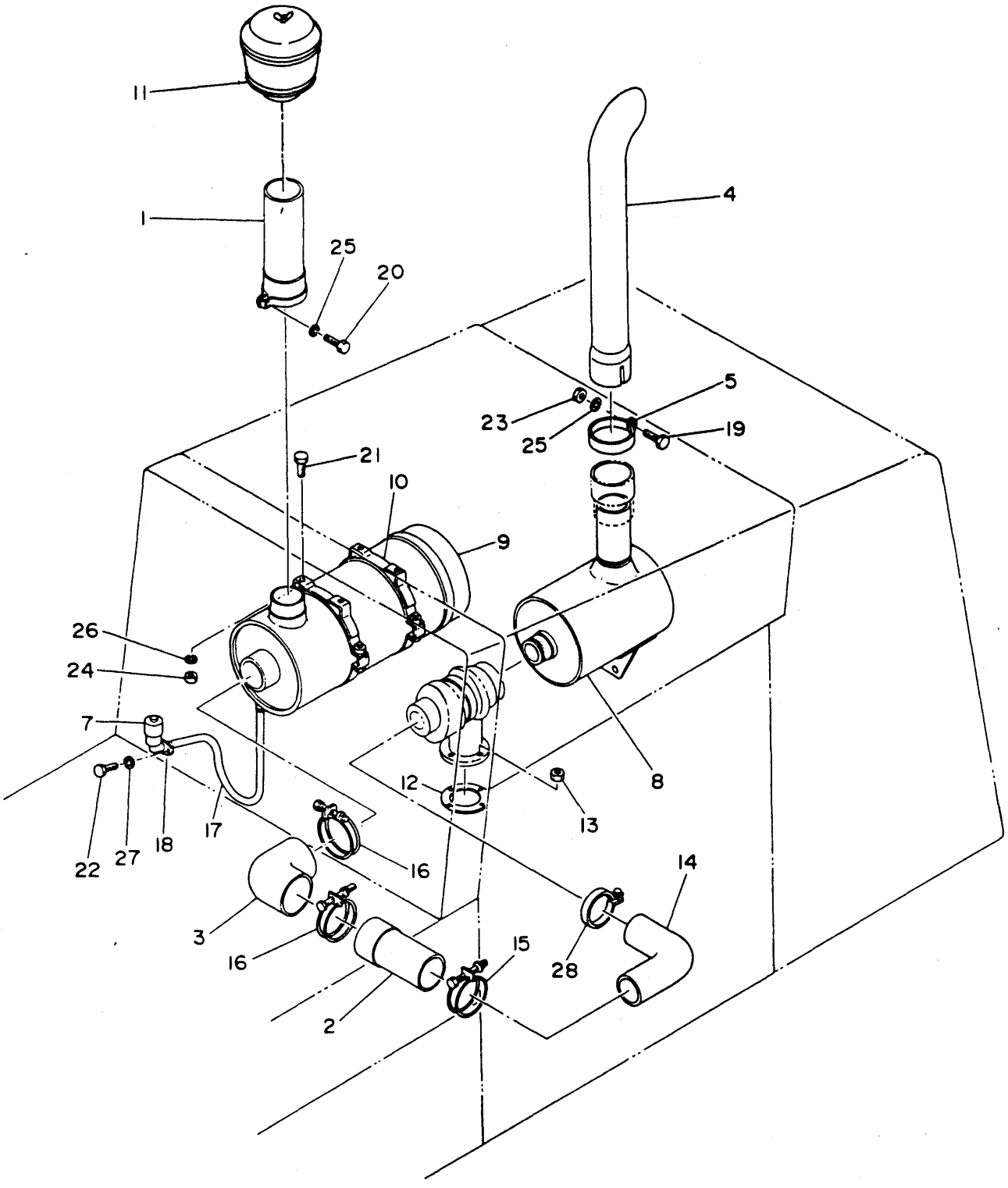

INTAKE & EXHAUST ARRGT. W/TURBO
S/N 1-62

FOR INTAKE & EXHAUST-TURBO S/N 1-62
SEE PAGE 51 OF THIS CATALOG

ENGINE

AIR FILTER ASSEMBLY

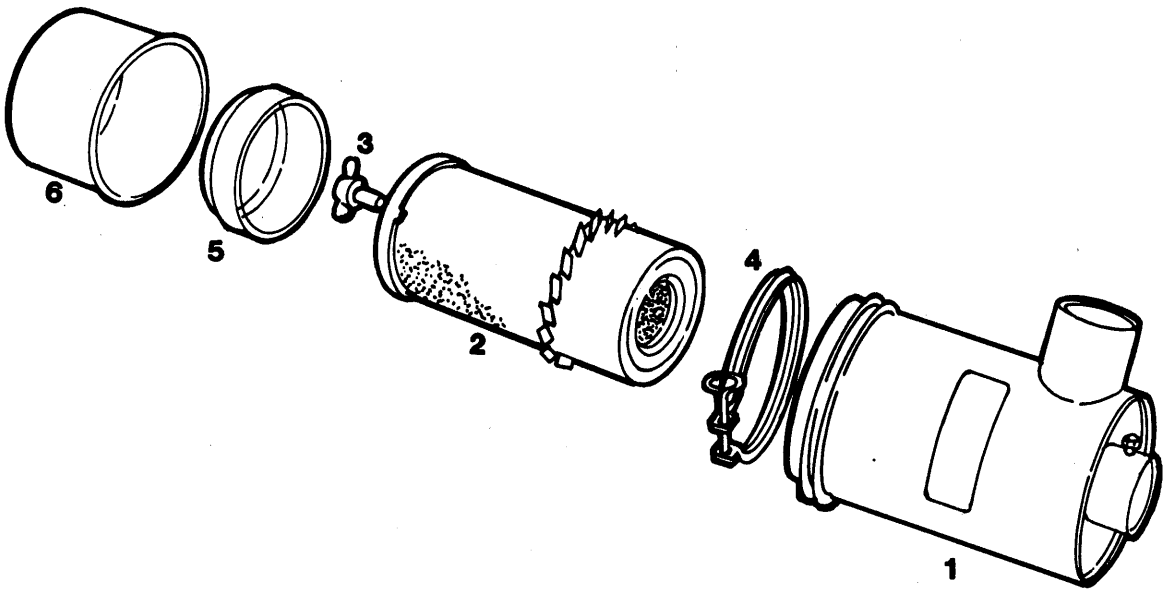

AIR CLEANER ASSY.

ITEM	NUMBER	QTY	DESCRIPTION
	4530937	1	AIR CLEANER, assy.
1	N.S.S.	1	BODY
2	1010407	1	FILTER, air
3	239517	1	NUT, wing
4	1004653	1	CLAMP
5	638416	1	BAFFLE
6	4059256	1	CUP

OIL PUMP ASSEMBLY

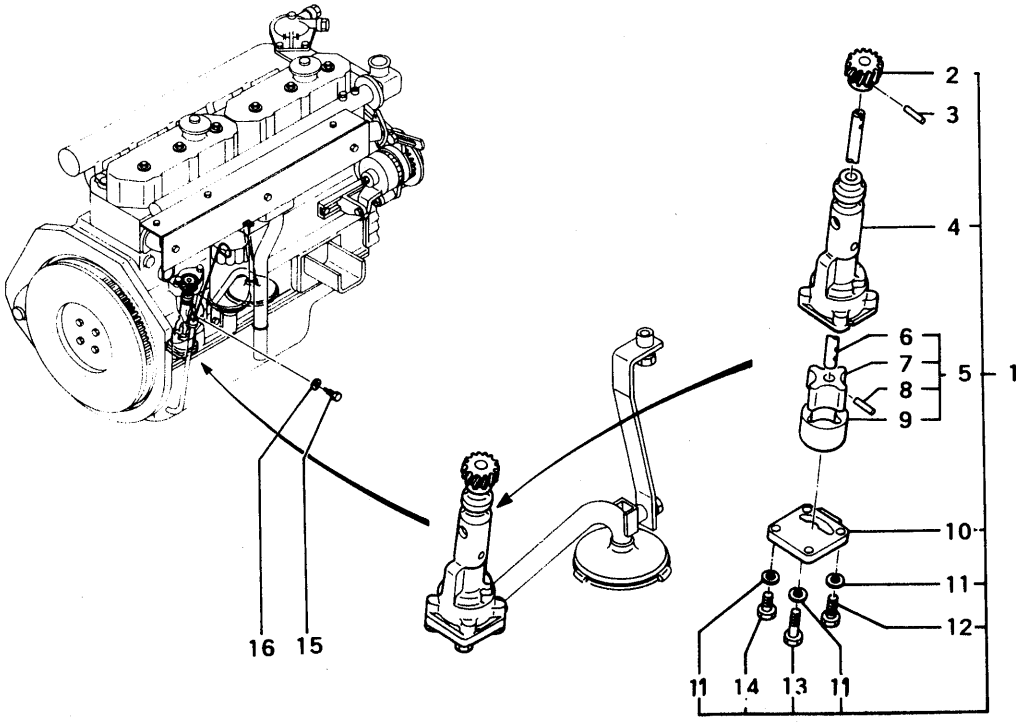

OIL STRAINER ASSEMBLY

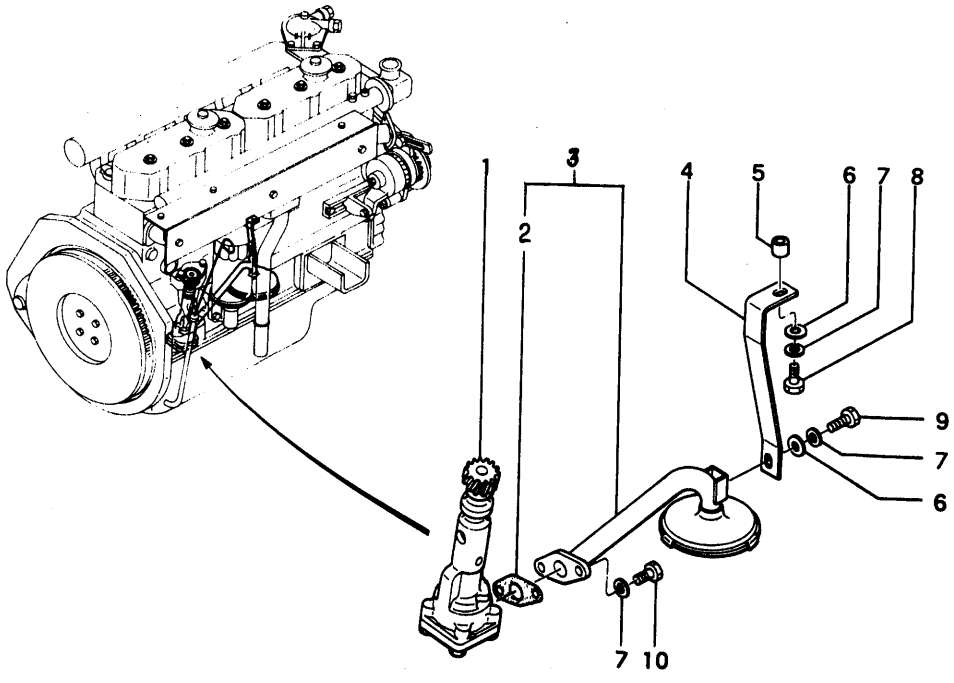

OIL PUMP

ITEM	NUMBER	QTY	DESCRIPTION
1	4530947	1	OIL PUMP, assy. (incl. 1-14)
2	4530203	1	GEAR, pump drive
3	4530204	1	PIN
4	N.S.S.	1	CASE, oil pump
5	4530948	1	ROTOR ASSY., oil pump (incl. 6-9)
6	N.S.S.	1	SHAFT, pump
7	N.S.S.	1	ROTOR, inner
8	N.S.S.	1	PIN
9	N.S.S.	1	ROTOR, outer
10	4530950	1	COVER, oil pump case
11	9500218	4	WASHER, lock M6, PLTD.
12	950450	1	BOLT, hex M6-1.0 x 25mm (10.9), PLTD.
13	950005	1	BOLT, hex M6-1.0 x 45mm (10.9), PLTD.
14	950001	2	BOLT, hex M6-1.0 x 16mm (10.9), PLTD.
15	4530233	1	BOLT, joint
16	4530543	1	GASKET

OIL STRAINER

ITEM	NUMBER	QTY	DESCRIPTION
1	4530947	1	OIL PUMP, assy.
2	4530150	1	GASKET
3	4530955	1	STRAINER, oil
4	4530954	1	STAY, strainer
5	4530182	1	SPACER
6	950228	2	WASHER, flat M8, PLTD.
7	950219	4	WASHER, lock M8, PLTD.
8	950016	1	BOLT M8-1.25 x 12mm, PLTD.
9	950016	1	BOLT, hex M20 - 2.5 x 120mm
10	950017	2	BOLT, hex M8 - 1.25 x 16mm

840D WHEEL LOADER

ENGINE

OIL PUMP & OIL STRAINER (TURBO)

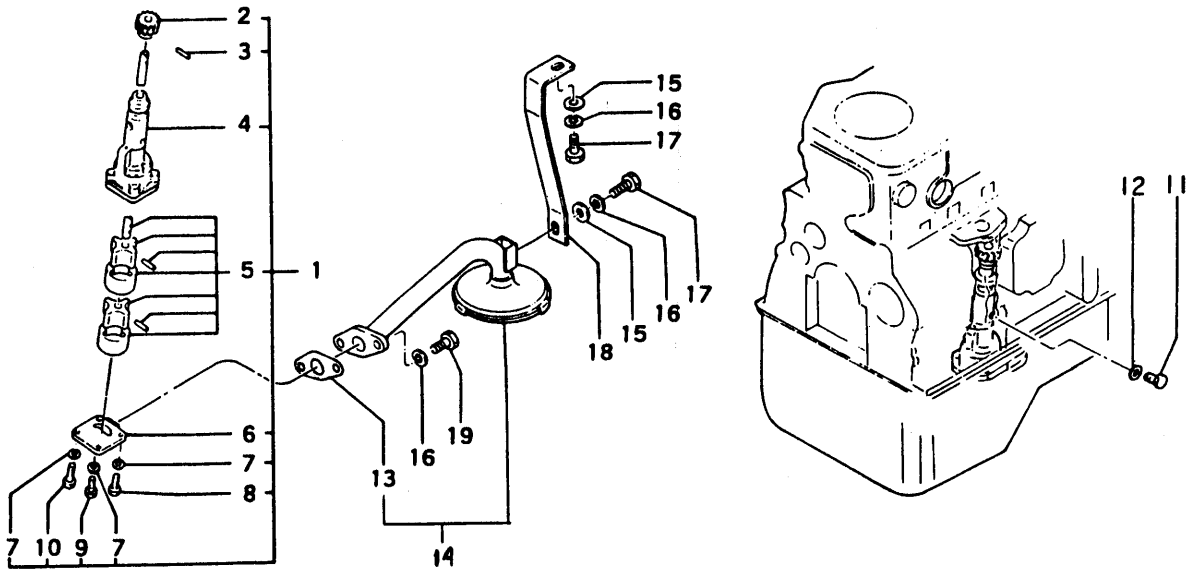

ENGINE

OIL PUMP & OIL STRAINER (TURBO)

ITEM	NUMBER	QTY	DESCRIPTION
1	6800129	1	OIL PUMP, assy. (incl. 2-10)
2	6810238	1	GEAR, pump drive
3	4530204	1	PIN
4	N.S.S.	1	CASE, oil pump
5	6810239	1	ROTOR ASSY., oil pump
6	4530950	1	COVER, oil pump case
7	950218	4	WASHER, lock M6
8	950005	1	BOLT, hex M6-1.0 x 45mm, PLTD.
9	950007	1	BOLT, hex M6-1.0 x 60mm, PLTD.
10	950003	2	BOLT, hex M6-1.0 x 30mm, PLTD.
11	4530233	1	BOLT, joint
12	4530543	1	GASKET
13	4530150	1	GASKET
14	6810240	1	STRAINER, oil
15	950228	2	WASHER, flat M8, PLTD.
16	950219	4	WASHER, lock M8, PLTD.
17	950016	2	BOLT, hex M8-1.25 x 12mm, PLTD.
18	6810241	1	STAY, strainer
19	950017	2	BOLT, hex M8-1.25 x 16mm, PLTD.

ENGINE

OIL PIPE

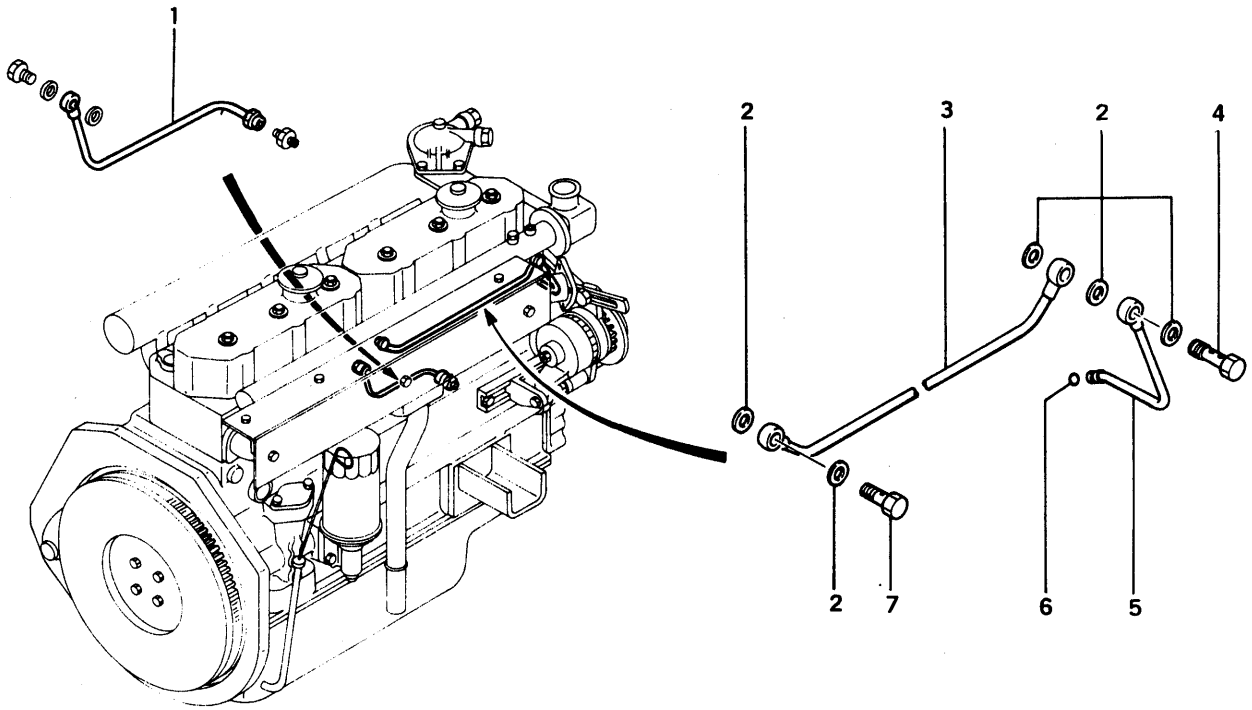

OIL PIPE

ITEM	NUMBER	QTY	DESCRIPTION
1	4530952	1	PIPE, oil
2	4530146	5	WASHER, sealing
3	6800132	1	PIPE, oil
4	4530953	1	BOLT, eye
5	4530904	1	PIPE, oil
6	4530508	1	O-RING
7	4530514	1	BOLT, eye

ENGINE

OIL PIPE & BREATHER (TURBO)

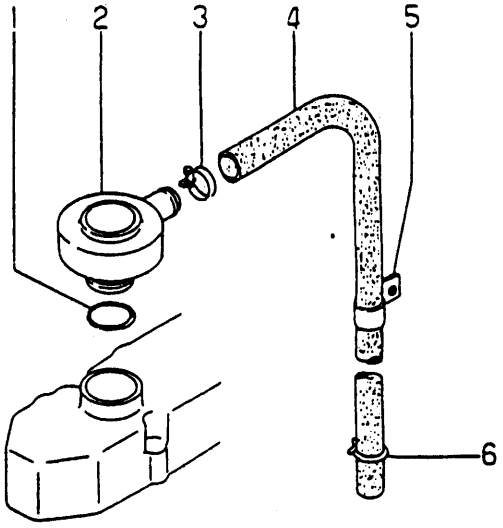

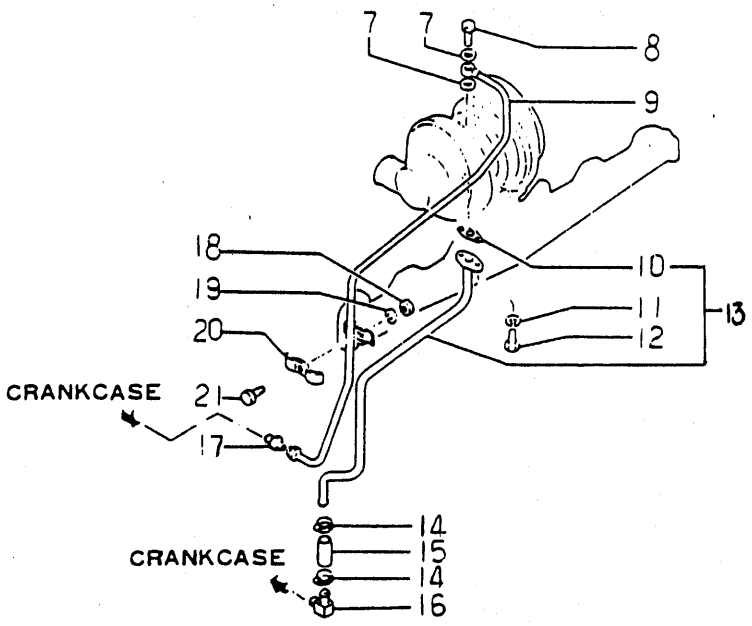

OIL PIPE & BREATHER (TURBO)

ITEM	NUMBER	QTY	DESCRIPTION
1	6810242	1	O-RING
2	6810243	1	BREATHER
3	6810244	1	CLAMP, hose
4	6810245	1	TUBE, soft vinyl
5	6810246	1	CLIP
6	6810247	1	STAY
7	4530667	2	GASKET
8	6810248	1	BOLT, eye
9	6810249	1	PIPE, oil
10	6800202	1	GASKET
11	950218	2	WASHER, lock M6, PLTD.
12	950001	2	BOLT, hex M6-1 x 16mm, PLTD.
13	6810250	1	PIPE, oil
14	6810251	2	CLAMP, hose
15	6810252	1	HOSE, rubber
16	6810253	1	ELBOW (for oil drain)
17	4530527	1	CONNECTOR (for oil supply)
18	950244	1	NUT, hex M6-1.0
19	950218	1	WASHER, lock M6, PLTD.
20	6810254	2	CLAMP, tube
21	950001	1	BOLT, hex M6-1.0 x 16mm, PLTD.

ENGINE

OIL COOLER & OIL PIPE

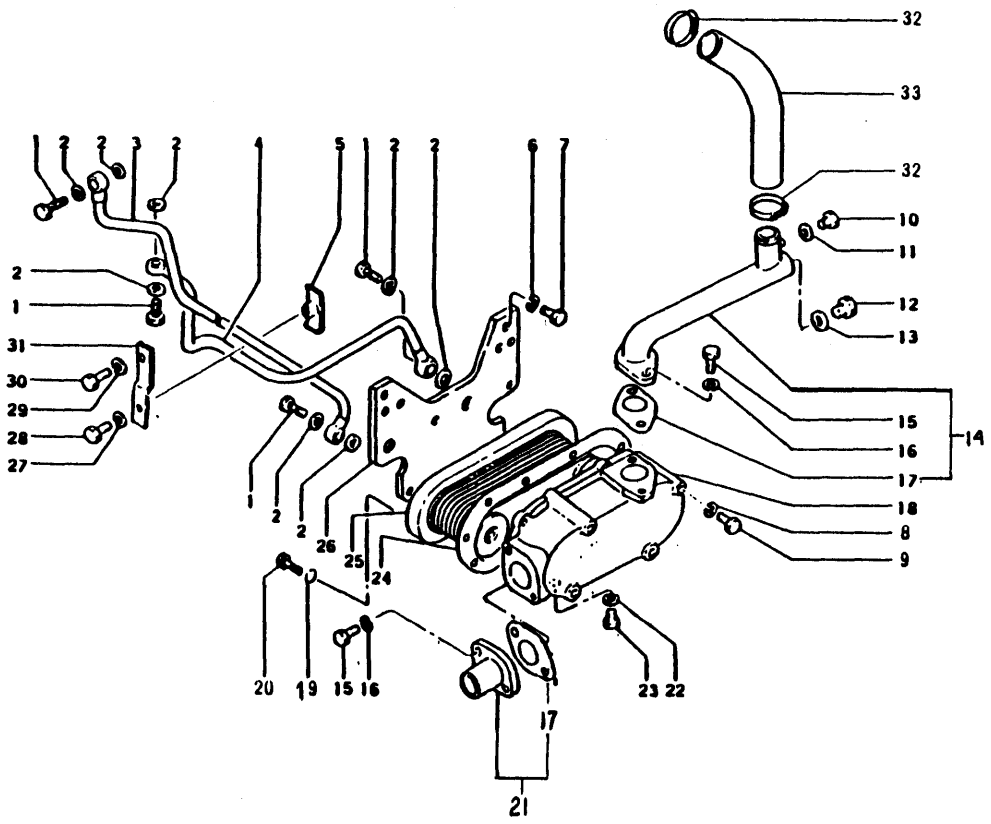

OIL COOLER & OIL PIPE

ITEM	NUMBER	QTY	DESCRIPTION
	6810262	1	OIL COOLER, assy. (incl. 18-20, 22-25)
1	6810257	4	BOLT, eye
2	4920042	8	GASKET
3	6810258	1	PIPE, oil
4	6810259	1	PIPE, oil
5	6810260	1	CLAMP
6	4920385	6	WASHER, lock M12, PLTD.
7	950051	6	BOLT, hex M12-1.75 x 25mm, PLTD.
8	950220	4	WASHER, lock M10, PLTD.
9	950045	4	BOLT, hex M10-1.5 x 100mm, PLTD.
10	4530130	1	PLUG
11	4530870	1	GASKET
12	4920397	1	PLUG
13	4920042	1	GASKET
14	6810261	1	PIPE, water
15	950035	4	BOLT, hex M10-1.5 x 20mm, PLTD.
16	950220	4	WASHER, lock M10, PLTD.
17	6800180	2	GASKET
18	6810263	1	CASE
19	950220	7	WASHER, lock M10, PLTD.
20	950035	7	BOLT, hex M10-1.5 x 20mm, PLTD.
21	6810264	1	PIPE, water
22	4530543	1	GASKET
23	4920138	1	PLUG
24	4530962	1	GASKET
25	6810265	1	ELEMENT
26	6810266	1	BRACKET
27	950220	2	WASHER, lock M10, PLTD.
28	4530536	1	BOLT
	4530535	1	BOLT
29	4920385	1	WASHER, lock M12
30	950051	1	BOLT, hex M12-1.75 x 25mm, PLTD.
31	6810267	1	BRACKET
32	6800142	2	CLAMP, hose
33	4530196	1	HOSE, rubber

ENGINE

OIL FILTER

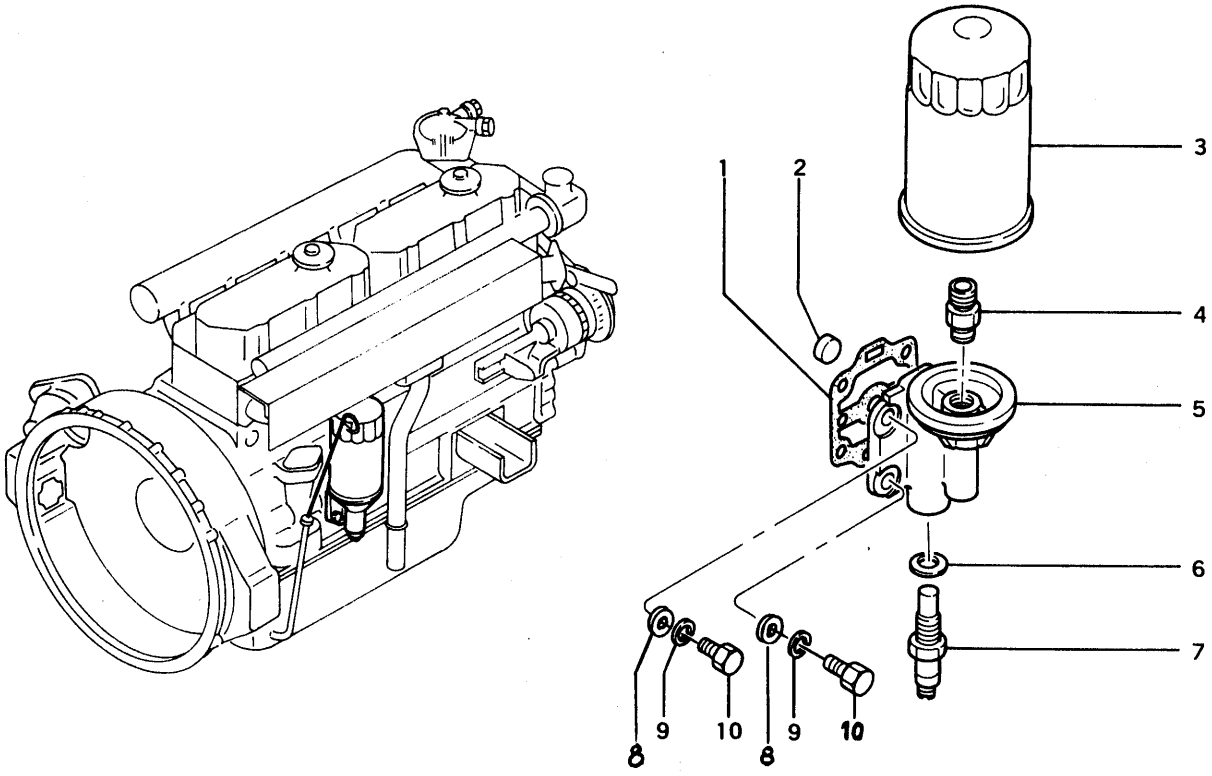

OIL FILTER

ITEM	NUMBER	QTY	DESCRIPTION
	6810268	1	BRACKET, assy. (incl 2, 4-7)
1	4530321	1	GASKET
2	4530141	1	CAP, sealing
3	4530964	1	ELEMENT, filter
4	4530319	1	UNION
5	N.S.S.	1	BRACKET
6	4530184	1	WASHER
7	4530185	1	RELIEF VALVE, assy.
8	950229	4	WASHER, plain M10, PLTD.
9	950220	4	WASHER, lock M10, PLTD.
10	950037	4	BOLT, hex M10-1.5 x 30mm, PLTD.

ENGINE

OIL FILLER & OIL LEVEL GAUGE

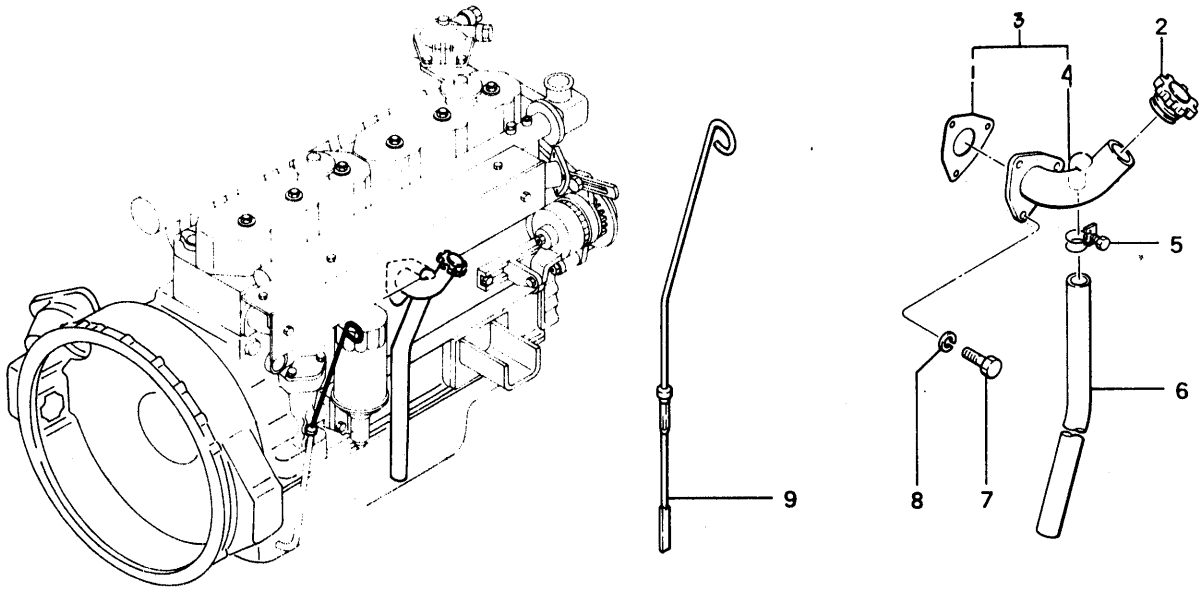

OIL FILLER&OIL LEVEL GAUGE

ITEM	NUMBER	QTY	DESCRIPTION
1	4530223	1	GASKET
2	4530235	1	CAP, oil filler
3	6810269	1	OIL FILLER, assy. (incl. 4)
4	N.S.S.	1	FILLER, oil
5	6810270	1	CLAMP, hose
6	4531025	1	TUBE, soft vinyl
7	950017	3	BOLT, hex M8-1.25 x 16mm, PLTD.
8	950219	3	WASHER, lock M8, PLTD.
9	4530907	1	GAUGE, oil level
10	4530495	1	STAY
	6810177		STAY (turbo)

ENGINE

COOLING SYSTEM

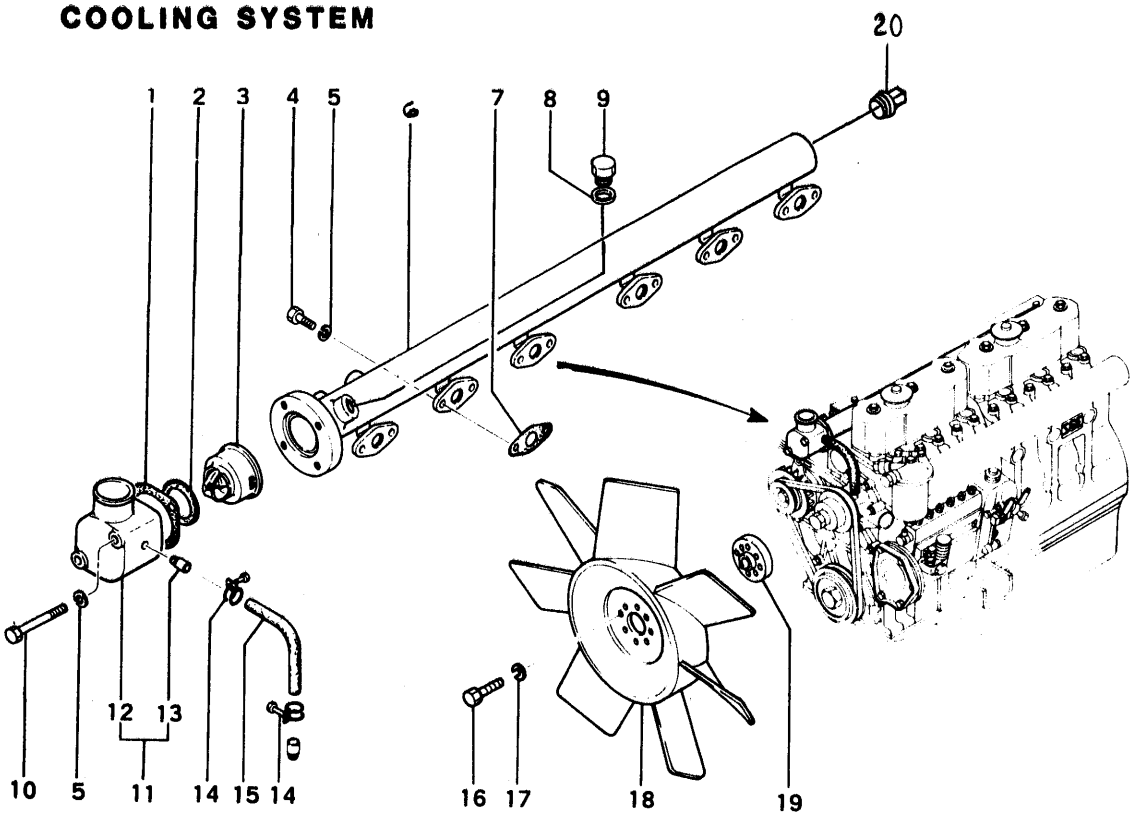

WATER PUMP

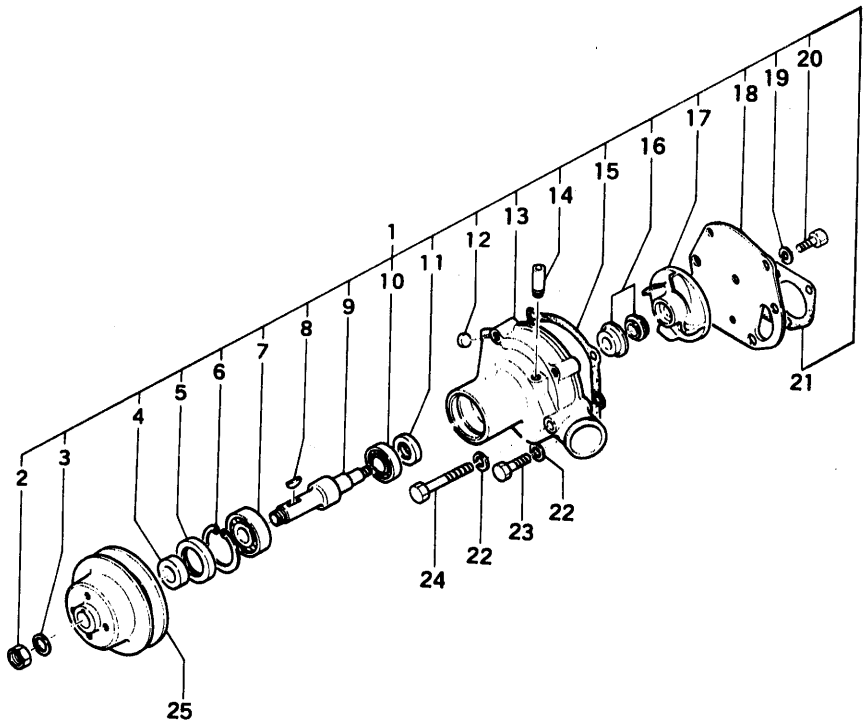

ITEM	NUMBER	QTY	DESCRIPTION
1	4921140	1	GASKET, water outlet
2	4530208	1	GASKET, thermostat
3	4920521	1	THERMOSTAT
4	950018	12	BOLT, hex M8-1.25 x 20mm, PLTD.
5	950219	14	WASHER, lock M6, PLTD.
6	6810271	1	PIPE, water outlet
7	4530150	6	GASKET
8	4530180	2	WASHER, seal
9	4530130	2	PLUG, screw
10	950312	2	BOLT, hex M8-1.25 x 60mm
11	4530909	1	ELBOW ASSY. (incl. 12 & 13)
12	N.S.S.	1	ELBOW
13	4530157	1	PIPE
14	921910	2	CLAMP, hose
15	4530973	1	HOSE, by-pass
16	950868	4	BOLT, hex M10-1.25 x 30mm
	4530536	4	BOLT, hex (turbo)
17	950220	4	WASHER, lock M10, PLTD.
18	4530995	1	FAN
19	4530911	1	SPACER, fan
20	6810273	1	PLUG, taper
	6810179	1	PLUG, taper (turbo)
21	6810272	1	PLATE, fan

WATER PUMP

ITEM	NUMBER	QTY	DESCRIPTION
1	4530966	1	WATER PUMP, assy. (incl. 2)
2	4530503	1	NUT, jam M14-2.0, PLTD.
3	950222	1	WASHER, lock M14, PLTD.
4	4530967	1	SPACER, water pump
5	4531023	1	SEAL, oil
6	4531024	1	RING, snap
7	4531029	1	BEARING, ball
8	4530506	1	KEY, woodruff
9	4530968	1	SHAFT
10	4531028	1	BEARING, ball
11	6800168	1	SEAL, oil
12	4530140	1	CAP, sealing
13	N.S.S.	1	CASE, water pump
14	4530332	1	PIPE
15	4530971	1	GASKET, pump case
16	4530856	1	SEAL, unit
	6800167	1	SEAL, unit (turbo)
17	4530847	1	IMPELLER
18	4530970	1	COVER
19	950219	2	WASHER, lock M8, PLTD.
20	950017	2	BOLT, hex M8-1.25 x 16mm, PLTD.
21	4921241	1	GASKET, water pump
22	950220	4	WASHER, lock M10, PLTD.
23	950452	2	BOLT, hex M10-1.5 x 35mm (10.9), PLTD.
24	950041	1	BOLT, hex M10-1.5 x 60mm, PLTD.
25	6800137	1	PULLEY, water pump

ENGINE

RADIATOR & COOLER PIPING

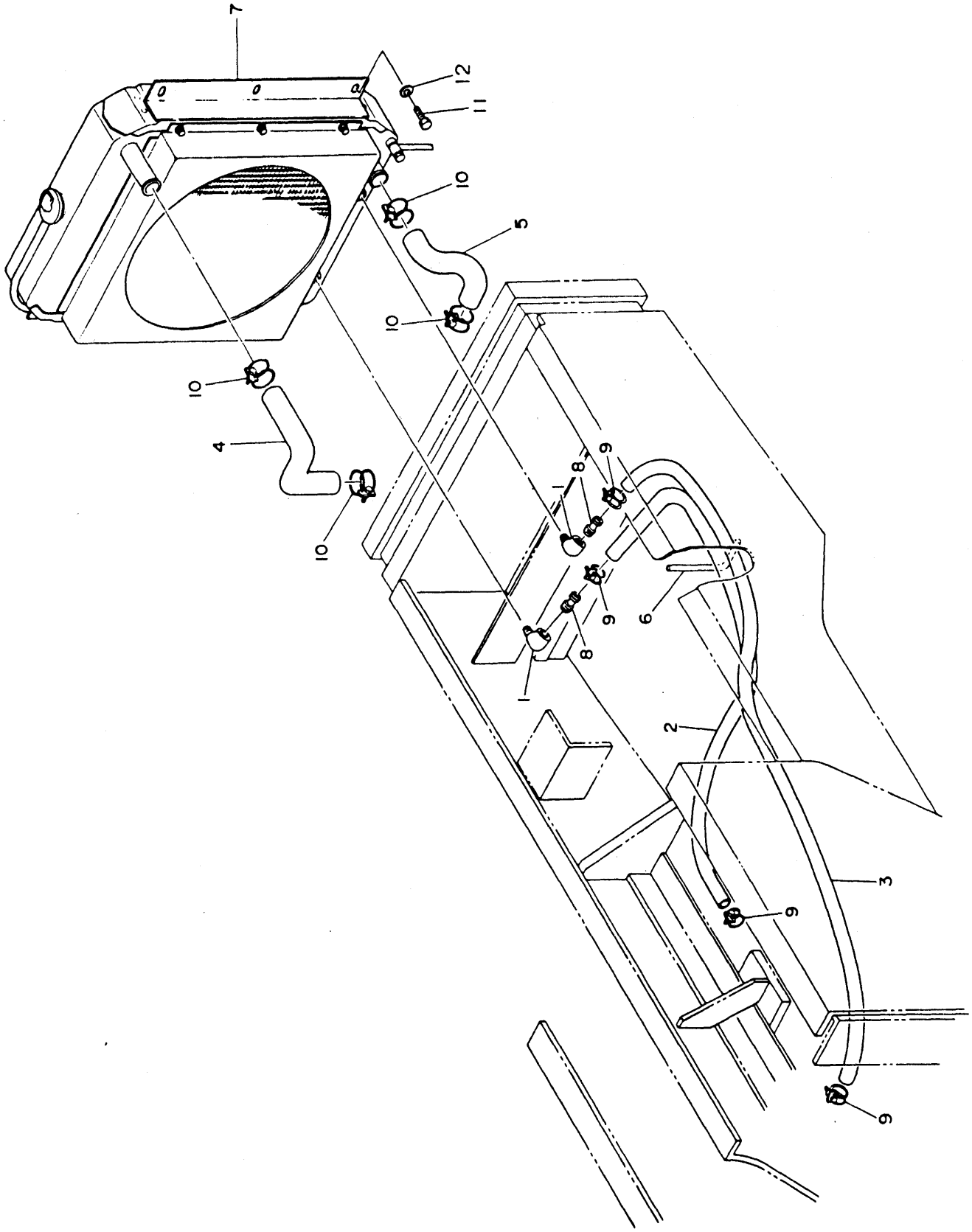

RADIATOR & COOLER PIPING

ITEM	NUMBER	QTY	DESCRIPTION
1	6811084	2	CONNECTOR
2	6900036	1	HOSE, oil cooler
3	6900035	1	HOSE, oil cooler
4	6810459	1	HOSE, radiator
5	6810460	1	HOSE, radiator
6	6811085	2	BRACKET
7	6810534	1	RADIATOR, assy.
8	6811086	2	ADAPTER
9	6811087	4	CLAMP, hose
10	6811088	4	CLAMP, hose
11	950067	6	BOLT, hex M14-2.0 x 30mm, PLTD.
12	2023985	6	WASHER, conical

ENGINE

INJECTION PUMP GENERAL ASSEMBLY

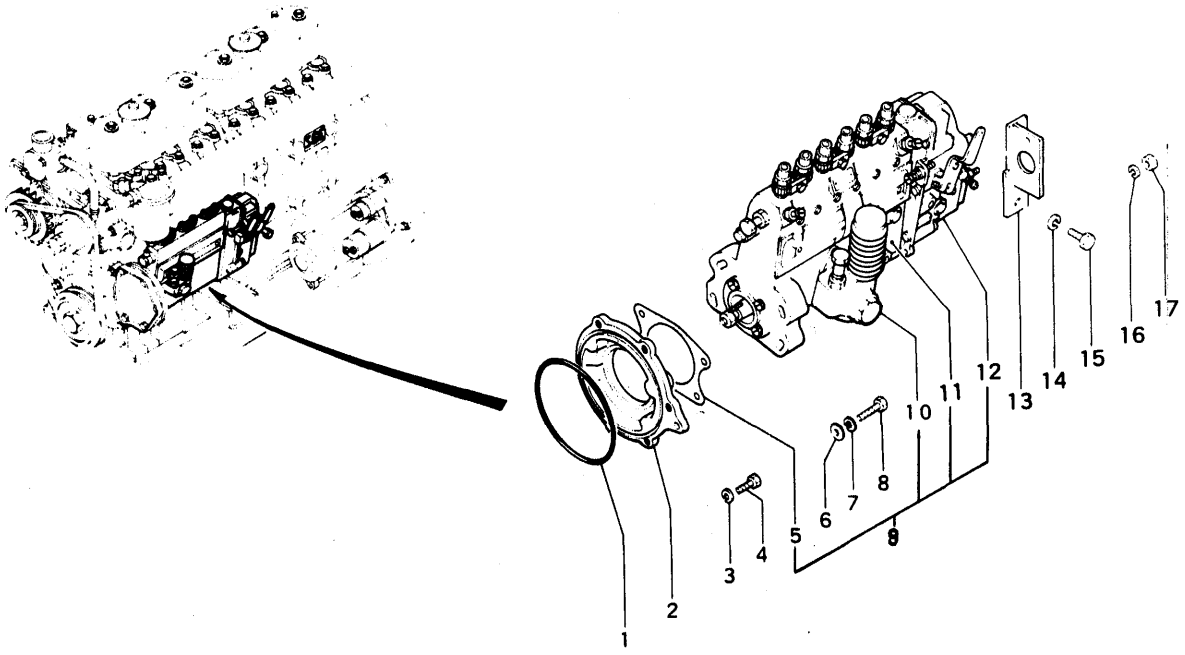

INJECTION PUMP GENERAL ASSEMBLY

ITEM	NUMBER	QTY	DESCRIPTION
1	4530212	1	O-RING
2	4530341	1	PLATE, flange
3	950219	2	WASHER, lock - M8, PLTD.
4	4530531	2	BOLT
	950018	2	BOLT (turbo)
5	4530124	1	GASKET
6	950229	4	WASHER, flat M10, PLTD.
7	950220	4	WASHER, lock M10, PLTD.
8	950452	4	BOLT, hex M10-1.5 x 35mm, PLTD.
9	4531002	1	INJECTION PUMP, general assy. (incl. 10, 11 & 12)
10	4530337	1	FEED PUMP, assy.
11	N.S.S.	1	INJECTION PUMP, assy.
12	N.S.S.	1	GOVERNOR, assy.
13	6810274	1	BRACKET, injection pump
14	4920385	1	WASHER, lock
15	950050	1	BOLT, hex M12-1.75 x 20mm, PLTD.
16	950219	1	WASHER, lock M8, PLTD.
17	4920380	1	NUT, hex M8-1.25, PLTD.

FUEL FEED PUMP

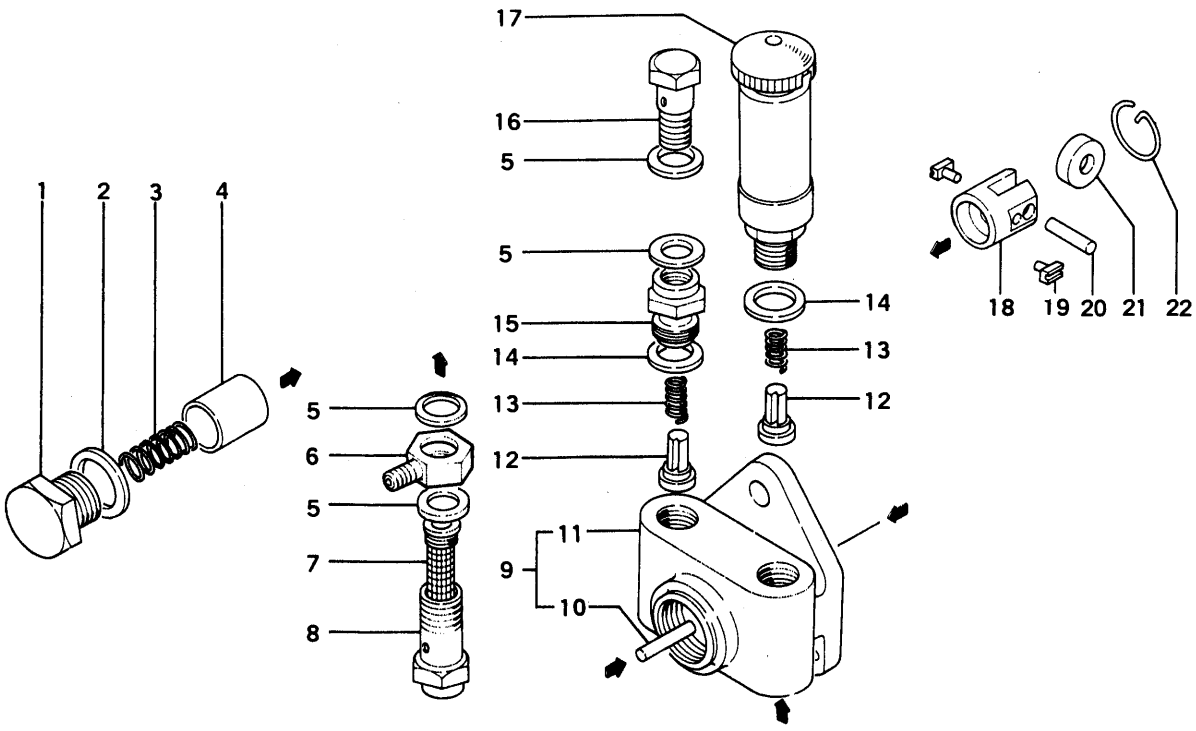

ITEM	NUMBER	QTY	DESCRIPTION
1	N.S.S.	1	PLUG, piston chamber
2	N.S.S.	1	WASHER, seal
3	N.S.S.	1	SPRING, piston
4	N.S.S.	AR	PISTON, blue (small diameter)
	N.S.S.	AR	PISTON, red
	4920509	AR	PISTON, yellow,
	N.S.S.	AR	PISTON, green
	N.S.S.	AR	PISTON, white (large diameter)
5	4920243	4	WASHER, nipple
7	4920327	1	FILTER, screen
8	4920516	1	SCREW, follow
9	N.S.S.	1	HOUSING, assy.
10	N.S.S.	AR	ROD, push, blue (small diameter)
	N.S.S.	AR	ROD, push, red
	N.S.S.	AR	ROD, push, yellow
	N.S.S.	AR	ROD, push, green
	N.S.S.	AR	ROD, push, white
	N.S.S.	AR	ROD, push, brown (large diameter)
11	N.S.S.	2	HOUSING, feed pump
12	N.S.S.	2	VALVE, check
13	N.S.S.	2	SPRING, check valve
14	4920325	2	WASHER, seal
15	N.S.S.	1	SUPPORT, valve
16	4920689	1	SCREW, hollow
17	4920500	1	PRIMING PUMP, complete
18	N.S.S.	1	TAPPET, feed pump
19	N.S.S.	2	BLOCK, sliding
20	N.S.S.	1	PIN, roller
21	N.S.S.	1	ROLLER
22	N.S.S.	1	RING, snap

ENGINE

INJECTION PUMP

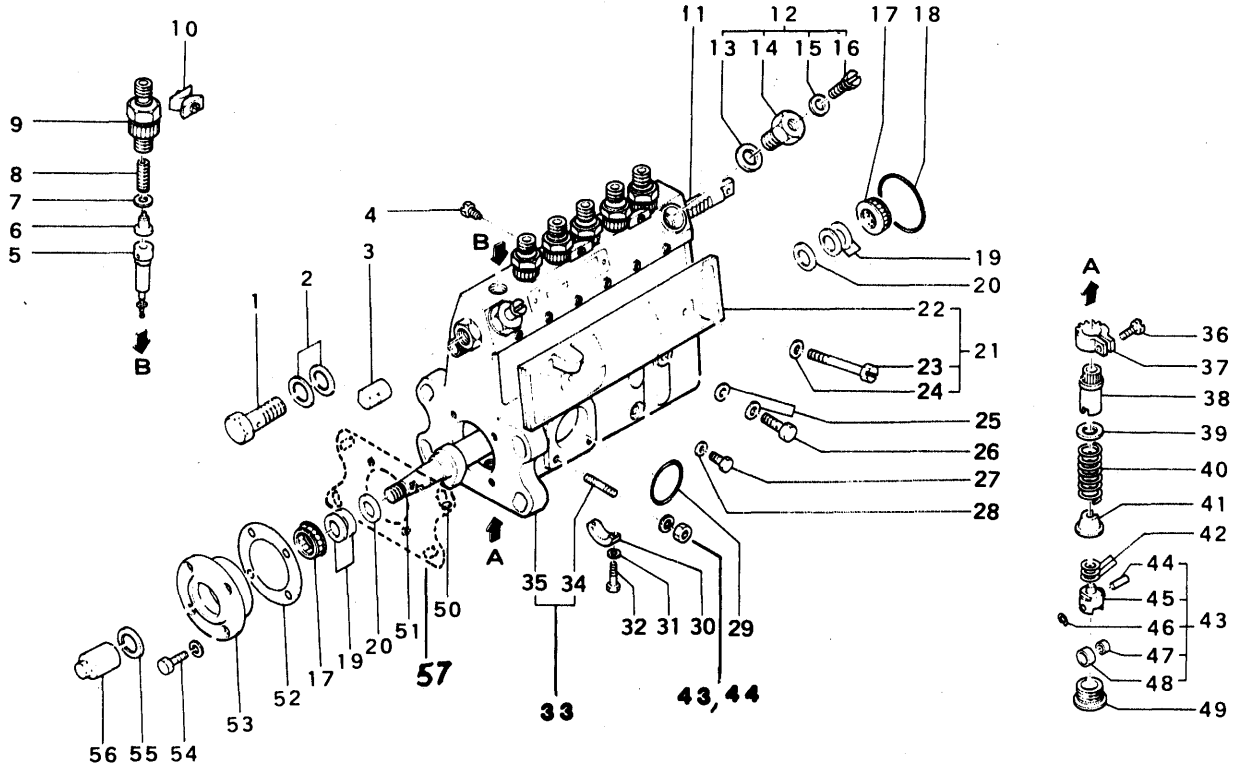

ITEM	NUMBER	QTY	DESCRIPTION
1	4920689	1	SCREW, hollow
2	4920243	2	WASHER, union
3	6810280	1	COVER, control rack
4	4920450	1	SCREW, rack guide
5	4920245	6	PUMP ELEMENT, sub-assy.
6	4920246	6	DELIVERY VALVE, sub-assy.
7	4920247	6	GASKET, delivery valve
8	4920248	6	SPRING, delivery
9	4920249	6	HOLDER, delivery valve
10	4920250	3	PLATE, lock
11	6810281	1	RACK, control
12	4920252	2	AIR BLEEDER, sub assy. (incl. 13-16)
13	4920253	2	WASHER, seal
14	4920451	2	NIPPLE, air bleeder
15	4920254	2	WASHER, seal
16	4920452	2	SCREW, air bleeder
17	4920256	2	ROLLER, bearing
18	4920255	1	O-RING
19	4920444	SEL	PLATE, shim (t=0.1 mm)
	4921150	SEL	PLATE, shim (t=0.12mm)
	4920445	SEL	PLATE, shim (t=0.14mm)
	4920446	SEL	PLATE, shim (t=0.16mm)
	4920447	SEL	PLATE, shim (t=0.18mm)
	4920448	SEL	PLATE, shim (t=0.5mm)
	6810282	SEL	PLATE, shim (t=0.3mm)
20	4920257	2	RING, adjusting
21	6810283	1	PUMP COVER, sub assy. (incl. 22-24)
22	6810284	1	PLATE, cover
23	4920454	2	SCREW, adjusting
24	4920254	2	PACKING, screw
25	4920259	2	WASHER, union
26	4920260	1	SCREW, hollow
27	6810285	1	SCREW, drain
28	6810286	1	WASHER, screw
29	4920261	1	O-RING
30	6810287	1	BEARING, center
31	6810288	2	WASHER, plate
32	6810289	2	SCREW, guide
33	6810290	1	PUMP HOUSING, complete (incl. 34 & 35)
34	4920679	3	STUD, feed pump
35	N.S.S.	1	BODY ASSY., pump
36	4920439	6	SCREW, pinion clamp
37	4920263	6	PINION, control
38	4920264	6	SLEEVE, control
39	4920265	6	SEAT, upper spring
40	4920266	6	SPRING, plunger
41	4920267	6	SEAT, lower spring
42	4920268	SEL	PLATE, shim (t=0.6mm)
	4920269	SEL	PLATE, shim (t=0.7mm)
	4920270	SEL	PLATE, shim (t=0.8mm)
	4920271	SEL	PLATE, shim (t=0.9mm)
	4920272	SEL	PLATE, shim (t=1.0mm)

ENGINE

INJECTION PUMP CONT'D.

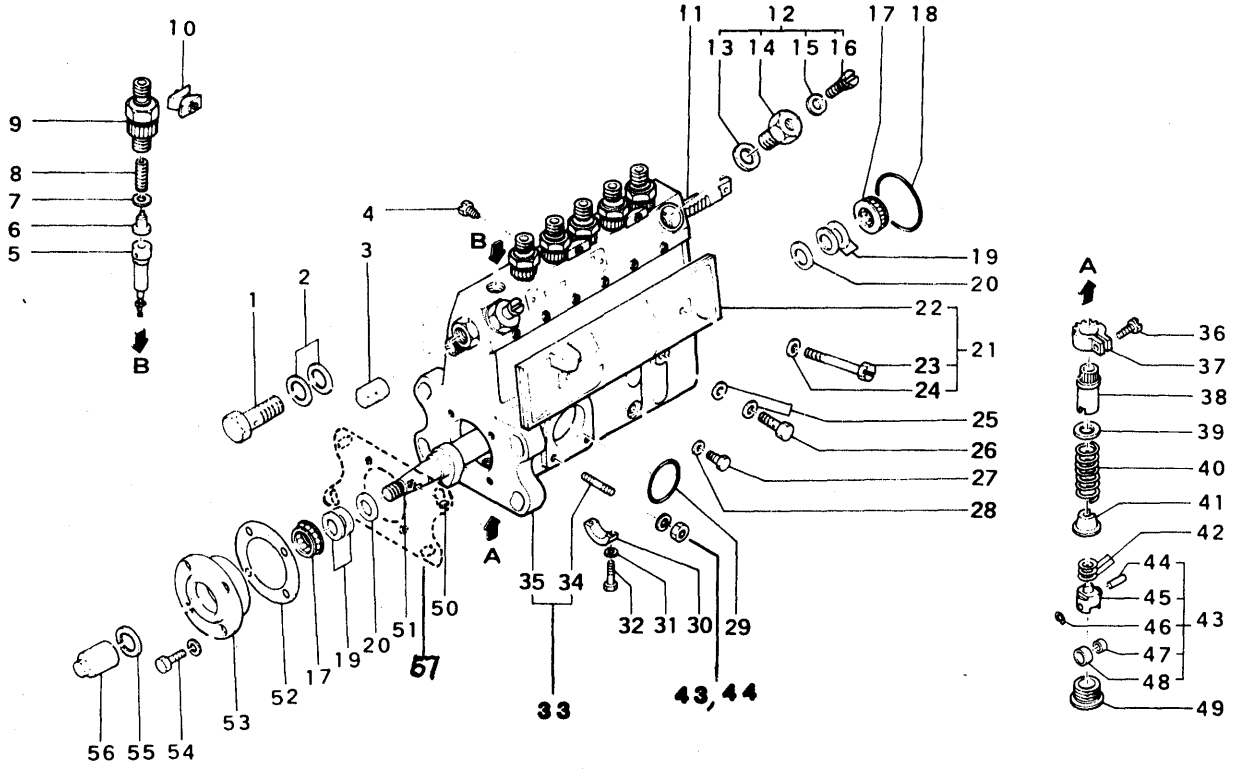

ITEM	NUMBER	QTY	DESCRIPTION
	4920273	SEL	PLATE, shim (t=1.1mm)
43	916622	3	NUT, hex .25-20, PLTD.
44	919310	3	WASHER, lock .25, PLTD.
	4920274	SEL	PLATE, shim (t=1.2mm)
	4920275	SEL	PLATE, shim (t=1.3mm)
	4920276	SEL	PLATE, shim (t=1.4mm)
	4920277	SEL	PLATE, shim (t=0.1mm)
	4920278	SEL	PLATE, shim (t=0.2mm)
	4920279	SEL	PLATE, shim (t=0.3mm)
	4920281	SEL	PLATE, shim (t=0.4mm)
	4920280	SEL	PLATE, shim (t=0.5mm)
	4920282	SEL	PLATE, shim (t=0.15mm)
43	4920283	6	TAPPET, sub-assy. (incl. 44-48)
44	4920441	6	PIN, roller
45	4920440	6	BODY, tappet
46	4920684	6	CIRCLIP
47	4920442	6	BUSHING, roller
48	4920443	6	ROLLER
49	4920284	6	PLUG, screw
50	6810291	1	KEY, woodruff
51	4920286	1	CAMSHAFT
52	6810293	1	GASKET, bearing cover
53	6810292	4	COVER, bearing
54	4920680	4	BOLT, w/washer
55	4920311	1	WASHER, spring
56	4920682	1	NUT, timer rotor
57	4530124	1	GASKET, pump hsg.
58	6810355	1	COVER ASSY., bearing (incl. 53)

ENGINE

GOVERNOR

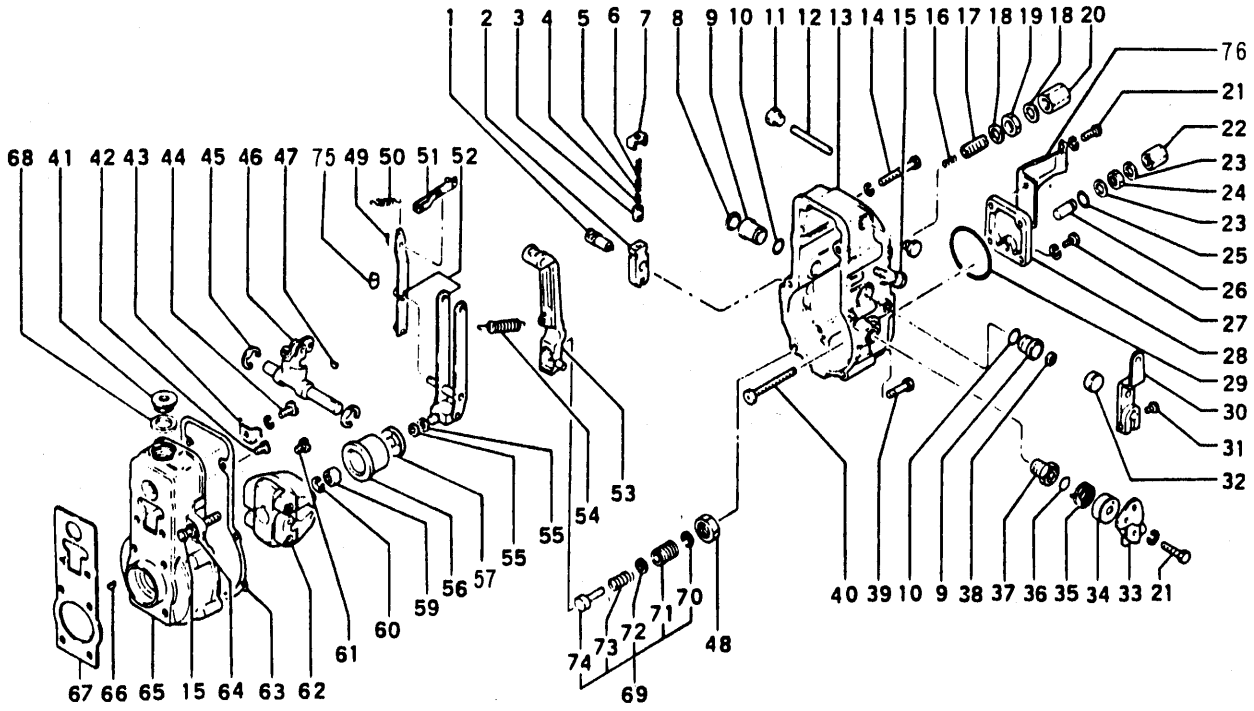

ITEM	NUMBER	QTY	DESCRIPTION
	N.S.S.	1	GOVERNOR ASSY.
1	4920299	1	SHAFT
2	6810294	1	LEVER, support
3	4920486	1	CUP, spring
4	4920297	1	SPRING, inner pressure
5	4920298	1	SPRING, middle pressure
6	4921229	1	SPRING, outer pressure
7	4921230	1	PLATE, cap
8	4921205	1	CAP, lever
9	4921206	2	BUSHING, lever
10	4920290	2	O-RING
11	4920470	2	PLUG, screw
12	4920477	1	SHAFT, lever suppting
13	6810295	1	COVER, governor
14	4921208	2	BOLT, w/washer
15	4921198	2	SCREW, adjusting
16	4920291	1	SPRING, idle
17	4921209	1	SCREW, adjusting
18	4920253	2	WASHER, nipple
19	4920683	1	NUT
20	4920483	1	NUT, cap
21	4920296	2	BOLT, w/washer
22	4921213	1	NUT, cap
23	4920294	2	WASHER, plate
24	4921212	1	NUT
25	4920289	1	O-RING
26	4921211	1	BUSHING
27	4921215	2	BOLT, w/washer
28	4921214	1	PLATE, cover
29	4920295	1	PACKING, rubber plate
30	6810296	1	ADJUSTING LEVER, sub-assy.
31	4920296	1	BOLT, w/washer
32	4921225	1	COLLAR, steel
33	6810297	1	STOP LEVER, sub-assy.
34	4920488	1	COVER, spring
35	6810298	1	SPRING, return
36	6810299	1	O-RING
37	4920481	1	BUSHING, bearing
38	4920688	1	SEAL, oil
39	4921235	4	BOLT, w/washer
40	4920301	1	SCREW, stroke adjusting
41	4920494	1	PLUG, screw
42	4921184	5	BOLT, w/washer
43	4921185	1	PLATE
44	4920655	2	BOLT, w/washer
45	4920308	2	WASHER, snap
46	4921187	1	SWIVELING LEVER, assy.
47	4920686	1	KEY, woodruff
48	4920473	1	NUT, lock
49	4921188	1	PIN, split
50	4920479	1	SPRING, start
51	4921190	1	SHACKLE, assy.

GOVERNOR CONT'D.

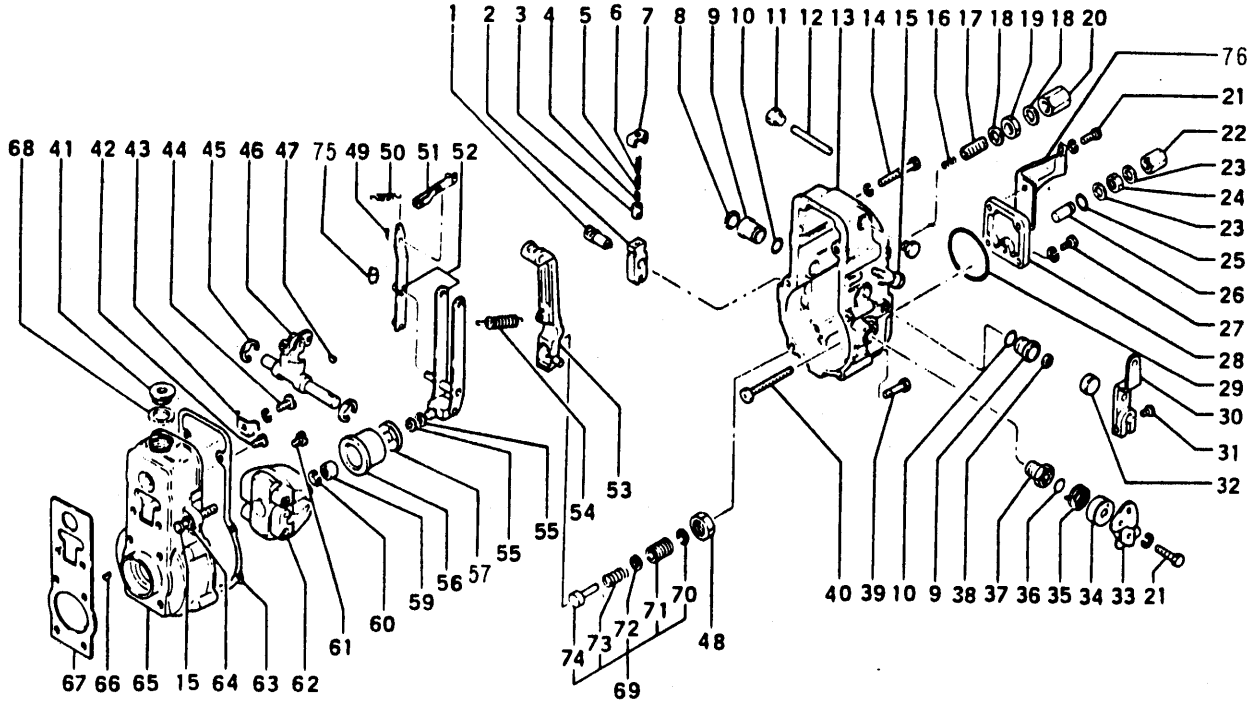

ITEM	NUMBER	QTY	DESCRIPTION
52	6810300	1	CONTROL LEVER, assy.
53	6810301	1	LEVER, tension
54	4920304	1	SPRING, speed control
55	4920313	SEL	WASHER, PLATE (t=0.2mm)
	4920314	SEL	WASHER, plate (t=0.3mm)
	4920315	SEL	WASHER, plate (t=0.4mm)
	4920316	SEL	WASHER, plate (t=0.1mm)
	4920317	SEL	WASHER, plate (t=1.0mm)
56	4920462	1	GOVERNOR, sleeve
57	6810302	1	BEARING
59	4920461	1	NUT, round
60	4920311	1	WASHER, lock
61	6810303	1	BOLT, w/washer
62	6810304	1	FLYWEIGHT, assy.
63	4920310	1	GASKET, housing
64	4920673	2	NUT
65	4921199	1	HOUSING, governor
66	6810305	1	KEY, woodruff
67	4921201	1	GASKET, governor
68	4921233	1	WASHER, seal
69	4921222	1	ADAPTER, assy. (incl. 70-74)
70	4920466	1	E-RING
71	4920470	1	SCREW, adapter
72	4920319	SEL	WASHER, plate (t=0.10mm)
	4920320	SEL	WASHER, plate (t=0.25mm)
	4920306	SEL	WASHER, plate (t=0.50mm)
	4920322	SEL	WASHER, plate (t=0.20mm)
73	6810306	1	SPRING, adapter
74	4920471	1	ADAPTER
75	4920479	1	SLIDER, start
76	4921210	1	BRACKET, stop

FUEL SYSTEM

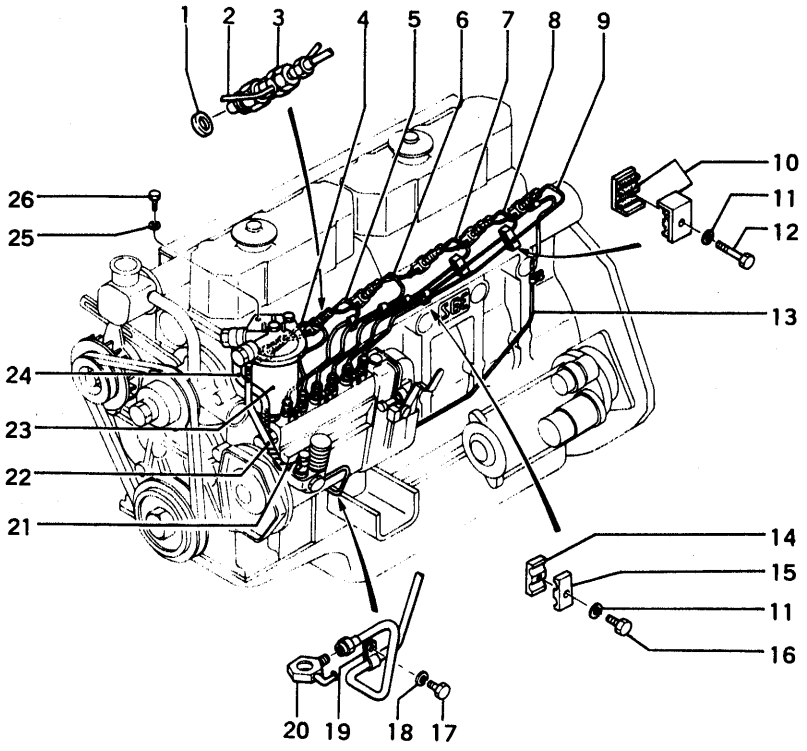

ITEM	NUMBER	QTY	DESCRIPTION
1	4530158	6	GASKET, nozzle
2	4530996	1	PIPE, fuel leak-off
3	4920236	6	NOZZLE ASSY.
4	4530786	1	PIPE, injection, No. 1
5	6810275	1	PIPE, injection, No. 2
6	4921142	1	PIPE, injection, No. 3
7	6800154	1	PIPE, injection, No. 4
8	6800155	1	PIPE, injection, No. 5
9	6800156	1	PIPE, injection, No. 6
10	6810276	1	CLAMP
	6810277	1	CLAMP
11	950218	5	WASHER, lock M6
12	950450	1	BOLT, hex M6-1.0 x 25mm, PLTD.
	950002	1	BOLT, hex M6-1.0 x 20mm, PLTD. (turbo)
13	4530997	1	PIPE, fuel return
	6810180	1	PIPE, fuel return (turbo)
14	4530111	3	CLAMP
15	4530121	3	CLAMP
16	950001	3	BOLT, hex M6-1.0 x 16mm, PLTD.
17	950050	1	BOLT, hex M12-1.75 x 20mm, PLTD.
18	4920385	1	WASHER, lock
19	4530144	2	CLIP
20	4921144	1	JOINT, eye
21	6810278	1	TUBE, coil
22	4530853	1	HOSE, fuel feed
23	4531048	1	FILTER ASSY., fuel
24	4530852	1	HOSE, fuel feed
25	950220	2	WASHER, lock M10, PLTD.
26	950037	2	BOLT, hex M10-1.5 x 30mm, PLTD.

FUEL NOZZLE

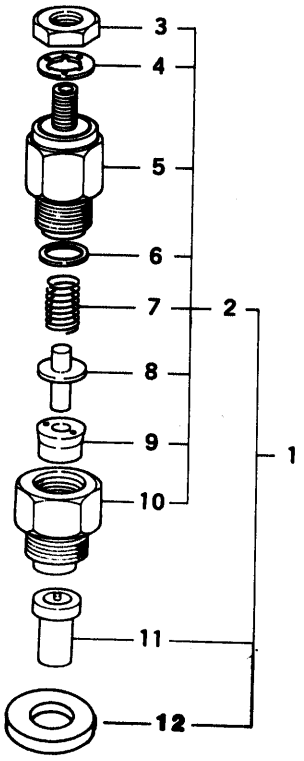

FUEL NOZZLE

ITEM	NUMBER	QTY	DESCRIPTION
1	4920236	6	NOZZLE, assy. (incl. 2-11)
2	4530192	6	NOZZLE HOLDER, assy.
3	4530472	6	NUT
4	4530473	6	PACKING
5	6810279	6	NOZZLE HOLDER BODY, complete
6	4530475	SEL	WASHER (t=1.0mm)
	4530476	SEL	WASHER (t=1.05mm)
	4530477	SEL	WASHER (t=1.10mm)
	6810356	SEL	WASHER (t=1.15mm)
	6810357	SEL	WASHER (t=1.20mm)
	6810358	SEL	WASHER (t=1.25mm)
	6810359	SEL	WASHER (t=1.30mm)
	6810360	SEL	WASHER (t=1.35mm)
	6810361	SEL	WASHER (t=1.40mm)
	6810362	SEL	WASHER (t=1.45mm)
	6810363	SEL	WASHER (t=1.50mm)
	6810364	SEL	WASHER (t=1.55mm)
	6810365	SEL	WASHER (t=1.60mm)
	6810366	SEL	WASHER (t=1.65mm)
	6810367	SEL	WASHER (t=1.70mm)
	6810368	SEL	WASHER (t=1.75mm)
	6810369	SEL	WASHER (t=1.80mm)
	6810352	SEL	WASHER (t=1.85mm)
	6810256	SEL	WASHER (t=1.90mm)
	4530478	SEL	WASHER (t=1.95mm)
7	4530479	6	SPRING, pressure
8	4530480	6	PIN, pressure
9	4530481	6	SPACER
10	4530482	6	NUT, retaining
11	4920242	6	NOZZLE TIP, assy.
12	4530158	6	GASKET, nozzle

FUEL FILTER

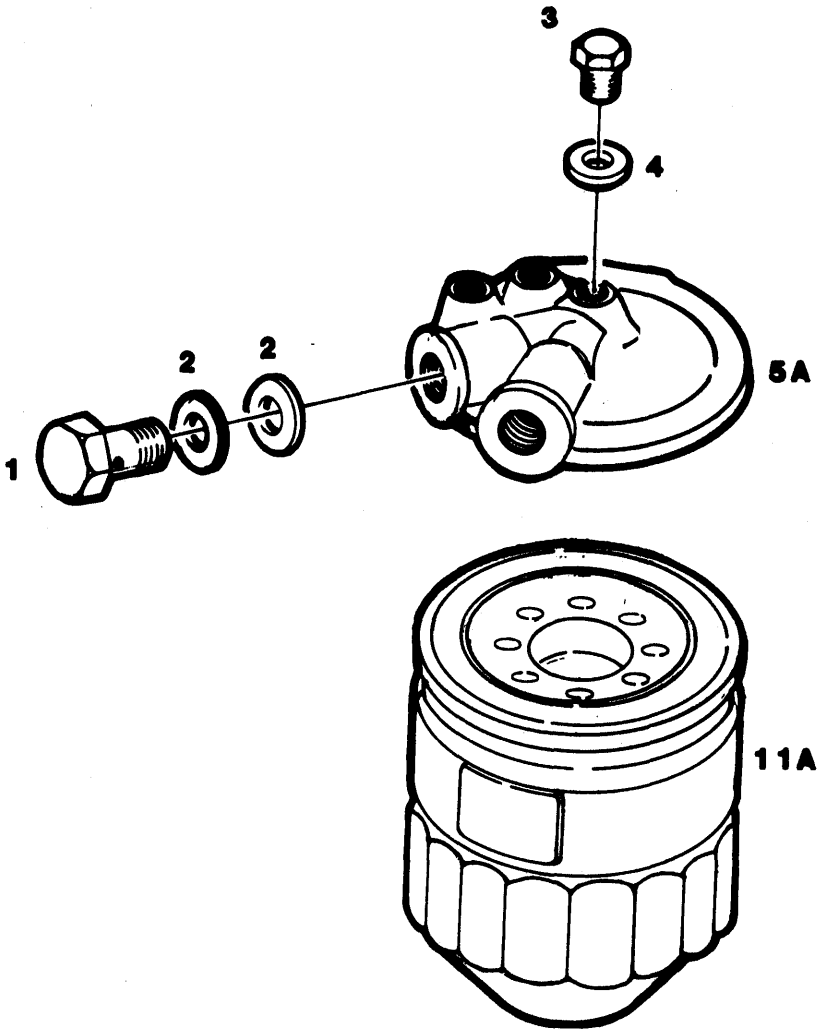

FUEL FILTER

ITEM	NUMBER	QTY	DESCRIPTION
	4531048	1	FUEL FILTER, assy. (incl. 1-5A, 11A)
1	4530132	2	BOLT, connector
2	4530129	4	GASKET
3	4530131	1	PLUG, air
4	4530128	2	GASKET
5A	4921171	1	BRACKET
11A	4921172	1	ELEMENT, assy.

STARTER GENERAL ARRANGEMENT

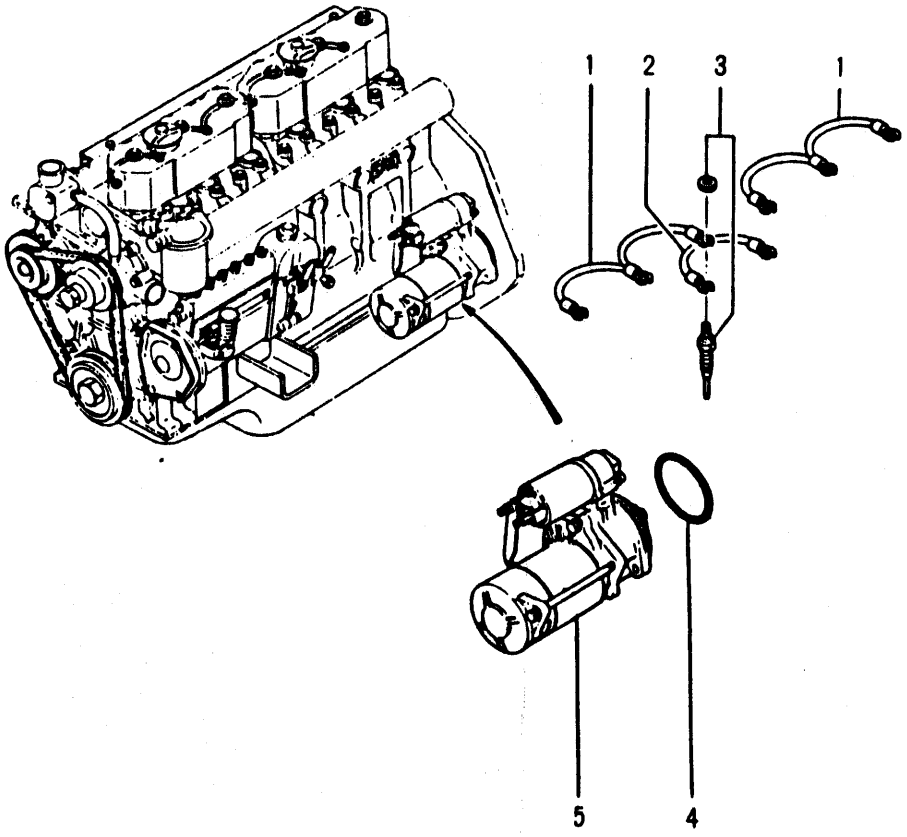

STARTER GENERAL ARRANGEMENT

ITEM	NUMBER	QTY	DESCRIPTION
1	4530351	2	WIRE, connection
2	6810308	1	WIRE, connection
3	4530872	6	PLUG, glow
4	4531003	1	O-RING
5	6810181	1	STARTER, assy.
	6800147	1	STARTER, assy. (turbo)

STARTER

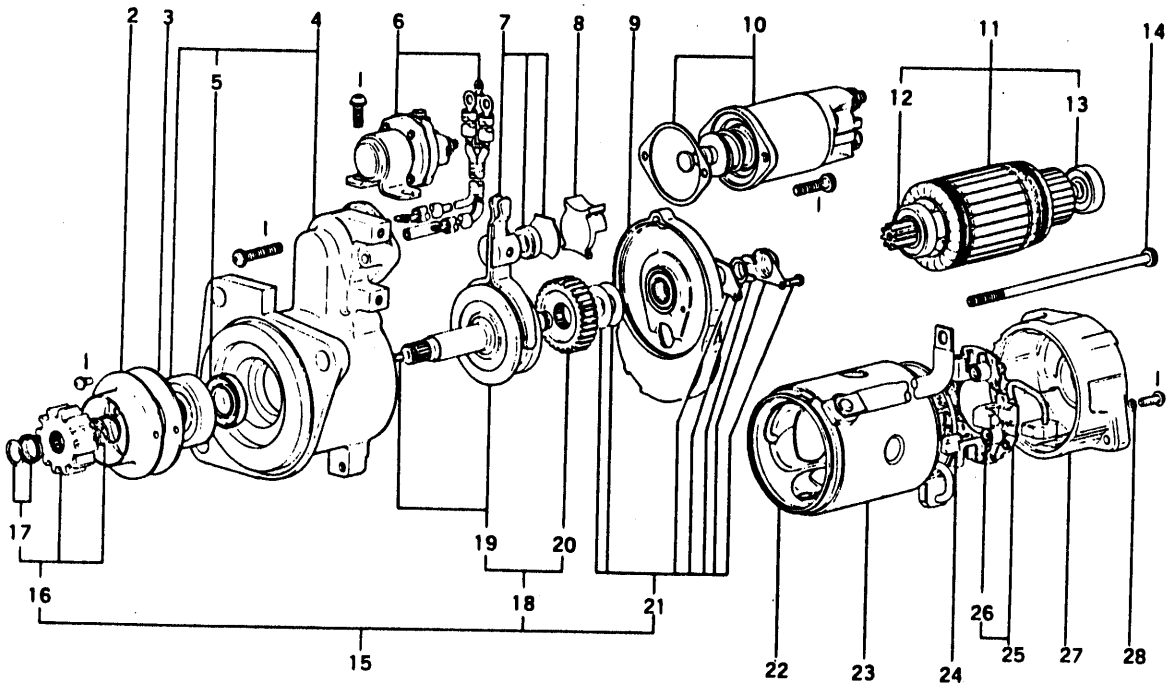

ITEM	NUMBER	QTY	DESCRIPTION
	6810181	1	STARTER, assy. (incl. 1-28)
	6800147	1	STARTER, assy. (turbo) (incl. 1-28)
1	2023890	1	SCREW, kit
2	2023891	1	COVER
3	2023892	1	PLATE
4	2023893	1	BRACKET, assy. (incl. 5)
5	2023894	1	SEAL, oil
6	2023895	1	SWITCH, assy.
7	2023896	1	LEVER, assy.
8	2023897	1	PACKING
9	2023898	1	BRACKET ASSY., center
	6810183	1	BRACKET ASSY., center (turbo)
10	2023899	1	SWITCH, assy.
11	2023901	1	ARMATURE, set (incl. 12 & 13)
12	2023902	1	BEARING
13	2023903	1	BEARING
14	2023904	1	BOLT
15	6810309	1	SHAFT ASSY., clutch set (incl. 16-21)
16	2023906	1	PINION, set (incl. 17)
17	4920418	1	STOPPER
18	2023908	1	GEAR, set (incl. 19 & 20)
19	6810310	1	SHAFT ASSY., pinion
20	6810311	1	GEAR
21	2024220	1	COVER, set
22	2024221	1	PACKING
23	2024222	1	YOKE, assy.
24	2024223	1	PACKING
25	2024224	1	BRUSH HOLDER, assy. (incl. 26)
26	2024225	4	SPRING, brush
27	2024226	1	BRACKET, rear
28	4920426	2	WASHER, rubber

ENGINE

ALTERNATOR GENERAL ASSEMBLY

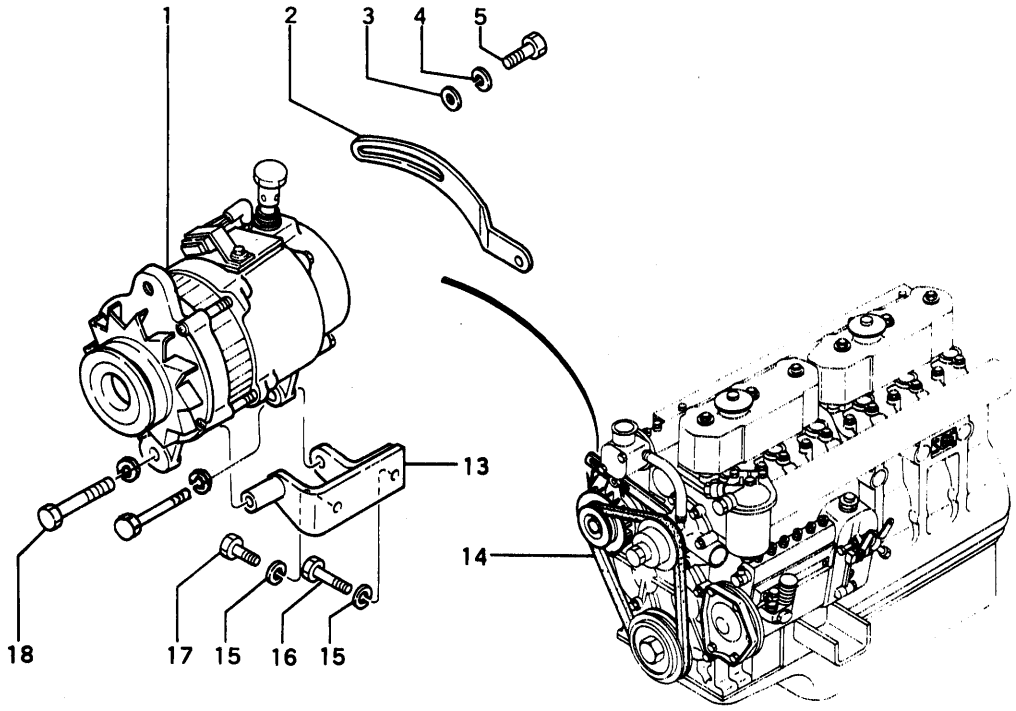

ALTERNATOR GENERAL ASSEMBLY

ITEM	NUMBER	QTY	DESCRIPTION
1	6800148	1	ALTERNATOR, assy.
2	6810312	1	PLATE, adjusting
3	950229	1	WASHER, flat M10, PLTD.
4	950220	1	WASHER, lock M10, PLTD.
5	950019	1	BOLT, hex M8-1.25 x 25mm, PLTD.
13	4921174	1	BRACKET, alternator
14	1023933	1	V-BELT
	6810184	1	V-BELT (turbo)
15	4920385	2	WASHER, lock M12
16	950052	1	BOLT, hex M12-1.75 x 30mm, PLTD.
17	950051	1	BOLT, hex M12-1.75 x 25mm, PLTD.
18	950868	2	BOLT, hex M10-1.25 x 30mm

ALTERNATOR

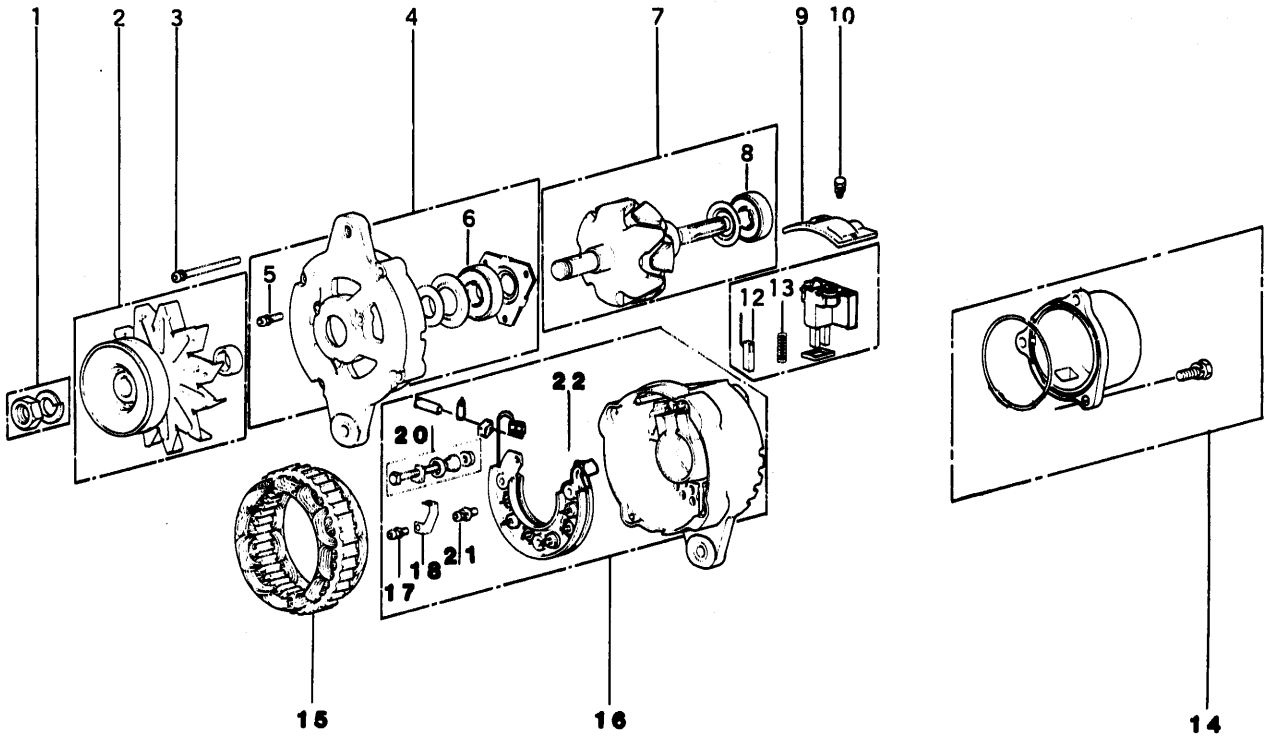

ALTERNATOR

ITEM	NUMBER	QTY	DESCRIPTION
	6800148	1	ALTERNATOR, assy. (incl. 1-22)
1	6810313	1	NUT, w/lockwasher
2	6810314	1	PULLEY, assy.
3	2023445	1	SCREW
4	6810315	1	BRACKET ASSY., front (incl. 5 & 6)
5	2024204	1	SCREW
6	2024205	1	BEARING
7	6810316	1	ROTOR, assy. (incl. 8)
8	2023448	1	BEARING
9	6810317	1	COVER, set
10	6810318	1	BOLT
11	6810319	1	REGULATOR, set (incl. 12 & 13)
12	2023454	2	BRUSH
13	2023455	2	SPRING, brush
14	6810320	1	COVER, set
15	6810321	1	STATOR
16	6810322	1	BRACKET ASSY., rear (incl. 17-22)
17	2023469	1	SCREW
18	6810323	1	CONNECTION
19	4920368	1	GROMMET
20	6810324	1	TERMINAL, set
21	6810325	1	SCREW
22	6810326	1	RECTIFIER

TURBOCHARGER

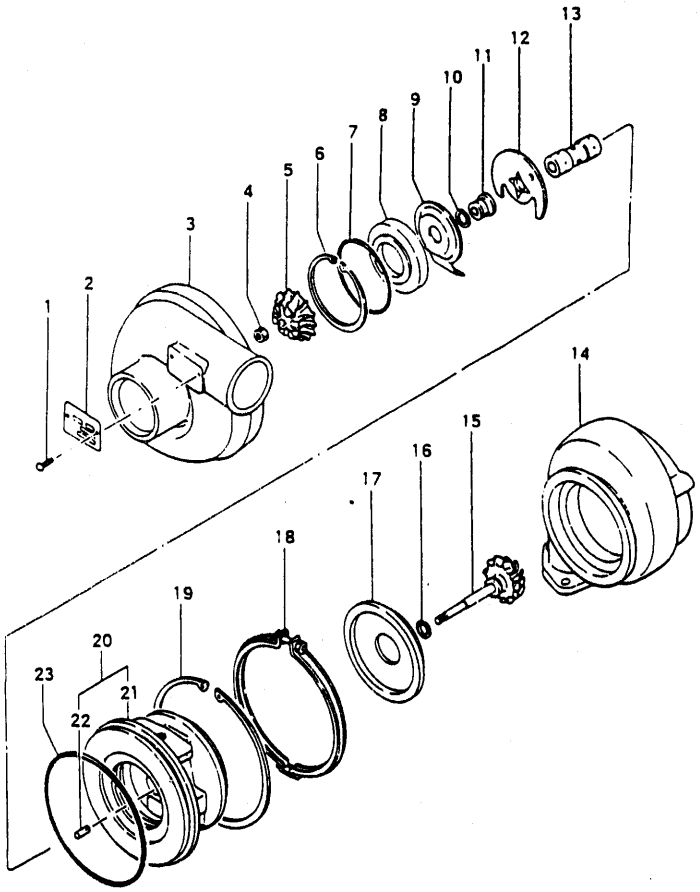

ITEM	NUMBER	QTY	DESCRIPTION
	6800160	1	TURBOCHARGER, assy. (incl. 1-23)
1	N.S.S.	2	RIVET, screw
2	N.S.S.	1	PLATE, name
3	6810220	1	COVER, compressor
4	6810221	1	NUT, lock
5	6810222	1	WHEEL, compressor
6	6810223	1	RING, snap
7	4920015	1	O-RING
8	6810224	1	INSERT
9	6810225	1	DEFLECTOR, oil
10	6810226	1	RING, piston
11	6810227	1	SLEEVE, thrust
12	6810228	1	BEARING, thrust
13	6810229	1	BEARING
14	6810230	1	HOUSING, turbine
15	6810231	1	SHAFT & TURBINE WHEEL, assy.
16	6810232	1	RING, piston
17	6810307	1	PLATE, turbine back
18	6810234	1	COUPLING, assy.
19	6810235	1	RING, snap
20	6810236	1	BEARING HOUSING & PIN, assy. (incl. 21 & 22)
21	N.S.S.	1	HOUSING, bearing
22	N.S.S.	1	HOUSING, bearing
23	6810237	1	O-RING

NOTES

SECTION 02 -LOADER GENERAL ARRANGEMENT INDEX

Arm Lock	128
Bonnet (S/N 63-)	120
Bonnet (S/N 1-62)	122
Brake Piping	142
Control Arrangement	110
Engine Control	106
Engine Mount	104
Foot Brake	134
Foot Brake Master Cylinder	136
Frame Lock	130
Front Frame	114
Fuel Tank	108
Parking Brake Assembly	140
Parking Brake	138
Positioner	126
Rear Frame	116
Seat Frame	118
Suspension	112
Working Arrangement	124

LOADER-GENERAL ARRANGEMENT

ENGINE MOUNT

S/N 63 & BEYOND

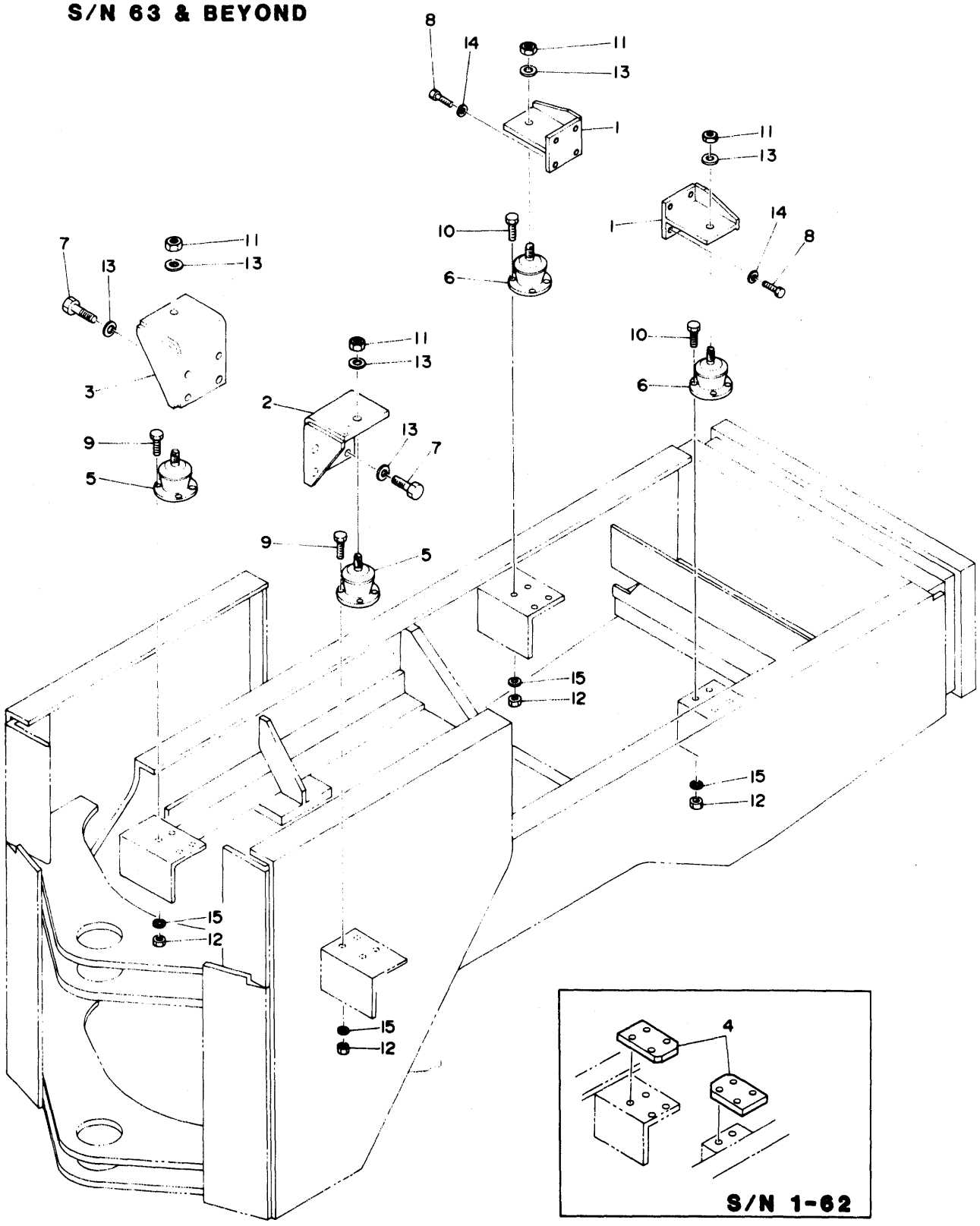

ENGINE MOUNT
S/N 63& BEYOND

ITEM	NUMBER	QTY	DESCRIPTION
1	6810481	2	BRACKET, rear
2	6810482	1	BRACKET, L.H.
3	6810483	1	BRACKET, R.H.
4	6811150	2	SPACER (S/N 1-62)
5	6810484	2	CUSHION, rubber
6	6810485	2	CUSHION, rubber
7	6900129	8	BOLT, hex M16-2 x 35mm
8	950377	8	BOLT, hex M12-1.75 x 30mm (10.9), PLTD.
9	950452	8	BOLT, hex M10-1.5 x 35mm (10.9)
10	950313	8	BOLT, hex M10-1.5 x 60mm
11	950249	4	NUT, hex M16-2
12	950211	16	NUT, hex M10-1.5, PLTD.
13	6900144	12	WASHER, lock .312
14	6900143	8	WASHER, lock .500
15	950221	16	WASHER, lock M12, PLTD.

LOADER-GENERAL ARRANGEMENT

ENGINE CONTROL

S/N 63-BEYOND

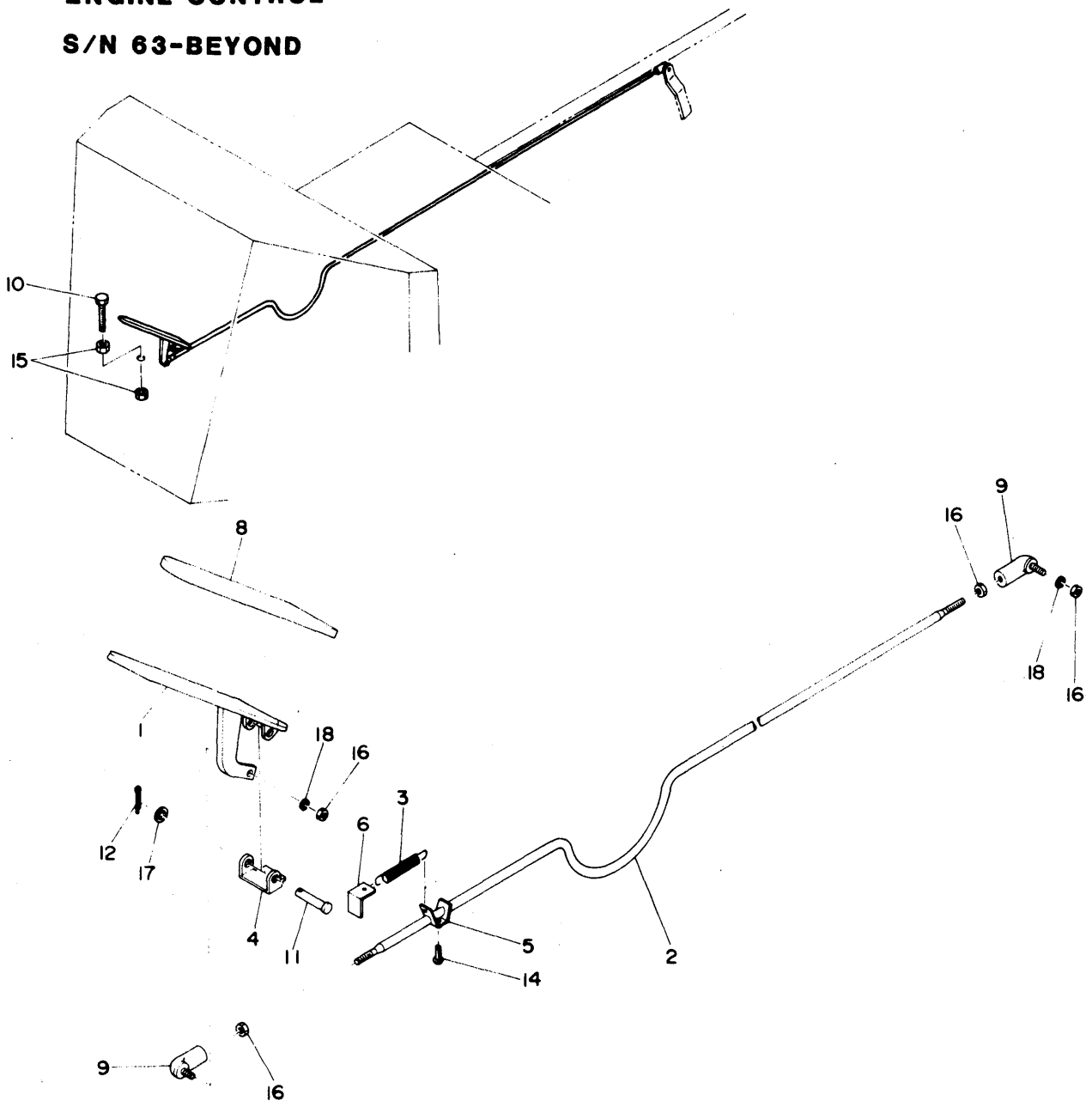

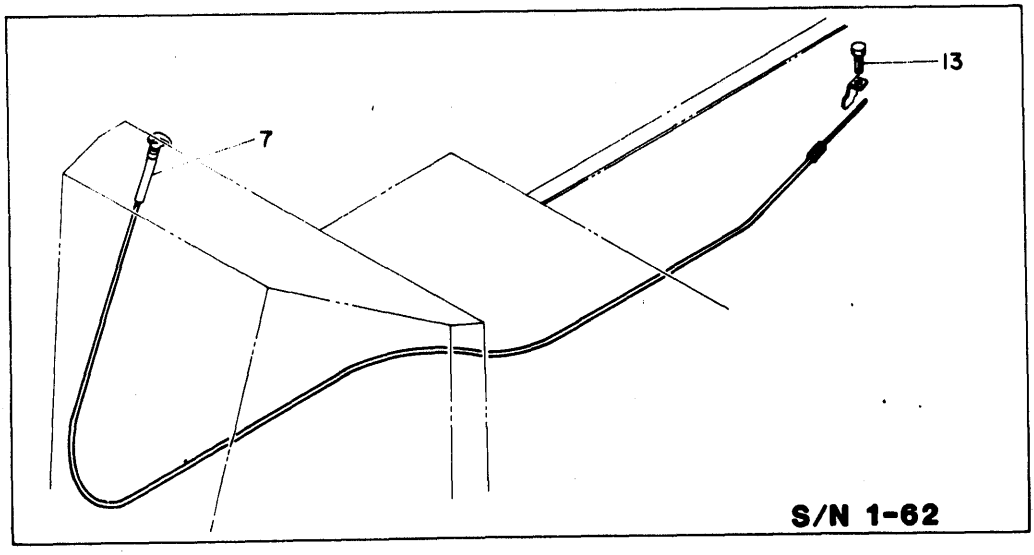

ENGINE CONTROL
S/N 63-BEYOND

ITEM	NUMBER	QTY	DESCRIPTION
1	6810479	1	PEDAL, accel.
2	6800065	1	ROD
3	6811147	1	SPRING
4	6811148	1	BRACKET
5	6800067	1	PLATE, lock
6	6811149	1	BRACKET
7	6800066	1	CABLE ASSY, stop (S/N 1-62)
8	2023087	1	COVER, pedal
9	6800069	2	ROD END
10	950320	1	BOLT, hex M10-1.5 x 70mm (S/N 1-62)
	950044	1	BOLT, hex M10-1.5 x 70mm (S/N 1-62)
	950044	1	BOLT, hex M10-1.25 x 90mm (S/N 63-)
11	2023199	1	PIN, headed
12	6900145	1	PIN, cotter
13	950262	1	BOLT, hex M6-1 x 16mm (S/N 1-62)
14	2023794	1	SCREW, round head
15	950246	2	NUT M10-1.5
16	950244	4	NUT M6-1.0
17	950228	1	WASHER, flat M8, PLTD.
18	950218	2	WASHER, lock M6, PLTD.

LOADER-GENERAL ARRANGEMENT

FUEL TANK

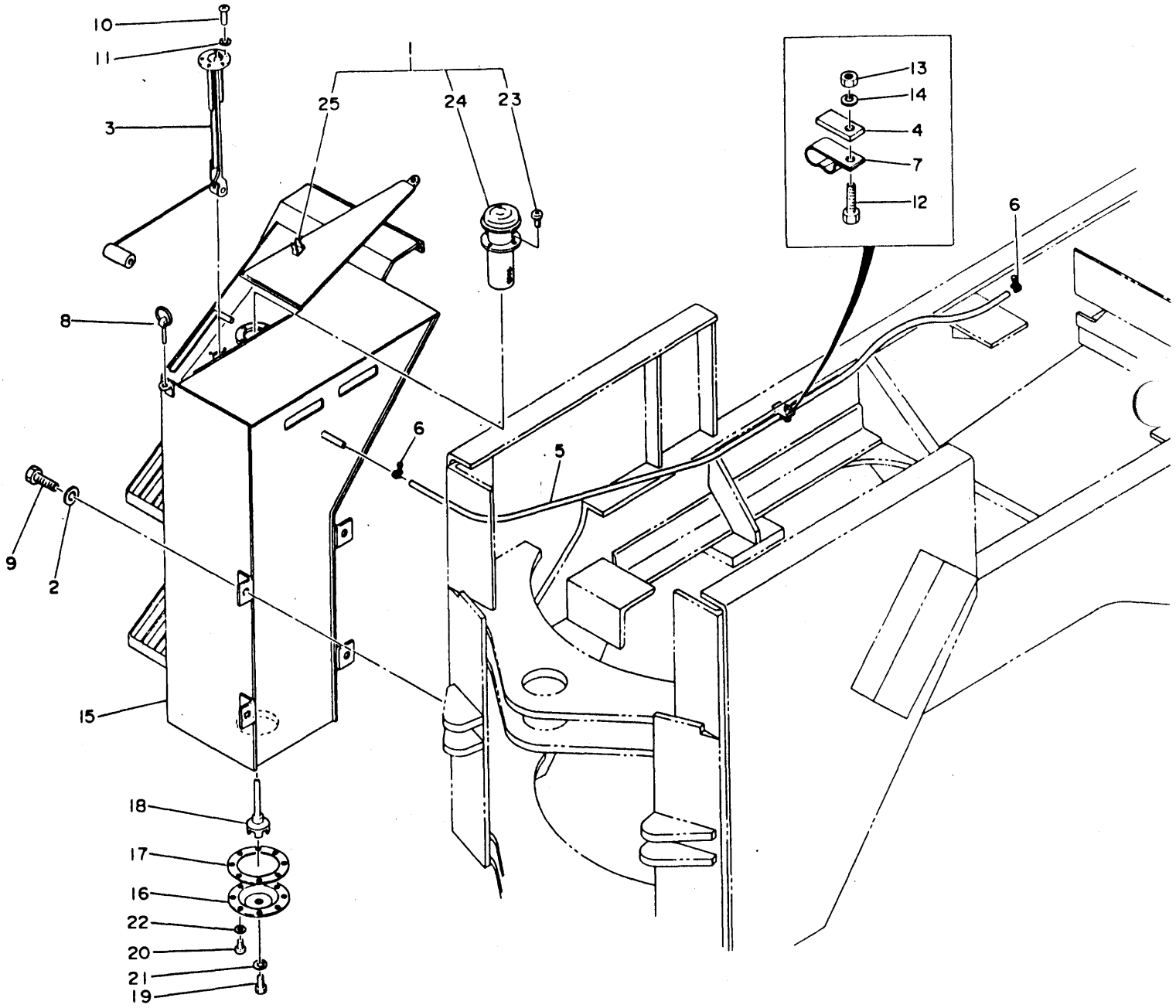

FUEL TANK

ITEM	NUMBER	QTY	DESCRIPTION
1	6810405	1	TANK ASSY., fuel (incl. 3, 8, 10, 11, 15-25)
2	6810686	4	WASHER, flat M17, PLTD.
3	6810639	1	SENDER
4	6811138	1	PLATE
5	6810058	1	HOSE, rubber
6	6811139	2	CLAMP, hose
7	6811140	1	CLIP
8	6810755	1	PIN, set
9	950379	4	BOLT, hex M16-2.0 x 20mm (10.9), PLTD.
10	2023016	5	SCREW, round head M5-.08 x 12mm, PLTD.
11	6811142	5	WASHER, seal
12	950262	1	BOLT, hex M6-1.0 x 16mm
13	950209	1	NUT, hex M6-1.0
14	950220	1	WASHER, lock M10, PLTD.
15	6810535	1	TANK, fuel
16	6810478	1	COVER
17	6811143	1	PACKING
18	6811144	1	STRAINER
19	6811145	1	PLUG, drain
20	2023085	8	SCREW, round head M6-.08 x 12mm, PLTD.
21	6811146	1	PACKING
22	950218	8	WASHER, lock M6, PLTD.
23	2023016	4	SCREW, round head M5-.08 x 12mm, PLTD.
24	6811135	1	BREATHER
25	6811136	1	STOPPER

LOADER-GENERAL ARRANGEMENT

CONTROL ARRGMT.

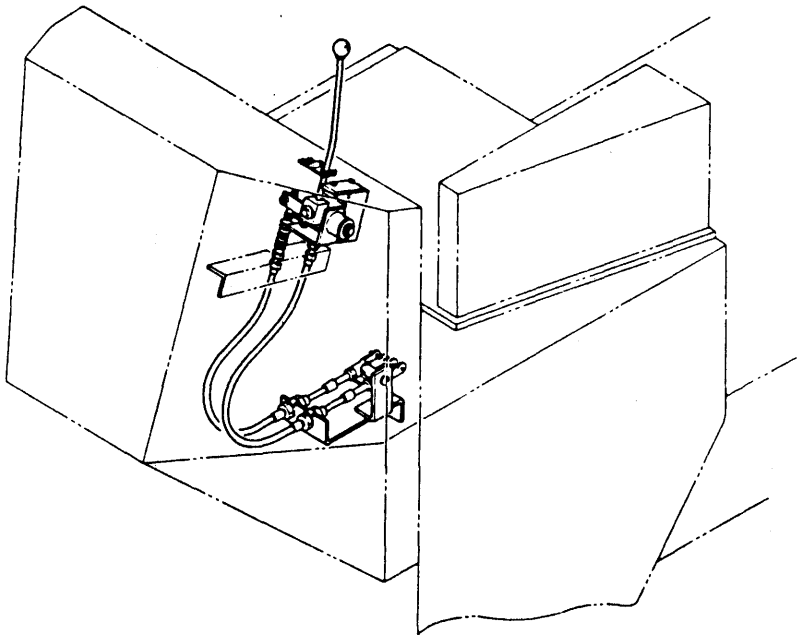

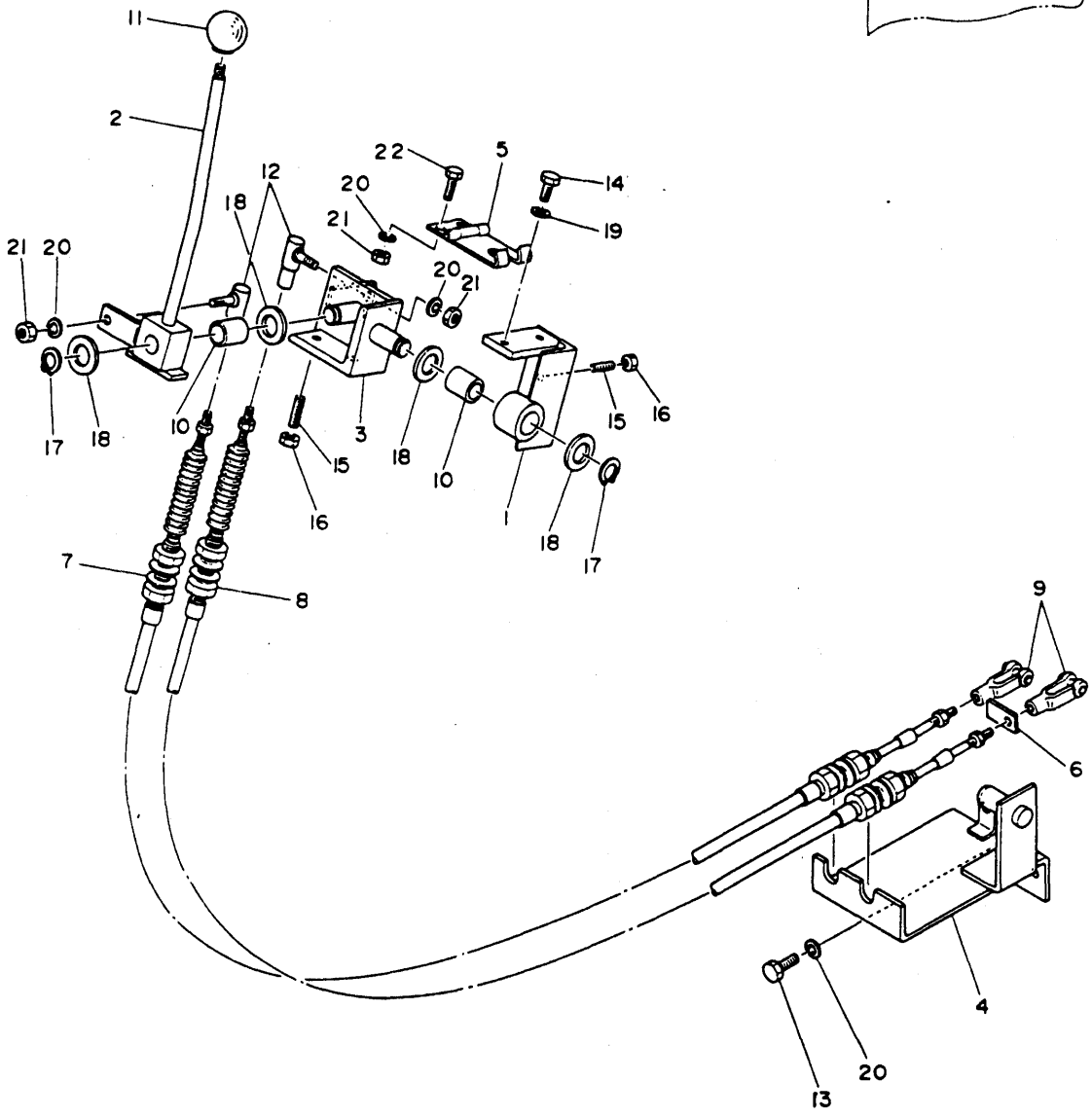

ITEM	NUMBER	QTY	DESCRIPTION
1	6810337	1	BRACKET (incl. 10)
2	6810338	1	LEVER (incl. 10)
3	6810458	1	LEVER
4	6810626	1	BRACKET
5	6811079	1	LEVER LOCK
6	6811080	1	PLATE
7	6800073	1	CABLE, assy.
8	6800074	1	CABLE, assy.
9	6811081	2	CLEVIS
10	6810792	2	BUSHING
11	6810681	1	KNOB
12	6800075	2	ROD END
13	6900131	2	BOLT, hex M8-1.25 x 80mm
14	950267	2	BOLT, hex M10-1.5 x 20mm
15	2024048	4	SCREW, set
16	950245	4	NUT, hex M8-1.25
17	2024047	2	RING, snap
18	950233	4	WASHER, flat M20, PLTD.
19	950220	2	WASHER, lock M10, PLTD.
20	950219	6	WASHER, lock M8, PLTD.
21	950210	4	NUT, hex M8-1.25, PLTD.
22	950018	2	BOLT, hex M8-1.25 x 20mm, PLTD.

840D WHEEL LOADER

LOADER-GENERAL ARRANGEMENT

SUSPENSION

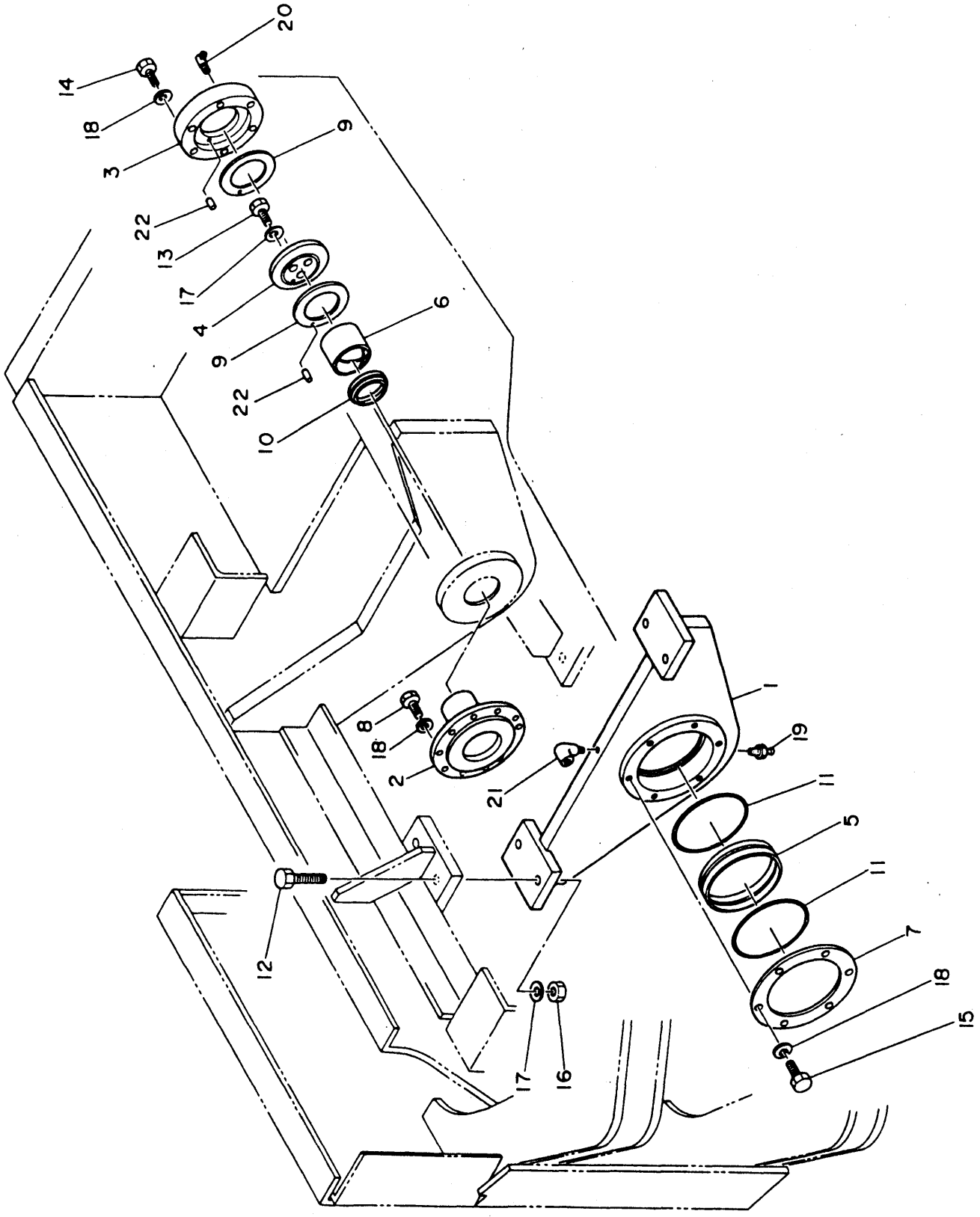

ITEM	NUMBER	QTY	DESCRIPTION
1	6810349	1	SUPPORT, front (incl. 5 & 11)
2	6900028	1	PIN (incl. 6 & 10)
3	6810413	1	COVER
4	6810076	1	WASHER, thrust
5	6810651	1	BUSHING
6	6810075	1	BUSHING
7	6810652	1	COVER
8	951177	10	BOLT M12-1.25 x 35mm
9	6810077	2	WASHER, thrust
10	6810654	1	SEAL, dust
11	6900029	2	O-RING
12	950497	4	BOLT, hex M16-2.0 x 80mm (10.9)
13	6900169	3	BOLT, hex M16-1.5 x 60mm (10.9)
14	950397	6	BOLT, hex M12-1.75 x 50mm (10.9), PLTD.
15	950050	6	BOLT, hex M12-1.75 x 20mm, PLTD.
16	950214	4	NUT, hex M16-2.0
17	6900144	7	WASHER, conical M16
18	6900143	22	WASHER, conical M12
19	914465	1	NIPPLE, grease
20	915276	1	NIPPLE, grease
21	6810655	1	ELBOW
22	6810656	2	PIN, spring

840D WHEEL LOADER

LOADER-GENERAL ARRANGEMENT

FRONT FRAME

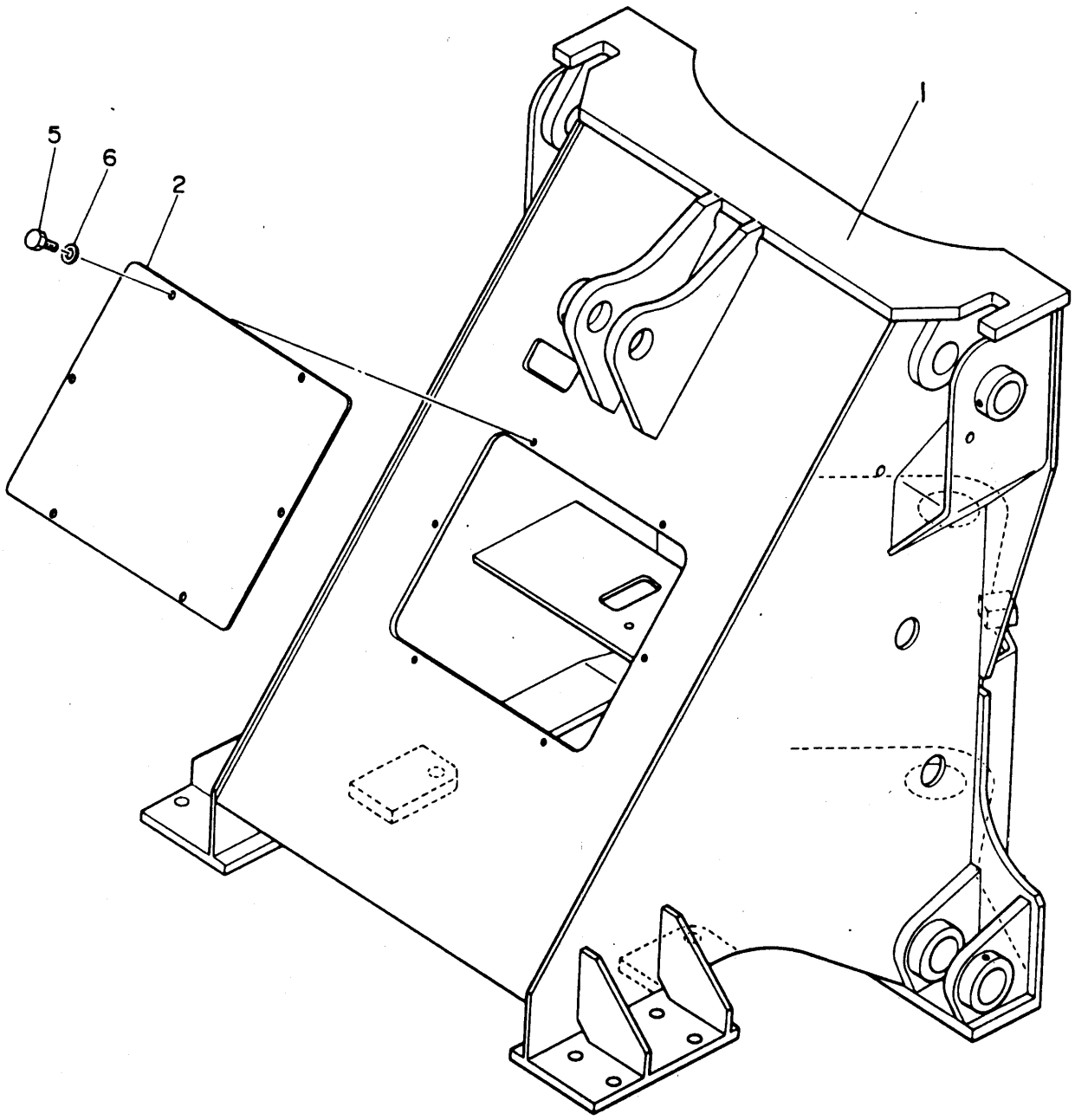

FRONT FRAME

ITEM	NUMBER	QTY	DESCRIPTION
1	6810492	1	FRAME, front (incl. 3 & 4)
2	6810761	1	COVER
3	6810673	5	BOSS
4	6810763	2	STOPPER
5	950034	6	BOLT, hex M10-1.5 x 16mm, PLTD.
6	950220	6	WASHER, lock M10, PLTD.

840D WHEEL LOADER

LOADER-GENERAL ARRANGEMENT

REAR FRAME

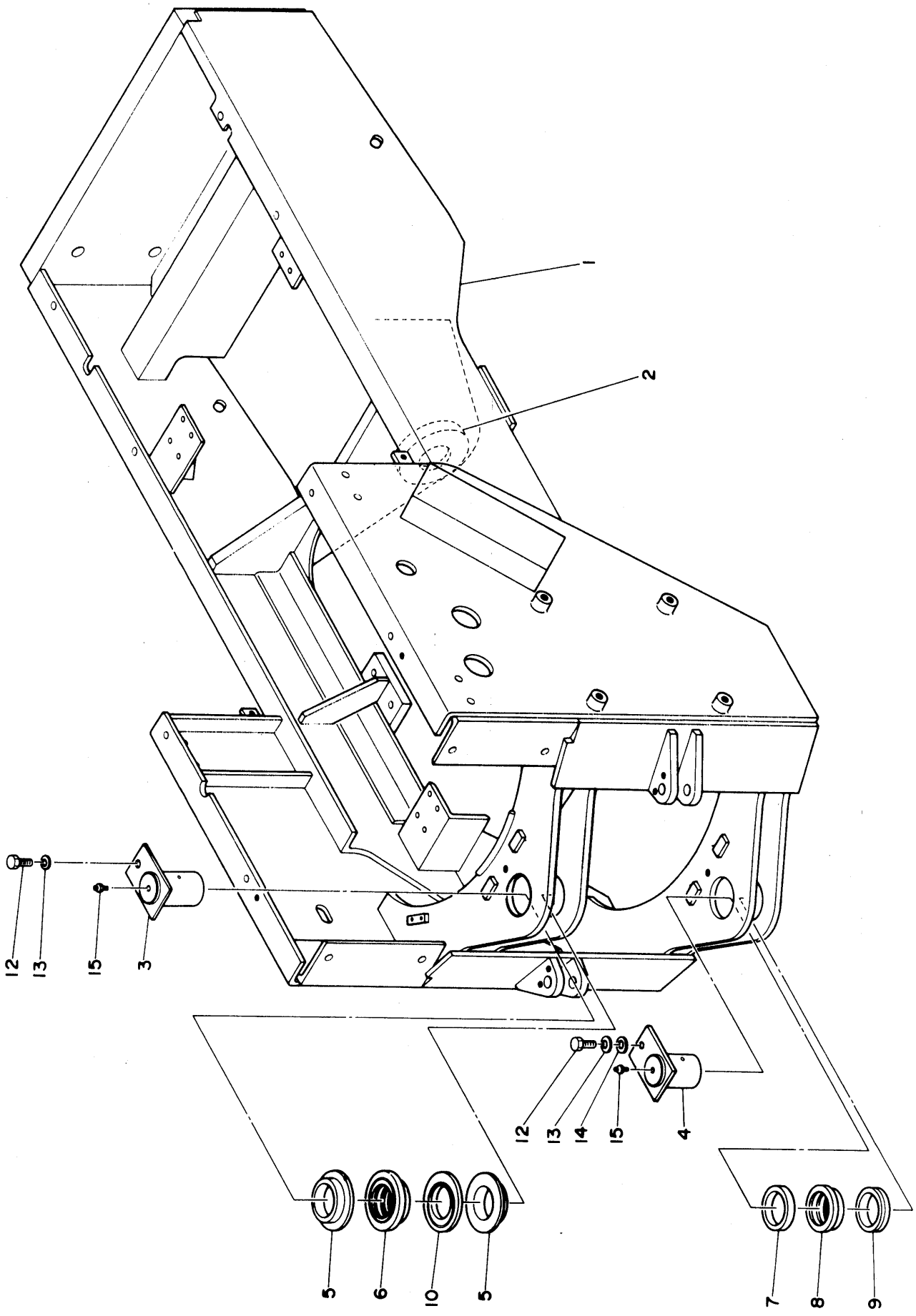

REAR FRAME

ITEM	NUMBER	QTY	DESCRIPTION
1	6810346	1	FRAME ASSY., rear (incl. 5-9)
2	6810444	1	BOSS
3	6810445	1	PIN, upper (incl. 5, 6 & 15)
4	6900043	1	PIN, lower (incl. 7-9 & 15)
5	6810091	2	BUSHING
6	6810092	1	BUSHING
7	6810093	1	BUSHING
8	6810094	1	BUSHING
9	6810095	1	BUSHING
10	6810764	1	WASHER, thrust (t=6.3mm)
10	6810765	1	WASHER, thrust (t=6.6mm)
10	6810766	1	WASHER, thrust (t=6.9mm)
10	6810767	1	WASHER, thrust (t=7.2mm)
10	6810768	1	WASHER, thrust (t=7.5mm)
10	6810769	1	WASHER, thrust (t=7.8mm)
11	6810770	4	STOPPER
12	950081	2	BOLT, hex M16-2 x 25mm, PLTD.
13	6900144	2	WASHER, conical
14	950232	1	WASHER, flat M16, PLTD.
15	2024079	2	ZERK, grease

LOADER-GENERAL ARRANGEMENT

SEAT FRAME

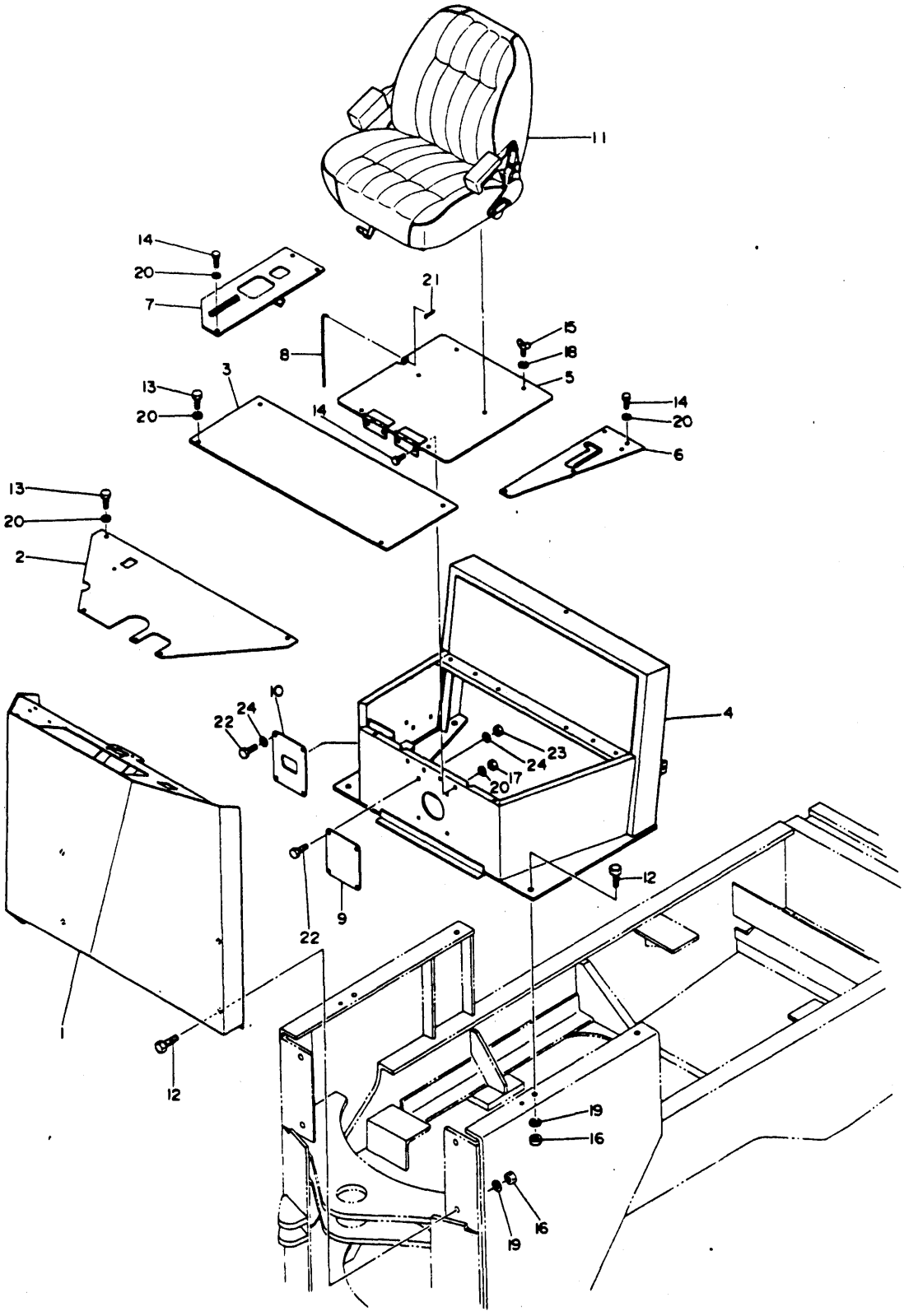

SEAT FRAME

ITEM	NUMBER	QTY	DESCRIPTION
1	6810490	1	BOARD, dash
2	6810441	1	PLATE, floor
3	6810756	1	PLATE, floor
4	6810491	1	BRACKET, seat
5	6810557	1	COVER (CENTER)
6	6810442	1	COVER (L.H.)
7	6810443	1	COVER (R.H.)
8	6810757	1	BAR, support
9	6810758	1	COVER
10	6810759	1	COVER
11	6810096	1	SEAT
12	950393	8	BOLT, hex M16-2.0 x 45mm (10.9), PLTD.
13	950051	9	BOLT, hex M12-1.75 x 25mm, PLTD.
14	950267	10	BOLT, hex M10-1.5 x 20mm
15	6900155	2	BOLT, wing
16	950249	8	NUT, hex M16-2.0
17	950211	4	NUT, hex M10-1.5, PLTD.
18	950229	2	WASHER, flat M10, PLTD.
19	6810686	8	WASHER, lock M16
20	950220	21	WASHER, lock M10, PLTD.
21	6900146	1	PIN, cotter
22	6900164	8	BOLT, hex
23	950944	4	NUT, hex M8-1.25, PLTD.
24	950219	8	WASHER, lock M8, PLTD.

LOADER-GENERAL ARRANGEMENT

BONNET

S/N 63-BEYOND

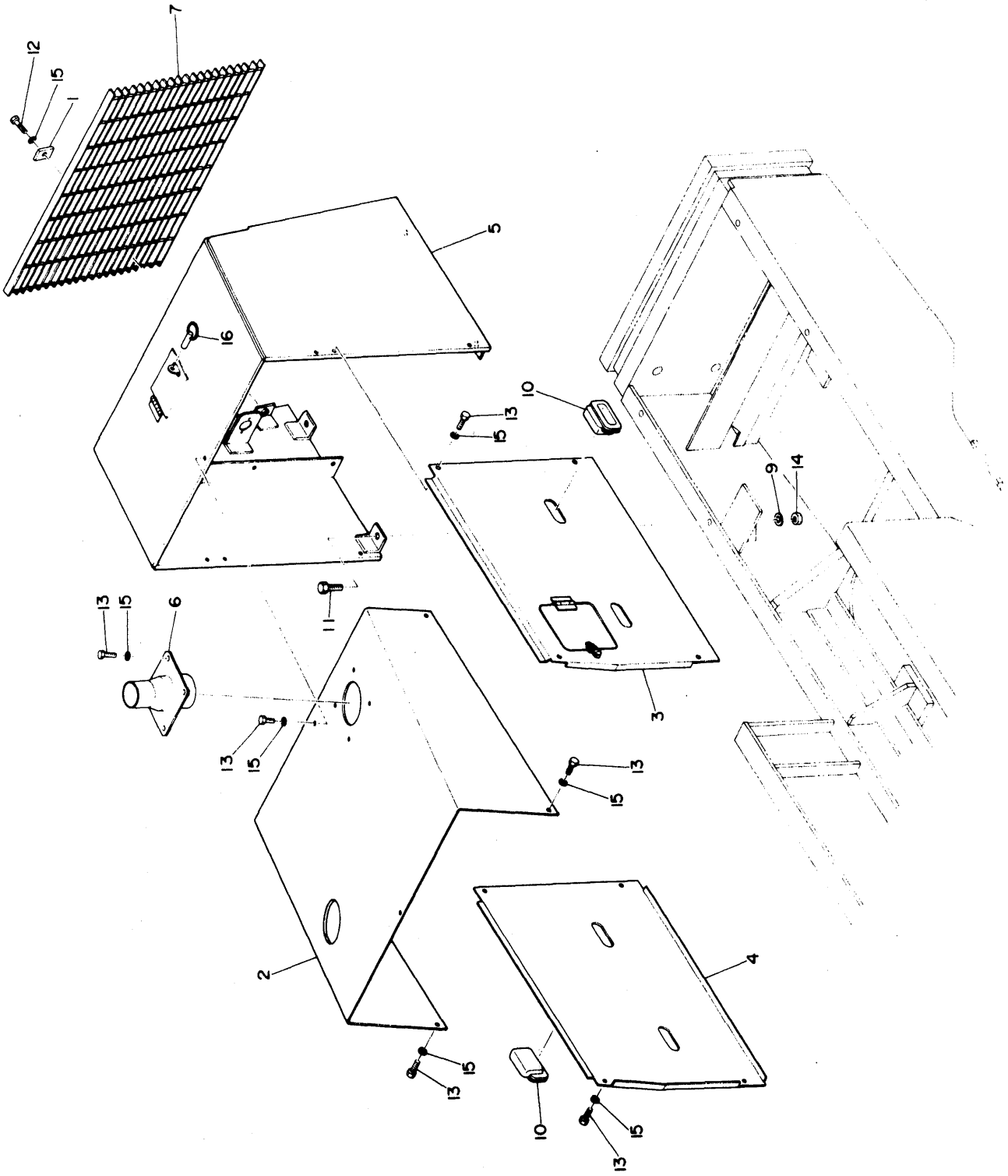

BONNET
S/N 63-BEYOND

ITEM	NUMBER	QTY	DESCRIPTION
1	6810750	4	CLAMP
2	6810552	1	HOOD (S/N 1-32)
	6810754	1	PIPE (S/N 63-)
3	6810553	1	SIDE PANEL, (L.H.)
4	6810554	1	SIDE PANEL, (R.H.)
5	6810555	1	SHROUD
6	6810751	1	PIPE (S/N 1-62)
	6810754	1	PIPE (S/N 63-)
7	6810556	1	GRILL
8	6810752	1	COVER (S/N 1-62)
9	6810686	4	WASHER
10	2023100	4	HOLDER
11	950494	4	BOLT, hex M16-2 x 40mm (10.9)
12	950039	4	BOLT, hex M10-1.5 x 45mm, PLTD.
13	950036	18	BOLT, hex M10-1.5 x 25mm, PLTD. (S/N 1-62)
	950036	14	BOLT, hex M10-1.25 x 25mm, PLTD. (S/N 63-)
14	950249	4	NUT, hex M16-2
15	6900142	22	WASHER, conical (S/N 1-62)
	6900142	18	WASHER, conical (S/N 63-)
16	239854	1	PIN, quick hitch

LOADER - GENERAL ARRANGEMENT

BONNET

S/N 1-62

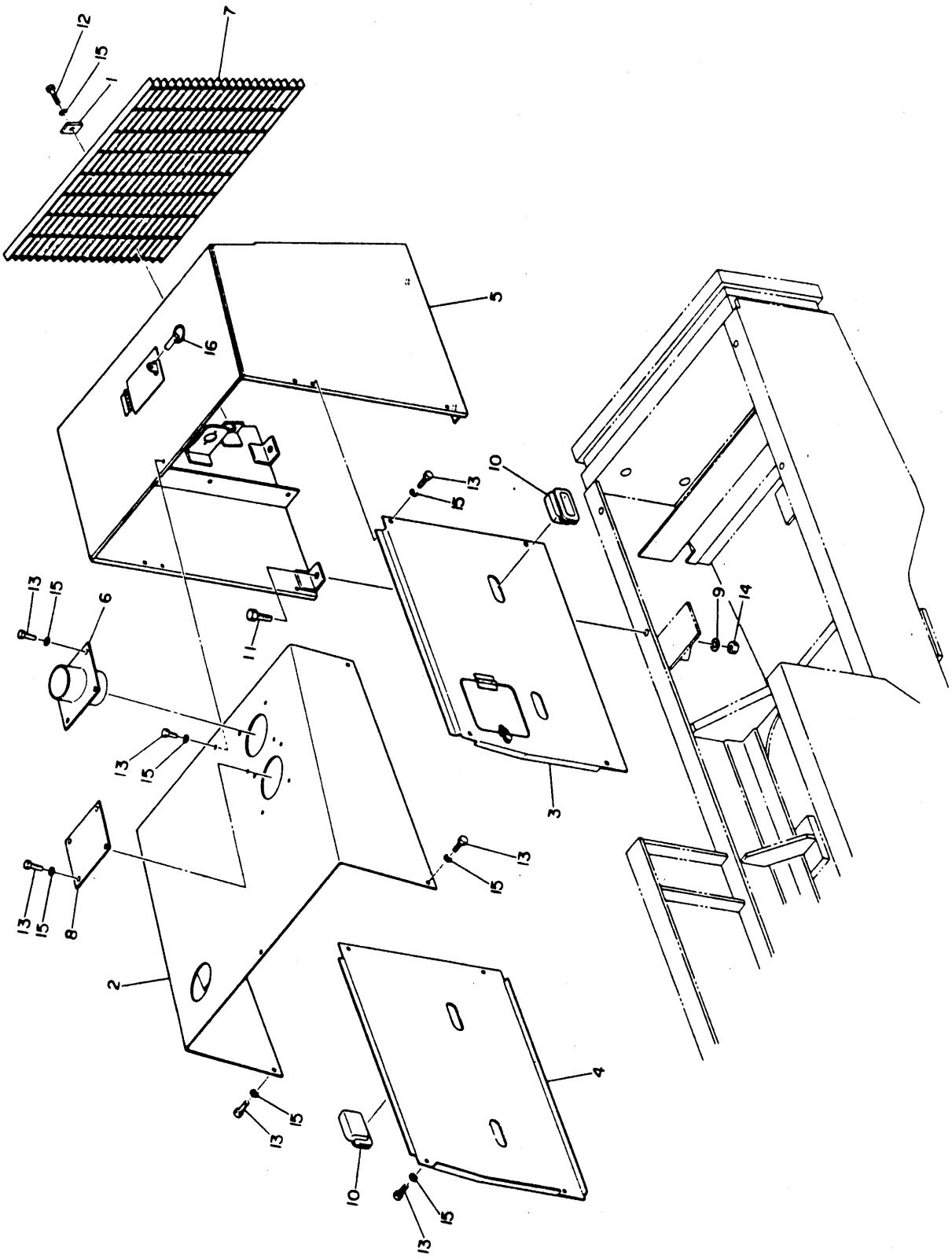

BONNET
S/N 1-62

ITEM	NUMBER	QTY	DESCRIPTION
1	6810750	4	CLAMP
2	6810552	1	HOOD (S/N 1-32)
	6810754	1	PIPE (S/N 63-)
3	6810553	1	SIDE PANEL, (L.H.)
4	6810554	1	SIDE PANEL, (R.H.)
5	6810555	1	SHROUD
6	6810751	1	PIPE (S/N 1-62)
	6810754	1	PIPE (S/N 63-)
7	6810556	1	GRILL
8	6810752	1	COVER (S/N 1-62)
9	6810686	4	WASHER
10	2023100	4	HOLDER
11	950494	4	BOLT, hex M16-2 x 40mm (10.9)
12	950039	4	BOLT, hex M10-1.5 x 45mm, PLTD.
13	950036	18	BOLT, hex M10-1.5 x 25mm, PLTD. (S/N 1-62)
	950036	14	BOLT, hex M10-1.25 x 25mm, PLTD. (S/N 63-)
14	950249	4	NUT, hex M16-2
15	6900142	22	WASHER, conical (S/N 1-62)
	6900142	18	WASHER, conical (S/N 63-)
16	239854	1	PIN, quick hitch

LOADER-GENERAL ARRANGEMENT

WORKING ARRGMT.

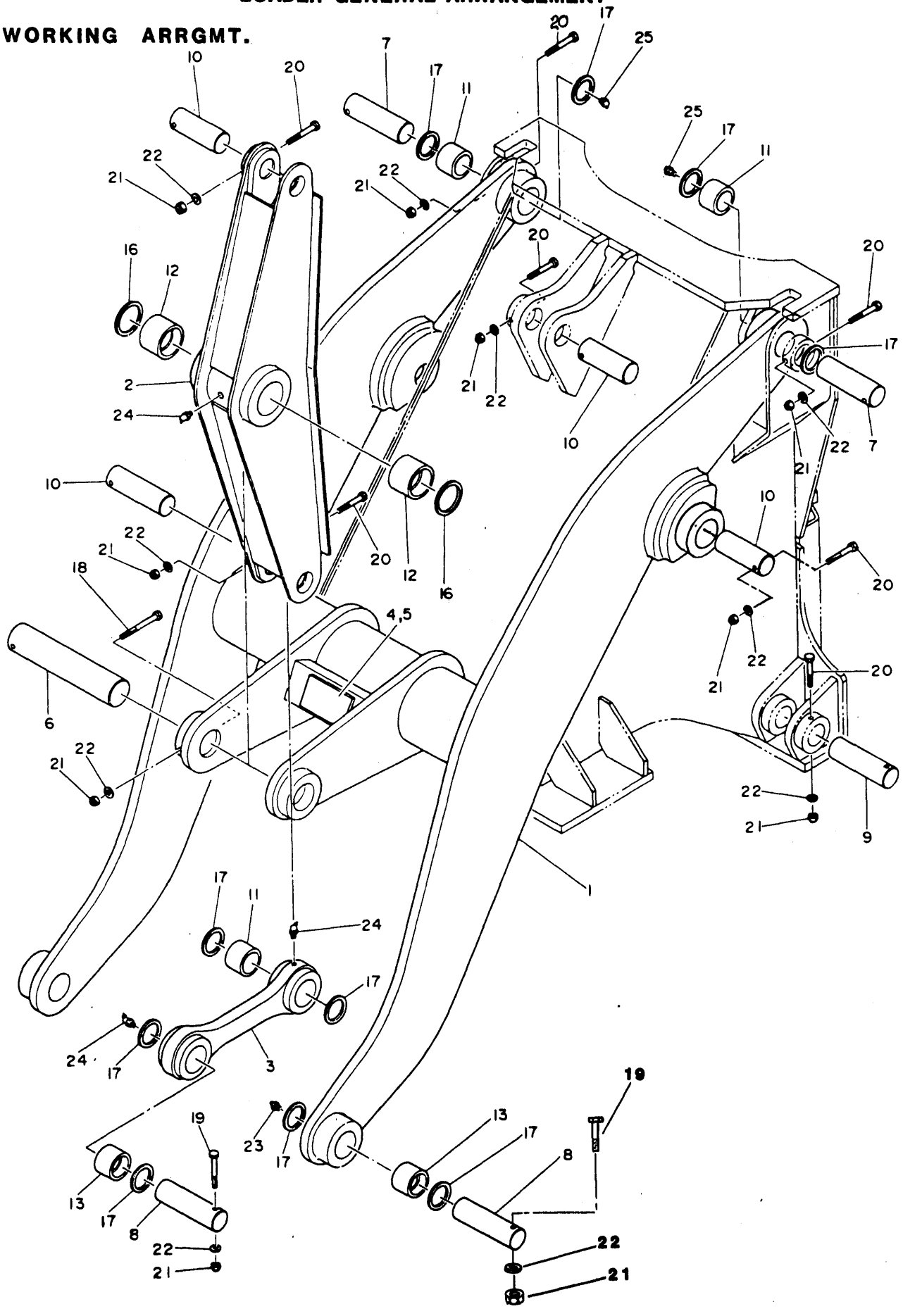

LOADER-GENERAL ARRANGEMENT

WORKING ARRGMT.

ITEM	NUMBER	QTY	DESCRIPTION
1	6810335	1	LIFT ARM (incl. 4,5,11 & 13)
2	6810340	1	BUCKET LEVER (incl. 12 & 24)
3	6810334	1	BUCKET LINK (incl. 11,13 & 24)
4	6810663	1	SPACER
5	6810664	1	SPACER
6	6900017	1	PIN, pivot
7	6810665	2	PIN, arm (incl. 25)
8	1023276	3	PIN, bucket (incl. 23)
9	6810666	2	PIN, cylinder
10	6810669	5	PIN, dogbone
11	2022674	3	BUSHING
12	2022676	2	BUSHING
13	2022708	3	BUSHING
15	6810673	2	BOSS
16	6810674	2	SEAL, dust
17	6810067	12	SEAL, dust
18	951149	1	BOLT, hex M12-1.75 x 145mm
19	6900140	3	BOLT, hex M12-1.75 x 125mm
20	951153	9	BOLT, hex M12-1.75 x 105mm
21	6900162	13	NUT, acorn
22	950230	13	WASHER, flat M12
23	914465	2	NIPPLE, grease
24	915274	3	NIPPLE, grease
25	915276	2	NIPPLE, grease

LOADER-GENERAL ARRANGEMENT

POSITIONER

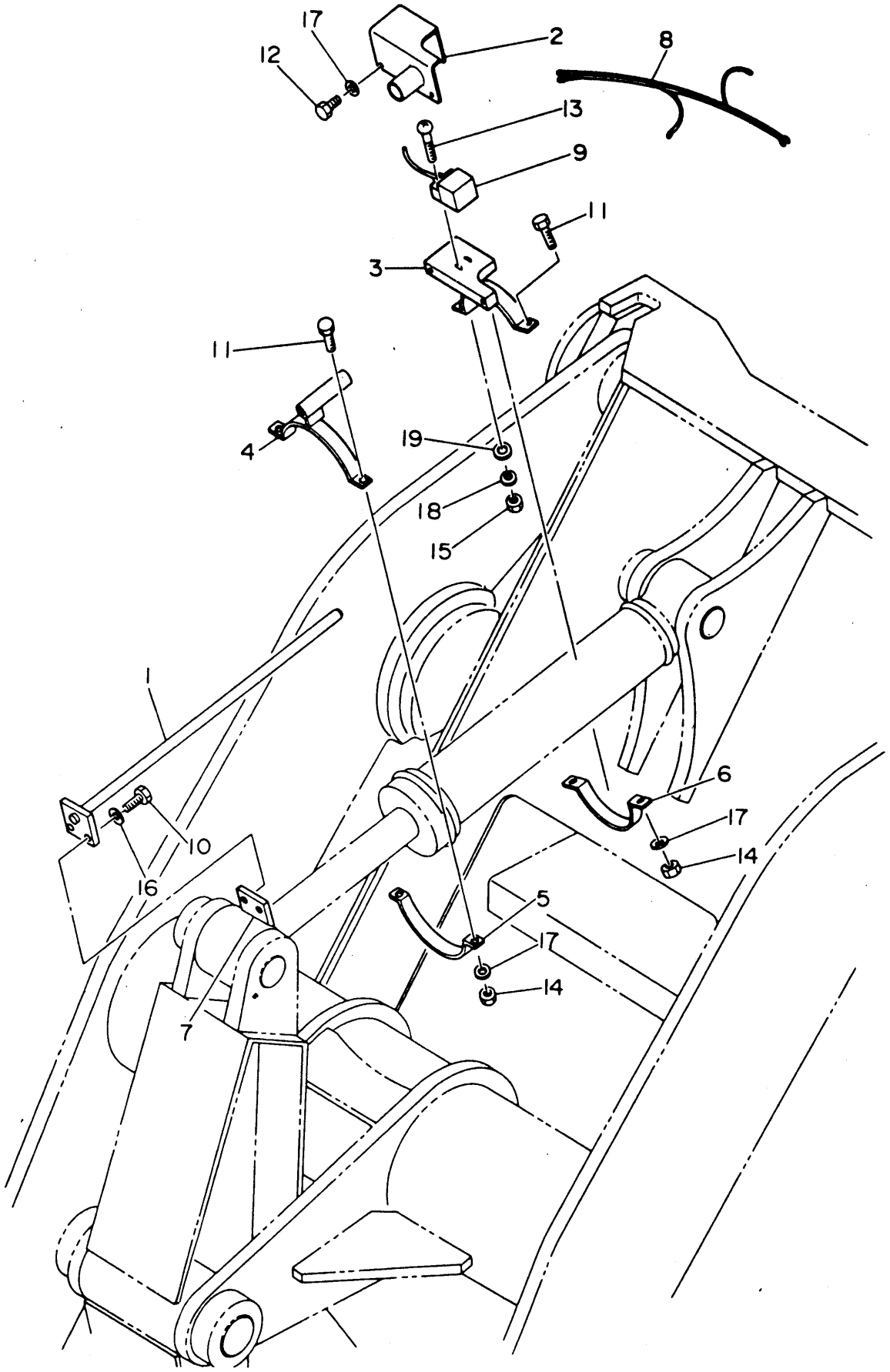

POSITIONER

ITEM	NUMBER	QTY	DESCRIPTION
	6810411	1	POSITIONER, kit (incl. 1-19)
1	6810078	1	ROD
2	6811161	1	COVER, switch
3	6810486	1	CLAMP
4	6810487	1	CLAMP
5	6900040	1	CLAMP
6	6900041	1	CLAMP
7	6811162	1	BRACKET, rod base
8	6811163	1	HARNESS, wire
9	6810090	1	SWITCH, proximity
10	950036	2	BOLT, hex M10-1.5 x 25mm, PLTD.
11	950020	4	BOLT, hex M8-1.25 x 30mm, PLTD.
12	950016	3	BOLT, hex M8-1.25 x 12mm, PLTD.
13	2024062	2	SCREW, round head M4-0.7 x 50mm
14	950210	4	NUT, hex M8-1.25, PLTD.
15	950716	2	NUT, hex M4-0.7, PLTD.
16	6900142	2	WASHER, conical M10, PLTD.
17	6900141	7	WASHER, conical M8, PLTD.
18	951105	2	WASHER, lock M4, PLTD.
19	951104	2	WASHER, flat M4, PLTD.

840D WHEEL LOADER

LOADER-GENERAL ARRANGEMENT

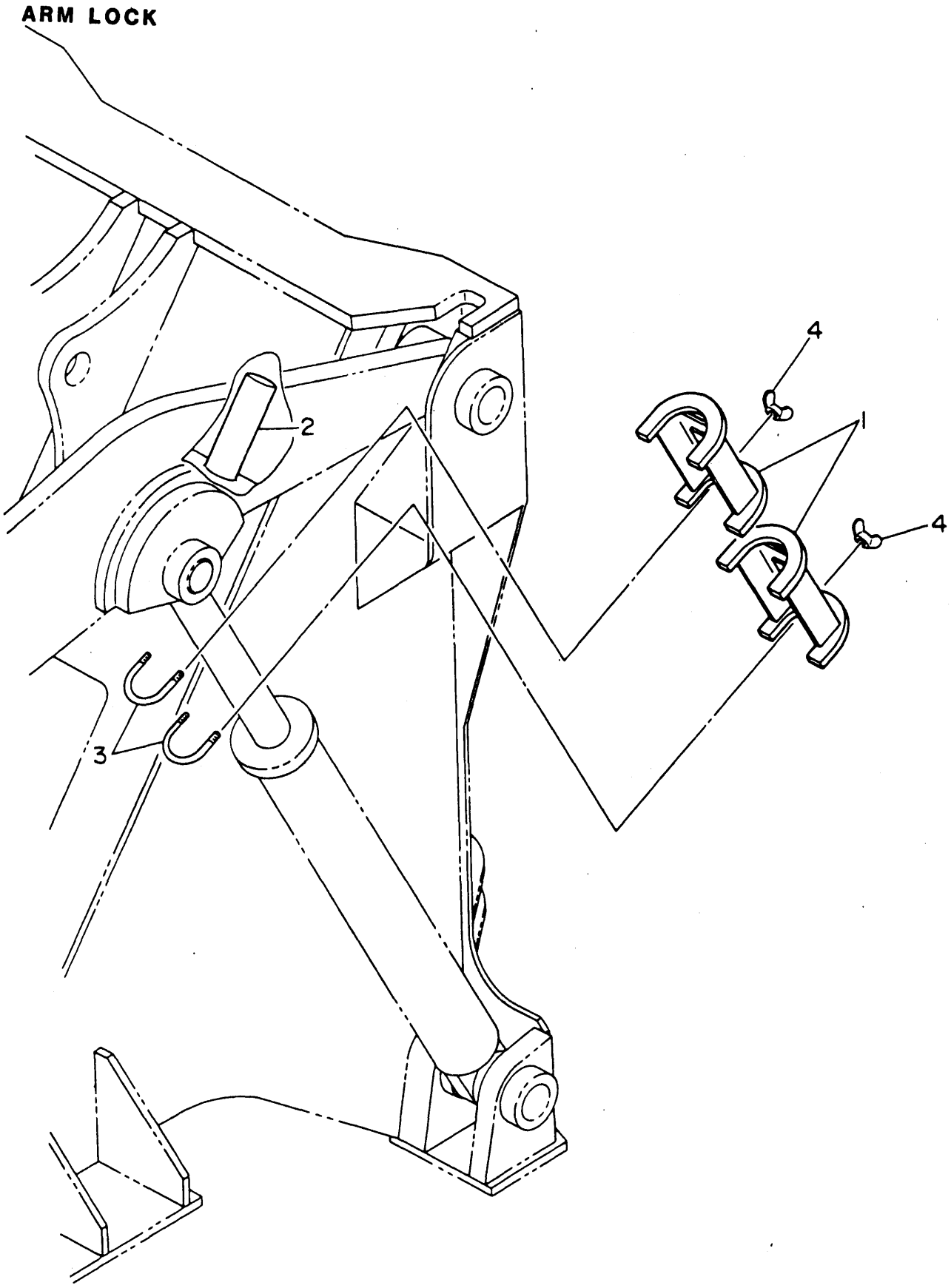

ARM LOCK

ITEM	NUMBER	QTY	DESCRIPTION
	6810152	1	ARMLOCK (incl. 1-4)
1	6810414	2	SUPPORT
2	6810658	2	STAY
3	6810659	2	U-BOLT
4	2022714	4	WINGNUT M-8, PLTD.

LOADER-GENERAL ARRANGEMENT

FRAME LOCK

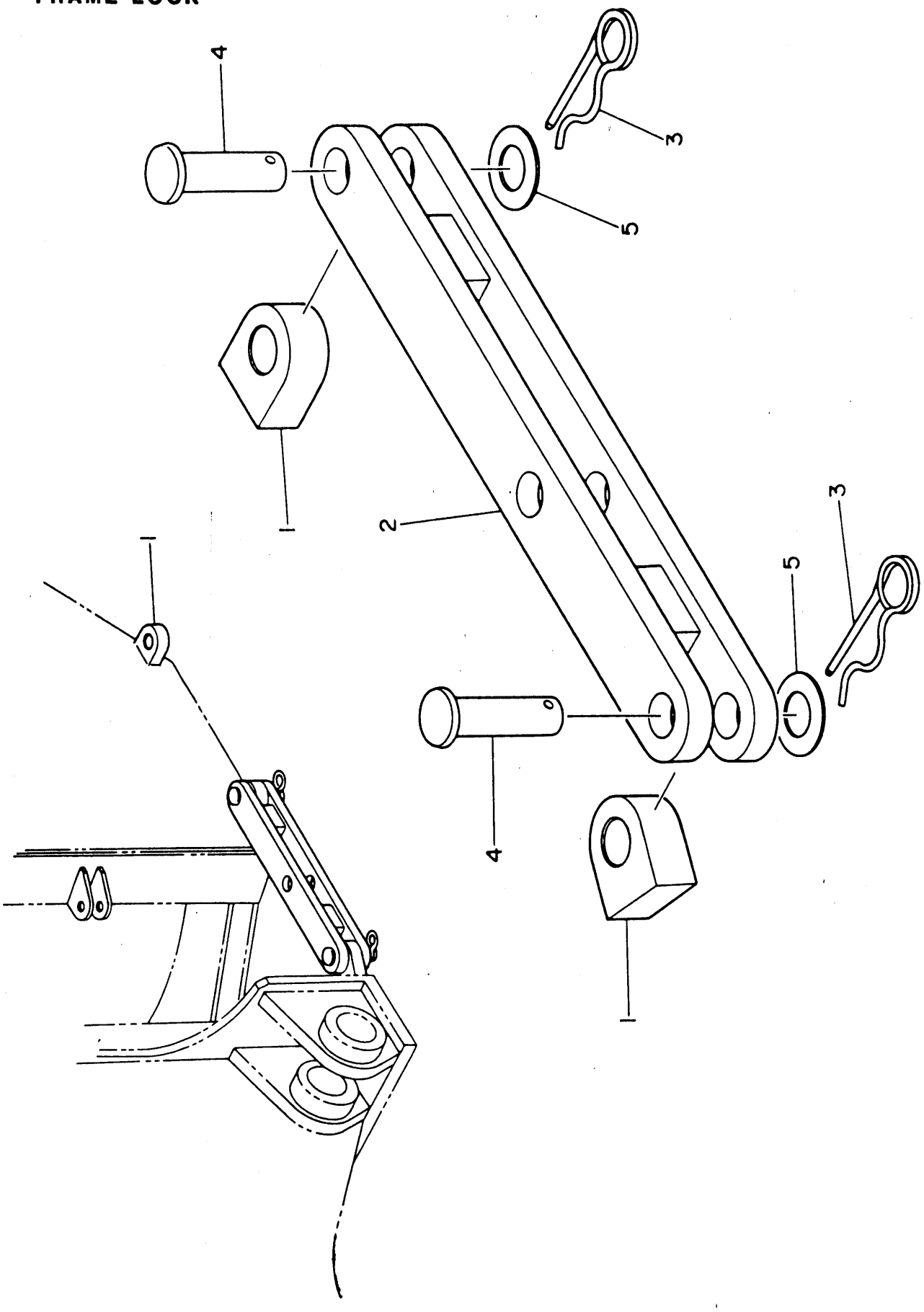

FRAME LOCK

ITEM	NUMBER	QTY	DESCRIPTION
	6810153	1	FRAME LOCK (incl. 1-5)
1	6810660	3	BRACKET
2	6810661	1	LINK
3	6900027	2	PIN, spring
4	6900149	2	PIN, head
5	900821	2	WASHER, flat M22

LOADER-GENERAL ARRANGEMENT

FOOT BRAKE

S/N 53-BEYOND

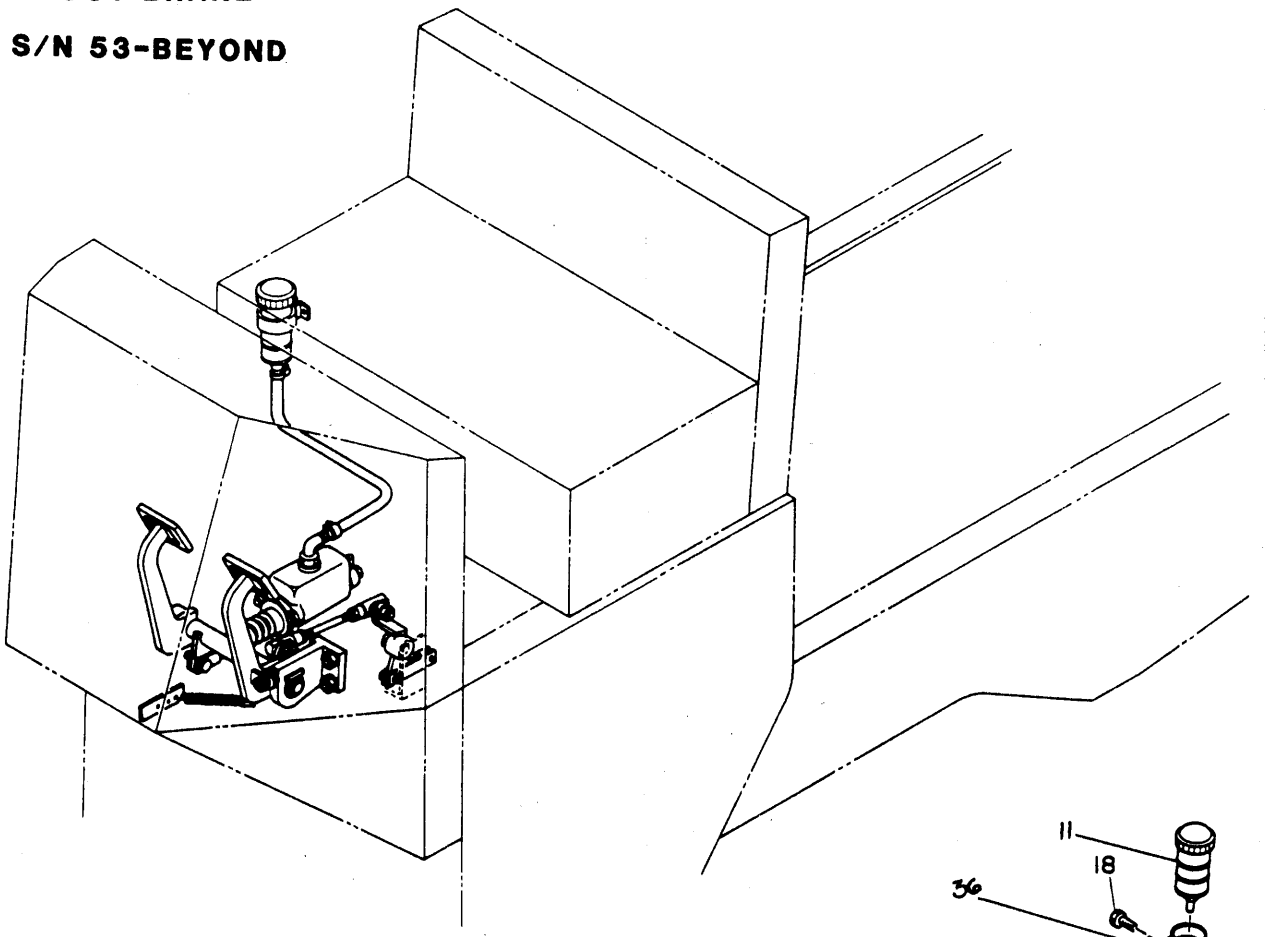

S/N 1-52

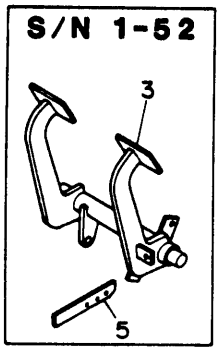

FOOT BRAKE

ITEM	NUMBER	QTY	DESCRIPTION
1	6810351	1	LINK (incl. 9)
2	6810786	2	LINK
3	6810350	1	PEDAL, brake (incl. 12) (S/N 1-52)
	6810372	1	PEDAL, brake (S/N 53-)
4	6810787	1	BRACKET
5	6810788	1	BRACKET (S/N 1-52)
	6810373	1	BRACKET (S/N 53-)
6	6810789	1	ROD
7	6810790	1	SPRING (S/N 1-52)
	6810790	2	SPRING (S/N 53-)
8	6810791	1	STOPPER, pedal (S/N 1-52)
	6810791	2	STOPPER, pedal (S/N 53-)
9	6810792	1	BUSHING
10	6810011	1	CYLINDER, master
11	6810009	1	RESERVOIR, assy.
12	6810793	2	BUSHING (S/N 1-52)
	6810394	2	BUSHING (S/N 53-)
13	6800075	1	ROD, end
14	6810794	1	ROD, end
15	2023879	2	COVER, pedal
16	950285	2	BOLT, hex M12-1.75 x 35mm (S/N 1-52)
	950053	2	BOLT, hex M12-1.75 x 40mm, PLTD. (S/N 53-)
17	950291	3	BOLT, hex M10-1.5 x 40mm
18	950000	2	BOLT, hex M6-1 x 12mm, PLTD.
19	950212	2	NUT, hex M12-1.75, PLTD.
20	950211	3	NUT, hex M10-1.5, PLTD.
21	950246	1	NUT, hex M10-1.5 (S/N 1-52)
	950285	2	NUT, hex M10-1.5 (S/N 53-)
22	950210	3	NUT, hex M8-1.25, PLTD.
23	6900136	1	NUT, hex M8-1.25, PLTD.
25	950233	1	WASHER, flat M20, PLTD.
26	950230	1	WASHER, flat M12, PLTD.
27	950562	1	PIN, split
28	950548	1	PIN, split
29	6900145	2	PIN, split
30	950221	2	WASHER, lock M6, PLTD.
31	950220	3	WASHER, lock M8, PLTD.
32	950219	2	WASHER, lock M10, PLTD.
33	950218	2	WASHER, lock M12, PLTD.
34	6900147	1	PIN, headed
35	6900148	2	PIN, headed
36	6810783	1	BAND
37	6810784	1	TUBE
38	6810032	2	CLAMP, hose

LOADER GENERAL-ARRANGEMENT

FOOT BRAKE

FOR S/N 1-52 SEE PAGE 132 OF THIS CATALOG

LOADER-GENERAL ARRANGEMENT

FOOT BRAKE MASTER CYLINDER

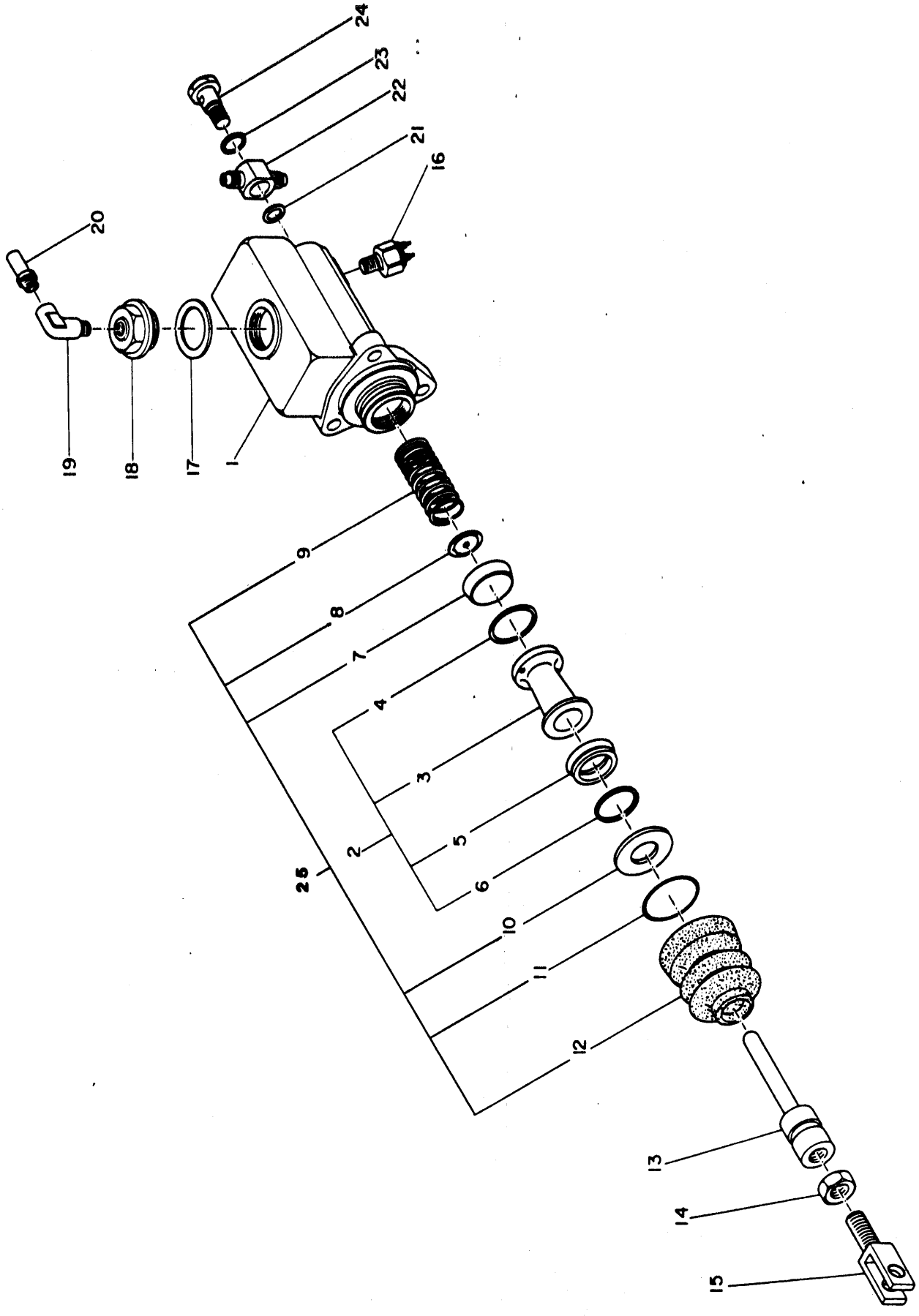

FOOT BRAKE MASTER CYLINDER

ITEM	NUMBER	QTY	DESCRIPTION
	6810011		CYLINDER ASSY., master (incl. 1-24)
1	6810568	1	BODY
2	6810569	1	PISTON, assy. (incl. 3-6)
3	6810570	1	PISTON
4	6810571	1	SPACER
5	6810572	1	S-CUP
6	6810573	1	RING, piston
7	6810574	1	P-CUP
8	6810575	1	RETAINER
9	6810576	1	SPRING
10	6810577	1	PLATE, stop
11	6810578	1	WIRE, stop
12	6810579	1	BOOT
13	6810580	1	ROD, push
14	6810581	1	NUT, hex M14-1.5
15	6810582	1	YOKE
16	6810010	1	SWITCH, stop lamp
17	6810034	1	GASKET
18	6810583	1	CAP
19	6810584	1	ELBOW
20	6810585	1	NIPPLE
21	6810586	1	GASKET
22	6810587	1	UNION
23	6810588	1	GASKET
24	6810589	1	BOLT, eye
	6810169		SERVICE KIT (incl. 2, 7-9, 11 & 12)

840D WHEEL LOADER

LOADER-GENERAL ARRANGEMENT

PARKING BRAKE

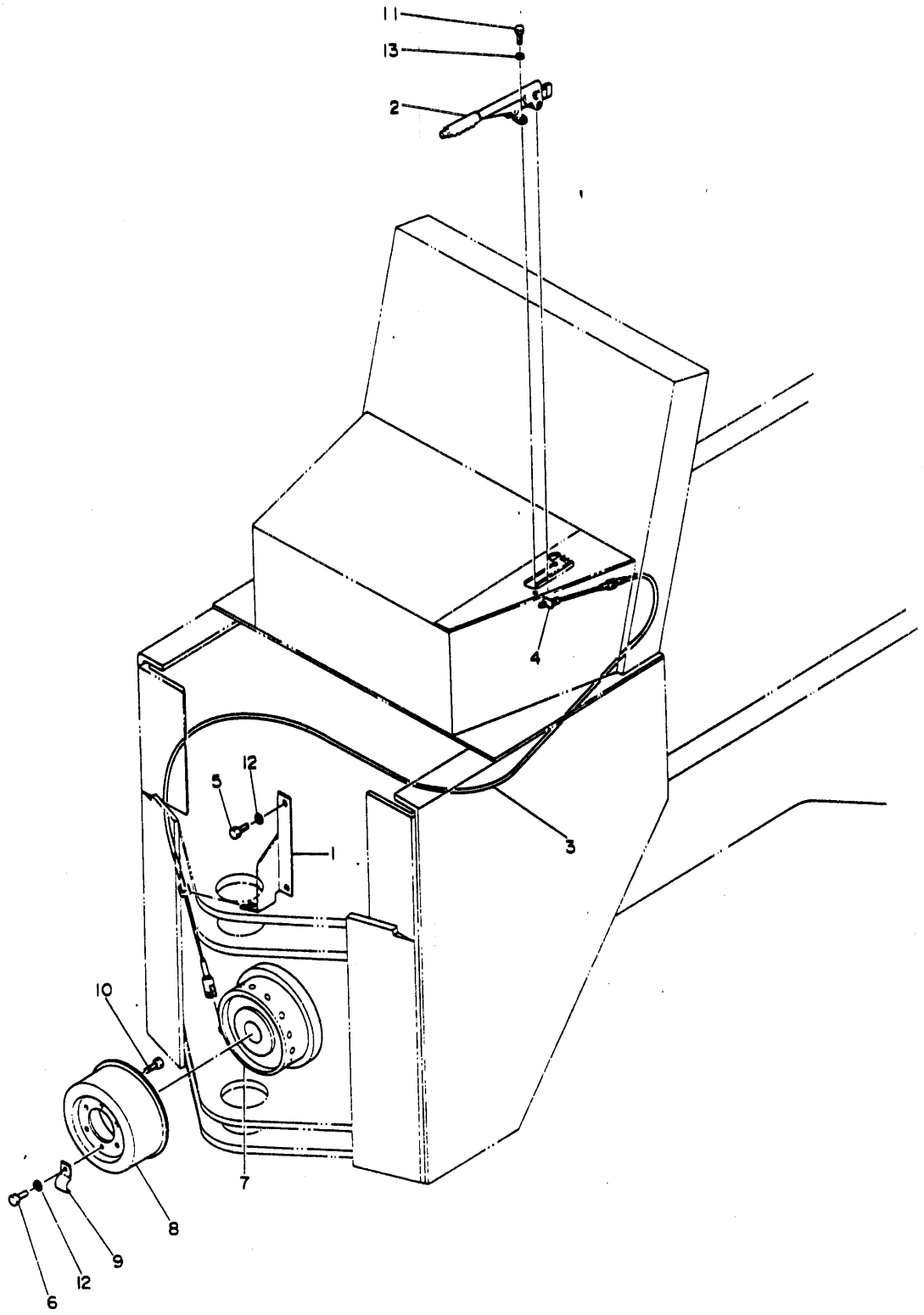

PARKING BRAKE

ITEM	NUMBER	QTY	DESCRIPTION
1	6810835	1	BRACKET
2	6810001	1	LEVER ASSY., parking
3	6810455	1	CABLE, assy.
4	6810836	1	JOINT
5	950052	2	BOLT, hex M12-1.75 x 30mm, PLTD.
6	950050	2	BOLT, hex M12-1.75 x 20mm, PLTD.
7	6810004	1	BRAKE ASSY., parking
8	6800082	1	DRUM, brake
9	6810002	2	COVER, sight
10	6810395	4	BOLT, hex
11	950014	4	BOLT, hex M8-1.25 x 25mm, PLTD.
12	950221	2	WASHER, lock M12, PLTD.
13	950219	4	WASHER, lock M8, PLTD.

840D WHEEL LOADER

LOADER-GENERAL ARRANGEMENT

PARKING BRAKE ASSY.

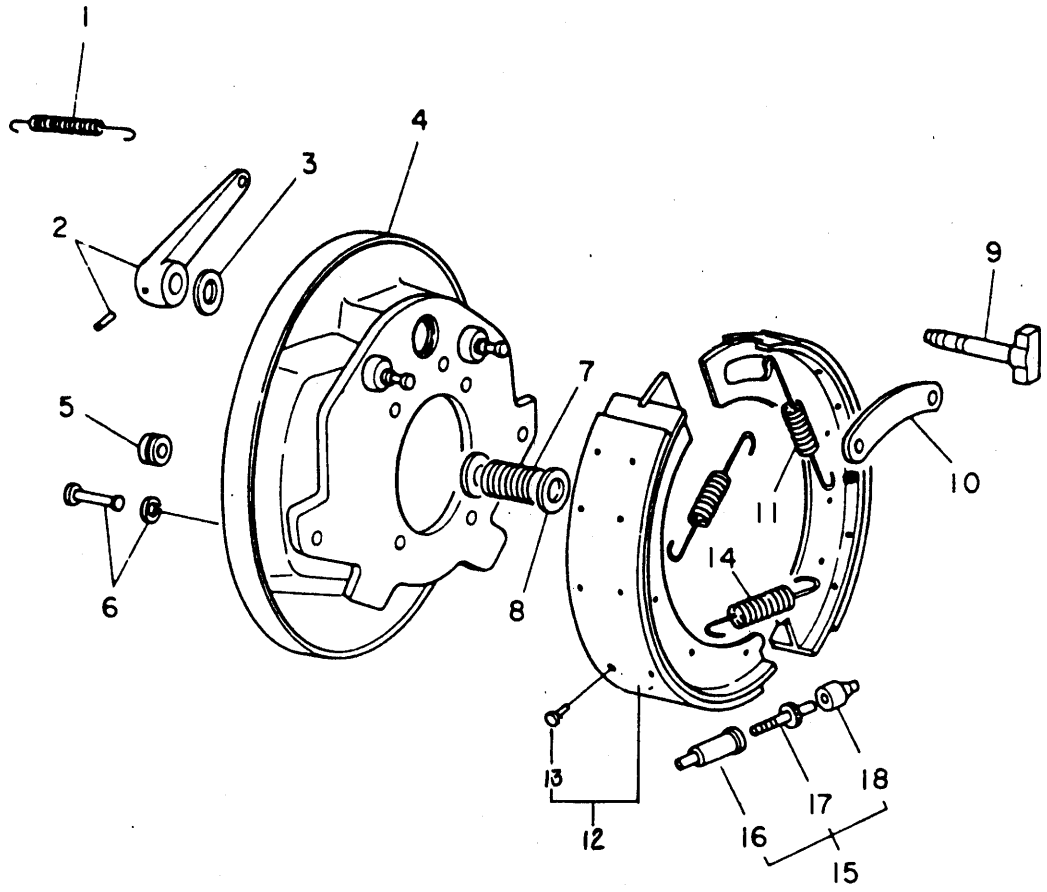

PARKING BRAKE ASSY.

ITEM	NUMBER	QTY	DESCRIPTION
	6810943	1	BRAKE ASSY., parking (incl. 1-18)
1	6810375	1	SPRING
2	6810376	1	LEVER
	6810377	1	PIN, roll
3	6810378	1	WASHER, flat
4	6810379	1	PLATE, support
5	6810380	2	GROMMET
6	6810381	2	PIN
	6810382	2	WASHER
7	6810383	2	SPRING
8	6810384	4	SEAT
9	6810385	1	SHAFT, cam
10	6810386	1	BRACE
11	6810387	2	SPRING
12	6810003	2	SHOE ASSY., brake (incl. 13)
13	6810388	2	LINING, brake
	6810389	20	RIVET
14	6810390	1	SPRING
15	6810005	1	SCREW ASSY., adjust (incl. 16-18)
16	6810391	1	NUT, adjust
17	6810392	1	SCREW, adjust
18	6810393	1	NUT, pivot

LOADER-GENERAL ARRANGEMENT

BRAKE PIPING

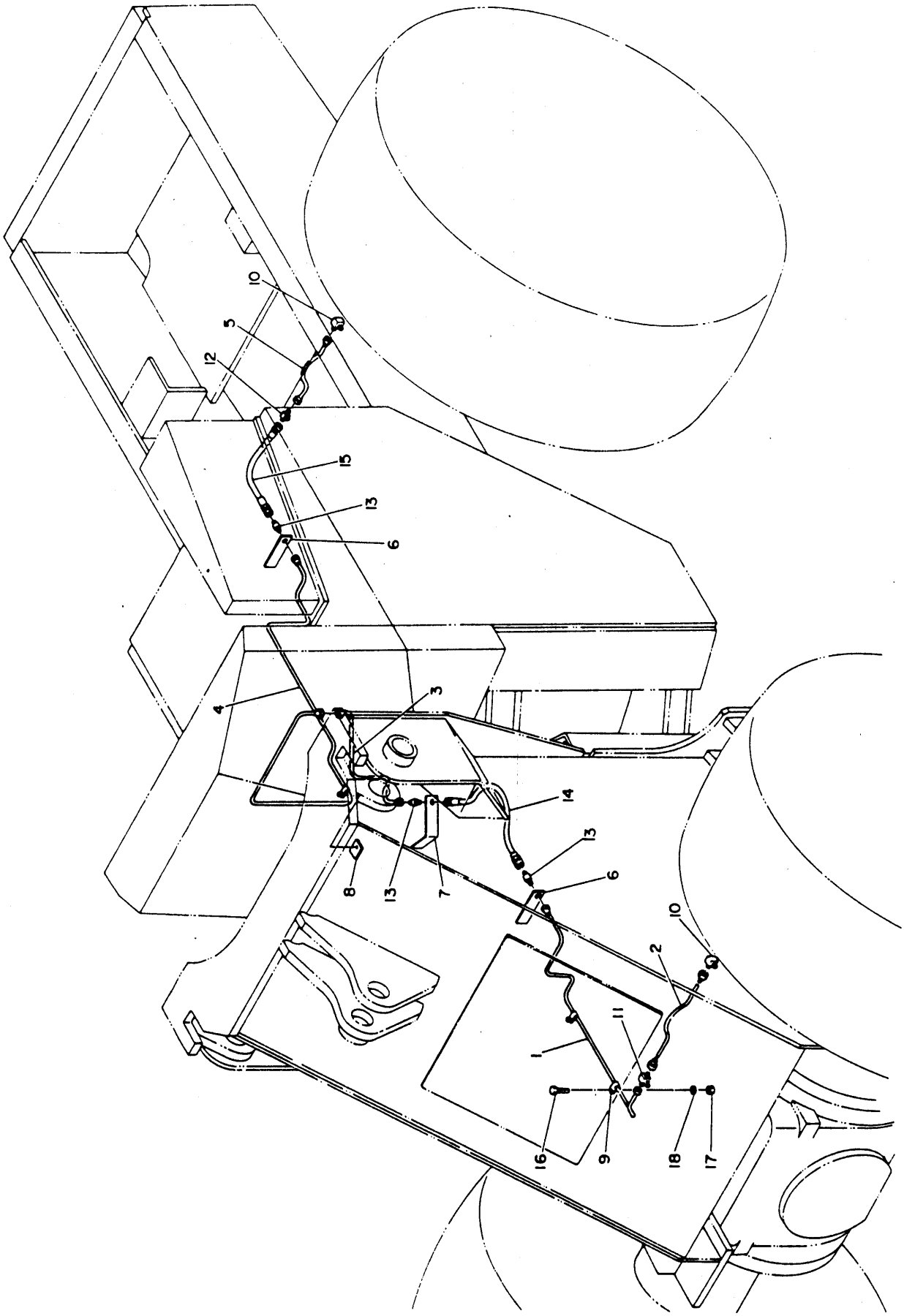

BRAKE PIPING

ITEM	NUMBER	QTY	DESCRIPTION
1	6810035	1	PIPE
2	6810036	1	PIPE
3	6810037	1	PIPE
4	6810038	1	PIPE
5	6810039	1	PIPE
6	6810779	2	BRACKET
7	6810780	1	BRACKET
8	6810781	1	BRACKET
9	6810782	3	CLAMP
10	6900047	2	CONNECTOR, elbow
11	6900045	1	CONNECTOR (A)
12	6900046	1	CONNECTOR (B)
13	6900048	3	CONNECTOR, straight
14	6810040	1	HOSE, assy.
15	6810041	1	HOSE, assy.
16	950450	3	BOLT, hex M6-1.0 x 25mm (10.9), PLTD.
17	950209	3	NUT, hex M6-1.0, PLTD.
18	950218	3	WASHER, lock M6, PLTD.

NOTES

SECTION 03 -ELECTRICAL INDEX

Electrical Arrangement	148
Electricl Diagram (S/N 63-)	145
Electrical Diagram (S/N 1-62)	146
Instruments	154
Instruments - Turbo	154
Instrument Panel (S/N 63-)	150
Instrument Panel (S/N 1-62)	152

ELECTRICAL DIAGRAM
S/N 63-BEYOND

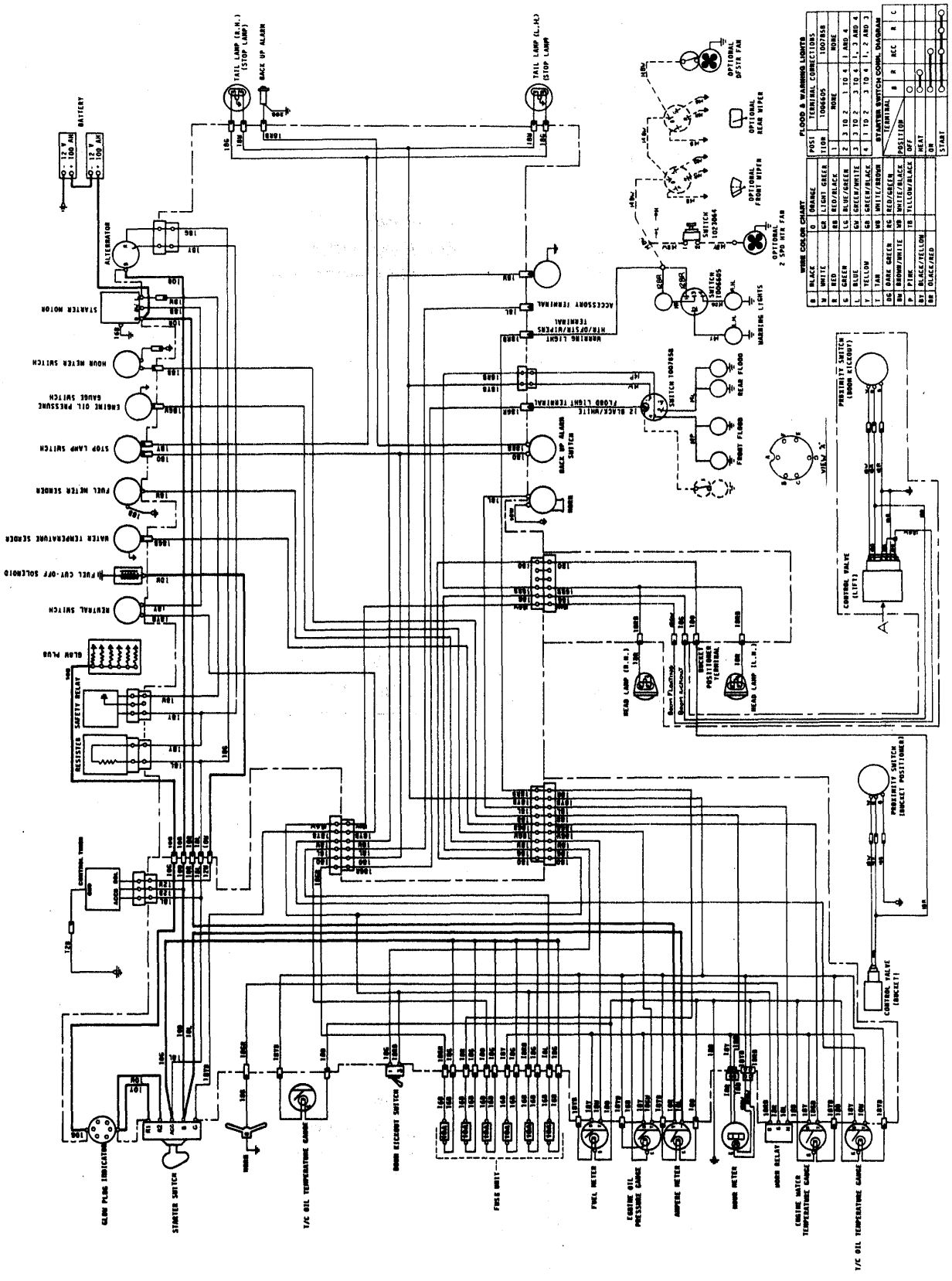

ELECTRICAL DIAGRAM

S/N 1-62

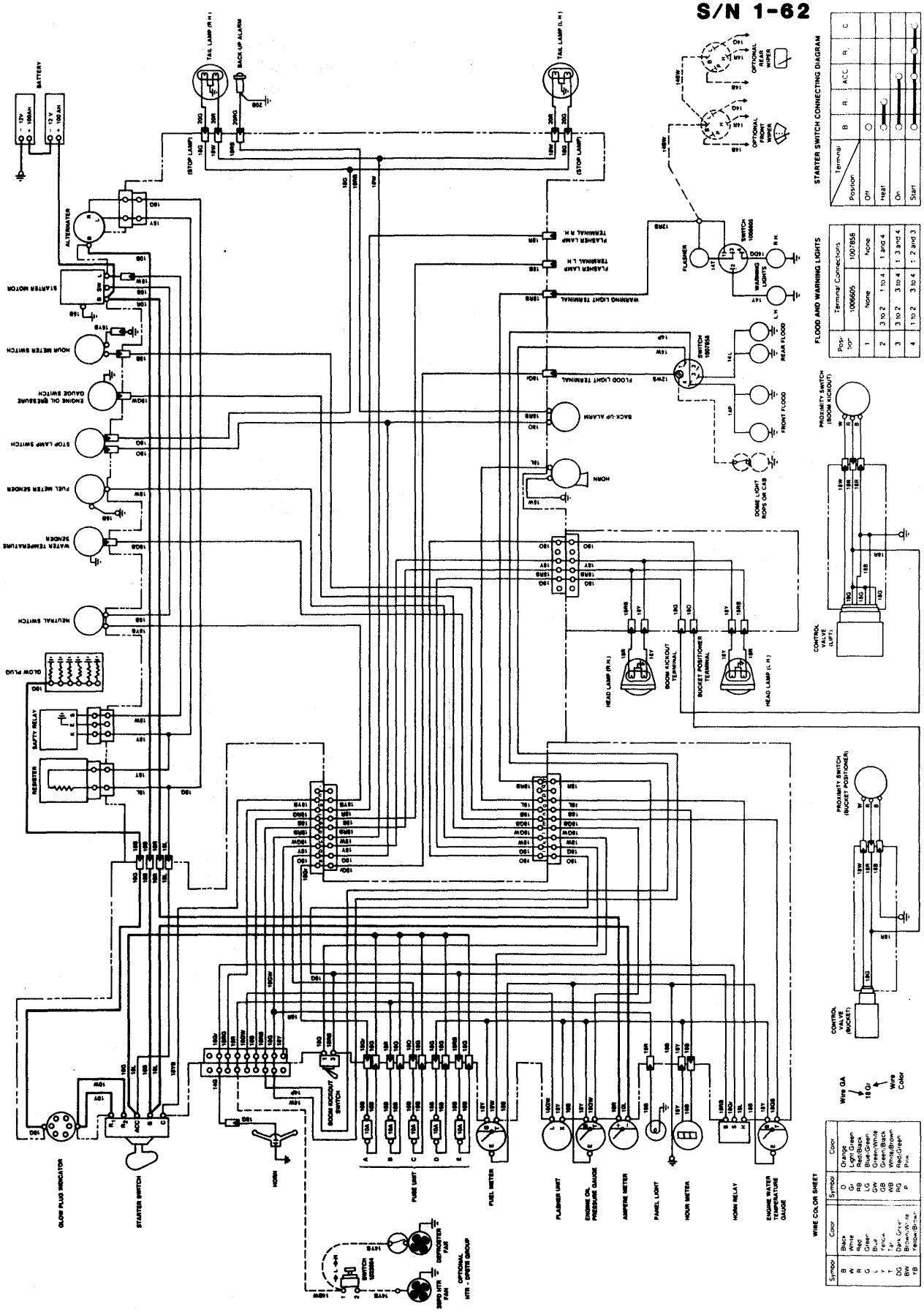

STARTER SWITCH CONNECTING DIAGRAM

Terminal / Position	B	R	ACC	R	C
Off	○				
Heat		●			○
On			●		○
Start	○			●	

FLOOD AND WARNING LIGHTS

Position	Terminal Connections				
	1006605				1007858
1	None				None
2	3 to 2	1 to 4			1 and 4
3	3 to 2	3 to 4			1 3 and 4
4	1 to 2	3 to 4			1 2 and 3

WIRE COLOR SHEET

Symbol	Color	Symbol	Color
B	Black	O	Orange
W	White	G	Light Green
R	Red	RB	Red/Black
G	Green	LG	Blue/Green
L	Blue	GW	Green/White
Y	Yellow	GB	Green/Black
T	Tan	WB	White/Black
DG	Dark Green	RG	Red/Green
BW	Brown/White	P	Pink
YB	Yellow/Brown		

Wire GA
18 Ga
Wire Color

840D WHEEL LOADER

ELECTRICAL

ELECTRICAL ARRGMT.

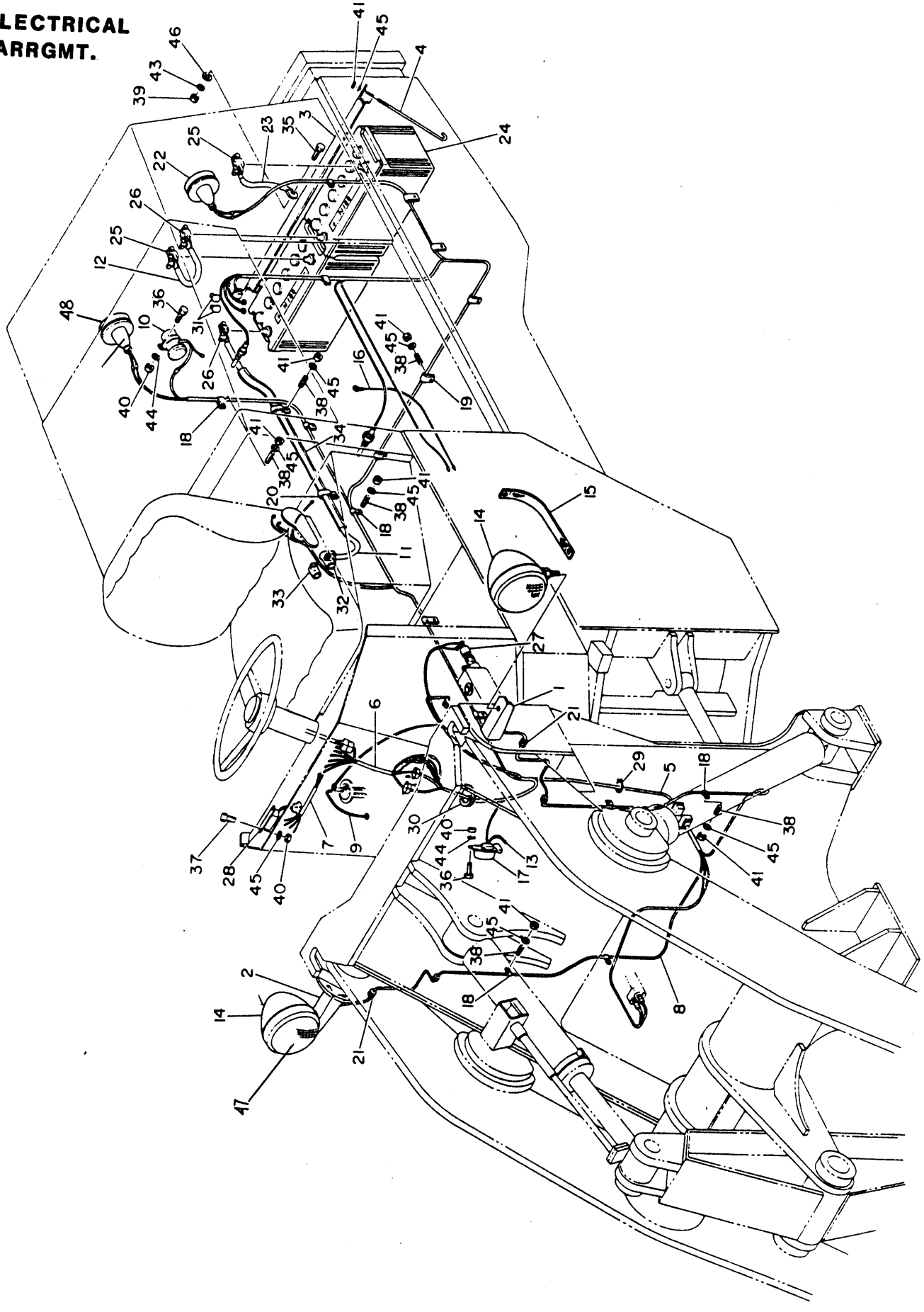

ELECTRICAL ARRGMT.

ITEM	NUMBER	QTY	DESCRIPTION
1	6810469	1	BRACKET (L)
2	6810470	1	BRACKET (R)
3	6810471	1	CLAMP
4	6811124	2	ROD
5	6810636	1	HARNESS, wire (S/N 1-18)
	6810620	1	WIRE HARNESS (S/N 19-62)
	6810621	1	WIRE HARNESS (S/N 63-)
6	6810637	1	HARNESS, wire (S/N 1-62)
	6810622	1	WIRE HARNESS (S/N 63-)
7	6810472	1	HARNEESS, wire (S/N 1-62)
	6810628	1	WIRE HARNESS (S/N 63-)
8	6810473	1	HARNESS, wire (S/N 1-62)
	6810638	1	WIRE HARNESS (S/N 63-)
9	6811125	1	WIRE, ground
10	6810474	1	BUZZER, back-up
11	6811126	1	CABLE ASSY., battery
12	6811127	2	CABLE ASSY., battery
13	6811128	1	WIRE, lead
14	2023212	2	LAMP, head (incl. 47)
15	6811129	1	WIRE, ground
16	6811130	1	WIRE, ground
17	6810475	1	RELAY
18	6811131	12	CLIP
19	6811132	9	CLIP
20	6811133	3	CLIP
21	6811134	4	BUSHING, rubber
22	6810476	2	LAMP, tail (incl. 48)
24	6810477	2	BATTERY
25	6811114	2	TERMINAL, battery
26	6811115	2	TERMINAL, battery
27	6811116	1	SWITCH, micro
28	6811117	1	RELAY, safety (S/N 1-18)
	6811112	1	RELAY, safety (S/N 19-)
30	6811118	1	BUSHING
31	6811119	3	CAP, terminal
32	6811120	1	COVER, terminal
33	6811121	2	COVER, terminal
34	6811122	1	TUBE, spiral
35	950051	1	BOLT, hex M12-1.75 x 25mm, PLTD.
36	950020	4	BOLT, hex M8-1.25 x 30mm, PLTD.
37	950265	4	BOLT, hex M6-1 x 20mm (S/N 1-62)
	950265	8	BOLT, hex M6-1 x 20mm (S/N 63-)
38	6811123	25	BOLT, stud
39	950212	1	NUT, hex M12-1.75, PLTD.
40	950210	4	NUT, hex M8-1.25, PLTD.
41	950244	4	NUT, hex M6-1 (S/N 1-62)
	950244	8	NUT, hex M6-1 (S/N 63-)
43	950221	1	WASHER, lock M12, PLTD.
44	950219	4	WASHER, lock M8, PLTD.
45	950218	29	WASHER, lock M6, PLTD. (S/N 1-62)
	950218	33	WASHER, Lock M-6, PLTD. (S/N 63-)
46	950230	1	WASHER, flat M12, PLTD.
47	6800235	2	BULB, 24v (sealed beam)
48	6800236	2	BULT, 24v

ELECTRICAL

INSTRUMENT PANEL
S/N 63-BEYOND

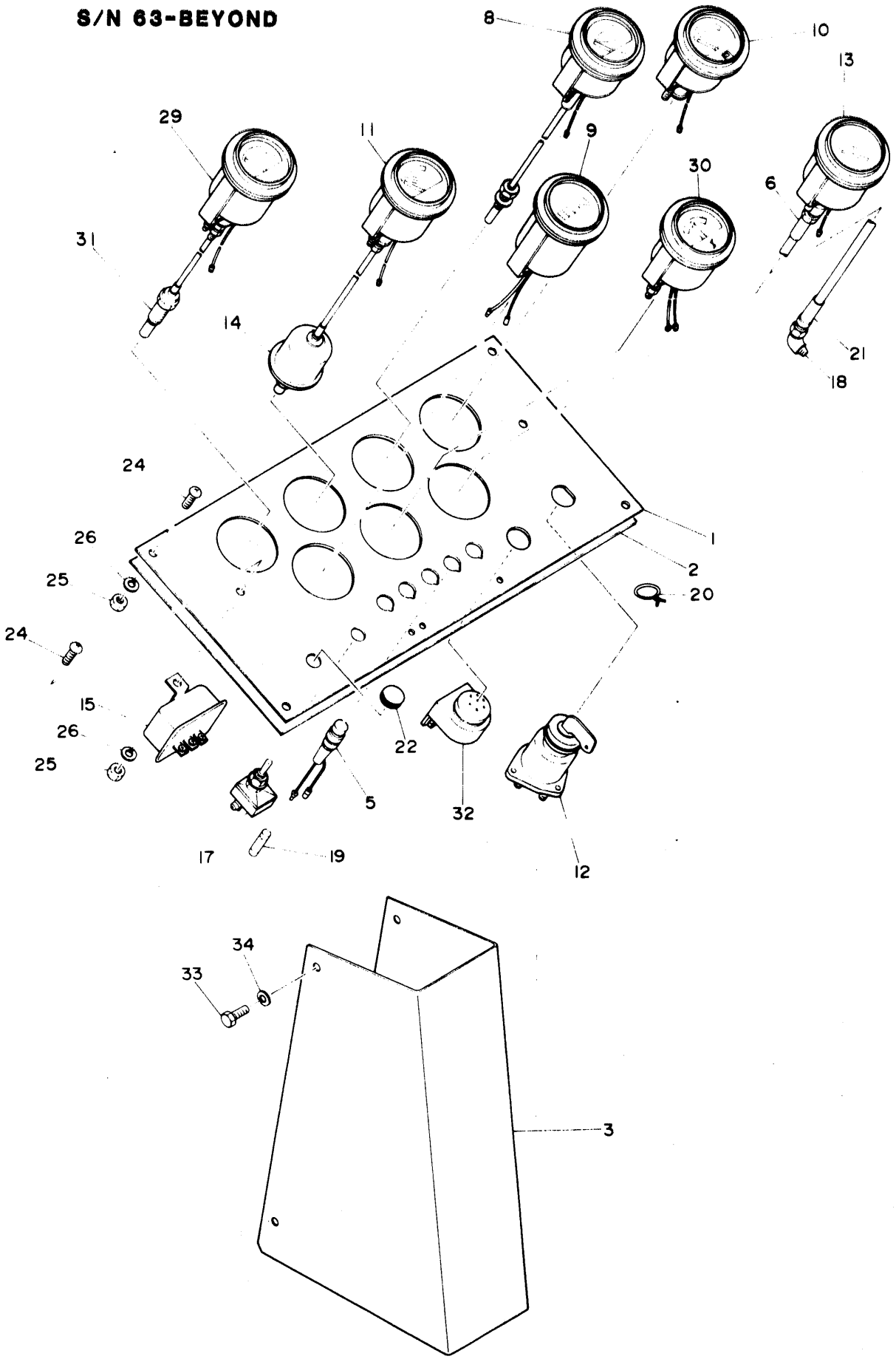

ITEM	NUMBER	QTY	DESCRIPTION
1	6810468	1	PANEL
2	6811102	1	SPACER
3	6811103	1	COVER
4	6811104	1	GUARD (S/N 1-62)
5	2022721	5	HOLDER, fuse (S/N 1-52)
	6811105	6	HOLDER, fuse (S/N 53-)
6	931218	1	CONNECTOR, gauge
7	6811106	1	LIGHT, panel (S/N 1-62)
8	6810631	1	GAUGE, temperature, t/c oil (S/N 1-62)
	6810647	1	GAUGE, temperature, t/coil (S/N 63-)
9	6811107	1	METER, hour (S/N 1-62)
	6811108	1	METER, hour (S/N 63-)
10	6810632	1	GAUGE, fuel (S/N 1-62)
	6810653	1	GAUGE, fuel (S/N 63-)
11	6810633	1	GAUGE, pressure, engine oil (S/N 1-62)
	6810648	1	GAUGE, pressure, engine oil (S/N 63-)
12	6811108	1	SWITCH, starter
13	6810634	1	GAUGE, pressure, t/c oil (S/N 1-62)
	6810685	1	GAUGE, pressure, t/c oil (S/N 63-)
14	6810635	1	SENDER
15	6811109	1	RELAY
16	6800072	1	FLASHER UNIT (S/N 1-52)
17	2022739	1	SWITCH, snap
18	6900011	1	ELBOW
19	6811111	6	FUSE, 10 amp
	6811111	6	FUSE (S/N 53-)
21	6900012	1	HOSE, synflex
22	6811113	1	BUSHING
23	6900153	2	SCREW, round head M4-0.7 x 12mm (S/N 1-62)
24	6900154	6	SCREW, round head M6-1.0 x 16mm (S/N 1-52)
	6900154	5	SCREW, round head M6-2.0 x 16mm
25	950717	6	NUT, hex M6-1, PLTD. (S/N 1-52)
	950717	5	NUT, hex M6-1/0, PLTD. (S/N 53-)
26	950218	6	WASHER, lock M6, PLTD. (S/N 1-52)
	950218	5	WASHER, lock M6, PLTD. (S/N 53-)
27	950716	2	NUT, hex M4- 0.7, PLTD. (S/N 1-62)
28	951105	2	WASHER, lock M4, PLTD. (S/N 1-62)
29	6810629	1	GAUGE, water temperature (S/N 1-62)
	6810686	1	GAUGE, water temperature (S/N 63-)
30	6810630	1	METER, ampere (S/N 1-62)
	6810618	1	METER, ampere (S/N 63-)
31	6810467	1	SENDER (S/N 1-62)
	6810465	2	SENDER (S/N 63-)
32	6811101	1	INDICATOR, glow plug
33	950000	4	BOLT, hex M6-1 x 12mm, PLTD.
34	950218	4	WASHER, lock M6, PLTD.
35	6800240	1	BULB (24v), instrument panel

ELECTRICAL

INSTRUMENT PANEL

S/N 1-62

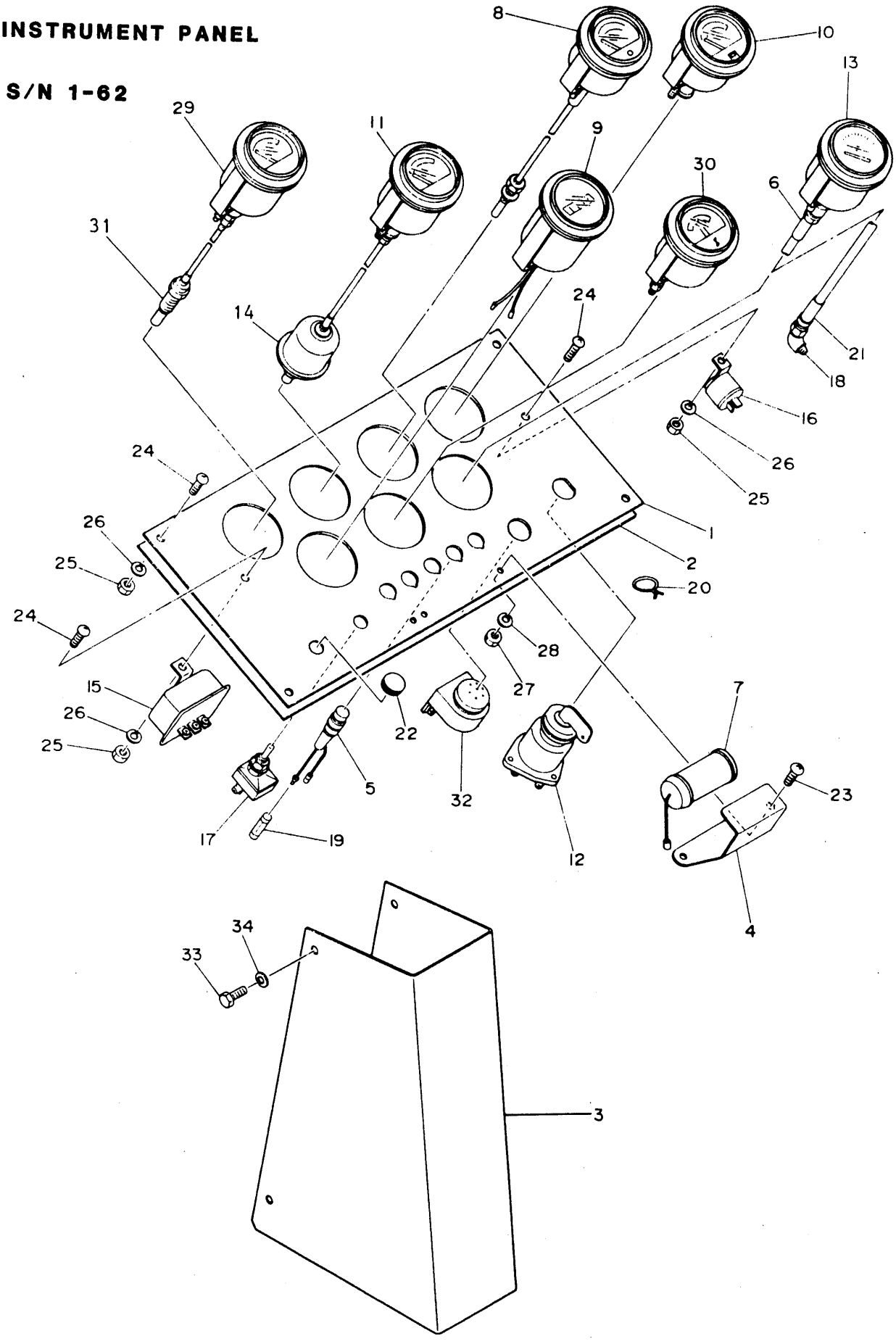

INSTRUMENT PANEL

FOR S/N 1-62 SEE PAGE 150 OF THIS CATALOG.

INSTRUMENTS

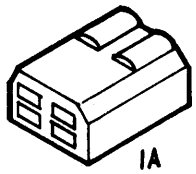

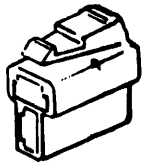

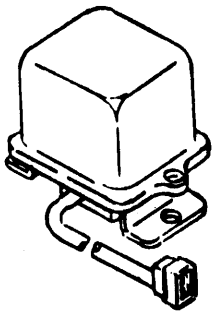

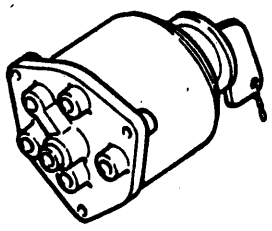

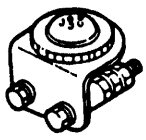

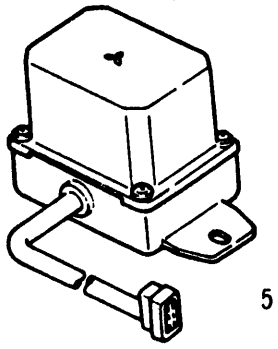

ITEM	NUMBER	QTY	DESCRIPTION
1	6810256	1	CONNECTOR
1A	6810255	1	CONNECTOR (turbo)
2	6800159	1	RELAY, safety
3	4530857	1	SWITCH, starter
4	4530844	1	INDICATOR, glow plug

NOTES

SECTION 04 - HYDRAULICS INDEX

Auxiliary Hydraulics	196
Bucket Cylinder	176
Control Valve Assembly	188
Control Valve Assembly	190
Control Valve Assembly (option)	192
Flow Divider	194
Hydraulic Piping	168 & 170
Hydraulic Pump	164
Hydraulic Pump	166
Hydraulic Tank	180
Hydraulic Valve	184
Hydraulic Valve (option)	186
Hydraulic Diagram	157
Hydraulic Diagram w/Lift Option	158
Lift Cylinder	172
Steering Arrangement	160
Steering Cylinder	162
Valve Control	182

840D WHEEL LOADER

HYDRAULICS

HYDRAULIC DIAGRAM

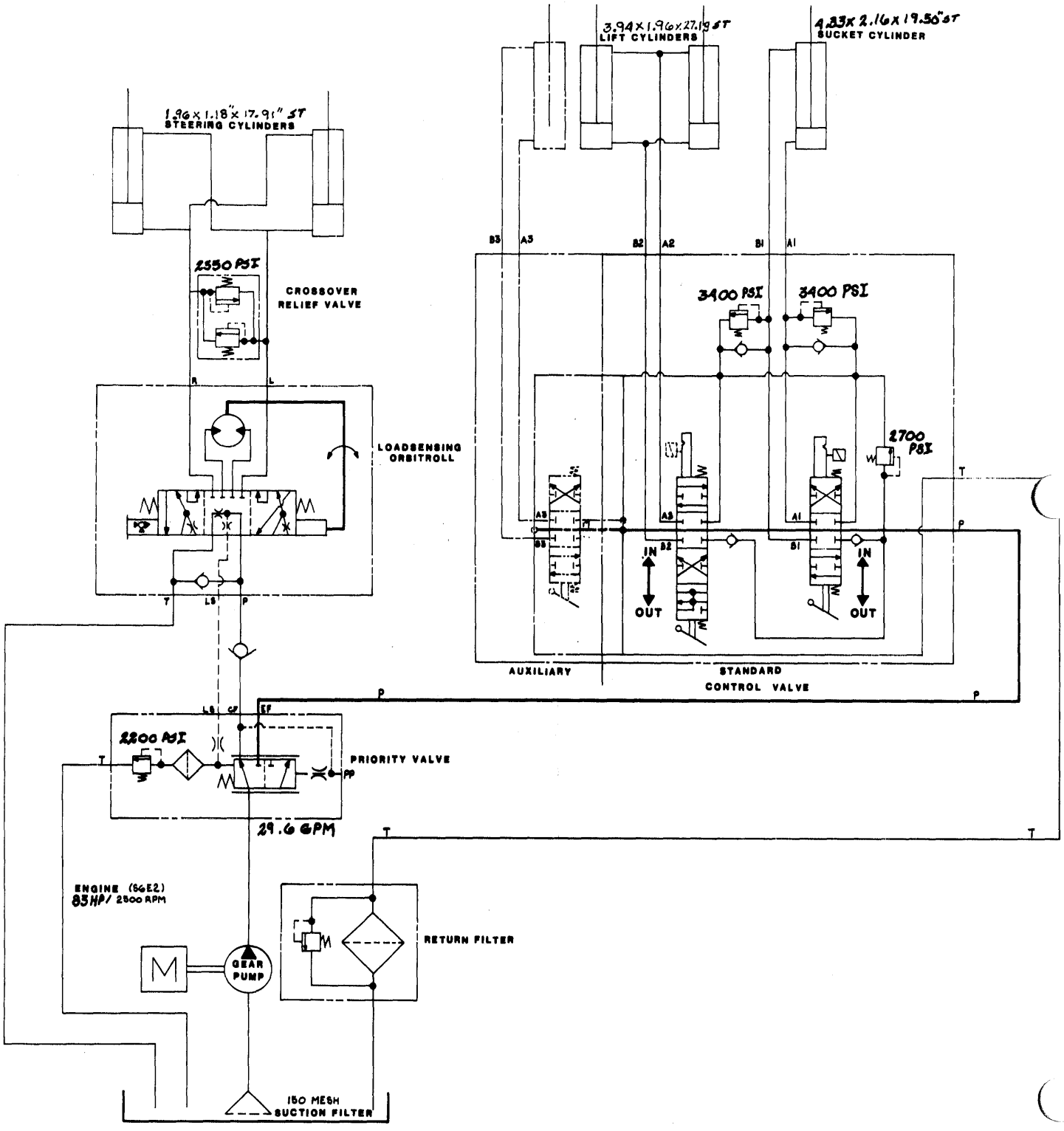

HYDRAULIC DIAGRAM WITH LIFT OPTION

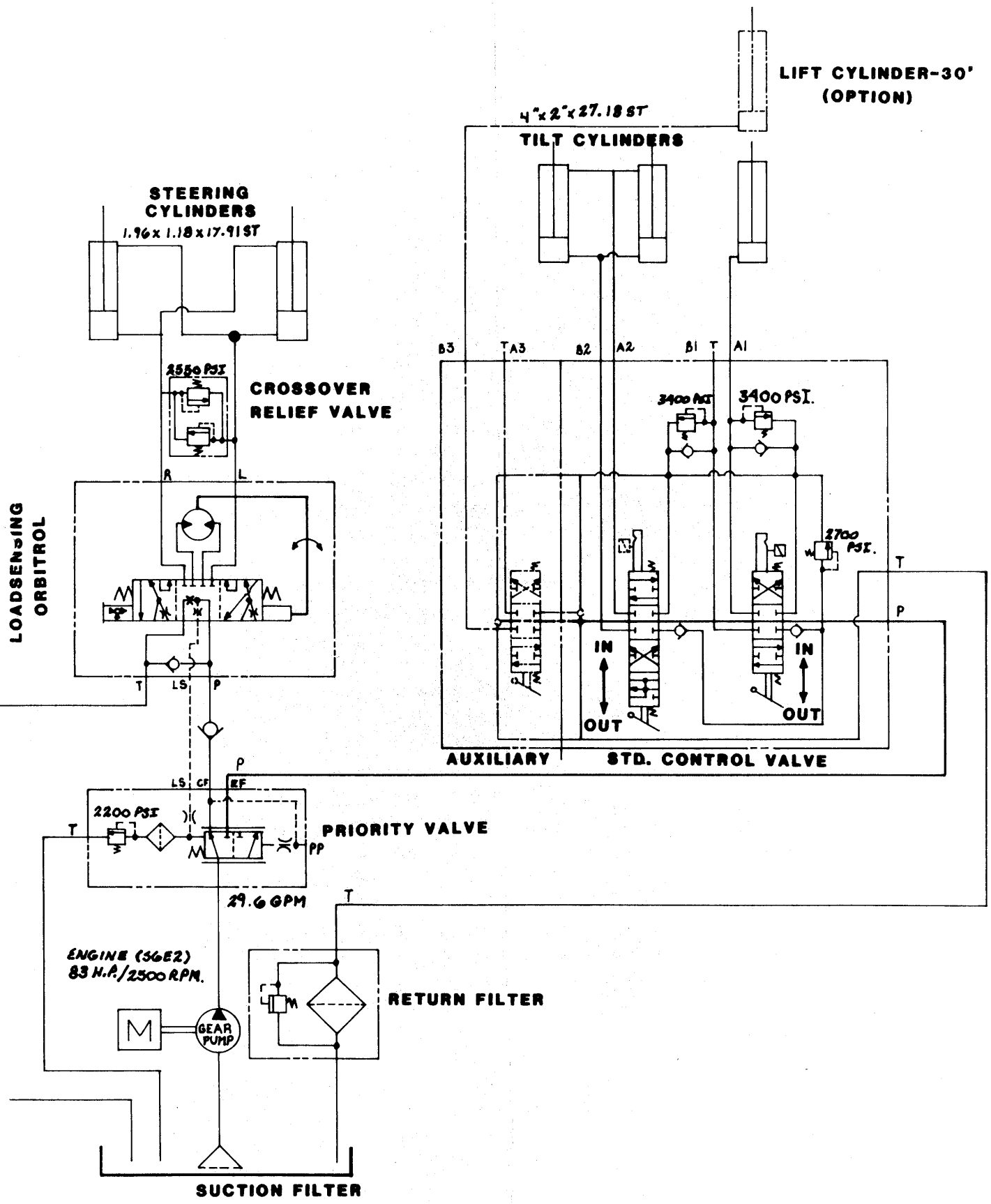

HYDRAULICS

STEERING ARRGMT.

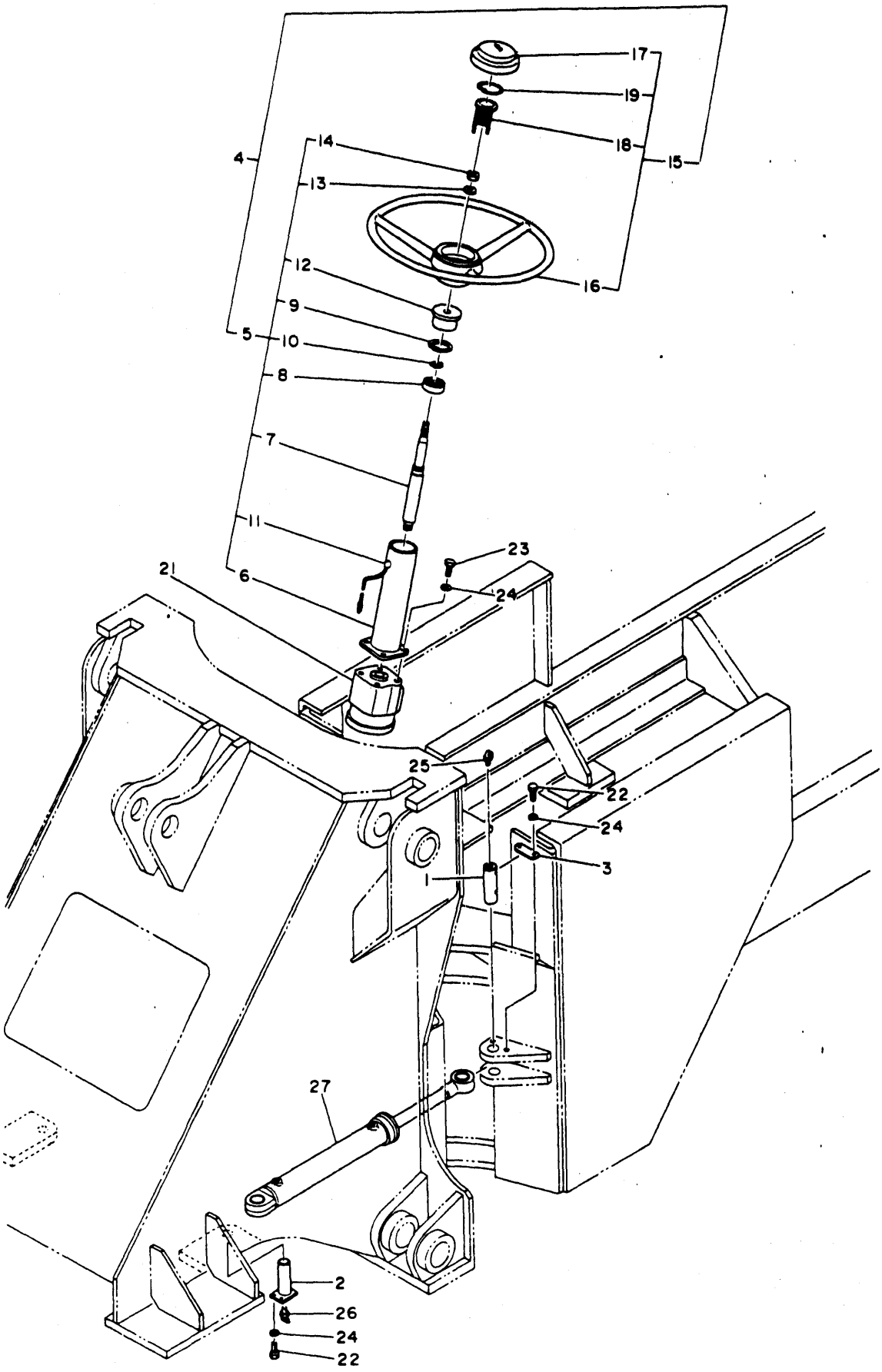

ITEM	NUMBER	QTY	DESCRIPTION
1	6900052	2	PIN
2	6900053	2	PIN
3	6810771	2	PLATE, set
4	6810566	1	STEERING, assy. (incl. 5 & 15)
5	6810567	1	SHAFT ASSY., column (incl. 6-14)
6	6810772	1	COLUMN
7	6810773	1	SHAFT
8	6810774	1	BEARING
9	927726	1	RING, snap
10	6810775	1	RING, snap
11	6810776	1	BUSHING, code
12	6810042	1	BUSHING, column
13	950241	1	WASHER, lock - M14 M8-1.25
14	950953	1	NUT, hex
15	6810044	1	WHEEL ASSY., steering (incl. 16-18)
16	6810777	1	WHEEL, steering
17	6810043	1	BUTTON, horn
18	6810013	1	CONTACT CUP, complete
19	6810778	1	SPRING, rock
21	6810446	1	ROLL, orbit
22	950036	8	BOLT, hex M10-1.25 x 25mm, PLTD.
23	2024169	4	BOLT, hex
24	950220	12	WASHER, lock M10, PLTD.
25	915276	2	NIPPLE, grease
26	914465	2	NIPPLE, grease
27	6810014	2	CYLINDER, steering

HYDRAULICS

STEERING CYLINDER

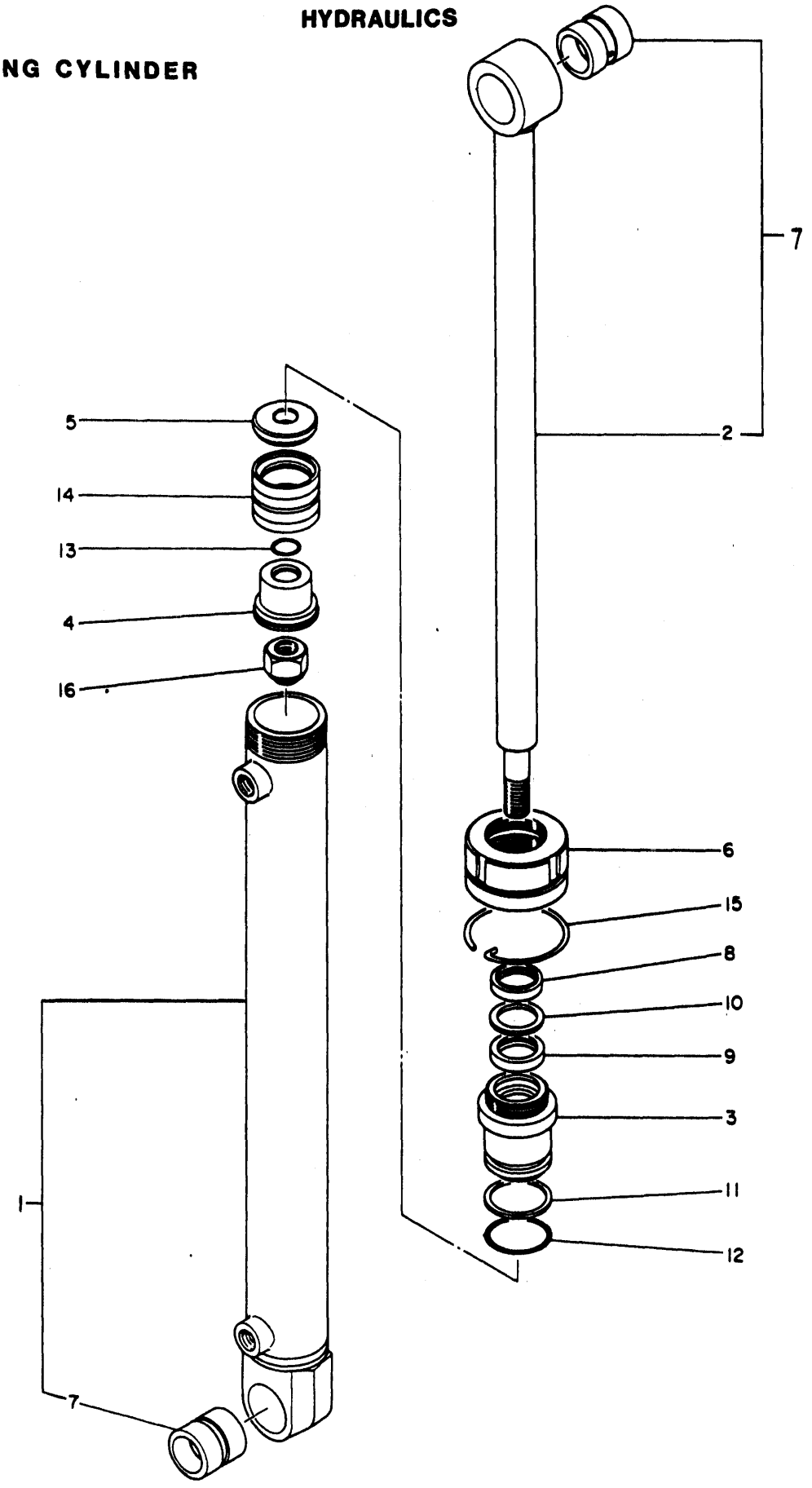

STEERING CYLINDER

ITEM	NUMBER	QTY	DESCRIPTION
	6810014		CYLINDER, steering (incl. 1-16)
1	6810347	1	CYLINDER (incl. 7)
2	6810348	1	ROD, piston (incl. 7)
3	6810560	1	BUSHING
4	6810561	1	PISTON
5	6810562	1	PLATE, piston
6	6810563	1	SCREW, grand
7	6810564	2	BUSHING
8	N.S.S.	1	SEAL, dust
9	N.S.S.	1	PACKING
10	N.S.S.	1	RING, back-up
11	N.S.S.	1	RING, back-up
12	N.S.S.	1	O-RING
13	N.S.S.	1	O-RING
14	N.S.S.	1	SEAL, piston
15	N.S.S.	1	RING
16	6810565	1	NUT, self locking
	6810166		SERVICE KIT (incl. 8-15)

HYDRAULIC PUMP

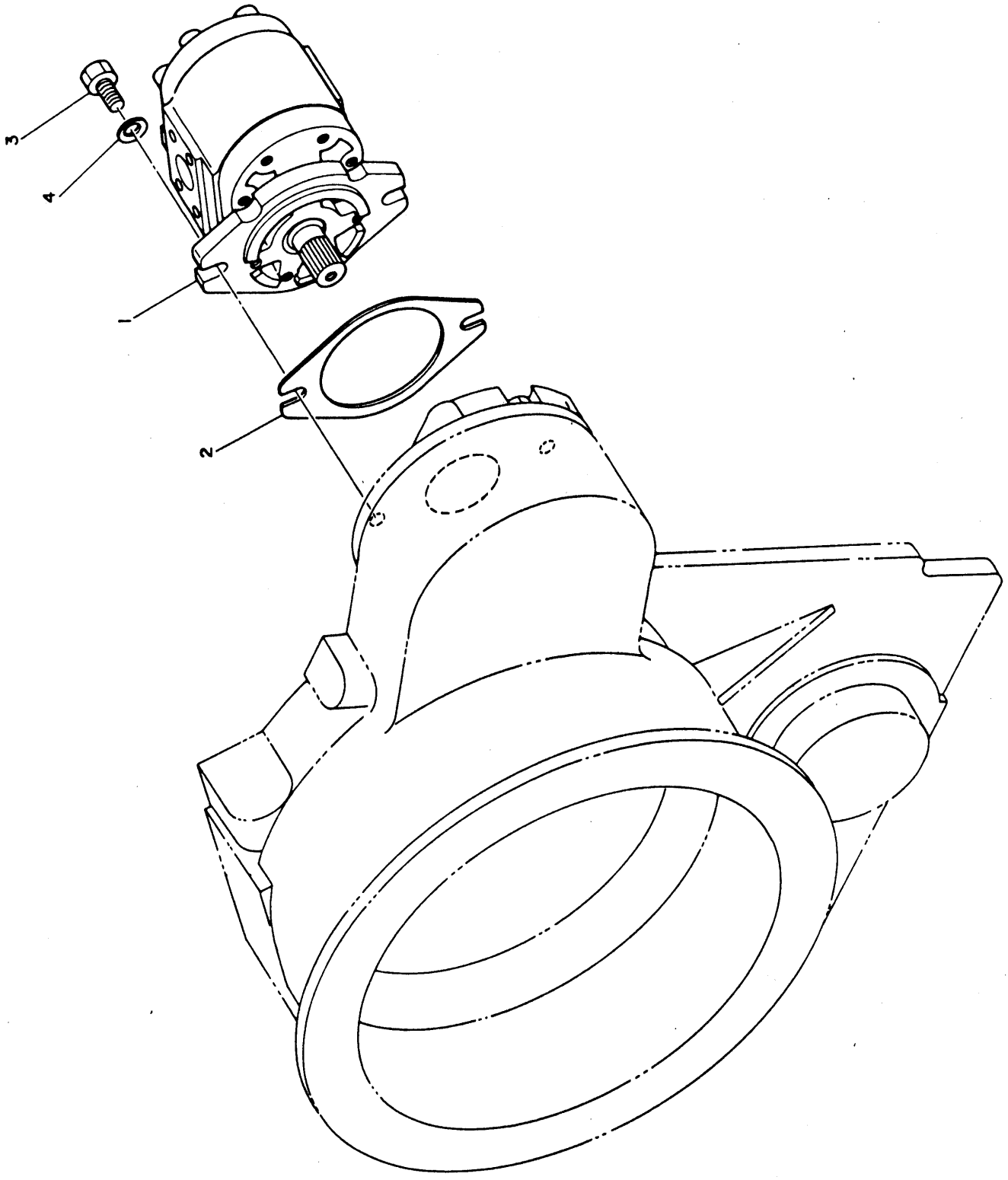

HYDRAULIC VALVE

ITEM	NUMBER	QTY	DESCRIPTION
	6810370	1	HYDRAULIC (incl. 1-4)
1	6810079	1	PUMP, gear
2	6810098	1	GASKET
3	950285	2	BOLT, hex M12-1.75 x 35mm
4	6900143	2	WASHER, conical

HYDRAULICS

GEAR PUMP

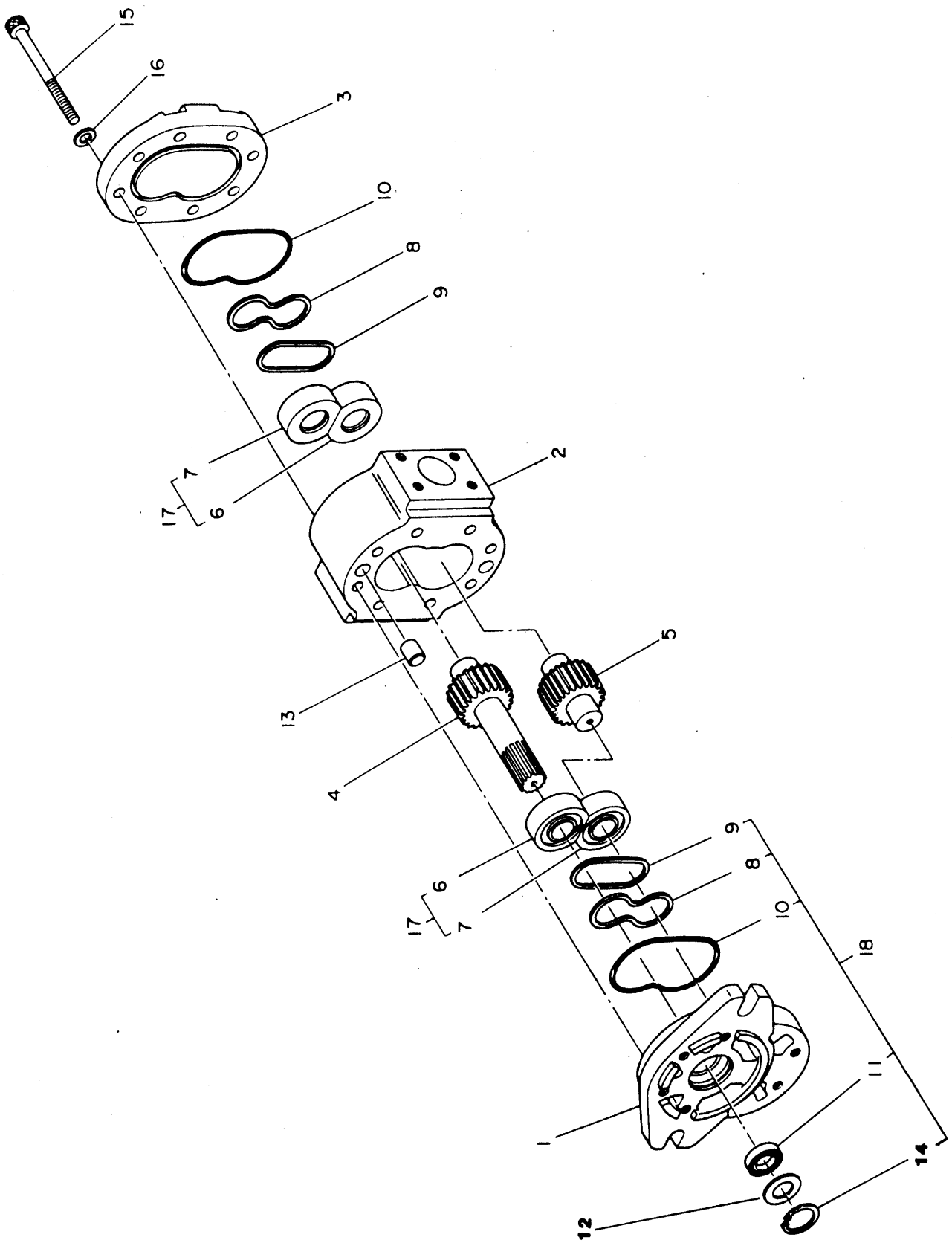

HYDRAULIC PUMP

ITEM	NUMBER	QTY	DESCRIPTION
	6810079		PUMP, gear
1	6810424	1	COVER, front
2	6810345	1	BODY, (incl. 2 & 17)
3	6810426	1	COVER, rear
4	6810427	1	GEAR, drive
5	6810428	1	GEAR, idler
6	6810429	2	BUSHING (A), assy.
7	6810430	2	BUSHING (B), assy.
8	N.S.S.	2	SEAL, balance
9	N.S.S.	2	SEAL, backup
10	N.S.S.	2	O-RING
11	N.S.S.	1	SEAL, oil
12	6810435	1	PLATE, oil seal
13	6810436	2	PIN, knock
14	927695	1	RING, snap
15	6900150	8	BOLT, hex socket M10-1.5 x 122mm, PLTD.
16	950229	8	WASHER, flat M10, PLTD.
17	6810437	1	BUSHING A, B KIT (incl. 6 & 7)
18	6810099	1	KIT, repair (incl. 8-11 & 14)

HYDRAULICS

HYDRAULIC PIPING

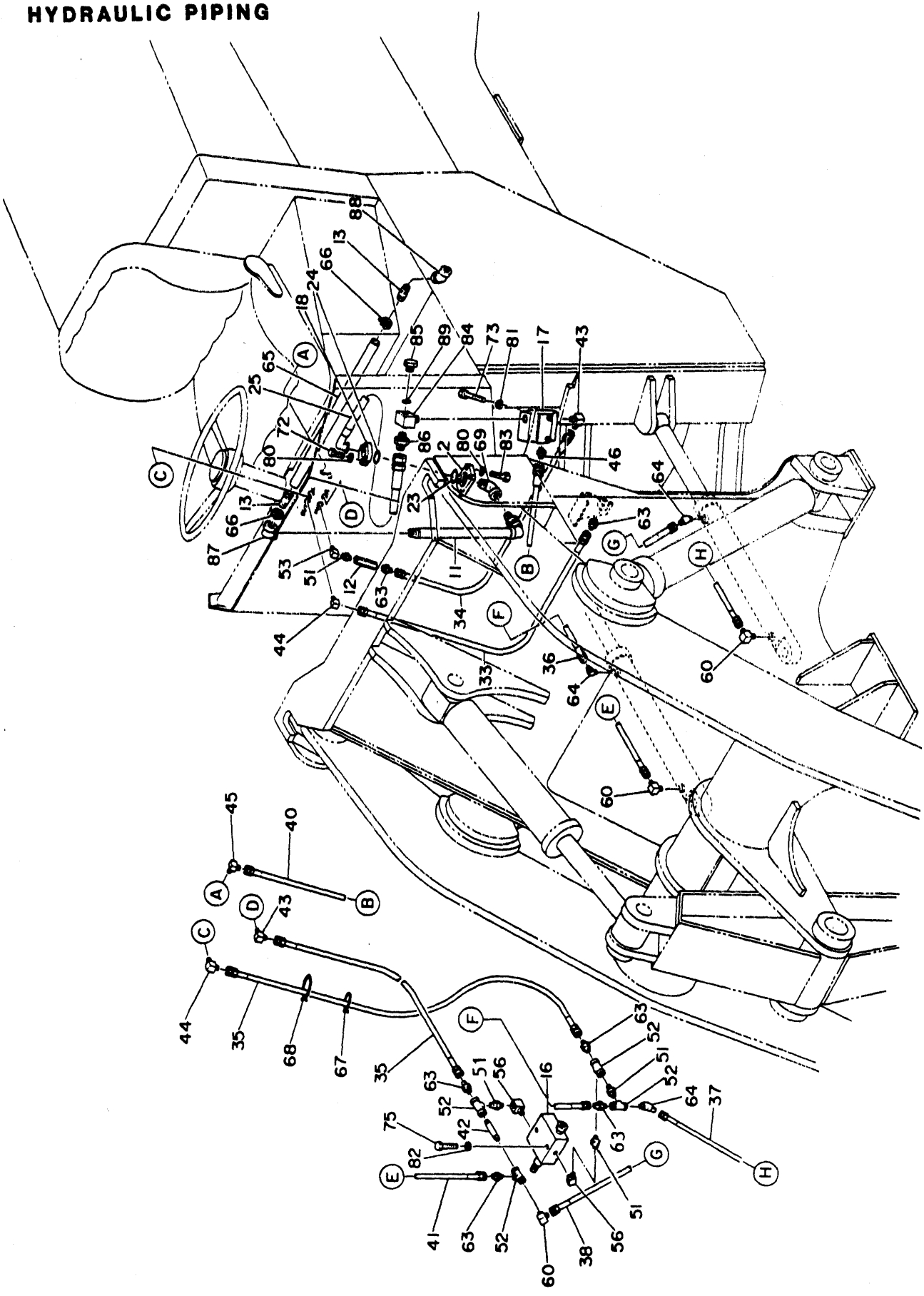

HYDRAULIC PIPING

ITEM	NUMBER	QTY	DESCRIPTION
1	6810421	1	MANIFOLD, assy.
2	6810735	1	FLANGE
3	6810422	1	PIPE, assy.
4	6810423	1	PIPE, assy.
5	6810736	1	PIPE, assy.
6	6810737	1	PIPE, assy.
7	6810738	2	CLAMP
8	6810739	1	SHIM
9	6810740	1	BRACKET
10	6810741	1	ELBOW
11	6810742	1	PIPE
12	6810743	1	VALVE, check
13	6810744	2	HOSE STEM
14	6810531	1	CYLINDER, bucket
15	6810545	2	CYLINDER, lift
16	6810046	1	VALVE, relief
17	6900057	1	VALVE
18	6810745	2	FLANGE, split
19	6810746	2	CLAMP, multiplex
20	6810747	4	CLAMP, multiplex
21	6810748	2	BUSHING, rubber
22	6810749	4	BUSHING, rubber
23	6900069	1	O-RING
24	6900070	1	O-RING
25	6810721	1	HOSE, hydraulic
26	6810772	1	HOSE, hydraulic
27	6810053	1	HOSE, hydraulic
28	6810723	1	HOSE, hydraulic
29	6810724	1	HOSE, hydraulic
30	6810054	2	HOSE, hydraulic
31	6810055	2	HOSE, hydraulic
32	6810056	2	HOSE, hydraulic
33	6810725	1	HOSE, hydraulic
34	6810726	1	HOSE, hydraulic
35	6810049	2	HOSE, hydraulic
36	6810050	1	HOSE, hydraulic
37	6810051	1	HOSE, hydraulic
38	6810052	1	HOSE, hydraulic
39	6810727	1	HOSE, hydraulic
40	6810728	1	HOSE, hydraulic
41	6810729	1	HOSE, hydraulic
42	6810730	1	NIPPLE
43	6810731	2	ELBOW
	933167	2	O-RING
44	6810732	2	ELBOW
	933167	2	O-RING
45	6810733	1	ELBOW
	921883	1	O-RING
46	6810734	2	CONNECTOR
	921883	2	O-RING
47	6810703	2	CONNECTOR
	921883	2	O-RING
48	6810704	1	ELBOW

HYDRAULICS

HYDRAULIC PIPING CONTD.

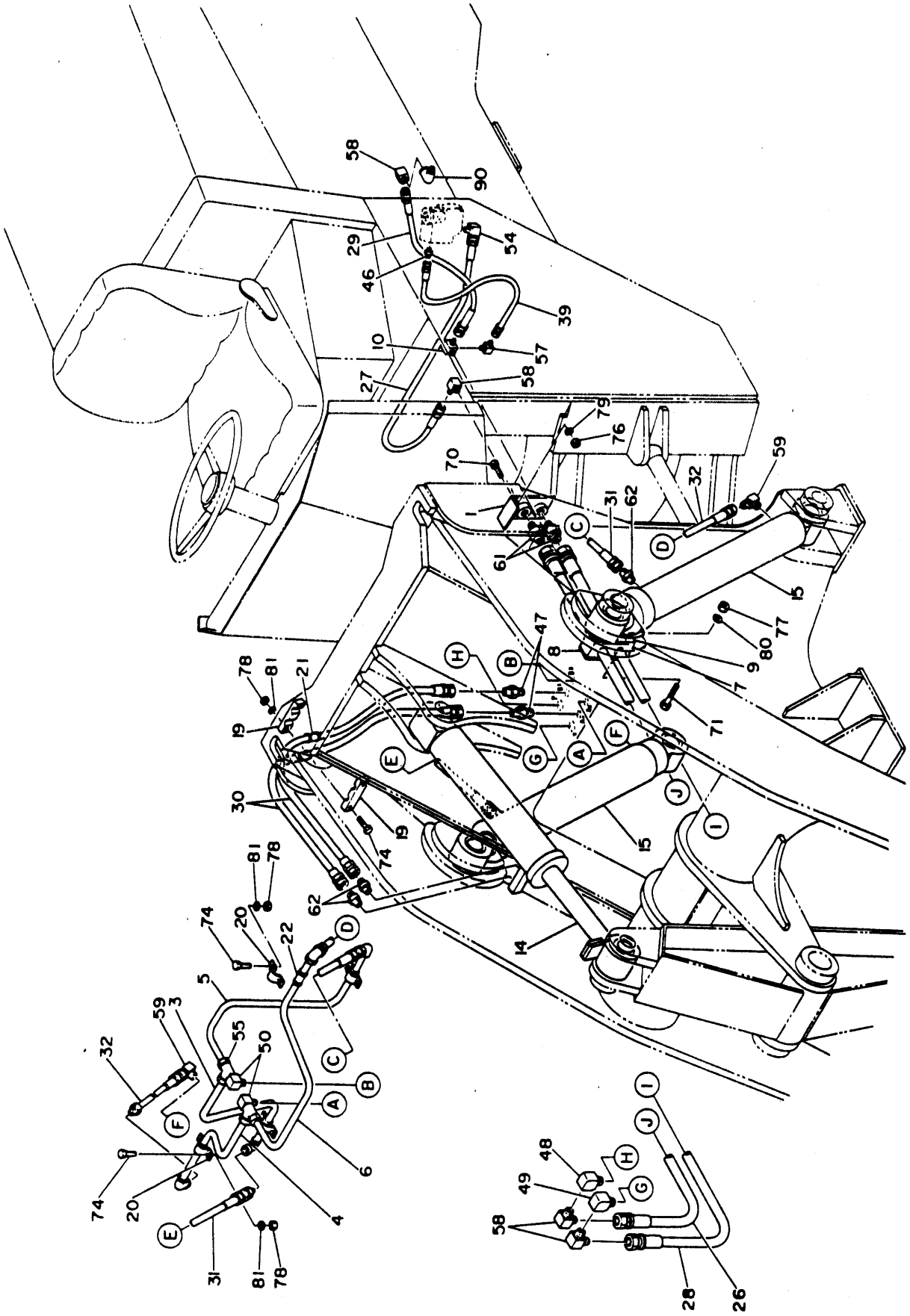

HYDRAULIC PIPING CONTD.

ITEM	NUMBER	QTY	DESCRIPTION
	921886	1	O-RING
49	6810705	1	ELBOW
	921214	1	O-RING
50	6810706	2	ELBOW
	921886	2	O-RING
51	6810707	4	NIPPLE
52	6810708	4	TEE
53	6810709	1	ELBOW
	933167	1	O-RING
54	6810710	1	ELBOW
	921206	1	O-RING
55	6810711	2	PIPE JOINT (B)
56	6810712	2	ELBOW
		2	O-RING
57	6810713	1	ELBOW
58	6810714	4	ELBOW
59	6810715	2	ELBOW
60	6810716	4	ELBOW
61	6810717	2	ADAPTER
62	6810718	4	ADAPTER
63	6810719	6	ADAPTER
64	6810720	3	ELBOW
65	6810696	1	HOSE, hydraulic
66	6810697	2	CLIP
69	2022705	1	ELBOW
70	950053	2	BOLT, hex M12-1.75 x 40mm, PLTD.
71	951134	2	BOLT, hex M10-1.5 x 95mm, PLTD.
72	950051	4	BOLT, hex M10-1.5 x 30mm, PLTD.
73	950026	2	BOLT, hex M8-1.25 x 80mm, PLTD.
74	950025	10	BOLT, hex M8-1.25 x 70mm, PLTD.
75	950007	2	BOLT, hex M6-1.0 x 55mm, PLTD.
76	950212	2	NUT, hex M12-1.75, PLTD.
77	950211	2	NUT, hex M10-1.5, PLTD.
78	950944	10	NUT, hex M8-1.25, PLTD.
79	950221	2	WASHER, lock M12, PLTD.
80	950220	10	WASHER, lock M10, PLTD.
81	950219	16	WASHER, lock M8, PLTD.
82	950218	6	WASHER, lock M6, PLTD.
83	950291	4	BOLT, hex M10-1.5 x 40mm
84	6810700	1	ELBOW
85	6810701	1	O-RING, seal plug
86	6810702	1	ADAPTER
87	2022703	2	ELBOW
88	2022704	1	ELBOW
89	921206	1	O-RING
90	6900152	1	ELBOW

HYDRAULICS

LIFT CYLINDER

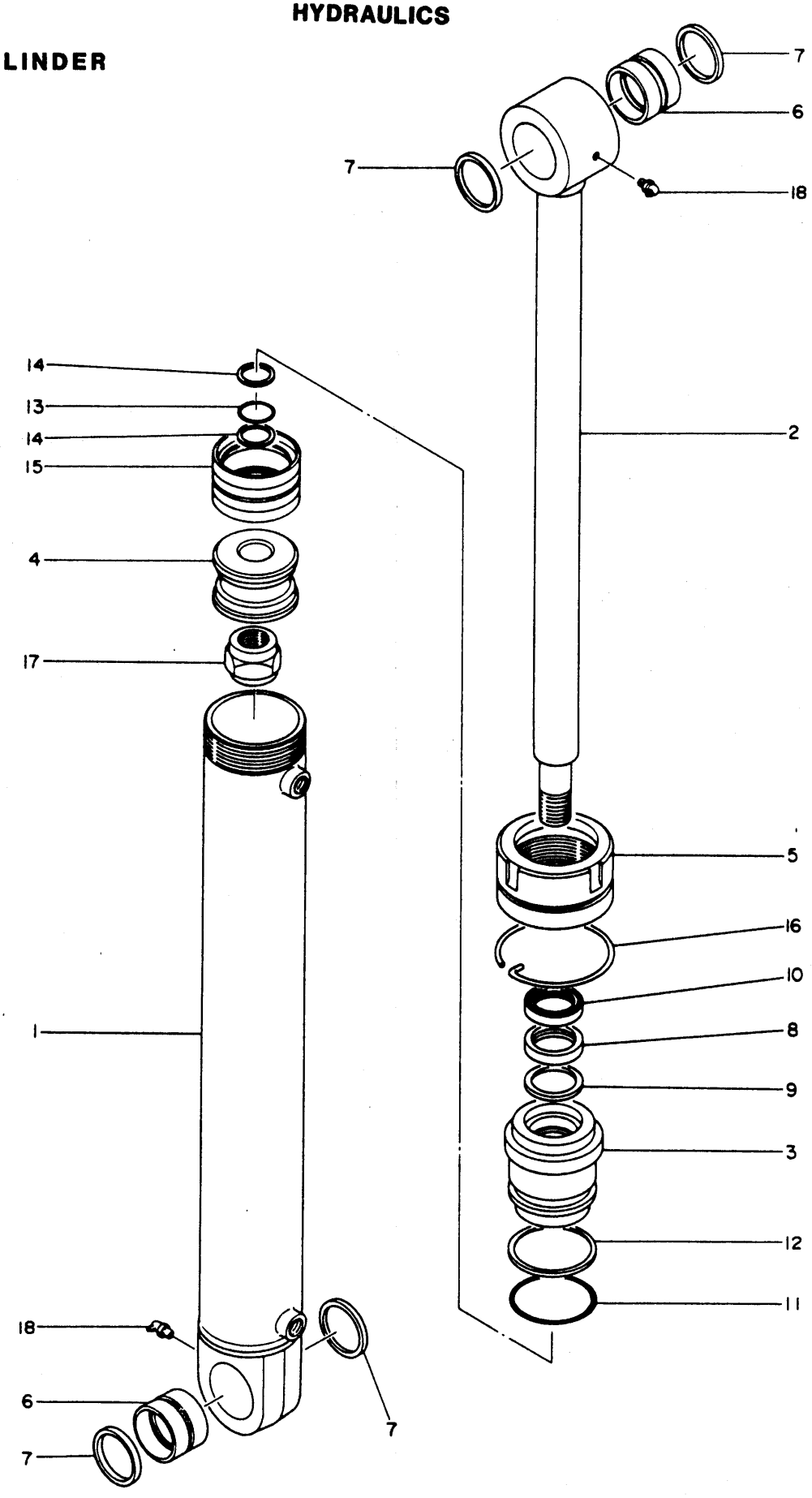

LIFT CYLINDER

ITEM	NUMBER	QTY	DESCRIPTION
	6810015	2	CYLINDER, lift (incl. 1-18)
1	6810341	1	CYLINDER (incl. 6)
2	6810342	1	ROD, piston (incl. 6)
3	6810548	1	BUSHING, guide
4	6810549	1	PISTON
5	6810550	1	SCREW, grand
6	6810047	2	BUSHING
7	6810542	4	SEAL, dust
8	N.S.S.	1	PACKING
9	N.S.S.	1	RING, buffer
10	N.S.S.	1	SEAL, dust
11	N.S.S.	1	O-RING
12	N.S.S.	1	RING, back-up
13	N.S.S.	1	O-RING
14	N.S.S.	2	RING, back-up
15	N.S.S.	1	SEAL, piston
16	N.S.S.	1	RING
17	6810551	1	NUT, self locking
18	6810544	2	NIPPLE, grease
19	6810159		SERVICE KIT (incl. 8-16)

HYDRAULICS

BUCKET CYLINDER

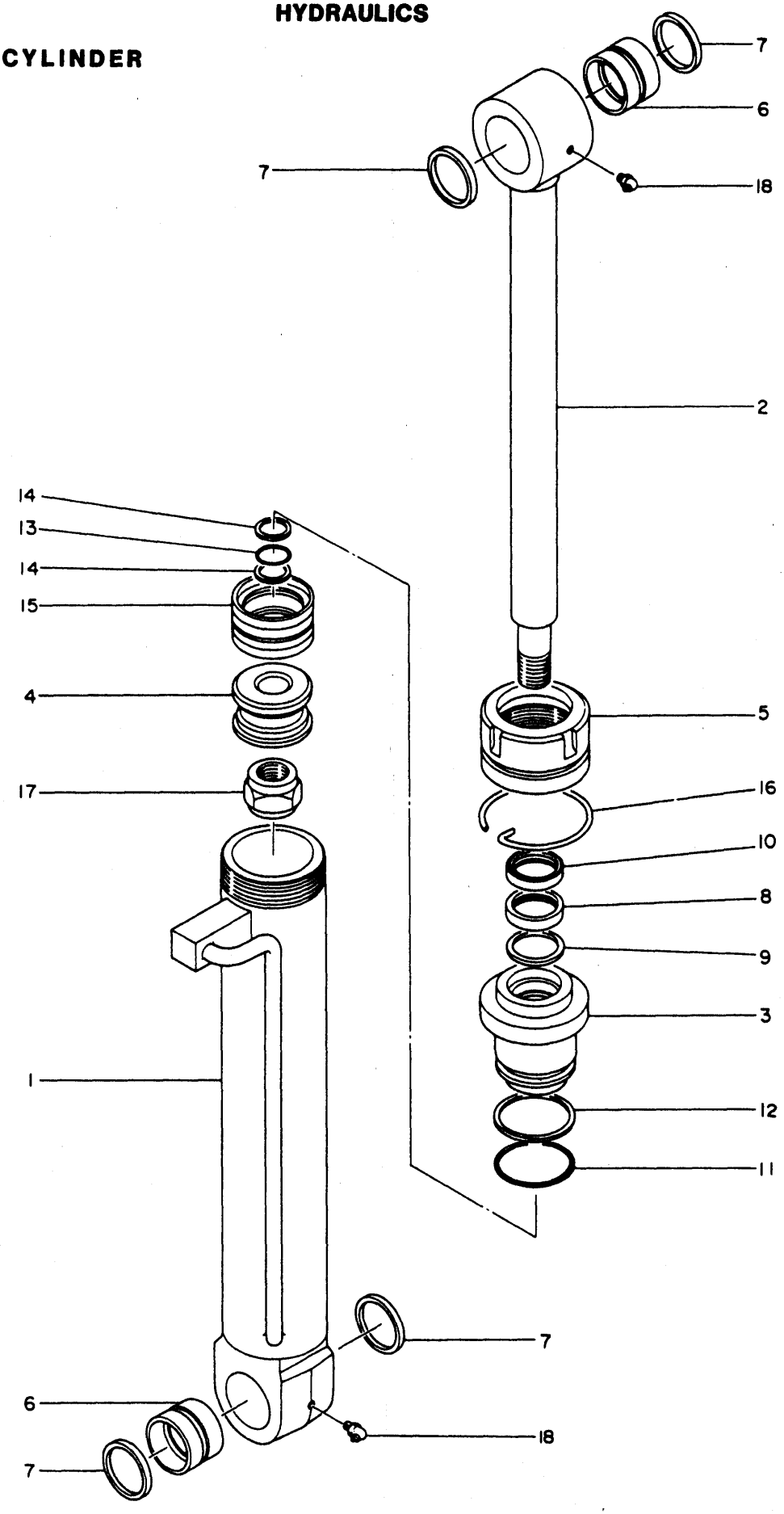

BUCKET CYLINDER

ITEM	NUMBER	QTY	DESCRIPTION
	6810016		CYLINDER, bucket (incl. 1-18)
1	6810343	1	CYLINDER (incl. 6)
2	6810344	1	ROD, piston (incl. 6)
3	6810538	1	BUSHING, guide
4	6810539	1	PISTON
5	6810540	1	SCREW, grand
6	6810541	2	BUSHING
7	6810542	4	SEAL, dust
8	N.S.S.	1	PACKING
9	N.S.S.	1	RING, buffer
10	N.S.S.	1	SEAL, dust
11	N.S.S.	1	O-RING
12	N.S.S.	1	RING, back up
13	N.S.S.	1	O-RING
14	N.S.S.	2	RING, back up
15	N.S.S.	1	SEAL, piston
16	N.S.S.	1	RING
17	6810543	1	NUT, self locking
18	6810544	2	NIPPLE, grease
19	6810158	1	SERVICE KIT (incl. 8-16)

HYDRAULICS

HYDRAULIC TANK

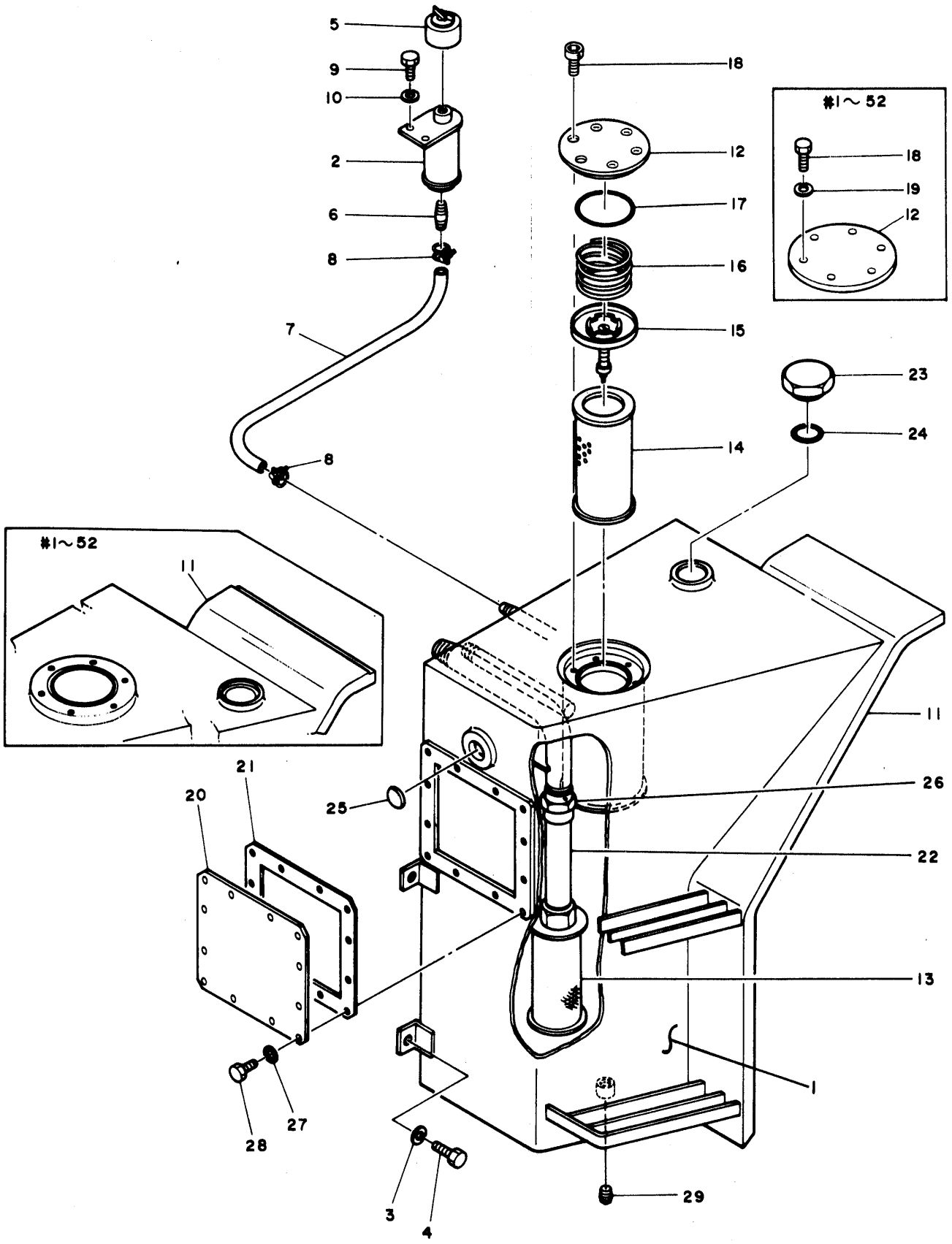

HYDRAULIC TANK

ITEM	NUMBER	QTY	DESCRIPTION
1	6810080	1	TANK ASSY., hydraulic (incl. 11-29)
2	6810418	1	TANK, surge
3	950232	4	WASHER, flat M16, PLTD.
4	950379	4	BOLT, hex M16-2 x 30mm (10.9), PLTD.
5	6810062	1	BREATHER, air
6	2023091	2	NIPPLE, hose
7	6810687	1	HOSE
8	6810688	2	CLAMP, hose
9	950036	2	BOLT, hex M10-1.5 x 25mm, PLTD.
10	950220	2	WASHER, lock M10, PLTD.
	6810080	1	TANK ASSY., hydraulic (incl. 11-29)
11	6810489	1	TANK, hydraulic (S/N 1-52)
	6810480	1	TANK, hydraulic (S/N 53-)
12	6810419	1	FLANGE (S/N 1-52)
	6810417	1	FLANGE (S/N 53-)
13	6810689	1	FILTER, suction
14	6800063	1	ELEMENT, filter
15	6810420	1	VALVE ASSY., by-pass
16	6810690	1	SPRING
17	6900010	1	O-RING
18	950036	6	BOLT, hex M10-1.5 x 25mm, PLTD. (S/N 1-52)
	950036	6	BOLT, hex M10-1.25 x 25mm (10.9), PLTD. (S/N 53-)
19	6900142	6	WASHER, conical (S/N 1-52)
20	6810691	1	COVER
21	6810061	1	GASKET
22	6810692	1	PIPE
23	6810693	1	PLUG
24	6900016	1	O-RING
25	6810683	1	LEVEL GAUGE, oil
26	6810684	1	UNION
27	6810685	12	WASHER, seal
28	950017	12	BOLT, hex M8-1.25 x 16mm, PLTD.
29	905261	1	PLUG, taper

840D WHEEL LOADER

HYDRAULICS

VALVE CONTROL

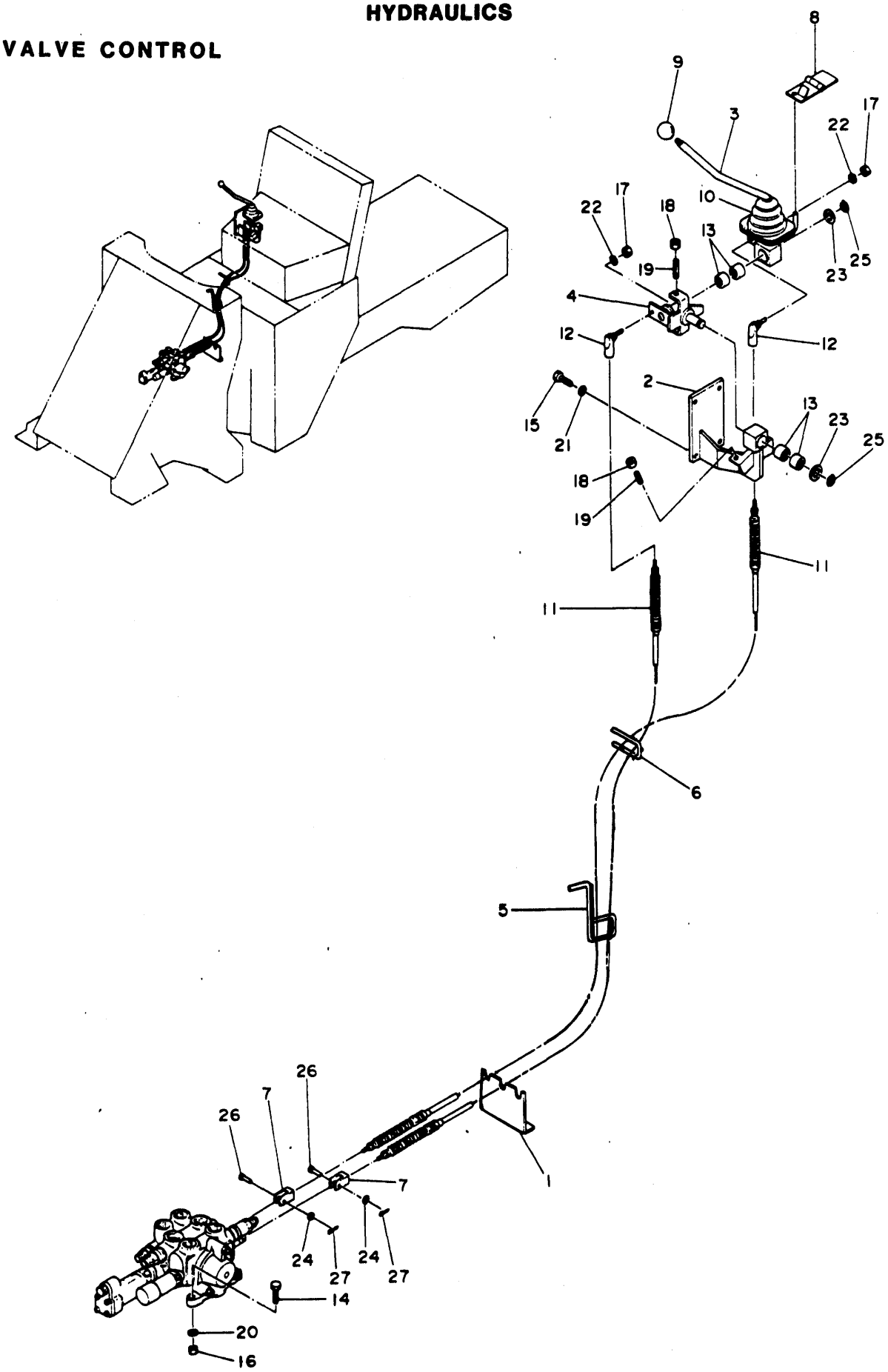

ITEM	NUMBER	QTY	DESCRIPTION
1	6810676	1	BRACKET
2	6810416	1	BRACKET
3	6810339	1	LEVER, (incl. 13) (S/N 1-32)
	6810371	1	LEVER (incl. 13) (S/N 63-)
4	6810340	1	LEVER (incl. 13)
5	6810677	1	CLAMP
6	6810678	1	CLAMP
7	6810679	2	CLEVIS
8	6810680	1	LEVER LOCK
9	6810681	1	KNOB
10	2023246	1	BOOT
11	6810065	2	CABLE ASSY.
12	6800075	2	ROD END
13	6810682	4	BEARING, needle
14	950054	4	BOLT, hex M14-2 x 35mm, PLTD.
15	950034	4	BOLT, hex M10-1.5 x 16mm, PLTD.
16	950213	4	NUT, hex M14-2, PLTD.
17	950210	2	NUT, hex M8-1.25, PLTD.
18	950245	4	NUT, hex M8-1.25 (L.H.), PLTD.
19	2023252	4	SCREW, set
20	950221	4	WASHER, lock M12, PLTD.
21	950220	4	WASHER, lock M10, PLTD.
22	950219	2	WASHER, lock M8, PLTD.
23	950233	2	WASHER, flat M20, PLTD.
24	950228	2	WASHER, flat - M8, PLTD.
25	2024047	2	RING, snap
26	2023253	2	PIN, head
27	6810675	2	PIN, split

HYDRAULICS

HYDRAULIC VALVE

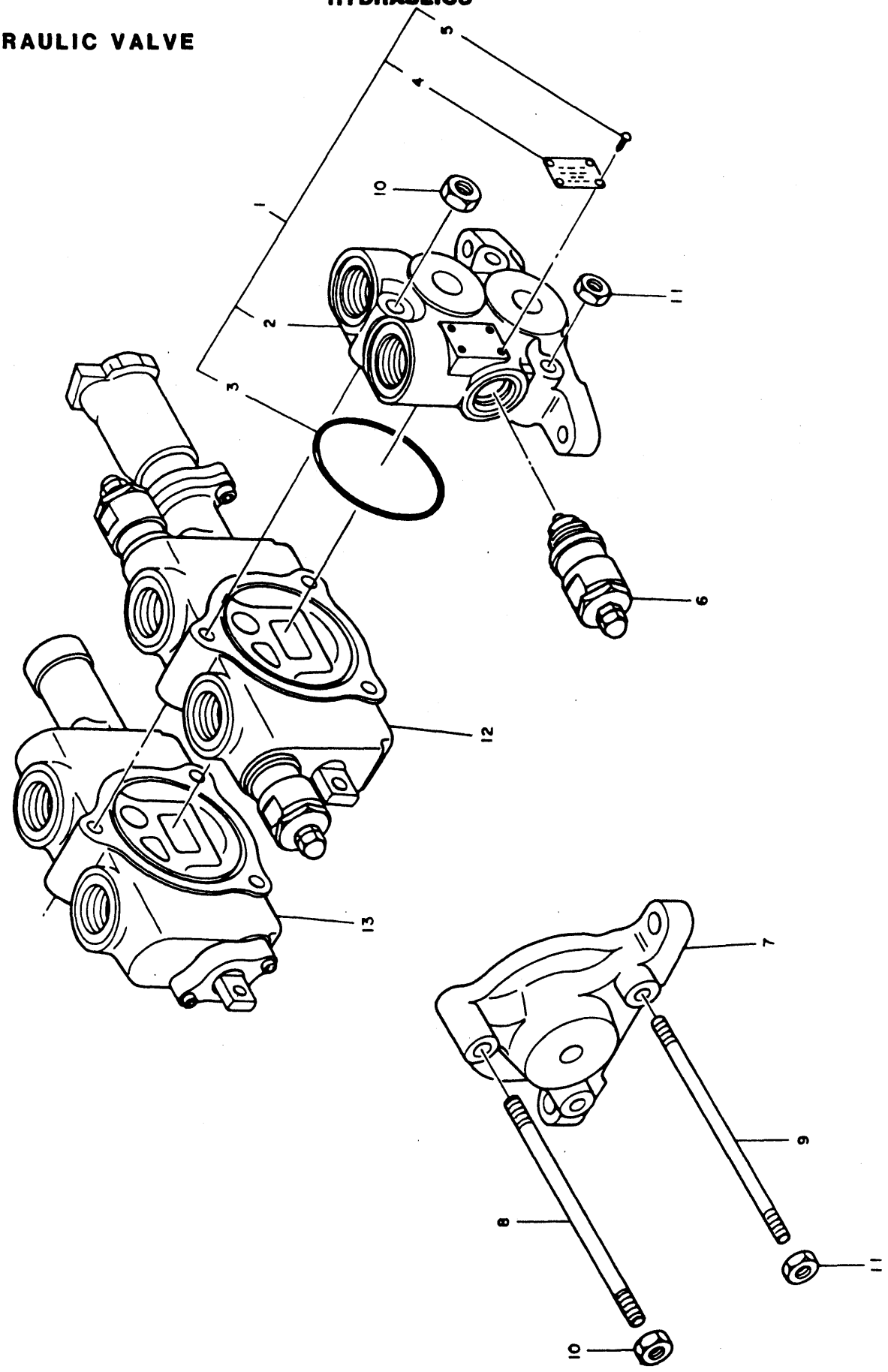

HYDRAULIC VALVE

ITEM	NUMBER	QTY	DESCRIPTION
	6810413	1	VALVE BANK (incl. 1-13)
1	6810640	1	INLET SECTION, assy. (incl. 2-5)
2	6810641	1	HOUSING, inlet
3	6810642	1	O-RING
4	N.S.S.	1	NAME PLATE
5	N.S.S.	4	SCREW, drive
6	6810643	1	VALVE ASSY., relief
7	6810644	1	OUTLET SECTION
8	6810645	1	ROD, tie
9	6810646	2	ROD, tie
10	950248	2	NUT, hex M14-1.5
11	950247	4	NUT, hex M12-1.25
12	6810649	1	SPOOL SECTION ASSY.
13	6810650	1	SPOOL SECTION ASSY.

HYDRAULIC VALVE-OPTION

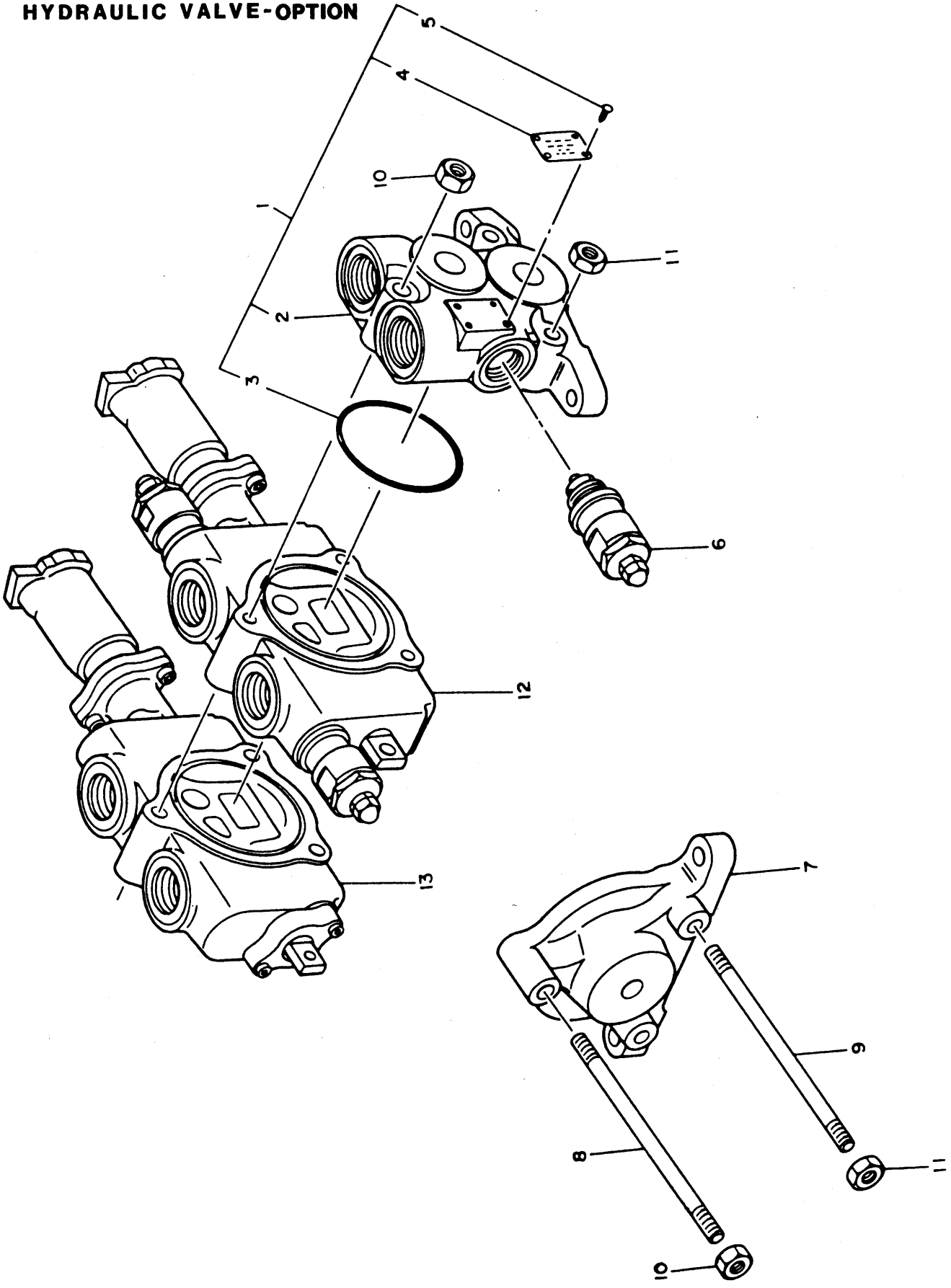

HYDRAULIC VALVE-OPTION

ITEM	NUMBER	QTY	DESCRIPTION
	6810072	1	VALVE BANK W/BOOM KICK-OUT (incl. 1-13)
1	6810640	1	INLET SECTION ASSY. (incl. 2-5)
2	6810641	1	HOUSING, inlet
3	6810642	1	O-RING
4	N.S.S.	1	NAME PLATE
5	N.S.S.	4	SCREW, drive
6	6810643	1	VALVE ASSY., relief
7	6810644	1	OUTLET SECTION
8	6810645	1	ROD, tie
9	6810646	2	ROD, tie
10	950248	2	NUT, hex M14-1.5
11	950247	4	NUT, hex M12-1.25
12	6810649	1	SPOOL SECTION ASSY.
13	6811174	1	SPOOL SECTION ASSY.

CONTROL VALVE ASSEMBLY

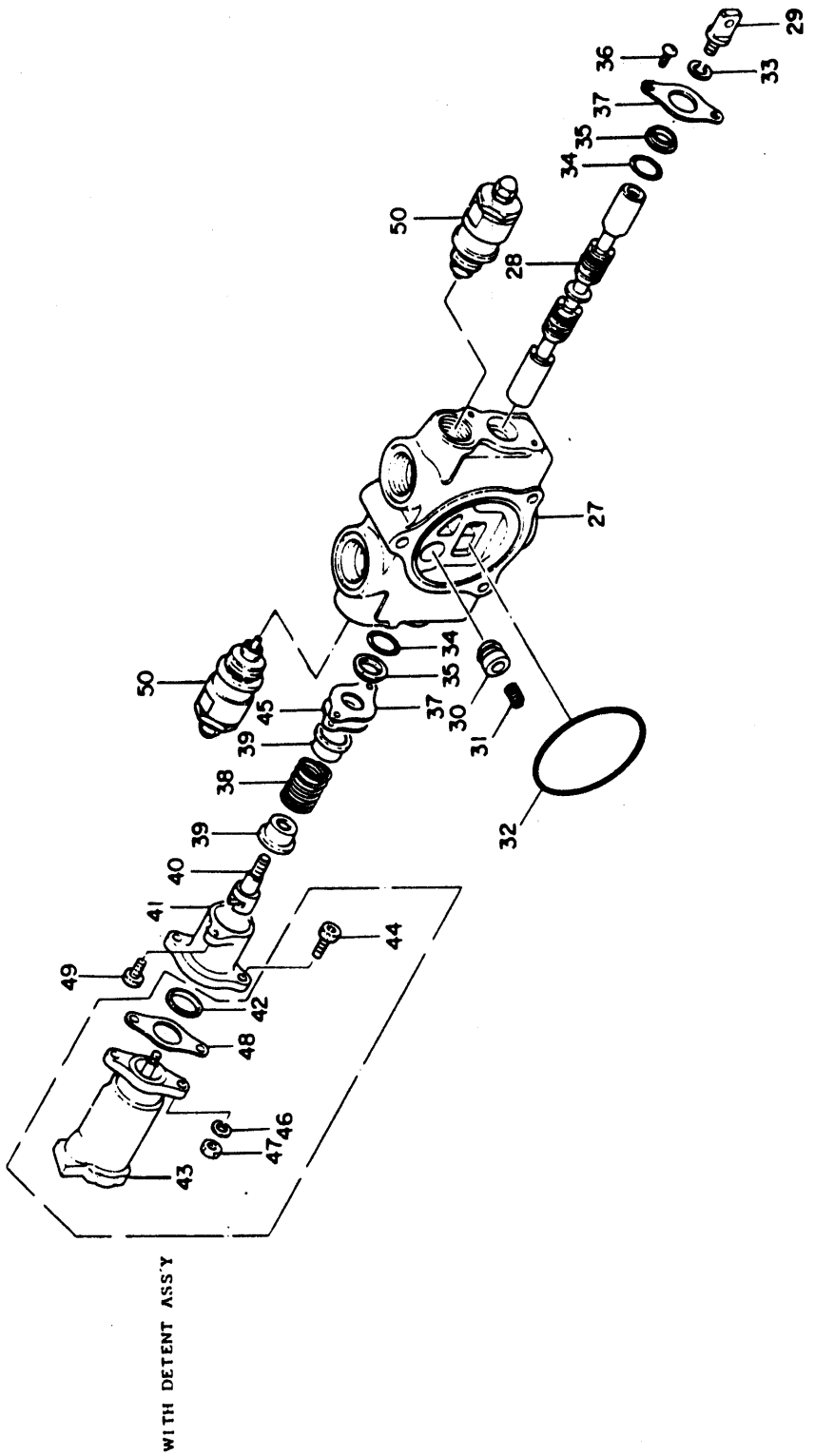

CONTROL VALVE ASSEMBLY

ITEM	NUMBER	QTY	DESCRIPTION
	6810650	1	SPOOL SECTION ASSY., lift (1-26)
1	N.S.S.	1	HOUSING, valve
2	N.S.S.	1	SPOOL
3	6810805	1	SPOOL HEAD
4	6810833	1	POPPET (check v.)
5	6810834	1	SPRING (check v.)
6	6810642	1	O-RING
7	950220	1	WASHER, lock M10, PLTD.
8	923574	2	O-RING
9	6810905	2	WIPER
10	6900194	2	BOLT, socket head M6-1.0 x 25mm, PLTD.
11	6810919	1	SEAL PLATE
12	6810997	1	PIN, detent
13	6810999	1	SLEEVE, detent
14	6811000	1	SPRING, detent
15	6811001	1	SPRING, spool
16	6811002	1	SEAT, spring
17	6811003	1	BALL, steel
18	6811009	4	BALL, detent
19	6811010	1	CAP
20	6811017	1	SPACER
21	6811021	1	O-RING
22	6811029	1	SPACER, detent
23	6811039	1	RING, snap
24	6810753	2	BOLT, socket head M6-1.0 x 22mm, PLTD.
25	6810925	1	SEAT, spring
26	6810762	1	PLATE, seal
	6810649	1	SPOOL SECTION ASSY., bucket (incl. 27-44, 46, 47, 49 & 50)

CONTROL VALVE ASSEMBLY

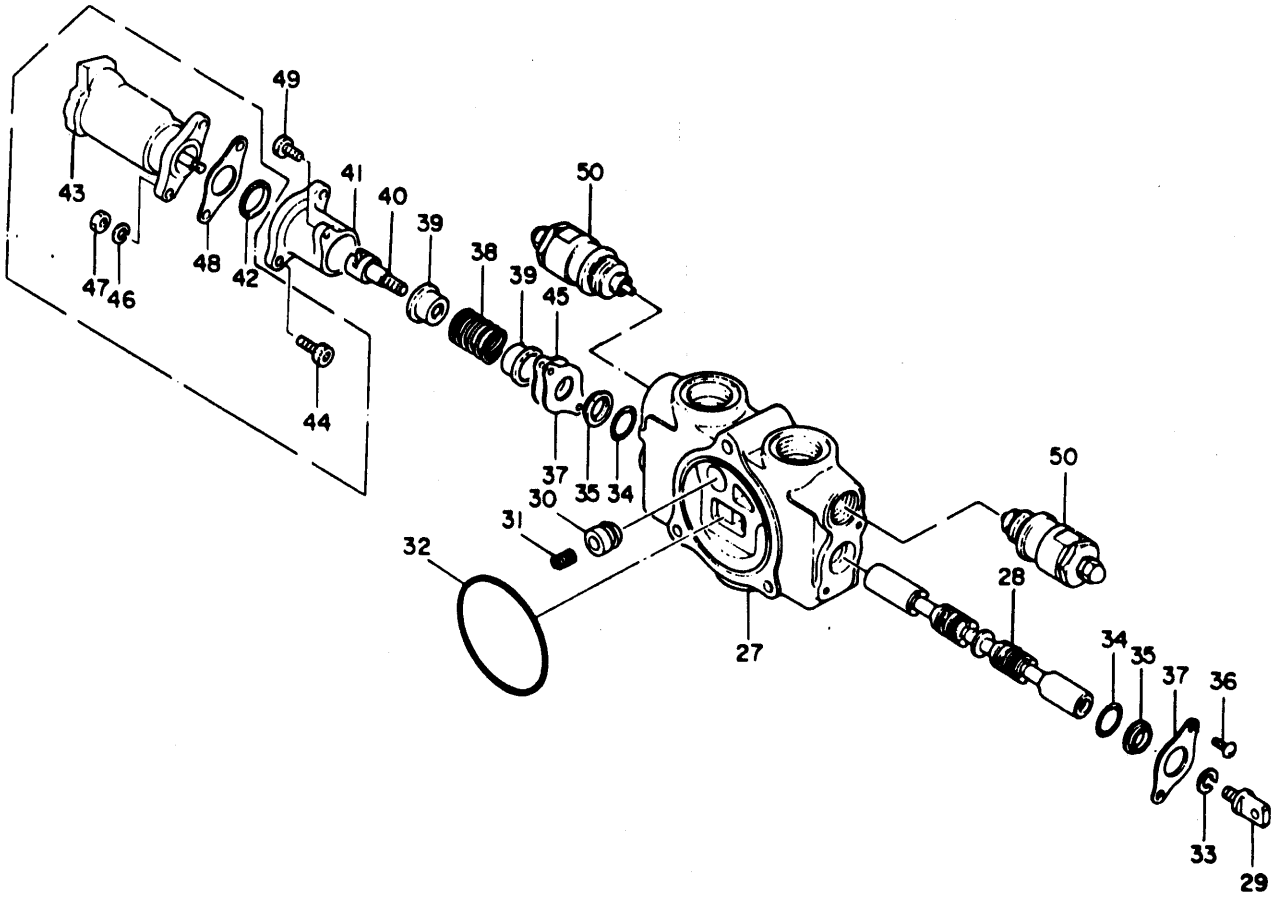

CONTROL VALVE ASSY.CONT'D.

ITEM	NUMBER	QTY	DESCRIPTION
27	N.S.S.	1	HOUSING, valve
28	N.S.S.	1	SPOOL
29	6810805	1	SPOOL HEAD
30	6810833	1	POPPET (check v.)
31	6810834	1	SPRING (check v.)
32	6810642	1	O-RING
33	950220	1	WASHER, lock M10, PLTD.
34	923574	2	O-RING
35	6810905	2	WIPER
36	6900193	2	SCREW, pan head M6-1.0 x 10mm, PLTD.
37	6810919	2	SEAL PLATE
38	6810920	1	SPRING
39	6810925	2	SEAT, spring
40	6810926	1	SCREW, cap
41	6810962	1	CAP
42	6810971	1	SPACER
43	6810973	1	DETENT ASSY.
44	951158	2	BOLT, socket head M6 - 1.0 x 30mm
45	6810975	1	GASKET
46	950218	1	WASHER, lock M6
47	950244	2	NUT, hex M6-1.0
48	6811175	1	GASKET
49	6900194	2	BOLT, socket head M6-1.0 x 25mm, PLTD.
50	6810643	2	VALVE ASSY., relief

CONTROL VALVE ASSEMBLY
OPTION

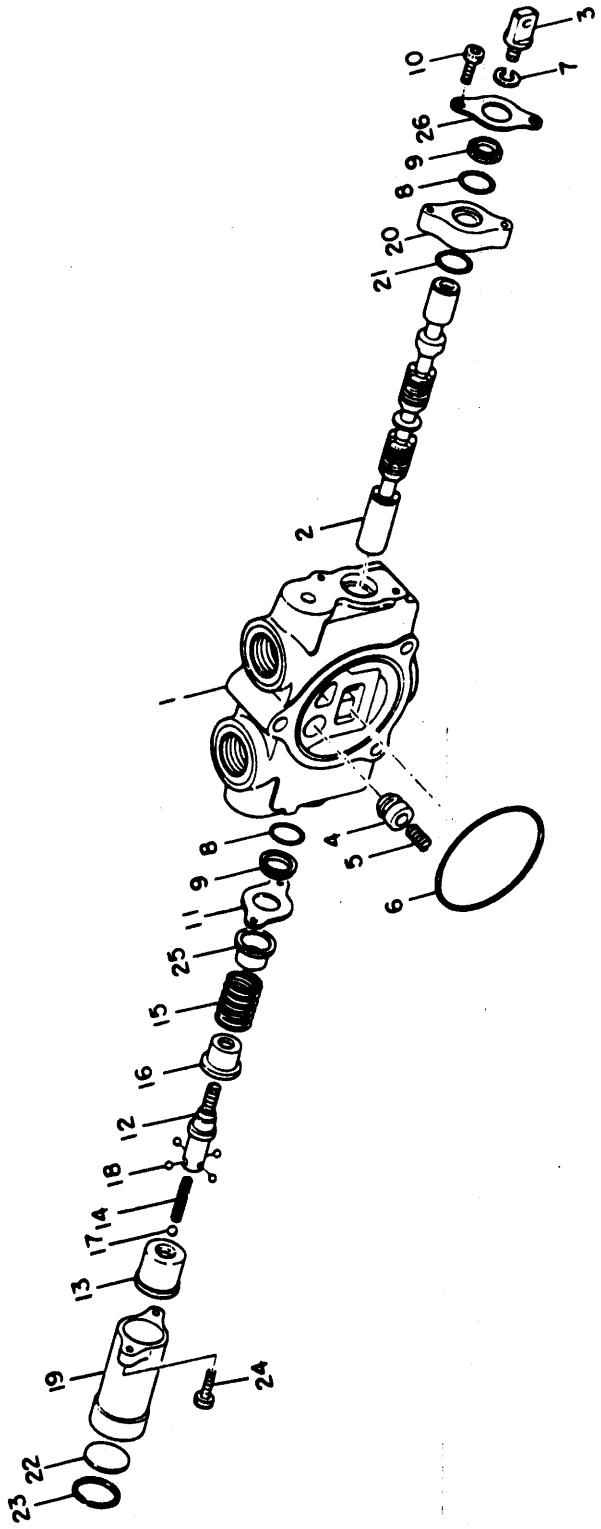

CONTROL VALVE ASSY.-OPTION

ITEM	NUMBER	QTY	DESCRIPTION
	6810650	1	SPOOL SECTION ASSY. (1-26)
1		1	HOUSING, valve
2		1	SPOOL
3	6810805	1	SPOOL HEAD
4	6810833	1	POPPET (check v.)
5	6810834	1	SPRING (check v.)
6	6810642	1	O-RING
7	6810856	1	WASHER, lock
8	6810872	2	O-RING
9	6810905	2	WIPER
10	6810994	2	BOLT, socket head
11	6810919	1	SEAL PLATE
12	6810997	1	PIN (detent)
13	6810999	1	SLEEVE (detent)
14	6811000	1	SPRING (detent)
15	6811001	1	SPRING
16	6811002	1	SEAT, spring
17	6811003	1	BALL, steel
18	6811009	4	BALL, steel
19	6811010	1	CAP
20	6811017	1	SPACER
21	6811021	1	O-RING
22	6811029	1	SPACER (detent)
23	6811039	1	RING, snap
24	6810753	2	BOLT, socket head
25	6810925	1	SEAT, spring
26	6810762	1	PLATE, seal

HYDRAULICS

FLOW DIVIDER

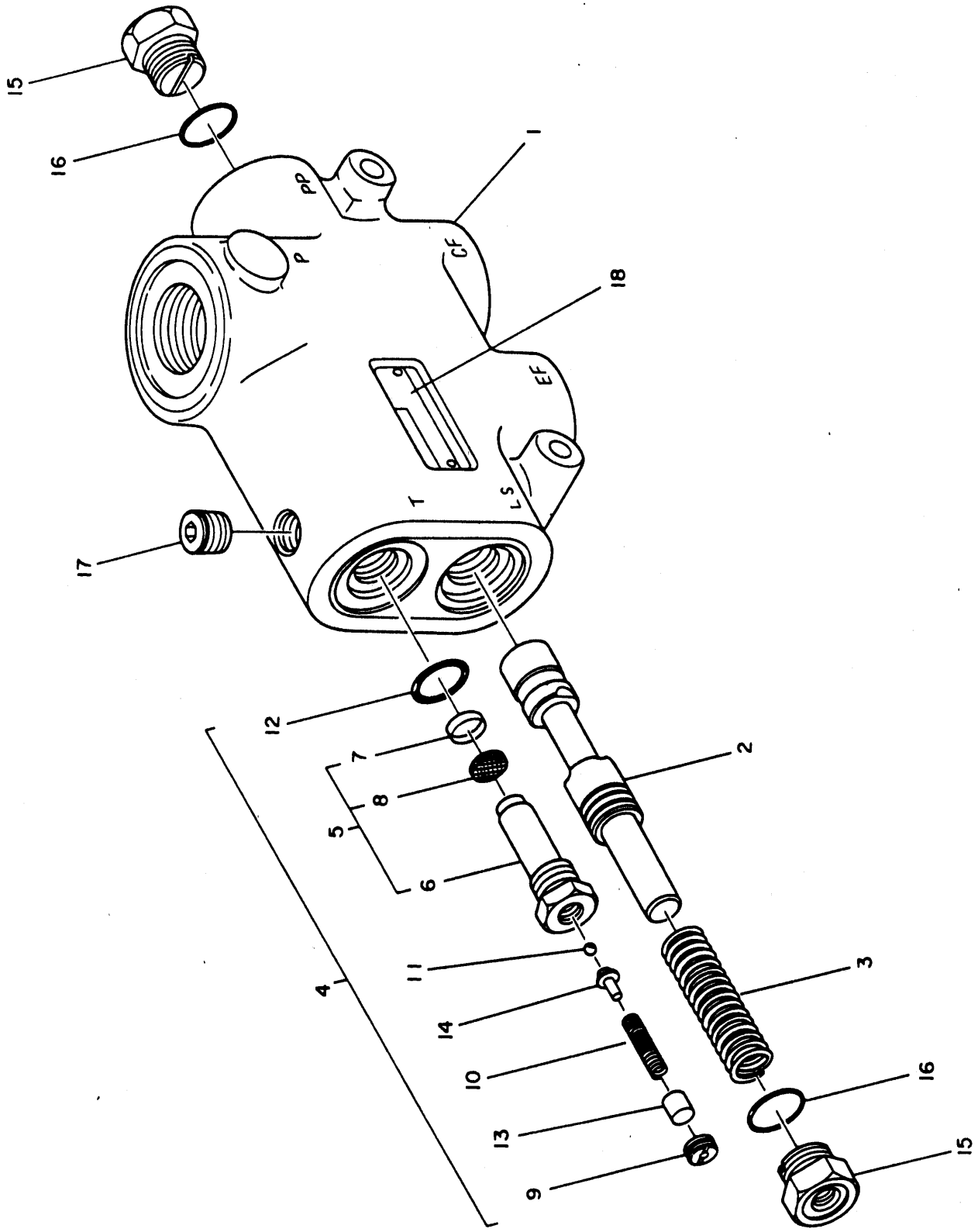

FLOW DIVIDER

ITEM	NUMBER	QTY	DESCRIPTION
	6810533	1	FLOW DIVIDER (incl. 1-18)
1	N.S.S.	1	HOUSING
2	N.S.S.	1	SPOOL
3	1023168	1	SPRING
4	6810057	1	RELIEF VALVE, cartridge (incl. 5-14)
5	N.S.S.	1	BODY, subassembly (incl. 6-8)
6	N.S.S.	1	BODY, relief valve
7	N.S.S.	1	RING
8	N.S.S.	1	SCREEN
9	N.S.S.	1	SCREW
10	N.S.S.	1	SPRING
11	N.S.S.	1	BALL
12	N.S.S.	1	O-RING
13	N.S.S.	1	GUIDE
14	N.S.S.	1	HOLDER
15	1023171	2	PLUG
16	1023172	2	O-RING
17	6810694	1	PLUG
18	N.S.S.	1	NAME PLATE

HYDRAULICS

AUXILIARY HYDRAULICS & VALVE GROUP

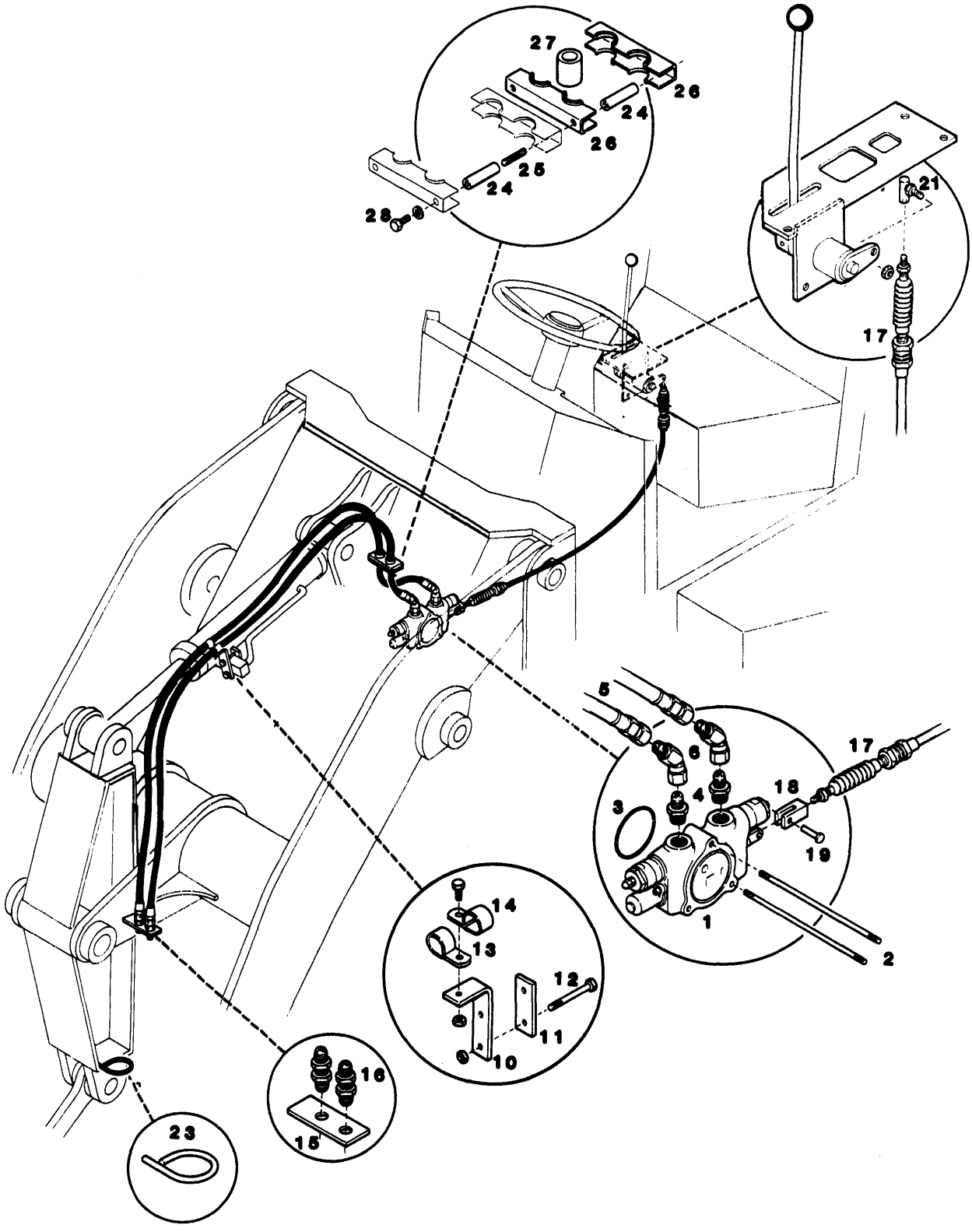

AUXILIARY HYDRAULICS & VALVE GROUP

ITEM	NUMBER	QTY	DESCRIPTION
	1096294		AUXILIARY HYDRAULIC GROUP (machinery item) (incl. 1-34)
1	1023541	1	SECTION ASSY., spool
2	1023619		TIE ROD KIT
3	923586	4	O-RING
4	924023	2	CONNECTOR, reduction
5	1023551	2	HOSE, ASSY.
6	924198	2	ELBOW, swivel nut
7	914929	3	NUT, lock .38-24
10	1023543	1	BAR, support
11	1023544	1	BAR, clamp
12	921972	2	SCREW, cap .38-24 x 2.50
13	914929	2	NUT, lock .38-24
14	925621	2	CLAMP
15	1023546	1	BAR, support
16	927062	2	FITTING, bulkhead
17	2023243	1	CABLE ASSY.
18	2023242	1	YOKE, metric
19	923093	1	PIN, yoke .31, PLTD.
20	918448	1	PIN, cotter .09 x 1.00, PLTD.
21	2023249	1	END, rod
22	950944	1	NUT, hex M8-1.25, PLTD.
23	1023545	1	GUIDE, hose
24	1023653	4	NUT, stacking
25	1023652	2	ADAPTER, thread
26	1023547	1	CLAMP
27	1023548	2	BUSHING
28	921332	4	SCREW, cap .31-18 x .75, PLTD.
29	917356	4	WASHER, lock .31, PTLD.
30	6810147	1	KNOB .50-13
31	6001278	1	CONTROL ASSY.
32	6001225	1	BRACKET, cable
33	950035	3	SCREW, cap M10-1.5 x 20mm, PLTD.
34	950220	3	WASHER, lock M10, PLTD.

NOTES

SECTION 05 -ATTATCHMENTS INDEX

Buckets	200
Carriage - 48"	218
Carriage - 60" Hook mt.	220
Carriage - 64" Hook mt.	220
Carriage - 60" Shaft mt.	222
Carriage - 64" Hook mt.	222
Carriage - 64" Shaft mt.	224
Counterweights	202
Lift Cylinder Piping	216
Lift Frame	206
Lift Forks - Hook and Shaft mt.	226
Mast Assembly - 15ft.	208
Mast Assembly - 30ft. (outer and second rail)	210
Mast Assembly - 30ft. (inner and third rail)	212
Lift Cylinder Piping	218
Tires	204

ATTATCHMENTS

BUCKETS

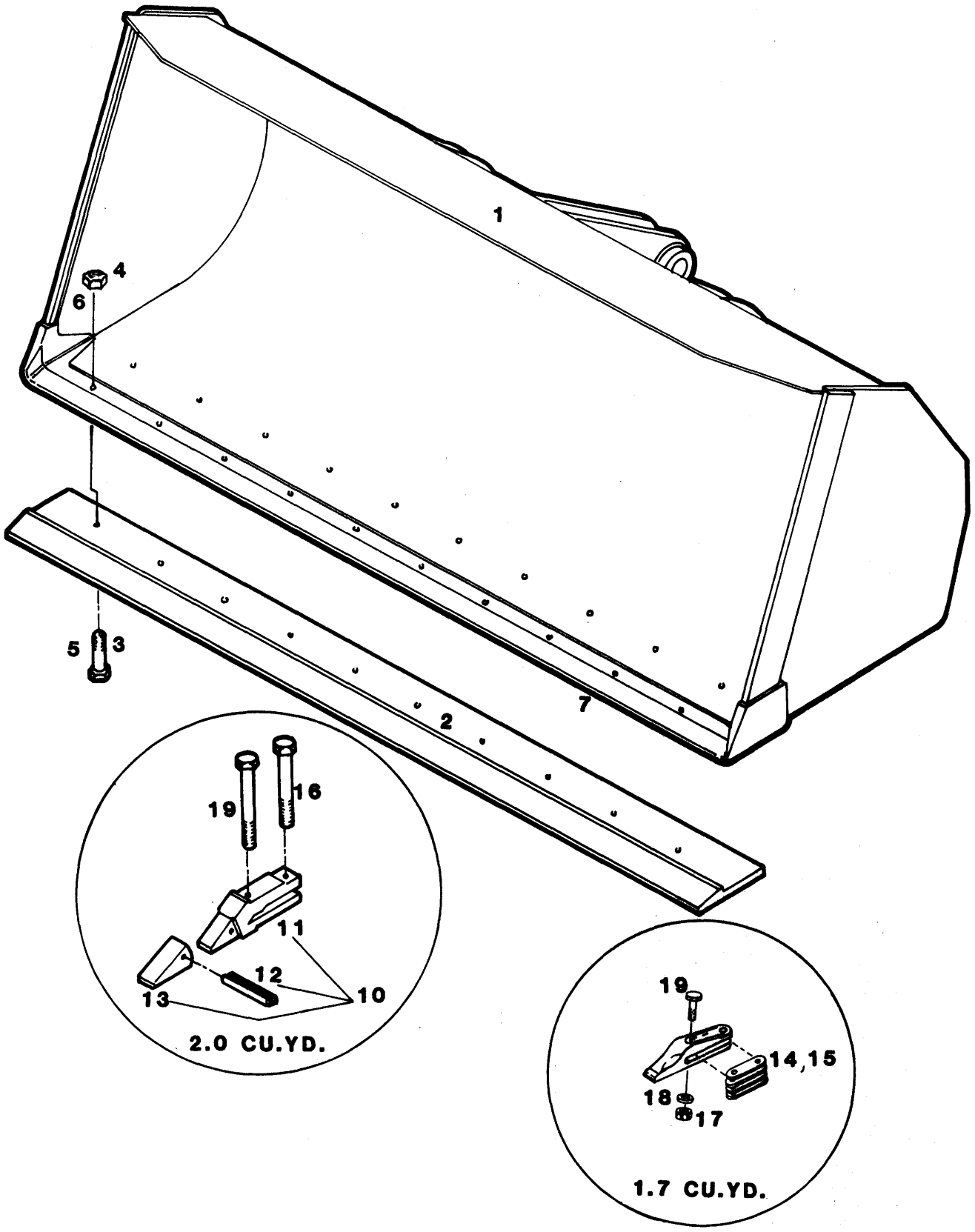

BUCKETS

ITEM	NUMBER	QTY	DESCRIPTION
1	6091025	1	BUCKET ASSY. 1.7 cu. yd. (machinery only)
	1096337	1	BUCKET ASSY. 2.0 cu. yd. (machinery only)
	1096332	1	BUEKCT ASSY. 3.0 cu. yd. (machinery only)
2	6800289	1	BLADE 1.7 cu. yd. (87.5")
	1023734	1	BLADE 2.0 & 3.0 cu. yd. (91.0")
3	6900126	7	BOLT, plow .62-11 x 2.0 (1.7)
4	910308	7	NUT, hex .62-11 (1.7)
5	923154	10	BOLT, hex .50-13 x 1.5 (GRD.8)
6	916951	10	NUT, hex .50-13
7	N.S.S.		EDGE, cutting 1.7 cu. yd.
8	1005765	1	EDGE, cutting - 2.0 & 3.0 cu. yd.
9	6810508	7	TOOTH
10	1010153	10	TOOTH ASSY. (2.0) (incl. 11-13)
11	N.S.S.	10	SHANK
12	2017635	10	PIN, flex
13	1010152	10	POINT, tooth
14	6810667	7	SHIM (0.5mm)
15	6810668	7	SHIM (0.7mm)
16	950406	14	BOLT, hex M16-2.0 x 60mm (10.9), PLTD.
17	950214	14	NUT, hex M16-2.0, PLTD.
18	6900144	14	WASHER, conical M16, PLTD.
19	920990	10	BOLT, hex .50-13 x 3.5 (GRD.8)
20	921991	10	NUT, hex .50-13
	6091041	1	TOOTH KIT 1.7 (incl. 7ea.-9, 14-18) (machinery only)
	6091042	1	BLADE KIT 1.7 (incl. 2-4) (machinery only)
	1095690	1	TOTH KIT 2.0 (incl. 10ea.-10, 19 & 20) (machinery only)
	1096288	1	BLADE KIT 2.0 (incl. 2, 5 & 6) (machinery only)

COUNTERWEIGHT
DUAL-COUNTERWEIGHT

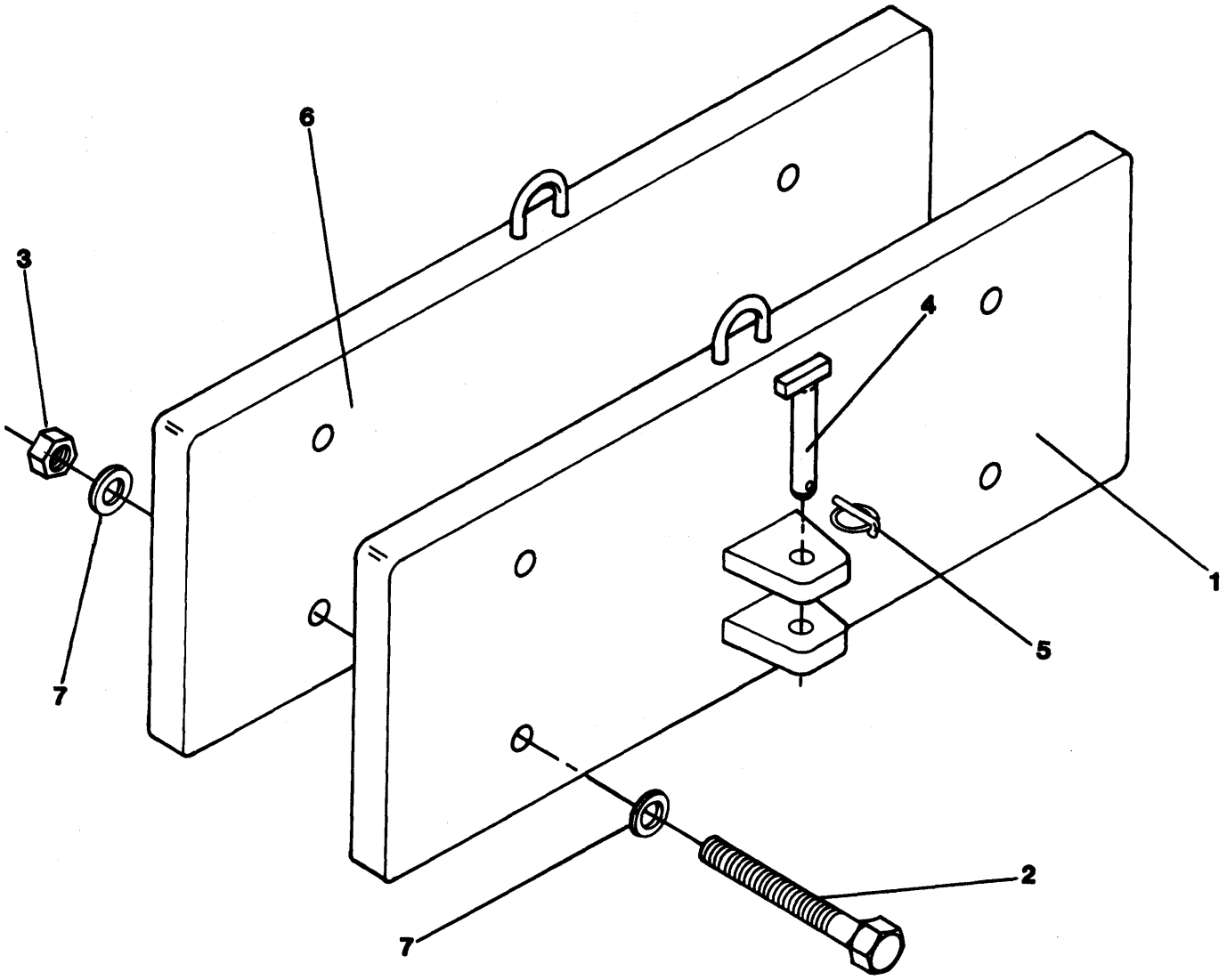

COUNTER WEIGHTS

ITEM	NUMBER	QTY	DESCRIPTION
1	6001127	1	COUNTERWEIGHT (incl. 1-5 & 7)
2	921256	4	SCREW, cap 1.0-8NC x 13.0
3	917793	4	NUT, hex 1.0-8NC
4	1023287	1	PIN, hitch
5	239854	1	PIN, quick-hitch
6	6001126	1	COUNTERWEIGHT
7	900822	8	WASHER, flat 1.0
8	6090083	1	DUAL COUNTERWEIGHTS (incl. 1-7)

TIRE ASSY.

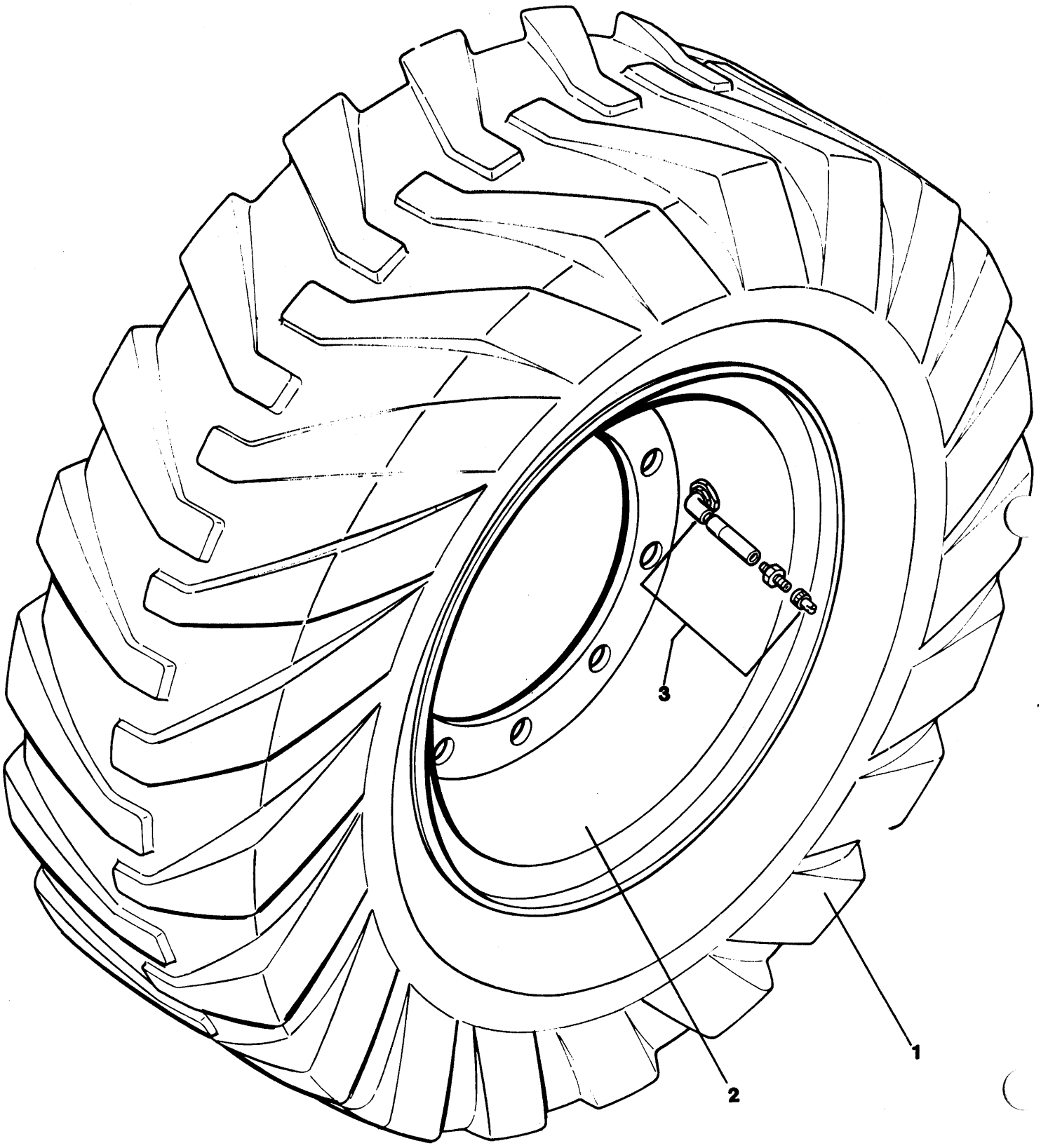

ITEM	NUMBER	QTY	DESCRIPTION
	1096563	4	15.5 25-12PR tubeless (incl. 1-3)
1	6800226	1	TIRE 15.5 x 25
2	6800231	1	RIM
3	3052021	1	VALVE, assy.
	6001184	2	TIRE, assy. (L.H.)
	6001185	2	TIRE, assy. (R.H.)
	6091023	4	16.9 24-10PR tubeless (incl. 1-3)
1	6800224	1	TIRE 16.9 x 24
2	6800229	1	RIM
3	1002846	1	VALVE, assy.
	6001183	2	TIRE, assy. (L.H.)
	6001182	2	TIRE, assy. (R.H.)
	1096564	4	18.4 24-10PR tubeless (incl. 1-3)
1	6800225	1	TIRE 18.4 x 24
2	6800230	1	RIM
3	1002846	1	VALVE, assy.
	6001186	2	TIRE, assy. (L.H.)
	6001187	2	TIRE, assy. (R.H.)

840D WHEEL LOADER

ATTATCHMENTS

LIFT FRAME

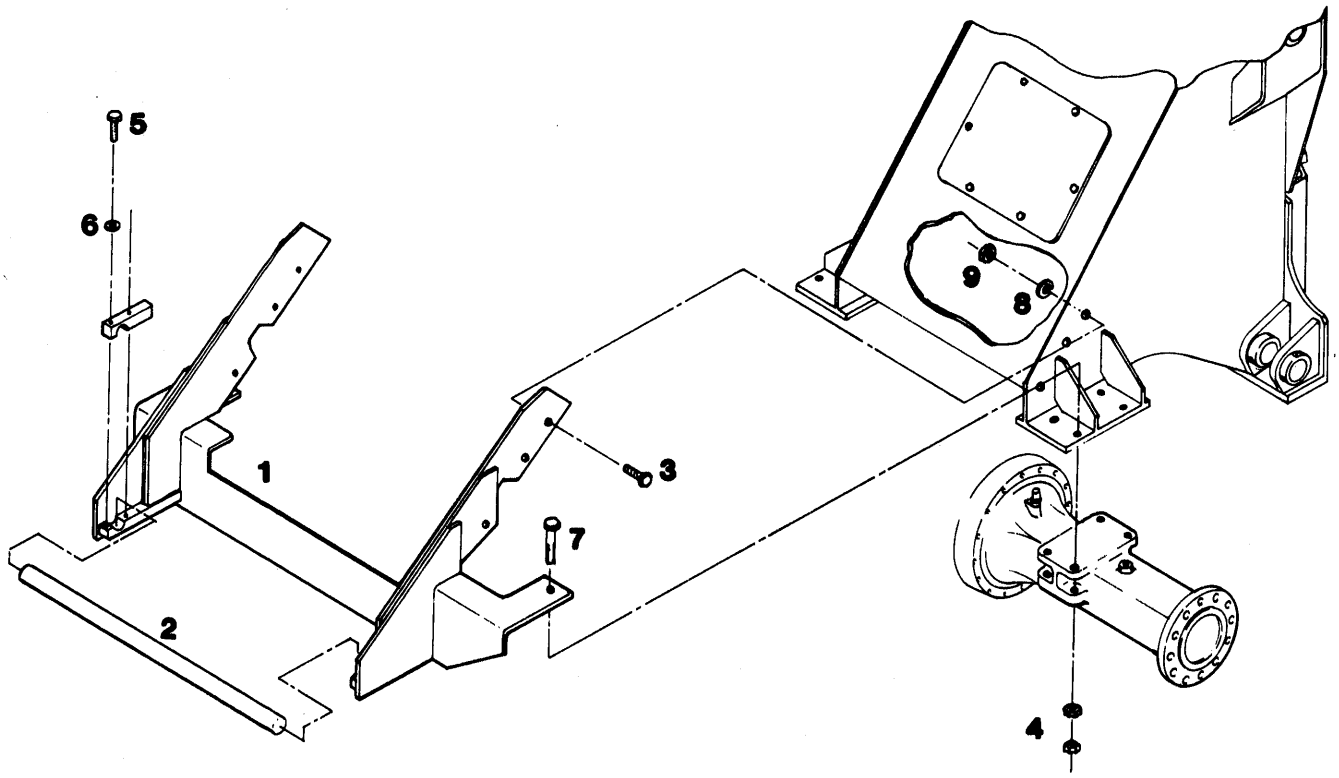

LIFT FRAME

ITEM	NUMBER	QTY	DESCRIPTION
1	6001273	1	FRAME, support
2	6001293	1	BAR, pivot
3	6900130	2	BOLT, hex M24-1.5 x 200mm
4	950251	4	NUT, hex M24-1.5
5	915439	4	SCREW, cap .62-11 x 2.0
6	910334	4	WASHER, lock .62
7	1916290	6	SCREW, cap .75-10 x 3.5
8	904369	6	WASHER, lock .75
9	900371	6	NUT, hex .75-10

ATTATCHMENTS

MAST ASSY.- 15'
MAST'S & ROLLER

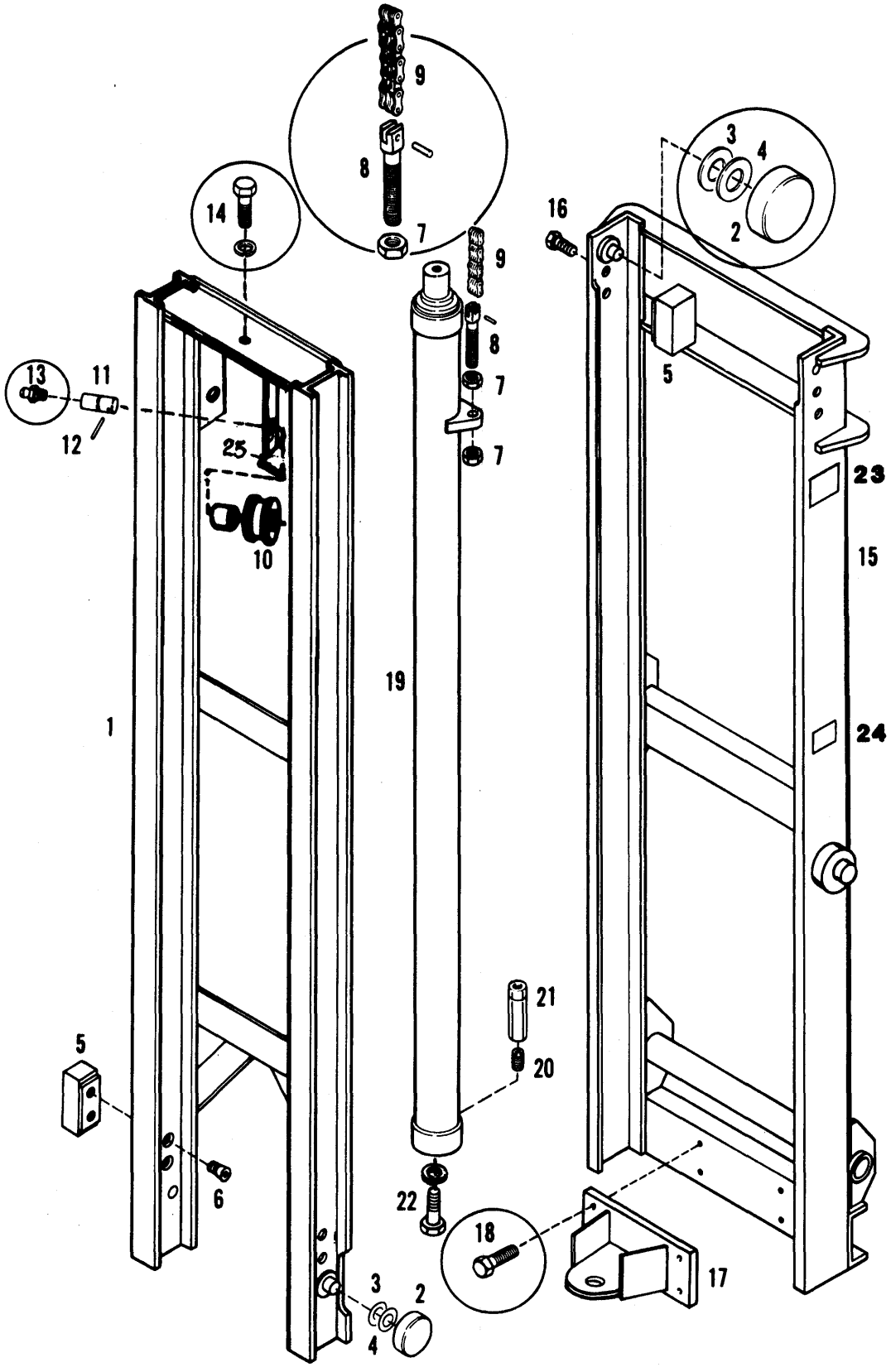

MAST ASSY.-15
MAST,S & ROLLER

ITEM	NUMBER	QTY	DESCRIPTION
1	1019820	1	RAIL, inner
	1005621	1	STUD, roller
2	1005603	4	BEARING, roller
3	1019821	4	SHIM (t=.049) (use as required)
4	1009657	4	SHIM (use as required)
5	1009660	4	BLOCK, bearing
6	924087	4	SCREW, flat hd. .50-13 x 1.5, PLTD.
7	916601	8	NUT, hex 1.-14, PLTD.
8	2018328	4	ANCHOR, chain
9	1017183	2	CHAIN
	2018215	4	PIN, chain
10	2018207	2	ROLLER, assy., chain (incl. item 11)
	2014642	2	BEARING, chain roller
11	2105521	2	PIN, roller chain
12	927630	2	PIN, spring
13	914465	2	FITTING, lube .125NPT
14	925149	1	SCREW, cap .75-10 x 2.5, PLTD.
	904369	1	WASHER, lock .75, PLTD.
15	6001129	1	RAIL, outer
	1005621	1	STUD, roller
16	916311	4	SCREW, cap .50-13 x 1.75, PLTD.
	904208	4	WASHER, lock .50, PLTD.
17	1019136	1	BRACKET ASSY., cylinder
18	916406	4	SCREW, cap .62-11 x 1.75, PLTD.
	904209	4	WASHER, lock .62, PLTD.
	918241	4	NUT, hex .62-11
19	1021401	1	CYLINDER ASSY., hydraulic
20	901500	1	NIPPLE
21	2020059	1	REGULATOR, flow (15 GPM)
22	926127	1	SCREW, cap .75 - 10 x 1.7, PLTD.
	919332	1	WASHER, lock .75, PLTD.
23	1024181	2	DECAL, trademark
24	1019379	2	DECAL (15ft.)
25	1024192	2	PLATE, guard

840D WHEEL LOADER

ATTATCHMENTS

MAST ASSY.-30'
OUTER & 2nd RAIL

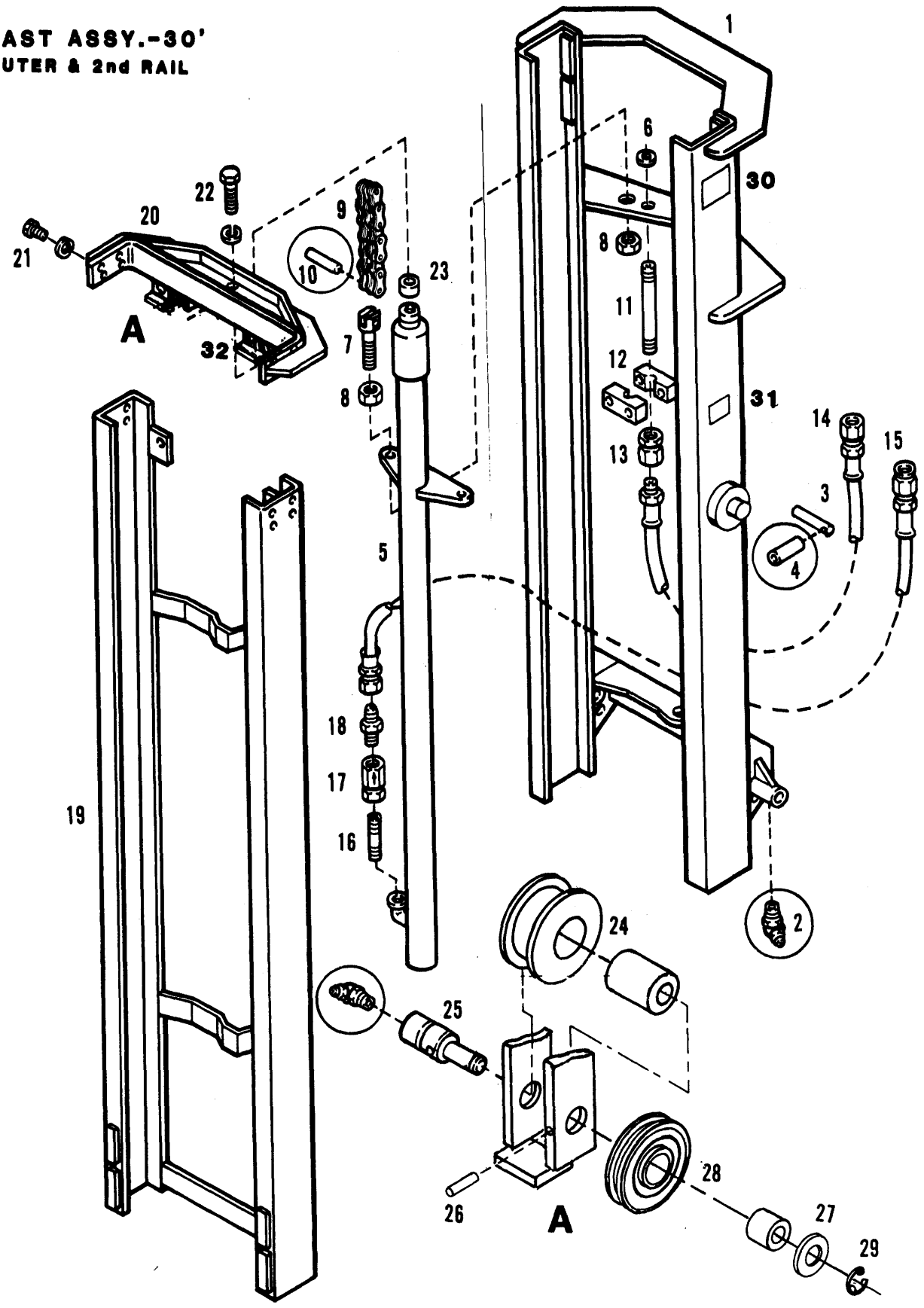

MAST ASSY.-30
OUTER & 2nd RAIL

ITEM	NUMBER	QTY	DESCRIPTION
1	6001282	1	RAIL ASSY., outer (30ft.)
2	925730	2	FITTING, lube
3	1009723	2	PIN, pivot
4	922949	2	PIN, spirol
5	1001967	1	CYLINDER ASSY., lift, 2nd stage
6	915978	2	WASHER, flat (use as required)
7	2018328	2	ANCHOR, chain
8	916601	4	NUT, jam 1.00-12
9	1001966	2	CHAIN, lift
10	2018215	4	PIN, lift chain
11	919565	1	NIPPLE
12	1002636	2	CLAMP
	923701	2	SCREW, cap .375-16 x 2.00, PLTD.
	916965	2	WASHER, lock .375, PLTD.
	916950	2	NUT, lock .375-16, PLTD.
13	926520	1	ADAPTER, swivel union
14	1009868	1	HOSE ASSY. 3/8 x 62" long
15	1009518	1	HOSE ASSY. 1/2 x 31.50
16	901500	1	NIPPLE
17	2020059	1	REGULATOR, flow
18	919128	1	CONNECTOR
	921279	1	FITTING, tube
19	1001929	1	RAIL ASSY., 2nd (30ft.)
20	1001944	1	SUPPORT, assy. top
21	923114	10	SCREW, cap .500-13 x 1.00, PLTD.
	904208	10	WASHER, lock .50, PLTD.
22	915563	1	SCREW, cap .750-16 x 3.50, PLTD.
	904369	1	WASHER, lock .75, PLTD.
23	1002567	1	SPACER
24	2018207	2	ROLLER ASSY., chain
	2014642	2	BUSHING
25	1001936	2	PIN, roller
		2	FITTING, grease
26	927630	2	PIN, spirol
27	627310	2	WASHER, flat
28	1001977	1	SHEAVE, assy.
	2014802	1	BUSHING
29	1000377	1	RING, snap
30	1024181	2	DECAL, trademark
31	1003712	2	DECAL (30ft.)
32	1024197	2	PLATE, guard
	1013571	1	SERVICE KIT, wear plate (incl. Wear Plates and Instrument Sheet)
32	1024197	2	PLATE, guard

MAST ASSY.-30'
INNER & 3rd RAIL

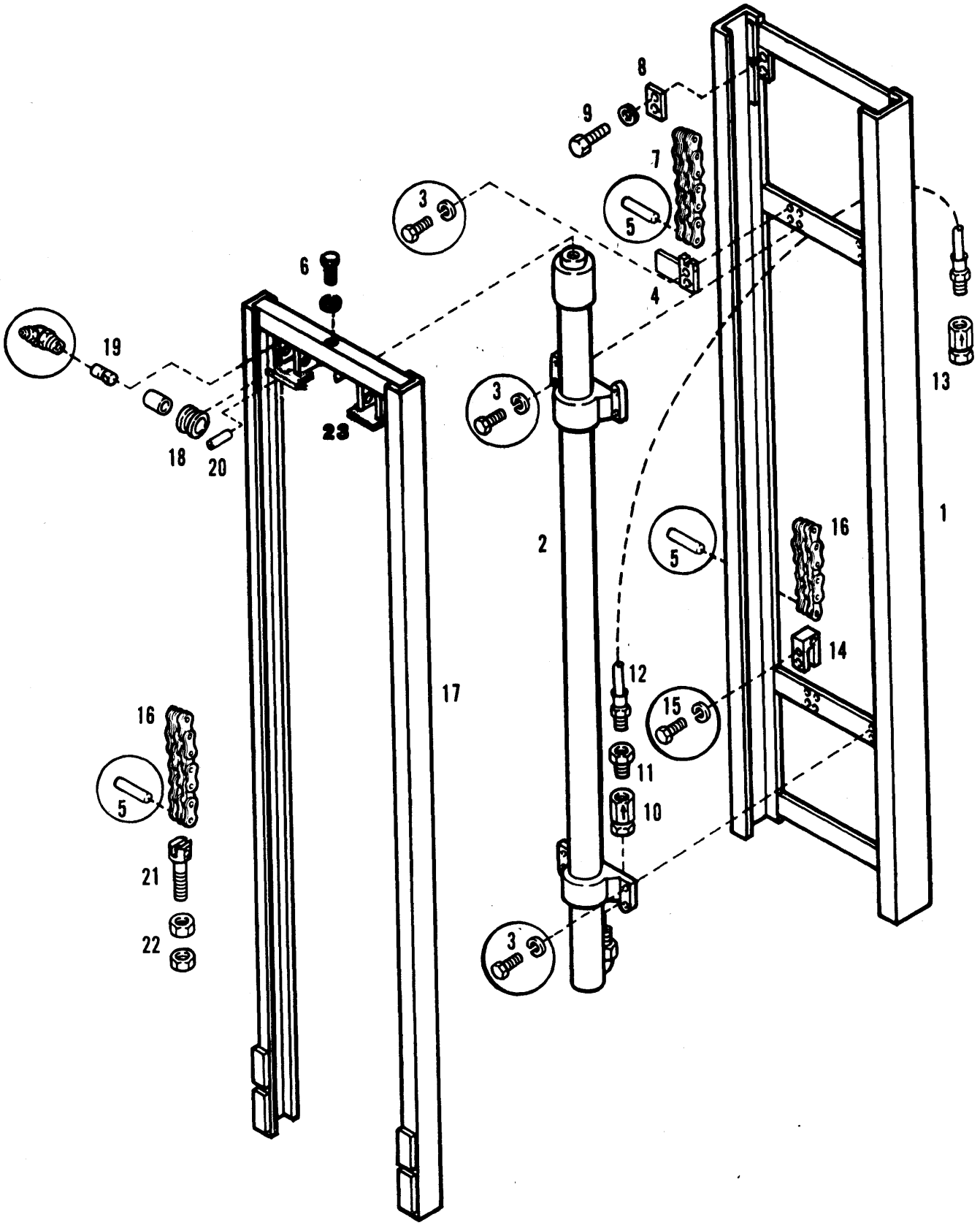

MAST ASSY.-30
INNER & 3rd RAIL

ITEM	NUMBER	QTY	DESCRIPTION
1	1001933	1	RAIL ASSY., 3rd (30ft)
2	1001986	1	CYLINDER ASSY., lift
3	916406	12	SCREW, cap .62-18 x 1.75, PLTD.
	904209	12	WASHER, lock .62, PLTD.
4	2019784	2	ANCHOR, chain
5	2018215	4	PIN, lift chain
6	915563	1	SCREW, cap .75-16 x 3.5, PLTD.
	904208	1	WASHER, lock .75, PLTD.
7	1001966	2	CHAIN, lift
8	1001962	2	GUIDE, brace
9	916311	4	SCREW, cap .50-13 x 1.25, PLTD.
	904208	4	WASHER, lock .5, PLTD.
10	2020059	1	REGULATOR, flow
11	920757	1	BUSHING, reducer
12	1001964	1	HOSE ASSY., 3/8 x 120" long
13	926520	1	ADAPTER, swivel union
14	1001963	2	ANCHOR, chain
15	916021	4	SCREW, cap .62-18 x 2, PLTD.
	904209	4	WASHER, lock .62, PLTD.
16	1001965	2	CHAIN, lift
17	1001941	1	RAIL ASSY., inner (30ft.)
18	2018207	2	ROLLER ASSY., chain
	2014642	2	BUSHING
19	2015521	2	PIN, roller
	915275	2	FITTING, lube
20	927630	2	PIN, spirol
21	2018328	2	ANCHOR, chain
22	910378	4	NUT, jam 1.0-12
23	1024197	2	PLATE, guard
	1013571	1	SERVICE KIT, wear plate (incls. wear plate and instrument sheet)

TILT CYLINDER PIPING

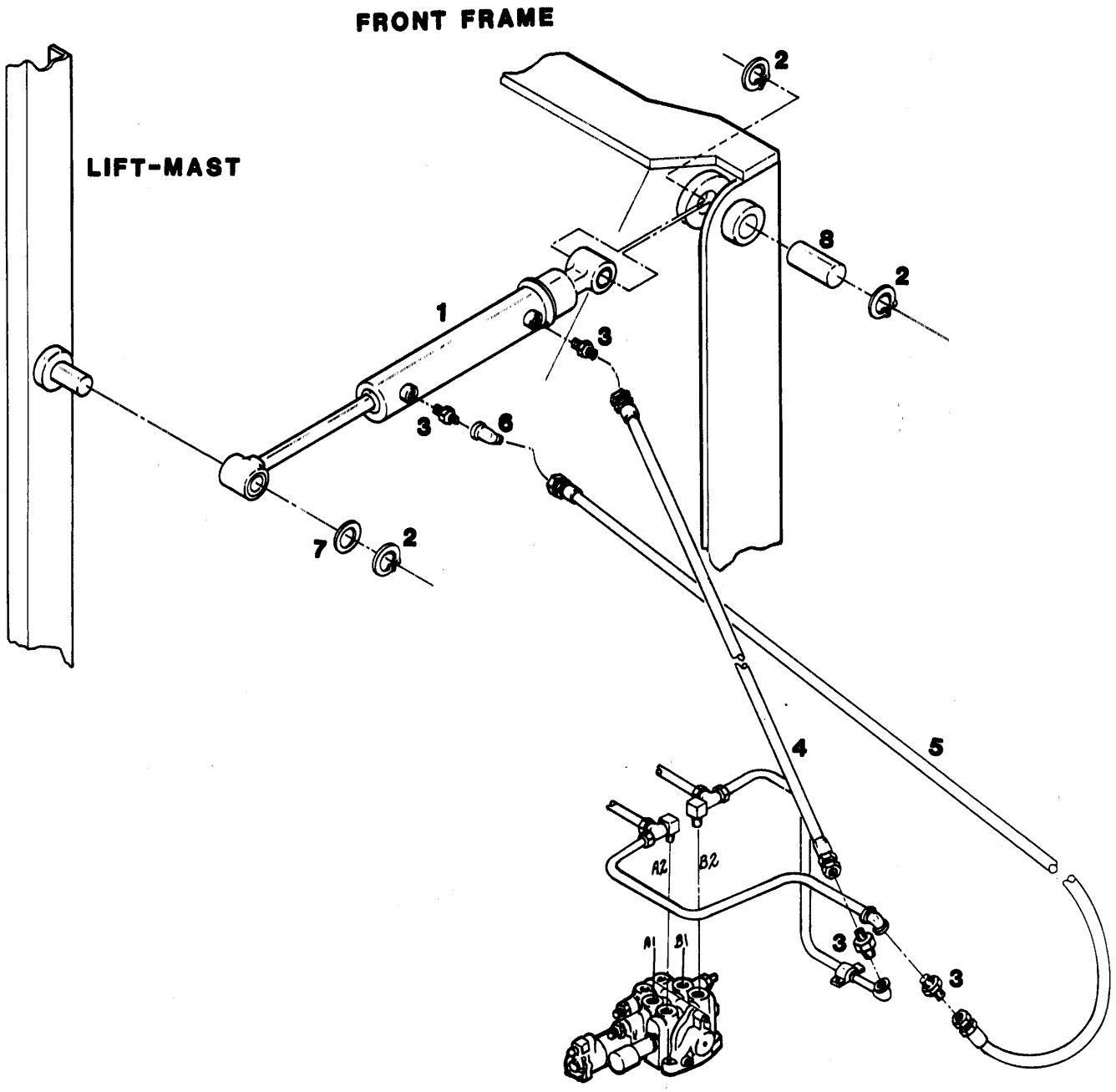

TILT CYLINDER PIPING

ITEM	NUMBER	QTY	DESCRIPTION
1	6810015	2	CYLINDER, tilt
2	6900173	6	RING, snap
3	6900204	8	CONNECTOR
4	6001099	2	HOSE ASSY.
5	6001100	2	HOSE ASSY.
6	921279	2	ELBOW
7	6001143	2	WASHER, spacer
8	6001157	2	PIN, cylinder mounting

LIFT CYLINDER PIPING

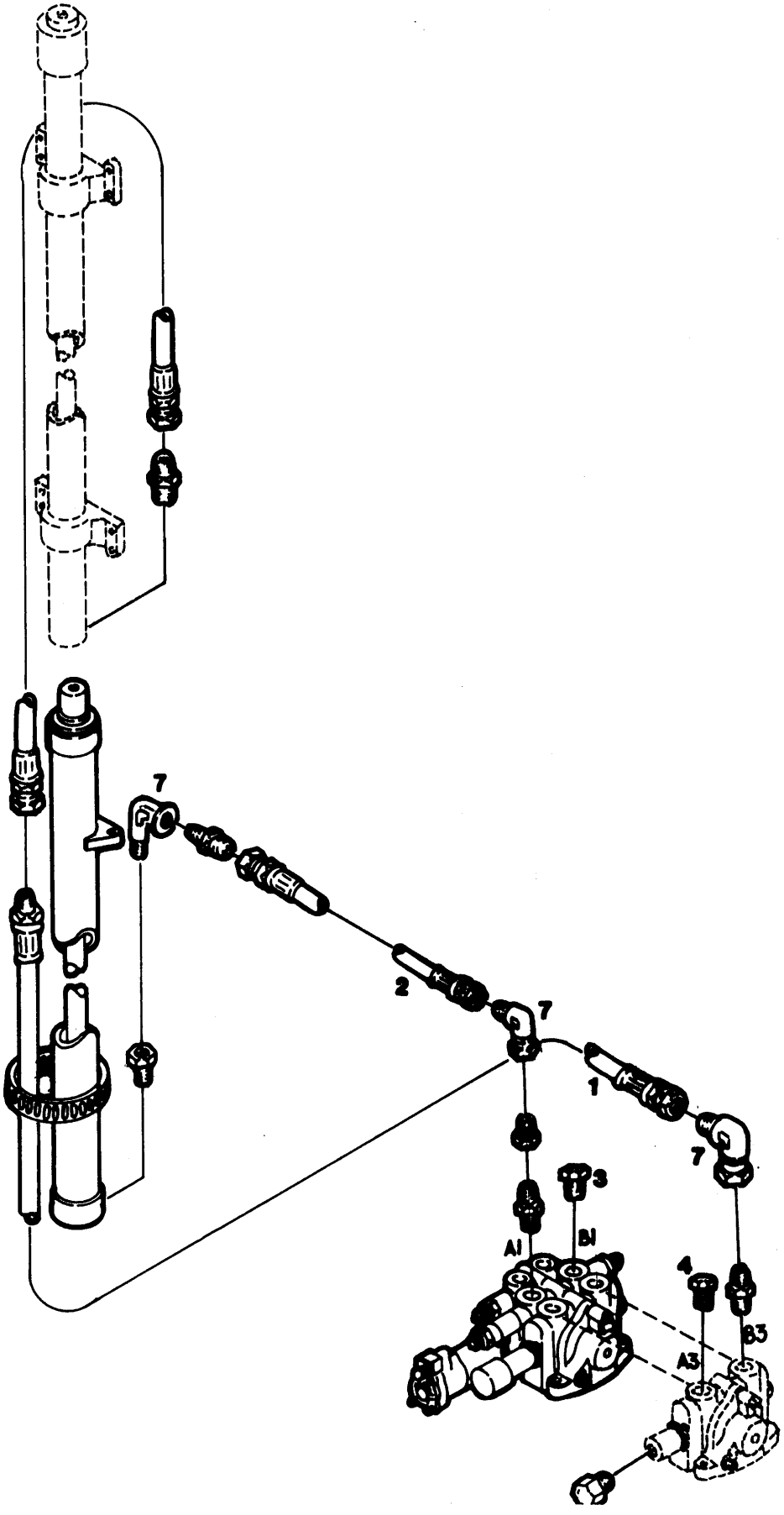

LIFT CYLINDER PIPING

ITEM	NUMBER	QTY	DESCRIPTION
1	6001310	1	HOSE ASSY. (30 ft. option)
2	6001309	1	HOSE ASSY.
3	924820	1	PLUG, pipe
4	921204	2	PLUG, pipe
5	924296	1	CONNECTOR
6	924167	1	CONNECTOR
7	921279	3	ELBOW
8	926770	1	CONNECTOR

ATTATCHMENTS

48" CARRIAGE

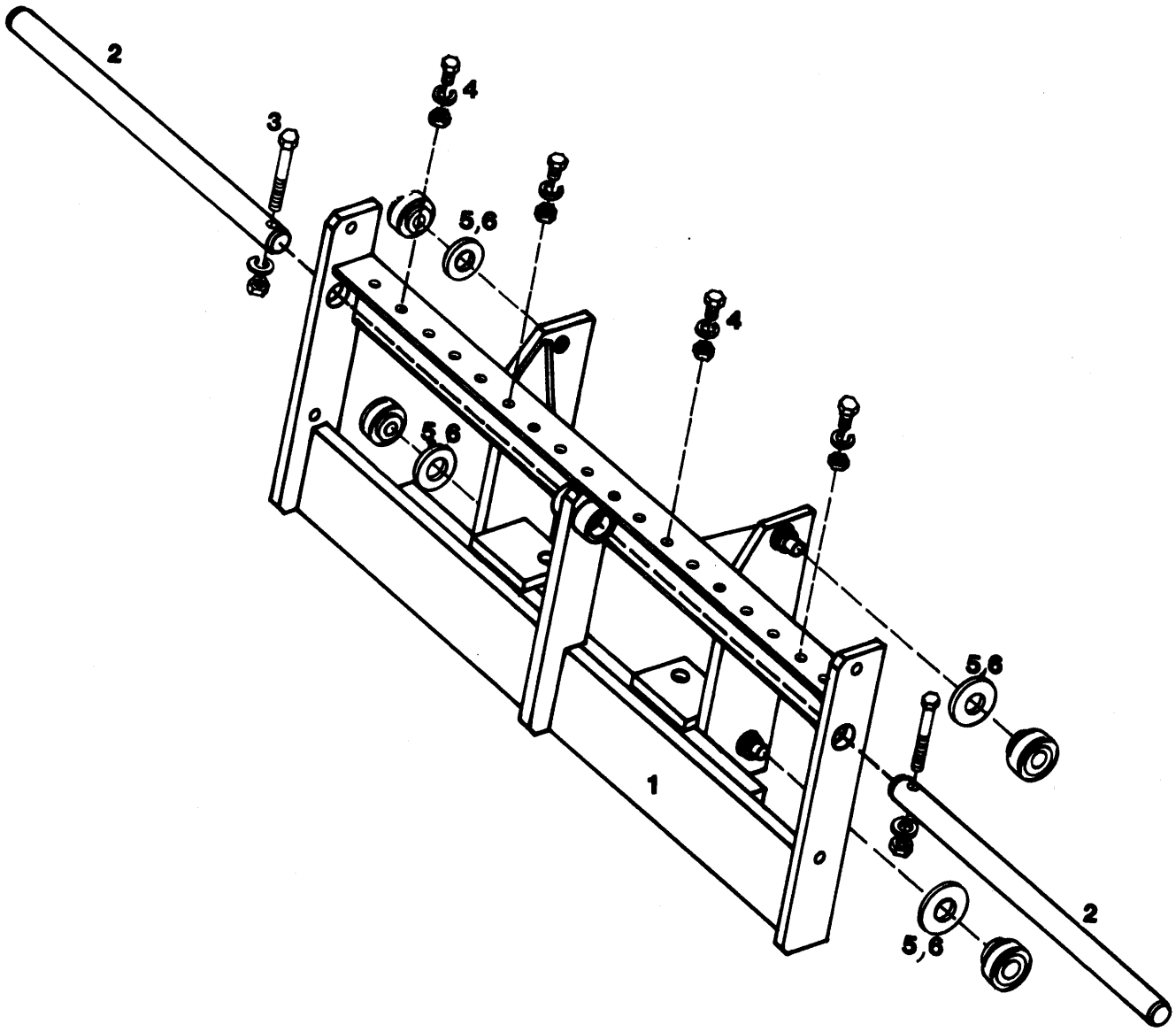

48" CARRIAGE

ITEM	NUMBER	QTY	DESCRIPTION
1	1014581	1	CARRIAGE, assy.
	1001732	4	BEARING, roller
	1001954	4	STUD
2	2019424	2	SHAFT, fork
3	923191	2	SCREW, cap .50-13 x 3.25, PLTD.
	916966	2	WASHER, lock .50, PLTD.
	916951	2	NUT, hex .50-13, PLTD.
4	920328	4	SCREW, cap .50-13-1.50, PLTD
	916966	4	WASHER, lock .50, PLTD.
	916951	4	NUT, hex .50-13, PLTD.
5	1017024	4	SHIM (t=.049(
6	1017025	4	SHIM (t=.083)

ATTATCHMENTS

CARRIAGE-64
HOOK MT.

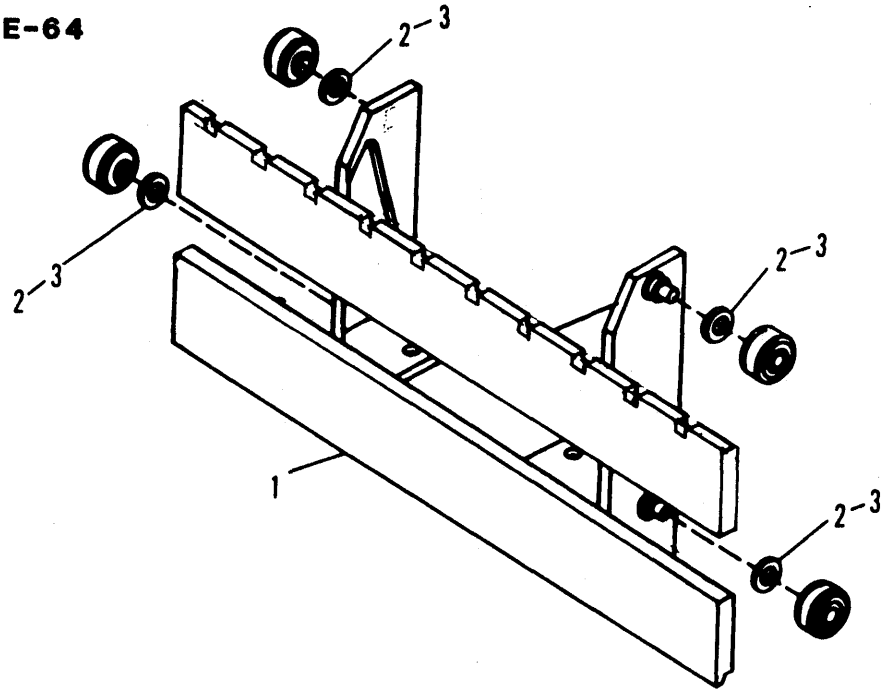

CARRIAGE-60
HOOK MT.

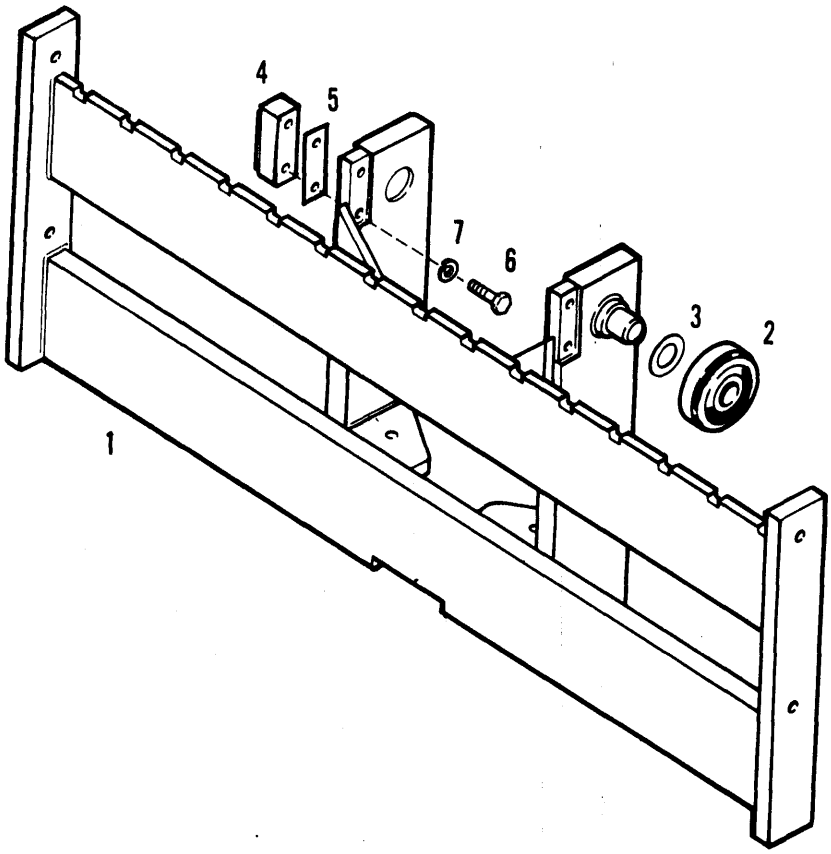

CARRIAGE-64 HOOK MT.

ITEM	NUMBER	QTY	DESCRIPTION
1	1014583	1	CARRIAGE ASSY. (64")
	1001954	4	STUD
	1001732	4	BEARING, roller
2	1017024	4	SHIM (t=.049)
3	1017025	4	SHIM (t=.083)

CARRIAGE -60 HOOK MT.

ITEM	NUMBER	QTY	DESCRIPTION
1	1019833	1	CARRIAGE ASSY. (60")
	1011599	4	SHAFT, bearing
2	1002841	4	BEARING, roller
3	1019821	4	SHIM
4	1009673	4	BLOCK ASSY., bearing
5	1009669	16	SHIM
6	916313	8	SCREW, cap .50-13 x 1.75, PLTD.
7	904208	8	WASHER, lock .50, PLTD.

CARRIAGE-60
SHAFT MT.

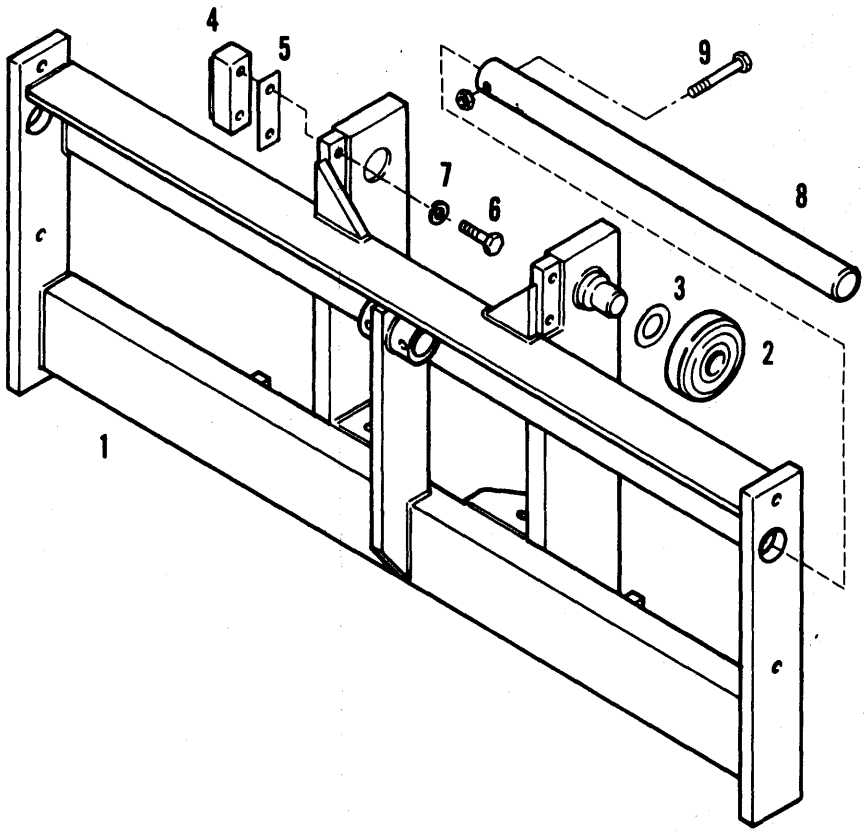

CARRIAGE-64
HOOK MT.

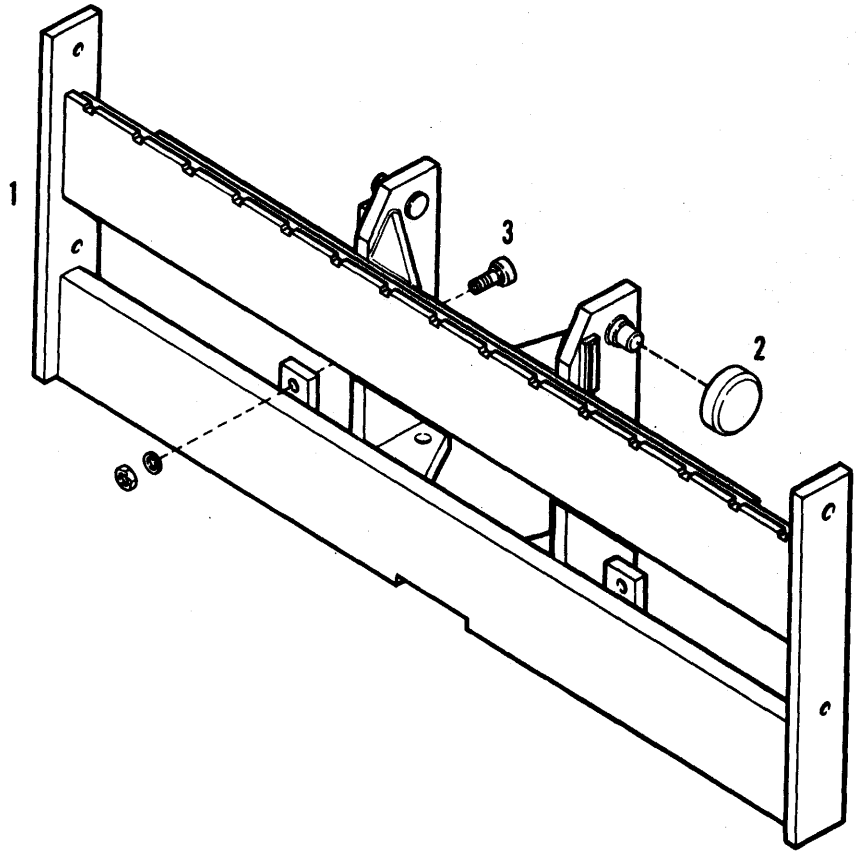

CARRIAGE -60 SHAFT MT.

ITEM	NUMBER	QTY	DESCRIPTION
1	1019835	1	CARRIAGE ASSY. (60")
	1011599	4	SHAFT, bearing
2	1002841	4	BEARING, roller
3	1019821	4	SHIM
4	1009673	4	BLOCK ASSY., bearing
5	1009669	16	SHIM
6	916313	8	SCREW, cap .50-13 x 1.75, PLTD.
7	904208	10	WASHER, lock .5, PTLD.
8	1017054	2	SHAFT, fork
9	916320	2	SCREW, cap .50-13 x 4, PLTD.
	910325	2	NUT, hex .50-13, PLTD.

CARRIAGE -64 HOOK MT.

ITEM	NUMBER	QTY	DESCRIPTION
1	1022012	1	CARRIAGE ASSY. (60")
	1001954	4	STUD, roller
2	1018095	4	BEARING, roller
3	1022368	2	BEARING, roller
	905347	2	WASHER, lock - .875, PLTD.
	910365	2	NUT, hex .88-14, PLTD.

CARRIAGE-84
SHAFT MT.

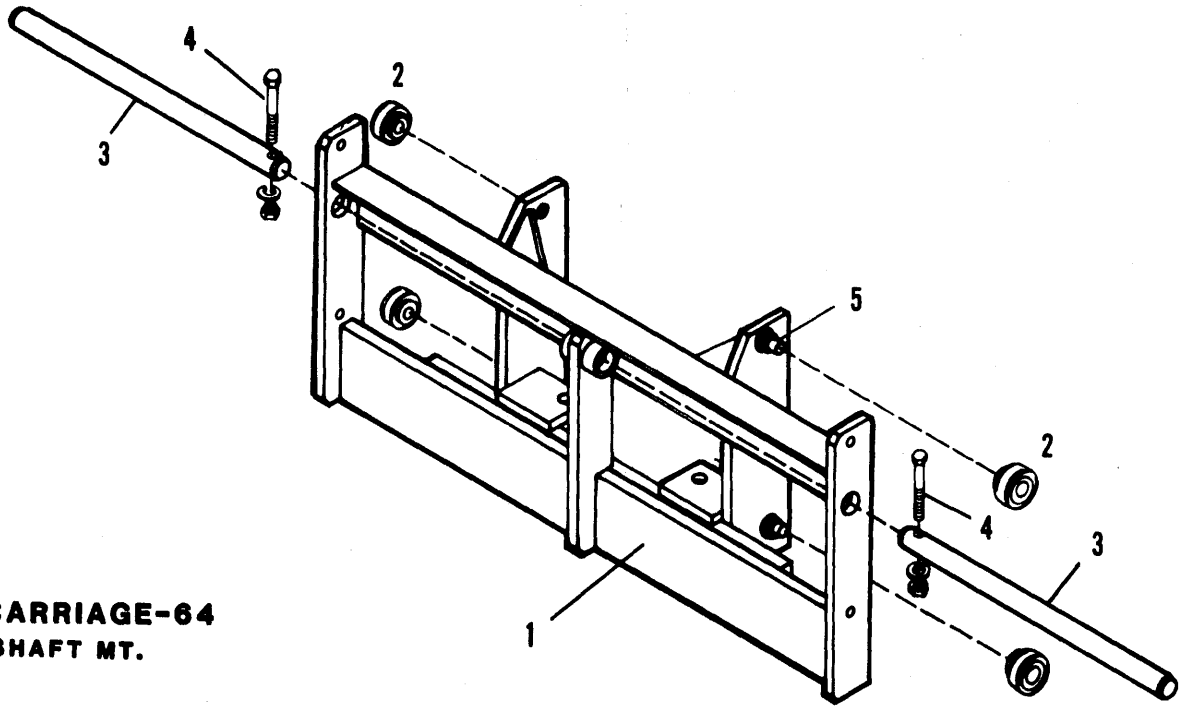

CARRIAGE-64
SHAFT MT.

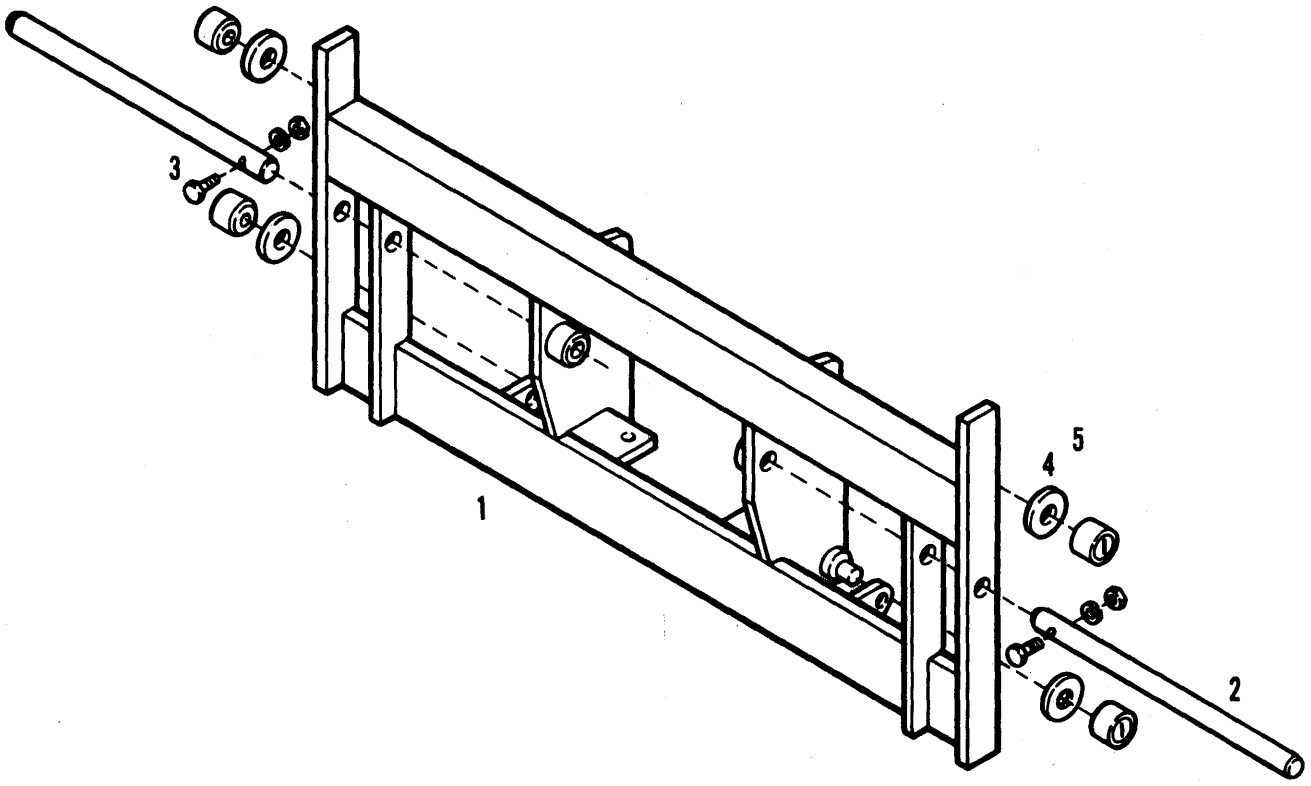

CARRIAGE -84 SHAFT MT.

ITEM	NUMBER	QTY	DESCRIPTION
1	1023293	1	CARRIAGE ASSY. (84")
2	1018095	4	ROLLER, bearing
3	1017054	2	SHAFT, fork
4	916320	2	SCREW, cap .50-13 x 4, PLTD.
	904208	4	WASHER, lock .50, PLTD.
	910325	4	NUT, hex .50-13, PLTD.
	905347	2	WASHER, lock, PLTD.
	910365	2	NUT, hex .88-9, PLTD.

CARRIAGE -64 SHAFT MT.

ITEM	NUMBER	QTY	DESCRIPTION
1	1013252	1	CARRIAGE ASSY. (64")
	1001732	4	BEARING, roller
	1001954	4	STUD
2	2019428	2	SHAFT, fork
3	916318	2	SCREW, cap .50-13 x 3.25, PLTD.
	904208	2	WASHER, lock .50, PLTD.
	910325	2	NUT, hex .50-13, PLTD.
4	1017024	4	SHIM (t=.049)
5	1017025	4	SHIM (t=.083)

LIFT FORKS
HOOK & SHAFT MT.

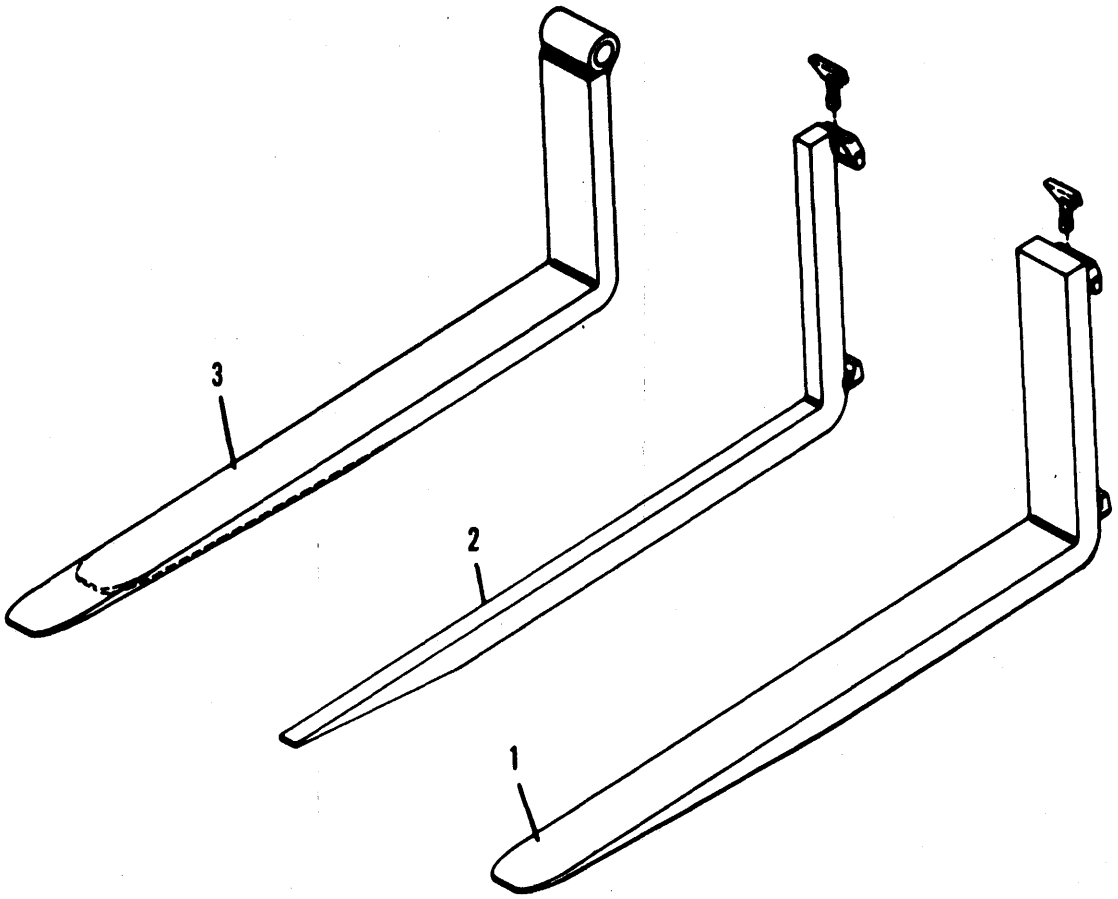

LIFT FORKS

ITEM	NUMBER	QTY	DESCRIPTION
1	2019548	2	FORK (48"), hook mount (5,000# CAP.)
	2019546	2	LATCH, assy.
	1017165	2	FORK (48"), hook mount (6,000# CAP.)
	1005636	2	LATCH, assy.
	1021424	2	FORK (48"), hook mount (8,000# CAP.)
	1005636	2	LATCH, assy.
2	1002400	6	FORK (46"), block hook mount (5,000# CAP.)
	2019546	6	LATCH, assy.
	1023093	6	FORK (46"), block hook mount (6,000# CAP.)
	1005636	6	LATCH, assy.
	6001316	6	FORK (46"), block shaft mount (6,0000# CAP.)
3	2018846	2	FORK - 42", shaft mount (6,000# CAP.)
	1023094	2	FORK - 42", shaft mount (8,000# CAP.)
	1021425	2	FORK - 48", shaft mount (8,000# CAP.)
	1023186	2	FORK - 60", shaft mount (8,000# CAP.)
	1022717	2	FORK - 72", shaft mount (8,000# CAP.)
	1022718	2	FORK - 84", shaft mount (8,000# CAP.)
	1022719	2	FORK - 96", shaft mount (8,000# CAP.)
	2018894	2	FORK - 48", shaft mount (5,000# CAP.)

840D WHEEL LOADER

ATTATCHMENTS

HOSE MTG. LOCATION

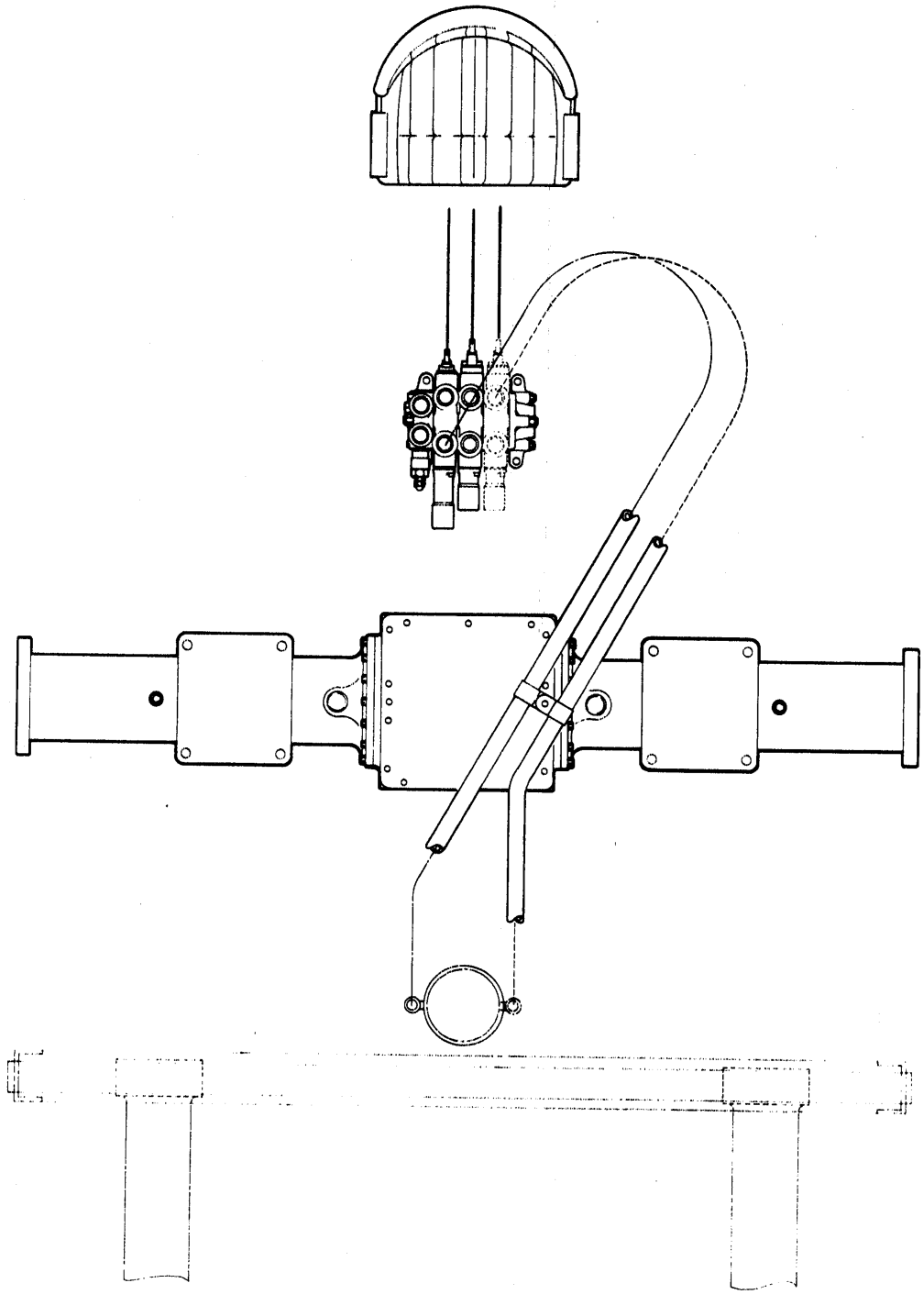

SECTION 06 -OPTIONS INDEX

Boom Kick-out	254
Cab Door Assembly	238
Cab - General Arrangement	230
Cab Windows	255
Cab Wiring	240
Front Fender	252
Front Wiper Assembly	234
Heater Assembly	248
Loader Cab Heater and Defroster Fan	246
Rear Wiper Assembly	236
ROPS Assembly	242
ROPS Wiring	244
Rotating Beacon	250

OPTIONS

CAB GENERAL ARRANGEMENT

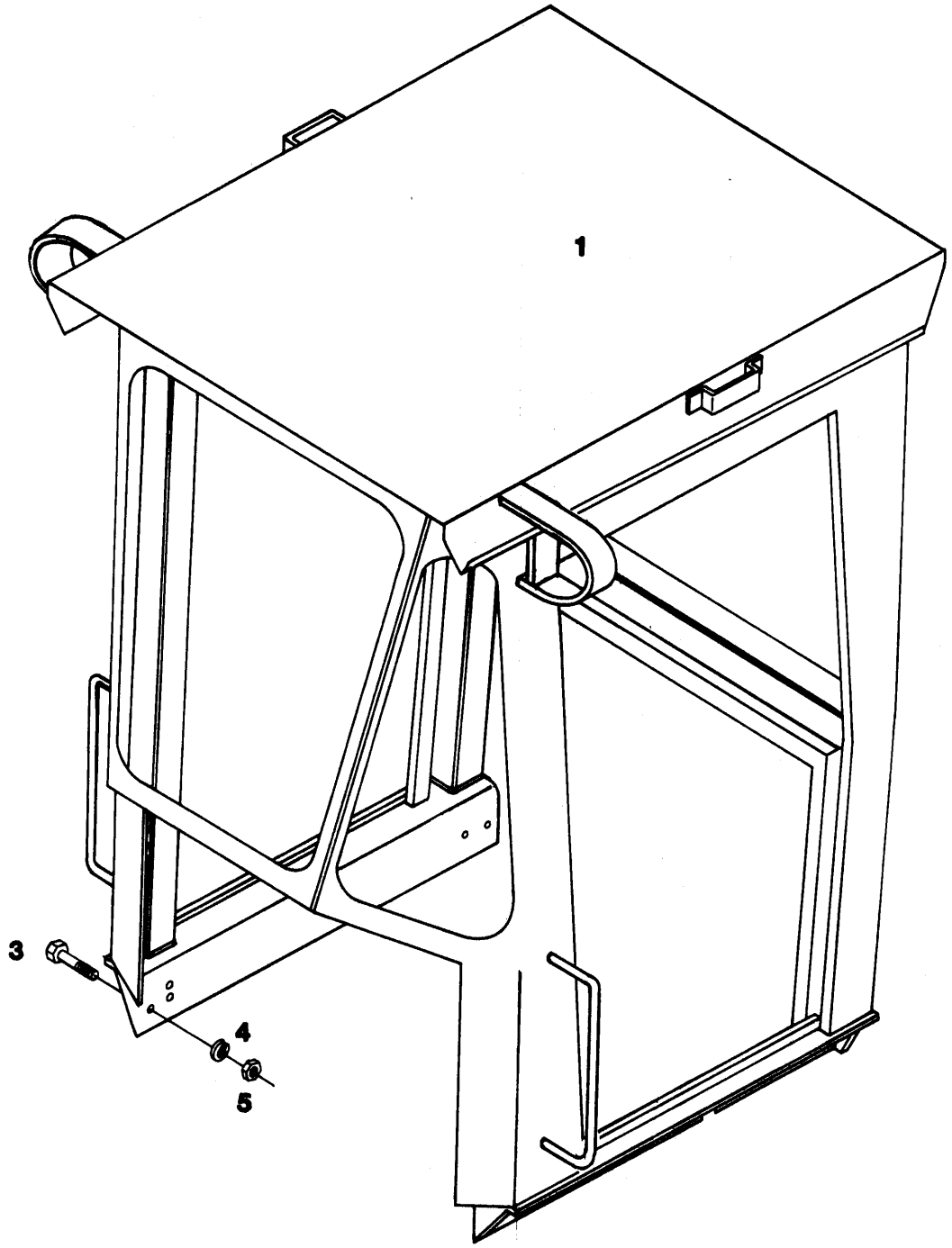

CAB GENERAL ARRANGEMENT

ITEM	NUMBER	QTY	DESCRIPTION
1	6800214	1	CAB ASSEMBLY
2	1022674	4	SHIM
3	924744	8	CAPSCREW .62-11 x 1.5, PLTD.
4	917373	8	WASHER, lock .62, PLTD.
5	915726	8	NUT, hex .62-11, PLTD.

OPTIONS

REAR SWINGOUT ASSM.

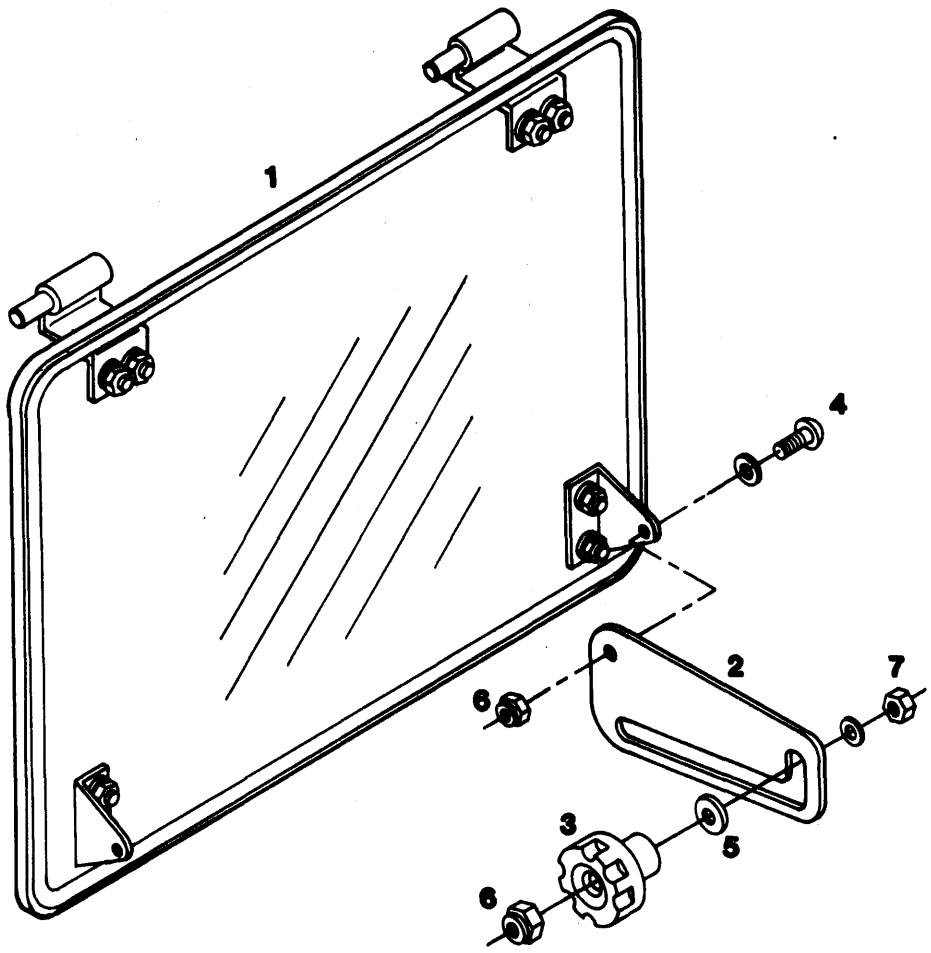

REAR SWINGOUT ASSM.

ITEM	NUMBER	QTY	DESCRIPTION
1	6800405	1	REAR SWINGOUT, assy.
	6800408	1	GLASS, rear swingout
	6800407	2	HOLDER, window
	6800409	1	RUBBER, rear swingout
	6800410	1	HINGE WELDMENT
	6800411	1	HINGE WELDMENT
	923341	4	SCREW, hex cap .25-20 x .75, PLTD.
	921260	8	NUT, hex (nylock) .25-20, PLTD.
	918264	8	WASHER, plain .25, PLTD.
	6900184	8	WASHER, fiber
	918157	4	SCREW, mach. .25-20 x .75, PLTD.
	6900183	4	WASHER, rubber
2	6800406	2	HOLDER, window
3	6800402	2	KNOB, black plastic
4	907722	2	SCREW, mach. .25-20 x .62, PLTD.
5	920380	4	WASHER, flat .25, PLTD.
6	921260	4	NUT, hex (nylock) .25 - 20, PLTD.
7	911007	2	NUT, hex .25-20, PLTD.

OPTIONS

FRONT WIPER ASSM.

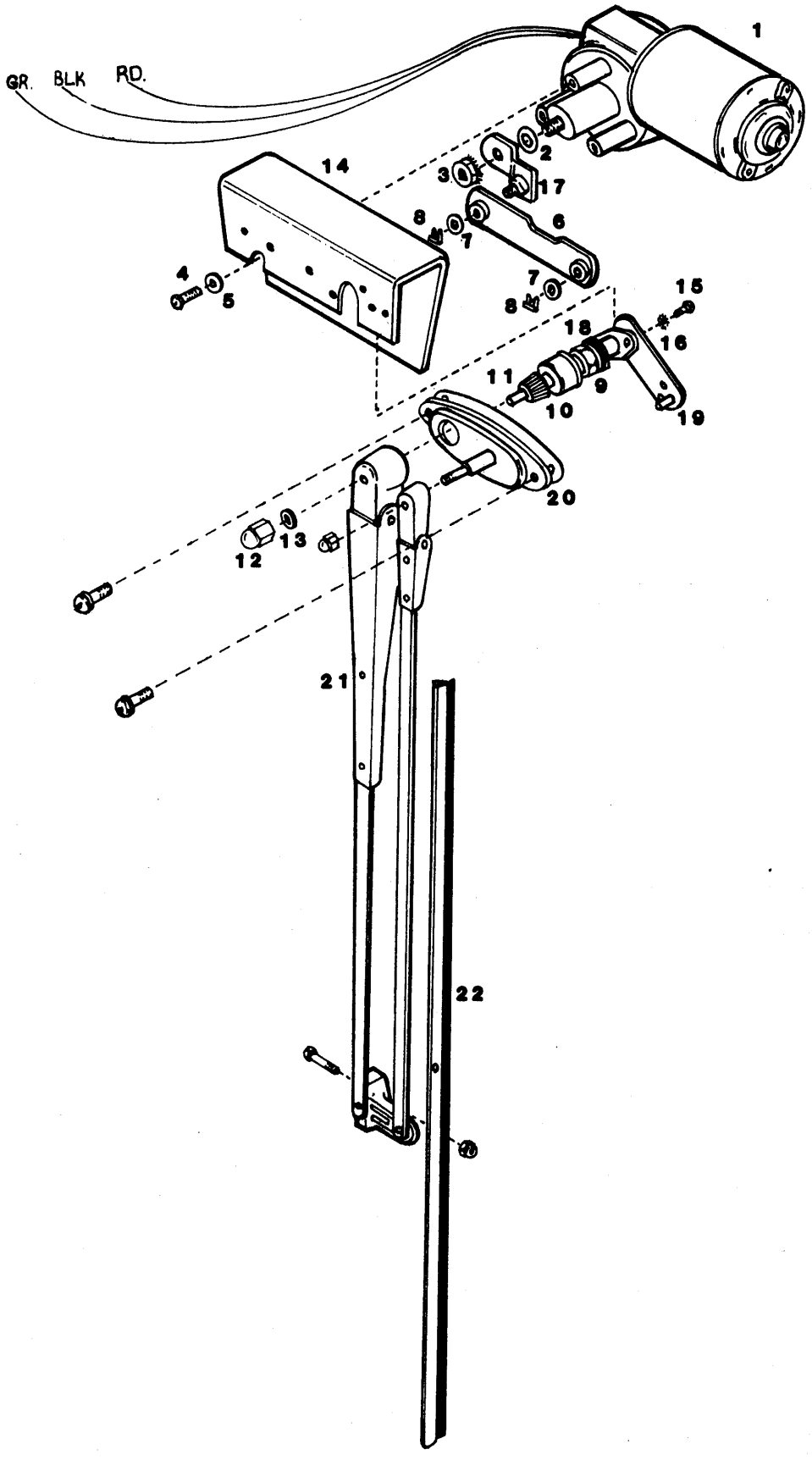

FRONT WIPER ASSM.

ITEM	NUMBER	QTY	DESCRIPTION
	1023559	1	MOTOR KIT, wiper (incl. 1-8,14-16)
1	6800293	1	MOTOR, wiper
2	246689	1	WASHER, flat .25, PLTD.
3	923662	1	NUT, hex .25-24, PLTD.
4	914120	3	SCREW, roundhead .25-24, PLTD.
5	921880	3	WASHER, lock .25, PLTD.
6	3060177	1	LINK, connecting
7	639073	2	WASHER, spring
8	639074	2	SPRING, clip
9	1013271	1	NUT, hex
10	1013272	1	CAP
11	1013273	1	DRIVER, knurled
12	1013274	1	NUT, acorn .31-.32NEF
13	923300	1	WASHER, lock (int. tooth) .31, PLTD.
14	3060178	1	BRACKET
15	922121	2	SCREW No.10-32 x .37, PLTD.
16	922711	2	WASHER, lock (ext. tooth) No.10, PLTD.
17	1174467	1	ARM, drive (order separately)
18	1013270	1	SHAFT, pivot (order separately)
19	1018840	1	SHAFT, pivot (incl. items 9-13)
20	1010344	1	PANTOGRAPH KIT
21	1010528	1	ARM, wiper
22	1023660	1	BLADE, wiper
23	1023566	1	COVER, wiper motor (not illustrated)

OPTIONS

REAR WIPER & MOTOR

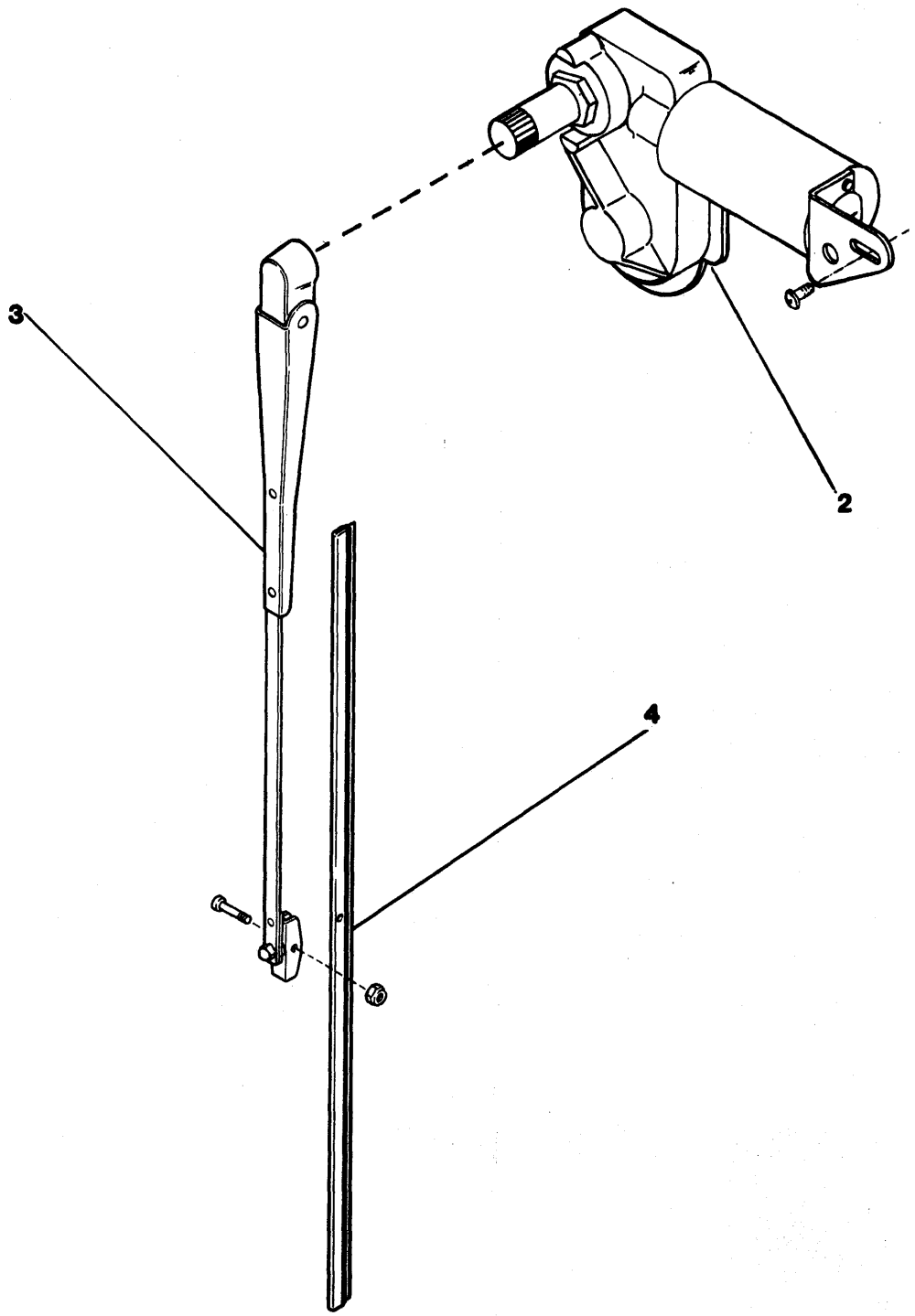

REAR WIPER & MOTOR

ITEM	NUMBER	QTY	DESCRIPTION
1	1023559	1	MOTOR KIT, wiper (incl. 1-8, 14-16)
2	6800292	1	MOTOR, wiper
3	1023659	1	ARM, wiper
4	1023660	1	BLADE, wipe
5	1023566	1	COVER, wiper motor (not shown)

OPTIONS

CAB DOOR ASSY.

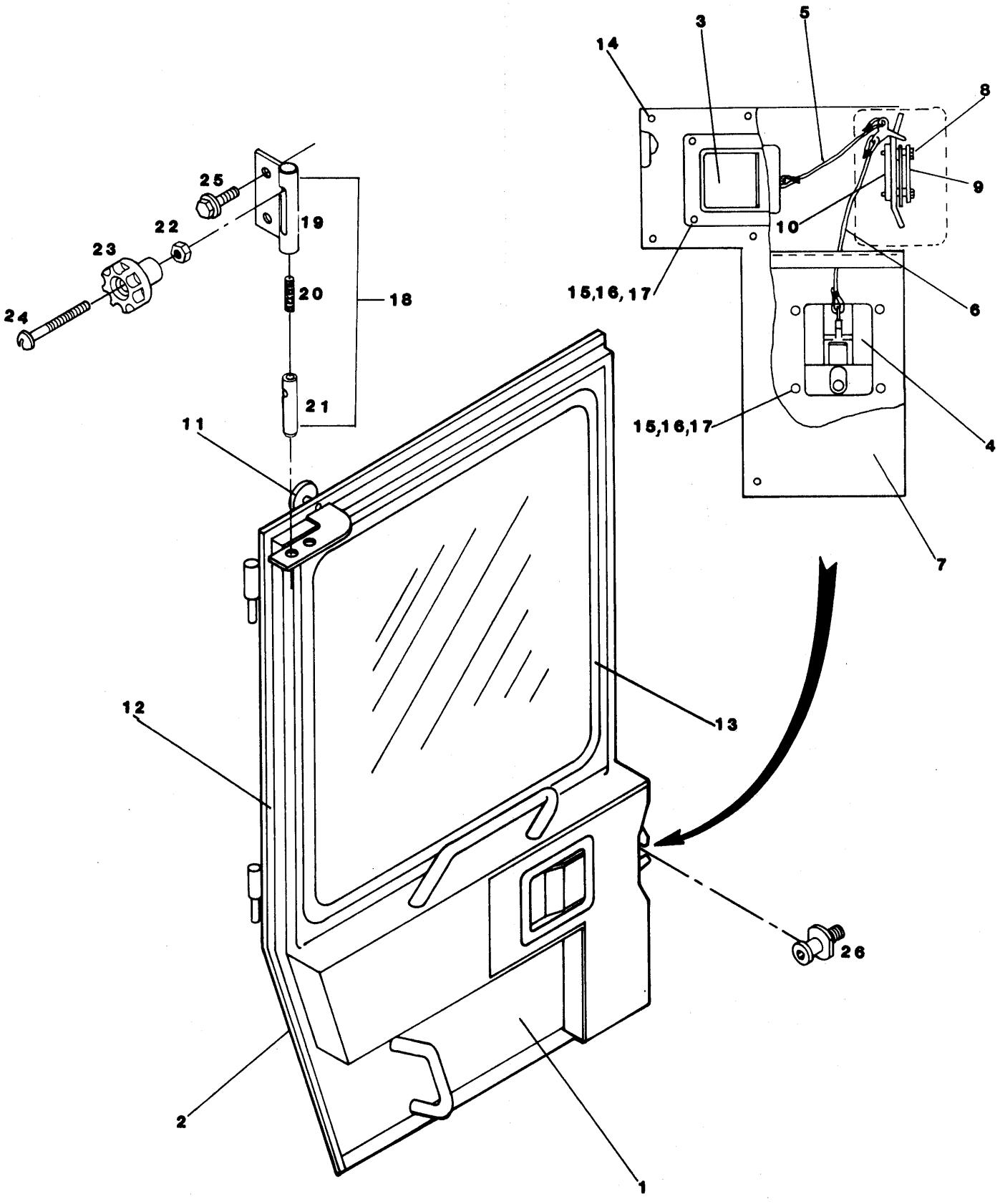

CAB DOOR ASSY.

ITEM	NUMBER	QTY	DESCRIPTION
1	6800412	1	DOOR, cab assy. L.H (shown)
	6800413	1	DOOR, cab assy. R.H.
2	6800379	1	WELDMENT, door L.H. (shown)
	6800380	1	WELDMENT, door R.H.
3	6800381	1	PADDLE HANDLE, non-locking
4	6800382	1	PADDLE HANDLE, locking
5	6800383	1	CABLE, assy. 9.0
6	6800386	1	CABLE, assy. 11.0
7	6800388	1	PANEL, door L.H. (shown)
	6800389	1	PANEL, door R.H.
8	921677	2	SCREW, hex .312-18 x 1.5, PLTD.
	901165	2	WASHER, flat .312, PLTD.
9	6800390	1	DOOR CATCH, rotary L.H. (shown)
	6800391	1	DOOR CATCH, rotary R.H.
10	6800392	1	RETAINER BAR, latch
11	6800393	1	DOOR STOP, assy.
12	6800396	1	RUBBER SEAL, door
13	6800397	1	RUBBER SEAL, window
14	6900171	8	SCREW, hex slotted-#8 x .5, PLTD.
15	931700	8	SCREW, mach. #10-24 x .62
16	904203	8	WASHER, lock .187, PLTD.
17	901310	8	NUT, hex #10-24NC, PLTD.
18	6800398	1	PLUNGER, assy. (incl. 19-24)
19	6800399	1	WELDMENT, door holder L.H. (shown)
	6800400	1	WELDMENT, door holder R.H.
20	6900170	1	SPRING, coil
21	6800401	1	PLUNGER, door holder
22	910516	1	NUT, hex .25-20, PLTD.
23	6800402	1	KNOB, door holder
24	900579	1	SCREW, mach. RD. Hd.-.25-20 x 1.5, PLTD.
25	922811	2	SCREW, hex washer-Hd.-.312 x .5, PLTD.
26	6800403	1	LATCH STRIKER, door
27	6800404	1	LATCH, door (not shown)
28	920380	2	WASHER, flat .25, PLTD. (not shown)
29	914868	2	SCREW, mach. .25-20 x 1", PLTD. (not shown)
30	910285	2	WASHER, lock .259, PLTD. (not shown)
31	910516	2	NUT, hex .25-20NC, PLTD. (not shown)

OPTIONS

CAB WIRING

S/N 63-BEYOND

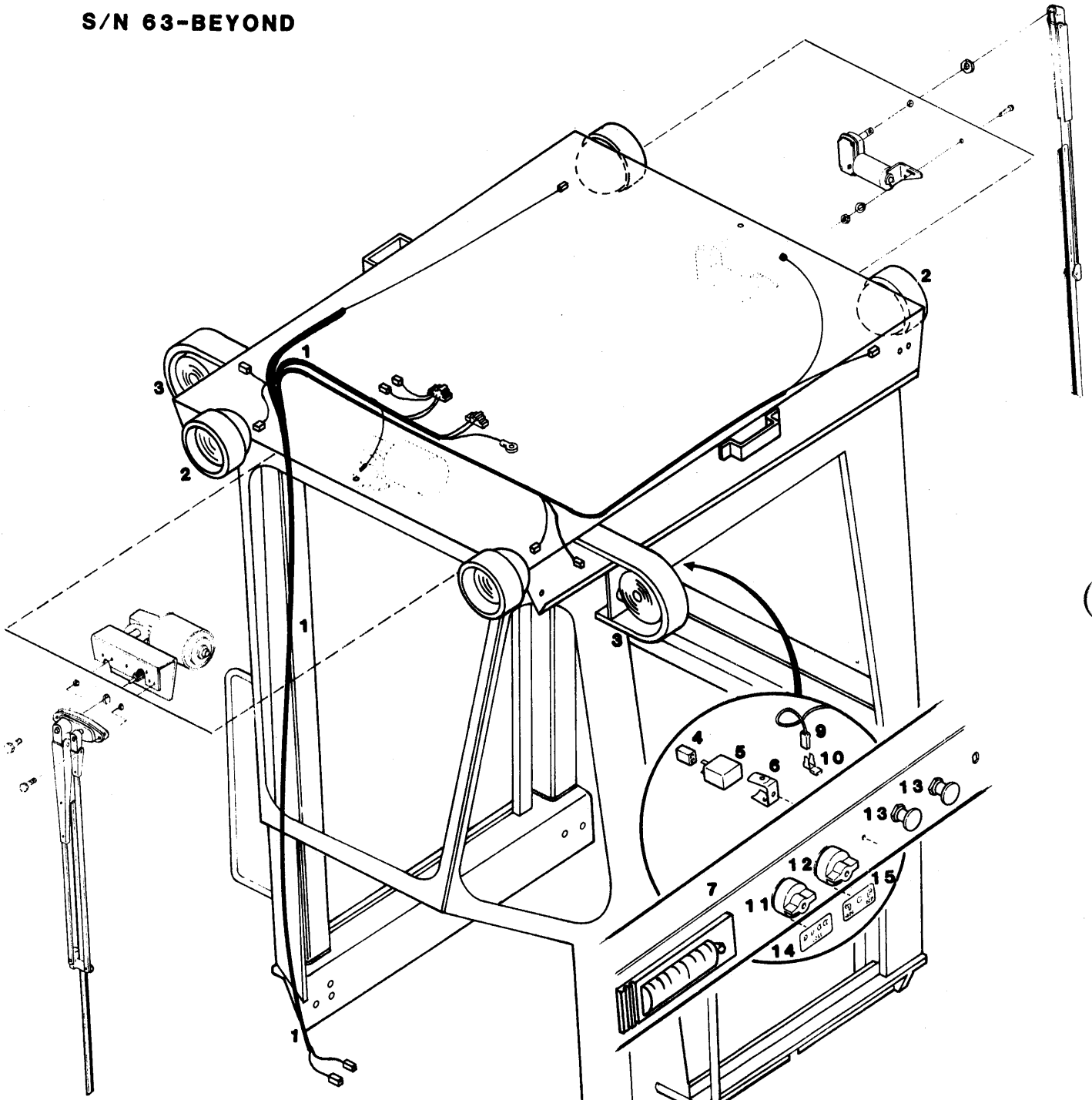

S/N 1-62

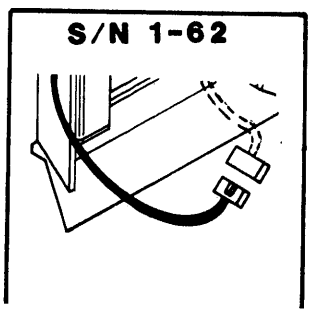

CAB WIRING
S/N 63-BEYOND

ITEM	NUMBER	QTY	DESCRIPTION
1	6800243	1	HARNESS, wire
2	1022690	4	LAMP, flood
3	1022691	2	LAMP, warning
4	1023143	1	CONNECTOR, assy.
5	1023144	1	FLASHER
6	245562	1	MOUNTING BRACKER, flasher
7	1022670	1	PANEL, assy.
8	1022721	1	LIGHT, dome assy.
9	1014415	2	WIRE, (from harness)
10	230170	2	ADAPTER, terminal
11	1007858	1	SWITCH, lights
12	1006605	1	SWITCH, warning
13	1010532	2	SWITCH
14	1016937	1	DECAL, lights
15	1016934	1	DECAL, turn signal

OPTIONS

R.O.P.S. ASSM.

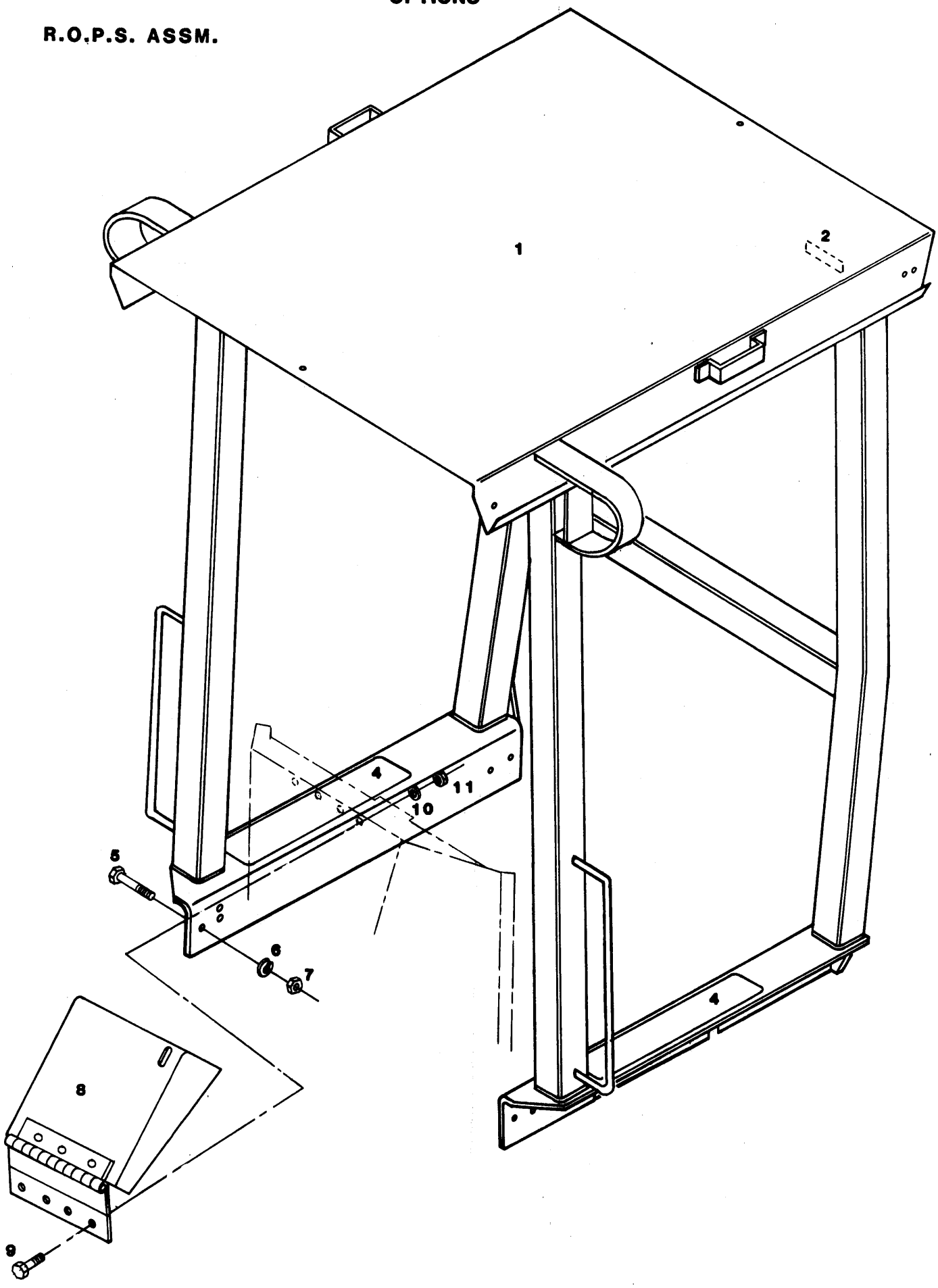

R.O.P.S. ASSM.

ITEM	NUMBER	QTY	DESCRIPTION
1	6091037	1	ROPS, assy. (incl. 2, 4-7, 12) (machinery only)
2	N.S.S.	2	PLATE, certification
4	1011496	2	TREAD, non-skid
5	915987	8	SCREW, hex .62-11 x 1.5, PLTD.
6	917373	8	WASHER, lock .62, PLTD.
7	915726	8	NUT, hex .62-11, PLTD.
8	6090056	1	COVER, instrument panel (incl. 9-11)
9	923341	4	SCREW, cap .25-20 x .75, PLTD.
10	918264	4	WASHER, plain - .25, PLTD.
11	920397	4	NUT, hex .25-20, PLTD.
12	1022674	4	SHIM

OPTIONS

R.O.P.S. WIRING

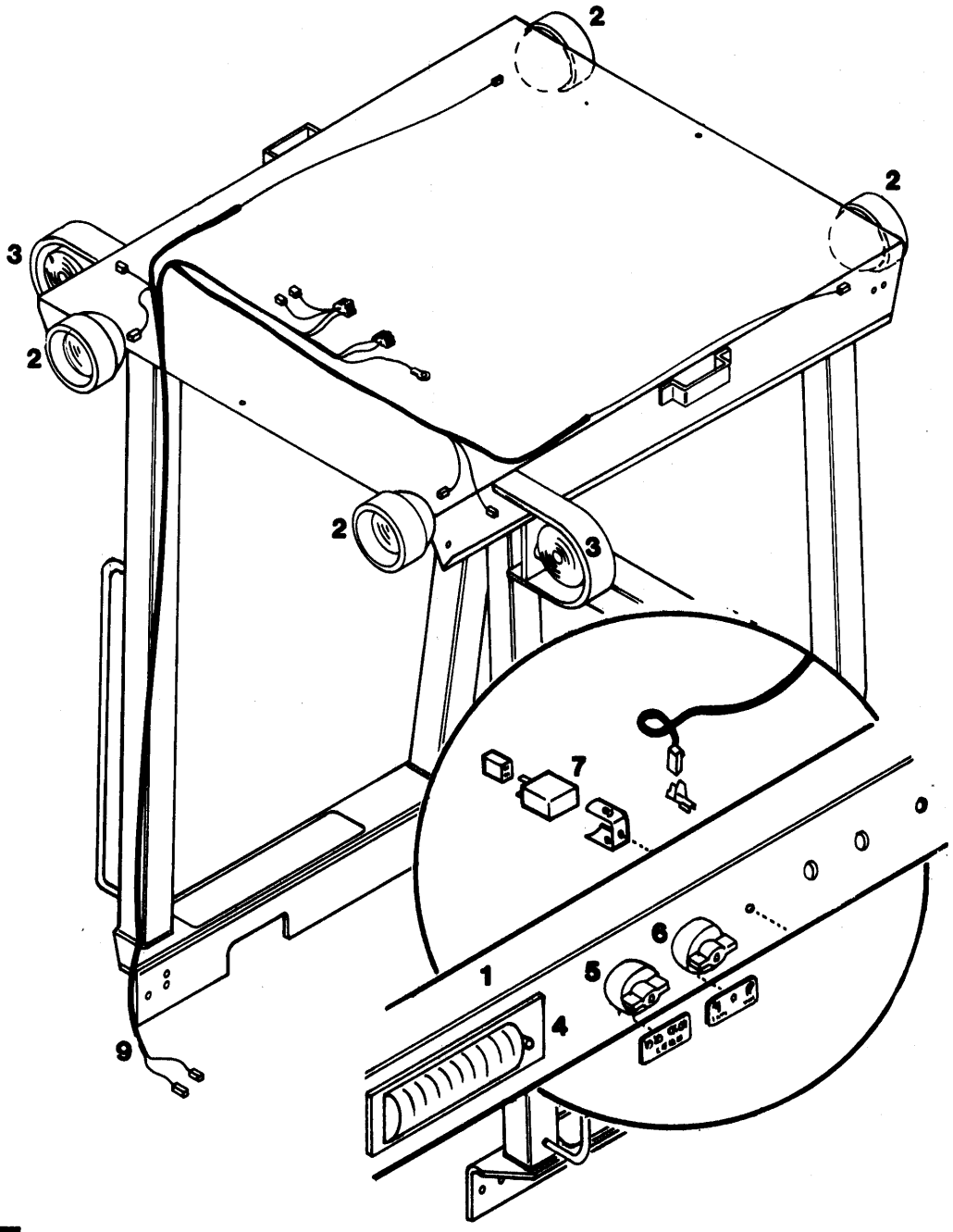

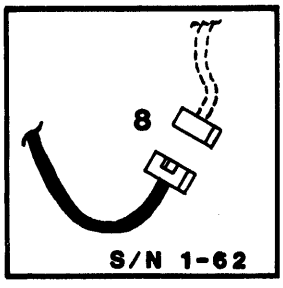

R.O.P.S. WIRING

ITEM	NUMBER	QTY	DESCRIPTION
1	6001199	1	PANEL, instrument
2	1022690	4	LIGHT, flood
3	1022691	2	LIGHT, warning
4	1022721	1	LIGHT, dome assy.
5	1007858	1	SWITCH, flood light
6	1006605	1	SWITCH, warning light
7	1023144	1	FLASHER 24v
8	6800218	1	HARNESS, wire (S/N 1-62)
9		1	HARNESS, wire (S/N 63-)
10	906938	1	WASHER, flat brass
11	927149	4	SCREW #8-32 x .50
12	1023143	1	CONNECTOR, wire
13	926790	4	CONNECTOR, wire
14	927187	4	SCREW, hex .375-16 x 1.0, PLTD.
15	916965	4	WASHER, lock .375, PLTD.
16	921985	4	BOLT, Hex .375-24 x 1.0
17	916602	4	NUT, hex .375-24
18	6800237	4	BULB-24v, floodlight
19	6800244	2	BULT-24V, flasher
20	6800239	1	BULB-24V, dome
21	6800240	1	BULB-24V, instrument panel

OPTIONS

HEATER-FIELD INSTALLATION

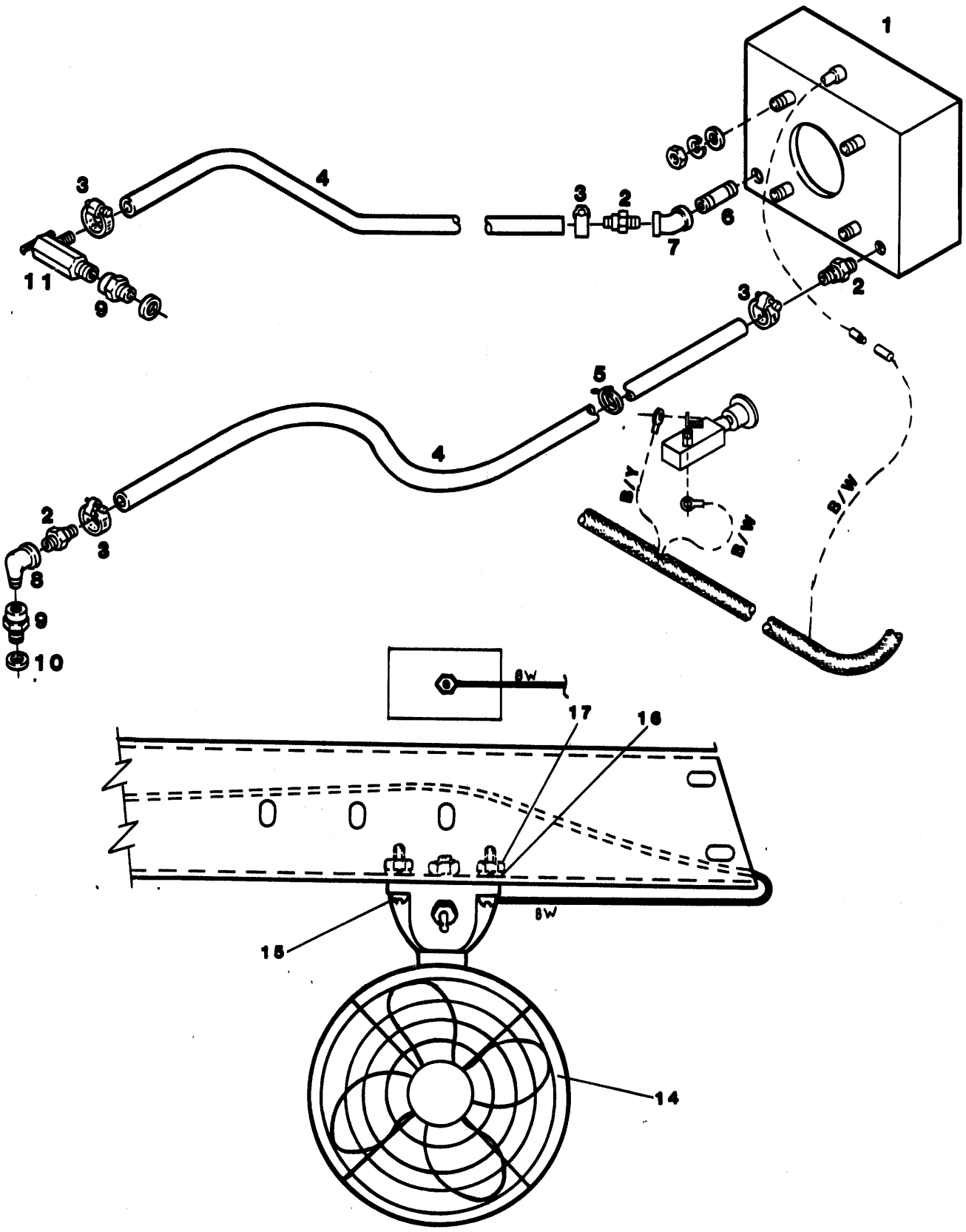

HEATER

ITEM	NUMBER	QTY	DESCRIPTION
	6091040		HEATER AND DEFROSTER GROUP (machinery item) (incl. 1-17)
1	1023062	1	HEATER, assy.
	918264	8	WASHER, flat .25, PLTD.
	916964	4	WASHER, lock .25, PLTD.
	916622	4	NUT, .25-20, PLTD.
2	925238	3	FITTING, hose
3	921911	4	CLAMP, hose
4	1012518	2	HOSE, heater
5	930871	4	WRAP, tie
6	901490	1	NIPPLE, pipe
7	901692	1	ELBOW
8	901723	1	ELBOW
9	1023066	2	ADAPTER
10	4530870	2	GASKET
11	2020415	1	VALVE, shut-off
12	1023064	1	SWITCH, heater, 24 volt
13	1016936	1	DECAL, heater fan (not illustrated)
14	1023065	1	FAN, 24 volt
15	917388	4	SCREW, cap No.10-24 x .75
16	917365	4	WASHER, lock No.10
17	916621	4	NUT, hex No.10-24

OPTIONS

HEATER ASSEMBLY

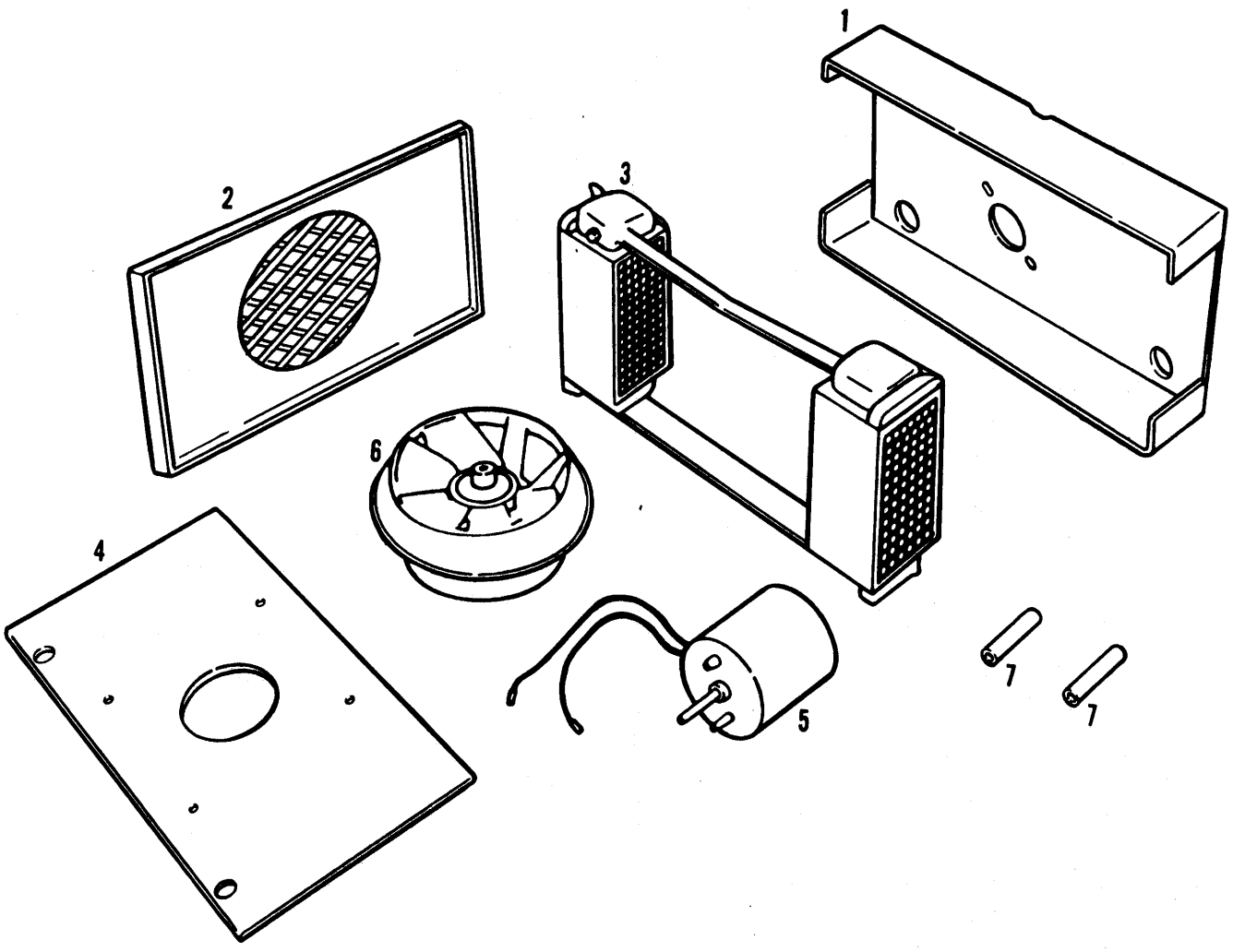

HEATER

ITEM	NUMBER	QTY	DESCRIPTION
	1023062	1	HEATER ASSY.
1	1012678	1	SHELL
2	1012679	1	COVER
3	1012680	1	CORE
4	1012681	1	GASKET
5	1023063	1	MOTOR
6	1012683	1	FAN
7	1012684	2	NIPPLE

OPTIONS

ROTATING BEACON

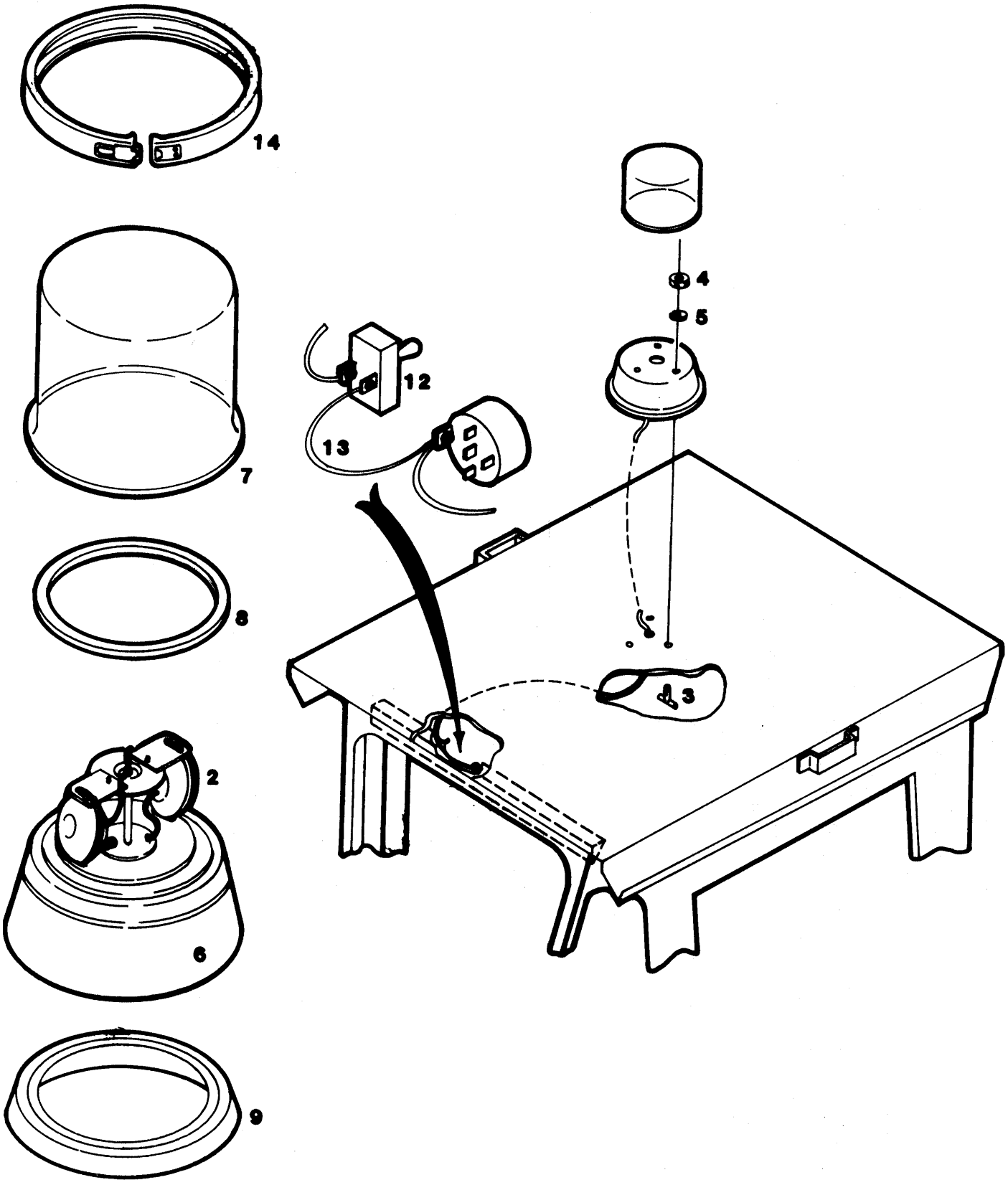

ROTATING BEACON

ITEM	NUMBER	QTY	DESCRIPTION
	6811177	1	BEACON, rotating (incl. 1-11)
1	6811231	1	MOTOR (not shown)
2	6811232	2	LAMP, sealed beam
3	6811233	3	BOLT, toggle
4	920435	3	NUT, hex .25-20, PLTD.
5	916964	3	WASHER, lock .25, PLTD.
6	6811236	1	BASE
7	6811237	1	LENS, amber
8	6811238	1	GASKET, lens
9	6811239	1	GASKET, mounting
10	923753	3	WASHER, flat .25, PLTD. (not shown)
11	6811234	3	WASHER, rubber (not shown)
12	2022739	1	SWITCH, swap
13	6810398	1	WIRE, jumper
14	6811235	1	RING, lens locking

OPTIONS

FRONT FENDER

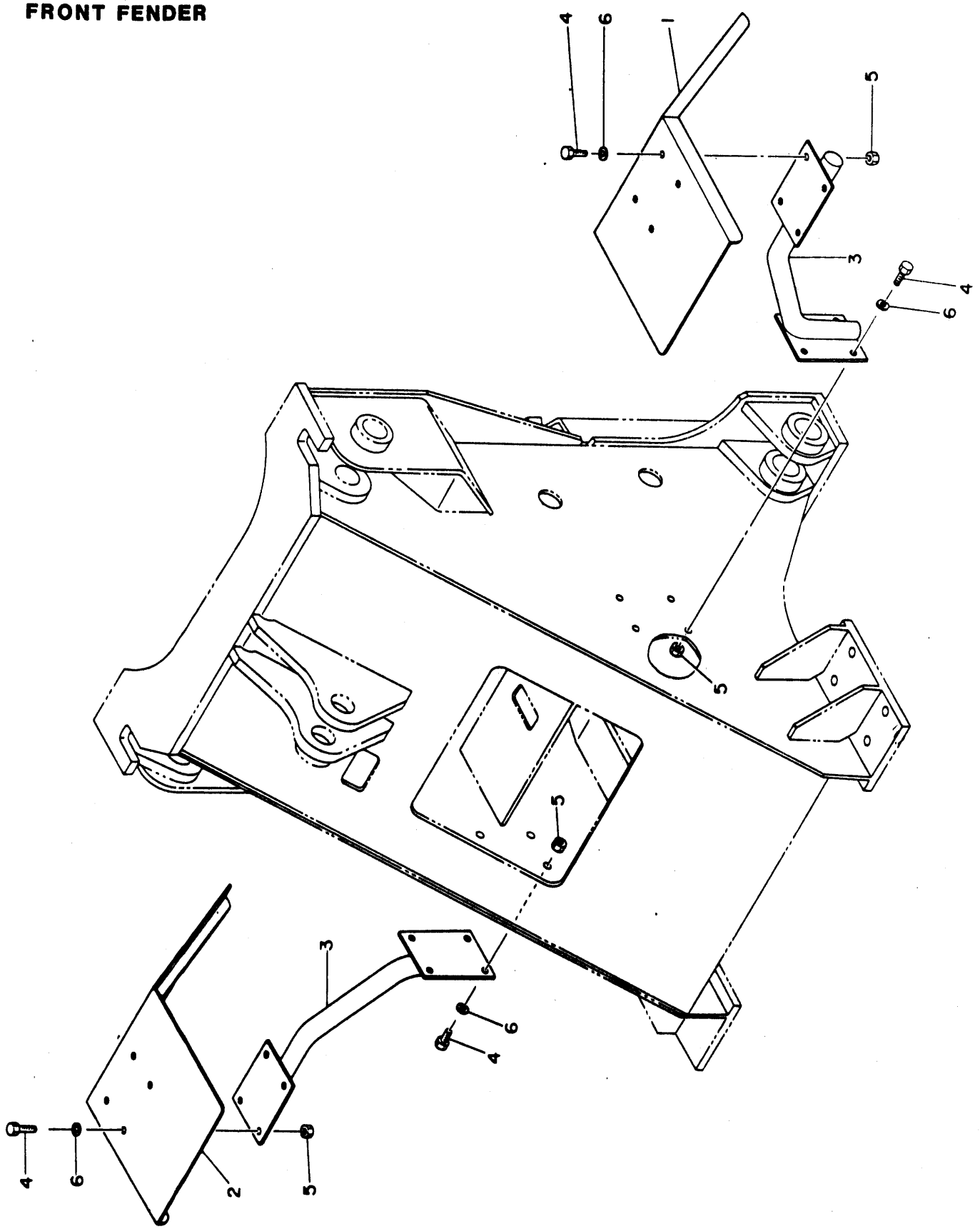

FRONT FENDER

ITEM	NUMBER	QTY	DESCRIPTION
	6810555	1	HOOD (S/N 33-62)
	6810545	1	HOOD (S/N 63-)
	6810161	1	FENDER, front (incl. 1-6)
1	6810438	1	FENDER (L.H.)
2	6810439	1	FENDER (R.H.)
3	6810440	2	BRACKET
4	950453	16	BOLT, hex M12-1.75 x 35mm, PLTD.
5	950212	16	NUT, hex M12-1.75, PLTD.
6	950221	16	WASHER, lock M12, PLTD.

BOOM KICKOUT

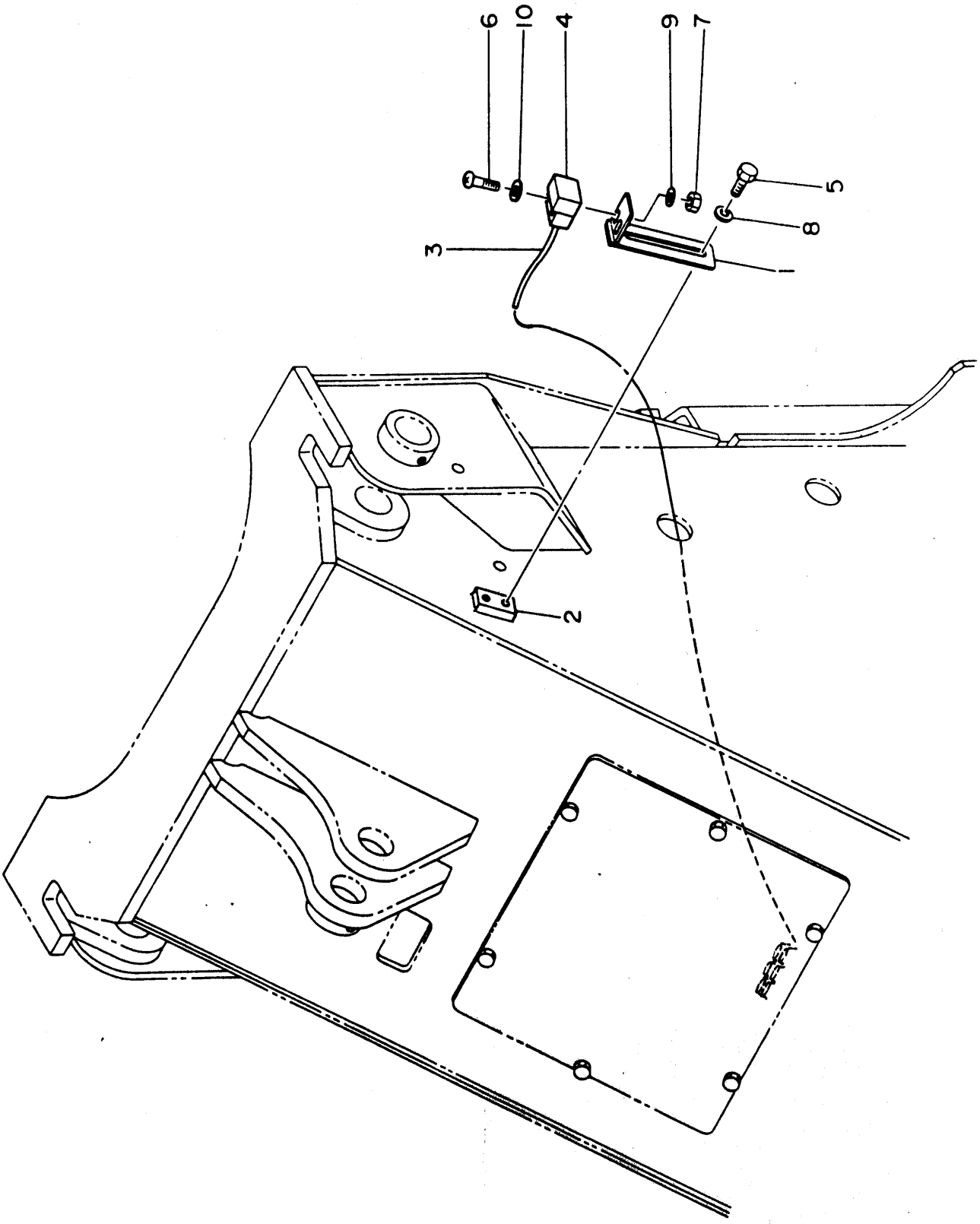

OPTIONS

BOOM KICKOUT

ITEM	NUMBER	QTY	DESCRIPTION
	6091047	1	BOOM KICK OUT (incl. 1-11)
1	6811157	1	BRACKET
2	6811158	1	SCREW SEAT
3	6811159	1	HARNESS, wire
4	6810090	1	SWITCH, proximity
5	950267	2	BOLT, hex M10-1.5 x 20mm
6	2024062	2	SCREW, round head M4-0.7 x 50mm
7	950716	2	NUT, hex M4-0.7, PLTD.
8	6900142	2	WASHER, conical M10, PLTD.
9	951105	2	WASHER, lock M4, PLTD.
10	951104	2	WASHER, flat M4, PLTD.
11	6811174	1	SPOOL SECTION ASSY. (not shown)

OPTIONS

CAB WINDOWS

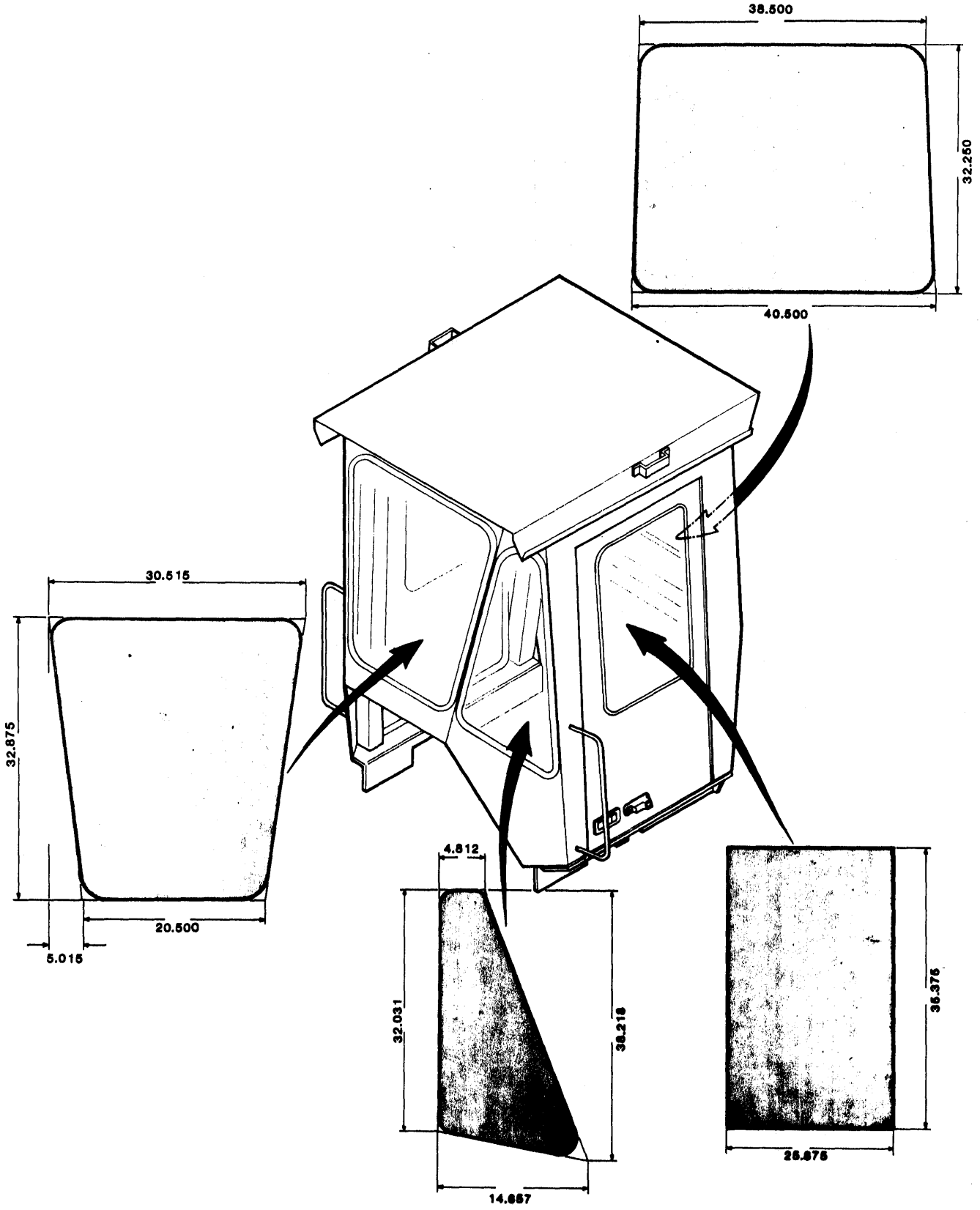

SECTION 07-DRIVE TRAIN INDEX

Accumulator	278
Axle - Final Drive	294
Counter Shaft (A)	268
Counter Shaft (B)	270
Control Valve	276
Front Axle Assembly	276 & 278
Main Shaft	266
Oil Pump	264
Oil Screen and Piping	280
Output Shaft	272
Propeller Shaft	282
Rear Axle Assembly	290 & 292
Rear Axle w/No-Spin Differential	296 & 298
Regulator Valve	274
Torque Converter and Transmission	258
Torque Converter and Transmission Case	260
Turbine and Stator Shaft	262

840D WHEEL LOADER

DRIVE TRAIN

TORQUE CONVERTER & TRANSMISSION

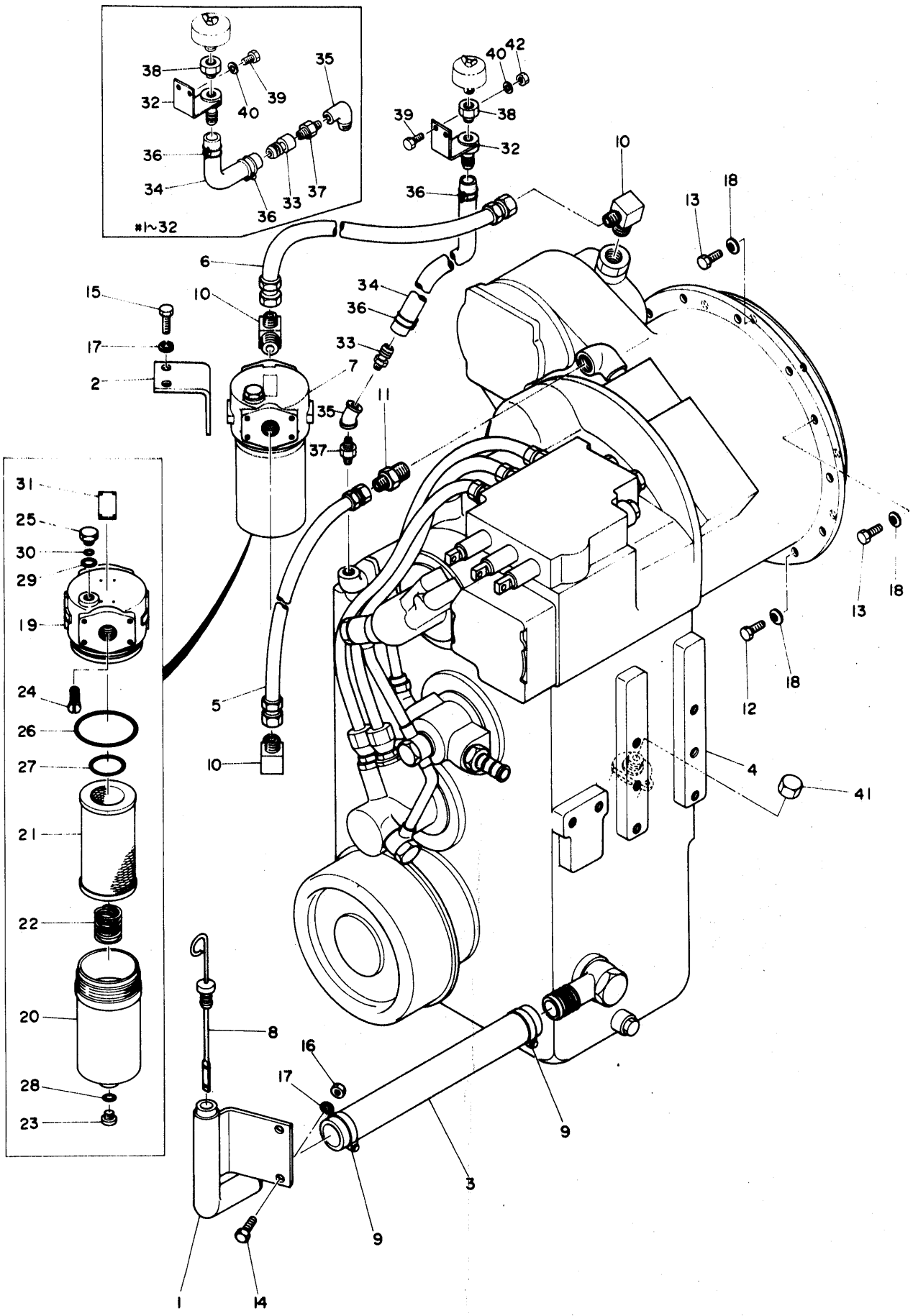

ITEM	NUMBER	QTY	DESCRIPTION
1	6811066	1	PIPE, oil level
2	6811067	1	BRACKET, filter
3	6811068	1	HOSE
4	6800081	1	TORQUE CONVERTER AND TRANSMISSION (complete)
5	6811069	1	HOSE
6	6811070	1	HOSE
7	6810021	1	LINE FILTER, assy. (incl. 19-31)
8	6810082	1	GAUGE, oil level
9	6811071	2	CLAMP, hose
10	6811072	3	ELBOW
11	6811073	1	ADAPTER
12	950371	11	BOLT, hex M10-1.5 x 25mm (10.9), PLTD.
13	950368	10	BOLT, hex M10-1.5 x 20mm (10.9), PLTD.
14	950051	2	BOLT, hex M12-1.75 x 25mm, PLTD.
15	950267	3	BOLT, hex M10-1.5 x 30mm
16	950211	2	NUT, hex M10-1.5, PLTD.
17	950220	4	WASHER, lock M14, PLTD.
18	6900142	2	WASHER, conical
19	6811074	1	HEAD, filter
20	6811075	1	CASE, lower
21	6800062	1	ELEMENT, filter
22	6811076	1	SPRING
23	6811077	1	PLUG, drain
24	6811078	1	VALVE, relief
25	6811058	1	PLUG, blind
26	6900156	1	O-RING
27	6900157	1	O-RING
28	6900158	1	O-RING
29	6900159	1	O-RING
30	6900158	1	O-RING
31	N.S.S.	1	PLATE, name
32	6811059	1	SUPPORT, breather
33	6811060	1	HOSE, stem (S/N 1-32)
	6900201	1	HOSE, stem (S/N 33-)
34	6811061	1	HOSE (S/N 1-32)
	6900202	1	HOSE (S/N 33-)
35	6900151	1	ELBOW (S/N 1-32)
	6900203	1	ELBOW (S/N 33-)
36	6811062	2	CLAMP, hose
37	6811063	1	NIPPLE
38	6811064	1	BUSHING
39	950017	2	BOLT, hex M8-1.25 x 16mm, PLTD. (S/N 1-32)
950018		2	BOLT, hex M8-1.25 x 20mm, PLTD. (S/N 33-)
40	950219	2	WASHER, lock - M8, PLTD.
41	6811065	1	CAP

DRIVE TRAIN

(1) TORQUE CONVERTER & TRANSMISSION CASE

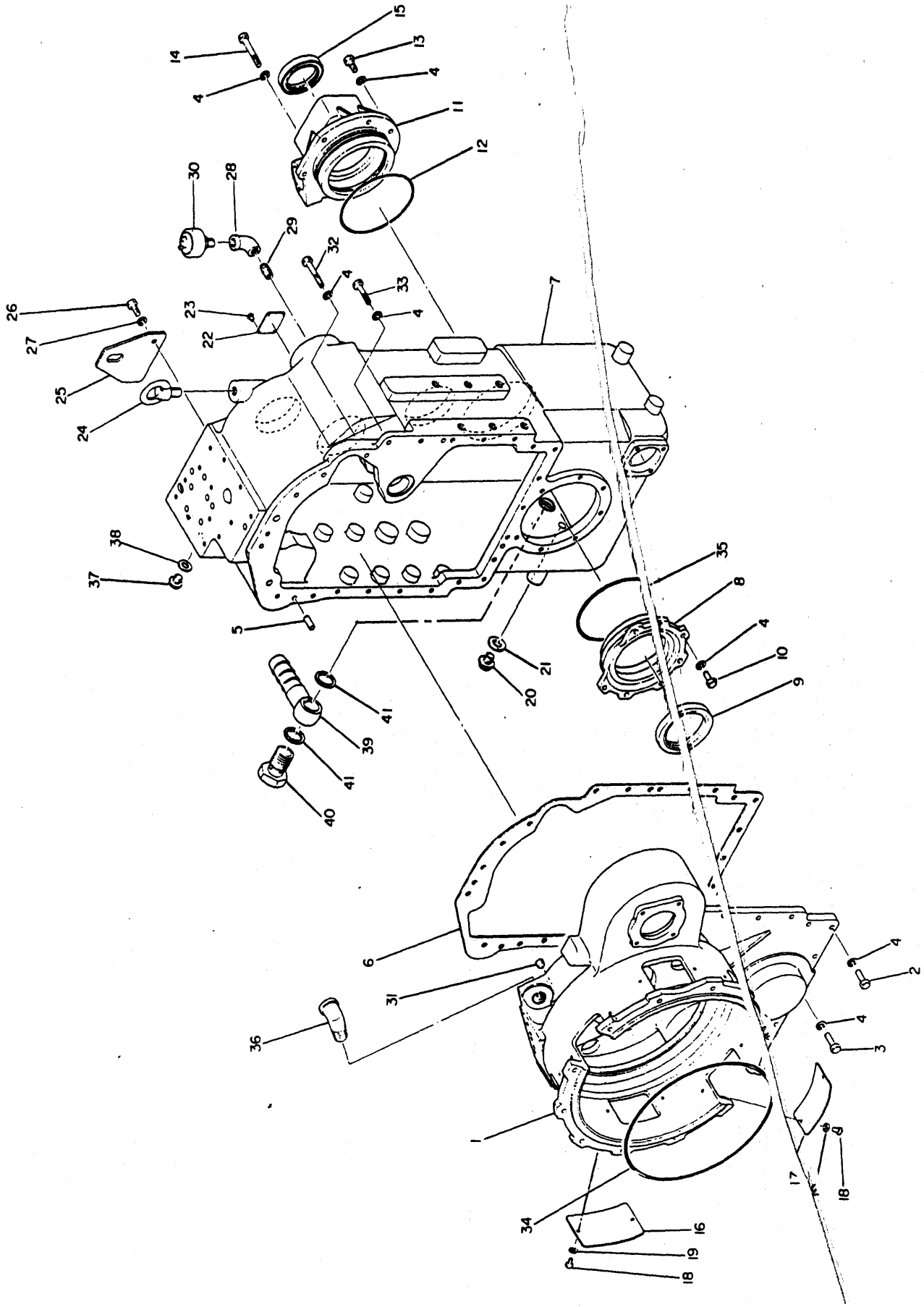

CONVERTER CASE

ITEM	NUMBER	QTY	DESCRIPTION
1	6811046	1	CASE, converter
2	2023601	17	BOLT, hex
3	2023663	1	BOLT, hex
4	6810849	37	WASHER, lock
5	6811048	3	PIN, straight
6	6811049	1	GASKET
7	6811050	1	CASE, transmission
8	6811051	1	RETAINER, oil seal
9	6810026	1	SEAL, oil
10	6810848	7	BOLT, hex
11	6811053	1	CASE, rear
12	2023664	1	O-RING
13	2023601	5	BOLT, hex
14	6811054	2	BOLT, hex
15	2023702	1	SEAL, oil
16	2023660	4	COVER
17	2023659	2	COVER
18	2023661	12	SCREW, round head
19	6811055	12	WASHER, lock
20	2023581	1	PLUG
21	2022782	1	WASHER, seal
22	N.S.S.	1	PLATE, name
23	6811057	4	RIVET
24	2022760	1	BOLT, eye
25	6811034	1	PLATE, eye
26	2023678	1	BOLT, hex
27	2023679	1	WASHER, lock
28	6811035	1	ELBOW
29	6811036	1	NIPPLE, pipe
30	6810020	1	BREATHER, air
31	6811037	1	PLUG
32	6811038	1	BOLT, hex
33	6810871	4	BOLT, hex
34	6900030	1	O-RING
35	6900031	1	O-RING
36	6811040	1	ELBOW
37	6811041	2	PLUG
38	6811042	2	WASHER, seal
39	6811043	1	NIPPLE, union
40	6811044	1	BOLT, eye
41	6810903	2	WASHER, seal

DRIVE TRAIN

(2) TURBINE & STATOR SHAFT

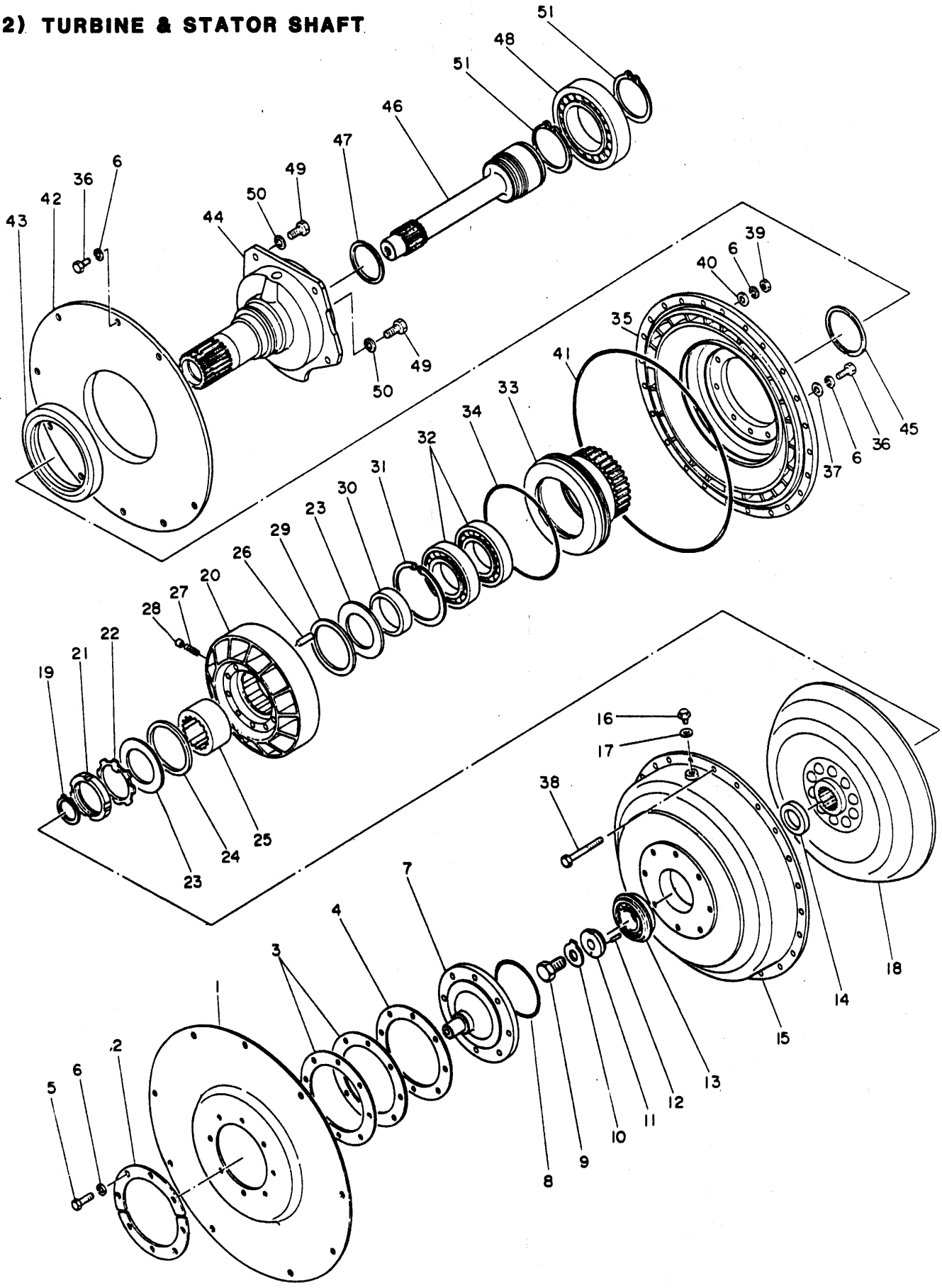

TURBINE & STATOR SHAFT

ITEM	NUMBER	QTY	DESCRIPTION
1	6811028	1	PLATE, flexible
2	2022787	1	PLATE (t=1.6mm)
3	2022784	2	SHIM (t=0.2mm)
4	2022785	1	SHIM (t=0.4mm)
5	2023574	8	BOLT, hex
6	6810880	51	WASHER, lock
7	6810027	1	BOSS, pilot
8	6900032	1	O-RING
9	2023589	1	BOLT, hex
10	2022792	1	WASHER, tab lock
11	2022790	1	RETAINER, bearing
12	2022791	1	PIN, straight
13	6811030	1	BEARING, ball
14	6811031	1	COLLAR
15	6811032	1	DRIVE COVER
16	2023590	2	PLUG
17	2023591	2	WASHER, seal
18	2022794	1	TURBINE
19	2023592	1	RING, snap
20	2022800	1	STATOR
21	2022795	1	NUT, ring
22	2022796	1	WASHER, tab lock
23	6811033	2	WASHER, thrust
24	2022799	1	WASHER, thrust
25	2022788	1	HUB
26	2022801	10	ROLLER
27	2022802	10	SPRING
28	2022803	10	SPRING CAP
29	2024149	1	WASHER, thrust
30	2022899	1	COLLAR
31	2022950	1	RING, snap
32	2023930	2	BEARING, ball
33	2022804	1	GEAR ASSY., pump-boss
34	2023594	1	O-RING
35	2022805	1	PUMP
36	2023596	19	BOLT, hex
37	2023597	10	WASHER, flat
38	2023598	24	BOLT, hex
39	2023600	24	NUT, hex
40	2023599	24	WASHER, flat
41	2023595	1	O-RING
42	6811023	1	SEAL DISK
43	2022751	1	SEAL, oil
44	6811024	1	SHAFT, stator
45	2022900	1	RING, seal
46	6811025	1	SHAFT, turbine
47	6811026	1	RING, seal
48	6811027	1	BEARING, roller
49	2023788	6	BOLT, hex
50	6810849	6	WASHER, lock
51	6811022	2	RING, snap

840D WHEEL LOADER

DRIVE TRAIN

(3) OIL PUMP

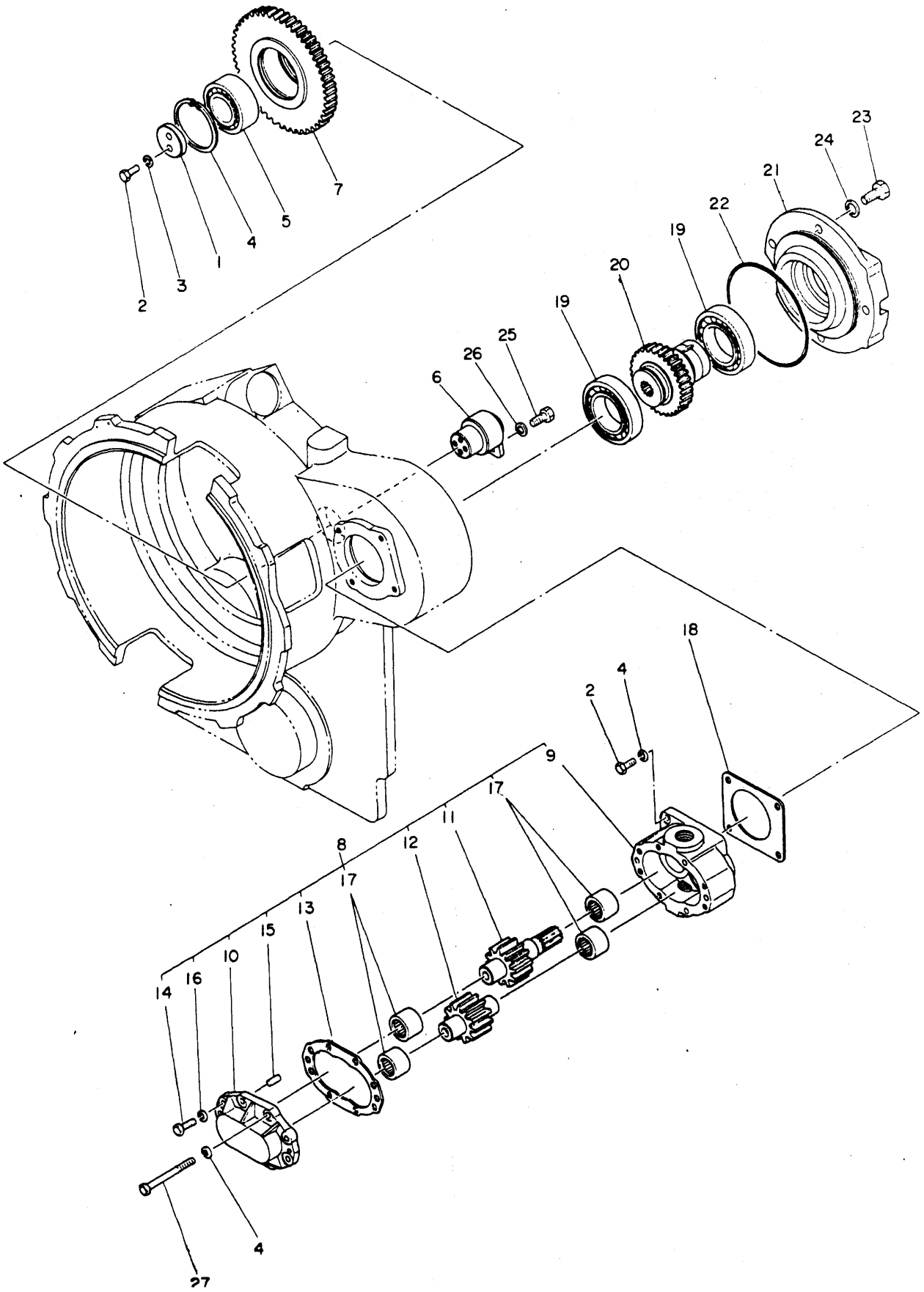

OIL PUMP

ITEM	NUMBER	QTY	DESCRIPTION
1	2022903	1	PLATE, lock
2	2023574	4	BOLT, hex
3	6810880	6	WASHER, lock
4	2023603	1	RING, snap
5	2023698	1	BEARING, ball
6	6811011	1	SHAFT, idle
7	6811012	1	GEAR, idle
8	6800083	1	PUMP ASSY., oil (incl. 9-18)
9	6811013	1	PUMP CASE, oil
10	6811014	1	CASE COVER, oil pump
11	6811015	1	GEAR, drive
12	6811016	1	GEAR, driven
13	2022855	1	GASKET
14	2023631	6	BOLT, hex
15	2023644	2	PIN, straight
16	6810880	6	WASHER, lock
17	6811018	4	BEARING, needle
18	2022838	1	GASKET
19	2023930	2	BEARING, ball
20	2022839	1	GEAR, driven
21	6811019	1	RETAINER, bearing
22	2023664	1	O-RING
23	2024080	4	BOLT, hex
24	6811020	4	WASHER, lock
25	2023788	1	BOLT, hex
26	6810849	1	WASHER, lock
27	2023630	2	BOLT, hex

840D WHEEL LOADER

DRIVE TRAIN

(4) MAIN SHAFT

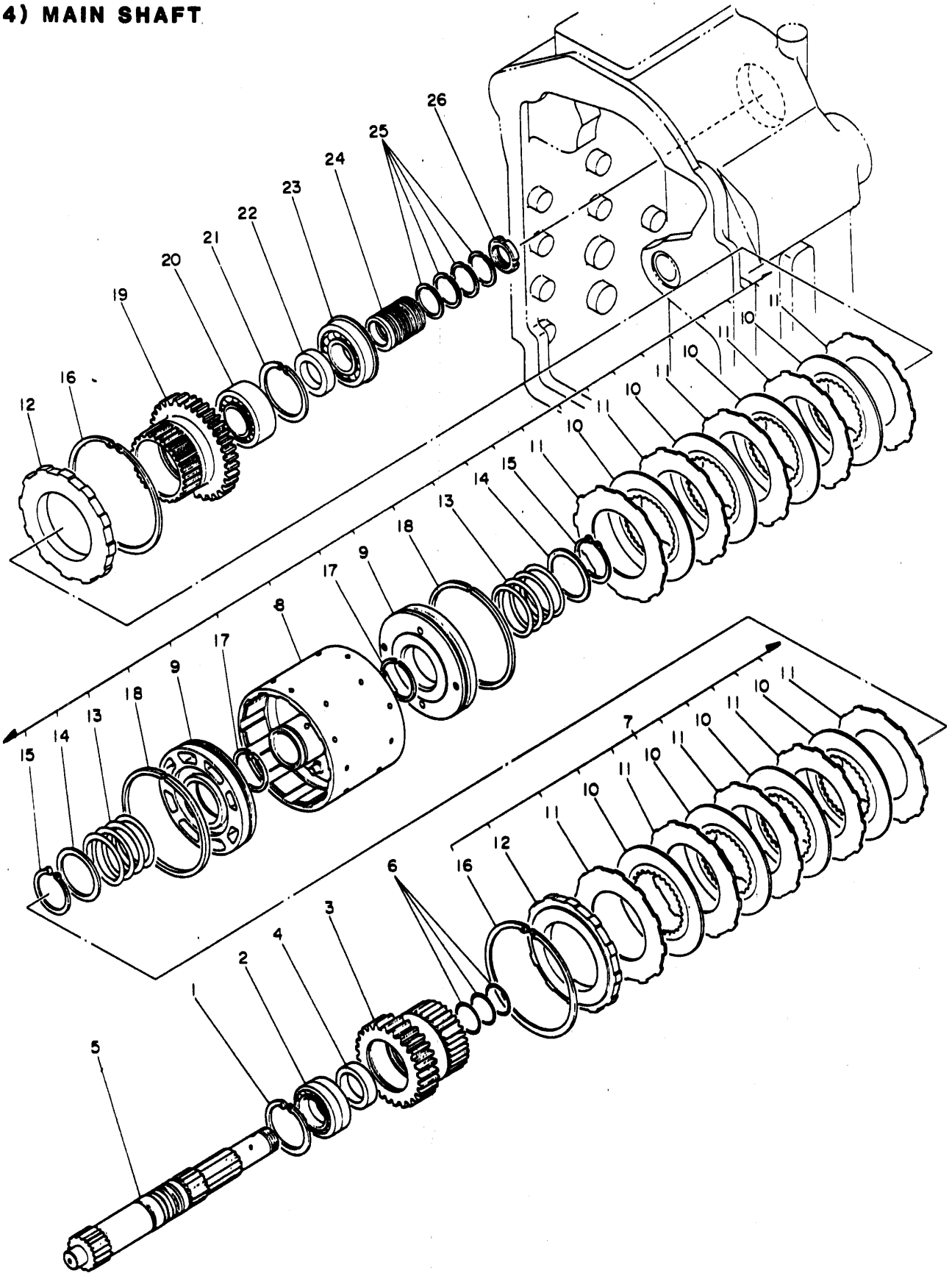

MAIN SHAFT

ITEM	NUMBER	QTY	DESCRIPTION
1	6810947	1	RING, snap
2	6810995	1	BEARING, ball
3	6810996	1	GEAR (A), clutch
4	6810957	1	COLLAR
5	6810998	1	SHAFT, main
6	2023577	3	O-RING
7	6800086	1	CLUTCH (A), assy. (incl. 8-18)
8	6800087	1	CLUTCH DRUM (A)
9	6810965	2	PISTON, clutch
10	2022817	8	PLATE, drive
11	2022818	10	PLATE, driven
12	6810966	2	PLATE, pressure
13	6810967	2	SPRING, return
14	6810968	2	RETAINER, spring
15	6810969	2	RING, snap
16	2023922	2	RING, snap
17	6810970	2	RING, piston
18	2023924	2	RING, piston
19	6811004	1	GEAR (B), clutch
20	6811005	1	BEARING, ball
21	2023584	1	RING, snap
22	6811006	1	SPACER
23	6811007	1	BEARING, ball
24	6811008	1	COLLAR (A)
25	6810028	4	RING, seal
26	6810992	1	NUT, lock
27	6090112	1	KIT, pressure plates (incl. 10 & 11)

DRIVE TRAIN

(5) COUNTER SHAFT (A)

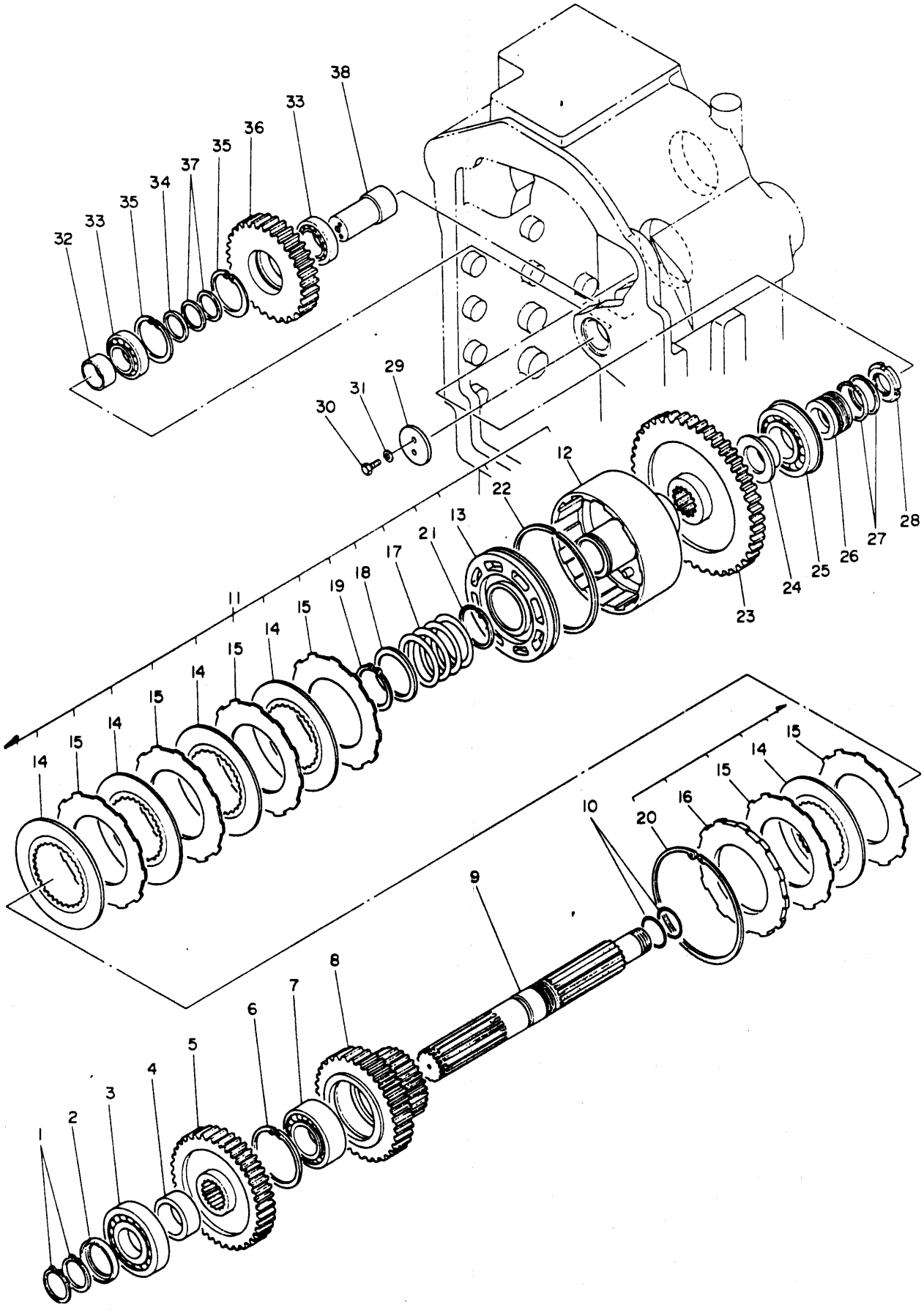

COUNTER SHAFT (A)

ITEM	NUMBER	QTY	DESCRIPTION
1	6810954	2	RING, snap
2	6810955	1	SPACER
3	6810956	1	BEARING, roller
4	6810981	1	COLLAR
5	6810982	1	GEAR (A), counter
6	6810983	1	RING, snap
7	6810984	1	BEARING, ball
8	6810985	1	GEAR (C), clutch
9	6810986	1	SHAFT (A), counter
10	2023577	2	O-RING
11	6810987	1	CLUTCH (B), assy. (incl. 12-22)
12	6810988	1	CLUTCH DRUM (B)
13	6810965	1	PISTON, clutch
14	2022817	5	PLATE, drive
15	2022818	6	PLATE, driven
16	2022819	1	PLATE, pressure
17	6810989	1	SPRING, return
18	6810968	1	RETAINER, spring
19	6810969	1	RING, snap
20	2023922	1	RING, snap
21	6810970	1	RING, piston
22	2023924	1	RING, piston
23	6810990	1	GEAR (B), counter
24	6810952	1	ADAPTER
25	6810949	1	BEARING, ball
26	6810972	1	COLLAR (B)
27	6810951	2	RING, seal
28	6810953	1	NUT, lock
29	2022770	1	PLATE, lock
30	2022977	2	BOLT, hex
31	6810880	2	WASHER, lock
32	6810976	1	SLEEVE
33	2023927	2	BEARING, ball
34	6810977	1	SPACER
35	2023928	2	RING, snap
36	6810978	1	GEAR, idle
37	6810979	AR	SHIM
38	6810980	1	SHAFT, idle
39	6090113	1	KIT, pressure plate (incl. 14 & 15)

840D WHEEL LOADER

DRIVE TRAIN

(6) COUNTER SHAFT (B)

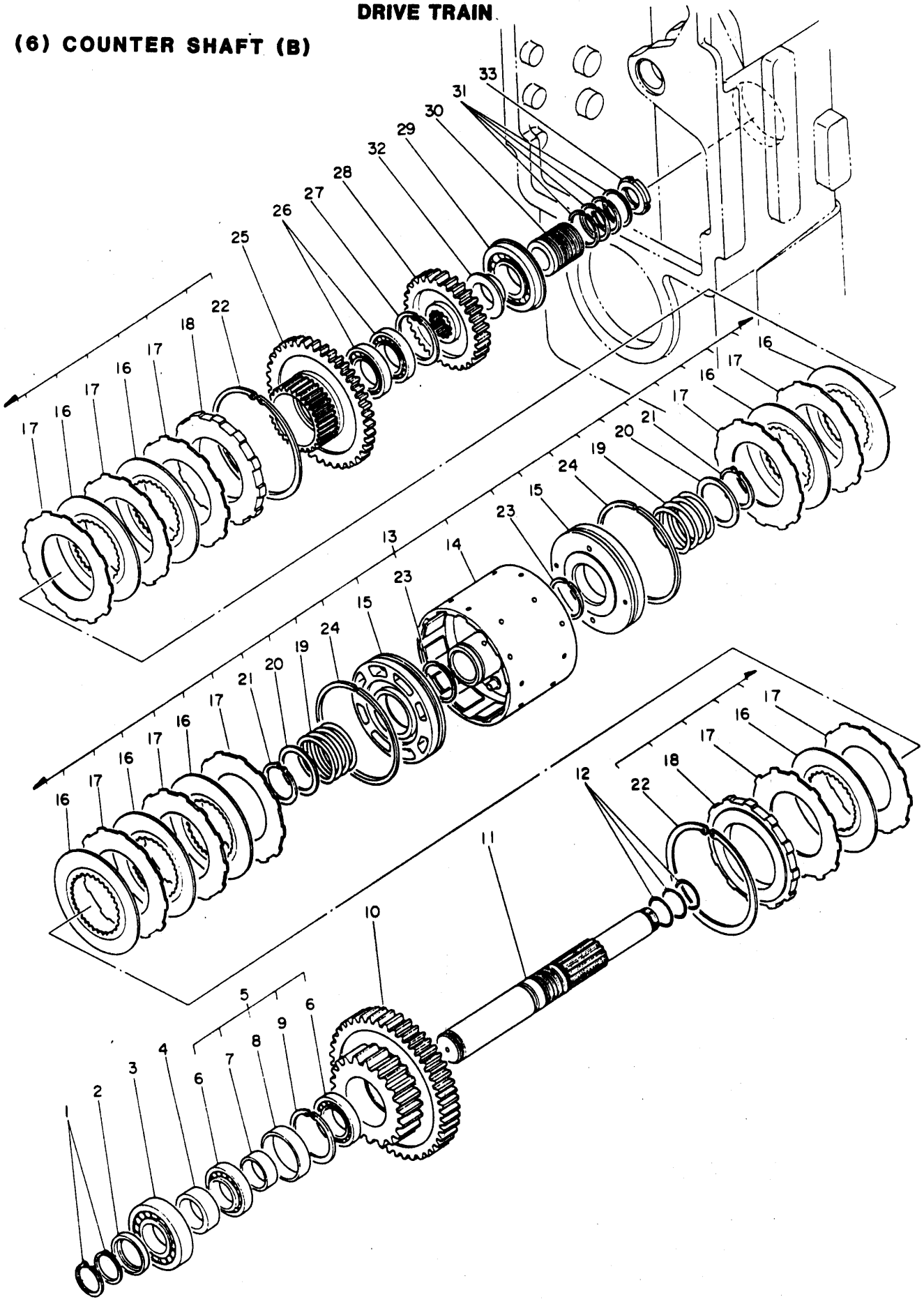

COUNTER SHAFT (B)

ITEM	NUMBER	QTY	DESCRIPTION
1	6810954	2	RING, snap
2	6810955	1	SPACER
3	6810956	1	BEARING, roller
4	6810957	1	COLLAR
5	6810958	1	GEAR BEARING ASSY., clutch (incl. 6-9)
6	6810959	2	BEARING, roller
7	6810960	1	COLLAR
8	6810961	1	COLLAR
9	6810947	1	RING, snap
10	6810963	1	GEAR (D), clutch
11	6810964	1	SHAFT (B), counter
12	2023577	3	O-RING
13	6800086	1	CLUTCH (A) ASSY. (incl. 14-24)
14	6800087	1	CLUTCH DRUM (A)
15	6810965	2	PISTON, clutch
16	2022817	8	PLATE, drive
17	2022818	10	PLATE, driven
18	6810966	2	PLATE, pressure
19	6810967	2	SPRING, return
20	6810968	2	RETAINER, spring
21	6810969	2	RING, snap
22	2023922	2	RING, snap
23	6810970	2	RING, piston
24	2023924	2	RING, piston
25	6810945	1	GEAR (E), clutch
26	6810946	2	BEARING, ball
27	6810947	1	RING, snap
28	6810948	1	GEAR (C), counter
29	6810949	1	BEARING, ball
30	6810950	1	COLLAR (C)
31	6810951	4	RING, seal
32	6810952	1	ADAPTER
33	6810953	1	NUT, lock
34	6090113	1	KIT, pressure plate (incl. 16 & 17)

DRIVE TRAIN

(7) OUTPUT SHAFT

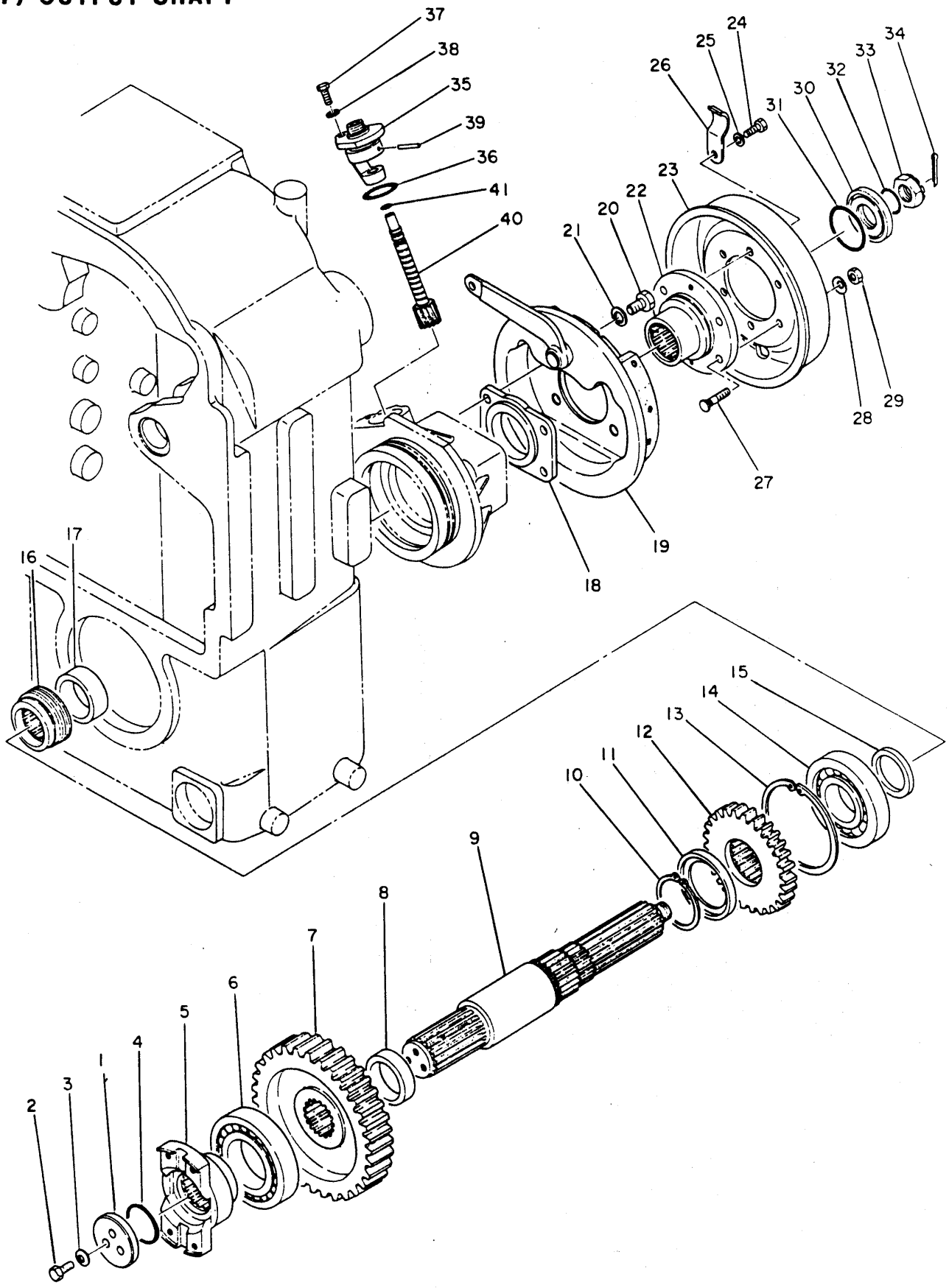

ITEM	NUMBER	QTY	DESCRIPTION
1	6810928	1	PLATE, lock
2	6810929	3	BOLT, hex
3	6810930	3	WASHER, conical
4	6810931	1	O-RING
5	6810022	1	COUPLING (A)
6	6810932	1	BEARING, roller
7	6810933	1	GEAR (A), reduction
8	6810934	1	SPACER
9	6810935	1	SHAFT, output
10	6810936	1	RING, snap
11	6810937	1	SPACER
12	6810938	1	GEAR (B), reduction
13	6810939	1	RING, snap
14	6810940	1	BEARING, ball
15	6810941	1	SPACER
16	2022833	1	GEAR, drive
17	6810942	1	SPACER
18	2023677	1	COVER, dust
19	6810943	1	BRAKE ASSY.
20	2023678	4	BOLT, hex
21	2023679	4	WASHER, spring
22	2023676	1	COUPLING (B)
23	6810944	1	DRUM, brake
24	2023588	2	BOLT, hex
25	6810880	2	WASHER, spring
26	6810921	2	COVER
27	6810922	4	BOLT
28	6810923	4	WASHER, conical
29	6810924	4	NUT, hex
30	2022913	1	SPACER, seal
31	2023675	1	O-RING
32	2023674	1	O-RING
33	2023673	1	NUT, castle
34	950564	2	PIN, cotter
35	2022836	1	GEAR CASE, speed meter
36	2023577	1	O-RING
37	6810848	2	BOLT, hex
38	6810849	1	WASHER, spring
39	2023688	1	PIN, straight
40	6810927	1	GEAR, driven
41	2023687	1	O-RING

DRIVE TRAIN

(8) REGULATOR VALVE

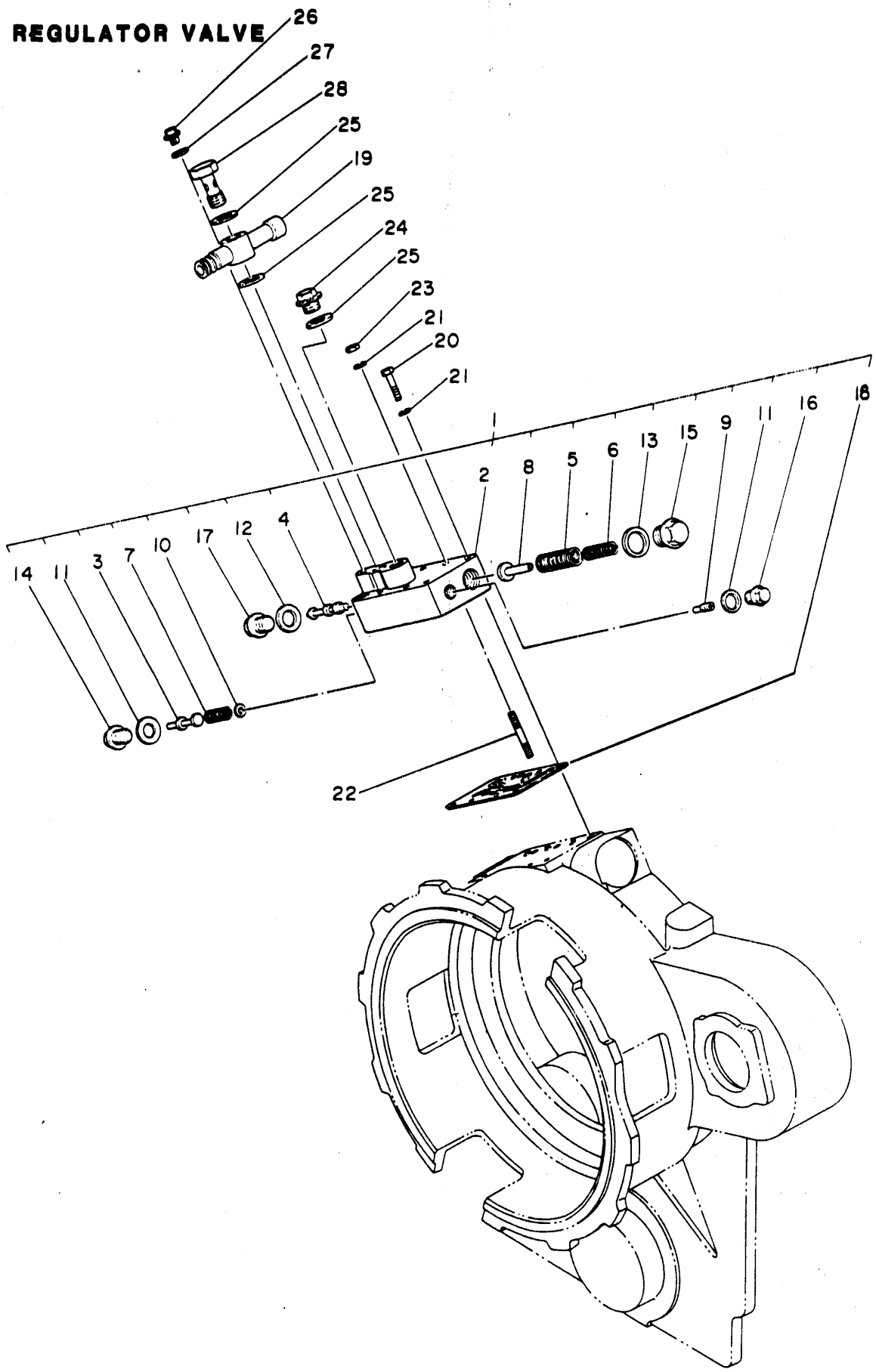

ITEM	NUMBER	QTY	DESCRIPTION
1	6800084	1	VALVE ASSY., regulator (incl. 2-18)
2	6810910	1	VALVE BODY, regulator
3	6810911	1	VALVE, regulator
4	6810912	1	VALVE, regulator
5	6810913	1	SPRING (A)
6	6810914	1	SPRING (B)
7	2022867	1	SPRING (C)
8	6810915	1	RETAINER, spring
9	2022869	1	SCREW, adjusting
10	2022870	1	RETAINER, spring
11	2022782	2	WASHER, seal
12	2022940	1	WASHER, seal
13	2022915	1	WASHER, seal
14	6810916	1	PLUG
15	2023604	1	PLUG
16	2023605	1	PLUG
17	6810917	1	PLUG
18	2022857	1	GASKET
19	2022937	1	CONNECTOR
20	2023610	7	BOLT, hex
21	6810880	8	WASHER, lock
22	2022922	1	BOLT, stud
23	2023600	1	NUT, hex
24	6810889	1	PLUG
25	2022940	3	WASHER, seal
26	2023611	2	PLUG
27	2022923	2	WASHER, seal
28	6810909	1	BOLT, eye

DRIVE TRAIN

(9) CONTROL VALVE

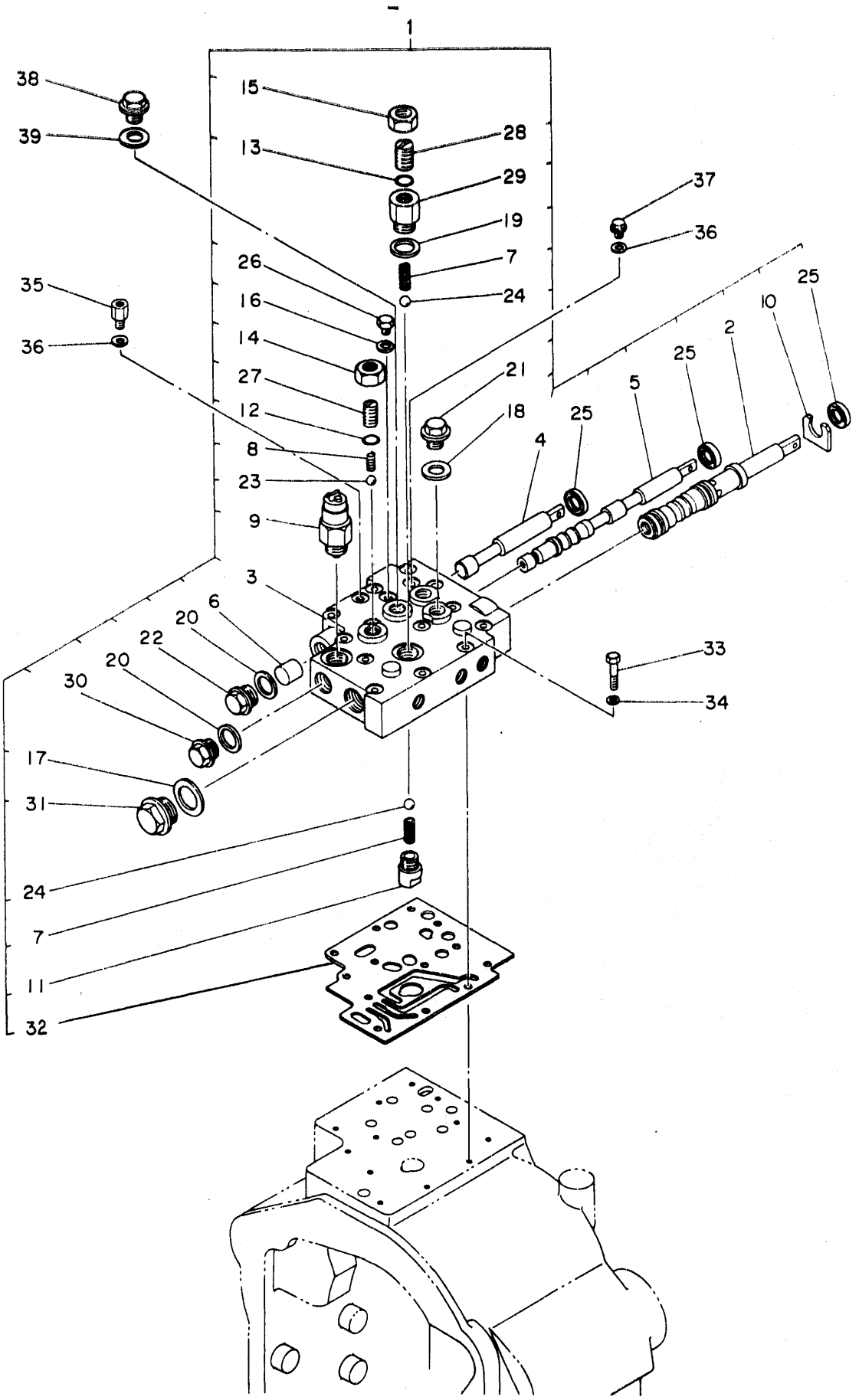

ITEM	NUMBER	QTY	DESCRIPTION
1	6800085	1	VALVE ASSY., control (incl. 2-32)
2	6810890	1	SPOOL, selector
3	6810891	1	VALVE BODY, control
4	6810892	1	SPOOL, shut-off
5	6810893	1	SPOOL, selector
6	6810894	1	STOPPER
7	6810895	2	SPRING
8	6810896	1	SPRING
9	6800076	1	SWITCH, neutral
10	6810897	1	STOPPER
11	6810898	1	CAP, spring
12	6810899	1	O-RING
13	6810900	1	O-RING
14	6810901	1	NUT, hex
15	6810902	1	NUT, hex
16	2022931	1	WASHER, seal
17	6810903	1	WASHER, seal
18	2022940	1	WASHER, seal
19	2022915	1	WASHER, seal
20	6810904	2	WASHER, seal
21	6810889	1	PLUG
22	6810906	1	PLUG
23	6810907	1	BALL, detent
24	6810908	2	BALL, detent
25	2023621	3	SEAL, oil
26	2023623	1	STOPPER
27	6810881	1	SCREW, adjusting
28	6810882	1	SCREW, adjusting
29	6810883	1	ADAPTER
30	6810884	1	PLUG
31	6810885	1	PLUG
32	6810029	1	GASKET
33	6810886	13	BOLT, hex
34	6810887	13	WASHER, seal
35	6810888	1	ADAPTER
36	2022923	2	WASHER, seal
37	2023611	1	PLUG
38	6810889	2	PLUG
39	2022940	2	WASHER, seal

DRIVE TRAIN

(10) ACCUMULATOR

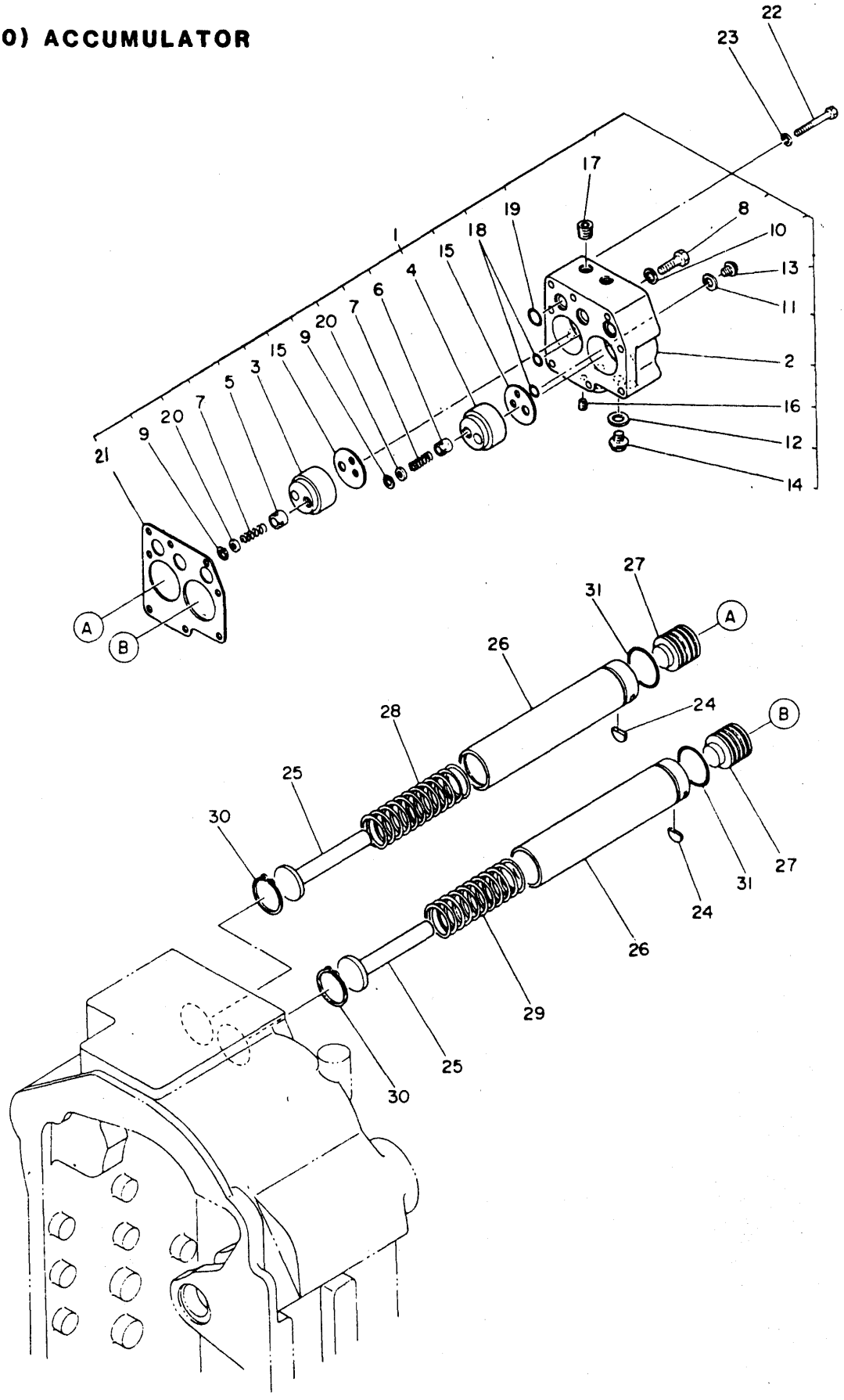

ACCUMULATOR

ITEM	NUMBER	QTY	DESCRIPTION
1	6810864	1	FLANGE ASSY., accumulator (incl. 2-21)
2	6810865	1	FLANGE
3	6810866	1	CYLINDER (A)
4	6810867	1	CYLINDER (B)
5	6810868	1	VALVE, check
6	6810869	1	VALVE, check
7	6810870	2	SPRING
8	6810871	2	BOLT, hex
9	2023649	2	RING, snap
10	6810849	2	WASHER, lock
11	2022923	2	WASHER, seal
12	6810873	2	WASHER, seal
13	2023611	2	PLUG
14	6810874	2	PLUG
15	6810875	2	PACKING
16	6810876	2	PLUG
17	6810877	2	PLUG
18	2023639	2	O-RING
19	2023789	6	O-RING
20	6810878	2	RETAINER, spring
21	6810084	1	GASKET
22	6810879	8	BOLT, hex
23	6810880	8	WASHER, lock
24	2022847	2	STOPPER
25	6810025	2	STOPPER
26	6800080	2	CYLINDER
27	6810023	2	PISTON
28	6810024	1	SPRING
29	6810861	1	SPRING
30	6810862	2	RING, snap
31	6810863	2	O-RING

DRIVE TRAIN

(11) OIL SCREEN & PIPING

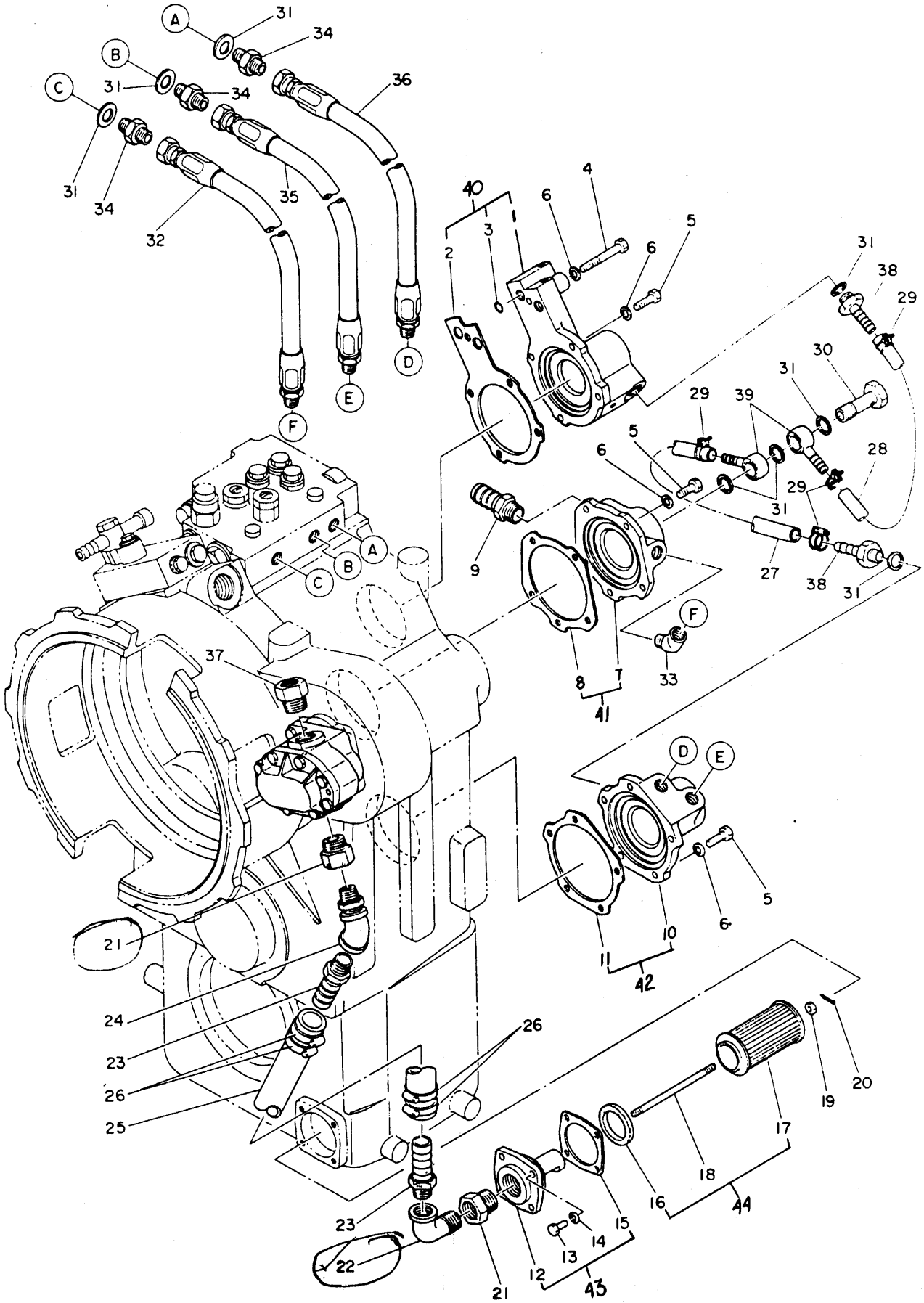

OIL SCREEN & PIPING

ITEM	NUMBER	QTY	DESCRIPTION
1	6810845	1	CASE (A) ASSY., servo
2	6810846	1	GASKET
3	2023639	2	O-RING
4	6810847	1	BOLT, hex
5	6810848	14	BOLT, hex
6	6810849	15	WASHER, lock
7	6810850	1	CASE (B) ASSY, servo
8	6810851	1	GASKET
9	6810852	1	CONNECTOR
10	6810853	1	CASE (C) ASSY., servo
11	6810854	1	GASKET
12	6810855	1	SCREEN BODY, oil
13	2022977	4	BOLT, hex M4-1.25 x 22mm
14	6810880	4	WASHER, lock
15	2022842	1	GASKET
16	2022917	1	PACKING, felt
17	6810059	1	SCREEN, oil
18	6810857	1	BOLT, stud
19	2023637	1	NUT, hex
20	951182	1	PIN, split
21	6810858	1	ADAPTER
22	6810859	1	ELBOW
23	2022756	2	CONNECTOR
24	6810860	1	ELBOW
25	6810837	1	TUBE, flexible
26	6810838	4	CLAMP, hose
27	6810839	1	HOSE, oil
28	6810840	1	HOSE, oil
29	6810841	4	CLAMP, wire
30	6900022	1	BOLT, eye
31	2022924	8	WASHER, seal
32	6800079	1	HOSE (A), assy.
33	6810842	1	ELBOW
34	6900021	3	CONNECTOR
35	6800077	1	HOSE (B), assy.
36	6800078	1	HOSE (C), assy.
37	6810843	1	ADAPTER
38	2023692	2	CONNECTOR
39	6810844	2	NIPPLE, hose

840D WHEEL LOADER

DRIVE TRAIN

PROPELLER SHAFT

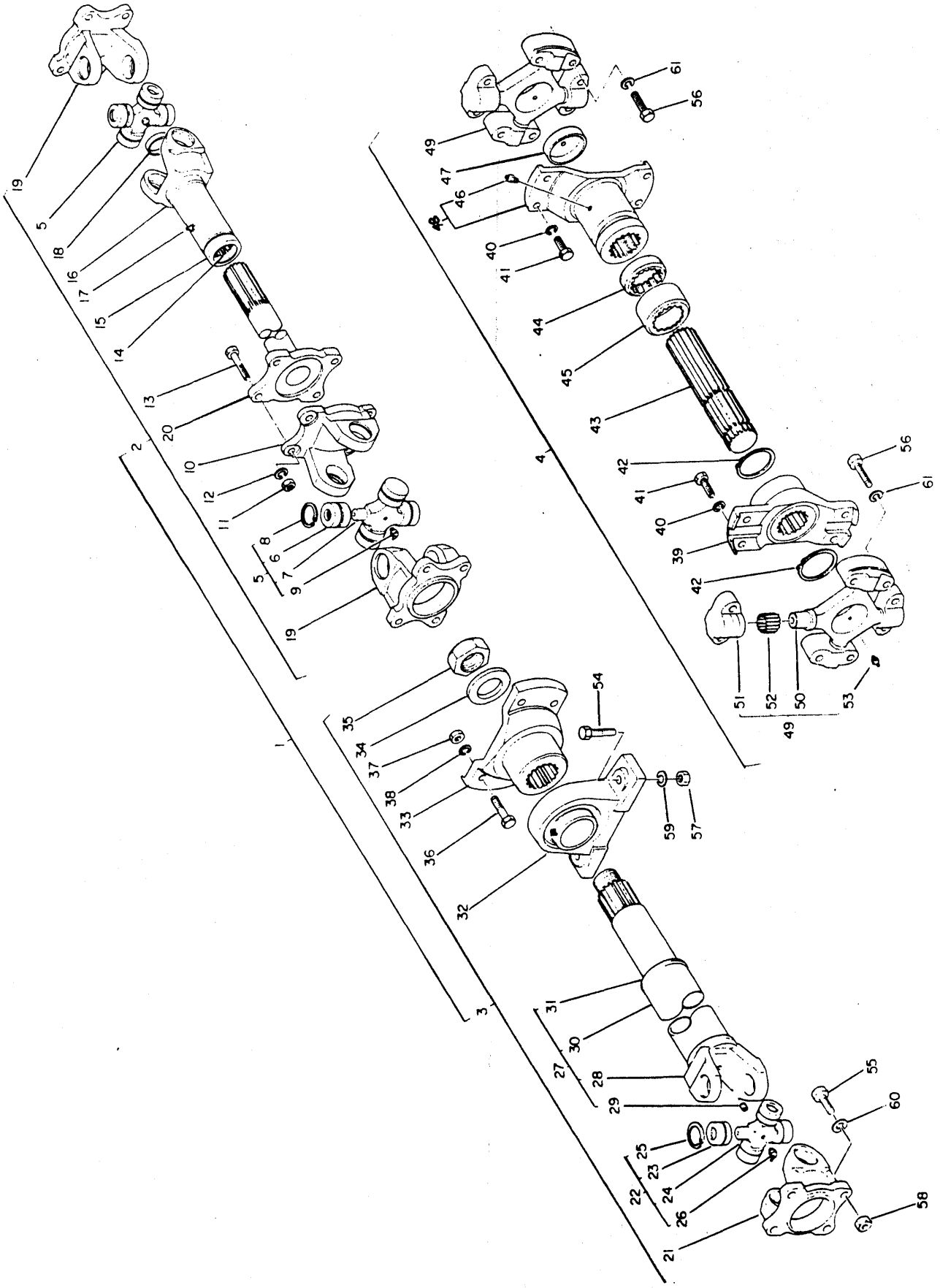

ITEM	NUMBER	QTY	DESCRIPTION
1	6800088	1	FRONT PROPELLER SHAFT, assy. (incl. 2 & 3)
2	6810613	1	SHAFT ASSY., propeller (incl. 5-20)
3	6810614	1	SHAFT ASSY., propeller (incl. 21-38)
4	6800089	1	SHAFT ASSY., rear propeller (incl. 39-53)
5	6800091	2	JOURNAL, assy. (incl. 6-9)
6	N.S.S.	4	BEARING
	N.S.S.	4	BEARING
7	N.S.S.	1	SPIDER
8	N.S.S.	4	RING, snap
9	6810599	2	NIPPLE, grease
10	6810619	1	YOKE, flange
11	6900195	4	NUT, hex M12-1.25, PLTD.
12	950221	4	WASHER, lock M12, PLTD.
13	951179	4	BOLT, hex M12-1.25 x 40mm, PLTD.
14	6800098	1	RING, felt
15	6800097	1	RETAINER
16	6810623	1	YOKE, sleeve
17	914465	1	NIPPLE, grease
18	6810624	1	PLUG
19	6800094	2	YOKE, flange
20	6810625	1	SHAFT, flange
21	6800090	1	YOKE, flange
22	6800091	1	JOURNAL, assy. (incl. 23-26)
23	N.S.S.	4	BEARING
24	N.S.S.	1	SPIDER
25	N.S.S.	4	RING, snap
26	6810599	1	NIPPLE, grease
27	6800092	1	TUBE, assy. (incl. 28-31)
28	N.S.S.	1	YOKE, weld
29	N.S.S.	1	PLUG
30	N.S.S.	1	TUBE
31	N.S.S.	1	SHAFT END
32	6800099	1	BEARING
33	6810604	1	FLANGE
34	950235	1	WASHER, flat M30, PLTD.
35	6900196	1	NUT, hex M30-1.5, PLTD.
36	951177	4	BOLT, hex M12-1.25 x 35mm
37	6900195	4	NUT, hex M12-1.25, PLTD.
38	950221	4	WASHER, lock M12, PLTD.
39	6800095	1	FLANGE
40	950220	8	WASHER, lock M10, PLTD.
41	951136	8	BOLT, hex M10-1.25 x 32mm
42	6810612	2	RING, snap
43	6800096	1	SHAFT, spline
44	6800098	1	RING, felt
45	6800097	1	RETAINER
46	914465	1	NIPPLE, grease
48	6810085	1	FLANGE SLIDE (incl. 46)
49	6810591	2	JOURNAL, assy. (incl. 50-53)

DRIVE TRAIN

PROPELLER SHAFT CONT'D.

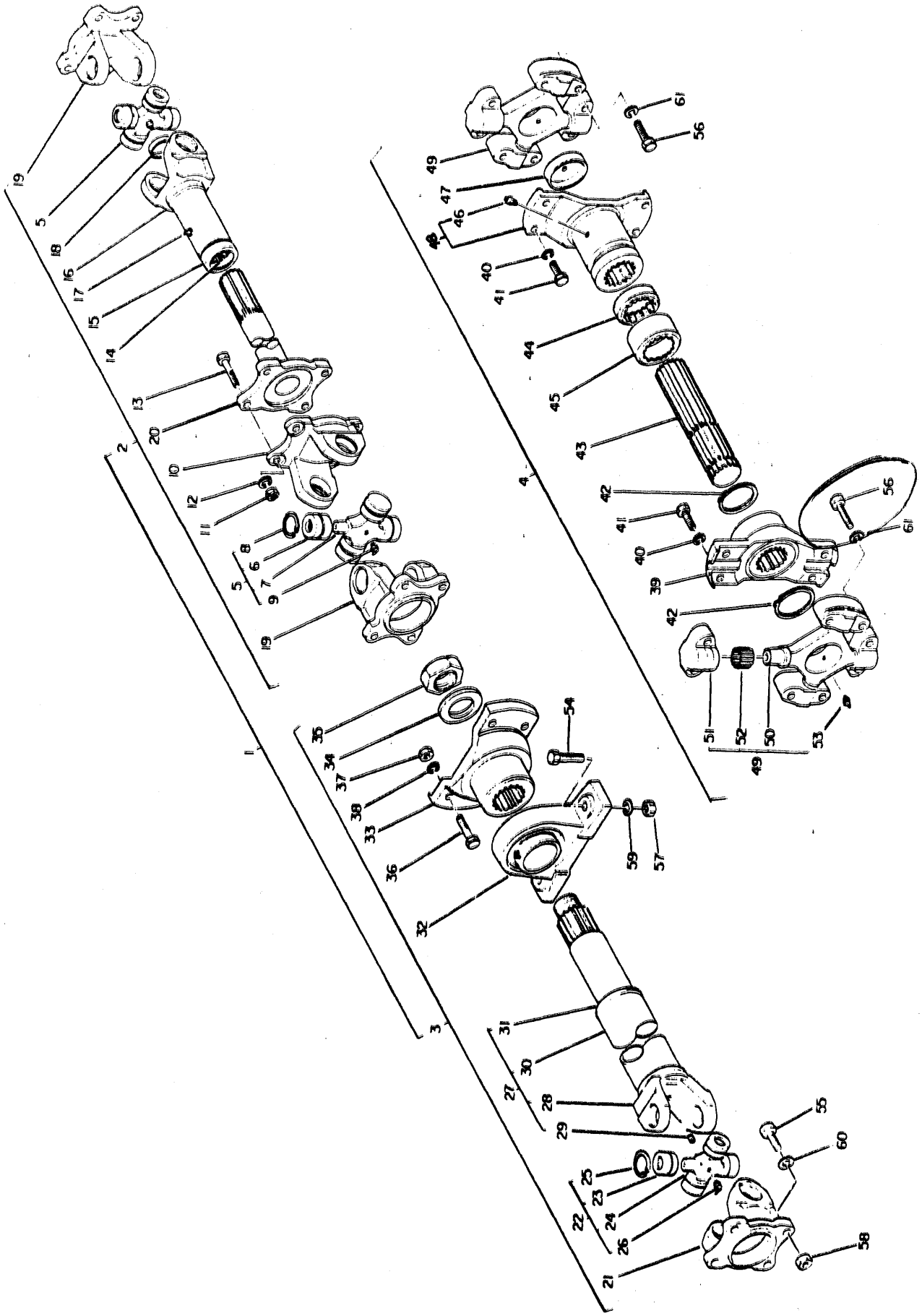

PROPELLER SHAFT CONT'D.

ITEM	NUMBER	QTY	DESCRIPTION
50	6810592	2	SPIDER
51	6810593	4	BEARING, assy
52	6810594	4	BEARING, assy.
53	6810595	2	NIPPLE, grease
54	950085	2	BOLT, hex M16-2.0 x 50mm (8.8), PLTD.
55	6900138	4	BOLT, hex M12-1.5 x 35mm
56	6900139	8	BOLT, hex M10-1.25 x 40mm
57	950209	2	NUT, hex M6-1.0
58	2023157	4	NUT, hex M12-1.5
59	950223	2	WASHER, lock M16, PLTD.
60	950221	4	WASHER, lock M12, PLTD.
61	950220	8	WASHER, lock M10, PLTD.

840D WHEEL LOADER

DRIVE TRAIN

FRONT AXLE ASSM.

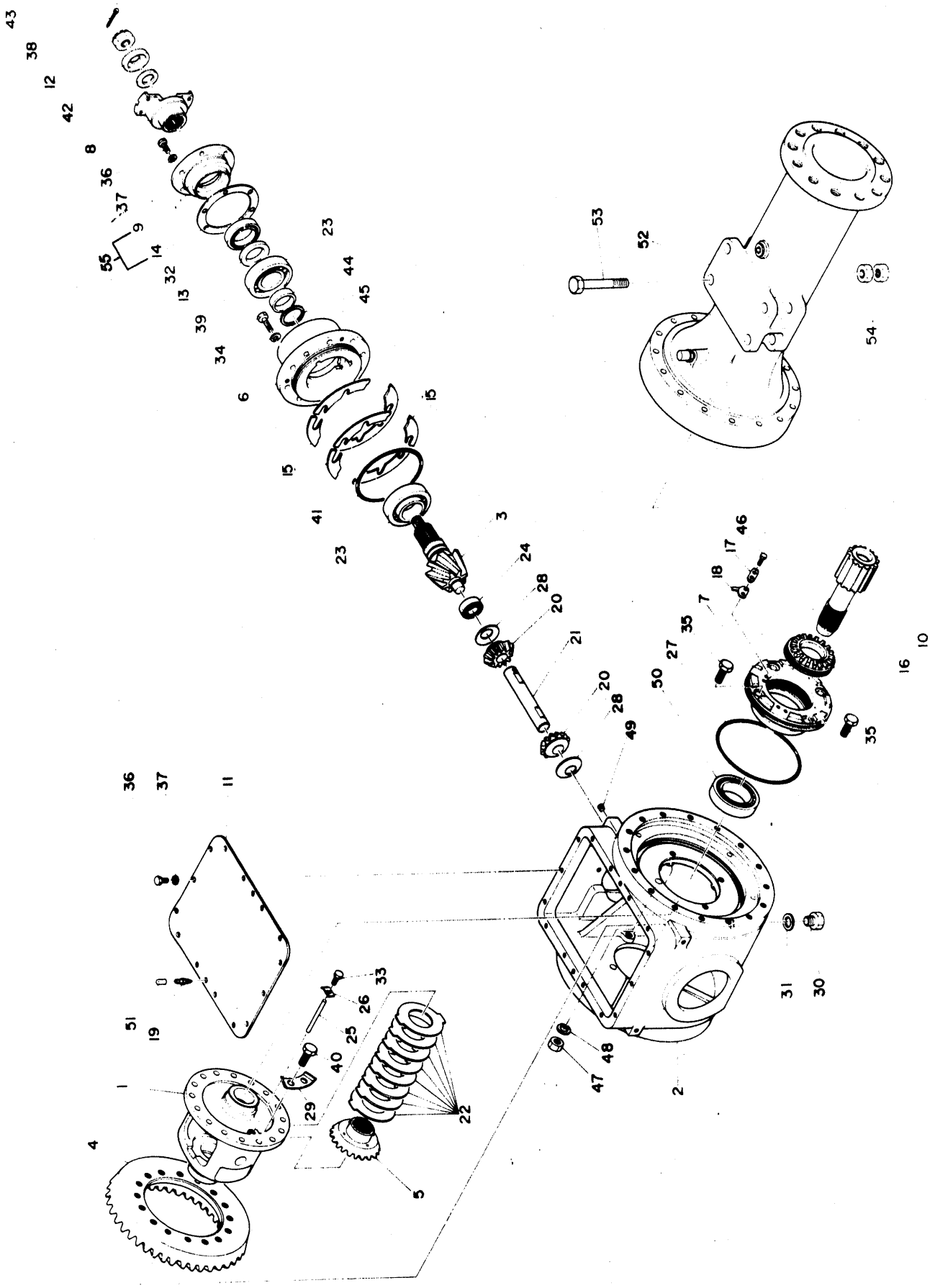

FRONT AXLE ASSM.

ITEM	NUMBER	QTY	DESCRIPTION
	6810006	1	AXLE ASSY., front (incl. 1-54)
1	6810512	1	DIFFCAGE
2	6810513	1	HOUSING (F), carrier
3	6810514	1	GEAR, pinion
4	6810515	1	GEAR, bevel
5	6810516	2	GEAR, side
6	6810517	1	CAGE
7	6810518	2	CARRIER, bearing
8	6800093	1	FLANGE
9	6810519	1	RETAINER
10	6810520	2	GEAR, sun
11	6810521	1	COVER
12	6810522	1	WASHER
13	6810523	1	SPACER (A)
14	6810524	1	GASKET
15	6810828	AR	SHIM (t=0.15mm)
15	6810829	AR	SHIM (t=0.2mm)
15	6810830	AR	SHIM (t=0.5mm)
16	6900118	2	NUT, adjust
17	6900119	2	WASHER, tab lock
18	6900120	2	WASHER, tab lock
19	6900121	2	BREATHER
20	6810525	2	PINION
21	6810526	1	SPIDER
22	6810447	AR	WASHER, thrust (t=1.3mm)
	6810448	AR	WASHER, thrust (t=1.5mm)
	6810449	AR	WASHER, thrust (t=1.7mm)
	6810450	AR	WASHER, thrust (t=1.9mm)
	6810451	AR	WASHER, thrust (t=1.2mm)
	6810452	AR	WASHER, thrust (t=1.4mm)
	6810453	AR	WASHER, thrust (t=1.6mm)
	6810454	AR	WASHER, thrust (t=1.8mm)
23	6810826	2	ROLLER BEARING, tapered
24	6810827	1	BEARING, roller
25	6810510	1	PIN
26	6810511	1	WASHER, tab lock
27	6900113	2	O-RING
28	6900114	2	WASHER, thrust
29	6900115	8	WASHER, tab lock
30	6900116	1	PLUG
31	6900117	1	PACKING
32	6900161	1	SEAL, oil
33	950034	1	BOLT, hex M10-1.5 x 16mm, PLTD.
34	950221	10	WASHER, lock M12, PLTD.
35	950393	8	BOLT, hex M16-2.0 x 45mm (10.9), PLTD.
36	950267	20	BOLT, hex M10-1.5 x 20mm
37	950220	20	WASHER, lock M10, PLTD.
38	6900135	1	NUT, castle M24-1.5
39	950385	10	BOLT, hex M10-1.5 x 40mm (10.9), PLTD.
40	6900132	16	BOLT, hex M16-2.0 x 35mm (10.9), PLTD.
		1	O-RING
		1	PACKING
		1	PIN, split

840D WHEEL LOADER

DRIVE TRAIN

FRONT AXLE ASSM. CONT'D.

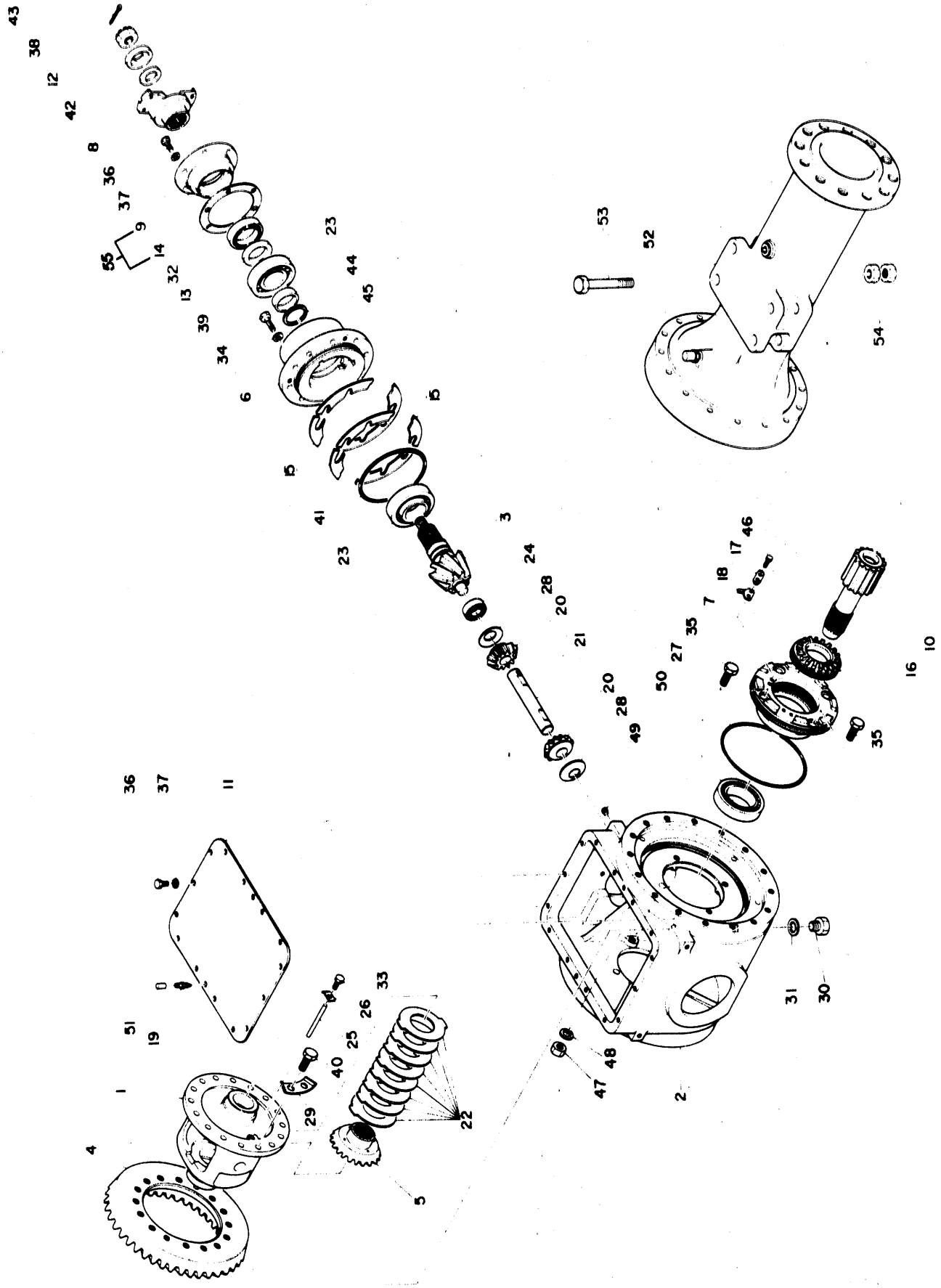

FRONT AXLE ASSY. CONT'D.

ITEM	NUMBER	QTY	DESCRIPTION
44	6810807	SEL	SPACER (t=11.05mm)
	6810808	SEL	SPACER (t=11.20mm)
	6810809	SEL	SPACER (t=11.35mm)
	6810810	SEL	SPACER (t=11.50mm)
	6810811	SEL	SPACER (t=11.65mm)
	6810812	SEL	SPACER (t=11.80mm)
	6810813	SEL	SPACER (t=11.95mm)
	6810814	SEL	SPACER (t=12.10mm)
	6810815	SEL	SPACER (t=12.25mm)
45	6810816	SEL	SPACER (t= 3.00mm)
	6810817	SEL	SPACER (t= 3.015mm)
	6810818	SEL	SPACER (t= 3.030mm)
	6810819	SEL	SPACER (t= 3.045mm)
	6810820	SEL	SPACER (t= 3.060mm)
	6810821	SEL	SPACER (t= 3.075mm)
	6810822	SEL	SPACER (t= 3.090mm)
	6810823	SEL	SPACER (t= 3.105mm)
	6810824	SEL	SPACER (t= 3.120mm)
	6810825	SEL	SPACER (t= 3.135mm)
46	950263	4	BOLT, hex M8-1.25 x 16mm
47	950249	2	NUT, hex M16-2.0
48	950223	2	WASHER, lock M16
49	926997	2	PLUG
50	6810798	2	ROLLER BEARING, tapered
51	6810806	2	CAP
52	6810008	2	DRIVE, final
53	6900163	8	BOLT, hex M24-3.0 x 160mm (10.9)
54	951147	16	NUT, hex M24-3.0
55	6001315	1	RETAINER, assy. (incl. 9 & 14)

840D WHEEL LOADER

DRIVE TRAIN

REAR AXLE ASSY.

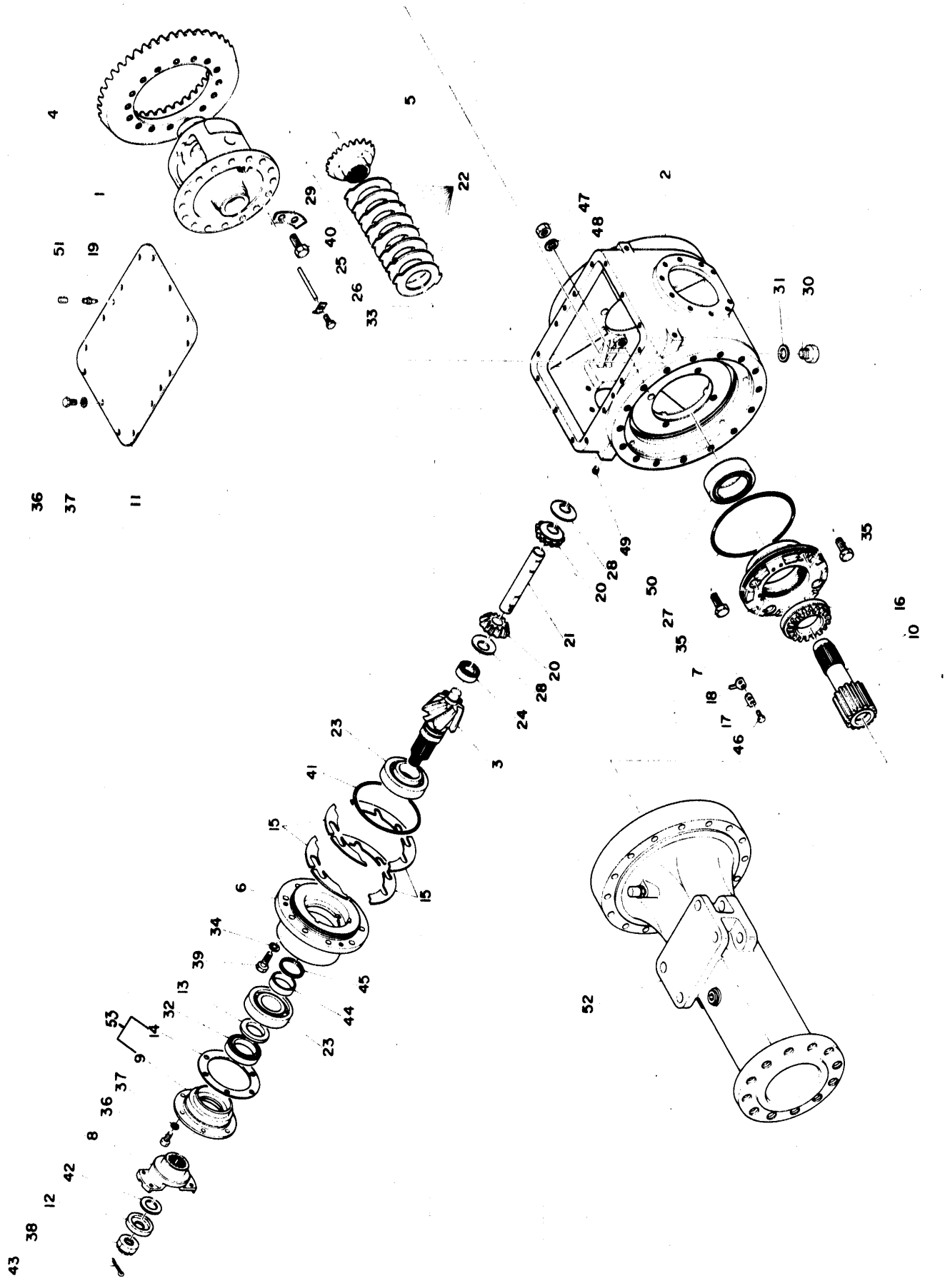

ITEM	NUMBER	QTY	DESCRIPTION
	6810007	1	AXLE ASSY., rear (incl. 1-52)
1	6810512	1	
2	6810530	1	HOUSING (R), carrier
3	6810514	1	GEAR, pinion
4	6810515	1	GEAR, bevel
5	6810516	2	GEAR, side
6	6810517	1	CAGE
7	6810518	2	CARRIER, bearing
8	6800093	1	FLANGE
9	6810519	1	RETAINER
10	6810532	2	GEAR, sun
11	6810521	1	COVER
12	6810522	1	WASHER
13	6810523	1	SPACER (A)
14	6810524	1	GASKET
15	6810832	AR	SHIM (t=0.15mm)
15	6810829	AR	SHIM (t=0.2mm)
15	6810830	AR	SHIM (t=0.5mm)
16	6900118	2	NUT, adjust
17	6900119	2	WASHER, tab lock
18	6900120	2	WASHER, tab lock
19	6900121	2	BREATHER
20	6810525	2	PINION
21	6810526	1	SPIDER
22	6810447	AR	WASHER, thrust (t=1.3mm),
	6810448	AR	WASHER, thrust (t=1.5mm)
	6810449	AR	WASHER, thrust (t=1.7mm)
	6810450	AR	WASHER, thrust (t=1.9mm)
	6810451	AR	WASHER, thrust (t=1.2mm)
	6810452	AR	WASHER, thrust (t=1.4mm)
	6810453	AR	WASHER, thrust (t=1.6mm)
	6810454	AR	WASHER, thrust (t=1.8mm)
23	6810826	2	ROLLER BEARING, tapered
24	6810827	1	BEARING, roller
25	6810510	1	PIN
26	6810511	1	WASHER, tab lock
27	6900113	2	O-RING
28	6900114	2	WASHER, thrust
29	6900115	8	WASHER, tab lock
30	6900116	1	PLUG
31	6900117	1	PACKING
32	6900161	1	SEAL, oil
33	950034	1	BOLT, hex M10-1.5 x 16mm, PLTD.
34	950221	10	WASHER, lock M12, PLTD.
35	950393	8	BOLT, hex M16-2.0 x 45mm (10.9), PLTD.
36	950267	20	BOLT, hex M10-1.5 x 20mm
37	950220	20	WASHER, lock M10
38	6900135	1	NUT, castle M24-1.5
39	950385	10	BOLT, hex M10-1.5 x 40mm (10.9), PLTD.
40	6900132	16	BOLT
41	6900160	1	O-RING
42	6810509	1	PACKING
		1	PIN, split
		SEL	SPACER (t=11.05mm)
		EL	SPACER (t=11.20mm)

840D WHEEL LOADER

DRIVE TRAIN

REAR AXLE ASSY. CONT'D.

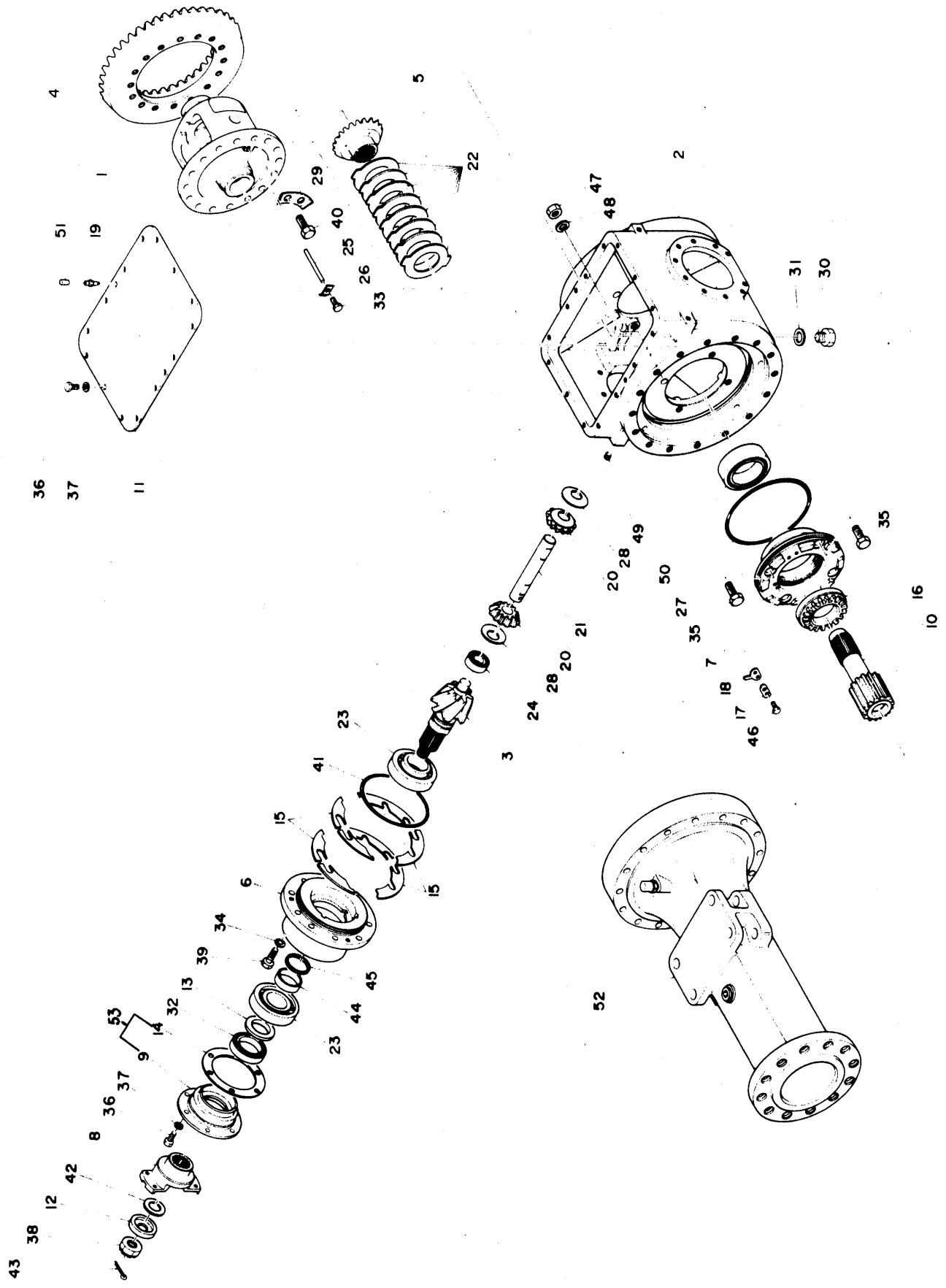

REAR AXLE ASSY. CONT'D.

ITEM	NUMBER	QTY	DESCRIPTION
	6810809	SEL	SPACER (t=11.35mm)
	6810810	SEL	SPACER (t=11.50mm)
	6810811	SEL	SPACER (t=11.65mm)
	6810812	SEL	SPACER (t=11.80mm)
	6810813	SEL	SPACER (t=11.95mm)
	6810814	SEL	SPACER (t=12.10mm)
	6810815	SEL	SPACER (t=12.25mm)
45	6810816	SEL	SPACER (t= 3.00mm)
	6810817	SEL	SPACER (t= 3.015mm)
	6810818	SEL	SPACER (t= 3.030mm)
	6810819	SEL	SPACER (t= 3.045mm)
	6810820	SEL	SPACER (t= 3.060mm)
	6810821	SEL	SPACER (t= 3.075mm)
	6810822	SEL	SPACER (t= 3.090mm)
	6810823	SEL	SPACER (t= 3.105mm)
	6810824	SEL	SPACER (t= 3.120mm)
	6810825	SEL	SPACER (t= 3.135mm)
46	950263	4	BOLT, hex M8-1.25 x 16mm
47	950249	2	NUT, hex M16-2.0, PLTD.
48	950223	2	WASHER, lock M16, PLTD.
49	926997	2	PLUG
50	6810798	2	ROLLER BEARING, tapered
51	6810806	2	CAP
52	6810008	2	DRIVE, final
53	6001315	1	RETAINER, assy. (incl. 9 & 14)
54	6001305	1	CAGE ASSY., diff. (incl. 1, 5, 20-22, 25, 26, 28 & 33)

DRIVE TRAIN

AXLE - FINAL DRIVE

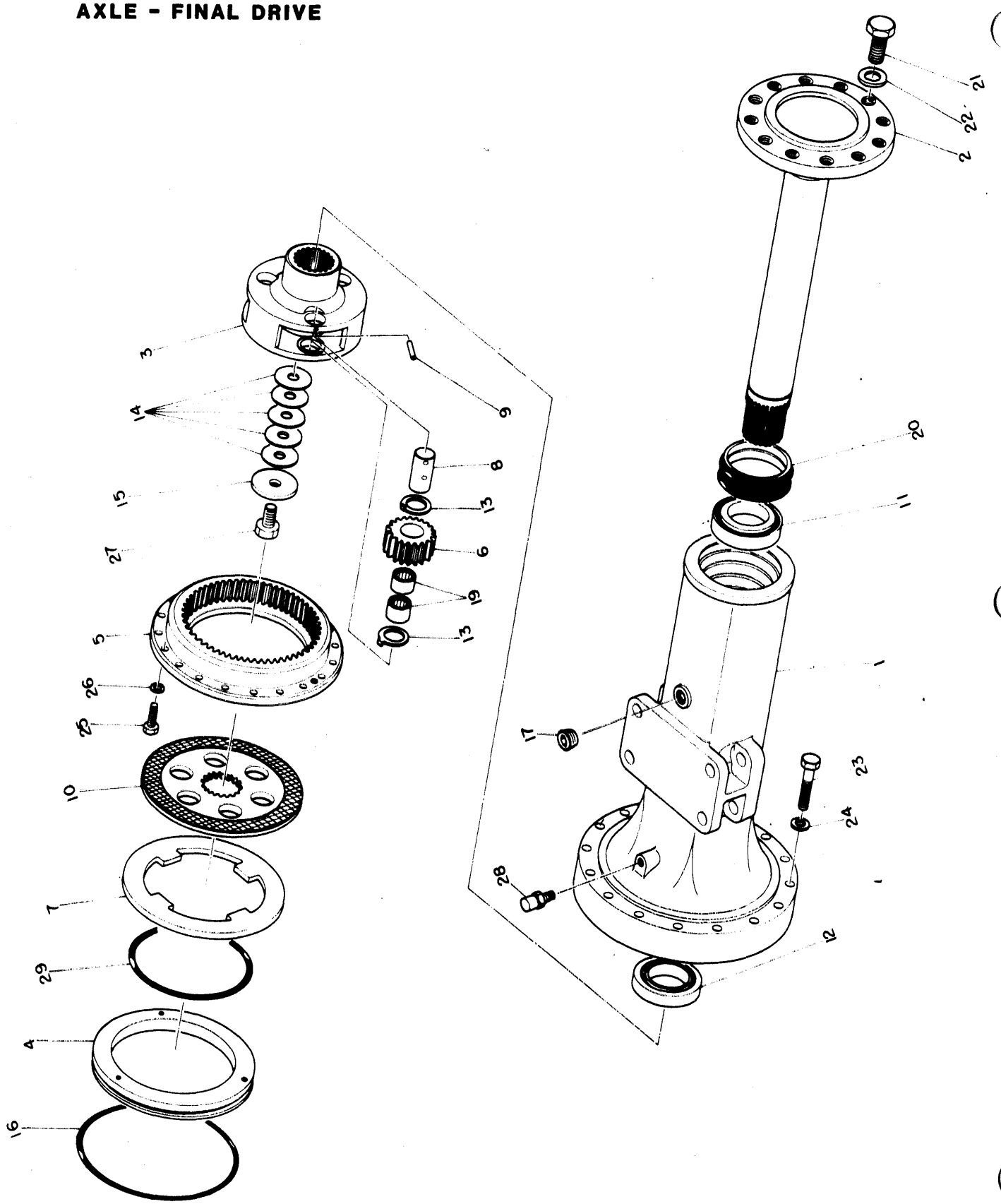

AXLE- FINAL DRIVE

ITEM	NUMBER	QTY	DESCRIPTION
	6810008	4	DRIVE ASSY., final (incl. 1-29)
1	6810497	1	CARRIER, axle
2	6810498	1	SHAFT, drive
3	6810499	1	GEAR CARRIER, planetary
4	6810500	1	PISTON
5	6810501	1	GEAR, internal
6	6810502	3	GEAR, planetary
7	6810503	1	PLATE, buck
8	6810504	3	GEAR SHAFT, planetary
9	6810796	3	PIN, spring
10	6810086	1	DISC., assy.
11	6810797	1	ROLLER BEARING, tapered
12	6810798	1	ROLLER BEARING, tapered
13	6810505	6	WASHER
14	6810799	AR	SHIM (t=0.25mm)
	6810800	AR	SHIM (t=0.5mm)
	6810801	AR	SHIM (t=1.0mm)
	6810802	AR	SHIM (t=0.3mm)
	6810803	AR	SHIM (t=0.35mm)
15	6810506	1	SPACER
16	6900044	1	O-RING
17	6900116	2	PLUG
18	6900117	2	PACKING
19	6810804	6	BEARING, needle
20	6810087	1	SEAL, set
21	6900134	12	BOLT M24-3.0 x 45mm (10.9), PLTD.
22	6810494	12	WASHER, flat M24, PLTD.
23	950425	16	BOLT, hex M16-2.0 x 90mm (10.9), PLTD.
24	6810495	16	WASHER, flat M16, PLTD.
25	950391	19	BOLT, hex M12-1.75 x 45mm (10.9), PLTD.
26	950221	19	WASHER, lock M12, PLTD.
27	950502	1	BOLT, hex M20-2.5 x 45MM (10.9)
28	6810496	1	BREATHER
29	6900054	1	O-RING

840D WHEEL LOADER

DRIVE TRAIN

REAR AXLE W/NO-SPINN DIFF.

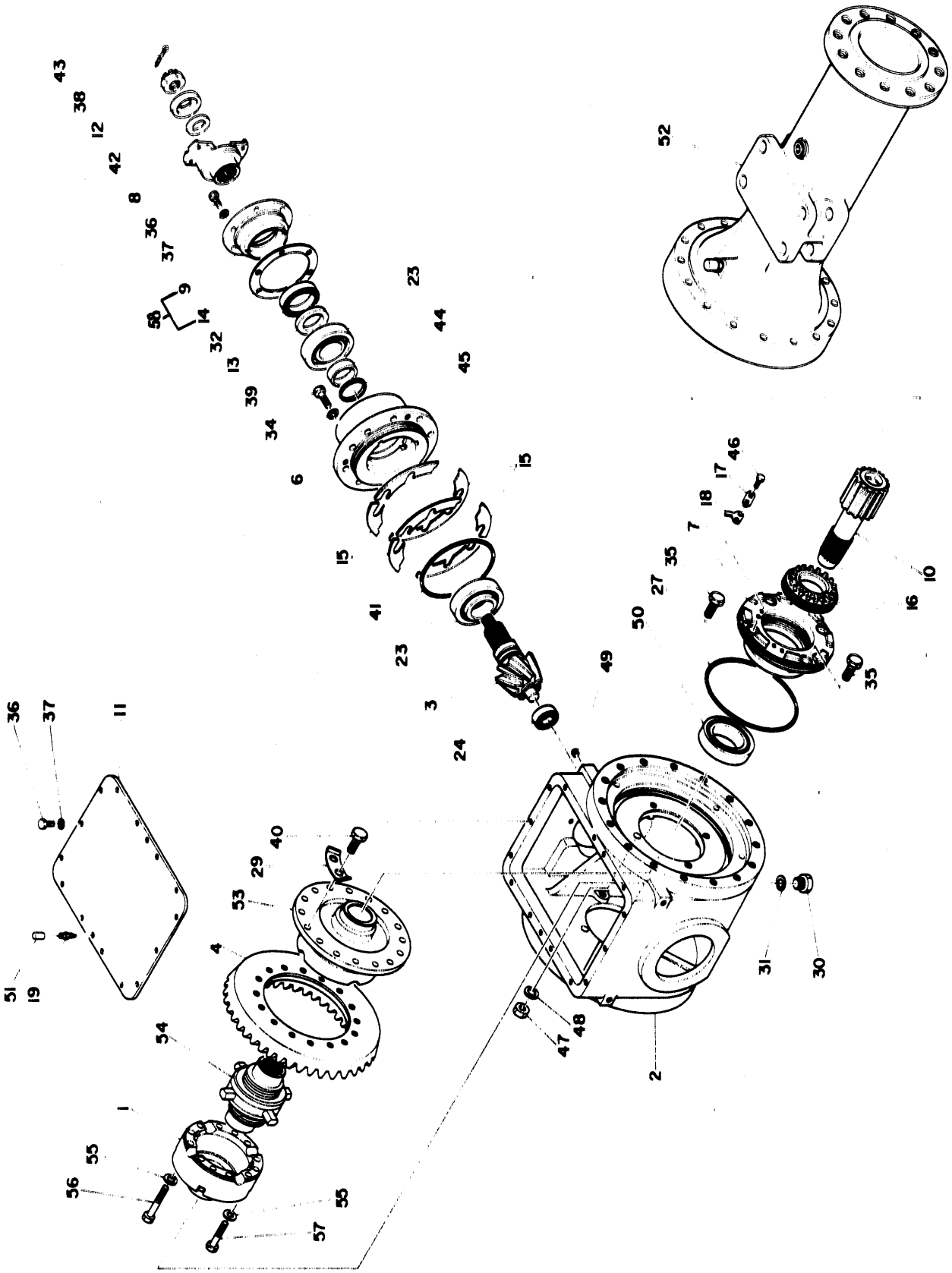

REAR AXLE W/NO-SPINN DIFF.

ITEM	NUMBER	QTY	DESCRIPTION
	6810528	1	AXLE, rear w/no-spin diff. (incl. 1-57)
1	6810529	1	DIFFCAGE (S)
2	6810530	1	HOUSING (R), carrier
3	6810514	1	GEAR, pinion
4	6810515	1	GEAR, bevel
6	6810517	1	CAGE
7	6810518	2	CARRIER, bearing
8	6800093	1	FLANGE
9	6810519	1	RETAINER
10	6810532	2	GEAR, sun
11	6810521	1	COVER
12	6810522	1	WASHER
13	6810523	1	SPACER
14	6810524	1	GASKET
15	6810832	AR	SHIM (t=0.15mm)
	6810829	AR	SHIM (t=0.2mm)
	6810830	AR	SHIM (t=0.5mm)
16	6900118	2	NUT, adjust
17	6900119	2	WASHER, tab lock
18	6900120	2	PLATE, tab lock
19	6900121	2	BREATHER
23	6810826	2	ROLLER BEARING, tapered
24	6810827	1	BEARING, roller
27	6900113	2	O-RING
29	6900115	8	WASHER, tab lock
30	6900116	1	PLUG
31	6900117	1	PACKING
32	6900161	1	SEAL, oil
34	950221	10	WASHER, lock M12, PLTD.
35	950393	8	BOLT, hex M16-2.0 x 45mm (10.9), PLTD.
36	950267	20	BOLT, hex M10-1.5 x 20mm
37	950220	20	WASHER, lock M10
38	6900135	1	NUT, castle M24-1.5
39	950385	10	BOLT, hex M10-1.5 x 40mm (10.9), PLTD.
40	6900132	16	BOLT, hex M16-2.0 x 35mm (10.9), PLTD.
41	6900160	1	O-RING
42	6810509	1	PACKING
43	950562	1	PIN, split
44	6810807	SEL	SPACER (t=11.05mm)
	6810808	SEL	SPACER (t=11.20mm)
	6810809	SEL	SPACER (t=11.35mm)
	6810810	SEL	SPCAER (t=11.50mm)
	6810811	SEL	SPACER (t=11.65mm)
	6810812	SEL	SPACER (t=11.80mm)
	6810813	SEL	SPACER (t=11.95mm)
	6810814	SEL	SPACER (t=12.10mm)
	6810815	SEL	SPACER (t=12.25mm)
45	6810816	SEL	SPACER (t= 3.00mm)
	6810817	SEL	SPACER (t= 3.015mm)
	6810818	SEL	SPACER (t= 3.030mm)

840D WHEEL LOADER

DRIVE TRAIN

REAR AXLE W/NO-SPINN DIFF. CONT'D.

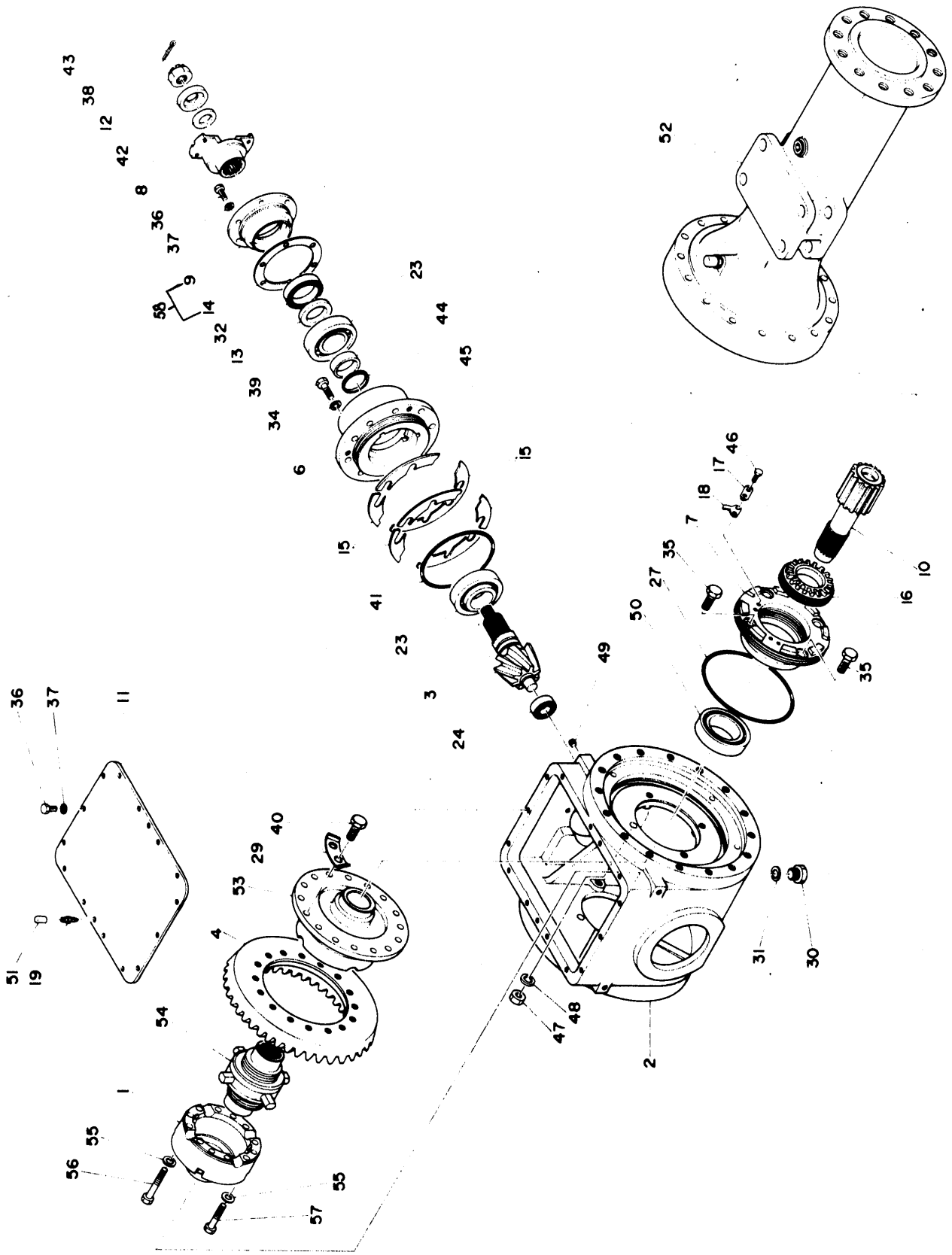

REAR AXLE W/NO-SPIN DIFF.CONT'D.

ITEM	NUMBER	QTY	DESCRIPTION
	6810819	SEL	SPACER (t= 3.045mm)
	6810820	SEL	SPACER (t= 3.060mm)
	6810821	SEL	SPACER (t= 3.075mm)
	6810822	SEL	SPACER (t= 3.090mm)
	6810823	SEL	SPACER (t= 3.105mm)
	6810824	SEL	SPACER (t= 3.120mm)
	6810825	SEL	SPACER (t= 3.135mm)
46	950263	4	BOLT, hex M8-1.25 x 16mm
47	950249	2	NUT, hex M16-2.0
48	950242	2	WASHER, lock M16
49	926997	2	PLUG
50	6810798	2	ROLLER BEARING, tapered
51	6810806	2	CAP
52	6810008	2	DRIVE, final
53	6810527	1	DIFFCAGE
54	6810831	1	DIFF., no-spin
55	950230	12	WASHER, flat M12
56	950478	8	BOLT, hex M12-1.75 x 80mm (10.9)
57	950476	4	BOLT, hex M12-1.75 x 70mm (10.9)
58	6001315	1	RETAINER, assy. (incl. 9 & 14)

NOTES

SECTION 08 -MISCELLANEOUS INFORMATION INDEX

Decals	301
Decals	302
Decals	303
Metric Information	309
Overhaul Gasket Kits	305
Over & Undersize Parts	306
Recommended Dealer Stocklisting	304
Unit Gasket Index	307-08

840D DECALS

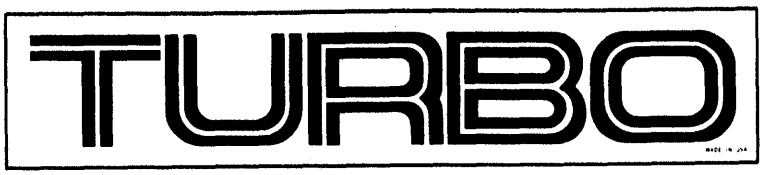

Part No. 1023215



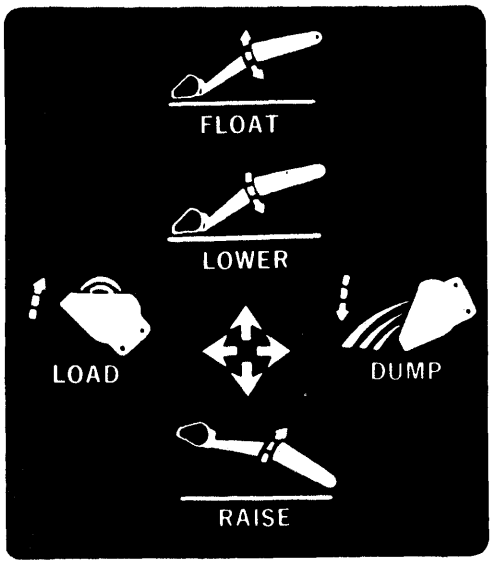

Part No. 1016940

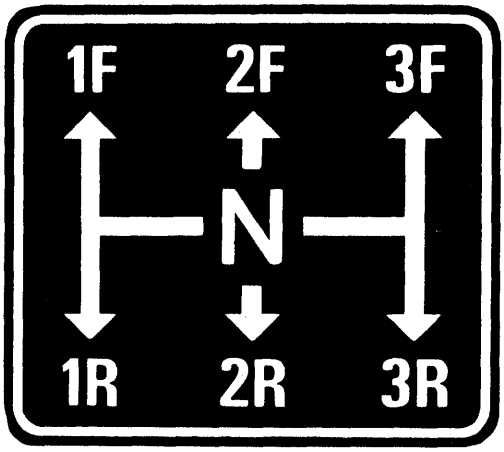

Part No. 6001104



Part No. 6001142



Part No. 1015143



Part No. 6001145

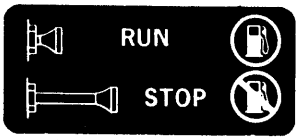

Part No. 1016933
(If Equipped)

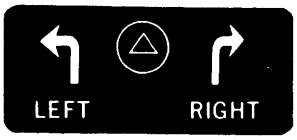

Part No. 1016934



Part No. 1016937

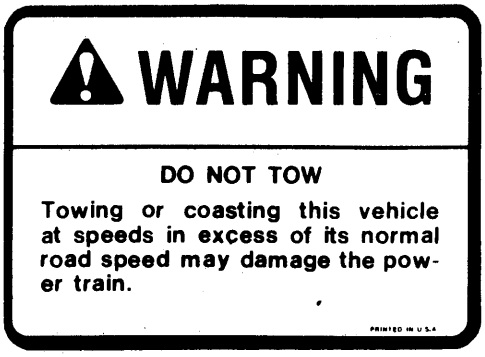

Part No. 1015118

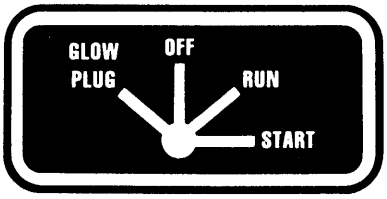

Part No. 6001208

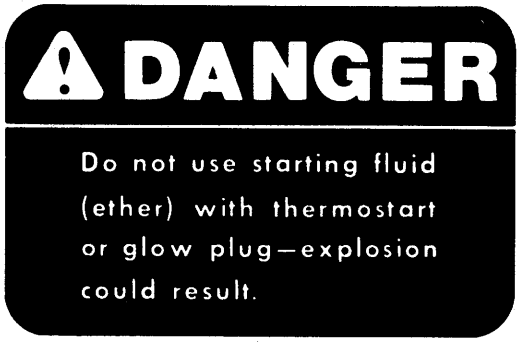

Part No. 1017128



Part No. 1023296



Part No. 1015114

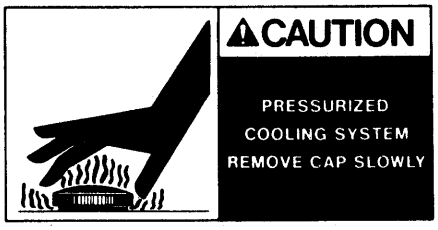

Part No. 1023118



Part No. 1024180

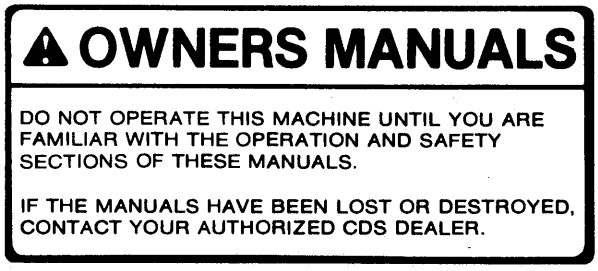

Part No. 1024176

303 SAFETY AND OPERATIONAL DECALS

WARNING: The following safety and operational decals are placed at strategic positions on the unit to provide the operator with a continual reminder of safe operating practices. If they become damaged or lost replace them immediately. They may be obtained from your CDS Dealer. The part number of decal is listed under each copy of the decal for your convenience.

When you clean the decals, use only a cloth, water and soap. Do not use solvent, gasoline, etc.



Part No. 1015119



Part No. 1015117



Part No. 1017839



Part No. 1018145

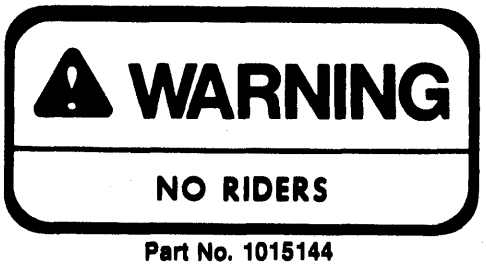

Part No. 1015144



Part No. 1024182



Part No. 1024198



Part No. 1015147



Part No. 1015145

RECOMMENDED DEALER INITIAL PARTS STOCK

ORDER QTY.	SUGG. QTY.	PART NUMBER	DESCRIPTION
	1	921206	O-RING
	1	921214	O-RING
	1	921349	O-RING
	1	921883	O-RING
	1	921886	O-RING
	2	2022710	DUST SEAL
	2	2022721	FUSE HOLDER
	1	2023208	LAMP
	3	2023212	HEAD LAMP
	1	2023220	MICRO SWITCH
	1	2023639	O-RING
	1	2023789	O-RING
	10	2024191	IGNITION KEYS
	10	4530964	ENGINE OIL FILTERS
	10	4531050	FUEL FILTERS
	5	6800062	TRANS. FILTER
	10	6800063	HYD. FILTER
	5	6800064	AIR FILTER
	1	6800066	CABLE ASSEMBLIES
	1	6800069	ROD END
	1	6800075	ROD END SWIVEL
	1	6800097	RETAINER
	1	6800098	FELT RING
	1	6810000	CABLE ASSEMBLIES
	1	6810012	MASTER CYLINDER SERVICE KIT
	1	6810028	SEAL RING
	1	6810040	HOSE
	1	6810041	HOSE
	1	6810048	DUST SEAL
	1	6810065	CABLE
	4	6810067	DUST SEAL
	1	6810073	WIPER SEAL
	3	6900010	O-RING
	3	6900016	O-RING
	2	6900020	SEAL WASHER
	1	6900065	O-RING

OVERHAUL GASKET KITS

6800104	1	OVERHAUL GASKET KIT, engine
4530917	2	GASKET, cylinder head
4530103	6	GASKET, rocker cover
4530921	2	GASKET, rocker cover
4530264	1	GASKET, front plate
4530178	1	GASKET, oil level
4530273	1	GASKET, timing gear case
4530863	1	GASKET, timing gear case
4530267	1	GASKET, flywheel housing
4530123	1	GASKET, flywheel housing plug
6800175	1	GASKET, oil pan
4530410	2	GASKET, inlet manifold
4530845	1	GASKET, exhaust manifold
6800177	2	GASKET, exhaust manifold
4530150	7	GASKET, oil strainer
4530508	1	O-RING, injection pump
6800180	2	GASKET, oil cooler inlet
4530321	1	GASKET, oil filter
4530223	1	GASKET, oil filler
4530971	1	GASKET, water pump
4921241	1	GASKET, water pump
4921140	1	GASKET, thermostat cover
4530208	1	GASKET, thermostat
4530150	6	GASKET, oil strainer
4530212	1	O-RING, injection pump
4530124	1	GASKET, injection pump
4530158	6	GASKET, nozzle
4531003	1	O-RING, starter
6800187	1	OIL SEAL KIT, engine
4530164	12	SEAL, valve stem
4530262	4	SEAL, side crankcase
4921117	1	OIL SEAL ASSY., rear
4530962	1	GASKET, oil cooler
4921123	1	SEAL, oil, timing case
4531023	1	SEAL, oil, water pump
6800168	1	SEAL, oil, water pump
4530856	1	SEAL, oil, water pump

OVERSIZE & UNDERSIZE PARTS

4530438	3	PLATE, thrust (O.S. 0.15mm)
4530439	3	PLATE, thrust (O.S. 0.30mm)
4530440	3	PLATE, thrust (O.S. 0.45mm)
4530269	14	BEARING, main (U.S. 0.25mm)
4530270	14	BEARING, main (U.S. 0.50mm)
6810327	6	PISTON RING SET (O.S. 0.25mm)
6810328	6	PISTON RING SET (O.S. 0.50mm)
6810329	6	PISTON (O.S. 0.25mm)
6810330	6	PISTON (O.S. 0.50mm)
4530295	12	BEARING, con-rod (U.S. 0.25mm)
4530296	12	BEARING, con-rod (U.S. 0.50mm)

UNIT GASKET INDEX

Cylinder Head Gasket Front	4530917	1
Cylinder Head Gasket Rear	4530917	1
Cylinder Head Gasket Turbo	6810188	1
Cylinder Head Plate Gasket	4921140	1
Cab Heater Basket	4530870	1
Fuel Filter Gasket	4530128	2
Injection Pump General Assembly	4530124	1
Water Pump-Pump Case Gasket	4530971	1
Water Pump Gasket	4921241	1
Cooling System - Water Outlet	4921140	1
Cooling System - Thermostat	4530208	1
Cooling System - Mounting Gasket	4530150	6
Flywheel Housing Gasket	4530267	1
Oil Pan Mounting Gasket	6800175	1
Exhaust Gasket	6811095	1
Muffler Gasket	4530845	1
Manifold (exhaust) Gasket	6800177	2
Exhaust Gasket Turbo	6811095	1
Inlet Gasket	4530410	2
Turbo Exhaust Pipe Gasket	6800199	1
Turbo Exhaust Pipe Gasket	4530845	1
Turbo Exhaust Manifold Gasket	6800177	2
Governor Gasket	4921201	1
Fuel System Nozzle Gasket	4530158	6
Delivery Valve Gasket (injection pump)	4920247	6
Bearing Cover Gasket	6810293	1
Pump Housing Gasket	4530124	1
Valve Gasket (6810650)	6810975	1
Valve Gasket (6810650)	6811175	1
Hydraulic Pump Gasket	6810098	1
Turbo Crankcase Gasket (#30)	4920042	1
Crank Case - Front Plate	4530264	1
Crankcase - Front Plate	4530868	1
Timing Gear - Gear Case	4530273	1
Timing Gear - (#7)	4530863	1
Turbo Timing Gear - Gear Case	4530273	1
Turbo Timing Gear (#7)	4530863	1
Foot Brake Gasket	6810588	1
Oil Filter Gasket	4530321	1
Oil Filler Gasket	4530223	1
Oil Cooler & Oil Pipe (#2)	4920042	8
Oil Cooler & Oil Pipe (#11)	4530870	1
Oil Cooler & Oil Pipe (#13)	4920042	1
Oil Cooler & Oil PIpe (#17)	6800180	2
Oil Cooler & Oil Pipe (#22)	4530543	1
Oil Cooler & Oil PIpe (#24)	4530962	1
Turbo Oil Pipe and Breather (#7)	4530667	2
Turbo Pipe Oil Breather (#10)	6800202	1
Oil Pump Gasket	4530543	1
Oil Strainer Gasket	4530150	1
Oil Pump and Oil Strainer Gasket	4530543	1
Oil Pump and Oil Strainer Gasket (#13)	4530150	

UNIT GASKET INDEX

Torque converter & Transmission (#2)	6810846	1
Torque Converter & Transmission (#8)	6810851	1
Torque Converter & Transmission (#11)	6810854	1
Torque Converter & Transmission (#15)	2022842	1
T,C & T Accumulator (#21)	6810084	1
T,C & T Control Valve (#32)	6810029	1
T,C & T Regulator Valve (#18)	2022857	1
T,C & T Oil PUmp (#13)	2022855	1
T,C & T OIl PUmp (#18)	2022838	1
T,C & T Converter Case (#6)	6811049	1

METRIC INFORMATION

In this manual measurements in U.S. customary units are followed by the metric equivalent in parentheses. For example: 5 inches (127 mm), 10 bushels (0.3524 m^3) and 100 horsepower (74.6 kW).

These metric equivalents are provided for your convenience as an aid in converting to the metric system. A chart showing metric terms, examples, and abbreviations used in this manual is provided below.

METRIC/U.S. CUSTOMARY UNIT EQUIVALENTS

	Multiply:		by:		to get:	Multiply:		by:		to get:
LINEAR	inches	x	25.4	=	millimetres (mm)	x	0.03937	=	inches
	feet	x	0.3048	=	metres (m)	x	1.0936	=	feet
	yards	x	0.9144	=	metres (m)	x	1.0936	=	yards
	miles	x	1.6093	=	kilometres (km)	x	0.6214	=	miles
	inches	x	2.54	=	centimetres (cm)	x	0.3937	=	inches
	microinches	x	0.0254	=	micrometres (um)	x	39.37	=	microinches
AREA	$inches^2$	x	645.16	=	$millimetres^2$ (mm^2)	x	0.00155	=	$inches^2$
	$inches^2$	x	6.4516	=	$centimetres^2$ (cm^2)	x	0.155	=	$inches^2$
	$feet^2$	x	0.0929	=	$metres^2$ (m^2)	x	10.764	=	$feet^2$
	$yards^2$	x	0.8361	=	$metres^2$ (m^2)	x	1.196	=	$yards^2$
	acres	x	0.4047	=	$hectometres^2$ (hm^2) hectares (ha)	x	2.471	=	acres
VOLUME	$inches^3$	x	16387	=	$millimetres^3$ (mm^3)	x	0.000061	=	$inches^3$
	$inches^3$	x	16.387	=	$centimetres^3$ (cm^3)	x	0.06102	=	$inches^3$
	$inches^3$	x	0.01639	=	litres	x	61.024	=	$inches^3$
	quarts	x	0.94635	=	litres	x	1.0567	=	quarts
	gallons	x	3.7854	=	litres	x	0.2642	=	gallons
	$feet^3$	x	28.317	=	litres	x	0.03531	=	$feet^3$
	$feet^3$	x	0.02832	=	$metres^3$ (m^3)	x	35.315	=	$feet^3$
	fluid oz.	x	29.57	=	millilitres (ml)	x	0.03381	=	fluid oz.
	$yards^3$	x	0.7646	=	$metres^3$ (m^3)	x	1.3080	=	$yards^3$
	teaspoons	x	4.929	=	millilitres (ml)	x	0.2029	=	teaspoons
	cups	x	0.2366	=	litres	x	4.227	=	cups
	bushel	x	35.239	=	litres	x	0.02838	=	bushels
	bushel	x	0.03524	=	$metres^3$ (m^3)	x	28.378	=	bushels
MASS	ounces (av)	x	28.35	=	grams (g)	x	0.03527	=	ounces (av)
	pounds (av)	x	0.4536	=	kilograms (kg)	x	2.2046	=	pounds (av)
	tons (2000 lbs.)	x	907.18	=	kilograms (kg)	x	0.001102	=	tons (2000 lbs.)
	tons (2000 lbs.)	x	0.90718	=	metric tons (t)	x	1.1023	=	tons (2000 lbs.)
	tons (long) (2240 lbs.)	x	1016.05	=	kilograms (kg)	x	.000984	=	tons (long) (2240 lbs.)
FORCE	ounces - f (av)	x	0.278	=	newtons (N)	x	3.597	=	ounces - f (av)
	pounds - f (av)	x	4.488	=	newtons (N)	x	0.2248	=	pounds - f (av)
	kilograms - f	x	9.807	=	newtons (N)	x	0.10197	=	kilograms - f
PRESSURE OR STRESS	pounds/sq. in.	x	6.895	=	kilopascals (kPa)	x	0.145	=	pounds/sq. in.
POWER	horsepower	x	0.746	=	kilowatts (kW)	x	1.34	=	horsepower
	ft-lbf/min.	x	0.0226	=	watts (W)	x	44.25	=	ft-lbf/min.
TORQUE	pound-inches	x	0.11298	=	newton-metres (N·m)	x	8.851	=	pound-inches
	pound-feet	x	1.3558	=	newton-metres (N·m)	x	0.7376	=	pound-feet
VELOCITY	miles/hour	x	1.6093	=	kilometres/hour (km/h)	x	0.6214	=	miles/hour
	feet/sec.	x	0.3048	=	metres/sec. (m/s)	x	3.281	=	feet/sec.
	kilometres/hr.	x	0.27778	=	metres/sec. (m/s)	x	3.600	=	kilometres/hr.
	miles/hour	x	0.4470	=	metres/sec. (m/s)	x	2.237	=	miles/hour

TEMPERATURE

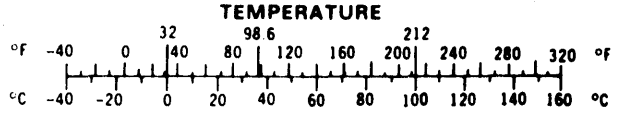

°Celsius = 0.556 (°F - 32)

°Fahrenheit = (1.8° C) + 32

NUMERICAL PART NO. INDEX

900371	206	9
900579	238	24
900821	130	5
900822	202	7
901165	238	8
901310	238	17
901490	246	6
901500	208	20
901692	246	7
901723	246	8
904203	238	16
904208	208	16
	212	6
	212	9
	220	7
	222	4
	222	7
	224	4
904209	208	18
	212	3
	212	15
904369	206	8
	208	14
905261	180	29
905347	222	3
	224	4
906938	200	10
907722	232	4
910285	238	30
910308	200	4
910325	222	4
	222	9
	224	4
910334	206	6
910365	222	3
	224	4
910378	212	22
910516	238	22
	238	31
911007	232	7
914120	234	4
914465	112	19
	124	23
	160	26
	208	13
	282	17
	282	46
	284	17
	284	46
914868	238	29
914929	196	7
	196	13
915274	124	24
915275	212	19
915276	112	20
	124	25
	160	25
915439	206	5
915563	212	6
915726	230	5
	242	7
915987	242	5
916021	212	15
916311	208	16
	212	9
916313	220	6
	222	6
916320	222	4
	222	9
	224	4
916406	208	18
	212	3
916601	208	7
916602	200	17
916621	246	17
916622	79	43
	81	43
	246	1
916951	200	6
	218	3
	218	4
916964	246	1
	250	5
916965	200	15
916966	218	3
	218	4
917356	196	29
917365	246	16
917373	230	4
	242	6
917388	246	15
917793	202	3
918157	232	1
918241	208	18
918264	232	1
	242	10
	246	1
918448	196	20
919310	79	44
	81	44
919332	208	22
920328	216	4
920380	232	5
	238	28
920397	242	11
920435	250	4
920757	212	11
920990	200	19
921204	216	4
921206	168	54
	168	89
	170	54
	170	89
921214	168	49
	170	49
921256	202	2
921260	232	1
	232	6
921279	214	6
	216	7
921332	196	28
921677	238	8
921880	234	5
921883	168	45
	168	46
	168	47
	170	45
	170	46
	170	47
921886	168	48
	168	50
	170	48
	170	50
921910	71	14
921911	246	3
921972	196	12
921985	200	16
921991	200	20
922121	234	15
922711	234	16
922811	238	25
923093	196	19
923154	200	5
923191	218	3
923300	234	13
923341	232	1
	242	9
923574	188	8
	190	34
923586	196	3
923662	234	3
923753	250	10
924023	196	4
924087	208	6
924167	216	6
924198	196	6
924296	216	5
924744	230	3
924820	216	3
925149	208	14
925238	246	2
925621	196	14
926127	208	22
926520	212	13
926770	216	8
926790	200	13
926997	286	49
	286	49
	290	49
	292	49
	296	49
	298	49
927062	196	16
927149	200	11
927187	200	14
927630	208	12
	212	20
927695	166	14
927726	160	9
930871	246	5
931218	150	6
931700	238	15
933167	168	43
	168	44
	168	53
	170	43
	170	44
	170	53
950000	132	18
	134	18
	150	33
950001	57	14
	63	12
	63	21
	87	16
950002	87	12
950003	59	10
950005	57	13
	59	8
950007	59	9
	168	75
	170	75
950014	138	11
950016	57	8
	57	9
	59	17
	126	12
950017	25	14
	57	10
	59	19
	69	7
	71	20
	180	28
	258	39
950018	11	17
	13	14
	15	14
	25	7
	31	11
	33	3
	71	4
	75	4
	110	22
	258	39
950019	29	11
	33	3
	43	1
	43	4
	45	5
	45	12
	97	5
950020	126	11
	148	36
9500218	57	11
950025	168	74
	170	74
950026	168	73
	170	73
950034	21	25
	23	24
	114	5
	182	15
	286	33
	288	33
	290	33
	292	33
950035	25	1
	65	15
	65	20
	196	33
950036	31	1
	45	19
950036	49	20
	53	20
	120	13
	126	10
	160	22
	180	9
	180	18
950037	67	10
	87	26
950039	29	3
	120	12
950041	71	24
950044	106	10
950045	65	9
950050	25	16
	75	15
	87	17
	112	15
	138	6
950051	49	19
	53	19
	65	7
	65	30
	97	17
	118	13
	148	35
	168	72
	170	72
	258	14
950052	31	4
	97	16
	138	5

950053	132	16
	134	16
	168	70
	170	70
950054	182	14
950067	73	11
950081	116	12
950085	282	54
	284	54
950209	7	4
	9	4
	108	13
	134	24
	142	17
	282	57
	284	57
950210	11	18
	13	15
	13	19
	45	1
	110	21
	126	14
	132	22
	148	40
	182	17
950211	49	23
	53	23
	104	12
	118	17
	132	20
	134	20
	168	77
	170	77
	258	16
950212	132	19
	134	19
	148	39
	168	76
	170	76
	252	5
950213	182	16
950214	112	16
	200	17
950218	7	5
	9	5
	49	27
	53	27
	59	7
950218	63	11
	63	19
	87	11
	106	18
	108	22
	132	33
	142	18
	148	45
	150	0
	150	34
	168	82
	170	82
	190	46
950219	11	16
	11	19
	13	13
	13	16
	13	20
	15	12
	25	6
	29	9
	31	10
	33	2
	43	2
	43	3
	45	8
	45	13
	49	26
	53	26
	57	7
	59	16
	69	8
	71	5
	71	19
	75	3
	75	16
	110	20
	118	24
	132	32
	134	32
	138	13
	148	44
	168	81
	170	81
	182	22
	258	40
950220	25	2
	29	2
	31	2
	41	2
	45	18
	49	25
	53	25
	65	8
	65	16
	65	19
	65	27
	67	9
	71	17
	71	22
	75	7
	87	25
	97	4
	108	14
	110	19
	114	6
	118	20
	132	31
	134	31
	160	24
	168	80
	170	80
	180	10
	182	21
	188	7
	190	33
	196	34
	258	17
	282	40
	282	61
950220	284	40
	284	61
	286	37
	288	37
	290	37
	292	37
	296	37
	298	37
950221	104	15
	132	30
	134	30
	138	12
	148	43
	168	79
	170	79
	182	20
	252	6
	282	12
	282	38
	282	60
	284	12
	284	38
	284	60
	286	34
	288	34
	290	34
	292	34
	294	26
	296	34
	298	34
950222	71	3
950223	282	59
	284	59
	286	48
	288	48
	290	48
	292	48
950228	29	9
	57	6
	59	15
	106	17
	182	24
950229	29	12
	45	17
	67	8
	75	6
	97	3
	118	18
	166	16
950230	124	22
	132	26
	134	26
	148	46
	296	55
	298	55
950232	116	14
	180	3
950233	110	18
	132	25
	134	25
	182	23
950235	282	34
	284	34
950241	160	13
950242	296	48
	298	48
950244	63	18
	106	18
	148	41
	190	47
950245	110	16
	182	18
950246	106	15
	132	21
	134	21
950247	184	11
	186	11
950248	184	10
	186	10
950249	104	11
	118	16
	120	14
	286	47
	288	47
	290	47
	292	47
	296	47
	298	47
950251	206	4
950262	49	22
	53	22
	106	13
	108	12
950263	286	46
	288	46
	290	46
	292	46
	296	46
	298	46
950265	148	37
950266	49	21
	53	21
950267	110	14
	118	14
	254	5
	258	15
	286	36
	288	36
	290	36
	292	36
	296	36
	298	36
950285	132	16
	132	21
	164	3
950291	132	17
	134	27
	168	83
	170	83
950312	71	10
950313	104	10
950320	106	10
950368	258	13
950371	258	12
950377	104	8
950379	108	9
	180	4
950385	286	39
	288	39
	290	39
	292	39
	296	39
	298	39
950391	294	25
950393	118	12
	286	35
	288	35
	290	35
	292	35
	296	35
	298	35
950397	112	14
950406	200	16
950425	294	23
950450	57	12
	87	12
	142	16
950452	71	23
	75	8
	104	9
950453	252	4
950476	296	57
	298	57
950478	296	56
	298	56
950494	120	11
950497	112	12
950502	294	27
950548	132	28
	134	28
950562	132	27
	134	27
	286	43
	288	43
	290	43
	292	43
	296	43
	298	43
950564	272	34
950649	21	20
	21	30
	23	20
	23	27
	37	4A

950716	126	15
	150	27
	254	7
950717	150	0
	150	25
950868	71	16
	97	18
950944	49	24
	53	24
	118	23
	134	22
	168	78
	170	78
	196	22
950953	160	14
951104	126	19
	254	10
951105	126	18
	150	28
	254	9
951134	168	71
	170	71
951136	282	41
	284	41
951147	286	54
	288	54
951149	124	18
951153	124	20
951158	190	44
951177	112	8
	282	36
	284	36
951179	282	13
	284	13
951182	280	20
1001732	218	1
	220	1
1001933	212	1
1001941	212	17
1001954	218	1
	220	1
	222	1
1001962	212	8
1001963	212	14
1001964	212	12
1001965	212	26
1001966	212	7
1001986	212	2
1002400	226	2
1002841	220	2
	222	2
1004653	55	4
1005603	208	2
1005621	208	1
	208	15
1005636	226	1
	226	2
1005765	200	8
1006605	200	6
	240	12
1007858	200	5
	240	11
1009657	208	4
1009660	208	5
1009669	220	5
	222	5
1009673	220	4
	222	4
1010152	200	13
1010153	200	10
1010344	234	20
1010407	55	2
1010528	234	21
1010532	240	13
1011496	242	4
1011599	220	1
	222	1
1012518	246	4
1012678	248	1
1012679	248	2
1012680	248	3
1012681	248	4
1012683	248	6
1012684	248	7
1013270	234	18
1013271	234	9
1013272	234	10
1013273	234	11
1013274	234	12
1013571	212	23
1014415	240	9
1014581	218	1
1014583	220	1
1016934	240	15
1016936	246	13
1016937	240	14
1017024	218	5
	220	2
1017025	218	1
	220	3
1017054	222	3
	222	8
	224	3
1017165	226	1
1017183	208	9
1018095	222	2
	224	2
1018840	234	19
1019136	208	17
1019379	208	24
1019820	208	1
1019821	208	3
	220	3
	222	3
1019833	220	1
1019835	222	1
1021401	208	19
1021424	226	1
1021425	226	3
1022012	222	1
1022368	222	3
1022670	240	7
1022674	230	2
	242	12
1022690	200	2
	240	2
1022691	200	3
	240	3
1022717	226	3
1022718	226	3
1022719	226	3
1022721	200	4
	240	8
1023062	246	1
	248	1
1023063	248	5
1023064	246	12
1023065	246	14
1023066	246	9
1023093	226	2
1023094	226	3
1023143	200	12
	240	4
1023144	200	7
	240	5
1023168	194	3
1023171	194	15
1023172	194	16
1023186	226	3
1023276	124	8
1023287	202	4
1023293	224	1
1023541	196	1
1023543	196	10
1023544	196	11
1023545	196	23
1023546	196	15
1023547	196	26
1023548	196	27
1023551	196	5
1023559	234	1
1023586	234	5
	234	23
1023619	196	2
1023652	196	25
1023653	196	24
1023659	234	3
1023660	234	4
	234	22
1023734	200	2
1023922	222	1
1023933	97	14
1024181	208	23
1024192	208	25
1024197	212	23
1095690	200	20
1096288	200	20
1096294	196	1
1096332	200	1
1096337	200	1
1174467	234	17
1916290	206	7
2014642	208	10
	212	18
2015521	212	19
2017635	200	12
2018207	208	10
	212	18
2018215	208	9
	212	5
2018328	208	8
	212	21
2018848	226	3
2018894	226	3
2019424	218	2
2019546	226	1
	226	2
2019548	226	1
2019784	212	4
2020059	208	21
	212	10
2020415	246	11
2022674	124	11
2022676	124	12
2022703	168	87
	170	87
2022704	168	88
	170	88
2022705	168	89
	170	89
2022708	124	13
2022714	128	4
2022721	150	5
2022739	150	17
	250	12
2022751	262	43
2022756	280	23
2022760	260	24
2022770	268	29
2022782	260	21
	274	11
2022784	262	3
2022785	262	4
2022787	262	2
2022788	262	25
2022790	262	11
2022791	262	12
2022792	262	10
2022794	262	18
2022795	262	21
2022796	262	22
2022799	262	24
2022800	262	20
2022801	262	26
2022802	262	27
2022803	262	28
2022804	262	33
2022805	262	35
2022817	266	10
	268	14
	270	16
2022818	266	11
	268	15
	270	17
2022819	268	16
2022833	272	16
2022836	272	35
2022838	264	18
2022839	264	20
2022842	280	15
2022847	278	24
2022855	264	13
2022857	274	18
2022867	274	7
2022869	274	9
2022870	274	10
2022899	262	30
2022900	262	45
2022903	264	1
2022913	272	30
2022915	274	13
	276	19
2022917	280	16
2022922	274	22
2022923	274	27
	276	36
	278	11
2022924	280	31
2022931	276	16
2022937	274	19
2022940	274	12
	274	25
	276	18
	276	39
2022950	262	31
2022977	268	30
	280	13
2023016	108	10
	108	23
2023085	108	20
2023087	106	8
2023091	180	6
2023100	120	10
2023157	282	58
	284	58
2023199	106	11
2023212	148	14

2023242	196	18	2023893	95	4	4530141	21	22	4530268	27	1
2023243	196	17	2023894	95	5		23	22	4530269	305	
2023246	182	10	2023895	95	6		67	2	4530270	305	
2023249	196	21	2023896	95	7	4530142	11	2	4530271	27	2
2023252	182	19	2023897	95	8		13	2	4530273	29	5
2023253	182	26	2023898	95	9	4530143	21	9		306	
2023445	99	3	2023899	95	10		23	9	4530292	35	1
2023448	99	8	2023901	95	11	4530144	87	19	4530293	35	6
2023454	99	12	2023902	95	12	4530146	61	2	4530294	35	7
2023455	99	13	2023903	95	13	4530147	21	26	4530295	305	
2023469	99	17	2023904	95	14		23	25	4530296	305	
2023574	262	5	2023906	95	16	4530150	57	2	4530319	67	4
	264	2	2023908	95	18		59	13	4530321	67	1
2023577	266	6	2023922	266	16		71	7		306	
	268	10		268	20		306		4530332	71	14
	270	12		270	22	4530151	15	3	4530337	75	10
	272	36	2023924	266	18	4530153	21	2	4530341	75	2
2023581	260	20		268	22		23	2	4530351	93	1
2023584	266	21		270	24	4530154	21	3	4530396	15	13
2023588	272	24	2023927	268	33		23	3	4530410	43	1
2023589	262	9	2023928	268	35	4530155	41	3		43	4
2023590	262	16	2023930	262	32	4530157	71	13		306	
2023591	262	17		264	19	4530158	87	1	4530426	33	8
2023592	262	19	2023985	73	12		89	12	4530436	15	5
2023594	262	34	2024047	110	17		306		4530437	15	2
2023595	262	41		182	25	4530159	11	3	4530438	305	
2023596	262	36	2024048	110	15		13	3	4530439	305	
2023597	262	37	2024062	126	13	4530160	15	28	4530440	305	
2023598	262	38		254	6	4530162	15	26	4530472	89	3
2023599	262	40	2024079	116	15	4530164	15	27	4530473	89	4
2023600	262	39	2024080	264	23		306		4530475	89	6
	274	23	2024149	262	29	4530167	21	1	4530476	89	6
2023601	260	2	2024169	160	23		23	1	4530477	89	6
	260	13	2024204	99	5	4530171	21	21	4530478	89	6
2023603	264	4	2024205	99	6		23	21	4530479	89	7
2023604	274	15	2024220	95	21		37	5	4530480	89	8
2023605	274	16	2024221	95	22	4530175	41	7	4530481	89	9
2023610	274	20	2024222	95	23	4530178	306		4530482	89	10
2023611	274	26	2024223	95	24	4530180	33	9	4530495	69	10
	276	37	2024224	95	25		71	8	4530500	45	7
	278	13	2024225	95	26	4530182	57	5	4530501	45	3
2023621	276	25	2024226	95	27	4530184	67	6		45	21
2023623	276	26	2105521	208	11	4530185	67	7	4530503	71	2
2023630	264	27	230170	240	10	4530192	89	2	4530504	37	7
2023631	264	14	239517	55	3	4530196	65	33	4530505	21	10
2023637	280	19	239854	120	16	4530197	15	25		23	10
2023639	278	18		202	5	4530198	15	24	4530506	71	8
	280	3	245562	240	6	4530199	15	6	4530507	37	4
2023644	264	15	246689	234	2		15	19	4530508	61	6
2023649	278	9	3060177	234	6	4530203	57	2		306	
2023659	260	17	3060178	234	14	4530204	57	3	4530511	35	7
2023660	260	16	4021600	49	7		59	3	4530514	61	7
2023661	260	18		53	7	4530208	71	2	4530515	15	1
2023663	260	3	4059256	55	6		306		4530524	21	12
2023664	260	12	4530103	306		4530212	75	1		23	12
	264	22	4530104	35	3		306			43	5
2023673	272	33	4530109	15	8	4530214	35	6		43	10
2023674	272	32		15	17	4530215	35	2	4530526	21	23
2023675	272	31	4530111	87	14	4530222	45	1	4530527	25	13
2023676	272	22	4530121	87	15		45	9		63	17
2023677	272	18	4530123	31	8		49	13	4530531	75	4
2023678	260	26		306			53	13	4530535	65	28
	272	20	4530124	75	5	4530223	69	1	4530536	41	1
2023679	260	27		79	57		306			65	28
	272	21		81	57	4530233	57	15		71	16
2023687	272	41		306			59	11	4530537	29	1
2023688	272	39	4530128	91	4	4530235	69	2	4530539	31	6
2023692	280	38	4530129	91	2	4530253	15	10	4530543	57	16
2023698	264	5	4530130	65	10	4530261	21	15		59	12
2023702	260	15		71	9		23	15		65	22
2023788	262	49	4530131	91	3	4530262	21	14	4530587	29	1
	264	25	4530132	91	1		23	14	4530667	63	7
2023789	278	19	4530134	31	9		306		4530725	15	30
2023794	106	14	4530140	21	13	4530263	25	3	4530786	87	4
2023879	132	15		23	13	4530264	25	4	4530844	154	4
2023890	95	1		71	12		306		4530845	45	2
2023891	95	2				4530267	31	7			
2023892	95	3					306				

4530845	45	10	4531024	71	6	4920269	79	42	4920315	83	55
	306		4531025	69	6		81	42		85	55
4530847	71	17	4531027	11	7	4920270	79	42	4920316	83	55
4530851	25	18		13	4		81	42		85	55
4530852	87	24	4531028	71	10	4920271	79	42	4920317	83	55
4530853	87	22	4531029	71	7		81	42		85	55
4530856	71	16	4531048	87	23	4920272	79	42	4920319	83	72
	306			91	1		81	42		85	72
4530857	154	3	4531063	29	4	4920273	79	42	4920320	83	72
4530861	25	8	4920015	101	7		81	42		85	72
4530862	21	8	4920042	23	30	4920274	79	44	4920322	83	72
	23	8		65	2		81	44		85	72
4530863	29	7		65	13	4920275	79	44	4920325	77	14
	306		4920092	11	9		81	44	4920327	77	7
4530864	29	8		13	6	4920276	79	44	4920368	99	19
4530866	21	29	4920093	11	10		81	44	4920373	29	10
	23	26		13	7	4920277	79	44	4920380	75	17
4530868	25	9	4920108	15	29		81	44	4920382	15	9
4530870	65	11	4920128	25	17	4920278	79	44		15	16
	246	10	4920138	65	23		81	44	4920384	25	15
4530872	93	3	4920236	87	3	4920279	79	44	4920385	31	5
4530879	39	2		89	1		81	44		65	6
4530884	11	12	4920242	89	11	4920280	79	44		65	29
	13	9	4920243	77	5		81	44		75	14
4530885	11	11		79	2	4920281	79	44		87	18
4530890	21	5		81	2		81	44		97	15
	23	5	4920245	79	5	4920282	79	44	4920397	23	31
4530891	21	4		81	5		81	44		65	12
	23	4	4920246	79	6	4920283	79	43	4920418	95	17
4530904	61	5		81	6		81	43	4920426	95	28
4530907	69	9	4920247	79	7	4920284	79	49	4920439	79	36
4530909	71	11		81	7		81	49		81	36
4530911	71	19	4920248	79	8	4920286	79	51	4920440	79	45
4530917	11	13		81	8		81	51		81	45
	306		4920249	79	9	4920289	83	25	4920441	79	44
4530919	11	1A		81	9		85	25		81	44
4530921	306		4920250	79	10	4920290	83	10	4920442	79	47
4530936	39	4		81	10		85	10		81	47
4530937	49	9	4920252	79	12	4920291	83	16	4920443	79	48
	53	9		81	12		85	16		81	48
	55	1	4920253	79	13	4920294	83	23	4920444	79	19
4530941	43	2		81	13		85	23		81	19
	43	3		83	18	4920295	83	29	4920445	79	19
4530947	57	1		85	18		85	29		81	19
4530948	57	5	4920254	79	15	4920296	83	21	4920446	79	19
4530950	57	10		79	24		83	31		81	19
	59	6		81	15		85	21	4920447	79	19
4530952	61	1		81	24		85	31		81	19
4530953	61	4	4920255	79	18	4920297	83	4	4920448	79	19
4530954	57	4		81	18		85	4		81	19
4530955	57	3	4920256	79	17	4920298	83	5	4920450	79	4
4530962	65	24		81	17		85	5		81	4
	306		4920257	79	20	4920299	83	1	4920451	79	14
4530964	67	3		81	20		85	1		81	14
4530966	71	1	4920259	79	25	4920301	83	40	4920452	79	16
4530967	71	4		81	25		85	40		81	16
4530968	71	9	4920260	79	26	4920304	83	54	4920454	79	23
4530970	71	18		81	26		85	54		81	23
4530971	71	15	4920261	79	29	4920306	83	72	4920461	83	59
	306			81	29		85	72		85	59
4530973	71	15	4920263	79	37	4920308	83	45	4920462	83	56
4530995	71	18		81	37		85	45		85	56
4530996	87	2	4920264	79	38	4920310	83	63	4920466	83	70
4530997	87	13		81	38		85	63		85	70
4531002	75	9	4920265	79	39	4920311	79	55	4920470	83	11
4531003	93	4		81	39		81	55		83	71
	306		4920266	79	40		83	60		85	11
4531018	39	6		81	40		85	60		85	71
4531021	21	7	4920267	79	41	4920313	83	55	4920471	83	74
	23	7		81	41		85	55		85	74
4531023	71	5	4920268	79	42	4920314	83	55	4920473	83	48
	306			81	42		85	55		85	48

4920477	83	12
	85	12
4920479	83	50
	83	75
	85	50
	85	75
4920481	83	37
	85	37
4920483	83	20
	85	20
4920486	83	3
	85	3
4920488	83	34
	85	34
4920494	83	41
	85	41
4920500	77	17
4920509	77	4
4920516	77	8
4920521	71	3
4920655	83	44
	85	44
4920673	83	64
	85	64
4920679	79	34
	81	34
4920680	79	54
	81	54
4920682	79	56
	81	56
4920683	83	19
	85	19
4920684	79	46
	81	46
4920686	83	47
	85	47
4920688	83	38
	85	38
4920689	77	16
	79	1
	81	1
4921110	15	4
4921112	15	20
4921117	25	11
	306	
4921123	29	6
	306	
4921140	11	14
	13	11
	71	1
	306	
4921142	87	6
4921144	87	20
4921150	79	19
	81	19
4921171	91	5A
4921172	91	11A
4921174	97	13
4921184	83	42
	85	42
4921185	83	43
	85	43
4921187	83	46
	85	46
4921188	83	49
	85	49
4921190	83	51
	85	51
4921198	83	15
	85	15
4921199	83	65
	85	65
4921201	83	67
	85	67
4921205	83	8
	85	8
4921206	83	9
	85	9
4921208	83	14
	85	14
4921209	83	17
	85	17
4921210	83	76
	85	76
4921211	83	26
	85	26
4921212	83	24
	85	24
4921213	83	22
	85	22
4921214	83	28
	85	28
4921215	83	27
	85	27
4921222	83	69
	85	69
4921225	83	32
	85	32
4921229	83	6
	85	6
4921230	83	7
	85	7
4921233	83	68
	85	68
4921235	83	39
	85	39
4921241	71	21
	306	
6001099	214	4
6001100	214	5
6001126	202	6
6001127	202	1
6001129	208	15
6001143	214	7
6001157	214	8
6001199	200	1
6001225	196	32
6001273	206	1
6001278	196	31
6001293	206	2
6001305	290	54
	292	54
6001309	216	2
6001310	216	1
6001315	286	55
	288	55
	290	53
	292	53
	296	58
	298	58
6001316	226	2
6090056	242	8
6090083	202	8
6090112	266	27
6090113	268	39
	270	34
6091025	200	1
6091037	242	1
6091040	246	1
6091041	200	20
6091042	200	20
6091047	254	1
638416	55	5
639073	234	7
639074	234	8
6800062	258	21
6800063	180	14
6800065	106	2
6800066	106	7
6800067	106	5
6800069	106	9
6800072	150	16
6800073	110	7
6800074	110	8
6800075	110	12
	132	13
	134	13
	182	12
6800076	276	9
6800077	280	35
6800078	280	36
6800079	280	32
6800080	278	26
6800081	258	4
6800082	138	8
6800083	264	8
6800084	274	1
6800085	276	1
6800086	266	7
	270	13
6800087	266	8
	270	14
6800088	282	1
	284	1
6800089	282	4
	284	4
6800090	282	21
	284	21
6800091	282	5
	282	22
	284	5
	284	22
6800092	282	27
	284	27
6800093	286	8
	288	8
	290	8
	292	8
	296	8
	298	8
6800094	282	19
	284	19
6800095	282	39
	284	39
6800096	282	43
	284	43
6800097	282	15
	282	45
	284	15
	284	45
6800098	282	14
	282	44
	284	14
	284	44
6800099	282	32
	284	32
6800104	306	
6800106	11	1B
6800111	37	2
6800115	35	5
6800116	35	1
6800119	35	2
6800120	37	1
6800121	33	4
6800122	35	1
6800123	41	9
6800124	41	4
6800125	41	8
6800126	41	5
6800129	59	1
6800132	61	3
6800137	71	25
6800142	43	9
	65	32
6800147	93	5
	95	1
6800148	97	1
	99	1
6800154	87	7
6800155	87	8
6800156	87	9
6800159	154	2
6800160	45	23
	101	1
6800161	43	5
6800162	43	8
6800166	37	9
6800167	71	16
6800168	71	10
	306	
6800175	33	1
	33	11
	306	
6800177	45	6
	45	14
	45	22
	306	
6800180	65	17
	306	
6800187	306	
6800199	45	7
6800200	45	4
6800202	63	10
6800214	230	1
6800218	200	8
6800235	148	47
6800236	148	48
6800237	200	18
6800239	200	20
6800240	150	35
	200	21
6800243	240	1
6800244	200	19
6800289	200	2
6800292	234	2
6800293	234	1
6800379	238	2
6800380	238	2
6800381	238	3
6800382	238	4
6800383	238	5
6800386	238	6
6800388	238	7
6800389	238	7
6800390	238	9
6800391	238	9
6800392	238	10
6800393	238	11
6800396	238	12
6800397	238	13
6800398	238	18
6800399	238	19
6800400	238	19
6800401	238	21
6800402	232	3
	238	23
6800403	238	26
6800404	238	27
6800405	232	1
6800406	232	2
6800407	232	1
6800408	232	1
6800409	232	1
6800410	232	1
6800411	232	1
6800412	238	1
6800413	238	1
6810001	138	2
6810002	138	9
6810003	140	12
6810004	138	7
6810005	140	15
6810006	286	1
	288	1

6810007	290	1
	292	1
6810008	286	52
	288	52
	290	52
	292	52
	294	1
	296	52
	298	52
6810009	132	11
	134	11
6810011	132	10
	134	10
6810013	160	18
6810014	160	27
	162	1
6810015	172	1
	214	1
6810016	176	1
6810019	49	5
	53	5
6810020	260	30
6810021	258	7
6810022	272	5
6810023	278	27
6810024	278	28
6810025	278	25
6810026	260	9
6810027	262	7
6810028	266	25
6810029	276	32
6810032	132	38
6810035	142	1
6810036	142	2
6810037	142	3
6810038	142	4
6810039	142	5
6810040	142	14
6810041	142	15
6810042	160	12
6810043	160	17
6810044	160	15
6810046	168	18
	170	18
6810047	172	6
6810049	168	35
	170	35
6810050	168	36
	170	36
6810051	168	37
	170	37
6810052	168	38
	170	38
6810053	168	27
	170	27
6810054	168	30
	170	30
6810055	168	31
	170	31
6810058	168	32
	170	32
6810057	194	4
6810058	108	5
6810059	280	17
6810061	180	21
6810062	180	5
6810065	182	11
6810067	124	17
6810072	186	1
6810075	112	6
6810076	112	4
6810077	112	9
6810078	126	1
6810079	164	1
	166	1
6810080	180	1
	180	10
6810082	258	8
6810084	278	21
6810085	282	48
	284	48
6810086	294	10
6810087	294	20
6810090	126	9
	254	4
6810091	116	5
6810092	116	6
6810093	116	7
6810094	116	8
6810095	116	9
6810096	118	11
6810098	164	2
6810099	166	18
6810147	196	30
6810152	128	1
6810153	130	1
6810158	176	19
6810159	172	19
6810161	252	1
6810166	162	16
6810170	31	3
6810171	35	5
6810172	35	6
6810173	35	7
6810174	37	8
6810176	37	9
6810177	89	10
6810179	71	20
6810180	87	13
6810181	93	5
	95	1
6810183	95	9
6810184	97	14
6810185	13	1A
6810186	13	18
6810187	13	8
6810188	13	10
6810189	11	15
	13	12
6810190	15	15
6810191	15	22
6810194	21	11
	23	11
6810195	23	8A
6810196	23	16
6810197	21	24
	23	23
6810198	23	29
6810199	23	32
6810200	25	5
6810201	25	10
6810202	31	3
6810203	33	10
6810204	37	10
6810205	39	5
6810206	43	6
6810207	43	7
6810209	45	4
	45	15
6810211	45	16
6810212	45	11
6810213	45	8
6810214	45	6
6810215	45	5
6810216	45	3
6810217	45	2
6810220	101	3
6810221	101	4
6810222	101	5
6810223	101	6
6810224	101	8
6810225	101	9
6810226	101	10
6810227	101	11
6810228	101	12
6810229	101	13
6810230	101	14
6810231	101	15
6810232	101	16
6810233	23	1
6810234	101	18
6810235	101	19
6810236	101	20
6810237	101	23
6810238	59	2
6810239	59	5
6810240	59	14
6810241	59	18
6810242	63	1
6810243	63	2
6810244	63	3
6810245	63	4
6810246	63	5
6810247	63	6
6810248	63	8
6810249	63	9
6810250	63	13
6810251	63	14
6810252	63	15
6810253	63	18
6810254	63	20
6810255	154	1A
6810256	89	6
	154	1
6810257	65	1
6810258	65	3
6810259	65	4
6810260	65	5
6810261	65	14
6810262	65	1
6810263	65	18
6810264	65	21
6810265	65	25
6810266	65	26
6810267	65	31
6810268	67	1
6810269	69	3
6810270	69	5
6810271	71	6
6810272	71	21
6810273	71	20
6810274	75	13
6810275	87	5
6810276	87	10
6810277	87	10
6810278	87	21
6810279	89	5
6810280	79	3
	81	3
6810281	79	11
	81	11
6810282	79	19
	81	19
6810283	79	21
	81	21
6810284	79	22
	81	22
6810285	79	27
	81	27
6810286	79	28
	81	28
6810287	79	30
	81	30
6810288	79	31
	81	31
6810289	79	32
	81	32
6810290	79	33
	81	33
6810291	79	50
	81	50
6810292	79	53
	81	53
6810293	79	52
	81	52
6810294	83	2
	85	2
6810295	83	13
	85	13
6810296	83	30
	85	30
6810297	83	33
	85	33
6810298	83	35
	85	35
6810299	83	36
	85	36
6810300	83	52
	85	52
6810301	83	53
	85	53
6810302	83	57
	85	57
6810303	83	61
	85	61
6810304	83	62
	85	62
6810305	83	66
	85	66
6810306	83	73
	85	73
6810307	101	17
6810308	93	2
6810309	95	15
6810310	95	19
6810311	95	20
6810312	97	2
6810313	99	1
6810314	99	2
6810315	99	4
6810316	99	7
6810317	99	9
6810318	99	10
6810319	99	11
6810320	99	14
6810321	99	15
6810322	99	16
6810323	99	18
6810324	99	20
6810325	99	21
6810326	99	22
6810327	305	
6810328	305	
6810329	305	
6810330	305	
6810331	39	1
6810332	21	0
6810333	21	16

6810334	124	3
6810335	124	1
6810337	110	1
6810338	110	2
6810339	182	3
6810340	124	2
	182	4
6810341	172	1
6810342	172	2
6810343	176	1
6810344	176	2
6810345	166	2
6810346	116	1
6810347	162	1
6810348	162	2
6810349	112	1
6810350	132	3
6810351	132	1
	134	1
6810352	89	6
6810356	89	6
6810357	89	6
6810358	89	6
6810359	89	6
6810360	89	6
6810361	89	6
6810362	89	6
6810363	89	6
6810364	89	6
6810365	89	6
6810366	89	6
6810367	89	6
6810368	89	6
6810369	89	6
6810370	164	1
6810371	182	3
6810372	132	3
6810373	132	5
6810375	140	1
6810376	140	2
6810377	140	2
6810378	140	3
6810379	140	4
6810380	140	5
6810381	140	6
6810382	140	6
6810383	140	7
6810384	140	8
6810385	140	9
6810386	140	10
6810387	140	11
6810388	140	13
6810389	140	13
6810390	140	14
6810391	140	16
6810392	140	17
6810393	140	18
6810394	132	12
6810395	138	10
6810398	250	13
6810405	108	1
6810408	9	1
6810409	7	1
6810411	126	1
6810413	112	3
	184	1
6810414	128	1
6810416	182	2
6810417	180	12
6810418	180	2
6810419	180	12
6810420	180	15
6810421	168	1
	170	1
6810422	168	3
	170	3
6810423	168	4
	170	4
6810424	166	1
6810426	166	3
6810427	166	4
6810428	166	5
6810429	166	6
6810430	166	7
6810435	166	12
6810436	166	13
6810437	166	17
6810438	252	1
6810439	252	2
6810440	252	3
6810441	118	2
6810442	118	6
6810443	118	7
6810444	116	2
6810445	116	3
6810446	160	21
6810447	286	22
	288	22
	290	22
	292	22
6810448	286	22
	288	22
	290	22
	292	22
6810449	286	22
	288	22
	290	22
	292	22
6810450	286	22
	288	22
	290	22
	292	22
6810451	286	22
	288	22
	290	22
	292	22
6810452	286	22
	288	22
	290	22
	292	22
6810453	286	22
	288	22
	290	22
	292	22
6810454	286	22
	288	22
	290	22
	292	22
6810455	138	3
6810458	110	3
6810459	73	4
6810460	73	5
6810461	49	1
	53	1
6810462	49	4
	53	4
6810463	49	6
	53	6
6810464	45	20
	53	8
6810465	150	31
6810466	49	10
6810467	150	31
6810468	150	1
6810469	148	1
6810470	148	2
6810471	148	3
6810472	148	7
6810473	148	8
6810474	148	10
6810475	148	17
6810476	148	22
6810477	148	24
6810478	108	16
6810479	106	1
6810480	180	11
6810481	104	1
6810482	104	2
6810483	104	3
6810484	104	5
6810485	104	6
6810486	126	3
6810487	126	4
6810489	180	11
6810490	118	1
6810491	118	4
6810492	114	1
6810494	294	22
6810495	294	24
6810496	294	28
6810497	294	1
6810498	294	2
6810499	294	3
6810500	294	4
6810501	294	5
6810502	294	6
6810503	294	7
6810504	294	8
6810505	294	13
6810506	294	15
6810508	200	9
6810509	286	42
	288	42
	290	42
	292	42
	296	42
	298	42
6810510	286	25
	288	25
	290	25
	292	25
6810511	286	26
	288	26
	290	26
	292	26
6810512	286	1
	288	1
	290	1
	292	1
6810513	286	2
	288	2
6810514	286	3
	288	3
	290	3
	292	3
	296	3
	298	3
6810515	286	4
	288	4
	290	4
	292	4
	296	4
	298	4
6810516	286	5
	288	5
	290	5
	292	5
6810517	286	6
	288	6
	290	6
	292	6
	296	6
	298	6
6810518	286	7
	288	7
	290	7
	292	7
	296	7
	298	7
6810519	286	9
	288	9
	290	9
	292	9
	296	9
	298	9
6810520	286	10
	288	10
6810521	286	11
	288	11
	290	11
	292	11
	296	11
	298	11
6810522	286	12
	288	12
	290	12
	292	12
	296	12
	298	12
6810523	286	13
	288	13
	290	13
	292	13
	296	13
	298	13
6810524	286	14
	288	14
	290	14
	292	14
	296	14
	298	14
6810525	286	20
	288	20
	290	20
	292	20
6810526	286	21
	288	21
	290	21
	292	21
6810527	296	53
	298	53
6810528	296	1
	298	1
6810529	296	1
	298	1
6810530	290	2
	292	2
	296	2
	298	2
6810531	168	14
	170	14
6810532	290	10
	292	10
	296	10
	298	10
6810533	194	1
6810534	73	7
6810535	108	15
6810538	176	3
6810539	176	4
6810540	176	5
6810541	176	6
6810542	172	7
	176	7
6810543	176	17
6810544	172	18
	176	18
6810545	168	15
	170	15
	252	1
6810548	172	3
6810549	172	4
6810550	172	5
6810551	172	17
6810552	120	2
6810553	120	3

6810554	120	4
6810555	120	5
	252	1
6810556	120	7
6810557	118	5
6810560	162	3
6810561	162	4
6810562	162	5
6810563	162	6
6810564	162	7
6810565	162	16
6810566	160	4
6810567	160	5
6810591	282	49
	284	49
6810592	282	50
	284	50
6810593	282	51
	284	51
6810594	282	52
	284	52
6810595	282	53
	284	53
6810596	49	14
6810599	282	9
	282	26
	284	9
	284	26
6810604	282	33
	284	33
6810607	49	11
6810612	282	42
	284	42
6810613	282	2
	284	2
6810614	282	3
	284	3
6810618	150	30
6810619	282	10
	284	10
6810620	148	5
6810621	148	5
6810622	148	6
6810623	282	16
	284	16
6810624	282	18
	284	18
6810625	282	20
	284	20
6810626	110	4
6810627	49	8
6810628	148	7
6810629	150	29
6810630	150	30
6810631	150	8
6810632	150	10
6810633	150	11
6810634	150	13
6810635	150	14
6810636	148	5
6810637	148	6
6810638	148	8
6810639	108	3
6810640	184	1
	186	1
6810641	184	2
	186	2
6810642	184	3
	186	3
	188	6
	190	32
6810643	184	6
	186	6
	190	50
6810644	184	7
	186	7
6810645	184	8
	186	8
6810646	184	9
	186	9
6810647	150	8
6810648	150	11
6810649	184	12
	186	12
	188	26
6810650	184	13
	188	1
6810651	112	5
6810652	112	7
6810653	150	10
6810654	112	10
6810655	112	21
6810656	112	22
6810658	128	2
6810659	128	3
6810660	130	1
6810661	130	2
6810663	124	4
6810664	124	5
6810665	124	7
6810666	124	9
6810667	200	14
6810668	200	15
6810669	124	10
6810673	114	3
	124	15
6810674	124	16
6810675	182	27
6810676	182	1
6810677	182	5
6810678	182	6
6810679	182	7
6810680	182	8
6810681	110	11
	182	9
6810682	182	13
6810683	180	25
6810684	180	26
6810685	150	13
	180	27
6810686	108	2
	118	19
	120	9
	150	29
6810687	180	7
6810688	180	8
6810689	180	13
6810690	180	16
6810691	180	20
6810692	180	22
6810693	180	23
6810694	194	17
6810696	168	65
	170	65
6810697	168	66
	170	66
6810700	168	84
	170	84
6810701	168	85
	170	85
6810702	168	86
	170	86
6810703	168	47
	170	47
6810704	168	48
	170	48
6810705	168	49
	170	49
6810706	168	50
	170	50
6810707	168	51
	170	51
6810708	168	52
	170	52
6810709	168	53
	170	53
6810710	168	54
	170	54
6810711	168	55
	170	55
6810712	168	56
	170	56
6810713	168	57
	170	57
6810714	168	58
	170	58
6810715	168	59
	170	59
6810716	168	60
	170	60
6810717	168	61
	170	61
6810718	168	62
	170	62
6810719	168	63
	170	63
6810720	168	64
	170	64
6810721	168	25
	170	25
6810723	168	28
	170	28
6810724	168	29
	170	29
6810725	168	33
	170	33
6810726	168	34
	170	34
6810727	168	39
	170	39
6810728	168	40
	170	40
6810729	168	41
	170	41
6810730	168	42
	170	42
6810731	168	43
	170	43
6810732	168	44
	170	44
6810733	168	45
	170	45
6810734	168	46
	170	46
6810735	168	2
	170	2
6810736	168	5
	170	5
6810737	168	6
	170	6
6810738	168	7
	170	7
6810739	168	8
	170	8
6810740	168	9
	170	9
6810741	168	10
	170	10
6810742	168	11
	170	11
6810743	168	12
	170	12
6810744	168	13
	170	13
6810745	168	18
	170	18
6810746	168	19
	170	19
6810747	168	20
	170	20
6810748	168	21
	170	21
6810749	168	22
	170	22
6810750	120	1
6810751	120	6
6810752	120	8
6810753	188	24
6810754	120	2
	120	6
6810755	108	8
6810756	118	3
6810757	118	8
6810758	118	9
6810759	118	10
6810761	114	2
6810762	188	26
6810763	114	4
6810764	116	10
6810765	116	10
6810766	116	10
6810767	116	10
6810768	116	10
6810769	116	10
6810770	116	11
6810771	160	3
6810772	160	6
	168	26
	170	26
6810773	160	7
6810774	160	8
6810775	160	10
6810776	160	11
6810777	160	16
6810778	160	19
6810779	142	6
6810780	142	7
6810781	142	8
6810782	142	9
6810783	132	36
	134	36
6810784	132	37
6810786	132	2
	134	2
6810787	132	4
	134	4
6810788	132	5
6810789	132	6
	134	6
6810790	132	7
	134	7
6810791	132	8
	134	8
6810792	110	10
	132	9
	134	9

6810793	132	12
6810794	132	14
	134	14
6810795	134	15
6810796	294	9
6810797	294	11
6810798	286	50
	288	50
	290	50
	292	50
	294	12
	296	50
	298	50
6810799	294	14
6810800	294	14
6810801	294	14
6810802	294	14
6810803	294	14
6810804	294	19
6810805	188	3
	190	29
6810806	286	51
	288	51
	290	51
	292	51
	296	51
	298	51
6810807	286	44
	288	44
	290	44
	292	44
	296	44
	298	44
6810808	286	44
	288	44
	290	44
	292	44
	296	44
	298	44
6810809	286	44
	288	44
	290	44
	292	44
	296	44
	298	44
6810810	286	44
	288	44
	290	44
	292	44
	296	44
	298	44
6810811	286	44
	288	44
	290	44
	292	44
	296	44
	298	44
6810812	286	44
	288	44
	290	44
	292	44
	296	44
	298	44
6810813	286	44
	288	44
	290	44
	292	44
	296	44
	298	44
6810814	286	44
	288	44
	290	44
	292	44
	296	44
	298	44
6810815	286	44
	288	44
	290	44
	292	44
	296	44
	298	44
6810816	286	45
	288	45
	290	45
	292	45
	296	45
	298	45
6810817	286	45
	288	45
	290	45
	292	45
	296	45
	298	45
6810818	286	45
	288	45
	290	45
	292	45
	296	45
	298	45
6810819	286	45
	288	45
	290	45
	292	45
	296	45
	298	45
6810820	286	45
	288	45
	290	45
	292	45
	296	45
	298	45
6810821	286	45
	288	45
	290	45
	292	45
	296	45
	298	45
6810822	286	45
	288	45
	290	45
	292	45
	296	45
	298	45
6810823	286	45
	288	45
	290	45
	292	45
	296	45
	298	45
6810824	286	45
	288	45
	290	45
	292	45
	296	45
	298	45
6810825	286	45
	288	45
	290	45
	292	45
	296	45
	298	45
6810826	286	23
	288	23
	290	23
	292	23
	296	23
	298	23
6810827	286	24
	288	24
	290	24
	292	24
	296	24
	298	24
6810828	286	15
	288	15
6810829	286	15
	288	15
	290	15
	292	15
	296	15
	298	15
6810830	286	15
	288	15
	290	15
	292	15
	296	15
	298	15
6810831	296	54
	298	54
6810832	290	15
	292	15
	296	15
	298	15
6810833	188	4
	190	30
6810834	188	5
	190	31
6810835	138	1
6810836	138	4
6810837	280	25
6810838	280	26
6810839	280	27
6810840	280	28
6810841	280	29
6810842	280	33
6810843	280	37
6810844	280	39
6810845	280	1
6810846	280	2
6810847	280	4
6810848	260	10
	272	37
	280	5
6810849	260	4
	262	50
	264	26
	272	38
	278	10
	280	6
6810850	280	7
6810851	280	8
6810852	280	9
6810853	280	10
6810854	280	11
6810855	280	12
6810857	280	18
6810858	280	21
6810859	280	22
6810860	280	24
6810861	278	29
6810862	278	30
6810863	278	31
6810864	278	1
6810865	278	2
6810866	278	3
6810867	278	4
6810868	278	5
6810869	278	6
6810870	278	7
6810871	260	33
	278	8
6810873	278	12
6810874	278	14
6810875	278	15
6810876	278	16
6810877	278	17
6810878	278	20
6810879	278	22
6810880	262	6
	264	3
	264	16
	268	31
	272	25
	274	21
	278	23
	280	14
6810881	276	27
6810882	276	28
6810883	276	29
6810884	276	30
6810885	276	31
6810886	276	33
6810887	276	34
6810888	276	35
6810889	274	24
	276	21
	276	38
6810890	276	2
6810891	276	3
6810892	276	4
6810893	276	5
6810894	276	6
6810895	276	7
6810896	276	8
6810897	276	10
6810898	276	11
6810899	276	12
6810900	276	13
6810901	276	14
6810902	276	15
6810903	260	41
	276	17
6810904	276	20
6810905	188	9
	190	35
6810906	276	22
6810907	276	23
6810908	276	24
6810909	274	28
6810910	274	2
6810911	274	3
6810912	274	4
6810913	274	5
6810914	274	6
6810915	274	8
6810916	274	14
6810917	274	17
6810919	188	11
	190	37
6810920	190	38
6810921	272	26
6810922	272	27
6810923	272	28
6810924	272	29
6810925	188	25
	190	39
6810926	190	40
6810927	272	40
6810928	272	1
6810929	272	2
6810930	272	3
6810931	272	4
6810932	272	6
6810933	272	7
6810934	272	8
6810935	272	9
6810936	272	10
6810937	272	11
6810938	272	12
6810939	272	13

6810940	272	14	6810988	268	12	6811064	258	38	6811126	148	11
6810941	272	15	6810989	268	17	6811065	258	41	6811127	148	12
6810942	272	17	6810990	268	23	6811066	258	1	6811128	148	13
6810943	140	1	6810992	266	26	6811067	258	2	6811129	148	15
	272	19	6810995	266	2	6811068	258	3	6811130	148	16
6810944	272	23	6810996	266	3	6811069	258	5	6811131	148	18
6810945	270	25	6810997	188	12	6811070	258	6	6811132	7	2
6810946	270	26	6810998	266	5	6811071	258	9		9	2
6810947	266	1	6810999	188	13	6811072	258	10		148	19
	270	9	6811000	188	14	6811073	258	11	6811133	148	20
	270	27	6811001	188	15	6811074	258	19	6811134	148	21
6810948	270	28	6811002	188	16	6811075	258	20	6811135	108	24
6810949	268	25	6811003	188	17	6811076	258	22	6811136	108	25
	270	29	6811004	266	19	6811077	258	23	6811138	108	4
6810950	270	30	6811005	266	20	6811078	258	24	6811139	108	6
6810951	268	27	6811006	266	22	6811079	110	5	6811140	108	7
	270	31	6811007	266	23	6811080	110	6	6811142	108	11
6810952	268	24	6811008	266	24	6811081	110	9	6811143	108	17
	270	32	6811009	188	18	6811084	73	1	6811144	108	18
6810953	268	28	6811010	188	19	6811085	73	6	6811145	108	19
	270	33	6811011	264	6	6811086	73	8	6811146	108	21
6810954	268	1	6811012	264	7	6811087	73	9	6811147	106	3
	270	1	6811013	264	9	6811088	49	3	6811148	106	4
6810955	268	2	6811014	264	10		53	3	6811149	106	6
	270	2	6811015	264	11		73	10	6811150	104	4
6810956	268	3	6811016	264	12	6811089	53	28	6811151	9	1
	270	3	6811017	188	20	6811090	49	2	6811152	9	1
6810957	266	4	6811018	264	17		53	2	6811154	7	1
	270	4	6811019	264	21	6811091	49	3	6811155	7	1
6810958	270	5	6811020	264	24		53	3	6811156	7	3
6810959	270	6	6811021	188	21	6811092	49	2	6811157	254	1
6810960	270	7	6811022	262	51		53	2	6811158	254	2
6810961	270	8	6811023	262	42	6811093	53	10	6811159	254	3
6810962	190	41	6811024	262	44	6811094	49	11	6811161	126	2
6810963	270	10	6811025	262	46		53	11	6811162	126	7
6810964	270	11	6811026	262	47	6811095	49	12	6811163	126	8
6810965	266	9	6811027	262	48		53	12	6811165	11	21
	268	13	6811028	262	1	6811097	53	14	6811174	186	13
	270	15	6811029	188	22	6811098	49	17		254	11
6810966	266	12	6811030	262	13		53	17	6811175	190	48
	270	18	6811031	262	14	6811099	49	18	6811177	250	1
6810967	268	13	6811032	262	15		53	18	6811231	250	1
	270	19	6811033	262	23	6811100	49	14	6811232	250	2
6810968	266	14	6811034	260	25	6811101	150	32	6811233	250	3
	268	18	6811035	260	28	6811102	150	2	6811234	250	11
	270	20	6811036	260	29	6811103	150	3	6811235	250	14
6810969	266	15	6811037	260	31	6811104	150	4	6811236	250	6
	268	19	6811038	260	32	6811105	150	5	6811237	250	7
	270	21	6811039	188	23	6811106	150	7	6811238	250	8
6810970	266	17	6811040	260	36	6811107	150	9	6811239	250	9
	268	21	6811041	260	37	6811108	150	9	681160	7	1
	270	23	6811042	260	38		150	12	6900010	180	17
6810971	190	42	6811043	260	39	6811109	150	15	6900011	150	18
6810972	268	26	6811044	260	40	6811111	150	19	6900012	150	21
6810973	190	43	6811046	260	1	6811112	148	28	6900014	49	15
6810975	190	45	6811048	260	5	6811113	150	22		53	15
6810976	268	32	6811049	260	6	6811114	148	25	6900015	49	16
6810977	268	34	6811050	260	7	6811115	148	26		53	16
6810978	268	36	6811051	260	8	6811116	148	27	6900016	180	24
6810979	268	37	6811053	260	11	6811117	148	28	6900017	124	6
6810980	268	38	6811054	260	14	6811118	148	30	6900020	49	15
6810981	268	4	6811055	260	19	6811119	148	31	6900021	280	34
6810982	268	5	6811057	260	23	6811120	148	32	6900022	280	30
6810983	268	6	6811058	258	25	6811121	148	33	6900027	130	3
6810984	268	7	6811059	258	32	6811122	148	34	6900028	112	2
6810985	268	8	6811060	258	33	6811123	9	3	6900029	112	11
6810986	268	9	6811061	258	34		148	38	6900030	260	34
6810987	268	11	6811062	258	36	6811124	148	4	6900031	260	35
			6811063	258	37	6811125	148	9	6900032	262	8

6900035	73	3
6900036	73	2
6900040	126	5
6900041	126	6
6900043	116	4
6900044	294	16
6900045	142	11
6900046	142	12
6900047	142	10
6900048	142	13
6900052	160	1
6900053	160	2
6900054	294	29
6900057	168	17
	170	17
6900069	168	23
	170	23
6900070	168	24
	170	24
6900113	286	27
	288	27
	290	27
	292	27
	296	27
	298	27
6900114	286	28
	288	28
	290	28
	292	28
6900115	286	29
	288	29
	290	29
	292	29
	296	29
	298	29
6900116	286	30
	288	30
	290	30
	292	30
	294	17
	296	30
	298	30
6900117	286	31
	288	31
	290	31
	292	31
	294	18
	296	31
	298	31
6900118	286	16
	288	16
	290	16
	292	16
	296	16
	298	16
6900119	286	17
	288	17
	290	17
	292	17
	296	17
	298	17
6900120	286	18
	288	18
	290	18
	292	18
	296	18
	298	18
6900121	286	19
	288	19
	290	19
	292	19
	296	19
	298	19
6900122	11	20
	13	17
6900123	13	21
6900126	200	3
6900129	104	7
6900130	206	3
6900131	110	13
6900132	286	40
	288	40
	290	40
	292	40
	296	40
	298	40
6900134	294	21
6900135	286	38
	288	38
	290	38
	292	38
	296	38
	298	38
6900136	132	23
	134	23
6900138	282	55
	284	55
6900139	282	56
	284	56
6900140	124	19
6900141	126	17
6900142	120	15
	126	16
	180	19
	254	8
	258	18
6900143	104	14
	112	18
	164	4
6900144	104	13
	112	17
	116	13
	200	18
6900145	106	12
	132	29
	134	29
6900146	118	21
6900147	132	34
	134	33
6900148	132	35
	134	35
6900149	130	4
6900150	166	15
6900151	258	35
6900152	168	90
	170	90
6900153	150	23
6900154	150	24
6900155	118	15
6900156	258	26
6900157	258	27
6900158	258	28
	258	30
6900159	258	29
6900160	286	41
	288	41
	290	41
	292	41
	296	41
	298	41
6900161	286	32
	288	32
	290	32
	292	32
	296	32
	298	32
6900162	124	21
6900163	286	53
	288	53
6900164	118	22
6900169	112	13
6900170	238	20
6900171	238	14
6900173	214	2
6900174	134	37
6900175	134	5
6900176	134	12
6900177	134	1
6900178	134	3
6900179	134	39
6900180	134	40
6900181	134	41
6900182	134	42
6900183	232	1
6900184	232	1
6900193	190	36
6900194	188	10
	190	49
6900195	282	11
	282	37
	284	11
	284	37
6900196	282	35
	284	35
6900200	49	16
	53	15
	53	16
6900201	258	33
6900202	258	34
6900203	258	35
6900204	214	3