BOBCAT

RUTHZIL TRATOR COMERCIAL DE PEÇAS LTDA 11 97083-6812 ROLANDO

843
(SN 5026 13001 23999)

Engine notes:

UPPER GASKET KIT 6564574

LOWER GASKET KIT 6564575

Parts Manual

GENERAL INFORMATION

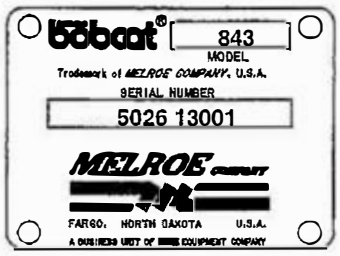

When using the machine serial number, use the complete number. When Serial Numbers do not appear below the page heading, parts information applies to all loaders.

Some Serial Number breaks are not available at time of printing. These are listed as & Below or & Above.

The number shown in the quantity column in this manual is the number of parts needed for the illustration on the page. For some parts an "x" will be shown in the quantity column. This "x" indicates that the quantity to be used is "As Needed".

When references L.H. and R.H. are used in this manual, it is done from the operator's seat in the forward operating position.

To find the size and kind of bolt use the Bobcat Standard Microfiche (P/N 6566077).

Some of the illustrations and information found in this parts manual were supplied to Bobcat Company by machine component companies.

ABBREVIATIONS & SYMBOLS

SALES = Order from Gwinner Sales Department

NSS = Not Serviced Seperately

NAP = Not Available as Parts

* = Changed or Added Sections, Pages or Part Numbers

Disposition Code Definition (Found in the Remarks Column)

[A] = Use Up

[B] = Use Up on Other Appplication (See PNI)

[C] = File PDR Report With Bobcat Parts Sales

[D] = Part Number Error

Explications en francais	Grid Nb	3
Erklärungen auf deutsch	Grid Nb	4
Spiegazioni in italiano	Grid Nb	5
Explicaciones en espanol	Grid Nb	6
Verklaring in het Nederlands	Grid Nb	7

NOTE D'INFORMATION

Pour toute référence au numéro de série de l'engin, toujours donner le numéro complet.

Le chiffré apparaissant dans la colonne des quantités de ce manuel représentent le nombre de pièces nécessaires pour l'illustration reprise sur la page. Dans certains cas, on lira un "x" dans la colonne des quantités. Cet "x" indique que la quantité nécessaire est "selon besoin".

Pour toute référence vers la GAUCHE ou la DROITE dans ce manuel, considérer que la personne se trouve assise dans le siège de l'opérateur, en position de fonctionnement en marche avant.

Certaines illustrations et informations reprises dans ce manuel de pièces de rechange ont été fournies à Bobcat par des fabricants de composants.

ABREVIATIONS & SYMBOLES

SALES	= Commander au Service Ventes à Bruxelles
NSS	= Pas vendu séparément
NAP	= Non disponible comme pièce de rechange
*	= Chapitre, page ou numéro de pièce modifié ou supplémentaire
BTI	= Bobcat Technical Information Bulletin : voir à la fin de la microfiché du modèle concerné ou la microfiche générale reprenant l' ensemble des "BTI".
was 6535403	= était avant 6535403
adj. (adjustment)	= réglage
Assembly	= ensemble
available W/Ref.	= disponible avec réf.
bulk/sold per foot	= en vrac/vendu par pied
does not include	= ne comprend pas
included with	= compris dans
I.D.	= D.I. (diamètre intérieur)
O.D.	= D.E. (diamètre extérieur)
not in kit	= pas en kit
W/ – WO/	= inclus/ – non inclus/
Qty	= quantité requise
see page/ref.	= voir page/réf.
used with ref/	= utilisé avec réf.
0,05 inch thickness	= 0,05 pouce d'épaisseur (un pouce = 25.4 mm)
weld on	= à souder

ALLGEMEINE INFORMATIONEN

Bei Angabe der Maschinen–Seriennummer stets die komplette Nummer angeben.

Bei der in der Mengenspalte (Anzahl) in diesem Handbuch angegebenen Zahl handelt es sich um die Anzahl von Teilen, die für die Abbildung auf der betreffenden Seite benötigt werden. Bei manchen Teilen in der Mengenspalte ist ein "x" angegeben. Dieses "x" weist darauf hin, dass sich die Anzahl der verwendeten Teile auf den "Bedarf" bezieht.

Bei Verwendung der Seitenangaben links und rechts in diesem Handbuch gelten diese für die Blickrichtung vom Fahrersitz aus, und zwar in Vorwärts–Betriebsrichtung.

Einige der in diesem Ersatzteilhandbuch aufgeführten Abbildungen und Informationen wurden der Bobcat von den Herstellern von Maschinenbauteilen zur Verfügung gestellt.

ABKÜRZUNGEN UND SYMBOLE

SALES	= Bestellung bei der Verkaufsabteilung in Brüssel
NSS	= Nicht einzeln erhältlich
NAP	= Nicht als Ersatzteil erhältlich
*	= Geänderte oder hinzugefügte Abschnitte, Seiten oder Teilenummern
BTI	= Bobcat Technical Information Bulletin : Siehe am Ende der Mikrokarte des jeweiligen Modells oder der allgemeinen Mikrokarte der BTI.
was 6535403	= War 6535403
adj.	= Einstellung
Assembly	= Baugruppe
available W/Ref.	= erhältlich mit der Referenz
bulk/sold per foot	= Mengenabnahme / Verkauf pro Fuss
does not include	= beinhaltet nicht
included with	= enthalten in
I.D.	= Innendurchmesser
O.D.	= Aussendurchmesser
not in kit	= nicht in Bausatz
W/ – WO/	= mit/ – ohne/
Qty	= Anzahl
see page/ref.	= Siehe Seite / Referenz
used with ref.	= verwendet mit Referenz
0.05 inch thickness	= Dicke : 0.05 Zoll (ein Zoll = 25.4 mm)
weld on	= anschweissen

INFORMAZIONI GENERALI

Quando si usa il numero di serie della macchina usare il numero completo.

Il numero mostrato nella colonna della quantità di questo manuale corrisponde al numero di componenti necessari per l'illustrazione della pagina. Per alcuni componenti appare "X" nella colonna delle quantità. Questa "X" indica che la quantità da usare è "come necessario".

See in questo manuale si fa riferimento alla parte destra o sinistra, si intende dal sedile dell'operatore nella posizione in avanti di funzionamento.

Alcune delle illustrazioni e informazioni trovate in questo manuale di componenti sono state fornite alla Bobcat da società di componenti di macchine.

SIMBOLI E ABBREVIAZIONI

SALES	= Ordinare al servizio vendite di Bruxelles
NSS	= Non vendute separatamente
NAP	= Non disponibile come componente
*	= Sezioni, pagine o numeri di componente cambiati o aggiunti
BTI	= (Bobcat Technical information) Ved. al termine del microfiche del modello relativo oppure microfiche generale
was 6535403	= era 6535403
adj. (adjustment)	= regol. (regolazione)
Assembly	= Complessivo
available W/ref.	= disponibile con rif.
bulk/sold per foot	= alla rinfusa/venduto al piede
does not include	= non comprende
Included with	= compreso con
I.D.	= d. i.
O.D.	= d. e.
not in kit	= non fa parte del kit
W/ – WO/	= con – senza
Qty	= Qtà
see page/ref	= ved. pagina/rif.
used with ref.	= usato con il rif.
0,05 inch thickness	= spessore 0,05 pollici (un pollice = 25,4 mm)
weld on	= a saldare

INFORMACION GENERAL

Al utilizar el número de serie de la máquina, debe emplearse el número completo.

El número que figura en la columna de "Unidades" en este manual es el número de piezas que se necesitan para la ilustración que consta en la página. En algunas piezas aparece una "x" en la columna de "Unidades". Esta "x" indica que las unidades a utilizar son "según sea necesario".

Cuando se empleen las referencias izq. y dcha., éstas se entienden mirando desde el asiento del conductor, en posición de marcha adelante.

Algunas de las ilustraciones y la información que figuran en este manual de piezas han sido facilitadas a Bobcat por empresas de componentes de máquinas.

ABREVIATURAS Y SIMBOLOS

VENTAS	= Pedido al Departamento de Ventas de Bruselas
NSS	= No se vende por separado
NAP	= No disponible como pieza de repuesto
*	= Secciones, páginas o referencias modificadas o añadidas
BTI	= (Bobcat Tecnical Information) Ver al final de la microficha del modelo afectado o en la microficha general "Boletín de Información Técnica Bobcat".
was 6535403	= era anteriormente el 6535403
adj. (adjustment)	= ajuste
assembly	= conjunto
available W/Ref.	= disponible con la ref.
bulk/sold per foot	= a granel/vendido por pies
does not include	= no incluye
included with	= incluido en
I.D.	= diámetro interior
O.D.	= diámetro exterior
not in kit	= no en el kit
W/ – WO/	= con/ – sin
Qty	= Unidades
see page /ref.	= ver página/ref.
used with ref.	= empleado con la ref.
0,05 inch thickness	= 0,05 pulgadas de espesor (1 pulgada = 25,4 mm)
weld on	= debe ser soldado

ALGEMENE INFORMATIE

Als u het serienummer van de machine gebruikt, geef dan het gehele serienummer.

Het cijfer dat voorkomt in de kolom "Aantal", in deze handleiding, is het aantal onderdelen dat nodig is van de illustratie op de pagina. Voor sommige onderdelen staat er een "x" in de kolom "Aantal". Deze "x" betekent dat er een aantal "zoals nodig" vereist is.

Wanneer er in deze handleiding naar "links" en naar "rechts" gerefereerd wordt, moet dit verstaan worden voor een bestuurder die in de bestuurdersstoel zit in de voorwaartse bedrijfsstand.

Sommige van de illustraties en informatie in deze onderdelen–handleiding werden door firma's van machine–componenten geleverd aan Bobcat.

AFKORTINGEN EN SYMBOLEN

SALES	= Bestellen bij de Verkoopafdeling te Brussel
NSS	= Niet afzonderlijk te verkrijgen
NAP	= Niet beschikbaar als onderdeel
*	= Gewijzigde of toegevoegde paragrafen, pagina's of onderdeelnummers
BTI	= Bobcat Technical Information Bulletin : Zie einde van de microfiche van het desbetreffende model of einde van de algemene microfiche die het geheel van alle "BTI" herneemt.
was 6535403	= was vroeger 6535403
adj. (adjustment)	= afstelling
Assembly	= geheel
available W/Ref.	= beschikbaar met ref.
bulk/sold per foot	= bulk/aan de meter verkocht
does not include	= bevat niet
includes with	= is bevat in
I.D.	= ϕ inw. (inwendige diameter)
O.D.	= ϕ uitw. (uitwendige diameter)
not in kit	= niet in de kit
W/ – WO/	= met/ – zonder/
Qty	= vereiste aantal
see page/ref.	= zie pagina/ref.
used with ref/	= gebruikt met ref.
0,05 inch thickness	= 0.05 inch dik (een inch = 25.4 mm)
weld on	= te lassen

843 ALPHABETICAL INDEX

AIR CLEANER 198
ALARM, BACK-UP 207
ALTERNATOR 146, 150, 228, 229
ANTI-FREEZE 286
AXLE 43
AXLE STUD 43

BACK-UP ALARM 207
BATTERY 138, 140
BEARING, AXLE 43
BELT, ALT. 158, 166
BLACK GOLD 286
BLOCK HEATER 208
BOB-TACH 34
BRAKE PAD 42
BREATHER, CHAINCASE 42

CAB 16, 18, 20
CAB ENCLOSURE . 210, 212, 222, 224, 227
CAMSHAFT 184
CAP, FUEL 30, 32
CAP, HYD. 84, 88, 92
CAP, RADIATOR 164, 172
COOLANT RECOVERY TANK 162, 170
COOLER, OIL 82, 96, 100, 104
COOLER, ENGINE OIL 194
CRANKSHAFT 182
CYLINDER, BLOCK 180
CYLINDER, LIFT 56
CYLINDER, TILT 60

DECALS 232, 234
DIPSTICK 196
DOOR, CAB 210, 214, 222, 224, 227
DOOR, REAR 12

ENGINE 175

FILTER, AIR 198
FILTER, ENGINE OIL 194
FILTER, FUEL 193
FILTER, HYD. 129
FIRE EXTINGUISER 239
FUEL FILTER 193

GAS SPRING 18, 20
GAS SPRING, CAB DOOR 212
GASKET KIT 200
GEARCASE 40
GLOW PLUG 178

HARDHAT 272
HARNESS, CAB 132, 134
HARNESS, ENGINE 138, 140
HEAD, CYLINDER 184
HEATER, BLOCK 208
HEATER, CAB 247, 248, 249, 250
HORN 253, 254
HYDROSTATIC FILTER 129
HYDROSTATIC MOTOR 122
HYDROSTATIC PUMP 118, 120

INSECT SCREEN KIT 257

KEYLESS IGNITION 256

LEVER KIT, BOB-TACH 34
LIFT ARM 14
LIFT ARM STOP 258
LIFT, SINGLE POINT 269
LIGHTS, FLASHER 240

MOTOR, HYDROSTATIC 122
MUFFLER 158, 166
MUFFLER, PURIFIER 261

OIL 286
OIL COOLER 82, 96, 100, 104

PAINT 286
PEDAL, BRAKE 42
PISTON 182
PUMP, GEAR 124, 126, 128
PUMP, HYDROSTATIC 118, 120
PUMP, INJECTION 192
PUMP, OIL 196
PUMP, WATER 190

RADIATOR 162, 170
RADIATOR, CAP 164, 172
RENTAL KIT 264, 265
RIM 279, 281

SEAL KIT, BUCKET POSITIONING 78
SEAL KIT, HYD. VALVE 72
SEAL KIT, LIFT 56
SEAL KIT, TILT CYL. 60
SEAT 35
SEAT, SUSPENSION 276, 278
SEAT BAR 22
SEAT BAR KIT 266
SEAT BELT 271
SINGLE POINT LIFT 269, 270
SPROCKET, DRIVE 43
STARTER 154, 156
STROBE LIGHT 273, 274

TANK, COOLANT RECOVERY ... 162, 170
THERMOSTAT 190
TIMING GEAR COVER 188
TIRES 279, 281

VALVE COVER 178
VALVE, BUCKET POSITIONING 78
VALVE, ENGINE 184
VALVE, HYDRAULIC 70

WINDOW, REAR 222
WINDOW, SIDE 210
WINDOW, TOP 222
WINDOWS, CAB 220
WINDSHIELD WIPER 212, 283

843 CONTENTS

MAIN FRAME 11–36
MAIN FRAME 11
LIFT ARMS & BOBTACH 13
OPERATOR CAB 15–20
SEAT & SEAT BAR 21–24
PANELS 25–28
FUEL SYSTEM 29–32
BOB–TACH 33
SEAT 35, 36
DRIVE TRAIN 37–43
DRIVE TRAIN 37
GEARCASE 39
DISC BRAKES 41
AXLE 43
HYDRAULIC SYSTEM 45–78
HYDRAULIC CIRCUITRY 45–50
AUXILIARY HYDRAULICS 51–54
LIFT CYLINDER 55, 56
TILT CYLINDER 57, 59
CONTROL VALVE 61
INLET SECTION 62
TILT SECTION 63
LIFT SECTION 65
AUXILIARY SECTION 67
CONTROL VALVE 69–72
CONTROL PEDALS 73–76
BUCKET POSITIONING VALVE 77
HYDROSTATIC SYSTEM 79–129
HYDROSTATIC CIRCUITRY 79–106
HAND CONTROLS 107–114
HYDROSTATIC PUMPS 115–120
HYDROSTATIC MOTOR 121
GEAR PUMP 123–128
HYDROSTATIC OIL FILTER 129
ELECTRICAL SYSTEM 131–156
CAB ELECTRICAL SYSTEM 131–136
ENGINE ELECTRICAL 137–140
ALTERNATOR 141–150
STARTER 151–156
POWER UNIT 157–200
ENGINE Perkins 204.25 TK200 Series & ATTACHING PARTS 157–172
THROTTLE 173
UNIVERSAL JOINT 174
ENGINE & BREAKDOWN 175–190
FUEL INJECTION SYSTEM 191
FUEL FILTER 193
ENGINE OIL COOLER & FILTER 194
LUBRICATION SYSTEM 195
AIR CLEANER 198
GASKET KIT 199

843 CONTENTS (Cont'd)

ACCESSORIES & OPTIONS

AIR SEAL/SCREEN KIT 203, 205
BACK–UP ALARM KIT 207
BLOCK HEATER 208
CAB ENCLOSURE 209
CAB DOOR 211–218
CAB WINDOWS 219
CAB ENCLOSURE 221–227
CLOSED ALTERNATOR KIT 228
CLOSED ALTERNATOR 229
DECALS 231–234
DEBRIS SCREEN KIT 235
DELUXE UPHOLSTERY KIT 236
DOOR STOP & TOW HITCH 237
ENGINE COOLANT KIT 238
FIRE EXTINGUISHER 239
FLASHER LIGHTS 240
FUEL FILL EXTENSION 241
HAND CONTROLS KIT 243–246
HEATER KIT 247, 248
HEATER 249, 250
HEATER PLUMBING KIT 251, 252
HORN 253
HORN KIT 254
HOSE CLAMP KIT 255
KEYLESS IGNITION 256
INSECT SCREEN KIT 257
LIFT ARM STOP 258
OPERATOR CAB (DELUXE) 259
MUFFLER/PURIFIER KIT 261
OPERATOR CAB (EUROPEAN) 262, 263
RENTAL KIT 264, 265
SEAT BAR KIT 266, 267
SINGLE POINT LIFT 269, 270
SEAT BELT 3" 271
SOUND REDUCTION HARDHAT 272
STROBE LIGHT 273, 274
SUSPENSION SEAT 276, 277
TIRES & RIMS 279–281
WATER LEVEL SENSOR KIT 282
WINDSHIELD WIPER 283

BULK ITEMS 285

NUMERICAL INDEX 287

MAIN FRAME

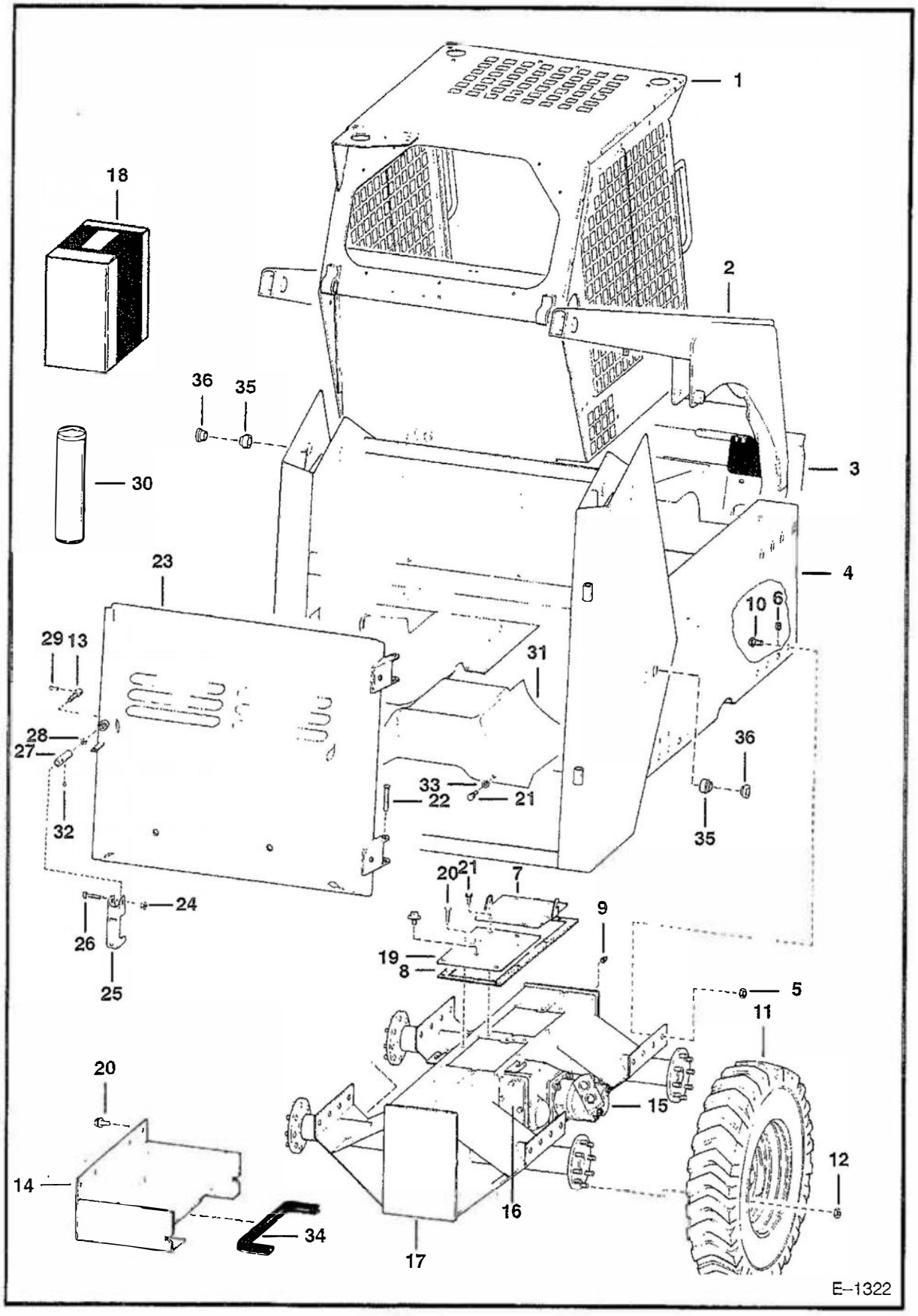
1
2
3
4
5
6
7
8
9
10
11
12
13
14
15
16
17
18
19
20
21
22
23
24
25
26
27
28
29
30
31
32
33
34
35
36
E–1322

MAIN FRAME (Cont'd)

Ref. No.	Part Number	Description	Remarks	Serial Number	Qty.
1		CAB	See Page 19		1
2		LIFT ARM	See Page 13		1
3		BOB–TACH	See Page 33		1
4	6562183	MAIN FRAME	Was 6569374 [A]	14999 & Below	1
	6565729	MAIN FRAME	Was 6569374 [A]	15001 – 19999	1
	6576709	MAIN FRAME	Was 6569374 [A]	20001 & Above	1
5	85D–12	NUT			16
6	6558465	WASHER	Not used with flange head bolt		12
7		COVER	See Page 41		1
8	6703117	GASKET	Was 6553833 [A]		1
9	40K–12	PLUG			1
10	31C–1228	BOLT	flange head		16
11		TIRE	See Page 279–281		4
12	6564669	NUT	wheel – Was 6519169 [A]		32
13	NAP	SCREW	coarse threads – Order 6565627		
			6565628 & 6565629		1
	6565629	SCREW	fine threads		1
14	6565076	COVER	R.H.		1
	6565077	COVER	L.H.		1
15		MOTOR	See Page 121		2
16		GEARCASE	See Page 39		2
17		CHAINCASE	See Page 37		1
18	6579448	LATCH	kit – Ref. 13, 24–29 & 32		1
19	6558467	PLATE			1
20	84G–3712	BOLT			16
21	84G–3716	BOLT			6
22	6564340	PIN			2
23	6704328	REAR DOOR	Was 6565073 [A]		1
24	85D–5	NUT			1
25	6563681	HANDLE			1
26	38C–624	BOLT	Was 6564599 [B]		1
27	NAP	NUT	coarse threads – Order 6565627		
			6565628 & 6565629		1
	6565628	NUT	fine threads		1
28	6563624	NUT	coarse threads		
	6565627	NUT	fine threads		1
29	6599361	ROLL PIN			1
30	6632501	SEALANT	Used to fill seam on top of		
			chaincase		1
31	6563677	COVER	dust		1
32	33G–404	SET SCREW			1
33	25E–17	WASHER			4
34	6599653	MOULDING	bulk – Sold Per Foot – Order		
			24"(609,6 mm) Per Side		x
35	6555987	BUSHING	Weld On		4
36	6555989	BUSHING	Weld On		4

LIFT ARMS & BOBTACH

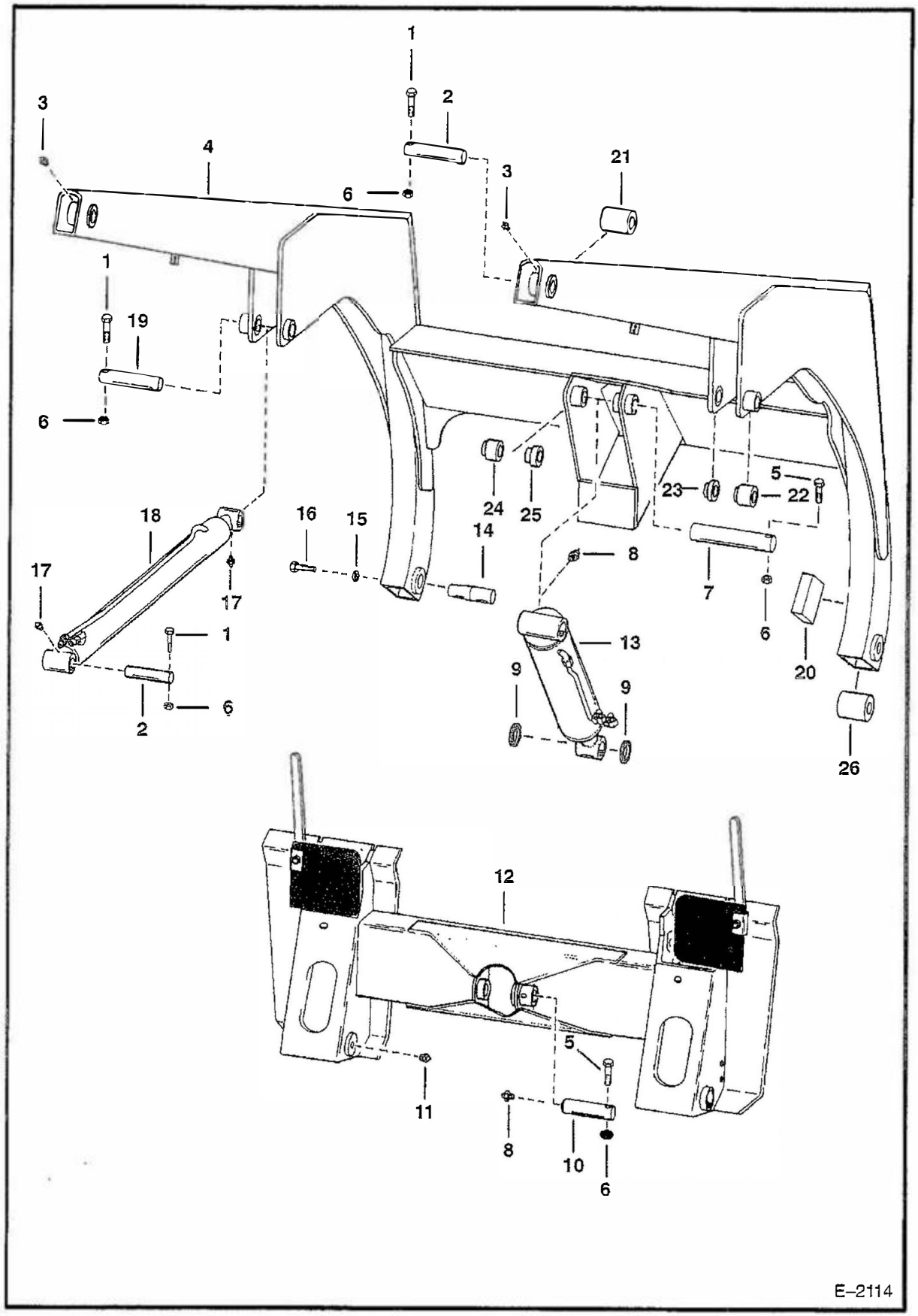

LIFT ARMS & BOBTACH (Cont'd)

Ref. No.	Part Number	Description	Remarks	Serial Number	Qty.
1	17C–640	BOLT			6
2	6559002	PIN			4
3	10H–35	GREASE ZERK	1/4–28		2
	10H–25	GREASE ZERK	1/8–27		2
4	6564160	LIFT ARM			1
5	17C–632	BOLT			2
6	85D–6	NUT			8
7	6704288	PIN	Was 6553061 [A]		1
8	10H–25	GREASE ZERK			2
9	6513605	SEAL			2
10	6703572	PIN	Was 6560704 [A]		1
11	743332	GREASE ZERK			2
12		BOB–TACH	See Page 33		1
13		CYLINDER	tilt – See Page 59		1
14	6559018	PIN			2
15	6576033	WASHER	Was 6558465 [A]		2
16	35C–1224	BOLT			2
17	11H–25	GREASE ZERK			4
18		CYLINDER	lift – See Page 56		2
19	6547593	PIN			2
20	6563335	STOP			2
21	6579117	BUSHING	Weld On – Was 6558986 [A]		2
22	6558992	BUSHING	Weld On		2
23	6558991	BUSHING	Weld On		2
24	6558803	BUSHING	Weld On		1
25	6558779	BUSHING	Weld On		1
26	6559838	BUSHING	Weld On		2

OPERATOR CAB
(S/N 19999 & Below)

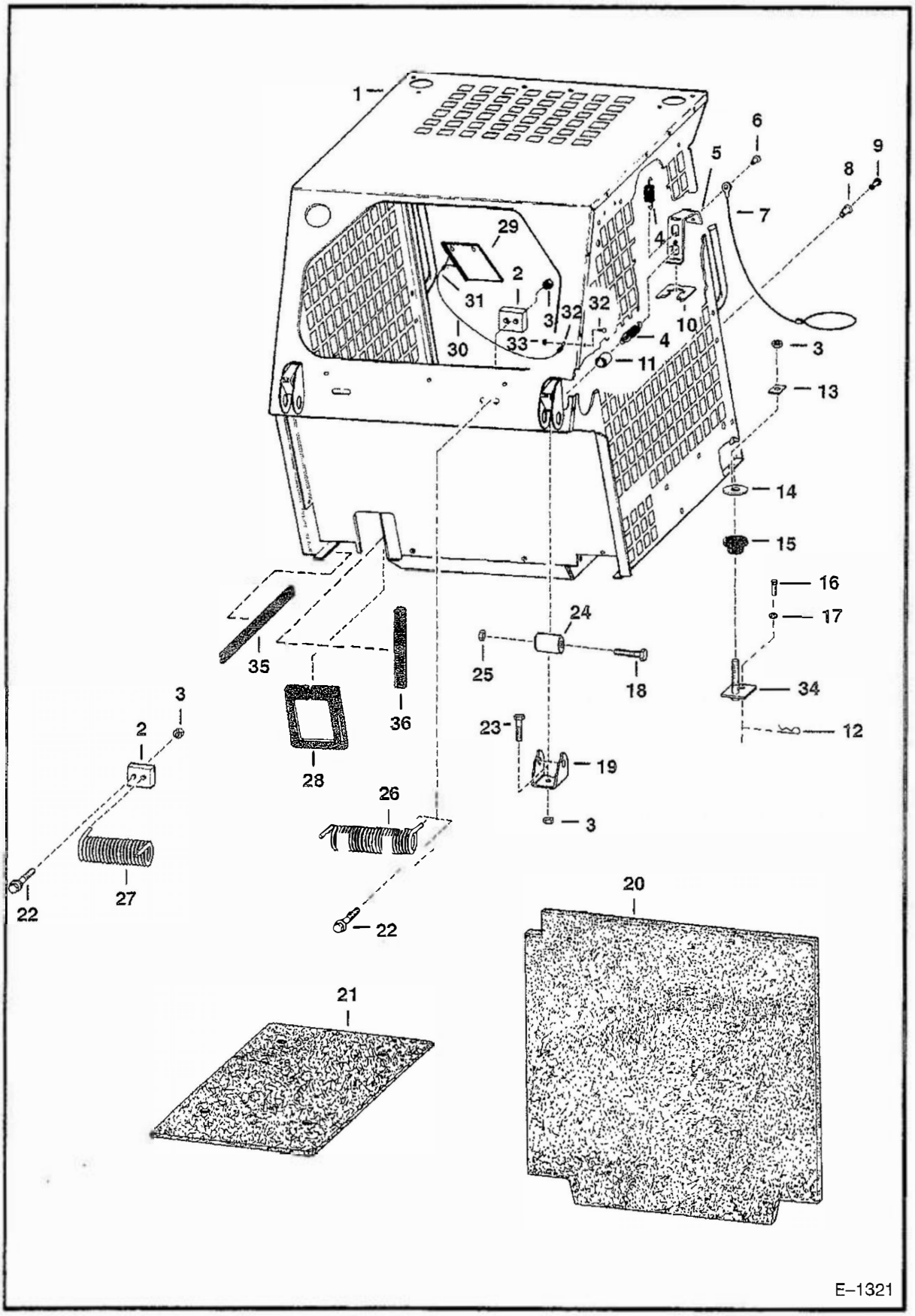

OPERATOR CAB (Cont'd)
(S/N 19999 & Below)

Ref. No.	Part Number	Description	Remarks	Serial Number	Qty.
1	NAP	CAB	See BTI 245		1
2	6563722	BLOCK			2
3	59D–8	NUT	Was 85D–8 [B]		6
4	6563128	SPRING			2
5	6563127	LEVER			1
6	6513733	RIVET			1
7	6563129	CABLE			1
8	6563156	SLEEVE		& Below	2
9	6630207	RIVET	Was 6512797 [A]	& Below	2
10	6564596	LATCH			1
11	6562683	TUBE			1
12	1306637	COTTER PIN			1
13	6553709	WASHER			2
14	6543321	WASHER			2
15	6560633	MOUNT	shock		2
16	221461	PIN		14999 & Below	2
17	6563914	WASHER		14999 & Below	2
18	17C–1056	BOLT			2
19	6562232	MOUNT			2
20	6568271	INSULATION	seat back – Was 6567826 [A]		1
21	6564688	INSULATION	seat pan		1
22	31C–824	BOLT			2
23	17C–824	BOLT			2
24	6562602	BUSHING			2
25	85D–10	NUT			2
26	6562688	SPRING			1
27	6562687	SPRING			1
28	6562804	SEAL			1
29	6567795	KIT	handbook – W/Ref. 30 & 31		1
	6567692	KIT	handbook – 4 Language – W/Ref. 30 & 31		1
30	6558309	WIRE ROPE	33" (838,2 mm) bulk – Sold Per Foot – Also Order (2) 6658310		
			Sleeve		x
31	6558310	SLEEVE			2
32*	10C–512	BOLT	Was 6553808 [A]		1
33	61D–5	NUT			1
34	6564701	BRACKET			2
35	6555351	MOULDING	bulk – Sold Per Foot – 12" (304,8 mm) Per Side		x
36	6513152	MOULDING	bulk – Sold Per Foot		x

OPERATOR CAB
(S/N 19999 & Below)

NOTE: 6714062 Gas Spring Kit to be used when loader is equipped W/Cab Enclosure. Because 6714062 Gas Spring is heavy duty W/larger diameter, (2) of 91G–410 Screws, with low profile heads, must be used in place of 35C–410 Bolt located behind gas spring on left side of ROPS.

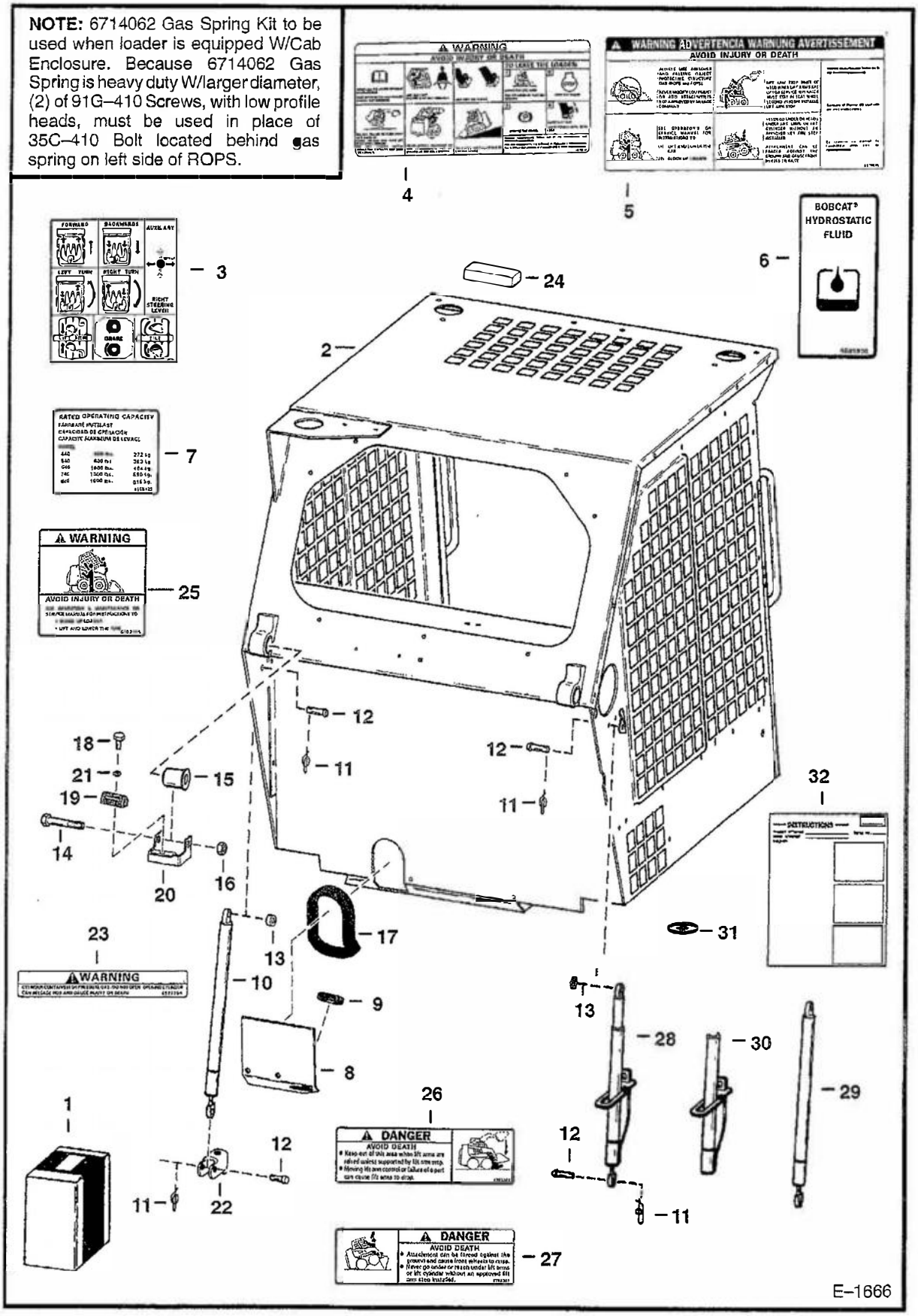

OPERATOR CAB (Cont'd)
(S/N 19999 & Below)

Ref. No.	Part Number	Description	Remarks	Serial Number	Qty.
1	6569248	KIT	cab – Ref. 8–24, 28 & 32 – Also Order 6569249		1
2	NSS	CAB	See BTI 245		1
3	6557312	DECAL			1
4	6579510	DECAL	Was 6575854 [A]		1
5	NAP	DECAL	Order Ref. 4 & 25–27 – Was 6575855 [A]		1
6	6565990	DECAL			1
7	6568439	DECAL			1
8	6568431	SHIELD			1
9	6553653	GROMMET			1
10	6700171	GAS SPRING	w/o lock – Was 6706590 [A]		1
	6714062	KIT	w/o lock – heavy duty gas spring SEE NOTE		1
	91G–416	SCREW	SEE NOTE		2
	6900531	INSTRUCTIONS	for kit 6714062		1
11	6631418	PIN	ring		4
12	6567743	PIN			4
13	6567604	SPACER			4
14	17C–1060	BOLT			2
15	6562602	BUSHING	rubber		2
16	83D–10	NUT			2
17	6555351	MOULDING	bulk – Sold Per Foot		x
18	84G–2516	BOLT	Was 61G–416 [B]		2
19	6568475	STOP			2
20	6568492	BRACKET			2
21	25E–13	WASHER			2
22	6567603	BRACKET			2
23	6577754	DECAL	gas spring – Warning – Was 6568741 [A]		2
24	6560690	INSULATION			2
25	6702255	DECAL	warning		1
26	6702301	DECAL	danger		1
27	6702302	DECAL	danger		1
28	NLA	GAS SPRING	With lock – Order 29, 30 & 31		1
29	6664205	GAS SPRING			1
30	6708189	TUBE	Was 6701175 [A]		1
31	6701174	WASHER			1
32	6570065	INSTRUCTIONS			1

OPERATOR CAB
(S/N 20001 & Above)

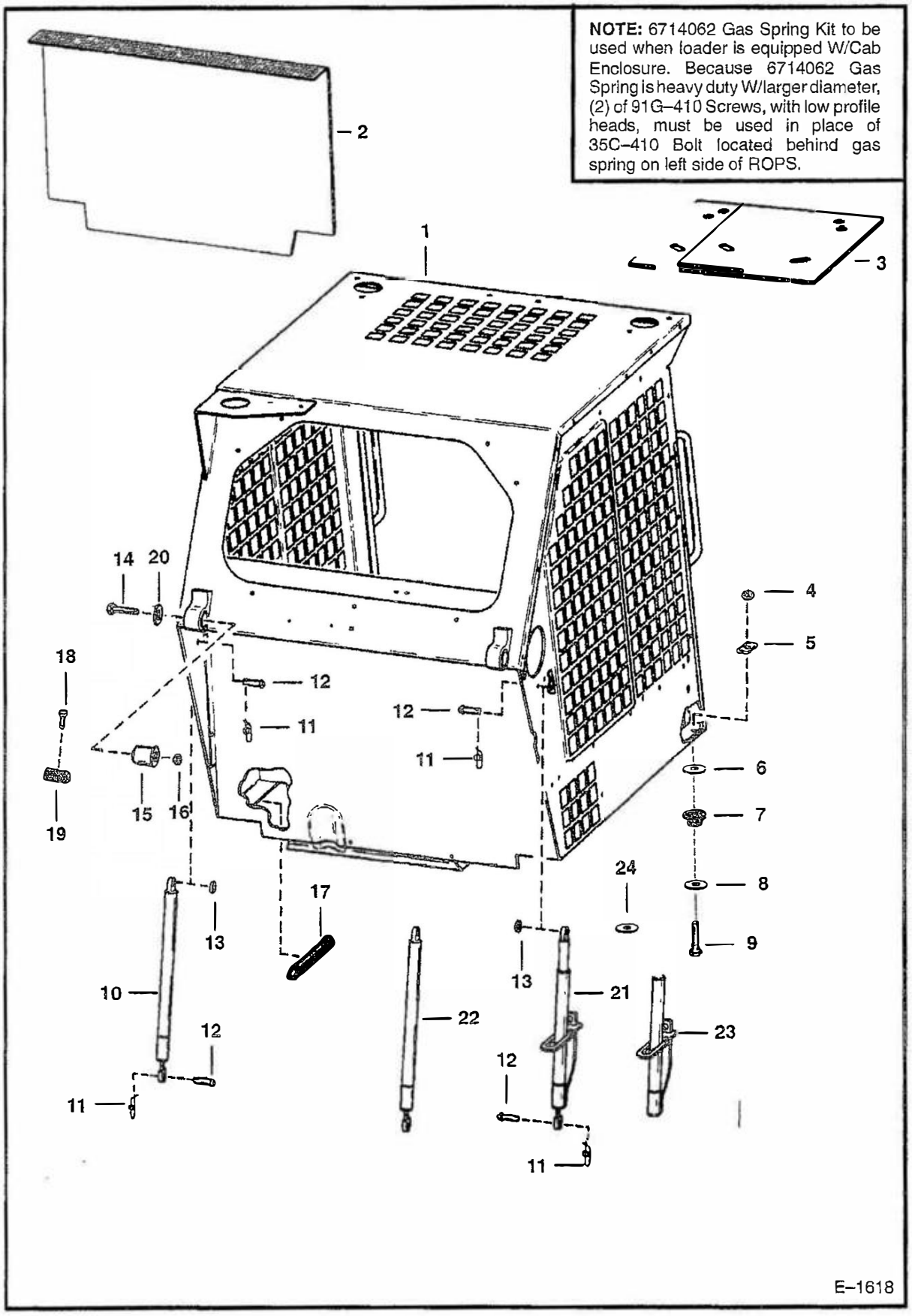

OPERATOR CAB (Cont'd)
(S/N 20001 & Above)

Ref. No.	Part Number	Description	Remarks	Serial Number	Qty.
1	6569249	CAB	Includes Decals – See BTI 245		1
2	6568271	INSULATION			1
3	6567890	INSULATION			1
4	59D–8	NUT	Was 85D–8 [B]		2
5	6553709	WASHER			2
6	6543321	WASHER			2
7	6560633	MOUNT			2
8	6515817	WASHER			2
9	17C–840	BOLT			2
10	6700171	GAS SPRING	w/o lock – Was 6706590 [A]		1
	6714062	KIT	w/o lock – heavy duty gas spring		
			SEE NOTE		1
	91G–416	SCREW	SEE NOTE		2
	6900531	INSTRUCTIONS	for kit 6714062		1
11	14J–1008	COTTER PIN			4
12	6567743	PIN			4
13	6567604	SPACER			4
14	17C–1056	BOLT			2
15	6562602	BUSHING	Isolator		2
16	83D–10	NUT			2
17	6555351	MOULDING	bulk – Sold Per Foot		x
18	61G–416	SCREW			2
19	6568475	STOP			2
20	6563152	WASHER			2
21	NLA	GAS SPRING	With lock – Order 22, 23 & 24		1
22	6664205	GAS SPRING			1
23	6708189	TUBE	Was 6701175 [A]		1
24	6701174	WASHER			1

SEAT & SEAT BAR

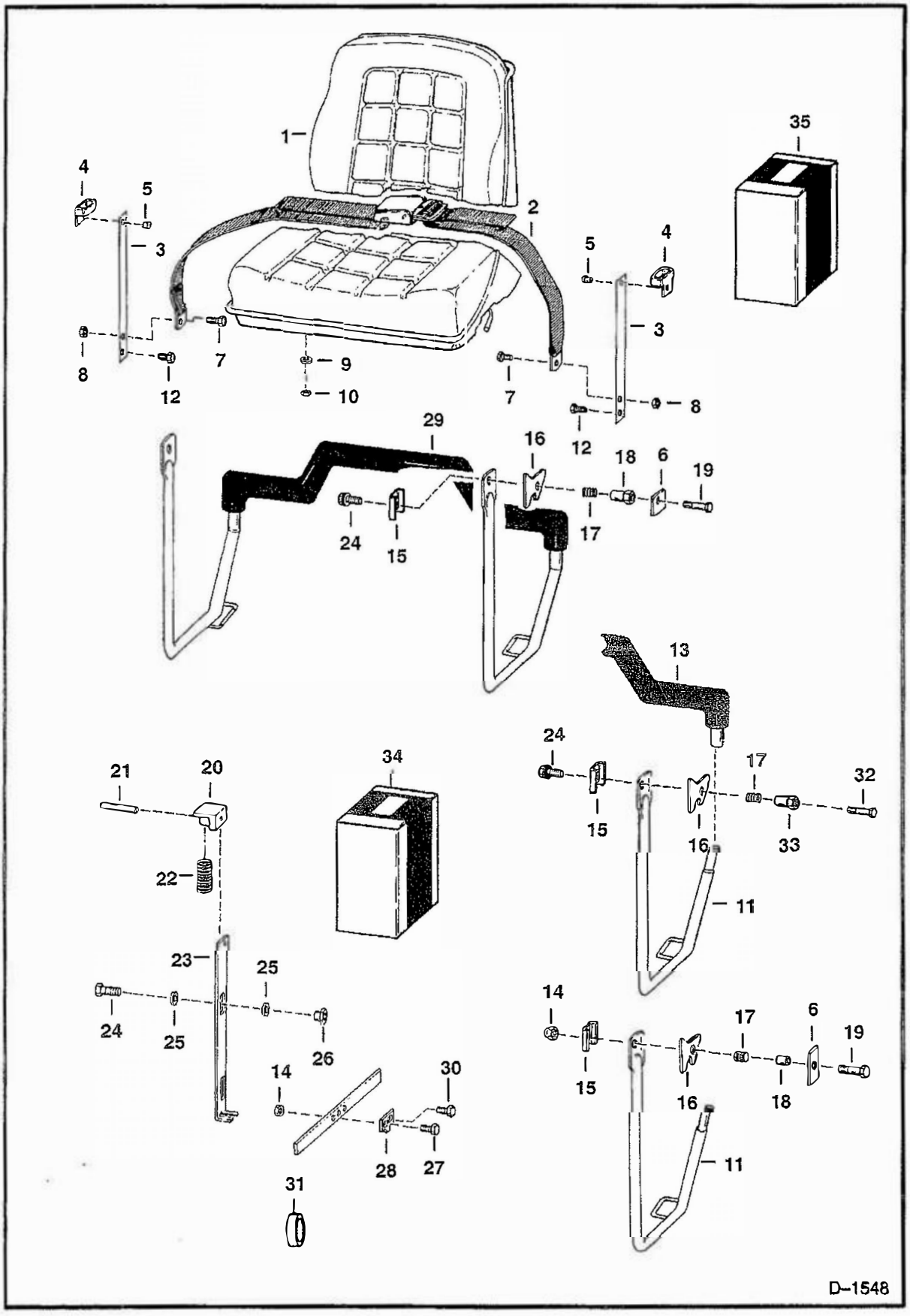

SEAT & SEAT BAR (Cont'd)

Ref. No.	Part Number	Description	Remarks	Serial Number	Qty.
1		SEAT	See Page 35		1
2	NAP	SEAT BELT	Order Ref. 35 – Was 6564774 [A]		1
*	NAP	SEAT BELT	Order 6675074 seal belt & (2) of Ref. 3 (6725373 spring plate) – Was 6667875 [A]		1
*	NAP	SEAT BELT	w/spring plates – Order 6675074 seal belt & (2) of Ref. 3 (6725373 spring plate) – Was 6725403 [A]		1
*	6675074	SEAT BELT	w/o spring plate		1
3	NAP	GUIDE ASSY	W/Ref. 4 & 5 – 13.75" – used W/NAP 6564774 seat belt – Was 6565354 [A]		2
*	NAP	GUIDE ASSY	W/Ref. 4 & 5 – 12.25" – used W/NAP 6667875 seat belt – Order 6711908 spring plate, Ref. 4 & (2) of Ref. 5 – Was 6711907 [A]		2
*	6711908	SPRING PLATE	Use W/Ref. 2 (NAP/6667875 seat belt)		2
*	6725373	SPRING PLATE	Use W/Ref. 2 (6675074 seat belt)		2
4	6565355	GUIDE			2
5	6630207	RIVET	Was 6512797 [A]		4
6	6564506	WASHER			2
7	17C–716	BOLT			2
8	85D–7	NUT			2
9	4E–5	WASHER	Was 4E–6 [B]		4
10	61D–5	NUT	Was 61D–6 [B]		4
11	NAP	ARM	L.H. – Order Ref. 29 – Was 6563296 [A]		1
	NAP	ARM	R.H. – Order Ref. 29 – Was 6563295 [A]		1
12	84G–3712	BOLT			2
13	NAP	SEAT BAR	Order Ref. 29 – Was 6563095 [A]		1
14	83D–6	NUT			6
15	6563557	WASHER			2
16	6563313	RETAINER			2
17	6704453	SPRING	Was 6503387 [A]		2
18	6564507	BUSHING			2
19	17C–636	BOLT			2
20	6563148	BLOCK			2
21	14J–2512	PIN			2
22	6702430	SPRING	Was 6563149 [A]		2
23	6563160	LOCK	Was 6563150 [A]		2
24	17C–612	BOLT			6
25	6700170	WASHER	Was 6563152 [A]		8
26	6559479	NUT			4
27	17C–616	BOLT			4
28	6563151	LINK			2
29	6706324	SEAT BAR	1 Piece – Was 6564588 [A]		1
30	31C–614	BOLT			1
31	6562956	CLAMP			1
32	35C–608	BOLT			2

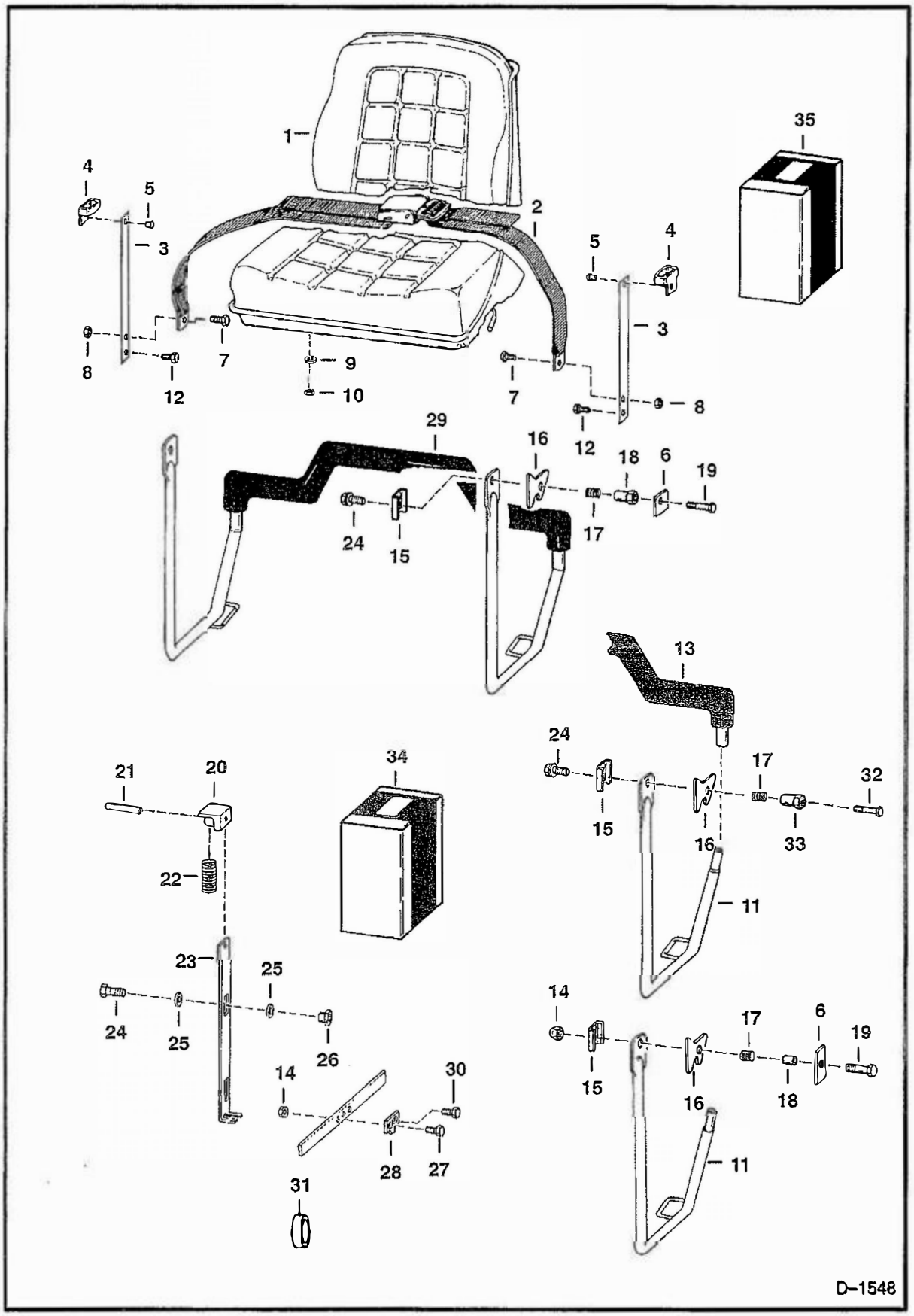
1
2
3
4
5
6
7
8
9
10
11
12
13
14
15
16
17
18
19
20
21
22
23
24
25
26
27
28
29
30
31
32
33
34
35
D-1548

SEAT & SEAT BAR (Cont'd)

Ref. No.	Part Number	Description	Remarks	Serial Number	Qty.
33	NAP	BUSHING	Order 6564506 & 6564507		2
34		KIT	Gas spring seat bar – See Page 266		1
35*	NAP	KIT	Seat belt – Order Ref. 2 – Was 6713061 [A]		1

PANELS
(S/N 19999 & Below)

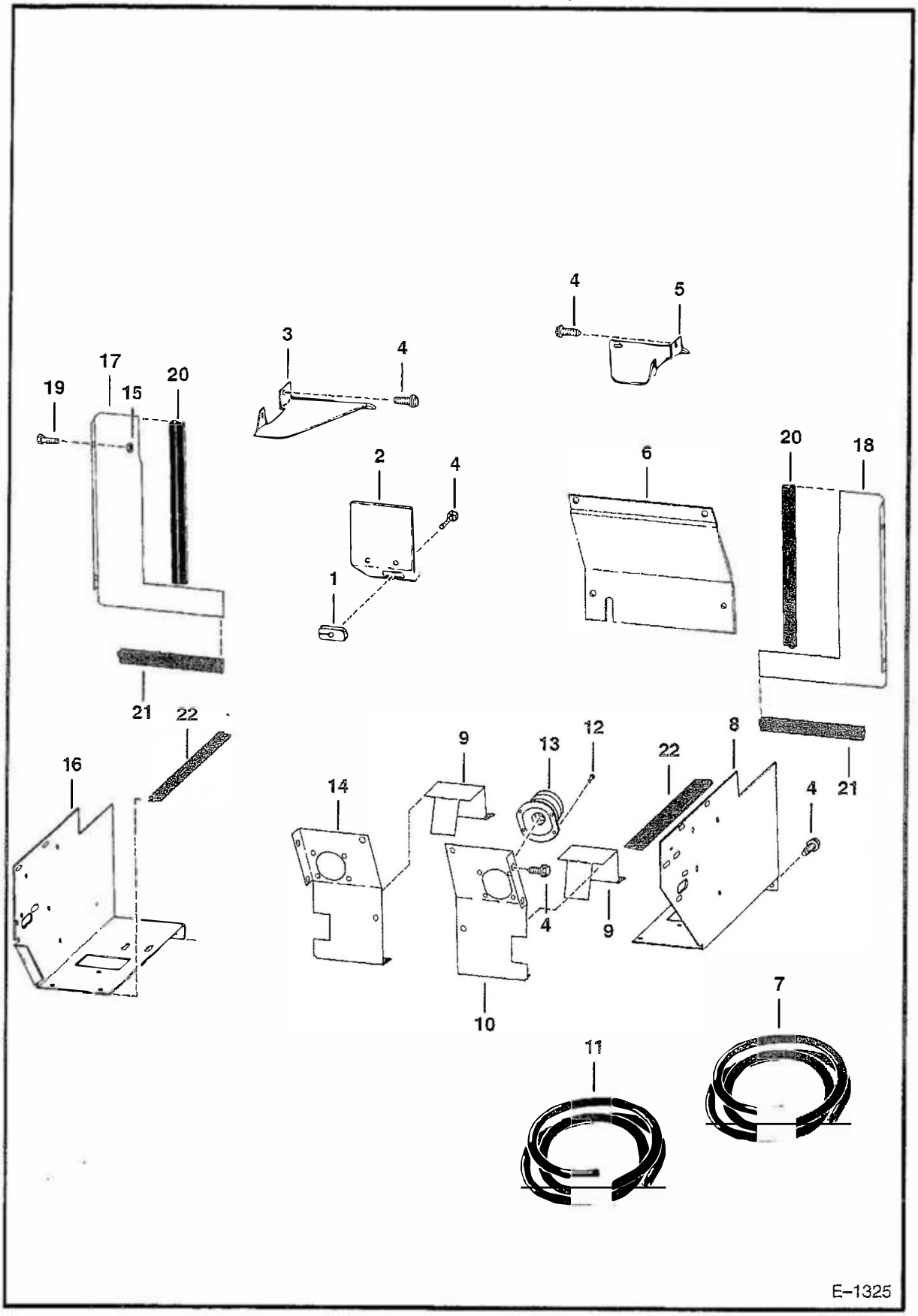

PANELS (Cont'd)
(S/N 19999 & Below)

Ref. No.	Part Number	Description	Remarks	Serial Number	Qty.
1	6553653	GROMMET			1
2	6562807	SHIELD			1
3	6562450	BRACE			1
4	84G–3712	BOLT			28
5	6562451	BRACE			1
6	6562589	COVER			1
7	6513152	MOULDING	bulk – Sold Per Foot – Order Feet Required		x
8	6562590	SHIELD	R.H.		1
9	6559762	STEP			2
10	6563546	PANEL	R.H.		1
11	4126590	MOULDING	bulk – Sold Per Foot – Order Feet Required		x
12	6598092	RIVET	Was 6512797 [B]		8
13	6532127	BOOT	rubber – Was 6563540 [A]		2
14	6563545	PANEL	L.H.		1
15	85D–6	NUT			4
16	6562591	SHIELD	L.H.		1
17	6564683	SHIELD			1
18	6564684	SHIELD			1
19	17C–612	BOLT			4
20	NAP	MOULDING	17"(431,8 mm) Order Ref. 7		x
21	NAP	MOULDING	12 1/2"(317,5 mm) Order Ref. 7		x
22	NAP	MOULDING	23"(584,2 mm) Order Ref. 11		x

PANELS
(S/N 20001 & Above)

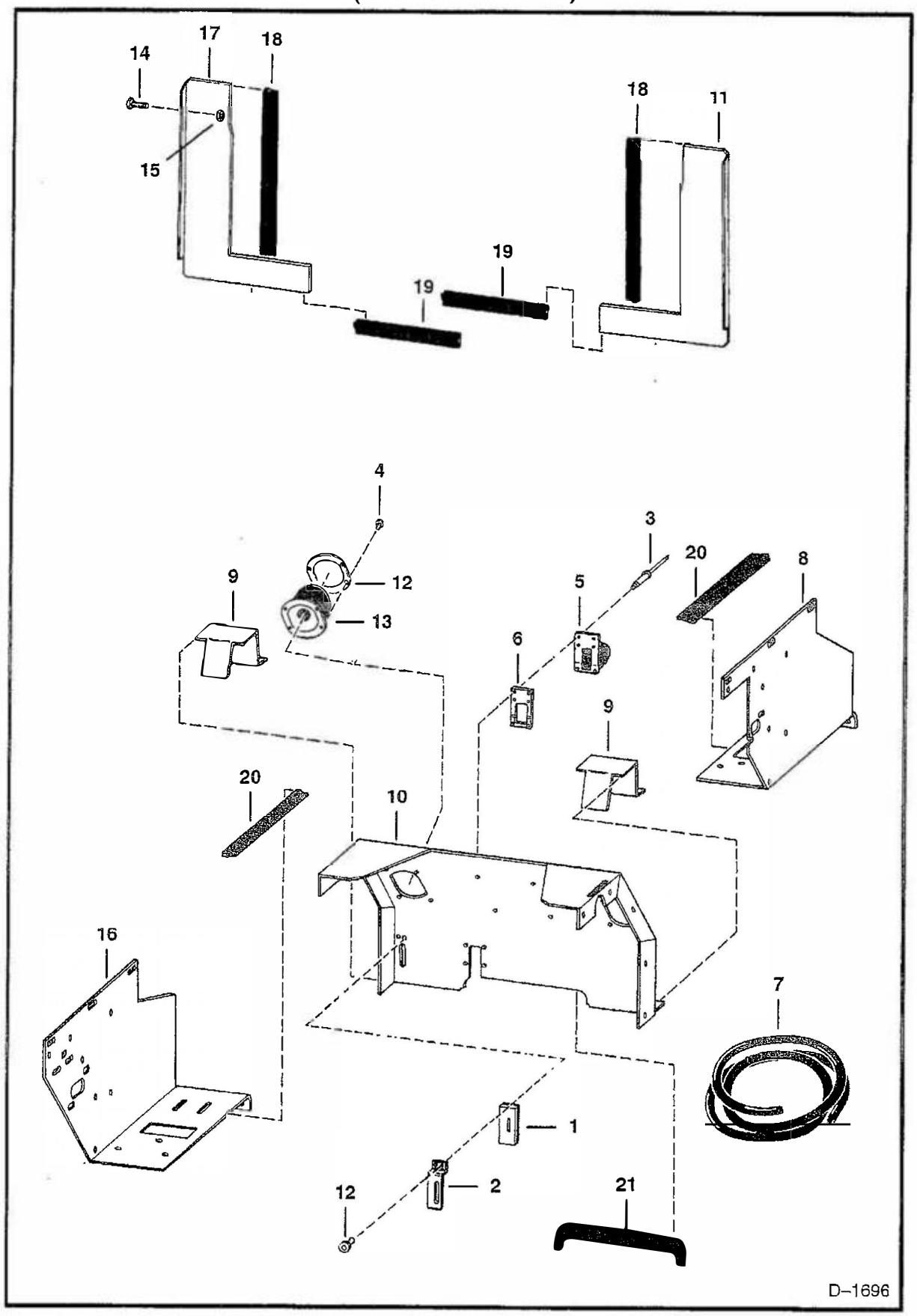

PANELS (Cont'd)
(S/N 20001 & Above)

Ref. No.	Part Number	Description	Remarks	Serial Number	Qty.
1	6577926	SEAL	foam – Was 6567741 [A]		2
2	6567738	RETAINER			2
3	6630207	RIVET	Was 6630193 [B]		8
4	84G–3712	BOLT			28
5	NAP	BOOT	Order 6571648 – Was 6565013 [A]		1
	6571648	BOOT	W/Metal insert not used		
			W/6571648		1
6	6565014	RETAINER			1
7	6513152	MOULDING	bulk – Sold Per Foot – Order Feet Required		x
8	6567740	SHIELD	R.H.		1
9	6559762	STEP			2
10	NAP	PANEL	Order 6577932 & 2 of 6577927 Retainers – Was 6567737 [A]		1
11	6564684	SHIELD	R.H.		1
12	NSS	PLATE	Order Ref. 13 – Was 6536392 [A]		2
13	6532127	BOOT	rubber – With Ref. 12		2
14	35C–616	BOLT			8
15	83D–6	NUT			8
16	6567739	SHIELD	L.H.		1
17	6564683	SHIELD	L.H.		1
18	NAP	MOULDING	17"(431,8 mm) Order Ref. 7		x
19	NAP	MOULDING	12 1/2"(317,5 mm) Order Ref. 7		x
20	NAP	MOULDING	23"(584,2 mm) Order Ref. 7		x
21	NAP	MOULDING	16"(406,4 mm) Order Ref. 7		x

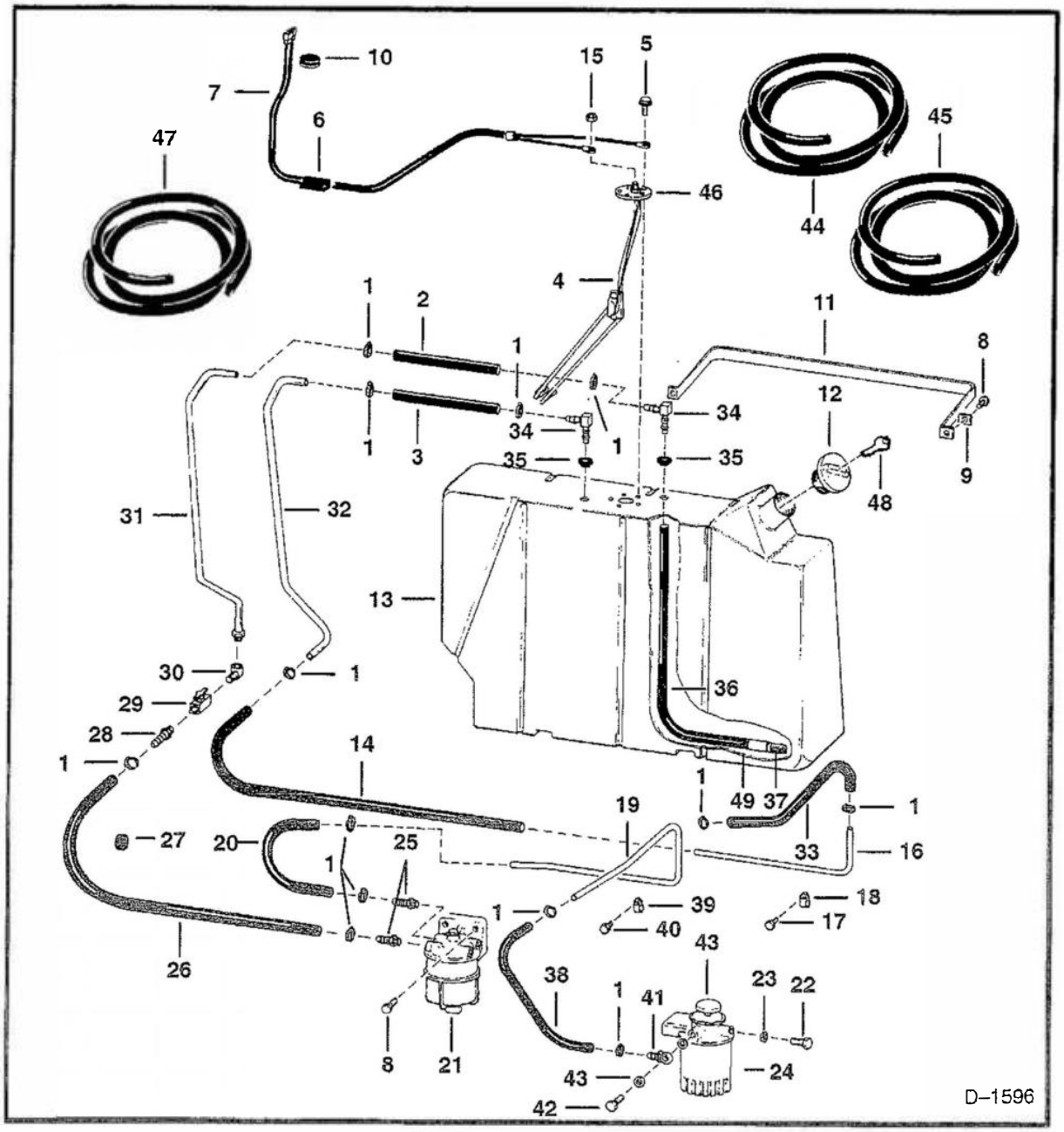

FUEL SYSTEM
(S/N 13315 & Below)

Ref. No.	Part Number	Description	Remarks	Serial Number	Qty.
1	6515575	CLAMP			13
2	NAP	HOSE	12" (304,8 mm) – Order Ref. 44		1
3	NAP	HOSE	6" (152,4 mm) – Order Ref. 44		1
4	6562552	SENDER			1
5	85G–1008	SCREW			5
6	6562606	SEAL			1
7	6560117	WIRE			1
8	84G–3716	BOLT			2
9	6559447	WASHER	square		2

FUEL SYSTEM (Cont'd)
(S/N 13315 & Below)

Ref. No.	Part Number	Description	Remarks	Serial Number	Qty.
10	742876	GROMMET			1
11	6562605	BAND			1
12	6661114	CAP	Green – Was 6632468 [A]		1
	NAP	CAP	locking – Code GC020 – Was 6630604 [A]		1
	6661696	CAP	locking – Code PK510 – W/Ref. 48		
13	6565516	TANK			1
14	6562537	HOSE			1
15	14D–10	NUT			1
16	6564567	TUBE			1
17	18C–612	BOLT			2
18	30H–31	CLAMP			2
19	6564566	TUBE			1
20	NAP	HOSE	13" (330,2 mm) – Order Ref. 45		1
21	6513104	TRAP	water		1
	6598739	GASKET	Upper		1
	6598740	GASKET	Lower		1
22	6515682	PLUG			2
23	6515466	WASHER			2
24	6599276	FILTER ASSY.			1
	6599194	CARTRIDGE	filter		1
25	1324240	ADAPTER			1
26	6562516	HOSE			1
27	6515603	GROMMET			1
28	6513421	CONNECTOR			1
29	6562553	VALVE	shut off		1
30	62F–4	ELBOW			1
31	6562608	TUBE			1
32	6562607	TUBE			1
33	NAP	HOSE	8" (203,2 mm) – Order Ref. 44		1
34	6598908	ELBOW			2
35	6553411	BUSHING			2
36	NAP	HOSE	21" (533,4 mm) – Order Ref. 47		1
37	6650239	SCREEN	Was 6598911 [A]		1
38	NAP	HOSE	12" (304,8) – Order Ref. 45		1
39	30H–15	CLAMP			1
40	18C–506	BOLT			1
41	6511033	FITTING	bango		1
42	6666396	BOLT	hollow – Was 6555922 [A]		1
43	2FM–12155	WASHER	sealing		2
44	6577821	HOSE	bulk – Sold Per Foot		x
45	6577822	HOSE	bulk – Sold Per Foot		x
46	6630972	GASKET			1
47	6569752	HOSE	bulk – Sold Per Foot		x
48	6654374	KEY	Code GC020		x
	6587458	KEY	Code PK510		x
49	6661213	CLIP			1

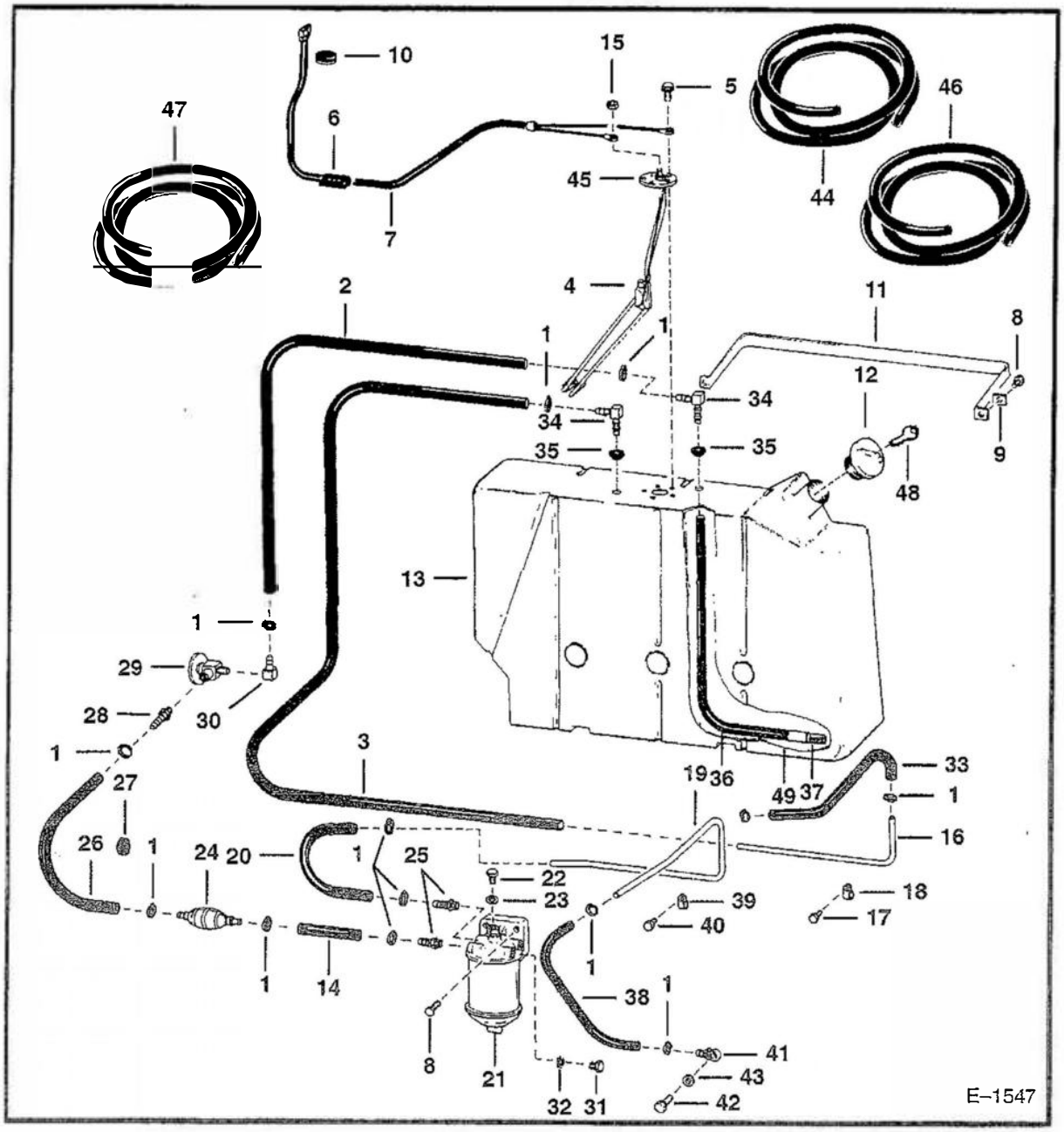

FUEL SYSTEM
(S/N 13316 & Above)

Ref. No.	Part Number	Description	Remarks	Serial Number	Qty.
1	6515575	CLAMP			13
2	NAP	HOSE	38" (965,2 mm) – Order Ref. 44		1
3	NAP	HOSE	48" (1219,2 mm) – Order Ref. 44		1
4	6562552	SENDER		13316–19999	1
	6568175	SENDER		20001 & Above	1
5	85G–1008	SCREW			5
6	6562606	SEAL		13316–19999	1
7	6560117	WIRE		13316–19999	1
8	84G–3716	BOLT			4

FUEL SYSTEM (Cont'd)
(S/N 13316 & Above)

Ref. No.	Part Number	Description	Remarks	Serial Number	Qty.
9	6559447	WASHER	square		2
10	742876	GROMMET			1
11	6562605	BAND			1
12	6661114	CAP	Green – Was 6632468 [A]		1
	NAP	CAP	locking – Code GC020 – Was 6630604 [A]		1
	6661696	CAP	locking – Code PK510 – W/Ref. 48		
13	6565516	TANK	See BTI 195	13316–19999	1
	6567944	TANK	See BTI 195	20001 & Above	1
14	NAP	HOSE	6" (152,4 mm) – Order Ref. 46		1
15	14D–10	NUT			1
16	6564567	TUBE			1
17	18C–612	BOLT			2
18	30H–31	CLAMP			2
19	6564566	TUBE			1
20	NAP	HOSE	13" (330,2 mm) – Order Ref. 46		1
21	6560348	FILTER	See Page 193		1
22	6515676	PLUG			1
23	6515468	WASHER			1
24	6657734	PUMP	hand primer – Was 6563396 [A]		1
25	1324240	ADAPTER			1
26	NAP	HOSE	12" (304,8 mm) – Order Ref. 46		1
27	6515603	GROMMET			1
28	6513421	CONNECTOR	Used W/barbless fuel valve		1
29	6632593	VALVE	shut off – Was 6512138 [A]		1
30	6598753	ELBOW			1
31	6515682	PLUG			2
32	6515466	WASHER	sealing		2
33	NAP	HOSE	8" (203,2 mm) – Order Ref. 44		1
34	6598908	ELBOW			2
35	6553411	BUSHING			2
36	NAP	HOSE	21" (533,4 mm) – Order Ref. 47		
			Was 6564193 [A]		1
37	6650239	SCREEN	Was 6598911 [A]		1
38	NAP	HOSE	12" (304,8 mm) – Order Ref. 46		1
39	30H–15	CLAMP			1
40	18C–508	BOLT			1
41	6511033	FITTING	bango – To Injection Pump		1
42	6555922	BOLT	hollow		1
43	2FM–12155	WASHER	sealing		2
44	6577821	HOSE	bulk – Sold Per Foot –		
			Was 672221 [A]		x
45	6630972	GASKET			1
46	6569752	HOSE	bulk – Sold Per Foot		x
47	6577822	HOSE	bulk – Sold Per Foot –		
			Was 6562515 [A]		x
48	6654374	KEY	Code GC020		x
	6587458	KEY	Code PK510		x
49	6661213	CLIP			1

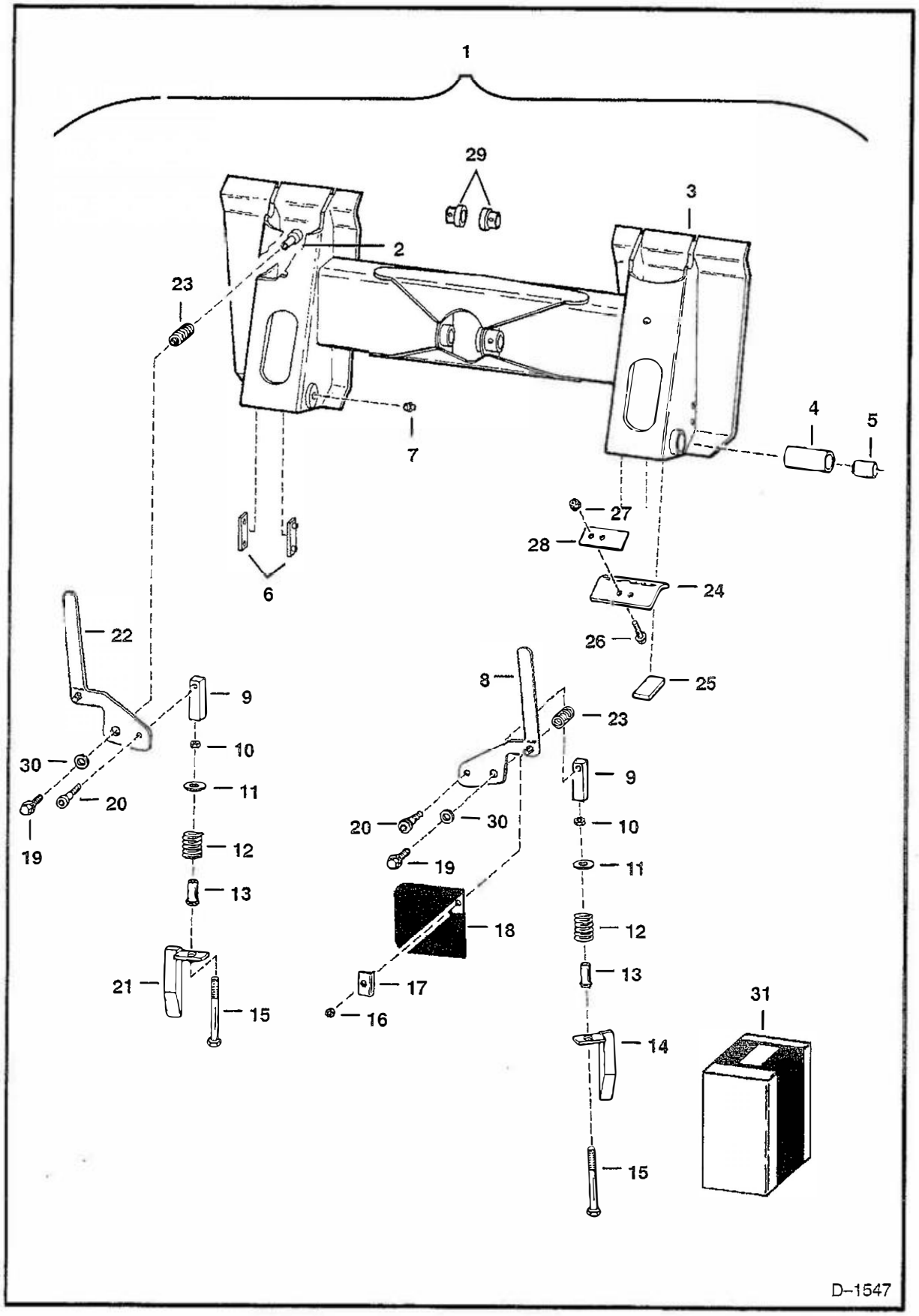
1
29
3
2
23
4
5
7
27
28
24
6
22
26
25
8
9
23
10
30
11
20
9
19
12
20
30
10
13
19
11
18
12
21
17
13
15
16
14
31
15
D–1547

BOB–TACH (Cont'd)

Ref. No.	Part Number	Description	Remarks	Serial Number	Qty.
1	6562394	BOB–TACH	W/Ref. 2–30		1
2	6562013	STUD			2
3	NAP	FRAME	Order Ref. 1		
4	6563436	BUSHING	Weld On		2
5	711273	RACE			2
6	6562026	INSERT			4
7	743332	GREASE ZERK			2
8	6563107	HANDLE	R.H.		1
9	NAP	BLOCK	Order 6565186 Block & 17C–884		
			Bolt		2
	6565186	BLOCK	Use Only W/17C–884 Bolt		2
10	7D–8	NUT			2
11	25E–21	WASHER			2
12	6562018	SPRING			2
13	6562019	GUIDE			2
14	6565189	WEDGE	R.H. – Was 6562022 [A]		1
15	17C–880	BOLT	1/2" x 5"		2
	17C–884	BOLT	1/2" x 5–1/4" – Use W/6565186		
			Block		2
16	85D–6	NUT			2
17	6563108	ANGLE			2
18	6563103	COVER	rubber		2
19	35C–610	BOLT			2
20	38C–810	BOLT	Was 661846 [B]		2
21	6565190	WEDGE	L.H. – Was 6562025 [A]		1
22	6563106	HANDLE	L.H.		1
23	6704453	SPRING	Was 6503387 [A]		2
24	6563349	STOP	Weld On		2
25	6563348	STOP	Weld On		2
26	31C–828	BOLT			4
27	83D–8	NUT			4
28	6568784	SHIM	.0966 (2,45 mm)		2
	6568785	SHIM	.1265 (3,21 mm)		2
	6568786	SHIM	.1713 (4,35 mm)		2
	6568787	SHIM	.2152 (5,46 mm)		2
29	6562642	BUSHING	Weld On		2
30	619021	WASHER			2
31	6579433	LEVER KIT	L.H. – Ref. 6, –13, 15–23 & 30		1
	6579434	LEVER KIT	R.H. – Ref. 6, 8–20, 23 & 30		1

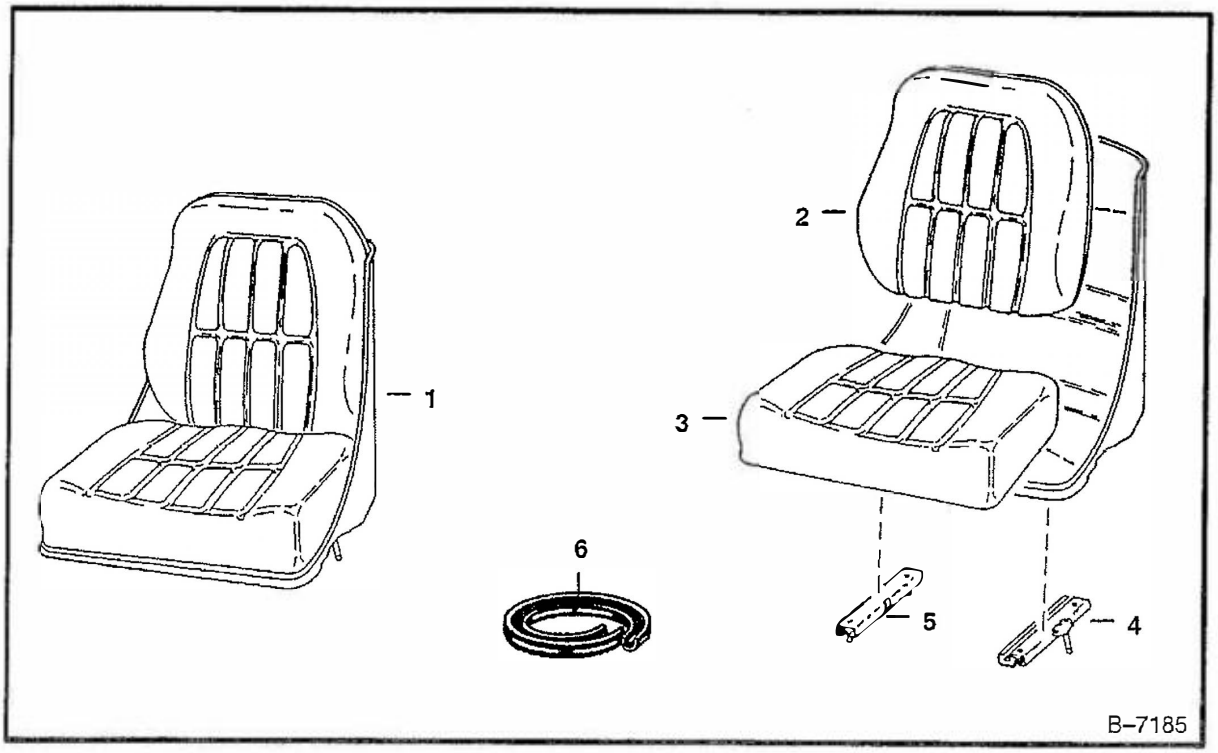

SEAT

Ref. No.	Part Number	Description	Remarks	Serial Number	Qty.
1*	NAP	SEAT	Order 6669135 – Was 6563140 [A]		1
2	6630465	CUSHION	back		1
3	6630468	CUSHION	seat		1
4	6630469	TRACK	W/Latch		1
5	6599780	TRACK	W/O Latch		1
6	6652935	EDGING	8 ft. (243,8 cm) – For Ref. 2 & 3		1
	6665656	CLIP			1

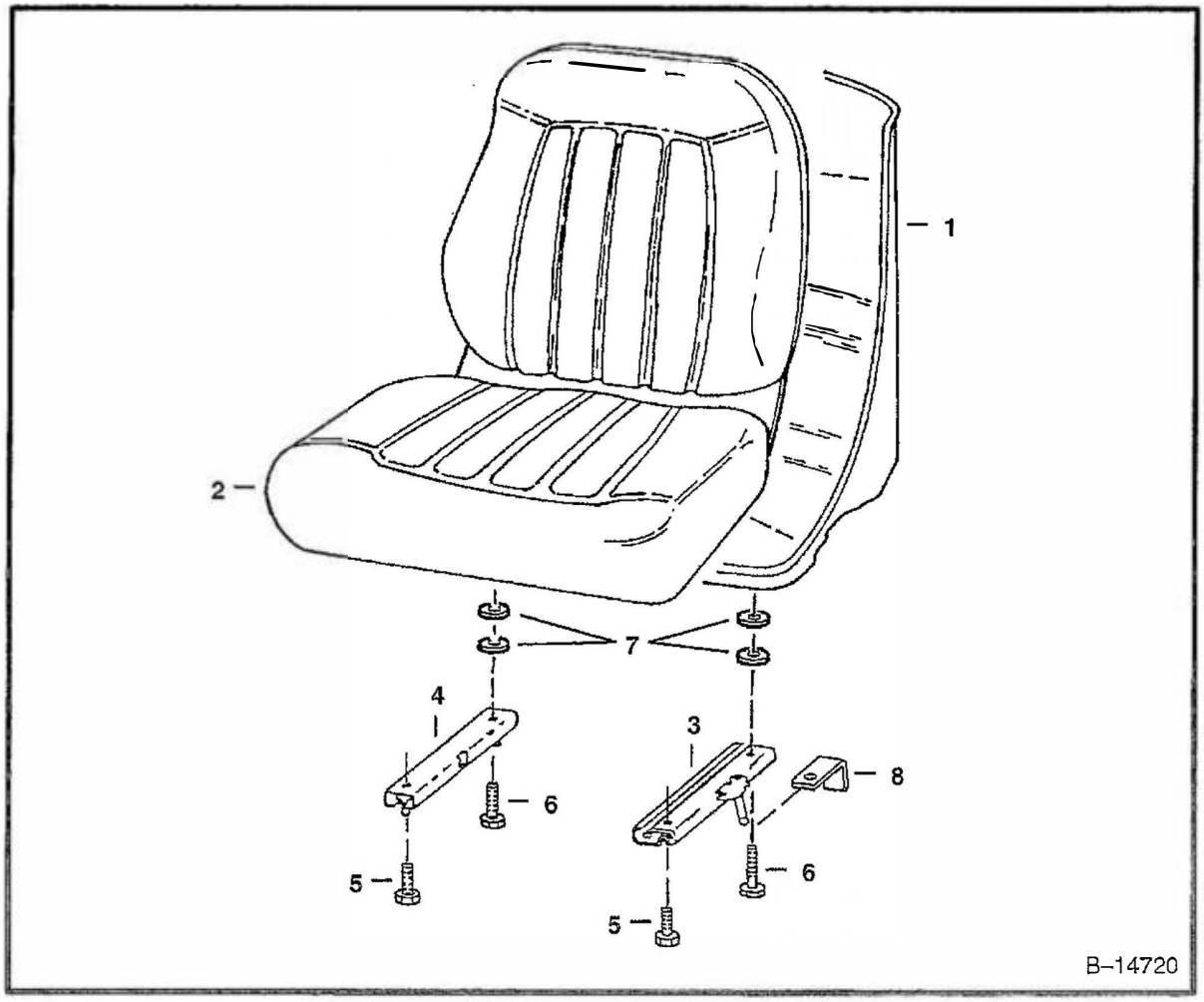

SEAT

Ref. No.	Part Number	Description	Remarks	Serial Number	Qty.
1	NAP	SEAT	W/Ref. 2 – 5 & 8 – Order 6669135		
			Seat		1
	6669135	SEAT	W/Ref. 2–7		1
2	6670160	CUSHION	W/edging, clip & (2) grommets		1
	NSS	EDGING			1
	NSS	CLIP			1
3	6669088	TRACK	L.H. – W/Latch		1
4	6669089	TRACK	R.H. – W/O Latch		1
5	25G–512	BOLT	6669135 Seat uses (2) bolts		4
6	25G–520	BOLT			2
7	7000010	SPACER			4
8	6668953	BRACKET	See S/L Dated 16 April 1996		2

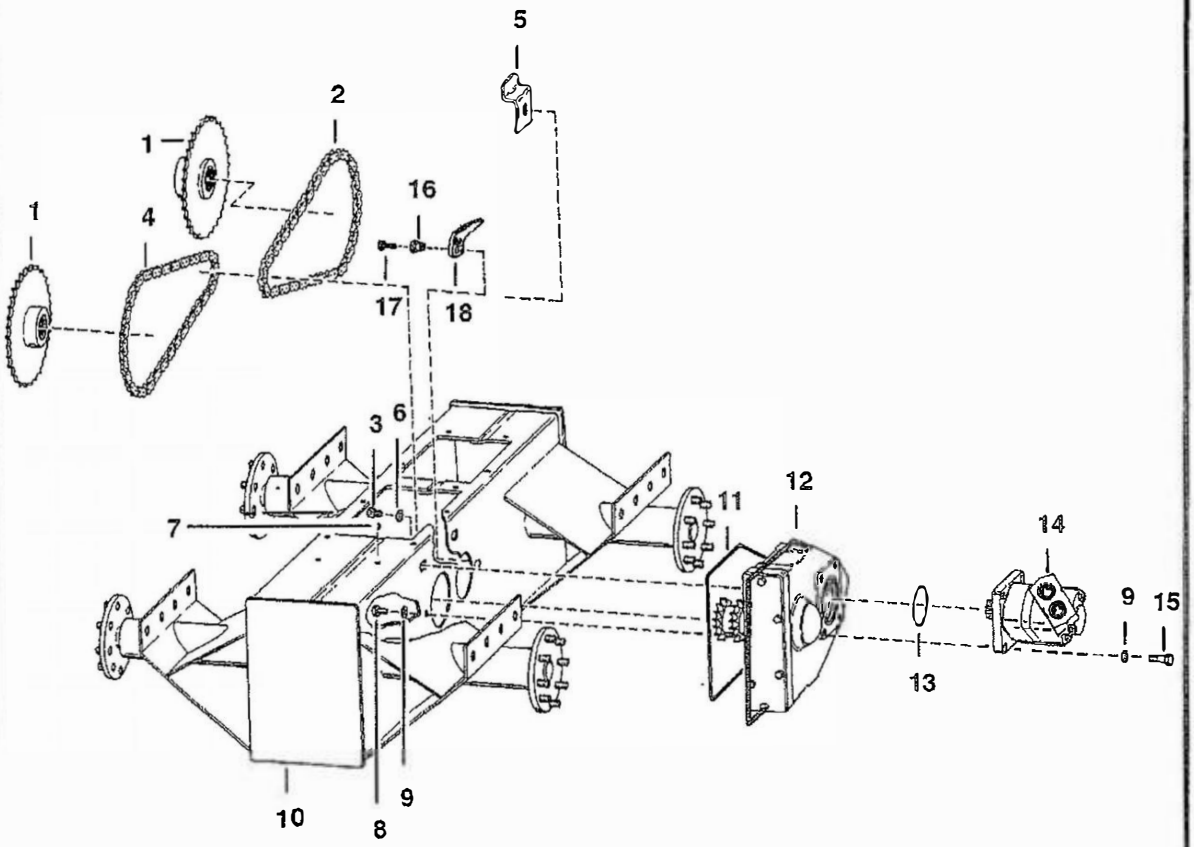

D–1524

DRIVE TRAIN (Cont'd)

Ref. No.	Part Number	Description	Remarks	Serial Number	Qty.
1	6568918	SPROCKET			4
2	6564229	CHAIN	W/Connector Link		2
	6510614	LINK	connector – Use for Diamond & Daldo chain		1
	6591030	LINK	connector – Tsubaki		1
3	17C–1228	BOLT			x
4	6564228	CHAIN	W/Connector Link		2
	6510614	LINK	connector – Diamond		1
	6591030	LINK	connector – Tsubaki		1
5	NAP	CHAIN GUIDE	Order Ref. 16–18		2
6	6576033	WASHER	Was 6558465 [A]		10
7	6558506	PLUG	breather		2
8	17C–820	BOLT			2
9*	6701097	WASHER	Was 6803867 [A]		10
10	6576718	CHAINCASE	Was 6562503 [A]		1
11	6558518	O–RING			2
12	6708266	GEARCASE	See Page 39		2
13	25K–30508	O–RING			2
14		MOTOR	See Page 119		2
15	17C–828	BOLT			8
16	6569807	BUSHING			2
17	17C–1252	BOLT			2
18	6569808	CHAIN GUIDE	plastic		2

GEARCASE

NOTE: When replacing complete gearcase, Ref.1 , identify how many snap ring grooves are on the existing hub, Ref. 3. If the existing hub has a double snap ring groove, the new gearcase will directly replace the old.
If the existing hub has a single snap ring groove, the hub that comes with the new gearcase will need to be replaced with the old hub. If the old hub is damaged, order a new 6708254 hub. Also determine if old snap ring can be used. If old snap ring is damaged, also order 742666 snap ring.

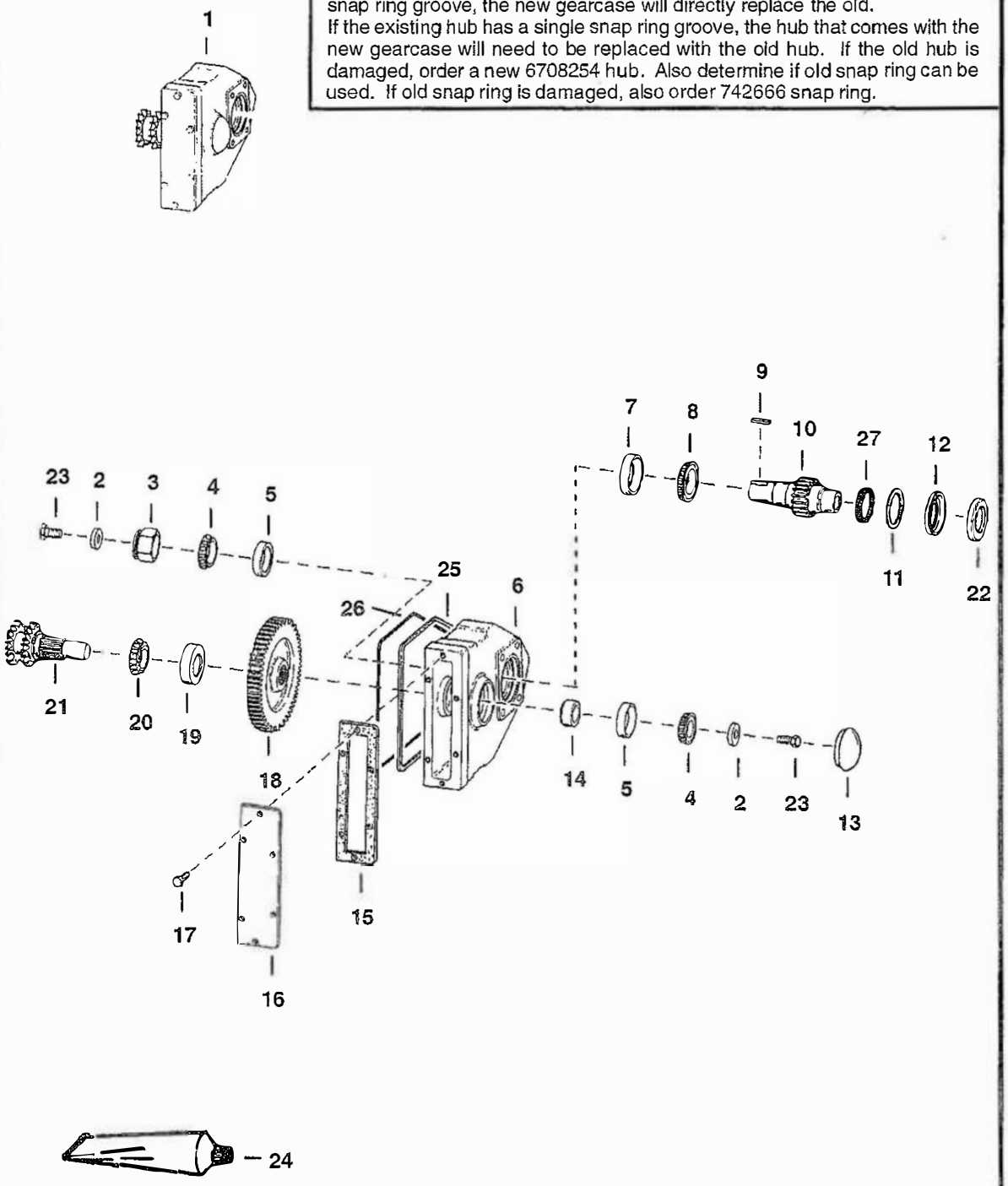

D–1444

GEARCASE (Cont'd)

Ref. No.	Part Number	Description	Remarks	Serial Number	Qty.
1	6708266	GEARCASE	Ref. 2–27 – SEE NOTE – Was 6578781 [A]		1
2	6558234	WASHER			2
3	6708254	HUB	Was 6703055 [A]		1
4	6648774	BEARING	Was 743778 [A]		2
5	6648776	RACE	Was 743777 [A]		2
6	NAP	HOUSING	Order 6563577 & Ref. 25 & 26		1
	6563577	HOUSING	With O–Ring Groove		1
7	1320905	CUP			1
8	1320904	BEARING			1
9	7J–6012	KEY			1
10	6558271	SHAFT			1
11	6559619	WASHER	back–up		1
12	6513588	SEAL			1
13	6565289	CAP			1
14	6558276	COLLAR			1
15	6558273	GASKET			1
16	6558274	COVER			1
17	17C–512	BOLT			6
18	6558270	GEAR			1
19	660181	RACE			1
20	731284	BEARING			1
21	6558278	SHAFT			1
22	6513681	BUSHING			1
23	17C–1220	BOLT			2
24	6561395	SEALANT	boretite		1
25	6563574	RETAINER	Used W/6563577 Housing		1
26	6558518	O–RING			1
27	6515195	SEAL	quad ring		1

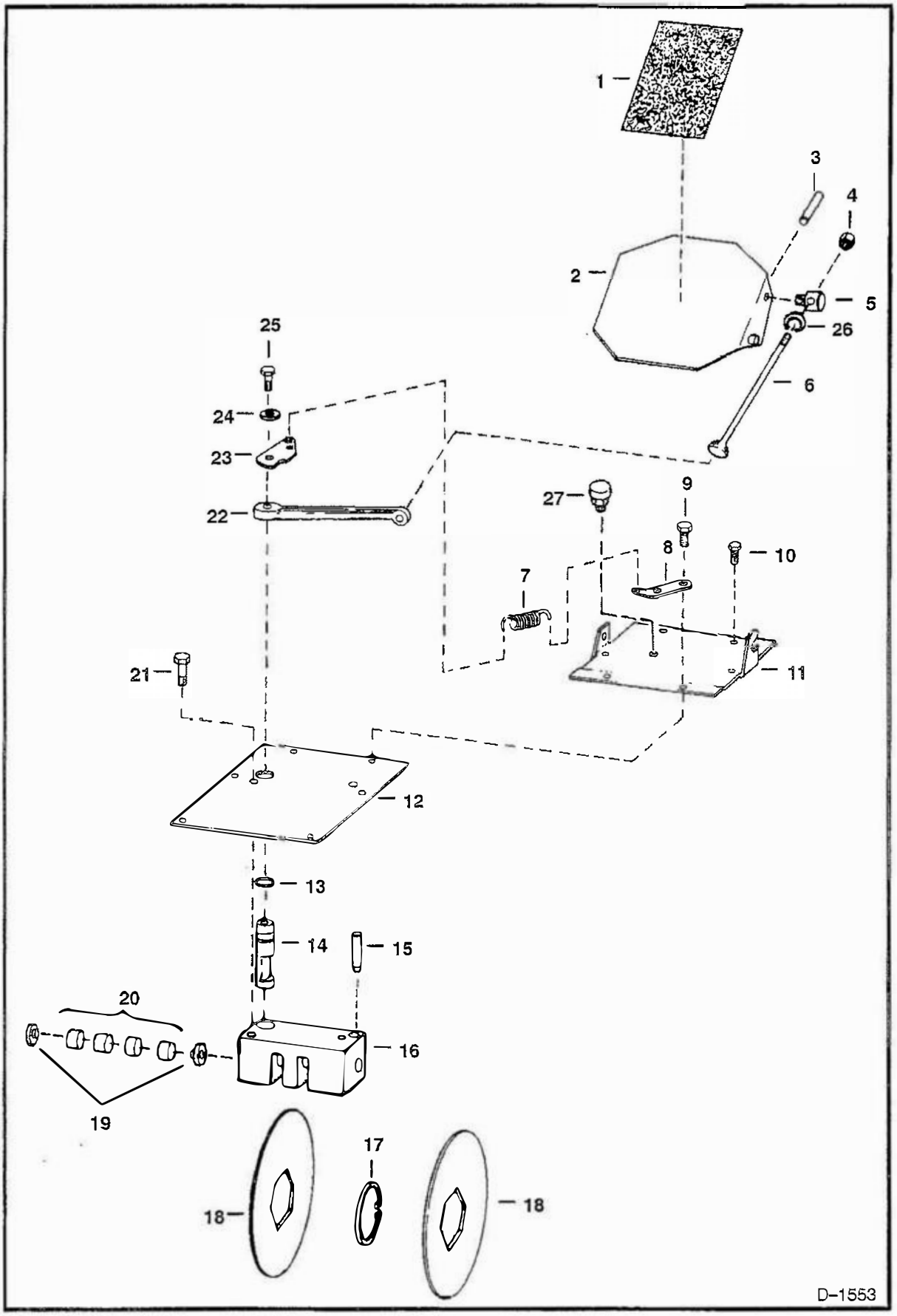
1
2
3
4
5
26
6
25
24
23
22
27
9
8
10
7
11
21
12
13
14
15
20
16
19
17
18
18
D-1553

DISC BRAKES (Cont'd)

Ref. No.	Part Number	Description	Remarks	Serial Number	Qty.
1	6553976	SAFETY TREAD			1
2	6563187	PEDAL			1
3	14J–2516	PIN			1
4	85D–8	NUT			1
5	6563178	PIVOT			1
6	6569601	ROD			1
7	6584584	SPRING	Was 6505076 [A]		1
8	6559218	ANGLE			1
9	84G–3716	BOLT			2
10	84G–3712	BOLT			8
11	NAP	COVER	Order 6575654 cover & 6632601 breather – Was 6554093 [A]	23611 & Below	1
	6575654	COVER			1
12	6558467	COVER			1
13	25K–30100	O–RING			1
14	6562755	PIN			1
15	784466	PIN			1
16	6562757	BLOCK			1
17	742666	SNAP RING			2
18	6559237	DISC			2
19	6562756	WASHER	wear		2
20	6557747	PUCK			4
21	17C–812	BOLT			2
22	6563823	LEVER			1
23	6577552	BRACKET	Was 6563173 [A]		1
24	6506477	WASHER			1
25	17C–820	BOLT			1
26	61D–8	NUT			1
27	6632601	BREATHER			1

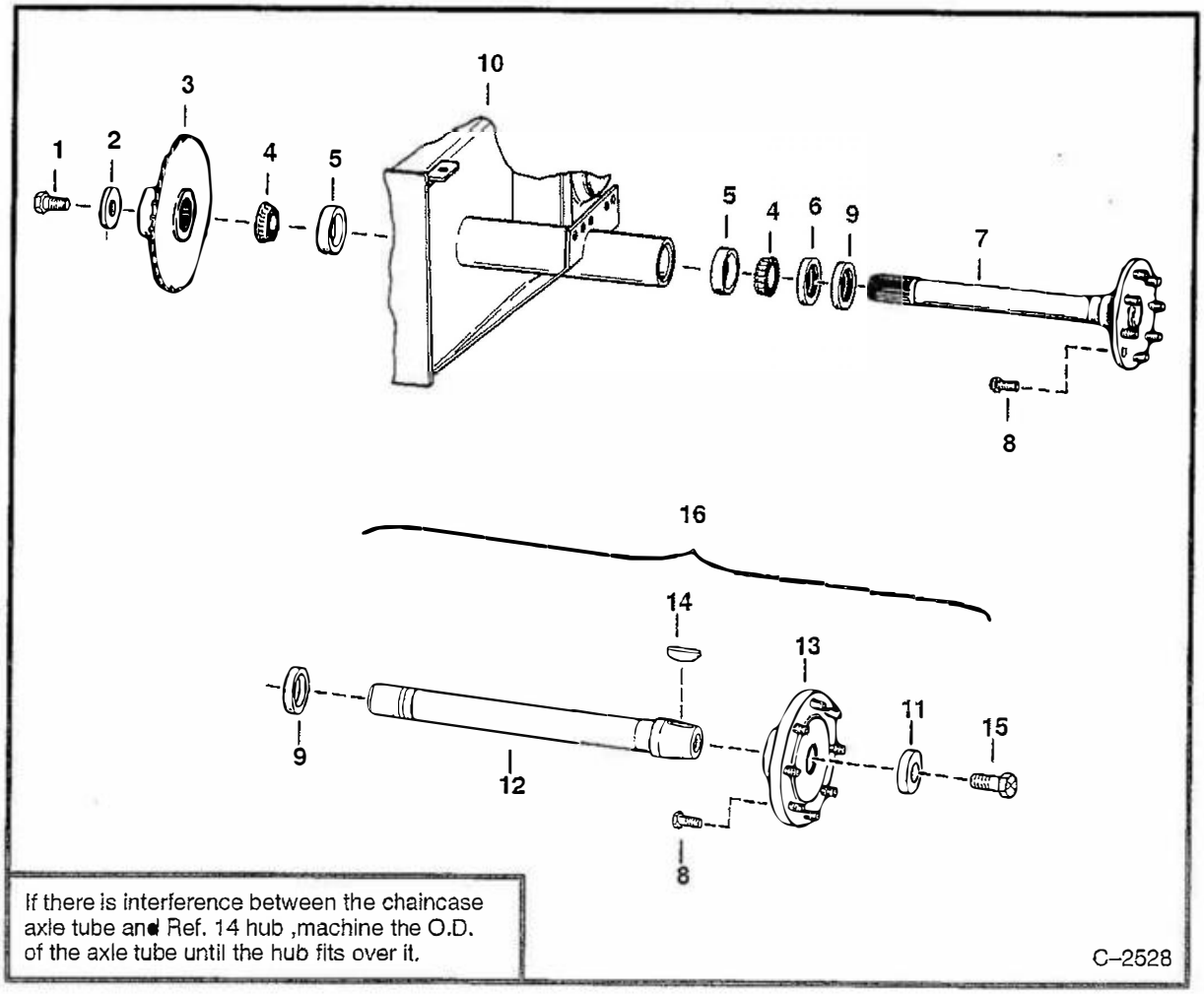

AXLE

Ref. No.	Part Number	Description	Remarks	Serial Number	Qty.
1*	2C–1626	BOLT	Was 18C–1626 [A]		1
2	6558694	WASHER			1
3	6568918	SPROCKET			1
4	1321608	BEARING			2
5	1321607	RACE			2
6	6658229	SEAL	Was 6513451 [A]		1
7	NAP	AXLE	Order 6708488 – Was 6558700 [A]		1
8	6709170	STUD	Was 6559502 [A]		8
9	6558693	WEAR RING			1
10		CHAINCASE	See Page 38		1
11	6565947	WASHER			1
12	6569618	AXLE			1
13	6578857	HUB	Was 6708489 [A]		1
14	6J–1664	KEY			1
15	17C–1024	BOLT			3
16	6708488	AXLE KIT	Ref. 11–15		1

Use only Bobcat belts and hoses to maintain maximum service life.

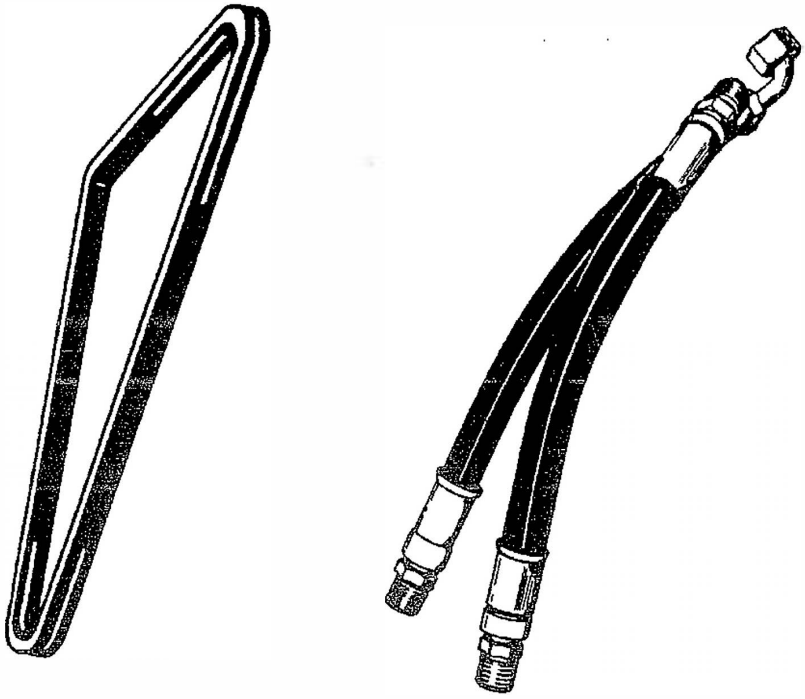

Available from Bobcat Parts.

Bobcat

HYDRAULIC CIRCUITRY
(S/N 14999 & Below)

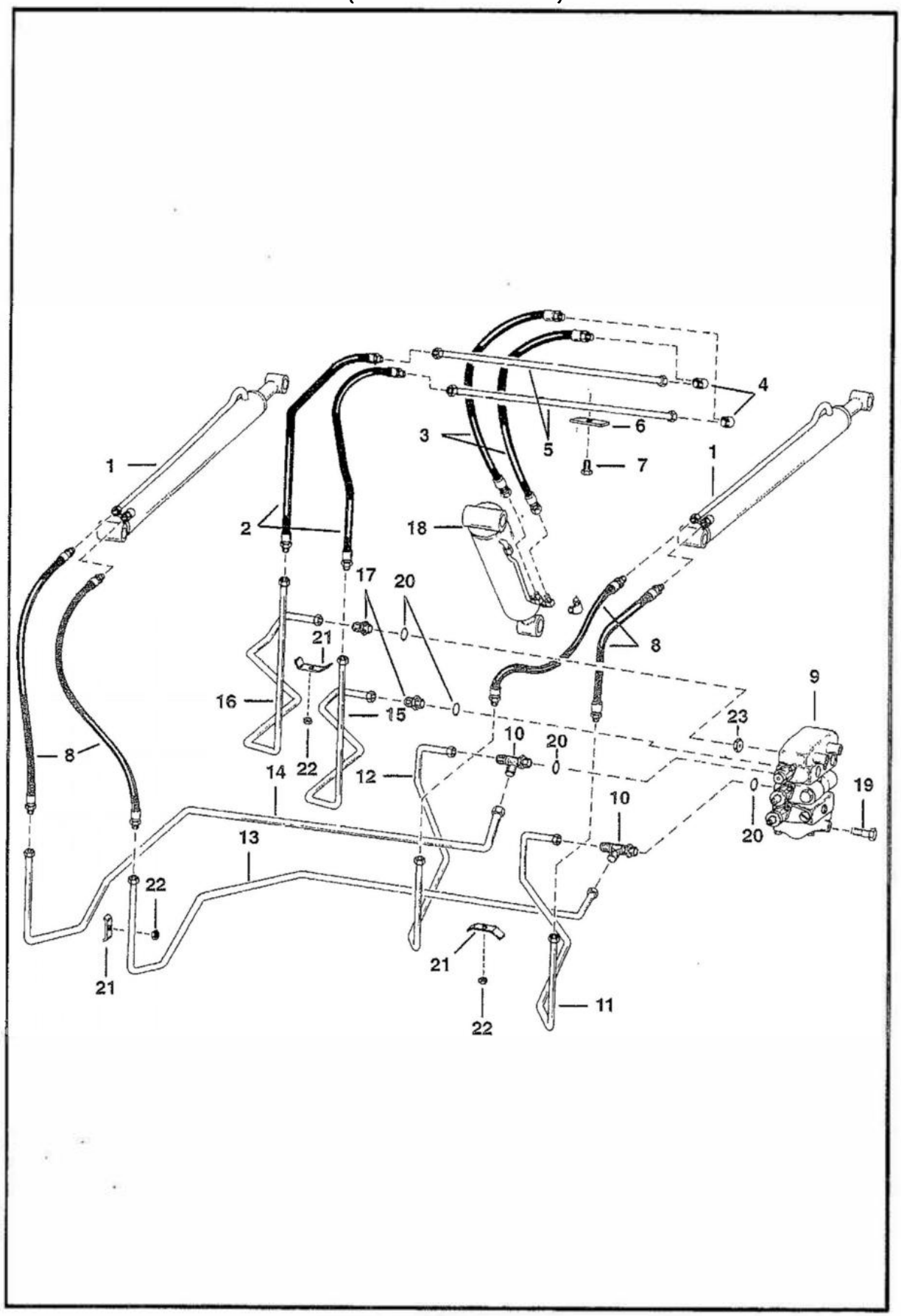

HYDRAULIC CIRCUITRY (Cont'd)
(S/N 14999 & Below)

Ref. No.	Part Number	Description	Remarks	Serial Number	Qty.
1		CYLINDER	lift – See Page 55 & 56		2
2	6560402	HOSE			2
3	659892	HOSE			2
4	77F–7	ELBOW			2
5	6559442	TUBE			2
6	6559459	WASHER			1
7	84G–3724	BOLT			1
8	6543063	HOSE			4
9		VALVE	See Page 61–69		1
10	21K–7	TEE	W/Ref. 20		2
11	6563427	TUBE			1
12	6563426	TUBE			1
13	6563424	TUBE			1
14	6563425	TUBE			1
15	6563858	TUBE			1
16	6563857	TUBE			1
17	15K–7	ADAPTER	W/Ref. 20		2
18		CYLINDER	tilt – See Page 57 & 59		1
19	17C–816	BOLT			3
20	79K–10	O–RING			4
21	6502203	CLAMP			3
22	85D–6	NUT			3
23*	NAP	ORIFICE	.141/.134 (3,58/3,40 mm) – Was 6599592 [A]		1

HYDRAULIC CIRCUITRY
(S/N 15001 Thru 21514)

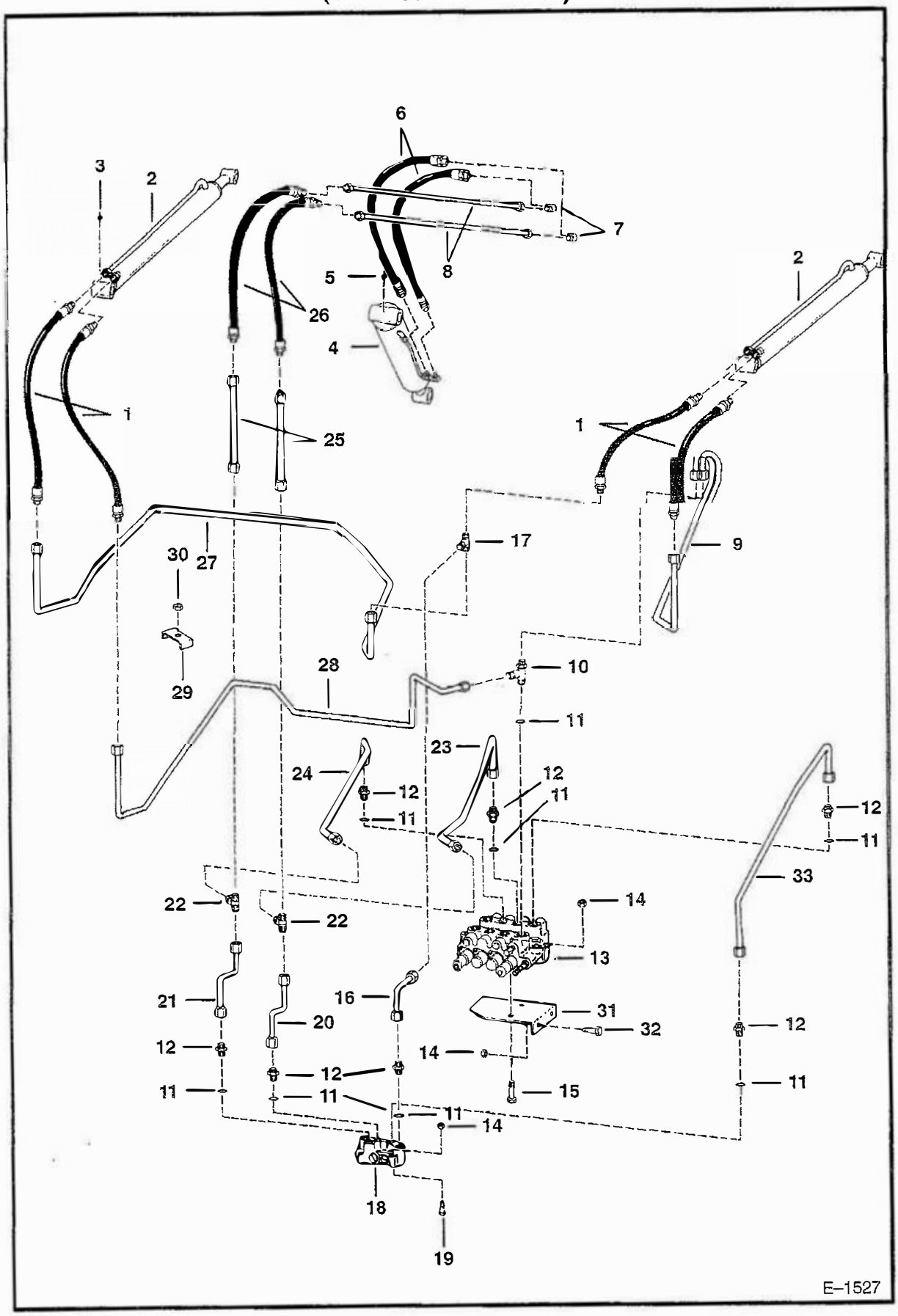

HYDRAULIC CIRCUITRY (Cont'd)
(S/N 15001 Thru 21514)

Ref. No.	Part Number	Description	Remarks	Serial Number	Qty.
1	6543063	HOSE			4
2		CYLINDER	lift – See Page 55 & 56		2
3	11H–15	GREASE ZERK			4
4		CYLINDER	tilt – See Page 57, 59		1
5	10H–25	GREASE ZERK			1
6	659892	HOSE			2
7	77F–7	ELBOW			2
8	6559442	TUBE			2
9	6565587	TUBE			1
10	21K–7	TEE	W/Ref. 11		1
11	79K–10	O–RING			x
12	15K–7	ADAPTER	W/Ref. 11		7
13		VALVE	See Page 69		1
14	61D–5	NUT			4
15	17C–560	BOLT			2
16	6565590	TUBE			1
17	13K–7	TEE			1
18		VALVE	bucket positioning – See Page 75		1
19	17C–528	BOLT			2
20	6565589	TUBE			1
21	6565588	TUBE			1
22	10K–7	TEE			2
23	6565585	TUBE			1
24	6565584	TUBE			1
25	6565597	TUBE			2
26	6560402	HOSE			2
27	6565579	TUBE			1
28	6565580	TUBE			1
29	6502203	CLAMP			3
30	85D–6	NUT			3
31	6565558	MOUNT	valve		1
32	17C–616	BOLT			2
33	6565586	TUBE			1

HYDRAULIC CIRCUITRY
(S/N 21515 & Above)

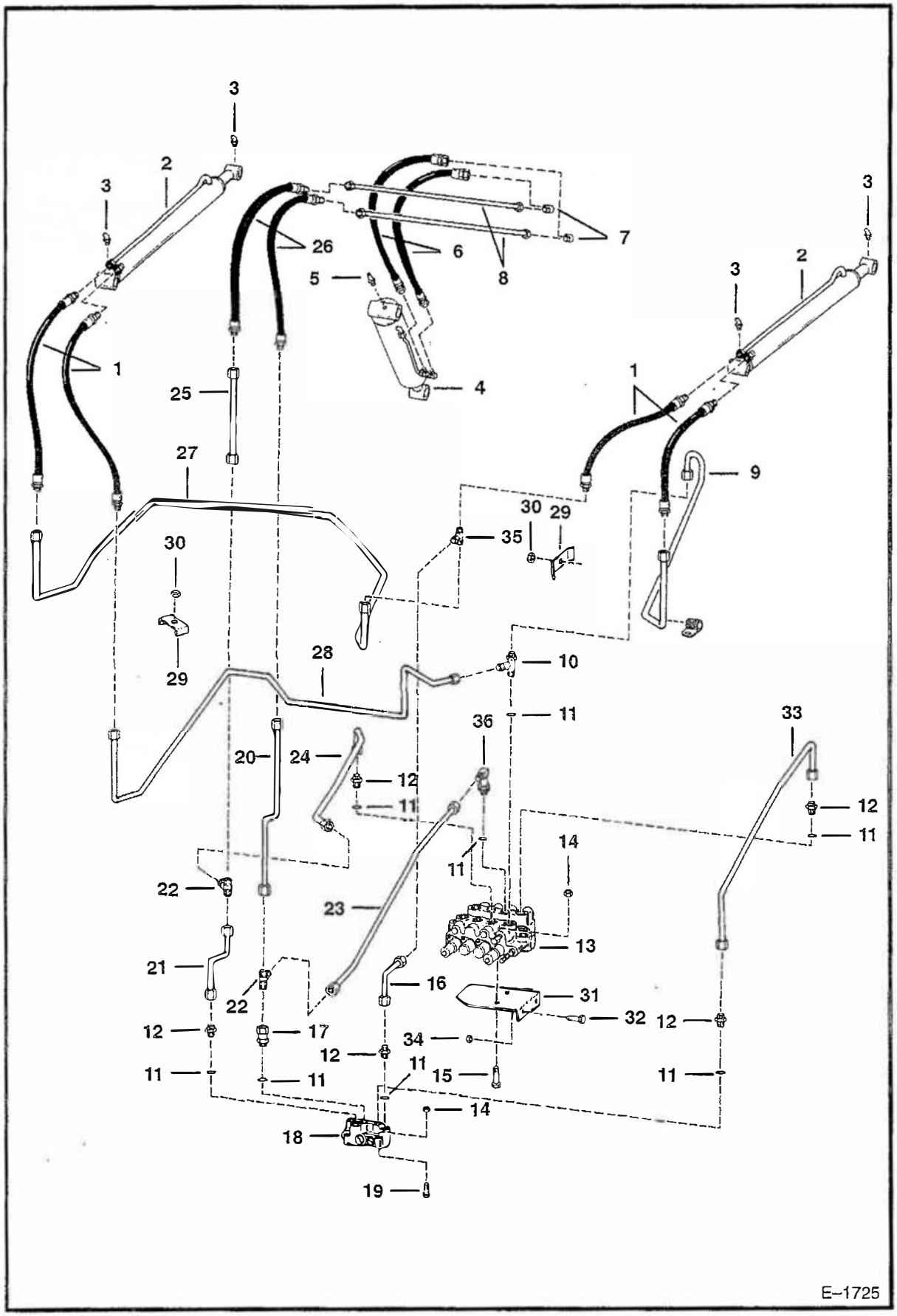

HYDRAULIC CIRCUITRY (Cont'd)
(S/N 21515 & Above)

Ref. No.	Part Number	Description	Remarks	Serial Number	Qty.
1	6543063	HOSE			4
2		CYLINDER	lift – See Page 55 & 56		2
3	11H–25	GREASE ZERK			4
4		CYLINDER	tilt – See Page 57 & 59		1
5	10H–25	GREASE ZERK			1
6	659892	HOSE			2
7	77F–7	ELBOW			2
8	6559442	TUBE			2
9	6565587	TUBE			1
10	21K–7	TEE	W/Ref. 11		1
11	79K–10	O–RING			x
12	15K–7	ADAPTER	W/Ref. 11		7
13		VALVE	See Page 69		1
14	85D–5	NUT			4
15	17C–560	BOLT			2
16	6565590	TUBE			1
17	1312113	ADAPTER	swivel		2
18		VALVE	bucket positioning – See Page 75		1
19	17C–528	BOLT			2
20	6569207	TUBE			1
21	6565588	TUBE			1
22	10K–7	TEE			2
23	6569206	TUBE			1
24	6565585	TUBE			1
25	6565597	TUBE			2
26	6560402	HOSE			2
27	6565579	TUBE			1
28	6565580	TUBE			1
29	6502203	CLAMP			3
30	85D–6	NUT			3
31	6565558	MOUNT	valve		1
32	17C–616	BOLT			2
33	6565586	TUBE			1
34	85D–6	NUT			2
35	13K–7	TEE			1
36	6519195	ELBOW			1

AUXILIARY HYDRAULICS
(S/N 14999 & Below)

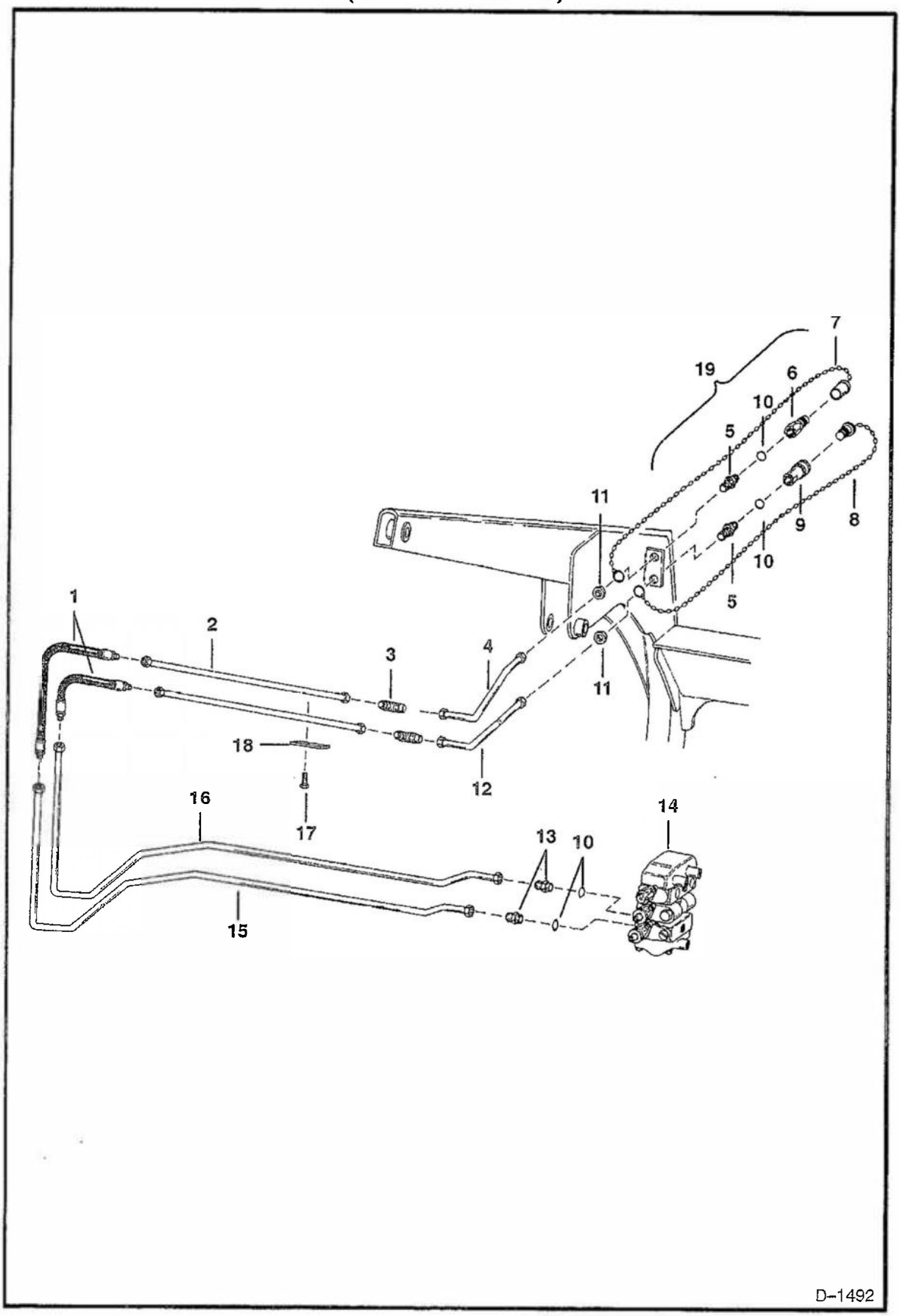

AUXILIARY HYDRAULICS (Cont'd)
(S/N 14999 & Below)

Ref. No.	Part Number	Description	Remarks	Serial Number	Qty.
1	6560402	HOSE			2
2	6559442	TUBE			2
3	77F–7	ELBOW			2
4	6559500	TUBE			1
5	45K–7	ADAPTER			2
6	6598757	QUICK COUPLER	Male		1
7	6515168	CAP	Steel		1
8	6515167	PLUG	Steel		1
9	6598758	QUICK COUPLER	Female		1
	48K–16	O–RING			1
	6665430	BACKUP RING			1
10	79K–10	O–RING			4
11	86F–7	NUT			2
12	6559501	TUBE			1
13	15K–7	ADAPTER	W/Ref. 10		2
14		VALVE	See Page 61–69		1
15	6563855	TUBE			1
16	6563856	TUBE			1
17	84G–3724	BOLT			1
18	6559459	WASHER			1
19	6513709	CAP	W/Plug assy. – Rubber		1

AUXILIARY HYDRAULICS
(S/N 15001 & Above)

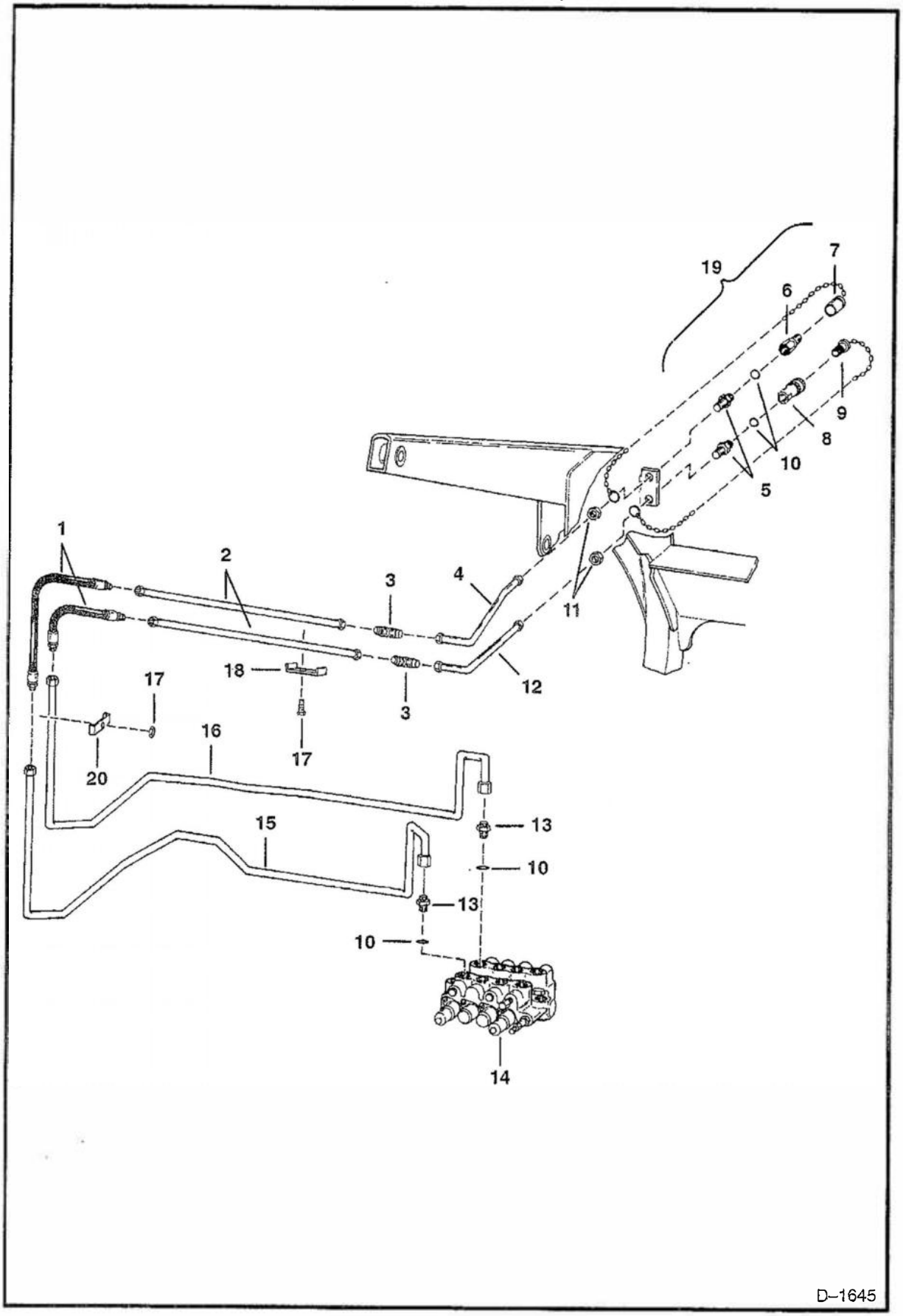

AUXILIARY HYDRAULICS (Cont'd)
(S/N 15001 & Above)

Ref. No.	Part Number	Description	Remarks	Serial Number	Qty.
1	6560402	HOSE			2
2	6559442	TUBE			2
3	77F–7	ELBOW			2
4	6559500	TUBE			1
5	45K–7	ADAPTER	W/Ref. 10		2
6	6598757	QUICK COUPLER	Male		1
7	6515168	CAP	Steel		1
8	6598758	QUICK COUPLER	Female		1
	48K–16	O–RING			1
9	6515167	PLUG	Steel		1
10	79K–10	O–RING			4
11	86F–7	NUT			2
12	6559501	TUBE			1
13	15K–7	ADAPTER	W/Ref. 10		2
14		VALVE	See Page 69		1
15	6565581	TUBE			1
16	6565582	TUBE			1
17	85D–6	NUT			2
18	6559459	WASHER			1
19	6513709	CAP	W/Plug assy. – Rubber		1
20	6502203	CLAMP			1

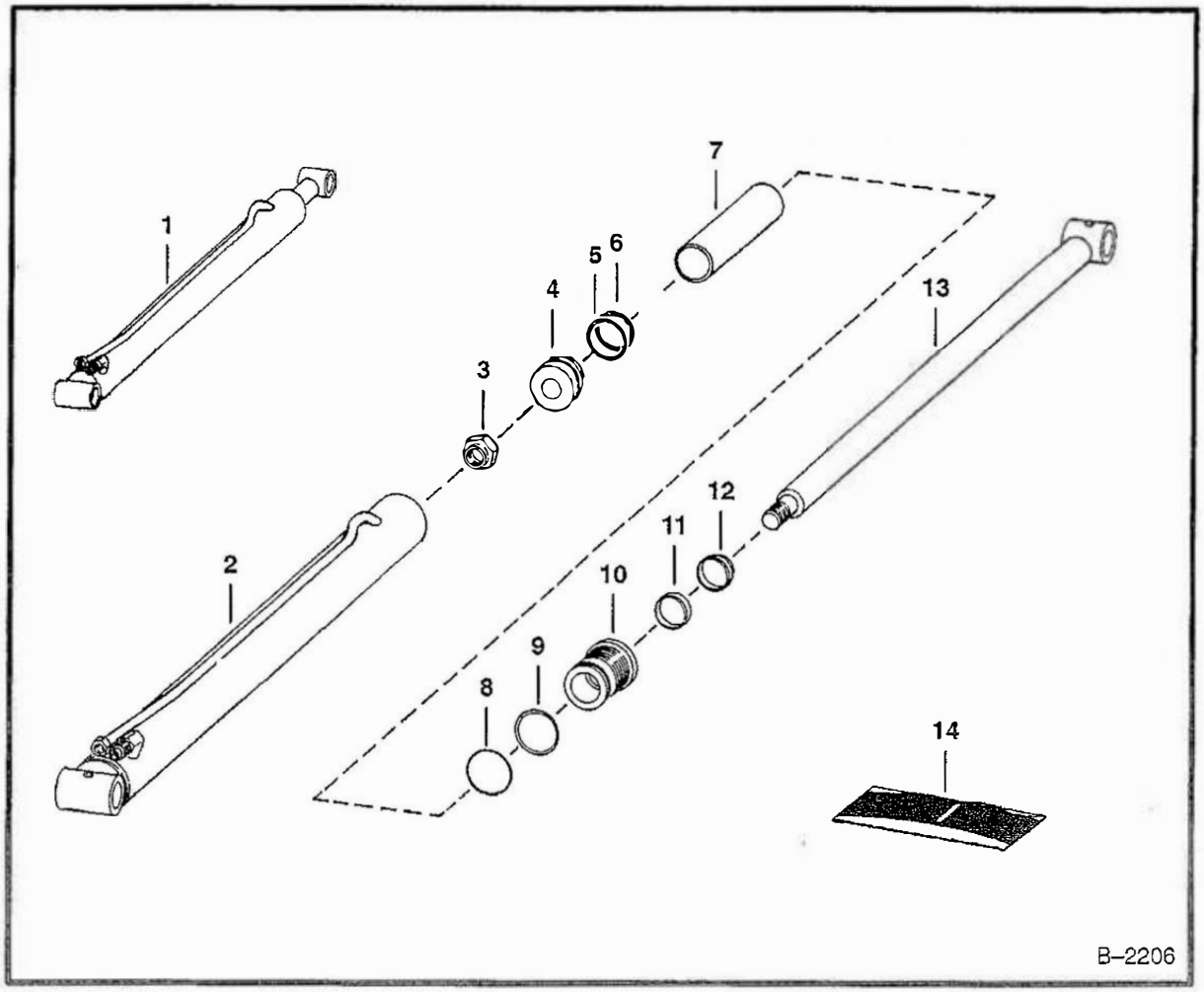

LIFT CYLINDER
(W/Welded On Tube)

Ref. No.	Part Number	Description	Remarks	Serial Number	Qty.
1	NAP	CYLINDER	lift – Ref. 2–13 – Order 6592991 Cyl. on Page 57		2
2	NAP	CASE	Order 6529695 Case & 6529690 Tube		1
3	86D–12	NUT			1
4	6543168	PISTON			1
5	NSS	RING			1
6	NSS	O–RING			1
7	NAP	SPACER			1
8	NSS	O–RING			1
9	NSS	WASHER	back–up		1
10	6539236	HEAD	Was 6555078 [A]		1
11	NSS	SEALod			1
12	NSS	SEAL	wiper		1
13	6592895	ROD			1
14	6589793	SEAL KIT	Ref. 5, 6, 8, 9, 11 & 12 – Was 6555117 [A]		1

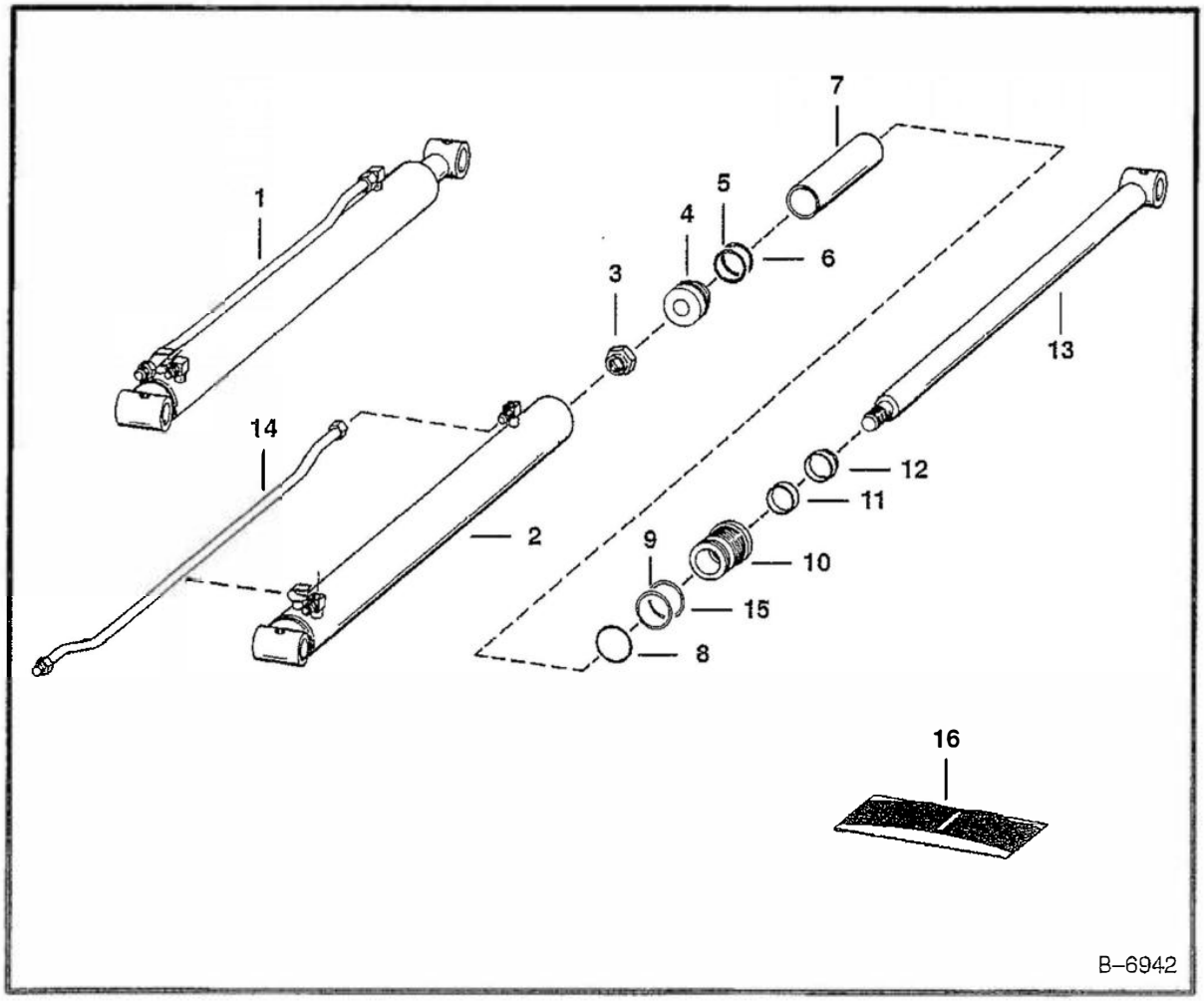

LIFT CYLINDER
(W/Replaceable Tube)

Ref. No.	Part Number	Description	Remarks	Serial Number	Qty.
1	6529692	CYLINDER	lift – Ref. 2–14 – Was 6592991 [A]		2
2	6529695	CASE	Also Order 6529690 Tube		1
3	92D–12	NUT	Was 86D–12 [B]		1
4	6543168	PISTON			1
5	NSS	RING			1
6	NSS	O–RING			1
7	NAP	SPACER			1
8	NSS	O–RING			1
9	NSS	WASHER	back–up		1
10	6539236	HEAD	Was 6534380 [A]		1
11	NSS	SEAL	rod		1
12	6665086	SEAL	wiper		1
13	6592895	ROD			1
14	6529383	TUBE	Cyl. with fitting & clamp in line		1
	6529690	TUBE	Cyl. with fitting & clamp off set		1
15	58K–140	O–RING			1
16	6589793	SEAL KIT	Ref. 3, 5, 6, 8, 9, 11, 12 & 15 – Was 6587974 [A]		1

TILT CYLINDER

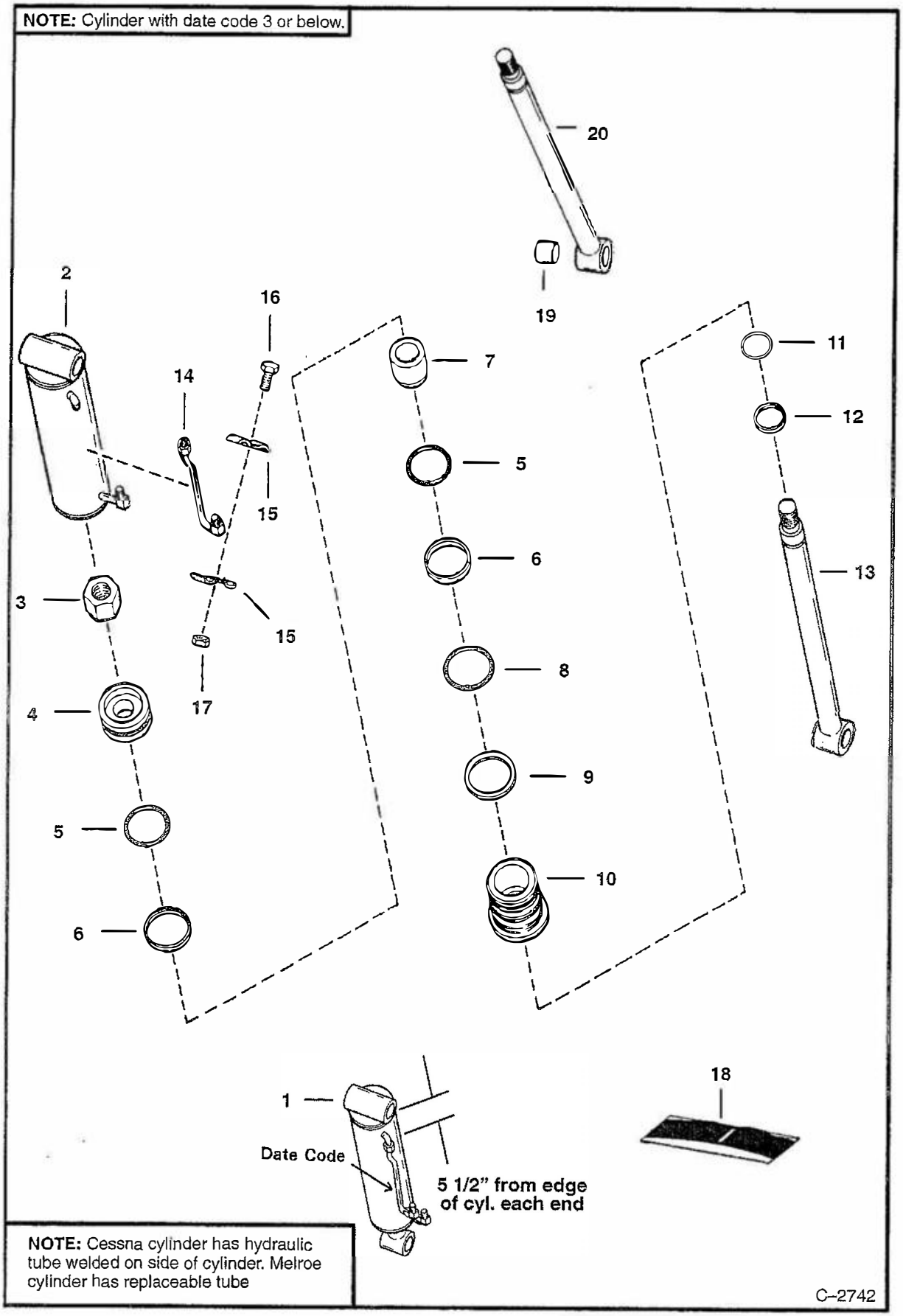

TILT CYLINDER (Cont'd)

Ref. No.	Part Number	Description	Remarks	Serial Number	Qty.
1	NAP	CYLINDER	tilt – Ref. 2–17 – Order 6592584 Cyl. on Page 59 – See Note		1
2	6592034	CASE			1
3	86D–16	NUT			1
4	6592448	PISTON			1
5	NSS	SEAL			2
6	NSS	O–RING			2
7	6591800	SLEEVE			1
8	NSS	O–RING			1
9	NSS	WASHER	back–up		1
10	6591799	HEAD			1
11	NSS	SEAL			1
12	NSS	SEAL	wiper		1
13	NAP	ROD	w/o bushing – Order Ref. 20 – Was 6592801 [A]		1
14	6592018	TUBE			1
15	6591804	CLAMP			2
16	17C–616	BOLT			1
17	85D–6	NUT			1
18	6661297	SEAL KIT	Ref. 5, 6, 8, 9, 11 & 12 – Was 6591885 [A]		1
19	6589665	BUSHING	Used with Ref. 20		2
20	6589784	ROD	W/bushing		1

TILT CYLINDER

NOTE: 6539808 cylinder has a date code ending with 4 or above. This cylinder has plugs Ref. 17 in elbows. The cylinder on Page 57 does not.

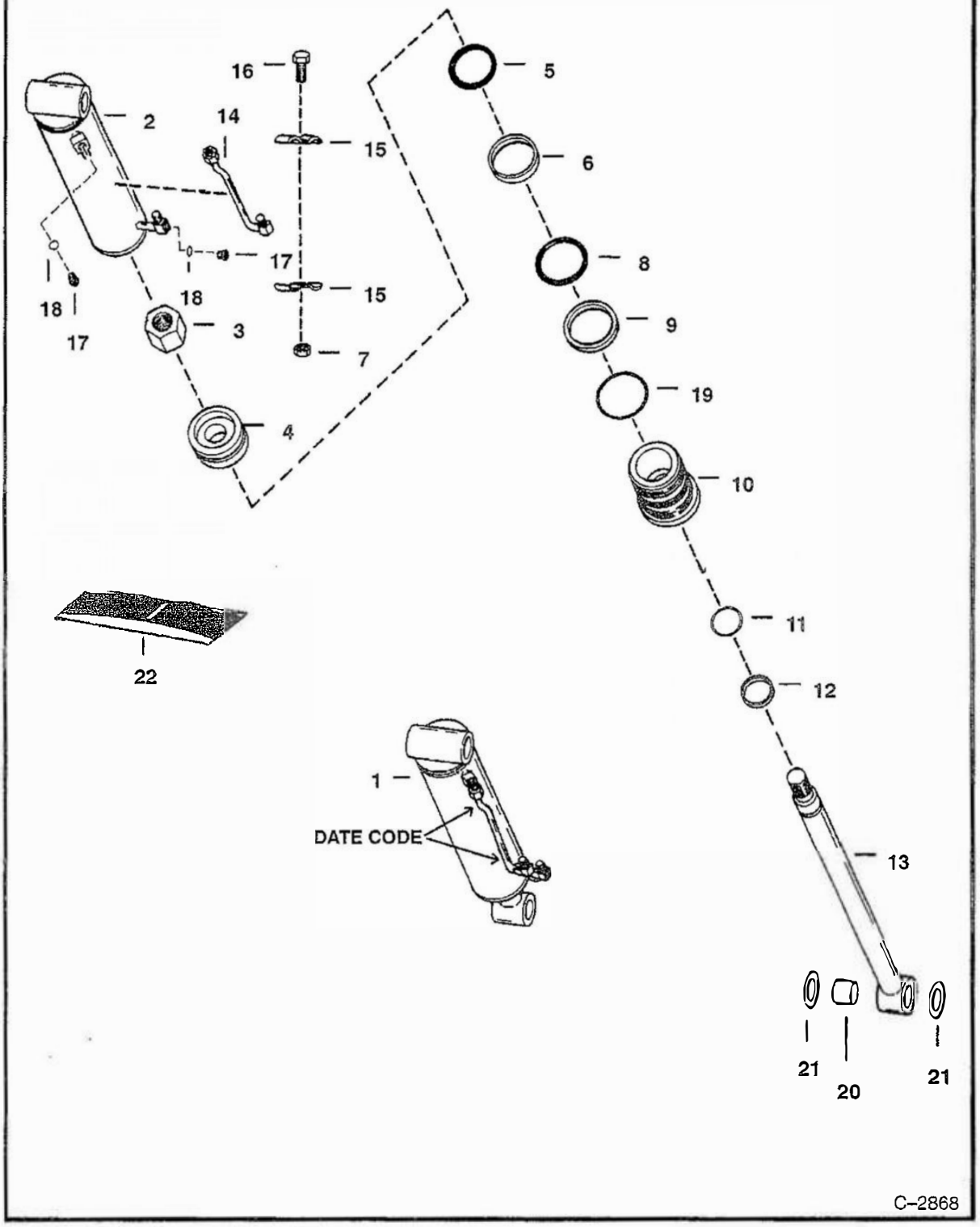

TILT CYLINDER (Cont'd)

Ref. No.	Part Number	Description	Remarks	Serial Number	Qty.
1	6539808	CYLINDER	tilt – Ref. 2–18 & 20 – Was 6592584 [A]		1
2	6592593	CASE			1
3	6804592	NUT	Was 86D–18 [A]		1
4	6592589	PISTON			1
5	NSS	SEAL			1
6	NSS	O–RING			1
7	85D–6	NUT			1
8	NSS	O–RING			1
9	NSS	WASHER	back–up		1
10	6529680	HEAD	Was 6592590 [A]		1
11	NSS	SEAL			1
12	NSS	SEAL	wiper		1
13	6539814	ROD	Also order 2 of Ref. 21 – Was 6592591 [A]		1
14	6592585	TUBE			1
15	6591804	CLAMP			2
16	17C–616	BOLT			1
17	NAP	PLUG	W/Ref. 18 – flat boss face – Was 47K–5 [A]		2
	90KV–5	PLUG	W/Ref. 18 – tapered boss face		2
18	79K–6	O–RING	Flat boss face		2
	95K–6	O–RING	Tapered boss face		2
19	58K–236	O–RING			1
20	6589665	BUSHING	Was 6534387 [A]		1
21	6654117	SEAL			2
22	6804605	SEAL KIT	Ref. 5, 6, 8, 9, 11, 12 & 20 – Was 6661308 [A]		1

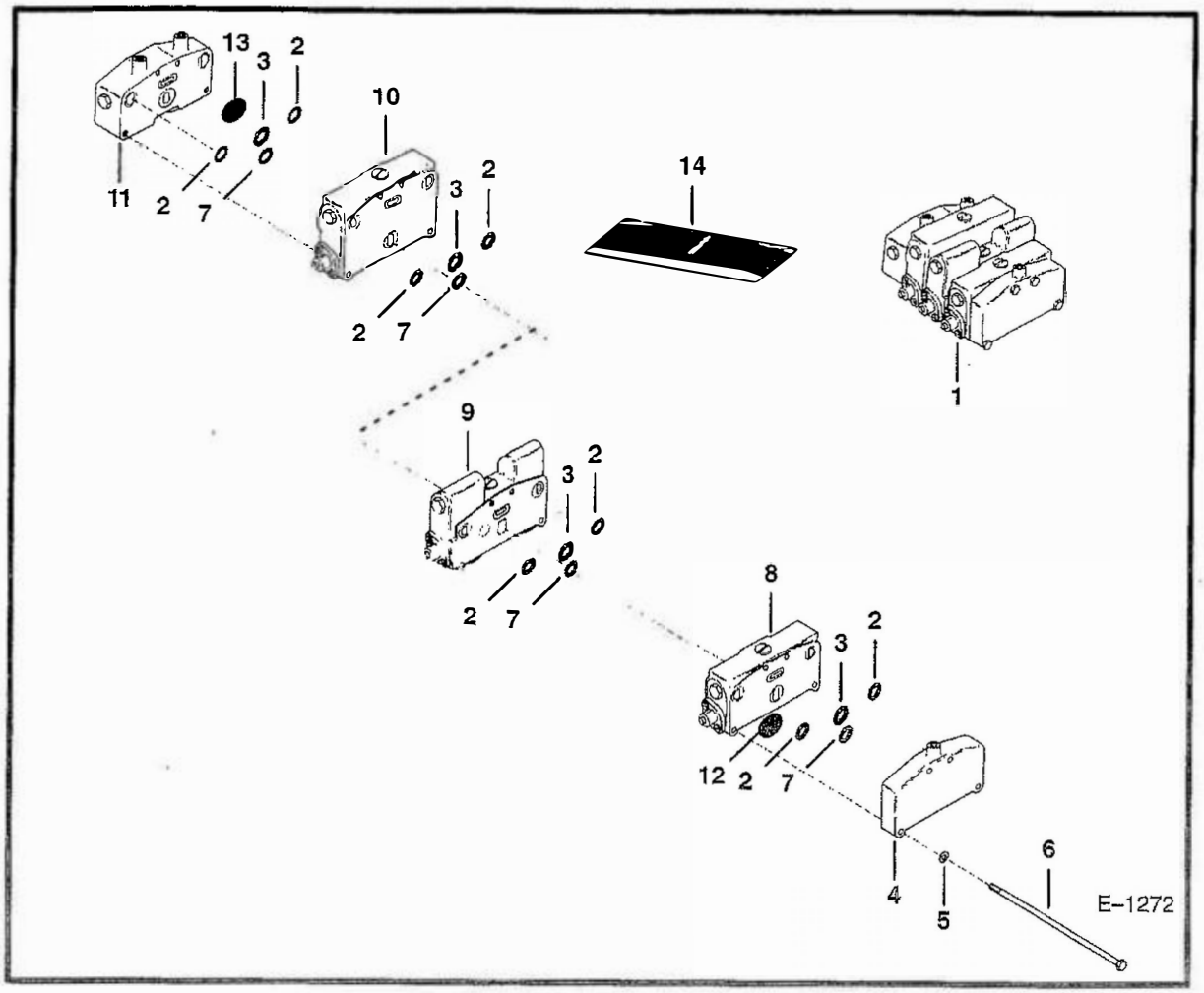

CONTROL VALVE
(S/N 14999 & Below)

Ref. No.	Part Number	Description	Remarks	Serial Number	Qty.
1	6562238	VALVE	control		1
2	NSS	O-RING			8
3	NSS	O-RING			4
4	6513851	PLATE	end		1
5	25E-6	WASHER			4
6	6513924	BOLT	tie		4
7	NSS	O-RING			4
8	NSS	SECTION	aux. – See Page 67 – Was 6513879 [A]		1
9	6598515	SECTION	lift – See Page 65		1
10	6598514	SECTION	tilt – See Page 63		1
11*	NAP	SECTION	inlet – See Page 62 – Was 6513852 [A]		1
12	NSS	O-RING			1
13	NSS	O-RING			2
14	6513932	SEAL KIT	Includes all O-rings, washers to rebuild complete valve		1
	6513928	SEAL KIT	sections – Ref. 2, 3, 7, 12 & 13		1

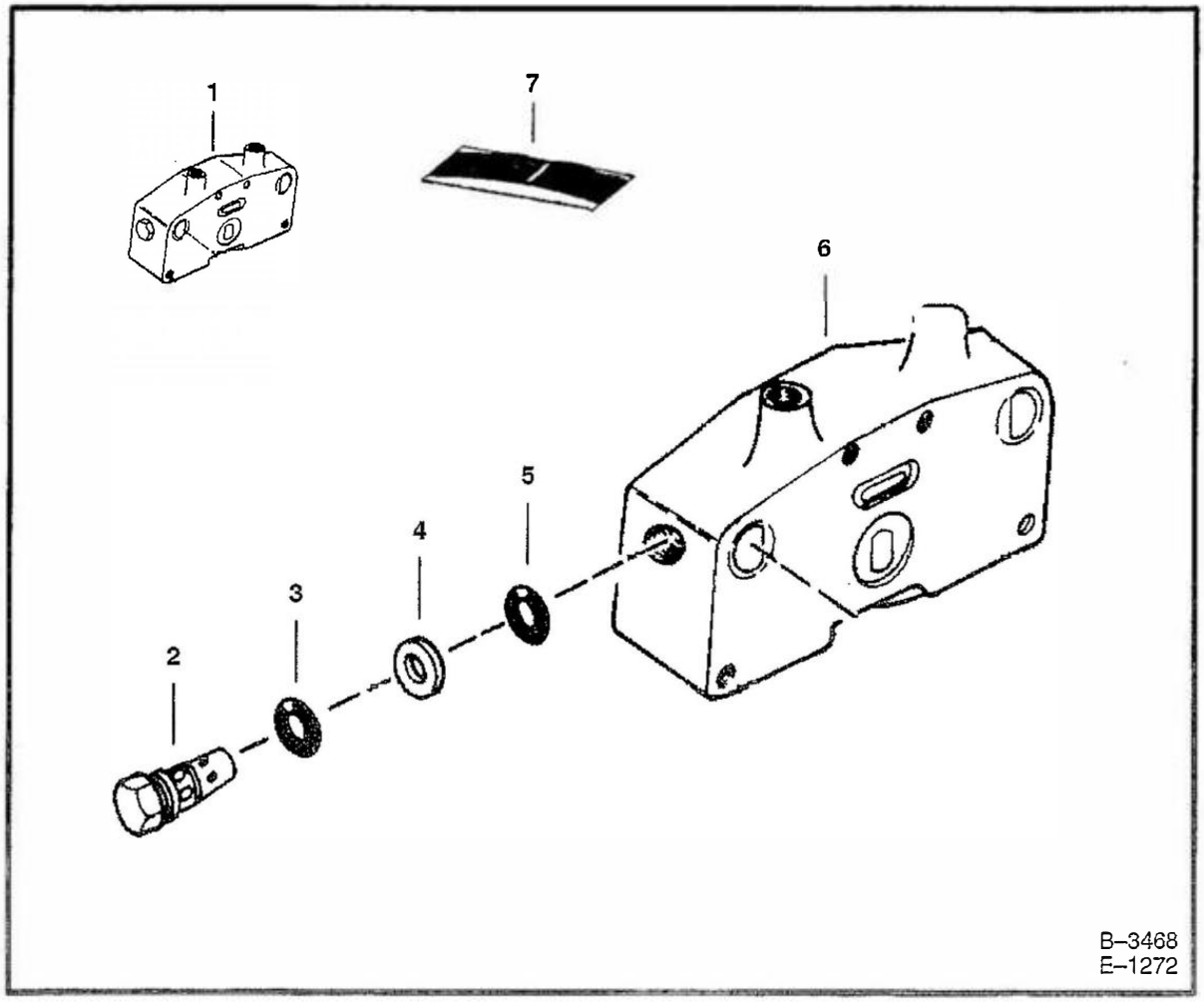

INLET SECTION

Ref. No.	Part Number	Description	Remarks	Serial Number	Qty.
1*	NAP	SECTION	inlet – Was 6513852 [A]		1
2	6513849	VALVE	relief		1
3	NSS	O–RING			1
4	NSS	WASHER	back–up		1
5	NSS	O–RING			1
6	NSS	BODY			1
7	948307	SEAL KIT	Ref. 3–5		1

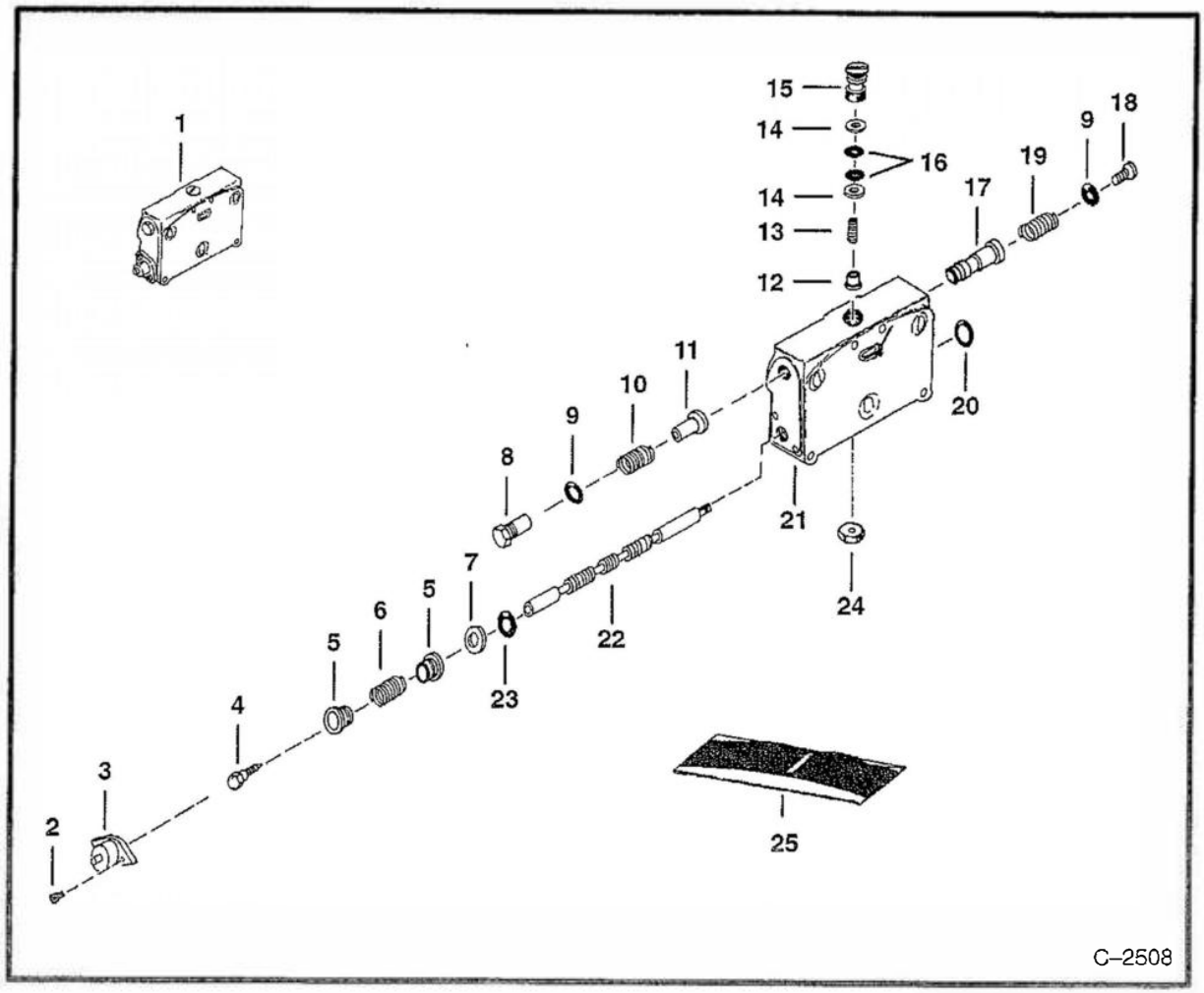

TILT SECTION

Ref. No.	Part Number	Description	Remarks	Serial Number	Qty.
1	6598514	SECTION	tilt		1
2	6631988	SCREW			2
3	6513918	CAP			1
4	6513917	SCREW			1
5	6513899	WASHER	centering		2
6	6513912	SPRING			1
7	6513909	WASHER	retainer		1
8	6513915	PLUG	lift check		1
9	NSS	O–RING			2
10	6513914	SPRING			1
11	6513916	PLUNGER			1
12	1550481	PLUNGER			1
13	1550482	SPRING			1
14	NSS	WASHER			2
15	6513919	PLUG			1
16	NSS	O–RING			2
17	NSS	SPOOL			1
18	6513920	PLUG			1

TILT SECTION (Cont'd)

Ref. No.	Part Number	Description	Remarks	Serial Number	Qty.
19	6513921	SPRING			1
20	NSS	O-RING			1
21	NSS	BODY			1
22	NSS	SPOOL			1
23	NSS	O-RING			1
24*	NAP	ORIFICE	size .1360 (3,45 mm) – Was 6599592 [A]		1
25	6598517	SEAL KIT	Ref. 9, 14, 16, 20 & 23		1

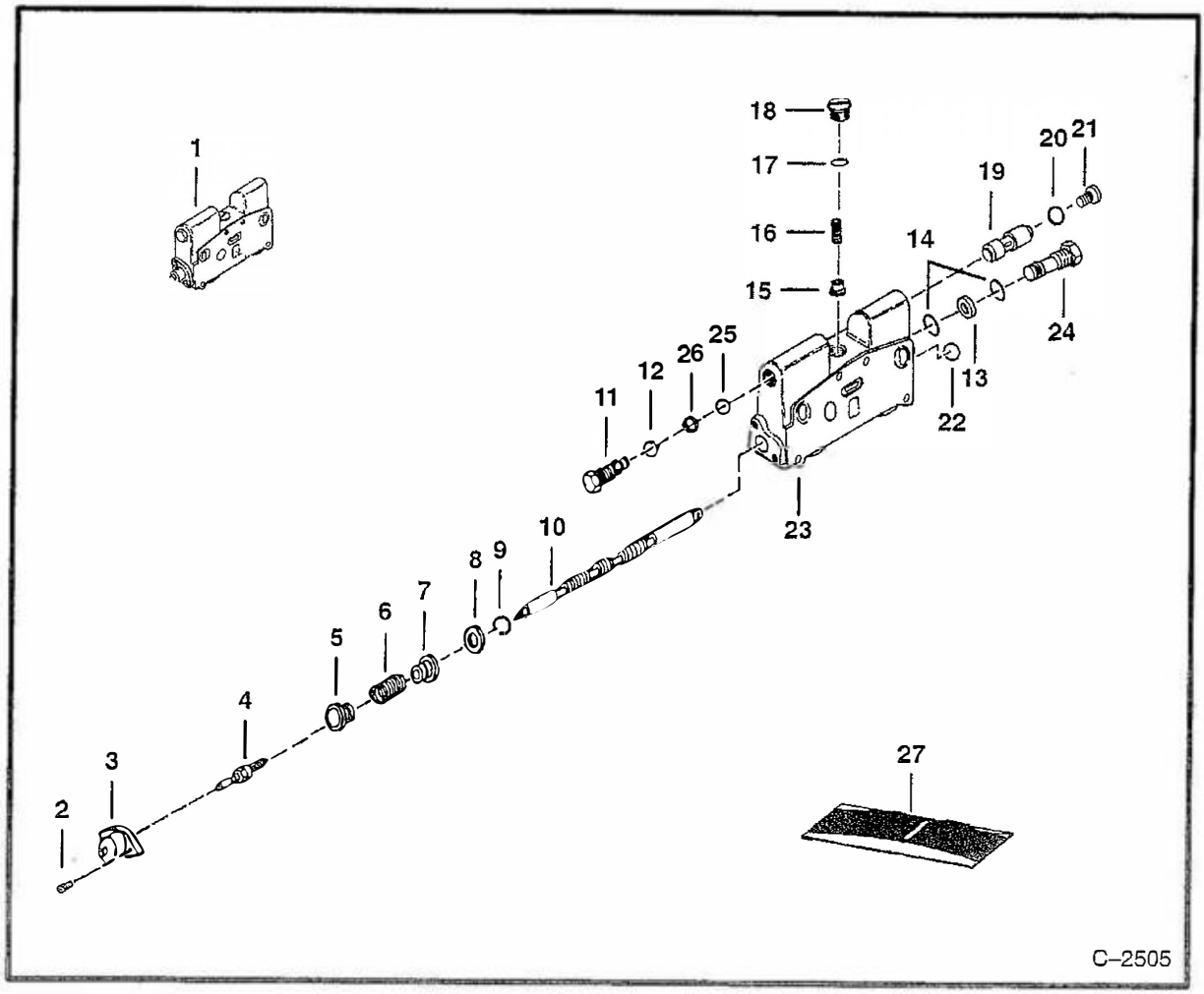

LIFT SECTION

Ref. No.	Part Number	Description	Remarks	Serial Number	Qty.
1	NAP	SECTION	lift – Without Ref. 11 & 14 – Was 6598515 [A]		1
2	6631988	SCREW			2
3	6513902	CAP			1
4	6598516	SCREW			1
5	6598679	WASHER	centering		1
6	6513912	SPRING			1
7	6513910	WASHER	centering		1
8	6513909	WASHER	retainer		1
9	NSS	O–RING			1
10	NSS	SPOOL			1
11	6513850	VALVE	relief		1
12	58K–117	O–RING			1
13	NSS	WASHER			1
14	NSS	O–RING			2
15	1550481	PLUNGER			1
16	1550482	SPRING			1
17	NSS	O–RING			1

LIFT SECTION (Cont'd)

Ref. No.	Part Number	Description	Remarks	Serial Number	Qty.
18	6513881	PLUG ASSY			1
19	NSS	SPOOL			1
20	NSS	O–RING			1
21	6513923	PLUG ASSY			1
22	NSS	O–RING			1
23	NSS	BODY			1
24	6598519	VALVE	relief		1
25	58K–113	O–RING			1
26	80K–113	WASHER	back–up – Was 73K–113 [A]		1
27	6598518	SEAL KIT	Ref. 9, 13, 14, 17, 20 & 22		1

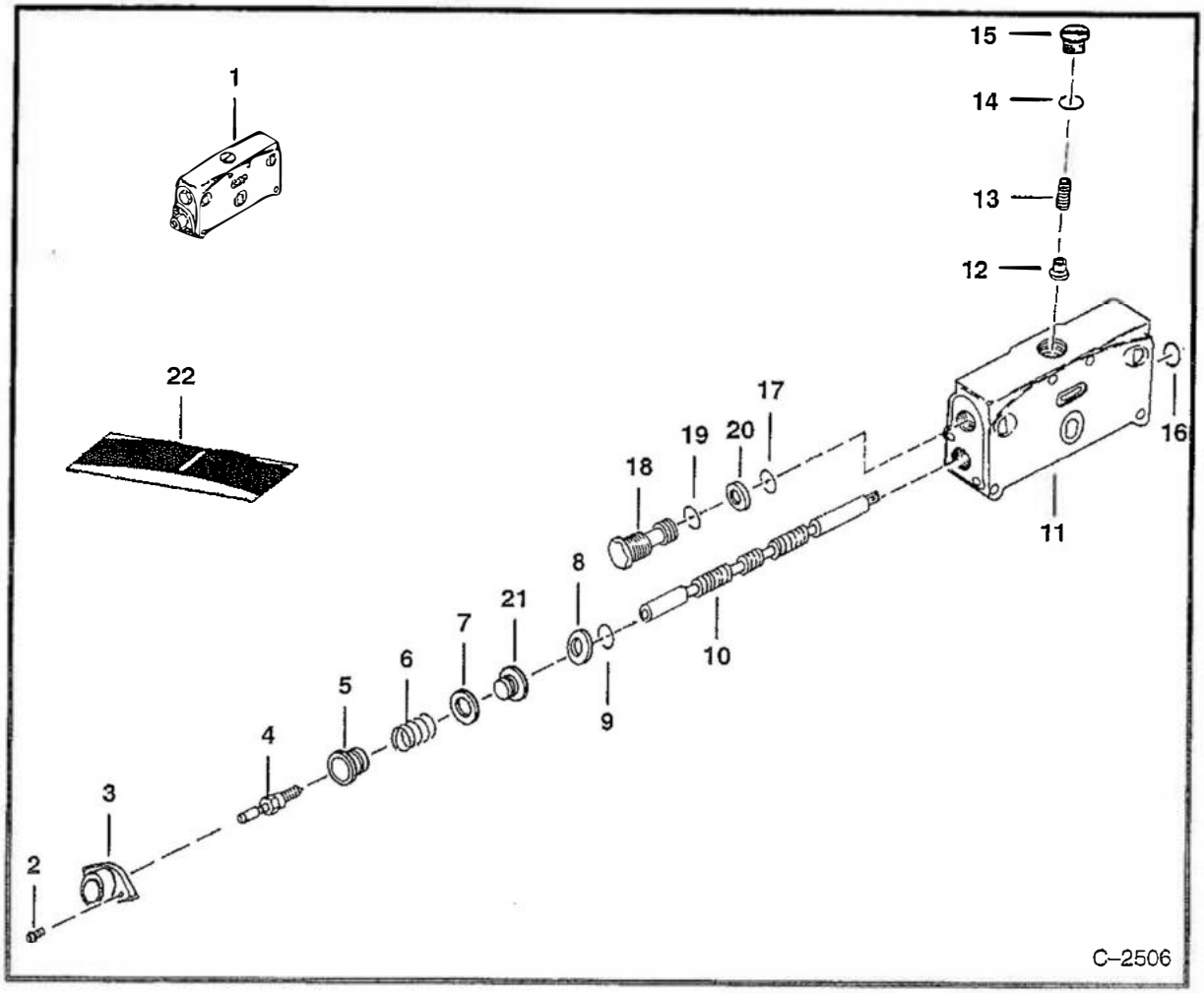

AUXILIARY SECTION

Ref. No.	Part Number	Description	Remarks	Serial Number	Qty.
1	NSS	SECTION	aux. – Was 6513879 [A]		1
2	6631988	SCREW			2
3	6513902	CAP	detent		1
4	6513911	SCREW			1
5	6513910	WASHER	centering		1
6	6513912	SPRING			1
7	6513913	WASHER	centering		1
8	6513909	WASHER	retainer		1
9	NSS	O–RING			1
10	NSS	SPOOL			1
11	NSS	BODY			1
12	1550481	PLUNGER			1
13	1550482	SPRING			1
14	NSS	O–RING			1
15	NSS	PLUG ASSY	Was 6513881 [A]		1
16	NSS	O–RING			1
17	NSS	O–RING			1
18	947751	PLUG			1

Ref. No.	Part Number	Description	Remarks	Serial Number	Qty.
19	NSS	O-RING			1
20	NSS	WASHER	back-up		1
21	6513899	WASHER			1
22	6513930	SEAL KIT	Ref. 9, 14, 16 & 19–21		1

CONTROL VALVE
(Bobcat)

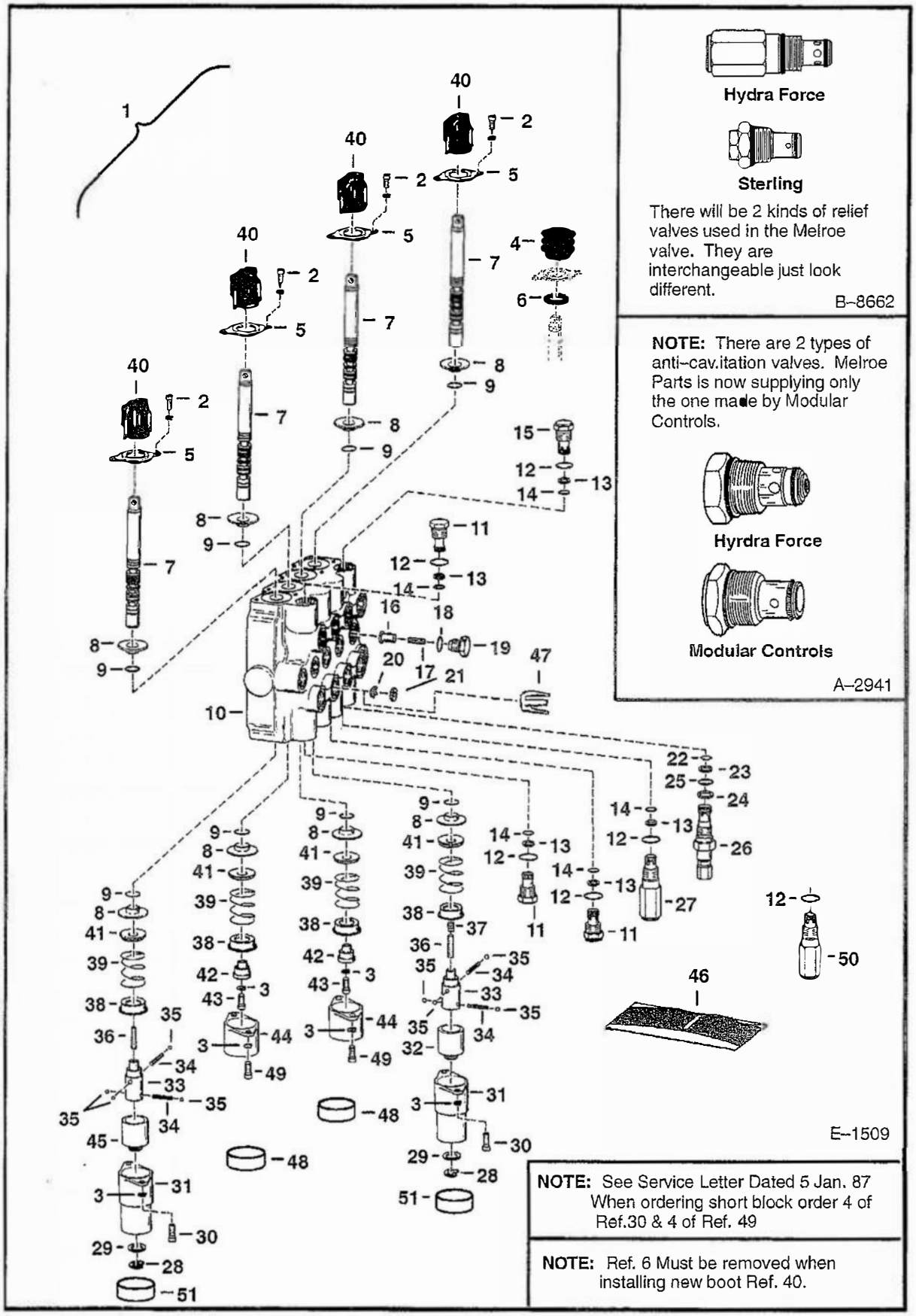

CONTROL VALVE (Cont'd)
(Bobcat)

Ref. No.	Part Number	Description	Remarks	Serial Number	Qty.
1	6539333	VALVE	Ref. 2–48 – See instruction that comes with valve – Was 6592464 [A]		1
	6592740	SHORT BLOCK	Ref. 2–10, & 37 – See Note		1
2	6588165	SCREW			8
3	22E–4	WASHER			2
4	NAP	BOOT	Order Ref. 40 – Was 6592122 [A]		4
5	6592123	RETAINER			4
6	NAP	FILTER	sintered – Not Used W/Ref. 40		
			Was 6592124 [A]		4
7	NSS	SPOOL			4
8	6592103	BUSHING	See Service Letter dated		
			5 Jan. 87		8
	6538466	BUSHING	With part # stamped on face		8
9	6659554	QUAD RING	See Service Letter dated		
			31 Aug. 92 – Was 6632204 [A]		8
	6646372	SEAL	Quad ring – See Service Letter dated 31 Aug. 92		8
10	NSS	BODY			1
11	6592720	PLUG	W/Ref. 12–14		2
12	79K–10	O–RING			5
13	73K–14	WASHER	back–up – Was 80K–14 [B]		5
14	58K–14	O–RING	back–up washer required – Was 25K–20016 [B]		5
*	6677106	O–RING	back–up washer not required		5
15	6667549	VALVE	anti–cavity – W/Ref. 12–14 – SEE NOTE – Was 6661345 [A]		2
16	6592115	SEAT			4
17	6592117	SPRING			4
18	79K–8	O–RING			4
19	6592116	NUT	load check		4
20	6592111	ORIFICE	.161/.154 (4,08/3,91 mm)		1
21	6593680	RETAINER			1
22	NSS	O–RING			1
23	NSS	WASHER	back–up		1
24	NSS	O–RING			1
25	NSS	WASHER	back–up		1
26*	6676199	VALVE	main relief – W/Ref. 22–25 – Was 6649321 [A]		1
27	6599161	RELIEF VALVE	W/Ref. 12–14 – See Note		1
28	799119	SNAP RING			2
29	6592098	WASHER			2
30	6588163	SCREW	7/8" (22,22 mm) – Was 69G–412 [B]		8
	29G–416	SCREW	1" (25,4 mm) – Was 6588982 [A]		4
31	NAP	BONNET	W/.25" flange – Order 6589226 bonnet, 6660644 cap, and 2 29G–416 screws – Was 6592094 [A]		2
	6589226	BONNET	W/.625" (15,87 mm) flange		2
32	6592096	SLEEVE	lift		1
33	6587575	ADAPTER	Was 6592099 [A]		2

CONTROL VALVE (Cont'd)
(Bobcat)

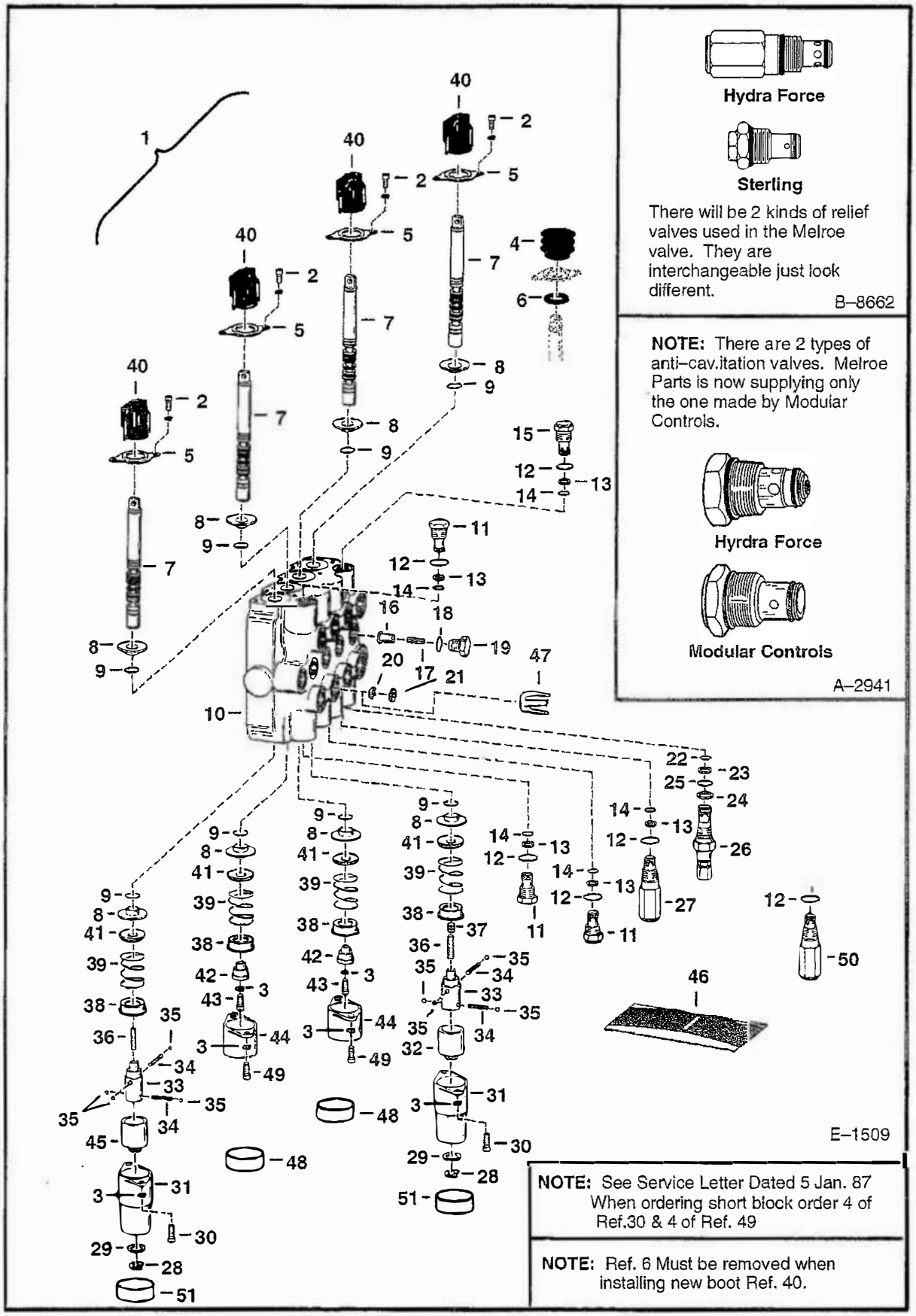

CONTROL VALVE (Cont'd)
(Bobcat)

Ref. No.	Part Number	Description	Remarks	Serial Number	Qty.
34	6592107	SPRING			4
35	6592105	BALL			8
36	6586918	SCREW	Was 6535747 [A]		2
37	NAP	PLUG	plastic – Order 6596807 plug and 54K–20002 O–Ring – Was 6592752 [A]		1
	6596807	PLUG			1
	54K–20002	O–RING			1
38	6592100	COLLAR			4
39	6587580	SPRING	Was 6592106 [A]		4
40	6587763	BOOT	Was 6583727 [A]		4
41	6587523	WASHER	Was 6592101 [A]		4
42	6592109	ADAPTER			2
43	6588166	SCREW	Was 74G–416 [B]		2
44	NAP	BONET	W/.25" (6,35 mm) flange – Order 6587633, 6662848 & 2 of 6588164		2
	6587633	BONET	W/.50" (12,7 mm) flange		2
45	6593349	SLEEVE	auxiliary		1
46	6803606	SEAL KIT	Ref. 9, 12–14, 18, 22–25, 30 & 40 See Service Letter dated 31 Aug. 92 – Was 6596736 [A]		1
	6803605	SEAL KIT	Ref. 9, 30 & 40 for one spool – Was 6596310 [A]		4
	6661328	SEAL KIT	main relief seal – Ref. 22–25		1
*	6809425	SEAL KIT	upper deck – Ref. 12–14 & 18 – Was 6586461 [A]		1
47	6532633	ORIFICE	.153 (3,88 mm)		1
48	6662848	CAP	used with 6587633 bonnet		2
49	6588164	SCREW			4
50	6664373	VALVE	Optional – port relief & anti cav. – W/Ref. 12 – 2500 PSI – use in tilt cyl. base end port		1
51	6660644	CAP			2

CONTROL PEDALS
(S/N 13001 – 14999)

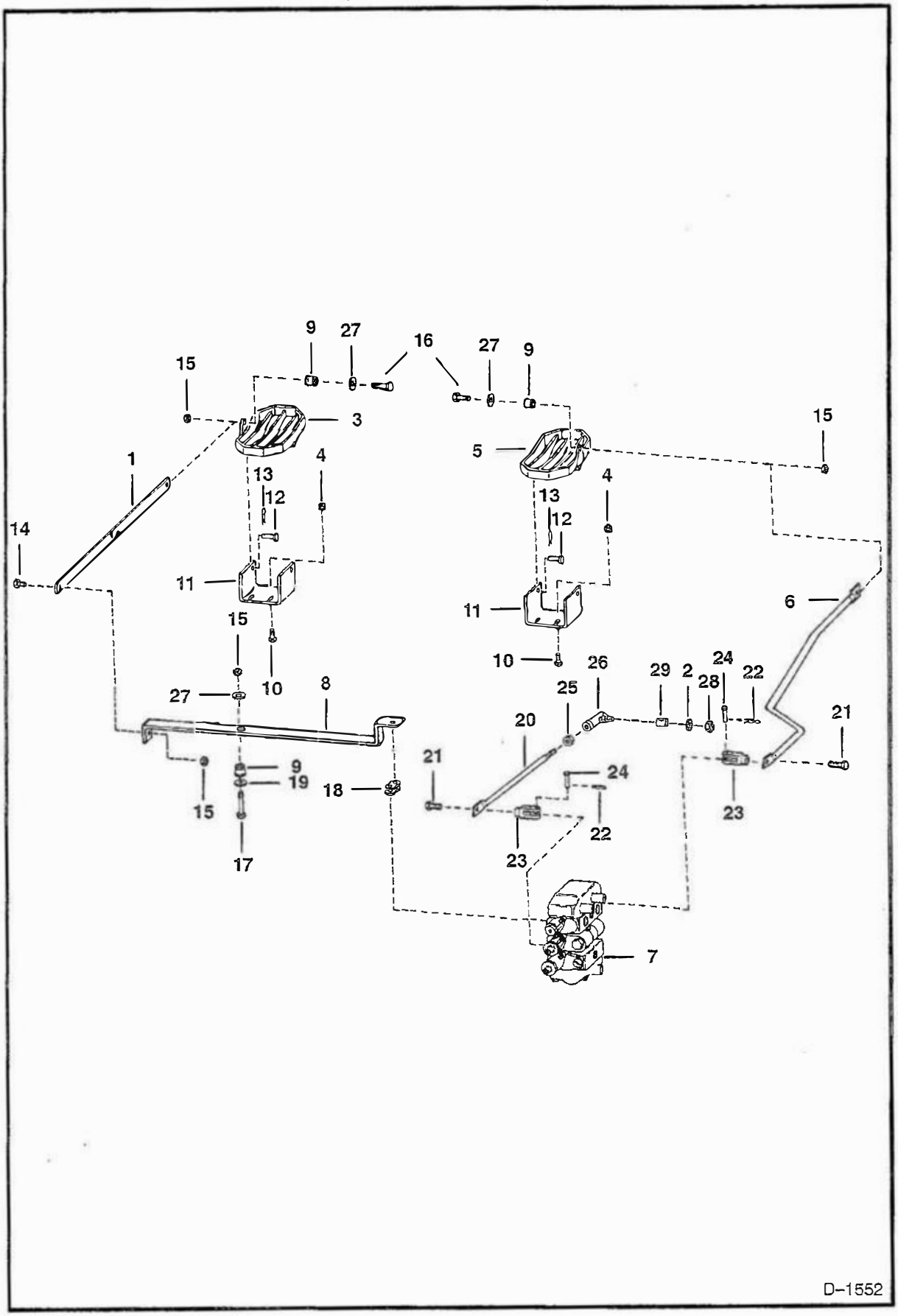

CONTROL PEDALS (Cont'd)
(S/N 13001 – 14999)

Ref. No.	Part Number	Description	Remarks	Serial Number	Qty.
1	6563159	LINKAGE			1
2	6557831	WASHER			1
3	6558451	PEDAL	L.H.		1
4	57D–6	NUT			4
5	6558453	PEDAL	R.H.		1
6	6563158	LINKAGE			1
7		VALVE	See Page 61–69		1
8	6558911	BAR			1
9	6665701	BUSHING	See BTI–228 – Was 6630081 [A]		7
10	6704349	BOLT	Was 6514537 [B]		4
11	6558912	BRACKET			2
12	1737762	PIN			2
13	1306637	COTTER PIN			2
14	17C–616	BOLT			1
15	85D–6	NUT			14
16	17C–624	BOLT			2
17	1304938	BOLT			1
18	6515186	LINK			1
19	25E–17	WASHER			3
20	6564861	ROD			1
21	18C–616	BOLT			2
22	6513495	COTTER PIN			2
23	6560526	CLEVIS			2
24	6559014	PIN			2
25	8D–6	NUT			1
26*	1301362	JOINT	ball – Was 6599953 [A]		1
27	6563914	WASHER			3
28	86D–6	NUT			1
29	6544654	BUSHING			1

CONTROL PEDALS
(15001 & Above)

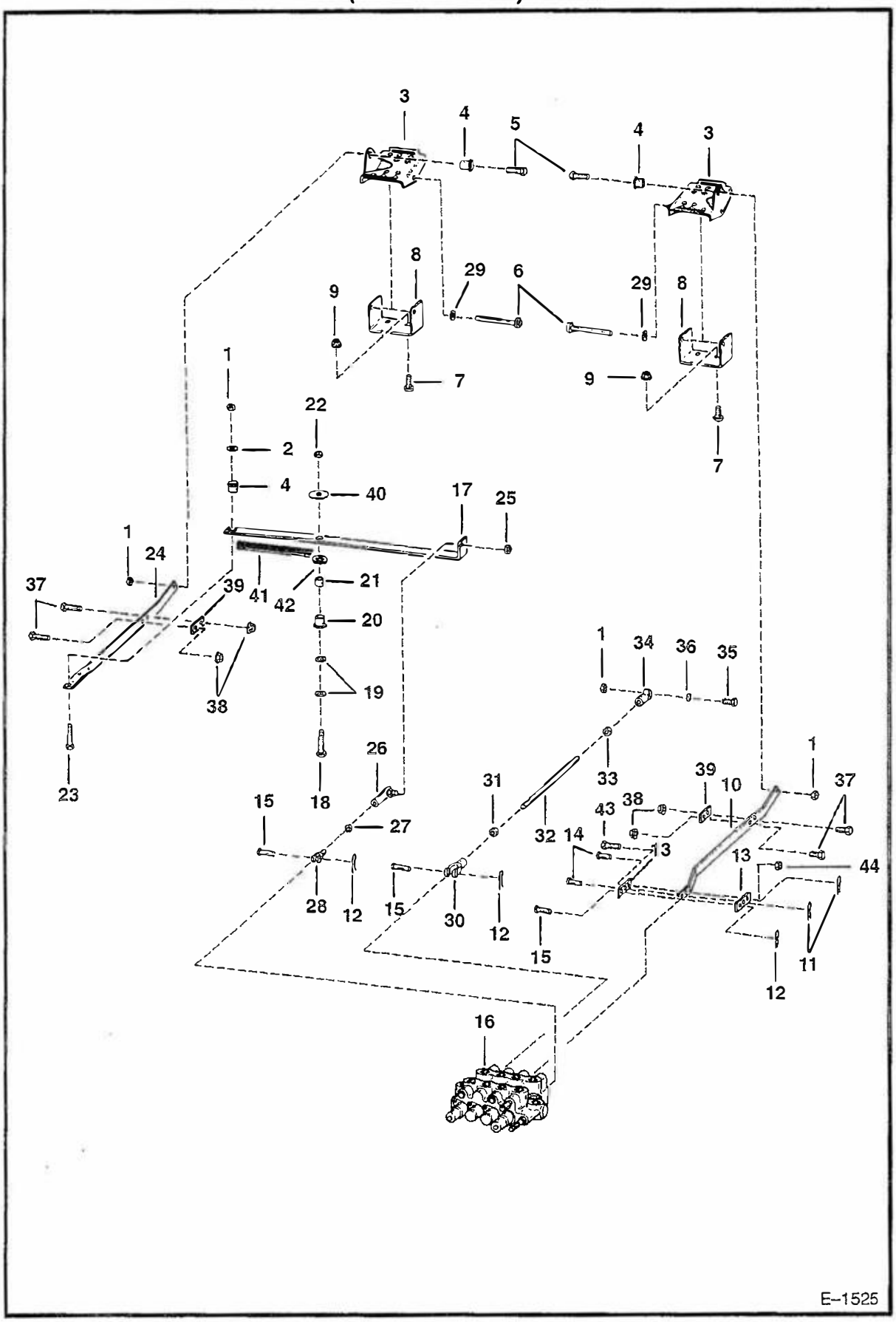

CONTROL PEDALS (Cont'd)
(15001 & Above)

Ref. No.	Part Number	Description	Remarks	Serial Number	Qty.
1	85D–6	NUT			1
2	6563914	WASHER			4
3*	6726680	PEDAL	Was 6564656 [A]		2
4	6665701	BUSHING	Was 6630081 [A]		3
5	17C–624	BOLT			2
6	6564657	PIN			2
7	6704349	BOLT	Was 6514537 [B]		4
8	6564722	BRACKET			2
9	57D–6	NUT			4
10	6564720	BAR			1
11	1306637	COTTER PIN			2
12	6513495	COTTER PIN			1
13	6706680	LINK	Also order Ref. 43 & 44 – Was 6564544 [A]		2
14	4F–6106	PIN			2
15	6564654	PIN			1
16	6592464	VALVE	See Page 69		1
17	6564721	LEVER			1
18	6565067	BOLT			1
19	25E–17	WASHER			2
20	NAP	BEARING	See BTI 228	15001–21695	1
	6569599	BEARING		21696 & Above	1
21	NAP	INSERT	See BTI 228	15001–21695	1
	6569598	INSERT		21696 & Above	1
22	61D–6	NUT			1
23	17C–628	BOLT			1
24	6564719	BAR			1
25	82D–5	NUT			1
26	6512356	JOINT	ball		1
27	8D–5	NUT			1
28	6585201	CLEVIS			1
29	25E–21	WASHER	Use if serrations on pins are too long		2
30	6564655	CLEVIS			1
31	8D–6	NUT			1
32	6564718	ROD	aux. control		1
33	13D–6	NUT			1
34	6512955	ROD END			1
35	17C–620	BOLT			1
36	6564535	WASHER			1
37	17C–614	BOLT			6
38	83D–6	NUT			4
39	6563151	LINK			2
40	6563914	WASHER		15001–20235	1
	616789	WASHER		20236 & Above	1
41	NAP	STRIP	rubber – See BTI 228	20236–21695	1
42	6569597	WASHER		21696 & Above	1
43	17C–620	BOLT			2
44	91D–6	NUT			2

BUCKET POSITIONING VALVE
(S/N 26662 & Below)

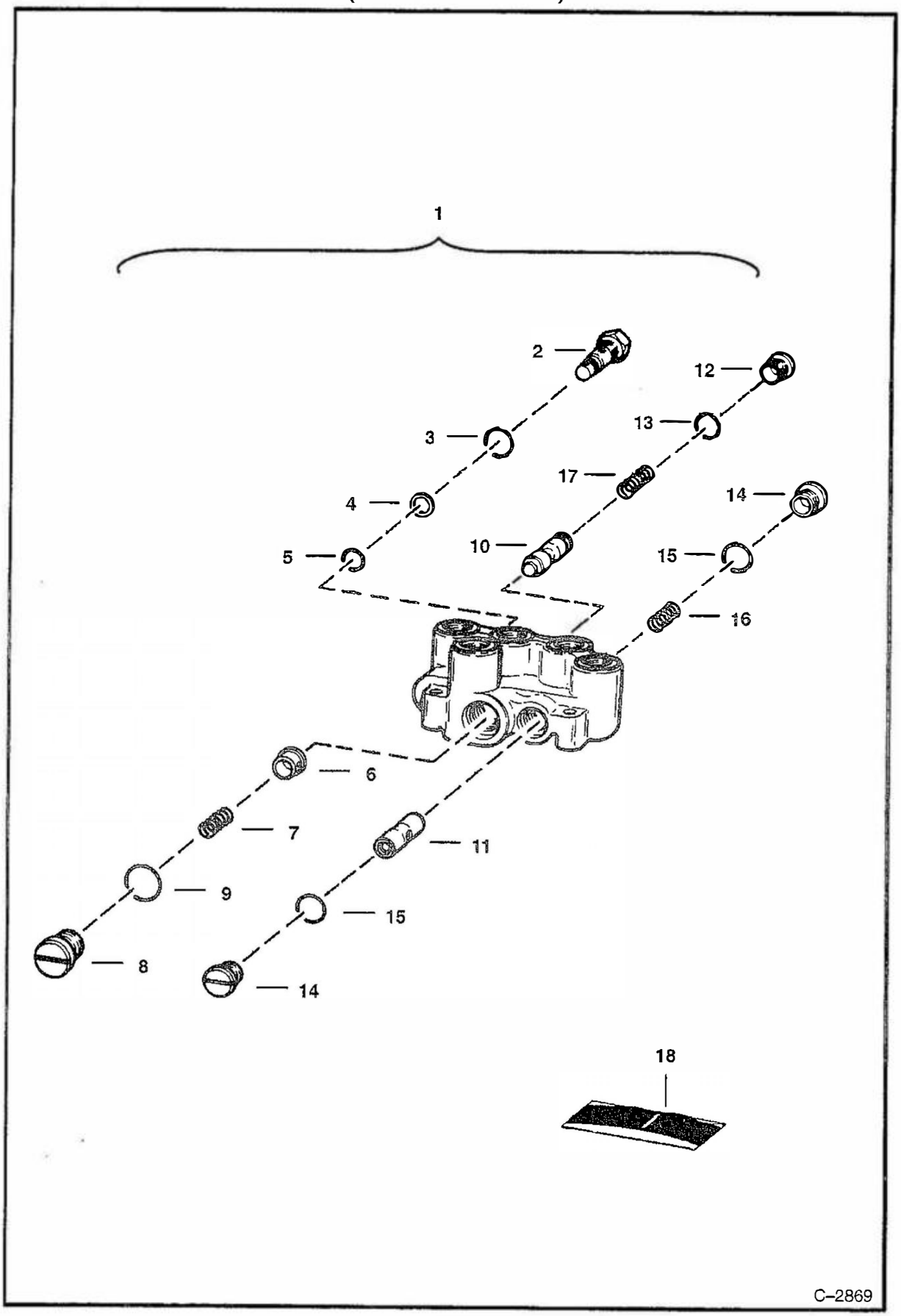

BUCKET POSITIONING VALVE (Cont'd)
(S/N 26662 & Below)

Ref. No.	Part Number	Description	Remarks	Serial Number	Qty.
1*	NAP	VALVE	Was 6630065 [A]		1
2	6630333	RELIEF VALVE			1
3	NSS	O-RING			1
4	NSS	WASHER	back-up		1
5	NSS	O-RING			1
6	947717	PLUNGER			1
7	947737	SPRING			1
8	6511372	PLUG	W/Ref. 9		1
9	58K-111	O-RING			1
10	NSS	SPOOL			1
11	NSS	SPOOL			1
12	6630119	PLUG	W/Ref. 13		1
13	58K-114	O-RING			1
14	6630120	PLUG	W/Ref. 15		2
15	58K-115	O-RING			2
16	6630121	SPRING			1
17	6630115	SPRING			1
18	6630130	SEAL KIT	W/Ref. 3-5, 9, 13 & 15		1

HYDROSTATIC CIRCUITRY
(S/N 14999 & Below)

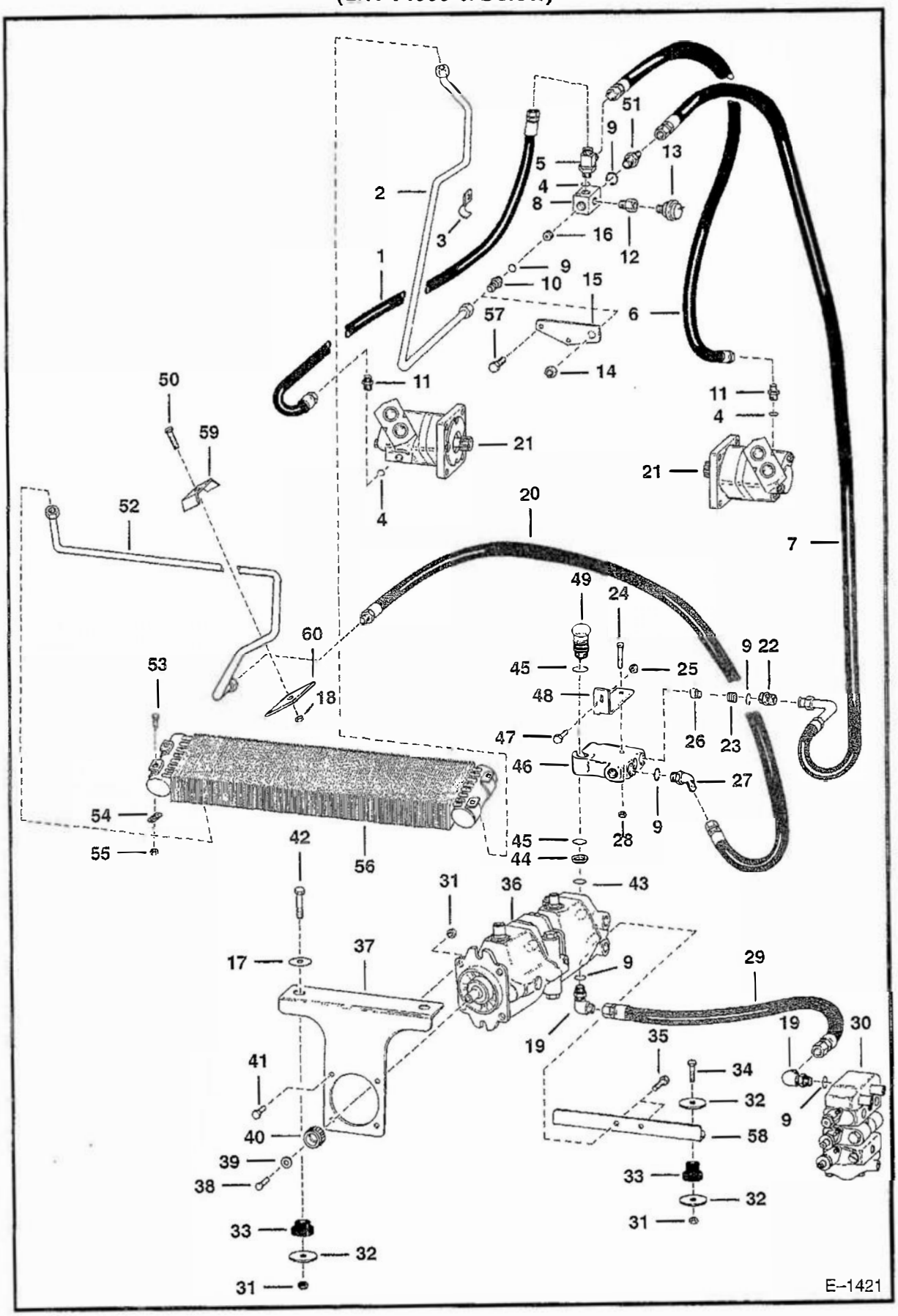

HYDROSTATIC CIRCUITRY (Cont'd)
(S/N 14999 & Below)

Ref. No.	Part Number	Description	Remarks	Serial Number	Qty.
1	3739527	HOSE			1
2	6560023	TUBE			1
3	5H–8	CLIP			1
4	79K–6	O–RING			x
5	21K–5	TEE	W/Ref. 4		1
6	1518597	HOSE			1
7	2755888	HOSE			1
8	6562692	BLOCK			1
9	79K–10	O–RING			x
10	45K–7	ADAPTER	W/Ref. 9		1
11	15K–5	ADAPTER	W/Ref. 4		2
12	6563922	SNUBBER	W/Filter		1
	6563920	FILTER			1
13	6564875	SWITCH	hydro. pressure		1
14	86F–7	NUT			1
15	6560033	BRACKET			1
16	6599589	ORIFICE	.270/.279 (6,85/7,08 mm)		1
17	6560899	WASHER			x
18	85D–6	NUT	lock		1
19	17K–7	ELBOW	W/Ref. 9		2
20	731783	HOSE			1
21		MOTOR	See Page 121		2
22	6562656	ADAPTER	W/Ref. 9		1
23	6562691	SPRING			1
24	17C–640	BOLT			1
25	57D–6	NUT			1
26	6565620	POPPET			1
27	18K–7	ELBOW	W/Ref. 9		1
28	61D–6	NUT			1
29	659892	HOSE			1
30		VALVE	See Page 61		1
31	85D–8	NUT			8
32	6564692	WASHER			6
33	6560633	MOUNT	shock		4
34	17C–836	BOLT			2
35	17C–712	BOLT			2
36		PUMP	See Page 115		1
37	6562301	MOUNT	pump		1
38	18C–616	BOLT			1
39	616783	WASHER			1
40	6562878	ADAPTER	spline		1
41	17C–824	BOLT			4
42	17C–840	BOLT			2
43	79K–12	O–RING			1
44	6562765	WASHER			1
45	58K–127	O–RING			1
46	6564034	BLOCK	port		2
47	31C–616	BOLT			1
48	6562872	BRACKET			1
49	6562751	SCREW	hollow		1
50	17C–624	BOLT			1

HYDROSTATIC CIRCUITRY (Cont'd)
(S/N 14999 & Below)

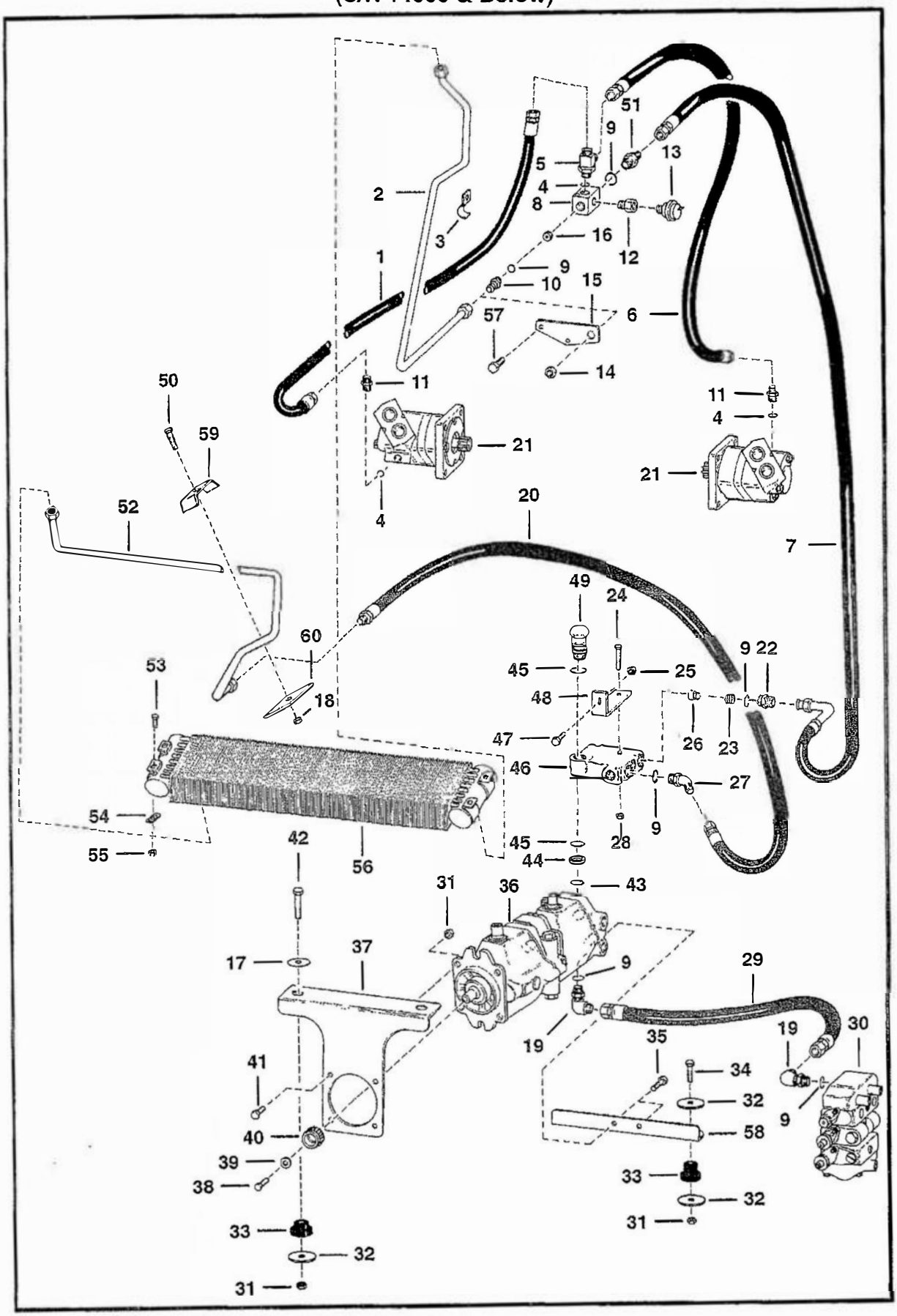

HYDROSTATIC CIRCUITRY (Cont'd)
(S/N 14999 & Below)

Ref. No.	Part Number	Description	Remarks	Serial Number	Qty.
51	15K–7	ADAPTER	W/Ref. 9		1
52	6564843	TUBE			1
53*	10C–512	BOLT	Was 6553808 [A]		2
54	774220	WASHER			2
55	85D–5	NUT			2
56	6598438	OIL COOLER			1
57	17C–516	BOLT			2
58	6559453	MOUNT	pump		1
59	6502203	CLAMP			1
60	6559459	WASHER			1

HYDROSTATIC CIRCUITRY
(S/N 14999 & Below)

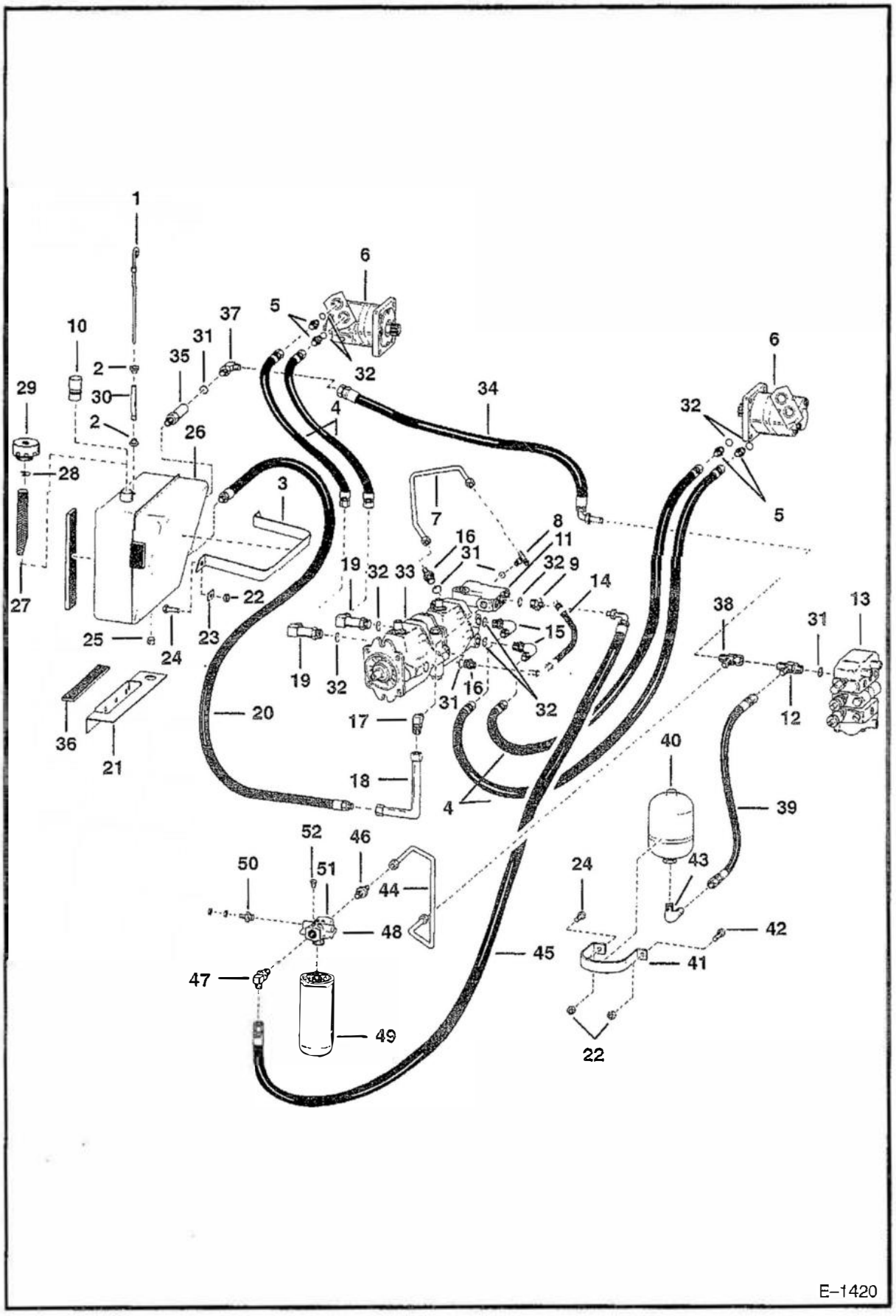

HYDROSTATIC CIRCUITRY (Cont'd)
(S/N 14999 & Below)

Ref. No.	Part Number	Description	Remarks	Serial Number	Qty.
1	6560575	DIPSTICK			1
2	6553411	BUSHING			2
3	6559449	BAND			1
4	6559159	HOSE			4
5	15K–10	ADAPTER	W/Ref. 32		4
6		MOTOR	See Page 121		2
7	6562870	TUBE			1
8	19K–7	TEE	W/Ref. 31		1
9	1303485	ADAPTER	W/Ref. 32		1
10	6563266	TUBE	extension		1
11	6564034	BLOCK	port		1
12	21K–7	TEE	W/Ref. 31		1
13		VALVE	See Page 61		1
14	6565155	HOSE			1
15	17K–10	ELBOW	W/Ref. 32		2
16	15K–7	ADAPTER	W/Ref. 31		2
17	1300309	ELBOW			1
18	6559873	TUBE			1
19	2513089	ELBOW	W/Ref. 32		2
20	6560251	HOSE			1
21	6559451	BRACKET	tank		1
22	61D–6	NUT			2
23	6559447	WASHER			2
24	17C–624	BOLT			2
25	16F–12	PLUG			1
26	6563264	TANK			1
27	6558604	SCREEN			1
28	713133	SNAP RING			1
29	NAP	CAP	Pack of 12 – Was 1779011 [A]		1
	6577785	CAP	Qty. of 1 – Was 6560209 [A]		1
30	6560574	TUBE			1
31	79K–10	O–RING			x
32	79K–16	O–RING			x
33		PUMP	See Page 115		1
34	6563265	HOSE			1
35	NAP	VALVE	relief – Was 6562889 [A]		1
36	6559448	STRIP	rubber – Sold Per Foot – Was 6559445 [A]		x
37	17K–7	ELBOW			1
38	13K–7	TEE			1
39	595033	HOSE			1
40	6599590	ACCUMULATOR			1
41	6564885	BAND			1
42	17C–616	BOLT			1
43	83F–7	ELBOW			1
44	6564866	TUBE			1
45	6565288	HOSE			1
46	755055	ADAPTER			1
47	1302104	ELBOW			1
48	NAP	HEAD	filter – W/Ref. 49–51 – See BTI 210	13744 & Below	1

HYDROSTATIC CIRCUITRY (Cont'd)
(S/N 14999 & Below)

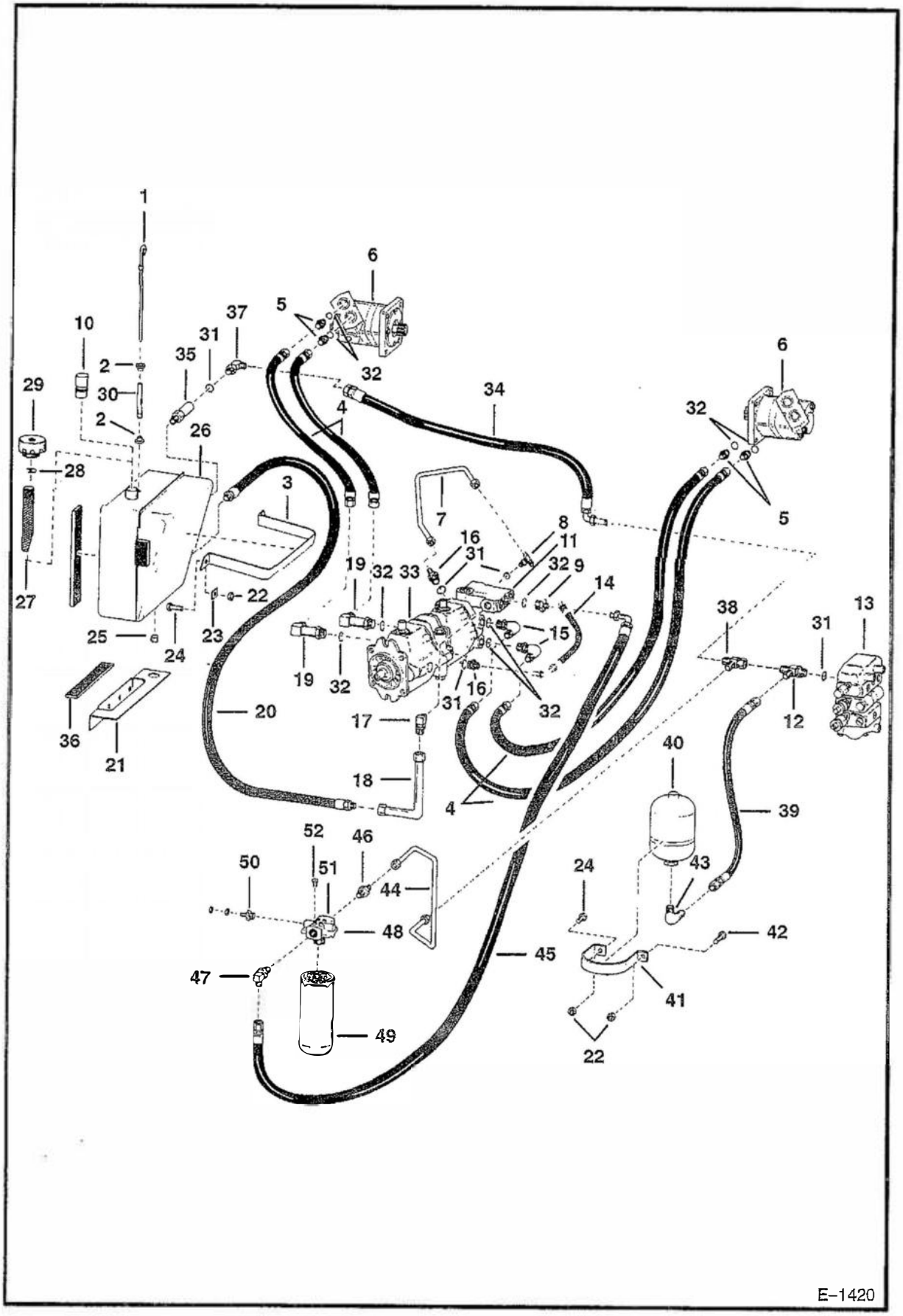

HYDROSTATIC CIRCUITRY (Cont'd)
(S/N 14999 & Below)

Ref. No.	Part Number	Description	Remarks	Serial Number	Qty.
49	6598903	ELEMENT	filter		1
50	6599364	SWITCH	pressure		1
	6599365	KIT	Nuts, washers & o–rings for switch		1
51	6599366	VALVE	by–pass	13744 & Below	1
	6630157	VALVE	by–pass	13745–14999	1
52	17C–610	BOLT			4

HYDROSTATIC CIRCUITRY
(S/N 15001 Thru 21514)

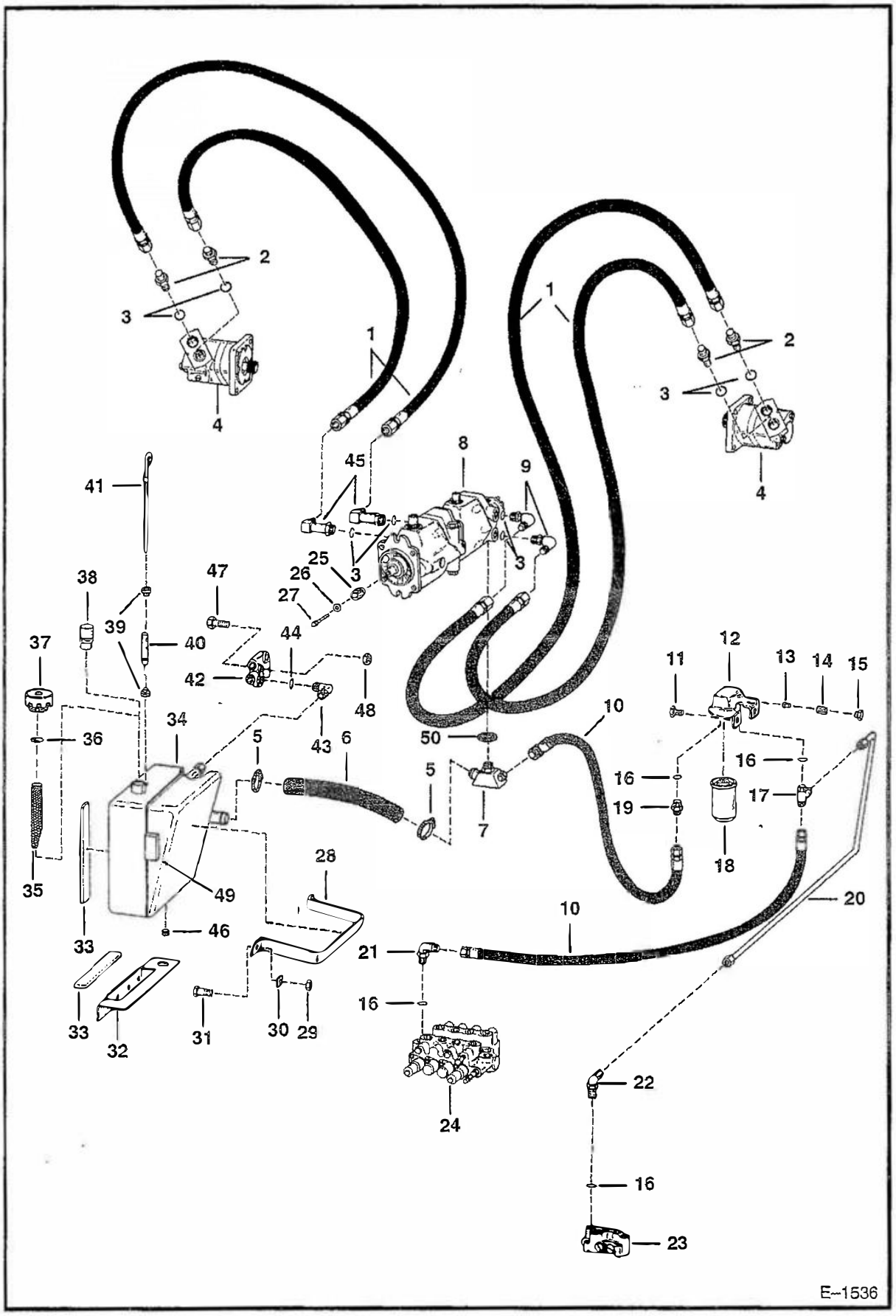

HYDROSTATIC CIRCUITRY (Cont'd)
(S/N 15001 Thru 21514)

Ref. No.	Part Number	Description	Remarks	Serial Number	Qty.
1	6559159	HOSE			4
2	15K–10	ADAPTER	W/Ref. 3		4
3	79K–16	O–RING			x
4		MOTOR	See Page 121		2
5	43H–1212	CLAMP			2
6	6565993	HOSE			1
7	6565557	TEE			1
8		PUMP	See Page 115		1
9	17K–10	ELBOW	W/Ref. 3		2
10	6565992	HOSE			2
11	84G–3712	BOLT			2
12	6564877	HEAD	filter		1
13	6515078	POPPET			1
14	6553897	SPRING			1
15	6561811	PLUG			1
16	79K–10	O–RING			1
17	21K–7	TEE	W/Ref. 16		1
18	6599543	FILTER			1
19	15K–7	ADAPTER	W/Ref. 16		1
20	6565583	TUBE			1
21	6714901	ELBOW	Was 1300294 [A]		1
22	17K–7	ELBOW	W/Ref. 16		1
23*	NAP	VALVE	bucket positioning – Was 6630065 [A]		1
24		VALVE	See Page 69		1
25	6562878	ADAPTER			1
26	616783	WASHER			1
27	18C–616	BOLT			1
28	6559449	BAND			1
29	61D–6	NUT			1
30	6559447	WASHER			2
31	17C–624	BOLT			1
32	6559451	BRACKET			1
33	6559448	STRIP	rubber – Sold Per Foot – Was 6559445 [A]		x
34	6565554	TANK	See BTI 229		1
35	6558604	SCREEN			1
36	713133	SNAP RING			1
37	NAP	CAP	Pack of 12 – Was 1779011 [A]		x
	6577785	CAP	Qty. of 1 – Was 6560209 [A]		1
38	6563266	TUBE	extension		1
39	6553411	BUSHING			2
40	6560574	TUBE			1
41	6560575	DIPSTICK			1
42	6565619	BLOCK	port		1
43	17K–8	ELBOW	W/Ref. 44		1
44	79K–12	O–RING			1
45	2513089	ELBOW	W/Ref. 3		2
46	16F–12	PLUG			1
47	35C–648	BOLT			1
48	83D–6	NUT			1

HYDROSTATIC CIRCUITRY (Cont'd)
(S/N 15001 Thru 21514)

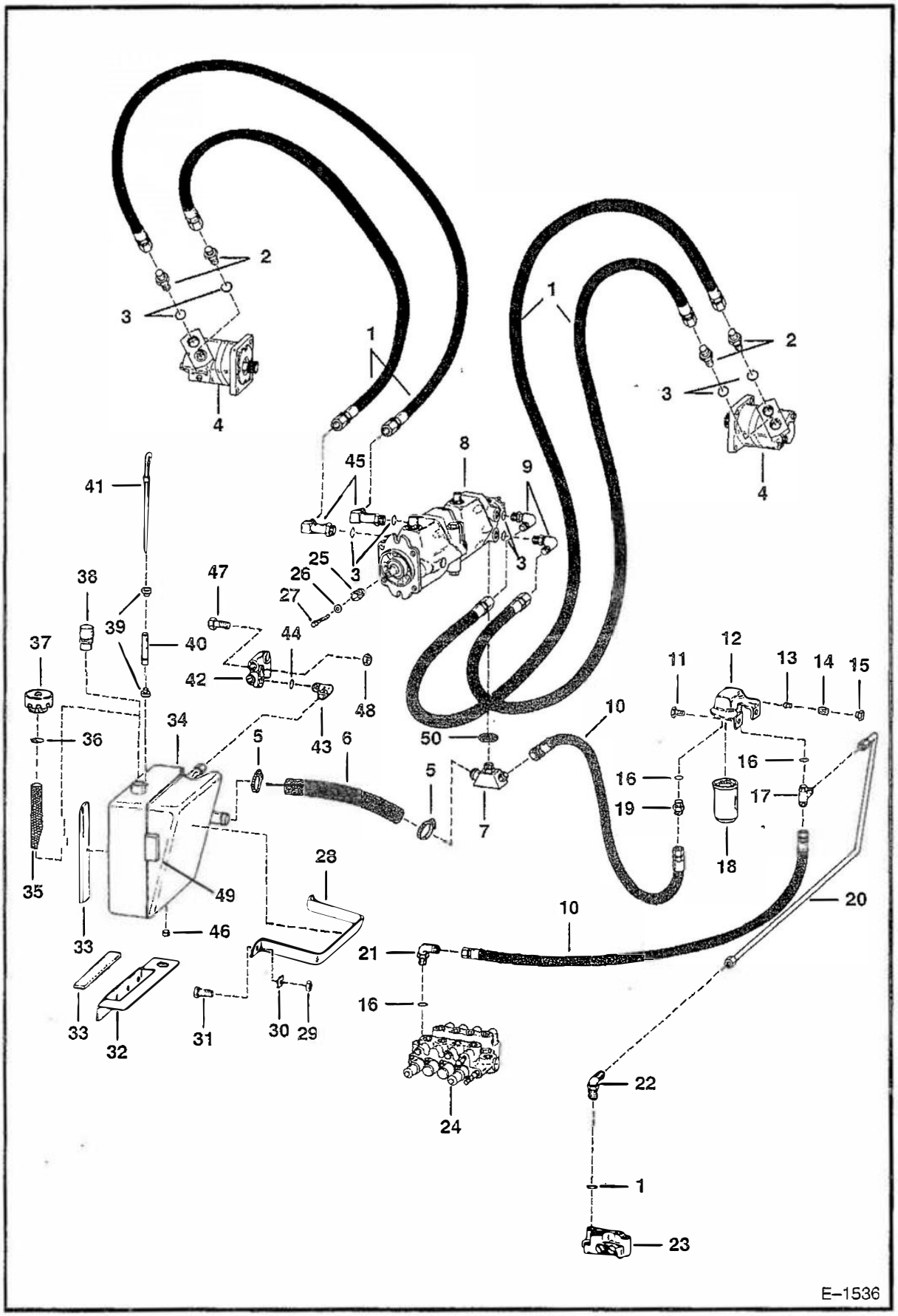

HYDROSTATIC CIRCUITRY (Cont'd)
(S/N 15001 Thru 21514)

Ref. No.	Part Number	Description	Remarks	Serial Number	Qty.
49	6559444	BLOCK	rubber		3
50	79K–20	O–RING			1

HYDROSTATIC CIRCUITRY
(S/N 21515 & Above)

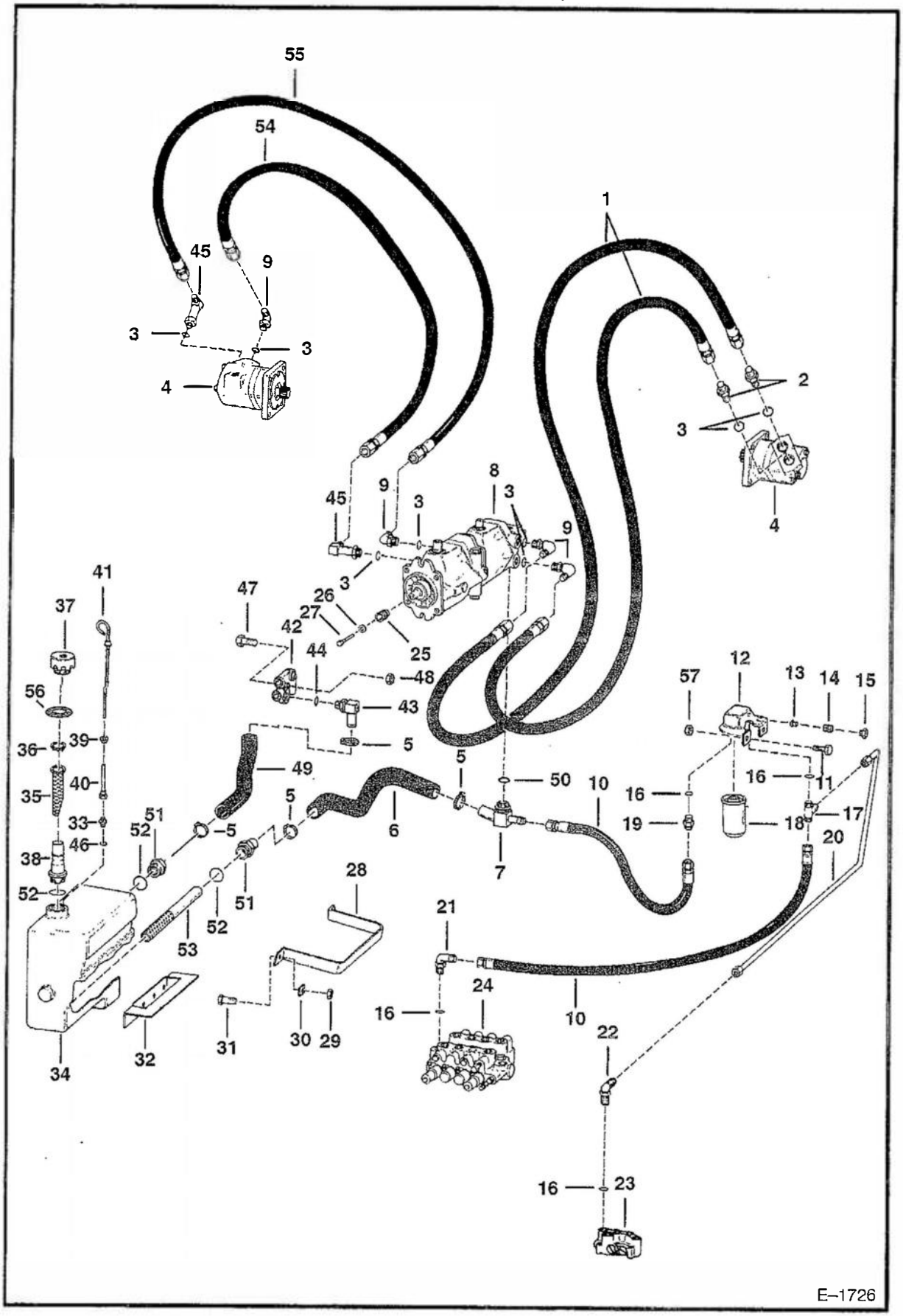

HYDROSTATIC CIRCUITRY (Cont'd)
(S/N 21515 & Above)

Ref. No.	Part Number	Description	Remarks	Serial Number	Qty.
1	6559159	HOSE			2
2	15K–10	ADAPTER	W/Ref. 3		2
3	79K–16	O–RING			x
4		MOTOR	See Page 121		2
5	42H–32	CLAMP			2
6	6569096	HOSE			1
7	6565557	TEE			1
8		PUMP	See Page 115		1
9	17K–10	ELBOW	W/Ref. 3		4
10	6565992	HOSE			2
11	17C–516	BOLT			2
12	6564877	HEAD	filter		1
13	6515078	POPPET			1
14	6553897	SPRING			1
15	6561811	PLUG			1
16	79K–10	O–RING			1
17	21K–7	TEE	W/Ref. 16		1
18	6599543	FILTER			1
19	15K–7	ADAPTER	W/Ref. 16		1
20	6565583	TUBE			1
21	6714901	ELBOW	Was 1300294 [A]		1
22	17K–7	ELBOW	W/Ref. 16		1
23*	NAP	VALVE	bucket positioning – Was 6630065 [A]		1
24		VALVE	See Page 69		1
25	6562878	ADAPTER			1
26	616783	WASHER			1
27	18C–616	BOLT			1
28	6569333	BAND			1
29	61D–6	NUT			1
30	6559447	WASHER			2
31	17C–624	BOLT			1
32	6559451	BRACKET			1
33	15K–5	ADAPTER			4
34	6569102	TANK			1
35	6558604	SCREEN			1
36	713133	SNAP RING			1
37	NAP	CAP	Pack of 12 – Was 1779011 [A]		x
*	6727475	CAP	Qty. of 1 – Was 6577785 [A]		1
38	6569098	TUBE	extension		1
39	6553411	BUSHING			1
40	6569101	TUBE			1
41	6560575	DIPSTICK			1
42	6565619	BLOCK	port		1
43	1629414	ELBOW	W/Ref. 44		1
44	79K–12	O–RING			1
45	2513089	ELBOW	W/Ref. 3		2
46	79K–6	O–RING			1
47	35C–648	BOLT			1
48	83D–6	NUT			1
49	6569103	HOSE			1

HYDROSTATIC CIRCUITRY (Cont'd)
(S/N 21515 & Above)

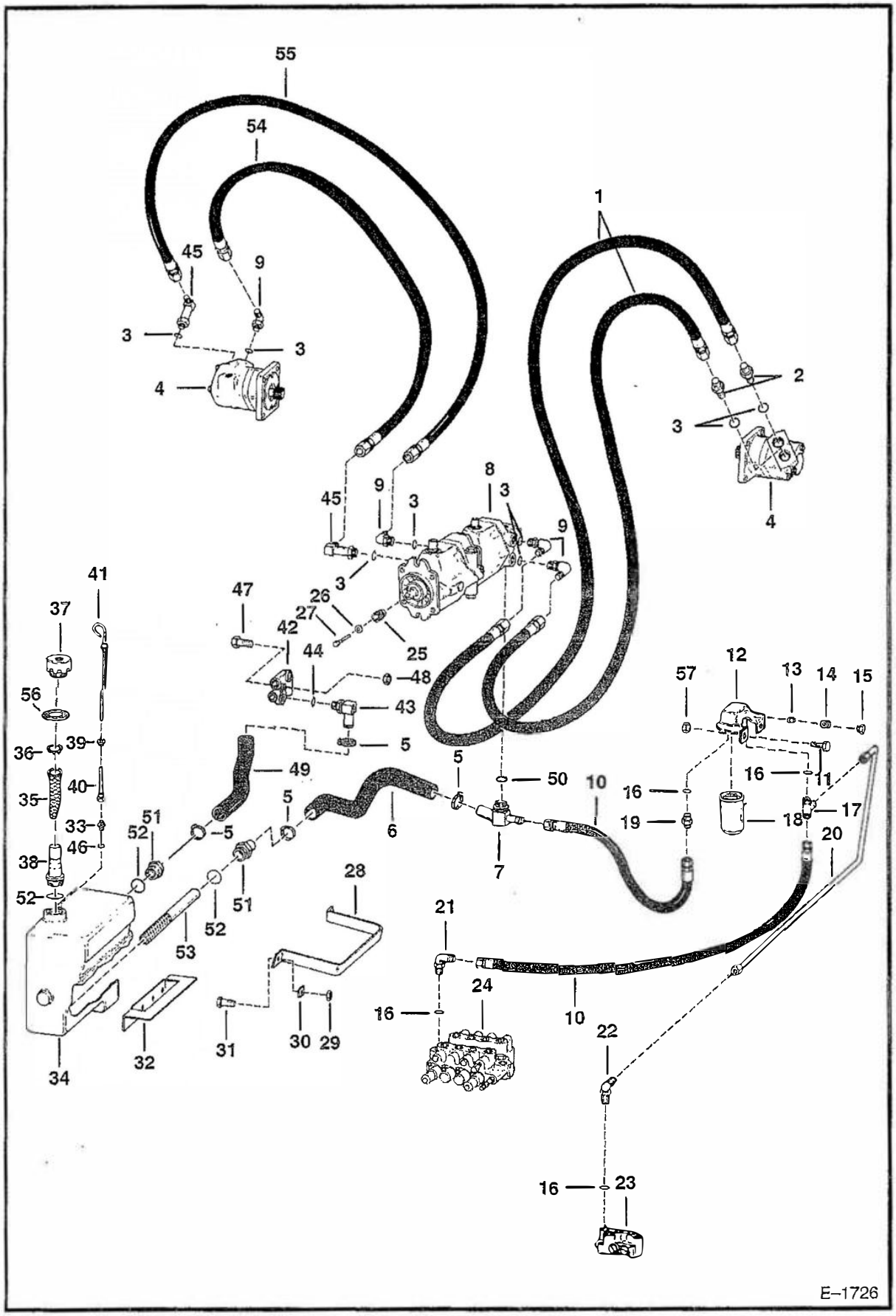

HYDROSTATIC CIRCUITRY (Cont'd)
(S/N 21515 & Above)

Ref. No.	Part Number	Description	Remarks	Serial Number	Qty.
50	79K–20	O–RING			1
51	6569100	ADAPTER			2
52	79K–24	O–RING			2
53	6641221	TUBE	diffuser – Was 6569099 [A]		1
54	6631707	HOSE			1
55	6631708	HOSE			1
56	6569097	SEAL			1
57	85D–5	NUT			2

HYDROSTATIC CIRCUITRY
(S/N 15001 thru 15622)

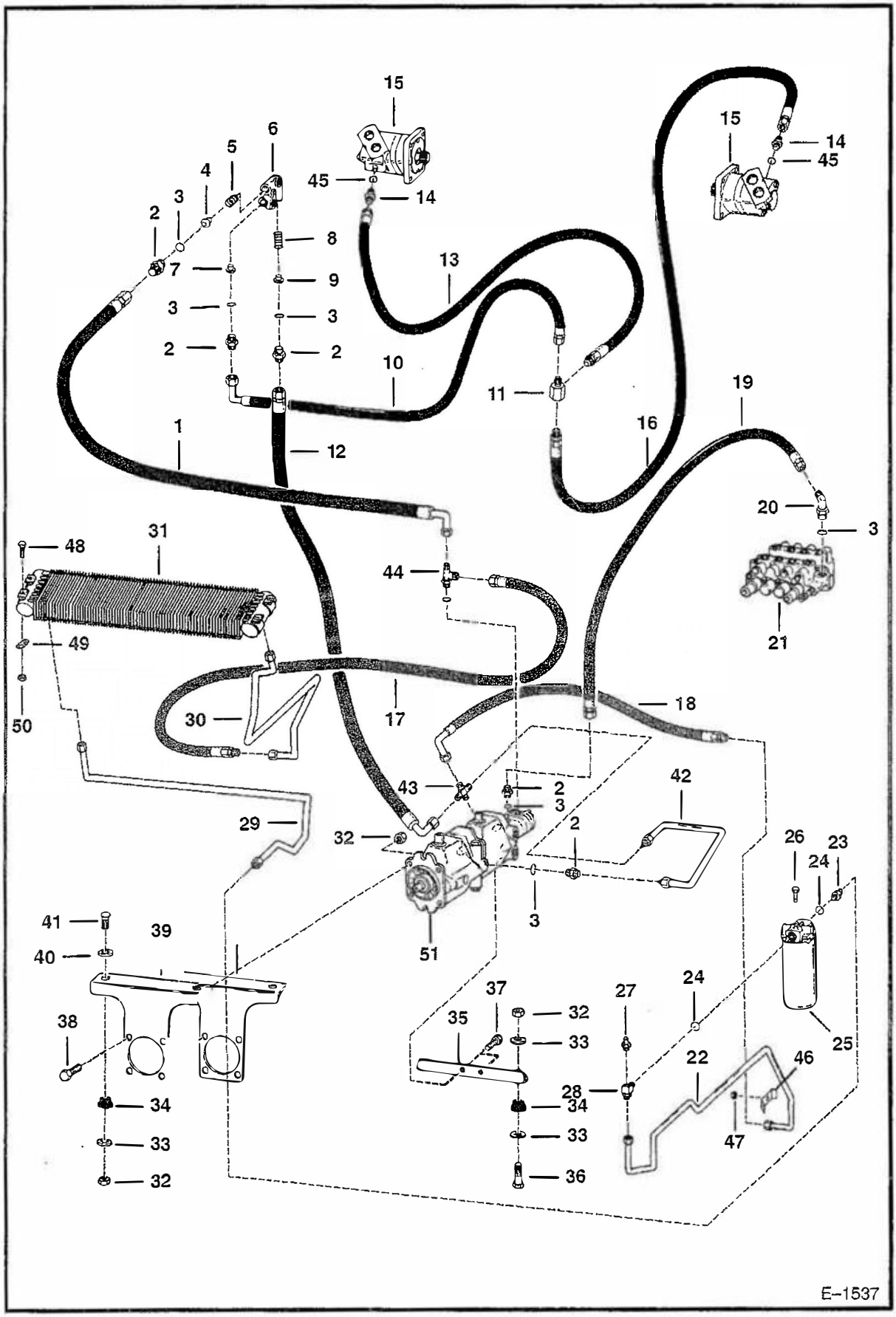

E-1537

HYDROSTATIC CIRCUITRY (Cont'd)
(S/N 15001 thru 15622)

Ref. No.	Part Number	Description	Remarks	Serial Number	Qty.
1	6567026	HOSE			1
2	15K–7	ADAPTER	W/Ref. 3 – See Ref. 19		4
3	79K–10	O–RING			x
4	6515078	POPPET			1
5	6565425	SPRING			1
6	6565619	BLOCK	port		1
7	6599654	ORIFICE			1
8	6567020	SPRING			1
9	6565620	POPPET			1
10	2524512	HOSE			1
11	6559340	TEE			1
12	6563982	HOSE			1
13	6560784	HOSE			1
14	15K–5	ADAPTER	W/O Ref. 45		2
15		MOTOR	See Page 121		2
16	6560785	HOSE			1
17	6565991	HOSE			1
18	6565625	HOSE			1
19	NAP	HOSE	Order 6575845 Hose & 17K–7 Elbow – Was 6567347 [A]		1
20	18K–7	ELBOW	W/Ref. 3		1
21		VALVE	See Page 69		1
22	6565592	TUBE			1
23	755055	ADAPTER	W/Ref. 24		1
24	79K–12	O–RING			x
25		FILTER	See Page 129		1
26	17C–610	BOLT			4
27	6630168	COUPLER	diagnostic		1
28	6565999	ELBOW			1
29	6565595	TUBE			1
30	6565594	TUBE			1
31	6598438	OIL COOLER			1
32	85D–8	NUT			1
33	6564692	WASHER			6
34	6560633	MOUNT	rubber		4
35	6559453	MOUNT			1
36	17C–836	BOLT			2
37	17C–712	BOLT			2
38	17C–824	BOLT			4
39	6562301	MOUNT			1
40	6560899	WASHER			x
41	17C–840	BOLT			2
42	6565593	TUBE			1
43	6567025	ADAPTER			1
44	21K–7	TEE			1
45	79K–6	O–RING			x
46	6502203	CLAMP			1
47	85D–6	NUT			1
48*	10C–512	BOLT	Was 6553808 [A]		4
49	774220	WASHER			4
50	85D–5	NUT			4

HYDROSTATIC CIRCUITRY (Cont'd)
(S/N 15001 thru 15622)

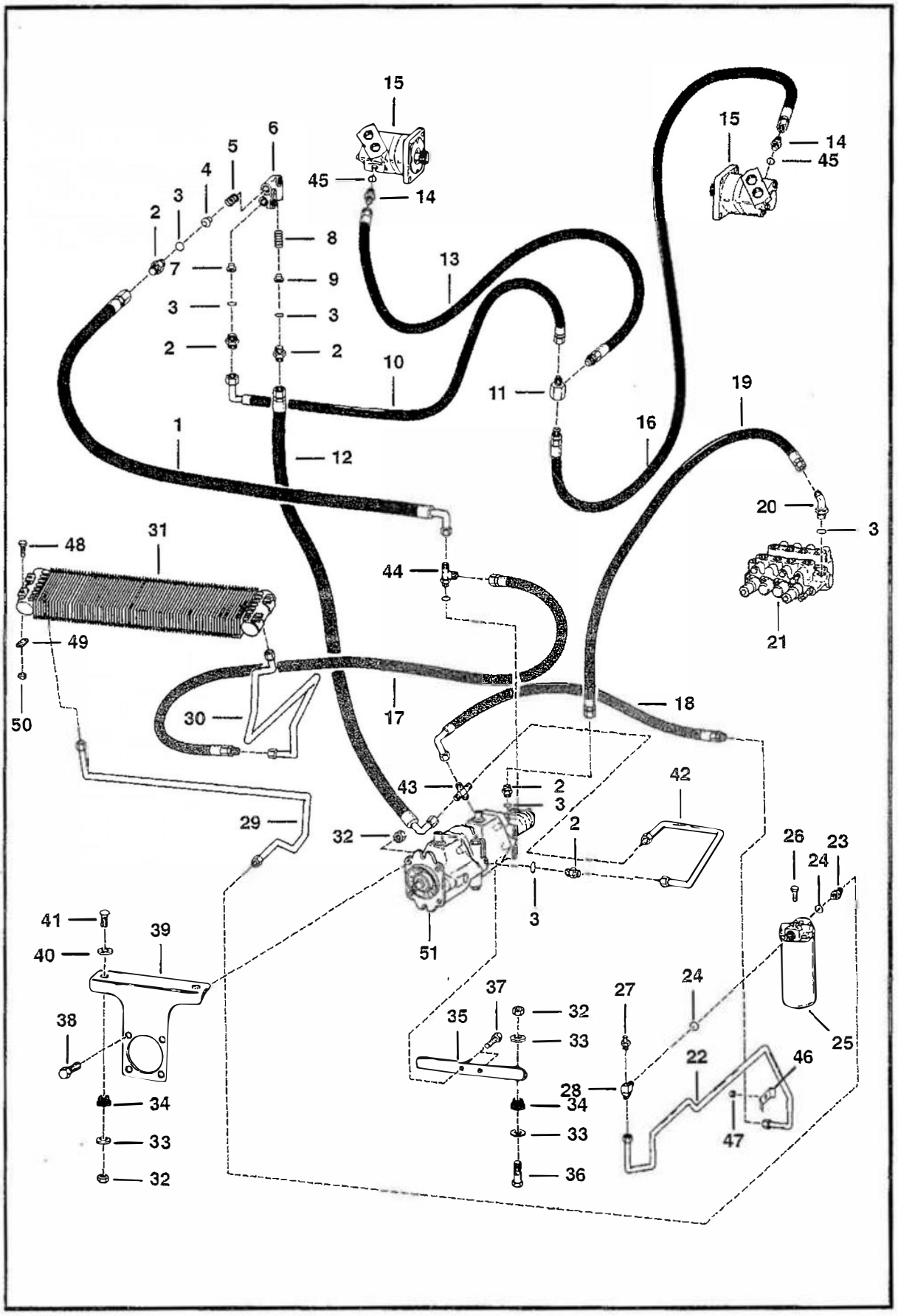

HYDROSTATIC CIRCUITRY (Cont'd)
(S/N 15001 thru 15622)

Ref. No.	Part Number	Description	Remarks	Serial Number	Qty.
51		PUMP	See Page 115		1

HYDROSTATIC CIRCUITRY
(S/N 15623 thru 22440)

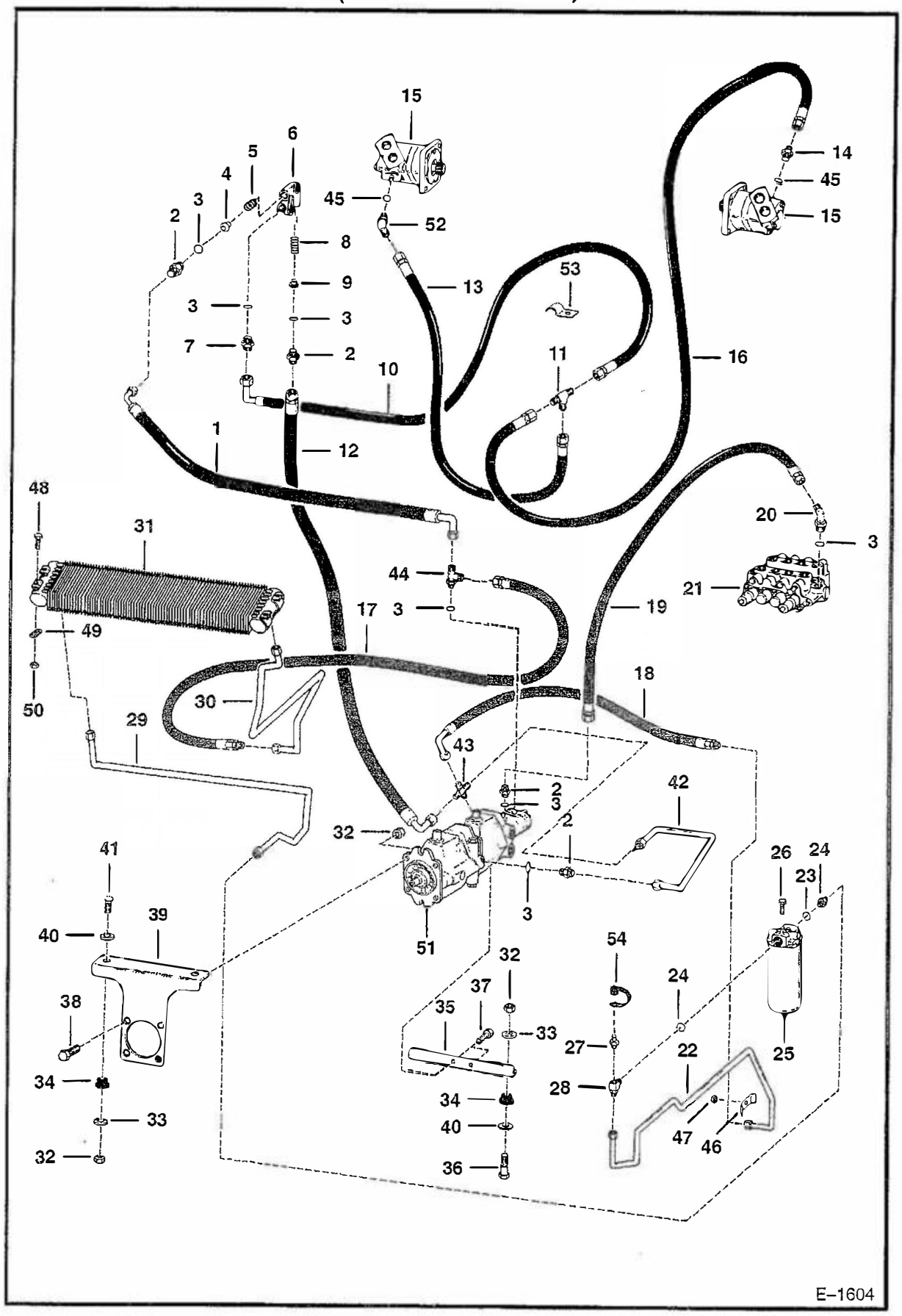

E–1604

HYDROSTATIC CIRCUITRY (Cont'd)
(S/N 15623 thru 22440)

Ref. No.	Part Number	Description	Remarks	Serial Number	Qty.
1	6567026	HOSE		15001–19999	1
	6568967	HOSE		20001 & Above	1
2	15K–7	ADAPTER	W/Ref. 3		3
3	79K–10	O–RING			x
4	6515078	POPPET			1
5	6565425	SPRING			1
6	6565619	BLOCK	port		1
7	731795	ADAPTER			1
8	6567020	SPRING			1
9	6565620	POPPET			1
10	1535863	HOSE			1
11	10K–5	TEE			1
12	6567506	HOSE			1
13	1326228	HOSE			1
14	15K–5	ADAPTER	W/O Ref. 45		1
	18K–5	ELBOW	W/Ref. 45		1
15		MOTOR	See Page 121		2
16	2365771	HOSE			1
17	6565991	HOSE			1
18	6565625	HOSE			1
19	NAP	HOSE	Order 6575845 Hose & 17K–7		
			Elbow – Was 6567347 [A]		1
20	18K–7	ELBOW	W/Ref. 3		1
21		VALVE	See Page 69		1
22	6565592	TUBE			1
23	755055	ADAPTER	W/Ref. 24		1
24	79K–12	O–RING			x
25		FILTER	See Page 129		1
26	17C–610	BOLT			4
27	6630168	COUPLER	diagnostic – Male – Order		
			Female from OTC MEL–1218		1
28	6565999	ELBOW			1
29	6565595	TUBE		15623–16488	1
	6567253	TUBE		16489–22440	1
30	6565594	TUBE		15623–16488	1
	6567252	TUBE		16489–22440	1
31	6598438	OIL COOLER			1
32	85D–8	NUT			1
33	6564692	WASHER			6
34	6560633	MOUNT	rubber		4
35	6559453	MOUNT			1
36	17C–836	BOLT			2
37	17C–712	BOLT			2
38	17C–824	BOLT			4
39	6562301	MOUNT			1
40	6560899	WASHER			x
41	17C–840	BOLT			2
42	6565593	TUBE			1
43	6567025	ADAPTER			1
44	21K–7	TEE			1
45	79K–6	O–RING			x

HYDROSTATIC CIRCUITRY (Cont'd)
(S/N 15623 thru 22440)

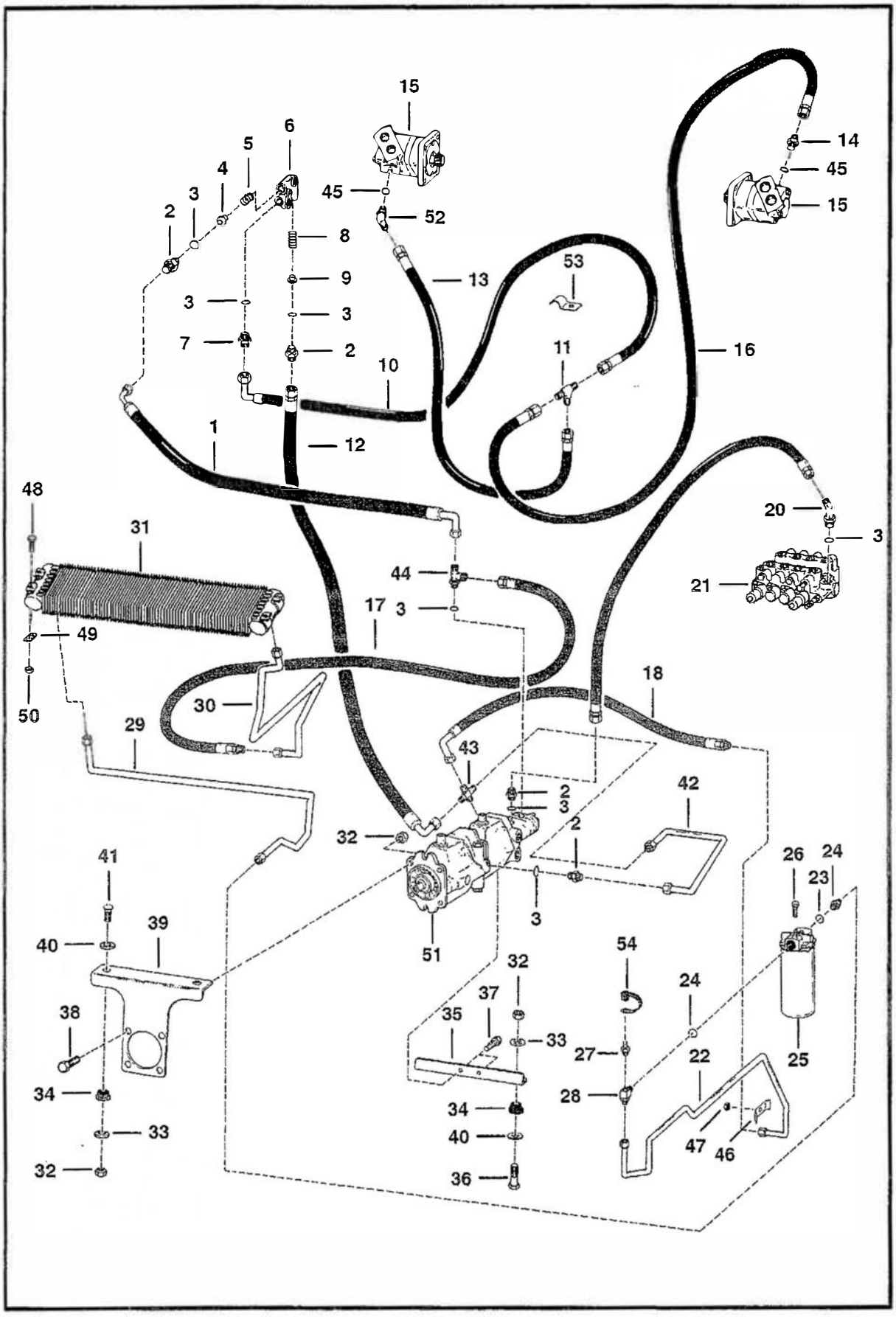

HYDROSTATIC CIRCUITRY (Cont'd)
(S/N 15623 thru 22440)

Ref. No.	Part Number	Description	Remarks	Serial Number	Qty.
46	6502203	CLAMP			1
47	85D–6	NUT			1
48*	10C–512	BOLT	Was 6553808 [A]	15623–16488	4
	7C–536	BOLT		16489–22440	4
49	774220	WASHER		15623–16488	4
50	85D–5	NUT			4
51		PUMP	See Page 115		1
52	18K–5	ELBOW	W/Ref. 45		1
53	5H–8	CLIP			1
54	6630367	DUST CAP			1

HYDROSTATIC CIRCUITRY
(S/N 22441 & Above)

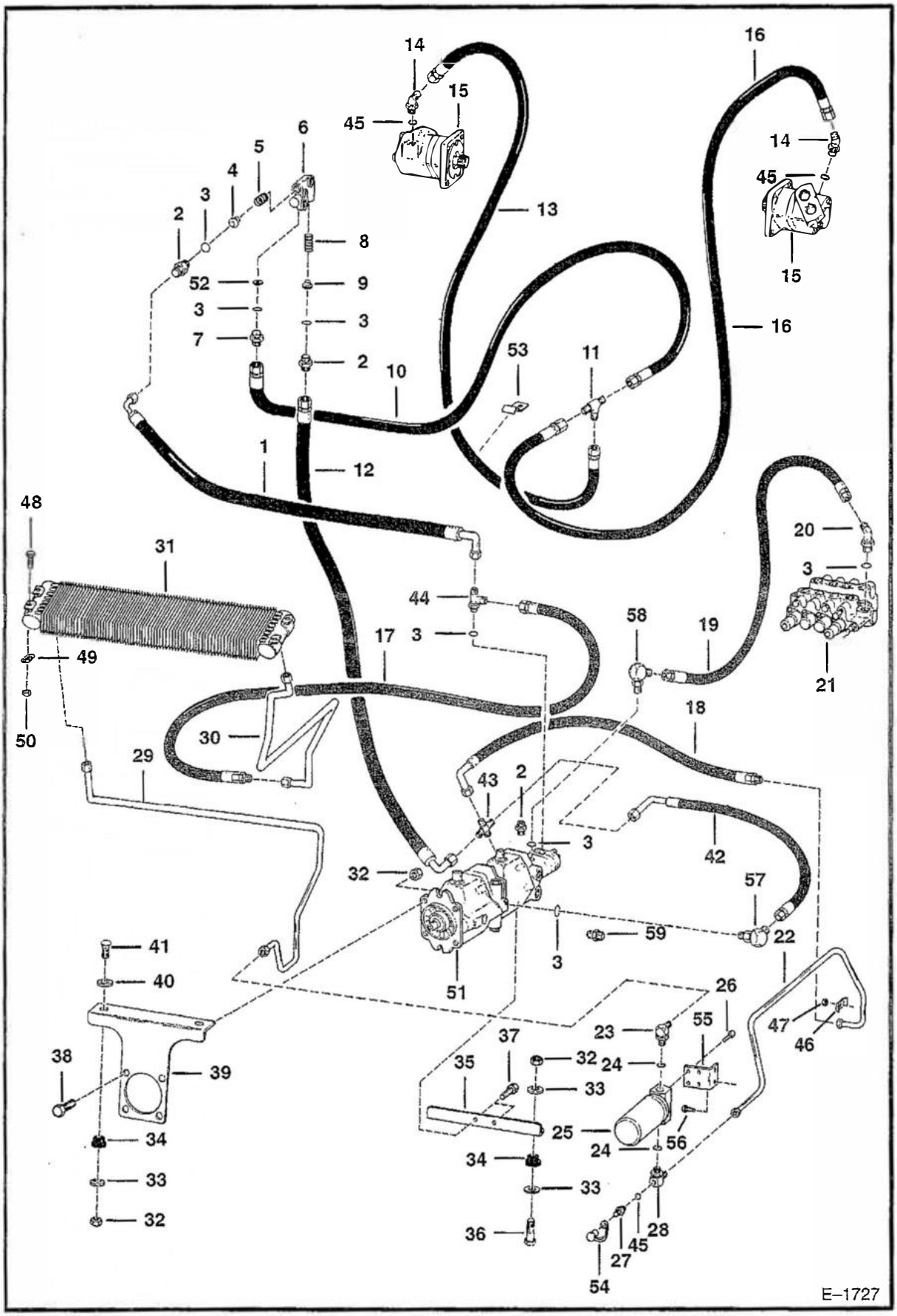

HYDROSTATIC CIRCUITRY (Cont'd)
(S/N 22441 & Above)

Ref. No.	Part Number	Description	Remarks	Serial Number	Qty.
1	6568967	HOSE			1
2	15K–7	ADAPTER	W/Ref. 3		2
3	79K–10	O–RING			x
4	6515078	POPPET			1
5	6565425	SPRING			1
6	6565619	BLOCK	port		1
7	731795	ADAPTER			1
8	6567020	SPRING			1
9	6565620	POPPET			1
10	1535863	HOSE			1
11	10K–5	TEE			1
12	6567506	HOSE			1
13	6542521	HOSE			1
14	18K–5	ELBOW	W/Ref. 45		2
15		MOTOR	See Page 121		2
16	1326228	HOSE			1
17	6565991	HOSE			1
18	6565625	HOSE			1
19	NAP	HOSE	Order 6575845 & Ref. 58 –		
			Was 6567347 [A]		1
	6575845	HOSE			1
20	18K–7	ELBOW	W/Ref. 3		1
21		VALVE	See Page 69		1
22	6568584	TUBE			1
23	1302104	ELBOW	W/Ref. 24		1
24	79K–12	O–RING			x
25	6631706	FILTER	See Page 129		1
26	17C–610	BOLT			4
27	6630168	COUPLER	diagnostic – Male – Order		
			Female from OTC MEL–1218		1
28	6565999	ELBOW			1
29	6568582	TUBE			1
30	6567252	TUBE			1
31	6598438	OIL COOLER			1
32	85D–8	NUT			1
33	6564692	WASHER			8
34	6560633	MOUNT	rubber		4
35	6559453	MOUNT			1
36	17C–836	BOLT			2
37	17C–712	BOLT			2
38	17C–824	BOLT			4
39	6562301	MOUNT			1
40	6560899	WASHER			x
41	35C–840	BOLT			2
42	NAP	TUBE	Order 6575688 & Ref. 57 –		
			Was 6569104 [A]		1
	6575688	HOSE			1
43	6567025	ADAPTER			1
44	21K–7	TEE			1
45	79K–6	O–RING			x
46	6502203	CLAMP			1

HYDROSTATIC CIRCUITRY (Cont'd)
(S/N 22441 & Above)

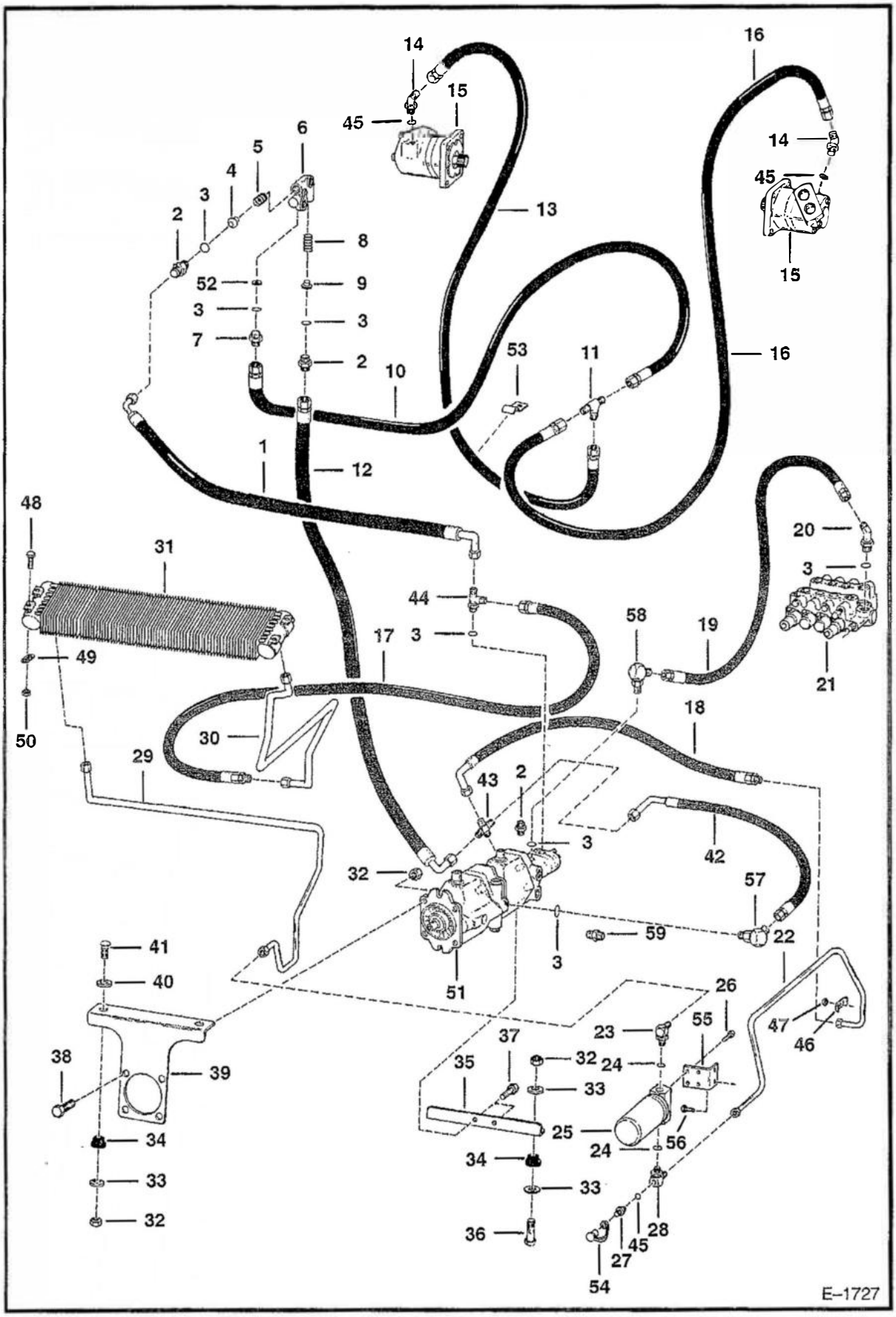

HYDROSTATIC CIRCUITRY (Cont'd)
(S/N 22441 & Above)

Ref. No.	Part Number	Description	Remarks	Serial Number	Qty.
47	85D–6	NUT			1
48	7C–536	BOLT			4
49	774220	WASHER			4
50	85D–5	NUT			4
51		PUMP	See Page 115		1
52	6599654	ORIFICE			2
53	5H–8	CLIP			1
54	6630367	DUST CAP			1
55	6565336	BRACKET			1
56	84G–3720	BOLT			2
57	6519195	ELBOW	W/Ref. 3		1
58	17K–7	ELBOW	W/Ref. 3		1
59	15K–7	ADAPTER	W/Ref. 3		2

HAND CONTROLS
(S/N 14999 & Below)

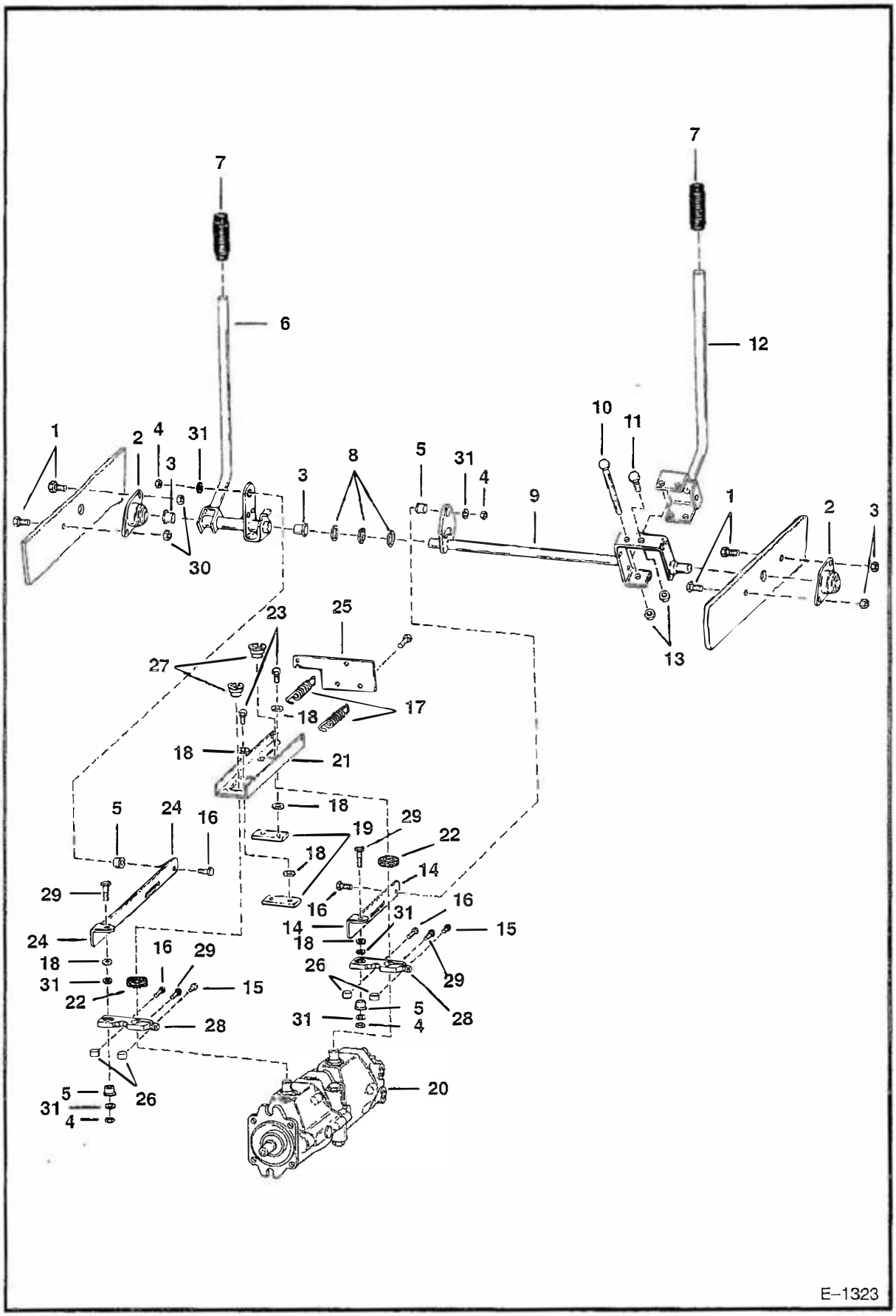

HAND CONTROLS (Cont'd)
(S/N 14999 & Below)

Ref. No.	Part Number	Description	Remarks	Serial Number	Qty.
1	31C–612	BOLT			4
2	6558736	BUSHING			2
3	6512027	BUSHING			2
4	85D–6	NUT			14
5	6665701	BUSHING	Was 6630081 [A]		4
6	6558845	LEVER			1
7	6513963	GRIP			2
8	25E–29	WASHER			x
9	6558844	SHAFT			1
10	6553081	BOLT			1
11	17C–620	BOLT			1
12	6558615	LEVER			1
13	61D–6	NUT			2
14	6565804	LINKAGE			1
15	17C–614	BOLT			2
16	17C–624	BOLT			6
17	6564939	SPRING			2
18	6557831	WASHER			8
19	6562281	BAR			2
20		PUMP	See Page 115		
21	6562168	BRACKET			1
22	6558436	GUIDE			2
23	8C–616	BOLT			4
24	6565803	LINKAGE			1
25	6562290	PLATE			1
26	6562062	CAM	lever		4
27	6567973	HUB			2
28	6565751	LEVER	pintle		2
29	17C–628	BOLT			3
30	83D–6	NUT			4
31	6563914	WASHER			8

HAND CONTROLS
(S/N 15001 thru 16191)

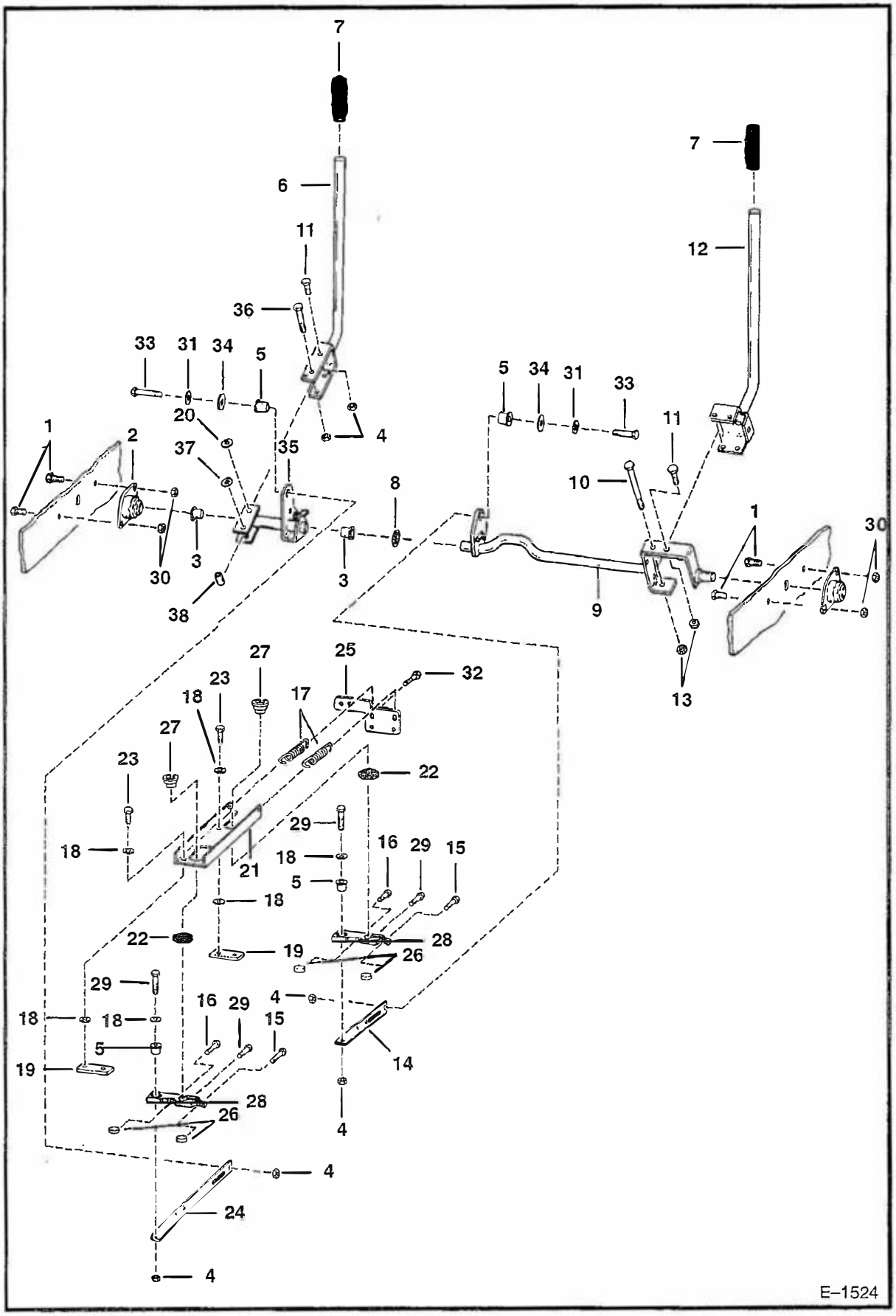

HAND CONTROLS (Cont'd)
(S/N 15001 thru 16191)

Ref. No.	Part Number	Description	Remarks	Serial Number	Qty.
1	35C–612	BOLT			4
2	6558736	BUSHING			2
3	6512027	BUSHING			2
4	85D–6	NUT			14
5	6665701	BUSHING	Was 6630081 [A]		4
6	6564663	LEVER			1
7	6513963	GRIP			2
8	25E–29	WASHER			x
9	6564727	SHAFT			1
10	6553081	BOLT			1
11	17C–620	BOLT			1
12	6558615	LEVER			1
13	61D–6	NUT			2
14	6565602	LINKAGE			1
15	17C–614	BOLT			2
16	17C–624	BOLT			2
17	6564939	SPRING			2
18	6557831	WASHER			8
19	6562281	BAR			2
20	25E–17	WASHER			x
21	6562168	BRACKET			1
22	6558436	GUIDE			2
23	8C–616	BOLT			4
24	6565601	LINKAGE			1
25	6565632	PLATE			1
26	6562062	CAM	lever		4
27	6567973	HUB			2
28	6565751	LEVER	pintle		2
29	17C–628	BOLT			3
30	83D–6	NUT			4
31	6563914	WASHER			8
32	17C–712	BOLT			2
33	17C–626	BOLT			2
34	6563965	WASHER			2
35	6564726	LEVER			1
36	17C–648	BOLT			1
37	6564648	WASHER			x
38	6564667	BUSHING			1

HAND CONTROLS
(S/N 16192 Thru 21750)

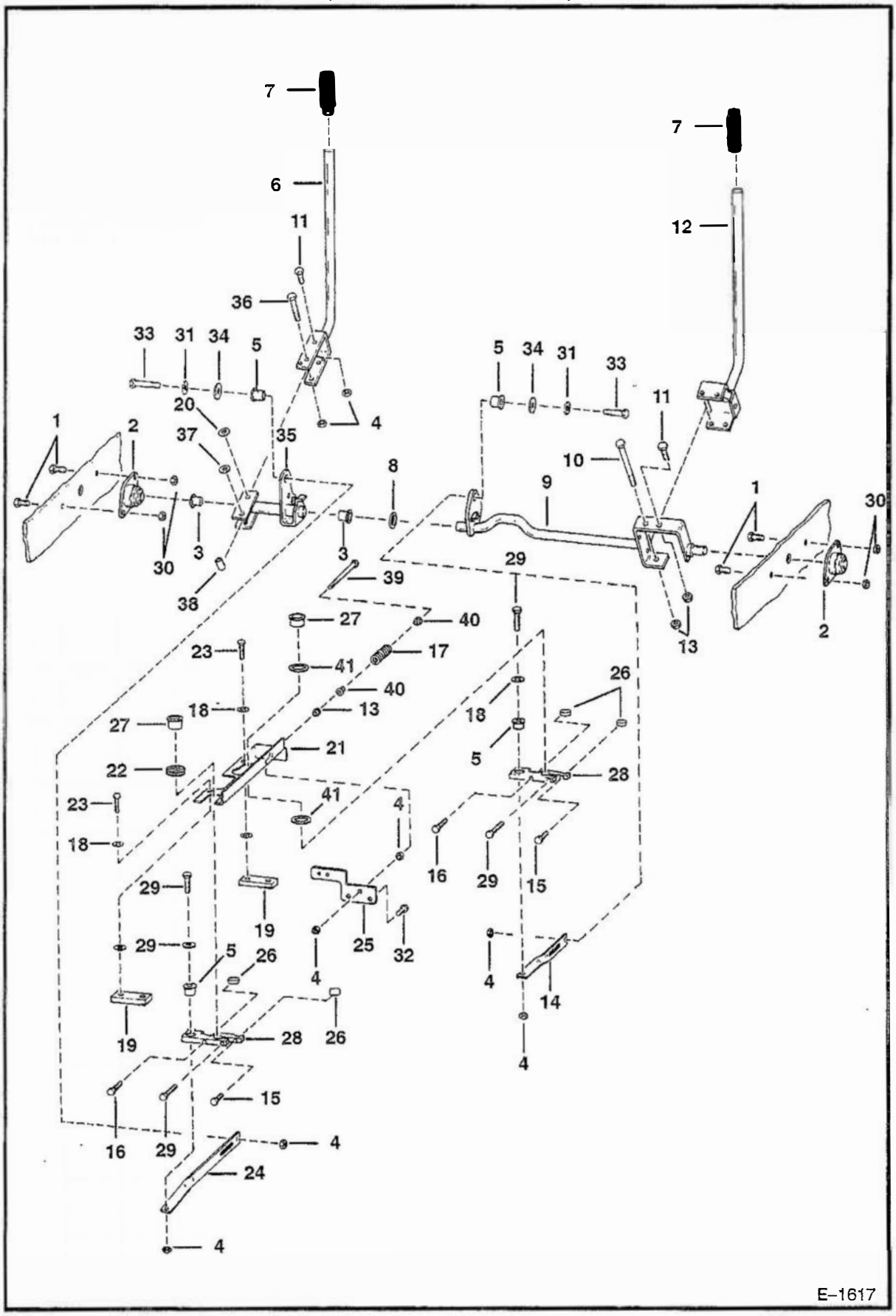

HAND CONTROLS (Cont'd)
(S/N 16192 Thru 21750)

Ref. No.	Part Number	Description	Remarks	Serial Number	Qty.
1	35C–612	BOLT			4
2	6558736	BUSHING			2
3	6512027	BUSHING			2
4	85D–6	NUT			5
5	6665701	BUSHING	Was 6630081 [A]		4
6	6564663	LEVER			1
7	6513963	GRIP			2
8	25E–29	WASHER			x
9	6564727	SHAFT			1
10	6553081	BOLT			1
11	17C–620	BOLT			1
12	6558615	LEVER			1
13	61D–6	NUT			3
14	6565602	LINKAGE			1
15	17C–614	BOLT			2
16	17C–624	BOLT			2
17	6567970	SPRING			1
18	6557831	WASHER			8
19	6562281	BAR			2
20	25E–17	WASHER			x
21	6562767	BRACKET	See BTI 241		1
22	6558436	GUIDE			1
23	8C–616	BOLT			4
24	6565601	LINKAGE			1
25	6567969	MOUNT			1
26	6562062	CAM	lever		4
27	6567973	HUB			2
28	6565751	LEVER	pintle		2
29	17C–628	BOLT			4
30	83D–6	NUT			4
31	6563914	WASHER			2
32	17C–712	BOLT			2
33	17C–626	BOLT			2
34	6563965	WASHER			2
35	6564726	LEVER			1
36	17C–648	BOLT			1
37	6564648	WASHER			x
38	6564667	BUSHING			1
39	17C–696	BOLT			1
40	6579990	BUSHING	Was 6558429 [A]		3
41	6558680	WASHER			2

HAND CONTROLS
(S/N 21751 & Above)

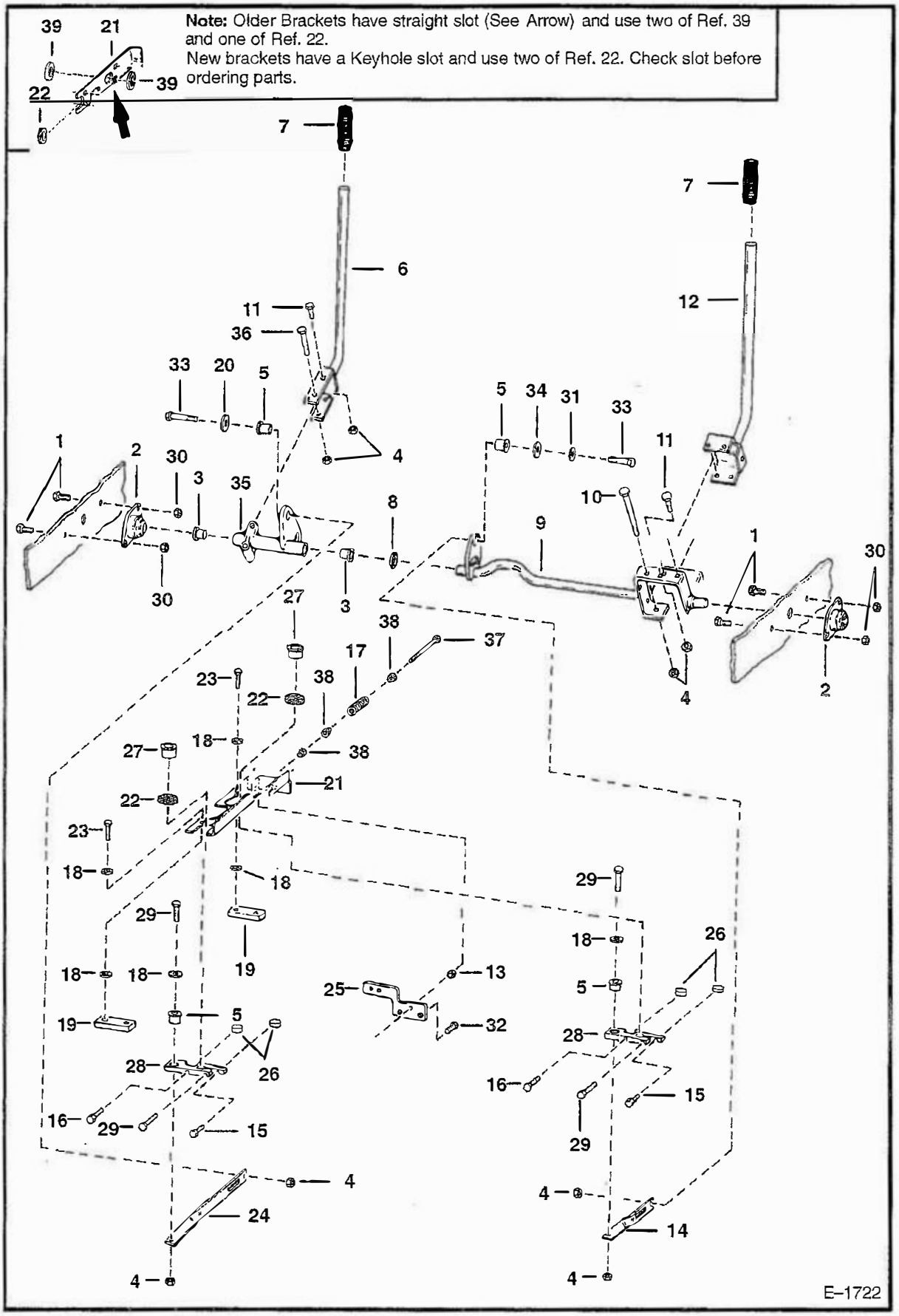

HAND CONTROLS (Cont'd)
(S/N 21751 & Above)

Ref. No.	Part Number	Description	Remarks	Serial Number	Qty.
1	35C–612	BOLT			4
2	6558736	BUSHING			2
3	6512027	BUSHING			2
4	85D–6	NUT			5
5	6665701	BUSHING	Was 6630081 [A]		4
6	6569496	LEVER			1
7	6513963	GRIP			2
8	25E–29	WASHER			x
9	6564727	SHAFT			1
10	6553081	BOLT			1
11	17C–620	BOLT			1
12	6558615	LEVER			1
13	61D–6	NUT		21751–22881	1
	85D–8	NUT		22882 & Above	1
14	6565602	LINKAGE			1
15	17C–614	BOLT			2
16	17C–624	BOLT			2
17	6567970	SPRING		21751–22881	1
	6571904	SPRING		22882 & Above	1
18	6557831	WASHER			8
19	6562281	BAR			2
20	6569505	WASHER			1
21	6562767	BRACKET	See BTI 241	21751–22881	1
	6571899	BRACKET	See Note	22882 & Above	1
22	6558436	GUIDE	See Note		1
23	8C–616	BOLT			4
24	6565601	LINKAGE			1
25	6567969	MOUNT		21751–22881	1
	6571909	MOUNT		22882 & Above	1
26	6562062	CAM	lever		4
27	6567973	HUB			2
28	6565751	LEVER	pintle		2
29	17C–628	BOLT			4
30	83D–6	NUT			4
31	6563914	WASHER			1
32	17C–712	BOLT			2
33	17C–626	BOLT			2
34	6563965	WASHER			1
35	6569507	LEVER			1
36	6569141	BOLT			1
37	17C–696	BOLT		21751–22881	1
	17C–896			22882 & Above	1
38	6579990	BUSHING	Was 6558429 [A]	21751–22881	3
	6571900	BUSHING		22882 & Above	3
39	6558680	WASHER	See Note		2

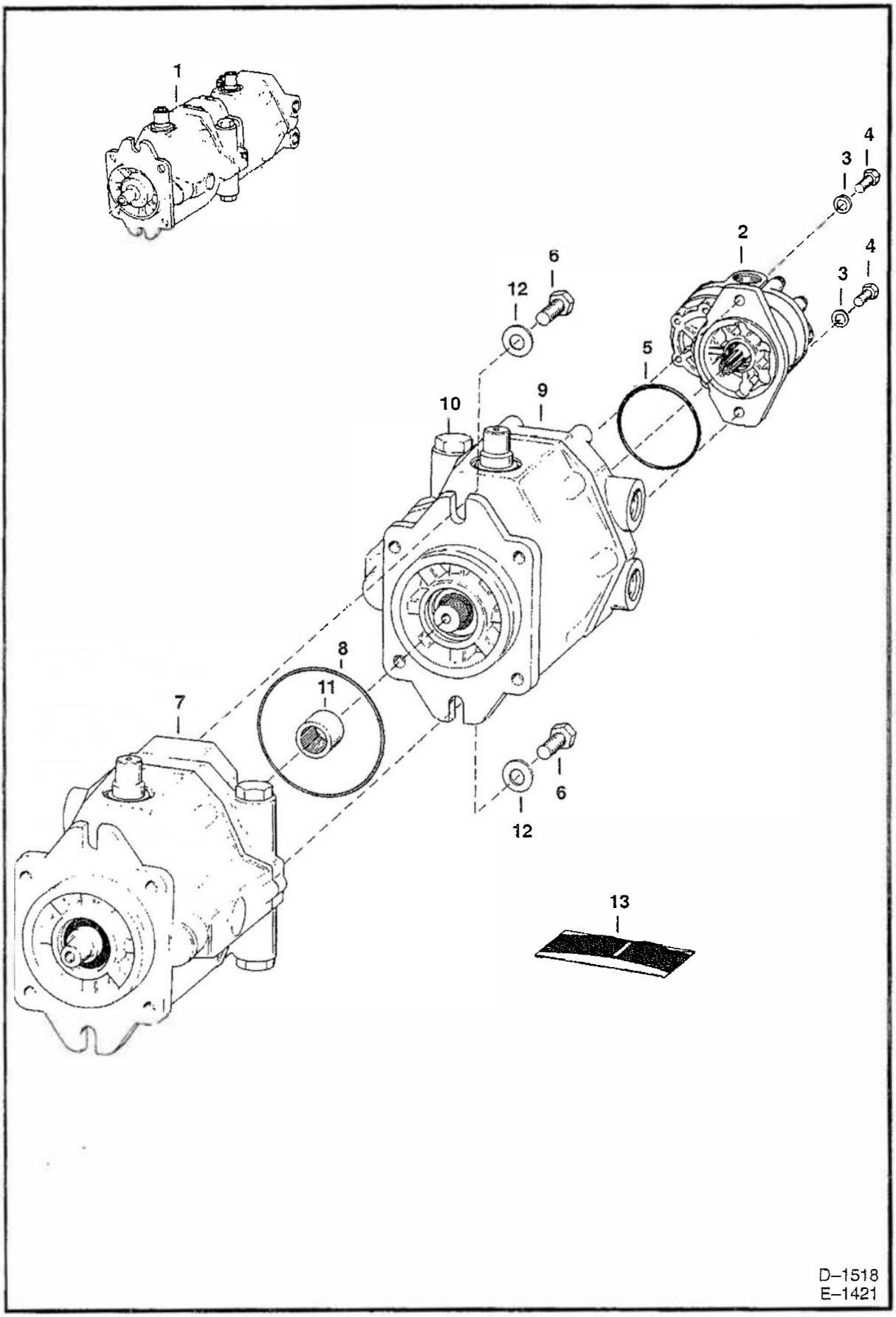
1
4
3
2
4
3
6
12
5
10
9
8
11
7
6
12
13
D–1518
E–1421

HYDROSTATIC PUMPS (Cont'd)

Ref. No.	Part Number	Description	Remarks	Serial Number	Qty.
1	6562725	PUMP	New	14999 & Below	1
	NAP	PUMP	W/double gear pump – New – 5/8–9 tooth shaft – 78552–RAC –		
			Order 6631702	15001–21523	1
	6631702	PUMP	W/double gear pump – New – 3/4–11 tooth shaft – 78552–RAF	21524 & Above	1
	6630573REM	PUMP	remanufactured	14999 & Below	1
	NAP	PUMP	remanufactured – 78552–RAC – Order 6632262	15001–21523	1
	6632262REM	PUMP	remanufactured – 78552 RAF	21524 & Above	1
2		PUMP	gear – See Page 123–127		1
3	6510584	WASHER			2
4	17C–616	BOLT			2
5	25K–20308	O–RING			1
6	17C–1024	BOLT			2
7		PUMP	rear – See Page 117		1
8	25K–30500	O–RING			1
9		PUMP	front – See Page 119		1
10	6513978	VALVE	relief		2
11	6514002	COUPLER			1
12	6513980	WASHER			2
13	6513979	SEAL KIT	Complete for front & rear pump – does not inlude gear pump seal kit See Page	14999 & Below	1
	6630388	SEAL KIT	Complete for front & rear pump – does not inlude gear pump seal kit See Page	15001 & Above	1

HYDROSTATIC PUMP
(Rear)

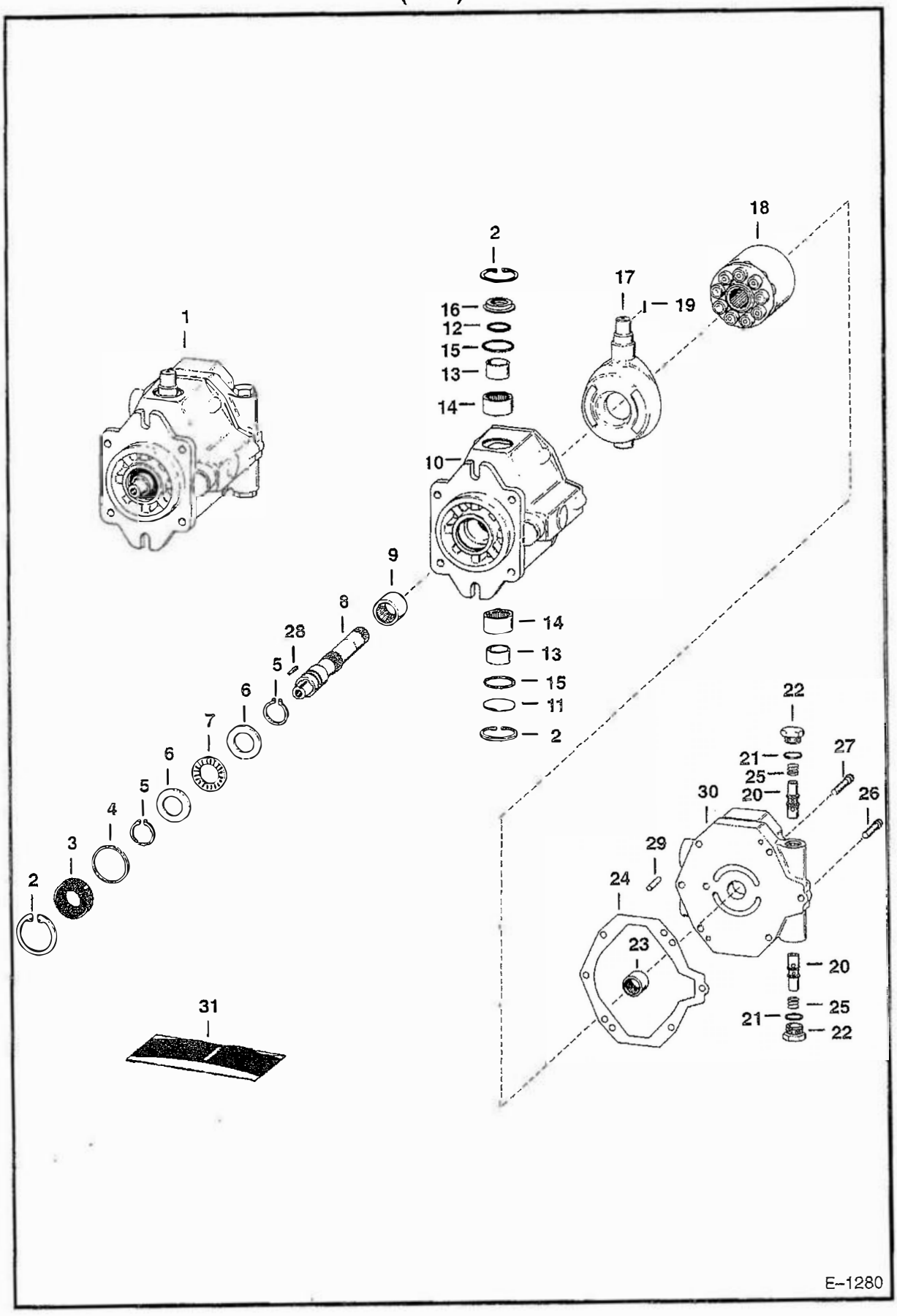

HYDROSTATIC PUMP (Cont'd)
(Rear)

Ref. No.	Part Number	Description	Remarks	Serial Number	Qty.
1	6513976	PUMP	rear – New		1
	6599512REM	PUMP	remanufactured		1
2	952149	SNAP RING			3
3	6630611	SEAL	shaft		1
4	6513982	WASHER			1
5	658128	SNAP RING			2
6	6513983	RACE			2
7	6513984	BEARING	thrust		1
8	6513999	SHAFT	drive		1
9	6514008	BEARING			1
10	6514000	HOUSING	W/Ref. 9		1
11	6513996	COVER			1
12	6514011	SEAL			1
13	6513990	RACE			1
14	6513987	BEARING			2
15	58K–225	O–RING			2
16	6513988	RETAINER	seal		1
17	6513993	PLATE	yoke		1
18	6513994	GROUP	rotating		1
19	6513986	KEY			1
20	6513978	VALVE	relief		2
21	58K–118	O–RING			2
22	6513998	PLUG			2
23	6514009	BEARING			1
24	6631911	GASKET			1
25	6514010	SPRING			2
26	93G–728	SCREW	cap		1
27	93G–736	SCREW	cap		5
28	7J–3010	KEY			1
29	886203	ROLL PIN			2
30	6514001	PLATE	back		1
31	6513979	SEAL KIT	Complete pump front & rear sections	14999 & Below	1
	6630388	SEAL KIT	Complete pump front & rear sections	15001 & Above	1

HYDROSTATIC PUMP
(Front)

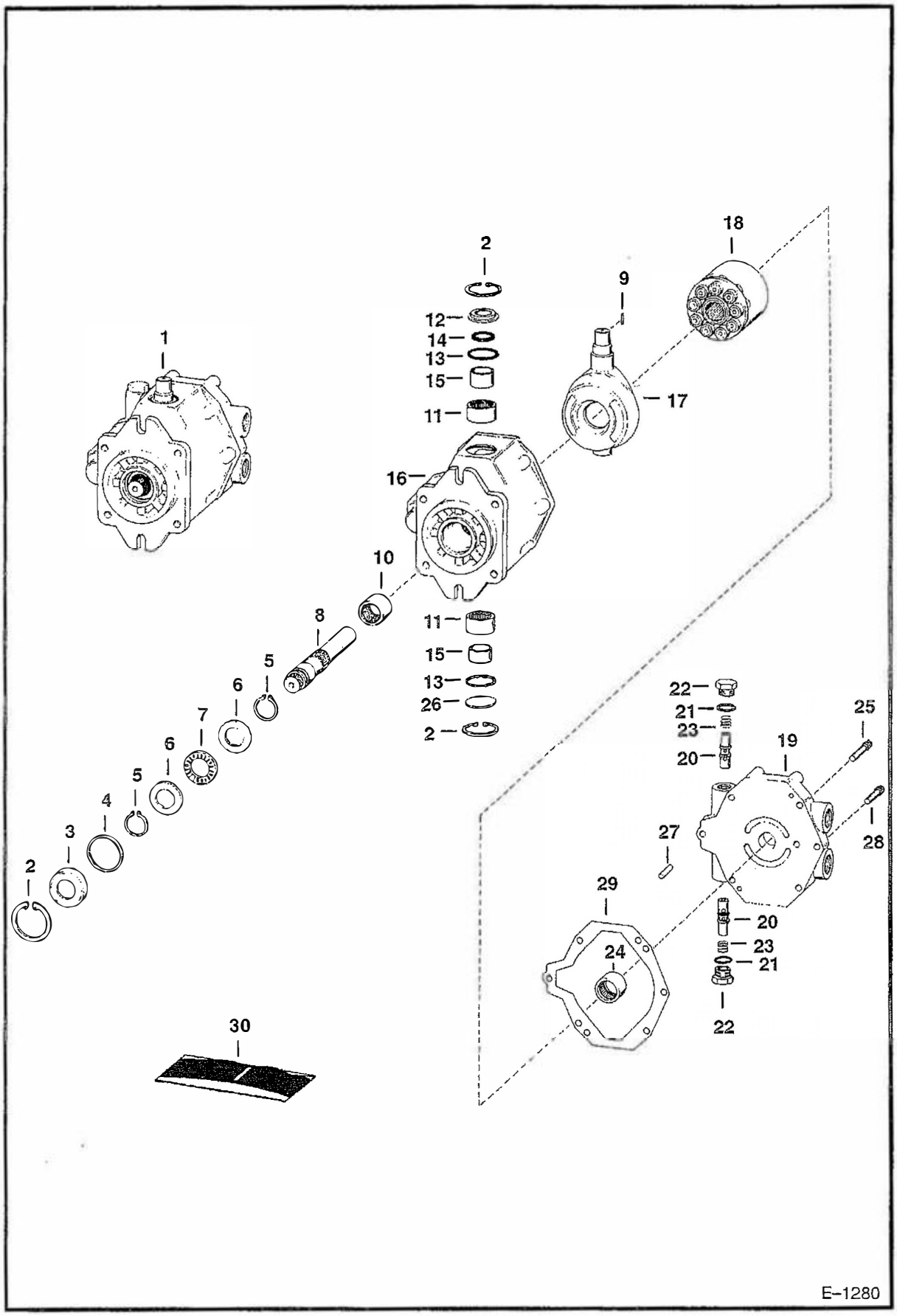

HYDROSTATIC PUMP (Cont'd)
(Front)

Ref. No.	Part Number	Description	Remarks	Serial Number	Qty.
1	6513977	PUMP	front – New – 5/8 (15,8 mm) –9 tooth – For 78552 RAC		1
	6599513REM	PUMP	remanufactured – 5/8 (15,8 mm) –9 tooth – For 78552 RAC		1
	6631910	PUMP	front – New – 3/4 (19,05 mm) – 11 tooth – For 78552 RAF		1
	6632261REM	PUMP	remanufactured – 3/4–11 tooth – For 78552 RAF		1
2	952149	SNAP RING	retaining		3
3	6513981	SPACER			1
4	6513982	WASHER			1
5	658128	SNAP RING	retaining		2
6	6513983	RACE	thrust		2
7	6513984	BEARING	thrust		1
8	6513985	SHAFT	5/8 (15,8 mm) – 9 Tooth – For 78552 RAC		1
	6631912	SHAFT	3/4 (15,8 mm) –11 Tooth – For 78552 RAF		1
9	6513986	KEY			1
10	6514008	BEARING			1
11	6513987	BEARING			2
12	6513988	RETAINER	seal		1
13	58K–225	O–RING			2
14	6514011	SEAL			1
15	6513990	RACE			1
16	6513991	HOUSING	W/Ref. 10		1
17	6513993	PLATE			1
18	6513994	GROUP	rotating		1
19	6513995	COVER	W/Ref. 24		1
20	6513978	VALVE	relief		2
21	58K–118	O–RING			2
22	6513998	PLUG			2
23	6514010	SPRING			2
24	6514009	BEARING			1
25	93G–736	SCREW			5
26	6513996	COVER			1
27	886203	ROLL PIN			2
28	93G–728	SCREW			1
29	6631911	GASKET			1
30	6513979	SEAL KIT	Complete pump front & rear sections	14999 & Below	1
	6630388	SEAL KIT	Complete pump front & rear sections	15001 & Above	1

HYDROSTATIC MOTOR

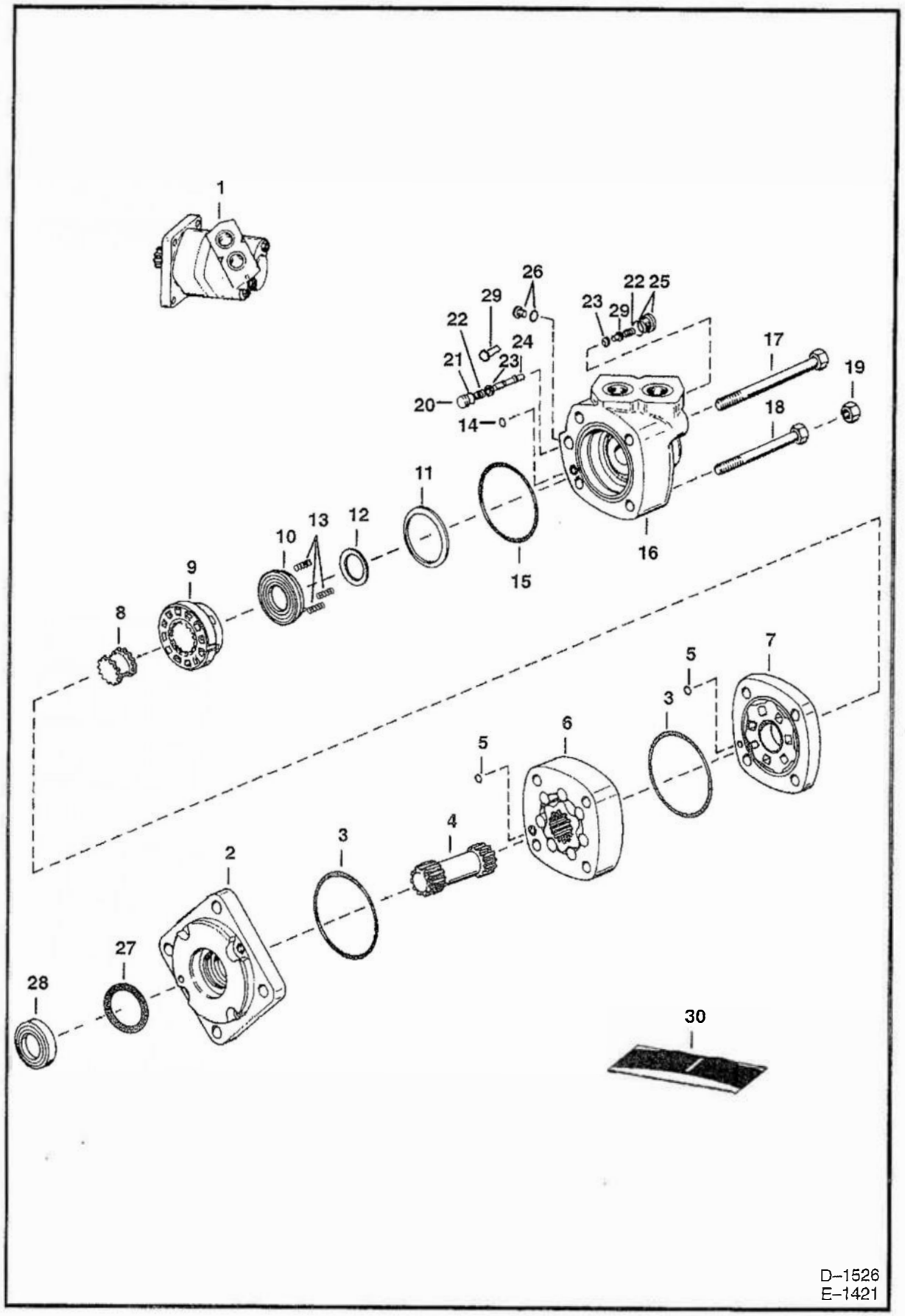

HYDROSTATIC MOTOR (Cont'd)

Ref. No.	Part Number	Description	Remarks	Serial Number	Qty.
1	6567926	MOTOR	kit – New		1
	6567927	MOTOR	kit – Remanufactured		1
2	6513528	FLANGE	mounting		1
3	6513524	O–RING			2
4	6513515	DRIVE			1
5	6632272	O–RING	Was 6513536 [A]		2
6	6513516	GEROLER			1
7	6513517	PLATE	valve		1
8	6513518	DRIVE	valve		1
9	6513519	VALVE			1
10	6513521	PLATE	balance assy – Was 6513942 [A]		1
11	6513520	SEAL	face – Outer		1
12	6513529	SEAL	face – Inner		1
13	6190121	SPRING			3
14	6513535	O–RING			1
15	58K–44	O–RING			1
16	6513943	HOUSING	valve		1
17	6661217	BOLT	Was 6513526 [A]		2
18	6661218	BOLT	Was 6513525 [A]		2
19	62D–8	NUT			4
20	6513539	PLUG			1
21	6513800	O–RING			1
22	6513533	SPRING			2
23	6513532	POPPET			2
24	6513510	PISTON			1
25	47K–5	PLUG			1
26	47K–2	PLUG			1
27	6513799	O–RING	O–ring no longer used in motor	20069 & Below	1
28	6513681	BUSHING	bronze		1
29	6561218	SHUTTLE			2
30	6660256	SEAL KIT	Ref. 3, 5, 11, 12, 14, 15, 21 – Was 6514893 [A]		1

GEAR PUMP
(#24307 RCA) (S/N 14999 & Below)

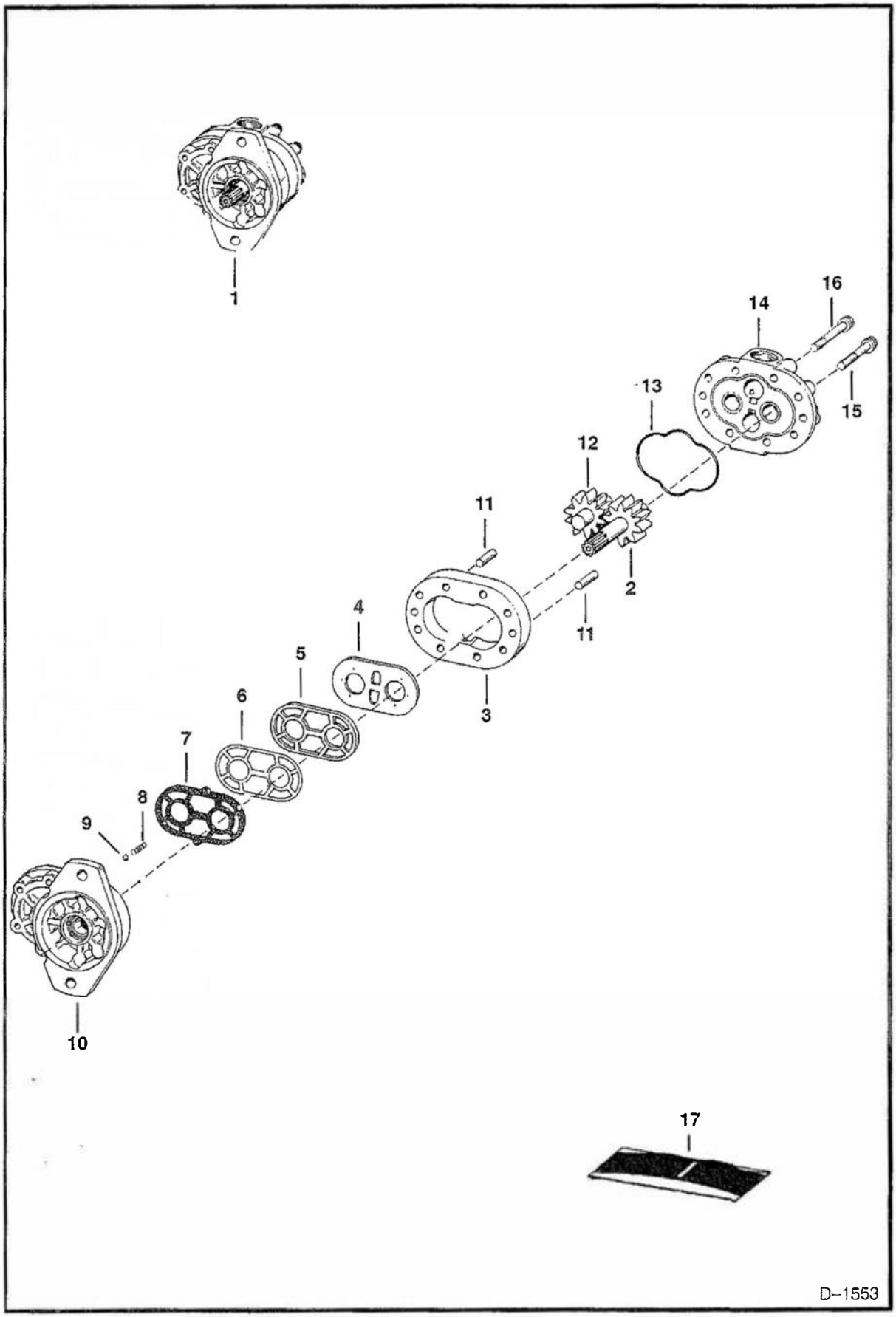

GEAR PUMP (Cont'd)
(#24307 RCA) (S/N 14999 & Below)

Ref. No.	Part Number	Description	Remarks	Serial Number	Qty.
1	NAP	PUMP	Order 6630239 – See BTI 211		1
2	6598423	DRIVE GEAR			1
3	891346	BODY			1
4	NSS	DIAPHRAGM			1
5	NSS	GASKET			1
6	NSS	SEAL			1
7	NSS	SEAL			1
8	3490588	SPRING			1
9	10J–7	BALL			1
10	6513974	PLATE	front		1
11	6598424	DOWEL PIN			1
12	6598422	IDLER GEAR			1
13	NSS	O–RING			1
14	6513975	PLATE	back		1
15	6632002	SCREW	cap		4
16	6632001	SCREW	cap		4
17	894215	SEAL KIT	Ref. 4 – 9, 11 & 13		1

GEAR PUMP
(#25306 RCA) (S/N 14999 & Below)

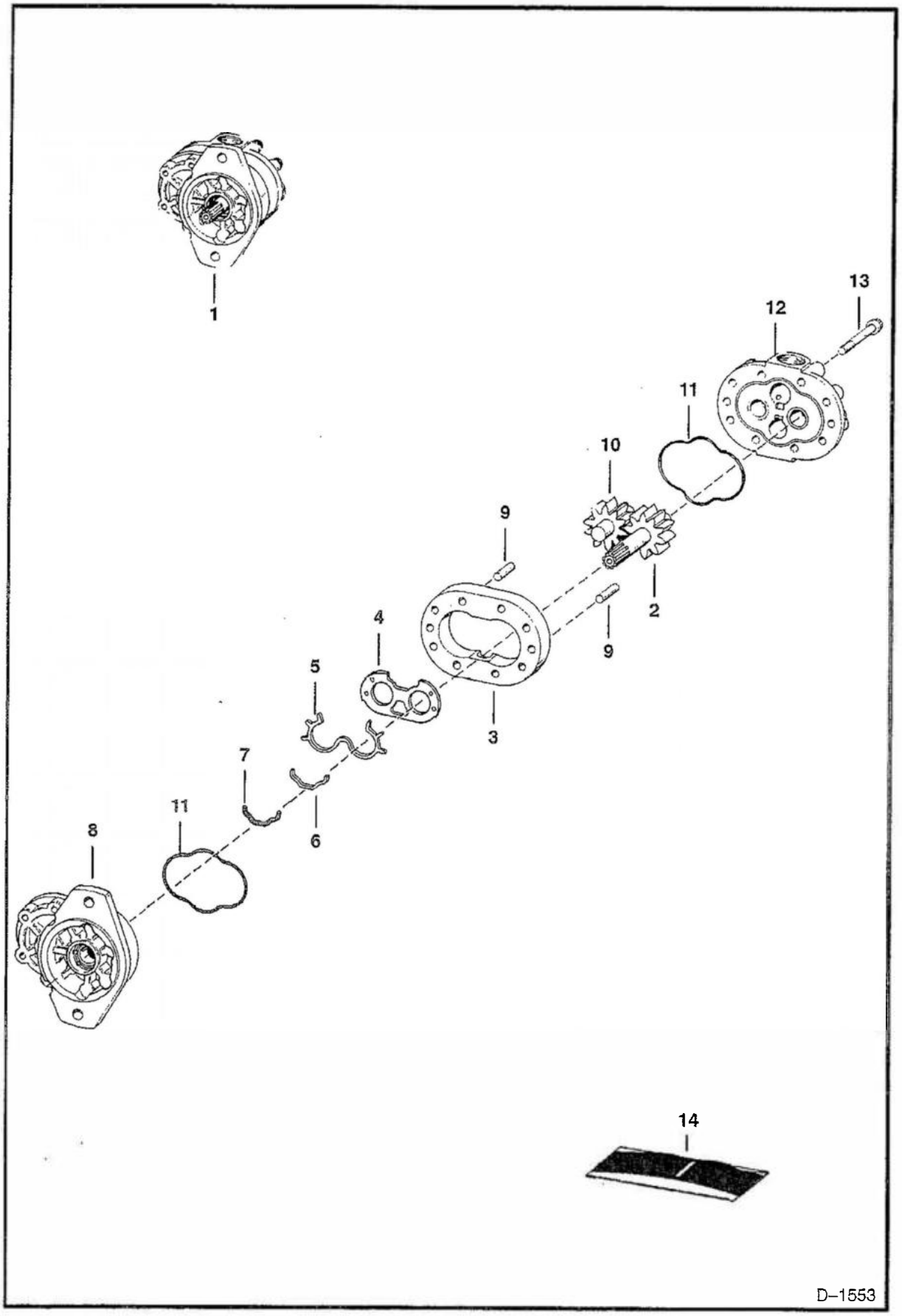

GEAR PUMP (Cont'd)
(#25306 RCA) (S/N 14999 & Below)

Ref. No.	Part Number	Description	Remarks	Serial Number	Qty.
1	6630239	PUMP	See BTI 211		1
2	6630386	DRIVE GEAR			1
3	6630359	BODY	W/Ref. 9		1
4	NSS	DIAPHRAGM			1
5	NSS	GASKET			1
6	NSS	SEAL			1
7	NSS	SEAL			1
8	NSS	PLATE	front – Was 6630352 [A]		1
9	455536	DOWEL PIN			4
10	6630360	GEAR	idler		1
11	NSS	O-RING			2
12	6630382	PLATE	back		1
13	6632001	SCREW	cap		8
14	6630383	SEAL KIT	Ref. 4-7, 9 & 11		1

GEAR PUMP
(Double) (S/N 15001 & Above)

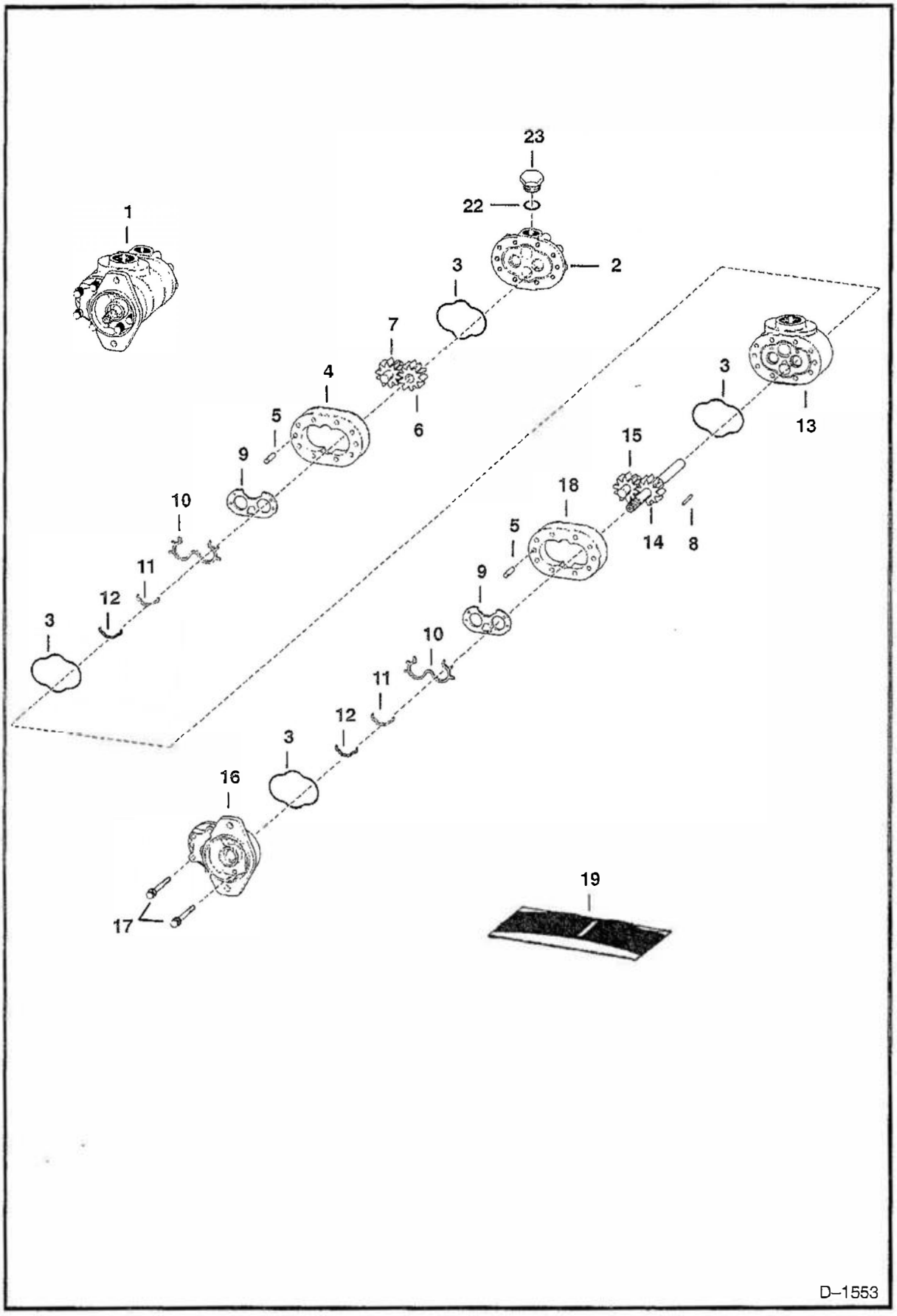

GEAR PUMP (Cont'd)
(Double) (S/N 15001 & Above)

Ref. No.	Part Number	Description	Remarks	Serial Number	Qty.
1	6630287	PUMP	gear – 5/8 (15,8 mm) – 9 tooth		
			Shaft		1
	6632039	PUMP	gear – 3/4 (15,8 mm) – 11 tooth		
			Shaft	21522 & Above	1
2	6630361	PLATE	back		1
3	NSS	O–RING			4
4	6630357	BODY	W/Ref. 5		1
5	455536	DOWEL PIN			8
6	6630363	GEAR	Slip		1
7	6630358	GEAR	Idler		1
8	6630351	KEY			1
9	NSS	PLATE	wear		2
10	NSS	SEAL			2
11	NSS	O–RING	molded		2
12	NSS	GASKET			2
13	6650614	PLATE	adapter – W/Ref. 5 –		
			Was 6630362 [A]		1
14	6630364	GEAR	Drive – 5/8 (15,8 mm) – 9 tooth		
			Shaft		1
	6632038	GEAR	Drive – 3/4 (15,8 mm) – 11 tooth		
			Shaft		1
15	6630360	GEAR	Idler		1
16	NAP	PLATE	front – 5/8 (15,8 mm) – 9 tooth		
			Shaft – Was 6630352 [A]		1
	6650612	PLATE	front – 3/4 (15,8 mm) – 11 tooth		
			Shaft – For 6632039 Pump		
			Was 6631915 [A]	29925 & Below	1
	6631915	PLATE			1
17	6632006	BOLT			8
18	6630359	BODY	W/Ref. 5		1
19	6630387	SEAL KIT	W/Ref. 3 & 9–12		1

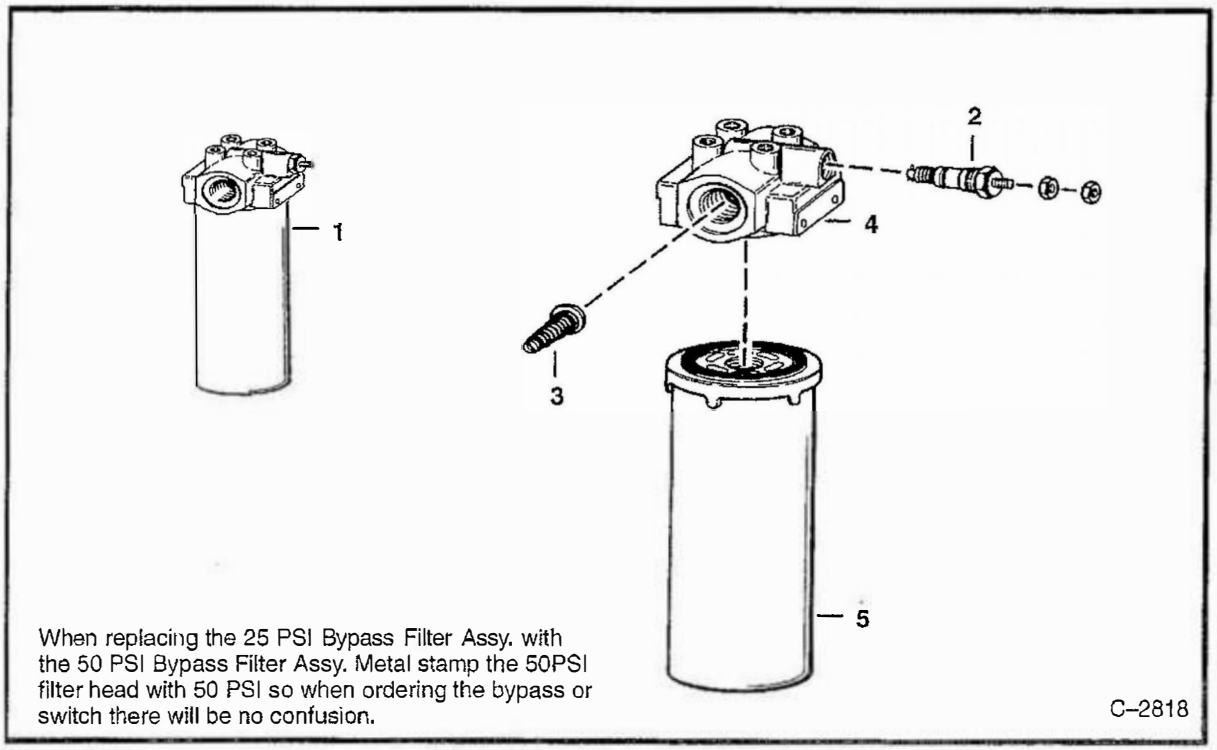

HYDROSTATIC OIL FILTER

Ref. No.	Part Number	Description	Remarks	Serial Number	Qty.
1	NAP	FILTER ASSY	W/25 PSI Bypass & Switch – Ref. 2–5	13001–20991	1
	6631706	FILTER ASSY	W/50 PSI Bypass & Switch – Ref. 2–5	20992 & Above	1
2	6599364	SWITCH	pressure – Use W/25 PSI	13001–20991	1
	6632053	SWITCH	pressure – Use W/50 PSI	20992 & Above	1
	6599365	KIT	Nut, washer & o–rings for 6599364 & 6632053 switches		1
3	NAP	VALVE	by–ass – 25 PSI – Order Ref. 1	13001–20991	1
	NAP	VALVE	bypass – 50 PSI – Order Ref. 1	20992 & Above	1
4	NSS	HEAD	Order Ref. 1		1
5	6598903	ELEMENT	filter		1

Bobcat Hydraulic/Hydrostatic Fluid
is blended to our specifications
to meet or exceed requirements of our components.



Available from Bobcat Parts.

Bobcat

CAB ELECTRICAL SYSTEM
(S/N 19999 & Below)

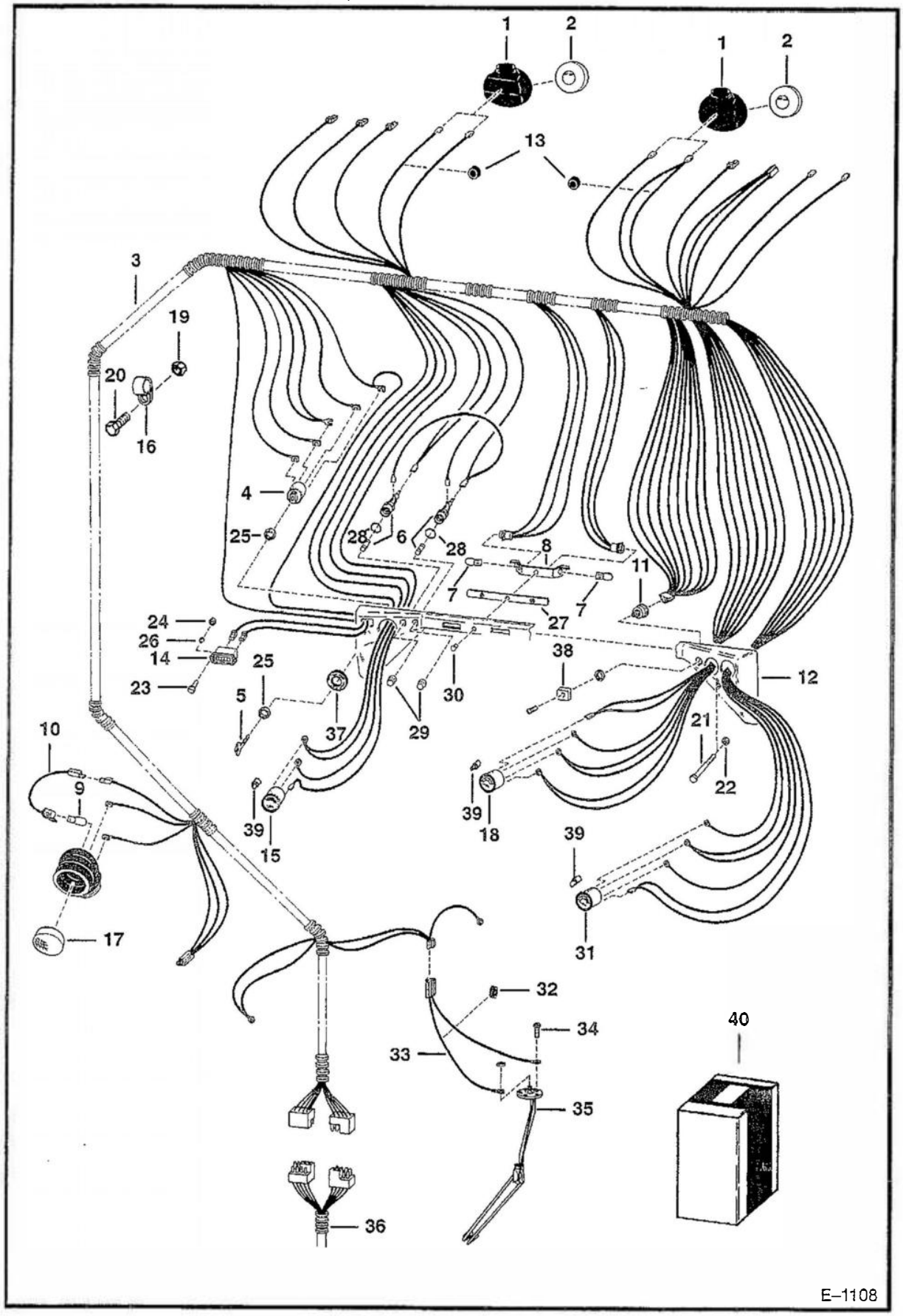

CAB ELECTRICAL SYSTEM (Cont'd)
(S/N 19999 & Below)

Ref. No.	Part Number	Description	Remarks	Serial Number	Qty.
1	6558142	HOUSING			3
2	6557486	LAMP			2
3	6564837	HARNESS	cab		1
4	NAP	SWITCH	ignition – Order Ref. 40 – See BTI 289 – Was 6519592 [A]		1
	6665606	SWITCH			1
5	6512809	KEY	for 6519592		x
	6709527	KEY	for 6665606		x
6	6513469	HOLDER	fuse		2
	1319451	FUSE			2
7	6513468	BULB			2
8	6558242	BRACKET			1
9	898731	LIGHT BULB			1
10	6564907	SOCKET			1
11	6512808	LIGHT SWITCH			1
12	6564787	PANEL			1
13	6557493	GROMMET			2
14	6664886	HOURMETER	Was 6631657 [A]		1
15	6669664	VOLTMETER	Was 6658819 [A]		1
16	30H–41	CLAMP			3
17	6563740	LAMP			1
18	6669665	FUEL GAUGE	Was 6658820 [A]		1
19	61D–5	NUT			3
20*	10C–512	BOLT	Was 6553808 [A]		3
21	17C–572	BOLT			2
22	83D–5	NUT			2
23	85G–608	SCREW			2
24	12D–6	NUT			2
25	6598721	NUT	Used W/NAP 6519592 switch		2
*	6674202	NUT	Used W/ 6665606 switch		1
26	12E–6	WASHER			2
27	6564785	LENS			1
28	6514643	GASKET			2
29	6514642	CAP			2
30	6514742	RIVET			1
31	6631649	GAUGE	engine temp. – See BTI 259		1
	6669663	GAUGE	engine temp. – See BTI 259 – Was 6658817 [A]		1
32	742876	GROMMET			1
33	6560117	WIRE			1
34	85G–1008	SCREW			1
35	6562552	SENDER	fuel		1
36		HARNESS	eng. – See Page 137		1
37	6703705	PLATE	for 6519592 – Was 6563431 [A]		1
	6709028	PLATE	for 6665606		1
38	6599781	KNOB	light switch		1
39	6599696	SOCKET	W/bulb assy.		3
	895771	BULB			3
40	6724282	SWITCH KIT	Ref. 4, 5 & 37		1

CAB ELECTRICAL SYSTEM
(S/N 20001 & Above)

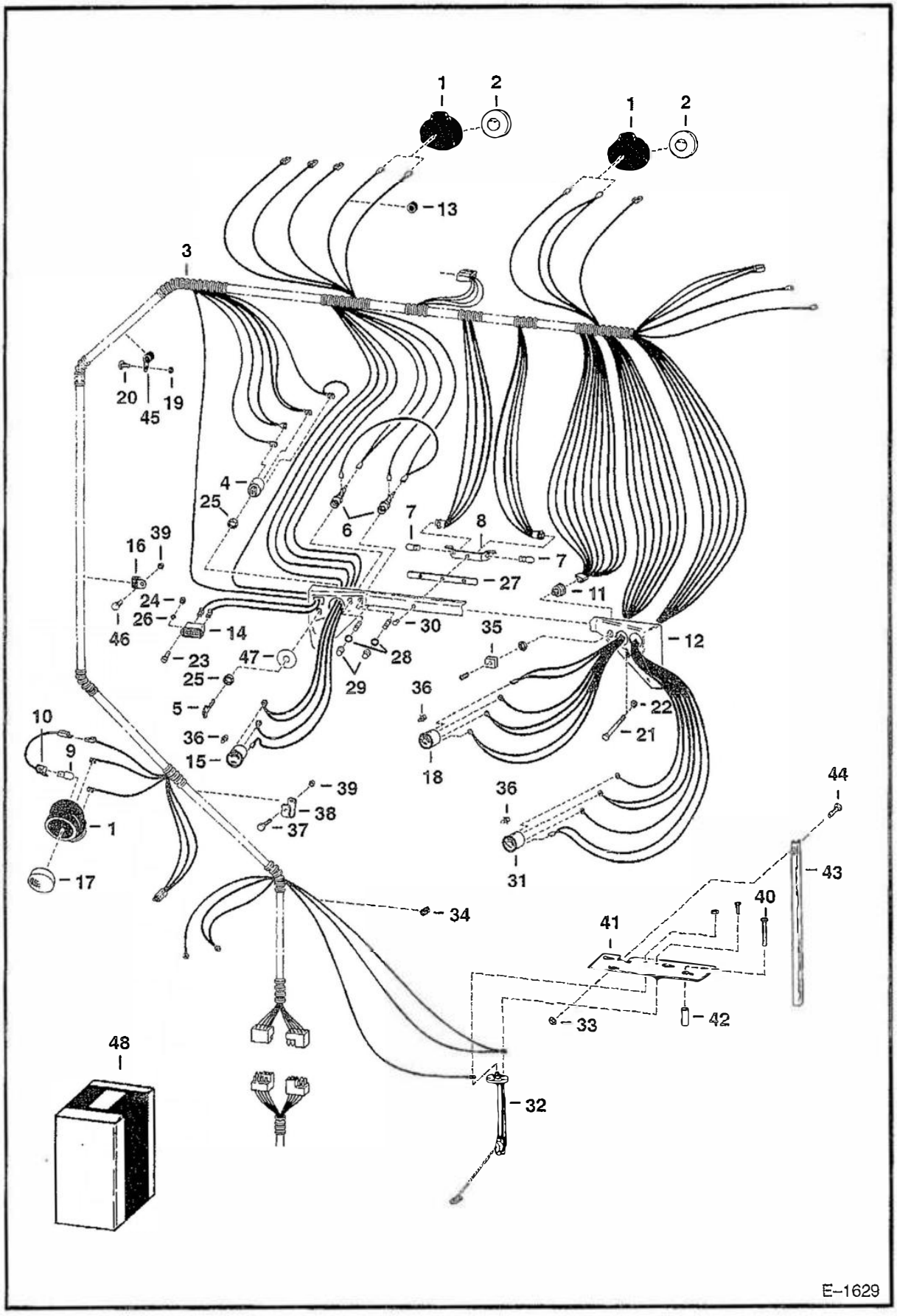

CAB ELECTRICAL SYSTEM (Cont'd)
(S/N 20001 & Above)

Ref. No.	Part Number	Description	Remarks	Serial Number	Qty.
1	6558142	HOUSING			3
2	6557486	LAMP			2
3	6567802	HARNESS			1
4	NAP	SWITCH	W/ Ref. 5 & 25 – Order 48 – See BTI 289 – Was 6519592 [A]		1
	6665606	SWITCH			1
5	6512809	KEY	for 6519592		x
	6709527	KEY	for 6665606		x
6	6513469	HOLDER	fuse		2
	1319451	FUSE			2
7	6513468	BULB			2
8	6558242	BRACKET			1
9	898731	LIGHT BULB			1
10	6564907	SOCKET			1
11	6512808	LIGHT SWITCH			1
12	6568211	PANEL			1
13	6557493	GROMMET			2
14	6664886	HOURMETER	Was 6631657 [A]		1
15	6669664	VOLTMETER	Was 6658819 [A]		1
16	30H–45	CLAMP	Was 30H–41 [B]		2
17	6563740	LAMP			1
18	6669665	FUEL GAUGE	Was 6658820 [A]		1
19	83D–4	NUT			2
20	25G–412	BOLT			2
21	17C–572	BOLT			2
22	83D–5	NUT			2
23	85G–608	SCREW			2
24	12D–6	NUT			2
25	6598721	NUT	Used W/NAP 6519592 switch		2
*	6674202	NUT	Used W/ 6665606 switch		1
26	12E–6	WASHER			2
27	6564785	LENS			1
28	6514643	GASKET			2
29	6514642	CAP			2
30	6514742	RIVET			1
31	6631649	GAUGE	engine temp. – See BTI 259		1
	6669663	GAUGE	engine temp. – See BTI 259 Was 6658817 [A]		1
32		SENDER	fuel – See Page 29		1
33	12D–10	NUT			1
34	6632215	GROMMET			1
35	6599781	KNOB	light switch		1
36	6599696	SOCKET	W/bulb assy.		3
	895771	BULB			3
37	17C–512	BOLT			1
38	31H–38	CLAMP			1
39	85D–5	NUT			1
40	89G–544	SCREW			3
41	6567896	SHIELD			1
42	6567898	SPACER			3
43	6567897	HOUSING			1

CAB ELECTRICAL SYSTEM (Cont'd)
(S/N 20001 & Above)

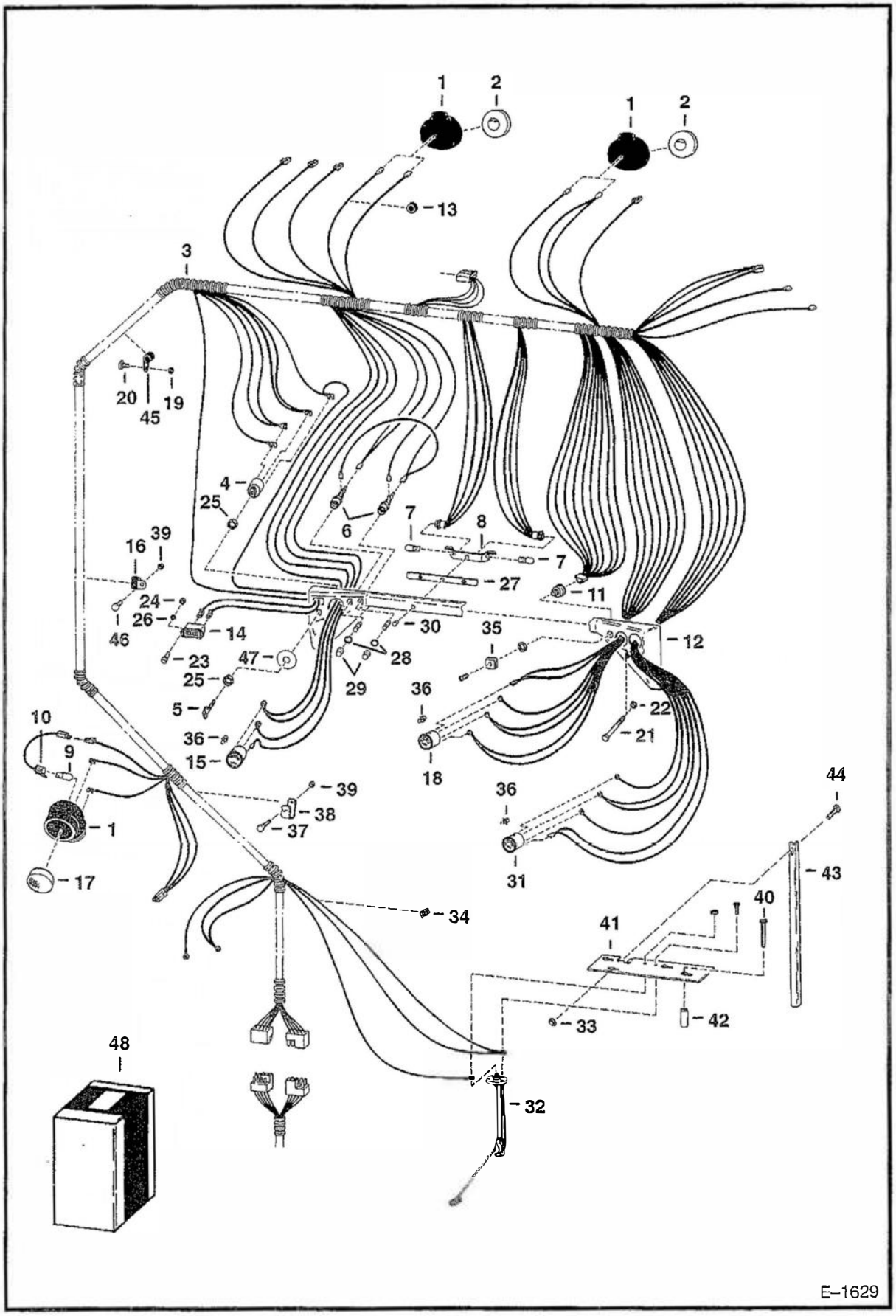

CAB ELECTRICAL SYSTEM (Cont'd)
(S/N 20001 & Above)

Ref. No.	Part Number	Description	Remarks	Serial Number	Qty.
44	85G–1008	SCREW			1
45	30H–55	CLAMP	Was 30H–54 [B]		2
46*	10C–512	BOLT	Was 6553808 [A]		1
47	6703705	PLATE	for 6519592 – Was 6563431 [A]		1
	6709028	PLATE	for 6665606		1
48	6724282	SWITCH KIT	Ref. 4, 5 & 47		1

ENGINE ELECTRICAL
(S/N 20376 & Below)

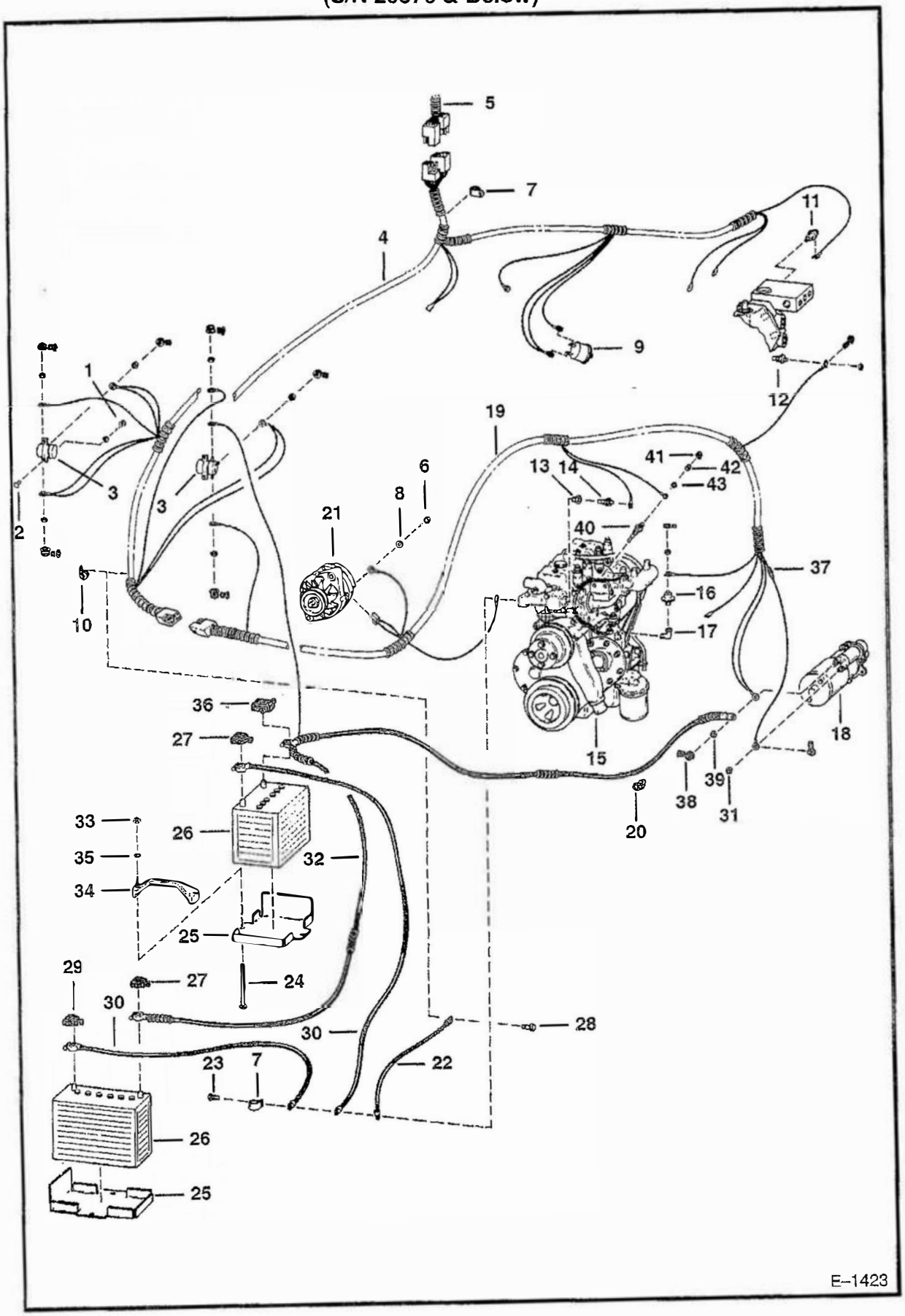

ENGINE ELECTRICAL (Cont'd)
(S/N 20376 & Below)

Ref. No.	Part Number	Description	Remarks	Serial Number	Qty.
1	61D–4	NUT			4
2	17C–408	BOLT			4
	7C–412	BOLT	carriage		4
3	6659319	SOLENOID	Was 6632186 [A]		2
4	6567432	HARNESS	chassis		1
5		HARNESS	cab – See Page 131		1
6	4DM–6	NUT			1
7	30H–46	CLAMP			2
8	6E–4	WASHER			1
9	6564875	SWITCH	hydro. pressure	14999 & Below	1
	6671062	SWITCH	hydro. pressure – Was 6664577 [A]	15001–20376	1
10	30H–55	CLAMP			1
11	6564560	SWITCH	hydro. temp.		1
12		SWITCH	filter – See Page 129		1
13	6564767	ADAPTER			1
14	NAP	SENDER	eng. temp. – See BTI 259 – Was 6599492 [A]		1
	6658818	SENDER	eng. temp. – See BTI 259		1
15	6564576	ENGINE	See Page 175		1
16	6631010	SWITCH	pressure – Engine Oil		1
17	1309105	ELBOW			1
18		STARTER	See Page 151		1
19	6567087	HARNESS	engine		1
20	30H–45	CLAMP			1
21		ALTERNATOR	See Page 141		1
22	6563025	CABLE			1
23	84G–3712	BOLT			2
24	6569623	BOLT			4
25	6558826	MOUNT	battery		2
26	6665917	BATTERY	Was 6633910 [A]		2
	6630154	GANG CAP	Danger		1
	6630155	GANG CAP	Poison		1
	6514898	CAP	tilt–tite		6
27	6599652	BOOT			2
28	18C–616	BOLT			1
29	2356058	BOOT			1
30	6564716	CABLE	negative – W/Ref. 27		2
31	4DM–5	NUT			1
32	6565059	CABLE	positive – W/Ref. 29 & 36		1
33	59D–5	NUT			4
34	6569203	CLAMP	battery		2
35	25E–15	WASHER			4
36	6598956	BOOT			1
37	3675725	DIODE			2
38	6560172	COVER			1
39	4DM–10	NUT			1
40	6599285	GLOW PLUG			4
41	6660927	NUT			4
42	6660928	WASHER			4
43	6660929	WASHER			4

ENGINE ELECTRICAL
(S/N 20377 & Above)

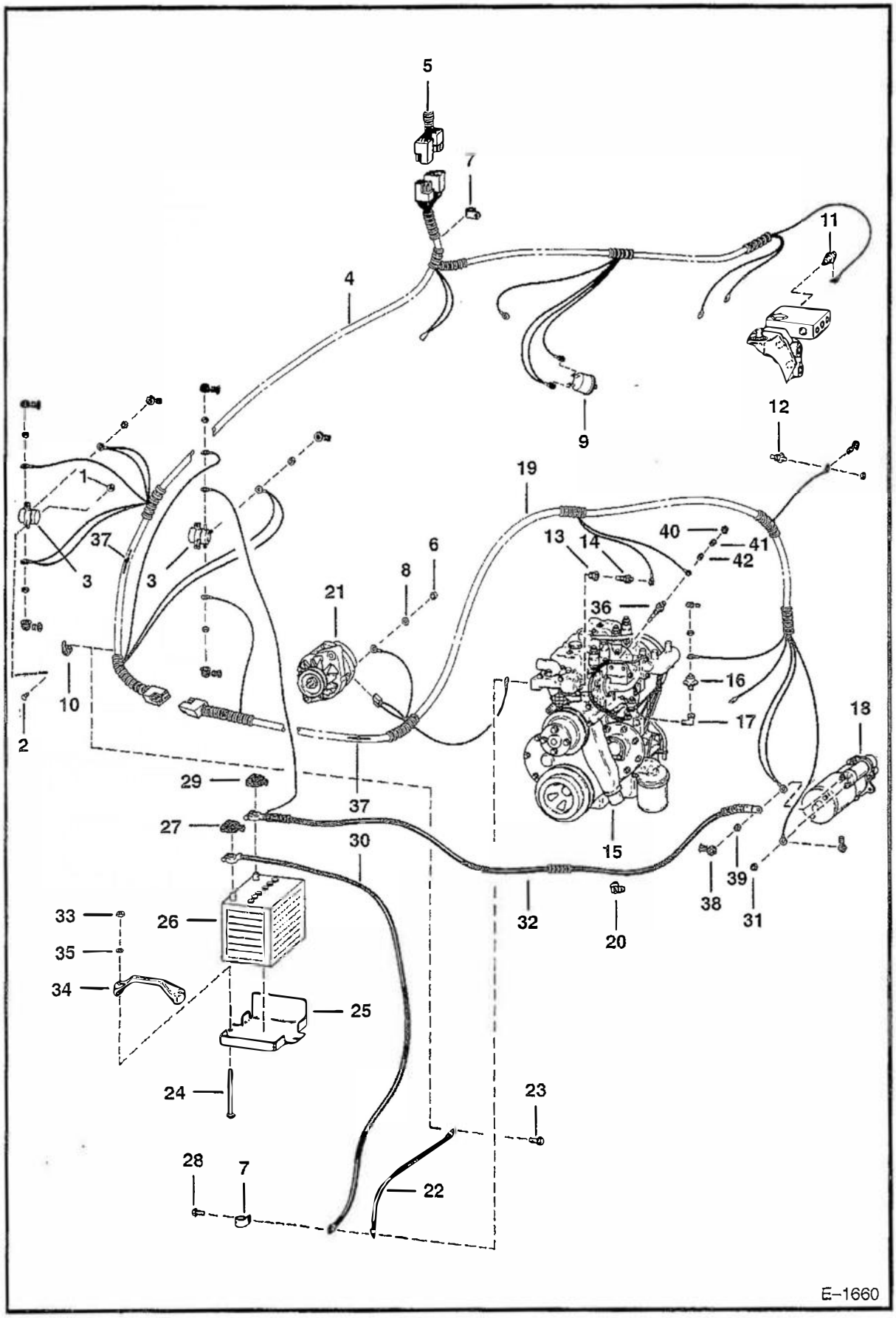

ENGINE ELECTRICAL (Cont'd)
(S/N 20377 & Above)

Ref. No.	Part Number	Description	Remarks	Serial Number	Qty.
1	61D–4	NUT			6
2	17C–408	BOLT	carriage		4
3	6659319	SOLENOID	Was 6632186		2
4	6567432	HARNESS	chassis		1
5		HARNESS	cab – See Page 131		1
6	4DM–6	NUT			1
7	30H–46	CLAMP			2
8	6E–4	WASHER			1
9	6671062	SWITCH	hydro. pressure –		
			Was 6664577 [A]		1
10	30H–55	CLAMP			1
11	6632633	SWITCH	hydro. temp. – Was 6564560 [A]		1
12		SWITCH	filter – See Page 129		1
13	6564767	ADAPTER			1
14	NAP	SENDER	eng. temp. – See BTI 259 –		
			Was 6599492 [A]		1
	6658818	SENDER	eng. temp. – See BTI 259		1
15	6564576	ENGINE	See Page 175		1
16	6631010	SWITCH	pressure – Engine Oil		1
17	1309105	ELBOW			1
18		STARTER	See Page 151		1
19	6567087	HARNESS	engine	20377–21867	1
	6569871	HARNESS	For Bobcat Alt.	21868 & Above	1
20	30H–45	CLAMP			1
21		ALTERNATOR	See Page 141		1
22	6563025	CABLE			1
23	84G–3712	BOLT			2
24	6569623	BOLT	hex		2
	6571757	BOLT	carriage		2
25	6561733	MOUNT	battery		1
26	6665031	BATTERY	625 Amp. – Was 6568707 [A]		1
	6665032	BATTERY	700 Amp. – Was 6631611 [A]		1
27	6599652	BOOT			2
28	18C–616	BOLT			1
29	2356058	BOOT			1
30	6564716	CABLE	negative – W/Ref. 27		1
31	4DM–5	NUT			1
32	6568717	CABLE	positive – W/Ref. 29		1
33	59D–5	NUT			2
34	6569203	CLAMP	battery		1
35	25E–15	WASHER			2
36	6599285	GLOW PLUG			4
37	3675725	DIODE			2
38	6560172	COVER			x
39	4DM–10	NUT			1
40	6660927	NUT			4
41	6660928	WASHER			4
42	6660929	WASHER			4

ALTERNATOR
(Open) (Delco 1103133)

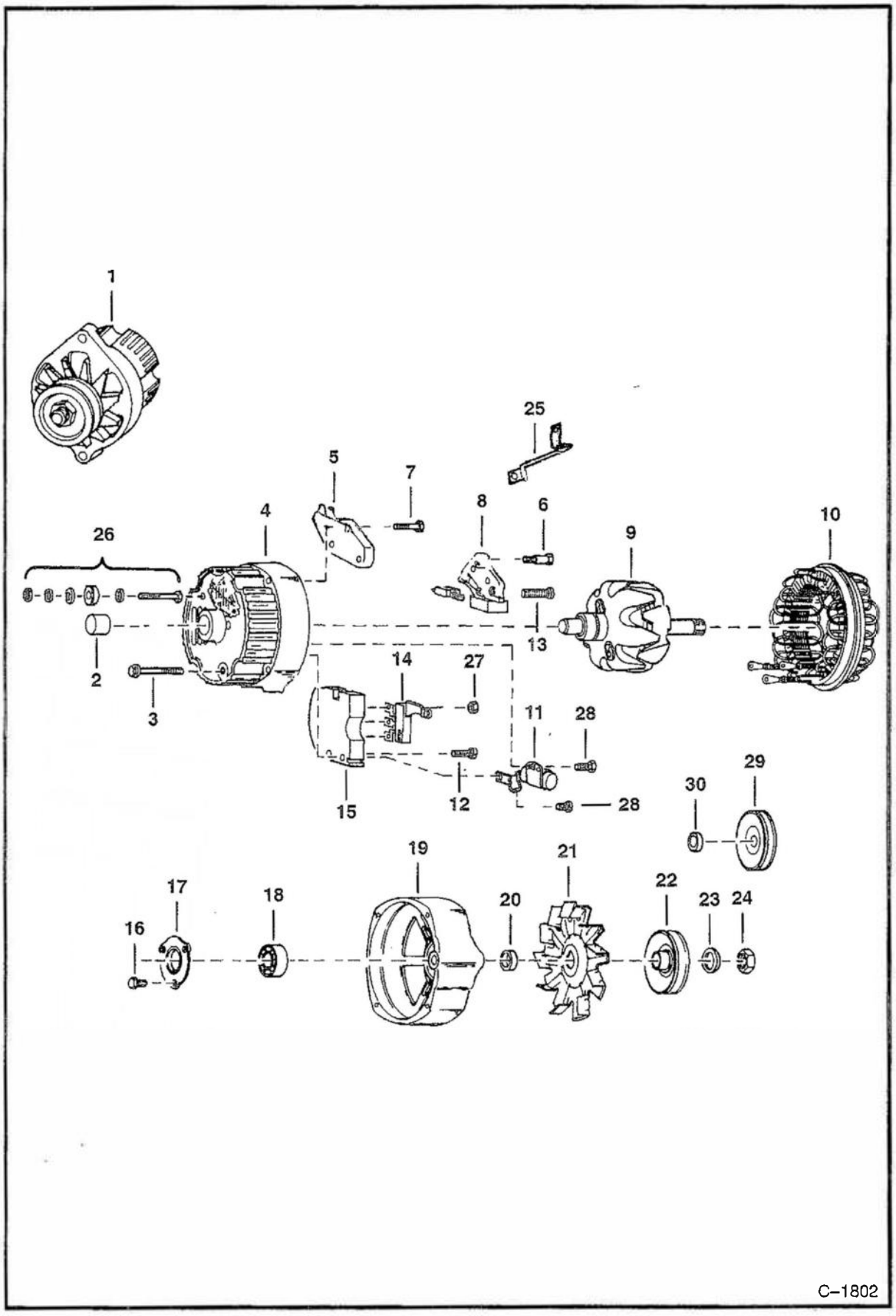

ALTERNATOR (Cont'd)
(Open) (Delco 1103133)

Ref. No.	Part Number	Description	Remarks	Serial Number	Qty.
1	NAP	ALTERNATOR	Order 908221		1
2	905351	BEARING			1
3	897467	BOLT	thru		4
4	905956	FRAME	W/Ref. 2		1
5	994381	REGULATOR	voltage		1
6	6511957	BOLT			2
7	999396	BOLT			2
8	999394	HOLDER	brush assy.		1
9	999305	ROTOR			1
10	2343911	STATOR	Was 999392 [A]		1
11	999308	CAPACITOR			1
12	994373	BOLT			1
13	999397	BOLT			1
14	994383	DIODE			1
15	995185	RECTIFIER			1
16	45G–1008	SCREW			3
17	897456	RETAINER	bearing		1
18	905350	BEARING			1
19	NAP	HOUSING			1
20	909831	COLLAR	Was 905958 [A]		1
21	329884	FAN			1
22	NAP	PULLEY	Order Ref. 29 & 30		1
23	794584	WASHER	lock		1
24*	NAP	NUT	hex – Was 859369 [A]		1
25	999395	TERMINAL	relay		1
26	905952	TERMINAL PKG.			1
27	12D–8	NUT			1
28	994378	BOLT			2
29	906104	PULLEY			1
30	906111	COLLAR			1

ALTERNATOR
(Open) (Delco 1105070 or 1105422)

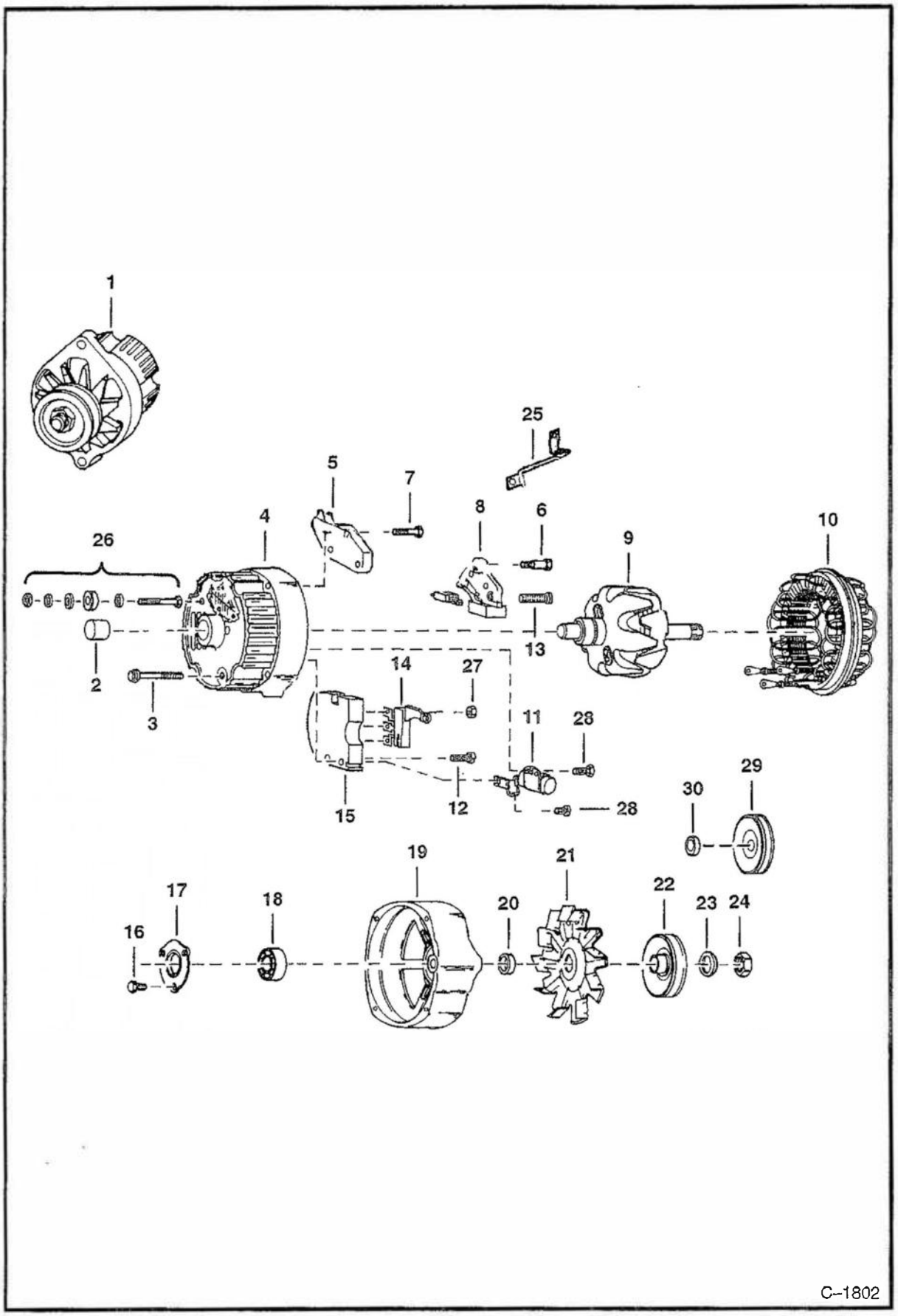

ALTERNATOR (Cont'd)
(Open) (Delco 1105070 or 1105422)

Ref. No.	Part Number	Description	Remarks	Serial Number	Qty.
1	908221	ALTERNATOR	Less Pulley & Fan		1
2	905351	BEARING			1
3	897467	BOLT	thru		4
4	905956	FRAME	W/Ref. 2		1
5	994381	REGULATOR	voltage		1
6	6511957	BOLT			2
7	999396	BOLT			2
8	999394	HOLDER	brush assy.		1
9	6599771	ROTOR			1
10	907953	STATOR			1
11	999308	CAPACITOR			1
12	6599768	BOLT			1
13	999397	BOLT			1
14	994383	DIODE			1
15	6599767	RECTIFIER			1
16	45G-1008	SCREW			3
17	850315	RETAINER	bearing		1
18	905350	BEARING			1
19	905957	HOUSING			1
20	909831	COLLAR	Was 905958 [A]		1
21	329884	FAN			1
22	NAP	PULLEY	Order Ref. 29 & 30		1
23	794584	WASHER	lock		1
24*	NAP	NUT	Was 859369 [A]		1
25	999395	TERMINAL	relay		1
26	905952	TERMINAL PKG			1
27	12D-8	NUT			1
28	994378	BOLT			2
29	906104	PULLEY			1
30	906111	COLLAR			1

ALTERNATOR
(Bobcat)

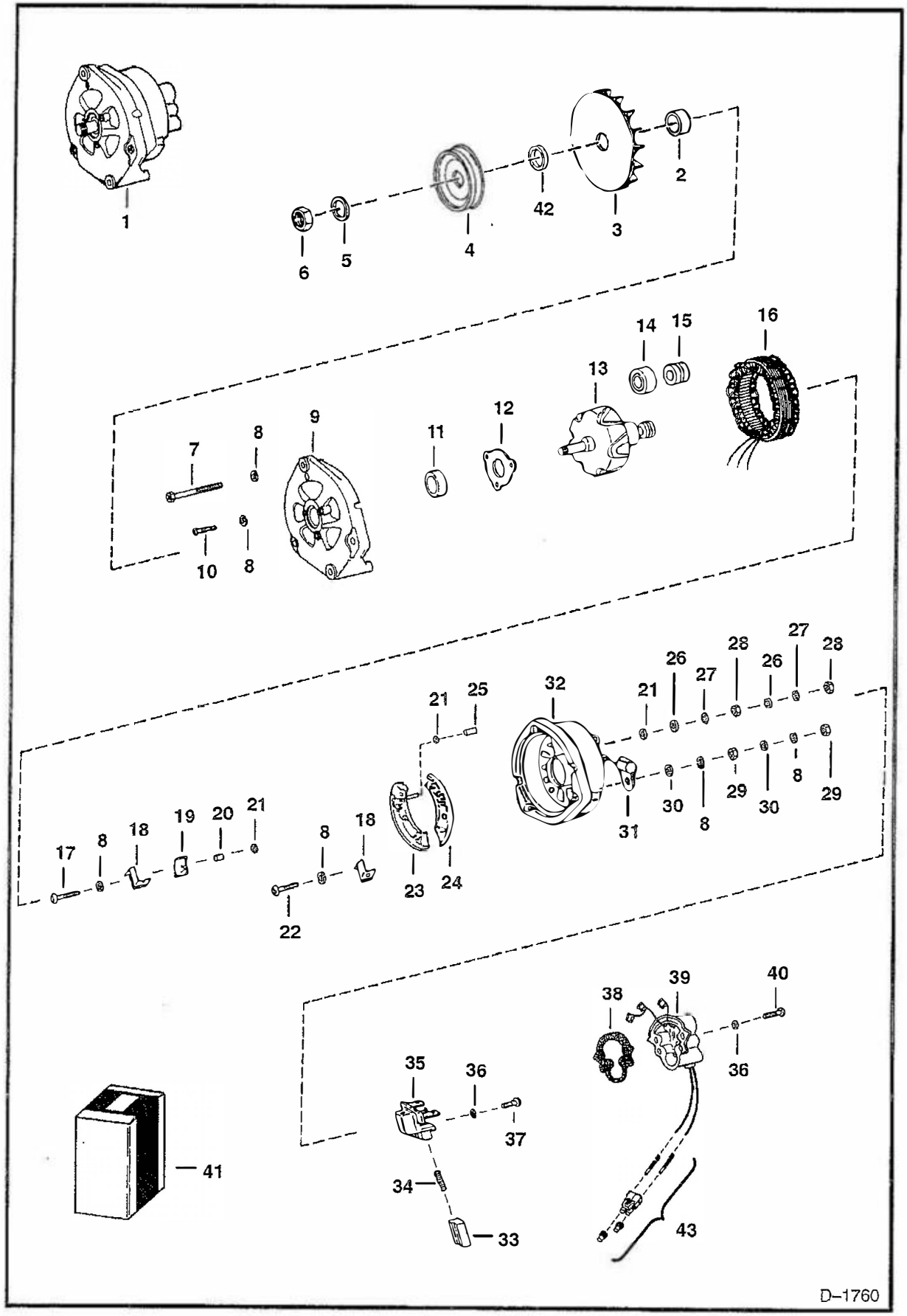

ALTERNATOR (Cont'd)
(Bobcat)

Ref. No.	Part Number	Description	Remarks	Serial Number	Qty.
1	NAP	ALTERNATOR	Less Ref. 3, 4 & 42 – Order 6661611 & 6659375 – See Page 149 – Was 6632211 [A]		1
2	6632210	SPACER			1
3	NAP	FAN	Order 6661611 and 6659375 – Was 6632209 [A]		1
4	6646599	PULLEY	Was 6571576 [A]		1
5	6632208	WASHER			1
6	6632207	NUT			1
7	6632222	BOLT			3
8	NSS	WASHER			11
9	NAP	BRACKET	W/Ref. 8 & 10–12 – Was 6632224 [A]		1
10	NSS	SCREW			3
11	NSS	BEARING			1
12	NSS	RETAINER			1
13	6632229	ROTOR	W/Ref. 14 & 15		1
14	NSS	BEARING			1
15	NSS	SLIP RING			1
16	NSS	STATOR	Was 6632230 [A]		1
17	NSS	BOLT			1
18	NSS	CLAMP			2
19	NSS	MOLD–U			1
20	NSS	BUSHING	insulation		1
21	NSS	WASHER	insulation		3
22	NSS	SCREW			2
23	NSS	HEATSINK			1
24	NSS	HEATSINK			1
25	NSS	BUSHING	insulation		1
26	NSS	WASHER			2
27	NSS	WASHER			2
28	NSS	NUT			2
29	NSS	NUT			2
30	NSS	WASHER			2
31	6632242	CONDENSOR			1
32	NSS	BRACKET	W/Ref. 8, 17–31 – Was 6632231 [A]		1
33	NSS	BRUSH			2
34	NSS	SPRING			2
35	NSS	BRUSH HOLDER	W/Ref. 33 & 34 – Was 6632248 [A]		1
36	NSS	WASHER			6
37	NSS	SCREW			2
38	6632253	GASKET			1
39	NSS	KIT, REGULATOR	W/Ref. 36 & 38–40 – Also Order 6630951 – Was 6632384 [A]		1
40	NSS	SCREW			4
41	6632381	KIT	bearing – W/Ref. 11, 14 & 15		1
	NSS	KIT, HARDWARE	external – W/Ref. 8, 21, 26–30, 36, 37 & 40 – Was 6632382 [A]		1
	6632383	KIT, HARDWARE	internal – W/Ref. 8, 17–22 & 25		1
	NSS	KIT	brush holder – W/Ref. 33–37 – SEE Ref.1 – Was 6632385 [A]		1

ALTERNATOR (Cont'd)
(Bobcat)

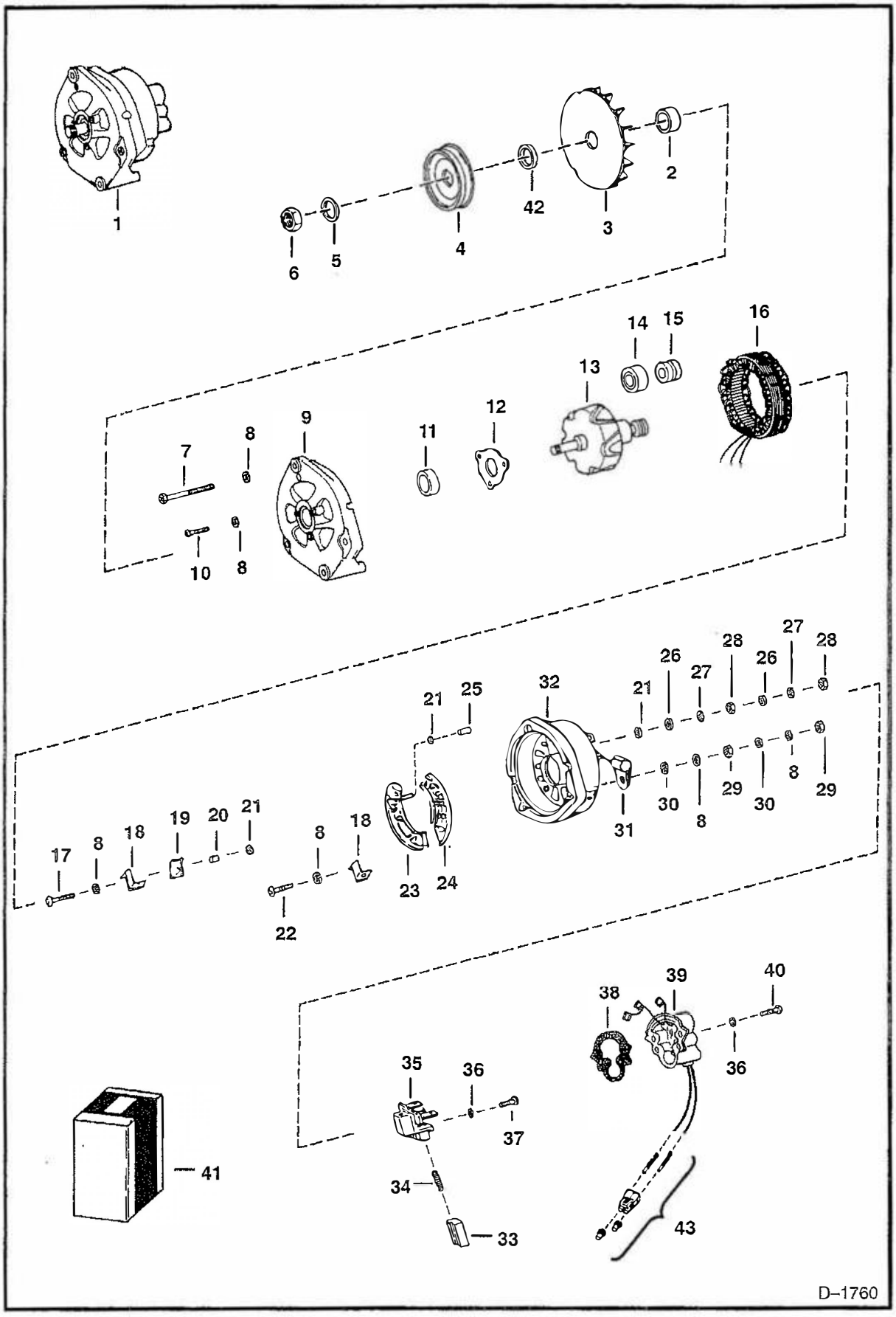

ALTERNATOR (Cont'd)
(Bobcat)

Ref. No.	Part Number	Description	Remarks	Serial Number	Qty.
42	6632323	WASHER	Was 6571554 [A]		1
43	6577456	KIT	Weather–Pak Connector – In–cludes both male & female parts		1

ALTERNATOR
(Bobcat)

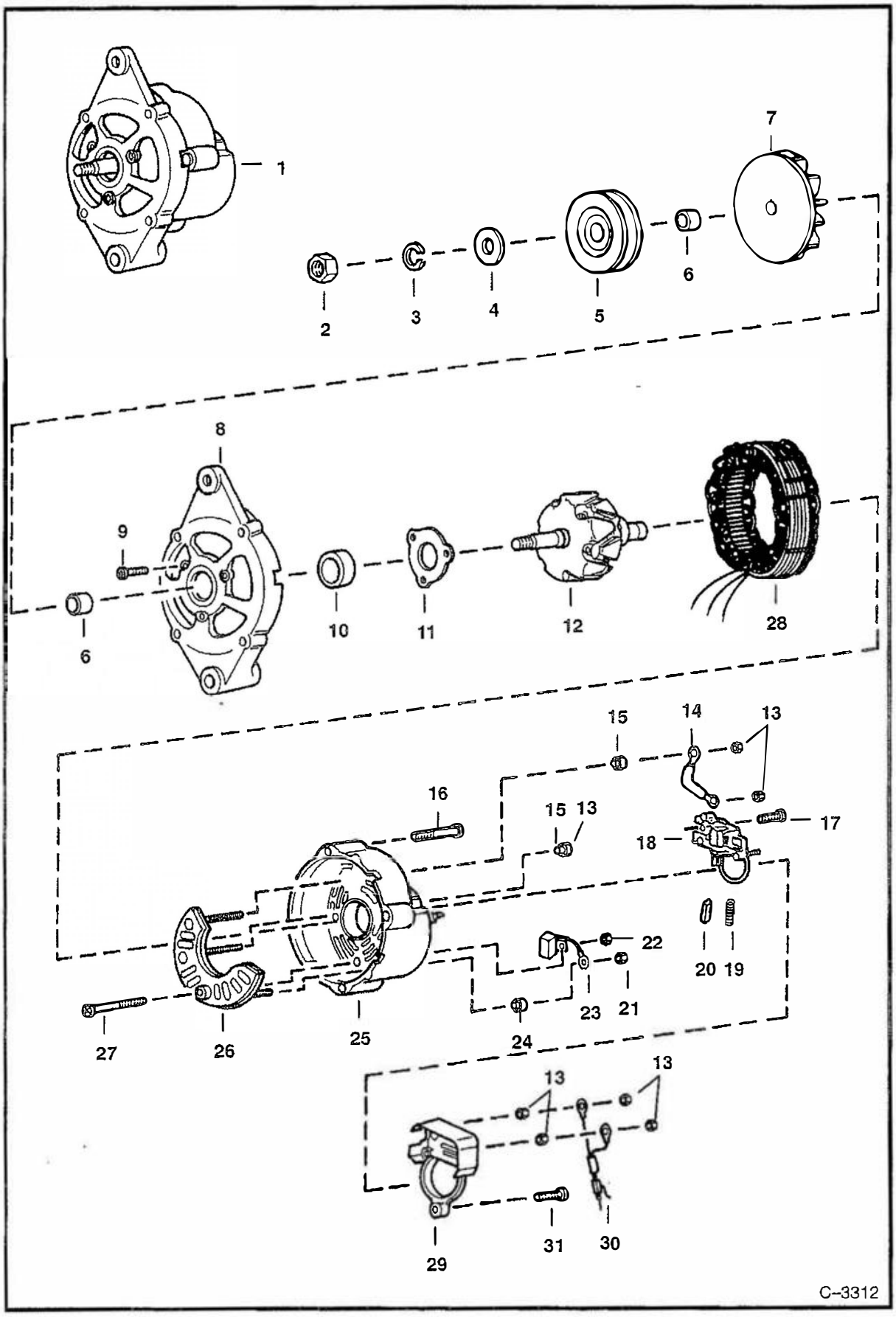

ALTERNATOR (Cont'd)
(Bobcat)

Ref. No.	Part Number	Description	Remarks	Serial Number	Qty.
1	6661611	ALTERNATOR	Less Fan & Pulley		1
2	6659371	NUT			1
3	6659372	WASHER			1
4	6632323	WASHER			1
5	6659373	PULLEY	Was 6571576 [A]		1
6	6659374	SPACER			2
7	6659375	FAN			1
8	6659376	BRACKET	W/Ref. 9 – 11		1
9	6659378	BOLT			3
10	6659379	BEARING			1
11	6632228	RETAINER			1
12	6659380	ROTOR			1
13	6659387	NUT			7
14	6659397	TERMINAL			1
15	6659386	HOLDER			2
16	6659392	BOLT			3
17	6659396	SCREW			2
18	6659393	REGULATOR	W/Ref. 19 & 20		1
19	6659395	SPRING			2
20	6659394	BRUSH			2
21	6659391	NUT			1
22	6659389	NUT			1
23	6659388	CONDENSER			1
24	6659390	HOLDER			1
25	6659382	BRACKET	rear – W/Ref. 13, 15, 21 – 27		1
26	6659384	RECTIFIER			1
27	6659385	SCREW			1
28	6659381	STATOR			1
29	6659398	COVER			1
30	6659400	CONNECTOR	assy.		1
31	6659399	SCREW			1

STARTER
(Delco 1109539)

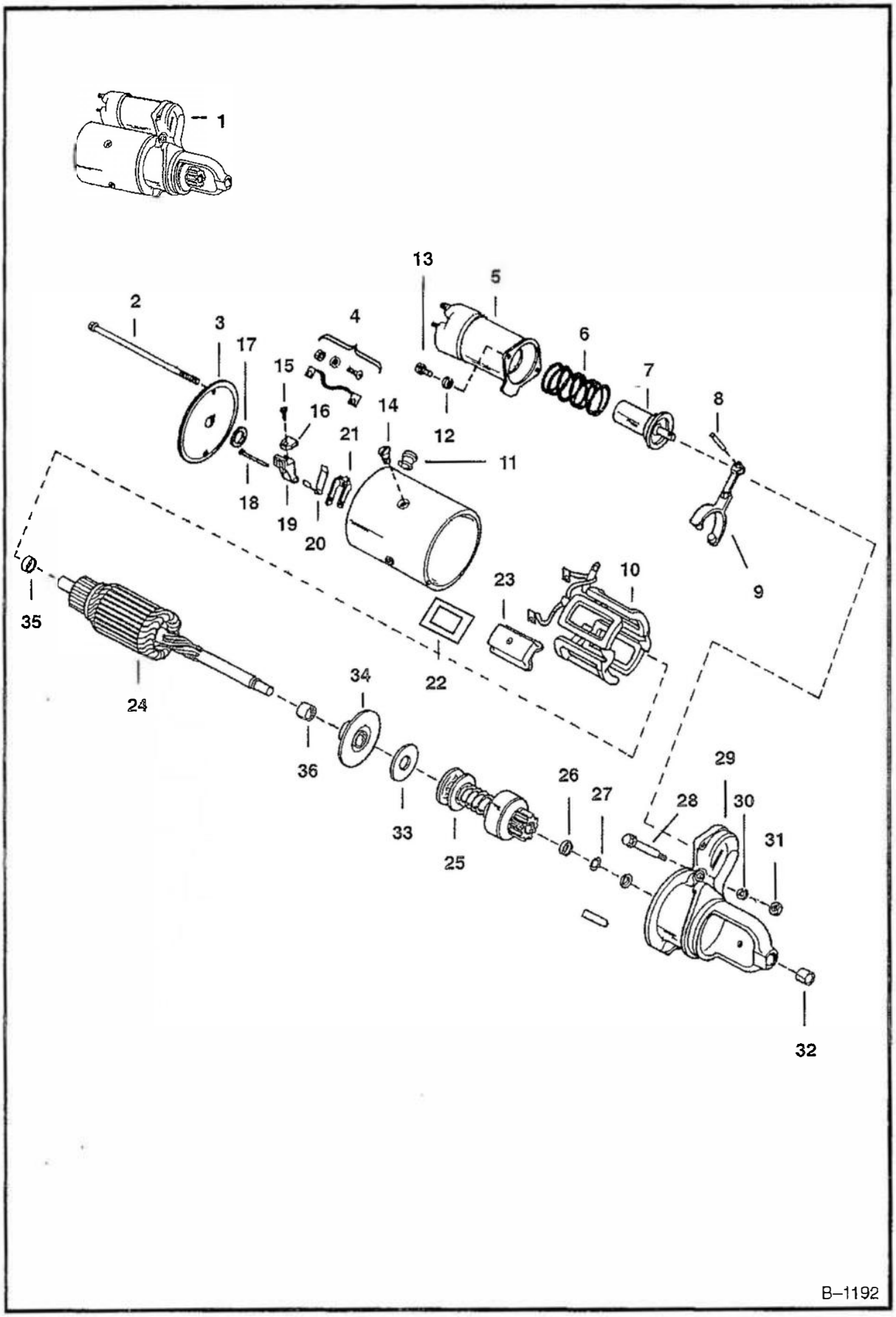

STARTER (Cont'd)
(Delco 1109539)

Ref. No.	Part Number	Description	Remarks	Serial Number	Qty.
1	NAP	STARTER	Order 1–6630181, 1–4DM–5, 1–4DM–10, and 1–6567050		1
2	895675	BOLT	thru		2
3	6511625	FRAME			1
4	6511627	HOLDER	brush support		4
5	6598234	SOLENOID			1
6	888968	SPRING			1
7	NAP	PLUNGER	Was 887782 [A]		1
8	999472	PIN			1
9	896126	LEVER			1
10	6511628	COIL	field – 4 Coils		1
11	NSS	GROMMET			1
12	NSS	WASHER			2
13	NSS	SCREW			2
14	NSS	SCREW			4
15	85G–1008	SCREW			4
16	945239	BRUSHES			4
17	NSS	WASHER			1
18	NSS	PIN			4
19	891252	HOLDER	brush		2
20	992568	SPRING	brush		4
21	880603	HOLDER	brush – Was 6511626 [A]		2
22	NSS	INSULATOR			4
23	NSS	POLE SHOE			4
24	6511629	ARMATURE			1
25	6512872	DRIVE			1
26	878608	COLLAR	stop		1
27	942142	RETAINER			1
28	884576	SCREW			1
29	NAP	HOUSING	drive – W/Ref. 32 –		
30	NSS	WASHER	Order Complete starter – Was 6598741 [A]		1 1
31	NSS	NUT			1
32	860669	BUSHING			1
33	991731	GASKET			1
34	874935	BUSHING			1
35	891602	PLATE	bearing		1
36	6598742	BUSHING			1

STARTER
(Delco 1998379)

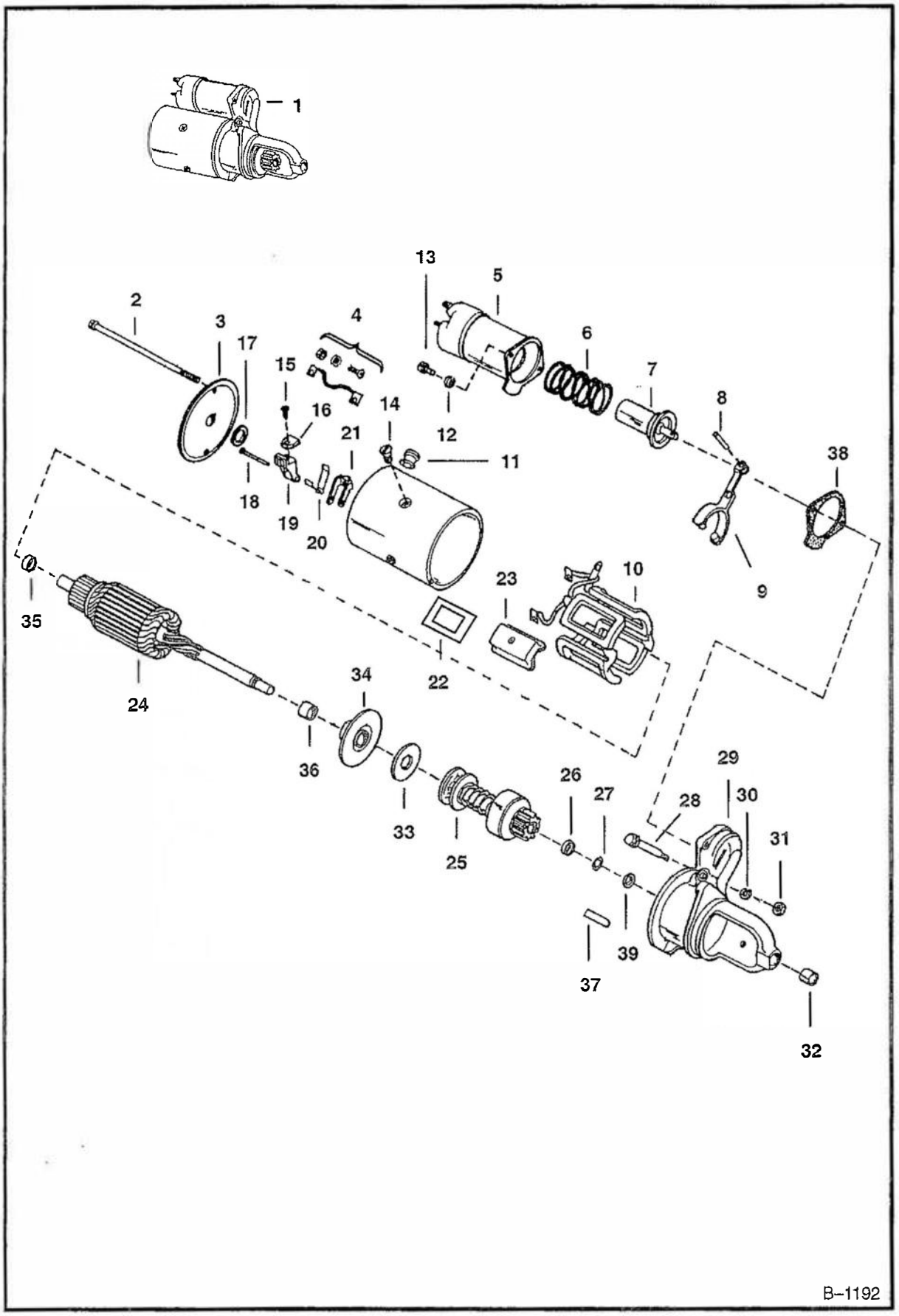

STARTER (Cont'd)
(Delco 1998379)

Ref. No.	Part Number	Description	Remarks	Serial Number	Qty.
1	NAP	STARTER	Order 6651210 Starter, 6701618 Brake, 6701628 Spacer, 5CM–1016 Bolt and 5CM–1630		
			Bolt – Was 6630181 [A]		1
	6630181REM	STARTER	remanufactured		1
2	6630404	BOLT	thru		2
3*	999460	FRAME	Was 6630408 [A]		1
4	6511627	HOLDER	brush support		1
5	6599449	SOLENOID			1
6	888968	SPRING	Was 906910 [A]		1
7	6658903	PLUNGER	Was 6630417 [A]		1
8	999472	PIN			1
9	896126	LEVER			1
10	6630407	COIL	field – 4 Coils		1
11	898131	GROMMET			1
12	23E–4	WASHER			2
13	43G–408	SCREW			2
14	859377	SCREW			8
15	NSS	SCREW			2
16	6630403	BRUSH			4
17	863995	WASHER			1
18	NSS	PIN			2
19	6630402	HOLDER	brush		2
20	6630406	SPRING			2
21	880603	HOLDER	brush – Was 6511626 [A]		2
22	NSS	INSULATOR			4
23	887834	POLE SHOE			4
24	6511629	ARMATURE			1
25	6512872	DRIVE			1
26	878608	COLLAR	stop		1
27	942142	RETAINER			1
28	884576	SCREW			1
29	6630418	HOUSING	drive – W/Ref. 32		1
30	991218	WASHER			2
31	NAP	NUT	Was 991219 [A]		1
32	860669	BUSHING			1
33	878103	GASKET			1
34	891602	PLATE	center		1
35	874935	BUSHING			1
36	6598742	BUSHING			1
37	6630405	DOWEL PIN			1
38	896128	BOOT			1
39	898127	COLLAR			1

STARTER
(Delco 1113281)

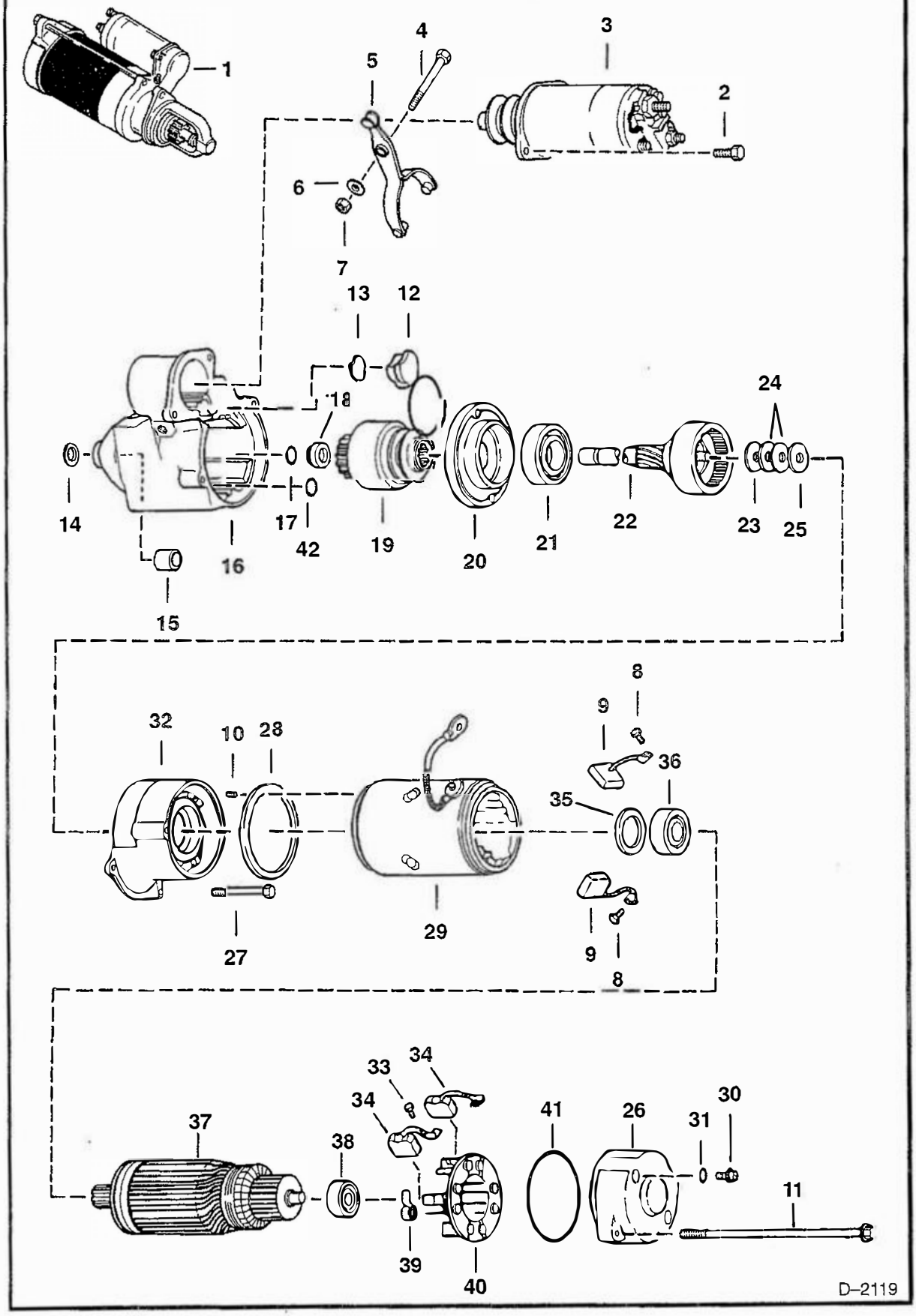

STARTER (Cont'd)
(Delco 1113281)

Ref. No.	Part Number	Description	Remarks	Serial Number	Qty.
1	6651664	STARTER	Was 6651210 [A]		1
2	NSS	SCREW			2
3	6658582	SOLENOID	Was 6658562 [A]		1
4	1CM–650	BOLT			1
5	6658572	LEVER			1
6	1EM–60	WASHER			1
7	7DM–6	NUT			1
8	13GM–404	SCREW			2
9	6658566	BRUSH			2
10	NSS	PIN			1
11	NSS	BOLT			1
12	NSS	PLUG			1
13	NSS	WASHER			1
14	NSS	WASHER			1
15	6658567	BUSHING			1
16	6661687	HOUSING DRIVE	Was 6658586 [A]		1
17	NSS	RING			1
18	6658573	STOP			1
19	6661685	DRIVE			1
20	6661686	SUPPORT	drive – W/Seal		1
21	6658571	SUPPORT	center		1
22	6658576	DRIVE SHAFT			1
23	NSS	WASHER			1
24	NSS	WASHER			2
25	NSS	WASHER			1
26	6658577	SUPPORT	Armature		1
27	NSS	BOLT			1
28	NSS	GASKET			1
29	6658580	FRAME ASSY			1
30	NSS	SCREW			2
31	NSS	WASHER			2
32	6658575	FRAME			1
33	13GM–408	SCREW			2
34	6658565	BRUSH			2
35	NSS	SPACER			1
36	6658569	BEARING			1
37	6658574	ARMATURE			1
38	6658570	BEARING			1
39	6658568	SPRING			4
40	6658564	BRUSH HOLDER	Assy.		1
41	6658581	O–RING			1
42	NSS	O–RING	For 1113285		1

ENGINE Perkins 204.25 TK200 Series & ATTACHING PARTS
(S/N 16488 & Below)

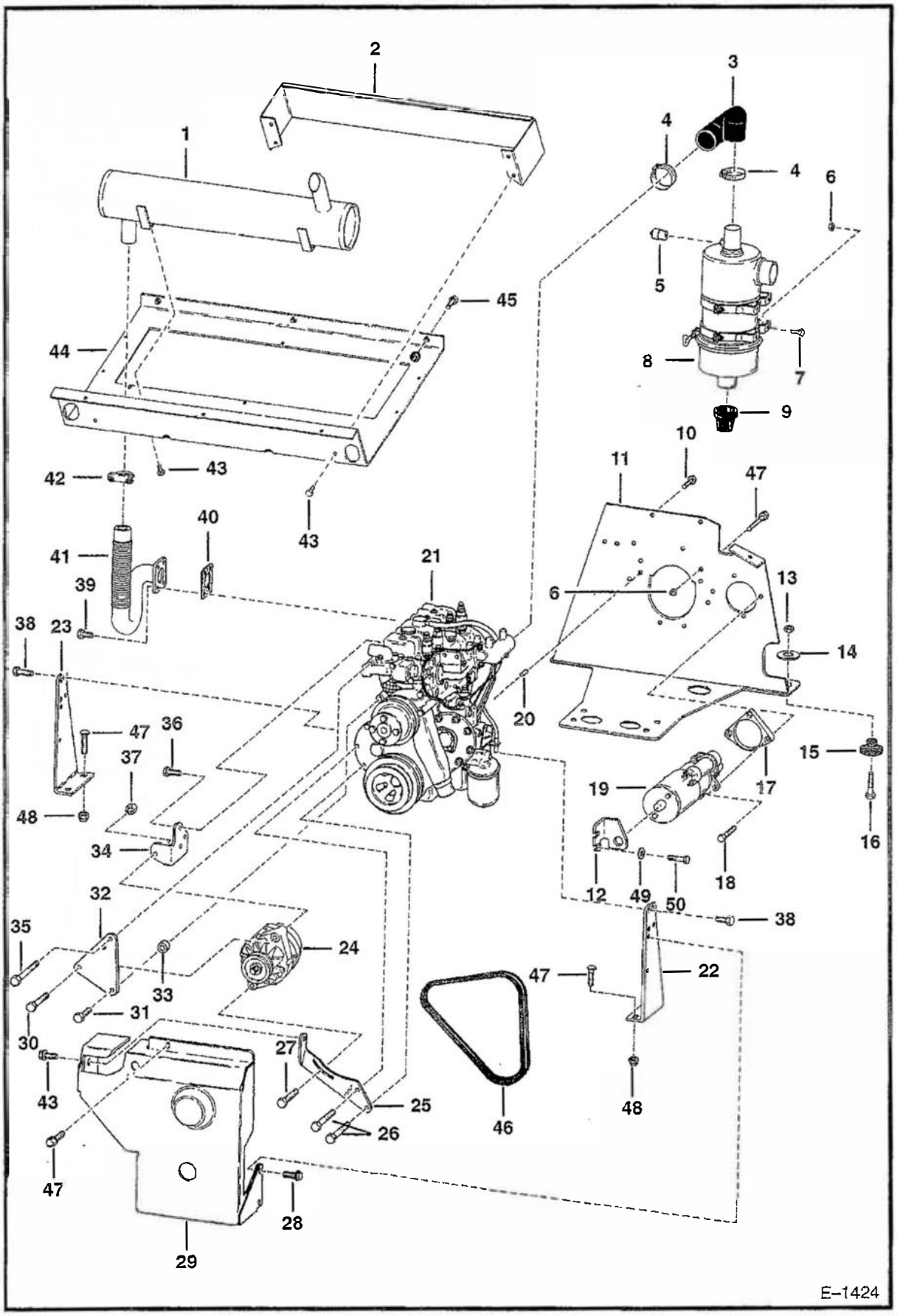

ENGINE Perkins 204.25 TK200 Series & ATTACHING PARTS (Cont'd) (S/N 16488 & Below)

Ref. No.	Part Number	Description	Remarks	Serial Number	Qty.
1	6559954	MUFFLER			1
2	6559949	SHIELD			1
3	6564219	HOSE			1
4	6598799	CLAMP			2
5	6515007	INDICATOR			1
6	61D-6	NUT			4
7	17C-614	BOLT			4
8		AIR CLEANER	See Page 198		1
9	946860	VALVE			1
10	9C-616	BOLT			8
11	6564447	MOUNT			1
12	6564570	BRACKET	For Delco Starter 1109539	15231 & Below	1
	6567050	BRACKET	For Delco Starter 1998379	15232-16488	1
13	85D-10	NUT			4
14	6514557	WASHER			4
15	6514897	MOUNT	rubber		4
16	17C-1048	BOLT			4
17	6562264	BLOCK			1
18	17C-628	BOLT			4
19		STARTER	See Page 151		1
20	3490213	DOWEL			2
21	6564576	ENGINE	See Page 175		1
22	6564426	MOUNT			1
23	6564425	MOUNT			1
24		ALTERNATOR	See Page 141		1
25	6564938	BRACKET			1
26	18C-544	BOLT			1
27	29CM-825	BOLT			1
28	84G-3716	BOLT			2
29	6564392	SHIELD			1
30	1CM-1080	BOLT			1
31	18C-5160	BOLT			1
32	6564344	BRACKET			1
33	6564343	BUSHING			3
34	6564345	BRACKET			1
35	18C-564	BOLT			1
36	1CM-1016	BOLT			1
37	39D-10	NUT			1
38	9C-716	BOLT			4
	86D-7	NUT			6
39	6559713	BOLT			2
40	6599308	GASKET			1
41	6564754	PIPE	exhaust		1
42	657904	CLAMP			1
43	84G-3712	BOLT			8
44	6564546	SHIELD			1
45	84G-3720	BOLT			8
46	6560056	BELT	alternator		1
47	37C-820	BOLT	Was 6560578 [A]		4
48	85D-8	NUT			4
49	25E-19	WASHER			2

ENGINE Perkins 204.25 TK200 Series & ATTACHING PARTS (Cont'd) (S/N 16488 & Below)

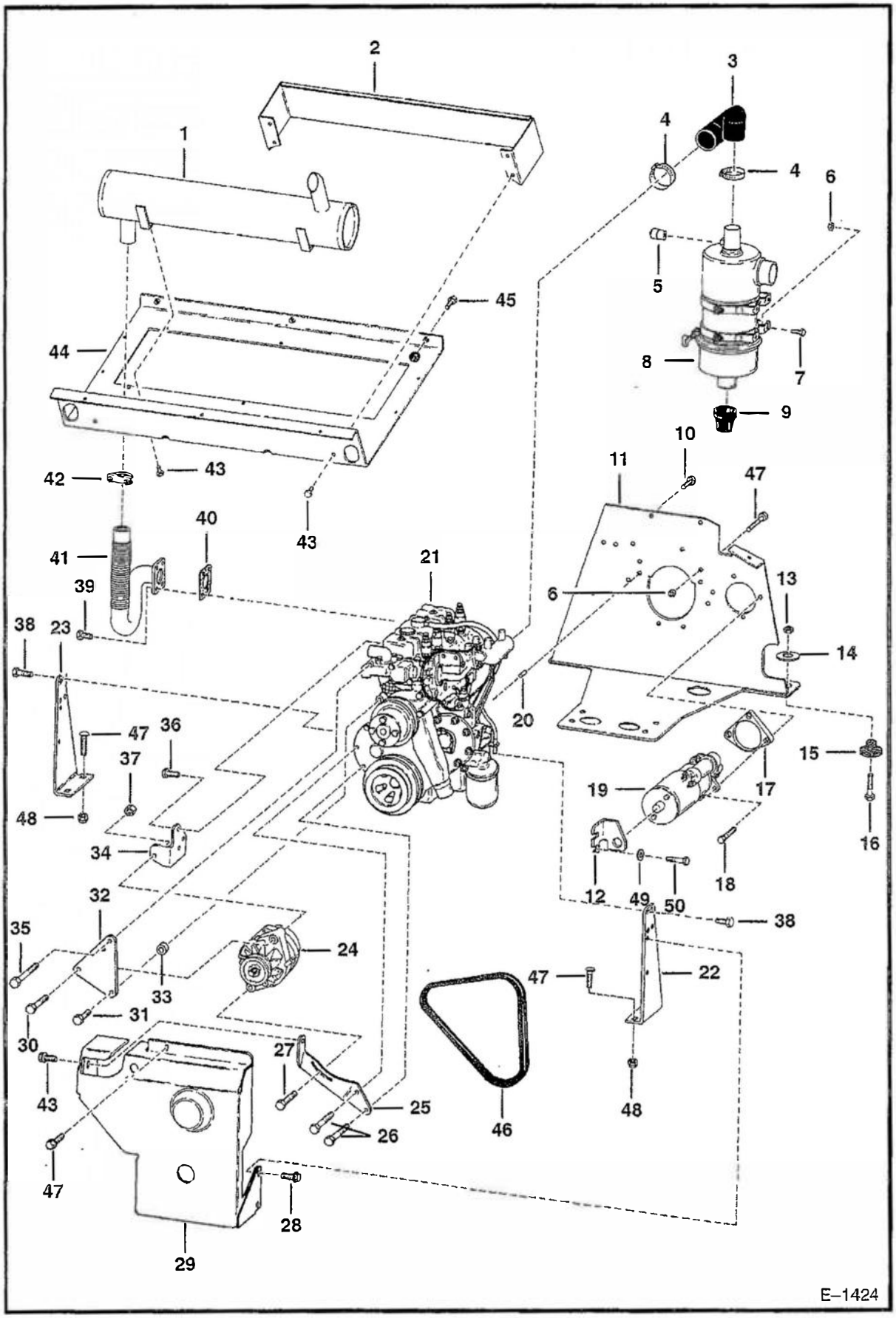

ENGINE Perkins 204.25 TK200 Series & ATTACHING PARTS (Cont'd) (S/N 16488 & Below)

Ref. No.	Part Number	Description	Remarks	Serial Number	Qty.
50	18C-720	BOLT			2

ENGINE Perkins 204.25 TK200 Series & ATTACHING PARTS
(S/N 16488 & Below)

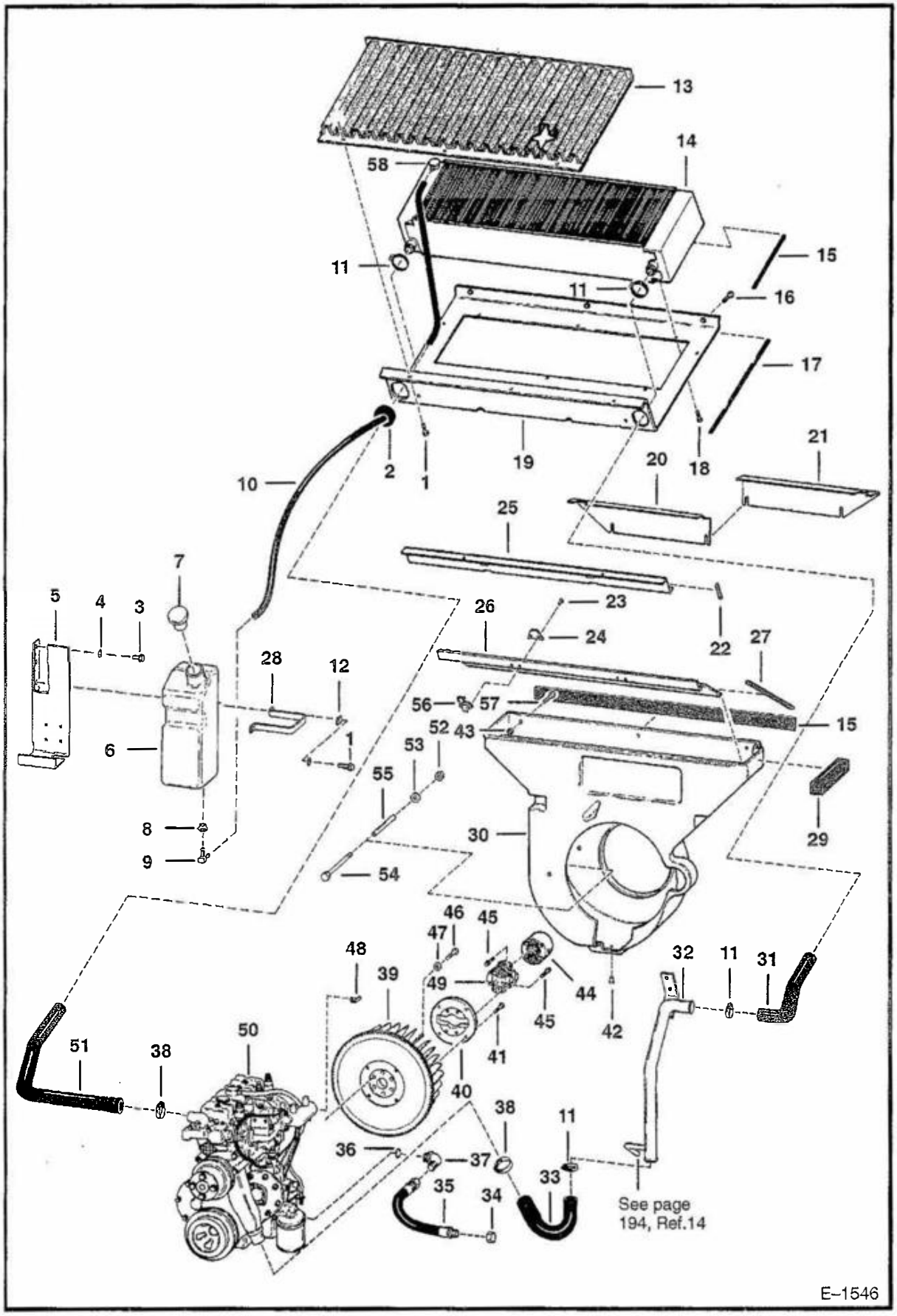

ENGINE Perkins 204.25 TK200 Series & ATTACHING PARTS (Cont'd) (S/N 16488 & Below)

Ref. No.	Part Number	Description	Remarks	Serial Number	Qty.
1	84G–3716	BOLT			6
2	6512067	GROMMET			2
3	84G–3712	BOLT			3
4	6E–6	WASHER			1
5	6709415	MOUNT	Was 6571814 [A]	15794 & Below	1
	6567509	MOUNT		15795–16488	1
6	NAP	TANK	Without barbed fitting – Order 6576660	15794 & Below	1
	6576660	TANK	With barbed fitting molded in	15794 & Below	1
	6567508	TANK		15795–16488	1
7	6702797	CAP	Was 6558658 [A]		1
8	6553411	BUSHING	Not used with 6576660 Tank		1
9	6553412	ELBOW	Not used with 6576660 Tank		1
10	6562603	HOSE			1
11	42H–32	CLAMP			4
12	6567511	WASHER		15795–16488	2
13	6567867	GRILL			1
14	6630558	RADIATOR			1
15	6511855	SEAL	bulk – Sold Per Foot		x
16	84G–3720	BOLT			3
17	6562050	MOULDING			2
18	17C–506	BOLT			6
19	6564546	SHIELD			1
20	6564282	RETAINER			1
21	6564281	RETAINER			1
22	6559763	MOULDING			2
23	6598954	RIVET			4
24	6564286	STOP			2
25	6564280	RETAINER			1
26	6564284	COVER			1
27	6564287	MOULDING			2
28	6567510	BAND		15795–16488	1
29	6560690	INSULATION	foam		2
30	6562211	SHROUD	blower		1
31	6564494	HOSE			1
32	6564499	TUBE			1
33	6564495	HOSE			1
34	36K–6	CAP			1
35*	6805079	HOSE	Was 6564639 [C]		1
36	79K–8	O–RING			1
37	17K–6	ELBOW			1
38	6598799	CLAMP			2
39	6563110	BLOWER	wheel – W/Ring Gear		1
	6513662	RING GEAR			1
40	6562882	ADAPTER			1
41	17C–624	BOLT			7
42	1316539	RIVET	Was 6598508 [A]		1
43	83D–6	NUT			3
44	6562879	YOKE	See Page 174		1
45	94G–524	SCREW			8
46	18C–822	BOLT			6

ENGINE Perkins 204.25 TK200 Series& ATTACHING PARTS (Cont'd) (S/N 16488 & Below)

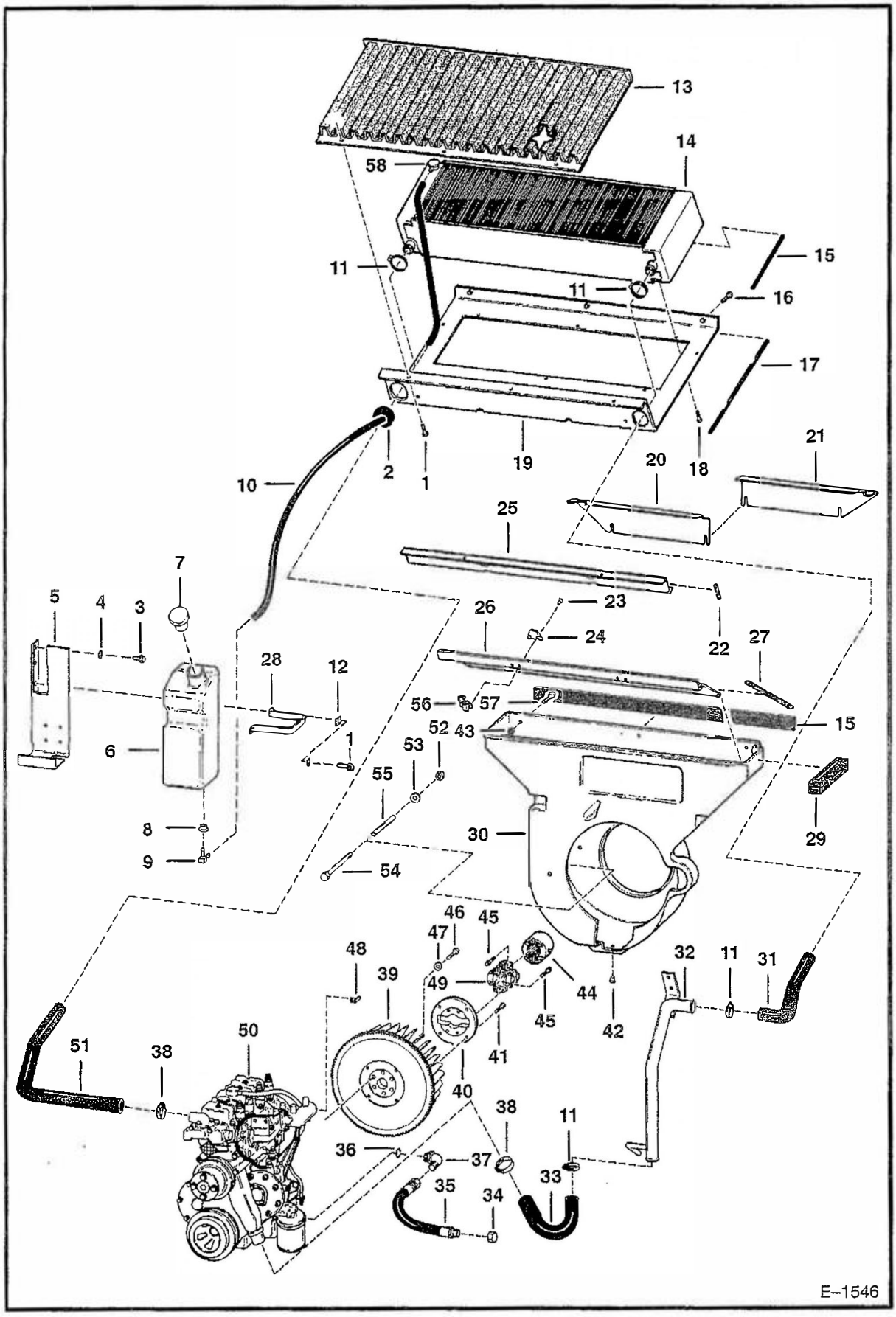

ENGINE Perkins 204.25 TK200 Series & ATTACHING PARTS (Cont'd) (S/N 16488 & Below)

Ref. No.	Part Number	Description	Remarks	Serial Number	Qty.
47	6557929	WASHER			6
48	6513679	DRAIN COCK			1
49		U-JOINT	See Page 174		1
50	6564576	ENGINE	See Page 175		1
51	6564220	HOSE			1
52	85D-6	NUT			1
53	25E-18	WASHER			4
54	6565333	BOLT			1
55	6563592	BUSHING			1
56	6598955	LATCH			2
57	84G-3720	BOLT			
58	6666606	CAP	radiator -- Was 6665383 [A]		1

ENGINE Perkins 204.25 TK200 Series & ATTACHING PARTS
(S/N 16489 & Above)

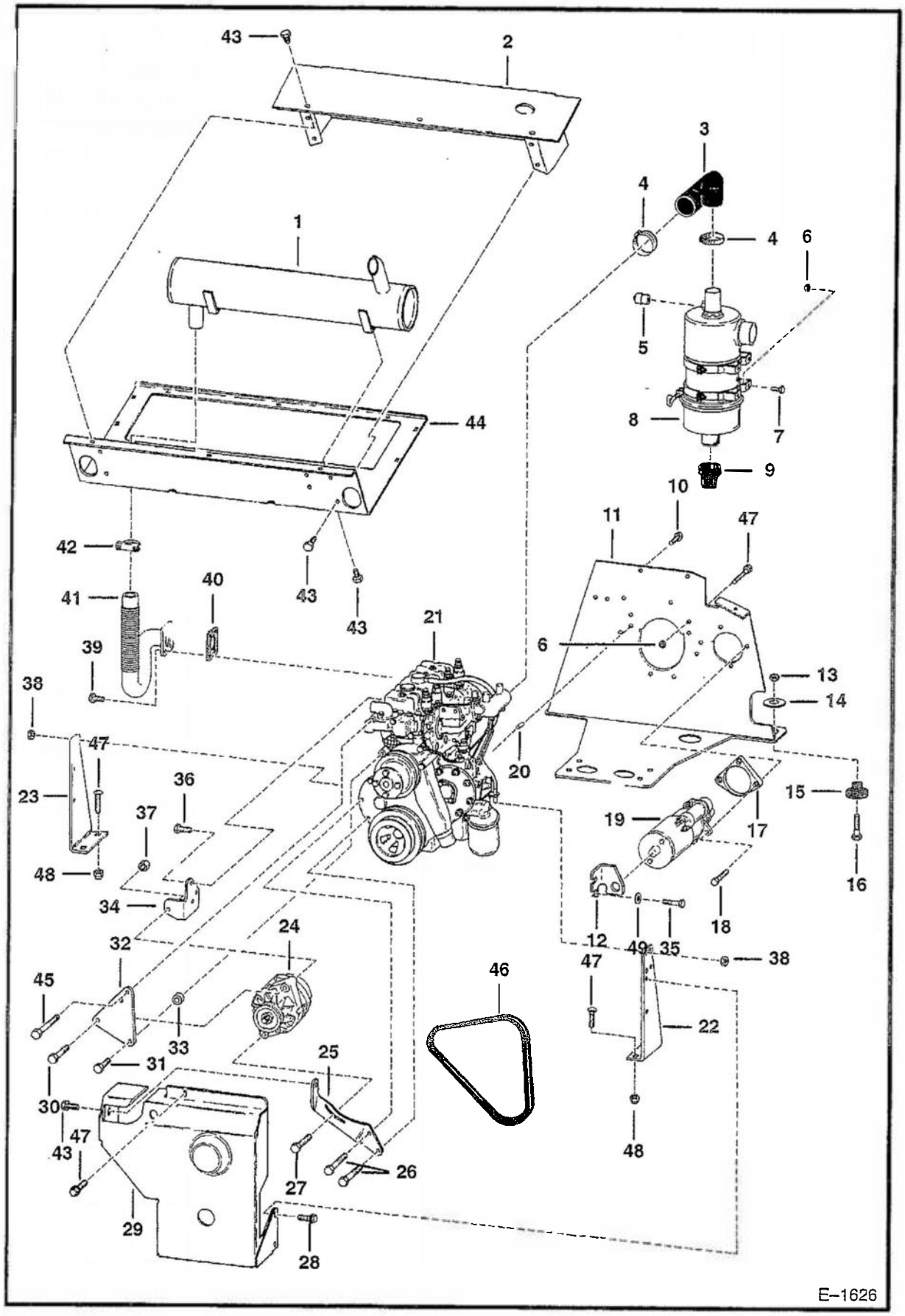

ENGINE Perkins 204.25 TK200 Series & ATTACHING PARTS (Cont'd) (S/N 16489 & Above)

Ref. No.	Part Number	Description	Remarks	Serial Number	Qty.
1	6559954	MUFFLER			1
2	6567720	SHIELD			1
3	6564219	HOSE			1
4	6598799	CLAMP			2
5	6515007	INDICATOR			1
6	61D-6	NUT			4
7	37C-616	BOLT	Was 6514537 [A]		4
8		AIR CLEANER	See Page 198		1
9	946860	VALVE			1
10	9C-616	BOLT			8
11	6564447	MOUNT			1
12	6567050	BRACKET	For Delco Starter 1998379		1
13	85D-10	NUT			4
14	6514557	WASHER			4
15	6514897	MOUNT	rubber		4
16	17C-1048	BOLT			4
17	6562264	BLOCK			1
18	17C-628	BOLT			4
19		STARTER	See Page 151		1
20	3490213	DOWEL			2
21	6564576	ENGINE	See Page 175		1
22	6564426	MOUNT			1
23	6564425	MOUNT			1
24		ALTERNATOR	See Page 141		1
25	6564938	BRACKET			1
26	18C-544	BOLT			1
27	29CM-825	BOLT	Delco Alternator		1
	35C-516	BOLT	Bobcat Alternator		1
28	84G-3716	BOLT			2
29	6564392	SHIELD			1
30	1CM-1080	BOLT	Delco Alternator		1
	17C-648	BOLT	Bobcat Alternator		1
31	18C-516	BOLT	Was 18C-5160 [D]		1
32	6564344	BRACKET			1
33	6564343	BUSHING			3
34	6564345	BRACKET			1
35	18C-720	BOLT			2
36	1CM-1016	BOLT			1
37	39D-10	NUT	Delco Alternator		1
	7D-6	NUT	Bocat Alternator		1
38	86D-7	NUT			6
39	6559713	BOLT			4
40	6599308	GASKET			1
41	6564754	PIPE	exhaust		1
42	657904	CLAMP			1
43	84G-3712	BOLT			8
44	6567715	SHIELD			1
45	18C-564	BOLT			1
46	6560056	BELT	alternator		1
47	37C-820	BOLT	Was 6560578 [A]		4
48	85D-8	NUT			4

ENGINE Perkins 204.25 TK200 Series & ATTACHING PARTS (Cont'd) (S/N 16489 & Above)

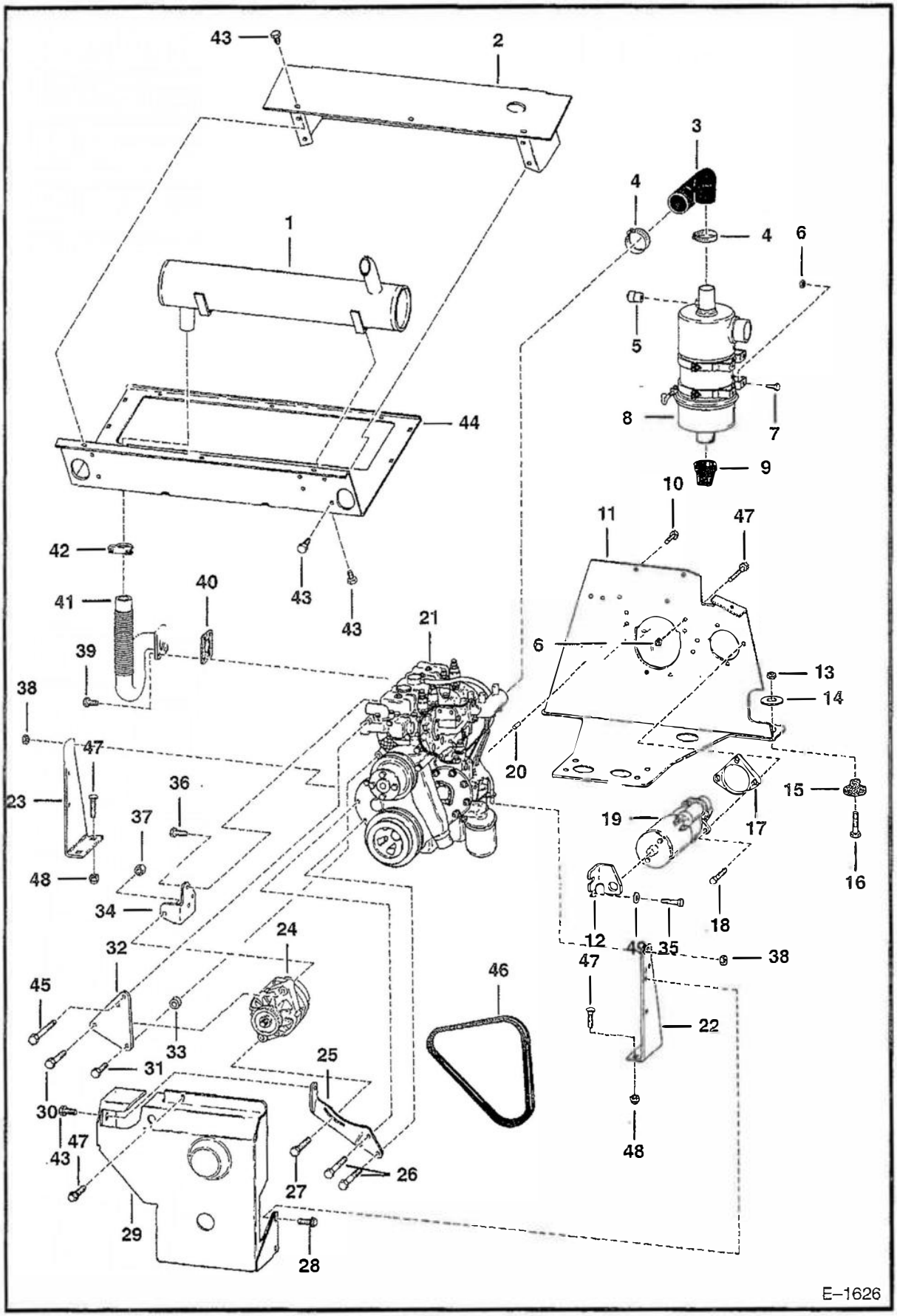

E–1626

ENGINE Perkins 204.25 TK200 Series & ATTACHING PARTS (Cont'd) (S/N 16489 & Above)

Ref. No.	Part Number	Description	Remarks	Serial Number	Qty.
49	25E-19	WASHER			2

ENGINE Perkins 204.25 TK200 Series & ATTACHING PARTS
(S/N 16489 & Above)

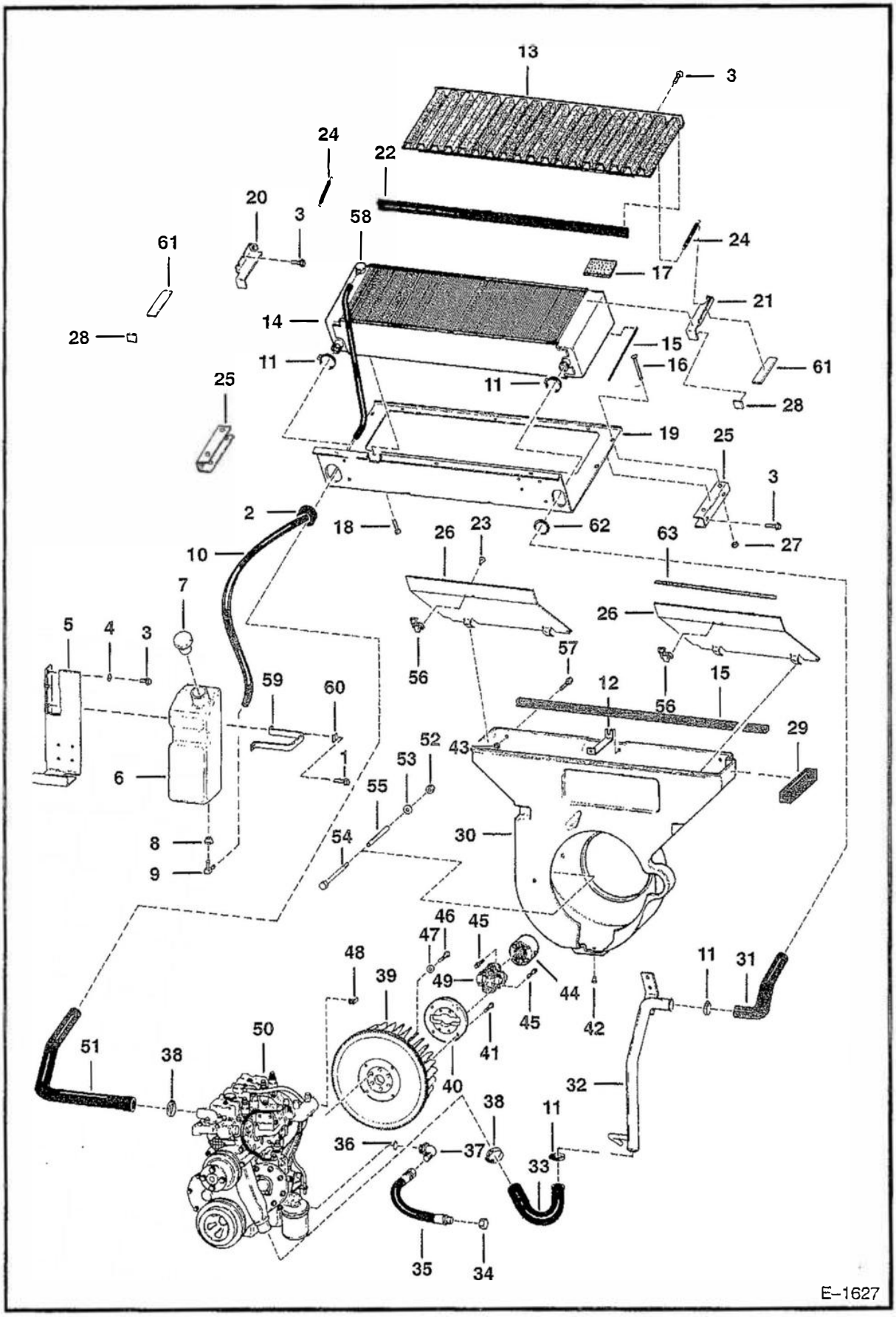

ENGINE Perkins 204.25 TK200 Series & ATTACHING PARTS (Cont'd) (S/N 16489 & Above)

Ref. No.	Part Number	Description	Remarks	Serial Number	Qty.
1	84G–3716	BOLT			6
2	6512067	GROMMET			2
3	84G–3712	BOLT			3
4	6E–6	WASHER			1
5	6567509	MOUNT			1
6	6567508	TANK			1
7	6702797	CAP	Was 6558658 [A]		1
8	6553411	BUSHING			1
9	6553412	ELBOW			1
10	6562603	HOSE			1
11	42H–32	CLAMP			4
12	6568898	BRACE			1
13	6567714	GRILL			1
14	6630558	RADIATOR			1
15	6511855	SEAL	bulk – Sold Per Foot		x
16	7C–536	BOLT			3
17	6554274	SEAL	foam – bulk – Sold Per Foot		x
18	17C–506	BOLT			2
19	6567715	SHIELD			1
20	6567893	BRACKET	retainer – W/Ref. 61 & 62		1
21	6567892	BRACKET	retainer – W/Ref. 61 & 62		1
22	4126590	MOULDING	bulk – Sold Per Foot		x
23	6631024	RIVET			4
24	6630533	SPRING			2
25	6567719	BRACKET	channel		2
26	6567718	COVER			2
27	57D–5	NUT			2
28	6567895	STRIP	rubber		2
29	6560690	INSULATION	foam		2
30	6562211	SHROUD	blower		1
31	6564494	HOSE			1
32	6564499	TUBE			1
33	6564495	HOSE			1
34	36K–6	CAP			1
35*	6805079	HOSE	Was 6564639 [C]		1
36	79K–8	O–RING			1
37	17K–6	ELBOW			1
38	42H–32	CLAMP	Was 42H–24 [A]		2
39	6563110	BLOWER	wheel – W/Ring Gear		1
	6513662	RING GEAR			1
40	6562882	ADAPTER			1
41	17C–624	BOLT			7
42	1316539	RIVET	Was 6598508 [A]		1
43	83D–6	NUT			3
44	6562879	YOKE	See Page 174		1
45	94G–524	SCREW			8
46	18C–822	BOLT			6
47	6557929	WASHER			6
48	6513679	DRAIN COCK			1
49		U–JOINT	See Page 174		1
50	6564576	ENGINE	See Page 175		1

ENGINE Perkins 204.25 TK200 Series & ATTACHING PARTS (Cont'd) (S/N 16489 & Above)

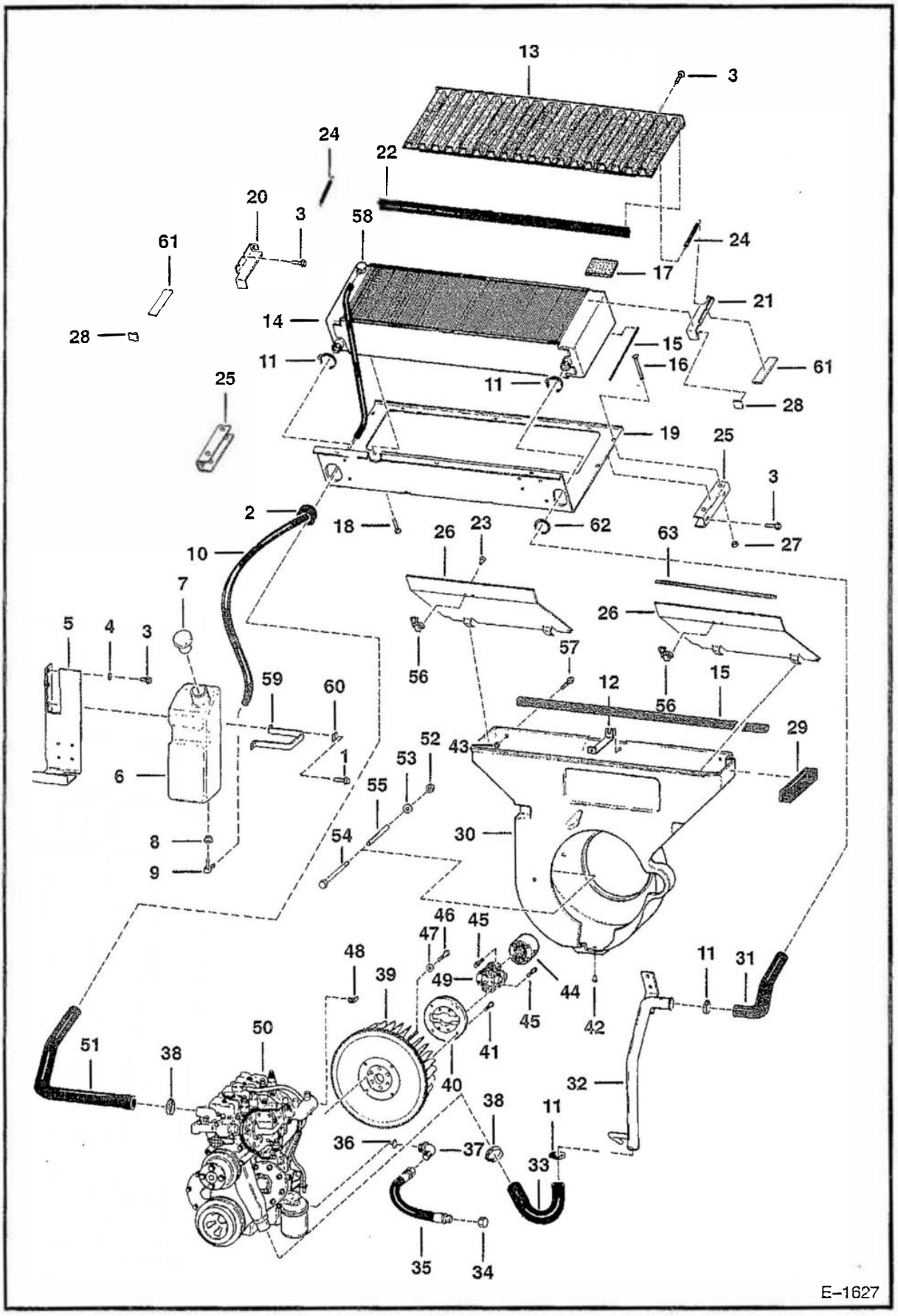

Ref. No.	Part Number	Description	Remarks	Serial Number	Qty.
51	6564220	HOSE			1
52	85D–6	NUT			1
53	25E–18	WASHER			4
54	6565333	BOLT			1
55	6563592	BUSHING			1
56	6598955	LATCH			2
57	84G–3720	BOLT			
58	6666606	CAP	radiator – Was 6665383 [A]		1
59	6567510	BAND			1
60	6567511	WASHER			2
61	6567894	STRIP	rubber		2
62	6512686	EDGING	bulk – Sold Per Foot		x
63	6578062	SEAL	bulk – Sold Per Foot		x

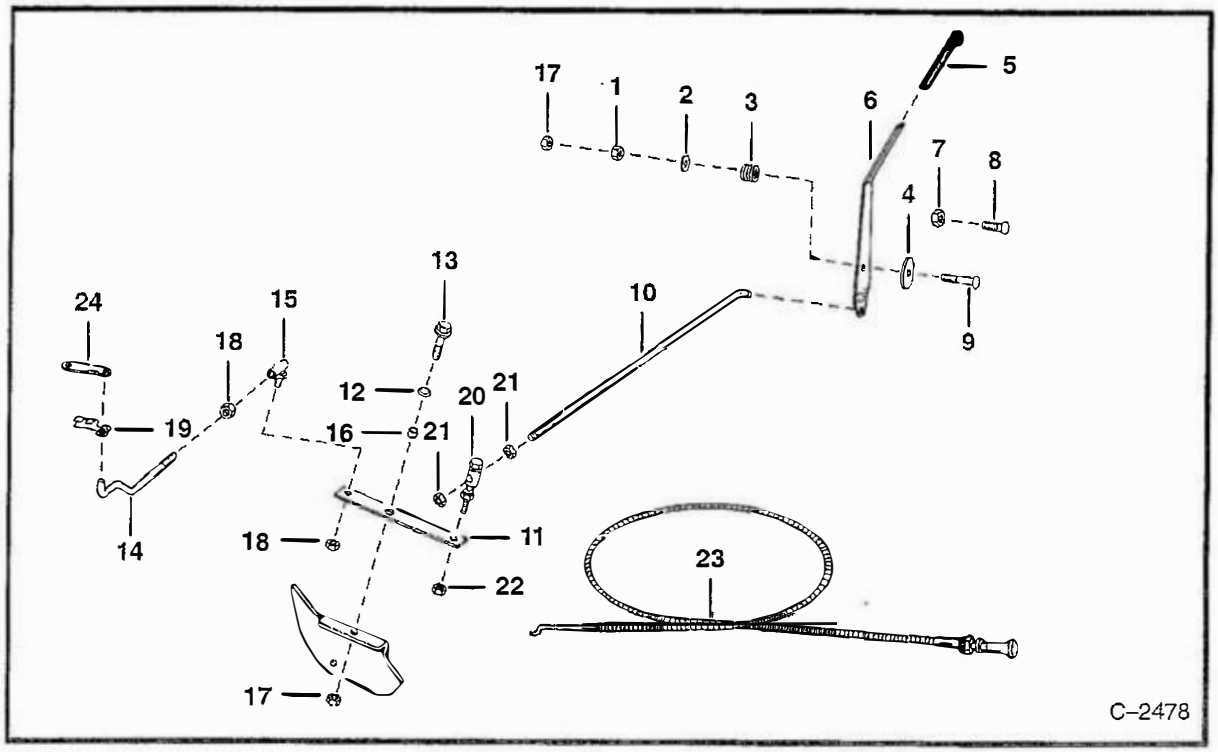

THROTTLE

Ref. No.	Part Number	Description	Remarks	Serial Number	Qty.
1	7D–6	NUT			1
2	27E–6	WASHER			1
3	6562126	SPRING			1
4	6562127	WASHER			1
5	6553557	GRIP			1
6	6563940	LEVER			1
7	57D–5	NUT			2
8*	10C–512	BOLT	Was 6553808 [A]		2
9	7C–640	BOLT			1
10	NAP	ROD	Order 1–6565150, 1–6557291, 1–85D–4 & 61D–4	13007 & Below	1
	6565150	ROD			1
11	6560157	LEVER			1
12	6512913	WASHER			1
13	84G–3720	BOLT			1
14	6564351	ROD			1
15	6554858	JOINT	ball		1
16	6544654	BUSHING			1
17	85D–6	NUT			1
18	62D–4	NUT			2
19	6512274	CLIP		13008 & Above	1
20	6557291	SWIVEL		13008 & Above	2
21	61D–4	NUT		13008 & Above	2
22	85D–4	NUT		13008 & Above	1
23	6564758	CABLE	shutoff – See Service Bulletin 843–002 or BTI 201		1
24	6641378	LEVER			1

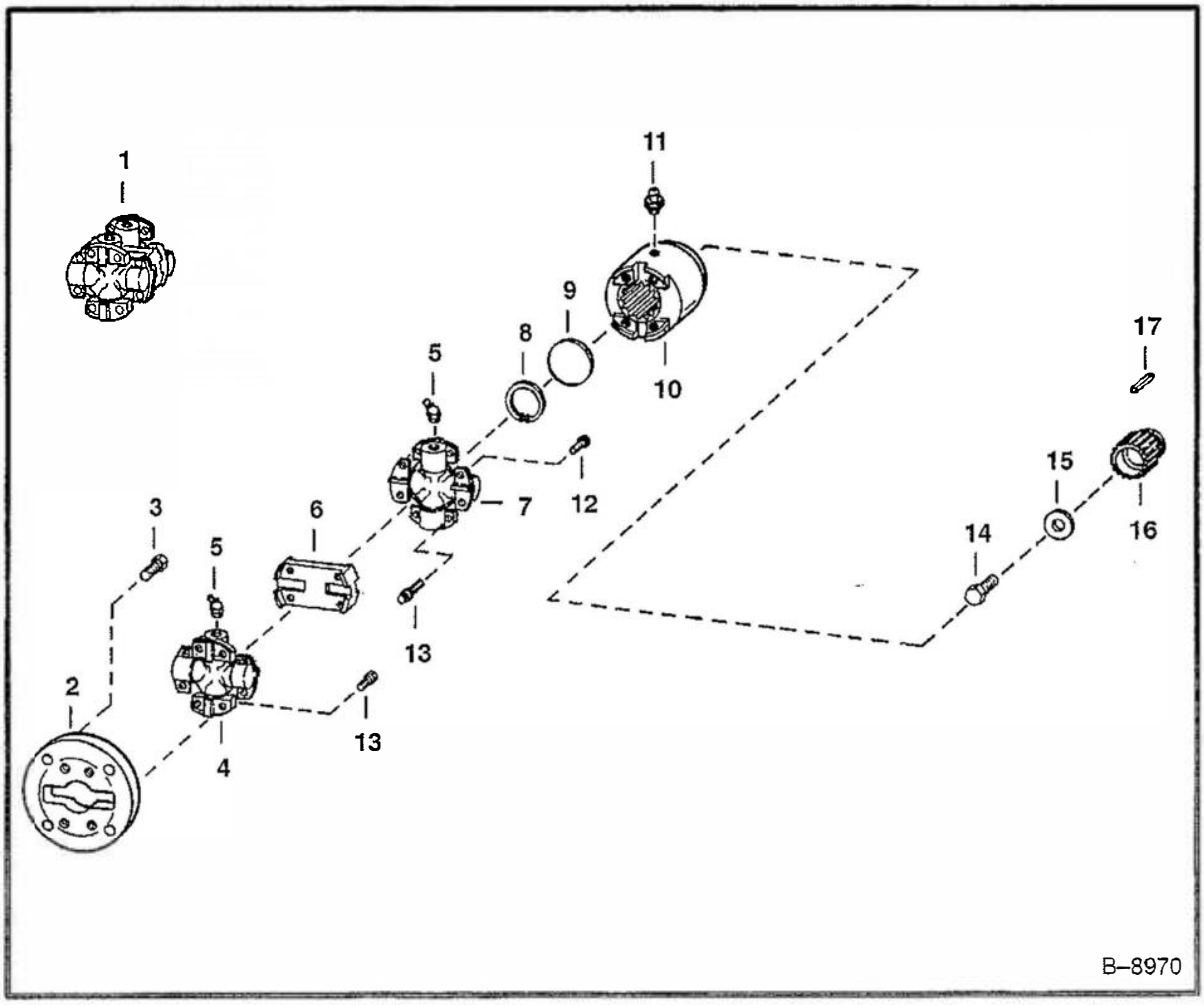

UNIVERSAL JOINT

Ref. No.	Part Number	Description	Remarks	Serial Number	Qty.
1	6599451	U–JOINT	Ref. 4–8 & 12		1
2	6562882	ADAPTER	flywheel		1
3	17C–624	BOLT			6
4	6599453	SPIDER			1
5	11H–25	GREASE ZERK			2
6	6599450	COUPLING			1
7	6599452	SPIDER			1
8	663823	SNAP RING			1
9	6562910	PLUG	expansion		1
10	6562879	YOKE			1
11	10H–35	GREASE ZERK			1
12	94G–526	SCREW			4
13	94G–524	SCREW			8
14	18C–616	BOLT			1
15	616783	WASHER			1
16	6562878	ADAPTER			1
17	7J–3010	KEY	square		1

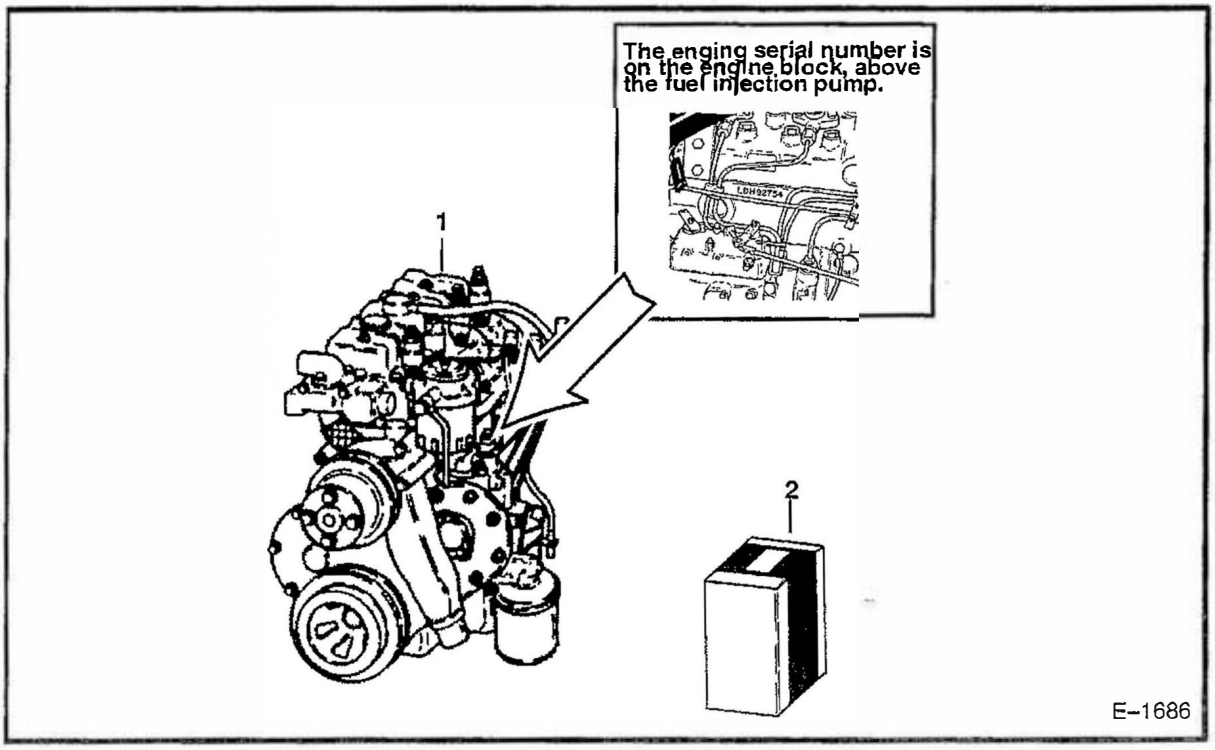

ENGINE
Perkins 204.25 TK200 Series

Ref. No.	Part Number	Description	Remarks	Serial Number	Qty.
1	NAP	ENGINE	Perkins – Does not include flywheel housing, starter, tackometer, flywheel,		
			alternatorbelt, alternator, water trap. & cooling fan – Order 6564576REM – Was 6564576 [A]		1
	NAP	SHORT BLOCK	W/liners & all plugs, mainbearings, thrust washers, crankshaft, rods, rod bearing,		
			piston, piston rings, rear housing & seal – Does not include camshaft & gear –		
	6564576REM	ENGINE	Was 6631007 [A] Reman. – Does not include flywheel housing, starter,		1
			tackometer, flywheel, alternatorbelt, alternator, water trap., cooling fan &		
2*	6564574	UPPER GASKET KIT			1
2*	6564575	LOWER GASKET KIT			

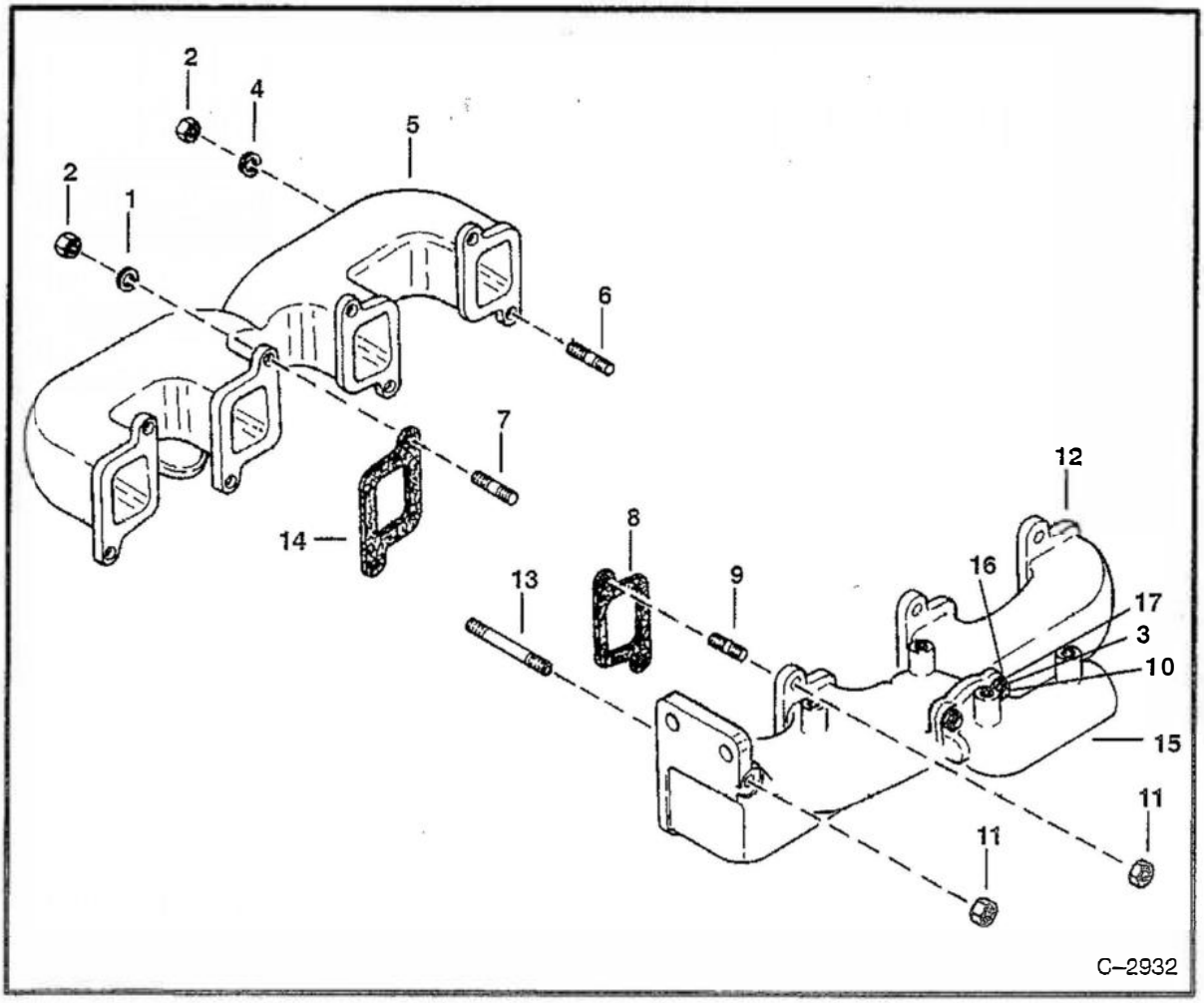

MANIFOLDS

Ref. No.	Part Number	Description	Remarks	Serial Number	Qty.
1	3725700	WASHER			4
2	6599261	NUT			8
3	10D–5	NUT			3
4	2E–5	WASHER			8
5	6599304	MANIFOLD	Exhaust		1
6	3726965	STUD			6
7*	NAP	STUD	Was 6599182 [A]		2
8	6599236	GASKET			4
9	6510484	STUD			3
10	6599191	STUD			3
11	62D–5	NUT			8
12	NAP	MANIFOLD	Intake – Was 6599298 [A]		1
13	6599176	STUD			1
14	6599260	GASKET			4
15	6599300	ELBOW			1
16*	NAP	GASKET	Was 6599303 [A]		1
17	2E–6	WASHER			3

VALVE COVER

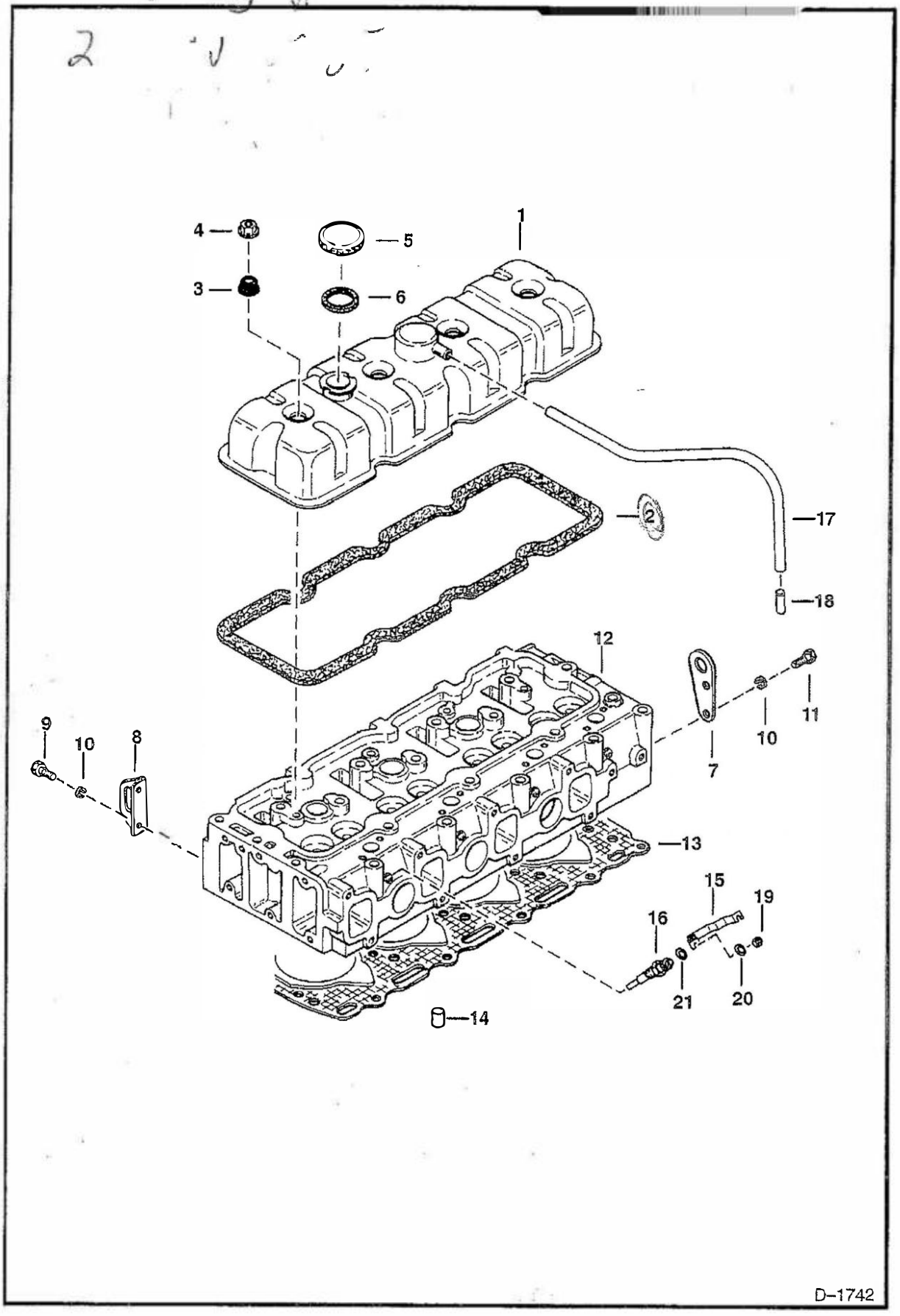

VALVE COVER (Cont'd)

Ref. No.	Part Number	Description	Remarks	Serial Number	Qty.
1	NAP	COVER	Order 1–6662856 cover, 1–6662857 gasket, 4–6662858 washer, 1–6662859 cap, 2–6662860 nut, 2–6662861 bolt, 2–6662862 stud, 1–6662863 hose, & 2–6599690 bolt – Was 6599269 [A]		1
2	6599184	GASKET			1
3	6599183	SEAL			4
4	6599195	NUT			4
5	6599256	CAP			1
6	6599200	GASKET			1
7	6599257	BRACKET			1
8	NAP	BRACKET	Was 6599289 [A]		1
9	18C–510	BOLT			4
10	2E–5	WASHER			4
11	18C–508	BOLT			4
12		HEAD ASSY	See Page 183		1
13	998057	GASKET			1
14	6598743	THIMBLE			2
15	6599294	CONNECTOR			3
16	6599285	GLOW PLUG			4
17	6662863	HOSE	Was 6599202 [A]		1
18	NAP	PIPE	Was 6599201 [A]		1
19	6660927	NUT			4
20	6660928	WASHER			4
21	6660929	WASHER			4

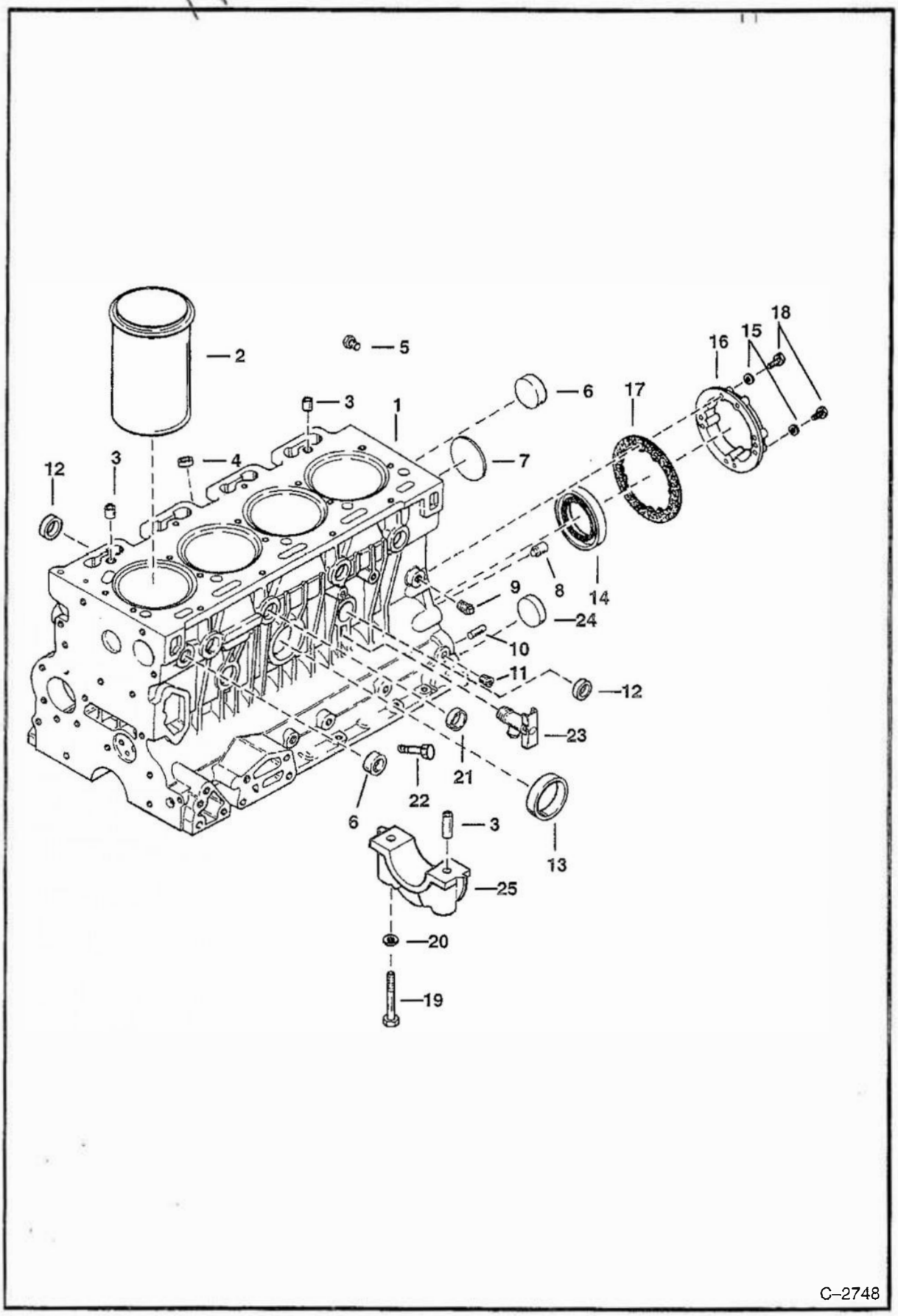
2
5
3
1
6
17
16
15
18
12
3
4
7
8
14
9
24
10
11
12
23
21
22
6
3
13
25
20
19
C–2748

CYLINDER BLOCK (Cont'd)

Ref. No.	Part Number	Description	Remarks	Serial Number	Qty.
1	6599297	BLOCK			1
2	6599247	LINER			4
3	6598743	THIMBLE			12
4	998062	PLUG			1
5	41K–4	PLUG			1
6	998047	PLUG	water – 10mm		2
7	998046	PLUG	camshaft		1
8	NAP	PIN	Was 6599171 [A]		2
9	16F–4	PLUG	water		1
10	NAP	DOWEL PIN	Was 6599311 [A]		2
11	16F–2	PLUG	Oil		4
12	998061	PLUG	water – 30mm – Was 6599166 [A]		1
13	6599316	PLUG	water – 50mm		1
14	6599217	SEAL	oil		1
15	2E–5	WASHER			8
16	6599213	HOUSING			1
17	6630613	GASKET			1
18	NAP	BOLT	Was 6599170 [A]		6
19	6599936	BOLT			10
20	6645245	WASHER	Was 998299 [A]		10
21	6599166	PLUG	Was 6599315 [A]		1
22	18C–867	BOLT			1
23	6513679	DRAIN COCK			1
24	999590	PLUG			1
25	NSS	CAP			4

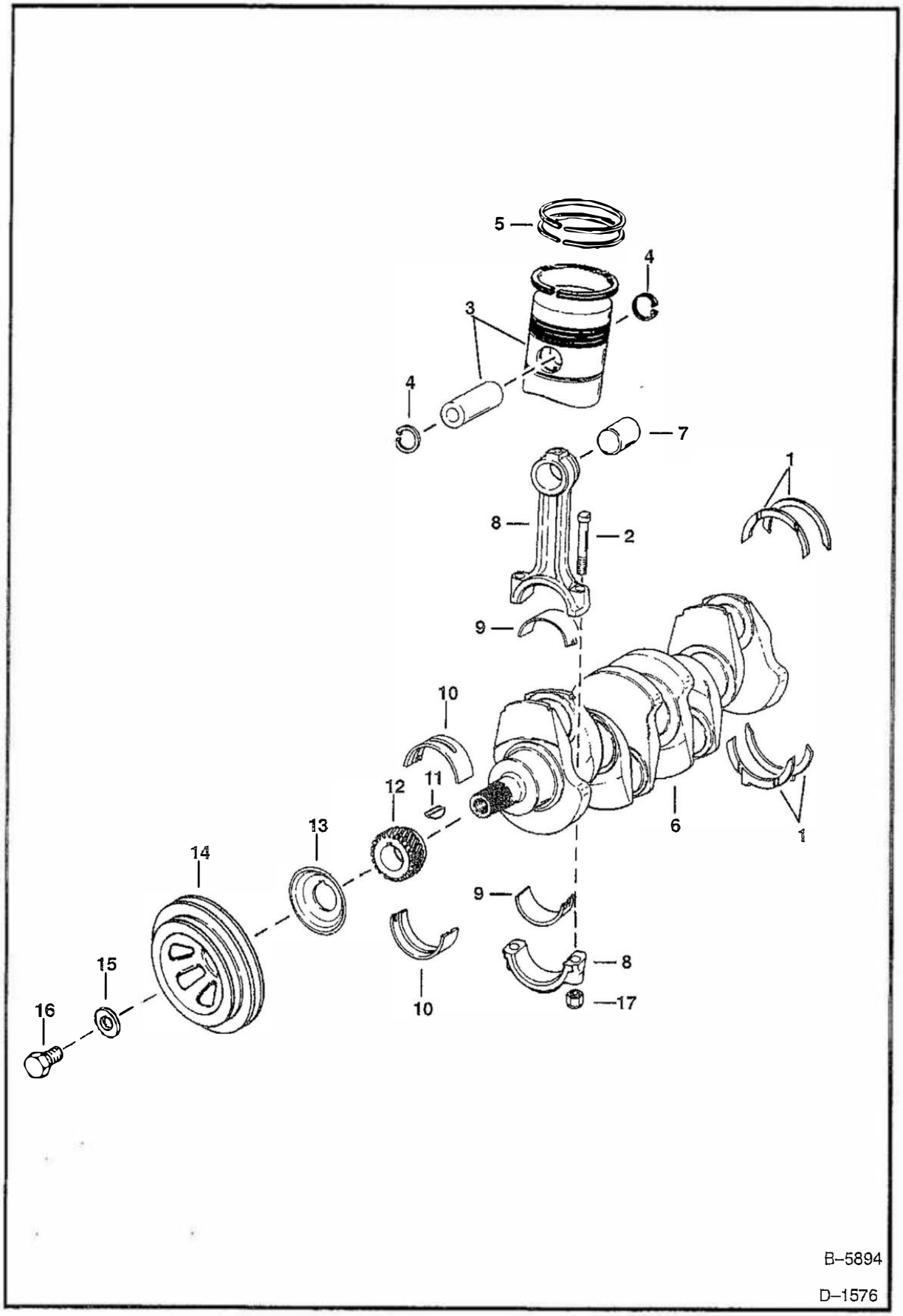
5
4
3
4
7
1
8
2
9
10
12
11
13
14
15
16
6
1
9
8
17
10
B–5894
D–1576

CRANKSHAFT (Cont'd)

Ref. No.	Part Number	Description	Remarks		
1	6599250	WASHER	thrust – set of 4 halves		
	6630229	WASHER	thrust – .014 (.355 mm) – 4 thrust washers		
2	998302	BOLT			
3	6599192	PISTON	piston only		
4	6599168	SNAP RING			
5	6599193	RINGS	piston, complete set		
6	6599296	CRANKSHAFT			1
7	6599212	BUSHING	one bushing		4
8	6599258	ROD ASSY	W/Ref. 2, 7 & 17		4
9	6599248	BEARING	Rod – Std.–Complete Eng. Set		1
	6630223	BEARING	rod – .010 (.254 mm) – Complete Eng. Set		1
	6630224	BEARING	rod – .020 (.508 mm) – Complete Eng. Set		1
	6630225	BEARING	rod – .030 (.762 mm) – Complete Eng. Set		1
10	998010	BEARING	main – Std.–Complete Eng. Set		1
	6630226	BEARING	main – .010 (.254 mm) – Complete Eng. Set		1
	6630227	BEARING	main – .020 (.508 mm) – Complete Eng. Set		1
	6630228	BEARING	main – .030 (.762 mm) – Complete Eng. Set		1
11	6599216	KEY			1
12	998020	GEAR	Was 6599214 [A]		1
13	6599295	FLANGE			1
14	6599270	PULLEY			1
15	6510608	WASHER			1
16	6599302	BOLT			1
17	6599177	NUT			2

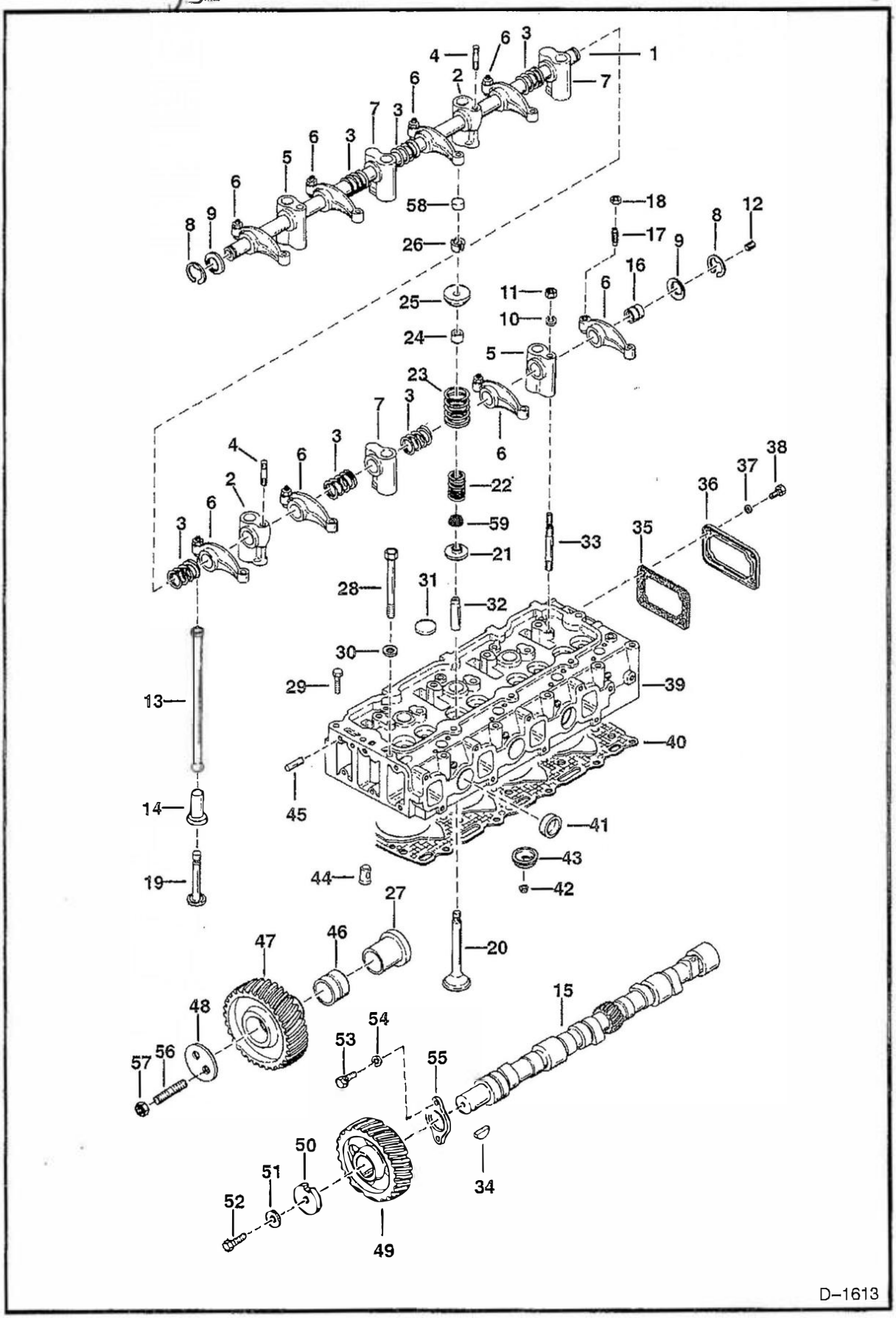
1
2
3
4
5
6
7
8
9
10
11
12
13
14
15
16
17
18
19
20
21
22
23
24
25
26
27
28
29
30
31
32
33
34
35
36
37
38
39
40
41
42
43
44
45
46
47
48
49
50
51
52
53
54
55
56
57
58
59
D–1613

TAPPET ASSEMBLY & CAMSHAFT (Cont'd)

Ref. No.	Part Number	Description	Remarks	Serial Number	Qty.
1	6599227	SHAFT	rocker assy.		1
2	6599230	BRACKET			2
3	997937	SPRING			6
4	998285	STUD			2
5	6630230	BRACKET			2
6	6599225	ARM	rocker		8
7	6599229	BRACKET			3
8	799119	SNAP RING			2
9	998293	WASHER			2
10	2E–6	WASHER			2
11	62D–6	NUT			2
12	3490714	PLUG			1
13	6599231	PUSH ROD			8
14	6599189	TAPPET			8
15	6599188	CAMSHAFT			1
16	998287	BUSHING	Was 6510375 [A]		8
17	997943	SCREW			8
18	8D–5	NUT			8
19	6599186	VALVE	Exhaust		4
20	997947	VALVE	Intake		4
21	997951	WASHER			8
22	997944	SPRING	Was 6599223 [A]		8
23	6599222	SPRING	Was 997948 [A]		8
24	6599224	DEFLECTOR			4
25	6599221	CAP			8
26	6599180	KEEPER			16
27	6599187	HUB			1
28	18C–894	BOLT			7
29	18C–867	BOLT			13
30	6645245	WASHER	Was 998299 [A]		20
31	6599166	PLUG	Water – 25mm – Was 997958 [D]		4
32	997950	GUIDE	Was 6599196 [A]		8
33	6630979	STUD			8
34	6J–606	KEY	Was 6599178 [A]		1
35	6599199	GASKET			1
36	6599198	COVER			1
37	2E–5	WASHER			2
38	18C–510	BOLT			2
39	NAP	HEAD	Ref. 31–33 & 41–45 –		
*	6599288REM	HEAD ASSY	Was 6599288 [A] Ref. 19–26, 31–33, 41–45 & 59 – Was 6631966 [A]		1 1
40	998057	GASKET	head		1
41	6599167	PLUG	Water – 35mm		7
42	997958	WASHER	retainer		4
43	6599181	INSERT			4
44	6599678	CAP	seal		4
45	997932	PLUG			1
46	6599937	BUSHING			1
47*	6599232	GEAR			1
48	6599233	PLATE			1

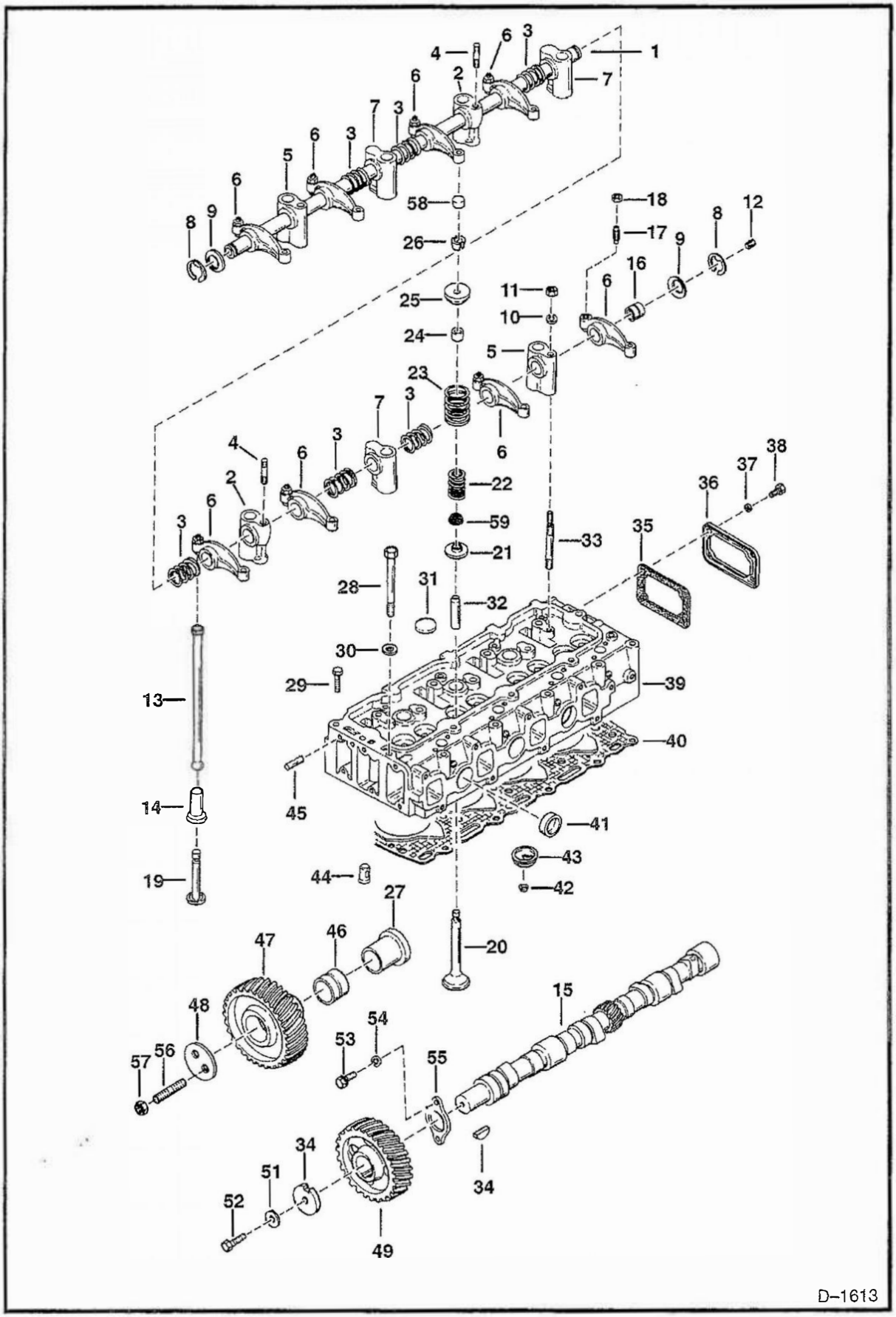
1
2
3
4
5
6
7
8
9
10
11
12
13
14
15
16
17
18
19
20
21
22
23
24
25
26
27
28
29
30
31
32
33
34
35
36
37
38
39
40
41
42
43
44
45
46
47
48
49
51
52
53
54
55
56
57
58
59
D–1613

TAPPET ASSEMBLY & CAMSHAFT (Cont'd)

Ref. No.	Part Number	Description	Remarks	Serial Number	Qty.
49	6599234	GEAR			1
50	6599259	PLATE			1
51	6645245	WASHER	Was 998299 [A]		1
52	18C–822	BOLT			1
53	18C–510	BOLT			2
54	2E–5	WASHER			2
55	6599235	PLATE			1
56	998043	STUD	Was 6599935 [A]		2
57	62D–5	NUT			2
58	6599271	CAP			4
59	6631970	SEAL			4

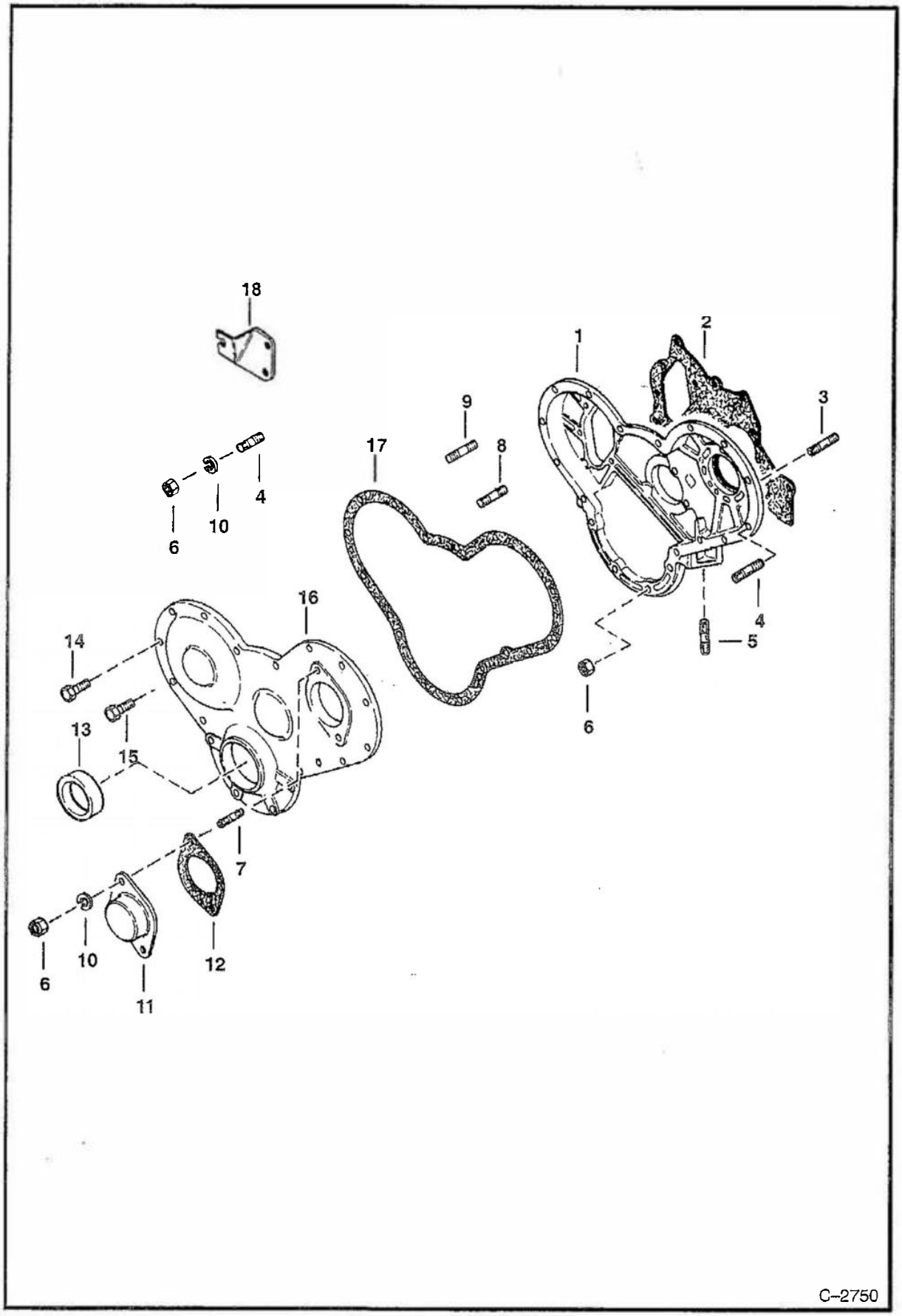
18
1
2
3
9
8
17
4
10
6
16
14
13
15
7
12
11
5
C-2750

TIMING GEAR COVER (Cont'd)

Ref. No.	Part Number	Description	Remarks	Serial Number	Qty.
1	6599204	HOUSING			1
2	6599206	GASKET			1
3	6599175	STUD			2
4	6599174	STUD			1
5	6599205	STUD			3
6	62D-5	NUT			x
7	NAP	STUD	Was 6599947 [A]		2
8	6510484	STUD			2
9	998043	STUD	Was 6599935 [A]		2
10	2E-5	WASHER			2
11	6599210	COVER			1
12	6599211	GASKET			1
13	6599208	SEAL			1
14	18C-514	BOLT			8
15	18C-518	BOLT			6
16	6599207	COVER			1
17	NAP	GASKET	Was 6599209 [A]		1
18	6599275	STOP	throttle & bracket		1

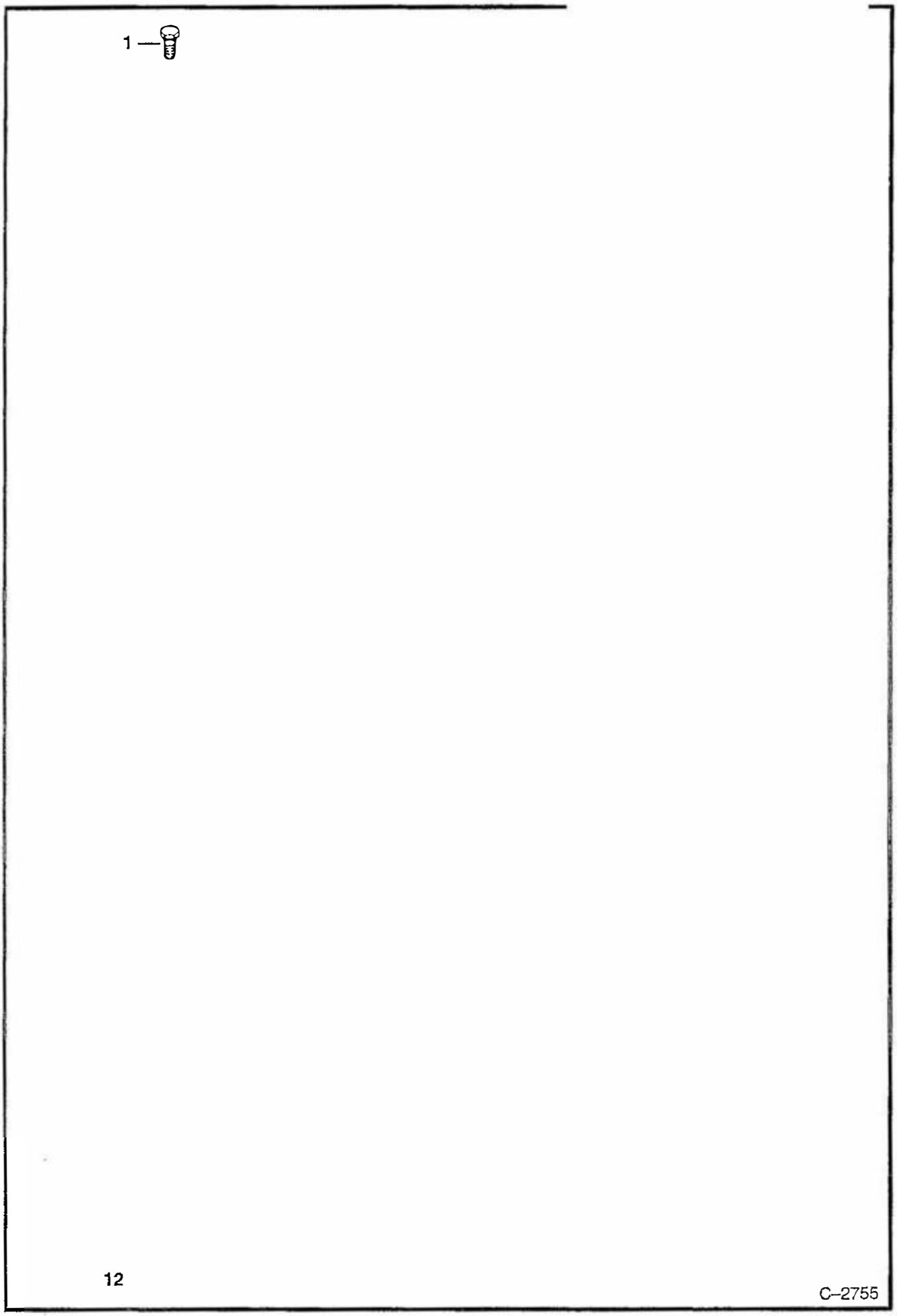
1
12
C–2755

WATER PUMP (Cont'd)

Ref. No.	Part Number	Description	Remarks	Serial Number	Qty.
1	18C–520	BOLT			2
2	2E–5	WASHER			3
3	6599245	COVER			1
4	6599246	GASKET			1
5	6599934	GASKET			1
6	6599938	PIN			1
7	6514600	THERMOSTAT			1
8	6599946	HOUSING			1
9	6599293	PULLEY			1
10	18C–552	BOLT	Was 6630336 [A]		1
11	18C–516	BOLT			4
12	4E–5	WASHER			12
13	6599314	CLAMP			2
14	6599287	HOSE			1
15*	NAP	GASKET	Was 6599244 [A]		1
16	6599286	HOUSING			1
17	18C–556	BOLT	Was 18C–540 [B]		1
18	6630541	WATER PUMP			1
19	18C–572	BOLT			1
20	18C–508	BOLT			4
21	6631623	GASKET			1
22	18C–556	BOLT			1
23*	NAP	GASKET	Was 6664803 [A]		1
24*	NAP	STUD	Was 6674023 [A]		2
25*	4E–4	WASHER			4
26*	6674022	NUT			2
27*	6674024	BOLT			4

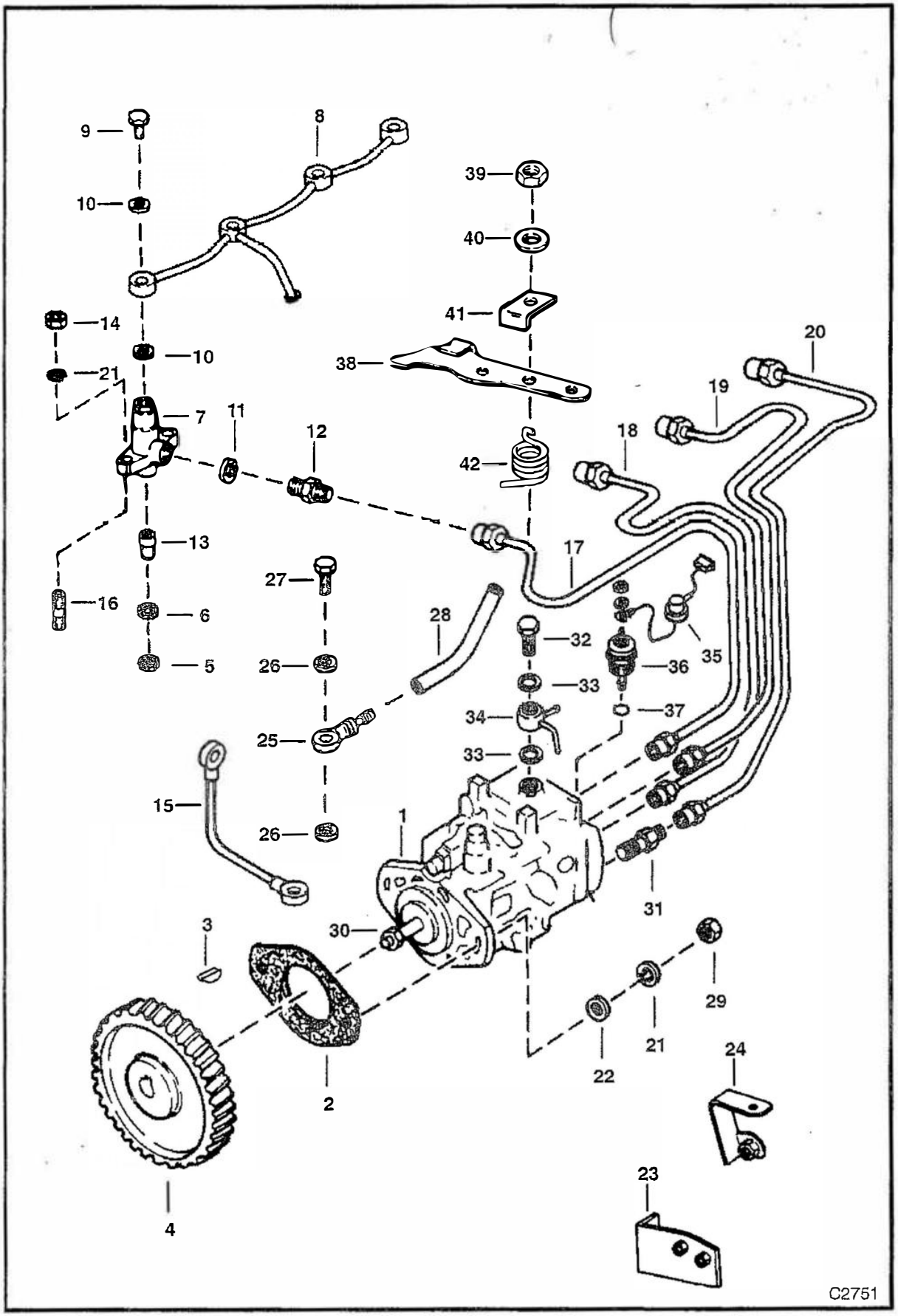
9
8
10
39
40
41
14
10
38
20
21
19
7
11
12
18
42
13
17
27
16
6
28
32
35
5
26
36
33
34
37
25
33
15
1
26
31
3
30
29
21
22
24
2
23
4
C2751

FUEL INJECTION SYSTEM (Cont'd)

Ref. No.	Part Number	Description	Remarks	Serial Number	Qty.
1	6599299	PUMP			1
2	6599241	GASKET			1
3	6599251	KEY			1
4	6599268	GEAR			1
5	6599262	SEAL			4
6	6599238	WASHER			4
7	6599301	INJECTOR	W/Ref. 13		4
8	6599273	PIPE	leak off		1
9	6599940	BOLT			4
10	6599252	WASHER			8
11	6599939	WASHER			4
12	6599949	ADAPTER			4
13	6599237	NOZZLE			4
14	62D-5	NUT			8
15	6599279	PIPE			1
16	998286	STUD			8
17	6599264	PIPE	Cyl.-1		1
18	6599265	PIPE	Cyl.-2		1
19	6599266	PIPE	Cyl.-3		1
20	6599267	PIPE	Cyl.-4		1
21	4E-5	WASHER			6
22	6599942	WASHER			2
23	6599944	BRACKET	injector pump		1
24	6599943	BRACKET	injector pump		1
25	6511033	FITTING			1
26	2FM-12155	WASHER			2
27	6555922	BOLT			1
28	NSS	HOSE	Purchase Locally		1
29	6599169	NUT			2
30	6630540	NUT			1
31	6630542	ADAPTER			4
32	6630545	BOLT			1
33	6630543	WASHER			2
34	NAP	EYE	Was 6630544 [A]		1
35	3490325	WIRE	Was 6630547 [A]		1
36	6630546	VALVE	shut-off – W/Ref. 37		1
37	NSS	GASKET			1
38	6641378	LEVER			1
39	6641379	NUT			1
40	6641380	WASHER			1
41	6641381	CLAMP			1
42	6641382	SPRING			1

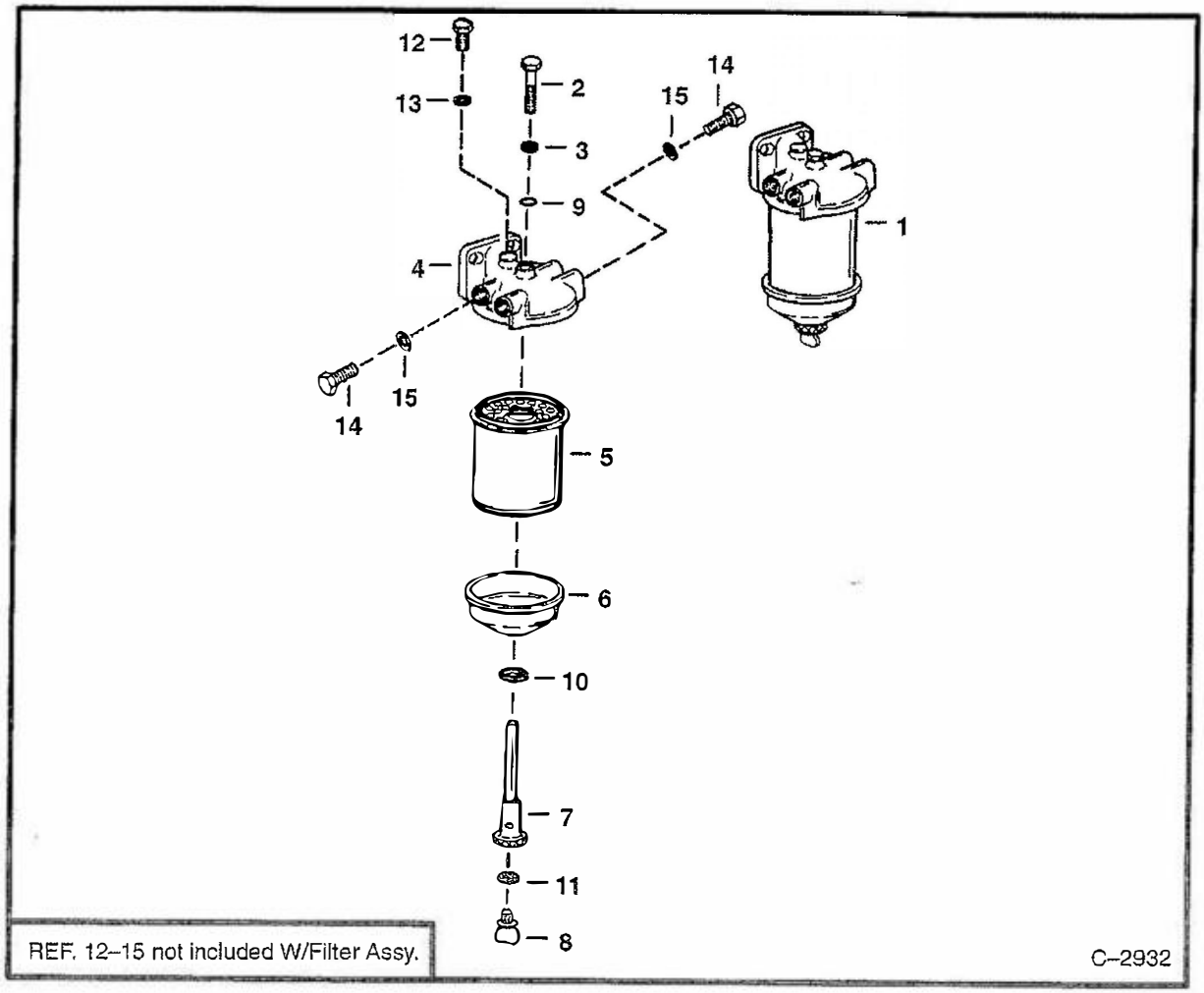

FUEL FILTER
(S/N 13316 & Above)

Ref. No.	Part Number	Description	Remarks	Serial Number	Qty.
1	6560348	FILTER	Ref. 2–11		1
2	6598227	BOLT			1
3	6598226	WASHER			1
4	6630219	HEAD			1
5	3885315	ELEMENT			1
6	6514714	BOWL	glass		1
	6598093	BOWL	metal – less plug & gasket		1
7	6598228	NUT			1
8	907212	PLUG	wing		1
9	6630220	RING	sealing		1
10	6630221	RING	sealing		1
11	3494503	WASHER			1
12	6515676	PLUG			1
13	6515468	WASHER			1
14	6515682	PLUG			2
15	6515466	WASHER			2

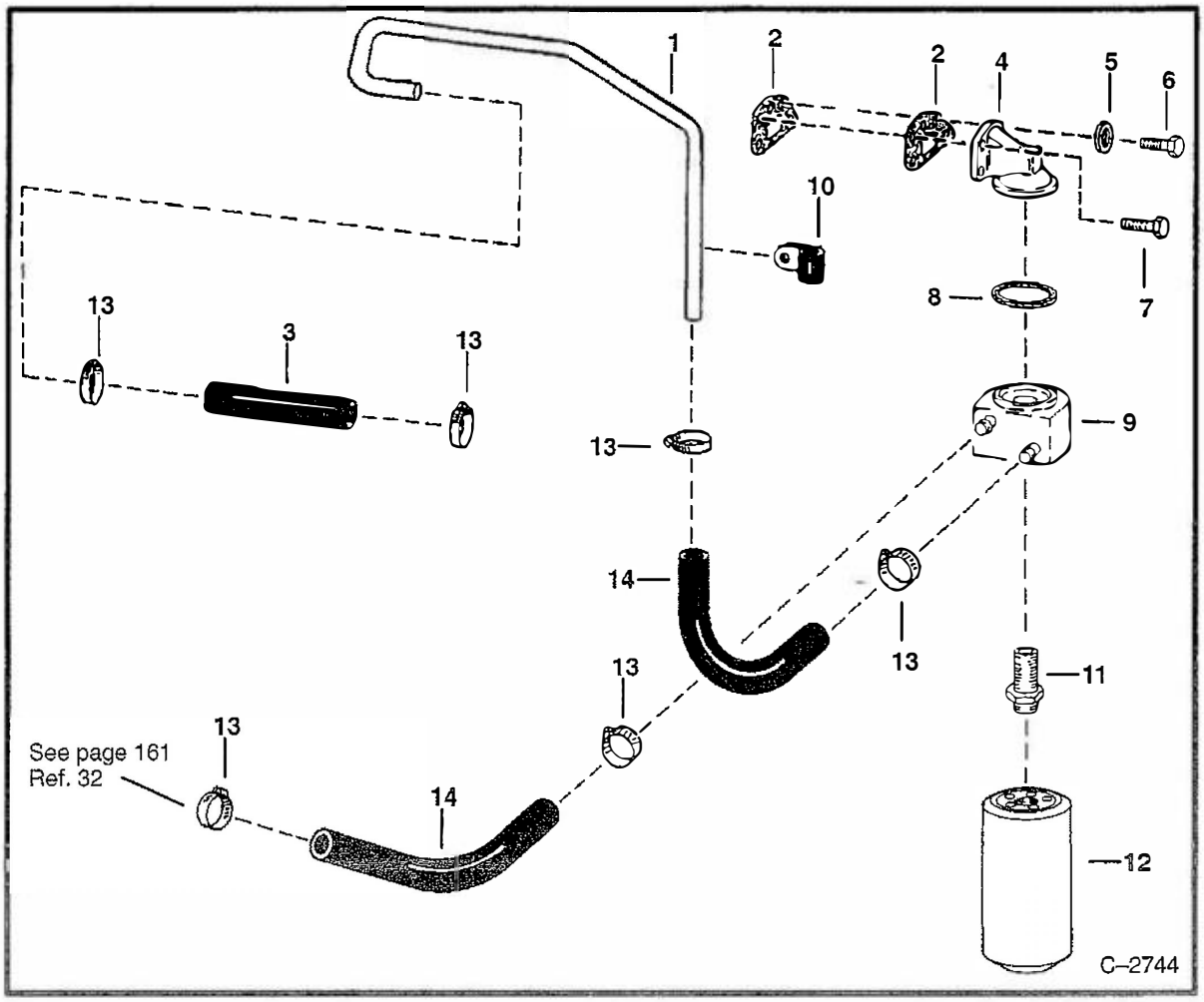

ENGINE OIL COOLER & FILTER

Ref. No.	Part Number	Description	Remarks	Serial Number	Qty.
1	6564569	TUBE			1
2	997782	GASKET	Was 3727370 [A]		2
3	NAP	HOSE	Order 889269 – Was 6564615 [A]		1
4	6514491	HEAD			1
5	25E–19	WASHER			2
6	18C–720	BOLT			2
7	18C–716	BOLT			2
8	6651862	GASKET	for 2–1/4" (57,15 mm) cooler		1
	962263	GASKET	for 1–7/8" (47,62 mm) cooler		1
9	NAP	COOLER	2–1/4" (57,15 mm) – Order 6645850 & 6646196	13353 & Below	1
	6645850	COOLER	1–7/8" (47,62 mm)	13354 & Above	1
10	30H–34	CLAMP			2
11	6660452	CONNECTOR	for 2–1/4" (57,15 mm) cooler	13353 & Below	1
	6646196	CONNECTOR	for 1–7/8" (47,62 mm) cooler	13354 & Above	1
12	960698	ELEMENT			1
13	42H–12	CLAMP	Was 1566240 [B]		6
14	6564565	HOSE			2

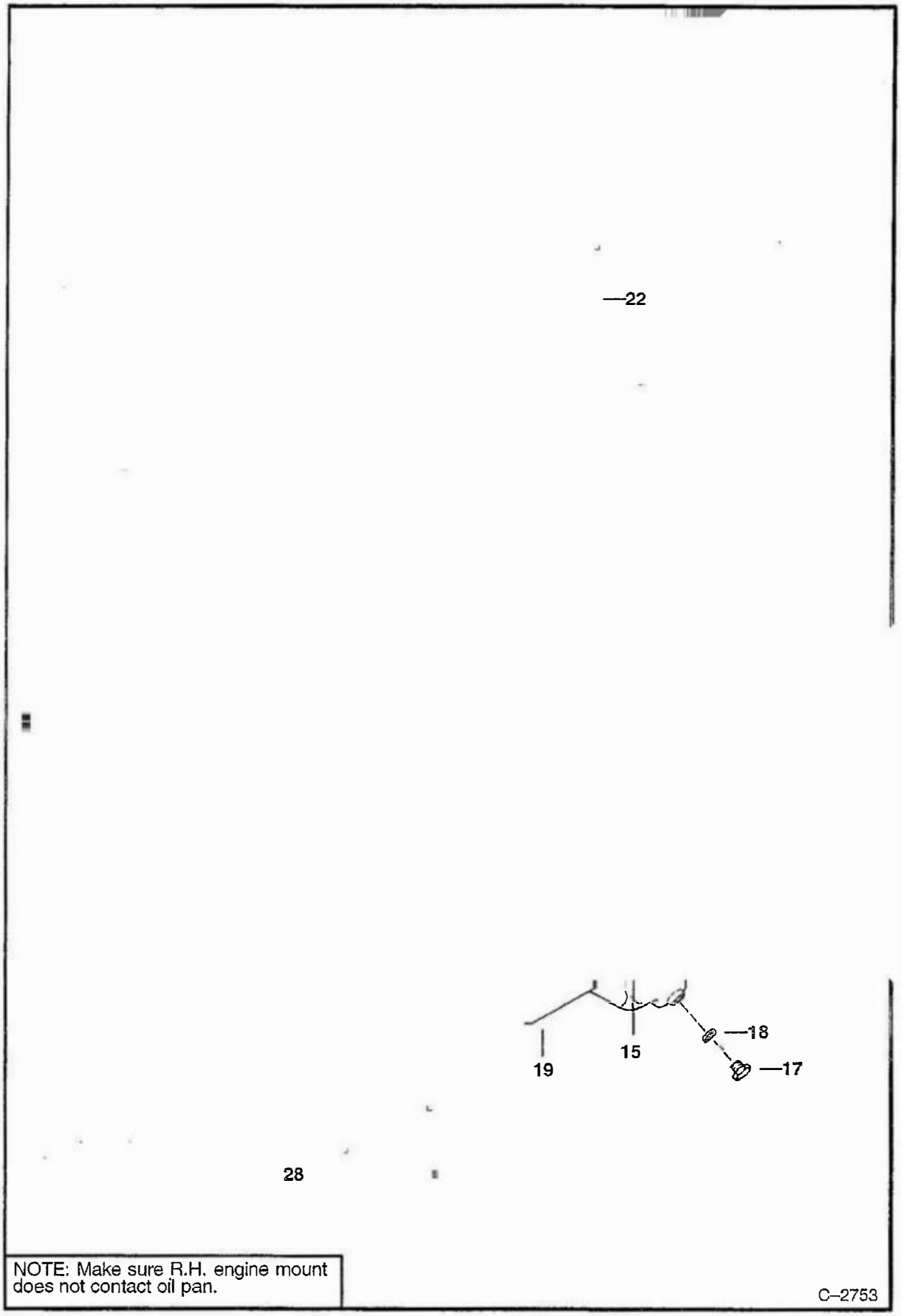
—22
19
15
—18
—17
28
NOTE: Make sure R.H. engine mount does not contact oil pan.
C–2753

LUBRICATION SYSTEM (Cont'd)

Ref. No.	Part Number	Description	Remarks	Serial Number	Qty.
1	6599290	PUMP			1
2	6599242	PLUNGER			1
3	6599253	SPRING			1
4	6599675	GASKET 8.46			1
5	18C–412	BOLT			2
6	4E–4	WASHER			4
7	6599292	PIPE			1
8	6599243	GASKET NA			2
9	6599219	BOLT			2
10	6599687	GASKET NA			1
11	NAP	BOLT	Was 6599688 [A]		2
12	6599682	STRAINER			1
13	6599679	PLATE			1
14	6599680	PLATE			1
15	6599674	PLATE			12
16	6599673	PLATE			2
17	6599692	PLUG			1
18	6599693	WASHER			1
19	6599686	OIL PAN	SEE NOTE		1
20	4E–5	WASHER			20
21	18C–510	BOLT			17
22	6564465	TUBE ASSY	oil fill – W/Ref. 23		1
23	6564568	GASKET			1
24	6599354	CAP	with chain		1
	6664468	CAP	spring loaded		1
25	6630231	DIPSTICK			1
26	NAP	PLUG	Was 6599291 [A]		1
27	NAP	BOLT	Was 6599945 [A]		2
28	18C–516	BOLT			1
29	6641222	CAP	plug		1
30	18C–512	BOLT			2

Use Bobcat replacement tires to maintain designed performance specifications.

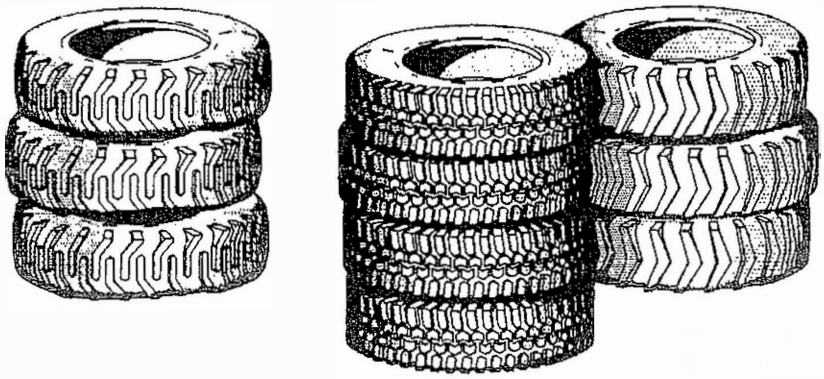

Available from Bobcat Parts.

Bobcat

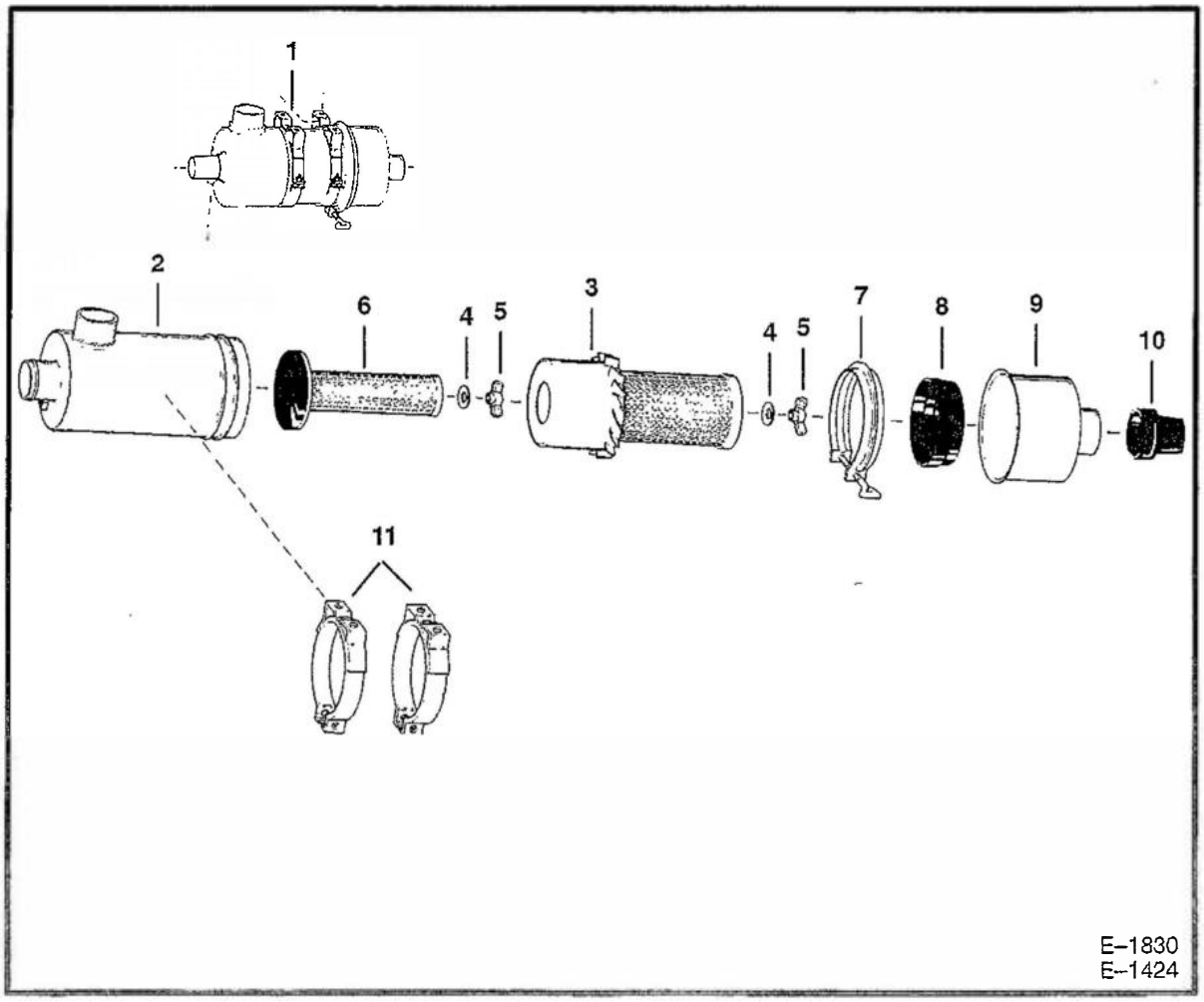

AIR CLEANER

Ref. No.	Part Number	Description	Remarks	Serial Number	Qty.
1	6562208	AIR CLEANER	Ref. 2–10		1
2	NAP	TANK			1
3	6598492	CARTRIDGE	Was 886525 [A]		1
4	886527	WASHER			2
5	3291290	WING NUT			2
6	6598362	CARTRIDGE			1
7	866028	CLAMP			1
8	891024	BAFFLE			1
9	6513797	CAP			1
10	946860	VALVE			1
11	6516191	BAND	Was 871610 [A]		2

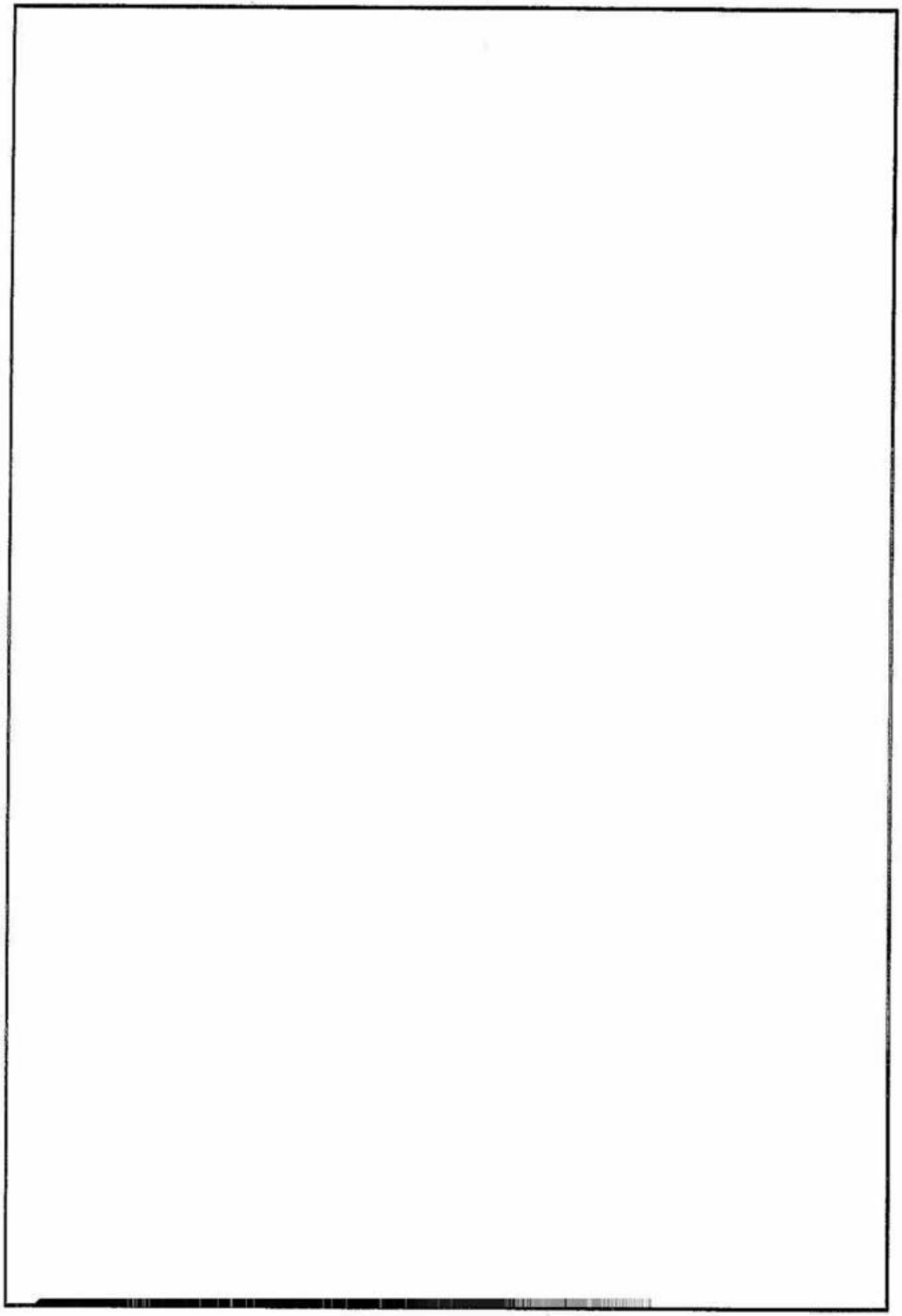

GASKET KIT (Cont'd)

Ref. No.	Part Number	Description	Remarks	Serial Number	Qty.
1*	NAP	GASKET KIT	Complete – Ref. 2–21, 23, 24 – Order components – Was 6630143 [A]		1
2	6599236	GASKET			4
3*	NAP	GASKET	Was 6599260 [A]		4
4	6599184	GASKET			1
5	6599183	SEAL			4
6	998057	GASKET			1
7	6599217	SEAL	oil		1
8	6630613	GASKET			1
9	6599224	DEFLECTOR			4
10	6599199	GASKET			1
11	6599687	GASKET			1
12	6631970	SEAL			4
13	6599206	GASKET			1
14	6599211	GASKET			1
15	6599208	SEAL			1
16*	NAP	GASKET	Was 6599209 [A]		1
17	6599246	GASKET			1
18	6599934	GASKET			1
19*	NAP	GASKET	Was 6599244 [A]		1
20	6631623	GASKET			1
21	6664803	GASKET			1
22	997782	GASKET	not in kit – Was 3727370 [A]		2
23	6599675	GASKET			1
24	6599243	GASKET			2

843 CONTENTS

MAIN FRAME 11–36
- MAIN FRAME 11
- LIFT ARMS & BOBTACH 13
- OPERATOR CAB 15–20
- SEAT & SEAT BAR 21–24
- PANELS 25–28
- FUEL SYSTEM 29–32
- BOB–TACH 33
- SEAT 35, 36

DRIVE TRAIN 37–43
- DRIVE TRAIN 37
- GEARCASE 39
- DISC BRAKES 41
- AXLE 43

HYDRAULIC SYSTEM 45–78
- HYDRAULIC CIRCUITRY 45–50
- AUXILIARY HYDRAULICS 51–54
- LIFT CYLINDER 55, 56
- TILT CYLINDER 57, 59
- CONTROL VALVE 61
- INLET SECTION 62
- TILT SECTION 63
- LIFT SECTION 65
- AUXILIARY SECTION 67
- CONTROL VALVE 69–72
- CONTROL PEDALS 73–76
- BUCKET POSITIONING VALVE 77

HYDROSTATIC SYSTEM 79–129
- HYDROSTATIC CIRCUITRY 79–106
- HAND CONTROLS 107–114
- HYDROSTATIC PUMPS 115–120
- HYDROSTATIC MOTOR 121
- GEAR PUMP 123–128
- HYDROSTATIC OIL FILTER 129

ELECTRICAL SYSTEM 131–156
- CAB ELECTRICAL SYSTEM 131–136
- ENGINE ELECTRICAL 137–140
- ALTERNATOR 141–150
- STARTER 151–156

POWER UNIT 157–200
- ENGINE Perkins 204.25 TK200 Series & ATTACHING PARTS 157–172
- THROTTLE 173
- UNIVERSAL JOINT 174
- ENGINE & BREAKDOWN 175–190
- FUEL INJECTION SYSTEM 191
- FUEL FILTER 193
- ENGINE OIL COOLER & FILTER 194
- LUBRICATION SYSTEM 195
- AIR CLEANER 198
- GASKET KIT 199

843 CONTENTS (Cont'd)

ACCESSORIES & OPTIONS

AIR SEAL/SCREEN KIT 203, 205
BACK–UP ALARM KIT 207
BLOCK HEATER 208
CAB ENCLOSURE 209
CAB DOOR 211–218
CAB WINDOWS 219
CAB ENCLOSURE 221–227
CLOSED ALTERNATOR KIT 228
CLOSED ALTERNATOR 229
DECALS 231–234
DEBRIS SCREEN KIT 235
DELUXE UPHOLSTERY KIT 236
DOOR STOP & TOW HITCH 237
ENGINE COOLANT KIT 238
FIRE EXTINGUISHER 239
FLASHER LIGHTS 240
FUEL FILL EXTENSION 241
HAND CONTROLS KIT 243–246
HEATER KIT 247, 248
HEATER 249, 250
HEATER PLUMBING KIT 251, 252
HORN 253
HORN KIT 254
HOSE CLAMP KIT 255
KEYLESS IGNITION 256
INSECT SCREEN KIT 257
LIFT ARM STOP 258
OPERATOR CAB (DELUXE) 259
MUFFLER/PURIFIER KIT 261
OPERATOR CAB (EUROPEAN) 262, 263
RENTAL KIT 264, 265
SEAT BAR KIT 266, 267
SINGLE POINT LIFT 269, 270
SEAT BELT 3" 271
SOUND REDUCTION HARDHAT 272
STROBE LIGHT 273, 274
SUSPENSION SEAT 276, 277
TIRES & RIMS 279–281
WATER LEVEL SENSOR KIT 282
WINDSHIELD WIPER 283

BULK ITEMS 285

NUMERICAL INDEX 287

AIR SEAL/SCREEN KIT
(S/N 19999 & Below)

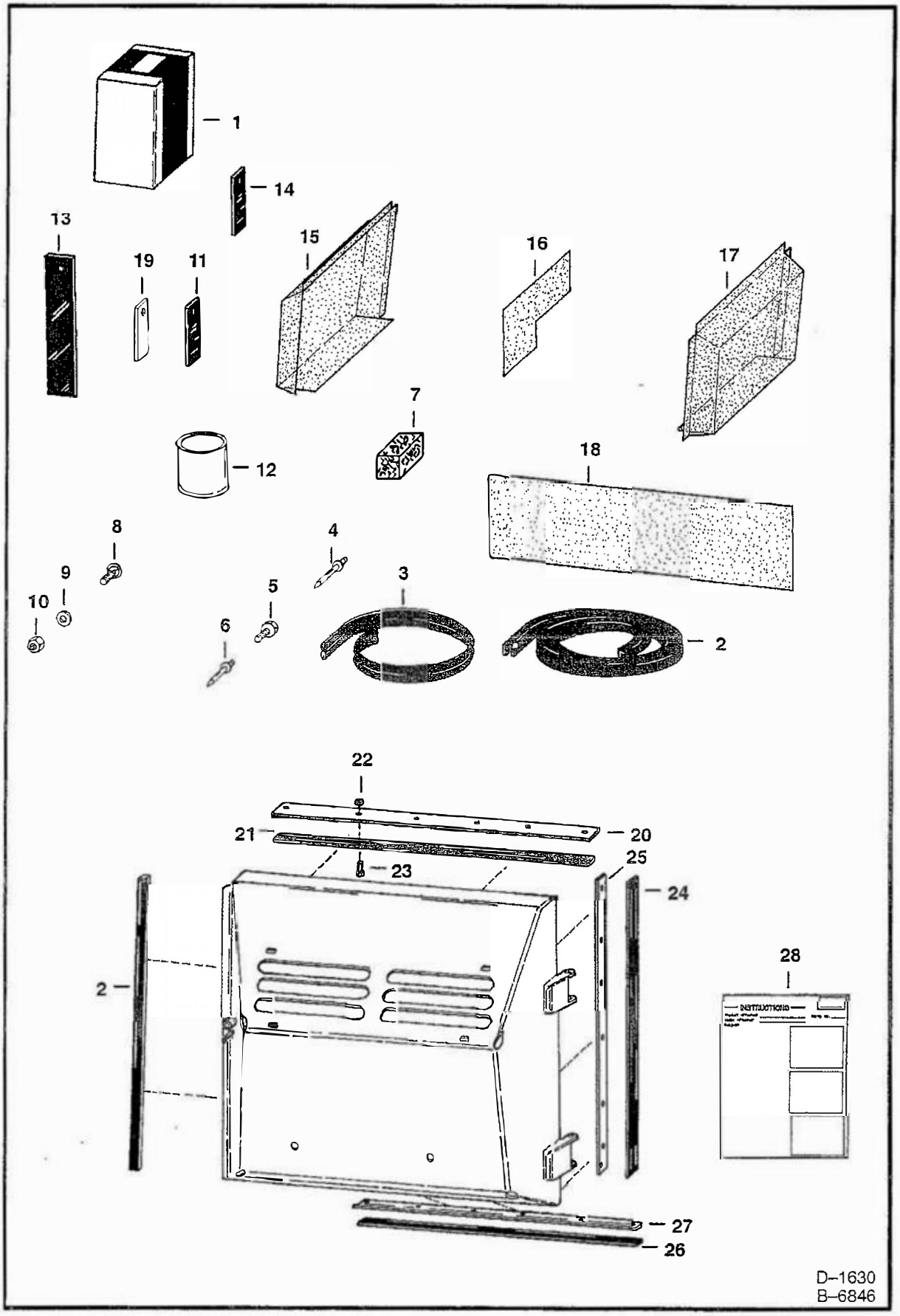

AIR SEAL/SCREEN KIT (Cont'd)
(S/N 19999 & Below)

Ref. No.	Part Number	Description	Remarks	Serial Number	Qty.
1	6565154	KIT	air seal/screen – Ref. 2–28		1
2	6632217	SEAL	rear door – Bulk – Sold Per Foot		x
3	6513152	MOULDING	air duct – Bulk – Sold Per Foot		x
4	6591035	RIVET	pop – For Rear Door and Grease Access		8
5	84G–3716	BOLT	thread forming		2
6	6515213	RIVET	pop – For Cab Screen		30
7	6565138	BLOCK	foam – For Lift Cylinder		2
8	7C–620	BOLT	hex – 3/8" x 1–1/4"		2
9	25E–17	WASHER			4
10	85D–6	NUT			2
11	6565141	FLAP	rubber – For Slots		2
12	6633583	PUTTY	Was 6555349 [A]		1
13	6565139	FLAP	rubber – For Lift Cylinder		2
14*	NAP	FLAP	rubber – For Grease Access – Was 6565137 [A]		2
15	6565021	SCREEN	formed – R.H.		1
16	6565118	SCREEN	flat		2
17	6565022	SCREEN	formed – L.H.		1
18	6565142	SCREEN	rear door		1
19	6567664	COVER			2
20	6567303	RETAINER			1
21	6567304	SEAL			1
22	85D–5	NUT			14
23	17C–516	BOLT			14
24	6569876	SEAL			1
25	6569877	RETAINER			1
26	6569937	SEAL			1
27	6569938	RETAINER			1
28	6566436	INSTRUCTIONS			1

AIR SEAL/SCREEN KIT
(S/N 20001 & Above)

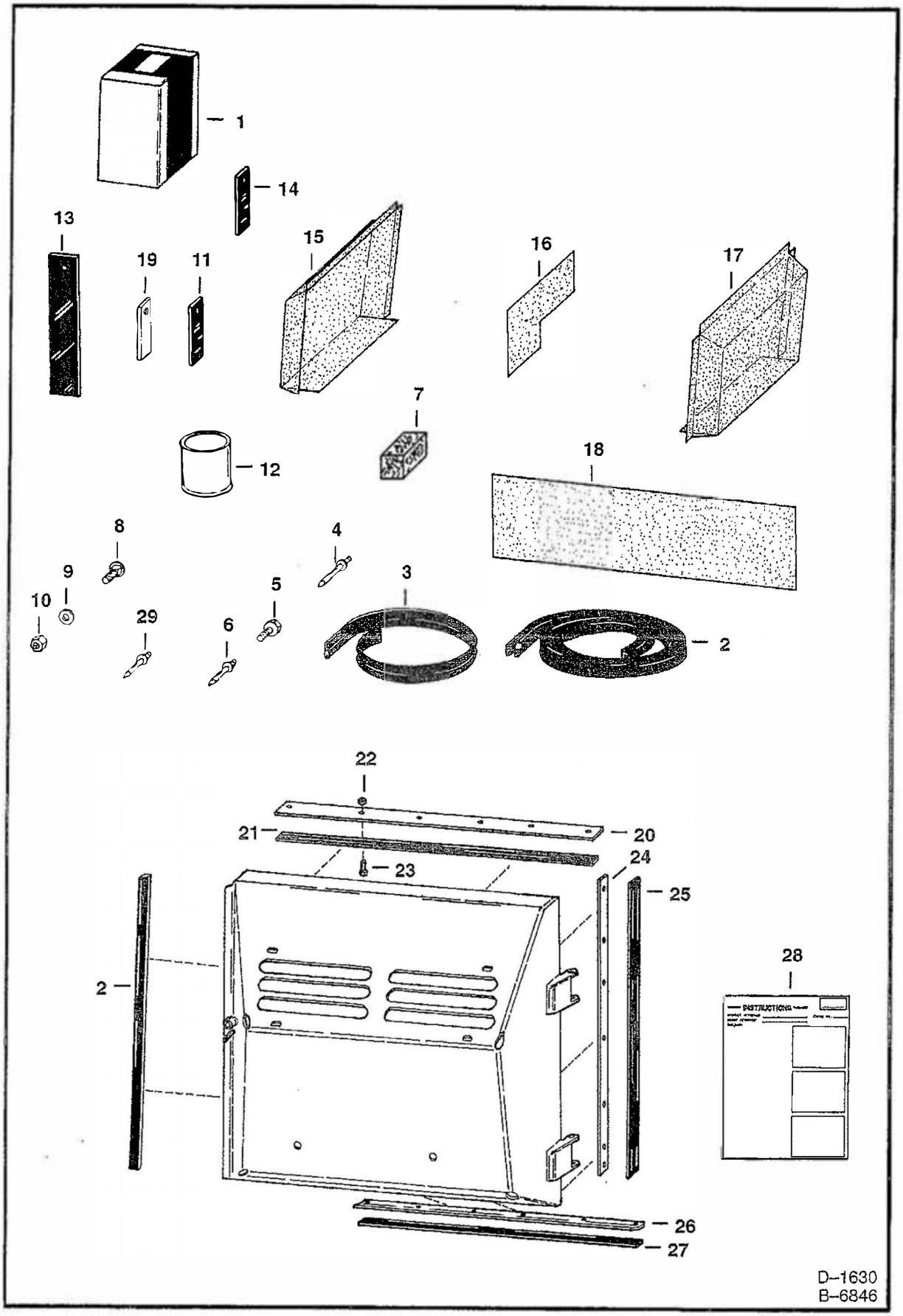

AIR SEAL/SCREEN KIT (Cont'd)
(S/N 20001 & Above)

Ref. No.	Part Number	Description	Remarks	Serial Number	Qty.
1	6568768	KIT	air seal/screen – Ref. 2–29		1
2	6632217	SEAL	rear door – Bulk – Sold Per Foot Order 4' (121,9 cm)		x
3	6513152	MOULDING	air duct – Bulk – Sold Per Foot – Order 4' (121,9 cm)		x
4	6591035	RIVET	pop – For Rear Door and Grease Access		8
5	84G–3716	BOLT	thread forming		2
6	6515213	RIVET	pop – For Cab Screen		24
7	6565138	BLOCK	foam – For Lift Cylinder		2
8	7C–620	BOLT			2
9	25E–17	WASHER			4
10	85D–6	NUT			2
11	6565141	FLAP	rubber – For Slots		2
12	6633583	PUTTY	Was 6555349 [A]		1
13	6565139	FLAP	rubber – For Lift Cylinder		2
14	6565137	FLAP	rubber – For Grease Access		2
15	6569404	SCREEN	formed – R.H.		1
16	NAP	SCREEN	flat – Order Ref. 15 or 17		1
17	6569405	SCREEN	formed – L.H.		1
18	6565142	SCREEN	rear door		1
19	6567664	COVER			2
20	6567303	RETAINER			1
21	6567304	SEAL			1
22	85D–5	NUT			14
23	17C–516	BOLT			14
24	6569877	RETAINER			1
25	6569876	SEAL			1
26	6569938	RETAINER			1
27	6569937	SEAL			1
28	6566965	INSTRUCTIONS			1
29	6598681	RIVET	For Grease Access		2

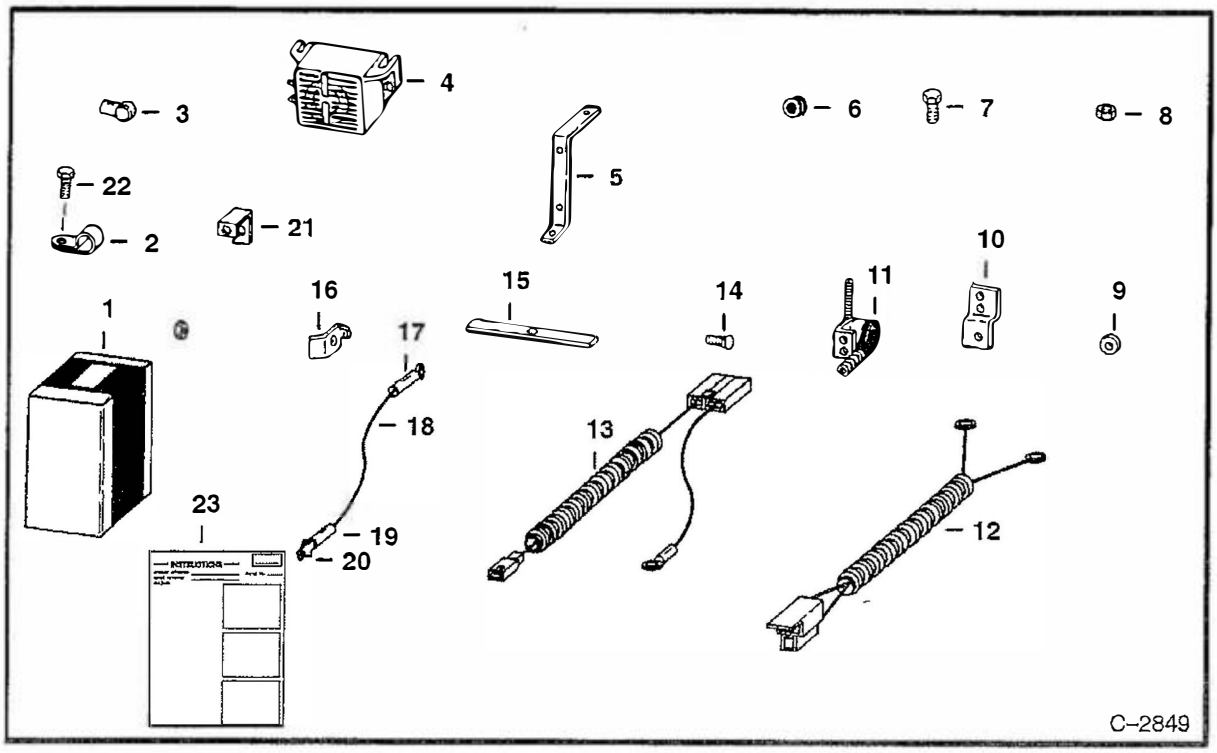

BACK-UP ALARM KIT

Ref. No.	Part Number	Description	Remarks	Serial Number	Qty.
1	6579094	KIT	back-up alarm – Ref. 2-23 Was 6565508 [A]		1
2	30H-31	CLAMP			3
3	616334	COVER			2
4	6599931	ALARM			1
	6668879	DECAL			1
5	6565275	BRACKET			1
6	6557493	GROMMET			1
7	17C-512	BOLT			7
8	85D-5	NUT			9
9	6E-5	WASHER			1
10	6557824	MOUNT			1
11	6579011	SWITCH	Was 6557640 [A]		2
12	6565500	HARNESS			1
13	6565499	WIRE			1
14*	10C-512	BOLT	Was 6553808 [A]		2
15	6557684	BAR			1
16	6557683	STOP			2
17	30R-103	TERMINAL			2
18*	NAP	WIRE	bulk – Sold Per Foot – Was 631094 [A]		x
19	614142	SLEEVE			4
20	6515131	TERMINAL			2
21	6565634	MOUNT			1
22	84G-3712	BOLT			3
23	6566580	INSTRUCTIONS			1

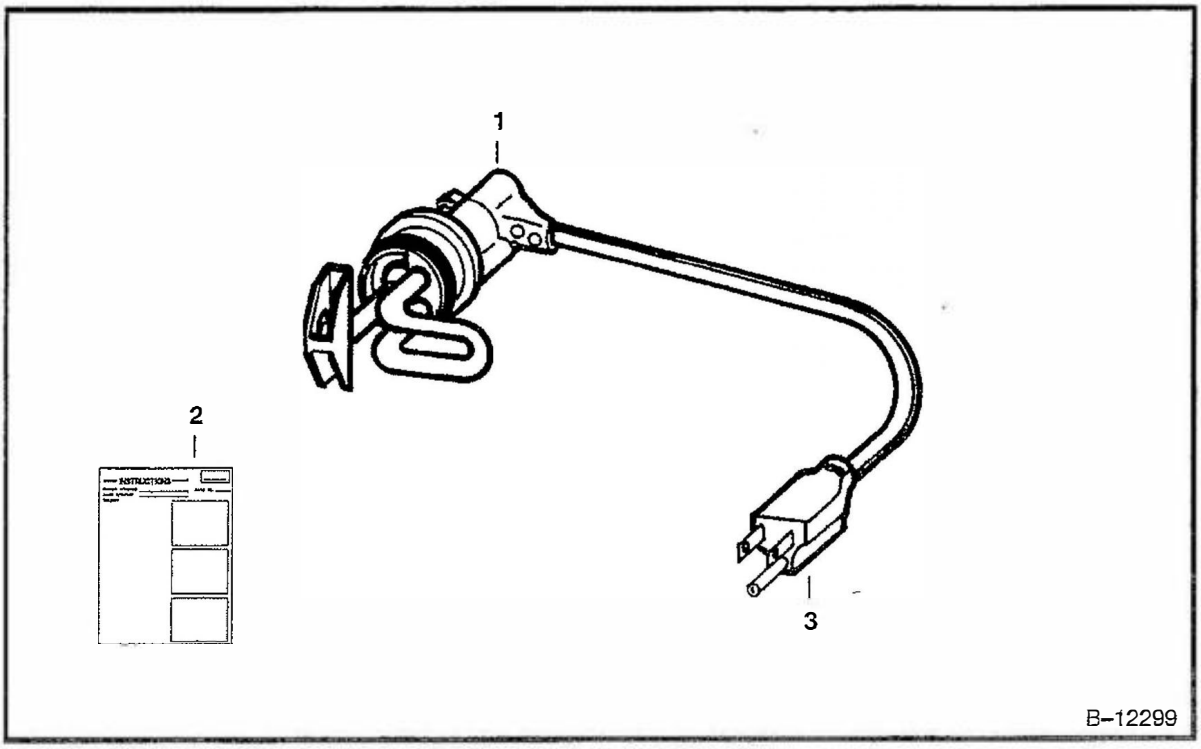

BLOCK HEATER

Ref. No.	Part Number	Description	Remarks	Serial Number	Qty.
1	6720743	HEATER	Located right side above starter W/Ref. 2		1
2	6720038	INSTRUCTIONS			1
3	6668881	CORD			1

CAB ENCLOSURE
(S/N 19999 & Below)

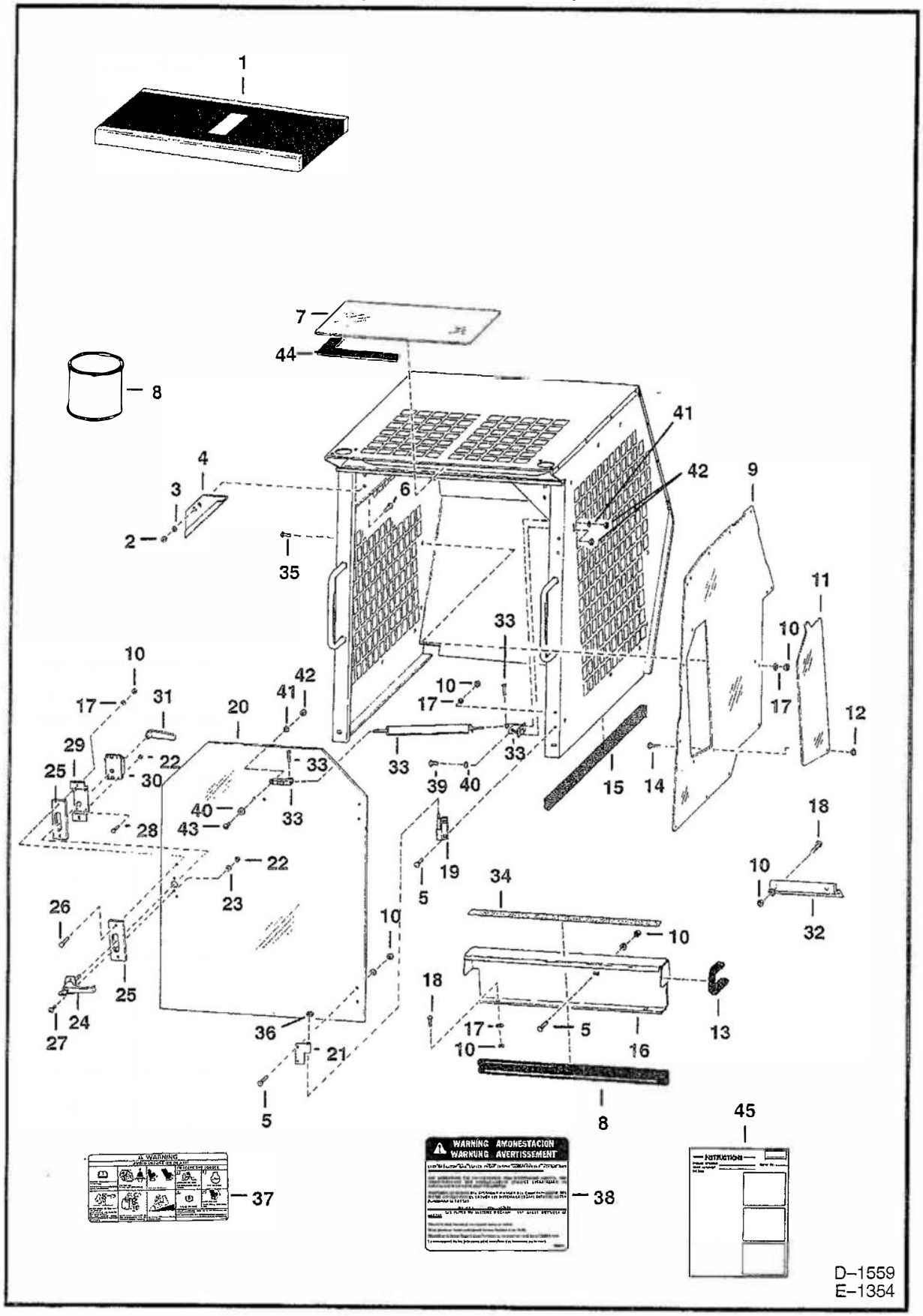

CAB ENCLOSURE (Cont'd)
(S/N 19999 & Below)

Ref. No.	Part Number	Description	Remarks	Serial Number	Qty.
1	6565757	KIT	cab enclosure – Ref. 2–45		1
2	61D–6	NUT			2
3	25E–18	WASHER			2
4	6555434	CHANNEL			2
5*	10C–512	BOLT	carriage – Was 6553808 [A]		8
6	17C–612	BOLT			2
7	6701986	TOP WINDOW	Was 6563391 [A]	& Below	1
	6705735	TOP WINDOW		& Above	1
8	NAP	SEAL	Purchase Locally		1
9	6565755	SIDE WINDOW			2
10	85D–5	NUT			39
11	6555108	DOOR			2
12	6555869	CLAMP			8
13	NAP	SEAL	Purchase Locally		1
14	14G–1008	SCREW			8
15	NAP	SEAL	Purchase Locally		1
16	6563392	SHIELD			1
17	25E–15	WASHER			46
18	17C–512	BOLT			6
19	6565970	HINGE			2
20	6555062	DOOR			1
21	6555057	HINGE			2
22	12D–10	NUT			6
23	25E–10	WASHER			2
24	1550695	HANDLE	outside – W/Key		1
25	6555054	PLATE			x
26	17C–516	BOLT			3
27	75G–1016	SCREW			2
28	45G–1008	SCREW			4
29	6555059	BRACKET			1
30	6598475	DOOR LATCH			1
31	6515600	HANDLE			1
32	6563446	BRACKET	Used on 843 Only		1
33	6564858	CLOSER	door – European Cab Enclosure		1
34	6564833	SAFETY TREAD	European Cab Enclosure		1
35	25G–510	BOLT			24
36	85D–4	NUT			2
37	6579510	DECAL	Was 6568691 [A]		1
38	6563410	DECAL			1
39	85G–1208	SCREW			4
40	12E–12	WASHER			6
41	25E–12	WASHER			4
42	12D–12	NUT			6
43	85G–1212	SCREW			2
44	6664351	SEAL	Used W/cab headliner	& Above	1
	6665012	SEAL	Used W/O cab headliner	& Above	1
45	6566606	INSTRUCTIONS			1

CAB DOOR

NOTE: When replacing glued on Cab Door Window, also Order 6708990 Window Retainer Kit.

NOTE: To completely enclose your cab Order 6568708 Enclosure Kit, this includes a Door Kit, Sheild Kit, Harness, Side, Rear & Top Windows.

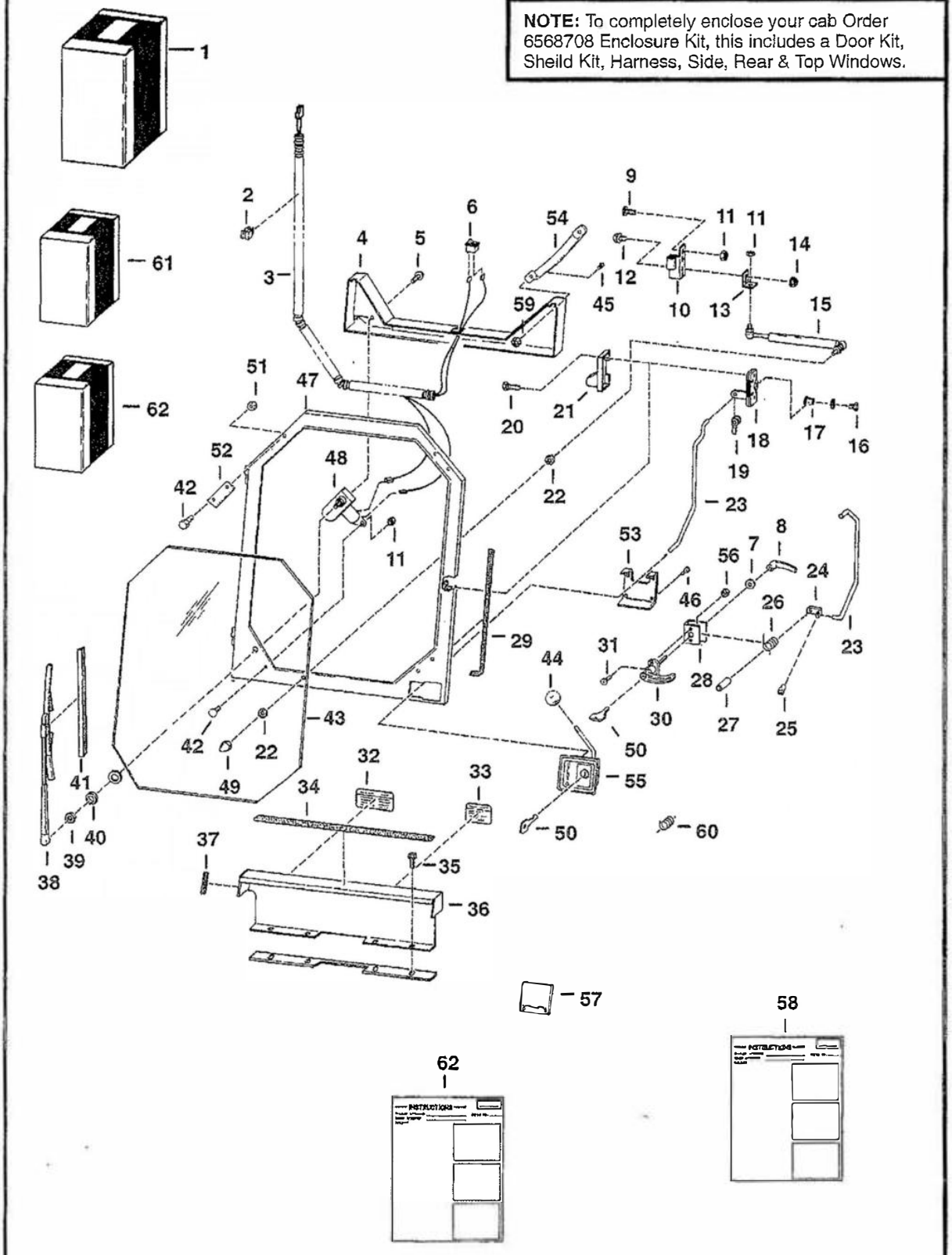

CAB DOOR (Cont'd)

Ref. No.	Part Number	Description	Remarks	Serial Number	Qty.
1	6571845	KIT			1
2	30H–37	CLAMP			1
3	6568739	HARNESS			1
4	6568724	SHIELD	Use with old style latch		1
	6704428	SHIELD	Use with new style latch – Was 6576471 [A]		1
5	84G–3112	BOLT			4
6	6631009	SWITCH			1
7	25E–18	WASHER	Use with old style latch		1
8	6515600	HANDLE	Use with old style latch		1
9*	10C–512	BOLT	Was 6553808 [A]		4
10	6568051	HINGE	For 1/4" (6,35 mm) – Hinge Pin		2
	6571715	HINGE	For 3/8" (9,52 mm) – Hinge Pin		2
11	83D–5	NUT			10
12	35C–412	BOLT			2
13	6568055	BRACKET			1
14	83D–4	NUT			2
15	6630797	GAS SPRING			1
	6632221	STUD	ball		2
	2756257	RETAINER	spring		2
16	17C–712	BOLT			1
17	6568047	NUT	bushing		1
18	6660932	LATCH	old style – Was 6647789 [A]		1
19	6512274	CLIP			1
20	35C–416	BOLT			4
21	6568728	SHIELD			1
22	25E–16	WASHER			2
23	6568727	ROD	Use with old style latch		1
	6704425	ROD	Use with new style latch – Was 6576470 [A]		1
24	6568528	BRACKET	Use with old style latch		1
25	6519480	CLIP	Use with old style latch		1
26	6568725	SPRING	Use with old style latch		1
27	6568526	SPACER	Use with old style latch		1
28	6568527	BRACKET	Use with old style latch		1
29	6568704	SEAL	bulk – Sold Per Foot		x
30	6568726	HANDLE	W/Keys – Use with old style latch		1
31	75G–1016	SCREW	Use with old style latch		2
32	6579510	DECAL	Was 6575854 [A]		1
33	6563410	DECAL			1
34	6564833	SAFETY TREAD			1
35	35C–520	BOLT			4
36	6568164	SHIELD			1
37	6555351	MOULDING	bulk – Sold Per Foot		x
38	6631008	ARM			1
39	NSS	NUT			1
40	NSS	SEAL			1
41	6630943	BLADE	wiper		1
42	25G–510	BOLT			1
43	6568705	WINDOW	SEE NOTE – .25" plastic		1
44	6647635	KNOB	Use with new style latch		1

NOTE: When replacing glued on Cab Door Window, also Order 6708990 Window Retainer Kit.

NOTE: To completely enclose your cab Order 6568708 Enclosure Kit, this includes a Door Kit, Sheild Kit, Harness, Side, Rear & Top Windows.

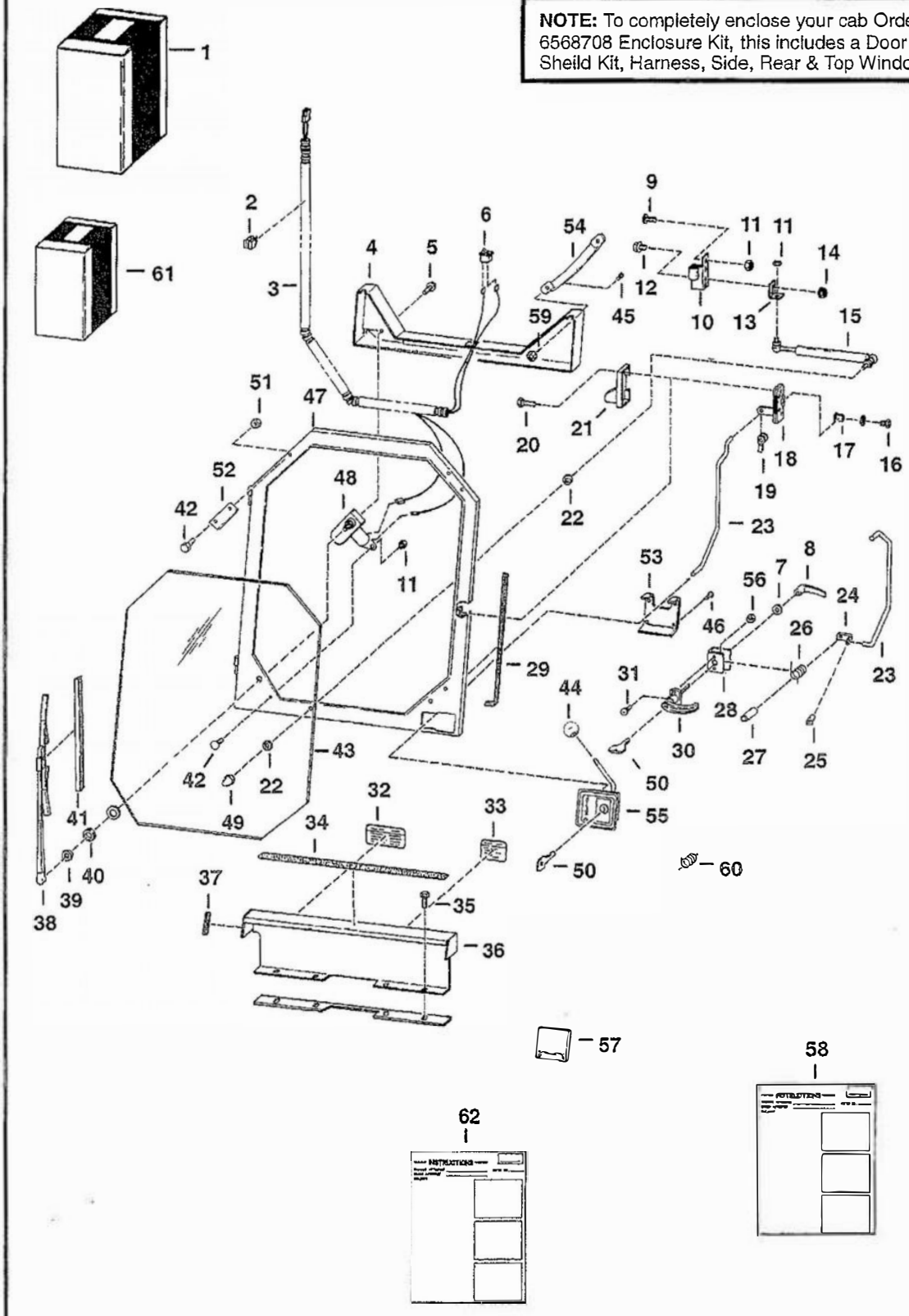

E–1648

Ref. No.	Part Number	Description	Remarks	Serial Number	Qty.
45	7G–416	BOLT	Use with new style latch Was 7G–412 [B]		2
46	45G–1008	SCREW	Use with new style latch		4
47	NAP	DOOR	1/4" (6,35 mm) hinge pin – W/Ref. 29 & 43 – Order Ref. 1 – Was 6568764 [A]		1
	NAP	DOOR	3/8" (9,52 mm) hinge pins – W/Ref. 29 & 43 – Order 6704431, 6576470, 6576471 & Ref. 45, 46,		
			53, 54 & 55 – Was 6571755 [A]		1
	6704430	DOOR	For use with new style latch – Was 6704430 [D]		1
48	6620642	MOTOR	W/Ref. 39 & 40		1
	6631927	GEAR			1
	961528	PACK OF PARTS			1
	6631928	SHAFT			1
49	46D–5	NUT			1
50	6632560	KEY			x
51	61D–5	NUT	Was 57D–5 [B, D]		8
52	6708850	CLIP	Was 6576238 [B, D]		4
53	6704426	RETAINER	Use with new style latch –		
			Was 6578398 [A]		1
54	6631935	HANDLE	Use with new style latch		1
55	6641274	LATCH	new style – W/Ref. 44 & 50		1
56	50D–10	NUT	Use with old style latch		2
57	6568620	COVER			2
58	6570264	INSTRUCTIONS	Use with new style latch		1
59	6660988	NUT			2
60	6662834	SPRING			1
61	6708990	KIT	window retainer – Ref. 42, 51, 52		
			& 62		1
62	6724279	INSTRUCTIONS			1

CAB DOOR
(L.H. Hinged)

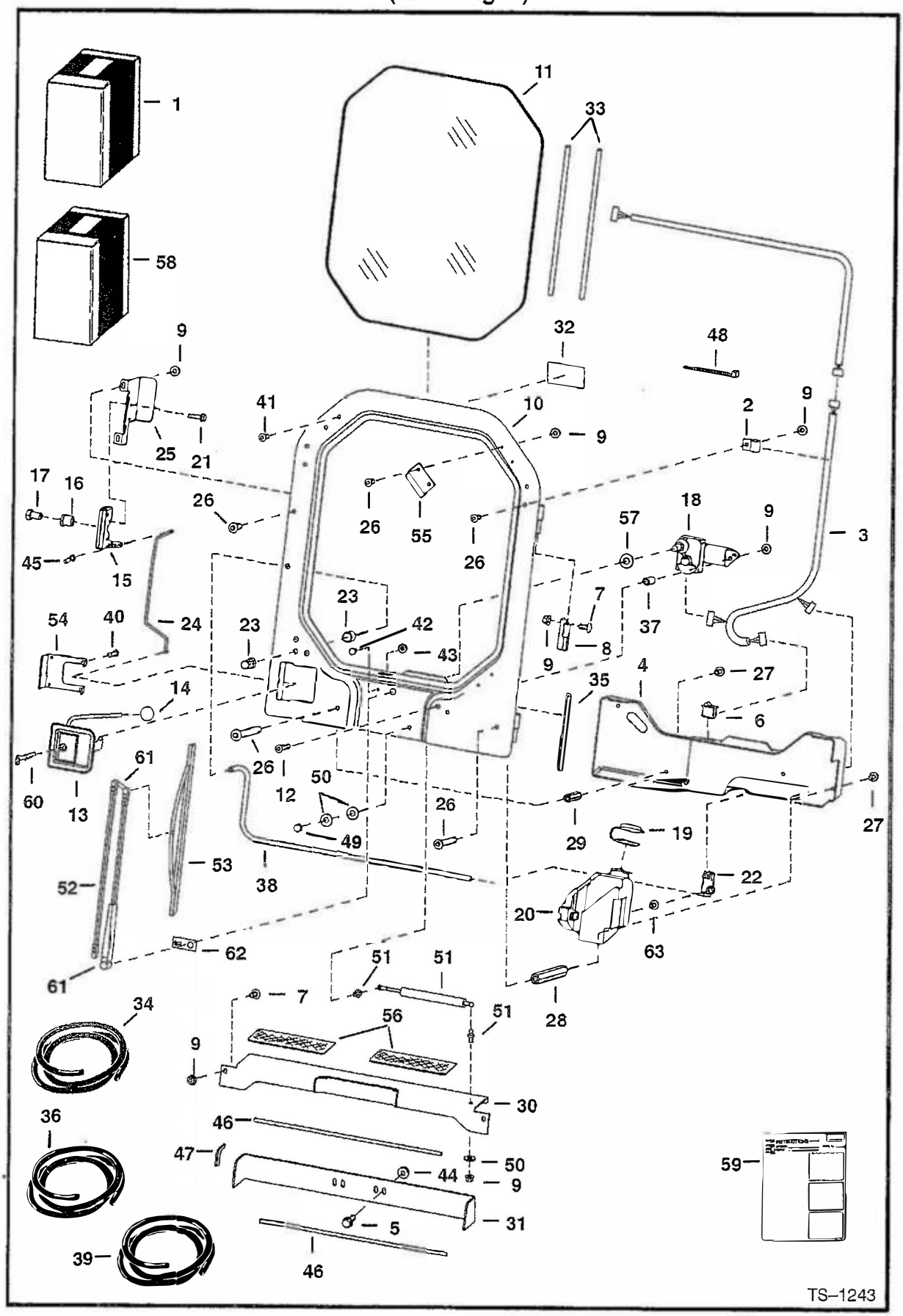

CAB DOOR (Cont'd)
(L.H. Hinged)

Ref. No.	Part Number	Description	Remarks	Serial Number	Qty.
1	6708973	KIT	door – Ref. 2–4, 6–29, 32–35, 37–43, 45, 48–55 & 57–59		1
	SALES	KIT	door – special applications –Ref. 4, 5, 7 – 17, 21, 24 – 37, 40 – 51, 54 – 56 & 58		1
2	30H–37	CLAMP			1
3	NAP	HARNESS	Order 6712259 Harness – Was 6708269 [A]		1
	6712259	HARNESS	W/(2) diodes		1
4	6707179	SHIELD			1
5	35C–616	BOLT			2
6	6665707	SWITCH			1
7	10C–512	BOLT			6
8	6707216	HINGE			2
9	83D–5	NUT	for standard door		10
	83D–5	NUT	for special applications door		15
10	6707220	DOOR			1
11	6707225	WINDOW	.25" thick – safety glass – for standard door		1
	6708499	WINDOW	.5" thick – plexiglass – for special applications door		1
12	25G–528	BOLT			1
13	6665530	LATCH	W/Ref. 14 – Also Order Ref. 60		1
14	6647635	KNOB			1
15	6665531	LATCH			1
16	6568047	NUT	bushing		1
17	17C–712	BOLT			1
18	6665532	MOTOR	wiper		1
	6631927	GEAR			1
	6670163	SHAFT	W/spline		1
	6670164	LINK			1
	6670165	CLIP			1
19	6665605	CAP			1
20	6707178	TANK			1
21	35C–416	BOLT			4
22	6664554	PUMP	wiper washer		1
23	6664555	NOZZLE	washer		1
24	6707221	ROD	latch release		1
25	6707222	MOUNT	latch		1
26	25G–512	BOLT	for standard door		7
	25G–512	BOLT	for special applications door		14
27	35C–510	BOLT			4
28	6707223	COUPLING			2
29	6707224	COUPLING			2
30	6707239	SHIELD	bolts to cab		1
31	6707236	SHIELD	bolts to mainframe		1
32	6707852	DECAL	exit		1
33	NAP	SEAL	for front window – 91"(2311 mm) long– Order Ref. 34		1
	NAP	CORD	for front window – 91"(2311 mm) long– Order Ref. 34		1

CAB DOOR (Cont'd)
(L.H. Hinged)

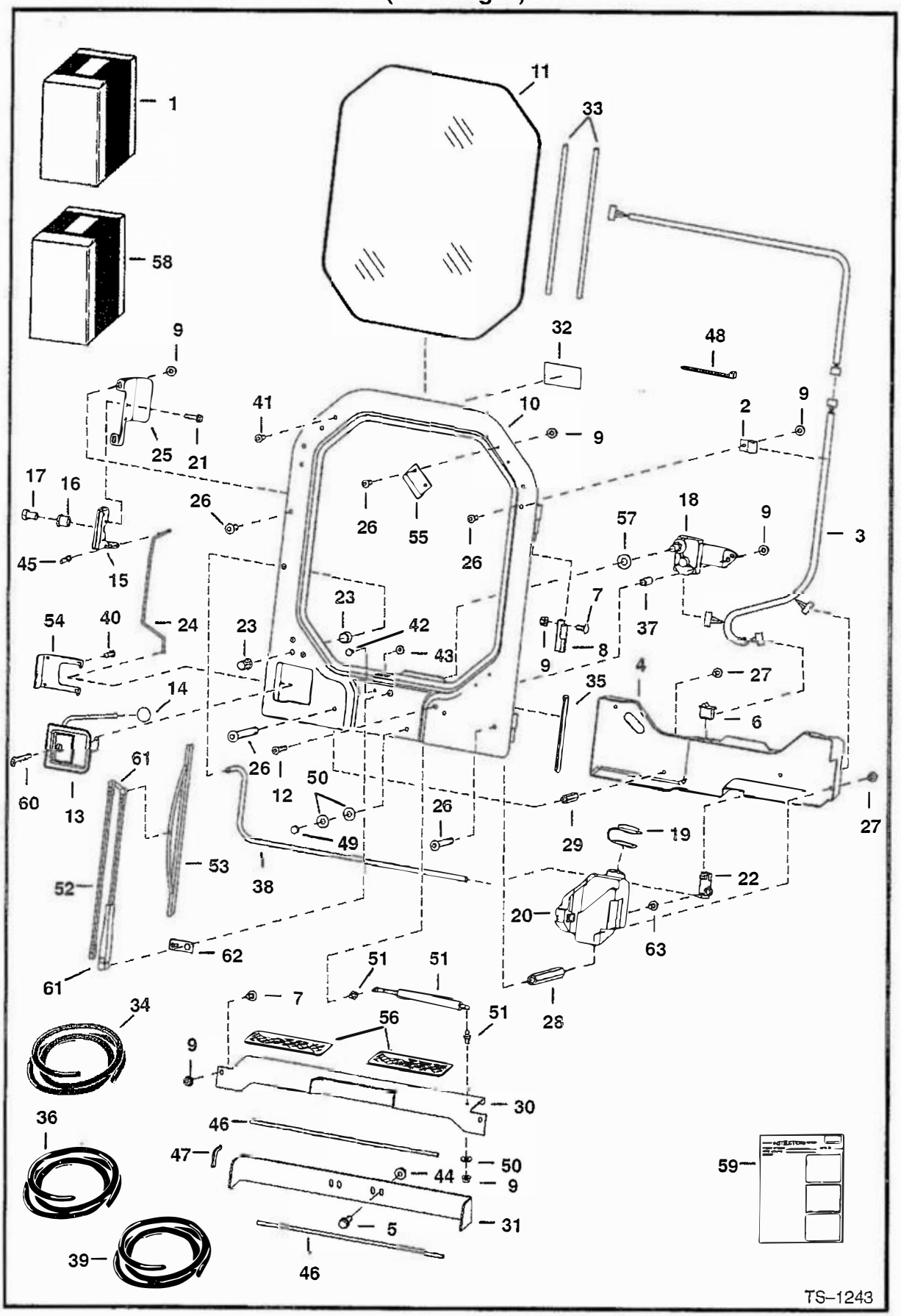

CAB DOOR (Cont'd)
(L.H. Hinged)

Ref. No.	Part Number	Description	Remarks	Serial Number	Qty.
34	6665568	EXTRUSION	bulk – Sold Per Foot		x
	6554149	CORD	bulk – Sold Per Foot		x
35	NAP	SEAL	137"(3480mm)long–Order Ref. 36		1
36	6513152	MOULDING	bulk – Sold Per Foot		x
37	6708096	BUSHING			1
38	NAP	HOSE	26"(660,4 mm)long–Order Ref. 39		1
39	6708310	HOSE	bulk – Sold Per Foot – 5/32" I.D.		x
40	45G–1008	SCREW			4
41	5289686	PLUG	black		11
42	17C–408	BOLT			1
43	55D–4	NUT			1
44	83D–6	NUT			2
45	6512274	CLIP			1
46	NAP	SEAL	28"(711mm) long–Order Ref. 36		2
47	NAP	SEAL	5"(127mm) long –Order Ref. 36		1
48	6610510	TIE			1
49	46D–5	NUT			1
50	25E–16	WASHER			3
51	6630797	GAS SPRING			1
	6632221	STUD	ball		2
	2756257	RETAINER	spring		2
52	6664095	ARM	wiper – W/Ref. 61 & 62		1
53	6664096	BLADE	wiper		1
54	6703751	RETAINER			1
55	6708500	CLAMP	for special applications door		4
56	6703757	SAFETY TREAD			2
57	27E–10	WASHER			1
58	6708975	KIT	shield – Ref. 5, 7, 19, 30, 31, 44, 46, 47, 56 & 59		1
59	6724029	INSTRUCTIONS			1
60	6709527	KEY			1
61	6670288	END	plastic		2
62	6670289	BRACKET			1
63	6666766	GROMMET			1

CAB WINDOWS
(S/N 20001 & Above)

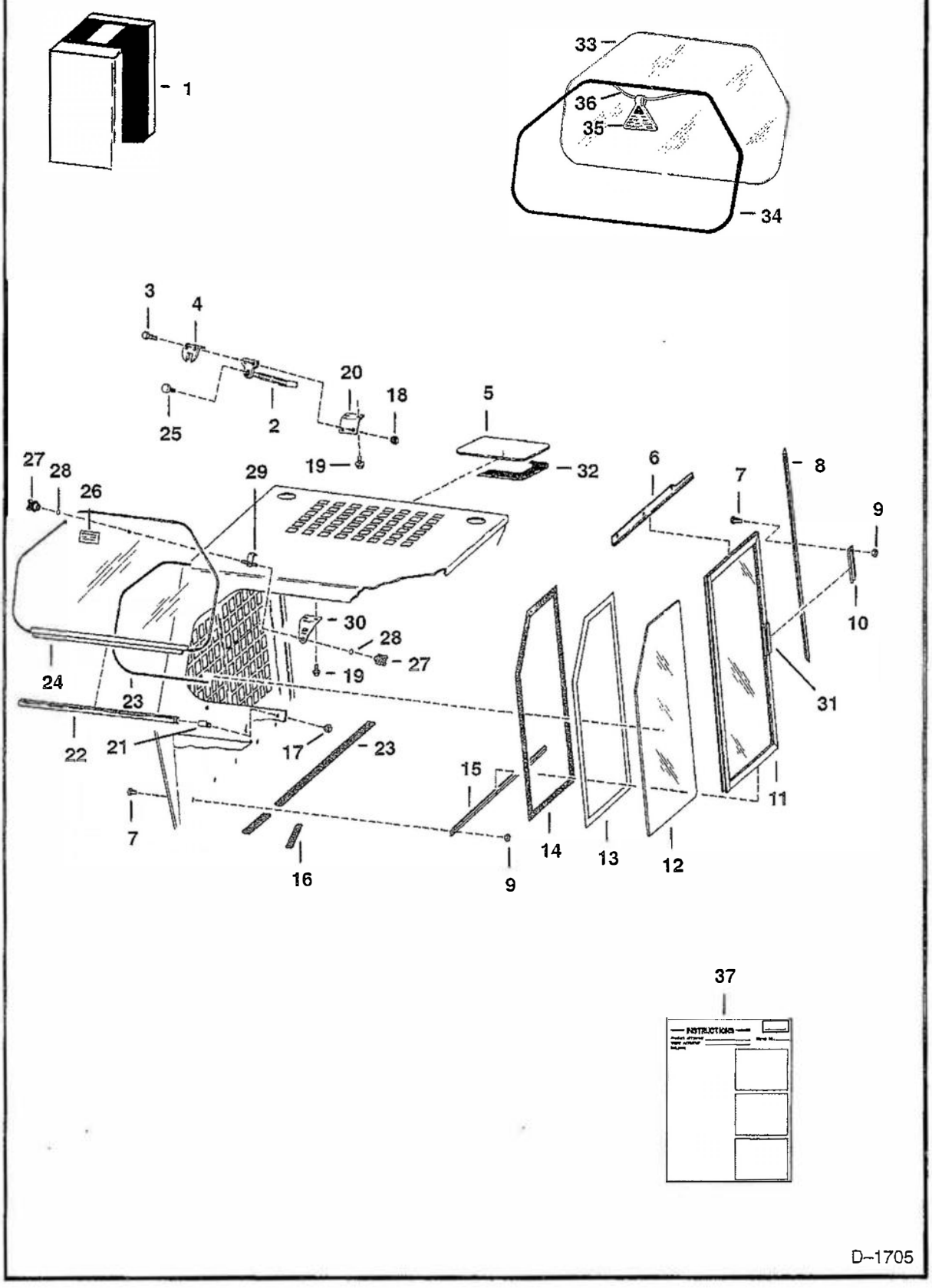

CAB WINDOWS (Cont'd)
(S/N 20001 & Above)

Ref. No.	Part Number	Description	Remarks	Serial Number	Qty.
1	SALES	KIT	W/Ref. 5–17, 21–24, 26–37		1
2	6630929	LATCH	W/Ref. 25		1
3	85G–1014	BOLT			2
4	NAP	CLIP	Order Ref. 27–30 –		
			Was 6630928 [A]		1
5	6701986	WINDOW	top	& Below	1
	6705735	WINDOW	top	& Above	1
6	6703159	TRACK	R.H. – Was 6630921 [A]		1
	6703160	TRACK	L.H. – Was 6630920 [A]		1
7	35C–410	BOLT	Was 25G–410 [D]		26
8	6630918	TRACK	L.H.		1
	6630919	TRACK	R.H.		1
9	83D–4	NUT			26
10	6630924	BRACKET			2
11	6658143	WINDOW	L.H. – Was 6630922 [A]		1
	6658142	WINDOW	R.H. – Was 6630923 [A]		1
12	6702731	WINDOW	Was 6567750 [A]		2
13	6631548	LOOP	scotchmate		1
14	6631549	LOOP	scotchmate		1
15	6661689	TRACK	L.H. – Was 6630916 [A]		1
	6661690	TRACK	R.H. – Was 6630917 [A]		1
16	6513152	MOULDING	bulk – Sold Per Foot		x
17	59D–4	NUT			3
18	50D–10	NUT			2
19	84G–3112	BOLT			2
20	6568540	MOUNT			1
21	6576513	BOLT	Was 6630927 [A]		3
22	6630926	HINGE			1
23	6555351	MOULDING	7.5' (228,6 cm) – 7.5' will do both		
			sides – bulk – Sold Per Foot		x
24	6630925	WINDOW			1
25	6631665	KNOB			1
26	6631625	DECAL	For old style latch		1
27	6571529	KNOB			2
28	58K–109	O–RING			2
29	6571532	BRACKET			1
30	6571533	MOUNT			1
31	6659949	LATCH			1
32	6664351	SEAL	Used W/cab headliner	& Above	1
	6665012	SEAL	Used W/O cab headliner	& Above	1
33	6703021	WINDOW			1
34	6658352	EXTRUSION	8.5' (259 cm) – bulk –		
			Sold Per Foot		x
35	6559515	EXIT TAG			1
36	6554149	CORD	8.5' (259 cm) – bulk –		
			Sold Per Foot		x
37	6566957	INSTRUCTIONS	side window		1
	6566955	INSTRUCTIONS	top window		1

CAB ENCLOSURE
(Special Applications)

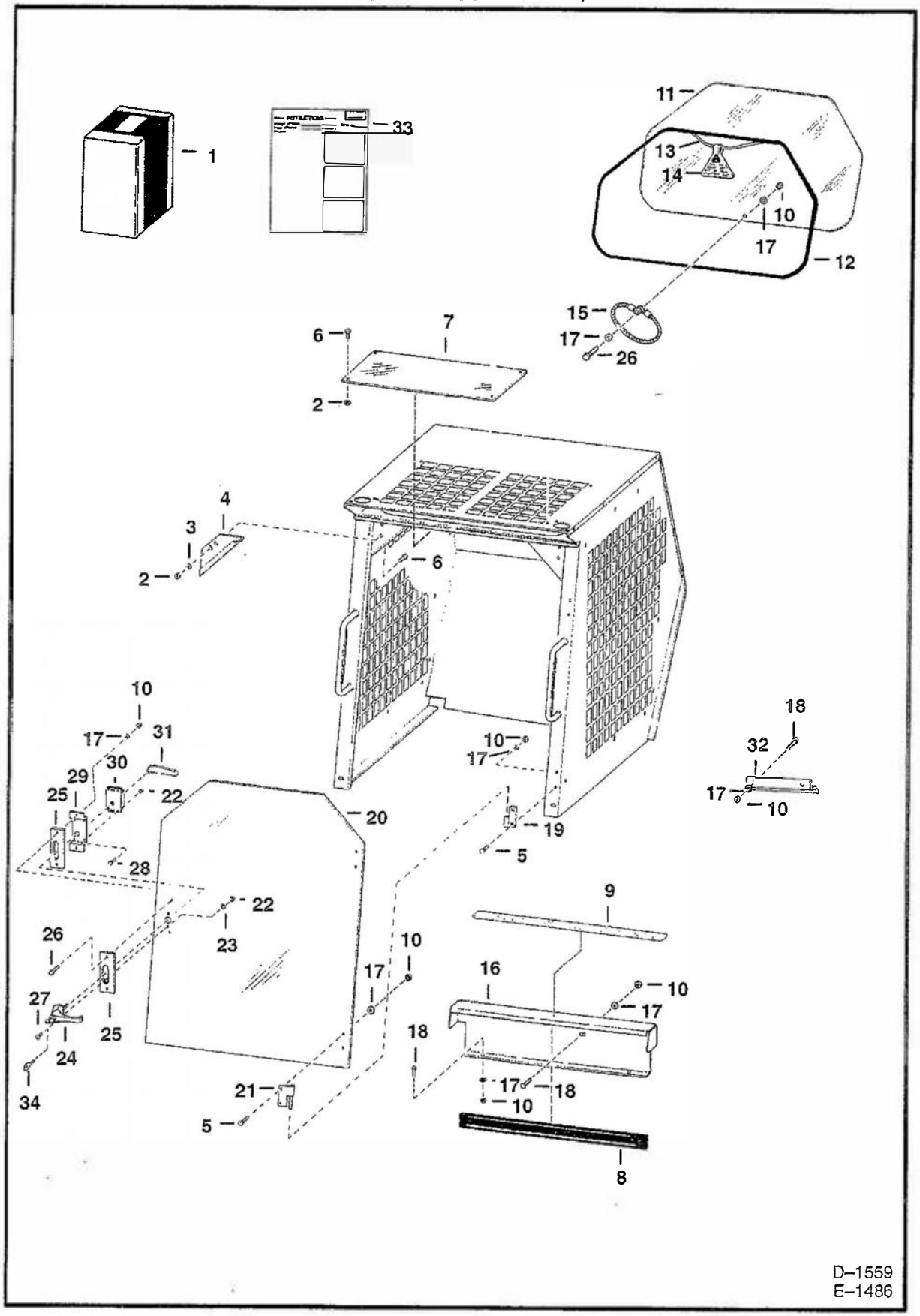

CAB ENCLOSURE (Cont'd)
(Special Applications)

Ref. No.	Part Number	Description	Remarks	Serial Number	Qty.
1	SALES	KIT	cab enclosure – Ref. 2–33		1
2	83D–6	NUT	Was 85D–6 [B]		4
3	25E–18	WASHER			2
4	6555434	CHANNEL		19999 & Below	2
5*	10C–512	BOLT	carriage – Was 6553808 [A]		8
6	35C–616	BOLT	Was 17C–612 [B]		4
7	6705216	WINDOW	top – Was 6564829 [A]		1
8	NAP	SEAL	Purchase Locally		1
9	6564833	SAFETY TREAD			1
10	85D–5	NUT			17
11	6564830	WINDOW	rear		1
12	6658352	EXTRUSION	bulk – Sold Per Foot – Was 6554221 [A]		x
13	6554149	CORD	bulk – Sold Per Foot – Was 6554223 [A]		x
14	6559515	EXIT TAG			1
15	6555331	WIRE ROPE			1
16	6563392	SHIELD		19999 & Below	1
	6568164	SHIELD		20001 & Above	1
17	25E–15	WASHER			46
18	17C–512	BOLT			6
19	6564831	HINGE			2
20	6564069	DOOR			1
21	6564832	HINGE			2
22	12D–10	NUT			6
23	25E–10	WASHER			2
24	1550695	HANDLE	outside – W/Key		1
25	6555054	PLATE			x
26	17C–516	BOLT			3
27	75G–1020	SCREW			2
28	45G–1008	SCREW			4
29	6555059	BRACKET			1
30	6598475	DOOR LATCH			1
31	6515600	HANDLE			1
32	6563446	BRACKET	Used on 843 Only	19999 & Below	1
33	6566403	INSTRUCTIONS			1
34	6665409	KEY			1

CAB ENCLOSURE
(Special Applications)

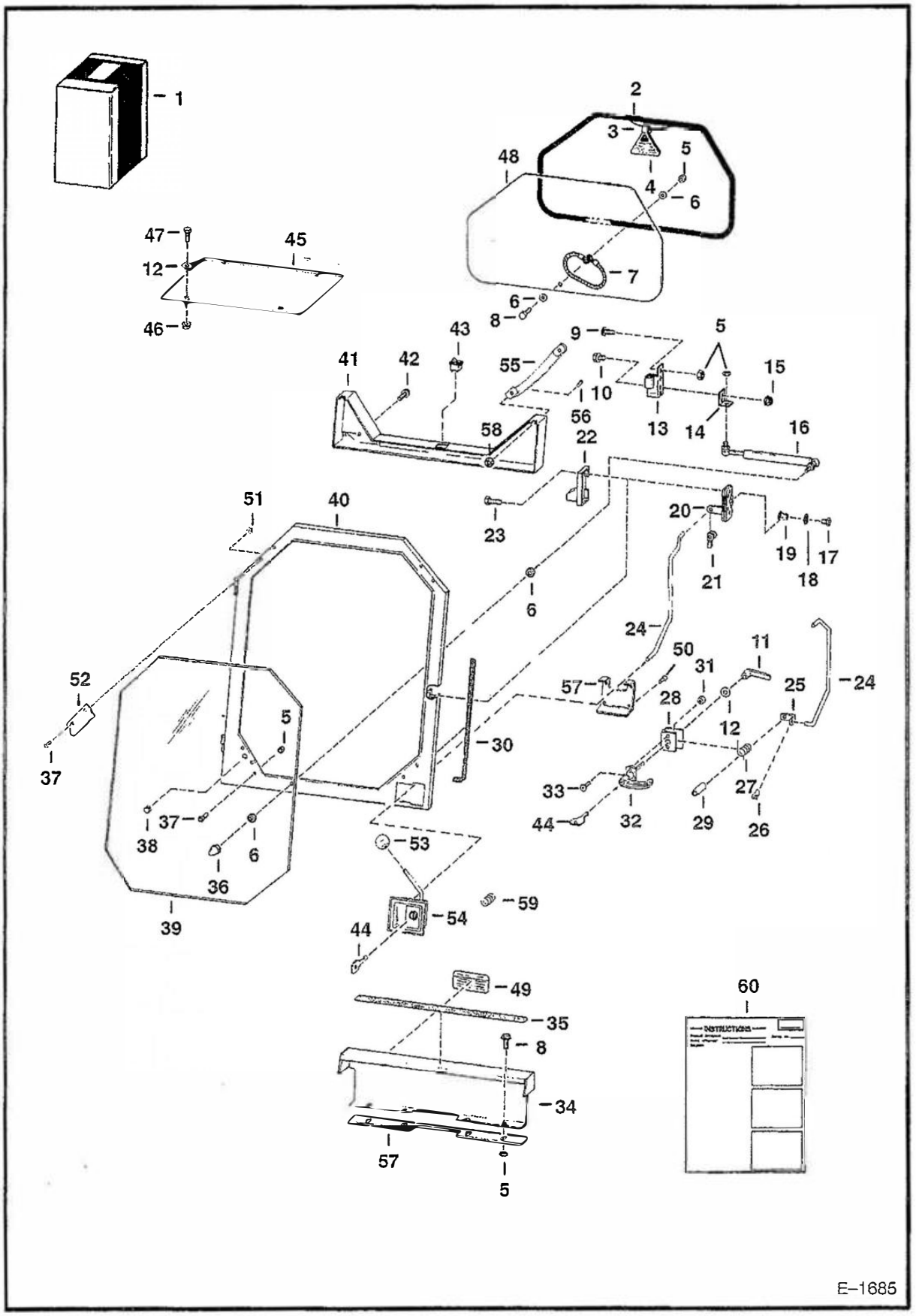

CAB ENCLOSURE (Cont'd)
(Special Applications)

Ref. No.	Part Number	Description	Remarks	Serial Number	Qty.
1	SALES	KIT	Ref. 2–60		1
2	6658352	EXTRUSION	8.5' (259 cm) bulk – Sold Per Foot – Was 6554221 [A]		x
3	6554149	CORD	8.5' (259 cm) bulk – Sold Per Foot – Was 6554223 [A]		x
4	6559515	TAG	exit		1
5	83D–5	NUT			10
6	25E–16	WASHER			4
7	6555331	WIRE ROPE			1
8	35C–516	BOLT			5
9*	10C–512	BOLT	Was 6553808 [A]		6
10	35C–412	BOLT			2
11	6515600	HANDLE	Use with old style latch		1
12	25E–18	WASHER	Use with old style latch		5
13	6571715	HINGE			2
14	6568055	BRACKET			1
15	83D–4	NUT			2
16	6630797	GAS SPRING			1
	6649244	BALL STUD	For Gas Spring		2
	6649245	CLIP			2
17	17C–714	BOLT			1
18	25E–19	WASHER			x
19	6568047	NUT	bushing		1
20	6660932	LATCH	Was 6647789 [A]		1
21	6512274	CLIP			1
22	6568728	SHIELD			1
23	35C–416	BOLT			4
24	6568727	ROD			1
	6704425	ROD	Was 6576470 [A]		1
25	6568528	BRACKET			1
26	6519480	CLIP			1
27	6568725	SPRING			1
28	6568527	BRACKET			1
29	6568526	SPACER			1
30	6568704	SEAL	12' (365,7 cm) bulk – Sold Per Foot		x
31	50D–10	NUT			2
32	6568726	HANDLE			1
33	75G–1016	SCREW			2
34	6568164	SHIELD			1
35	6564833	SAFETY TREAD			1
36	46D–5	NUT			1
37	25G–510	BOLT			1
38	6632454	PLUG			1
39	6569033	WINDOW	.25" poly carbonate		1
40	NAP	DOOR	W/Ref. 39 – Order Ref. 1		1
	6704434	DOOR	Use with new style latch – Was 6576465 [A]		1
41	6568724	SHIELD	Use with old style latch		1
	6704428	SHIELD	Use with new style latch – Was 6576471 [A]		1

CAB ENCLOSURE (Cont'd)
(Special Applications)

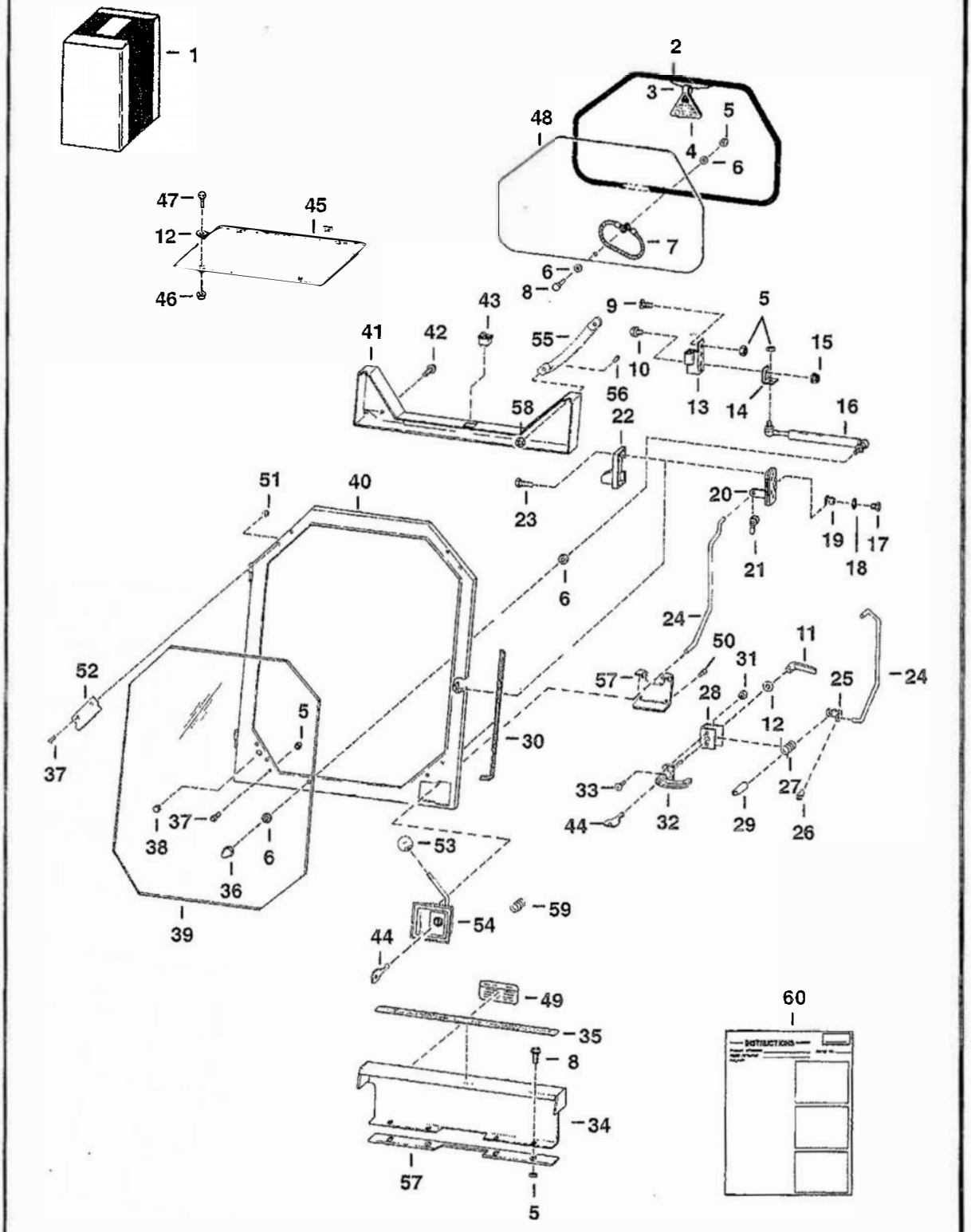

CAB ENCLOSURE (Cont'd)
(Special Applications)

Ref. No.	Part Number	Description	Remarks	Serial Number	Qty.
42	84G–3112	BOLT			4
43	6631009	SWITCH			1
44	6632560	KEY	Use with old style latch		x
45	6705216	WINDOW	top – Was 6564829 [A]		1
46	83D–6	NUT	Was 85D–6 [B]		4
47	35C–616	BOLT	Was 17C–616 [B]		4
48	6564830	WINDOW	rear		1
49	6563410	DECAL			1
50	45G–1008	SCREW			1
51	57D–5	NUT			4
52	6576238	CLIP	window		8
53	6647635	KNOB			1
54	6641274	LATCH	new style		1
55	6631935	HANDLE			1
56	7G–416	BOLT	Was 7G–412 [B]		2
57	6704426	RETAINER	Was 6578398 [A]		1
58	6660988	NUT			2
59	6662834	SPRING			1
60	6570279	INSTRUCTIONS			1

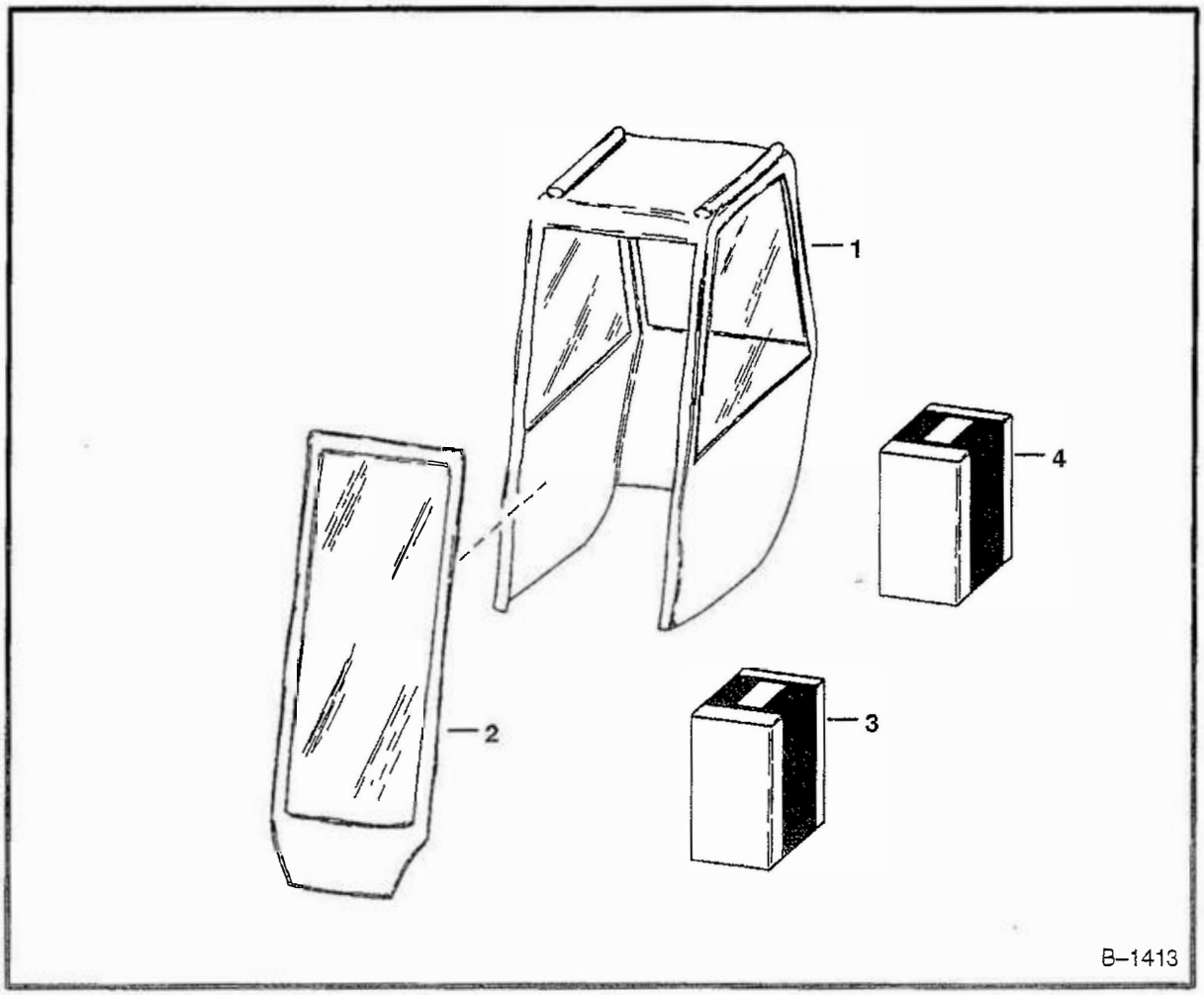

CAB ENCLOSURE
(Canvas)

Ref. No.	Part Number	Description	Remarks	Serial Number	Qty.
1	6565270	ENCLOSURE	W/Ref. 2	19999 & Below	1
2	6599721	DOOR	vinyl		1
		DOOR	lexan – For use with wiper –		
			See Page 211		
3	6662839	HINGE KIT			1
4	6722597	VELCRO	27' (822,9 cm)		1

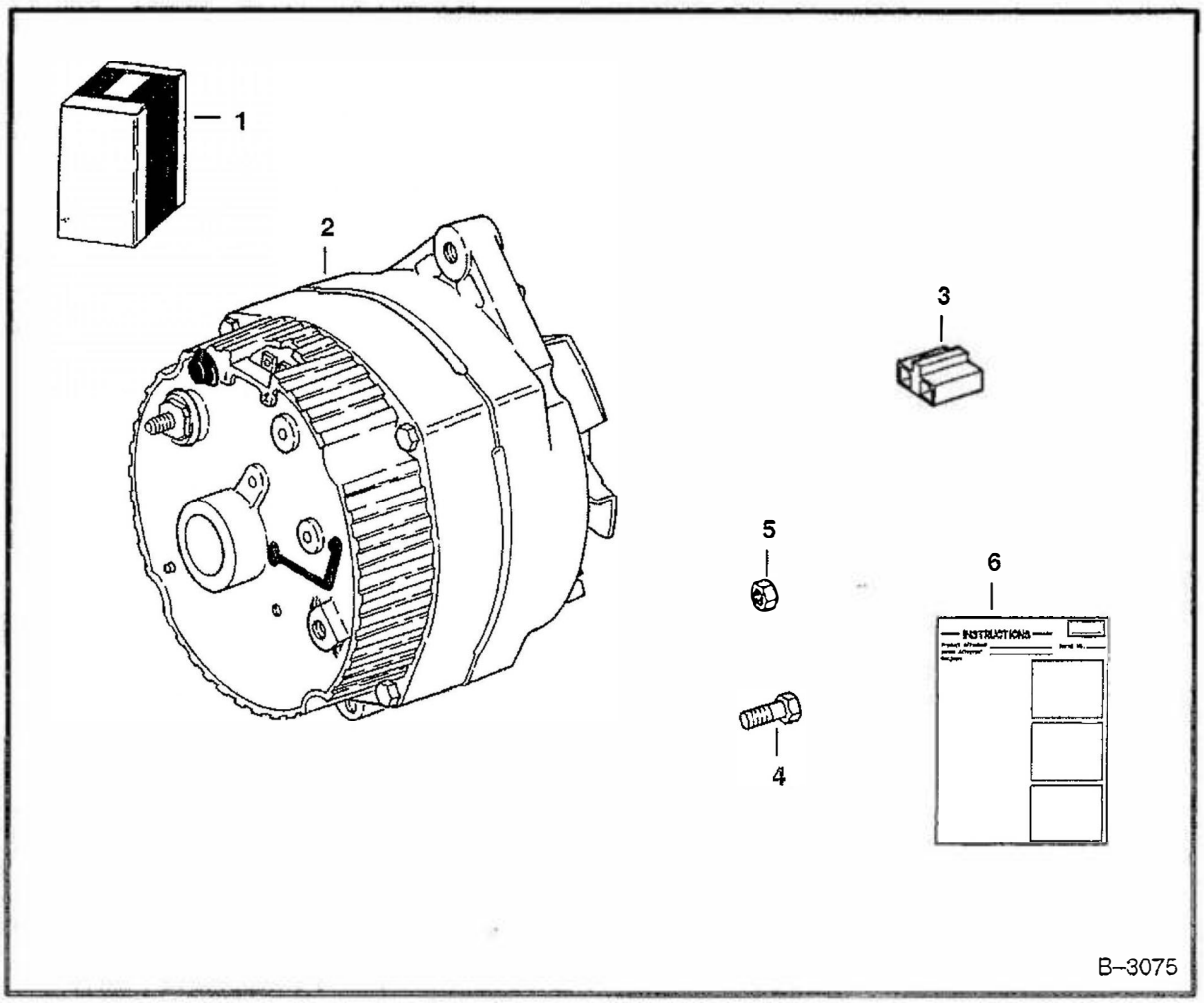

CLOSED ALTERNATOR KIT
(Delco)

Ref. No.	Part Number	Description	Remarks	Serial Number	Qty.
1	NAP	KIT	6559894 Not Available as Kit – Order Ref. 2 – 6		1
2*	NAP	ALTERNATOR	Order 6599740REM – Was 6599740 [A]		1
*	6599740REM	ALTERNATOR			1
3	6510596	CONNECTOR			1
4	29CM–825	BOLT			1
5	4DM–6	NUT			1
6	6556415	INSTRUCTIONS			1

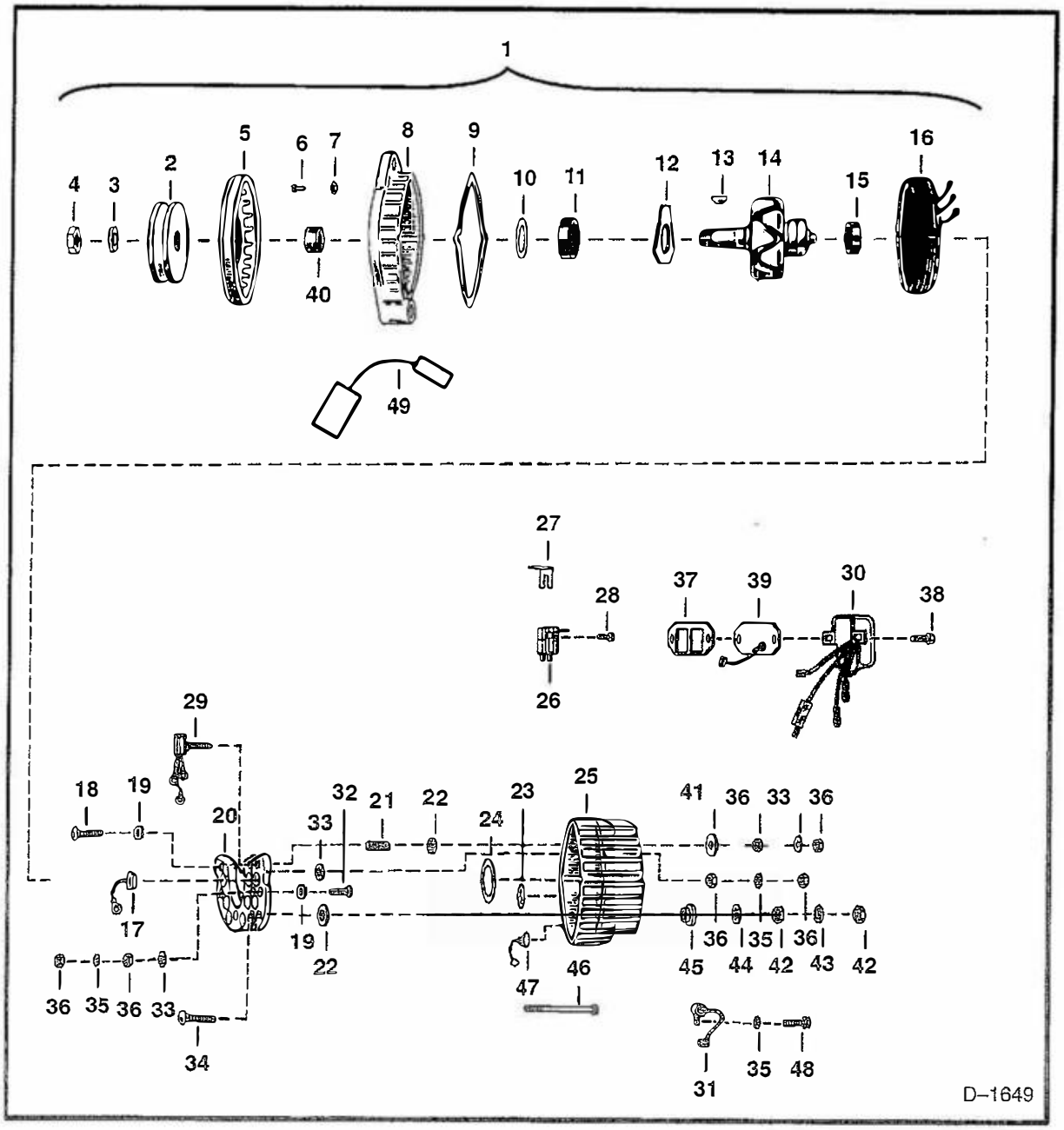

CLOSED ALTERNATOR
(30 Amp. Motorola or Prestolite)

Ref. No.	Part Number	Description	Remarks	Serial Number	Qty.
1	6630098	ALTERNATOR	Ref. 3–48 – See BTI 212		1
	NAP	ALTERNATOR	3–29, 31–48 – Order 6630098 – See BTI 212 – Was 6662990 [A]		1
2	6630163	PULLEY	Was 6630163 [B]		1
3	6635557	WASHER	Was 896978 [A]		1
4	6635526	NUT	Was 896979 [A]		1
5	899157	FAN			1
6	41G–806	SCREW			3
7	17E–8	WASHER			3

CLOSED ALTERNATOR (Cont'd)
(30 Amp. Motorola or Prestolite)

Ref. No.	Part Number	Description	Remarks	Serial Number	Qty.
8	6630340	HOUSING			1
9	6630345	GASKET			1
10	899374	SEAL			1
11	889163	BEARING			1
12	6630343	RETAINER			1
13	6J–405	KEY			1
14	899163	ROTOR			1
15	1991038	BEARING			1
16	6630341	STATOR			1
17	899375	DIODE			3
18	7C–322	BOLT			1
19	897245	INSULATOR			4
20	899167	SINK	heat		1
21	897239	SLEEVE			1
22	899376	WASHER			2
23	899165	INSULATOR			3
24	896992	RETAINER			1
25	6630342	HOUSING			1
26	6630344	BRUSH ASSY.			1
27	899169	INSULATOR			1
28	84G–1608	BOLT			2
29	6630350	DIODE	field		1
30	6630349	REGULATOR	voltage		1
31	6630348	CAPACITOR			1
32	7C–312	BOLT			3
33	896996	WASHER			5
34	899377	BOLT			1
35	17E–10	WASHER			5
36	12D–10	NUT			10
37	899170	GASKET			1
38	84G–1910	BOLT			2
39	6630346	COVER			1
40	6649459	SPACER	Was 899158 [A]		1
41	896990	WASHER			1
42	62D–4	NUT			2
43	4E–4	WASHER			1
44	897732	WASHER			1
45	897719	INSULATOR			1
46	896984	BOLT	thru		4
47	899378	DIODE			3
48	84G–1906	BOLT			1
49	6713803	HARNESS	Was 6704887 [A]		1

DECALS

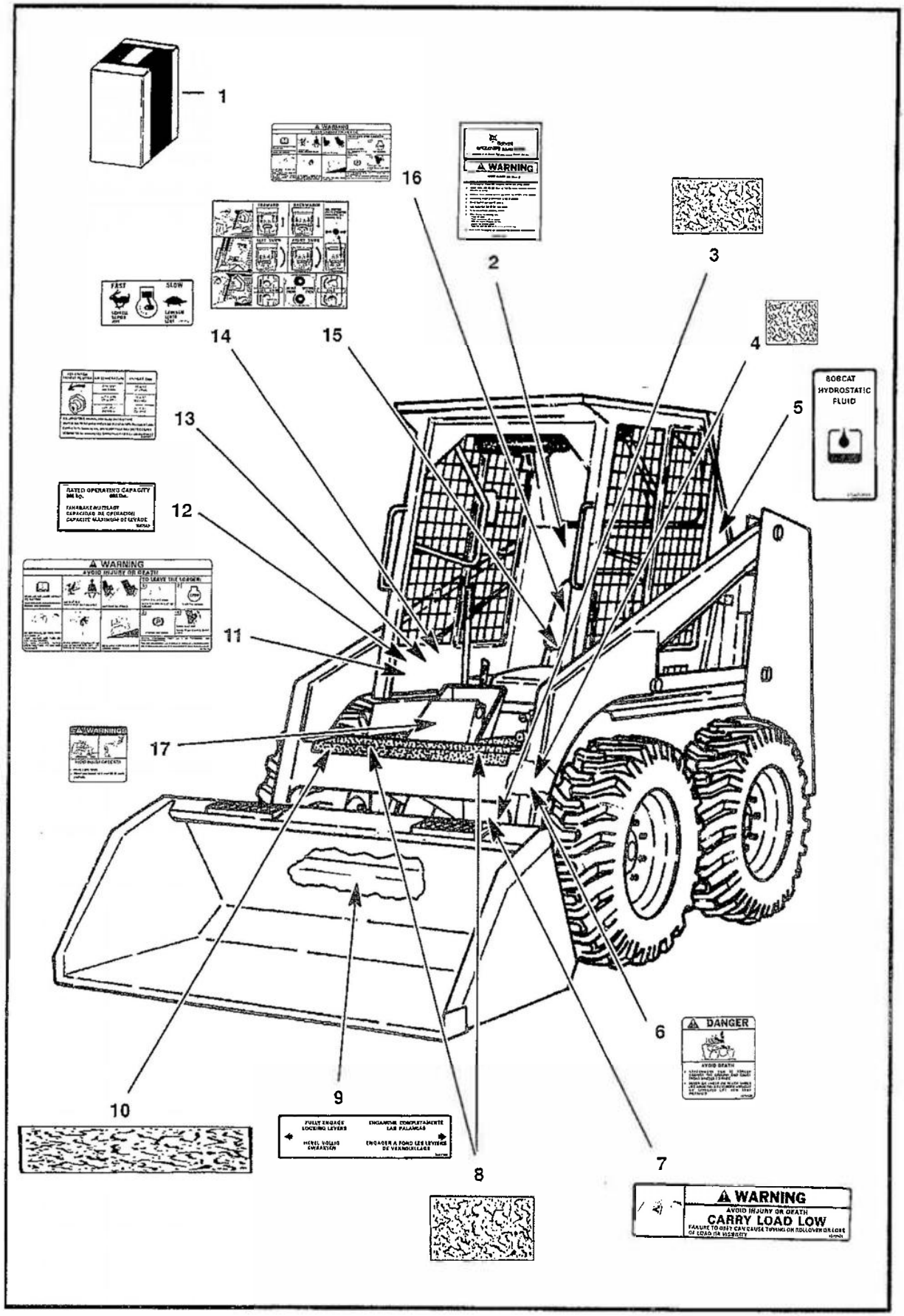
1
2
3
4
5
6
7
8
9
10
11
12
13
14
15
16
17
WARNING
BOBCAT HYDROSTATIC FLUID
DANGER
WARNING
AVOID INJURY OR DEATH
CARRY LOAD LOW

DECALS (Cont'd)

Ref. No.	Part Number	Description	Remarks	Serial Number	Qty.
1	6569282	KIT	decal – Ref. 2–17 & 2–12 On Page 233		1
2	6567795	KIT	handbook – W/Wire Rope		1
	6558309	WIRE ROPE	33" (838,2 mm) – bulk – Sold Per Foot – Also Order –2– 6558310 – Was 6558305 [A]		1
	6558310	SLEEVE			2
3	6553976	SAFETY TREAD	5" x 8" (127 x 203,2 mm)		1
4	6559077	SAFETY TREAD	3.25" x 3.25" (82,5 x 82,5 mm)		2
5	6565990	DECAL	hydraulic fluid		1
6	6579509	DECAL	danger – Was 6702301 [A]		1
7	6579528	DECAL	carry load low – Was 6565254 [A]		1
8	6577949	SAFETY TREAD	6.8"(172,7 mm) x 8.75"(222 mm) – Was 6553977 [A]		2
9	6561383	DECAL	Bob–Tach		1
10	6553978	SAFETY TREAD	35" x 8" (889 x 203,2 mm)		1
11	6702255	DECAL	warning		1
12	6561376	DECAL	capacity		1
13	6565927	DECAL	pre–heat		1
14	6557565	DECAL	throttle		1
15	6569021	DECAL	operating		1
16	6579510	DECAL	warning – Was 6575854 [A]		1
17	6710358	DECAL	warning		1

DECALS

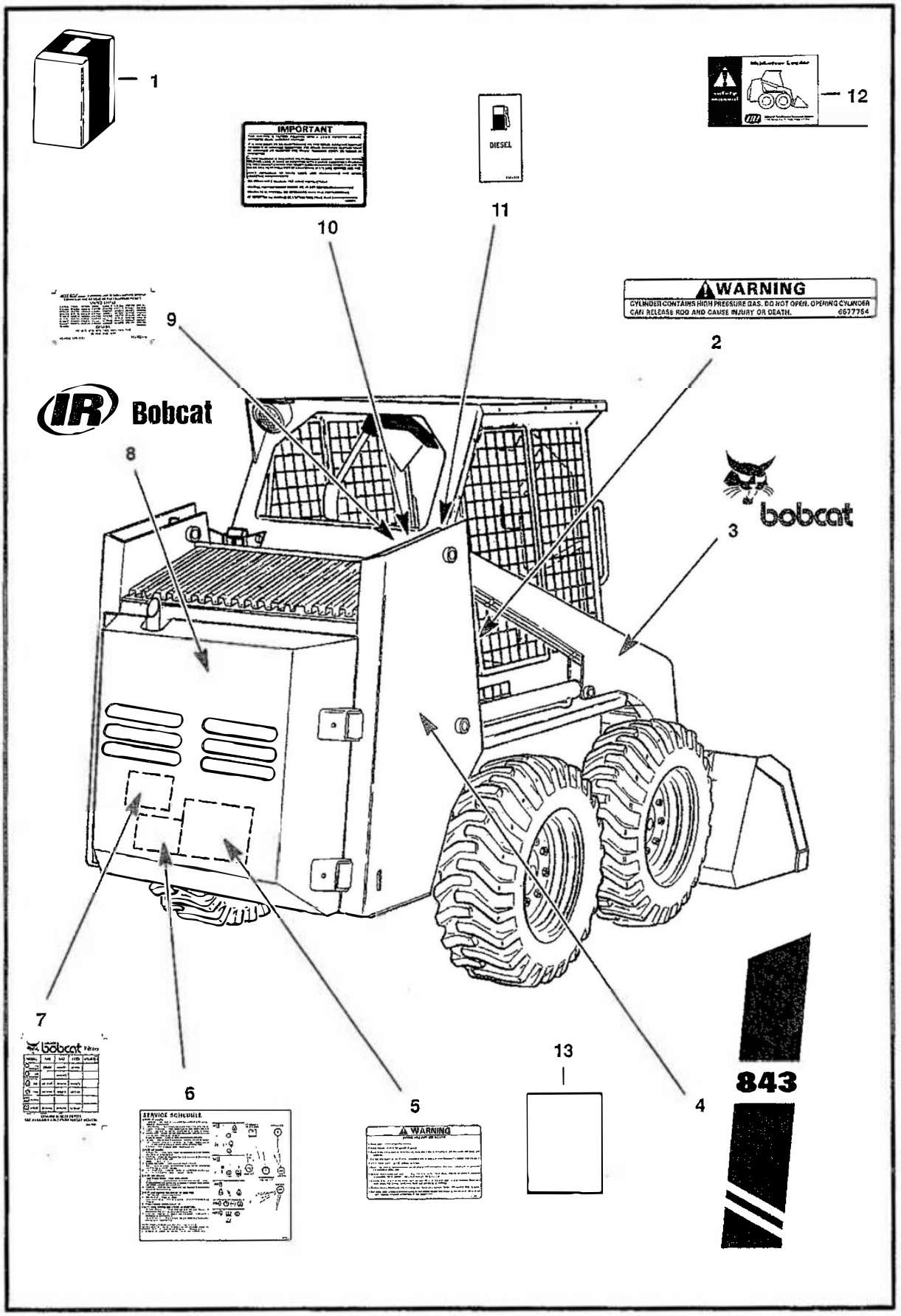
1
IMPORTANT
DIESEL
12
10
11
9
WARNING
CYLINDER CONTAINS HIGH PRESSURE GAS. DO NOT OPEN. OPENING CYLINDER CAN RELEASE ROD AND CAUSE INJURY OR DEATH. 6677754
2
Bobcat
8
bobcat
3
7
13
843
6
5
4
WARNING

DECALS (Cont'd)

Ref. No.	Part Number	Description	Remarks	Serial Number	Qty.
1	6569282	KIT	decal – Ref. 2–12 & 2–17 On Page 231		1
2	6577754	DECAL	gas spring warning – Was 6568741 [A]		2
3	6559070	DECAL	Bobcat – R.H.		2
	6559071	DECAL	Bobcat – L.H.		1
4	6569089	DECAL	model no. – R.H. – not in kit		1
	6569088	DECAL	model no. – L.H. – not in kit		1
5	6567875	DECAL	service		1
6	6703328	DECAL	filters – not in kit – Was 6569342 [A]		1
7	6576441	DECAL	filter replacement		1
8*	6727307	DECAL	Was 6711327 [A]		1
9	6557224	DECAL	patent		1
10	6560573	DECAL	spark arrestor		1
11	6589739	DECAL	diesel fuel – Was 6561379 [A]		1
12	6556500	SAFETY MANUAL	Not in Kit		1
13	6708929	DECAL	propylene glycol antifreeze		1

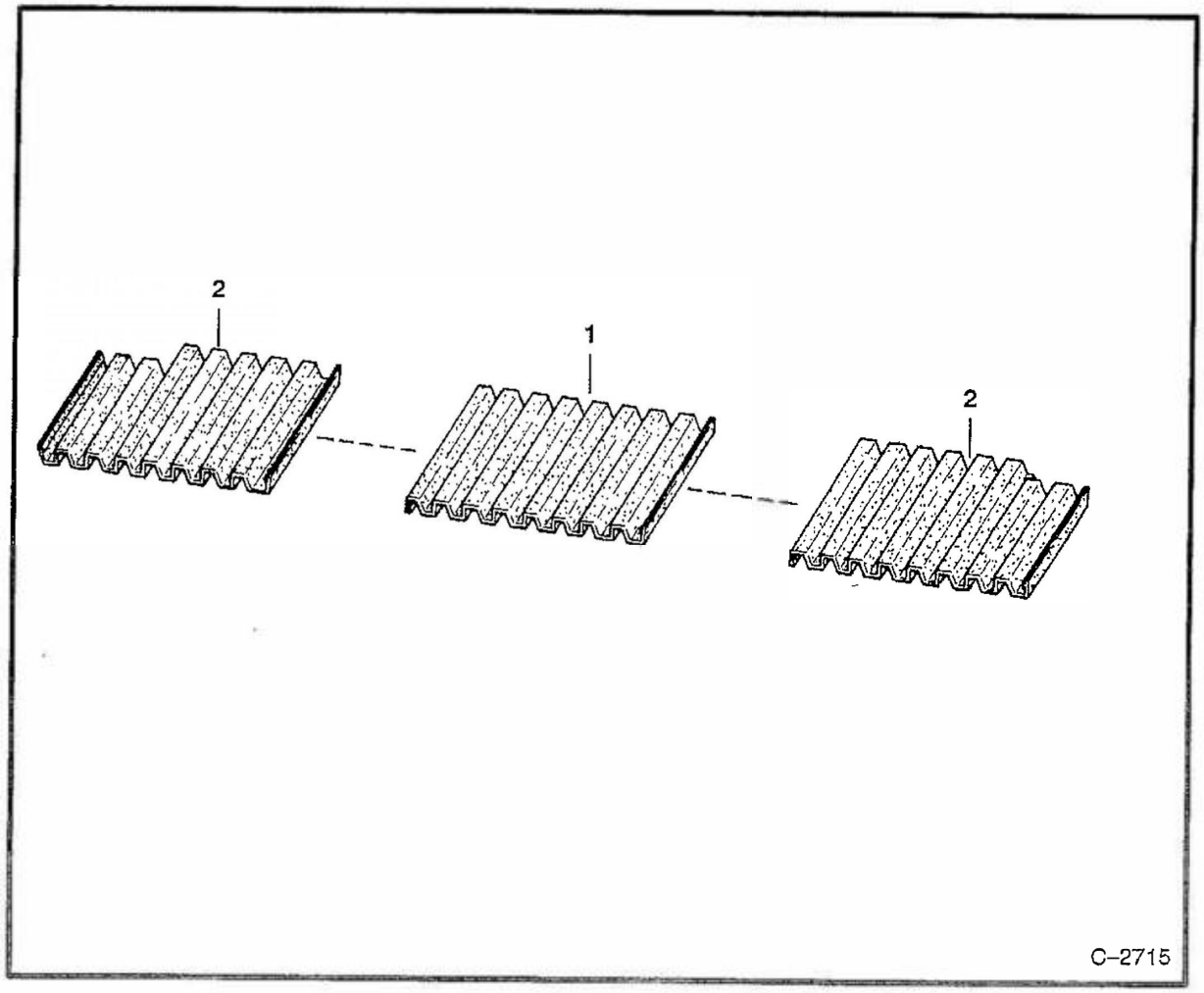

DEBRIS SCREEN KIT

Ref. No.	Part Number	Description	Remarks	Serial Number	Qty.
1	6564283	SCREEN	See BTI 207		1
2	6564285	SCREEN	See BTI 207		2

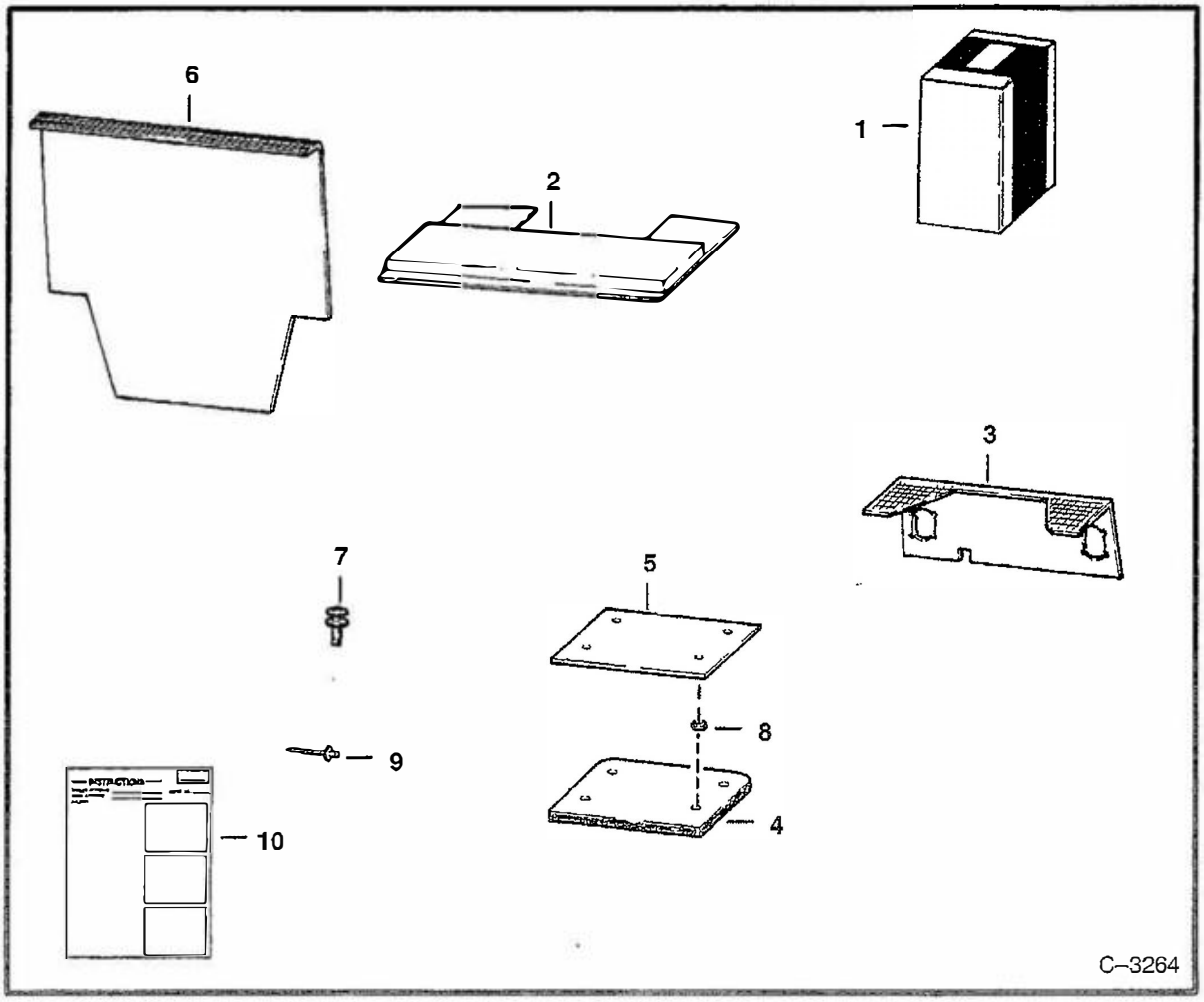

DELUXE UPHOLSTERY KIT

Ref. No.	Part Number	Description	Remarks	Serial Number	Qty.
1	NAP	KIT	Order Ref. 2–10		1
2	6565373	INSULATION	cab top		1
3	6568321	INSULATION	843 Only		1
4	6577273	INSULATION	seat pan – Was 6567902 [A]		1
5	6577439	INSULATION	seat pan – Was 6567903 [A]		1
6	6576494	INSULATION	cab back – Was 6568179 [A]		1
7	6630800	PIN	expander		1
8	61D–5	NUT			4
9	6661209	RIVET	Was 6632113 [A]		8
10	6570031	INSTRUCTIONS			1

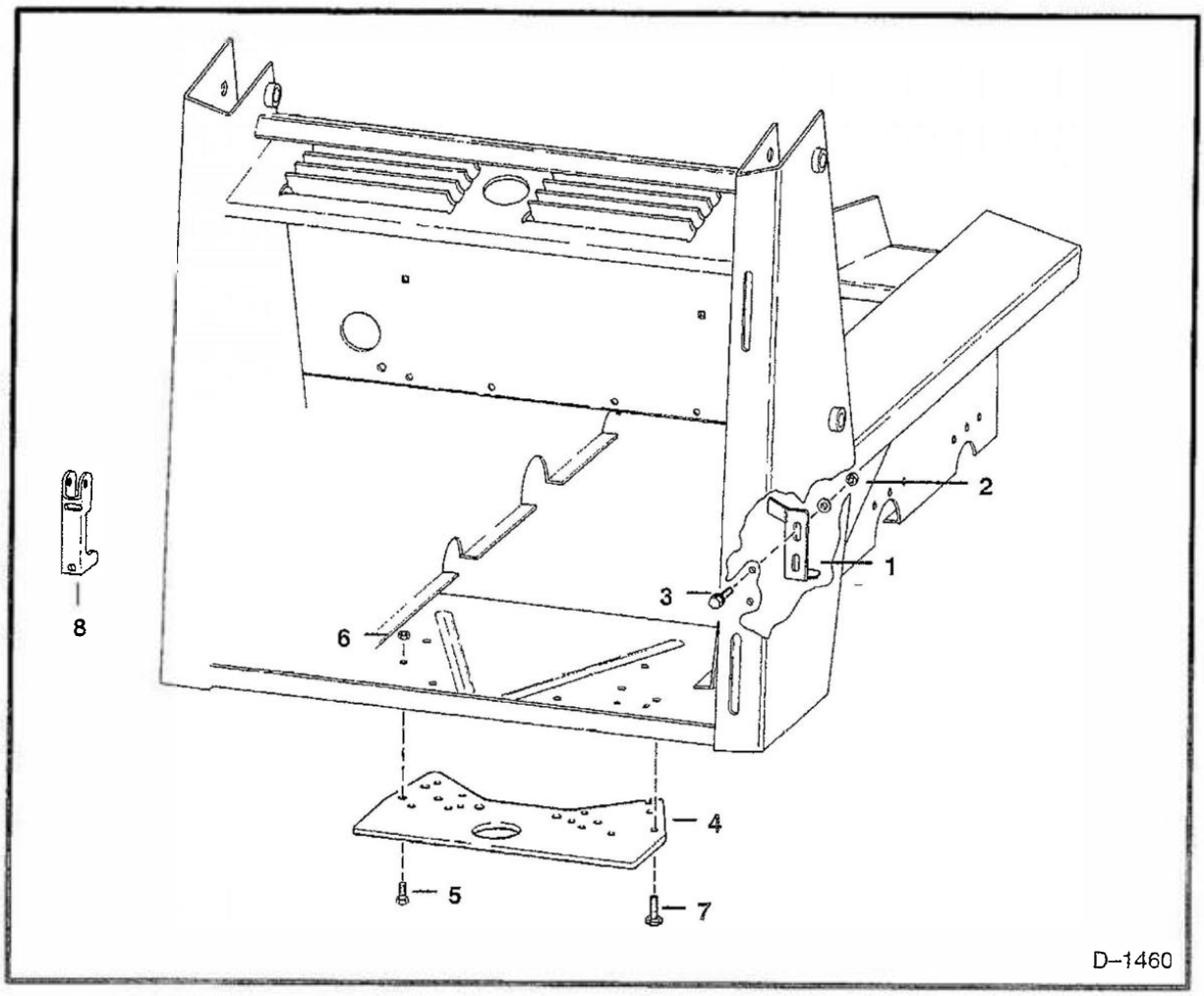

DOOR STOP & TOW HITCH
(For European Export Kit)

Ref. No.	Part Number	Description	Remarks	Serial Number	Qty.
1	6563614	DOOR STOP			1
2	6563612	BUSHING			1
3	84G–3724	BOLT			1
4	6563613	HITCH			1
5	7C–832	BOLT			2
6	83D–8	NUT			2
7	17C–628	BOLT			2
	17C–1064	BOLT			2
8	6563681	HANDLE	Was 6563989 [A]		1

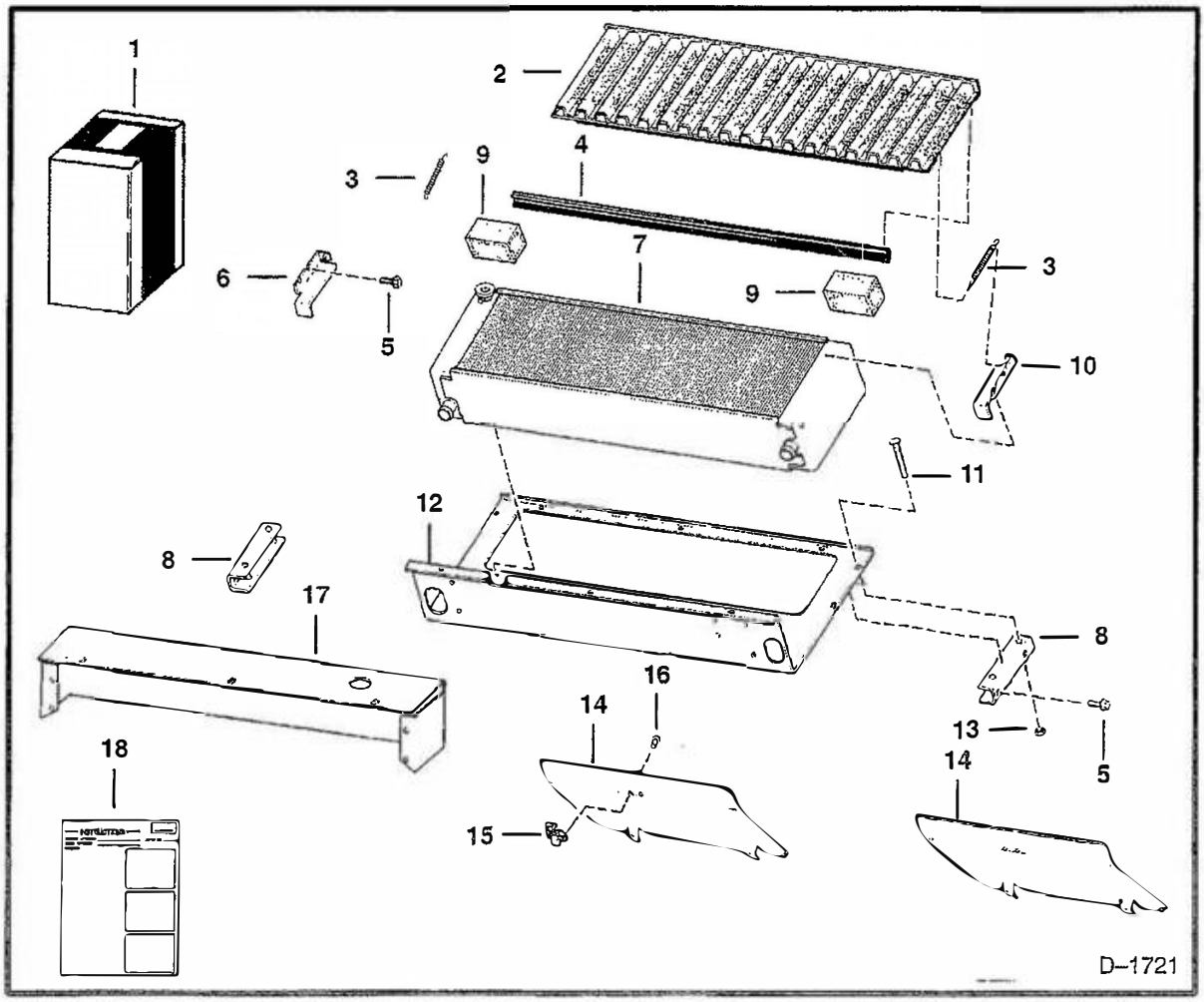

ENGINE COOLANT KIT

Ref. No.	Part Number	Description	Remarks	Serial Number	Qty.
1	6569297	KIT			1
2	6567714	GRILL	rear		1
3	6630533	SPRING			2
4	4126590	MOULDING	bulk – Sold Per Foot		x
5	84G–3712	BOLT	self–threading		8
6	6567893	BRACKET	retainer		1
7	6630558	RADIATOR			1
8	6567719	BRACKET	channel		2
9	6554274	SEAL	foam – Bulk – Sold Per Foot		x
10	6567892	BRACKET	retainer		1
11	7C–536	BOLT			4
12	6567715	SHIELD	heat		1
13	57D–5	NUT			4
14	6567718	COVER			2
15	6598955	LATCH			2
16	6631024	RIVET			4
17	6567720	SHIELD	muffler		1
18	6570084	INSTRUCTIONS			1

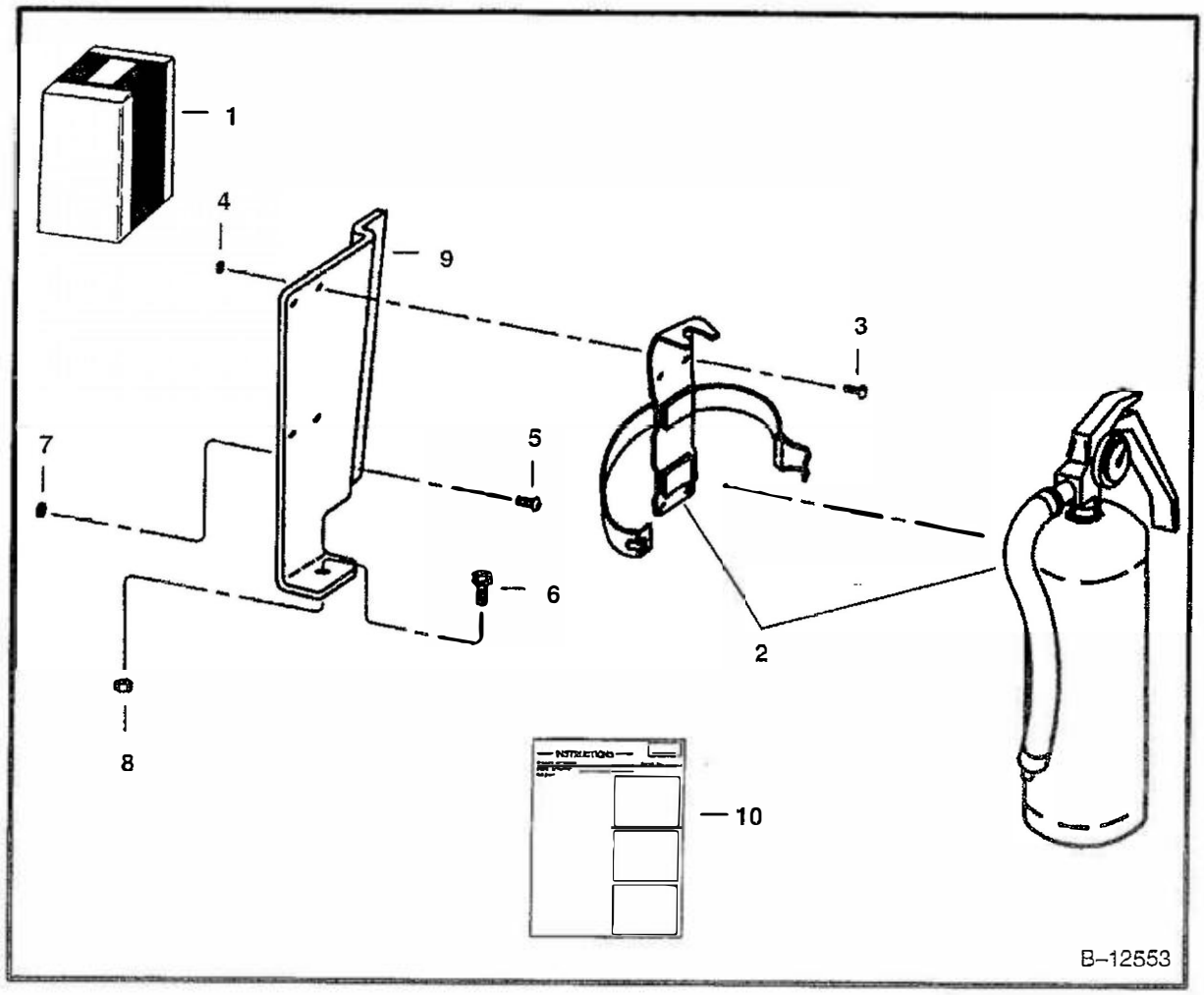

FIRE EXTINGUISHER

Ref. No.	Part Number	Description	Remarks	Serial Number	Qty.
1	6569112	KIT	fire extinguisher – Ref. 2–10		1
2	1908806	EXTINGUISHER			1
3	85G–1008	SCREW			4
4	12D–10	NUT			4
5	25G–410	BOLT			2
6	35C–516	BOLT			1
7	83D–4	NUT			2
8	83D–5	NUT			1
9	6569095	MOUNT			1
10	6570040	INSTRUCTIONS			1

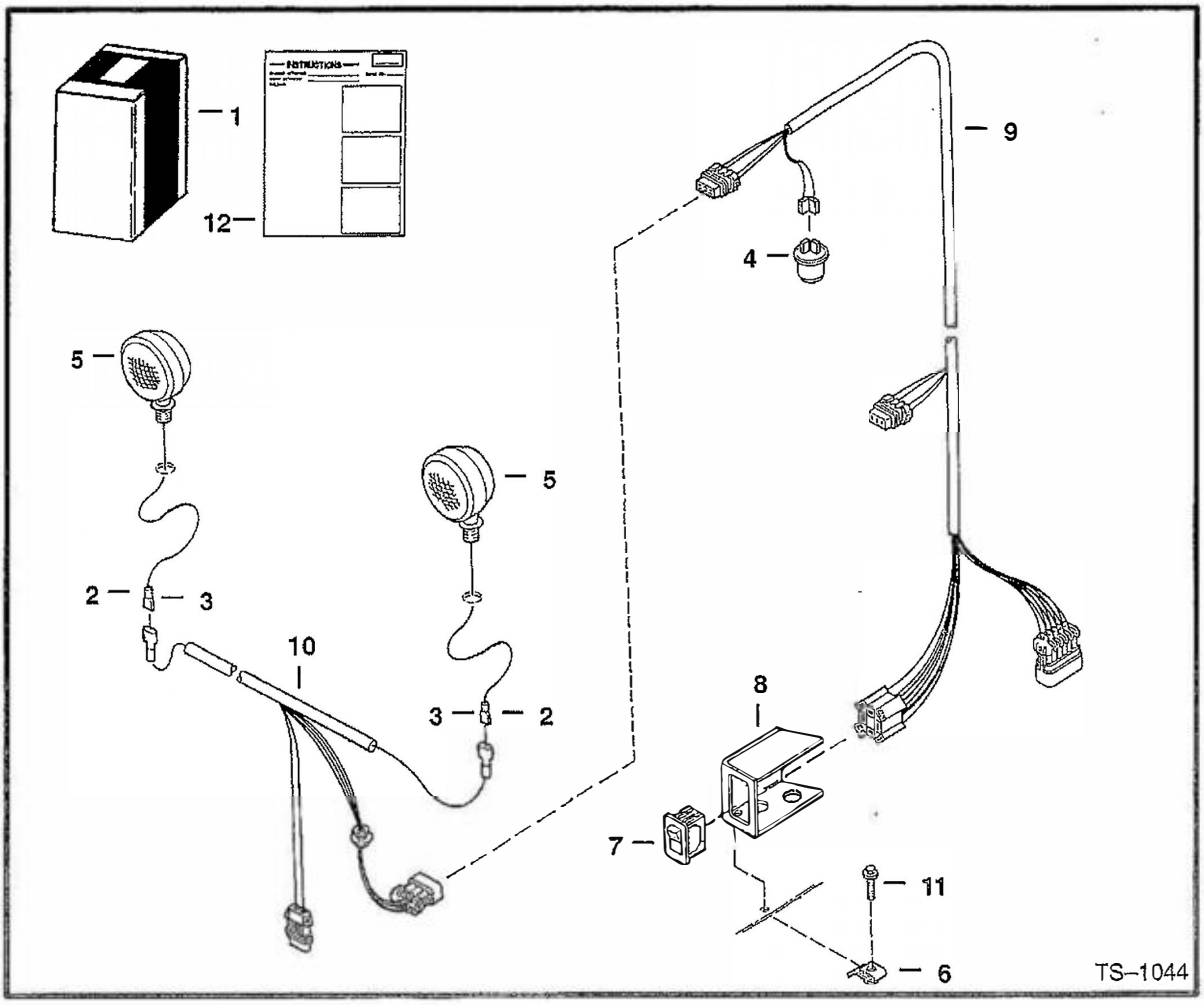

FLASHER LIGHTS

Ref. No.	Part Number	Description	Remarks	Serial Number	Qty.
1	6558076	KIT	Flasher – Ref. 2 – 6		1
2	614142	SLEEVE			2
3	6515131	BLADE			2
4	6557904	FLASHER			1
5	6517516	LIGHT	Was 6557903 [A]		2
6	6660988	RETAINER			2
7	6668815	SWITCH			1
8	6711708	MOUNT			1
9	6712288	HARNESS			1
10	6714213	HARNESS			1
11	31C–420	BOLT			2
12	6556222	INSTRUCTIONS			1

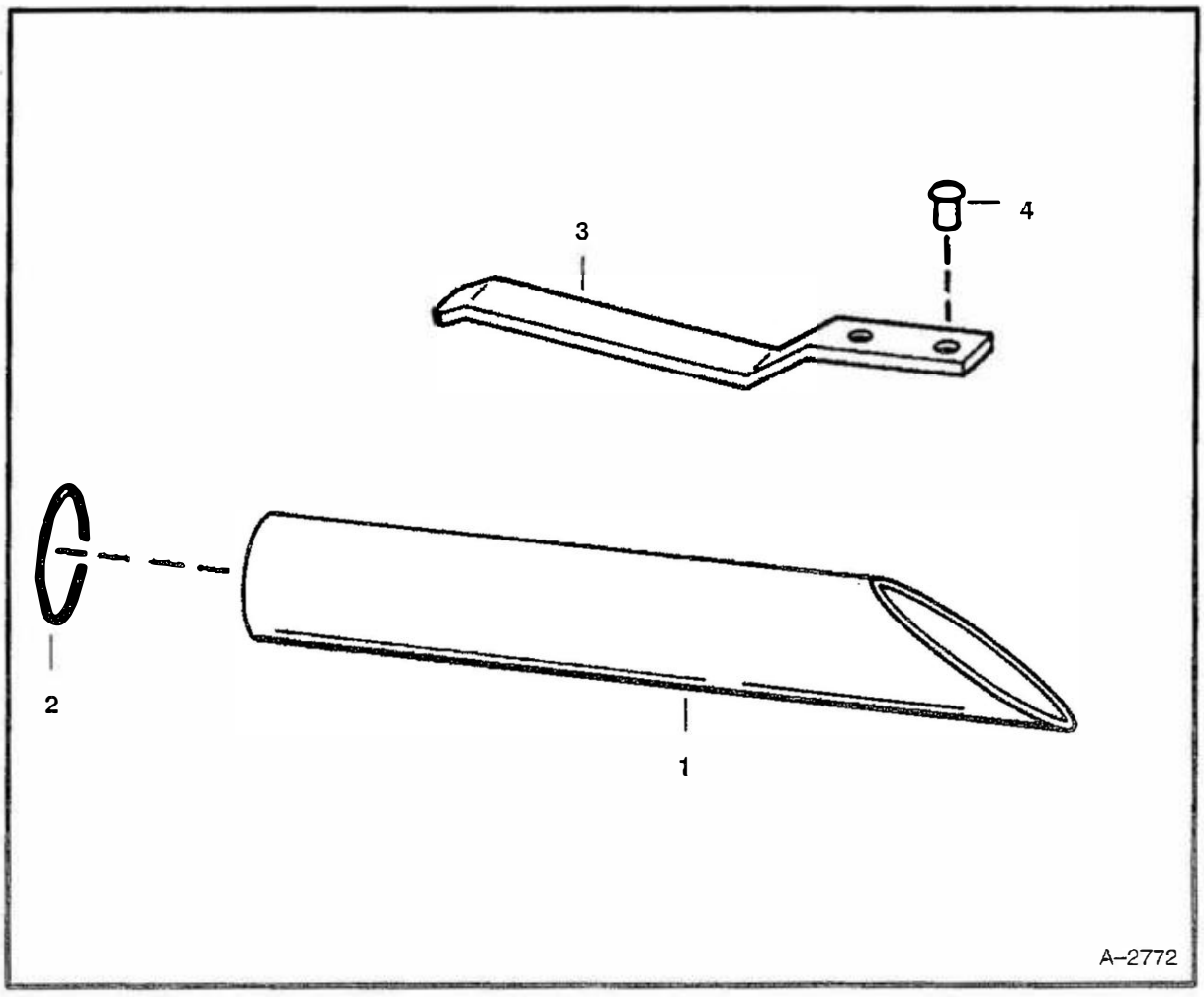

FUEL FILL EXTENSION
(For European Export Kit)

Ref. No.	Part Number	Description	Remarks	Serial Number	Qty.
1	6563987	EXTENSION			1
2	79K–20	O–RING			1
3	6564304	RETAINER			1
4	6630207	RIVET	Was 6512797 [B]		2

High quality Bobcat brand work tools are available to help with your cleanup needs.

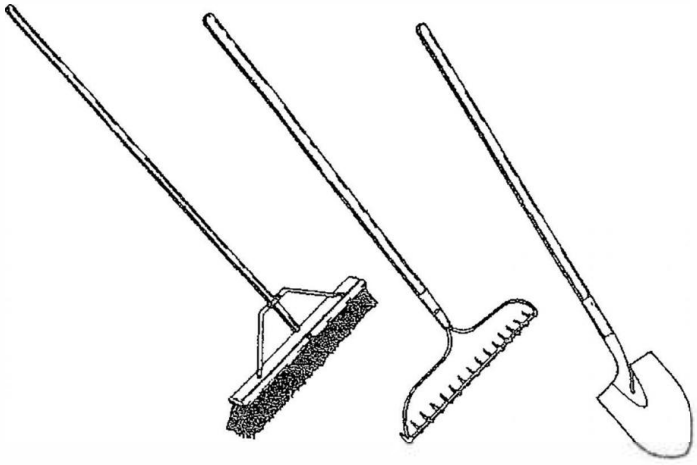

Available from Bobcat Parts.

Bobcat

HAND CONTROLS KIT

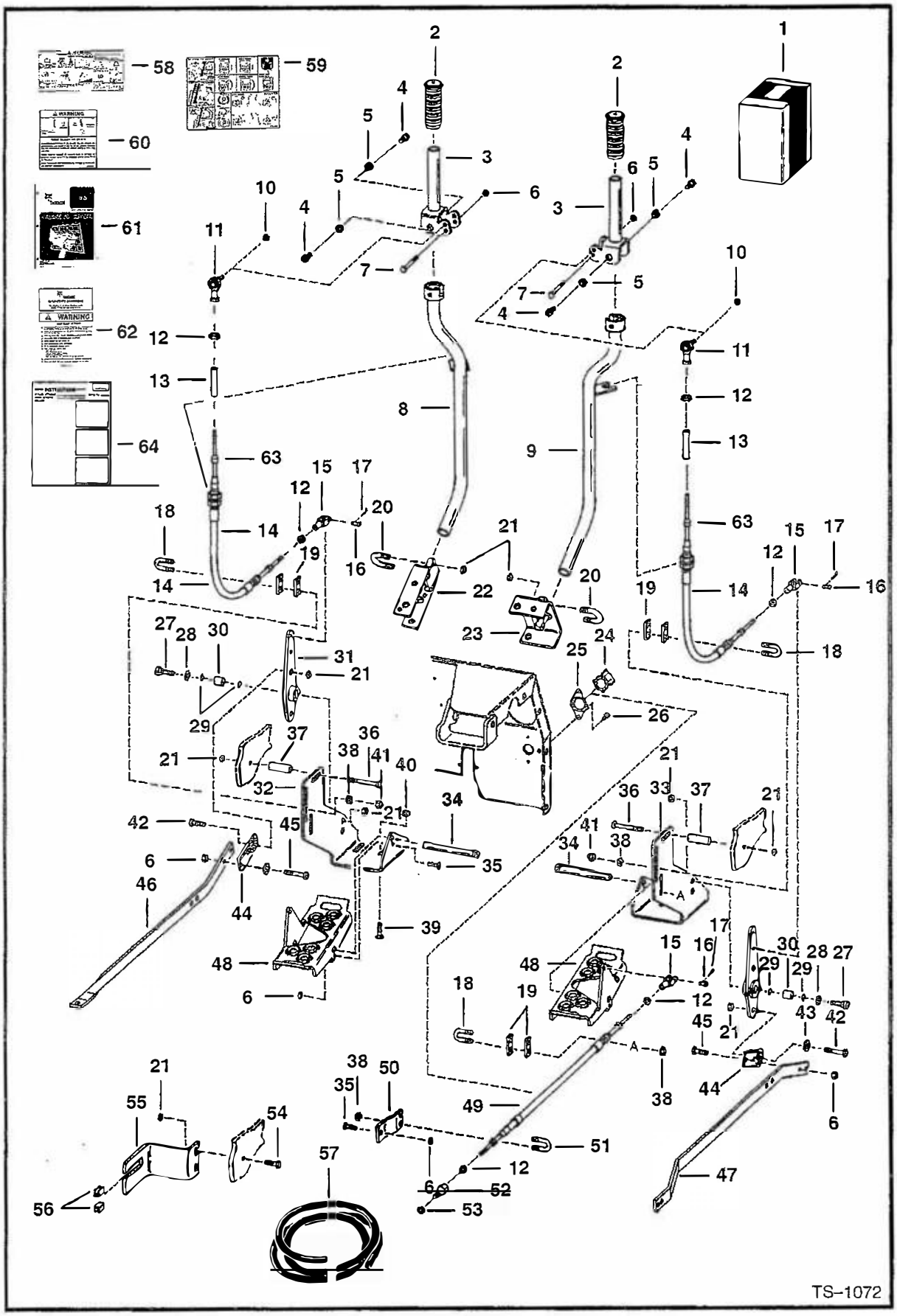

HAND CONTROLS KIT (Cont'd)

Ref. No.	Part Number	Description	Remarks	Serial Number	Qty.
1	NAP	KIT	Ref. 2–29 & 32–64 – Was 6703460 [A]		1
2	6513963	GRIP			2
3	6703380	LEVER			2
4	38C–606	BOLT			4
5	6702990	BUSHING	bronze sleeve		4
6	85D–4	NUT			7
7	17C–440	BOLT			2
8	6703384	LEVER			1
9	6703387	LEVER			1
10	86D–4	NUT			2
11	6631036	BALL JOINT			2
12	8D–4	NUT			6
13	6658930	BOOT			2
14	6658613	CABLE			2
15	2J–4200	ROD END			3
16	4F–4051	PIN			3
17	6513495	COTTER			3
18	6703888	U–BOLT			3
19	6703735	PLATE			6
20	6700768	U–BOLT			4
21	85D–6	NUT			16
22	6703374	BRACKET			1
23	6703377	BRACKET			1
24	6587763	BOOT			1
25	6592123	RETAINER			1
26	84G–1612	BOLT			2
27	38C–816	BOLT			2
28	6655781	BEARING	thrust		2
29	58K–14	O–RING			4
30	6702782	BUSHING	bronze – Not in Kit		2
31	6703390	BELLCRANK	W/Ref. 30		2
32	6703371	BRACKET			1
33	6703370	BRACKET			1
34	6703367	PIN			2
35	17C–416	BOLT			2
36	17C–640	BOLT			2
37	6703890	SPACER			2
38	83D–5	NUT			8
39	37C–616	BOLT			4
40	57D–6	NUT			4
41	46D–5	NUT			4
42	17C–620	BOLT			2
43	6563914	WASHER			2
44	6658682	BEARING	swivel		2
45	17C–410	BOLT			4
46	6703709	LINK	L.H.		1
47	6703710	LINK	R.H.		1
48	6703368	PEDAL			2
49	6660354	CABLE			1
50	6565006	BRACKET			1

HAND CONTROLS KIT (Cont'd)

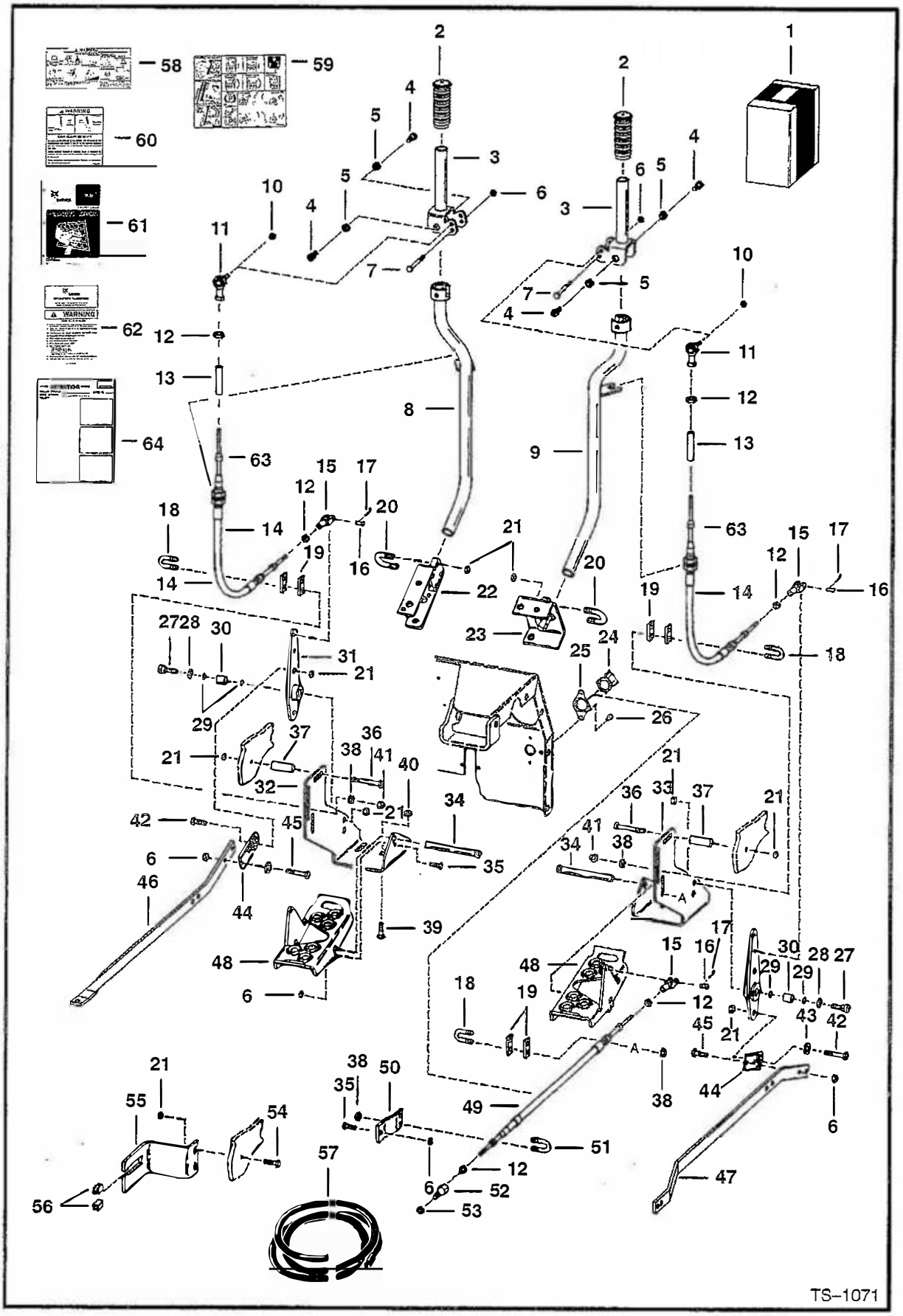

HAND CONTROLS KIT (Cont'd)

Ref. No.	Part Number	Description	Remarks	Serial Number	Qty.
51	6592766	U-BOLT			1
52	6565005	ADAPTER			1
53	7D-4	NUT			1
54	17C-616	BOLT			2
55	6703892	BRACKET			1
56	NAP	GUIDE	2.20" (55,9 mm) – Order Ref. 57		2
57	6660355	GUIDE	bulk – Sold Per Foot		x
58	6704283	DECAL	operations		1
59	6702997	DECAL	warning		1
60	6703919	DECAL	warning		1
61	6720908	MANUAL	operators		1
62	6720909	HANDBOOK	W/wire rope		1
	6558309	WIRE ROPE	Also Order 2 of 6558310		1
	6558310	SLEEVE	wire rope		2
63	6666534	SEAL			4
64	6720922	INSTRUCTIONS			1

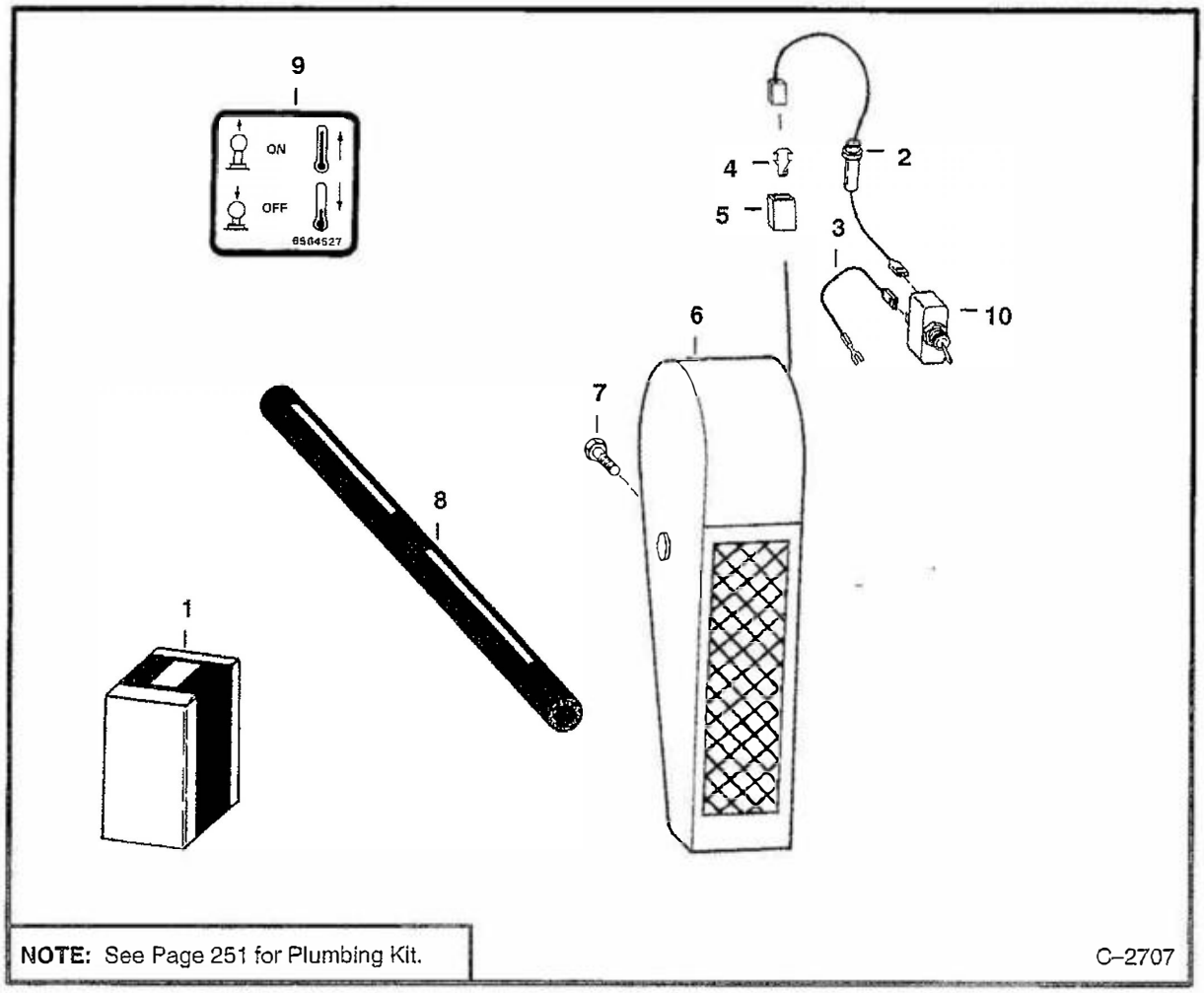

HEATER KIT
(Red Dot)

Ref. No.	Part Number	Description	Remarks	Serial Number	Qty.
1	NAP	KIT	Ref. 2–10 – Order 6648496 – See Note – Was 6564522 [A]		1
2	6565514	WIRE	W/Fuse		1
	661556	FUSE			1
3	6564517	WIRE			1
4	1675806	TERMINAL			1
5	6519548	CONNECTOR			1
6	6599355	HEATER	See Page 249		1
7	17C–412	BOLT			4
8	6564545	SHIELD			2
9	6564527	DECAL			1
10	6515521	SWITCH			1

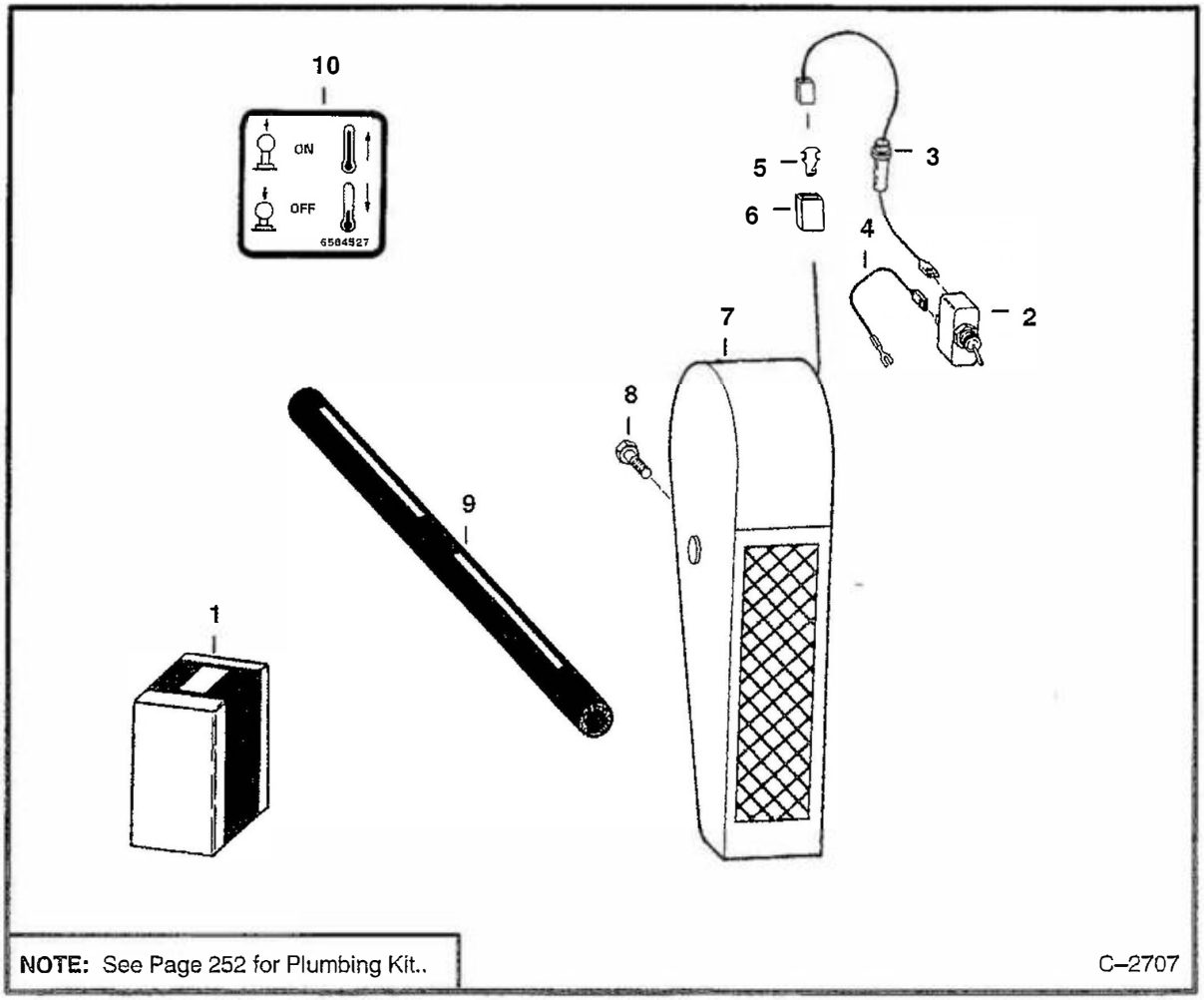

HEATER KIT
(Perrin)

Ref. No.	Part Number	Description	Remarks	Serial Number	Qty.
1	6648496	KIT	Ref. 2–10		1
2	6515521	SWITCH			1
3	6703041	WIRE	Was 6648457 [A]		1
	661556	FUSE			1
4	6564517	WIRE			1
5	1675806	TERMINAL			1
6	6519548	CONNECTOR			1
7	6648461	HEATER	See Page 250		1
8	17C–412	BOLT			4
9	6648463	SHIELD			2
10	6564527	DECAL			1

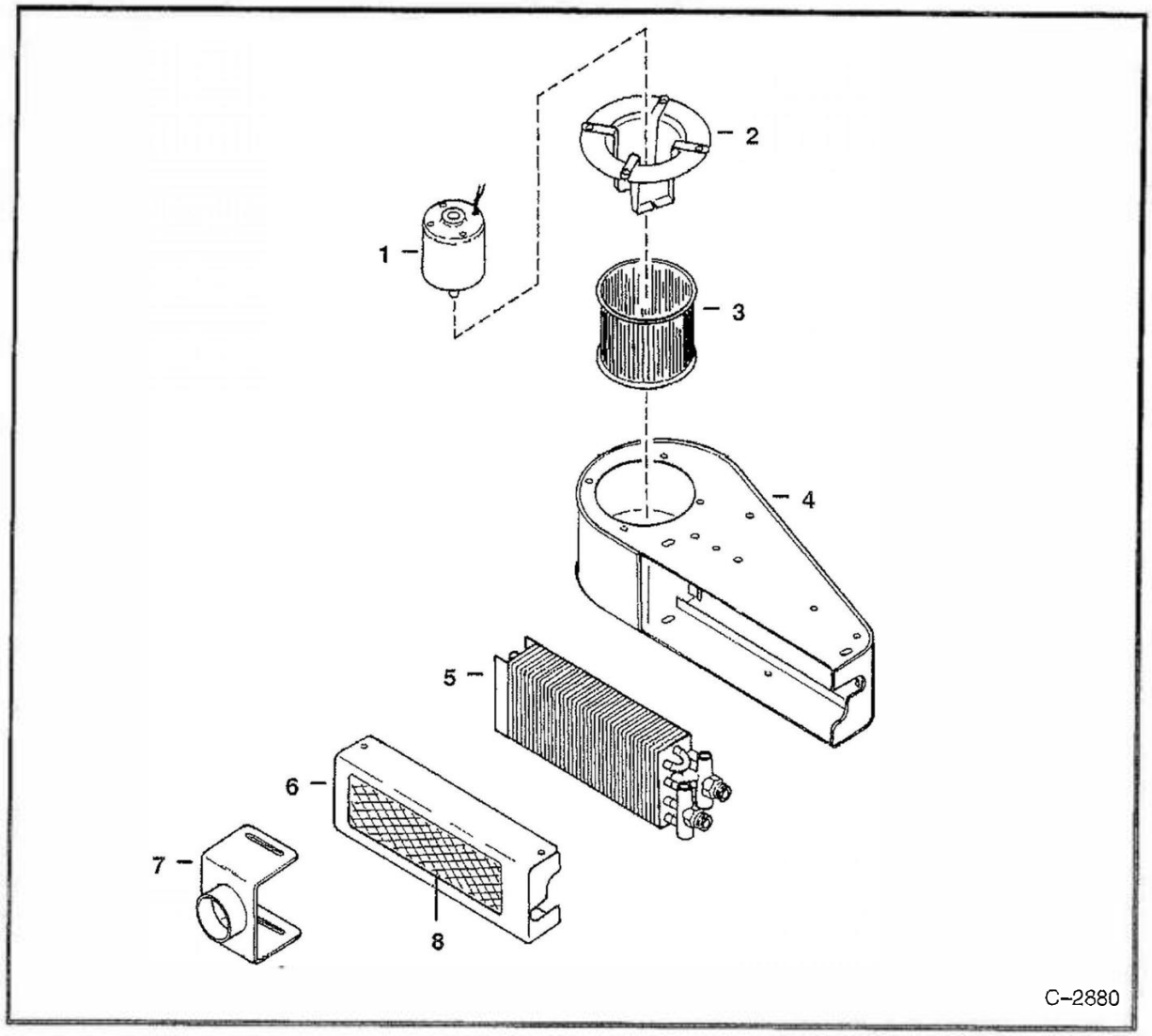

HEATER
(Red Dot)

Ref. No.	Part Number	Description	Remarks	Serial Number	Qty.
1	6630980	MOTOR			1
2	6630981	MOUNT			1
3	6630982	BLOWER			1
4	6630983	HOUSING			1
5	6630984	CORE			1
6	6630985	COVER			1
7	6630849	OUTLET	aux.		1
8	6630986	SCREEN			1

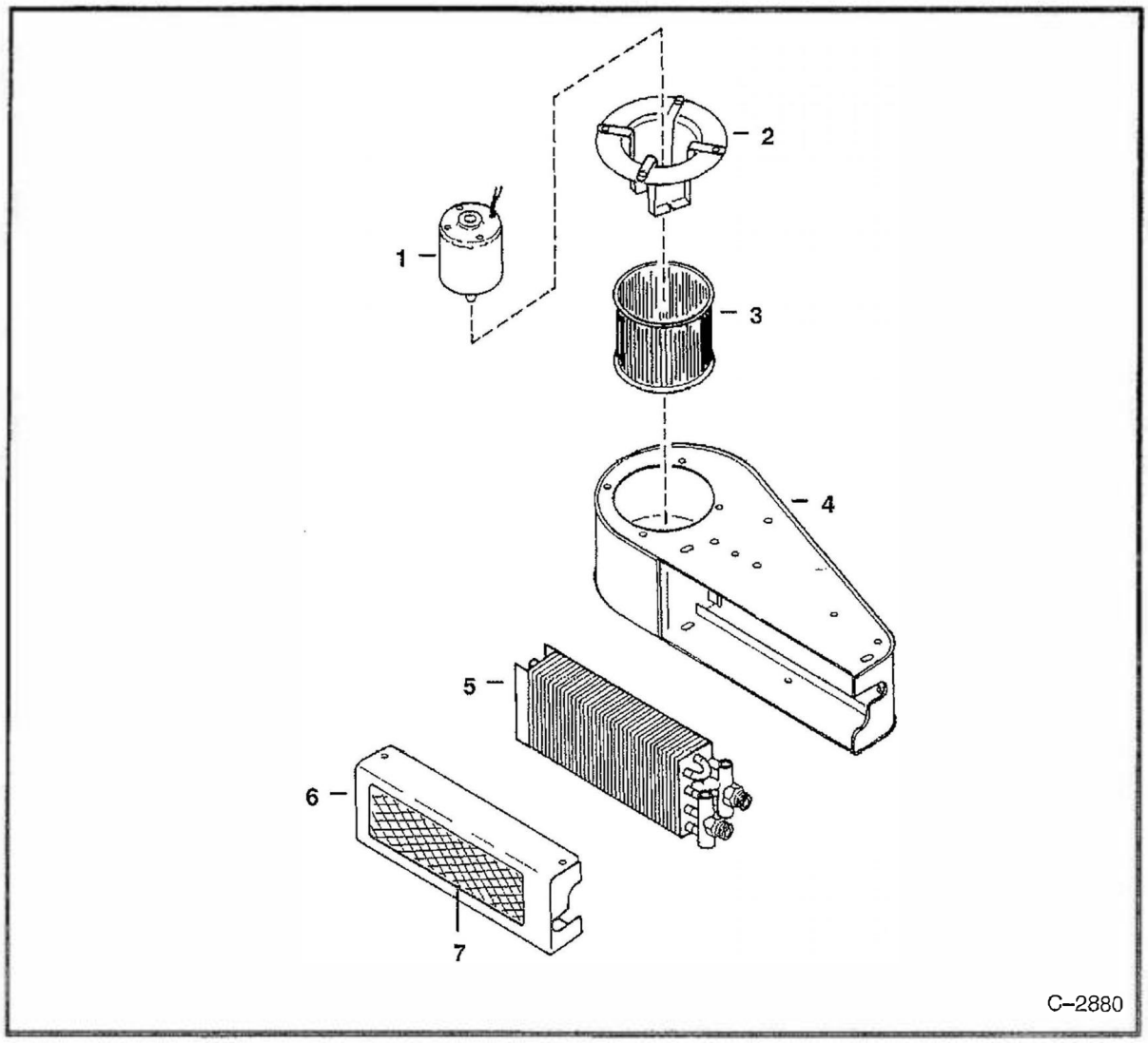

HEATER
(Perrin)

Ref. No.	Part Number	Description	Remarks	Serial Number	Qty.
1	6648466	MOTOR			1
2	6648467	MOUNT			1
3	6648468	BLOWER			1
4	6648469	HOUSING			1
5	6648471	CORE			1
6	6648472	COVER			1
7	6648473	SCREEN			1

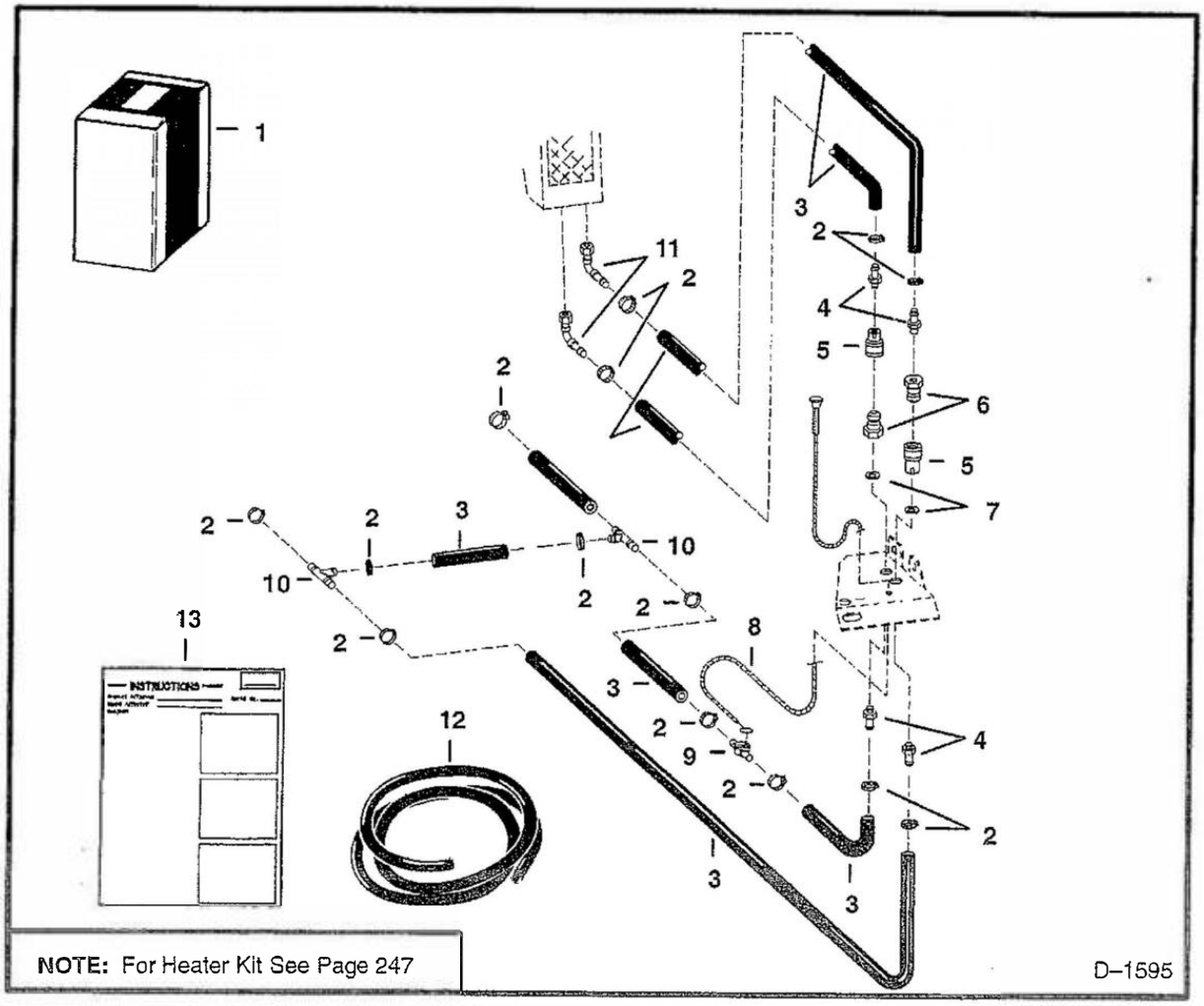

HEATER PLUMBING KIT
(Red Dot)

Ref. No.	Part Number	Description	Remarks	Serial Number	Qty.
1	6648497	KIT	Ref. 2–13		1
2	42H–10	CLAMP			14
3	889269	HOSE	bulk – Sold Per Foot		x
4	6516296	INSERT			4
5	6599358	QUICK COUPLER	Female		2
6	6599357	QUICK COUPLER	Male		2
7	25E–29	WASHER			4
8	6599465	CABLE	control		1
9	6599462	VALVE	control		1
10	1732490	TEE			2
	6564697	TEE	Kubota Engine		2
11	6599356	ELBOW			2
	6648475	O–RING			2
12	6565977	HOSE	bulk – Sold Per Foot		x
13	6566314	INSTRUCTIONS			1

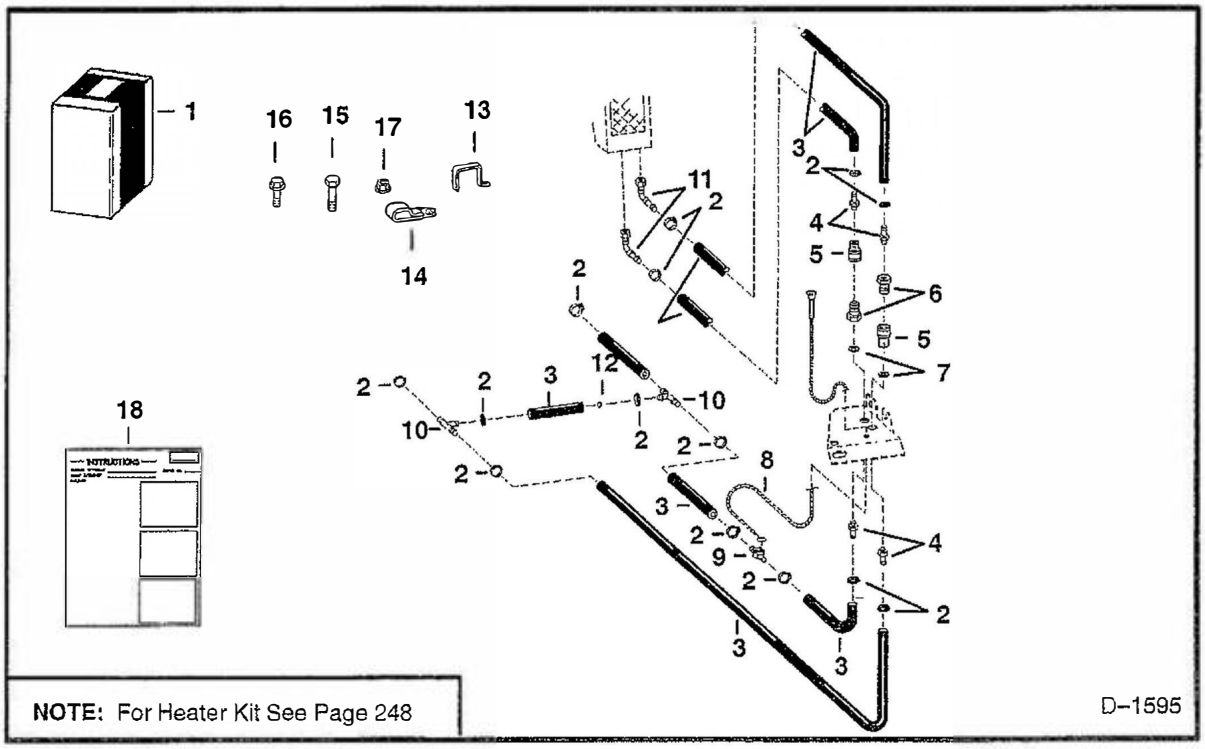

NOTE: For Heater Kit See Page 248

HEATER PLUMBING KIT
(Perrin)

Ref. No.	Part Number	Description	Remarks	Serial Number	Qty.
1	6648497	KIT	Ref. 2–18		1
2	42H–10	CLAMP			14
3	889269	HOSE	bulk – Sold Per Foot		x
4	6516296	INSERT			4
5	6648479	QUICK COUPLER			2
6	6648480	QUICK COUPLER			2
7	25E–29	WASHER			4
8	6648482	CABLE			1
9	6648483	VALVE			1
10	1732490	TEE			2
	6648485	TEE	Kubota Engine		2
11	6648474	ELBOW			2
	6648475	O–RING			2
12	6585223	ORIFICE			1
13	6660795	GUIDE			1
14	31H–52	CLIP			1
15	84G–3712	BOLT			1
16	17C–512	BOLT			1
17	57D–7	NUT			1
18	6566314	INSTRUCTIONS			1

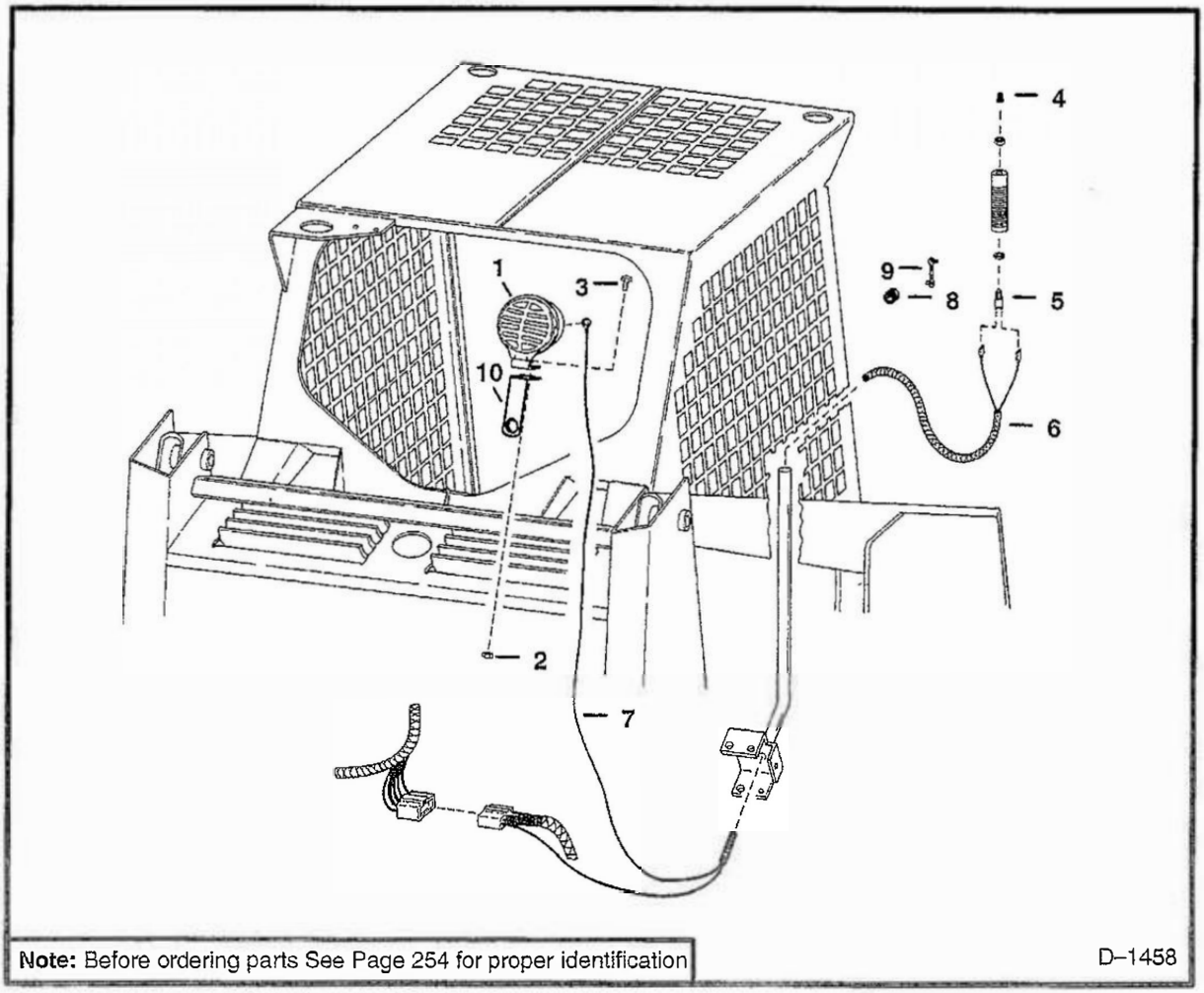

Note: Before ordering parts See Page 254 for proper identification

D–1458

HORN
(For European Export Kit)

Ref. No.	Part Number	Description	Remarks	Serial Number	Qty.
1	6559478	HORN		19999 & Below	1
	6630988	HORN		20001 & Above	1
2	83D–5	NUT			1
3	7C–516	BOLT			1
4	6660205	SEAL	Was 6513483 [A]		1
5	6513482	SWITCH			1
6	6563604	HARNESS			1
7	6563605	HARNESS		19999 & Below	1
	6568819	HARNESS		20001 & Above	1
8	6519484	GROMMET			1
9	6513498	CLAMP			3
10	6630987	BRACKET		20001 & Above	1

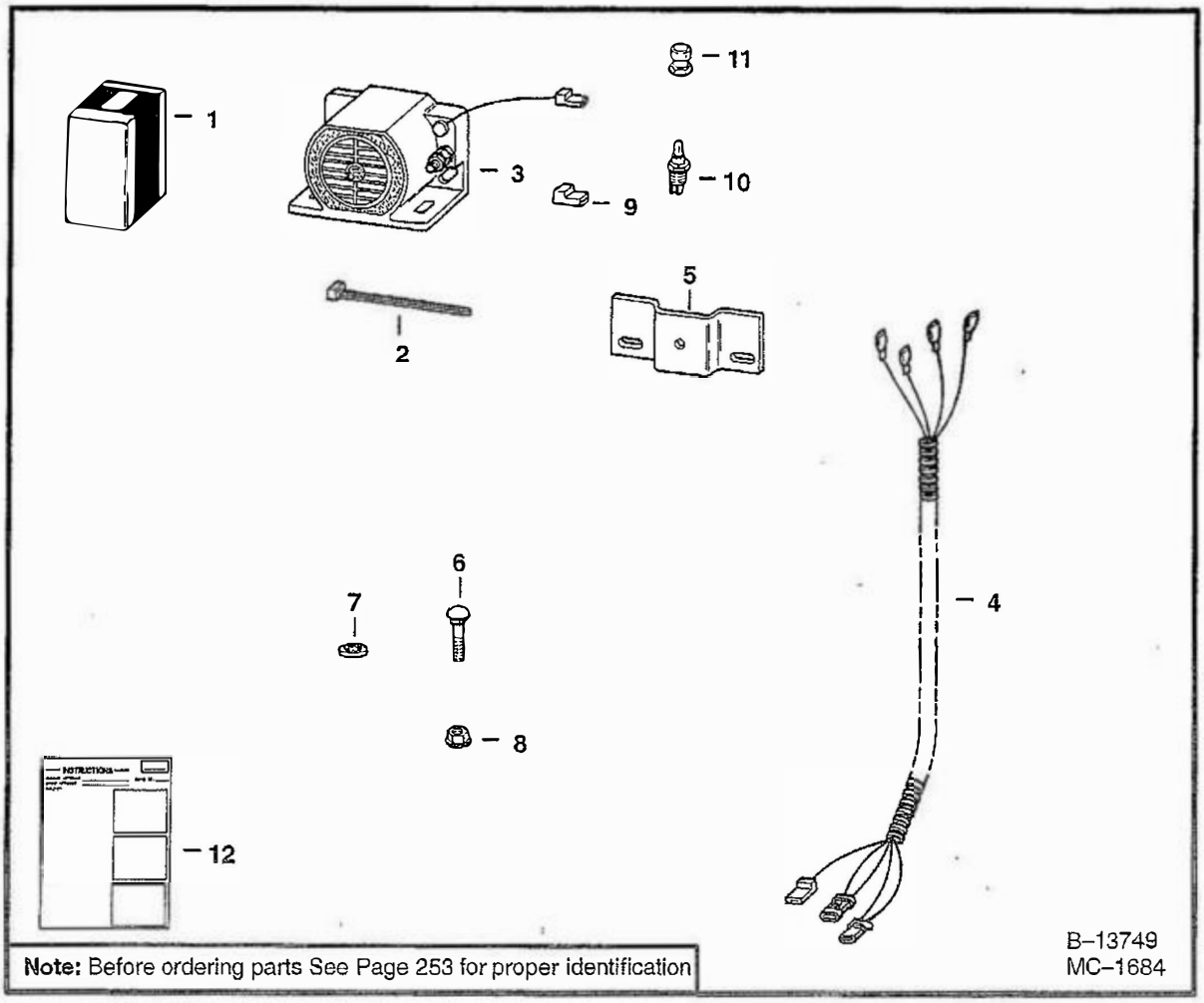

Note: Before ordering parts See Page 253 for proper identification

m

HORN KIT
(Domestic & European)

Ref. No.	Part Number	Description	Remarks	Serial Number	Qty.
1	6703944	HORN KIT	Ref. 2–12		1
2	6633498	STA–STRAP			2
3	6660294	HORN			1
4	6703943	HARNESS			1
5	6704641	MOUNT	Was 6703391 [A]		1
6	84G–2516	BOLT	Was 7C–412 [B]		2
7	25E–13	WASHER	Was 25E–15 [B]		1
8	59D–4	NUT	Was 83D–4 [B]		2
9	6517924	INSULATOR	switch		1
10	6513482	SWITCH			1
11	6660205	SEAL	switch		1
12	6720957	INSTRUCTIONS			1

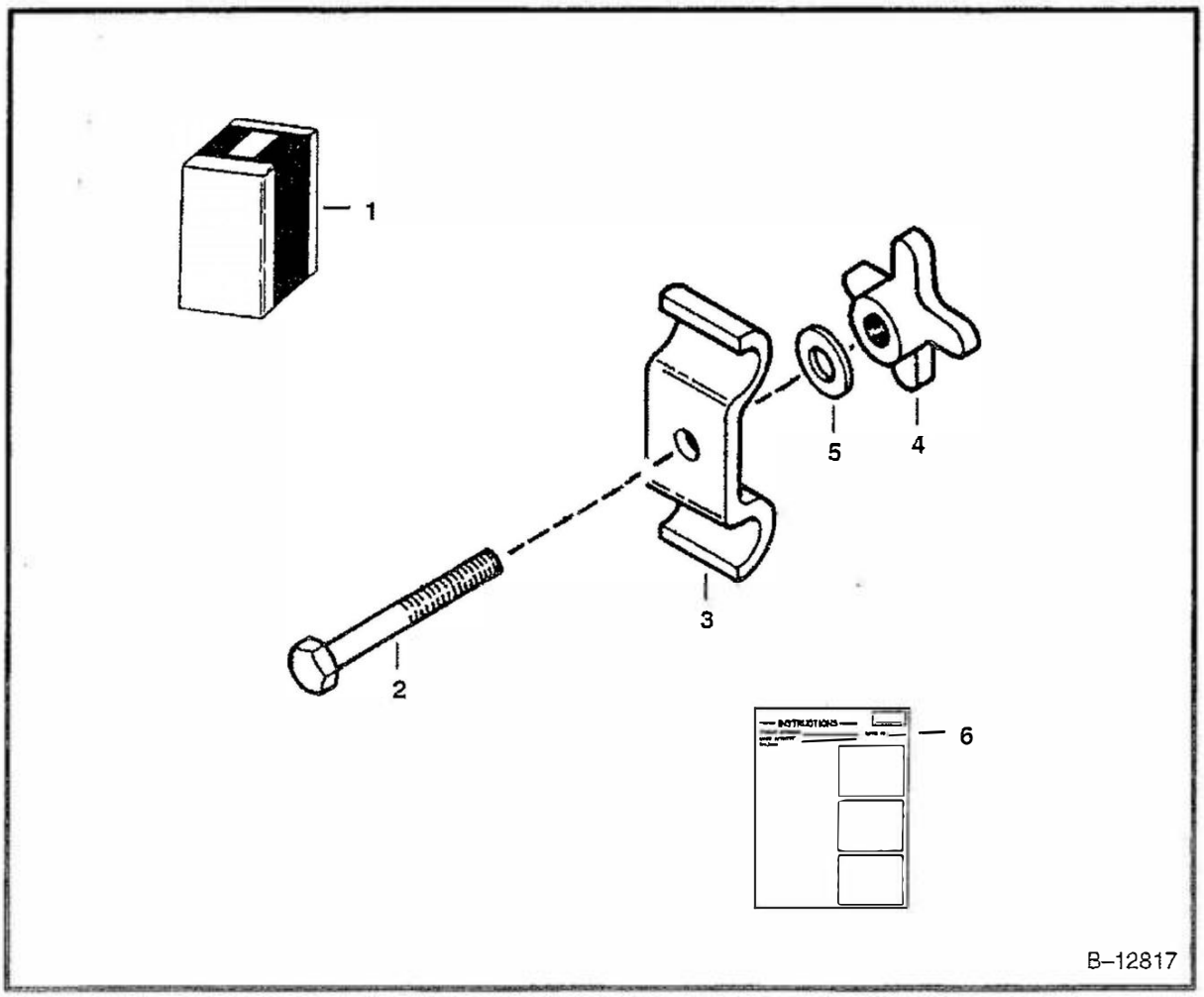

HOSE CLAMP KIT
(Lower Lift Arms)

Ref. No.	Part Number	Description	Remarks	Serial Number	Qty.
1	6700168	KIT	Ref. 2–5		1
2	17C–652	BOLT	Was 17C–644 [B]		1
3	6563353	CLAMP			1
4	6647668	KNOB			1
5	25E–17	WASHER			1
6	6720035	INSTRUCTIONS			1

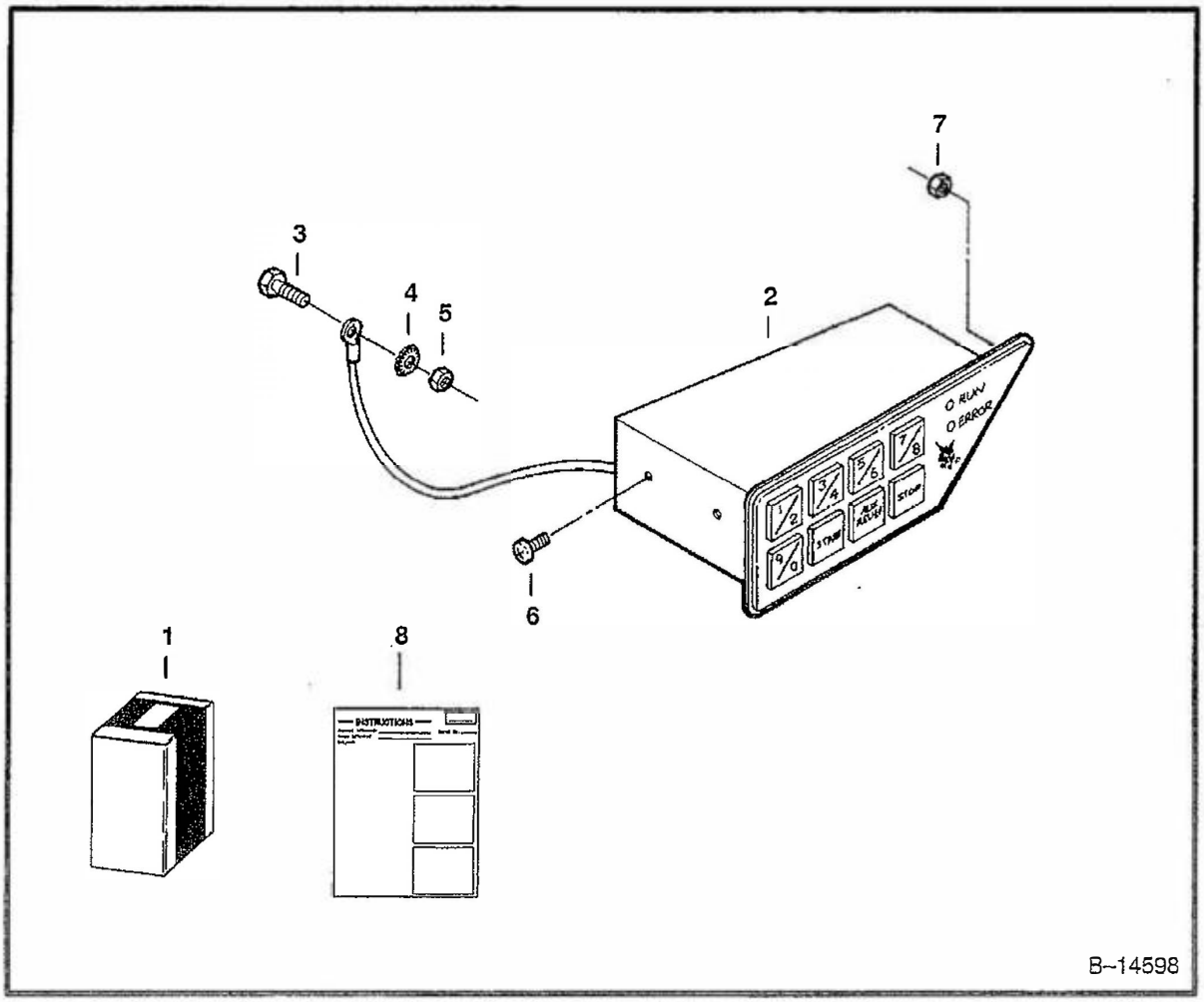

KEYLESS IGNITION

Ref. No.	Part Number	Description	Remarks	Serial Number	Qty.
1	6712972	KIT	Keyless ignition – W/Ref. 2 – 8		1
2	NSS	MODULE	Order Ref. 1		1
3	35C–410	BOLT			1
4	6E–4	WASHER	Star		1
5	83D–4	NUT			1
6	87G–806	BOLT			2
7	12D–6	NUT			1
8	6724586	INSTRUCTIONS			1

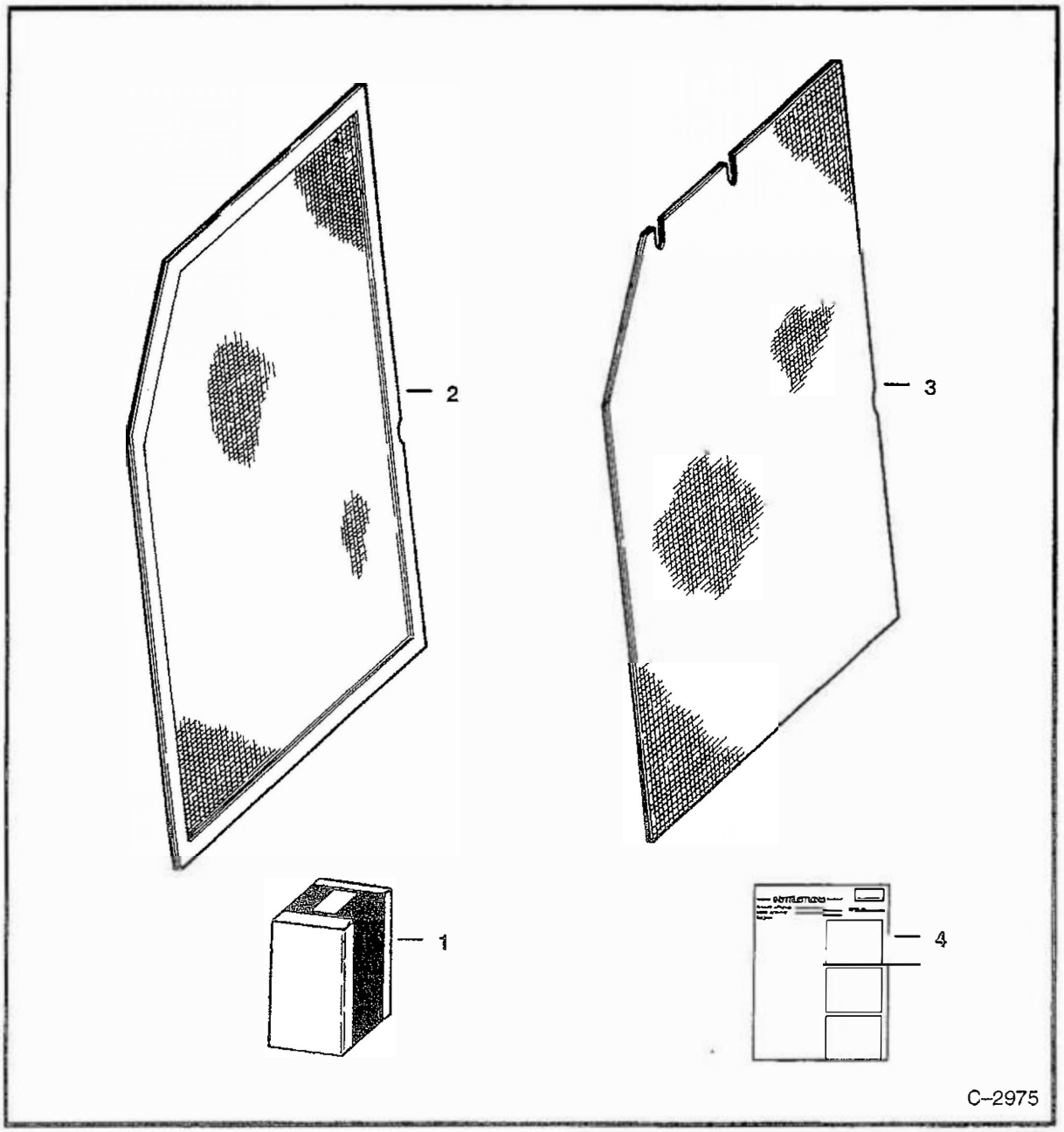

INSECT SCREEN KIT

Ref. No.	Part Number	Description	Remarks	Serial Number	Qty.
1	NAP	KIT	insect screen – Ref. 2–4 – Was 6571597 [A]		1
2	NAP	SCREEN	insect – R.H. – Was 6569935 [A]		1
3	NAP	SCREEN	insect – L.H. – Was 6569936 [A]		1
4	6570223	INSTRUCTIONS			1

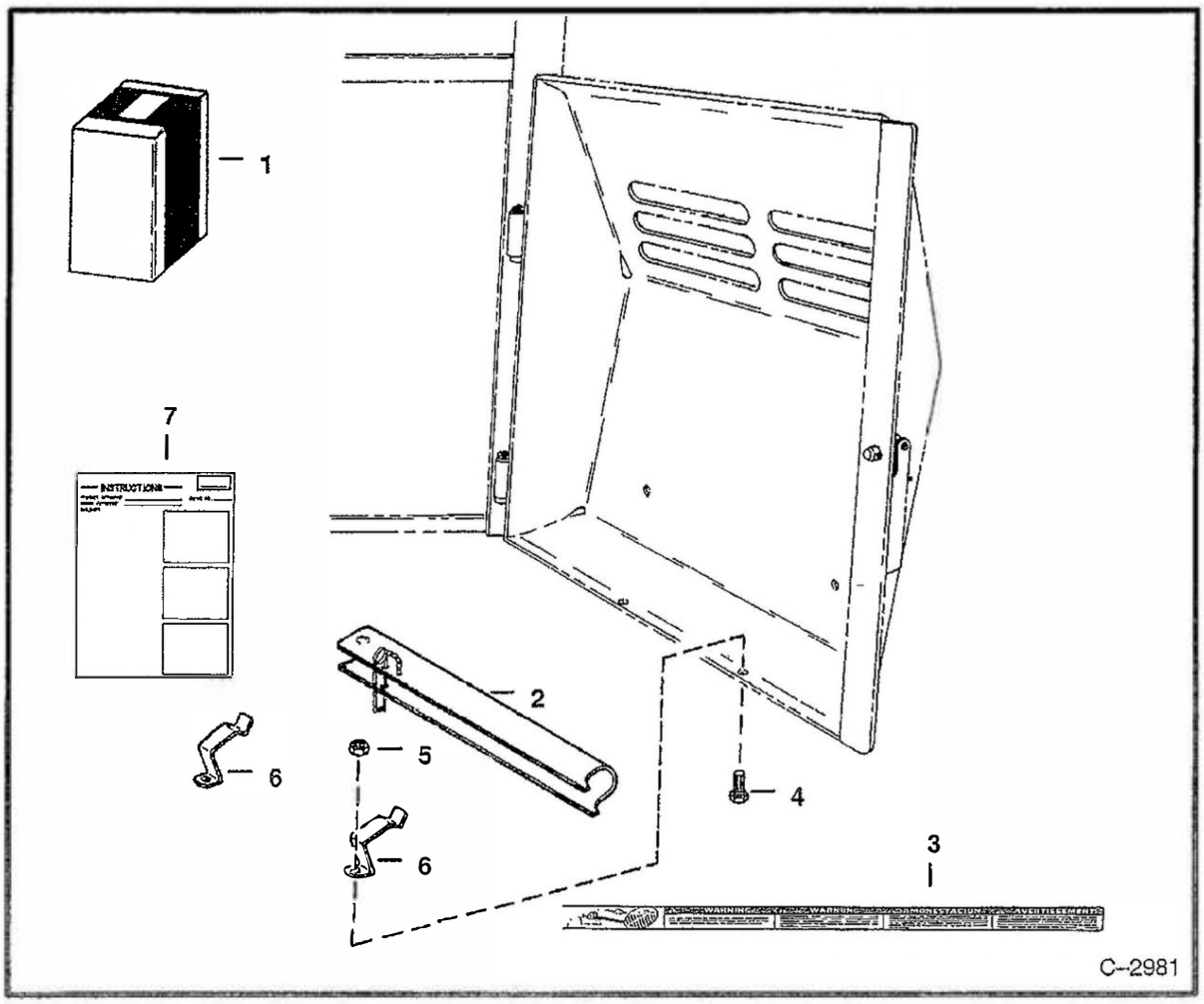

LIFT ARM STOP

Ref. No.	Part Number	Description	Remarks	Serial Number	Qty.
1	6563336	KIT	Ref. 2–7		1
2	6559550	STOP	Was 6563449 [A]		1
3	6563423	DECAL			1
4	17C–616	BOLT			2
5	85D–6	NUT			2
6	6563603	BRACKET			2
7	6566056	INSTRUCTIONS			1

OPERATOR CAB
(Deluxe) (S/N 20001 & Above)

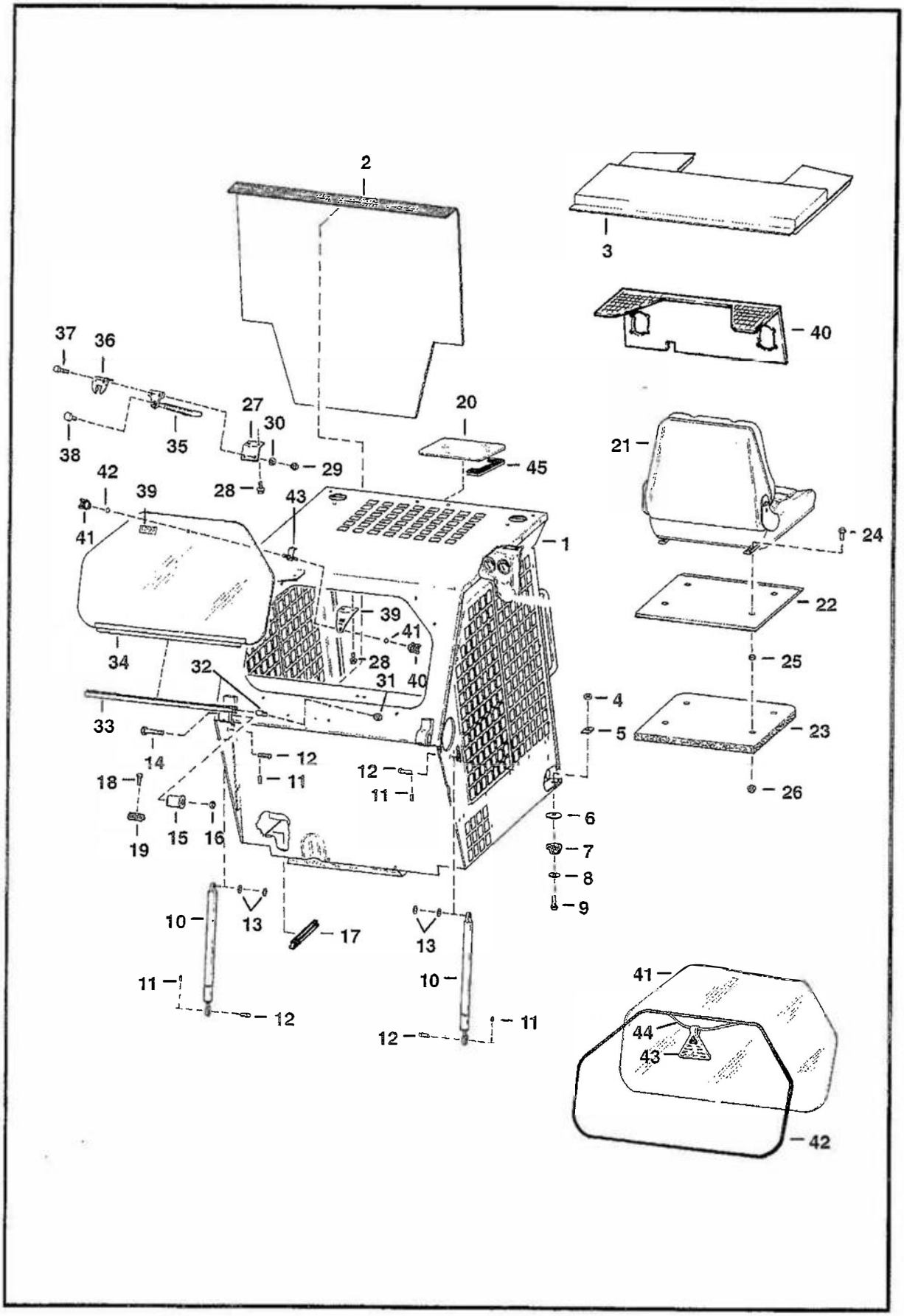

OPERATOR CAB (Cont'd)
(Deluxe) (S/N 20001 & Above)

Ref. No.	Part Number	Description	Remarks	Serial Number	Qty.
1	SALES	CAB	Ref. 2–26, 40–43		1
2	6576494	INSULATION	Was 6568179 [A]		1
3	6565373	INSULATION			1
4	85D–8	NUT			2
5	6553709	WASHER			2
6	6543321	WASHER			2
7	6560633	MOUNT			2
8	6515817	WASHER			2
9	17C–840	BOLT			2
10	6630783	GAS SPRING			2
11	6631418	COTTER PIN			4
12	6567743	PIN			4
13	6567604	SPACER			4
14	17C–1056	BOLT			2
15	6562602	MOUNT	rubber		2
16	83D–10	NUT			2
17	6555351	MOULDING	36" (914,4 mm) – Sold Per Foot		x
18	61G–416	SCREW			2
19	6568475	STOP			2
20	6701986	WINDOW	top – Was 6563391 [A]		1
	6705735	WINDOW		& Above	1
21		SEAT	See Page 276		1
22	6577439	INSULATION	Was 6577273 [A]		1
23	6577273	INSULATION	Was 6567902 [A]		1
24	35C–514	BOLT	Was 35C–516 [B, D]		4
25	61D–5	NUT			4
26	83D–5	NUT			4
27	6568540	MOUNT			1
28	84G–3112	BOLT			2
29	50D–10	NUT			2
30	25E–10	WASHER			2
31	59D–4	NUT			3
32	6576513	BOLT	Was 6630927 [A]		3
33	6630926	HINGE			1
34	6630925	WINDOW			1
35	6630929	LATCH	W/Ref. 38		1
36	NAP	CLIP	Order 2–6571529, 1–6571532, 2–59K–10, 1–6571533 – Was 6630928 [A]		1
37	85G–1014	BOLT			2
38	6631665	KNOB			1
39	6631625	DECAL			1
40	6568321	INSULATION	843 Only		1
41	6704891	WINDOW			1
42	6658352	EXTRUSION	8.5' (259 cm) – Sold Per Foot		x
43	6559515	EXIT TAG			1
44	6554149	CORD	8.5' (259 cm) – Sold Per Foot		x
45	6664351	SEAL	Used W/cab headliner	& Above	1
	6665012	SEAL	Used W/O cab headliner	& Above	1

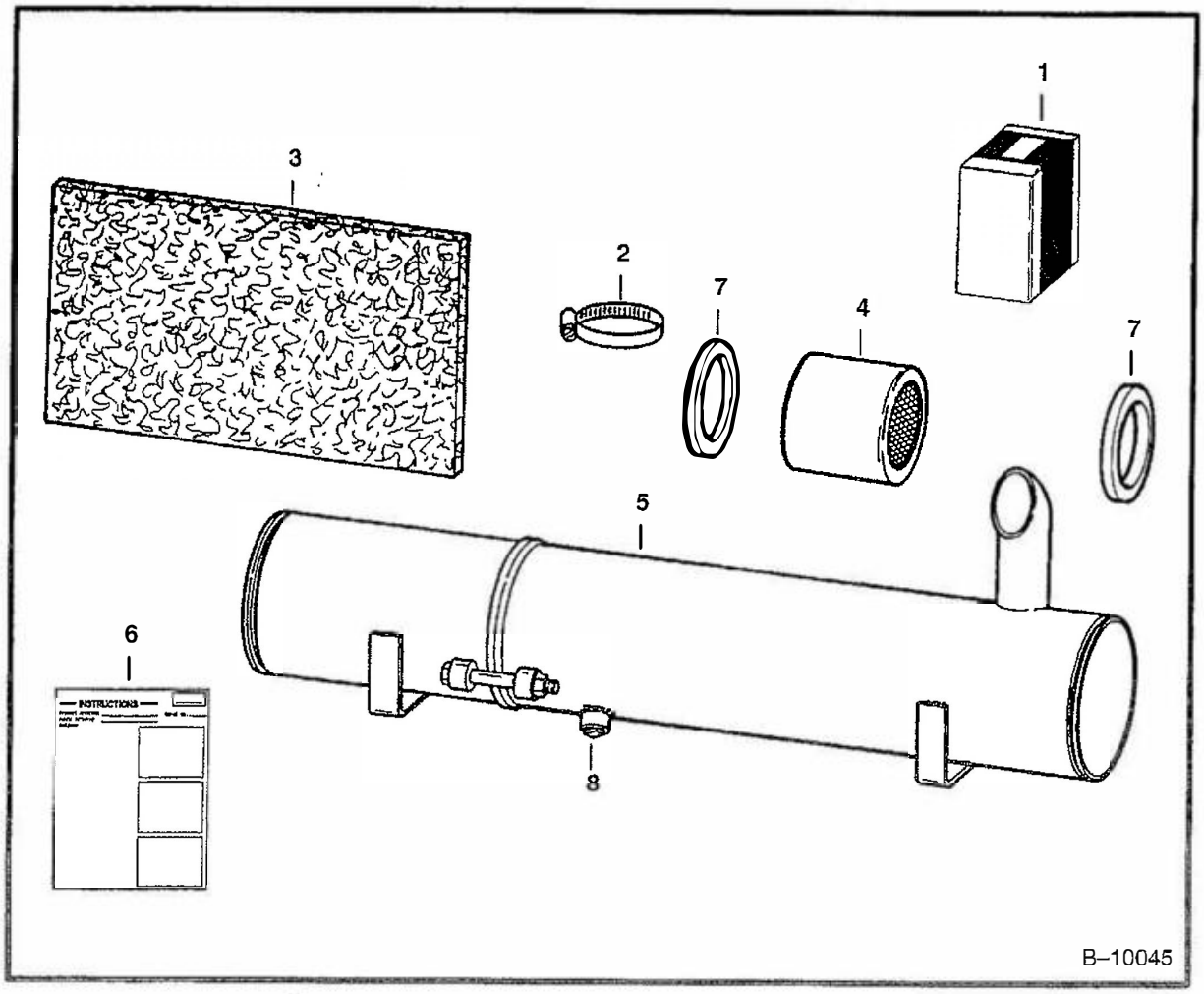

MUFFLER/PURIFIER KIT

Ref. No.	Part Number	Description	Remarks	Serial Number	Qty.
1	6571624	KIT	muffler/purifier – Ref. 2–8		1
2	6515576	CLAMP			3
3	6571628	INSULATION			1
4	6632304	PURIFIER	Also Order Ref. 7		1
5	6632306	MUFFLER	W/Ref. 4 & 7		1
6	6570254	INSTRUCTIONS			1
7	6633675	GASKET			2
8	6661062	PLUG	Pipe 3/8" NPT		1

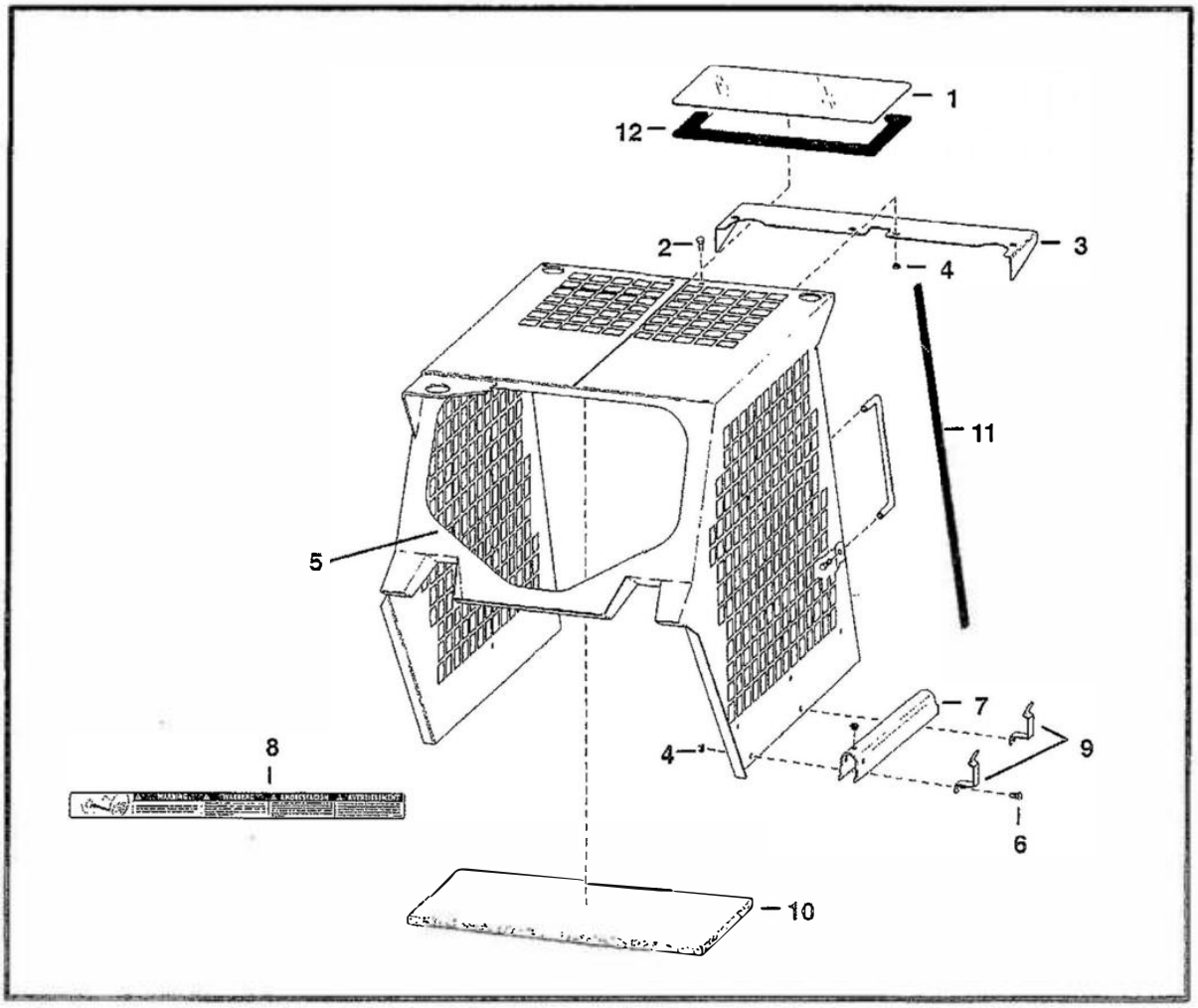

OPERATOR CAB
(For European Export Kit)

Ref. No.	Part Number	Description	Remarks	Serial Number	Qty.
1	6701986	WINDOW	top – Was 6563391 [A]	& Below	1
	6705735	WINDOW	top	& Above	1
2	31C–612	BOLT			4
3	6563611	EXTENSION			1
4	83D–6	NUT			6
5	6560072	MOULDING			1
6	17C–614	BOLT			4
7	6559550	STOP	lift arm – W/Ref. 8 – Was 6563449 [A]		1
8	6563423	DECAL			1
9	6563603	BRACKET			2
10	6563602	HEADLINER			1
11	6563986	MOULDING			1
12	6664351	SEAL	Used W/ cab headliner	& Above	1
	6665012	SEAL	Used W/O cab headliner	& Above	1

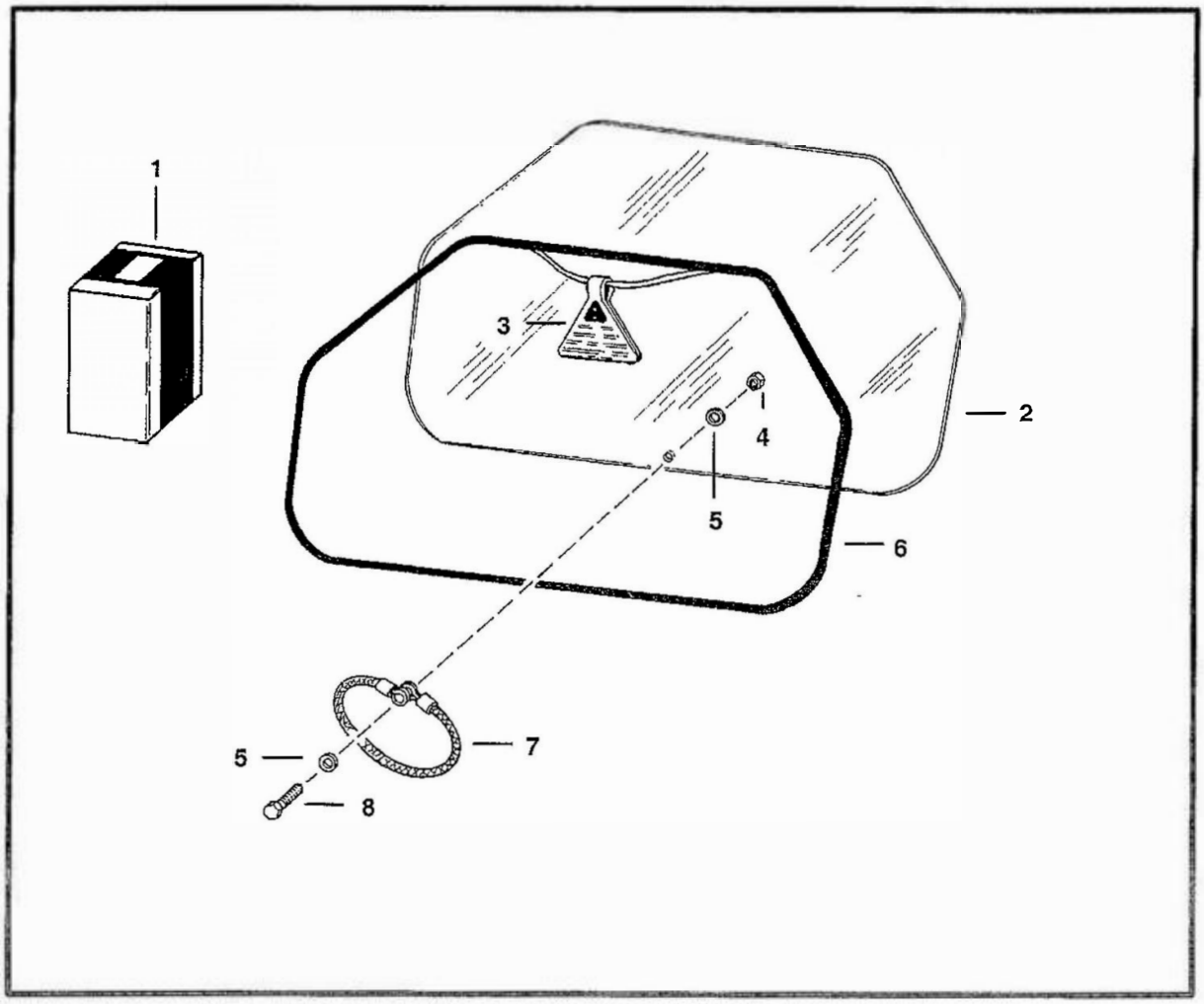

OPERATOR CAB
(For European Export Kit)

Ref. No.	Part Number	Description	Remarks	Serial Number	Qty.
1	NAP	KIT	rear window – Order Ref. 2–8		1
2	6704891	WINDOW	Was 6562916 [A]		1
3	6559515	TAG	exit		1
4	61D–5	NUT			1
5	25E–15	WASHER			2
6	6658352	EXTRUSION	bulk – Sold Per Foot –		
	6554149	CORD	Was 6554221 [A] bulk – Sold Per Foot – Was 6554223 [A]		x x
7	6555331	WIRE ROPE			1
8	17C–516	BOLT			1

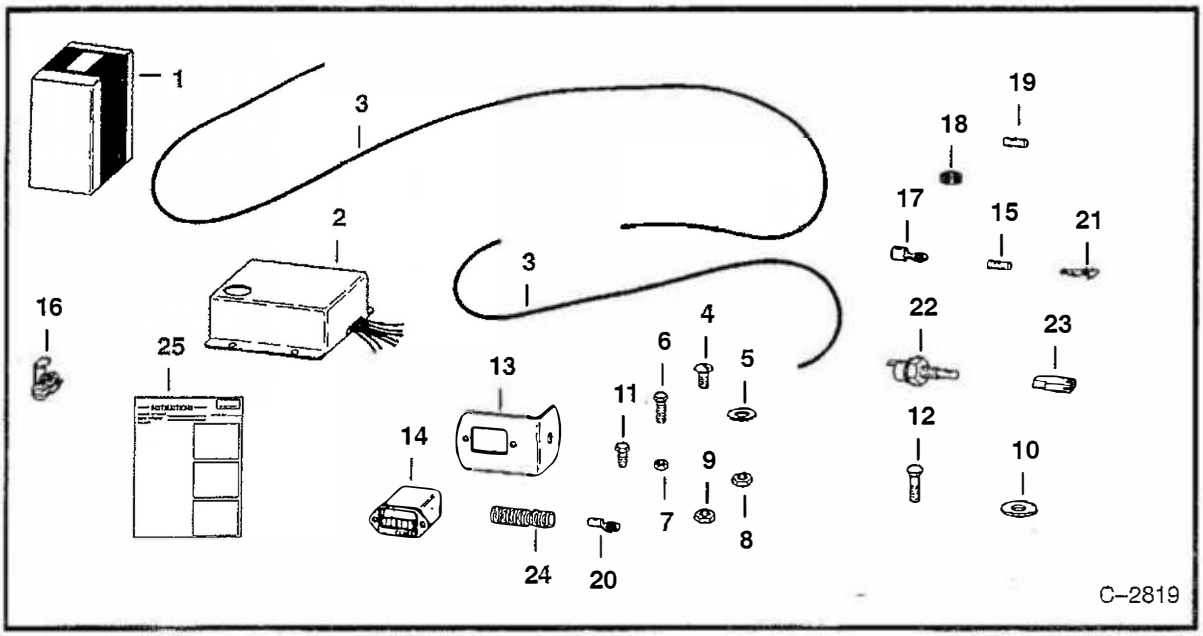

RENTAL KIT
(S/N 13001 thru 19999)

Ref. No.	Part Number	Description	Remarks	Serial Number	Qty.
1	6565552	KIT	rental – Ref 2–25		1
2	6513274	MODULE			1
3	6565382	WIRE	White		2
	6565642	WIRE	Black		1
4	85G–608	SCREW			2
5	25E–17	WASHER			1
6	17C–614	BOLT			1
7	12D–6	NUT			2
8	61D–4	NUT			6
9	61D–6	NUT			1
10	25E–21	WASHER			1
11	17C–408	BOLT			4
12	7C–616	BOLT			2
13	6552906	BRACKET			1
14	6664886	HOURMETER	Was 6631656 [D]		1
15	637641	SLEEVE	.33"(8,32 mm) x 1.0"(25,4 mm)		1
16	6513275	CONNECTOR			6
17	30R–104	TERMINAL			1
	30R–107	TERMINAL			1
18	97F–5	BUSHING			1
19	614142	SLEEVE	.148"(3,75 mm) x .75"(19,05 mm)		1
20	30R–305	TERMINAL			1
21	733616	TERMINAL			1
22	6630821	SWITCH			1
23	6519548	CONNECTOR			1
24	6584978	CONDUIT	bulk – Sold Per Foot – Was 6565528 [A]		x
25	6566523	INSTRUCTIONS			1

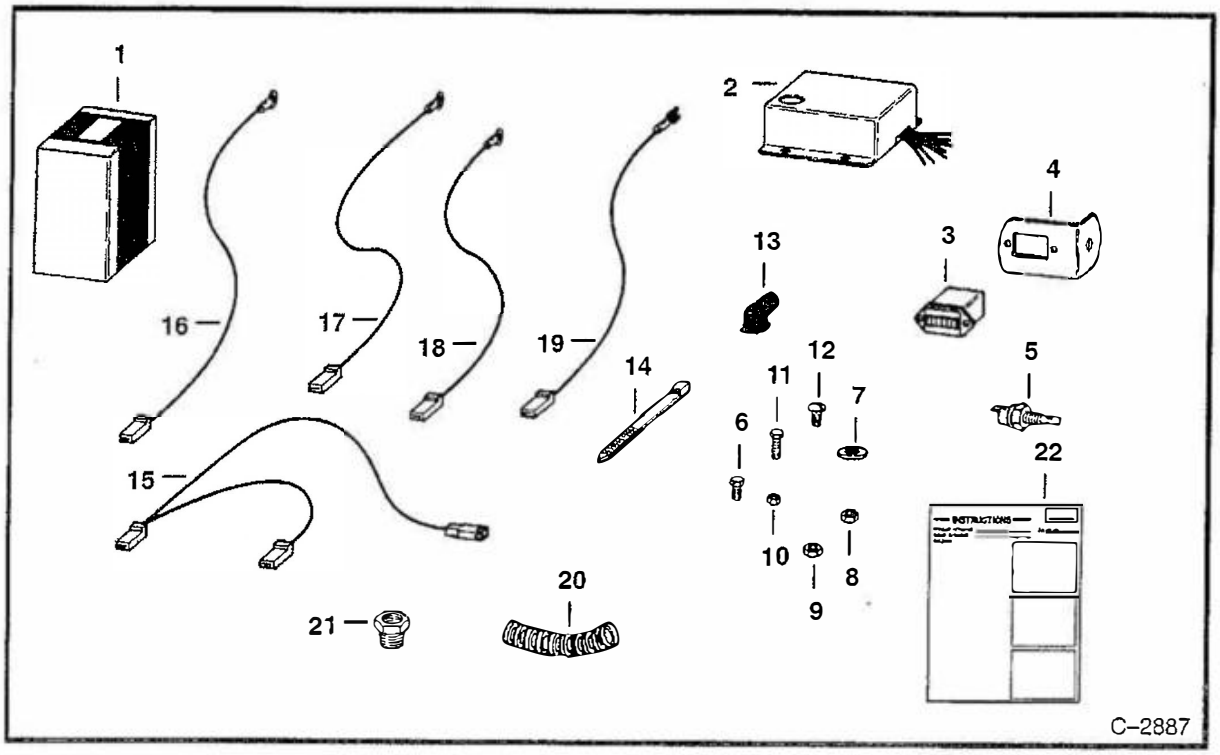

RENTAL KIT
(S/N 20001 & Above)

Ref. No.	Part Number	Description	Remarks	Serial Number	Qty.
1	6567990	KIT	Ref. 2–22		1
2	6567956	MODULE	shut down		1
3	6664886	HOURMETER	Was 6631657 [A]		1
4	6552906	BRACKET			1
5	6630821	SWITCH	eng. temp.		1
6	17C–614	BOLT			1
7	25E–17	WASHER			1
8	61D–6	NUT			1
9	12D–6	NUT			2
10	61D–4	NUT			4
11	17C–408	BOLT			4
12	85G–608	SCREW			2
13	6560172	COVER			1
14	6610510	TIE	Was 1715312 [B]		6
15	6567959	WIRE	White		1
16	6567968	WIRE	Yellow/Red		1
17	6567971	WIRE	Black		1
18	6567972	WIRE	White		1
19	6567979	WIRE	Yellow/Green		1
20	6584978	CONDUIT	bulk – Sold Per Foot		x
21	19F–5	ADAPTER			1
22	6566844	INSTRUCTIONS			1

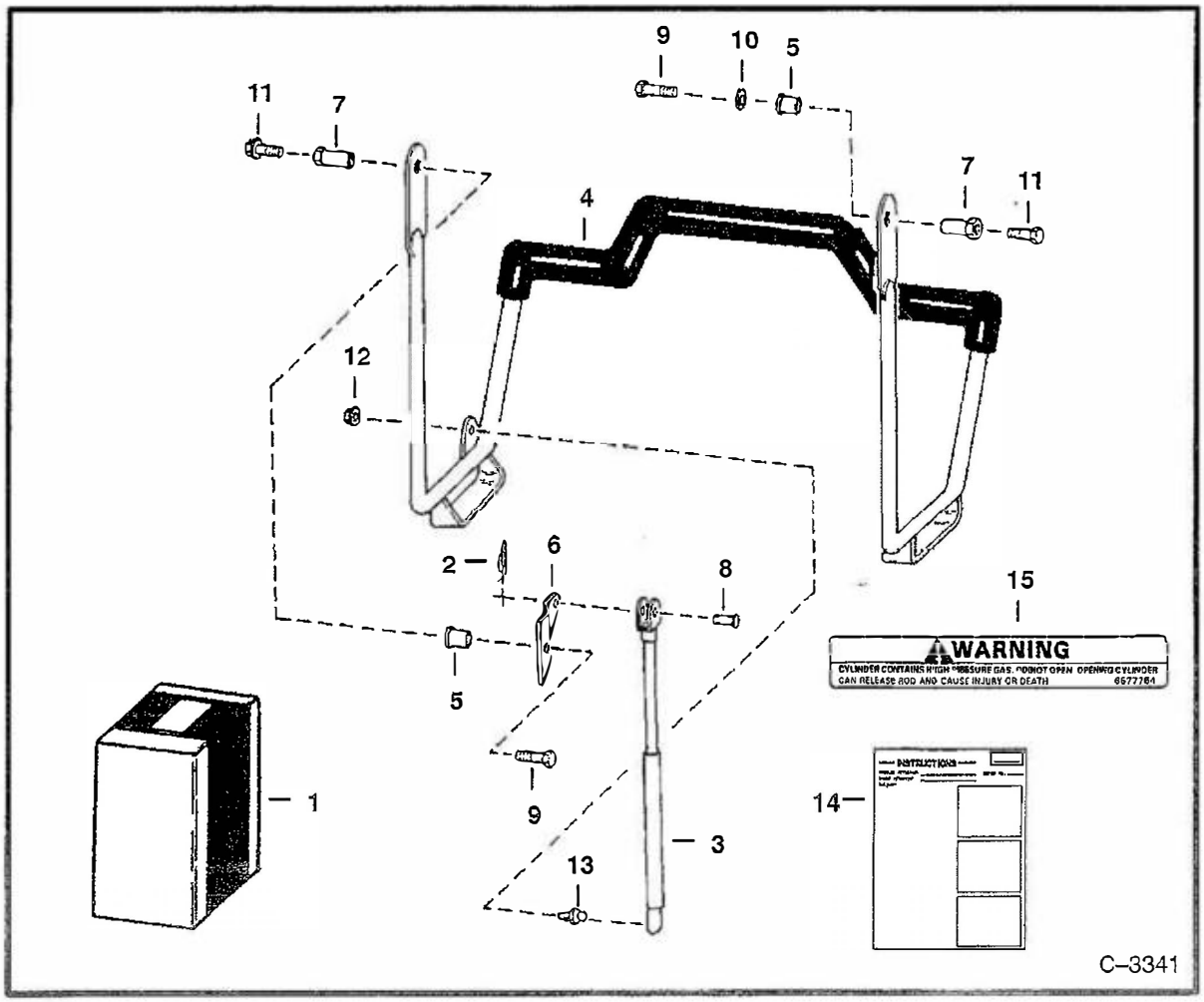

SEAT BAR KIT

Ref. No.	Part Number	Description	Remarks	Serial Number	Qty.
1	NAP	KIT	seat bar – Order 6713853 – Was 6706796 [A]		1
2	6631418	PIN	ring		1
3	6664207	GAS SPRING			1
4	6716778	SEAT BAR	Was 6706358 [A]		1
5	6706387	BUSHING			2
6	6706388	BRACKET			1
7	6706389	BUSHING			2
8	4F–5062	PIN			1
9	17C–612	BOLT			2
10	25E–21	WASHER			1
11	35C–608	BOLT			2
12	83D–5	NUT			1
13	6649244	BALL STUD			2
14	6722836	INSTRUCTIONS			1
15	6577754	DECAL			1

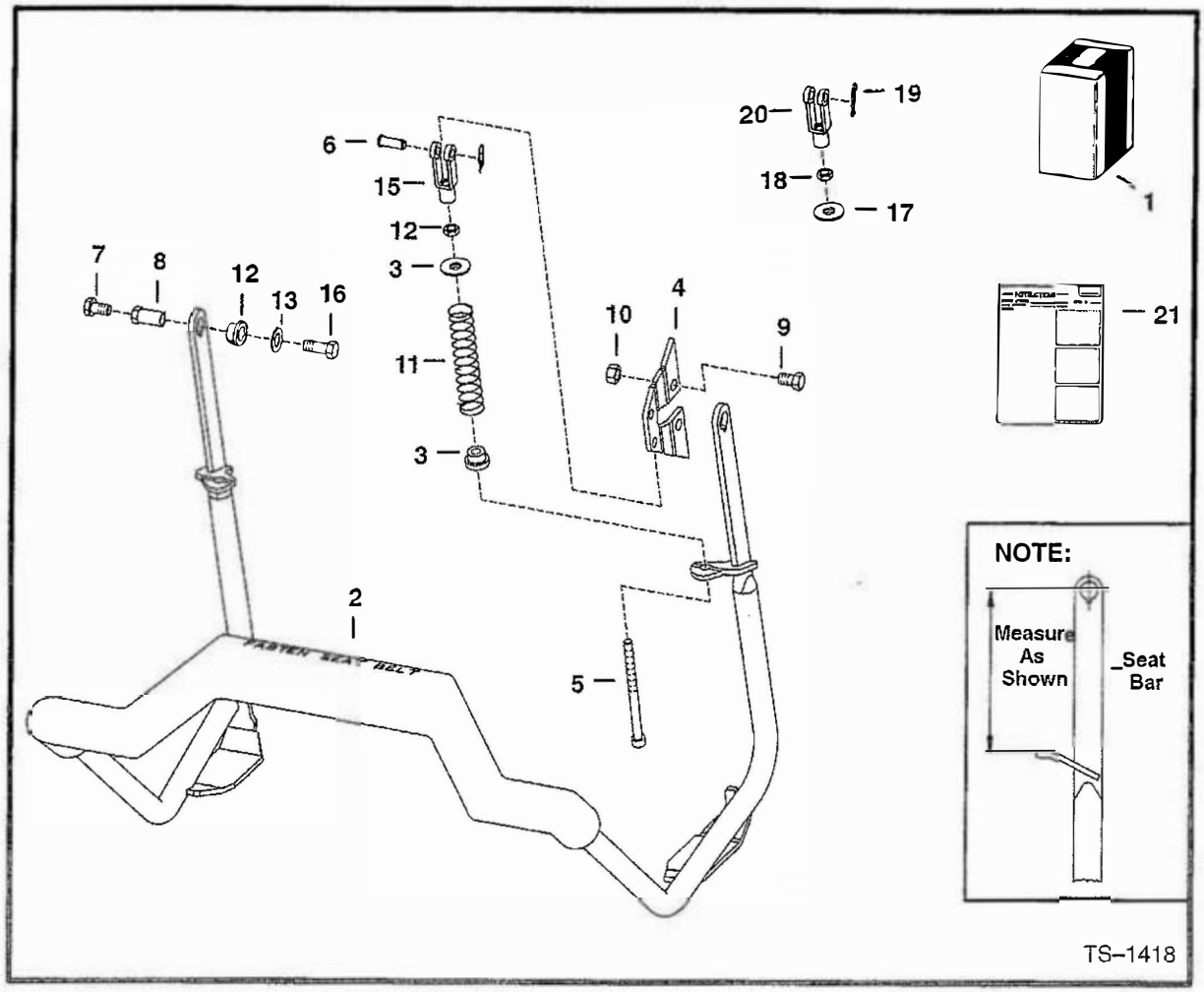

SEAT BAR KIT
(Compression Spring)

Ref. No.	Part Number	Description	Remarks	Serial Number	Qty.
1	6713853	KIT	Ref. 2 – 16 & 21		1
2	NAP	SEAT BAR	Order 6713609 Seat Bar & (2) ea. of Ref. 3, 5, 14 & 15 –		
	6716777	SEAT BAR	6.88" (174,8mnm) center of top hole to weld on tab 6.13" (155,7mm) center of top hole to weld on tab – SEE NOTE		1
			Was 6713609 [A]		1
3	6710659	BUSHING	Used W/NAP 6710661 Seat Bar		2
	6710659	BUSHING	Used W/6713609 Seat Bar		4
4	6710660	MOUNT			2
5	6713887	BOLT			2
6	4F–6106	PIN	clevis		2
7	35C–608	BOLT			2
8	6706962	BUSHING			1
9	17C–712	BOLT			2
10	91D–7	NUT			2
11	6701535	SPRING			2

SEAT BAR KIT (Cont'd)
(Compression Spring)

Ref. No.	Part Number	Description	Remarks	Serial Number	Qty.
12	6664882	BUSHING			2
13	25E–17	WASHER			2
14	6631418	PIN	Used W/6713609 Seat Bar		2
15	6713589	CLEVIS	2.09"(53,1 mm) length – Used W/6713609 Seat Bar		2
16	17C–612	BOLT			2
17	6571991	WASHER	Used W/NAP 6710661 Seat Bar – Not in Kit		2
18	8D–6	NUT	jam – Used W/NAP 6710661 Seat Bar – Not in Kit		2
19	1306637	PIN	cotter – Used W/NAP 6710661 Seat Bar – Not in Kit		2
20	2J–6208	CLEVIS	2.85"(72,4 mm) length – Used W/NAP 6710661 Seat Bar		2
21	6900096	INSTRUCTIONS			1

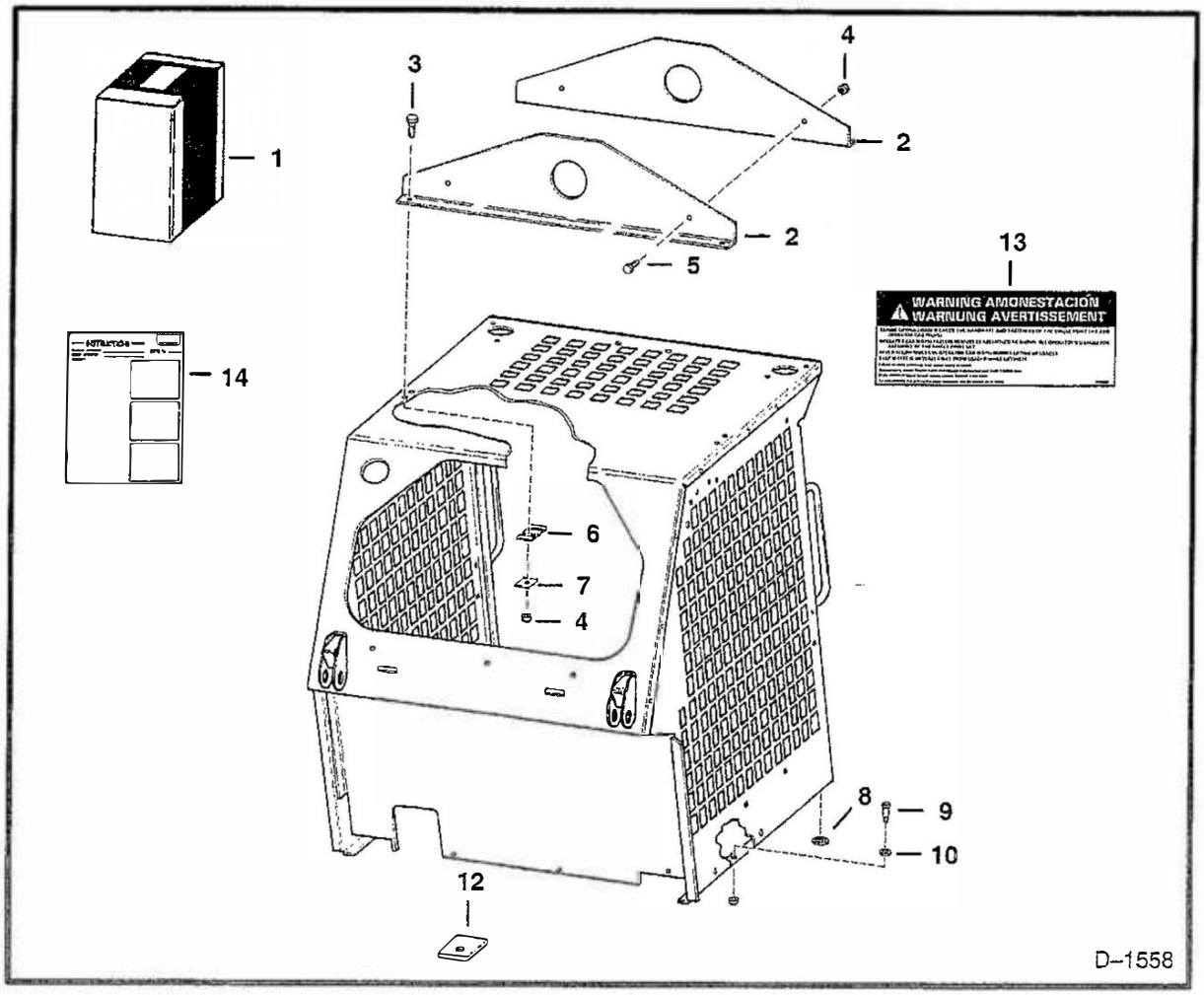

SINGLE POINT LIFT
(19999 & Below)

Ref. No.	Part Number	Description	Remarks	Serial Number	Qty.
1	NAP	KIT	Ref. 3–14 – Order 6568042 Kit – See Page 270		1
2	6560175	ANGLE			2
3	17C–824	BOLT			4
4	85D–8	NUT			6
5	17C–816	BOLT			4
6	6563494	SHIM			4
7	6553709	WASHER			4
8	6560899	WASHER			2
9	672401	BOLT			2
10	6563495	WASHER			2
11	6563551	WASHER			1
12	6560900	RETAINER			4
13	6565932	DECAL	safety		2
14	6556604	INSTRUCTIONS			1

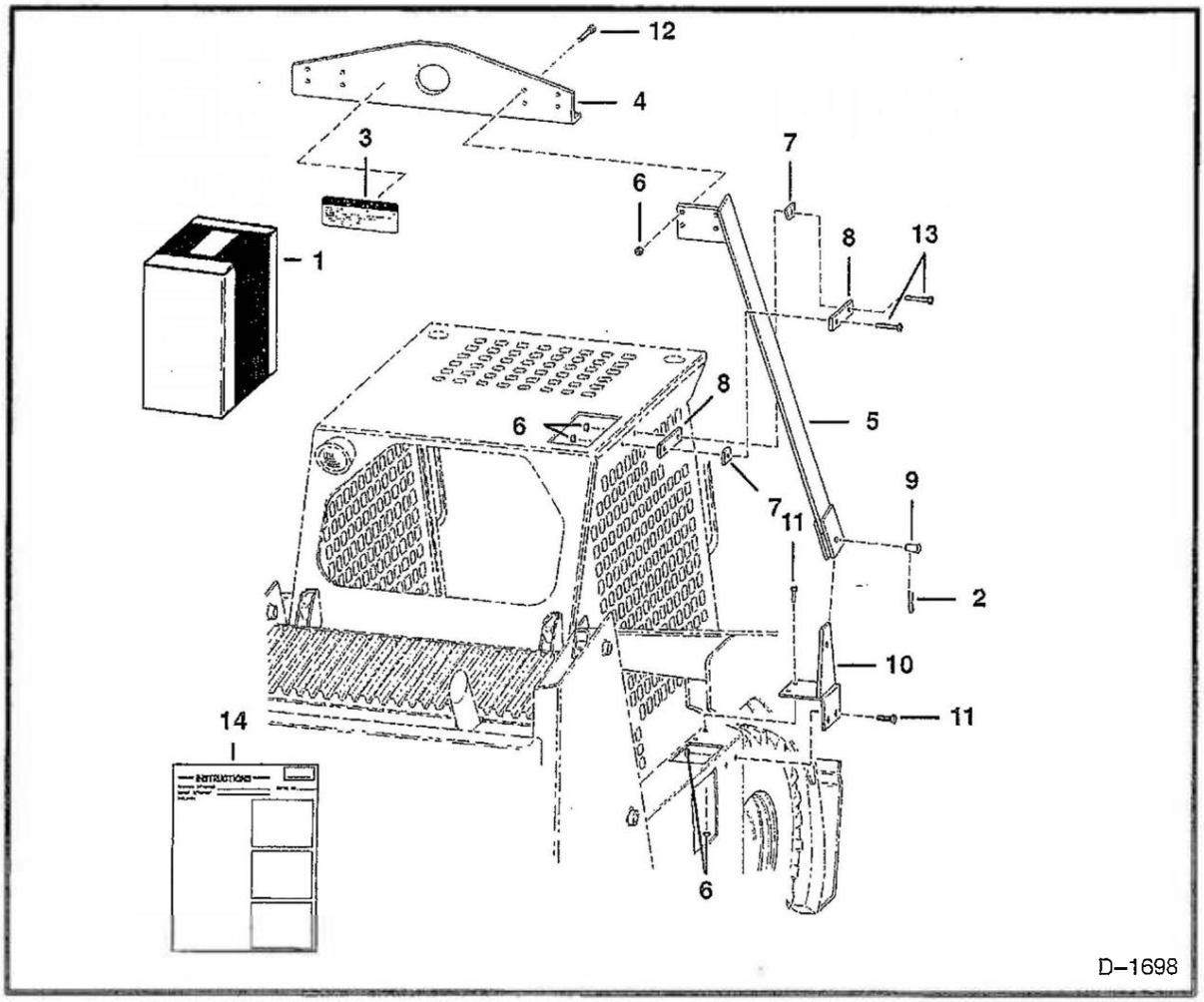

SINGLE POINT LIFT KIT

Ref. No.	Part Number	Description	Remarks	Serial Number	Qty.
1	6568042	KIT	single point lift – Ref. 2–14		1
2	1320075	PIN			2
3	6565932	DECAL			2
4	6567827	ANGLE			1
5	6567831	ARM			1
	6567835	ARM			1
6	85D–8	NUT			20
7	6567836	STOP			4
8	6567837	RETAINER			4
9	6567838	PIN			2
10	6567879	ANGLE			2
11	17C–820	BOLT			8
12	17C–824	BOLT			8
13	17C–828	BOLT			4
14	6566947	INSTRUCTIONS			1

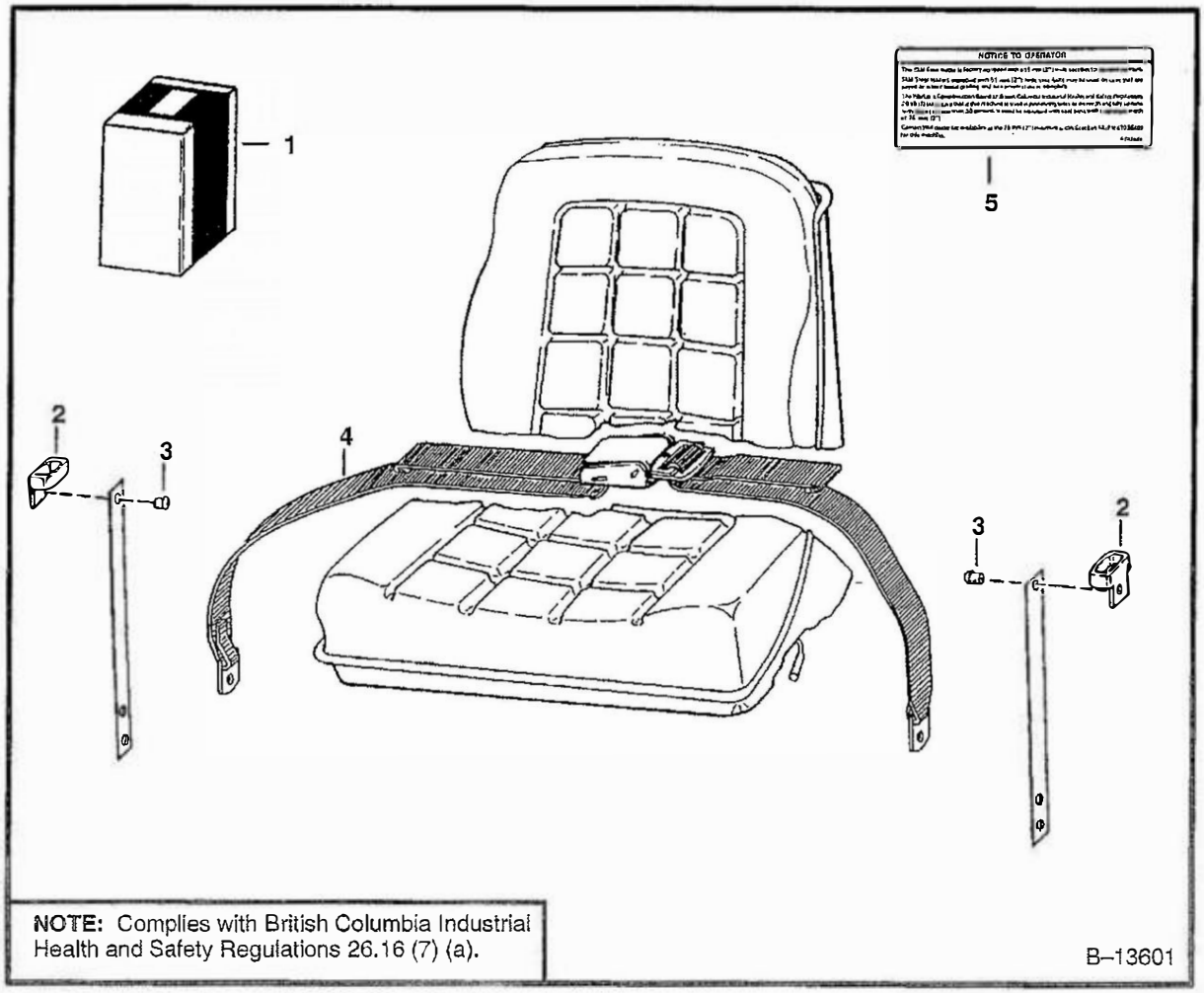

SEAT BELT 3"

Ref. No.	Part Number	Description	Remarks	Serial Number	Qty.
1	6703640	KIT	W/Ref. 2–5		1
2	6703703	GUIDE			2
3	6630207	RIVET	Was 6512797 [A]		4
4	6659999	BELT			1
5	6703641	DECAL			1

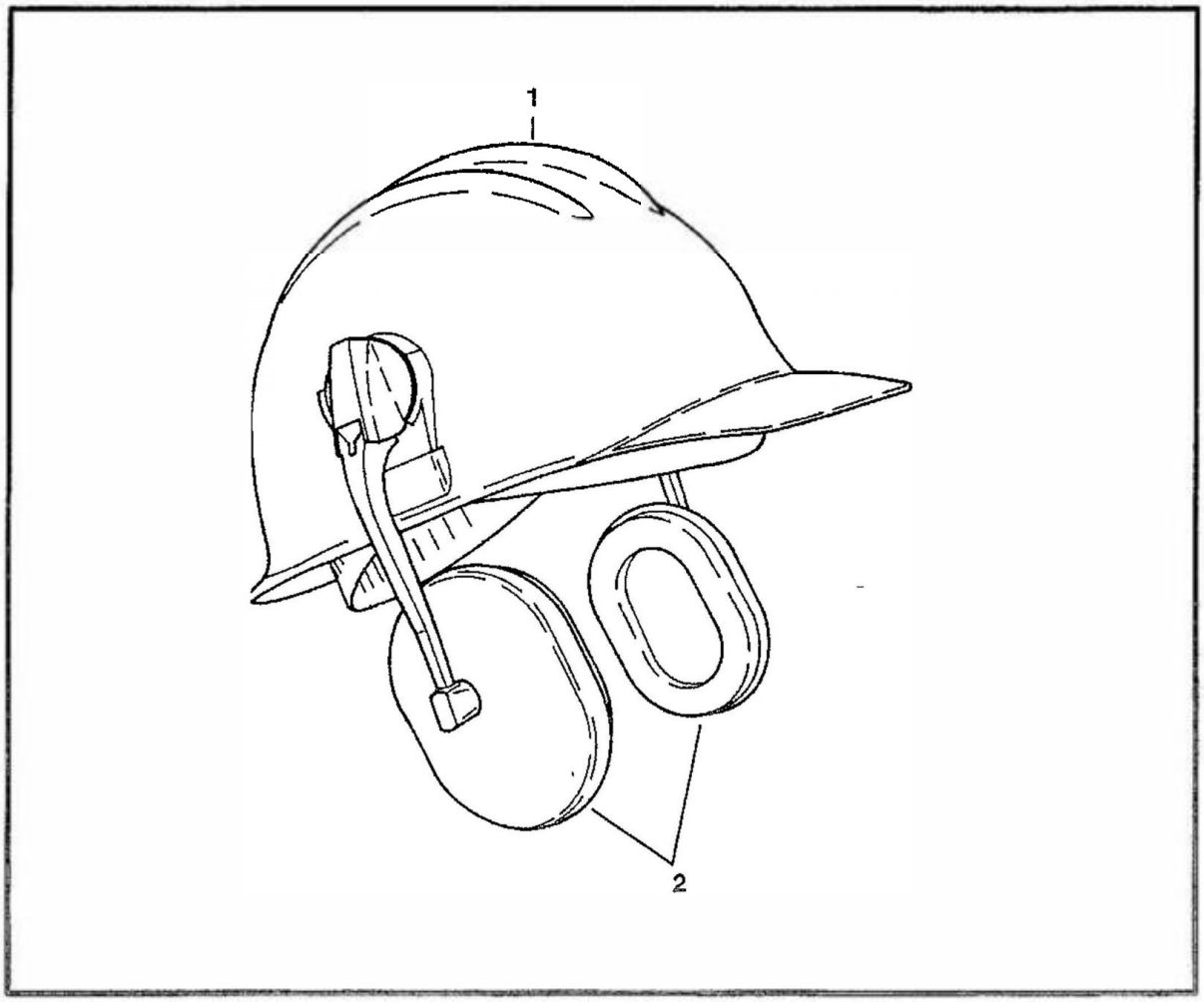

SOUND REDUCTION HARDHAT

Ref. No.	Part Number	Description	Remarks	Serial Number	Qty.
1	6559552	HARDHAT			1
2	6559775	EARMUFFS			1

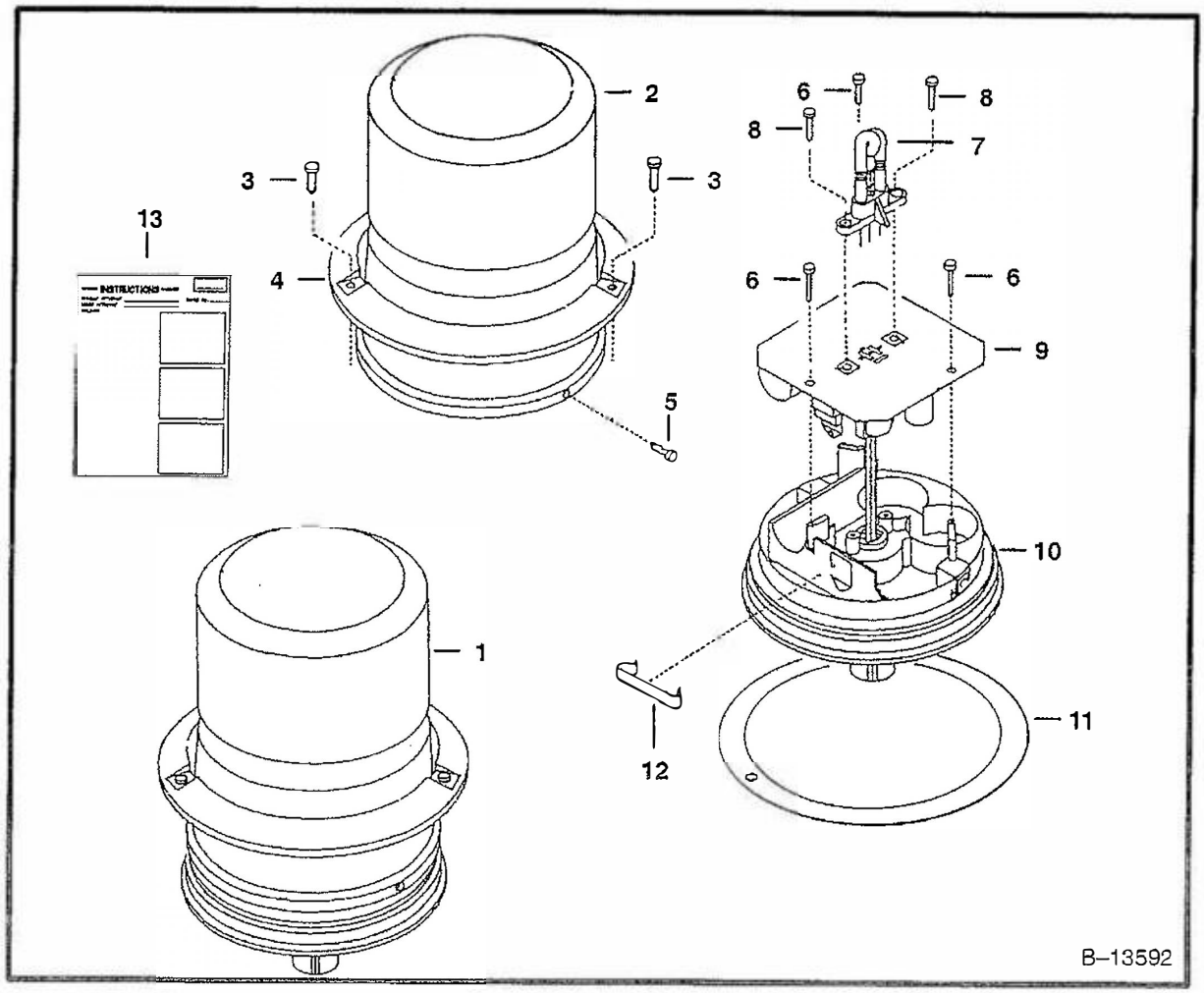

STROBE LIGHT
(Amber – 2414ALW)

Ref. No.	Part Number	Description	Remarks	Serial Number	Qty.
1	6587526	STROBE LIGHT	Strobe light – Ref. 2–13 – Was 6659815 [A]		1
2	NAP	LENS	Amber – Was 6659971 [A]		1
	NAP	LENS	Blue – Not in kit – Was 6660247 [A]		1
3	NSS	SCREW			3
4	NAP	COLLAR	Mounting – Was 6659974 [A]		1
5	NSS	SCREW			1
6	NSS	SCREW			3
7	6659972	FLASH TUBE			1
8	NSS	SCREW			2
9	NSS	POWER SUPPLY			1
10	NSS	BASE			1
11	NAP	GASKET	Was 6659973 [A]		1
12	NSS	RETAINER			1
13	6720856	INSTRUCTIONS			1

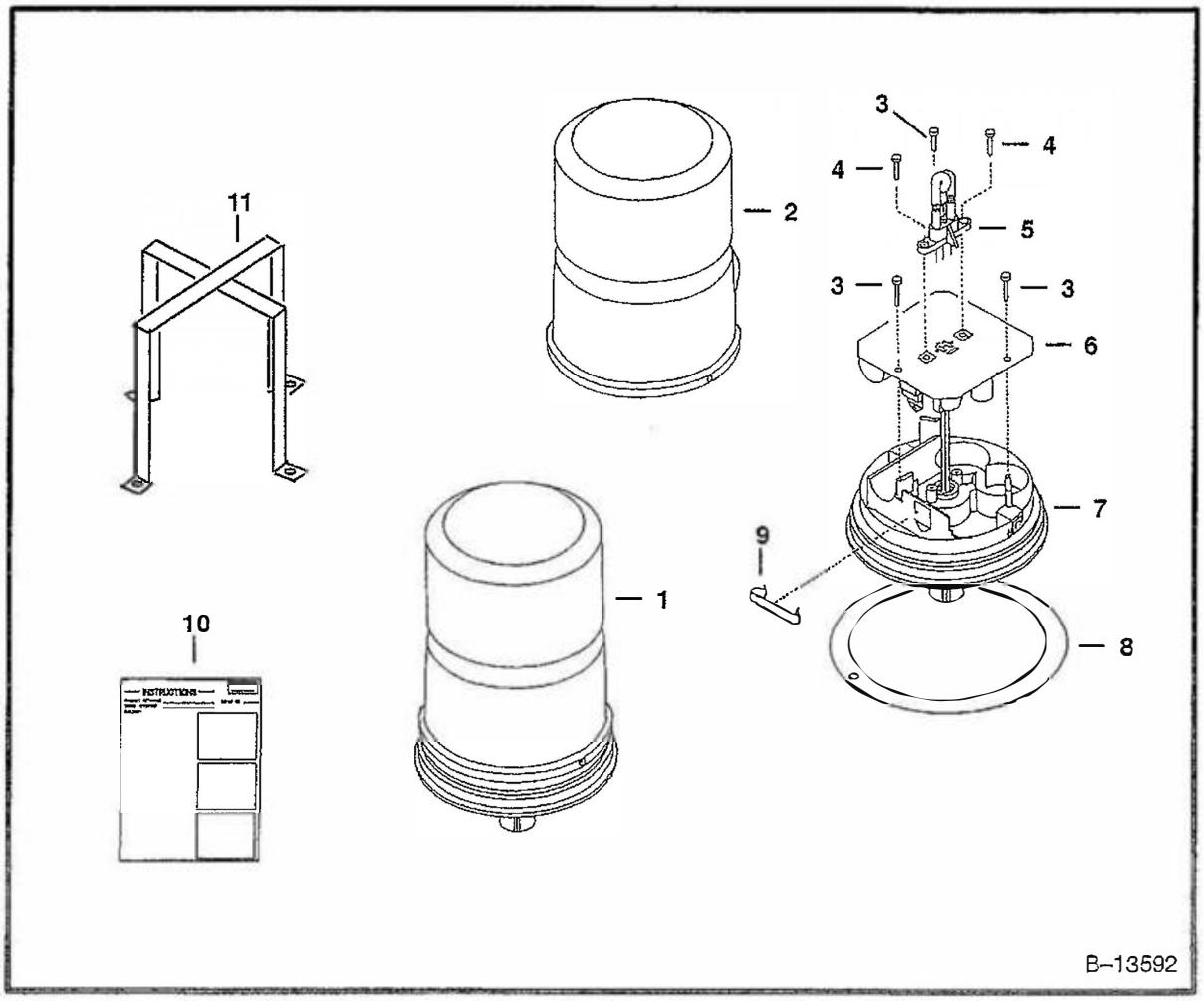

STROBE LIGHT
(Amber – 3414 ALW)

Ref. No.	Part Number	Description	Remarks	Serial Number	Qty.
1	6587526	KIT	Strobe light – Ref. 2 –13 – Was 6659815 [A]		1
2	6665021	LENS	Amber		1
	6665025	LENS	Blue – Not in kit		1
3	NSS	SCREW			3
4	NSS	SCREW			1
5	6665022	FLASH TUBE			1
6	NSS	POWER SUPPLY			1
7	NSS	BASE			1
8	6665023	GASKET			1
9	NSS	RETAINER			1
10	6720856	INSTRUCTIONS			1
11	6665024	BRANCH GUARD			1

Use only Bobcat belts and hoses to maintain maximum service life.

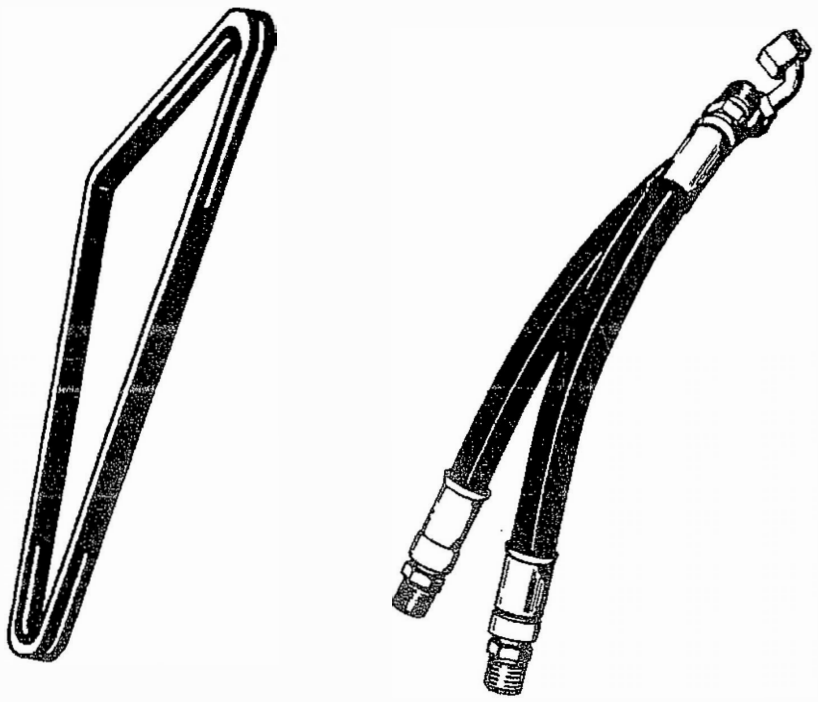

Available from Bobcat Parts.

Bobcat

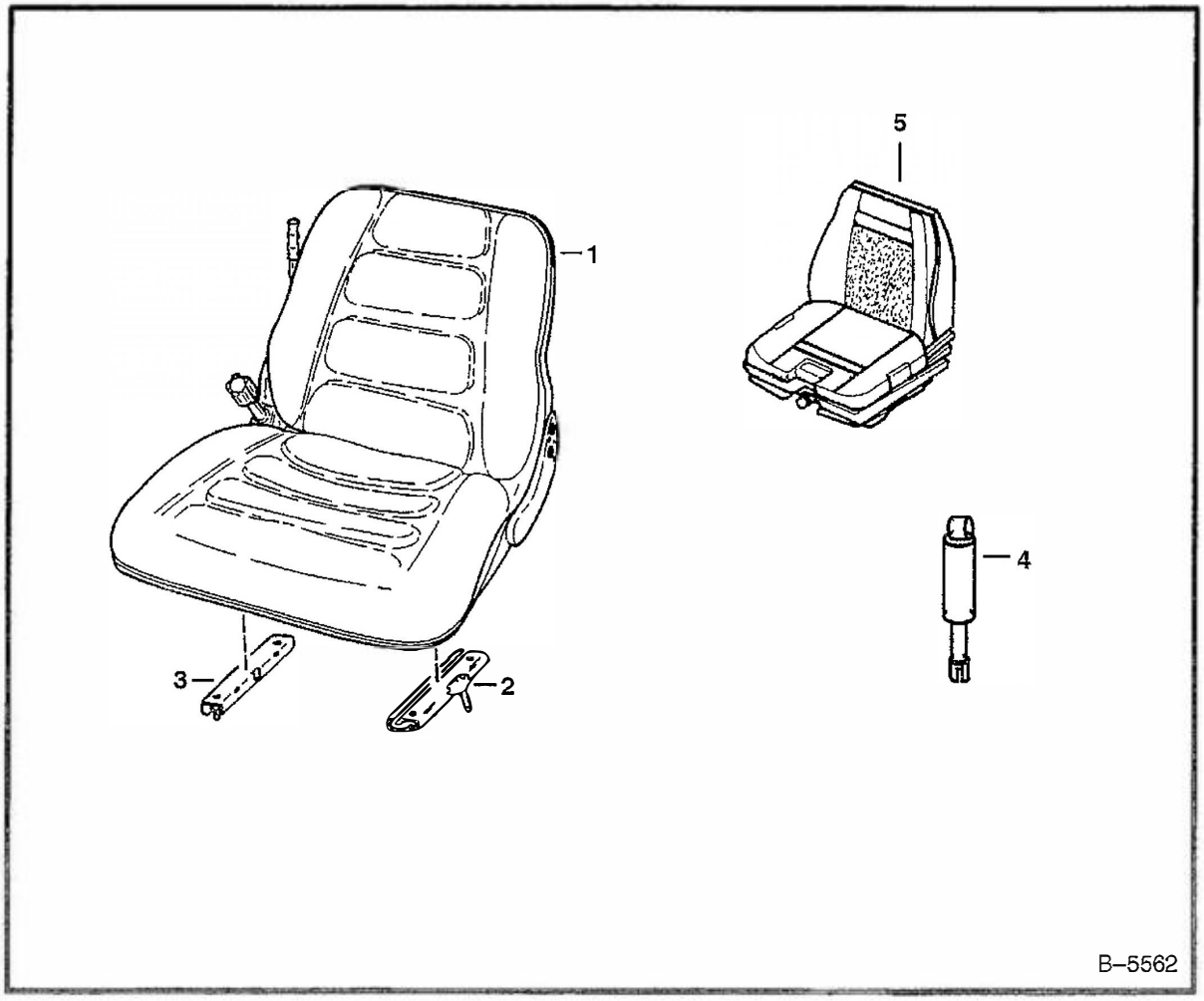

SUSPENSION SEAT
(Grammer)

Ref. No.	Part Number	Description	Remarks	Serial Number	Qty.
1	6632388	SEAT	grammer		1
	3737010	CUSHION	seat		1
	3737081	CUSHION	backrest		1
2	3737000	TRACK	W/Adjusting Handle		1
3	3737001	TRACK	W/O Adjusting Handle		1
4	6660348	GAS SPRING			1
5*	NAP	SEAT	Milsco – Order 6674019 – Was 6647432 [A]		1

SUSPENSION SEAT
(Milsco)

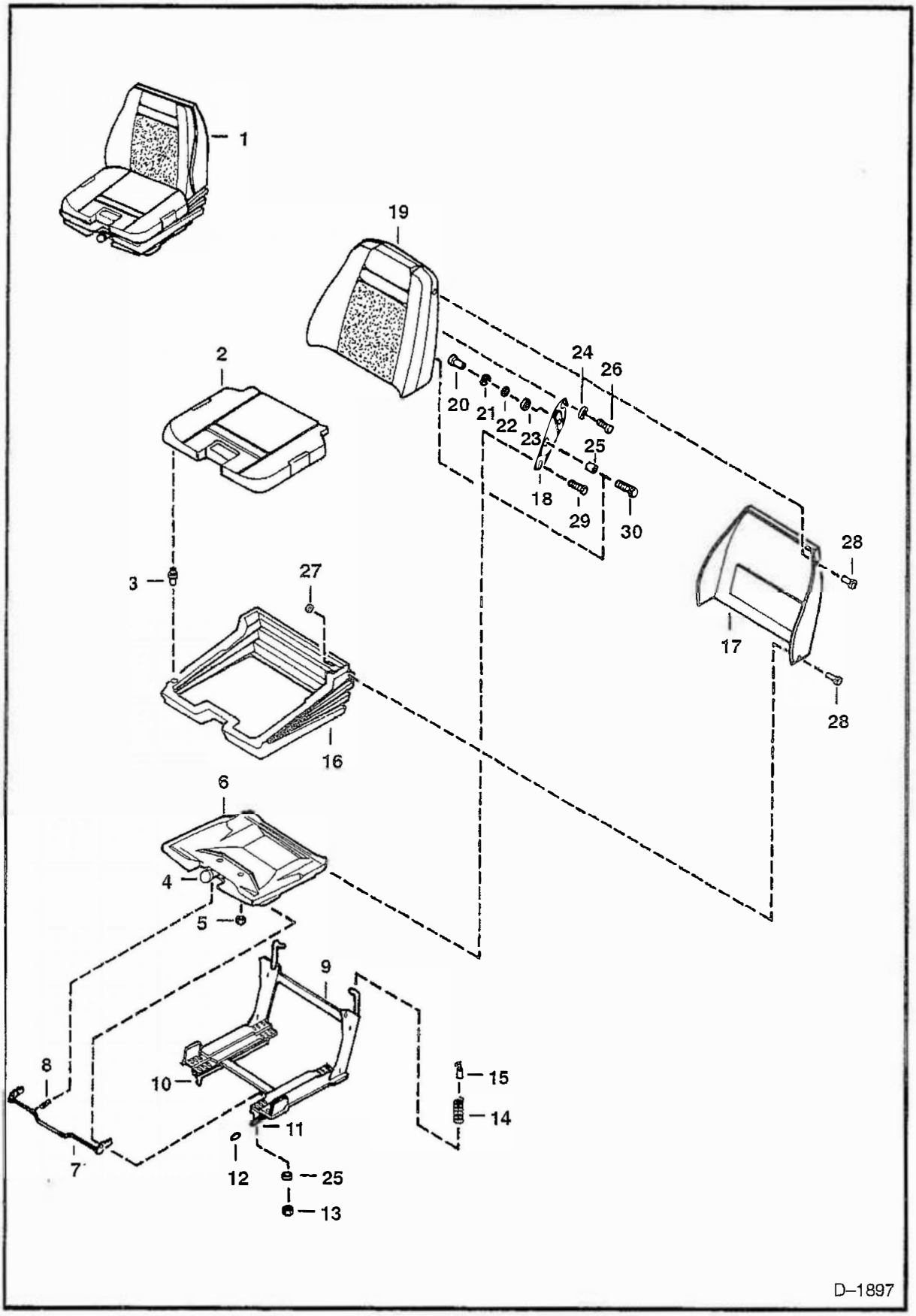

SUSPENSION SEAT (Cont'd)
(Milsco)

Ref. No.	Part Number	Description	Remarks	Serial Number	Qty.
1*	NAP	SEAT	Ref. 2–28 – Order 6674019 – Was 6647432 [A]		1
2	6650226	SEAT CUSHION	W/Ref. 3		1
3	6650231	CLIP			x
4	6650219	KNOB KIT	Ref. 3 – W/Nut, Bushing		1
5	6650241	PUSH NUT			2
6	6650230	SEAT PAN	W/Mounting Hardware		1
7	6650221	LATCH TILT	Ref. 8 – W/Mounting Hardware		1
8	6650229	SPRING			1
9	NSS	FRAME			1
10	6650228	TRACK			1
11	6599779	TRACK ADJ	Was 6650227 [A]		1
12	6650242	TIP			1
13	61D–5	NUT			4
14	6650222	SPRING			1
15	6650223	CABLE			1
16	6650243	BOOT			1
17	6650220	SHROUD			1
18	6650224	SUPPORT	R.H. & L.H. Backrest		1
19	6650225	BACK CUSHION	W/Mounting Hardware		1
20	6650244	NUT			2
21	6650245	WASHER			2
22	6650246	WASHER			2
23	6650247	WASHER			2
24	6650248	SPACER			2
25	6650249	SPACER			2
26	17C–510	BOLT			4
27	6650250	WASHER			5
28	6650251	CLIP			7
29	6668717	SCREW	shoulder		4
30	31C–510	BOLT			2

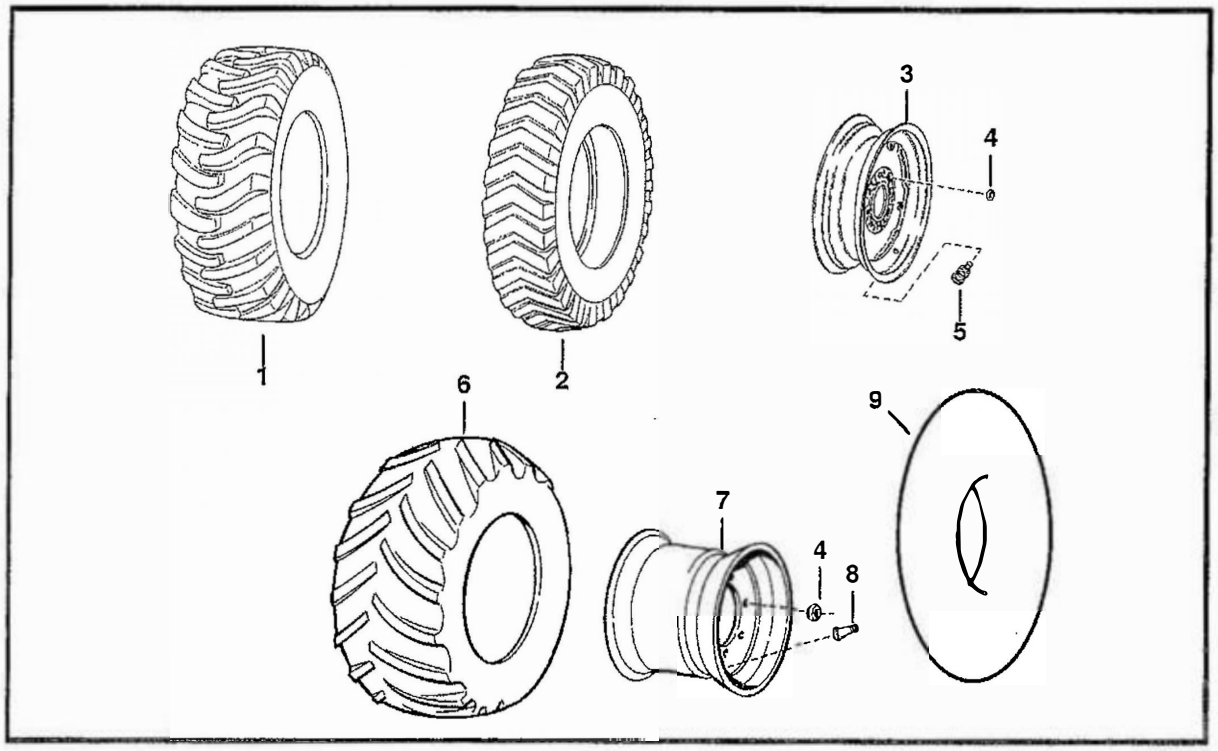

TIRES & RIMS

Ref. No.	Part Number	Description	Remarks	Serial Number	Qty.
1	6519249	TIRE	12 x 16.5, 6 ply rating – Goodyear		
			Was 6563320 [A]		4
	6670145	TIRE	12 x 16.5, 6 ply rating – Firestone		
			Was 6543468 [A]		4
	6590832	TIRE	12 x 16.5, 8 ply rating – Goodyear		4
	NLA	TIRE	12 x 16.5, 6 ply rating – General –		
			Was 6631614 [A]		4
	6652817	TIRE	12 x 16.5, 10 ply rating – Bobcat		
			brand		4
	6667888	TIRE	Dico – Heavy duty – 12x16.5 –		
			10 ply rating		4
	6662754	TIRE	12 x 16.5, 8 ply rating – trac 2 –		
			Dico		4
	6665725	TIRE	8.25 x 15, 6 ply rating – IDT		
			(industrial deep thread) – Dico		4
2	NAP	TIRE	8.25 x 15, 6 ply rating –		
			Was 6519248 [A] – can use		
			6543468, 6590832, 6631614 or		
			6661601		4
3	6565240	RIM	Used W/Ref. 1 – See BTI 197		4
	6562498	RIM	Used W/Ref. 2 – See BTI 197		4
4	6564669	NUT	wheel		32
5	1614765	STEM	valve		4
6	6513971	TIRE	31 x 15.5, 8 ply Terra Grip		4
7	6561095	RIM	Use W/Ref. 6		4
8	6591447	STEM	valve – Use W/Ref. 7		4
9	6630822	TUBE	Use W/Ref. 1		4

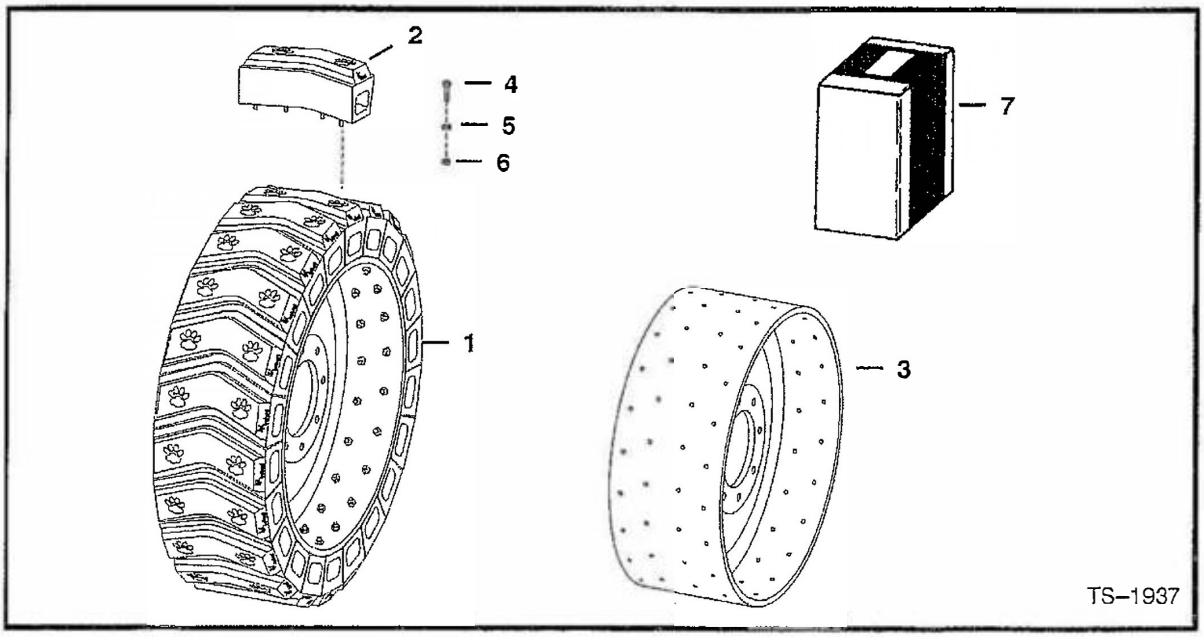

TIRES & RIMS
(Solid Tire – Iatco)

Ref. No.	Part Number	Description	Remarks	Serial Number	Qty.
1	6664990	TIRE & RIM	Assy. – R.H. – 8.25 x 15		2
	6664991	TIRE & RIM	Assy. – L.H. – 8.25 x 15		2
*	6674009	TIRE & RIM	Assy. – R.H. – 12 x 16.5 – Was 6669041 [A]		2
*	6674008	TIRE & RIM	Assy. – L.H. – 12 x 16.5 – Was 6669042 [A]		2
2	6664992	KIT	Box of (10) segments – 8.25 x 15 W/Ref. 4 – 6 – (20) segments/tire		x
*	6674012	KIT	Box of (12) segments – 12 x 16.5 W/Ref. 4 – 6 – (22) segments/tire – Was 6669043 [A]		x
3	NAP	RIM	R.H. – 8.25 x 15 – Order Ref. 1		2
	NAP	RIM	L.H. – 8.25 x 15 – Order Ref. 1		2
	NAP	RIM	R.H. – 12 x 16.5 – Order Ref. 1		2
	NAP	RIM	L.H. – 12 x 16.5 – Order Ref. 1		2
4	1CM–830	BOLT			x
5	25E–15	WASHER			x
6	40DM–8	NUT			x
7	6707173	KIT	wheel – Set of (4) 8.25 x 15 Tire & Rim Assys. – Ref. 1 – (2) R.H. & (2) L.H.		1
8*	6718304	KIT	wheel – Set of (4) 12 x 16.5 Tire & Rim Assys. – Ref. 1 – (2) R.H. & (2) L.H. – Was 6712828 [A]		1

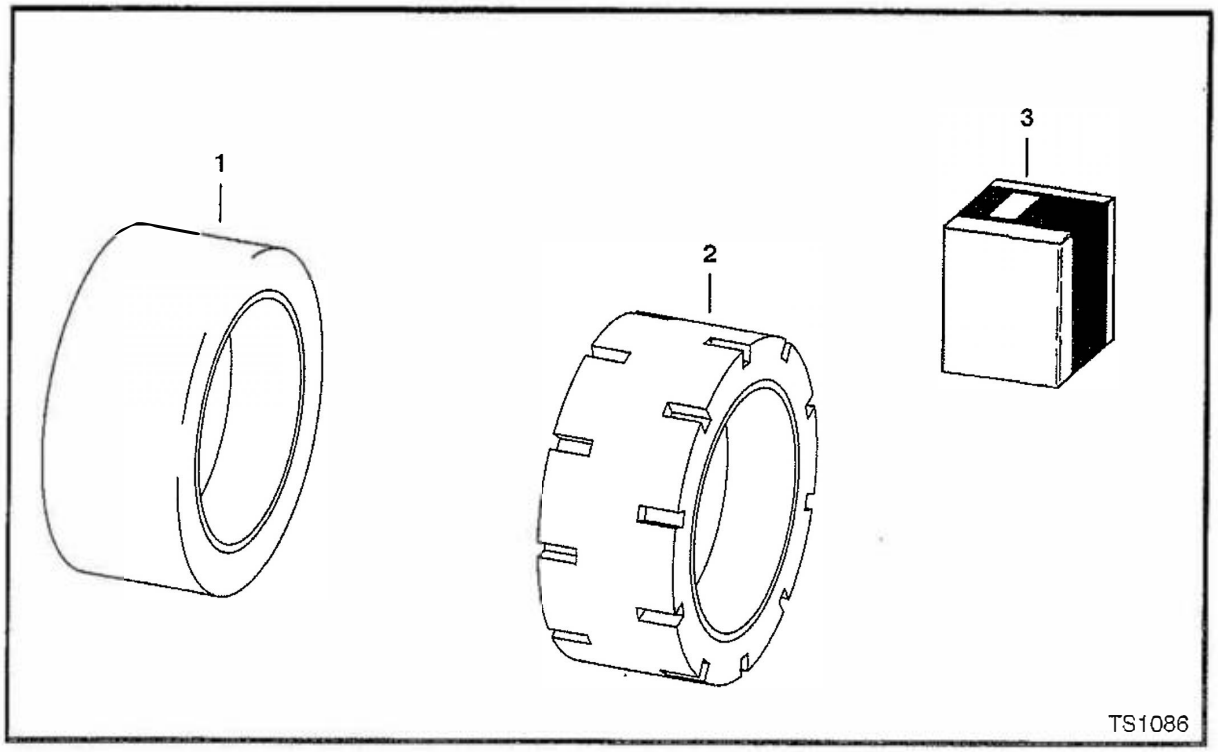

TIRES & RIMS
(Solid Tire – Setco)

Ref. No.	Part Number	Description	Remarks	Serial Number	Qty.
1	6704169	TIRE & RIM	10 X 33 Slick with wire		4
2	6704170	TIRE & RIM	10 X 33 Staggered Gear Lug		4
3	6722151	TIRE & RIM	10 X 33 Slick with wire –Set of 4		1
	6722152	TIRE & RIM	10 X 33 Staggered Gear Lug – Set of 4		1

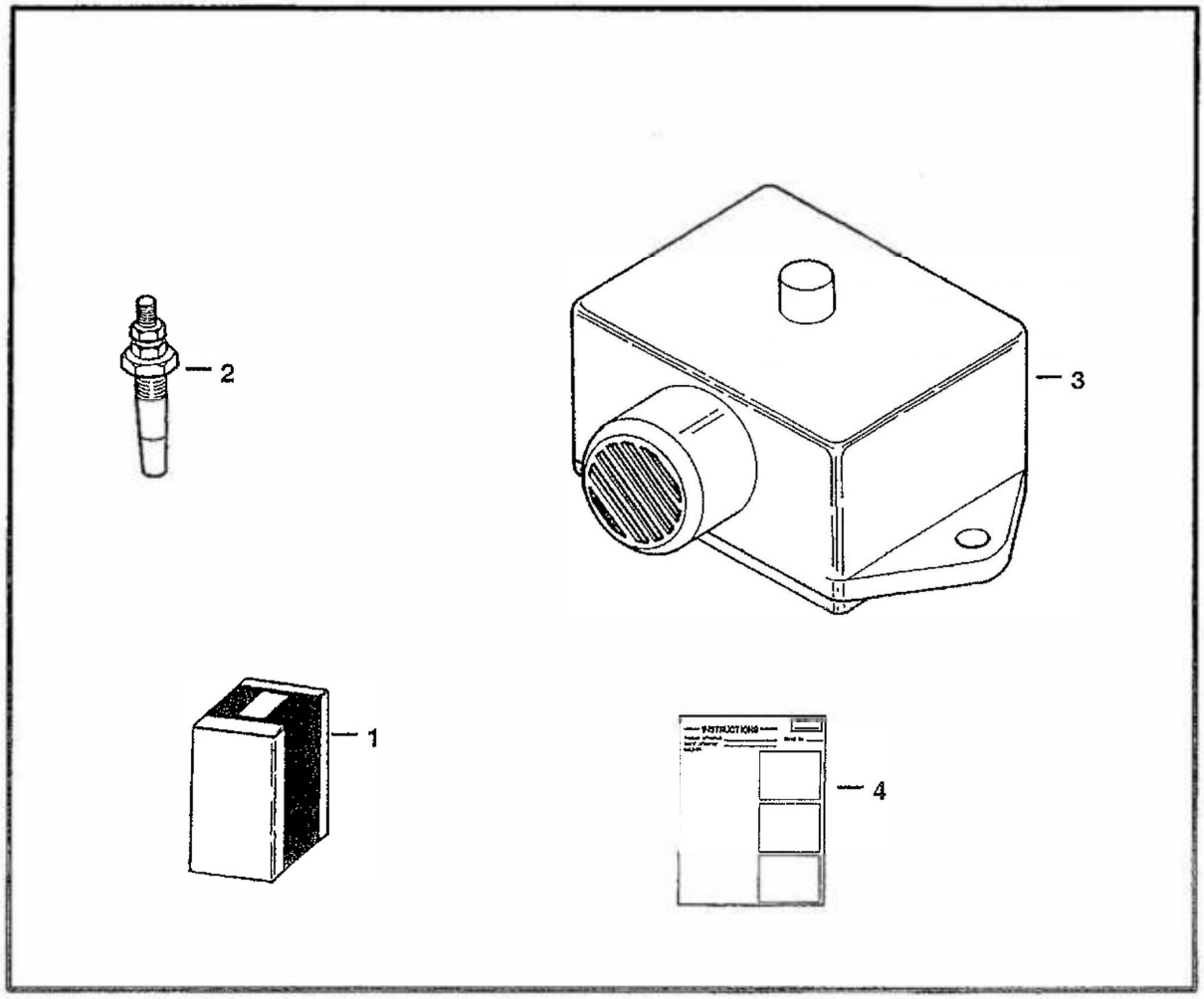

WATER LEVEL SENSOR KIT

Ref. No.	Part Number	Description	Remarks	Serial Number	Qty.
1	6571700	KIT	water level sensor – Ref. 2–4		1
2	6632954	PROBE			1
3	NSS	ALARM	Order Ref. 1		1
4	6570238	INSTRUCTIONS			1

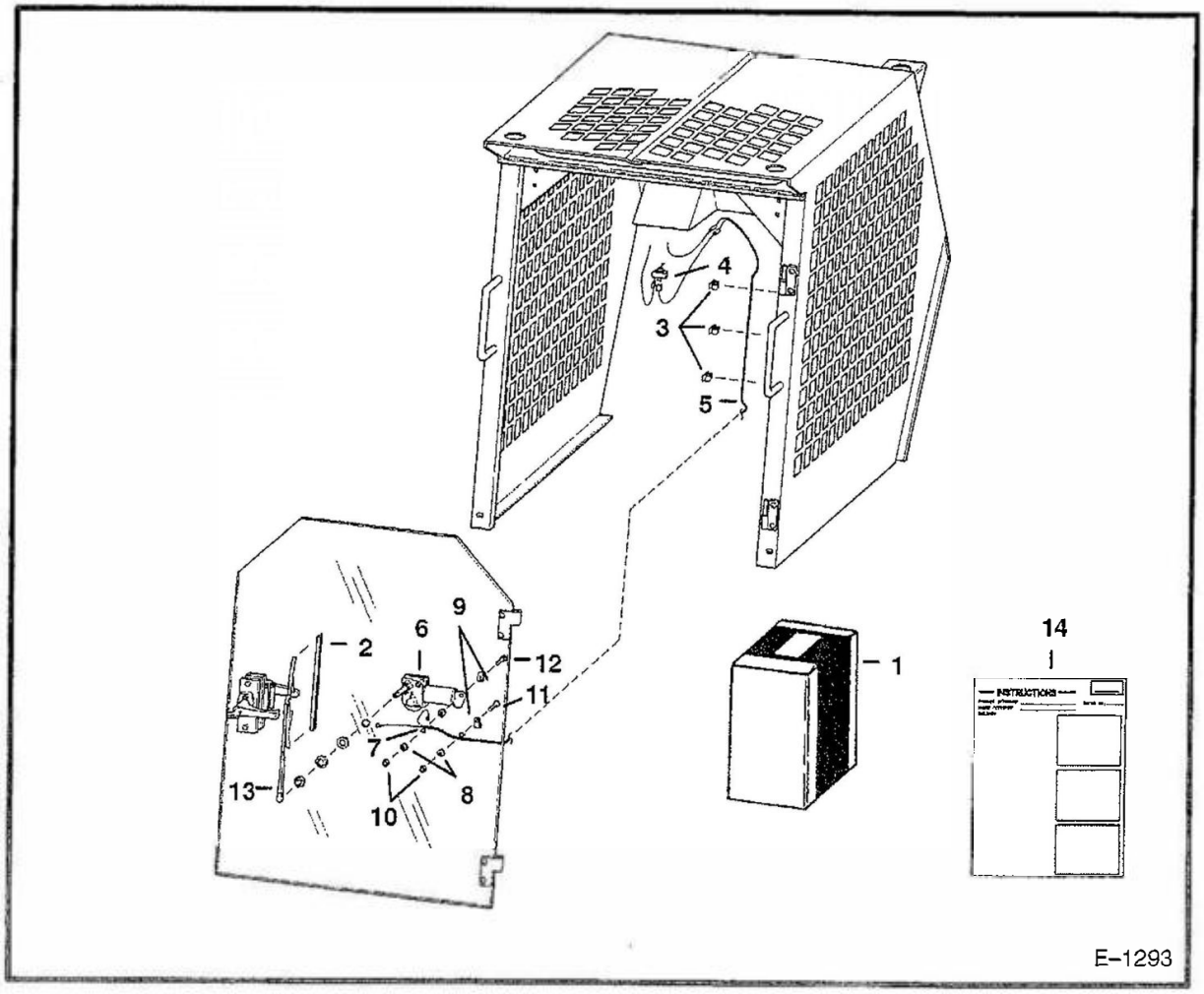

WINDSHIELD WIPER

Ref. No.	Part Number	Description	Remarks	Serial Number	Qty.
1	6562123	KIT	wiper – Ref. 2–14		1
2	1550697	BLADE			1
3	6514850	CLIP			3
4	6515521	SWITCH	toggle		1
5	6561592	HARNESS			1
6	6561971	MOTOR			1
7	12E–10	WASHER			1
8	25E–10	WASHER			3
9	30H–14	CLIP			2
10	51D–10	NUT			2
11	86G–1012	SCREW			1
12	86G–1016	SCREW			1
13	1744552	ARM	Was 852454 [A]		1
14	6556702	INSTRUCTIONS			1

Bobcat batteries are designed to meet the needs of your machine.

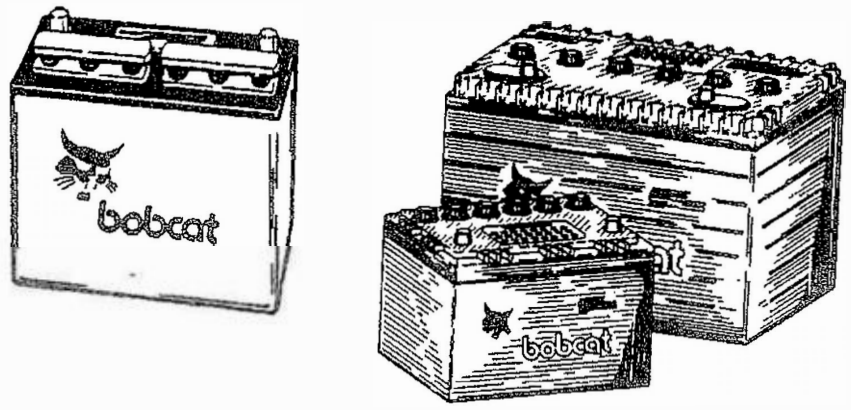

Available from Bobcat Parts.

Bobcat

BULK ITEMS
(See Note)

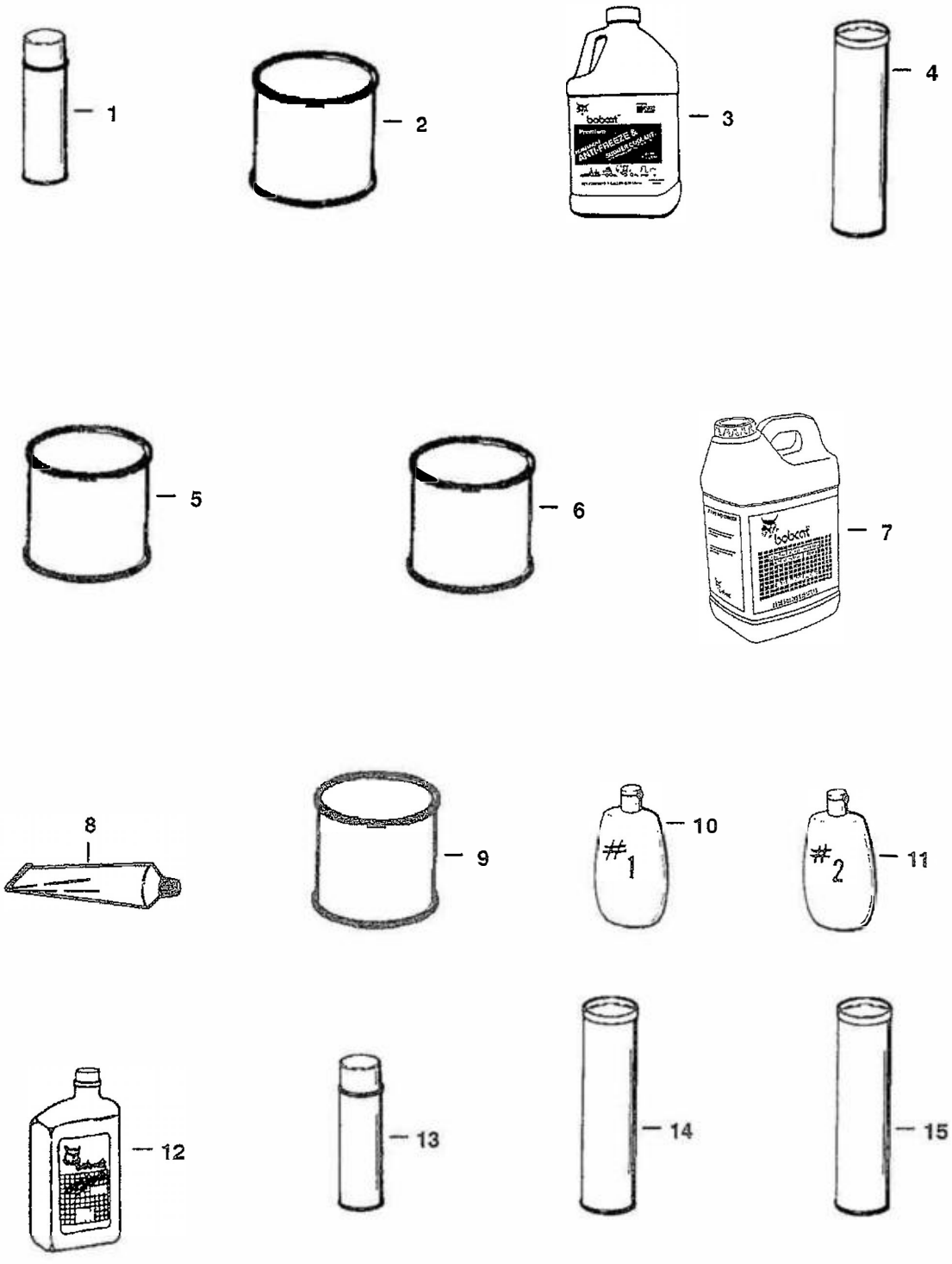

NOTE: Some of these Bulk Items may not be used on this Bobcat.

NOTE: See Merchandising catalog for more products & information.

NOTE: Paint spray cans are packaged 6 per box. Motor oil quarts are packaged 12 per box. Motor oil 5 qt. jugs are packaged 4 per box.

BULK ITEMS (Cont'd)
(SEE NOTE)

Ref. No.	Part Number	Description	Remarks	Serial Number	Qty.
1	6722783	PAINT	orange – Spray Can – See Note		x
	6722786	PAINT	charcoal – Spray Can – See Note		x
	6722789	PAINT	white – Spray Can – See Note		x
2	6722781	PAINT	orange – Gal. – Also Order Ref. 5		x
	6722782	PAINT	orange – Qt. – Also Order Ref. 5		x
	6722784	PAINT	charcoal – Gal. – Also Order		
			Ref. 5		x
	6722785	PAINT	charcoal – Qt. –Also Order Ref. 5		x
	6722787	PAINT	white – Gal. – Also Order Ref. 5		x
	6722788	PAINT	white – Qt. Also Order Ref. 5		x
3	6724094	ANTI–FREEEZE	gallon – premixed PG		x
	6724354	ANTI–FREEZE	gallon – concentrate PG		x
4	6633583	SEALANT	chaincase covers		x
5	6653517	REDUCER	gallon		x
6	6653518	PRIMER	gallon		x
	6653519	PRIMER	Qt.		x
7	6563328	BLACK GOLD	Hydraulic/Hydrostatic		
			Transmission Fluid – 5 Gallons –		
			2–2 1/2 Gallon Containers		x
	6722344	BLACK GOLD	Hydraulic/Hydrostatic		
			Trans. Fluid – 5 Gal. Container		x
	6563330	BLACK GOLD	55 Gallon Drum		x
8	6599360	SEALANT	electrical – 3 oz. tube		x
9	6634393	LUBRICANT	90 wt. gear – pint – For use in		
			cooling fan drive assy		x
10	6630188	POLISH	window–1 (8 oz.)		x
11	6630189	POLISH	window–2 (8 oz.) – scratch		
			remover		x
12	6657303	MOTOR OIL	30 CE/SG – 1 Qt. – See Note		x
	6724559	MOTOR OIL	SAE 30 – 1 Gal. – See Note		x
	6674206	MOTOR OIL	SAE 30 – 2.5 Gal. – See Note		x
	6657301	MOTOR OIL	10W30 CE/SG – 1 Qt. – See Note		x
	6724557	MOTOR OIL	SAE 10W30 – 1 Gal.–See Note		x
	6674205	MOTOR OIL	SAE 10W30 – 2.5 Gal.–See Note		x
	6657299	MOTOR OIL	15W40 CE/SG – 1 Qt. – See Note		x
	6724558	MOTOR OIL	SAE 15W40 – 1 Gal.– See Note		x
	6674204	MOTOR OIL	SAE 15W40 – 2.5 Gal.– See Note		x
13	6675380	ADHESIVE	insulation – spray can		x
14	6658266	GREASE	general purpose		x
15	6599719	GREASE	14.5 oz. cart. – For fan idler brg.		x
16	6650407	ADHESIVE	1 oz. tube		x
17	6650388	SEALANT	flange		x

Part No.	Description	Was	Code	Page
221461	PIN			16
329884	FAN			142, 144
455536	DOWEL PIN			126, 128
595033	HOSE			84
614142	SLEEVE			207, 240, 264
616334	COVER			207
616783	WASHER			80, 88, 92, 174
616789	WASHER			76
619021	WASHER			34
637641	SLEEVE			264
657904	CLAMP			158, 166
658128	SNAP RING			118, 120
659892	HOSE			46, 48, 50, 80
660181	RACE			40
661556	FUSE			247, 248
663823	SNAP RING			174
711273	RACE			34
713133	SNAP RING			84, 88, 92
731284	BEARING			40
731783	HOSE			80
731795	ADAPTER			100, 104
733616	TERMINAL			264
742666	SNAP RING			42
742876	GROMMET			30, 32, 132
743332	GREASE ZERK			14, 34
755055	ADAPTER			84, 96, 100
774220	WASHER			82, 96, 102, 106
784466	PIN			42
794584	WASHER			142, 144
799119	SNAP RING			70, 184
850315	RETAINER			144
859377	SCREW			154
860669	BUSHING			152, 154
863995	WASHER			154
866028	CLAMP			198
874935	BUSHING			152, 154
878103	GASKET			154
878608	COLLAR			152, 154
880603	HOLDER	6511626	A	152, 154
884576	SCREW			152, 154
886203	ROLL PIN			118, 120
886527	WASHER			198
887834	POLE SHOE			154
888968	SPRING			152
888968	SPRING	906910	A	154
889163	BEARING			230
889269	HOSE			251, 252
891024	BAFFLE			198
891252	HOLDER			152
891346	BODY			124
891602	PLATE			152, 154

Code for dispostiiton of old part number
A — Use up
B — Use on other application (See PNI)
C — File PDR Report with Melroe Parts Sales
D — Part Number Error

Part No.	Description	Was	Code	Page
894215	SEAL KIT			124
895675	BOLT			152
895771	BULB			132, 134
896126	LEVER			152, 154
896128	BOOT			154
896984	BOLT			230
896990	WASHER			230
896992	RETAINER			230
896996	WASHER			230
897239	SLEEVE			230
897245	INSULATOR			230
897456	RETAINER			142
897467	BOLT			142, 144
897719	INSULATOR			230
897732	WASHER			230
898127	COLLAR			154
898131	GROMMET			154
898731	LIGHT BULB			132, 134
899157	FAN			229
899163	ROTOR			230
899165	INSULATOR			230
899167	SINK			230
899169	INSULATOR			230
899170	GASKET			230
899374	SEAL			230
899375	DIODE			230
899376	WASHER			230
899377	BOLT			230
899378	DIODE			230
905350	BEARING			142, 144
905351	BEARING			142, 144
905952	TERMINAL PKG			142, 144
905956	FRAME			142, 144
905957	HOUSING			144
906104	PULLEY			142, 144
906111	COLLAR			142, 144
907212	PLUG			193
907953	STATOR			144
908221	ALTERNATOR			144
909831	COLLAR	905958	A	142, 144
942142	RETAINER			152, 154
945239	BRUSHES			152
946860	VALVE			158, 166, 198
947717	PLUNGER			78
947737	SPRING			78
947751	PLUG			67
948307	SEAL KIT			62
952149	SNAP RING			118, 120
960698	ELEMENT			1, 194
961528	PACK OF PARTS			214
962263	GASKET			194

Code for dispostiiton of old part number
A — Use up
B — Use on other application (See PNI)
C — File PDR Report with Melroe Parts Sales
D — Part Number Error

Part No.	Description	Was	Code	Page
991218	WASHER			154
991731	GASKET			152
992568	SPRING			152
994373	BOLT			142
994378	BOLT			142, 144
994381	REGULATOR			142, 144
994383	DIODE			142, 144
995185	RECTIFIER			142
997782	GASKET	3727370	A	194, 200
997932	PLUG			184
997937	SPRING			184
997943	SCREW			184
997944	SPRING	6599223	A	184
997947	VALVE			184
997950	GUIDE	6599196	A	184
997951	WASHER			184
997958	WASHER			184
998010	BEARING			182
998020	GEAR	6599214	A	182
998043	STUD	6599935	A	186, 188
998046	PLUG			180
998047	PLUG			180
998057	GASKET			178, 184, 200
998061	PLUG	6599166	A	180
998062	PLUG			180
998285	STUD			184
998286	STUD			192
998287	BUSHING	6510375	A	184
998293	WASHER			184
998302	BOLT			182
999305	ROTOR			142
999308	CAPACITOR			142, 144
999394	HOLDER			142, 144
999395	TERMINAL			142, 144
999396	BOLT			142, 144
999397	BOLT			142, 144
* 999460	FRAME	6630408	A	154
999472	PIN			152, 154
999590	PLUG			180
1300309	ELBOW			84
1301362	JOINT	6599953	A	74
1302104	ELBOW			84, 104
1303485	ADAPTER			84
1304938	BOLT			74
1306637	COTTER PIN			74, 76, 268
1306637	COTTER PIN	61D-5	A	16
1309105	ELBOW			138, 140
1312113	ADAPTER			50
1316539	RIVET	6598508	A	162, 170
1319451	FUSE			132, 134
1320075	PIN			270

Code for dispostiiton of old part number
A — Use up
B — Use on other application (See PNI)
C — File PDR Report with Melroe Parts Sales
D — Part Number Error

Part No.	Description	Was	Code	Page
1320904	BEARING			40
1320905	CUP			40
1321607	RACE			43
1321608	BEARING			43
1324240	ADAPTER			30, 32
1326228	HOSE			100, 104
1518597	HOSE			80
1535863	HOSE			100, 104
1550481	PLUNGER			63, 65, 67
1550482	SPRING			63, 65, 67
1550695	HANDLE			210, 222
1550697	BLADE			283
1614765	STEM			279
1629414	ELBOW			92
1675806	TERMINAL			247, 248
1732490	TEE			251, 252
1737762	PIN			74
1744552	ARM	852454	A	283
1908806	EXTINGUISHER			239
1991038	BEARING			230
2343911	STATOR	999392	A	142
2356058	BOOT			138, 140
2365771	HOSE			100
2513089	ELBOW			84, 88, 92
2524512	HOSE			96
2755888	HOSE			80
2756257	RETAINER			212, 218
3291290	WING NUT			198
3490213	DOWEL			158, 166
3490325	WIRE	6630547	A	192
3490588	SPRING			124
3490714	PLUG			184
3494503	WASHER			193
3675725	DIODE			138, 140
3725700	WASHER			176
3726965	STUD			176
3737000	TRACK			276
3737001	TRACK			276
3737010	CUSHION			276
3737081	CUSHION			276
3739527	HOSE			80
3885315	ELEMENT			1, 193
4126590	MOULDING			26, 170, 238
5289686	PLUG			218
6190121	SPRING			122
6502203	CLAMP			46, 48, 50, 54, 82, 96, 102, 104
6506477	WASHER			42
6510484	STUD			176, 188
6510584	WASHER			116
6510596	CONNECTOR			228
6510608	WASHER			182

Code for dispostiiton of old part number
A — Use up
B — Use on other application (See PNI)
C — File PDR Report with Melroe Parts Sales
D — Part Number Error

Part No.	Description	Was	Code	Page
6510614	LINK			38
6511033	FITTING			30, 32, 192
6511372	PLUG			78
6511625	FRAME			152
6511627	HOLDER			152, 154
6511628	COIL			152
6511629	ARMATURE			152, 154
6511855	SEAL			162, 170
6511957	BOLT			142, 144
6512027	BUSHING			108, 110, 112, 114
6512067	GROMMET			162, 170
6512274	CLIP			173, 212, 218, 224
6512356	JOINT			76
6512686	EDGING			172
6512808	LIGHT SWITCH			132, 134
6512809	KEY			132, 134
6512872	DRIVE			152, 154
6512913	WASHER			173
6512955	ROD END			76
6513104	TRAP			30
6513152	MOULDING			16, 26, 28, 204, 206, 218, 220
6513274	MODULE			264
6513275	CONNECTOR			264
6513421	CONNECTOR			30, 32
6513468	BULB			132, 134
6513469	HOLDER			132, 134
6513482	SWITCH			253, 254
6513495	COTTER PIN			74, 76, 244
6513498	CLAMP			253
6513510	PISTON			122
6513515	DRIVE			122
6513516	GEROLER			122
6513517	PLATE			122
6513518	DRIVE			122
6513519	VALVE			122
6513520	SEAL			122
6513521	PLATE	6513942	A	122
6513524	O-RING			122
6513528	FLANGE			122
6513529	SEAL			122
6513532	POPPET			122
6513533	SPRING			122
6513535	O-RING			122
6513539	PLUG			122
6513588	SEAL			40
6513605	SEAL			14
6513662	RING GEAR			162, 170
6513679	DRAIN COCK			164, 170, 180
6513681	BUSHING			40, 122
6513709	CAP			52, 54
6513797	CAP			198

Code for dispostiiton of old part number
A — Use up
B — Use on other application (See PNI)
C — File PDR Report with Melroe Parts Sales
D — Part Number Error

Part No.	Description	Was	Code	Page
6513799	O-RING			122
6513800	O-RING			122
6513849	VALVE			62
6513850	VALVE			65
6513851	PLATE			61
6513881	PLUG ASSY			66
6513899	WASHER			63, 68
6513902	CAP			65, 67
6513909	WASHER			63, 65, 67
6513910	WASHER			65, 67
6513911	SCREW			67
6513912	SPRING			63, 65, 67
6513913	WASHER			67
6513914	SPRING			63
6513915	PLUG			63
6513916	PLUNGER			63
6513917	SCREW			63
6513918	CAP			63
6513919	PLUG			63
6513920	PLUG			63
6513921	SPRING			64
6513923	PLUG ASSY			66
6513924	BOLT			61
6513928	SEAL KIT			61
6513930	SEAL KIT			68
6513932	SEAL KIT			61
6513943	HOUSING			122
6513963	GRIP			108, 110, 112, 114, 244
6513971	TIRE			279
6513974	PLATE			124
6513975	PLATE			124
6513976	PUMP			118
6513977	PUMP			120
6513978	VALVE			116, 118, 120
6513979	SEAL KIT			116, 118, 120
6513980	WASHER			116
6513981	SPACER			120
6513982	WASHER			118, 120
6513983	RACE			118, 120
6513984	BEARING			118, 120
6513985	SHAFT			120
6513986	KEY			118, 120
6513987	BEARING			118, 120
6513988	RETAINER			118, 120
6513990	RACE			118, 120
6513991	HOUSING			120
6513993	PLATE			118, 120
6513994	GROUP			118, 120
6513995	COVER			120
6513996	COVER			118, 120
6513998	PLUG			118, 120

Code for dispostiiton of old part number
A — Use up
B — Use on other application (See PNI)
C — File PDR Report with Melroe Parts Sales
D — Part Number Error

Part No.	Description	Was	Code	Page
6513999	SHAFT			118
6514000	HOUSING			118
6514001	PLATE			118
6514002	COUPLER			116
6514008	BEARING			118, 120
6514009	BEARING			118, 120
6514010	SPRING			118, 120
6514011	SEAL			118, 120
6514491	HEAD			194
6514557	WASHER			158, 166
6514600	THERMOSTAT			190
6514642	CAP			132, 134
6514643	GASKET			132, 134
6514714	BOWL			193
6514742	RIVET			132, 134
6514850	CLIP			283
6514897	MOUNT			158, 166
6514898	CAP			138
6515007	INDICATOR			158, 166
6515078	POPPET			88, 92, 96, 100, 104
6515131	TERMINAL			207, 240
6515167	PLUG			52, 54
6515168	CAP			52, 54
6515186	LINK			74
6515195	SEAL			40
6515213	RIVET			204, 206
6515466	WASHER			30, 32, 193
6515468	WASHER			32, 193
6515521	SWITCH			247, 248, 283
6515575	CLAMP			29, 31
6515576	CLAMP			261
6515600	HANDLE			210, 212, 222, 224
6515603	GROMMET			30, 32
6515676	PLUG			32, 193
6515682	PLUG			30, 32, 193
6515733	RIVET			16
6515817	WASHER			20, 260
6516191	BAND	871610	A	198
6516296	INSERT			251, 252
6517516	LIGHT	6557903	A	240
6517924	INSULATOR			254
6519195	ELBOW			50, 106
6519249	TIRE	6563320	A	279
6519480	CLIP			212, 224
6519484	GROMMET			253
6519548	CONNECTOR			247, 248, 264
6529383	TUBE			56
6529680	HEAD	6592590	A	60
6529690	TUBE			56
6529692	CYLINDER	6592991	A	56
6529695	CASE	6592996		56

Code for dispostiiton of old part number
A — Use up
B — Use on other application (See PNI)
C — File PDR Report with Melroe Parts Sales
D — Part Number Error

Part No.	Description	Was	Code	Page
6532127	BOOT			28
6532127	BOOT	6563540	A	26
6532633	ORIFICE			72
6533583	PUTTY	6555349	A	204, 206
6538466	BUSHING			70
6539236	HEAD	6534380	A	55, 56
6539333	VALVE	6592464	A	70
6539808	CYLINDER	6592584	A	60
6539814	ROD	6592591	A	60
6542521	HOSE			104
6543063	HOSE			46, 48, 50
6543168	PISTON			55, 56
6543321	WASHER			16, 20, 260
6544654	BUSHING			74, 173
6547593	PIN			14
6552906	BRACKET			264, 265
6553081	BOLT			108, 110, 112, 114
6553411	BUSHING			30, 32, 84, 88, 92, 162, 170
6553412	ELBOW			162, 170
6553557	GRIP			173
6553653	GROMMET			18, 26
6553709	WASHER			16, 20, 260, 269
6553897	SPRING			88, 92
6553976	SAFETY TREAD			42, 232
6553978	SAFETY TREAD			232
6554149	CORD			218, 260
6554149	CORD	6554223	A	222, 224, 263
6554274	SEAL			170, 238
6554858	JOINT			173
6555054	PLATE			210, 222
6555057	HINGE			210
6555059	BRACKET			210, 222
6555062	DOOR			210
6555108	DOOR			210
6555331	WIRE ROPE			222, 224, 263
6555351	MOULDING			16, 18, 20, 212, 220, 260
6555434	CHANNEL			210, 222
6555869	CLAMP			210
6555922	BOLT			32, 192
6555987	BUSHING			12
6555989	BUSHING			12
6556222	INSTRUCTIONS			240
6556415	INSTRUCTIONS			228
6556500	SAFETY MANUAL			234
6556604	INSTRUCTIONS			269
6556702	INSTRUCTIONS			283
6557224	DECAL			234
6557291	SWIVEL			173
6557312	DECAL			18
6557486	LAMP			132, 134
6557493	GROMMET			132, 134, 207

Code for dispostiiton of old part number
A — Use up
B — Use on other application (See PNI)
C — File PDR Report with Melroe Parts Sales
D — Part Number Error

Part No.	Description	Was	Code	Page
6557565	DECAL			232
6557683	STOP			207
6557684	BAR			207
6557747	PUCK			42
6557824	MOUNT			207
6557831	WASHER			74, 108, 110, 112, 114
6557904	FLASHER			240
6557929	WASHER			164, 170
6558076	KIT			240
6558142	HOUSING			132, 134
6558234	WASHER			40
6558242	BRACKET			132, 134
6558270	GEAR			40
6558271	SHAFT			40
6558273	GASKET			40
6558274	COVER			40
6558276	COLLAR			40
6558278	SHAFT			40
6558309	WIRE ROPE			246
6558309	WIRE ROPE	6558305	A	16, 232
6558310	SLEEVE			16, 232, 246
6558436	GUIDE			108, 110, 112, 114
6558451	PEDAL			74
6558453	PEDAL			74
6558467	COVER			42
6558506	PLUG			38
6558518	O-RING			38, 40
6558604	SCREEN			84, 88, 92
6558615	LEVER			108, 110, 112, 114
6558680	WASHER			112, 114
6558693	WEAR RING			43
6558694	WASHER			43
6558736	BUSHING			108, 110, 112, 114
6558779	BUSHING			14
6558803	BUSHING			14
6558826	MOUNT			138
6558844	SHAFT			108
6558845	LEVER			108
6558911	BAR			74
6558912	BRACKET			74
6558991	BUSHING			14
6558992	BUSHING			14
6559002	PIN			14
6559014	PIN			74
6559018	PIN			14
6559070	DECAL			234
6559071	DECAL			234
6559077	SAFETY TREAD			232
6559159	HOSE			84, 88, 92
6559218	ANGLE			42
6559237	DISC			42

Code for dispostiiton of old part number

A — Use up

B — Use on other application (See PNI)

C — File PDR Report with Melroe Parts Sales

D — Part Number Error

Part No.	Description	Was	Code	Page
6559340	TEE			96
6559442	TUBE			46, 48, 50, 52, 54
6559444	BLOCK			90
6559447	WASHER			29, 32, 84, 88, 92
6559448	STRIP	6559445	A	84, 88
6559449	BAND			84, 88
6559451	BRACKET			84, 88, 92
6559453	MOUNT			82, 96, 100, 104
6559459	WASHER			46, 52, 54, 82
6559478	HORN			253
6559479	NUT			22
6559500	TUBE			52, 54
6559501	TUBE			52, 54
6559515	EXIT TAG			220, 222, 224, 260, 263
6559550	STOP			6563449
6559550	STOP			A, 258, 262
6559552	HARDHAT			272
6559619	WASHER			40
6559713	BOLT			158, 166
6559762	STEP			26, 28
6559763	MOULDING			162
6559775	EARMUFFS			272
6559838	BUSHING			14
6559873	TUBE			84
6559949	SHIELD			158
6559954	MUFFLER			158, 166
6560023	TUBE			80
6560033	BRACKET			80
6560056	BELT			158, 166
6560072	MOULDING			262
6560117	WIRE			29, 31, 132
6560157	LEVER			173
6560172	COVER			138, 140, 265
6560175	ANGLE			269
6560251	HOSE			84
6560348	FILTER			32, 193
6560402	HOSE			46, 48, 50, 52, 54
6560526	CLEVIS			74
6560573	DECAL			234
6560574	TUBE			84, 88
6560575	DIPSTICK			84, 88, 92
6560633	MOUNT			16, 20, 80, 96, 100, 104, 260
6560690	INSULATION			18, 162, 170
6560784	HOSE			96
6560785	HOSE			96
6560899	WASHER			80, 96, 100, 104, 269
6560900	RETAINER			269
6561095	RIM			279
6561218	SHUTTLE			122
6561376	DECAL			232
6561383	DECAL			232

Code for dispostiiton of old part number
A — Use up
B — Use on other application (See PNI)
C — File PDR Report with Melroe Parts Sales
D — Part Number Error

Part No.	Description	Was	Code	Page
6561395	SEALANT			40
6561592	HARNESS			283
6561733	MOUNT			140
6561811	PLUG			88, 92
6561971	MOTOR			283
6562013	STUD			34
6562018	SPRING			34
6562019	GUIDE			34
6562026	INSERT			34
6562050	MOULDING			162
6562062	CAM			108, 110, 112, 114
6562123	KIT			283
6562126	SPRING			173
6562127	WASHER			173
6562168	BRACKET			108, 110
6562183	MAIN FRAME	6569374	A	12
6562208	AIR CLEANER			198
6562211	SHROUD			162, 170
6562232	MOUNT			16
6562238	VALVE			61
6562264	BLOCK			158, 166
6562281	BAR			108, 110, 112, 114
6562290	PLATE			108
6562301	MOUNT			80, 96, 100, 104
6562394	BOB–TACH			34
6562450	BRACE			26
6562451	BRACE			26
6562498	RIM			279
6562516	HOSE			30
6562537	HOSE			30
6562552	SENDER			29, 31, 132
6562553	VALVE			30
6562589	COVER			26
6562590	SHIELD			26
6562591	SHIELD			26
6562602	BUSHING			16, 18, 20
6562603	HOSE			162, 170
6562605	BAND			30, 32
6562606	SEAL			29, 31
6562607	TUBE			30
6562608	TUBE			30
6562642	BUSHING			34
6562656	ADAPTER			80
6562683	TUBE			16
6562687	SPRING			16
6562688	SPRING			16
6562691	SPRING			80
6562692	BLOCK			80
6562725	PUMP			116
6562751	SCREW			80
6562755	PIN			42

Code for dispostiiton of old part number
A — Use up
B — Use on other application (See PNI)
C — File PDR Report with Melroe Parts Sales
D — Part Number Error

Part No.	Description	Was	Code	Page
6562756	WASHER			42
6562757	BLOCK			42
6562765	WASHER			80
6562767	BRACKET			112, 114
6562804	SEAL			16
6562807	SHIELD			26
6562870	TUBE			84
6562872	BRACKET			80
6562878	ADAPTER			80, 88, 92, 174
6562879	YOKE			162, 170, 174
6562882	ADAPTER			162, 170, 174
6562910	PLUG			174
6562956	CLAMP			22
6563025	CABLE			138, 140
6563103	COVER			34
6563106	HANDLE			34
6563107	HANDLE			34
6563108	ANGLE			34
6563110	BLOWER			162, 170
6563127	LEVER			16
6563128	SPRING			16
6563129	CABLE			16
6563148	BLOCK			22
6563151	LINK			22, 76
6563152	WASHER			20
6563156	SLEEVE			16
6563158	LINKAGE			74
6563159	LINKAGE			74
6563160	LOCK	6563150	A	22
6563178	PIVOT			42
6563187	PEDAL			42
6563264	TANK			84
6563265	HOSE			84
6563266	TUBE			84, 88
6563313	RETAINER			22
6563328	BLACK GOLD			1, 286
6563330	BLACK GOLD			1, 286
6563335	STOP			14
6563336	KIT			258
6563348	STOP			34
6563349	STOP			34
6563353	CLAMP			255
6563392	SHIELD			210, 222
6563410	DECAL			210, 212, 226
6563423	DECAL			258, 262
6563424	TUBE			46
6563425	TUBE			46
6563426	TUBE			46
6563427	TUBE			46
6563436	BUSHING			34
6563446	BRACKET			222

Code for dispostiiton of old part number
A — Use up
B — Use on other application (See PNI)
C — File PDR Report with Melroe Parts Sales
D — Part Number Error

Part No.	Description	Was	Code	Page
6563494	SHIM			269
6563495	WASHER			269
6563545	PANEL			26
6563546	PANEL			26
6563551	WASHER			269
6563557	WASHER			22
6563574	RETAINER			40
6563577	HOUSING			40
6563592	BUSHING			164, 172
6563602	HEADLINER			262
6563603	BRACKET			258, 262
6563604	HARNESS			253
6563605	HARNESS			253
6563611	EXTENSION			262
6563612	BUSHING			237
6563613	HITCH			237
6563614	DOOR STOP			237
6563677	COVER			12
6563681	HANDLE			12
6563681	HANDLE	6563989	A	237
6563722	BLOCK			16
6563740	LAMP			132, 134
6563823	LEVER			42
6563855	TUBE			52
6563856	TUBE			52
6563857	TUBE			46
6563858	TUBE			46
6563914	WASHER			16, 74, 76, 108, 110, 112, 114, 244
6563920	FILTER			80
6563922	SNUBBER			80
6563940	LEVER			173
6563965	WASHER			110, 112, 114
6563982	HOSE			96
6563986	MOULDING			262
6563987	EXTENSION			241
6564034	BLOCK			80, 84
6564069	DOOR			222
6564160	LIFT ARM			14
6564219	HOSE			158, 166
6564220	HOSE			164, 172
6564228	CHAIN			38
6564229	CHAIN			38
6564280	RETAINER			162
6564281	RETAINER			162
6564282	RETAINER			162
6564283	SCREEN			235
6564284	COVER			162
6564285	SCREEN			235
6564286	STOP			162
6564287	MOULDING			162
6564304	RETAINER			241

Code for dispostiiton of old part number
A — Use up
B — Use on other application (See PNI)
C — File PDR Report with Melroe Parts Sales
D — Part Number Error

Part No.	Description	Was	Code	Page
6564340	PIN			12
6564343	BUSHING			158, 166
6564344	BRACKET			158, 166
6564345	BRACKET			158, 166
6564351	ROD			173
6564392	SHIELD			158, 166
6564425	MOUNT			158, 166
6564426	MOUNT			158, 166
6564447	MOUNT			158, 166
6564465	TUBE ASSY			196
6564494	HOSE			162, 170
6564495	HOSE			162, 170
6564499	TUBE			162, 170
6564506	WASHER			22
6564507	BUSHING			22
6564517	WIRE			247, 248
6564527	DECAL			247, 248
6564535	WASHER			76
6564545	SHIELD			247
6564546	SHIELD			158, 162
6564560	SWITCH			138
6564565	HOSE			194
6564566	TUBE			30, 32
6564567	TUBE			30, 32
6564568	GASKET			196
6564569	TUBE			194
6564570	BRACKET			158
6564576	ENGINE			138, 140, 158, 164, 166, 170
6564576REM	ENGINE	6564576	A	175
6564596	LATCH			16
6564648	WASHER			110, 112
6564654	PIN			76
6564655	CLEVIS			76
6564657	PIN			76
6564663	LEVER			110, 112
6564667	BUSHING			110, 112
6564669	NUT	6519169	A	12, 279
6564683	SHIELD			26, 28
6564684	SHIELD			26, 28
6564688	INSULATION			16
6564692	WASHER			80, 96, 100, 104
6564697	TEE			251
6564701	BRACKET			16
6564716	CABLE			138, 140
6564718	ROD			76
6564719	BAR			76
6564720	BAR			76
6564721	LEVER			76
6564722	BRACKET			76
6564726	LEVER			110, 112
6564727	SHAFT			110, 112, 114

Code for dispostiiton of old part number
A — Use up
B — Use on other application (See PNI)
C — File PDR Report with Melroe Parts Sales
D — Part Number Error

Part No.	Description	Was	Code	Page
6564754	PIPE			158, 166
6564758	CABLE			173
6564767	ADAPTER			138, 140
6564785	LENS			132, 134
6564787	PANEL			132
6564830	WINDOW			222
6564831	HINGE			222
6564832	HINGE			222
6564833	SAFETY TREAD			210, 212, 222, 224
6564837	HARNESS			132
6564843	TUBE			82
6564858	CLOSER			210
6564861	ROD			74
6564866	TUBE			84
6564875	SWITCH			80, 138
6564877	HEAD			88, 92
6564885	BAND			84
6564907	SOCKET			132, 134
6564938	BRACKET			158, 166
6564939	SPRING			108, 110
6565005	ADAPTER			246
6565006	BRACKET			244
6565014	RETAINER			28
6565021	SCREEN			204
6565022	SCREEN			204
6565059	CABLE			138
6565067	BOLT			76
6565076	COVER			12
6565077	COVER			12
6565118	SCREEN			204
6565138	BLOCK			204, 206
6565139	FLAP			204
6565141	FLAP			204
6565142	SCREEN			204, 206
6565150	ROD			173
6565154	KIT			204
6565155	HOSE			84
6565186	BLOCK			34
6565189	WEDGE	6562022	A	34
6565190	WEDGE	6562025	A	34
6565240	RIM			279
6565270	ENCLOSURE			227
6565275	BRACKET			207
6565288	HOSE			84
6565289	CAP			40
6565333	BOLT			164, 172
6565336	BRACKET			106
6565355	GUIDE			22
6565373	INSULATION			236, 260
6565382	WIRE			264
6565425	SPRING			96, 100, 104

Code for dispostiiton of old part number
A — Use up
B — Use on other application (See PNI)
C — File PDR Report with Melroe Parts Sales
D — Part Number Error

Part No.	Description	Was	Code	Page
6565499	WIRE			207
6565500	HARNESS			207
6565514	WIRE			247
6565516	TANK			30, 32
6565552	KIT			264
6565554	TANK			88
6565557	TEE			88, 92
6565558	MOUNT			48, 50
6565579	TUBE			48, 50
6565580	TUBE			48, 50
6565581	TUBE			54
6565582	TUBE			54
6565583	TUBE			88, 92
6565584	TUBE			48
6565585	TUBE			48, 50
6565586	TUBE			48, 50
6565587	TUBE			48, 50
6565588	TUBE			48, 50
6565589	TUBE			48
6565590	TUBE			48, 50
6565592	TUBE			96, 100
6565593	TUBE			96, 100
6565594	TUBE			96, 100
6565595	TUBE			96, 100
6565597	TUBE			48, 50
6565601	LINKAGE			110, 112, 114
6565602	LINKAGE			110, 112, 114
6565619	BLOCK			88, 92, 96, 100, 104
6565620	POPPET			80, 96, 100, 104
6565625	HOSE			96, 100, 104
6565627	NUT			12
6565629	SCREW			12
6565632	PLATE			110
6565634	MOUNT			207
6565642	WIRE			264
6565729	MAIN FRAME	6569374	A	12
6565751	LEVER			108, 110, 112, 114
6565755	WINDOW			210
6565757	KIT			210
6565803	LINKAGE			108
6565804	LINKAGE			108
6565927	DECAL			232
6565932	DECAL			269, 270
6565947	WASHER			43
6565970	HINGE			210
6565977	HOSE			251
6565990	DECAL			18, 232
6565991	HOSE			96, 100, 104
6565992	HOSE			88, 92
6565993	HOSE			88
6565999	ELBOW			96, 100, 104

Code for dispostiiton of old part number
A — Use up
B — Use on other application (See PNI)
C — File PDR Report with Melroe Parts Sales
D — Part Number Error

Part No.	Description	Was	Code	Page
6566056	INSTRUCTIONS			258
6566314	INSTRUCTIONS			251, 252
6566403	INSTRUCTIONS			222
6566436	INSTRUCTIONS			204
6566523	INSTRUCTIONS			264
6566580	INSTRUCTIONS			207
6566606	INSTRUCTIONS			210
6566844	INSTRUCTIONS			265
6566947	INSTRUCTIONS			270
6566955	INSTRUCTIONS			220
6566957	INSTRUCTIONS			220
6566965	INSTRUCTIONS			206
6567020	SPRING			96, 100, 104
6567025	ADAPTER			96, 100, 104
6567026	HOSE			96, 100
6567050	BRACKET			158, 166
6567087	HARNESS			138, 140
6567252	TUBE			100, 104
6567253	TUBE			100
6567303	RETAINER			204, 206
6567304	SEAL			204, 206
6567432	HARNESS			138, 140
6567506	HOSE			100, 104
6567508	TANK			162, 170
6567509	MOUNT			162, 170
6567510	BAND			162, 172
6567511	WASHER			162, 172
6567603	BRACKET			18
6567604	SPACER			18, 20, 260
6567664	COVER			204, 206
6567692	KIT			16
6567714	GRILL			170, 238
6567715	SHIELD			166, 170, 238
6567718	COVER			170, 238
6567719	BRACKET			170, 238
6567720	SHIELD			166, 238
6567738	RETAINER			28
6567739	SHIELD			28
6567740	SHIELD			28
6567743	PIN			18, 20, 260
6567795	KIT			16, 232
6567802	HARNESS			134
6567827	ANGLE			270
6567831	ARM			270
6567835	ARM			270
6567836	STOP			270
6567837	RETAINER			270
6567838	PIN			270
6567867	GRILL			162
6567875	DECAL			234
6567879	ANGLE			270

Code for dispostiiton of old part number

A — Use up

B — Use on other application (See PNI)

C — File PDR Report with Melroe Parts Sales

D — Part Number Error

Part No.	Description	Was	Code	Page
6567890	INSULATION			20
6567892	BRACKET			170, 238
6567893	BRACKET			170, 238
6567894	STRIP			172
6567895	STRIP			170
6567896	SHIELD			134
6567897	HOUSING			134
6567898	SPACER			134
6567926	MOTOR			122
6567927	MOTOR			122
6567944	TANK			32
6567956	MODULE			265
6567959	WIRE			265
6567968	WIRE			265
6567969	MOUNT			112, 114
6567970	SPRING			112, 114
6567971	WIRE			265
6567972	WIRE			265
6567973	HUB			108, 110, 112, 114
6567979	WIRE			265
6567990	KIT			265
6568042	KIT			270
6568047	NUT			212, 216, 224
6568051	HINGE			212
6568055	BRACKET			212, 224
6568164	SHIELD			212, 222, 224
6568175	SENDER			31
6568211	PANEL			134
6568271	INSULATION			20
6568271	INSULATION	6567826	A	16
6568321	INSULATION			236, 260
6568431	SHIELD			18
6568439	DECAL			18
6568475	STOP			18, 20, 260
6568492	BRACKET			18
6568526	SPACER			212, 224
6568527	BRACKET			212, 224
6568528	BRACKET			212, 224
6568540	MOUNT			220, 260
6568582	TUBE			104
6568584	TUBE			104
6568620	COVER			214
6568704	SEAL			212, 224
6568705	WINDOW	NSS	D	212
6568708	KIT ENCLOSURE			211, 213
6568717	CABLE			140
6568724	SHIELD			212, 224
6568725	SPRING			212, 224
6568726	HANDLE			212, 224
6568727	ROD			212, 224
6568728	SHIELD			212, 224

Code for dispostiiton of old part number
A — Use up
B — Use on other application (See PNI)
C — File PDR Report with Melroe Parts Sales
D — Part Number Error

Part No.	Description	Was	Code	Page
6568739	HARNESS			212
6568768	KIT			206
6568784	SHIM			34
6568785	SHIM			34
6568786	SHIM			34
6568787	SHIM			34
6568819	HARNESS			253
6568898	BRACE			170
6568918	SPROCKET			38, 43
6568967	HOSE			100, 104
6569021	DECAL			232
6569033	WINDOW			224
6569088	DECAL			234
6569089	DECAL			234
6569095	MOUNT			239
6569096	HOSE			92
6569097	SEAL			94
6569098	TUBE			92
6569100	ADAPTER			94
6569101	TUBE			92
6569102	TANK			92
6569103	HOSE			92
6569112	KIT			239
6569141	BOLT			114
6569203	CLAMP			138, 140
6569206	TUBE			50
6569207	TUBE			50
6569248	KIT			18
6569249	CAB			20
6569282	KIT			232, 234
6569297	KIT			238
6569333	BAND			92
6569404	SCREEN			206
6569405	SCREEN			206
6569496	LEVER			114
6569505	WASHER			114
6569507	LEVER			114
6569597	WASHER			76
6569598	INSERT			76
6569599	BEARING			76
6569601	ROD			42
6569618	AXLE			43
6569623	BOLT			138, 140
6569752	HOSE			30, 32
6569807	BUSHING			38
6569808	CHAIN GUIDE			38
6569871	HARNESS			140
6569876	SEAL			204, 206
6569877	RETAINER			204, 206
6569937	SEAL			204, 206
6569938	RETAINER			204, 206

Code for dispostiiton of old part number
A — Use up
B — Use on other application (See PNI)
C — File PDR Report with Melroe Parts Sales
D — Part Number Error

Part No.	Description	Was	Code	Page
6570031	INSTRUCTIONS			236
6570040	INSTRUCTIONS			239
6570065	INSTRUCTIONS			18
6570084	INSTRUCTIONS			238
6570223	INSTRUCTIONS			257
6570238	INSTRUCTIONS			282
6570254	INSTRUCTIONS			261
6570264	INSTRUCTIONS			214
6570279	INSTRUCTIONS			226
6571529	KNOB			220
6571532	BRACKET			220
6571533	MOUNT			220
6571624	KIT			261
6571628	INSULATION			261
6571648	BOOT			28
6571700	KIT			282
6571715	HINGE			212, 224
6571757	BOLT			140
6571845	KIT	SALES	A	212
6571899	BRACKET			114
6571900	BUSHING			114
6571904	SPRING			114
6571909	MOUNT			114
6571991	WASHER			268
6575654	COVER			42
6575688	HOSE			104
6575845	HOSE			104
6576033	WASHER	6558465	A	14, 38
6576238	CLIP			226
6576441	DECAL			234
6576494	INSULATION	6568179	A	236, 260
6576513	BOLT	6630927	A	220, 260
6576660	TANK			162
6576709	MAIN FRAME	6569374	A	12
6576718	CHAINCASE	6562503	A	38
6577273	INSULATION	6567902	A	236, 260
6577439	INSULATION	6567903	A	236
6577439	INSULATION	6577273	A	260
6577456	KIT			148
6577552	BRACKET	6563173	A	42
6577754	DECAL			266
6577754	DECAL	6568741	A	18, 234
6577785	CAP	6560209	A	84, 88
6577821	HOSE	672221	A	30, 32
6577822	HOSE	6562515	A	30, 32
6577926	SEAL	6567741	A	28
6577949	SAFETY TREAD	6553977	A	232
6578062	SEAL			172
6578857	HUB	6708499	A	43
6579011	SWITCH	6557640	A	207
6579094	KIT	6565508	A	207

Code for dispostiiton of old part number
A — Use up
B — Use on other application (See PNI)
C — File PDR Report with Melroe Parts Sales
D — Part Number Error

Part No.	Description	Was	Code	Page
6579117	BUSHING	6558986	A	14
6579433	LEVER KIT			34
6579434	LEVER KIT			34
6579448	LATCH			12
6579509	DECAL	6702301	A	232
6579510	DECAL	6575854	A	18, 210, 212, 232
6579528	DECAL	6565254	A	232
6579990	BUSHING	6558429	A	112, 114
6584584	SPRING	6505076	A	42
6584978	CONDUIT			265
6584978	CONDUIT	6565528	A	264
6585201	CLEVIS			76
6585223	ORIFICE			252
6586918	SCREW	6535747	A	72
6587458	KEY			30, 32
6587523	WASHER	6592101	A	72
6587526	STROBE LIGHT	6659815	A	273, 274
6587575	ADAPTER	6592099	A	70
6587580	SPRING	6592106	A	72
6587633	BONET	6592097	A	72
6587763	BOOT			244
6587763	BOOT	6583727	A	72
6588163	SCREW	69G–412	B	70
6588164	SCREW			72
6588165	SCREW	73G–410	B	70
6588166	SCREW	74G–416	B	72
6589226	BONNET			70
6589665	BUSHING			58
6589665	BUSHING	6534387	A	60
6589739	DECAL	6561379	A	234
6589784	ROD			58
6589793	SEAL KIT	6555117	A	55
6589793	SEAL KIT	6587974	A	56
6590832	TIRE			279
6591030	LINK			38
6591035	RIVET			204, 206
6591447	STEM			279
6591799	HEAD			58
6591800	SLEEVE			58
6591804	CLAMP			58, 60
6592018	TUBE			58
6592034	CASE			58
6592096	SLEEVE			70
6592098	WASHER			70
6592100	COLLAR			72
6592103	BUSHING			70
6592105	BALL			72
6592107	SPRING			72
6592109	ADAPTER			72
6592111	ORIFICE			70
6592115	SEAT			70

Code for dispostiiton of old part number
A — Use up
B — Use on other application (See PNI)
C — File PDR Report with Melroe Parts Sales
D — Part Number Error

Part No.	Description	Was	Code	Page
6592116	NUT			70
6592117	SPRING			70
6592123	RETAINER			70, 244
6592448	PISTON			58
6592464	VALVE			76
6592585	TUBE			60
6592589	PISTON			60
6592593	CASE			60
6592720	PLUG			70
6592740	SHORT BLOCK			70
6592766	U-BOLT			246
6592895	ROD			55, 56
6593349	SLEEVE			72
6593680	RETAINER			70
6596807	PLUG			72
6598092	RIVET	6512797	B	26
6598093	BOWL			193
6598226	WASHER			193
6598227	BOLT			193
6598228	NUT			193
6598234	SOLENOID			152
6598362	CARTRIDGE			1, 198
6598422	IDLER GEAR			124
6598423	DRIVE GEAR			124
6598424	DOWEL PIN			124
6598438	OIL COOLER			82, 96, 100, 104
6598475	DOOR LATCH			210, 222
6598492	CARTRIDGE	886525	A	1, 198
6598514	SECTION			61, 63
6598515	SECTION			61
6598516	SCREW			65
6598517	SEAL KIT			64
6598518	SEAL KIT			66
6598519	VALVE			66
6598679	WASHER			65
6598681	RIVET			206
6598721	NUT			132, 134
6598739	GASKET			30
6598740	GASKET			30
6598742	BUSHING			152, 154
6598743	THIMBLE			178, 180
6598753	ELBOW			32
6598757	QUICK COUPLER			52, 54
6598758	QUICK COUPLER			52, 54
6598799	CLAMP			158, 162, 166
6598903	ELEMENT			1, 86, 129
6598908	ELBOW			30, 32
6598954	RIVET			162
6598955	LATCH			164, 172, 238
6598956	BOOT			138
6599161	RELIEF VALVE			70

Code for dispostiiton of old part number
A — Use up
B — Use on other application (See PNI)
C — File PDR Report with Melroe Parts Sales
D — Part Number Error

Part No.	Description	Was	Code	Page
6599166	PLUG	6599315	A	180
6599166	PLUG	997958	D	184
6599167	PLUG			184
6599168	SNAP RING			182
6599169	NUT			192
6599174	STUD			188
6599175	STUD			188
6599176	STUD			176
6599177	NUT			182
6599180	KEEPER			184
6599181	INSERT			184
6599183	SEAL			178, 200
6599184	GASKET			178, 200
6599186	VALVE			184
6599187	HUB			184
6599188	CAMSHAFT			184
6599189	TAPPET			184
6599191	STUD			176
6599192	PISTON			182
6599193	RING			182
6599194	CARTRIDGE			30
6599195	NUT			178
6599198	COVER			184
6599199	GASKET			184, 200
6599200	GASKET			178
6599204	HOUSING			188
6599205	STUD			188
6599206	GASKET			188, 200
6599207	COVER			188
6599208	SEAL			188, 200
6599210	COVER			188
6599211	GASKET			188, 200
6599212	BUSHING			182
6599213	HOUSING			180
6599216	KEY			182
6599217	SEAL			180, 200
6599219	BOLT			196
6599221	CAP			184
6599222	SPRING	997948	A	184
6599224	DEFLECTOR			184, 200
6599225	ARM			184
6599227	SHAFT			184
6599229	BRACKET			184
6599230	BRACKET			184
6599231	PUSH ROD			184
* 6599232	GEAR			184
6599233	PLATE			184
6599234	GEAR			186
6599235	PLATE			186
6599236	GASKET			176, 200
6599237	NOZZLE			192

Code for dispostiiton of old part number
A — Use up
B — Use on other application (See PNI)
C — File PDR Report with Melroe Parts Sales
D — Part Number Error

Part No.	Description	Was	Code	Page
6599238	WASHER			192
6599241	GASKET			192
6599242	PLUNGER			196
6599243	GASKET			196, 200
6599245	COVER			190
6599246	GASKET			190, 200
6599247	LINER			180
6599248	BEARING			182
6599250	WASHER			182
6599251	KEY			192
6599252	WASHER			192
6599253	SPRING			196
6599256	CAP			178
6599257	BRACKET			178
6599258	ROD ASSY			182
6599259	PLATE			186
6599260	GASKET			176
6599261	NUT			176
6599262	SEAL			192
6599264	PIPE			192
6599265	PIPE			192
6599266	PIPE			192
6599267	PIPE			192
6599268	GEAR			192
6599270	PULLEY			182
6599271	CAP			186
6599273	PIPE			192
6599275	STOP			188
6599276	FILTER ASSY			30
6599279	PIPE			192
6599285	GLOW PLUG			138, 140, 178
6599286	HOUSING			190
6599287	HOSE			190
* 6599288REM	HEAD ASSY			184
6599290	PUMP			196
6599292	PIPE			196
6599293	PULLEY			190
6599294	CONNECTOR			178
6599295	FLANGE			182
6599296	CRANKSHAFT			182
6599297	BLOCK			180
6599299	PUMP			192
6599300	ELBOW			176
6599301	INJECTOR			192
6599302	BOLT			182
6599304	MANIFOLD			176
6599308	GASKET			158, 166
6599314	CLAMP			190
6599316	PLUG			180
6599354	CAP			196
6599355	HEATER			247

Code for dispostiiton of old part number
A — Use up
B — Use on other application (See PNI)
C — File PDR Report with Melroe Parts Sales
D — Part Number Error

Part No.	Description	Was	Code	Page
6599356	ELBOW			251
6599357	QUICK COUPLER			251
6599358	QUICK COUPLER			251
6599360	SEALANT			286
6599361	ROLL PIN			12
6599364	SWITCH			86, 129
6599365	KIT			86, 129
6599366	VALVE			86
6599449	SOLENOID			154
6599450	COUPLING			174
6599451	U–JOINT			174
6599452	SPIDER			174
6599453	SPIDER			174
6599462	VALVE			251
6599465	CABLE			251
6599512REM	PUMP			118
6599513REM	PUMP			120
6599543	FILTER			88, 92
6599589	ORIFICE			80
6599590	ACCUMULATOR			84
6599652	BOOT			138, 140
6599653	MOULDING			12
6599654	ORIFICE			96, 106
6599673	PLATE			196
6599674	PLATE			196
6599675	GASKET			196, 200
6599678	CAP			184
6599679	PLATE			196
6599680	PLATE			196
6599682	STRAINER			196
6599686	OIL PAN			196
6599687	GASKET			196, 200
6599692	PLUG			196
6599693	WASHER			196
6599696	SOCKET			132, 134
6599719	GREASE			286
6599721	DOOR			227
* 6599740REM	ALTERNATOR			228
6599767	RECTIFIER			144
6599768	BOLT			144
6599771	ROTOR			144
6599779	TRACK ADJUSTER	6650227	A	278
6599780	TRACK			35
6599781	KNOB			132, 134
6599931	ALARM			207
6599934	GASKET			190, 200
6599936	BOLT			180
6599937	BUSHING			184
6599938	PIN			190
6599939	WASHER			192
6599940	BOLT			192

Code for dispostiiton of old part number
A — Use up
B — Use on other application (See PNI)
C — File PDR Report with Melroe Parts Sales
D — Part Number Error

Part No.	Description	Was	Code	Page
6599942	WASHER			192
6599943	BRACKET			192
6599944	BRACKET			192
6599946	HOUSING			190
6599949	ADAPTER			192
6610510	TIE			218
6610510	TIE	1715312	B	265
6620642	MOTOR			214
6630098	ALTERNATOR			229
6630115	SPRING			78
6630119	PLUG			78
6630120	PLUG			78
6630121	SPRING			78
6630130	SEAL KIT			78
6630154	GANG CAP			138
6630155	GANG CAP			138
6630156	RADIATOR CAP			1
6630157	VALVE			86
6630163	PULLEY	6630163	B	229
6630168	COUPLER			96, 100, 104
6630181REM	STARTER			154
6630188	POLISH			286
6630189	POLISH			286
6630207	RIVET	6512797	A	22, 241
6630207	RIVET	6630193	B	28
6630219	HEAD			193
6630220	RING			193
6630221	RING			193
6630223	BEARING			182
6630224	BEARING			182
6630225	BEARING			182
6630226	BEARING			182
6630227	BEARING			182
6630228	BEARING			182
6630229	WASHER			182
6630230	BRACKET			184
6630231	DIPSTICK			196
6630239	PUMP			126
6630287	PUMP			128
6630333	RELIEF VALVE			78
6630340	HOUSING			230
6630341	STATOR			230
6630342	HOUSING			230
6630343	RETAINER			230
6630344	BRUSH ASSY			230
6630345	GASKET			230
6630346	COVER			230
6630348	CAPICITOR			230
6630349	REGULATOR			230
6630350	DIODE			230
6630351	KEY			128

Code for dispostiiton of old part number
A — Use up
B — Use on other application (See PNI)
C — File PDR Report with Melroe Parts Sales
D — Part Number Error

Part No.	Description	Was	Code	Page
6630357	BODY			128
6630358	GEAR			128
6630359	BODY			126, 128
6630360	GEAR			126, 128
6630361	PLATE			128
6630363	GEAR			128
6630364	GEAR			128
6630367	DUST CAP			102, 106
6630382	PLATE			126
6630383	SEAL KIT			126
6630386	DRIVE GEAR			126
6630387	SEAL KIT			128
6630388	SEAL KIT			116, 118, 120
6630402	HOLDER			154
6630403	BRUSH			154
6630404	BOLT			154
6630405	DOWEL PIN			154
6630406	SPRING			154
6630407	COIL			154
6630418	HOUSING			154
6630465	CUSHION			35
6630468	CUSHION			35
6630469	TRACK			35
6630533	SPRING			170, 238
6630540	NUT			192
6630541	WATER PUMP			190
6630542	ADAPTER			192
6630543	WASHER			192
6630545	BOLT			192
6630546	VALVE			192
6630558	RADIATOR			162, 170, 238
6630573REM	PUMP			116
6630611	SEAL			118
6630613	GASKET			180, 200
6630783	GAS SPRING			260
6630797	GAS SPRING			212, 218, 224
6630800	PIN			236
6630821	SWITCH			264, 265
6630822	TUBE			279
6630849	OUTLET			249
6630918	TRACK			220
6630919	TRACK			220
6630924	BRACKET			220
6630925	WINDOW			220, 260
6630926	HINGE			220, 260
6630929	LATCH			220, 260
6630943	BLADE			212
6630972	GASKET			30, 32
6630979	STUD			184
6630980	MOTOR			249
6630981	MOUNT			249

Code for dispostiiton of old part number

A — Use up

B — Use on other application (See PNI)

C — File PDR Report with Melroe Parts Sales

D — Part Number Error

Part No.	Description	Was	Code	Page
6630982	BLOWER			249
6630983	HOUSING			249
6630984	CORE			249
6630985	COVER			249
6630986	SCREEN			249
6630987	BRACKET			253
6630988	HORN			253
6631008	ARM			212
6631009	SWITCH			212, 226
6631010	SWITCH			138, 140
6631024	RIVET			170, 238
6631036	BALL JOINT			244
6631418	PIN			18, 260, 266, 268
6631548	LOOP			220
6631549	LOOP			220
6631623	GASKET			190, 200
6631625	DECAL			220
6631649	GAUGE			132, 134
6631665	KNOB			220, 260
6631702	PUMP			116
6631706	FILTER			104, 129
6631707	HOSE			94
6631708	HOSE			94
6631910	PUMP			120
6631911	GASKET			118, 120
6631912	SHAFT			120
6631915	PLATE			128
6631927	GEAR			214, 216
6631928	SHAFT			214
6631935	HANDLE			214, 226
6631970	SEAL			186, 200
6631988	SCREW			63, 65, 67
6632001	SCREW			124, 126
6632002	SCREW			124
6632006	BOLT			128
6632038	GEAR			128
6632039	PUMP			128
6632053	SWITCH			129
6632207	NUT			146
6632208	WASHER			146
6632210	SPACER			146
6632215	GROMMET			134
6632217	SEAL			204, 206
6632221	STUD			212, 218
6632222	BOLT			146
6632228	RETAINER			150
6632229	ROTOR			146
6632231	BRACKET			146
6632242	CONDENSOR			146
6632253	GASKET			146
6632261REM	PUMP			120

Code for dispostiiton of old part number
A — Use up
B — Use on other application (See PNI)
C — File PDR Report with Melroe Parts Sales
D — Part Number Error

Part No.	Description	Was	Code	Page
6632262REM	PUMP			116
6632272	O-RING	6513536	A	122
6632304	PURIFIER			261
6632306	MUFFLER			261
6632323	WASHER			150
6632323	WASHER	6571554	A	148
6632381	KIT			146
6632383	KIT			146
6632388	SEAT			276
6632454	PLUG			224
6632501	SEALANT			12
6632560	KEY			214, 226
6632593	VALVE	6512138	A	32
6632601	BREATHER			42
6632633	SWITCH	6564560	A	140
6632954	PROBE			282
6633498	STA-STRAP			254
6633583	SEALANT			286
6633675	GASKET			261
6634393	LUBRICANT			286
6635526	NUT	896979	A	229
6635557	WASHER	896978	A	229
6641221	TUBE	6569099	A	94
6641222	CAP			196
6641274	LATCH			214, 226
6641378	LEVER			173, 192
6641379	NUT			192
6641380	WASHER			192
6641381	CLAMP			192
6641382	SPRING			192
6645245	WASHER	998299	A	180, 184, 186
6645850	COOLER			194
6646196	CONNECTOR			194
6646372	SEAL			70
6646599	PULLEY	6571576	A	146
6647635	KNOB			212, 216, 226
6647668	KNOB			255
6648461	HEATER			248
6648463	SHIELD			248
6648466	MOTOR			250
6648467	MOUNT			250
6648468	BLOWER			250
6648469	HOUSING			250
6648471	CORE			250
6648472	COVER			250
6648473	SCREEN			250
6648474	ELBOW			252
6648475	O-RING			251, 252
6648479	QUICK COUPLER			252
6648480	QUICK COUPLER			252
6648482	CABLE			252

Code for dispostiiton of old part number
A — Use up
B — Use on other application (See PNI)
C — File PDR Report with Melroe Parts Sales
D — Part Number Error

Part No.	Description	Was	Code	Page
6648483	VALVE			252
6648485	TEE			252
6648496	KIT			248
6648497	KIT			251, 252
6648774	BEARING	743778	A	40
6648776	RACE	743777	A	40
6649244	BALL STUD			224, 266
6649245	CLIP			224
6649459	SPACER	899158	A	230
6650219	KNOB KIT			278
6650220	SHROUD			278
6650221	LATCH TILT			278
6650222	SPRING			278
6650223	CABLE			278
6650224	SUPPORT			278
6650225	BACK CUSHION			278
6650226	SEAT CUSHION			278
6650228	TRACK			278
6650229	SPRING			278
6650230	SEAT PAN			278
6650231	CLIP			278
6650239	SCREEN	6598911	A	30, 32
6650241	PUSH NUT			278
6650242	TIP			278
6650243	BOOT			278
6650244	NUT			278
6650245	WASHER			278
6650246	WASHER			278
6650247	WASHER			278
6650248	SPACER			278
6650249	SPACER			278
6650250	WASHER			278
6650251	CLIP			278
6650388	SEALANT			286
6650407	ADHESIVE			286
6650612	PLATE	6631915	A	128
6650614	PLATE	6630362	A	128
6651664	STARTER	6651210	A	156
6651862	GASKET			194
6652817	TIRE			279
6652935	EDGING			35
6653517	REDUCER			286
6653518	PRIMER			286
6653519	PRIMER			286
6654117	SEAL			60
6654149	CORD			220
6654374	KEY			30, 32
6655781	BEARING			244
6657299	MOTOR OIL			1, 286
6657300	MOTOR OIL			1
6657301	MOTOR OIL			1, 286

Code for dispostiiton of old part number
A — Use up
B — Use on other application (See PNI)
C — File PDR Report with Melroe Parts Sales
D — Part Number Error

Part No.	Description	Was	Code	Page
6657302	MOTOR OIL			1
6657303	MOTOR OIL			1, 286
6657304	MOTOR OIL			1
6657734	PUMP	6563396	A	32
6658142	WINDOW	6630923	A	220
6658143	WINDOW	6630922	A	220
6658229	SEAL	6513451	A	43
6658266	GREASE			286
6658352	EXTRUSION			220, 260
6658352	EXTRUSION	6554221	A	222, 224, 263
6658564	BRUSH HOLDER			156
6658565	BRUSH			156
6658566	BRUSH			156
6658567	BUSHING			156
6658568	SPRING			156
6658569	BEARING			156
6658570	BEARING			156
6658571	CENTER SUPPORT			156
6658572	LEVER			156
6658573	STOP			156
6658574	ARMATURE			156
6658575	FRAME			156
6658576	DRIVE SHAFT			156
6658577	SUPPORT			156
6658580	FRAME ASSY			156
6658581	O-RING			156
6658582	SOLENOID	6658562	A	156
6658613	CABLE			244
6658682	BEARING			244
6658818	SENDER			138, 140
6658820	FUEL GAUGE	6631650	A	132
6658903	PLUNGER	6630417	A	154
6658930	BOOT			244
6659319	SOLENOID	6632186	A	138, 140
6659371	NUT			150
6659372	WASHER			150
6659373	PULLEY	6571576	A	150
6659374	SPACER			150
6659375	FAN			150
6659376	BRACKET			150
6659378	BOLT			150
6659379	BEARING			150
6659380	ROTOR			150
6659381	STATOR			150
6659382	BRACKET			150
6659384	RECTIFIER			150
6659385	SCREW			150
6659386	HOLDER			150
6659387	NUT			150
6659388	CONDENSER			150
6659389	NUT			150

Code for dispostiiton of old part number
A — Use up
B — Use on other application (See PNI)
C — File PDR Report with Melroe Parts Sales
D — Part Number Error

Part No.	Description	Was	Code	Page
6659390	HOLDER			150
6659391	NUT			150
6659392	BOLT			150
6659393	REGULATOR			150
6659394	BRUSH			150
6659395	SPRING			150
6659396	SCREW			150
6659397	TERMINAL			150
6659398	COVER			150
6659399	SCREW			150
6659400	CONNECTOR			150
6659554	SEAL	6632204	A	70
6659949	LATCH			220
6659972	FLASH TUBE			273
6659999	BELT			271
6660205	SEAL			254
6660205	SEAL	6513483	A	253
6660256	SEAL KIT	6514893	A	122
6660294	HORN			254
6660348	GAS SPRING			276
6660354	CABLE			244
6660355	GUIDE			246
6660452	CONNECTOR	2342091	A	194
6660644	CAP			72
6660795	GUIDE			252
6660927	NUT			138, 140, 178
6660928	WASHER			138, 140, 178
6660929	WASHER			138, 140, 178
6660932	LATCH	6647789	A	212, 224
6660988	NUT			214, 226, 240
6661062	PLUG			261
6661114	CAP	6632468	A	30, 32
6661209	RIVET	6658691	A	236
6661213	CLIP			30, 32
6661217	BOLT	6513526	A	122
6661218	BOLT	6513525	A	122
6661297	SEAL KIT	6591885	A	58
6661328	KIT	6592474	A	72
6661611	ALTERNATOR			150
6661685	DRIVE	6658583	A	156
6661686	DRIVE SUPPORT	6658578	A	156
6661687	HOUSING DRIVE	6658586	A	156
6661689	TRACK	6630916	A	220
6661690	TRACK	6630917	A	220
6661696	CAP			30, 32
6662754	TIRE			279
6662834	SPRING			214, 226
6662839	HINGE KIT			227
6662848	CAP			72
6662863	HOSE	6599202	A	178
6664095	ARM			218

Code for dispostiiton of old part number
A — Use up
B — Use on other application (See PNI)
C — File PDR Report with Melroe Parts Sales
D — Part Number Error

Part No.	Description	Was	Code	Page
6664096	BLADE			218
6664205	GAS SPRING			18, 20
6664207	GAS SPRING			266
6664351	SEAL			210, 220, 260, 262
6664373	VALVE			72
6664468	CAP			196
6664554	PUMP			216
6664555	NOZZLE			216
6664803	GASKET			200
6664882	BUSHING			268
6664886	HOURMETER	6631656	D	264
6664886	HOURMETER	6631657	A	132, 134, 265
6664990	TIRE & RIM			280
6664991	TIRE & RIM			280
6664992	KIT			280
6665012	SEAL			210, 220, 260, 262
6665021	LENS			274
6665022	FLASH TUBE			274
6665023	GASKET			274
6665024	GUARD			274
6665025	LENS			274
6665031	BATTERY	6568707	A	1, 140
6665032	BATTERY	6631611	A	1, 140
6665086	SEAL			56
6665409	KEY			222
6665430	BACKUP RING			52
6665530	LATCH			216
6665531	LATCH			216
6665532	MOTOR			216
6665568	EXTRUSION			218
6665605	CAP			216
6665606	SWITCH			132, 134
6665656	CLIP			35
6665701	BUSHING	6630081	A	74, 76, 108, 110, 112, 114
6665707	SWITCH			216
6665725	TIRE			279
6665917	BATTERY	6633910	A	138
6666396	BOLT	6555922	A	30
6666534	SEAL			246
6666606	CAP	6665383	A	164, 172
6666766	GROMMET			218
6667549	VALVE	6661345	A	70
6667888	TIRE			279
6668717	SCREW			278
6668815	SWITCH			240
6668879	DECAL			207
6668881	CORD			208
6668953	BRACKET			36
6669088	TRACK			36
6669089	TRACK			36
6669135	SEAT			36

Code for dispostiiton of old part number
A — Use up
B — Use on other application (See PNI)
C — File PDR Report with Melroe Parts Sales
D — Part Number Error

	Part No.	Description	Was	Code	Page
	6669663	GAUGE	6658817	A	132, 134
	6669664	VOLTMETER	6658819	A	132, 134
	6669665	FUEL GAUGE	6658820	A	134
	6670145	TIRE	6543468	A	279
	6670160	CUSHION			36
	6670163	SHAFT			216
	6670164	LINK			216
	6670165	CLIP			216
	6670288	END			218
	6670289	BRACKET			218
	6671062	SWITCH	6664577	A	138, 140
*	6674008	TIRE & RIM	6660942	A	280
*	6674009	TIRE & RIM	6660941	A	280
*	6674012	KIT	6660943	A	280
*	6674022	NUT			190
*	6674024	BOLT			190
*	6674202	NUT			132, 134
	6674204	MOTOR OIL			1, 286
	6674205	MOTOR OIL			1, 286
	6674206	MOTOR OIL			1, 286
	6675074	SEAT BELT			22
	6675380	ADHESIVE			286
*	6676199	VALVE	6649321	A	70
*	6677106	O-RING			70
	6700168	KIT			255
	6700170	WASHER	6563152	A	22
	6700171	GAS SPRING	6706590	A	18, 20
	6700207	RIVET	6512797	A	16, 271
	6700768	U-BOLT			244
*	6701097	WASHER	6803867	A	38
	6701174	WASHER			18, 20
	6701535	SPRING			267
	6701986	WINDOW	6563391	A	210, 220, 260, 262
	6702255	DECAL			18, 232
	6702301	DECAL			18
	6702302	DECAL	6575694	A	18
	6702430	SPRING	6563149	A	22
	6702731	WINDOW	6567750	A	220
	6702782	BUSHING			244
*	6702797	CAP	6558658	A	162
	6702797	CAP	6558658	A	170
	6702990	BUSHING			244
	6702997	DECAL			246
	6703021	WINDOW			220
	6703041	WIRE	6648457	A	248
	6703117	GASKET	6553833	A	12
	6703159	TRACK	6630921	A	220
	6703160	TRACK	6630920	A	220
	6703328	DECAL	6569342	A	234
	6703367	PIN			244
	6703370	BRACKET			244

Code for dispostiiton of old part number
A — Use up
B — Use on other application (See PNI)
C — File PDR Report with Melroe Parts Sales
D — Part Number Error

Part No.	Description	Was	Code	Page
6703371	BRACKET			244
6703374	BRACKET			244
6703377	BRACKET			244
6703380	LEVER			244
6703384	LEVER			244
6703386	PEDAL			244
6703387	LEVER			244
6703390	BELLCRANK			244
6703572	PIN	6560704	A	14
6703640	KIT			271
6703641	DECAL			271
6703703	GUIDE			271
6703705	PLATE	6563431	A	132, 136
6703709	LINK			244
6703710	LINK			244
6703735	PLATE			244
6703751	RETAINER			218
6703757	SAFETY TREAD			218
6703888	U-BOLT			244
6703890	SPACER			244
6703892	BRACKET			246
6703943	HARNESS			254
6703944	HORN KIT			254
6703991	DECAL			246
6704169	TIRE & RIM			281
6704170	TIRE & RIM			281
6704283	DECAL			246
6704288	PIN	6553061	A	14
6704328	REAR DOOR	6565073	A	12
6704349	BOLT	6514537	B	74, 76
6704425	ROD	6576470	A	212, 224
6704426	RETAINER	6578398	A	214, 226
6704428	SHIELD	6576471	A	212, 224
6704430	DOOR	6704431	A	214
6704434	DOOR	6576465	A	224
6704453	SPRING	6503387	A	22, 34
6704641	MOUNT	6703391	A	254
6704891	WINDOW			260
6704891	WINDOW	6562916	A	263
6705216	WINDOW	6564829	A	222, 226
6705735	WINDOW			210, 220, 260, 262
6706324	SEAT BAR	6564588	A	22
6706387	BUSHING			266
6706388	BRACKET			266
6706389	BUSHING			266
6706680	LINK	6564544	A	76
6706962	BUSHING			267
6707173	KIT			280
6707178	TANK			216
6707179	SHIELD			216
6707216	HINGE			216

Code for dispostiiton of old part number
A — Use up
B — Use on other application (See PNI)
C — File PDR Report with Melroe Parts Sales
D — Part Number Error

	Part No.	Description	Was	Code	Page
	6707220	DOOR			216
	6707221	ROD			216
	6707222	MOUNT			216
	6707223	COUPLING			216
	6707224	COUPLING			216
	6707225	WINDOW			216
	6707236	SHIELD			216
	6707239	SHIELD			216
	6707852	DECAL			216
	6708096	BUSHING			218
	6708189	TUBE	6701175	A	18, 20
	6708254	HUB	6703055	A	40
	6708266	GEARCASE			38
	6708266	GEARCASE	6578781	A	40
	6708310	HOSE			218
	6708488	AXLE KIT			43
	6708499	WINDOW			216
	6708500	CLAMP			218
	6708850	CLIP	6576238	B	D, 214
	6708929	DECAL			234
	6708973	KIT			216
	6708975	KIT			218
	6708990	KIT			214
	6709028	PLATE			132, 136
	6709170	STUD	6559502	A	43
	6709415	MOUNT	6571814	A	162
	6709527	KEY			132, 134, 218
	6710358	DECAL			232
	6710659	BUSHING			267
	6710660	MOUNT			267
	6711708	MOUNT			240
*	6711908	SPRING PLATE			22
	6712259	HARNESS			216
	6712288	HARNESS			240
	6712972	KIT			256
	6713589	CLEVIS			268
	6713609	SEAT BAR			267
	6713803	HARNESS	6704887	A	230
	6713853	KIT			267
	6713887	BOLT			267
	6714062	KIT			18, 20
	6714213	HARNESS			240
	6714901	ELBOW	1300294	A	88, 92
*	6716777	SEAT BAR	6713609	A	267
	6716778	SEAT BAR	6706358	A	266
*	6718304	KIT	6712828	A	280
	6720035	INSTRUCTIONS			255
	6720038	INSTRUCTIONS			208
	6720743	BLOCK HEATER			208
	6720856	INSTRUCTIONS			273, 274
	6720908	MANUAL			246

Code for dispostiiton of old part number

A — Use up

B — Use on other application (See PNI)

C — File PDR Report with Melroe Parts Sales

D — Part Number Error

	Part No.	Description	Was	Code	Page
	6720909	MANUAL			246
	6720922	INSTRUCTIONS			246
	6720957	INSTRUCTIONS			254
	6722151	TIRE & RIM			281
	6722152	TIRE & RIM			281
	6722344	BLACK GOLD			286
	6722597	VELCRO			227
	6722781	PAINT			286
	6722782	PAINT			286
	6722783	PAINT			286
	6722784	PAINT			286
	6722785	PAINT			286
	6722786	PAINT			286
	6722787	PAINT			286
	6722788	PAINT			286
	6722789	PAINT			286
	6722836	INSTRUCTIONS			266
	672401	BOLT			269
	6724029	INSTRUCTIONS			218
	6724094	ANTI-FREEZE			286
	6724279	INSTRUCTIONS			214
	6724282	SWITCH KIT			132, 136
	6724354	ANTI-FREEZE			286
	6724557	MOTOR OIL			286
	6724558	MOTOR OIL			286
	6724559	MOTOR OIL			286
	6724586	INSTRUCTIONS			256
*	6725373	SPRING PLATE			22
*	6726680	PEDAL	6564656	A	76
*	6727307	DECAL	6711327	A	234
*	6727475	CAP	6577785	A	92
	6803605	SEAL KIT	6596310	A	72
	6803606	SEAL KIT	6596736	A	72
	6804592	NUT	86D-18	A	60
	6804605	SEAL KIT	6661308	A	60
*	6805079	HOSE	6564639	C	162, 170
*	6809425	SEAL KIT	6586461	A	72
	6900096	INSTRUCTIONS			268
	6900531	INSTRUCTIONS			18, 20
	7000010	SPACER			36
	1CM-650	BOLT			156
	1CM-830	BOLT			280
	1CM-1016	BOLT			158, 166
	1CM-1080	BOLT			158, 166
	1EM-60	WASHER			156
	2C-1626	BOLT	18C-1626	A	43
	2E-5	WASHER			176, 178, 180, 184, 186, 188, 190
	2E-6	WASHER			176, 184
	2FM-12155	WASHER			30, 32, 192
	2J-4200	ROD END			244
	2J-6208	CLEVIS			268

Code for dispostiiton of old part number
A — Use up
B — Use on other application (See PNI)
C — File PDR Report with Melroe Parts Sales
D — Part Number Error

Part No.	Description	Was	Code	Page
4DM–5	NUT			138, 140
4DM–6	NUT			138, 140, 228
4DM–10	NUT			138, 140
4E–4	WASHER			190, 196, 230
4E–5	WASHER			190, 192, 196
4E–5	WASHER	4E–6	A	22
4F–4051	PIN			244
4F–5062	PIN			266
4F–6106	PIN			76, 267
5H–8	CLIP			80, 102, 106
6E–4	WASHER			138, 140, 256
6E–5	WASHER			207
6E–6	WASHER			162, 170
6J–405	KEY			230
6J–606	KEY	6599178	A	184
6J–1664	KEY			43
7C–312	BOLT			230
7C–322	BOLT			230
7C–412	BOLT			138
7C–516	BOLT			253
7C–536	BOLT			102, 106, 170, 238
7C–616	BOLT			264
7C–620	BOLT			204, 206
7C–640	BOLT			173
7C–832	BOLT			237
7D–4	NUT			246
7D–6	NUT			166, 173
7D–8	NUT			34
7DM–6	NUT			156
7G–416	BOLT	7G–412	B	214, 226
7J–3010	KEY			118, 174
7J–6012	KEY			40
8C–616	BOLT			108, 110, 112, 114
8D–4	NUT			244
8D–5	NUT			76, 184
8D–6	NUT			74, 76, 268
9C–616	BOLT			158, 166
9C–716	BOLT			158
10C–512	BOLT			216
10C–512	BOLT	6553808	A	16, 82, 96, 102, 132, 136, 173 207, 212, 222, 224
10D–5	NUT			176
10H–25	GREASE ZERK			14, 48, 50
10H–35	GREASE ZERK			14, 174
10J–7	BALL			124
10K–5	TEE			100, 104
10K–7	TEE			48, 50
11H–15	GREASE ZERK			48
11H–25	GREASE ZERK			14, 50, 174
12D–6	NUT			132, 134, 256, 264, 265
12D–8	NUT			142, 144

Code for dispostiiton of old part number
A — Use up
B — Use on other application (See PNI)
C — File PDR Report with Melroe Parts Sales
D — Part Number Error

Part No.	Description	Was	Code	Page
12D–10	NUT			134, 210, 222, 230, 239
12D–12	NUT			210
12E–6	WASHER			132, 134
12E–10	WASHER			283
12E–12	WASHER			210
13D–6	NUT			76
13GM–404	SCREW			156
13GM–408	SCREW			156
13K–7	TEE			48, 50, 84
14D–10	NUT			30, 32
14G–1008	SCREW			210
14J–1008	COTTER PIN			20
14J–2512	PIN			22
14J–2516	PIN			42
15K–5	ADAPTER			80, 92, 96, 100
15K–7	ADAPTER			46, 48, 50, 52, 54, 82, 84, 88, 92, 96 100, 104, 106
15K–10	ADAPTER			84, 88, 92
16F–2	PLUG			180
16F–4	PLUG			180
16F–12	PLUG			84, 88
17C–408	BOLT			138, 140, 218, 264, 265
17C–410	BOLT			244
17C–412	BOLT			247, 248
17C–416	BOLT			244
17C–440	BOLT			244
17C–506	BOLT			162, 170
17C–510	BOLT			278
17C–512	BOLT			40, 134, 207, 210, 222, 252
17C–516	BOLT			82, 92, 204, 206, 210, 222, 263
17C–528	BOLT			48, 50
17C–560	BOLT			48, 50
17C–572	BOLT			132, 134
17C–610	BOLT			86, 96, 100, 104
17C–612	BOLT			22, 26, 210, 266, 268
17C–614	BOLT			76, 108, 110, 112, 114, 158
17C–616	BOLT			262, 264, 265 22, 48, 50, 58, 60, 74, 84, 116 246, 258
17C–620	BOLT			76, 108, 110, 112, 114, 244
17C–624	BOLT			74, 76, 80, 84, 88, 92, 108, 110 112, 114, 162, 170, 174
17C–626	BOLT			110, 112, 114
17C–628	BOLT			76, 108, 110, 112, 114, 158, 166, 237
17C–632	BOLT			14
17C–636	BOLT			22
17C–640	BOLT			14, 80, 244
17C–648	BOLT			110, 112, 166
17C–652	BOLT	17C–644	B	255
17C–696	BOLT			112, 114

Code for dispostiiton of old part number
A — Use up
B — Use on other application (See PNI)
C — File PDR Report with Melroe Parts Sales
D — Part Number Error

Part No.	Description	Was	Code	Page
17C–712	BOLT			80, 96, 100, 104, 110, 112, 114 212, 216, 267
17C–714	BOLT			224
17C–716	BOLT			22
17C–812	BOLT			42
17C–816	BOLT			46, 269
17C–820	BOLT			38, 42, 270
17C–824	BOLT			16, 80, 96, 100, 104, 269, 270
17C–828	BOLT			38, 270
17C–836	BOLT			80, 96, 100, 104
17C–840	BOLT			20, 80, 96, 100, 260
17C–880	BOLT			34
17C–884	BOLT			34
17C–896	BOLT			114
17C–1024	BOLT			43, 116
17C–1048	BOLT			158, 166
17C–1056	BOLT			16, 20, 260
17C–1060	BOLT			18
17C–1064	BOLT			237
17C–1220	BOLT			40
17C–1228	BOLT			38
17C–1252	BOLT			38
17E–8	WASHER			229
17E–10	WASHER			230
17K–6	ELBOW			162, 170
17K–7	ELBOW			80, 84, 88, 92, 106
17K–8	ELBOW			88
17K–10	ELBOW			84, 88, 92
18C–412	BOLT			196
18C–506	BOLT			30
18C–508	BOLT			32, 178, 190
18C–510	BOLT			178, 184, 186, 196
18C–512	BOLT			196
18C–514	BOLT			188
18C–516	BOLT			190, 196
18C–516	BOLT	18C–1560	D	166
18C–5160	BOLT			158
18C–518	BOLT			188
18C–520	BOLT			190
18C–544	BOLT			158, 166
18C–552	BOLT	6630336	A	190
18C–556	BOLT			190
18C–556	BOLT	18C–540	B	190
18C–564	BOLT			158, 166
18C–572	BOLT			190
18C–612	BOLT			30, 32
18C–616	BOLT			74, 80, 88, 92, 138, 140, 174
18C–716	BOLT			194
18C–720	BOLT			160, 166, 194
18C–822	BOLT			162, 170, 186
18C–867	BOLT			180, 184

Code for dispostiiton of old part number
A — Use up
B — Use on other application (See PNI)
C — File PDR Report with Melroe Parts Sales
D — Part Number Error

Part No.	Description	Was	Code	Page
18C–894	BOLT			184
18K–5	ELBOW			100, 102, 104
18K–7	ELBOW			80, 96, 100, 104
19F–5	ADAPTER			265
19K–7	TEE			84
21K–5	TEE			80
21K–7	TEE			46, 48, 50, 84, 88, 92, 96, 100, 104
22E–4	WASHER			70
23E–4	WASHER			154
25E–6	WASHER			61
25E–10	WASHER			210, 222, 260, 283
25E–12	WASHER			210
25E–13	WASHER			18
25E–13	WASHER	25E–15	B	254
25E–15	WASHER			138, 140, 210, 222, 263, 280
25E–16	WASHER			212, 218, 224
25E–17	WASHER			12, 74, 76, 110, 112, 204, 206, 255 264, 265, 268
25E–18	WASHER			164, 172, 210, 212, 222, 224
25E–19	WASHER			158, 168, 194, 224
25E–21	WASHER			34, 76, 264, 266
25E–29	WASHER			108, 110, 112, 114, 251, 252
25G–410	BOLT			239
25G–412	BOLT			134
25G–510	BOLT			210, 212, 224
25G–512	BOLT			36, 216
25G–520	BOLT			36
25G–528	BOLT			216
25K–20308	O–RING			116
25K–30100	O–RING			42
25K–30500	O–RING			116
25K–30508	O–RING			38
27E–6	WASHER			173
27E–10	WASHER			218
29CM–825	BOLT			158, 166, 228
29G–416	SCREW	6588982	A	70
30H–14	CLIP			283
30H–15	CLAMP			30, 32
30H–31	CLAMP			30, 32, 207
30H–34	CLAMP			194
30H–37	CLAMP			212, 216
30H–41	CLAMP			132
30H–45	CLAMP			138, 140
30H–45	CLAMP	30H–41	B	134
30H–46	CLAMP			138, 140
30H–55	CLAMP			138, 140
30H–55	CLAMP	30H–54	B	136
30R–103	TERMINAL			207
30R–104	TERMINAL			264
30R–107	TERMINAL			264
30R–305	TERMINAL			264

Code for dispostiiton of old part number
A — Use up
B — Use on other application (See PNI)
C — File PDR Report with Melroe Parts Sales
D — Part Number Error

Part No.	Description	Was	Code	Page
31C–420	BOLT			240
31C–510	BOLT			278
31C–612	BOLT			108, 262
31C–614	BOLT			22
31C–616	BOLT			80
31C–824	BOLT			16
31C–828	BOLT			34
31C–1228	BOLT			12
31H–12	CLIP			252
31H–38	CLAMP			134
33G–404	SET SCREW			12
35C–410	BOLT			256
35C–410	BOLT	25G–410	D	220
35C–412	BOLT			212, 224
35C–416	BOLT			212, 216, 224
35C–510	BOLT			216
35C–514	BOLT	35C–516	B D	260
35C–516	BOLT			166, 224, 239
35C–520	BOLT			212
35C–608	BOLT			22, 266, 267
35C–610	BOLT			34
35C–612	BOLT			110, 112, 114
35C–616	BOLT			28, 216
35C–616	BOLT	17C–612	B	222
35C–616	BOLT	17C–616	B	226
35C–648	BOLT			88, 92
35C–840	BOLT			104
35C–1224	BOLT			14
36K–6	CAP			162, 170
37C–616	BOLT			244
37C–616	BOLT	6514537	A	166
37C–820	BOLT	6560578	A	158, 166
38C–606	BOLT			244
38C–624	BOLT	6564599	B	12
38C–810	BOLT	661846	B	34
38C–816	BOLT			244
39D–10	NUT			158, 166
40DM–8	NUT			280
40K–12	PLUG			12
41G–806	SCREW			229
41K–4	PLUG			180
42H–10	CLAMP			251, 252
42H–12	CLAMP	1566240	B	194
42H–24	CLAMP	6513595	A	170
42H–32	CLAMP			92, 162, 170
43G–408	SCREW			154
43H–1212	CLAMP			88
45G–1008	SCREW			142, 144, 210, 214, 218, 222, 226
45K–7	ADAPTER			52, 54, 80
46D–5	NUT			214, 218, 224, 244
47K–2	PLUG			122

Code for dispostiiton of old part number
A — Use up
B — Use on other application (See PNI)
C — File PDR Report with Melroe Parts Sales
D — Part Number Error

Part No.	Description	Was	Code	Page
47K–5	PLUG			60, 122
48K–16	O–RING			52, 54
50D–10	NUT			214, 220, 224, 260
51D–10	NUT			283
54K–20002	O–RING			72
55D–4	NUT			218
57D–5	NUT			170, 173, 226, 238, 252
57D–6	NUT			74, 76, 80, 244
58K–14	O–RING			244
58K–14	O–RING	25K–20016	B	70
58K–44	O–RING			122
58K–109	O–RING			220
58K–111	O–RING			78
58K–113	O–RING			66
58K–114	O–RING			78
58K–115	O–RING			78
58K–117	O–RING			65
58K–118	O–RING			118, 120
58K–127	O–RING			80
58K–140	O–RING			56
58K–225	O–RING			118, 120
58K–236	O–RING			60
59D–4	NUT			220, 260
59D–4	NUT	83D–4	B	254
59D–5	NUT			138, 140
59D–8	NUT	85D–8	B	16, 20
61D–4	NUT			138, 140, 173, 264, 265
61D–5	NUT			16, 48, 132, 236, 260, 263, 278
61D–5	NUT	57D–5	B D	214
61D–5	NUT	61D–6	A	22
61D–6	NUT			76, 80, 84, 88, 92, 108, 110, 112 114, 158, 166, 210, 264, 265
61D–8	NUT			42
61G–416	SCREW			20, 260
62D–4	NUT			173, 230
62D–5	NUT			176, 186, 188, 192
62D–6	NUT			184
62D–8	NUT			122
62F–4	ELBOW			30
73K–14	WASHER	80K–14	B	70
75G–1016	SCREW			210, 212, 224
75G–1020	SCREW			222
77F–7	ELBOW			46, 48, 50, 52, 54
79K–6	O–RING			60, 80, 92, 96, 100, 104
79K–8	O–RING			70, 162, 170
79K–10	O–RING			46, 48, 50, 52, 54, 70, 80, 84, 88, 92 96, 100, 104
79K–12	O–RING			80, 88, 92, 96, 100, 104
79K–16	O–RING			84, 88, 92
79K–20	O–RING			90, 94, 241
79K–24	O–RING			94

Code for dispostiiton of old part number
A — Use up
B — Use on other application (See PNI)
C — File PDR Report with Melroe Parts Sales
D — Part Number Error

Part No.	Description	Was	Code	Page
80K–113	WASHER	73K–113	A	66
82D–5	NUT			76
83D–4	NUT			134, 212, 220, 224, 239, 256
83D–5	NUT			132, 134, 212, 216, 224, 239, 244 253, 260, 266
83D–6	NUT			22, 28, 76, 88, 92, 108, 110, 112, 114 162, 170, 218, 262
83D–6	NUT	85D–6	B	222, 226
83D–8	NUT			34, 237
83D–10	NUT			18, 20, 260
83F–7	ELBOW			84
84G–1608	BOLT			230
84G–1612	BOLT			244
84G–1906	BOLT			230
84G–1910	BOLT			230
84G–2516	BOLT	61G–416	B	18
84G–2516	BOLT	7C–412	B	254
84G–3112	BOLT			212, 220, 226, 260
84G–3712	BOLT			12, 22, 26, 28, 42, 88, 138, 140, 158 162, 166, 170, 207, 238, 252
84G–3716	BOLT			12, 29, 31, 42, 158, 162, 166, 170 204, 206
84G–3720	BOLT			106, 158, 162, 164, 172, 173
84G–3724	BOLT			46, 52, 237
85D–4	NUT			173, 210, 244
85D–5	NUT			12, 50, 82, 94, 96, 102, 106, 134 204, 206, 207, 210, 222
85D–6	NUT			14, 26, 34, 46, 48, 50, 54, 58, 60, 74 76, 80, 96, 102, 106, 108, 110, 112 114, 164, 172, 173, 204, 206, 244, 258
85D–7	NUT			22
85D–8	NUT			42, 80, 96, 100, 104, 114, 158, 166 260, 269, 270
85D–10	NUT			16, 158, 166
85D–12	NUT			12
85G–608	SCREW			132, 134, 264, 265
85G–1008	SCREW			29, 31, 132, 136, 152, 239
85G–1014	BOLT			220, 260
85G–1208	SCREW			210
85G–1212	SCREW			210
86D–4	NUT			244
86D–6	NUT			74
86D–7	NUT			158, 166
86D–12	NUT			55
86D–16	NUT			58
86F–7	NUT			52, 54, 80
86G–1012	SCREW			283
86G–1016	SCREW			283
87G–806	BOLT			256
89G–544	SCREW			134
90KV–5	PLUG			60

Code for dispostiiton of old part number
A — Use up
B — Use on other application (See PNI)
C — File PDR Report with Melroe Parts Sales
D — Part Number Error

	Part No.	Description	Was	Code	Page
	91D–6	NUT			76
	91D–7	NUT			267
	91G–416	SCREW			18, 20
	92D–12	NUT	86D–12	B	56
	93G–728	SCREW			118, 120
	93G–736	SCREW			118, 120
	94G–524	SCREW			162, 170, 174
	94G–526	SCREW			174
	95K–6	O–RING			60
	97F–5	BUSHING			264
*	NAP	ALTERNATOR	6599740	A	228
*	NAP	ALTERNATOR	6662990	A	229
*	NAP	BOLT	6553808	A	210
*	NAP	FLAP	6565137	A	204
*	NAP	GASKET	6599209	A	188, 200
*	NAP	GASKET	6599244	A	190, 200
*	NAP	GASKET	6599260	A	200
*	NAP	GASKET	6599303	A	176
*	NAP	GASKET	6664803	A	190
*	NAP	GUIDE ASSY	6711907	A	22
*	NAP	KIT	6630143	A	175
*	NAP	KIT	6630143	A	200
*	NAP	KIT	6713061	A	24
*	NAP	NUT	859369	A	142, 144
*	NAP	ORIFICE	6599592	A	46
*	NAP	ORIFICE	6599592	A	64
*	NAP	SEAT	6563140	A	35
*	NAP	SEAT	6647432	A	278
*	NAP	SEAT BELT	6667875	A	22
*	NAP	SEAT BELT	6725403	A	22
*	NAP	SECTION	6513852	A	61, 62
*	NAP	STUD	6599182	A	176
*	NAP	STUD	6674023	A	190
*	NAP	VALVE	6630065	A	78, 88, 92
*	NAP	WIRE	631094	A	207
	NAP	ALTERNATOR	6632211	A	146
	NAP	ARM	6563295	A	22
	NAP	ARM	6563296	A	22
	NAP	AXLE	6558700	A	43
	NAP	BOLT	6599170	A	180
	NAP	BOLT	6599688	A	196
	NAP	BOLT	6599945	A	196
	NAP	BONNET	6592094	A	70
	NAP	BOOT	6565013	A	28
	NAP	BOOT	6592122	A	70
	NAP	BRACKET	6632224	A	146
	NAP	BRACKET	6599289	A	178
	NAP	CAP	177801	A	84
	NAP	CAP	1779011	A	88, 92
	NAP	CAP	6630604	A	30, 32

Code for dispostiiton of old part number
A — Use up
B — Use on other application (See PNI)
C — File PDR Report with Melroe Parts Sales
D — Part Number Error

Part No.	Description	Was	Code	Page
NAP	CLIP	6630928	A	220, 260
NAP	COLLAR	6659974	A	273
NAP	COVER	554093	A	42
NAP	COVER	6599269	A	178
NAP	DECAL	6575855	A	18
NAP	DOOR	6568764	A	214
NAP	DOOR	6571754	A	224
NAP	DOOR	6571755	A	214
NAP	DOWEL PIN	6599311	A	180
NAP	ENGINE	6564576	A	175
NAP	EYE	6630544	A	192
NAP	FAN	6632209	A	146
NAP	FILTER	6592124	A	70
NAP	GASKET	6659973	A	273
NAP	GUIDE ASSY	6565354	A	22
NAP	HARNESS	6708269	A	216
NAP	HEAD	6599288	A	184
NAP	HOSE	6564193	A	32
NAP	HOSE	6564615	A	194
NAP	HOSE	6567347	A	96, 100, 104
NAP	HOUSING	6598741	A	152
NAP	KIT	6564522	A	247
NAP	KIT	6571597	A	257
NAP	KIT	6703460	A	244
NAP	KIT	6706796	A	266
NAP	LENS	6659971	A	273
NAP	LENS	6660247	A	273
NAP	MANIFOLD	6599298	A	176
NAP	NUT	991219	A	154
NAP	PANEL	6567737	A	28
NAP	PIN	6599171	A	180
NAP	PIPE	6599201	A	178
NAP	PLATE	6630352	A	128
NAP	PLUG	6592752	A	72
NAP	PLUG	6599291	A	196
NAP	PLUNGER	887782	A	152
NAP	ROD	6592801	A	58
NAP	SCREEN	6569935	A	257
NAP	SCREEN	6569936	A	257
NAP	SEAT	6647432	A	276
NAP	SEAT BAR	6563095	A	22
NAP	SEAT BELT	6564774	A	22
NAP	SECTION	6598515	A	65
NAP	SENDER	6599492	A	140
NAP	SENDER	6599592	A	138
NAP	SHORT BLOCK	6631007	A	175
NAP	STARTER	6630181	A	154
NAP	STUD	6599947	A	188
NAP	SWITCH	6519592	A	132, 134
NAP	TIRE	6519248	A	279
NAP	TUBE	6569104	A	104

Code for dispostiiton of old part number
A — Use up
B — Use on other application (See PNI)
C — File PDR Report with Melroe Parts Sales
D — Part Number Error

Part No.	Description	Was	Code	Page
NAP	VALVE	6562889	A	84
NAP	TIRE	6631614	A	279
NSS	BRUSH HOLDER	6632248	A	146
NSS	KIT	6632382	A	146
NSS	KIT	6632384	A	146
NSS	KIT	6632385	A	146
NSS	PLATE	6536392	A	28
NSS	PLATE	6630352	A	126
NSS	PLUG ASSY	6513881	A	67
NSS	SECTION	6513879	A	61, 67
NSS	STATOR	6632230	A	146

Notes:

engineparts2@gmail.com

Code for dispostiiton of old part number
A — Use up
B — Use on other application (See PNI)
C — File PDR Report with Melroe Parts Sales
D — Part Number Error