www.youfixthis.com

RUTHZIL TRATOR COMERCIAL DE PEÇAS LTDA 11 97083-6812 ROLANDO

8

5

3

Parts Manual

S/N 5084 11001 & Above
S/N 5097 11001 & Above

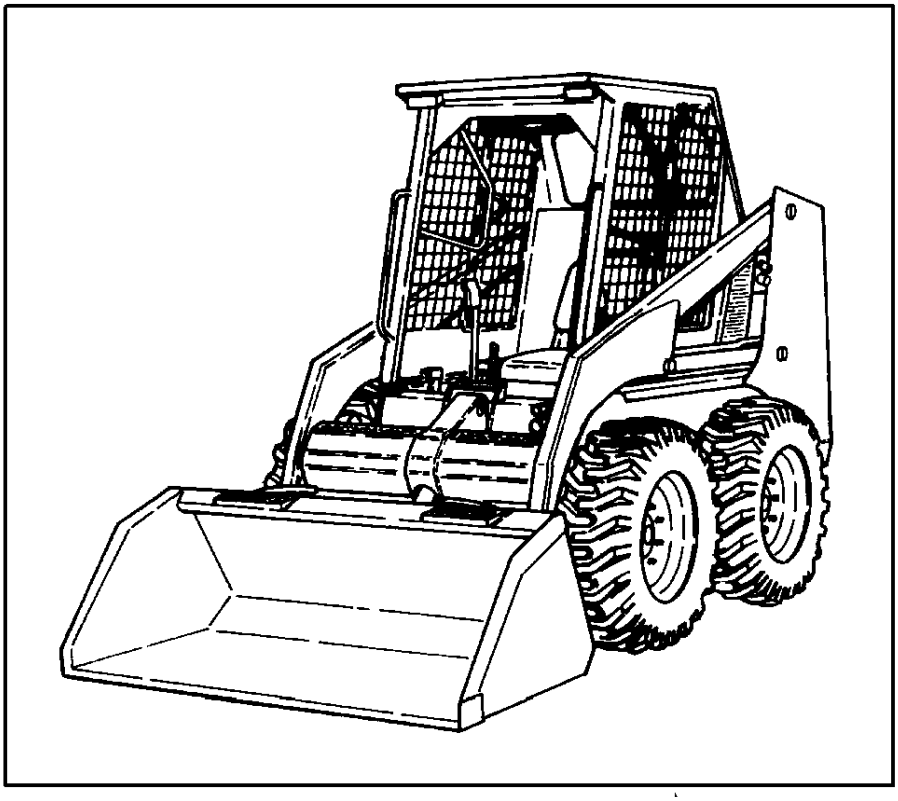

www.youfixthis.com

853 ALPHABETICAL INDEX

ADHESIVE N22
AIR CLEANER H22
ALTERNATOR .. F10, F18, F22, G20, J3
ANTI-FREEZE N22
AXLE B18

BATTERY F2, F6, F10
BELT, ALTERNATOR G20
BELT, COOLING FAN DRIVE G14
BELT, MAIN DRIVE G14
BLACK GOLD N22
BOB-TACH B2, B6
BOOT, RUBBER B8
BRAKES B16

CAB A14
CAB ENCLOSURE I20, I23
CABLE, BATTERY F2, F6, F10
CAMSHAFT H8
CAP, FUEL B10
CAP, HYD. OIL D12, D16
CAP, RADIATOR G2
CHAIN, DRIVE B12
CHAINCASE A12, B12
COOLING FAN DRIVE ASSY. G24
CRANKSHAFT H14
CYLINDER BLOCK H10
CYLINDER HEAD H6
CYLINDER, LIFT B2, B20, C5, C6
CYLINDER, TILT B2, B20, C2, C4

DIPSTICK, ENG. OIL H10
DOOR, CAB I12, I20
DOOR, REAR A12, A22

ENGINE H2
EXTINGUISER K1

FAN G2
FILTER, AIR H22
FILTER, ENG. OIL G6, G10
FILTER, FUEL B10
FILTER, HYD. OIL D18, D20, E19
FIRE EXTINGUISHER K1
FUEL SYSTEM B10
FUSE E22

GAS SPRING .. A14, G6, G10, I12, I20
GLOW PLUG H20

HARNESS, CAB E22, E24
HARNESS, CONTROLS F14
HARNESS, ENGINE F2, F6
HARNESS, LIGHTS F2, F6
HEATER K22, K23
HOOD, ENGINE A12, G6, G10
HOURMETER KIT M4
HUB, AXLE B18

INJECTION NOZZLES H20
INSECT SCREEN KIT M5

LATCH, REAR DOOR A22
LEVER, STEERING E2
LIFT ARM B2
LIGHT E22, E24
LIGHTS, FLASHER K2
LOCK, REAR DOOR M22
LUBRICANT N22

MAIN FRAME A12
MANIFOLD H4
MODULE, AUX. CONTROLS . E22, E24
MOTOR, HYDRO. D12, D16, E6
MOUNT, ENGINE G20
MOUNT, HYDO. PUMP G14, G20
MUFFLER G6, G10
MUFFLER, PURIFIER M13

OIL N22
OIL COOLER D20

PAINT N22
PANEL, INSTRUMENT E22, E24
PEDALS, CONTROL C7
PISTON H14
POLISH N22
PUMP, GEAR E17, E18
PUMP, HYDRO. E8, E12
PUMP, INJECTION H20
PUMP, OIL H10
PUMP, WATER H16

QUICK COUPLER B22, K4, M16

RADIATOR G2
RIM N17
RING GEAR G14

SEALANT N22
SEAT A18, A19, N12, N14
SEAT BAR A18
SEAT BELT A18, N16
SENDER, FUEL B10, F2, F6, F10
SENSOR, ENG. OIL PRESS.F2, F6, F10
SENSOR, ENG. TEMP. F2, F6, F10
SENSOR, HYDRO. TEMP. . F2, F6, F10
SHOCK, CONTROLS E2
SHORT BLOCK H2
SOLENOID F2, F6, F10, K4, M16
SPROCKET, AXLE B18
STARTER F2, F6, F10, F24, G20
STOP, LIFT ARM B2
STROBE LIGHT N7, N8, N9
SWITCH, HYDRO. PRESS. F4, F8, F12
SWITCH, IGNITION, LIGHT .. E22, E24

TANK, COOLANT G2
TANK, FUEL B10
TANK, HYDRO. D12, D16
THERMOSTAT H15
THROTTLE G22
TIRE N17

VALVE STEM N17
VALVE, DIVERTER C20
VALVE, ENGINE H6
VALVE, HYD. CONTROL C10, D6

WINDOW, REAR A14, J2
WINDOW, SIDE J2
WINDSHIELD WIPER I12, J22

www.youfixthis.com

853 CONTENTS

MAIN FRAME 12-35
- MAIN FRAME 12-13
- OPERATOR CAB 14-17
- SEAT & SEAT BAR 18-19
- SEAT 20-21
- * SEAT 22-23
- REAR DOOR 24-25
- LIFT ARM & BOB-TACH 26-29
- BOB-TACH 30-31
- PANELS 32-33
- FUEL SYSTEM 34-35

DRIVE SYSTEM 36-42
- DRIVE TRAIN 36-37
- GEARCASE 38-39
- DISC BRAKE 40-41
- AXLE 42-43

HYDRUALIC SYSTEM 44-69
- HYDRAULIC CIRCUITRY 44-45
- AUXILIARY HYDRAULICS 46-47
- TILT CYLINDER 48-51
- LIFT CYLINDER 52-55
- CONTROL PEDALS 56-57
- HYDRAULIC CONTROL VALVE 58-61
- * HYDRAULIC CONTROL VALVE 62-65
- BUCKET POSITIONING VALVE 66-67
- FRONT AUXILIARY VALVE 68-69

HIGH HORSEPOWER HYDRAULICS 70-83
- HIGH HORSEPOWER HYDRAULICS 70-83

HYDROSTATIC SYSTEM 84-117
- HYDROSTATIC CIRCUITRY 84-95
- HAND CONTROLS 96-99
- HYDROSTATIC MOTOR 100-101
- HYDROSTATIC PUMP 102-111
- GEAR PUMP 112-115
- HYDROSTATIC OIL FILTER 116-117

ELECTRICAL SYSTEM 118-145
- CAB ELECTRICAL SYSTEM 118-121
- ENGINE ELECTRICAL SYSTEM 122-133
- CONTROLS ELECTRICAL 134-137
- ALTERNATOR 138-143
- STARTER 144-145

POWER UNIT 146-193
- COOLING SYSTEM 146-149
- ENGINE & ATTACHING PARTS 150-165
- THROTTLE 166-167
- COOLING FAN DRIVE ASSY. 168-169
- ENGINE & GASKET KITS 170-171
- MANIFOLDS 172-173
- CYLINDER HEAD & COVER 174-175
- CAMSHAFT & TIMING GEAR 176-177
- CRANKCASE & OIL PAN 178-181
- PISTON & CRANKSHAFT 182-183
- THERMOSTAT HOUSING 184-185
- WATER PUMP 186-187

www.youfixthis.com

853 CONTENTS (Cont'd)

POWER UNIT (CONT'D) 146-193
FUEL INJECTION SYSTEM 188-191
AIR CLEANER 192-193
ACCESSORIES & OPTIONS 197-349
ACCESS COVER 197-200
BACK-UP ALARM KIT 201-204
* BEACON LIGHT 205-206
BOB-TACH LEVERS 207-208
BLOCK HEATER 209-210
BUCKET POSITION ON-OFF KIT 211-212
BUMPERS 213-214
CAB DOOR 215-222
CAB ENCLOSURE 223-228
CAB WINDOWS 229-230
CLOSED ALTERNATOR 231-232
DECALS 233-236
ELECTRICAL CONTROLS KIT 237-242
EXPORT ACCESSORIES (SOUND OPTION) 243-244
* ENGINE MOUNT KITS 245-246
EXPORT ACCESSORIES 247-248
REAR WIPER KIT 249-250
* EXPORT ACCESSORIES (PETAL EXTENDERS) 251-252
* FIRE EXTINGUISHER 253-254
* FLASHER LIGHTS 255-256
FRONT AUXILIARY 257-258
HAND CONTROLS KIT 259-268
* HEATER KIT (FRESH AIR) 269-272
* HEATER (FRESH AIR) 273-274
* HEATER KIT 275-276
* HEATER 277-278
HEATER PLUMBING KIT (FRESH AIR) 279-280
* HEATER PLUMBING KIT 281-282
HOOD KIT 283-284
HORN KIT 285-286
HOURMETER KIT 287-288
INSECT SCREEN KIT 289-290
* KEYLESS IGNITION 291-292
LIFT KIT 293-298
MUFFLER/PURIFIER KIT 299-302
* MUFFLER/PURIFIER KIT 303-304
RADIATOR SCREEN KIT 305-306
REAR AUXILIARY 307-312
REAR AUXILIARY VALVE 313-314
REAR DOOR LOCK 315-316
SEAT BAR KIT 317-318
* SEAT BAR KIT 319-322
SOUND OPTION 323-324
STROBE LIGHT 325-328
* STROBE LIGHT 329-330
SUSPENSION SEAT (MILSCO) 331-332
* SUSPENSION SEAT (MICHIGAN) 333-334
SUSPENSION SEAT (GRAMMER) 335-336
3" SEAT BELT 337-338
TIRES & RIMS (SOLID TIRE - SETCO) 339-340
* TIRES & RIMS (SOLID TIRE - LATCO) 341-342

www.youfixthis.com

853 CONTENTS (Cont'd)

ACCESSORIES & OPTIONS (CONT'D) 197-349
TIRES & RIMS 343-344
TOOL BOX 345-346
BULK ITEMS 347-348
NUMERICAL INDEX 349-355
NUMERICAL INDEX 349-355

www.youfixthis.com

853 CONTENTS

MAIN FRAME 12-35
MAIN FRAME 12-13
OPERATOR CAB 14-17
SEAT & SEAT BAR 18-19
SEAT 20-21
* SEAT 22-23
REAR DOOR 24-25
LIFT ARM & BOB-TACH 26-29
BOB-TACH 30-31
PANELS 32-33
FUEL SYSTEM 34-35
DRIVE SYSTEM 36-42
DRIVE TRAIN 36-37
GEARCASE 38-39
DISC BRAKE 40-41
AXLE 42-43
HYDRUALIC SYSTEM 44-69
HYDRAULIC CIRCUITRY 44-45
AUXILIARY HYDRAULICS 46-47
TILT CYLINDER 48-51
LIFT CYLINDER 52-55
CONTROL PEDALS 56-57
HYDRAULIC CONTROL VALVE 58-61
* HYDRAULIC CONTROL VALVE 62-65
BUCKET POSITIONING VALVE 66-67
FRONT AUXILIARY VALVE 68-69
HIGH HORSEPOWER HYDRAULICS 70-83
HIGH HORSEPOWER HYDRAULICS 70-83
HYDROSTATIC SYSTEM 84-117
HYDROSTATIC CIRCUITRY 84-95
HAND CONTROLS 96-99
HYDROSTATIC MOTOR 100-101
HYDROSTATIC PUMP 102-111
GEAR PUMP 112-115
HYDROSTATIC OIL FILTER 116-117
ELECTRICAL SYSTEM 118-145
CAB ELECTRICAL SYSTEM 118-121
ENGINE ELECTRICAL SYSTEM 122-133
CONTROLS ELECTRICAL 134-137
ALTERNATOR 138-143
STARTER 144-145
POWER UNIT 146-193
COOLING SYSTEM 146-149
ENGINE & ATTACHING PARTS 150-165
THROTTLE 166-167
COOLING FAN DRIVE ASSY. 168-169
ENGINE & GASKET KITS 170-171
MANIFOLDS 172-173
CYLINDER HEAD & COVER 174-175
CAMSHAFT & TIMING GEAR 176-177
CRANKCASE & OIL PAN 178-181
PISTON & CRANKSHAFT 182-183
THERMOSTAT HOUSING 184-185
WATER PUMP 186-187

www.youfixthis.com

853 CONTENTS (Cont'd)

POWER UNIT (CONT'D) 146-193
FUEL INJECTION SYSTEM 188-191
AIR CLEANER 192-193
ACCESSORIES & OPTIONS 197-349
ACCESS COVER 197-200
BACK-UP ALARM KIT 201-204
* BEACON LIGHT 205-206
BOB-TACH LEVERS 207-208
BLOCK HEATER 209-210
BUCKET POSITION ON-OFF KIT 211-212
BUMPERS 213-214
CAB DOOR 215-222
CAB ENCLOSURE 223-228
CAB WINDOWS 229-230
CLOSED ALTERNATOR 231-232
DECALS 233-236
ELECTRICAL CONTROLS KIT 237-242
EXPORT ACCESSORIES (SOUND OPTION) 243-244
* ENGINE MOUNT KITS 245-246
EXPORT ACCESSORIES 247-248
REAR WIPER KIT 249-250
* EXPORT ACCESSORIES (PETAL EXTENDERS) 251-252
* FIRE EXTINGUISHER 253-254
* FLASHER LIGHTS 255-256
FRONT AUXILIARY 257-258
HAND CONTROLS KIT 259-268
* HEATER KIT (FRESH AIR) 269-272
* HEATER (FRESH AIR) 273-274
* HEATER KIT 275-276
* HEATER 277-278
HEATER PLUMBING KIT (FRESH AIR) 279-280
* HEATER PLUMBING KIT 281-282
HOOD KIT 283-284
HORN KIT 285-286
HOURMETER KIT 287-288
INSECT SCREEN KIT 289-290
* KEYLESS IGNITION 291-292
LIFT KIT 293-298
MUFFLER/PURIFIER KIT 299-302
* MUFFLER/PURIFIER KIT 303-304
RADIATOR SCREEN KIT 305-306
REAR AUXILIARY 307-312
REAR AUXILIARY VALVE 313-314
REAR DOOR LOCK 315-316
SEAT BAR KIT 317-318
* SEAT BAR KIT 319-322
SOUND OPTION 323-324
STROBE LIGHT 325-328
* STROBE LIGHT 329-330
SUSPENSION SEAT (MILSCO) 331-332
* SUSPENSION SEAT (MICHIGAN) 333-334
SUSPENSION SEAT (GRAMMER) 335-336
3" SEAT BELT 337-338
TIRES & RIMS (SOLID TIRE - SETCO) 339-340
* TIRES & RIMS (SOLID TIRE - LATCO) 341-342

www.youfixthis.com

853 CONTENTS (Cont'd)

ACCESSORIES & OPTIONS (CONT'D) 197-349
TIRES & RIMS 343-344
TOOL BOX 345-346
BULK ITEMS 347-348
NUMERICAL INDEX 349-355
NUMERICAL INDEX 349-355

www.youfixthis.com

HIGH MAINTENANCE ITEMS
MODEL 853

	PART NO.	DESCRIPTION		PAGE #
1	6659329	ENGINE OIL FILTER	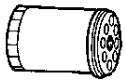	155
2	6647773	FUEL FILTER		35
3	6598492	AIR CLEANER, OUTER	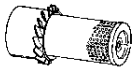	193
4	6598362	AIR CLEANER, INNER	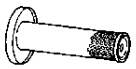	193
5	6646678	RADIATOR CAP		147
6	6661248	HYDROSTATIC FILTER, # 3 MEDIA		117
7*	6665032	BATTERY		127
8	6563328	BLACK GOLD	Hyd/Hydro Fluid - 2 2 1/2 Gallons (5 Gal.)	348
9	6563330	BLACK GOLD	55 Gallon Drum	348
		(HYDRAULIC RESERVOIR CAPACITY)		15.5 QTS. (14,7 L.)
		(HYDRAULIC/HYDROSTATIC SYSTEM)		8.0 GALS. (30,3 L.)
10	6657299	MOTOR OIL	15W40 CE/SG -1 Qt.	348
11	6657300	MOTOR OIL	15W40 CE/SG -5 Qt.	348
12	6657301	MOTOR OIL	10W30 CE/SG -1 Qt.	348
13	6657302	MOTOR OIL	10W30 CE/SG -5 Qt.	348
14	6657303	MOTOR OIL	30 CE/SG -1 Qt.	348
15	6657304	MOTOR OIL	30 CE/SG -5 Qt.	348
		(ENGINE OIL W/FILTER CAPACITY)		8 QTS. (7,6 L.)

www.youfixthis.com

GENERAL INFORMATION

When using the machine serial number, use the complete number.

Some Serial Number breaks are not available at time of printing. These are listed as & Below or & Above.

The number shown in the quantity column in this manual is the number of parts needed for the illustration on the page. For some parts an "x" will be shown in the quantity column. This "x" indicates that the quantity to be used is "As Needed".

When references L.H. and R.H. are used in this manual, it is done from the operator's seat in the forward operating position.

To find the size and kind of bolt use the Melroe Standard Microfiche (P/N 6566077).

Some of the illustrations and information found in this parts manual were supplied to Melroe Company by machine component companies.

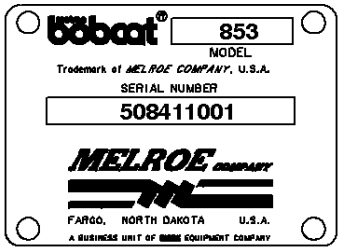

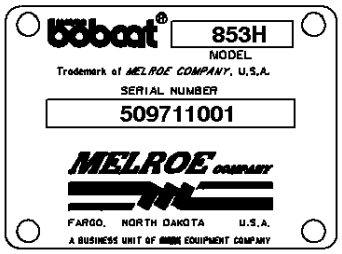

ABBREVIATIONS & SYMBOLS

SALES = Order from Gwinner Sales Department

NSS = Not Serviced Seperately

NAP = Not Available as Parts

* = Changed or Added Sections, Pages or Part Numbers

Disposition Code Definition (Found in the Remarks Column)

[A] = Use Up

[B] = Use Up on Other Appplication (See PNI)

[C] = File PDR Report With Melroe Parts Sales

[D] = Part Number Error

Explications en francais	Grid Nb	A3
Erklärungen auf deutsch	Grid Nb	A4
Spiegazioni in italiano	Grid Nb	A5
Explicaciones en espanol	Grid Nb	A6
Verklaring in het Nederlands	Grid Nb	A7

www.youfixthis.com

NOTE D'INFORMATION

Pour toute référence au numéro de série de l'engin, toujours donner le numéro complet.

Le chiffré apparaissant dans la colonne des quantités de ce manuel représentent le nombre de pièces nécessaires pour l'illustration reprise sur la page. Dans certains cas, on lira un "x" dans la colonne des quantités. Cet "x" indique que la quantité nécessaire est "selon besoin".

Pour toute référence vers la GAUCHE ou la DROITE dans ce manuel, considérer que la personne se trouve assise dans le siège de l'opérateur, en position de fonctionnement en marche avant.

Certaines illustrations et informations reprises dans ce manuel de pièces de rechange ont été fournies à Melroe Company, une société du groupe Clark Equipment Company, par des fabricants de composants.

ABREVIATIONS & SYMBOLES

SALES	= Commander au Service Ventes à Bruxelles
NSS	= Pas vendu séparément
NAP	= Non disponible comme pièce de rechange
*	= Chapitre, page ou numéro de pièce modifié ou supplémentaire
BTI	= Bobcat Technical Information Bulletin : voir à la fin de la microfiché du modèle concerné ou la microfiche générale reprenant l' ensemble des "BTI".
was 6535403	= était avant 6535403
adj. (adjustment)	= réglage
Assembly	= ensemble
available W/Ref.	= disponible avec réf.
bulk/sold per foot	= en vrac/vendu par pied
does not include	= ne comprend pas
included with	= compris dans
I.D.	= D.I. (diamètre intérieur)
O.D.	= D.E. (diamètre extérieur)
not in kit	= pas en kit
W/ - WO/	= inclus/ - non inclus/
Qty	= quantité requise
see page/ref.	= voir page/réf.
used with ref/	= utilisé avec réf.
0,05 inch thickness	= 0,05 pouce d'épaisseur (un pouce = 25.4 mm)
weld on	= à souder

www.youfixthis.com

ALLGEMEINE INFORMATIONEN

Bei Angabe der Maschinen-Seriennummer stets die komplette Nummer angeben.

Bei der in der Mengenspalte (Anzahl) in diesem Handbuch angegebenen Zahl handelt es sich um die Anzahl von Teilen, die für die Abbildung auf der betreffenden Seite benötigt werden. Bei manchen Teilen in der Mengenspalte ist ein “x” angegeben. Dieses “x” weist darauf hin, dass sich die Anzahl der verwendeten Teile auf den “Bedarf” bezieht.

Bei Verwendung der Seitenangaben links und rechts in diesem Handbuch gelten diese für die Blickrichtung vom Fahrersitz aus, und zwar in Vorwärts-Betriebsrichtung.

Einige der in diesem Ersatzteilhandbuch aufgeführten Abbildungen und Informationen wurden der Melroe Company, einem Geschäftszweig der Clark Equipment Company, von den Herstellern von Maschinenbauteilen zur Verfügung gestellt.

ABKÜRZUNGEN UND SYMBOLE

SALES	= Bestellung bei der Verkaufsabteilung in Brüssel
NSS	= Nicht einzeln erhältlich
NAP	= Nicht als Ersatzteil erhältlich
*	= Geänderte oder hinzugefügte Abschnitte, Seiten oder Teilenummern
BTI	= Bobcat Technical Information Bulletin : Siehe am Ende der Mikrokarte des jeweiligen Modells oder der allgemeinen Mikrokarte der BTI.
was 6535403	= War 6535403
adj.	= Einstellung
Assembly	= Baugruppe
available W/Ref.	= erhältlich mit der Referenz
bulk/sold per foot	= Mengenabnahme / Verkauf pro Fuss
does not include	= beinhaltet nicht
included with	= enthalten in
I.D.	= Innendurchmesser
O.D.	= Aussendurchmesser
not in kit	= nicht in Bausatz
W/ - WO/	= mit/ - ohne/
Qty	= Anzahl
see page/ref.	= Siehe Seite / Referenz
used with ref.	= verwendet mit Referenz
0.05 inch thickness	= Dicke : 0.05 Zoll (ein Zoll = 25.4 mm)
weld on	= anschweissen

www.youfixthis.com

INFORMAZIONI GENERALI

Quando si usa il numero di serie della macchina usare il numero completo.

Il numero mostrato nella colonna della quantità di questo manuale corrisponde al numero di componenti necessari per l'illustrazione della pagina. Per alcuni componenti appare "X" nella colonna delle quantità. Questa "X" indica che la quantità da usare è "come necessario".

See in questo manuale si fa riferimento alla parte destra o sinistra, si intende dal sedile dell'operatore nella posizione in avanti di funzionamento.

Alcune delle illustrazioni e informazioni trovate in questo manuale di componenti sono state fornite alla Melroe Company, una Unità commerciale della Clark Equipment Company, da società di componenti di macchine.

SIMBOLI E ABBREVIAZIONI

SALES	= Ordinare al servizio vendite di Bruxelles
NSS	= Non vendute separatamente
NAP	= Non disponibile come componente
*	= Sezioni, pagine o numeri di componente cambiati o aggiunti
BTI	= (Bobcat Technical information) Ved. al termine del microfiche del modello relativo oppure microfiche generale
was 6535403	= era 6535403
adj. (adjustment)	= regol. (regolazione)
Assembly	= Complessivo
available W/ref.	= disponibile con rif.
bulk/sold per foot	= alla rinfusa/venduto al piede
does not include	= non comprende
Included with	= compreso con
I.D.	= d. i.
O.D.	= d. e.
not in kit	= non fa parte del kit
W/ - WO/	= con - senza
Qty	= Qtà
see page/ref	= ved. pagina/rif.
used with ref.	= usato con il rif.
0,05 inch thickness	= spessore 0,05 pollici (un pollice = 25,4 mm)
weld on	= a saldare

www.youfixthis.com

INFORMACION GENERAL

Al utilizar el número de serie de la máquina, debe emplearse el número completo.

El número que figura en la columna de “Unidades” en este manual es el número de piezas que se necesitan para la ilustración que consta en la página. En algunas piezas aparece una “x” en la columna de “Unidades”. Esta “x” indica que las unidades a utilizar son “según sea necesario”.

Cuando se empleen las referencias izq. y dcha., éstas se entienden mirando desde el asiento del conductor, en posición de marcha adelante.

Algunas de las ilustraciones y la información que figuran en este manual de piezas han sido facilitadas a Melroe Company, División de Clark Equipment Company, por empresas de componentes de máquinas.

ABREVIATURAS Y SIMBOLOS

VENTAS	= Pedido al Departamento de Ventas de Bruselas
NSS	= No se vende por separado
NAP	= No disponible como pieza de repuesto
*	= Secciones, páginas o referencias modificadas o añadidas
BTI	= (Bobcat Tecnical Information) Ver al final de la microficha del modelo afectado o en la microficha general “Boletín de Información Técnica Bobcat”.
was 6535403	= era anteriormente el 6535403
adj. (adjustment)	= ajuste
assembly	= conjunto
available W/Ref.	= disponible con la ref.
bulk/sold per foot	= a granel/vendido por pies
does not include	= no incluye
included with	= incluido en
I.D.	= diámetro interior
O.D.	= diámetro exterior
not in kit	= no en el kit
W/ - WO/	= con/ - sin
Qty	= Unidades
see page /ref.	= ver página/ref.
used with ref.	= empleado con la ref.
0,05 inch thickness	= 0,05 pulgadas de espesor (1 pulgada = 25,4 mm)
weld on	= debe ser soldado

www.youfixthis.com

ALGEMENE INFORMATIE

Als u het serienummer van de machine gebruikt, geef dan het gehele serienummer.

Het cijfer dat voorkomt in de kolom “Aantal”, in deze handleiding, is het aantal onderdelen dat nodig is van de illustratie op de pagina. Voor sommige onderdelen staat er een “x” in de kolom “Aantal”. Deze “x” betekent dat er een aantal “zoals nodig” vereist is.

Wanneer er in deze handleiding naar “links” en naar “rechts” gerefereerd wordt, moet dit verstaan worden voor een bestuurder die in de bestuurdersstoel zit in de voorwaartse bedrijfsstand.

Sommige van de illustraties en informatie in deze onderdelen-handleiding werden door firma’s van machine-componenten geleverd aan Melroe Company, een handelseenheid van Clark Equipment Company.

AFKORTINGEN EN SYMBOLEN

SALES	= Bestellen bij de Verkoopafdeling te Brussel
NSS	= Niet afzonderlijk te verkrijgen
NAP	= Niet beschikbaar als onderdeel
*	= Gewijzigde of toegevoegde paragrafen, pagina’s of onderdeelnummers
BTI	= Bobcat Technical Information Bulletin : Zie einde van de microfiche van het desbetreffende model of einde van de algemene microfiche die het geheel van alle “BTI” herneemt.
was 6535403	= was vroeger 6535403
adj. (adjustment)	= afstelling
Assembly	= geheel
available W/Ref.	= beschikbaar met ref.
bulk/sold per foot	= bulk/aan de meter verkocht
does not include	= bevat niet
includes with	= is bevat in
I.D.	= ϕ inw. (inwendige diameter)
O.D.	= ϕ uitw. (uitwendige diameter)
not in kit	= niet in de kit
W/ - WO/	= met/ - zonder/
Qty	= vereiste aantal
see page/ref.	= zie pagina/ref.
used with ref/	= gebruikt met ref.
0,05 inch thickness	= 0.05 inch dik (een inch = 25.4 mm)
weld on	= te lassen

www.youfixthis.com

MAIN FRAME

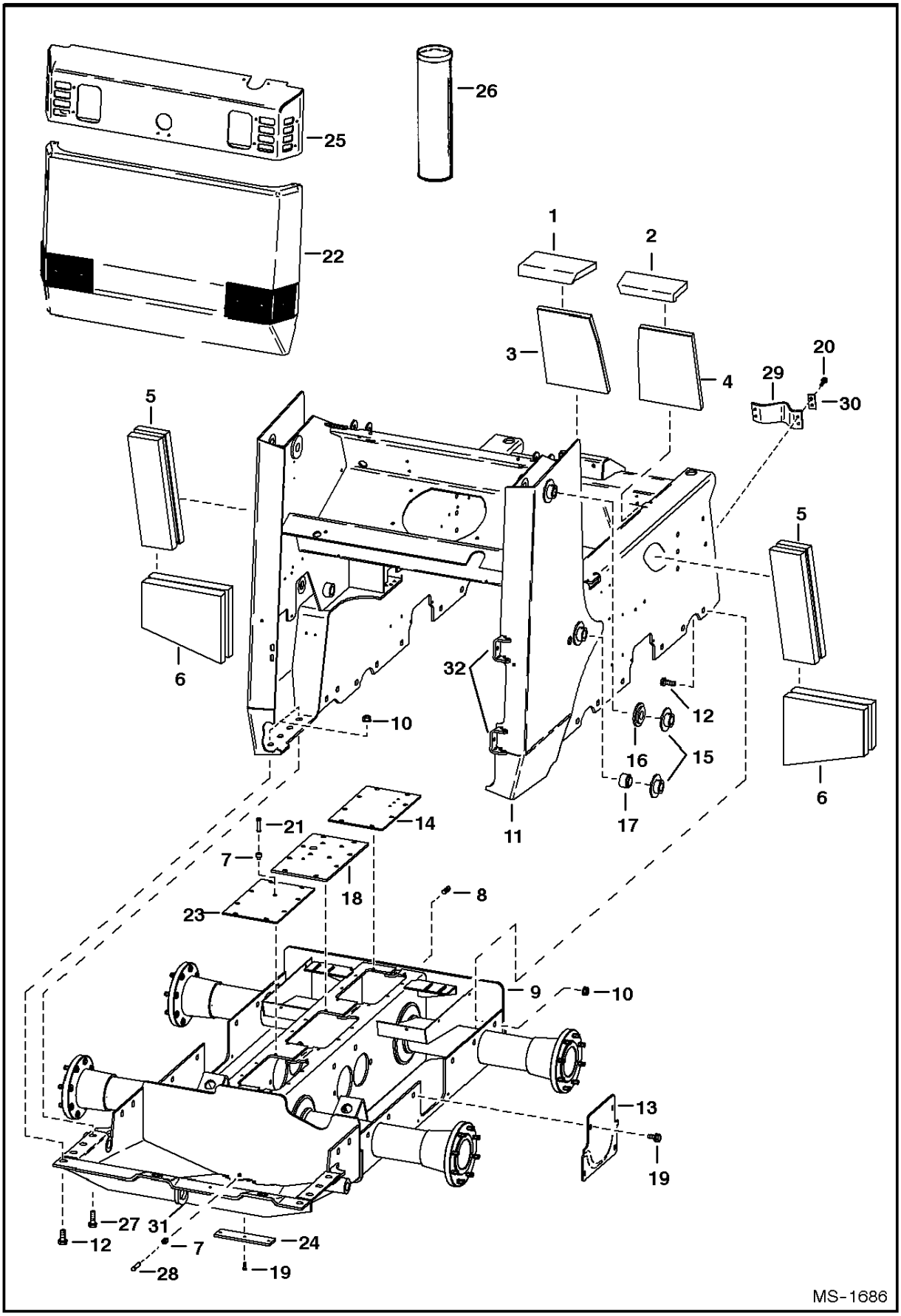

www.youfixthis.com

MAIN FRAME

Ref.N°	Part N°	Description	Remarks	Serial N°	Qty.
1	6703963	INSULATION	crossmember		1
2	6703964	INSULATION	crossmember		1
3	6703965	INSULATION	crossmember		1
4	6703969	INSULATION	crossmember		1
5	6703967	INSULATION	fender		2
6	6703968	INSULATION	transmission		2
7	6553411	BUSHING			2
8	11F-12	PLUG			1
9	6578976	CHAINCASE	See Page DRIVE TRAIN(1)		1
10	83D-12	NUT			24
11	6579513	MAIN FRAME			1
12	31C-1228	BOLT			20
13	6703189	COVER	Was 6578352 [A]		2
14	6578505	COVER	See Page DISC BRAKE(1)		1
15	6702584	BUSHING	weld on		4
16	6702583	BUSHING	weld on - Was 6577955 [A]		2
17	6555987	BUSHING	weld on		6
18	6706279	COVER	See Page DISC BRAKE(1) - Was 6702922 [A]		1
19	84G-3712	BOLT			8
20	84G-3716	BOLT			8
21	6646626	BREATHER			1
22		REAR DOOR	See Page REAR DOOR(10)		1
23	6700330	COVER	See Page DISC BRAKE(1)		1
24	6700182	COVER			1
25		HOOD	See Page ENGINE & ATTACHING PARTS(1)- ENGINE & ATTACHING PARTS(1) & HOOD KIT(14) - Was 6578046 [A]		1
26	6633583	SEALANT	chaincase cover		x
27	31C-1232	BOLT			4
28	6599645	PLUG			1
29	6702164	SPACER	flexible		2
30	6579106	SHIM			4
31	6706485	HOOK	tie down - weld on		2
32	6577394	BRACKET	hinge - weld on		2

www.youfixthis.com

OPERATOR CAB

NOTE: 6714062 Gas Spring Kit to be used when loader is equipped W/Cab Enclosure. Because Gas Spring is heavy duty W/larger diameter, (2) 91G-416 Screws, with low profile heads, must be used in place of 35C-410 Bolt located behind gas spring on left side of ROPS.

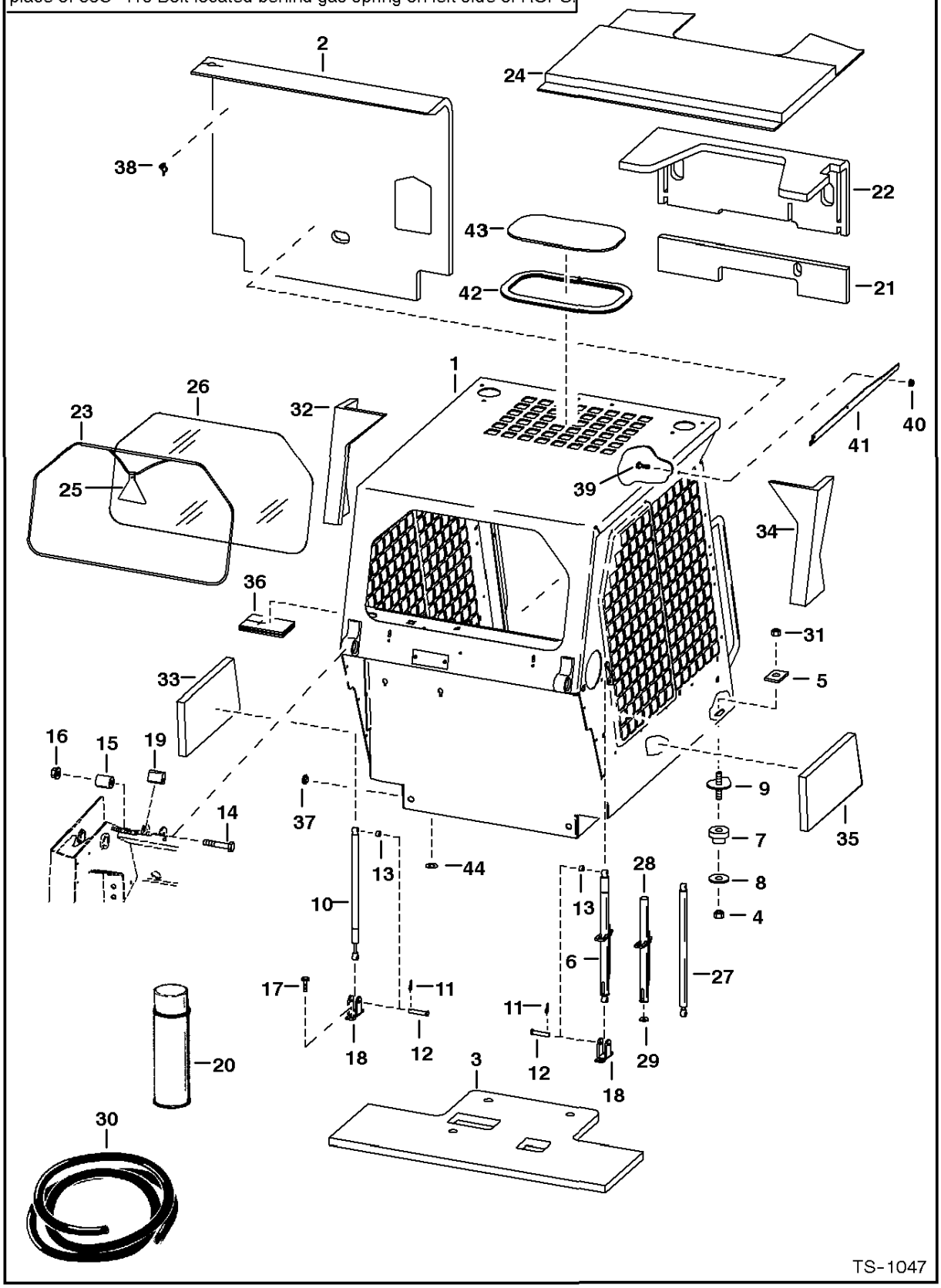

www.youfixthis.com

OPERATOR CAB

Ref.N°	Part N°	Description	Remarks	Serial N°	Qty.
1	6701957	OPERATOR CAB	includes Cab Decals - Also Order (2) of Ref. OPERATOR CAB(44)		1
2	6706569	INSULATION	seat back - use W/Ref. OPERATOR CAB(20) - Was 6701553 [A]		1
2	6708682	INSULATION	seat back - shown - use W/Ref. OPERATOR CAB(38) - Was 6705816 [A]		1
3	6715095	INSULATION	seat pan - Was 6706982 [A]		1
4	85D-8	NUT			2
5	6553709	WASHER			2
6	NAP	GAS SPRING	Order Ref. OPERATOR CAB(27)-OPERATOR CAB(29) - Was 6701176 [A]		1
7	6560633	MOUNT			2
8	6515817	WASHER			2
9	6702971	BOLT	Was 6568398 [A]		2
10	6700171	GAS SPRING	w/out lock - Was 6706590 [A]		1
10	6714062	KIT	W/out lock - heavy duty, gas spring -SEE NOTE		1
10	91G-416	BOLT	SEE NOTE		2
10	6900531	INSTRUCTIONS	for kit 6714062		1
11	6631418	PIN	ring		4
12	6567743	PIN			4
13	6567604	SPACER			2
14	17C-1056	BOLT			2
15	6562602	BUSHING	rubber		2
16	53D-10	NUT	Was 83D-10 [B]		2
17	84G-3112	BOLT			4
18	6706349	MOUNT	Was 6576340 [S]		2
19	6579613	STOP	cab tilt		2
20	6652818	ADHESIVE	insulation - 24 oz. spray can - Was 6632469 [S]		x
21	6701674	INSULATION	controls panel - use W/Ref. OPERATOR CAB(20)		1
22	6708181	INSULATION	controls panel - use W/Ref. OPERATOR CAB(20) - Was 6701675 [A]		1
23	NAP	EXTRUSION	81.5' (2070,1 mm) long - Order Ref. OPERATOR CAB(30)ncom3B }H~10{M		x
23	NAP	CORD	81.5' (2070,1 mm) long - Order Ref. OPERATOR CAB(30)		x
24	6701519	INSULATION	cab top - use W/Ref. OPERATOR CAB(20)		1
24	6706155	INSULATION	cab top - use W/Ref. OPERATOR CAB(38)		1
25	6559515	EXIT TAG			1
26	6701651	WINDOW	rear		1
27	6664205	GAS SPRING	Was 6655389 [A]		1
28	6708189	TUBE	stop - Was 6701175 [A]		1
29	6701174	WASHER			1
30	6665568	SEAL	bulk - Sold Per Foot - Was 6658352 [B]		x
30	6554149	CORD	bulk - Sold Per Foot		x
31	59D-8	NUT			2
32	6703449	INSULATION	cab back - L.H. - use W/Ref. OPERATOR CAB(20)		1
32	6706156	INSULATION	cab back - L.H. - use W/Ref. OPERATOR CAB(38)		1
33	6703451	INSULATION	cab back - use W/Ref. OPERATOR CAB(20)		1
34	6703450	INSULATION	Cab Back- R.H. - use W/Ref. OPERATOR CAB(20)		1
34	6706151	INSULATION	Cab Back- L.H. - use W/Ref. OPERATOR CAB(38)		1
35	6703452	INSULATION	Cab Back-use W/Ref. OPERATOR CAB(20)		1
36	6703455	INSULATION	Cab Back-use W/Ref. OPERATOR CAB(20) - Was 6703453 [A]		1
37	6664374	PLUG	heater hole		5
38	6664310	CLIP			8
39	35C-410	BOLT			4
40	83D-4	NUT			4

www.youfixthis.com

OPERATOR CAB

Ref.N°	Part N°	Description	Remarks	Serial N°	Qty.
41	6703159	TRACK	R.H.		1
41	6703160	TRACK	L.H.		1
42	6664351	SEAL	Used W/Cab Headliner	& Above	1
42	6665012	SEAL	Used W/O Cab Headliner	& Above	1
43	6705735	WINDOW			1
44	6707318	GUIDE	spacer - for seat rear mounting bolts		2

www.youfixthis.com

SEAT & SEAT BAR

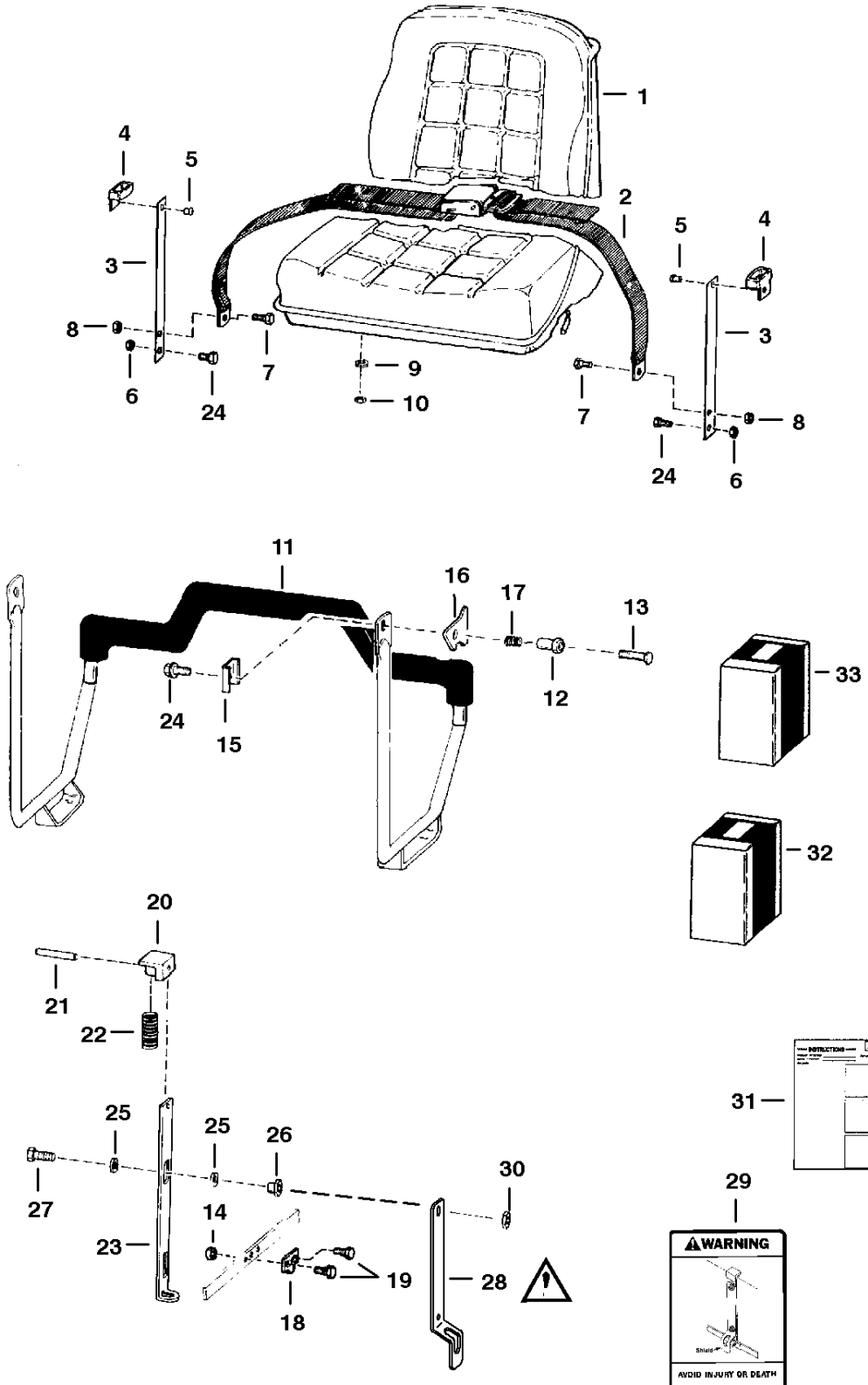

WARNING: Never operate loader without pedal lock shield 6705474 on both interlocks. Shields prevent foot from unlocking interlocks when leaving loader seat.

B-20146

www.youfixthis.com

SEAT & SEAT BAR

Ref.N°	Part N°	Description	Remarks	Serial N°	Qty.
1		SEAT	See Page SEAT(1)		1
2	NAP	SEAT BELT	Order Ref. SEAT & SEAT BAR(33) - Was 6564774[A]		1
2	6667875	SEAT BELT			1
3	NAP	GUIDE ASSY.	W/Ref. SEAT & SEAT BAR(4) & SEAT & SEAT BAR(5) - 13.75" used W/6564774 - Was 6565354 [A]		2
3	6711907	GUIDE ASSY.	W/Ref. SEAT & SEAT BAR(4) & SEAT & SEAT BAR(5) - 12.25" used w/6667875		2
4	6565355	GUIDE			2
5	6630207	RIVET	Was 6512797 [A]		4
6	85D-6	NUT			2
7	17C-716	BOLT			2
8	85D-7	NUT			2
9	4E-5	WASHER			4
10	61D-5	NUT			4
11	6706324	SEAT BAR	one piece - Was 6703301 [A]		1
12	6568742	BUSHING			2
13	35C-608	BOLT			2
14	83D-6	NUT			4
15	6563557	WASHER			2
16	6563313	RETAINER			2
17	6704453	SPRING	Was 6578252 [A]		2
18	6563151	LINK			2
19	17C-616	BOLT			4
20	6563148	BLOCK			2
21	14J-2512	PIN			2
22	6702430	SPRING	Was 6563149 [A]		2
23	6578150	LOCK			2
24	84G-3712	BOLT			4
25	6700170	WASHER	nylon - Was 65700170 [A]		8
26	6559479	NUT			4
27	6705489	BOLT	Was 84G-3724 [A]		4
28	6705474	LOCK SHIELD	Never operate loader without pedal lock shield on both interlocks ... SEE WARNING ON PREVIOUS PAGE		2
29	6705720	DECAL	Was 6705488 [A]		1
30	59D-6	NUT			4
31	6722392	INSTRUCTIONS	for Ref. SEAT & SEAT BAR(28)		1
32	6706796	KIT	gas spring seat bar - See Page SEAT BAR KIT(1)		1
33	6713061	KIT	W/Ref. SEAT & SEAT BAR(2) & SEAT & SEAT BAR(3)		1

www.youfixthis.com

SEAT

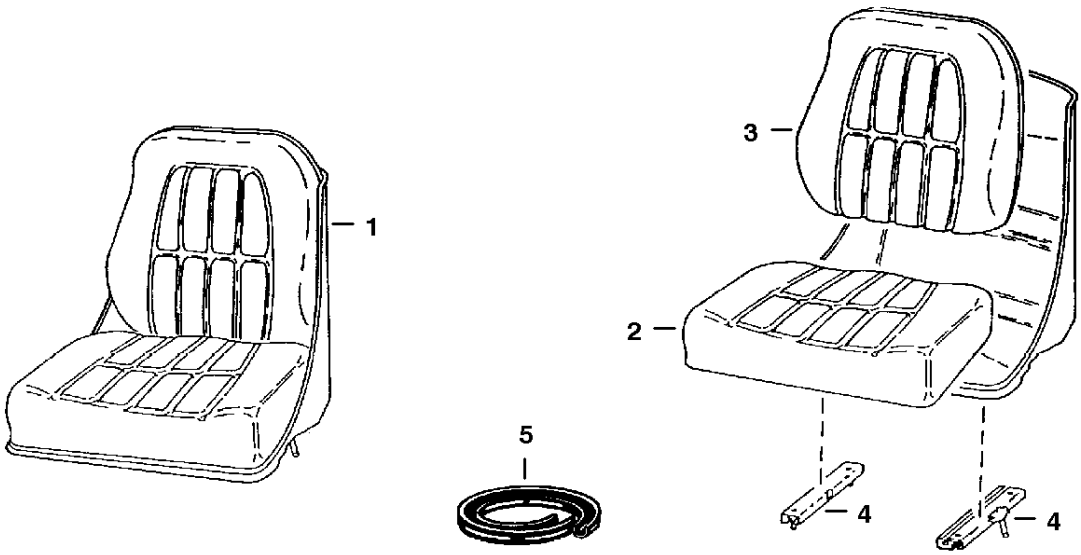

B-7185

www.youfixthis.com

SEAT

Ref.N°	Part N°	Description	Remarks	Serial N°	Qty.
1	6563140	SEAT			1
2	6630468	SEAT CUSHION	seat		1
3	6630465	BACK CUSHION	back		1
4	6630469	TRACK	W/Latch		1
4	6599780	TRACK	WO/Latch		1
5	6652935	EDGING	96" (2,4 m) For Ref. SEAT(2) & SEAT(3)		x
5	6665656	CLIP			1

www.youfixthis.com

* SEAT

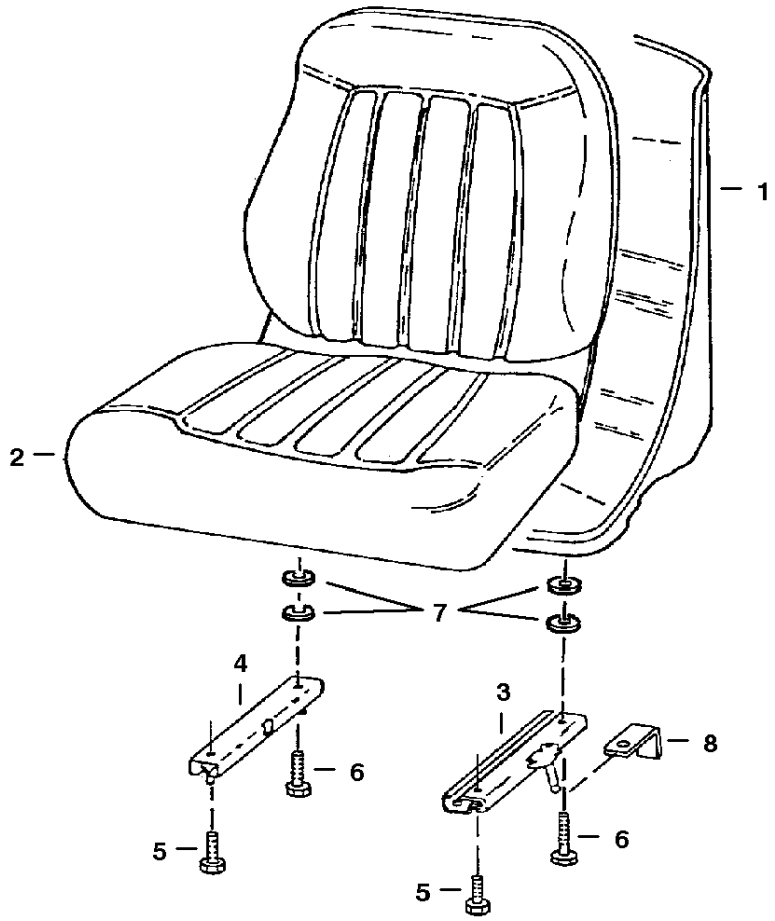

B-14720

www.youfixthis.com

* SEAT

Ref.N°	Part N°	Description	Remarks	Serial N°	Qty.
1	*NAP	SEAT	W/Ref. * SEAT(2)-* SEAT(5) & * SEAT(8) - Order 6669135, Seat - Was 6667684[A]		1
1	6669135	SEAT	W/Ref. * SEAT(2)-* SEAT(7)com3`M }H~10{M		x
2	6670160	CUSHION	W/edging, clip & (2) grommets		1
2	NSS	EDGING			1
2	NSS	CLIP			1
3	6669088	TRACK	L.H. - W/Latch		1
4	6669089	TRACK	R.H. - W/O Latch		1
5	25G-512	BOLT	6669135 Seat uses (2) bolts		4
6	25G-520	BOLT			2
7	7000010	SPACER			4
8	6668953	BRACKET	See S/L Dated 16 April 1996		2

www.youfixthis.com

REAR DOOR

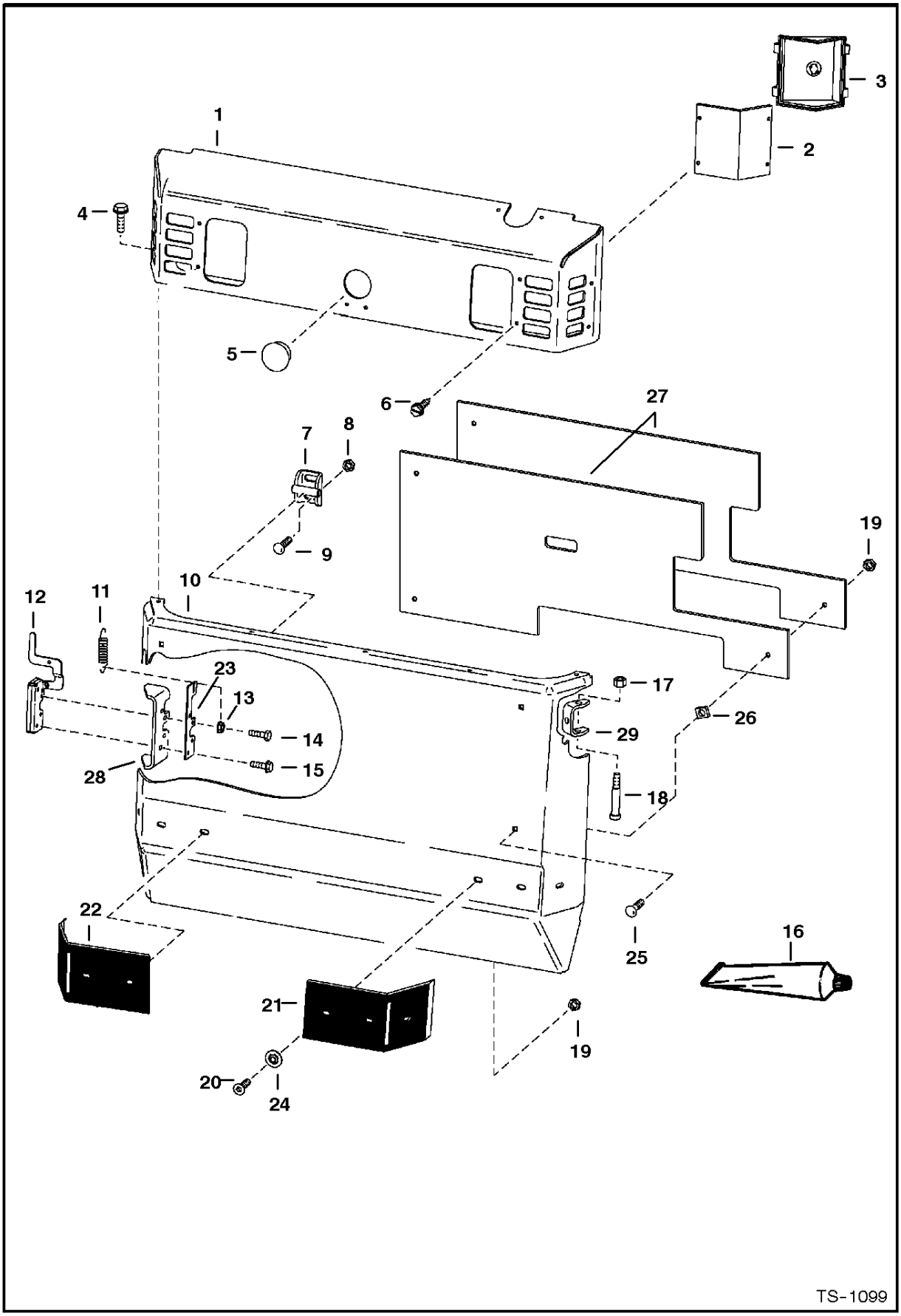

www.youfixthis.com

REAR DOOR

Ref.N°	Part N°	Description	Remarks	Serial N°	Qty.
1	6703868	HOOD	steel -For Field Kit See Page HOOD KIT(1)		1
2	6703797	LENS			2
3	6704362	HOUSING	light		2
4	84G-3716	BOLT			5
5	6660646	PLUG			1
6	6706517	SCREW	self tapping - Was 6704400 [A]		8
7	6715157	STRIKER ASSY.	Was 6579969 [A]		1
8	83D-8	NUT			2
9	37C-820	BOLT	Was 10C-820 [B]		2
10	6708624	REAR DOOR	Was 6704639 [A]		1
11	6563128	SPRING			1
12	6649420	LATCH			1
13	57D-4	NUT			1
14	17C-424	BOLT			1
15	31C-420	BOLT	Was 35C-416		3
16	6649835	ADHESIVE	Used W/Ref. REAR DOOR(21) & REAR DOOR(22)		x
17	59D-6	NUT	Was 85D-8		2
18	38C-856	BOLT	Was 17C-868		2
19	83D-6	NUT			10
20	9G-628	BOLT	Was 25G-624		6
21	6577400	BUMPER	bond W/Ref. REAR DOOR(16)		1
22	6577401	BUMPER	bond W/Ref. REAR DOOR(16)		1
23	6704464	GUIDE	latch		1
24	6704332	WASHER			6
25	37C-624	BOLT			4
26	1612281	NUT			4
27	6712177	WEIGHT	Was 6704638 [A]		2
28	6700279	LATCH PLATE	latch		1
29	6577395	HINGE			2

www.youfixthis.com

LIFT ARM & BOB-TACH

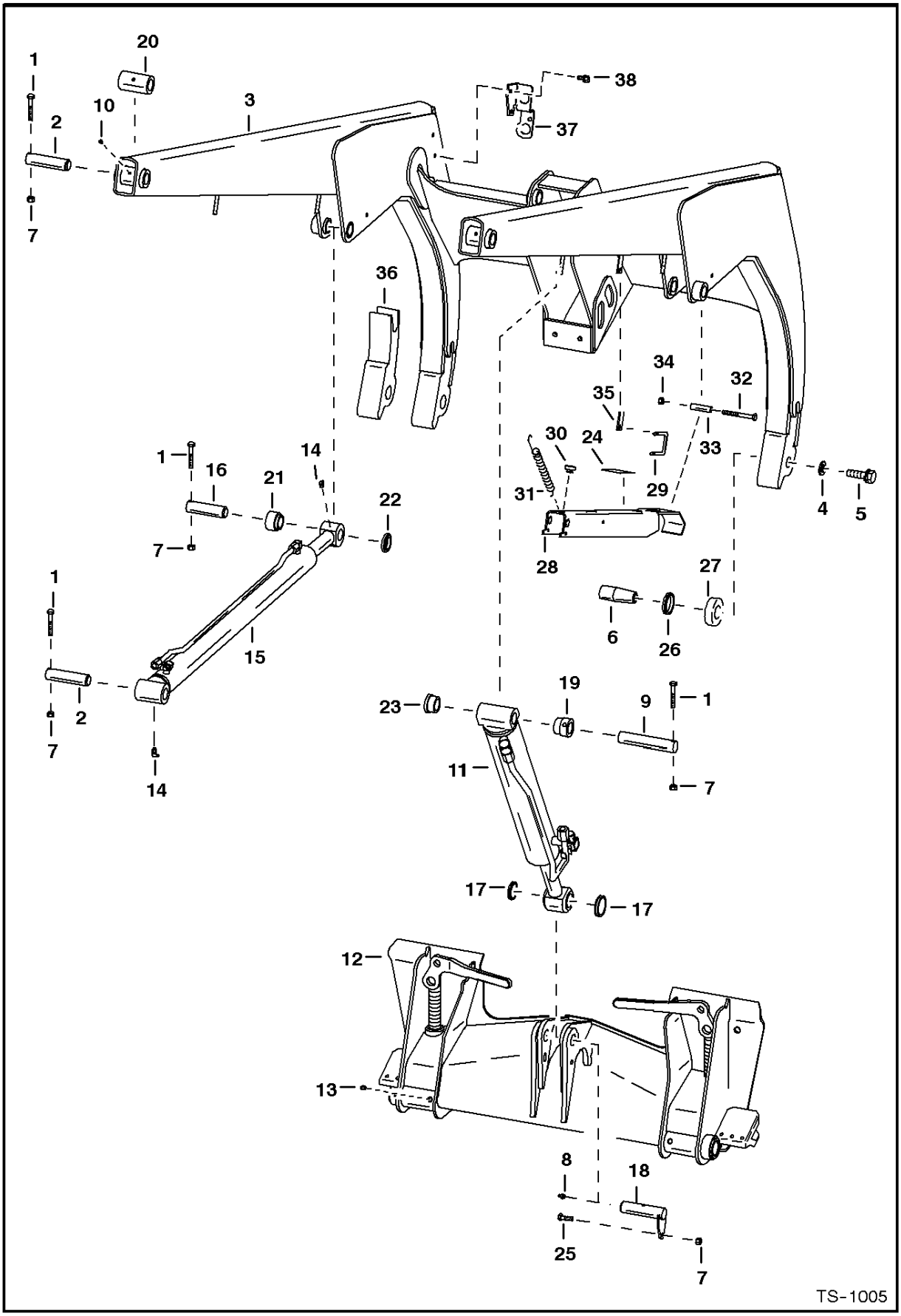

www.youfixthis.com

LIFT ARM & BOB-TACH

Ref.N°	Part N°	Description	Remarks	Serial N°	Qty.
1	17C-640	BOLT			7
2	6702935	PIN	Was 6577954 [B]		4
3	NAP	LIFT ARM	Order 6705719 Lift Arm , 6704108, 6704130, 6704140 & 6703588 Tubelines, 6706751 Bracket & (2) 84G-3712 Bolts - Was 6578834 [A]	5084 11124 & Bel	1
3	NAP	LIFT ARM	Order 6705719 Lift Arm, 6706751 Bracket & (4) of 84G-3712 Bolts -Was 6703226 [A]	5084 11125 & Abv	1
3	NAP	LIFT ARM	Order 6705719 Lift Arm, 6706752 Bracket & (4) of 84G-3712 Bolts -Was 6703226 [A]	5097 11001 & Abv	1
3	6705719	LIFT ARM			1
4	6576033	WASHER			2
4	35C-1224	BOLT			2
5	31C-1272	BOLT	Was 35C-1224 [B]		2
5	NAP	PIN	Order 6707180 Pin & 31C-1272 Bolt		2
6	6707180	PIN	Was 6579118 [A]		2
7	85D-6	NUT			8
8	10H-25	GREASE ZERK			1
9	6704288	PIN	Was 6553061 [B]		1
10	10H-35	GREASE ZERK			2
11		CYLINDER	tilt- See Page TILT CYLINDER(1) - TILT CYLINDER(1)		1
12		BOB-TACH	See Page BOB-TACH(1)		1
13	743332	GREASE ZERK			2
14	11H-15	GREASE ZERK			4
15		CYLINDER	lift - See Page LIFT CYLINDER(1) & LIFT CYLINDER(1)		2
16	6547593	PIN			2
17	6654117	SEAL			2
18	6705223	PIN	Was 6700037 [A]		1
19	6704287	BUSHING	Weld On - Also Order Ref. LIFT ARM & BOB-TACH(9) - Was 6576349 [A]		1
20	6579117	BUSHING	Weld On		2
21	6558992	BUSHING	Weld On		2
22	6558991	BUSHING	Weld On		2
23	6703363	BUSHING	Weld On - Also Order Ref. LIFT ARM & BOB-TACH(9) - Was 6576350 [A]		1
24	6704436	PAD	rubber - self adhesive		1
25	17C-620	BOLT			1
26	6651709	SEAL			2
27	6700463	CUP			2
28	6705090	BOOM STOP	assy. - Was 6700616 [A]		1
29	6714810	PIN	retainer - Was 6700525 [A]		1
30	6519178	BUMPER			1
31	6579072	SPRING			1
32	17C-660	BOLT	Was 17C-656		1
33	6700533	SPACER			1
34	61D-6	NUT			1
35	6705091	TAB	weld on		1
36	NAP	ARM	R.H. - weld on - Was 6578837[A]		1
36	NAP	ARM	L.H. - weld on - Was 6578838[A]		1
37		BRACKET	See Page AUXILIARY HYDRAULICS(1) & HIGH HORSEPOWER HYDRAULICS(18)		1
38		BOLT	See Page AUXILIARY HYDRAULICS(1) & HIGH HORSEPOWER HYDRAULICS(18)		2

www.youfixthis.com

BOB-TACH

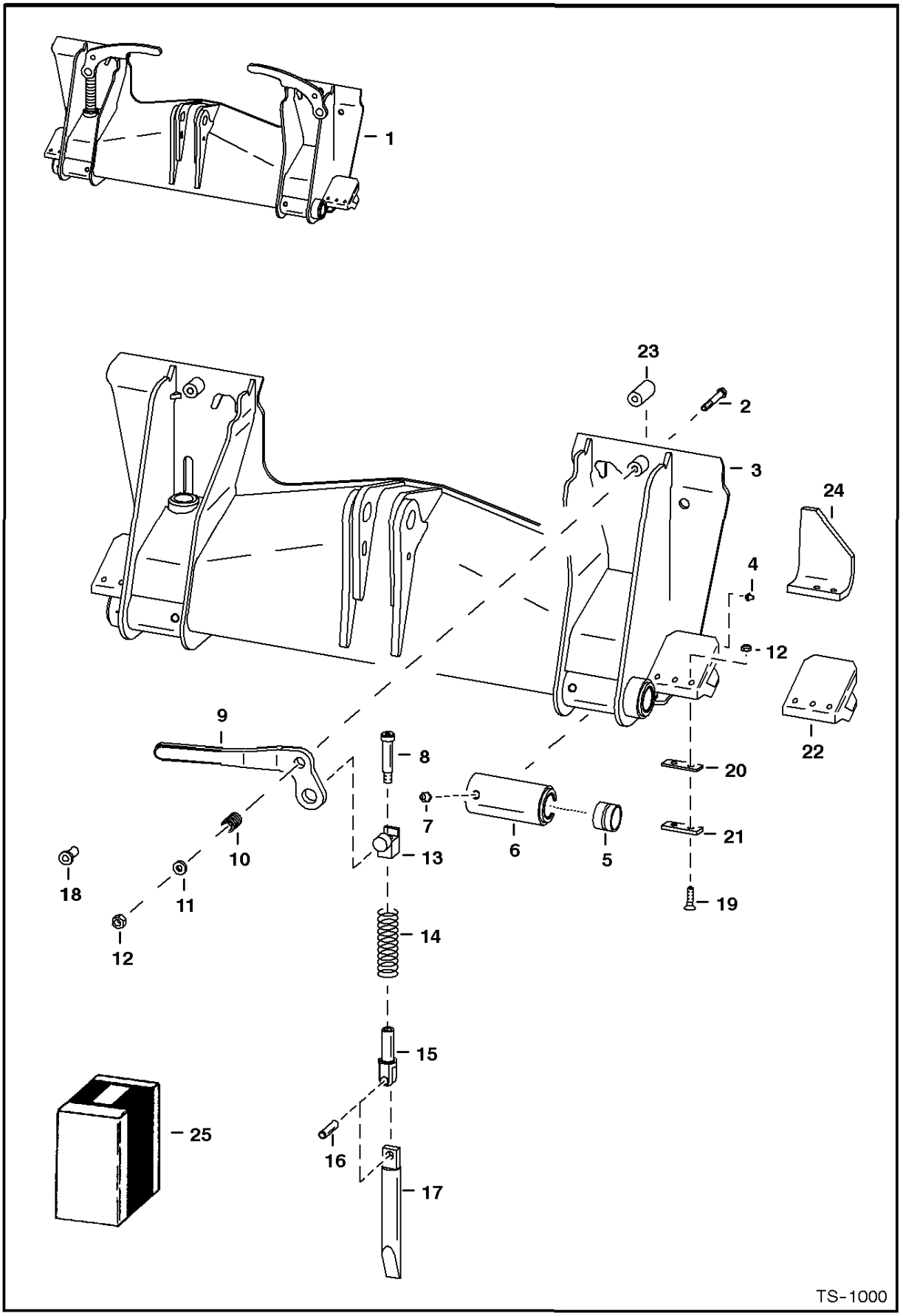

www.youfixthis.com

BOB-TACH

Ref.N°	Part N°	Description	Remarks	Serial N°	Qty.
1	6577986	BOB-TACH	Ref. BOB-TACH(2)-BOB-TACH(24) - Was SALES [D]		2
2	17C-644	BOLT	See Ref. BOB-TACH(10) & BOB-TACH(11)		2
2	17C-660	BOLT	See Ref. BOB-TACH(10) & BOB-TACH(11)		2
3	NAP	FRAME			1
4	10H-35	GREASE ZERK			2
5	711273	BUSHING	Press Fit		2
6	6578703	BUSHING	Weld - On - W/Ref. BOB-TACH(5) - Was 6578704 [A]		2
7	743332	GREASE ZERK			2
8	38C-1036	BOLT	shoulder - Was 6578166 [A]		2
9	6702904	LEVER	R.H.		1
9	6702903	LEVER	L.H.		1
10	6704453	SPRING	used W/17C-644 bolt		2
10	6713040	SPRING	used W/17C-660 bolt		2
11	6557831	WASHER	used W/17C-644 bolt	5084 11012 & Abv., 5097 11001 & Abv.	2
11	619021	WASHER	used W/17C-660 bolt		2
12	85D-6	NUT			6
13	6704240	PIVOT ASSY	Was 6576456 [A]		2
14	6562018	SPRING	Was 6578253 [A]		2
15	6704248	PIVOT	wedge - Was 6576454 [A]		2
16	14J-5032	PIN			2
17	6704242	WEDGE ASSY.	Was 6702877 [A]		2
18	6575636	BUSHING	lever	5084 11001 & Bel.	2
19	9G-620	BOLT			4
20	6579106	SHIM	.125		2
20	6707514	SHIM	.06		x
21	6579104	SHIM	.250		2
22	NAP	STOP	R.H. plate-weld on - order 6713526 - Was 6704604[A]		1
22	NAP	STOP	L.H. plate-weld on - order 6713526 - three hole Was 6704603 [A]		1
22	6713526	STOP	weld-on - two hole	hcom3:6}H~10{M	x
23	6702958	BUSHING	weld on		2
24	NAP	STOP	R.H. plate - Order 6713526		1
24	NAP	STOP	L.H. plate - Order 6713526		1
25	6724775	LEVER KIT	R.H. Bob-Tach - Ref. BOB-TACH(2) & BOB-TACH(8)-BOB-TACH(17)		1
25	6724776	LEVER KIT	L.H. Bob-Tach - Ref. BOB-TACH(2) & BOB-TACH(8)-BOB-TACH(17)		1

www.youfixthis.com

PANELS

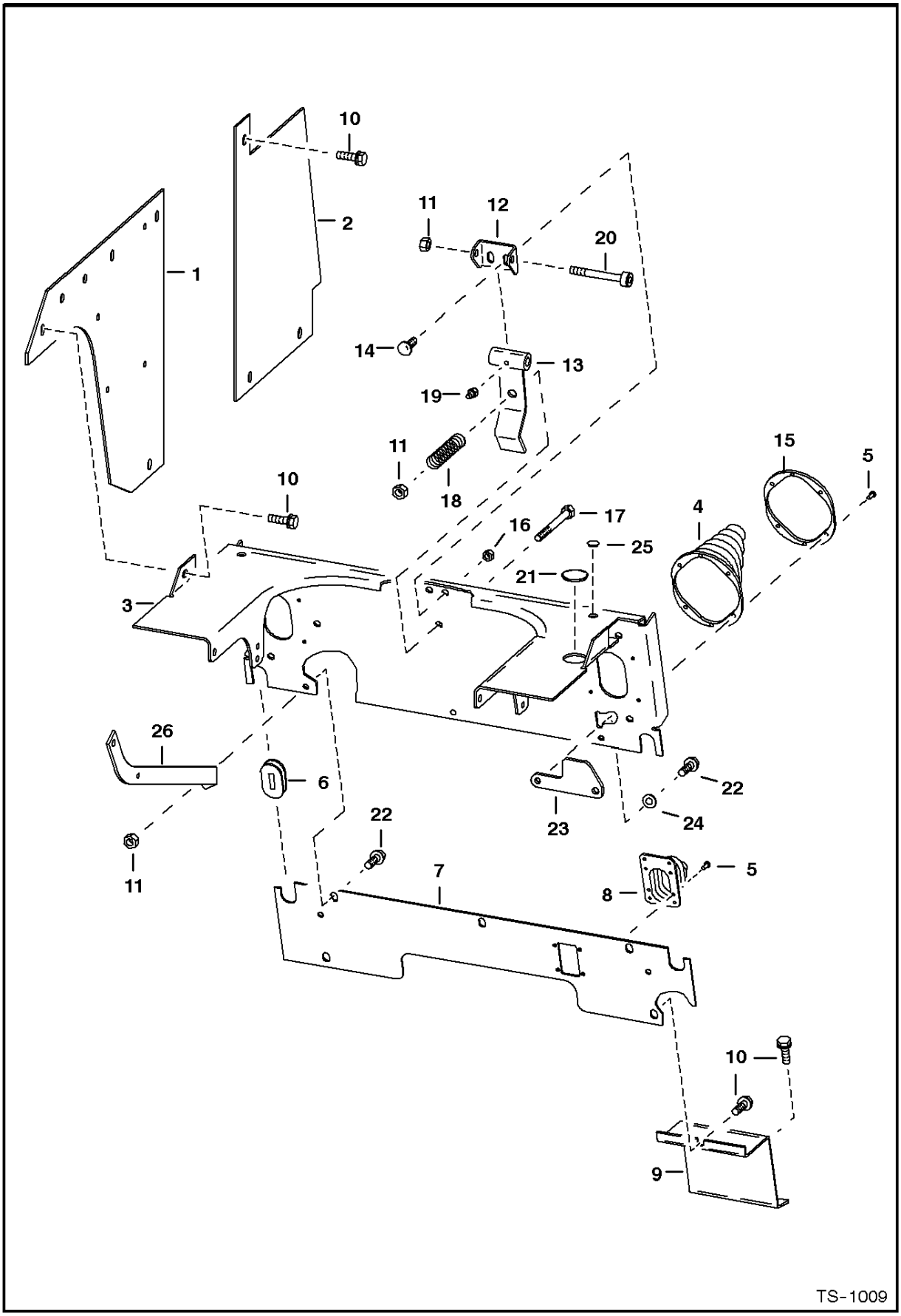

www.youfixthis.com

PANELS

Ref.N°	Part N°	Description	Remarks	Serial N°	Qty.
1	6710647	PANEL	Was 6701346 [A]		2
2	6701345	PANEL			2
3	6707475	PANEL	Was 6579459 [A]		1
4	6532127	BOOT	W/Ref. PANELS(15) - Was 6655676 [A]		2
5	6630207	RIVET	Was 6513493 [A]		12
6	6577961	GROMMET			2
7	6700211	PANEL			1
8	6571648	BOOT			1
9	6700772	PANEL			2
10	84G-3712	BOLT			23
11	91D-6	NUT	Was 85D-6 [B]		4
12	6701951	MOUNT			1
13	6701950	SPRING PLATE			1
14	10C-512	BOLT	Was 10C-510 [B]		2
15	NAP	PLATE	Order Ref. PANELS(4) - Was 6536392 [A]		2
16	85D-5	NUT			2
17	17C-664	BOLT			1
18	6505082	SPRING			1
19	10H-25	GREASE ZERK			1
20	38C-836	BOLT	Was 6701960 [A]		1
21	6707674	PLUG	for 1.25'(31,8 mm) dia. hole - Was 6665697 [A]		1
22	84G-3716	BOLT			6
23	6703330	LEVER	stop		2
24	616783	WASHER			2
25	6649949	PLUG		5084 12023 & Abv	2
25				5097 11192 & Abv	2
26		BRACE	See Page HAND CONTROLS(32)		1

www.youfixthis.com

FUEL SYSTEM

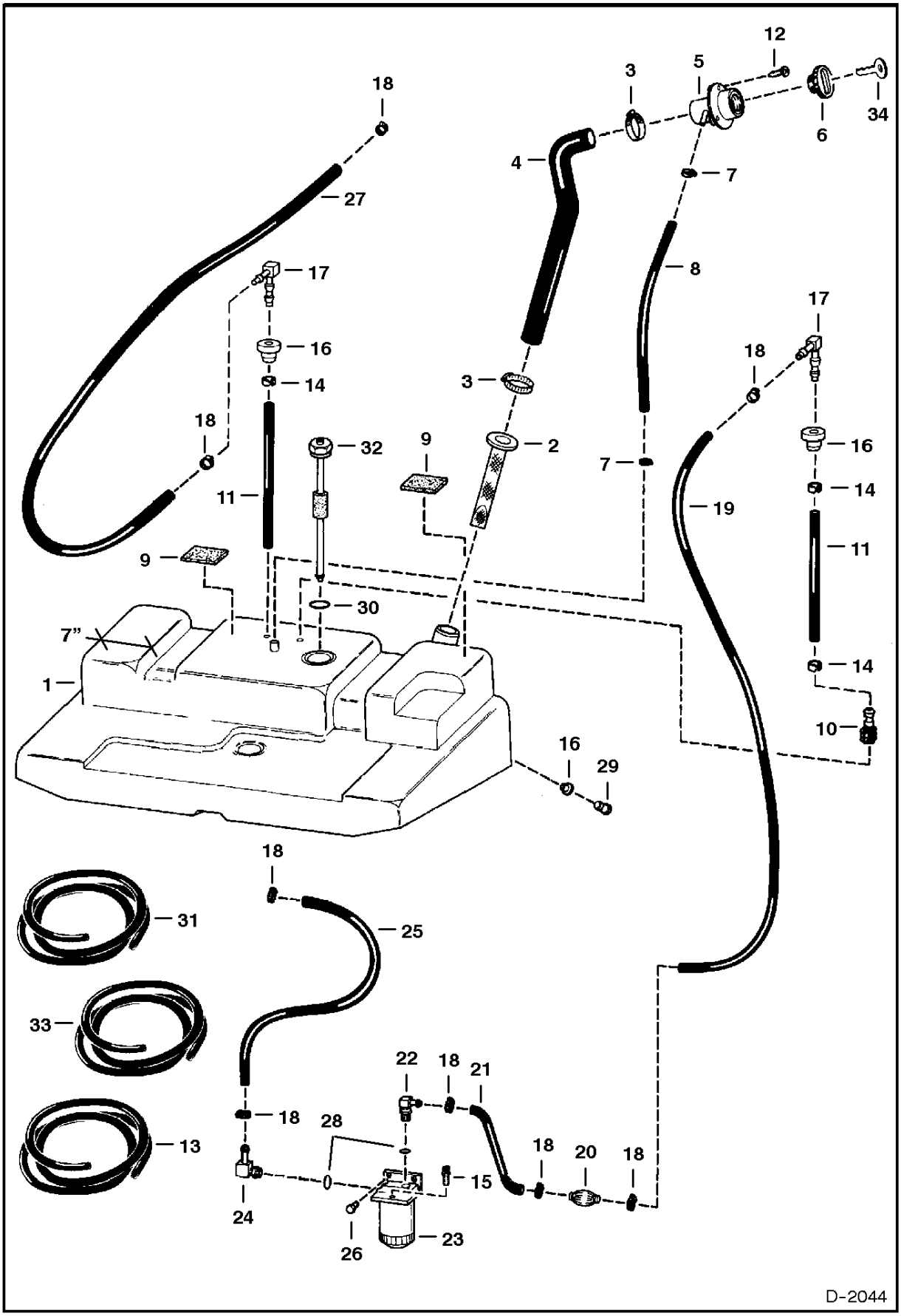

www.youfixthis.com

FUEL SYSTEM

Ref.N°	Part N°	Description	Remarks	Serial N°	Qty.
1	6708527	TANK	Was 6579125 [A]		1
2	6569219	SCREEN			1
3	42H-32	CLAMP	Was 6513595 [A]		2
4	6579274	HOSE			1
5	6701449	FILLER TUBE			1
6	6661114	CAP	green fuel fill - W/Ref. FUEL SYSTEM(34)- Was 6632468 [A]		1
6	NAP	CAP	locking-W/Ref. FUEL SYSTEM(34)-Code GC020 - Was 6654373 [A]		1
6	6661696	FUEL CAP	locking - W/Ref. FUEL SYSTEM(34)-Code PK510		1
7	42H-10	CLAMP			2
8	NAP	HOSE	31" (787,4 mm) long - Order Ref. FUEL SYSTEM(13)		1
9	6578278	PAD	self adhesive one side		2
10	6650239	SCREEN	Was 6659239 [D]		1
11	6579554	HOSE	12.5" (317.5mm)		2
12	6706517	SCREW	Was 6579119 [B]		3
13	6578172	HOSE	bulk - Sold Per Foot		x
14	6661213	CLAMP			3
15	6658180	PLUG	plug		1
16	6553411	BUSHING			3
17	6598908	ELBOW			2
18	6515575	CLAMP			8
19	NAP	HOSE	30" (762 mm) long - Order Ref. FUEL SYSTEM(33)		1
20	6657734	PUMP	hand primer - Was 6563396 [A]		1
21	NAP	HOSE	13.5" (342,9 mm) long - Order Ref. FUEL SYSTEM(33)		1
22	6657042	ELBOW			1
23	6667353	FILTER ASSY	Was 6657020 [A]		1
23	6667352	FILTER	Was 6647773 [A]		1
23	72F-1	DRAIN COCK			1
24	6657083	ELBOW	W/Ref. FUEL SYSTEM(28)- Was 6657088 [D]		1
25	NAP	HOSE	16" (406,4 mm) long - Order Ref. FUEL SYSTEM(31)		2
26	84G-3110	BOLT			2
27	NAP	HOSE	51" (1295,4 mm) long - Order Ref. FUEL SYSTEM(33)		1
28	79K-5	O-RING			2
29	6599645	PLUG			1
30	79K-14	O-RING	Was 79K-20 [B]		1
31	6577822	HOSE	bulk - Sold Per Foot		x
32	6658958	SENSOR	fuel - W/Ref. FUEL SYSTEM(30) - Was 6576946 [A]		1
33	6577821	HOSE	bulk - Sold Per Foot		x
34	6654374	KEY	Code GC020		1
34	6587458	KEY SET	Code PK510		1

www.youfixthis.com

DRIVE TRAIN

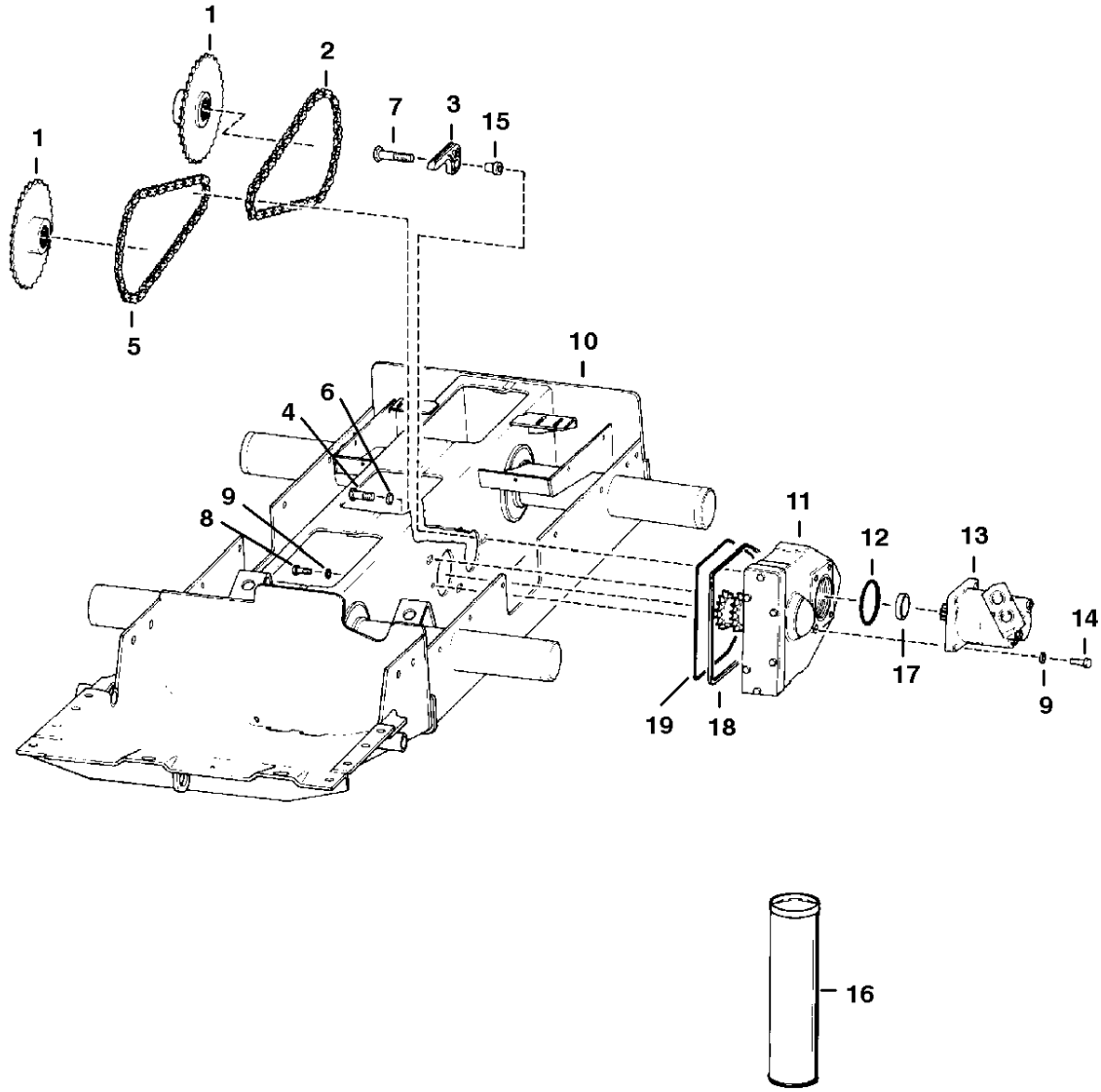

www.youfixthis.com

DRIVE TRAIN

Ref.N°	Part N°	Description	Remarks	Serial N°	Qty.
1	6568918	SPROCKET	Was 6568919 [A]		4
2	6564229	CHAIN	W/Connector Link		2
2	6510614	LINK	connector - Used for Diamond & Daldo chain		1
2	6591030	LINK	connector - Tsubaki		1
3	6569808	GUIDE	chain - Plastic		1
4	17C-1228	BOLT			8
5	6564228	CHAIN	W/Connector Link		2
5	6510614	LINK	connector - Diamond		1
5	6591030	LINK	connector - Tsubaki		1
6	6576033	WASHER	Was 6558465 [A]		10
7	17C-1252	BOLT			2
8	17C-820	BOLT			2
9	6803867	WASHER	Was 6558956[A]		10
10	6578976	CHAINCASE			1
11	6708266	GEARCASE	See Page GEARCASE(1) - Was 6578781 [A]		2
12	25K-30508	O-RING	Was 25K-40404 [B]		2
13		MOTOR	See Page HYDROSTATIC MOTOR(1)		2
14	17C-828	BOLT			8
15	6569807	BUSHING			2
16	6633583	SEALANT	use between Ref. DRIVE TRAIN(10) & DRIVE TRAIN(11)		1
17	6513681	BEARING			2
18	6563574	RETAINER			2
19	6558518	O-RING			2

www.youfixthis.com

GEARCASE

NOTE: When replacing complete gearcase, Ref. 1, the attached hub, Ref. 3 (W/double snap ring grooves) that comes on the new gearcase, must be removed. Use the old hub (W/single snap ring groove) from the old gearcase, or if the old hub is damaged, order a new 6708254 hub. Also determine if old snap ring can be used. If old snap ring is damaged, also order 742666 snap ring.

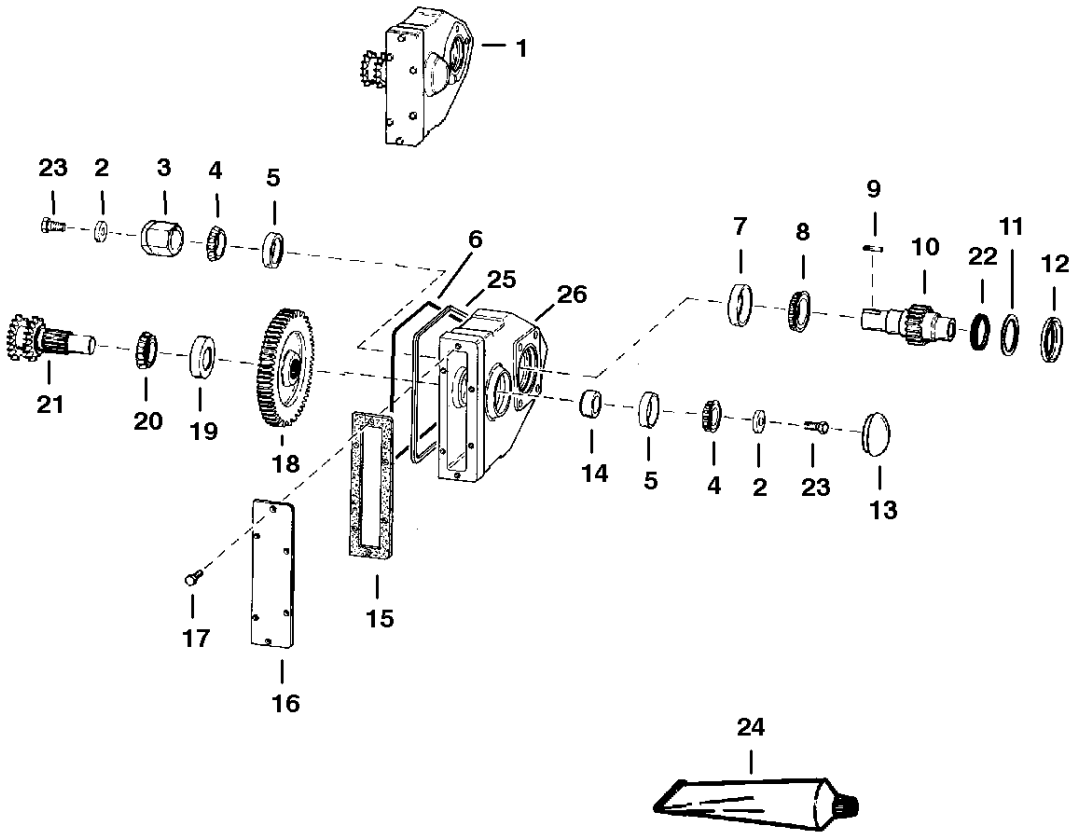

D-1937

www.youfixthis.com

GEARCASE

Ref.N°	Part N°	Description	Remarks	Serial N°	Qty.
1	NAP	GEARCASE	Ref. GEARCASE(2)-GEARCASE(23) Order 6708266 Gear- case, Ref. GEARCASE(6) & GEARCASE(25) - SEE NOTE		1
1	6708266	GEARCASE	Ref. GEARCASE(2) - GEARCASE(5), GEARCASE(7) - GEARCASE(23) & GEARCASE(26)SEE NOTE Was 6578781 [A]		1
2	6558234	WASHER			2
3	6708254	HUB	single snap ring groove - Was 6703055 [A]		1
4	6648774	BEARING	Was 743778 [A]		2
5	6648776	RACE	Was 743777 [A]		2
6	6558518	O-RING			2
7	1320905	CUP			1
8	1320904	BEARING			1
9	6708255	KEY	Was 7J-6012 [B]		1
10	6558271	SHAFT			1
11	6559619	WASHER	back-up		1
12	6513588	SEAL			1
13	6565289	CAP			1
14	6558276	COLLAR			1
15	6558273	GASKET			1
16	6558274	COVER			1
17	17C-512	BOLT			6
18	6558270	GEAR			1
19	660181	RACE			1
20	731284	BEARING			1
21	6558278	SHAFT	Was 6658278 [D]		1
22	6515195	SEAL	quad ring		1
23	17C-1220	BOLT			2
24	6561395	SEALANT	bore tite		1
25	6563574	RETAINER			2
26	NAP	HOUSING	Order 6708266 Gearcase, Ref. GEARCASE(6) & GEARCASE(25) - Was 6563577 [A]		1

www.youfixthis.com

DISC BRAKE

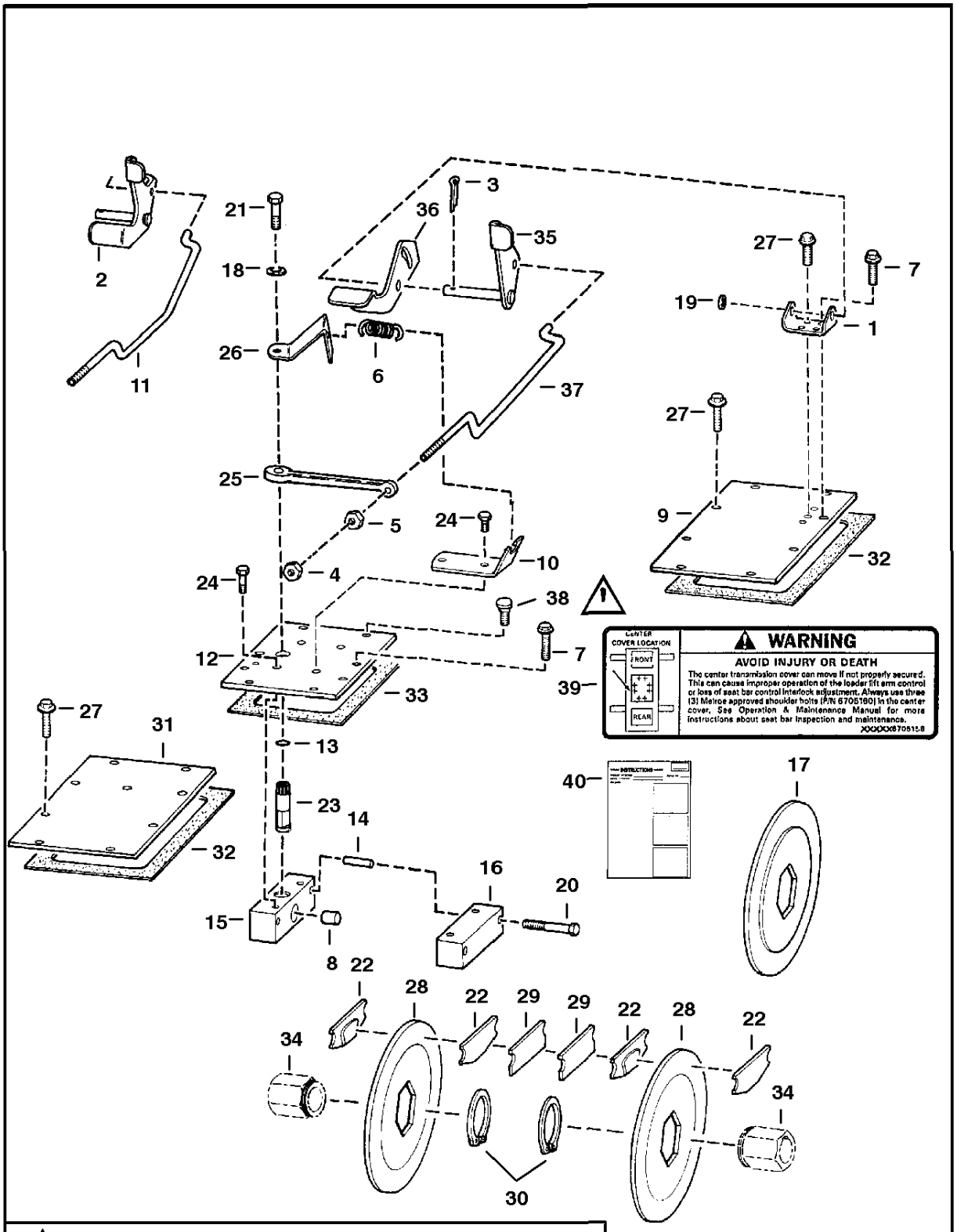

WARNING: The center transmission cover can move if not properly secured. This can cause improper operation of the loader lift arm control or loss of seat bar control interlock adjustment. Always use three (3) Melroe approved shoulder bolts (P/N 6705160) in the center cover. See Operation & Maintenance Manual for more instructions about seat bar inspection and maintenance.

D-2122

www.youfixthis.com

DISC BRAKE

Ref.N°	Part N°	Description	Remarks	Serial N°	Qty.
1	6700073	PEDAL MOUNT			1
2	NAP	PEDAL	brake - Order Ref. DISC BRAKE(35)-DISC BRAKE(37)		1
3	1318565	PIN			1
4	85D-8	NUT			1
5	6564669	NUT			1
6	6584584	SPRING			1
7	84G-3716	BOLT			9
8	6569927	PIN			1
9	6578505	COVER			1
10	6701627	BRACKET			1
11	NAP	ROD	Order Ref. DISC BRAKE(35)DISC BRAKE(37)Was 6700074 [A]		1
12	6702922	COVER	used w/450 bent cross link - See Page CONTROL PEDALS(1)		1
12	6706279	COVER	used w/new style cross link - See Page CONTROL PEDALS(1)		1
13	25K-30100	O-RING			1
14	6571796	SPACER			2
15	6571795	BLOCK			1
16	6571794	BLOCK			1
17	NAP	DISC	Order (2) ea. of Ref. DISC BRAKE(28)DISC BRAKE(30) & DISC BRAKE(34) - Was 6578784 [A]	5084 11010 & Bel	2
18	6506477	WASHER			1
19	25E-25	WASHER			1
20	17C-880	BOLT			2
21	17C-820	BOLT			1
22	6700706	PAD			4
23	6569842	CAM PIN			1
24	17C-816	BOLT			4
25	6563823	LEVER			1
26	6701626	BRACKET			1
27	84G-3712	BOLT			7
28	6705721	DISC	Was 6559237 [B,D]	5084 11011 & Abv	2
28				5097 11001 & Abv	2
29	6702805	SPACER		5084 11011 & Abv	2
29				5097 11001 & Abv	2
30	742666	SNAP RING		5084 11011 & Abv	2
30				5097 11001 & Abv	2
31	6700330	COVER			1
32	6703097	GASKET			2
33	6703099	GASKET			1
34	6708254	HUB	See Note on Page GEARCASE(3) - Was 6703055 [A]		2
35	6704812	PEDAL	brake		1
36	6704811	PEDAL	brake		1
37	6704810	ROD			1
38	6705160	SHOULDER BOLT	Always use (3) 6705160 shoulder bolts in center cover ... SEE WARNING ON PREVIOUS PAGE		3
39	6705158	DECAL	warning		1
40	6722343	INSTRUCTIONS			1

www.youfixthis.com

AXLE

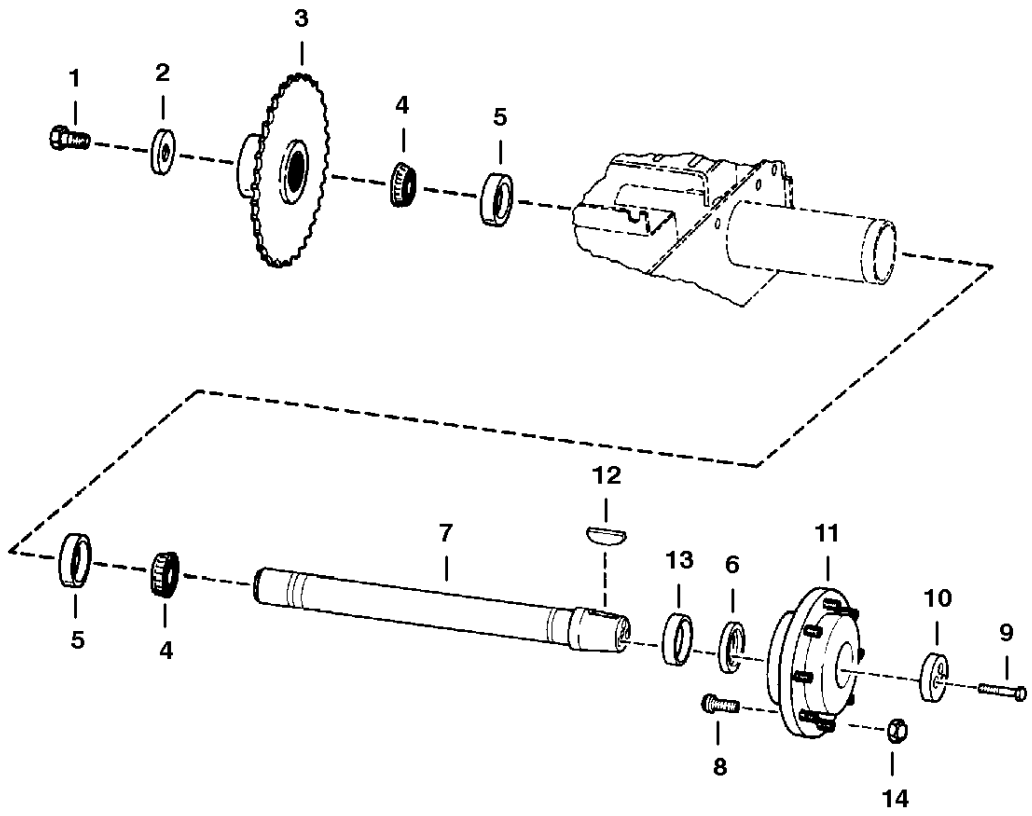

www.youfixthis.com

AXLE

Ref.N°	Part N°	Description	Remarks	Serial N°	Qty.
1	18C-1626	BOLT	Was 18C-1628 [B]		1
2	6558694	WASHER			1
3	6568918	SPROCKET			1
4	1321608	BEARING			2
5	1321607	RACE			2
6	6658229	SEAL	Was 6513451 [A]		1
7	6569618	AXLE			1
8	6709170	STUD	wheel - Was 6559502 [A]		8
9	17C-1024	BOLT			3
10	6565947	CAP	recessed		1
11	6578857	HUB	W/Ref. AXLE(8)		1
12	6J-1664	KEY	Was 5J-1674 [B]		1
13	6558693	RING	wear		1
14	6564669	NUT	wheel		8

www.youfixthis.com

HYDRAULIC CIRCUITRY

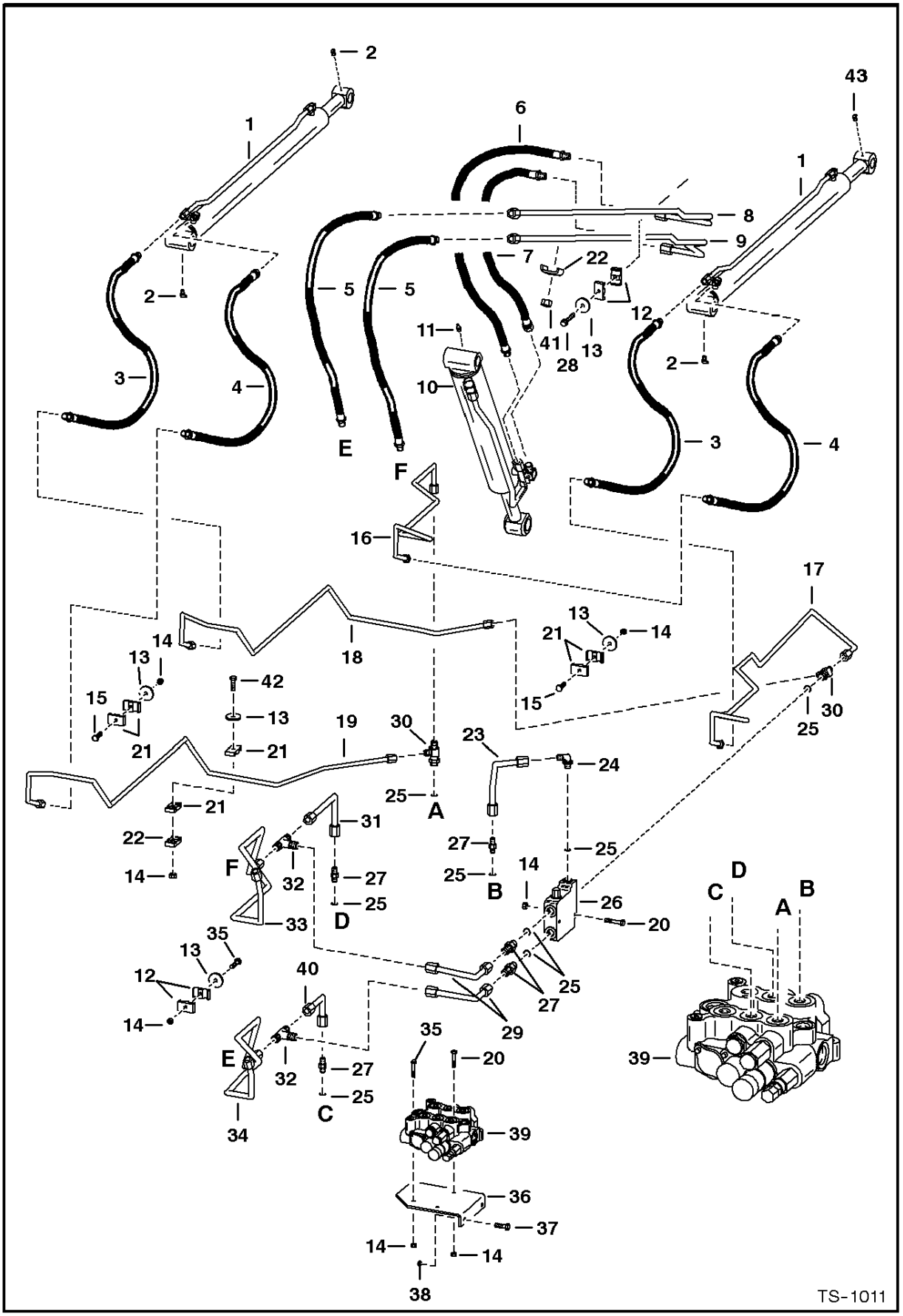

www.youfixthis.com

HYDRAULIC CIRCUITRY

Ref.N°	Part N°	Description	Remarks	Serial N°	Qty.
1		CYLINDER	lift - See Page LIFT CYLINDER(1) & LIFT CYLINDER(1)		2
2	11H-15	GREASE ZERK	Was 11H-25 [B]		3
3	6700235	HOSE			2
4	6700234	HOSE			2
5	6700242	HOSE			2
6	6578774	HOSE			1
7	6578773	HOSE			1
8	6700959	TUBE		5084 11137 & Bel	1
8	6704130	TUBE	Was 6703587 [C]	5084 11138 & Abv	1
8				5097 11001 & Abv	1
9	6700960	TUBE		5084 11137 & Bel	1
9	6703588	TUBE		5084 11138 & Abv	1
9				5097 11001 & Abv	1
10		CYLINDER	tilt - See Page TILT CYLINDER(1) - TILT CYLINDER(1) - Was 6532589 [A]		1
11	10H-25	GREASE ZERK			1
12	6701893	CLAMP	Was 6577697 [A]		4
13	872229	WASHER			5
14	85D-5	NUT			8
15	10C-528	BOLT			2
16	6579668	TUBE			1
17	6579667	TUBE			1
18	6579670	TUBE			1
19	6579671	TUBE			1
20	17C-540	BOLT			3
21	6701892	CLAMP	Was 6577696 [A]		6
22	6502203	CLAMP			3
23	6579669	TUBE			1
24	17K-7	ELBOW	W/Ref. HYDRAULIC CIRCUITRY(25)		1
25	79K-10	O-RING	Was 69K-10 [B]		x
26	6666341	VALVE	bucket position - See Page * HYDRAULIC CONTROL VALVE(1) - Was 6645249 [A]		1
27	15K-7	ELBOW	W/Ref. HYDRAULIC CIRCUITRY(25)		5
28	84G-3724	BOLT	Was 84G-3728 [B]		1
29	6579672	TUBE			2
30	6578183	TEE	W/Ref. HYDRAULIC CIRCUITRY(25)		2
31	6579674	TUBE			1
32	10K-7	TEE			2
33	6579676	TUBE			1
34	6579677	TUBE			1
35	17C-528	BOLT			2
36	6579692	MOUNT	valve - Was 6565558 [B]		1
37	17C-616	BOLT			2
38	85D-6	NUT	Was 85D-8 [B]		2
39		VALVE	See Page HYDRAULIC CONTROL VALVE(1) & NO PAGE		1
40	6579675	TUBE			1
41	59D-6	NUT	Was 85D-6 [B]		2
42	17C-544	BOLT			1
43	12H-15	GREASE ZERK	for R.H. lift cylinder rod end		1

www.youfixthis.com

AUXILIARY HYDRAULICS

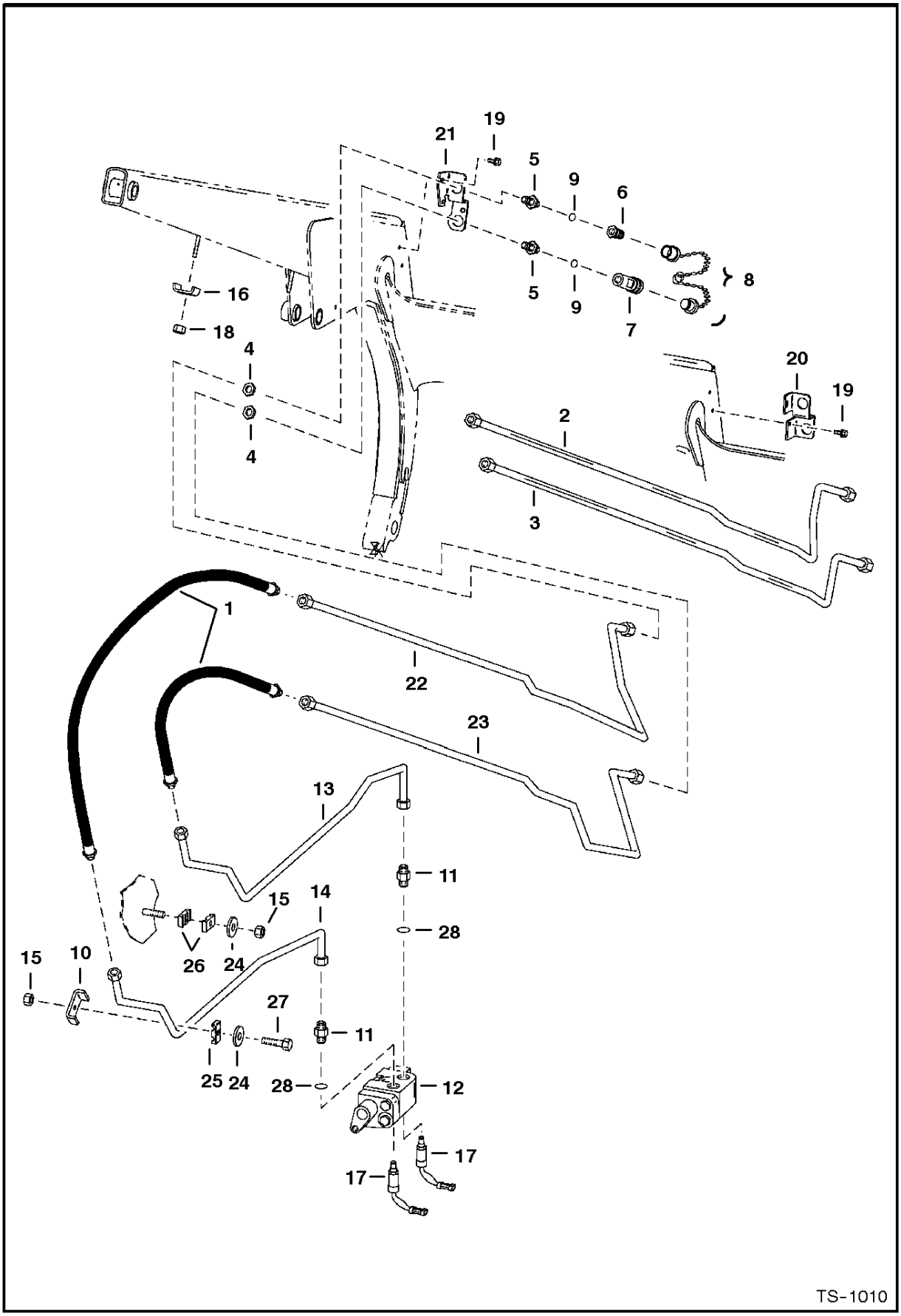

www.youfixthis.com

AUXILIARY HYDRAULICS

Ref.N°	Part N°	Description	Remarks	Serial N°	Qty.
1	6708253	HOSE	Was 6530780 [A]		2
2	NAP	TUBE	Order Ref. AUXILIARY HYDRAULICS(21)-AUXILIARY HYDRAULICS(23) - Was 6700961 [C]	5084 11137 & Bel	1
2	NAP	TUBE	Order Ref. AUXILIARY HYDRAULICS(21)-AUXILIARY HYDRAULICS(23) - Was 6703416 [C]	508411138-11944	1
3	NAP	TUBE	Order Ref. AUXILIARY HYDRAULICS(21)-AUXILIARY HYDRAULICS(23) - Was 6700962 [C]	5084 11137 & Bel	1
3	NAP	TUBE	Order Ref. AUXILIARY HYDRAULICS(21)-AUXILIARY HYDRAULICS(23) - Was 6703415 [C]	508411138-11944	1
4	86F-8	NUT			2
5	6579875	CONNECTOR			2
6	6598757	COUPLER	male		1
7	6598758	COUPLER	female		1
7	48K-16	O-RING			1
7	6665430	BACK-UP RING			1
8	6513709	CAP PLUG	W/Plug Assy. - Rubber		1
8	6515167	PLUG	steel		1
8	6515168	CAP	steel		1
9	79K-10	O-RING			5
10	6568476	CLAMP			1
11	15K-8	ADAPTER	W/Ref. AUXILIARY HYDRAULICS(28)		2
12		VALVE	front aux. - See Page FRONT AUXILIARY VALVE(1)		1
13	6705178	TUBE	Was 6579867 [A]		1
14	6705177	TUBE	Was 6579868 [A]		1
15	85D-6	NUT			2
16	6502203	CLAMP	Was 6703216 [B]		2
17	6649018	SOLENOID	See Page FRONT AUXILIARY VALVE(1)		2
18	59D-6	NUT			2
19	84G-3112	BOLT	5/16' dia.		2
19	84G-3712	BOLT	3/8' dia.		2
20	6703409	BRACKET	See Page HIGH HORSEPOWER HYDRAULICS(18) - Ref. HIGH HORSEPOWER HYDRAULICS(18) for 853H bracket	508411125-11944	1
21	NAP	BRACKET	Order 6706751 Bracket & (2) of 84G-3712 BoltsAWas 6704113 [A]	508411945- 14999	1
21	6706751	BRACKET	See Page HIGH HORSEPOWER HYDRAULICS(18) - Ref. HIGH HORSEPOWER HYDRAULICS(18) for 853H bracket		1
22	6704140	TUBE	See Page HIGH HORSEPOWER HYDRAULICS(18) - Ref. HIGH HORSEPOWER HYDRAULICS(22) for 853H tube	5084 11945 & Abv	1
23	6704108	TUBE	See Page HIGH HORSEPOWER HYDRAULICS(47), Ref. HIGH HORSEPOWER HYDRAULICS(47)	5084 11945 & Abv	1
24	872229	WASHER			2
25	6701892	CLAMP			1
26	6592506	CLAMP			2
27	17C-640	BOLT			1
28	79K-12	O-RING			2

www.youfixthis.com

TILT CYLINDER

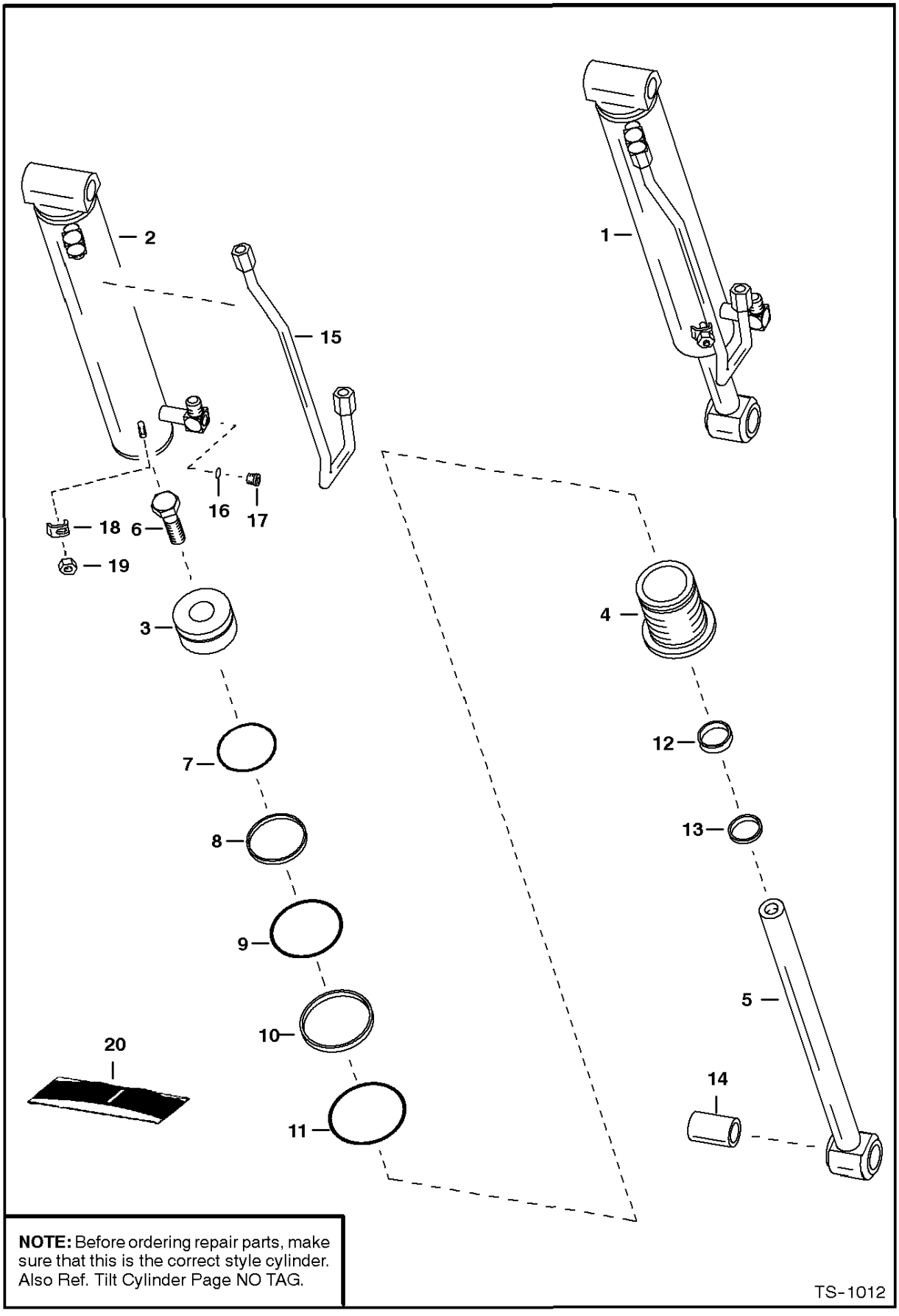

NOTE: Before ordering repair parts, make sure that this is the correct style cylinder. Also Ref. Tilt Cylinder Page NO TAG.

www.youfixthis.com

TILT CYLINDER

Ref.N°	Part N°	Description	Remarks	Serial N°	Qty.
1	NAP	CYLINDER	tilt - Ref TILT CYLINDER(2)-TILT CYLINDER(19) - Order 6586991 Cylinder - See Page TILT CYLINDER(1) - Was 6539075 [A]		1
2	6586997	CASE	See Page TILT CYLINDER(1) - Was 6534595 [A]		1
3	6539146	PISTON	Was 6534575 [A]		1
4	6529680	HEAD			1
5	6534574	ROD	W/Ref. TILT CYLINDER(14)		1
6	6536391	BOLT			1
7	NSS	SEAL			1
8	NSS	O-RING			1
9	NSS	O-RING			1
10	NSS	WASHER	back-up		1
11	58K-234	O-RING			1
12	NSS	SEAL			1
13	NSS	SEAL	wiper		1
14	6589665	BUSHING	Was 6534387 [B]		1
15	6532590	TUBE			1
16	79K-6	O-RING			2
17	47K-5	PLUG	W/Ref. TILT CYLINDER(16)		2
18	6562266	CLAMP			1
19	91D-6	NUT	Was 85D-6 [B]		1
20	6661308	SEAL KIT	Ref. TILT CYLINDER(7)-TILT CYLINDER(13) - Was 6538144 [A]		1

www.youfixthis.com

TILT CYLINDER

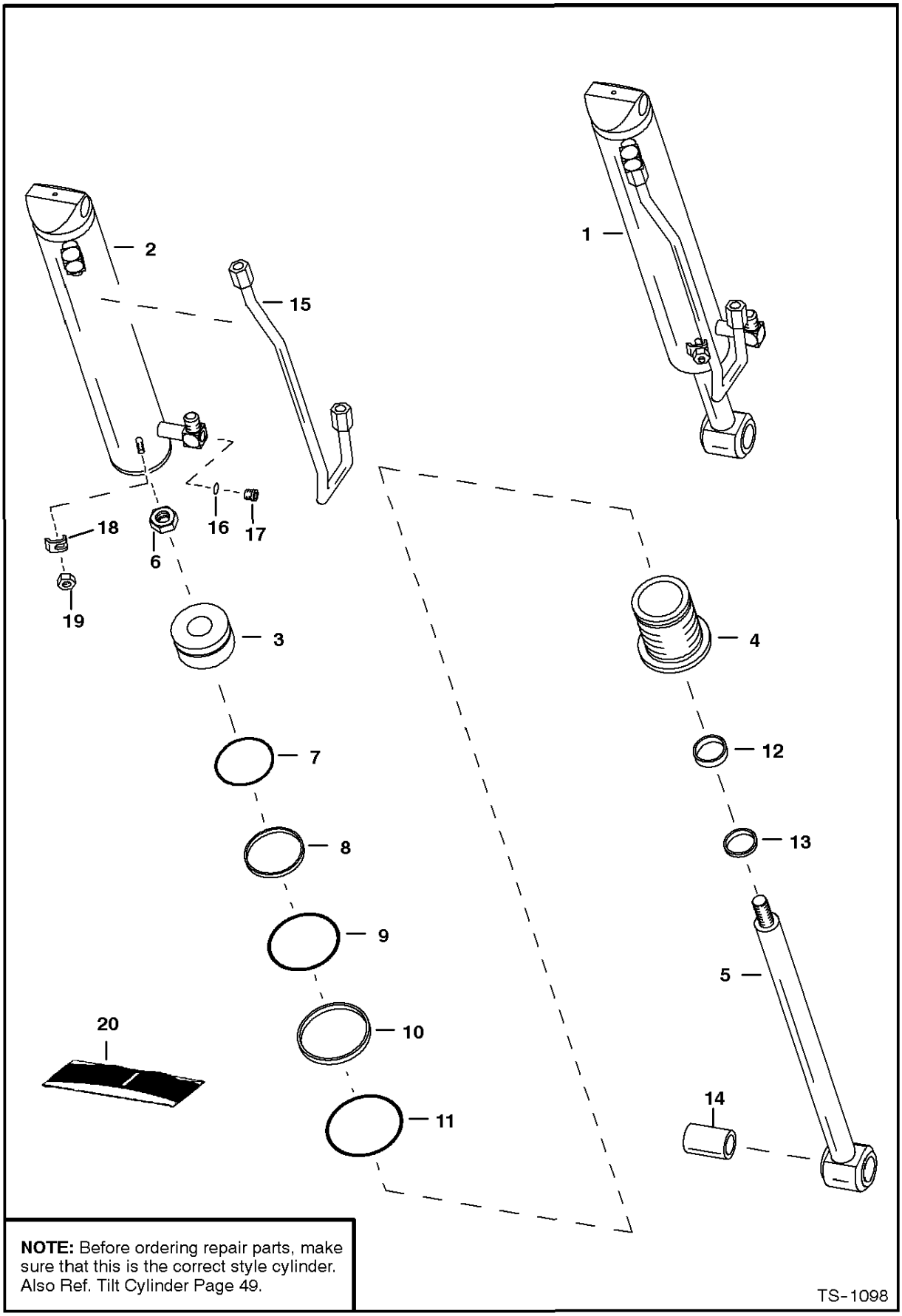

NOTE: Before ordering repair parts, make sure that this is the correct style cylinder. Also Ref. Tilt Cylinder Page 49.

www.youfixthis.com

TILT CYLINDER

Ref.N°	Part N°	Description	Remarks	Serial N°	Qty.
1	6586991	CYLINDER	tilt - Ref. TILT CYLINDER(2) - TILT CYLINDER(19)		1
2	6586997	CASE	3.25' (82,6 mm) I.D.		1
3	6586996	PISTON			1
4	6539185	HEAD			1
5	6586993	ROD			1
6	6804592	NUT	Was 92D-18 [B]		1
7	6513466	SEAL	piston		1
8	54K-30226	O-RING			1
9	54K-40300	O-RING			1
10	80K-234	WASHER	back-up		1
11	58K-236	O-RING			1
12	6667326	SEAL			1
13	6665086	SEAL	wiper		1
14	6589665	BUSHING	Was 6534387 [A]		1
15	6532590	TUBE			1
16	79K-6	O-RING	Flat boss face		2
16	95K-6	O-RING	Tapered boss face		2
17	NAP	PLUG	Flat boss face - Was 47K-5 [A]		2
17	90KV-5	PLUG	Tapered boss face		2
18	6562266	CLAMP			1
19	91D-6	NUT	Was 85D-6 [B]		1
20	6804605	SEAL KIT	Ref. TILT CYLINDER(6)-TILT CYLINDER(13) - Was 6589792 [A]		1

www.youfixthis.com

LIFT CYLINDER

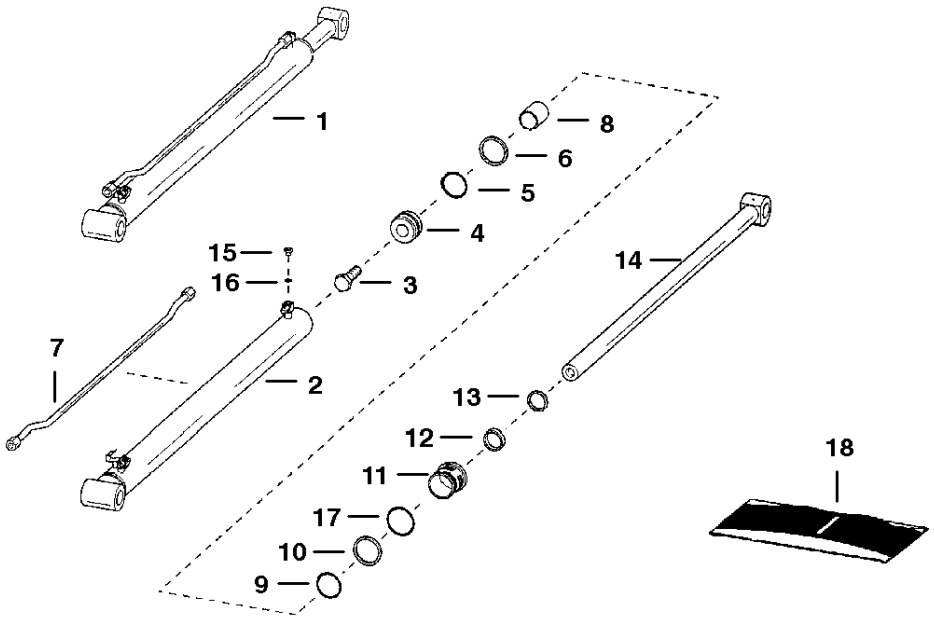

TS-1013

www.youfixthis.com

LIFT CYLINDER

Ref.N°	Part N°	Description	Remarks	Serial N°	Qty.
1	NAP	CYLINDER	Ref. LIFT CYLINDER(2)-LIFT CYLINDER(17) - Order 6587125inD1} Cyl. - Was 6539861 [A]		2
2	NAP	CASE	Order 6587125inD1} Cyl.- Was 6539865 [A]		1
3	18C-1232	BOLT			1
4	6534379	PISTON			1
5	NSS	RING			1
6	NSS	O-RING			1
7	6532739	TUBE			1
8	6555082	SPACER			1
9	NSS	O-RING			1
10	NSS	WASHER	back-up		1
11	6539236	HEAD	Was 6534380 [A]		1
12	NSS	SEAL	rod		1
13	NSS	SEAL	wiper		1
14	NAP	ROD	Order 6587126inD1} Rod, 6661820inD1}! Piston, 6587134inD1}# Spacer & 92D-16inD1}% Nut - Was 6534381 [A]		1
15	47K-5	PLUG	W/Ref. LIFT CYLINDER(16)		2
16	79K-6	O-RING			2
17	NSS	O-RING			1
18	6589793	SEAL KIT	Ref. LIFT CYLINDER(5), LIFT CYLINDER(6), LIFT CYLINDER(9), LIFT CYLINDER(10), LIFT CYLINDER(12), LIFT CYLINDER(13) & LIFT CYLIND		1

www.youfixthis.com

LIFT CYLINDER

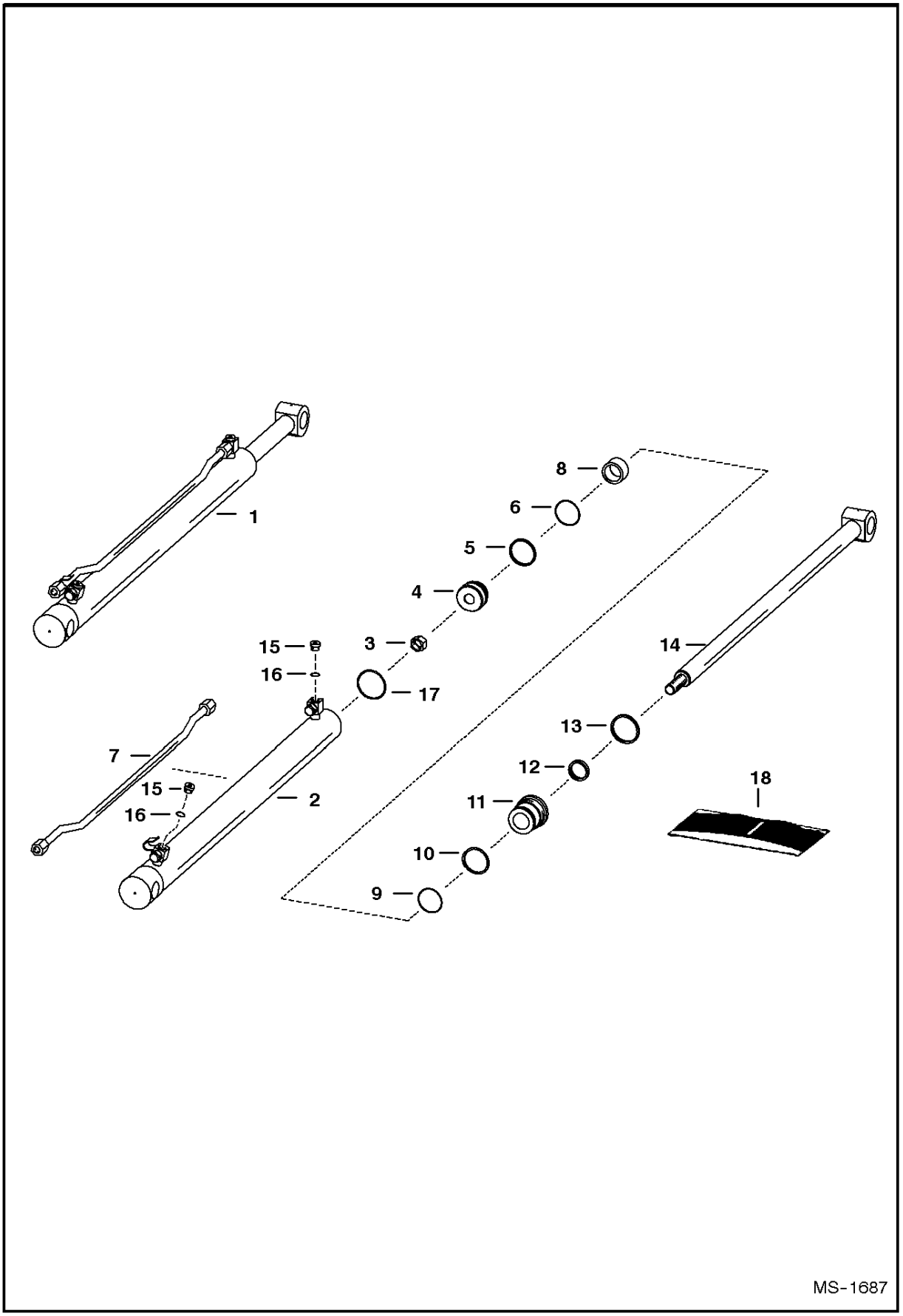

www.youfixthis.com

LIFT CYLINDER

Ref.N°	Part N°	Description	Remarks	Serial N°	Qty.
1	6587125	CYLINDER	Ref. LIFT CYLINDER(2)-LIFT CYLINDER(17)		1
2	6587133	CASE			1
3	92D-16	NUT			1
4	6665207	PISTON	W/Ref. LIFT CYLINDER(5)&LIFT CYLINDER(6)-W/Non -Replaceable wear sleeves - Was 6661820 [A]		1
5	6519328	O-RING	Was NSS [D]		1
6	25K-30126	O-RING	Was NSS [D]		1
7	6532739	TUBE			1
8	6587134	SPACER			1
9	54K-60128	O-RING	Was NSS [D]		1
10	80K-328	RING	back-up - Was NSS [D]		1
11	6539236	HEAD			1
12	6667326	SEAL	rod - Was NSS [D]		1
13	6665086	SEAL	wiper - Was NSS [D]		1
14	6587126	ROD			1
15	NAP	PLUG	W/Ref. LIFT CYLINDER(16) - Flat boss face - Was 47K-5 [A]		2
15	90KV-5	PLUG	W/Ref. LIFT CYLINDER(16)Tapered boss face		2
16	79K-6	O-RING	Flat boss face		2
16	95K-6	O-RING	Tapered boss face		2
17	58K-140	O-RING			1
18	6586915	SEAL KIT	Ref. LIFT CYLINDER(3), LIFT CYLINDER(5), LIFT CYLINDER(6), LIFT CYLINDER(9), LIFT CYLINDER(10), LIFT CYLINDER(12), LIFT CYLINDER		1

www.youfixthis.com

CONTROL PEDALS

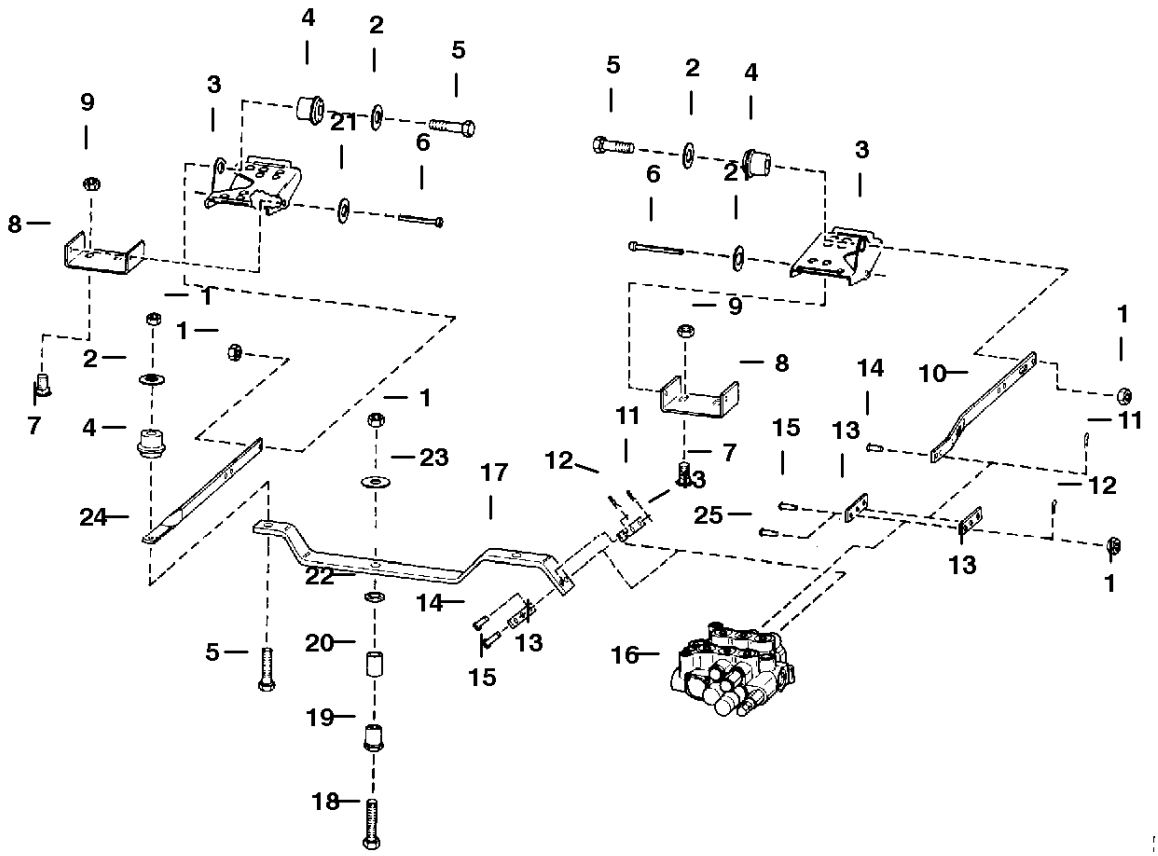

www.youfixthis.com

CONTROL PEDALS

Ref.N°	Part N°	Description	Remarks	Serial N°	Qty.
1	91D-6	NUT	Was 85D-6 [B]		6
2	6563914	WASHER			3
3	6564656	PEDAL			2
4	6665701	BUSHING	Was 6630081 [A]		3
5	17C-624	BOLT	Was 17C-626 [B]		3
6	6564657	PIN			2
7	6704349	BOLT	Was 37C-616 [B]		4
8	6564658	BRACKET			2
9	57D-6	NUT			4
10	6579547	BAR			1
11	1306637	PIN			3
12	6513495	COTTER PIN			2
13	6706680	LINK	Also Order (2) ea. of Ref. CONTROL PEDALS(1) & CONTROL PEDALS(25) - SEE BTI 295- Was 6564544 [A]		4
14	4F-6106	PIN			3
15	6564654	PIN			2
16		VALVE	See Page HYDRAULIC CONTROL VALVE(1) & HIGH HORSEPOWER HYDRAULICS(1)		1
17	6702923	LEVER	Was 6579548 [A]		1
18	6565067	BOLT			1
19	6577815	RETAINING NUT			1
20	6569599	BEARING			1
21	25E-21	WASHER	Used if serrations on pins are too long		2
22	6569597	WASHER			1
23	616789	WASHER			1
24	6576302	BAR			1
25	17C-620	BOLT			2

www.youfixthis.com

HYDRAULIC CONTROL VALVE

NOTE: Spools are available for service. The boot end of the spool is stamped W/# 1, 2, 3 or painted red, green or black respectively. Reference S/L Dated 17 Jul 1996.

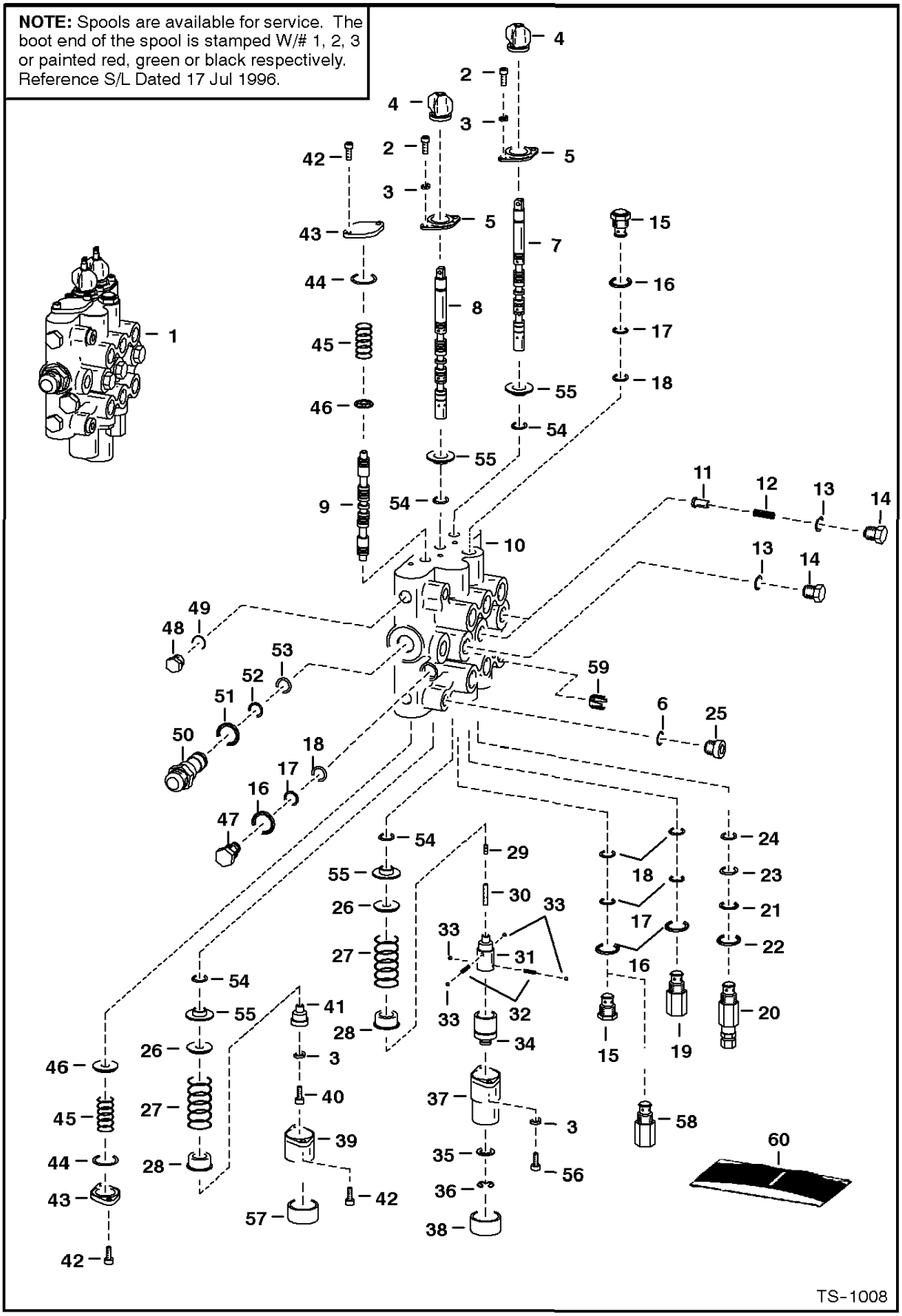

www.youfixthis.com

HYDRAULIC CONTROL VALVE

Ref.N°	Part N°	Description	Remarks	Serial N°	Qty.
1	NAP	VALVE	Ref. HYDRAULIC CONTROL VALVE(2)-HYDRAULIC CONTROL VALVE(55) - W/long spools - SEE BTI 295 - Order 6596095, 6706105, & (2) of 67		1
2	6588165	SCREW	Was 73G-410 [B]		4
3	22E-4	WASHER			7
4	6587763	BOOT	rubber - Was 6583727 [A]		2
5	6592123	RETAINER			2
6	79K-6	O-RING			2
7	6666576	SPOOL	lift - # 1 or Red - SEE NOTE		1
7	6666577	SPOOL	lift - # 2 or Green - SEE NOTE		1
7	6666578	SPOOL	lift - # 3 or Black - SEE NOTE		1
8	6666579	SPOOL	tilt - # 1 or Red - SEE NOTE		1
8	6666580	SPOOL	tilt - # 2 or Green - SEE NOTE		1
8	6666581	SPOOL	tilt - # 3 or Black - SEE NOTE		1
9	6588074	SPOOL	auxiliary - SEE NOTE - Also See S/L dated 17 Sept 92		3
10	NSS	BODY			1
11	6592115	SEAT	load check		2
12	6592117	SPRING			2
13	79K-8	O-RING			3
14	6592116	NUT	load check		3
15	6667549	VALVE	anti-cavity check - W/Ref. HYDRAULIC CONTROL VALVE(16)-HYDRAULIC CONTROL VALVE(18) - Was 6661345 [A]		2
16	79K-10	O-RING			1
17	80K-14	WASHER	back-up - Was 73K-14 [B]		4
18	58K-14	O-RING	Was 25K-20016 [B]		4
19	6599161	RELIEF VALVE	port relief - W/Ref. HYDRAULIC CONTROL VALVE(16) -HYDRAULIC CONTROL VALVE(18)		1
20	6649321	VALVE	main relief - W/Ref. HYDRAULIC CONTROL VALVE(21)-HYDRAULIC CONTROL VALVE(24)		1
21	58K-17	O-RING	Was NSS [D]		1
22	6665569	WASHER	back-up - Was NSS [D]		1
23	25K-20016	O-RING	Was NSS [D]		1
24	6665510	RING	glide - Was NSS [D]		1
25	47K-5	PLUG	W/Ref. HYDRAULIC CONTROL VALVE(6)		2
26	6587523	WASHER	Was 6592101 [A]		2
27	6587580	SPRING	Was 6592106 [A]		2
28	6592100	COLLAR			2
29	NAP	PLUG	Order 6596807 plug &54K-20002 O-RingWas 6592752 [A]		1
29	6596807	PLUG	plastic		1
29	54K-20002	O-RING			1
30	6586918	SCREW	Was 6535747 [A]		1
31	6587575	ADAPTER	Was 6592099 [A]		1
32	6592107	SPRING			2
33	6592105	BALL			4
34	6531270	SLEEVE			1
35	6592098	WASHER			1
36	NAP	BONNET	.25' flange - Order 6589226 Bonnet, Ref. HYDRAULIC CONTROL VALVE(38) & (2) of 6588982 Screws - Was 6592094 [A]		1
36	6589226	BONNET	.625' flange		1
37	799119	RETAINER			1
38	6660644	CAP	Was 6631704 [A]		1
39	NAP	BONNET	.25' flange - Order 6587633 Bonnet, Ref. HYDRAULIC CONTROL VALVE(57) & (2) of 6588164 Screws - Was 6592097 [A]		1
39	6587633	BONNET	.5' flange		1

www.youfixthis.com

HYDRAULIC CONTROL VALVE

Ref.N°	Part N°	Description	Remarks	Serial N°	Qty.
40	6588166	SCREW	Was 74G-416 [B]		1
41	6592109	ADAPTER			1
42	6588164	SCREW	.75' long - Use W/NAP 6538574 End Cap - Was 69G-412 [B]		2
42	6588982	SCREW	1' long-Use W/6588981 End Cap		4
43	NAP	END CAP	.375' thick - Order 6588981 End Cap & (2) of 6588982 Screws - Was 6538574 [A]		2
43	6588981	END CAP	.625' thick		2
44	58K-124	O-RING			2
45	6530899	SPRING			2
46	6537096	WASHER	Was 6530898 [A]		2
47	6592720	PLUG	W/Ref. HYDRAULIC CONTROL VALVE(16)-HYDRAULIC CONTROL VALVE(18)		1
48	6534973	PLUG	W/Ref. HYDRAULIC CONTROL VALVE(49)		2
49	79K-7	O-RING			2
50	6534917	ADAPTER	W/Ref. HYDRAULIC CONTROL VALVE(51)-HYDRAULIC CONTROL VALVE(53)		1
51	79K-12	O-RING			1
52	80K-18	RING	back-up		1
53	58K-18	O-RING	Was 25K-20024 [B]		1
54	6665089	SEAL	lip - See S/L 31 Aug. 92 - Was 6659554 [A]		4
54	6646372	SEAL	See S/L 31 Aug. 92		4
55	6538466	BUSHING	Was 6534576 [A]		4
56	6588163	SCREW	7/8' long		2
56	6588982	SCREW	1' long		2
57	6662848	CAP			1
58	6664373	VALVE	optional - port relief & anti-cav. - W/Ref. HYDRAULIC CONTROL VALVE(16) - 2500 PSI - use in tilt cylinder base end port		1
59	6532633	ORIFICE	.153		1
60	6803605	SEAL KIT	one spool - Ref. HYDRAULIC CONTROL VALVE(4), HYDRAULIC CONTROL VALVE(54) & HYDRAULIC CONTROL VALVE(56) - See S/L 31 Aug. 92 - W		x
60	6596311	SEAL KIT	complete - Ref. HYDRAULIC CONTROL VALVE(4), HYDRAULIC CONTROL VALVE(13), HYDRAULIC CONTROL VALVE(16)-HYDRAULIC CONTROL VALVE(18)		x
60	6632279	SEAL KIT	Ref. HYDRAULIC CONTROL VALVE(21)-HYDRAULIC CONTROL VALVE(24) - Was 6532868 [A]		x
60	6586461	SEAL KIT	Ref. HYDRAULIC CONTROL VALVE(13) & HYDRAULIC CONTROL VALVE(16)-HYDRAULIC CONTROL VALVE(18)Was 6592475 [A]		x

www.youfixthis.com

* HYDRAULIC CONTROL VALVE

NOTE: Spools are available for service. The boot end of the spool is stamped W/# 1, 2, 3 or painted red, green or black respectively. Reference S/L Dated 17 July 1996.

NOTE: Before ordering repair parts, make sure that this is the correct style Control Valve. Note the style of boot retainers, Ref. 5, stamped or flat. Also Ref. Control Valve Page 59.

NOTE: For 853 High Horsepower Hydraulic loaders See Page 71.

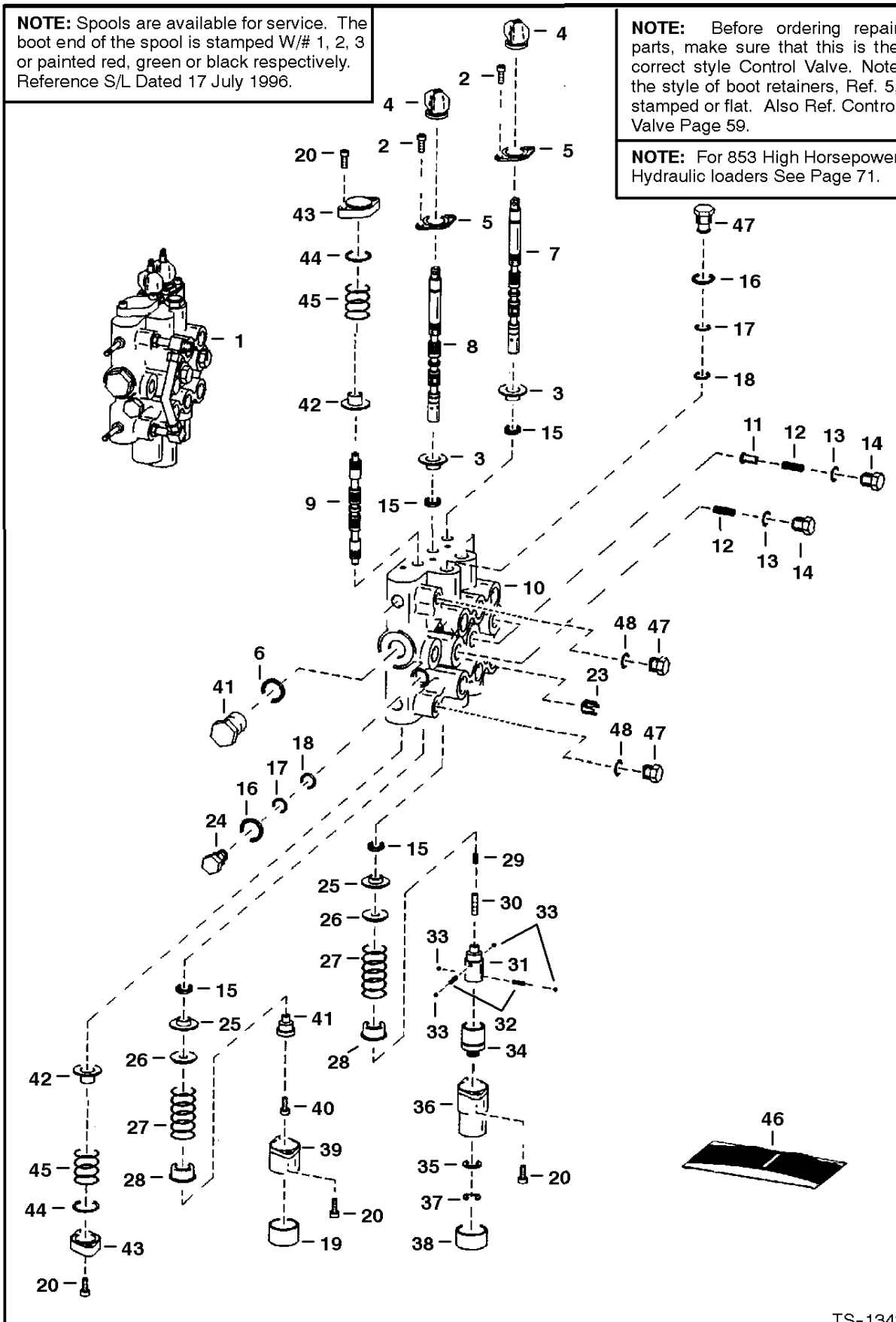

www.youfixthis.com

* HYDRAULIC CONTROL VALVE

Ref.N°	Part N°	Description	Remarks	Serial N°	Qty.
1	6596095	VALVE	Ref. * HYDRAULIC CONTROL VALVE(2) - - W/short spools - See BTI E 295		1
2	29G-412	SCREW			4
3	6589565	RETAINER	seal		2
4	6587763	BOOT	rubber		2
5	6589564	RETAINER	flat		2
6	79K-6	O-RING			x
7	6666588	SPOOL	lift - # 1 or Red - SEE NOTE		1
7	6666589	SPOOL	lift - # 2 or Green-SEE NOTE		1
7	6666590	SPOOL	lift - # 3 or Black - SEE NOTE		1
8	6666591	SPOOL	tilt - # 1 or Red - SEE NOTE		1
8	6666592	SPOOL	tilt - # 2 or Green-SEE NOTE		1
8	6666593	SPOOL	tilt - # 3 or Black - SEE NOTE		1
9	6588074	SPOOL	auxiliary - SEE NOTE		3
10	NSS	BODY			1
11	6592115	SEAT	load check		2
12	6592117	SPRING			3
13	79K-8	O-RING			3
14	6592116	NUT	load check		3
15	6665846	SEAL			4
16	79K-10	O-RING			2
17	80K-14	WASHER	back-up		5
18	58K-14	O-RING			5
19	6662848	CAP			1
20	29G-416	SCREW			8
21	79K-12	O-RING	flat boss face		1
21	99K-12	O-RING	tapered boss cace		1
22	24K-8	PLUG	W/Ref. * HYDRAULIC CONTROL VALVE(21)- flat boss face		1
22	24NK-8	PLUG	W/Ref. * HYDRAULIC CONTROL VALVE(21) - tapered boss face		1
23	6532633	ORIFICE	.153		1
24	6592720	PLUG	W/Ref. * HYDRAULIC CONTROL VALVE(16)-* HYDRAULIC CONTROL VALVE(18)		2
25	6595663	BUSHING			2
26	6587523	WASHER			2
27	6587580	SPRING			2
28	6592100	COLLAR			2
29	NAP	PLUG	plastic - order 6596807 Plug & 54K-20002 O - RingWas 6592752 [B]		1
29	6596807	PLUG			1
29	54K-20002	O-RING			1
30	6586918	SCREW			1
31	6587575	ADAPTER			1
32	6592107	SPRING			2
33	6592105	BALL			4
34	6531270	SLEEVE			1
35	6592098	WASHER			1
36	799119	RETAINER			1
37	6589226	BONNET	.625' flange		1
38	6660644	CAP			1
39	6587633	BONNET			1
40	30G-416	SCREW			1
41	6592109	ADAPTER			1
42	6537096	WASHER			2
43	6588981	END CAP	.625" thick		2

www.youfixthis.com

* HYDRAULIC CONTROL VALVE

Ref.N°	Part N°	Description	Remarks	Serial N°	Qty.
44	58K-124	O-RING			2
45	6588197	SPRING			2
46	6803605	SEAL KIT	one spool - Ref. * HYDRAULIC CONTROL VALVE(2), * HYDRAULIC CONTROL VALVE(4) & * HYDRAULIC CONTROL VALVE(15) - Was 6596310 [A]		x
46	6596311	SEAL KIT	complete - Ref. * HYDRAULIC CONTROL VALVE(4), * HYDRAULIC CONTROL VALVE(13), * HYDRAULIC CONTROL VALVE(15), * HYDRAULIC CONTROL		x
46	6632279	SEAL KIT	main relief - Ref. * HYDRAULIC CONTROL VALVE(4)-* HYDRAULIC CONTROL VALVE(13)		x
46	6586461	SEAL KIT	Ref. * HYDRAULIC CONTROL VALVE(13) & * HYDRAULIC CONTROL VALVE(16)-* HYDRAULIC CONTROL VALVE(18)		x
47	47K-5	PLUG	W/Ref. * HYDRAULIC CONTROL VALVE(48) - flat boss face		2
47	90KV-5	PLUG	W/Ref. * HYDRAULIC CONTROL VALVE(48) - tapered boss face		2
48	79K-6	O-RING	flat boss face		2
48	95K-6	O-RING	tapered boss facekpro1Page		x

www.youfixthis.com

BUCKET POSITIONING VALVE

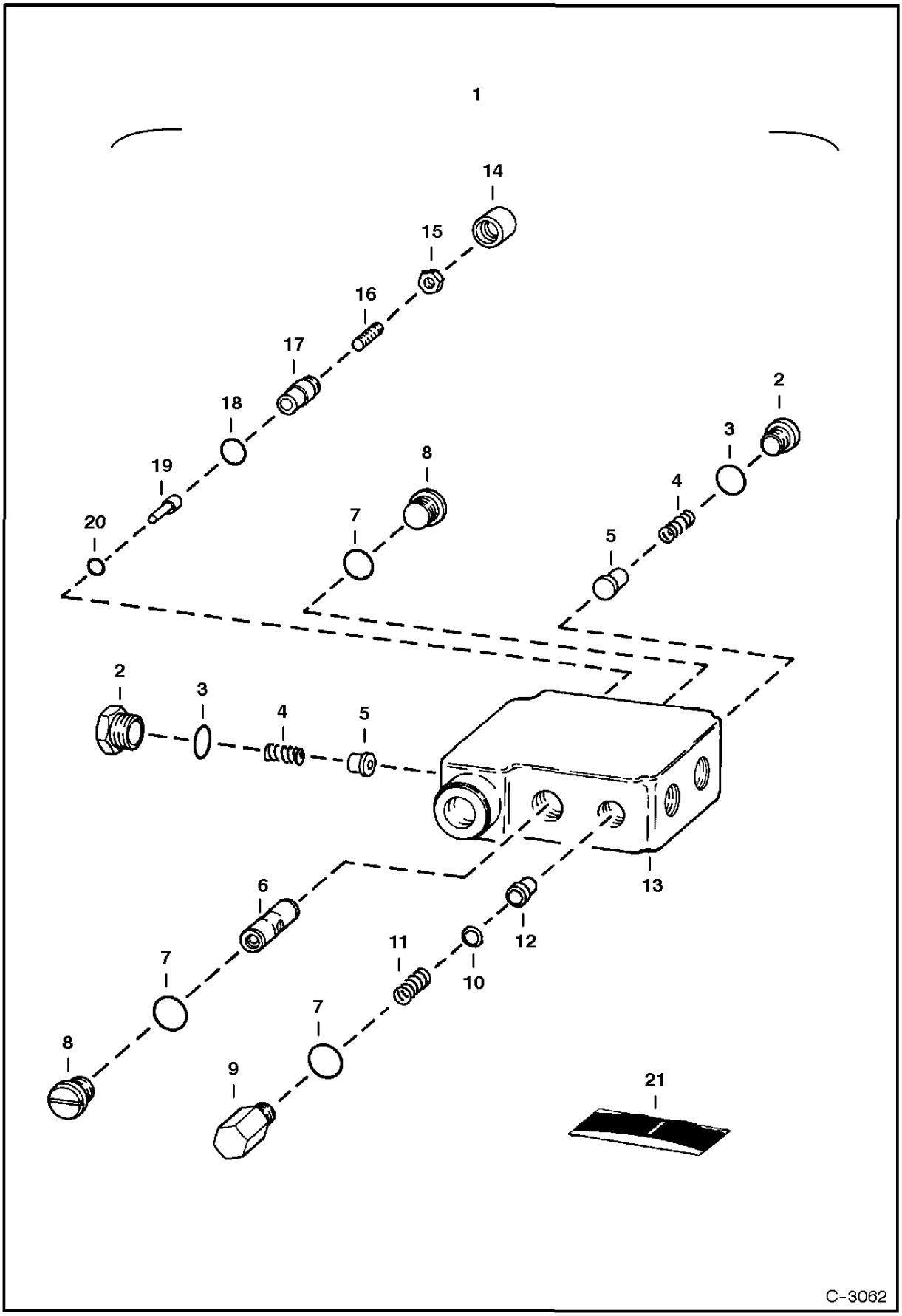

www.youfixthis.com

BUCKET POSITIONING VALVE

Ref.N°	Part N°	Description	Remarks	Serial N°	Qty.
1	6666341	VALVE	Ref. BUCKET POSITIONING VALVE(2)-BUCKET POSITIONING VALVE(20) - Was 6645249 [A]		1
2	6647784	PLUG	W/Ref. BUCKET POSITIONING VALVE(3)		2
3	79K-8	O-RING			2
4	6647785	SPRING			2
5	6647783	LOAD CHECK			2
6	NSS	SPOOL			1
7	80K-116	RING	backup - Was 6667679 [A]		3
8	6647780	PLUG	W/Ref. BUCKET POSITIONING VALVE(7)		2
9	6667176	PLUG	W/Ref. BUCKET POSITIONING VALVE(7) - Was 6647779 [B, D]		1
10	6667680	SNAP RING			1
11	6648294	SPRING			1
12	NSS	SPOOL			1
13	NSS	BODY			1
14	6667676	COVER			1
15	6631561	NUT			1
16	6648293	SCREW			1
17	6647778	CAP			1
18	6634874	O-RING	Was 6667678 [A]		1
19	6647777	PIN			1
20	6667677	O-RING			1
21	6647786	SEAL KIT	Ref. BUCKET POSITIONING VALVE(3), BUCKET POSITIONING VALVE(7), BUCKET POSITIONING VALVE(14), BUCKET POSITIONING VALVE(18) & BUCK		1

www.youfixthis.com

FRONT AUXILIARY VALVE

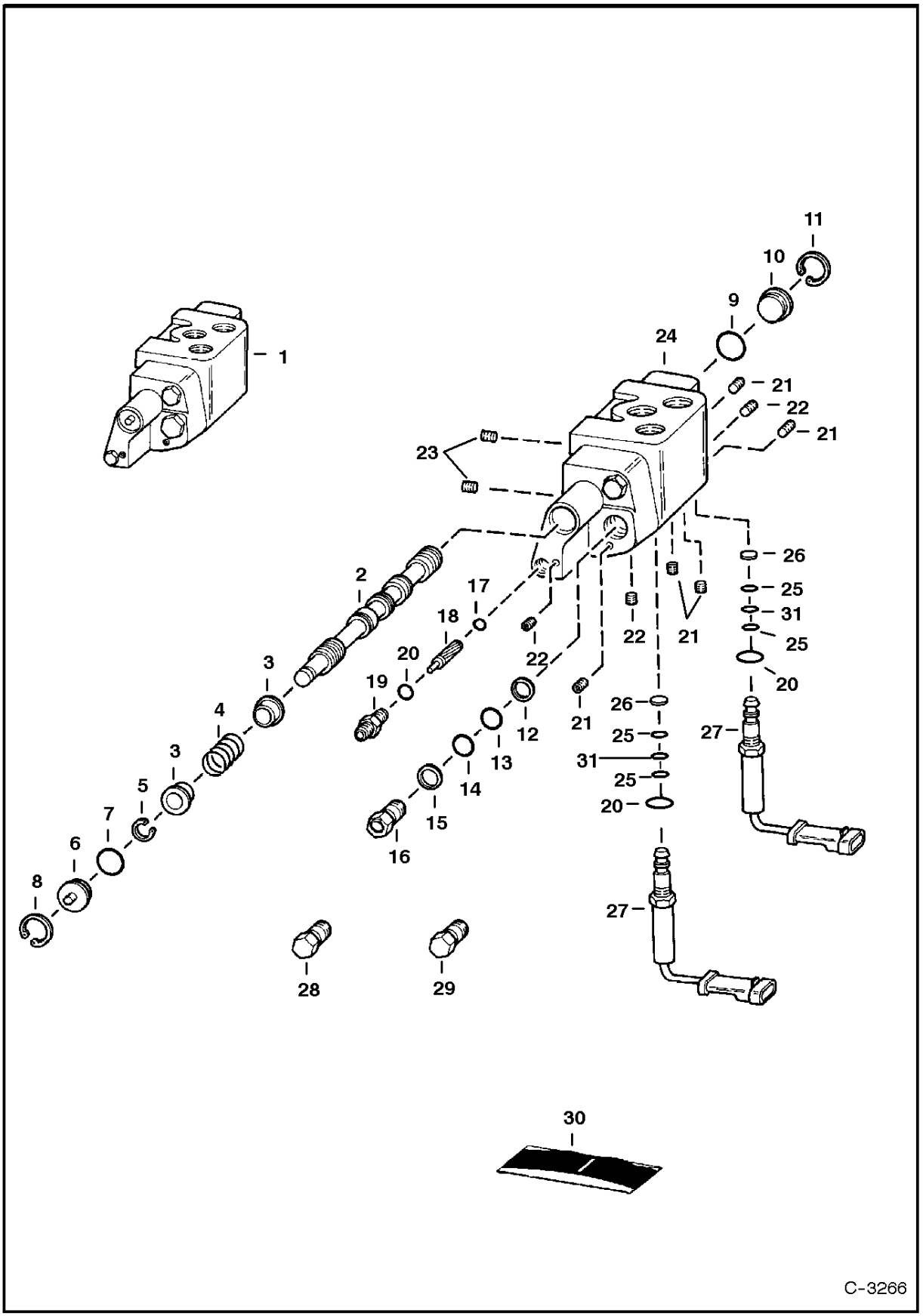

www.youfixthis.com

FRONT AUXILIARY VALVE

Ref.N°	Part N°	Description	Remarks	Serial N°	Qty.
0	6661343	VALVE	front aux. - Ref. FRONT AUXILIARY VALVE(2) - FRONT AUXILIARY VALVE(24)		1
2	NSS	SPOOL			1
3	6659585	GUIDE			2
4	6659586	SPRING			1
5	6659587	SCREW			1
6	6659588	PLUG			1
7	NSS	O-RING			1
8	6659589	SNAP RING			1
9	NSS	O-RING			1
10	6659590	PLUG			1
11	6659591	SNAP RING			1
12	NSS	BACK-UP RING			1
13	NSS	O-RING			1
14	NSS	O-RING			1
15	NSS	BACK-UP RING			1
16	NSS	PLUG	Order 6661343 valve - Was 6659592 [A]		1
17	NSS	O-RING			1
18	NAP	FILTER	W/Ref. FRONT AUXILIARY VALVE(17) - Was 6659593 [A]		1
19	15K-5	ADAPTER	W/Ref. FRONT AUXILIARY VALVE(20)		1
20	79K-6	O-RING			3
21	6659596	PLUG			5
22	6659597	PLUG	teflon - 1/8'		4
23	NSS	PLUG			2
24	NSS	HOUSING			1
25	25K-20010	O-RING	smaller O.D. than threads of Ref. FRONT AUXILIARY VALVE(27) - Was NSS		5
26	NSS	ORIFICE	Order Ref. FRONT AUXILIARY VALVE(27)		2
27	6649018	SOLENOID	W/Ref. FRONT AUXILIARY VALVE(20), FRONT AUXILIARY VALVE(25), FRONT AUXILIARY VALVE(26) & FRONT AUXILIARY VALVE(31)- W/Internal		2
28	6658127	RELIEF VALVE	check (For Grapples)		1
29	6630187	VALVE	relief (For Grapples)		1
30	6659600	SEAL KIT	Ref. FRONT AUXILIARY VALVE(7), FRONT AUXILIARY VALVE(9), FRONT AUXILIARY VALVE(12) - FRONT AUXILIARY VALVE(15), FRONT AUXILIARY		1
31	80K-11	BACK-UP RING			2

www.youfixthis.com

HIGH HORSEPOWER HYDRAULICS
(Auxiliary Hydraulics)

NOTE: When installing Ref. 20 between Ref. 17 & 25 and between Ref. 17 & 28, it is important to install the 37 degree flared end into Ref. 17.

NOTE: Items 38-44 have been removed from Rear Aux. Kits and are part of the 853HHH equipment. Items 38-44 must be used in conjunction with all loaders equipped with a 6586520 control valve.

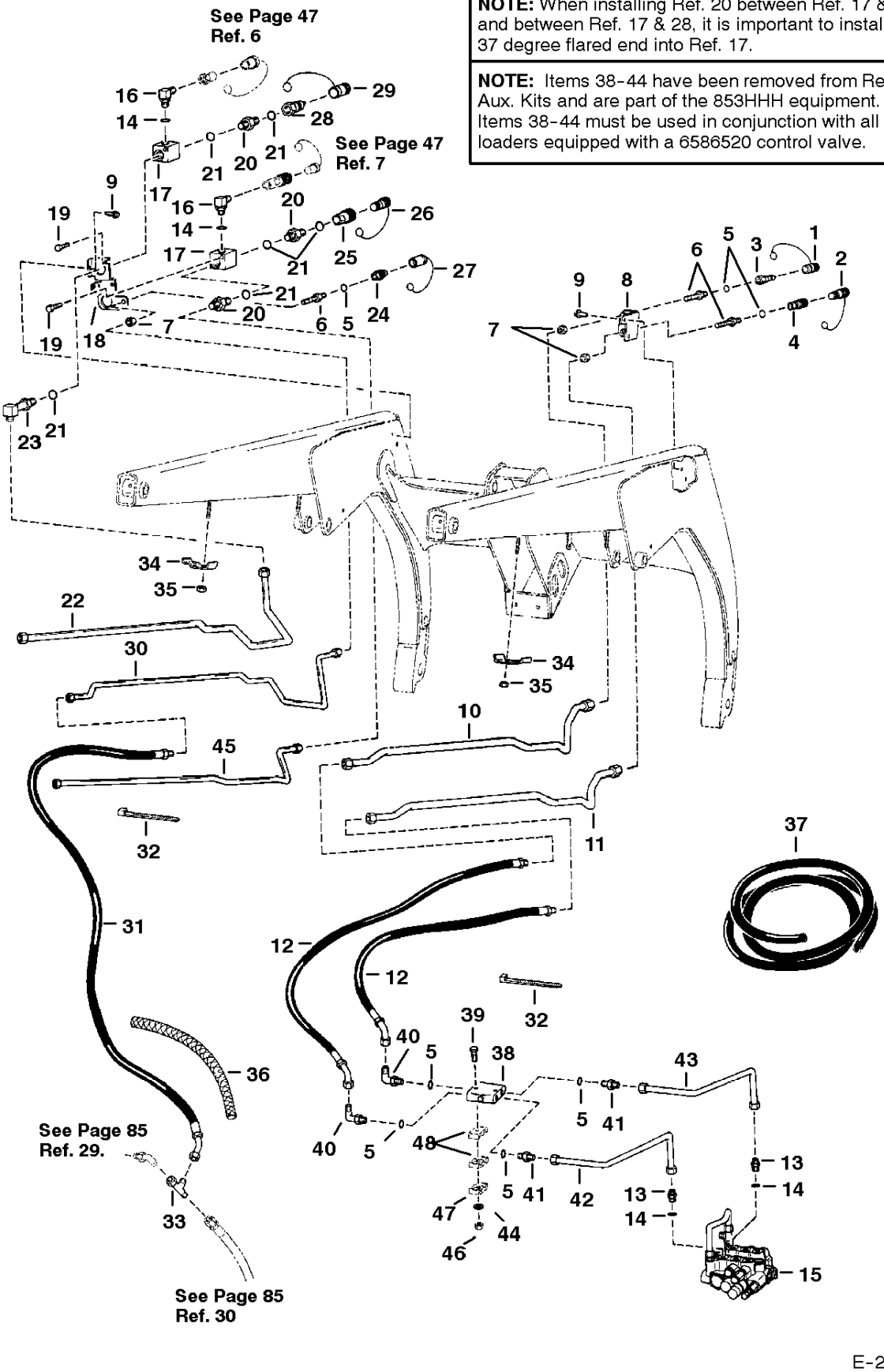

www.youfixthis.com

HIGH HORSEPOWER HYDRAULICS

Ref.N°	Part N°	Description	Remarks	Serial N°	Qty.
1	1513549	CAP			1
2	1519324	PLUG			1
3	6648969	QUICK COUPLER	male		1
4	6648967	QUICK COUPLER	female		1
4	6655795	SEAL KIT			1
5	79K-6	O-RING			x
6	45K-5	ADAPTER			3
7	86F-5	NUT			3
8	6706750	BRACKET	Was 6703411 [A]		1
9	84G-3112	BOLT	5/16' dia.		4
9	84G-3712	BOLT	3/8' dia.		4
10	6703413	TUBE			1
11	6703412	TUBE			1
12	6703430	HOSE			2
13	731795	ADAPTER	W/Ref. HIGH HORSEPOWER HYDRAULICS(14)		2
14	79K-10	O-RING			x
15		VALVE	See Page HIGH HORSEPOWER HYDRAULICS(6)		1
16	6704013	ELBOW	W/Ref. HIGH HORSEPOWER HYDRAULICS(14) - Was 6703395 [C]		2
17	6704010	BLOCK	Was 6703396 [C]		2
18	6706752	BRACKET	Was 6704011 [A]		1
19	17C-612	BOLT			2
20	15K-8	ADAPTER	W/Ref. HIGH HORSEPOWER HYDRAULICS(21)		3
21	79K-12	O-RING			x
22	6704109	TUBE			1
23	6519187	ELBOW	W/Ref. HIGH HORSEPOWER HYDRAULICS(21)		1
24	6658253	QUICK COUPLER	male - thread together - shown		1
24	6658252	QUICK COUPLER	female-thd. together- not shown		1
25	6648968	QUICK COUPLER	female		1
25	6655796	SEAL KIT			1
26	6515598	PLUG			1
27	3679001	CAP	Was 6658255 [A]		1
28	6648970	QUICK COUPLER	male		1
29	6515599	CAP			1
30	6704110	TUBE	Was 6703414 [C]		1
31	6703429	HOSE			1
32	6624289	STA-STRAP	Was 6512052 [A]		6
33	13K-5	TEE			1
34	6703216	CLAMP			4
35	59D-6	NUT			4
36	NAP	COVER	35'(889,0 mm)long-Order Ref. HIGH HORSEPOWER HYDRAULICS(37)		2
37	6651436	SHIELD	bulk - Sold Per Foot		x
38	6630527	VALVE		5097 11374 & Abv	1
38	6660645	SEAL KIT		5097 11374 & Abv	1
39	17C-560	BOLT		5097 11374 & Abv	1
40	17K-5	ELBOW	W/Ref. HIGH HORSEPOWER HYDRAULICS(5)	5097 11374 & Abv	2
41	15K-5	ADAPTER	W/Ref. HIGH HORSEPOWER HYDRAULICS(5)	5097 11374 & Abv	2
42	6702511	TUBE		5097 11374 & Abv	1
43	6702512	TUBE		5097 11374 & Abv	1
44	25E-15	WASHER		5097 11374 & Abv	1
45	6704108	TUBE			1
46	85D-5	NUT		5097 11374 & Abv	1
47	6502203	CLAMP	See Page HYDRAULIC CIRCUITRY(1)		1
48	6701892	CLAMP	See Page HYDRAULIC CIRCUITRY(1)		1

www.youfixthis.com

HIGH HORSEPOWER HYDRAULICS
(Hydrostatic Circuitry)

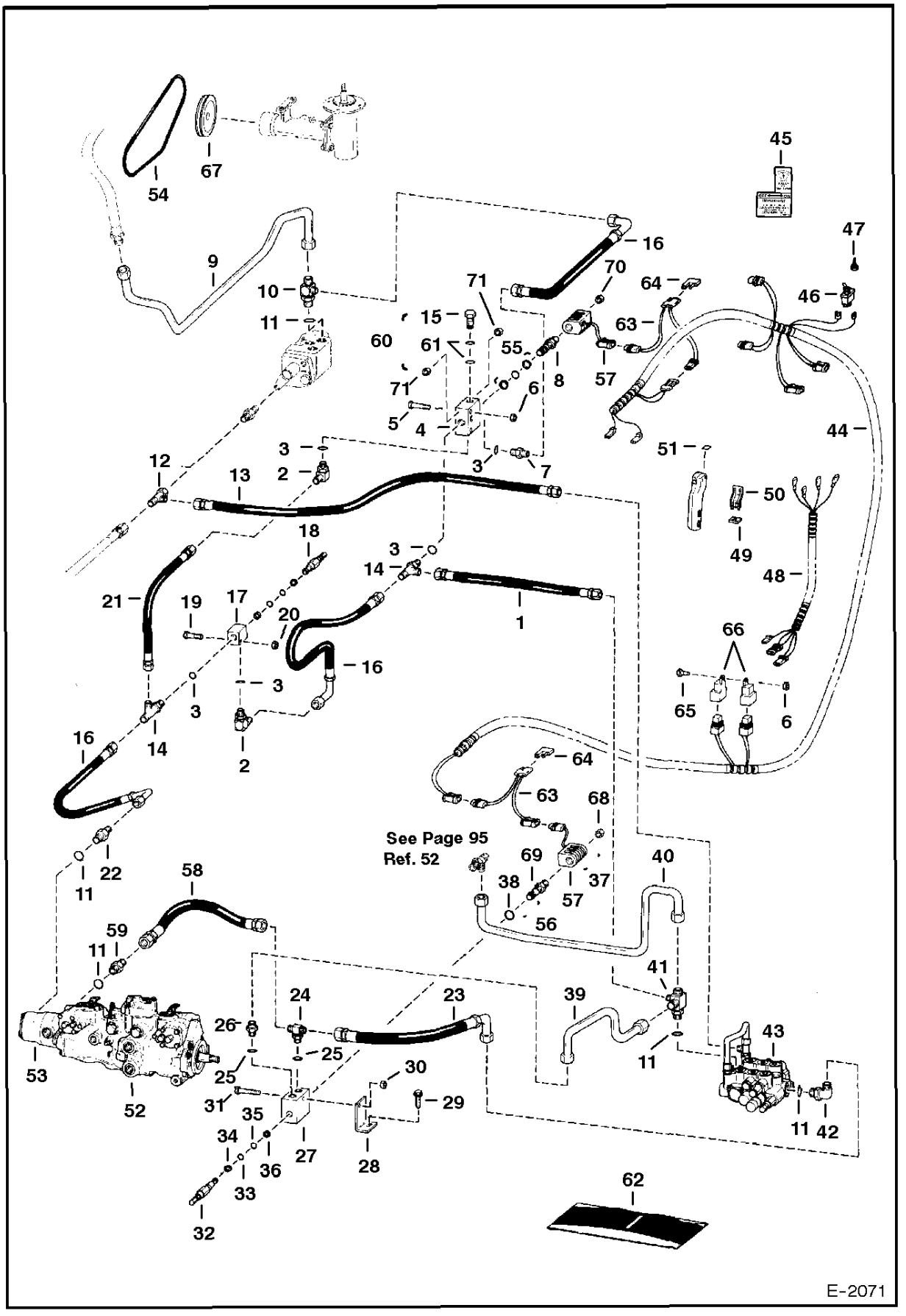

www.youfixthis.com

HIGH HORSEPOWER HYDRAULICS

Ref.N°	Part N°	Description	Remarks	Serial N°	Qty.
1	6703153	HOSE			1
2	17K-5	ELBOW	W/Ref. HIGH HORSEPOWER HYDRAULICS(3)		2
3	79K-6	O-RING			x
4	NAP	BLOCK	manifold - Order Ref. HIGH HORSEPOWER HYDRAULICS(60) Was 6658833 [A]{com3g' }H~10{M		x
4	6660782	BLOCK	manifold		1
5	17C-436	BOLT			2
6	85D-4	NUT			3
7	15K-5	ADAPTER	W/Ref. HIGH HORSEPOWER HYDRAULICS(3)		1
8	6667713	SPOOL	valve - Was 6660784 [A]		1
9	6705480	TUBE	Was 6702510 [A]		1
10	6702515	TEE	W/Ref. HIGH HORSEPOWER HYDRAULICS(11)		1
11	79K-12	O-RING			x
12	13K-5	TEE			1
13	6617708	HOSE			1
14	21K-5	TEE	W/Ref. HIGH HORSEPOWER HYDRAULICS(3)		2
15	6667714	CHECK VALVE	Was 6660783 [A]		1
16	6703154	HOSE			3
17	6658831	BLOCK	manifold		1
18	6658838	VALVE	relief - Was 6658883 [D]		1
19	17C-528	BOLT			1
20	85D-5	NUT			1
21	6703152	HOSE			1
22	731795	ADAPTER	W/Ref. HIGH HORSEPOWER HYDRAULICS(11)		1
23	6707480	HOSE	Was 6535276 [A]		1
24	6700209	TEE	W/Ref. HIGH HORSEPOWER HYDRAULICS(25) - Was 6702514 [B]		1
25	79K-10	O-RING			x
26	730963	CONNECTOR			1
27	6703149	BLOCK	manifold		1
28	6701860	BRACKET			1
29	84G-3716	BOLT			1
30	85D-6	NUT			1
31	17C-640	BOLT			1
32	6649321	VALVE	relief - W/Ref. HIGH HORSEPOWER HYDRAULICS(33)-HIGH HORSEPOWER HYDRAULICS(36)		1
33	NSS	O-RING			1
34	NSS	WASHER	back-up		1
35	NSS	O-RING			1
36	NSS	RING	glide		1
37	6658883	SOLENOID	W/Ref. HIGH HORSEPOWER HYDRAULICS(38), HIGH HORSEPOWER HYDRAULICS(57), HIGH HORSEPOWER HYDRAULICS(68) & HIGH HORSEPOWER HYDRAULI		1
38	79K-16	O-RING			x
39	6702506	TUBE			1
40	6702509	TUBE			1
41	6702517	TEE	W/Ref. HIGH HORSEPOWER HYDRAULICS(11)		1
42	17K-8	ELBOW	W/Ref. HIGH HORSEPOWER HYDRAULICS(11)		1
43		VALVE	control - See Page HIGH HORSEPOWER HYDRAULICS(1)		1
44	6703166	HARNESS			1
45	6706508	DECAL	Was 6703167 [A]		1
46	6658858	SWITCH			1
47	6515510	COVER	switch		1
48	6702633	HARNESS			1
49	6572087	INSULATOR			1

www.youfixthis.com

HIGH HORSEPOWER HYDRAULICS

Ref.N°	Part N°	Description	Remarks	Serial N°	Qty.
50	NAP	SWITCH	leaf - Was 6569451 [A]		1
51	6703561	PLATE	decal		1
52		PUMP	tandem W/double gear pump - See Page HYDROSTATIC PUMP(1)		1
53		PUMP	double gear pump - See Page HIGH HORSEPOWER HYDRAULICS(1)		1
54	6703924	BELT			1
55	6667715	SEAL KIT	W/Ref. HIGH HORSEPOWER HYDRAULICS(8) - Was 6657408 [A]		1
56	6660358	SEAL KIT			1
57	6660785	COIL			2
58	6707479	HOSE	Was 6703906 [A]		1
59	15K-8	ADAPTER			1
60	6660568	VALVE ASSY.	Ref. HIGH HORSEPOWER HYDRAULICS(4), HIGH HORSEPOWER HYDRAULICS(8), HIGH HORSEPOWER HYDRAULICS(55), HIGH HORSEPOWER HYDRAULICS(57		1
61	6667716	SEAL KIT	for Ref. HIGH HORSEPOWER HYDRAULICS(15) - Was 6660786 [A]		1
62	6632279	SEAL KIT	Ref. HIGH HORSEPOWER HYDRAULICS(33)-HIGH HORSEPOWER HYDRAULICS(36) - Was 6532868 [A]		1
63	6703898	HARNESS			2
64	6703899	DIODE			2
65	17C-412	BOLT			1
66	6651975	SOLENOID	relay		2
67	6703483	PULLEY	cooling fan drive assy.		1
68	6662829	NUT			1
69	6662828	SPOOL	valve		2
70	6662790	NUT			1
71	16F-2	PLUG			2

www.youfixthis.com

HIGH HORSEPOWER HYDRAULICS
(Control Valve)

NOTE: Spools are available for service. The boot end of the spool is stamped W/# 1, 2, 3 or painted red, green or black respectively. Reference S/L Dated 17 Jul 1996.

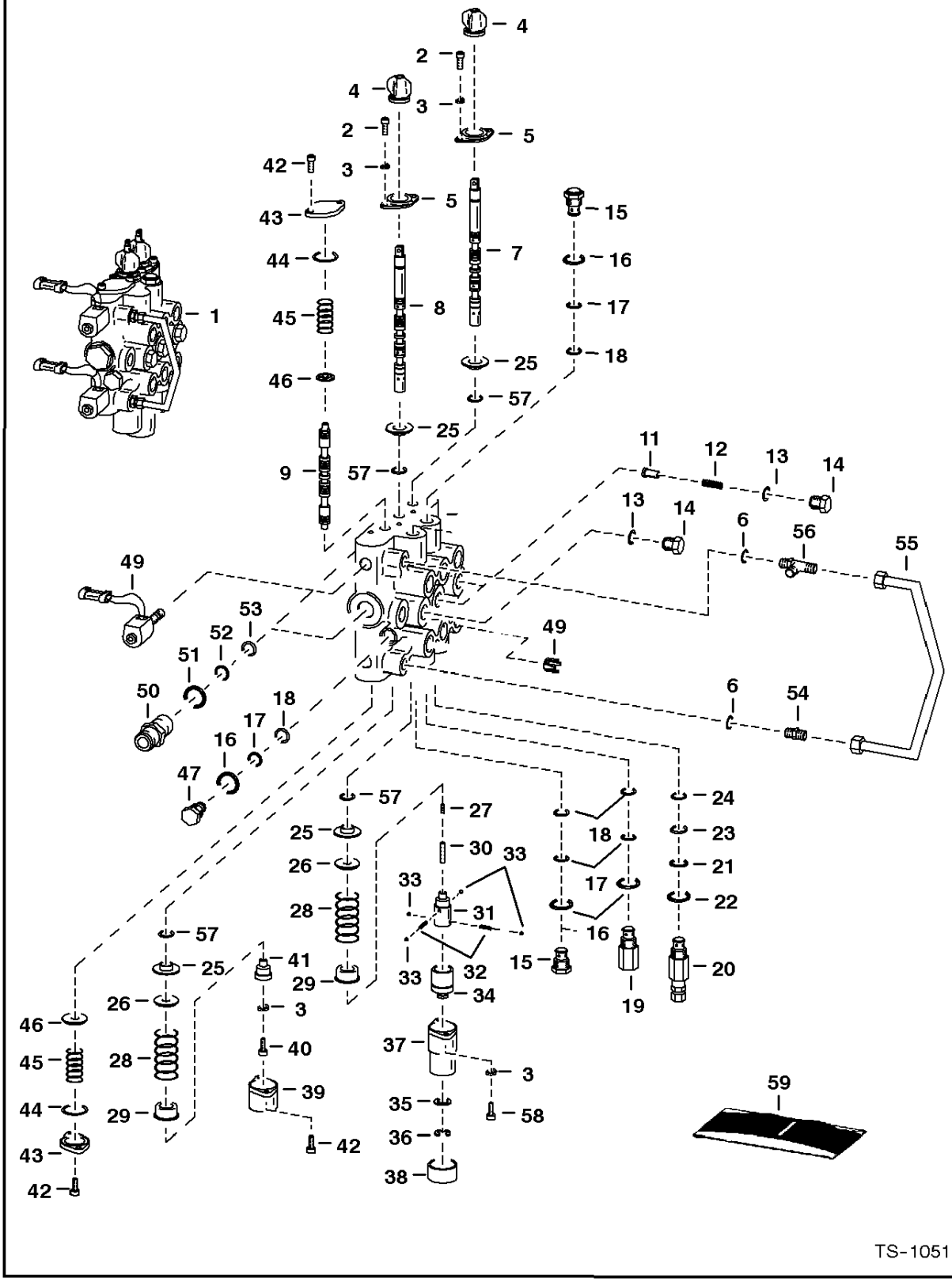

www.youfixthis.com

HIGH HORSEPOWER HYDRAULICS

Ref.N°	Part N°	Description	Remarks	Serial N°	Qty.
1	NAP	VALVE	Ref. HIGH HORSEPOWER HYDRAULICS(2)HIGH HORSEPOWER HYDRAULICS(57)- W/long spools - See BTI 281 & 295Order 6596095, 6706105 (2),		1
1	NAP	VALVE	Ref. HIGH HORSEPOWER HYDRAULICS(2) - HIGH HORSEPOWER HYDRAULICS(57) - W/long spools - W/motoring spool - See Note prior to Page		1
1	NAP	VALVE	Ref. HIGH HORSEPOWER HYDRAULICS(2) - HIGH HORSEPOWER HYDRAULICS(57) - W/long spools - W/motoring spools -See BTI 295 - Order 65		x
2	6588165	SCREW	Was 73G-410 [B]		4
3	22E-4	WASHER			7
4	6587763	BOOT	rubber - Was 6583727 [A]		2
5	6592123	RETAINER			2
6	79K-6	O-RING			x
7	6666576	SPOOL	lift - # 1 or Red - SEE NOTE		1
7	6666577	SPOOL	lift - # 2 or Green - SEE NOTE		1
7	6666578	SPOOL	lift - # 3 or Black - SEE NOTE		1
8	6666579	SPOOL	tilt - # 1 or Red - SEE NOTE		1
8	6666580	SPOOL	tilt - # 2 or Green - SEE NOTE		1
8	6666581	SPOOL	tilt - # 3 or Black - SEE NOTE		1
9	6588190	SPOOL	auxiliary - SEE NOTE		3
10	NSS	BODY			1
11	6592115	SEAT	load check		2
12	6592117	SPRING			2
13	79K-8	O-RING			3
14	6592116	NUT	load check		3
15	6667549	VALVE	anti-cavity check -W/Ref. HIGH HORSEPOWER HYDRAULICS(16)-HIGH HORSEPOWER HYDRAULICS(18) -Was 6661345 [A]		2
16	79K-10	O-RING			1
17	80K-14	WASHER	back-up		4
18	58K-14	O-RING			4
19	6599161	RELIEF VALVE	port relief - W/Ref. HIGH HORSEPOWER HYDRAULICS(16)-HIGH HORSEPOWER HYDRAULICS(18)		1
20	6658838	VALVE	main relief -W/Ref. HIGH HORSEPOWER HYDRAULICS(21)-HIGH HORSEPOWER HYDRAULICS(24)		1
21	58K-17	O-RING	Was NSS [D]		1
22	6665569	WASHER	back-up - Was NSS [D]		1
23	25K-20016	O-RING	Was NSS [D]		1
24	6665570	RING	glide - Was NSS [D]		1
25	6538466	BUSHING			4
26	6587523	WASHER	Was 6592101 [A]		2
27	NAP	PLUG	Order 6596807 Plug & 54K20002 O-Ring - Was 6592752 [A]		1
27	6596807	PLUG	plastic		1
27	54K-20002	O-RING			1
28	6587580	SPRING	Was 6592106 [A]		2
29	6592100	COLLAR			2
30	6586918	SCREW	Was 6535747 [A]		1
31	6587575	ADAPTER	Was 6592099 [A]		1
32	6592107	SPRING			2
33	6592105	BALL			4
34	6531270	SLEEVE			1
35	6592098	WASHER			1
36	799119	RETAINER			1
37	NAP	BONNET	.25' flange - Order 6589226 Bonnet, Ref. HIGH HORSEPOWER HYDRAULICS(57) & (2) of 6588982 Screw Was 6592094 [A]		1
37	6589226	BONNET	.625' flange		1

www.youfixthis.com

HIGH HORSEPOWER HYDRAULICS

Ref.N°	Part N°	Description	Remarks	Serial N°	Qty.
38	6660644	CAP	Was 6631704 [A]		1
39	NAP	BONNET	.25' flange - Order 6587633 Bonnet, 6662848 Cap & (2) of 6588164 Bolt - Was 6592097[A]		1
39	6587633	BONNET	.5' flange		1
40	74G-416	SCREW			1
40	6588166	SCREW			1
41	6592109	ADAPTER			1
42	69G-412	BOLT			8
42	6588164	SCREW			6
43	6538574	END CAP			2
44	58K-124	O-RING			2
45	6530899	SPRING			2
46	6537096	WASHER			2
47	6592720	PLUG	W/Ref. HIGH HORSEPOWER HYDRAULICS(16)-HIGH HORSEPOWER HYDRAULICS(18)		1
48	6532633	ORIFICE	.153"		1
49	6653395	VALVE			2
49	6665758	STEM	W/O-Ring		2
49	79K-7	O-RING			2
49	6665759	COIL			2
49	6586459	SEAL KIT	Was 6534559 [A]		x
50	6534917	ADAPTER	W/Ref. HIGH HORSEPOWER HYDRAULICS(51)-HIGH HORSEPOWER HYDRAULICS(53)		1
51	79K-12	O-RING			1
52	80K-18	RING	back-up		1
53	58K-18	O-RING	Was 25K-20024 [A]		1
54	15K-7	ELBOW	W/Ref. HIGH HORSEPOWER HYDRAULICS(6)		1
55	6702507	TUBE			1
55	6588770	TUBE			1
56	21K-5	TEE	W/Ref. HIGH HORSEPOWER HYDRAULICS(6)		1
56	6587889	TEE	W/Ref. HIGH HORSEPOWER HYDRAULICS(6)		1
57	6665089	SEAL	Was 6659554 [A]		4
58	6588163	SCREW	7/8" lomg		2
58	6588982	SCREW	1" long		2
59	6585856	SEAL KIT	one spoolARef. HIGH HORSEPOWER HYDRAULICS(4), HIGH HORSEPOWER HYDRAULICS(57) & HIGH HORSEPOWER HYDRAULICS(58) - Was 6661315 [A]		x
59	6589861	SEAL KIT	complete - Ref. HIGH HORSEPOWER HYDRAULICS(4), HIGH HORSEPOWER HYDRAULICS(13), HIGH HORSEPOWER HYDRAULICS(16)-HIGH HORSEPOWER HY		x
59	6632279	SEAL KIT	Ref. HIGH HORSEPOWER HYDRAULICS(21)-HIGH HORSEPOWER HYDRAULICS(24)		x
59	6586461	SEAL KIT	Ref. HIGH HORSEPOWER HYDRAULICS(13) & HIGH HORSEPOWER HYDRAULICS(16)-HIGH HORSEPOWER HYDRAULICS(18) Was 6592475 [A]		x

www.youfixthis.com

HIGH HORSEPOWER HYDRAULICS
(Double Gear Pump)

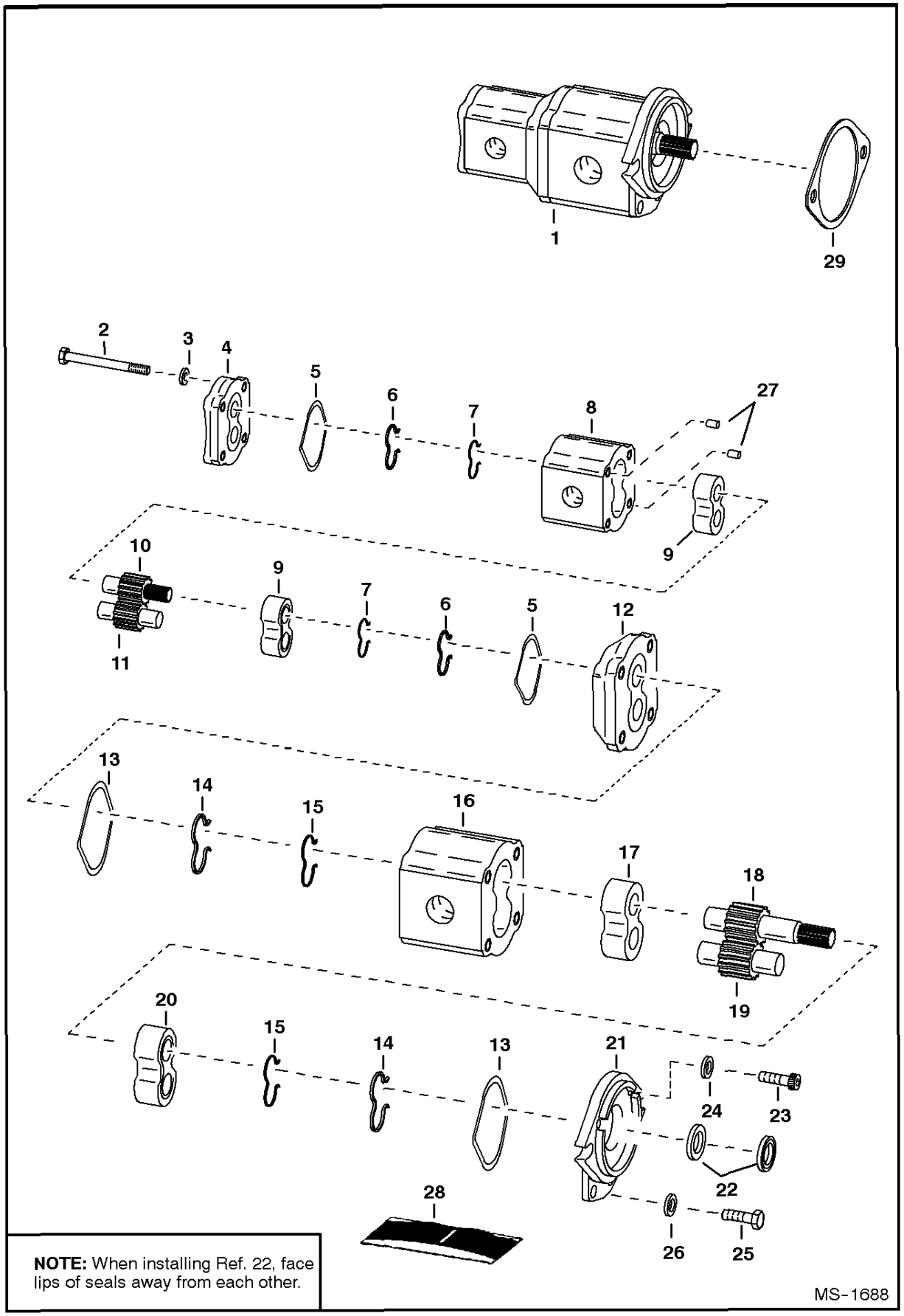

NOTE: When installing Ref. 22, face lips of seals away from each other.

www.youfixthis.com

HIGH HORSEPOWER HYDRAULICS

Ref.N°	Part N°	Description	Remarks	Serial N°	Qty.
1	6665552	PUMP	double - Ref. HIGH HORSEPOWER HYDRAULICS(2) - HIGH HORSEPOWER HYDRAULICS(27) - Was 6660378 [A]		1
2	NSS	BOLT			4
3	NSS	WASHER			4
4	6660595	COVER			1
5	NSS	O-RING	seal		2
6	NSS	SEAL			2
7	NSS	RING			2
8	NSS	BODY			1
9	NSS	BEARING			2
10	NSS	GEAR	drive		1
11	NSS	GEAR			1
12	6670665	COVER	Was NSS [D]		1
13	NSS	O-RING	seal		2
14	NSS	SEAL			2
15	NSS	RING			2
16	NSS	BODY			1
17	NSS	BEARING			1
18	NSS	GEAR	drive		1
19	NSS	GEAR	idler		1
20	6658118	BEARING			1
21	6670666	COVER	Was NSS [D]		1
22	NSS	SEAL			2
23	6669471	BOLT	Was NSS [D]		2
24	NSS	SEAL			2
25	6669472	BOLT	Was NSS [D]		2
26	NSS	WASHER			2
27	NSS	DOWEL			2
28	6666835	SEAL KIT	Ref. HIGH HORSEPOWER HYDRAULICS(5) - HIGH HORSEPOWER HYDRAULICS(7), HIGH HORSEPOWER HYDRAULICS(13) - HIGH HORSEPOWER HYDRAULICS(		1
28	6660596	SEAL KIT	Ref. HIGH HORSEPOWER HYDRAULICS(5) - HIGH HORSEPOWER HYDRAULICS(7), HIGH HORSEPOWER HYDRAULICS(13) - HIGH HORSEPOWER HYDRAULICS(		1
29	6660339	GASKET			1

www.youfixthis.com

HYDROSTATIC CIRCUITRY
(S/N 5084 11290 & Below)

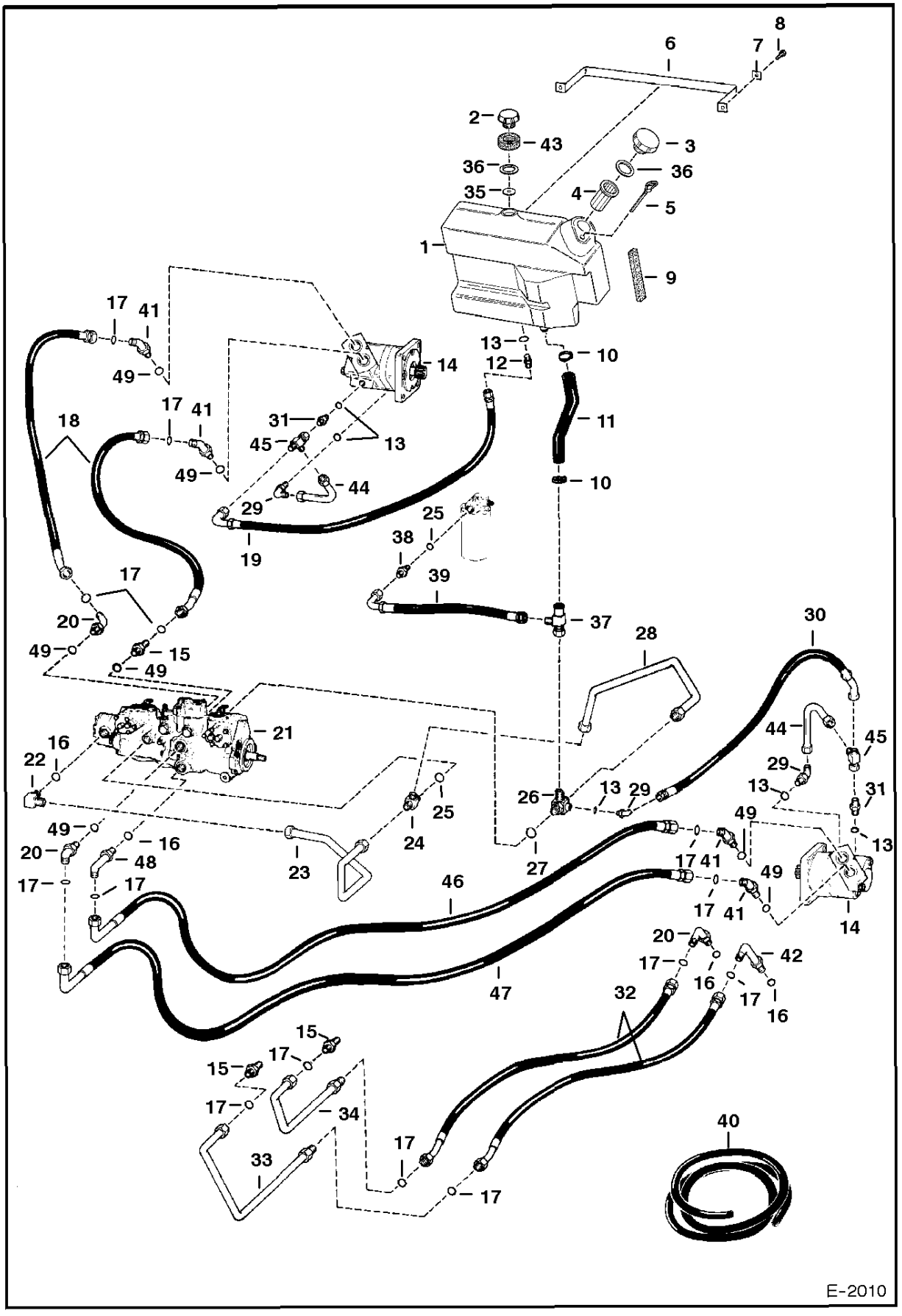

www.youfixthis.com

HYDROSTATIC CIRCUITRY

Ref.N°	Part N°	Description	Remarks	Serial N°	Qty.
1	6704551	TANK	Was 6700459 [A]		1
2	6577785	CAP	breather-Also Order Ref. HYDROSTATIC CIRCUITRY(36) & HYDROSTATIC CIRCUITRY(43)		1
3	6532508	CAP	hyd. oil - Also Order Ref. HYDROSTATIC CIRCUITRY(36)		1
4	6569219	SCREEN			1
5	6577459	DIPSTICK			1
5	25K-20010	O-RING			2
6	6579939	BAND			1
7	6559447	WASHER	square		2
8	84G-3712	BOLT			2
9	NAP	FOAM	16"(406 mm)long-Order Ref. HYDROSTATIC CIRCUIT RY(40)		x
10	6666864	CLAMP	Was 42H-20 [A]		2
11	6579685	HOSE			1
12	15K-5	ADAPTER	W/Ref. HYDROSTATIC CIRCUITRY(13)		1
13	79K-6	O-RING			x
14		MOTOR	See Page HYDROSTATIC MOTOR(1)		2
15	41E-616	ADAPTER	W/Ref. HYDROSTATIC CIRCUITRY(17) & HYDROSTA TIC CIRCUITRY(49) - Was 52E-16 [A]		1
16	79K-16	O-RING			x
17	58K-21	O-RING			10
18	6700240	HOSE			2
19	6703013	HOSE	Was 6706754 [B,D]		1
20	42E-1616	ELBOW	W/Ref. HYDROSTATIC CIRCUITRY(17) & HYDROSTA TIC CIRCUITRY(49) - Was 55E-16 [A]		2
21		PUMP	See Page HYDROSTATIC PUMP(1)		1
22	6702096	ELBOW	W/Ref. HYDROSTATIC CIRCUITRY(16)		1
23	6579662	TUBE			1
24	6700089	TEE	W/Ref. HYDROSTATIC CIRCUITRY(25)		1
25	79K-12	O-RING			1
26	6702095	TEE	W/Ref. HYDROSTATIC CIRCUITRY(27)		1
27	79K-20	O-RING			1
28	6579661	TUBE			1
29	17K-5	ELBOW	W/Ref. HYDROSTATIC CIRCUITRY(13)		3
30	6578327	HOSE	Was 6577891 [B]		1
31	6658676	RELIEF VALVE	inline (225 PSI) - W/Ref. HYDROSTATIC CIRCUITRY(13) - Was 6653526 [A]		2
32	6700236	HOSE	Was 6701377 [A]		2
33	NAP	TUBE	Order Ref. HYDROSTATIC CIRCUITRY(20), HYDROS TATIC CIRCUITRY(41) & HYDROSTATIC CIRCUITRY(47) - Was 6579679 [A]		1
34	NAP	TUBE	Order Ref. HYDROSTATIC CIRCUITRY(41), HYDROS TATIC CIRCUITRY(46) & HYDROSTATIC CIRCUITRY(48) Was 6702293 [A]		1
35	6701552	BAFFLE			1
36	6700631	GASKET			2
37	6702001	TEE			1
38	6659459	VALVE	W/Ref. HYDROSTATIC CIRCUITRY(25) - Was 665557 2 [A]		1
39	6707464	HOSE	Was 6700233 [A]		1
40	6511855	FOAM STRIP	bulk-Sold Per Foot - Self Adhesive		x
41	6665206	ELBOW	W/Ref. HYDROSTATIC CIRCUITRY(49) - Was 69E- 16 [B]		2
42	NAP	ELBOW	Order 6722528inD1 Hose Kit - See BTI 272 - Was 77E- 16 [B]		1
43	6703427	FOAM FILTER			1
44	6703815	TUBE			2
45	13K-5	TEE			2

www.youfixthis.com

HYDROSTATIC CIRCUITRY

Ref.N°	Part N°	Description	Remarks	Serial N°	Qty.
46	6704548	HOSE			1
47	6704547	HOSE			1
48	77E-1616	ELBOW			1
49	75K-16	O-RING			x

www.youfixthis.com

HYDROSTATIC CIRCUITRY
(S/N 5084 11291 & Above) (S/N 5097 11001 & Above)

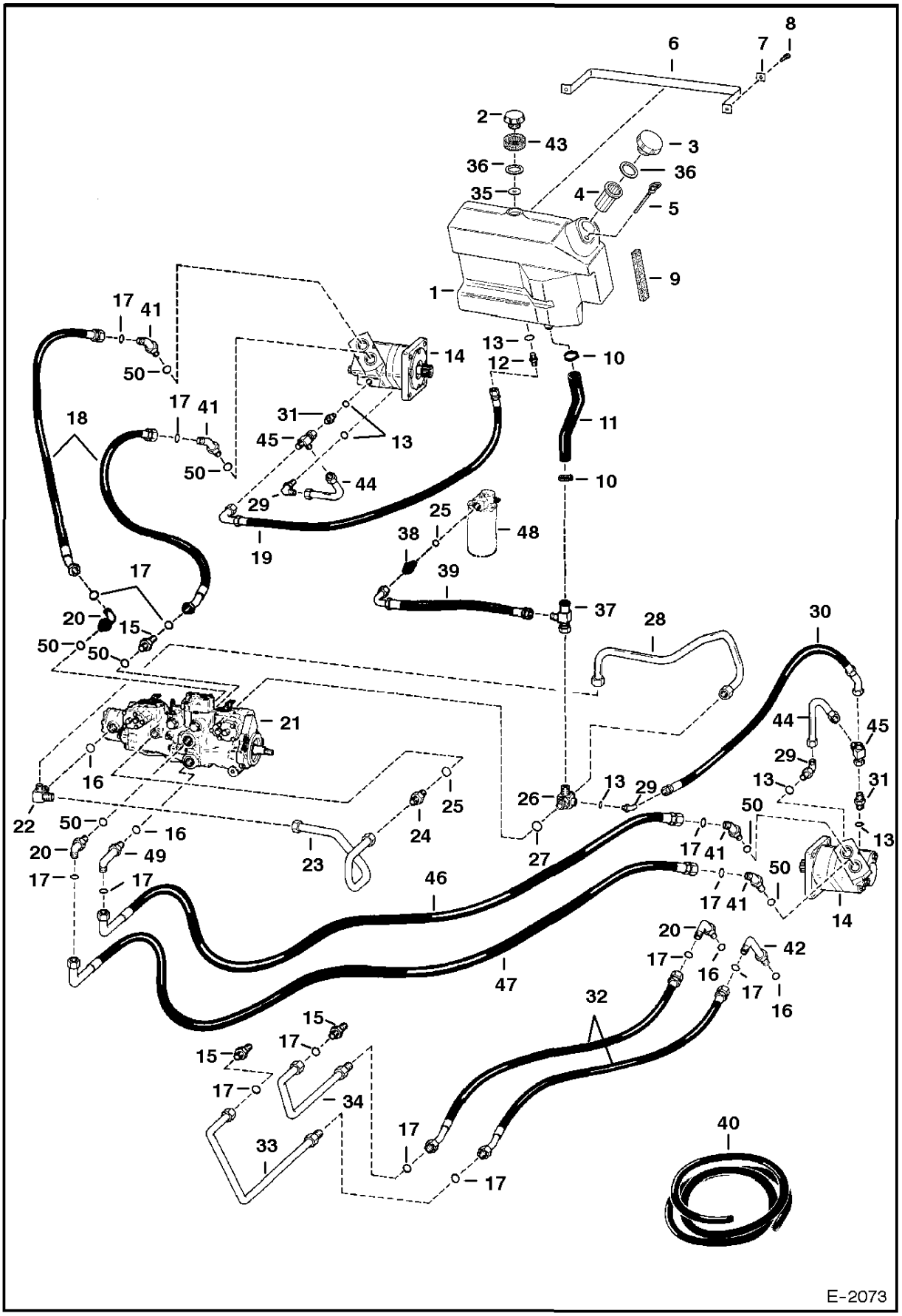

www.youfixthis.com

HYDROSTATIC CIRCUITRY

Ref.N°	Part N°	Description	Remarks	Serial N°	Qty.
1	6704551	TANK	Was 6700459		1
2	6577785	CAP	breather-Also Order Ref. HYDROSTATIC CIRCUITRY(36)		1
3	6532508	CAP	hyd. oil-Also Order Ref. HYDROSTATIC CIRCUITRY(3 6)		1
4	6569219	SCREEN			1
5	6577459	DIPSTICK			1
5	25K-20010	O-RING			2
6	6579939	BAND			1
7	6559447	WASHER	square		2
8	84G-3712	BOLT			2
9	NAP	FOAM	16" (406,4 mm) long - Order Ref. HYDROSTATIC CIRCUITRY(40)		x
10	6666864	CLAMP	Was 42H-20 [A]		2
11	6579685	HOSE			1
12	15K-5	ADAPTER	W/Ref. HYDROSTATIC CIRCUITRY(13)		1
13	79K-6	O-RING			x
14		MOTOR	See Page HYDROSTATIC MOTOR(1)		2
15	41E-616	ADAPTER	W/Ref. HYDROSTATIC CIRCUITRY(17) & HYDROSTA TIC CIRCUITRY(50) - Was 52E-16 [A]		1
16	79K-16	O-RING			x
17	58K-21	O-RING			10
18	6700240	HOSE			2
19	6703013	HOSE	Was 6706754 [B,D]		1
20	42E-1616	ELBOW	W/Ref. HYDROSTATIC CIRCUITRY(17) & HYDROSTA TIC CIRCUITRY(50) - Was 55E-16 [A]		2
21		PUMP	See Page HYDROSTATIC PUMP(1)		1
22	6702516	TEE	W/Ref. HYDROSTATIC CIRCUITRY(16)		1
23	6702508	TUBE			1
24	15K-8	ADAPTER	W/Ref. HYDROSTATIC CIRCUITRY(25)		1
25	79K-12	O-RING			1
26	6702095	TEE	W/Ref. HYDROSTATIC CIRCUITRY(27)		1
27	79K-20	O-RING			1
28	6702513	TUBE			1
29	17K-5	ELBOW	W/Ref. HYDROSTATIC CIRCUITRY(13)		3
30	6578327	HOSE	Was 6577891 [B]		1
31	6658676	RELIEF VALVE	inline (225 PSI) - W/Ref. HYDROSTATIC CIRCUITRY(13)		2
32	6700236	HOSE			2
33	NAP	TUBE	Order Ref. HYDROSTATIC CIRCUITRY(20), HYDROS TATIC CIRCUITRY(41) & HYDROSTATIC CIRCUITRY(47) Was 6579679		1
34	NAP	TUBE	Order Ref. HYDROSTATIC CIRCUITRY(41), HYDROS TATIC CIRCUITRY(42) & HYDROSTATIC CIRCUITRY(46) Was 6702293 [A]		1
35	6701552	BAFFLE			1
36	6700631	GASKET			2
37	6702001	TEE			1
38	6659459	VALVE	W/Ref. HYDROSTATIC CIRCUITRY(25)	5084 12400 & Bel	1
38				5097 11314 & Bel	1
38	15K-8	ADAPTER	W/Ref. HYDROSTATIC CIRCUITRY(25)	5084 12401 & Abv	1
38				5097 11315 & Abv	1
39	6707464	HOSE	Was 6700233 [A]		1
40	6511855	FOAM STRIP	bulk - Sold Per Foot		x
41	6665206	ELBOW	W/Ref. HYDROSTATIC CIRCUITRY(50) - Was 69E-16		2
42	NAP	ELBOW	Order 6722528inD1 Hose Kit - See BTI 272 - Was 77E-16 [B]		1
43	6703427	FOAM FILTER			1

www.youfixthis.com

HYDROSTATIC CIRCUITRY

Ref.N°	Part N°	Description	Remarks	Serial N°	Qty.
44	6703815	TUBE			2
45	13K-5	TEE			2
46	6704548	HOSE			1
47	6704547	HOSE			1
48	NAP	FILTER ASSY.	SEE BTI 267 - Was 6648905 [A]	5084 12400 & Bel	1
48				5097 11314 & Bel	1
48	6661282	FILTER ASSY.	W/Internal check valve - See Page HYDROSTATIC OIL FILTER(1) - Was 6660451 [A]	5084 12401 & Abv	1
48				5097 11315 & Abv	1
48	6661248	ELEMENT	Was 6630977[B]		1
49	77E-1616	ELBOW	Was 77E-16 [D]		1
50	75K-16	O-RING			x

www.youfixthis.com

HYDROSTATIC CIRCUITRY

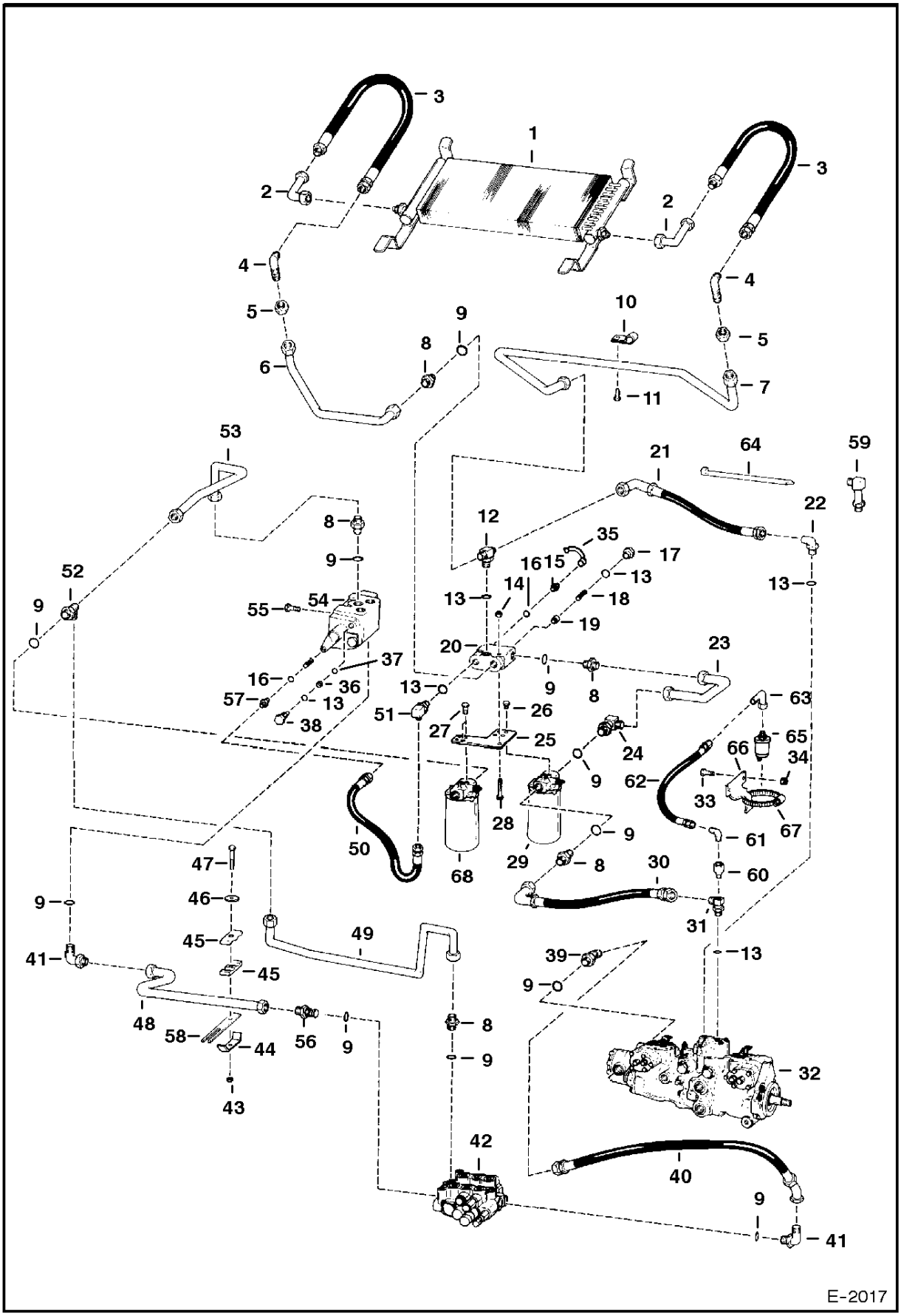

www.youfixthis.com

HYDROSTATIC CIRCUITRY

Ref.N°	Part N°	Description	Remarks	Serial N°	Qty.
1	6662948	COOLER	oil - Was 6659359 [A]		1
2	6703012	TUBE	Was 6700920 [A]		2
3	6654205	HOSE			2
4	88F-8	ELBOW			2
5	86F-8	NUT			2
6	6579665	TUBE			1
7	6579664	TUBE			1
8	15K-8	ADAPTER	W/Ref. HYDROSTATIC CIRCUITRY(9)		5
9	79K-12	O-RING			x
10	6H-18	CLAMP			1
11	84G-3712	BOLT			1
12	6700209	TEE			1
13	79K-10	O-RING			x
14	85D-6	NUT			3
15	6630168	COUPLER	W/Ref. HYDROSTATIC CIRCUITRY(16)		1
16	79K-6	O-RING			x
17	6561811	PLUG	filter by-pass - W/Ref. HYDROSTATIC CIRCUITRY(13)		1
18	6567020	SPRING			1
19	6565620	POPPET	poppet		1
20	6579689	PORT BLOCK			1
21	6705981	HOSE	Was 6700232 [A]		1
22	17K-7	ELBOW	W/Ref. HYDROSTATIC CIRCUITRY(13) - for use W/M91- 46907 & 46909 pumps only		1
23	6579663	TUBE			1
24	6700599	ELBOW	W/Ref. HYDROSTATIC CIRCUITRY(9)		1
25	6579693	MOUNT			1
26	35C-610	BOLT	Was 17C-608 [B]		4
27	17C-614	BOLT			4
28	17C-640	BOLT	Was 17C-636		2
29	6661247	FILTER ASSY.	See Page HYDROSTATIC OIL FILTER(1) - Was 6648905 [A]		1
29	6661248	ELEMENT	Was 6630977 [B]		1
30	6707464	HOSE	Was 6700233 [A]		1
31	6579651	ELBOW	W/Ref. HYDROSTATIC CIRCUITRY(13)		1
32		PUMP	See Page HYDROSTATIC PUMP(1)		1
33	17C-416	BOLT			2
34	85D-4	NUT			2
35	6630367	DUST CAP	dust		1
36	80K-14	WASHER	back-up - Was 73K-14 [B]		1
37	58K-14	O-RING	Was 25K-20016 [B]		1
38	6592720	PLUG	W/Ref. HYDROSTATIC CIRCUITRY(13), HYDROSTATIC CIRCUITRY(36) & HYDROSTATIC CIRCUITRY(37)		1
39	18K-8	ELBOW	W/Ref. HYDROSTATIC CIRCUITRY(9)		1
40	6700239	HOSE			1
41	17K-8	ELBOW	W/Ref. HYDROSTATIC CIRCUITRY(9)		2
42		VALVE	See Page HYDRAULIC CONTROL VALVE(1) & NO PAGE		1
43	85D-5	NUT			1
44	6502203	CLAMP			1
45	6701892	CLAMP	Was 6577696 [A]		2
46	872229	WASHER			1
47	17C-544	BOLT	Was 17C-540		1
48	6579879	TUBE			1
49	6579877	TUBE			1
50	6617708	HOSE			1
51	1300913	ELBOW	W/Ref. HYDROSTATIC CIRCUITRY(13)		1

www.youfixthis.com

HYDROSTATIC CIRCUITRY

Ref.N°	Part N°	Description	Remarks	Serial N°	Qty.
52	21K-8	TEE	W/Ref. HYDROSTATIC CIRCUITRY(9)		1
53	6579878	TUBE			1
54		VALVE	front aux. - See Page FRONT AUXILIARY VALVE(1)		1
55	17C-720	BOLT			2
56	6534917	ADAPTER	W/Ref. HYDROSTATIC CIRCUITRY(9), 58K-18 O-Ring & 73K-18 Back-up Washer		1
57	15K-5	ADAPTER	W/Ref. HYDROSTATIC CIRCUITRY(16)		1
58	6702548	PAD			2
59	6519195	ELBOW	W/Ref. HYDROSTATIC CIRCUITRY(13) - for use W/M91- 46910 & 46911 pumps		1
60	6563922	SNUBBER	W/Filter		1
60	6563920	FILTER			1
61	83F-3	ELBOW			1
62	6530901	HOSE			1
63	85F-3	ELBOW			1
64	6610510	NYLON TIE	Was 30H-31		1
65		SENDER	Hyd. chg. press. - See Page ENGINE ELECTRICAL SYSTEM(50)		1
66	6704319	MOUNT			1
67	42H-16	CLAMP	Was 42H-24		1
68	NAP	FILTER ASSY.	SEE BTI 267 - Was 6648905 [A]	5084 12400 & Bel	1
68				5097 11314 & Bel	1
68	6661282	FILTER ASSY.	W/Internal check valve - See Page HYDROSTATIC OIL FILTER(1) - Was 6660451 [A]	5084 12401 & Abv	1
68				5097 11315 & Abv	1
68	6661248	ELEMENT	Was 6630977 [B]		1

www.youfixthis.com

HAND CONTROLS

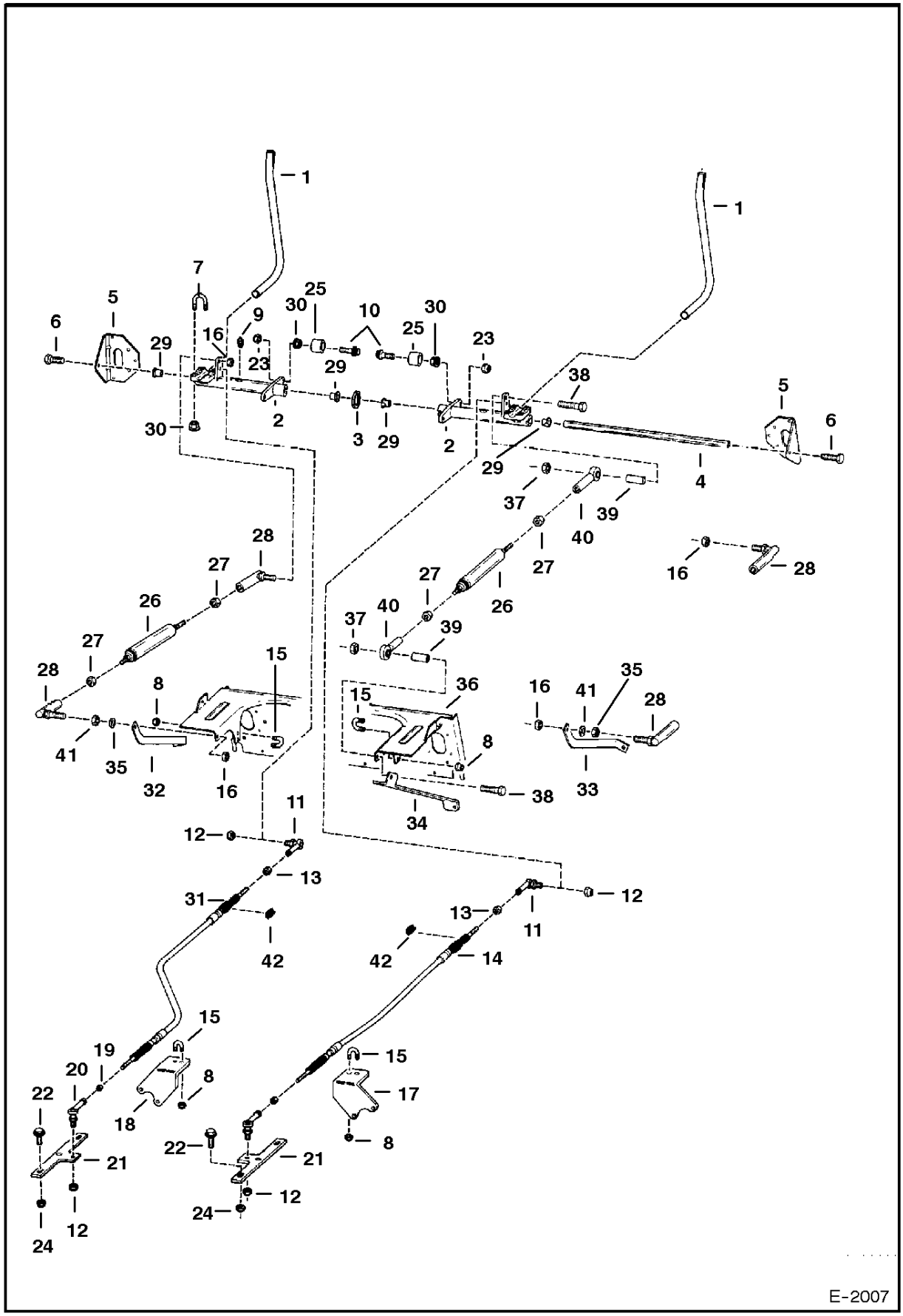

E-2007

www.youfixthis.com

HAND CONTROLS

Ref.N°	Part N°	Description	Remarks	Serial N°	Qty.
1	6576991	LEVER		5084 11353 & Bel	2
1				5097 11094 & Bel	2
1	6702543	LEVER	for Cobra style handles	5084 11354 & Abv	2
1				5097 11095 & Abv	2
2	NAP	BELLCRANK	W/O Notch for bushing tab - Order 6703881 Bellcrank & (2) of	5084 12022 & Bel	999
2	6703881	BELLCRANK	W/ Notch for bushing tab	5084 12023 & Abv	2
2				5097 11192 & Abv	2
3	6599741	WASHER	wave		1
4	NAP	ROD	use W/Ref. HAND CONTROLS(6) (17C-616 Bolt) - Order 6716545 Rod & (2) 45C-624 Bolt - Was 6576250 [A]		1
4	6716945	ROD	use W/Ref. 45C-624 Bolt		1
5	6577230	MOUNT			2
6	17C-616	BOLT			2
6	45C-624	BOLT			2
7	6700768	U-BOLT			4
8	85D-5	NUT			8
9	6518200	GREASE ZERK			2
10	6705966	BOLT	Was 93G-628 [B]		2
11	6631036	BALL JOINT	R.H. thread - I.D. only		2
12	86D-4	NUT			4
13	8D-4	NUT			2
14	6710273	CABLE	W/Ref. HAND CONTROLS(42) - 30" (762mm) long - Was 6655825 [A]		1
15	6592766	U-BOLT			4
16	62D-6	NUT	Was 86D-6 [B]		4
17	6703627	MOUNT	Was 6700078 [A]		1
18	6703626	MOUNT	Was 6700077 [A]		1
19	13D-4	NUT	L.H. thread		2
20	6652799	BALL JOINT	L.H. thread - I.D. only		2
21	6704616	LEVER	pintle - Was 6703633 [A]		2
22	35C-610	BOLT	Was 17C-610 [B]		4
23	57D-6	NUT	Was 61D-6		2
24	91D-6	NUT	Was 85D-6 [B]		4
25	6704435	WEAR CAM	Was 6576200 [C]		2
26	6649551	DAMPENER			2
27	8D-6	NUT	Was 62D-6		4
28	6599744	BALL JOINT			4
29	NAP	BUSHING	W/O Tab - Order 6703881 Bellcrank & (2) of 6703879 Bushing -Was 6700348 [C]	5084 12022 & Bel	4
29				5097 11191 & Bel	4
29	6703879	BUSHING	W/Tab	5084 12023 & Abv	4
29				5097 11192 & Abv	4
30	83D-6	NUT			4
31	6710274	CABLE	W/Ref. HAND CONTROLS(42) - 32" (812,8mm) long - Was 6658251 [A]		1
32	6703551	BRACE	L.H.	5084 11200 & Abv	1
32				5097 11001 & Abv	1
33	NAP	BRACE	R.H. - See Page PANELS(26) - Order Ref. HAND CONTROLS(34) & (2) ea. of Ref. HAND CONTROLS(37) - HAND CONTROLS(40) - Was 6703546	5084 11200 & Abv	1
33				5097 11001 & Abv	1
34	6708064	BRACE	R.H.		1
35	25E-18	WASHER		5084 11200 & Abv	2
36	6579459	PANEL	See Page PANELS(26)		1
37	91D-6	NUT			2

www.youfixthis.com

HAND CONTROLS

Ref.N°	Part N°	Description	Remarks	Serial N°	Qty.
38	17C-636	BOLT			2
39	6708314	BUSHING			2
40	6512954	ROD END			2
41	62D-6	NUT			2
42	6666534	SEAL			4

www.youfixthis.com

HYDROSTATIC MOTOR

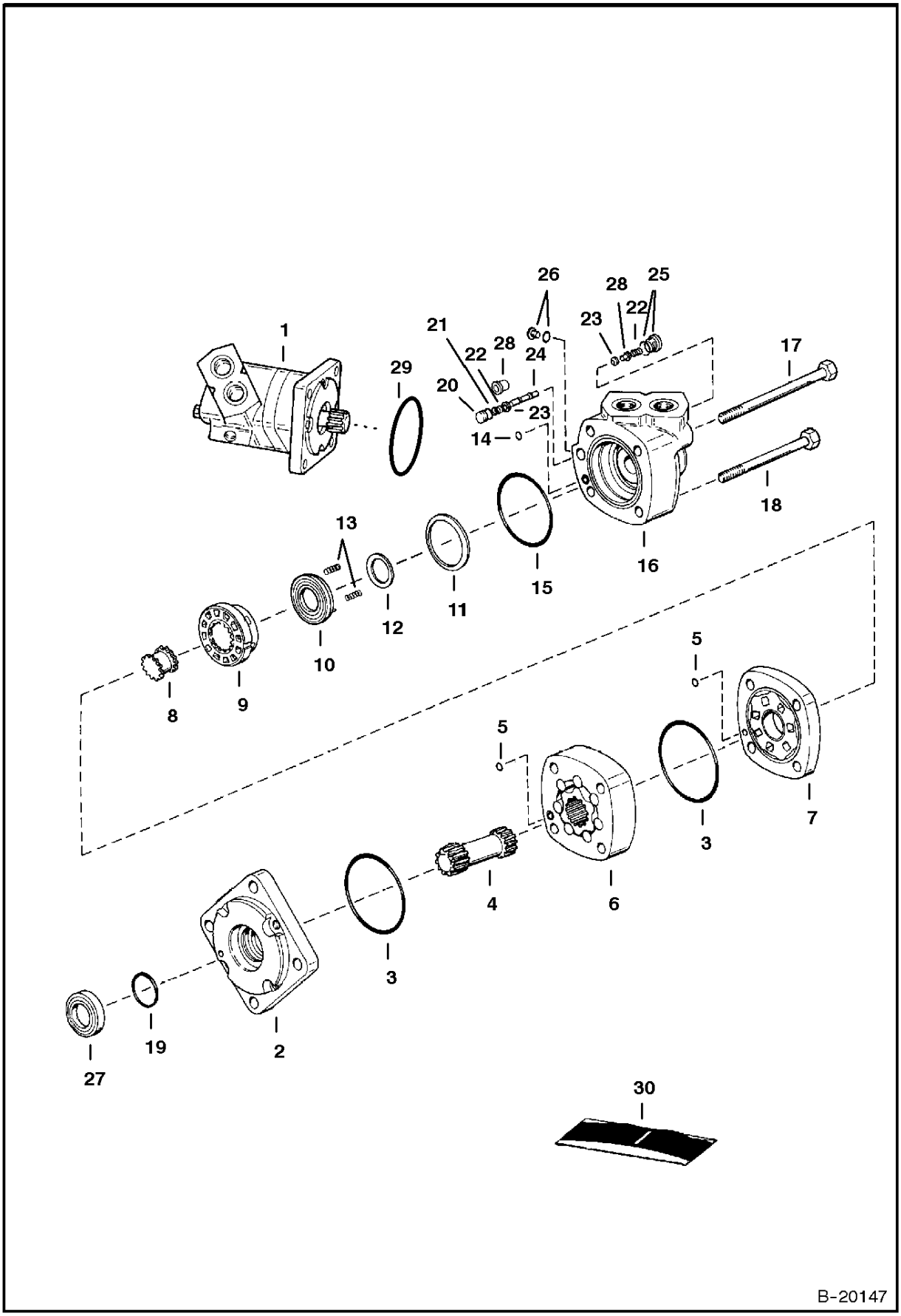

www.youfixthis.com

HYDROSTATIC MOTOR

Ref.N°	Part N°	Description	Remarks	Serial N°	Qty.
1	NAP	MOTOR	kit - Ref. HYDROSTATIC MOTOR(2)-HYDROSTATIC MOTOR(29) (114-1019-005) & (114-1059-005) - Was 6720886 [A]		1
1	6722529	MOTOR	kit - Ref. HYDROSTATIC MOTOR(2)-HYDROSTATIC MOTOR(29) (114-1064-005) & (006)		1
2	6513528	HOUSING	mounting		1
3	6513524	O-RING			2
4	6658758	DRIVE			1
5	6632272	O-RING			2
6	6658761	GEROLER			1
7	6661809	PLATE	valve - Was 6658759 [C]		1
8	6513518	DRIVE	valve		1
9	6513519	VALVE			1
10	6658757	PLATE	balance assy.		1
11	6513520	SEAL	face - Outer		1
12	6513529	SEAL	face - Inner		1
13	6190121	SPRING			3
14	25K-20010	O-RING			1
15	58K-44	O-RING	Was 6658756 [A]		1
16	6660455	HOUSING	valve - for 114-1019-005 & 114-1059-005 motors - Was 6660225 [A]		1
16	6665237	HOUSING	valve - for 114-1064-005 motorwcom32, }H~10{M		x
17	6658755	BOLT			2
18	6658754	BOLT			2
19	6513799	O-RING			1
20	6513539	PLUG			1
21	6513800	O-RING			1
22	6513533	SPRING			2
23	6513532	POPPET			2
24	6513510	PISTON			1
25	47K-5	PLUG			1
26	47K-2	PLUG			1
27	6513681	BEARING	bronze		1
28	6561218	SHUTTLE			2
29	25K-30508	O-RING	not part of seal kit-See Page DRIVE TRAIN(12)		1
30	6660256	SEAL KIT	Ref. HYDROSTATIC MOTOR(3), HYDROSTATIC MOTOR(5), HYDROSTATIC MOTOR(11), HYDROSTATIC MOTOR(12), HYDROSTATIC MOTOR(14), HYDROSTATI		1

www.youfixthis.com

HYDROSTATIC PUMP
(Left Half) (M91-46907, 46909, 46910, 46911, 46918 & 46919)

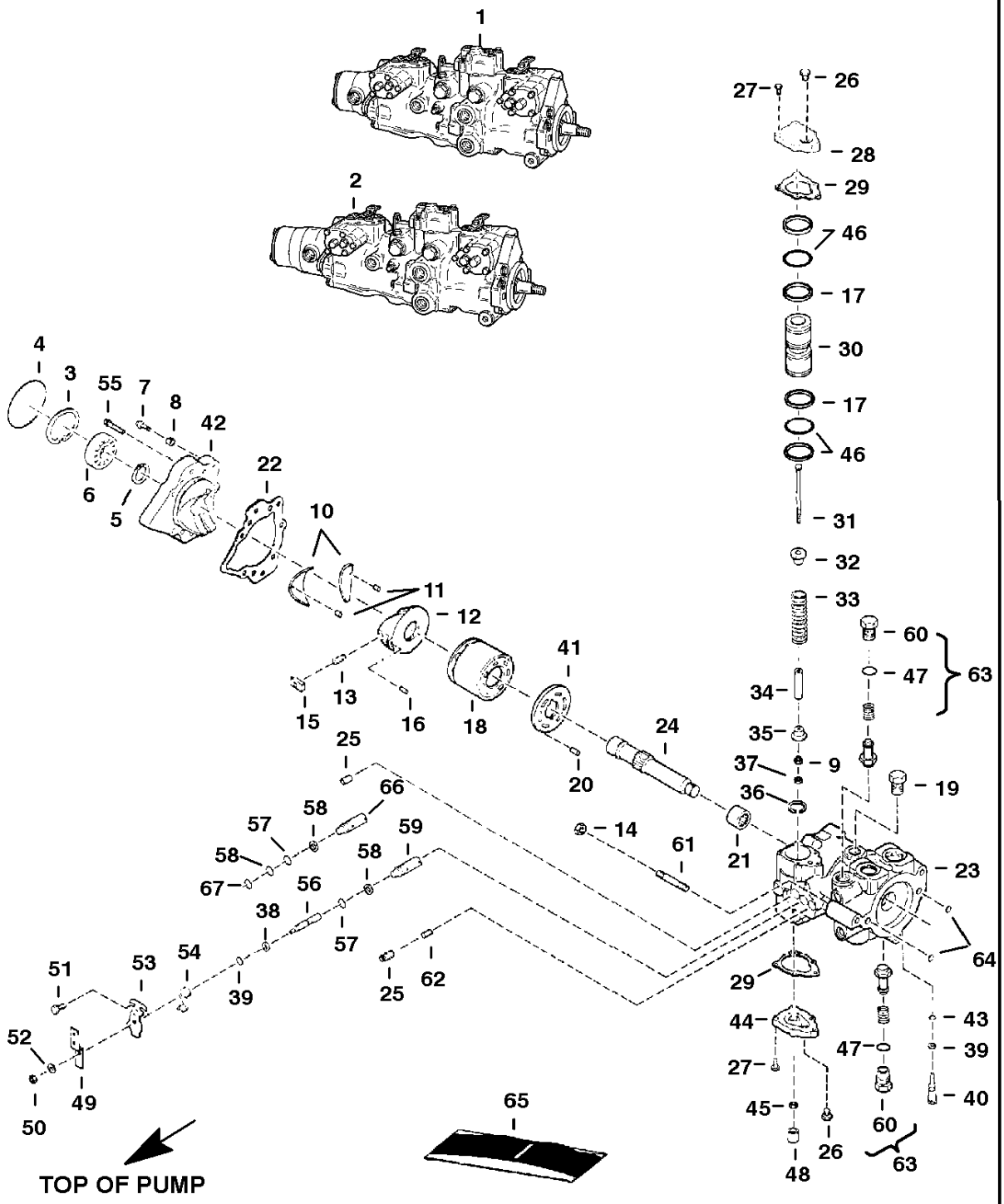

NOTE: Ref. 1 & 2 are shown in a right rear view. Ref 3-64 are components of the left half of the tandem pump, and are shown in a left front view, rotated 90 degrees.

E-2011

www.youfixthis.com

HYDROSTATIC PUMP

Ref.N°	Part N°	Description	Remarks	Serial N°	Qty.
1	NAP	PUMP	Order 6662917inD1}s Pump & 6519195 Elbow-W/gear pumpM91-46906 M91-46909 - Was 6658751 [A]		1
1	NAP	PUMP	Order 6662917inD1}s Pump - W/gear pumpM91-46911 Was 6660481 [A]		1
1	6671021	PUMP	W/gear pump - M91-46919 - Was 6662917 [A]		1
1	6662350	PUMP	Remanufactured - W/gear pump		1
2	NAP	PUMP	Order 6662918inD1}o Pump & 6519195 Elbow - M91-46907 - W/double gear pump - for high horse- power option - Was 6659462 [A]		1
2	NAP	PUMP	Order 6662918inD1}o Pump-W/double gear pump-M91-46910 - for high horse-power option - Was 6660482 [A]		1
2	6662918	PUMP	W/double gear pump - M91-46918 - for high horse-power option		1
2	6662351	PUMP	Remanufactured -W/double gear pump - for high horse power option		1
3	669863	SNAP RING			1
4	6645080	O-RING	Was 6657080 [D]		1
4	6660339	GASKET	for high horsepower option pump		1
5	658128	SNAP RING			2
6	654299	BEARING			1
7	6653741	SCREW			1
8	6634592	PIN			1
9	6653728	NUT	locking		1
10	6634613	BEARING	journal		2
11	791355	PIN	Was 6657326 [A]		2
12	6634382	SWASHPLATE			1
13	6632464	PIN			1
14	61D-8	NUT			2
15	6631428	SLEEVE			1
16	6673049	PIN	Was6634591 [A]		1
17	6659256	RING	Was 6653740 [A]		2
18	6670274	ROTATING PIECE	M91-46907, 46909 - Was 6634311 [A]		1
18	6631478	ROTATING PIECE	M91-46910, 46911		1
19	47K-8	PLUG	Was 6653730 A[]		2
20	6634553	PIN			1
21	6631022	BEARING			1
22	6640612	GASKET			1
23	6656075	HOUSING			1
24	6657316	SHAFT			1
25	6518510	PLUG			1
26	6645086	PLUG			2
27	6660434	BOLT	Was 6653736 [A]		8
28	6634425	GASKET			2
29	6645072	COVER	servo		1
30	6634429	PISTON	servo		1
31	6631470	SCREW			1
32	6631444	GUIDE			1
33	6631430	SPRING			1
34	6631446	STOP			1
35	6631445	GUIDE			1
36	6631469	RING			1
37	6648256	NUT			1
38	6645079	O-RING			1
39	6631467	RING			2
40	6632462	VALVE	by-pass		1
41	6634471	VALVE	plate		1
42	6657317	COVER	Was 6651317 [A]		1

www.youfixthis.com

HYDROSTATIC PUMP

Ref.N°	Part N°	Description	Remarks	Serial N°	Qty.
43	58K-12	O-RING			1
44	6645071	COVER			1
45	6631458	NUT			1
46	6634488	SEAL			2
47	79K-12	O-RING			2
48	NAP	COVER	Was 6631451 [A]		1
49	6657319	HANDLE			1
50	6653734	NUT			1
51	6653733	BOLT			1
52	6653735	WASHER			1
53	6631453	BRACKET			1
54	6631449	SPRING			1
55	6666220	BOLT	.4375 (11,1 mm)Was 6656077[A]		6
56	NAP	SPOOL	Order (2) of 6666211 Spool - use one on each half of tandem pump - Was 6634428 [A]		1
56	6666211	SPOOL	metered		1
57	6631468	WASHER	See S/L dated 14 Dec 95		1
58	25K-20020	O-RING	See S/L dated 14 Dec 95		1
59	6657315	SLEEVE	(.050)		1
60	6660418	PLUG	Was NSS		2
61	6631642	STUD			1
62	6657320	ORIFICE	.157		1
62	6669257	ORIFICE	.054		1
63	6653221	RELIEF VALVE	W/Ref. HYDROSTATIC PUMP(47) & HYDROSTATIC PUMP(60)-5000 PSI(345 Bar)		2
63	6662847	RELIEF VALVE	W/Ref. HYDROSTATIC PUMP(47) & HYDROSTATIC PUMP(60)-4350 PSI(300 Bar)		2
63	6662846	RELIEF VALVE	W/Ref. HYDROSTATIC PUMP(47) & HYDROSTATIC PUMP(60)-3986 PSI(280 Bar)		2
64	6653738	O-RING			2
65	6664371	SEAL KIT	W/Ref. HYDROSTATIC PUMP(4), HYDROSTATIC PUMP(17), HYDROSTATIC PUMP(19), HYDROSTATIC PUMP(22), HYDROSTATIC PUMP(29), HYDROSTATIC		1
66	NAP	SLEEVE, REAIR	See S/L dated 14 Dec 95		1
67	6631471	WASHER	See S/L dated 14 Dec 95		1

www.youfixthis.com

HYDROSTATIC PUMP
(Right Half) (M91-46907, 46909, 46910, 46911, 46918 & 46919)

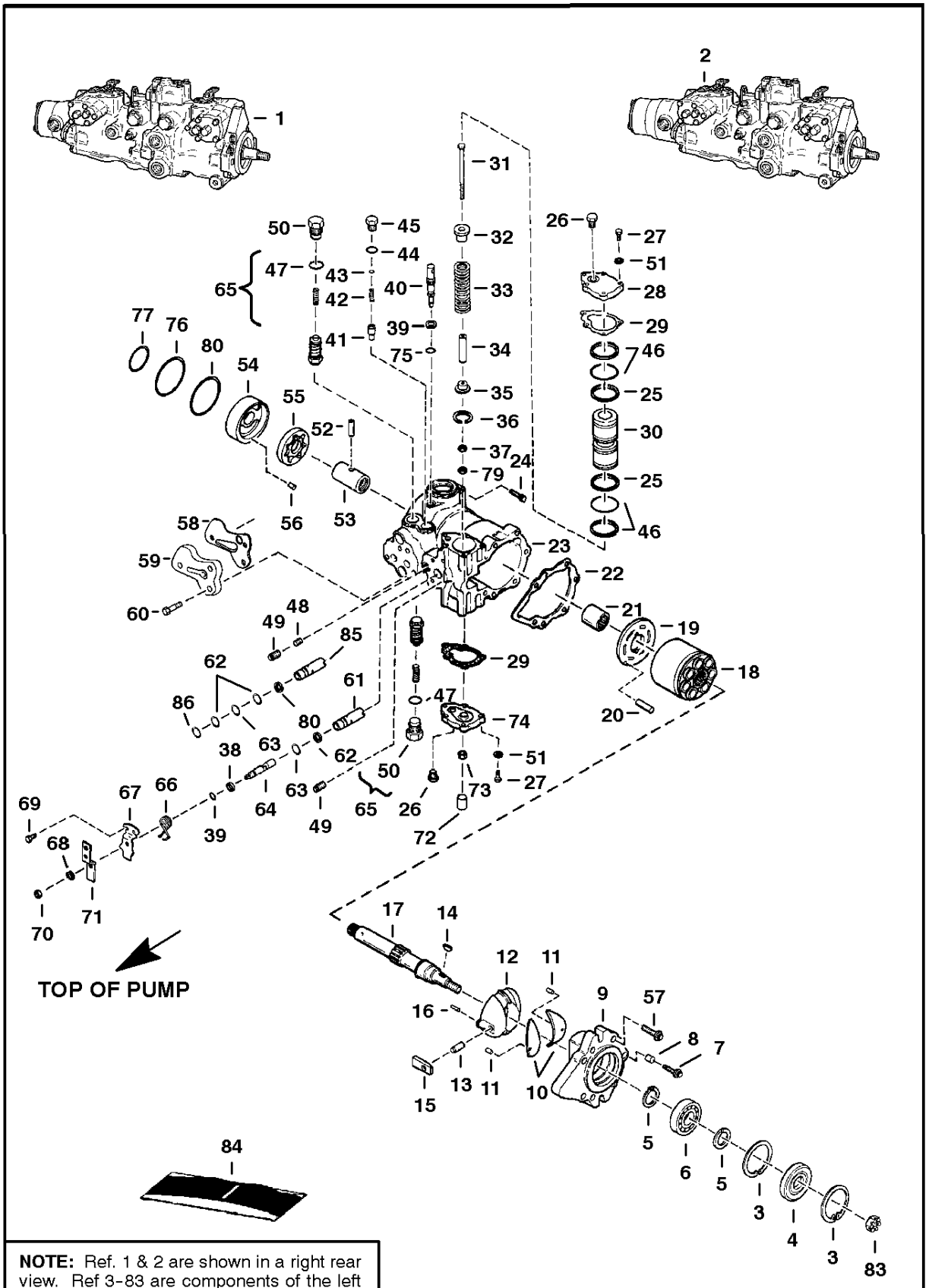

NOTE: Ref. 1 & 2 are shown in a right rear view. Ref 3-83 are components of the left half of the tandem pump, and are shown in a left front view, rotated 90 degrees.

www.youfixthis.com

HYDROSTATIC PUMP

Ref.N°	Part N°	Description	Remarks	Serial N°	Qty.
1	NAP	PUMP	Order 6662917inD1}s Pump & 6519195 Elbow - W/gear pump - M91-46909 - Was 6658751 [A]		1
1	NAP	PUMP	Order 6662917inD1}s Pump - W/gear pump - M91-46911 - Was 6660481 [A]		1
1	6661021	PUMP, REMAN	W/gear pump - M91-46919 - Was 6662917 [A]		1
1	6662350	PUMP	Remanufactured - W/gear pump		1
2	NAP	PUMP	Order 6662918inD1}o Pump & 6519195 Elbow - M91-46907 - W/double gear pump - for high horse- power option - Was 6659462 [A]		1
2	NAP	PUMP	Order 6662918inD1}o Pump-W/double gear pump-M91-46910 - for high horse-power option - Was 6660482 [A]		1
2	6662918	PUMP	W/double gear pump - M91-46918 - for high horse-power option		1
2	6662351	PUMP	Remanufactured -W/double gear pump - for high horse power option		1
3	669863	SNAP RING			2
4	6645090	SEAL			1
5	658128	SNAP RING			2
6	654299	BEARING			1
7	93G-616	BOLT			6
8	6634592	PIN			1
9	6656076	COVER	front		1
10	6634613	BEARING	journal		2
11	791355	PIN	Was 6657326 [A]		2
12	6634382	SWASHPLATE			1
13	6632464	PIN			1
14	6J-807	KEY			1
15	6631428	SLEEVE			1
16	6673049	PIN	Was 6634591 [A]		1
17	6666221	SHAFT	Was 6631426 [A]		1
18	6670274	ROTATING PIECE	M91-46907, 46909- Was 6634311 [A]		1
18	6631478	ROTATING PIECE	M91-46910, 46911		1
19	6634474	PLATE			1
20	6634553	PIN			1
21	6631022	BEARING			1
22	6640612	GASKET			1
23	6656074	HOUSING			1
24	93G-832	BOLT			2
25	6659256	RING	Was 6653740 [A]		2
26	6645086	PLUG			4
27	6660434	BOLT	Was 6653736 [A]		8
28	6645072	COVER	servo		1
29	6634425	GASKET			2
30	6634429	PISTON	servo		1
31	6631470	SCREW			1
32	6631444	GUIDE			1
33	6631430	SPRING			1
34	6631446	STOP			1
35	6631445	GUIDE			1
36	6631469	RING			1
37	6653728	NUT			1
38	6645079	O-RING			1
39	6631467	RING			1
40	6632462	VALVE	bypass - M91-46907, 46909, 46910 & 46911		1
41	6518656	VALVE	charge relief		1
42	6518657	SPRING			1
43	6598058	SHIM KIT	.005, .010, .020, .050, .100		1

www.youfixthis.com

HYDROSTATIC PUMP

Ref.N°	Part N°	Description	Remarks	Serial N°	Qty.
44	79K-10	O-RING			1
45	6631465	PLUG			1
46	6634488	SEAL			2
47	79K-12	O-RING			2
48	6657320	ORIFICE	.157		1
48	6669257	ORIFICE	.054		1
49	6518510	PLUG			2
50	6660418	PLUG	Was 47K-8 [B]		1
51	6518479	WASHER			10
52	6657325	PIN			1
53	6631438	COUPLER			1
54	6657321	COVER	M91-46909		1
54	6661788	COVER	M91-46907, 46910 & 46911		1
55	6657318	ROTOR ASSY.	M91-46909		1
55	6661633	ROTOR ASSY.	M91-46907, 46910 & 46911		1
56	6660435	PIN	Was 6657324 [A]		1
57	6653741	SCREW			1
58	6634552	O-RING	M91-46907, 46909		3
58	6660779	O-RING PLATE	M91-46910, 46911		1
59	6634313	ADAPTER	M91-46907, 46909		1
59	6660778	ADAPTER	M91-46910, 46911		1
60	6634604	BOLT	M91-46907, 46909		2
60	6660780	BOLT	M91-46910, 46911		3
61	6657315	SLEEVE	(.050)		1
62	25K-20020	O-RING			1
63	6631468	WASHER			1
64	NAP	SPOOL	Order (2) of 6666211 Spool - use one on each half of tandem pump -Was 6634428 [A]		1
64	6666211	SPOOL	metered		1
65	6653221	RELIEF VALVE	W/Ref. HYDROSTATIC PUMP(47) & HYDROSTATIC PUMP(50)-5000 PSI(345 Bar)		2
65	6662847	RELIEF VALVE	W/Ref. HYDROSTATIC PUMP(47) & HYDROSTATIC PUMP(50)-4350 PSI(300 Bar)		2
65	6662846	RELIEF VALVE	W/Ref. HYDROSTATIC PUMP(47) & HYDROSTATIC PUMP(50)-3986 PSI(280 Bar)		2
66	6631449	SPRING			1
67	6631453	BRACKET			1
68	6653735	WASHER			1
69	6653733	BOLT			1
70	6653734	NUT			1
71	6657319	HANDLE			1
72	NAP	COVER	Was 6631451 [A]		1
73	6631458	NUT			1
74	6645071	COVER			1
75	58K-12	O-RING			1
76	6657323	O-RING	Was 657323 [A]		1
77	6657322	O-RING			1
78					1
79	6648256	NUT	locking		1
80	6655042	O-RING	square		1
81	6661634	PLATE	spacer - M91-46909		1
82					1
83	86D-12	NUT			1
84	6664371	SEAL KIT	W/Ref. HYDROSTATIC PUMP(4), HYDROSTATIC PUMP(22), HYDROSTATIC PUMP(25), HYDROSTATIC PUMP(29), HYDROSTATIC PUMP(38), HYDROSTATIC		1

www.youfixthis.com

HYDROSTATIC PUMP

Ref.N°	Part N°	Description	Remarks	Serial N°	Qty.
85	NAP	SLEEVE, REPAIR	SEE BTI		1
86	6631471	WASHER			1

www.youfixthis.com

GEAR PUMP
(B5501-29155) (20 mm Dia. Shaft)

NOTE: Assemble Ref. 12 Seals back to back.

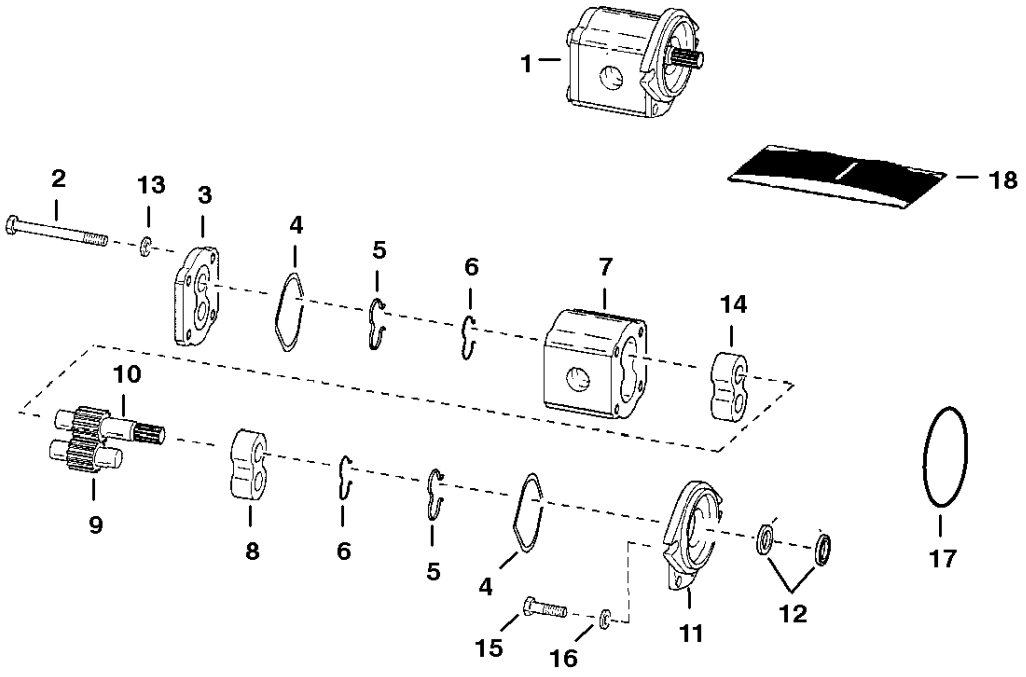

MS-1689

www.youfixthis.com

GEAR PUMP

Ref.N°	Part N°	Description	Remarks	Serial N°	Qty.
1	NAP	PUMP	Ref. GEAR PUMP(2)-GEAR PUMP(14) -Order 6665551inD1}Pump - See Page GEAR PUMP(1)Was 6657327 [A]		1
2	NSS	BOLT	Was 6658124 [A]		4
3	6658123	COVER			1
4	NSS	O-RING	seal		2
5	NSS	SEAL			2
6	NSS	RING	Was 6658119 [A]		2
7	NSS	BODY			1
8	6658118	BEARING			1
9	NSS	GEAR	idler - 20 mm dia. - Was 6658121 [A]		1
10	NSS	GEAR	drive - 20 mm dia. - Was 6658120[A]		1
11	6658122	COVER			1
12	NSS	SEAL			2
13	NSS	WASHER	Was 6658125 [A]		4
14	NSS	BEARING	Was 6658117 [A]		1
15	17C-616	BOLT			2
16	28E-6	WASHER			2
17	6645080	O-RING			1
18	6658126	SEAL KIT	Ref. GEAR PUMP(4)-GEAR PUMP(6) & GEAR PUMP(12)		1

www.youfixthis.com

GEAR PUMP
(B5501-34022) (22 mm Dia. Shaft)

NOTE: Assemble Ref. 12 Seals back to back.

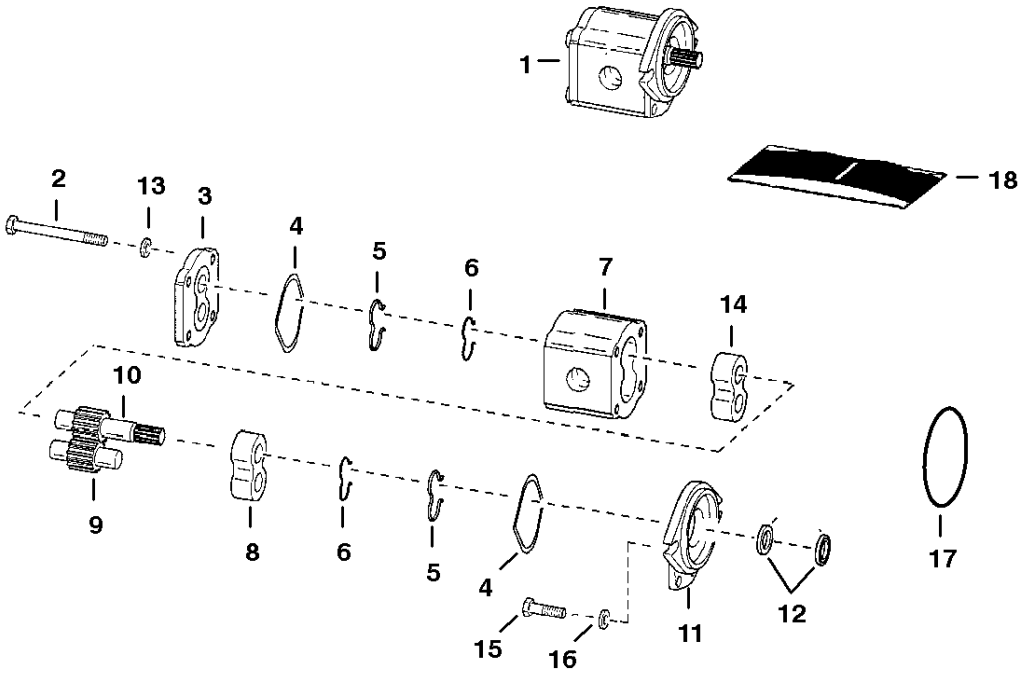

MS-1689A

www.youfixthis.com

GEAR PUMP

Ref.N°	Part N°	Description	Remarks	Serial N°	Qty.
1	6665551	PUMP	Ref. GEAR PUMP(2)-GEAR PUMP(14)		1
2	NSS	BOLT			4
3	6658123	COVER			1
4	NSS	O-RING	seal		2
5	NSS	SEAL			2
6	NSS	RING			2
7	NSS	BODY			1
8	NSS	BEARING			1
9	NSS	GEAR	idler - 22 mm dia.		1
10	NSS	GEAR	drive - 22 mm dia.		1
11	6658122	COVER			1
12	NSS	SEAL			2
13	NSS	WASHER			4
14	NSS	BEARING			2
15	17C-616	BOLT			2
16	28E-6	WASHER			2
17	6645080	O-RING			1
18	6666834	SEAL KIT	Ref. GEAR PUMP(4)-GEAR PUMP(6) & GEAR PUMP(12)		1

www.youfixthis.com

HYDROSTATIC OIL FILTER

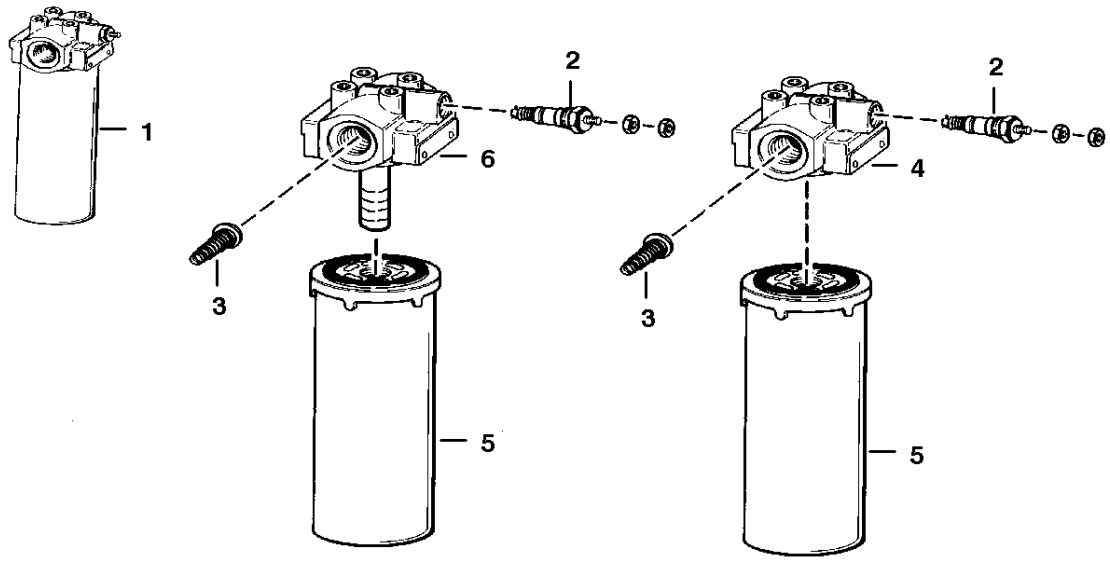

B-20148

www.youfixthis.com

HYDROSTATIC OIL FILTER

Ref.N°	Part N°	Description	Remarks	Serial N°	Qty.
1	6661247	FILTER ASSY.	W/Ref. HYDROSTATIC OIL FILTER(2)-HYDROSTATIC OIL FILTER(5) (50 PSI by-pass & switch) - Was 6648905 [A]		1
1	6661282	FILTER ASSY.	W/Ref. HYDROSTATIC OIL FILTER(2), HYDROSTATIC OIL FILTER(3), HYDROSTATIC OIL FILTER(5) & HYDROSTATIC OIL FILTER(6) (50 PSI by- p		1
2	6660260	SWITCH	pressure - Normally closed		1
2	6599365	KIT	Nut, washer & o-rings for switch		1
3	NAP	VALVE	by-pass (50 PSI - Order Ref. HYDROSTATIC OIL FILTER(1))		1
4	NSS	HEAD	Order 6661247 Filter Assy.		1
5	6661248	ELEMENT	Was 6630977 [B]		1
6	NSS	HEAD	W/Internal check valve - Order 6661282 Filter Assy.		1

www.youfixthis.com

CAB ELECTRICAL SYSTEM
(S/N 5084 11010 & Below)

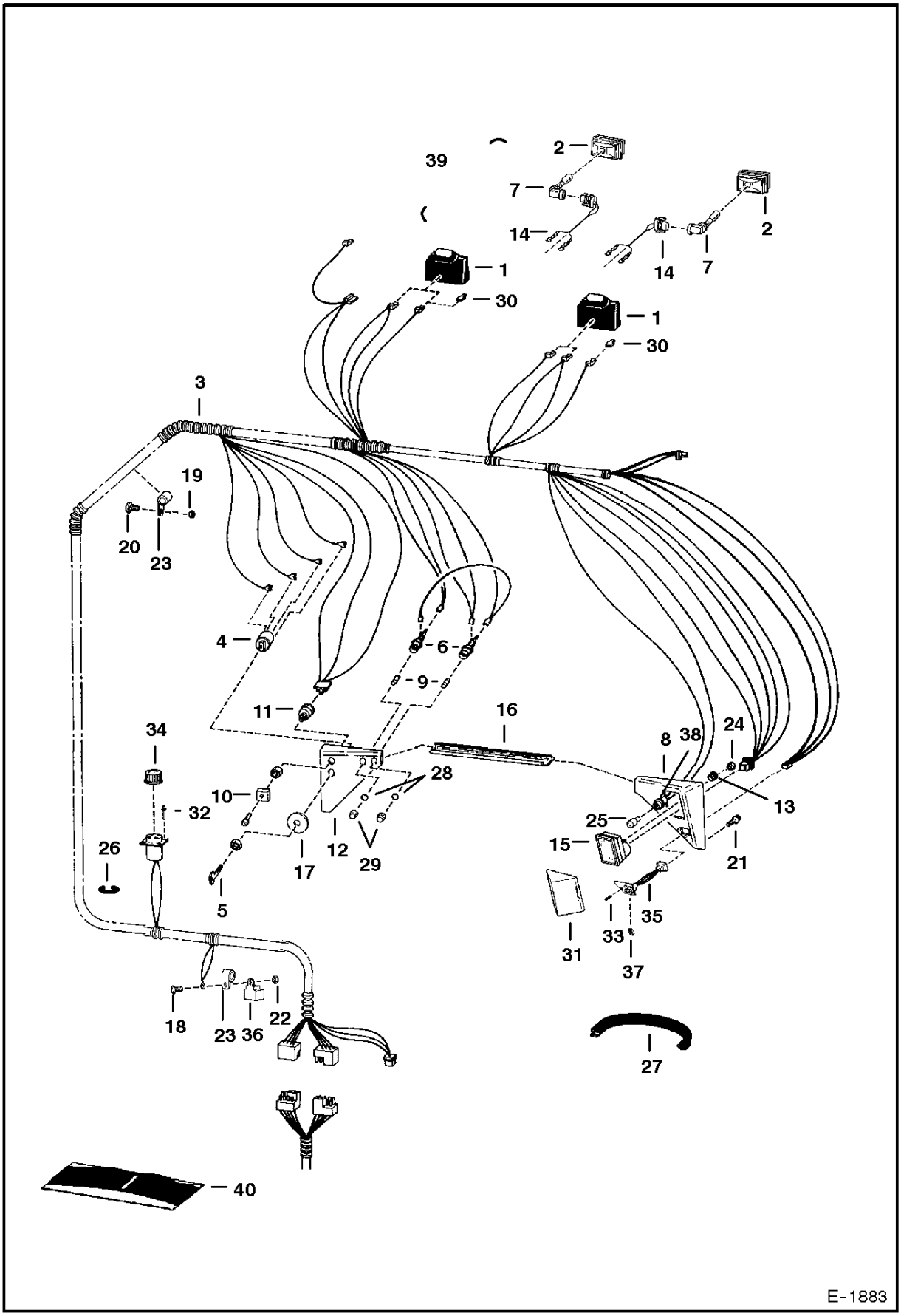

www.youfixthis.com

CAB ELECTRICAL SYSTEM

Ref.N°	Part N°	Description	Remarks	Serial N°	Qty.
1	6578824	HOUSING	rubber		2
2	6649478	BULB HOUSING			2
3	6576352	HARNESS			1
4	NAP	SWITCH	ignition - Order Ref. CAB ELECTRICAL SYSTEM(40) - See BTI 289 - Was 6519592 [A]		1
4	6665606	SWITCH	ignition		1
5	6512809	KEY	ignition - For 6519592 Switch		x
5	6709527	KEY	ignition - For 6665606 Switch - Was 6666202 [A]		x
6	6513469	FUSE HOLDER	fuse		2
7	6667934	LIGHT BULB	Was 6650111 [A]		2
8	6572055	PANEL	R.H.		1
9	1319451	FUSE			2
10	6599781	KNOB	light switch - Was 6599696 [A]		1
11	6512808	SWITCH			1
12	6572054	PANEL	L.H.		1
13	17E-8	WASHER			2
14	6578528	HARNESS	light		2
15	6665923	DISPLAY	LCD monitor - Was 6708080 [A]		1
16	6578780	CROSSMEMBER	Was 6572066 [A]		1
17	6563431	PLATE	For 6519592 Switch		1
17	6709028	PLATE	For 6665606 Switch - Was 6708701 [A]		1
18	10C-412	BOLT			1
19	83D-4	NUT			2
20	35C-412	BOLT	Was 35C-410 [B]		2
21	84G-3112	BOLT			6
22	61D-4	NUT			1
23	30H-54	CLIP			3
24	12D-8	NUT			2
25	6578357	BULB			1
26	NAP	MOULDING	6" (152,4 mm) long - Order Ref. CAB ELECTRICAL SYSTEM(27)		1
27	6630138	MOULDING	bulk - Sold Per Foot		x
28	6514643	GASKET			2
29	6514642	CAP			2
30	6519548	CONNECTOR			2
31	6700487	SHIELD	snap in place		1
32	6515213	RIVET	Was 41G-408 [B]		4
33	6669225	SCREW	Was 58G-408 [A]		2
34	6651703	CAP			1
35	6667903	SWITCH	aux. controls module - Was 6700603 [A]		1
36	6651975	SOLENOID	relay		1
37	6660594	BUTTON	on/off		1
38	6649331	SOCKET	light - W/6' wire leads		1
39	6577801	LIGHT ASSY	Ref.CAB ELECTRICAL SYSTEM(1), CAB ELECTRICAL SYSTEM(2), CAB ELECTRICAL SYSTEM(7) & CAB ELECTRICAL SYSTEM(14)		2
40	6724282	SWITCH KIT	Ref. CAB ELECTRICAL SYSTEM(4), CAB ELECTRICAL SYSTEM(5) & CAB ELECTRICAL SYSTEM(17)		1

www.youfixthis.com

CAB ELECTRICAL SYSTEM
(S/N 5084 11011 & Above) (S/N 5097 11001 & Above)

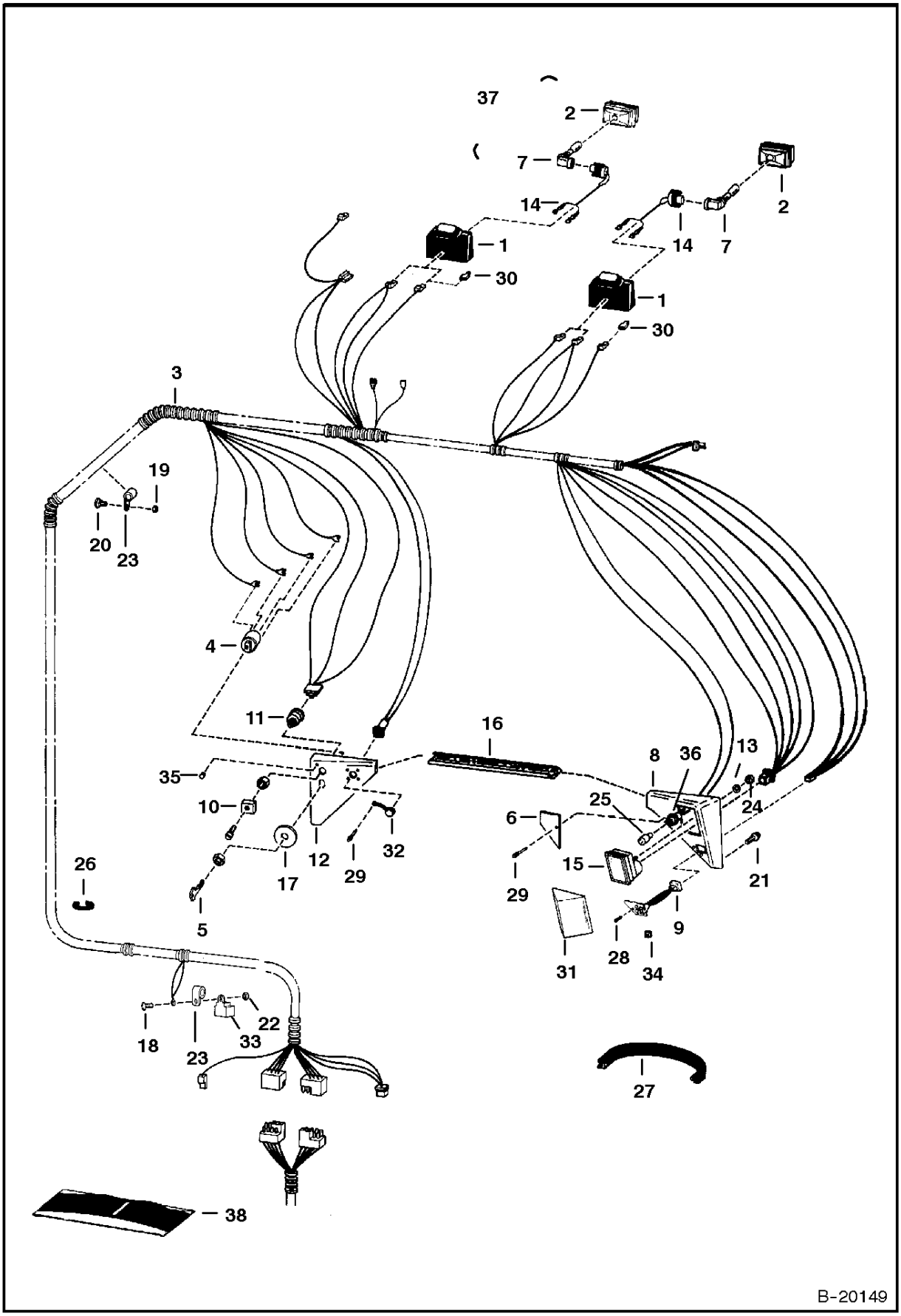

www.youfixthis.com

CAB ELECTRICAL SYSTEM

Ref.N°	Part N°	Description	Remarks	Serial N°	Qty.
1	6578824	HOUSING	rubber		2
2	6649478	BULB HOUSING			2
3	6705136	HARNESS	Was 6704407 [A]		1
4	NAP	SWITCH	ignition - Order Ref. CAB ELECTRICAL SYSTEM(38) - See BTI 289 - Was 6519592 [A]		1
4	6665606	SWITCH	ignition		1
5	6512809	KEY	ignition - For 6519592 Switch		x
5	6709527	KEY	ignition - For 6665606 Switch - Was 6666202 [A]		x
6	6702678	PLATE	service codes		1
7	6667934	LIGHT BULB	Was 6650111 [A]		2
8	6702660	PANEL	R.H.		1
9	6667903	SWITCH	aux. controls module - Was 6700603 [A]		1
10	6599781	KNOB	light switch		1
11	6512808	SWITCH			1
12	6702608	PANEL	L.H.		1
13	17E-8	WASHER			2
14	6578528	HARNESS	light		2
15	6665923	DISPLAY	LCD monitor - Was 6708080 [A]		1
16	6578780	CROSSMEMBER			1
17	6702263	PLATE	For 6519592 Switch		1
17	6709028	PLATE	For 6665606 Switch - Was 6708701 [A]		1
18	10C-412	BOLT			1
19	83D-4	NUT			2
20	35C-412	BOLT	Was 35C-410 [B]		2
21	6702642	BOLT			6
22	61D-4	NUT			1
23	30H-54	CLIP			3
24	12D-8	NUT			2
25	6578357	BULB			1
26	NAP	MOULDING	6" (152,4 mm) long -Order Ref. CAB ELECTRICAL SYSTEM(27)		1
27	6630138	MOULDING	bulk - Sold Per Foot		x
28	6669225	SCREW	Was 58G-408 [A]		2
29	6704892	RIVET	Was 6658512 [A]		2
30	6519548	CONNECTOR			2
31	6700487	SHIELD	snap in place		1
32	6651703	CAP			1
33	6651975	SOLENOID	relay		1
34	6660594	BUTTON	on/off		1
35	6660955	PLUG			1
36	6649331	SOCKET	light - W/6' wire leads		1
37	6577801	LIGHT ASSY	Ref. CAB ELECTRICAL SYSTEM(1), CAB ELECTRICAL SYSTEM(2), CAB ELECTRICAL SYSTEM(7) & CAB ELECTRICAL SYSTEM(14)		2
38	6724282	SWITCH KIT	Ref. CAB ELECTRICAL SYSTEM(4), CAB ELECTRICAL SYSTEM(5) & CAB ELECTRICAL SYSTEM(17)		1

www.youfixthis.com

ENGINE ELECTRICAL SYSTEM
(S/N 5084 11010 & Below)

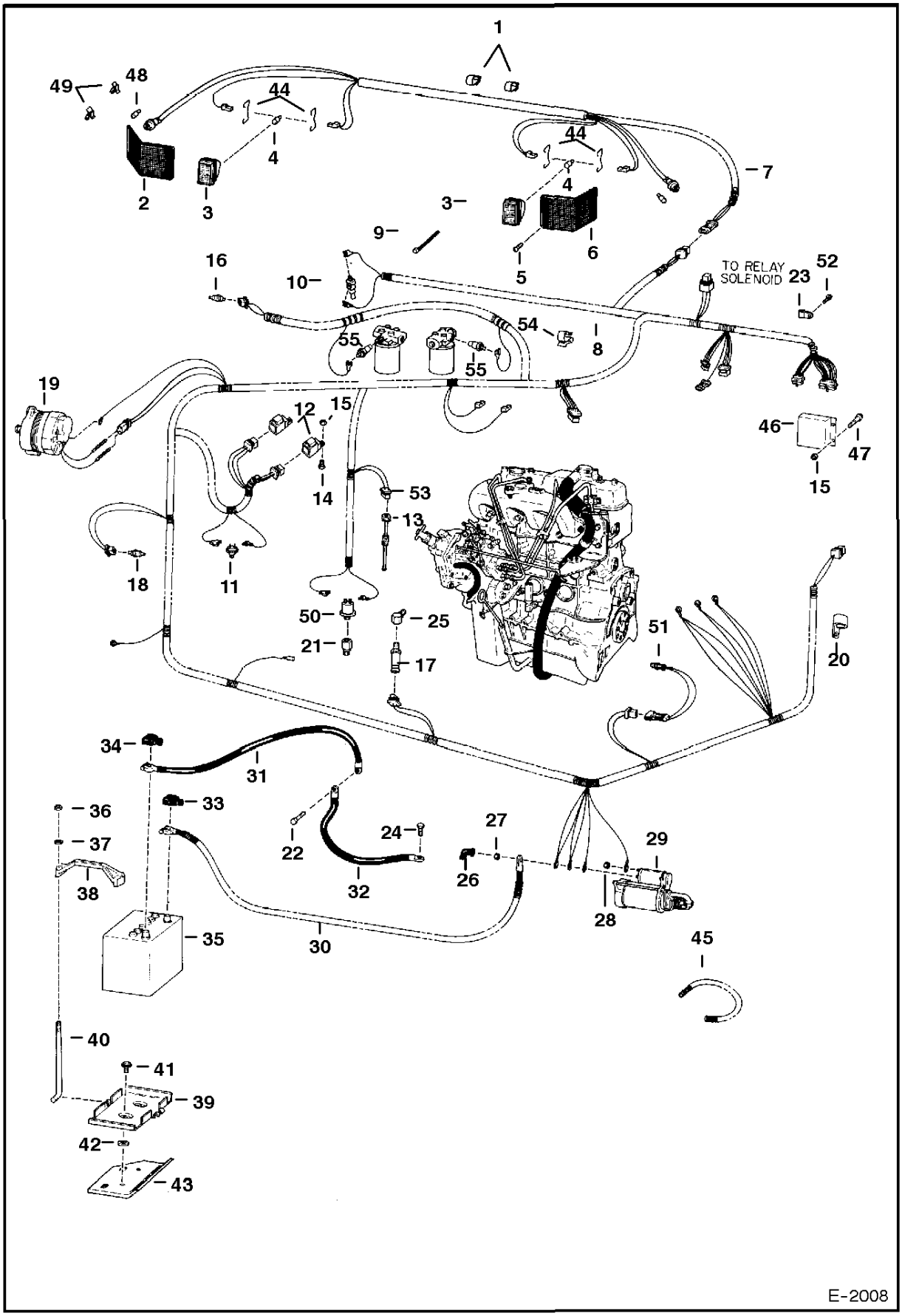

www.youfixthis.com

ENGINE ELECTRICAL SYSTEM

Ref.N°	Part N°	Description	Remarks	Serial N°	Qty.
1	30H-35	CLIP	Was 30H-33 [D]		2
2	6577504	LENS			1
3	6665922	LAMP	W/Ref. ENGINE ELECTRICAL SYSTEM(4) - Was 6661353 [A]		2
3	6665431	SOCKET	threaded bulb		2
4	898731	LIGHT BULB			2
5	6706517	SCREW	Was 6579119 [A]		8
6	6577505	LENS			1
7	6577648	HARNESS	lights		1
8	NAP	HARNESS	engine - Was 6579653 [A]		1
9	6610510	NYLON TIE	Was 1715312 [A]		4
10	6648326	SWITCH	coolant level		1
11	6660316	SWITCH	vacuum - Was 6651570 [A]		1
12	6651975	SOLENOID	relay		2
13	6658958	SENSOR	fuel - Was 6576946 [A]		1
13	79K-14	O-RING			1
14	17C-412	BOLT			2
15	61D-4	NUT			2
16	6654200	SENSOR	hydro. temp		1
17	6660204	SENSOR	eng. oil pressureAWas 6649476 [A]		1
18	6654202	SENSOR	eng. temp.		1
19		ALTERNATOR	See Page ALTERNATOR(1)		1
20	30H-46	CLAMP			1
21	6563922	SNUBBER	W/Filter		1
21	6563920	FILTER			1
22	2CM-1016	BOLT	Was 1CM-1016 [B]		1
23	30H-57	CLAMP			2
24	84G-3712	BOLT			1
25	6707040	ELBOW	Was 6658634 [A]		1
26	6560172	COVER			1
27	4DM-10	NUT			1
28	4DM-5	NUT			1
29		STARTER	See Page STARTER(1)		1
30	NAP	CABLE	pos. - 34" (863,6mm) long - Order 6576188 Cable - W/30" (762 mm) of Ref. ENGINE ELECTRICAL SYSTEM(45) - Was 6579809 [A]		1
30	6576188	CABLE	pos. - 40" (101,6mm) long		1
31	6579806	CABLE	ground		1
32	6563025	CABLE	ground		1
33	2356058	BOOT			1
34	6599652	BOOT			1
35	6665032	BATTERY	Was 6631611 [A]		1
35	6630153	BATTERY CAP			2
36	59D-5	NUT			2
37	25E-15	WASHER			2
38	6569203	CLAMP			1
39	6712536	MOUNT	Was 6577809 [A]		1
40	6576280	BOLT			2
41	84G-3716	BOLT			2
42	6555455	WASHER			2
43	6579989	BRACKET			1
44	6701392	CLIP			4
45	6563505	CONDUIT	bulk - Sold Per Foot		x
46	6667828	BOSS	initialized - Was 6661214 [A]		1
46	6664133	BOSS	not initialized - Was 6722444 [A]		1
46	6666918	BOSS	backup - Was 6661110 [A]		1

www.youfixthis.com

ENGINE ELECTRICAL SYSTEM

Ref.N°	Part N°	Description	Remarks	Serial N°	Qty.
47	10C-412	BOLT			4
48	6649481	BULB			2
49	6649923	CLIP			2
50	NAP	SENDER	one post - hyd. chg. pressure - See BTI 271 - Was 6655589 [A]		1
50	6661518	SENDER	two post - hyd. chg. pressure		1
51	6658260	SENSOR	RPM Counter - Was 6651511 [A]		1
52	84G-3116	BOLT			1
53	6646383	CONNECTOR	fuel sender		1
53	6632946	TERMINAL	female		2
54	6599698	CLIP			3
55	6660260	SWITCH	filter - See Page HYDROSTATIC OIL FILTER(2)		2

www.youfixthis.com

ENGINE ELECTRICAL SYSTEM
(S/N 5084 11011-12460) (S/N 5097 11334 & Below)

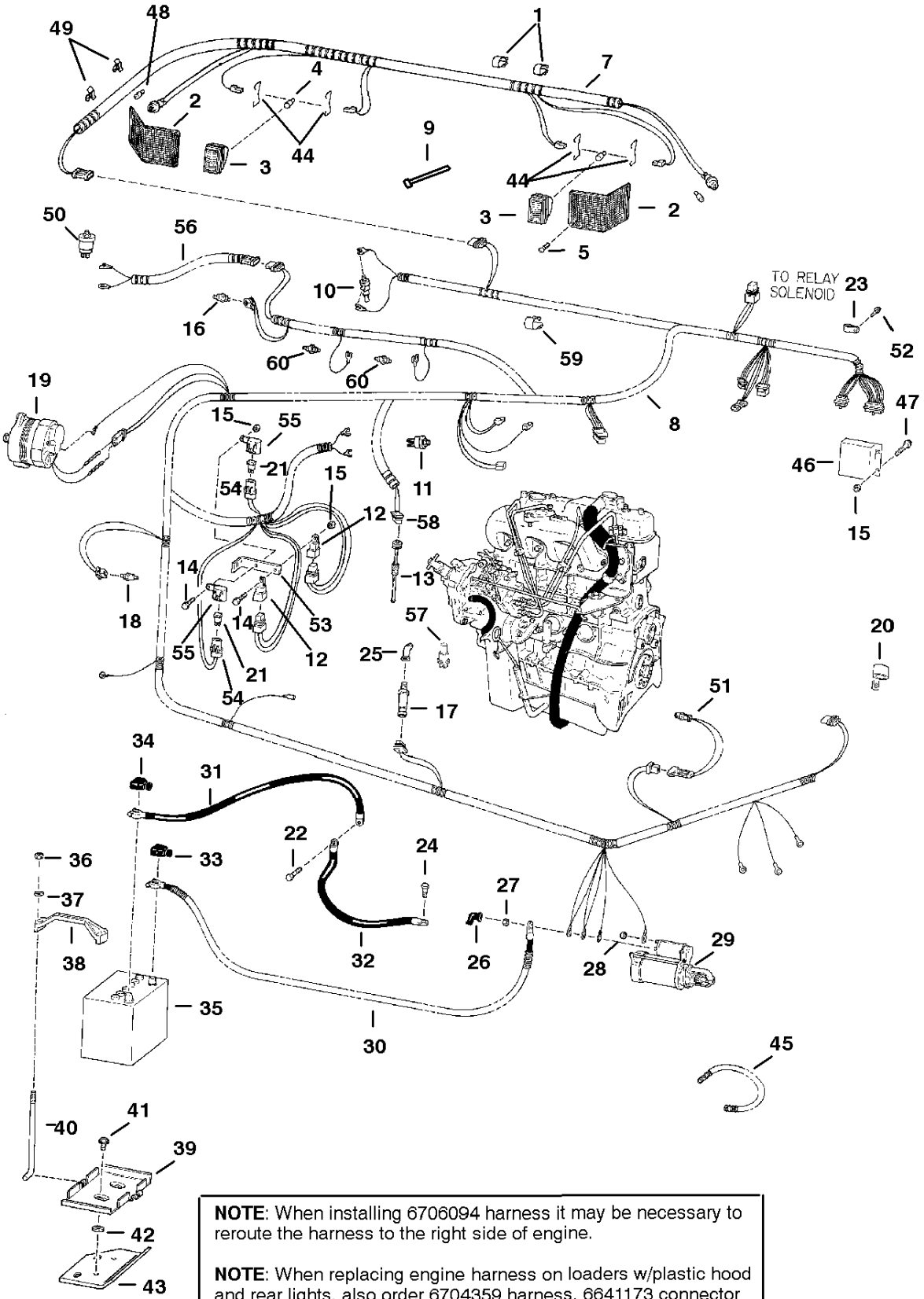

www.youfixthis.com

ENGINE ELECTRICAL SYSTEM

Ref.N°	Part N°	Description	Remarks	Serial N°	Qty.
1	30H-35	CLIP			2
2	6577504	LENS			1
3	6665922	LAMP	W/Ref. ENGINE ELECTRICAL SYSTEM(4) - Was 6661353 [A]		2
3	6665431	SOCKET	threaded bulb		2
4	898731	LIGHT BULB			2
5	6706517	SCREW	Was 6579119 [A]		8
6	6577505	LENS			1
7	6577648	HARNESS	lights		1
8	NAP	HARNESS	engine -W/resistor- for one post hyd. chg. press. sender - Order 6706094 Harness, 6704931 transducer, Ref. ENGINE ELECTRICAL S		1
8	6706094	HARNESS	engine - W/O resistor - for two post hyd. chg. press. sender - Was 6705035 [A]		1
9	6610510	NYLON TIE	Was 1715312 [A]		4
10	6648326	SWITCH	coolant level		1
11	6660316	SWITCH	vacuum - Was 6651570 [A]		1
12	6651975	SOLENOID	relay		2
13	6658958	SENSOR	fuel - Was 6576946 [A]		1
13	79K-14	O-RING			1
14	45G-1212	BOLT			2
15	50D-12	NUT			2
16	6654200	SENSOR	hydro. temp		1
17	6660204	SENSOR	eng. oil pressureAWas 6649476 [A]		1
18	6654202	SENSOR	eng. temp.		1
19		ALTERNATOR	See Page ALTERNATOR(1)		1
20	30H-46	CLAMP			1
21	6702444	FUSE	25 amp		2
22	2CM-1016	BOLT	Was 1CM-1016 [B]		1
23	30H-57	CLAMP			2
24	84G-3712	BOLT			1
25	6707040	ELBOW	Was 6658634 [A]		1
26	6560172	COVER			1
27	4DM-10	NUT			1
28	4DM-5	NUT			1
29		STARTER	See Page STARTER(1)		1
30	NAP	CABLE	pos. - 34" (863,6mm) long - Order 6576188 Cable - W/30" (762 mm) of Ref. ENGINE ELECTRICAL SYSTEM(45) - Was 6579809 [A]		1
30	6576188	CABLE	pos. - 40" (101,6mm) long		1
31	6579806	CABLE	ground		1
32	6563025	CABLE	ground		1
33	2356058	BOOT			1
34	6599652	BOOT			1
35	6665032	BATTERY	Was 6631611 [A]		1
35	6630153	BATTERY CAP			2
36	59D-5	NUT			2
37	25E-15	WASHER			2
38	6569203	CLAMP			1
39	6712536	MOUNT	Was 6577809 [A]		1
40	6576280	BOLT			2
41	84G-3716	BOLT			2
42	6555455	WASHER			2
43	6579989	BRACKET			1
44	6701392	CLIP			4
45	6563505	CONDUIT	bulk - Sold Per Foot		x
46	6667828	BOSS	initialized - Was 6661214 [A]		1

www.youfixthis.com

ENGINE ELECTRICAL SYSTEM

Ref.N°	Part N°	Description	Remarks	Serial N°	Qty.
46	6669133	BOSS	not initialized - Was 6722444 [A]		1
46	6666918	BOSS	backup - Was 6661110 [A]		1
47	10C-412	BOLT			4
48	6649481	BULB			2
49	6649923	CLIP			2
50	NAP	SENDER	one post - hyd. chg. pressure - See BTI 271 or S/L 22 June 92 - Was 6655589 [A]		1
50	6661518	SENDER	two post - hyd. chg. pressure		1
51	6658260	SENSOR	RPM Counter		1
52	84G-3116	BOLT			1
53	6702650	BRACKET			1
54	6657305	HOLDER	fuse		2
55	6657306	CAP	fuse		2
56	6704931	HARNESS	transducer - for two post sender		1
57	6667584	NIPPLE	Was 6651946 [A]		1
58	6646383	CONNECTOR	fuel sender		1
58	6632946	TERMINAL	female		2
59	6599698	CLIP			3
60	6660260	SWITCH	filter - See Page HYDROSTATIC OIL FILTER(2)		2

www.youfixthis.com

ENGINE ELECTRICAL SYSTEM
(S/N 5084 12461 & Above) (S/N 5097 11335 & Above)

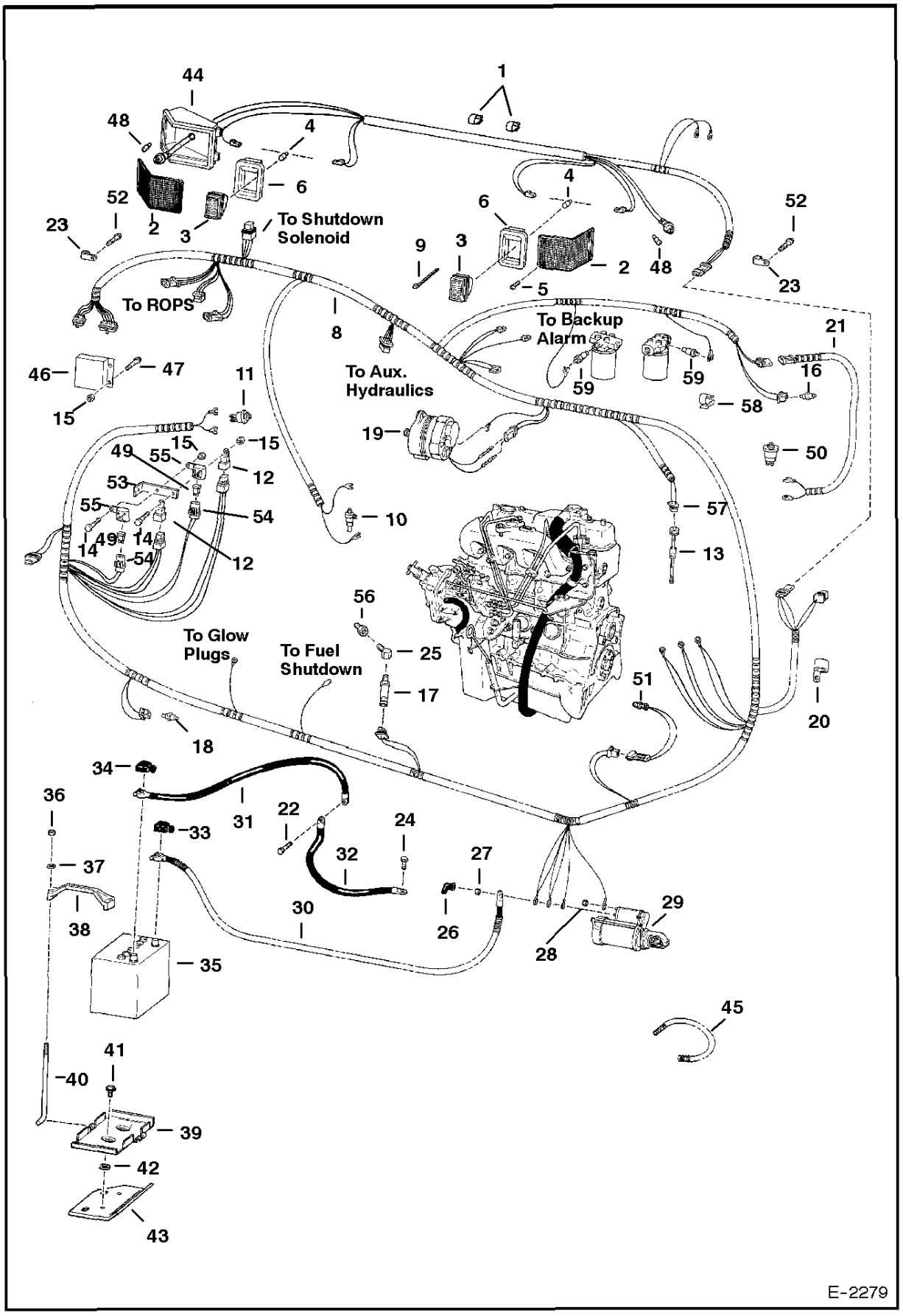

www.youfixthis.com

ENGINE ELECTRICAL SYSTEM

Ref.N°	Part N°	Description	Remarks	Serial N°	Qty.
1	30H-35	CLIP			3
2	6703797	LENS			1
3	6665922	LAMP	W/Ref. ENGINE ELECTRICAL SYSTEM(4) - Was 6661353 [A]		2
3	6665431	SOCKET	threaded bulb		2
4	898731	LIGHT BULB			2
5	6706517	SCREW	self tapping - Was 6704400 [A]		8
6	6703796	MOUNT			1
7	6704232	HARNESS	lights		1
8	6704234	HARNESS	engine -W/resistor- for one post hyd. chg. press. sender		1
8	6705035	HARNESS	engine - W/O resistor - for two post hyd. chg. press. sender		1
9	6610510	NYLON TIE	Was 1715312 [A]		3
10	6648326	SWITCH	coolant level		1
11	6660316	SWITCH	vacuum		1
12	6651975	SOLENOID	relay		2
13	6658958	SENSOR	fuel		1
13	79K-14	O-RING			1
14	45G-1212	BOLT			2
15	50D-12	NUT			2
16	6654200	SENSOR	hydro. temp		1
17	6660204	SENSOR	eng. oil pressure		1
18	6654202	SENSOR	eng. temp.		1
19		ALTERNATOR	See Page ALTERNATOR(1)		1
20	30H-46	CLAMP			1
21	6704345	HARNESS	transducer - for one post hyd. chg. press. sender		1
21	6704931	HARNESS	transducer - for two post hyd. chg. press. sender		1
22	5CM-1016	BOLT	Was 2CM-1016 [B]		1
23	30H-57	CLAMP			2
24	84G-3712	BOLT			1
25	6707040	ELBOW	Was 6658634 [A]		1
26	6560172	COVER			1
27	4DM-10	NUT			1
28	4DM-5	NUT			1
29		STARTER	See Page STARTER(1)		1
30	NAP	CABLE	pos. - 34" (863,6mm) long - Order 6576188 Cable - W/30" (762 mm) of Ref. ENGINE ELECTRICAL SYSTEM(45) - Was 6579809 [A]		1
30	6576188	CABLE	pos. - 40" (101,6mm) long		1
31	6579806	CABLE	ground		1
32	6563025	CABLE	ground		1
33	2356058	BOOT			1
34	6599652	BOOT			1
35	6665032	BATTERY	Was 6631611 [A]		1
35	6630153	BATTERY CAP			2
36	59D-5	NUT			2
37	25E-15	WASHER			2
38	6569203	CLAMP			1
39	6712536	MOUNT	Was 6577809 [A]		1
40	6576280	BOLT			2
41	84G-3716	BOLT			2
42	6555455	WASHER			2
43	6579989	BRACKET			1
44	6704362	HOUSING	light		2
45	6563505	CONDUIT	bulk - Sold Per Foot		x
46	6667828	BOSS	initialized - Was 6661214 [A]		1

www.youfixthis.com

ENGINE ELECTRICAL SYSTEM

Ref.N°	Part N°	Description	Remarks	Serial N°	Qty.
46	6666916	BOSS	not initialized - Was 6722444 [A]		1
46	6666918	BOSS	backup - Was 6661110 [A]		1
47	10C-412	BOLT			4
48	6649481	BULB			2
49	6702444	FUSE	25amp		2
50	NAP	SENDER	one post - hyd. chg. pressure - See BTI 271 - Was 6655589 [A]		1
50	6661518	SENDER	two post - hyd. chg. pressure		1
51	6658260	SENSOR	RPM Counter		1
52	84G-3116	BOLT			1
53	6702650	BRACKET			1
54	6657305	HOLDER	fuse		2
55	6657306	CAP	fuse		2
56	6667584	NIPPLE	Was 6651946 [A]		1
57	6632946	TERMINAL	female		2
57	6646383	CONNECTOR	fuel sender		1
58	6599698	CLIP			3
59	6660260	SWITCH	filter - See Page HYDROSTATIC OIL FILTER(2)		2

www.youfixthis.com

CONTROLS ELECTRICAL
(S/N 5084 11353 & Below)

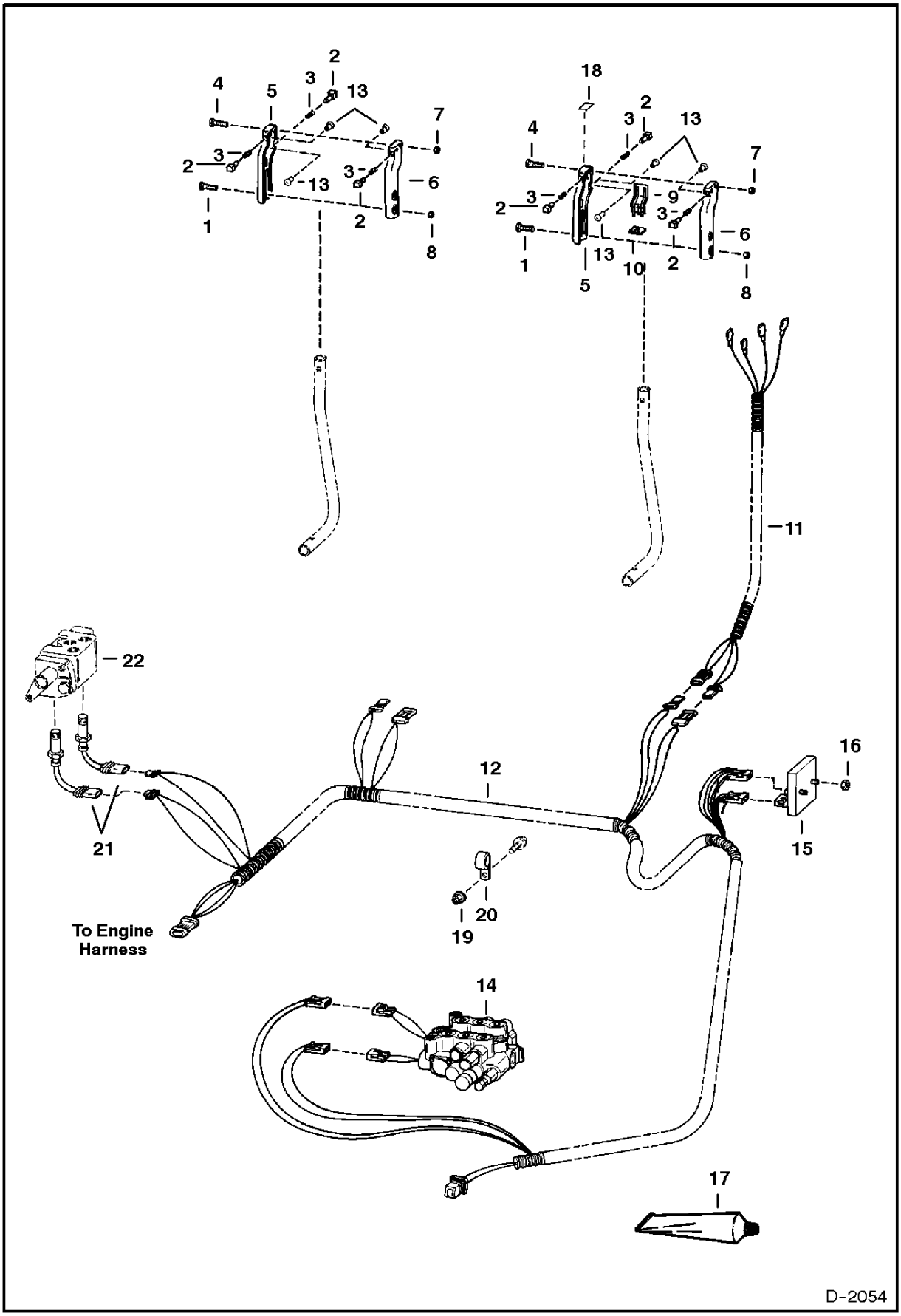

www.youfixthis.com

CONTROLS ELECTRICAL

Ref.N°	Part N°	Description	Remarks	Serial N°	Qty.
1	85G-820	BOLT			4
2	6700356	SWITCH	push - See BTI 248		6
3	6571977	SPRING			6
4	85G-620				4
5	6569444	HANDLE	See BTI 248 - Also Order Ref.		2
5			CONTROLS ELECTRICAL(2), CONTROLS ELECTRIC AL(3) & CONTROLS ELECTRICAL(13)com3]K }H~10{ M		x
6	6569445	HANDLE	See BTI 248 - Also Order Ref.		2
6			CONTROLS ELECTRICAL(2), CONTROLS ELECTRIC AL(3) & CONTROLS ELECTRICAL(13)com3.) }H~10{M		x
7	12D-6	NUT			4
8	12D-8	NUT			4
9	NAP	SWITCH	leaf - Was 6569451 [A]		1
10	6572087	INSULATOR			1
11	6576323	HARNESS			1
12	6579881	HARNESS		5084 11010 & Bel	1
12	6702634	HARNESS		5084 11011-11353	1
13	6700354	RETAINER	See BTI 248		6
14		VALVE	See Page HYDRAULIC CONTROL VALVE(1) & NO PAGE		1
15	6579880	MODULE	aux. control		1
16	85D-4	NUT	Was 12D-10 [A]		2
17	6654216	ADHESIVE	3 gr. tube - See BTI 248		x
18	6577506	PLATE			1
19	89D-6	NUT			1
20	30H-42	CLAMP			1
21	6649018	SOLENOID	Was 6659595 [A]		2
22		VALVE	front aux. - See Page FRONT AUXILIARY VALVE(1)		1

www.youfixthis.com

CONTROLS ELECTRICAL
(S/N 5084 11354 & Above) (S/N 5097 11001 & Above)

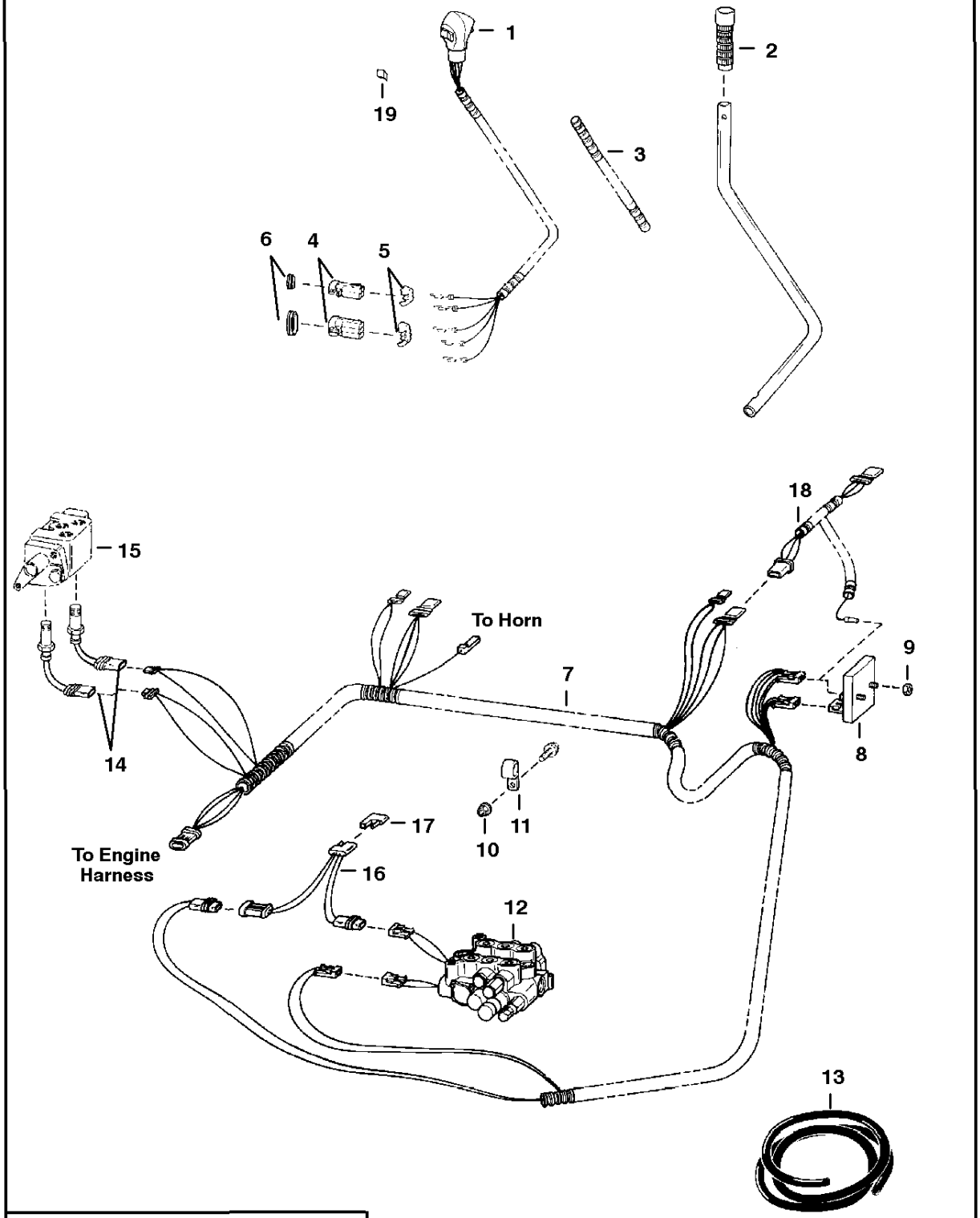

NOTE: Switches for Ref. 1 are not sold seperately. Order 6704454 handle assy.

D-2150

www.youfixthis.com

CONTROLS ELECTRICAL

Ref.N°	Part N°	Description	Remarks	Serial N°	Qty.
1	6704454	HANDLE ASSY	Cobra style - W/Ref. 3 - Also Order Ref. CONTROLS ELECTRICAL(4)-CONTROLS ELECTRICAL(6) - Was 6703845 [A]		2
2	6702621	GRIP			2
3	NAP	CONDUIT	36' (914,4 mm) long - Order Ref. CONTROLS ELECTRICAL(13)		1
4	6641179	CONNECTOR	2 - pin		2
4	6640699	CONNECTOR	3 - pin		2
5	6641180	LOCK	2 - pin		2
5	6640700	LOCK	3 - pin		2
6	6649683	SEAL	for use W/2 - pin connector		2
6	6659553	SEAL	for use W/3 - pin connector		2
7	6703005	HARNESS		5084 11714 & Bel	1
7				5097 11094 & Bel	1
7	NAP	HARNESS	Order 6705283inD1} Harness - Was 6703878 [A]	5084 11715 & Abv	1
7				5097 11095 & Abv	1
7	6705283	HARNESS		5084 11715 & Abv	1
7				5097 11095 & Abv	1
8	6671669	MODULE	aux. control - Was 6706215 [C]		1
9	85D-4	NUT			2
10	89D-6	NUT			1
11	30H-42	CLAMP			1
12		VALVE	See Page HYDRAULIC CONTROL VALVE(1) & NO PAGE		1
13	6584978	CONDUIT	bulk - Sold Per Foot - Was 6702614		x
14	6649018	SOLENOID	Was 6659595 [A]		2
15		VALVE	front aux. - See Page FRONT AUXILIARY VALVE(1)		1
16	6703898	HARNESS	853HHH only & Rear Aux. Kit - See Page REAR AUXILIARY(31)		2
17	6703899	DIODE	853HHH only & Rear Aux. Kit - See Page REAR AUXILIARY(31)		2
18	6705284	HARNESS	used for momentary reverse flow		1
19	6664315	DECAL	switch		2

www.youfixthis.com

ALTERNATOR
(Melroe)

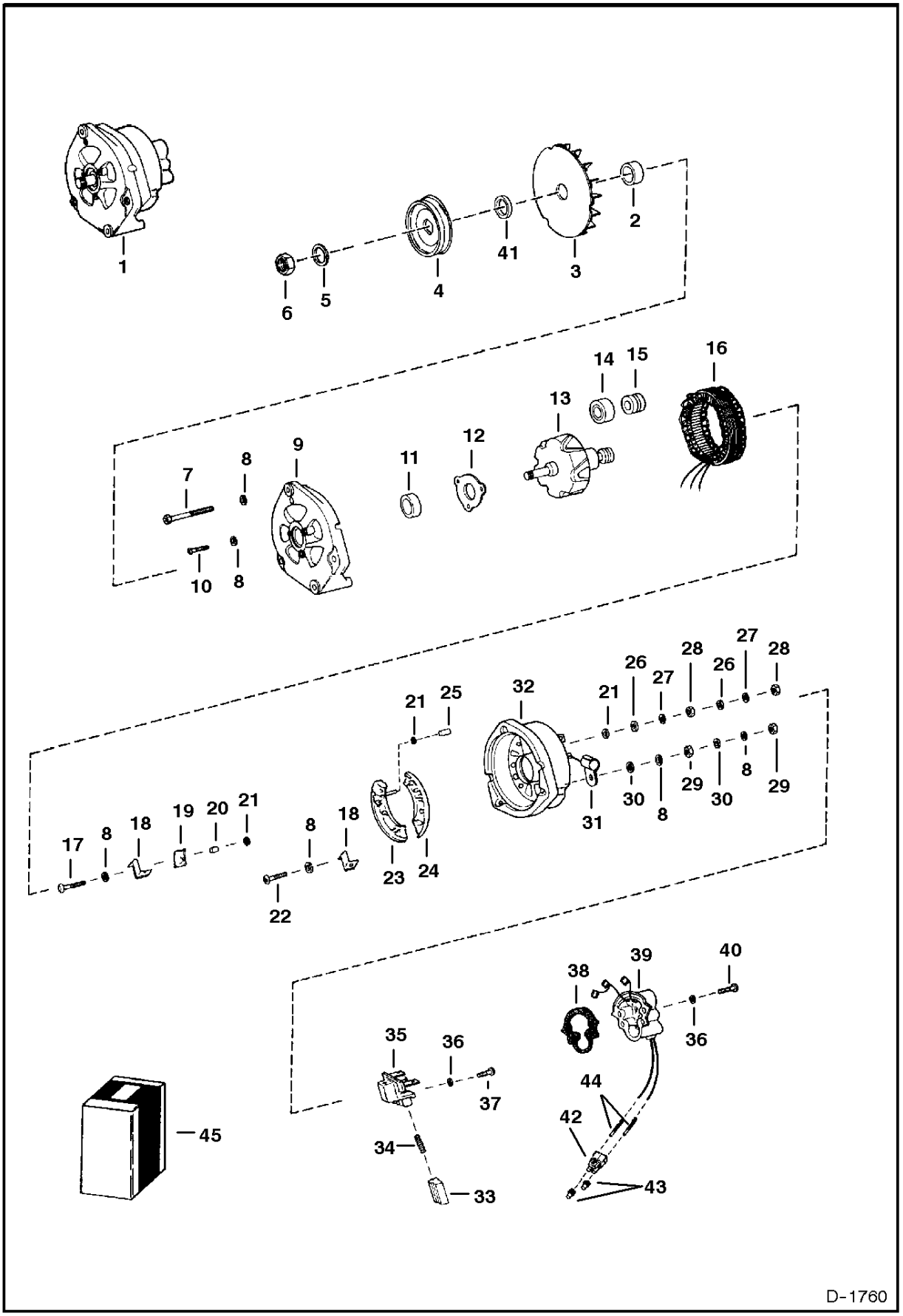

www.youfixthis.com

ALTERNATOR

Ref.N°	Part N°	Description	Remarks	Serial N°	Qty.
1	NAP	ALTERNATOR	Less Ref. ALTERNATOR(3), ALTERNATOR(4) & ALTERNATOR(41) - Order 6661611inD1}$ Alt & 6659375inD1}& FanA See Page ALTERNATOR(1)Wa		x
2	6632210	SPACER			1
3	NAP	FAN	Order 6661611 alternator and 6659375 Fan - Was 6632209 [A]		1
4	6579830	PULLEY			1
5	6632208	WASHER			1
6	6632207	NUT			1
7	6632222	BOLT			3
8	NSS	WASHER			11
9	NAP	BRACKET	W/Ref. ALTERNATOR(8) & ALTERNATOR(10)ALTER NATOR(12)Was 6632224 [A]		1
10	NSS	SCREW			3
11	NSS	BEARING			1
12	NSS	RETAINER			1
13	NSS	ROTOR	W/Ref. ALTERNATOR(14) & Was 6632229 [A]		1
14	NSS	BEARING			1
15	NSS	SLIP RING			1
16	6632230	STATOR			1
17	NSS	BOLT			1
18	NSS	CLAMP			2
19	NSS	MOLD-U			1
20	NSS	BUSHING	insulation		1
21	NSS	WASHER	insulation		3
22	NSS	SCREW			2
23	NSS	HEATSINK			1
24	NSS	HEATSINK			1
25	NSS	BUSHING	insulation		1
26	NSS	WASHER			2
27	NSS	WASHER			2
28	NSS	NUT			2
29	NSS	NUT			2
30	NSS	WASHER			2
31	6632242	CONDENSOR			1
32	NSS	BRACKET	W/Ref. ALTERNATOR(8) & ALTERNATOR(17)-ALTER NATOR(31)Was 6632231 [A]		1
33	NSS	BRUSH			2
34	NSS	SPRING			2
35	NSS	LATCH	W/Ref. ALTERNATOR(33) & ALTERNATOR(34)Was 6632248 [A]		1
36	NSS	WASHER			6
37	NSS	SCREW			2
38	6632253	GASKET			1
39	6632384	KIT	regulator - W/Ref. ALTERNATOR(36) & ALTERNATOR (38)-ALTERNATOR(40) Also Order 6630951		1
40	NSS	SCREW			4
41	6571554	SPACER			1
42	6630949	CONNECTOR			1
43	6648320	SEAL			2
44	6630951	TERMINAL			2
45	NAP	KIT	bearing - W/Ref. ALTERNATOR(11), ALTERNATOR(14) & ALTERNATOR(15) - Was 6632381 [A]		1
45	6632382	KIT	external hardware - W/Ref. ALTERNATOR(8), ALTERN ATOR(21), ALTERNATOR(26)-ALTERNATOR(30), ALTERNATOR(36), ALTERNATOR(37) & ALTER		1
45	6632383	KIT	internal hardware - W/Ref. ALTERNATOR(8), ALTERN ATOR(17)- ALTERNATOR(22) & ALTERNATOR(25)		1

www.youfixthis.com

ALTERNATOR

Ref.N°	Part N°	Description	Remarks	Serial N°	Qty.
45	NSS	KIT	brush holder - W/Ref. ALTERNATOR(33)-ALTERNATOR(37)- Was 6632385 [A]		1

www.youfixthis.com

ALTERNATOR
(Melroe)

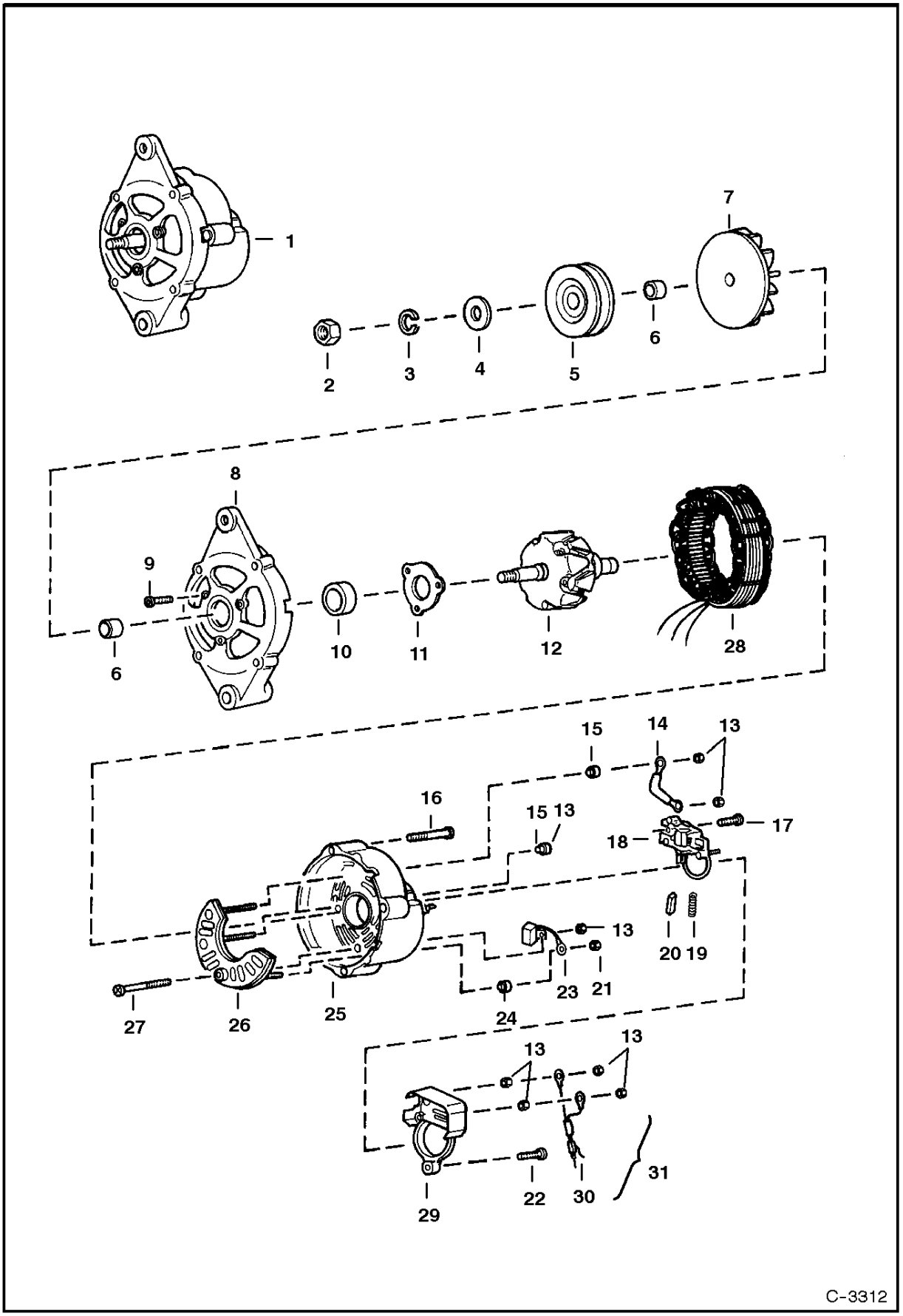

www.youfixthis.com

ALTERNATOR

Ref.N°	Part N°	Description	Remarks	Serial N°	Qty.
1	6661611	ALTERNATOR	Less Fan & Pulley		1
2	6659371	NUT			1
3	6659372	WASHER			1
4	6632323	WASHER			1
5	6579830	PULLEY			1
6	6659374	SPACER			2
7	6659375	FAN			1
8	6659376	BRACKET	W/Ref. ALTERNATOR(9) - ALTERNATOR(11)		1
9	6659378	BOLT			3
10	6659379	BEARING			1
11	6632228	RETAINER			1
12	6659380	ROTOR			1
13	6659387	NUT			7
14	6659397	TERMINAL			1
15	6659386	HOLDER			2
16	6659392	BOLT			3
17	6659396	SCREW			2
18	6659393	REGULATOR	W.Ref. ALTERNATOR(19) & ALTERNATOR(20)		1
19	6659395	SPRING			2
20	6659394	BRUSH			2
21	6659391	NUT			1
22	6659399	SCREW			1
23	6659388	CONDENSER			1
24	6659390	HOLDER			1
25	6659382	BRACKET	rear - W/Ref. ALTERNATOR(13), ALTERNATOR(15) & ALTERNATOR(21) - ALTERNATOR(27)		1
26	6659384	RECTIFIER			1
27	6659385	SCREW			1
28	6659381	STATOR			1
29	6659398	COVER			1
30	6659400	CONNECTOR	assy.		1
31	6577456	KIT	Weather-Pak Connector - Includes both male & female parts		1

www.youfixthis.com

STARTER
(1113285)

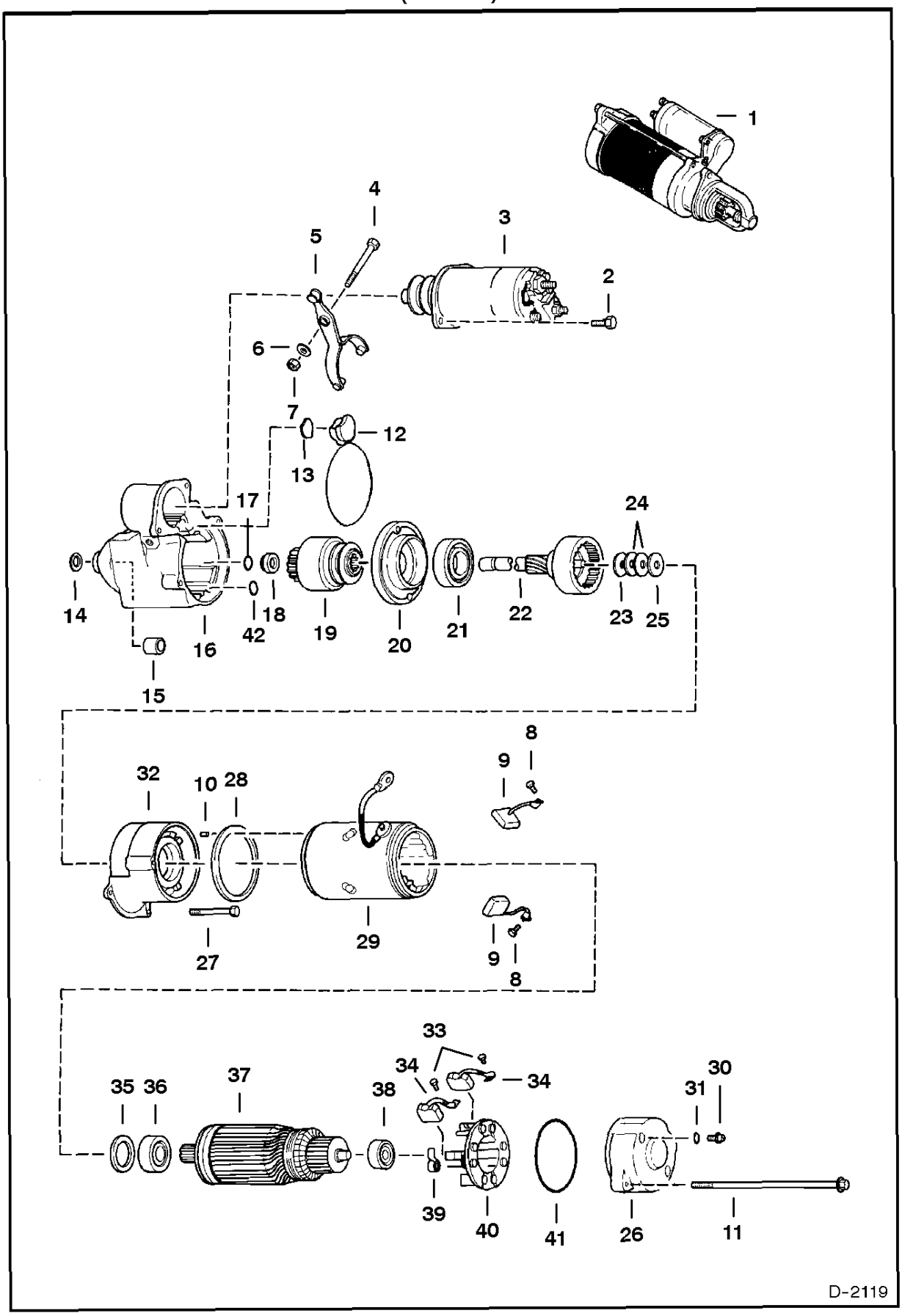

www.youfixthis.com

STARTER

Ref.N°	Part N°	Description	Remarks	Serial N°	Qty.
1	6651664	STARTER	NOTE: This starter can be replaced by Nippondenso starter (P/N 6665324) if used in conjunction W/6713794 Wiring Kit. See Model 8		1
2	NSS	SCREW			2
3	6658582	SOLENOID	Was 6658562 [A]		1
4	1CM-650	BOLT			1
5	6658572	LEVER			1
6	1EM-60	WASHER			1
7	7DM-6	NUT			1
8	13GM-404	SCREW			2
9	6658566	BRUSH			2
10	NSS	PIN			1
11	NSS	BOLT			2
12	NSS	PLUG			1
13	NSS	WASHER			1
14	NSS	WASHER			1
15	6658567	BUSHING			1
16	6661687	HOUSING	Was 6658586 [A]		1
17	NSS	RING			1
18	6658573	STOP			1
19	6661685	DRIVE	Was 6658583 [A]		1
20	6661686	SUPPORT	drive - W/Seal - Was 6658578 [A]		1
21	6658571	SUPPORT	center		1
22	6658576	SHAFT			1
23	NSS	WASHER			1
24	NSS	WASHER			2
25	NSS	WASHER			1
26	6658577	SUPPORT	armature		1
27	NSS	BOLT			2
28	NSS	GASKET			1
29	6658580	FRAME			1
30	NSS	SCREW			2
31	NSS	WASHER			2
32	6658575	FRAME			1
33	13GM-408	SCREW			2
34	6658565	BRUSH			2
35	NSS	SPACER			1
36	6658569	BEARING			1
37	6658574	ARMATURE			1
38	6658570	BEARING			1
39	6658568	SPRING			4
40	6658564	HOLDER	brush		1
41	6658581	O-RING			1
42	NSS	O-RING			2

www.youfixthis.com

COOLING SYSTEM

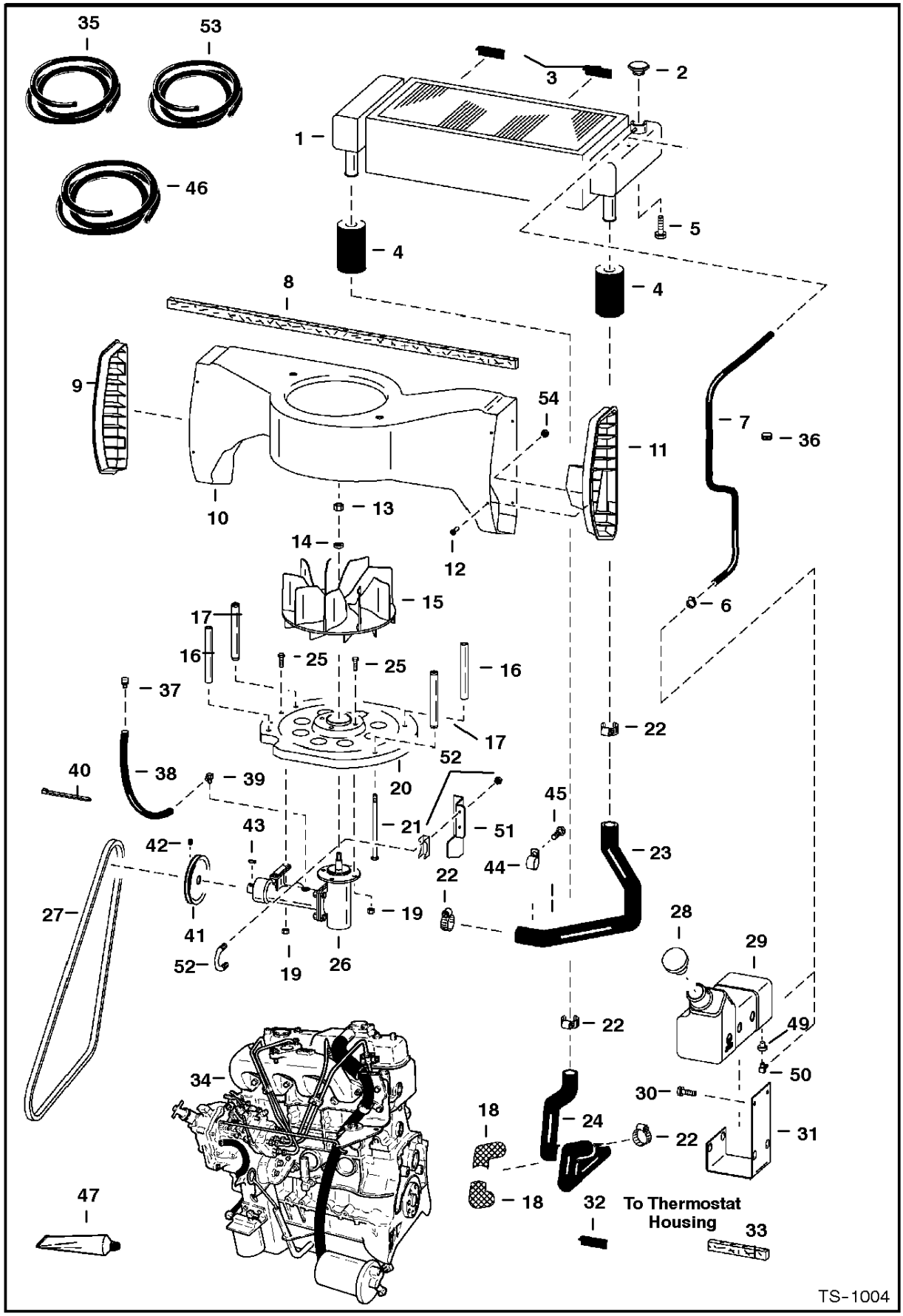

www.youfixthis.com

COOLING SYSTEM

Ref.N°	Part N°	Description	Remarks	Serial N°	Qty.
1	6579535	RADIATOR			1
2	6646678	CAP	14 PSI		1
3	NAP	MOULDING	3" (76,2 mm) long-Order Ref. COOLING SYSTEM(32)		2
4	6702697	SPACER			2
5	35C-508	BOLT			2
6	6515575	CLAMP			1
7	NAP	HOSE	32"(812,8 mm) longAOrder Ref. COOLING SYSTEM(50)		1
8	NAP	HOSE	32" (812,8mm) longAOrder Ref. COOLING SYSTEM(52)		1
9	NAP	LOUVER	L.H. - plastic - Order 6713308 Louver & (3) each of 6661209 Rivets & Ref. COOLING SYSTEM(53)Was 6700419 [A]		1
9	6713308	LOUVER	L.H. - steel		1
10	6700329	HOUSING			1
11	NAP	LOUVER	R.H. - plastic - Order 6713306 & (3) each of 6661209 Rivets & Ref. COOLING SYSTEM(53) - Was 6700418 [A]		1
11	6713306	LOUVER	R.H. - steel		1
12	6706517	SCREW	Use W/Plastic Louver - Was6579119 [A]		8
12	6661209	RIVET	Use W/Steel Louver		6
13	86D-8	NUT			1
14	6803867	WASHER	Was 6558956 [A]		1
15	6715142	FAN	Was 6700334 [A]		1
16	6577382	SPACER			2
17	6704907	SPACER	Was 6701593		2
18	NAP	COVER	10.5'(266,7 mm) longAOrder Ref. COOLING SYSTEM(46)		2
19	61D-6	NUT			6
20	6577227	INLET			1
21	17C-6116	BOLT			4
22	6518820	CLAMP			4
23	6700737	HOSE			1
24	6700738	HOSE			1
25	17C-616	BOLT			6
26	6702139	HOUSING ASSY.	See Page COOLING FAN DRIVE ASSY.(1)		1
27	6701265	BELT	cooling fan drive		1
27	6703924	BELT	cooling fan drive - 853HHH - See Page HIGH HORSEPOWER HYDRAULICS(50)		1
28	6702797	CAP			1
29	6578861	TANK	coolant over flow		1
30	84G-3708	BOLT			2
31	6579529	MOUNT			1
31	6706242	MOUNT			1
32	6649402	MOULDING	bulk - Sold Per Foot		x
33	6511855	FOAM STRIP	bulk - Sold Per Foot		x
34	6650076	ENGINE	See Page ENGINE & GASKET KITS(1)		1
35	6577822	HOSE	bulk - Sold Per Foot		x
36	1303932	GROMMET			1
37	6646626	BREATHER			1
38	NAP	HOSE	19.5' (495,3 mm) long - Order Ref. COOLING SYSTEM(35)		1
39	6657376	ELBOW			1
40	6610510	NYLON TIE	Was 1715312 [A]		1
41	NAP	PULLEY	5.75" O.D. - Was 6579541 [A]		1
41	6710665	PULLEY	6.00" O.D. deep groove		1
41	6703483	PULLEY	HHH option - See Page HIGH HORSEPOWER HYDRAULICS(67)		1

www.youfixthis.com

COOLING SYSTEM

Ref.N°	Part N°	Description	Remarks	Serial N°	Qty.
42	6715143	SET SCREW	Was 16G-506 [A]		2
43	7J-2108	KEY	Was 7J-2100 [B]		1
44	30H-60	CLIP	Was 6703939 [A]		1
45	1CM-812	BOLT			1
46	6651436	SHIELD	Bulk - Sold Per Foot - Was 6649389 [A]		x
47	6650407	ADHESIVE	1 oz. tube		x
48	6553411	BUSHING	alternate design		1
49	6553412	ELBOW	alternate design		1
50	6667189	HOSE	bulk - sold per foot		x
51	6707797	SHIELD	belt		1
52	6626631	CLAMP			1
53	25E-10	WASHER	used w/steel Louvers		6

www.youfixthis.com

ENGINE & ATTACHING PARTS
(Air Cleaner, Muffler & Grill)

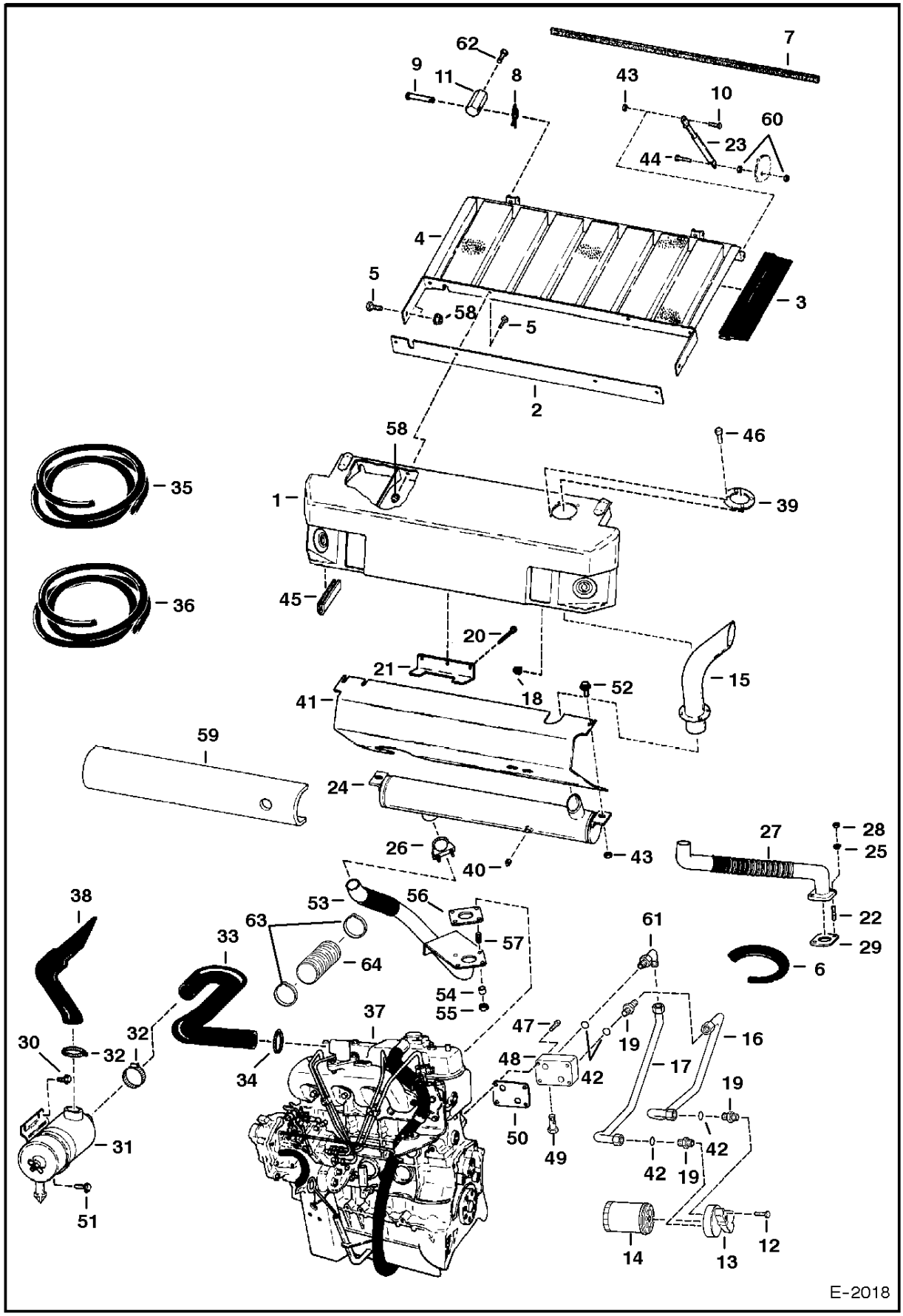

www.youfixthis.com

ENGINE & ATTACHING PARTS

Ref.N°	Part N°	Description	Remarks	Serial N°	Qty.
1	NAP	HOOD	plastic - Order 6704402inD1}: Hood Kit - Was 6701629 [A]		1
2	6701237	GRILL SEAL	grill		1
3	NAP	MOULDING	15.74" (399,8 mm) long - Order Ref. ENGINE & ATTAC HING PARTS(6)		2
4	6701507	GRILL			1
5	17C-512	BOLT			6
6	6646705	MOULDING	bulk - Sold Per Foot		x
7	NAP	MOULDING	34.5" (876,3 mm) long - Order Ref. ENGINE & ATTACH ING PARTS(35)		1
8	6631418	PIN	ring		2
9	6567743	PIN			2
10	17C-612	BOLT			1
11	6579326	MOUNT			2
12	17C-620	BOLT			2
13	6702762	FILTER HEAD	Was 6702229 [A]		1
14	6659329	ELEMENT	engine oil - Was 6631833 [B]		1
15	6700169	TUBE	exhaust		1
16	6702256	TUBE			1
17	NAP	TUBE	Order 6704546 Tube & Ref. ENGINE & ATTACHING PARTS(61)- Was 6702257 [A]	5084 12445 & Bel	1
17				5097 11332 & Bel	1
17	6704546	TUBE		5084 12445 & Abv	1
17				5097 11333 & Abv	1
18	83D-6	NUT			2
19	15K-7	ELBOW	W/Ref. ENGINE & ATTACHING PARTS(42)		3
20	58G-2512	BOLT			3
21	6578362	MOUNT			1
22	6631885	STUD	Was 6658215 [A]		2
23	6652946	GAS SPRING			1
24	6658671	MUFFLER	spark arrestor - Was 6579374 [A]		1
25	6512736	WASHER			2
26	657904	CLAMP			1
27	6660283	PIPE	exhaust - 2 bolt flange - Was 6579376 [A]		1
28	4DM-8	NUT			2
29	6651947	GASKET	2 bolt flange		1
30	84G-3708	BOLT			2
31		AIR CLEANER	See Page AIR CLEANER(1)		1
32	6598799	CLAMP			2
33	6705282	HOSE	W/Ref. ENGINE & ATTACHING PARTS(63) & ENGINE & ATTACHING PARTS(64) Was 6700763 [A]		1
34	42H-32	CLAMP	Was 6513595 [A]		1
35	6511855	FOAM STRIP	bulk - Sold Per Foot		x
36	6512686	SEAL	bulk - Sold Per Foot		x
37	6650076	ENGINE	See Page ENGINE & GASKET KITS(1)		1
38	6703332	HOSE	Was 6701148 [A]		1
39	6578710	RING			1
40	866104	PLUG	brass 3/8" (9,5 mm)		1
41	6703812	SHIELD	not required for 6661769inD1}i Muffler - Was 6701186 [A]		1
42	79K-10	O-RING			4
43	85D-6	NUT			3
44	17C-624	BOLT			1
45	NAP	MOUDING	3.5" (88,9 mm) long - Order Ref. ENGINE & ATTACHIN G PARTS(36)		2
46	6657701	RIVET			4
47	29CM-845	SCREW			4

www.youfixthis.com

ENGINE & ATTACHING PARTS

Ref.N°	Part N°	Description	Remarks	Serial N°	Qty.
48	6654909	PORT BLOCK			1
49	6631836	VALVE			1
50	6658690	GASKET			1
51	84G-3712	BOLT			1
52	35C-612	BOLT			2
53	6660665	PIPE	exhaust - 4 bolt flange - Was 6703862 [A]		1
54	6625291	SPACER	for 4 bolt flange		4
55	2DM -10	NUT	for 4 bolt flange		4
56	6705793	GASKET	for 4 bolt flangeAWas 6569003 [B]		1
57	6631734	STUD	for 4 bolt flange		4
58	83D-5	NUT			6
59	6704329	INSULATION	for use W/6660250 Muffler only		1
60	61D-6	NUT			2
61	17K-7	ELBOW	W/Ref. ENGINE & ATTACHING PARTS(42)		1
62	17C-608	BOLT			2
63	6664004	CLAMP			2
64	6706394	SHIELD	8'(203,2 mm) long		1

www.youfixthis.com

ENGINE & ATTACHING PARTS
(Air Cleaner, Muffler & Grill)

NOTE: When replacing Ref. 4 drill the gas spring mounting holes on 6705132 Grill to .41".

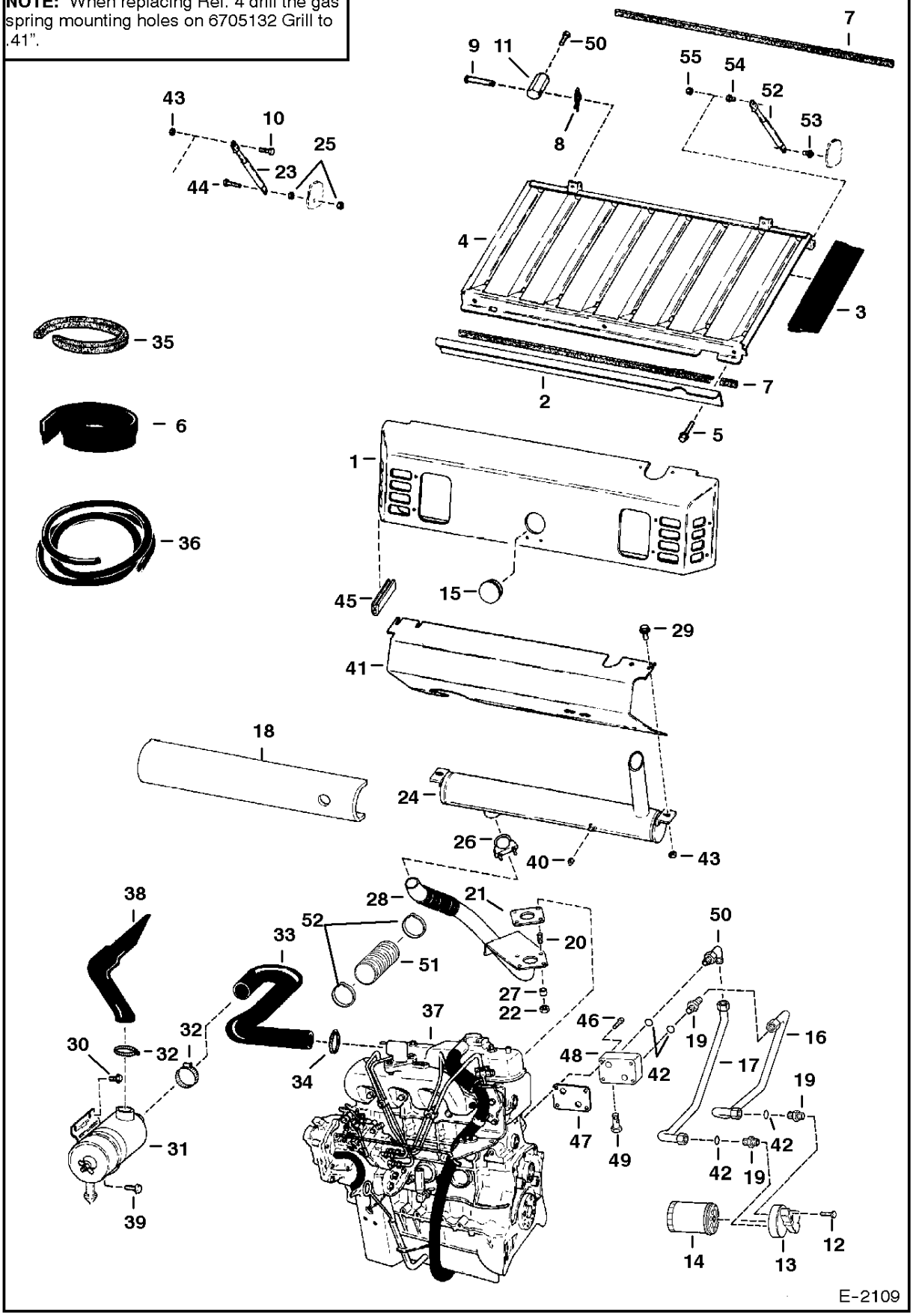

www.youfixthis.com

ENGINE & ATTACHING PARTS

Ref.N°	Part N°	Description	Remarks	Serial N°	Qty.
1	6703868	HOOD	steel -For Field Kit See Page HOOD KIT(1)		1
2	6708981	BRACKET	Was 6703471 [A]		1
3	NAP	MOULDING	19"(482,6 mm) long-Order Ref. ENGINE & ATTACHIN G PARTS(6)		2
4	NAP	GRILL	Order 6705132inD1}= Grill -See Note - Was 6703813 [A]		1
4	6705132	GRILL			1
5	84G-3112	BOLT			3
6	6646705	MOULDING	bulk - Sold Per Foot		x
7	NAP	MOULDING	34.5"(876mm)long-Order Ref. ENGINE & ATTACHING PARTS(35)		2
8	6631418	PIN	ring		2
9	6567743	PIN			2
10	17C-612	BOLT			1
11	6579326	MOUNT			2
12	17C-620	BOLT			2
13	6702762	FILTER HEAD			1
14	6659329	ELEMENT	engine oil		1
15	6660646	PLUG			1
16	6702256	TUBE			1
17	NAP	TUBE	Order 6704546inD1} Tube & Ref. ENGINE & ATTACHI NG PARTS(61)- Was 6702257 [A]	5084 12445 & Bel	1
17				5097 11332 & Bel	1
17	6704546	TUBE		5084 12445 & Abv	1
17				5097 11333 & Abv	1
18	6704329	INSULATION	for use W/6660250 Muffler only		1
19	15K-7	ELBOW	W/Ref. ENGINE & ATTACHING PARTS(42)		3
20	6631734	STUD			4
21	6705793	GASKET	Was 6569003 [B]		1
22	2DM -10	NUT			4
23	6652946	GAS SPRING			1
24	NAP	MUFFLER	spark arrestor - Order 6661769inD1}i Muffler - Was 6660250 [A]		1
24	6661769	MUFFLER	double insulated spark arrestor		1
25	61D-6	NUT			2
26	657904	CLAMP			1
27	6625291	SPACER			4
28	6660665	PIPE	exhaust		1
29	35C-612	BOLT			2
30	84G-3708	BOLT			2
31		AIR CLEANER	See Page AIR CLEANER(1)		1
32	6598799	CLAMP			2
33	6705282	HOSE	W/Ref. ENGINE & ATTACHING PARTS(51) & ENGINE & ATTACHING PARTS(52) Was 6700763 [A]		1
34	42H-32	CLAMP	Was 6513595 [A]		1
35	6511855	FOAM STRIP	bulk - Sold Per Foot		x
36	6512686	SEAL	bulk - Sold Per Foot		x
37	6650076	ENGINE	See Page ENGINE & GASKET KITS(1)		1
38	6703332	HOSE			1
39	84G-3712	BOLT			1
40	866104	PLUG	brass 3/8" (9,5 mm)		1
41	6703812	SHIELD	not required for 6661769inD1}i Muffler		1
42	79K-10	O-RING			4
43	85D-6	NUT			3
44	17C-624	BOLT			1
45	NAP	MOUDING	3.5" (89 mm)long - Order Ref. ENGINE & ATTACHING PARTS(36)		2

www.youfixthis.com

ENGINE & ATTACHING PARTS

Ref.N°	Part N°	Description	Remarks	Serial N°	Qty.
46	29CM-845	SCREW			4
47	6658690	GASKET			1
48	6654909	PORT BLOCK			1
49	6631836	VALVE			1
50	17C-608	BOLT			2
51	6706394	SHIELD	8' (203,2 mm) long		1
52	6664004	CLAMP			2

www.youfixthis.com

ENGINE & ATTACHING PARTS
(Belt Drive System)

NOTE: 3 groove flywheel is no longer available.When replacing a 3 groove flywheel with a 4 groove flywheel, make sure to use the inner 3 grooves to insure proper alignment of the 3 groove bolt.

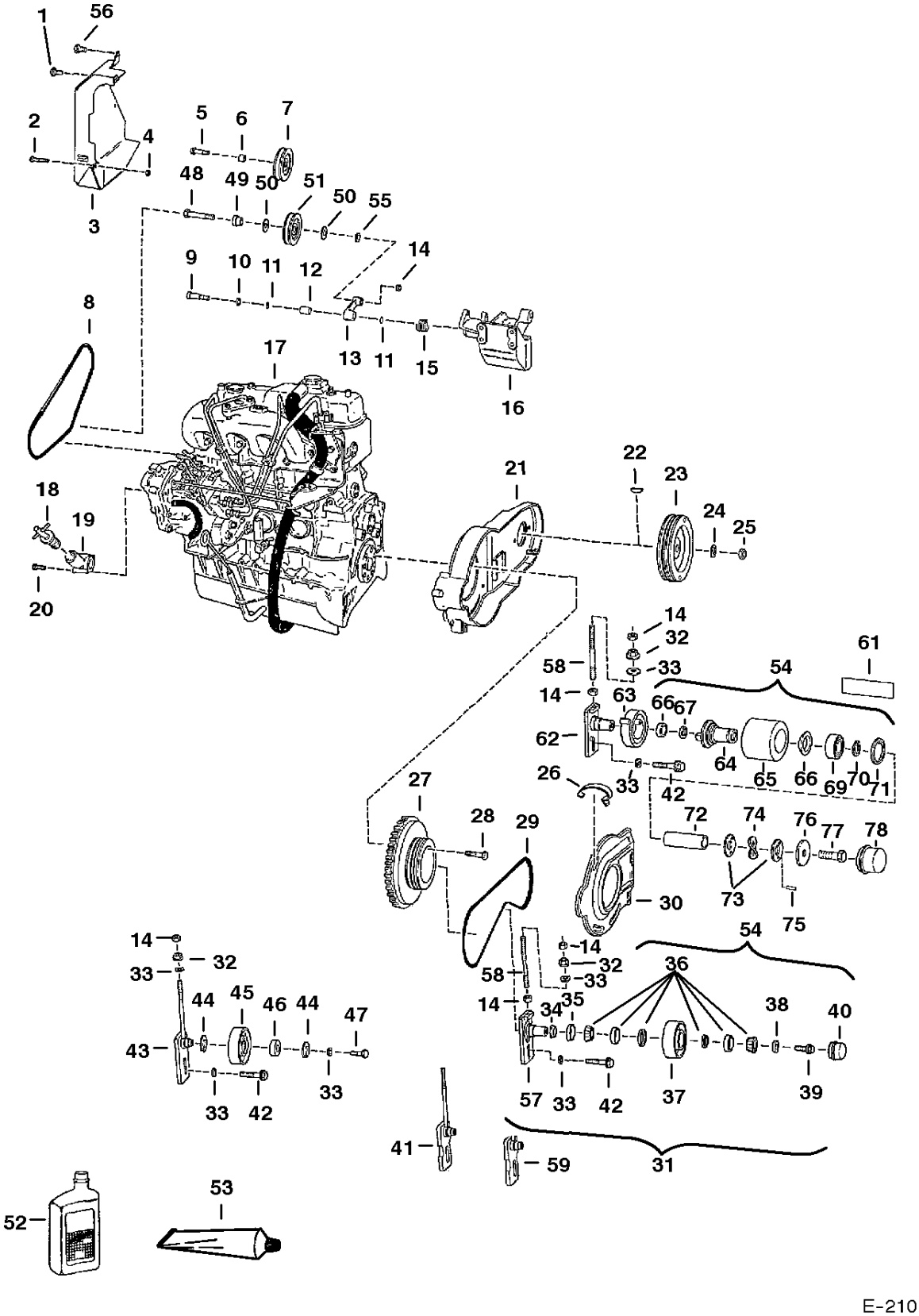

www.youfixthis.com

ENGINE & ATTACHING PARTS

Ref.N°	Part N°	Description	Remarks	Serial N°	Qty.
1	1CM-812	BOLT	Was 17C-812 [A]		2
2	35C-528	BOLT			1
3	6579759	SHIELD			1
4	61D-5	NUT			1
5	35C-628	BOLT			1
6	6578452	SPACER			1
7	NAP	PULLEY	cooling fan drive idler - Order 6662997inD1}' PulleyAWa s 6653253 [B]		1
7	6662997	PULLEY	cooling fan drive idler		1
8	6701265	BELT	cooling fan drive		1
9	38C-820	BOLT	Was 6577807 [A]		1
10	6655781	BEARING	thrust		1
11	6704820	O-RING	Was 58K-14		2
12	NAP	BEARING	bronze - Was 6655780 [A]		1
12	6670682	BEARING	nylonbcom3gJ }H~10{M		x
13	6703507	IDLER	W/Ref. ENGINE & ATTACHING PARTS(12) - Was 6701656 [C]		1
14	61D-6	NUT			3
15	6700722	SPRING			1
16	NAP	MOUNT	engine, alt., & hyd. pump - Order 6706165inD1} Mount, Ref. ENGINE & ATTACHING PARTS(48), ENGINE & ATTACHING PARTS(49), ENGINE &		1
16	6706165	MOUNT	engine, alt., & hyd. pump - with extra ear on left surface W/ 3/8' dia. threaded hole		1
17	6650076	ENGINE	See Page ENGINE & GASKET KITS(1)		1
18	6649962	CAP	oil fill		1
19	6568956	INLET			1
20	1CM-650	BOLT	Was 1CM-656 [B]		2
21	6578951	MOUNT			1
22	6J-807	KEY	woodruff		1
23	6579333	PULLEY	hyd. pump - 3 groove		1
23	6705807	PULLEY	hyd. pump - 4 groove		1
24	6576033	WASHER			1
25	92D-12	NUT	Was 86D-12		1
26	6701160	CLIP			3
27	NAP	FLYWHEEL	3 groove - order 6705805 Fly-	wheel & Ref. ref1V7jjd26bilea, 6705808 shield- SEE NOTE - Wa	x
27	6705805	FLYWHEEL	4 groove		1
27	6513662	RING GEAR			1
28	6665036	BOLT	Was 6631605 [A]		8
29	6660766	BELT	drive - 3 grooveAWas 6658306[A]		1
29	6662855	BELT	pump drive - 4 groove		1
30	6705808	SHIELD	Was 6700605 [A]		1
31	NAP	IDLER ASSY.	fixed - Ref. ENGINE & ATTACHING PARTS(34) - ENGINE & ATTACHING PARTS(40) - 3 groove -	Order Ref. ref1J?$tr3cengg & ref1R?$tre3n ggWas 6705451 [A]	x
31	6708606	IDLER ASSY.	fixed - Ref. ENGINE & ATTACHING PARTS(14), ENGINE & ATTACHING PARTS(34)-ENGINE & ATTAC HING PARTS(40), ENGINE & ATTACHING PARTS(5		1
32	57D-6	NUT			9
33	616783	WASHER			2
34	6661070	SLEEVE	wear - Also Order Ref. ENGINE & ATTACHING PARTS (35)		1
35	6661066	SEAL	Also Order Ref. ENGINE & ATTACHING PARTS(34)		1
36	NAP	BEARING	Order Ref. ENGINE & ATTACHING PARTS(54) - Was 6661071 [A]		1
37	6704416	PULLEY	Also Order Ref. ENGINE & ATTACHING PARTS(54) - 3 groove		1
37	6707191	PULLEY	Also Order Ref. ENGINE & ATTACHING PARTS(54) - 4 groove - Was 6705810 [A]		1

www.youfixthis.com

ENGINE & ATTACHING PARTS

Ref.N°	Part N°	Description	Remarks	Serial N°	Qty.
38	6704484	WASHER			1
39	35C-612	BOLT			1
40	6660967	CAP	grease		1
41	NAP	BRACKET	3 grooveAOrder 6708607 Bracket, Ref. ENGINE & ATTACHING PARTS(58) 6708598 Red & Ref. ENGINE & ATTACHING PARTS(14) 61D-6 Nut - Wa		1
41	NAP	BRACKET	4 groove - Order Ref. ENGINE & ATTACHING PARTS(14), ENGINE & ATTACHING PARTS(57) & ENGINE & ATTACHING PARTS(58) - Was 6705859 [A		1
42	17C-620	BOLT			1
43	NAP	BRACKET	Order Ref. ENGINE & ATTACHING PARTS(31) - Was 6703283 [A]		1
44	6653758	SNAP RING			2
45	NAP	PULLEY	idler - Order Ref. ENGINE & ATTACHING PARTS(31) - Was 6702951 [A]		1
46	NAP	BEARING	Order Ref. ENGINE & ATTACHING PARTS(31) - Was 6651452 [A]		1
47	17C-612	BOLT			1
48	17C-636	BOLT		& Abv	1
49	6704443	BUSHING	spacer	& Abv	1
50	6660995	RING	grease - Was 6660955[D]	& Abv	2
51	6662997	PULLEY	cooling fan drive idler	& Abv	1
52	6661405	OIL	quart can - For Use W/Ref. ENGINE & ATTACHING PARTS(31)		x
53	6633583	SEALANT	Use W/Ref. ENGINE & ATTACHING PARTS(34) & ENGINE & ATTACHING PARTS(41) and W/Ref. ENGINE & ATTACHING PARTS(37) & ENGINE & ATTACH		x
54	6722248	REPAIR KIT	bearing - Ref. ENGINE & ATTACHING PARTS(34)- ENGINE & ATTACHING PARTS(36) & ENGINE & ATTACHING PARTS(40)		1
55	6704444	WASHER		& Abv	1
56	1CM-870	BOLT			1
57	6708567	BRACKET			1
58	6708598	ROD			1
59	6708607	BRACKET			1
60	6711698	IDLER ASSY.	spring loaded to replace 3groove fixed Idler - also Order Ref. ENGINE & ATTACHING PARTS(58) & ENGINE & ATTACHING PARTS(61)- W/R		1
61	6709030	DECAL	belt tension - spring loaded Idler		1
62	6708767	BRACKET			1
63	6705491	SPRING	tension		1
64	NAP	HUB ASSY	Order Ref. ENGINE & ATTACHING PARTS(50)		1
65	6704391	PULLEY			1
66	6661112	SEAL			1
67	6703168	BEARING	thrust		1
68	6664209	SEAL			1
69	NAP	BEARING	ball - order Ref. ENGINE & ATTACHING PARTS(50)		1
70	6658536	SNAP RING			1
71	6658847	SNAP RING			1
72	6704393	BEARING	bronze sleeve		1
73	6705231	WASHER			1
74	6710585	WASHER	wave spring		1
75	14J-1808	PIN			2
76	6705232	WASHER			1
77	17C-610	BOLT			1
78	6708770	CAP	grease		1

www.youfixthis.com

ENGINE & ATTACHING PARTS
(Engine Mounts)

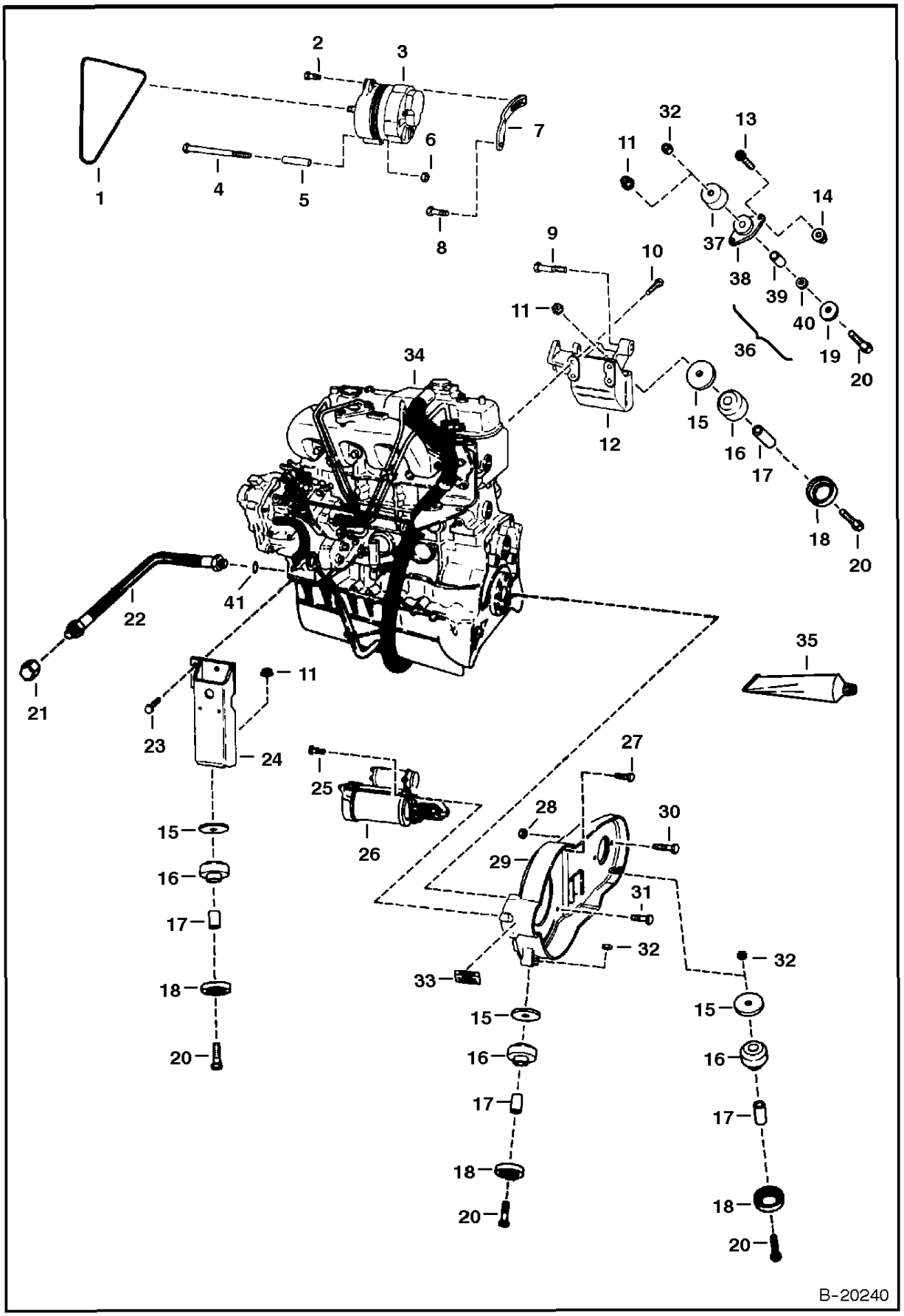

www.youfixthis.com

ENGINE & ATTACHING PARTS

Ref.N°	Part N°	Description	Remarks	Serial N°	Qty.
1	6655314	BELT	alternator		1
2	35C-516	BOLT			1
3		ALTERNATOR	See Page ALTERNATOR(1)		1
4	17C-6104	BOLT			1
5	6579805	SPACER			1
6	61D-6	NUT			3
7	6579771	BRACKET			1
8	29CM-825	SCREW			1
9	17C-840	BOLT	hyd. pump mounting		1
10	5CM-1035	BOLT			4
11	83D-8	NUT			2
12		MOUNT	See Page ENGINE & ATTACHING PARTS(16)		1
13	25G-616	BOLT			8
14	57D-6	NUT			8
15	6705106	WASHER			4
16	NAP	MOUNT	See BTI 273		4
17	NAP	BUSHING	See BTI 273		4
18	6661787	WASHER			4
19	NAP	WASHER	See BTI 273 - Was 6702546 [C]		4
20	17C-852	BOLT	Was 17C-848 [B]		4
21	36K-7	CAP			1
22	6701344	HOSE	engine oil drain - W/Ref. ENGINE & ATTACHING PARTS(41)		1
23	3984320	BOLT			4
24	6579635	MOUNT			1
25	35C-620	BOLT			2
26		STARTER	See Page STARTER(1)		1
27	5CM-1025	BOLT			3
28	85D-8	NUT			2
29	6578951	MOUNT			1
30	17C-832	BOLT			2
31	12CM-1230	BOLT			2
32	6652918	NUT			2
33	6702942	DECAL	warning - See Page DECALS(14)		1
34	6650076	ENGINE	See Page ENGINE & GASKET KITS(1)		1
35	6650407	ADHESIVE	used on Ref. ENGINE & ATTACHING PARTS(9)		x
36	NAP	MOUNT KIT	Ref. ENGINE & ATTACHING PARTS(38) - ENGINE & ATTACHING PARTS(40) - See BTI 273 - Was 672214 5 [C]		4
37	NAP	SNUBBER CUP	See BTI 273 - Was 6703733 [C]		4
38	NAP	MOUNT	See BTI 273 - Was 6660453 [C]		4
39	NAP	BUSHING	See BTI 273 - Was 6704449 [C]		4
40	NAP	WASHER	See BTI 273 - Was 6704448 [C]		4
41	79K-10	O-RING			x

www.youfixthis.com

THROTTLE

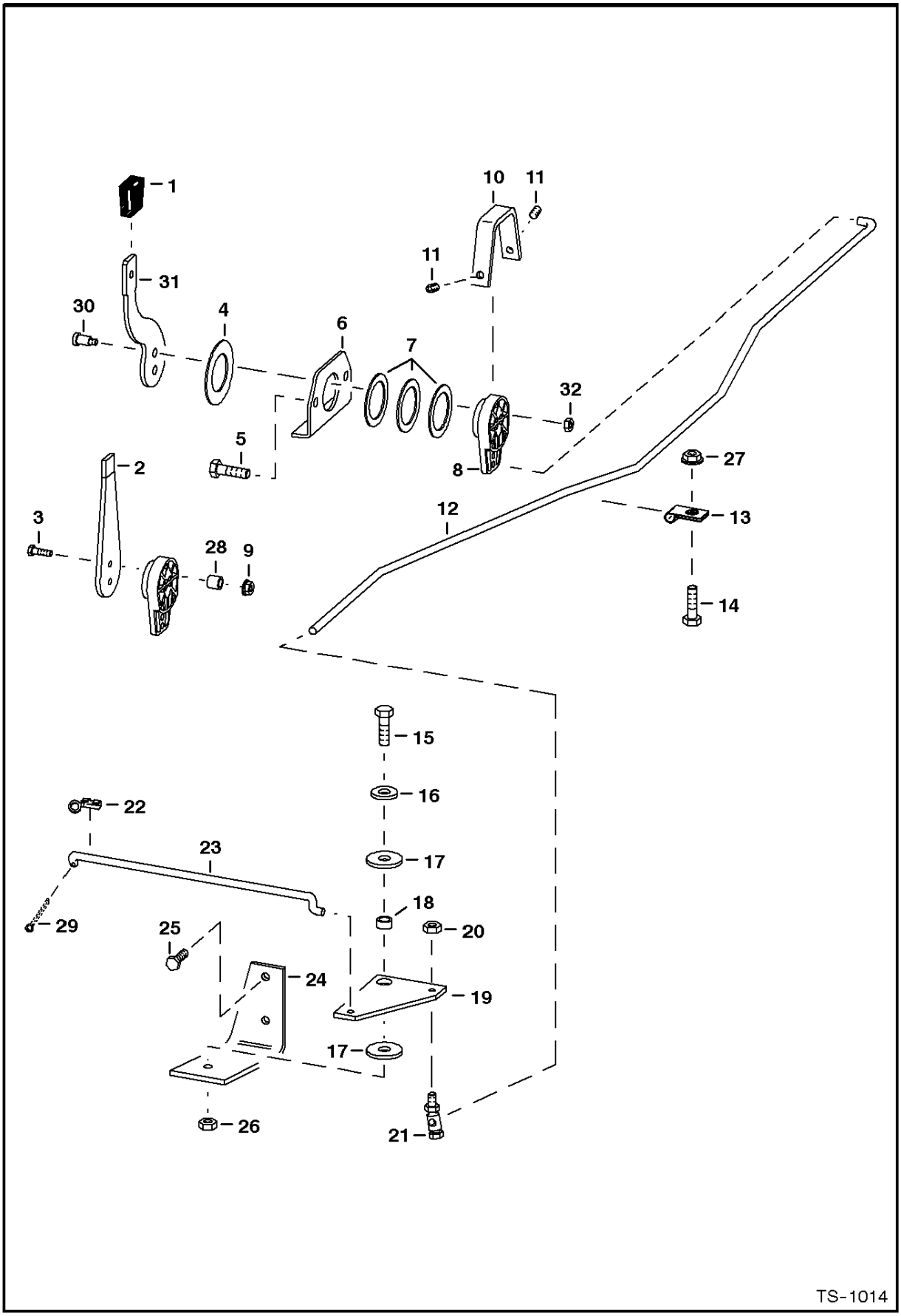

www.youfixthis.com

THROTTLE

Ref.N°	Part N°	Description	Remarks	Serial N°	Qty.
1	6564452	GRIP			1
2	6567911	LEVER	Was 6557291 [D]		1
3	17C-518	BOLT			2
4	6567962	WASHER			1
5	84G-3724	BOLT			2
5	17C-624	BOLT	Use W/ threaded side panel		2
6	6576262	MOUNT			1
7	6630945	WASHER			3
8	NAP	LEVER	Order 6705225inD1}0 Lever, Ref. THROTTLE(31) & (2) each of Ref. THROTTLE(30) & THROTTLE(32) - Was 6703492 [C]		1
8	6709022	LEVER	Was 6705225 [A]		1
9	57D-5	NUT	Was 85D-5 [A]		2
10	6576261	COVER			1
11	15G-512	SET SCREW			2
12	6579741	ROD			1
13	30H-19	CLAMP	Was 30H-20 [B]		1
14	17C-512	BOLT	Was 84G-3712 [A]		1
15	84G-3720	BOLT			1
16	25E-18	WASHER			1
17	6700170	WASHER	plastic - Was 6563152 [A]		2
18	6564343	BUSHING			1
19	6701187	BELLCRANK			1
20	85D-4	NUT			1
21	6557291	BALL JOINT			1
22	6519480	CLIP			1
23	6579740	ROD			1
24	6579743	MOUNT			1
25	1CM-820	BOLT			2
26	91D-6	NUT	Was 85D-6 [B]		1
27	61D-5	NUT			1
28	6703491	SPACER			2
29	6631418	PIN	ring		1
30	38C-610	BOLT	shoulder		2
31	6705452	LEVER			1
32	85D-5	NUT			2

www.youfixthis.com

COOLING FAN DRIVE ASSY.

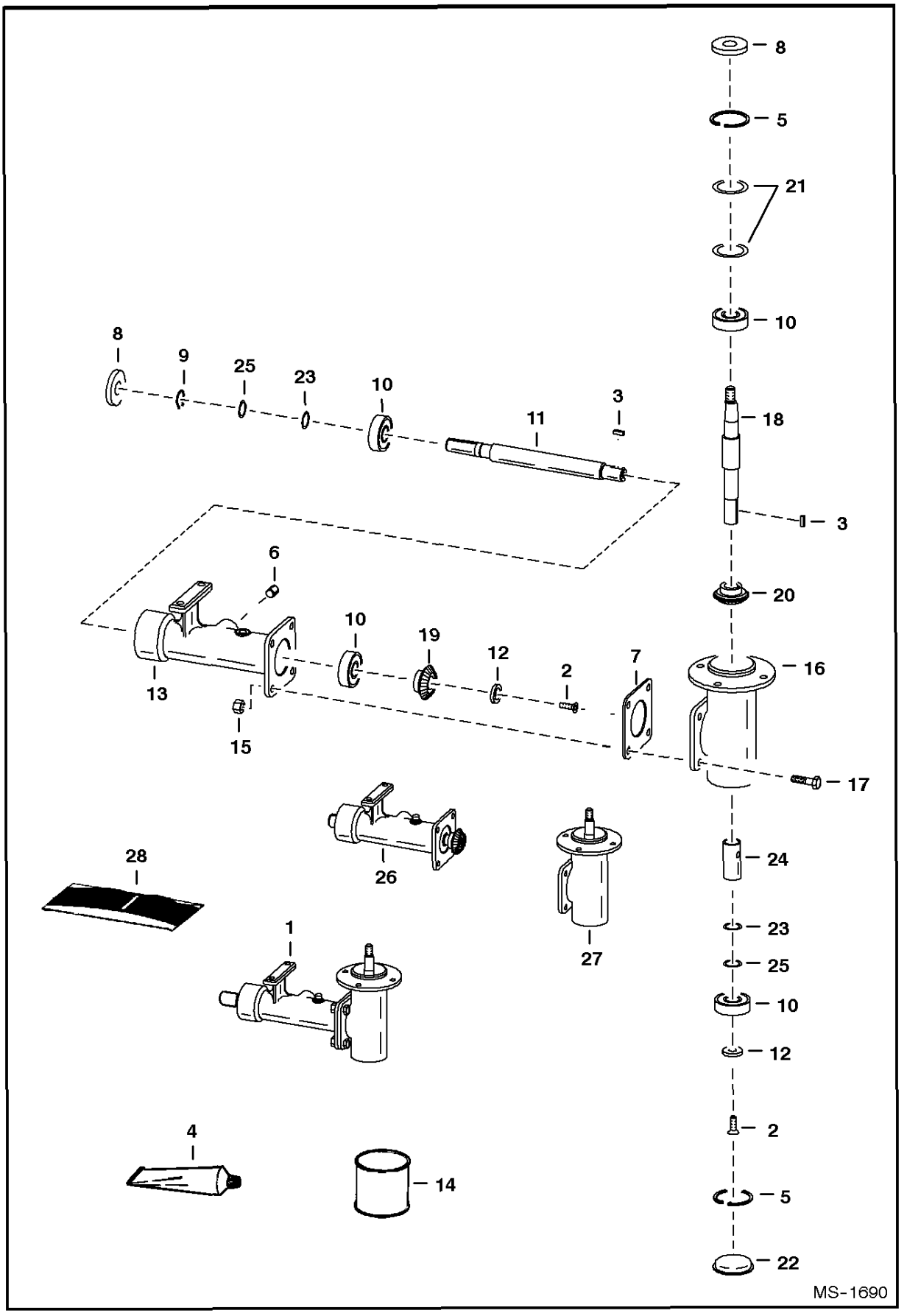

www.youfixthis.com

COOLING FAN DRIVE ASSY.

Ref.N°	Part N°	Description	Remarks	Serial N°	Qty.
1	6702139	HOUSING ASSY.	Ref. COOLING FAN DRIVE ASSY.(2) - COOLING FAN DRIVE ASSY.(25)		1
2	9G-512	SCREW			2
3	7J-2010	KEY			2
4	6672486	SEALANT	Use W/Ref. COOLING FAN DRIVE ASSY.(7) & COOLING FAN DRIVE ASSY.(22) - Was 6633583 [A]		x
5	6653758	SNAP RING			2
6	16F-8	PLUG			1
7	6578284	SHIM	.003" (0,08 mm) thickness		4
8	6653702	SEAL			2
9	6653757	SNAP RING			1
10	6646627	BEARING			4
11	6702137	SHAFT			1
12	6702140	WASHER	countersink		2
13	6579641	HOUSING			1
14	6634393	LUBRICANT	1 pint		x
15	95D-6	NUT	Was 61D-6 [A]		4
16	NSS	HOUSING	Order Ref. COOLING FAN DRIVE ASSY.(1) or Ref. COOLING FAN DRIVE ASSY.(27)		1
17	17C-620	BOLT			4
18	6702136	SHAFT			1
19	6702103	GEAR			1
20	6702102	GEAR			1
21	6702166	SHIM	.002' (0,05 mm) thickness - 2' (50,8 mm) O.D.		x
21	6702144	SHIM	.005" (0,13 mm) thickness - 2' (50,8 mm) O.D.		x
22	6700782	CAP	grease		1
23	6701159	SHIM	.005" (0,13 mm) thickness - 1' (25,4 mm) O.D.		x
24	6702163	SPACER			1
25	6702165	SHIM	.002" (0,05 mm) thickness - 1' (25,4 mm) O.D.		x
26	6707078	HOUSING ASSY.	half		1
27	6707079	HOUSING ASSY.	half		1
28	6669384	SPEEDY SLEEVE	repair kit		1

www.youfixthis.com

ENGINE & GASKET KITS

NOTE: Remove oil filter head supplied W/Engine and stock as 843B service parts.

Ref. 12-14, 16 , 17, 19 & 46-50 on Page 155 can be used from old engine or order parts as required.

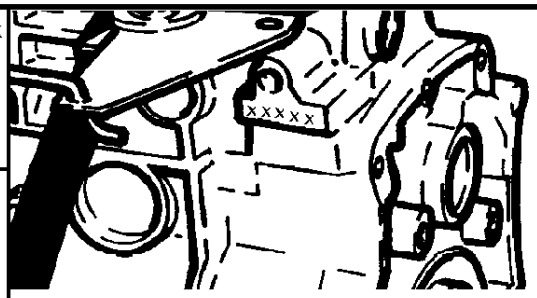

ENGINE S/N LOCATION

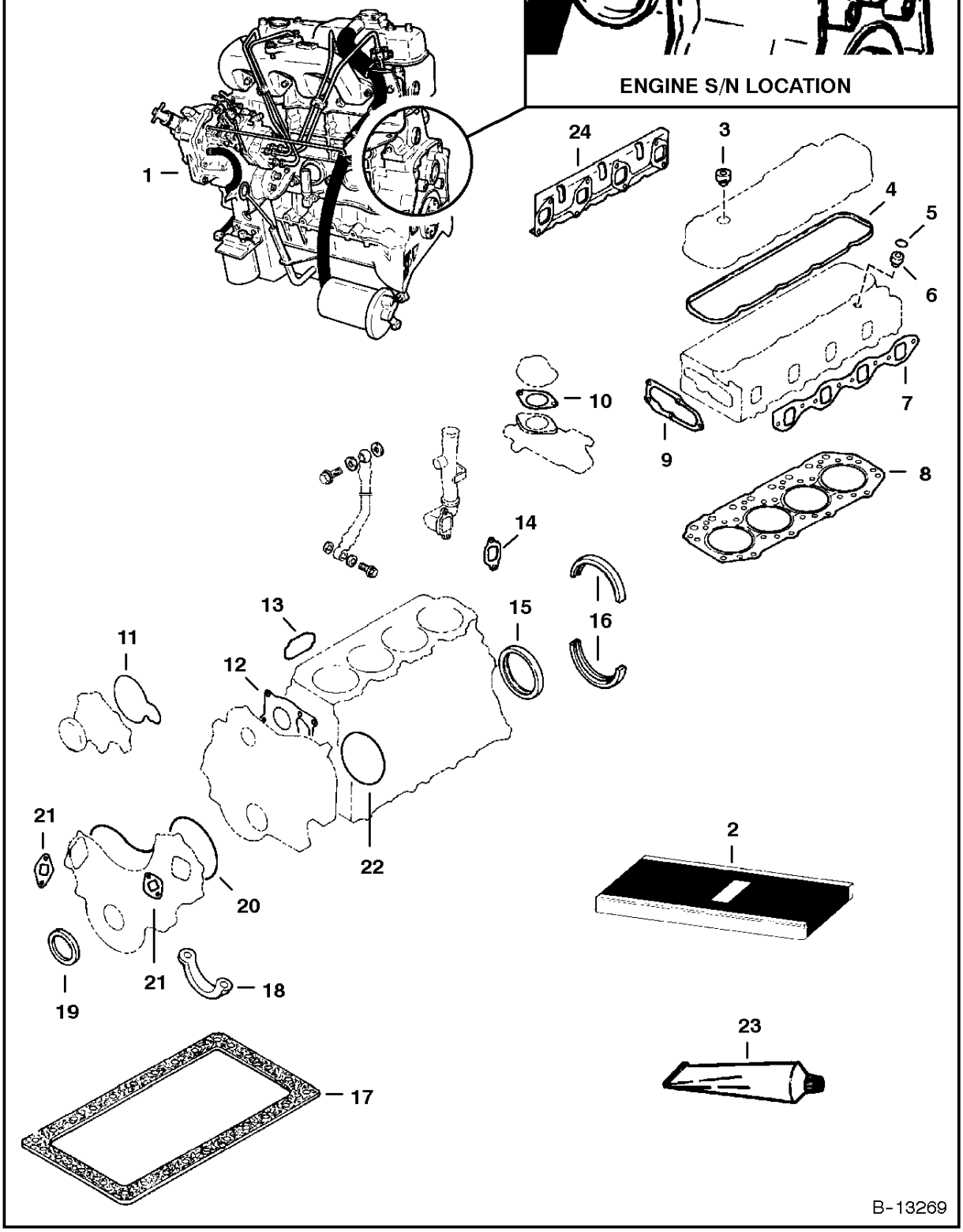

www.youfixthis.com

ENGINE & GASKET KITS

Ref.N°	Part N°	Description	Remarks	Serial N°	Qty.
1	6650076	ENGINE	Isuzu - Includes manifolds, injection pump, injectors, water pump & oil filter - Does not include flywheel, starte r, alternator,		1
1	NAP	SHORT BLOCK	Was 6655793 [A]		1
1	6664578	KIT	engine rebuild -W/ liners, piston, rings, valve guides, inlet & exhaust valves. Main, rod, & cam bearings. Rod bushings & gask		1
2	6661342	GASKET KIT	Complete - Ref. ENGINE & GASKET KITS(3)-ENGINE & GASKET KITS(19) - Was 6647664 [A]		1
2	6660008	GASKET KIT	top - Ref. ENGINE & GASKET KITS(3)-ENGINE & GASKET KITS(10) & ENGINE & GASKET KITS(24) - Was 6631949 [A]		1
3	6631827	GASKET	head cover nut		3
4	6631877	GASKET	head cover		1
5	6655312	O-RING			4
6	6631775	SEAL	nozzle holder		4
7	6631802	GASKET	Was 6661095 [A]		1
8	6655861	GASKET	head		1
9	6631869	GASKET	thermostat housing		1
10	6661097	GASKET	outlet - Was 6655319 [A]		1
11	6631846	GASKET	water pump		1
12	6661352	GASKET	gearcase - Was 6631764 [A]		1
13	6667585	GASKET	oil filter - Was 6655310 [A]		1
14	6631856	GASKET	inlet pipe		1
15	6656476	SEAL	rear		1
16	6660009	GASKET	Was 6632961 [A]		2
17	6660325	GASKET	oil pan - Was 6632958 [A]		1
18	6665210	GASKET	Was 6632962 [A]		1
19	6631741	SEAL	front		1
20	6631809	O-RING	Not in Kits		1
21	6664303	GASKET	Not in Kits - Was 6660324 [A]		2
22	6631758	O-RING	Not in Kits		1
23	6650388	SEALANT	gasket eliminator - Not in Kit - Was 1802303 [A]		1
24	6660989	GASKET	Was 6631801 [A]		1

www.youfixthis.com

MANIFOLDS

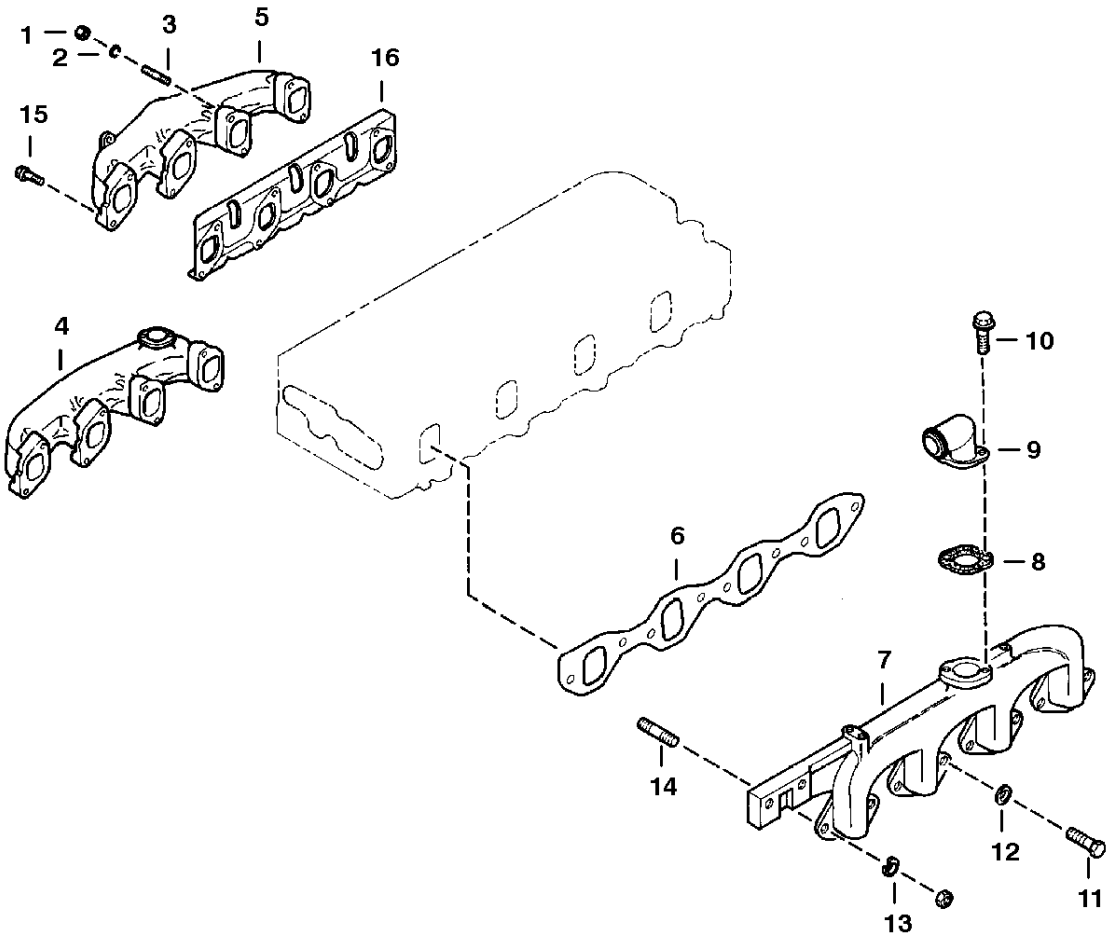

www.youfixthis.com

MANIFOLDS

Ref.N°	Part N°	Description	Remarks	Serial N°	Qty.
1	6513035	NUT			2
2	6512736	WASHER			2
3	6631885	STUD	Was 6658215 [A]		2
4	6658201	MANIFOLD	Exhaust - 2 bolt flange		1
5	6659933	MANIFOLD	Exhaust - 4 bolt flange - Was 6659953 [D]		1
6	6631802	GASKET	Was 6661095 [D]		1
7	6654908	MANIFOLD	Intake		1
8	6664012	GASKET	Was 6662954 [A]		1
9	6655098	PIPE			1
10	909498	BOLT			2
11	6661091	BOLT	Was 3676970 [A]		6
12	3674002	WASHER			1
13	6667578	NUT	Was 6631736 [A]		2
14	6631884	STUD			2
15	6513049	BOLT			6
16	6660989	GASKET	Was 6631801 [A]		1

www.youfixthis.com

CYLINDER HEAD & COVER

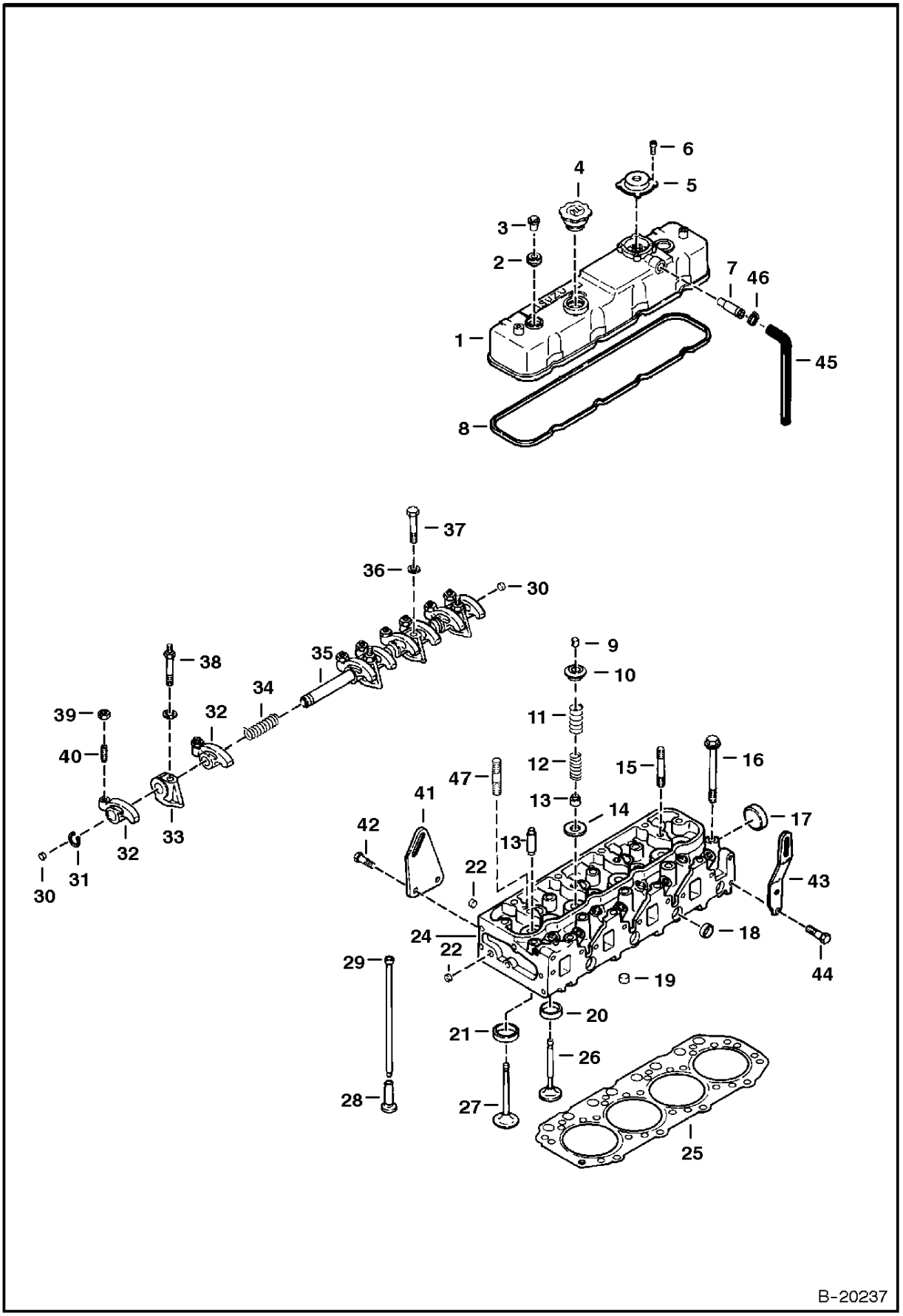

www.youfixthis.com

CYLINDER HEAD & COVER

Ref.N°	Part N°	Description	Remarks	Serial N°	Qty.
1	6664552	COVER	Was 6659923 [A]		1
2	6667413	GASKET	Was 6631827 [A]		3
3	6631832	NUT			3
4	6631851	CAP	push in		1
4	6660923	CAP	screw type		1
5	6631862	VALVE	breather		1
6	6631883	SCREW			4
7	6631864	PIPE	breather		1
8	6631877	GASKET			1
9	6513139	COLLAR			16
10	6631785	SEAT			8
11	6631865	SPRING	outer		8
12	6631866	SPRING	inner		8
13	6631753	SEAL			8
14	3676843	SEAT			8
15	6631885	STUD			2
16	6631852	BOLT			18
17	6631730	CUP	sealing - 44,6 mm		1
18	6631731	CUP	sealing - 22 mm		7
19	6670643	CUP	sealing - 16 mm - Was 6512964 [A]		3
20	6631778	INSERT	valve seat - Exhaust		4
21	6631777	INSERT	valve seat - Intake		4
22	6631738	CUP	sealing - 12 mm		5
23	6631747	GUIDE	valve		8
24	6655860	HEAD	cylinder - W/Ref. CYLINDER HEAD & COVER(17)-CYLINDER HEAD & COVER(23)		1
25	6655861	GASKET	cylinder head		1
26	6631855	VALVE	exhaust		4
27	6631781	VALVE	intake		4
28	6631784	TAPPET			8
29	6631812	ROD			8
30	6512759	PLUG			2
31	6512760	SNAP RING			2
32	6631819	ARM	rocker		8
33	6631820	BRACKET			4
34	6658195	SPRING			3
35	6631821	SHAFT			1
36	6658218	WASHER			4
37	6658194	BOLT			1
38	6658196	BOLT			3
39	6512755	NUT			8
40	6631817	SCREW	adjusting		8
41	6631782	HANGER			1
42	6661091	BOLT	Was 3676970 [A]		1
42	6631880	BOLT			1
43	6631844	HANGER			1
44	6658213	BOLT			2
45	743564	HOSE	bulk - Sold Per Foot		x
46	42H-10	CLAMP			1
47	6631884	STUD			2

www.youfixthis.com

CAMSHAFT & TIMING GEAR

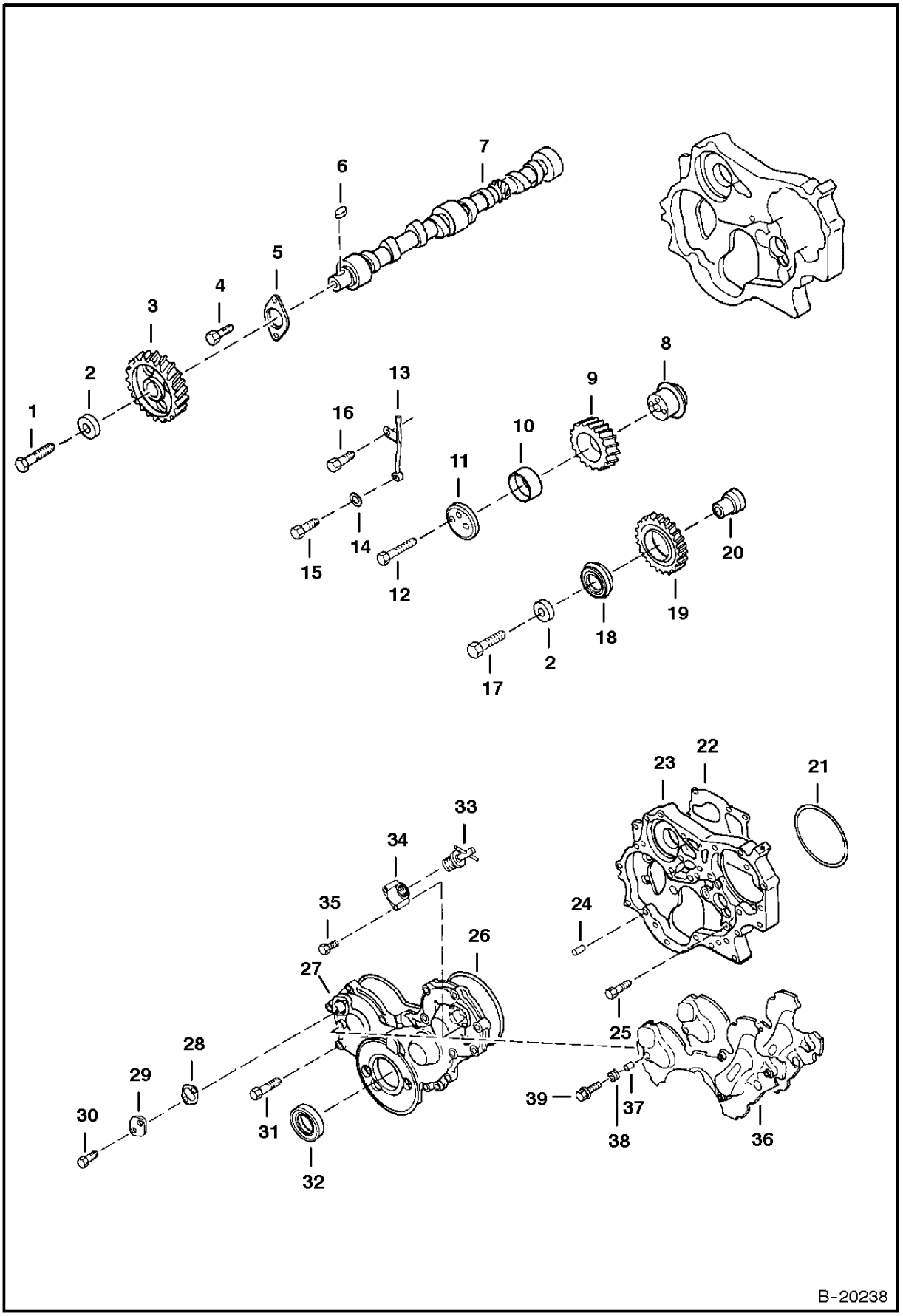

www.youfixthis.com

CAMSHAFT & TIMING GEAR

Ref.N°	Part N°	Description	Remarks	Serial N°	Qty.
1	6658197	BOLT			1
2	6512741	WASHER			1
3	6655315	GEAR			1
4	6658213	BOLT	Was 6658212 [D]		2
5	6631763	PLATE			1
6	6512740	KEY			1
7	6631776	CAMSHAFT			1
8	6631805	SHAFT			1
9	6631806	GEAR	W/Ref. CAMSHAFT & TIMING GEAR(10)		1
10	NSS	BUSHING	Order Ref. CAMSHAFT & TIMING GEAR(9)		1
11	6631811	COLLAR	thrust		1
12	6512735	BOLT			2
13	6631803	PIPE	oil		1
14	3674007	GASKET			1
15	6631815	BOLT	hollow		1
16	6513004	BOLT			1
17	6631757	BOLT			1
18	6631761	BEARING			1
19	6661098	GEAR	idler - W/Bearing - Was 6658188 [A]		1
20	6631760	SHAFT			1
21	6631758	O-RING			1
22	6661352	GASKET	Was 6631764 [A]		1
23	6659924	CASE	timing gear - Was 6631829 [A]		1
24	6631886	PIN			2
25	6512989	BOLT			6
25	6513050	BOLT			2
26	6631809	O-RING			1
27	6659925	COVER	Was 6631828 [A]		1
28	6664303	GASKET	Was 6660324 [A]		1
29	3676441	COVER	timing check		1
30	6667579	BOLT	Was 3676964 [A]		2
31	6513047	BOLT			8
31	6631733	BOLT			2
31	6631906	BOLT			1
32	6631741	SEAL			1
33	6649962	CAP			1
34	6568956	INLET			1
35	1CM-650	BOLT	Was 1CM-656 [D]		2
36	6631830	COVER	rubber - W/Ref. CAMSHAFT & TIMING GEAR(37)-CAMSHAFT & TIMING GEAR(39)		1
36	6631831	SPACER	foam rubber		1
37	6631751	BUSHING			1
38	6631752	MOUNT			4
39	6631882	BOLT			4

www.youfixthis.com

CRANKCASE & OIL PAN

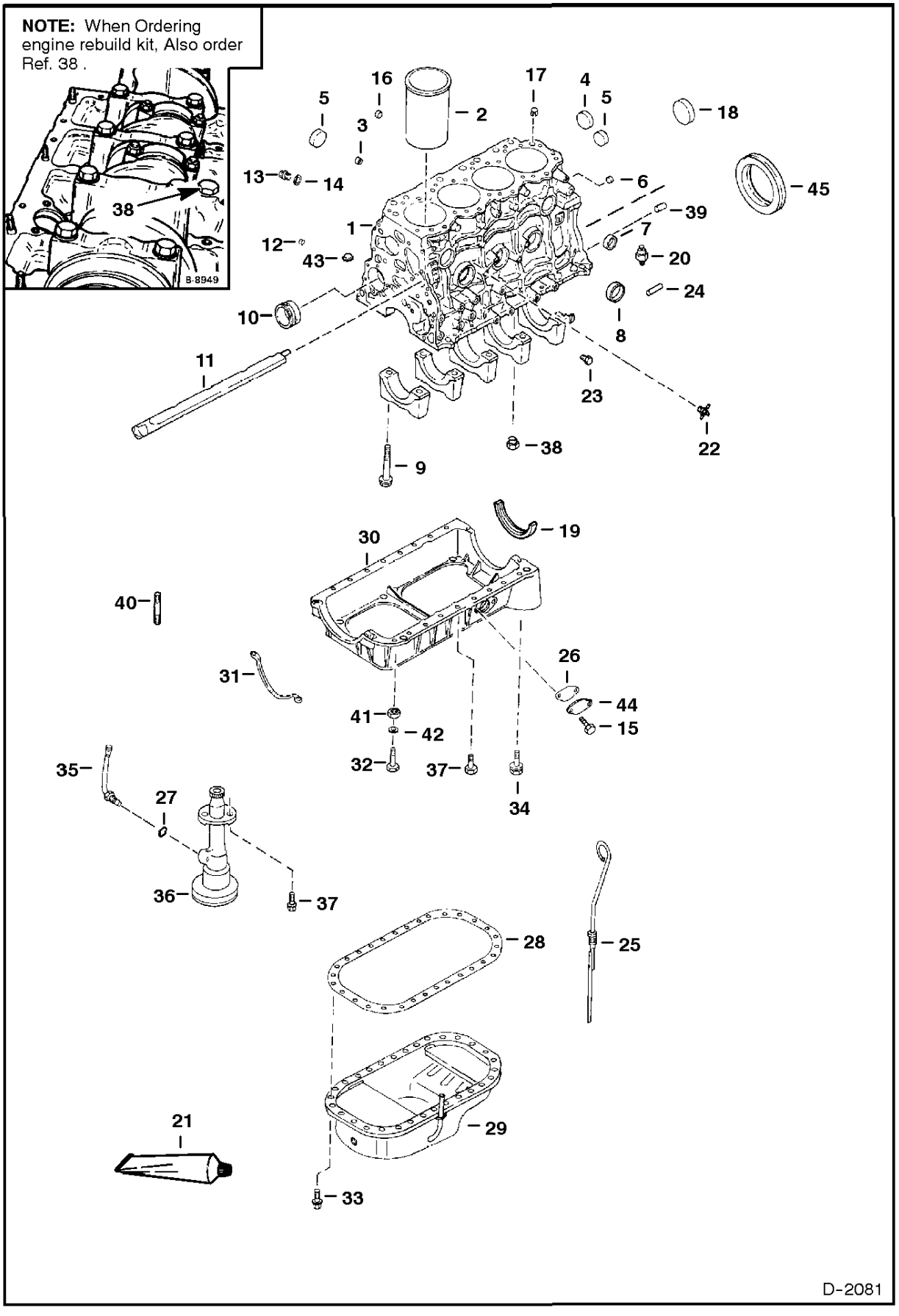

www.youfixthis.com

CRANKCASE & OIL PAN

Ref.N°	Part N°	Description	Remarks	Serial N°	Qty.
1	6655862	BLOCK	W/Ref. CRANKCASE & OIL PAN(2)-CRANKCASE & OIL PAN(10)		1
2	6631853	LINER			4
2	6664579	LINER KIT	W/liner, piston, rings & rod bush. - for complete engine		1
3	6631743	CUP	sealing - 18 mm		3
4	6631745	CUP	sealing - 38.42 mm		1
5	6631746	CUP	sealing - 36 mm		4
6	6631738	CUP	sealing - size N/A		1
7	6669706	CUP	sealing - 31.75 mm - Was 6631758 [A]		2
8	6631730	CUP	sealing - 44.6 mm		3
9	6631893	BOLT			10
10	6636008	BEARING SET	camshaft std.		1
10	NAP	BEARING SET	camshaft - 0.25 mm - Was 6640808 [A]		1
10	6640809	BEARING SET	camshaft - 0.50 mm		1
10	NAP	BEARING SET	camshaft - 0.75 mm - Was 6640810 [A]		1
10	6640811	BEARING SET	camshaft - 1.00 mm		1
11	6658192	DUCT	water		1
12	6631739	PLUG	taper oil gallery		2
13	6631824	PLUG	oil gallery		1
14	3674009	GASKET			1
15	6512989	BOLT			2
16	6670643	CUP	sealing - 16 mm - Was 6512964 [A]		2
17	6658202	DOWEL			2
18	6631922	CUP	sealing - 56 mm		1
19	6660009	GASKET			2
20	6660204	SENSOR	oil pressure		1
21	6650388	SEALANT	gasket - Between Ref. CRANKCASE & OIL PAN(1) & CRANKCASE & OIL PAN(30) - Was 1802303 [A]		x
22	6660326	VALVE	drain - Was 6569288 [A]		1
23	6631891	PLUG	water drain		1
24	6631886	PIN	rear plate - Was 6658217 [A]		1
25	6658211	DIPSTICK			1
26	6641271	GASKET			1
27	6631740	O-RING			2
28	6660325	GASKET			1
29	6658208	PAN			1
30	6659927	CRANKCASE			1
31	6665210	GASKET	Was 6632962 [A]		1
32	6632968	BOLT			4
33	6667582	BOLT	Was 6631879 [A]		30
34	6658219	BOLT			2
35	6658199	PIPE			1
36	6658191	OIL PUMP			1
37	6658214	BOLT	Was 3676977[A]		2
38	6513010	PLUG	oil jet		1
39	6631886	PIN			2
40	6658216	STUD			2
41	6513035	NUT			2
42	6512736	WASHER			4
43	6632964	CAP	sealing		1
44	6632960	COVER	With Gasket		1
45	6656476	SEAL	fabric lip seal		1

www.youfixthis.com

PISTON & CRANKSHAFT

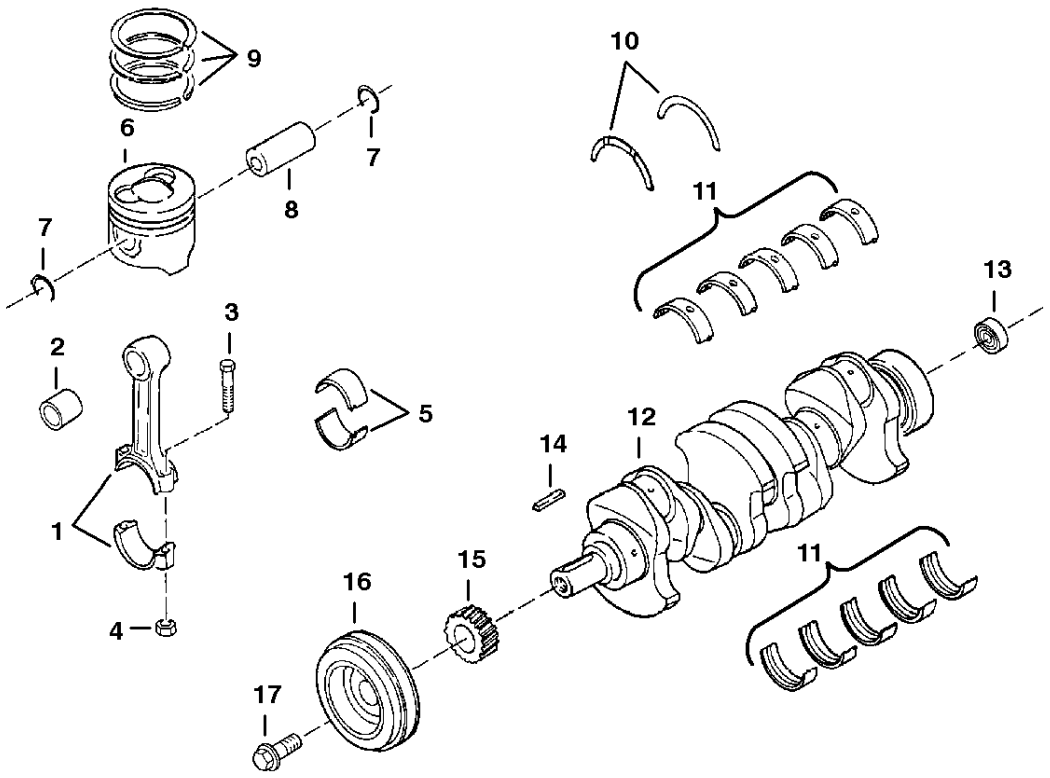

C-3224

www.youfixthis.com

PISTON & CRANKSHAFT

Ref.N°	Part N°	Description	Remarks	Serial N°	Qty.
1	6655864	ROD	connecting - W/Ref. PISTON & CRANKSHAFT(2)-PISTON & CRANKSHAFT(4)		4
2	6631859	BUSHING			4
3	6631748	BOLT	Was 6658193 [A]		8
4	6631735	NUT			8
5	6655313	BEARING	conn. rod		4
6	6655863	PISTON	For A or C Piston - W/O Ref. PISTON & CRANKSHAFT (7)-PISTON & CRANKSHAFT(9)		4
7	6631793	SNAP RING			8
8	6631860	PIN			4
9	6631854	RING SET	std.		4
10	6655932	BEARING	thrust		2
11	6631841	KIT	main bearing - W/Ref. PISTON & CRANKSHAFT(10)		1
12	6631769	CRANKSHAFT			1
13	6631878	BEARING			1
14	6512743	KEY			1
15	6631804	GEAR			1
16	6658209	PULLEY	2-groove - Was 6651941 [A]		1
16	6664474	PULLEY	3-groove		1
17	6660666	BOLT			1

www.youfixthis.com

THERMOSTAT HOUSING

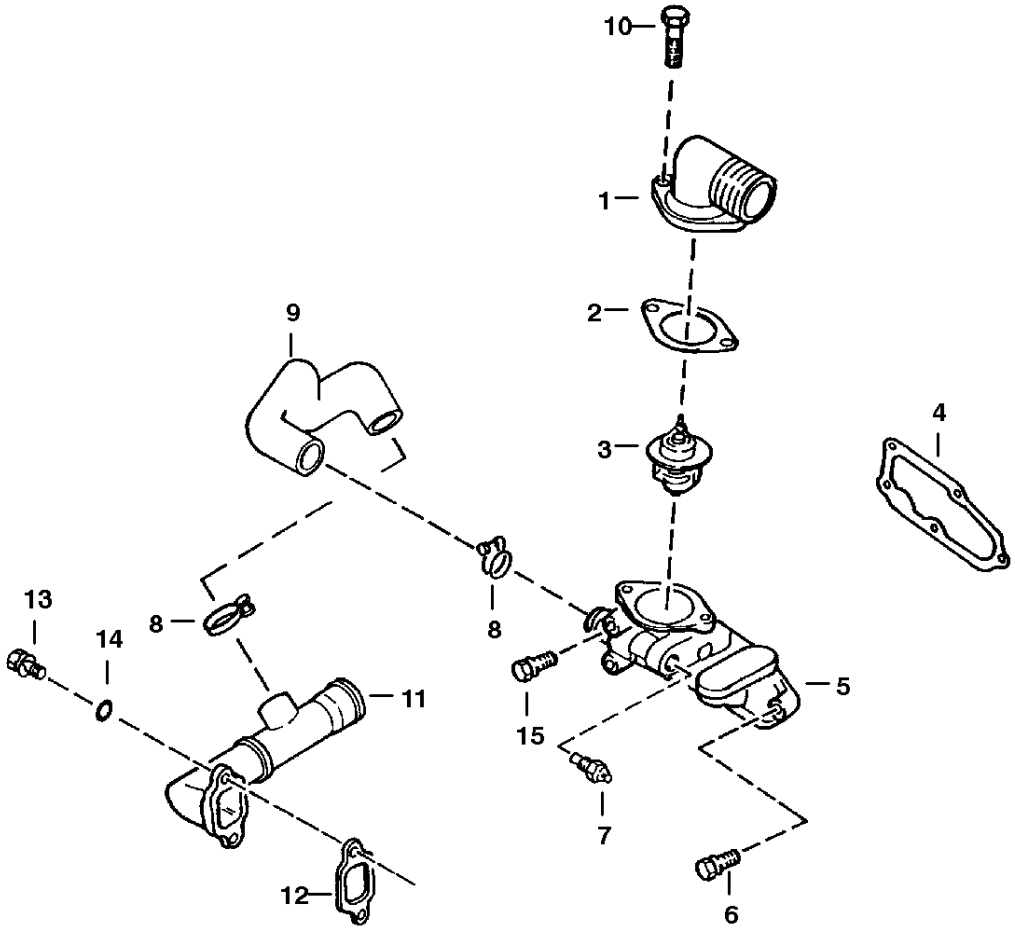

www.youfixthis.com

THERMOSTAT HOUSING

Ref.N°	Part N°	Description	Remarks	Serial N°	Qty.
1	6651938	HOUSING	outlet		1
2	6661097	GASKET	Was 6655319		1
3	6631692	THERMOSTAT			1
4	6631869	GASKET			1
5	6631774	HOUSING			1
6	3768067	BOLT			3
7	6654202	SENSOR	eng. temp. - See Page ENGINE ELECTRICAL SYSTEM (18)		1
8	6655311	CLAMP			2
9	6658187	HOSE	Was 6631873		1
10	6658214	BOLT			2
11	6654910	PIPE			1
12	6631856	GASKET			1
13	6513004	BOLT			2
14	6EM-100	WASHER			2
15	1CM-870	BOLT			2

www.youfixthis.com

WATER PUMP

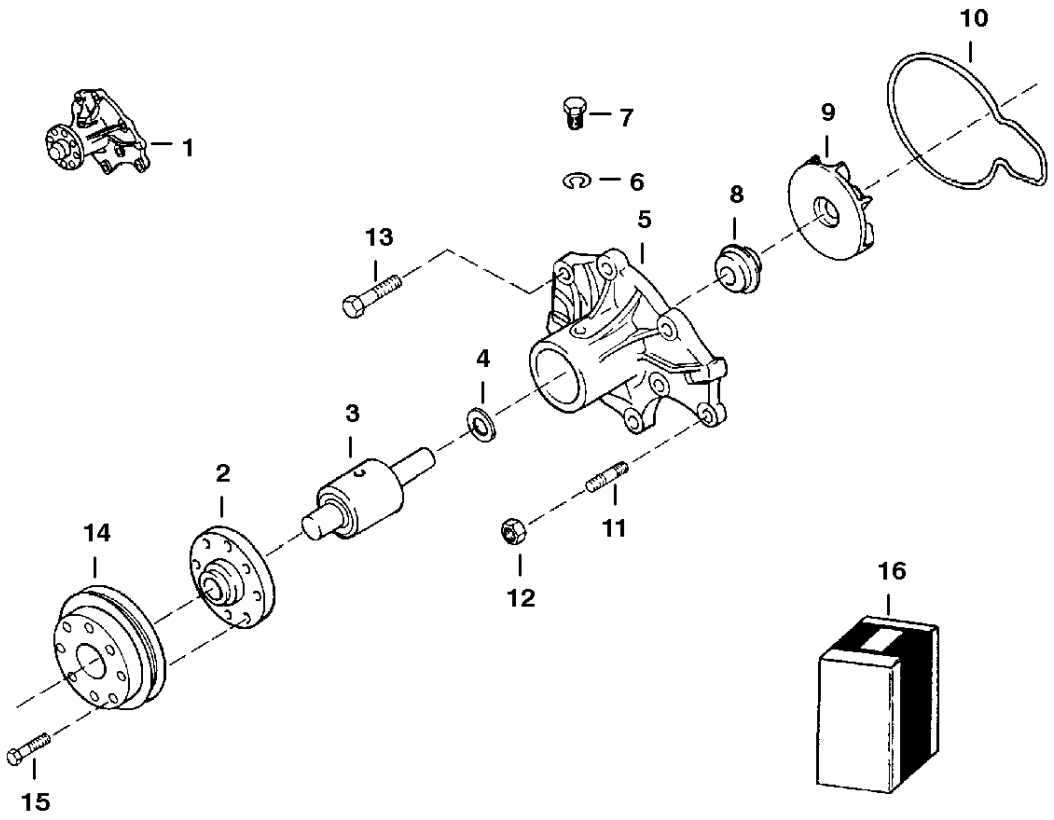

C-2935

www.youfixthis.com

WATER PUMP

Ref.N°	Part N°	Description	Remarks	Serial N°	Qty.
1	6671508	PUMP	Ref. WATER PUMP(2)-WATER PUMP(9) - Was 66318 10 [A]		1
2	NSS	CENTER			1
3	NSS	BEARING UNIT			1
4	NSS	THROWER			1
5	NSS	HOUSING			1
6	6512736	WASHER			1
7	6631894	SCREW			1
8	NSS	SEAL			1
9	NSS	IMPELLER			1
10	6631846	GASKET			1
11	6631884	STUD			2
12	6631729	NUT			2
13	6512735	BOLT			5
14	6659929	PULLEY	Was 6631816 [A]		1
15	6667582	BOLT	Was 6631879 [A]		4
16	6658696	REPAIR KIT	Ref. WATER PUMP(3), WATER PUMP(4) & WATER PUMP(8) WATER PUMP(10)Was 6655866 [A]		1

www.youfixthis.com

FUEL INJECTION SYSTEM

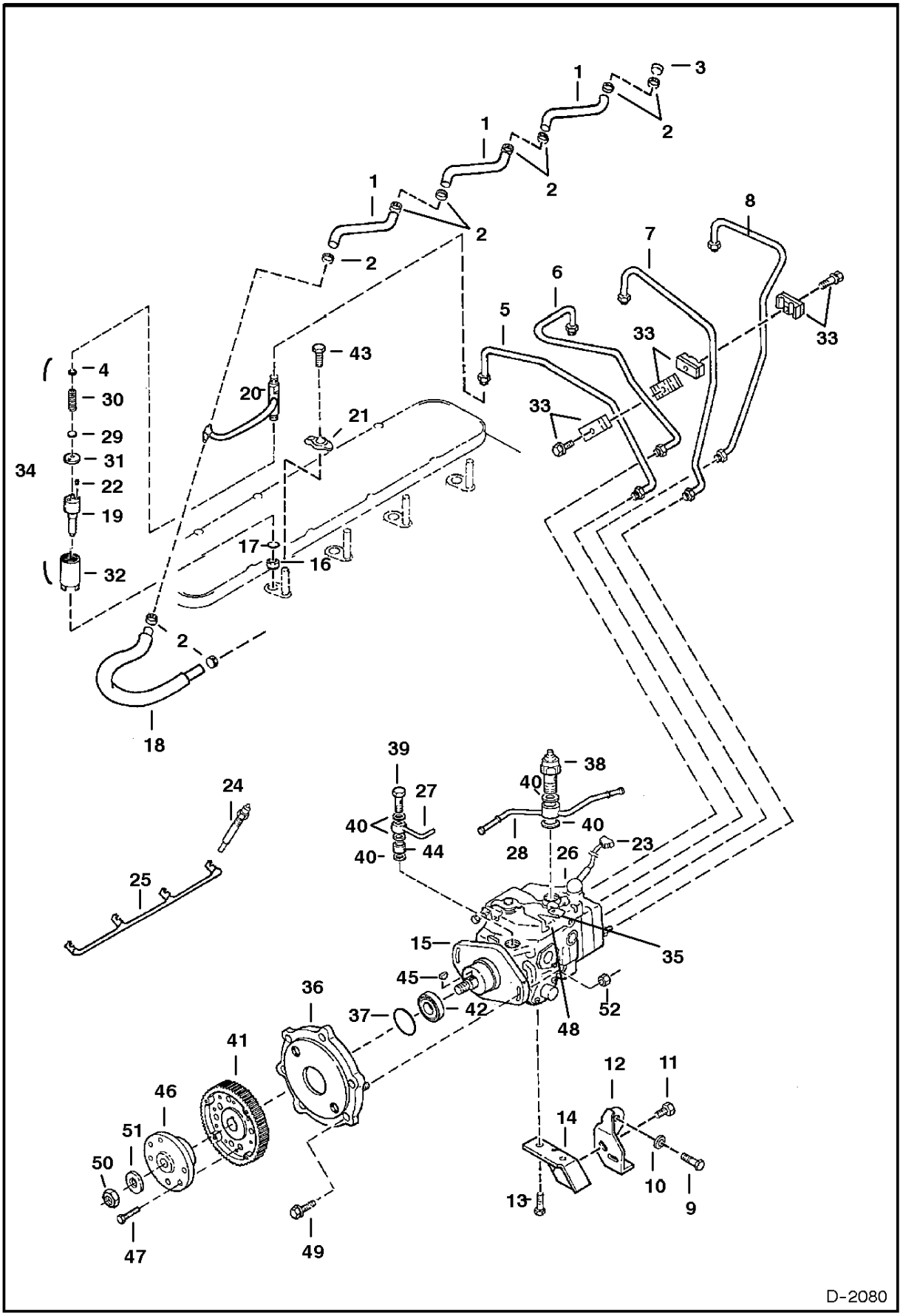

www.youfixthis.com

FUEL INJECTION SYSTEM

Ref.N°	Part N°	Description	Remarks	Serial N°	Qty.
1	6631822	HOSE			3
2	6631849	CLAMP			9
3	6658203	CAP			1
4	6648013	SHIM	.500 mm		x
4	6648014	SHIM	.525 mm		x
4	6648015	SHIM	.550 mm		x
4	6648016	SHIM	.575 mm		x
4	6648017	SHIM	.600 mm		x
4	6648018	SHIM	.625 mm		x
4	6648019	SHIM	.650 mm		x
4	6648020	SHIM	.675 mm		x
4	6648021	SHIM	.700 mm		x
4	6648022	SHIM	.725 mm		x
4	6648023	SHIM	.750 mm		x
4	6648024	SHIM	.775 mm		x
4	6648025	SHIM	.800 mm		x
4	6648026	SHIM	.825 mm		x
4	6648027	SHIM	.850 mm		x
4	6648028	SHIM	.875 mm		x
4	6648029	SHIM	.900 mm		x
4	6648030	SHIM	.925 mm		x
4	6648031	SHIM	.950 mm		x
4	6648032	SHIM	.975 mm		x
4	6648033	SHIM	1.000 mm		x
4	6648034	SHIM	1.025 mm		x
4	6648035	SHIM	1.050 mm		x
4	6648036	SHIM	1.075 mm		x
4	6648037	SHIM	1.100 mm		x
4	6648038	SHIM	1.125 mm		x
4	6648039	SHIM	1.150 mm		x
4	6648040	SHIM	1.175 mm		x
4	6648041	SHIM	1.200 mm		x
4	6648042	SHIM	1.225 mm		x
4	6648043	SHIM	1.250 mm		x
4	6648044	SHIM	1.275 mm		x
4	6648045	SHIM	1.300 mm		x
4	6648046	SHIM	1.325 mm		x
4	6648047	SHIM	1.350 mm		x
4	6648048	SHIM	1.375 mm		x
4	6648049	SHIM	1.400 mm		x
4	6648050	SHIM	1.425 mm		x
4	6648051	SHIM	1.450 mm		x
4	6648052	SHIM	1.475 mm		x
4	6648053	SHIM	1.500 mm		x
5	6658204	PIPE	injection - No. 1		1
6	6658205	PIPE	injection - No. 2		1
7	6658206	PIPE	injection - No. 3		1
8	6658207	PIPE	injection - No. 4		1
9	3676976	BOLT			2
10	3674002	WASHER			2
11	6661091	BOLT	Was 3676970 [A]		1
12	6631790	BRACKET			1
13	6631881	BOLT			2
14	6631791	BRACKET			1
15	6658210	PUMP	injection		1

www.youfixthis.com

FUEL INJECTION SYSTEM

Ref.N°	Part N°	Description	Remarks	Serial N°	Qty.
16	6631775	SEAL			4
17	6655312	O-RING			4
18	6631826	HOSE			1
19	6631857	NOZZLE			4
20	6658200	HOLDER	nozzle - W/Ref. FUEL INJECTION SYSTEM(32)		4
21	6631813	BRACKET			4
22	6658189	PIN			2
23	6660220	WIRE			1
24	6631808	GLOW PLUG			4
25	6631789	CONNECTOR	glow plug		1
26	6630546	SOLENOID	fuel shut-off - Was 6632196 [A]		1
27	6646744	LINE			1
28	6646745	LINE			1
29	6658190	SEAT			1
30	6646747	SPRING			1
31	6646748	SPACER			1
32	6646749	NUT	retaining		1
33	3674076	CLAMP ASSY.			2
34	6646906	INJECTOR	Ref. FUEL INJECTION SYSTEM(4), FUEL INJECTION SYSTEM(19), FUEL INJECTION SYSTEM(22) & FUEL INJECTION SYSTEM(29)-FUEL INJECTION S		4
35	6648012	LEVER			1
36	6650621	BRACKET			1
37	6650622	O-RING			1
38	6651849	BOLT			1
39	6651850	BOLT			1
40	6651851	WASHER			5
41	6658695	GEAR	Was 6652519 [A]		1
42	6652518	SEAL			1
43	6658198	BOLT			4
44	6660949	SPACER			1
45	6668723	KEY			1
46	6669667	COUPLER			1
47	6669668	BOLT			6
48	6670557	SPRING			1
49	6673936	BOLT			4
49	6673937	BOLT			1
49	6661091	BOLT			1
50	6673943	NUT			1
51	6673942	WASHER			1
52	6673944	NUT			2

www.youfixthis.com

AIR CLEANER

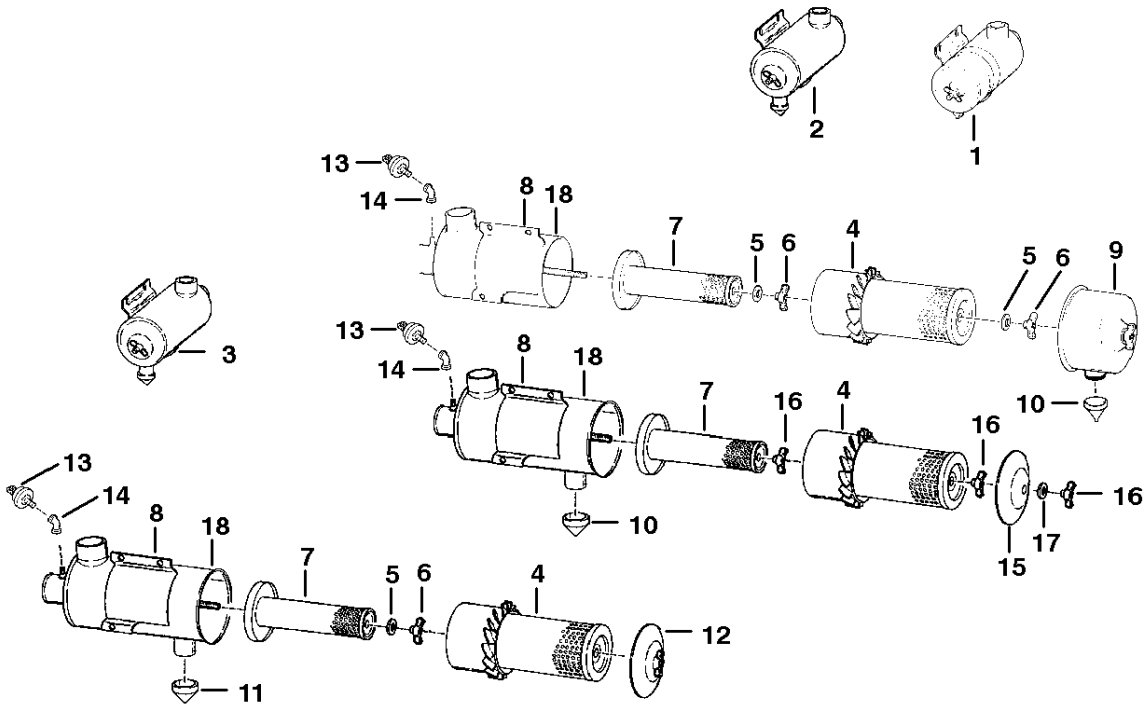

D-2123

www.youfixthis.com

AIR CLEANER

Ref.N°	Part N°	Description	Remarks	Serial N°	Qty.
1	NAP	AIR CLEANER	Order Ref. AIR CLEANER(2) - W/ 1.5' Evacuator Valve - Ref. AIR CLEANER(4)-AIR CLEANER(10), AIR CLEANER(13), AIR CLEANER(14) &		1
2	6661400	AIR CLEANER	W/1.5' Evacuator Valve - Ref. AIR CLEANER(4), AIR CLEANER(7), AIR CLEANER(8), AIR CLEANER(10) & AIR CLEANER(13)-AIR CLEANER(18)		x
3	NAP	AIR CLEANER	W/ 2' Evacuator Valve - Ref. AIR CLEANER(4) - AIR CLEANER(8) & AIR CLEANER(11) - AIR CLEANER(14) - Order 6661400 Air Cleaner		1
4	6598492	CARTRIDGE			1
5	886527	WASHER			2
6	3291290	WING NUT			2
7	6598362	CARTRIDGE			1
8	866028	CLAMP			1
9	6657114	CAP	Was 6598493 [B]		1
10	6655938	VALVE	evacuator - 1.5" I.D.		1
11	6655937	VALVE	evacuator - 2" I.D.		1
12	6630941	COVER	W/Wing Nut - Was 6655936 [D]		1
13	6660316	SWITCH	Was 6651570 [A]		1
14	23F-1	ELBOW	Was 6701947 [B]		1
15	6661242	COVER			1
16	6661243	WING NUT			3
17	6661244	WASHER			1
18	NAP	TANK			1

www.youfixthis.com

ACCESS COVER
(Cleanout - Lower Front of Chaincase)

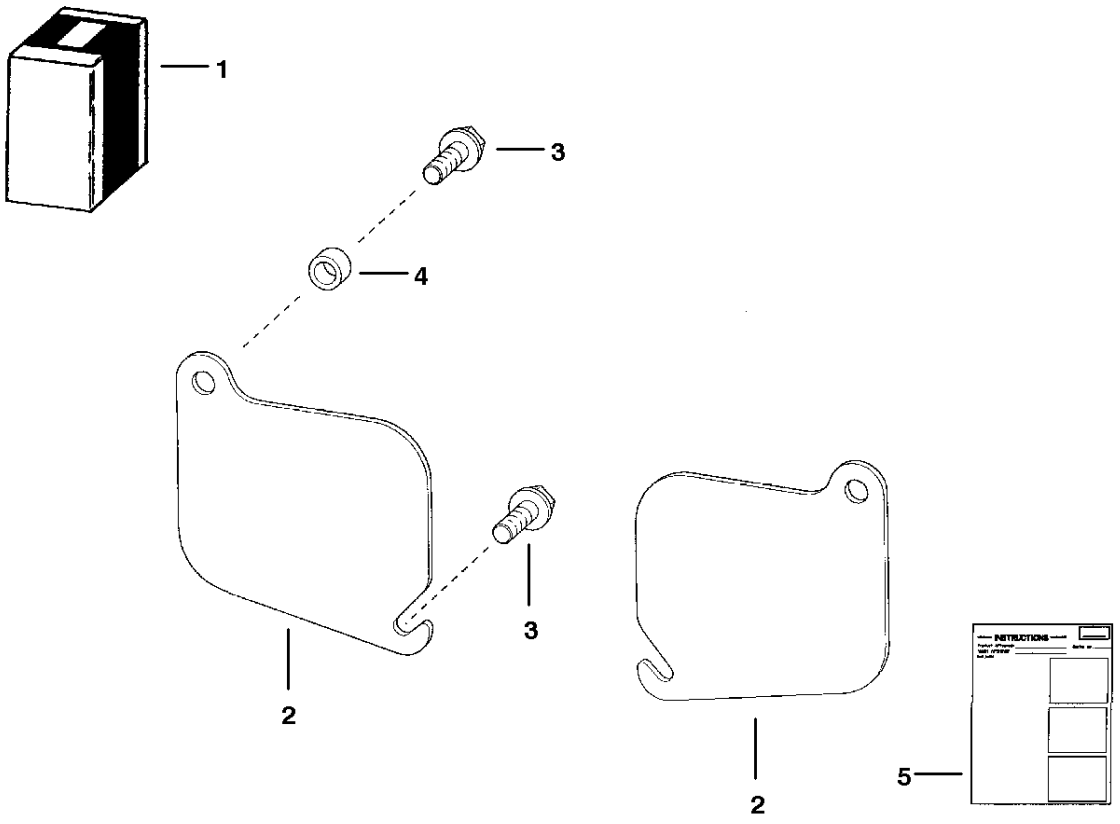

TS-1049

www.youfixthis.com

ACCESS COVER

Ref.N°	Part N°	Description	Remarks	Serial N°	Qty.
1	6577880	KIT	Ref. ACCESS COVER(2)-ACCESS COVER(5)		1
2	6577812	COVER			2
3	84G-3720	BOLT			4
4	6562619	BUSHING			2
5	6570931	INSTRUCTIONS			1

www.youfixthis.com

ACCESS COVER
(Hyd. Tank Fill Cap)

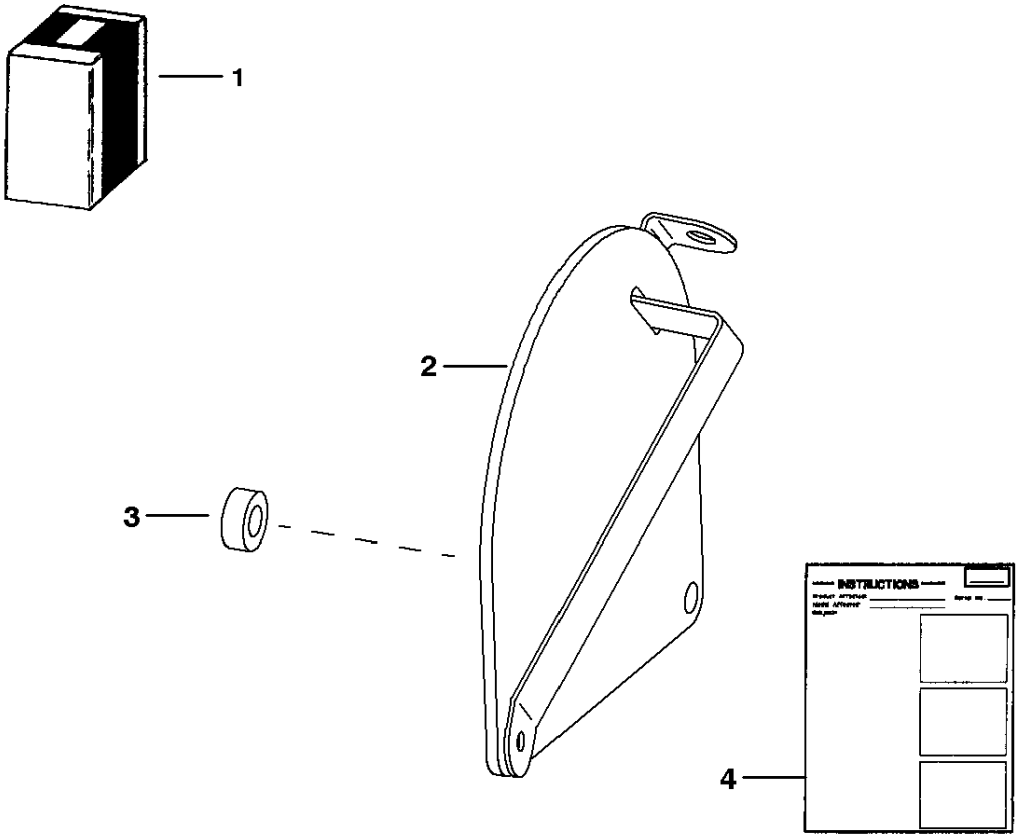

TS-1133

www.youfixthis.com

ACCESS COVER

Ref.N°	Part N°	Description	Remarks	Serial N°	Qty.
1	6700710	KIT	Ref. ACCESS COVER(2)-ACCESS COVER(4)		1
2	6700347	COVER			1
3	6700704	BUSHING			1
4	6720185	INSTRUCTIONS			1

www.youfixthis.com

BACK-UP ALARM KIT
(For Use W/Plastic Hood)

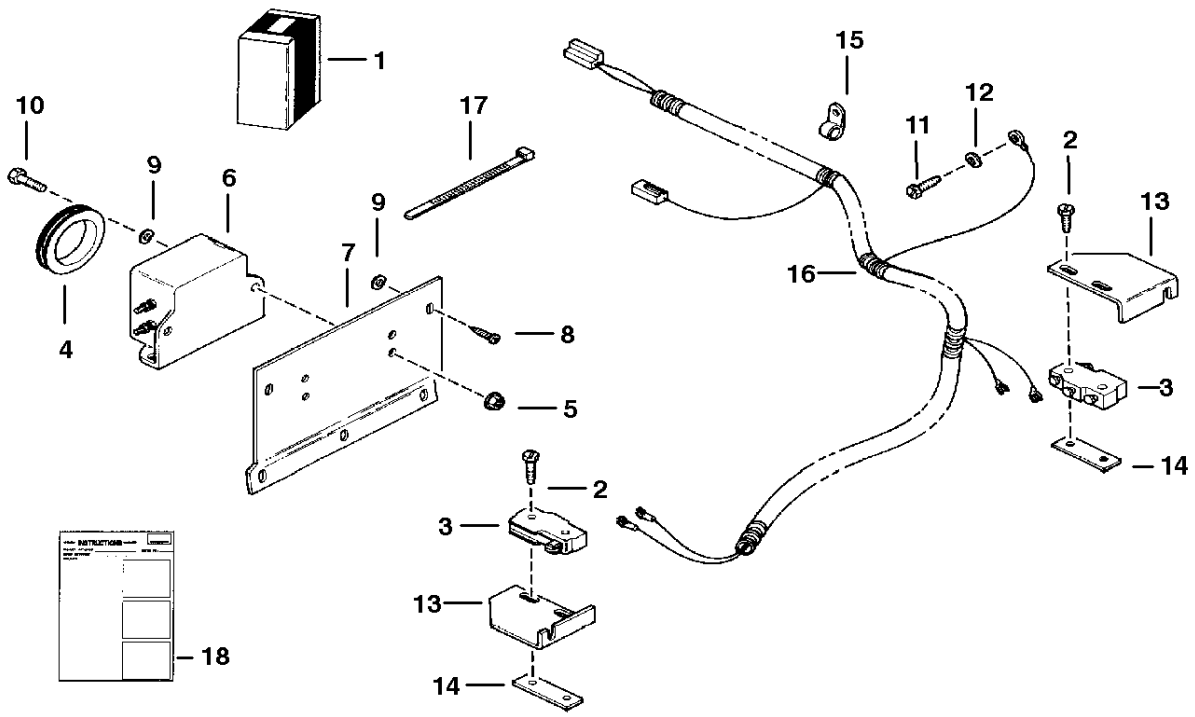

B-20239

www.youfixthis.com

BACK-UP ALARM KIT

Ref.N°	Part N°	Description	Remarks	Serial N°	Qty.
1	6702590	KIT	Ref. BACK-UP ALARM KIT(2)-BACK-UP ALARM KIT(18)		1
2	59G-620	BOLT	Was 59G-616 [B]		4
3	6646781	SWITCH			2
4	6512067	GROMMET			1
5	83D-4	NUT			2
6	6599931	ALARM			1
6	6668879	DECAL			1
7	6579850	MOUNT			1
8	58G-2512	BOLT			2
9	25E-13	WASHER			12
10	17C-408	BOLT			2
11	59G-1008	BOLT			1
12	12E-10	WASHER			1
13	6702589	MOUNT			2
14	6702593	SPACER			2
15	30H-23	CLAMP			1
16	6702591	HARNESS			1
17	6610510	NYLON TIE	Was 1715312 [A]		2
18	6720597	INSTRUCTIONS			1

www.youfixthis.com

BACK-UP ALARM KIT
(For Use W/Steel Hood)

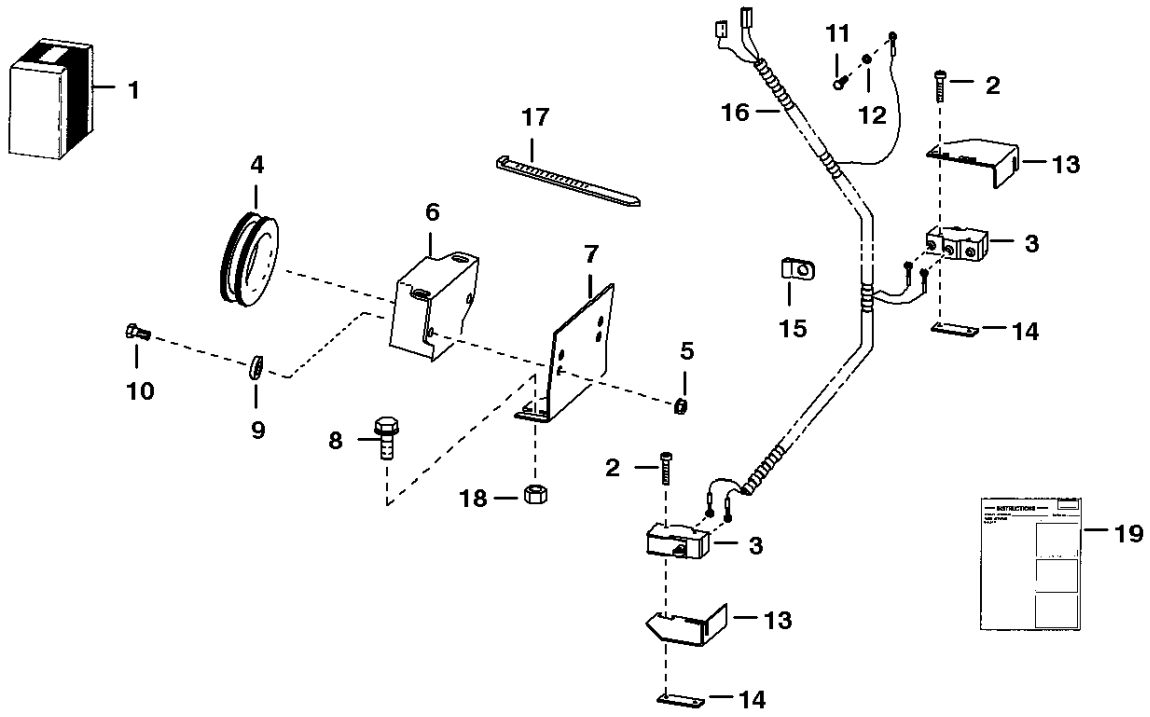

TS-1094

www.youfixthis.com

BACK-UP ALARM KIT

Ref.N°	Part N°	Description	Remarks	Serial N°	Qty.
1	6704817	KIT	Ref. BACK-UP ALARM KIT(2)-BACK-UP ALARM KIT(19)		1
2	59G-616	BOLT			4
3	6646781	SWITCH			2
4	6577545	GROMMET			1
5	83D-4	NUT			2
6	6599931	ALARM			1
6	6668879	DECAL			1
7	6704163	MOUNT			1
8	35C-516	BOLT	Was 58G-2512 [B]		2
9	25E-13	WASHER			2
10	17C-410	BOLT	Was 17C-408 [B]		2
11	59G-1008	BOLT			1
12	12E-10	WASHER			1
13	6702589	MOUNT			2
14	6702593	SPACER			2
15	30H-23	CLAMP			1
16	6704815	HARNESS			1
17	6610510	NYLON TIE	not in kit - Was 1715312 [A]		4
18	61D-5	NUT			2
19	6722235	INSTRUCTIONS			1

www.youfixthis.com

* BEACON LIGHT

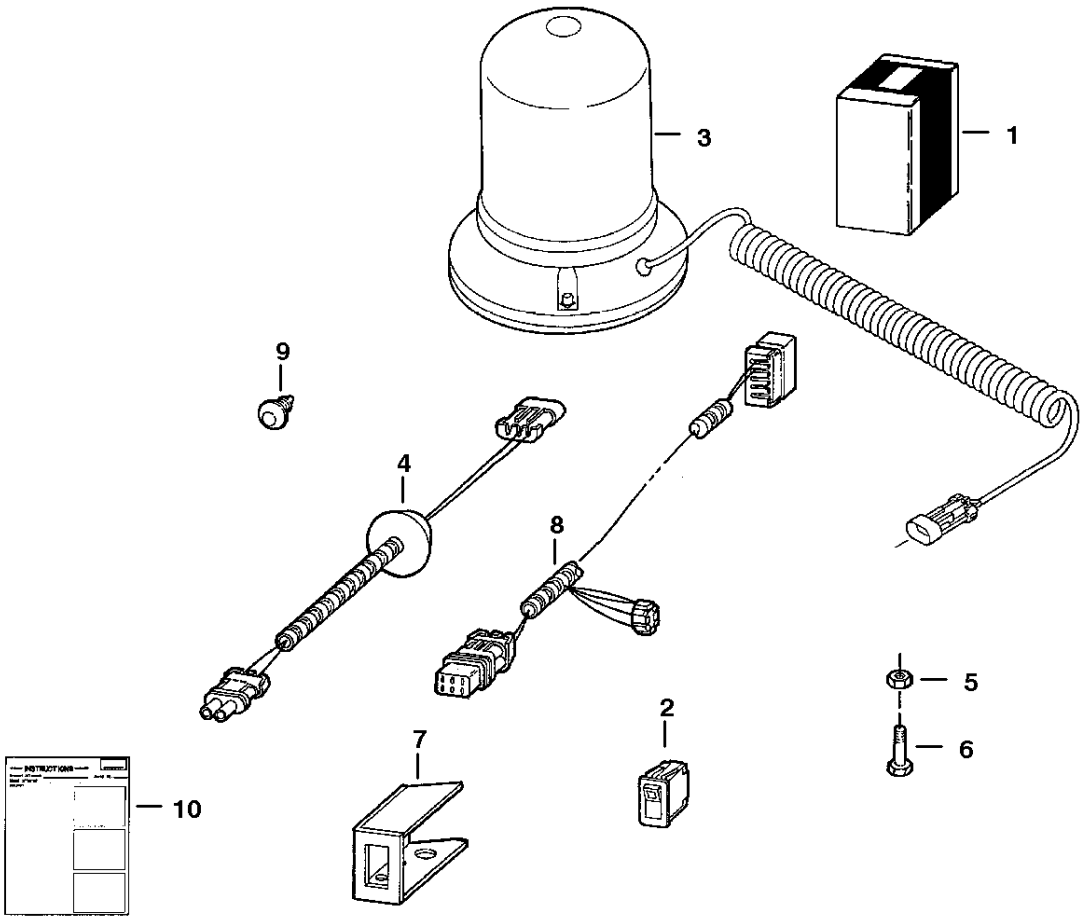

www.youfixthis.com

* BEACON LIGHT

Ref.N°	Part N°	Description	Remarks	Serial N°	Qty.
1	6712692	BEACON KIT	Ref. * BEACON LIGHT(2) - * BEACON LIGHT(5) - Was 6708342 [A]		1
2	6668816	SWITCH	Was 6665317 [A]		1
3	6665730	BEACON			1
3	6666571	BULB			1
3	6666572	LENS			1
4	6708318	HARNESS	beacon		1
5	6660988	RETAINER			2
6	35C-412	BOLT			2
7	6711708	MOUNT			1
8	6712258	HARNESS	strobe		1
9	6669308	RETAINER	snap in		1
10	*6724071	INSTRUCTIONS			1

www.youfixthis.com

BOB-TACH LEVERS
(For Use W/Industrial Grapple Fork)

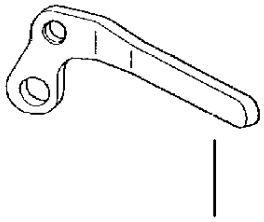

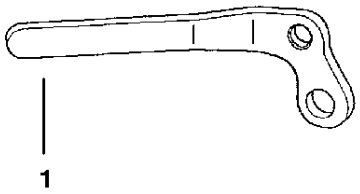

TS-1019

www.youfixthis.com

BOB-TACH LEVERS

Ref.N°	Part N°	Description	Remarks	Serial N°	Qty.
1	6578139	LEVER	R.H.		1
2	6578140	LEVER	L.H.		1

www.youfixthis.com

BLOCK HEATER
(Engine)

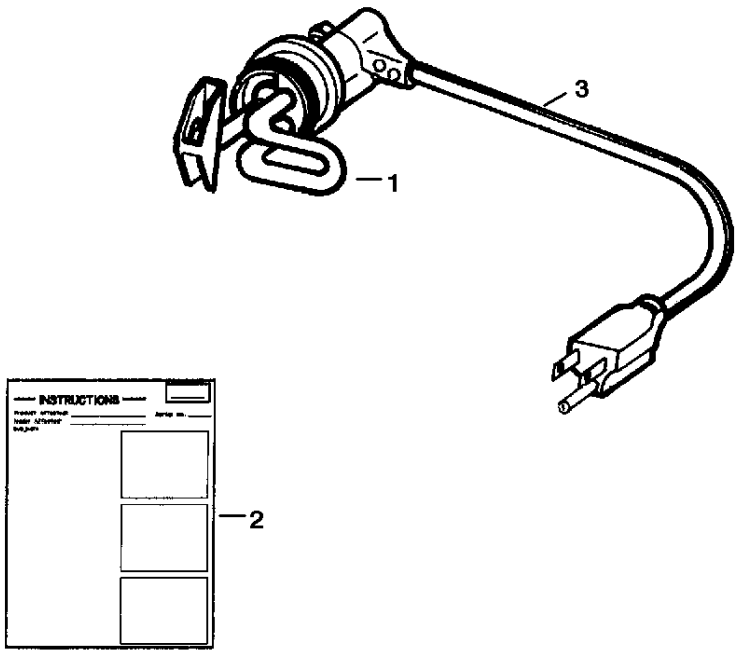

B-12299

www.youfixthis.com

BLOCK HEATER

Ref.N°	Part N°	Description	Remarks	Serial N°	Qty.
1	6720742	HEATER	W/Ref. BLOCK HEATER(2)		1
2	6720038	INSTRUCTIONS			1
3	6668881	CORD			1

www.youfixthis.com

BUCKET POSITION ON-OFF KIT

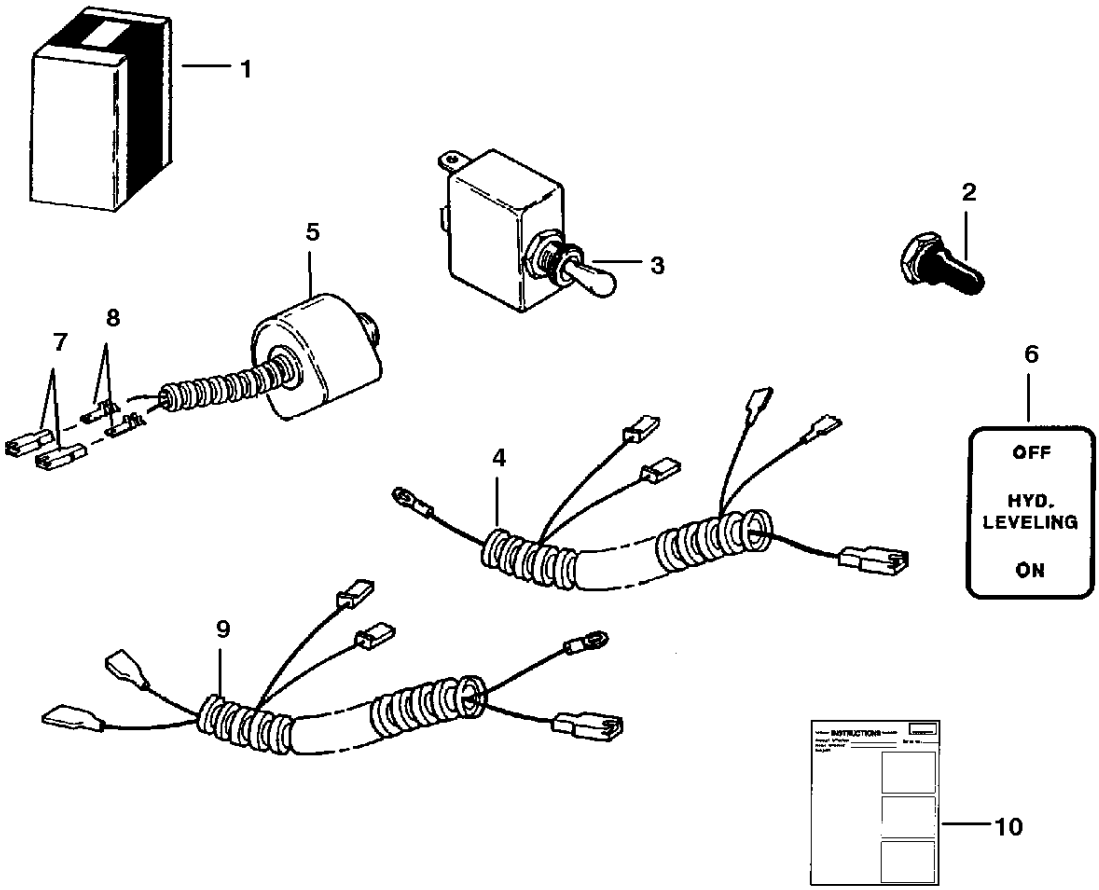

B-13277

www.youfixthis.com

BUCKET POSITION ON-OFF KIT

Ref.N°	Part N°	Description	Remarks	Serial N°	Qty.
1	6701548	KIT	Ref. BUCKET POSITION ON-OFF KIT(2)-BUCKET POSITION ON-OFF KIT(10)		1
2	6515510	COVER			1
3	6515521	SWITCH			1
4	6701376	HARNESS			1
5	NAP	SOLENOID	Order 6703601 - Was 6655036[A]		1
5	6703601	SOLENOID	W/Ref. BUCKET POSITION ON-OFF KIT(7) & BUCKET POSITION ON-OFF KIT(8)		1
6	6701462	DECAL			1
7	6519548	CONNECTOR	Was 6512640 [A]		2
8	1732366	TERMINAL			2
9	6704411	HARNESS			1
10	6720321	INSTRUCTIONS			1

www.youfixthis.com

BUMPERS
(Rear Door)

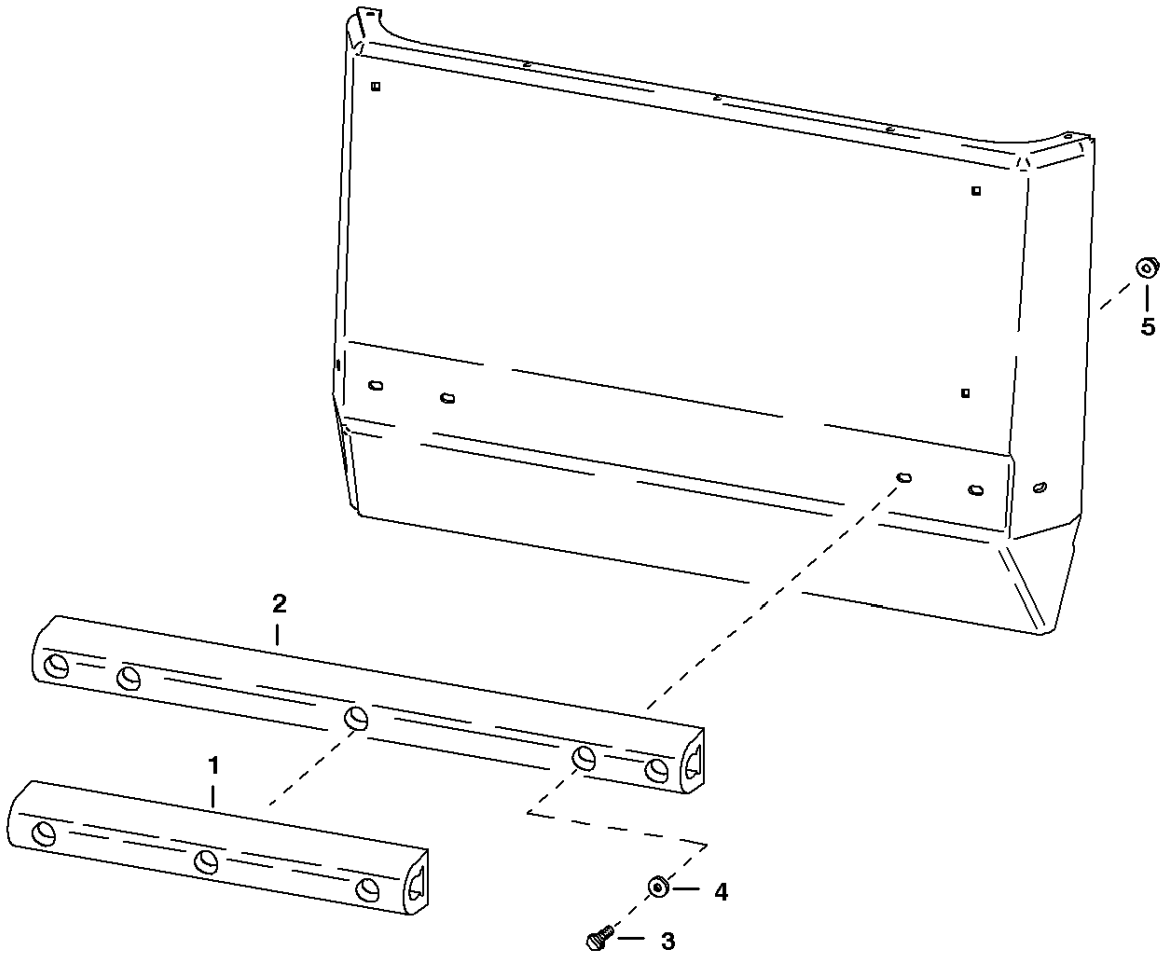

TS-1126

www.youfixthis.com

BUMPERS

Ref.N°	Part N°	Description	Remarks	Serial N°	Qty.
1	6705166	BUMPER	22' (558,8 mm) long		1
2	6705167	BUMPER	36' (919,4 mm) long		1
3	17C-628	BOLT	See BTI 270		x
4	25E-18	WASHER	See BTI 270		x
5	83D-6	NUT	See BTI 270		x

www.youfixthis.com

CAB DOOR
(R.H. Hinged)

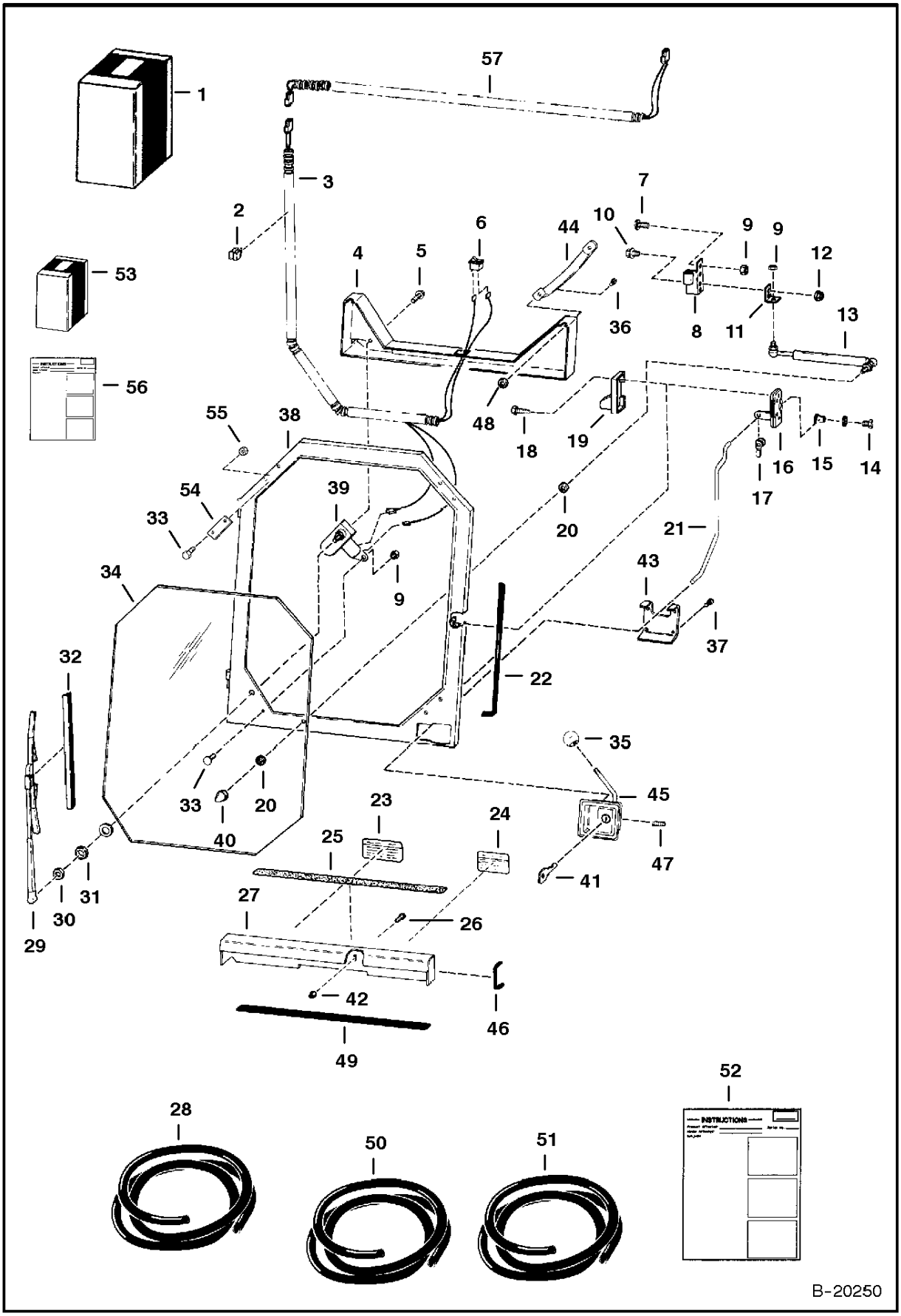

www.youfixthis.com

CAB DOOR

Ref.N°	Part N°	Description	Remarks	Serial N°	Qty.
1	NAP	KIT	Ref. CAB DOOR(2) - CAB DOOR(52) - Order 6708973 door kit, 6708975 shield kit & 6708225 harness - See Page CAB DOOR(1) - Was 6		1
2	30H-37	CLAMP	Was 30H-7 [B]		1
3	6568739	HARNESS			1
4	6704428	SHIELD	Was 6576471 [A]		1
5	84G-3112	BOLT			2
6	6631009	SWITCH			1
7	6553808	BOLT			4
8	6571715	HINGE			2
9	83D-5	NUT			6
10	35C-412	BOLT			2
11	6568055	BRACKET			1
12	83D-4	NUT			2
13	6630797	GAS SPRING			1
13	6632221	STUD	ball		2
13	2756257	RETAINER	spring		2
14	17C-712	BOLT			1
15	6568047	NUT	bushing		1
16	6660932	LATCH	Was 6647789 [A]		1
17	6512274	CLIP			1
18	35C-416	BOLT			4
19	6568728	SHIELD			1
20	25E-16	WASHER			2
21	6704425	ROD	Was 6576470 [A]		1
22	NAP	SEAL	100'(2540 mm) long - Order Ref. CAB DOOR(51)		x
23	6579510	DECAL	Was 6575854 [A]		1
24	6563410	DECAL			1
25	6564833	SAFETY TREAD			1
26	35C-616	BOLT			2
27	6579324	SHIELD			1
28	6555351	SEAL	bulk - Sold Per Foot		x
29	6631008	ARM			1
30	NSS	NUT			1
31	NSS	SEAL			1
32	6630943	BLADE	wiper		1
33	25G-510	BOLT			8
34	6568705	WINDOW	1/4' Plastic - SEE BTI 293		1
35	6647635	KNOB			1
36	7G-416	BOLT	Was 7G-412 [B]		2
37	45G-1008	BOLT			4
38	6704430	DOOR	Was 6576466 [A]		1
39	6620642	MOTOR	wiper - W/Ref. CAB DOOR(30) & CAB DOOR(31)		1
39	6631927	GEAR			1
39	961528	HARDWARE			1
39	6631928	SHAFT	w/spline		1
40	46D-5	NUT			1
41	6632560	KEY			x
42	57D-6	NUT			2
43	6704426	RETAINER	Was 6578398 [A]		1
44	6631935	HANDLE			1
45	6641274	LATCH			1
46	NAP	SEAL	6' (152,4 mm)long-Order Ref. CAB DOOR(28)		2
47	6662834	SPRING			1
48	6660988	RETAINER			2
49	NAP	SEAL	28'(711,2mm)long-Order Ref. CAB DOOR(50)		1

www.youfixthis.com

CAB DOOR

Ref.N°	Part N°	Description	Remarks	Serial N°	Qty.
50	6513152	SEAL	bulk - Sold Per Foot		x
51	6568704	MOULDING	bulk - Sold Per Foot		x
52	6570929	INSTRUCTIONS			1
53	6708990	KIT	window retainer-Ref. CAB DOOR(33) & CAB DOOR(54)-CAB DOOR(56)		1
54	6708850	RETAINER			4
55	61D-5	NUT			7
56	6724279	INSTRUCTIONS			1
57	6708225	HARNESS			1

www.youfixthis.com

CAB DOOR
(L.H. Hinged)

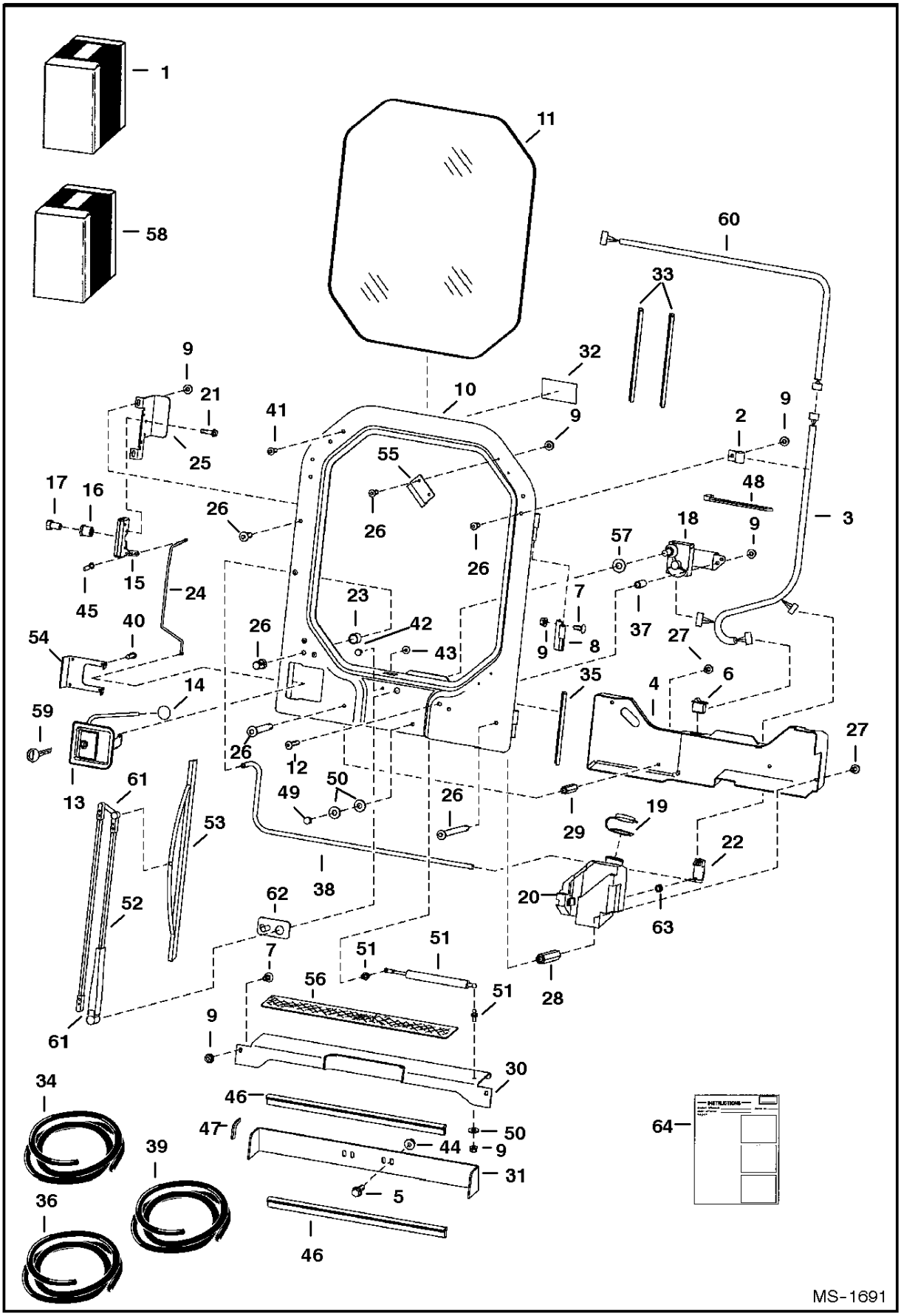

www.youfixthis.com

CAB DOOR

Ref.N°	Part N°	Description	Remarks	Serial N°	Qty.
1	6708973	KIT	door - Ref. CAB DOOR(2)-CAB DOOR(4), CAB DOOR(6)-CAB DOOR(29), CAB DOOR(32),CAB DOOR(37)-CAB DOOR(43), CAB DOOR(48)-CAB DOOR(55)		1
1	SALES	KIT	door - special applications - Ref. CAB DOOR(4), CAB DOOR(5), CAB DOOR(7)-CAB DOOR(17), CAB DOOR(21), CAB DOOR(24)-CAB DOOR(37),		1
2	30H-37	CLAMP			1
3	NAP	HARNESS	Order 6712259 Harness - Was6708269 [A]		1
3	6712259	HARNESS	W/(2) diodes		1
4	6707179	SHIELD			1
5	35C-616	BOLT			2
6	6665707	SWITCH			1
7	10C-512	BOLT			6
8	6707216	HINGE			2
9	83D-5	NUT	for standard door		10
9	83D-5	NUT	for special applications door		15
10	6707220	DOOR			1
11	6707225	WINDOW	.25" thick - safety glass - for standard door		1
11	6708499	WINDOW	.5" thick - plexiglass - for special applications door		1
12	25G-528	BOLT			1
13	6665530	LATCH	W/Ref. CAB DOOR(14) - Also order Ref. CAB DOOR(59)		1
14	6647635	KNOB			1
15	6665531	LATCH			1
16	6568047	NUT	bushing		1
17	17C-712	BOLT			1
18	6665532	MOTOR	wiper		1
18	6631927	GEAR			1
18	6670163	SHAFT	w/spline		1
18	6670164	LINK			1
18	6670165	CLIP			1
19	6665605	CAP			1
20	6707178	TANK			1
21	35C-416	BOLT			4
22	6664554	PUMP	wiper washer		1
23	6664555	NOZZLE	washer		1
24	6707221	ROD	latch release		1
25	6707222	MOUNT	latch		1
26	25G-512	BOLT	for standard door		7
26	25G-512	BOLT	for special applications door		14
27	35C-510	BOLT			4
28	6707223	COUPLING			2
29	6707224	COUPLING			2
30	6707239	SHIELD	bolts to cab		1
31	6707236	SHIELD	bolts to mainframe		1
32	6707852	DECAL			1
33	NAP	SEAL	91"(2311 mm)long-Order Ref. CAB DOOR(34)		1
33	NAP	CORD	91"(2311 mm)long-Order Ref. CAB DOOR(34)		1
34	6665568	SEAL	bulk - Sold Per Foot		x
34	6554149	CORD	bulk - Sold Per Foot		x
35	NAP	SEAL	137"(3480mm)long-Order Ref. CAB DOOR(36)		1
36	6513152	SEAL	bulk - Sold Per Foot		x
37	6708096	BUSHING			1
38	NAP	HOSE	26"(660,4 mm)long-Order Ref. CAB DOOR(39)		1
39	6708310	HOSE	bulk - Sold Per Foot - 5/32' I.D.		x
40	45G-1008	BOLT			4

www.youfixthis.com

CAB DOOR

Ref.N°	Part N°	Description	Remarks	Serial N°	Qty.
41	5289686	PLUG	black		12
42	17C-408	BOLT			1
43	55D-4	NUT			1
44	83D-6	NUT			2
45	6512274	CLIP			1
46	NAP	SEAL	28"(711 mm)long-Order Ref. CAB DOOR(36)		2
47	NAP	SEAL	5"(127 mm)long -Order Ref. CAB DOOR(36)		1
48	6610510	NYLON TIE			1
49	46D-5	NUT			1
50	25E-16	WASHER			3
51	6630797	GAS SPRING			1
51	6632221	STUD	ball		2
51	2756257	RETAINER	spring		2
52	6664095	ARM	wiper - W/Ref. CAB DOOR(61) & CAB DOOR(62)		1
53	6664096	BLADE	wiper		1
54	6703751	RETAINER			1
55	6708500	CLAMP	for special applications door		4
56	6564833	SAFETY TREAD	Was 6703757 [B]		1
57	27E-10	WASHER			1
58	6708975	KIT	shields - Ref. CAB DOOR(5), CAB DOOR(7), CAB DOOR(9), CAB DOOR(30), CAB DOOR(31), CAB DOOR(44), CAB DOOR(46), CAB DOOR(47), CAB		1
59	6709527	KEY			1
60	6708225	HARNESS	for non BICS loaders only		1
61	6670288	END	plastic		2
62	6670289	BRACKET			1
63	6666766	GROMMET			1
64	6724556	INSTRUCTIONS	Was 6724029 [B]		1

www.youfixthis.com

CAB ENCLOSURE
(Special Applications)

NOTE: Order Cab Enclosure fro Gwinner Sales #6708702

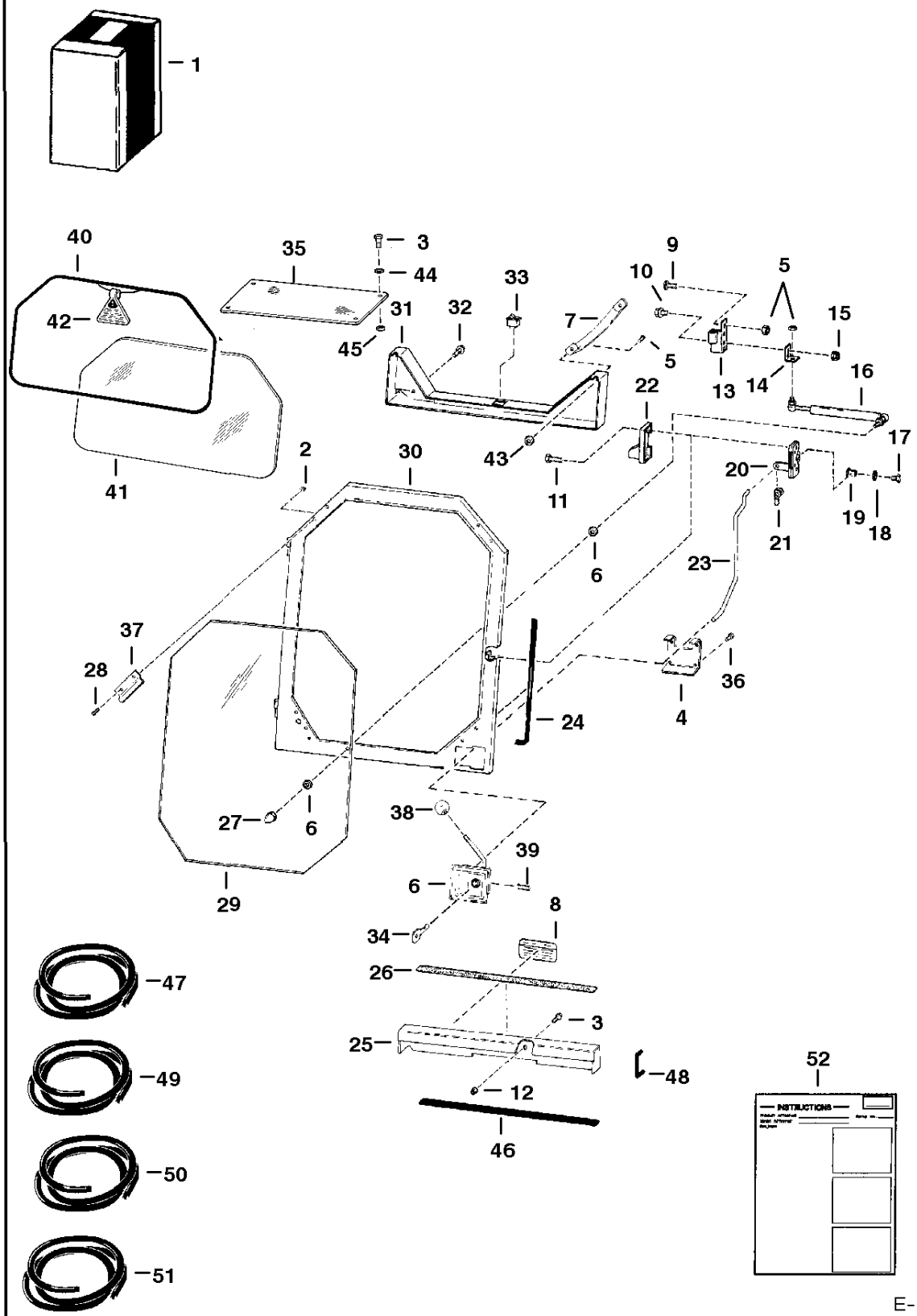

www.youfixthis.com

CAB ENCLOSURE

Ref.N°	Part N°	Description	Remarks	Serial N°	Qty.
1	SALES	KIT	Ref. CAB ENCLOSURE(2) - CAB ENCLOSURE(52) - SEE NOTE		1
2	57D-5	NUT			8
3	35C-616	BOLT	Was 17C-616 [B]		6
4	6704426	RETAINER	Was 6578398 [A]		1
5	7G-416	BOLT	Was 7G-412 [A]		2
6	6641274	LATCH			1
7	6631935	HANDLE			1
8	6563410	DECAL			1
9	6553808	BOLT			4
10	35C-412	BOLT			2
11	35C-416	BOLT			4
12	57D-6	NUT			2
13	6571715	HINGE			2
14	6568055	BRACKET			1
15	83D-4	NUT			2
16	6630797	GAS SPRING			1
17	17C-714	BOLT			1
18	25E-19	WASHER			3
19	6568047	NUT	bushing		1
20	6660932	LATCH	Was 6647789 [A]		1
21	6512274	CLIP			1
22	6568728	SHIELD			1
23	6704425	ROD	Was 6576470 [A]		1
24	NAP	SEAL	100'(2540 mm)lng.-Order Ref. CAB ENCLOSURE(51)		x
25	6579324	SHIELD			1
26	6564833	SAFETY TREAD			2
27	46D-5	NUT			1
28	25G-510	BOLT			8
29	6569033	WINDOW	1/2' Poly-carbonate		1
30	NAP	DOOR	W/Ref. CAB ENCLOSURE(29) - Was 6704434 [A]		1
31	6704428	SHIELD	Was 6576471 [A]		1
32	84G-3112	BOLT			2
33	6631009	SWITCH			1
34	6632560	KEY			1
35	6705216	WINDOW	top - Was 6701986 [A]		1
36	45G-1008	BOLT			4
37	6576238	CLIP			4
38	6647635	KNOB			1
39	6662834	SPRING			1
40	NAP	EXTRUSION	81.5'(2070 mm)long-Order Ref. CAB ENCLOSURE(47)		x
40	NAP	CORD	81.5'(2070 mm)long-Order Ref. CAB ENCLOSURE(47)		x
41	6579325	WINDOW	.25" thick poly carbonate		1
42	6559515	EXIT TAG			1
43	6660988	RETAINER			2
44	25E-18	WASHER			4
45	83D-6	NUT	Was 85D-6 [B]		4
46	NAP	SEAL	28'(711,2mm)long-Order Ref. CAB ENCLOSURE(50)		1
47	6665568&	EXTRUSION	&bulk - Sold Per Foot - Was 6658352 [B]		x
47	6554149	CORD	bulk - Sold Per Foot		x
48	NAP	SEAL	6'(152,4 mm)long-Order Ref. CAB ENCLOSURE(49)		1
49	6555351	SEAL	bulk - Sold Per Foot		x
50	6513152	SEAL	bulk - Sold Per Foot		x
51	6568704	MOULDING	bulk - Sold Per Foot		x
52	6570929	INSTRUCTIONS			1

www.youfixthis.com

CAB ENCLOSURE
(Vinyl)

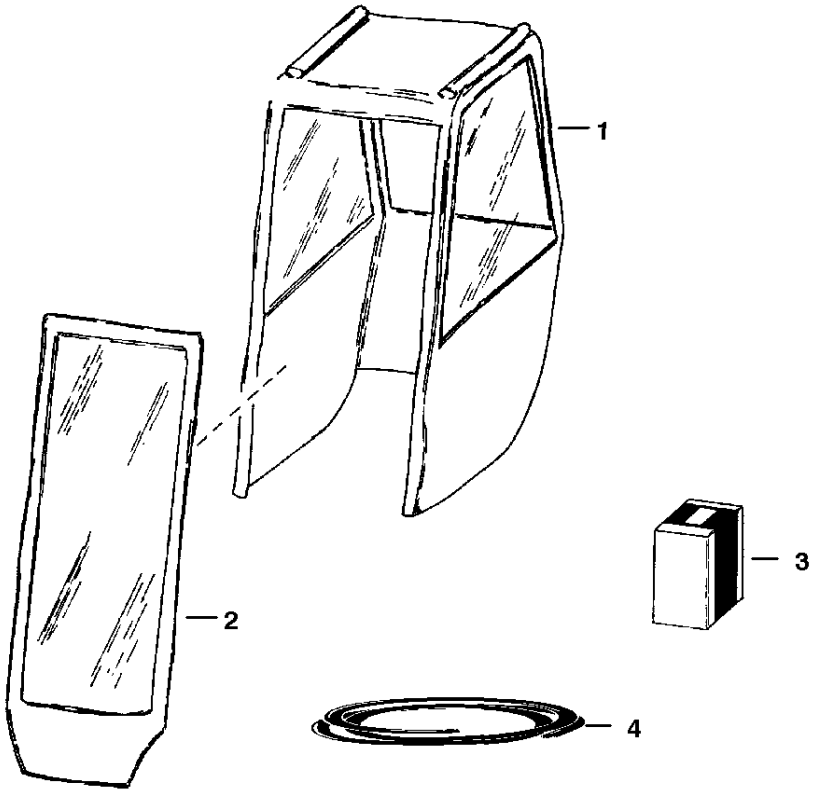

B-1413

www.youfixthis.com

CAB ENCLOSURE

Ref.N°	Part N°	Description	Remarks	Serial N°	Qty.
1	6565270	VINYL CAB	fastens to cab W/velcro - W/Ref. CAB ENCLOSURE(2) - CAB ENCLOSURE(4) - Was 6658856		1
1	6660340'	VINYL CAB	fits over cab - W/Ref. CAB ENCLOSURE(2)		1
2	6599721	DOOR	vinyl		1
3	6662839	HINGE KIT			1
4	6722597	VELCRO	27 feet (8,2 m)		1

www.youfixthis.com

CAB WINDOWS

NOTE: Prior to Ordering Cab Enclosure Kit from Sales, measure the opening in the top of the cab. If the cab opening measures 8.58"x15.5" (217,9 x 393,7 mm) the Kit will include the correct top window & seal. However, if the cab opening measures 9"x15.5" (228,6 x 393,7 mm) also Order 6701986 Window and 6555350 Adhesive.

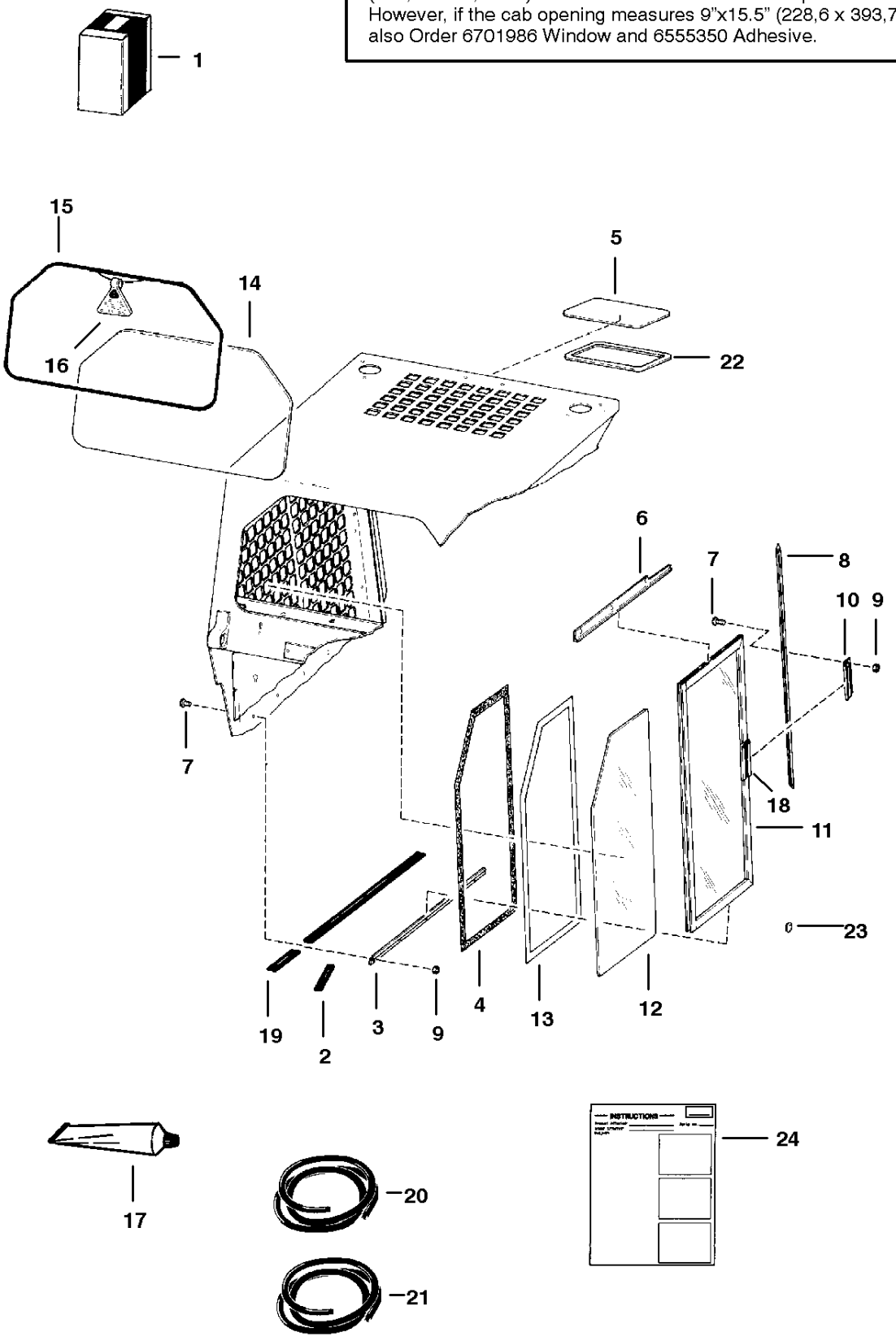

B-20241

www.youfixthis.com

CAB WINDOWS

Ref.N°	Part N°	Description	Remarks	Serial N°	Qty.
1	SALES	KIT	cab enclosure - SEE NOTE		1
2	6513152	SEAL	bulk - Sold Per Foot		x
3	6661689	TRACK	L.H.		1
3	6661690	TRACK	R.H.		1
4	6631549	LOOP	scotchmate		2
5	6701986	WINDOW	glued on - for 9' x 15.5')(228,6 x 393,7 mm)opening in cab		1
5	6705735	WINDOW	use W/Ref. CAB WINDOWS(22) - for 8.58' x 15.5')(217,9 x 393,7 mm)opening in cab		1
6	6703160	TRACK	L.H.		1
6	6703159	TRACK	R.H.		1
7	35C-410	BOLT			26
8	6630918	TRACK	L.H.		1
8	6630919	TRACK	R.H.		1
9	83D-4	NUT			26
10	6630924	BRACKET			2
11	6658143	WINDOW	L.H.		1
11	6658142	WINDOW	R.H.		1
12	6702731	WINDOW			2
13	6631548	LOOP	scotchmate		2
14	6701651	WINDOW	rear - .25" thick safety glass		1
15	NAP	EXTRUSION	81.5'(2070 mm)long-Order Ref. CAB WINDOWS(21)		x
15	NAP	CORD	81.5'(2070 mm)long-Order Ref. CAB WINDOWS(21)		x
16	6559515	EXIT TAG			1
17	6555350	ADHESIVE	rubber - Use W/Ref. CAB WINDOWS(5)		x
18	6659949	LATCH			2
19	NAP	SEAL	24.5'(622mm)long-Order Ref. CAB WINDOWS(20)		1
20	6555351	SEAL	bulk - Sold Per Foot		x
21	6665568	SEAL	bulk - Sold Per Foot - Was 6658352 [B]		x
21	6554149	CORD	bulk - Sold Per Foot		x
22	6664351	SEAL	Used W/Cab Headliner		1
22	6665012	SEAL	Used W/O Cab Headliner		1
23	6632265	PLUG	button		2
24	6566957	INSTRUCTIONS	Side Windows		1
24	6720320	INSTRUCTIONS	Rear Window		1
24	6720598	INSTRUCTIONS	Top Window		1

www.youfixthis.com

CLOSED ALTERNATOR
(30 Amp. Motorola or Prestolite)

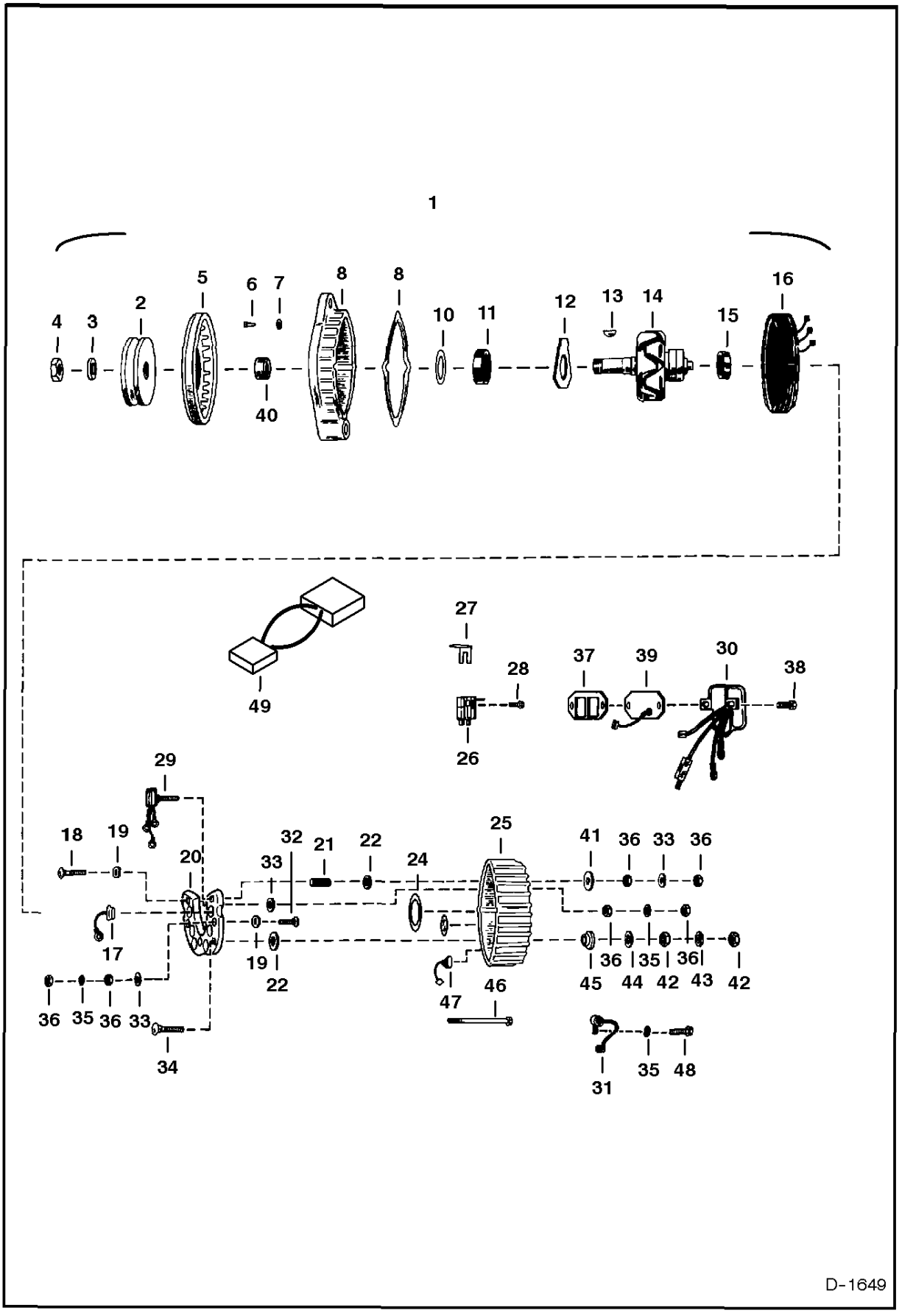

www.youfixthis.com

CLOSED ALTERNATOR

Ref.N°	Part N°	Description	Remarks	Serial N°	Qty.
1	6630098	ALTERNATOR	Ref. CLOSED ALTERNATOR(3)-CLOSED ALTERNAT OR(48) - See BTI 212 - Was NAP [D]		1
1	NAP	ALTERNATOR	Order 6630098Was 6662990 [A]	~com3B=}H~10{M	x
2	6531885	PULLEY	Was 6630164[A]		1
3	6635557	WASHER	Was896978 [A]		1
4	6635526	NUT	Was 896979 [A]		1
5	899157	FAN			1
6	41G-806	SCREW			3
7	17E-8	WASHER			3
8	6630340	HOUSING			1
9	6630345	GASKET			1
10	899374	SEAL			1
11	889163	BEARING			1
12	6630343	RETAINER			1
13	6J-405	KEY			1
14	899163	ROTOR			1
15	1991038	BEARING			1
16	6630341	STATOR			1
17	899375	DIODE			3
18	7C-322	BOLT			1
19	897245	INSULATOR			4
20	899167	SINK	heat		1
21	897239	SLEEVE			1
22	899376	WASHER			2
23	899165	INSULATOR			3
24	896992	RETAINER			1
25	6630342	HOUSING			1
26	6630344	BRUSH ASSY.			1
27	899169	INSULATOR			1
28	84G-1608	SCREW			2
29	6630350	DIODE	field		1
30	6668733	REGULATOR	voltage - Was 6630349 [A]		1
31	6630348	CAPACITOR			1
32	7C-312	BOLT			3
33	896996	WASHER			5
34	899377	BOLT			1
35	17E-10	WASHER			5
36	12D-10	NUT			10
37	899170	GASKET			1
38	84G-1910	SCREW			2
39	6630346	COVER			1
40	6649459	SPACER	Was 899158 [A]		1
41	896990	WASHER			1
42	62D-4	NUT			2
43	4E-4	WASHER			1
44	897732	WASHER			1
45	897719	INSULATOR			1
46	896984	BOLT	thru		4
47	899378	DIODE			3
48	84G-1906	SCREW			1
49	6713803	HARNESS	Was 6704887 [A]		1

www.youfixthis.com

DECALS

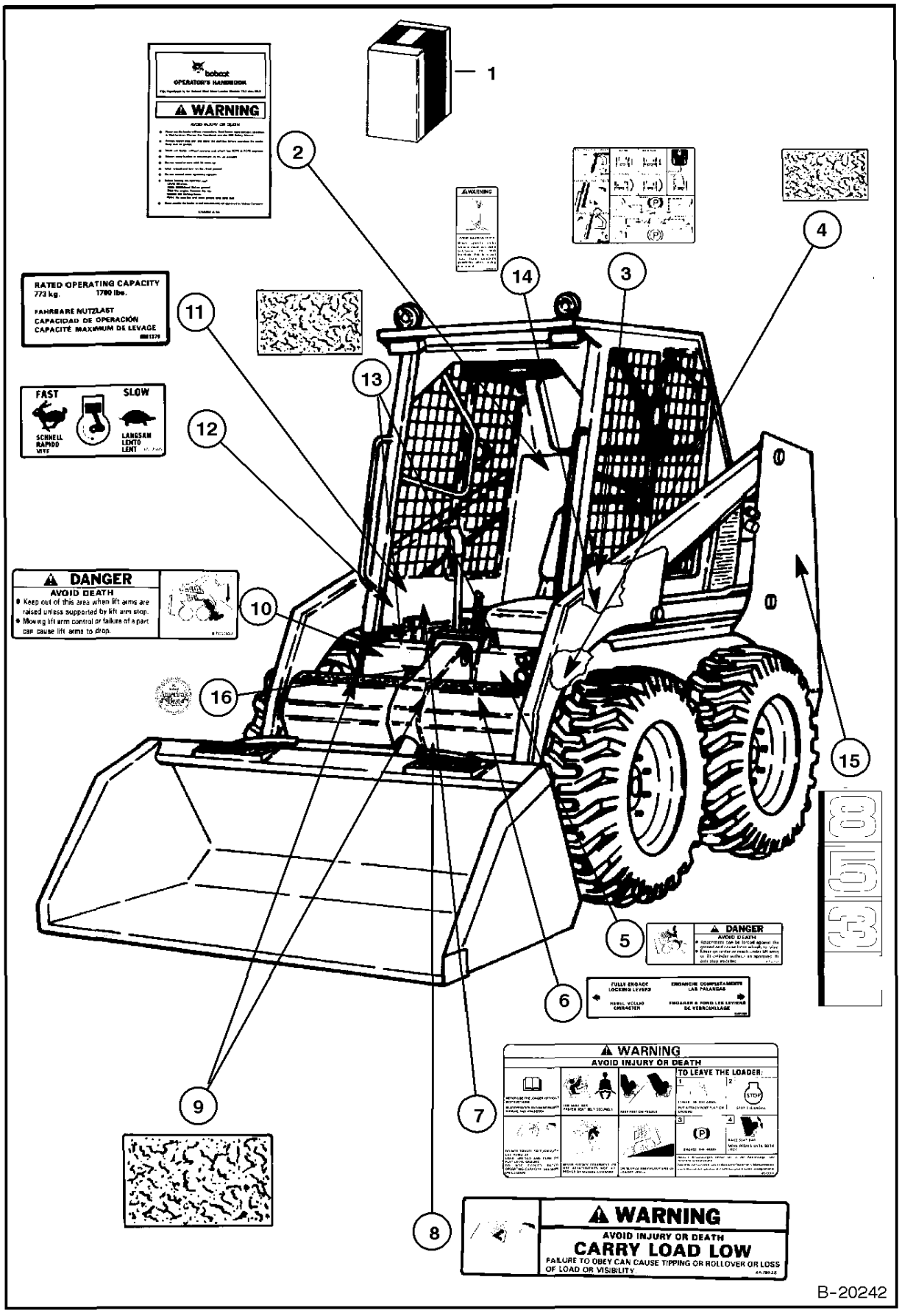

B-20242

www.youfixthis.com

DECALS

Ref.N°	Part N°	Description	Remarks	Serial N°	Qty.
1	6701898	KIT	decal - Ref. DECALS(2) - DECALS(14) on this page & Ref. DECALS(2) - DECALS(13) on Page DECALS(1)		1
2	6701899	KIT	handbook - W/Wire Rope		1
2	6558309	WIRE ROPE	33' (838,2 mm) long - Bulk - Sold Per Foot -Also Order (2) of 6558310 SleeveAWas 6558305 [A]		x
2	6558310	SLEEVE	wire rope		2
3	6703723	DECAL	operating - Was 6702553 [A]		1
4	6554100	SAFETY TREAD	6' x 6' (152,4 mm x 152,4 mm)		3
5	6702301	DECAL	danger - Was 6579509 [A]		1
6	6561383	DECAL	Bob-tach		1
7	6579510	DECAL	warning		1
8	6579528	DECAL	carry load low		1
9	6577947	SAFETY TREAD	7.5' x 15' (190,5 mm x 381,0 mm)		2
10	6702302	DECAL	danger - Was 6579639 [A]		1
11	6561376	DECAL	capacity		1
12	6557565	DECAL	throttle		1
13	6577949	SAFETY TREAD	6.8' x 8.75' - (172,7 mm x 222,3 mm)		2
14	6705720	DECAL	warning - lock shield		1
15	6702855	DECAL	model no. 853 L.H. - Not in Kit - Was 6579965 [A]		1
15	6703292	DECAL	model no. 853H L.H. - Not in Kit		1
16	6705088	DECAL	America's Best - Not in Kit		1

www.youfixthis.com

DECALS

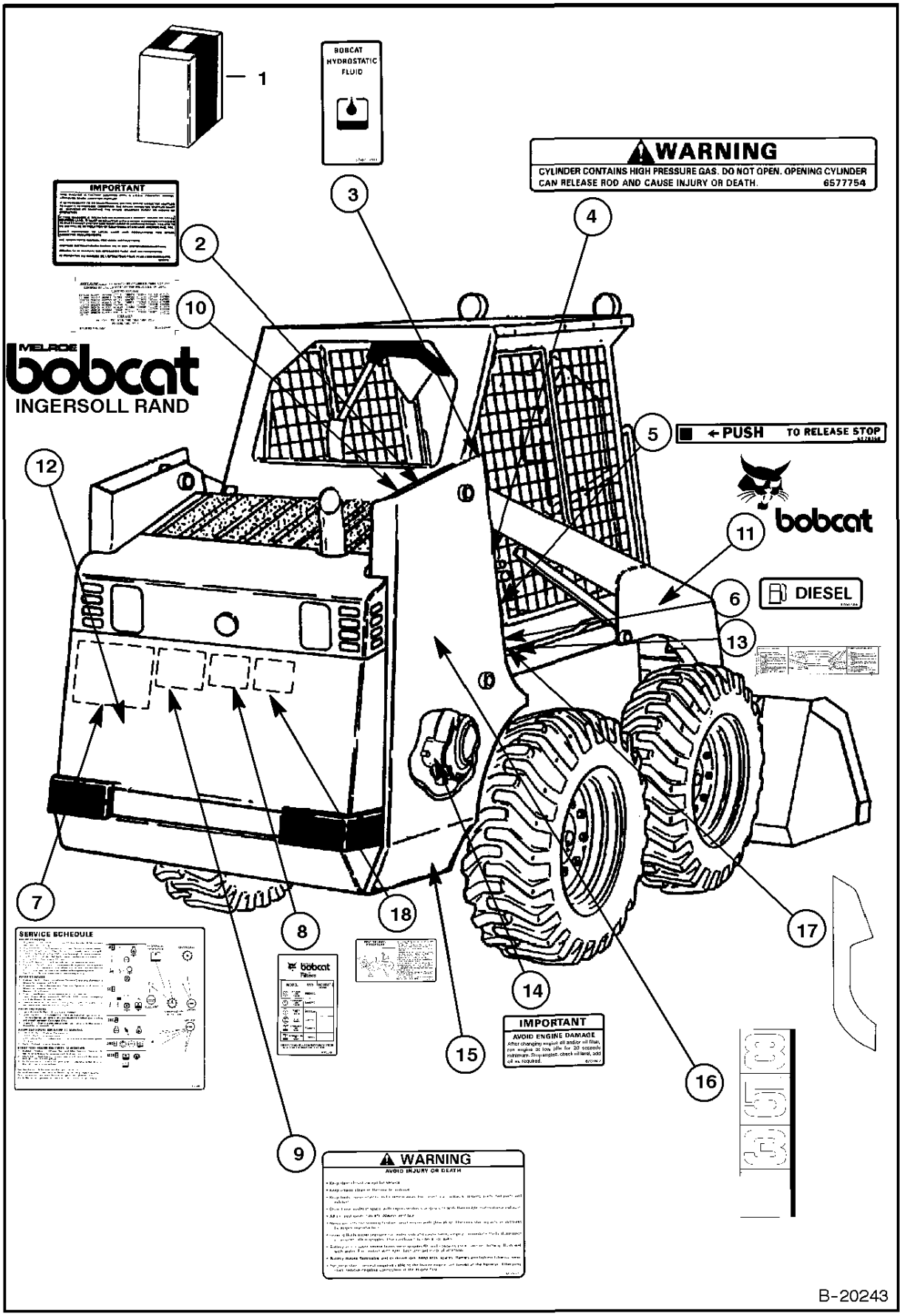

www.youfixthis.com

DECALS

Ref.N°	Part N°	Description	Remarks	Serial N°	Qty.
1	6701898	KIT	decal - Ref. DECALS(2) - DECALS(13) on this page & Ref. DECALS(2) - DECALS(14) on Page DECALS(1)		1
2	6560573	DECAL	spark arrestor		1
3	6565990	DECAL	hydraulic fluid		1
4	6577754	DECAL	warning		2
5	6578368	DECAL	push		1
6	6700388	DECAL	diesel		1
7	6708212	DECAL	service - Was 6578218 [A]		1
8	6703329	DECAL	filters - Was 6700273 [A]		1
9	6579511	DECAL	warning		1
10	6557224	DECAL	patent		1
11	6559070	DECAL	R.H. - Bobcat head		1
11	6559071	DECAL	L.H. - Bobcat head		1
12	6711327	DECAL	Melroe Logo - Was 6577782 [A]		1
13	6706558	DECAL	boom stop - Was 6701921 [C]		1
14	6702942	DECAL	warning - Not in Kit - See Page ENGINE & ATTACHIN G PARTS(33)		1
15	NAP	DECAL	trim R.H. - Not in Kit - Was 6701206 [C]		1
15	NAP	DECAL	trim L.H. - Not in Kit - Was 6701207 [C]		1
16	6702854	DECAL	model no. 853 R.H. - Not in Kit - Was 6579966 [A]		1
16	6703291	DECAL	model no. 853H R.H. - Not in Kit		1
17	NAP	DECAL	upright patch - R.H. - Shown - Not in Kit - Was 6701204 [C]		1
17	NAP	DECAL	upright patch - L.H. - Not Shown - Not in Kit - Was 6701205 [C]		1
18	6705221	DECAL	belt tension - Not in Kit		1
19	6708929	DECAL	propylene glycol anti-freeze		1

www.youfixthis.com

ELECTRICAL CONTROLS KIT

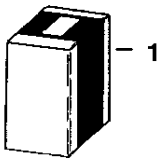

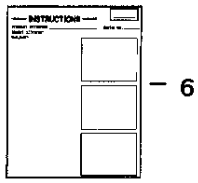

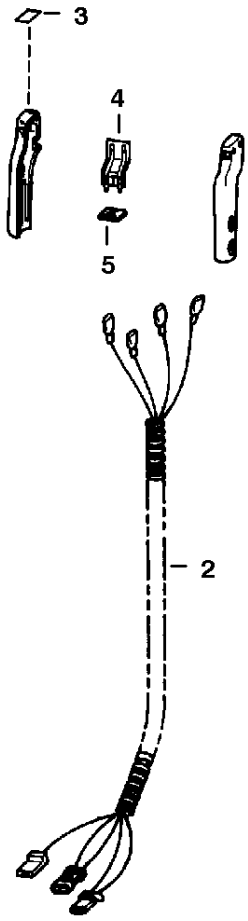

NOTE: Loaders equipped W/Cobra style handles do not require Electric Controls Kit. Similar components are standard equipment.

B-17642

www.youfixthis.com

ELECTRICAL CONTROLS KIT

Ref.N°	Part N°	Description	Remarks	Serial N°	Qty.
1	6703188	CONTROLS KIT	Ref. ELECTRICAL CONTROLS KIT(2)-ELECTRICAL CONTROLS KIT(6) - !If loader is not equipped W/Rear Auxiliaries, it is necessary to o		1
2	6702633	HARNESS	control kit		1
3	6702636	PLATE	controls		1
4	NAP	SWITCH	leaf - Was 6569451 [A]		1
5	6572087	INSULATOR	switch		1
6	6720761	INSTRUCTIONS	Elec. Controls Kit		1

www.youfixthis.com

ELECTRICAL CONTROLS KIT
(Attachments)

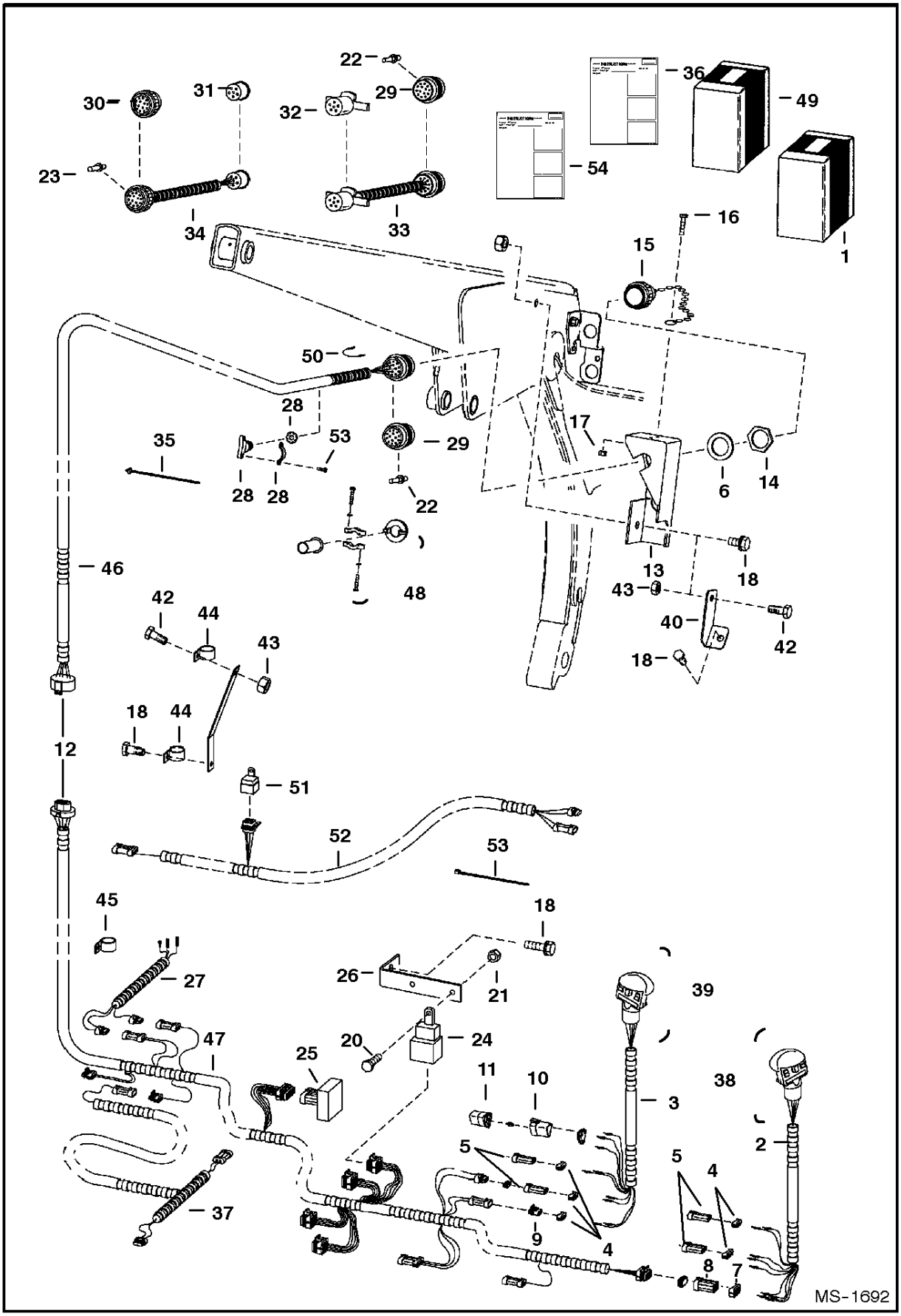

www.youfixthis.com

ELECTRICAL CONTROLS KIT

Ref.N°	Part N°	Description	Remarks	Serial N°	Qty.
1	NAP	KIT	controls - W/handles - Ref. ELECTRICAL CONTROLS KIT(2)-ELECTRICAL CONTROLS KIT(28)	- order attachment control kit from Gwinner Sales #6709228,	x
2	6706340	HANDLE ASSY.	R.H. - Also Order Ref. ELECTRICAL CONTROLS KIT(4), ELECTRICAL CONTROLS KIT(5), ELECTRICAL CONTROLS KIT(7) & ELECTRICAL CONTROLS		1
2	6640690	PIN			9
2	6641176	SEAL			9
3	6707976	HANDLE ASSY	L.H. - Also Order Ref. ELECTRICAL CONTROLS KIT(4), ELECTRICAL CONTROLS KIT(5), & ELECTRICAL CONTROLS KIT(9)ELECTRICAL CONTROLS K		1
3	6640690	PIN			5
3	6640691	PIN			2
3	6641176	SEAL			7
3	6662257	PIN			3
4	6641180	LOCK	2 - pin		2
4	6640700	LOCK	3 - pin		2
5	6640699	CONNECTOR	3 - pin		2
5	6641179	CONNECTOR	2 - pin		2
6	6664037	WASHER			1
7	6641181	LOCK	6 - pin		1
8	6641173	CONNECTOR	6 - pin		1
9	6641178	CONNECTOR	2 - pin		1
10	6664800	LOCK	3 pin triangle - Was 6664186[B]		1
11	6664599	CONNECTOR	3 pin triangle - Was 6664184[B]		1
12	NAP	HARNESS	one piece - order Ref. ELECTRICAL CONTROLS KIT(4 6) & ELECTRICAL CONTROLS KIT(47), 6711621 & (4) of 6665005 - Was 6705901 [A]		1
13	6706753	MOUNT	used W/Ref. ELECTRICAL CONTROLS KIT(12)		1
13	6711621	MOUNT	used W/Ref. ELECTRICAL CONTROLS KIT(46)com32, }H~10{M		x
14	6664036	NUT			1
15	6664035	CAP			1
16	45G-508	BOLT			1
17	50D-5	NUT			1
18	84G-3716	BOLT			2
19	85D-4	NUT			2
20	45G-1212	BOLT			2
21	50D-12	NUT			2
22	6664040	PIN	male		x
23	6664041	SOCKET	female		x
24	6651975	SOLENOID	relay - used W/Ref. ELECTRICAL CONTROLS KIT(12)		4
24	6670312	SOLENOID	relay - used W/Ref. ELECTRICAL CONTROLS KIT(46) com393 }H~10{M		x
25	6664388	DIODE	memory		1
26	6702650	BRACKET			1
27	6706446	HARNESS			1
28	6667569	CONNECTOR	Also Order (6) of Ref. ELECTRICAL CONTROLS KIT(2 2), W/Ref. ELECTRICAL CONTROLS KIT(48) - Was 6664039 [A]		1
29	6665001	CONNECTOR	Not in KitsAAlso Order (6) of Ref. ELECTRICAL CONTROLS KIT(23), W/Ref. ELECTRICAL CONTROL S KIT(48)Was 6664034 [A]		1
30	6649028	CLAMP			1
31	6664181	CONNECTOR	trailer style - Not in Kits		1
32	6664182	CONNECTOR	trailer style - Not in Kits		1
33	6706392	HARNESS	Not in Kits - connects old loader harness to new attachm ent harness - W/Ref. ELECTRICAL CONTROLS KIT(28) & ELECTRICAL CONTROLS K		1

www.youfixthis.com

ELECTRICAL CONTROLS KIT

Ref.N°	Part N°	Description	Remarks	Serial N°	Qty.
34	6706391	HARNESS	Not in Kits -connects new loader harness to old attachment harness - W/Ref. ELECTRICAL CONTROLS KIT(31) & ELECTRICAL CONTROLS KI		1
35	6610510	NYLON TIE			6
36	6722758	INSTRUCTIONS	for control elec. kit		1
36	6722759	INSTRUCTIONS	for Ref. ELECTRICAL CONTROLS KIT(3)-ELECTRICAL CONTROLS KIT(5) & ELECTRICAL CONTROLS KIT(9)-ELECTRICAL CONTROLS KIT(11)		1
37	6706552	HARNESS	for grader		1
38	6706567	KIT	R.H. handle assy. -W/Ref. ELECTRICAL CONTROLS KIT(2), ELECTRICAL CONTROLS KIT(4), ELECTRICAL CONTROLS KIT(5), ELECTRICAL CONTROL		1
39	6706568	KIT	L.H. handle assy. - W/Ref. ELECTRICAL CONTROLS KIT(3)-ELECTRICAL CONTROLS KIT(5) & ELECTRICAL CONTROLS KIT(9)-ELECTRICAL CONTRO		1
40	6709176	BRACKET	873 only		1
41	6709177	BRACKET	873 only		1
42	17C-612	BOLT			2
43	85D-6	NUT			2
44	30H-46	CLAMP			2
45	30H-49	CLAMP			2
46	6710299	HARNESS			1
47	6710300	HARNESS			1
48	6669286	CLAMP	W/saddles		1
49	6716799	KIT	dual function aux. - Ref.		1
50	6716844	HARNESS	jumper		1
51	6670312	SOLENOID	relay		1
52	6716798	HARNESS	KP diverter		1
53	6624289	STA-STRAP			6
54	6900601	INSTRUCTIONS			1

www.youfixthis.com

EXPORT ACCESSORIES
(Sound Option)

NOTE: Use of this Sound Kit in conjunction W/Sound Kit on Page 324 reduces the noise level at operator ear to 85 decibels.

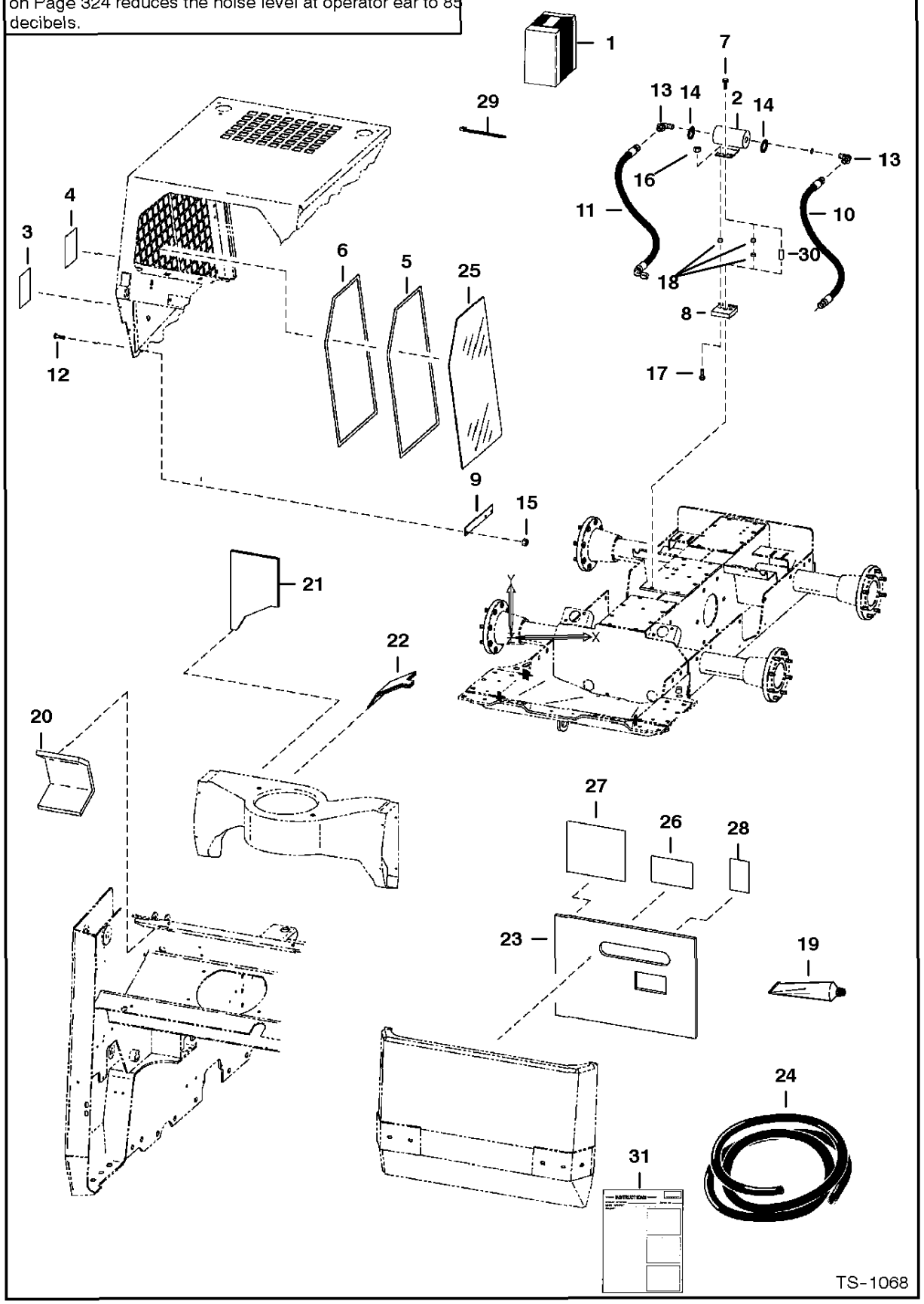

www.youfixthis.com

EXPORT ACCESSORIES

Ref.N°	Part N°	Description	Remarks	Serial N°	Qty.
1	6704849	SOUND KIT	Ref. EXPORT ACCESSORIES(2) - EXPORT ACCESS ORIES(31) - Was SALES		1
2	6659982	MUFFLER	Was 6703648 [A]		1
3	6579385	DECAL	sound level warning - 85 decibel		1
4	6579406	DECAL	sound level warning-106 decibel - Was 6579403 [A]		1
5	6631548	LOOP	scotchmate		2
6	6631549	LOOP	scotchmate		2
7	84G-3724	BOLT			1
8	NAP	MOUNT	rubber - Order 6705333inD1}I Mount & Ref. EXPORT ACCESSORIES(7) & EXPORT ACCESSORIES(18) - Was 6705333 [C]		1
8	6705333	MOUNT	rubber		1
9	6700875	RETAINER	window		4
10	6703461	HOSE			1
11	6703462	HOSE			1
12	17C-410	BOLT			6
13	17K-8	ELBOW	W/Ref. 14		2
14	79K-12	O-RING			2
15	61D-4	NUT			6
16	85D-6	NUT	Was 61D-6 [B]		2
17	35C-616	BOLT			2
18	6562619	BUSHING			2
19	6633583	SEALANT			x
20	6703331	INSULATION	air inlet		1
21	6703453	INSULATION	blower housing		1
22	6703454	INSULATION	blower housing		1
23	6703456	INSULATION	rear door		1
24	6555351	SEAL	Bulk - Sold Per Foot		x
25	6702731	WINDOW	cab		2
26	6579511	DECAL	warning		1
27	6708212	DECAL	service - Was 6578218 [A]		1
28	6703329	DECAL	filters		1
29	6633498	STA-STRAP			1
30	6715744	BUSHING			1
31	6722242	INSTRUCTIONS			1

www.youfixthis.com

* ENGINE MOUNT KITS
(For Rough Applications)

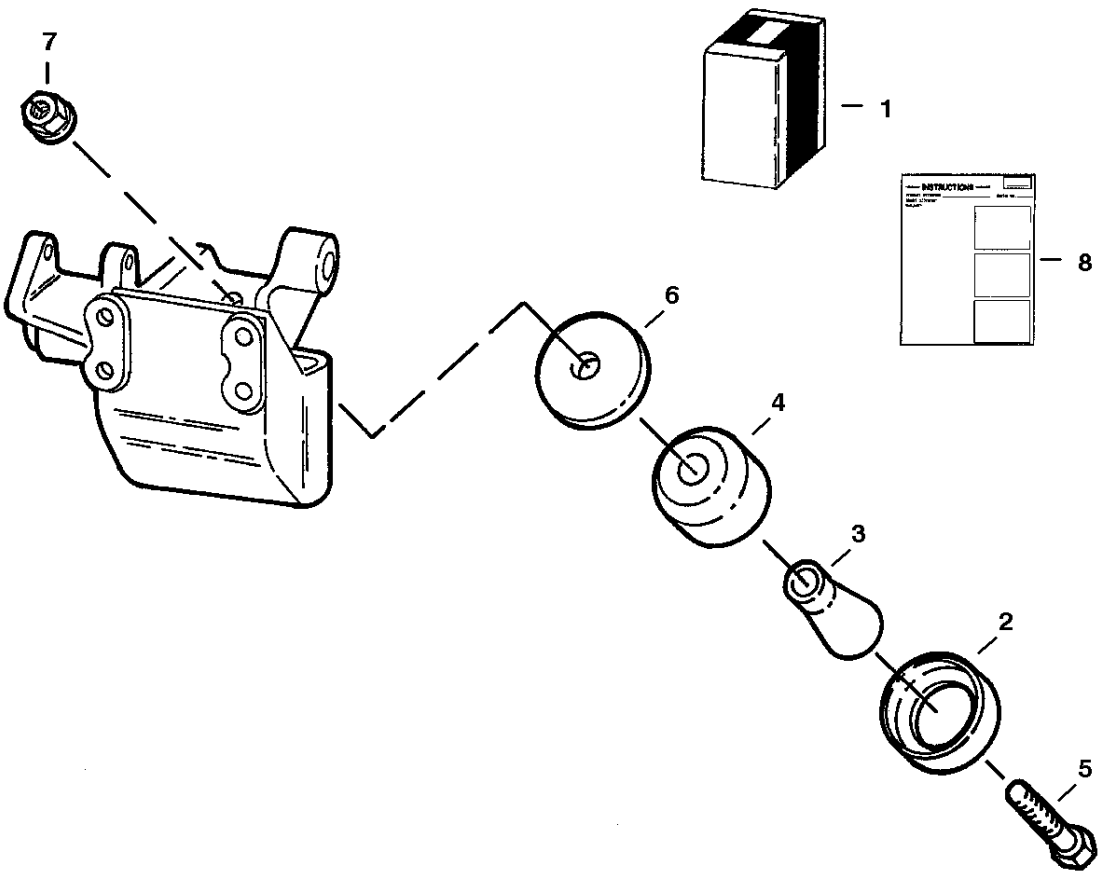

B-14623

www.youfixthis.com

* ENGINE MOUNT KITS

Ref.N°	Part N°	Description	Remarks	Serial N°	Qty.
1	6711632	MOUNTING KIT	mounting - Ref. * ENGINE MOUNT KITS(2)-* ENGINE MOUNT KITS(8)		1
2	6661787	WASHER			4
3	6715287	SPACER			4
4	6668104	MOUNT			4
5	43C-852	BOLT			4
6	6705106	WASHER			4
7	6652918	NUT			4
8	6724482	INSTRUCTION			1

www.youfixthis.com

EXPORT ACCESSORIES

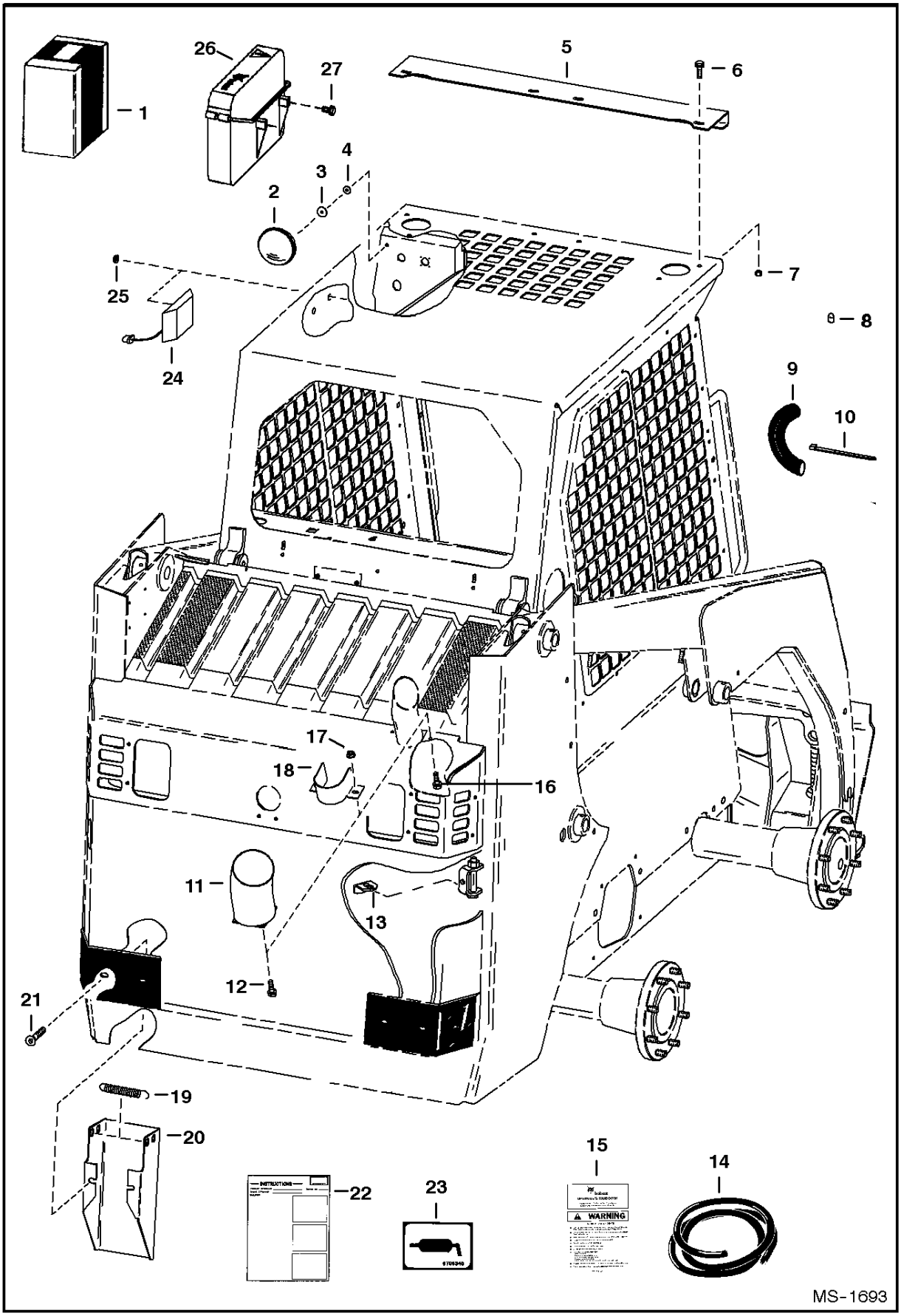

www.youfixthis.com

EXPORT ACCESSORIES

Ref.N°	Part N°	Description	Remarks	Serial N°	Qty.
1	SALES	KIT	European Access. - Ref. EXPORT ACCESSORIES(2) - EXPORT ACCESSORIES(14)		1
2	6653388	MIRROR	convex		1
3	6518952	WASHER			1
4	25E-13	WASHER			1
5	6701852	SHIELD			1
6	35C-616	BOLT			4
7	61D-6	NUT			4
8	NAP	COVER	grease - Order Ref. EXPORT ACCESSORIES(24) - Was 6652943 [B]		14
9	NAP	COVER	18' (457,2 mm) long - Order Ref. EXPORT ACCESSORIES(14)		2
10	6610510	NYLON TIE	Was 1715312 [A]		4
11	6703158	SHIELD	exhaust - Use W/Plastic Hood		1
12	6703697	BOLT	Was 59G-816 [B]		4
13	6701883	STOP	tailgate		1
14	6656155	COVER	bulk (Sold Per Foot) 1.25' (31,8 mm) I.D.		x
15	6704832	HANDBOOK	handbook- 6 Language Operator - W/wire rope - Not in Kit - Was 6720984 [A]		1
15	6558309	WIRE ROPE	Also Order (2) of 6558310		1
16	6558310	SLEEVE	wire rope		1
17	35C-412	BOLT			2
18	57D-4	NUT			2
19	6709092	SHIELD	exhaust - Use W/Steel Hood - Was 6704653 [A]		1
20	6700743	SPRING			1
21	6709379	TOOL HOLDER	Was 6705100 [A]		1
22	9G-636	BOLT			2
23	6722300	INSTRUCTIONS	For Ref. EXPORT ACCESSORIES(20) - EXPORT ACCESSORIES(22)		1
24	6705340	DECAL	lube		1
25	6664368	DOME LIGHT			1
25	6665353	SWITCH			1
25	6665367	BULB			1
26	6664221	RETAINER	snap in		2
27	6708827	CONTAINER	Manuals		1
28	6702642	BOLT			2

www.youfixthis.com

REAR WIPER KIT

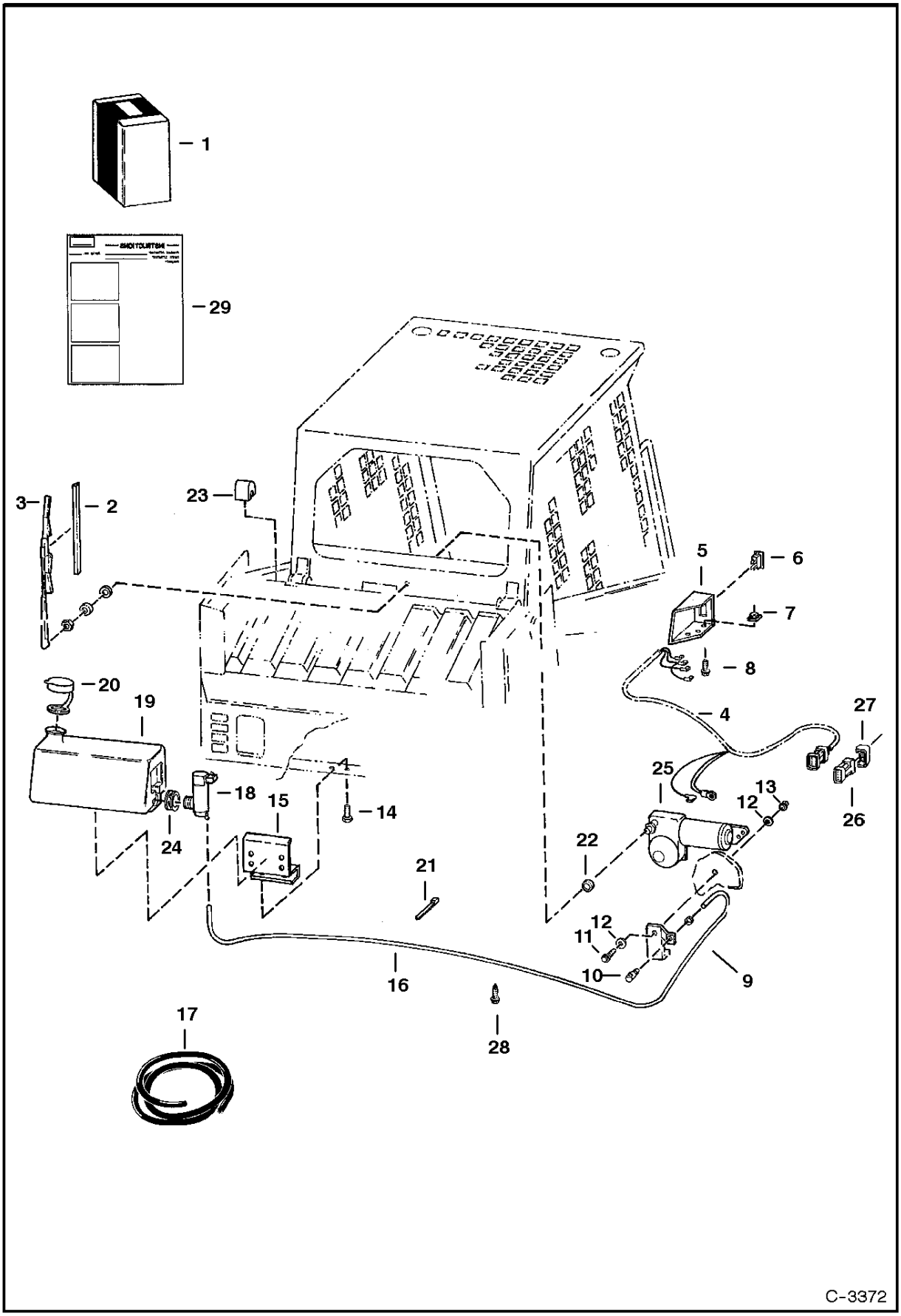

www.youfixthis.com

REAR WIPER KIT

Ref.N°	Part N°	Description	Remarks	Serial N°	Qty.
1	6712688	KIT	rear wiper - Ref. REAR WIPER KIT(2)-REAR WIPER KIT(23) & REAR WIPER KIT(25)-REAR WIPER KIT(29)8com3E- }H~10{M		x
2	6665688	BLADE			1
3	6665687	ARM	Was 1744552 [A]		1
4	NAP	HARNESS	W/2-pin connector - Order 6712260 harness & Ref. REAR WIPER KIT(26) & REAR WIPER KIT(27) - Was 6708285 [A]		1
4	6712260	HARNESS	)W/10-pin connector - W/(2) diode		1
5	6708280	MOUNT	switch		1
6	6668817	SWITCH	rocker - Was 6665706 [A]		1
7	6660988	RETAINER			2
8	35C-412	BOLT			2
9	6708286	MOUNT	nozzle		1
10	6664555	NOZZLE	Was 6666767 [A]		1
11	17C-514	BOLT	Was 35C-514 [A]		1
12	25E-15	WASHER			2
13	83D-5	NUT			1
14	84G-3710	BOLT			2
15	6708044	MOUNT	tank		1
16	NAP	HOSE	84'(2133.6mm) long - Order Ref. REAR WIPER KIT(17)		1
17	6708310	HOSE	Bulk - sold per foot - clear - 0.15'(3.81mm) I.D.		x
18	6664554	PUMP			1
19	6708035	TANK			1
20	6665605	CAP			1
21	6610510	NYLON TIE			5
22	6708069	BUSHING			1
23	6708272	STOP	cab		2
24	6666766	GROMMET	not in kit		1
25	6665602	MOTOR			1
26	6641179	CONNECTOR			1
27	6641180	LOCK			1
28	6669308	RETAINER	snap-in		2
29	6724788	INSTRUCTIONS			1

www.youfixthis.com

* EXPORT ACCESSORIES
(Pedal Extenders)

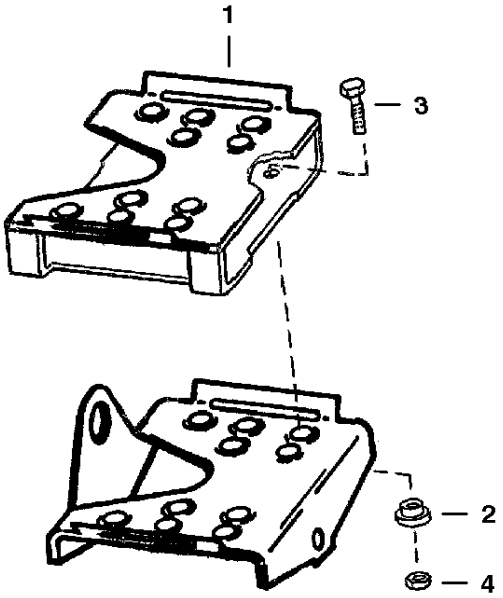

B-14856

www.youfixthis.com

* EXPORT ACCESSORIES

Ref.N°	Part N°	Description	Remarks	Serial N°	Qty.
1	6713115	PEDAL	extender		2
2	6713116	BUSHING			8
3	17C-516	BOLT			8
4	85D-5	NUT			8

www.youfixthis.com

* FIRE EXTINGUISHER

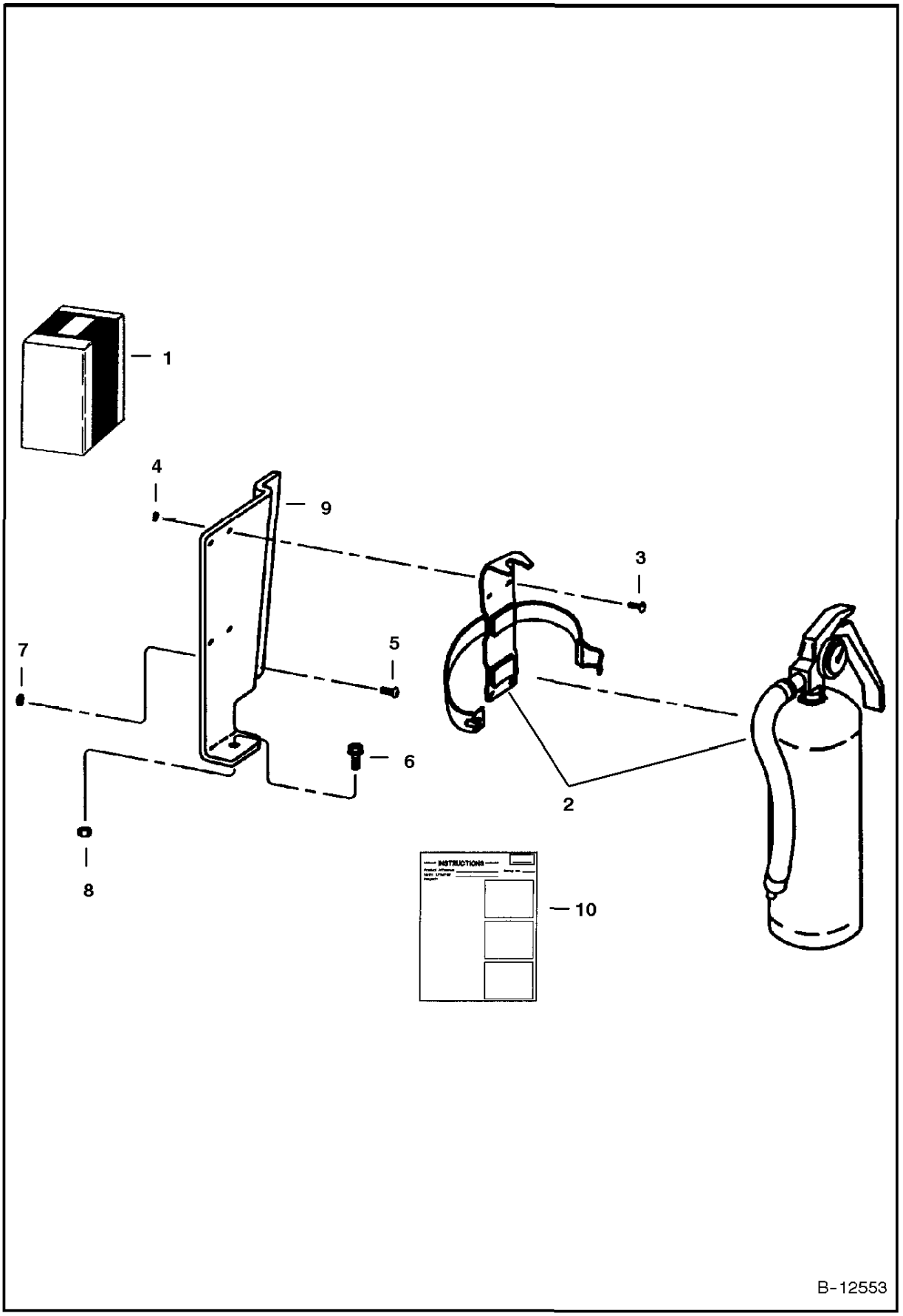

www.youfixthis.com

* FIRE EXTINGUISHER

Ref.N°	Part N°	Description	Remarks	Serial N°	Qty.
1	6569112	KIT	fire extinguisher - Ref. * FIRE EXTINGUISHER(2) - * FIRE EXTINGUISHER(10)		1
2	1908806	EXTINGUISHERinD 1}	fire		1
3	85G-1008	BOLT			4
4	12D-10	NUT			4
5	25G-410	BOLT			2
6	35C-516	BOLT			1
7	83D-4	NUT			2
8	83D-5	NUT			1
9	6569095	MOUNT			1
10	6570040	INSTRUCTIONS			1

www.youfixthis.com

* FLASHER LIGHTS

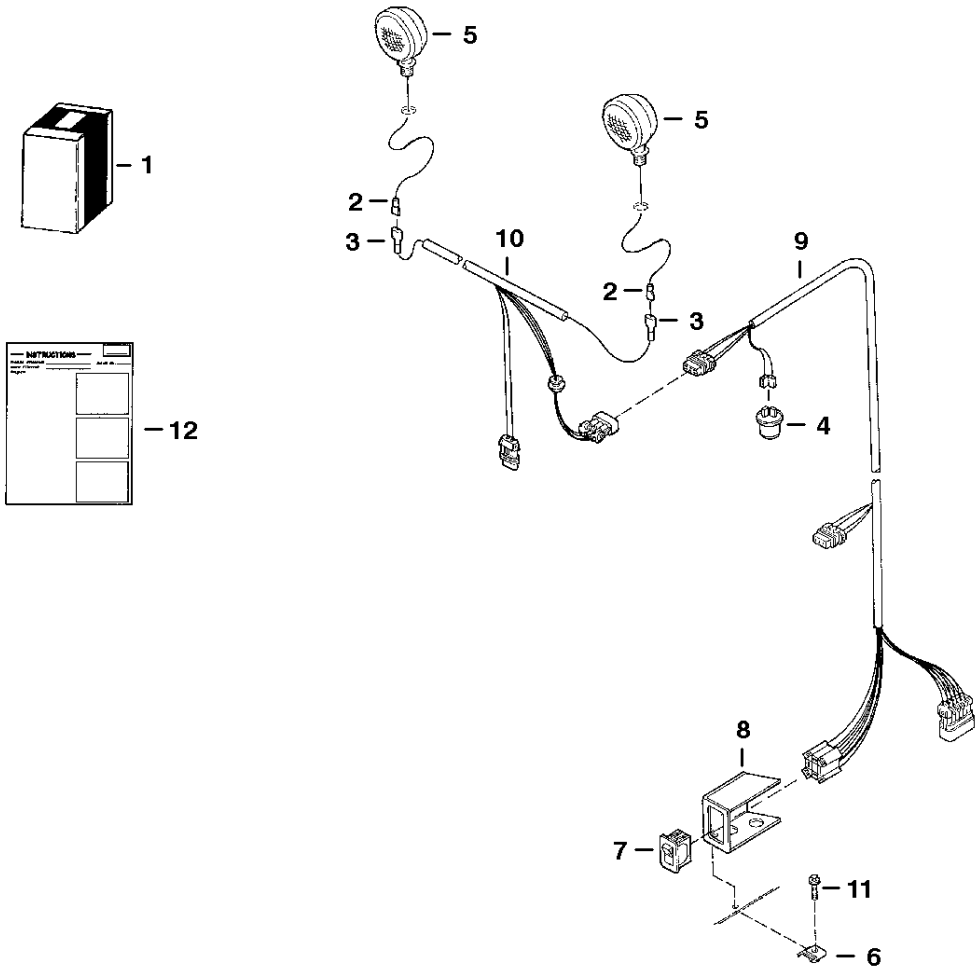

D-2395

www.youfixthis.com

* FLASHER LIGHTS

Ref.N°	Part N°	Description	Remarks	Serial N°	Qty.
1	6558076	KIT	flasher - Ref. * FLASHER LIGHTS(2) - * FLASHER LIGHTS(12)		1
2	614142	SLEEVE			2
3	6515131	TERMINAL			2
4	6557904	FLASHER			1
5	6517516	LIGHT	Was 6557903 [A]		2
6	6660988	RETAINER			2
7	6668815	SWITCH			1
8	6711708	MOUNT			1
9	6712288	HARNESS			1
10	6714213	HARNESS			1
11	31C-420	BOLT			2
12	6556222	INSTRUCTIONS			1

www.youfixthis.com

FRONT AUXILIARY
(Right Side)

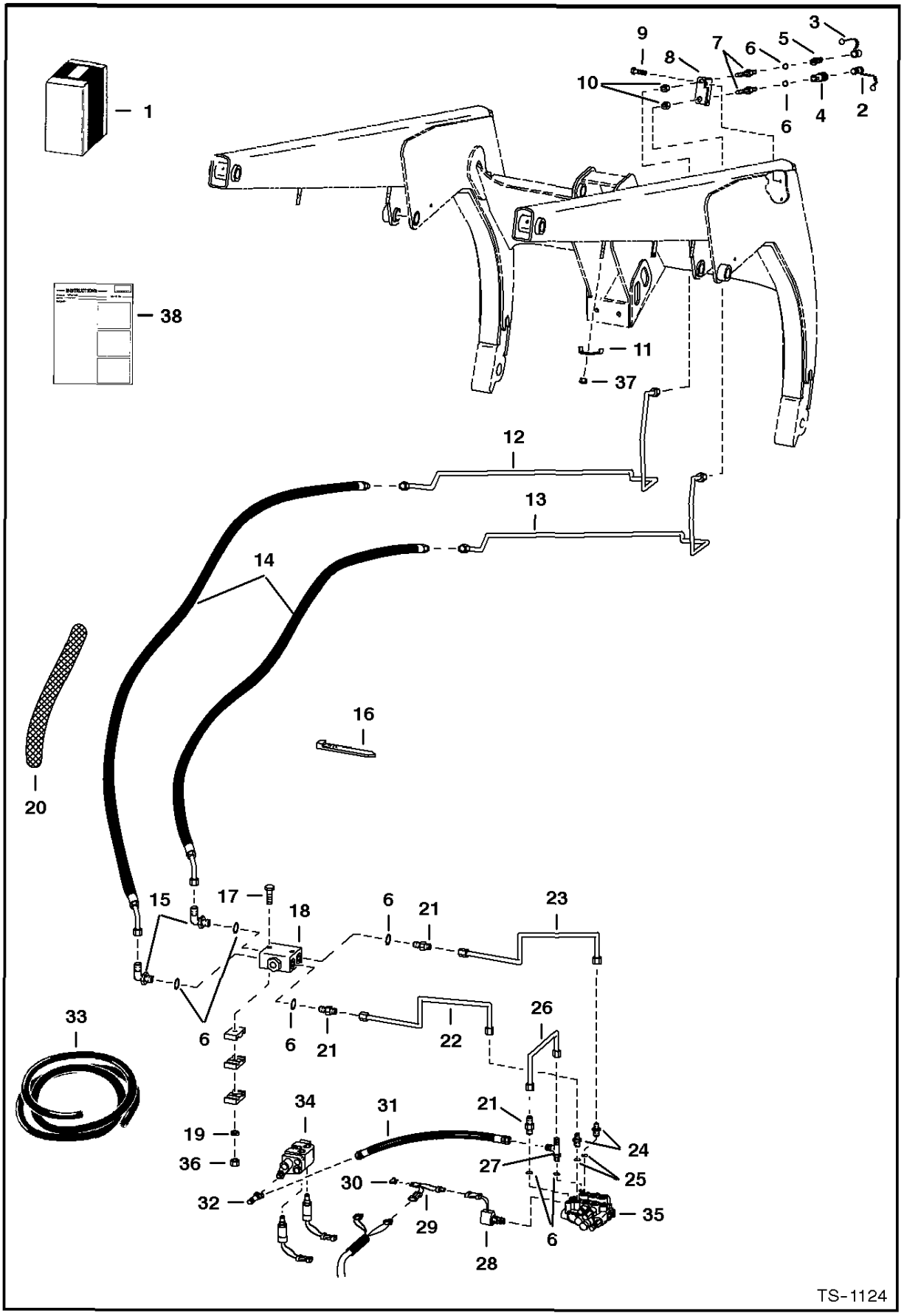

www.youfixthis.com

FRONT AUXILIARY

Ref.N°	Part N°	Description	Remarks	Serial N°	Qty.
1	6704818	KIT	Ref. FRONT AUXILIARY(2) - FRONT AUXILIARY(33) & FRONT AUXILIARY(38) - Was SALES		1
2	1519324	PLUG			1
3	1513549	CAP			1
4	6648967	QUICK COUPLER	female		1
4	6655795	SEAL KIT			1
5	6648969	QUICK COUPLER	male		1
6	79K-6	O-RING			x
7	45K-5	ADAPTER			2
8	6706750	BRACKET	Was 6703411 [A]		1
9	84G-3112	BOLT	5/16' dia.		2
9	84G-3712	BOLT	3/8' dia.		2
10	86F-5	NUT			2
11	6703216	CLAMP			2
12	6703413	TUBE			1
13	6703412	TUBE			1
14	6703430	HOSE	Was 6700281 [B]		2
15	17K-5	ELBOW	W/Ref. FRONT AUXILIARY(6)		2
16	6624289	STA-STRAP	Was 6512052 [A]		2
17	17C-560	BOLT			1
18	6630527	VALVE			1
18	6660645	SEAL KIT			1
19	25E-15	WASHER			1
20	NAP	COVER	35' (889,0 mm) long - Order Ref. FRONT AUXILIARY(33)		2
21	15K-5	ADAPTER	W/Ref. FRONT AUXILIARY(6)		3
22	6702511	TUBE			1
23	6702512	TUBE			1
24	731795	ADAPTER	W/Ref. FRONT AUXILIARY(25)		2
25	79K-10	O-RING			x
26	6702507	TUBE			1
27	21K-5	TEE	W/Ref. FRONT AUXILIARY(6)		1
28	6653395	VALVE			2
28	6665758	STEM	W/O-Ring		2
28	79K-7	O-RING			2
28	6665759	COIL			2
28	6586459	SEAL KIT			x
29	6703898	HARNESS			2
30	6703899	DIODE			2
31	6617708	HOSE			1
32	13K-5	TEE			1
33	6651436	SHIELD	bulk - Sold Per Foot		x
34		VALVE	front aux. - Not in Kit - See Page FRONT AUXILIARY VALVE(1)		2
35		VALVE	control -Not in Kit - See Page HYDRAULIC CONTROL VALVE(1) & HIGH HORSEPOWER HYDRAULICS(1)		1
36	85D-5	NUT	Not in Kit		1
37	59D-6	NUT	Not in Kit		2
38	6722237	INSTRUCTIONS			1

www.youfixthis.com

HAND CONTROLS KIT
(S/N 5084 11353 & Below)

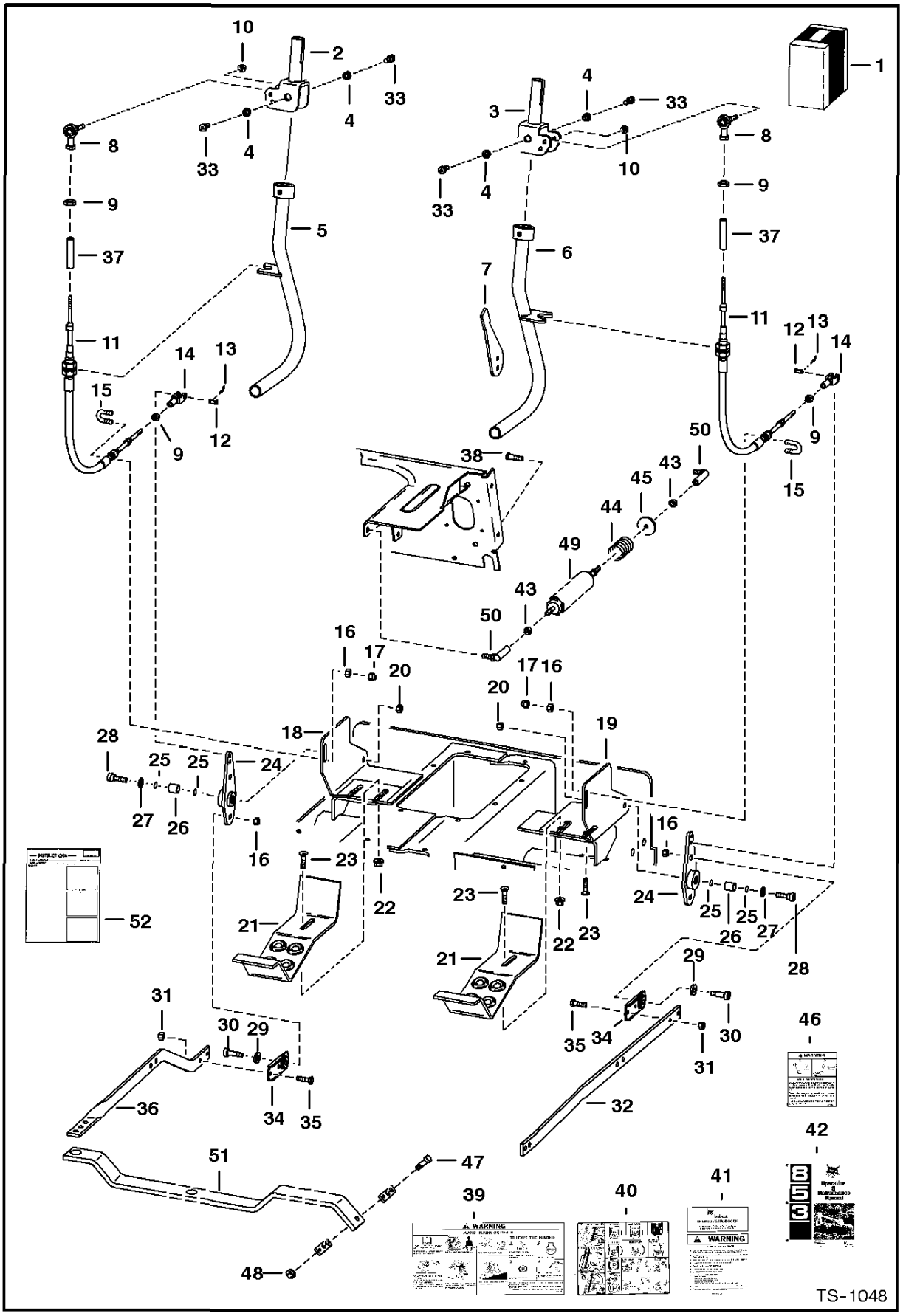

www.youfixthis.com

HAND CONTROLS KIT

Ref.N°	Part N°	Description	Remarks	Serial N°	Qty.
1	NAP	KIT	Ref. HAND CONTROLS KIT(2)-HAND CONTROLS KIT(48) & HAND CONTROLS KIT(52)-Was 6703224 [A]		1
2	6702992	LEVER			1
3	6702993	LEVER			1
4	6702990	BUSHING	bronze sleeve		4
5	6702787	LEVER			1
6	6702791	LEVER			1
7	6702775	LEVER	throttle		1
8	6631036	BALL JOINT			2
9	8D-4	NUT			4
10	86D-4	NUT			2
11	6658613	CABLE			2
12	4F-4051	PIN			2
13	6513495	COTTER PIN			2
14	2J-4200	CLEVIS			2
15	6592766	U-BOLT			2
16	83D-5	NUT			6
17	46D-5	NUT			4
18	6706420	MOUNT	cable - Was 6702778 [A]		1
19	6706421	MOUNT	cable - Was 6702777 [A]		1
20	85D-6	NUT			2
21	6702776	BRACKET			2
22	57D-6	NUT			6
23	37C-620	BOLT	carriage		6
24	6706281	BELLCRANK	W/Ref. HAND CONTROLS KIT(26) - Was 6704292 [A]		2
25	58K-14	O-RING			4
26	6702782	BUSHING	bronze		2
27	6655781	BEARING	thrust		2
28	38C-816	BOLT	shoulder		2
29	6563914	WASHER			2
30	6704285	BOLT	Was 17C-620 [B]		2
31	85D-4	NUT			4
32	6703122	LINK	tilt		1
33	38C-606	BOLT			4
34	6658682	BEARING	swivel		2
35	17C-410	BOLT			4
36	6702773	LINK	lift		1
37	6658930	BOOT			2
38	25G-612	BOLT	socket hex head		2
39	6702997	DECAL	warning		1
40	6702996	DECAL	operating		1
41	6703280	HANDBOOK			1
41	6558309	WIRE ROPE	33' (838,2 mm) long - Bulk - Sold Per Foot - Also Order (2) of 6558310 inD1}#Sleeve		x
41	6558310	SLEEVE	wire rope		2
42	6720683	MANUAL	operator		1
43	8D-6	NUT			4
44	6703463	SPRING			2
45	619021	WASHER			2
46	6703403	DECAL	warning		1
47	38C-612	BOLT			1
48	59D-6	NUT			1
49	6649551	DAMPENER	Not in Kit		2
50	6599744	BALL JOINT	Not in Kit		4
51		LINK	Not in Kit - See Page CONTROL PEDALS(17)		1

www.youfixthis.com

HAND CONTROLS KIT

Ref.N°	Part N°	Description	Remarks	Serial N°	Qty.
52	6720672	INSTRUCTIONS			1

www.youfixthis.com

HAND CONTROLS KIT
(S/N 5084 11354 & Above) (S/N 5097 11001 & Above)

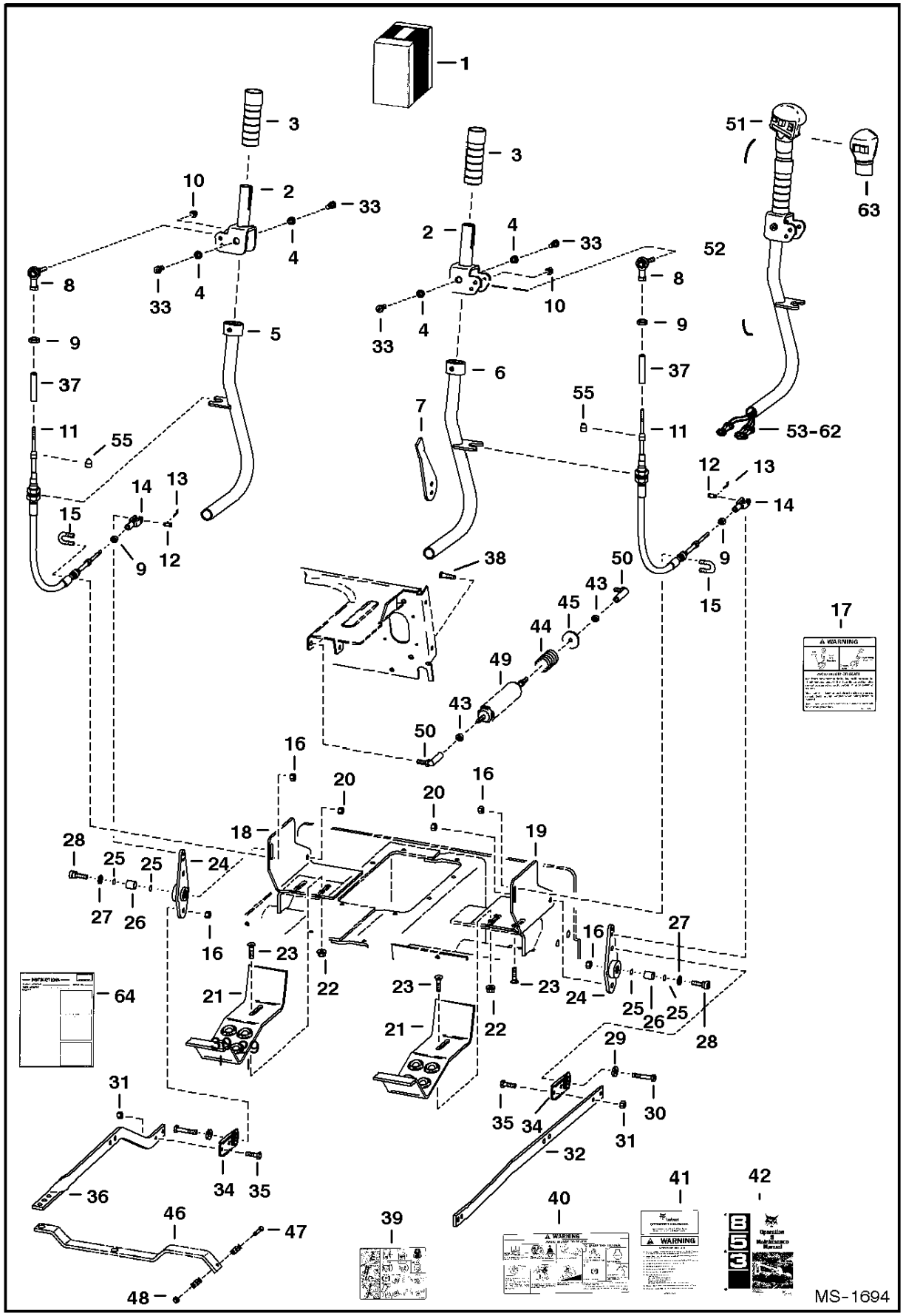

www.youfixthis.com

HAND CONTROLS KIT

Ref.N°	Part N°	Description	Remarks	Serial N°	Qty.
1	NAP	KIT	Cobra style handle - Ref. HAND CONTROLS KIT(2) - HAND CONTROLS KIT(45), HAND CONTROLS KIT(47), HAND CONTROLS KIT(48), HAND CONTR		1
1	NAP	KIT	Multi switch handle - Ref. HAND CONTROLS KIT(2) - HAND CONTROLS KIT(45), HAND CONTROLS KIT(47), HAND CONTROLS KIT(48) & HAND CON		1
1	NAP	KIT	Multi switch handle - Ref. HAND CONTROLS KIT(2) - HAND CONTROLS KIT(45), HAND CONTROLS KIT(47), HAND CONTROLS KIT(48) & HAND CON		1
2	6702786	LEVER	Used W/6658613 Cable		2
2	6707349	LEVER	Used W/6666379 Cable		2
3	6702621	GRIP	Used W/6658613 Cable		2
3	6707367	GRIP	Used W/6666379 Cable		2
4	6702990	BUSHING	bronze sleeve		4
5	6702787	LEVER	Used W/6658613 Cable		1
5	6707351	LEVER	Used W/6666379 Cable		1
6	6702791	LEVER	Used W/6658613 Cable		1
6	6707352	LEVER	Used W/6666379 Cable		1
7	6702775	LEVER	throttle		1
8	6631036	BALL JOINT			2
9	8D-4	NUT			4
10	86D-4	NUT			2
11	6658613	CABLE	31.5' (800 mm) long		2
11	6666379	CABLE	33.5' (851 mm) long		2
12	4F-4051	PIN			2
13	6513495	COTTER PIN			2
14	2J-4200	CLEVIS			2
15	6592766	U-BOLT			2
16	83D-5	NUT			6
17	6703726	DECAL	warning		1
18	6706420'	MOUNT	cable - Was 6702778 [A]		1
19	6706421	MOUNT	cable - Was 6702777 [A]		1
20	85D-6	NUT			2
21	6702776	BRACKET			2
22	57D-6	NUT			6
23	37C-620	BOLT	carriage		6
24	6706281	BELLCRANK	W/Ref. HAND CONTROLS KIT(26) - Was 6704292 [A]		2
25	58K-14	O-RING			4
26	6702782	BUSHING	bronze		2
27	6655781	BEARING	thrust		2
28	38C-816	BOLT	shoulder		2
29	6563914	WASHER			2
30	38C-610	BOLT	Was 6704285 [A]		2
31	85D-4	NUT			4
32	6703122	LINK	tilt		1
33	38C-606	BOLT			4
34	6658682	BEARING	swivel		2
35	17C-410	BOLT			4
36	6702773	LINK	lift		1
37	6658930	BOOT			2
38	25G-612	BOLT	socket hex head		2
39	6703724	DECAL	operating		1
40	6703725	DECAL	warning		1
41	6703678	HANDBOOK KIT	for Kits made NAP		1
41	6708159	HANDBOOK KIT			1
41	6558309	WIRE ROPE	33' (838,2 mm) long - Bulk - Sold Per Foot - Also Order (2) of 6558310 inD1}#Sleeve		x

www.youfixthis.com

HAND CONTROLS KIT

Ref.N°	Part N°	Description	Remarks	Serial N°	Qty.
41	6558310	SLEEVE	wire rope		2
42	6724035	MANUAL	operator - Was 6720916 [A]		1
43	8D-6	NUT			4
44	6703463	SPRING			2
45	619021	WASHER			2
46		LINK	Not in Kit - See Page CONTROL PEDALS(17)		1
47	38C-612	BOLT			1
48	59D-6	NUT			1
49	6649551	DAMPENER	Not in Kit - Was 6649557 [B,D]		1
50	6599744	BALL JOINT	Not in Kit		2
51	6662857	PIN			3
51	6706568	KIT	L.H. Multi switch - includes Ref. HAND CONTROLS KIT(51), HAND CONTROLS KIT(53), HAND CONTROL S KIT(54), HAND CONTROLS KIT(56) & H		1
51	6706340	HANDLE ASSY.	R.H. - Multi switch - Also Order Ref. HAND CONTROLS KIT(53), HAND CONTROLS KIT(54), HAND CONTROL S KIT(57), HAND CONTROLS KIT(58)		1
51	6640690	PIN			9
51	6641176	SEAL			9
51	6706567	KIT	R.H. Multi switch - includes Ref. HAND CONTROLS KIT(51), HAND CONTROLS KIT(53), HAND CONTROL S KIT(54), HAND CONTROLS KIT(57), HA		1
51	6707976	HANDLE ASSY	L.H. - Multi switch - Also Order Ref. HAND CONTROLS KIT(53), HAND CONTROLS KIT(54), HAND CONTROL S KIT(56), HAND CONTROLS KIT(59)		1
51	6640690	PIN			5
51	6640691	PIN			2
51	6641176	SEAL			7
52	NAP	LEVER ASSY.	R.H. - Cobra style - W/Ref. HAND CONTROLS KIT(2) - HAND CONTROLS KIT(4), HAND CONTROLS KIT(6), HAND CONTROLS KIT(33), HAND CONTR		1
52	NAP	LEVER ASSY.	L.H. - Cobra style - W/Ref. HAND CONTROLS KIT(2) - HAND CONTROLS KIT(5), HAND CONTROLS KIT(33), HAND CONTROLS KIT(51), HAND CONT		1
52	NAP	LEVER ASSY.	R.H. - Multi switch style - W/Ref. HAND CONTROLS KIT(2) - HAND CONTROLS KIT(4), HAND CONTROLS KIT(6), HAND CONTROLS KIT(33), HAN		1
52	NAP	LEVER ASSY.	L.H. - Multi switch style - W/Ref. HAND CONTROLS KIT(2) - HAND CONTROLS KIT(5), HAND CONTROLS KIT(33), HAND CONTROLS KIT(51), HA		1
52	NAP	LEVER ASSY.	R.H. - Order component parts - Was 6707365 [A]		1
52	NAP	LEVER ASSY.	L.H.- Order component parts - Was 6707366 [A]		1
53	6641179	CONNECTOR	2 - pin		2
54	6641180	LOCK	2 - pin		2
55	6666534	SEAL			4
56	6641178	CONNECTOR	2 - pin		1
57	6641173	CONNECTOR	6 - pin		1
58	6641181	LOCK	6 - pin		1
59	6664599	CONNECTOR	2 - pin - Was 6664184 [A]		1
60	6664800	LOCK	2 - pin - Was 6664186 [A]		1
61	6640699	CONNECTOR	3 - pin		2
62	6640700	LOCK	3 - pin		2
63	6704454	HANDLE ASSY	Cobra - Also Order Ref. HAND CONTROLS KIT(53) - HAND CONTROLS KIT(55) - See Page CONTROLS ELECTRICAL(1)		2
64	6722847	INSTRUCTIONS	Was 6720917 [A]		1

www.youfixthis.com

* HEATER KIT
(Fresh Air)

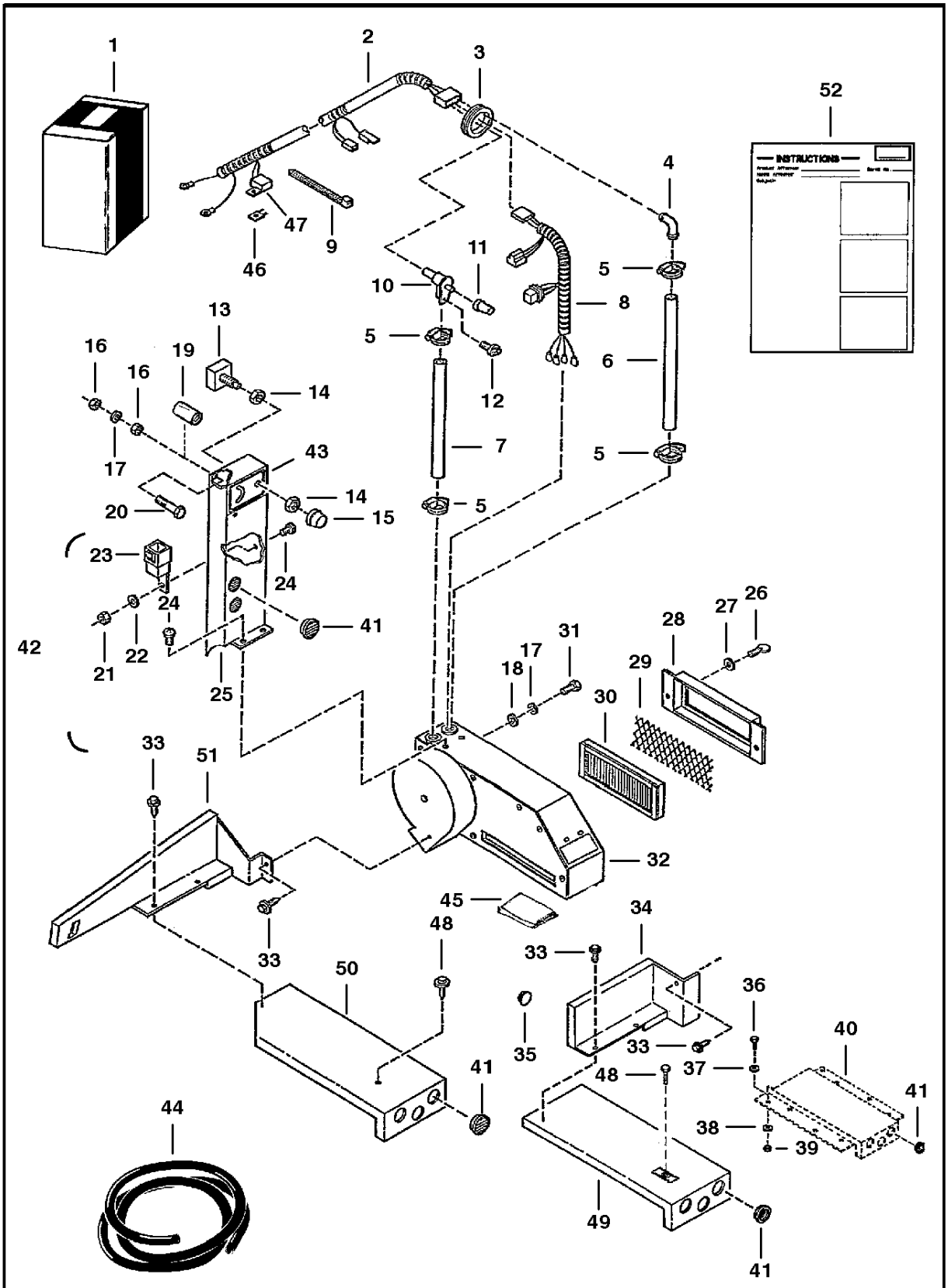

NOTE: For Heater Plumbing Kit See Page 280.

D-2372

www.youfixthis.com

* HEATER KIT

Ref.N°	Part N°	Description	Remarks	Serial N°	Qty.
1	NAP	KIT	&Ref. * HEATER KIT(2) - * HEATER KIT(49) & * HEATER KIT(52) - Was 6660567 [A]		1
1	NAP	KIT	&Ref. * HEATER KIT(2)* HEATER KIT(49) & * HEATER KIT(52)Was 6709836 [A]Fcom3c }H~10{M		x
1	6713379	KIT	Ref. * HEATER KIT(2) - * HEATER KIT(18), * HEATER KIT(20) - * HEATER KIT(33), * HEATER KIT(36) - * HEATER KIT(39), * HEATER KIT(		1
2	6660894	HARNESS	W/Ref. * HEATER KIT(46) & * HEATER KIT(47)		1
3	6512067	GROMMET			1
4	6660879	ELBOW			1
5	42H-10	CLAMP			4
6	NAP	HOSE	17'(431,8 mm) long - Order Ref. * HEATER KIT(44)		1
7	NAP	HOSE	19'(482,6 mm) long - Order Ref. * HEATER KIT(44)		1
8	6660892	HARNESS			1
9	6660883	TIE			6
10	6654191	VALVE			1
11	6660881	KNOB	water valve		1
12	6660884	SCREW			1
13	6660659	SWITCH	fan		1
14	6624435	NUT			2
14	6624435	NUT	for 6713379 heater kit		2
15	6660822	KNOB			1
16	61D-4	NUT			6
16	6670142	NUT	for 6713379 heater kit		2
17	4E-4	WASHER			5
18	25E-14	WASHER			5
19	6660893	SPACER	for NAP 6709836 heater kit		2
20	17C-424	BOLT	Used W/Ref. * HEATER KIT(19)		2
20	17C-416	BOLT	Used W/O Ref. * HEATER KIT(19)		2
20	6670144	BOLT	for 6713379 heater kit		2
21	6641065	NUT			1
22	6641072	WASHER			1
23	6651975	SOLENOID	relay		1
24	6641066	SCREW			2
25	6660864	COVER	W/O vent holes		1
25	6850026	COVER	also Order (2) of Ref. * HEATER KIT(41)		1
26	6660930	THUMBSCREW			2
27	25E-10	WASHER			2
28	6660886	COVER			1
29	6660891	SCREEN			1
30	6660880	FILTER			1
31	17C-412	BOLT			3
32		HEATER	See Page * HEATER(1)		1
33	6705792	SCREW			3
34	6660888	VENT	side - Use W/2.32'(58,9 mm) wide heater blower housing - for NAP 6709836 heater kit		1
34	6708914	VENT	side - Use W/1.95'(49,5 mm) wide heater blower housing - for NAP 6709836 heater kit		1
35	6657719	PLUG			1
36	17C-516	BOLT			2
37	25E-16	WASHER			2
38	4E-5	WASHER			2
39	61D-5	NUT			2
40	NAP	DUCT	under seat - Order Ref. * HEATER KIT(49) - Was 6708915 [A]		1
41	6660885	LOUVER			5

www.youfixthis.com

* HEATER KIT

Ref.N°	Part N°	Description	Remarks	Serial N°	Qty.
42	6660890	COVER ASSY.	Ref. * HEATER KIT(21) - * HEATER KIT(23), & * HEATER KIT(25) & * HEATER KIT(43)		1
43	6660865	DECAL	fan & valve		1
44	889269	HOSE	bulk - Sold Per Foot		x
45	NAP	MOULDING			1
46	6702444	FUSE	25 amp		1
47	6657306	CAP	fuse		1
48	84G-3120	BOLT			1
49	6711732	DUCT	under seat - for NAP 6709836 heater kit		1
50	6669652	DUCT	under seat - for 6713379 heater kit - also Order (3) of Ref. * HEATER KIT(41)		1
51	6669650	VENT	side - for 6713379 heater kit		1
52	6724384	INSTRUCTIONS	Was 6722058 [B]		1

www.youfixthis.com

* HEATER
(Fresh Air)

NOTE:6667183 Heater has a 1.95''(49,5mm) wide blower housing, Ref. 26. This narrower housing allows clearance for use with the Side Pivot Seat Kit.

NOTE: If 2.5'' (63,5mm) thick core is used in older heater housing, drill two .312 dia. holes 1'' above existing holes, for Ref. 7 & 8.

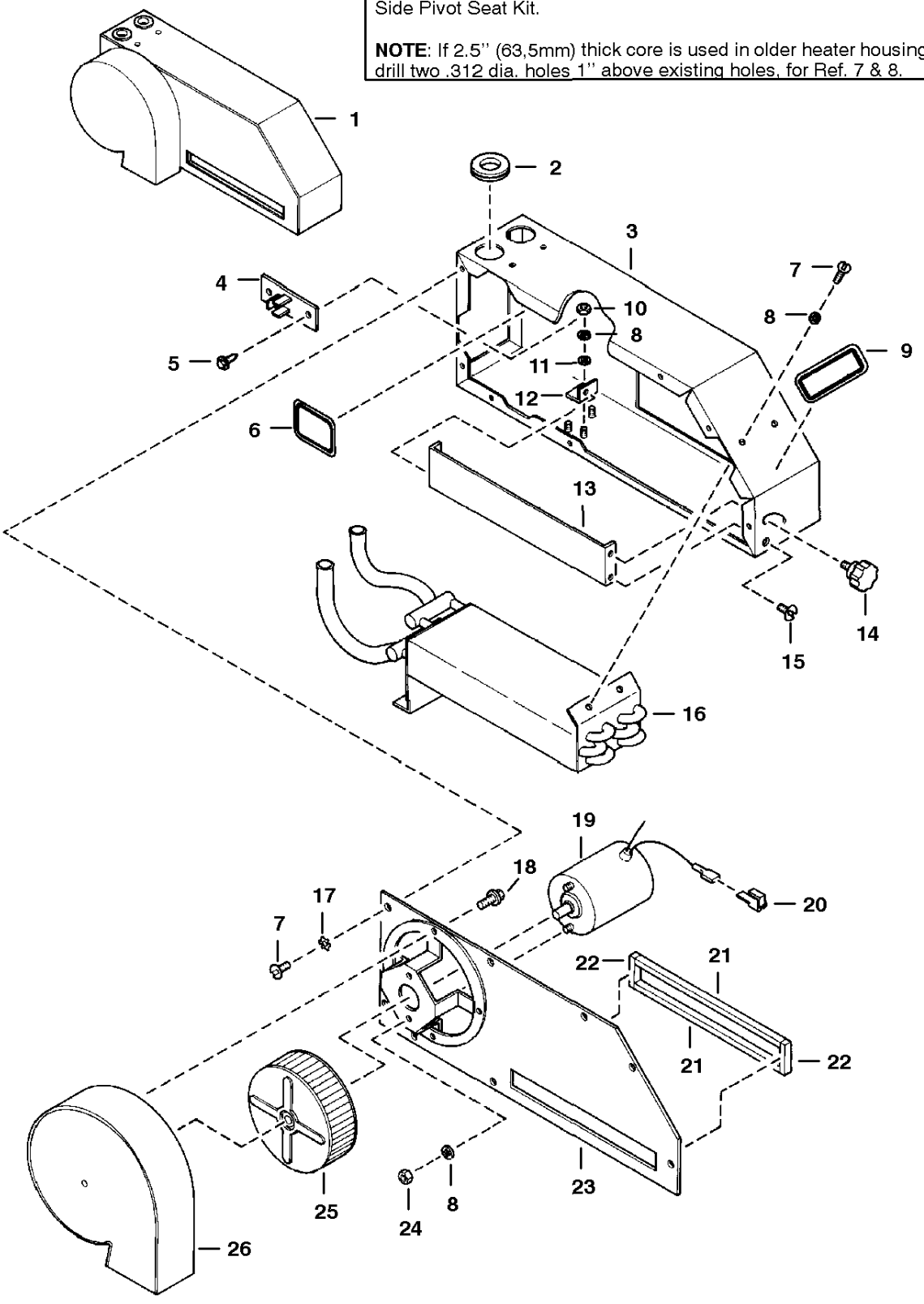

B-20244

www.youfixthis.com

* HEATER

Ref.N°	Part N°	Description	Remarks	Serial N°	Qty.
1	NAP	HEATER	Ref. * HEATER(2)-* HEATER(26) - Was 6660889 [A]		1
1	NAP	HEATER	Ref. * HEATER(2)-* HEATER(26) - Order 6667183 Heater & 6708914 Vent - SEE NOTE		1
1	6667183	HEATER	Ref. * HEATER(2)-* HEATER(26) - SEE NOTE		1
1	6669689	HEATER	Ref. * HEATER(2)-* HEATER(26) - SEE NOTE		1
2	6641056	GROMMET	heater - SEE NOTE		2
3	6664806	HOUSING	heater - 18.3" (464,8mm) long		1
4	6632584	RESISTOR			1
5	6705792	SCREW			3
6	6660656	DECAL	wiring schematic		1
7	6641066	SCREW			10
8	6641072	WASHER			7
9	6660868	DECAL	recirculation		1
10	6641065	NUT			3
11	25E-10	WASHER			3
12	6660873	BRACKET	door		1
13	6660872	DOOR			1
13	6664808	DOOR	10.5" (266,7mm) long		1
14	6660869	KNOB			1
15	6648470	SCREW			1
16	NAP	CORE	Order 6670140, redrill hole - Was 6660866 [A]		1
16	6670140	CORE	2.5' (63,5mm) thick		1
17	12E-10	WASHER			8
18	6641062	SCREW			4
19	6660876	MOTOR			1
20	6660654	CONNECTOR			1
21	6660877	MOULDING			1
22	6660878	MOULDING			1
23	6664807	COVER	18.4" (467,4mm) long - 1.40'(35,6 mm) wide		1
23	6667567	COVER	18.4" (467,4mm) long - 1.125'(28,6 mm) wide		1
24	6641073	NUT			2
25	6660867	BLOWER	1.75'(44,4 mm) wide		1
25	6667565	BLOWER	1.50'(38,1 mm) wide		1
26	6660871	HOUSING	blower - 2.32'(58,9 mm) wide - for 6667183 heater		1
26	6667566	HOUSING	blower - 1.95'(49,5 mm) wide - for 6667183 heater		1
26	6850027	HOUSING	blower - W/hole in rear - for 6669689 heater		1

www.youfixthis.com

* HEATER KIT

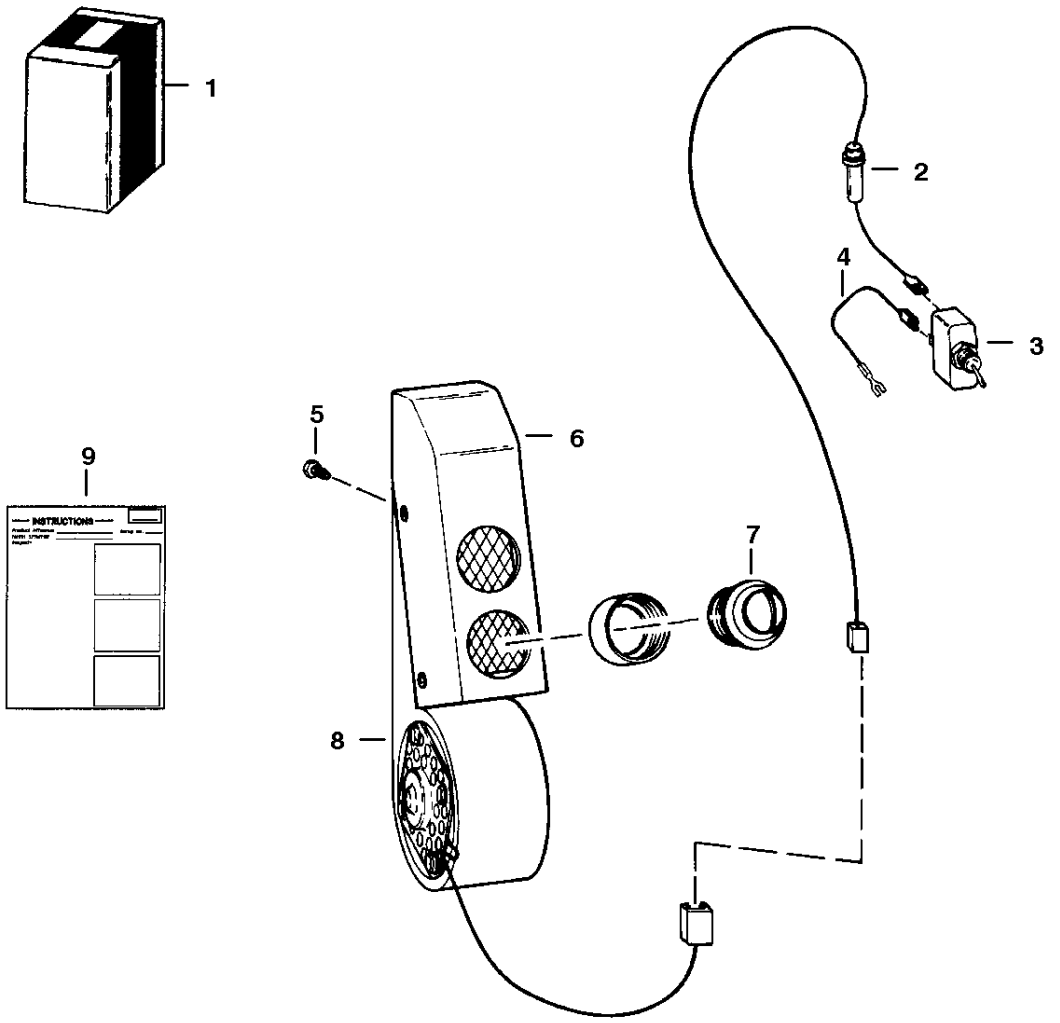

NOTE: For Heater Plumbing Kit See Page 282.

B-13415

www.youfixthis.com

* HEATER KIT

Ref.N°	Part N°	Description	Remarks	Serial N°	Qty.
1	6703046	KIT	Ref. * HEATER KIT(2)-* HEATER KIT(9)		1
2	6703041	WIRE	fused		1
3	6515521	SWITCH			1
4	6564517	WIRE			1
5	17C-412	BOLT			3
6	6702975	VENT			1
7	6632587	BALL	louvered		2
8	6658693	HEATER	See Page * HEATER(1)		1
9	6720656	INSTRUCTIONS			1

www.youfixthis.com

* HEATER

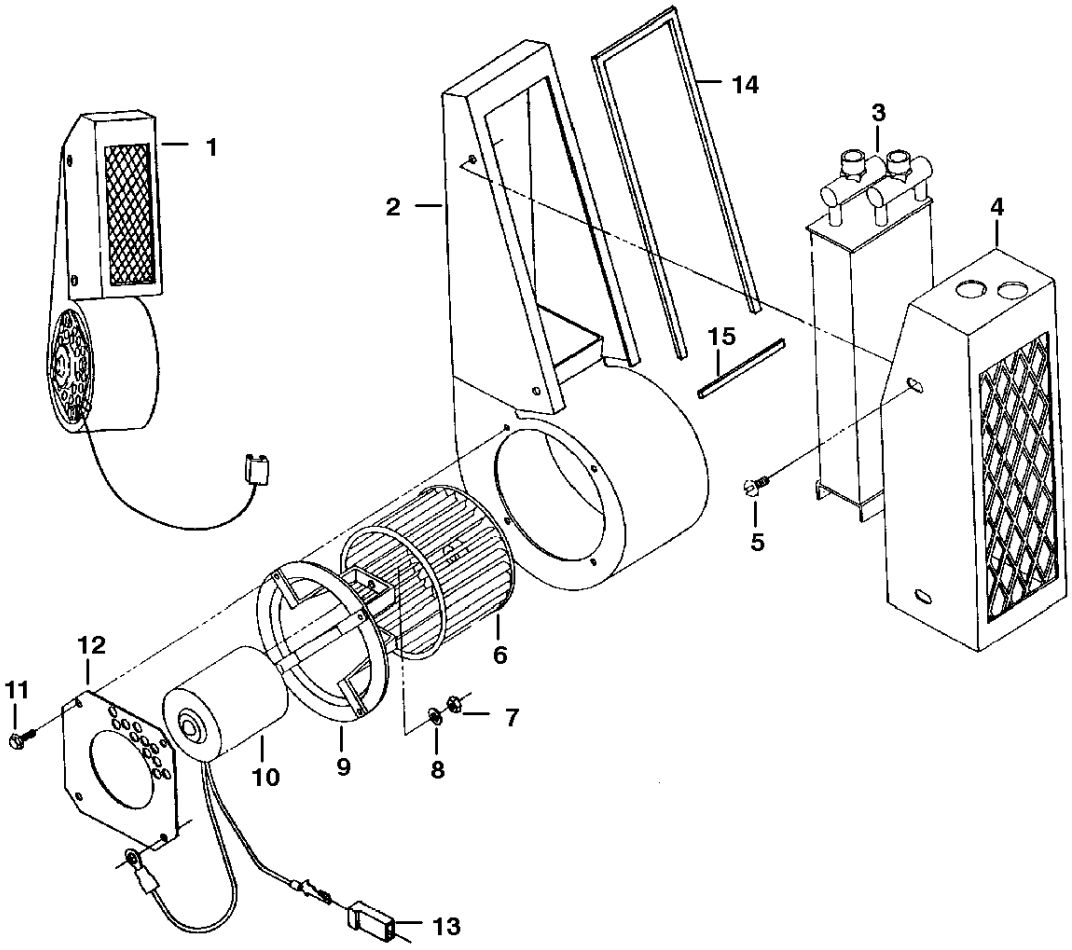

B-13521

www.youfixthis.com

* HEATER

Ref.N°	Part N°	Description	Remarks	Serial N°	Qty.
1	6658693	HEATER			1
2	6648469	HOUSING			1
3	6648471	CORE			1
4	6648472	COVER			1
5	6648470	SCREW			4
6	6648468	FAN			1
7	6641073	NUT			2
8	6641072	WASHER			2
9	6648467	BRACKET			1
10	6648466	MOTOR			1
11	6641062	SCREW			4
12	6659890	SHIELD			1
13	6648460	CONNECTOR			1
14	6659891	MOULDING			1
15	6659892	MOULDING			1

www.youfixthis.com

HEATER PLUMBING KIT
(Fresh Air)

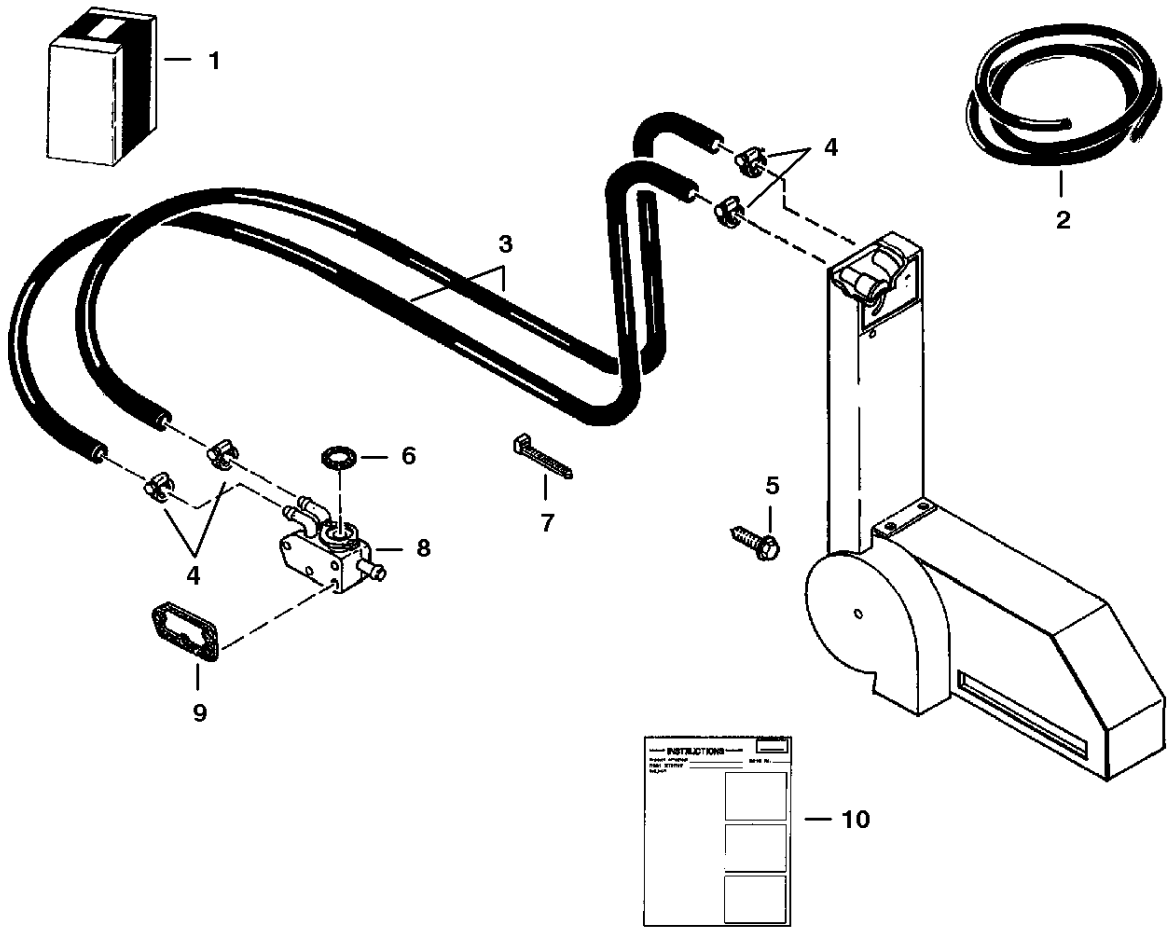

NOTE: For Heater Kit See Page 270.

B-13714

www.youfixthis.com

HEATER PLUMBING KIT

Ref.N°	Part N°	Description	Remarks	Serial N°	Qty.
1	6704294	KIT	Ref. HEATER PLUMBING KIT(2) - HEATER PLUMBIN G KIT(10)		1
2	NAP	HOSE	193" (4902,2mm) long - Order Ref. HEATER PLUMBIN G KIT(3)		1
3	889269	HOSE	bulk - Sold Per Foot		x
4	42H-10	CLAMP			6
5	84G-3712	BOLT			1
6	6655319	GASKET			1
7	6610510	NYLON TIE			2
8	6632263	HOUSING	thermostat		1
9	6631869	GASKET			1
10	6722058	INSTRUCTIONS			1

www.youfixthis.com

* HEATER PLUMBING KIT

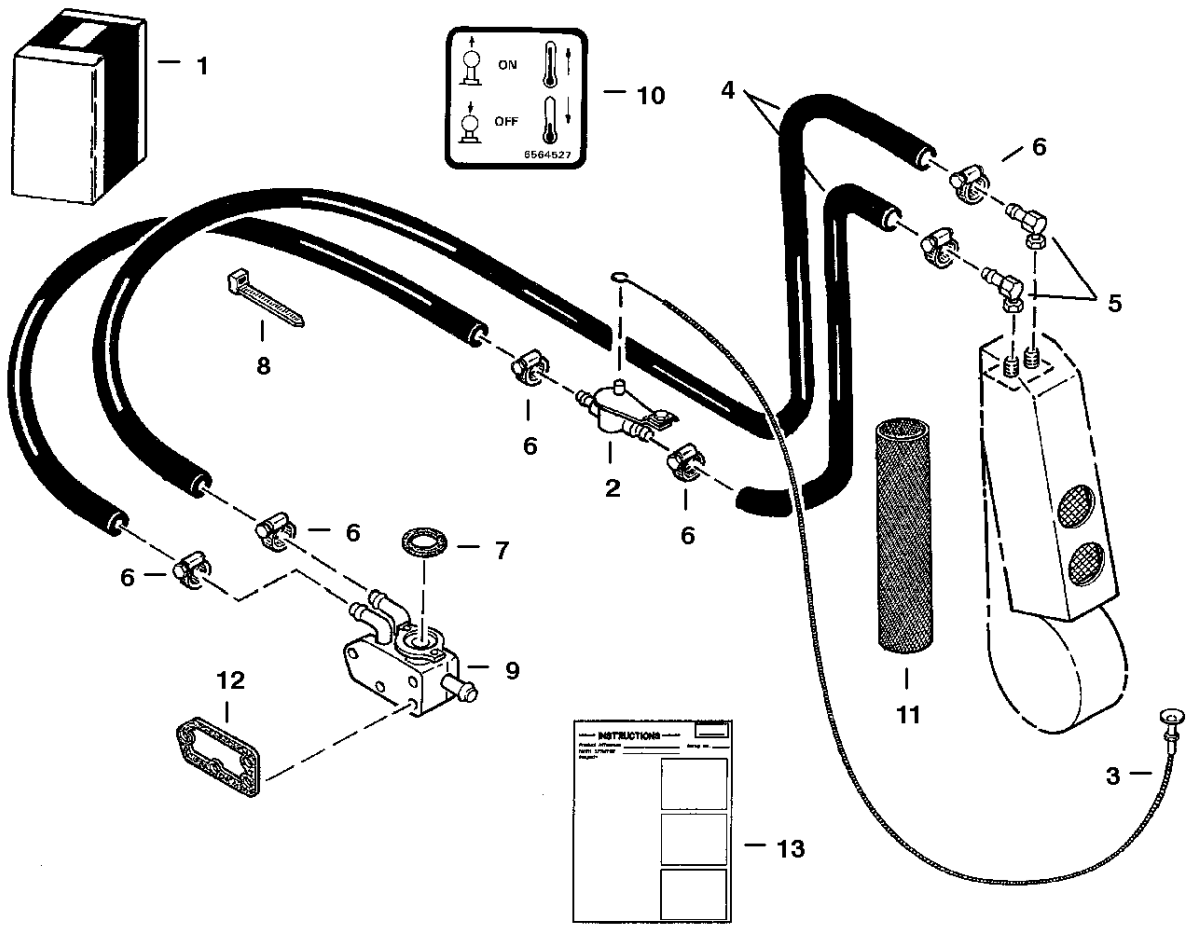

NOTE: For Heater Kit See Page 276

B-13505

www.youfixthis.com

* HEATER PLUMBING KIT

Ref.N°	Part N°	Description	Remarks	Serial N°	Qty.
1	6703464	KIT	Ref.		1
2	6599462	VALVE	control		1
3	6599465	CABLE	control		1
4	889269	HOSE	bulk - Sold Per Foot		x
5	6648474	ELBOW			2
5	6648475	O-RING			2
6	42H-10	CLAMP			6
7	6661097	GASKET			1
8	6610510	NYLON TIE			2
9	6632263	HOUSING	thermostat		1
10	6564527	DECAL	temperature		1
11	6652367	HOSE	bulk - Sold Per Foot - 1.62' I.D.		x
12	6631869	GASKET			1
13	6720656	INSTRUCTIONS			1

www.youfixthis.com

HOOD KIT
(Steel)

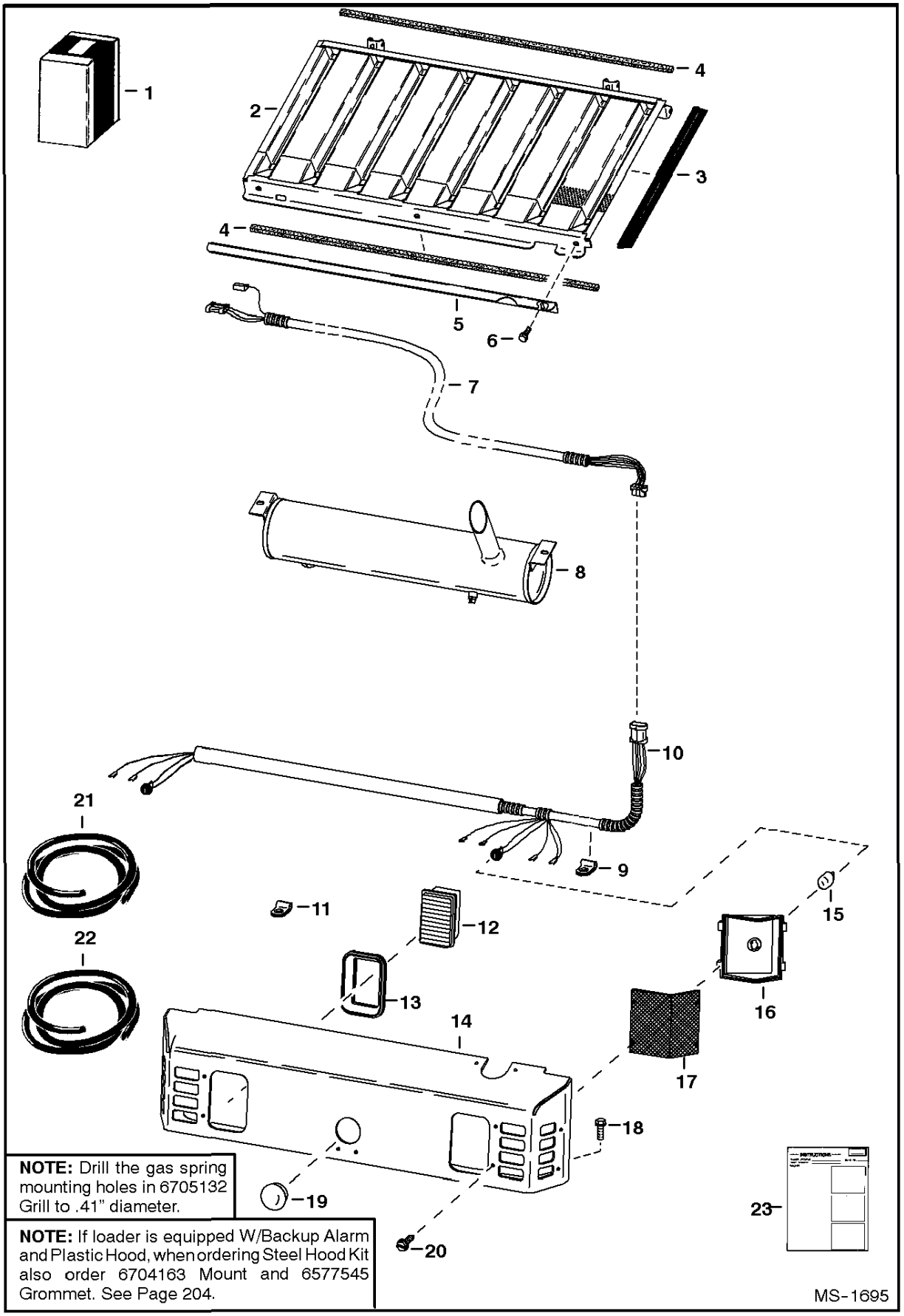

NOTE: Drill the gas spring mounting holes in 6705132 Grill to .41" diameter.

NOTE: If loader is equipped W/Backup Alarm and Plastic Hood, when ordering Steel Hood Kit also order 6704163 Mount and 6577545 Grommet. See Page 204.

MS-1695

www.youfixthis.com

HOOD KIT

Ref.N°	Part N°	Description	Remarks	Serial N°	Qty.
1	6704402	HOOD KIT	Ref. HOOD KIT(2) - HOOD KIT(23)		1
2	6705132	GRILL	See Note - Was 6703813 [A]		1
3	NAP	MOULDING	19' (482,6 mm) long - Order Ref. HOOD KIT(22)		2
4	NAP	MOULDING	34.5' (876,3mm) long - Order Ref. HOOD KIT(21)		1
5	6708981	BRACKET	Was 6703471 [A]		1
6	84G-3112	BOLT			3
7	6704359	HARNESS	light/alarm		1
8	6661769	MUFFLER	Was 6660250 [A]		1
9	30H-27	CLAMP			1
10	6704232	HARNESS	light		1
11	30H-35	CLIP			3
12	6665922	LAMP	white - W/898731inD1 Bulb - Was 6661353 [A]		2
12	6665431	SOCKET	threaded bulb		2
13	6703796	MOUNT	light		2
14	6703868	HOOD			1
15	6649481	BULB			2
16	6704362	HOUSING	light		1
17	6703797	LENS			2
18	84G-3716	BOLT			5
19	6660646	PLUG			1
20	6706517	SCREW	self tapping - Was 6704400 [A]		8
21	6511855	FOAM STRIP	bulk - Sold Per Foot		x
22	6646705	MOULDING	bulk - Sold Per Foot		x
23	6722084	INSTRUCTIONS			1

www.youfixthis.com

HORN KIT

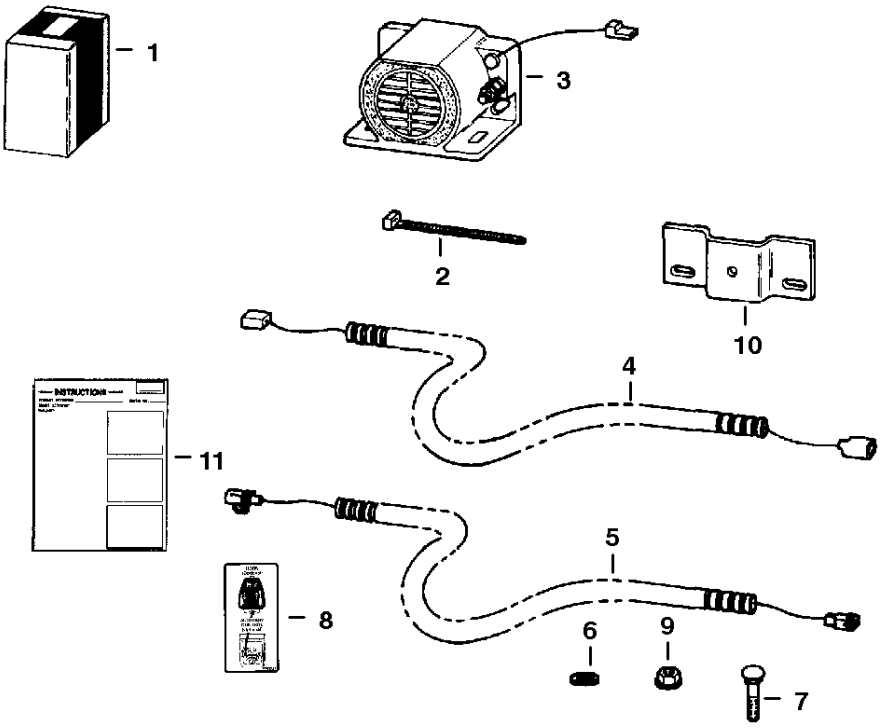

NOTE: If loader is not equipped W/Rear Auxiliaries, it is necessary to order Electric Control Kit when ordering Horn Kit.
If loader is equipped W/Rear Auxiliaries, it is not necessary to order Electric Control Kit when ordering Horn Kit.

C-3267

www.youfixthis.com

HORN KIT

Ref.N°	Part N°	Description	Remarks	Serial N°	Qty.
1	6703162	HORN KIT	Ref. HORN KIT(2)-HORN KIT(11)		1
2	6610510	NYLON TIE	Was 1715312 [A]		2
3	6660294	HORN			1
4	6701961	HARNESS	113'(2870,2 mm) long		1
5	6704408	HARNESS	54'(1371,6 mm) long		1
6	25E-13	WASHER	Was 6E-4 [B]		1
7	84G-2516	BOLT	Was 7C-412 [B]		2
8	6703727	DECAL	horn/aux.		1
9	59D-4	NUT	Was 83D-4 [B]		2
10	6704641	MOUNT	Was 6703391 [A]		1
11	6720761	INSTRUCTIONS	For Horn Kit & Elec. Controls Kit		1

www.youfixthis.com

HOURMETER KIT

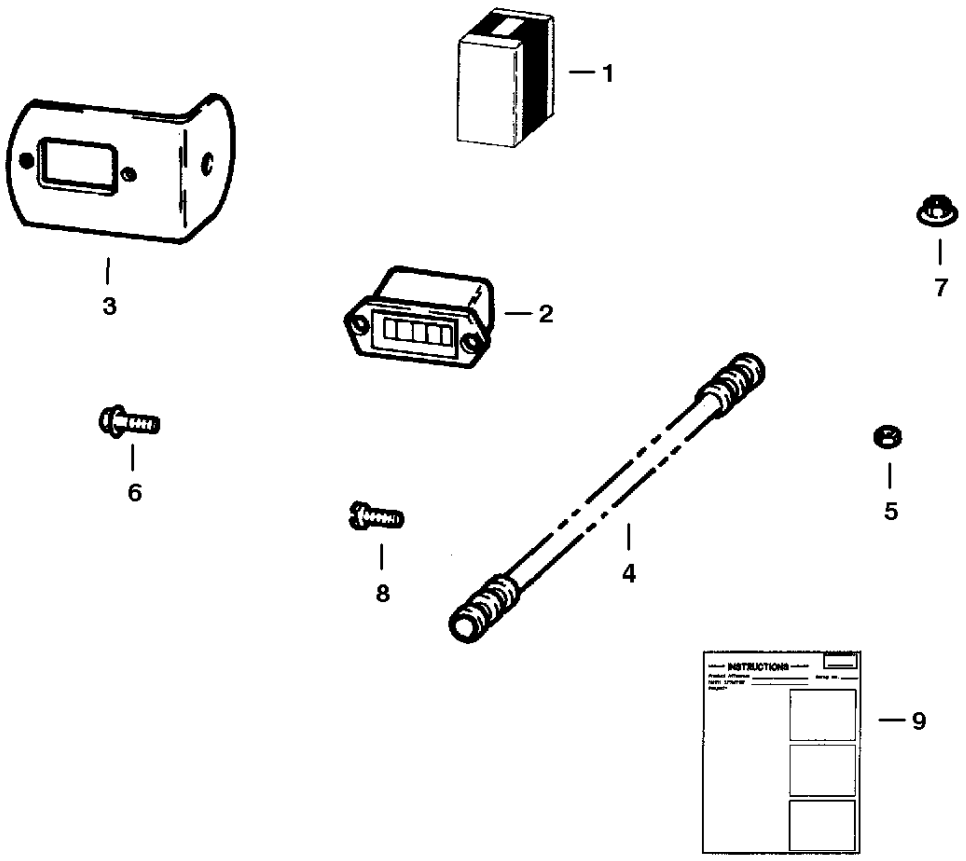

B-13086

www.youfixthis.com

HOURMETER KIT

Ref.N°	Part N°	Description	Remarks	Serial N°	Qty.
1	6700229	KIT	Ref. HOURMETER KIT(2) - HOURMETER KIT(9)		1
2	6664886	HOURMETER	Was 6631657 [A]		1
3	6552906	BRACKET			1
4	6700228	HARNESS			1
5	12D-6	NUT			2
6	35C-716	BOLT			1
7	55D-7	NUT			1
8	85G-608	SCREW			2
9	6720451	INSTRUCTIONS			1

www.youfixthis.com

INSECT SCREEN KIT

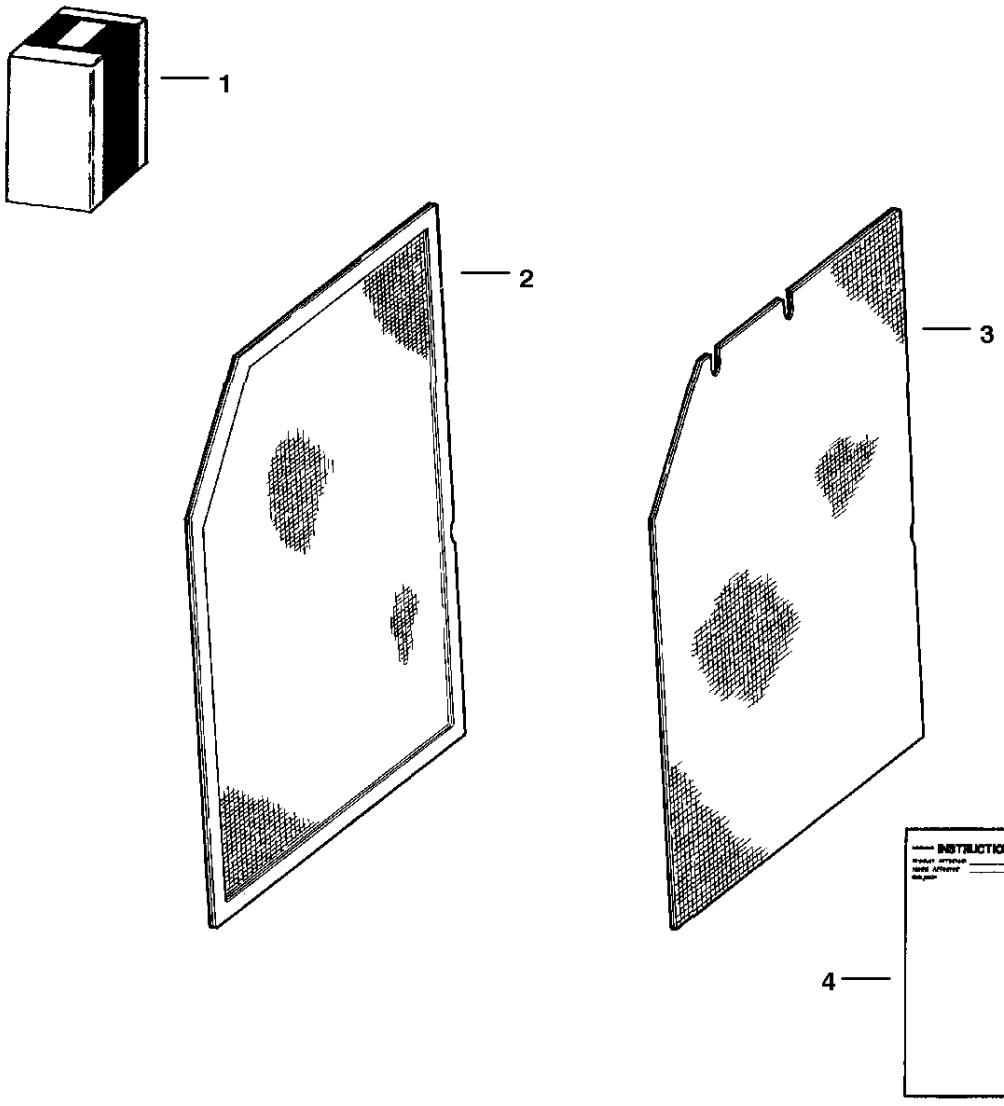

C-2975

www.youfixthis.com

INSECT SCREEN KIT

Ref.N°	Part N°	Description	Remarks	Serial N°	Qty.
1	NAP	KIT	insect screen - Ref. INSECT SCREEN KIT(2) - INSECT SCREEN KIT(4) - Was 6571597 [A]		1
2	NAP	SCREEN	insect - R.H. - Was 6569935 [A]		1
3	NAP	SCREEN	insect - L.H. - Was 6569936 [A]		1
4	6570223	INSTRUCTIONS			1

www.youfixthis.com

* KEYLESS IGNITION

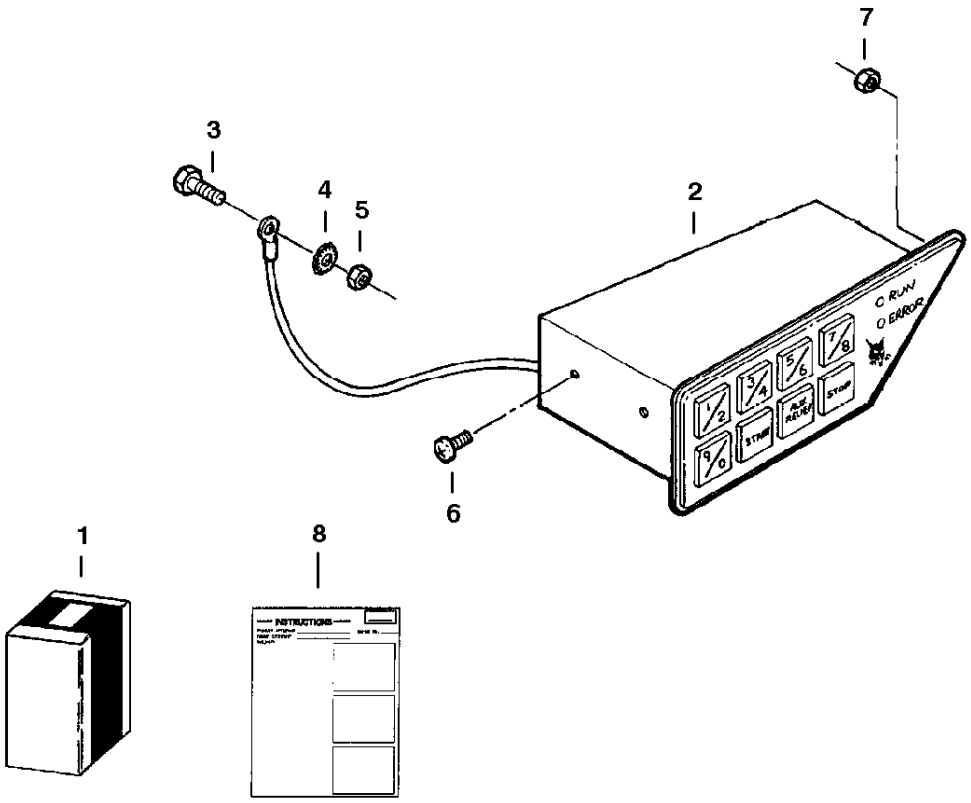

B-14598

www.youfixthis.com

* KEYLESS IGNITION

Ref.N°	Part N°	Description	Remarks	Serial N°	Qty.
1	6712972	KIT	Keyless ignition - W/Ref. * KEYLESS IGNITION(2) - * KEYLESS IGNITION(8) - Was 6710444 [A]		1
2	NSS	MODULE	Order Ref. * KEYLESS IGNITION(1)		1
3	35C-410	BOLT			1
4	6E-4	WASHER	Star		1
5	83D-4	NUT			1
6	87G-806	BOLT			2
7	12D-6	NUT			1
8	6724586	INSTRUCTIONS	Was 6724420 [A]		1

www.youfixthis.com

LIFT KIT
(Single Point)

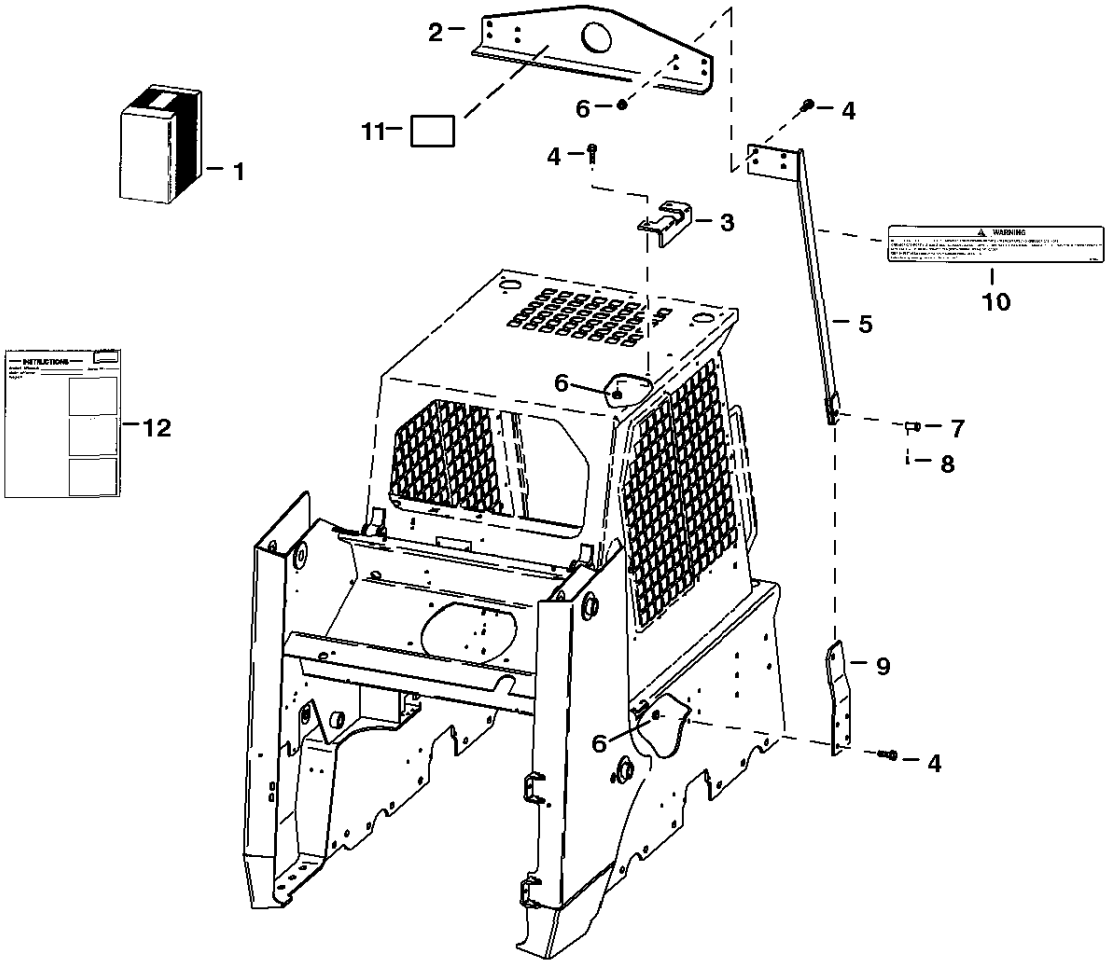

TS-1114

www.youfixthis.com

LIFT KIT

Ref.N°	Part N°	Description	Remarks	Serial N°	Qty.
1	6704773	KIT	Ref. LIFT KIT(2) - LIFT KIT(12)		1
2	6567827	ANGLE			1
3	6704148	BRACKET	R.H.		1
3	6704154	BRACKET	L.H.		1
4	17C-824	BOLT			20
5	6704146	BRACKET	R.H.		1
5	6704147	BRACKET	L.H.		1
6	57D-8	NUT			20
7	6567838	PIN			2
8	1320075	COTTER PIN			2
9	6705072	BRACKET	R.H.		1
9	6705073	BRACKET	L.H.		1
10	6704786	DECAL			2
11	6533898	DECAL			1
12	6722269	INSTRUCTIONS			1

www.youfixthis.com

LIFT KIT
(Four Point - .5" Thick Rear Lift Eyes)

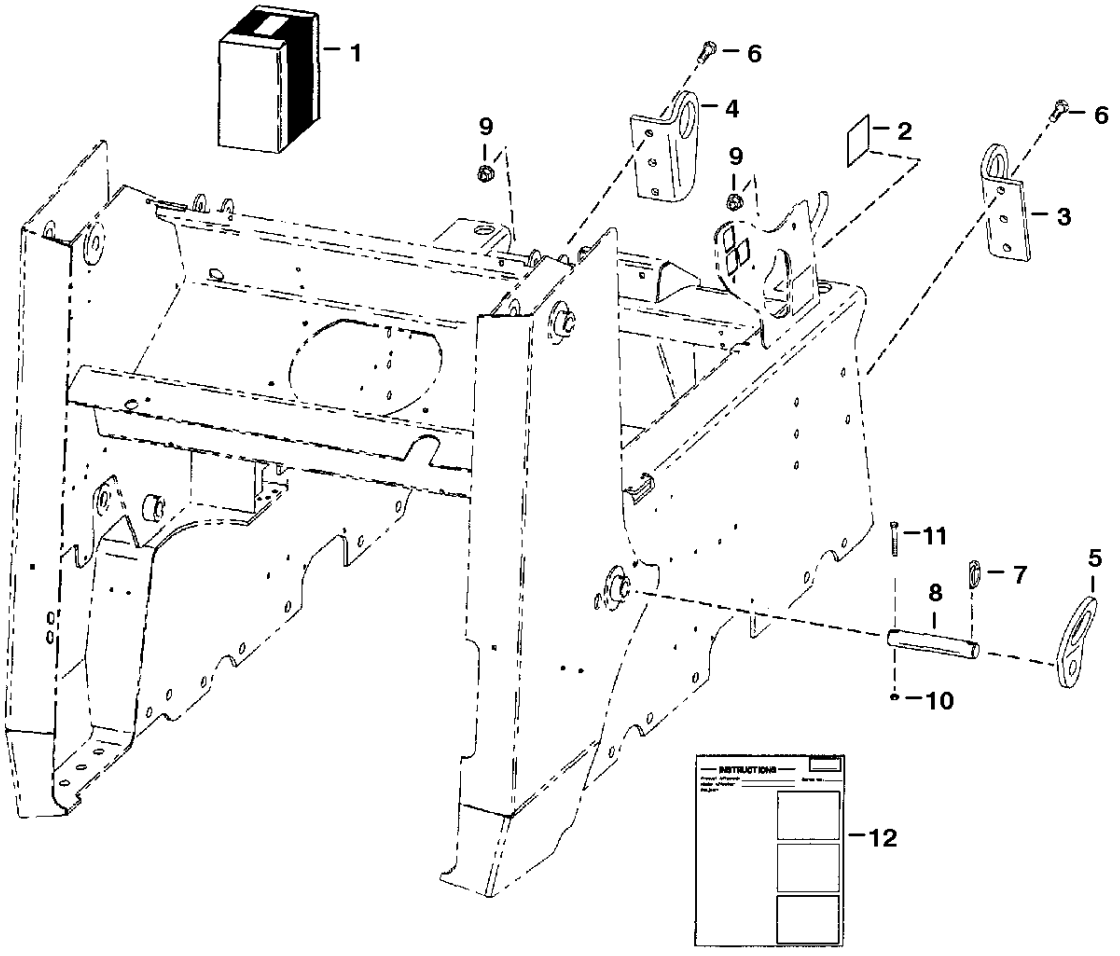

TS-1041

www.youfixthis.com

LIFT KIT

Ref.N°	Part N°	Description	Remarks	Serial N°	Qty.
1	NAP	KIT	Ref. LIFT KIT(2) - 9 & LIFT KIT(12) - Order 6707002 &KitASee Page LIFT KIT(1)Was 6701572 [C]		1
2	6702916	DECAL			2
3	6701573	LIFT EYE	front - R.H.		1
4	6701574	LIFT EYE	front - L.H.		1
5	NAP	LIFT EYE	rear - Order 6706825 Lift Eye, 6706807 Pin,4D-20 Nut,17C-540 Bolt & 87D-5 Nut - Was 6701525 [C]		2
6	17C-1028	BOLT			6
7	6560382	PIN			2
8	NAP&	IDLER ASSY.	Order 6706825 Lift Eye, 6706807 Pin, 4D-20 Nut, 17C-540 Bolt & 87D-5 Nut - Was 6702303 [C]		2
9	83D-10	NUT			6
10	85D-6	NUT	Not in Kit		2
11	17C-640	BOLT	Not in Kit		2
12	6720651	INSTRUCTIONS			1

www.youfixthis.com

LIFT KIT
(Four Point - .75" Thick Rear Lift Eyes)

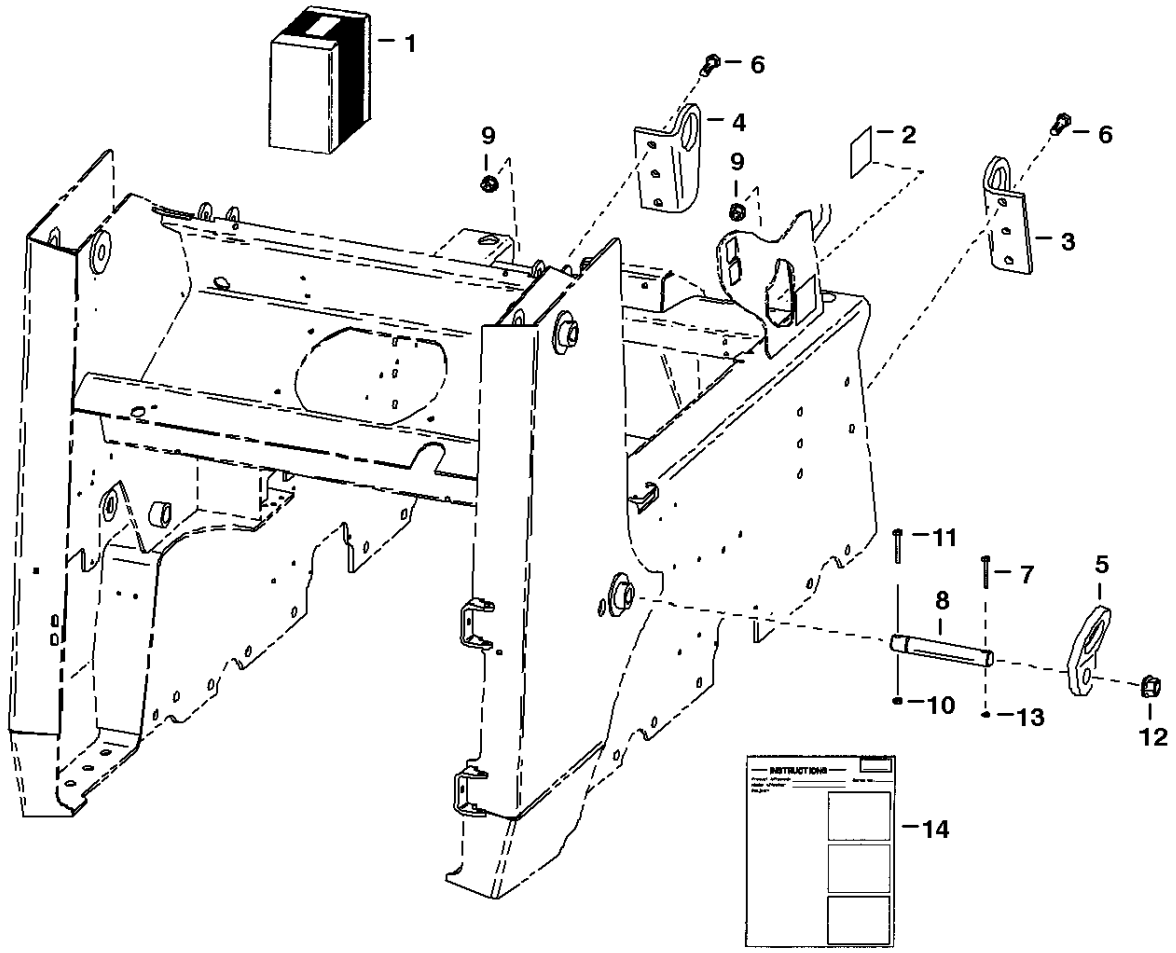

www.youfixthis.com

LIFT KIT

Ref.N°	Part N°	Description	Remarks	Serial N°	Qty.
1	6707002	KIT	Ref. LIFT KIT(2) - 9 & LIFT KIT(12) - LIFT KIT(14)		1
2	6702916	DECAL			2
3	6701573	LIFT EYE	front - R.H.		1
4	6701574	LIFT EYE	front - L.H.		1
5	6706825	LIFT EYE	rear		2
6	17C-1028	BOLT			6
7	17C-540	BOLT			2
8	6706807	PIN			2
9	83D-10	NUT			6
10	85D-6	NUT	Not in Kit		2
11	17C-640	BOLT	Not in Kit		2
12	4D-20	NUT			2
13	87D-5	NUT			2
14	6722873	INSTRUCTIONS			1

www.youfixthis.com

MUFFLER/PURIFIER KIT
(For Plastic Hood)

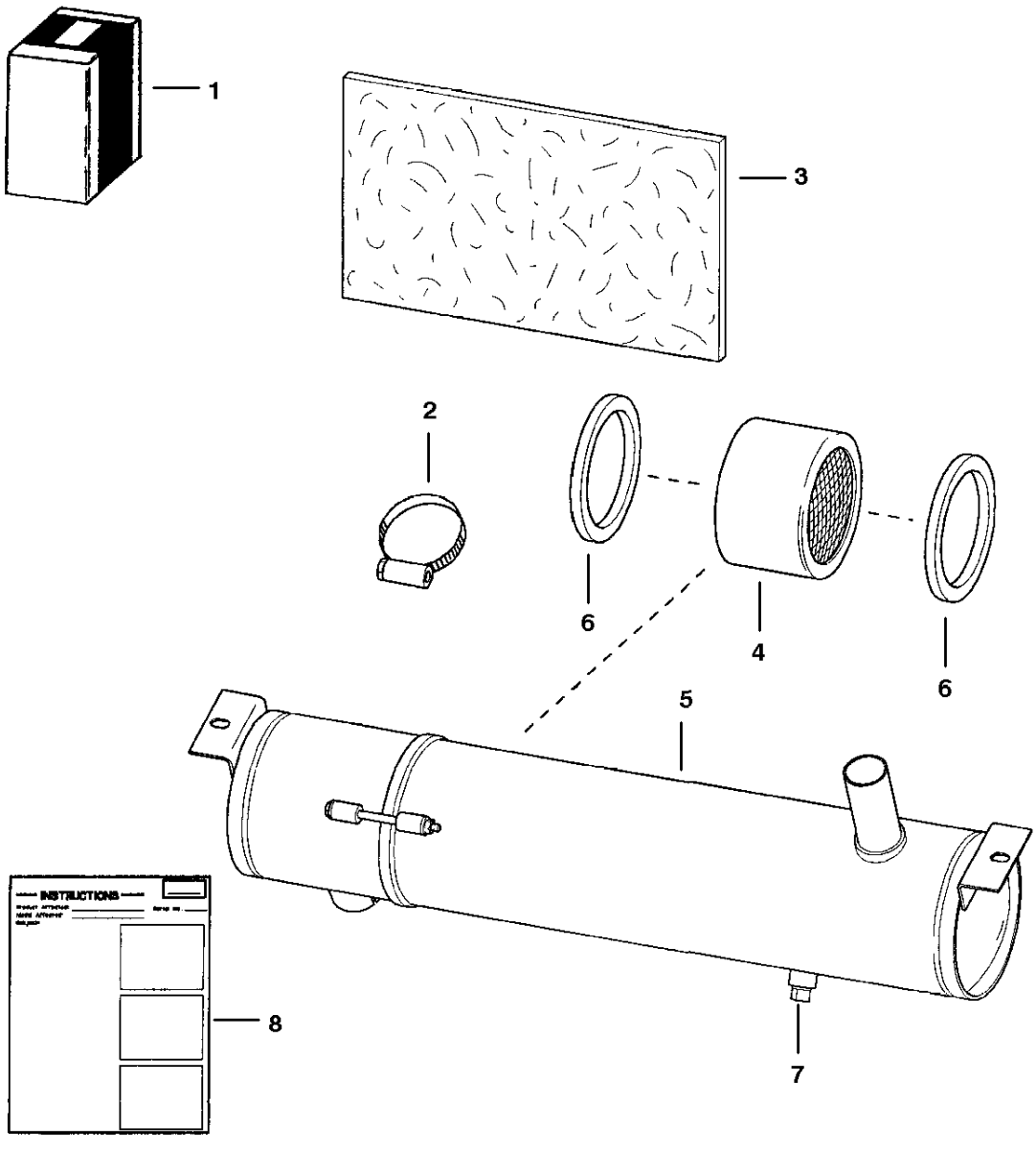

TS-1050

www.youfixthis.com

MUFFLER/PURIFIER KIT

Ref.N°	Part N°	Description	Remarks	Serial N°	Qty.
1	NAP	KIT	muffler/purifier - Ref. MUFFLER/PURIFIER KIT(2) - MUFFLER/PURIFIER KIT(8) - Was 6703214 [A]		1
2	6515576	CLAMP			3
3	6571628	INSULATION			1
4	6632304	PURIFIER	Also Order Ref. MUFFLER/PURIFIER KIT(6)		1
5	6702701	MUFFLER			1
6	6633675	GASKET			2
7	6661062	PLUG	3/8'		1
8	6570254	INSTRUCTIONS			1

www.youfixthis.com

MUFFLER/PURIFIER KIT
(For Steel Hood)

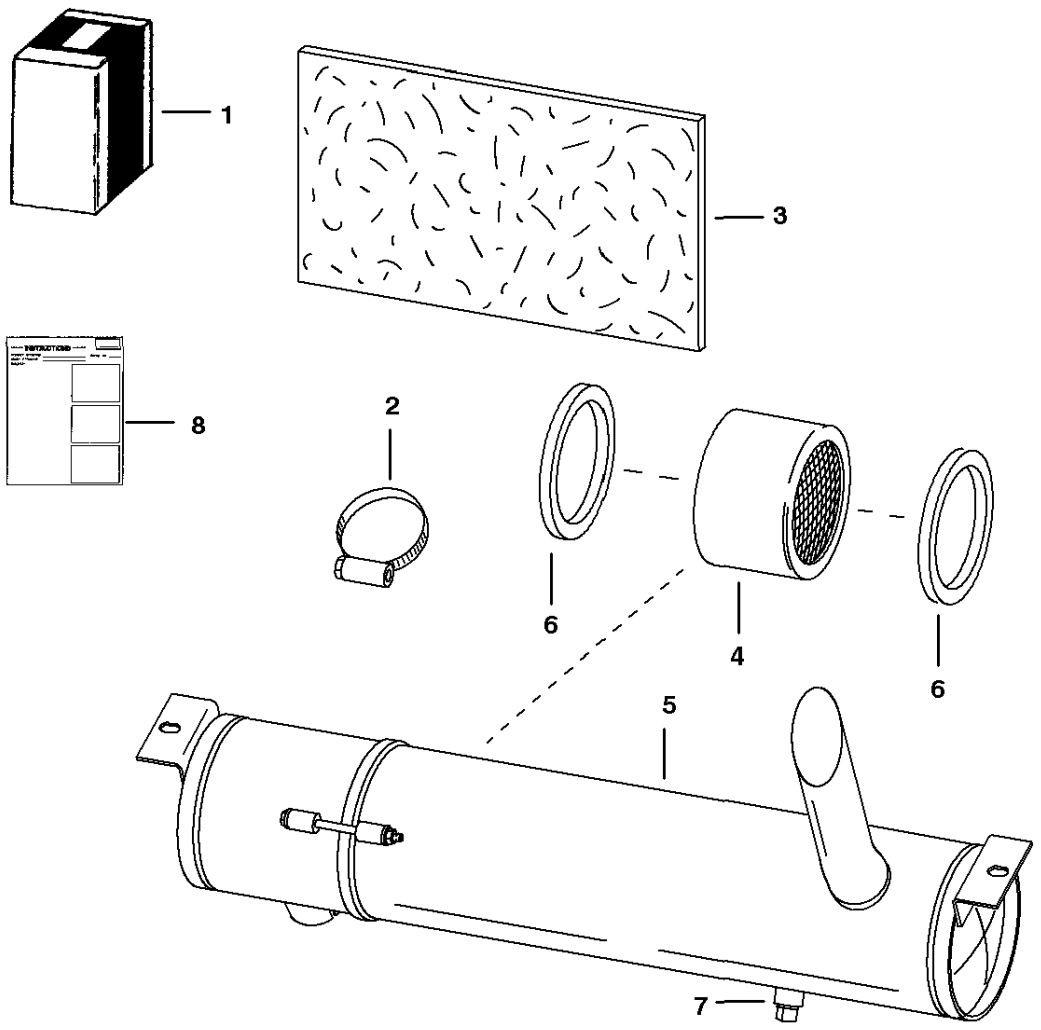

TS-1120

www.youfixthis.com

MUFFLER/PURIFIER KIT

Ref.N°	Part N°	Description	Remarks	Serial N°	Qty.
1	NAP	KIT	muffler/purifier - Ref. MUFFLER/PURIFIER KIT(2)-MUFFLER/PURIFIER KIT(8) - Was 6704877 [A]		1
2	6515576	CLAMP			3
3	6571628	INSULATION			1
4	6632304	PURIFIER	Also Order Ref. MUFFLER/PURIFIER KIT(6)		1
5	6662299	MUFFLER	W/Ref. MUFFLER/PURIFIER KIT(6) - Was 6660951		1
5	17C-464	BOLT			2
5	25E-14	WASHER			4
5	85D-4	NUT			2
6	6633675	GASKET			2
7	6661062	PLUG	3/8' (9,5 mm)		1
8	6570254	INSTRUCTIONS			1

www.youfixthis.com

* MUFFLER/PURIFIER KIT

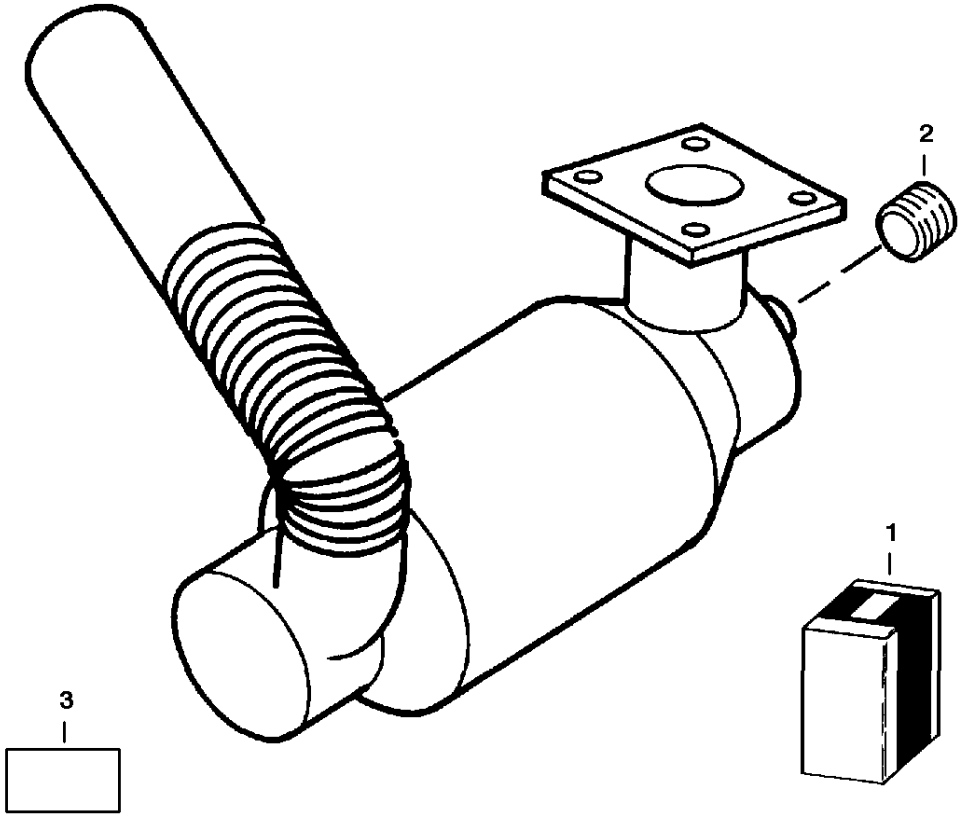

B-20245

www.youfixthis.com

* MUFFLER/PURIFIER KIT

Ref.N°	Part N°	Description	Remarks	Serial N°	Qty.
1	6667621	KIT	for 4-bolt flange only		1
2	6659543	PLUG			1
3	6667573	DECAL			1

www.youfixthis.com

RADIATOR SCREEN KIT

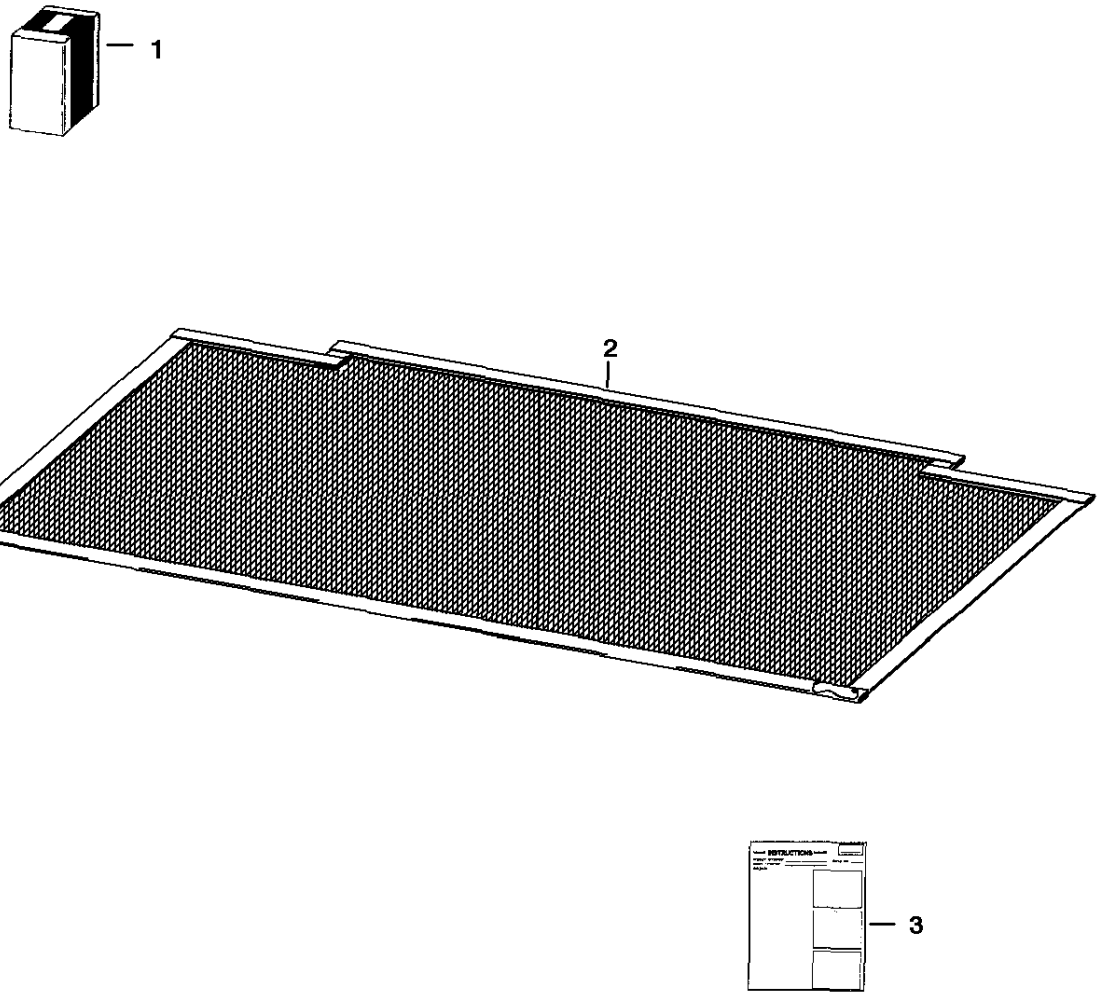

www.youfixthis.com

RADIATOR SCREEN KIT

Ref.N°	Part N°	Description	Remarks	Serial N°	Qty.
1	6706940	KIT	Ref. RADIATOR SCREEN KIT(2) & RADIATOR SCREEN KIT(3)		1
2	6706286	SCREEN			1
3	6722861	INSTRUCTIONS			1

www.youfixthis.com

REAR AUXILIARY

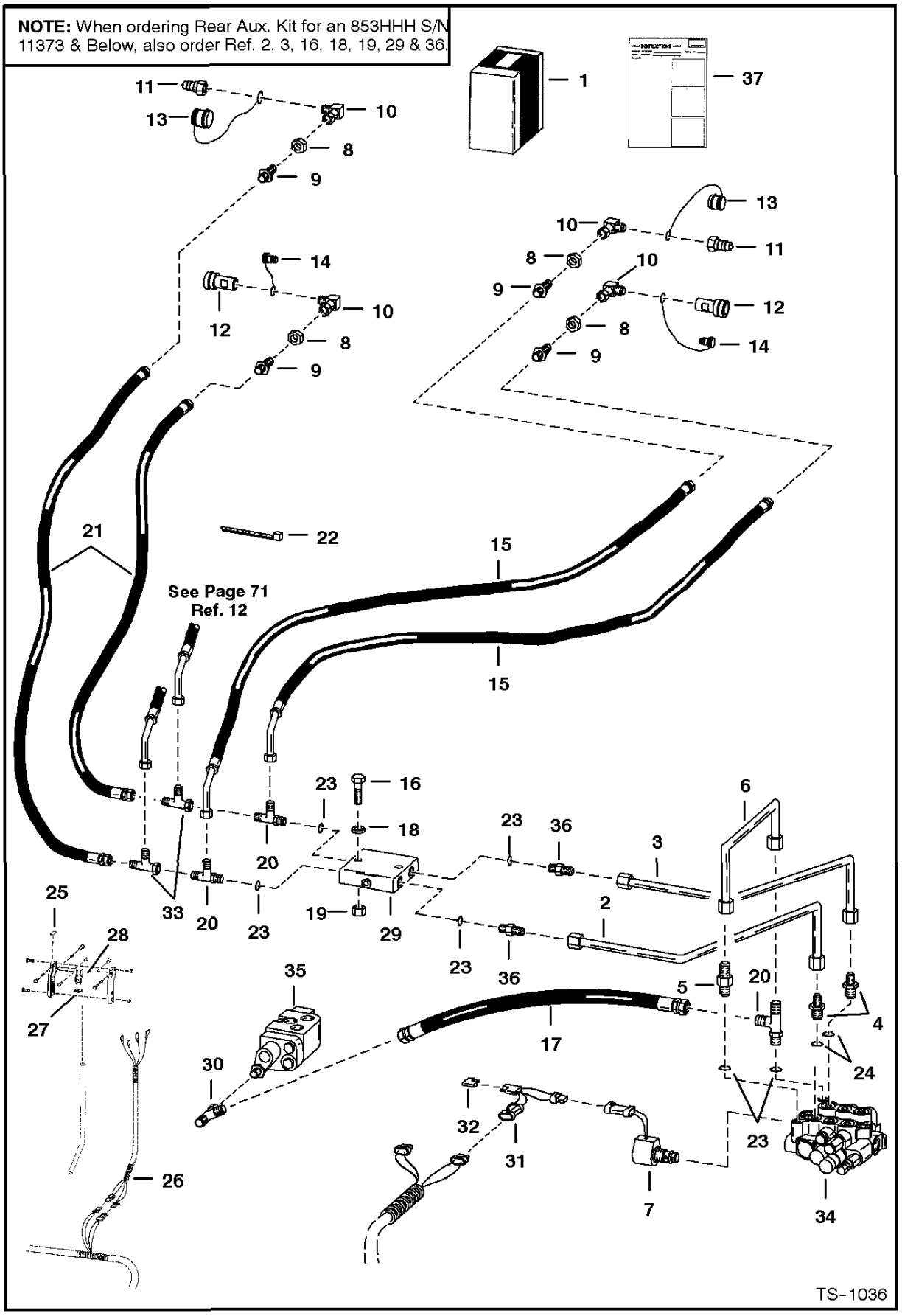

www.youfixthis.com

REAR AUXILIARY

Ref.N°	Part N°	Description	Remarks	Serial N°	Qty.
1	6703372	KIT	Ref. REAR AUXILIARY(2) - REAR AUXILIARY(30) & REAR AUXILIARY(36) - Was SALES	5084 11353 & Bel	1
1	6704134	KIT	Ref. REAR AUXILIARY(2) - REAR AUXILIARY(24), REAR AUXILIARY(29) - REAR AUXILIARY(32) & REAR AUXILIARY(36) - Was SALES	5084 11354 & Abv	1
1	SALES	KIT	For 853HHH - Ref. REAR AUXILIARY(2), REAR AUXILIARY(3), REAR AUXILIARY(5), REAR AUXILIARY(8)-REAR AUXILIARY(16), REAR AUXILIARY	5097 11373 & Bel	1
1	SALES	KIT	For 853HHH - Ref. REAR AUXILIARY(5), REAR AUXILIARY(8)-REAR AUXILIARY(15), REAR AUXILIARY(20)-REAR AUXILIARY(22), REAR AUXILIA	5097 11374 & Abv	1
2	6702511	TUBE	Was 6700316 [A]	5097 11373 & Bel	1
3	6702512	TUBE	Was 6700317 [A]	5097 11373 & Bel	1
4	731795	ADAPTER	W/Ref. REAR AUXILIARY(24)		2
5	15K-5	ADAPTER	W/Ref. REAR AUXILIARY(23)		1
6	6702507	TUBE	Was 6700427 [A]		1
7	6653395	VALVE	Was 6553395 [A]		2
7	6665758	STEM	W/O-Ring		2
7	79K-7	O-RING			2
7	6665759	COIL			2
7	6586459	SEAL KIT	Was 6534559 [A]		x
8	86F-5	NUT			4
9	45K-5	ADAPTER			4
10	1631632	ELBOW			4
10	6703827	ELBOW	Use W/connect under pressure couplers		4
11	2341398	COUPLER	Male		2
11	NAP	COUPLER	Male -connect under pressure - Was 6657037 [A]		2
12	2342026	COUPLER	Female		2
12	NAP	COUPLER	Female -connect under pressure - Was 6657038 [A]		2
13	1513549	CAP			2
14	1519324	PLUG			2
15	6700281	HOSE			2
16	17C-560	BOLT		5097 11373 & Bel	1
17	6617708	HOSE	Was 6701039 [A]		1
18	25E-15	WASHER		5097 11373 & Bel	1
19	85D-5	NUT			1
20	21K-5	TEE	W/Ref. REAR AUXILIARY(23)		3
21	6700282	HOSE			2
22	6610510	NYLON TIE	Was 6591255 [A]		2
23	79K-6	O-RING			x
24	79K-10	O-RING			x
25	6702636	PLATE	decal	5084 11353 & Bel	1
25	6703561	PLATE	decal - for HHH option only	5084 11353 & Bel	1
26	6576297	HARNESS		5084 11010 & Bel	1
26	6702633	HARNESS		5084 11011-11353	1
27	6572087	INSULATOR		5084 11353 & Bel	1
28	NAP	SWITCH	leaf - Was 6569451 [A]	5084 11353 & Bel	1
29	6630527	VALVE		5097 11373 & Bel	1
29	6660645	SEAL KIT		5097 11373 & Bel	1
30	13K-5	TEE			1
31	6703898	HARNESS		5097 11354 & Abv	2
32	6703899	DIODE		5097 11354 & Abv	2
33	13K-5	TEE	for High Horsepower option only		2
34		VALVE	Not in Kits - See Page HYDRAULIC CONTROL VALVE(1) & HIGH HORSEPOWER HYDRAULICS(1)		1
35		VALVE	aux. - Not in Kits - See Page FRONT AUXILIARY VALVE(1)		2
36	15K-5	ADAPTER	W/Ref. REAR AUXILIARY(23)	5097 11373 & Bel	2

www.youfixthis.com

REAR AUXILIARY

Ref.N°	Part N°	Description	Remarks	Serial N°	Qty.
37	6720341	INSTRUCTIONS		5084 11353 & Bel	1
37	6720952	INSTRUCTIONS		5084 11354 & Abv	1

www.youfixthis.com

REAR AUXILIARY

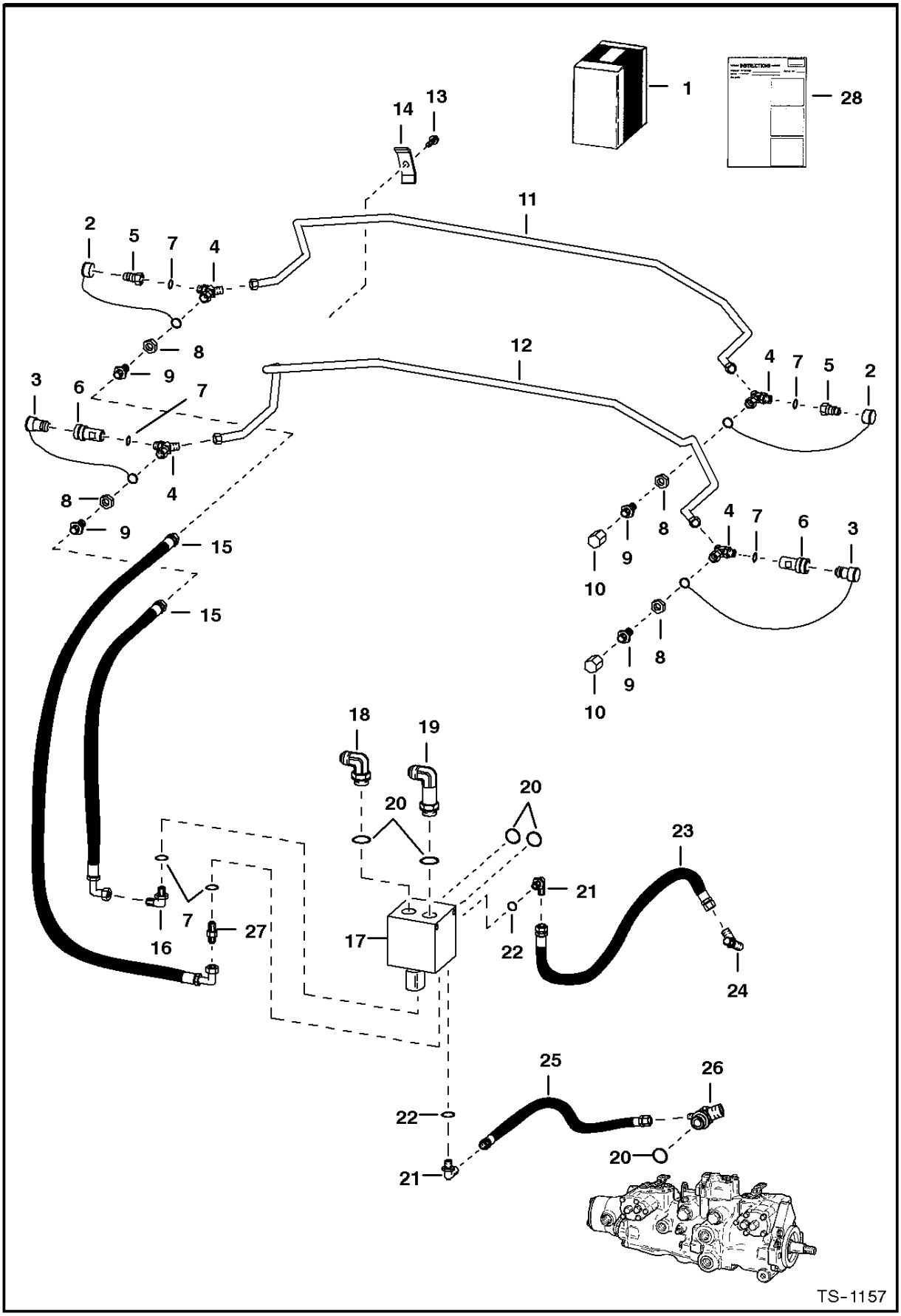

www.youfixthis.com

REAR AUXILIARY

Ref.N°	Part N°	Description	Remarks	Serial N°	Qty.
1	SALES	KIT	Ref. REAR AUXILIARY(2)-REAR AUXILIARY(26) & REAR AUXILIARY(28)		1
2	1513549	CAP			2
3	1519324	PLUG			2
4	6706220	TEE	W/Ref. REAR AUXILIARY(7)		4
5	6648969	QUICK COUPLER	male		2
6	6648967	QUICK COUPLER	female		2
6	6655795	SEAL KIT			2
7	79K-6	O-RING			x
8	61E-4	NUT			4
9	51E-404	ADAPTER			4
10	63E-4	PLUG			2
11	6706167	TUBE			1
12	6706168	TUBE			1
13	84G-3716	BOLT			1
14	6500989	CLAMP			1
15	6706221	HOSE			2
16	17K-5	ELBOW	W/Ref. REAR AUXILIARY(7)		1
17	6649686	VALVE	diverter - See Page REAR AUXILIARY VALVE(1)		1
18	17K-8	ELBOW	W/Ref. REAR AUXILIARY(20)		1
19	6519187	ELBOW	W/Ref. REAR AUXILIARY(20)		1
20	79K-12	O-RING			x
21	17K-3	ELBOW	W/Ref. REAR AUXILIARY(22)		2
22	79K-4	O-RING			x
23	6702276	HOSE			1
24	21K-5	TEE	W/Ref. REAR AUXILIARY(7)		1
25	6706228	HOSE			1
26	6706144	CONNECTOR	W/Ref. REAR AUXILIARY(20)		1
27	15K-5	ADAPTER	Part of Base Equipment		1
28	6722589	INSTRUCTIONS			1

www.youfixthis.com

REAR AUXILIARY VALVE

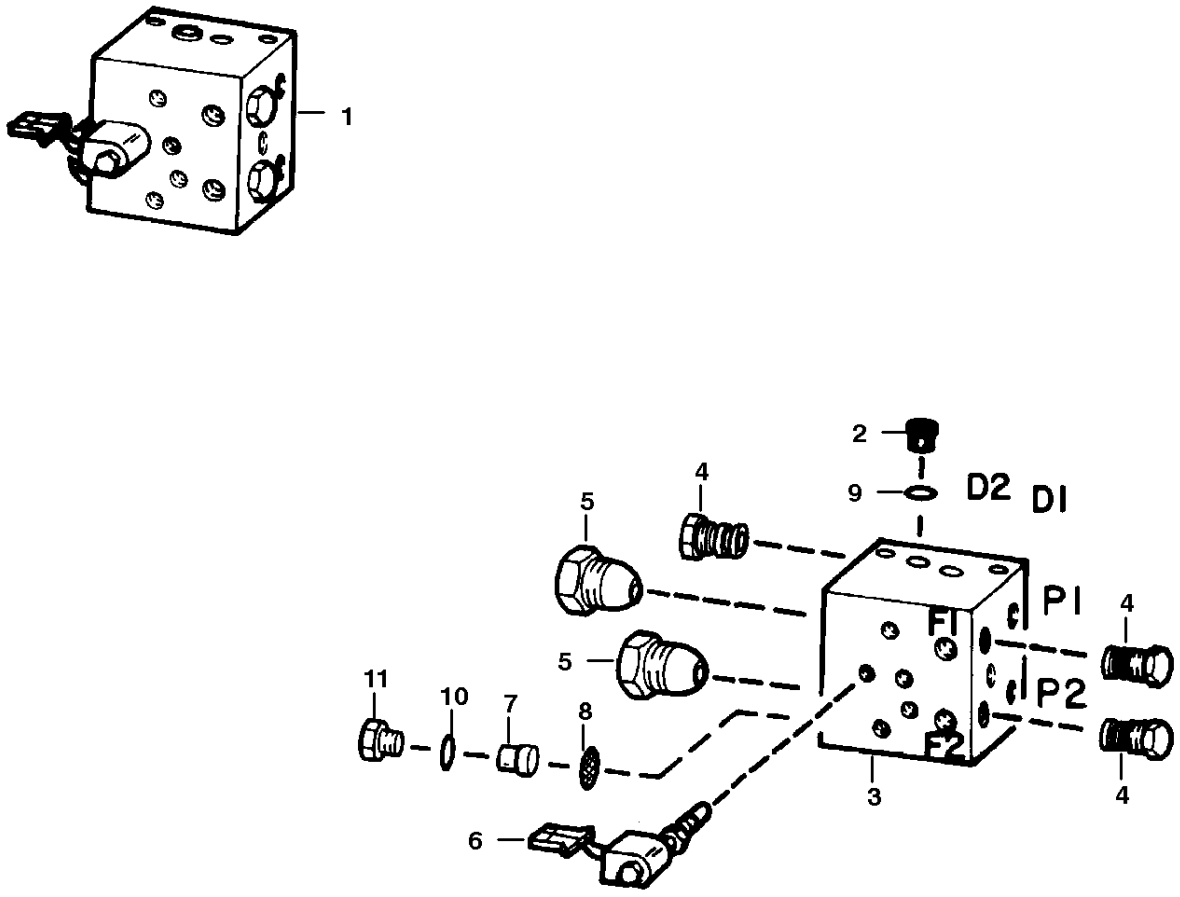

www.youfixthis.com

REAR AUXILIARY VALVE

Ref.N°	Part N°	Description	Remarks	Serial N°	Qty.
1	6649686	VALVE	diverter		1
2	6653490	PLUG	W/Ref. REAR AUXILIARY VALVE(9)		11
3	NSS	BODY			1
4	6664212	CHECK VALVE			3
4	6653487	SEAL KIT			2
5	6653484	VALVE			2
5	6653485	SEAL KIT			2
6	6653488	VALVE	solenoid - W/Connector		1
6	6653489	COIL			1
6	6657409	SEAL KIT			1
7	6657720	RETAINER			1
8	6657721	DISC	filtered		1
9	79K-2	O-RING			11
10	79K-5	O-RING			1
11	24K-4	PLUG			1

www.youfixthis.com

REAR DOOR LOCK

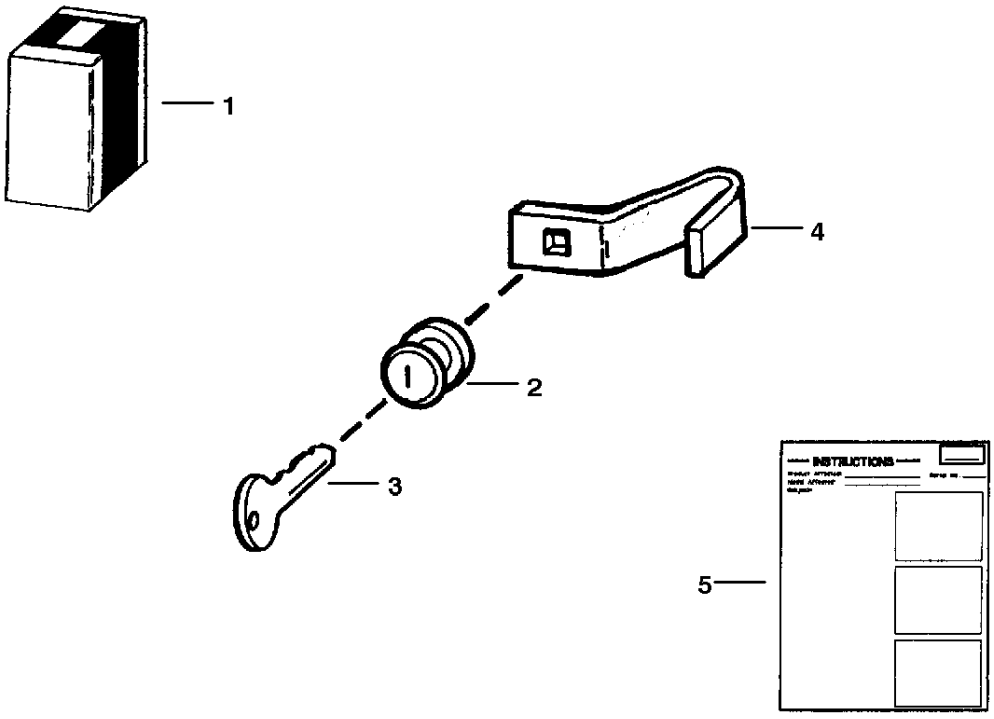

B-12953

www.youfixthis.com

REAR DOOR LOCK

Ref.N°	Part N°	Description	Remarks	Serial N°	Qty.
1	6578802	KIT	lock - Ref. REAR DOOR LOCK(2)-REAR DOOR LOCK(5)		1
2	6649555	LOCK			1
3	6659327	KEY			1
4	6700108	LATCH			1
5	6570762	INSTRUCTIONS			1

www.youfixthis.com

SEAT BAR KIT

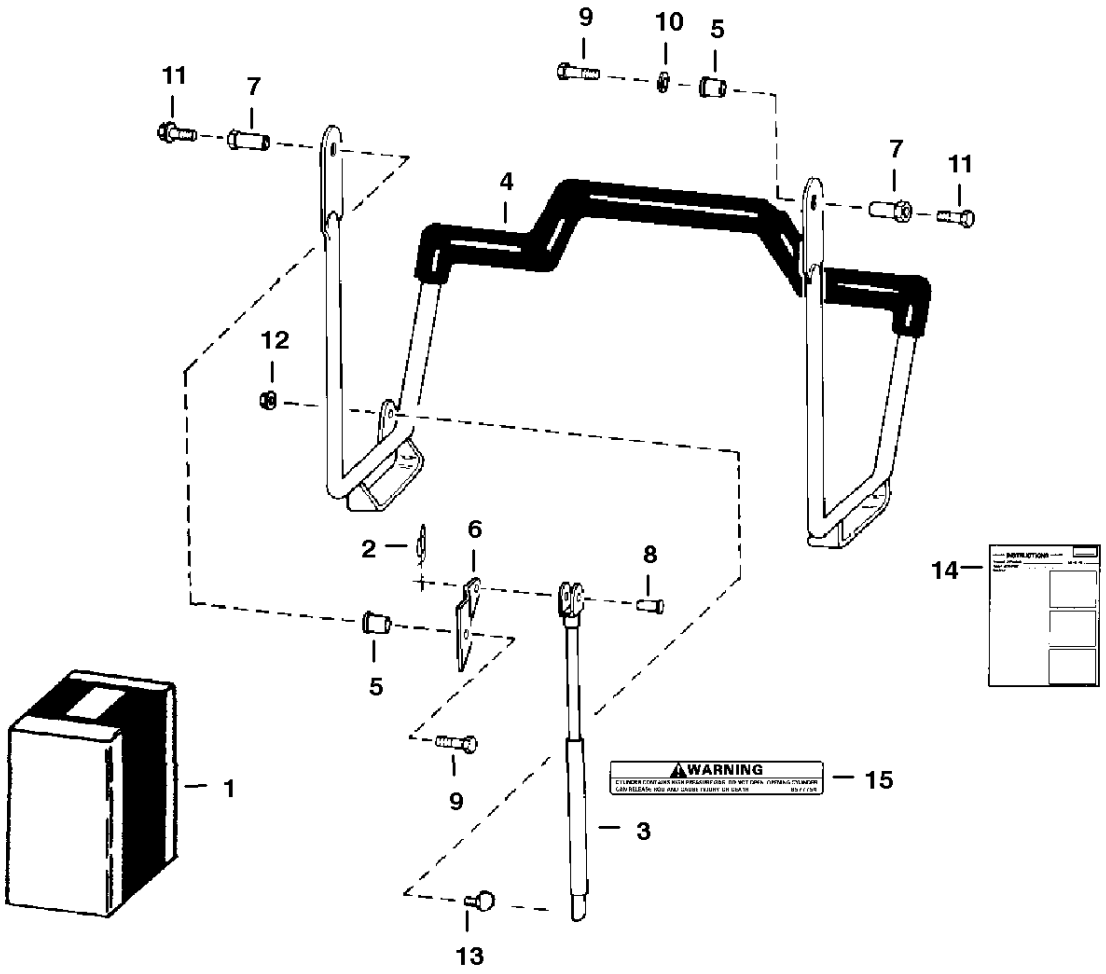

www.youfixthis.com

SEAT BAR KIT

Ref.N°	Part N°	Description	Remarks	Serial N°	Qty.
1	NAP	KIT	seat bar - Ref. SEAT BAR KIT(2)-SEAT BAR KIT(14) - Was 6706796 [A]		1
2	6631418	PIN	ring		1
3	6664207	GAS SPRING			1
4	6716778	SEAT BAR	Was 6706358 [A]		1
5	6706387	BUSHING			2
6	6706388	BRACKET			1
7	6706389	BUSHING			2
8	4F-5062	PIN			1
9	17C-612	BOLT			2
10	25E-21	WASHER			1
11	35C-608	BOLT			2
12	83D-5	NUT			1
13	6649244	BALL STUD			1
14	6722836	INSTRUCTIONS			1
15	6577754	DECAL			1

www.youfixthis.com

* SEAT BAR KIT
(Forward Position - Compression Spring)

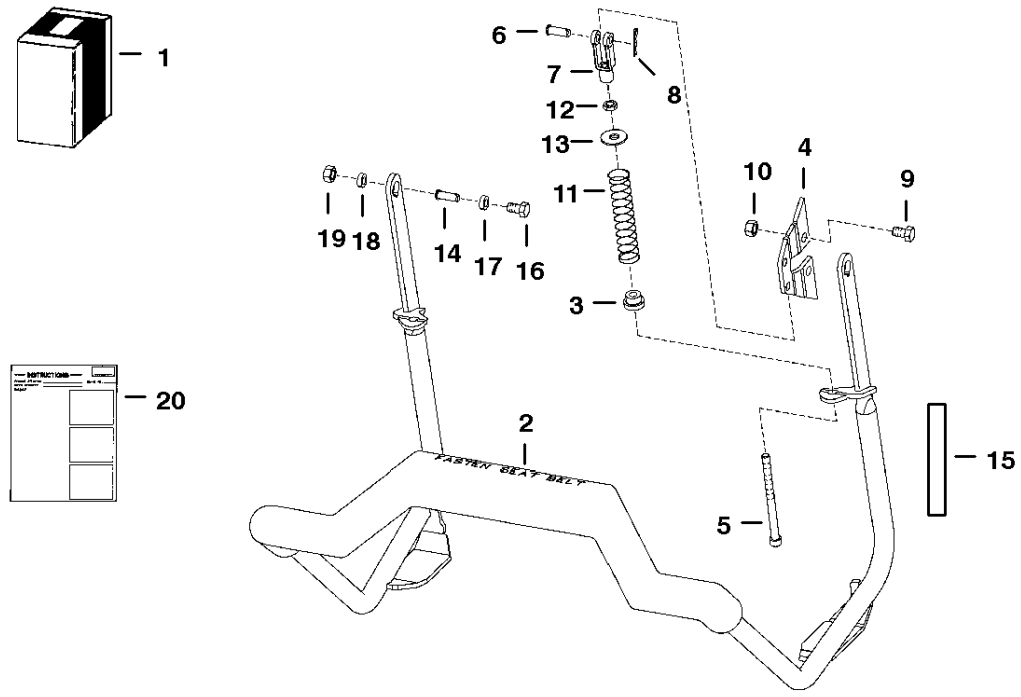

MS-1696

www.youfixthis.com

* SEAT BAR KIT

Ref.N°	Part N°	Description	Remarks	Serial N°	Qty.
1	6714285	KIT	Ref. * SEAT BAR KIT(2) - * SEAT BAR KIT(16) & * SEAT BAR KIT(20)Was 6713853 [A]		1
2	6716779	SEAT BAR	W/Ref. * SEAT BAR KIT(15) - Was 6714282 [A]		1
3		BUSHING			2
4		MOUNT			2
5		BOLT			2
6		PIN	clevis		2
7	6713589	CLEVIS			2
8	6631418	PIN			2
9		BOLT			2
10		NUT			2
11		SPRING			2
12		NUT	jam		2
13		WASHER			2
14	6664882	BUSHING			2
15	6714629	DECAL			1
16	17C-612	BOLT			2
17	25E-17	WASHER			2
18	6706962	BUSHING			1
19	35C-608	BOLT			2
20	6900096	INSTRUCTIONS			1

www.youfixthis.com

* SEAT BAR KIT
(Compression Spring)

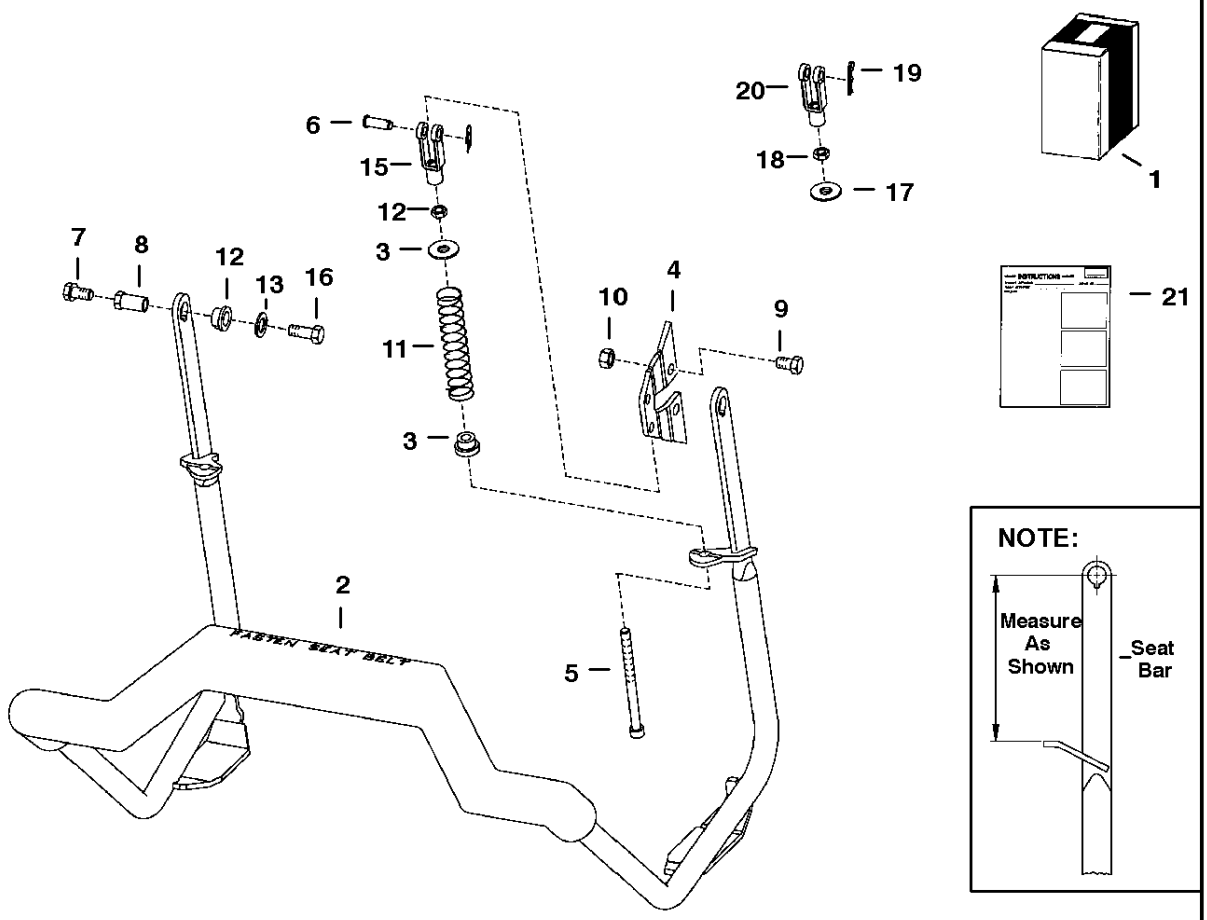

TS-1418

www.youfixthis.com

* SEAT BAR KIT

Ref.N°	Part N°	Description	Remarks	Serial N°	Qty.
1	6713853	KIT	Ref. * SEAT BAR KIT(2) - * SEAT BAR KIT(16) & * SEAT BAR KIT(21)		1
2	NAP	SEAT BAR	Order 6713609inD1}H Seat Bar & (2) ea. of Ref. * SEAT BAR KIT(3), * SEAT BAR KIT(5), * SEAT BAR KIT(14) & * SEAT BAR KIT(15) -		1
2	6716777	SEAT BAR	6.13" (155,7mm) center of top hole to weld on tab - SEE NOTE - Was 6713609 [A]		1
3	6710659	BUSHING	Used W/NAP 6710661 Seat Bar		2
3	6710659	BUSHING	Used W/6713609 Seat Bar		4
4	6710660	MOUNT			2
5	6713887	BOLT			2
6	4F-6106	PIN	clevis		2
7	35C-608	BOLT			2
8	6706962	BUSHING			1
9	17C-712	BOLT			2
10	91D-7	NUT			2
11	6701535	SPRING			2
12	6664882	BUSHING			2
13	25E-17	WASHER			2
14	6631418	PIN	Used W/6713609 Seat Bar		2
15	6713589	CLEVIS	2.09'(53,1 mm) slot length - Used W/6713609 Seat Bar		2
16	17C-612	BOLT			2
17	6571991	WASHER	Used W/NAP 6710661 Seat Bar - Not in Kit		2
18	8D-6	NUT	jam -Used W/NAP 6710661 Seat Bar - Not in Kit		2
19	1306637	PIN	cotter -Used W/NAP 6710661 Seat Bar - Not in Kit		2
20	2J-6208	CLEVIS	2.85'(72,4 mm) slot length - Used W/NAP 6710661 Seat Bar		2
21	6900096	INSTRUCTIONS			1

www.youfixthis.com

SOUND OPTION
(90 Decibel)

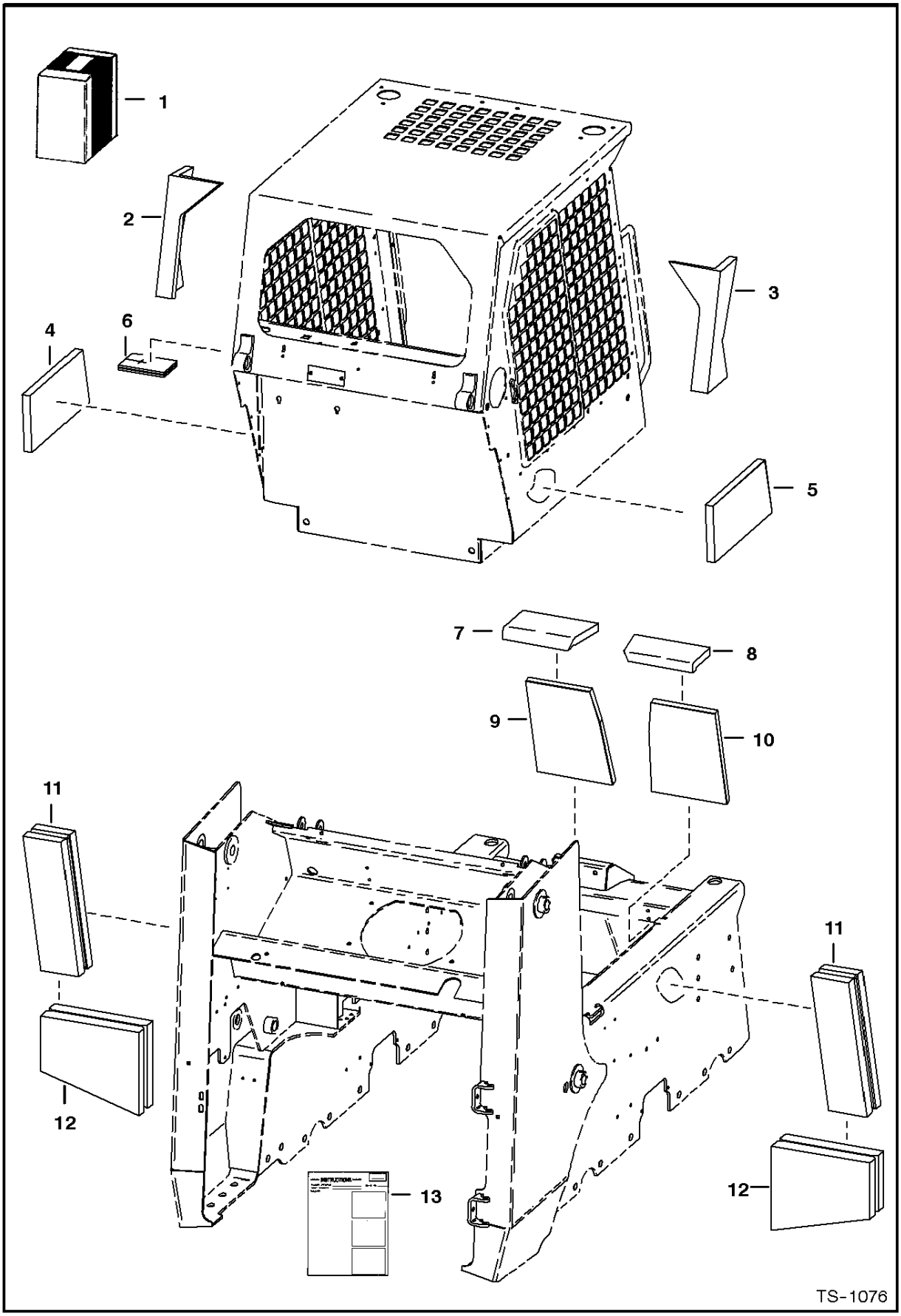

www.youfixthis.com

SOUND OPTION

Ref.N°	Part N°	Description	Remarks	Serial N°	Qty.
1	6704126	SOUND KIT	Ref. SOUND OPTION(2) - SOUND OPTION(13)		1
2	6703449	INSULATION	cab back		1
3	6703450	INSULATION	cab back		1
4	6703451	INSULATION	cab back		1
5	6703452	INSULATION	cab back		1
6	6703455	INSULATION	cab back		1
7	6703963	INSULATION	crossmember		1
8	6703964	INSULATION	crossmember		1
9	6703965	INSULATION	crossmember		1
10	6703969	INSULATION	crossmember		2
11	6703967	INSULATION	fender		2
12	6703968	INSULATION	transmission		2
13	6720961	INSTRUCTIONS			1

www.youfixthis.com

STROBE LIGHT
(Amber - 2414 ALW)

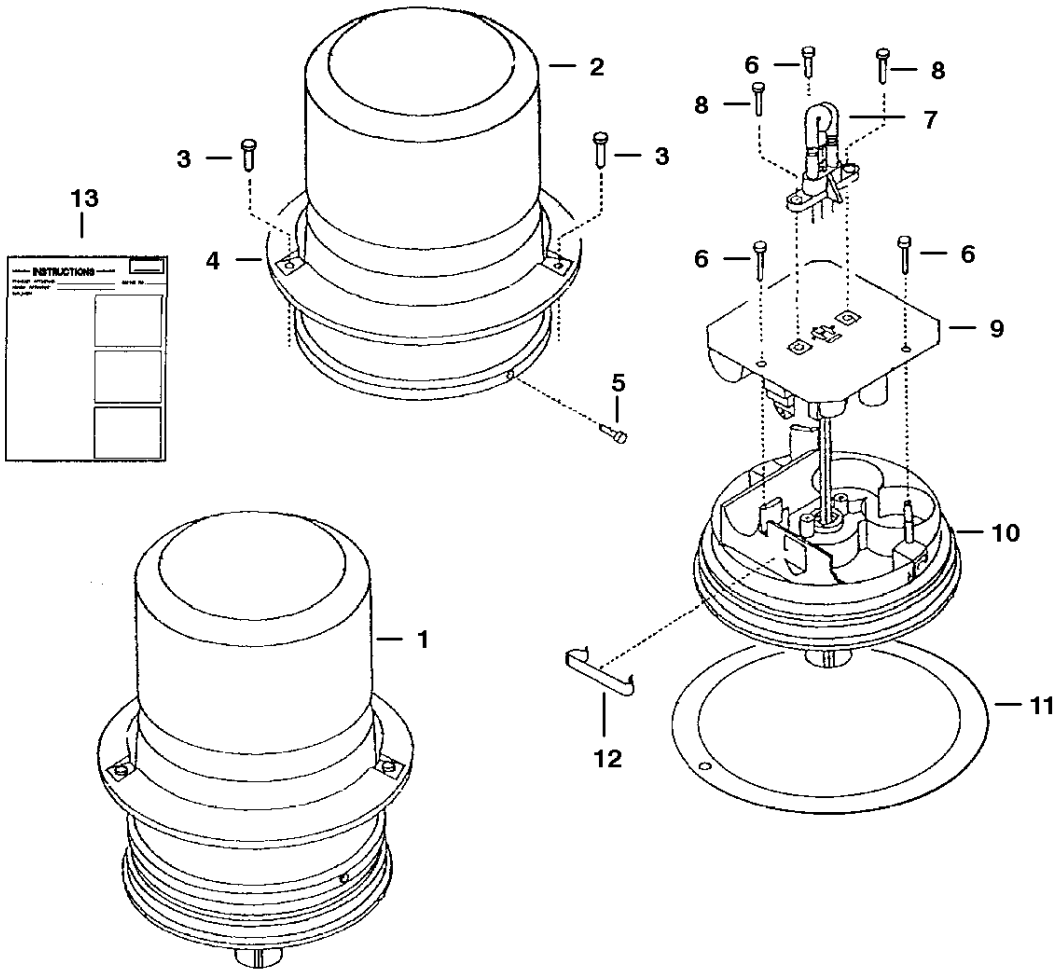

B-13592

www.youfixthis.com

STROBE LIGHT

Ref.N°	Part N°	Description	Remarks	Serial N°	Qty.
1	NAP	STROBE LIGHT	Strobe light - Ref. STROBE LIGHT(2)-STROBE LIGHT(13) - Order 6587526 - See Page STROBE LIGHT(1) - Was 6659815 [A]		1
2	NSS	LENS	Amber - Was 6659997 [A]		1
2	NSS	LENS	Blue - Not in kit - Was 6660247 [A]		1
3	NSS	SCREW			3
4	NSS	COLLAR	Mounting - Was 6659974 [A]		1
5	NSS	SCREW			1
6	NSS	SCREW			3
7	NSS	FLASH TUBE	Was 6659972 [A]		1
8	NSS	SCREW			2
9	NSS	POWER SUPPLY			1
10	NSS	BASE			1
11	NSS	GASKET	Was 6659973 [A]		1
12	NSS	RETAINER			1
13	6720856	INSTRUCTIONS			1

www.youfixthis.com

STROBE LIGHT
(Amber - 3414 ALW)

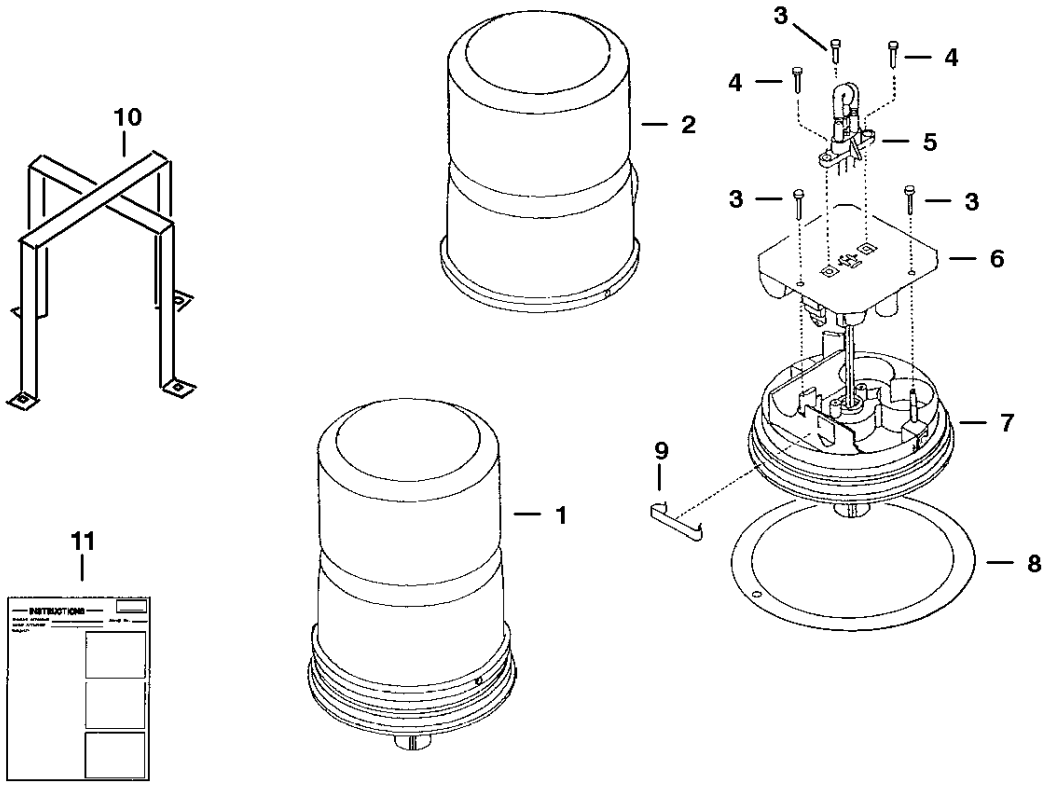

B-20246

www.youfixthis.com

STROBE LIGHT

Ref.N°	Part N°	Description	Remarks	Serial N°	Qty.
1	6587526	KIT	Strobe light - Ref. STROBE LIGHT(2) -STROBE LIGHT(9) & STROBE LIGHT(11)		1
2	6665021	LENS	Amber - Screw On		1
2	6665025	LENS	Blue - Not in kit - Screw On		1
3	NSS	SCREW			3
4	NSS	SCREW			1
5	6665022	FLASH TUBE			1
6	NSS	POWER SUPPLY			1
7	NSS	BASE			1
8	6665023	GASKET			1
9	NSS	RETAINER			1
10	6665024	BRANCH GUARD	not in kit		1
11	6720856	INSTRUCTIONS			1

www.youfixthis.com

* STROBE LIGHT

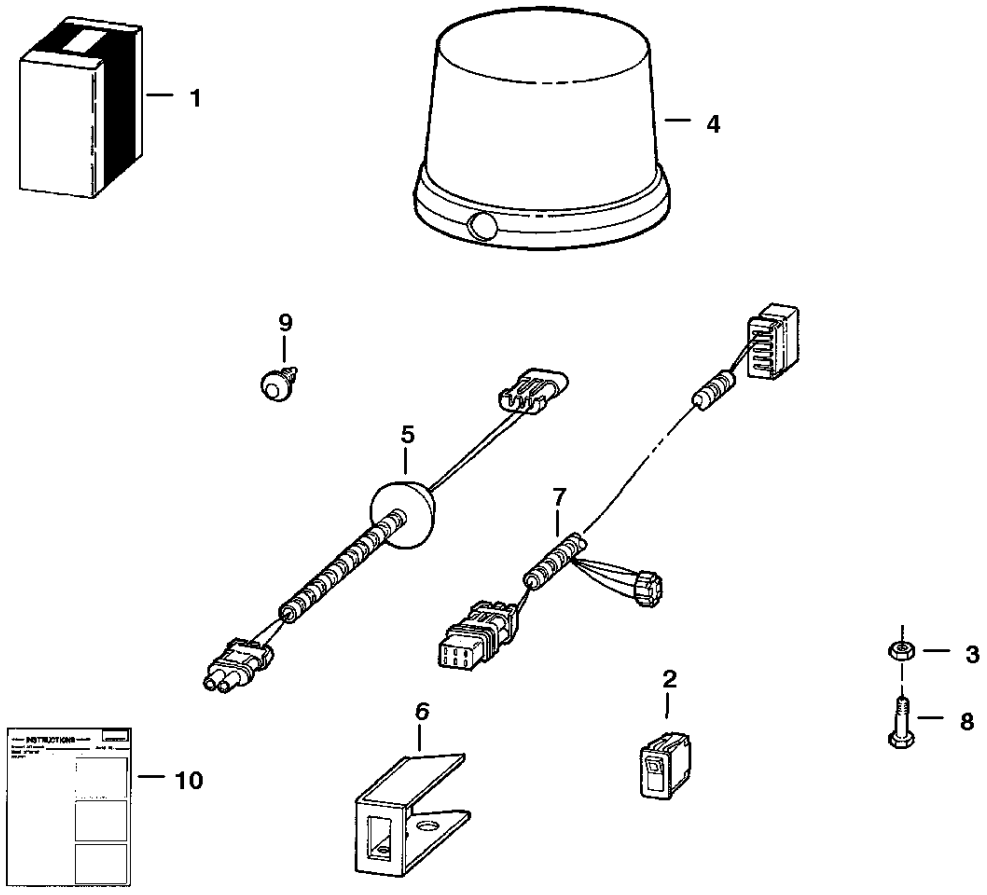

www.youfixthis.com

* STROBE LIGHT

Ref.N°	Part N°	Description	Remarks	Serial N°	Qty.
1	6712696	STROBE KIT	Strobe light - Ref. * STROBE LIGHT(2)-* STROBE LIGHT(10)		1
2	6668816	SWITCH			1
3	6660988	RETAINER			2
4	6669191	LIGHT	Strobe - magnetic base		1
4	6665022	FLASH TUBE	bulb		1
5	6708318	HARNESS	beacon		1
6	6711708	MOUNT	switch		1
7	6712258	HARNESS	strobe		1
8	35C-412	BOLT			2
9	6669308	RETAINER			2
10	6724071	INSTRUCTIONS			1

www.youfixthis.com

SUSPENSION SEAT
(Milsco)

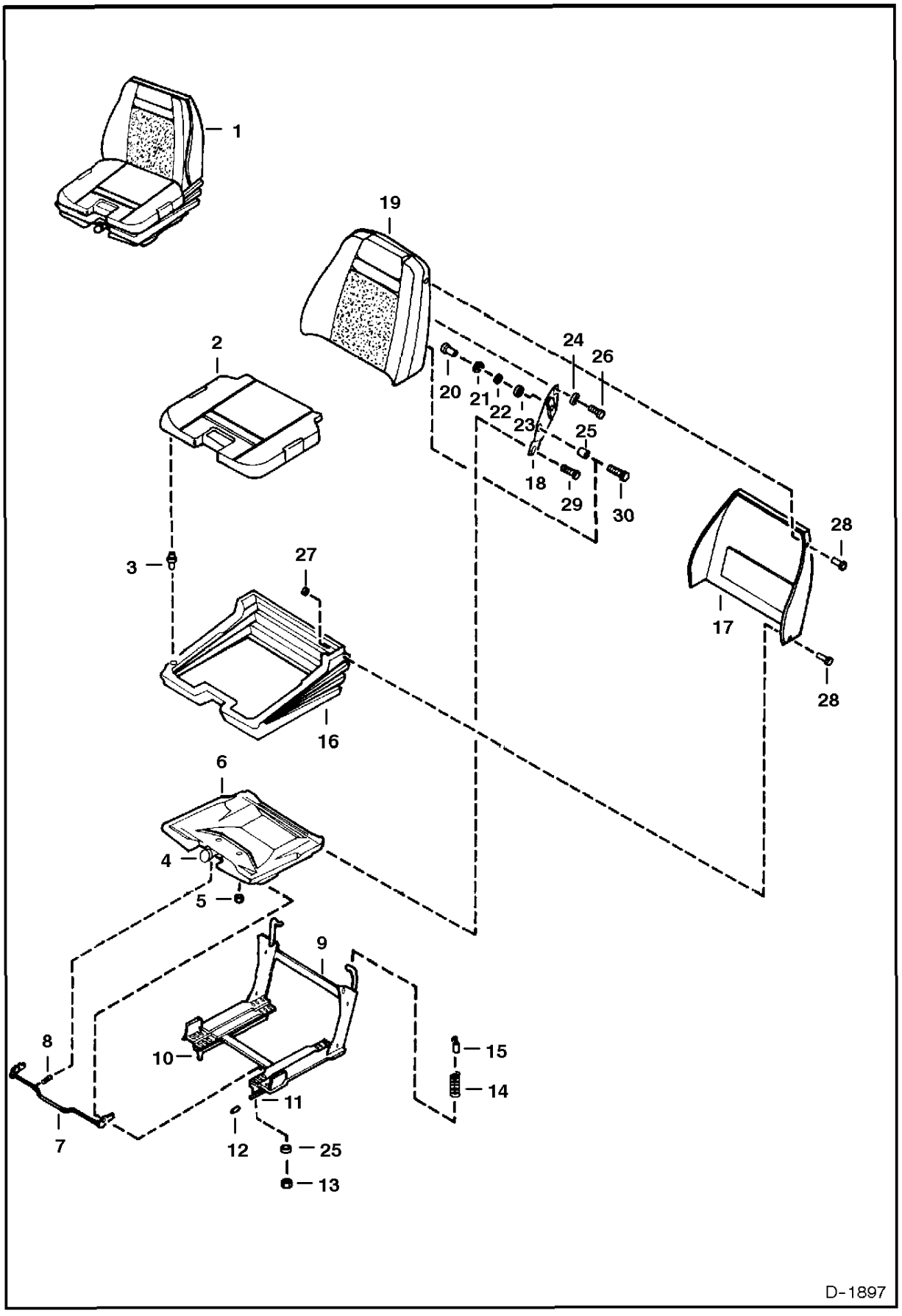

www.youfixthis.com

SUSPENSION SEAT

Ref.N°	Part N°	Description	Remarks	Serial N°	Qty.
1	6647432	SEAT	Ref. SUSPENSION SEAT(2) - SUSPENSION SEAT(28)		1
2	6650226	SEAT CUSHION	W/Ref. SUSPENSION SEAT(3)		1
3	6650231	CLIP			x
4	6650219	KNOB KIT	W/Nut, Bushing		1
5	6650241	PUSH NUT			2
6	6650230	SEAT PAN	W/Mounting Hardware		1
7	6650221	LATCH TILT	W/Ref. SUSPENSION SEAT(8) - W/Mounting Hardwar e		1
8	6650229	SPRING			1
9	NSS	FRAME			1
10	6650228	TRACK	W/Mounting Hardware		1
11	6599779	ADJUSTER	W/Mounting Hardware - Was 6650227 [A]		1
12	6650242	TIP			1
13	61D-5	NUT			4
14	6650222	SPRING			1
15	6650223	CABLE			1
16	6650243	BOOT			1
17	6650220	SHROUD	W/Mounting Hardware		1
18	6650224	SUPPORT	R.H. & L.H. Backrest		1
19	6650225	BACK CUSHION	W/Mounting Hardware		1
20	6650244	NUT			2
21	6650245	WASHER			2
22	6650246	WASHER			2
23	6650247	WASHER			2
24	6650248	SPACER			2
25	6650249	SPACER			2
26	17C-510	BOLT			4
27	6650250	WASHER			5
28	6650251	CLIP			7
29	6668717	SCREW	shoulder		4
30	31C-510	BOLT			2

www.youfixthis.com

*SUSPENSION SEAT
(Michigan)

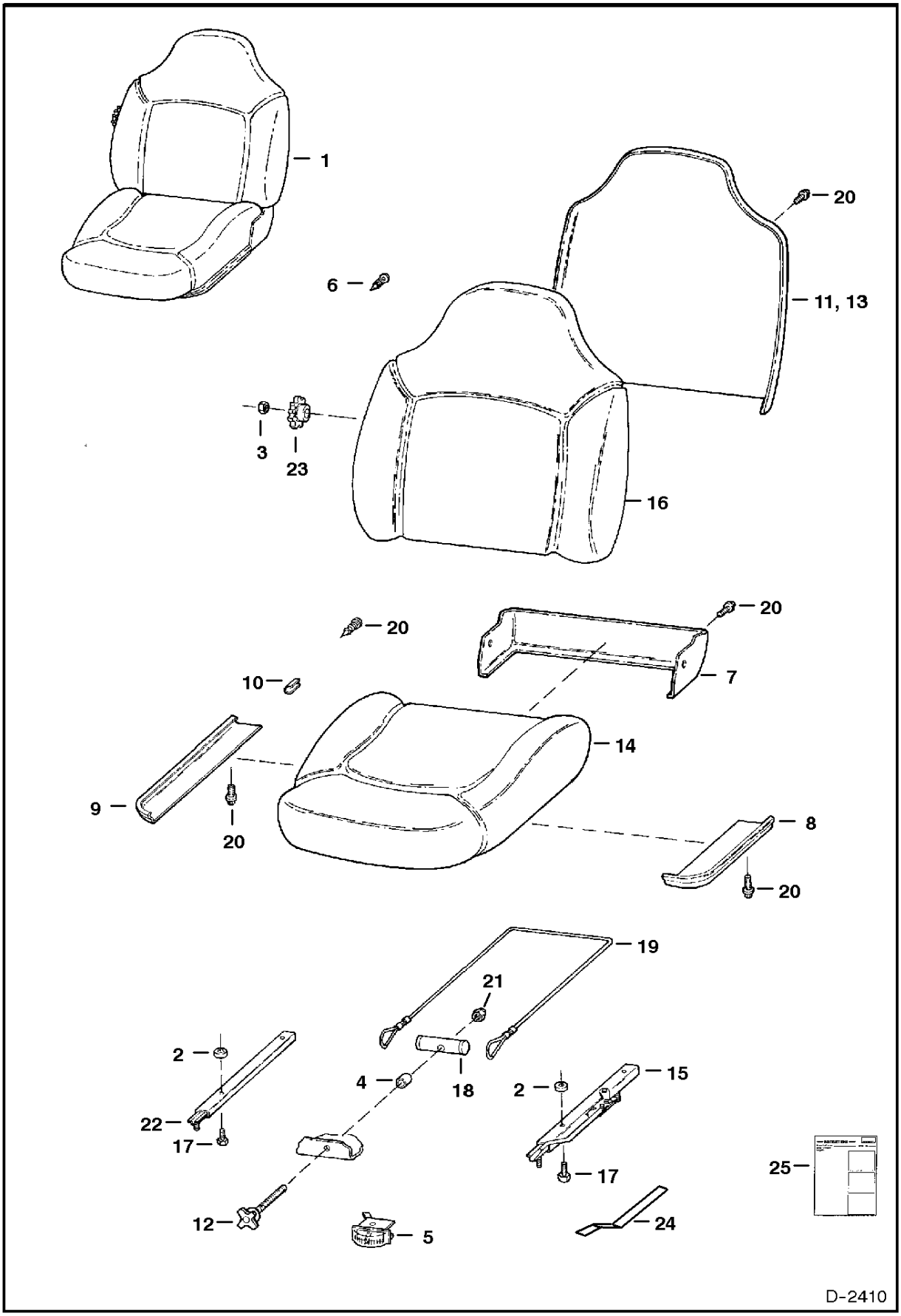

www.youfixthis.com

*

Ref.N°	Part N°	Description	Remarks	Serial N°	Qty.
1	6670113	SEAT	Ref. * (2) - * (23) - Also Order Ref. * (24) & * (25)		1
2	6672715	SPACER			4
3	6672738	NUT			1
4	6672717	SPACER			1
5	6672718	INDICATOR			1
6	6672719	CLIP			7
7	6672720	COVER			1
8	6672721	FENDER	L.H.		1
9	6672722	FENDER	R.H.		1
10	6672723	CLIP			2
11	6672724	PANEL			1
12	6672725	KNOB			1
13	6672726	FRAME			1
14	6672727	CUSHION	seat		1
15	NAP	ADJUSTER	L.H. W/10" (254mm) latch		1
15	6674013	TRACK	L.H. W/8" (203.2mm) latch		1
16	6672729	CUSHION	back		1
17	6672730	BOLT			4
18	6672731	BAR			1
19	6672732	CABLE			2
20	6672733	BOLT			14
21	6672734	NUT			1
22	6669089	TRACK	Was 6672735 [A]		1
23	6672737	KNOB			1
23	6672736	DECAL			1
24	6706966	SPRING	plate		1
25	6724017	INSTRUCTIONS			1

www.youfixthis.com

SUSPENSION SEAT
(Grammer)

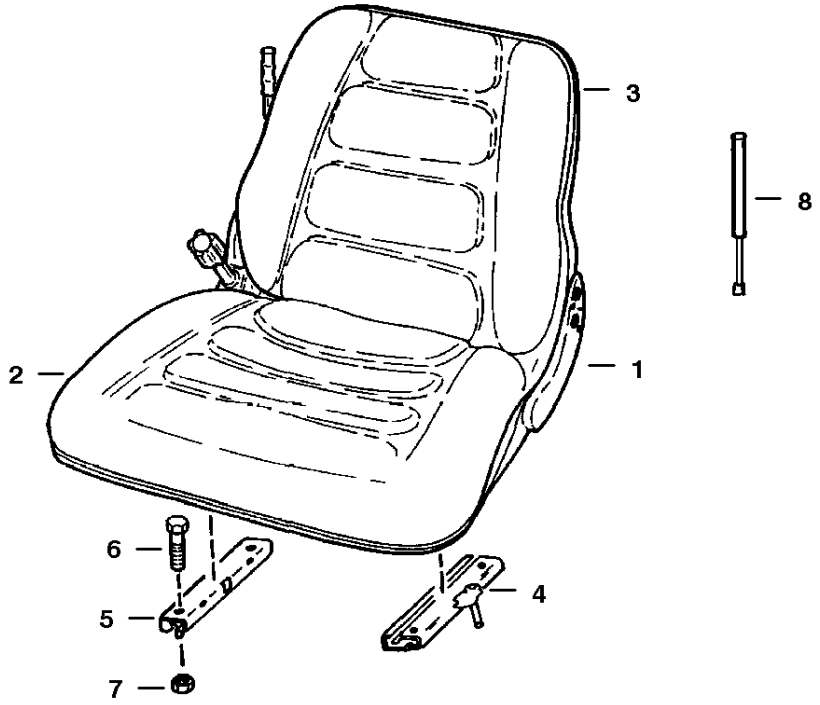

B-5562

www.youfixthis.com

SUSPENSION SEAT

Ref.N°	Part N°	Description	Remarks	Serial N°	Qty.
1	6632388	SEAT			1
2	3737010	CUSHION	seat		1
3	3737081	CUSHION	backrest		1
4	3737000	TRACK	W/Adjusting Handle		1
5	3737001	TRACK	W/O Adjusting Handle		1
6	17C-512	BOLT			4
7	61D-5	NUT			4
8	6660348	GAS SPRING			1

www.youfixthis.com

3" SEAT BELT

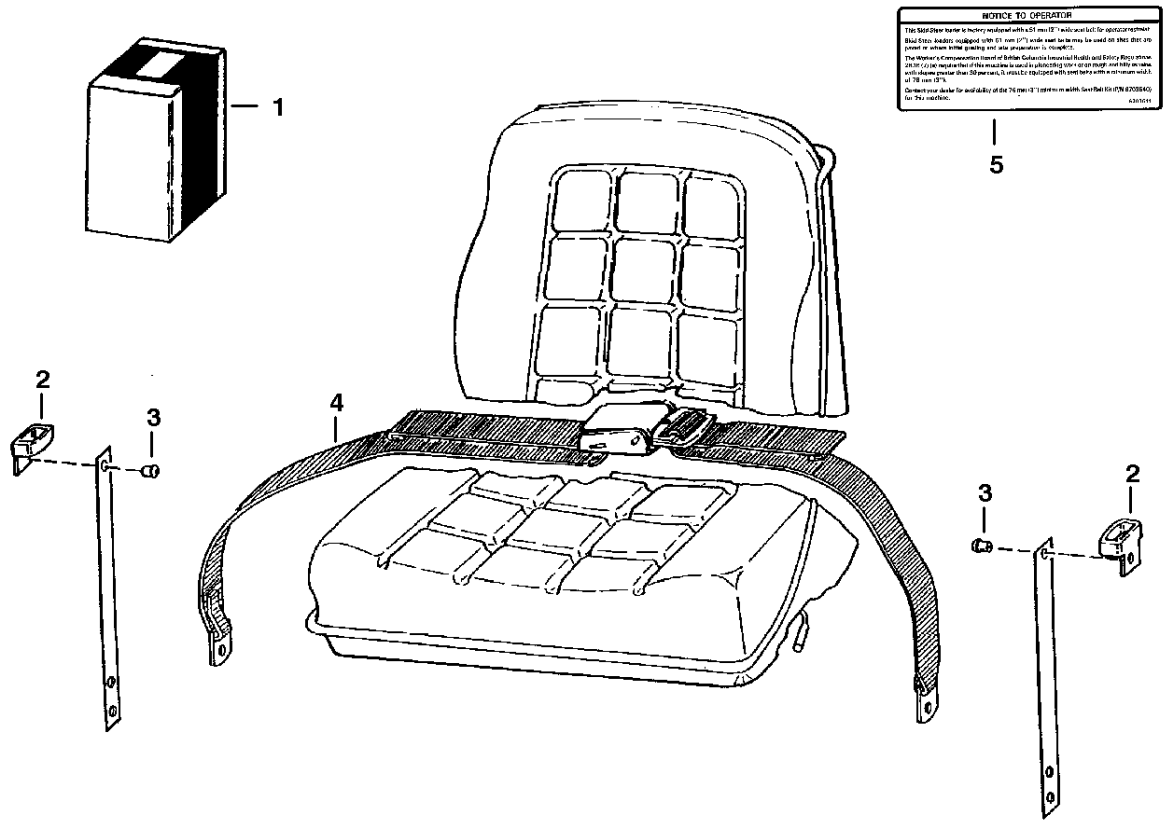

NOTE: Complies with British Columbia Industrial Health and Safety Regulations 26.16 (7) (a).

B-13601

www.youfixthis.com

3" SEAT BELT

Ref.N°	Part N°	Description	Remarks	Serial N°	Qty.
1	6703640	KIT	W/Ref. 3" SEAT BELT(2) - 3" SEAT BELT(5)		1
2	6703703	GUIDE			2
3	6630207	RIVET	Was 6512797 [A]		4
4	6659999	BELT			1
5	6703641	DECAL			x

www.youfixthis.com

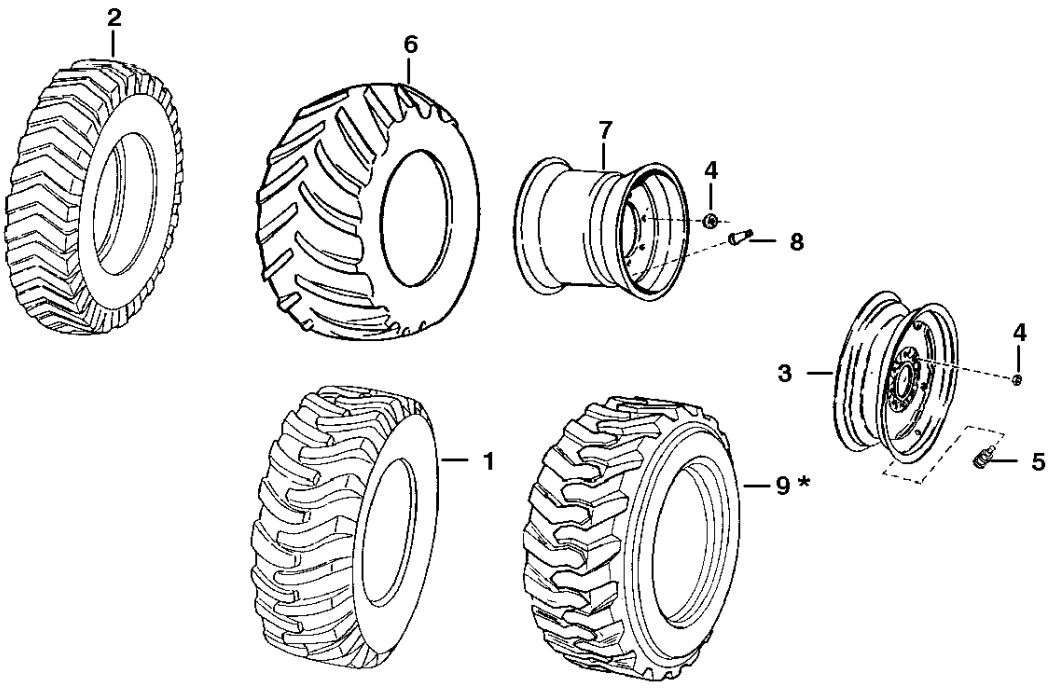

B-20248

www.youfixthis.com

TIRES & RIMS

Ref.N°	Part N°	Description	Remarks	Serial N°	Qty.
1	6519249	TIRE	12 x 16.5 6 Ply Rating - Goodyear		4
1	6670145	TIRE	12 x 16.5, 8 Ply Rating - Firestone - Was 6543468 [A]		4
1	6590832	TIRE	12 x 16.5, 8 Ply Rating - Goodyear		4
1	NAP	TIRE	12 x 16.5, 6 Ply Rating - General - Was 6631614 [A]		4
1	6662754	TIRE	12 x 16.5, 8 Ply - Trac 2 Dico		4
1	6667888	TIRE	Dico - Heavy Duty - 12x16.5, 10 Ply Rating		4
2	NAP	TIRE	8.25 x 15, 6 Ply Rating - Use Ref. TIRES & RIMS(1) - Was 6519248 [A]		4
2	6665725	TIRE	8.25 x 15, 6 Ply Rating - IDT (Industrial Deep Tread) Dico		4
3	6565240	RIM	Used W/Ref. TIRES & RIMS(1) - See BTI 197inD1}v		4
3	6562498	RIM	Used W/Ref. TIRES & RIMS(2) - See BTI 197		4
4	6564669	NUT	wheel - Was 6519169		32
5	1614765	VALVE	valve		4
6	6513971	TIRE	31 x 15.5, 8 Ply Terra Grip		4
6	6667892	TIRE	12 x 16.5, 8 Ply - Trac 2 Dico		4
6	6666668	TIRE	31 X 15.5, 8 Ply - Ultra Grip - Goodyear		4
7	6561095	RIM	Use W/Ref. TIRES & RIMS(6)		4
8	6591447	STEM	valve - Use W/Ref. TIRES & RIMS(7)		4
9	6661601	TIRE	12.00-16.5, 10 Ply Rating - Bobcat Brand		4

www.youfixthis.com

* TIRES & RIMS
(Solid Tire - Iatco)

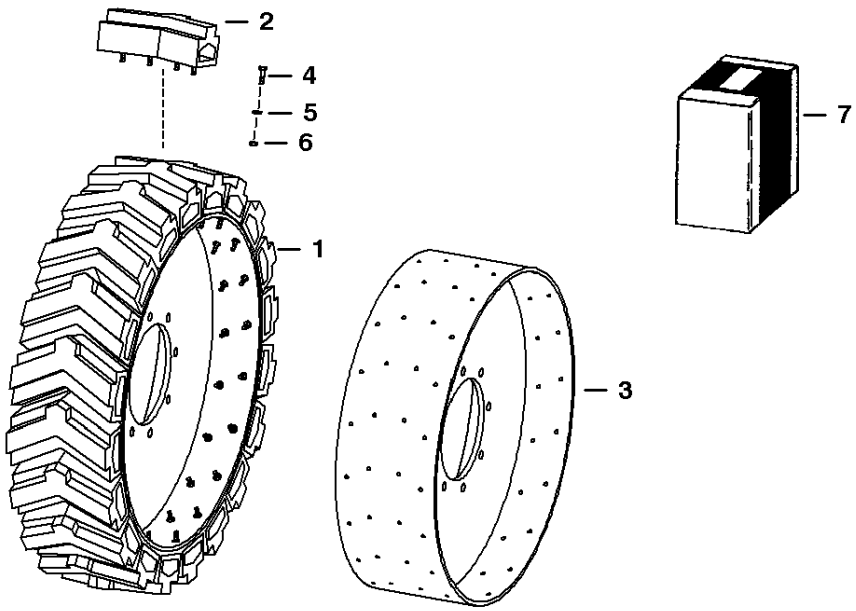

TS-1082

www.youfixthis.com

* TIRES & RIMS

Ref.N°	Part N°	Description	Remarks	Serial N°	Qty.
1	6664990	TIRE & RIM	Assy. - R.H. - 8.25 x 15		2
1	6664991	TIRE & RIM	Assy. - L.H. - 8.25 x 15		2
1	6669041	TIRE & RIM	Assy. - R.H. - 12 x 16.5 - Was 6660562 [A]		2
1	6669042	TIRE & RIM	Assy. - L.H. - 12 x 16.5 - Was 6660563 [A]		2
2	6664492	KIT	Box of ( ) segments - 8.25 x 15 W/Ref. * TIRES & RIMS(4) - * TIRES & RIMS(6) - ( ) segments/tire		x
2	6669043	KIT	Box of (11) segments - 12 x 16.5 W/Ref. * TIRES & RIMS(4) - * TIRES & RIMS(6) - (22) segments/tire - Was 6660957 [A]		x
3	NAP	RIM	R.H. - 8.25 x 15 - Order Ref. * TIRES & RIMS(1)		2
3	NAP	RIM	L.H. - 8.25 x 15 - Order Ref. * TIRES & RIMS(1)		2
3	NAP	RIM	R.H. - 12 x 16.5 - Order Ref. * TIRES & RIMS(1)		2
3	NAP	RIM	L.H. - 12 x 16.5 - Order Ref. * TIRES & RIMS(1)		2
4	1CM-830	BOLT			x
5	25E-15	WASHER			x
6	40DM-8	NUT			x
7	6707173	KIT	wheel - Set of (4) 8.25 x 15 Tire & Rim Assys. - Ref. * TIRES & RIMS(1) - (2) R.H. & (2) L.H.		1
8	6712828	KIT	wheel - Set of (4) 12 x 16.5 Tire & Rim Assys. - Ref. * TIRES & RIMS(1) - (2) R.H. & (2) L.H. - Was 6707062 [A]		1

www.youfixthis.com

TIRES & RIMS
(Solid Tire - Setco)

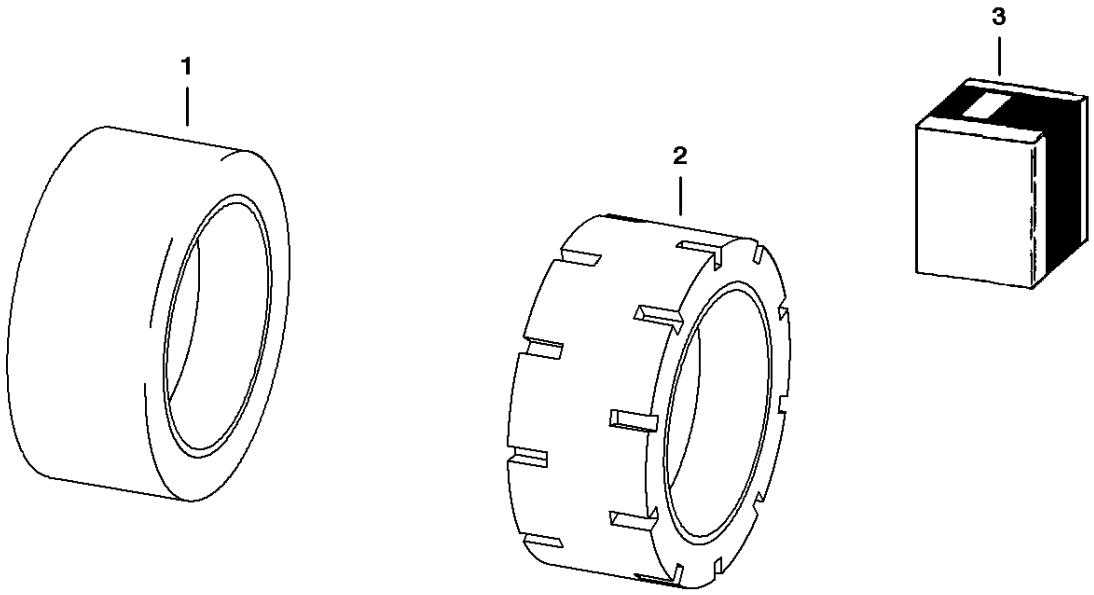

TS-1086

www.youfixthis.com

TIRES & RIMS

Ref.N°	Part N°	Description	Remarks	Serial N°	Qty.
1	6704169	TIRE & RIM	10 X 33 Slick with wire		4
2	6704170	TIRE & RIM	10 X 33 Staggered Gear Lug		4
3	6722151	TIRE & RIM	10 X 33 Slick with wire -Set of (4)		1
3	6722152	TIRE & RIM	10 X 33 Staggered Gear Lug - Set of (4)		1

www.youfixthis.com

TOOL BOX

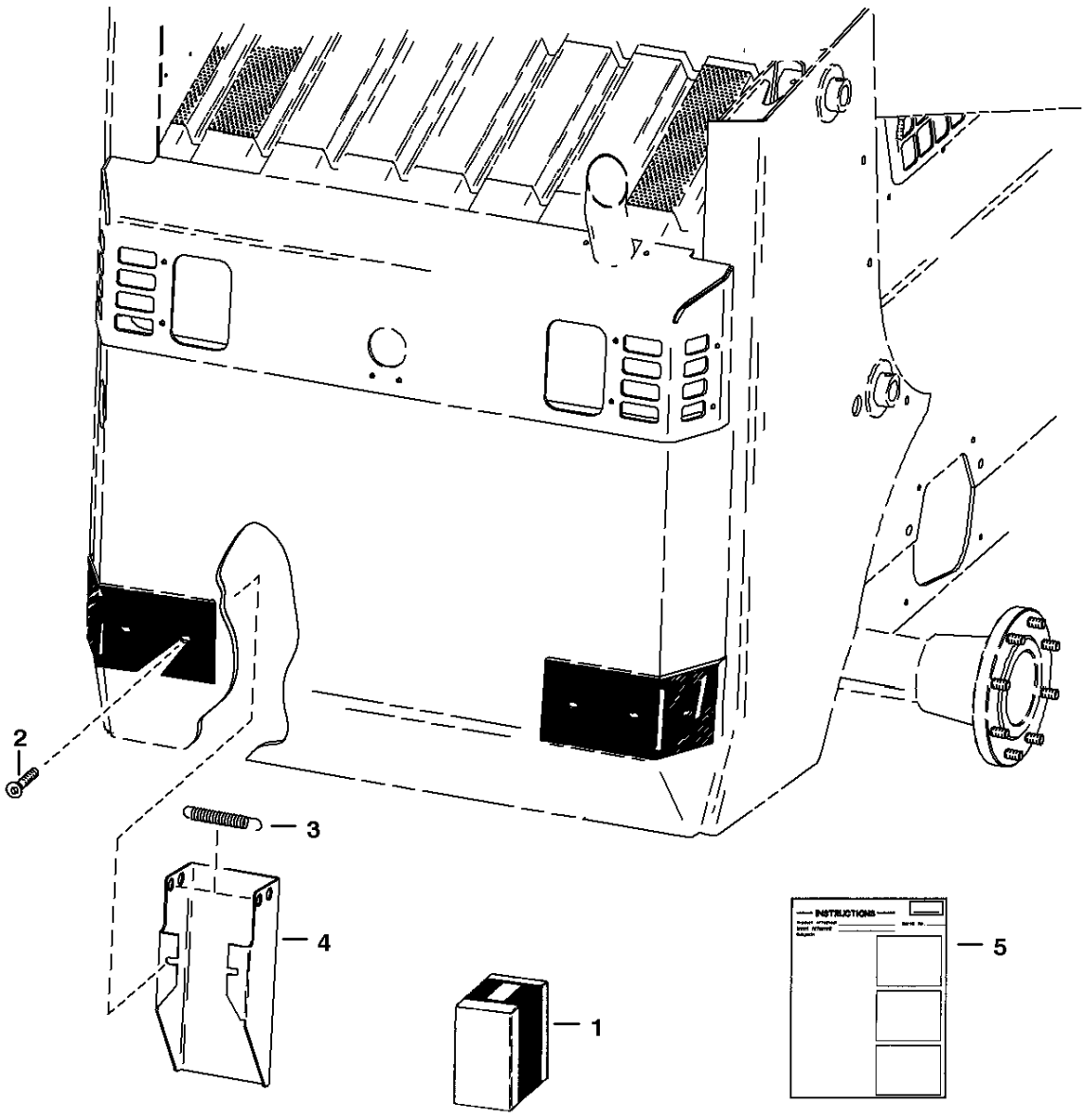

TS-1139

www.youfixthis.com

TOOL BOX

Ref.N°	Part N°	Description	Remarks	Serial N°	Qty.
1	6705108	KIT	Ref. TOOL BOX(2)-TOOL BOX(5)		1
2	9G-636	BOLT			2
3	6700743	SPRING			1
4	6709379	TOOL HOLDER	Was 6705100 [A]		1
5	6722300	INSTRUCTIONS			1

www.youfixthis.com

BULK ITEMS
(See Note)

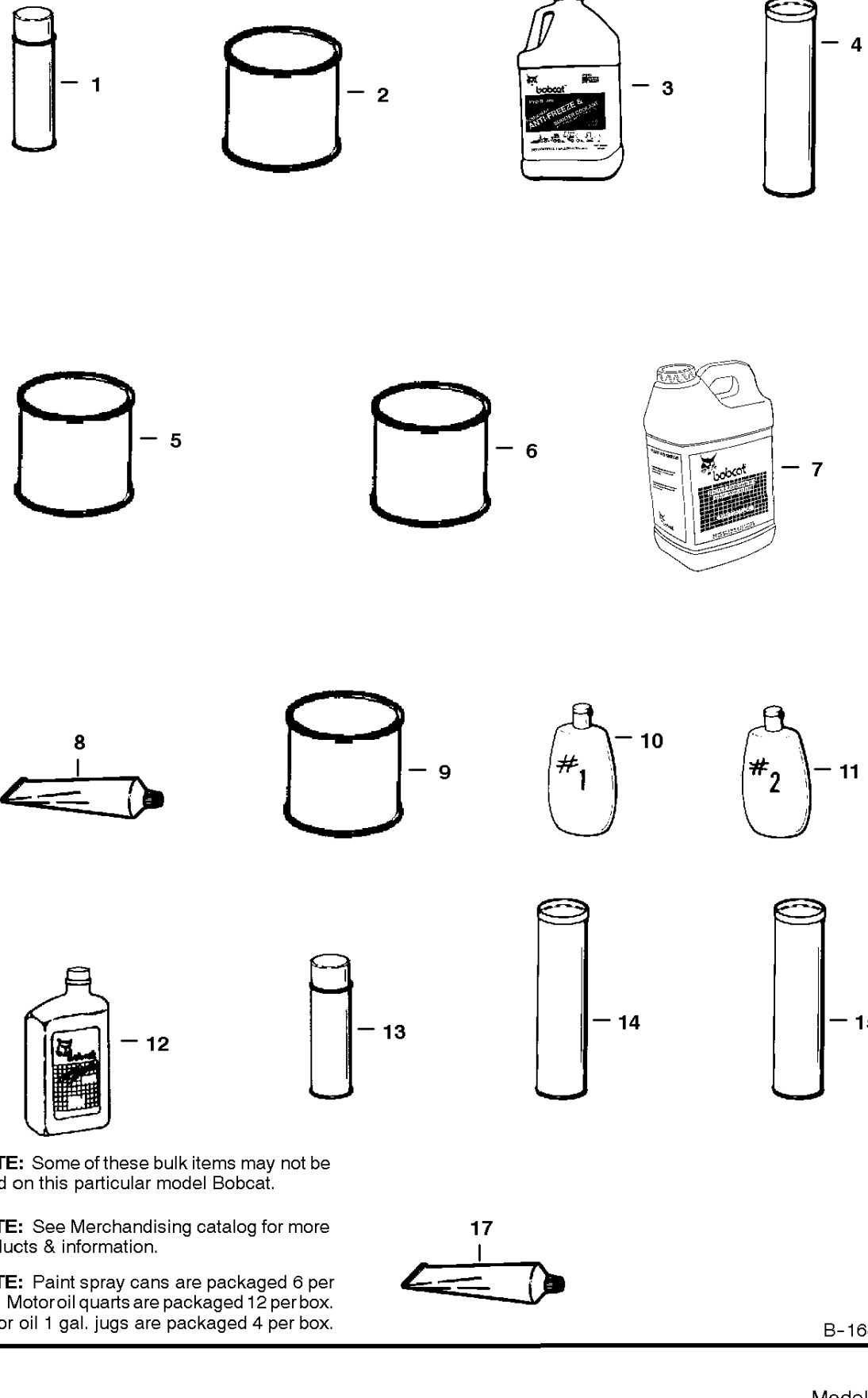

NOTE: Some of these bulk items may not be used on this particular model Bobcat.

NOTE: See Merchandising catalog for more products & information.

NOTE: Paint spray cans are packaged 6 per box. Motor oil quarts are packaged 12 per box. Motor oil 1 gal. jugs are packaged 4 per box.

B-16462

www.youfixthis.com

BULK ITEMS

Ref.N°	Part N°	Description	Remarks	Serial N°	Qty.
1	6722783	PAINT	orange - Spray Can - See Note		x
1	6722786	PAINT	charcoal - Spray Can - See Note		x
1	6722789	PAINT	white - Spray Can - See Note		x
2	6722781	PAINT	orange - Gallon - Also Order Ref. BULK ITEMS(5)		x
2	6722782	PAINT	orange - Qt. - Also Order Ref. BULK ITEMS(5)		x
2	6722784	PAINT	charcoal - Gallon - Also Order Ref. BULK ITEMS(5)		x
2	6722785	PAINT	charcoal - Qt. - Also Order Ref. BULK ITEMS(5)		x
2	6722787	PAINT	white - Gallon - Also Order Ref. BULK ITEMS(5)		x
2	6722788	PAINT	white - Qt. Also Order Ref. BULK ITEMS(5)		x
3	6724094	ANTI-FREEEZE	gallon - premixed PG - Was 6658230		x
3	6724354	ANTI-FREEZE	gallon - PG concentrate		x
4	6633583	SEALANT	chaincase covers		x
5	6653517	REDUCER	gallon		x
6	6653518	PRIMER	gallon		x
6	6653519	PRIMER	Qt.		x
7	6563328	BLACK GOLD	Hydraulic/Hydrostatic Transmission Fluid - 5 Gallons - 2-2 1/2 Gallon Containers		x
7	6722344	BLACK GOLD	Hydraulic/Hydrostatic Transmission Fluid - 5 Gallons Container		x
7	NAP	BLACK GOLD	30 Gallon Drum - Was 6563329		x
7	6563330	BLACK GOLD	55 Gallon Drum		x
8	6599360	SEALANT	electrical - 3 oz. tube		x
9	6634393	LUBRICANT	90 wt. gear - pint - For use in cooling fan drive assy.		x
10	6630188	POLISH	window-1 (8 oz.)		x
10	6630190	POLISH	window-1 (64 oz.)		x
11	6630189	POLISH	window-2 (8 oz.) - scratch remover		x
11	6630191	POLISH	window-2 (64 oz.) - scratch remover		x
12	6657303	MOTOR OIL	30 CE/SG - 1 Qt. - See Note		x
12	6657301	MOTOR OIL	10W30 CE/SG - 1 Qt. - See Note		x
12	6657299	MOTOR OIL	15W40 CE/SG - 1 Qt. - See Note		x
12	6724557	MOTOR OIL	SAE 10W30 - 1 Gallon - Was 6657302 [A]		x
12	6724558	MOTOR OIL	SAE 15W401 Gallon - Was 6657300[A]		x
12	6724559	MOTOR OIL	SAE 301 GallonAWas 6657304[A]		x
13	6652818	ADHESIVE	insulation - spray can		x
14	6658266	GREASE	general purpose		x
15	6599719	GREASE	14.5 oz. cartridge - For fan idler bearing		x
16	6650407	ADHESIVE	1 oz. tube		x
17	6650388	SEALANT	flange		x

www.youfixthis.com

NUMERICAL INDEX

	Part No.	Description	Was	Code	Page
	614142	SLEEVE			K2
	616783	WASHER			B8, G14
	616789	WASHER			C8
*	619021	WASHER			B6
	619021	WASHER			K6, K12
	654299	BEARING			E8, E12
	657904	CLAMP			G6, G10
	658128	SNAP RING			E8, E12
	660181	RACE			B14
	669863	SNAPRING			E8, E12
	706340	HANDLE ASSY.			K12
	711273	BUSHING			B6
	730963	ADAPTER			D2
	731284	BEARING			B14
	731795	ADAPTER			C22, D2, K4, M16
	742666	SNAPRING			B16
	743332	GREASE ZERK			B2, B6
	743564	HOSE			H6
	791355	PIN	6657326	A	E8, E12
	799119	SNAP RING			C12, C14, D8
	866028	CLAMP			H22
	866104	PLUG			G6, G10
	872229	WASHER			B20, B22, D20
	886527	WASHER			H22
	889163	BEARING			J4
*	889269	HOSE			K18, K21, K24
	896984	BOLT			J4
	896990	WASHER			J4
	896992	RETAINER			J4
	896996	WASHER			J4
	897239	SLEEVE			J4
	897245	INSULATOR			J4
	897719	INSULATOR			J4
	897732	WASHER			J4
	898731	LIGHT BULB			F2, F6, F10, M2
	899157	FAN			J3
	899163	ROTOR			J4
	899165	INSULATOR			J4
	899167	SINK			J4
	899169	INSULATOR			J4
	899170	GASKET			J4
	899374	SEAL			J4
	899375	DIODE			J4
	899376	WASHER			J4
	899377	BOLT			J4
	899378	DIODE			J4
	909498	BOLT			H4
	961528	PACK OF PARTS			I12
	1300913	ELBOW			D22
	1303932	GROMMET			G2
*	1306637	PIN			N4

Code for disposition of old part number

A — Use up

B — Use on other application (See PNI)

C — File PDR Report with Melroe Parts Sales

D — Part Number Error

www.youfixthis.com

NUMERICAL INDEX (Cont'd)

	Part No.	Description	Was	Code	Page
	1306637	COTTER PIN			C7
	1318565	PIN			B16
	1319451	FUSE			E22
	1320075	COTTER PIN			M7
	1320904	BEARING			B14
	1320905	CUP			B14
	1321607	RACE			B18
	1321608	BEARING			B18
	1513549	CAP			C22, K4, M16, M20
	1519324	PLUG			C22, K4, M16, M20
	1612281	NUT			A22
	1614765	STEM			N17
	1631632	ELBOW			M16
	1732366	TERMINAL			I8
	1908806	EXTINGUISHER			K1
	1991038	BEARING			J4
	2341398	COUPLER			M16
	2342026	COUPLER			M16
	2356058	BOOT			F2, F6, F10
	2756257	RETAINER			I12, I18
	3291290	WING NUT			H22
	3674002	WASHER			H4, H18
	3674007	GASKET			H8
	3674009	GASKET			H10
	3674076	CLAMP ASSY.			H20
	3676441	COVER			H8
	3676843	SEAT			H6
	3676976	BOLT			H18
	3679001	CAP	6658255	A	C22
	3737000	TRACK			N15
	3737001	TRACK			N15
	3737010	CUSHION			N15
	3737081	CUSHION			N15
	3768067	BOLT			H15
	3984320	BOLT			G20
	5289686	PLUG			I18
	6190121	SPRING			E6
	6500989	CLAMP			M20
*	6502203	CLAMP			C24
	6502203	CLAMP			B20, D20
	6502203	CLAMP	6703216	B	B22
	6505082	SPRING			B8
	6506477	WASHER			B16
	6510614	LINK			B12
	6511855	MOULDING			D12, D16, G2, G6, G10, M2
	6512067	GROMMET			I3, K16
	6512274	CLIP			I12, I18, I20
	6512686	MOULDING			G6, G10
	6512735	BOLT			H8, H16
	6512736	WASHER			G6, H4, H12, H16
	6512740	KEY			H8

Code for disposition of old part number

A — Use up

B — Use on other application (See PNI)

C — File PDR Report with Melroe Parts Sales

D — Part Number Error

www.youfixthis.com

NUMERICAL INDEX (Cont'd)

Part No.	Description	Was	Code	Page
83D-5	NUT			G8, I12, I16, J22, K1, K6, K10, N1
83D-6	NUT			A18, A22, E2, G6, I9, I18
83D-6	NUT	85D-6	B	I20
83D-8	NUT			G20
83D-10	NUT			M9, M10
83D-12	NUT			A12
83F-3	ELBOW			D22
84G-1608	BOLT			J4
84G-1906	BOLT			J4
84G-1910	BOLT			J4
84G-2516	BOLT	7C-412	B	M3
84G-3110	BOLT			B10
84G-3112	BOLT			A14, B22, C22, E22, G10, I12, I20, K4, M2
84G-3116	BOLT			F4, F8, F12
84G-3120	BOLT			K18
84G-3708	BOLT			G2, G6, G10
84G-3710	BOLT			J22
84G-3712	BOLT			A12, A18, B8, B16, B22, C22, D12, D16, D20, F2, F6, F10, G8, G10, K4, K21
84G-3716	BOLT			A12, A22, B8, B16, D2, F2, F8, F12, J12, M2, M20
84G-3720	BOLT			G22, I1
84G-3724	BOLT			G22, J16
84G-3724	BOLT	84G-3728	B	B20
85D-4	NUT			D2, D20, F14, F16, G22, J12, K6, K10, M12
85D-5	NUT			B20, C22, D2, G22, J24, K4, M16
85D-6	NUT			A18, B2, B6, B8, B22, D2, D20, G8, G12, J14, K6, K10, M9, M10
85D-6	NUT	61D-6	B	J16
85D-6	NUT	85D-8	B	B20
85D-7	NUT			A18
85D-8	NUT			A14, A22, B16, D20, E2, G20
85F-3	ELBOW			D22
85G-608	BOLT			M4
85G-620	BOLT			F14
85G-820	BOLT			F14
85G-1008	BOLT			K1
86D-12	NUT			E16
86D-4	NUT			E2, K6, K10
86D-8	NUT			G2
86F-5	NUT			C22, K4, M16
86F-8	NUT			B22, D20
87D-5	NUT			M10
87G-806	BOLT			M6
88F-8	ELBOW			D20
89D-6	NUT			F14, F16
90KV-5	PLUG			C4, C6, C16
91D-6	NUT			E4

Code for disposition of old part number

A — Use up

B — Use on other application (See PNI)

C — File PDR Report with Melroe Parts Sales

D — Part Number Error

www.youfixthis.com

NUMERICAL INDEX (Cont'd)

Part No.	Description	Was	Code	Page
91D-6	NUT	85D-6	B	B8, C2, C4, C7, E2, G22
91D-7	NUT			N2, N3
91G-416	SCREW			A14
92D-12	NUT	86D-12	B	G14
92D-16	NUT			C5, C6
93G-524	BOLT			E16
93G-616	BOLT			E12
93G-832	BOLT			E12
95D-5	NUT	61D-6	A	G24
95K-6	O-RING			C4, C6, C16
99K-12	O-RING			C14

Code for disposition of old part number
A — Use up
B — Use on other application (See PNI)
C — File PDR Report with Melroe Parts Sales
D — Part Number Error

www.youfixthis.com

NUMERICAL INDEX (Cont'd)

	Part No.	Description	Was	Code	Page
*	NAP	AIR CLEANER	6653506	A	H22
*	NAP	ALTERNATOR	6662990	A	J3
*	NAP	BEARING	6655780	A	G14
*	NAP	BEARING SET	6640808	A	H10
*	NAP	BEARING SET	6640810	A	H10
*	NAP	BRACKET	6632224	A	F18
*	NAP	BRACKET	6705450	A	G16
*	NAP	CABLE	6579809	A	F2, F6, F10
*	NAP	CORE	6660866	A	K20
*	NAP	COVER	6631451	A	E10, E16
*	NAP	DUCT	6708915	A	K18
*	NAP	FAN	6632209	A	F18
*	NAP	FILTER	6659593	A	C20
*	NAP	FLYWHEEL	6701888	A	G14
*	NAP	HARNESS	6705901	A	J12
*	NAP	HARNESS	6708269	A	I16
*	NAP	HARNESS	6708285	A	J22
*	NAP	HEATER	6660889	A	K20
*	NAP	IDLER ASSY.	6705451	A	G14
*	NAP	KIT	6571597	A	M5
*	NAP	KIT	6579342	A	I12
*	NAP	KIT	6632381	A	F18
*	NAP	KIT	6660567	A	K16
*	NAP	KIT	6703214	A	M11
*	NAP	KIT	6704877	A	M12
*	NAP	KIT	6706796	A	N1
*	NAP	KIT	6708260	A	K10
*	NAP	KIT	6709836	A	K16
*	NAP	LOUVER	6700418	A	G2
*	NAP	LOUVER	6700419	A	G2
*	NAP	PLUG	47K-5	A	C4, C6
*	NAP	PULLEY	6579541	A	G4
*	NAP	ROD	6576250	A	E2
*	NAP	SCREEN	6569935	A	M5
*	NAP	SCREEN	6569936	A	M5
*	NAP	SEAT	6667684	A	A20
*	NAP	SEAT BELT	6564774	A	A18
*	NAP	STOP	6704603	A	B6
*	NAP	STOP	6704604	A	B6
*	NAP	SWITCH	6569451	A	D4, F14, J10, M16
*	NAP	TIRE	6631614	A	N17
*	NAP	VALVE	6586520	A	D6
*	NAP	VALVE	6588768	A	D6
*	NAP	VALVE	6588778	A	C10
*	NAP	VALVE	6588786	A	D6
	NAP	AIR CLEANER	6647788	A	H22
	NAP	ALTERNATOR	6632211	A	F18
	NAP	ARM	6578837	A	B4
	NAP	ARM	6578838	A	B4
	NAP	BEARING	6651452	A	G16
	NAP	BEARING	6661071	A	G16

Code for disposition of old part number

A — Use up

B — Use on other application (See PNI)

C — File PDR Report with Melroe Parts Sales

D — Part Number Error

www.youfixthis.com

NUMERICAL INDEX (Cont'd)

Part No.	Description	Was	Code	Page
NAP	BELLCRANK	6700197	C	E2
NAP	BLACK GOLD	6563329	A	N22
NAP	BONNET	6592094	A	C10, D8
NAP	BONNET	6592097	A	C12, D8
NAP	BRACE	6703546	A	E4
NAP	BRACKET	6703283	A	G16
NAP	BRACKET	6704113	A	B22
NAP	BRACKET	6705859	A	G16
NAP	BUSHING	6700348	C	E2
NAP	BUSHING	6704449	C	G20
NAP	CAP	6654373	A	B10
NAP	CASE	6539865	A	C5
NAP	COUPLER	6657038	A	M16
NAP	COUPLER	66657037	A	M16
NAP	COVER	6652943	B	J20
NAP	CYLINDER	6539075	A	C2
NAP	CYLINDER	6539861	A	C5
NAP	DECAL	6701204	C	J8
NAP	DECAL	6701205	C	J8
NAP	DECAL	6701206	C	J8
NAP	DECAL	6701207	C	J8
NAP	DISC	6578784	A	B16
NAP	DOOR	6704434	A	I20
NAP	ELBOW	77E-16	B	D12, D16
NAP	END CAP	6538574	A	C12
NAP	FILTER ASSY.	6648905	A	D18, D22
NAP	GAS SPRING	6701176	A	A14
NAP	GRILL	6703813	A	G10
NAP	GUIDE ASSY.	6565354	A	A18
NAP	HARNESS	6579653	A	F2
NAP	HARNESS	6702898	A	F6
NAP	HARNESS	6703878	A	F16
NAP	HOOD	6701629	A	G6
NAP	HOUSING	6563577	A	B14
NAP	IDLER PULLEY	6653253	B	G14
NAP	KIT	6701572	C	M9
NAP	KIT	6703224	A	K6
NAP	KIT	6703676	A	K10
NAP	KIT	6706823	A	K10
NAP	LEVER	6703492	C	G22
NAP	LEVER ASSY.	6707366	A	K12
NAP	LEVER ASSY.	6701000	A	K12
NAP	LEVER ASSY.	6704487	A	K12
NAP	LEVER ASSY.	6704488	A	K12
NAP	LEVER ASSY.	6707099	A	K12
NAP	LEVER ASSY.	6707365	A	K12
NAP	LIFT ARM	6578834	A	B2
NAP	LIFT ARM	6703226	A	B2
NAP	LIFT EYE	6701525	C	M9
NAP	MOTOR KIT	6720886	A	E6
NAP	MOUNT	6579358	A	G14

Code for disposition of old part number

A — Use up

B — Use on other application (See PNI)

C — File PDR Report with Melroe Parts Sales

D — Part Number Error

www.youfixthis.com

NUMERICAL INDEX (Cont'd)

	Part No.	Description	Was	Code	Page
	NAP	MOUNT	6660453	C	G20
	NAP	MOUNT	6703477	C	J16
	NAP	MOUNT KIT	6722145	C	G20
	NAP	MUFFLER	6660250	A	G10
	NAP	PEDAL	6578501	A	B16
	NAP	PIN	6702303	C	M9
	NAP	PLATE	6536392	A	B8
	NAP	PLUG	6592752	A	C10, D6
	NAP	PULLEY	6702951	A	G16
	NAP	PUMP	6657327	A	E17
	NAP	PUMP	6658751	A	E8, E12
	NAP	PUMP	6659462	A	E8, E12
	NAP	PUMP	6660481	A	E8, E12
	NAP	PUMP	6660482	A	E8, E12
	NAP	ROD	6534381	A	C5
	NAP	ROD	6700074	A	B16
	NAP	SENDER	6655589	A	F4, F8, F12
	NAP	SHORT BLOCK	6655793	A	H2
	NAP	SNUBBER CUP	6703733	C	G20
	NAP	SOLENOID	6655036	A	I8
	NAP	SPOOL	6634428	A	E10, E14
	NAP	STROBE LIGHT	6659815	A	N7
	NAP	SWITCH	6519592	A	E22, E24
	NAP	TIRE	6519248	A	N17
	NAP	TUBE	6579679	A	D12, D16
	NAP	TUBE	6700692	C	B22
	NAP	TUBE	6700961	C	B22
	NAP	TUBE	6702257	A	G6, G10
	NAP	TUBE	6702293	A	D12, D16
	NAP	WASHER	6702546	C	G20
	NAP	WASHER	6704448	C	G20
*	NSS	KIT	6632385	A	F18
*	NSS	PLUG	6659592	A	C20
*	NSS	ROTOR	6632229	A	F18
	NSS	BEARING	6658117	A	E17
	NSS	BOLT	6658124	A	E17
	NSS	BRACKET	6632231	A	F18
	NSS	BRUSH HOLDER	6632248	A	F18
	NSS	COLLAR	6659974	A	N7
	NSS	FLASH TUBE	6659972	A	N7
	NSS	GASKET	6659973	A	N7
	NSS	GEAR	6658120	A	E17
	NSS	GEAR	6658121	A	E17
	NSS	LENS	6659997	A	N7
	NSS	LENS	6660247	A	N7
	NSS	RING	6658119	A	E17
	NSS	WASHER	6658125	A	E17

Code for disposition of old part number

A — Use up

B — Use on other application (See PNI)

C — File PDR Report with Melroe Parts Sales

D — Part Number Error