CATERPILLAR®

SEBP4421
February 2008

RUTHZIL TRATOR COMERCIAL DE PEÇAS LTDA 11 97083-6812 ROLANDO

Parts Manual

SIS

See “General Information” for New Parts Manual Features.

854K Wheel Dozer

2211-Up (Machine)
LJW1-Up (Engine)
K2K1-Up (Transmission)
T2G1-Up (Torque Converter)

Powered By C32 Engine
This Parts Manual is also available in .pdf Format on Compact Disc (CD-ROM) - Caterpillar Form No. SERP4421.

Product and Dealer Information

Note: For product identification plate locations, see the section “Product Identification Information” in the Operation and Maintenance Manual.

Delivery Date: _____

Product Information

Model: _____

Product Identification Number: _____

Engine Serial Number: _____

Transmission Serial Number: _____

Generator Serial Number: _____

Attachment Serial Numbers: _____

Attachment Information: _____

Customer Equipment Number: _____

Dealer Equipment Number: _____

Dealer Information

Name: _____ Branch: _____

Address: _____

_____

_____

	Dealer Contact	Phone Number	Hours
Sales:	_____	_____	_____
Parts:	_____	_____	_____
Service:	_____	_____	_____

Informations produit et concessionnaire

Nota: Voir l'emplacement de la plaque signalétique du produit au chapitre "Informations produit" du guide d'utilisation et d'entretien.

Date de livraison: _____

Informations produit

Modèle: _____

Numéro d'identification produit: _____

Numéro de série du moteur: _____

Numéro de série de la boîte de vitesses: _____

Numéro de série de l'alternateur: _____

Numéros de série d'équipement: _____

Informations sur l'équipement: _____

Numéro matériel client: _____

Numéro matériel concessionnaire: _____

Informations concessionnaire

Nom: _____ Agence: _____

Adresse: _____

_____

_____

	Contact concessionnaire	Numéro de téléphone	Heures
Ventes:			
Pièces:			
Service:			

Información del Producto/Distribuidor

Nota: Para saber la ubicación de las placas de identificación del producto, ver la sección “Información sobre identificación del producto” en el Manual de Operación y Mantenimiento.

Fecha de entrega: _____

Información del producto

Modelo: _____

Número de identificación del producto: _____

Número de serie del motor: _____

Número de serie de la transmisión: _____

Número de serie del generador: _____

Números de serie de los accesorios: _____

Información sobre los accesorios: _____

Número del equipo del cliente: _____

Número del equipo del distribuidor: _____

Información del distribuidor

Nombre: _____ Sucursal: _____

Dirección: _____

_____

_____

	Comunicación con el distribuidor	Número de teléfono	Horas
Ventas:			
Piezas:			
Servicio:			

Informações Sobre Produto e Revendedor

Nota: Para localizações da placa de identificação do produto, consulte a seção, “Informações Sobre Identificação do Produto” no Manual de Operação e Manutenção.

Data de Entrega: _____

Informações Sobre o Produto

Modelo: _____

Número de Identificação do Produto: _____

Número de Série do Motor: _____

Número de Série da Transmissão: _____

Número de Série do Gerador: _____

Números de Série de Acessórios: _____

Informações Sobre Acessórios: _____

Número do Equipamento do Cliente: _____

Número do Equipamento do Revendedor: _____

Informações Sobre o Revendedor

Nome: _____ Filial: _____

Endereço: _____

_____

_____

	Contato do Revendedor	Telefone	Horas
Vendas:	_____	_____	_____
Peças:	_____	_____	_____
Serviço:	_____	_____	_____

Produkt- und Händlerinformation

Anmerkung: Für die Lage der Produkt-Identnummer und Seriennummern siehe Abschnitt “Produkt-Identinformation” im Betriebs- und Wartungshandbuch.

Lieferdatum: _____

Produkt-Identinformation

Modell: _____

Produkt-Identnummer: _____

Seriennummer des Motors: _____

Seriennummer des Getriebes: _____

Seriennummer des Generators: _____

Seriennummern der Arbeitsgeräte: _____

Arbeitsgeräteinformation: _____

Kundennummer: _____

Händlernummer: _____

Händlerinformation

Name: _____ Niederlassung: _____

Adresse: _____

_____

_____

	Kontaktperson beim Händler	Telefon	Dienststunden
Verkauf:	_____	_____	_____
Ersatzteile:	_____	_____	_____
Service:	_____	_____	_____

MEMORANDA

TABLE OF CONTENTS

Name	Page
GENERAL INFORMATION	A29
REPAIR ALTERNATIVES	A48
SUPPLEMENTAL COOLANT ADDITIVES	A53
MAINTENANCE PARTS	A58
INDEX	A78
MACHINE ARRANGEMENT	1
CHASSIS AR	1
COMMON AR	2
ENGINE ARRANGEMENT	3
ENGINE AR	3
ENGINE AR-COMPLETE	7
ENGINE AR-CORE	17
INSTALLATION AR-ENGINE	19
BASIC ENGINE	21
ACCESSORY GP-ENGINE	21
ACTUATOR GP-VALVE	23
BASE GP-VALVE COVER & INJ HARN	25
CAMSHAFT GP	29
COVER GP-CYLINDER BLOCK	30
COVER GP-SOUND SUPPRESSION	36
COVER GP-VALVE MECHANISM	37
CRANKSHAFT GP	42
CYLINDER BLOCK AS	43
CYLINDER BLOCK GP	46
CYLINDER HEAD AS	48
CYLINDER HEAD GP	50
DAMPER GP	53
EXTENSION GP-DRAIN	55
FLYWHEEL GP	56
GEAR GP-FRONT	57
GEAR GP-REAR	59
HOUSING GP-FLYWHEEL	61
HOUSING GP-FRONT	63
HOUSING GP-REAR	64
LIFTING GP-ENGINE	65
MECHANISM GP-FUEL PUMP & VALVE	67
MOUNTING GP-ALTERNATOR & COMPR	69
PAN GP-OIL	70
PISTON & ROD GP	71
PLUG GP-CYLINDER BLOCK	74
PLUG GP-CYLINDER HEAD	75
ROCKER ARM GP	76
SUPPORT GP-ENGINE	80
LUBRICATION SYSTEM	82
FASTENER GP-OIL PUMP MOUNTING	82
FILLER GP-ENGINE OIL	83
FILTER GP-ENGINE OIL	84
FUMES DISPOSAL GP	85
GAUGE GP-OIL LEVEL (DIPSTICK)	86
LINES GP-ENGINE OIL	88
LINES GP-ENGINE OIL FILTER	90
LINES GP-OIL SUPPLY	97
LINES GP-TURBOCHARGER OIL	99
METERING GP-ENGINE OIL	101
PUMP GP-ENGINE OIL	103
RENEWAL AR-OIL	104
TANK & MTG GP-ENGINE OIL	105
TANK GP-ENGINE OIL	106
VALVE GP-METERING	107
COOLING SYSTEM	108
CORE GP-OIL COOLER	108
FAN GP-SUCTION	109
LINES GP-WATER	111
PUMP GP-WATER	116
RADIATOR GP	118
SHROUD GP-RADIATOR	124
TANK GP-RADIATOR TOP	126
VALVE GP-RADIATOR DRAIN	129
AIR INLET AND EXHAUST SYSTEM	130
AFTERCOOLER GP-AIR	130
AIR CLEANER GP	131
DUST EJECTOR GP	134
LINES GP-AFTERCOOLER AIR	135
LINES GP-AIR	136
LINES GP-TURBOCHARGER AIR	140
MANIFOLD GP-EXHAUST	141
MUFFLER GP	144
SHIELD GP-HEAT	145
SUPPORT GP-AFTERCOOLER	148
TURBOCHARGER GP	150
FUEL SYSTEM	153
ADAPTER GP-FAST FILL FUEL	153
COOLER GP-FUEL	155
DRAIN GP-FUEL	158
FILTER GP-WATER SEP & FUEL	159
FUEL AR-CONVENTIONAL FILL	160
FUEL AR-FAST FILL	160
LINES GP-FUEL	161
LINES GP-FUEL FILTER	166
MOUNTING GP-FUEL FILTER	176
PUMP & MTG GP-FUEL TRANSFER	183
PUMP GP-FUEL INJECTION	184
PUMP GP-FUEL TRANSFER	185
TANK GP-FUEL	186
VALVE GP-CHECK	190
WATER SEP & FUEL PRM PUMP GP	191

TABLE OF CONTENTS

Name	Page
ELECTRICAL AND STARTING SYSTEM	192
ALARM GP	192
BATTERY & WIRING GP	193
BATTERY GP	198
BUFFER GP-SENSOR	199
CAMERA AR	200
CONNECTION GP-ELECTRICAL	201
CONTROL & MTG GP-ENGINE ELEK	202
CONTROL GP-COMMUNICATION	204
CONTROL GP-UNPROGRAMMED	205
ELECTRICAL AR	206
ELECTRONICS GP-MONITOR	206
ELECTRONICS GP-POWER TRAIN	210
ENCLOSURE GP-ELECTRONICS BAY	211
FASTENER GP-WIRING HARNESS	212
HEATER GP-FUEL	213
HEATER GP-JACKET WATER	216
INSTALLATION AR-CAES	219
INSTALLATION AR-COMMUNICATION	219
LAMP GP-DOME	220
LAMP GP-FLOOD	221
LAMP GP-HEAD	224
LAMP GP-SIGNAL	226
LIGHTING GP-AUXILIARY	227
LIGHTING GP-FLOOD	228
LIGHTING GP-STOP	236
MOUNTING GP-CAMERA	237
SENSOR GP-ENGINE	238
SENSOR GP-EXHAUST TEMPERATURE	245
SENSOR GP-LIQUID LEVEL	246
SENSOR GP-POSITION	247
SENSOR GP-PRESSURE	248
SENSOR GP-SPEED	258
SENSOR GP-TEMPERATURE	265
STARTING AID GP-ETHER	270
STARTING MOTOR GP-ELECTRIC	272
SWITCH GP-BYPASS	279
SWITCH GP-DISCONNECT	280
SWITCH GP-ENGINE BRAKE	281
SWITCH GP-LIMIT	282
SWITCH GP-LIQUID LEVEL	283
SWITCH GP-MAGNETIC	284
SWITCH GP-PRESSURE	288
SWITCH GP-TOGGLE	289
SWITCH GP-WIPER	290
VALVE GP-ETHER STARTING	291
WIRING GP-AUTOLUBE CONTROL	292
WIRING GP-BUMPER	294
WIRING GP-CAB	299
WIRING GP-CAMERA	309
WIRING GP-CHASSIS	310
WIRING GP-COMMUNICATION	312
WIRING GP-CONVERTER	314
WIRING GP-ELECTRONICS BAY	315
WIRING GP-ENGINE	319
WIRING GP-ENGINE ELECTRONIC	325
WIRING GP-FRONT	328
WIRING GP-MACHINE	330
WIRING GP-OIL RENEWAL SYSTEM	346
WIRING GP-POWER TRAIN	348
WIRING GP-REAR	350
WIRING GP-ROPS	353
WIRING GP-SERVICE CENTER	357
POWER TRAIN	358
AXLE AR-FIXED	358
AXLE AR-OSCILLATING	358
AXLE GP-FIXED	359
AXLE GP-OSCILLATING	361
BLOCK GP-HYDRAULIC	364
CASE & PARTS GP-PLANETARY	366
CASE GP-TRANSFER GEAR	368
CONTROL GP-TRANSMISSION HYD	369
DIFFERENTIAL & BEVEL GEAR GP	370
DIFFERENTIAL GP	376
DRAIN GP-ECOLOGY	377
FILTER & MTG GP-POWER TRAIN	378
FILTER GP-OIL	380
GAUGE GP-SIGHT	385
GEAR GP-INPUT TRANSFER	386
GEAR GP-OUTPUT TRANSFER	388
LINES GP-AXLE OIL COOLER	392
LINES GP-AXLE VENT	401
LINES GP-POWER TRAIN OIL	405
MANIFOLD GP-CONTROL	412
MOUNTING GP-AXLE	413
MOUNTING GP-RIM	414
MOUNTING GP-TORQUE CONVERTER	414
PLANETARY GP-TRANSMISSION	415
POWER TRAIN AR	420
PUMP & MOTOR GP-AXLE OIL CLR	421
PUMP & MTG GP-AXLE OIL COOLER	422
PUMP GP-TRANSMISSION	423
RIM AR	425
RIM GP-DEMOUNTABLE	426
SHAFT GP-DRIVE	428
SHAFT GP-INPUT DRIVE	430
SLIP JOINT GP	431
SPIDER & BEARING GP	432
SUPPORT GP-TRANSMISSION	433
TIRE & RIM AR	434
TORQUE CONVERTER & HOUSING GP	439
TORQUE CONVERTER GP-LOCKUP	441
TRANSMISSION AR	445
UNIVERSAL JOINT GP	446
VALVE & MTG GP-LOCKUP CLUTCH	449
VALVE GP-MODULATING	450

TABLE OF CONTENTS

Name	Page
VALVE GP-RELIEF	452
VALVE GP-SELECTOR	453
VALVE GP-SELECTOR & PRESS CONT	454
VALVE GP-SOLENOID	456
VALVE GP-TORQUE CONV PRIORITY	459
VALVE GP-TRANSMISSION CONTROL	461
WHEEL & FINAL DRIVE GP	464
WHEEL GP-FINAL DRIVE & BRAKE	466
FRAME AND BODY	467
COVER GP-ACCESS	467
DOOR GP-ACCESS	469
DRAWBAR GP	471
ENCLOSURE GP-HYDRAULIC TANK	472
FENDER GP	477
FENDER GP-FRONT	481
FENDER GP-ROADING	482
FIREWALL GP	486
FRAME AS-FRONT	488
FRAME AS-REAR	491
GUARD GP-CRANKCASE	496
GUARD GP-POWER TRAIN	497
GUARD GP-RADIATOR	498
HANDRAIL GP	500
HARDWARE GP-HANDRAIL MOUNTING	505
HITCH GP-ARTICULATING	510
HOOD & GUARD GP	512
INSULATION GP-RADIATOR SHIELD	517
LADDER GP	519
LINES GP-AUTOMATIC LUBRICATION	524
LINES GP-GREASE	531
LINES GP-LUBRICATION	537
LINK GP-STEERING FRAME LOCK	539
LUBRICATION AR-AUTOMATIC	540
MOUNTING GP-BUMPER	541
PANEL GP-HOOD	542
SHIELD GP-ENGINE COMPARTMENT	545
SHIELD GP-RADIATOR	547
STEP GP	549
SUPPRESSION AR-SOUND	551
SUPPRESSION GP-SOUND	552
TANK & BUMPER AR-FUEL	555
TANK GP-GREASE	556
VALVE GP-LUBE DISTRIBUTION	557
WALKWAY GP	559
BRAKING SYSTEM	560
ACCUMULATOR GP-BRAKE	560
BASE GP-FOOT BRAKE	562
BRAKE GP-PARKING	564
BRAKE GP-SERVICE	566
CONTROL GP-FOOT BRAKE	568
CONTROL GP-PARKING BRAKE	569
CONTROL GP-SERVICE BRAKE	570
LINES GP-SERVICE BRAKE	581
PUMP & MTG GP-BRAKE	585
PUMP GP-PISTON	586
ROTATING GP-PUMP	587
SCREEN GP-HIGH PRESSURE	588
VALVE & MTG GP-BRAKE CONTROL	589
VALVE GP-BRAKE CONTROL	591
VALVE GP-PUMP CONTROL	592
STEERING SYSTEM	593
ACTUATOR GP-PUMP	593
BARREL GP-PUMP	596
CYLINDER & MTG GP-STEERING	597
CYLINDER GP-STEERING	598
FILTER GP-OIL	599
HEAD GP-PUMP	601
LINES GP-SECONDARY STEERING	602
LINES GP-STEERING	609
LINES GP-STEERING NEUTRALIZER	617
LINES GP-STEERING OIL COOLER	620
PLUG GP-CONTROL VALVE	623
PUMP & MTG GP-SECONDARY STEER	624
PUMP & MTG GP-STEERING	625
PUMP GP-GEAR	626
PUMP GP-PISTON	629
ROTATING GP-PUMP	631
SCREEN GP-HIGH PRESSURE	633
STOP GP-STEERING	634
VALVE & MTG GP-STEERING	635
VALVE GP-CHECK	636
VALVE GP-PILOT	643
VALVE GP-PILOT CARTRIDGE	644
VALVE GP-PUMP CONTROL	646
VALVE GP-RELIEF	649
VALVE GP-SELECTOR & PRESS CONT	653
VALVE GP-SHUTTLE	654
VALVE GP-STEERING	655
VALVE GP-STEERING NEUTRALIZER	659
HYDRAULIC SYSTEM	660
COOLER GP-HYD & STEERING OIL	660
CYLINDER & MTG GP-LIFT	662
CYLINDER GP-LIFT	664
CYLINDER GP-TILT	670
FILTER & LINES GP-CASE DRAIN	674
FILTER GP-OIL	678
FITTING GP-HYDRAULIC	680
HYDRAULIC AR	681
LINES GP-HYDRAULIC	683
LINES GP-HYDRAULIC FAN	688
LINES GP-LIFT CYLINDER	699

TABLE OF CONTENTS

Name	Page
LINES GP-PILOT	702
LINES GP-TILT CYLINDER	710
MOTOR & MTG GP-HYDRAULIC FAN	714
MOTOR GP-PISTON	715
PISTON GP-HYDRAULIC CYLINDER	716
PIVOT GP-PILOT VALVE	717
PUMP & MTG GP-HYDRAULIC FAN	718
PUMP & MTG GP-IMPLEMENT	719
PUMP & MTG GP-IMPLEMENT PILOT	721
PUMP GP-GEAR	722
PUMP GP-PISTON	725
ROTATING GP-MOTOR	727
ROTATING GP-PUMP	729
TANK & MTG GP-HYDRAULIC	730
TANK GP-HYDRAULIC	732
VALVE & MTG GP-HYDRAULIC FAN	737
VALVE & MTG GP-MAIN CONTROL	739
VALVE & MTG GP-SOLENOID	740
VALVE GP-CONTROL	741
VALVE GP-DEMAND FAN	745
VALVE GP-MAKEUP	746
VALVE GP-MANUAL	747
VALVE GP-PILOT	748
VALVE GP-PILOT CARTRIDGE	750
VALVE GP-PUMP CONTROL	752
VALVE GP-RELIEF	753
VALVE GP-SEQUENCE	755
VALVE GP-SHUTTLE	757
VALVE GP-SOLENOID	758
VALVE GP-TILT CONTROL	760
IMPLEMENTS	761
BULLDOZER AR	761
LINK GP-STABILIZER	762
PIN GP-BULLDOZER	763
PUSH ARM GP	765
TRUNNION GP-BULLDOZER	769
WORK TOOLS	770
BLADE AS-COAL	770
BLADE AS-SEMI-UNIVERSAL	770
BLADE GP-COAL	773
BLADE GP-SEMI-UNIVERSAL	775
OPERATOR STATION	778
ACCUMULATOR & MTG GP-REFRIG	778
ADJUSTER GP-SEAT	780
AIR COMPRESSOR GP-SEAT	781
AIR CONDITIONER AR	782
AIR CONDITIONER GP	783
ARM GP-WINDOW WIPER	787
BOX GP-STORAGE	788
CAB & PLATFORM GP	790
CAB AR	792
CAB GP	793
COMPRESSOR GP-REFRIGERANT	796
CONDENSER & MTG GP-REFRIGERANT	797
CONTROL GP-HANDLE	798
CONTROL GP-PILOT OPERATED HYD	799
CONTROL GP-STEERING	802
CONTROL GP-STIC	804
CONTROL GP-STIC LOCKOUT	807
COVER GP-CAB	809
DOOR GP-ACCESS	811
DOOR GP-CAB	813
DUCT GP-CAB AIR	815
FILTER GP-CAB AIR	816
INSTALLATION GP-RADIO	818
LATCH GP	819
LATCH GP-CAB DOOR & WINDOW	820
LINER GP-CAB	823
LINES GP-AIR CONDITIONER	827
LINES GP-CAB HEATER	829
MIRROR GP-REAR VIEW	830
MODULE GP-MESSAGE CENTER	831
MODULE GP-MONITOR KEYPAD	832
MODULE GP-QUAD GAUGE	833
MOTOR GP-WINDOW WIPER	834
MOUNTING GP-ANTENNA	838
MOUNTING GP-MONITOR	841
MOUNTING GP-PLATFORM	843
MOUNTING GP-ROPS	844
OPERATOR AR	845
PAN GP-BACKREST	846
PAN GP-SEAT	848
PANEL GP-INSTRUMENT	849
PEDAL GP-GOVERNOR	852
PLATFORM GP-OPERATOR	853
PRECLEANER AR-CAB AIR	858
PRECLEANER GP-CAB AIR	859
RADIO GP	860
RECLINER GP-SEAT	865
ROPS AR	866
ROPS GP	867
SEALING GP-GLASS	869
SEAT BELT GP	870
SEAT GP	871
SEAT GP-COMPANION	878
SEAT GP-SUSPENSION	881
SPRING GP-CAB DOOR	884
SUPPORT GP-HYDRAULIC CONTROL	886
SUPPORT GP-SEAT	889
SUPPORT GP-STEERING CONTROL	890
SUSPENSION GP-SEAT	893
WASHER GP-WINDOW	895
WIPER & WASHER GP-WINDOW	896
WIPER GP-WINDOW	898

TABLE OF CONTENTS

Name	Page	Name	Page
SERVICE EQUIPMENT AND SUPPLIES	902		
ENCLOSURE GP-SERVICE CENTER	902		
FILM GP	903		
FILM GP-INTERNATIONAL	906		
FILM GP-SERVICE CENTER	907		
FILM GP-U.S.	908		
LINES GP-DIAGNOSTIC	909		
PLATE GP-ENGINE IDENTIFICATION	914		
PROTECTION GP-VANDALISM	915		
SERVICE CENTER AR	917		
SERVICE CENTER GP	918		
PART NUMBER INDEX	B1		

TABLE DES MATIÈRES

Désignation	Page
GÉNÉRALITÉS	A32
OPTIONS DE RÉPARATION	A49
ADDITIFS POUR LIQUIDE DE REFROIDISSEMENT	A54
PIÈCES DE RECHANGE	A62
INDEX	A90
VERSION DE MACHINE	1
VERSION DE CHASSIS	1
VERSION NORMALE	2
MOTEUR (VERSION)	3
MOTEUR (VERSION)	3
VERSION DE MOTEUR COMPLET	7
MOTEUR - PARTIE CENTRALE (VERSION)	17
MONTAGE DE MOTEUR (VERSION)	19
MOTEUR STANDARD	21
ACCESSOIRE DE MOTEUR (ASS)	21
MÉCANISME DE COMMANDE DE SOUPAPE	23
SUPPORT DE CACHE-SOUPAPE ET FAISC. DE CABL. D'IN.	25
ARBRE A CAMES (ASS)	29
BLOC-CYLINDRES - COUVERCLE (ASS)	30
INSONORISATION - COUVERCLE (ASS)	36
CACHE-SOUPAPES (ASS)	37
VILEBREQUIN (ASS)	42
BLOC-CYLINDRES (ENS)	43
BLOC-CYLINDRES (ASS)	46
CULASSE (ENS)	48
CULASSE (ASS)	50
AMORTISSEUR DE VIBRATIONS (ASS)	53
RALLONGE DE VIDANGE (ASS)	55
VOLANT MOTEUR (ASS)	56
PIGNONNERIE AV (ASS)	57
PIGNON AR (ASS)	59
CARTER DE VOLANT (ASS)	61
CARTER AV (ASS)	63
CARTER ARRIERE (ASS)	64
OEILLETONS DE LEVAGE MOTEUR (ASS)	65
CULBUTERIE ET POMPE A CARBURANT (ASS)	67
MONTAGE DE L'ALTERNATEUR ET COMPRESSEUR (ASS)	69
HUILE MOTEUR - CARTER (ASS)	70
PISTON ET BIELLE (ASS)	71
BOUCHON DE BLOC-CYLINDRES (ASS)	74
BOUCHON - CULASSE (ASS)	75
AXE DE CULBUTEUR (ASS)	76
SUPPORT DE MOTEUR (ASS)	80
CIRCUIT DE GRAISSAGE	82
BOULONNERIE DE MONTAGE DE LA POMPE A HUILE (ASS)	82
BOUCHON DE REMPLISSAGE D'HUILE MOTEUR (ASS)	83
FILTRE À HUILE MOTEUR (ASS)	84
DISPOSITIF D'EVACUATION DES VAPEURS DE CARTER	85
JAUGE D'HUILE MOTEUR (BAIONNETTE) (ASS)	86
CANALISATIONS D'HUILE MOTEUR (ASS)	88
CANALISATIONS - FILTRE À HUILE MOTEUR (ASS)	90
CANALISATIONS D'ALIMENTATION D'HUILE (ASS)	97
CANALISATIONS D'HUILE DE TURBOCOMPRESSEUR (ASS)	99
RÉGULATION D'HUILE MOTEUR (ASS)	101
POMPE A HUILE MOTEUR (ASS)	103
VERSION D'HUILE DE RENOUVELLEMENT	104
RÉSRVOIR D'HUILE MOTEUR ET MONTAGE (ASS)	105
RÉSERVOIR D'HUILE MOTEUR (ASS)	106
SOUPAPE DE RÉGULATION	107
CIRCUIT DE REFROIDISSEMENT	108
FAISCEAU DU REFROIDISSEUR D'HUILE (ASS)	108
VENTILATEUR ASPIRANT (ASS)	109
CANALISATIONS D'EAU (ASS)	111
POMPE A EAU (ASS)	116
RADIATEUR (ASS)	118
CARÉNAGE DU RADIATEUR (ASS)	124
RÉSERVOIR DU COUVERCLE DE RADIATEUR (ASS)	126
ROBINET DE VIDANGE DE RADIATEUR (ASS)	129

* TRADUCTION NON DISPONIBLE AU MOMENT DE LA PUBLICATION

TABLE DES MATIÈRES

Désignation	Page
CIRCUIT D'ADMISSION D'AIR ET D'ÉCHAPPEMENT	130
REFROIDISSEUR D'ADMISSION D'AIR (ASS)	130
FILTRE A AIR (ASS)	131
ÉJECTEUR AUTOMATIQUE DE POUSSIÈRE (ASS)	134
CANALISATIONS D'AIR DE REFROIDISSEUR D'ADMISSION (ASS)	135
CANALISATIONS D'AIR (ASS)	136
CANALISATIONS D'AIR DE TURBOCOMPRESSEUR (ASS)	140
COLLECTEUR D'ÉCHAPPEMENT (ASS)	141
SILENCIEUX (ASS)	144
ÉCRAN THERMIQUE (ASS)	145
SUPPORT DE REFROIDISSEUR D'ADMISSION (ASS)	148
TURBOCOMPRESSEUR (ASS)	150
CIRCUIT DE CARBURANT	153
ADAPTATEUR DE REMPLIS. RAPIDE DE CARBURANT (ASS)	153
REFROIDISSEUR DE CARBURANT	155
VIDANGE DE CARBURANT (ASS)	158
FILTRE DE SÉPARATEUR D'EAU ET DE CARBURANT (ASS)	159
CARBURANT - REMPLISSAGE CLASSIQUE (VERSION)	160
REMPLISSAGE RAPIDE DE CARBURANT (VERSION)	160
CANALISATIONS DE CARBURANT (ASS)	161
CANALISATIONS DU FILTRE A CARBURANT (ASS)	166
MONTAGE DE FILTRE À CARBURANT (ASS)	176
POMPE D'ALIMENTATION ET MONTAGE (ASS)	183
POMPE D'INJECTION DE CARBURANT (ASS)	184
POMPE D'ALIMENTATION EN CARBURANT (ASS)	185
RÉSERVOIR DE CARBURANT (ASS)	186
CLAPET DE RETENUE (ENS)	190
POMPE DE SÉPARATEUR D'EAU ET D'AMORÇAGE DE CARBURANT (ASS)	191
CIRCUIT ELECTRIQUE ET DE DEMARRAGE	192
AVERTISSEUR (ASS)	192
BATTERIE ET CÂBLAGE	193
BATTERIE (ASS)	198
AMPLIFICATEUR - CAPTEUR (ASS)	199
VERSION DE CAMÉRA	200
BRANCHEMENT ÉLECTRIQUE (ASS)	201
COMMANDE ET MONTAGE - MOTEUR	202
COMMANDE DE COMMUNICATION (ASS)	204
COMMANDE NON PROGRAMMEE (ASS)	205
VERSION ÉLECTRIQUE	206
ÉLECTRONIQUE-MONITEUR (ASS)	206
ÉLECTRONIQUE DE TRANSMISSION (ASS)	210
CARÉNAGE DE BAIE ÉLECTRONIQUE (ASS)	211
BOULONNERIE DE FAISCEAU DE CABLES	212
RECHAUFFEUR DE CARBURANT (ASS)	213
EAU DES CHEMISES - RECHAUFFEUR (ASS)	216
VERSION DE MONTAGE DE CAES	219
VERSION DE MONTAGE-COMMUNICATION	219
PLAFONNIER (ASS)	220
LAMPE - PHARE (ASS)	221
PHARE AV (ASS)	224
LAMPE - CLIGNOTANT DE DIRECTION (ASS)	226
ÉCLAIRAGE - AUXILIAIRE (ASS)	227
ÉCLAIRAGE - PROJECTEURS (ASS)	228
ÉCLAIRAGE-FEUX D'ARRÊT (ASS)	236
MONTAGE DE CAMÉRA (ASS)	237
CAPTEUR - MOTEUR (ASS)	238
CAPTEUR DE TEMPERATURE D'ECHAPPEMENT (ASS)	245
CAPTEUR DE NIVEAU DU LIQUIDE (ASS)	246
SONDE - CIRCUIT DE CARBURANT	247
CAPTEUR DE PRESSION (ASS)	248
CAPTEUR DE VITESSE (ASS)	258
CAPTEUR DE TEMPERATURE (ASS)	265
AUXILIAIRE DE DÉMARRAGE À L'ÉTHER	270
DÉMARREUR ÉLECTRIQUE (ASS)	272
INTERRUPTEUR - DÉRIVATION (ASS)	279
ROBINET DE BATTERIE (ASS)	280
CONTACTEUR DE FREIN MOTEUR (ASS)	281
CONTACTEUR DE LIMITE (ASS)	282
CONTACTEUR - NIVEAU DE LIQUIDE (ASS)	283

* TRADUCTION NON DISPONIBLE AU MOMENT DE LA PUBLICATION

TABLE DES MATIÈRES

Désignation	Page
CONTACTEUR MAGNETIQUE (ASS)	284
MANOCONTACT	288
INTERRUPTEUR À BASCULE (ASS)	289
INTERRUPTEUR D'ESSUIE-GLACE (ASS)	290
SOUPAPE DE DÉMARRAGE À L'ÉTHER (ASS)	291
CÂBLAGE DE COMMANDE DE GRAISSAGE AUTOMATIQUE (ASS)	292
CÂBLAGE D'AMORTISSEUR (ASS)	294
CABLAGE DE CABINE (ASS)	299
CÂBLAGE DE CAMÉRA (ASS)	309
CABLAGE DE CHASSIS (ASS)	310
CÂBLAGE DE COMMUNICATION (ASS)	312
*WIRING GP-CONVERTER	314
CÂBLAGE DE NICHE ÉLECTRONIQUE (ASS)	315
CABLAGE DE MOTEUR (ASS)	319
CABLAGE - ELECTRONIQUE DU MOTEUR (ASS)	325
CABLAGE AV (ASS)	328
CABLAGE DE LA MACHINE (ASS)	330
CÂBLAGE DE CIRCUIT DE RENOUVELLEMENT D'HUILE (ASS)	346
CABLAGE DE TRANSMISSION (ASS)	348
CABLAGE AR (ASS)	350
CÂBLAGE BÂTI ROPS	353
CÂBLAGE DE CENTRE D'ENTRETIEN	357
TRANSMISSION	358
ESSIEU FIXE (VERSION)	358
ESSIEU OSCILLANT (VERSION)	358
ESSIEU FIXE	359
ESSIEU OSCILLANT	361
BLOC - HYDRAULIQUE (ASS)	364
TRAINS PLANÉTAIRES - CARTER ET PIÈCES	366
CARTER D'ENGRENAGES DE TRANSFERT	368
COMMANDE HYDRAULIQUE DE BOÎTE (ASS)	369
COURONNE ET DIFFERENTIEL (ASS)	370
DIFFERENTIEL (ASS)	376
VIDANGE-ÉCOLOGIE (ASS)	377
FILTRE ET MONTAGE - TRANSMISSION (ASS)	378
FILTRE A HUILE (ASS)	380
REGARD DE NIVEAU (ASS)	385
PIGNONNERIE D'ENTREE DE TRANSFERT (ASS)	386
ENGRENAGE DE TRANSFERT DE RENDEMENT (ASS)	388
CANALISATIONS DE REFROIDISSEUR D'HUILE D'ESSIEU (ASS)	392
CANALISATIONS D'ÉVENT D'ESSIEU (ASS)	401
CANALISATIONS D'HUILE DE TRANSMISSION (ASS)	405
COLLECTEUR - COMMANDE (ASS)	412
MONTAGE D'ESSIEU (ASS)	413
MONTAGE DE JANTE (ASS)	414
CONVERTISSEUR DE COUPLE - MONTAGE (ASS)	414
BOÎTE PLANÉTAIRE (ASS)	415
TRANSMISSION (VERSION)	420
POMPE ET MOTEUR - NETTOYEUR D'HUILE D'ESSIEU (ASS)	421
POMPE ET MONTAGE DE REFROIDISSEUR D'HUILE D'ESSIEU	422
POMPE DE BOÎTE DE VITESSES (ASS)	423
JANTE (VERSION)	425
JANTE DÉMONTABLE (ASS)	426
ARBRE D'ENTRAÎNEMENT (ASS)	428
ARBRE DE TRANSMISSION D'ENTRÉE (ASS)	430
CARDAN COULISSANT (ASS)	431
CROISILLON ET ROULEMENT	432
SUPPORT DE TRANSMISSION (ASS)	433
PNEU ET JANTE (VERSION)	434
CONVERTISSEUR DE COUPLE ET CARTER (ASS)	439
CONVERTISSEUR DE COUPLE - VERROUILLAGE (ASS)	441
BOÎTE DE VITESSES (VERSION)	445
JOINT UNIVERSEL (ASS)	446
SOUPAPE ET MONTAGE - EMBRAYAGE DE VERROUILLAGE (ASS)	449
SOUPAPE DE MODULATION (ASS)	450
CLAPET DE DECHARGE (ASS)	452
SOUPAPE SÉLECTRICE (ASS)	453
SOUPAPE SELECTRICE ET REGULATRICE DE PRESSION	454
SOUPAPE - SOLÉNOÏDE (ASS)	456
SOUPAPE DE PRIORITÉ DE CONVERTISSEUR DE COUPLE (ASS)	459
DISTRIBUTEUR DE BOITE (ASS)	461
ROUE ET RÉDUCTEURS (ASS)	464
RÉDUCTEURS, ROUE ET FREIN (ASS)	466
CHÂSSIS ET BENNE	467
COUVERCLE DE VISITE (ASS)	467
PORTE DE VISITE (ASS)	469
BARRE D'ATTELAGE (ASS)	471

* TRADUCTION NON DISPONIBLE AU MOMENT DE LA PUBLICATION

TABLE DES MATIÈRES

Désignation	Page
CARENAGE - RESERVOIR HYDRAULIQUE (ASS)	472
GARDE-BOUE (ASS)	477
GARDE-BOUE AV (ASS)	481
GARDE-BOUE (ASS)	482
CLOISON PARE-FEU (ASS)	486
BÂTI AV (ENS)	488
BÂTI AR (ENS)	491
CARTER - BLINDAGE (ASS)	496
BLINDAGE DE TRANSMISSION (ASS)	497
PROTÈGE-RADIATEUR (ASS)	498
MAIN COURANTE (ASS)	500
*HARDWARE GP-HANDRAIL MOUNTING	505
ATTELAGE D'ARTICULATION (ASS)	510
CAPOT ET PROTECTION (ASS)	512
*INSULATION GP-RADIATOR SHIELD	517
ECHELLE (ASS)	519
CANALISATIONS DE GRAISSAGE AUTOMATIQUE (ASS)	524
CANALISATIONS DE GRAISSAGE (ASS)	531
LIAISON - VERROUILLAGE DE CHÂSSIS DE DIRECTION (ASS)	539
GRAISSAGE AUTOMATIQUE (VERSION)	540
MONTAGE DE PARE-CHOCS (ASS)	541
TABLEAU - CAISSON (ASS)	542
ÉCRAN THERMIQUE DE COMPARTIMENT MOTEUR	545
*SHIELD GP-RADIATOR	547
MARCHEPIED (ASS)	549
INSONORISATION (VERSION)	551
INSONORISATION (ASS)	552
VERSION DE RÉSERVOIR DE CARBURANT ET PARE-CHOCS	555
RÉSERVOIR - GRAISSE (ASS)	556
SOUPAPE DE DISTRIBUTION DE GRAISSAGE (ASS)	557
PASSERELLE (ASS)	559
CIRCUIT DE FREINS	560
ACCUMULATEUR - FREIN	560
SUPPORT - PÉDALE DE FREIN (ASS)	562
FREIN DE STATIONNEMENT (ASS)	564
FREIN DE MANOEUVRE (ASS)	566
COMMANDE DE LA PÉDALE DE FREIN (ASS)	568
COMMANDE DE FREIN DE STATIONNEMENT (ASS)	569
FREIN DE MANOEUVRE - COMMANDE (ASS)	570
CANALISATIONS DU FREIN DE MANOEUVRE (ASS)	581
POMPE ET MONTAGE - FREIN (ASS)	585
POMPE A PISTONS (ASS)	586
GROUPE DE ROTATION DE POMPE	587
FILTRE HAUTE PRESSION (ASS)	588
SOUPAPE ET MONTAGE - COMMANDE DE FREIN (ASS)	589
DISTRIBUTEUR DE FREIN (ASS)	591
DISTRIBUTEUR DE POMPE (ASS)	592
CIRCUIT DE DIRECTION	593
MECANISME DE COMMANDE DE POMPE (ASS)	593
CORPS DE POMPE (ASS)	596
VERIN DE DIRECTION ET MONTAGE (ASS)	597
VERIN DE DIRECTION (ASS)	598
FILTRE A HUILE (ASS)	599
TÊTE DE POMPE (ASS)	601
CANALISATION DE DIRECTION AUXILIAIRE	602
CANALISATIONS DE DIRECTION (ASS)	609
CANALISATIONS DE NEUTRALISATION DE DIRECTION (ASS)	617
CANALISATIONS DE REFROIDISSEUR D'HUILE DE DIRECTION	620
BOUCHON-DISTRIBUTEUR (ASS)	623
POMPE DE DIRECTION AUXILIAIRE ET MONTAGE (ASS)	624
POMPE DE DIRECTION ET MONTAGE (ASS)	625
POMPE A ENGRENAGES (ASS)	626
POMPE A PISTONS (ASS)	629
GROUPE DE ROTATION DE POMPE	631
FILTRE HAUTE PRESSION (ASS)	633
ARRÊT-DIRECTION (ASS)	634
SOUPAPE DE DIRECTION ET MONTAGE (ENS)	635
CLAPET DE RETENUE (ENS)	636
SOUPAPE PILOTE (ASS)	643
SOUPAPE - CARTOUCHE PILOTE (ASS)	644
DISTRIBUTEUR DE POMPE (ASS)	646
CLAPET DE DECHARGE (ASS)	649
SOUPAPE SELECTRICE ET REGULATRICE DE PRESSION	653
VANNE PILOTE (ASS)	654
SOUPAPE DE DIRECTION (ASS)	655
SOUPAPE DE NEUTRALISATION DE DIRECTION (ASS)	659

* TRADUCTION NON DISPONIBLE AU MOMENT DE LA PUBLICATION

TABLE DES MATIÈRES

Désignation	Page
CIRCUIT HYDRAULIQUE	660
REFROIDISSEUR D'HUILE HYDRAULIQUE ET DE DIRECTION	660
VÉRIN DE LEVAGE ET MONTAGE (ASS)	662
VÉRIN DE LEVAGE (ASS)	664
VÉRIN D'INCLINAISON (ASS)	670
FILTRE ET CANALISATIONS - VIDANGE DE CARTER	674
FILTRE A HUILE (ASS)	678
GRAISSEUR HYDRAULIQUE (ASS)	680
VERSION HYDRAULIQUE	681
CANALISATIONS HYDRAULIQUES (ASS)	683
CANALISATIONS HYDRAULIQUES DE VENTILATEUR (ASS)	688
CANALISATIONS DE VÉRIN DE LEVAGE (ASS)	699
CANALISATIONS A COMMANDE PILOTE (ASS)	702
CANALISATIONS DU VÉRIN D'INCLINAISON (ASS)	710
MOTEUR ET MONTAGE DE VENTILATEUR HYDRAULIQUE (ASS)	714
GROUPE DE MOTEUR A PISTONS	715
PISTON - VÉRIN HYDRAULIQUE (ASS)	716
ARTICULATION DE SOUPAPE PILOTE (ASS)	717
POMPE ET MONTAGE-VENTILATEUR HYDRAULIQUE	718
POMPE D'EQUIPEMENT ET MONTAGE (ASS)	719
POMPE & GROUPE DE MONTAGE-PILOTE D'ÉQUIPEMENT	721
POMPE A ENGRENAGES (ASS)	722
POMPE A PISTONS (ASS)	725
GROUPE DE ROTATION DE MOTEUR	727
GROUPE DE ROTATION DE POMPE	729
RÉSERVOIR HYDRAULIQUE ET MONTAGE (ASS)	730
RÉSERVOIR HYDRAULIQUE (ASS)	732
SOUPAPE ET MONTAGE - VENTILATEUR HYDRAULIQUE (ASS)	737
COMMANDE PRINCIPALE DE SOUPAPE ET MONTAGE (ASS)	739
SOUPAPE ET MONTAGE - SOLÉNOÏDE	740
DISTRIBUTEUR (ASS)	741
SOUPAPE DE VENTILATEUR À VITESSE VARIABLE (ASS)	745
CLAPET DE COMPENSATION (ASS)	746
SOUPAPE A COMMANDE MANUELLE (ASS)	747
SOUPAPE PILOTE (ASS)	748
SOUPAPE - CARTOUCHE PILOTE (ASS)	750
DISTRIBUTEUR DE POMPE (ASS)	752
CLAPET DE DECHARGE (ASS)	753
SOUPAPE DE SÉQUENCE (ASS)	755
VANNE PILOTE (ASS)	757
SOUPAPE - SOLÉNOÏDE (ASS)	758
DISTRIBUTEUR D'INCLINAISON (ASS)	760
ÉQUIPEMENTS	761
VERSION DE BULLDOZER	761
STABILISATEUR - BRAS DE POUSSEE (ASS)	762
AXE DE BULLDOZER (ASS)	763
BRAS DE POUSSÉE (ASS)	765
TOURILLON DE BULLDOZER (ASS)	769
OUTILS DE TRAVAIL	770
LAME - CHARBON (ENS)	770
LAME SEMI-UNIVERSELLE (ENS)	770
LAME - CHARBON (ASS)	773
LAME SEMI-UNIVERSELLE (ASS)	775
POSTE DE CONDUITE	778
ACCUMULATEUR ET MONTAGE DE RÉFRIGÉRANT (ASS)	778
REGLAGE DE SIEGE (ASS)	780
SIÈGE - COMPRESSEUR D'AIR (ASS)	781
CLIMATISEUR (VERSION)	782
CLIMATISEUR (ASS)	783
BRAS D'ESSUIE-GLACE (ASS)	787
COFFRE DE RANGEMENT (ASS)	788
CABINE ET PLATE-FORME (ASS)	790
CABINE (VERSION)	792
CABINE (ASS)	793
COMPRESSEUR DE REFRIGERANT (ASS)	796
CONDENSATEUR ET MONTAGE (RÉFRIGÉRANT)	797
COMMANDE DE POIGNÉE (ASS)	798
COMMANDE HYDRAULIQUE PILOTE (ASS)	799
COMMANDE DE DIRECTION (ASS)	802
COMMANDE DE BRAS (ASS)	804
VERROUILLAGE DE COMMANDE STIC	807
COUVERCLE - CABINE (ASS)	809
PORTE DE VISITE (ASS)	811
PORTIÈRE DE CABINE (ASS)	813

* TRADUCTION NON DISPONIBLE AU MOMENT DE LA PUBLICATION

TABLE DES MATIÈRES

Désignation	Page
GAINE D'AIR (ASS)	815
FILTRE À AIR DE CABINE (ASS)	816
MONTAGE DE RADIO (ASS)	818
VERROU (ASS)	819
LOQUET - PORTE DE CABINE ET GLACE	820
CABINE - REVÊTEMENT (ASS)	823
CANALISATIONS DE CLIMATISEUR (ASS)	827
CANALISATIONS DE CHAUFFAGE DE CABINE (ASS)	829
RÉTROVISEUR (ASS)	830
MODULE (ASS)-CENTRE DE MESSAGE	831
MODULE (ASS)-TOUCHE DE MODULE DE SURVEILLANCE	832
MODULE - QUATRE INSTRUMENTS (ASS)	833
MOTEUR D'ESSUIE-GLACE (ASS)	834
MONTAGE-ANTENNE (ASS)	838
MONTAGE DE MONITEUR (ASS)	841
MONTAGE DE PLATE-FORME (ASS)	843
MONTAGE DU TOIT ROPS (ASS)	844
POSTE DE CONDUITE (VERSION)	845
COUVERCLE INFÉRIEUR-DOSSIER (ASS)	846
SIEGE - COUVERCLE INFERIEUR (ASS)	848
TABLEAU DE BORD (ASS)	849
RÉGULATEUR - PÉDALE (ASS)	852
PLATE-FORME DE CABINE	853
VERSION DE PRÉFILTRE À AIR DE CABINE	858
PRÉFILTRE À AIR DE CABINE (ASS)	859
RADIO (ASS)	860
SIÈGE INCLINABLE (ASS)	865
ROPS (VERSION)	866
TOIT ROPS (ASS)	867
ÉTANCHÉITÉ - GLACE (ASS)	869
CEINTURE DE SECURITE (ASS)	870
SIÈGE (ASS)	871
SIEGE PASSAGER (ASS)	878
SIÈGE AVEC SUSPENSION (ASS)	881
PORTE DE CABINE - RESSORT (ASS)	884
SUPPORT DE COMMANDE HYDRAULIQUE (ASS)	886
SUPPORT DE SIÈGE (ASS)	889
SUPPORT DE COMMANDE DE DIRECTION (ASS)	890
SIÈGE AVEC SUSPENSION (ASS)	893
LAVE-GLACE - VITRE (ASS)	895
ESSUIE-GLACE ET LAVE-GLACE	896
ESSUIE-GLACE (ASS)	898

Désignation	Page
MATÉRIEL ET FOURNITURES D'ENTRETIEN	902
CARÉNAGE DU CENTRE D'ENTRETIEN (ASS)	902
PLAQUE SIGNALÉTIQUE (ASS)	903
AUTOCOLLANT (ASS)-INTERNATIONAL	906
*FILM GP-SERVICE CENTER	907
AUTOCOLLANT (ASS)-ÉTATS-UNIS	908
CANALISATIONS DE DIAGNOSTIC (ASS)	909
PLAQUE D'IDENTIFICATION MOTEUR (ASS)	914
PROTECTION ANTIVANDALISME (ASS)	915
VERSION DE CENTRE D'ENTRETIEN	917
CENTRE D'ENTRETIEN (ASS)	918
INDEX DE NUMÉROS DE PIÈCES	B1

* TRADUCTION NON DISPONIBLE AU MOMENT DE LA PUBLICATION

CONTENIDO

Nombre	Página
INFORMACIÓN GENERAL	A36
ALTERNATIVAS DE REPARACIÓN	A50
ADITIVOS DE REFRIGERANTE SUPLEMENTARIOS	A55
PIEZAS DE MANTENIMIENTO	A66
INDICE	A103
CONFIGURACIÓN DE MÁQUINAS	1
CHASIS (CONFIG)	1
CONFIGURACIÓN COMÚN	2
CONFIGURACION DE MOTOR	3
CONFIGURACIÓN DE MOTORES	3
CONFIGURACIÓN DE MOTOR COMPLETO	7
MOTOR - NÚCLEO (CONFIG)	17
CONFIGURACIÓN DE INSTALACIÓN DEL MOTOR	19
MOTOR BÁSICO	21
GRUPO DE ACSESORIO-MOTOR	21
GRUPO ACCIONADOR, VALVULA	23
BASE DE LA TAPA DE VÁLVULAS Y MAZO DE CABLES DE INYECTOR (GR)	25
ÁRBOL DE LEVAS (GR)	29
TAPA DEL BLOQUE MOTOR (GR)	30
TAPA DEL INSONORIZADOR (GR)	36
TAPA DEL MECANISMO DE VÁLVULAS (GR)	37
CIGÜEÑAL (GR)	42
BLOQUE MOTOR (CONJ)	43
BLOQUE MOTOR (GR)	46
CULATA DE CILINDROS (CONJ)	48
CULATA DE CILINDROS (GR)	50
AMORTIGUADOR DE VIBRACIONES (GR)	53
EXTENSIÓN DE DRENAJE (GR)	55
VOLANTE (GR)	56
ENGRANAJE DELANTERO (GR)	57
ENGRANAJE TRASERO (GR)	59
VOLANTE - CAJA DE (GR)	61
CAJA DELANTERA (GR)	63
*HOUSING GP-REAR	64
CÁNCAMOS DE LEVANTAMIENTO DEL MOTOR (GR)	65
BOMBA DE COMBUSTIBLE Y MECANISMO DE VÁLVULAS (GR)	67
MONTAJE DE ALTERNADOR Y COMPRESOR (GR)	69
CÁRTER - COLECTOR DEL (GR)	70
PISTÓN Y BIELA (GR)	71
TAPÓN DEL BLOQUE MOTOR (GR)	74
TAPÓN DE CULATA (GR)	75
BALANCÍN (GR)	76
MOTOR - SOPORTE DEL (GR)	80
SISTEMA DE LUBRICACIÓN	82
TORNILLERÍA DE MONT. DE LA BOMBA DE ACEITE (GR)	82
TUBO DE LLENADO DE ACEITE (GR)	83
FILTRO DE ACEITE DEL MOTOR (GR)	84
ESCAPE DE GASES (GR)	85
INDICADOR DEL NIVEL DE ACEITE (VARILLA) (GR)	86
TUBERÍAS DE ACEITE DEL MOTOR (GR)	88
TUBERÍAS DEL FILTRO DE ACEITE DEL MOTOR	90
TUBERIAS DE ACEITE (GR)	97
TURBOCOMPRESOR - TUBERÍAS DE ACEITE DEL (GR)	99
DOSIFICADOR DE ACEITE DE MOTOR (GR)	101
BOMBA DE ACEITE DEL MOTOR (GR)	103
CONFIGURACIÓN DE RENOVACIÓN DE ACEITE	104
*TANK & MTG GP-ENGINE OIL	105
GRUPO DE TANQUE, ACEITE DEL MOTOR	106
VÁLVULA DE DOSIFICACIÓN (GR)	107
SISTEMA DE ENFRIAMIENTO	108
NÚCLEO DEL ENFRIADOR DE ACEITE (GR)	108
SUCCIÓN - VENTILADOR DE (GR)	109
TUBERÍAS DEL AGUA (GR)	111
BOMBA DE AGUA (GR)	116
RADIADOR (GR)	118
PROTECTOR DE RADIADOR (GR)	124
TAPA DEL TANQUE DE RADIADOR (GR)	126
VÁLVULA DE DRENAJE DEL RADIADOR (GR)	129
SISTEMA DE AIRE DE ADMISIÓN Y ESCAPE	130
POSENFRIADOR DE AIRE (GR)	130
FILTRO DE AIRE (GR)	131
EXPULSOR DE POLVO (GR)	134
TUBERÍAS DE POSENFRIADOR DE AIRE (CONJ)	135
AIRE - TUBERÍAS DE (GR)	136

* NO HAY TRADUCCION DISPONIBLE EN EL MOMENTO DE LA IMPRESION

CONTENIDO

Nombre	Página
GRUPO DE TUBERÍAS DE AIRE DEL TURBOCOMPRESOR	140
MÚLTIPLE DE ESCAPE (GR)	141
SILENCIADOR (GR)	144
PROTECTOR TÉRMICO (GR)	145
GRUPO DE SOPORTE DEL POSENFRIADOR	148
TURBOCOMPRESOR (GR)	150
SISTEMA DE COMBUSTIBLE	153
ADAPTADOR DE LLENADO RÁPIDO DE COMBUSTIBLE (GR)	153
ENFRIADOR DEL COMBUSTIBLE (GR)	155
DRENAJE DE COMBUSTIBLE (GR)	158
FILTRO DE COMBUSTIBLE Y SEPARADOR DE AGUA (GR)	159
COMBUSTIBLE-LLENADO CONVENCIONAL (CONFIG)	160
LLENADO RÁPIDO DE COMBUSTIBLE (CONFIG)	160
TUBERÍAS DE COMBUSTIBLE (GR)	161
TUBERÍAS DEL FILTRO DE COMBUSTIBLE	166
MONTAJE DE FILTRO DE COMBUSTIBLE (GR)	176
BOMBA DE TRANSFERENCIA DE COMBUSTIBLE Y MONTAJE (GR)	183
BOMBA DE INYECCIÓN DE COMBUSTIBLE (GR)	184
BOMBA DE TRANSFERENCIA DE COMBUSTIBLE (GR)	185
COMBUSTIBLE - TANQUE DE (GR)	186
VÁLVULA DE RETENCIÓN (GR)	190
SEPARADOR DE AGUA Y BOMBA DE CEBADO DE COMBUSTIBLE (GR)	191
SISTEMA ELECTRICO Y DE ARRANQUE	192
ALARMA (GR)	192
BATERÍA Y CABLES (GR)	193
BATERÍA (GR)	198
SENSOR DE AMORTIGUADOR (GR)	199
CONFIGURACIÓN DE CÁMARA	200
CONEXIÓN ELÉCTRICA (GR)	201
CONTROL ELECTRÓNICO DEL MOTOR Y MONTAJE	202
CONTROL DE COMUNICACION (GR)	204
CONTROL NO PROGRAMADO (GR)	205
CONFIGURACIÓN ELÉCTRICA	206
ELECTRONICA DE MONITOR (GR)	206
TREN DE FUERZA-GRUPO ELECTRÓNICO	210
*ENCLOSURE GP-ELECTRONICS BAY	211
TORNILLERIA DE MAZO DE CABLES (GR)	212
CALENTADOR DEL COMBUSTIBLE (GR)	213
AGUA DE LAS CAMISAS - CALENTADOR DEL (GR)	216
INSTALACIÓN CAES (CONFIG)	219
INSTALACION DE COMUNICATION (CONFIG)	219
LÁMPARA DEL TECHO (GR)	220
REFLECTOR (GR)	221
LÁMPARA DE FARO DELANTERO (GR)	224
LUZ DE SEÑAL DE GIRO (GR)	226
LUCES AUXILIARES (GR)	227
LUCES DE REFLECTOR (GR)	228
LUCES DE PARADA (GR)	236
GRUPO DE MONTAJE DE CÁMARA	237
SENSOR DEL MOTOR (GR)	238
SENSOR DE TEMPERATURA DE ESCAPE (GR)	245
SENSOR DEL NIVEL DE LÍQUIDO	246
DETECTOR DE POSICIÓN (SISTEMA DE COMBUST.) (GR)	247
SENSOR DE PRESIÓN (GR)	248
SENSOR DE VELOCIDAD (GR)	258
SENSOR DE TEMPERATURA (GR)	265
AUXILIAR DE ARRANQUE CON ÉTER (GR)	270
MOTOR DE ARRANQUE ELÉCTRICO (GR)	272
INTERRUPTOR DE DERIVACIÓN	279
DISYUNTOR (GR)	280
INTERRUPTOR DEL FRENO DE MOTOR (GR)	281
INTERRUPTOR LÍMITE (GR)	282
INTERRUPTOR DE NIVEL DE LIQUIDO (GR)	283
INTERRUPTOR MAGNÉTICO (GR)	284
INTERRUPTOR DE PRESIÓN (GR)	288
INTERRUPTOR DE VOLQUETE (GR)	289
INTERRUPTOR DEL LIMPIADOR (GR)	290
GRUPO DE VÁLVULA-ARRANQUE CON ÉTER	291
GRUPO DE CABLES-CONTROL DE AUTOLUBRICACIÓN	292
CABLES DEL PARAGOLPES (GR)	294
CABLES DE LA CABINA (GR)	299
GRUPO DE CABLES DE CÁMARA	309
CABLES DEL CHASIS (GR)	310

* NO HAY TRADUCCION DISPONIBLE EN EL MOMENTO DE LA IMPRESION

CONTENIDO

Nombre	Página
ALAMBRADO DE COMUNICACION (GR)	312
*WIRING GP-CONVERTER	314
*WIRING GP-ELECTRONICS BAY	315
CABLES DEL MOTOR (GR)	319
CABLES DEL SISTEMA ELECTRÓNICO DEL MOTOR (GR)	325
CABLES DELANTEROS (GR)	328
CABLES DE LA MÁQUINA (GR)	330
*WIRING GP-OIL RENEWAL SYSTEM	346
CABLES DEL TREN DE FUERZA (GR)	348
CABLES POSTERIORES (GR)	350
CABLES DE LA ESTRUCTURA ROPS (GR)	353
*WIRING GP-SERVICE CENTER	357
TREN DE FUERZA	358
EJE FIJO (CONFIG)	358
EJE OSCILANTE (CONFIG)	358
EJE FIJO (GR)	359
EJE OSCILANTE (GR)	361
BLOQUE HIDRÁULICO (GR)	364
CAJA Y PIEZAS DE LOS PLANETARIOS	366
CAJA DE ENGRANAJE DE TRANSFERENCIA (GR)	368
CONTROL HIDRÁULICO DE LA TRANSMISIÓN (GR)	369
DIFERENCIAL Y CORONA (GR)	370
DIFERENCIAL (GR)	376
DRENAJE DE SEGURIDAD ECOLÓGICA (GR)	377
FILTRO Y MONTAJE DEL TREN DE FUERZA (GR)	378
FILTRO DE ACEITE (GR)	380
MIRILLA DE MEDIDOR (GR)	385
ENGRANAJE DE TRANSFERENCIA DE ENTRADA (GR)	386
ENGRANAJE DE TRANSFERENCIA DE SALIDA	388
TUBERÍAS DEL ENFRIADOR DE ACEITE DEL EJE (GR)	392
TUBERÍAS DE VENTILACIÓN DEL EJE (GR)	401
TUBERÍAS DE ACEITE DEL TREN DE FUERZA (GR)	405
CONTROL DEL MULTIPLE (GR)	412
EJE - GRUPO DE MONTAJE	413
MONTAJE DE ARO	414
MONTAJE DEL CONVERTIDOR DE PAR (GR)	414
TRANSMISIÓN PLANETARIA (GR)	415
TREN DE FUERZA (CONFIG)	420
BOMBA Y MOTOR DEL ENFRIADOR DEL ACEITE DEL EJE (GR)	421
BOMBA DEL ENFRIADOR DE ACEITE DEL EJE Y MONTAJE (GR)	422
BOMBA DE LA TRANSMISIÓN (GR)	423
LLANTA (CONFIG)	425
ARO DESMONTABLE (GR)	426
EJE DE MANDO (GR)	428
EJE DE MANDO DE ENTRADA (GR)	430
JUNTA DESLIZANTE (GR)	431
CRUCETA Y COJINETE (GR)	432
SOPORTE DE LA TRANSMISIÓN (GR)	433
ARO Y RUEDA	434
CONVERTIDOR DE PAR Y CAJA (GR)	439
TRABA DEL CONVERTIDOR DE PAR (GR)	441
TRANSMISION (CONFIG)	445
JUNTA UNIVERSAL (GR)	446
VÁLVULA DEL EMBRAGUE DE DESCONEXIÓN Y MONTAJE (GR)	449
VÁLVULA DE MODULACIÓN (GR)	450
VÁLVULA DE ALIVIO (GR)	452
VÁLVULA SELECTORA (GR)	453
VÁLVULA SELECTORA Y DE CONTROL DE PRESIÓN (GR)	454
VÁLVULA DE SOLENOIDE (GR)	456
VÁLVULA DE PRIORIDAD DEL CONVERTIDOR DE PAR (GR)	459
VÁLVULA DE CONTROL DE LA TRANSMISIÓN (GR)	461
RUEDA Y MANDOS FINALES	464
MANDOS FINALES, RUEDA Y FRENO (GR)	466
BASTIDOR Y CAJA	467
GRUPO DE TAPA, ACCESO	467
PUERTA DE ACCESO (GR)	469
BARRA DE TIRO (GR)	471
COMPARTIMIENTO DEL TANQUE HIDRÁULICO (GR)	472
GUARDABARROS (GR)	477
GUARDABARROS DELANTERO (GR)	481
GUARDABARROS PARA DESPLAZAMIENTO EN CARRETERA (GR)	482
MAMPARA ANTITÉRMICA (GR)	486
BASTIDOR DELANTERO (CONJ)	488
BASTIDOR TRASERO (CONJ)	491
CÁRTER - PROTECTOR DEL (GR)	496
PROTECTOR DEL TREN DE FUERZA (GR)	497
PROTECTOR DEL RADIADOR (GR)	498
*HANDRAIL GP	500

* NO HAY TRADUCCION DISPONIBLE EN EL MOMENTO DE LA IMPRESION

CONTENIDO

Nombre	Página
*HARDWARE GP-HANDRAIL MOUNTING	505
ENGANCHE ARTICULADO (GR)	510
CAPO Y PROTECTOR (GR)	512
*INSULATION GP-RADIATOR SHIELD	517
ESCALERILLA (GR)	519
GRUPO DE TUBERIAS DE LUBRICACIÓN AUTOMÁTICA	524
TUBERÍAS DE ENGRASE (GR)	531
TUBERÍAS DE LUBRICACIÓN (GR)	537
TIRANTE DE TRABA DEL BASTIDOR DE DIRECCIÓN (GR)	539
LUBRICACION AUTOMATICA (CONFIG)	540
MONTAJE DEL PARACHOQUES (GR)	541
PANEL DEL CAPÓ (GR)	542
PROTECTOR TÉRMICO DEL COMPARTIMIENTO DEL MOTOR (GR)	545
*SHIELD GP-RADIATOR	547
ESTRIBO DEL OPERADOR (GR)	549
INSONORIZADOR (CONFIG)	551
INSONORIZADOR (GR)	552
CONFIGURACION DE PARAGOLPE Y TANQUE-COMBUSTIBLE	555
TANQUE DE GRASA (GR)	556
VÁLVULA DE DISTRIBUCIÓN DE LUBRICACIÓN (GR)	557
PASARELA (GR)	559
SISTEMA DE FRENOS	560
ACUMULADOR DEL FRENO (GR)	560
BASE DEL FRENO DE PIE (GR)	562
FRENO DE ESTACIONAMIENTO (GR)	564
FRENO DE SERVICIO (GR)	566
CONTROL DEL PEDAL DE FRENO (GR)	568
CONTROL DEL FRENO DE ESTACIONAMIENTO	569
FRENO DE SERVICIO - CONTROL (GR)	570
TUBERÍAS DEL FRENO DE SERVICIO (GR)	581
BOMBA Y MONTAJE DEL FRENO (GR)	585
BOMBA DE PISTONES (GR)	586
GRUPO GIRATORIO DE BOMBA	587
REJILLA DE ALTA PRESION (GR)	588
VÁLVULA Y MONTAJE DEL CONTROL DE FRENO (GR)	589
VÁLVULA DE CONTROL DEL FRENO (GR)	591
VALVULA DE CONTROL DE LA BOMBA (GR)	592
SISTEMA DE DIRECCIÓN	593
ACTIVADOR DE LA BOMBA (GR)	593
CAÑÓN DE LA BOMBA (GR)	596
CILINDRO DE DIRECCIÓN Y MONTAJE (GR)	597
CILINDRO DE DIRECCIÓN (GR)	598
FILTRO DE ACEITE (GR)	599
CABEZA DE BOMBA (GR)	601
TUBERÍAS DE LA DIRECCIÓN SECUNDARIA (GR)	602
TUBERÍAS DE DIRECCIÓN (GR)	609
TUBERÍAS DE NEUTRALIZACIÓN DE LA DIRECCIÓN (GR)	617
TUBERIAS DE ENFRIADOR DE ACEITE DE DIRECCION (GR)	620
TAPON DE VALVULA DE CONTROL (GR)	623
BOMBA Y MONTAJE DE LA DIRECCIÓN SECUNDARIA (GR)	624
BOMBA DE DIRECCIÓN Y MONTAJE (GR)	625
BOMBA DE ENGRANAJES (GR)	626
BOMBA DE PISTONES (GR)	629
GRUPO GIRATORIO DE BOMBA	631
REJILLA DE ALTA PRESION (GR)	633
TOPE DE DIRECCION (GR)	634
VÁLVULA DE DIRECCIÓN Y MONTAJE (GR)	635
VÁLVULA DE RETENCIÓN (GR)	636
VÁLVULA PILOTO (GR)	643
VALVULA PILOTO DE CARTUCHO (GR)	644
VALVULA DE CONTROL DE LA BOMBA (GR)	646
VÁLVULA DE ALIVIO (GR)	649
VÁLVULA SELECTORA Y DE CONTROL DE PRESIÓN (GR)	653
VÁLVULA DE LANZADERA (GR)	654
VÁLVULAS DE LA DIRECCIÓN (GR)	655
VÁLVULA NEUTRALIZADORA DE DIRECCIÓN (GR)	659
SISTEMA HIDRÁULICO	660
*COOLER GP-HYD & STEERING OIL	660
MONTAJE Y CILINDRO DE LEVANTAMIENTO (GR)	662
CILINDRO DE LEVANTAMIENTO (GR)	664
INCLINACIÓN HORIZONTAL - CILINDRO DE (GR)	670
FILTRO Y TUBERÍAS DE LA CAJA DE DRENAJE (GR)	674
FILTRO DE ACEITE (GR)	678
CONEXION HIDRAULICA (GR)	680

* NO HAY TRADUCCION DISPONIBLE EN EL MOMENTO DE LA IMPRESION

CONTENIDO

Nombre	Página
HIDRÁULICA (CONFIG)	681
TUBERÍAS HIDRÁULICAS (GR)	683
TUBERÍAS HIDRÁULICAS DEL VENTILADOR (GR)	688
CILINDRO DE LEVANTAMIENTO - TUBERÍAS DEL (GR)	699
TUBERÍAS CON SERVOMANDO (GR)	702
TUBERÍAS DEL CILINDRO DE INCLINACIÓN (GR)	710
MOTOR Y MONTAJE DE VENTILADOR HIDRAULICO (GR)	714
PISTONES DEL MOTOR (GR)	715
PISTÓN DE CILINDRO HIDRÁULICO (GR)	716
GRUPO DE PIVOTE, VÁLVULA PILOTO	717
BOMBA Y MONTAJE DE VENTILADOR HIDRAULICO (GR)	718
BOMBA DE IMPLEMENTOS Y MONTAJE (GR)	719
BOMBA Y MONTAJE DE PILOTO DE IMPLEMENTO	721
BOMBA DE ENGRANAJES (GR)	722
BOMBA DE PISTONES (GR)	725
GRUPO DE ROTACIÓN DEL MOTOR (GR)	727
GRUPO GIRATORIO DE BOMBA	729
TANQUE HIDRÁULICO Y MONTAJE (GR)	730
TANQUE HIDRÁULICO (GR)	732
VÁLVULA Y MONTAJE DEL VENTILADOR HIDRÁULICO (GR)	737
MONTAJE Y VALVULA DEL CONTROL PRINCIPAL (GR)	739
VALVULA DE SOLENOIDE Y MONTAJE (GR	740
VÁLVULA DE CONTROL (GR)	741
GRUPO DE VÁLVULA, VENTILADOR	745
VÁLVULA DE COMPENSACION (GR)	746
VÁLVULA DE CONTROL MANUAL (GR)	747
VÁLVULA PILOTO (GR)	748
VALVULA PILOTO DE CARTUCHO (GR)	750
VALVULA DE CONTROL DE LA BOMBA (GR)	752
VÁLVULA DE ALIVIO (GR)	753
VÁLVULA DE SECUENCIA (GR)	755
VÁLVULA DE LANZADERA (GR)	757
VÁLVULA DE SOLENOIDE (GR)	758
VALVULA DE CONTROL DE INCLINACION (GR)	760

Nombre	Página
IMPLEMENTOS	761
HOJA TOPADORA (CONFIG)	761
ESTABILIZADOR DEL BRAZO DE EMPUJE (GR)	762
PASADOR DE HOJA TOPADORA (GR)	763
BRAZO DE EMPUJE (GR)	765
MUÑÓN DE LA HOJA TOPADORA (GR)	769
HERRAMIENTAS	770
HOJA PARA CARBÓN (CONJ)	770
HOJA SEMIUNIVERSAL (CONJ)	770
HOJA PARA CARBÓN (GR)	773
HOJA SEMIUNIVERSAL (GR)	775
PUESTO DEL OPERADOR	778
ACUMULADOR DEL REFRIGERANTE Y MONTAJE (GR)	778
AJUSTADOR DEL ASIENTO (GR)	780
COMPRESOR DE AIRE DEL ASIENTO (GR)	781
ACONDICIONADOR DE AIRE (CONFIG)	782
ACONDICIONADOR DE AIRE (GR)	783
BRAZO DE LIMPIAPARABRISAS (GR)	787
CAJA DE ALMACENAMIENTO	788
CABINA Y PLATAFORMA (GR)	790
CABINA (CONFIG)	792
CABINA (GR)	793
COMPRESOR DE REFRIGERANTE (GR)	796
CONDENSADOR DEL REFRIGERANTE Y MONTAJE (GR)	797
CONTROL DE MANIJA (GR)	798
CONTROL HIDRÁULICO DE OPERACIÓN PILOTO (GR)	799
CONTROL DE DIRECCIÓN (GR)	802
CONTROL DE LA PALANCA (GR)	804
TRABA DE LA PALANCA DE CONTROL (GR)	807
TAPA DE LA CABINA (GR)	809
PUERTA DE ACCESO (GR)	811
PUERTA DE CABINA	813
CONDUCTO DE AIRE (GR)	815
FILTRO DE AIRE DE LA CABINA (GR)	816
INSTALACIÓN DE RADIO (GR)	818
RETÉN (GR)	819
PESTILLO DE PUERTA Y VENTANA DE LA CABINA (GR)	820
REVESTIMIENTO DE LA CABINA (GR)	823
TUBERÍAS DE ACONDICIONADOR DE AIRE (GR)	827

* NO HAY TRADUCCION DISPONIBLE EN EL MOMENTO DE LA IMPRESION

CONTENIDO

Nombre	Página
TUBERÍAS DE CALEFACCIÓN DE LA CABINA	829
RETROVISOR (GR)	830
MODULO CENTRAL DE MENSAJES(GR)	831
MODULO DEL TECLADO MONITOR (GR)	832
MODULO ELECTRÓNICO DE CUATRO INDICADORES (GR)	833
MOTOR-LIMPIAPARABRISAS (GR)	834
MONTAJE DE ANTENA (GR)	838
MONTAJE GR-MONITOR	841
MONTAJE DE LA PLATAFORMA (GR)	843
MONTAJE DE LA ESTRUCTURA ROPS (GR)	844
COMPARTIMIENTO DEL OPERADOR (CONFIG)	845
SOPORTE DEL RESPALDO (GR)	846
CUBIERTA INFERIOR DEL ASIENTO DEL OPERADOR (GR)	848
TABLERO DE INSTRUMENTOS (GR)	849
REGULADOR - PEDAL DEL (GR)	852
PLATAFORMA DE LA CABINA	853
*PRECLEANER AR-CAB AIR	858
GRUPO DE ANTEFILTRO DE AIRE DE CABINA	859
RADIO (GR)	860
RECLINACION DE ASIENTO (GR)	865
ESTRUCTURA ROPS (CONFIG)	866
ESTRUCTURA ROPS (GR)	867
SELLADO DEL VIDRIO (GR)	869
CINTURÓN DE SEGURIDAD (GR)	870
ASIENTO (GR)	871
ASIENTO PARA ACOMPAÑANTE (GR)	878
SUSPENSIÓN - ASIENTO CON (GR)	881
RESORTE DE LA PUERTA DE LA CABINA (GR)	884
SOPORTE DEL CONTROL HIDRÁULICO (GR)	886
SOPORTE DEL ASIENTO (GR)	889
SOPORTE DE CONTROL DE LA DIRECCIÓN (GR)	890
ASIENTO CON SUSPENSIÓN (GR)	893
LAVAPARABRISAS DE LA VENTANA (GR)	895
LIMPIA Y LAVAPARABRISAS (GR)	896
LIMPIAPARABRISAS DE LA VENTANA (GR)	898
EQUIPO DE SERVICIO Y SUMINISTROS	902
*ENCLOSURE GP-SERVICE CENTER	902
ETIQUETA DE ADVERTENCIA (GR)	903
*FILM GP-INTERNATIONAL	906
*FILM GP-SERVICE CENTER	907
*FILM GP-U.S.	908
GRUPO DE TUBERIAS DE DIAGNÓSTICO	909
PLACA DE IDENTIFICACIÓN DEL MOTOR (GR)	914
GRUPO DE PROTECCIÓN CONTRA EL VANDALISMO	915
*SERVICE CENTER AR	917
CENTRO DE SERVICIO GR	918
INDICE DE NUMEROS DE PIEZA	B1

* NO HAY TRADUCCION DISPONIBLE EN EL MOMENTO DE LA IMPRESION

ÍNDICE

Designação	Página
INFORMAÇÃO GERAL	A40
ALTERNATIVAS DE REPARO	A51
ADITIVOS SUPLEMENTARES DO LÍQUIDO ARREFECEDOR	A56
PEÇAS DE MANUTENÇÃO	A70
ÍNDICE	A116
MÁQUINA - ARRANJO	1
CHASSI	1
ARRANJO BÁSICO	2
MOTOR - ARRANJO	3
MOTOR	3
MOTOR COMPLETO	7
MOTOR - NÚCLEO	17
GRUPO DE INSTALAÇÃO - MOTOR	19
MOTOR BÁSICO	21
ACESSÓRIO - MOTOR	21
ACIONADOR - VÁLVULA	23
GR. BÁSICO - TAMPA DAS VÁLVULAS E CHICOTE DE INJEÇÃO	25
EIXO-COMANDO DE VÁLVULA	29
TAMPA - BLOCO DO MOTOR	30
TAMPA - REDUÇÃO DE RUÍDOS	36
TAMPA - MECANISMO DAS VÁLVULAS	37
VIRABREQUIM	42
BLOCO DO MOTOR	43
CABEÇOTE DO MOTOR	48
AMORTECEDOR	53
EXTENSÃO DO TUBO DE DRENAGEM	55
VOLANTE DO MOTOR	56
ENGRENAGENS DE DISTRIBUIÇÃO	57
ENGRENAGENS DE COMANDO TRASEIRO	59
CAIXA DO VOLANTE DO MOTOR	61
CAIXA DIANTEIRA	63
CAIXA TRASEIRA	64
LEVANTAMENTO DO MOTOR	65
MECANISMO DAS VÁLVULAS E BOMBA DE COMBUSTÍVEL	67
MONTAGEM - ALTERNADOR E COMPRESSOR	69
CÁRTER DO ÓLEO DO MOTOR	70
PISTÃO E BIELA	71
BUJÃO DO BLOCO DO CILINDRO	74
BUJÃO - CABEÇA DO CILINDRO	75
BALANCIM	76
SUPORTE DO MOTOR	80
SISTEMA DE LUBRIFICAÇÃO	82
FIXADORES - BOMBA DE ÓLEO DO MOTOR	82
BOCAL DE ENCHIMENTO DE ÓLEO DO MOTOR	83
FILTRO - ÓLEO DO MOTOR	84
ELIMINAÇÃO DE VAPORES DO CÁRTER	85
INDICADOR - NÍVEL DO ÓLEO (VARETA)	86
TUBOS - ÓLEO DO MOTOR	88
TUBOS - FILTRO DE ÓLEO DO MOTOR	90
TUBOS - SUPRIMENTO DE ÓLEO	97
TUBOS - ÓLEO DO TURBOALIMENTADOR	99
MEDIÇÃO - ÓLEO DO MOTOR	101
BOMBA DE ÓLEO - MOTOR	103
RENOVAÇÃO-ÓLEO	104
TANQUE E MONTAGEM-ÓLEO DO MOTOR	105
TANQUE - ÓLEO DO MOTOR	106
VÁLVULA - MEDIÇÃO	107
SISTEMA DE ARREFECIMENTO	108
COLMÉIA - ARREFECEDOR DE ÓLEO	108
VENTILADOR DE SUCÇÃO	109
TUBOS - ÁGUA	111
BOMBA DE ÁGUA	116
RADIADOR	118
DEFLETOR DO RADIADOR	124
TANQUE SUPERIOR DO RADIADOR	126
VÁLVULA DE DRENAGEM DO RADIADOR	129
SISTEMA DA ADMISSÃO DE AR E DE ESCAPE	130
PÓS-ARREFECEDOR DA ADMISSÃO DE AR	130
PURIFICADOR DE AR	131
EJETOR DE POEIRA	134
TUBULAÇÕES - AR DO PÓS-ARREFECEDOR	135
TUBOS - AR	136
TUBULAÇÕES - AR DO TURBOALIMENTADOR	140
COLETOR DE ESCAPE	141
SILENCIADOR	144
DEFLETOR TÉRMICO DE CALOR	145
SUPORTE - PÓS-ARREFECEDOR	148
TURBOALIMENTADOR	150

* TRADUÇÃO NÃO DISPONÍVEL NO MOMENTO DA IMPRESSÃO

ÍNDICE

Designação	Página
SISTEMA DE COMBUSTÍVEL	153
ADAPTADOR - ABASTECIMENTO RÁPIDO DE COMBUSTÍVEL	153
ARREFECEDOR DO COMBUSTÍVEL	155
DRENO DO COMBUSTÍVEL	158
FILTRO DE COMBUSTÍVEL E SEPARADOR DE ÁGUA	159
COMBUSTÍVEL - ABASTECIMENTO CONVENCIONAL	160
COMBUSTÍVEL - ABASTECIMENTO RÁPIDO	160
TUBOS - COMBUSTÍVEL	161
TUBOS - FILTRO DO COMBUSTÍVEL	166
MONTAGEM DO FILTRO DE COMBUSTÍVEL	176
BOMBA E MONTAGEM - TRANSFERÊNCIA DE COMBUSTÍVEL	183
BOMBA DE INJEÇÃO DO COMBUSTÍVEL	184
BOMBA DE TRANSFERÊNCIA DO COMBUSTÍVEL	185
TANQUE DE COMBUSTÍVEL	186
VÁLVULA DE RETENÇÃO	190
SEPARADOR DE ÁGUA E BOMBA DE ESCORVA DE COMBUSTÍVEL	191
SISTEMA ELÉTRICO E DE PARTIDA	192
ALARME	192
BATERIA E CABOS / FIOS ELÉTRICOS	193
BATERIA	198
AMORTECEDOR - SENSOR	199
CÂMERA	200
CONEXÃO - ELÉTRICA	201
CONTROLE ELETRÔNICO E MONTAGEM - MOTOR	202
CONTROLE-COMUNICAÇÃO	204
CONTROLE - NÃO PROGRAMADO	205
SISTEMA ELÉTRICO	206
SISTEMA ELETRÔNICO - MONITOR	206
SISTEMA ELETRÔNICO - TREM DE FORÇA	210
COBERTURTA- BAIA ELETRÔNICA	211
FIXADORES - CHICOTE	212
AQUECEDOR DO COMBUSTÍVEL	213
AQUECEDOR DA ÁGUA DO MOTOR	216
INSTALAÇÃO - CAES	219
INSTALAÇÃO-COMUNICAÇÃO	219
LÂMPADA - TETO	220
LÂMPADA - FAROL	221
FAROL DIANTEIRO	224
LÂMPADA - SINALIZAÇÃO	226
ILUMINAÇÃO - AUXILIAR	227
SISTEMA DE ILUMINAÇÃO - FARÓIS	228
ILUMINAÇÃO - FREIOS	236
MONTAGEM-CÂMERA	237
SENSOR DO MOTOR	238
SENSOR - TEMPERATURA DE ESCAPE	245
SENSOR - NÍVEL DE LÍQUIDO	246
EMISSOR - POSIÇÃO	247
SENSOR - PRESSÃO	248
SENSOR DE VELOCIDADE	258
SENSOR - TEMPERATURA	265
AUXILIAR DE PARTIDA A ÉTER	270
MOTOR ELÉTRICO DE PARTIDA	272
INTERRUPTOR DE DERIVAÇÃO	279
CHAVE GERAL	280
INTERRUPTOR DO FREIO - MOTOR	281
INTERRUPTOR - LIMITE	282
INTERRUPTOR - NÍVEL DO LÍQUIDO	283
INTERRUPTOR - MAGNÉTICO	284
INTERRUPTOR - PRESSÃO	288
INTERRUPTOR - BALANCIM	289
INTERRUPTOR - LIMPADOR DO PÁRA-BRISA	290
VALVULA - PARTIDA A ETER	291
FIAÇÃO - CONTROLE DE LUBRIFICAÇÃO AUTOMÁTICA	292
CABOS E FIOS ELÉTRICOS - PÁRA-CHOQUE	294
CABOS/FIOS ELÉTRICOS - CABINE	299
FIAÇÃO-CÂMERA	309
CABOS/FIOS ELÉTRICOS - CHASSI	310
CABO/FIOS ELÉTRICOS-COMUNICAÇÃO	312
CABOS/FIOS ELÉTRICOS - CONVERSOR	314
FIAÇAO-SALIÊNCIA DO SISTEMA ELETRÔNICO	315
CABOS/FIOS ELÉTRICOS - MOTOR	319
CABOS/FIOS ELÉTRICOS - SISTEMA ELETRÔNICO	325
CABOS/FIOS ELÉTRICOS - DIANTEIROS	328
CABOS/FIOS ELÉTRICOS - MÁQUINA	330
FIAÇÃO-SISTEMA DE RENOVAÇÃO DO ÓLEO	346
CABOS/FIOS ELÉTRICOS - TREM DE FORÇA	348
CABOS/FIOS ELÉTRICOS - TRASEIROS	350
CABOS/FIOS ELÉTRICOS - ESTRUTURA ROPS	353
FIAÇÃO-CENTRO DE SERVIÇO	357

* TRADUÇÃO NÃO DISPONÍVEL NO MOMENTO DA IMPRESSÃO

ÍNDICE

Designação	Página
TREM DE FORÇA	358
EIXO FIXO	358
EIXO OSCILANTE	358
EIXO FIXO	359
EIXO OSCILANTE	361
BLOCO HIDRÁULICO	364
CARCAÇA DAS ENGRENAGENS PLANETÁRIAS E COMPONENTES	366
CAIXA - ENGRENAGEM DE TRANSFERÊNCIA	368
CONTROLE HIDRÁULICO DA TRANSMISSÃO	369
DIFERENCIAL E COROA	370
DIFERENCIAL	376
DRENO - ECOLOGIA	377
FILTRO DO TREM DE FORÇA E MONTAGEM	378
FILTRO - ÓLEO	380
VISOR DE NÍVEL	385
ENGRENAGEM - TRANSFERÊNCIA DE ENTRADA	386
ENGRENAGENS DE SAÍDA DE TRANSFERÊNCIA	388
TUBOS - ARREFECEDOR DE ÓLEO DO EIXO	392
TUBOS - VENTILADOR DO EIXO	401
TUBOS - ÓLEO DA TRANSMISSÃO	405
COLETOR - CONTROLE	412
MONTAGEM DO EIXO	413
MONTAGEM - ARO	414
MONTAGEM - CONVERSOR DE TORQUE	414
ENGRENAGENS PLANETÁRIAS - TRANSMISSÃO	415
TREM DE FORÇA	420
BOMBA E MOTOR - ARREFECEDOR DE ÓLEO DO EIXO	421
BOMBA DO ARREFECEDOR DE ÓLEO DO EIXO E MONTAGEM	422
BOMBA DA TRANSMISSÃO	423
ARO	425
ARO DESMONTÁVEL	426
EIXO DE TRANSMISSÃO	428
EIXO DO COMANDO DE ENTRADA	430
JUNTA CORREDIÇA	431
CRUZETA E MANCAL	432
SUPORTE - TRANSMISSÃO	433
PNEU E ARO	434
CONVERSOR DE TORQUE E CARCAÇA	439
CONVERSOR DE TORQUE - TRAVA	441
TRANSMISSÃO	445
JUNTA UNIVERSAL	446
VÁLVULA DA EMBREAGEM DE TRAVAMENTO E MONTAGEM	449
VÁLVULA DE MODULAÇÃO	450
VÁLVULA DE ALÍVIO	452
VÁLVULA SELETORA	453
VÁLVULA SELETORA E CONTROLE DE PRESSÃO	454
VÁLVULA SOLENÓIDE	456
VÁLVULA DE PRIORIDADE DO CONVERSOR DE TORQUE	459
VÁLVULA DE CONTROLE - TRANSMISSÃO	461
RODA E COMANDO FINAL	464
RODA - COMANDO FINAL E FREIO	466
CHASSI E CARROCERIA	467
TAMPA - ACESSO	467
PORTA DE ACESSO	469
BARRA DE TRAÇÃO	471
COBERTURA - TANQUE HIDRÁULICO	472
PÁRA-LAMA	477
PÁRA-LAMA DIANTEIRO	481
PÁRA-LAMA	482
PAINEL TRASEIRO DO MOTOR	486
ARMAÇÃO DIANTEIRA	488
CHASSI TRASEIRO	491
PROTETOR - CÁRTER DO ÓLEO DO MOTOR	496
PROTETOR - TREM DE FORÇA	497
PROTETOR - RADIADOR	498
CORRIMAO, BALAUSTRE	500
*HARDWARE GP-HANDRAIL MOUNTING	505
ENGATE - ARTICULAÇÃO	510
CAPÔ E PROTETOR	512
*INSULATION GP-RADIATOR SHIELD	517
ESCADA	519
TUBULAÇÕES - LUBRIFICAÇÃO AUTOMÁTICA	524
TUBOS - GRAXA	531
TUBOS - LUBRIFICAÇÃO	537
ELO - TRAVA DA ARMAÇÃO DA DIREÇÃO	539
LUBRIFICAÇÃO - AUTOMÁTICA	540
MONTAGEM - PÁRA-CHOQUE	541
PAINEL DO CAPÔ	542
BLINDAGEM DO COMPARTIMENTO DO MOTOR	545
PROTETOR-RADIADOR	547
DEGRAU	549
RUÍDO - ARRANJO PARA SUPRESSÃO	551
REDUÇÃO DE RUÍDO	552

* TRADUÇÃO NÃO DISPONÍVEL NO MOMENTO DA IMPRESSÃO

ÍNDICE

Designação	Página
TANQUE E PÁRA-CHOQUE-COMBUSTÍVEL	555
TANQUE - GRAXA	556
VÁLVULA DE LUBRIFICAÇÃO - DISTRIBUIÇÃO	557
PASSADIÇO	559
SISTEMA DE FREIO	560
ACUMULADOR - FREIO	560
BASE DO FREIO - PEDAL	562
FREIO DE ESTACIONAMENTO	564
FREIO DE SERVIÇO	566
CONTROLE DO PEDAL DO FREIO	568
CONTROLE DO FREIO DE ESTACIONAMENTO	569
CONTROLE DO FREIO DE SERVIÇO	570
TUBOS - FREIO DE SERVIÇO	581
BOMBA DO FREIO E MONTAGEM	585
BOMBA DE PISTÃO	586
GRUPO ROTATIVO DA BOMBA	587
TELA - PRESSÃO ALTA	588
VÁLVULA DE CONTROLE E MONTAGEM - FREIOS	589
VÁLVULA DE CONTROLE DOS FREIOS	591
VÁLVULA DE CONTROLE DA BOMBA	592
SISTEMA DE DIREÇÃO	593
ACIONADOR DA BOMBA	593
CILINDRO DA BOMBA	596
CILINDRO DE DIREÇÃO E MONTAGEM	597
CILINDRO DA DIREÇÃO	598
FILTRO - ÓLEO	599
CABEÇA DA BOMBA	601
TUBOS - DIREÇÃO SECUNDÁRIA	602
TUBOS - DIREÇÃO	609
TUBOS - NEUTRALIZADOR DA DIREÇÃO	617
TUBOS - ARREFECEDOR DO ÓLEO DA DIREÇÃO	620
BUJÃO - VÁLVULA DE CONTROLE	623
BOMBA DA DIREÇÃO SECUNDÁRIA E MONTAGEM	624
BOMBA E MONTAGEM - DIREÇÃO	625
BOMBA DE ENGRENAGENS	626
BOMBA DE PISTÃO	629
GRUPO ROTATIVO DA BOMBA	631
TELA - PRESSÃO ALTA	633
BATENTE - DIREÇÃO	634
VÁLVULA DA DIREÇÃO E MONTAGEM	635
VÁLVULA DE RETENÇÃO	636
VÁLVULA DE CONTROLE PILOTO	643
VÁLVULA DO CARTUCHO PILOTO	644
VÁLVULA DE CONTROLE DA BOMBA	646
VÁLVULA DE ALÍVIO	649
VÁLVULA SELETORA E CONTROLE DE PRESSÃO	653
VÁLVULA DE SEPARAÇÃO	654
VÁLVULA DA DIREÇÃO	655
VÁLVULA - NEUTRALIZADOR DA DIREÇÃO	659
SISTEMA HIDRÁULICO	660
ARREFECEDOR-ÓLEO HIDRÁULICO E DE DIREÇÃO	660
CILINDRO DE LEVANTAMENTO E MONTAGEM	662
CILINDRO DE LEVANTAMENTO	664
CILINDRO DE INCLINAÇÃO	670
FILTROS E TUBOS - DRENAGEM DA CAIXA	674
FILTRO - ÓLEO	678
CONEXÃO - HIDRÁULICA	680
COMANDO HIDRÁULICO	681
TUBOS - ÓLEO HIDRÁULICO	683
TUBOS - VENTILADOR HIDRÁULICOS	688
TUBOS - CILINDRO DE LEVANTAMENTO	699
TUBOS - CIRCUITO PILOTO	702
TUBOS - CILINDRO DE INCLINAÇÃO	710
MOTOR E MONTAGEM - VENTILADOR HIDRÁULICO	714
MOTOR - PISTÃO	715
PISTÃO - CILINDRO HIDRÁULICO	716
ARTICULAÇÃO DA VÁLVULA PILOTO	717
BOMBA DO VENTILADOR HIDRÁULICO E MONTAGEM	718
BOMBA E MONTAGEM - ACESSÓRIO	719
BOMBA E MONTAGEM - PILOTO DO ACESSÓRIO	721
BOMBA DE ENGRENAGENS	722
BOMBA DE PISTÃO	725
MOTOR DO GRUPO ROTATIVO	727
GRUPO ROTATIVO DA BOMBA	729
TANQUE DE ÓLEO HIDRÁULICO E MONTAGEM	730
TANQUE HIDRÁULICO	732
VÁLVULA DO VENTILADOR HIDRÁULICO	737
VÁLVULA DO CONTROLE PRINCIPAL E MONTAGEM	739
VALVULA DO SOLENOIDE E MONTAGEM	740
VÁLVULA DE CONTROLE	741

* TRADUÇÃO NÃO DISPONÍVEL NO MOMENTO DA IMPRESSÃO

ÍNDICE

Designação	Página
VÁLVULA - VENTILADOR POR DEMANDA	745
VÁLVULA COMPENSADORA	746
VÁLVULA MANUAL	747
VÁLVULA DE CONTROLE PILOTO	748
VÁLVULA DO CARTUCHO PILOTO	750
VÁLVULA DE CONTROLE DA BOMBA	752
VÁLVULA DE ALÍVIO	753
VÁLVULA DE SEQUÊNCIA	755
VÁLVULA DE SEPARAÇÃO	757
VÁLVULA SOLENÓIDE	758
VÁLVULA DE CONTROLE DE INCLINAÇÃO	760
ACESSÓRIOS	761
LÂMINA	761
ELO ESTABILIZADOR	762
PINO DA LÂMINA	763
BRAÇO DE EMPUXO	765
MUNHÃO DA LÂMINA	769
FERRAMENTAS DE TRABALHO	770
LÂMINA PARA CARVÃO	770
LÂMINA SEMI-UNIVERSAL	770
LÂMINA PARA CARVÃO	773
LÂMINA SEMI-UNIVERSAL	775
ESTAÇÃO DO OPERADOR	778
ACUMULADOR DO REFRIGERANTE E MONTAGEM	778
AJUSTADOR DO ASSENTO	780
COMPRESSOR DE AR - ASSENTO	781
CONDICIONADOR DE AR	782
BRACO DO LIMPADOR	787
CAIXA DE ARMAZENAMENTO	788
CABINE E PLATAFORMA	790
CABINE	792
COMPRESSOR DE REFRIGERANTE	796
CONDENSADOR DO REFRIGERANTE E MONTAGEM	797
CONTROLE-CABO	798
CONTROLE HIDRÁULICO DE OPERAÇÃO PILOTO	799
CONTROLE DE DIREÇÃO	802
CONTROLE INTEGRADO DA TRANSMISSÂO DA DIREÇÃO	804
TRAVA - CONTROLE DO BRAÇO	807
TAMPA - CABINE	809
PORTA DE ACESSO	811
PORTA DA CABINE	813
DUCTO DE AR	815
FILTRO - AR DA CABINE	816
INSTALAÇÃO DO RÁDIO	818
TRINCO	819
TRINCO - PORTA DA CABINA E JANELA	820
REVESTIMENTO DA CABINE	823
TUBOS - AR CONDICIONADO	827
TUBOS - AQUECEDOR DA CABINE	829
ESPELHO RETROVISOR	830
MÓDULO - CENTRO DE MENSAGEM	831
MÓDULO - TECLADO DO MONITOR	832
MÓDULO ELETRÔNICO DE QUATRO INDICADORES	833
MOTOR - LIMPADOR DO VIDRO	834
MONTAGEM-ANTENA	838
MONTAGEM - MONITOR	841
MONTAGEM - PLATAFORMA	843
MONTAGEM - ESTRUTURA ROPS	844
CABINE	845
FUNDO - ENCOSTO	846
ASSENTO - FUNDO	848
PAINEL DE INSTRUMENTOS	849
PEDAL DO GOVERNADOR	852
PLATAFORMA DO OPERADOR	853
PRÉ-PURIFICADOR, AR DA CABINE	858
PRÉ-PURIFICADOR-AR DA CABINE	859
RÁDIO	860
RECLINAÇÃO - ASSENTO	865
ESTRUTURA ROPS	866
RETENÇÃO - VIDRO	869
CINTO DE SEGURANÇA	870
ASSENTO	871
ASSENTO DE PASSAGEIRO	878
ASSENTO COM SUSPENSÃO	881
MOLA - PORTA DA CABINA	884
SUPORTE - CONTROLE HIDRÁULICO	886
SUPORTE - ASSENTO	889
SUPORTE - CONTRÔLE DA DIREÇÃO	890
SUSPENSÃO - ASSENTO	893
LAVADOR DO VIDRO	895
LIMPADOR E LAVADOR - JANELA	896
LIMPADOR DO VIDRO	898
EQUIPAMENTOS DE SERVIÇO E SUPRIMENTOS	902
COBERTURA-CENTRO DE SERVIÇO	902
DECALQUE	903
ADESIVO-INTERNACIONAL	906
ADESIVO-CENTRO DE SERVIÇO	907
ADESIVO-EUA	908
TUBULAÇÕES DE DIAGNÓSTICO	909
PLACA - IDENTIFICAÇÃO DO MOTOR	914
PROTEÇÃO CONTRA VANDALISMO	915
CENTRO DE SERVIÇO	917

* TRADUÇÃO NÃO DISPONÍVEL NO MOMENTO DA IMPRESSÃO

ÍNDICE

Designação	Página	Designação	Página
ÍNDICE DE NÚMERO DE PEÇA	B1		

* TRADUÇÃO NÃO DISPONÍVEL NO MOMENTO DA IMPRESSÃO

INHALTSVERZEICHNIS

Bezeichnung	Seite
ALLGEMEINE HINWEISE	A44
REPARATURALTERNATIVEN	A52
KÜHLMITTELZUSATZ	A57
WARTUNGSTEILE	A74
STICHWORTVERZEICHNIS	A129
MASCHINE	1
FAHRWERK	1
GRUNDAUSFÜHRUNG	2
MOTOR	3
MOTORAUSFÜHRUNG	3
MOTOR, KOMPLETT	7
MOTORKÜHLERBLOCK	17
MOTOR-EINBAUSATZ	19
MOTOR (GRUNDAUSFÜHRUNG)	21
ZUSATZAUSRÜSTUNG - MOTOR	21
BETÄTIGUNGSVENTIL	23
SOCKEL FÜR VENTILDECKEL U. EINSPRITZKABELBAUM	25
NOCKENWELLE	29
MOTORBLOCKDECKEL	30
SCHALLDÄMPFENDE VERKLEIDUNG	36
VENTILDECKEL	37
KURBELWELLE	42
MOTORBLOCK	43
ZYLINDERKOPF	48
DÄMPFER	53
ABLASSVERLÄNGERUNG	55
SCHWUNGRAD	56
STIRNRAD	57
ZAHNRADVORGELEGE	59
SCHWUNGRADGEHÄUSE	61
STIRNRADGEHÄUSE	63
GEHÄUSE, HINTEN	64
MOTORHUBÖSE	65
KRAFTOFFPUMPE UND VENTILSTEUERUNG	67
DREHSTROMGENERATOR - UND KOMPRESSORAUFHAENGUNG	69
ÖLWANNE	70
PLEUELSTANGE UND KOLBEN	71
ZYLINDERBLOCKSCHRAUBE	74
ZYLINDERKOPFSTOPFEN	75
VENTILKIPPHEBEL	76
MOTORAUFHÄNGUNG	80
SCHMIERSYSTEM	82
ÖLPUMPEN-BEFESTIGUNGSTEILE	82
MOTORÖLEINFÜLLSTUTZEN	83
ÖLFILTER	84
ENTDUNSTER	85
ÖLMESSSTAB	86
MOTORÖLLEITUNGEN	88
MOTORÖLFILTERLEITUNGEN	90
ÖLZUFUHRLEITUNGEN	97
TURBOLADERÖLLEITUNGEN	99
DOSIERVORRICHTUNG - MOTORÖL	101
SCHMIERPUMPE	103
ÖLAUFFRISCHUNGSVORRICHTUNG	104
MOTORÖLTANK U. BEFESTIGUNG	105
MOTORÖLTANK	106
DOSIERVENTIL	107
KÜHLSYSTEM	108
ÖLKÜHLERBLOCK	108
SAUGLÜFTER	109
KÜHLWASSERLEITUNGEN	111
KÜHLWASSERPUMPE	116
KÜHLER	118
KÜHLERABDECKUNG	124
KÜHLERWASSERKASTEN, OBEN	126
KÜHLERABLASSVENTIL	129
LUFTANSAUG- UND ABGASSYSTEM	130
LADELUFTKÜHLER	130
LUFTREINIGER	131
STAUBAUSWERFER	134
LADELUFTKÜHLERLEITUNGEN	135
DRUCKLUFTLEITUNGEN	136
TURBOLADERLUFTLEITUNGEN	140
AUSPUFFKRÜMMER	141
SCHALLDÄMPFER	144
WÄRMESCHIRM	145
LADELUFTKÜHLERTRÄGER	148
TURBOLADER	150
KRAFTSTOFFSYSTEM	153
SCHNELLBETANKUNGSANSCHLUSS	153
KRAFTSTOFFKÜHLER	155
KRAFTSTOFFABLASS	158
WASSERABSCHEIDER- U. KRAFTSTOFFILTER	159
KRAFTSTOFFEINFÜLLVORRICHTUNG (STANDARD)	160
KRAFTSTOFFEINFÜLLVORRICHTUNG (SCHNELLFÜLLUNG)	160
KRAFTSTOFFLEITUNGEN	161
KRAFTSTOFFILTERLEITUNGEN	166
KRAFTSTOFFILTERBEFESTIGUNG	176

* ÜBERSETZUNG ZUM ZEITPUNKT DER DRUCKLEGUNG NICHT VORHANDEN

INHALTSVERZEICHNIS

Bezeichnung	Seite
KRAFTSTOFFÖRDERPUMPE UND BEFESTIGUNGSTEILE	183
KRAFTSTOFFEINSPRITZPUMPE	184
KRAFTSTOFFÖRDERPUMPE	185
KRAFTSTOFFTANK	186
SPERRVENTIL	190
WASSERABSCHEIDER U. KRAFTSTOFFENTLÜFTUNGSPUMPE	191
ELEKTRISCHE ANLAGE U. STARTSYSTEM	192
WARNVORRICHTUNG	192
BATTERIE UND VERDRAHTUNG	193
BATTERIE	198
PUFFER - SENSOR	199
KAMERA	200
ANSCHLUSS, ELEKTR.	201
STEUERUNGSEINHEIT, ELEKTRON. FÜR MOTOR UND BEFEST.	202
ÜBERTRAGUNGSSTEURUNG	204
STEUERUNG - NICHT PROGRAMMIERT	205
ELEKTR. ANLAGE	206
ELEKTRONIK - MONITOR	206
KRAFTÜBERTRAGUNGSELEKTRONIK	210
*ENCLOSURE GP-ELECTRONICS BAY	211
VERDRAHTUNGSKABELBAUMHALTETEILE	212
KRAFTSTOFFHEIZUNG	213
UMLAUFKÜHLWASSERHEIZUNG	216
EINBAUSATZ - CAES	219
ÜBERTRAGUNGSEINBAUSATZ	219
FAHRERHAUSBELEUCHTUNG	220
ARBEITSLEUCHTEN	221
FRONTSCHEINWERFER	224
BLINKLEUCHTE	226
ZUSATZBELEUCHTUNG	227
ARBEITSLEUCHTEN	228
BREMSBELEUCHTUNG	236
CAMERABEFESTIGUNG	237
MOTORSENSOR	238
AUSPUFFTEMPERATURSENSOR	245
FLÜSSIGKEITSSTANDSENSOR	246
STELLUNGSSENSOR	247
DRUCKSENSOR	248
DREHZAHLSENSOR	258
TEMPERATURSENSOR	265
ÄTHERSTARTHILFE	270
STARTERMOTOR	272
UMGEHUNGSSCHALTER	279
TRENNSCHALTER	280
MOTORBREMSENSCHALTER	281
BEGRENZUNGSSCHALTER	282
FLÜSSIGKEITSSCHALTER	283
MAGNETSCHALTER	284
DRUCKSCHALTER	288
KIPPSCHALTER	289
SCHEIBENWISCHERSCHALTER	290
ÄTHERSTARTVENTIL	291
AUTOM. SCHMIERVORRICHTUNG - STEUERUNGSVERDRAHTUNG	292
STOSSSTANGENVERDRAHTUNG	294
FAHRERHAUSVERDRAHTUNG	299
KAMERA, VERDRAHTUNG	309
FAHRGESTELLVERDRAHTUNG	310
ÜBERTRAGUNGSVERDRAHTUNG	312
UMFORMERVERDRAHTUNG	314
VERDRAHTUNG - ELEKTRONIK-BAY	315
MOTORVERDRAHTUNG	319
VERDRAHTUNG (ELEKTRONIKSYSTEM)	325
VERDRAHTUNG, VORNE	328
MASCHINENVERDRAHTUNG	330
ÖLAUFFRISCHUNGSSYSTEM - VERDRAHTUNG	346
KRAFTÜBERTRAGUNGSVERDRAHTUNG	348
VERDRAHTUNG, HINTEN	350
ÜBERROLLSCHUTZVERDRAHTUNG	353
*WIRING GP-SERVICE CENTER	357
KRAFTÜBERTRAGUNG	358
STARRACHSE	358
PENDELACHSE	358
STARRACHSE	359
PENDELACHSE	361
HYDRAULIKBLOCK	364
PLANETENANTRIEBSGEHÄUSE U. TEILE	366
VERTEILERGETRIEBEGEHÄUSE	368
GETRIEBEHYDRAULIK	369
DIFFERENTIAL UND TELLERRAD	370
DIFFERENTIAL	376
ABLASS (UMWELTFREUNDLICH)	377
KRAFTÜBERTRAGUNG - FILTER U. BEFESTIGUNG	378
ÖLFILTER	380
SCHAUGLAS	385
VERTEILERGETRIEBEANTRIEB	386
ACHSENÖLKÜHLERLEITUNGEN	392
ACHSENTLÜFTERLEITUNGEN	401
ÖLLEITUNGEN - KRAFTÜBERTRAGUNG	405
STEUERKRÜMMER	412

* ÜBERSETZUNG ZUM ZEITPUNKT DER DRUCKLEGUNG NICHT VORHANDEN

INHALTSVERZEICHNIS

Bezeichnung	Seite
ACHSENANBAUSATZ	413
FELGENAUFHÄNGUNG	414
DREHMOMENTWANDLERAUFHÄNGUNG	414
PLANETENGETRIEBE	415
KRAFTÜBERTRAGUNG	420
ACHSENÖLKÜHLERPUMPE UND MOTOR	421
ACHSENÖLKÜHLERPUMPE U. BEFESTIGUNGSTEILE	422
GETRIEBEPUMPE	423
FELGE	425
FELGE (TEILBAR)	426
ANTRIEBSWELLE	428
ANTRIEBSWELLEN-KEILVERZAHNUNG	431
KREUZGELENK UND LAGER	432
GETRIEBEAUFHÄNGUNG	433
REIFEN UND FELGE	434
DREHZAHLWANDLER U. GEHÄUSE	439
DREHMOMENTWANDLERSPERRE	441
GETRIEBE	445
KREUZGELENK	446
KUPPLUNGSSPERRENVENTIL U. BEFESTIGUNGSTEILE	449
MODULATORVENTIL	450
ÜBERDRUCKVENTIL	452
SCHALTVENTIL	453
VENTIL - SCHALT- UND DRUCKSTEUERUNG	454
MAGNETVENTIL	456
DREHMOMENTWANDLER-VORRANGVENTIL	459
GETRIEBESTEUERVENTIL	461
SEITENANTRIEB UND RAD	464
SEITENANTRIEB UND RADBREMSE	466
RAHMEN UND FAHRGESTELL	467
ZUGANGSKLAPPE	467
ZUGSTANGE	471
HYDRAULIKTANKVERKLEIDUNG	472
SCHUTZBLECHE	477
SCHUTZBLECHE, VORNE	481
SCHUTZBLECHE (STRASSENAUSRÜSTUNG)	482
FEUERSCHUTZWAND	486
VORDERRAHMEN	488
HINTERRAHMEN	491
PANZERWANNE	496
ANTRIEBSSCHUTZ	497
KÜHLERSCHUTZ	498
GELAENDER	500
*HARDWARE GP-HANDRAIL MOUNTING	505
KNICKGELENK-ANHÄNGUNG	510
MOTORHAUBE UND VERKLEIDUNG	512
*INSULATION GP-RADIATOR SHIELD	517
STEIGLEITER	519
AUTOMATISCHE SCHMIERLEITUNGEN	524
SCHMIERLEITUNGEN	531
KNICKGELENKSPERRE	539
SCHMIERSYSTEM, AUTOM.	540
STOSSTANGEN-BEFESTIGUNGSTEILE	541
HAUBENBLENDE	542
MOTORRAUM-SCHUTZVERKLEIDUNG	545
*SHIELD GP-RADIATOR	547
STEIGLEITER	549
SCHALLDÄMPFUNG	551
KRAFTSTOFFTANK U. STOSSSTANGE	555
SCHMIERFETTANK	556
SCHMIERÖLVERTEILERVENTIL	557
LAUFSTEG	559
BREMSSYSTEM	560
BREMSDRUCKSPEICHER	560
FUSSBREMSSOCKEL	562
FESTSTELLBREMSE	564
BETRIEBSBREMSE	566
FUSSBREMSGESTÄNGE	568
FESTSTELLBREMSGESTÄNGE	569
BREMSGESTÄNGE	570
BETRIEBSBREMSLEITUNGEN	581
BREMSPUMPE UND BEFESTIGUNGSTEILE	585
KOLBENPUMPE	586
KOLBENPUMPENUMLAUFSATZ	587
HOCHDRUCKSIEB	588
BREMSSTEUERVENTIL UND BEFESTIGUNGSTEILE	589
BREMSSTEUERVENTIL	591
PUMPENSTEUERVENTIL	592
LENKSYSTEM	593
PUMPENSTELLGLIED	593
PUMPENZYLINDER	596
LENKZYLINDER UND AUFHÄNGUNG	597
LENKZYLINDER	598
ÖLFILTER	599
PUMPENKOPF	601
NOTLENKUNGSLEITUNGEN	602
LENKÖLLEITUNGEN	609

* ÜBERSETZUNG ZUM ZEITPUNKT DER DRUCKLEGUNG NICHT VORHANDEN

INHALTSVERZEICHNIS

Bezeichnung	Seite
LENKNEUTRALISIERLEITUNGEN	617
LENKÖLKÜHLERLEITUNGEN	620
STEUERVENTILSTOPFEN	623
NOTLENKUNGSPUMPE UND BEFESTIGUNGSTEILE	624
LENKPUMPE UND AUFHÄNGUNG	625
ZAHNRADPUMPE	626
KOLBENPUMPE	629
KOLBENPUMPENUMLAUFSATZ	631
HOCHDRUCKSIEB	633
LENKUNGSANSCHLAG	634
LENKVENTIL U. BEFESTIGUNGSTEILE	635
SPERRVENTIL	636
VORSTEUERVENTIL	643
EINBAUVORSTEUERVENTIL	644
PUMPENSTEUERVENTIL	646
ÜBERDRUCKVENTIL	649
VENTIL - SCHALT- UND DRUCKSTEUERUNG	653
PENDELVENTIL	654
LENKVENTIL	655
LENKNEUTRALISIERVENTIL	659
HYDRAULIKSYSTEM	660
*COOLER GP-HYD & STEERING OIL	660
HUBZYLINDER U. BEFESTIGUNGSTEILE	662
HUBZYLINDER	664
KIPPZYLINDER	670
GEHÄUSEABLASSFILTER U. LEITUNGEN	674
ÖLFILTER	678
HYDRAULIKFITTING	680
HYDRAULIKSYSTEM	681
HYDRAULIKLEITUNGEN	683
HYDRAULIKLÜFTERLEITUNGEN	688
HUBZYLINDERLEITUNGEN	699
VORSTEUERLEITUNGEN	702
NEIGEZYLINDERLEITUNGEN	710
HYDRAULIKKÜHLERMOTOR U. BEFESTIGUNG	714
KOLBENMOTOR	715
HYDRAULIKZYLINDERKOLBEN	716
VORSTEUERVENTIL	717
HYDRAULIKLÜFTERPUMPE U. BEFESTIGUNG	718
ARBEITSGERÄTEPUMPE UND AUFHÄNGUNG	719
ARBEITSGERÄTEVORSTEUERPUMPE U. BEFESTIGUNGSTEILE	721
ZAHNRADPUMPE	722
KOLBENPUMPE	725
MOTORDREHVORRICHTUNG	727
KOLBENPUMPENUMLAUFSATZ	729
HYDRAULIKTANK UND BEFESTIGUNGSTEILE	730
HYDRAULIKTANK	732
HYDRAULIKLÜFTERVENTIL U. BEFESTIGUNGSTEILE	737
VENTIL UND BEFESTIGUNGSTEILE - HAUPTSTEUERUNG	739
SOLENOIDVENTIL U. BEFESTIGUNGSTEILE	740
STEUERVENTIL	741
VENTIL - TEMPERATURGESTEUERTER LÜFTER	745
AUSGLEICHSVENTIL	746
VENTIL, MECH.	747
VORSTEUERVENTIL	748
EINBAUVORSTEUERVENTIL	750
PUMPENSTEUERVENTIL	752
ÜBERDRUCKVENTIL	753
FOLGEVENTIL	755
PENDELVENTIL	757
MAGNETVENTIL	758
KIPPSTEUERVENTIL	760
ARBEITSGERÄTE	761
PLANIEREINRICHTUNG	761
STABILISATORGELENK	762
PLANIERSCHILDBOLZEN	763
SCHUBARM	765
MONTAGEZAPFEN (PLANIERSCHILDEINRICHTUNG)	769
ARBEITSGERÄTE	770
KOHLESCHILD	770
SU-SCHILD	770
KOHLESCHILD	773
SU-SCHILD	775
FAHRERHAUS	778
KÄLTEMITTEL-DRUCKSPEICHER UND BEFESTIGUNG	778
FAHRERSITZVERSTELLER	780
LUFTKOMPRESSORSITZ	781
KLIMAANLAGE	782
SCHEIBENWISCHERARM	787
VERSTAUKASTEN	788
FAHRERHAUS UND PLATTFORM	790
FAHRERHAUS	792
KÄLTEMITTELKOMPRESSOR	796
KÄLTEMITTELKONDENSATOR U. BEFESTIGUNGSTEILE	797
STEUERHEBEL	798

* ÜBERSETZUNG ZUM ZEITPUNKT DER DRUCKLEGUNG NICHT VORHANDEN

INHALTSVERZEICHNIS

Bezeichnung	Seite
HYDRAULIKBEDIENUNG (MIT VORSTEUERUNG)	799
LENKBETÄTIGUNG	802
STIC-KOMBIHEBEL	804
STIC-KOMBIHEBEL - STEUERUNGSSPERRE	807
FAHRERHAUSABDECKUNG	809
ZUGANGSKLAPPE	811
FAHRERHAUSTÜR	813
LUFTKANAL	815
FAHRERHAUSLUFTFILTER	816
RADIOEINBAUSATZ	818
VERRIEGELUNG	819
FAHRERHAUSTÜR- U. FENSTERVERRIEGELUNG	820
FAHRERHAUSAUSKLEIDUNG	823
KLIMAANLAGENLEITUNGEN	827
FAHRERHAUSHEIZUNGSLEITUNGEN	829
RÜCKSPIEGEL	830
MELDEZENTRUMMODUL	831
MODUL-MONITORTASTATUR	832
MODUL - VIER ELEKTRON. ANZEIGEN	833
SCHEIBENWISCHERMOTOR	834
ANTENNENBEFESTIGUNG	838
MONITORBEFESTIGUNG	841
PLATTFORM-ANBAUSATZ	843
ÜBERROLLSCHUTZAUFLAGER	844
FAHRERHAUSAUSRÜSTUNG	845
SCHALE - RÜCKENLEHNE	846
FAHRERSITZVERKLEIDUNG	848
INSTRUMENTENTAFEL	849
GASPEDAL	852
FAHRERPLATTFORM	853
FAHRERHAUS - VORREINIGER	858
VORREINIGER, FAHRERHAUSLUFT	859
RADIO	860
VERSTELLBARER SITZ	865
ÜBERROLLSCHUTZ	866
GLASDICHTUNG	869
SICHERHEITSGURT	870
FAHRERSITZ	871
BEIFAHRERSITZ	878
SCHWINGSITZ	881
FAHRERHAUSTÜRFEDER	884
HYDRAULIKSTEUERAUFHÄNGUNG	886
SITZUNTERBAU	889
LENKBETÄTIGUNGSAUFHÄNGUNG	890
FAHRERSITZFEDERUNG	893
SCHEIBENWASCHANLAGE	895
SCHEIBENWISCHER UND -WASCHANLAGE	896
SCHEIBENWISCHER	898
WARTUNGSAUSRÜSTUNG UND -ZUBEHÖR	902
RAUM - SERVICE CENTER	902
AUFKLEBER	903
AUFKLEBER-INTERNATIONAL	906
*FILM GP-SERVICE CENTER	907
AUFKLEBER-USA	908
DIAGNOSELEITUNGEN	909
MOTOR ID-SCHILD	914
SCHUTZABDECKUNG	915
*SERVICE CENTER AR	917
SERVICE CENTER	918
ERSATZTEILNUMMERNINDEX	B1

* ÜBERSETZUNG ZUM ZEITPUNKT DER DRUCKLEGUNG NICHT VORHANDEN

GENERAL INFORMATION

1. MACHINE IDENTIFICATION

Caterpillar machines are identified by Product Identification Numbers (PIN). Some components included in a machine may be identified by Serial Numbers (S/N). Typical components that will be serialized include engines, transmissions, bulldozers, and rippers. The machine and engine are further identified by arrangement numbers and in some cases modification numbers. These numbers are shown on the product identification plate(s) and on the master plate in the operator's compartment.

Caterpillar dealers need all of these numbers to determine accurate parts identification.

SIS *New Feature*

Effective First Quarter 2001 the Caterpillar Product Identification Number (PIN) changed from 8 to 17 characters. In an effort to provide uniform equipment identification, Caterpillar and other construction equipment manufacturers are moving to comply with the latest version of the product identification numbering standard. Non-road machine PINs are defined by ISO 10261. The new PIN format will apply to all Caterpillar machines and generator sets. The PIN plates and frame marking will display the 17 character PIN. The new format will look like the following:

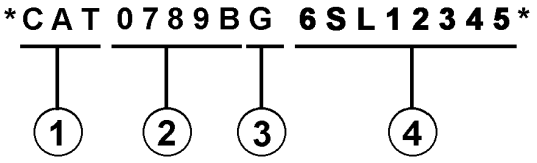

Where:

1. Caterpillar's World Manufacturing Code (characters 1-3)

2. Machine Descriptor (characters 4-8)

3. Check Character (character 9)

4. Machine Indicator Section (MIS) or Product Sequence Number (characters 10-17). These were previously referred to as the Serial Number.

Machines and generator sets produced before First Quarter 2001 will maintain their 8 character PIN format.

Components such as engines, transmissions, axles, etc. and work tools will continue to use an 8 character Serial Number (S/N).

2. ORDERING PARTS

⚠ WARNING

When replacement parts are required for this product Caterpillar recommends using Caterpillar replacement parts or parts with equivalent specifications including, but not limited to, physical dimensions, type, strength and material.

Failure to heed this warning can lead to premature failures, product damage, personal injury or death.

Quality Caterpillar replacement parts are available from Caterpillar dealers throughout the world. Their parts inventories are up to date and include all parts normally required to protect your investment in Caterpillar machines. Dealers may offer repair kits or remanufactured parts to allow selection of the most effective repair alternative for a particular situation. When ordering parts, your order should specify the quantity, part number, part name, and the serial number/product identification number of the machine for which the parts are needed.

3. PARTS MANUAL ORGANIZATION

Product information in this manual is presented as "information elements" that represent all of the components for the specific model. Engine Arrangement and Seat Group are examples of information elements. The information elements are organized alphabetically by part name and secondarily by part number within each major section of the manual.

4. TABLE OF CONTENTS

A table of contents (TOC) is found at the beginning of the manual. The TOC lists each section of the manual with a complete list of all information elements organized as they appear in the manual. Page numbers are provided for quick reference to detailed parts identification illustrations and serviceable consist lists.

5. MAINTENANCE PARTS INDEX

The Maintenance Parts Index, located near the beginning of the manual, references most frequently used maintenance part numbers, providing description, quantity, usage and page number. This information is organized alphabetically by part description.

GENERAL INFORMATION

6. INDEX

The index located near the front of the manual is an alphabetical listing of all information elements included in the manual. Page numbers are provided for quick reference to detailed parts identification illustrations and serviceable consist lists.

7. PART NUMBER INDEX

A numerical index listing all part numbers and the corresponding page number(s) appears at the back of the manual.

8. CAPTIONS

Captions located at the beginning of each information element identify the part number and part name along with additional descriptive information. PIN and S/N information found in each caption should be used to select correct information for a specific machine. Field replacement options, identification of optional attachment components, and where used ("part of") information is also provided.

The first line of a caption is shown in larger type font to indicate the beginning of an information element. Captions for additional pages that may be required to illustrate an information element will be shown in standard type font and will include the term *(contd.)* .

9. NON-SERVICED PARTS

In some instances it is necessary to display non-serviced parts that are a link to a lower level serviceable consist lists. These non-serviced part numbers are shown in *italic* type indicating that they are not available.

10. PARTS LIST REFERENCE NUMBERS

Numbers shown in the Ref No column correspond to numbers used in the associated graphic(s). An alphabetic suffix may be added to a reference number to identify lower level consist items. Numbers shown in the Graphic Ref column refer to the graphic number identifier displayed in the lower left corner of each illustration. The Graphic Ref number may be used in combination with the item Ref No to determine the correct part number. There may be intentional omission of a Ref No in a consist list as information is updated to reflect the latest serviceable part numbers.

11. INDENTED PART NAMES

When a part name is indented in a parts list, it is part of (included in) the group or assembly under which it is indented.

12. ILLUSTRATION REFERENCE LETTERS

When necessary, illustrations contain reference letters (A, B, C etc.) that are intended to track lines and harnesses from one point to another. They are also used to show where to reconnect illustrations that have been separated.

13. ABBREVIATIONS AND SYMBOLS

O.D. – Outside Diameter
I.D. – Inside Diameter
A – Not Part Of This Group
B – Use As Required
C – Change From Previous Type
D – Order By The Meter
E – Order By The Centimeter
F – Not Shown
G – Order By The Inch
I – Refer To Hydraulic Information System
M – Metric Part
R – Remfg Part May Be Available
Y – Separate Illustration
Z – Not Serviced Separately

SIS *New Feature*

14. DESCRIPTION OF TYPE CHANGES

Type - A type is defined as any configuration change that requires an additional Information Element for an Arrangement, Group, or Assembly. If serial number breaks for types are not available, a type # (Type 1, Type 2, etc.) will be displayed in the caption. These "type" changes are identified with a "C" note (change from previous type) in the Parts List. Only the "types" that apply to this Parts Manual will be included. Additional types may exist causing "C" notes to appear on an Information Element when no other types are shown.

15.<END>

This symbol indicates the end of an information element.

NOTE:

Continuing improvement and advancement of product design may cause changes to your machine which may not be included in this publication. Whenever a question arises regarding your caterpillar product or this publication, please consult your caterpillar dealer for the latest available information.

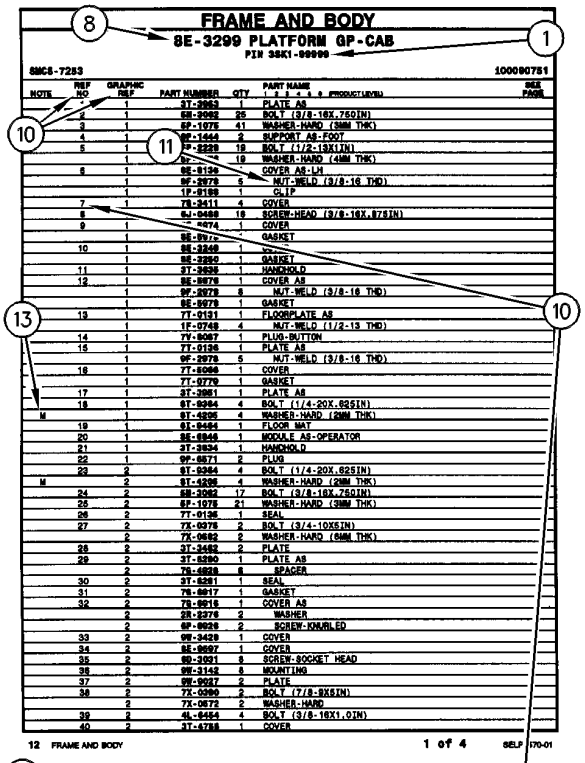
FRAME AND BODY
8E-3299 PLATFORM GP-CAB
PIN 35K1-99999
8MC8-7253
100090751
1 of 4
SELP4570-01

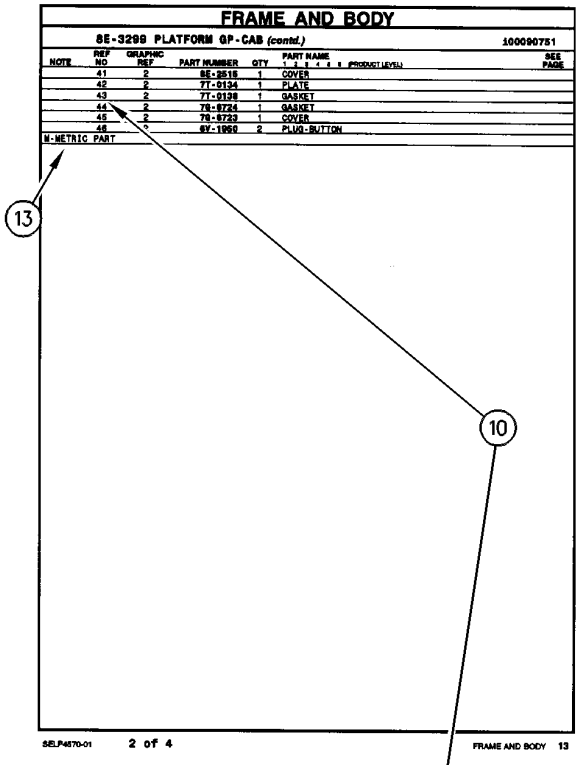
FRAME AND BODY
8E-3299 PLATFORM GP-CAB (contd.)
100090751
2 of 4
SELP4570-01

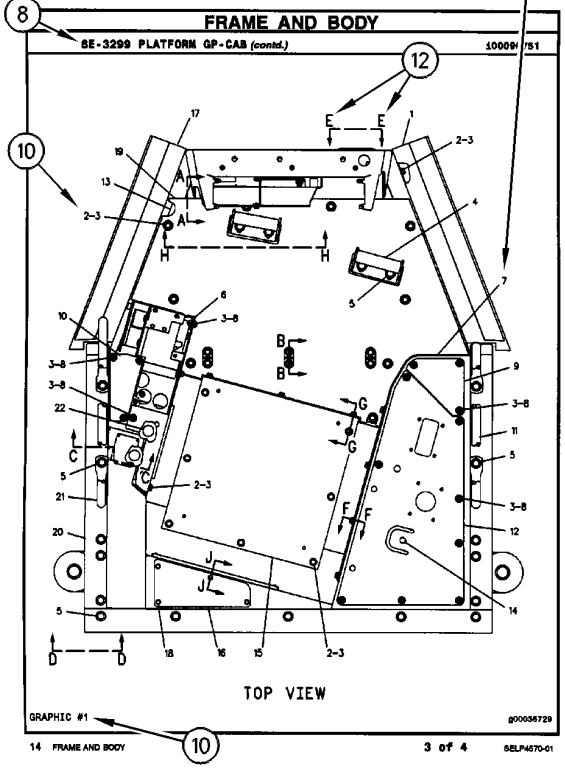
FRAME AND BODY
8E-3299 PLATFORM GP-CAB (contd.)
TOP VIEW
GRAPHIC #1
g00036729
3 of 4
SELP4570-01

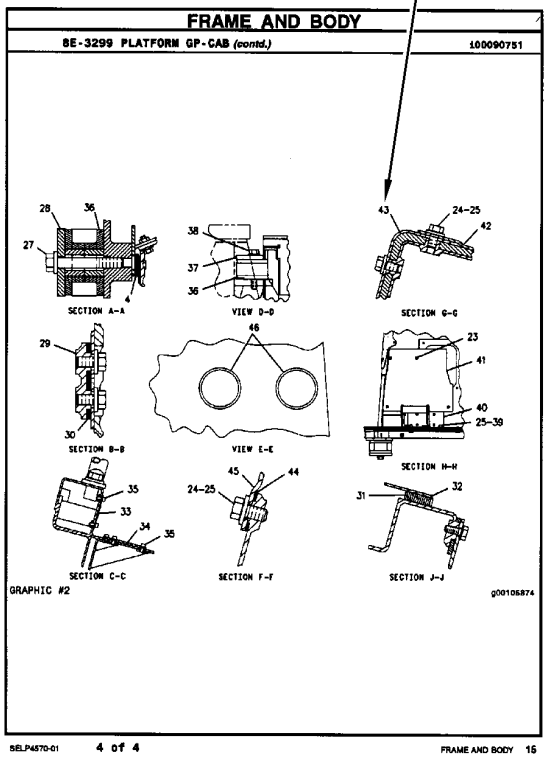
FRAME AND BODY
8E-3299 PLATFORM GP-CAB (contd.)
100090751
SECTION A-A
VIEW D-D
SECTION G-G
SECTION B-B
VIEW E-E
SECTION H-H
SECTION C-C
SECTION F-F
SECTION J-J
GRAPHIC #2
g00105874
4 of 4
SELP4570-01

GÉNÉRALITÉS

1. IDENTIFICATION DE LA MACHINE

Toutes les machines Caterpillar portent un numéro d'identification (PIN). Certains composants des machines peuvent porter des numéros de série (S/N). En général, parmi les composants qui portent des numéros de série il y a les moteurs, les transmissions, les bulldozers et les rippers. En plus, la machine et le moteur peuvent recevoir des numéros de version, et dans certains cas, de modification. Ces numéros figurent sur les plaques de numéro de série et sur la plaque signalétique principale qui se trouve dans le poste de conduite.

Les concessionnaires Caterpillar doivent connaître tous ces numéros pour identifier correctement les pièces.

SIS *Nouvelle Caractéristique*

À partir du premier trimestre 2001, le numéro d'identification produit (PIN) Caterpillar passe de 8 à 17 caractères. Afin de permettre une identification uniforme des matériels, Caterpillar et d'autres constructeurs de machines de travaux publics s'efforcent de se conformer à la norme la plus récente portant sur les numéros d'identification des produits. Les numéros d'identification (PIN) de machines de chantier sont définis par la norme ISO 10261. Le nouveau format du numéro d'identification est valable pour toutes les machines et tous les groupes électrogènes Caterpillar. Le numéro d'identification produit (PIN) figurant sur la plaque et sur le châssis se composera de 17 caractères. Le nouveau format ressemblera à ceci:

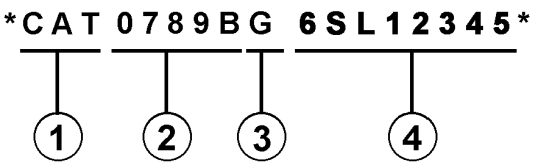

Il se décomposera de la façon suivante:

1. Code international de fabrication de Caterpillar (caractères 1 à 3)

2. Descriptif de la machine (caractères 4 à 8)

3. Contrôle (caractère 9)

4. Indicateur machine (MIS) ou numéro de séquence produit (caractères 10 à 17). Ceux-ci étaient auparavant désignés sous le terme de numéro de série.

Les machines et les groupes électrogènes construits avant le premier trimestre 2001 garderont le format à 8 caractères du numéro d'identification produit (PIN).

Les organes tels que les moteurs, les boîtes de vitesses, les essieux, etc., continueront d'être désignés par un numéro de série (S/N) à 8 caractères.

2. COMMANDE DE PIÈCES

⚠ DANGER

Lorsqu'il faut remplacer des pièces de rechange pour ce produit Caterpillar recommande d'utiliser les pièces de rechange Caterpillar ou les pièces qui ont des spécifications équivalentes dont les dimensions physiques, le type, la force et le matériau. Ces équivalences ne se limitent pas à l'énoncé précédent.

L'inobservation de cette mise en garde peut entraîner des défaillances prématurées, des dommages au produit, des blessures ou même la mort.

Les concessionnaires Caterpillar fournissent dans le monde entier des pièces de rechange de qualité Caterpillar. Leurs stocks de pièces sont constamment réapprovisionnés et comptent toutes les pièces nécessaires pour assurer la bonne marche de vos machines Caterpillar. Certains concessionnaires proposent également des kits de réparation ou des pièces rénovées, ce qui permet de choisir la solution la plus économique dans une situation donnée. Lors des commandes de pièces, mentionner la quantité, le numéro et la désignation des pièces ainsi que le numéro de série ou le numéro d'identification (PIN) de la machine pour laquelle ces pièces sont requises.

3. ORGANISATION DU CATALOGUE DE PIÈCES

Les renseignements sur les produits sont présentés sous forme de "Information element" (élément d'information) représentant tous les composants d'un modèle donné. "Engine Arrangement" (version de moteur) et "Seat Group" (assemblage de siège)" sont des exemples d'éléments d'information. Les éléments d'information sont classés par ordre alphabétique par la désignation standard des pièces et par numéros de pièces dans chaque partie importante du manuel.

4. TABLE DES MATIÈRES

Nouvelle Caractéristique

La table des matières se trouve au début du manuel. La table des matières fournit la liste de tous les chapitres du manuel avec une liste complète de tous les éléments d'information classés par ordre d'apparition dans le manuel. Les numéros de page sont fournis afin que l'utilisateur puisse trouver rapidement les illustrations détaillées concernant l'identification des pièces et les listes des pièces d'entretien.

5. INDEX DES PIÈCES D'ENTRETIEN

La rubrique "Index des pièces d'entretien" qui se trouve au début du manuel renvoie aux pièces d'entretien les plus fréquemment utilisées en précisant la désignation, la quantité, là où la pièce est utilisée et le numéro de page. Ces pièces sont classés par ordre alphabétique.

6. INDEX

L'index qui se trouve vers le début du manuel est une liste alphabétique de tous les éléments d'information du manuel. Les numéros de page sont fournis afin que l'utilisateur puisse trouver rapidement les illustrations détaillées concernant l'identification des pièces et les listes des pièces d'entretien.

7. INDEX DES NUMÉROS DE PIÈCES

Une liste numérique de tous les numéros de pièces et des pages correspondantes se trouve à la fin du manuel.

8. LÉGENDES

Les légendes qui se trouvent en haut de chaque page de chaque élément d'information fournissent le numéro de pièce, la désignation ainsi que des renseignements supplémentaires sur les pièces. Les renseignements concernant les numéros de série (S/N) qui se trouvent dans chaque légende doivent être utilisés pour sélectionner les informations correctes pour un moteur donné. Les informations concernant les options de remplacement sur le chantier, l'identification des composants des équipements offerts en option et les lieux d'application sont aussi fournies.

Nouvelle Caractéristique

Les lettres de la première ligne d'une légende sont présentées en police plus grande afin d'indiquer le début d'une unité d'information. Les légendes qui pourraient être requises pour des pages supplémentaires afin d'illustrer une unité d'information seront présentées en police standard et comprendront le terme (à suivre).

9. PIÈCES NON FOURNIES

Nouvelle Caractéristique

Dans certains cas, il est nécessaire d'indiquer les pièces non fournies qui sont en aval de la liste des pièces d'entretien. Les numéros des pièces non fournies dans la liste des pièces et les légendes seront en italique pour signaler qu'ils ne sont pas disponibles.

10. NUMÉROS DE RÉFÉRENCE DE LA LISTE DES PIÈCES

Nouvelle Caractéristique

Les numéros indiqués dans la colonne des numéros de références correspondent aux numéros utilisés dans les illustrations auxquelles ils sont associés. Un suffixe alphabétique peut être ajouté à un numéro de référence pour identifier la liste des articles en aval. Les numéros indiqués dans la colonne de référence de l'illustration renvoient à l'identification du numéro affiché dans le coin inférieur gauche de chaque illustration. Le numéro de référence de l'illustration pourrait être utilisé avec le numéro de référence de l'article pour déterminer le numéro de pièce correct. Il peut y avoir une omission intentionnelle d'un numéro de référence dans une liste de pièces suite à la mise à jour des informations en vue de refléter les numéros de pièces les plus récentes.

11. DÉSIGNATIONS DE PIÈCES EN RETRAIT

Lorsqu'une désignation de pièce est en retrait, cela veut dire que l'article en regard fait partie de l'ensemble sous lequel il figure.

12. LETTRES DE RÉFÉRENCE DES ILLUSTRATIONS

Quand cela est nécessaire, les illustrations comportent des lettres de référence (A, B, C, etc.) pour montrer le trajet des canalisations et faisceaux de câbles d'un point à l'autre. Elles sont utilisées également pour indiquer où relier les illustrations séparées auparavant.

13. ABRÉVIATIONS ET SYMBOLES

O.D. – Diamètre extérieur
I.D. – Diamètre intérieur
A – Ne fait pas partie de ce groupe
B – Utiliser selon besoin
C – Modification
D – Commander par mètre
E – Commander par centimètre
F – Non représenté
G – Commander par pouce
I – Voir "Hydraulic Information System"
M – Pièce métrique
R – Pièce rénovée éventuellement disponible
Y – Illustration séparée
Z – Non fourni séparément

NOTA:

En raison du progrès technique et des améliorations continuelles apportées au matériel, votre machine comporte peut-être des modifications qui n'apparaissent pas dans la présente publication. En cas de doute sur un détail de votre machine Caterpillar ou sur le texte de la présente publication, adressez-vous à votre concessionnaire Caterpillar.

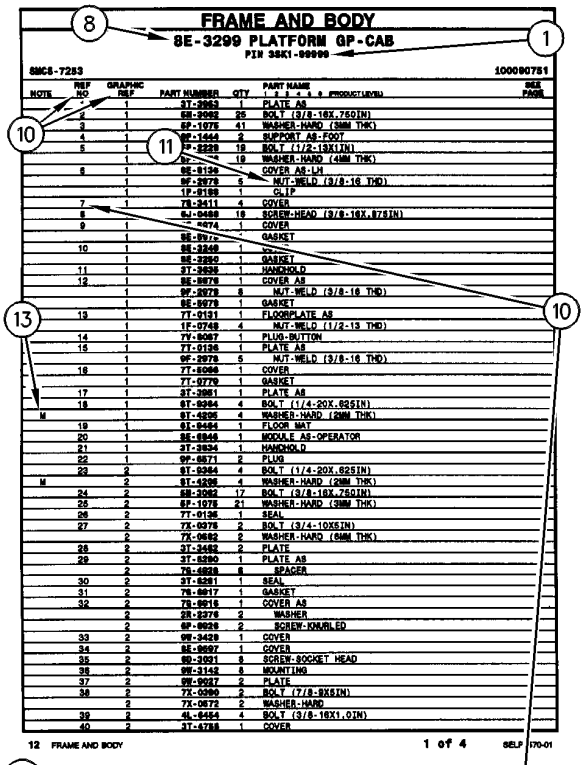

FRAME AND BODY

8E-3299 PLATFORM GP-CAB

PIN 3SK1-99999

8MC8-7253 100090751

NOTE	REF NO	GRAPHIC REF	PART NUMBER	QTY	PART NAME 1 2 3 4 5 6 (PRODUCT LEVEL)	SEE PAGE
	1	1	3T-3963	1	PLATE AS	
	2	1	6M-3092	26	BOLT (3/8-16X.750IN)	
	3	1	6P-1976	41	WASHER-HARD (3MM THK)	
	4	1	8P-1444	2	SUPPORT AS-FOOT	
	5	1	7P-2229	19	BOLT (1/2-13X1IN)	
		1	6P-[illegible]	19	WASHER-HARD (4MM THK)	
	6	1	8E-8194	1	COVER AS-LH	
		1	9F-2978	5	NUT-WELD (3/8-16 THD)	
		1	1P-8188	1	CLIP	
	7	1	7X-3411	4	COVER	
	8	1	6J-0488	18	SCREW-HEAD (3/8-16X.875IN)	
	9	1	[illegible]474	1	COVER	
		1	8E-8[illegible]	1	GASKET	
	10	1	8E-3248	1	[illegible]	
		1	8E-3250	1	GASKET	
	11	1	3T-3939	1	HANDHOLD	
	12	1	8E-8478	1	COVER AS	
		1	9F-2978	8	NUT-WELD (3/8-16 THD)	
		1	8E-8478	1	GASKET	
	13	1	7T-0131	1	FLOORPLATE AS	
		1	1F-0748	4	NUT-WELD (1/2-13 THD)	
	14	1	7V-8067	1	PLUG-BUTTON	
	15	1	7T-0126	1	PLATE AS	
		1	9F-2978	5	NUT-WELD (3/8-16 THD)	
	16	1	7T-8066	1	COVER	
		1	7T-0770	1	GASKET	
	17	1	3T-3981	1	PLATE AS	
	18	1	6T-9364	4	BOLT (1/4-20X.625IN)	
M		1	9T-4206	4	WASHER-HARD (2MM THK)	
	19	1	6I-9464	1	FLOOR MAT	
	20	1	8E-8846	1	MODULE AS-OPERATOR	
	21	1	3T-3934	1	HANDHOLD	
	22	1	9F-8871	2	PLUG	
	23	2	9T-9364	4	BOLT (1/4-20X.625IN)	
M		2	9T-4206	4	WASHER-HARD (2MM THK)	
	24	2	6M-3092	17	BOLT (3/8-16X.750IN)	
	25	2	6P-1976	21	WASHER-HARD (3MM THK)	
	26	2	7T-0136	1	SEAL	
	27	2	7X-0376	2	BOLT (3/4-10X5IN)	
		2	7X-0682	2	WASHER-HARD (6MM THK)	
	28	2	3T-3482	2	PLATE	
	29	2	3T-8390	1	PLATE AS	
		2	7X-4828	6	SPACER	
	30	2	3T-8261	1	SEAL	
	31	2	7X-8917	1	GASKET	
	32	2	7X-8916	1	COVER AS	
		2	2R-2376	2	WASHER	
		2	6P-8026	2	SCREW-KNURLED	
	33	2	9W-3429	1	COVER	
	34	2	8E-9907	1	COVER	
	35	2	6D-3091	9	SCREW-SOCKET HEAD	
	36	2	9W-3142	8	MOUNTING	
	37	2	9W-9027	2	PLATE	
	38	2	7X-0380	2	BOLT (7/8-9X6IN)	
		2	7X-0672	2	WASHER-HARD	
	39	2	4L-6464	4	BOLT (3/8-16X1.0IN)	
	40	2	3T-4788	1	COVER	

12 FRAME AND BODY 1 of 4 SELP4570-01

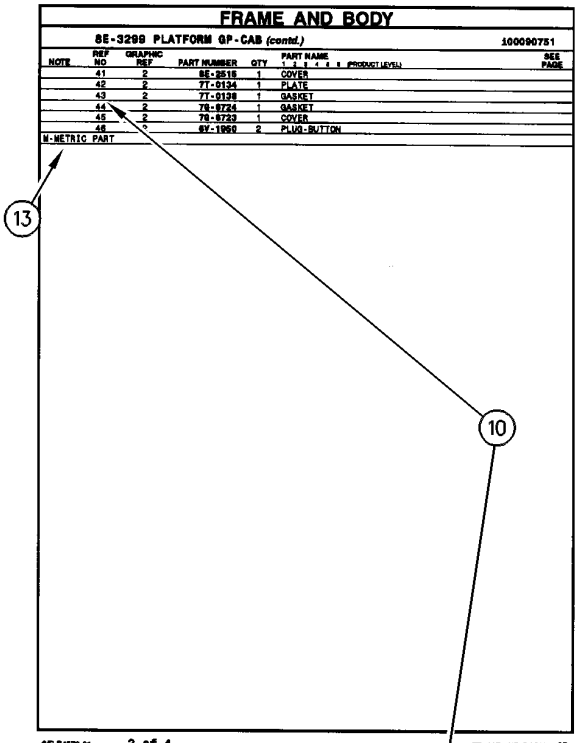

FRAME AND BODY

8E-3299 PLATFORM GP-CAB (contd.) 100090751

NOTE	REF NO	GRAPHIC REF	PART NUMBER	QTY	PART NAME 1 2 3 4 5 6 (PRODUCT LEVEL)	SEE PAGE
	41	2	8E-8516	1	COVER	
	42	2	7T-0134	1	PLATE	
	43	2	7T-0138	1	GASKET	
	44	2	7N-8724	1	GASKET	
	45	2	7N-8723	1	COVER	
	46	2	6V-1960	2	PLUG-BUTTON	

M-METRIC PART

SELP4570-01 2 of 4 FRAME AND BODY 13

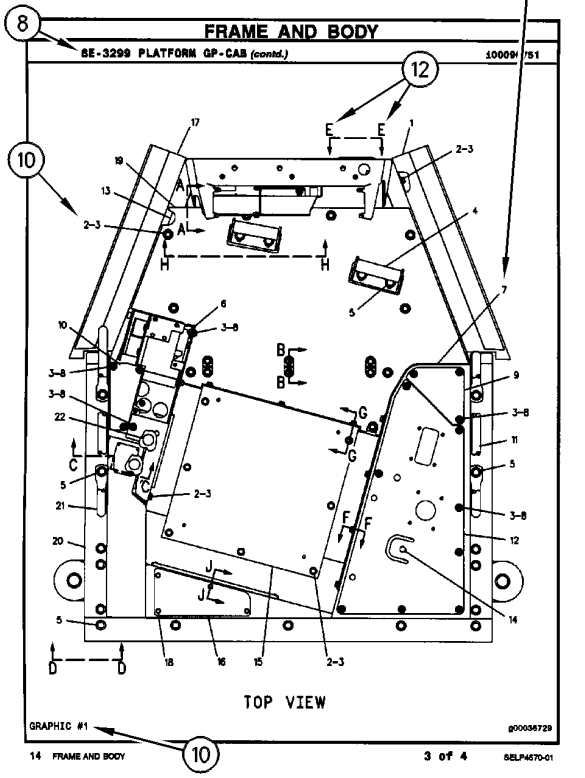

FRAME AND BODY

8E-3299 PLATFORM GP-CAB (contd.) 100090751

TOP VIEW

GRAPHIC #1 g00036729

14 FRAME AND BODY 3 of 4 SELP4570-01

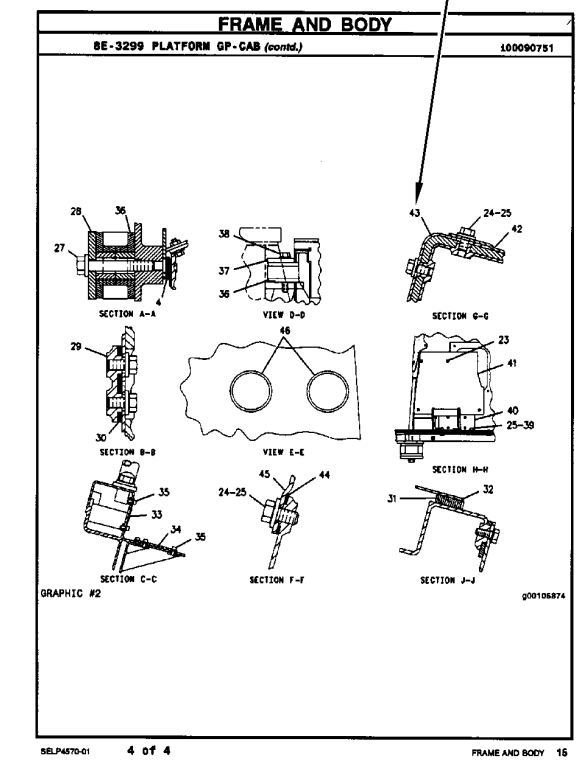

FRAME AND BODY

8E-3299 PLATFORM GP-CAB (contd.) 100090751

SECTION A-A VIEW D-D SECTION G-G

SECTION B-B VIEW E-E SECTION H-H

SECTION C-C SECTION F-f SECTION J-J

GRAPHIC #2 g00105874

SELP4570-01 4 of 4 FRAME AND BODY 15

INFORMACIÓN GENERAL

1. MÁQUINAS

Las máquinas Caterpillar se identifican con Números de Identificación del Producto (PIN). Algunos componentes incluídos en la máquina pueden estar identificados con Números de Serie (N/S). Los componentes que tienen típicamente esta identificación incluyen motores, transmisiones, hojas topadoras y desgarradores. La máquina y el motor se identifican además con Números de Configuración y en algunos casos, Números de Modificación. Estos números están en las placas de identificación del producto o en la placa principal en la cabina del operador.

Los distribuidores Caterpillar necesitan estos números para identificar con exactitud los números de piezas de repuesto.

SIS *Nueva Característica*

A partir del primer trimestre del 2001, el Número de Identificación de Producto (PIN) de Caterpillar cambió de 8 a 17 caracteres. Para hacer más uniforme el método de identificación de equipos, Caterpillar y otros fabricantes de equipo de construcción han tomado medidas para cumplir con la versión más reciente de la norma de numeración de identificación de productos. Los Números de Identificación de Producto para máquinas que no se operan en carreteras son definidos por la norma ISO 10261. El nuevo formato PIN corresponderá a todas las máquinas y grupos electrógenos Caterpillar. Las placas y los caracteres PIN estampados en el bastidor mostrarán el PIN de 17 caracteres. El nuevo formato tendrá la apariencia siguiente:

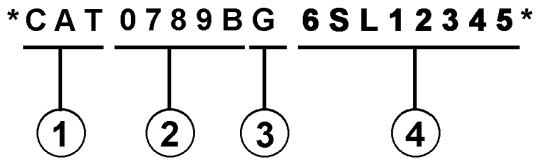

Significado de los caracteres:

1. Código de Fabricación Mundial de Caterpillar (caracteres 1-3)

2. Sección Descriptor de la Máquina (caracteres 4-8)

3. Carácter de Verificación (carácter 9)

4. Sección Indicador de la Máquina (MIS) o Número de Secuencia de Producto (caracteres 10-17). Anteriormente, estos caracteres constituían el Número de Serie.

Las máquinas y grupos electrógenos producidos antes del primer semestre del 2001 mantendrán su formato PIN de 8 caracteres.

Los componentes como motores, transmisiones, ejes, herramientas de trabajo, etc., continuarán usando un Número de Serie (S/N) de 8 caracteres.

2. COMO PEDIR REPUESTOS

⚠ ADVERTENCIA

Cuando se necesiten piezas de repuesto para este producto, Caterpillar recomienda usar piezas de repuesto Caterpillar o piezas que tengan especificaciones equivalentes incluyendo, pero sin estar limitadas a, dimensiones físicas, tipo, fortaleza y material.

El no hacer caso de esta advertencia puede llevar a fallas prematuras, daños al producto y lesiones graves o mortales.

Las piezas de repuesto Caterpillar de calidad están a la disposición de los distribuidores Caterpillar en todo el mundo. Sus existencias actualizadas incluyen todas las piezas normalmente requeridas para proteger su inversión en máquinas Caterpillar. Los distribuidores pueden tener juegos de reparación o piezas remanufacturadas para permitir la selección de la mejor alternativa de reparación en un caso en particular. Al pedir piezas de repuesto, especifique en su pedido la cantidad, el número de pieza, el nombre de la pieza y el número de serie/número de identificación del producto, de la máquina para la cual se necesitan estas piezas.

3. ORGANIZACION DEL MANUAL DE PIEZAS

La información sobre el producto, se presenta en este manual, como "elementos de información" que representan todos los componentes de un modelo específico. Las configuraciones de motores y los grupos de asientos son ejemplos de elementos de información. Los elementos de información están organizados primeramente por nombres de piezas en orden alfabético y en segundo lugar, por el número de pieza dentro de cada sección principal del manual.

4. CONTENIDO

La página de Contenido se encuentra al principio del manual. El Contenido indica cada sección del manual con una lista completa de todos los elementos de información organizados en el orden que aparecen en el manual. Los números de página proporcionan una referencia rápida a las ilustraciones detalladas de identificación de piezas y a las listas de componentes de repuesto de dichas piezas.

5. ÍNDICE DE PIEZAS DE MANTENIMIENTO

Al principio de este catálogo se encuentra un índice de los números de piezas utilizadas más frecuentemente para el mantenimiento, que incluye descripción, cantidad necesaria, lugar de utilización y número de página. Esta información está organizada alfabéticamente, por descripción de la pieza.

6. ÍNDICE

El Índice, ubicado cerca del principio del manual, es una lista en orden alfabético de todos los elementos de información incluídos en el manual. Los números de página proporcionan una referencia rápida a las ilustraciones detalladas de identificación de piezas y a las listas de componentes de repuesto de dichas piezas.

7. INDICE NUMÉRICO DE PIEZAS

Un índice numérico de piezas con el correspondiente número de página aparece al final de este catálogo.

8. TÍTULOS

Los títulos ubicados al principio de cada elemento de información identifican el número y el nombre de la pieza junto con información descriptiva. Se debe usar información sobre los Números de Identificación de Pieza (PIN) y los números de serie (S/N) para seleccionar la información que corresponda a una máquina en particular. También se suministra información sobre las opciones de reparación en el campo, la identificación de componentes de accesorios optativos y el lugar de ubicación de la pieza ("es parte de").

La primera línea del título se muestra con un tipo de letra más grande para indicar el comienzo de un elemento de información. Si se requieren páginas adicionales para ilustrar un elemento de información, los títulos se muestran con un tipo de letra normal y la continuación se indica entre paréntesis.

9. PIEZAS QUE NO SE SUMINISTRAN COMO REPUESTO

En algunos casos es necesario indicar piezas que no se suministran como repuesto pero que pueden estar conectadas a listas de componentes de otras piezas de repuesto. En tal caso, dichas piezas se muestran en cursiva para indicar que no son piezas disponibles.

10. NÚMEROS DE REFERENCIA

Los números en la columna de No. de Referencia corresponden a los números indicados en la ilustración que pertenece a ese número de pieza. Los números que tienen un sufijo alfabético identifican artículos de las listas de componentes de piezas. Los números en la columna de Referencia de la ilustración se identifican en la esquina inferior izquierda de cada ilustración. Para determinar el número de pieza correcto se puede utilizar tanto el No. de Referencia de la ilustración como el No. de Referencia del artículo. A medida que se actualiza la información para indicar los más recientes números de piezas de repuesto, puede omitirse intencionalmente un No. de Referencia en una lista de componentes de piezas.

11. NOMBRES DE PIEZA SANGRADOS

Cuando el nombre de una pieza está sangrado en una lista, significa que esta pieza forma parte del grupo o conjunto del renglón inmediatamente superior.

12. LETRAS DE REFERENCIA DE ILUSTRACIONES

Las ilustraciones contienen algunas veces letras de referencia (A, B, C etc.) cuyo propósito es seguir el trayecto de líneas y mazos de cables de un punto a otro. También se utilizan para mostrar dónde volver a unir ilustraciones que se habían separado.

13. ABREVIATURAS Y SIMBOLOS

O.D. – Diámetro exterior
I.D. – Diámetro interior
A – No es pieza de este grupo
B – Utilizado según la demanda
C – Indica cambio
D – Se pide por metro
E – Se pide por centímetro
F – No se muestra
G – Se pide por pulgada
I – Consulte el sistema de información hidráulica
M – Pieza métrica
R – Puede estar disponible como pieza remanufacturada
Y – Ilustración separada
Z – No se suministra por separado

SIS *Nueva Característica*

14. DESCRIPCIÓN DE LOS CAMBIOS DE TIPO

Tipo – Un tipo se define como cualquier cambio de configuración que requiere un Elemento de información adicional de una Configuración, Grupo o Conjunto. Si el número de serie se clasifica por tipos que no están disponibles, se mostrará un número de tipo (Tipo 1,Tipo 2,etc.) en el comentario de la fotografía. Estos cambios de "tipo" se identifican con una nota "C" (cambio con respecto al tipo anterior) en la Lista de Piezas. Se incluirían sólo los "tipos" que aplican a este Manual de Piezas. Es posible que haya tipos adicionales que causen la aparición de notas "C" en el Elemento de Información cuando no se muestran otros tipos."

15.<END>

Este símbolo indica el final de un elemento de información.

NOTA:

Las contínuas mejoras y adelantos en diseño podrían originar cambios a su máquina que no se incluyen en esta publicación. Cuando tenga alguna pregunta acerca de su producto Caterpillar o de esta publicación, consulte al distribuidor Caterpillar para obtener la información más reciente.

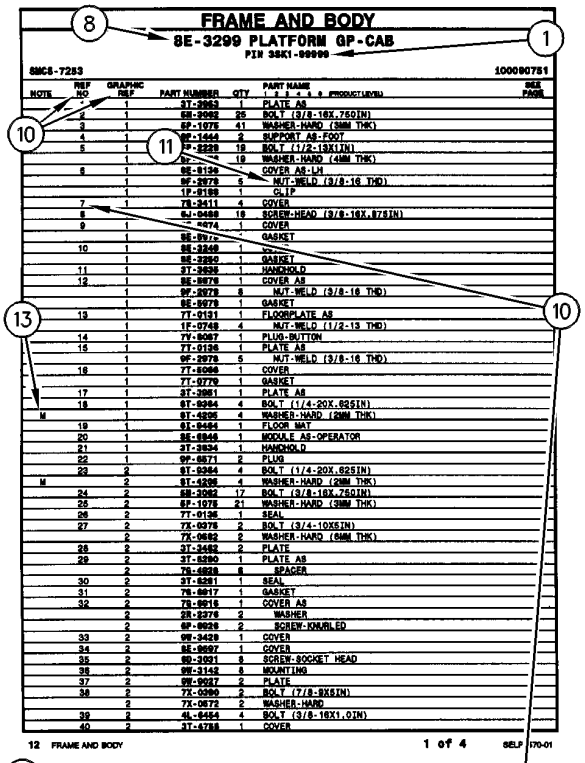

FRAME AND BODY

8E-3299 PLATFORM GP-CAB

PIN 3SK1-99999

8MC8-7253 100090751

NOTE	REF NO	GRAPHIC REF	PART NUMBER	QTY	PART NAME 1 2 3 4 5 6 (PRODUCT LEVEL)	SEE PAGE
	1	1	3T-3963	1	PLATE AS	
	2	1	5M-3982	26	BOLT (3/8-16X.750IN)	
	3	1	5P-1976	41	WASHER-HARD (38MM THK)	
	4	1	9P-1444	2	SUPPORT AS-FOOT	
	5	1	7S-2229	18	BOLT (1/2-13X1IN)	
		1	5P-[illegible]	18	WASHER-HARD (44MM THK)	
	6	1	8E-8194	1	COVER AS-LH	
		1	9F-2978	5	NUT-WELD (3/8-16 THD)	
		1	1P-8188	1	CLIP	
	7	1	7S-2411	4	COVER	
	8	1	5J-0488	18	SCREW-HEAD (3/8-16X.875IN)	
	9	1	[illegible]474	1	COVER	
		1	8E-8[illegible]	1	GASKET	
	10	1	8E-3248	1	[illegible]	
		1	8E-3250	1	GASKET	
	11	1	3T-3939	1	HANDHOLD	
	12	1	8E-8478	1	COVER AS	
		1	9F-2978	6	NUT-WELD (3/8-16 THD)	
		1	8E-8478	1	GASKET	
	13	1	7T-0131	1	FLOORPLATE AS	
		1	1F-0748	4	NUT-WELD (1/2-13 THD)	
	14	1	7V-8067	1	PLUG-BUTTON	
	15	1	7T-0126	1	PLATE AS	
		1	9F-2978	5	NUT-WELD (3/8-16 THD)	
	16	1	7T-8066	1	COVER	
		1	7T-0770	1	GASKET	
	17	1	3T-3981	1	PLATE AS	
	18	1	9T-8364	4	BOLT (1/4-20X.625IN)	
M		1	9T-4206	4	WASHER-HARD (2MM THK)	
	19	1	6I-8464	1	FLOOR MAT	
	20	1	8E-8846	1	MODULE AS-OPERATOR	
	21	1	3T-3934	1	HANDHOLD	
	22	1	9P-8871	2	PLUG	
	23	2	9T-8364	4	BOLT (1/4-20X.625IN)	
M		2	9T-4206	4	WASHER-HARD (2MM THK)	
	24	2	5M-3982	17	BOLT (3/8-16X.750IN)	
	25	2	5P-1976	21	WASHER-HARD (38MM THK)	
	26	2	7T-0136	1	SEAL	
	27	2	7X-0376	2	BOLT (3/4-10X5IN)	
		2	7X-0682	2	WASHER-HARD (64MM THK)	
	28	2	3T-3482	2	PLATE	
	29	2	3T-8390	1	PLATE AS	
		2	7S-4828	6	SPACER	
	30	2	3T-8261	1	SEAL	
	31	2	7S-8917	1	GASKET	
	32	2	7S-8916	1	COVER AS	
		2	2R-2376	2	WASHER	
		2	6P-8026	2	SCREW-KNURLED	
	33	2	9W-3429	1	COVER	
	34	2	8E-8907	1	COVER	
	35	2	9D-3091	9	SCREW-SOCKET HEAD	
	36	2	9W-3142	8	MOUNTING	
	37	2	9W-9027	2	PLATE	
	38	2	7X-0390	2	BOLT (7/8-9X6IN)	
		2	7X-0672	2	WASHER-HARD	
	39	2	4L-6464	4	BOLT (3/8-16X1.0IN)	
	40	2	3T-4788	1	COVER	

12 FRAME AND BODY 1 of 4 SELP4570-01

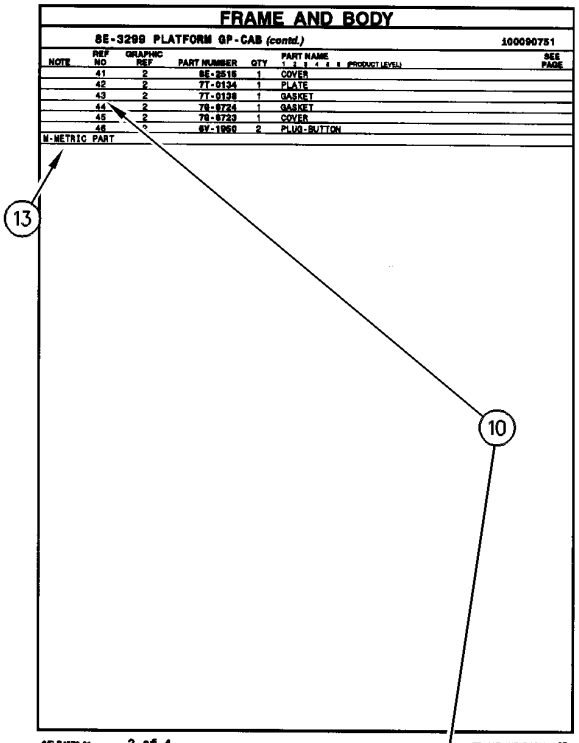

FRAME AND BODY

8E-3299 PLATFORM GP-CAB (contd.) 100090751

NOTE	REF NO	GRAPHIC REF	PART NUMBER	QTY	PART NAME 1 2 3 4 5 6 (PRODUCT LEVEL)	SEE PAGE
	41	2	8E-8516	1	COVER	
	42	2	7T-0134	1	PLATE	
	43	2	7T-0138	1	GASKET	
	44	2	7S-8724	1	GASKET	
	45	2	7S-8723	1	COVER	
	46	2	6Y-1960	2	PLUG-BUTTON	

M-METRIC PART

SELP4570-01 2 of 4 FRAME AND BODY 13

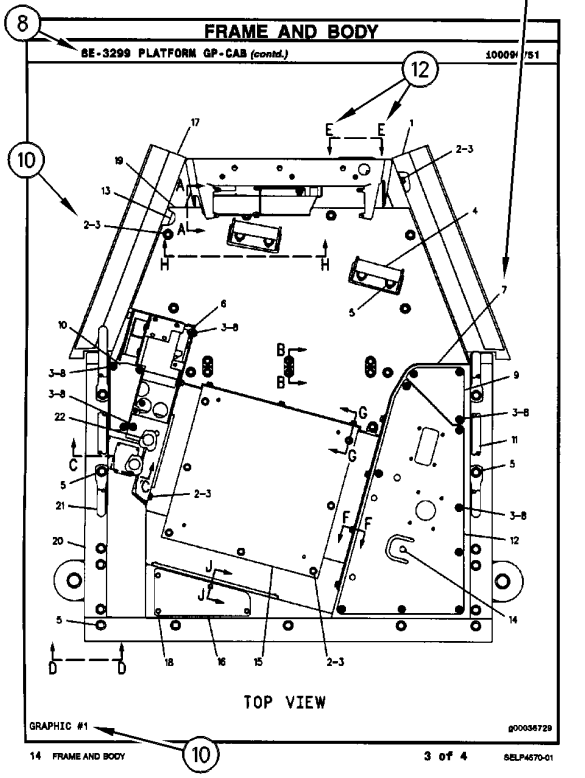

FRAME AND BODY

8E-3299 PLATFORM GP-CAB (contd.) 100090751

TOP VIEW

GRAPHIC #1 g00036729

14 FRAME AND BODY 3 of 4 SELP4570-01

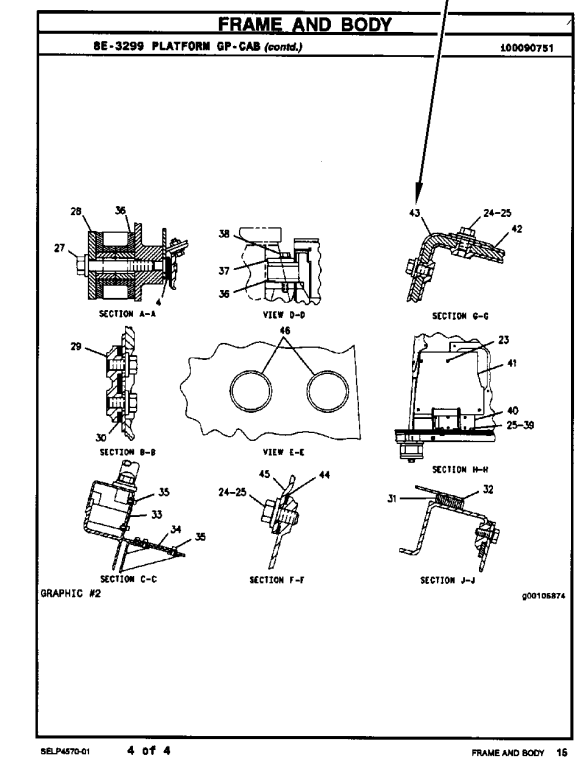

FRAME AND BODY

8E-3299 PLATFORM GP-CAB (contd.) 100090751

SECTION A-A VIEW D-D SECTION G-G

SECTION B-B VIEW E-E SECTION H-H

SECTION C-C SECTION F-F SECTION J-J

GRAPHIC #2 g00105874

SELP4570-01 4 of 4 FRAME AND BODY 15

INFORMAÇÃO GERAL

1. IDENTIFICAÇÃO DA MÁQUINA

As máquinas Caterpillar são identificadas pelos Números de Informação do Produto (PIN). Alguns componentes incluídos numa máquina podem ser identificados por Números de Série (S/N). Componentes típicos que serão enumerados com números de série incluem motores, transmissões, lâminas e ríperes. Além do número de série, a máquina e o motor são ainda identificados por números de arranjo e, em alguns casos, números de modificações. Tais números encontram-se na(s) placa(s) de identificação do produto e na placa mestre no compartimento do operador.

SIS *Novidades*

A partir do primeiro trimestre de 2001 o Número de Identificação de Produto da Caterpillar (PIN) precisa ser mudado de 8 para 17 caracteres. Esforçando-se para fornecer uma identificação uniforme de equipamentos, a Caterpillar e outros fabricantes de equipamento de construção estão mudando para atender a versão mais atualizada do padrão de identificação de produtos. Os números de PIN para produtos de aplicações não rodoviárias são definidos pela ISO 10261. O novo formato de número PIN será adotado em todas as máquinas e grupos geradores Caterpillar. As placas e as marcações do chassi mostrarão os 17 dígitos de PIN. O novo formato terá a seguinte disposição:

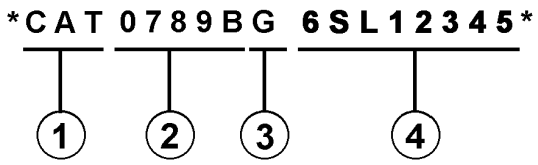

Onde:

1. Código de Fabricação Mundial da Caterpillar (dígitos 1-3)

2. Descrição da Máquina (dígitos 4-8)

3. Dígito de Verificação (dígito 9)

4. Seção de Indicador da Máquina (MIS) ou Número de Seqüência de Produto (dígitos 10-17). Estes eram anteriormente chamados de Número de Série.

Máquinas e grupos geradores produzidos antes do primeiro trimestre de 2001 manterão o formato de 8 caracteres de PIN.

Componentes como motores, transmissões, eixos, ferramentas de trabalho, etc. continuarão a usar Número de Série (S/N) com oito caracteres.

2. COMO OBTER PEÇAS

⚠ CUIDADO

Quando peças de substituição são exigidas para este produto, a Caterpillar recomenda a utilização de peças de substituição Caterpillar ou peças com as especificações equivalentes incluindo, mas não limitadas, à dimensões físicas, tipos, resistência e materiais.

A inobservância desta advertência poderá resultar em falhas prematuras, danos ao produto, ferimentos ou morte.

As Peças de Reposição de Qualidade Caterpillar encontram-se disponíveis nos revendedores Caterpillar no mundo inteiro. Seus estoques de peças são atualizados e incluem todas as peças normalmente necessárias para proteger seu investimento em máquinas Caterpillar. Alguns revendedores podem oferecer jogos de reparo ou peças de troca/remanufaturadas disponíveis como uma opção da alternativa de reparo mais eficaz para uma situação específica. Ao encomendar peças, seu pedido deve especificar a quantidade, o número e o nome da peça e o número de série/número de identificação do produto referentes à máquina para a qual as peças se destinam.

3. ORGANIZAÇÃO DO MANUAL DE PEÇAS

A informação do produto neste manual é apresentada em forma de "elementos de informação" que representam todos os componentes para o modelo específico. Arranjo de Motor e Grupo de Assento são exemplos de elementos de informação. Os elementos de informação são organizados em ordem alfabética por nome de peça ou secundariamente, por número de peça incluído em cada seção principal do manual.

4. LISTA DE CONTEÚDOS

A Lista de Conteúdos (TOC) se encontra no princípio do manual. A Lista de Conteúdos (TOC) relaciona em cada seção do manual uma lista completa com todos os elementos de informação organizados conforme aparecem no manual. Números de página são fornecidos para que se tenha referência rápida de ilustrações de peças detalhadas e listas de conteúdos que podem receber serviço de manutenção.

5. ÍNDICE DE PEÇAS DE MANUTENÇÃO

O Índice de Peças de Manutenção, localizado perto do princípio do manual, faz referência aos números de peça de manutenção usados com maior frequência, fornecendo uma descrição, a quantidade, o uso e o número de página. Esta informação é organizada com a descrição da peça em ordem alfabética.

6. ÍNDICE

O Índice localizado perto do princípio do manual, consiste de uma lista em ordem alfabética de todos os elementos de informação incluídos no manual. Números de página são fornecidos para que se tenha referência rápida de ilustrações de peças detalhadas e listas de conteúdos que podem receber serviço de manutenção.

7. ÍNDICE DE NÚMERO DE PEÇA

Um índice numérico relacionando todos os números de peça e a(s) página(s) correspondentes, aparece no final do manual.

8. LEGENDAS

As legendas localizadas no início de cada elemento de informação identificam o número e o nome de peça, juntamente com informação descritiva adicional. Informações sobre o Número de Informação do Produto (PIN) e o Número de Série (S/N) encontradas em cada legenda devem ser usadas para selecionar a informação correta sobre uma máquina específica. Opções de substituição no campo, identificação de componentes de acessórios opcionais e informações sobre onde são utilizados ("parte de") são também fornecidas.

A primeira linha de uma legenda é indicada em tipo maior para indicar o princípio de um elemento de informação. Legendas para páginas adicionais que podem ser necessárias para ilustrar um elemento de informação serão apresentadas em tipo padrão e incluirão o termo *(continua)* .

9. NÃO DISPONÍVEL SEPARADAMENTE

Em alguns casos, é necessário mostrar peças não disponíveis separadamente que têm uma ligação com listas de conteúdos de nível inferior que podem receber serviço de manutenção. Os números de peça destes componentes não disponíveis aparecerão em *itálico* , a fim de indicar que não estão disponíveis.

10. NÙMEROS DE REFERÊNCIA À LISTA DE PEÇAS

Os números indicados na coluna Ref No (No. de Referência) correspondem-se aos números usados no(s) gráfico(s) correspondente(s). Um sufixo com letras pode ser acrescentado a um número de referência para identificar itens de conteúdo de nível inferior. Os números indicados na coluna Graphic Ref (Referência de Gráfico) referem-se ao identificador de número de gráfico presente no canto esquerdo inferior de cada ilustração. O número de Referência de Gráfico pode ser usado em combinação com o item Ref No para determinar-se o número de peça correto. Poderá haver omissão intencional de um número de referência (Ref No) de uma lista de conteúdos uma vez que as informações são atualizadas para refletir os números de peça mais recentes que podem receber serviço de manutenção.

11. NOMES DE PEÇAS DESALINHADOS

Quando um nome de peça encontra-se desalinhado numa lista de peças, significa que tal item faz parte do (está incluído no) grupo ou conjunto sob o qual está relacionado.

12. LETRAS DE REFERÊNCIA NAS ILUSTRAÇÕES

Quando necessário, as ilustrações contêm letras de referência (A, B, C, etc.) que são utilizadas para seguir tubulações e cabos elétricos de um ponto a outro. Também foram utilizadas para indicar onde se pode reconectar as ilustrações que foram separadas.

13. ABREVIAÇÕES E SÍMBOLOS

O.D. – "Outside Diameter" (Diâmetro Externo)
I.D. – "Inside Diameter" (Diâmetro Interno)
A – Não faz parte deste grupo
B – Use conforme necessário
C – Indica modificação
D – Vendido por metro
E – Vendido por centímetro
F – Não ilustrado
G – Vendido por polegada
I – Consultar o Sistema de Informações Hidráulicas
M – Peça métrica
R – Peça remanufaturada pode estar disponível; consulte o seu revendedor Cat
Y – Ilustração separada
Z – Não disponível separadamente

SIS *Novidades*

14. <END>

Este símbolo indica o final de um elemento de informação.

INFORMAÇÃO GERAL

NOTA:

Os contínuos aperfeiçoamentos e avanços no projeto do produto podem ocasionar modificações em sua máquina que talvez ainda não estejam incluídas nesta publicação. Sempre que surgirem dúvidas quanto a um produto Caterpillar ou quanto à presente publicação, consulte o seu revendedor Caterpillar para obter as informações mais recentes disponíveis.

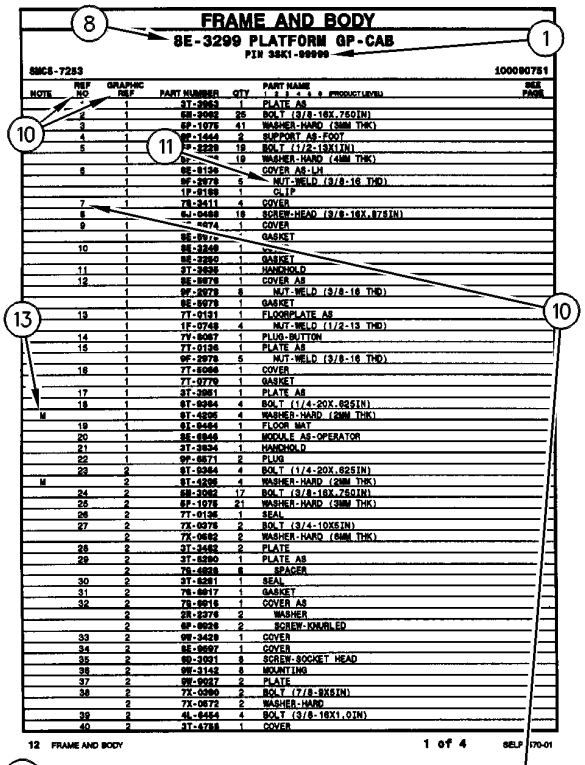

FRAME AND BODY

8E-3299 PLATFORM GP-CAB

PIN 3SK1-99999

SMCS-7283 100090751

NOTE	REF NO	GRAPHIC REF	PART NUMBER	QTY	PART NAME 1 2 3 4 5 6 (PRODUCT LEVEL)	SEE PAGE
	1	1	3T-3963	1	PLATE AS	
	2	1	5M-3092	26	BOLT (3/8-16X.750IN)	
	3	1	5P-1976	41	WASHER-HARD (3MM THK)	
	4	1	9P-1444	2	SUPPORT AS-FOOT	
	5	1	7P-2229	19	BOLT (1/2-13X1IN)	
		1	5P-[illegible]	19	WASHER-HARD (4MM THK)	
	6	1	8E-8194	1	COVER AS-LH	
		1	9F-2978	5	NUT-WELD (3/8-16 THD)	
		1	1P-8188	1	CLIP	
	7	1	7X-3411	4	COVER	
	8	1	5J-3488	18	SCREW-HEAD (3/8-16X.875IN)	
	9	1	[illegible]474	1	COVER	
		1	8E-8[illegible]	1	GASKET	
	10	1	8E-3248	1	[illegible]	
		1	8E-3250	1	GASKET	
	11	1	3T-3939	1	HANDHOLD	
	12	1	8E-8478	1	COVER AS	
		1	9F-2978	8	NUT-WELD (3/8-16 THD)	
		1	8E-8478	1	GASKET	
	13	1	7T-0131	1	FLOORPLATE AS	
		1	1F-0748	4	NUT-WELD (1/2-13 THD)	
	14	1	7V-8067	1	PLUG-BUTTON	
	15	1	7T-0126	1	PLATE AS	
		1	9F-2978	5	NUT-WELD (3/8-16 THD)	
	16	1	7T-8066	1	COVER	
		1	7T-0770	1	GASKET	
	17	1	3T-3981	1	PLATE AS	
	18	1	9T-8364	4	BOLT (1/4-20X.625IN)	
M		1	9T-4206	4	WASHER-HARD (2MM THK)	
	19	1	6I-8464	1	FLOOR MAT	
	20	1	8E-8846	1	MODULE AS-OPERATOR	
	21	1	3T-3934	1	HANDHOLD	
	22	1	9P-8871	2	PLUG	
	23	2	9T-8364	4	BOLT (1/4-20X.625IN)	
M		2	9T-4206	4	WASHER-HARD (2MM THK)	
	24	2	5M-3092	17	BOLT (3/8-16X.750IN)	
	25	2	5P-1978	21	WASHER-HARD (3MM THK)	
	26	2	7T-0136	1	SEAL	
	27	2	7X-0378	2	BOLT (3/4-10X5IN)	
		2	7X-0682	2	WASHER-HARD (6MM THK)	
	28	2	3T-3482	2	PLATE	
	29	2	3T-8390	1	PLATE AS	
		2	7X-4828	6	SPACER	
	30	2	3T-8261	1	SEAL	
	31	2	7X-8917	1	GASKET	
	32	2	7X-8916	1	COVER AS	
		2	2R-2376	2	WASHER	
		2	6P-8026	2	SCREW-KNURLED	
	33	2	9W-3429	1	COVER	
	34	2	8E-8907	1	COVER	
	35	2	6D-3091	9	SCREW-SOCKET HEAD	
	36	2	9W-3142	8	MOUNTING	
	37	2	9W-9027	2	PLATE	
	38	2	7X-0380	2	BOLT (7/8-9X6IN)	
		2	7X-0672	2	WASHER-HARD	
	39	2	4L-6464	4	BOLT (3/8-16X1.0IN)	
	40	2	3T-4788	1	COVER	

12 FRAME AND BODY 1 of 4 SELP4570-01

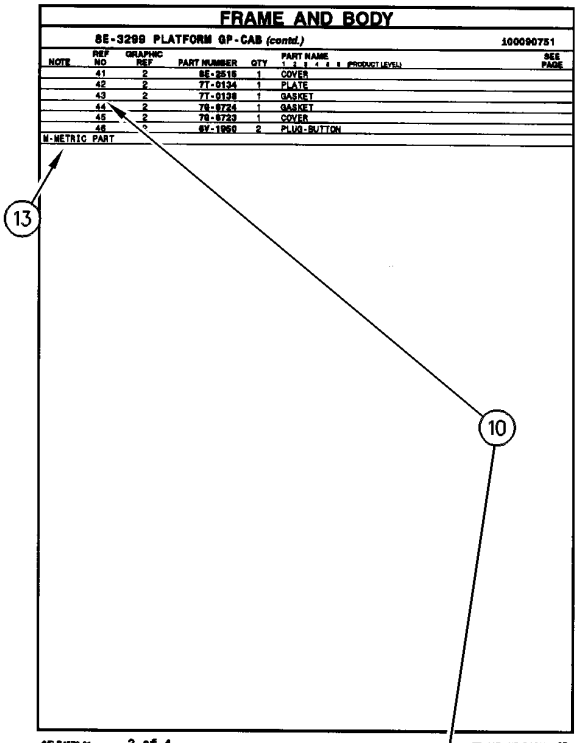

FRAME AND BODY

8E-3299 PLATFORM GP-CAB (contd.) 100090751

NOTE	REF NO	GRAPHIC REF	PART NUMBER	QTY	PART NAME 1 2 3 4 5 6 (PRODUCT LEVEL)	SEE PAGE
	41	2	8E-8516	1	COVER	
	42	2	7T-0134	1	PLATE	
	43	2	7T-0138	1	GASKET	
	44	2	7X-8724	1	GASKET	
	45	2	7X-8723	1	COVER	
	46	2	6V-1960	2	PLUG-BUTTON	

M-METRIC PART

SELP4570-01 2 of 4 FRAME AND BODY 13

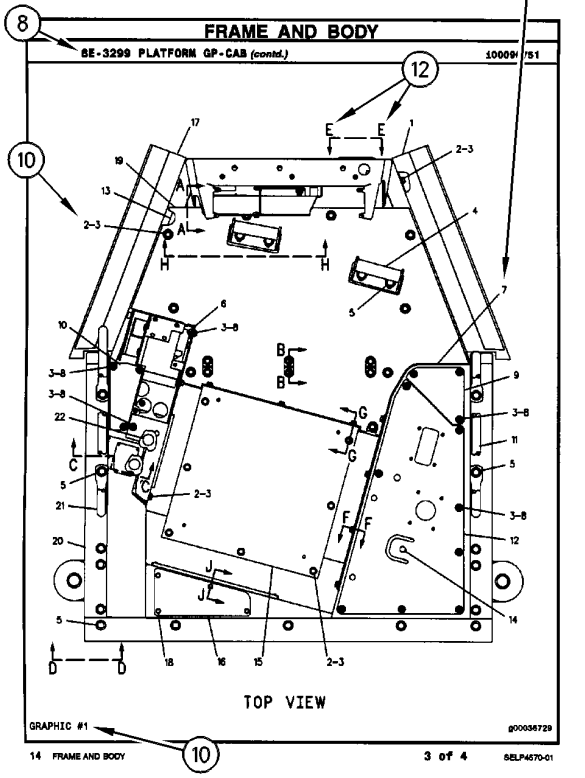

FRAME AND BODY

8E-3299 PLATFORM GP-CAB (contd.) 100090751

TOP VIEW

GRAPHIC #1 g00036729

14 FRAME AND BODY 3 of 4 SELP4570-01

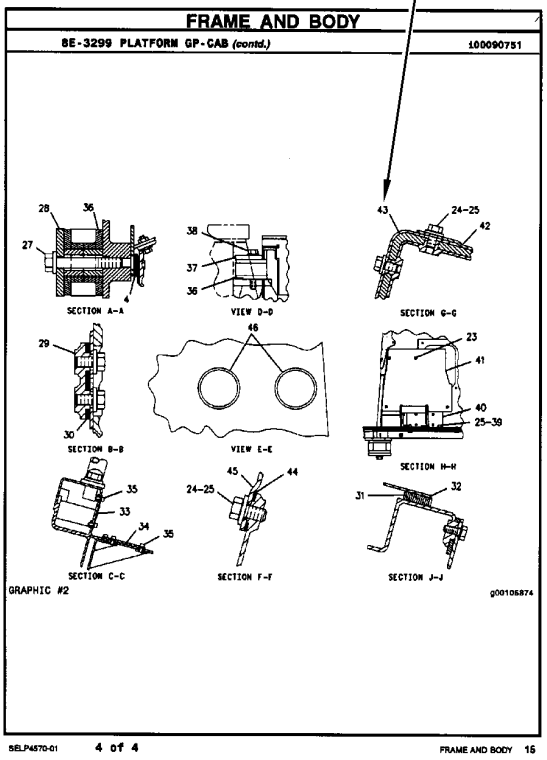

FRAME AND BODY

8E-3299 PLATFORM GP-CAB (contd.) 100090751

SECTION A-A VIEW D-D SECTION G-G

SECTION B-B VIEW E-E SECTION H-H

SECTION C-C SECTION F-F SECTION J-J

GRAPHIC #2 g00105874

SELP4570-01 4 of 4 FRAME AND BODY 15

ALLGEMEINE HINWEISE

1. MASCHINENKENNZEICHNUNG

Caterpillar-Maschinen sind mit PRODUCT IDENTIFICATION NUMBERS (PIN) (Produkt-Identnummern) gekennzeichnet. Einige Baugruppen, z.B. Motoren, Getriebe, Planierschilde und Aufreißer, sind mit SERIAL NUMBERS (S/N) (Seriennummern) gekennzeichnet. An der Maschine und am Motor befinden sich außerdem ARRANGEMENT NUMBERS (Ausrüstungsnummern) sowie in einigen Fällen MODIFICATION NUMBERS (Änderungsnummern). Sie befinden sich auf den PIN-Schildern und auf dem Typenschild im Fahrerhaus.

Bei Ersatzteilbestellungen müssen dem Händler alle diese Nummern zur Verfügung gestellt werden.

SIS *Neu im Parts Manual*

Vom ersten Quartal 2001 ab wurde die Caterpillar Produkt-Identnummer (PIN) von 8 auf 17 Zeichen geändert. Um zur Standardisierung der Produkt-Identnummer beizutragen, sind Caterpillar und andere Baumaschinenhersteller bestrebt, die aktuellste Norm zur Produkt-Identnummerierung einzuführen. Produkt-Identnummern für Baumaschinen sind durch ISO 10261 definiert. Das neue Format der Produkt-Identnummern gilt für alle Caterpillar-Maschinen und -Stromaggregate. Die Produkt-Identschilder und -Identrahmenmarkierung enthalten die aus 17 Zeichen bestehende Identnummer. Das neue Format hat folgende Abschnitte:

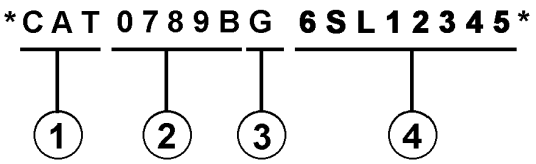

Abschnitte:

1. Caterpillars weltweiter Herstellungscode (Zeichen 1-3)

2. Modell (Zeichen 4-8)

3. Kontrollzeichen (Zeichen 9)

4. Maschinenspezifische Kennung (MIS) oder Produktsequenznummer (Zeichen 10-17). Diese wurde früher als Seriennummer bezeichnet.

Für vor dem ersten Quartal 2001 hergestellte Maschinen und Stromaggregate wird das aus 8 Zeichen bestehende PIN-Format beibehalten.

Bauteile wie z.B. Motoren, Getriebe, Achsen sowie Arbeitsgeräte werden weiterhin eine aus 8 Zeichen bestehende Seriennummer (S/N) aufweisen.

2. BESTELLEN VON ERSATZTEILEN

⚠ WARNUNG

Wenn für diese Maschine Ersatzteile benötigt werden, empfiehlt Caterpillar, ausschließlich Caterpillar-Ersatzteile oder solche zu verwenden, die die gleichen technischen Merkmale hinsichtlich Typ, Festigkeit, Werkzeugeigenschaften und die gleichen Maße aufweisen.

Bei Nichtbeachtung dieser Warnung besteht Verletzungs- oder sogar Lebensgefahr! Ferner kann Nichtbeachtung vorzeitige Ausfälle der Teile und Beschädigung der Maschine zur Folge haben.

Original Caterpillar-Ersatzteile können weltweit bei jedem Caterpillar-Händlern bestellt werden. Die umfangreichen Händlerlager enthalten normalerweise alle Teile, die Sie für Ihre Caterpillar-Maschine benötigen. Einige Händler bieten Reparatursätze, Austausch- oder werküberholte Teile an, so daß Sie eine Auswahl unter verschiedenen Reparaturmöglichkeiten treffen können. Ihre Bestellung muß folgende Angaben enthalten: Anzahl der benötigten Teile, Bestellnummer, Bezeichnung des Teils, Serien-Nr./Produkt-Ident-Nr., Ausrüstungs-Nr. und Änderungs-Nr. der Maschine, für die diese Teile benötigt werden.

3. AUFBAU DES PARTS MANUAL

Die Produktinformationen für alle Komponenten eines bestimmten Modells sind in INFORMATION ELEMENTS (Informationseinheiten) gegliedert. ENGINE ARRANGEMENT (Motorausführung) und SEAT GROUP (Fahrersitz) sind Beispiele für solche Informationseinheiten. Sie sind innerhalb jeder Gruppe alphabetisch, entsprechend der Ersatzteilbezeichnung, und zusätzlich numerisch, entsprechend der Ersatzteilnummer, geordnet.

4. INHALTSVERZEICHNIS

Das Inhaltsverzeichnis befindet sich am Anfang des Buches. Im Inhaltsverzeichnis werden die einzelnen Abschnitte des Buches aufgeführt. Die Abschnitte enthalten eine vollständige Aufstellung aller Informationseinheiten. Diese sind entsprechend ihrem Erscheinen im Buch geordnet. Das Inhaltsverzeichnis enthält Seitenangaben für Schnellverweise auf detaillierte Abbildungen und Teillisten.

ALLGEMEINE HINWEISE

5. INDEX FÜR WARTUNGSTEILE

Der Index für Wartungsteile vorn im Buch enthält die Bestellnummern, Seitenangaben, Mengenangaben und Informationen über den Einsatzbereich für die am häufigsten benötigten Ersatzteile. Die Angaben sind alphabetisch entsprechend der Teilebezeichnung geordnet.

6. INDEX

Der Index vorn im Buch enthält eine alphabetische Liste aller Informationseinheiten. Er enthält Seitenangaben für Schnellverweise auf detaillierte Abbildungen und Teillisten.

7. INDEX FÜR BESTELLNUMMERN

Hinten im Buch befindet sich ein numerischer Index, mit allen Bestellnummern und dem Hinweis auf die Seite, auf der sich die betreffende Abbildung befindet.

8. ÜBERSCHRIFTEN

Die Überschriften, die sich am Anfang jeder der Informationseinheiten befinden, enthalten Bestellnummern, Ersatzteilbezeichnungen und zusätzliche beschreibende Informationen. Produkt-Ident- und Seriennummern in den Überschriften sollten zur Auswahl der richtigen Informationen für die betreffende Maschine verwendet werden. Die Überschriften enthalten außerdem Informationen über möglichen Außendienstersatz, mögliche Baugerätekomponenten und die Baugruppe, zu der das Teil gehört.

Die erste Zeile einer Überschrift erscheint in einer größeren Schriftart, um den Anfang einer Informationseinheit zu kennzeichnen. Überschriften für zusätzliche Seiten, die zur Erläuterung einer Informationseinheit notwendig sind, erscheinen in normaler Schriftart und enthalten den Begriff "(contd.)".

9. NICHT EINZELN LIEFERBARE TEILE

In einigen Fällen ist es notwendig nicht lieferbare Teile, die selbst mit einer eigenen Teilliste im Buch vertreten sind, aufzuführen. Die Bestellnummern dieser nicht einzeln lieferbaren Teile erscheinen kursiv, wodurch angezeigt wird, daß sie nur in Verbindung mit anderen Teilen lieferbar sind.

10. REFERENZNUMMER FÜR ERSATZTEILE

Die Zahlen, die in der Spalte "Ref No" aufgeführt sind, stimmen mit den Zahlen in den beigefügten Abbildungen überein. Ein Buchstaben-Suffix kann zu einer Referenznummer hinzugefügt werden, um zu kennzeichnen, daß das Teil mit einer eigenen Teilliste im Buch aufgeführt ist. Die in der Spalte "Graphic Ref" angeführten Zahlen verweisen auf die Identifikationsnummer der Abbildung, die sich in der linken unteren Ecke der Abbildung befindet. Diese Nummer kann zusammen mit der Referenznummer des Teils angegeben werden, um die richtige Ersatzteilnummer zu ermitteln. Referenznummern können absichtlich weggelassen werden, da die Nummern der lieferbaren Ersatzteile ständig aktualisiert werden.

11. EINGERÜCKTE BEZEICHNUNGEN

Wenn eine Bezeichnung eingerückt ist, wird dadurch angezeigt, daß das Teil zu einer Baugruppe gehört, unter deren Bezeichnung es eingerückt ist.

12. REFERENZBUCHSTABEN

Falls erforderlich sind in den Abbildungen Referenzbuchstaben enthalten (z.B. A, B, C, usw.), die Leitungen und Kabelbäume von einem Punkt zum anderen verfolgen. Außerdem geben sie die Stelle an, an der getrennte Abbildungen fortgesetzt werden.

13. ABKÜRZUNGEN UND SYMBOLE

O.D. – Außendurchmesser
I.D. – Innendurchmesser
A – kein Teil dieser Gruppe
B – nach Bedarf verwenden
C – Hinweis auf eine Änderung
D – in Meter-Länge bestellen
E – in Zentimeter-Länge bestellen
F – nicht gezeigt
G – in Zoll-Länge bestellen
I – siehe Hydraulikinformationssystem
M – metrisches Teil
R – werküberholtes Teil unter Umständen lieferbar
Y – separate Abbildung
Z – nicht einzeln lieferbar

SIS *Neu im Parts Manual*

14. BESCHREIBUNG DER TYPENÄNDERUNGEN

Typ-A bezieht sich auf alle Konfigurationsänderungen, die ein zusätzliches Informationselement für Ausführung, Gruppe oder Einheit benötigen. Wenn kein Seriennummernumbruch für Typen erhältlich ist, wird in der Überschrift eine Typennummer (Typ 1, Typ 2, etc.) angegeben. Diese "Typenänderungen" sind in der Teileliste mit der Anmerkung "C" (Änderung des vorherigen Typs) versehen. Es werden nur die für dieses Ersatzteilhandbuch relevanten "Typen" angegeben. Es können zusätzliche Typen vorhanden sein, was zu "C" Anmerkungen zu einem Informationselement führen kann, wenn keine anderen Typen angegeben werden.

15. <END>

Dieses Symbol zeigt das Ende eines Informationselements an.

ANMERKUNG:

Ständig vorgenommene Verbesserungen und Weiterentwicklungen an Ihrer Maschine können Änderungen verursachen, die in der vorliegenden Ausgabe noch nicht berücksichtigt sind. Fragen zu Ihrer Caterpillar-Maschine oder diesem Ersatzteilbuch beantwortet Ihr Caterpillar-Händler.

ALLGEMEINE HINWEISE

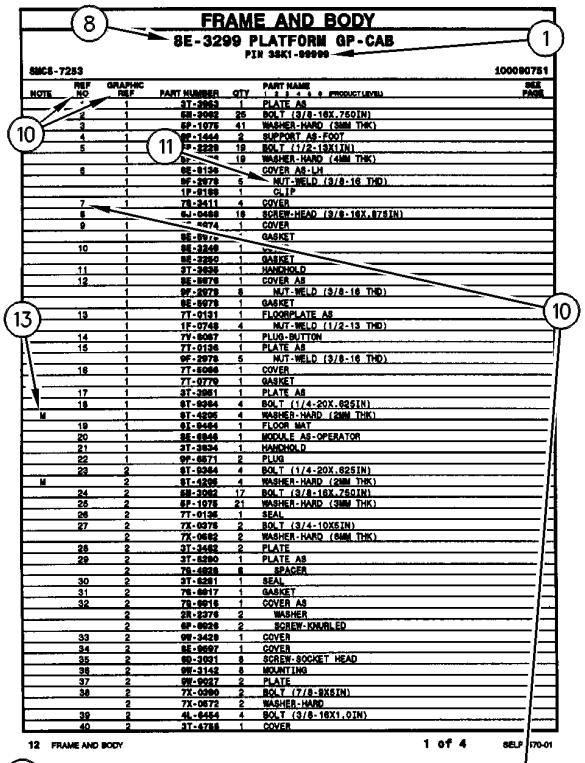

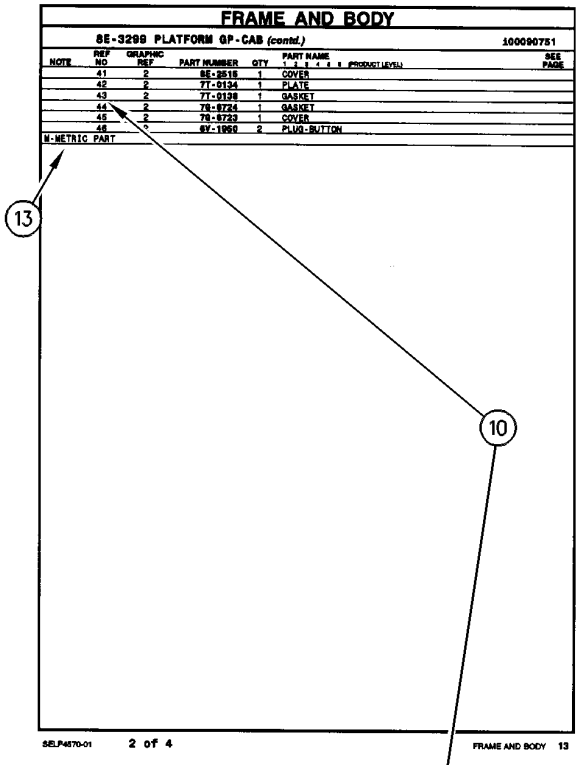

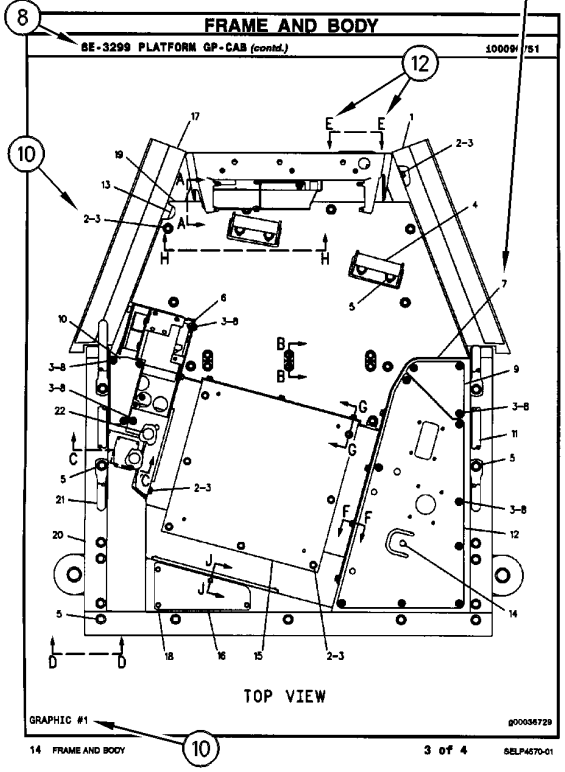

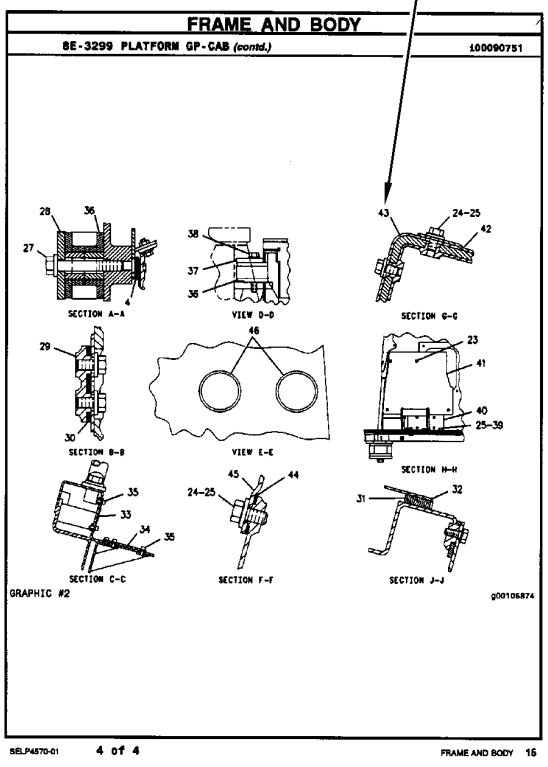

REPAIR ALTERNATIVES

REMANUFACTURED COMPONENTS

As an option when making repairs consider Caterpillar Remanufactured Components. Components that are available through the Caterpillar Remanufactured Program are identified three ways in the parts book:

- with the letter R in the note field of the parts list
- with an R* at the beginning of the first line of the caption
- with an *R at the end of the first line of the caption

Typical components included in the Remanufacturing Program include:

ALTERNATORS
CONNECTING RODS
CRANKSHAFTS - UNDERSIZE
CRANKSHAFTS - UPGRADE TO NEW
CYLINDER HEADS
ELECTRONIC CONTROL MODULES (ECM)
ELECTRONIC SENSORS
FUEL INJECTORS
FUEL NOZZLES
FUEL PUMPS
GOVERNORS
OIL PUMPS
PISTONS
SHORT BLOCKS
STARTERS
TURBOCHARGERS - COMPLETE
TURBOCHARGER CARTRIDGES
WATER PUMPS

Caterpillar Remanufactured engines for many engine arrangements are also available.

OPTIONS DE RÉPARATION

COMPOSANTS RÉNOVÉS

Comme option de réparation, considérer les composants rénovés Caterpillar. Les composants disponibles dans le cadre du programme Caterpillar de composants rénovés sont identifiés de trois façons dans le catalogue de pièces:

- avec la lettre "R" dans l'espace note de la liste des pièces
- avec R* au début de la première ligne des légendes
- avec *R à la fin de la première ligne des légendes

Les composants suivants figurent parmi les composants typiques du programme de rénovation:

ALTERNATEURS
BIELLES
VILEBREQUINS - SOUS-DIMENSIONNÉS
VILEBREQUINS - REMIS À NEUF
CULASSES
MODULES DE COMMANDE ÉLECTRONIQUE (ECM)
CAPTEURS ÉLECTRONIQUES
INJECTEURS
TÊTES D'INJECTEURS
POMPES À CARBURANT
RÉGULATEURS
POMPES À HUILE
PISTONS
BLOCS EMBIELLÉS
DÉMARREURS
TURBOCOMPRESSEURS - COMPLETS
CARTOUCHES DE TURBOCOMPRESSEUR
POMPES À EAU

Des moteurs rénovés sont aussi disponibles pour plusieurs versions de moteur.

ALTERNATIVAS DE REPARACIÓN

COMPONENTES REMANUFACTURADOS

Al hacer reparaciones, tenga en cuenta la opción de Componentes Remanufacturados Caterpillar. Los componentes que están disponibles por medio del programa de Productos Remanufacturados Caterpillar se identifican de tres maneras en el manual de piezas:

- con la letra R en el espacio de Nota de la lista de piezas
- con una R* al comienzo de la primera línea de la leyenda
- con una *R al final de la primera línea de la leyenda

Los componentes que se incluyen típicamente en el Programa de Productos Remanufacturados son:

ALTERNADORES
BIELAS
CIGÜEÑALES - BAJOMEDIDA
CIGÜEÑALES - REMANUFACTURADOS A NUEVO
CULATAS
MÓDULOS DE CONTROL ELECTRÓNICO (ECM)
SENSORES ELECTRONICOS
INYECTORES
BOQUILLAS
BOMBAS DE COMBUSTIBLE
REGULADORES
BOMBAS DE ACEITE
PISTONES
MONOBLOQUES
MOTORES DE ARRANQUE
TURBOCOMPRESORES - COMPLETOS
NÚCLEOS DE TURBOCOMPRESOR
BOMBAS DE AGUA

También hay disponibles motores Remanufacturados Caterpillar para muchas de las configuraciones de motores.

ALTERNATIVAS DE REPARO

COMPONENTES REMANUFATURADOS

Considere o uso de Componentes Remanufaturados Caterpillar ao efetuar reparos. Os componentes disponíveis através do Programa de Remanufatura Caterpillar são identificados de três formas no manual de peças:

- com um R na área da nota da lista de peças
- com um R* no princípio da primeira linha da legenda
- com um *R no final da primeira linha da legenda

Os componentes típicos que constam no Programa de Remanufatura incluem:

ALTERNADORES
BIELAS
VIRABREQUINS - SUBMEDIDAS
VIRABREQUINS - ATUALIZAÇÃO
CABEÇOTES
MÓDULOS DE CONTROLE ELETRÔNICO (ECM)
SENSORES ELETRÔNICOS
INJETORES DE COMBUSTÍVEL
BICOS DE ABASTECIMENTO DE COMBUSTÍVEL
BOMBAS DE COMBUSTÍVEL
GOVERNADORES
BOMBAS DE ÓLEO
PISTÕES
BLOCOS BÁSICOS DO MOTOR
MOTORES DE PARTIDA
TURBOALIMENTADORES - COMPLETOS
CARTUCHOS DE TURBOALIMENTADORES
BOMBAS D'ÁGUA

Motores Remanufaturados Caterpillar também encontram-se disponíveis para diversos arranjos de motor.

REPARATURALTERNATIVEN

WERKÜBERHOLTE AT-PRODUKTE

Bei Reparaturen sollten werküberholte AT-Produkte von Caterpillar in Betracht gezogen werden. Die durch das AT-Programm von Caterpillar erhältlichen Teile sind im Parts Book auf drei verschiedene Arten gekennzeichnet:

- mit dem Buchstaben R in der Spalte NOTE der Ersatzteilliste
- mit einem R* am Anfang der ersten Zeile der Überschrift
- mit einem *R am Ende der ersten Zeile der Überschrift

Das AT-Programm umfaßt u.a. folgende Produkte:

DREHSTROMGENERATOREN
PLEUELSTANGEN
KURBELWELLEN - MIT UNTERMASS
KURBELWELLEN - MIT ORIGINALMASS
ZYLINDERKÖPFE
ELEKTRONISCHE STEUEREINHEITEN (EMC)
ELEKTRONISCHE SENSOREN
PUMPENDÜSEN
EINSPRITZDÜSEN
KRAFTSTOFFPUMPEN
DREHZAHLREGLER
ÖLPUMPEN
KOLBEN
TEILMOTOREN
ANLASSER
TURBOLADER - KOMPLETT
TURBOLADERLAUFZEUGE
KÜHLWASSERPUMPEN

Viele Motoren können durch werküberholte AT-Motoren von Caterpillar ersetzt werden.

SUPPLEMENTAL COOLANT ADDITIVES

CUSTOMER BENEFITS:

Protects against cavitation, foam, erosion, corrosion, and scale buildup in cooling systems.

- Provides measured coolant conditioner.

DESCRIPTION:

Additives deplete from the coolant with normal operation. For this reason, Supplemental Coolant Additives (SCA) must be added to all heavy duty coolants at regular intervals. In addition, when not using a fully formulated, pre-charged antifreeze, like Caterpillar's DEAC, an initial charge of SCA must be added to the cooling system. The amount of SCA added to the system is dependent on the capacity of the system.

The SCA for initial fill is provided as a liquid. SCA's for maintenance intervals are available in liquid form and as a spin-on element. (No Spin-on available for 3600 Family of Engines)

NOTE:

The amount of SCA added at initial fill is not the same as the amount added at maintenance intervals.

The coolant additive elements can be used with any ethylene or propylene glycol type antifreeze which meets ASTM D4985 or ASTM D5345 Specifications.

NOTE:

For use with standard heavy duty coolant only, not for use with Extended Life Coolant.

PARTS NEEDED:

Cooling System Capacity		Liquid SCA at Initial Fill	Liquid SCA at Maintenance*	Spin-on SCA Maintenance Element*
Liters	Gallons			
22-30	(6-8)	3P-2044 (1)	6V-3542 (1)	111-2370 (1)
30-38	(8-10)	3P-2044 (1) 6V-3542 (1)	111-2372 (1)	111-2369 (1)
38-49	(10-13)	3P-2044 (1) 8T-1589 (1)	111-2372 (1)	111-2369 (1)
49-64	(13-17)	3P-2044 (2)	8T-1589 (1)	9N-3368 (1)
64-83	(17-22)	3P-2044 (2) 8T-1589 (1)	111-2372 (1) 6V-3542 (1)	111-2371 (1)
83-114	(22-30)	3P-2044 (3) 8T-1589 (1)	3P-2044 (1)	9N-3718 (1)
114-163	(30-43)	3P-2044 (5)	3P-2044 (1) 6V-3542 (1)	111-2371 (2)
163-242	(43-64)	3P-2044 (8)	3P-2044 (2)	9N-3718 (2)

** Normal maintenance period is 250 hrs. See your Operation and Maintenance Manual for complete coolant maintenance instructions.*

( ) Indicates quantity required.

ADDITIFS POUR LIQUIDE DE REFROIDISSEMENT

AVANTAGES POUR LE CLIENT

L'additif protège contre la cavitation, la mousse, l'érosion, la corrosion et l'accumulation de dépôts dans le circuit de refroidissement.

- L'additif complémentaire fournit une quantité mesurée d'additif.

DESCRIPTION:

Les additifs s'épuisent pendant l'utilisation du moteur. C'est pourquoi l'on doit ajouter de l'additif au liquide de refroidissement/antigel pour moteurs diesel à intervalles réguliers. En plus, si l'on n'utilise pas de l'antigel entièrement formulé et pré-chargé comme le liquide de refroidissement/antigel Caterpillar pour moteurs diesel, une quantité initiale d'additif doit être ajoutée au circuit de refroidissement. La quantité d'additif à ajouter au circuit dépend de la contenance du circuit.

L'additif pour le remplissage initial est fourni sous forme liquide. L'additif pour l'entretien ultérieur est disponible sous forme liquide et sous forme d'élément à visser. (Il n'y a pas d'élément à visser pour les moteurs de la famille 3600).

NOTA:

La quantité d'additif à ajouter au remplissage initial diffère de la quantité à ajouter aux intervalles d'entretien.

Les éléments d'additif peuvent être utilisés avec tout antigel de type éthylène ou propylène-glycol conforme à la norme ASTM D4985 ou ASTM D5345.

NOTA:

A utiliser uniquement avec du liquide de refroidissement pour moteurs diesel et non avec le liquide de refroidissement longue durée.

PIÈCES NÉCESSAIRES:

Contenance du circuit de refroidissement		Additif liquide au remplissage initial	Additif liquide aux intervalles d'entretien*	Elément d'additif à visser aux intervalles d'entretien*
Litres	Gallons U.S.			
22-30	(6-8)	3P-2044 (1)	6V-3542 (1)	111-2370 (1)
30-38	(8-10)	3P-2044 (1) 6V-3542 (1)	111-2372 (1)	111-2369 (1)
38-49	(10-13)	3P-2044 (1) 8T-1589 (1)	111-2372 (1)	111-2369 (1)
49-64	(13-17)	3P-2044 (2)	8T-1589 (1)	9N-3368 (1)
64-83	(17-22)	3P-2044 (2) 8T-1589 (1)	111-2372 (1) 6V-3542 (1)	111-2371 (1)
83-114	(22-30)	3P-2044 (3) 8T-1589 (1)	3P-2044 (1)	9N-3718 (1)
114-163	(30-43)	3P-2044 (5)	3P-2044 (1) 6V-3542 (1)	111-2371 (2)
163-242	(43-64)	3P-2044 (8)	3P-2044 (2)	9N-3718 (2)

** L'intervalle d'entretien normal est de 250 heures-service. Voir le Guide d'utilisation et d'entretien pour de plus amples renseignements concernant l'entretien du circuit de refroidissement.*

( ) Indique la quantité exigée.

ADITIVOS DE REFRIGERANTE SUPLEMENTARIOS

VENTAJAS PARA EL USUARIO:

Protegen contra la cavitación, la formación de espuma, la corrosión y la acumulación de escamas en los sistemas de enfriamiento.

- Suministra un acondicionador dosificado de refrigerante.

DESCRIPCIÓN:

Los aditivos en el refrigerante se agotan con la operación normal. Por esta razón, se debe agregar Aditivo de refrigerante suplementario (SCA) a todos los refrigerantes para servicio pesado, a intervalos regulares. Además, cuando no se usa un anticongelante de precarga completo, tal como el DEAC de Caterpillar, es necesario agregar una cantidad de aditivo de refrigerante suplementario inicial al sistema de enfriamiento. La cantidad de aditivo que se debe agregar depende de la capacidad del sistema.

El SCA de llenado inicial es líquido. El que se usa para el mantenimiento está disponible tanto en líquido como en un elemento enroscable. (No hay elemento enroscable disponible para la Familia de Motores 3600).

NOTA:

La cantidad de aditivo de llenado inicial no es la misma que se agrega en los intervalos de mantenimiento.

Los elementos de aditivo de refrigerante se pueden usar con cualquier anticongelante de tipo glicol etilénico o propílico que esté de acuerdo con las especificaciones de las normas ASTM D4985 o ASTM D5345.

NOTA:

Se debe utilizar únicamente con refrigerante estándar para servicio pesado; no se debe usar con Refrigerante de Larga Duración.

PIEZAS NECESARIAS:

Capacidad del Sistema de Enfriamiento		SCA líquido de llenado inicial	SCA líquido de mantenimiento*	Elemento de mantenimiento enroscable*
litros	gal EE.UU.			
22-30	6-8	3P-2044 (1)	6V-3542 (1)	111-2370 (1)
30-38	8-10	3P-2044 (1) 6V-3542 (1)	111-2372 (1)	111-2369 (1)
38-49	10-13	3P-2044 (1) 8T-1589 (1)	111-2372 (1)	111-2369 (1)
49-64	13-17	3P-2044 (2)	8T-1589 (1)	9N-3368 (1)
64-83	17-22	3P-2044 (2) 8T-1589 (1)	111-2372 (1) 6V-3542 (1)	111-2371 (1)
83-114	22-30	3P-2044 (3) 8T-1589 (1)	3P-2044 (1)	9N-3718 (1)
114-163	30-43	3P-2044 (5)	3P-2044 (1) 6V-3542 (1)	111-2371 (2)
163-242	43-64	3P-2044 (8)	3P-2044 (2)	9N-3718 (2)

** El período normal de mantenimiento es de 250 horas. Para ver las instrucciones completas sobre el mantenimiento del refrigerante, consulte el Manual de Operación y Mantenimiento.*

( ) Indica la cantidad necesaria.

ADITIVOS SUPLEMENTARES DO LÍQUIDO ARREFECEDOR

BENEFÍCIOS PARA O CLIENTE:

Protege contra cavitação, espuma, erosão, corrosão e acúmulo de crostas nos sistemas de arrefecimento.

- Fornece uma quantidade pré-determinada de condicionador de arrefecimento.

DESCRIÇÃO:

Com a operação normal, os aditivos se esgotam do líquido arrefecedor. Por isso, Aditivos Suplementares do Líquido Arrefecedor (SCA) devem ser acrescentados a todos os líquidos arrefecedores para serviço pesado em intervalos regulares. Além disso, quando um anticongelante pré-carregado, totalmente formulado não for usado, como o DEAC Caterpillar, uma carga inicial de SCA deve ser acrescentada ao sistema de arrefecimento. A quantidade de SCA acrescentada ao sistema depende da capacidade do sistema.

O SCA para abastecimento inicial é fornecido em forma de líquido. Os aditivos suplementares (SCA) para intervalos de manutenção estão à disposição em forma líquida e como um elemento com roscas. (Exceto os Motores da Família 3600)

NOTA:

A quantidade de SCA adicionada no abastecimento inicial não é a mesma que a acrescentada nos intervalos de manutenção.

Os elementos do aditivo do líquido arrefecedor podem ser usados com qualquer tipo de anticongelante etileno ou propileno que satisfaz as Especificações ASTM D4985 ou ASTM D5345.

NOTA:

Para uso apenas com líquido arrefecedor para serviço pesado padrão, não deve ser usado com Líquido Arrefecedor de Vida Longa.

PEÇAS NECESSÁRIAS:

Capacidade do Sistema de Arrefecimento		Líquido SCA Durante Abastecimento Inicial	Líquido SCA Durante Manutenção*	Elemento de Manutenção de SCA com Roscas*
Litros	Galões			
22-30	6-8	3P-2044 (1)	6V-3542 (1)	111-2370 (1)
30-38	8-10	3P-2044 (1) 6V-3542 (1)	111-2372 (1)	111-2369 (1)
38-49	10-13	3P-2044 (1) 8T-1589 (1)	111-2372 (1)	111-2369 (1)
49-64	13-17	3P-2044 (2)	8T-1589 (1)	9N-3368 (1)
64-83	17-22	3P-2044 (2) 8T-1589 (1)	111-2372 (1) 6V-3542 (1)	111-2371 (1)
83-114	22-30	3P-2044 (3) 8T-1589 (1)	3P-2044 (1)	9N-3718 (1)
114-163	30-43	3P-2044 (5)	3P-2044 (1) 6V-3542 (1)	111-2371 (2)
163-242	43-64	3P-2044 (8)	3P-2044 (2)	9N-3718 (2)

** O período normal de manutenção é de 250 horas. Consulte o Manual de Operação e Manutenção para obter instruções completas quanto à manutenção do líquido arrefecedor.*

( ) Indica a quantidade exigida.

KÜHLMITTELZUSATZ

VORTEILE FÜR DEN KUNDEN:

Schutz gegen Kavitation, Schaumbildung, Erosion, Korrosion und Kesselsteinbildung in Kühlsystemen.

- Richtig dosierter Kühlmittelzusatz

BESCHREIBUNG:

Additive erschöpfen sich während des Motorbetriebs. Deshalb muß allen HD-Kühlmitteln regelmäßig Kühlmittelzusatz beigefügt werden. Wenn bei Erstfüllung kein vollwertiges Fertigkühlmittel, wie das Frostschutz- und Kühlmittel für Dieselmotoren von Caterpiller (DEAC), verwendet wird, muß bei Erstfüllung Kühlmittelzusatz beigefügt werden. Wieviel Kühlmittelzusatz beigefügt werden muß, hängt vom Inhalt des Kühlsystems ab.

Für Erstfüllung ist Kühlmittelzusatz nur in flüssiger Form erhältlich. Für Wartungsintervalle ist Kühlmittelzusatz in flüssiger Form und als Zusatzelement erhältlich. (Für die Motorbaureihe 3600 sind keine Zusatzelemente erhältlich.)

ANMERKUNG:

Die Kühlmittelmenge bei Erstfüllung ist nicht die gleiche Menge, die bei Wartungsintervallen beigefügt werden muß.

Die Kühlmittelzusatzelemente können mit allen Frostschutzmitteln auf Ethylen- oder Propylenglykolbasis verwendet werden, die den Standards nach ASTM D4985 oder ASTM D5345 entsprechen.

ANMERKUNG:

Den Kühlmittelzusatz nicht mit Langzeitkühlmittel (ELC) von Caterpillar verwenden. Der Kühlmittelzusatz ist nur für HD-Kühlmittel bestimmt.

TEILEBEZEICHNUNG:

Kühlsysteminhalt		Kühlmittelzusatz bei Erstfüllung	Flüssiger Kühlmittelzusatz bei Wartung*	Kühlmittelzusatzelement bei Wartung*
Liter	US-Gall.			
22-30	(6-8)	3P-2044 (1)	6V-3542 (1)	111-2370 (1)
30-38	(8-10)	3P-2044 (1) 6V-3542 (1)	111-2372 (1)	111-2369 (1)
38-49	(10-13)	3P-2044 (1) 8T-1589 (1)	111-2372 (1)	111-2369 (1)
49-64	(13-17)	3P-2044 (2)	8T-1589 (1)	9N-3368 (1)
64-83	(17-22)	3P-2044 (2) 8T-1589 (1)	111-2372 (1) 6V-3542 (1)	111-2371 (1)
83-114	(22-30)	3P-2044 (3) 8T-1589 (1)	3P-2044 (1)	9N-3718 (1)
114-163	(30-43)	3P-2044 (5)	3P-2044 (1) 6V-3542 (1)	111-2371 (2)
163-242	(43-64)	3P-2044 (8)	3P-2044 (2)	9N-3718 (2)

** Der normale Wartungsintervall beträgt 250 Betriebsstunden. Für vollständige Anweisungen zur Wartung des Kühlsystems, siehe Betriebs- und Wartungshandbuch.*

( ) Erforderliche Anzahl

MAINTENANCE PARTS

DESCRIPTION	PART NUMBER	QTY	WHERE USED	PAGE
AIR INLET AND EXHAUST SYSTEM				
FILTER ELEMENT AS-AIR (PRIMARY)	132-7168	1	AIR CLEANER GP	133
FILTER ELEMENT AS-AIR (SECONDARY)	106-3973	1	AIR CLEANER GP	133
BASIC ENGINE				
BELT-SERPENTINE	175-4862	1	ACCESSORY GP-ENGINE	21
BREATHER AS (CRANKCASE)	282-9105	2	COVER GP-VALVE MECHANISM	37
		2	COVER GP-VALVE MECHANISM	39
PLUG-DRAIN (ENGINE OIL PAN)	109-5839	1	PAN GP-OIL	70
SEAL-VALVE COVER	222-6456	1	BASE GP-VALVE COVER & INJ HARN	26
	224-7506	6	COVER GP-VALVE MECHANISM	37
		6	COVER GP-VALVE MECHANISM	39
SEAL-VALVE COVER (VALVE COVER)	222-6456	1	BASE GP-VALVE COVER & INJ HARN	27
BRAKING SYSTEM				
SCREEN AS-HIGH PRESSURE	104-3895	1	SCREEN GP-HIGH PRESSURE	588
COOLING SYSTEM				
CAP-PRESSURE (7-PSI)	6L-8617	1	TANK GP-RADIATOR TOP	126
PLUG-DRAIN	6N-9590	1	VALVE GP-RADIATOR DRAIN	129
REGULATOR-TEMPERATURE (92-DEG C)	248-5513	2	LINES GP-WATER	112
SEAL-LIP TYPE (REGULATOR HOUSING)	3S-9643	2	LINES GP-WATER	112

MAINTENANCE PARTS

DESCRIPTION	PART NUMBER	QTY	WHERE USED	PAGE
ELECTRICAL AND STARTING SYSTEM				
BATTERY GP-ELECTRONIC CONTROL (ROAD ANALYSIS/VIMS MAIN MODULE)	143-8480	1	CONTROL GP-UNPROGRAMMED	205
BATTERY (12-VOLT, MAINTENANCE FREE)	153-5710	4	BATTERY & WIRING GP	193
CIRCUIT BREAKER AS (10-AMPERE) (KEY SWITCH)	6T-3642	1	WIRING GP-ELECTRONICS BAY	316
CIRCUIT BREAKER AS (105-AMPERE) (MAIN)	171-2212	1	WIRING GP-ELECTRONICS BAY	315
CIRCUIT BREAKER AS (105-AMPERE) (START)	171-2212	1	WIRING GP-ELECTRONICS BAY	315
CIRCUIT BREAKER AS (15-AMPERE) (RUNNING LIGHTS)	3T-2662	1	WIRING GP-ELECTRONICS BAY	315
ELEMENT AS (CIGARETTE LIGHTER)	198-6571	1	WIRING GP-CAB	300
ELEMENT AS-JACKET WATER HEATER (240-VOLT, 1500-WATT)	239-8051	2	HEATER GP-JACKET WATER	217
FUSE (10-AMPERE)	113-8490	24	WIRING GP-ELECTRONICS BAY	315
FUSE (15-AMPERE)	113-8491	15	WIRING GP-ELECTRONICS BAY	315
FUSE (20-AMPERE)	113-8492	1	WIRING GP-ELECTRONICS BAY	315
KEY	5P-8500	1	WIRING GP-BUMPER	294
KEY (BATTERY DISCONNECT)	8H-5306	1	SWITCH GP-DISCONNECT	280
LAMP AS (AMBER, LED, 24-VOLT)	250-2298	1	WIRING GP-BUMPER	294
LAMP GP-DOME (24-VOLT)	3E-6389	1	WIRING GP-CAB	299
LAMP GP-FLOOD (24-VOLT)	219-6485	2	LIGHTING GP-FLOOD	231
LAMP-HALOGEN (24-VOLT, 65-WATT)	9X-3463	1	LAMP GP-FLOOD	221
		1	LAMP GP-FLOOD	222
		1	LAMP GP-FLOOD	223
		1	LAMP GP-HEAD	224
		1	LAMP GP-HEAD	225
LAMP-INTERIOR	8Y-6335	1	WIRING GP-CAB	299
LAMP (VIMS, LED, WHITE)	305-5629	1	WIRING GP-CAB	300
LAMP (24-VOLT)	7N-9943	1	LAMP GP-DOME	220
	110-2079	11	WIRING GP-CAB	299
	163-1876	1	WIRING GP-CAB	299
	163-1878	5	WIRING GP-CAB	299
	163-1883	1	WIRING GP-BUMPER	294
LAMP (24-VOLT) (GREEN)	163-1884	2	WIRING GP-SERVICE CENTER	357
FRAME AND BODY				
KEY	5P-8500	1	HOOD & GUARD GP	512
FUEL SYSTEM				
CAP AS-FILLER (FUEL TANK)	7X-7700	1	ADAPTER GP-FAST FILL FUEL	153
		1	FUEL AR-CONVENTIONAL FILL	160
FILTER AS-FUEL (ADVANCED EFFICIENCY) (SECONDARY)	1R-0755	1	MOUNTING GP-FUEL FILTER	176
		1	MOUNTING GP-FUEL FILTER	179
FILTER AS-WATER SEP & FUEL (PRIMARY)	1R-0770	1	FILTER GP-WATER SEP & FUEL	159
STRAINER-FUEL	9P-7121	1	TANK GP-FUEL	186

MAINTENANCE PARTS

DESCRIPTION	PART NUMBER	QTY	WHERE USED	PAGE
HYDRAULIC SYSTEM				
CAP-FILLER (HYDRAULIC TANK)	4J-3754	1	TANK GP-HYDRAULIC	732
		1	TANK GP-HYDRAULIC	734
FILTER ELEMENT AS-OIL (ULTRA HIGH EFFICIENCY)	207-5035	1	FILTER GP-OIL	678
FILTER GP-OIL (HYDRAULIC FAN PUMP CASE DRAIN)	166-4647	1	FILTER & LINES GP-CASE DRAIN	674
FILTER GP-OIL (IMPLEMENT PUMP CASE DRAIN)	166-4647	1	FILTER & LINES GP-CASE DRAIN	675
FILTER-OIL (ULTRA HIGH EFFICIENCY)	102-2828	1	FILTER GP-OIL	679
PLUG-DRAIN	9J-7031	1	TANK GP-HYDRAULIC	732
PLUG-DRAIN (HYDRAULIC TANK)	9J-7031	1	TANK GP-HYDRAULIC	734
SCREEN AS (HYDRAULIC TANK)	9T-9227	4	TANK GP-HYDRAULIC	732
SCREEN AS (STEERING OIL)	9T-9227	1	TANK GP-HYDRAULIC	734
SCREEN (HYDRAULIC)	118-8693	2	TANK GP-HYDRAULIC	734
STRAINER AS (HYDRAULIC TANK)	6E-4922	1	TANK GP-HYDRAULIC	734
STRAINER AS (HYDRAULIC TANK FILL)	3D-6678	1	TANK GP-HYDRAULIC	732
		1	TANK GP-HYDRAULIC	734
LUBRICATION SYSTEM				
BREATHER (ENGINE)	9G-5127	1	TANK GP-ENGINE OIL	106
CAP-FILLER (ENGINE OIL)	6G-9333	1	TANK GP-ENGINE OIL	106
		1	FILLER GP-ENGINE OIL	83
FILTER AS-ENGINE OIL (STANDARD EFFICIENCY)	1R-0716	2	FILTER GP-ENGINE OIL	84
MACHINE ARRANGEMENT				
KEY (LITERATURE COMPARTMENT)	5P-8500	2	CHASSIS AR	1
OPERATOR STATION				
BLADE AS-WIPER (400-MM) (REAR)	6V-5851	1	WIPER & WASHER GP-WINDOW	896
BLADE AS-WIPER (700-MM) (FRONT)	6V-7419	1	WIPER & WASHER GP-WINDOW	896
BLADE AS-WIPER (700-MM) (SIDE WINDOW)	6V-7419	2	WIPER GP-WINDOW	899
CAP-VENTED (WINDOW WASHER)	8E-8292	1	WASHER GP-WINDOW	895
FILTER ELEMENT-CAB AIR (STANDARD EFFICIENCY)	9X-8216	1	CAB GP	794
		1	FILTER GP-CAB AIR	816
LAMP GP-DOME (24-VOLT)	3E-6389	1	CAB GP	794
RECEIVER DRYER AS (REFRIGERANT)	257-3227	1	ACCUMULATOR & MTG GP-REFRIG	778
SEAT BELT	206-1749	1	SEAT GP	874
SEAT BELT GP (RETRACTABLE)	222-0345	1	SEAT GP	873
		1	SEAT GP	877

MAINTENANCE PARTS

DESCRIPTION	PART NUMBER	QTY	WHERE USED	PAGE
POWER TRAIN				
BREATHER AS (POWER TRAIN)	4H-6112	2	LINES GP-POWER TRAIN OIL	405
CUP-DUST	168-1917	1	SLIP JOINT GP	431
FILTER ELEMENT AS-OIL (ULTRA HIGH EFFICIENCY) (POWER TRAIN)	132-8876	1	FILTER GP-OIL	380
		2	FILTER GP-OIL	382
PLUG-MAGNETIC	5P-4484	1	AXLE GP-FIXED	359
		1	AXLE GP-OSCILLATING	361
	6V-0439	1	WHEEL & FINAL DRIVE GP	464
PLUG (TRANSMISSION OIL DRAIN)	138-1510	1	DRAIN GP-ECOLOGY	377
SCREEN AS-FILTER (AXLE OIL COOLER)	222-6713	1	FILTER GP-OIL	384
SCREEN-SUCTION	3S-3875	2	GEAR GP-OUTPUT TRANSFER	388
SERVICE EQUIPMENT AND SUPPLIES				
CAP AS-OIL FILLER (POWER TRAIN)	7W-1484	1	PROTECTION GP-VANDALISM	915
STEERING SYSTEM				
FILTER GP-OIL (STEERING PUMP CASE DRAIN)	166-4647	1	LINES GP-STEERING	611
FILTER-OIL (ADVANCED EFFICIENCY) (CASE DRAIN)	1G-8878	1	FILTER GP-OIL	600
FILTER-OIL (ULTRA HIGH EFFICIENCY)	126-1817	1	FILTER GP-OIL	599
SCREEN AS	307-6457	1	VALVE GP-STEERING	655
SCREEN AS-HIGH PRESSURE	104-3895	1	SCREEN GP-HIGH PRESSURE	633
SEAL-O-RING	8C-3097	1	VALVE GP-RELIEF	649
VALVE GP-SELECTOR & PRESS CONT (SECONDARY STEERING)	6E-3078	1	LINES GP-SECONDARY STEERING	602
		1	LINES GP-SECONDARY STEERING	605

PIÈCES DE RECHANGE

DESCRIPTION	NUMÉRO DE PIECÈS	QTÉ	DOMAINE D'APPLICATION	PAGE
CHÂSSIS ET BENNE				
CLÉ	5P-8500	1	CAPOT ET PROTECTION (ASS)	512
CIRCUIT D'ADMISSION D'AIR ET D'ÉCHAPPEMENT				
ÉLÉMENT DE FILTRE À AIR (ENS) (PRINCIPAL)	132-7168	1	FILTRE A AIR (ASS)	133
ÉLÉMENT DE FILTRE À AIR (ENS) (SECONDAIRE)	106-3973	1	FILTRE A AIR (ASS)	133
CIRCUIT DE CARBURANT				
BOUCHON DE GOULOTTE DE REMPLISSAGE (ENS) (RÉSERVOIR DE CARBURANT)	7X-7700	1	ADAPTATEUR DE REMPLIS. RAPIDE DE CARBURANT (ASS)	153
		1	CARBURANT - REMPLISSAGE CLASSIQUE (VERSION)	160
FILTRE - SÉPARATEUR D'EAU ET DE CARBURANT (ENS) (PRINCIPAL)	1R-0770	1	FILTRE DE SÉPARATEUR D'EAU ET DE CARBURANT (ASS)	159
FILTRE À CARBURANT	9P-7121	1	RÉSERVOIR DE CARBURANT (ASS)	186
FILTRE A CARBURANT (ENS) (EFFICACITÉ AVANCÉE) (AUXILIAIRE)	1R-0755	1	MONTAGE DE FILTRE À CARBURANT (ASS)	176
		1	MONTAGE DE FILTRE À CARBURANT (ASS)	179
CIRCUIT DE DIRECTION				
ÉCRAN (ENS)	307-6457	1	SOUPAPE DE DIRECTION (ASS)	655
FILTRE A HUILE (ASS) (RETOUR AU CARTER DE POMPE DE DIRECTION)	166-4647	1	CANALISATIONS DE DIRECTION (ASS)	611
FILTRE À HUILE (EFFICACITÉ AVANCÉE) (RETOUR AU CARTER)	1G-8878	1	FILTRE A HUILE (ASS)	600
FILTRE À HUILE (ULTRA-GRANDE EFFICACITÉ)	126-1817	1	FILTRE A HUILE (ASS)	599
JOINT TORIQUE	8C-3097	1	CLAPET DE DECHARGE (ASS)	649
*SCREEN AS-HIGH PRESSURE	104-3895	1	FILTRE HAUTE PRESSION (ASS)	633
SOUPAPE SELECTRICE ET REGULATRICE DE PRESSION (DIRECTION AUXILIAIRE)	6E-3078	1	CANALISATION DE DIRECTION AUXILIAIRE	602
		1	CANALISATION DE DIRECTION AUXILIAIRE	605
CIRCUIT DE FREINS				
*SCREEN AS-HIGH PRESSURE	104-3895	1	FILTRE HAUTE PRESSION (ASS)	588
CIRCUIT DE GRAISSAGE				
BOUCHON DE GOULOTTE DE REMPLISSAGE (HUILE MOTEUR)	6G-9333	1	BOUCHON DE REMPLISSAGE D'HUILE MOTEUR (ASS)	83
		1	RÉSERVOIR D'HUILE MOTEUR (ASS)	106
FILTRE A HUILE MOTEUR (ENS) (EFFICACITÉ STANDARD)	1R-0716	2	FILTRE À HUILE MOTEUR (ASS)	84
RENIFLARD (MOTEUR)	9G-5127	1	RÉSERVOIR D'HUILE MOTEUR (ASS)	106

* TRADUCTION NON DISPONIBLE AU MOMENT DE LA PUBLICATION

PIÈCES DE RECHANGE

DESCRIPTION	NUMÉRO DE PIECÈS	QTÉ	DOMAINE D'APPLICATION	PAGE
CIRCUIT DE REFROIDISSEMENT				
BOUCHON DE VIDANGE	6N - 9590	1	ROBINET DE VIDANGE DE RADIATEUR (ASS)	129
COUVERCLE DE PRESSION (7-PSI)	6L - 8617	1	RÉSERVOIR DU COUVERCLE DE RADIATEUR (ASS)	126
THERMOSTAT (92-DEG C)	248 - 5513	2	CANALISATIONS D'EAU (ASS)	112
TYPE LÈVRE À JOINT (CARTER DE RÉGULATEUR)	3S - 9643	2	CANALISATIONS D'EAU (ASS)	112
CIRCUIT ELECTRIQUE ET DE DEMARRAGE				
AMPOULE (*VIMS, LED, WHITE)	305 - 5629	1	CABLAGE DE CABINE (ASS)	300
AMPOULE (24 VOLTS)	7N - 9943	1	PLAFONNIER (ASS)	220
	163 - 1883	1	CÂBLAGE D'AMORTISSEUR (ASS)	294
	110 - 2079	11	CABLAGE DE CABINE (ASS)	299
	163 - 1876	1	CABLAGE DE CABINE (ASS)	299
	163 - 1878	5	CABLAGE DE CABINE (ASS)	299
AMPOULE (24 VOLTS) (VERTE)	163 - 1884	2	CÂBLAGE DE CENTRE D'ENTRETIEN	357
BATTERIE-COMMANDE ÉLECTRONIQUE (ASS) (ANALYSE SUR ROUTES/ MODULE VIMS PRINCIPAL)	143 - 8480	1	COMMANDE NON PROGRAMMEE (ASS)	205
BATTERIE (12V, SANS ENTRETIEN)	153 - 5710	4	BATTERIE ET CÂBLAGE	193
CLÉ	5P - 8500	1	CÂBLAGE D'AMORTISSEUR (ASS)	294
CLÉ (COUPE-BATTERIE)	8H - 5306	1	ROBINET DE BATTERIE (ASS)	280
DISJONCTEUR (ENS) (10A) (INTERRUPTEUR À CLÉ)	6T - 3642	1	CÂBLAGE DE NICHE ÉLECTRONIQUE (ASS)	316
DISJONCTEUR (ENS) (105A) (DÉMARRAGE)	171 - 2212	1	CÂBLAGE DE NICHE ÉLECTRONIQUE (ASS)	315
DISJONCTEUR (ENS) (105A) (PRINCIPAL)	171 - 2212	1	CÂBLAGE DE NICHE ÉLECTRONIQUE (ASS)	315
DISJONCTEUR (ENS) (15A) (FEUX DE ROUTE)	3T - 2662	1	CÂBLAGE DE NICHE ÉLECTRONIQUE (ASS)	315
ÉLÉMENT DU RÉCHAUFFEUR D'EAU DES CHEMISES (ENS) (240V, 1500W)	239 - 8051	2	EAU DES CHEMISES - RECHAUFFEUR (ASS)	217
ELEMENT (ENS) (*CIGARETTE LIGHTER)	198 - 6571	1	CABLAGE DE CABINE (ASS)	300
FUSIBLE (10A)	113 - 8490	24	CÂBLAGE DE NICHE ÉLECTRONIQUE (ASS)	315
FUSIBLE (15A)	113 - 8491	15	CÂBLAGE DE NICHE ÉLECTRONIQUE (ASS)	315
FUSIBLE (20A)	113 - 8492	1	CÂBLAGE DE NICHE ÉLECTRONIQUE (ASS)	315
LAMPE - PHARE (ASS) (24 VOLTS)	219 - 6485	2	ÉCLAIRAGE - PROJECTEURS (ASS)	231
LAMPE (ENS) (JAUNE, LED, 24-VOLTS)	250 - 2298	1	CÂBLAGE D'AMORTISSEUR (ASS)	294
LAMPE HALOGÈNE (24V, 65W)	9X - 3463	1	LAMPE - PHARE (ASS)	221
		1	LAMPE - PHARE (ASS)	222
		1	LAMPE - PHARE (ASS)	223
		1	PHARE AV (ASS)	224
		1	PHARE AV (ASS)	225
PLAFONNIER	8Y - 6335	1	CABLAGE DE CABINE (ASS)	299
PLAFONNIER (ASS) (24 VOLTS)	3E - 6389	1	CABLAGE DE CABINE (ASS)	299

* TRADUCTION NON DISPONIBLE AU MOMENT DE LA PUBLICATION

PIÈCES DE RECHANGE

DESCRIPTION	NUMÉRO DE PIECÈS	QTÉ	DOMAINE D'APPLICATION	PAGE
CIRCUIT HYDRAULIQUE				
BOUCHON DE GOULOTTE DE REMPLISSAGE (RÉSERVOIR HYDRAULIQUE)	4J-3754	1	RÉSERVOIR HYDRAULIQUE (ASS)	732
		1	RÉSERVOIR HYDRAULIQUE (ASS)	734
BOUCHON DE VIDANGE	9J-7031	1	RÉSERVOIR HYDRAULIQUE (ASS)	732
BOUCHON DE VIDANGE (RÉSERVOIR HYDRAULIQUE)	9J-7031	1	RÉSERVOIR HYDRAULIQUE (ASS)	734
CREPINE (ENS) (REMPLISSAGE DE RÉSERVOIR HYDRAULIQUE)	3D-6678	1	RÉSERVOIR HYDRAULIQUE (ASS)	732
		1	RÉSERVOIR HYDRAULIQUE (ASS)	734
CREPINE (ENS) (RÉSERVOIR HYDRAULIQUE)	6E-4922	1	RÉSERVOIR HYDRAULIQUE (ASS)	734
ÉCRAN (ENS) (HUILE DE DIRECTION)	9T-9227	1	RÉSERVOIR HYDRAULIQUE (ASS)	734
ÉCRAN (ENS) (RÉSERVOIR HYDRAULIQUE)	9T-9227	4	RÉSERVOIR HYDRAULIQUE (ASS)	732
ÉCRAN (HYDRAULIQUE)	118-8693	2	RÉSERVOIR HYDRAULIQUE (ASS)	734
ÉLÉMENT DE FILTRE À HUILE (ENS) (ULTRA-GRANDE EFFICACITÉ)	207-5035	1	FILTRE A HUILE (ASS)	678
FILTRE A HUILE (ASS) (*IMPLEMENT PUMP CASE DRAIN)	166-4647	1	FILTRE ET CANALISATIONS - VIDANGE DE CARTER	675
FILTRE A HUILE (ASS) (ROBINET DE VIDANGE DE CARTER DE POMPE DE VENTILATEUR HYDRAULIQUE)	166-4647	1	FILTRE ET CANALISATIONS - VIDANGE DE CARTER	674
FILTRE À HUILE (ULTRA-GRANDE EFFICACITÉ)	102-2828	1	FILTRE A HUILE (ASS)	679
MATÉRIEL ET FOURNITURES D'ENTRETIEN				
BOUCHON DE GOULOTTE DE REMPLISSAGE D'HUILE MOTEUR (TRANSMISSION)	7W-1484	1	PROTECTION ANTIVANDALISME (ASS)	915
MOTEUR STANDARD				
BOUCHON DE VIDANGE (CARTER D'HUILE MOTEUR)	109-5839	1	HUILE MOTEUR - CARTER (ASS)	70
COURROIE MULTIPLE	175-4862	1	ACCESSOIRE DE MOTEUR (ASS)	21
JOINT DE CACHE-SOUPAPES	222-6456	1	SUPPORT DE CACHE-SOUPAPE ET FAISC. DE CABL. D'IN.	26
	224-7506	6	CACHE-SOUPAPES (ASS)	37
		6	CACHE-SOUPAPES (ASS)	39
JOINT DE CACHE-SOUPAPES (CACHE-SOUPAPES)	222-6456	1	SUPPORT DE CACHE-SOUPAPE ET FAISC. DE CABL. D'IN.	27
RENIFLARD (ENS) (CARTER)	282-9105	2	CACHE-SOUPAPES (ASS)	37
		2	CACHE-SOUPAPES (ASS)	39

* TRADUCTION NON DISPONIBLE AU MOMENT DE LA PUBLICATION

PIÈCES DE RECHANGE

DESCRIPTION	NUMÉRO DE PIECÈS	QTÉ	DOMAINE D'APPLICATION	PAGE
POSTE DE CONDUITE				
BALAI D'ESSUIE-GLACE (ENS) (400-M) (ARRIÈRE)	6V-5851	1	ESSUIE-GLACE ET LAVE-GLACE	896
BALAI D'ESSUIE-GLACE (ENS) (700-MM) (AVANT)	6V-7419	1	ESSUIE-GLACE ET LAVE-GLACE	896
BALAI D'ESSUIE-GLACE (ENS) (700-MM) (VITRE LATÉRALE)	6V-7419	2	ESSUIE-GLACE (ASS)	899
BOUCHON À ÉVENT (LAVE-GLACE)	8E-8292	1	LAVE-GLACE - VITRE (ASS)	895
CEINTURE DE SÉCURITÉ	206-1749	1	SIÈGE (ASS)	874
CEINTURE DE SECURITE (ASS) (RÉTRACTABLE)	222-0345	1	SIÈGE (ASS)	873
		1	SIÈGE (ASS)	877
ÉLÉMENT DE FILTRE À AIR DE CABINE (EFFICACITÉ STANDARD)	9X-8216	1	CABINE (ASS)	794
		1	FILTRE À AIR DE CABINE (ASS)	816
PLAFONNIER (ASS) (24 VOLTS)	3E-6389	1	CABINE (ASS)	794
RÉCEPTEUR-DÉSHYDRATEUR (ENS) (RÉFRIGÉRANT)	257-3227	1	ACCUMULATEUR ET MONTAGE DE RÉFRIGÉRANT (ASS)	778
TRANSMISSION				
BOUCHON AIMANTÉ	5P-4484	1	ESSIEU FIXE	359
		1	ESSIEU OSCILLANT	361
	6V-0439	1	ROUE ET RÉDUCTEURS (ASS)	464
BOUCHON FILETÉ (ROBINET DE VIDANGE DE BOÎTE DE VITESSES)	138-1510	1	VIDANGE-ÉCOLOGIE (ASS)	377
BOUCHON PARE-POUSSIÈRE	168-1917	1	CARDAN COULISSANT (ASS)	431
ÉLÉMENT DE FILTRE À HUILE (ENS) (ULTRA-GRANDE EFFICACITÉ) (TRANSMISSION)	132-8876	1	FILTRE A HUILE (ASS)	380
		2	FILTRE A HUILE (ASS)	382
ENSEMBLE DE FILTRE (REFROIDISSEUR D'HUILE D'ESSIEU)	222-6713	1	FILTRE A HUILE (ASS)	384
RENIFLARD (ENS) (TRANSMISSION)	4H-6112	2	CANALISATIONS D'HUILE DE TRANSMISSION (ASS)	405
TAMIS D'ASPIRATION	3S-3875	2	ENGRENAGE DE TRANSFERT DE RENDEMENT (ASS)	388
VERSION DE MACHINE				
CLÉ (COMPARTIMENT POUR LA DOCUMENTATION)	5P-8500	2	VERSION DE CHASSIS	1

* TRADUCTION NON DISPONIBLE AU MOMENT DE LA PUBLICATION

PIEZAS DE MANTENIMIENTO

DESCRIPCION	NUMERO DE PIEZA	CANT	SE UTILIZA EN	PAGINA
BASTIDOR Y CAJA				
LLAVE	5P-8500	1	CAPO Y PROTECTOR (GR)	512
CONFIGURACIÓN DE MÁQUINAS				
LLAVE (COMPARTIMENTO PARA LA LITERATURA)	5P-8500	2	CHASIS (CONFIG)	1
EQUIPO DE SERVICIO Y SUMINISTROS				
TAPA DEL TUBO DE LLENADO DE ACEITE (CONJ) (TREN DE FUERZA)	7W-1484	1	GRUPO DE PROTECCIÓN CONTRA EL VANDALISMO	915
MOTOR BÁSICO				
CORREA-SERPENTIN	175-4862	1	GRUPO DE ACSESORIO-MOTOR	21
RESPIRADERO (CONJ) (CÁRTER DEL MOTOR)	282-9105	2	TAPA DEL MECANISMO DE VÁLVULAS (GR)	37
		2	TAPA DEL MECANISMO DE VÁLVULAS (GR)	39
*SEAL-VALVE COVER	222-6456	1	BASE DE LA TAPA DE VÁLVULAS Y MAZO DE CABLES DE INYECTOR (GR)	26
	224-7506	6	TAPA DEL MECANISMO DE VÁLVULAS (GR)	37
		6	TAPA DEL MECANISMO DE VÁLVULAS (GR)	39
*SEAL-VALVE COVER (TAPA DE VÁLVULA)	222-6456	1	BASE DE LA TAPA DE VÁLVULAS Y MAZO DE CABLES DE INYECTOR (GR)	27
TAPÓN DE DRENAJE (COLECTOR DE ACEITE DEL MOTOR)	109-5839	1	CÁRTER - COLECTOR DEL (GR)	70
PUESTO DEL OPERADOR				
CINTURÓN DE SEGURIDAD (GR) (RETRACTIL)	222-0345	1	ASIENTO (GR)	873
		1	ASIENTO (GR)	877
*FILTER ELEMENT-CAB AIR (GRUPO DE LAMPARA-TABLERO)	9X-8216	1	CABINA (GR)	794
		1	FILTRO DE AIRE DE LA CABINA (GR)	816
HOJA DE LIMPIAPARABRISAS (CONJ) (*400-MM) (PARTE TRASERA)	6V-5851	1	LIMPIA Y LAVAPARABRISAS (GR)	896
HOJA DE LIMPIAPARABRISAS (CONJ) (*700-MM) (DELANTERO)	6V-7419	1	LIMPIA Y LAVAPARABRISAS (GR)	896
HOJA DE LIMPIAPARABRISAS (CONJ) (*700-MM) (VENTANA LATERAL)	6V-7419	2	LIMPIAPARABRISAS DE LA VENTANA (GR)	899
LÁMPARA DEL TECHO (GR) (24 VOLTIOS)	3E-6389	1	CABINA (GR)	794
*SEAT BELT	206-1749	1	ASIENTO (GR)	874
SECADOR DE RECEPTOR (CONJ) (REFRIGERANTE)	257-3227	1	ACUMULADOR DEL REFRIGERANTE Y MONTAJE (GR)	778
TAPA CON RESPIRADERO (LIMPIAPARABRISAS)	8E-8292	1	LAVAPARABRISAS DE LA VENTANA (GR)	895

* NO HAY TRADUCCION DISPONIBLE EN EL MOMENTO DE LA IMPRESION

PIEZAS DE MANTENIMIENTO

DESCRIPCION	NUMERO DE PIEZA	CANT	SE UTILIZA EN	PAGINA
SISTEMA DE AIRE DE ADMISIÓN Y ESCAPE				
ELEMENTO DEL FILTRO DE AIRE (CONJ) (PRIMARIO)	132-7168	1	FILTRO DE AIRE (GR)	133
ELEMENTO DEL FILTRO DE AIRE (CONJ) (SECUNDARIO)	106-3973	1	FILTRO DE AIRE (GR)	133
SISTEMA DE COMBUSTIBLE				
COLADOR DE COMBUSTIBLE	9P-7121	1	COMBUSTIBLE - TANQUE DE (GR)	186
FILTRO DE COMBUSTIBLE (CONJ) (EFICIENCIA AVANZADA) (SECUNDARIO(A))	1R-0755	1	MONTAJE DE FILTRO DE COMBUSTIBLE (GR)	176
		1	MONTAJE DE FILTRO DE COMBUSTIBLE (GR)	179
FILTRO DE COMBUSTIBLE Y SEPARADOR DE AGUA (CONJ) (PRIMARIO)	1R-0770	1	FILTRO DE COMBUSTIBLE Y SEPARADOR DE AGUA (GR)	159
TAPA DE LLENADO (CONJ) (TANQUE DE COMBUSTIBLE)	7X-7700	1	ADAPTADOR DE LLENADO RÁPIDO DE COMBUSTIBLE (GR)	153
		1	COMBUSTIBLE-LLENADO CONVENCIONAL (CONFIG)	160
SISTEMA DE DIRECCIÓN				
FILTRO DE ACEITE (EFICIENCIA AVANZADA) (DRENAJE DE LA CAJA)	1G-8878	1	FILTRO DE ACEITE (GR)	600
FILTRO DE ACEITE (EFICIENCIA ULTRA ALTA)	126-1817	1	FILTRO DE ACEITE (GR)	599
FILTRO DE ACEITE (GR) (DRENAJE DE CAJA DE BOMBA DE DIRECCION)	166-4647	1	TUBERÍAS DE DIRECCIÓN (GR)	611
PANTALLA (CONJ)	307-6457	1	VÁLVULAS DE LA DIRECCIÓN (GR)	655
*SCREEN AS-HIGH PRESSURE	104-3895	1	REJILLA DE ALTA PRESION (GR)	633
SELLO ANULAR	8C-3097	1	VÁLVULA DE ALIVIO (GR)	649
VÁLVULA SELECTORA Y DE CONTROL DE PRESIÓN (GR) (DIRECCIÓN SECUNDARIA)	6E-3078	1	TUBERÍAS DE LA DIRECCIÓN SECUNDARIA (GR)	602
		1	TUBERÍAS DE LA DIRECCIÓN SECUNDARIA (GR)	605
SISTEMA DE ENFRIAMIENTO				
REGULADOR DE TEMPERATURA (TERMOSTATO) (92 GRADOS CENTÍGRADOS)	248-5513	2	TUBERÍAS DEL AGUA (GR)	112
SELLO DE LABIO (CAJA DE REGULADOR)	3S-9643	2	TUBERÍAS DEL AGUA (GR)	112
TAPA DE PRESION (7 LB/PULG2)	6L-8617	1	TAPA DEL TANQUE DE RADIADOR (GR)	126
TAPÓN DE DRENAJE	6N-9590	1	VÁLVULA DE DRENAJE DEL RADIADOR (GR)	129
SISTEMA DE FRENOS				
*SCREEN AS-HIGH PRESSURE	104-3895	1	REJILLA DE ALTA PRESION (GR)	588

* NO HAY TRADUCCION DISPONIBLE EN EL MOMENTO DE LA IMPRESION

PIEZAS DE MANTENIMIENTO

DESCRIPCION	NUMERO DE PIEZA	CANT	SE UTILIZA EN	PAGINA
SISTEMA DE LUBRICACIÓN				
FILTRO DE ACEITE DEL MOTOR (CONJ) (GRUPO DE LAMPARA-TABLERO)	1R-0716	2	FILTRO DE ACEITE DEL MOTOR (GR)	84
RESPIRADERO (MOTOR)	9G-5127	1	GRUPO DE TANQUE, ACEITE DEL MOTOR	106
TAPA DEL TUBO DE LLENADO (ACEITE DEL MOTOR)	6G-9333	1	GRUPO DE TANQUE, ACEITE DEL MOTOR	106
		1	TUBO DE LLENADO DE ACEITE (GR)	83
SISTEMA ELECTRICO Y DE ARRANQUE				
BATERIA DE CONTROL ELECTRONICO (GR) (ANALISIS DE VÍA/MODULO PRINCIPAL VIMS)	143-8480	1	CONTROL NO PROGRAMADO (GR)	205
BATERÍA (12-VOLTIOS, LIBRE DE MANTENIMIENTO)	153-5710	4	BATERÍA Y CABLES (GR)	193
DISYUNTOR (CONJ) (10-AMPERIOS) (INTERRUPTOR DE LLAVE)	6T-3642	1	*WIRING GP-ELECTRONICS BAY	316
DISYUNTOR (CONJ) (105 AMPERIOS) (ARRANQUE)	171-2212	1	*WIRING GP-ELECTRONICS BAY	315
DISYUNTOR (CONJ) (105 AMPERIOS) (PRINCIPAL)	171-2212	1	*WIRING GP-ELECTRONICS BAY	315
DISYUNTOR (CONJ) (15 AMPERIOS) (LUCES DE TRABAJO)	3T-2662	1	*WIRING GP-ELECTRONICS BAY	315
ELEMENTO (CONJ) (*CIGARETTE LIGHTER)	198-6571	1	CABLES DE LA CABINA (GR)	300
ELEMENTO DEL CALENTADOR DEL AGUA DE LAS CAMISAS (240 VOLTIOS, 1500 VATIOS)	239-8051	2	AGUA DE LAS CAMISAS - CALENTADOR DEL (GR)	217
FUSIBLE (10-AMPERIOS)	113-8490	24	*WIRING GP-ELECTRONICS BAY	315
FUSIBLE (15 AMPERIOS)	113-8491	15	*WIRING GP-ELECTRONICS BAY	315
FUSIBLE (20-AMPERIOS)	113-8492	1	*WIRING GP-ELECTRONICS BAY	315
LÁMPARA (CONJ) (*AMBER, LED, 24-VOLT)	250-2298	1	CABLES DEL PARAGOLPES (GR)	294
LÁMPARA DEL TECHO (GR) (24 VOLTIOS)	3E-6389	1	CABLES DE LA CABINA (GR)	299
LÁMPARA (*VIMS, LED, WHITE)	305-5629	1	CABLES DE LA CABINA (GR)	300
LÁMPARA (24 VOLTIOS)	7N-9943	1	LÁMPARA DEL TECHO (GR)	220
	110-2079	11	CABLES DE LA CABINA (GR)	299
	163-1876	1	CABLES DE LA CABINA (GR)	299
	163-1878	5	CABLES DE LA CABINA (GR)	299
	163-1883	1	CABLES DEL PARAGOLPES (GR)	294
LÁMPARA (24 VOLTIOS) (VERDE)	163-1884	2	*WIRING GP-SERVICE CENTER	357
LLAVE	5P-8500	1	CABLES DEL PARAGOLPES (GR)	294
LLAVE (INTERRUPTOR GENERAL)	8H-5306	1	DISYUNTOR (GR)	280
LUCES DE ALÓGENO (24 VOLTIOS, 65 VATIOS)	9X-3463	1	LÁMPARA DE FARO DELANTERO (GR)	224
		1	LÁMPARA DE FARO DELANTERO (GR)	225
		1	REFLECTOR (GR)	221
		1	REFLECTOR (GR)	222
		1	REFLECTOR (GR)	223
LUZ INTERIOR	8Y-6335	1	CABLES DE LA CABINA (GR)	299
REFLECTOR (GR) (24 VOLTIOS)	219-6485	2	LUCES DE REFLECTOR (GR)	231

* NO HAY TRADUCCION DISPONIBLE EN EL MOMENTO DE LA IMPRESION

PIEZAS DE MANTENIMIENTO

DESCRIPCION	NUMERO DE PIEZA	CANT	SE UTILIZA EN	PAGINA
SISTEMA HIDRÁULICO				
COLADOR (CONJ) (LLENADO DEL TANQUE HIDRÁULICO)	3D-6678	1	TANQUE HIDRÁULICO (GR)	732
		1	TANQUE HIDRÁULICO (GR)	734
COLADOR (CONJ) (TANQUE HIDRÁULICO)	6E-4922	1	TANQUE HIDRÁULICO (GR)	734
ELEMENTO DE FILTRO DE ACEITE (CONJ) (EFICIENCIA ULTRA ALTA)	207-5035	1	FILTRO DE ACEITE (GR)	678
FILTRO DE ACEITE (EFICIENCIA ULTRA ALTA)	102-2828	1	FILTRO DE ACEITE (GR)	679
FILTRO DE ACEITE (GR) (*HYDRAULIC FAN PUMP CASE DRAIN)	166-4647	1	FILTRO Y TUBERÍAS DE LA CAJA DE DRENAJE (GR)	674
FILTRO DE ACEITE (GR) (*IMPLEMENT PUMP CASE DRAIN)	166-4647	1	FILTRO Y TUBERÍAS DE LA CAJA DE DRENAJE (GR)	675
PANTALLA (CONJ) (ACEITE DE LA DIRECCIÓN)	9T-9227	1	TANQUE HIDRÁULICO (GR)	734
PANTALLA (CONJ) (TANQUE HIDRÁULICO)	9T-9227	4	TANQUE HIDRÁULICO (GR)	732
REJILLA (HIDRÁULICO)	118-8693	2	TANQUE HIDRÁULICO (GR)	734
TAPA DEL TUBO DE LLENADO (TANQUE HIDRÁULICO)	4J-3754	1	TANQUE HIDRÁULICO (GR)	732
		1	TANQUE HIDRÁULICO (GR)	734
TAPÓN DE DRENAJE	9J-7031	1	TANQUE HIDRÁULICO (GR)	732
TAPÓN DE DRENAJE (TANQUE HIDRÁULICO)	9J-7031	1	TANQUE HIDRÁULICO (GR)	734
TREN DE FUERZA				
*CUP-DUST	168-1917	1	JUNTA DESLIZANTE (GR)	431
ELEMENTO DE FILTRO DE ACEITE (CONJ) (EFICIENCIA ULTRA ALTA) (TREN DE FUERZA)	132-8876	1	FILTRO DE ACEITE (GR)	380
		2	FILTRO DE ACEITE (GR)	382
REJILLA DE FILTRO (CONJ) (ENFRIADOR DE ACEITE DE EJE)	222-6713	1	FILTRO DE ACEITE (GR)	384
REJILLA DE SUCCIÓN	3S-3875	2	ENGRANAJE DE TRANSFERENCIA DE SALIDA	388
RESPIRADERO (CONJ) (TREN DE FUERZA)	4H-6112	2	TUBERÍAS DE ACEITE DEL TREN DE FUERZA (GR)	405
TAPÓN (DRENAJE DE ACEITE DE TRANSMISION)	138-1510	1	DRENAJE DE SEGURIDAD ECOLÓGICA (GR)	377
TAPÓN MAGNÉTICO	5P-4484	1	EJE FIJO (GR)	359
		1	EJE OSCILANTE (GR)	361
	6V-0439	1	RUEDA Y MANDOS FINALES	464

* NO HAY TRADUCCION DISPONIBLE EN EL MOMENTO DE LA IMPRESION

PEÇAS DE MANUTENÇÃO

DESCRIÇÃO	NÚMERO DE PEÇA	QUANT	UTILIZADA EM	PÁGINA
CHASSI E CARROCERIA				
CHAVE	5P-8500	1	CAPÔ E PROTETOR	512
EQUIPAMENTOS DE SERVIÇO E SUPRIMENTOS				
TAMPA - BOCAL DE ENCHIMENTO DE ÓLEO (TREM DE FORÇA)	7W-1484	1	PROTEÇÃO CONTRA VANDALISMO	915
ESTAÇÃO DO OPERADOR				
CINTO DE SEGURANÇA	206-1749	1	ASSENTO	874
CINTO DE SEGURANÇA (RETRÁTIL)	222-0345	1	ASSENTO	873
		1	ASSENTO	877
ELEMENTO FILTRANE-AR DA CABINE (EFICIÊNCIA PADRÃO)	9X-8216	1	CABINE	794
		1	FILTRO - AR DA CABINE	816
LÂMINA DO LIMPADOR DE PÁRA-BRISA (400 MM) (TRASEIRO)	6V-5851	1	LIMPADOR E LAVADOR - JANELA	896
LÂMINA DO LIMPADOR DE PÁRA-BRISA (700 MM) (DIANTEIRO)	6V-7419	1	LIMPADOR E LAVADOR - JANELA	896
LÂMINA DO LIMPADOR DE PÁRA-BRISA (700 MM) (VIDRO LATERAL)	6V-7419	2	LIMPADOR DO VIDRO	899
LÂMPADA - TETO (24 VOLTS)	3E-6389	1	CABINE	794
RECEPTOR SECADOR (REFRIGERANTE)	257-3227	1	ACUMULADOR DO REFRIGERANTE E MONTAGEM	778
TAMPA COM RESPIRO (LAVADOR DO VIDRO)	8E-8292	1	LAVADOR DO VIDRO	895
MÁQUINA - ARRANJO				
CHAVE (COMPARTIMENTO PARA PUBLICAÇÕES)	5P-8500	2	CHASSI	1
MOTOR BÁSICO				
BUJÃO DO DRENO (CÁRTER DE ÓLEO DO MOTOR)	109-5839	1	CÁRTER DO ÓLEO DO MOTOR	70
CORREIA- SERPENTINA	175-4862	1	ACESSÓRIO - MOTOR	21
RESPIRO (CÁRTER DO MOTOR)	282-9105	2	TAMPA - MECANISMO DAS VÁLVULAS	37
		2	TAMPA - MECANISMO DAS VÁLVULAS	39
RETENTOR - TAMPA DA VÁLVULA	222-6456	1	GR. BÁSICO - TAMPA DAS VÁLVULAS E CHICOTE DE INJEÇÃO	26
	224-7506	6	TAMPA - MECANISMO DAS VÁLVULAS	37
		6	TAMPA - MECANISMO DAS VÁLVULAS	39
RETENTOR - TAMPA DA VÁLVULA (MECANISMO DAS VÁLVULAS - TAMPA)	222-6456	1	GR. BÁSICO - TAMPA DAS VÁLVULAS E CHICOTE DE INJEÇÃO	27
SISTEMA DA ADMISSÃO DE AR E DE ESCAPE				
ELEMENTO DO FILTRO DE AR (PRIMÁRIO)	132-7168	1	PURIFICADOR DE AR	133
ELEMENTO DO FILTRO DE AR (SECUNDÁRIO)	106-3973	1	PURIFICADOR DE AR	133

* TRADUÇÃO NÃO DISPONÍVEL NO MOMENTO DA IMPRESSÃO

PEÇAS DE MANUTENÇÃO

DESCRIÇÃO	NÚMERO DE PEÇA	QUANT	UTILIZADA EM	PÁGINA
SISTEMA DE ARREFECIMENTO				
BUJÃO DO DRENO	6N-9590	1	VÁLVULA DE DRENAGEM DO RADIADOR	129
REGULADOR DE TEMPERATURA/ TERMOSTATO (92 GRAUS C)	248-5513	2	TUBOS - ÁGUA	112
TAMPA DE PRESSÃO (7 PSI)	6L-8617	1	TANQUE SUPERIOR DO RADIADOR	126
VEDADOR TIPO LABIO (ALOJAMENTO DO REGULADOR)	3S-9643	2	TUBOS - ÁGUA	112
SISTEMA DE COMBUSTÍVEL				
FILTRO - COMBUSTÍVEL	9P-7121	1	TANQUE DE COMBUSTÍVEL	186
FILTRO - COMBUSTÍVEL (EFICIÊNCIA AVANÇADA) (SECUNDÁRIO)	1R-0755	1	MONTAGEM DO FILTRO DE COMBUSTÍVEL	176
		1	MONTAGEM DO FILTRO DE COMBUSTÍVEL	179
FILTRO - SEPARADOR DE ÁGUA E COMBUSTÍVEL (PRIMÁRIO)	1R-0770	1	FILTRO DE COMBUSTÍVEL E SEPARADOR DE ÁGUA	159
TAMPA - BOCAL DE ENCHIMENTO (TANQUE DE COMBUSTÍVEL)	7X-7700	1	ADAPTADOR - ABASTECIMENTO RÁPIDO DE COMBUSTÍVEL	153
		1	COMBUSTÍVEL - ABASTECIMENTO CONVENCIONAL	160
SISTEMA DE DIREÇÃO				
FILTRO - ÓLEO (DRENO DA CAIXA DA BOMBA DA DIREÇÃO)	166-4647	1	TUBOS - DIREÇÃO	611
FILTRO - ÓLEO (EFICIÊNCIA AVANÇADA) (CAIXA DE DRENAGEM)	1G-8878	1	FILTRO - ÓLEO	600
FILTRO - ÓLEO (EXTREMA EFICIÊNCIA)	126-1817	1	FILTRO - ÓLEO	599
RETENTOR DE ANEL-O	8C-3097	1	VÁLVULA DE ALÍVIO	649
*SCREEN AS-HIGH PRESSURE	104-3895	1	TELA - PRESSÃO ALTA	633
TELA FILTRANTE	307-6457	1	VÁLVULA DA DIREÇÃO	655
VÁLVULA SELETORA E CONTROLE DE PRESSÃO (DIREÇÃO SECUNDÁRIA)	6E-3078	1	TUBOS - DIREÇÃO SECUNDÁRIA	602
		1	TUBOS - DIREÇÃO SECUNDÁRIA	605
SISTEMA DE FREIO				
*SCREEN AS-HIGH PRESSURE	104-3895	1	TELA - PRESSÃO ALTA	588
SISTEMA DE LUBRIFICAÇÃO				
FILTRO - ÓLEO DO MOTOR (EFICIÊNCIA PADRÃO)	1R-0716	2	FILTRO - ÓLEO DO MOTOR	84
RESPIRO (MOTOR)	9G-5127	1	TANQUE - ÓLEO DO MOTOR	106
TAMPA - BOCAL DE ENCHIMENTO (ÓLEO DO MOTOR)	6G-9333	1	BOCAL DE ENCHIMENTO DE ÓLEO DO MOTOR	83
		1	TANQUE - ÓLEO DO MOTOR	106

* TRADUÇÃO NÃO DISPONÍVEL NO MOMENTO DA IMPRESSÃO

PEÇAS DE MANUTENÇÃO

DESCRIÇÃO	NÚMERO DE PEÇA	QUANT	UTILIZADA EM	PÁGINA
SISTEMA ELÉTRICO E DE PARTIDA				
BATERIA - CONTROLE ELETRÔNICO (ANÁLISE NA ESTRADA - MÓDULO PRINCIPAL DO VIMS)	143-8480	1	CONTROLE - NÃO PROGRAMADO	205
BATERIA (12 VOLTS, ISENTO DE MANUTENÇÃO)	153-5710	4	BATERIA E CABOS / FIOS ELÉTRICOS	193
CHAVE	5P-8500	1	CABOS E FIOS ELÉTRICOS - PÁRA-CHOQUE	294
CHAVE (DESCONEXÃO DA BATERIA)	8H-5306	1	CHAVE GERAL	280
DISJUNTOR AUTOMÁTICO DE CIRCUITO (10 AMPERES) (CHAVE INTERRUPTORA)	6T-3642	1	FIAÇAO-SALIÊNCIA DO SISTEMA ELETRÔNICO	316
DISJUNTOR AUTOMÁTICO DE CIRCUITO (105 AMPERES) (PARTIDA)	171-2212	1	FIAÇAO-SALIÊNCIA DO SISTEMA ELETRÔNICO	315
DISJUNTOR AUTOMÁTICO DE CIRCUITO (105 AMPERES) (PRINCIPAL)	171-2212	1	FIAÇAO-SALIÊNCIA DO SISTEMA ELETRÔNICO	315
DISJUNTOR AUTOMÁTICO DE CIRCUITO (15 AMPERES) (ILUMINAÇÃO DE OPERAÇÃO)	3T-2662	1	FIAÇAO-SALIÊNCIA DO SISTEMA ELETRÔNICO	315
ELEMENTO - AQUECEDOR DE ÁGUA DA CAMISA (240 VOLTS, 1500 WATTS)	239-8051	2	AQUECEDOR DA ÁGUA DO MOTOR	217
ELEMENTO (ACENDEDOR DE CIGARROS)	198-6571	1	CABOS/FIOS ELÉTRICOS - CABINE	300
FUSÍVEL (10 AMPERES)	113-8490	24	FIAÇAO-SALIÊNCIA DO SISTEMA ELETRÔNICO	315
FUSÍVEL (15 AMPERES)	113-8491	15	FIAÇAO-SALIÊNCIA DO SISTEMA ELETRÔNICO	315
FUSÍVEL (20-AMPERES)	113-8492	1	FIAÇAO-SALIÊNCIA DO SISTEMA ELETRÔNICO	315
LÂMPADA - FAROL (24 VOLTS)	219-6485	2	SISTEMA DE ILUMINAÇÃO - FARÓIS	231
LÂMPADA - HALOGÊNEO (24 VOLTS, 65 WATTS)	9X-3463	1	FAROL DIANTEIRO	224
		1	FAROL DIANTEIRO	225
		1	LÂMPADA - FAROL	221
		1	LÂMPADA - FAROL	222
		1	LÂMPADA - FAROL	223
LÂMPADA - TETO (24 VOLTS)	3E-6389	1	CABOS/FIOS ELÉTRICOS - CABINE	299
LÂMPADA (ÂMBAR, LED, 24 VOLTS)	250-2298	1	CABOS E FIOS ELÉTRICOS - PÁRA-CHOQUE	294
LÂMPADA-INTERNA	8Y-6335	1	CABOS/FIOS ELÉTRICOS - CABINE	299
LÂMPADA (VIMS, LED, BRANCA)	305-5629	1	CABOS/FIOS ELÉTRICOS - CABINE	300
LÂMPADA (24 VOLTS)	7N-9943	1	LÂMPADA - TETO	220
	110-2079	11	CABOS/FIOS ELÉTRICOS - CABINE	299
	163-1876	1	CABOS/FIOS ELÉTRICOS - CABINE	299
	163-1878	5	CABOS/FIOS ELÉTRICOS - CABINE	299
	163-1883	1	CABOS E FIOS ELÉTRICOS - PÁRA-CHOQUE	294
LÂMPADA (24 VOLTS) (VERDE)	163-1884	2	FIAÇÃO-CENTRO DE SERVIÇO	357

* TRADUÇÃO NÃO DISPONÍVEL NO MOMENTO DA IMPRESSÃO

PEÇAS DE MANUTENÇÃO

DESCRIÇÃO	NÚMERO DE PEÇA	QUANT	UTILIZADA EM	PÁGINA
SISTEMA HIDRÁULICO				
BUJÃO DO DRENO	9J - 7031	1	TANQUE HIDRÁULICO	732
BUJÃO DO DRENO (TANQUE HIDRÁULICO)	9J - 7031	1	TANQUE HIDRÁULICO	734
ELEMENTO FILTRANTE - ÓLEO (EXTREMA EFICIÊNCIA)	207 - 5035	1	FILTRO - ÓLEO	678
FILTRO - ÓLEO (DRENO DA CAIXA DA BOMBA DO IMPLEMENTO)	166 - 4647	1	FILTROS E TUBOS - DRENAGEM DA CAIXA	675
FILTRO - ÓLEO (DRENO DA CAIXA DA BOMBA DO VENTILADOR HIDRÁULICO)	166 - 4647	1	FILTROS E TUBOS - DRENAGEM DA CAIXA	674
FILTRO - ÓLEO (EXTREMA EFICIÊNCIA)	102 - 2828	1	FILTRO - ÓLEO	679
TAMPA - BOCAL DE ENCHIMENTO (TANQUE HIDRÁULICO)	4J - 3754	1	TANQUE HIDRÁULICO	732
		1	TANQUE HIDRÁULICO	734
TELA FILTRANTE (ENCHIMENTO DO TANUQE HIDRÁULICO)	3D - 6678	1	TANQUE HIDRÁULICO	732
		1	TANQUE HIDRÁULICO	734
TELA FILTRANTE (HIDRÁULICO)	118 - 8693	2	TANQUE HIDRÁULICO	734
TELA FILTRANTE (ÓLEO DA DIREÇÃO)	9T - 9227	1	TANQUE HIDRÁULICO	734
TELA FILTRANTE (TANQUE HIDRÁULICO)	6E - 4922	1	TANQUE HIDRÁULICO	734
	9T - 9227	4	TANQUE HIDRÁULICO	732
TREM DE FORÇA				
BUJÃO MAGNÉTICO	5P - 4484	1	EIXO FIXO	359
		1	EIXO OSCILANTE	361
	6V - 0439	1	RODA E COMANDO FINAL	464
CAPA-CONTRA POEIRA	168 - 1917	1	JUNTA CORREDIÇA	431
ELEMENTO FILTRANTE - ÓLEO (EXTREMA EFICIÊNCIA) (TREM DE FORÇA)	132 - 8876	1	FILTRO - ÓLEO	380
		2	FILTRO - ÓLEO	382
RESPIRO (TREM DE FORÇA)	4H - 6112	2	TUBOS - ÓLEO DA TRANSMISSÃO	405
TAMPÃO (DRENO DO ÓLEO DA TRANSMISSÃO)	138 - 1510	1	DRENO - ECOLOGIA	377
TELA DE SUCÇÃO	3S - 3875	2	ENGRENAGENS DE SAÍDA DE TRANSFERÊNCIA	388
TELA FILTRANTE (ARREFECEDOR DO ÓLEO DO EIXO)	222 - 6713	1	FILTRO - ÓLEO	384

* TRADUÇÃO NÃO DISPONÍVEL NO MOMENTO DA IMPRESSÃO

WARTUNGSTEILE

BESCHREIBUNG	ERSATZTEIL-NUMMER	MENGE	VERWENDET IN	SEITE
BREMSSYSTEM				
*SCREEN AS-HIGH PRESSURE	104-3895	1	HOCHDRUCKSIEB	588
ELEKTRISCHE ANLAGE U. STARTSYSTEM				
ARBEITSLEUCHTEN (24 V)	219-6485	2	ARBEITSLEUCHTEN	231
BATTERIE - ELEKTRONISCHE STEUERUNG (STRASSENANALYSE/ VIMS HAUPTMODUL)	143-8480	1	STEUERUNG - NICHT PROGRAMMIERT	205
BATTERIE (12 V, WARTUNGSFREI)	153-5710	4	BATTERIE UND VERDRAHTUNG	193
BELEUCHTUNGSANLAGE (*AMBER, LED, 24-VOLT)	250-2298	1	STOSSSTANGENVERDRAHTUNG	294
ELEMENT (*CIGARETTE LIGHTER)	198-6571	1	FAHRERHAUSVERDRAHTUNG	300
FAHRERHAUSBELEUCHTUNG (24 V)	3E-6389	1	FAHRERHAUSVERDRAHTUNG	299
HALOGENSCHINWERFER (24V)(65W)	9X-3463	1	ARBEITSLEUCHTEN	221
		1	ARBEITSLEUCHTEN	222
		1	ARBEITSLEUCHTEN	223
		1	FRONTSCHEINWERFER	224
		1	FRONTSCHEINWERFER	225
INNENLEUCHTE	8Y-6335	1	FAHRERHAUSVERDRAHTUNG	299
LEUCHTE (*VIMS, LED, WHITE)	305-5629	1	FAHRERHAUSVERDRAHTUNG	300
LEUCHTE (24 V)	7N-9943	1	FAHRERHAUSBELEUCHTUNG	220
	110-2079	11	FAHRERHAUSVERDRAHTUNG	299
	163-1876	1	FAHRERHAUSVERDRAHTUNG	299
	163-1878	5	FAHRERHAUSVERDRAHTUNG	299
	163-1883	1	STOSSSTANGENVERDRAHTUNG	294
LEUCHTE (24 V) (GRÜN)	163-1884	2	*WIRING GP-SERVICE CENTER	357
SCHLÜSSEL	5P-8500	1	STOSSSTANGENVERDRAHTUNG	294
SCHLÜSSEL (ELEKTRISCHER HAUPTSCHALTER)	8H-5306	1	TRENNSCHALTER	280
SICHERUNG (10 A)	113-8490	24	VERDRAHTUNG - ELEKTRONIK-BAY	315
SICHERUNG (15 A)	113-8491	15	VERDRAHTUNG - ELEKTRONIK-BAY	315
SICHERUNG (20 A)	113-8492	1	VERDRAHTUNG - ELEKTRONIK-BAY	315
UMLAUFKÜHLWASSERHEIZUNGS-ELEMENT (240 V, 1500 W)	239-8051	2	UMLAUFKÜHLWASSERHEIZUNG	217
UNTERBRECHER (10 A) (STARTSCHALTERSCHLÜSSEL)	6T-3642	1	VERDRAHTUNG - ELEKTRONIK-BAY	316
UNTERBRECHER (105 A) (HAUPTUNTERBRECHER)	171-2212	1	VERDRAHTUNG - ELEKTRONIK-BAY	315
UNTERBRECHER (105 A) (STARTEN)	171-2212	1	VERDRAHTUNG - ELEKTRONIK-BAY	315
UNTERBRECHER (15 A) (FAHRSCHEINWERFER)	3T-2662	1	VERDRAHTUNG - ELEKTRONIK-BAY	315

* ÜBERSETZUNG ZUM ZEITPUNKT DER DRUCKLEGUNG NICHT VORHANDEN

WARTUNGSTEILE

BESCHREIBUNG	ERSATZTEIL-NUMMER	MENGE	VERWENDET IN	SEITE
FAHRERHAUS				
FAHRERHAUSBELEUCHTUNG (24 V)	3E-6389	1	FAHRERHAUS	794
FILTERELEMENT - FAHRERHAUSLUFT (STANDRAD EFFIZIENZ)	9X-8216	1	FAHRERHAUS	794
		1	FAHRERHAUSLUFTFILTER	816
KAPPE MIT ENTLÜFTER (SCHEIBEN-WASCHER)	8E-8292	1	SCHEIBENWASCHANLAGE	895
SCHEIBENWISCHERBLATT (400 MM) (HINTEN)	6V-5851	1	SCHEIBENWISCHER UND -WASCHANLAGE	896
SCHEIBENWISCHERBLATT (700 MM) (SEITENFENSTER)	6V-7419	2	SCHEIBENWISCHER	899
SCHEIBENWISCHERBLATT (700 MM) (VORNE)	6V-7419	1	SCHEIBENWISCHER UND -WASCHANLAGE	896
SICHERHEITSGURT	206-1749	1	FAHRERSITZ	874
SICHERHEITSGURT ((AUTOMATIKSICHERHEITSGURT))	222-0345	1	FAHRERSITZ	873
		1	FAHRERSITZ	877
TROCKNERSAMMLER (KÜHLMITTEL)	257-3227	1	KÄLTEMITTEL-DRUCKSPEICHER UND BEFESTIGUNG	778
HYDRAULIKSYSTEM				
ABLASSSTOPFEN	9J-7031	1	HYDRAULIKTANK	732
ABLASSSTOPFEN (HYDRAULIKTANK)	9J-7031	1	HYDRAULIKTANK	734
EINFÜLLSTUTZENKAPPE (HYDRAU-LIKTANK)	4J-3754	1	HYDRAULIKTANK	732
		1	HYDRAULIKTANK	734
FILTERSIEB (HYDRAULIKTANK)	6E-4922	1	HYDRAULIKTANK	734
FILTERSIEB (HYDRAULIKTANKEIN-FÜLLSIEB)	3D-6678	1	HYDRAULIKTANK	732
		1	HYDRAULIKTANK	734
ÖLFILTER (FEINSTFILTER)	102-2828	1	ÖLFILTER	679
ÖLFILTER (*HYDRAULIC FAN PUMP CASE DRAIN)	166-4647	1	GEHÄUSEABLASSFILTER U. LEITUNGEN	674
ÖLFILTER (*IMPLEMENT PUMP CASE DRAIN)	166-4647	1	GEHÄUSEABLASSFILTER U. LEITUNGEN	675
ÖLFILTERELEMENT (FEINSTFILTER)	207-5035	1	ÖLFILTER	678
SCREEN (HYDRAULIK)	118-8693	2	HYDRAULIKTANK	734
SIEB (HYDRAULIKTANK)	9T-9227	4	HYDRAULIKTANK	732
SIEB (LENKUNGSÖL)	9T-9227	1	HYDRAULIKTANK	734
KRAFTSTOFFSYSTEM				
EINFÜLLKAPPE (KRAFTSTOFFTANK)	7X-7700	1	KRAFTSTOFFEINFÜLLVORRICHTUNG (STANDARD)	160
		1	SCHNELLBETANKUNGSANSCHLUSS	153
KRAFTSTOFFILTER (HOCHLEISTUNG) (AUSFALLSCHUTZ)	1R-0755	1	KRAFTSTOFFILTERBEFESTIGUNG	176
		1	KRAFTSTOFFILTERBEFESTIGUNG	179
KRAFTSTOFFSIEB	9P-7121	1	KRAFTSTOFFTANK	186
WASSERABSCHEIDER UND KRAFTST-OFFILTER (HAUPTELEMENT)	1R-0770	1	WASSERABSCHEIDER- U. KRAFTSTOFFILTER	159

* ÜBERSETZUNG ZUM ZEITPUNKT DER DRUCKLEGUNG NICHT VORHANDEN

WARTUNGSTEILE

BESCHREIBUNG	ERSATZTEIL-NUMMER	MENGE	VERWENDET IN	SEITE
KRAFTÜBERTRAGUNG				
ANSAUGSIEB	3S-3875	2	VERTEILERGETRIEBEANTRIEB	388
ENTLÜFTER (KRAFTÜBERTRAGUNG)	4H-6112	2	ÖLLEITUNGEN - KRAFTÜBERTRAGUNG	405
FILTERSIEB (ACHSÖLKÜHLER)	222-6713	1	ÖLFILTER	384
MAGNETSTOPFEN	5P-4484	1	PENDELACHSE	361
		1	STARRACHSE	359
	6V-0439	1	SEITENANTRIEB UND RAD	464
ÖLFILTERELEMENT (FEINSTFILTER) (KRAFTÜBERTRAGUNG)	132-8876	1	ÖLFILTER	380
		2	ÖLFILTER	382
SCHRAUBE (GETRIEBEÖLABLASS)	138-1510	1	ABLASS (UMWELTFREUNDLICH)	377
STAUBKAPPE	168-1917	1	ANTRIEBSWELLEN-KEILVERZAHNUNG	431
KÜHLSYSTEM				
ABLASSSTOPFEN	6N-9590	1	KÜHLERABLASSVENTIL	129
DRUCKKAPPE (7 PSI)	6L-8617	1	KÜHLERWASSERKASTEN, OBEN	126
LIPPENDICHTUNG (REGULATORGEHÄUSE)	3S-9643	2	KÜHLWASSERLEITUNGEN	112
TEMPERATURREGLER (92 GRAD)	248-5513	2	KÜHLWASSERLEITUNGEN	112
LENKSYSTEM				
O-RING-DICHTUNG	8C-3097	1	ÜBERDRUCKVENTIL	649
ÖLFILTER (FEINSTFILTER)	126-1817	1	ÖLFILTER	599
ÖLFILTER (HOCHLEISTUNG) (GEHÄUSEABLASS)	1G-8878	1	ÖLFILTER	600
ÖLFILTER (LENKPUMPENRÜCKLAUF)	166-4647	1	LENKÖLLEITUNGEN	611
*SCREEN AS-HIGH PRESSURE	104-3895	1	HOCHDRUCKSIEB	633
SIEB	307-6457	1	LENKVENTIL	655
VENTIL - SCHALT- UND DRUCKSTEUERUNG (NOTLENKUNG)	6E-3078	1	NOTLENKUNGSLEITUNGEN	602
		1	NOTLENKUNGSLEITUNGEN	605
LUFTANSAUG- UND ABGASSYSTEM				
LUFTFILTER (HAUPTELEMENT)	132-7168	1	LUFTREINIGER	133
LUFTFILTER (HILFSELEMENT)	106-3973	1	LUFTREINIGER	133
MASCHINE				
SCHLÜSSEL (LTERATURFACH)	5P-8500	2	FAHRWERK	1
MOTOR (GRUNDAUSFÜHRUNG)				
ABLASSSTOPFEN (MOTORÖLWANNE)	109-5839	1	ÖLWANNE	70
ENTLÜFTER (KURBELGEHÄUSE)	282-9105	2	VENTILDECKEL	37
		2	VENTILDECKEL	39
SERPENTINENFÖRMIGER RIEMEN	175-4862	1	ZUSATZAUSRÜSTUNG - MOTOR	21
VENTILDECKELDICHTUNG	222-6456	1	SOCKEL FÜR VENTILDECKEL U. EINSPRITZKABELBAUM	26
	224-7506	6	VENTILDECKEL	37
		6	VENTILDECKEL	39
VENTILDECKELDICHTUNG (VENTILDECKEL)	222-6456	1	SOCKEL FÜR VENTILDECKEL U. EINSPRITZKABELBAUM	27

* ÜBERSETZUNG ZUM ZEITPUNKT DER DRUCKLEGUNG NICHT VORHANDEN

WARTUNGSTEILE

BESCHREIBUNG	ERSATZTEIL-NUMMER	MENGE	VERWENDET IN	SEITE
RAHMEN UND FAHRGESTELL				
SCHLÜSSEL	5P-8500	1	MOTORHAUBE UND VERKLEIDUNG	512
SCHMIERSYSTEM				
EINFÜLLSTUTZENKAPPE (MOTORÖL)	6G-9333	1	MOTORÖLEINFÜLLSTUTZEN	83
		1	MOTORÖLTANK	106
ENTLÜFTER (MOTOR)	9G-5127	1	MOTORÖLTANK	106
ÖLFILTER (STANDRAD EFFIZIENZ)	1R-0716	2	ÖLFILTER	84
WARTUNGSAUSRÜSTUNG UND -ZUBEHÖR				
ÖLEINFÜLLSTUTZEN (KRAFTÜBER-TRAGUNG)	7W-1484	1	SCHUTZABDECKUNG	915

* ÜBERSETZUNG ZUM ZEITPUNKT DER DRUCKLEGUNG NICHT VORHANDEN

INDEX

Name	Page

A

ACCESSORY GP-ENGINE–ALTERNATOR, AIR CONDITIONER COMPRESSOR 21
ACCUMULATOR & MTG GP-REFRIG 778
ACCUMULATOR GP-BRAKE–CHARGED 560
ACCUMULATOR GP-BRAKE–UNCHARGED 561
ACCUMULATOR-REFRIGERANT 778
ACTUATOR GP-PUMP 593
594
595
ACTUATOR GP-VALVE 23
24
ADAPTER GP-FAST FILL FUEL 153
ADJUSTER GP-SEAT 780
AFTERCOOLER GP-AIR 130
AIR CLEANER GP 131
133
AIR COMPRESSOR GP-SEAT 781
AIR CONDITIONER AR 782
AIR CONDITIONER GP 783
ALARM GP–ACTION 192
ALARM GP (BACKUP) 350
ALTERNATOR GP-CHARGING (24-VOLT, 150-AMPERE) 21
ARM GP-WINDOW WIPER–FRONT 787
ASHTRAY 886
AXLE AR-FIXED–FRONT 358
AXLE AR-OSCILLATING–REAR 358
AXLE GP-FIXED–FRONT 359
AXLE GP-OSCILLATING–REAR 361
AXLE OIL COOLER PUMP & MOTOR 421

B

BARREL GP-PUMP–STEERING 596
BASE AS-INDICATOR (GREEN) 357
BASE GP-FOOT BRAKE–PEDAL, LH 562
BASE GP-FOOT BRAKE–PEDAL, RH 563
BASE GP-FUEL FILTER 191
BASE GP-VALVE COVER & INJ HARN 25
26
27
28
BATTERY & WIRING GP 193
BATTERY GP–CAES, RECHARGEABLE 198
BATTERY GP-ELECTRONIC CONTROL (ROAD ANALYSIS/VIMS MAIN MODULE) 205
BATTERY (12-VOLT, MAINTENANCE FREE) 193
BELT-SERPENTINE 21
BLADE AS-COAL 770
BLADE AS-SEMI-UNIVERSAL 770
BLADE AS-SEMI-UNIVERSAL–HEAVY-DUTY . . . 771
BLADE AS-WIPER (400-MM) (REAR) 896
BLADE AS-WIPER (700-MM) (FRONT) 896
BLADE AS-WIPER (700-MM) (SIDE WINDOW) . . . 899
BLADE GP-COAL 773
BLADE GP-SEMI-UNIVERSAL 775
776
BLOCK GP-HYDRAULIC–AXLE, FRONT 364
BLOCK GP-HYDRAULIC–AXLE, REAR 365
BLOCK GP-JUNCTION (BATTERY) 194
BOX GP-STORAGE 788
789
BRACKET AS-ADJUSTABLE SWITCH 562
BRAKE GP-PARKING 564
BRAKE GP-SERVICE 566
BREATHER AS (CRANKCASE) 37
39
BREATHER AS (POWER TRAIN) 405
BREATHER (ENGINE) 106
BUFFER GP-SENSOR–FUEL LEVEL 199
BULLDOZER AR 761

C

CAB & PLATFORM GP 790
CAB AR 792
CAB GP 793
CAB GP–ANTENNA, AIR FILTER, DUCTS, GRAB HANDLES 794
CAMERA AR–WORK AREA VISUAL SYSTEM . . . 200
CAMERA GP (115-DEG, COLOR) 309
CAMSHAFT GP 29
CAP AS-FILLER (FUEL TANK) 153
160
CAP AS-OIL FILLER (POWER TRAIN) 915
CAP-FILLER (ENGINE OIL) 83
106
CAP-FILLER (HYDRAULIC TANK) 732
734
CAP-PRESSURE (7-PSI) 126
CAP-VENTED (WINDOW WASHER) 895
CASE & PARTS GP-PLANETARY 366
CASE GP-TRANSFER GEAR 368
CHASSIS AR 1
CIRCUIT BREAKER AS (10-AMPERE) (KEY SWITCH) 316
CIRCUIT BREAKER AS (105-AMPERE) (MAIN) 315
CIRCUIT BREAKER AS (105-AMPERE) (START) 315
CIRCUIT BREAKER AS (15-AMPERE) (RUNNING LIGHTS) 315
COMMON AR 2
COMPRESSOR GP-REFRIGERANT 796
CONDENSER & MTG GP-REFRIGERANT 797
CONNECTION GP-ELECTRICAL 201
CONNECTOR GP-ELECTRONIC 237
CONTROL & MTG GP-ENGINE ELEK 202

INDEX

Name	Page
	203
CONTROL GP-COMMUNICATION–PRODUCT LINK 121SR	204
CONTROL GP-FOOT BRAKE	568
CONTROL GP-HANDLE–LIFT, TILT, TIP W/DOWNSHIFT	798
CONTROL GP-PARKING BRAKE	569
CONTROL GP-PILOT OPERATED HYD–JOYSTICK, 3-FUNCTION	799
CONTROL GP-SERVICE BRAKE	570
CONTROL GP-STEERING	802
CONTROL GP-STIC	804
	805
CONTROL GP-STIC LOCKOUT	807
CONTROL GP-TRANSMISSION HYD	369
CONTROL GP-UNPROGRAMMED–VIMS	205
CONTROL GP-UNPROGRAMMED (POWER TRAIN)	315
COOLANT HEATER LINES	829
COOLER GP-FUEL	155
	156
COOLER GP-HYD & STEERING OIL	660
CORE AS-AFTERCOOLER	130
CORE AS-AXLE OIL COOLER	392
CORE AS-CONDENSER (REFRIGERANT)	797
CORE AS-FUEL COOLER	155
	156
CORE AS-HYDRAULIC OIL COOLER	660
CORE AS-OIL COOLER (ENGINE)	112
CORE AS-RADIATOR	118
	121
CORE AS-STEERING OIL COOLER	660
CORE GP-OIL COOLER–TRANSMISSION	108
COVER GP-ACCESS–FRONT FRAME	467
COVER GP-CAB	809
COVER GP-CYLINDER BLOCK–CENTRAL STRUCTURE	33
COVER GP-CYLINDER BLOCK–FRONT STRUCTURE	30
	34
COVER GP-CYLINDER BLOCK–REAR STRUCTURE	32
COVER GP-SOUND SUPPRESSION	36
COVER GP-VALVE MECHANISM	37
	39
CRANKSHAFT GP	42
CUP-DUST	431
CYLINDER & MTG GP-LIFT	662
CYLINDER & MTG GP-STEERING	597
CYLINDER BLOCK AS	43
	45
CYLINDER BLOCK GP	46
CYLINDER GP-LIFT–LH	668
CYLINDER GP-LIFT–QUICK-DROP, LH	666
CYLINDER GP-LIFT–RH	669
CYLINDER GP-LIFT–RH, QUICK DROP	664
CYLINDER GP-STEERING	598
CYLINDER GP-TILT–LH–TILT, TIP FUNCTION	670
CYLINDER GP-TILT–RH–TILT, TIP FUNCTION	672
CYLINDER HEAD AS	48
CYLINDER HEAD GP	50
	51

D

DAMPER GP	53
	54
DIFFERENTIAL & BEVEL GEAR GP	370
	373
DIFFERENTIAL & BEVEL GEAR GP–FIXED AXLE	374
DIFFERENTIAL & BEVEL GEAR GP–OSCILLATING AXLE	371
DIFFERENTIAL GP	376
DOOR GP-ACCESS–HOOD SIDE	469
DOOR GP-ACCESS–PLATFORM, INNER, RH	811
DOOR GP-ACCESS–PLATFORM, OUTER, RH	812
DOOR GP-CAB–LH	813
DOOR GP-CAB (RH)	793
DRAIN GP-ECOLOGY–POWER TRAIN OIL	377
DRAIN GP-FUEL	158
DRAWBAR GP	471
DUCT GP-CAB AIR	815
DUST EJECTOR GP	134

E

ELECTRICAL AR	206
ELECTRONICS GP-MONITOR–VIMS, ENGLISH, CZECHOSLOVAKIAN	209
ELECTRONICS GP-MONITOR–VIMS, ENGLISH, DANISH	210
ELECTRONICS GP-MONITOR–VIMS, ENGLISH, DUTCH	207
ELECTRONICS GP-MONITOR–VIMS, ENGLISH, FINNISH	209
ELECTRONICS GP-MONITOR–VIMS, ENGLISH, FRENCH	208
ELECTRONICS GP-MONITOR–VIMS, ENGLISH, GERMAN	206
ELECTRONICS GP-MONITOR–VIMS, ENGLISH, GREEK	207
ELECTRONICS GP-MONITOR–VIMS, ENGLISH, ICELANDIC	210
ELECTRONICS GP-MONITOR–VIMS, ENGLISH, ITALIAN	207
ELECTRONICS GP-MONITOR–VIMS, ENGLISH, NORWEGIAN	209

INDEX

Name	Page
ELECTRONICS GP-MONITOR–VIMS, ENGLISH, PORTUGUESE	208
ELECTRONICS GP-MONITOR–VIMS, ENGLISH, RUSSIAN	207
ELECTRONICS GP-MONITOR–VIMS, ENGLISH, SPANISH	206
ELECTRONICS GP-MONITOR–VIMS, ENGLISH, SWEDISH	208
ELECTRONICS GP-POWER TRAIN	210
ELEMENT AS (CIGARETTE LIGHTER)	300
ELEMENT AS-JACKET WATER HEATER (240-VOLT, 1500-WATT)	217
ENCLOSURE GP-ELECTRONICS BAY	211 315
ENCLOSURE GP-HYDRAULIC TANK	474
ENCLOSURE GP-HYDRAULIC TANK–LH	472
ENCLOSURE GP-HYDRAULIC TANK–RH	475
ENCLOSURE GP-SERVICE CENTER	902
ENGINE AR	3 4 5 6
ENGINE AR-COMPLETE	7 8 11 14
ENGINE AR-CORE	17 18
EXTENSION GP-BACKREST (CLOTH)	873 877
EXTENSION GP-DRAIN–ENGINE OIL	55

F

FAN GP-SUCTION	109
FASTENER GP-CYLINDER HEAD	51
FASTENER GP-OIL PUMP MOUNTING–ENGINE	82
FASTENER GP-WIRING HARNESS–ELECTRONICS BAY	212
FENDER GP	477
FENDER GP-FRONT	481
FENDER GP-ROADING	482
FILLER GP-ENGINE OIL	83
FILM-CONTROL (THROTTLE LOCK, HYDRAULIC, HORN)	799
FILM-FACE (LH)	850
FILM-FACE (RH)	850
FILM GP	903 905
FILM GP-INTERNATIONAL	906
FILM GP-SERVICE CENTER	907
FILM GP-U.S.	908
FILM-IDENTIFICATION (FUEL PRIMING, ENG SERV LIGHT)	334
FILM-IDENTIFICATION (SERVICE CENTER RECEIVERS, REAR)	907
FILM-IDENTIFICATION (STAIRWAY LIGHTS)	294
FILM-IDENTIFICATION (STARTING MOTOR LOCKOUT)	294
FILM-IDENTIFICATION (TRANSMISSION LOCKOUT)	294
FILM-IDENTIFICATION (WORK LIGHT)	334
FILM-INFORMATION (PRODUCT LINK, READ OMM)	219
FILM-INFORMATION (24-VOLT)	905
FILM-INSTRUCTION (ENGINE SHUTDOWN)	294
FILM-INSTRUCTION (NO STEP)	905
FILM-INSTRUCTION (SEAT ADJUSTMENT)	893
FILM-INSTRUCTION (WATER IN, WATER OUT)	783
FILM-KEYPAD	832
FILM-SERVICE	295
FILM-WARNING (DO NOT OPERATE, READ OMM)	908
FILM-WARNING (NO WELD, NO DRILL, READ OMM)	905
FILM-WARNING (PRODUCT LINK 300, INTL)	219
FILM-WARNING (PRODUCT LINK 300, U.S.)	219
FILTER & LINES GP-CASE DRAIN–HYDRAULIC FAN PUMP OIL	674
FILTER & LINES GP-CASE DRAIN–IMPLEMENT PUMP OIL	675
FILTER & MTG GP-POWER TRAIN–TORQUE CONVERTER, TRANSMISSION	378
FILTER AS-ENGINE OIL (STANDARD EFFICIENCY)	84
FILTER AS-FUEL (ADVANCED EFFICIENCY) (SECONDARY)	176 179
FILTER AS-WATER SEP & FUEL (PRIMARY)	159
FILTER ELEMENT AS-AIR (PRIMARY)	133
FILTER ELEMENT AS-AIR (SECONDARY)	133
FILTER ELEMENT AS-OIL (ULTRA HIGH EFFICIENCY)	678
FILTER ELEMENT AS-OIL (ULTRA HIGH EFFICIENCY) (POWER TRAIN)	380 382
FILTER ELEMENT-CAB AIR (STANDARD EFFICIENCY)	794 816
FILTER GP-CAB AIR	816
FILTER GP-ENGINE OIL	84
FILTER GP-OIL–CASE DRAIN	600
FILTER GP-OIL–HYDRAULIC FAN	678
FILTER GP-OIL–IMPLEMENT PILOT	679
FILTER GP-OIL–SCREEN–AXLE OIL COOLER	384

INDEX

Name	Page
FILTER GP-OIL– STEERING OIL COOLER, PILOT	599
FILTER GP-OIL– TORQUE CONVERTER CHARGING	380
FILTER GP-OIL–TRANSMISSION CHARGING	382
FILTER GP-OIL (HYDRAULIC FAN PUMP CASE DRAIN)	674
FILTER GP-OIL (IMPLEMENT PUMP CASE DRAIN)	675
FILTER GP-OIL (STEERING PUMP CASE DRAIN)	611
FILTER GP-WATER SEP & FUEL–PRIMARY	159
FILTER-OIL (ADVANCED EFFICIENCY) (CASE DRAIN)	600
FILTER-OIL (ULTRA HIGH EFFICIENCY)	679
FILTER-OIL (ULTRA HIGH EFFICIENCY)	599
FINAL DRIVE & WHEEL	464 466
FIREWALL GP	486
FITTING GP-AIR CONDITIONER	827
FITTING GP-HYDRAULIC	680
FLOOR MAT	794
FLYWHEEL GP	56
FRAME AS-FRONT	488
FRAME AS-REAR	491
FUEL AR-CONVENTIONAL FILL	160
FUEL AR-FAST FILL	160
FUMES DISPOSAL GP	85
FUSE (10-AMPERE)	315
FUSE (15-AMPERE)	315
FUSE (20-AMPERE)	315

G

GAUGE AS-OIL LEVEL (DIPSTICK) (ENGINE)	86 87
GAUGE GP-OIL LEVEL (DIPSTICK)–ENGINE	86 87
GAUGE GP-SIGHT–POWER TRAIN OIL	385
GAUGE-LIQUID LEVEL	385
GAUGE-LIQUID LEVEL (SIGHT GLASS)	732
GAUGE-LIQUID LEVEL (SIGHT GLASS) (HYDRAULIC TANK)	734
GAUGE-SIGHT	106 126
GEAR GP-FRONT	57
GEAR GP-INPUT TRANSFER	386
GEAR GP-OUTPUT TRANSFER	388
GEAR GP-REAR	59
GUARD GP-CRANKCASE	496
GUARD GP-POWER TRAIN	497
GUARD GP-RADIATOR	498

H

HANDRAIL GP	501
HANDRAIL GP–FRONT	504
HANDRAIL GP–RH	500
HANDRAIL GP–STAIRS, RH	503
HARDWARE GP-HANDRAIL MOUNTING	505 507 508 509
HARNESS AS-AXLE (AXLE OIL COOLER)	334
HARNESS AS-AXLE (FRONT, TEMPERATURE SENSOR)	328
HARNESS AS-AXLE (REAR)	334
HARNESS AS-BRAKE (PARKING, SWITCH)	334
HARNESS AS-BUMPER	295
HARNESS AS-CAB (INSIDE, REAR)	300
HARNESS AS-CAB (LOWER)	300
HARNESS AS-CAB (POWER CONVERTER)	314
HARNESS AS-CHASSIS (FRAME, LH)	334
HARNESS AS-CHASSIS (MAIN)	334
HARNESS AS-CHASSIS (ROPS)	353
HARNESS AS-CONTROL (CAES RECEIVER)	330
HARNESS AS-CONTROL (CAES, ROPS SIDE)	330
HARNESS AS-CONTROL (ELECTRONICS BAY)	315
HARNESS AS-CONTROL (PRODUCT LINK)	312
HARNESS AS-CONTROL (SERVICE CENTER, OIL RENEWAL)	357
HARNESS AS-ENGINE	27 322
HARNESS AS-ENGINE (ELECTRONIC CONTROL MODULE)	325
HARNESS AS-ENGINE (UNIT INJECTOR)	26
HARNESS AS-FRONT (AXLE, CONTROL VALVE, LIGHTS)	328
HARNESS AS-FRONT CHASSIS (MAIN)	328
HARNESS AS-FRONT (FLOODLIGHTS, HORN)	232
HARNESS AS-HEATER & AIR COND	784
HARNESS AS-HOOD (STAIRWAY LIGHTS)	334
HARNESS AS-HYDRAULIC TANK (IMPLEMENT, HYDRAULIC FAN)	334
HARNESS AS-HYDRAULIC TANK (STEERING, BRAKE)	334
HARNESS AS-LIGHTING (ENGINE ENCLOSURE, ETHER)	334
HARNESS AS-LIGHTING (INBOARD FLOODLIGHTS, FRONT)	232
HARNESS AS-MONITOR (CAES)	841
HARNESS AS-MONITOR (VIMS MAIN MODULE)	299
HARNESS AS-MONITOR (WORK AREA VISUAL SYSTEM)	237

INDEX

Name	Page
HARNESS AS-OPERATOR CONTROLS (IMPLEMENT CONTROLS POD)	300
HARNESS AS-OPERATOR CONTROLS (QUARTER WINDOW WIPER)	300
HARNESS AS-OPERATOR CONTROLS (REAR WINDOW WIPER)	300
HARNESS AS-OPERATOR CONTROLS (WINDOW WASHER)	300
HARNESS AS-PANEL (FRONT)	300
HARNESS AS-PANEL (GROUND LEVEL SHUTDOWN)	294
HARNESS AS-PANEL (SIDE, RH)	300
HARNESS AS-PLATFORM (ELECTRONICS BAY TO CAB)	334
HARNESS AS-PLATFORM (FILTER, PUMP BYPASS SWITCHES)	310
HARNESS AS-POWER (AUTOMATIC LUBRICATION CONTROL)	292
HARNESS AS-RADIO	862 863 864
HARNESS AS-REAR CHASSIS	350
HARNESS AS-REAR CHASSIS (OIL RENEWAL SYSTEM)	334
HARNESS AS-SENSOR (FUEL PRESSURE)	176
HARNESS AS-SENSOR (FUEL PRESSURE)	179
HARNESS AS-SENSOR (SPEED)	259
HARNESS AS-SENSOR (TURBOCHARGER AIR INLET PRESS)	136
HARNESS AS-SWITCH (SECONDARY STEERING)	602 605
HARNESS AS-TRANSMISSION (CLUTCH SOLENOIDS)	461
HARNESS AS-TRANSMISSION (SPEED SENSORS)	348
HARNESS AS-TRANSMISSION (TORQUE CONVERTER)	348
HARNESS AS-VALVE (SEAT AIR COMPRESSOR)	893
HARNESS AS-WIRING (FERRITE)	841
HARNESS AS-WIRING (HEATED SEAT)	848
HARNESS AS-WIRING (SERVICE CENTER, AUTOLUBE)	357
HARNESS AS-WIRING (SPEED SENSOR)	260
HEAD GP-PUMP–STEERING	601
HEATER GP-FUEL	213 214
HEATER GP-JACKET WATER	216 217
HITCH GP-ARTICULATING	510
HOOD & GUARD GP	512
HOUSING GP-FLYWHEEL	61
HOUSING GP-FRONT	63
HOUSING GP-REAR	64
HYDRAULIC AR	681
HYDRAULIC AR–SECONDARY STEERING, DELUXE FILTRATION	682
HYDRAULIC AR–SECONDARY STEERING, STANDARD FILTRATION	681

I

INDICATOR-AIR FILTER CHANGE	136
INJECTOR GP-FUEL	184
INSTALLATION AR-CAES	219
INSTALLATION AR-COMMUNICATION–PRODUCT LINK	219
INSTALLATION AR-ENGINE	19
INSTALLATION GP-RADIO	818
INSULATION GP-RADIATOR SHIELD–BOTTOM, SOUND SUPPRESSION	518
INSULATION GP-RADIATOR SHIELD–TOP, SOUND SUPPRESSION	517

K

KEY	294 512
KEY (BATTERY DISCONNECT)	280
KEY (LITERATURE COMPARTMENT)	1
KIT-SEAL	560 561 626
KIT-SLIDER BLOCK	881

L

LADDER GP–STAIRWAY, HANDRAILS, LH	519
LADDER GP–STAIRWAY, HANDRAILS, RH	521
LAMP AS (AMBER, LED, 24-VOLT)	294
LAMP GP-DOME	220
LAMP GP-DOME (24-VOLT)	299 794
LAMP GP-FLOOD	221 222 223
LAMP GP-FLOOD (24-VOLT)	231
LAMP GP-HEAD–HIGH BEAM	224
LAMP GP-HEAD–LOW BEAM	225
LAMP GP-SIGNAL–STOP, TAIL	226
LAMP GP-SIGNAL (VIMS, LED, BLUE)	350
LAMP-HALOGEN (24-VOLT, 65-WATT)	224 225
LAMP-HALOGEN (24-VOLT, 65-WATT)	221 222 223
LAMP-INTERIOR	299
LAMP (VIMS, LED, WHITE)	300
LAMP (24-VOLT)	220

INDEX

Name	Page
	294
	299
LAMP (24-VOLT) (GREEN)	357
LATCH GP–LH–HOOD SIDE	819
LATCH GP-CAB DOOR & WINDOW	820
LIFTING GP-ENGINE	65
LIGHTER GP (12-VOLT)	300
LIGHTING GP-AUXILIARY–FRONT, INSIDE POSITION	227
LIGHTING GP-FLOOD–ENGINE COMPARTMENT LIGHTS	234
LIGHTING GP-FLOOD–FRONT, OUTSIDE POSITION	228
LIGHTING GP-FLOOD–LIFT CYLINDER MOUNTED, FRONT	232
LIGHTING GP-FLOOD–REAR, STAIRWAY ACCESS	231
LIGHTING GP-FLOOD–ROPS FRONT, REAR	229
LIGHTING GP-STOP	236
LINER GP-CAB	823
LINES GP-AFTERCOOLER AIR	135
LINES GP-AIR	139
LINES GP-AIR–TURBOCHARGER INLET	136
LINES GP-AIR CONDITIONER	827
LINES GP-AUTOMATIC LUBRICATION	524
	528
LINES GP-AXLE OIL COOLER	392
LINES GP-AXLE VENT–FRONT	403
LINES GP-AXLE VENT–REAR	401
LINES GP-CAB HEATER	829
LINES GP-DIAGNOSTIC–REMOTE PRESSURE TAPS	909
LINES GP-ENGINE OIL	88
	89
LINES GP-ENGINE OIL FILTER	90
	92
	94
LINES GP-FUEL	161
	163
LINES GP-FUEL FILTER	166
	168
	172
LINES GP-GREASE	531
	536
LINES GP-HYDRAULIC–IMPLEMENT PUMP	683
LINES GP-HYDRAULIC–IMPLEMENT PUMP HIGH PRESSURE SCREEN, DELUXE FILTRATION	686
LINES GP-HYDRAULIC–SECONDARY STEERING, STANDARD FILTRATION	684
LINES GP-HYDRAULIC FAN	690
LINES GP-HYDRAULIC FAN–HYDRAULIC FAN PUMP, MOTOR HIGH PRESSURE SCREENS, DELUXE FILTRATION	697
LINES GP-HYDRAULIC FAN–STANDARD FILTRATION	688
LINES GP-LIFT CYLINDER	699
LINES GP-LUBRICATION–LIFT CYLINDERS, STEERING CYLINDERS, ARTICULATED HITCH	537
LINES GP-LUBRICATION–STEERING CYLINDERS, TRUNNIONS	538
LINES GP-OIL SUPPLY–OIL RENEWAL SYSTEM	97
LINES GP-PILOT	702
LINES GP-POWER TRAIN OIL	405
LINES GP-SECONDARY STEERING	602
LINES GP-SECONDARY STEERING–SECONDARY STEERING HIGH PRESSURE SCREEN, DELUXE FILTRATION	605
LINES GP-SERVICE BRAKE–BRAKE PUMP HIGH PRESSURE SCREEN, DELUXE FILTRATION	583
LINES GP-SERVICE BRAKE–STANDARD FILTRATION	581
LINES GP-STEERING	611
LINES GP-STEERING–STANDARD FILTRATION	609
LINES GP-STEERING–STEERING PUMP HIGH PRESSURE SCREEN, DELUXE FILTRATION	615
LINES GP-STEERING NEUTRALIZER	617
LINES GP-STEERING OIL COOLER	620
LINES GP-TILT CYLINDER	710
	712
LINES GP-TURBOCHARGER AIR	140
LINES GP-TURBOCHARGER OIL	99
LINES GP-WATER–ENGINE, TRANSMISSION COOLERS	112
LINES GP-WATER–RADIATOR	111
LINK GP-STABILIZER	762
LINK GP-STEERING FRAME LOCK	539
LUBRICATION AR-AUTOMATIC	540

M

MANIFOLD GP-CONTROL–AXLE OIL COOLER	412
MANIFOLD GP-CONTROL (BRAKE ACCUMULATOR CHARGE)	571
MANIFOLD GP-EXHAUST	141
	143
MECHANISM GP-FUEL PUMP & VALVE	67
	68
METERING GP-ENGINE OIL–OIL RENEWAL SYSTEM	101
MIRROR GP-REAR VIEW	830
	831

INDEX

Name	Page
MODULE GP-DISPLAY (WORK AREA VISUAL SYSTEM)	237
MODULE GP-MESSAGE CENTER	831
MODULE GP-MONITOR KEYPAD	832
MODULE GP-QUAD GAUGE	833
MODULE GP-SPEEDOMETER & TACH	299
MOTOR & MTG GP-HYDRAULIC FAN	714
MOTOR GP-BLOWER (CAB AIR)	859
MOTOR GP-PISTON–HYDRAULIC FAN	715
MOTOR GP-WINDOW WIPER–FRONT	835
MOTOR GP-WINDOW WIPER–FRONT QUARTER, LH	837
MOTOR GP-WINDOW WIPER–FRONT QUARTER, RH	836
MOTOR GP-WINDOW WIPER–REAR	834
MOTOR GP-WINDOW WIPER (24-VOLT) (REAR)	896
MOTOR GP-WINDOW WIPER (24-VOLT, 2-SPEED)	834
	836
	837
MOUNTING GP-ALTERNATOR & COMPR	69
MOUNTING GP-ANTENNA	839
MOUNTING GP-ANTENNA–RADIO	838
MOUNTING GP-AXLE	413
MOUNTING GP-BUMPER	541
MOUNTING GP-CAMERA–WORK AREA VISUAL SYSTEM	237
MOUNTING GP-FUEL FILTER	176
	179
MOUNTING GP-MONITOR–CAES	841
MOUNTING GP-PLATFORM	843
MOUNTING GP-RIM	414
MOUNTING GP-ROPS	844
MOUNTING GP-TORQUE CONVERTER	414
MUFFLER GP	144
PADLOCK GP	153
	160
	294
	512
	541
	915
PADLOCK GP (HYDRAULIC TANK CAP)	916
PAN GP-BACKREST	846
	847
PAN GP-OIL	70
PAN GP-SEAT	848
PANEL GP-HOOD	544
PANEL GP-HOOD–TOP, FRONT	542
PANEL GP-INSTRUMENT–FRONT	850
PANEL GP-INSTRUMENT–SIDE	849
PEDAL GP-GOVERNOR	852
PIN GP-BULLDOZER	763
PISTON & ROD GP	71
	72
PISTON GP-HYDRAULIC CYLINDER	716
PIVOT GP-PILOT VALVE	717
PLANETARY GP-TRANSMISSION	415
PLATE GP-ENGINE IDENTIFICATION	914
PLATE-INSTRUCTION (BATTERY)	193
PLATE-PRESSURE	723
PLATE-SERIAL NUMBER (TRANSMISSION)	439
PLATFORM GP-OPERATOR	853
	854
	857
PLUG-DRAIN	129
	732
PLUG-DRAIN (ENGINE OIL PAN)	70
PLUG-DRAIN (HYDRAULIC TANK)	734
PLUG GP-CONTROL VALVE–PRESSURE, FLOW COMPENSATOR	623
PLUG GP-CYLINDER BLOCK	74
PLUG GP-CYLINDER HEAD	75
PLUG-MAGNETIC	359
	361
	464
PLUG (TRANSMISSION OIL DRAIN)	377
POTENTIOMETER AS (TEMPERATURE CONTROL)	300
POWER TRAIN AR	420
PRECLEANER AR-CAB AIR	858
PRECLEANER GP-CAB AIR	859
PROTECTION GP-VANDALISM	405
	915
	916
PUMP & MOTOR GP-AXLE OIL CLR	421
PUMP & MTG GP-AXLE OIL COOLER	422
PUMP & MTG GP-BRAKE	585
PUMP & MTG GP-FUEL TRANSFER	183
PUMP & MTG GP-HYDRAULIC FAN	718
PUMP & MTG GP-IMPLEMENT	719
PUMP & MTG GP-IMPLEMENT PILOT	721
PUMP & MTG GP-SECONDARY STEER	624
PUMP & MTG GP-STEERING–STEERING OIL COOLER, PILOT	625
PUMP GP-ENGINE OIL	103
PUMP GP-FUEL INJECTION	184
PUMP GP-FUEL PRM & WATER SEP	191
PUMP GP-FUEL TRANSFER	185
PUMP GP-GEAR–IMPLEMENT	723
PUMP GP-GEAR–IMPLEMENT PILOT	722
PUMP GP-GEAR–SECONDARY STEERING	626

O

OPERATOR AR	845
ORIFICE AS-AIR CONDITIONER	778

P

INDEX

Name	Page
PUMP GP-GEAR–STEERING OIL COOLER, PILOT	628
PUMP GP-PISTON–BRAKE	586
PUMP GP-PISTON–HYDRAULIC FAN	725
PUMP GP-PISTON–STEERING	629
PUMP GP-TRANSMISSION	423, 424
PUMP GP-WATER	116, 117
PUSH ARM GP–LH	767
PUSH ARM GP–RH	765

R

Name	Page
RADIATOR GP–HIGH AMBIENT TEMPERATURE COOLING	121
RADIATOR GP–STANDARD AMBIENT TEMPERATURE COOLING	118
RADIO GP–AM/FM/CD PLAYER	862
RADIO GP–AM/FM/WB	862
RADIO GP–AM/FM/WB/CD PLAYER	860, 862
RADIO GP–AM/FM/WB/SIRIUS/ CD PLAYER	861, 864
RADIO GP–AM/FM/WB/XM/ CD PLAYER	863
RADIO GP (AM/FM CD PLAYER)	862
RADIO GP (AM/FM/WB)	862
RADIO GP (AM/FM/WB/XM/ CD PLAYER)	863
RECEIVER DRYER AS (REFRIGERANT)	778
RECLINER GP-SEAT	865
REGULATOR-TEMPERATURE (92-DEG C)	112
RELAY AS (24-VOLT) (AIR CONDITIONER PRECLEANER)	315
RELAY AS (24-VOLT) (BACKLIGHT)	315
RELAY AS (24-VOLT) (BACKUP ALARM)	315
RELAY AS (24-VOLT) (FENDER FLOODLIGHTS)	315
RELAY AS (24-VOLT) (HEATED MIRRORS)	315
RELAY AS (24-VOLT) (HORN)	315
RELAY AS (24-VOLT) (INTERMEDIATE START RELAY)	315
RELAY AS (24-VOLT) (ROPS HID LIGHTS)	315
RELAY AS (24-VOLT) (SINGLE TILT)	299
RENEWAL AR-OIL	104
RIM AR	425
RIM GP-DEMOUNTABLE	426, 427
ROCKER ARM GP	76, 77, 78, 79
ROPS AR	866
ROPS GP	867
ROTATING GP-MOTOR–HYDRAULIC FAN	727
ROTATING GP-PUMP–BRAKE	587
ROTATING GP-PUMP–HYDRAULIC FAN	729
ROTATING GP-PUMP–STEERING	631

S

Name	Page
SCREEN AS	655
SCREEN AS-FILTER (AXLE OIL COOLER)	384
SCREEN AS-HIGH PRESSURE	588, 633
SCREEN AS (HYDRAULIC TANK)	732
SCREEN AS (STEERING OIL)	734
SCREEN GP-HIGH PRESSURE	588, 633
SCREEN (HYDRAULIC)	734
SCREEN-SUCTION	388
SEAL GP-CRANKSHAFT (FRONT)	42
SEAL-LIP TYPE (REGULATOR HOUSING)	112
SEAL-O-RING	649
SEAL-VALVE COVER	26, 37, 39
SEAL-VALVE COVER (VALVE COVER)	27
SEALING GP-GLASS	869
SEAT BELT	874
SEAT BELT GP–RETRACTABLE	870
SEAT BELT GP (RETRACTABLE)	873, 877
SEAT GP	874
SEAT GP–CLOTH	871, 873
SEAT GP–CLOTH, HEATED	875, 877
SEAT GP-COMPANION	878, 879, 880
SEAT GP-SUSPENSION	881, 883
SEAT GP-SUSPENSION–HEATED	882
SENDER AS-FUEL LEVEL	186
SENSOR AS-TEMPERATURE	266, 267
SENSOR GP-ENGINE	238, 241
SENSOR GP-EXHAUST TEMPERATURE	245
SENSOR GP-EXHAUST TEMPERATURE (TURBOCHARGER INLET)	238
SENSOR GP-EXHAUST TEMPERATURE (TURBOCHARGER, RH, LH)	241
SENSOR GP-LIQUID LEVEL	246
SENSOR GP-LIQUID LEVEL (ENGINE OIL LEVEL)	241
SENSOR GP-LIQUID LEVEL (IMPLEMENT, HYDRAULIC FAN TANK)	334
SENSOR GP-LIQUID LEVEL (STEERING, BRAKE HYDRAULIC TANK)	334

INDEX

Name	Page
SENSOR GP-POSITION	247, 852
SENSOR GP-POSITION (ROTARY)	562
SENSOR GP-PRESSURE	136, 248, 249, 250, 251, 252, 253, 254, 255, 256, 257
SENSOR GP-PRESSURE (ATMOSPHERIC)	241
SENSOR GP-PRESSURE (BOOST)	241
SENSOR GP-PRESSURE (ENGINE OIL)	179
SENSOR GP-PRESSURE (ENGINE OIL)	241
SENSOR GP-PRESSURE (FRONT AXLE BRAKE OIL)	570
SENSOR GP-PRESSURE (FUEL)	176
SENSOR GP-PRESSURE (HYDRAULIC FAN PUMP OIL)	348
SENSOR GP-PRESSURE (IMPLEMENT PILOT OIL)	333
SENSOR GP-PRESSURE (IMPLEMENT PUMP OIL, RH)	310
SENSOR GP-PRESSURE (REAR AXLE BRAKE OIL)	570
SENSOR GP-PRESSURE (STEERING PILOT OIL)	333
SENSOR GP-PRESSURE (STEERING PUMP OIL, LH)	333
SENSOR GP-SPEED	258, 259, 260, 261, 262, 263, 264
SENSOR GP-SPEED (CAM GEAR)	241
SENSOR GP-SPEED (CRANKSHAFT)	238, 241
SENSOR GP-SPEED (TORQUE CONVERTER OUTPUT)	389
SENSOR GP-SPEED (TRANSFER GEAR INPUT)	386
SENSOR GP-TEMPERATURE	265, 266, 267, 268, 269
SENSOR GP-TEMPERATURE (AMBIENT AIR)	334
SENSOR GP-TEMPERATURE (COOLANT)	238, 241
SENSOR GP-TEMPERATURE (FRONT AXLE OIL)	328
SENSOR GP-TEMPERATURE (FUEL)	176
SENSOR GP-TEMPERATURE (IMPLEMENT, HYDRAULIC FAN OIL)	334
SENSOR GP-TEMPERATURE (INTAKE AIR TEMPERATURE)	241
SENSOR GP-TEMPERATURE (REAR AXLE OIL)	334
SENSOR GP-TEMPERATURE (STEERING, BRAKE OIL)	334
SENSOR GP-TEMPERATURE (TORQUE CONVERTER OIL)	348
SENSOR GP-TEMPERATURE (TRANSMISSION SUMP OIL)	348
SERVICE CENTER AR	917
SERVICE CENTER GP	918, 919
SERVICE GP-COMMUNICATION (PRODUCT LINK 300)	312
SERVICE GP-POWER TRAIN	210
SHAFT GP-DRIVE	428
SHAFT GP-INPUT DRIVE	430
SHIELD GP-ENGINE COMPARTMENT	545
SHIELD GP-HEAT	145, 146, 147
SHIELD GP-RADIATOR–SOUND SUPPRESSION	547
SHROUD GP-RADIATOR	124
SLIP JOINT GP–CENTER	431
SOFTWARE GP-COMMUNICATION (PRODUCT LINK 121SR)	204
SOFTWARE GP-POWER TRAIN	210
SOLENOID AS-STARTING MOTOR (24-VOLT)	273, 276
SPIDER & BEARING GP	432
SPRING GP-CAB DOOR	884
STARTING AID GP-ETHER	270
STARTING MOTOR GP-ELECTRIC	272, 275
STARTING MOTOR GP-ELECTRIC–DUAL	278
STEP GP	549, 550
STOP GP-STEERING	634
STRAINER AS (HYDRAULIC TANK)	734
STRAINER AS (HYDRAULIC TANK FILL)	732, 734
STRAINER-FUEL	186
SUPPORT GP-AFTERCOOLER	148, 149
SUPPORT GP-ENGINE	80, 81
SUPPORT GP-HYDRAULIC CONTROL	886

INDEX

Name	Page
SUPPORT GP-SEAT	889
SUPPORT GP-STEERING CONTROL	890
SUPPORT GP-TRANSMISSION	433
SUPPRESSION AR-SOUND	551
SUPPRESSION AR-SOUND–ENGINE COMPARTMENT SHIELD	551
SUPPRESSION GP-SOUND–HOOD TOP, SIDE	552
SUSPENSION GP-SEAT–AIR	893
SWITCH AS-LIMIT (PARKING BRAKE)	589
SWITCH AS-LIMIT (SINGLE POLE) (THROTTLE LOCK DEACTIVATION)	563
SWITCH AS-LIMIT (STOP LIGHT)	562
SWITCH AS-MAGNETIC (24-VOLT) (START RELAY)	286
SWITCH AS-PRESSURE (BRAKE ACCUMULATOR CHARGE)	333
SWITCH AS-PRESSURE (DIFFERENTIAL)	310
SWITCH AS-PRESSURE (FILTER BYPASS)	679
SWITCH AS-PRESSURE (OIL FILTER)	678
SWITCH AS-PRESSURE (OIL FILTER BYPASS)	599
SWITCH AS-PRESSURE (PARKING BRAKE OIL)	589
SWITCH AS-PRESSURE (REFRIGERANT COMPR, HIGH SIDE)	21
SWITCH AS-PRESSURE (REFRIGERANT COMPR, LOW SIDE)	21
SWITCH AS-PRESSURE (SECONDARY STEERING OIL)	602, 605
SWITCH AS-PUSH BUTTON (HORN)	300
SWITCH AS-PUSH BUTTON (THROTTLE LOCK RESUME)	300
SWITCH AS-PUSH BUTTON (THROTTLE LOCK SET)	300
SWITCH AS-ROCKER (HYDRAULIC LOCKOUT)	300
SWITCH AS-ROCKER (INTERIOR LIGHT)	301
SWITCH AS-ROCKER (QUICKSHIFT)	300
SWITCH AS-ROCKER (RUNNING LIGHTS)	300
SWITCH AS-ROCKER (STAIRWAY ACCESS LIGHT)	300
SWITCH AS-ROCKER (THROTTLE LOCK ENABLE)	300
SWITCH AS-ROCKER (TILT, TIP FUNCTION)	300
SWITCH AS-ROCKER (TORQUE CONVERTER LOCKUP CLUTCH)	300
SWITCH AS-ROCKER (24-VOLT) (FLOODLIGHTS, FRONT)	301
SWITCH AS-ROCKER (24-VOLT) (FLOODLIGHTS, REAR)	301
SWITCH AS-ROTARY (FAN BLOWER SPEED)	299
SWITCH AS-ROTARY (REDUCED RIMPULL SELECT)	299
SWITCH AS-ROTARY (WIPER, WASHER) (QUARTER WINDOW)	299
SWITCH AS-START (KEY)	294
SWITCH AS-TEMPERATURE (AIR CONDITIONER)	784
SWITCH AS-TOGGLE (ENGINE COMPARTMENT LIGHTS, LH)	333
SWITCH AS-TOGGLE (ENGINE COMPARTMENT LIGHTS, RH)	333
SWITCH AS-TOGGLE (GROUND LEVEL SHUTDOWN)	294
SWITCH AS-TOGGLE (STAIRWAY ACCESS LIGHTS)	294
SWITCH AS-TOGGLE (STARTING MOTOR LOCKOUT)	294
SWITCH AS-TOGGLE (TRANSMISSION LOCKOUT)	294
SWITCH AS-WIPER (24-VOLT) (FRONT INTERMITTENT)	290
SWITCH GP-BYPASS–POWER TRAIN OIL FILTER	279
SWITCH GP-DISCONNECT–BATTERY	280
SWITCH GP-DISCONNECT (BATTERY)	193
SWITCH GP-ENGINE BRAKE	281
SWITCH GP-KEY (START)	300
SWITCH GP-LIMIT–STIC LOCKOUT CONTROL	282
SWITCH GP-LIQUID LEVEL–ENGINE OIL PAN, OIL TANK	283
SWITCH GP-LIQUID LEVEL (ENGINE OIL)	238
SWITCH GP-LIQUID LEVEL (OIL RENEWAL METERING TANK)	346
SWITCH GP-MAGNETIC–MAIN RELAY	287
SWITCH GP-MAGNETIC–START RELAY	284, 285, 286
SWITCH GP-MAGNETIC (24-VOLT DC) (START RELAY 1)	315
SWITCH GP-MAGNETIC (24-VOLT DC) (START RELAY 2)	315
SWITCH GP-MAGNETIC (24-VOLT) (MAIN RELAY)	315
SWITCH GP-PRESSURE–FUEL FILTER	288
SWITCH GP-TOGGLE–FUEL PRIMING PUMP ON, OFF	289
SWITCH GP-TOGGLE (FUEL PRIMING PUMP ON, OFF)	333
SWITCH GP-WIPER–INTERMITTENT–FRONT, REAR	290
SWITCH GP-WIPER (24-VOLT, INTERMITTENT) (FRONT)	299
SWITCH GP-WIPER (24-VOLT, INTERMITTENT) (REAR)	299

INDEX

Name	Page

T

TANK & BUMPER AR-FUEL 555
TANK & MTG GP-ENGINE OIL–
OIL RENEWAL SYSTEM 105
TANK & MTG GP-HYDRAULIC–
IMPLEMENT, HYDRAULIC FAN 731
TANK & MTG GP-HYDRAULIC–
STEERING, BRAKE 730
TANK GP-ENGINE OIL–
METERING, OIL RENEWAL SYSTEM 106
TANK GP-FUEL 186
189
TANK GP-GREASE 556
TANK GP-HYDRAULIC–
IMPLEMENT, HYDRAULIC FAN OIL 732
TANK GP-HYDRAULIC–STEERING, BRAKE 734
TANK GP-RADIATOR TOP 126
TIRE & RIM AR 434
435
436
437
438
TORQUE CONVERTER & HOUSING GP–
LOCKUP 439
TORQUE CONVERTER GP-LOCKUP 441
TRANSMISSION AR 445
TRUNNION GP-BULLDOZER 769
TUBE AS-SCREEN (MAGNETIC) 388
TURBOCHARGER GP 150
151
152

U

UNIVERSAL JOINT GP–FRONT 447
UNIVERSAL JOINT GP–INPUT DRIVESHAFT . . . 448
UNIVERSAL JOINT GP–REAR 446

V

VALVE & MTG GP-BRAKE CONTROL–
PARKING 589
VALVE & MTG GP-HYDRAULIC FAN 737
VALVE & MTG GP-LOCKUP CLUTCH–
TORQUE CONVERTER 449
VALVE & MTG GP-MAIN CONTROL 739
VALVE & MTG GP-SOLENOID–
HYDRAULIC LOCKOUT 740
VALVE & MTG GP-STEERING–SECONDARY . . . 635
VALVE AS-RELIEF (GREASE PRESSURE) 556
VALVE-BREAKER RELIEF 401
730
731
VALVE-BREAKER RELIEF
(HYDRAULIC TANK) 403
VALVE GP-BRAKE CONTROL–PARKING 591
VALVE GP-BRAKE CONTROL (SERVICE) 570
VALVE GP-CHECK 642
VALVE GP-CHECK–COOLER BYPASS 642
VALVE GP-CHECK–FUEL 190
VALVE GP-CHECK–STEERING 640
641
VALVE GP-CHECK–
STEERING CLR FLTR BYP, PILOT 639
VALVE GP-CHECK–STEERING PILOT 636
VALVE GP-CHECK–STEERING QUAD 637
638
VALVE GP-CHECK (AIR PURGE) 675
VALVE GP-CHECK (FUEL) 168
172
VALVE GP-CHECK (PILOT) 702
VALVE GP-CONTROL 741
VALVE GP-DEMAND FAN 745
VALVE GP-ETHER STARTING 291
VALVE GP-LUBE DISTRIBUTION–
12-INJECTOR 557
558
VALVE GP-MAKEUP–
HYDRAULIC FAN MOTOR 746
VALVE GP-MANUAL–LOWERING CONTROL . . . 747
VALVE GP-METERING–
OIL RENEWAL SYSTEM 107
VALVE GP-MODULATING–
TC IMPELLER CLUTCH 451
VALVE GP-MODULATING–
TORQUE CONVERTER LOCKUP CLUTCH . . . 450
VALVE GP-PILOT–JOYSTICK, 3-FUNCTION 748
VALVE GP-PILOT–STIC STEERING 643
VALVE GP-PILOT CARTRIDGE 644
645
750
751
VALVE GP-PRESSURE REDUCING
(STEERING PILOT OIL REGULATOR) 656
VALVE GP-PUMP CONTROL–
FLOW COMPENSATOR–STEERING 647
VALVE GP-PUMP CONTROL–
PRESSURE COMPENSATOR–BRAKE 592
VALVE GP-PUMP CONTROL–
PRESSURE COMPENSATOR–
HYDRAULIC FAN 752
VALVE GP-PUMP CONTROL–
PRESSURE COMPENSATOR–STEERING . . . 648
VALVE GP-PUMP CONTROL–
PRESSURE, FLOW COMPENSATOR–
STEERING 646
VALVE GP-RADIATOR DRAIN–
COOLANT TANK SHUTOFF 129

INDEX

Name	Page
VALVE GP-RELIEF–IMPLEMENT PILOT	753, 754
VALVE GP-RELIEF–PUMP BACKUP	650
VALVE GP-RELIEF–SECONDARY STEERING	649
VALVE GP-RELIEF–STEERING PILOT	651, 652
VALVE GP-RELIEF–TORQUE CONVERTER OUTLET PRESS	452
VALVE GP-RELIEF (MAIN)	650
VALVE GP-RELIEF (PUMP BACKUP)	655
VALVE GP-RELIEF (STEERING CYLINDER CROSSOVER)	655
VALVE GP-SELECTOR–TRANSMISSION	453
VALVE GP-SELECTOR & PRESS CONT–SECONDARY STEERING	653
VALVE GP-SELECTOR & PRESS CONT–TRANSMISSION	454
VALVE GP-SELECTOR & PRESS CONT (SECONDARY STEERING)	602, 605
VALVE GP-SEQUENCE–AXLE OIL COOLER	755, 756
VALVE GP-SHUTTLE	654, 702, 757
VALVE GP-SOLENOID	456, 457, 458, 758, 759
VALVE GP-SOLENOID (AXLE OCLR ACTIVATE, DEACTIVATE)	412
VALVE GP-SOLENOID (24-VOLT) (DUAL TILT)	760
VALVE GP-STEERING–WITH SECONDARY STEERING	655
VALVE GP-STEERING NEUTRALIZER	659
VALVE GP-TILT CONTROL–DUAL	760
VALVE GP-TIRE	426
VALVE GP-TORQUE CONV PRIORITY	459
VALVE GP-TRANSMISSION CONTROL	461
VALVE-SHUTOFF	829

W

Name	Page
WALKWAY GP	559
WASHER GP-WINDOW	895
WATER SEP & FUEL PRM PUMP GP	191
WHEEL & FINAL DRIVE GP	464
WHEEL GP-FINAL DRIVE & BRAKE	466
WIPER & WASHER GP-WINDOW–FRONT, REAR	896
WIPER GP-WINDOW–FRONT QUARTER	898, 899
WIPER GP-WINDOW (FRONT QUARTER)	899
WIRING GP-AUTOLUBE CONTROL	292
WIRING GP-BUMPER	294
WIRING GP-CAB	299
WIRING GP-CAMERA	309
WIRING GP-CHASSIS	310
WIRING GP-COMMUNICATION–PRODUCT LINK	312
WIRING GP-CONVERTER	314
WIRING GP-ELECTRONICS BAY	315
WIRING GP-ENGINE	319, 322
WIRING GP-ENGINE ELECTRONIC	325
WIRING GP-FRONT	328
WIRING GP-MACHINE	330, 333
WIRING GP-OIL RENEWAL SYSTEM–ENGINE OIL METERING TANK	347
WIRING GP-OIL RENEWAL SYSTEM–SERVICE CENTER	346
WIRING GP-POWER TRAIN	348
WIRING GP-REAR	350
WIRING GP-ROPS	353
WIRING GP-SERVICE CENTER–OIL RENEWAL	357

INDEX

Désignation	Page

A

ACCESSOIRE DE MOTEUR (ASS)	21
ACCUMULATEUR - FREIN	560 561
ACCUMULATEUR - RÉFRIGÉRANT	778
ACCUMULATEUR ET MONTAGE DE RÉFRIGÉRANT (ASS)	778
ADAPTATEUR DE REMPLIS. RAPIDE DE CARBURANT (ASS)	153
ALLUME-CIGARE (ASS) (12 VOLTS)	300
ALTERNATEUR DE CHARGE (ASS) (24-VOLTS, 150-AMPÈRES)	21
AMORTISSEUR DE VIBRATIONS (ASS)	53 54
AMPLIFICATEUR - CAPTEUR (ASS)	199
AMPOULE (*VIMS, LED, WHITE)	300
AMPOULE (24 VOLTS)	220 294 299
AMPOULE (24 VOLTS) (VERTE)	357
ARBRE A CAMES (ASS)	29
ARBRE DE TRANSMISSION D'ENTRÉE (ASS)	430
ARBRE D'ENTRAÎNEMENT (ASS)	428
ARRÊT-DIRECTION (ASS)	634
ARTICULATION DE SOUPAPE PILOTE (ASS)	717
ATTELAGE D'ARTICULATION (ASS)	510
AUTOCOLLANT (ASS)- INTERNATIONAL	906
AUTOCOLLANT (ASS)-ÉTATS-UNIS	908
AUTOCOLLANT-BLOC DE TOUCHES	832
AUTOCOLLANT-COMMANDE (*THROTTLE LOCK, HYDRAULIC, HORN)	799
AUTOCOLLANT DE MISE EN GARDE (NE PAS UTILISER, LIRE LE GUIDE D'UTILISATION ET D'ENTRETIEN)	908
AUTOCOLLANT DE MISE EN GARDE (PAS DE SOUDAGE, PAS DE PERÇAGE, LIRE LE GUIDE D'UTILISATION ET D'ENTRETIEN)	905
AUTOCOLLANT DE MISE EN GARDE (PRODUCT LINK 300, ÉTATS-UNIS)	219
AUTOCOLLANT DE MISE EN GARDE (PRODUCT LINK 300, INTERNATIONAL)	219
AUTOCOLLANT D'IDENTIFICATION (AMORÇAGE DE CARBURANT, TÉMOIN D'ENTRETIEN MOTEUR)	334
AUTOCOLLANT D'IDENTIFICATION (PROJECTEUR)	334
AUTOCOLLANT D'IDENTIFICATION (*SERVICE CENTER RECEIVERS, REAR)	907
AUTOCOLLANT D'IDENTIFICATION (*STAIRWAY LIGHTS)	294
AUTOCOLLANT D'IDENTIFICATION (*STARTING MOTOR LOCKOUT)	294
AUTOCOLLANT D'IDENTIFICATION (*TRANSMISSION LOCKOUT)	294
AUTOCOLLANT-ENTRETIEN	295
AUTOCOLLANT-INFORMATION (PRODUCT LINK, LIRE LE GUIDE D'UTILISATION ET D'ENTRETIEN)	219
AUTOCOLLANT-INFORMATION (PRODUCT LINK, LIRE LE GUIDE D'UTILISATION ET D'ENTRETIEN)	219
AUTOCOLLANT-INFORMATION (24 VOLTS)	905
AUXILIAIRE DE DÉMARRAGE À L'ÉTHER	270
AVERTISSEUR (ASS)	192
AVERTISSEUR (ASS) (RECUL)	350
AXE DE BULLDOZER (ASS)	763
AXE DE CULBUTEUR (ASS)	76 77 78 79

B

BALAI D'ESSUIE-GLACE (ENS) (400-M) (ARRIÈRE)	896
BALAI D'ESSUIE-GLACE (ENS) (700-MM) (AVANT)	896
BALAI D'ESSUIE-GLACE (ENS) (700-MM) (VITRE LATÉRALE)	899
BARRE D'ATTELAGE (ASS)	471
BASE DE FILTRE À CARBURANT (ASS)	191
BASE D'INDICATEUR (ENS) (VERT)	357
BÂTI AR (ENS)	491
BÂTI AV (ENS)	488
BATTERIE (ASS)	198
BATTERIE-COMMANDE ÉLECTRONIQUE (ASS) (ANALYSE SUR ROUTES/ MODULE VIMS PRINCIPAL)	205
BATTERIE ET CÂBLAGE	193
BATTERIE (12V, SANS ENTRETIEN)	193
BLINDAGE DE TRANSMISSION (ASS)	497
BLOC - HYDRAULIQUE (ASS)	364 365
BLOC-CYLINDRES - COUVERCLE (ASS)	30 32 33 34
BLOC-CYLINDRES (ASS)	46
BLOC-CYLINDRES (ENS)	43 45
BLOC DE BRANCHEMENT (ASS) (BATTERIE)	194
BOÎTE DE VITESSES (VERSION)	445
BOÎTE PLANÉTAIRE (ASS)	415
BOUCHON - CULASSE (ASS)	75
BOUCHON À ÉVENT (LAVE-GLACE)	895

* TRADUCTION NON DISPONIBLE AU MOMENT DE LA PUBLICATION

INDEX

Désignation	Page
BOUCHON AIMANTÉ	359, 361, 464
BOUCHON DE BLOC-CYLINDRES (ASS)	74
BOUCHON DE GOULOTTE DE REMPLISSAGE D'HUILE MOTEUR (TRANSMISSION)	915
BOUCHON DE GOULOTTE DE REMPLISSAGE (ENS) (RÉSERVOIR DE CARBURANT)	153, 160
BOUCHON DE GOULOTTE DE REMPLISSAGE (HUILE MOTEUR)	83
BOUCHON DE GOULOTTE DE REMPLISSAGE (HUILE MOTEUR)	106
BOUCHON DE GOULOTTE DE REMPLISSAGE (RÉSERVOIR HYDRAULIQUE)	732, 734
BOUCHON DE REMPLISSAGE D'HUILE MOTEUR (ASS)	83
BOUCHON DE VIDANGE	129, 732
BOUCHON DE VIDANGE (CARTER D'HUILE MOTEUR)	70
BOUCHON DE VIDANGE (RÉSERVOIR HYDRAULIQUE)	734
BOUCHON-DISTRIBUTEUR (ASS)	623
BOUCHON FILETÉ (ROBINET DE VIDANGE DE BOÎTE DE VITESSES)	377
BOUCHON PARE-POUSSIÈRE	431
BOULONNERIE DE FAISCEAU DE CABLES	212
BOULONNERIE DE LA CULASSE (ASS)	51
BOULONNERIE DE MONTAGE DE LA POMPE A HUILE (ASS)	82
BRANCHEMENT ÉLECTRIQUE (ASS)	201
BRAS DE POUSSÉE (ASS)	765, 767
BRAS D'ESSUIE-GLACE (ASS)	787

C

Désignation	Page
CABINE - REVÊTEMENT (ASS)	823
CABINE (ASS)	793, 794
CABINE ET PLATE-FORME (ASS)	790
CABINE-FAISCEAU DE CÂBLES (ENS) (INFÉRIEUR)	300
CABINE-FAISCEAU DE CÂBLES (ENS) (*INSIDE, REAR)	300
CABINE-FAISCEAU DE CÂBLES (ENS) (*POWER CONVERTER)	314
CABINE (VERSION)	792
CABLAGE - ELECTRONIQUE DU MOTEUR (ASS)	325
CABLAGE AR (ASS)	350
CABLAGE AV (ASS)	328
CÂBLAGE BÂTI ROPS	353
CÂBLAGE D'AMORTISSEUR (ASS)	294
CABLAGE DE CABINE (ASS)	299
CÂBLAGE DE CAMÉRA (ASS)	309
CÂBLAGE DE CENTRE D'ENTRETIEN	357
CABLAGE DE CHASSIS (ASS)	310
CÂBLAGE DE CIRCUIT DE RENOUVELLEMENT D'HUILE (ASS)	346
CÂBLAGE DE CIRCUIT DE RENOUVELLEMENT D'HUILE (ASS)	347
CÂBLAGE DE COMMANDE DE GRAISSAGE AUTOMATIQUE (ASS)	292
CÂBLAGE DE COMMUNICATION (ASS)	312
CABLAGE DE LA MACHINE (ASS)	330, 333
CABLAGE DE MOTEUR (ASS)	319, 322
CÂBLAGE DE NICHE ÉLECTRONIQUE (ASS)	315
CABLAGE DE TRANSMISSION (ASS)	348
CÂBLAGE-MONITEUR (MODULE PRINCIPAL VIMS)	299
CÂBLAGE-MONITEUR (SYSTÈME DE TERRASSEMENT ASSISTÉ PAR ORDINATEUR (CAES))	841
CÂBLAGE-MONITEUR (SYSTÈME DE VISION DE L'AIRE DE TRAVAIL)	237
CABLAGE MOTEUR (ENS)	27, 322
CABLAGE MOTEUR (ENS) (INJECTEUR POMPE)	26
CABLAGE MOTEUR (ENS) (MODULE DE COMMANDE ÉLECTRONIQUE)	325
CACHE-SOUPAPES (ASS)	37, 39
CADENAS (ASS)	153, 160, 512, 541, 915
CADENAS (ASS)	294
CADENAS (ASS) (BOUCHON DE RÉSERVOIR HYDRAULIQUE)	916
CAMÉRA (ASS) (115-DEG, COULEUR)	309
CANALISATION DE DIRECTION AUXILIAIRE	602, 605
CANALISATIONS - FILTRE À HUILE MOTEUR (ASS)	90, 92, 94
CANALISATIONS A COMMANDE PILOTE (ASS)	702
CANALISATIONS D'AIR (ASS)	136

* TRADUCTION NON DISPONIBLE AU MOMENT DE LA PUBLICATION

INDEX

Désignation	Page
	139
CANALISATIONS D'AIR DE REFROIDISSEUR D'ADMISSION (ASS)	135
CANALISATIONS D'AIR DE TURBOCOMPRESSEUR (ASS)	140
CANALISATIONS D'ALIMENTATION D'HUILE (ASS)	97
CANALISATIONS DE CARBURANT (ASS)	161
	163
CANALISATIONS DE CHAUFFAGE DE CABINE (ASS)	829
CANALISATIONS DE CLIMATISEUR (ASS)	827
CANALISATIONS DE DIAGNOSTIC (ASS)	909
CANALISATIONS DE DIRECTION (ASS)	615
CANALISATIONS DE DIRECTION (ASS)	609
	611
CANALISATIONS DE GRAISSAGE (ASS)	531
	536
	537
	538
CANALISATIONS DE GRAISSAGE AUTOMATIQUE (ASS)	524
	528
CANALISATIONS DE NEUTRALISATION DE DIRECTION (ASS)	617
CANALISATIONS DE RÉCHAUFFEUR DE LIQUIDE DE REFROIDISSEMENT	829
CANALISATIONS DE REFROIDISSEUR D'HUILE DE DIRECTION	620
CANALISATIONS DE REFROIDISSEUR D'HUILE D'ESSIEU (ASS)	392
CANALISATIONS DE VÉRIN DE LEVAGE (ASS)	699
CANALISATIONS D'EAU (ASS)	111
	112
CANALISATIONS D'ÉVENT D'ESSIEU (ASS)	401
	403
CANALISATIONS D'HUILE DE TRANSMISSION (ASS)	405
CANALISATIONS D'HUILE DE TURBOCOMPRESSEUR (ASS)	99
CANALISATIONS D'HUILE MOTEUR (ASS)	88
	89
CANALISATIONS DU FILTRE A CARBURANT (ASS)	166
	168
CANALISATIONS DU FILTRE A CARBURANT (ASS)	172
CANALISATIONS DU FREIN DE MANOEUVRE (ASS)	581
	583
CANALISATIONS DU VÉRIN D'INCLINAISON (ASS)	710
	712
CANALISATIONS HYDRAULIQUES (ASS)	683
	684
	686
CANALISATIONS HYDRAULIQUES DE VENTILATEUR (ASS)	688
	690
	697
CAPOT ET PROTECTION (ASS)	512
CAPTEUR - MOTEUR (ASS)	238
CAPTEUR - MOTEUR (ASS)	241
CAPTEUR DE NIVEAU DU LIQUIDE (ASS)	246
CAPTEUR DE NIVEAU DU LIQUIDE (ASS) (NIVEAU D'HUILE MOTEUR)	241
CAPTEUR DE NIVEAU DU LIQUIDE (ASS) (RÉSERVOIR DE VENTILATEUR HYDRAULIQUE, D'ÉQUIPEMENT)	334
CAPTEUR DE NIVEAU DU LIQUIDE (ASS) (*STEERING, BRAKE HYDRAULIC TANK)	334
CAPTEUR DE PRESSION (ASS)	136
	248
	249
	250
	251
	252
	253
	254
	255
	256
	257
CAPTEUR DE PRESSION (ASS) (ATMOSPHÉRIQUE)	241
CAPTEUR DE PRESSION (ASS) (CARBURANT)	176
CAPTEUR DE PRESSION (ASS) (*FRONT AXLE BRAKE OIL)	570
CAPTEUR DE PRESSION (ASS) (HUILE DE POMPE DE VENTILATEUR HYDRAULIQUE)	348
CAPTEUR DE PRESSION (ASS) (HUILE MOTEUR)	179
CAPTEUR DE PRESSION (ASS) (HUILE MOTEUR)	241
CAPTEUR DE PRESSION (ASS) (HUILE PILOTE DE DIRECTION)	333
CAPTEUR DE PRESSION (ASS) (HUILE PILOTE D'ÉQUIPEMENT)	333
CAPTEUR DE PRESSION (ASS) (*IMPLEMENT PUMP OIL, RH)	310
CAPTEUR DE PRESSION (ASS) (*REAR AXLE BRAKE OIL)	570
CAPTEUR DE PRESSION (ASS) (*STEERING PUMP OIL, LH)	333

* TRADUCTION NON DISPONIBLE AU MOMENT DE LA PUBLICATION

INDEX

Désignation	Page
CAPTEUR DE PRESSION (ASS) (SURALIMENTATION)	241
CAPTEUR DE TEMPERATURE (ASS)	265 266 267 268 269
CAPTEUR DE TEMPERATURE (ASS) (AIR AMBIANT)	334
CAPTEUR DE TEMPERATURE (ASS) (CARBURANT)	176
CAPTEUR DE TEMPERATURE (ASS) (HUILE DE CARTER DE TRANSMISSION)	348
CAPTEUR DE TEMPERATURE (ASS) (HUILE DE FREIN DE DIRECTION)	334
CAPTEUR DE TEMPERATURE (ASS) (HUILE D'ESSIEU ARRIÈRE)	334
CAPTEUR DE TEMPERATURE (ASS) (HUILE D'ESSIEU AVANT)	328
CAPTEUR DE TEMPERATURE (ASS) (HUILE DU CONV. DE COUPLE)	348
CAPTEUR DE TEMPERATURE (ASS) (*IMPLEMENT, HYDRAULIC FAN OIL)	334
CAPTEUR DE TEMPERATURE (ASS) (LIQUIDE DE REFROIDISSEMENT)	238 241
CAPTEUR DE TEMPERATURE (ASS) (TEMPÉRATURE D'AIR D'ADMISSION)	241
CAPTEUR DE TEMPERATURE D'ECHAPPEMENT (ASS)	245
CAPTEUR DE TEMPERATURE D'ECHAPPEMENT (ASS) (ADMISSION DE TURBOCOMPRESSEUR)	238
CAPTEUR DE TEMPERATURE D'ECHAPPEMENT (ASS) (TURBOCOMPRESSEUR, DROITE, GAUCHE)	241
CAPTEUR DE TEMPÉRATURE (ENS)	266 267
CAPTEUR DE VITESSE (ASS)	260 261 262 263 264
CAPTEUR DE VITESSE (ASS)	258 259
CAPTEUR DE VITESSE (ASS) (ENGRENAGE DE TRANSFERT D'ENTRÉE)	386
CAPTEUR DE VITESSE (ASS) (PIGNONNERIE DE CAME)	241
CAPTEUR DE VITESSE (ASS) (SORTIE DU CONVERTISSEUR DE COUPLE)	389
CAPTEUR DE VITESSE (ASS) (VILEBREQUIN)	238
CAPTEUR DE VITESSE (ASS) (VILEBREQUIN)	241
CARBURANT - REMPLISSAGE CLASSIQUE (VERSION)	160
CARDAN COULISSANT (ASS)	431
CARENAGE - RESERVOIR HYDRAULIQUE (ASS)	472 474 475
CARÉNAGE DE BAIE ÉLECTRONIQUE (ASS)	315
CARÉNAGE DE BAIE ÉLECTRONIQUE (ASS)	211
CARÉNAGE DU CENTRE D'ENTRETIEN (ASS)	902
CARÉNAGE DU RADIATEUR (ASS)	124
CARTER - BLINDAGE (ASS)	496
CARTER ARRIERE (ASS)	64
CARTER AV (ASS)	63
CARTER DE VOLANT (ASS)	61
CARTER D'ENGRENAGES DE TRANSFERT	368
CEINTURE DE SÉCURITÉ	874
CEINTURE DE SECURITE (ASS)	870
CEINTURE DE SECURITE (ASS) (RÉTRACTABLE)	873 877
CENDRIER	886
CENTRE D'ENTRETIEN (ASS)	918 919
CLAPET DE COMPENSATION (ASS)	746
CLAPET DE DECHARGE (ASS)	452 649 650 651 652 753 754
CLAPET DE DECHARGE (ASS) (DOUBLE ALIMENTATION DE VÉRIN DE DIRECTION)	655
CLAPET DE DECHARGE (ASS) (PRINCIPAL)	650
CLAPET DE DECHARGE (ASS) (*PUMP BACKUP)	655
CLAPET DE DÉCHARGE HYDRAULIQUE	401 730 731
CLAPET DE DÉCHARGE HYDRAULIQUE (RÉSERVOIR HYDRAULIQUE)	403
CLAPET DE DECHARGE (PRESSION DE LA GRAISSE)	556
CLAPET DE RETENUE (ENS)	190 636 637

* TRADUCTION NON DISPONIBLE AU MOMENT DE LA PUBLICATION

INDEX

Désignation	Page
	638
	639
	640
	641
	642
CLAPET DE RETENUE (ENS) (CARBURANT)	168
	172
CLAPET DE RETENUE (ENS) (PILOTE)	702
CLAPET DE RETENUE (ENS) (PURGE DE L'AIR)	675
CLÉ	294
	512
CLÉ (COMPARTIMENT POUR LA DOCUMENTATION)	1
CLÉ (COUPE-BATTERIE)	280
CLÉ DE CONTACTEUR (ASS) (DÉMARRAGE)	300
CLIMATISEUR (ASS)	783
CLIMATISEUR (VERSION)	782
CLOISON PARE-FEU (ASS)	486
COFFRE DE RANGEMENT (ASS)	788
	789
COLLECTEUR - COMMANDE (ASS)	412
COLLECTEUR - COMMANDE (ASS) (*BRAKE ACCUMULATOR CHARGE)	571
COLLECTEUR D'ÉCHAPPEMENT (ASS)	141
	143
COMMANDE DE BRAS (ASS)	804
	805
COMMANDE DE COMMUNICATION (ASS)	204
COMMANDE DE DIRECTION (ASS)	802
COMMANDE DE FAISCEAU (ENS) (*CAES RECEIVER)	330
COMMANDE DE FAISCEAU (ENS) (*CAES, ROPS SIDE)	330
COMMANDE DE FAISCEAU (ENS) (COFFRET ÉLECTRONIQUE)	315
COMMANDE DE FAISCEAU (ENS) (LIAISON DE PRODUIT)	312
COMMANDE DE FAISCEAU (ENS) (*SERVICE CENTER, OIL RENEWAL)	357
COMMANDE DE FREIN DE STATIONNEMENT (ASS)	569
COMMANDE DE LA PÉDALE DE FREIN (ASS)	568
COMMANDE DE POIGNÉE (ASS)	798
COMMANDE ET MONTAGE - MOTEUR	202
	203
COMMANDE HYDRAULIQUE DE BOÎTE (ASS)	369
COMMANDE HYDRAULIQUE PILOTE (ASS)	799
COMMANDE NON PROGRAMMEE (ASS)	205
COMMANDE NON PROGRAMMEE (ASS) (TRANSMISSION)	315
COMMANDE PRINCIPALE DE SOUPAPE ET MONTAGE (ASS)	739
COMPRESSEUR DE REFRIGERANT (ASS)	796
CONDENSATEUR ET MONTAGE (RÉFRIGÉRANT)	797
CONTACTEUR - NIVEAU DE LIQUIDE (ASS)	283
CONTACTEUR - NIVEAU DE LIQUIDE (ASS) (HUILE MOTEUR)	238
CONTACTEUR - NIVEAU DE LIQUIDE (ASS) (RÉSERVOIR DE DOSAGE DE RENOUVELLEMENT D'HUILE)	346
CONTACTEUR DE FREIN MOTEUR (ASS)	281
CONTACTEUR DE LIMITE (ASS)	282
CONTACTEUR MAGNETIQUE (ASS)	284
	285
	286
	287
CONTACTEUR MAGNETIQUE (ASS) (24 V CC) (DÉMARRER RELAIS 1)	315
CONTACTEUR MAGNETIQUE (ASS) (24 V CC) (DÉMARRER RELAIS 2)	315
CONTACTEUR MAGNETIQUE (ASS) (24 VOLTS) (RELAIS PRINCIPAL)	315
CONTACTEUR MAGNETIQUE (ENS) (24 VOLTS) (RELAIS DE DÉMARRAGE)	286
CONTACTEUR RÉGLABLE DE SUPPORT (ENS)	562
CONVERTISSEUR DE COUPLE - MONTAGE (ASS)	414
CONVERTISSEUR DE COUPLE - VERROUILLAGE (ASS)	441
CONVERTISSEUR DE COUPLE ET CARTER (ASS)	439
CORPS DE POMPE (ASS)	596
COURONNE ET DIFFERENTIEL (ASS)	370
	371
	373
	374
COURROIE MULTIPLE	21
COUVERCLE - CABINE (ASS)	809
COUVERCLE DE PRESSION (7-PSI)	126
COUVERCLE DE VISITE (ASS)	467
COUVERCLE INFÉRIEUR-DOSSIER (ASS)	846
	847
CREPINE (ENS) (REMPLISSAGE DE RÉSERVOIR HYDRAULIQUE)	732
	734
CREPINE (ENS) (RÉSERVOIR HYDRAULIQUE)	734
CROISILLON ET ROULEMENT	432
CULASSE (ASS)	50
	51
CULASSE (ENS)	48

* TRADUCTION NON DISPONIBLE AU MOMENT DE LA PUBLICATION

INDEX

Désignation	Page
CULBUTERIE ET POMPE A CARBURANT (ASS)	67 68
D	
DÉMARREUR ÉLECTRIQUE (ASS)	275 278
DÉMARREUR ÉLECTRIQUE (ASS)	272
DIFFERENTIEL (ASS)	376
DISJONCTEUR DE SECURITE (ENS) (FEUX D'ARRÊT)	562
DISJONCTEUR DE SECURITE (ENS) (FREIN DE STATIONNEMENT)	589
DISJONCTEUR DE SECURITE (ENS) (PÔLE UNIQUE) (DÉSACTIVATION DU VERROUILLAGE DU PAPILLON DES GAZ)	563
DISJONCTEUR (ENS) (10A) (INTERRUPTEUR À CLÉ)	316
DISJONCTEUR (ENS) (105A) (DÉMARRAGE)	315
DISJONCTEUR (ENS) (105A) (PRINCIPAL)	315
DISJONCTEUR (ENS) (15A) (FEUX DE ROUTE)	315
DISPOSITIF D'EVACUATION DES VAPEURS DE CARTER	85
DISTRIBUTEUR (ASS)	741
DISTRIBUTEUR DE BOITE (ASS)	461
DISTRIBUTEUR DE FREIN (ASS)	591
DISTRIBUTEUR DE FREIN (ASS) (ENTRETIEN)	570
DISTRIBUTEUR DE POMPE (ASS)	592 646 647 648
DISTRIBUTEUR DE POMPE (ASS)	752
DISTRIBUTEUR D'INCLINAISON (ASS)	760
E	
EAU DES CHEMISES - RECHAUFFEUR (ASS)	216 217
ECHELLE (ASS)	519 521
ÉCLAIRAGE - AUXILIAIRE (ASS)	227
ÉCLAIRAGE - PROJECTEURS (ASS)	228 229 231 232
ÉCLAIRAGE - PROJECTEURS (ASS)	234
ÉCLAIRAGE-FEUX D'ARRÊT (ASS)	236
ÉCRAN (ENS)	655
ÉCRAN (ENS) (HUILE DE DIRECTION)	734
ÉCRAN (ENS) (RÉSERVOIR HYDRAULIQUE)	732
ÉCRAN (HYDRAULIQUE)	734
ÉCRAN THERMIQUE (ASS)	145 146 147
ÉCRAN THERMIQUE DE COMPARTIMENT MOTEUR	545
ÉJECTEUR AUTOMATIQUE DE POUSSIÈRE (ASS)	134
ÉLECTRONIQUE DE TRANSMISSION (ASS)	210
ÉLECTRONIQUE-MONITEUR (ASS)	206 207 208 209 210
ÉLÉMENT DE FILTRE À AIR DE CABINE (EFFICACITÉ STANDARD)	816
ÉLÉMENT DE FILTRE À AIR DE CABINE (EFFICACITÉ STANDARD)	794
ÉLÉMENT DE FILTRE À AIR (ENS) (PRINCIPAL)	133
ÉLÉMENT DE FILTRE À AIR (ENS) (SECONDAIRE)	133
ÉLÉMENT DE FILTRE À HUILE (ENS) (ULTRA-GRANDE EFFICACITÉ)	678
ÉLÉMENT DE FILTRE À HUILE (ENS) (ULTRA-GRANDE EFFICACITÉ) (TRANSMISSION)	380 382
ÉLÉMENT DU RÉCHAUFFEUR D'EAU DES CHEMISES (ENS) (240V, 1500W)	217
ELEMENT (ENS) (*CIGARETTE LIGHTER)	300
ENGRENAGE DE TRANSFERT DE RENDEMENT (ASS)	388
ENSEMBLE DE FILTRE (REFROIDISSEUR D'HUILE D'ESSIEU)	384
ENTRETIEN - COMMUNICATION (ASS) (PRODUCT LINK 300)	312
ENTRETIEN DE LA TRANSMISSION (ASS)	210
ESSIEU FIXE	359
ESSIEU FIXE (VERSION)	358
ESSIEU OSCILLANT	361
ESSIEU OSCILLANT (VERSION)	358
ESSUIE-GLACE (ASS)	898 899
ESSUIE-GLACE (ASS) (QUART AVANT)	899
ESSUIE-GLACE ET LAVE-GLACE	896
ÉTANCHÉITÉ - GLACE (ASS)	869
F	
FAISCEAU-BOÎTE DE TRANSMISSION (*CLUTCH SOLENOIDS)	461

* TRADUCTION NON DISPONIBLE AU MOMENT DE LA PUBLICATION

INDEX

Désignation	Page
FAISCEAU-BOÎTE DE TRANSMISSION (CONVERTISSEUR DE COUPLE)	348
FAISCEAU-BOÎTE DE TRANSMISSION (*SPEED SENSORS)	348
FAISCEAU DE CABLES - CAPTEUR (ENS) (PRESSION DU CARBURANT)	176, 179
FAISCEAU DE CABLES - CAPTEUR (ENS) (*TURBOCHARGER AIR INLET PRESS)	136
FAISCEAU DE CABLES - CAPTEUR (ENS) (VITESSE)	259
FAISCEAU DE CÂBLES AVANT (ENS) (*AXLE, CONTROL VALVE, LIGHTS)	328
FAISCEAU DE CÂBLES AVANT (ENS) (PROJECTEURS, KLAXON)	232
FAISCEAU DE CÂBLES DE FREINS (ENS) (*PARKING, SWITCH)	334
FAISCEAU DE CABLES DE LA PLATE-FORME (*ELECTRONICS BAY TO CAB)	334
FAISCEAU DE CABLES DE LA PLATE-FORME (*FILTER, PUMP BYPASS SWITCHES)	310
FAISCEAU DE CABLES (ENS) (CAPTEUR DE VITESSE)	260
FAISCEAU DE CABLES (ENS) (FERRITE)	841
FAISCEAU DE CABLES (ENS) (*SERVICE CENTER, AUTOLUBE)	357
FAISCEAU DE CABLES (ENS) (SIÈGE CHAUFFANT)	848
FAISCEAU DE CAPOT (ENS) (*STAIRWAY LIGHTS)	334
FAISCEAU DE CHÂSSIS ARRIÈRE	350
FAISCEAU DE CHÂSSIS ARRIÈRE (CIRCUIT DE RENOUVELLEMENT D'HUILE)	334
FAISCEAU DE CHÂSSIS AVANT (ENS) (PRINCIPAL)	328
FAISCEAU DE CHÂSSIS (ENS) (*FRAME, LH)	334
FAISCEAU DE CHÂSSIS (ENS) (PRINCIPAL)	334
FAISCEAU DE CHÂSSIS (ENS) (ROPS)	353
FAISCEAU DE CHAUFFAGE ET CLIMATISATION	784
FAISCEAU DE COMMANDES (ENS) (FENÊTRE D'AFFICHAGE DE L'INDICATEUR DE CHARGE UTILE DES COMMANDES D'ÉQUIPEMENT)	300
FAISCEAU DE COMMANDES (ENS) (LAVE-VITRE)	300
FAISCEAU DE COMMANDES (ENS) (*QUARTER WINDOW WIPER)	300
FAISCEAU DE COMMANDES (ENS) (*REAR WINDOW WIPER)	300
FAISCEAU DE CONDENSEUR (ENS) (RÉFRIGÉRANT)	797
FAISCEAU DE CONTACTEUR (ENS) (DIRECTION SECONDAIRE)	602, 605
FAISCEAU DE PARE-CHOCS	295
FAISCEAU DE RADIO (ENS)	862, 863, 864
FAISCEAU DE REFROIDISSEUR D'ADMISSION (ENS)	130
FAISCEAU DE REFROIDISSEUR D'HUILE DE DIRECTION (ENS)	660
FAISCEAU DE REFROIDISSEUR D'HUILE D'ESSIEU	392
FAISCEAU DE REFROIDISSEUR D'HUILE HYDRAULIQUE (ENS)	660
FAISCEAU DE RÉSERVOIR HYDRAULIQUE (ENS) (*IMPLEMENT, HYDRAULIC FAN)	334
FAISCEAU DE RÉSERVOIR HYDRAULIQUE (ENS) (*STEERING, BRAKE)	334
FAISCEAU DE SOUPAPE (ENS) (COMPRESSEUR PNEUMATIQUE DE SIÈGE)	893
FAISCEAU D'ÉCLAIRAGE (ENS) (*ENGINE ENCLOSURE, ETHER)	334
FAISCEAU D'ÉCLAIRAGE (ENS) (PROJECTEURS INTÉRIEURS, AVANT)	232
FAISCEAU D'ESSIEU (ENS) (ARRIÈRE)	334
FAISCEAU D'ESSIEU (ENS) (*FRONT, TEMPERATURE SENSOR)	328
FAISCEAU D'ESSIEU (ENS) (REFROIDISSEUR D'HUILE D'ESSIEU)	334
FAISCEAU DU REFROIDISSEUR DE CARBURANT (ENS)	155, 156
FAISCEAU DU REFROIDISSEUR D'HUILE (ASS)	108
FAISCEAU DU REFROIDISSEUR D'HUILE (ENS) (MOTEUR)	112
*FILM GP-SERVICE CENTER	907
FILTRE - SÉPARATEUR D'EAU ET DE CARBURANT (ENS) (PRINCIPAL)	159
FILTRE A AIR (ASS)	131, 133
FILTRE À AIR DE CABINE (ASS)	816
FILTRE À CARBURANT	186
FILTRE A CARBURANT (ENS) (EFFICACITÉ AVANCÉE) (AUXILIAIRE)	179
FILTRE A CARBURANT (ENS) (EFFICACITÉ AVANCÉE) (AUXILIAIRE)	176
FILTRE A HUILE (ASS)	380, 382, 384, 599

* TRADUCTION NON DISPONIBLE AU MOMENT DE LA PUBLICATION

INDEX

Désignation	Page
	600
	678
	679
FILTRE A HUILE (ASS) (*IMPLEMENT PUMP CASE DRAIN)	675
FILTRE A HUILE (ASS) (RETOUR AU CARTER DE POMPE DE DIRECTION)	611
FILTRE A HUILE (ASS) (ROBINET DE VIDANGE DE CARTER DE POMPE DE VENTILATEUR HYDRAULIQUE)	674
FILTRE À HUILE (EFFICACITÉ AVANCÉE) (RETOUR AU CARTER)	600
FILTRE À HUILE MOTEUR (ASS)	84
FILTRE A HUILE MOTEUR (ENS) (EFFICACITÉ STANDARD)	84
FILTRE À HUILE (ULTRA-GRANDE EFFICACITÉ)	599
	679
FILTRE DE SÉPARATEUR D'EAU ET DE CARBURANT (ASS)	159
FILTRE ET CANALISATIONS - VIDANGE DE CARTER	674
	675
FILTRE ET MONTAGE - TRANSMISSION (ASS)	378
FILTRE HAUTE PRESSION (ASS)	588
	633
FREIN DE MANOEUVRE - COMMANDE (ASS)	570
FREIN DE MANOEUVRE (ASS)	566
FREIN DE STATIONNEMENT (ASS)	564
FUSIBLE (10A)	315
FUSIBLE (15A)	315
FUSIBLE (20A)	315

G

GAINE D'AIR (ASS)	815
GARDE-BOUE (ASS)	477
	482
GARDE-BOUE AV (ASS)	481
GRAISSAGE AUTOMATIQUE (VERSION)	540
GRAISSEUR HYDRAULIQUE (ASS)	680
GROUPE DE MOTEUR A PISTONS	715
GROUPE DE ROTATION DE MOTEUR	727
GROUPE DE ROTATION DE POMPE	587
	631
	729

H

*HARDWARE GP-HANDRAIL MOUNTING	505
	507
	508
	509
HUILE MOTEUR - CARTER (ASS)	70

I

INDICATEUR DE REMPLACEMENT DE FILTRE À AIR	136
INJECTEUR DE CARBURANT (ASS)	184
INSONORISATION - COUVERCLE (ASS)	36
INSONORISATION (ASS)	552
INSONORISATION (VERSION)	551
*INSULATION GP-RADIATOR SHIELD	517
	518
INTERRUPTEUR - BOUTON-POUSSOIR (ENS) (ENSEMBLE DE VERROU DE LA MANETTE DE GAZ)	300
INTERRUPTEUR - BOUTON-POUSSOIR (ENS) (KLAXON)	300
INTERRUPTEUR - BOUTON-POUSSOIR (ENS) (RÉENCLENCHEMENT DU VERROU DE LA MANETTE DE GAZ)	300
INTERRUPTEUR - DÉRIVATION (ASS)	279
INTERRUPTEUR À BASCULE (ASS)	289
INTERRUPTEUR À BASCULE (ASS) (MARCHE, ARRÊT DE POMPE D'AMORÇAGE DE CARBURANT)	333
INTERRUPTEUR À BASCULE (ENS) (ARRÊT DEPUIS LE SOL)	294
INTERRUPTEUR À BASCULE (ENS) (ÉCLAIRAGE DE MARCHEPIED)	294
INTERRUPTEUR À BASCULE (ENS) (*ENGINE COMPARTMENT LIGHTS, LH)	333
INTERRUPTEUR À BASCULE (ENS) (*ENGINE COMPARTMENT LIGHTS, RH)	333
INTERRUPTEUR À BASCULE (ENS) (VERROUILLAGE DE LA BOÎTE DE VITESSES)	294
INTERRUPTEUR À BASCULE (ENS) (VERROUILLAGE DU DÉMARREUR)	294
INTERRUPTEUR BALANCIER (ENS) (ACTIVATION DU VERROUILLAGE DU PAPILLON DES GAZ)	300
INTERRUPTEUR BALANCIER (ENS) (BLOCAGE HYDRAULIQUE)	300
INTERRUPTEUR BALANCIER (ENS) (CHANGEMENT RAPIDE)	300
INTERRUPTEUR BALANCIER (ENS) (ÉCLAIRAGE DE MARCHEPIED)	300
INTERRUPTEUR BALANCIER (ENS) (ECLAIRAGE INTERIEUR)	301

* TRADUCTION NON DISPONIBLE AU MOMENT DE LA PUBLICATION

INDEX

Désignation	Page
INTERRUPTEUR BALANCIER (ENS) (EMBRAYAGE DE VERROUILLAGE DE CONVERTISSEUR DE COUPLE)	300
INTERRUPTEUR BALANCIER (ENS) (FEUX DE ROUTE)	300
INTERRUPTEUR BALANCIER (ENS) (*TILT, TIP FUNCTION)	300
INTERRUPTEUR BALANCIER (ENS) (24 VOLTS) (PROJECTEURS ARRIÈRE)	301
INTERRUPTEUR BALANCIER (ENS) (24 VOLTS) (PROJECTEURS AVANT)	301
INTERRUPTEUR DE DEMARRAGE (ENS) (CLAVETTE)	294
INTERRUPTEUR D'ESSUIE-GLACE (ASS)	290
INTERRUPTEUR D'ESSUIE-GLACE (ASS) (24-VOLTS, INTERMITTENT) (ARRIÈRE)	299
INTERRUPTEUR D'ESSUIE-GLACE (ASS) (24-VOLTS, INTERMITTENT) (AVANT)	299
INTERRUPTEUR D'ESSUIE-GLACE (24 VOLTS) (AV, INTERMITTENT)	290
INTERRUPTEUR ROTATIF (ENS) (ESSUIE-GLACE, LAVE-GLACE) (CUSTODE)	299
INTERRUPTEUR ROTATIF (ENS) (SÉLECTION D'EFFORT À LA JANTE RÉDUIT)	299
INTERRUPTEUR ROTATIF (ENS) (VITESSE DU VENTILATEUR SOUFFLANT)	299

J

JANTE DÉMONTABLE (ASS)	426 427
JANTE (VERSION)	425
JAUGE DE NIVEAU D'HUILE	385
JAUGE DE NIVEAU D'HUILE (REGARD)	732
JAUGE DE NIVEAU D'HUILE (REGARD) (RÉSERVOIR HYDRAULIQUE)	734
JAUGE D'HUILE MOTEUR (BAIONNETTE) (ASS)	86 87
JAUGE D'HUILE MOTEUR (BAÏONNETTE) (ENS) (MOTEUR)	86 87
JOINT DE CACHE-SOUPAPES	26 37 39
JOINT DE CACHE-SOUPAPES (CACHE-SOUPAPES)	27
JOINT DE VILEBREQUIN (ASS) (AVANT)	42
JOINT TORIQUE	649
JOINT UNIVERSEL (ASS)	446 447 448

K

KIT DE BLOC COULISSANT	881
KIT DE JOINTS	560 561 626

L

LAME - CHARBON (ASS)	773
LAME - CHARBON (ENS)	770
LAME SEMI-UNIVERSELLE (ASS)	775 776
LAME SEMI-UNIVERSELLE (ENS)	770 771
LAMPE - CLIGNOTANT DE DIRECTION (ASS)	226
LAMPE - CLIGNOTANT DE DIRECTION (ASS) (VIMS, LED, BLEU)	350
LAMPE - PHARE (ASS)	221
LAMPE - PHARE (ASS)	222 223
LAMPE - PHARE (ASS) (24 VOLTS)	231
LAMPE (ENS) (JAUNE, LED, 24-VOLTS)	294
LAMPE HALOGÈNE (24V, 65W)	221 222 223 224 225
LAVE-GLACE - VITRE (ASS)	895
LIAISON - VERROUILLAGE DE CHÂSSIS DE DIRECTION (ASS)	539
LOGICIEL - TRANSMISSION (ENS)	210
LOGICIEL DE COMMUNICATION (ASS) (PRODUCT LINK 121SR)	204
LOQUET - PORTE DE CABINE ET GLACE	820

M

MAIN COURANTE (ASS)	500 501 503 504
MANOCONTACT	288
MANOCONTACT (ENS) (CHARGE D'ACCUMULATEUR DE FREIN)	333
MANOCONTACT (ENS) (COMPRESSEUR DE RÉFRIGÉRANT, CÔTÉ ÉLEVÉ)	21
MANOCONTACT (ENS) (COMPRESSEUR DE RÉFRIGÉRANT, CÔTÉ INFÉRIEUR)	21
MANOCONTACT (ENS) (DÉRIVATION DU FILTRE À HUILE)	599
MANOCONTACT (ENS) (DIFFÉRENTIEL)	310
MANOCONTACT (ENS) (FILTRE À HUILE)	678

* TRADUCTION NON DISPONIBLE AU MOMENT DE LA PUBLICATION

INDEX

Désignation	Page
MANOCONTACT (ENS) (FILTRE DE DÉRIVATION)	679
MANOCONTACT (ENS) (HUILE DE DIRECTION AUXILIAIRE)	602 605
MANOCONTACT (ENS) (HUILE DE FREIN DE STATIONNEMENT)	589
MARCHEPIED (ASS)	549 550
MECANISME DE COMMANDE DE POMPE (ASS)	593 594 595
MÉCANISME DE COMMANDE DE SOUPAPE	23 24
MODULE - QUATRE INSTRUMENTS (ASS)	833
MODULE (ASS)-CENTRE DE MESSAGE	831
MODULE (ASS)-TOUCHE DE MODULE DE SURVEILLANCE	832
MODULE D'AFFICHAGE (ASS) (SYSTÈME DE VISION DE L'AIRE DE TRAVAIL)	237
MODULE D'INDICATEUR DE VITESSE ET COMPTE-TOURS (ASS)	299
MONTAGE-ANTENNE (ASS)	838 839
MONTAGE DE CAMÉRA (ASS)	237
MONTAGE DE FILTRE À CARBURANT (ASS)	176 179
MONTAGE DE JANTE (ASS)	414
MONTAGE DE L'ALTERNATEUR ET COMPRESSEUR (ASS)	69
MONTAGE DE MONITEUR (ASS)	841
MONTAGE DE MOTEUR (VERSION)	19
MONTAGE DE PARE-CHOCS (ASS)	541
MONTAGE DE PLATE-FORME (ASS)	843
MONTAGE DE RADIO (ASS)	818
MONTAGE D'ESSIEU (ASS)	413
MONTAGE DU TOIT ROPS (ASS)	844
MOTEUR - PARTIE CENTRALE (VERSION)	17 18
MOTEUR DE SOUFFLANTE (ASS) (AIR DE CABINE)	859
MOTEUR D'ESSUIE-GLACE (ASS)	834 835 836 837
MOTEUR D'ESSUIE-GLACE (ASS) (24 VOLTS) (ARRIÈRE)	896
MOTEUR D'ESSUIE-GLACE (ASS) (24V, 2 VITESSES)	834 836 837
MOTEUR ET MONTAGE DE VENTILATEUR HYDRAULIQUE (ASS)	714
MOTEUR (VERSION)	3 4 5 6

O

Désignation	Page
OEILLETONS DE LEVAGE MOTEUR (ASS)	65
ORIFICE DE CLIMATISEUR (ENS)	778

P

Désignation	Page
PANNEAU DE FAISCEAU (ENS) (ARRÊT À HAUTEUR D'HOMME)	294
PANNEAU DE FAISCEAU (ENS) (AVANT)	300
PANNEAU DE FAISCEAU (ENS) (*SIDE, RH)	300
PASSERELLE (ASS)	559
PHARE AV (ASS)	224 225
PIGNON AR (ASS)	59
PIGNONNERIE AV (ASS)	57
PIGNONNERIE D'ENTREE DE TRANSFERT (ASS)	386
PISTON - VÉRIN HYDRAULIQUE (ASS)	716
PISTON ET BIELLE (ASS)	71 72
PLAFONNIER	299
PLAFONNIER (ASS)	220
PLAFONNIER (ASS) (24 VOLTS)	299
PLAFONNIER (ASS) (24 VOLTS)	794
PLAQUE DE NUMÉRO DE SÉRIE (BOITE DE VITESSE)	439
PLAQUE DE PRESSION	723
PLAQUE D'IDENTIFICATION MOTEUR (ASS)	914
PLAQUE D'INSTRUCTIONS (BATTERIE)	193
PLAQUE SIGNALÉTIQUE (ASS)	903 905
PLAQUE SIGNALETIQUE (DROITE)	850
PLAQUE SIGNALETIQUE (GAUCHE)	850
PLATE-FORME DE CABINE	853 854 857
PNEU - GROUPE DE VALVE	426
PNEU ET JANTE (VERSION)	434 435 436 437 438
POMPE & GROUPE DE MONTAGE-PILOTE D'ÉQUIPEMENT	721
POMPE A EAU (ASS)	116

* TRADUCTION NON DISPONIBLE AU MOMENT DE LA PUBLICATION

INDEX

Désignation	Page
	117
POMPE A ENGRENAGES (ASS)	626
	628
	722
	723
POMPE A HUILE MOTEUR (ASS)	103
POMPE A PISTONS (ASS)	586
	629
	725
POMPE D'ALIMENTATION EN CARBURANT (ASS)	185
POMPE D'ALIMENTATION ET MONTAGE (ASS)	183
POMPE D'AMORÇAGE DE CARBURANT ET SÉPARATEUR D'EAU (ASS)	191
POMPE DE BOÎTE DE VITESSES (ASS)	423
	424
POMPE DE DIRECTION AUXILIAIRE ET MONTAGE (ASS)	624
POMPE DE DIRECTION ET MONTAGE (ASS)	625
POMPE DE SÉPARATEUR D'EAU ET D'AMORÇAGE DE CARBURANT (ASS)	191
POMPE D'EQUIPEMENT ET MONTAGE (ASS)	719
POMPE D'INJECTION DE CARBURANT (ASS)	184
POMPE ET MONTAGE - FREIN (ASS)	585
POMPE ET MONTAGE DE REFROIDISSEUR D'HUILE D'ESSIEU	422
POMPE ET MONTAGE-VENTILATEUR HYDRAULIQUE	718
POMPE ET MOTEUR - NETTOYEUR D'HUILE D'ESSIEU (ASS)	421
POMPE ET MOTEUR DE REFR. D'HUILE D'ESSIEU	421
PORTE DE CABINE - RESSORT (ASS)	884
PORTE DE VISITE (ASS)	469
	811
	812
PORTIÈRE DE CABINE (ASS)	813
PORTIÈRE DE CABINE (ASS) (DROITE)	793
POSTE DE CONDUITE (VERSION)	845
POTENTIOMETRE (ENS) (COMMANDE DE TEMPÉRATURE)	300
PRÉFILTRE À AIR DE CABINE (ASS)	859
PROTECTION ANTIVANDALISME (ASS)	405
	916
PROTECTION ANTIVANDALISME (ASS)	915
PROTÈGE-RADIATEUR (ASS)	498
PUISSANCE DE FAISCEAU (ENS) (*AUTOMATIC LUBRICATION CONTROL)	292

R

Désignation	Page
RACCORD DE CLIMATISEUR (ASS)	827
RACCORD ÉLECTRONIQUE (ASS)	237
RADIATEUR (ASS)	118
RADIATEUR (ASS)	121
RADIATEUR-CORPS (ENS)	118
	121
RADIO (ASS)	860
	861
	862
	863
	864
RADIO (ASS) (AM/FM LECTEUR DE CD)	862
RADIO (ASS) (AM/FM/WB)	862
RADIO (ASS) (AM/FM/WB/XM/ LECTEUR CD)	863
RALLONGE DE VIDANGE (ASS)	55
RALLONGE DU DOSSIER DE SIEGE (TOILE)	873
	877
RÉCEPTEUR-DÉSHYDRATEUR (ENS) (RÉFRIGÉRANT)	778
RECHAUFFEUR DE CARBURANT (ASS)	213
	214
RÉDUCTEUR ET ROUE	464
	466
RÉDUCTEURS, ROUE ET FREIN (ASS)	466
REFROIDISSEUR D'ADMISSION D'AIR (ASS)	130
REFROIDISSEUR DE CARBURANT	155
	156
REFROIDISSEUR D'HUILE HYDRAULIQUE ET DE DIRECTION	660
REGARD DE NIVEAU	106
	126
REGARD DE NIVEAU (ASS)	385
REGLAGE DE SIEGE (ASS)	780
RÉGULATEUR - PÉDALE (ASS)	852
RÉGULATION D'HUILE MOTEUR (ASS)	101
RELAIS (ENS) (24 VOLTS) (AVERTISSEUR DE RECUL)	315
RELAIS (ENS) (24 VOLTS) (*INTERMEDIATE START RELAY)	315
RELAIS (ENS) (24 VOLTS) (KLAXON)	315
RELAIS (ENS) (24 VOLTS) (PRÉFILTRE DE CLIMATISEUR)	315
RELAIS (ENS) (24 VOLTS) (PROJECTEURS HID SUR ROPS)	315
RELAIS (ENS) (24 VOLTS) (PROJECTEURS SUR GARDE-BOUE)	315
RELAIS (ENS) (24 VOLTS) (RÉTROÉCLAIRAGE)	315
RELAIS (ENS) (24 VOLTS) (RÉTROVISEURS À CHAUFFAGE INTÉGRÉ)	315
RELAIS (ENS) (24 VOLTS) (*SINGLE TILT)	299

* TRADUCTION NON DISPONIBLE AU MOMENT DE LA PUBLICATION

INDEX

Désignation	Page
REMPLISSAGE RAPIDE DE CARBURANT (VERSION)	160
RENIFLARD (ENS) (CARTER)	37
	39
RENIFLARD (ENS) (TRANSMISSION)	405
RENIFLARD (MOTEUR)	106
RÉSERVOIR - GRAISSE (ASS)	556
RÉSERVOIR DE CARBURANT (ASS)	186
	189
RÉSERVOIR D'HUILE MOTEUR (ASS)	106
RÉSERVOIR DU COUVERCLE DE RADIATEUR (ASS)	126
RÉSERVOIR HYDRAULIQUE (ASS)	732
	734
RÉSERVOIR HYDRAULIQUE ET MONTAGE (ASS)	730
	731
RÉSRVOIR D'HUILE MOTEUR ET MONTAGE (ASS)	105
RÉTROVISEUR (ASS)	830
	831
ROBINET DE BATTERIE (ASS)	280
ROBINET DE BATTERIE (ASS) (BATTERIE)	193
ROBINET DE VIDANGE DE RADIATEUR (ASS)	129
ROPS (VERSION)	866
ROTATION DE LA ROUE DU VENTILATEUR SOUFFLANT (ARRÊT MOTEUR)	294
ROTATION DE LA ROUE DU VENTILATEUR SOUFFLANT (ENTRÉE D'EAU, SORTIE D'EAU)	783
ROTATION DE LA ROUE DU VENTILATEUR SOUFFLANT (N. D'ÉTAPE)	905
ROTATION DE LA ROUE DU VENTILATEUR SOUFFLANT (RÉGLAGE DU SIÈGE)	893
ROUE ET RÉDUCTEURS (ASS)	464

S

Désignation	Page
*SCREEN AS-HIGH PRESSURE	588
	633
*SHIELD GP-RADIATOR	547
SIÈGE - COMPRESSEUR D'AIR (ASS)	781
SIEGE - COUVERCLE INFERIEUR (ASS)	848
SIÈGE (ASS)	871
	873
	874
	875
	877
SIÈGE AVEC SUSPENSION (ASS)	881
	882
	883
	893
SIÈGE INCLINABLE (ASS)	865
SIEGE PASSAGER (ASS)	878
	879
	880
SILENCIEUX (ASS)	144
SOLÉNOÏDE DE DÉMARREUR (ENS) (24 VOLTS)	273
	276
SONDE - CIRCUIT DE CARBURANT	247
	852
SONDE - CIRCUIT DE CARBURANT (ROTATIF)	562
SONDE - NIVEAU DE CARBURANT (ENS)	186
SOUPAPE - CARTOUCHE PILOTE (ASS)	644
	645
SOUPAPE - CARTOUCHE PILOTE (ASS)	750
	751
SOUPAPE - SOLÉNOÏDE (ASS)	456
	457
	458
	758
	759
SOUPAPE - SOLÉNOÏDE (ASS) (*AXLE OCLR ACTIVATE, DEACTIVATE)	412
SOUPAPE - SOLÉNOÏDE (ASS) (24 VOLTS) (DOUBLE DÉVERS)	760
SOUPAPE A COMMANDE MANUELLE (ASS)	747
SOUPAPE D'ARRÊT	829
SOUPAPE DE DÉMARRAGE À L'ÉTHER (ASS)	291
SOUPAPE DE DIRECTION (ASS)	655
SOUPAPE DE DIRECTION ET MONTAGE (ENS)	635
SOUPAPE DE DISTRIBUTION DE GRAISSAGE (ASS)	557
	558
SOUPAPE DE MODULATION (ASS)	450
	451
SOUPAPE DE NEUTRALISATION DE DIRECTION (ASS)	659
SOUPAPE DE PRIORITÉ DE CONVERTISSEUR DE COUPLE (ASS)	459
SOUPAPE DE RÉGULATION	107
SOUPAPE DE SÉQUENCE (ASS)	755
	756
SOUPAPE DE VENTILATEUR À VITESSE VARIABLE (ASS)	745
SOUPAPE ET MONTAGE - COMMANDE DE FREIN (ASS)	589
SOUPAPE ET MONTAGE - EMBRAYAGE DE VERROUILLAGE (ASS)	449
SOUPAPE ET MONTAGE - SOLÉNOÏDE	740

* TRADUCTION NON DISPONIBLE AU MOMENT DE LA PUBLICATION

INDEX

Désignation	Page
SOUPAPE ET MONTAGE - VENTILATEUR HYDRAULIQUE (ASS)	737
SOUPAPE PILOTE (ASS)	643
	748
SOUPAPE RÉDUCTRICE DE PRESSION (ASS) (*STEERING PILOT OIL REGULATOR)	656
SOUPAPE SÉLECTRICE (ASS)	453
SOUPAPE SELECTRICE ET REGULATRICE DE PRESSION	454
	653
SOUPAPE SELECTRICE ET REGULATRICE DE PRESSION (DIRECTION AUXILIAIRE)	602
	605
STABILISATEUR - BRAS DE POUSSEE (ASS)	762
SUPPORT - PÉDALE DE FREIN (ASS)	562
	563
SUPPORT DE CACHE-SOUPAPE ET FAISC. DE CABL. D'IN.	25
	26
	27
	28
SUPPORT DE COMMANDE DE DIRECTION (ASS)	890
SUPPORT DE COMMANDE HYDRAULIQUE (ASS)	886
SUPPORT DE MOTEUR (ASS)	80
	81
SUPPORT DE REFROIDISSEUR D'ADMISSION (ASS)	148
	149
SUPPORT DE SIÈGE (ASS)	889
SUPPORT DE TRANSMISSION (ASS)	433

T

TABLEAU - CAISSON (ASS)	542
	544
TABLEAU DE BORD (ASS)	849
	850
TAMIS D'ASPIRATION	388
TAPIS DE PLANCHER	794
TÊTE DE POMPE (ASS)	601
THERMOCONTACT (ENS) (CLIMATISEUR)	784
THERMOSTAT (92-DEG C)	112
TOIT ROPS (ASS)	867
TOURILLON DE BULLDOZER (ASS)	769
TRAINS PLANÉTAIRES - CARTER ET PIÈCES	366
TRANSMISSION (VERSION)	420
TUBE DE FILTRE (ENS) (MAGNÉTIQUE)	388
TURBOCOMPRESSEUR (ASS)	150
	151
	152
TYPE LÈVRE À JOINT (CARTER DE RÉGULATEUR)	112

V

VANNE PILOTE (ASS)	654
	702
	757
VENTILATEUR ASPIRANT (ASS)	109
VERIN DE DIRECTION (ASS)	598
VERIN DE DIRECTION ET MONTAGE (ASS)	597
VÉRIN DE LEVAGE (ASS)	664
	666
	668
	669
VÉRIN DE LEVAGE ET MONTAGE (ASS)	662
VÉRIN D'INCLINAISON (ASS)	670
	672
VERROU (ASS)	819
VERROUILLAGE DE COMMANDE STIC	807
VERSION DE BULLDOZER	761
VERSION DE CAMÉRA	200
VERSION DE CENTRE D'ENTRETIEN	917
VERSION DE CHASSIS	1
VERSION DE MONTAGE-COMMUNICATION	219
VERSION DE MONTAGE DE CAES	219
VERSION DE MOTEUR COMPLET	7
	8
	11
	14
VERSION DE PRÉFILTRE À AIR DE CABINE	858
VERSION DE RÉSERVOIR DE CARBURANT ET PARE-CHOCS	555
VERSION D'HUILE DE RENOUVELLEMENT	104
VERSION ÉLECTRIQUE	206
VERSION HYDRAULIQUE	681
	682
VERSION NORMALE	2
VIDANGE DE CARBURANT (ASS)	158
VIDANGE-ÉCOLOGIE (ASS)	377
VILEBREQUIN (ASS)	42
VOLANT MOTEUR (ASS)	56

W

*WIRING GP-CONVERTER	314

* TRADUCTION NON DISPONIBLE AU MOMENT DE LA PUBLICATION

INDICE

Nombre	Página

A

ACONDICIONADOR DE AIRE (CONFIG) 782
ACONDICIONADOR DE AIRE (GR) 783
ACTIVADOR DE LA BOMBA (GR) 593
594
595
ACUMULADOR DE REFRIGERANTE 778
ACUMULADOR DEL FRENO (GR) 560
561
ACUMULADOR DEL REFRIGERANTE Y MONTAJE (GR) 778
ADAPTADOR DE LLENADO RÁPIDO DE COMBUSTIBLE (GR) 153
AGUA DE LAS CAMISAS - CALENTADOR DEL (GR) 216
217
AIRE - TUBERÍAS DE (GR) 136
139
AJUSTADOR DEL ASIENTO (GR) 780
ALAMBRADO DE COMUNICACION (GR) 312
ALARMA (GR) 192
ALARMA (GR) (RESPALDO) 350
ALFOMBRILLA DEL PISO 794
AMORTIGUADOR DE VIBRACIONES (GR) 53
54
ÁRBOL DE LEVAS (GR) 29
ARO DESMONTABLE (GR) 426
427
ARO Y RUEDA 434
435
436
437
438
ASIENTO CON SUSPENSIÓN (GR) 893
ASIENTO (GR) 871
873
874
875
877
ASIENTO PARA ACOMPAÑANTE (GR) 878
879
880
AUXILIAR DE ARRANQUE CON ÉTER (GR) 270

B

BALANCÍN (GR) 76
77
78
79
BARRA DE TIRO (GR) 471
*BASE AS-INDICATOR (VERDE) 357
BASE DE LA TAPA DE VÁLVULAS Y MAZO DE CABLES DE INYECTOR (GR) 25
26
27
28
BASE DEL FILTRO DE COMBUSTIBLE (GR) 191
BASE DEL FRENO DE PIE (GR) 562
563
BASTIDOR DELANTERO (CONJ) 488
BASTIDOR TRASERO (CONJ) 491
BATERIA DE CONTROL ELECTRONICO (GR) (ANALISIS DE VÍA/MODULO PRINCIPAL VIMS) 205
BATERÍA (GR) 198
BATERÍA Y CABLES (GR) 193
BATERÍA (12-VOLTIOS, LIBRE DE MANTENIMIENTO) 193
BLOQUE DE EMPALME (GR) (BATERÍA) 194
BLOQUE DESLIZANTE-JUEGO 881
BLOQUE HIDRÁULICO (GR) 364
365
BLOQUE MOTOR (CONJ) 43
45
BLOQUE MOTOR (GR) 46
BOMBA DE ACEITE DEL MOTOR (GR) 103
BOMBA DE AGUA (GR) 116
117
BOMBA DE COMBUSTIBLE Y MECANISMO DE VÁLVULAS (GR) 67
68
BOMBA DE DIRECCIÓN Y MONTAJE (GR) 625
BOMBA DE ENGRANAJES (GR) 626
628
722
723
BOMBA DE IMPLEMENTOS Y MONTAJE (GR) 719
BOMBA DE INYECCIÓN DE COMBUSTIBLE (GR) 184
BOMBA DE LA TRANSMISIÓN (GR) 423
424
BOMBA DE PISTONES (GR) 586
629
725
BOMBA DE SEPARADOR DE AGUA Y CEBADO DE COMBUSTIBLE (GR) 191
BOMBA DE TRANSFERENCIA DE COMBUSTIBLE (GR) 185
BOMBA DE TRANSFERENCIA DE COMBUSTIBLE Y MONTAJE (GR) 183
BOMBA DEL ENFRIADOR DE ACEITE DEL EJE Y MONTAJE (GR) 422

* NO HAY TRADUCCION DISPONIBLE EN EL MOMENTO DE LA IMPRESION

INDICE

Nombre	Página
BOMBA Y MONTAJE DE LA DIRECCIÓN SECUNDARIA (GR)	624
BOMBA Y MONTAJE DE PILOTO DE IMPLEMENTO	721
BOMBA Y MONTAJE DE VENTILADOR HIDRAULICO (GR)	718
BOMBA Y MONTAJE DEL FRENO (GR)	585
BOMBA Y MOTOR DEL ENFRIADOR DE ACEITE DE EJE	421
BOMBA Y MOTOR DEL ENFRIADOR DEL ACEITE DEL EJE (GR)	421
BRAZO DE EMPUJE (GR)	765 767
BRAZO DE LIMPIAPARABRISAS (GR)	787

C

Nombre	Página
CABEZA DE BOMBA (GR)	601
CABINA - MAZO DE CABLES DE LA (INFERIOR)	300
CABINA - MAZO DE CABLES DE LA (*INSIDE, REAR)	300
CABINA - MAZO DE CABLES DE LA (*POWER CONVERTER)	314
CABINA (CONFIG)	792
CABINA (GR)	793 794
CABINA Y PLATAFORMA (GR)	790
CABLES CONJ. - TANQUE HIDRÁULICO (*IMPLEMENT, HYDRAULIC FAN)	334
CABLES CONJ. - TANQUE HIDRÁULICO (*STEERING, BRAKE)	334
CABLES DE LA CABINA (GR)	299
CABLES DE LA ESTRUCTURA ROPS (GR)	353
CABLES DE LA MÁQUINA (GR)	330
CABLES DE LA MÁQUINA (GR)	333
CABLES DEL CHASIS (GR)	310
CABLES DEL MOTOR (GR)	319 322
CABLES DEL PARAGOLPES (GR)	294
CABLES DEL SISTEMA ELECTRÓNICO DEL MOTOR (GR)	325
CABLES DEL TREN DE FUERZA (GR)	348
CABLES DELANTEROS (GR)	328
CABLES POSTERIORES (GR)	350
CAJA DE ALMACENAMIENTO	788 789
CAJA DE ENGRANAJE DE TRANSFERENCIA (GR)	368
CAJA DELANTERA (GR)	63
CAJA Y PIEZAS DE LOS PLANETARIOS	366
CALCOMANÍA DE ADVERTENCIA (ASIENTO AJUSTABLE)	893
CALCOMANÍA DE ADVERTENCIA (ENTRADA DE AGUA, SALIDA DE AGUA)	783
CALCOMANÍA DE ADVERTENCIA (NO OPERE, LEA EL OMM)	908
CALCOMANÍA DE ADVERTENCIA (NO PISAR)	905
CALCOMANÍA DE ADVERTENCIA (NO SUELDE, NO TALADRE, LEA EL OMM)	905
CALCOMANÍA DE ADVERTENCIA (PARADA DE MOTOR)	294
CALCOMANÍA DE ADVERTENCIA (*PRODUCT LINK 300, INTL)	219
CALCOMANÍA DE ADVERTENCIA (*PRODUCT LINK 300, U.S.)	219
CALCOMANÍA DE IDENTIFICACIÓN (CEBADO DE COMBUSTIBLE, LUZ DE SERVICIO DEL MOTOR)	334
CALCOMANÍA DE IDENTIFICACIÓN (LUZ DE TRABAJ0)	334
CALCOMANÍA DE IDENTIFICACIÓN (*SERVICE CENTER RECEIVERS, REAR)	907
CALCOMANÍA DE IDENTIFICACIÓN (*STAIRWAY LIGHTS)	294
CALCOMANÍA DE IDENTIFICACIÓN (*STARTING MOTOR LOCKOUT)	294
CALCOMANÍA DE IDENTIFICACIÓN (*TRANSMISSION LOCKOUT)	294
CALCOMANIA DEL TABLERO DE INSTRUMENTOS (IZQUIERDO)	850
CALCOMANIA DEL TABLERO DE INSTRUMENTOS (LADO DERECHO)	850
CALCOMANIA-TECLADO	832
CALENTADOR DEL COMBUSTIBLE (GR)	213 214
CÁNCAMOS DE LEVANTAMIENTO DEL MOTOR (GR)	65
CANDADO (GR)	153 160 294 512 541 915
CANDADO (GR) (TAPA DEL TANQUE HIDRÁULICO)	916
CAÑÓN DE LA BOMBA (GR)	596
CAPO Y PROTECTOR (GR)	512
CARGA - ALTERNADOR DE (GR) (*24-VOLT, 150-AMPERE)	21
CÁRTER - COLECTOR DEL (GR)	70
CÁRTER - PROTECTOR DEL (GR)	496
CENICERO	886
CENTRO DE SERVICIO GR	918 919

* NO HAY TRADUCCION DISPONIBLE EN EL MOMENTO DE LA IMPRESION

INDICE

Nombre	Página
CHASIS (CONFIG)	1
CIGÜEÑAL (GR)	42
CILINDRO DE DIRECCIÓN (GR)	598
CILINDRO DE DIRECCIÓN Y MONTAJE (GR)	597
CILINDRO DE LEVANTAMIENTO - TUBERÍAS DEL (GR)	699
CILINDRO DE LEVANTAMIENTO (GR)	664
	666
	668
	669
CINTURÓN DE SEGURIDAD (GR)	870
CINTURÓN DE SEGURIDAD (GR) (RETRACTIL)	873
	877
COLADOR (CONJ) (LLENADO DEL TANQUE HIDRÁULICO)	732
COLADOR (CONJ) (LLENADO DEL TANQUE HIDRÁULICO)	734
COLADOR (CONJ) (TANQUE HIDRÁULICO)	734
COLADOR DE COMBUSTIBLE	186
COMBUSTIBLE - TANQUE DE (GR)	186
	189
COMBUSTIBLE-LLENADO CONVENCIONAL (CONFIG)	160
COMPARTIMIENTO DEL OPERADOR (CONFIG)	845
COMPARTIMIENTO DEL TANQUE HIDRÁULICO (GR)	472
	474
	475
COMPRESOR DE AIRE DEL ASIENTO (GR)	781
COMPRESOR DE REFRIGERANTE (GR)	796
CONDENSADOR DEL REFRIGERANTE Y MONTAJE (GR)	797
CONDUCTO DE AIRE (GR)	815
CONECTOR ELECTRONICO (GR)	237
CONEXIÓN ELÉCTRICA (GR)	201
CONEXION HIDRAULICA (GR)	680
(CONFIG) CABLERIA, CHASIS DELANTERO (PRINCIPAL)	328
CONFIGURACIÓN COMÚN	2
CONFIGURACIÓN DE CABLERIA, CALENTADOR Y ACONDICIONADOR DE AIRE	784
CONFIGURACIÓN DE CÁMARA	200
CONFIGURACIÓN DE INSTALACIÓN DEL MOTOR	19
CONFIGURACIÓN DE MOTOR COMPLETO	7
	8
	11
	14
CONFIGURACIÓN DE MOTORES	3
	4
	5
	6
CONFIGURACION DE PARAGOLPE Y TANQUE-COMBUSTIBLE	555
CONFIGURACIÓN DE RENOVACIÓN DE ACEITE	104
CONFIGURACIÓN ELÉCTRICA	206
CONJ. DE CABLES-CAPÓ (*STAIRWAY LIGHTS)	334
CONJ. ORIFICIO-AIRE ACONDICIONADO	778
CONJUNTO DE CABLERIA, CHASIS TRASERO	350
CONJUNTO DE CABLERIA, CHASIS TRASERO (SISTEMA DE RENOVACION DE ACEITE)	334
CONJUNTO DE CABLERIA, RADIO	862
	863
CONJUNTO DE CABLERIA, RADIO	862
	864
CONJUNTO DE CABLES, VÁLVULA (COMPRESOR DE AIRE DEL ASIENTO)	893
CONJUNTO DE MAZO DE CABLES DE PARACHOQUES	295
CONJUNTO DE NÚCLEO-CONDENSADOR (REFRIGERANTE)	797
CONJUNTO DE SOPORTE DE INTERRUPTOR AJUSTABLE	562
CONJUNTO MAZO DE CABLES-CONTROLES DEL OPERADOR (*IMPLEMENT CONTROLS POD)	300
CONJUNTO MAZO DE CABLES-CONTROLES DEL OPERADOR (LAVAPARABRISAS)	300
CONJUNTO MAZO DE CABLES-CONTROLES DEL OPERADOR (*QUARTER WINDOW WIPER)	300
CONJUNTO MAZO DE CABLES-CONTROLES DEL OPERADOR (*REAR WINDOW WIPER)	300
CONTROL DE COMUNICACION (GR)	204
CONTROL DE DIRECCIÓN (GR)	802
CONTROL DE LA PALANCA (GR)	804
	805
CONTROL DE MANIJA (GR)	798
CONTROL DEL FRENO DE ESTACIONAMIENTO	569
CONTROL DEL MULTIPLE (GR)	412
CONTROL DEL MULTIPLE (GR) (*BRAKE ACCUMULATOR CHARGE)	571
CONTROL DEL PEDAL DE FRENO (GR)	568
CONTROL ELECTRÓNICO DEL MOTOR Y MONTAJE	202
	203
CONTROL HIDRÁULICO DE LA TRANSMISIÓN (GR)	369

* NO HAY TRADUCCION DISPONIBLE EN EL MOMENTO DE LA IMPRESION

INDICE

Nombre	Página
CONTROL HIDRÁULICO DE OPERACIÓN PILOTO (GR)	799
CONTROL NO PROGRAMADO (GR)	205
CONTROL NO PROGRAMADO (GR) (TREN DE FUERZA)	315
CONVERTIDOR DE PAR Y CAJA (GR)	439
*COOLER GP-HYD & STEERING OIL	660
*CORE AS-AXLE OIL COOLER	392
*CORE AS-STEERING OIL COOLER	660
CORREA-SERPENTIN	21
CRUCETA Y COJINETE (GR)	432
CUBIERTA INFERIOR DEL ASIENTO DEL OPERADOR (GR)	848
CULATA DE CILINDROS - TORNILLERÍA DE LA (GR)	51
CULATA DE CILINDROS (CONJ)	48
CULATA DE CILINDROS (GR)	50 51
*CUP-DUST	431

D

DETECTOR DE NIVEL DEL COMBUSTIBLE	186
DETECTOR DE POSICIÓN (SISTEMA DE COMBUST.) (GR)	247
DETECTOR DE POSICIÓN (SISTEMA DE COMBUST.) (GR)	852
DETECTOR DE POSICIÓN (SISTEMA DE COMBUST.) (GR) (ROTATORIO)	562
DIFERENCIAL (GR)	376
DIFERENCIAL Y CORONA (GR)	370 371 373 374
DISYUNTOR (CONJ) (10-AMPERIOS) (INTERRUPTOR DE LLAVE)	316
DISYUNTOR (CONJ) (105 AMPERIOS) (ARRANQUE)	315
DISYUNTOR (CONJ) (105 AMPERIOS) (PRINCIPAL)	315
DISYUNTOR (CONJ) (15 AMPERIOS) (LUCES DE TRABAJO)	315
DISYUNTOR (GR)	280
DISYUNTOR (GR) (BATERÍA)	193
DOSIFICADOR DE ACEITE DE MOTOR (GR)	101
DRENAJE DE COMBUSTIBLE (GR)	158
DRENAJE DE SEGURIDAD ECOLÓGICA (GR)	377

E

EJE - GRUPO DE MONTAJE	413
EJE DE MANDO DE ENTRADA (GR)	430
EJE DE MANDO (GR)	428
EJE FIJO (CONFIG)	358
EJE FIJO (GR)	359
EJE OSCILANTE (CONFIG)	358
EJE OSCILANTE (GR)	361
ELECTRONICA DE MONITOR (GR)	206 207 208 209 210
ELEMENTO (CONJ) (*CIGARETTE LIGHTER)	300
ELEMENTO DE FILTRO DE ACEITE (CONJ) (EFICIENCIA ULTRA ALTA)	678
ELEMENTO DE FILTRO DE ACEITE (CONJ) (EFICIENCIA ULTRA ALTA) (TREN DE FUERZA)	380 382
ELEMENTO DEL CALENTADOR DEL AGUA DE LAS CAMISAS (240 VOLTIOS, 1500 VATIOS)	217
ELEMENTO DEL FILTRO DE AIRE (CONJ) (PRIMARIO)	133
ELEMENTO DEL FILTRO DE AIRE (CONJ) (SECUNDARIO)	133
ENCENDEDOR (GR) (12 VOLTIOS)	300
*ENCLOSURE GP-ELECTRONICS BAY	211 315
*ENCLOSURE GP-SERVICE CENTER	902
ENFRIADOR DEL COMBUSTIBLE (GR)	155 156
ENGANCHE ARTICULADO (GR)	510
ENGRANAJE DE TRANSFERENCIA DE ENTRADA (GR)	386
ENGRANAJE DE TRANSFERENCIA DE SALIDA	388
ENGRANAJE DELANTERO (GR)	57
ENGRANAJE TRASERO (GR)	59
ESCALERILLA (GR)	519 521
ESCAPE DE GASES (GR)	85
ESTABILIZADOR DEL BRAZO DE EMPUJE (GR)	762
ESTRIBO DEL OPERADOR (GR)	549 550
ESTRUCTURA ROPS (CONFIG)	866
ESTRUCTURA ROPS (GR)	867
ETIQUETA DE ADVERTENCIA (GR)	903 905
EXPULSOR DE POLVO (GR)	134
EXTENSIÓN DE DRENAJE (GR)	55
EXTENSIÓN DEL RESPALDO (GR) (DE TELA)	873
EXTENSIÓN DEL RESPALDO (GR) (DE TELA)	877

* NO HAY TRADUCCION DISPONIBLE EN EL MOMENTO DE LA IMPRESION

INDICE

Nombre	Página

F

*FILM GP-INTERNATIONAL 906
*FILM GP-SERVICE CENTER 907
*FILM GP-U.S. 908
*FILM-SERVICE 295
*FILTER ELEMENT-CAB AIR (GRUPO DE LAMPARA-TABLERO) 794, 816
FILTRO DE ACEITE DEL MOTOR (CONJ) (GRUPO DE LAMPARA-TABLERO) 84
FILTRO DE ACEITE DEL MOTOR (GR) 84
FILTRO DE ACEITE (EFICIENCIA AVANZADA) (DRENAJE DE LA CAJA) 600
FILTRO DE ACEITE (EFICIENCIA ULTRA ALTA) 599, 679
FILTRO DE ACEITE (GR) 380, 382, 384, 600, 678, 679
FILTRO DE ACEITE (GR) 599
FILTRO DE ACEITE (GR) (DRENAJE DE CAJA DE BOMBA DE DIRECCION) 611
FILTRO DE ACEITE (GR) (*HYDRAULIC FAN PUMP CASE DRAIN) 674
FILTRO DE ACEITE (GR) (*IMPLEMENT PUMP CASE DRAIN) 675
FILTRO DE AIRE DE LA CABINA (GR) 816
FILTRO DE AIRE (GR) 131, 133
FILTRO DE COMBUSTIBLE (CONJ) (EFICIENCIA AVANZADA) (SECUNDARIO(A)) 176, 179
FILTRO DE COMBUSTIBLE Y SEPARADOR DE AGUA (CONJ) (PRIMARIO) 159
FILTRO DE COMBUSTIBLE Y SEPARADOR DE AGUA (GR) 159
FILTRO Y MONTAJE DEL TREN DE FUERZA (GR) 378
FILTRO Y TUBERÍAS DE LA CAJA DE DRENAJE (GR) 675
FILTRO Y TUBERÍAS DE LA CAJA DE DRENAJE (GR) 674
FRENO DE ESTACIONAMIENTO (GR) 564
FRENO DE SERVICIO - CONTROL (GR) 570
FRENO DE SERVICIO (GR) 566
FUSIBLE (10-AMPERIOS) 315
FUSIBLE (15 AMPERIOS) 315
FUSIBLE (20-AMPERIOS) 315

G

GRUPO ACCIONADOR, VALVULA 23, 24
GRUPO DE ACSESORIO-MOTOR 21
GRUPO DE ANTEFILTRO DE AIRE DE CABINA 859
GRUPO DE CABLES-CONTROL DE AUTOLUBRICACIÓN 292
GRUPO DE CABLES DE CÁMARA 309
GRUPO DE CÁMARA (*115-DEG, COLOR) 309
GRUPO DE CONEXION-ACONDICIONADOR DE AIRE 827
GRUPO DE MONTAJE DE CÁMARA 237
GRUPO DE PIVOTE, VÁLVULA PILOTO 717
GRUPO DE PROTECCIÓN CONTRA EL VANDALISMO 405, 915, 916
GRUPO DE ROTACIÓN DEL MOTOR (GR) 727
GRUPO DE SERVICIO DE COMUNICACIONES (PRODUCT LINK 300) 312
GRUPO DE SOFTWARE, COMUNICACIÓN (PRODUCT LINK 121SR) 204
GRUPO DE SOPORTE DEL POSENFRIADOR . . . 148, 149
GRUPO DE TANQUE, ACEITE DEL MOTOR 106
GRUPO DE TAPA, ACCESO 467
GRUPO DE TUBERÍAS DE AIRE DEL TURBOCOMPRESOR 140
GRUPO DE TUBERIAS DE DIAGNÓSTICO 909
GRUPO DE TUBERIAS DE LUBRICACIÓN AUTOMÁTICA 524, 528
GRUPO DE VÁLVULA-ARRANQUE CON ÉTER 291
GRUPO DE VÁLVULA, VENTILADOR 745
GRUPO GIRATORIO DE BOMBA 587, 631, 729
GUARDABARROS DELANTERO (GR) 481
GUARDABARROS (GR) 477
GUARDABARROS PARA DESPLAZAMIENTO EN CARRETERA (GR) 482

H

*HANDRAIL GP 500, 501, 503, 504
*HARDWARE GP-HANDRAIL MOUNTING 505, 507, 508

* NO HAY TRADUCCION DISPONIBLE EN EL MOMENTO DE LA IMPRESION

INDICE

Nombre	Página
	509
*HARNESS AS-PLATFORM (*ELECTRONICS BAY TO CAB)	334
*HARNESS AS-PLATFORM (*FILTER, PUMP BYPASS SWITCHES)	310
HIDRÁULICA (CONFIG)	681
	682
HOJA DE LIMPIAPARABRISAS (CONJ) (*400-MM) (PARTE TRASERA)	896
HOJA DE LIMPIAPARABRISAS (CONJ) (*700-MM) (DELANTERO)	896
HOJA DE LIMPIAPARABRISAS (CONJ) (*700-MM) (VENTANA LATERAL)	899
HOJA PARA CARBÓN (CONJ)	770
HOJA PARA CARBÓN (GR)	773
HOJA SEMIUNIVERSAL (CONJ)	770
	771
HOJA SEMIUNIVERSAL (GR)	775
	776
HOJA TOPADORA (CONFIG)	761
*HOUSING GP-REAR	64

I

INCLINACIÓN HORIZONTAL - CILINDRO DE (GR)	670
	672
INDICADOR- CAMBIO DE FILTRO DE AIRE	136
INDICADOR DEL NIVEL DE ACEITE (VARILLA) (GR)	86
INDICADOR DEL NIVEL DE ACEITE (VARILLA) (GR)	87
INDICADOR DEL NIVEL DEL ACEITE (VARILLA) (CONJ) (MOTOR)	86
	87
INSONORIZADOR (CONFIG)	551
INSONORIZADOR (GR)	552
INSTALACIÓN CAES (CONFIG)	219
INSTALACION DE COMUNICATION (CONFIG)	219
INSTALACIÓN DE RADIO (GR)	818
*INSULATION GP-RADIATOR SHIELD	517
	518
INTERRUPTOR DE ARRANQUE (CONJ) (LLAVE)	294
INTERRUPTOR DE DERIVACIÓN	279
INTERRUPTOR DE LÍMITE (CONJ) (FRENO DE ESTACIONAMIENTO)	589
INTERRUPTOR DE LÍMITE (CONJ) (LUZ DE PARADA)	562
INTERRUPTOR DE LÍMITE (CONJ) (UN SOLO POLO) (DESACTIVACION DE TRABA DEL ACELERADOR)	563
INTERRUPTOR DE LLAVE (GR) (ARRANQUE)	300
INTERRUPTOR DE NIVEL DE LIQUIDO (GR)	283
INTERRUPTOR DE NIVEL DE LIQUIDO (GR) (ACEITE DEL MOTOR)	238
INTERRUPTOR DE NIVEL DE LIQUIDO (GR) (*OIL RENEWAL METERING TANK)	346
INTERRUPTOR DE PRESIÓN (CONJ) (ACEITE DE FRENO DE ESTACIONAMIENTO)	589
INTERRUPTOR DE PRESIÓN (CONJ) (ACEITE DE LA DIRECCION SECUNDARIA)	605
INTERRUPTOR DE PRESIÓN (CONJ) (ACEITE DE LA DIRECCION SECUNDARIA)	602
INTERRUPTOR DE PRESIÓN (CONJ) (CARGA DE ACUMULADOR DE FRENO)	333
INTERRUPTOR DE PRESIÓN (CONJ) (DERIVACIÓN DEL FILTRO DE ACEITE)	599
INTERRUPTOR DE PRESIÓN (CONJ) (DIFERENCIAL)	310
INTERRUPTOR DE PRESIÓN (CONJ) (FILTRO DE ACEITE)	678
INTERRUPTOR DE PRESIÓN (CONJ) (FILTRO DE DERIVACIÓN)	679
INTERRUPTOR DE PRESIÓN (CONJ) (LADO INFERIOR DEL COMPRESOR DE REFRIGERANTE)	21
INTERRUPTOR DE PRESIÓN (CONJ) (*REFRIGERANT COMPR, HIGH SIDE)	21
INTERRUPTOR DE PRESIÓN (GR)	288
INTERRUPTOR DE TEMPERATURA (CONJ) (AIRE ACONDICIONADO)	784
INTERRUPTOR DE VOLQUETE (CONJ) (APAGADO A NIVEL DEL SUELO)	294
INTERRUPTOR DE VOLQUETE (CONJ) (CAMBIO RÁPIDO)	300
INTERRUPTOR DE VOLQUETE (CONJ) (DESCONEXIÓN HIDRÁULICA)	300
INTERRUPTOR DE VOLQUETE (CONJ) (EMBRAGUE DE TRABA DE CONVERTIDOR DE PAR)	300
INTERRUPTOR DE VOLQUETE (CONJ) (*ENGINE COMPARTMENT LIGHTS, LH)	333
INTERRUPTOR DE VOLQUETE (CONJ) (*ENGINE COMPARTMENT LIGHTS, RH)	333
INTERRUPTOR DE VOLQUETE (CONJ) (LUCES DE ESCALERILLA DE ACCESO)	300
INTERRUPTOR DE VOLQUETE (CONJ) (LUCES DE TRABAJO)	300
INTERRUPTOR DE VOLQUETE (CONJ) (LUZ DE ACCESO A LA ESCALERA)	294
INTERRUPTOR DE VOLQUETE (CONJ) (LUZ INTEROR)	301

* NO HAY TRADUCCION DISPONIBLE EN EL MOMENTO DE LA IMPRESION

INDICE

Nombre	Página
INTERRUPTOR DE VOLQUETE (CONJ) (*STARTING MOTOR LOCKOUT)	294
INTERRUPTOR DE VOLQUETE (CONJ) (*TILT, TIP FUNCTION)	300
INTERRUPTOR DE VOLQUETE (CONJ) (TRABA DE ACTIVACION DEL ACELERADOR)	300
INTERRUPTOR DE VOLQUETE (CONJ) (*TRANSMISSION LOCKOUT)	294
INTERRUPTOR DE VOLQUETE (CONJ) (24 VOLTIOS) (REFLECTORES DELANTEROS)	301
INTERRUPTOR DE VOLQUETE (CONJ) (24 VOLTIOS) (REFLECTORES, TRASEROS)	301
INTERRUPTOR DE VOLQUETE (GR)	289
INTERRUPTOR DE VOLQUETE (GR) (BOMBA DE CEBADO DE COMBUSTIBLE, ACTIVADA/DESACTIVADA)	333
INTERRUPTOR DEL FRENO DE MOTOR (GR)	281
INTERRUPTOR DEL LIMPIADOR (GR)	290
INTERRUPTOR DEL LIMPIADOR (GR) (*24-VOLT, INTERMITTENT) (DELANTERO)	299
INTERRUPTOR DEL LIMPIADOR (GR) (*24-VOLT, INTERMITTENT) (PARTE TRASERA)	299
INTERRUPTOR DEL LIMPIAPARABRISAS (CONJ) (24 VOLTIOS) (INTERMITENTE DELANTERO)	290
INTERRUPTOR LÍMITE (GR)	282
INTERRUPTOR MAGNÉTICO (CONJ) (24 VOLTIOS) (RELÉ DE ARRANQUE)	286
INTERRUPTOR MAGNÉTICO (GR)	284 285 286 287
INTERRUPTOR MAGNÉTICO (GR) (24 VOLTIOS CC) (RELE DE ARRANQUE 1)	315
INTERRUPTOR MAGNÉTICO (GR) (24 VOLTIOS CC) (RELE DE ARRANQUE 2)	315
INTERRUPTOR MAGNÉTICO (GR) (24 VOLTIOS) (RELE PRINCIPAL)	315
INTERRUPTOR PULSADOR (CONJ) (AJUSTE DE TRABA DE ACELERACION)	300
INTERRUPTOR PULSADOR (CONJ) (BOCINA)	300
INTERRUPTOR PULSADOR (CONJ) (RESUMICION DEL AJUSTE DE LA TRABA DE ACELERACION)	300
INTERRUPTOR ROTATIVO (CONJ) (LIMPIA, LAVAPARABRISAS) (*QUARTER WINDOW)	299
INTERRUPTOR ROTATIVO (CONJ) (SELECTOR DE REDUCCIÓN DE FUERZA DE TRACCIÓN)	299
INTERRUPTOR ROTATIVO (CONJ) (VELOCIDAD DEL VENTILADOR SOPLADOR)	299
INYECTOR DE COMBUSTIBLE (GR)	184

J

JUEGO DE SELLOS	560 561 626
JUNTA DESLIZANTE (GR)	431
JUNTA UNIVERSAL (GR)	446 447 448

L

LÁMPARA (CONJ) (*AMBER, LED, 24-VOLT)	294
LÁMPARA DE FARO DELANTERO (GR)	224 225
LÁMPARA DEL TECHO (GR)	220
LÁMPARA DEL TECHO (GR) (24 VOLTIOS)	794
LÁMPARA DEL TECHO (GR) (24 VOLTIOS)	299
LÁMPARA (*VIMS, LED, WHITE)	300
LÁMPARA (24 VOLTIOS)	220 294 299
LÁMPARA (24 VOLTIOS) (VERDE)	357
LAVAPARABRISAS DE LA VENTANA (GR)	895
LIMPIA Y LAVAPARABRISAS (GR)	896
LIMPIAPARABRISAS DE LA VENTANA (GR)	898 899
LIMPIAPARABRISAS DE LA VENTANA (GR) (CUARTO DELANTERO)	899
LLANTA (CONFIG)	425
LLAVE	294 512
LLAVE (COMPARTIMENTO PARA LA LITERATURA)	1
LLAVE (INTERRUPTOR GENERAL)	280
LLENADO RÁPIDO DE COMBUSTIBLE (CONFIG)	160
LUBRICACION AUTOMATICA (CONFIG)	540
LUCES AUXILIARES (GR)	227
LUCES DE ALÓGENO (24 VOLTIOS, 65 VATIOS)	221 222 223
LUCES DE ALÓGENO (24 VOLTIOS, 65 VATIOS)	224

* NO HAY TRADUCCION DISPONIBLE EN EL MOMENTO DE LA IMPRESION

INDICE

Nombre	Página
	225
LUCES DE PARADA (GR)	236
LUCES DE REFLECTOR (GR)	228
	229
	231
	232
	234
LUZ DE SEÑAL DE GIRO (GR)	226
LUZ DE SEÑAL DE GIRO (GR) (*VIMS, LED, BLUE)	350
LUZ INTERIOR	299

M

Nombre	Página
MAMPARA ANTITÉRMICA (GR)	486
MANDOS FINALES, RUEDA Y FRENO (GR)	466
MAZO DE CABLES (CONJ) (FERRITA)	841
MAZO DE CABLES (CONJ) (*HEATED SEAT)	848
MAZO DE CABLES (CONJ) (SENSOR DE VELOCIDAD)	260
MAZO DE CABLES (CONJ) (*SERVICE CENTER, AUTOLUBE)	357
MAZO DE CABLES DE CONTROL (CONJ) (*CAES RECEIVER)	330
MAZO DE CABLES DE CONTROL (CONJ) (*CAES, ROPS SIDE)	330
MAZO DE CABLES DE CONTROL (CONJ) (COMPARTIMIENTO DE LA ELECTRONICA)	315
MAZO DE CABLES DE CONTROL (CONJ) (ESLABON DE PRODUCTO)	312
MAZO DE CABLES DE CONTROL (CONJ) (*SERVICE CENTER, OIL RENEWAL)	357
MAZO DE CABLES DE LA TRANSMISION (*CLUTCH SOLENOIDS)	461
MAZO DE CABLES DE LA TRANSMISION (CONVERTIDOR DE PAR)	348
MAZO DE CABLES DE LA TRANSMISION (*SPEED SENSORS)	348
MAZO DE CABLES DE LOS FRENOS (CONJ) (*PARKING, SWITCH)	334
MAZO DE CABLES DE POTENCIA (CONJ) (*AUTOMATIC LUBRICATION CONTROL)	292
MAZO DE CABLES DE SENSOR (CONJ) (PRESION DE COMBUSTIBLE)	179
MAZO DE CABLES DE SENSOR (CONJ) (PRESION DE COMBUSTIBLE)	176
MAZO DE CABLES DE SENSOR (CONJ) (*TURBOCHARGER AIR INLET PRESS)	136
MAZO DE CABLES DE SENSOR (CONJ) (VELOCIDAD)	259
MAZO DE CABLES DEL CHASIS (CONJ) (*FRAME, LH)	334
MAZO DE CABLES DEL CHASIS (CONJ) (PRINCIPAL)	334
MAZO DE CABLES DEL CHASIS (CONJ) (ROPS)	353
MAZO DE CABLES DEL EJE (*AXLE OIL COOLER)	334
MAZO DE CABLES DEL EJE (*FRONT, TEMPERATURE SENSOR)	328
MAZO DE CABLES DEL EJE (SELECTOR DE MARCHAS AUTOMÁTICO/MANUAL)	334
MAZO DE CABLES DEL INTERRUPTOR (CONFIG) (DIRECCIÓN SECUNDARIA)	602
	605
MAZO DE CABLES DEL MONITOR (CONJ) (*CAES)	841
MAZO DE CABLES DEL MONITOR (CONJ) (MODULO PRINCIPAL DEL VIMS)	299
MAZO DE CABLES DEL MONITOR (CONJ) (*WORK AREA VISUAL SYSTEM)	237
MAZO DE CABLES DEL MOTOR (CONJ)	27
MAZO DE CABLES DEL MOTOR (CONJ)	322
MAZO DE CABLES DEL MOTOR (CONJ) (INYECTOR UNITARIO)	26
MAZO DE CABLES DEL MOTOR (CONJ) (MÓDULO DE CONTROL ELECTRONICO)	325
MAZO DE CABLES DEL TABLERO (CONJ) (*FRONT)	300
MAZO DE CABLES DEL TABLERO (CONJ) (PARADA A NIVEL DEL SUELO)	294
MAZO DE CABLES DEL TABLERO (CONJ) (*SIDE, RH)	300
MAZO DE CABLES DELANTERO (CONJ) (*AXLE, CONTROL VALVE, LIGHTS)	328
MAZO DE CABLES DELANTERO (CONJ) (LUCES DE TRABAJO, BOCINA)	232
MAZO DE CABLES, LUCES (*ENGINE ENCLOSURE, ETHER)	334
MAZO DE CABLES, LUCES (LUCES INTERNAS, DELANTERAS)	232
MEDIDOR DEL NIVEL DE LÍQUIDO	385
MEDIDOR DEL NIVEL DE LÍQUIDO (MIRILLA DE CRISTAL)	732
MEDIDOR DEL NIVEL DE LÍQUIDO (MIRILLA DE CRISTAL) (TANQUE HIDRÁULICO)	734
MIRILLA	106
	126
MIRILLA DE MEDIDOR (GR)	385
MODULO CENTRAL DE MENSAJES(GR)	831
MODULO DE LA PANTALLA (GR) (*WORK AREA VISUAL SYSTEM)	237
MÓDULO DEL TACÓMETRO Y DEL VELOCÍMETRO (GR)	299

* NO HAY TRADUCCION DISPONIBLE EN EL MOMENTO DE LA IMPRESION

INDICE

Nombre	Página
MODULO DEL TECLADO MONITOR (GR)	832
MODULO ELECTRÓNICO DE CUATRO INDICADORES (GR)	833
MONTAJE DE ALTERNADOR Y COMPRESOR (GR)	69
MONTAJE DE ANTENA (GR)	838
	839
MONTAJE DE ARO	414
MONTAJE DE FILTRO DE COMBUSTIBLE (GR)	176
	179
MONTAJE DE LA ESTRUCTURA ROPS (GR)	844
MONTAJE DE LA PLATAFORMA (GR)	843
MONTAJE DEL CONVERTIDOR DE PAR (GR)	414
MONTAJE DEL PARACHOQUES (GR)	541
MONTAJE GR-MONITOR	841
MONTAJE Y CILINDRO DE LEVANTAMIENTO (GR)	662
MONTAJE Y VALVULA DEL CONTROL PRINCIPAL (GR)	739
MOTOR - NÚCLEO (CONFIG)	17
	18
MOTOR - SOPORTE DEL (GR)	80
	81
MOTOR DE ARRANQUE ELÉCTRICO (GR)	272
	275
	278
*MOTOR GP-BLOWER (AIRE DE CABINA)	859
MOTOR-LIMPIAPARABRISAS (GR)	834
	835
	836
	837
MOTOR-LIMPIAPARABRISAS (GR) (24 VOLTIOS) (PARTE TRASERA)	896
MOTOR-LIMPIAPARABRISAS (GR) (24 VOLTIOS, 2 VELOCIDADES)	834
	836
	837
MOTOR Y MONTAJE DE VENTILADOR HIDRAULICO (GR)	714
MÚLTIPLE DE ESCAPE (GR)	141
	143
MUÑÓN DE LA HOJA TOPADORA (GR)	769

N

NUCLEO DE ENFRIADOR DE COMBUSTIBLE (CONJ)	155
	156
NUCLEO DE RADIADOR (CONJ)	118
	121
NÚCLEO DEL ENFRIADOR DE ACEITE (CONJ) (MOTOR)	112
NÚCLEO DEL ENFRIADOR DE ACEITE (GR)	108
NÚCLEO DEL POSENFRIADOR (CONJ)	130

P

PANEL DEL CAPÓ (GR)	542
	544
PANTALLA (CONJ)	655
PANTALLA (CONJ) (ACEITE DE LA DIRECCIÓN)	734
PANTALLA (CONJ) (TANQUE HIDRÁULICO)	732
PASADOR DE HOJA TOPADORA (GR)	763
PASARELA (GR)	559
PESTILLO DE PUERTA Y VENTANA DE LA CABINA (GR)	820
PISTÓN DE CILINDRO HIDRÁULICO (GR)	716
PISTÓN Y BIELA (GR)	71
	72
PISTONES DEL MOTOR (GR)	715
PLACA DE CONTROL (*THROTTLE LOCK, HYDRAULIC, HORN)	799
PLACA DE IDENTIFICACIÓN DEL MOTOR (GR)	914
PLACA DE INFORMACION (*PRODUCT LINK, READ OMM)	219
PLACA DE INFORMACION (24 VOLTIOS)	905
PLACA DE INSTRUCCIONES (BATERÍA)	193
PLACA DEL NÚMERO DE SERIE (TRANSMISION)	439
PLATAFORMA DE LA CABINA	853
	854
	857
*PLATE-PRESSURE	723
POSENFRIADOR DE AIRE (GR)	130
POTENCIÓMETRO (CONJ) (CONTROL DE TEMPERATURA)	300
*PRECLEANER AR-CAB AIR	858
PROTECTOR DE RADIADOR (GR)	124
PROTECTOR DEL RADIADOR (GR)	498
PROTECTOR DEL TREN DE FUERZA (GR)	497
PROTECTOR TÉRMICO DEL COMPARTIMIENTO DEL MOTOR (GR)	545
PROTECTOR TÉRMICO (GR)	145
	146
	147
PUERTA DE ACCESO (GR)	469
PUERTA DE ACCESO (GR)	811
	812
PUERTA DE CABINA	813
PUERTA DE CABINA (LADO DERECHO)	793

* NO HAY TRADUCCION DISPONIBLE EN EL MOMENTO DE LA IMPRESION

INDICE

Nombre	Página

R

RADIADOR (GR) 121
RADIADOR (GR) 118
RADIO (GR) 860
861
862
863
864
RADIO (GR) (*AM/FM CD PLAYER) 862
RADIO (GR) (AM/FM/WB) 862
RADIO (GR) (*AM/FM/WB/XM/ CD PLAYER) 863
RECLINACION DE ASIENTO (GR) 865
REFLECTOR (GR) 221
222
223
REFLECTOR (GR) (24 VOLTIOS) 231
REFRIGERANTE DE ACEITE, NÚCLEO (CONJ) 660
REGULADOR - PEDAL DEL (GR) 852
REGULADOR DE TEMPERATURA (TERMOSTATO) (92 GRADOS CENTÍGRADOS) 112
REJILLA DE ALTA PRESION (GR) 588
REJILLA DE ALTA PRESION (GR) 633
REJILLA DE FILTRO (CONJ) (ENFRIADOR DE ACEITE DE EJE) 384
REJILLA DE SUCCIÓN 388
REJILLA (HIDRÁULICO) 734
RELÉ (CONJ) (24 VOLTIOS) (*AIR CONDITIONER PRECLEANER) 315
RELÉ (CONJ) (24 VOLTIOS) (ALARMA DE RETROCESO) 315
RELÉ (CONJ) (24 VOLTIOS) (BOCINA) 315
RELÉ (CONJ) (24 VOLTIOS) (*FENDER FLOODLIGHTS) 315
RELÉ (CONJ) (24 VOLTIOS) (*HEATED MIRRORS) 315
RELÉ (CONJ) (24 VOLTIOS) (*INTERMEDIATE START RELAY) 315
RELÉ (CONJ) (24 VOLTIOS) (LUZ TRASERA) . . . 315
RELÉ (CONJ) (24 VOLTIOS) (*ROPS HID LIGHTS) 315
RELÉ (CONJ) (24 VOLTIOS) (*SINGLE TILT) 299
RESORTE DE LA PUERTA DE LA CABINA (GR) 884
RESPIRADERO (CONJ) (CÁRTER DEL MOTOR) 37
39
RESPIRADERO (CONJ) (TREN DE FUERZA) . . . 405
RESPIRADERO (MOTOR) 106
RETÉN (GR) 819
RETROVISOR (GR) 830
831
REVESTIMIENTO DE LA CABINA (GR) 823
RUEDA Y MANDOS FINALES 464
466

S

*SCREEN AS-HIGH PRESSURE 588
633
*SEAL-VALVE COVER 26
37
39
*SEAL-VALVE COVER (TAPA DE VÁLVULA) 27
*SEAT BELT 874
SECADOR DE RECEPTOR (CONJ) (REFRIGERANTE) 778
SELLADO DEL VIDRIO (GR) 869
SELLO ANULAR 649
SELLO DE CIGÜEÑAL (GR) (DELANTERO) 42
SELLO DE LABIO (CAJA DE REGULADOR) 112
SENSOR DE AMORTIGUADOR (GR) 199
SENSOR DE PRESIÓN (GR) 136
248
249
250
251
252
253
254
255
256
257
SENSOR DE PRESIÓN (GR) (ACEITE DE LA BOMBA DEL VENTILADOR HIDRÁULICO) . . . 348
SENSOR DE PRESIÓN (GR) (ACEITE DEL MOTOR) 179
241
SENSOR DE PRESIÓN (GR) (ATMOSFERICA) 241
SENSOR DE PRESIÓN (GR) (COMBUSTIBLE) 176
SENSOR DE PRESIÓN (GR) (*FRONT AXLE BRAKE OIL) 570
SENSOR DE PRESIÓN (GR) (*IMPLEMENT PILOT OIL) 333
SENSOR DE PRESIÓN (GR) (*IMPLEMENT PUMP OIL, RH) 310
SENSOR DE PRESIÓN (GR) (*REAR AXLE BRAKE OIL) 570
SENSOR DE PRESIÓN (GR) (REFUERZO) 241
SENSOR DE PRESIÓN (GR) (*STEERING PILOT OIL) 333
SENSOR DE PRESIÓN (GR) (*STEERING PUMP OIL, LH) 333

* NO HAY TRADUCCION DISPONIBLE EN EL MOMENTO DE LA IMPRESION

INDICE

Nombre	Página
SENSOR DE TEMPERATURA (CONJ)	266, 267
SENSOR DE TEMPERATURA DE ESCAPE (GR)	245
SENSOR DE TEMPERATURA DE ESCAPE (GR) (ENTRADA DE TURBOALIMENTADOR)	238
SENSOR DE TEMPERATURA DE ESCAPE (GR) (TURBOCOMPRESOR, DER, IZQ)	241
SENSOR DE TEMPERATURA (GR)	265, 266, 267, 268, 269
SENSOR DE TEMPERATURA (GR) (ACEITE DE CONVERTIDOR DE PAR)	348
SENSOR DE TEMPERATURA (GR) (ACEITE DEL EJE DELANTERO)	328
SENSOR DE TEMPERATURA (GR) (ACEITE DEL EJE POSTERIOR)	334
SENSOR DE TEMPERATURA (GR) (AIRE AMBIENTAL)	334
SENSOR DE TEMPERATURA (GR) (COMBUSTIBLE)	176
SENSOR DE TEMPERATURA (GR) (*IMPLEMENT, HYDRAULIC FAN OIL)	334
SENSOR DE TEMPERATURA (GR) (*INTAKE AIR TEMPERATURE)	241
SENSOR DE TEMPERATURA (GR) (REFRIGERANTE)	238, 241
SENSOR DE TEMPERATURA (GR) (*STEERING, BRAKE OIL)	334
SENSOR DE TEMPERATURA (GR) (*TRANSMISSION SUMP OIL)	348
SENSOR DE VELOCIDAD (GR)	258, 259
SENSOR DE VELOCIDAD (GR)	260
SENSOR DE VELOCIDAD (GR)	261, 262, 263, 264
SENSOR DE VELOCIDAD (GR) (*CAM GEAR)	241
SENSOR DE VELOCIDAD (GR) (CIGÜEÑAL)	238
SENSOR DE VELOCIDAD (GR) (CIGÜEÑAL)	241
SENSOR DE VELOCIDAD (GR) (SALIDA DEL CONVERTIDOR DE PAR)	389
SENSOR DE VELOCIDAD (GR) (*TRANSFER GEAR INPUT)	386
SENSOR DEL MOTOR (GR)	238
SENSOR DEL MOTOR (GR)	241
SENSOR DEL NIVEL DE LÍQUIDO	246
SENSOR DEL NIVEL DE LÍQUIDO (*IMPLEMENT, HYDRAULIC FAN TANK)	334
SENSOR DEL NIVEL DE LÍQUIDO (NIVEL DEL ACEITE DE MOTOR)	241
SENSOR DEL NIVEL DE LÍQUIDO (*STEERING, BRAKE HYDRAULIC TANK)	334
SEPARADOR DE AGUA Y BOMBA DE CEBADO DE COMBUSTIBLE (GR)	191
*SERVICE CENTER AR	917
SERVICIO DE TREN DE FUERZA (GR)	210
*SHIELD GP-RADIATOR	547
SILENCIADOR (GR)	144
SOFTWARE DEL TREN DE FUERZA (GR)	210
SOLENOIDE DEL MOTOR DE ARRANQUE (CONJ) (24 VOLTIOS)	273, 276
SOPORTE DE CONTROL DE LA DIRECCIÓN (GR)	890
SOPORTE DE LA TRANSMISIÓN (GR)	433
SOPORTE DEL ASIENTO (GR)	889
SOPORTE DEL CONTROL HIDRÁULICO (GR)	886
SOPORTE DEL RESPALDO (GR)	846, 847
SUCCIÓN - VENTILADOR DE (GR)	109
SUSPENSIÓN - ASIENTO CON (GR)	881, 882, 883

T

Nombre	Página
TABLERO DE INSTRUMENTOS (GR)	849, 850
*TANK & MTG GP-ENGINE OIL	105
TANQUE DE GRASA (GR)	556
TANQUE HIDRÁULICO (GR)	732, 734
TANQUE HIDRÁULICO Y MONTAJE (GR)	730, 731
TAPA CON RESPIRADERO (LIMPIAPARABRISAS)	895
TAPA DE LA CABINA (GR)	809
TAPA DE LLENADO (CONJ) (TANQUE DE COMBUSTIBLE)	153, 160
TAPA DE PRESION (7 LB/PULG2)	126
TAPA DEL BLOQUE MOTOR (GR)	30, 32, 33, 34
TAPA DEL INSONORIZADOR (GR)	36
TAPA DEL MECANISMO DE VÁLVULAS (GR)	37, 39
TAPA DEL TANQUE DE RADIADOR (GR)	126

* NO HAY TRADUCCION DISPONIBLE EN EL MOMENTO DE LA IMPRESION

INDICE

Nombre	Página
TAPA DEL TUBO DE LLENADO (ACEITE DEL MOTOR)	106
TAPA DEL TUBO DE LLENADO (ACEITE DEL MOTOR)	83
TAPA DEL TUBO DE LLENADO DE ACEITE (CONJ) (TREN DE FUERZA)	915
TAPA DEL TUBO DE LLENADO (TANQUE HIDRÁULICO)	732, 734
TAPÓN DE CULATA (GR)	75
TAPÓN DE DRENAJE	129, 732
TAPÓN DE DRENAJE (COLECTOR DE ACEITE DEL MOTOR)	70
TAPÓN DE DRENAJE (TANQUE HIDRÁULICO)	734
TAPON DE VALVULA DE CONTROL (GR)	623
TAPÓN DEL BLOQUE MOTOR (GR)	74
TAPÓN (DRENAJE DE ACEITE DE TRANSMISION)	377
TAPÓN MAGNÉTICO	359, 361, 464
TIRANTE DE TRABA DEL BASTIDOR DE DIRECCIÓN (GR)	539
TOPE DE DIRECCION (GR)	634
TORNILLERIA DE MAZO DE CABLES (GR)	212
TORNILLERÍA DE MONT. DE LA BOMBA DE ACEITE (GR)	82
TRABA DE LA PALANCA DE CONTROL (GR)	807
TRABA DEL CONVERTIDOR DE PAR (GR)	441
TRANSMISION (CONFIG)	445
TRANSMISIÓN PLANETARIA (GR)	415
TREN DE FUERZA (CONFIG)	420
TREN DE FUERZA-GRUPO ELECTRÓNICO	210
*TUBE AS-SCREEN (MAGNÉTICO)	388
TUBERÍAS CON SERVOMANDO (GR)	702
TUBERÍAS DE ACEITE DEL MOTOR (GR)	88, 89
TUBERÍAS DE ACEITE DEL TREN DE FUERZA (GR)	405
TUBERIAS DE ACEITE (GR)	97
TUBERÍAS DE ACONDICIONADOR DE AIRE (GR)	827
TUBERIAS DE CALEFACCION	829
TUBERÍAS DE CALEFACCIÓN DE LA CABINA	829
TUBERÍAS DE COMBUSTIBLE (GR)	161, 163
TUBERÍAS DE DIRECCIÓN (GR)	609, 611, 615
TUBERIAS DE ENFRIADOR DE ACEITE DE DIRECCION (GR)	620
TUBERÍAS DE ENGRASE (GR)	531, 536
TUBERÍAS DE LA DIRECCIÓN SECUNDARIA (GR)	605
TUBERÍAS DE LA DIRECCIÓN SECUNDARIA (GR)	602
TUBERÍAS DE LUBRICACIÓN (GR)	537, 538
TUBERÍAS DE NEUTRALIZACIÓN DE LA DIRECCIÓN (GR)	617
TUBERÍAS DE POSENFRIADOR DE AIRE (CONJ)	135
TUBERÍAS DE VENTILACIÓN DEL EJE (GR)	401, 403
TUBERÍAS DEL AGUA (GR)	111, 112
TUBERÍAS DEL CILINDRO DE INCLINACIÓN (GR)	710, 712
TUBERÍAS DEL ENFRIADOR DE ACEITE DEL EJE (GR)	392
TUBERÍAS DEL FILTRO DE ACEITE DEL MOTOR	90, 92, 94
TUBERÍAS DEL FILTRO DE COMBUSTIBLE	166, 168, 172
TUBERÍAS DEL FRENO DE SERVICIO (GR)	581, 583
TUBERÍAS HIDRÁULICAS DEL VENTILADOR (GR)	688, 690, 697
TUBERÍAS HIDRÁULICAS (GR)	683, 684, 686
TUBO DE LLENADO DE ACEITE (GR)	83
TURBOCOMPRESOR - TUBERÍAS DE ACEITE DEL (GR)	99
TURBOCOMPRESOR (GR)	150, 151, 152

V

VÁLVULA DE ALIVIO DEL FRENO	401, 730, 731
VÁLVULA DE ALIVIO DEL FRENO (TANQUE HIDRÁULICO)	403
VÁLVULA DE ALIVIO (GR)	452, 649

* NO HAY TRADUCCION DISPONIBLE EN EL MOMENTO DE LA IMPRESION

INDICE

Nombre	Página
	650
	651
	652
	753
	754
VÁLVULA DE ALIVIO (GR) (CRUCE DEL CILINDRO DE DIRECCION)	655
VÁLVULA DE ALIVIO (GR) (PRINCIPAL)	650
VÁLVULA DE ALIVIO (GR) (*PUMP BACKUP)	655
VÁLVULA DE COMPENSACION (GR)	746
VALVULA DE CONTROL DE INCLINACION (GR)	760
VALVULA DE CONTROL DE LA BOMBA (GR)	592
	646
	647
	648
	752
VÁLVULA DE CONTROL DE LA TRANSMISIÓN (GR)	461
VÁLVULA DE CONTROL DEL FRENO (GR)	591
VÁLVULA DE CONTROL DEL FRENO (GR) (SERVICIO)	570
VÁLVULA DE CONTROL (GR)	741
VÁLVULA DE CONTROL MANUAL (GR)	747
VÁLVULA DE CORTE	829
VÁLVULA DE DIRECCIÓN Y MONTAJE (GR)	635
VÁLVULA DE DISTRIBUCIÓN DE LUBRICACIÓN (GR)	557
	558
VÁLVULA DE DOSIFICACIÓN (GR)	107
VÁLVULA DE DRENAJE DEL RADIADOR (GR)	129
VÁLVULA DE LANZADERA (GR)	654
	702
VÁLVULA DE LANZADERA (GR)	757
VÁLVULA DE MODULACIÓN (GR)	450
	451
VÁLVULA DE PRIORIDAD DEL CONVERTIDOR DE PAR (GR)	459
VÁLVULA DE RETENCIÓN (GR)	190
	636
	637
	638
	639
	640
	641
	642
VÁLVULA DE RETENCIÓN (GR) (*AIR PURGE)	675
VÁLVULA DE RETENCIÓN (GR) (COMBUSTIBLE)	168
	172
VÁLVULA DE RETENCIÓN (GR) (PILOTO)	702
VÁLVULA DE SECUENCIA (GR)	755
	756
VÁLVULA DE SOLENOIDE (GR)	456
	457
	458
VÁLVULA DE SOLENOIDE (GR)	758
	759
VÁLVULA DE SOLENOIDE (GR) (*AXLE OCLR ACTIVATE, DEACTIVATE)	412
VÁLVULA DE SOLENOIDE (GR) (24 VOLTIOS) (DOBLE INCLINACIÓN)	760
VALVULA DE SOLENOIDE Y MONTAJE (GR	740
VÁLVULA DEL EMBRAGUE DE DESCONEXIÓN Y MONTAJE (GR)	449
VÁLVULA DEL NEUMÁTICO (GR)	426
VALVULA (*GREASE PRESSURE)	556
VÁLVULA NEUTRALIZADORA DE DIRECCIÓN (GR)	659
VALVULA PILOTO DE CARTUCHO (GR)	644
	645
	750
	751
VÁLVULA PILOTO (GR)	643
	748
VÁLVULA REDUCTORA DE PRESIÓN (GR) (*STEERING PILOT OIL REGULATOR)	656
VÁLVULA SELECTORA (GR)	453
VÁLVULA SELECTORA Y DE CONTROL DE PRESIÓN (GR)	454
VÁLVULA SELECTORA Y DE CONTROL DE PRESIÓN (GR)	653
VÁLVULA SELECTORA Y DE CONTROL DE PRESIÓN (GR) (DIRECCIÓN SECUNDARIA)	602
	605
VÁLVULA Y MONTAJE DEL CONTROL DE FRENO (GR)	589
VÁLVULA Y MONTAJE DEL VENTILADOR HIDRÁULICO (GR)	737
VÁLVULAS DE LA DIRECCIÓN (GR)	655
VOLANTE - CAJA DE (GR)	61
VOLANTE (GR)	56

W

*WIRING GP-CONVERTER	314
*WIRING GP-ELECTRONICS BAY	315
*WIRING GP-OIL RENEWAL SYSTEM	346
	347
*WIRING GP-SERVICE CENTER	357

* NO HAY TRADUCCION DISPONIBLE EN EL MOMENTO DE LA IMPRESION

ÍNDICE

Designação	Página
A	
ACENDEDOR DE CIGARROS (12-VOLTS)	300
ACESSÓRIO - MOTOR	21
ACIONADOR - VÁLVULA	23
	24
ACIONADOR DA BOMBA	593
	594
	595
ACUMULADOR - FREIO	560
	561
ACUMULADOR - REFRIGERANTE	778
ACUMULADOR DO REFRIGERANTE E MONTAGEM	778
ADAPTADOR - ABASTECIMENTO RÁPIDO DE COMBUSTÍVEL	153
ADESIVO-CENTRO DE SERVIÇO	907
ADESIVO-EUA	908
ADESIVO-INTERNACIONAL	906
ADESIVO-SERVIÇO	295
AJUSTADOR DO ASSENTO	780
ALARME	192
ALARME (MARCHA-À-RÉ)	350
ALTERNADOR DE CORRENTE (24 VOLTS, 150 AMPÈRES)	21
AMORTECEDOR	53
	54
AMORTECEDOR - SENSOR	199
AQUECEDOR DA ÁGUA DO MOTOR	216
	217
AQUECEDOR DO COMBUSTÍVEL	213
	214
ARMAÇÃO DIANTEIRA	488
ARO	425
ARO DESMONTÁVEL	426
	427
ARRANJO BÁSICO	2
ARREFECEDOR DO COMBUSTÍVEL	155
	156
ARREFECEDOR-ÓLEO HIDRÁULICO E DE DIREÇÃO	660
ARTICULAÇÃO DA VÁLVULA PILOTO	717
ASSENTO	871
	873
	874
	875
	877
ASSENTO - FUNDO	848
ASSENTO COM SUSPENSÃO	881
	882
	883
ASSENTO DE PASSAGEIRO	878
	879
	880
AUXILIAR DE PARTIDA A ÉTER	270
B	
BALANCIM	76
	77
	78
	79
BARRA DE TRAÇÃO	471
BASE DO FILTRO DE COMBUSTÍVEL	191
BASE DO FREIO - PEDAL	562
	563
BASE-INDICADOR (VERDE)	357
BATENTE - DIREÇÃO	634
BATERIA	198
BATERIA - CONTROLE ELETRÔNICO (ANÁLISE NA ESTRADA - MÓDULO PRINCIPAL DO VIMS)	205
BATERIA E CABOS / FIOS ELÉTRICOS	193
BATERIA (12 VOLTS, ISENTO DE MANUTENÇÃO)	193
BLINDAGEM DO COMPARTIMENTO DO MOTOR	545
BLOCO DE JUNÇÃO (BATERIA)	194
BLOCO DO MOTOR	43
	45
	46
BLOCO HIDRÁULICO	364
	365
BOCAL DE ENCHIMENTO DE ÓLEO DO MOTOR	83
BOMBA - ESCORVA DE COMBUSTÍVEL E SEPARADOR DE ÁGUA	191
BOMBA DA DIREÇÃO SECUNDÁRIA E MONTAGEM	624
BOMBA DA TRANSMISSÃO	423
	424
BOMBA DE ÁGUA	116
	117
BOMBA DE ENGRENAGENS	626
	628
	722
	723
BOMBA DE INJEÇÃO DO COMBUSTÍVEL	184
BOMBA DE ÓLEO - MOTOR	103
BOMBA DE PISTÃO	586
	629
	725
BOMBA DE TRANSFERÊNCIA DO COMBUSTÍVEL	185
BOMBA DO ARREFECEDOR DE ÓLEO DO EIXO E MONTAGEM	422

* TRADUÇÃO NÃO DISPONÍVEL NO MOMENTO DA IMPRESSÃO

ÍNDICE

Designação	Página
BOMBA DO ARREFECEDOR DO EIXO E MOTOR	421
BOMBA DO FREIO E MONTAGEM	585
BOMBA DO VENTILADOR HIDRÁULICO E MONTAGEM	718
BOMBA E MONTAGEM - ACESSÓRIO	719
BOMBA E MONTAGEM - DIREÇÃO	625
BOMBA E MONTAGEM - PILOTO DO ACESSÓRIO	721
BOMBA E MONTAGEM - TRANSFERÊNCIA DE COMBUSTÍVEL	183
BOMBA E MOTOR - ARREFECEDOR DE ÓLEO DO EIXO	421
BRAÇO DE EMPUXO	765
	767
BRACO DO LIMPADOR	787
BUJÃO - CABEÇA DO CILINDRO	75
BUJÃO - VÁLVULA DE CONTROLE	623
BUJÃO DO BLOCO DO CILINDRO	74
BUJÃO DO DRENO	129
	732
BUJÃO DO DRENO (CÁRTER DE ÓLEO DO MOTOR)	70
BUJÃO DO DRENO (TANQUE HIDRÁULICO)	734
BUJÃO MAGNÉTICO	359
	361
	464

C

CABEÇA DA BOMBA	601
CABEÇOTE DO MOTOR	48
	50
	51
CABINE	792
	793
	794
	845
CABINE E PLATAFORMA	790
CABO/FIOS ELÉTRICOS-COMUNICAÇÃO	312
CABOS E FIOS ELÉTRICOS - PÁRA-CHOQUE	294
CABOS/FIOS ELÉTRICOS - CABINE	299
CABOS/FIOS ELÉTRICOS - CHASSI	310
CABOS/FIOS ELÉTRICOS - CONVERSOR	314
CABOS/FIOS ELÉTRICOS - DIANTEIROS	328
CABOS/FIOS ELÉTRICOS - ESTRUTURA ROPS	353
CABOS/FIOS ELÉTRICOS - MÁQUINA	330
	333
CABOS/FIOS ELÉTRICOS - MOTOR	319
	322
CABOS/FIOS ELÉTRICOS - SISTEMA ELETRÔNICO	325
CABOS/FIOS ELÉTRICOS - TRASEIROS	350
CABOS/FIOS ELÉTRICOS - TREM DE FORÇA	348
CADEADO	153
	160
	294
	512
	541
	915
CADEADO (TAMPA DO TANQUE HIDRÁULICO)	916
CAIXA - ENGRENAGEM DE TRANSFERÊNCIA	368
CAIXA DE ARMAZENAMENTO	788
	789
CAIXA DIANTEIRA	63
CAIXA DO VOLANTE DO MOTOR	61
CAIXA TRASEIRA	64
CÂMERA	200
CÂMERA (115 GRAUS, COR)	309
CAPA-CONTRA POEIRA	431
CAPÔ E PROTETOR	512
CARCAÇA DAS ENGRENAGENS PLANETÁRIAS E COMPONENTES	366
CÁRTER DO ÓLEO DO MOTOR	70
CENTRO DE SERVIÇO	917
	918
	919
CHASSI	1
CHASSI TRASEIRO	491
CHAVE	294
	512
CHAVE (COMPARTIMENTO PARA PUBLICAÇÕES)	1
CHAVE (DESCONEXÃO DA BATERIA)	280
CHAVE GERAL	280
CHAVE GERAL (BATERIA)	193
CHICOTE - CABINE (INFERIOR)	300
CHICOTE - CABINE (INTERIOR, TRASEIRO)	300
CHICOTE - CABINE (*POWER CONVERTER)	314
CHICOTE - CABOS ELÉTRICOS (AQUECIMENTO DO ASSENTO)	848
CHICOTE - CABOS ELÉTRICOS (FERRITA)	841
CHICOTE - CABOS ELÉTRICOS (SENSOR DE VELOCIDADE)	260
CHICOTE - CABOS ELÉTRICOS (*SERVICE CENTER, AUTOLUBE)	357
CHICOTE - CHASSI (ARMAÇÃO, LADO ESQUERDO)	334
CHICOTE - CHASSI (PRINCIPAL)	334
CHICOTE - CHASSI (ROPS)	353

* TRADUÇÃO NÃO DISPONÍVEL NO MOMENTO DA IMPRESSÃO

ÍNDICE

Designação	Página
CHICOTE - DIANTEIRO (EIXO, VÁLVULA DE CONTROLE, LUZES)	328
CHICOTE - DIANTEIRO (FARÓIS, BUZINA)	232
CHICOTE - FREIOS (ESTACIONAMENTO, INTERRUPTOR)	334
CHICOTE - ILUMINAÇÃO (COBERTURA DO MOTOR, ÉTER)	334
CHICOTE - ILUMINAÇÃO (FARÓIS INTERNOS, DIANTEIROS)	232
CHICOTE - MONITOR (CAES)	841
CHICOTE - MONITOR (MÓDULO PRINCIPAL VIMS)	299
CHICOTE - MONITOR (SISTEMA VISUAL DA ÁREA DE TRABALHO)	237
CHICOTE - MOTOR	27
	322
CHICOTE - MOTOR (MÓDULO DE CONTROLE ELETRÔNICO)	325
CHICOTE - MOTOR (UNIDADE INJETORA)	26
CHICOTE - PLATAFORMA (FILTRO, INTERRUPTORES DE DERIVAÇÃO DA BOMBA)	310
CHICOTE - PLATAFORMA (SALIÊNCIA SO SISTEMA ELETRÔNICO PARA CABINE)	334
CHICOTE - SENSOR (PRESS ADMISSÃO DO AR DO TURBOALIMENTADOR)	136
CHICOTE - SENSOR (PRESSÃO DO COMBUSTÍVEL)	176
CHICOTE - SENSOR (PRESSÃO DO COMBUSTÍVEL)	179
CHICOTE - SENSOR (VELOCIDADE)	259
CHICOTE - TRANSMISSÃO (CONVERSOR DE TORQUE)	348
CHICOTE - TRANSMISSÃO (SOLENÓIDES DA EMBREAGEM)	461
CHICOTE - TRANSMISSÃO (*SPEED SENSORS)	348
CHICOTE - VÁLVULA (COMPRESSOR DE AR DO ASSENTO)	893
CHICOTE-CHASSI DIANTEIRO (PRINCIPAL)	328
CHICOTE-CHASSI TRASEIRO	350
CHICOTE-CHASSI TRASEIRO (SISTEMA DE RENOVAÇÃO DE ÓLEO)	334
CILINDRO DA BOMBA	596
CILINDRO DA DIREÇÃO	598
CILINDRO DE DIREÇÃO E MONTAGEM	597
CILINDRO DE INCLINAÇÃO	670
	672
CILINDRO DE LEVANTAMENTO	664
	666
	668
	669
CILINDRO DE LEVANTAMENTO E MONTAGEM	662
CINTO DE SEGURANÇA	870
	874
CINTO DE SEGURANÇA (RETRÁTIL)	873
	877
CINZEIRO	886
COBERTURA - TANQUE HIDRÁULICO	472
	474
	475
COBERTURA-CENTRO DE SERVIÇO	902
COBERTURTA- BAIA ELETRÔNICA	211
	315
COLETOR - CONTROLE	412
COLETOR - CONTROLE (CARGA DO ACUMULADOR DO FREIO)	571
COLETOR DE ESCAPE	141
	143
COLMÉIA - ARREFECEDOR DE ÓLEO	108
COLMÉIA - ARREFECEDOR DE ÓLEO HIDRÁULICO	660
COLMÉIA - ARREFECEDOR DE ÓLEO (MOTOR)	112
COLMÉIA - ARREFECEDOR DO COMBUSTÍVEL	155
	156
COLMÉIA-ARREFECEDOR DO ÓLEO DA DIREÇÃO	660
COLMÉIA-ARREFECEDOR DO ÓLEO DO EIXO	392
COLMEIA DO ARREFECEDOR DA ADMISSAO	130
COLMEIA DO CONDENSADOR (REFRIGERANTE)	797
COLMEIA DO RADIADOR	118
	121
COMANDO FINAL E RODA	464
	466
COMANDO HIDRÁULICO	681
	682
COMBUSTÍVEL - ABASTECIMENTO CONVENCIONAL	160
COMBUSTÍVEL - ABASTECIMENTO RÁPIDO	160
COMPRESSOR DE AR - ASSENTO	781
COMPRESSOR DE REFRIGERANTE	796
CONDENSADOR DO REFRIGERANTE E MONTAGEM	797
CONDICIONADOR DE AR	782
	783
CONECTOR ELETRÔNICO	237
CONEXÃO - CONDICIONADOR DE AR	827
CONEXÃO - ELÉTRICA	201
CONEXÃO - HIDRÁULICA	680

* TRADUÇÃO NÃO DISPONÍVEL NO MOMENTO DA IMPRESSÃO

ÍNDICE

Designação	Página
CONTROLE - NÃO PROGRAMADO	205
CONTROLE - NÃO PROGRAMADO (TREM DE FORÇA)	315
CONTROLE-CABO	798
CONTROLE-COMUNICAÇÃO	204
CONTROLE DE DIREÇÃO	802
CONTROLE DO FREIO DE ESTACIONAMENTO	569
CONTROLE DO FREIO DE SERVIÇO	570
CONTROLE DO PEDAL DO FREIO	568
CONTROLE ELETRÔNICO E MONTAGEM - MOTOR	202
	203
CONTROLE HIDRÁULICO DA TRANSMISSÃO	369
CONTROLE HIDRÁULICO DE OPERAÇÃO PILOTO	799
CONTROLE INTEGRADO DA TRANSMISSÂO DA DIREÇÃO	804
	805
CONVERSOR DE TORQUE - TRAVA	441
CONVERSOR DE TORQUE E CARCAÇA	439
CORREIA- SERPENTINA	21
CORRIMAO, BALAUSTRE	500
	501
	503
	504
CRUZETA E MANCAL	432

D

Designação	Página
DECALCOMANIA - FACIAL (LADO DIREITO)	850
DECALCOMANIA - FACIAL (LADO ESQUERDO)	850
DECALQUE	903
	905
DECALQUE - ADVERTÊNCIA (NÃO OPERE, CONSULTE OMM)	908
DECALQUE - ADVERTÊNCIA (NÃO SOLDAR, NÃO PERFURAR, CONSULTAR OMM)	905
DECALQUE - ADVERTÊNCIA (PRODUCT LINK 300, EUA)	219
DECALQUE - ADVERTÊNCIA (PRODUCT LINK 300, INTERNACIONAL)	219
DECALQUE - CONTROLE (TRAVA DO ACELRADOR, HIDRÁULICA, BUZINA)	799
DECALQUE - IDENTIFICAÇÃO (ESCORVA DO COMBUSTÍVEL, LUZ DE SERVIÇO DO MOTOR)	334
DECALQUE - IDENTIFICAÇÃO (LUZ DE TRABALHO)	334
DECALQUE - IDENTIFICAÇÃO (LUZES DA ESCADA)	294
DECALQUE - IDENTIFICAÇÃO (RECEPTORES DO CENTRO DE SERVIÇO, TRASEIROS)	907
DECALQUE - IDENTIFICAÇÃO (TRAVA DA TRANSMISSÃO)	294
DECALQUE - IDENTIFICAÇÃO (TRAVA DO MOTOR DE PARTIDA)	294
DECALQUE - INFORMAÇÕES (PRODUCT LINK, CONSULTAR OMM)	219
DECALQUE - INFORMAÇÕES (24 VOLTS)	905
DECALQUE - INSTRUÇÃO (AJUSTE DO ASSENTO)	893
DECALQUE - INSTRUÇÃO (ENTRADA E SAIDA DE AGUA)	783
DECALQUE - INSTRUÇÃO (PARADA DO MOTOR)	294
DECALQUE - INSTRUÇÃO (SEM DEGRAUS)	905
DECALQUE - TECLADO	832
DEFLETOR DO RADIADOR	124
DEFLETOR TÉRMICO DE CALOR	145
	146
	147
DEGRAU	549
	550
DIFERENCIAL	376
DIFERENCIAL E COROA	370
	371
	373
	374
DISJUNTOR AUTOMÁTICO DE CIRCUITO (10 AMPERES) (CHAVE INTERRUPTORA)	316
DISJUNTOR AUTOMÁTICO DE CIRCUITO (105 AMPERES) (PARTIDA)	315
DISJUNTOR AUTOMÁTICO DE CIRCUITO (105 AMPERES) (PRINCIPAL)	315
DISJUNTOR AUTOMÁTICO DE CIRCUITO (15 AMPERES) (ILUMINAÇÃO DE OPERAÇÃO)	315
DRENO - ECOLOGIA	377
DRENO DO COMBUSTÍVEL	158
DUCTO DE AR	815

E

Designação	Página
EIXO-COMANDO DE VÁLVULA	29
EIXO DE TRANSMISSÃO	428
EIXO DO COMANDO DE ENTRADA	430
EIXO FIXO	358
	359
EIXO OSCILANTE	358
	361
EJETOR DE POEIRA	134
ELEMENTO - AQUECEDOR DE ÁGUA DA CAMISA (240 VOLTS, 1500 WATTS)	217

* TRADUÇÃO NÃO DISPONÍVEL NO MOMENTO DA IMPRESSÃO

ÍNDICE

Designação	Página
ELEMENTO (ACENDEDOR DE CIGARROS)	300
ELEMENTO DO FILTRO DE AR (PRIMÁRIO)	133
ELEMENTO DO FILTRO DE AR (SECUNDÁRIO)	133
ELEMENTO FILTRANE-AR DA CABINE (EFICIÊNCIA PADRÃO)	794 816
ELEMENTO FILTRANTE - ÓLEO (EXTREMA EFICIÊNCIA)	678
ELEMENTO FILTRANTE - ÓLEO (EXTREMA EFICIÊNCIA) (TREM DE FORÇA)	380 382
ELIMINAÇÃO DE VAPORES DO CÁRTER	85
ELO - TRAVA DA ARMAÇÃO DA DIREÇÃO	539
ELO ESTABILIZADOR	762
EMISSOR - NÍVEL DO COMBUSTÍVEL	186
EMISSOR - POSIÇÃO	247 852
EMISSOR - POSIÇÃO (GIRATÓRIO)	562
ENGATE - ARTICULAÇÃO	510
ENGRENAGEM - TRANSFERÊNCIA DE ENTRADA	386
ENGRENAGENS DE COMANDO TRASEIRO	59
ENGRENAGENS DE DISTRIBUIÇÃO	57
ENGRENAGENS DE SAÍDA DE TRANSFERÊNCIA	388
ENGRENAGENS PLANETÁRIAS - TRANSMISSÃO	415
ESCADA	519 521
ESPELHO RETROVISOR	830 831
ESTRUTURA ROPS	866 867
EXTENSÃO - ENCOSTO (TECIDO)	873 877
EXTENSÃO DO TUBO DE DRENAGEM	55

F

Designação	Página
FAROL DIANTEIRO	224 225
FIAÇÃO - AMORTECEDOR	295
FIAÇÃO - AQUECEDOR E AR CONDICIONADO	784
FIAÇÃO - CONTROLE (CAES, LATERAL DA ROPS)	330
FIAÇÃO - CONTROLE (*CAES RECEIVER)	330
FIAÇÃO - CONTROLE DE LUBRIFICAÇÃO AUTOMÁTICA	292
FIAÇÃO - CONTROLE (ELETRÔNICO)	315
FIAÇÃO - CONTROLE (PRODUCT LINK)	312
FIAÇÃO - CONTROLE (*SERVICE CENTER, OIL RENEWAL)	357
FIAÇAO - CONTROLES DO OPERADOR (LAVADOR DE VIDROS)	300
FIAÇAO - CONTROLES DO OPERADOR (LIMPADOR DO VIDRO DE QUADRANTE)	300
FIAÇAO - CONTROLES DO OPERADOR (LIMPADOR DO VIDRO TRASEIRO)	300
FIAÇAO - CONTROLES DO OPERADOR (TOMADA DOS CONTROLES DO IMPLEMENTO)	300
FIAÇÃO - EIXO (ARREFECEDOR DO ÓLEO DO EIXO)	334
FIAÇÃO - EIXO (DIANTEIRO, SENSOR DA TEMPERATURA)	328
FIAÇÃO - EIXO (PARTE TRASEIRA)	334
FIAÇÃO - INTERRUPTOR (DIREÇÃO SECUNDÁRIA)	602 605
FIAÇÃO - PAINEL (DESLIGAMENTO EXTERNO)	294
FIAÇÃO - PAINEL (DIANTEIRA)	300
FIAÇÃO - PAINEL (LATERAL, DIREITO)	300
FIAÇÃO-CÂMERA	309
FIAÇÃO-CAPÔ (LUZES DA ESCADA)	334
FIAÇÃO-CENTRO DE SERVIÇO	357
FIAÇÃO ELÉTRICA (*AUTOMATIC LUBRICATION CONTROL)	292
FIAÇÃO-RÁDIO	862 863 864
FIAÇAO-SALIÊNCIA DO SISTEMA ELETRÔNICO	315
FIAÇÃO-SISTEMA DE RENOVAÇÃO DO ÓLEO	346 347
FIAÇÃO-TANQUE HIDRÁULICO (DIREÇÃO, FREIO)	334
FIAÇÃO-TANQUE HIDRÁULICO (IMPLEMENTO, VENTILADOR HIDRÁULICO)	334
FILTRO - AR DA CABINE	816
FILTRO - COMBUSTÍVEL	186
FILTRO - COMBUSTÍVEL (EFICIÊNCIA AVANÇADA) (SECUNDÁRIO)	176 179
FILTRO - ÓLEO	380 382 384 599 600 678 679
FILTRO - ÓLEO DO MOTOR	84

* TRADUÇÃO NÃO DISPONÍVEL NO MOMENTO DA IMPRESSÃO

ÍNDICE

Designação	Página
FILTRO - ÓLEO DO MOTOR (EFICIÊNCIA PADRÃO)	84
FILTRO - ÓLEO (DRENO DA CAIXA DA BOMBA DA DIREÇÃO)	611
FILTRO - ÓLEO (DRENO DA CAIXA DA BOMBA DO IMPLEMENTO)	675
FILTRO - ÓLEO (DRENO DA CAIXA DA BOMBA DO VENTILADOR HIDRÁULICO)	674
FILTRO - ÓLEO (EFICIÊNCIA AVANÇADA) (CAIXA DE DRENAGEM)	600
FILTRO - ÓLEO (EXTREMA EFICIÊNCIA)	599 679
FILTRO - SEPARADOR DE ÁGUA E COMBUSTÍVEL (PRIMÁRIO)	159
FILTRO DE COMBUSTÍVEL E SEPARADOR DE ÁGUA	159
FILTRO DO TREM DE FORÇA E MONTAGEM	378
FILTROS E TUBOS - DRENAGEM DA CAIXA	674 675
FIXADORES - BOMBA DE ÓLEO DO MOTOR	82
FIXADORES - CABEÇOTE DO MOTOR	51
FIXADORES - CHICOTE	212
FREIO DE ESTACIONAMENTO	564
FREIO DE SERVIÇO	566
FUNDO - ENCOSTO	846 847
FUSÍVEL (10 AMPERES)	315
FUSÍVEL (15 AMPERES)	315
FUSÍVEL (20-AMPERES)	315

G

GR. BÁSICO - TAMPA DAS VÁLVULAS E CHICOTE DE INJEÇÃO	25 26 27 28
GR. DE SERVICO - TREM DE FORÇA	210
GRUPO DE INSTALAÇÃO - MOTOR	19
GRUPO ROTATIVO DA BOMBA	587 631 729

H

*HARDWARE GP-HANDRAIL MOUNTING	505 507 508 509

I

ILUMINAÇÃO - AUXILIAR	227
ILUMINAÇÃO - FREIOS	236
INDICADOR - NÍVEL DE LÍQUIDO	385
INDICADOR - NÍVEL DE LÍQUIDO (VISOR DE VIDRO)	732
INDICADOR - NÍVEL DE LÍQUIDO (VISOR DE VIDRO) (TANQUE HIDRÁULICO)	734
INDICADOR - NÍVEL DO ÓLEO (VARETA)	86 87
INDICADOR - VARETA DO NÍVEL DE ÓLEO (MOTOR)	86 87
INDICADOR-TROCAR FILTRO DE AR	136
INJETOR DE COMBUSTÍVEL	184
INSTALAÇÃO - CAES	219
INSTALAÇÃO-COMUNICAÇÃO	219
INSTALAÇÃO DO RÁDIO	818
*INSULATION GP-RADIATOR SHIELD	517 518
INTERRUPTOR - BALANCIM	289
INTERRUPTOR - BALANCIM (ACIONADOR DE TRAVA DO ACELERADOR)	300
INTERRUPTOR - BALANCIM (BOMBA DE ESCORVA DE COMBUSTÍVEL, LIGAR-DESLIGAR)	333
INTERRUPTOR - BALANCIM (EMBREAGEM DE TRAVA DO CONVERSOR DE TORQUE)	300
INTERRUPTOR - BALANCIM (ILUMINAÇÃO DE OPERAÇÃO)	300
INTERRUPTOR - BALANCIM (INCLINAÇÃO, FUNÇÃO DA PONTA)	300
INTERRUPTOR - BALANCIM (LUZ DO ACESSO ÀS ESCADAS)	300
INTERRUPTOR - BALANCIM (LUZ INTERIOR)	301
INTERRUPTOR - BALANCIM (LUZES DE ACESSO AOS DEGRAUS)	294
INTERRUPTOR - BALANCIM (LUZES DO COMPARTIMENTO DO MOTOR, LADO DIREITO)	333
INTERRUPTOR - BALANCIM (LUZES DO COMPARTIMENTO DO MOTOR, LADO ESQUERDO)	333
INTERRUPTOR - BALANCIM (MUDANÇA RÁPIDA)	300
INTERRUPTOR - BALANCIM (PARADA A NÍVEL DO SOLO)	294
INTERRUPTOR - BALANCIM (TRAVA DA TRANSMISSÃO)	294
INTERRUPTOR - BALANCIM (TRAVA DO MOTOR DE PARTIDA)	294
INTERRUPTOR - BALANCIM (TRAVA HIDRÁULICA)	300

* TRADUÇÃO NÃO DISPONÍVEL NO MOMENTO DA IMPRESSÃO

ÍNDICE

Designação	Página
INTERRUPTOR - BALANCIM (24 VOLTS) (FARÓIS, DIANTEIROS)	301
INTERRUPTOR - BALANCIM (24 VOLTS) (FARÓIS, TRASEIROS)	301
INTERRUPTOR - BOTÃO (AJUSTAR A TRAVA DO ACELERADOR)	300
INTERRUPTOR - BOTÃO (BUZINA)	300
INTERRUPTOR - BOTÃO (RETOMAR A TRAVA DO ACELERADOR)	300
INTERRUPTOR - LIMITADOR (FREIO DE ESTACIONAMENTO)	589
INTERRUPTOR - LIMITADOR (LUZ DE FREIO)	562
INTERRUPTOR - LIMITADOR (POLO SIMPLES) (DESATIVAÇÃO DA TRAVA DO ACELERADOR)	563
INTERRUPTOR - LIMITE	282
INTERRUPTOR - LIMPADOR DO PÁRA-BRISA	290
INTERRUPTOR - LIMPADOR DO PÁRA-BRISA (24 VOLTS, INTERMITENTE) (DIANTEIRO)	299
INTERRUPTOR - LIMPADOR DO PÁRA-BRISA (24 VOLTS, INTERMITENTE) (TRASEIRO)	299
INTERRUPTOR - LIMPADOR (24 VOLTS) (PISCA-PISCA DIANTEIRA)	290
INTERRUPTOR - MAGNÉTICO	284 285 286 287
INTERRUPTOR - MAGNÉTICO (24 VOLTS CC) (RELÉ DE PARTIDA NÚMERO 1)	315
INTERRUPTOR - MAGNÉTICO (24 VOLTS CC) (RELÉ DE PARTIDA NÚMERO 2)	315
INTERRUPTOR - MAGNÉTICO (24 VOLTS) (RELÉ DE PARTIDA)	286
INTERRUPTOR - MAGNÉTICO (24 VOLTS) (RELÉ PRINCIPAL)	315
INTERRUPTOR - NÍVEL DO LÍQUIDO	283
INTERRUPTOR - NÍVEL DO LÍQUIDO (ÓLEO DO MOTOR)	238
INTERRUPTOR - NÍVEL DO LÍQUIDO (TANQUE DE MEDIÇÃO DE RENOVAÇÃO DO ÓLEO)	346
INTERRUPTOR - PARTIDA (CHAVE)	294
INTERRUPTOR - PRESSÃO	288
INTERRUPTOR - PRESSÃO (CARGA DO ACUMULADOR DO FREIO)	333
INTERRUPTOR - PRESSÃO (COMPRESSOR DO GÁS REFRIGERANTE, LADO ALTO)	21
INTERRUPTOR - PRESSÃO (DERIVAÇÃO DO FILTRO)	679
INTERRUPTOR - PRESSÃO (DERIVAÇÃO DO FILTRO DE ÓLEO)	599
INTERRUPTOR - PRESSÃO (DIFERENCIAL)	310
INTERRUPTOR - PRESSÃO (FILTRO DO ÓLEO)	678
INTERRUPTOR - PRESSÃO (ÓLEO DA DIREÇÃO SECUNDÁRIA)	602 605
INTERRUPTOR - PRESSÃO (ÓLEO DO FREIO DE ESTACIONAMENTO)	589
INTERRUPTOR - PRESSÃO (*REFRIGERANT COMPR, LOW SIDE)	21
INTERRUPTOR - ROTATIVO (LIMPADOR, LAVADOR DE PÁRA-BRISA) (VIDRO LATERAL)	299
INTERRUPTOR - ROTATIVO (SELEÇÃO DE FORÇA DE TRAÇÃO REDUZIDA)	299
INTERRUPTOR - ROTATIVO (VELOCIDADE DO VENTILADOR)	299
INTERRUPTOR - TEMPERATURA (AR CONDICIONADO)	784
INTERRUPTOR-CHAVE (PARTIDA)	300
INTERRUPTOR DE DERIVAÇÃO	279
INTERRUPTOR DO FREIO - MOTOR	281

J

JOGO DE BLOCO DESLIZADOR	881
JOGO DE RETENTOR	560 561 626
JUNTA CORREDIÇA	431
JUNTA UNIVERSAL	446 447 448

L

LÂMINA	761
LÂMINA DO LIMPADOR DE PÁRA-BRISA (400 MM) (TRASEIRO)	896
LÂMINA DO LIMPADOR DE PÁRA-BRISA (700 MM) (DIANTEIRO)	896
LÂMINA DO LIMPADOR DE PÁRA-BRISA (700 MM) (VIDRO LATERAL)	899
LÂMINA PARA CARVÃO	770 773
LÂMINA SEMI-UNIVERSAL	770 771 775 776
LÂMPADA - FAROL	221 222 223
LÂMPADA - FAROL (24 VOLTS)	231

* TRADUÇÃO NÃO DISPONÍVEL NO MOMENTO DA IMPRESSÃO

ÍNDICE

Designação	Página
LÂMPADA - HALOGÊNEO (24 VOLTS, 65 WATTS)	221
	222
	223
	224
	225
LÂMPADA - SINALIZAÇÃO	226
LÂMPADA - SINALIZAÇÃO (VIMS, LED, AZUL)	350
LÂMPADA - TETO	220
LÂMPADA - TETO (24 VOLTS)	299
LÂMPADA - TETO (24 VOLTS)	794
LÂMPADA (ÂMBAR, LED, 24 VOLTS)	294
LÂMPADA-INTERNA	299
LÂMPADA (VIMS, LED, BRANCA)	300
LÂMPADA (24 VOLTS)	220
	294
	299
LÂMPADA (24 VOLTS) (VERDE)	357
LAVADOR DO VIDRO	895
LEVANTAMENTO DO MOTOR	65
LIMPADOR DO VIDRO	898
	899
LIMPADOR DO VIDRO (LATERAL DIANTEIRO)	899
LIMPADOR E LAVADOR - JANELA	896
LUBRIFICAÇÃO - AUTOMÁTICA	540

M

MECANISMO DAS VÁLVULAS E BOMBA DE COMBUSTÍVEL	67
	68
MEDIÇÃO - ÓLEO DO MOTOR	101
MÓDULO - CENTRO DE MENSAGEM	831
MÓDULO - TECLADO DO MONITOR	832
MÓDULO - VELOCÍMETRO E TACÔMETRO	299
MÓDULO DO VISOR (SISTEMA VISUAL DA ÁREA DE TRABALHO)	237
MÓDULO ELETRÔNICO DE QUATRO INDICADORES	833
MOLA - PORTA DA CABINA	884
MONTAGEM - ALTERNADOR E COMPRESSOR	69
MONTAGEM - ARO	414
MONTAGEM - CONVERSOR DE TORQUE	414
MONTAGEM - ESTRUTURA ROPS	844
MONTAGEM - MONITOR	841
MONTAGEM - PÁRA-CHOQUE	541
MONTAGEM - PLATAFORMA	843
MONTAGEM-ANTENA	838
	839
MONTAGEM-CÂMERA	237
MONTAGEM DO EIXO	413
MONTAGEM DO FILTRO DE COMBUSTÍVEL	176
	179
MOTOR	3
	4
	5
	6
MOTOR - LIMPADOR DO VIDRO	834
	835
	836
	837
MOTOR - LIMPADOR DO VIDRO (24 VOLTS) (TRASEIRO)	896
MOTOR - LIMPADOR DO VIDRO (24 VOLTS, 2 VELOCIDADES)	834
	836
	837
MOTOR - NÚCLEO	17
	18
MOTOR - PISTÃO	715
MOTOR COMPLETO	7
	8
	11
	14
MOTOR DO GRUPO ROTATIVO	727
MOTOR E MONTAGEM - VENTILADOR HIDRÁULICO	714
MOTOR ELÉTRICO DE PARTIDA	272
	275
	278
MOTOR-SOPRADOR (AR DA CABINE)	859
MUNHÃO DA LÂMINA	769

O

ORIFÍCIO-CONDICIONADOR DE AR	778

P

PAINEL DE INSTRUMENTOS	849
	850
PAINEL DO CAPÔ	542
	544
PAINEL TRASEIRO DO MOTOR	486
PÁRA-LAMA	477
	482
PÁRA-LAMA DIANTEIRO	481
PASSADIÇO	559
PEDAL DO GOVERNADOR	852
PINO DA LÂMINA	763
PISTÃO - CILINDRO HIDRÁULICO	716
PISTÃO E BIELA	71
	72
PLACA - IDENTIFICAÇÃO DO MOTOR	914

* TRADUÇÃO NÃO DISPONÍVEL NO MOMENTO DA IMPRESSÃO

ÍNDICE

Designação	Página
PLACA - NÚMERO DE SÉRIE (TRANSMISSÃO)	439
PLACA DE INSTRUÇÃO (BATERIA)	193
PLACA-PRESSÃO	723
PLATAFORMA DO OPERADOR	853
	854
	857
PNEU E ARO	434
	435
	436
	437
	438
PORTA DA CABINE	813
PORTA DA CABINE (LADO DIREITO)	793
PORTA DE ACESSO	469
	811
	812
PÓS-ARREFECEDOR DA ADMISSÃO DE AR	130
POTENCIÔMETRO (CONTROLE DE TEMPERATURA)	300
PRÉ-PURIFICADOR, AR DA CABINE	858
PRÉ-PURIFICADOR-AR DA CABINE	859
PROTEÇÃO CONTRA VANDALISMO	405
	915
	916
PROTETOR - CÁRTER DO ÓLEO DO MOTOR	496
PROTETOR - RADIADOR	498
PROTETOR - TREM DE FORÇA	497
PROTETOR-RADIADOR	547
PURIFICADOR DE AR	131
	133

R

RADIADOR	118
	121
RÁDIO	860
	861
	862
	863
	864
RÁDIO (AM/FM/WB)	862
RÁDIO (AM/FM/WB/XM/TOCA CD)	863
RÁDIO (RÁDIO AM/FM TOCA CD)	862
RECEPTOR SECADOR (REFRIGERANTE)	778
RECLINAÇÃO - ASSENTO	865
REDUÇÃO DE RUÍDO	552
REGULADOR DE TEMPERATURA/ TERMOSTATO (92 GRAUS C)	112
RELÉ (CONJ) (24 VOLTS) (ALARME DE MARCHA-À-RÉ)	315
RELÉ (CONJ) (24 VOLTS) (AQUECIMENTO DOS ESPELHOS)	315
RELÉ (CONJ) (24 VOLTS) (BUZINA)	315
RELÉ (CONJ) (24 VOLTS) (HOLOFOTES DO PÁRA-LAMA)	315
RELÉ (CONJ) (24 VOLTS) (LUZ TRASEIRA)	315
RELÉ (CONJ) (24 VOLTS) (LUZES HID DA ROPS)	315
RELÉ (CONJ) (24 VOLTS) (PRÉ-PURIFICADOR DO CONDICIONADOR DE AR)	315
RELÉ (CONJ) (24 VOLTS) (RELÉ DE PARTIDA INTERMEDIÁRIO)	315
RELÉ (CONJ) (24 VOLTS) (*SINGLE TILT)	299
RENOVAÇÃO-ÓLEO	104
RESPIRO (CÁRTER DO MOTOR)	37
	39
RESPIRO (MOTOR)	106
RESPIRO (TREM DE FORÇA)	405
RETENÇÃO - VIDRO	869
RETENTOR - TAMPA DA VÁLVULA	26
	37
	39
RETENTOR - TAMPA DA VÁLVULA (MECANISMO DAS VÁLVULAS - TAMPA)	27
RETENTOR DE ANEL-O	649
RETENTOR DO VIRABREQUIM (DIANTEIRO)	42
REVESTIMENTO DA CABINE	823
RODA - COMANDO FINAL E FREIO	466
RODA E COMANDO FINAL	464
RUÍDO - ARRANJO PARA SUPRESSÃO	551

S

*SCREEN AS-HIGH PRESSURE	588
	633
SENSOR - NÍVEL DE LÍQUIDO	246
SENSOR - NÍVEL DE LÍQUIDO (DIREÇÃO, TANQUE HIDRÁULICO DO FREIO)	334
SENSOR - NÍVEL DE LÍQUIDO (IMPLEMENTO, TANQUE DO VENTILADOR HIDRÁULICO)	334
SENSOR - NÍVEL DE LÍQUIDO (NÍVEL DO ÓLEO DO MOTOR)	241
SENSOR - PRESSÃO	136
	248
	249
	250
	251
	252
	253
	254
	255
	256
	257
SENSOR - PRESSÃO (ATMOSFÉRICA)	241
SENSOR - PRESSÃO (COMBUSTÍVEL)	176

* TRADUÇÃO NÃO DISPONÍVEL NO MOMENTO DA IMPRESSÃO

ÍNDICE

Designação	Página
SENSOR - PRESSÃO (ÓLEO DA BOMBA DA DIREÇÃO, ESQUERDO)	333
SENSOR - PRESSÃO (ÓLEO DA BOMBA DO IMPLEMENTO, DIREITO)	310
SENSOR - PRESSÃO (ÓLEO DA BOMBA DO VENTILADOR HIDRÁULICO)	348
SENSOR - PRESSÃO (ÓLEO DO FREIO DO EIXO DIANTEIRO)	570
SENSOR - PRESSÃO (ÓLEO DO FREIO DO EIXO TRASEIRO)	570
SENSOR - PRESSÃO (ÓLEO DO MOTOR)	179
	241
SENSOR - PRESSÃO (ÓLEO PILOTO DA DIREÇÃO)	333
SENSOR - PRESSÃO (ÓLEO PILOTO DO IMPLEMENTO)	333
SENSOR - PRESSÃO (REFORÇAR)	241
SENSOR - TEMPERATURA	265
	266
	267
	268
	269
SENSOR - TEMPERATURA (AR AMBIENTE)	334
SENSOR - TEMPERATURA (COMBUSTÍVEL)	176
SENSOR - TEMPERATURA DE ESCAPE	245
SENSOR - TEMPERATURA DE ESCAPE (ADMISSÃO DO TURBOALIMENTADOR)	238
SENSOR - TEMPERATURA DE ESCAPE (TURBOALIMENTADOR, DIREITO, ESQUERDO)	241
SENSOR - TEMPERATURA (DIREÇÃO, ÓLEO DO FREIO)	334
SENSOR - TEMPERATURA (IMPLEMENTO, ÓLEO DO VENTILADOR HIDRÁULICO)	334
SENSOR - TEMPERATURA (LÍQUIDO ARREFECEDOR)	238
	241
SENSOR - TEMPERATURA (ÓLEO DO CONVERSOR DE TORQUE)	348
SENSOR - TEMPERATURA (ÓLEO DO EIXO DIANTEIRO)	328
SENSOR - TEMPERATURA (ÓLEO DO EIXO TRASEIRO)	334
SENSOR - TEMPERATURA (ÓLEO DO TANQUE DA TRANSMISSÃO)	348
SENSOR - TEMPERATURA (TEMPERATURA DO AR DA ADMISSÃO)	241
SENSOR DE TEMPERATURA	266
	267
SENSOR DE VELOCIDADE	258
	259
	260
	261
	262
	263
	264
SENSOR DE VELOCIDADE (ENGRENAGEM - ÁRVORE DE MANIVELAS)	241
SENSOR DE VELOCIDADE (ENTRADA DA ENGRENAGEM DE TRANSFERÊNCIA)	386
SENSOR DE VELOCIDADE (SAÍDA DO CONVERSOR DE TORQUE)	389
SENSOR DE VELOCIDADE (VIRABREQUIM)	238
	241
SENSOR DO MOTOR	238
	241
SEPARADOR DE ÁGUA E BOMBA DE ESCORVA DE COMBUSTÍVEL	191
SERVIÇO-COMUNICAÇÃO (PRODUCT LINK 300)	312
SILENCIADOR	144
SISTEMA DE ILUMINAÇÃO - FARÓIS	228
	229
	231
	232
	234
SISTEMA ELÉTRICO	206
SISTEMA ELETRÔNICO - MONITOR	206
	207
	208
	209
	210
SISTEMA ELETRÔNICO - TREM DE FORÇA	210
SOFTWARE - COMUNICAÇÃO (PRODUCT LINK 121SR)	204
SOFTWARE - TREM DE FORÇA	210
SOLENÓIDE DO MOTOR DE ARRANQUE (24 VOLTS)	273
	276
SUPORTE - ASSENTO	889
SUPORTE - CONTRÔLE DA DIREÇÃO	890
SUPORTE - CONTROLE HIDRÁULICO	886
SUPORTE - PÓS-ARREFECEDOR	148
	149
SUPORTE - TRANSMISSÃO	433
SUPORTE DO MOTOR	80
	81
SUPORTE-INTERRUPTOR AJUSTÁVEL	562
SUSPENSÃO - ASSENTO	893

T

TAMPA - ACESSO	467
TAMPA - BLOCO DO MOTOR	30
	32
	33

* TRADUÇÃO NÃO DISPONÍVEL NO MOMENTO DA IMPRESSÃO

ÍNDICE

Designação	Página
	34
TAMPA - BOCAL DE ENCHIMENTO DE ÓLEO (TREM DE FORÇA)	915
TAMPA - BOCAL DE ENCHIMENTO (ÓLEO DO MOTOR)	83
	106
TAMPA - BOCAL DE ENCHIMENTO (TANQUE DE COMBUSTÍVEL)	153
	160
TAMPA - BOCAL DE ENCHIMENTO (TANQUE HIDRÁULICO)	732
	734
TAMPA - CABINE	809
TAMPA - MECANISMO DAS VÁLVULAS	37
	39
TAMPA - REDUÇÃO DE RUÍDOS	36
TAMPA COM RESPIRO (LAVADOR DO VIDRO)	895
TAMPA DE PRESSÃO (7 PSI)	126
TAMPÃO (DRENO DO ÓLEO DA TRANSMISSÃO)	377
TANQUE - GRAXA	556
TANQUE - ÓLEO DO MOTOR	106
TANQUE DE COMBUSTÍVEL	186
	189
TANQUE DE ÓLEO HIDRÁULICO E MONTAGEM	730
	731
TANQUE E MONTAGEM-ÓLEO DO MOTOR	105
TANQUE E PÁRA-CHOQUE-COMBUSTÍVEL	555
TANQUE HIDRÁULICO	732
	734
TANQUE SUPERIOR DO RADIADOR	126
TAPETE	794
TELA - PRESSÃO ALTA	588
	633
TELA DE SUCÇÃO	388
TELA FILTRANTE	655
TELA FILTRANTE (ARREFECEDOR DO ÓLEO DO EIXO)	384
TELA FILTRANTE (ENCHIMENTO DO TANUQE HIDRÁULICO)	732
	734
TELA FILTRANTE (HIDRÁULICO)	734
TELA FILTRANTE (ÓLEO DA DIREÇÃO)	734
TELA FILTRANTE (TANQUE HIDRÁULICO)	732
	734
TRANSMISSÃO	445
TRAVA - CONTROLE DO BRAÇO	807
TREM DE FORÇA	420
TRINCO	819
TRINCO - PORTA DA CABINA E JANELA	820
TUBO-TELA (MAGNÉTICO)	388
TUBOS - ÁGUA	111
	112
TUBOS - AQUECEDOR DA CABINE	829
TUBOS - AR	136
	139
TUBOS - AR CONDICIONADO	827
TUBOS - ARREFECEDOR DE ÓLEO DO EIXO	392
TUBOS - ARREFECEDOR DO ÓLEO DA DIREÇÃO	620
TUBOS - CILINDRO DE INCLINAÇÃO	710
	712
TUBOS - CILINDRO DE LEVANTAMENTO	699
TUBOS - CIRCUITO PILOTO	702
TUBOS - COMBUSTÍVEL	161
	163
TUBOS - DIREÇÃO	609
	611
	615
TUBOS - DIREÇÃO SECUNDÁRIA	602
	605
TUBOS - FILTRO DE ÓLEO DO MOTOR	90
	92
	94
TUBOS - FILTRO DO COMBUSTÍVEL	166
	168
	172
TUBOS - FREIO DE SERVIÇO	581
	583
TUBOS - GRAXA	531
	536
TUBOS - LUBRIFICAÇÃO	537
	538
TUBOS - NEUTRALIZADOR DA DIREÇÃO	617
TUBOS - ÓLEO DA TRANSMISSÃO	405
TUBOS - ÓLEO DO MOTOR	88
	89
TUBOS - ÓLEO DO TURBOALIMENTADOR	99
TUBOS - ÓLEO HIDRÁULICO	683
	684
	686
TUBOS - SUPRIMENTO DE ÓLEO	97
TUBOS - VENTILADOR DO EIXO	401
	403
TUBOS - VENTILADOR HIDRÁULICOS	688
	690
	697
TUBOS DO AQUECEDOR	829
TUBULAÇÕES - AR DO PÓS-ARREFECEDOR	135
TUBULAÇÕES - AR DO TURBOALIMENTADOR	140

* TRADUÇÃO NÃO DISPONÍVEL NO MOMENTO DA IMPRESSÃO

ÍNDICE

Designação	Página
TUBULAÇÕES - LUBRIFICAÇÃO AUTOMÁTICA	524 528
TUBULAÇÕES DE DIAGNÓSTICO	909
TURBOALIMENTADOR	150 151 152
V	
VÁLVULA - MEDIÇÃO	107
VÁLVULA - NEUTRALIZADOR DA DIREÇÃO	659
VALVULA - PARTIDA A ETER	291
VÁLVULA - VENTILADOR POR DEMANDA	745
VÁLVULA COMPENSADORA	746
VÁLVULA DA DIREÇÃO	655
VÁLVULA DA DIREÇÃO E MONTAGEM	635
VÁLVULA DA EMBREAGEM DE TRAVAMENTO E MONTAGEM	449
VÁLVULA DE ALÍVIO	452 649 650 651 652 753 754
VÁLVULA DE ALÍVIO (CILINDRO DE DIREÇÃO - DUAS DIREÇÕES)	655
VÁLVULA DE ALÍVIO (PRESSÃO DA GRAXA)	556
VÁLVULA DE ALÍVIO (PRINCIPAL)	650
VÁLVULA DE ALÍVIO (RESERVA DA BOMBA)	655
VÁLVULA DE CONTROLE	741
VÁLVULA DE CONTROLE - TRANSMISSÃO	461
VÁLVULA DE CONTROLE DA BOMBA	592 646 647 648 752
VÁLVULA DE CONTROLE DE INCLINAÇÃO	760
VÁLVULA DE CONTROLE DOS FREIOS	591
VÁLVULA DE CONTROLE DOS FREIOS (SERVIÇO)	570
VÁLVULA DE CONTROLE E MONTAGEM - FREIOS	589
VÁLVULA DE CONTROLE PILOTO	643 748
VÁLVULA DE DRENAGEM DO RADIADOR	129
VÁLVULA DE LUBRIFICAÇÃO - DISTRIBUIÇÃO	557 558
VÁLVULA DE MODULAÇÃO	450 451
VÁLVULA DE PARADA	829
VÁLVULA DE PNEU	426
VÁLVULA DE PRIORIDADE DO CONVERSOR DE TORQUE	459
VÁLVULA DE REDUÇÃO DE PRESSÃO (REGULADOR DO ÓLEO PILOTO DA DIREÇÃO)	656
VÁLVULA DE RETENÇÃO	190 636 637 638 639 640 641 642
VÁLVULA DE RETENÇÃO (COMBUSTÍVEL)	168 172
VÁLVULA DE RETENÇÃO (PILOTO)	702
VÁLVULA DE RETENÇÃO (PURGAÇÃO DO AR)	675
VÁLVULA DE SEPARAÇÃO	654 702 757
VÁLVULA DE SEQUÊNCIA	755 756
VÁLVULA DISJUNTORA	401 730 731
VÁLVULA DISJUNTORA (TANQUE HIDRÁULICO)	403
VÁLVULA DO CARTUCHO PILOTO	644 645 750 751
VÁLVULA DO CONTROLE PRINCIPAL E MONTAGEM	739
VALVULA DO SOLENOIDE E MONTAGEM	740
VÁLVULA DO VENTILADOR HIDRÁULICO	737
VÁLVULA MANUAL	747
VÁLVULA SELETORA	453
VÁLVULA SELETORA E CONTROLE DE PRESSÃO	454 653
VÁLVULA SELETORA E CONTROLE DE PRESSÃO (DIREÇÃO SECUNDÁRIA)	602 605
VÁLVULA SOLENÓIDE	456 457 458 758 759
VÁLVULA SOLENÓIDE (ATIVAR, DESATIVAR OCLR EIXO)	412

* TRADUÇÃO NÃO DISPONÍVEL NO MOMENTO DA IMPRESSÃO

ÍNDICE

Designação	Página
VÁLVULA SOLENÓIDE (24 VOLTS) (INCLINAÇÃO DUPLA)	760
VEDADOR TIPO LABIO (ALOJAMENTO DO REGULADOR)	112
VENTILADOR DE SUCÇÃO	109
VIGIA	106
	126
VIRABREQUIM	42
VISOR DE NÍVEL	385
VOLANTE DO MOTOR	56

* TRADUÇÃO NÃO DISPONÍVEL NO MOMENTO DA IMPRESSÃO

STICHWORTVERZEICHNIS

Bezeichnung	Seite
A	
ABLASS (UMWELTFREUNDLICH)	377
ABLASSSTOPFEN	129
	732
ABLASSSTOPFEN (HYDRAULIKTANK)	734
ABLASSSTOPFEN (MOTORÖLWANNE)	70
ABLASSVERLÄNGERUNG	55
ABSPERRVENTIL	829
ACHSENANBAUSATZ	413
ACHSENÖLKÜHLERLEITUNGEN	392
ACHSENÖLKÜHLERPUMPE U. BEFESTIGUNGSTEILE	422
ACHSENÖLKÜHLERPUMPE U. MOTOR	421
ACHSENÖLKÜHLERPUMPE UND MOTOR	421
ACHSENTLÜFTERLEITUNGEN	401
	403
ACHSÖLKÜHLERNETZ	392
ANSAUGSIEB	388
ANSCHLUSS - ELEKTRON.	237
ANSCHLUSS, ELEKTR.	201
ANTENNENBEFESTIGUNG	838
	839
ANTRIEBSSCHUTZ	497
ANTRIEBSSTRANG-WARTUNGSSATZ	210
ANTRIEBSWELLE	428
	430
ANTRIEBSWELLEN-KEILVERZAHNUNG	431
ANZEIGEMODUL (*WORK AREA VISUAL SYSTEM)	237
ARBEITSGERÄTEPUMPE UND AUFHÄNGUNG	719
ARBEITSGERÄTEVORSTEUERPUMPE U. BEFESTIGUNGSTEILE	721
ARBEITSLEUCHTEN	221
	222
	223
	228
	229
	231
	232
	234
ARBEITSLEUCHTEN (24 V)	231
ASCHENBECHER	886
ÄTHERSTARTHILFE	270
ÄTHERSTARTVENTIL	291
AUFKLEBER	903
	905
AUFKLEBER - INFORMATION (PRODUCT LINK, HANDBUCH LESEN)	219
AUFKLEBER - INFORMATION (24 V)	905
AUFKLEBER - SERVICE	295
AUFKLEBER - TASTENFELD	832
AUFKLEBER-INTERNATIONAL	906
AUFKLEBER (KONTROLLE) (*THROTTLE LOCK, HYDRAULIC, HORN)	799
AUFKLEBER (LINKS)	850
AUFKLEBER (RECHTS)	850
AUFKLEBER-USA	908
AUSGLEICHSVENTIL	746
AUSPUFFKRÜMMER	141
	143
AUSPUFFTEMPERATURSENSOR	245
AUSPUFFTEMPERATURSENSOR (TURBILADEREINLASS)	238
AUSPUFFTEMPERATURSENSOR (TURBOLADER, RECHTS, LINKS)	241
AUTOM. SCHMIERVORRICHTUNG - STEUERUNGSVERDRAHTUNG	292
AUTOMATISCHE SCHMIERLEITUNGEN	524
	528
B	
*BASE AS-INDICATOR (GRÜN)	357
BATTERIE	198
BATTERIE - ELEKTRONISCHE STEUERUNG (STRASSENANALYSE/VIMS HAUPTMODUL)	205
BATTERIE UND VERDRAHTUNG	193
BATTERIE (12 V, WARTUNGSFREI)	193
BEDIENUNGSELEMENTE - KABELSTRANG (ARBEITSGERÄTESTEUERUNG)	300
BEDIENUNGSELEMENTE - KABELSTRANG (*QUARTER WINDOW WIPER)	300
BEDIENUNGSELEMENTE - KABELSTRANG (*REAR WINDOW WIPER)	300
BEDIENUNGSELEMENTE - KABELSTRANG (SCHEIBENWASCHER)	300
BEGRENZUNGSSCHALTER	282
BEIFAHRERSITZ	878
	879
	880
BELEUCHTUNGSANLAGE (*AMBER, LED, 24-VOLT)	294
BELEUCHTUNGSKABELSTRANG (*ENGINE ENCLOSURE, ETHER)	334
BELEUCHTUNGSKABELSTRANG (NACH INNEN GERICHTETE ARBEITSSCHEINWERFER, VORN)	232
BETÄTIGUNGSVENTIL	23
	24
BETRIEBSBREMSE	566
BETRIEBSBREMSLEITUNGEN	581
	583
BLINKLEUCHTE	226
BLINKLEUCHTE (*VIMS, LED, BLUE)	350

* ÜBERSETZUNG ZUM ZEITPUNKT DER DRUCKLEGUNG NICHT VORHANDEN

STICHWORTVERZEICHNIS

Bezeichnung	Seite
BREMS-KABELBAUM (*PARKING, SWITCH)	334
BREMSBELEUCHTUNG	236
BREMSDRUCKSPEICHER	560
	561
BREMSGESTÄNGE	570
BREMSPUMPE UND BEFESTIGUNGSTEILE	585
BREMSSTEUERVENTIL	591
BREMSSTEUERVENTIL (SERVICE)	570
BREMSSTEUERVENTIL UND BEFESTIGUNGSTEILE	589

C

CAMERA (*115-DEG, COLOR)	309
CAMERABEFESTIGUNG	237
*COOLER GP-HYD & STEERING OIL	660

D

DÄMPFER	53
	54
DIAGNOSELEITUNGEN	909
DICHTUNGSSATZ	560
	561
	626
DIFFERENTIAL	376
DIFFERENTIAL UND TELLERRAD	370
	371
	373
	374
DOSIERVENTIL	107
DOSIERVORRICHTUNG - MOTORÖL	101
DREHKNOPFSCHALTER (GEBLÄSEGESCHWINDIGKEIT)	299
DREHKNOPFSCHALTER (REDUZIERTE FELGENKRAFT WÄHLEN)	299
DREHKNOPFSCHALTER (WISCHER, WASCHER) (*QUARTER WINDOW)	299
DREHMOMENTWANDLER-VORRANGVENTIL	459
DREHMOMENTWANDLERAUFHÄNGUNG	414
DREHMOMENTWANDLERSPERRE	441
DREHSTROMGENERATOR - UND KOMPRESSORAUFHAENGUNG	69
DREHSTROMGENERATOR (24 V, 150 A)	21
DREHZAHLSENSOR	258
	259
	260
	261
	262
	263
	264

Bezeichnung	Seite
DREHZAHLSENSOR (DREHMOMENTWANDLERAUSGANG)	389
DREHZAHLSENSOR (KURBELWELLE)	238
	241
DREHZAHLSENSOR (NOCKENSTEUERUNG)	241
DREHZAHLSENSOR (*TRANSFER GEAR INPUT)	386
DREHZAHLWANDLER U. GEHÄUSE	439
DRUCKBEGRENZUNGSVENTIL (FETTDRUCK)	556
DRUCKKAPPE (7 PSI)	126
DRUCKKNOPFSCHALTER (DREHZAHLSPERRE BETÄTIGEN)	300
DRUCKKNOPFSCHALTER (DREHZAHLSPERRE WIEDER AUFNEHMEN)	300
DRUCKKNOPFSCHALTER (HUPE)	300
DRUCKLUFTLEITUNGEN	136
	139
DRUCKPLATTE	723
DRUCKREDUZIERVENTIL (*STEERING PILOT OIL REGULATOR)	656
DRUCKSCHALTER	288
DRUCKSCHALTER (BREMSDRUCKSPEICHER - DRUCKBEAUFSCHLAGUNG)	333
DRUCKSCHALTER (DIFFERENTIAL)	310
DRUCKSCHALTER (FESTSTELLBREMSÖL)	589
DRUCKSCHALTER (KÄLTEMITTELKOMPRESSOR, OBERE SEITE)	21
DRUCKSCHALTER (KÄLTEMITTELKOMPRESSOR, UNTERE SEITE)	21
DRUCKSCHALTER (NEBENSTROMFILTER)	679
DRUCKSCHALTER (NOTLENKUNGSÖL)	602
	605
DRUCKSCHALTER (ÖLFILTER)	678
DRUCKSCHALTER (ÖLFILTERUMGEHUNG)	599
DRUCKSENSOR	136
	248
	249
	250
	251
	252
	253
	254
	255
	256
	257
DRUCKSENSOR (ARBIETSGERÄTEVORSTEUERÖL)	333
DRUCKSENSOR (ATMOSPHÄRISCH)	241
DRUCKSENSOR (*FRONT AXLE BRAKE OIL)	570
DRUCKSENSOR (HYDRAULIKLÜFTERÖLPUMPE)	348

* ÜBERSETZUNG ZUM ZEITPUNKT DER DRUCKLEGUNG NICHT VORHANDEN

STICHWORTVERZEICHNIS

Bezeichnung	Seite
DRUCKSENSOR (*IMPLEMENT PUMP OIL, RH)	310
DRUCKSENSOR (KRAFTSTOFF)	176
DRUCKSENSOR (LADUNG)	241
DRUCKSENSOR (MOTORÖL)	179
	241
DRUCKSENSOR (*REAR AXLE BRAKE OIL)	570
DRUCKSENSOR (*STEERING PILOT OIL)	333
DRUCKSENSOR (*STEERING PUMP OIL, LH)	333

E

EINBAUSATZ - CAES	219
EINBAUVORSTEUERVENTIL	644
	645
	750
	751
EINFÜLLKAPPE (KRAFTSTOFFTANK)	153
	160
EINFÜLLSTUTZENKAPPE (HYDRAULIK-TANK)	732
	734
EINFÜLLSTUTZENKAPPE (MOTORÖL)	83
	106
ELEKTR. ANLAGE	206
ELEKTRONIK - MONITOR	206
	207
	208
	209
	210
ELEMENT (*CIGARETTE LIGHTER)	300
*ENCLOSURE GP-ELECTRONICS BAY	211
	315
ENDSCHALTER (BREMSLEUCHTE)	562
ENDSCHALTER (EINPOLIG) (GASREGELSPER-REN-ABSCHALTUNG)	563
ENDSCHALTER (FESTSTELLBREMSE)	589
ENTDUNSTER	85
ENTLÜFTER (KRAFTÜBERTRAGUNG)	405
ENTLÜFTER (KURBELGEHÄUSE)	37
	39
ENTLÜFTER (MOTOR)	106

F

FAHRERHAUS	792
	793
	794
FAHRERHAUS - VORREINIGER	858
FAHRERHAUS-KABELBAUM (*INSIDE, REAR)	300
FAHRERHAUS-KABELBAUM (*POWER CONVERTER)	314
FAHRERHAUS-KABELBAUM (UNTEN)	300
FAHRERHAUS UND PLATTFORM	790
FAHRERHAUSABDECKUNG	809
FAHRERHAUSAUSKLEIDUNG	823
FAHRERHAUSAUSRÜSTUNG	845
FAHRERHAUSBELEUCHTUNG	220
FAHRERHAUSBELEUCHTUNG (24 V)	299
	794
FAHRERHAUSHEIZUNGSLEITUNGEN	829
FAHRERHAUSLUFTFILTER	816
FAHRERHAUSTÜR	813
FAHRERHAUSTÜR- U. FENSTERVERRIEGE-LUNG	820
FAHRERHAUSTÜR (RECHTS)	793
FAHRERHAUSTÜRFEDER	884
FAHRERHAUSVERDRAHTUNG	299
FAHRERPLATTFORM	853
	854
	857
FAHRERPLATTFORM-KABELSTRANG (*ELECTRONICS BAY TO CAB)	334
FAHRERPLATTFORM-KABELSTRANG (*FILTER, PUMP BYPASS SWITCHES)	310
FAHRERSITZ	871
	873
	874
	875
	877
FAHRERSITZFEDERUNG	893
FAHRERSITZVERKLEIDUNG	848
FAHRERSITZVERSTELLER	780
FAHRGESTELLVERDRAHTUNG	310
FAHRWERK	1
FAHRWERK-KABELBAUM (*FRAME, LH)	334
FAHRWERK-KABELBAUM (HAUPT)	334
FAHRWERK-KABELBAUM (ÜBERROLL-SCHUTZ)	353
FELGE	425
FELGE (TEILBAR)	426
	427
FELGENAUFHÄNGUNG	414
FESTSTELLBREMSE	564
FESTSTELLBREMSGESTÄNGE	569
FEUERSCHUTZWAND	486
*FILM GP-SERVICE CENTER	907
FILTERELEMENT - FAHRERHAUSLUFT (STANDRAD EFFIZIENZ)	794
	816
FILTERSIEB (ACHSÖLKÜHLER)	384
FILTERSIEB (HYDRAULIKTANK)	734

* ÜBERSETZUNG ZUM ZEITPUNKT DER DRUCKLEGUNG NICHT VORHANDEN

STICHWORTVERZEICHNIS

Bezeichnung	Seite
FILTERSIEB (HYDRAULIKTANKEINFÜLL-SIEB)	732, 734
FLÜSSIGKEITSSCHALTER	283
FLÜSSIGKEITSSCHALTER (MOTORÖL)	238
FLÜSSIGKEITSSCHALTER (*OIL RENEWAL METERING TANK)	346
FLÜSSIGKEITSSTANDSENSOR	246
FLÜSSIGKEITSSTANDSENSOR (*IMPLEMENT, HYDRAULIC FAN TANK)	334
FLÜSSIGKEITSSTANDSENSOR (MOTORÖL-STAND)	241
FLÜSSIGKEITSSTANDSENSOR (*STEERING, BRAKE HYDRAULIC TANK)	334
FOLGEVENTIL	755, 756
FRONTSCHEINWERFER	224, 225
FUSSBREMSGESTÄNGE	568
FUSSBREMSSOCKEL	562, 563
FUSSMATTE	794

G

GASPEDAL	852
GEHÄUSE, HINTEN	64
GEHÄUSEABLASSFILTER U. LEITUNGEN	674, 675
GELAENDER	500, 501, 503, 504
GESCHWINDIGKEITS- U. DREHZAHLMESSER-MODUL	299
GETRIEBE	445
GETRIEBE-KABELBAUM (*CLUTCH SOLENOIDS)	461
GETRIEBE-KABELBAUM (DREHZAHLWAND-LER)	348
GETRIEBE-KABELBAUM (*SPEED SENSORS)	348
GETRIEBEAUFHÄNGUNG	433
GETRIEBEHYDRAULIK	369
GETRIEBEPUMPE	423, 424
GETRIEBESTEUERVENTIL	461
GLASDICHTUNG	869
GLEITSCHIENENBLOCK-EINBAUSATZ	881
GRUNDAUSFÜHRUNG	2

H

HALOGENSCHINWERFER (24V)(65W)	221, 222, 223, 224, 225
HALTERUNG, EINSTELLBARER SCHALTER	562
*HARDWARE GP-HANDRAIL MOUNTING	505, 507, 508, 509
HAUBENBLENDE	542, 544
HEIZUNGSLEITUNGEN	829
HINTERRAHMEN	491
HOCHDRUCKSIEB	588, 633
HUBZYLINDER	664, 666, 668, 669
HUBZYLINDER U. BEFESTIGUNGSTEILE	662
HUBZYLINDERLEITUNGEN	699
HYDRAULIKBEDIENUNG (MIT VORSTEUE-RUNG)	799
HYDRAULIKBLOCK	364, 365
HYDRAULIKFITTING	680
HYDRAULIKKÜHLERMOTOR U. BEFESTI-GUNG	714
HYDRAULIKLEITUNGEN	683, 684, 686
HYDRAULIKLÜFTERLEITUNGEN	688, 690, 697
HYDRAULIKLÜFTERPUMPE U. BEFESTI-GUNG	718
HYDRAULIKLÜFTERVENTIL U. BEFESTI-GUNGSTEILE	737
HYDRAULIKÖLKÜHLERBLOCK	660
HYDRAULIKSTEUERAUFHÄNGUNG	886
HYDRAULIKSYSTEM	681, 682
HYDRAULIKTANK	732, 734
HYDRAULIKTANK-KABELSTRANG (*IMPLEMENT, HYDRAULIC FAN)	334
HYDRAULIKTANK-KABELSTRANG (*STEERING, BRAKE)	334
HYDRAULIKTANK UND BEFESTIGUNGSTEI-LE	730, 731

* ÜBERSETZUNG ZUM ZEITPUNKT DER DRUCKLEGUNG NICHT VORHANDEN

STICHWORTVERZEICHNIS

Bezeichnung	Seite
HYDRAULIKTANKVERKLEIDUNG	472, 474, 475
HYDRAULIKZYLINDERKOLBEN	716

I

Bezeichnung	Seite
IDENTIFIZIERUNGS-AUFKLEBER (ARBEITSSCHEINWERFER)	334
IDENTIFIZIERUNGS-AUFKLEBER (KRAFTSTOFFENTLÜFTUNG, MOTORWWARTUNGSLEUCHTE)	334
IDENTIFIZIERUNGS-AUFKLEBER (*SERVICE CENTER RECEIVERS, REAR)	907
IDENTIFIZIERUNGS-AUFKLEBER (*STAIRWAY LIGHTS)	294
IDENTIFIZIERUNGS-AUFKLEBER (*STARTING MOTOR LOCKOUT)	294
IDENTIFIZIERUNGS-AUFKLEBER (*TRANSMISSION LOCKOUT)	294
INNENLEUCHTE	299
INSTRUKTIONS-AUFKLEBER (FÜR SITZVERSTELLUNG)	893
INSTRUKTIONS-AUFKLEBER (MOTORABSTELLUNG)	294
INSTRUKTIONS-AUFKLEBER (NICHT BETRETEN)	905
INSTRUKTIONS-AUFKLEBER (WASSER-EINGANG, WASSER-AUSGANG)	783
INSTRUKTONSSCHILD (BATTERIE)	193
INSTRUMENTENTAFEL	849, 850
INSTRUMENTENTAFEL-KABELSTRANG (ABSTELLUNG AUF STANDEBENE)	294
INSTRUMENTENTAFEL-KABELSTRANG (*SIDE, RH)	300
INSTRUMENTENTAFEL-KABELSTRANG (VORN)	300
*INSULATION GP-RADIATOR SHIELD	517, 518

K

Bezeichnung	Seite
KABELBAUM, VORNE (ARBEITSSCHEINWERFER, WARNHORN)	232
KABELBAUM, VORNE (*AXLE, CONTROL VALVE, LIGHTS)	328
KABELSTRANG - ACHSE (*AXLE OIL COOLER)	334
KABELSTRANG - ACHSE (*FRONT, TEMPERATURE SENSOR)	328
KABELSTRANG - ACHSE (HINTEN)	334
KABELSTRANG - HAUBE (*STAIRWAY LIGHTS)	334
KABELSTRANG - HEIZUNG U. KLIMAANLAGE	784
KABELSTRANG - HINTERES FAHRWERK	350
KABELSTRANG - HINTERES FAHRWERK (ÖLAUFFRISCHSYSTEM)	334
KABELSTRANG - VORDERES FAHRWERK (HAUPT)	328
KABELSTRANG (*AUTOMATIC LUBRICATION CONTROL)	292
KÄLTEMITTEL-DRUCKSPEICHER	778
KÄLTEMITTEL-DRUCKSPEICHER UND BEFESTIGUNG	778
KÄLTEMITTELKOMPRESSOR	796
KÄLTEMITTELKONDENSATOR U. BEFESTIGUNGSTEILE	797
KAMERA	200
KAMERA, VERDRAHTUNG	309
KAPPE MIT ENTLÜFTER (SCHEIBENWASCHER)	895
KIPPSCHALTER	289
KIPPSCHALTER (ABSTELLUNG AUF STANDEBENE)	294
KIPPSCHALTER (DREHMOMENTWANDLER-ÜBERBRÜCKUNGSKUPPLUNG)	300
KIPPSCHALTER (*ENGINE COMPARTMENT LIGHTS, LH)	333
KIPPSCHALTER (*ENGINE COMPARTMENT LIGHTS, RH)	333
KIPPSCHALTER (FAHRSCHEINWERFER)	300
KIPPSCHALTER (GASREGELSPERRE)	300
KIPPSCHALTER (GETRIEBESPERRE)	294
KIPPSCHALTER (HYDRAULIKSPERRE)	300
KIPPSCHALTER (INNENLEUCHTE)	301
KIPPSCHALTER (KRAFTSTOFFENTLÜFTUNGSPUMPE EIN/AUS)	333
KIPPSCHALTER (SCHNELLSCHALTUNG)	300
KIPPSCHALTER (STARTERMOTOR SPERRUNG)	294
KIPPSCHALTER (STEIGLEITERLEUCHTEN)	294
KIPPSCHALTER (STUFENZUGANGSBELEUCHTUNG)	300
KIPPSCHALTER (*TILT, TIP FUNCTION)	300
KIPPSCHALTER (24 V) (ARBEITSSCHEINWERFER, HINTEN)	301
KIPPSCHALTER (24 V) (ARBEITSSCHEINWERFER, VORN)	301
KIPPSTEUERVENTIL	760
KIPPZYLINDER	670, 672
KLEMMLEISTE (BATTERIE)	194
KLIMAANLAGE	782

* ÜBERSETZUNG ZUM ZEITPUNKT DER DRUCKLEGUNG NICHT VORHANDEN

STICHWORTVERZEICHNIS

Bezeichnung	Seite
	783
KLIMAANLAGENFITTING	827
KLIMAANLAGENLEITUNGEN	827
KNICKGELENK-ANHÄNGUNG	510
KNICKGELENKSPERRE	539
KOHLESCHILD	770
	773
KOLBENMOTOR	715
KOLBENPUMPE	586
	629
	725
KOLBENPUMPENUMLAUFSATZ	587
	631
	729
KONDENSATORBLOCK (KÜHLMITTEL)	797
KRAFTOFFPUMPE UND VENTILSTEUERUNG	67
	68
KRAFTSTOFFABLASS	158
KRAFTSTOFFEINFÜLLVORRICHTUNG (SCHNELLFÜLLUNG)	160
KRAFTSTOFFEINFÜLLVORRICHTUNG (STANDARD)	160
KRAFTSTOFFEINSPRITZDÜSE	184
KRAFTSTOFFEINSPRITZPUMPE	184
KRAFTSTOFFHEIZUNG	213
	214
KRAFTSTOFFILTER (HOCHLEISTUNG) (AUSFALLSCHUTZ)	176
	179
KRAFTSTOFFILTERBEFESTIGUNG	176
	179
KRAFTSTOFFILTERLEITUNGEN	166
	168
	172
KRAFTSTOFFILTERSOCKEL	191
KRAFTSTOFFKÜHLER	155
	156
KRAFTSTOFFKÜHLERBLOCK	155
	156
KRAFTSTOFFLEITUNGEN	161
	163
KRAFTSTOFFÖRDERPUMPE	185
KRAFTSTOFFÖRDERPUMPE UND BEFESTIGUNGSTEILE	183
KRAFTSTOFFSIEB	186
KRAFTSTOFFSTANDGEBER	186
KRAFTSTOFFTANK	186
	189
KRAFTSTOFFTANK U. STOSSSTANGE	555
KRAFTÜBERTRAGUNG	420
KRAFTÜBERTRAGUNG - FILTER U. BEFESTIGUNG	378

Bezeichnung	Seite
KRAFTÜBERTRAGUNGSELEKTRONIK	210
KRAFTÜBERTRAGUNGSVERDRAHTUNG	348
KREUZGELENK	446
	447
	448
KREUZGELENK UND LAGER	432
KÜHLER	118
	121
KÜHLERABDECKUNG	124
KÜHLERABLASSVENTIL	129
KÜHLERBLOCK	118
	121
KÜHLERSCHUTZ	498
KÜHLERWASSERKASTEN, OBEN	126
KÜHLWASSERLEITUNGEN	111
	112
KÜHLWASSERPUMPE	116
	117
KUPPLUNGSSPERRENVENTIL U. BEFESTIGUNGSTEILE	449
KURBELWELLE	42
KURBELWELLENDICHTUNG (VORNE)	42

L

Bezeichnung	Seite
LADELUFTKÜHLER	130
LADELUFTKÜHLERBLOCK	130
LADELUFTKÜHLERLEITUNGEN	135
LADELUFTKÜHLERTRÄGER	148
	149
LAUFSTEG	559
LENKBETÄTIGUNG	802
LENKBETÄTIGUNGSAUFHÄNGUNG	890
LENKNEUTRALISIERLEITUNGEN	617
LENKNEUTRALISIERVENTIL	659
LENKÖLKÜHLERLEITUNGEN	620
LENKÖLLEITUNGEN	609
	611
	615
LENKPUMPE UND AUFHÄNGUNG	625
LENKUNGS- UND ÖLKÜHLERBLOCK	660
LENKUNGSANSCHLAG	634
LENKVENTIL	655
LENKVENTIL U. BEFESTIGUNGSTEILE	635
LENKZYLINDER	598
LENKZYLINDER UND AUFHÄNGUNG	597
LEUCHTE (*VIMS, LED, WHITE)	300
LEUCHTE (24 V)	220
	294
	299
LEUCHTE (24 V) (GRÜN)	357
LIPPENDICHTUNG (REGULATORGEHÄUSE)	112
LUFTFILTER (HAUPTELEMENT)	133

* ÜBERSETZUNG ZUM ZEITPUNKT DER DRUCKLEGUNG NICHT VORHANDEN

STICHWORTVERZEICHNIS

Bezeichnung	Seite
LUFTFILTER (HILFSELEMENT)	133
LUFTFILTERWECHSELANZEIGE	136
LUFTKANAL	815
LUFTKOMPRESSORSITZ	781
LUFTREINIGER	131
	133

M

MAGNETSCHALTER	284
	285
	286
	287
MAGNETSCHALTER (24 V DC) (STARTRELAIS 1)	315
MAGNETSCHALTER (24 V DC) (STRATRELAIS 2)	315
MAGNETSCHALTER (24 V) (HAUPTRELAIS)	315
MAGNETSCHALTER (24 V) (STARTRELAIS)	286
MAGNETSPULE - ANLASSMOTOR (ELEKTR.) (24 V)	273
	276
MAGNETSTOPFEN	359
	361
	464
MAGNETVENTIL	456
	457
	458
	758
	759
MAGNETVENTIL (*AXLE OCLR ACTIVATE, DEACTIVATE)	412
MAGNETVENTIL (24 V) (DOPPELNEIGUNG)	760
MASCHINENVERDRAHTUNG	330
	333
MELDEZENTRUMMODUL	831
MODUL - VIER ELEKTRON. ANZEIGEN	833
MODUL-MONITORTASTATUR	832
MODULATORVENTIL	450
	451
MONITOR - KABELBAUM (CAES)	841
MONITOR - KABELBAUM (VIMS - HAUPTMODUL)	299
MONITOR - KABELBAUM (*WORK AREA VISUAL SYSTEM)	237
MONITORBEFESTIGUNG	841
MONTAGEZAPFEN (PLANIERSCHILDEINRICH-TUNG)	769
MOTOR-EINBAUSATZ	19
*MOTOR GP-BLOWER (FAHRERHAUS LUFT)	859
MOTOR ID-SCHILD	914
MOTOR, KOMPLETT	7
	8
	11
	14
MOTORAUFHÄNGUNG	80
	81
MOTORAUSFÜHRUNG	3
	4
	5
	6
MOTORBLOCK	43
	45
	46
MOTORBLOCKDECKEL	30
	32
	33
	34
MOTORBREMSENSCHALTER	281
MOTORDREHVORRICHTUNG	727
MOTORHAUBE UND VERKLEIDUNG	512
MOTORHUBÖSE	65
MOTORKABELSTRANG	27
	322
MOTORKABELSTRANG (ELEKTRN. STEUERMODUL)	325
MOTORKABELSTRANG (PUMPENDÜSE)	26
MOTORKÜHLERBLOCK	17
	18
MOTORÖLEINFÜLLSTUTZEN	83
MOTORÖLFILTERLEITUNGEN	90
	92
	94
MOTORÖLLEITUNGEN	88
	89
MOTORÖLTANK	106
MOTORÖLTANK U. BEFESTIGUNG	105
MOTORRAUM-SCHUTZVERKLEIDUNG	545
MOTORSENSOR	238
	241
MOTORVERDRAHTUNG	319
	322

N

NEIGEZYLINDERLEITUNGEN	710
	712
NOCKENWELLE	29
NOTLENKUNGSLEITUNGEN	602
	605
NOTLENKUNGSPUMPE UND BEFESTIGUNGS-TEILE	624

* ÜBERSETZUNG ZUM ZEITPUNKT DER DRUCKLEGUNG NICHT VORHANDEN

STICHWORTVERZEICHNIS

Bezeichnung	Seite
O	
O-RING-DICHTUNG	649
ÖFFNUNG - KLIMAANLAGE	778
ÖLAUFFRISCHUNGSSYSTEM - VERDRAHTUNG	346
	347
ÖLAUFFRISCHUNGSVORRICHTUNG	104
ÖLEINFÜLLSTUTZEN (KRAFTÜBERTRAGUNG)	915
ÖLFILTER	84
	380
	382
	384
	599
	600
	678
	679
ÖLFILTER (FEINSTFILTER)	599
ÖLFILTER (FEINSTFILTER)	679
ÖLFILTER (HOCHLEISTUNG) (GEHÄUSEABLASS)	600
ÖLFILTER (*HYDRAULIC FAN PUMP CASE DRAIN)	674
ÖLFILTER (*IMPLEMENT PUMP CASE DRAIN)	675
ÖLFILTER (LENKPUMPENRÜCKLAUF)	611
ÖLFILTER (STANDRAD EFFIZIENZ)	84
ÖLFILTERELEMENT (FEINSTFILTER)	678
ÖLFILTERELEMENT (FEINSTFILTER) (KRAFTÜBERTRAGUNG)	380
	382
ÖLKÜHLERBLOCK	108
ÖLKÜHLERBLOCK (MOTOR)	112
ÖLLEITUNGEN - KRAFTÜBERTRAGUNG	405
ÖLMESSSTAB	86
	87
ÖLMESSSTAB (MOTOR)	86
	87
ÖLPUMPEN-BEFESTIGUNGSTEILE	82
ÖLWANNE	70
ÖLZUFUHRLEITUNGEN	97
P	
PANZERWANNE	496
PENDELACHSE	358
	361
PENDELVENTIL	654
	702
	757
PLANETENANTRIEBSGEHÄUSE U. TEILE	366
PLANETENGETRIEBE	415
PLANIEREINRICHTUNG	761
PLANIERSCHILDBOLZEN	763
PLATTFORM-ANBAUSATZ	843
PLEUELSTANGE UND KOLBEN	71
	72
POTENTIOMETER (TEMPERATURREGELUNG)	300
PUFFER - SENSOR	199
PUMPE FÜR KRAFTSTOFFENTLÜFTUNG U. WASSERABSCHEIDER	191
PUMPENKOPF	601
PUMPENSTELLGLIED	593
	594
	595
PUMPENSTEUERVENTIL	592
	646
	647
	648
	752
PUMPENZYLINDER	596
R	
RADIO	860
	861
	862
	863
	864
RADIO - KABELSTRANG	862
	863
	864
RADIO (AM/FM CD SPIELER)	862
RADIO (AM/FM/WB)	862
RADIO (*AM/FM/WB/XM/ CD PLAYER)	863
RADIOEINBAUSATZ	818
RAUM - SERVICE CENTER	902
REIFEN UND FELGE	434
	435
	436
	437
	438
REIFENVENTIL	426
RELAIS (24 V) (*AIR CONDITIONER PRECLEANER)	315
RELAIS (24 V) (BEHEIZTE SPIEGEL)	315
RELAIS (24 V) (*FENDER FLOODLIGHTS)	315
RELAIS (24 V) (HUPE)	315
RELAIS (24 V) (*INTERMEDIATE START RELAY)	315
RELAIS (24 V) (*ROPS HID LIGHTS)	315
RELAIS (24 V) (RÜCKFAHRALARM)	315
RELAIS (24 V) (RÜCKLEUCHTE)	315
RELAIS (24 V) (*SINGLE TILT)	299
ROHR - SIEB (MAGNETISCH)	388

* ÜBERSETZUNG ZUM ZEITPUNKT DER DRUCKLEGUNG NICHT VORHANDEN

STICHWORTVERZEICHNIS

Bezeichnung	Seite
RÜCKLEHNENVERLÄNGERUNG (STOFF)	873, 877
RÜCKSCHLAGVENTIL (GEGEN VAKUUM)	401, 730, 731
RÜCKSCHLAGVENTIL (GEGEN VAKUUM) (HYDRAULIKTANK)	403
RÜCKSPIEGEL	830, 831

S

Bezeichnung	Seite
SAUGLÜFTER	109
SCHALE - RÜCKENLEHNE	846, 847
SCHALLDÄMPFENDE VERKLEIDUNG	36
SCHALLDÄMPFER	144
SCHALLDÄMPFUNG	551, 552
SCHALTERKABELSTRANG (NOTLENKUNG)	602, 605
SCHALTVENTIL	453
SCHAUGLAS	106, 126, 385
SCHAUGLAS - FLÜSSIGKEITSSTAND	385
SCHAUGLAS - FLÜSSIGKEITSSTAND (SCHAUGLAS)	732
SCHAUGLAS - FLÜSSIGKEITSSTAND (SCHAUGLAS) (HYDRAULIKTANK)	734
SCHEIBENWASCHANLAGE	895
SCHEIBENWISCHER	898, 899
SCHEIBENWISCHER UND -WASCHANLAGE	896
SCHEIBENWISCHER (VORDERES VIERTEL)	899
SCHEIBENWISCHERARM	787
SCHEIBENWISCHERBLATT (400 MM) (HINTEN)	896
SCHEIBENWISCHERBLATT (700 MM) (SEITENFENSTER)	899
SCHEIBENWISCHERBLATT (700 MM) (VORNE)	896
SCHEIBENWISCHERMOTOR	834, 835, 836, 837
SCHEIBENWISCHERMOTOR (24 V) (HINTEN)	896
SCHEIBENWISCHERMOTOR (24V, 2 GESCHWINDIGKEITEN)	834, 836, 837
SCHEIBENWISCHERSCHALTER	290
SCHEIBENWISCHERSCHALTER (24 V, INTERMITTIEREND) (HINTEN)	299
SCHEIBENWISCHERSCHALTER (24 V, INTERMITTIEREND) (VORNE)	299
SCHEIBENWISCHERSCHALTER (24 V) (VORN, INTERVALLSCHALTUNG)	290
SCHLÜSSEL	294, 512
SCHLÜSSEL (ELEKTRISCHER HAUPTSCHALTER)	280
SCHLÜSSEL (LTERATURFACH)	1
SCHLÜSSELSCHALTER (STARTEN)	300
SCHMIERFETTANK	556
SCHMIERLEITUNGEN	531, 536, 537, 538
SCHMIERÖLVERTEILERVENTIL	557, 558
SCHMIERPUMPE	103
SCHMIERSYSTEM, AUTOM.	540
SCHNELLBETANKUNGSANSCHLUSS	153
SCHRAUBE (GETRIEBEÖLABLASS)	377
SCHUBARM	765, 767
SCHUTZABDECKUNG	405, 915, 916
SCHUTZBLECHE	477
SCHUTZBLECHE (STRASSENAUSRÜSTUNG)	482
SCHUTZBLECHE, VORNE	481
SCHWINGSITZ	881, 882, 883
SCHWUNGRAD	56
SCHWUNGRADGEHÄUSE	61
*SCREEN AS-HIGH PRESSURE	588, 633
SCREEN (HYDRAULIK)	734
SEITENANTRIEB U. RAD	464, 466
SEITENANTRIEB UND RAD	464
SEITENANTRIEB UND RADBREMSE	466
SENSOR, KABELSTRANG (DREHZAHL)	259
SENSOR, KABELSTRANG (KRAFTSTOFFDRUCK)	176, 179
SENSOR, KABELSTRANG (*TURBOCHARGER AIR INLET PRESS)	136
SERIENNUMMERNSCHILD (GETRIEBE)	439
SERPENTINENFÖRMIGER RIEMEN	21
SERVICE CENTER	918

* ÜBERSETZUNG ZUM ZEITPUNKT DER DRUCKLEGUNG NICHT VORHANDEN

STICHWORTVERZEICHNIS

Bezeichnung	Seite
	919
*SERVICE CENTER AR	917
SERVICE GP- KOMMUNIKATION (PRODUCT LINK 300)	312
*SHIELD GP-RADIATOR	547
SICHERHEITSGURT	870
	874
SICHERHEITSGURT ((AUTOMATIKSICHERHEITSGURT))	873
	877
SICHERUNG (10 A)	315
SICHERUNG (15 A)	315
SICHERUNG (20 A)	315
SIEB	655
SIEB (HYDRAULIKTANK)	732
SIEB (LENKUNGSÖL)	734
SITZUNTERBAU	889
SOCKEL FÜR VENTILDECKEL U. EINSPRITZKABELBAUM	25
	26
	27
	28
SOFTWARE - KOMMUNIKATION (PRODUCT LINK 212SR)	204
SOFTWARE - KRAFTÜBERTRAGUNG	210
SOLENOIDVENTIL U. BEFESTIGUNGSTEILE	740
SPERRVENTIL	190
	636
	637
	638
	639
	640
	641
	642
SPERRVENTIL (ENTLÜFTUNG)	675
SPERRVENTIL (KRAFTSTOFF)	168
	172
SPERRVENTIL (VORSTEUERUNG)	702
STABILISATORGELENK	762
STARRACHSE	358
	359
STARTERMOTOR	272
	275
	278
STARTSCHALTER (TASTE)	294
STAUBAUSWERFER	134
STAUBKAPPE	431
STEIGLEITER	519
	521
	549
	550
STELLUNGSSENSOR	247
	852
STELLUNGSSENSOR (ROTIEREND)	562
STEUERHEBEL	798
STEUERKRÜMMER	412
STEUERKRÜMMER (*BRAKE ACCUMULATOR CHARGE)	571
STEUERUNG - NICHT PROGRAMMIERT	205
STEUERUNG - NICHT PROGRAMMIERT (KRAFTÜBERTRAGUNG)	315
STEUERUNGS-KABELSTRANG (*CAES RECEIVER)	330
STEUERUNGS-KABELSTRANG (*CAES, ROPS SIDE)	330
STEUERUNGS-KABELSTRANG (ELEKTRONIK-ABTEIL)	315
STEUERUNGS-KABELSTRANG (PRODUCT LINK RADIO)	312
STEUERUNGS-KABELSTRANG (*SERVICE CENTER, OIL RENEWAL)	357
STEUERUNGSEINHEIT, ELEKTRON. FÜR MOTOR UND BEFEST.	202
	203
STEUERVENTIL	741
STEUERVENTILSTOPFEN	623
STIC-KOMBIHEBEL	804
	805
STIC-KOMBIHEBEL - STEUERUNGSSPERRE	807
STIRNRAD	57
STIRNRADGEHÄUSE	63
STOSSFÄNGER - VERDRAHTUNG	295
STOSSSTANGENVERDRAHTUNG	294
STOSSTANGEN-BEFESTIGUNGSTEILE	541
SU-SCHILD	770
	771
	775
	776

T

TEMPERATURREGLER (92 GRAD)	112
TEMPERATURSCHALTER (KLIMAANLAGE)	784
TEMPERATURSENSOR	265
	266
	267
	268
	269
TEMPERATURSENSOR (DREHMOMENT-WANDLERÖL)	348
TEMPERATURSENSOR (HINTERACHSÖL)	334
TEMPERATURSENSOR (*IMPLEMENT, HYDRAULIC FAN OIL)	334
TEMPERATURSENSOR (KRAFTSTOFF)	176
TEMPERATURSENSOR (KÜHLMITTEL)	238

* ÜBERSETZUNG ZUM ZEITPUNKT DER DRUCKLEGUNG NICHT VORHANDEN

STICHWORTVERZEICHNIS

Bezeichnung	Seite
	241
TEMPERATURSENSOR (LENKUNG, BREMSÖL)	334
TEMPERATURSENSOR (LUFTEINLASSTEMPERATUR)	241
TEMPERATURSENSOR (*TRANSMISSION SUMP OIL)	348
TEMPERATURSENSOR (UMGEBUNGSLUFT)	334
TEMPERATURSENSOR (VORDERACHSÖL)	328
TRENNSCHALTER	280
TRENNSCHALTER (BATTERIE)	193
TROCKNERSAMMLER (KÜHLMITTEL)	778
TURBOLADER	150
	151
	152
TURBOLADERLUFTLEITUNGEN	140
TURBOLADERÖLLEITUNGEN	99

U

ÜBERDRUCKVENTIL	452
	649
	650
	651
	652
	753
	754
ÜBERDRUCKVENTIL (HAUPTUNTERBRECHER)	650
ÜBERDRUCKVENTIL (*PUMP BACKUP)	655
ÜBERDRUCKVENTIL (UMSCHALTVENTIL - LENKZYLINDER)	655
ÜBERROLLSCHUTZ	866
	867
ÜBERROLLSCHUTZAUFLAGER	844
ÜBERROLLSCHUTZVERDRAHTUNG	353
ÜBERTRAGUNGSEINBAUSATZ	219
ÜBERTRAGUNGSSTEURUNG	204
ÜBERTRAGUNGSVERDRAHTUNG	312
UMFORMERVERDRAHTUNG	314
UMGEHUNGSSCHALTER	279
UMLAUFKÜHLWASSERHEIZUNG	216
	217
UMLAUFKÜHLWASSERHEIZUNGS-ELEMENT (240 V, 1500 W)	217
UNTERBRECHER (10 A) (STARTSCHALTER-SCHLÜSSEL)	316
UNTERBRECHER (105 A) (HAUPTUNTERBRECHER)	315
UNTERBRECHER (105 A) (STARTEN)	315
UNTERBRECHER (15 A) (FAHRSCHEINWERFER)	315

Bezeichnung	Seite

V

VENTIL - SCHALT- UND DRUCKSTEUERUNG	454
	653
VENTIL - SCHALT- UND DRUCKSTEUERUNG (NOTLENKUNG)	602
	605
VENTIL - TEMPERATURGESTEUERTER LÜFTER	745
VENTIL, MECH.	747
VENTIL UND BEFESTIGUNGSTEILE - HAUPTSTEUERUNG	739
VENTILDECKEL	37
	39
VENTILDECKELDICHTUNG	26
	37
	39
VENTILDECKELDICHTUNG (VENTILDECKEL)	27
VENTILKABELSTRANG (SITZ LUFTKOMPRESSOR)	893
VENTILKIPPHEBEL	76
	77
	78
	79
VERDRAHTUNG - ELEKTRONIK-BAY	315
VERDRAHTUNG (ELEKTRONIKSYSTEM)	325
VERDRAHTUNG, HINTEN	350
VERDRAHTUNG, VORNE	328
VERDRAHTUNGSKABELBAUM (BEHEIZTER SITZ)	848
VERDRAHTUNGSKABELBAUM (FERRIT)	841
VERDRAHTUNGSKABELBAUM-HALTETEILE	212
VERDRAHTUNGSKABELBAUM (*SERVICE CENTER, AUTOLUBE)	357
VERDRAHTUNGSKABELBAUM (*SPEED SENSOR)	260
VERRIEGELUNG	819
VERSTAUKASTEN	788
	789
VERSTELLBARER SITZ	865
VERTEILERGETRIEBEANTRIEB	386
	388
VERTEILERGETRIEBEGEHÄUSE	368
VORDERRAHMEN	488
VORHÄNGESCHLOSS	153
	160
	294
	512
	541
	915
VORHÄNGESCHLOSS (HYDRAULIKTANKKAPPE)	916

* ÜBERSETZUNG ZUM ZEITPUNKT DER DRUCKLEGUNG NICHT VORHANDEN

STICHWORTVERZEICHNIS

Bezeichnung	Seite
VORREINIGER, FAHRERHAUSLUFT	859
VORSTEUERLEITUNGEN	702
VORSTEUERVENTIL	643
	717
	748

W

WÄRMESCHIRM	145
	146
	147
WARNAUFKLEBER (NICHT IN BETRIEB NEHMEN, HANDBUCH)	908
WARNAUFKLEBER (NICHT SCHWEISSEN, NICHT BOHREN, HANDBUCH LESEN)	905
WARNAUFKLEBER (PRODUCT LINK 300, INTERNATIONAL)	219
WARNAUFKLEBER (PRODUKT LINK 300, USA)	219
WARNVORRICHTUNG	192
WARNVORRICHTUNG (SICHERHEITSSCHALTER)	350
WASSERABSCHEIDER- U. KRAFTSTOFFILTER	159
WASSERABSCHEIDER U. KRAFTSTOFFENTLÜFTUNGSPUMPE	191
WASSERABSCHEIDER UND KRAFTSTOFFILTER (HAUPTELEMENT)	159
*WIRING GP-SERVICE CENTER	357

Z

ZAHNRADPUMPE	626
	628
	722
	723
ZAHNRADVORGELEGE	59
ZIGARETTENANZÜNDER (12 V)	300
ZUGANGSKLAPPE	467
	469
	811
	812
ZUGSTANGE	471
ZUSATZAUSRÜSTUNG - MOTOR	21
ZUSATZBELEUCHTUNG	227
ZYLINDERBLOCKSCHRAUBE	74
ZYLINDERKOPF	48
	50
	51
ZYLINDERKOPF-HALTETEILE	51
ZYLINDERKOPFSTOPFEN	75

* ÜBERSETZUNG ZUM ZEITPUNKT DER DRUCKLEGUNG NICHT VORHANDEN

MACHINE ARRANGEMENT

262-2081 CHASSIS AR

S/N: 2211-UP

PART OF 262-2077 COMMON AR

SMCS-7000 **i02897731**

NOTE	PART NUMBER	QTY	PART NAME 1 2 3 4 5 6 (PRODUCT LEVEL)	SEE PAGE
Y	*279-0383*	1	AFTERCOOLER GP-AIR	130
Y	*275-3639*	1	CAB GP (ANTENNA, AIR FILTER, DUCTS)	794
Y	*279-0384*	1	CONDENSER & MTG GP-REFRIGERANT	797
Y	*279-0385*	1	COOLER GP-HYD & STEERING OIL	660
Y	*210-2665*	1	COVER GP-ACCESS (FRONT FRAME)	467
Y	*279-5278*	1	ENCLOSURE GP-HYDRAULIC TANK (RH)	475
Y	*109-6908*	1	ENCLOSURE GP-HYDRAULIC TANK (LH)	472
Y	*279-0386*	1	FAN GP-SUCTION	109
Y	*109-6845*	1	FENDER GP-FRONT	481
Y	*269-4795*	1	FILM GP	903
Y	*293-6470*	1	FILM GP	905
Y	*279-5280*	1	FIREWALL GP	486
Y	**273-0225**	1	FRAME AS-FRONT	488
Y	**290-2690**	1	FRAME AS-REAR	491
Y	*279-5281*	1	GUARD GP-CRANKCASE	496
Y	*317-9133*	1	GUARD GP-POWER TRAIN	497
Y	*279-0387*	1	GUARD GP-RADIATOR	498
Y	*290-2691*	1	HITCH GP-ARTICULATING	510
Y	*279-5282*	1	HOOD & GUARD GP	512
Y	*283-6455*	1	LADDER GP (STAIRWAY, HANDRAILS, LH)	519
Y	*279-0389*	1	LINES GP-AFTERCOOLER AIR	135
Y	*283-0135*	1	LINES GP-AIR CONDITIONER	827
Y	*273-7160*	1	LINES GP-CAB HEATER	829
Y	*284-2859*	1	LINES GP-GREASE	531
Y	*279-0388*	1	LINES GP-WATER (RADIATOR)	111
Y	*109-6839*	1	LINK GP-STEERING FRAME LOCK	539
Y	*143-3604*	1	MIRROR GP-REAR VIEW	831
Y	*170-1931*	1	MOUNTING GP-BUMPER	541
Y	*109-6852*	1	MOUNTING GP-PLATFORM	843
Y	*247-3069*	1	MOUNTING GP-ROPS	844
Y	*280-7083*	1	OPERATOR AR	845
Y	*279-5284*	1	PLATFORM GP-OPERATOR	854
Y	*317-2718*	1	PLATFORM GP-OPERATOR	857
Y	*247-3066*	1	ROPS AR	866
Y	*279-0394*	1	SHROUD GP-RADIATOR	124
Y	*279-5276*	1	STARTING AID GP-ETHER	270
Y	*109-6861*	1	SUPPORT GP-TRANSMISSION	433
Y	*279-5277*	1	TANK & BUMPER AR-FUEL	555
Y	*279-0391*	1	TANK GP-RADIATOR TOP	126
	6V-1970	1	LITERATURE GP	
	5P-8500	2	KEY (LITERATURE COMPARTMENT)	
	5P-7958	1	SLEEVE-CABLE SPLICE	

Y-SEPARATE ILLUSTRATION

<END>

MACHINE ARRANGEMENT

262-2077 COMMON AR

S/N: 2211-UP

SMCS-7000 **i02900613**

NOTE	PART NUMBER	QTY	PART NAME 1 2 3 4 5 6 (PRODUCT LEVEL)	SEE PAGE
Y	*214-7136*	1	BULLDOZER AR (WITHOUT BLADE)	761
Y	*262-2081*	1	CHASSIS AR	1
Y	*316-6993*	1	ELECTRICAL AR	206
Y	*279-9400*	1	HYDRAULIC AR	681
Y	*246-4284*	1	INSTALLATION AR-ENGINE	19
Y	*262-2085*	1	POWER TRAIN AR	420

Y-SEPARATE ILLUSTRATION

<END>

ENGINE ARRANGEMENT

279-9490 ENGINE AR

S/N: 2211-UP

AN ATTACHMENT

SMCS-1000 **i02904930**

NOTE	PART NUMBER	QTY	PART NAME 1 2 3 4 5 6 (PRODUCT LEVEL)	SEE PAGE
Y	**259-3143**	1	ENGINE AR-COMPLETE (ENGINE BRAKE)	14
Y	*281-4090*	1	SUPPRESSION AR-SOUND (ENGINE COMPARTMENT SHIELD)	551
Y	*282-4332*	1	SWITCH GP-ENGINE BRAKE	281

Y-SEPARATE ILLUSTRATION

ENGINE ARRANGEMENT

279-9491 ENGINE AR

S/N: 2211-UP

COMPRESSION BRAKE, SOUND SUPPRESSION

AN ATTACHMENT

SMCS-1000 **i02904110**

NOTE	PART NUMBER	QTY	PART NAME 1 2 3 4 5 6 (PRODUCT LEVEL)	SEE PAGE
Y	*246-8228*	1	ENGINE AR-COMPLETE (ENGINE BRAKE, SOUND SUPPR)	8
Y	*282-4332*	1	SWITCH GP-ENGINE BRAKE	281

Y-SEPARATE ILLUSTRATION

ENGINE ARRANGEMENT

317-7016 ENGINE AR

S/N: 2211-UP

AN ATTACHMENT

SMCS-1000 **i02905060**

NOTE	PART NUMBER	QTY	PART NAME 1 2 3 4 5 6 (PRODUCT LEVEL)	SEE PAGE
Y	**259-3142**	1	ENGINE AR-COMPLETE	11
Y	*281-4090*	1	SUPPRESSION AR-SOUND (ENGINE COMPARTMENT SHIELD)	551

Y-SEPARATE ILLUSTRATION

ENGINE ARRANGEMENT

317-7017 ENGINE AR

S/N: 2211-UP

AN ATTACHMENT

SMCS-1000 **i02905041**

NOTE	PART NUMBER	QTY	PART NAME 1 2 3 4 5 6 (PRODUCT LEVEL)	SEE PAGE
Y	**246-4283**	1	ENGINE AR-COMPLETE (SOUND SUPPRESSION)	7
Y	*279-5288*	1	SUPPRESSION AR-SOUND	551

Y-SEPARATE ILLUSTRATION

ENGINE ARRANGEMENT

246-4283 ENGINE AR-COMPLETE

S/N: LJW2195-UP
703 BRAKE KW (943 BHP) AT 1750RPM
PART OF 317-7017 ENGINE AR
AN ATTACHMENT

SMCS-1000 **i02948178**

NOTE	PART NUMBER	QTY	PART NAME 1 2 3 4 5 6 (PRODUCT LEVEL)	SEE PAGE
Y	*291-2838*	1	ACCESSORY GP-ENGINE (ALTERNATOR, A/C COMPRESSOR)	21
Y	*251-7428*	1	CONNECTION GP-ELECTRICAL	201
Y	*266-9851*	1	CONTROL & MTG GP-ENGINE ELEK	203
Y	*245-9778*	1	COVER GP-CYLINDER BLOCK (REAR STRUCTURE)	32
Y	*273-1643*	1	COVER GP-CYLINDER BLOCK (FRONT STRUCTURE)	34
Y	*254-1776*	1	COVER GP-CYLINDER BLOCK	33
Y	*289-2229*	1	COVER GP-SOUND SUPPRESSION	36
Y	*266-9850*	1	COVER GP-VALVE MECHANISM	37
Y	*257-8730*	1	DAMPER GP	54
Y	*261-2303*	1	ENGINE AR-CORE	17
Y	*261-8340*	1	FILLER GP-ENGINE OIL	83
Y	*4N-2357*	1	FILTER GP-ENGINE OIL	84
Y	*245-9777*	1	FLYWHEEL GP	56
Y	*206-5086*	1	GAUGE GP-OIL LEVEL (DIPSTICK) (ENGINE)	86
Y	*245-9776*	1	GEAR GP-REAR	59
Y	*245-9775*	1	HOUSING GP-FLYWHEEL	61
Y	*235-2014*	1	LIFTING GP-ENGINE	65
Y	*285-6532*	1	LINES GP-AIR	139
Y	*144-4306*	1	LINES GP-ENGINE OIL	88
Y	*225-9619*	1	LINES GP-ENGINE OIL FILTER	90
Y	*285-6534*	1	LINES GP-FUEL FILTER	166
Y	*217-5677*	1	LINES GP-TURBOCHARGER OIL	99
Y	*288-4419*	1	LINES GP-WATER (ENGINE, TRANSMISSION COOLERS)	112
Y	*295-0647*	1	MANIFOLD GP-EXHAUST	143
Y	*261-8342*	1	MOUNTING GP-ALTERNATOR & COMPR	69
Y	*256-7941*	1	MOUNTING GP-FUEL FILTER	176
			S/N: LJW2195-3156	
Y	*320-7496*	1	MOUNTING GP-FUEL FILTER	179
			S/N: LJW3157-UP	
Y	*291-1432*	1	PAN GP-OIL	70
Y	*266-9848*	1	PLATE GP-ENGINE IDENTIFICATION	914
Y	*277-6297*	1	PLUG GP-CYLINDER BLOCK	74
Y	*223-6407*	1	PLUG GP-CYLINDER HEAD	75
Y	*223-6421*	1	PUMP & MTG GP-FUEL TRANSFER	183
Y	*230-4172*	1	PUMP GP-WATER (JACKET WATER)	117
Y	*285-6531*	1	SENSOR GP-ENGINE	238
Y	*292-2257*	1	SHIELD GP-HEAT	147
Y	*234-5913*	1	SUPPORT GP-AFTERCOOLER	148
Y	*217-5672*	1	SUPPORT GP-ENGINE	80
Y	*291-2837*	1	WIRING GP-ENGINE	319
			PLEASE USE THE GASKET KIT LINK IN SIS OR CONTACT YOUR LOCAL DEALER FOR THE LATEST GASKET KIT INFORMATION	

Y-SEPARATE ILLUSTRATION

ENGINE ARRANGEMENT

246-8228 ENGINE AR-COMPLETE

S/N: LJW1-UP
703 BRAKE KW (943 BHP) AT 1750 RPM
PART OF 279-9491 ENGINE AR
AN ATTACHMENT

SMCS-1000 **i02946362**

NOTE	REF NO	GRAPHIC REF	PART NUMBER	QTY	PART NAME 1 2 3 4 5 6 (PRODUCT LEVEL)	SEE PAGE
Y	1	1	*4N-2357*	1	FILTER GP-ENGINE OIL	84
Y	4	1	*217-5672*	1	SUPPORT GP-ENGINE	80
Y	5	2	*217-5677*	1	LINES GP-TURBOCHARGER OIL	99
Y	6	2	*223-6407*	1	PLUG GP-CYLINDER HEAD	75
Y	7	2	*223-6421*	1	PUMP & MTG GP-FUEL TRANSFER	183
Y	8	1	*230-4172*	1	PUMP GP-WATER (JACKET WATER)	117
Y	9	2	*235-2014*	1	LIFTING GP-ENGINE	65
Y	10	1	*241-0072*	1	CONTROL & MTG GP-ENGINE ELEK	202
Y	11	1	*245-9775*	1	HOUSING GP-FLYWHEEL	61
Y	12	1	*245-9776*	1	GEAR GP-REAR	59
Y	13	1	*245-9777*	1	FLYWHEEL GP	56
Y	14	1	*245-9778*	1	COVER GP-CYLINDER BLOCK (REAR STRUCTURE)	32
Y	15	1	*251-7428*	1	CONNECTION GP-ELECTRICAL	201
Y	17	1	*254-1776*	1	COVER GP-CYLINDER BLOCK	33
Y	19	2	*257-8730*	1	DAMPER GP	54
Y	20	1	*261-2304*	1	ENGINE AR-CORE	18
I	21	2	*264-8340*	1	HOSE AS	
Y	22	2	*261-8342*	1	MOUNTING GP-ALTERNATOR & COMPR	69
Y	23	1	*270-7020*	1	LINES GP-ENGINE OIL	89
Y	24	2	*273-1643*	1	COVER GP-CYLINDER BLOCK (FRONT STRUCTURE)	34
Y	25	1	*277-6297*	1	PLUG GP-CYLINDER BLOCK	74
Y	26	1	*285-6532*	1	LINES GP-AIR	139
Y	27	1	*288-4419*	1	LINES GP-WATER (ENGINE, TRANSMISSION COOLERS)	112
Y	28	1	*289-2229*	1	COVER GP-SOUND SUPPRESSION	36
Y	29	1	*291-1432*	1	PAN GP-OIL	70
Y	30	1	*292-2257*	1	SHIELD GP-HEAT	147
Y	31	1	*295-0647*	1	MANIFOLD GP-EXHAUST	143
Y	32	1	*303-2218*	1	WIRING GP-ENGINE ELECTRONIC	325
Y	33	1	*303-2219*	1	SENSOR GP-ENGINE	241
Y	34	1	*304-4238*	1	COVER GP-VALVE MECHANISM	39
Y	35	1	*311-4119*	1	SUPPORT GP-AFTERCOOLER	149
Y	36	1	*314-8801*	1	GAUGE GP-OIL LEVEL (DIPSTICK) (ENGINE)	87
Y	37	1	*316-5686*	1	LINES GP-ENGINE OIL FILTER	94
Y	38	2	*317-9135*	1	LINES GP-FUEL FILTER	168
Y	39	2	*320-7496*	1	MOUNTING GP-FUEL FILTER	179
					PLEASE USE THE GASKET KIT LINK IN SIS OR CONTACT YOUR LOCAL DEALER FOR THE LATEST GASKET KIT INFORMATION	

I-REFER TO HYDRAULIC INFORMATION SYSTEM
Y-SEPARATE ILLUSTRATION

ENGINE ARRANGEMENT

246-8228 **ENGINE AR-COMPLETE** *(contd.)* **i02946362**

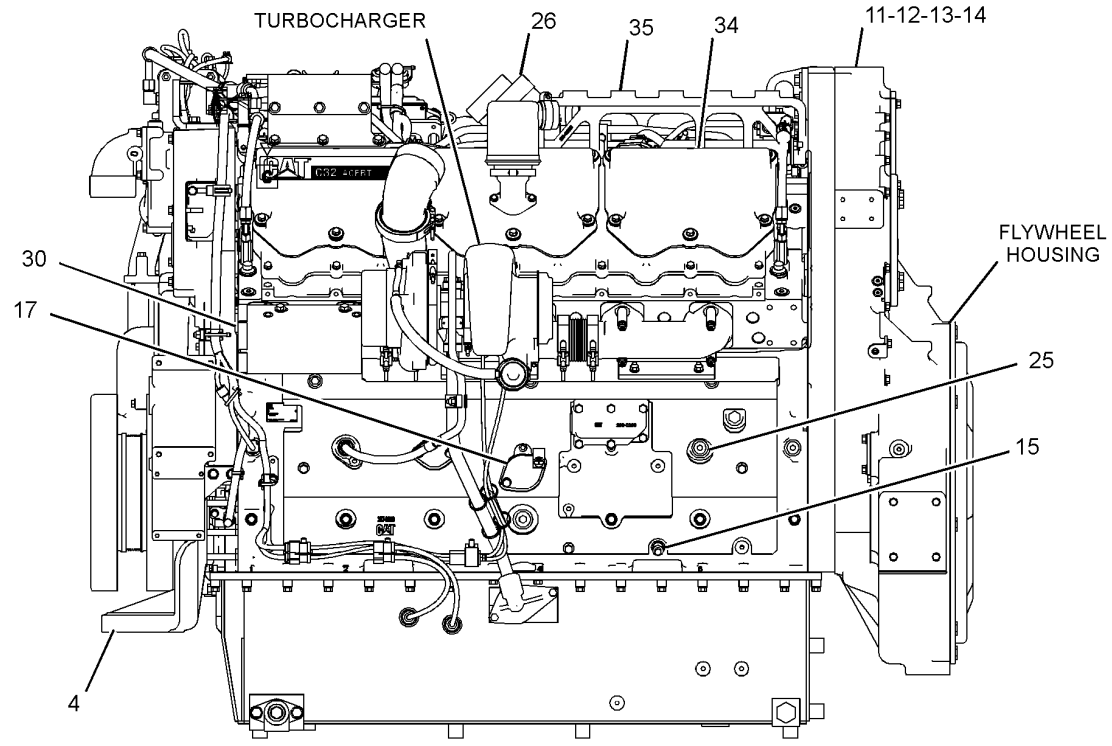

LEFT SIDE VIEW OF ENGINE

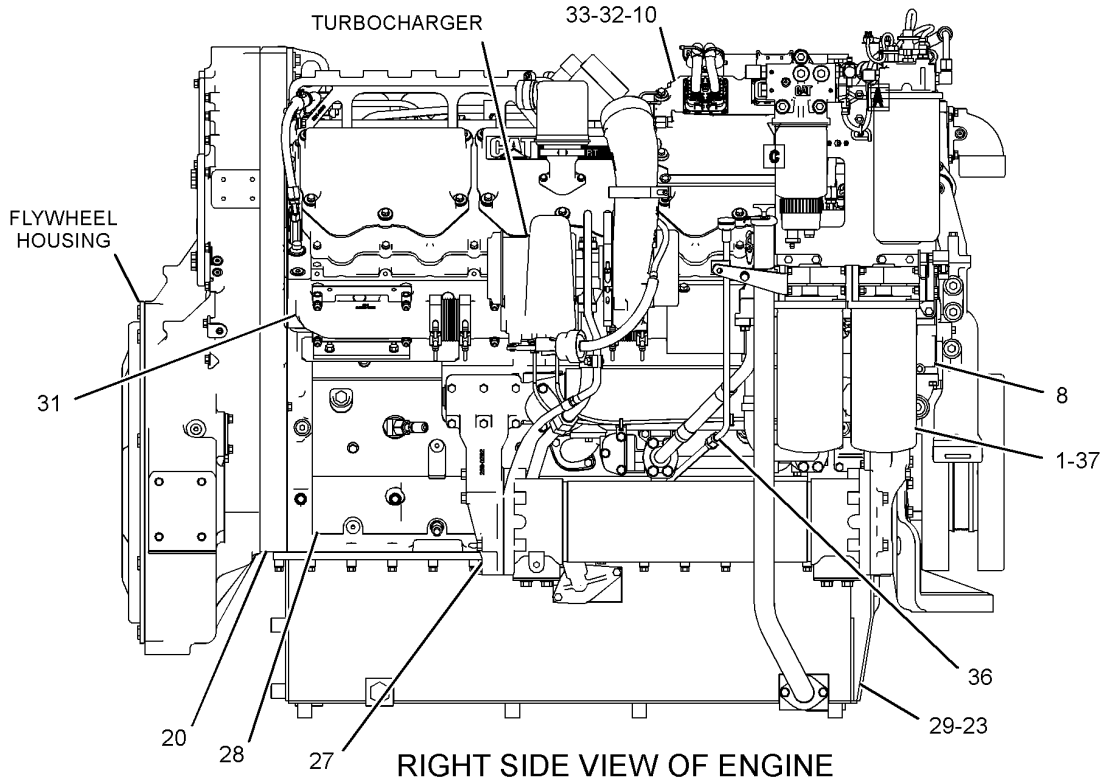

RIGHT SIDE VIEW OF ENGINE

GRAPHIC #1 g01446100

ENGINE ARRANGEMENT

246-8228 **ENGINE AR-COMPLETE** *(contd.)* **i02946362**

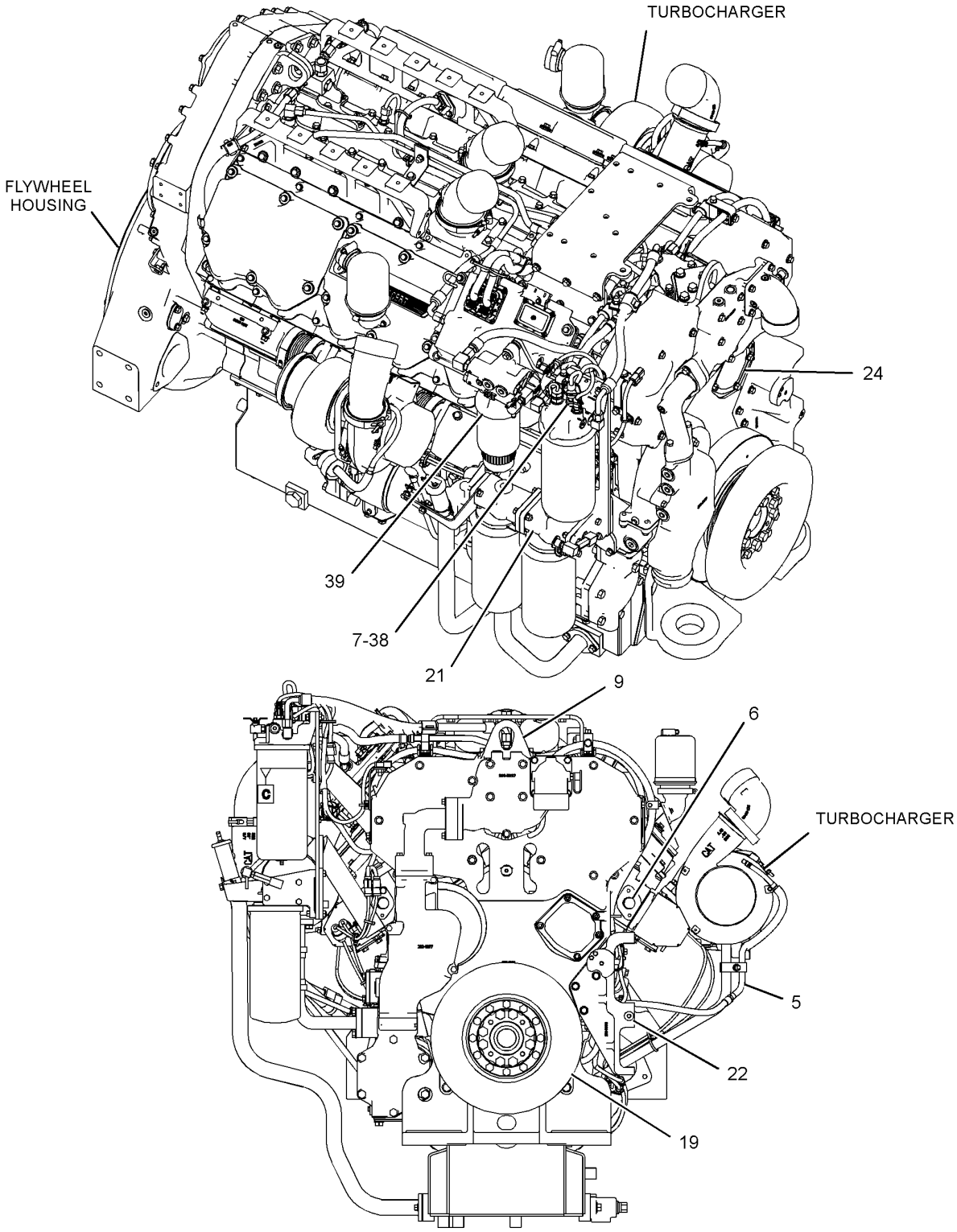

FRONT VIEW OF ENGINE

GRAPHIC #2

<END>

g01446101

ENGINE ARRANGEMENT

259-3142 ENGINE AR-COMPLETE

S/N: LJW2195-UP
703 BRAKE KW (943 BHP) AT 1750 RPM
PART OF 317-7016 ENGINE AR
AN ATTACHMENT

SMCS-1000 **i02946378**

NOTE	REF NO	GRAPHIC REF	PART NUMBER	QTY	PART NAME 1 2 3 4 5 6 (PRODUCT LEVEL)	SEE PAGE
Y	1	1	*4N-2357*	1	FILTER GP-ENGINE OIL	84
Y	4	1	*217-5672*	1	SUPPORT GP-ENGINE	80
Y	5	2	*217-5677*	1	LINES GP-TURBOCHARGER OIL	99
Y	6	1	*223-6407*	1	PLUG GP-CYLINDER HEAD	75
Y	7	2	*223-6421*	1	PUMP & MTG GP-FUEL TRANSFER	183
Y	8	2	*224-3170*	1	COVER GP-CYLINDER BLOCK (FRONT STRUCTURE)	30
Y	9	1	*230-4172*	1	PUMP GP-WATER (JACKET WATER)	117
Y	10	1	*235-2014*	1	LIFTING GP-ENGINE	65
Y	11	2	*241-0072*	1	CONTROL & MTG GP-ENGINE ELEK	202
Y	12	2	*243-3864*	1	SHIELD GP-HEAT	146
Y	13	2	*245-9775*	1	HOUSING GP-FLYWHEEL	61
Y	14	2	*245-9776*	1	GEAR GP-REAR	59
Y	15	2	*245-9777*	1	FLYWHEEL GP	56
Y	16	2	*245-9778*	1	COVER GP-CYLINDER BLOCK (REAR STRUCTURE)	32
Y	17	2	*251-7428*	1	CONNECTION GP-ELECTRICAL	201
Y	18	1	*253-2633*	1	MANIFOLD GP-EXHAUST	141
Y	20	1	*254-1776*	1	COVER GP-CYLINDER BLOCK	33
Y	22	1	*257-8730*	1	DAMPER GP	54
Y	23	1	*261-2303*	1	ENGINE AR-CORE	17
Y	24	1	*261-8340*	1	FILLER GP-ENGINE OIL	83
Y	25	2	*261-8342*	1	MOUNTING GP-ALTERNATOR & COMPR	69
Y	26	1	*270-7020*	1	LINES GP-ENGINE OIL	89
Y	27	2	*277-6297*	1	PLUG GP-CYLINDER BLOCK	74
Y	28	2	*285-6532*	1	LINES GP-AIR	139
Y	29	1	*288-4419*	1	LINES GP-WATER (ENGINE, TRANSMISSION COOLERS)	112
Y	30	1	*291-1432*	1	PAN GP-OIL	70
Y	31	2	*303-2218*	1	WIRING GP-ENGINE ELECTRONIC	325
Y	32	2	*303-2219*	1	SENSOR GP-ENGINE	241
Y	33	1	*304-4238*	1	COVER GP-VALVE MECHANISM	39
Y	34	1	*311-4119*	1	SUPPORT GP-AFTERCOOLER	149
Y	35	1	*314-8801*	1	GAUGE GP-OIL LEVEL (DIPSTICK) (ENGINE)	87
Y	36	1	*316-5686*	1	LINES GP-ENGINE OIL FILTER	94
Y	37	2	*317-9135*	1	LINES GP-FUEL FILTER	168
Y	38	1	*320-7496*	1	MOUNTING GP-FUEL FILTER	179
					PLEASE USE THE GASKET KIT LINK IN SIS OR CONTACT YOUR LOCAL DEALER FOR THE LASTEST GASKET KIT INFPRMATION	

Y-SEPARATE ILLUSTRATION

ENGINE ARRANGEMENT

259-3142 **ENGINE AR-COMPLETE** *(contd.)* **i02946378**

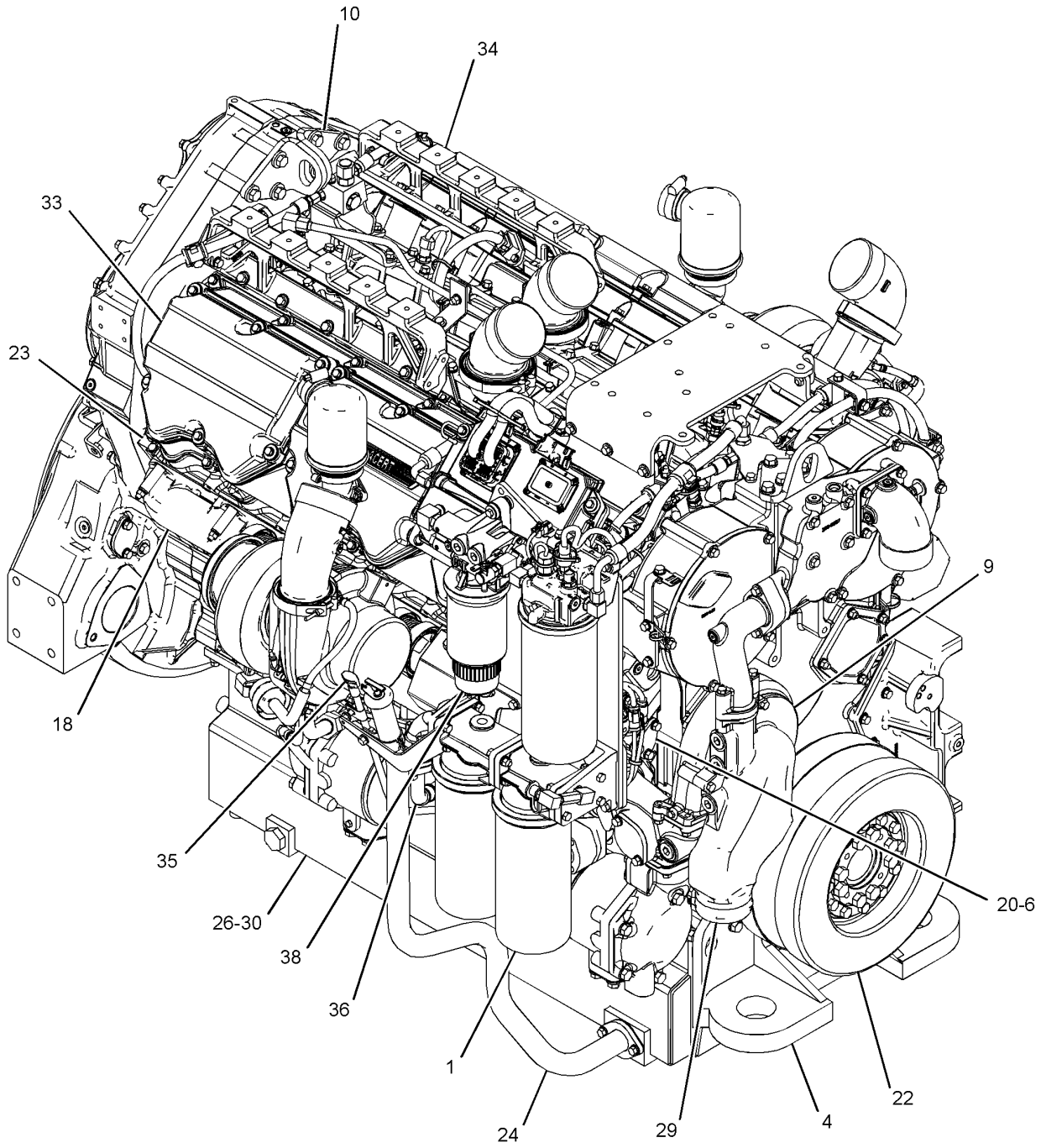

GRAPHIC #1 g01446599

259-3142 **ENGINE AR-COMPLETE** *(contd.)* **i02946378**

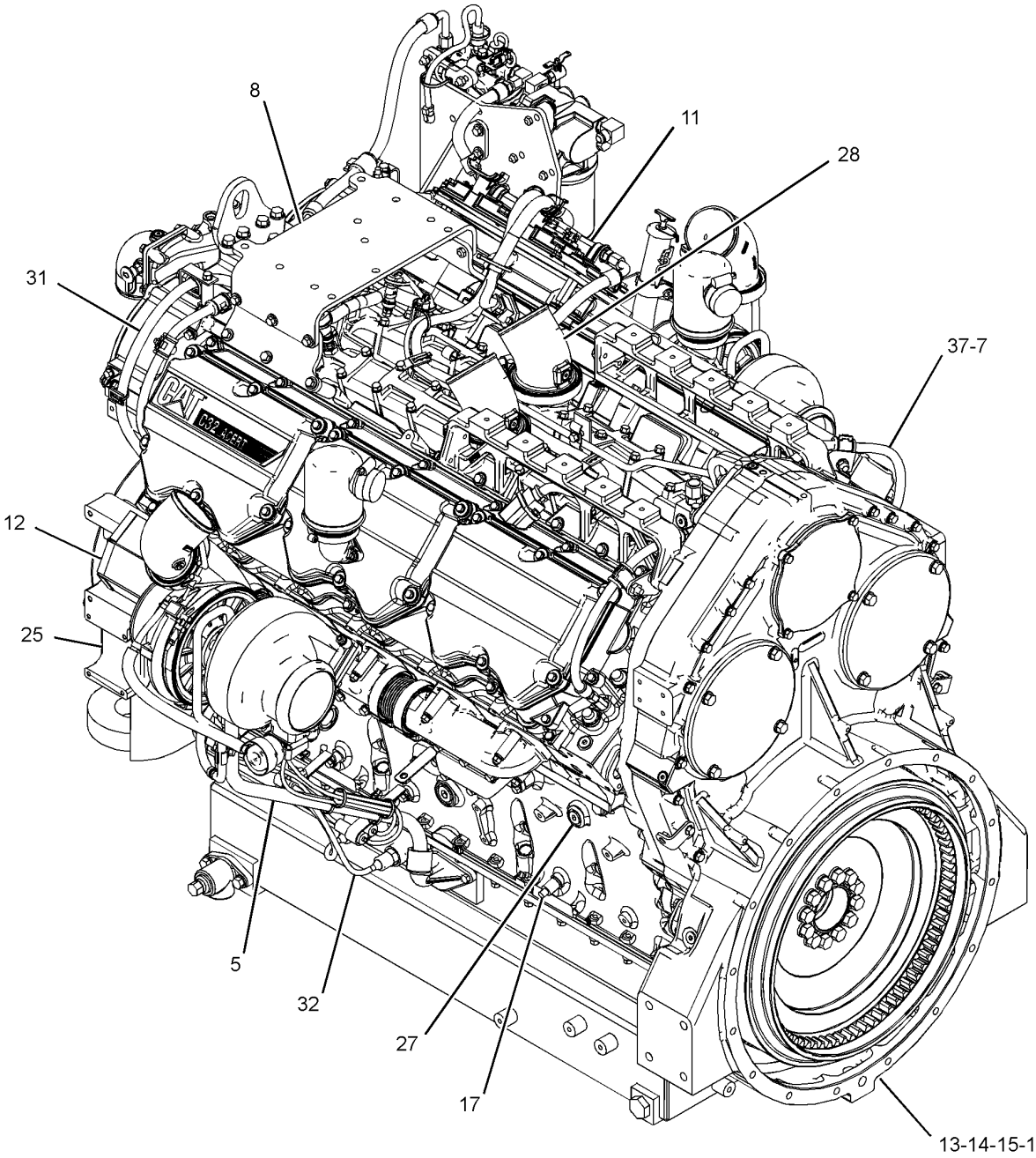

GRAPHIC #2 **<END>** g01446704

ENGINE ARRANGEMENT

259-3143 ENGINE AR-COMPLETE

S/N: LJW2195-UP
703 BRAKE KW (943 BHP) AT 1750 RPM. COMPRESSION BRAKE
PART OF 279-9490 ENGINE AR
AN ATTACHMENT

SMCS-1000 **i02946500**

NOTE	REF NO	GRAPHIC REF	PART NUMBER	QTY	PART NAME 1 2 3 4 5 6 (PRODUCT LEVEL)	SEE PAGE
Y	1	1	*4N-2357*	1	FILTER GP-ENGINE OIL	84
Y	4	1	*217-5672*	1	SUPPORT GP-ENGINE	80
Y	5	2	*217-5677*	1	LINES GP-TURBOCHARGER OIL	99
Y	6	2	*223-6407*	1	PLUG GP-CYLINDER HEAD	75
Y	7	2	*223-6421*	1	PUMP & MTG GP-FUEL TRANSFER	183
Y	8	2	*224-3170*	1	COVER GP-CYLINDER BLOCK (FRONT STRUCTURE)	30
Y	9	1	*230-4172*	1	PUMP GP-WATER (JACKET WATER)	117
Y	10	2	*235-2014*	1	LIFTING GP-ENGINE	65
Y	11	1	*241-0072*	1	CONTROL & MTG GP-ENGINE ELEK	202
Y	12	1	*243-3864*	1	SHIELD GP-HEAT	146
Y	13	1	*245-9775*	1	HOUSING GP-FLYWHEEL	61
Y	14	1	*245-9776*	1	GEAR GP-REAR	59
Y	15	1	*245-9777*	1	FLYWHEEL GP	56
Y	16	1	*245-9778*	1	COVER GP-CYLINDER BLOCK (REAR STRUCTURE)	32
Y	17	1	*251-7428*	1	CONNECTION GP-ELECTRICAL	201
Y	18	1	*253-2633*	1	MANIFOLD GP-EXHAUST	141
Y	20	1	*254-1776*	1	COVER GP-CYLINDER BLOCK	33
Y	22	2	*257-8730*	1	DAMPER GP	54
Y	23	1	*261-2304*	1	ENGINE AR-CORE	18
Y	24	2	*261-8340*	1	FILLER GP-ENGINE OIL	83
Y	25	2	*261-8342*	1	MOUNTING GP-ALTERNATOR & COMPR	69
Y	26	1	*270-7020*	1	LINES GP-ENGINE OIL	89
Y	27	1	*277-6297*	1	PLUG GP-CYLINDER BLOCK	74
Y	28	1	*285-6532*	1	LINES GP-AIR	139
Y	29	1	*288-4419*	1	LINES GP-WATER (ENGINE, TRANSMISSION COOLERS)	112
Y	30	1	*291-1432*	1	PAN GP-OIL	70
Y	31	1	*303-2218*	1	WIRING GP-ENGINE ELECTRONIC	325
Y	32	1	*303-2219*	1	SENSOR GP-ENGINE	241
Y	33	1	*304-4238*	1	COVER GP-VALVE MECHANISM	39
Y	34	1	*311-4119*	1	SUPPORT GP-AFTERCOOLER	149
Y	35	1	*314-8801*	1	GAUGE GP-OIL LEVEL (DIPSTICK) (ENGINE)	87
Y	36	1	*316-5686*	1	LINES GP-ENGINE OIL FILTER	94
Y	37	2	*317-9135*	1	LINES GP-FUEL FILTER	168
Y	38	2	*320-7496*	1	MOUNTING GP-FUEL FILTER	179
					PLEASE USE THE GASKET KIT LINK IN SIS OR CONTACT YOUR LOCAL DEALER FOR THE LATEST GASKET KIT INFORMATION	

Y-SEPARATE ILLUSTRATION

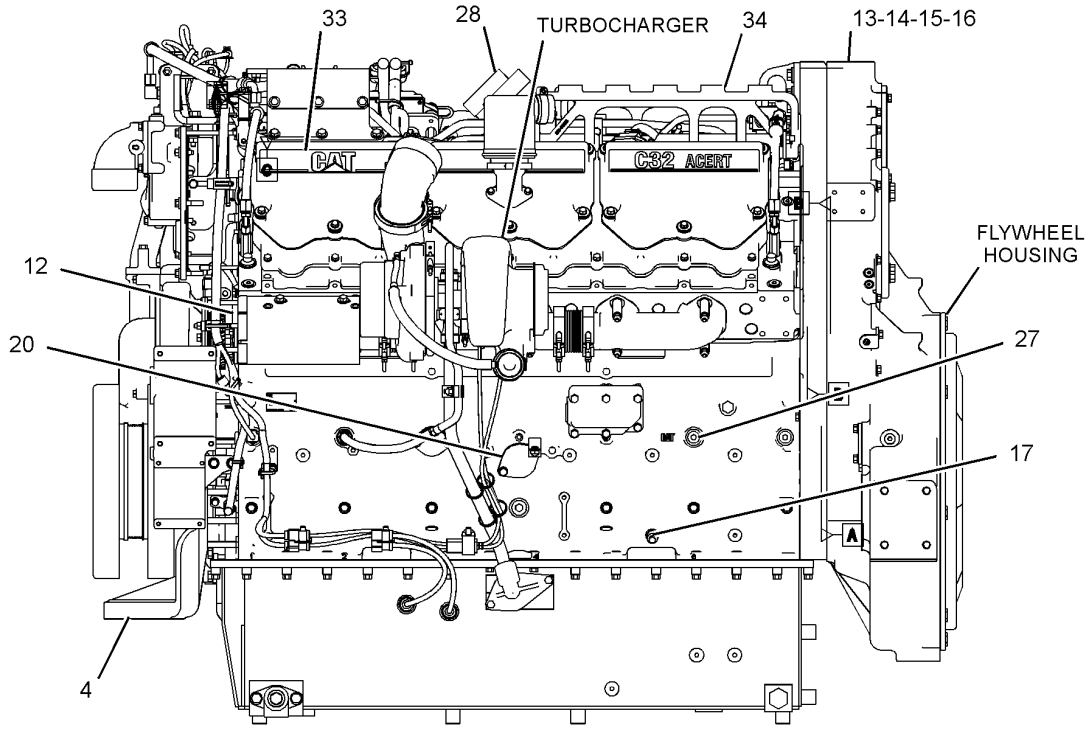

LEFT SIDE VIEW OF ENGINE

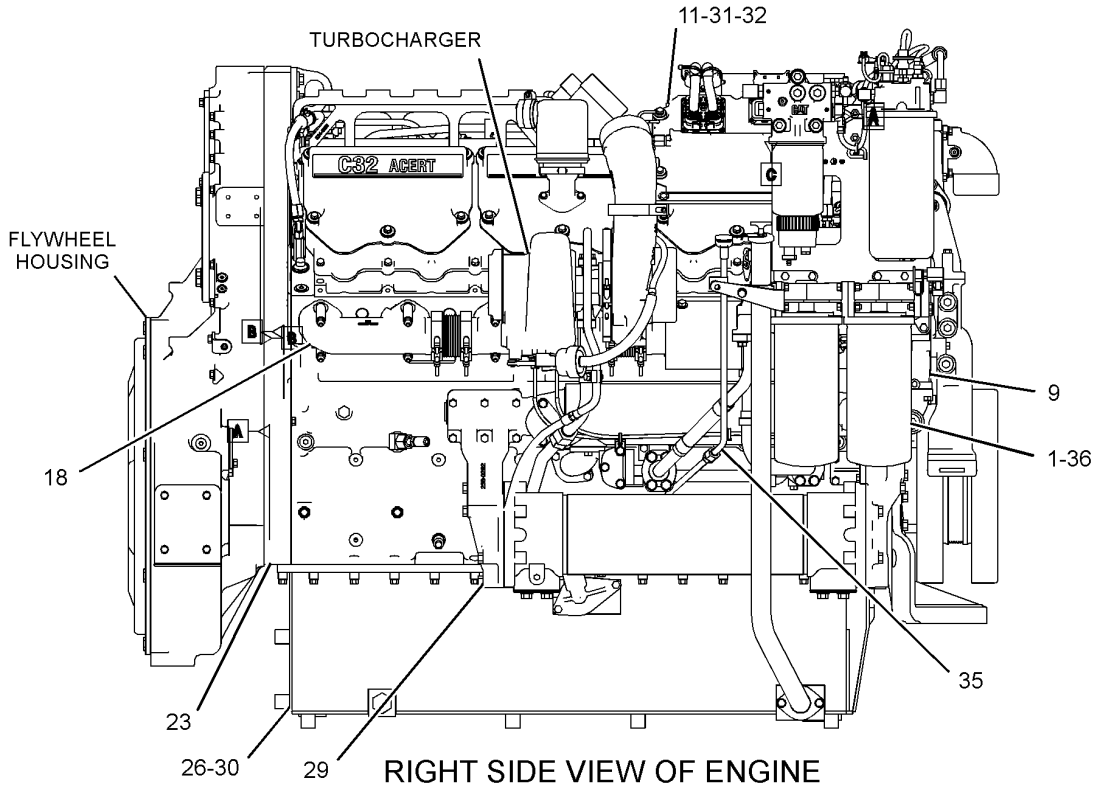

RIGHT SIDE VIEW OF ENGINE

GRAPHIC #1 g01446179

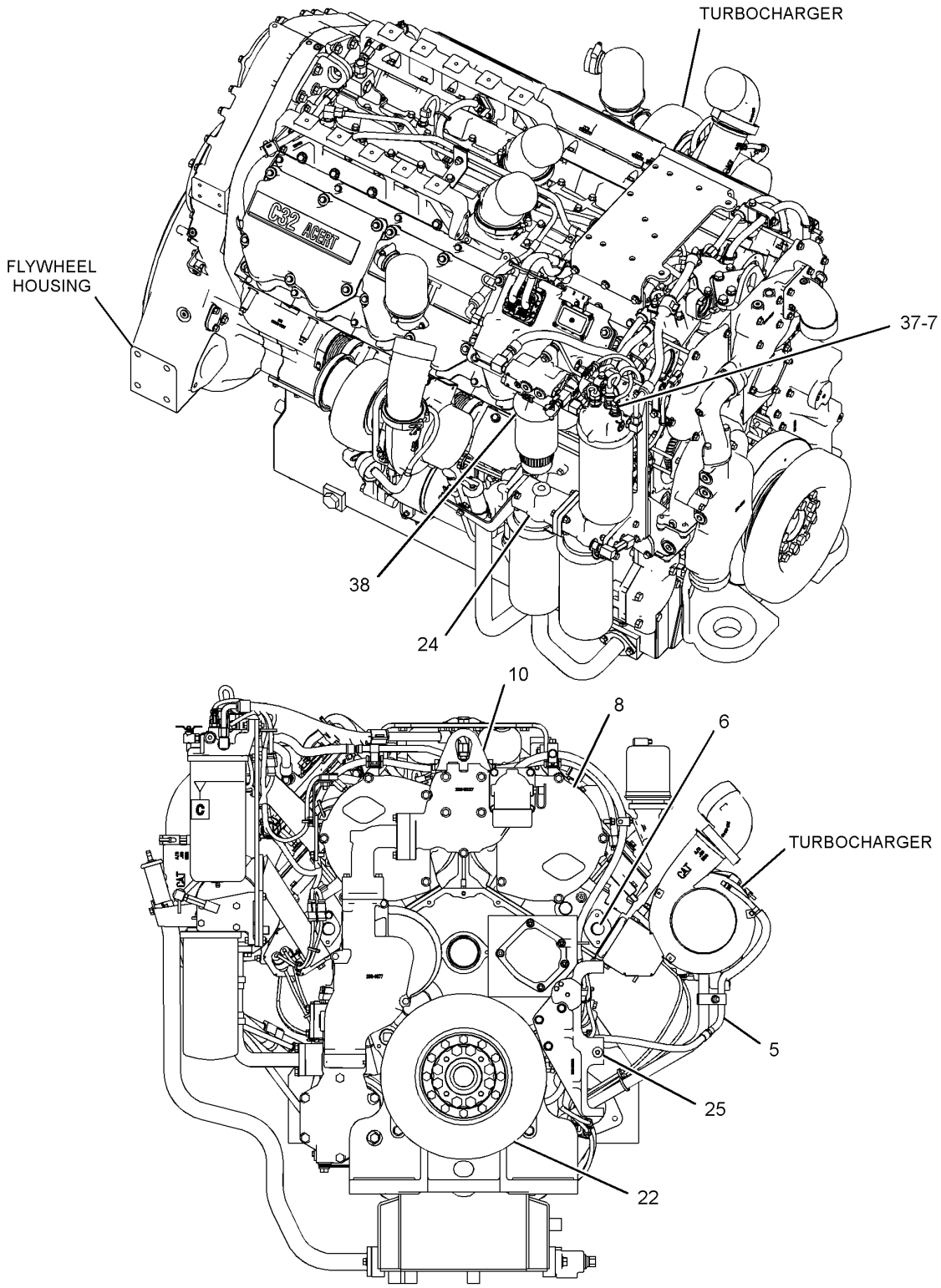

FRONT VIEW OF ENGINE

GRAPHIC #2 **<END>** g01446181

ENGINE ARRANGEMENT

261-2303 ENGINE AR-CORE

S/N: LJW2195-UP

PART OF 246-4283, 259-3142 ENGINE AR-COMPLETE

AN ATTACHMENT

SMCS-1000 **i02875424**

NOTE	PART NUMBER	QTY	PART NAME 1 2 3 4 5 6 (PRODUCT LEVEL)	SEE PAGE
Y	*223-6408*	1	BASE GP-VALVE COVER & INJ HARN	25
Y	*260-9307*	1	CAMSHAFT GP	29
Y	*224-3250*	1	CRANKSHAFT GP	42
Y	*253-9882*	1	CYLINDER BLOCK GP	46
Y	*284-8895*	1	CYLINDER HEAD GP	51
Y	*119-8583*	1	FASTENER GP-OIL PUMP MOUNTING	82
Y	*235-0993*	1	GEAR GP-FRONT	57
Y	*238-9862*	1	HOUSING GP-FRONT	63
Y	*233-2462*	1	HOUSING GP-REAR	64
Y	*260-9631*	1	MECHANISM GP-FUEL PUMP & VALVE	68
Y	*319-6714*	12	PISTON & ROD GP	72
YR	**116-1980**	1	PUMP GP-ENGINE OIL	103
Y	*235-1401*	12	PUMP GP-FUEL INJECTION	184
Y	*290-4621*	1	TURBOCHARGER GP	150
	282-8749	1	ELECTRONICS GP-ENGINE RATINGS	

R-REMFG PART MAY BE AVAILABLE
Y-SEPARATE ILLUSTRATION

ENGINE ARRANGEMENT

261-2304 ENGINE AR-CORE

S/N: LJW1-UP
703 BRAKE KW (943 BHP) . CAT COMPRESSION BRAKE
PART OF 246-8228, 259-3143 ENGINE AR-COMPLETE
AN ATTACHMENT

SMCS-1000 **i02912276**

NOTE	PART NUMBER	QTY	PART NAME 1 2 3 4 5 6 (PRODUCT LEVEL)	SEE PAGE
Y	*255-7955*	1	ACTUATOR GP-VALVE	23
Y	*249-8717*	1	BASE GP-VALVE COVER & INJ HARN	28
Y	*260-9307*	1	CAMSHAFT GP	29
Y	*224-3250*	1	CRANKSHAFT GP	42
Y	*253-9882*	1	CYLINDER BLOCK GP	46
Y	*284-8895*	1	CYLINDER HEAD GP	51
Y	*119-8583*	1	FASTENER GP-OIL PUMP MOUNTING	82
Y	*235-0993*	1	GEAR GP-FRONT	57
Y	*238-9862*	1	HOUSING GP-FRONT	63
Y	*233-2462*	1	HOUSING GP-REAR	64
Y	*255-8001*	1	MECHANISM GP-FUEL PUMP & VALVE	67
Y	*239-6144*	12	PISTON & ROD GP	71
YR	**116-1980**	1	PUMP GP-ENGINE OIL	103
Y	*235-1401*	12	PUMP GP-FUEL INJECTION	184
Y	*290-4621*	1	TURBOCHARGER GP	150
	282-8749	1	ELECTRONICS GP-ENGINE RATINGS	

R-REMFG PART MAY BE AVAILABLE
Y-SEPARATE ILLUSTRATION

ENGINE ARRANGEMENT

246-4284 INSTALLATION AR-ENGINE

S/N: 2211-UP

PART OF 262-2077 COMMON AR

SMCS-1000 **i02890553**

NOTE	REF NO	GRAPHIC REF	PART NUMBER	QTY	PART NAME 1 2 3 4 5 6 (PRODUCT LEVEL)	SEE PAGE
Y	1	1	*217-5696*	1	LINES GP-TURBOCHARGER AIR	140
Y	2	1	*221-1460*	1	SUPPORT GP-ENGINE	81
Y	3	1	*234-4919*	1	SHIELD GP-HEAT (TURBOCHARGER)	145
Y	4	1	*238-8388*	1	DRAIN GP-FUEL	158
Y	5	1	*252-8716*	1	STARTING MOTOR GP-ELECTRIC (DUAL)	278
Y	6	1	*273-3191*	1	EXTENSION GP-DRAIN	55
Y	7	1	*275-1232*	1	MUFFLER GP	144
Y	8	1	*275-1233*	1	AIR CLEANER GP	131
Y	9	1	*275-1234*	1	DUST EJECTOR GP	134
Y	10	1	*275-1237*	1	LINES GP-AIR (TURBOCHARGER INLET)	136
Y	11	1	*291-2838*	1	ACCESSORY GP-ENGINE (ALTERNATOR, A/C COMPRESSOR)	21
Y	12	1	*301-4186*	1	FUMES DISPOSAL GP	85

Y-SEPARATE ILLUSTRATION

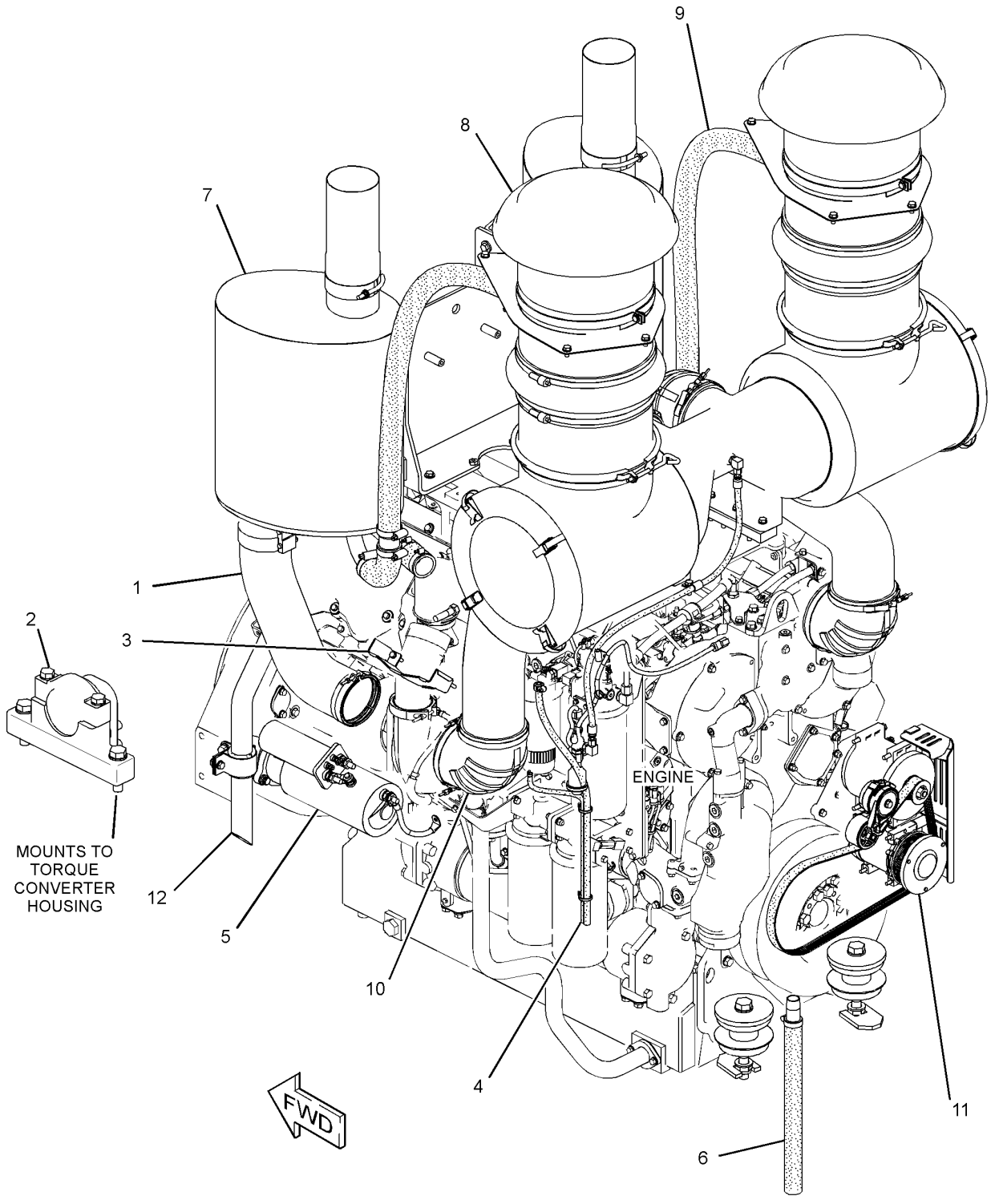

GRAPHIC #1 **<END>** g01443792

291-2838 ACCESSORY GP-ENGINE–
ALTERNATOR, AIR CONDITIONER COMPRESSOR
S/N: 2211-UP; LJW2195-UP
PART OF 246-4283 ENGINE AR-COMPLETE, 246-4284 INSTALLATION AR-ENGINE
ALSO AN ATTACHMENT

SMCS-1358, 1405, 1802 **i02957152**

NOTE	REF NO	GRAPHIC REF	PART NUMBER	QTY	PART NAME 1 2 3 4 5 6 (PRODUCT LEVEL)	SEE PAGE
	1	1	**3S-2093**	2	STRAP-CABLE	
	2	1	**114-5333**	1	SWITCH AS-PRESSURE (REFRIGERANT COMPR, HIGH SIDE)	
		1	**102-8802**	1	KIT-RECEPTACLE (2-PIN)	
					(INCLUDES RECEPTACLE AS AND WEDGE)	
		1	**186-3735**	2	PIN-CONNECTOR (16-GA TO 18-GA)	
E		1	**9X-1386**		SLEEVE (25-CM)	
	3	1	**124-3019**	1	BRACKET AS	
M		1	**8T-3490**	1	NUT-WELD (M10X1.5-THD)	
	4	1	**129-5096**	1	PULLEY-ALTERNATOR	
	5	1	**138-7500**	4	SPACER (11X25X50-MM THK)	
	6	1	**149-6371**	1	SWITCH AS-PRESSURE (REFRIGERANT COMPR, LOW SIDE)	
		1	**102-8802**	1	KIT-RECEPTACLE (2-PIN)	
					(INCLUDES RECEPTACLE AS AND WEDGE)	
		1	**186-3735**	1	PIN-CONNECTOR (16-GA TO 18-GA)	
	7	1	**175-4862**	1	BELT-SERPENTINE	
	8	1	**190-0642**	1	BELT TENSIONER	
	9	1	**268-3688**	1	GUARD AS	
	10	1	**272-1889**	1	ALTERNATOR GP-CHARGING (24-VOLT, 150-AMPERE)	
Y	11	1	**277-7245**	1	COMPRESSOR GP-REFRIGERANT	796
	12	1	**278-4944**	1	WIRE AS	
	13	1	**032-3237**	1	SPACER (10.93X19.05X25.4-MM THK)	
	14	1	**130-5300**	3	CLIP	
	15	1	**5M-3062**	1	BOLT (3/8-16X0.75-IN)	
	16	1	**5P-4116**	2	WASHER-HARD (8.8X20.5X2-MM THK)	
M	17	1	**7X-2538**	2	BOLT (M8X1.25X100-MM)	
M	18	1	**7X-2542**	2	BOLT (M8X1.25X150-MM)	
M	19	1	**7X-2545**	2	BOLT (M10X1.5X150-MM)	
	20	1	**7X-7729**	1	WASHER (11X25X3-MM THK)	
	21	1	**8T-4121**	4	WASHER-HARD (11X21X2.5-MM THK)	
M	22	1	**8T-4172**	1	BOLT (M10X1.5X80-MM)	
M	23	1	**8T-4185**	1	BOLT (M10X1.5X50-MM)	
M	24	1	**8T-4198**	2	BOLT (M10X1.5X100-MM)	
	25	1	**8T-4224**	2	WASHER-HARD (8.8X16X2-MM THK)	
	26	1	**8T-4896**	1	WASHER-HARD (10.2X18.5X2.5-MM THK)	
M	27	1	**8T-6408**	1	BOLT (M10X1.5X160-MM)	
	28	1	**9X-7378**	1	SEAL-O-RING	

E-ORDER BY THE CENTIMETER
M-METRIC PART
Y-SEPARATE ILLUSTRATION

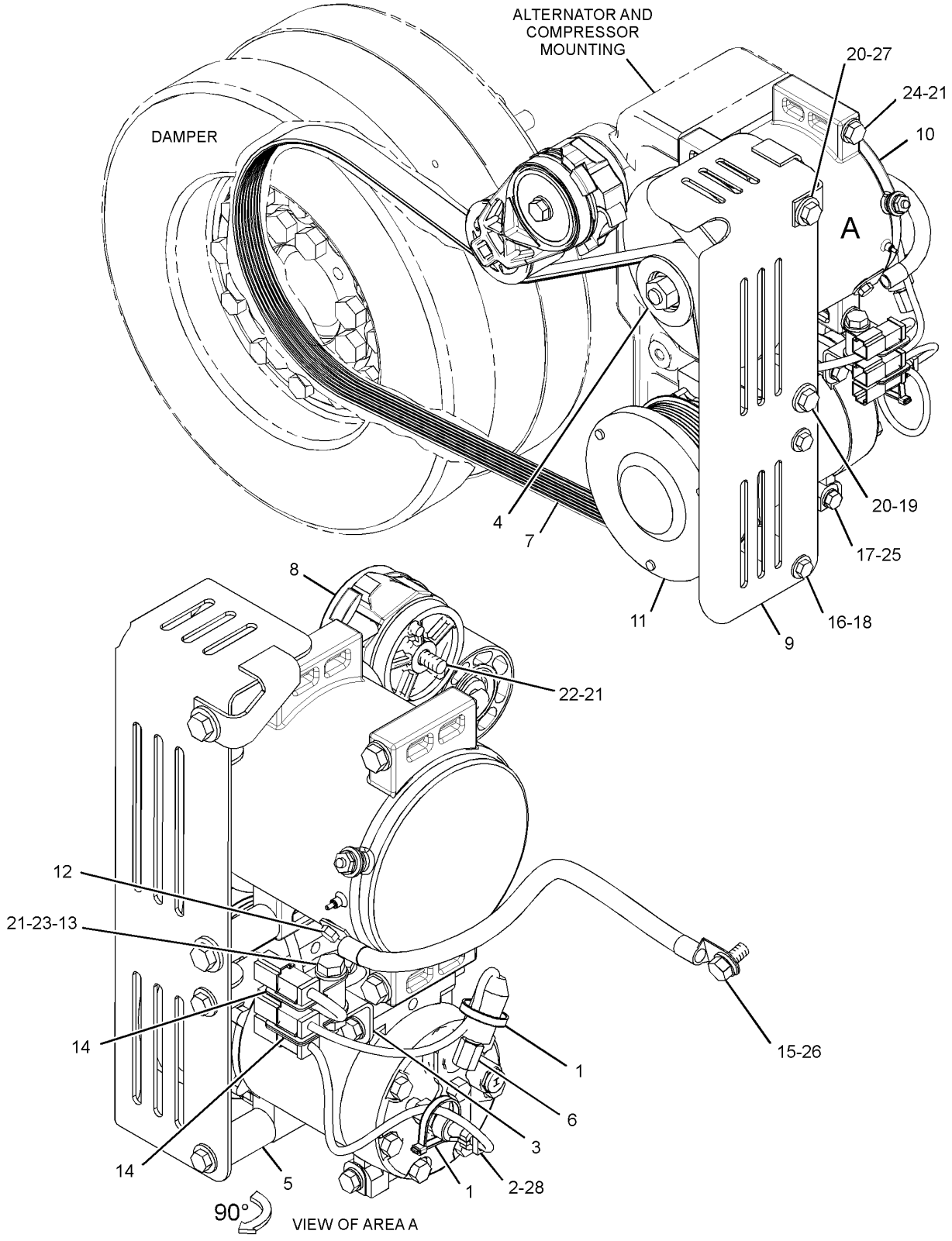

GRAPHIC #1 **<END>** g01436685

BASIC ENGINE

255-7955 ACTUATOR GP-VALVE

S/N: LJW1-UP
PART OF 261-2304 ENGINE AR-CORE
AN ATTACHMENT

SMCS-1130 **i02939985**

NOTE	REF NO	GRAPHIC REF	PART NUMBER	QTY	PART NAME 1 2 3 4 5 6 (PRODUCT LEVEL)	SEE PAGE
C	1	1	**304-9553**	18	STUD	
	2	1	**234-9505**	6	SUPPORT	
	3	1	**234-9508**	6	BOLT (1/2-13X5.65-IN)	
	4	1	**235-0658**	12	STUD	
	5	1	**235-1088**	12	NUT (3/8-16-THD)	
	6	1	**235-1089**	24	NUT-FLANGE (1/2-13-THD)	
CY	7	1	**313-4622**	6	ACTUATOR GP-VALVE	24
	8	1	**8T-7062**	6	STUD-TAPERLOCK (1/2-13X55, 1/2-13X21-MM)	

C-CHANGE FROM PREVIOUS TYPE
Y-SEPARATE ILLUSTRATION

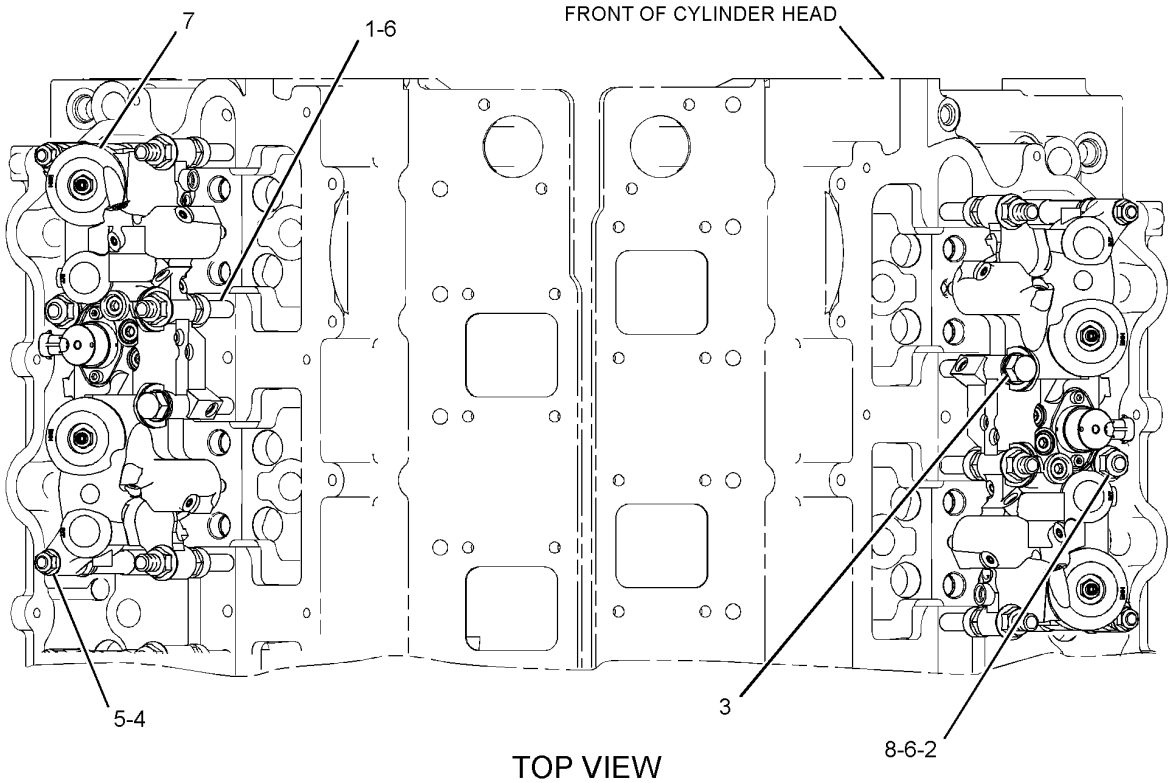

TOP VIEW

GRAPHIC #1 **<END>** g01257274

BASIC ENGINE

313-4622 ACTUATOR GP-VALVE

S/N: LJW1-UP

PART OF 255-7955 ACTUATOR GP-VALVE

AN ATTACHMENT

SMCS-1130 **i02888777**

NOTE	REF NO	GRAPHIC REF	PART NUMBER	QTY	PART NAME 1 2 3 4 5 6 (PRODUCT LEVEL)	SEE PAGE
	1	1	**230-9446**	2	SCREW-ADJUSTMENT	
	2	1	**230-9447**	2	NUT-JAM	
	3	1	**250-9378**	1	VALVE AS-BRAKE	
	4	1	**4B-9880**	3	BALL	

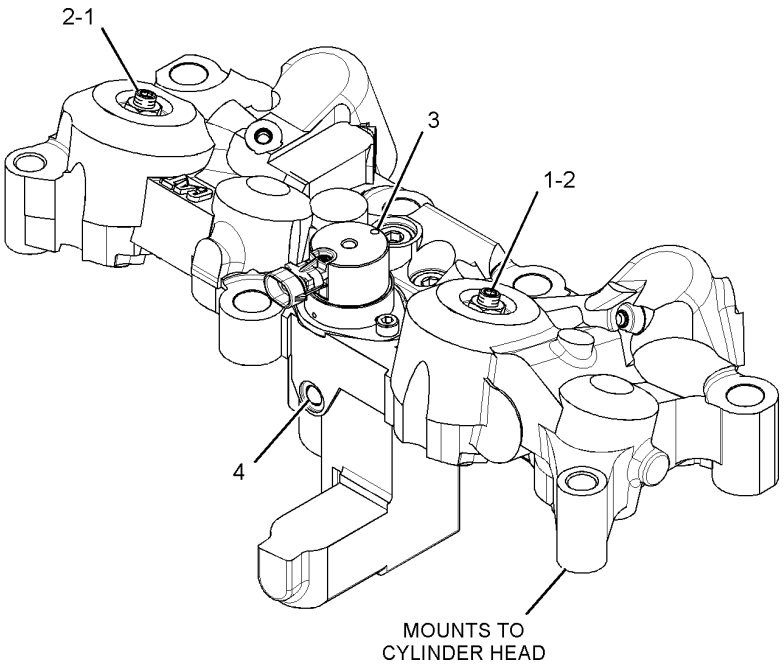

GRAPHIC #1 **<END>** g01447264

BASIC ENGINE

223-6408 BASE GP-VALVE COVER & INJ HARN

S/N: LJW2195-UP
PART OF 261-2303 ENGINE AR-CORE
AN ATTACHMENT

SMCS-1120, 1408 **i02230983**

NOTE	REF NO	GRAPHIC REF	PART NUMBER	QTY	PART NAME 1 2 3 4 5 6 (PRODUCT LEVEL)	SEE PAGE
	1	1	**7E-6508**	12	CAP AS (UNIT INJECTOR)	
Y	2	1	*226-4927*	2	BASE GP-VALVE COVER & INJ HARN	26
	3	1	**1A-9579**	32	BOLT (5/16-18X1.5-IN)	
	4	1	**9M-1974**	32	WASHER-HARD (8.8X16X2-MM THK)	

Y-SEPARATE ILLUSTRATION

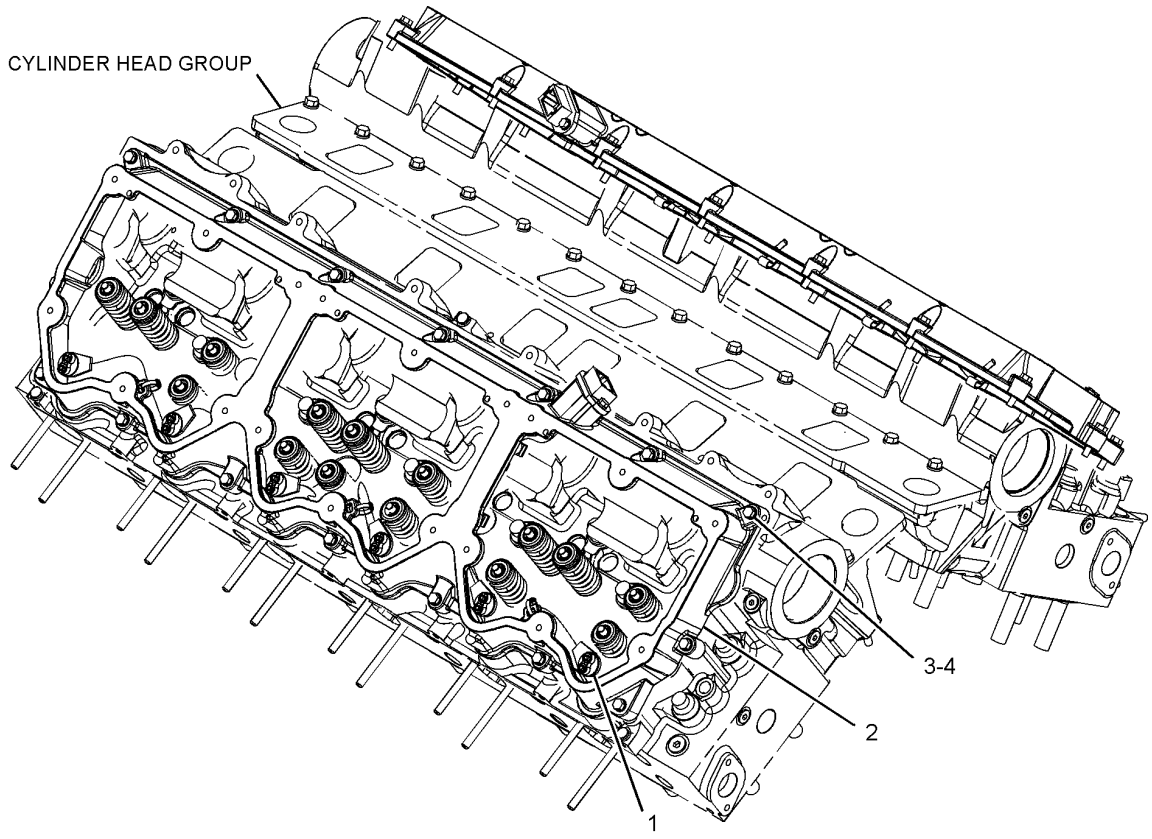

GRAPHIC #1 **<END>** g01051256

226-4927 BASE GP-VALVE COVER & INJ HARN

S/N: LJW2195-UP

PART OF 223-6408 BASE GP-VALVE COVER & INJ HARN

AN ATTACHMENT

SMCS-1120, 1408 **i02961081**

NOTE	REF NO	GRAPHIC REF	PART NUMBER	QTY	PART NAME 1 2 3 4 5 6 (PRODUCT LEVEL)	SEE PAGE
	1	1	**6V-0128**	1	SEAL-CONNECTOR	
	2	1	**100-5218**	4	CLIP	
	3	1	**222-6953**	1	BASE-VALVE MECHANISM COVER	
C	4	1	**285-6647**	1	HARNESS AS-ENGINE (UNIT INJECTOR)	
		1	**102-8801**	1	KIT-RECEPTACLE (12-PIN)	
					(INCLUDES RECEPTACLE AS AND WEDGE)	
		1	**103-8134**	1	KIT-RECEPTACLE (12-PIN)	
					(INCLUDES RECEPTACLE AS AND WEDGE)	
		1	**8T-8737**	3	PLUG-SEAL	
		1	**9X-3401**	9	PIN-CONNECTOR (16-GA TO 18-GA)	
		1	**126-1767**	9	PIN-CONNECTOR (14-GA)	
	5	1	**100-5219**	2	CLIP	
	6	1	**123-3202**	3	STRAP-CABLE	
	7	1	**4F-7957**	2	BOLT (1/4-20X0.875-IN)	
	8	1	**5P-0537**	8	WASHER-HARD (7.2X14.5X2-MM THK)	
	9	1	**8H-3127**	6	BOLT (1/4-20X0.75-IN)	
	10	1	**222-6456**	1	SEAL-VALVE COVER	

C-CHANGE FROM PREVIOUS TYPE

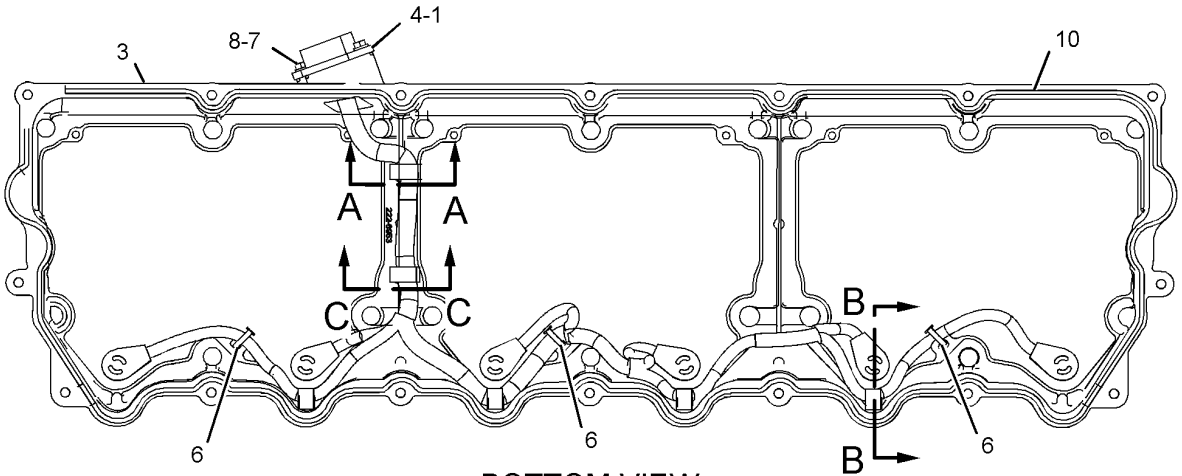

BOTTOM VIEW

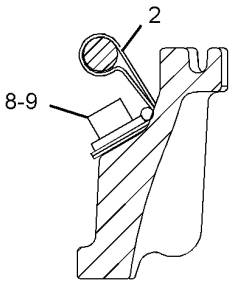

SECTION B-B

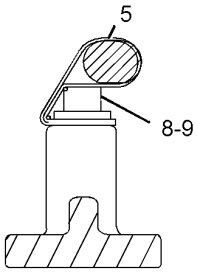

SECTION C-C

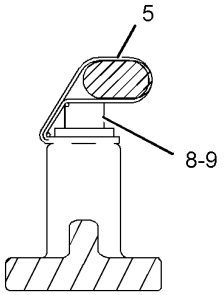

SECTION A-A

GRAPHIC #1

<END>

g01051193

249-8716 BASE GP-VALVE COVER & INJ HARN

S/N: LJW1-UP

PART OF 249-8717 BASE GP-VALVE COVER & INJ HARN

AN ATTACHMENT

SMCS-1120, 1408 **i02946529**

NOTE	REF NO	GRAPHIC REF	PART NUMBER	QTY	PART NAME 1 2 3 4 5 6 (PRODUCT LEVEL)	SEE PAGE
	1	1	**6V-0128**	1	SEAL-CONNECTOR	
	3	1	**222-6953**	1	BASE-VALVE MECHANISM COVER	
	4	1	**292-9253**	1	HARNESS AS-ENGINE	
	5	1	**100-5219**	6	CLIP	
	6	1	**123-3202**	3	STRAP-CABLE	
	7	1	**4F-7957**	2	BOLT (1/4-20X0.875-IN)	
	8	1	**5P-0537**	8	WASHER-HARD (7.2X14.5X2-MM THK)	
	9	1	**8H-3127**	6	BOLT (1/4-20X0.75-IN)	
	10	1	**222-6456**	1	SEAL-VALVE COVER (VALVE COVER)	

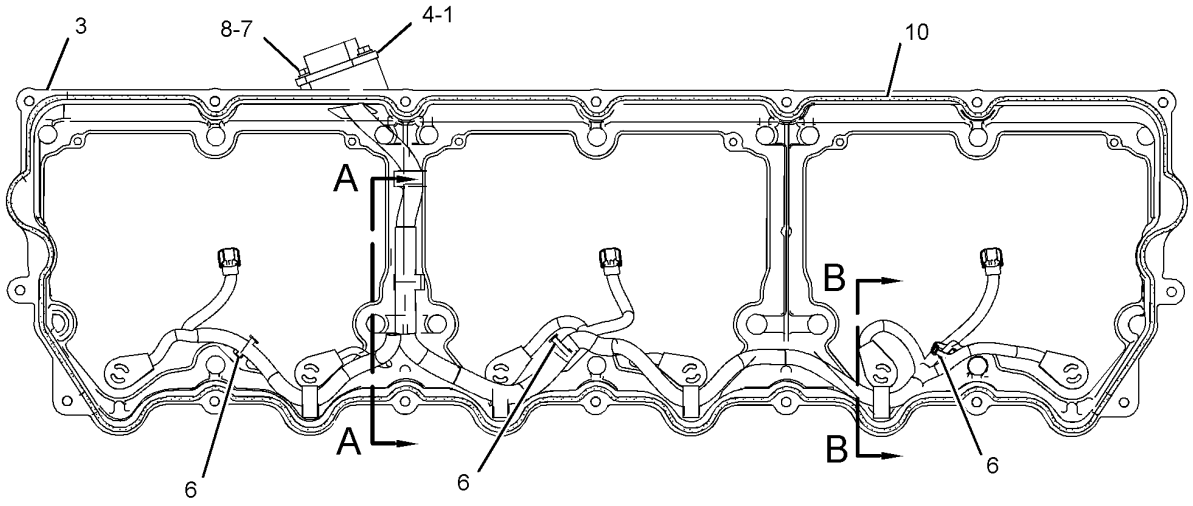

BOTTOM VIEW

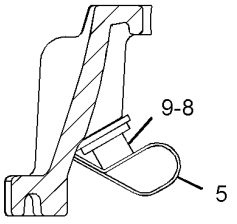

SECTION B-B

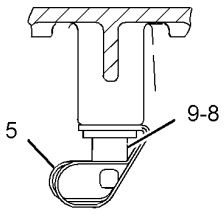

SECTION C-C

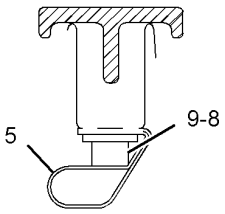

SECTION D-D

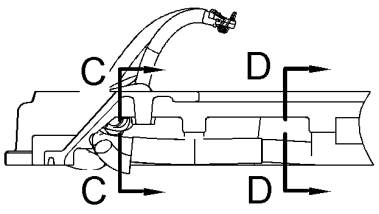

SECTION A-A

GRAPHIC #1 **<END>** g01386686

249-8717 BASE GP-VALVE COVER & INJ HARN

S/N: LJW1-UP
PART OF 261-2304 ENGINE AR-CORE
AN ATTACHMENT

SMCS-1120, 1408 **i02499078**

NOTE	REF NO	GRAPHIC REF	PART NUMBER	QTY	PART NAME 1 2 3 4 5 6 (PRODUCT LEVEL)	SEE PAGE
	1	1	**7E-6508**	12	CAP AS	
Y	2	1	*249-8716*	2	BASE GP-VALVE COVER & INJ HARN	27
	3	1	**1A-9579**	32	BOLT (5/16-18X1.5-IN)	
	4	1	**9M-1974**	32	WASHER-HARD (8.8X16X2-MM THK)	

Y-SEPARATE ILLUSTRATION

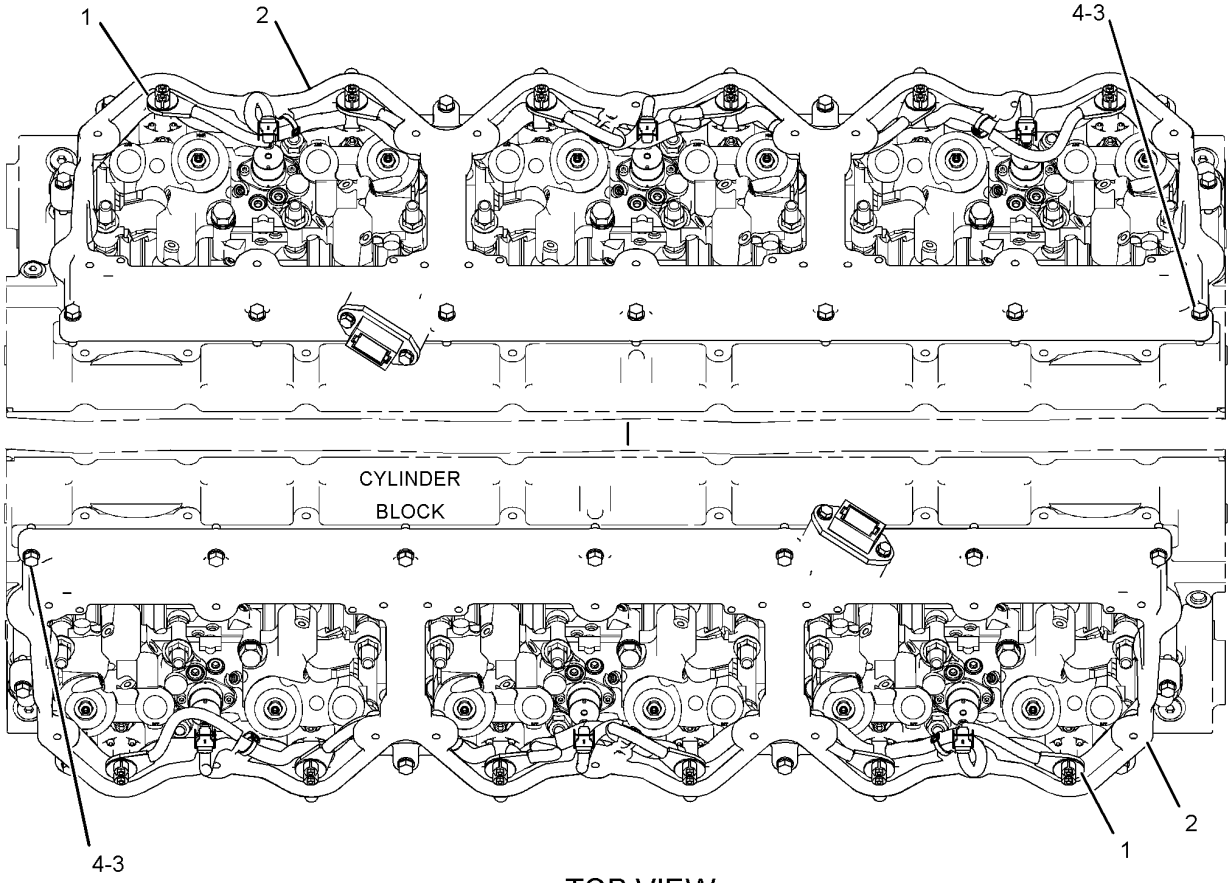

TOP VIEW

GRAPHIC #1 **<END>** g01257307

260-9307 CAMSHAFT GP

S/N: LJW1-UP
PART OF 261-2303, 261-2304 ENGINE AR-CORE
AN ATTACHMENT

SMCS-1210, 1211, 1212 **i02762468**

NOTE	REF NO	GRAPHIC REF	PART NUMBER	QTY	PART NAME 1 2 3 4 5 6 (PRODUCT LEVEL)	SEE PAGE
	1	1	**301-7454**	1	CAMSHAFT (RIGHT BANK)	
J	2	1	**301-7457**	1	CAMSHAFT (LEFT BANK)	

J-END MARKED "F" ON FRONT END OF ENGINE

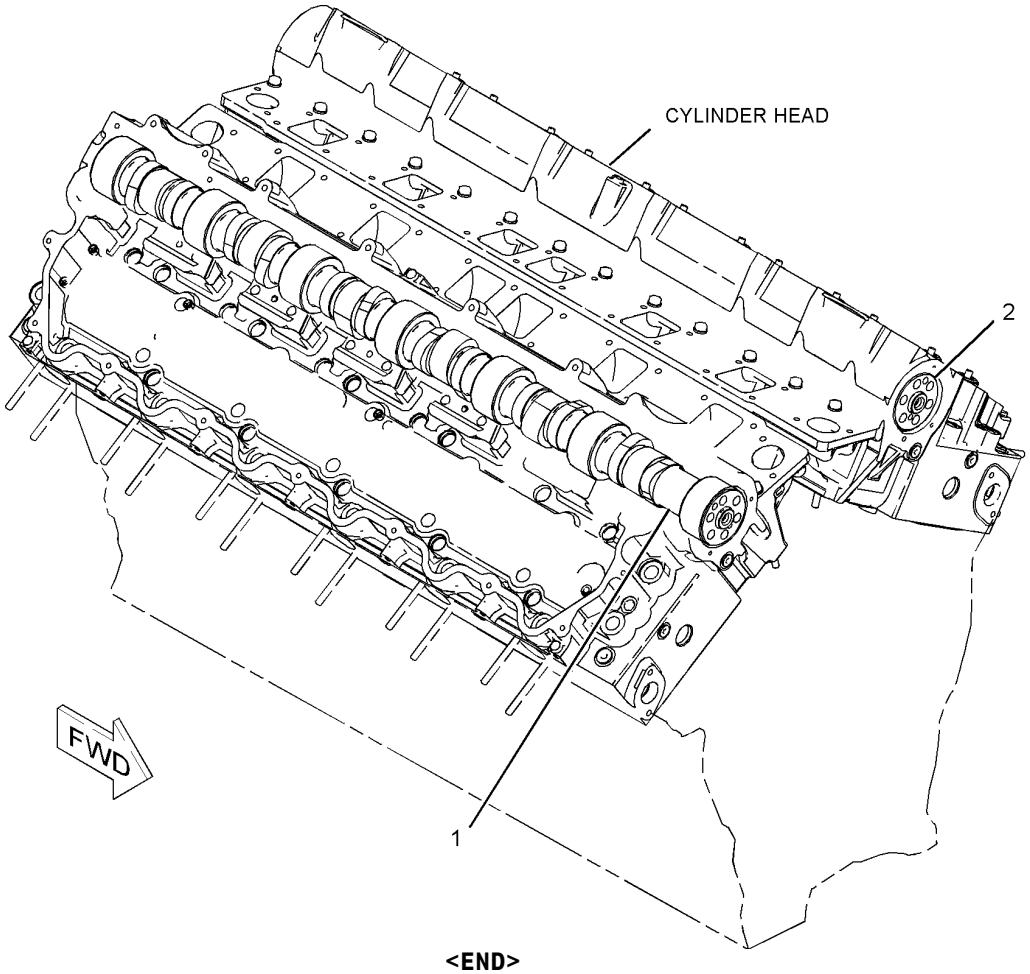

GRAPHIC #1 **<END>** g01051265

BASIC ENGINE

224-3170 COVER GP-CYLINDER BLOCK–FRONT STRUCTURE

S/N: LJW2195-UP

PART OF 259-3142, 259-3143 ENGINE AR-COMPLETE

AN ATTACHMENT

SMCS-1201 **i02620013**

NOTE	REF NO	GRAPHIC REF	PART NUMBER	QTY	PART NAME 1 2 3 4 5 6 (PRODUCT LEVEL)	SEE PAGE
	1	1	**4P-7820**	1	COVER-ACCESSORY DRIVE	
	3	1	**228-9093**	1	SUPPORT AS	
M		1	**8T-3490**	10	NUT-WELD (M10X1.5-THD)	
	4	1	**234-3441**	2	SUPPORT-HOUSING	
	5	1	**274-4051**	2	COVER-CAMSHAFT	
	6	1	**239-1139**	2	SEAL	
	7	1	**239-1418**	1	BRACKET AS	
		1	**1F-0750**	3	NUT-WELD (3/8-16-THD)	
	8	1	**239-1419**	1	BRACKET AS	
		1	**1F-0750**	3	NUT-WELD (3/8-16-THD)	
	9	1	**0S-1588**	6	BOLT (3/8-16X1.25-IN)	
	10	1	**0S-1590**	4	BOLT (3/8-16X2-IN)	
	12	1	**0S-1594**	3	BOLT (3/8-16X1-IN)	
	13	1	**0S-1619**	6	BOLT (3/8-16X3-IN)	
	15	1	**125-9794**	1	SEAL-O-RING	
	17	1	**2M-1538**	1	STUD-TAPERLOCK (3/8-16X1.6-IN)	
	18	1	**2P-1974**	3	STUD-TAPERLOCK (3/8-16X4.2-IN)	
	19	1	**3K-3256**	1	STUD-TAPERLOCK (3/8-16X1.7-IN)	
	20	1	**5F-4899**	2	BOLT (3/8-16X5.5-IN)	
	21	1	**5M-2894**	5	WASHER-HARD (10.2X18.5X2.5-MM THK)	
	22	1	**9S-8752**	6	NUT-FULL (3/8-16-THD)	
	23	1	**9X-6458**	22	WASHER-HARD (10.2X22.5X3-MM THK)	

M-METRIC PART

224-3170 **COVER GP-CYLINDER BLOCK** *(contd.)* **i02620013**

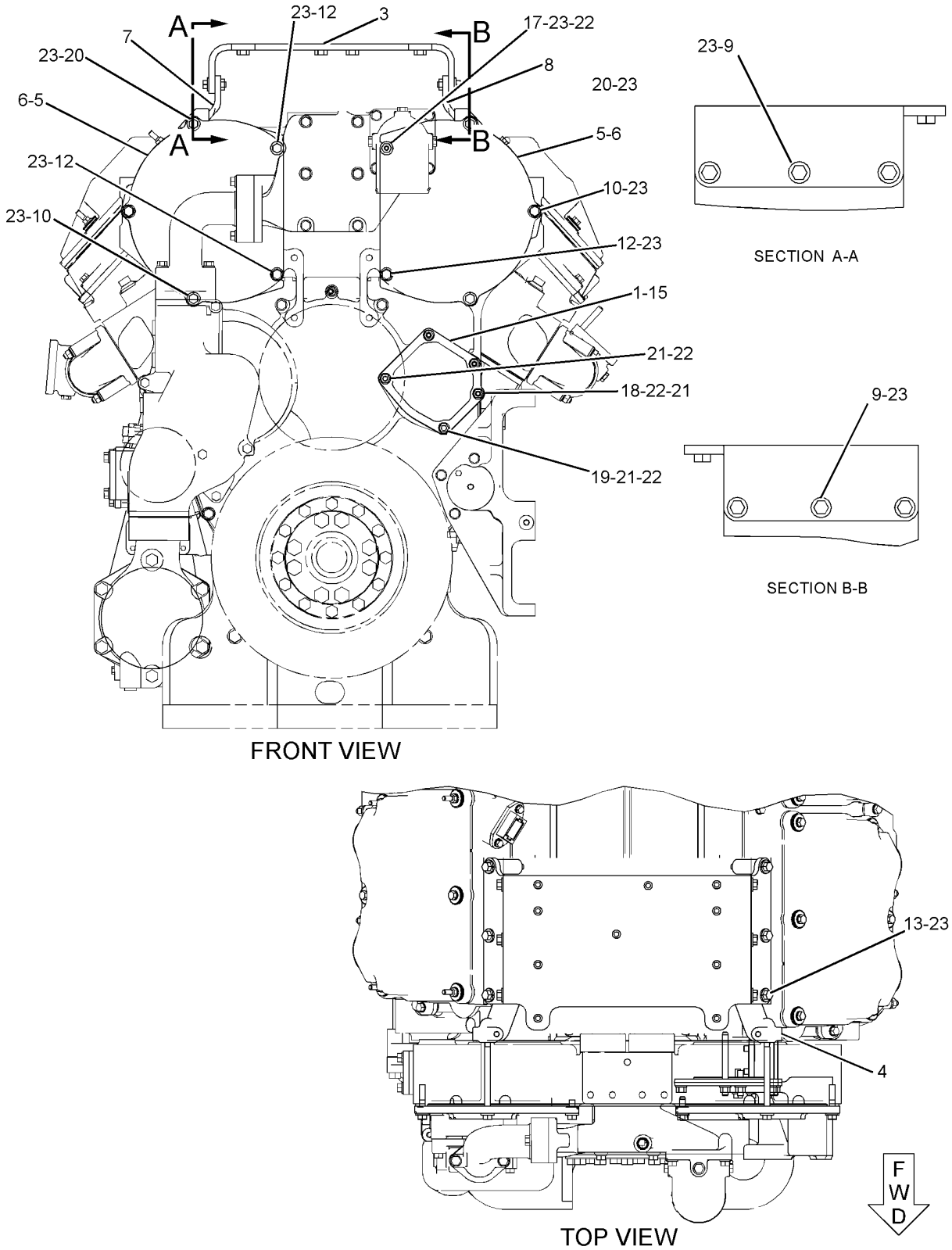

GRAPHIC #1 **<END>** g01309284

BASIC ENGINE

245-9778 COVER GP-CYLINDER BLOCK–REAR STRUCTURE

S/N: LJW1-UP

PART OF 246-4283, 246-8228, 259-3142, 259-3143 ENGINE AR-COMPLETE

AN ATTACHMENT

SMCS-1201 **i02881435**

NOTE	REF NO	GRAPHIC REF	PART NUMBER	QTY	PART NAME 1 2 3 4 5 6 (PRODUCT LEVEL)	SEE PAGE
	1	1	**227-5538**	1	SEAL-O-RING	
	2	1	**273-8703**	1	COVER	
	3	1	**234-8937**	2	SEAL-INTEGRAL	
	4	1	**246-9919**	2	COVER	
	5	1	**0S-1585**	8	BOLT (1/2-13X1.5-IN)	
	6	1	**0S-1594**	2	BOLT (3/8-16X1-IN)	
	7	1	**0S-1619**	2	BOLT (3/8-16X3-IN)	
	8	1	**1A-2029**	4	BOLT (3/8-16X1.125-IN)	
	9	1	**2P-2772**	2	COVER	
	10	1	**5M-2894**	8	WASHER-HARD (10.2X18.5X2.5-MM THK)	
	11	1	**5P-8245**	8	WASHER-HARD (13.5X25.5X3-MM THK)	
	12	1	**5P-8429**	2	SEAL-O-RING	

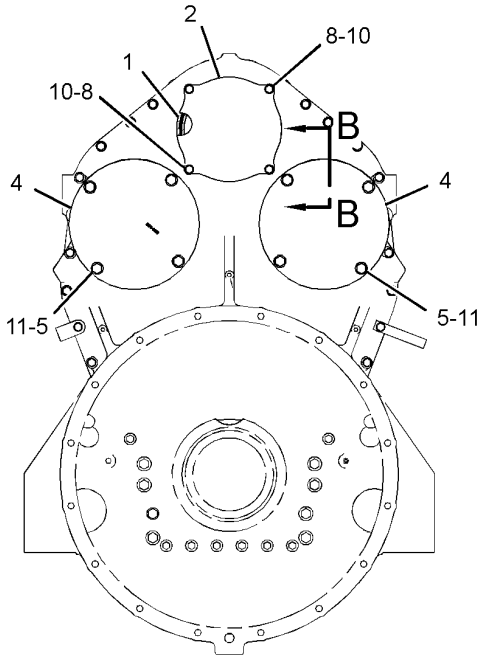

REAR VIEW OF ENGINE

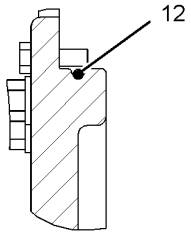

SECTION B-B

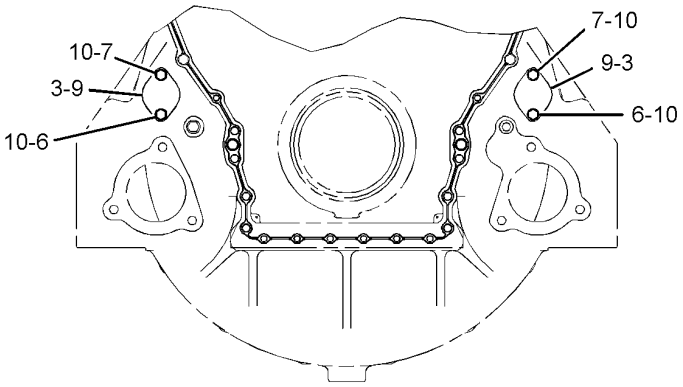

FRONT VIEW OF ENGINE

GRAPHIC #1 **<END>** g01430332

254-1776 COVER GP-CYLINDER BLOCK–CENTRAL STRUCTURE

S/N: LJW1-UP

PART OF 246-4283, 246-8228, 259-3142, 259-3143 ENGINE AR-COMPLETE

AN ATTACHMENT

SMCS-1201 **i02875116**

NOTE	REF NO	GRAPHIC REF	PART NUMBER	QTY	PART NAME 1 2 3 4 5 6 (PRODUCT LEVEL)	SEE PAGE
	1	1	**4N-1683**	1	COVER	
	2	1	**154-6626**	1	BRACKET AS	
M	2A	1	**8T-3490**	1	NUT-WELD (M10X1.5-THD)	
	3	1	**234-8937**	1	SEAL-INTEGRAL	
	4	1	**239-5571**	1	SEAL-INTEGRAL	
	5	1	**239-5572**	1	SEAL-INTEGRAL	
	6	1	**0S-1588**	2	BOLT (3/8-16X1.25-IN)	
	7	1	**0S-1594**	5	BOLT (3/8-16X1-IN)	
	8	1	**2P-2772**	1	COVER	
	9	1	**4N-0794**	1	COVER	
	10	1	**5M-2894**	7	WASHER-HARD (10.2X18.5X2.5-MM THK)	

M-METRIC PART

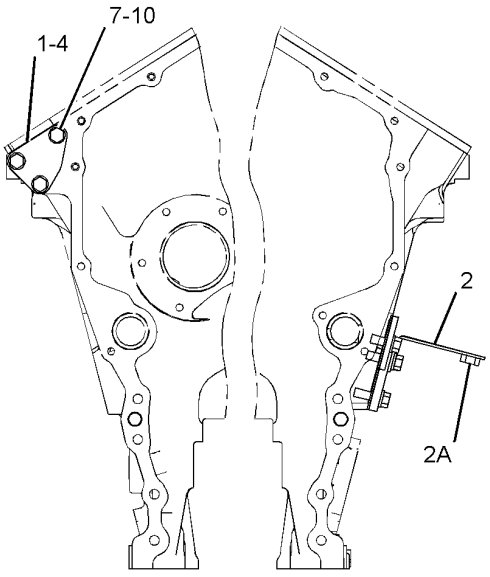

FRONT VIEW OF ENGINE

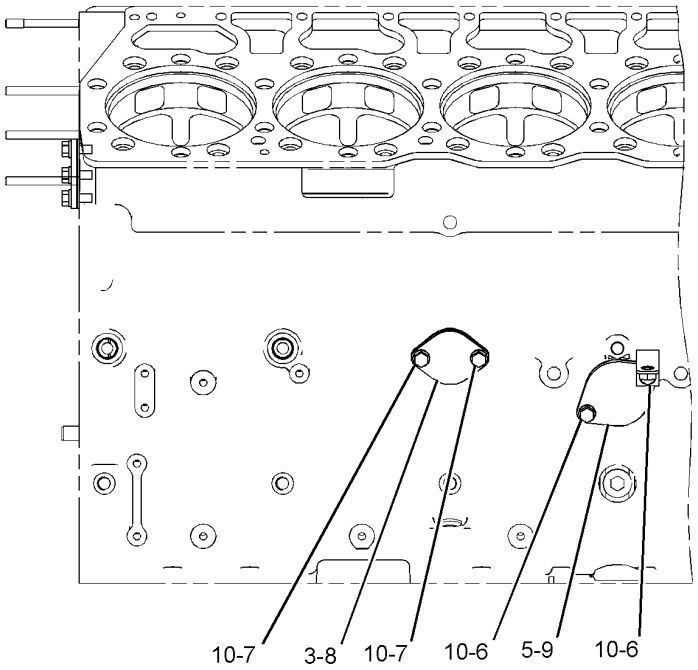

LEFT SIDE VIEW OF ENGINE

GRAPHIC #1 **<END>** g01431839

273-1643 COVER GP-CYLINDER BLOCK–FRONT STRUCTURE

S/N: LJW1-UP

PART OF 246-4283, 246-8228 ENGINE AR-COMPLETE

AN ATTACHMENT

SMCS-1201 **i02870399**

NOTE	REF NO	GRAPHIC REF	PART NUMBER	QTY	PART NAME 1 2 3 4 5 6 (PRODUCT LEVEL)	SEE PAGE
	1	1	**4P-7820**	1	COVER-ACCESSORY DRIVE	
	2	1	**228-9093**	1	SUPPORT AS	
		1	**7T-1099**	1	LINK	
M		1	**8T-3490**	11	NUT-WELD (M10X1.5-THD)	
	3	1	**234-3441**	2	SUPPORT-HOUSING	
C	4	1	**274-4051**	2	COVER-CAMSHAFT	
	5	1	**239-1139**	2	SEAL	
	6	1	**239-1418**	1	BRACKET AS	
	7	1	**239-1419**	1	BRACKET AS	
					(EACH BRACKET AS INCLUDES)	
		1	**1F-0750**	3	NUT-WELD (3/8-16-THD)	
	8	1	**257-3880**	1	COVER AS-PANEL	
	9	1	**0L-1143**	3	BOLT (3/8-16X2.5-IN)	
	10	1	**0S-1588**	6	BOLT (3/8-16X1.25-IN)	
	11	1	**0S-1590**	1	BOLT (3/8-16X2-IN)	
	12	1	**0S-1591**	3	BOLT (3/8-16X1.5-IN)	
	13	1	**0S-1619**	6	BOLT (3/8-16X3-IN)	
	14	1	**125-9794**	1	SEAL-O-RING	
	15	1	**1D-4706**	2	BOLT (3/8-16X6-IN)	
	16	1	**2M-1538**	1	STUD-TAPERLOCK (3/8-16X1.6-IN)	
	17	1	**2P-1974**	3	STUD-TAPERLOCK (3/8-16X4.2-IN)	
	18	1	**3K-3256**	1	STUD-TAPERLOCK (3/8-16X1.7-IN)	
	19	1	**5M-2894**	5	WASHER-HARD (10.2X18.5X2.5-MM THK)	
	20	1	**9S-8752**	6	NUT-FULL (3/8-16-THD)	
	21	1	**9X-6458**	22	WASHER-HARD (10.2X22.5X3-MM THK)	
	22	1	**3J-4278**	7	SPACER (13.5X22.2X6.5-MM THK)	

C-CHANGE FROM PREVIOUS TYPE
M-METRIC PART

273-1643 **COVER GP-CYLINDER BLOCK** *(contd.)* **i02870399**

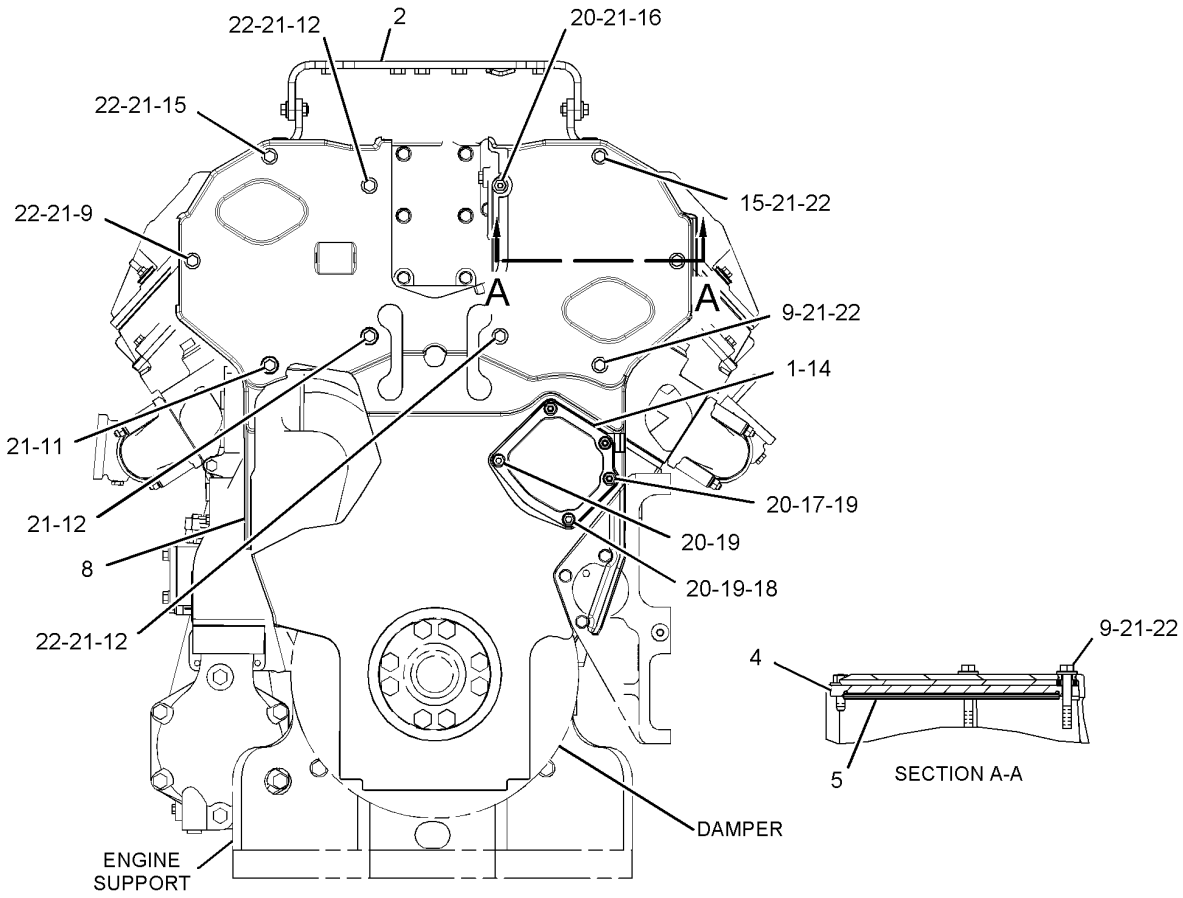

FRONT VIEW OF ENGINE

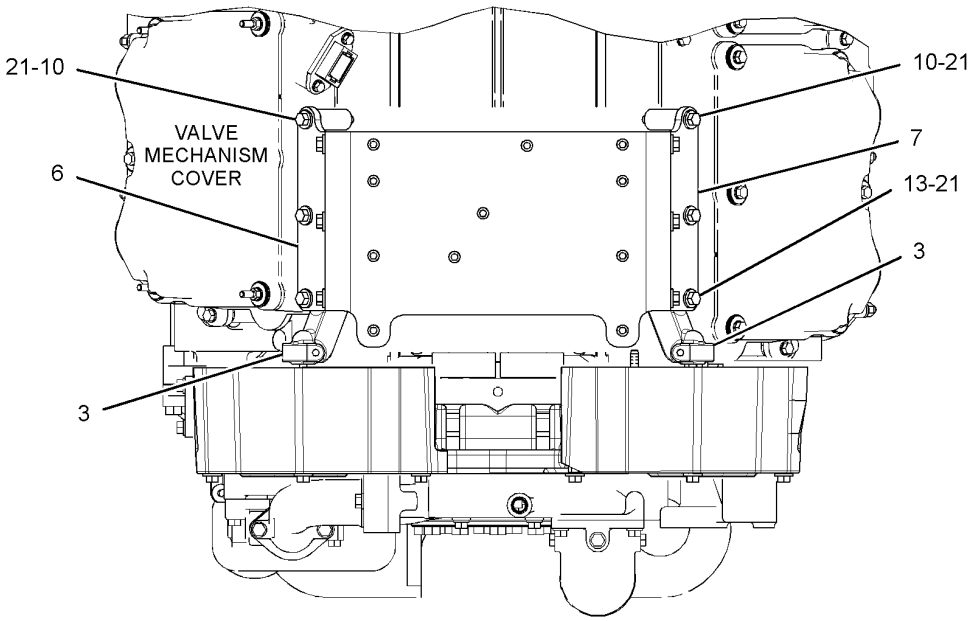

TOP VIEW OF ENGINE

GRAPHIC #1 **<END>** g01451361

BASIC ENGINE

289-2229 COVER GP-SOUND SUPPRESSION

S/N: LJW1-UP

PART OF 246-4283, 246-8228 ENGINE AR-COMPLETE

AN ATTACHMENT

SMCS-1801 **i02866136**

NOTE	REF NO	GRAPHIC REF	PART NUMBER	QTY	PART NAME 1 2 3 4 5 6 (PRODUCT LEVEL)	SEE PAGE
	1	1	**257-3882**	1	PANEL AS-SOUND SUPPRESSION	
	2	1	**257-3883**	1	PANEL AS-SOUND SUPPRESSION	
	3	1	**0S-0509**	6	BOLT (3/8-16X0.75-IN)	
	4	1	**0S-1591**	5	BOLT (3/8-16X1.5-IN)	
	5	1	**9X-6458**	11	WASHER-HARD (10.2X22.5X3-MM THK)	

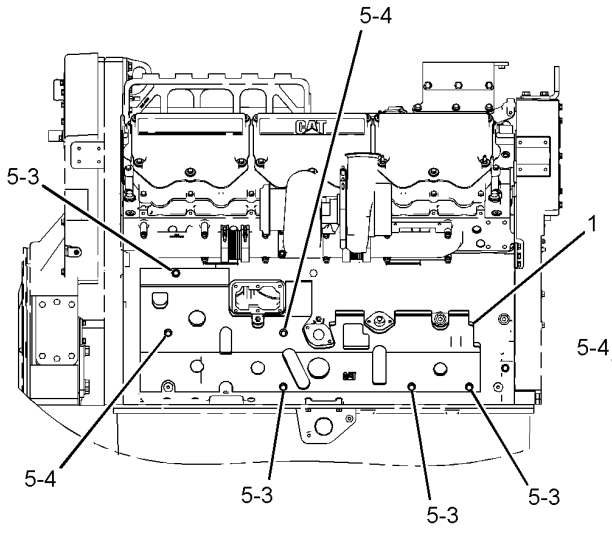

RIGHT SIDE VIEW OF ENGINE

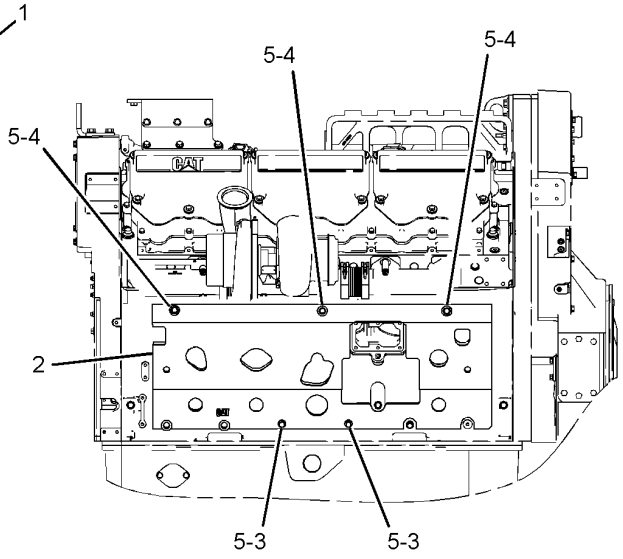

LEFT SIDE VIEW OF ENGINE

GRAPHIC #1 **<END>** g01435385

BASIC ENGINE

266-9850 COVER GP-VALVE MECHANISM

S/N: LJW2195-UP
PART OF 246-4283 ENGINE AR-COMPLETE
AN ATTACHMENT

SMCS-1107 **i02948742**

NOTE	REF NO	GRAPHIC REF	PART NUMBER	QTY	PART NAME 1 2 3 4 5 6 (PRODUCT LEVEL)	SEE PAGE
	1	1	**4W-3034**	2	CLAMP-HOSE	
	2	1	**126-0559**	4	BOLT (5/16-18X1.25-IN)	
	3	1	**212-7728**	36	WASHER-ISOLATOR	
	4	1	**223-1993**	2	COVER	
	5	1	**224-7506**	6	SEAL-VALVE COVER	
	6	1	**224-9907**	4	STUD (5/16-18-THD)	
	7	1	**238-9850**	4	COVER	
	8	1	**282-9105**	2	BREATHER AS (CRANKCASE)	
	9	1	**292-1163**	2	ELBOW	
	10	1	**033-6031**	2	SEAL-O-RING	
	11	1	**5P-8211**	2	SEAL-O-RING	
	12	1	**7X-0440**	32	BOLT (5/16-18X1.75-IN)	
	13	1	**8T-4224**	36	WASHER-HARD (8.8X16X2-MM THK)	

266-9850 **COVER GP-VALVE MECHANISM** *(contd.)* **i02948742**

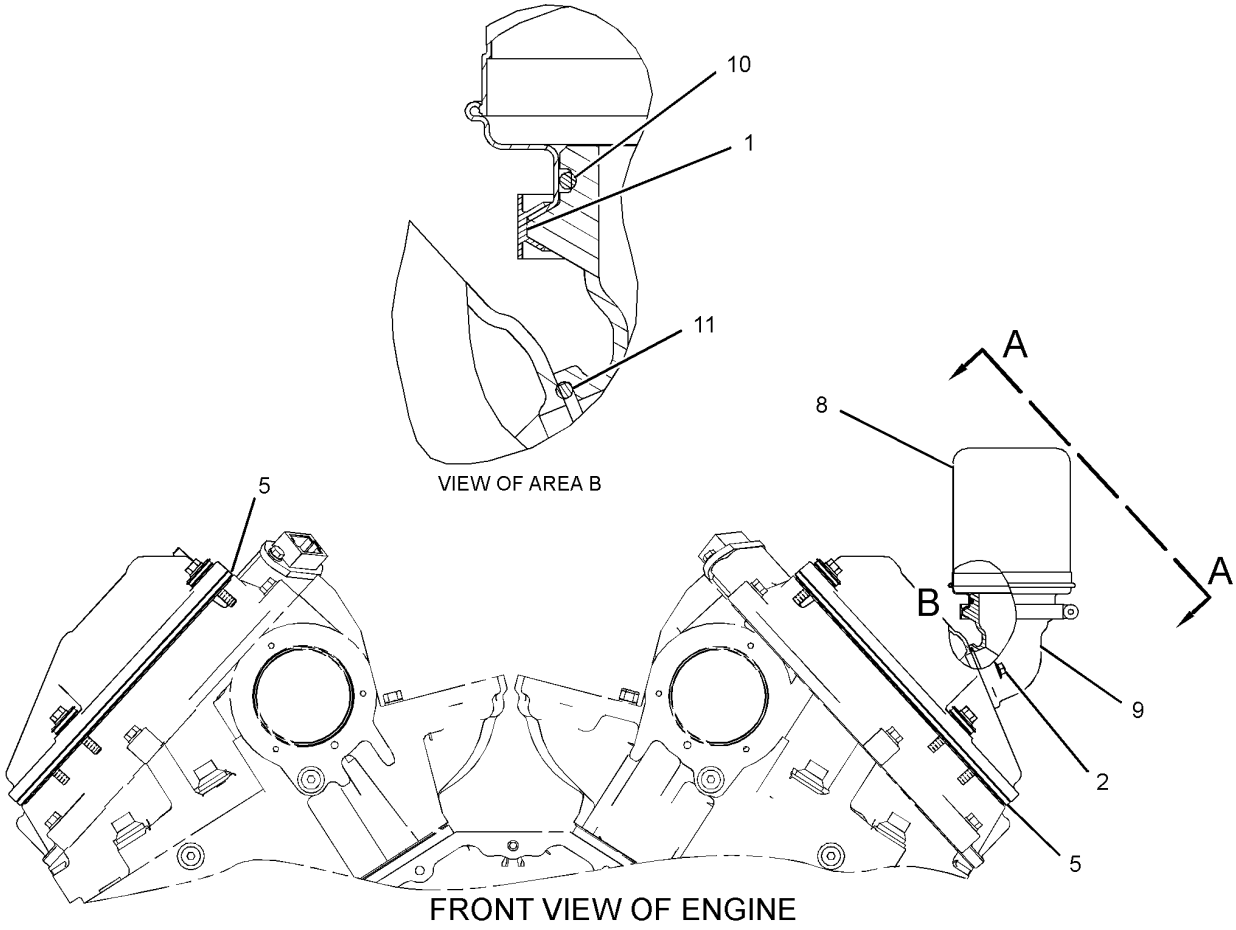

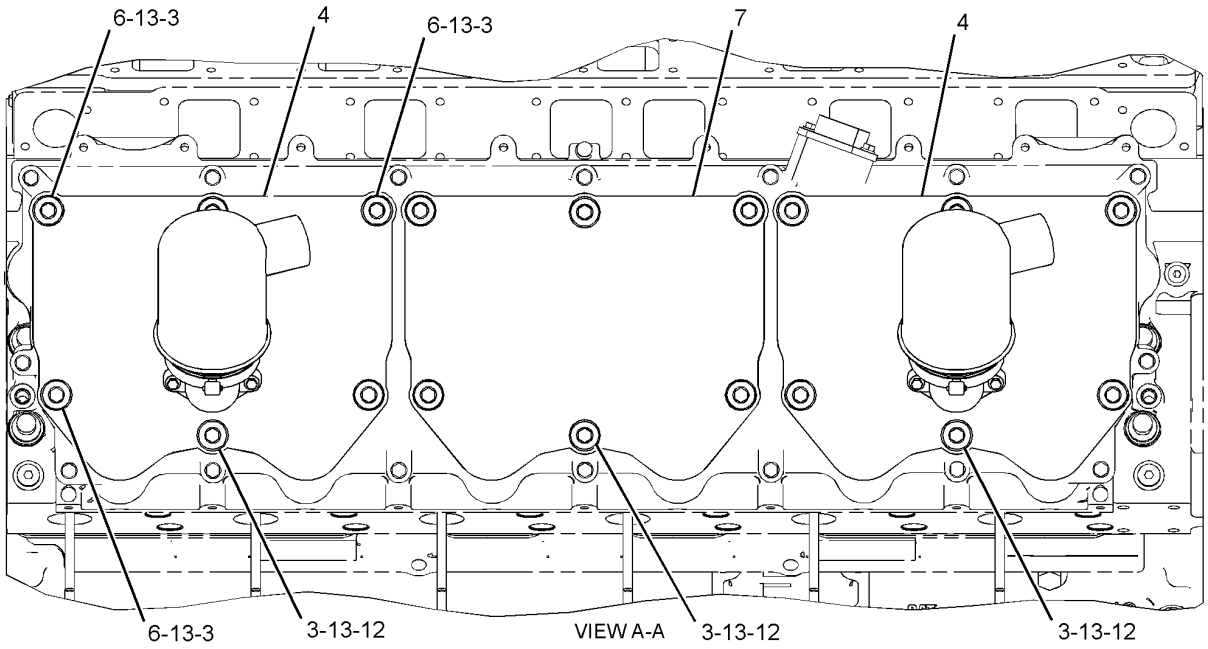

GRAPHIC #1

<END>

g01432729

BASIC ENGINE

304-4238 COVER GP-VALVE MECHANISM

S/N: LJW1-UP

PART OF 246-8228, 259-3142, 259-3143 ENGINE AR-COMPLETE

AN ATTACHMENT

SMCS-1107 **i02948739**

NOTE	REF NO	GRAPHIC REF	PART NUMBER	QTY	PART NAME 1 2 3 4 5 6 (PRODUCT LEVEL)	SEE PAGE
	1	1	**4W-3034**	2	CLAMP-HOSE	
	2	1	**126-0559**	4	BOLT (5/16-18X1.25-IN)	
	3	2	**212-7728**	36	WASHER-ISOLATOR	
	4	2	**223-1993**	2	COVER	
	5	1	**224-7506**	6	SEAL-VALVE COVER	
	6	2	**224-9907**	4	STUD (5/16-18-THD)	
	7	2	**238-9850**	4	COVER	
	8	1	**282-9105**	2	BREATHER AS (CRANKCASE)	
	9	1	**292-1163**	2	ELBOW	
	10	1	**033-6031**	2	SEAL-O-RING	
	11	1	**5P-8211**	2	SEAL-O-RING	
	12	2	**7X-0440**	32	BOLT (5/16-18X1.75-IN)	
	13	2	**8T-4224**	36	WASHER-HARD (8.8X16X2-MM THK)	

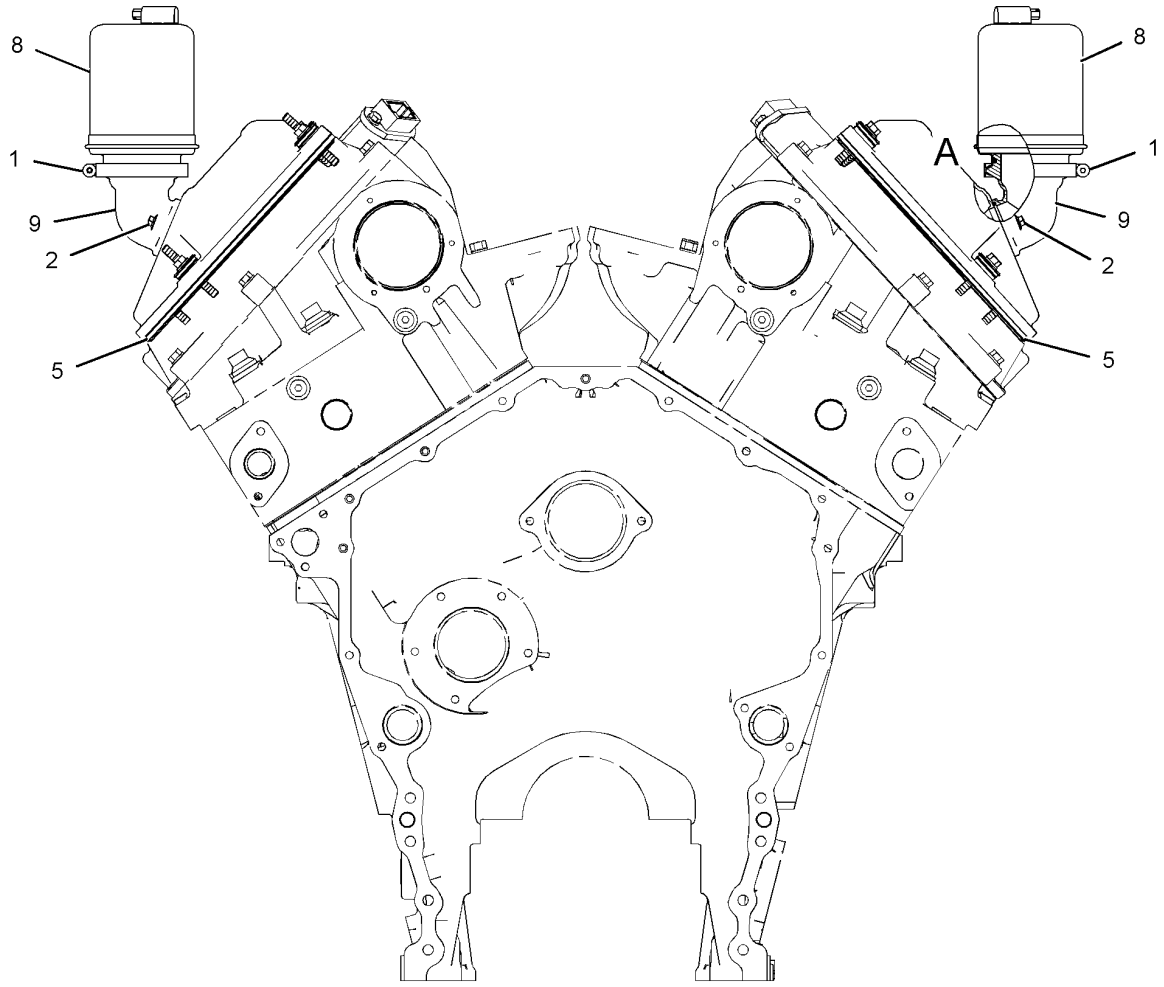

FRONT VIEW OF ENGINE

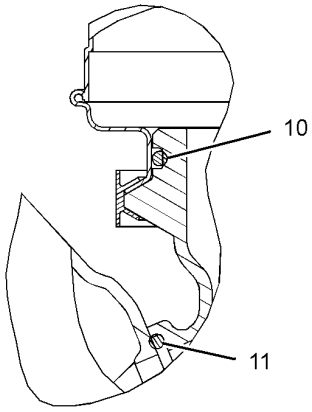

VIEW OF AREA A

GRAPHIC #1 g01436279

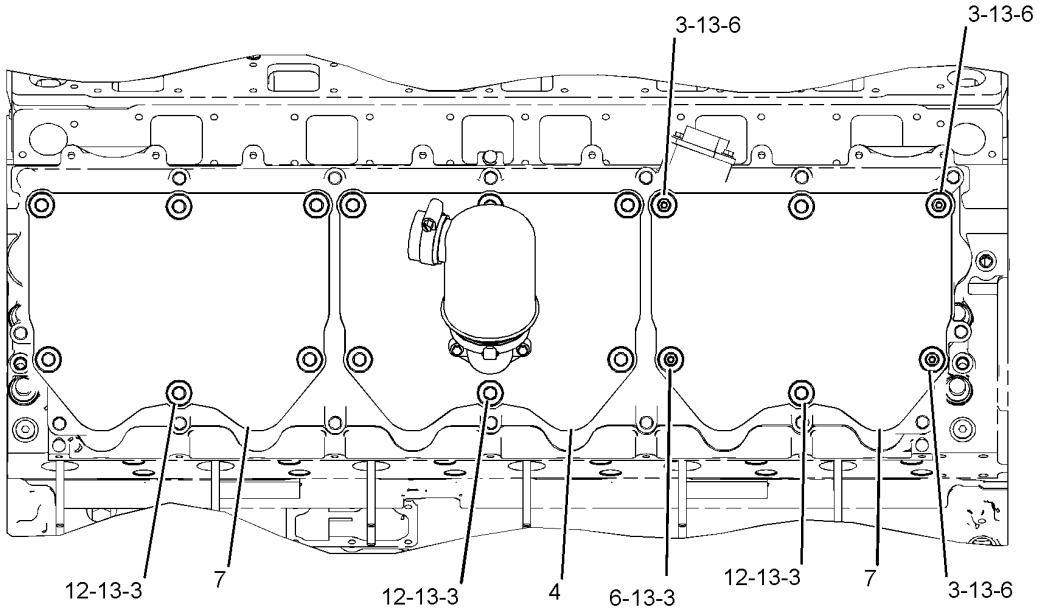

RIGHT SIDE VIEW OF ENGINE

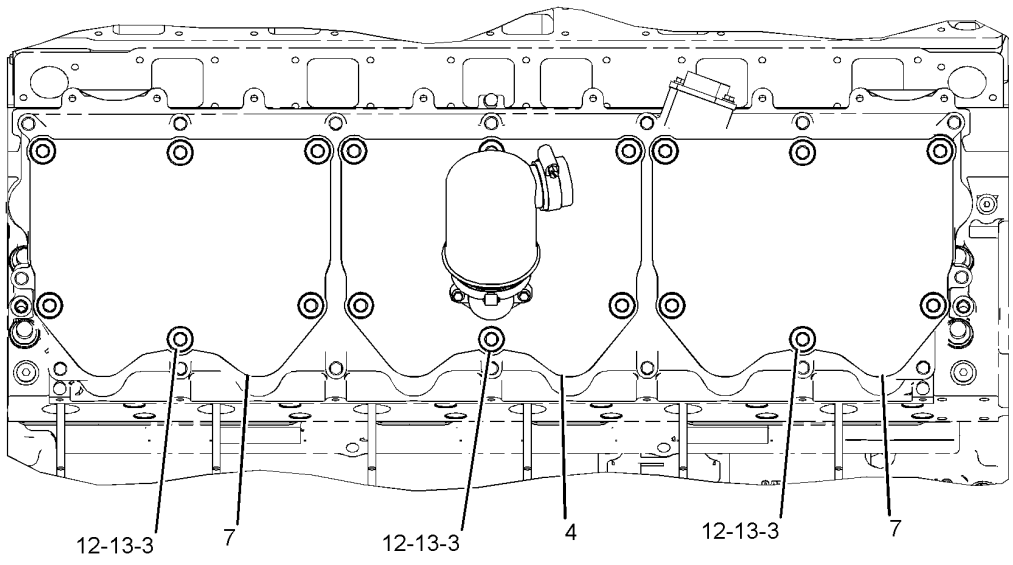

LEFT SIDE VIEW OF ENGINE

GRAPHIC #2 **<END>** g01436283

BASIC ENGINE

224-3250 CRANKSHAFT GP

S/N: LJW1-UP

PART OF 261-2303, 261-2304 ENGINE AR-CORE

AN ATTACHMENT

SMCS-1202 **i02620015**

NOTE	REF NO	GRAPHIC REF	PART NUMBER	QTY	PART NAME 1 2 3 4 5 6 (PRODUCT LEVEL)	SEE PAGE
	1	1	**253-1752**	2	PLATE-THRUST	
	2	1	**142-5867**	1	SEAL GP-CRANKSHAFT (FRONT)	
	3	1	**211-0592**	7	BEARING-MAIN (STANDARD)	
AB			**4W-5698**		BEARING-MAIN (0.63-MM US)	
AB			**4W-5699**		BEARING-MAIN (1.27-MM US)	
AB			**4W-5700**		BEARING-MAIN (0.63-MM OS)	
AB			**4W-5701**		BEARING-MAIN (0.63-MM US - 0.63-MM OS)	
	4	1	**224-3252**	1	CRANKSHAFT AS	
	4A	1	**223-9135**	1	GEAR-CRANKSHAFT (99-TEETH)	
	4B	1	**7S-5005**	1	DOWEL	
	4C	1	**4N-0684**	1	DOWEL	

A-NOT PART OF THIS GROUP
B-USE AS REQUIRED

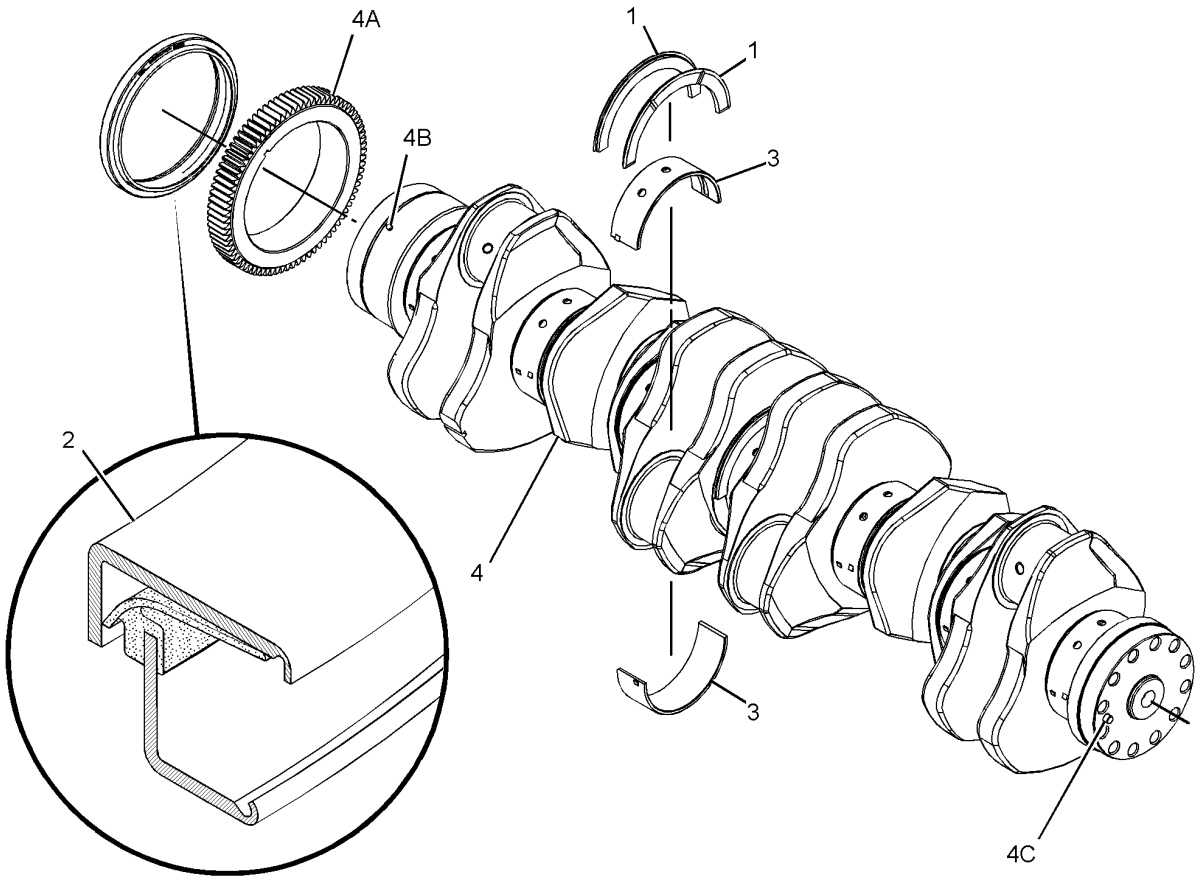

GRAPHIC #1 **<END>** g01301827

BASIC ENGINE

230-7181 CYLINDER BLOCK AS

S/N: LJW1-UP

PART OF 253-9883 CYLINDER BLOCK AS

AN ATTACHMENT

SMCS-1201 **i02334359**

NOTE	REF NO	GRAPHIC REF	PART NUMBER	QTY	PART NAME 1 2 3 4 5 6 (PRODUCT LEVEL)	SEE PAGE
	1	1	**3P-1323**	14	BOLT-BEARING CAP (7/8-14X7.75-IN)	
	2	1	**225-5965**	4	SLEEVE	
	3	1	**225-5966**	1	SLEEVE	
	4	1	**226-0916**	1	CYLINDER BLOCK	
	5	1	**232-7607**	7	CAP-CRANKSHAFT	
	6	1	**234-6902**	14	BOLT-12 POINT HEAD (M11X1.25X50-MM)	
	8	1	**4N-0685**	1	BEARING-SLEEVE (1-IN WIDE)	
	9	1	**4N-6658**	1	BEARING-SLEEVE (1.3-IN WIDE)	
	10	1	**7W-6492**	2	PLUG-PIPE	
	11	1	**9H-1031**	14	WASHER-HARD (24X41.5X6-MM THK)	

230-7181 CYLINDER BLOCK AS *(contd.)* **i02334359**

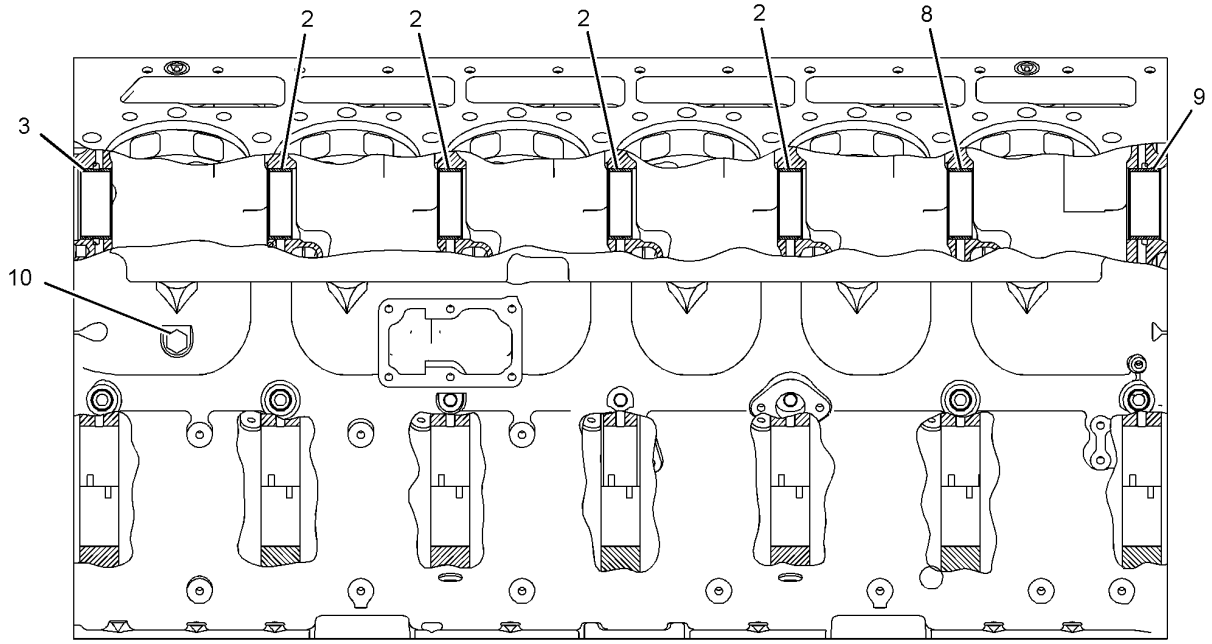

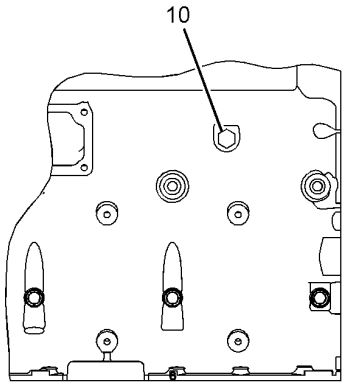

VIEW A-A

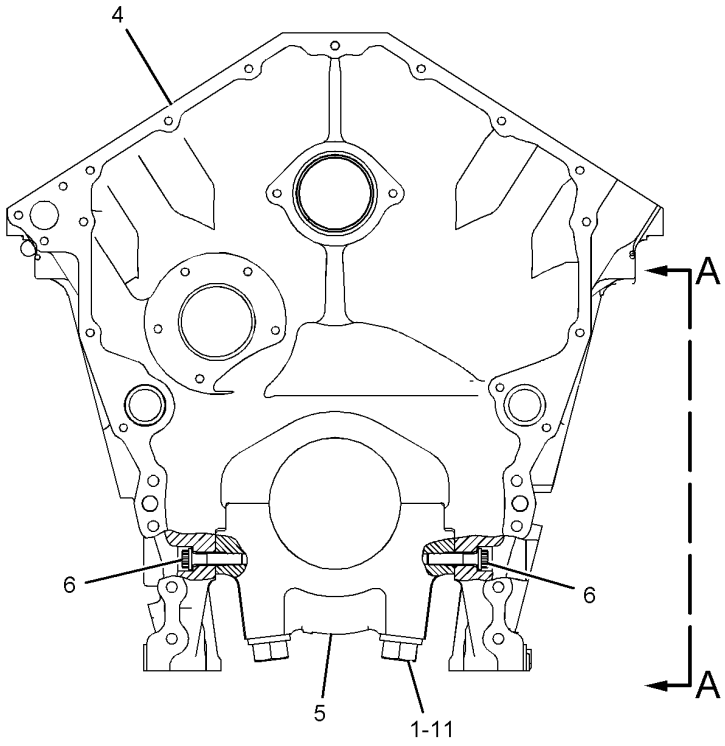

GRAPHIC #1 **<END>** g01108162

253-9883 CYLINDER BLOCK AS

S/N: LJW1-UP

PART OF 253-9882 CYLINDER BLOCK GP

AN ATTACHMENT

SMCS-1201 **i02287940**

NOTE	REF NO	GRAPHIC REF	PART NUMBER	QTY	PART NAME 1 2 3 4 5 6 (PRODUCT LEVEL)	SEE PAGE
Y	1	1	**230-7181**	1	CYLINDER BLOCK AS	43
	2	1	**253-8766**	12	LINER-CYLINDER	
	3	1	**9L-5854**	12	BAND-FILLER (130.2-MM ID)	
	4	1	**155-0809**	12	SEAL-LINER	
	5	1	**155-2793**	12	SEAL-LINER	
	6	1	**155-0810**	12	SEAL-LINER	

Y-SEPARATE ILLUSTRATION

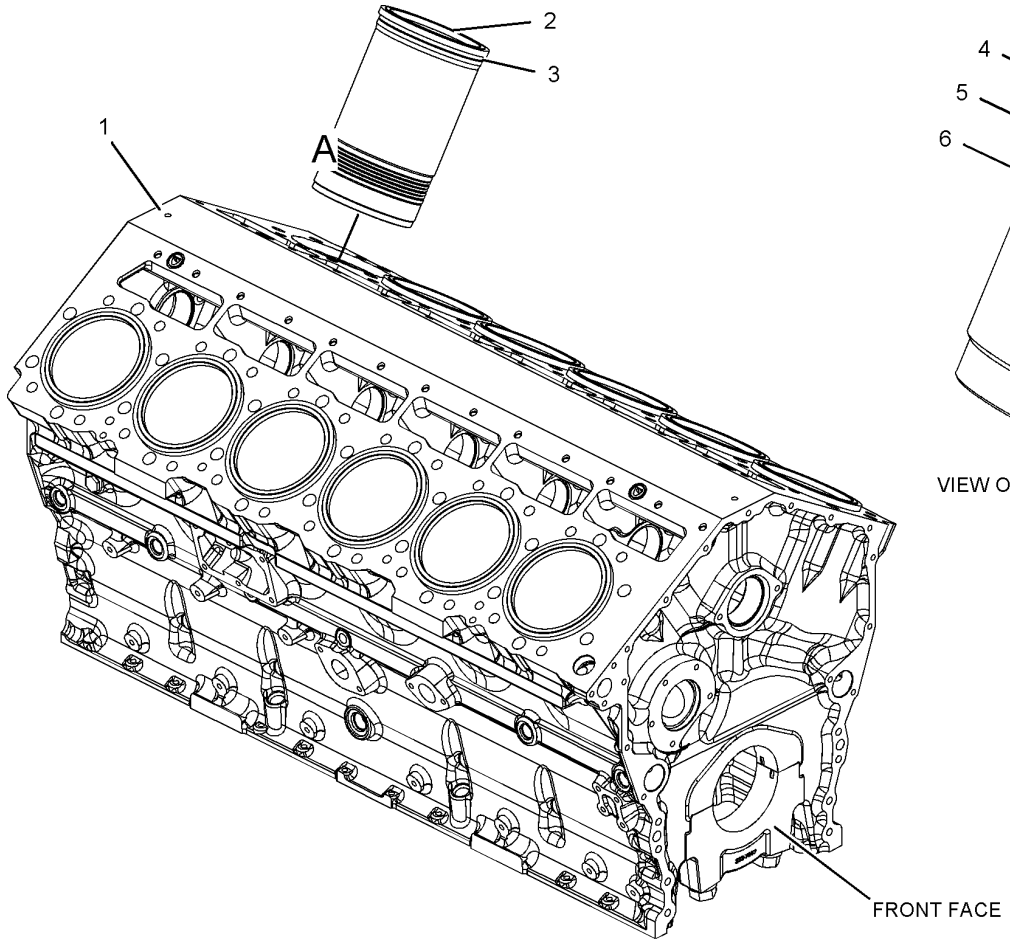

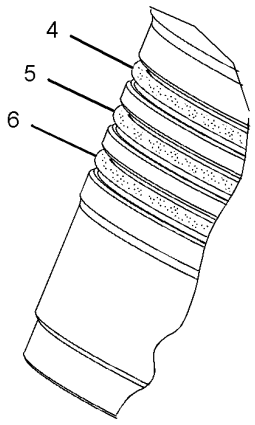

VIEW OF AREA A

GRAPHIC #1 **<END>** g01051844

BASIC ENGINE

253-9882 CYLINDER BLOCK GP

S/N: LJW1-UP

PART OF 261-2303, 261-2304 ENGINE AR-CORE

AN ATTACHMENT

SMCS-1201 **i02287916**

NOTE	REF NO	GRAPHIC REF	PART NUMBER	QTY	PART NAME 1 2 3 4 5 6 (PRODUCT LEVEL)	SEE PAGE
Y	1	1	**253-9883**	1	CYLINDER BLOCK AS	45
	2	1	**3B-0645**	1	PLUG-CUP	
	3	1	**5P-8356**	4	SEAL-O-RING	
	4	1	**4N-1650**	4	DOWEL	
	5	1	**225-3101**	2	GASKET-PLATE	
	6	1	**225-3100**	2	PLATE-SPACER	
	7	1	**7C-9614**	4	PLUG-TAPERLOCK (1-5/8-12-2A-THD)	
	8	1	**4N-0683**	4	DOWEL	
	9	1	**214-1728**	1	STUD (3/8-16, 1/8-27X3.5-IN)	
	10	1	**6L-4428**	3	STUD-TAPERLOCK (3/8-16X4.01-IN)	
	11	1	**8T-6757**	2	PLUG-PIPE	
	12	1	**6V-5050**	2	SEAL-O-RING	
	13	1	**9S-8008**	2	PLUG-O-RING	
	14	1	**240-9543**	14	WASHER (12.45X22.35X1.82-MM THK)	

Y-SEPARATE ILLUSTRATION

253-9882 **CYLINDER BLOCK GP** *(contd.)* **i02287916**

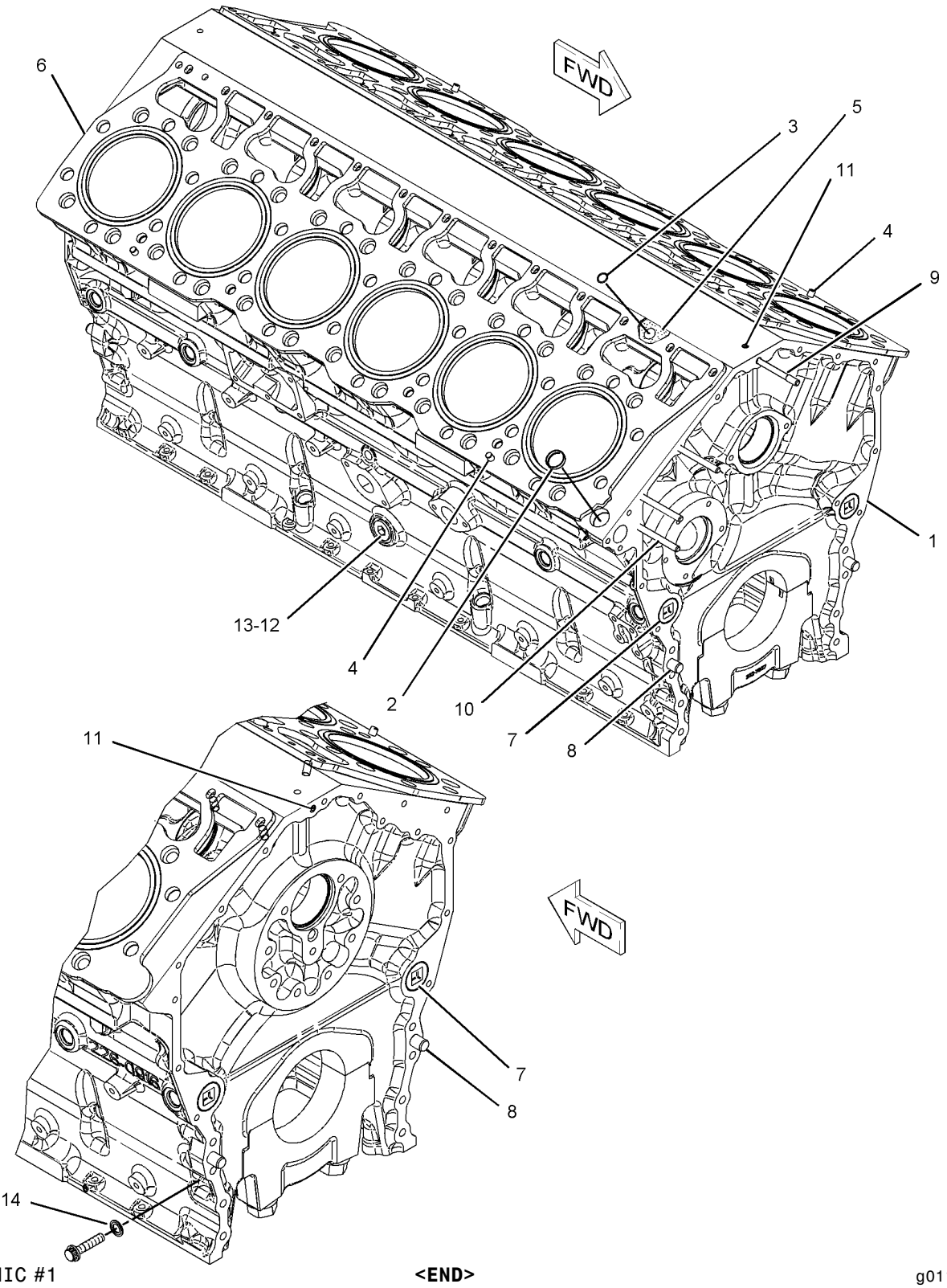

GRAPHIC #1 **<END>** g01100703

BASIC ENGINE

284-2787 CYLINDER HEAD AS

S/N: LJW1-UP

PART OF 284-8892 CYLINDER HEAD GP

AN ATTACHMENT

SMCS-1100, 1101 **i02851636**

NOTE	REF NO	GRAPHIC REF	PART NUMBER	QTY	PART NAME 1 2 3 4 5 6 (PRODUCT LEVEL)	SEE PAGE
	1	1	**3B-0623**	36	PLUG-CUP	
	2	1	**122-7375**	24	GUIDE-VALVE (STANDARD)	
AB		1	**122-0447**		GUIDE-VALVE (0.51-MM OS)	
AB		1	**122-8612**		GUIDE-VALVE (0.13-MM OS)	
	3	1	**216-5582**	7	BEARING-SLEEVE (STANDARD)	
AB		1	**217-0751**		BEARING-SLEEVE (0.254-MM OS)	
AB		1	**217-0752**		BEARING-SLEEVE (0.762-MM OS)	
AB		1	**261-3429**		BEARING-SLEEVE (1.778-MM OS)	
AB		1	**261-3430**		BEARING-SLEEVE (1.27-MM OS)	
	4	1	**263-4920**	6	SLEEVE-INJECTOR (INLET)	
	5	1	*284-2786*	1	CYLINDER HEAD AS	
		1	**224-3983**	12	INSERT-SEAT (INLET) (STANDARD)	
AB		1	**314-3063**		INSERT-VALVE SEAT (0.55 MM US THK)	
AB		1	**314-3064**		INSERT-VALVE SEAT (INLET 0.13 OS OD)	
AB		1	**314-3065**		INSERT-VALVE SEAT (0.13 MM OS OD, 0.55 MM US THK) (INLET)	
AB		1	**314-3066**		INSERT-VALVE SEAT (INLET 0.26 OS OD)	
AB		1	**314-3067**		INSERT-VALVE SEAT (0.26 MM OS OD, 0.55 MM US THK) (INLET)	
AB		1	**314-3068**		INSERT-VALVE SEAT (INLET 0.51 OS OD)	
AB		1	**314-3069**		INSERT-VALVE SEAT (0.51 MM OS OD, 0.55 MM US THK) (INLET)	
		1	**226-5561**	12	INSERT-VALVE (EXHAUST) (STANDARD)	
AB		1	**288-4883**		INSERT-VALVE (EXHAUST 0.51 OS OD)	
AB		1	**288-4884**		INSERT-VALVE (EXHAUST 0.76 OS OD)	
	7	1	**166-2904**	12	SEAL-O-RING	
	8	1	**3B-0645**	2	PLUG-CUP	
	9	1	**8T-6757**	3	PLUG-PIPE	
	10	1	**9X-7430**	6	SEAL-O-RING	

A-NOT PART OF THIS GROUP
B-USE AS REQUIRED

284-2787 CYLINDER HEAD AS *(contd.)* **i02851636**

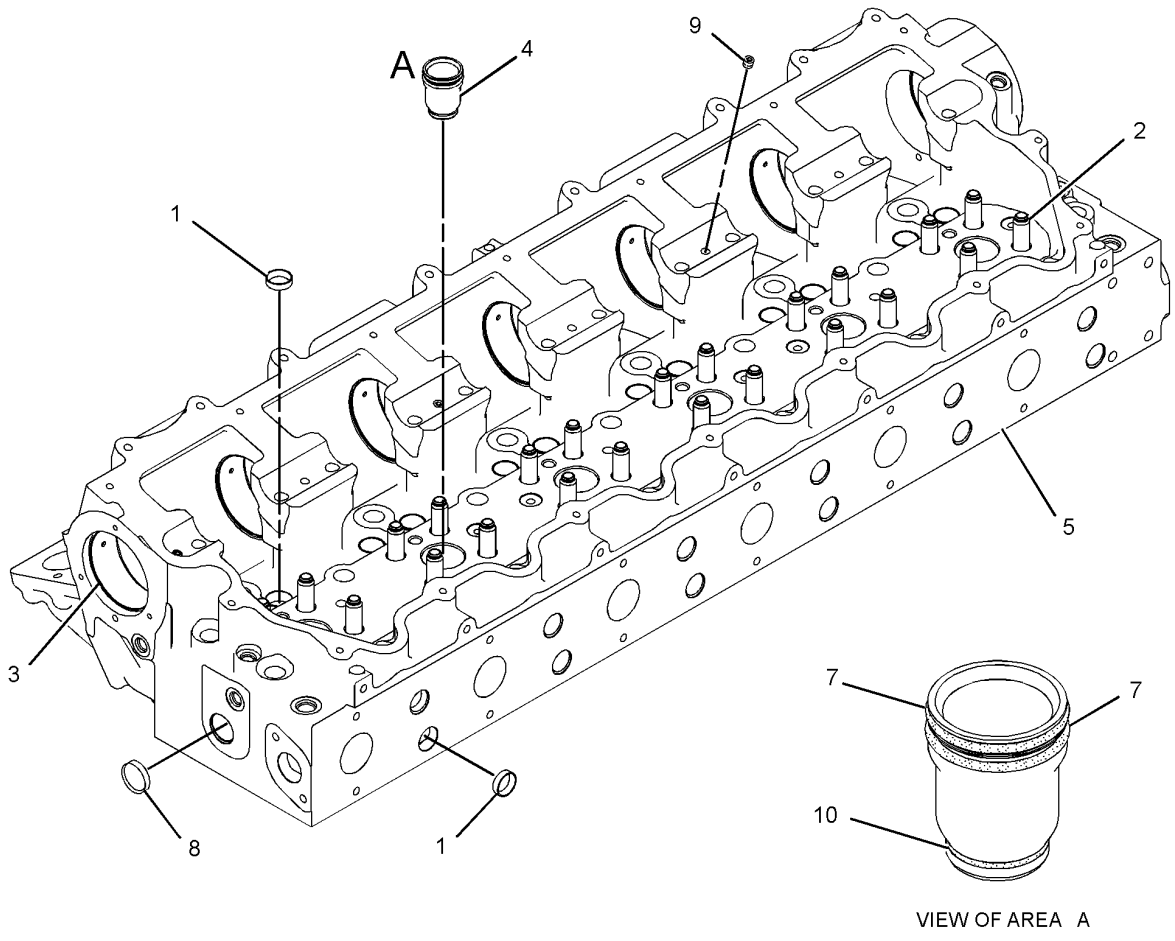

GRAPHIC #1 **<END>** g01422176

BASIC ENGINE

284-8892 CYLINDER HEAD GP

S/N: LJW1-UP

PART OF 284-8895 CYLINDER HEAD GP

AN ATTACHMENT

SMCS-1100 **i02834859**

NOTE	REF NO	GRAPHIC REF	PART NUMBER	QTY	PART NAME 1 2 3 4 5 6 (PRODUCT LEVEL)	SEE PAGE
	1	1	**2A-4429**	48	LOCK-RETAINER	
	2	1	**6I-0928**	24	WASHER	
	3	1	**153-7023**	12	VALVE-INLET	
	4	1	**153-7024**	12	VALVE-EXHAUST	
	5	1	**211-3122**	24	SPRING-VALVE (INNER)	
	6	1	**247-9908**	24	SPRING-VALVE (OUTER)	
Y	7	1	**284-2787**	1	CYLINDER HEAD AS	48
	8	1	**163-2478**	24	SEAL-VALVE STEM	
	9	1	**186-2001**	24	ROTOCOIL AS	

Y-SEPARATE ILLUSTRATION

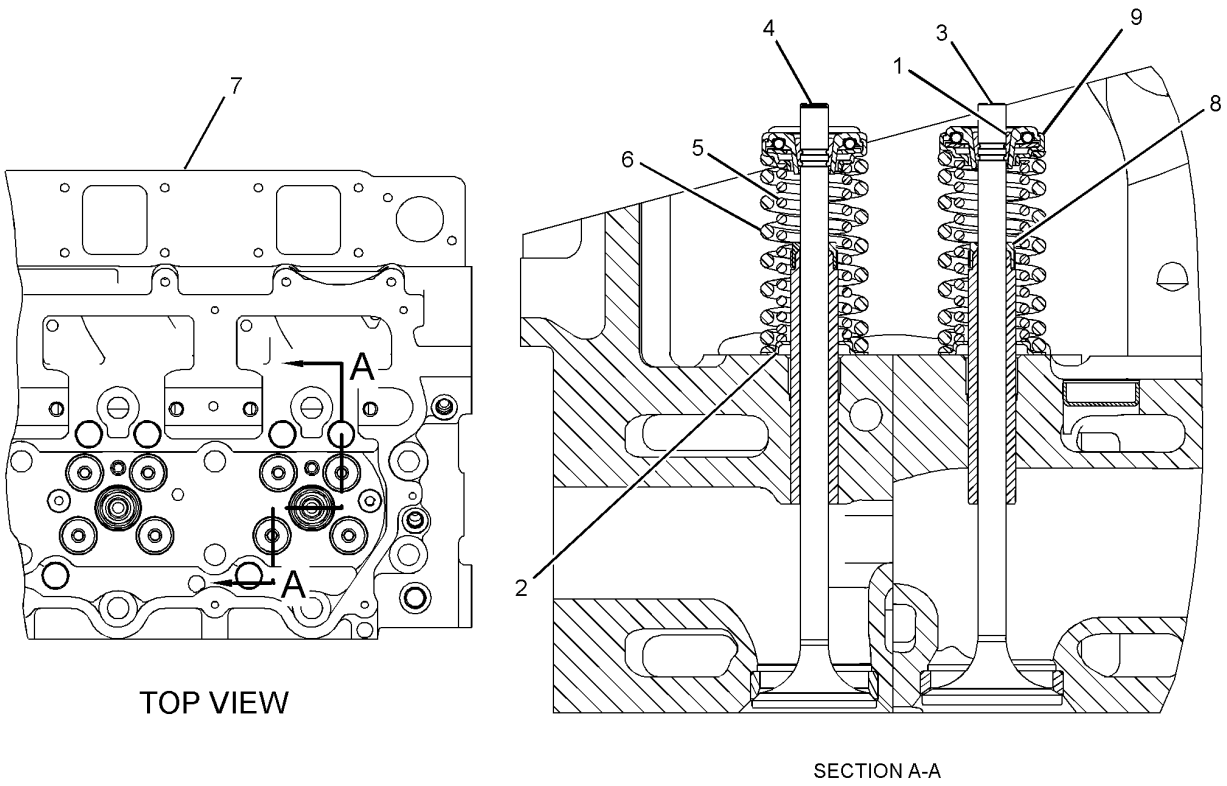

TOP VIEW

SECTION A-A

GRAPHIC #1 **<END>** g01256655

BASIC ENGINE

284-8895 CYLINDER HEAD GP

S/N: LJW1-UP

PART OF 261-2303, 261-2304 ENGINE AR-CORE

AN ATTACHMENT

SMCS-1100 **i02897562**

NOTE	REF NO	GRAPHIC REF	PART NUMBER	QTY	PART NAME 1 2 3 4 5 6 (PRODUCT LEVEL)	SEE PAGE
	1	1	**3E-6772**	48	SEAL (WATER)	
	2	1	*6I-4025*	32	FASTENER GP-CYLINDER HEAD	
					(EACH INCLUDES)	
		1	**5H-1504**	1	WASHER-HARD (20X33.5X5-MM THK)	
		1	**124-1855**	1	BOLT-12 POINT HEAD (3/4-16X7.638-IN)	
	3	1	**106-1792**	24	STUD-TAPERLOCK (3/8-16X4-IN)	
	4	1	*106-5673*	20	FASTENER GP-CYLINDER HEAD	
					(EACH INCLUDES)	
		1	**5H-1504**	1	WASHER-HARD (20X33.5X5-MM THK)	
		1	**124-1854**	1	BOLT-12 POINT HEAD (3/4-16X8.5-IN)	
	5	1	**225-3099**	2	GASKET-CYLINDER HEAD	
	6	1	**248-0036**	26	BOLT-WASHER HEAD (3/8-16X6-IN)	
YR	7	1	**284-8892**	2	CYLINDER HEAD GP	50
	8	1	**6V-5049**	10	SEAL-O-RING	
	9	1	**6V-6609**	4	SEAL-O-RING	
	10	1	**9S-8004**	10	PLUG-O-RING	
	11	1	**9S-8005**	4	PLUG-O-RING	

R-REMFG PART MAY BE AVAILABLE
Y-SEPARATE ILLUSTRATION

284-8895 **CYLINDER HEAD GP** *(contd.)* **i02897562**

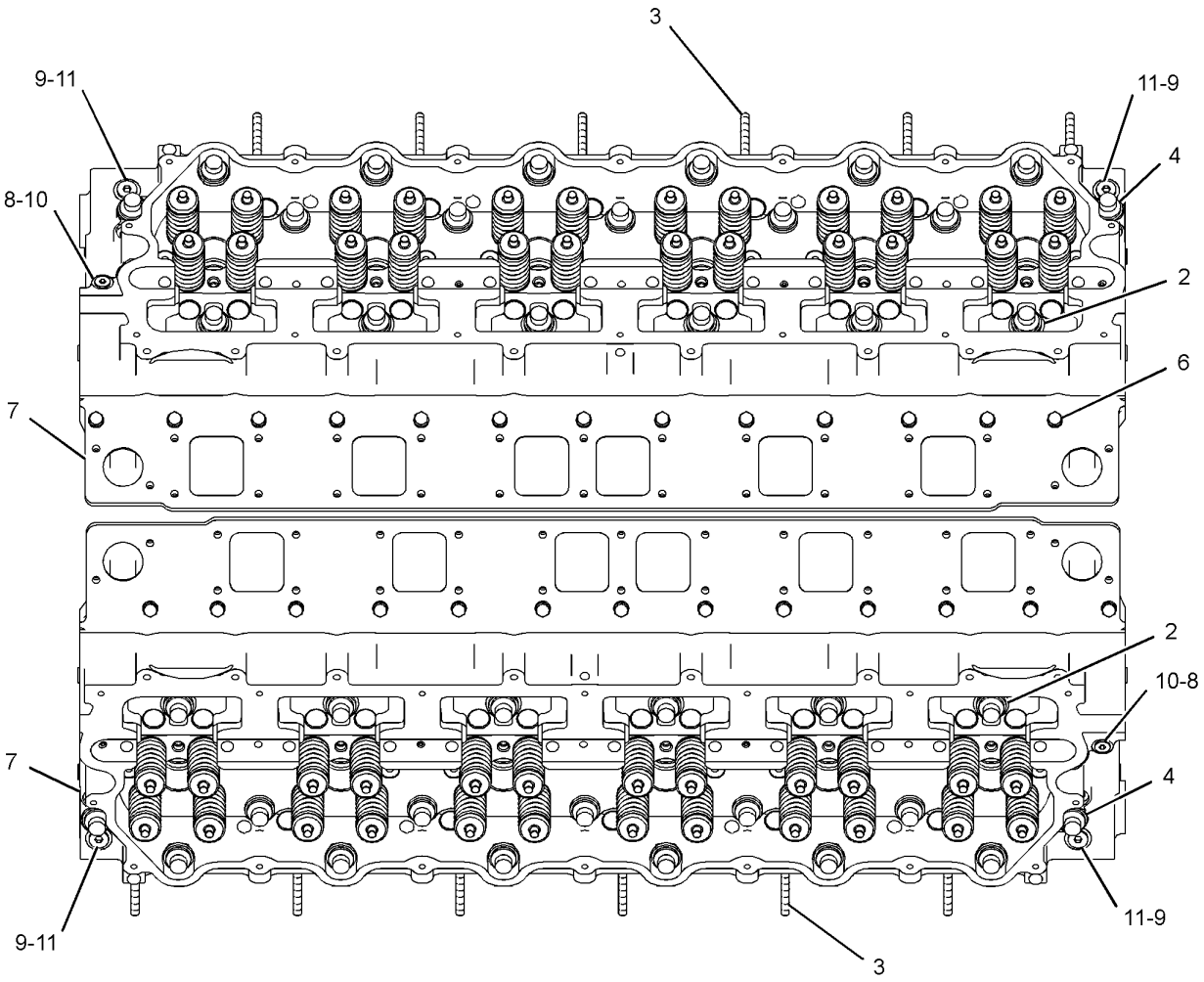

TOP VIEW

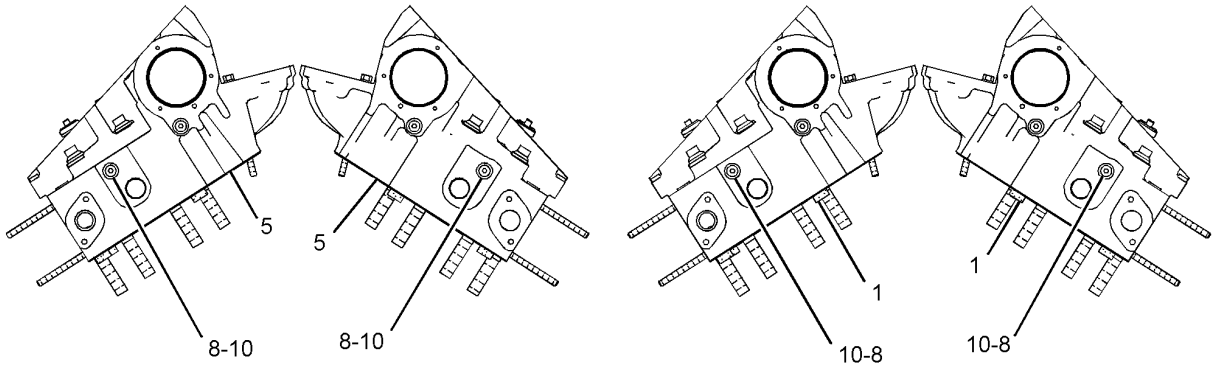

REAR VIEW FRONT VIEW

GRAPHIC #1 **<END>** g01259053

234-1579 DAMPER GP

S/N: LJW1-UP
PART OF 235-0993 GEAR GP-FRONT
AN ATTACHMENT

SMCS-1205 **i02067224**

NOTE	REF NO	GRAPHIC REF	PART NUMBER	QTY	PART NAME 1 2 3 4 5 6 (PRODUCT LEVEL)	SEE PAGE
	1	1	**103-0126**	1	DOWEL	
	2	1	**9X-8872**	16	BOLT-LOCKING (3/8-16X0.875-IN)	

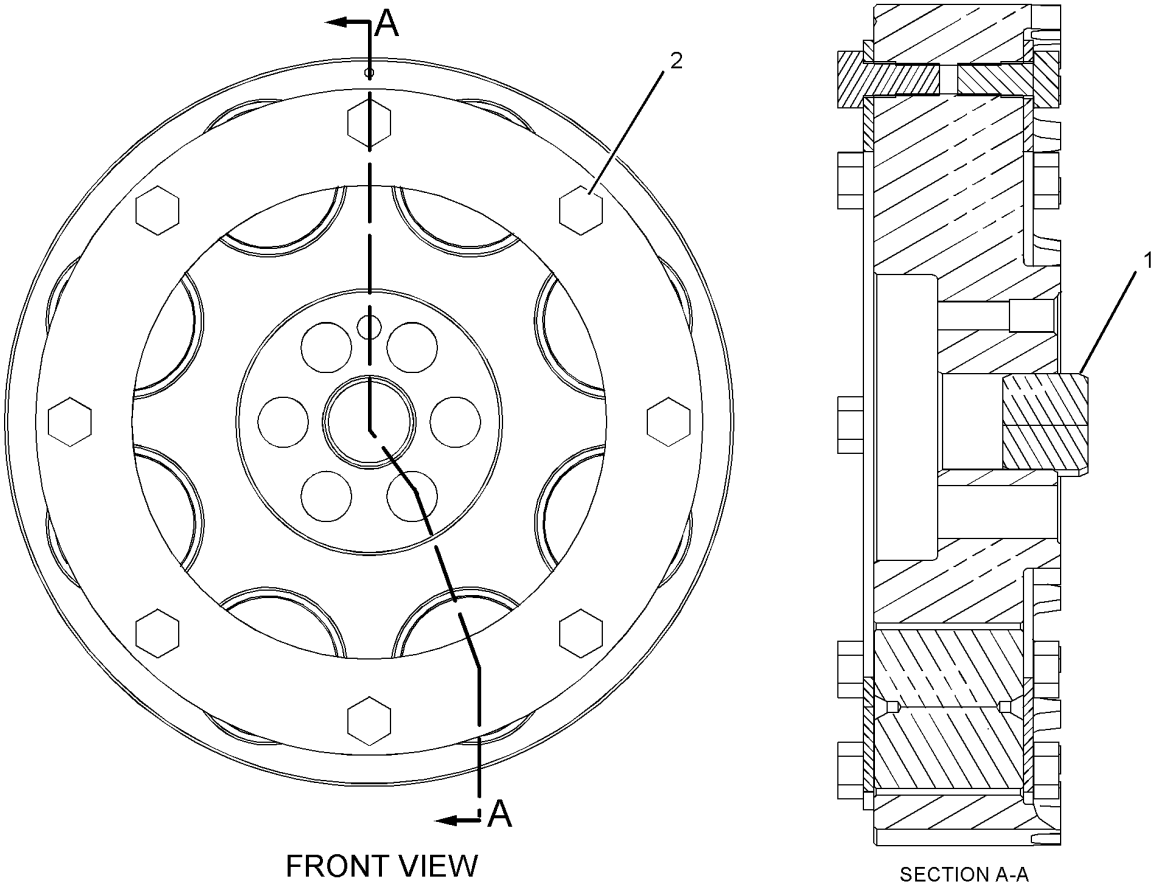

FRONT VIEW

SECTION A-A

GRAPHIC #1 **<END>** g01051809

BASIC ENGINE

257-8730 DAMPER GP

S/N: LJW1-UP

PART OF 246-4283, 246-8228, 259-3142, 259-3143 ENGINE AR-COMPLETE AN ATTACHMENT

SMCS-1205 **i02875119**

NOTE	REF NO	GRAPHIC REF	PART NUMBER	QTY	PART NAME 1 2 3 4 5 6 (PRODUCT LEVEL)	SEE PAGE
	1	1	**6N-7654**	1	SPACER (6.312X8.18X0.312-IN THK)	
R	2	1	**167-8130**	2	DAMPER AS	
	3	1	**257-8731**	1	ADAPTER-DAMPER	
	4	1	**261-9576**	8	BOLT (5/8-18X274.65X10.81-IN)	
	5	1	**277-8099**	1	PULLEY-CRANKSHAFT	
	6	1	**8S-9089**	12	BOLT (1/2-13X4.5-IN)	

R-REMFG PART MAY BE AVAILABLE

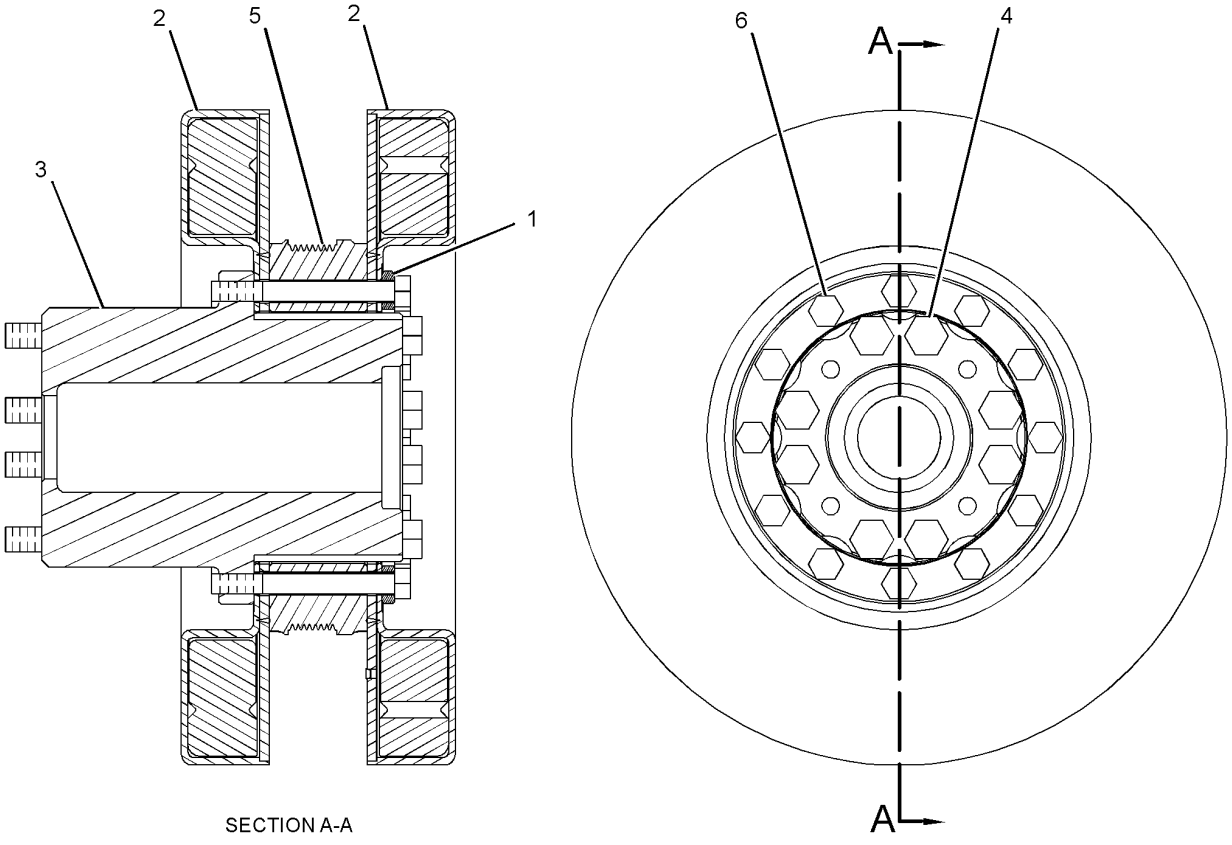

GRAPHIC #1 **<END>** g01432137

273-3191 EXTENSION GP-DRAIN—ENGINE OIL

S/N: 2211-UP

PART OF 246-4284 INSTALLATION AR-ENGINE

SMCS-1302 **i02866422**

NOTE	REF NO	GRAPHIC REF	PART NUMBER	QTY	PART NAME 1 2 3 4 5 6 (PRODUCT LEVEL)	SEE PAGE
	1	1	**9M-2904**	1	CLAMP-HOSE	
	2	1	**6B-3156**	1	NIPPLE-PIPE	
G	3	1	**9X-2379**		HOSE (20-IN)	

G-ORDER BY THE INCH

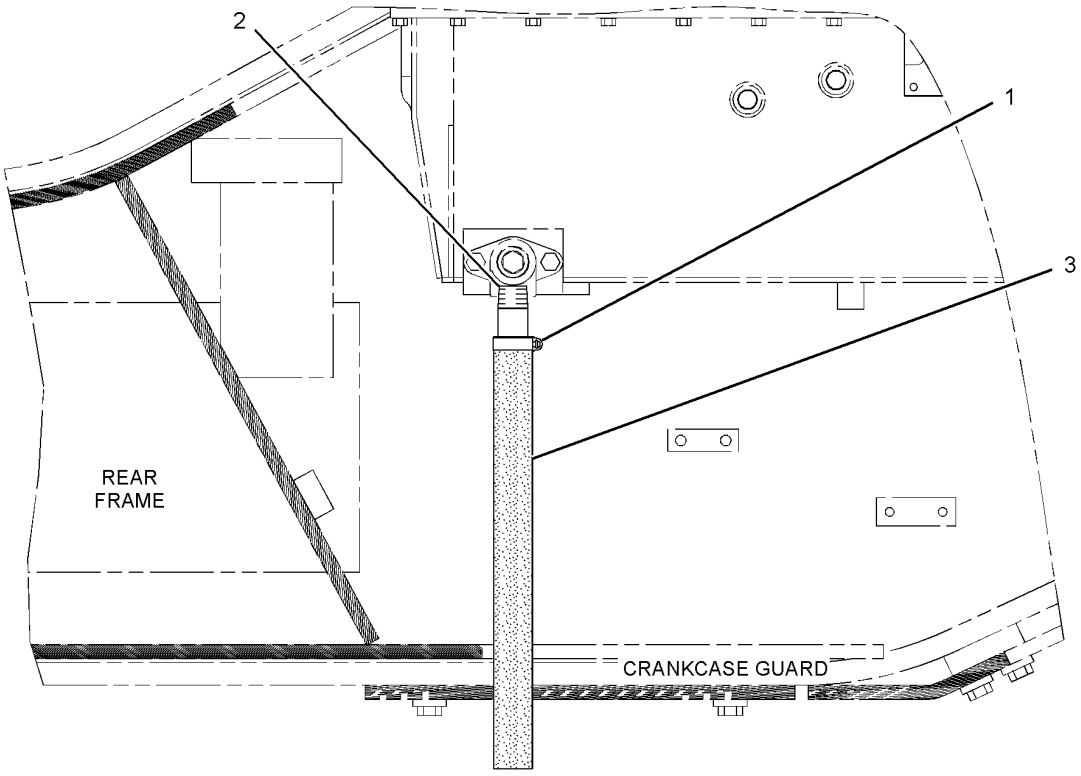

RIGHT SIDE VIEW

GRAPHIC #1 **<END>** g01443611

BASIC ENGINE

245-9777 FLYWHEEL GP

S/N: LJW1-UP

PART OF 246-4283, 246-8228, 259-3142, 259-3143 ENGINE AR-COMPLETE AN ATTACHMENT

SMCS-1156 **i02414468**

NOTE	REF NO	GRAPHIC REF	PART NUMBER	QTY	PART NAME 1 2 3 4 5 6 (PRODUCT LEVEL)	SEE PAGE
	1	1	**251-2308**	1	FLYWHEEL AS	
		1	**8M-6755**	1	GEAR-FLYWHEEL (136-TEETH)	
	2	1	**4D-3704**	12	WASHER-HARD (17X30X5-MM THK)	
	3	1	**7H-5569**	12	BOLT (5/8-18X7.5-IN)	

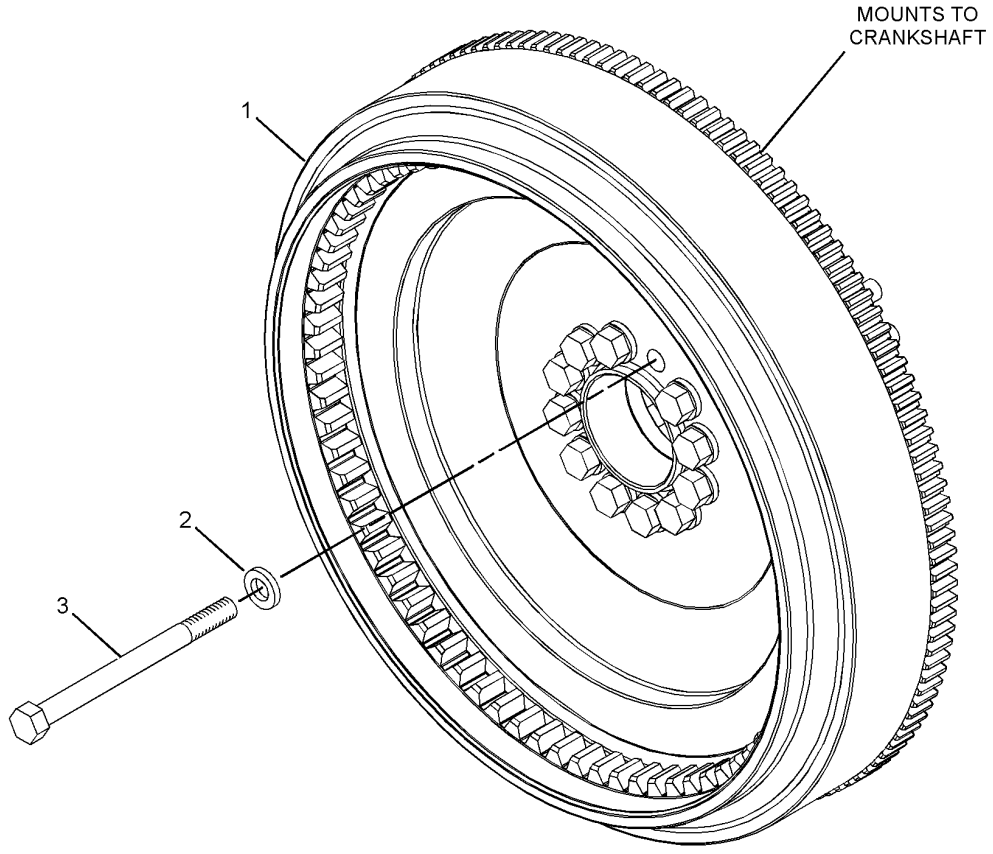

GRAPHIC #1 **<END>** g01265118

BASIC ENGINE

235-0993 GEAR GP-FRONT

S/N: LJW1-UP

PART OF 261-2303, 261-2304 ENGINE AR-CORE

AN ATTACHMENT

SMCS-1151, 1162, 1206 **i02747151**

NOTE	REF NO	GRAPHIC REF	PART NUMBER	QTY	PART NAME 1 2 3 4 5 6 (PRODUCT LEVEL)	SEE PAGE
	1	1	**3G-2292**	5	BOLT-LOCKING (3/8-16X0.87-IN)	
	2	1	**4N-0342**	1	PLATE	
	3	1	**7N-2443**	1	WASHER-THRUST (2.508X3.5X0.188-IN THK)	
	4	1	**109-3416**	1	GEAR (85-TEETH) (OIL PUMP)	
	5	1	**112-9217**	1	PLATE-THRUST	
	6	1	**117-9712**	1	SHAFT-DRIVE IDLER	
C	7	1	**300-5575**	1	GEAR AS-IDLER (99-TEETH)	
		1	**1B-8705**	1	KEY-WOODRUFF	
		1	**131-7123**	1	BEARING-SLEEVE	
	8	1	**223-9137**	1	GEAR AS (86-TEETH) (CAMSHAFT)	
		1	**101-3374**	1	GEAR-CAMSHAFT DRIVE (86-TEETH)	
	9	1	**224-5332**	2	PLATE-SEALING	
Y	10	1	*234-1579*	2	DAMPER GP	53
	11	1	**236-4136**	2	ADAPTER AS	
					(EACH INCLUDES)	
		1	**4N-0684**	2	DOWEL	
	12	1	**031-5085**	6	BOLT-LOCKING (1/4-20X1-IN)	
	13	1	**0S-0509**	2	BOLT (3/8-16X0.75-IN)	
	14	1	**0S-1571**	1	BOLT (3/8-16X1.75-IN)	
	15	1	**117-8801**	2	SEAL-O-RING	
	16	1	**1B-8705**	1	KEY-WOODRUFF	
	17	1	**1P-7346**	1	WASHER-HARD (10.2X35X6-MM THK)	
	18	1	**2B-2695**	4	BOLT (5/16-18X0.875-IN)	
	19	1	**5E-8771**	2	SEAL-O-RING	
	20	1	**5P-0537**	6	WASHER-HARD (7.2X14.5X2-MM THK)	
	21	1	**7K-3116**	12	BOLT-12 POINT HEAD (5/8-11X3.5-IN)	

C-CHANGE FROM PREVIOUS TYPE
Y-SEPARATE ILLUSTRATION

235-0993 **GEAR GP-FRONT** *(contd.)* **i02747151**

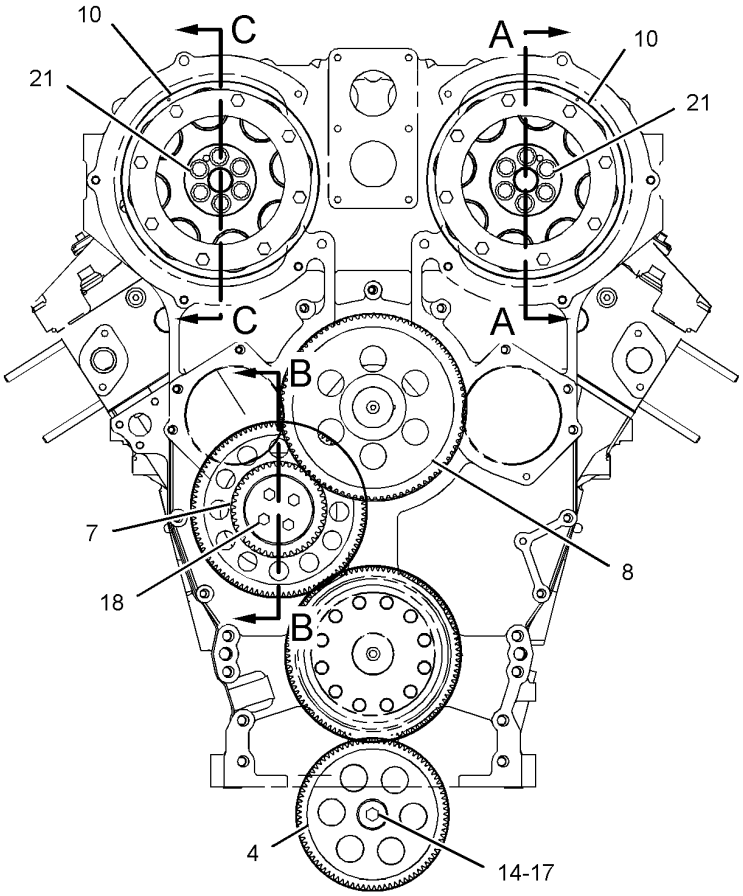

FRONT VIEW

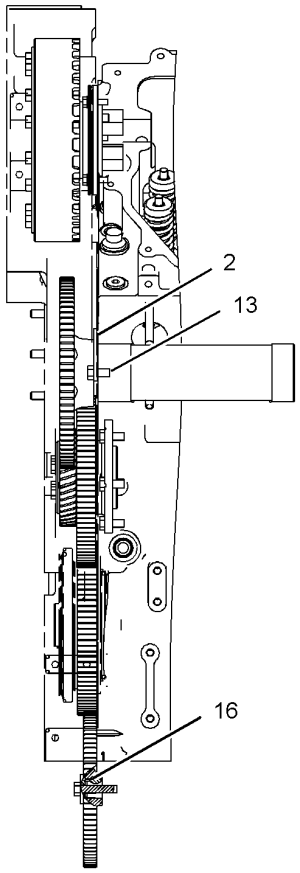

LEFT SIDE VIEW

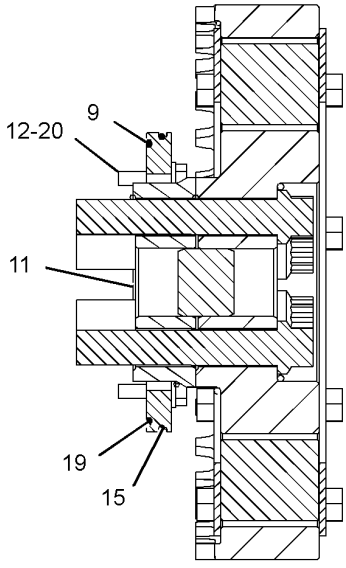

SECTION A-A

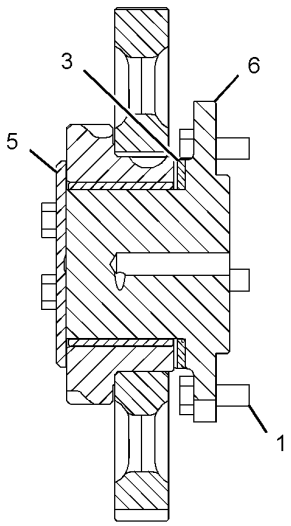

SECTION B-B

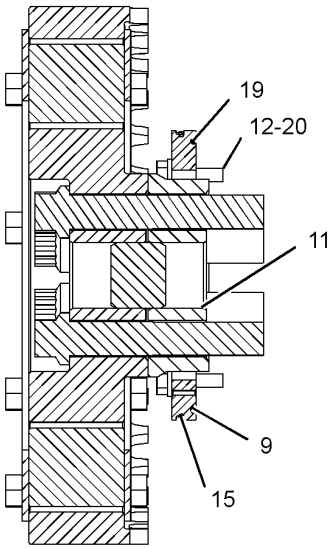

SECTION C-C

GRAPHIC #1 **<END>** g01365739

BASIC ENGINE

245-9776 GEAR GP-REAR

S/N: LJW1-UP

PART OF 246-4283, 246-8228, 259-3142, 259-3143 ENGINE AR-COMPLETE

AN ATTACHMENT

SMCS-1204 **i02875091**

NOTE	REF NO	GRAPHIC REF	PART NUMBER	QTY	PART NAME 1 2 3 4 5 6 (PRODUCT LEVEL)	SEE PAGE
	1	1	**4N-0848**	1	SLEEVE-WEAR	
	2	1	**5B-0213**	6	BOLT (3/8-16X2.375-IN)	
	3	1	**102-5861**	2	PLATE-THRUST	
	4	1	**185-1497**	1	GEAR AS-IDLER (79-TEETH)	
		1	**224-9664**	1	BEARING-SLEEVE	
	5	1	**224-1219**	1	SHAFT-STUB	
	6	1	**224-1220**	1	PLATE	
	7	1	**224-1221**	1	SHAFT-STUB	
	8	1	**224-5332**	2	PLATE-SEALING	
	9	1	**224-9657**	2	ADAPTER AS	
		1	**4N-0684**	1	DOWEL	
	10	1	**226-6036**	1	GEAR AS-IDLER (40/70-TEETH)	
		1	**1B-8705**	1	KEY-WOODRUFF	
		1	**226-6052**	1	BEARING-SLEEVE	
	11	1	**227-0159**	1	SHAFT-STUB	
	12	1	**228-5813**	1	GEAR AS-CRANKSHAFT (49-TEETH)	
		1	**4N-0684**	1	DOWEL	
	13	1	**229-1663**	1	PLATE-THRUST	
	14	1	**230-6202**	1	GEAR AS-IDLER (70/83-TEETH)	
	14A	1	**209-8622**	1	BEARING-SLEEVE	
					—OR—	
	14B	1	**224-9664**	1	BEARING-SLEEVE	
	15	1	**264-0544**	2	GEAR AS-CAMSHAFT (56-TEETH)	
		1	**9N-0575**	1	DOWEL	
	16	1	**031-5085**	6	BOLT-LOCKING (1/4-20X1-IN)	
	17	1	**117-8801**	2	SEAL-O-RING	
	18	1	**1A-2029**	4	BOLT (3/8-16X1.125-IN)	
	19	1	**245-3804**	1	BOLT (3/8-16X3.5-IN)	
	20	1	**5E-8771**	2	SEAL-O-RING	
	21	1	**6J-3913**	12	BOLT-12 POINT HEAD (5/8-11X3.25-IN)	
	22	1	**6V-3319**	1	SEAL-O-RING	
	23	1	**7B-3235**	8	BOLT (1/2-13X1.375-IN)	

245-9776 **GEAR GP-REAR** *(contd.)* **i02875091**

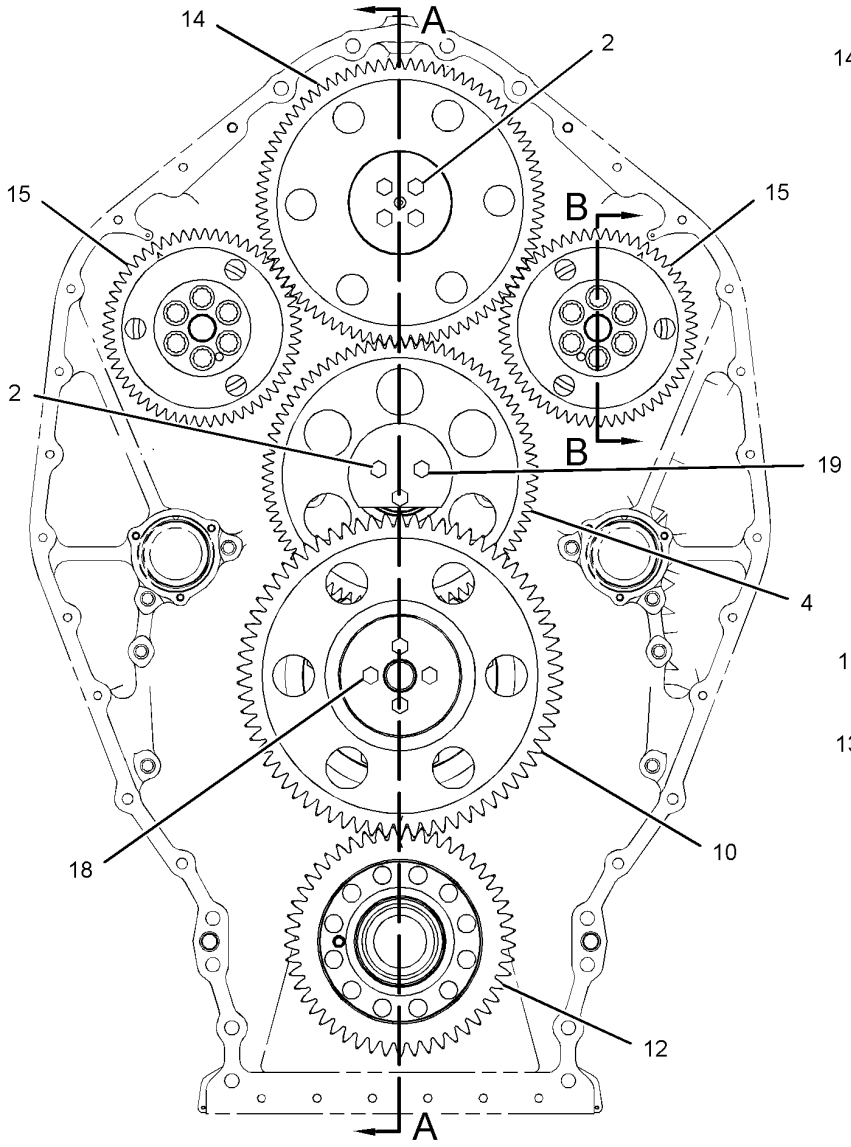

REAR VIEW OF ENGINE

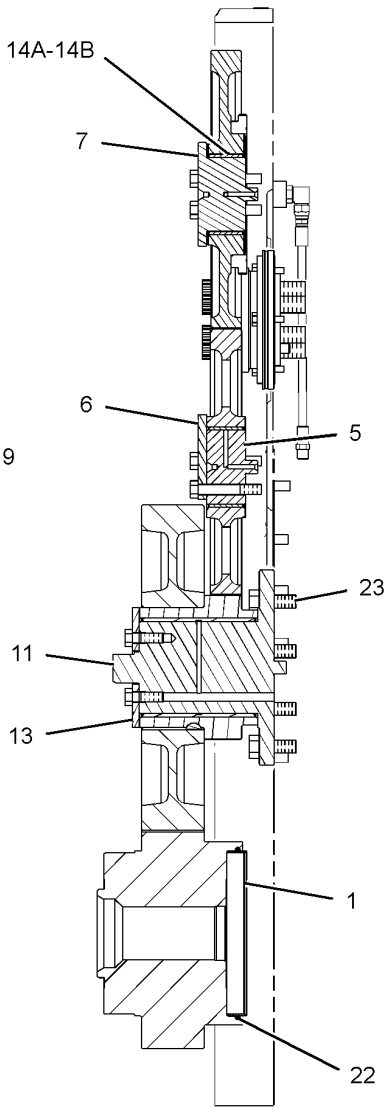

SECTION A-A

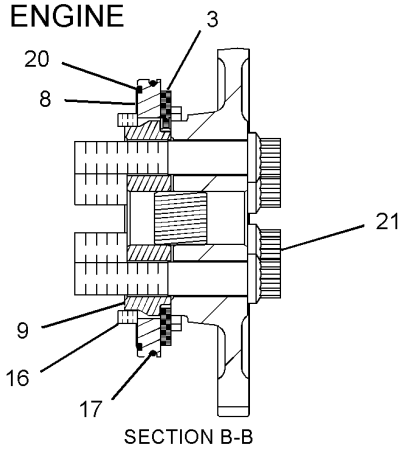

SECTION B-B

GRAPHIC #1

<END>

g01437096

BASIC ENGINE

245-9775 HOUSING GP-FLYWHEEL

S/N: LJW1-UP

PART OF 246-4283, 246-8228, 259-3142, 259-3143 ENGINE AR-COMPLETE

AN ATTACHMENT

SMCS-1157 **i02948437**

NOTE	REF NO	GRAPHIC REF	PART NUMBER	QTY	PART NAME 1 2 3 4 5 6 (PRODUCT LEVEL)	SEE PAGE
	1	1	**142-5868**	1	SEAL-CRANKSHAFT (REAR FLYWHEEL HOUSING)	
	2	1	**160-8708**	2	BRACKET AS	
					(EACH INCLUDES)	
M		1	**8T-3490**	1	NUT-WELD (M10X1.5-THD)	
	3	1	**225-1242**	1	GASKET (FLYWHEEL HOUSING)	
	4	1	**246-8811**	1	HOUSING AS-FLYWHEEL	
	4A	1	**1W-3136**	1	BAFFLE	
	5	1	**0S-1619**	2	BOLT (3/8-16X3-IN)	
	6	1	**1A-5183**	18	BOLT (3/8-16X4.75-IN)	
	7	1	**231-4470**	2	BOLT (3/8-16X6.25-IN)	
	8	1	**231-4471**	8	BOLT (1/2-13X6.25-IN)	
	9	1	**3K-8460**	2	PLUG	
	10	1	**5M-2894**	28	WASHER-HARD (10.2X18.5X2.5-MM THK)	
	11	1	**5P-7814**	2	SEAL-O-RING	
	12	1	**5P-8245**	8	WASHER-HARD (13.5X25.5X3-MM THK)	
	13	1	**6V-5048**	2	SEAL-O-RING	
	14	1	**6V-5049**	2	SEAL-O-RING	
	15	1	**8L-2786**	2	SEAL-O-RING	
	16	1	**8S-9191**	6	BOLT (3/8-16X4-IN)	
	17	1	**9S-8002**	2	PLUG-O-RING	
	18	1	**9S-8004**	2	PLUG-O-RING	
	19	1	**9S-8005**	2	PLUG-O-RING	
	20	1	**6V-5050**	1	SEAL-O-RING	
	21	1	**9S-8008**	1	PLUG-O-RING	

M-METRIC PART

245-9775 **HOUSING GP-FLYWHEEL** *(contd.)* **i02948437**

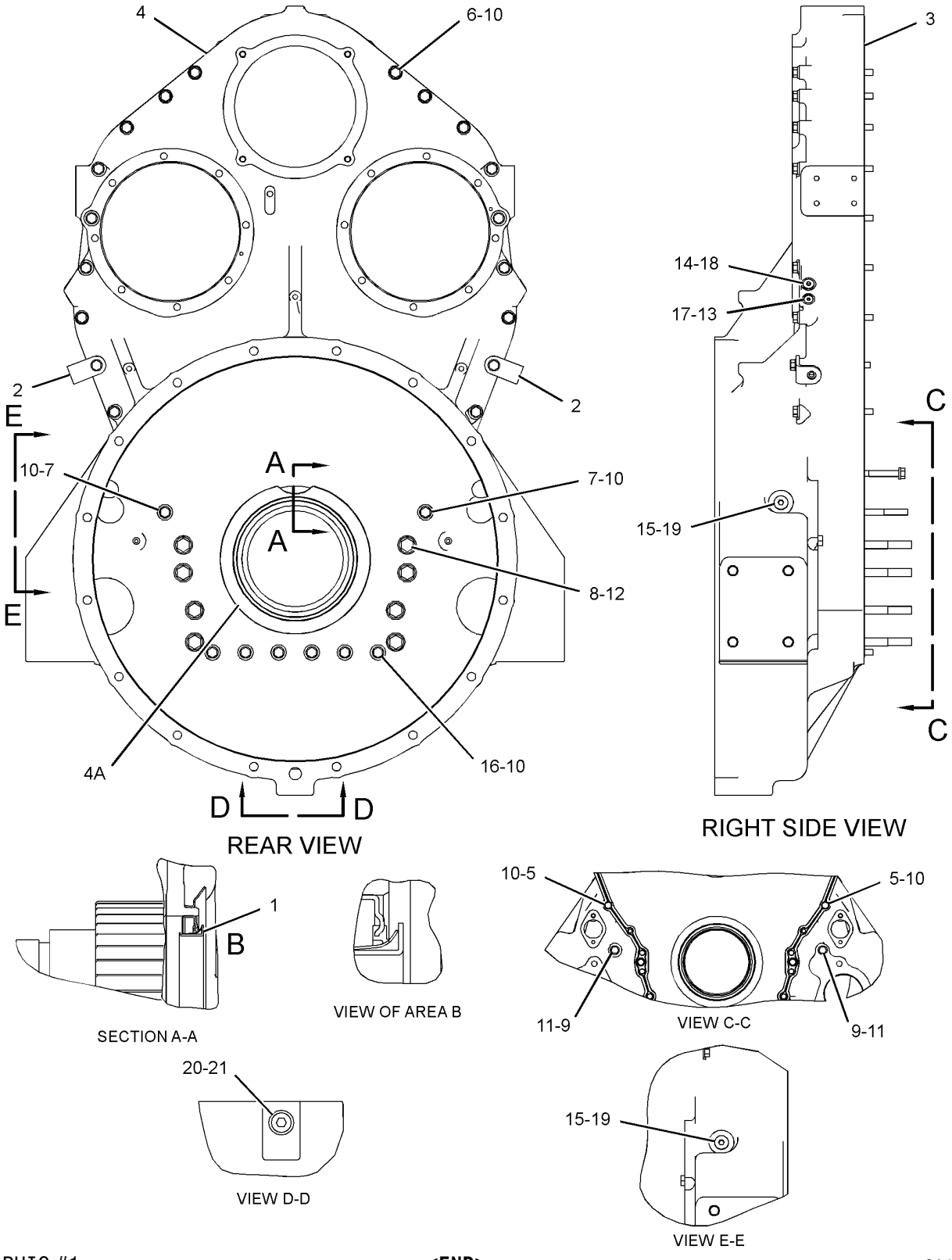

GRAPHIC #1 **<END>** g01431700

BASIC ENGINE

238-9862 HOUSING GP-FRONT

S/N: LJW1-UP

PART OF 261-2303, 261-2304 ENGINE AR-CORE

AN ATTACHMENT

SMCS-1151, 1162, 1206 **i02748396**

NOTE	REF NO	GRAPHIC REF	PART NUMBER	QTY	PART NAME 1 2 3 4 5 6 (PRODUCT LEVEL)	SEE PAGE
	1	1	**214-1727**	1	GASKET (CYLINDER BLOCK)	
	2	1	**238-9861**	1	HOUSING AS	
	2A	1	**238-9860**	2	DOWEL	
	3	1	**0L-1352**	4	BOLT (3/8-16X3.25-IN)	
	4	1	**2K-4973**	1	LOCKNUT (3/8-16-THD)	
	5	1	**3K-3256**	2	STUD-TAPERLOCK (3/8-16X1.7-IN)	
	6	1	**5M-2894**	5	WASHER-HARD (10.2X18.5X2.5-MM THK)	

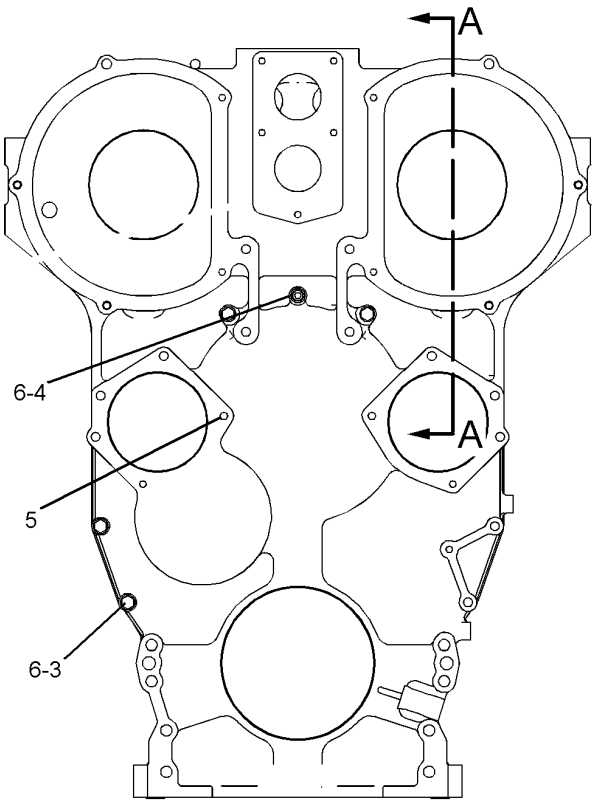

FRONT VIEW

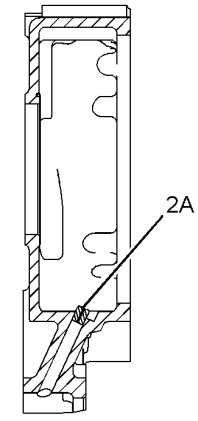

SECTION A-A

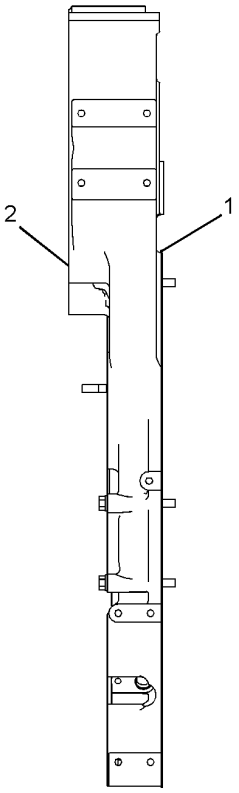

LEFT SIDE VIEW

GRAPHIC #1 **<END>** g01050949

BASIC ENGINE

233-2462 HOUSING GP-REAR

S/N: LJW1-UP

PART OF 261-2303, 261-2304 ENGINE AR-CORE

AN ATTACHMENT

SMCS-1166 **i02041104**

NOTE	REF NO	GRAPHIC REF	PART NUMBER	QTY	PART NAME 1 2 3 4 5 6 (PRODUCT LEVEL)	SEE PAGE
	1	1	**161-7293**	1	GASKET-CYLINDER	
	2	1	**224-5322**	1	HOSE AS	
	3	1	**232-3643**	1	HOUSING AS-REAR	
		1	**4N-0683**	2	DOWEL	
	4	1	**234-4279**	1	FLANGE	
	5	1	**030-7946**	1	ELBOW	
	6	1	**053-2294**	2	BOLT-12 POINT HEAD (3/8-16X1.75-IN)	
	7	1	**061-8639**	1	SEAL-O-RING	
	8	1	**0S-1616**	2	BOLT (1/4-20X1-IN)	
	9	1	**3S-0127**	8	BOLT-12 POINT HEAD (3/8-16X2.25-IN)	
	10	1	**5P-0537**	2	WASHER-HARD (7.2X14.5X2-MM THK)	
	11	1	**6V-5048**	2	SEAL-O-RING	
	12	1	**9S-8002**	1	PLUG-O-RING	
B	13	1	**4C-9612**		SEALANT-SILICONE	

B-USE AS REQUIRED

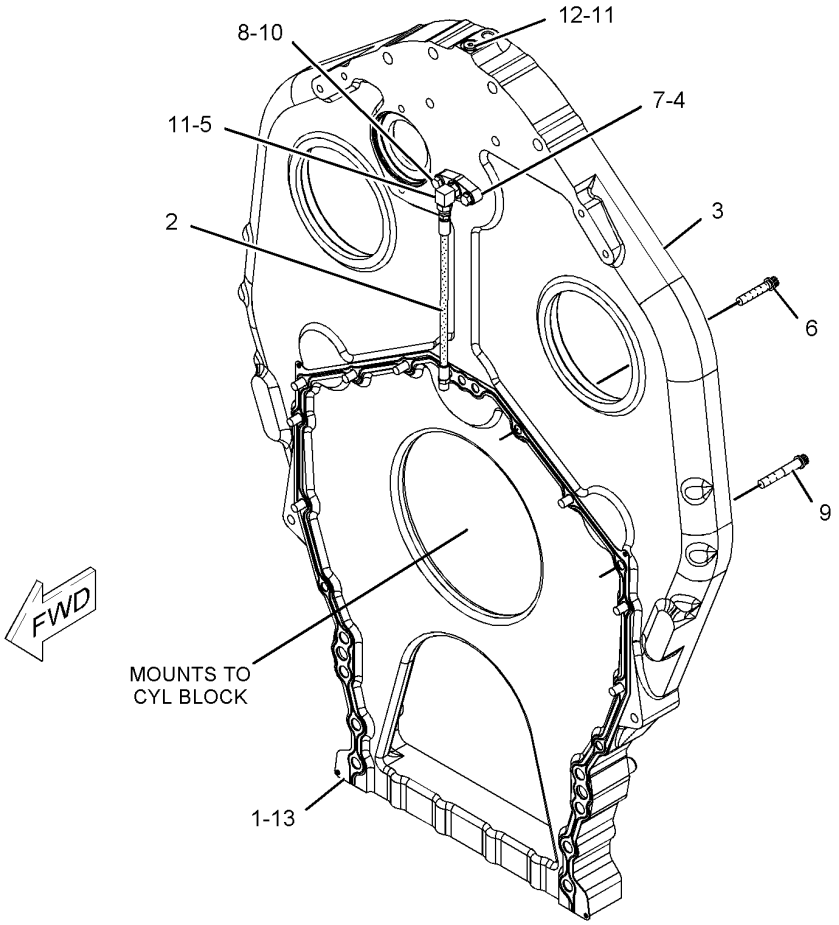

GRAPHIC #1 **<END>** g01051089

BASIC ENGINE

235-2014 LIFTING GP-ENGINE

S/N: LJW1-UP

PART OF 246-4283, 246-8228, 259-3142, 259-3143 ENGINE AR-COMPLETE AN ATTACHMENT

SMCS-1122 **i02040826**

NOTE	REF NO	GRAPHIC REF	PART NUMBER	QTY	PART NAME 1 2 3 4 5 6 (PRODUCT LEVEL)	SEE PAGE
	1	1	**230-1550**	1	EYE AS-LIFTING	
	2	1	**235-1861**	1	EYE-LIFTING	
	3	1	**5P-8245**	5	WASHER-HARD (13.5X25.5X3-MM THK)	
	4	1	**7B-3235**	7	BOLT (1/2-13X1.375-IN)	
	5	1	**7D-1649**	6	WASHER-HARD (13.5X32X5-MM THK)	
	6	1	**9X-8875**	4	BOLT (1/2-13X3.5-IN)	

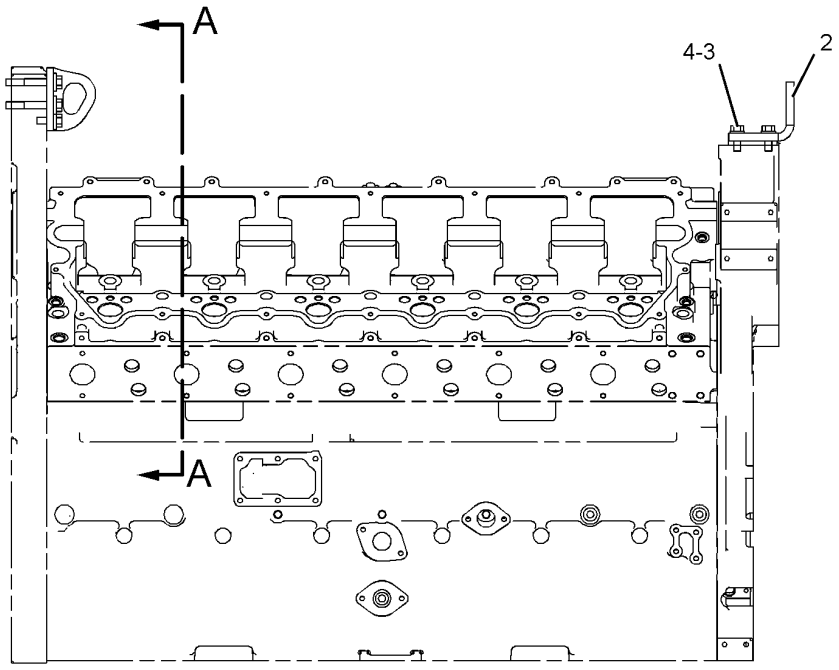

RIGHT SIDE VIEW

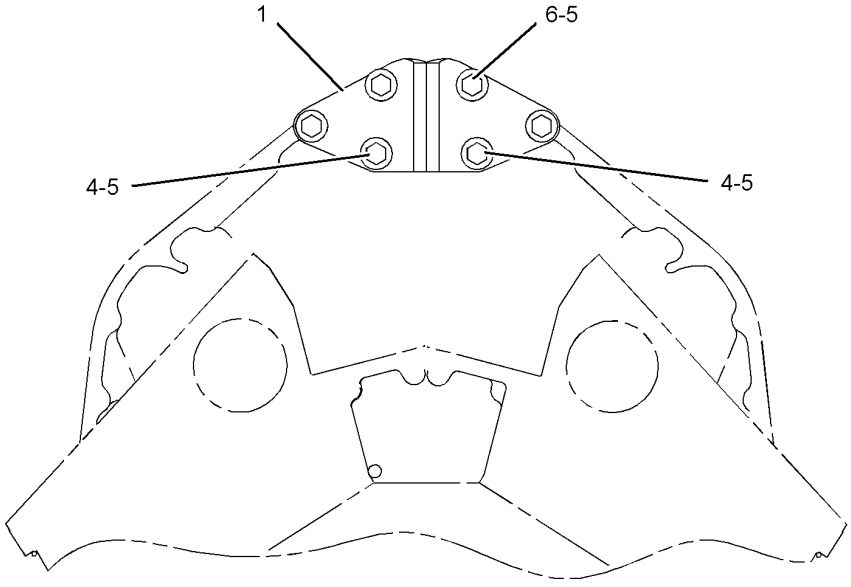

SECTION A-A

GRAPHIC #1

<END>

g01051242

BASIC ENGINE

255-8001 MECHANISM GP-FUEL PUMP & VALVE

S/N: LJW1-UP
PART OF 261-2304 ENGINE AR-CORE
AN ATTACHMENT

SMCS-1102, 1123 **i02662357**

NOTE	REF NO	GRAPHIC REF	PART NUMBER	QTY	PART NAME 1 2 3 4 5 6 (PRODUCT LEVEL)	SEE PAGE
	1	1	**6I-1458**	24	BRIDGE-VALVE	
CY	2	1	*301-5349*	6	ROCKER ARM GP	76

C-CHANGE FROM PREVIOUS TYPE
Y-SEPARATE ILLUSTRATION

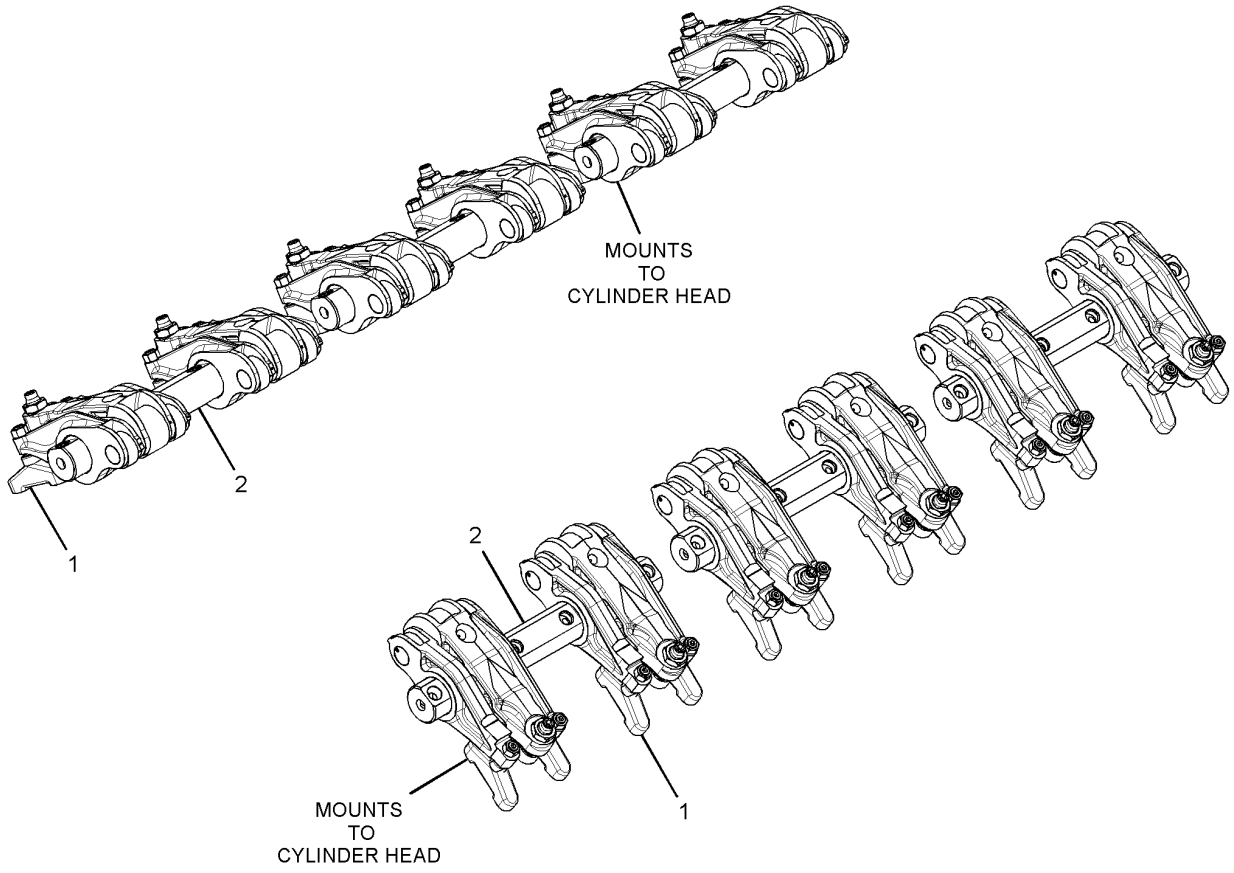

GRAPHIC #1 **<END>** g01342783

BASIC ENGINE

260-9631 MECHANISM GP-FUEL PUMP & VALVE

S/N: LJW2195-UP
PART OF 261-2303 ENGINE AR-CORE
AN ATTACHMENT

SMCS-1102, 1123 **i02662389**

NOTE	REF NO	GRAPHIC REF	PART NUMBER	QTY	PART NAME 1 2 3 4 5 6 (PRODUCT LEVEL)	SEE PAGE
	1	1	**6I-1458**	24	BRIDGE-VALVE	
CY	2	1	*301-5349*	6	ROCKER ARM GP	76
	3	1	**5J-5794**	24	BOLT (1/2-13X3.5-IN)	

C-CHANGE FROM PREVIOUS TYPE
Y-SEPARATE ILLUSTRATION

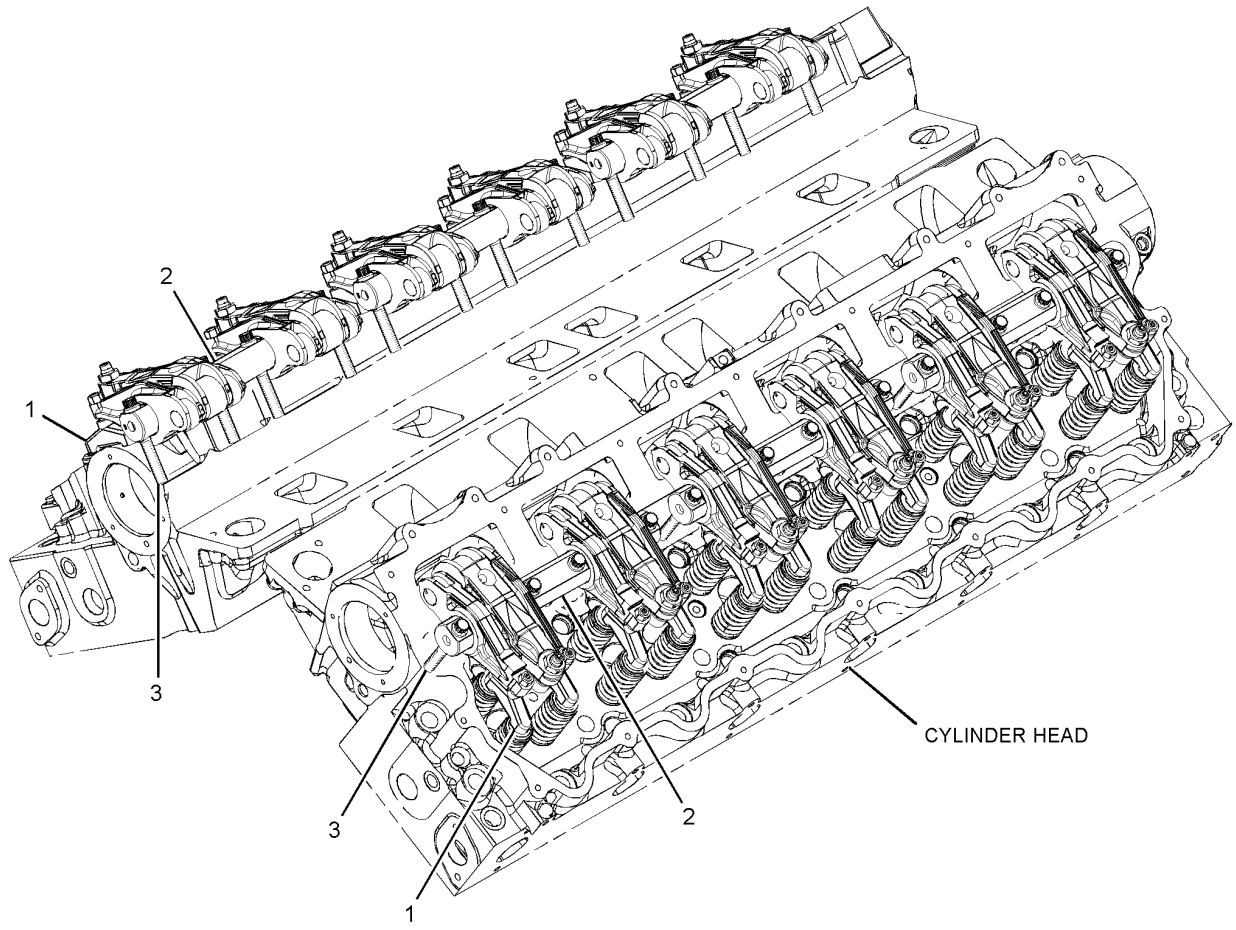

GRAPHIC #1 **<END>** g01341846

BASIC ENGINE

261-8342 MOUNTING GP-ALTERNATOR & COMPR

S/N: LJW1-UP

PART OF 246-4283, 246-8228, 259-3142, 259-3143 ENGINE AR-COMPLETE

AN ATTACHMENT

SMCS-1405, 1802 **i02864802**

NOTE	REF NO	GRAPHIC REF	PART NUMBER	QTY	PART NAME 1 2 3 4 5 6 (PRODUCT LEVEL)	SEE PAGE
	1	1	**261-8033**	1	BRACKET	
	2	1	**0S-1591**	2	BOLT (3/8-16X1.5-IN)	
	3	1	**8S-9191**	2	BOLT (3/8-16X4-IN)	
	4	1	**0S-1571**	1	BOLT (3/8-16X1.75-IN)	
	5	1	**5M-2894**	5	WASHER-HARD (10.2X18.5X2.5-MM THK)	

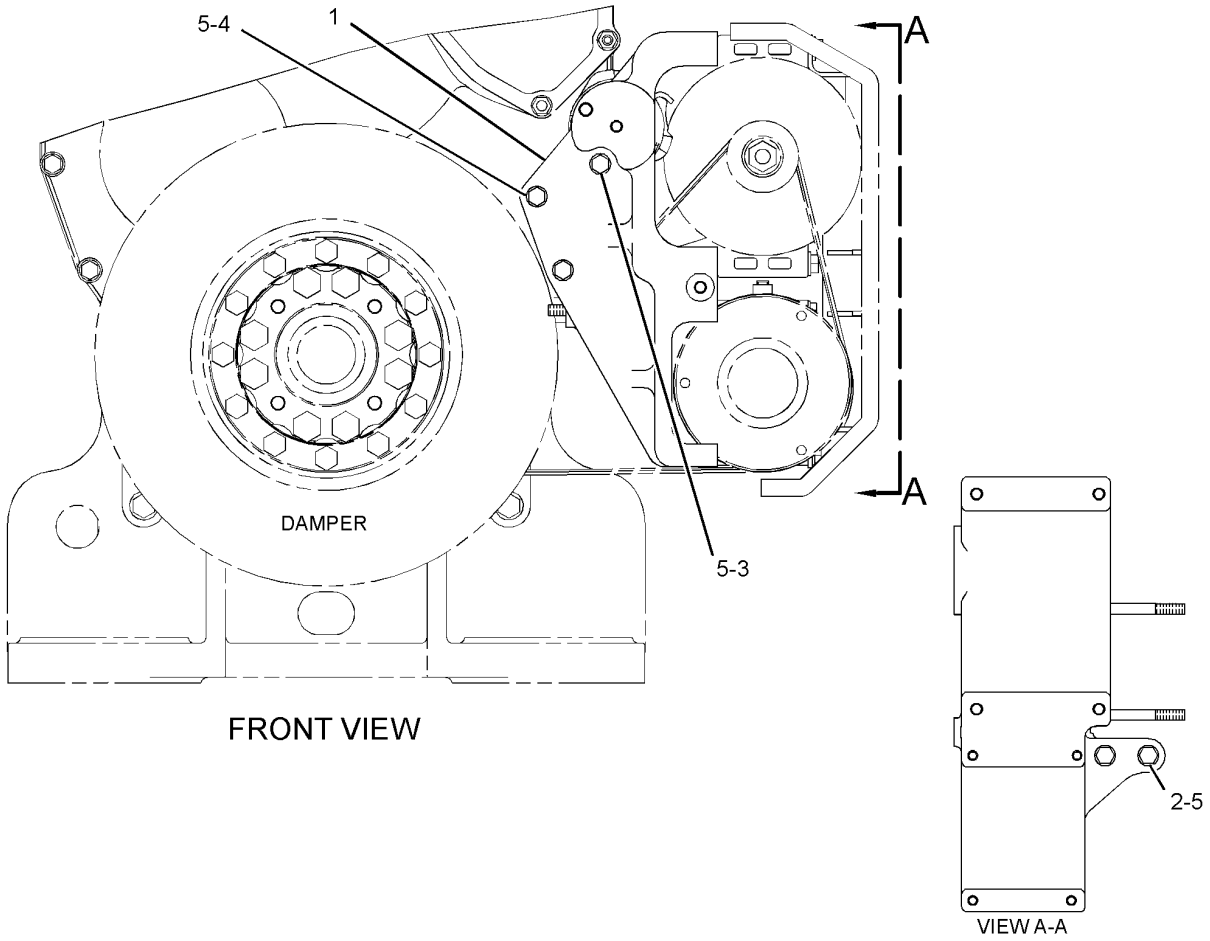

FRONT VIEW

GRAPHIC #1 **<END>** g01215482

BASIC ENGINE

291-1432 PAN GP-OIL

S/N: LJW1-UP

PART OF 246-4283, 246-8228, 259-3142, 259-3143 ENGINE AR-COMPLETE AN ATTACHMENT

SMCS-1302 **i02867679**

NOTE	REF NO	GRAPHIC REF	PART NUMBER	QTY	PART NAME 1 2 3 4 5 6 (PRODUCT LEVEL)	SEE PAGE
	1	1	**4N-0205**	36	SPACER (0.42X0.75X0.6-IN THK)	
	2	1	**4P-0519**	1	ADAPTER AS-DRAIN	
	2A	1	**109-5839**	1	PLUG-DRAIN (ENGINE OIL PAN)	
	2B	1	**109-5840**	1	ADAPTER-PLUG	
	3	1	**6N-1396**	1	GASKET-OIL PAN	
	4	1	**293-5426**	1	PAN AS-OIL	
	4A	1	**8Y-3925**	5	BOSS (3/8-16X1.2-IN)	
	4B	1	**9R-4595**	5	BOSS (M12X1.75X30-MM)	
	5	1	**2P-3203**	4	BOLT-WASHER HEAD (3/8-16X1.25-IN)	
	6	1	**2P-3205**	36	BOLT-WASHER HEAD (3/8-16X1.75-IN)	
	7	1	**5P-7701**	2	SEAL-O-RING	
	8	1	**5P-8245**	2	WASHER-HARD (13.5X25.5X3-MM THK)	
	9	1	**6V-3830**	1	SEAL-O-RING	
	10	1	**7B-3235**	2	BOLT (1/2-13X1.375-IN)	
	11	1	**9S-4181**	2	PLUG-O-RING	

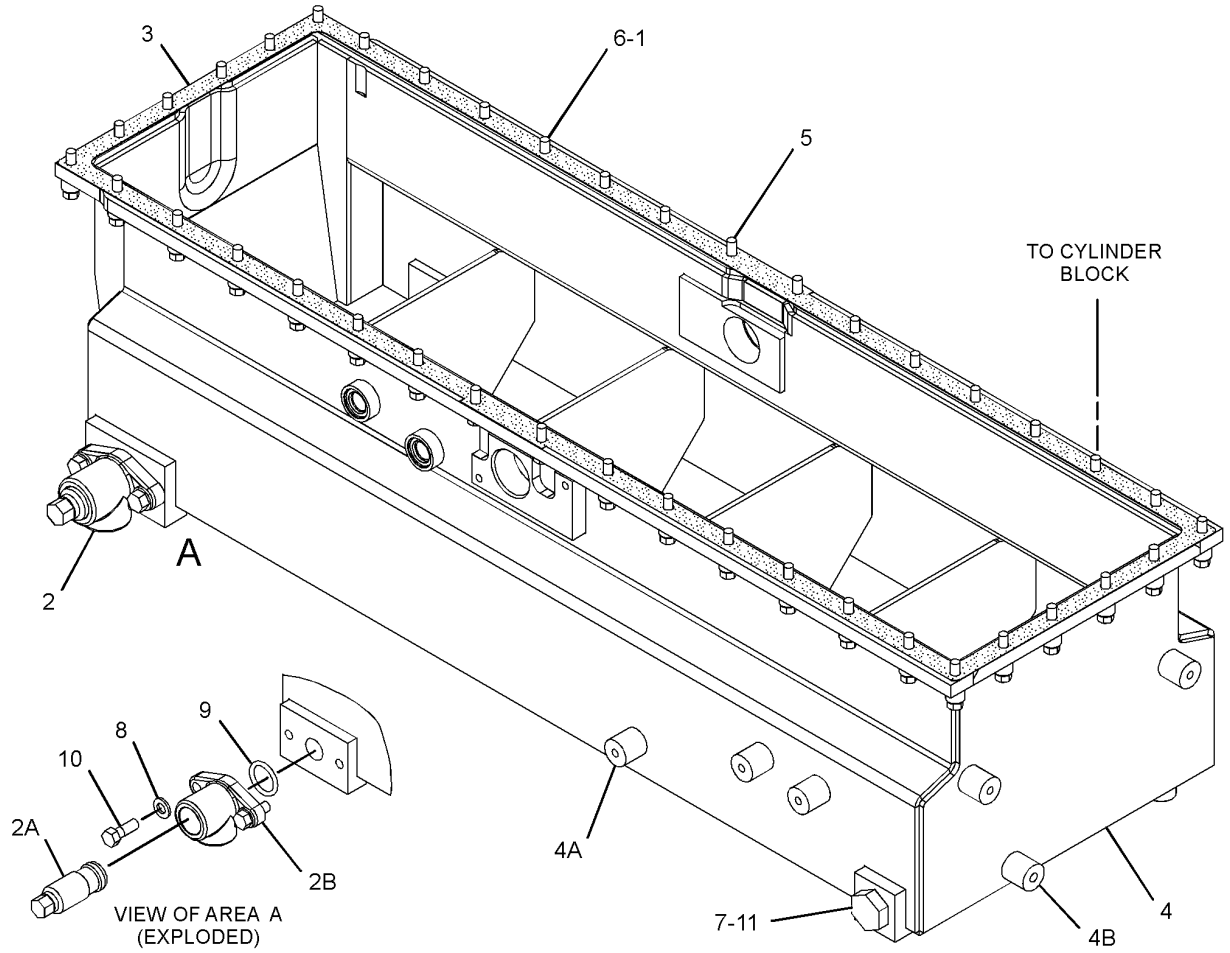

GRAPHIC #1 **<END>** g01445719

239-6144 PISTON & ROD GP

S/N: LJW1-UP
16.5:1 COMPRESSION RATIO
PART OF 261-2304 ENGINE AR-CORE
AN ATTACHMENT

SMCS-1225 **i02423423**

NOTE	REF NO	GRAPHIC REF	PART NUMBER	QTY	PART NAME 1 2 3 4 5 6 (PRODUCT LEVEL)	SEE PAGE
	1	1	**150-1156**	1	BOLT-SPECIAL (OIL JET) (3/8-16X1-IN)	
	2	1	**180-7350**	1	PIN-PISTON	
	3	1	**223-9159**	1	RING-PISTON-TOP	
	4	1	**230-2569**	2	RETAINER-PIN	
	5	1	**232-3226**	1	BEARING-CONNECTING ROD	
	6	1	**232-3232**	1	ROD AS	
	6A	1	**213-3217**	4	BOLT (M11X1.25X84-MM)	
	6B	1	**219-4458**	2	PIN-DOWEL	
	6C	1	**229-6259**	1	BEARING	
	7	1	**232-6553**	1	TUBE AS-OIL JET	
	8	1	**238-2707**	1	RING-PISTON (INTERMEDIATE)	
	9	1	**246-5659**	1	RING-PISTON-OIL	
	10	1	**247-7789**	1	BODY AS	

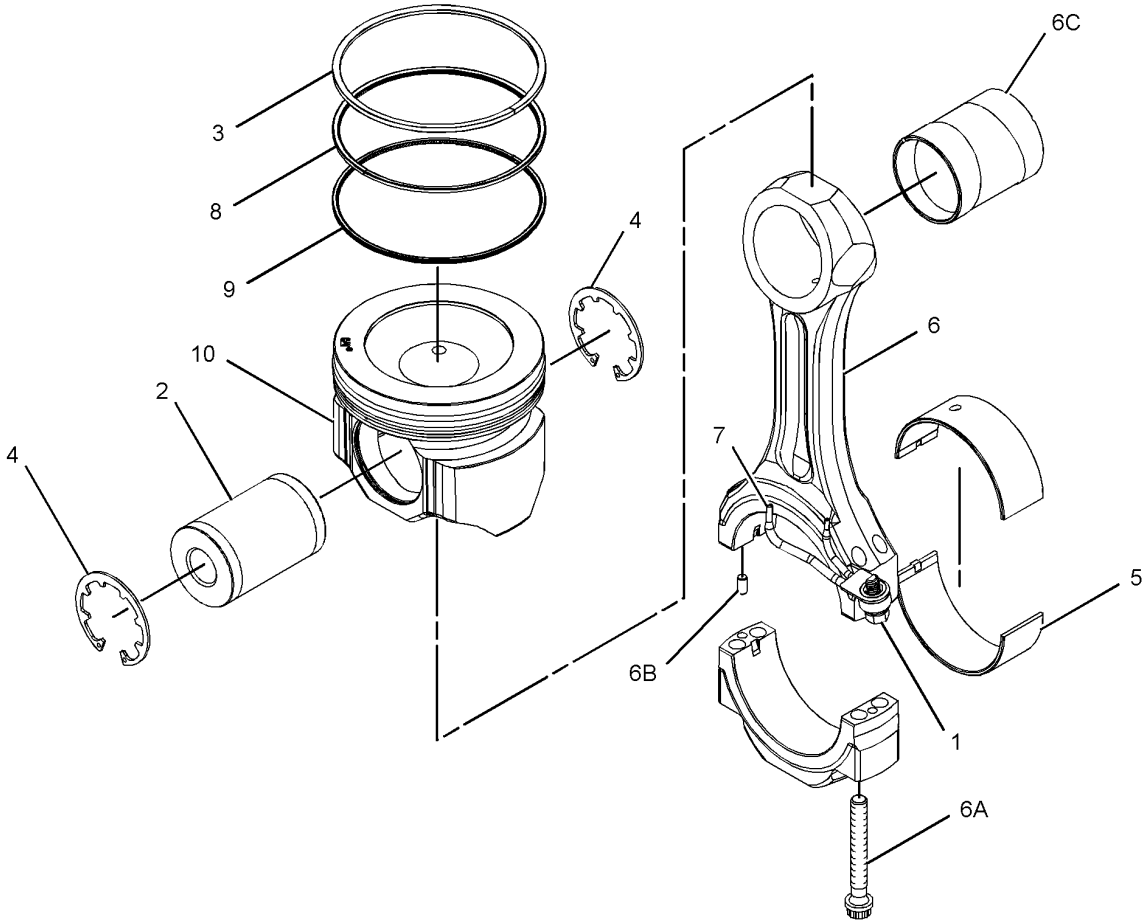

GRAPHIC #1 **<END>** g01212734

BASIC ENGINE

319-6714 PISTON & ROD GP

S/N: LJW2195-UP
16.5:1 COMPRESSION RATIO
PART OF 261-2303 ENGINE AR-CORE
AN ATTACHMENT

SMCS-1225 **i02875987**

NOTE	REF NO	GRAPHIC REF	PART NUMBER	QTY	PART NAME 1 2 3 4 5 6 (PRODUCT LEVEL)	SEE PAGE
	1	1	**150-1156**	1	BOLT-SPECIAL (OIL JET)	
	2	1	**180-7350**	1	PIN-PISTON	
	3	1	**223-9159**	1	RING-PISTON-TOP	
	4	1	**230-2569**	2	RETAINER-PIN	
	5	1	**232-3226**	1	BEARING-CONNECTING ROD	
R	6	1	**232-3232**	1	ROD AS	
		1	**213-3217**	4	BOLT (M11X1.25X84-MM)	
		1	**219-4458**	2	PIN-DOWEL	
	7	1	**238-2707**	1	RING-PISTON (INTERMEDIATE)	
	8	1	**246-5659**	1	RING-PISTON-OIL	
	9	1	**280-6943**	1	TUBE AS-OIL JET	
	10	1	**319-6716**	1	BODY AS-PISTON	

R-REMFG PART MAY BE AVAILABLE

319-6714 **PISTON & ROD GP** *(contd.)* **i02875987**

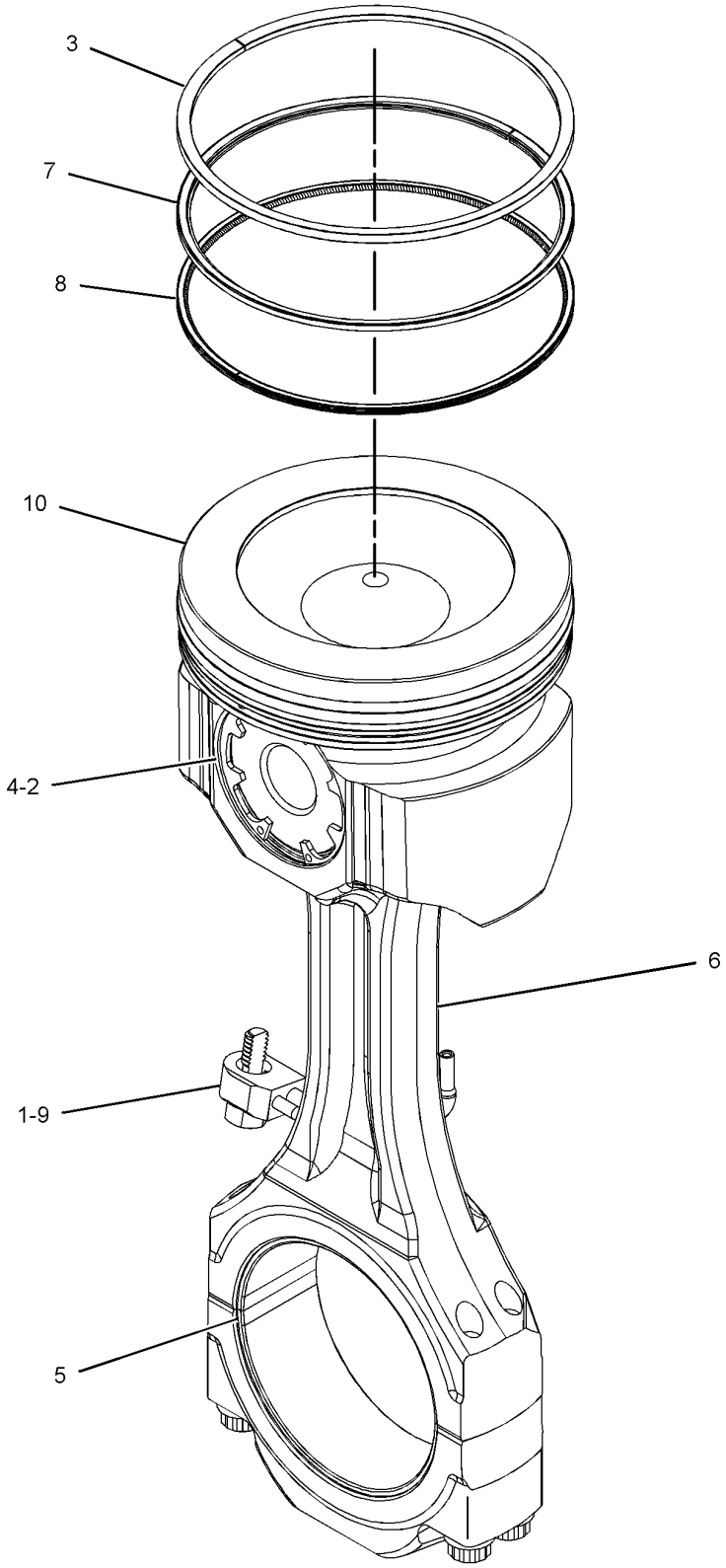

GRAPHIC #1 **<END>** g01432613

277-6297 PLUG GP-CYLINDER BLOCK

S/N: LJW1-UP

PART OF 246-4283, 246-8228, 259-3142, 259-3143 ENGINE AR-COMPLETE

AN ATTACHMENT

SMCS-1201 **i02875152**

NOTE	REF NO	GRAPHIC REF	PART NUMBER	QTY	PART NAME 1 2 3 4 5 6 (PRODUCT LEVEL)	SEE PAGE
	1	1	**6V-4589**	5	SEAL-O-RING	
	2	1	**7W-6534**	4	PLUG-PIPE	
	3	1	**8T-6757**	1	PLUG-PIPE	
	4	1	**9S-8006**	5	PLUG-O-RING	

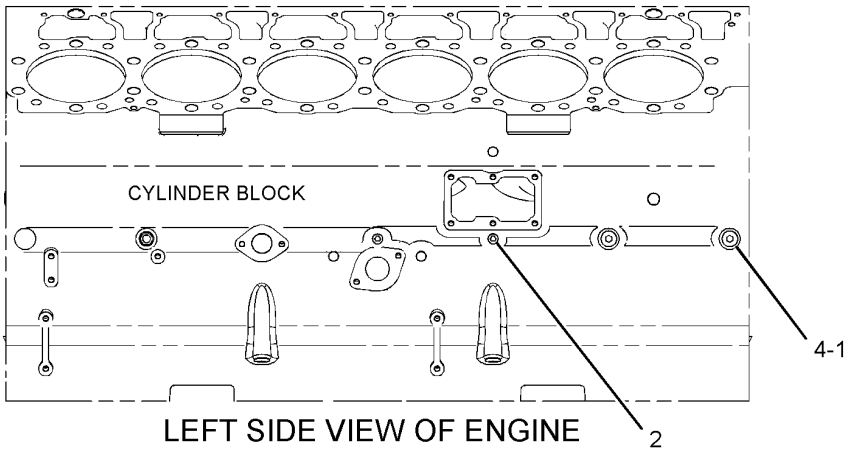

LEFT SIDE VIEW OF ENGINE

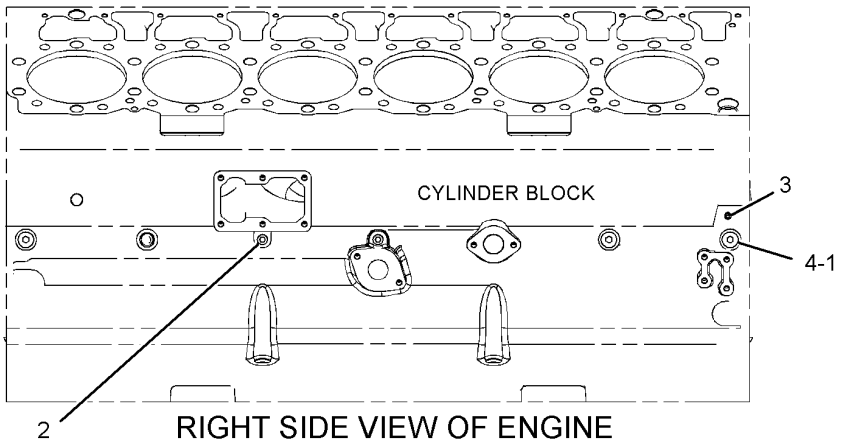

RIGHT SIDE VIEW OF ENGINE

GRAPHIC #1

<END>

g01431247

BASIC ENGINE

223-6407 PLUG GP-CYLINDER HEAD

S/N: LJW1-UP

PART OF 246-4283, 246-8228, 259-3142, 259-3143 ENGINE AR-COMPLETE

AN ATTACHMENT

SMCS-1100 **i02040812**

NOTE	REF NO	GRAPHIC REF	PART NUMBER	QTY	PART NAME 1 2 3 4 5 6 (PRODUCT LEVEL)	SEE PAGE
	1	1	**3B-0645**	4	PLUG-CUP	

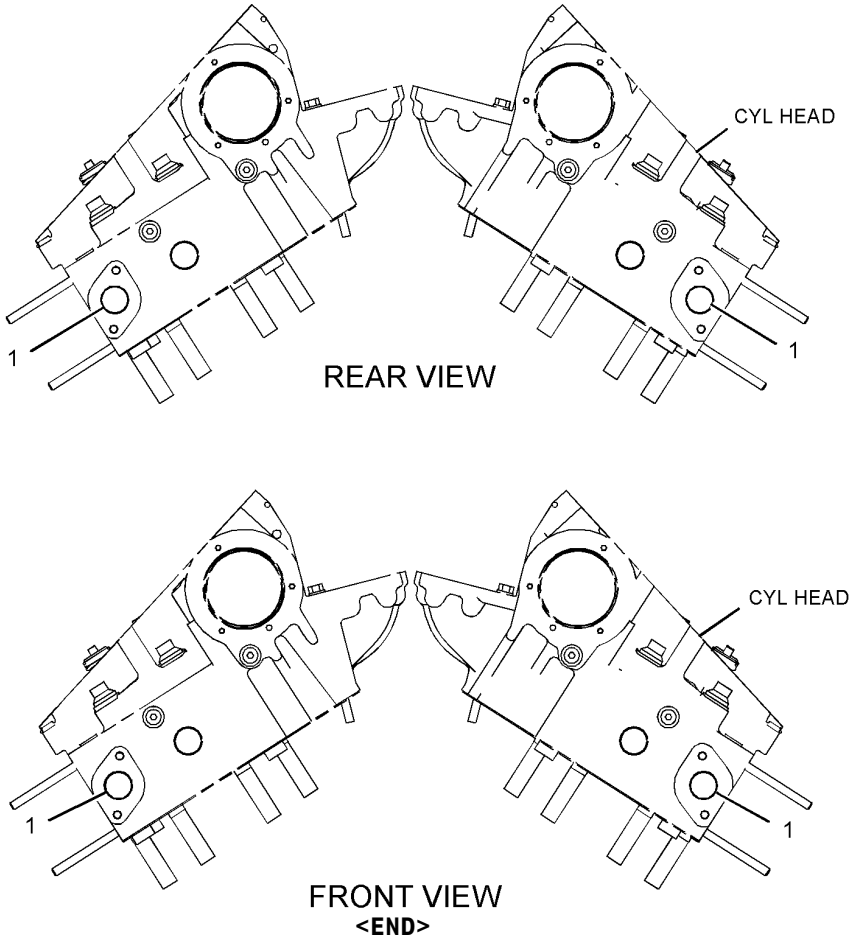

GRAPHIC #1

<END>

g01051070

BASIC ENGINE

301-5349 ROCKER ARM GP

S/N: LJW1-UP

PART OF 255-8001, 260-9631 MECHANISM GP-FUEL PUMP & VALVE

AN ATTACHMENT

SMCS-1123 **i02851792**

NOTE	REF NO	GRAPHIC REF	PART NUMBER	QTY	PART NAME 1 2 3 4 5 6 (PRODUCT LEVEL)	SEE PAGE
	1	1	**313-4085**	1	SHAFT AS-ROCKER ARM	
		1	**4B-9782**	2	BALL	
Y	2	1	*301-5350*	2	ROCKER ARM GP (INTAKE)	77
Y	3	1	*301-5352*	2	ROCKER ARM GP (UNIT INJECTOR)	78
Y	4	1	*301-5354*	2	ROCKER ARM GP (EXHAUST)	79

Y-SEPARATE ILLUSTRATION

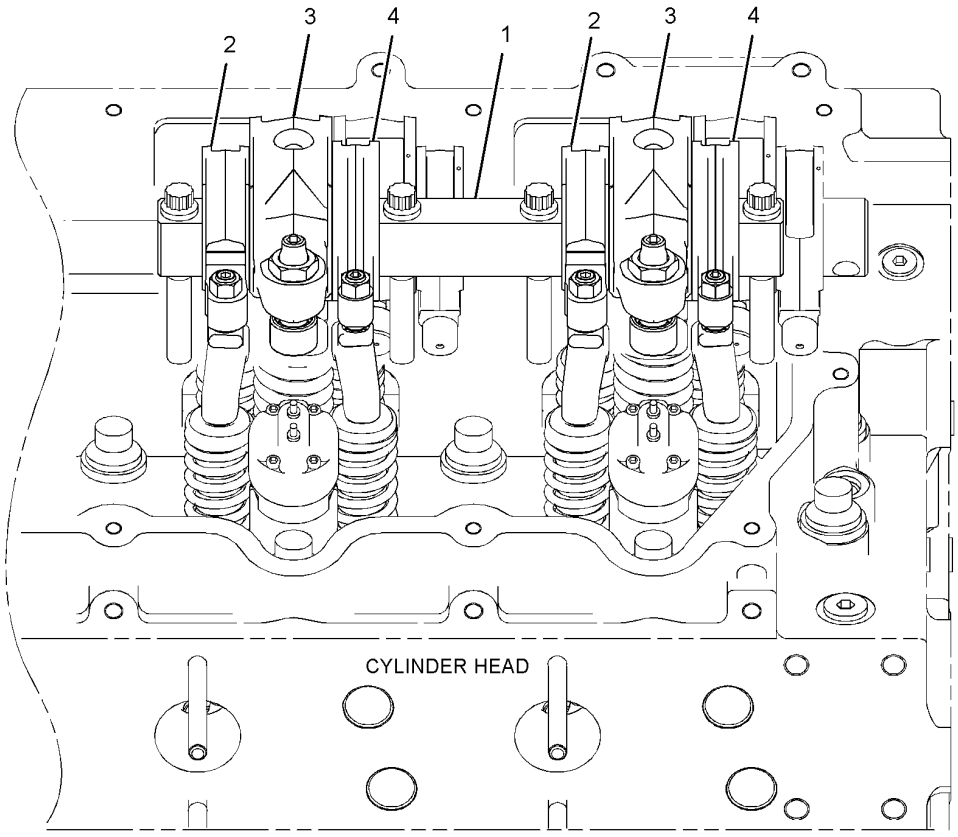

GRAPHIC #1 **<END>** g01340078

BASIC ENGINE

301-5350 ROCKER ARM GP

S/N: LJW1-UP

PART OF 301-5349 ROCKER ARM GP

AN ATTACHMENT

SMCS-1123 **i02662955**

NOTE	REF NO	GRAPHIC REF	PART NUMBER	QTY	PART NAME 1 2 3 4 5 6 (PRODUCT LEVEL)	SEE PAGE
	1	1	**258-8721**	1	BUTTON	
	2	1	**274-4491**	1	SCREW-ARM ADJUSTMENT (3/8-24X1.20-IN)	
	3	1	**276-5317**	1	NUT (3/8-24-THD)	
R	4	1	**301-5351**	1	ROCKER ARM AS	
	5	1	**8L-2777**	1	SEAL-O-RING	

R-REMFG PART MAY BE AVAILABLE

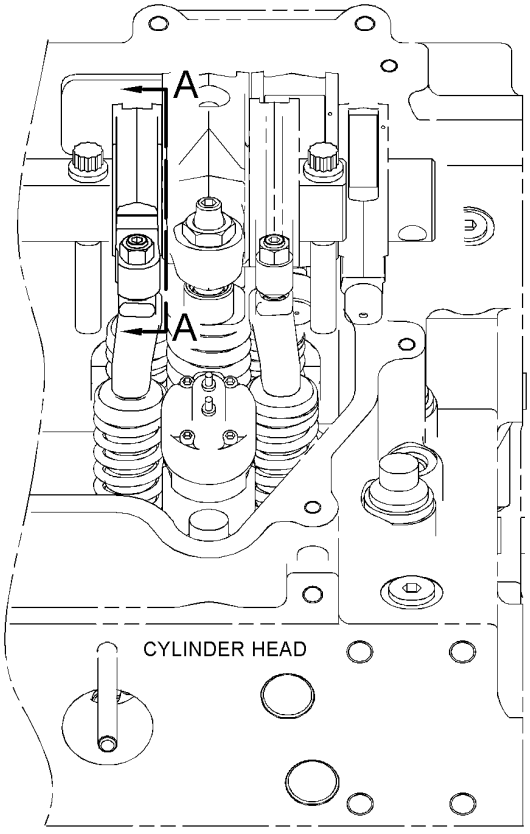

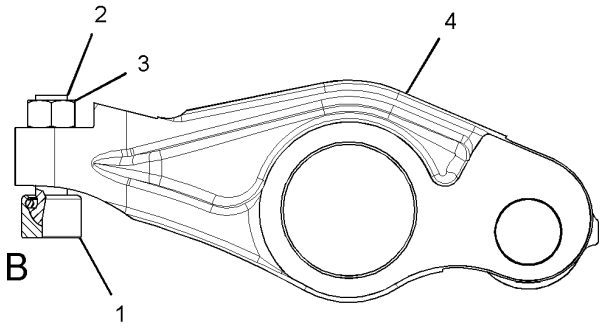

VIEW A-A

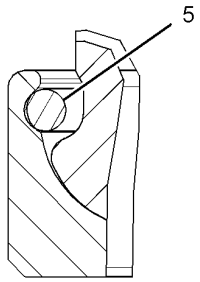

VIEW OF AREA B

GRAPHIC #1 **<END>** g01340076

301-5352 ROCKER ARM GP

S/N: LJW1-UP

PART OF 301-5349 ROCKER ARM GP

AN ATTACHMENT

SMCS-1123 **i02730627**

NOTE	REF NO	GRAPHIC REF	PART NUMBER	QTY	PART NAME 1 2 3 4 5 6 (PRODUCT LEVEL)	SEE PAGE
	1	1	**192-4151**	1	BUTTON	
	2	1	**196-5069**	1	SCREW-ARM ADJUSTMENT	
	3	1	**196-5070**	1	NUT-JAM (9/16-18-THD)	
R	4	1	**278-1363**	1	ROCKER ARM AS	
	5	1	**061-8639**	1	SEAL-O-RING	

R-REMFG PART MAY BE AVAILABLE

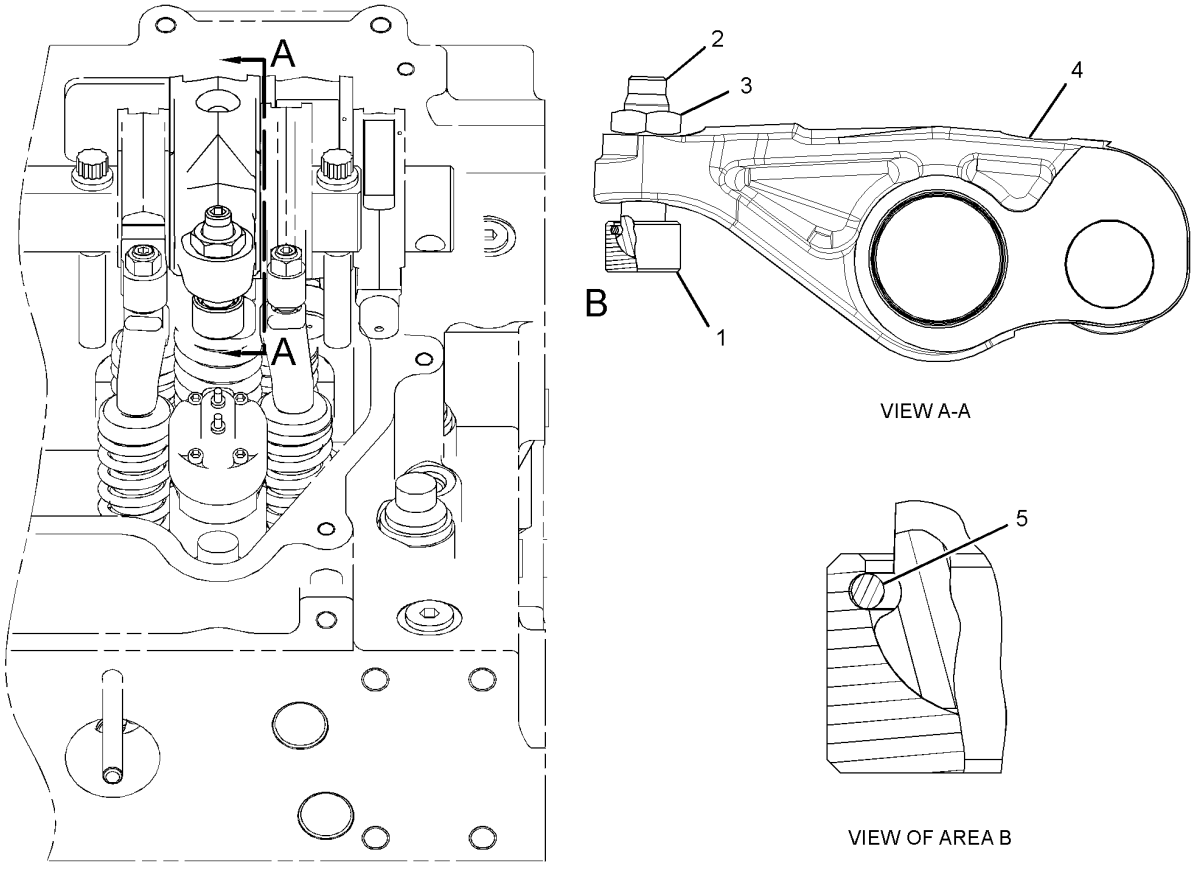

GRAPHIC #1 **<END>** g01340074

301-5354 ROCKER ARM GP

S/N: LJW1-UP
PART OF 301-5349 ROCKER ARM GP
AN ATTACHMENT

SMCS-1123 **i02662992**

NOTE	REF NO	GRAPHIC REF	PART NUMBER	QTY	PART NAME 1 2 3 4 5 6 (PRODUCT LEVEL)	SEE PAGE
	1	1	**258-8721**	1	BUTTON	
	2	1	**274-4491**	1	SCREW-ARM ADJUSTMENT (3/8-24X1.20-IN)	
	3	1	**276-5317**	1	NUT (3/8-24-THD)	
R	4	1	**301-5355**	1	ROCKER ARM AS	
	5	1	**8L-2777**	1	SEAL-O-RING	

R-REMFG PART MAY BE AVAILABLE

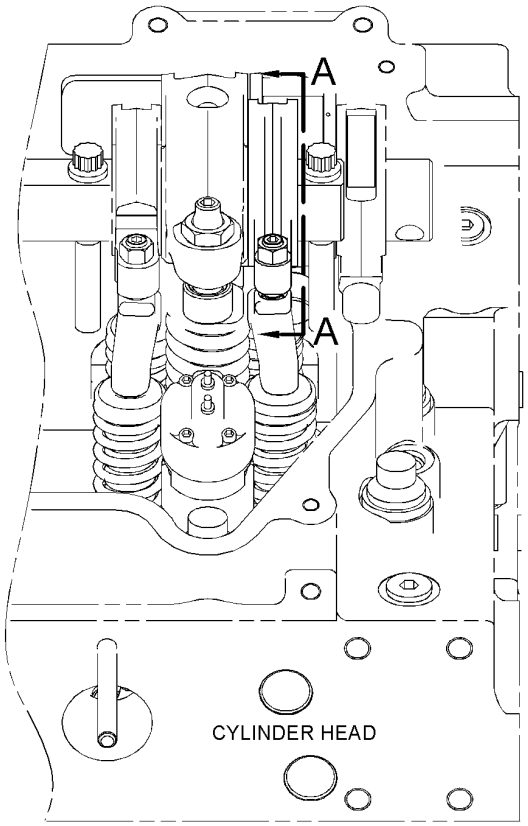

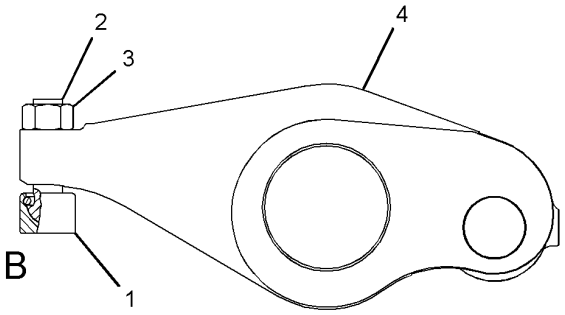

VIEW A-A

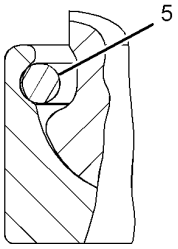

VIEW OF AREA B

GRAPHIC #1 **<END>** g01340052

BASIC ENGINE

217-5672 SUPPORT GP-ENGINE

S/N: LJW1-UP

PART OF 246-4283, 246-8228, 259-3142, 259-3143 ENGINE AR-COMPLETE AN ATTACHMENT

SMCS-1152, 1153, 1154 **i02946900**

NOTE	REF NO	GRAPHIC REF	PART NUMBER	QTY	PART NAME 1 2 3 4 5 6 (PRODUCT LEVEL)	SEE PAGE
	1	1	*4P-2289*	1	SUPPORT AS-ENGINE	
		1	**9Y-7770**	1	SUPPORT-ENGINE	
		1	**4N-0683**	2	DOWEL	
	2	1	**5P-8245**	8	WASHER-HARD (13.5X25.5X3-MM THK)	
	3	1	**9X-8878**	8	BOLT (1/2-13X5.25-IN)	

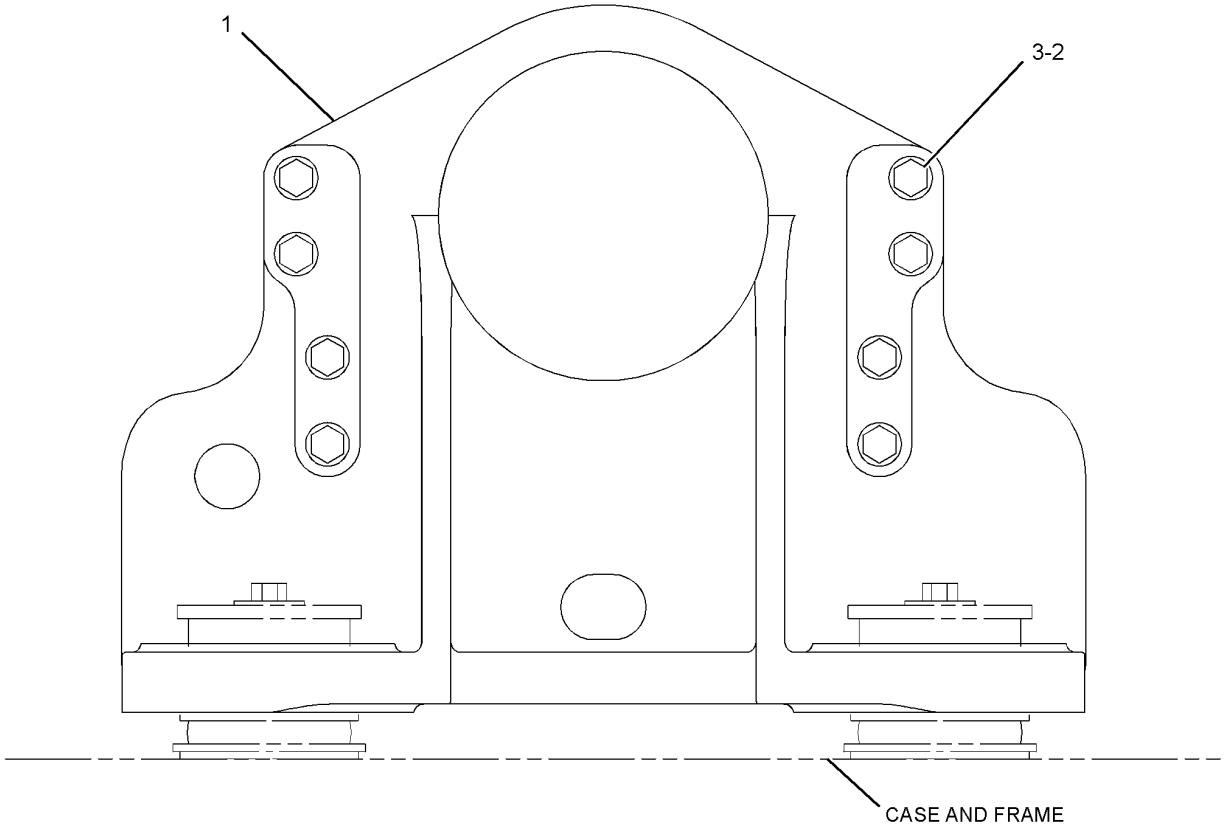

GRAPHIC #1 **<END>** g01467329

BASIC ENGINE

221-1460 SUPPORT GP-ENGINE

S/N: 2211-UP

PART OF 246-4284 INSTALLATION AR-ENGINE

SMCS-1152, 1153, 1154 **i02866273**

NOTE	REF NO	GRAPHIC REF	PART NUMBER	QTY	PART NAME 1 2 3 4 5 6 (PRODUCT LEVEL)	SEE PAGE
	1	1	**4P-7882**	2	CAP	
	2	1	**6Y-2090**	2	MOUNT AS	
	3	1	**6Y-9980**	2	MOUNT AS	
					(EACH INCLUDES)	
		1	**9W-8095**	1	PAD-REBOUND	
		1	**9W-9958**	1	MOUNT	
	4	1	**9W-7385**	2	SLEEVE	
	5	1	**9W-7388**	2	WASHER (26X144X12-MM THK)	
	6	1	**246-6042**	2	SUPPORT	
	7	1	**246-6155**	2	SUPPORT	
M	8	1	**7X-2489**	4	BOLT (M24X3X100-MM)	
M	9	1	**7X-2564**	4	BOLT (M20X2.5X90-MM)	
M	10	1	**7X-2578**	2	BOLT (M24X3X200-MM)	
	11	1	**7Y-1030**	2	SUPPORT AS	
					(EACH INCLUDES)	
M		1	**7Y-5233**	1	LOCKNUT (M24X3-THD)	
	12	1	**8T-4123**	16	WASHER (22X35X3.5-MM THK)	
	13	1	**8T-4167**	8	WASHER-HARD (26X44X4-MM THK)	
M	14	1	**8T-6430**	12	BOLT (M20X2.5X50-MM)	

M-METRIC PART

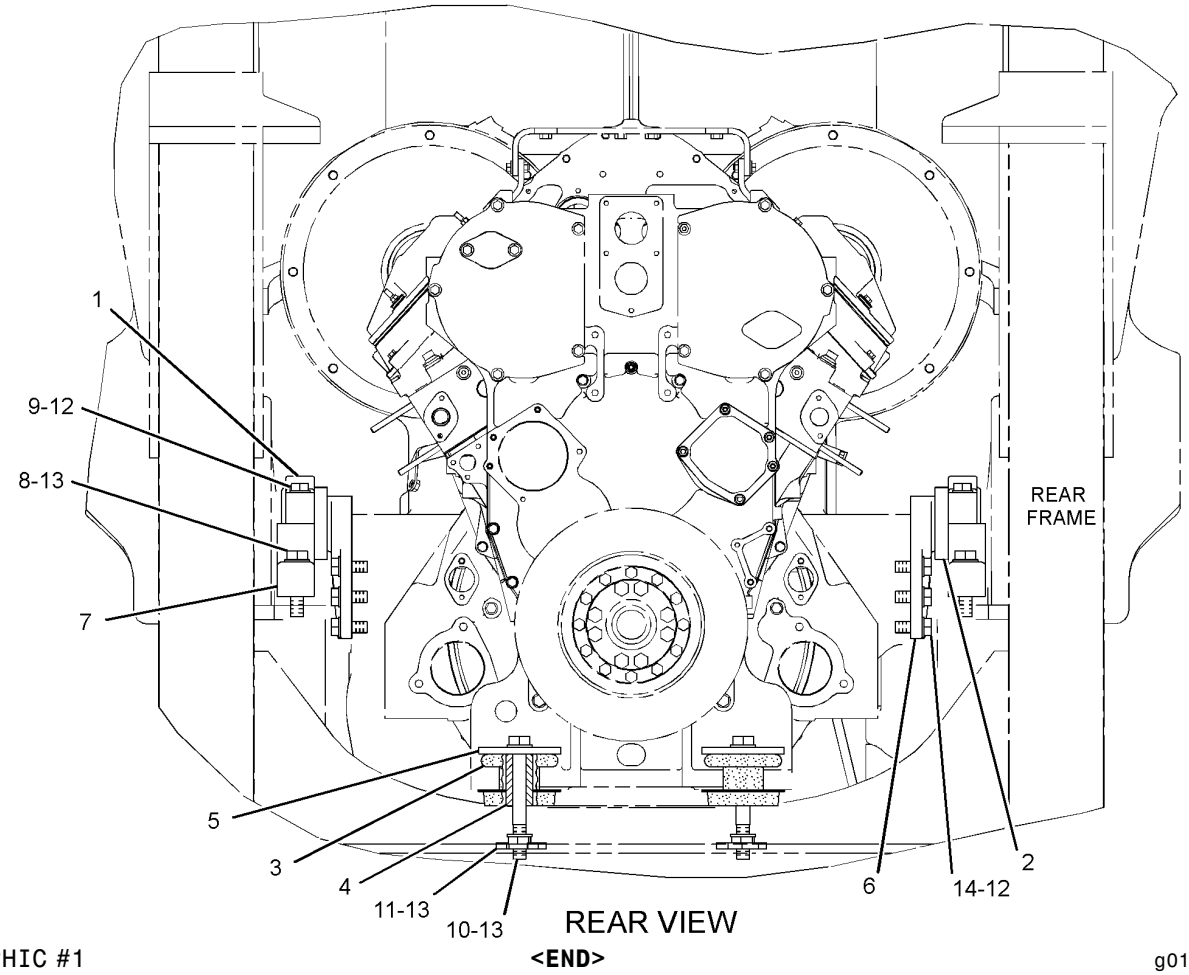

GRAPHIC #1

<END>

g01439059

119-8583 FASTENER GP-OIL PUMP MOUNTING–ENGINE

S/N: LJW2195-UP
PART OF 261-2303, 261-2304 ENGINE AR-CORE
AN ATTACHMENT

SMCS-1304 **i02334496**

NOTE	REF NO	GRAPHIC REF	PART NUMBER	QTY	PART NAME 1 2 3 4 5 6 (PRODUCT LEVEL)	SEE PAGE
	1	1	**0L-1143**	1	BOLT (3/8-16X2.5-IN)	
	2	1	**5M-2894**	3	WASHER-HARD (10.2X18.5X2.5-MM THK)	
	3	1	**0S-1619**	2	BOLT (3/8-16X3-IN)	

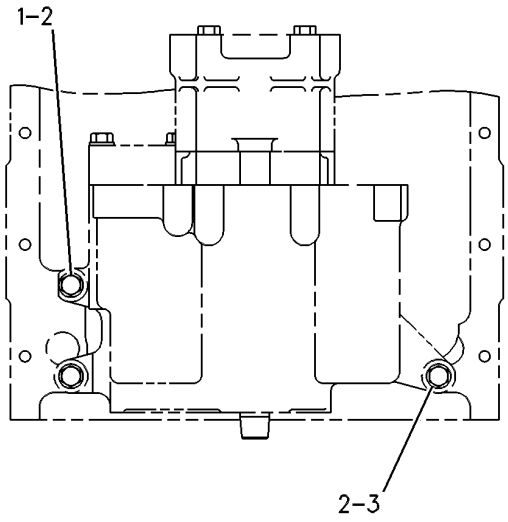

GRAPHIC #1 **<END>** g00086534

261-8340 FILLER GP-ENGINE OIL

S/N: LJW2195-UP

PART OF 246-4283, 259-3142, 259-3143 ENGINE AR-COMPLETE

AN ATTACHMENT

SMCS-1316 **i02929861**

NOTE	REF NO	GRAPHIC REF	PART NUMBER	QTY	PART NAME 1 2 3 4 5 6 (PRODUCT LEVEL)	SEE PAGE
	1	1	**3F-6156**	1	HOOK	
	2	1	**6G-9333**	1	CAP-FILLER (ENGINE OIL)	
	3	1	**206-5095**	1	BRACKET	
	4	1	**239-5572**	1	SEAL-INTEGRAL	
	5	1	**300-3685**	1	TUBE AS-FILLER	
	6	1	**0S-1588**	2	BOLT (3/8-16X1.25-IN)	
	7	1	**0S-1594**	1	BOLT (3/8-16X1-IN)	
	8	1	**143-4535**	1	CLIP (SLOT)	
	9	1	**143-4536**	1	CLIP (TAB)	
	10	1	**5M-2894**	4	WASHER-HARD (10.2X18.5X2.5-MM THK)	
	11	1	**9S-8752**	1	NUT-FULL (3/8-16-THD)	

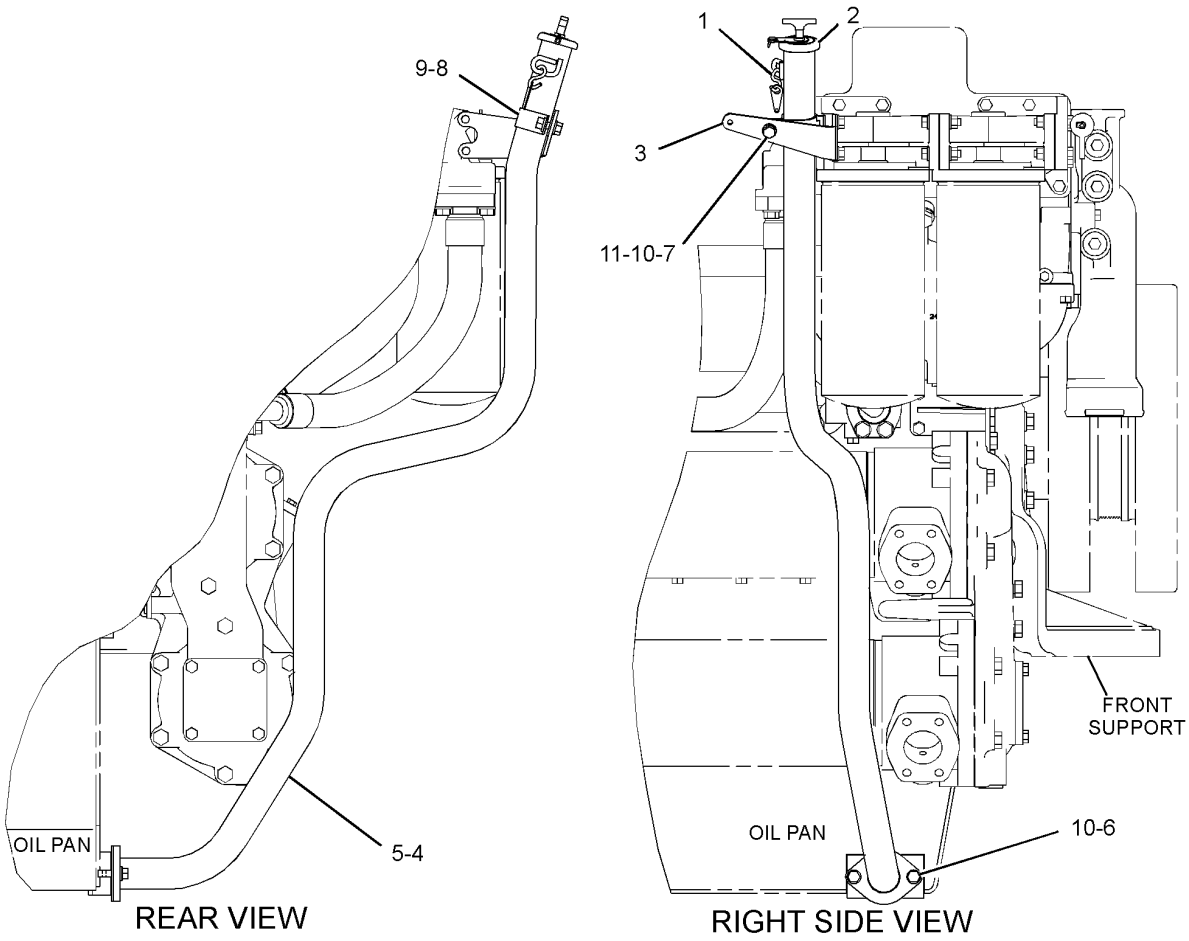

GRAPHIC #1 **<END>** g01215544

LUBRICATION SYSTEM

4N-2357 FILTER GP-ENGINE OIL

S/N: LJW1-UP

PART OF 246-4283, 246-8228, 259-3142, 259-3143 ENGINE AR-COMPLETE

AN ATTACHMENT

SMCS-1306, 1308 **i02888806**

NOTE	REF NO	GRAPHIC REF	PART NUMBER	QTY	PART NAME 1 2 3 4 5 6 (PRODUCT LEVEL)	SEE PAGE
	1	1	**2P-4303**	2	BASE AS-OIL FILTER	
					(EACH INCLUDES)	
	2	1	**2P-4304**	1	STUD-HOLLOW	
C	3	1	**7F-9090**	4	SCREW-DRIVE (NO 8X3/8-IN)	
C	4	1	**1R-0716**	2	FILTER AS-ENGINE OIL (STANDARD EFFICIENCY)	
	5	1	**4N-7082**	2	SHIELD-OIL FILTER	
	6	1	**0S-1571**	4	BOLT (3/8-16X1.75-IN)	
		1	**9S-8752**	4	NUT-FULL (3/8-16-THD)	
		1	**5M-2894**	8	WASHER-HARD (10.2X18.5X2.5-MM THK)	
	7	1	**2P-4305**	1	GASKET	

C-CHANGE FROM PREVIOUS TYPE

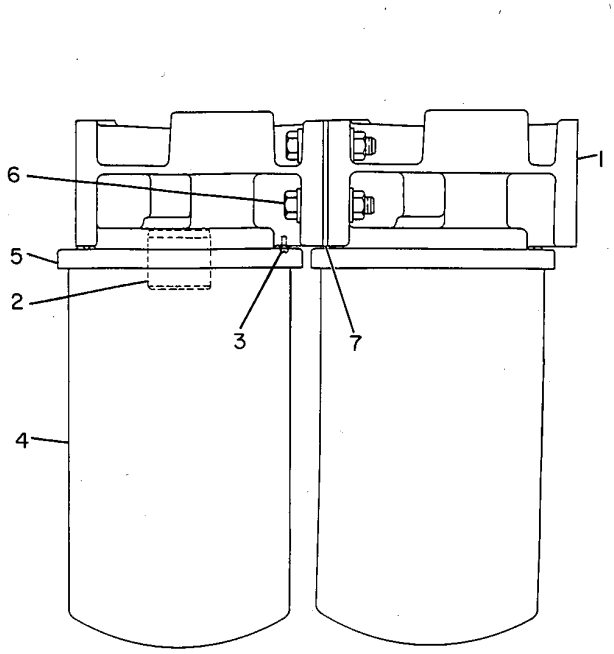

GRAPHIC #1 **<END>** g00081612

301-4186 FUMES DISPOSAL GP

S/N: 2211-UP

PART OF 246-4284 INSTALLATION AR-ENGINE

SMCS-1317 **i02890864**

NOTE	REF NO	GRAPHIC REF	PART NUMBER	QTY	PART NAME 1 2 3 4 5 6 (PRODUCT LEVEL)	SEE PAGE
E	1	1	**5P-1259**		HOSE (8.9-CM EACH)	
	2	1	**5P-0597**	4	CLAMP-HOSE	
	3	1	**138-4409**	2	SPACER (10.5X22X35-MM THK)	
	4	1	**279-0103**	2	BRACKET AS	
					(EACH INCLUDES)	
M		1	**8T-3490**	1	NUT-WELD (M10X1.5-THD)	
	5	1	**301-4187**	1	TUBE	
	6	1	**301-4188**	1	TUBE	
	7	1	**4B-4278**	2	WASHER (10.2X20.5X1.6-MM THK)	
	8	1	**5P-7470**	4	CLIP (SLOT)	
	9	1	**5P-7471**	4	CLIP (TAB)	
	10	1	**5P-7703**	4	GROMMET	
	11	1	**7X-0347**	2	BOLT (5/8-11X2.25-IN)	
	12	1	**8T-4121**	2	WASHER-HARD (11X21X2.5-MM THK)	
	13	1	**8T-4122**	2	WASHER-HARD (17X32X3.5-MM THK)	
M	14	1	**8T-4195**	2	BOLT (M10X1.5X30-MM)	
	15	1	**8T-9377**	2	BOLT (3/8-16X2.25-IN)	

E-ORDER BY THE CENTIMETER
M-METRIC PART

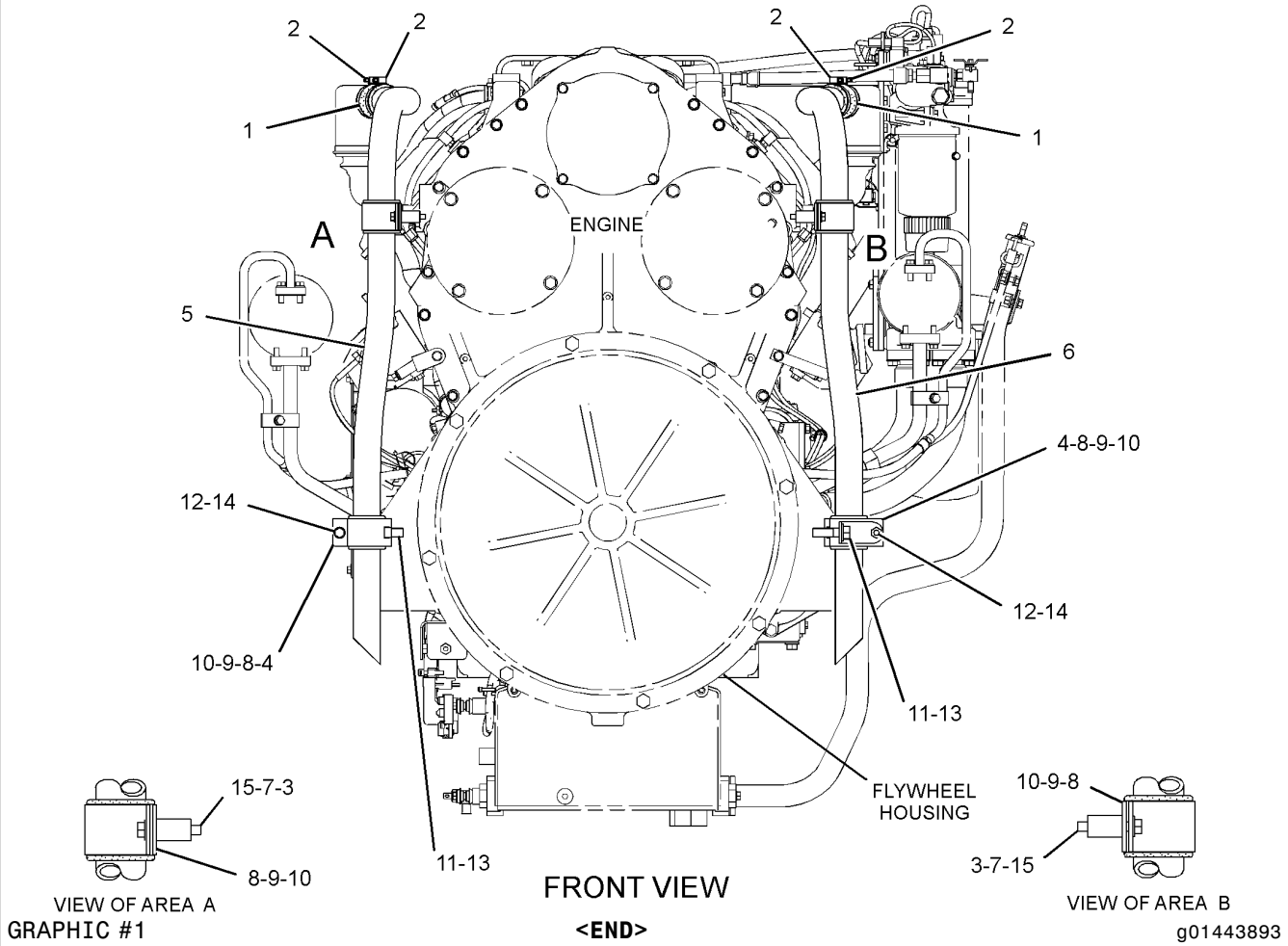

GRAPHIC #1

<END>

g01443893

LUBRICATION SYSTEM

206-5086 GAUGE GP-OIL LEVEL (DIPSTICK)—ENGINE

S/N: LJW2195-UP
PART OF 246-4283 ENGINE AR-COMPLETE
AN ATTACHMENT

SMCS-1326 **i02946961**

NOTE	REF NO	GRAPHIC REF	PART NUMBER	QTY	PART NAME 1 2 3 4 5 6 (PRODUCT LEVEL)	SEE PAGE
	1	1	**4B-0418**	1	CLIP	
J	2	1	**165-6170**	3	PLUG	
	3	1	**206-5088**	1	TUBE AS	
	4	1	**206-5089**	1	TUBE AS	
	5	1	**0S-1594**	1	BOLT (3/8-16X1-IN)	
	6	1	**061-8639**	1	SEAL-O-RING	
	7	1	**206-5090**	1	GAUGE AS-OIL LEVEL (DIPSTICK) (ENGINE)	
	8	1	**5M-2894**	2	WASHER-HARD (10.2X18.5X2.5-MM THK)	
	9	1	**033-6033**	1	SEAL-O-RING	
	10	1	**9S-8752**	1	NUT-FULL (3/8-16-THD)	

J-USED TO PLUG OPTIONAL DIPSTICK LOCATION

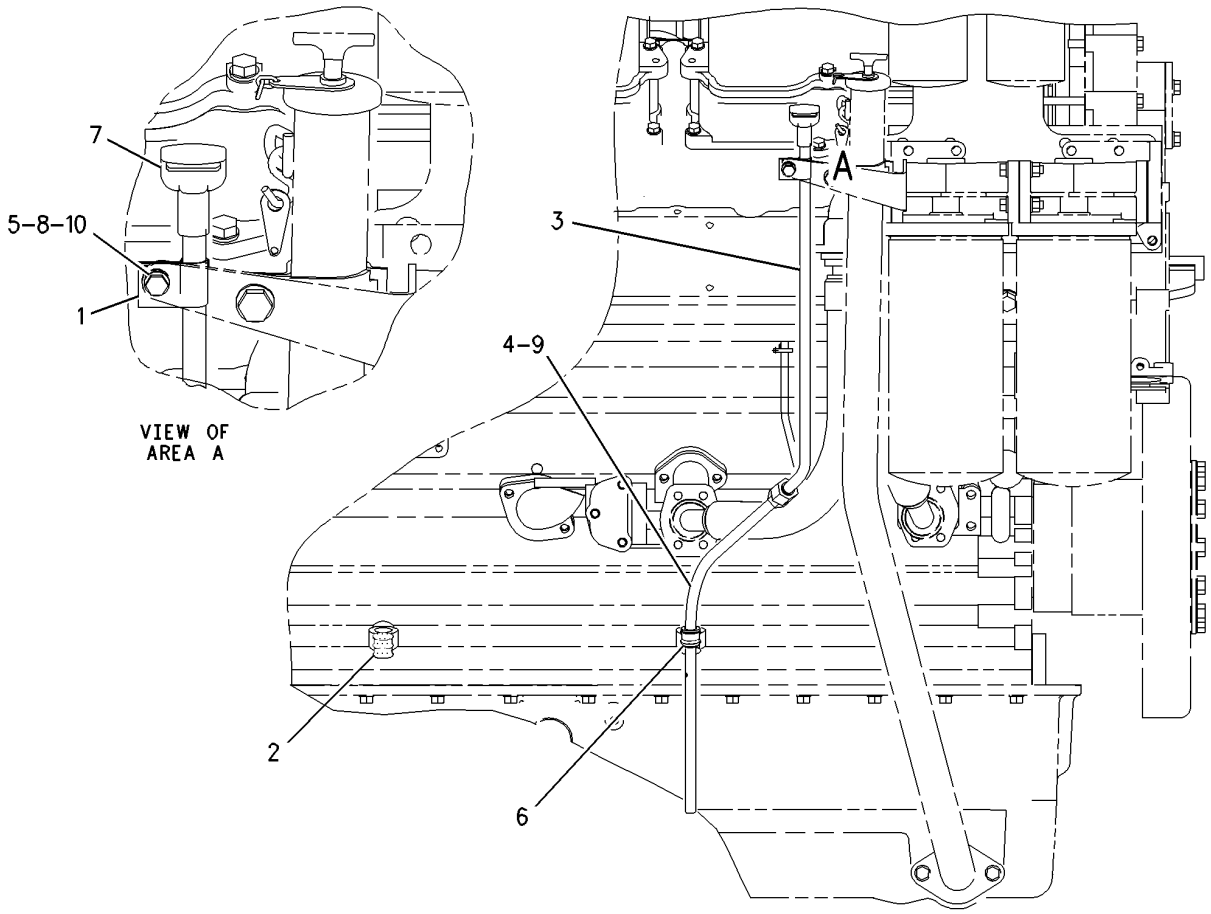

RIGHT SIDE VIEW

GRAPHIC #1 **<END>** g00849151

314-8801 GAUGE GP-OIL LEVEL (DIPSTICK)—ENGINE

S/N: LJW1-UP

PART OF 246-8228, 259-3142, 259-3143 ENGINE AR-COMPLETE

AN ATTACHMENT

SMCS-1326 **i02875118**

NOTE	REF NO	GRAPHIC REF	PART NUMBER	QTY	PART NAME 1 2 3 4 5 6 (PRODUCT LEVEL)	SEE PAGE
	1	1	**165-6170**	3	PLUG	
	2	1	**206-5088**	1	TUBE AS	
	3	1	**206-5089**	1	TUBE AS	
	4	1	**314-8800**	1	GAUGE AS-OIL LEVEL (DIPSTICK) (ENGINE)	
	5	1	**033-6033**	1	SEAL-O-RING	
	6	1	**061-8639**	1	SEAL-O-RING	
	7	1	**0S-1588**	1	BOLT (3/8-16X1.25-IN)	
	8	1	**4B-0418**	1	CLIP	
	9	1	**5M-2894**	2	WASHER-HARD (10.2X18.5X2.5-MM THK)	
	10	1	**9S-8752**	1	NUT-FULL (3/8-16-THD)	

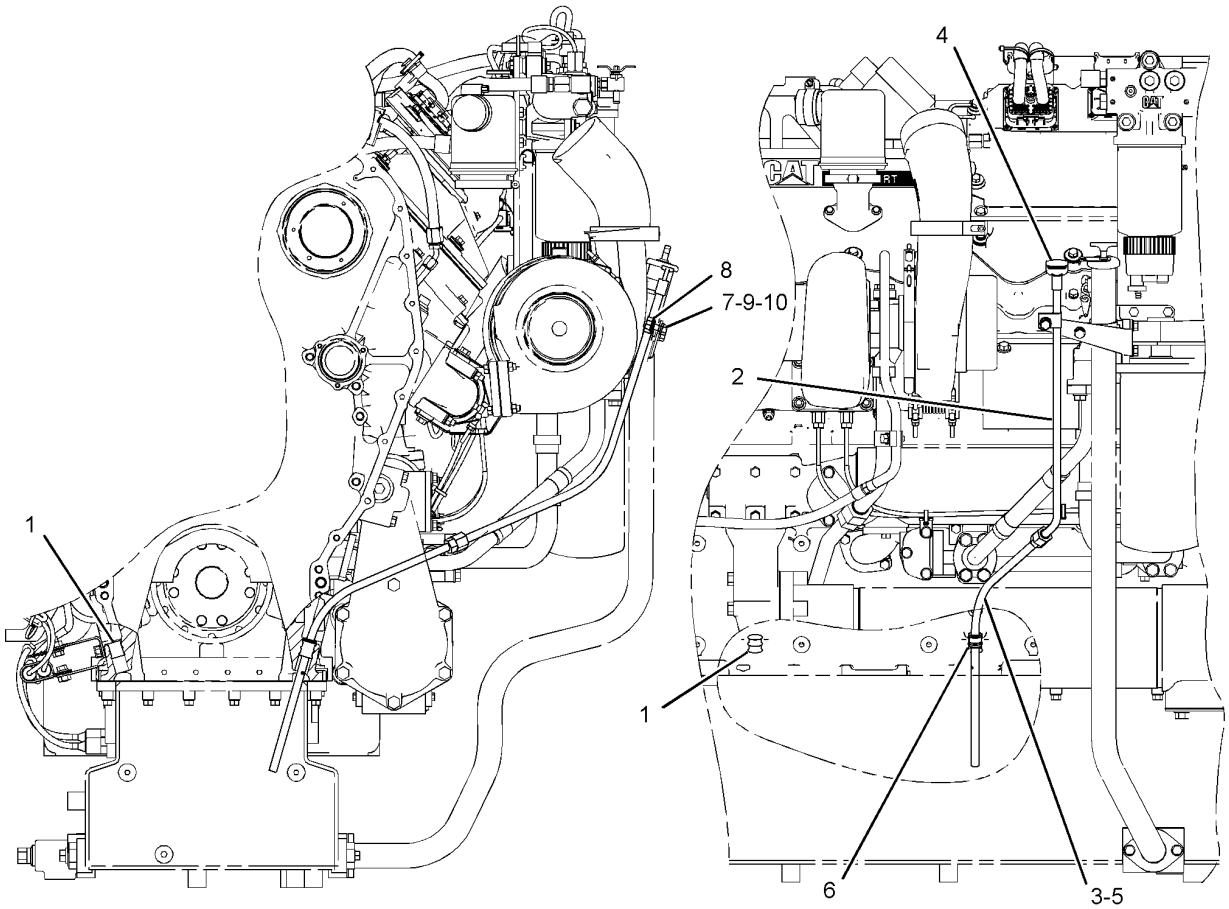

REAR VIEW OF ENGINE RIGHT SIDE VIEW OF ENGINE

GRAPHIC #1 **<END>** g01432091

LUBRICATION SYSTEM

144-4306 LINES GP-ENGINE OIL

S/N: LJW2195-UP
PART OF 246-4283 ENGINE AR-COMPLETE
AN ATTACHMENT

SMCS-1307 **i02755836**

NOTE	REF NO	GRAPHIC REF	PART NUMBER	QTY	PART NAME 1 2 3 4 5 6 (PRODUCT LEVEL)	SEE PAGE
	1	1	**4N-0913**	1	SCREEN AS-SUCTION (ENGINE OIL LINES)	
	2	1	**4N-0914**	1	CLIP	
	3	1	**8N-2104**	1	BELL AS-SUCTION	
		1	**1F-0750**	2	NUT-WELD (3/8-16-THD)	
	4	1	**139-6118**	1	TUBE AS-SUCTION	
	5	1	**0S-1571**	2	BOLT (3/8-16X1.75-IN)	
	6	1	**5M-2894**	6	WASHER-HARD (10.2X18.5X2.5-MM THK)	
	7	1	**6N-1050**	1	SUPPORT-BELL	
	8	1	**116-2699**	1	TUBE AS	
	9	1	**0L-1351**	1	BOLT (3/8-16X0.875-IN)	
	10	1	**8M-9024**	1	WASHER-HARD (10.2X22.5X5-MM THK)	
	11	1	**109-0076**	1	SEAL-O-RING	
	12	1	**109-0078**	1	SEAL-O-RING	
	13	1	**0S-0509**	2	BOLT (3/8-16X0.75-IN)	
	14	1	**1A-2029**	2	BOLT (3/8-16X1.125-IN)	

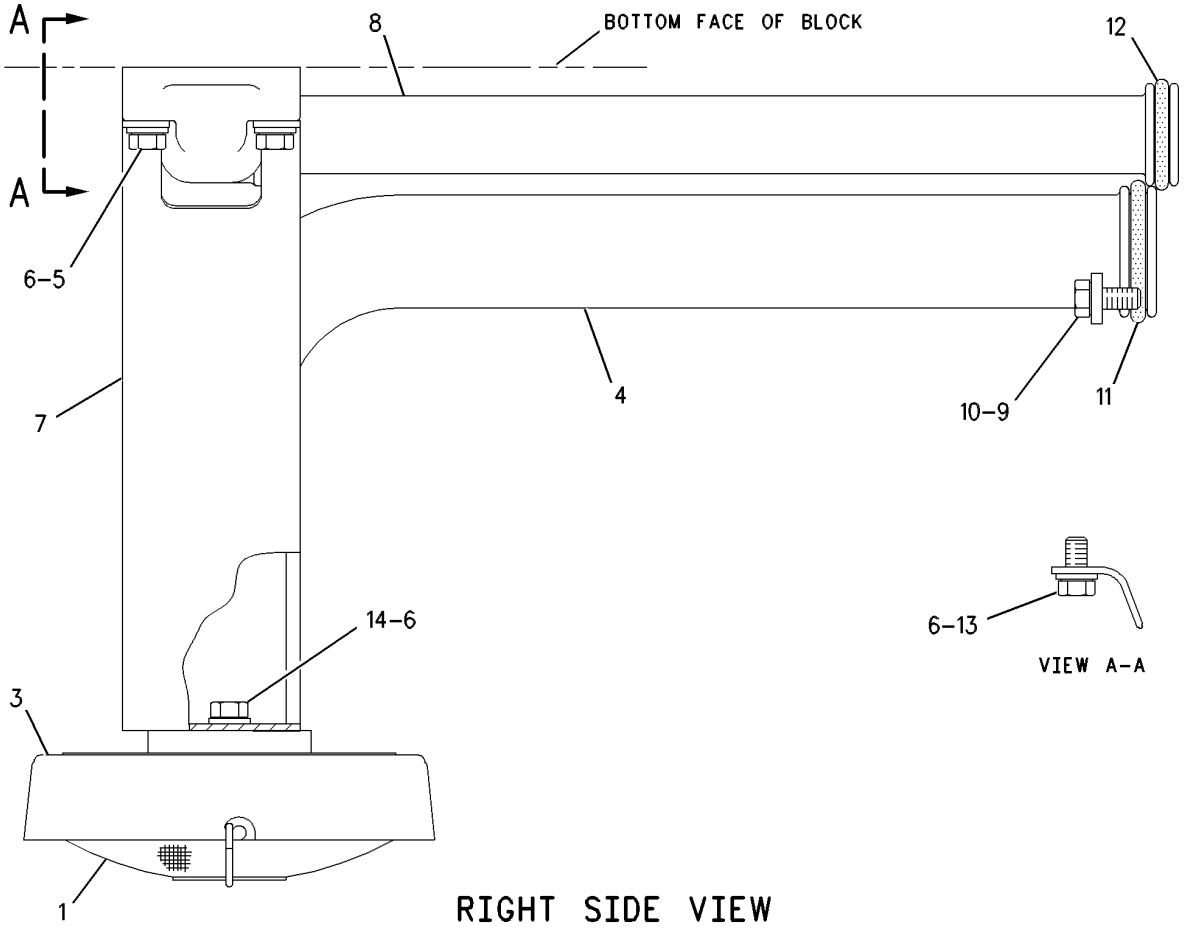

RIGHT SIDE VIEW

GRAPHIC #1 **<END>** g00458538

LUBRICATION SYSTEM

270-7020 LINES GP-ENGINE OIL

S/N: LJW1-UP

PART OF 246-8228, 259-3142, 259-3143 ENGINE AR-COMPLETE

AN ATTACHMENT

SMCS-1307 **i02499112**

NOTE	REF NO	GRAPHIC REF	PART NUMBER	QTY	PART NAME 1 2 3 4 5 6 (PRODUCT LEVEL)	SEE PAGE
	1	1	**4N-0913**	1	SCREEN AS-SUCTION	
	2	1	**4N-0914**	1	CLIP	
	3	1	**8N-2104**	1	BELL AS-SUCTION	
	4	1	**116-2699**	1	TUBE AS	
	5	1	**270-7021**	1	TUBE AS	
	6	1	**270-7022**	1	SUPPORT	
	7	1	**0L-1351**	1	BOLT (3/8-16X0.875-IN)	
	8	1	**0S-0509**	2	BOLT (3/8-16X0.75-IN)	
	9	1	**0S-1571**	2	BOLT (3/8-16X1.75-IN)	
	10	1	**1A-2029**	2	BOLT (3/8-16X1.125-IN)	
	11	1	**3P-0650**	1	SEAL-O-RING	
	12	1	**5M-2894**	6	WASHER-HARD (10.2X18.5X2.5-MM THK)	
	13	1	**5P-8068**	1	SEAL-O-RING	
	14	1	**8M-9024**	1	WASHER-HARD (10.2X22.5X5-MM THK)	

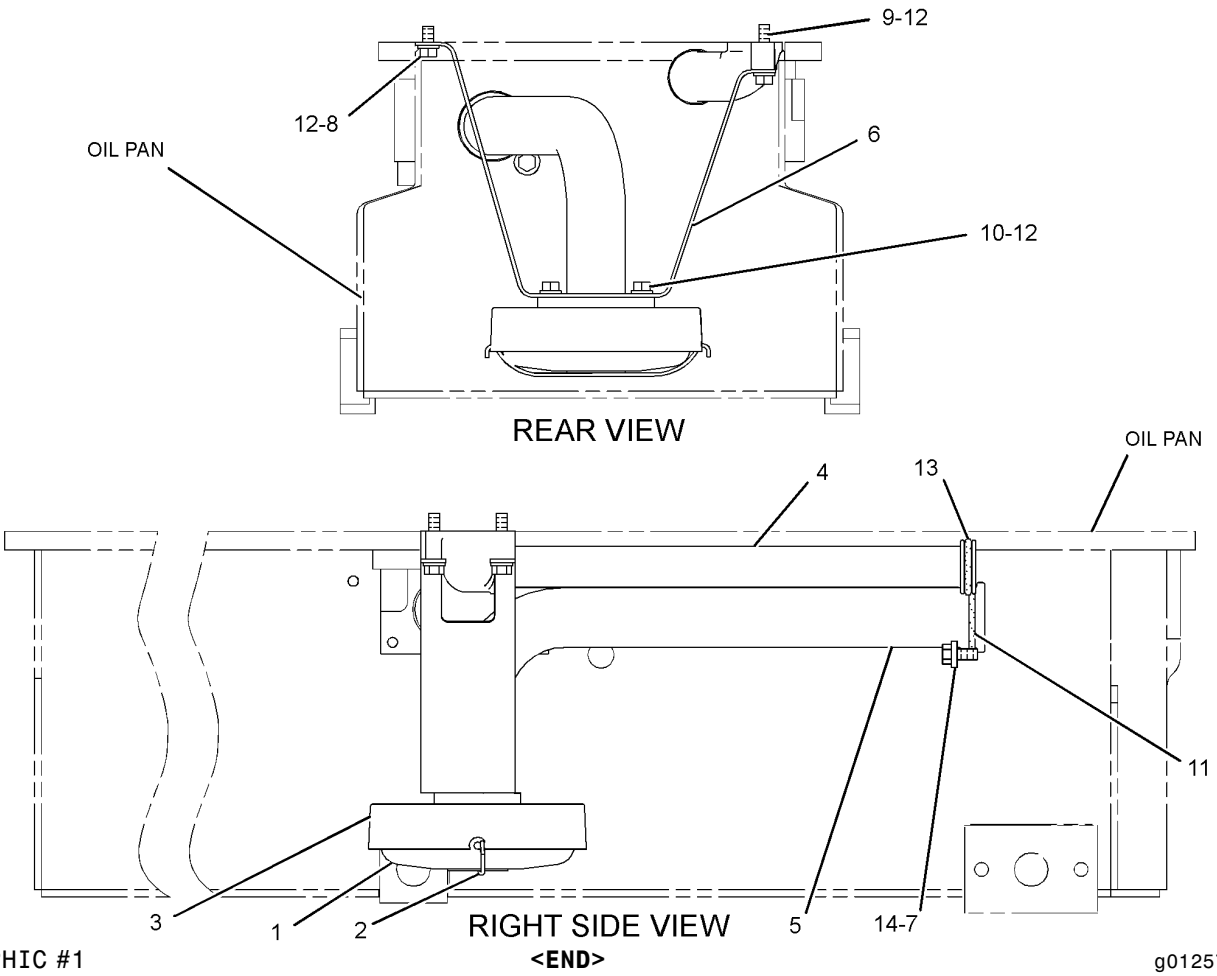

GRAPHIC #1

<END>

g01257426

LUBRICATION SYSTEM

225-9619 LINES GP-ENGINE OIL FILTER

S/N: LJW2195-UP
PART OF 246-4283 ENGINE AR-COMPLETE
AN ATTACHMENT
TYPE 1

SMCS-1307, 1308 **i02946965**

NOTE	REF NO	GRAPHIC REF	PART NUMBER	QTY	PART NAME 1 2 3 4 5 6 (PRODUCT LEVEL)	SEE PAGE
	1	1	**1W-1116**	1	BODY-BYPASS	
	2	1	**2P-4305**	2	GASKET	
	3	1	**4N-0861**	1	COVER	
	4	1	**4N-0865**	1	GASKET	
	5	1	**4N-8411**	1	TUBE-COOLER BYPASS	
	6	1	**4N-8600**	1	ADAPTER-BASE	
	7	1	**5G-6504**	4	LUG	
	8	1	**7C-9010**	1	SUPPORT-BASE	
I	9	1	**7C-9452**	1	HOSE AS	
I	10	1	**7E-9227**	1	HOSE AS	
	11	1	**8C-3445**	1	CAP-DUST	
	12	1	**9F-6304**	2	SPRING	
	13	1	**9M-0853**	2	PLUNGER-VALVE	
	14	1	**225-9618**	1	SUPPORT AS	
		1	**1F-0750**	8	NUT-WELD (3/8-16-THD)	
	15	1	**061-7540**	4	SEAL-O-RING	
	16	1	**0L-2070**	1	BOLT (3/8-16X2.25-IN)	
	17	1	**0S-1571**	10	BOLT (3/8-16X1.75-IN)	
	18	1	**0S-1588**	2	BOLT (3/8-16X1.25-IN)	
	19	1	**0S-1594**	10	BOLT (3/8-16X1-IN)	
	20	1	**0S-1608**	1	BOLT (3/8-16X3.75-IN)	
	21	1	**0T-0065**	1	BOLT (3/8-16X3.5-IN)	
	22	1	**0T-0772**	16	BOLT (7/16-14X1.5-IN)	
	23	1	**151-5145**	1	ELBOW	
	24	1	**1A-1460**	4	BOLT (1/2-13X2-IN)	
	25	1	**1A-2029**	2	BOLT (3/8-16X1.125-IN)	
	26	1	**1P-4578**	8	FLANGE-HALF	
	27	1	**3P-0650**	3	SEAL-O-RING	
	28	1	**4N-8770**	1	ELBOW-COOLER OUTLET	
	29	1	**5M-2894**	11	WASHER-HARD (10.2X18.5X2.5-MM THK)	
	30	1	**5P-8068**	1	SEAL-O-RING	
	31	1	**5P-8244**	16	WASHER-HARD (12X22.5X2.5-MM THK)	
	32	1	**5P-8245**	4	WASHER-HARD (13.5X25.5X3-MM THK)	
	33	1	**5P-9890**	2	SEAL-O-RING	
	34	1	**6V-5048**	2	SEAL-O-RING	
	35	1	**8C-3446**	1	VALVE-FLUID SAMPLING (ENGINE OIL)	
	36	1	**9S-8752**	4	NUT-FULL (3/8-16-THD)	

I-REFER TO HYDRAULIC INFORMATION SYSTEM

225-9619 **LINES GP-ENGINE OIL FILTER** *(contd.)* **i02946965**

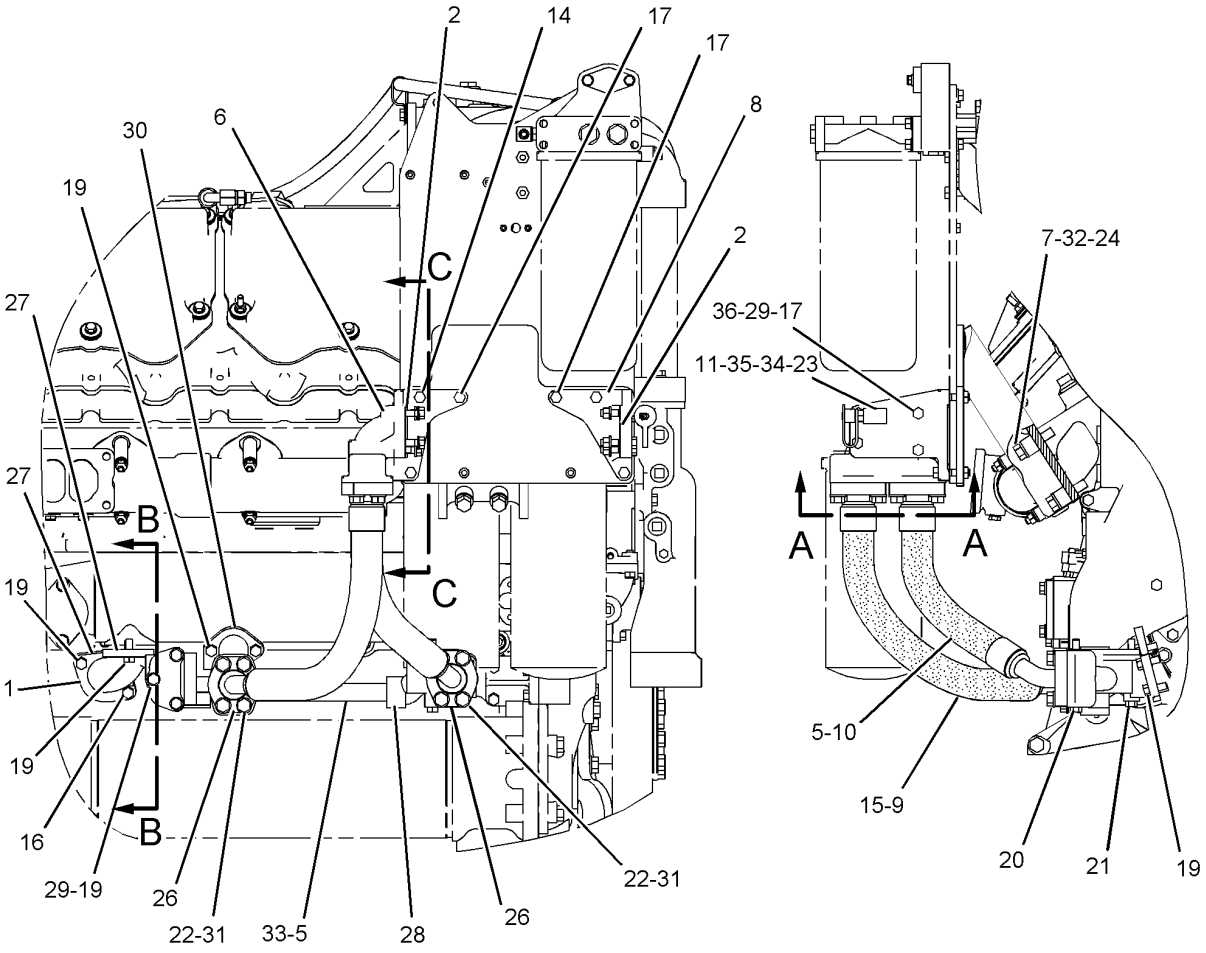

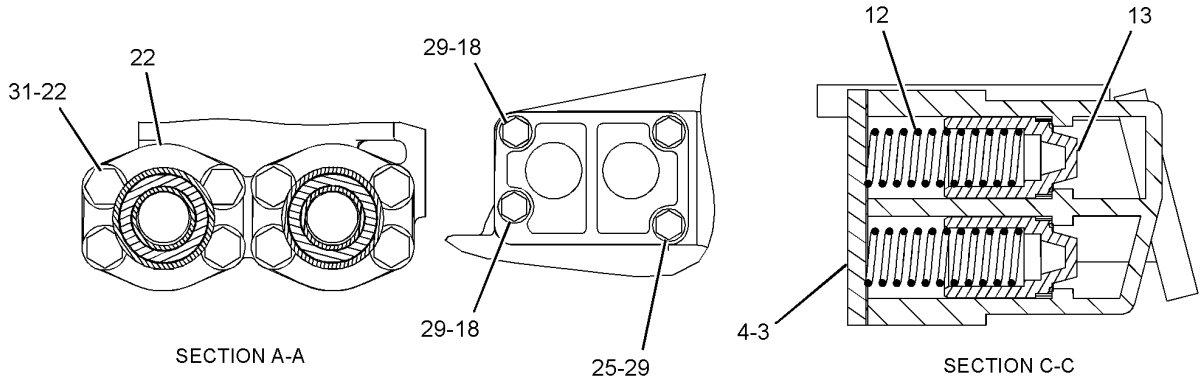

GRAPHIC #1

<END>

g01051226

LUBRICATION SYSTEM

225-9619 LINES GP-ENGINE OIL FILTER

S/N: LJW2195-UP
PART OF 246-4283 ENGINE AR-COMPLETE
AN ATTACHMENT
TYPE 2

SMCS-1307, 1308 **i02949463**

NOTE	REF NO	GRAPHIC REF	PART NUMBER	QTY	PART NAME 1 2 3 4 5 6 (PRODUCT LEVEL)	SEE PAGE
	1	1	**1W-1116**	1	BODY-BYPASS	
	2	1	**2P-4305**	2	GASKET	
	3	1	**4N-0861**	1	COVER	
	4	1	**4N-0865**	1	GASKET	
	5	1	**4N-8411**	1	TUBE-COOLER BYPASS	
	6	1	**4N-8600**	1	ADAPTER-BASE	
	7	1	**5G-6504**	4	LUG	
C	8	1	**6G-2168**	1	BLOCK	
	9	1	**7C-9010**	1	SUPPORT-BASE	
	10	1	**8C-3445**	1	CAP-DUST	
	11	1	**9F-6304**	2	SPRING	
	12	1	**9M-0853**	2	PLUNGER-VALVE	
	13	1	**225-9618**	1	SUPPORT AS	
		1	**1F-0750**	8	NUT-WELD (3/8-16-THD)	
C	14	1	**248-3329**	1	TUBE AS	
C	15	1	**312-2019**	1	TUBE AS	
C	16	1	**061-7540**	5	SEAL-O-RING	
	17	1	**0L-2070**	1	BOLT (3/8-16X2.25-IN)	
	18	1	**0S-1571**	10	BOLT (3/8-16X1.75-IN)	
	19	1	**0S-1588**	2	BOLT (3/8-16X1.25-IN)	
	20	1	**0S-1594**	10	BOLT (3/8-16X1-IN)	
	21	1	**0S-1608**	1	BOLT (3/8-16X3.75-IN)	
	22	1	**0T-0065**	1	BOLT (3/8-16X3.5-IN)	
C	23	1	**0T-0772**	12	BOLT (7/16-14X1.5-IN)	
	24	1	**151-5145**	1	ELBOW	
	25	1	**1A-1460**	4	BOLT (1/2-13X2-IN)	
	26	1	**1A-2029**	2	BOLT (3/8-16X1.125-IN)	
C	27	1	**3D-2824**	1	SEAL-O-RING	
	28	1	**3P-0650**	3	SEAL-O-RING	
C	29	1	**4F-5192**	4	BOLT (7/16-14X3-IN)	
	30	1	**4N-8770**	1	ELBOW-COOLER OUTLET	
	31	1	**5M-2894**	11	WASHER-HARD (10.2X18.5X2.5-MM THK)	
	32	1	**5P-8068**	1	SEAL-O-RING	
	33	1	**5P-8244**	16	WASHER-HARD (12X22.5X2.5-MM THK)	
	34	1	**5P-8245**	4	WASHER-HARD (13.5X25.5X3-MM THK)	
	35	1	**5P-9890**	2	SEAL-O-RING	
	36	1	**6V-5048**	2	SEAL-O-RING	
	37	1	**8C-3446**	1	VALVE-FLUID SAMPLING (ENGINE OIL)	
C	38	1	**9S-4183**	1	PLUG-O-RING	
	39	1	**9S-8752**	4	NUT-FULL (3/8-16-THD)	

C-CHANGE FROM PREVIOUS TYPE

225-9619 **LINES GP-ENGINE OIL FILTER** *(contd.)* **i02949463**

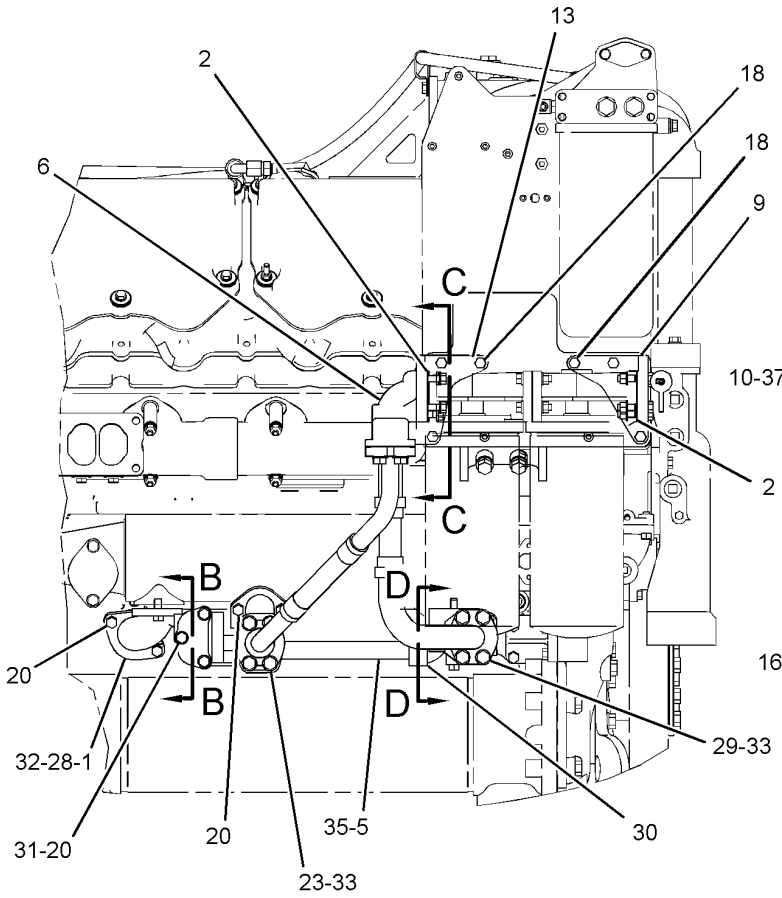

RIGHT SIDE VIEW OF ENGINE

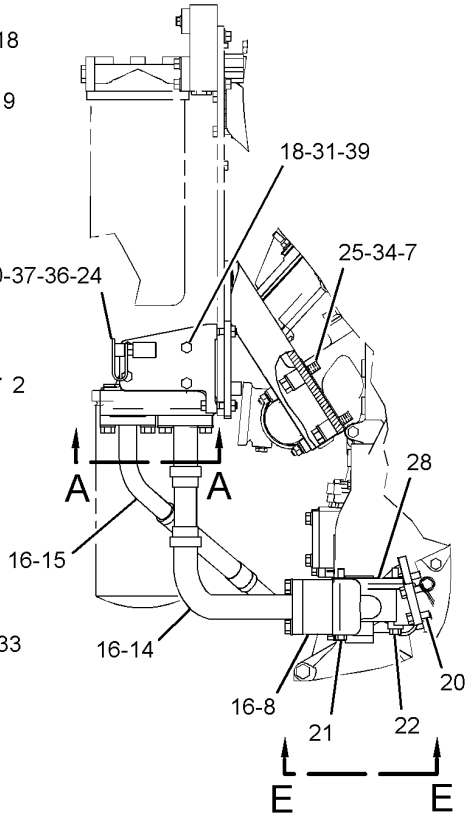

FRONT VIEW OF ENGINE

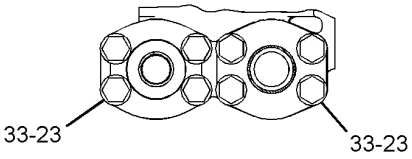

SECTION A-A

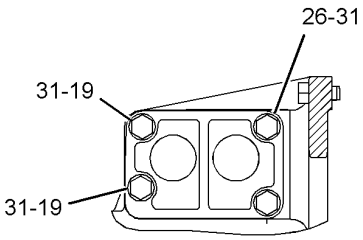

SECTION C-C

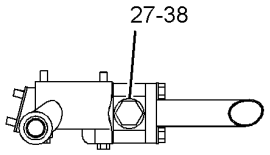

SECTION D-D

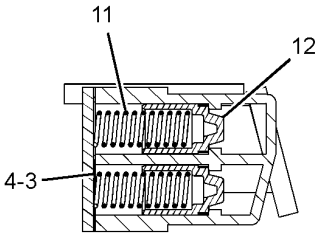

SECTION B-B

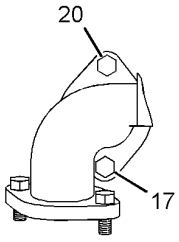

VIEW E-E

GRAPHIC #1 **<END>** g01470006

LUBRICATION SYSTEM

316-5686 LINES GP-ENGINE OIL FILTER

S/N: LJW1-UP

PART OF 246-8228, 259-3142, 259-3143 ENGINE AR-COMPLETE

AN ATTACHMENT

SMCS-1307, 1308 **i02947052**

NOTE	REF NO	GRAPHIC REF	PART NUMBER	QTY	PART NAME 1 2 3 4 5 6 (PRODUCT LEVEL)	SEE PAGE
	1	1	**1W-1116**	1	BODY-BYPASS	
	2	1	**2P-4305**	2	GASKET	
	3	1	**4N-0861**	1	COVER	
	4	1	**4N-0865**	1	GASKET	
	5	1	**4N-8411**	1	TUBE-COOLER BYPASS	
	6	1	**4N-8600**	1	ADAPTER-BASE	
	7	2	**5G-6504**	4	LUG	
	8	2	**6G-2168**	1	BLOCK	
	9	1	**7C-9010**	1	SUPPORT-BASE	
	10	2	**8C-3445**	1	CAP-DUST	
	11	1	**9F-6304**	2	SPRING	
	12	1	**9M-0853**	2	PLUNGER-VALVE	
	13	1	**225-9618**	1	SUPPORT AS	
		1	**1F-0750**	8	NUT-WELD (3/8-16-THD)	
		1	**5B-1983**	1	BOSS (3/8-16-THD)	
	14	2	**248-3329**	1	TUBE AS	
	15	2	**312-2019**	1	TUBE AS	
	16	2	**061-7540**	5	SEAL-O-RING	
	17	2	**0L-2070**	1	BOLT (3/8-16X2.25-IN)	
	18	1,2	**0S-1571**	10	BOLT (3/8-16X1.75-IN)	
	19	1	**0S-1588**	2	BOLT (3/8-16X1.25-IN)	
	20	1,2	**0S-1594**	10	BOLT (3/8-16X1-IN)	
	21	2	**0S-1608**	1	BOLT (3/8-16X3.75-IN)	
	22	2	**0T-0065**	1	BOLT (3/8-16X3.5-IN)	
	23	1,2	**0T-0772**	12	BOLT (7/16-14X1.5-IN)	
	24	2	**151-5145**	2	ELBOW	
	25	2	**164-7900**	1	ADAPTER	
	26	2	**1A-1460**	4	BOLT (1/2-13X2-IN)	
	27	1	**1A-2029**	2	BOLT (3/8-16X1.125-IN)	
	28	2	**3D-2824**	1	SEAL-O-RING	
	29	1,2	**3P-0650**	3	SEAL-O-RING	
	30	1	**4F-5192**	4	BOLT (7/16-14X3-IN)	
	31	1	**4N-8770**	1	ELBOW-COOLER OUTLET	
	32	1,2	**5M-2894**	11	WASHER-HARD (10.2X18.5X2.5-MM THK)	
	33	1	**5P-8068**	1	SEAL-O-RING	
	34	1,2	**5P-8244**	16	WASHER-HARD (12X22.5X2.5-MM THK)	
	35	2	**5P-8245**	4	WASHER-HARD (13.5X25.5X3-MM THK)	
	36	1	**5P-9890**	2	SEAL-O-RING	
	37	2	**6V-5048**	4	SEAL-O-RING	
	38	2	**8C-3446**	1	VALVE-FLUID SAMPLING (ENGINE OIL)	
	39	2	**9S-4183**	1	PLUG-O-RING	
	40	2	**9S-8752**	4	NUT-FULL (3/8-16-THD)	

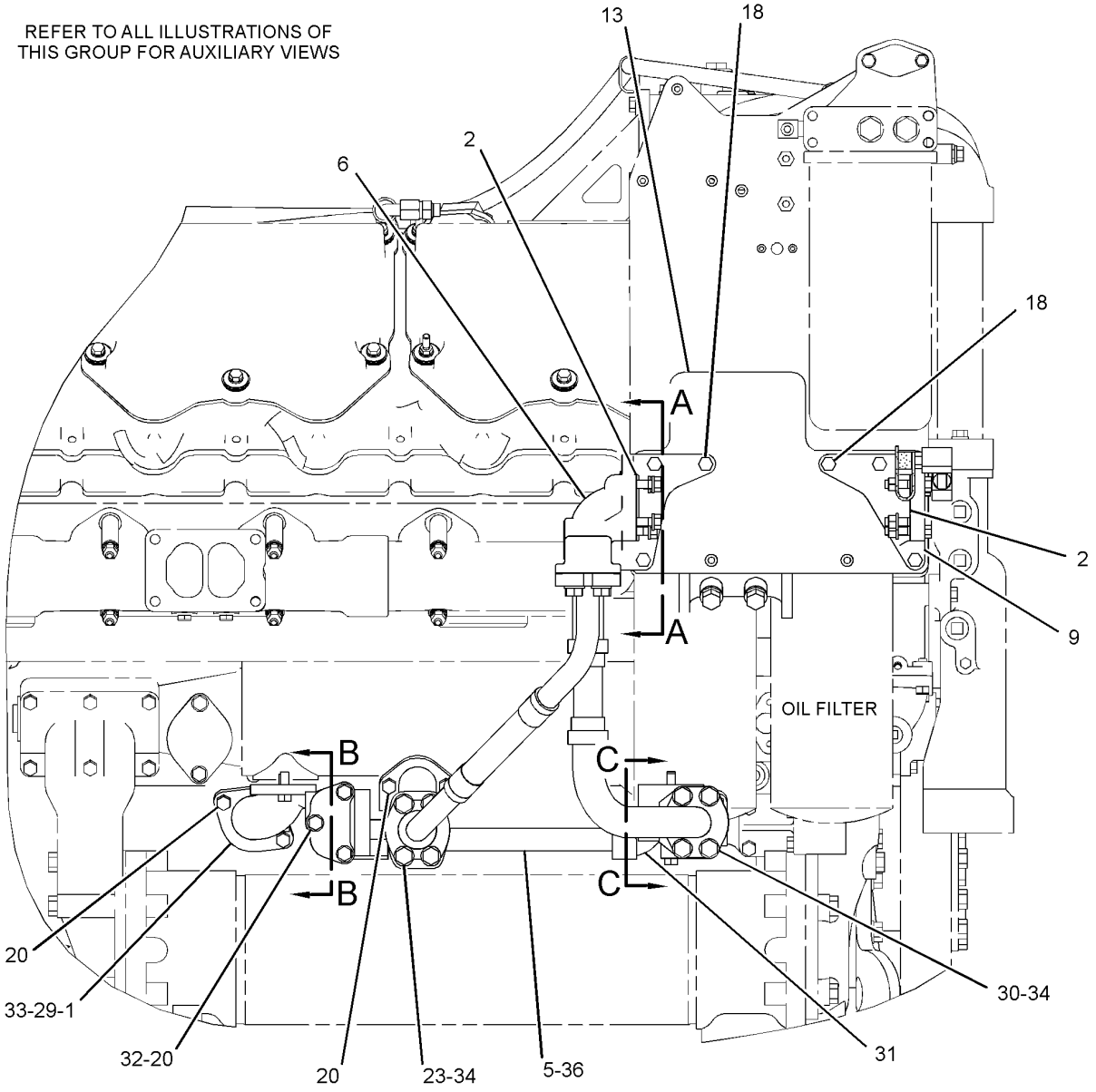

RIGHT SIDE VIEW OF ENGINE

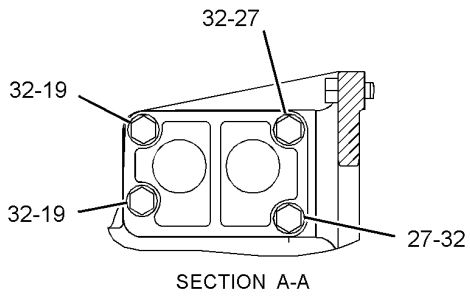

SECTION A-A

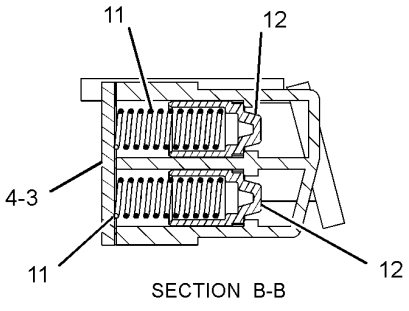

SECTION B-B

GRAPHIC #1

g01436112

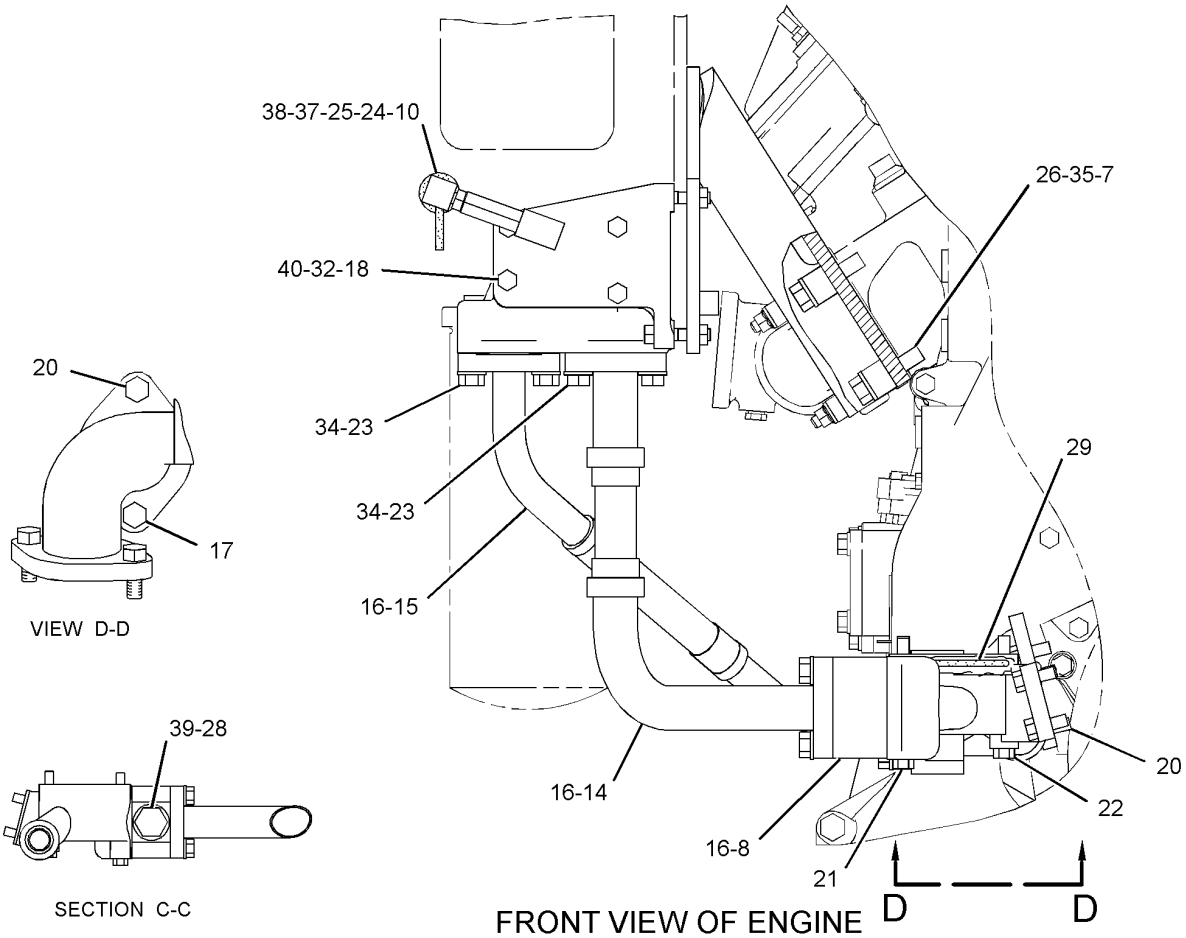

GRAPHIC #2

<END>

g01436152

LUBRICATION SYSTEM

290-6869 LINES GP-OIL SUPPLY–OIL RENEWAL SYSTEM

S/N: 2211-UP

PART OF 282-9064 RENEWAL AR-OIL

AN ATTACHMENT

SMCS-1307 **i02901539**

NOTE	REF NO	GRAPHIC REF	PART NUMBER	QTY	PART NAME 1 2 3 4 5 6 (PRODUCT LEVEL)	SEE PAGE
	1	1	**2V-2043**	1	LOCKNUT-FLARED (1-5/8-12-THD)	
	2	1	**110-8827**	1	FITTING AS (QUICK DISCONNECT)	
	3	1	**279-0103**	2	BRACKET AS	
					(EACH INCLUDES)	
M		1	**8T-3490**	1	NUT-WELD (M10X1.5-THD)	
	4	1	**285-0957**	1	TUBE AS	
I	5	1	**290-7380**	1	HOSE AS	
	6	1	**290-7381**	1	TUBE AS	
	7	1	**315-6119**	1	HOSE AS	
	8	1	**315-6120**	1	HOSE AS	
	9	1	*148-8341*	1	CONNECTOR AS	
		1	**3D-2824**	1	SEAL-O-RING	
		1	**6V-8713**	1	CONNECTOR	
		1	**7J-9108**	1	SEAL-O-RING	
	10	1	*148-8360*	1	ELBOW AS	
		1	**6V-9182**	1	ELBOW	
		1	**6V-9746**	1	SEAL-O-RING	
		1	**7M-8485**	1	SEAL-O-RING	
	11	1	*155-3504*	2	ELBOW AS	
					(EACH INCLUDES)	
		1	**2M-9780**	1	SEAL-O-RING	
		1	**6V-9003**	1	ELBOW	
		1	**7J-9108**	1	SEAL-O-RING	
	12	1	**1S-0994**	3	CLIP	
	13	1	**6V-9170**	1	NUT-BULKHEAD (1-14-THD)	
	14	1	**7J-9108**	2	SEAL-O-RING	
	15	1	**7X-0347**	1	BOLT (5/8-11X2.25-IN)	
	16	1	**7X-0515**	1	WASHER-HARD (17X35X5-MM THK)	
	17	1	**8T-4121**	7	WASHER-HARD (11X21X2.5-MM THK)	
M	18	1	**8T-4137**	7	BOLT (M10X1.5X20-MM)	
	19	1	**9M-8406**	4	CLIP	

I-REFER TO HYDRAULIC INFORMATION SYSTEM
M-METRIC PART

290-6869 **LINES GP-OIL SUPPLY** *(contd.)* **i02901539**

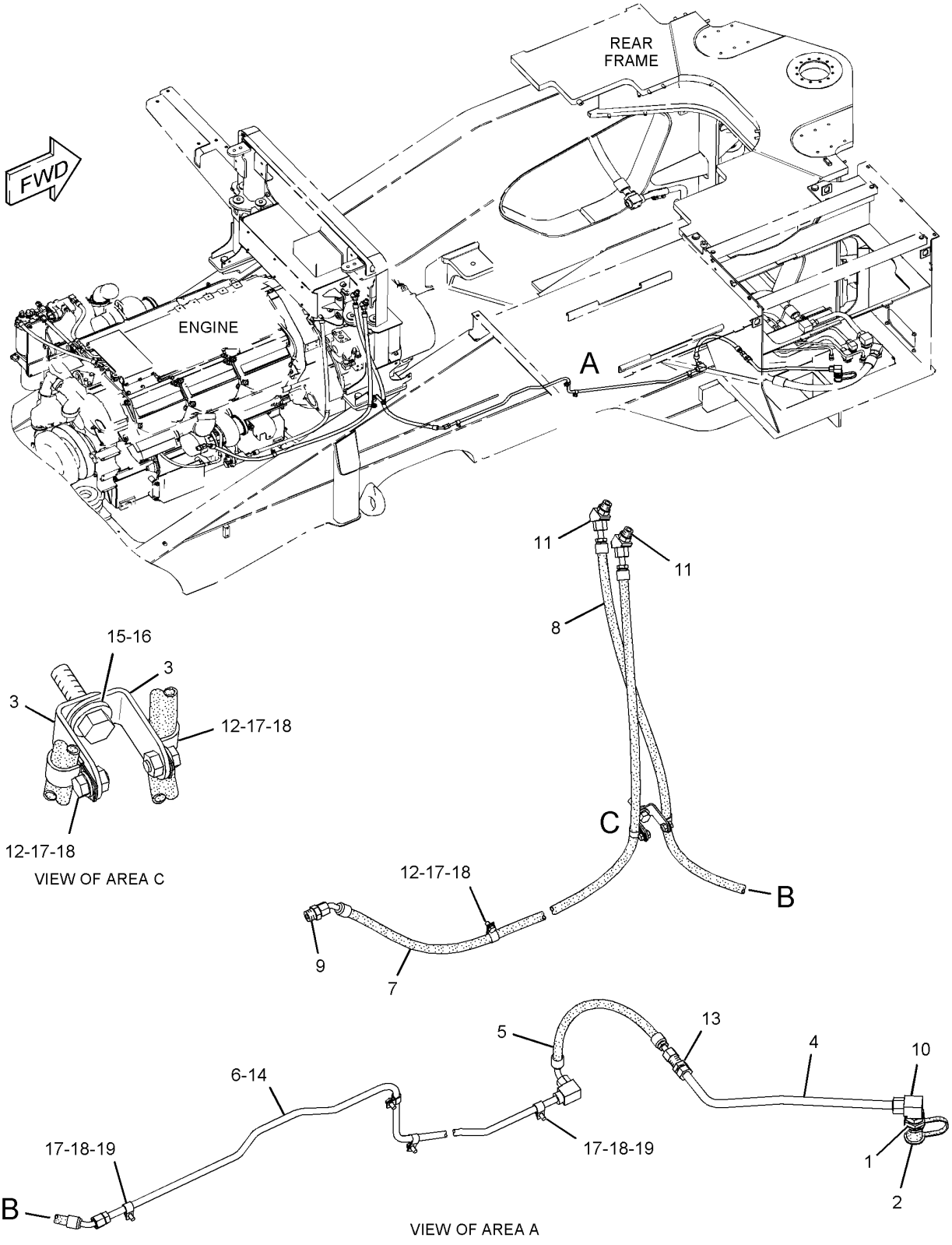

GRAPHIC #1

<END>

g01450459

LUBRICATION SYSTEM

217-5677 LINES GP-TURBOCHARGER OIL

S/N: LJW1-UP

PART OF 246-4283, 246-8228, 259-3142, 259-3143 ENGINE AR-COMPLETE

AN ATTACHMENT

SMCS-1052, 1307 **i02947059**

NOTE	REF NO	GRAPHIC REF	PART NUMBER	QTY	PART NAME 1 2 3 4 5 6 (PRODUCT LEVEL)	SEE PAGE
	1	1	**7N-9008**	2	ELBOW	
	2	1	**9M-2564**	4	CLAMP-TUBE	
	3	1	*126-2702*	2	SEAL-INTEGRAL	
	4	1	*198-6068*	2	SEAL-INTEGRAL	
	5	1	**217-5678**	2	TUBE AS	
	6	1	**217-5680**	1	TUBE AS	
	7	1	**217-5681**	1	TUBE AS	
	8	1	**239-3200**	1	TUBE AS	
	9	1	**0S-1588**	6	BOLT (3/8-16X1.25-IN)	
	10	1	**106-9586**	1	SEAL-O-RING	
	11	1	**112-3540**	2	SEAL-O-RING	
	12	1	**136-7227**	2	SEAL-O-RING	
	13	1	**3B-1915**	8	BOLT (3/8-16X1.375-IN)	
	14	1	**5M-2894**	12	WASHER-HARD (10.2X18.5X2.5-MM THK)	
	15	1	**5P-5846**	2	SEAL-O-RING	
	16	1	**6V-8642**	1	CONNECTOR	
	17	1	**6V-9003**	1	ELBOW	
	18	1	**8L-2746**	2	SEAL-O-RING	
	19	1	**9S-8752**	2	NUT-FULL (3/8-16-THD)	

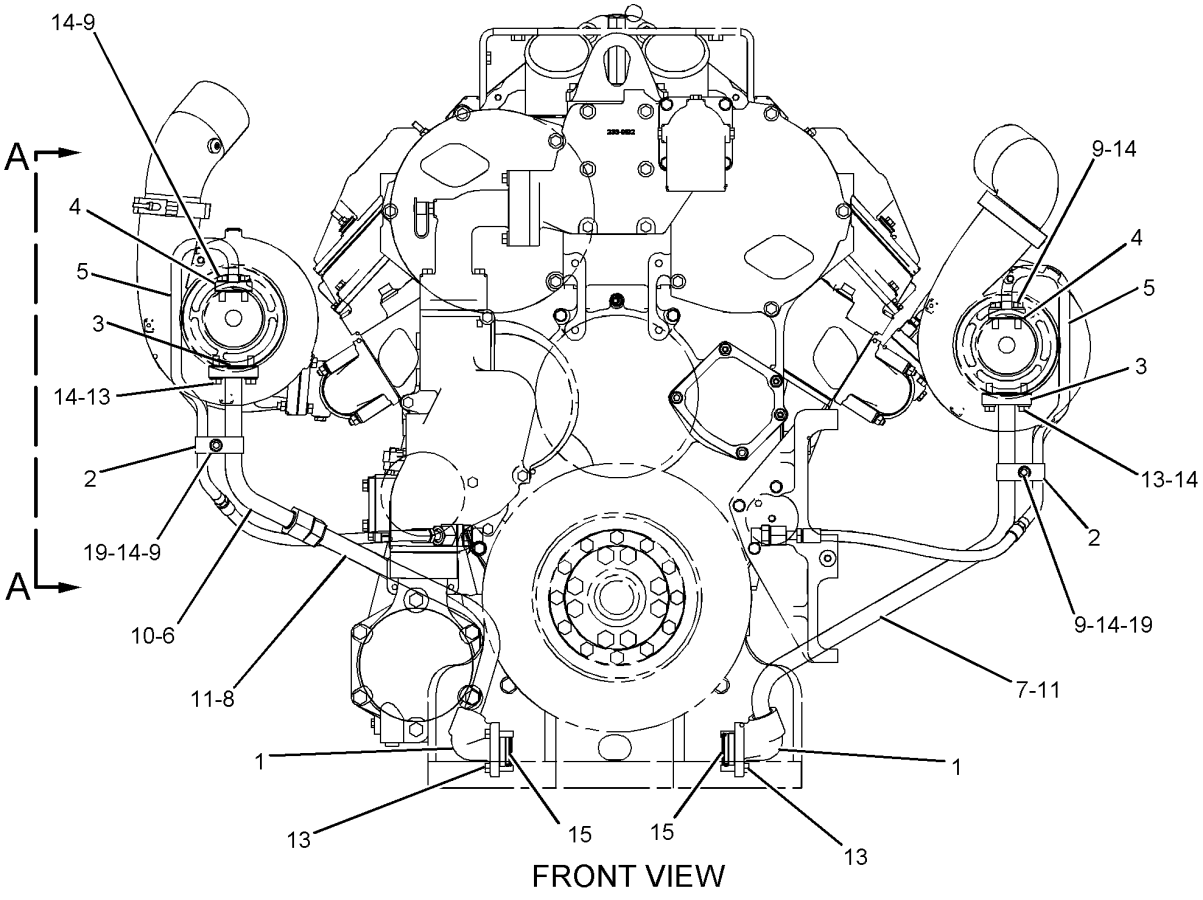

FRONT VIEW

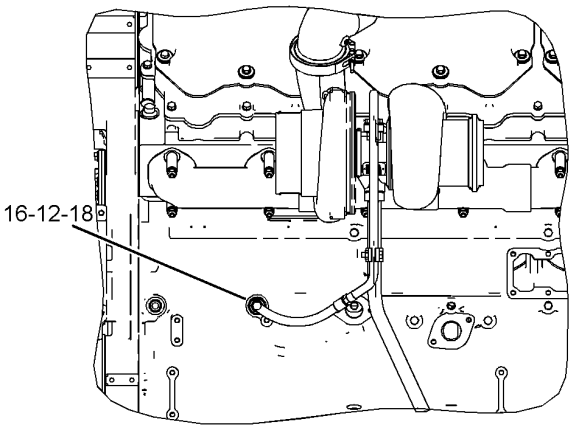

LEFT SIDE VIEW

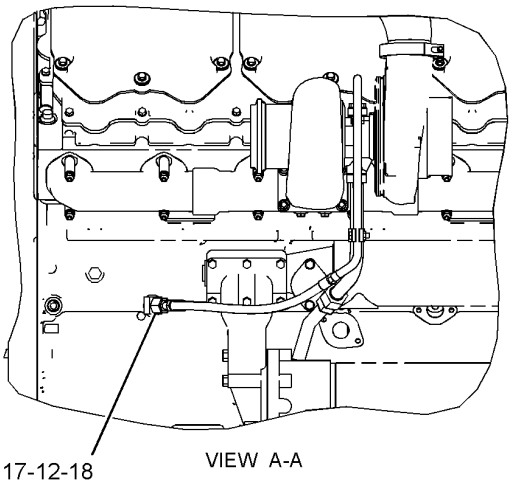

VIEW A-A

GRAPHIC #1 **<END>** g01051232

306-2134 METERING GP-ENGINE OIL—OIL RENEWAL SYSTEM

S/N: 2211-UP

PART OF 280-8930, 282-9064 RENEWAL AR-OIL AN ATTACHMENT

SMCS-1307 **i02907500**

NOTE	REF NO	GRAPHIC REF	PART NUMBER	QTY	PART NAME 1 2 3 4 5 6 (PRODUCT LEVEL)	SEE PAGE
	1	1	**3S-2093**	2	STRAP-CABLE	
	2	1	**8C-6867**	1	CONNECTOR	
	3	1	**124-3019**	2	BRACKET AS	
					(EACH INCLUDES)	
M		1	**8T-3490**	1	NUT-WELD (M10X1.5-THD)	
	4	1	**176-5647**	1	PLATE	
Y	5	1	**235-0266**	1	VALVE GP-METERING (OIL RENEWAL SYSTEM)	107
	6	1	**239-5572**	1	SEAL-INTEGRAL	
I	7	1	**247-0837**	1	HOSE AS	
	8	1	**253-2640**	1	BRACKET AS	
		1	**8T-5912**	2	NUT-WELD (3/8-16-THD)	
I	9	1	**281-9571**	1	HOSE AS	
I	10	1	**301-6820**	1	HOSE AS	
	11	1	**061-7538**	3	SEAL-O-RING	
	12	1	**228-7091**	3	SEAL-O-RING	
	13	1	**272-1777**	1	WASHER-HARD (11X18.5X15-MM THK)	
	14	1	**2P-8421**	1	ADAPTER-O-RING	
	15	1	**4J-5477**	1	SEAL-O-RING	
	16	1	**4K-8864**	1	CLIP	
	17	1	**4L-9337**	2	BOLT (3/8-16X1.5-IN)	
	18	1	**214-7568**	1	SEAL-O-RING	
	19	1	**6V-5050**	1	SEAL-O-RING	
	20	1	**6V-8627**	1	ELBOW	
	21	1	**6V-8937**	1	REDUCER-O-RING	
	22	1	**6V-9845**	1	TEE-SWIVEL	
	23	1	**6V-9849**	1	ELBOW	
	24	1	**7X-0288**	3	BOLT (3/8-16X1.625-IN)	
	25	1	**8T-4121**	2	WASHER-HARD (11X21X2.5-MM THK)	
M	26	1	**8T-4137**	2	BOLT (M10X1.5X20-MM)	
	27	1	**8T-4896**	7	WASHER-HARD (10.2X18.5X2.5-MM THK)	
	28	1	**8T-9101**	2	BOLT (3/8-16X2.75-IN)	
	29	1	**9M-8406**	3	CLIP	
	30	1	**9X-6581**	1	NUT-O-RING SEAL (1-14-THD)	

I-REFER TO HYDRAULIC INFORMATION SYSTEM
M-METRIC PART
Y-SEPARATE ILLUSTRATION

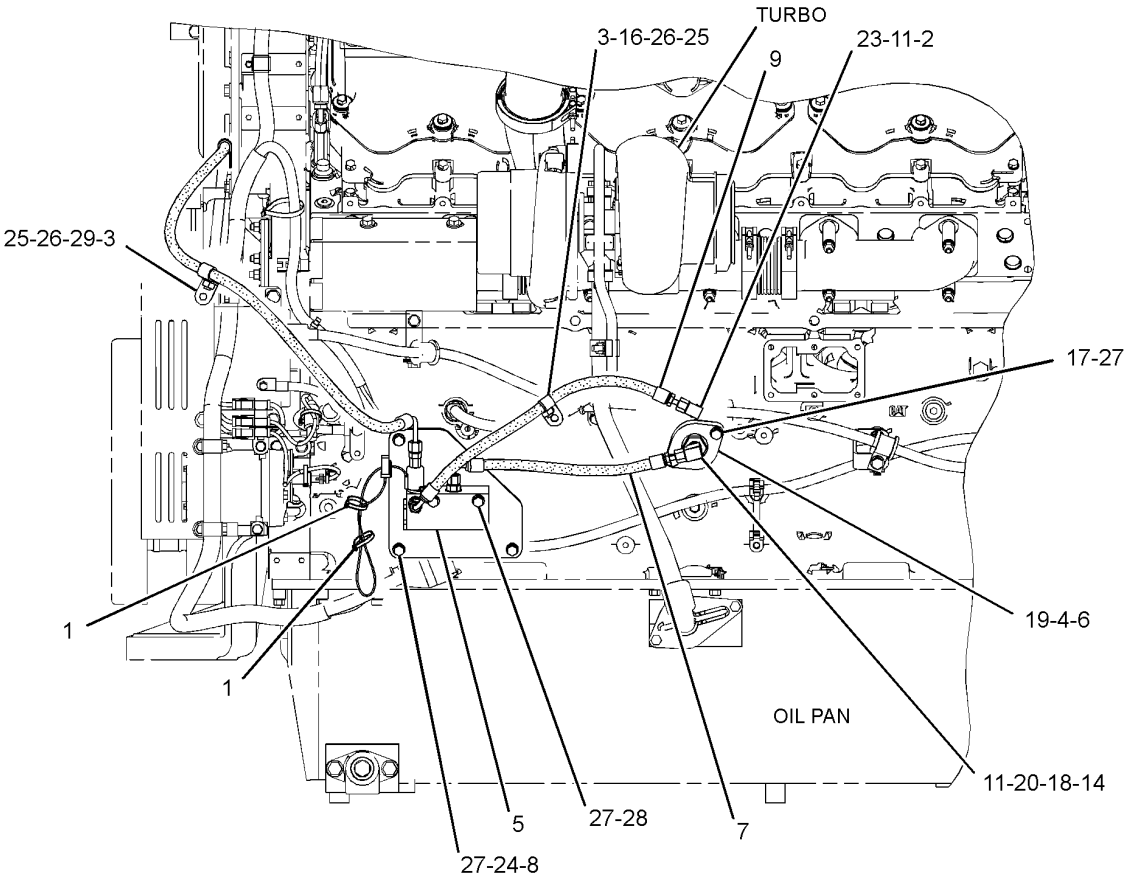

LEFT SIDE VIEW OF ENGINE

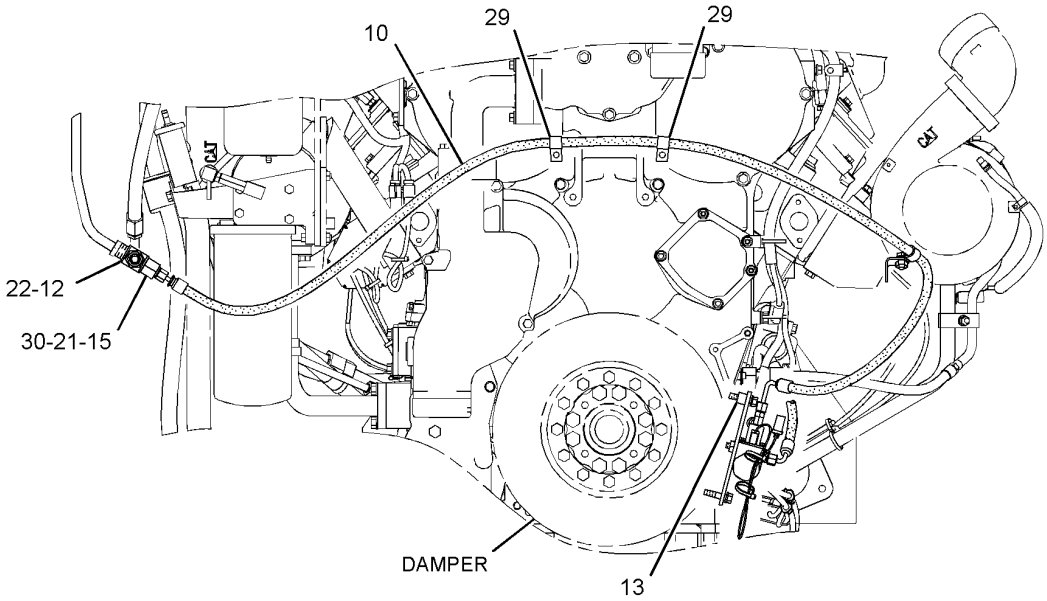

FRONT VIEW OF ENGINE

GRAPHIC #1 **<END>** g01448873

LUBRICATION SYSTEM

116-1980 PUMP GP-ENGINE OIL*R

S/N: LJW1-UP
PART OF 261-2303, 261-2304 ENGINE AR-CORE
AN ATTACHMENT

SMCS-1304, 1315 **i02334508**

NOTE	REF NO	GRAPHIC REF	PART NUMBER	QTY	PART NAME 1 2 3 4 5 6 (PRODUCT LEVEL)	SEE PAGE
	1	1	**116-1979**	1	BODY AS-OIL PUMP	
		1	**7N-2156**	2	BEARING-SLEEVE	
		1	**8M-8489**	2	DOWEL	
	2	1	**105-1482**	1	SHAFT AS-PUMP DRIVE	
	3	1	**107-7373**	1	SHAFT AS-IDLER	
	4	1	**127-6356**	1	COVER AS-PUMP	
		1	**8S-6511**	2	BEARING-SLEEVE	
	5	1	**2P-3205**	4	BOLT-WASHER HEAD (3/8-16X1.75-IN)	
	6	1	**7C-1512**	1	PLUNGER	
	7	1	**7C-1511**	1	RING-PLUNGER	
	8	1	**2S-2760**	1	SPRING	
	9	1	**1M-0644**	2	BOLT (3/8-16X2.25-IN)	
	10	1	**122-9943**	1	RETAINER	
	11	1	**5M-2894**	2	WASHER-HARD (10.2X18.5X2.5-MM THK)	

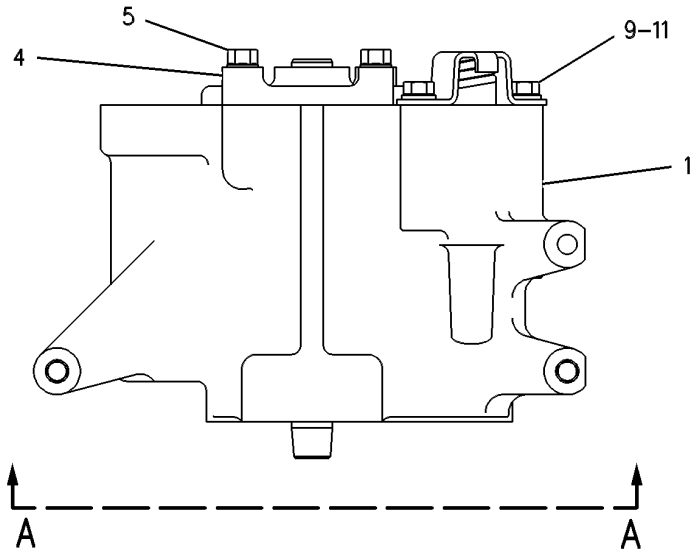

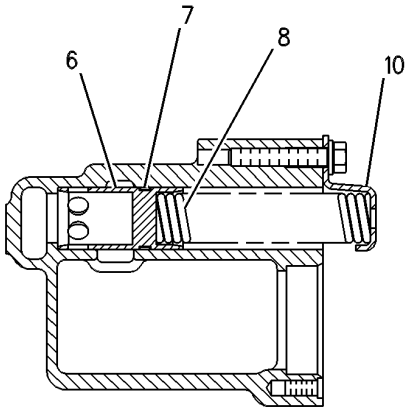

SECTION B-B

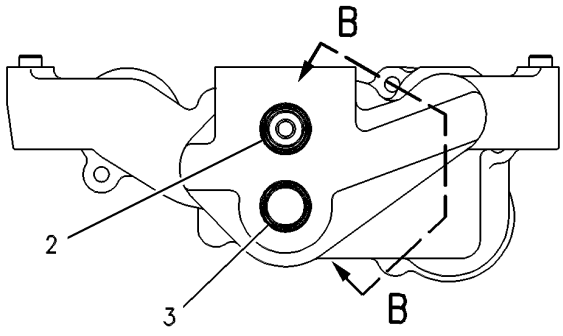

VIEW A-A

GRAPHIC #1 **<END>** g00086528

LUBRICATION SYSTEM

280-8930 RENEWAL AR-OIL

S/N: 2211-UP

CANNOT BE USED WITH 286-0856—PAGE 917

AN ATTACHMENT

SMCS-1349 **i02901566**

NOTE	PART NUMBER	QTY	PART NAME 1 2 3 4 5 6 (PRODUCT LEVEL)	SEE PAGE
Y	*290-6870*	1	FITTING GP-HYDRAULIC	680
Y	*306-2134*	1	METERING GP-ENGINE OIL (OIL RENEWAL SYSTEM)	101
Y	*279-5290*	1	TANK & MTG GP-ENGINE OIL (OIL RENEWAL SYSTEM)	105
Y	*291-1072*	1	WIRING GP-OIL RENEWAL SYSTEM (ENGINE OIL METERING TANK)	347

Y-SEPARATE ILLUSTRATION

<END>

282-9064 RENEWAL AR-OIL

S/N: 2211-UP

AN ATTACHMENT

SMCS-1349 **i02901565**

NOTE	PART NUMBER	QTY	PART NAME 1 2 3 4 5 6 (PRODUCT LEVEL)	SEE PAGE
Y	*290-6869*	1	LINES GP-OIL SUPPLY (OIL RENEWAL SYSTEM)	97
Y	*306-2134*	1	METERING GP-ENGINE OIL (OIL RENEWAL SYSTEM)	101
Y	*279-5290*	1	TANK & MTG GP-ENGINE OIL (OIL RENEWAL SYSTEM)	105
Y	*291-0530*	1	WIRING GP-OIL RENEWAL SYSTEM (SERVICE CENTER)	346

Y-SEPARATE ILLUSTRATION

<END>

279-5290 TANK & MTG GP-ENGINE OIL—OIL RENEWAL SYSTEM

S/N: 2211-UP
PART OF 280-8930, 282-9064 RENEWAL AR-OIL
AN ATTACHMENT

SMCS-751T **i02901541**

NOTE	REF NO	GRAPHIC REF	PART NUMBER	QTY	PART NAME 1 2 3 4 5 6 (PRODUCT LEVEL)	SEE PAGE
	1	1	**7T-8331**	4	MOUNT AS	
Y	2	1	*288-9965*	1	TANK GP-ENGINE OIL (METERING, OIL RENEWAL SYSTEM)	106
	3	1	**7X-0590**	4	WASHER-HARD (13.5X44.5X6-MM THK)	
M	4	1	**8T-4648**	4	BOLT (M12X1.75X70-MM)	

M-METRIC PART
Y-SEPARATE ILLUSTRATION

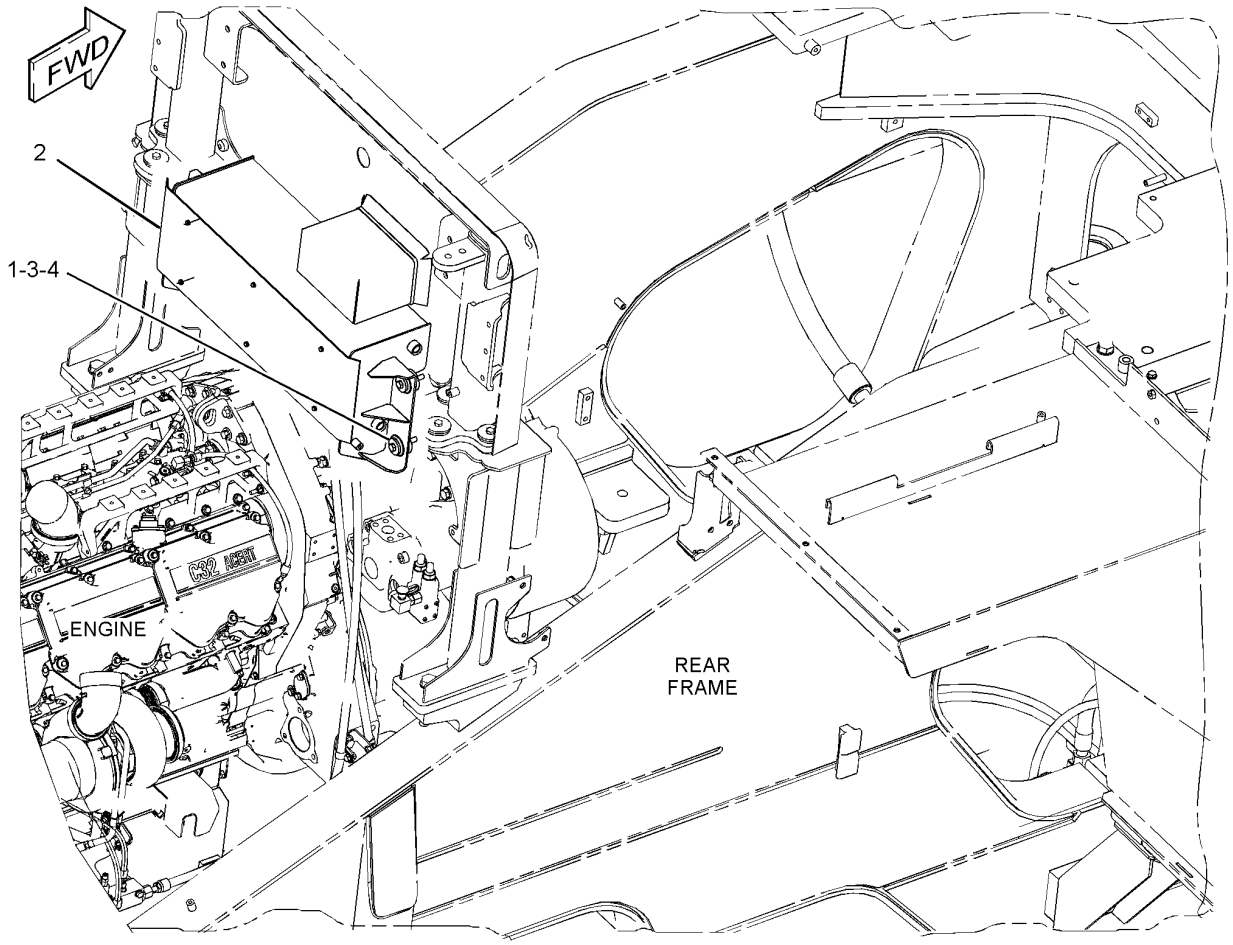

GRAPHIC #1 **<END>** g01446439

288-9965 TANK GP-ENGINE OIL—METERING, OIL RENEWAL SYSTEM

S/N: 2211-UP

PART OF 279-5290 TANK & MTG GP-ENGINE OIL

AN ATTACHMENT

SMCS-751T **i02900844**

NOTE	REF NO	GRAPHIC REF	PART NUMBER	QTY	PART NAME 1 2 3 4 5 6 (PRODUCT LEVEL)	SEE PAGE
	1	1	**6G-9333**	1	CAP-FILLER (ENGINE OIL)	
	2	1	**9G-5127**	1	BREATHER (ENGINE)	
	3	1	**9Y-9236**	1	GAUGE-SIGHT	
	4	1	**285-9353**	1	TANK AS (ENGINE OIL)	
	5	1	**288-2734**	1	SHEET	
M	6	1	**5C-9553**	7	BOLT (M6X1X16-MM)	
	7	1	**9X-8256**	7	WASHER (6.6X12X2-MM THK)	
E	8	1	**146-4325**		SEAL (53-CM)	

E-ORDER BY THE CENTIMETER
M-METRIC PART

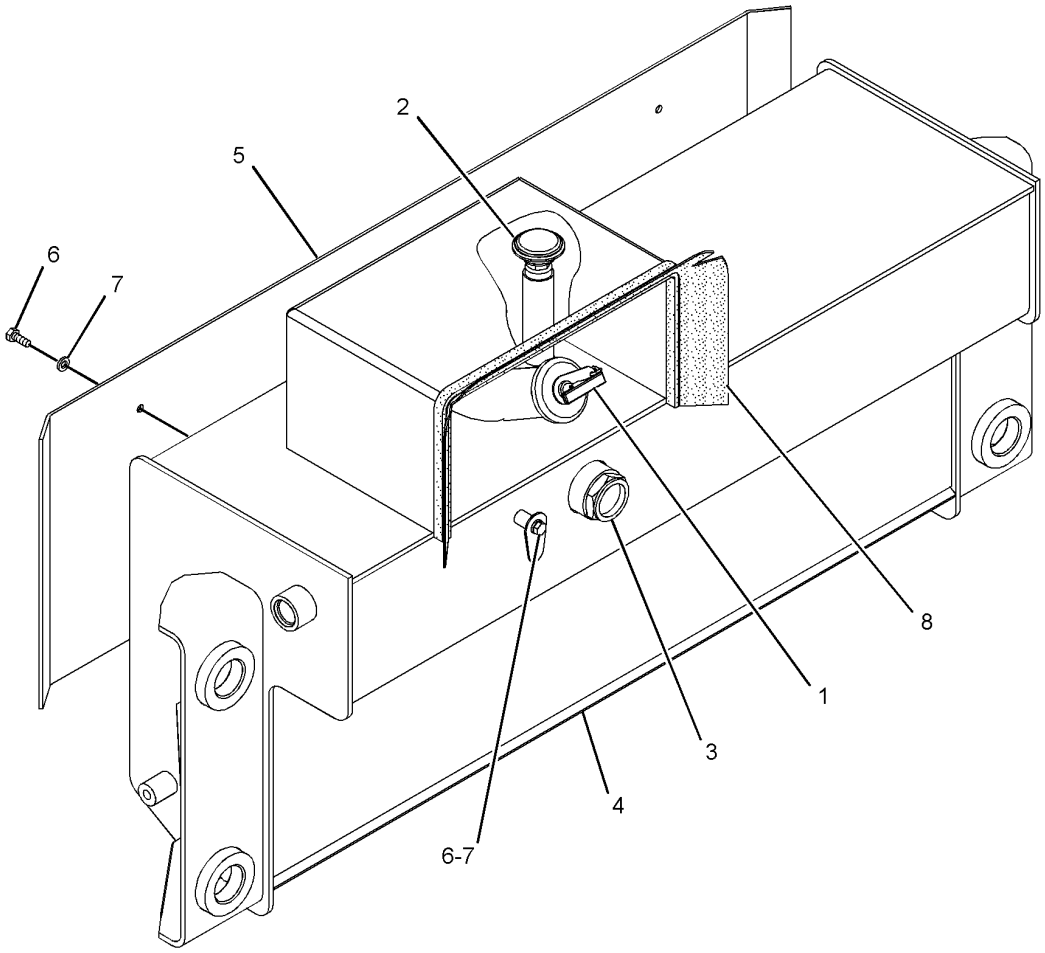

GRAPHIC #1 **<END>** g01447544

235-0266 VALVE GP-METERING–OIL RENEWAL SYSTEM

S/N: 2211-UP

PART OF 306-2134 METERING GP-ENGINE OIL

AN ATTACHMENT

SMCS-130M **i02209979**

NOTE	REF NO	GRAPHIC REF	PART NUMBER	QTY	PART NAME 1 2 3 4 5 6 (PRODUCT LEVEL)	SEE PAGE
	1	1	**081-5622**	1	ADAPTER	
	2	1	**155-2270**	1	KIT-CONNECTING PLUG (2-PIN)	
					(INCLUDES PLUG ASSEMBLY AND WEDGE)	
	3	1	**186-3736**	2	SOCKET-CONNECTOR (16-GA TO 18-GA)	
	4	1	**3J-7354**	1	SEAL-O-RING	
	5	1	**4J-5477**	3	SEAL-O-RING	
	6	1	**6V-8647**	1	CONNECTOR	
	7	1	**7J-0204**	1	SEAL-O-RING	

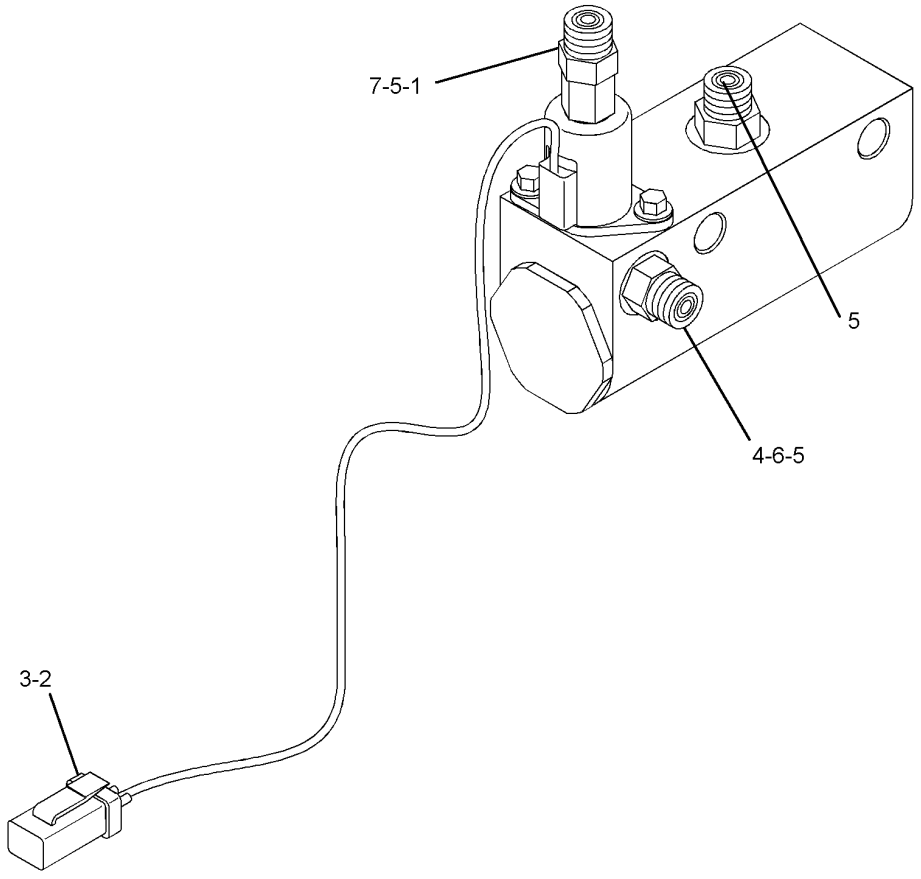

GRAPHIC #1 **<END>** g01120753

4W-0419 CORE GP-OIL COOLER–TRANSMISSION*R

S/N: LJW1-UP
PART OF 288-4419 LINES GP-WATER
AN ATTACHMENT

SMCS-1375, 1378 **i02072615**

NOTE	REF NO	GRAPHIC REF	PART NUMBER	QTY	PART NAME 1 2 3 4 5 6 (PRODUCT LEVEL)	SEE PAGE
	1	1	**5M-6214**	2	PLUG-PIPE	

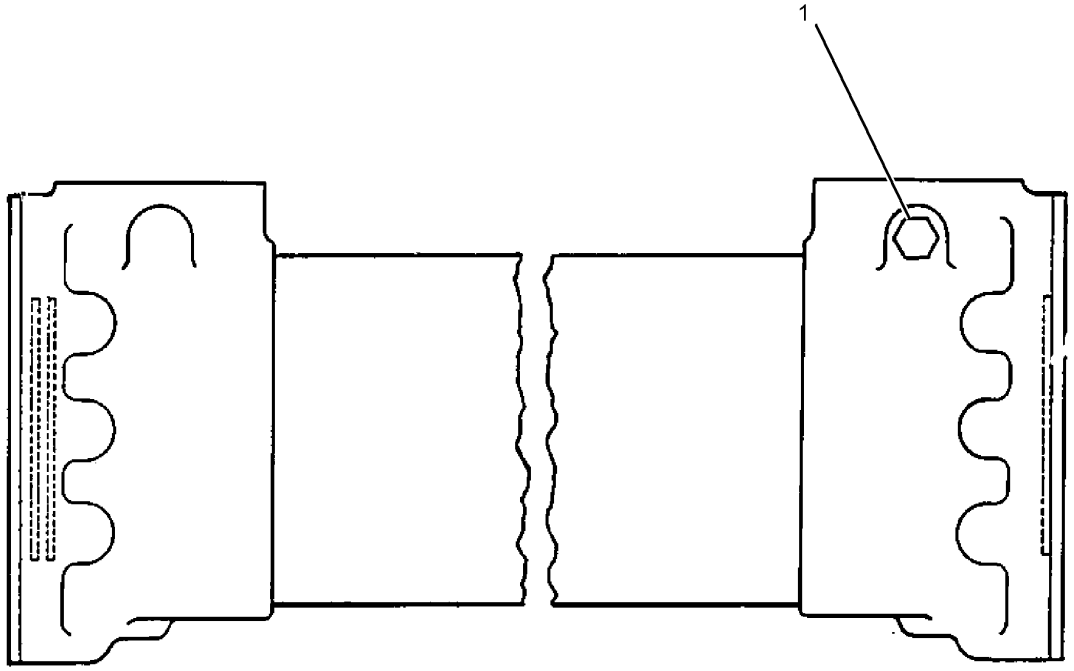

GRAPHIC #1 **<END>** g01061355

COOLING SYSTEM

279-0386 FAN GP-SUCTION

S/N: 2211-UP

PART OF 262-2081 CHASSIS AR

SMCS-1356 **i02885004**

NOTE	REF NO	GRAPHIC REF	PART NUMBER	QTY	PART NAME 1 2 3 4 5 6 (PRODUCT LEVEL)	SEE PAGE
	1	1	**5T-2471**	8	SPACER (17X30X35-MM THK)	
	2	1	**6S-6251**	6	MOUNT	
	3	1	**7X-0540**	1	WASHER-HARD (17X90X10-MM THK)	
	4	1	**112-7250**	1	ADAPTER	
	5	1	**146-5067**	8	SPACER (13X30X22.2-MM THK)	
	6	1	**237-2502**	1	SUPPORT AS	
	7	1	**237-2508**	2	SCREEN	
	8	1	**273-3992**	4	BLOCK	
	9	1	**279-0410**	1	GUARD AS-FAN	
	10	1	**279-0417**	1	GUARD AS-FAN	
	11	1	**279-7397**	1	SPIDER AS-FAN	
	12	1	**280-9035**	2	CHANNEL AS	
	13	1	**280-9037**	1	GUARD AS-FAN	
	14	1	**280-9038**	2	GUARD AS-FAN	
	15	1	**280-9055**	1	BAFFLE AS	
	16	1	**5P-1076**	27	WASHER-HARD (13.5X30X4-MM THK)	
	17	1	**5P-7782**	1	BOLT-LOCKING (5/8-11X3.75-IN)	
	18	1	**7X-0515**	1	WASHER-HARD (17X35X5-MM THK)	
	19	1	**7X-0590**	6	WASHER-HARD (13.5X44.5X6-MM THK)	
M	20	1	**7X-2555**	8	BOLT (M16X2X80-MM)	
	21	1	**7X-7729**	8	WASHER (11X25X3-MM THK)	
	22	1	**8T-4121**	8	WASHER-HARD (11X21X2.5-MM THK)	
M	23	1	**8T-4136**	8	BOLT (M10X1.5X25-MM)	
M	24	1	**8T-4139**	4	BOLT (M12X1.75X30-MM)	
M	25	1	**8T-4186**	8	BOLT (M10X1.5X40-MM)	
	26	1	**8T-4222**	8	WASHER-PLATED (11X32X2.5-MM THK)	
	27	1	**8T-4223**	8	WASHER-HARD (13.5X25.5X3-MM THK)	
M	28	1	**8T-4244**	2	NUT (M12X1.75-THD)	
M	29	1	**8T-4910**	14	BOLT (M12X1.75X60-MM)	
M	30	1	**8T-4956**	21	BOLT (M12X1.75X35-MM)	
D	31	1	**5P-7211**		SEAL (1.6-M)	

D-ORDER BY THE METER
M-METRIC PART

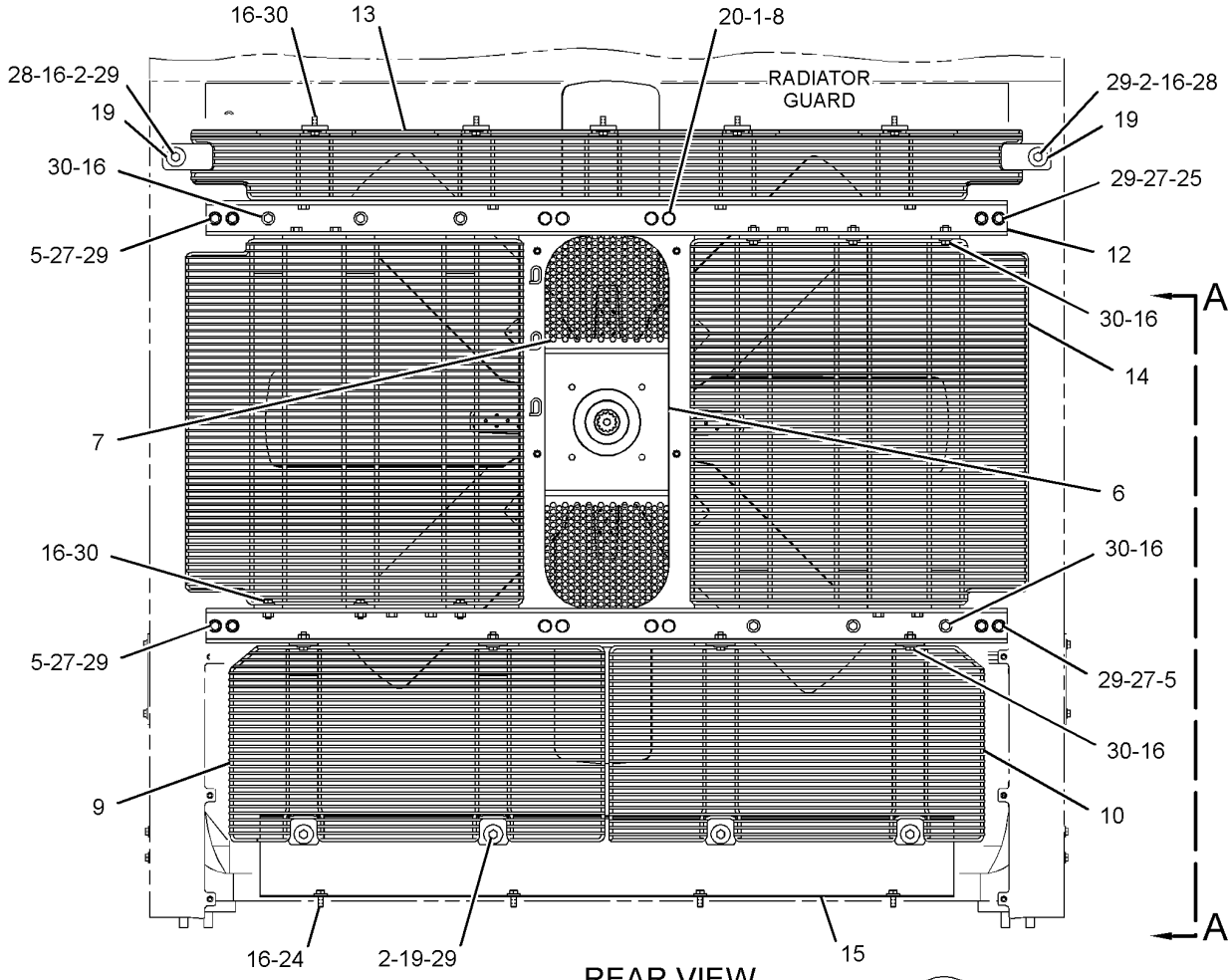

REAR VIEW

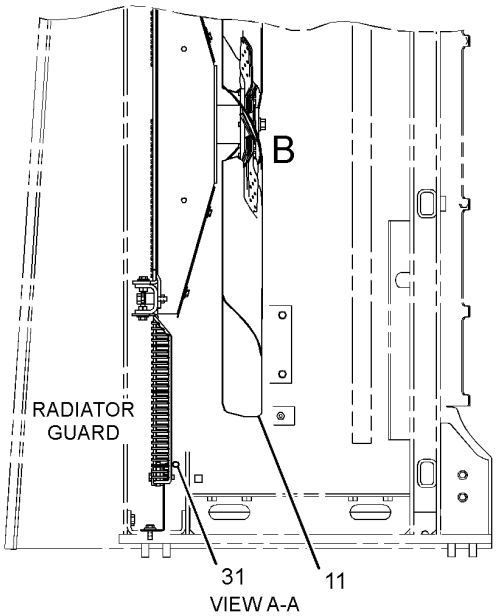

VIEW A-A

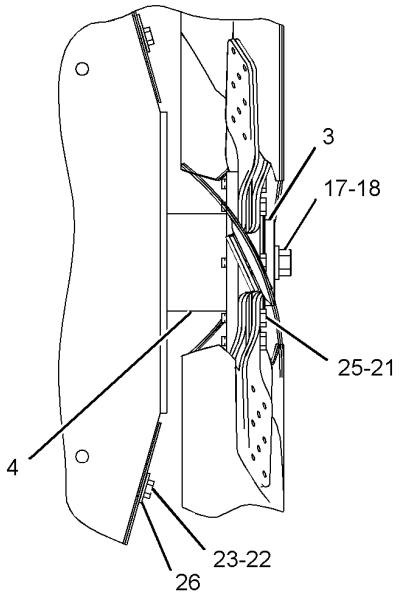

VIEW OF AREA B

GRAPHIC #1 **<END>** g01448883

COOLING SYSTEM

279-0388 LINES GP-WATER–RADIATOR

S/N: 2211-UP

PART OF 262-2081 CHASSIS AR

SMCS-1380 **i02884980**

NOTE	REF NO	GRAPHIC REF	PART NUMBER	QTY	PART NAME 1 2 3 4 5 6 (PRODUCT LEVEL)	SEE PAGE
	1	1	**191-7815**	1	HOSE	
	2	1	**279-0401**	1	TUBE AS	
	3	1	**279-0402**	1	TUBE	
	4	1	**295-5522**	1	ELBOW	
	5	1	**209-4588**	4	CLAMP	
	6	1	**216-2211**	4	CLAMP	
E	7	1	**5P-0764**		HOSE (19-CM EACH)	

E-ORDER BY THE CENTIMETER

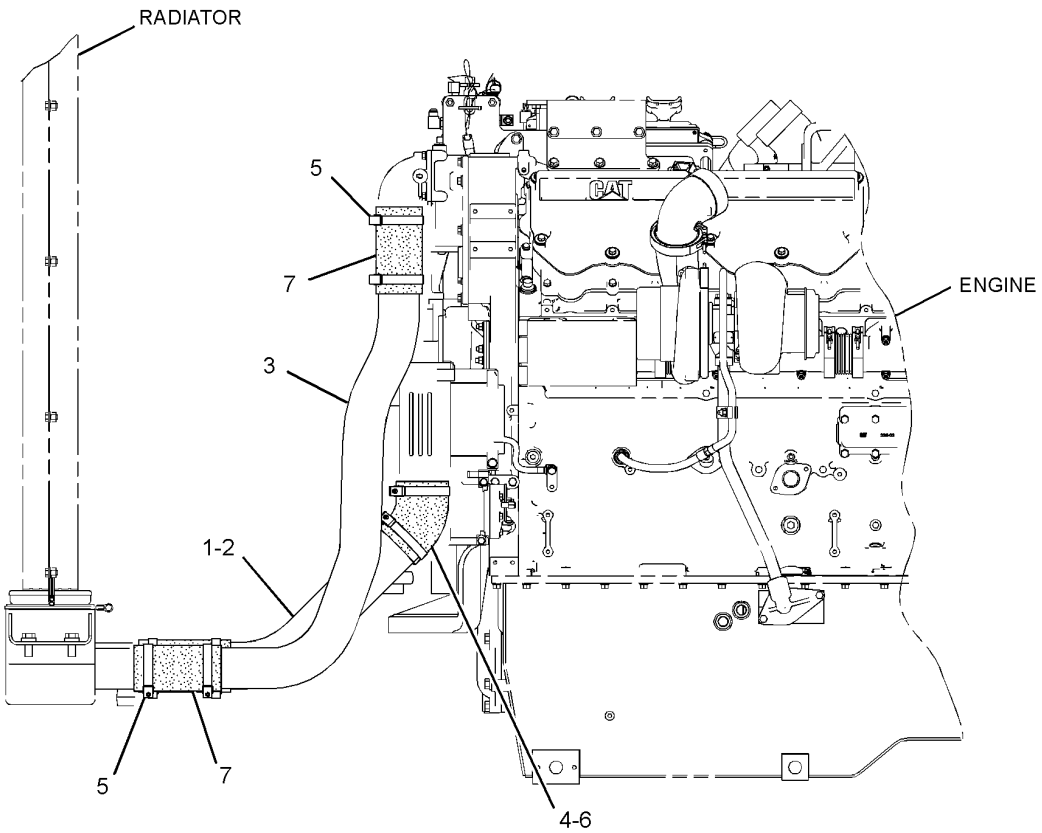

RIGHT SIDE VIEW

GRAPHIC #1 **<END>** g01443315

COOLING SYSTEM

288-4419 LINES GP-WATER—ENGINE, TRANSMISSION COOLERS

S/N: LJW1-UP

PART OF 246-4283, 246-8228, 259-3142, 259-3143 ENGINE AR-COMPLETE AN ATTACHMENT

SMCS-1380 **i02947066**

NOTE	REF NO	GRAPHIC REF	PART NUMBER	QTY	PART NAME 1 2 3 4 5 6 (PRODUCT LEVEL)	SEE PAGE
	1	1,2	**4N-0794**	2	COVER	
	2	1	**4N-0864**	2	GASKET	
	3	2	**4N-1946**	1	GASKET	
	4	2	**4N-2198**	1	FLANGE	
	5	2	**4N-2199**	2	GASKET	
	6	2	**4N-2380**	1	SPACER	
	7	2	**4N-8452**	1	SUPPORT	
YR	8	1	**4W-0419**	1	CORE GP-OIL COOLER (TRANSMISSION)	108
	9	1	**6N-0008**	1	ADAPTER	
R	10	1	**7C-0145**	1	CORE AS-OIL COOLER (ENGINE)	
	11	1	**7S-8767**	2	GASKET	
	12	1	**157-0670**	1	CAP-DUST	
	13	1	**200-6410**	1	SEAL-O-RING	
	14	2	**230-1294**	1	ELBOW	
	15	2	**230-1296**	1	ELBOW	
	16	1,2	**230-1302**	3	FLANGE	
	17	1,2	**231-4708**	5	SEAL-O-RING	
	18	1	**233-4877**	1	COVER-WATER PUMP	
	19	1	**234-3438**	1	ELBOW	
	20	1	**235-4753**	1	ELBOW	
	21	1	**236-2502**	2	COVER	
	22	1	**238-0281**	1	BONNET (ENGINE OIL COOLER)	
	23	1	**238-0292**	1	BONNET	
	24	1	**238-0293**	1	ADAPTER	
	25	1	**238-0994**	1	BONNET	
	26	1	**239-5225**	1	HOUSING AS (REGULATOR)	
	26A	2	**3B-0622**	1	PLUG-CUP	
	26B	2	**3S-9643**	2	SEAL-LIP TYPE (REGULATOR HOUSING)	
	26C	2	**111-4374**	1	VALVE AS-VENT LINE	
	27	1	**248-5513**	2	REGULATOR-TEMPERATURE (92-DEG C)	
	28	1	**0L-1143**	2	BOLT (3/8-16X2.5-IN)	
	29	1	**0S-1571**	1	BOLT (3/8-16X1.75-IN)	
	30	1	**0S-1587**	5	BOLT (1/2-13X1.75-IN)	
	31	2	**0S-1588**	4	BOLT (3/8-16X1.25-IN)	
	32	1,2	**0S-1594**	13	BOLT (3/8-16X1-IN)	
	33	1	**0S-1608**	5	BOLT (3/8-16X3.75-IN)	
	34	1,2	**0S-1619**	11	BOLT (3/8-16X3-IN)	
	35	2	**0T-0055**	4	BOLT (3/8-16X4.25-IN)	
	36	2	**0T-0573**	2	BOLT (3/8-16X2.75-IN)	
	37	1	**107-5769**	2	SEAL-O-RING	
	38	1	**109-0074**	1	SEAL-O-RING	
	39	2	**109-0075**	1	SEAL-O-RING	
	40	2	**109-0076**	3	SEAL-O-RING	
	41	1	**109-0077**	2	SEAL-O-RING	
	42	1	**154-9023**	1	VALVE-SAMPLING	
	43	2	**1A-2029**	6	BOLT (3/8-16X1.125-IN)	
	44	1	**1B-2886**	4	BOLT (1/2-13X3.75-IN)	
	45	1,2	**1C-2251**	6	BOLT (3/8-16X1.87-IN)	
	46	1	**3B-1915**	3	BOLT (3/8-16X1.375-IN)	
	47	1,2	**5M-2894**	12	WASHER-HARD (10.2X18.5X2.5-MM THK)	
	48	1	**5P-6619**	1	SEAL-O-RING	
	49	1	**6V-5063**	5	SEAL-O-RING	
	50	1	**6V-5064**	2	SEAL-O-RING	
	51	1	**6V-6609**	1	SEAL-O-RING	
	52	1	**6V-9027**	4	SEAL-O-RING	

288-4419 **LINES GP-WATER** *(contd.)* **i02947066**

NOTE	REF NO	GRAPHIC REF	PART NUMBER	QTY	PART NAME 1 2 3 4 5 6 (PRODUCT LEVEL)	SEE PAGE
	53	1,2	**7C-0307**	2	GASKET	
	54	1,2	**8T-1703**	3	SEAL-O-RING	
	55	1	**9S-1366**	3	BOLT (1/2-13X2.5-IN)	
	56	1	**9S-8002**	3	PLUG-O-RING	
	57	1	**9S-8005**	1	PLUG-O-RING	
	58	1	**9S-8008**	5	PLUG-O-RING	
	59	1	**9S-9334**	2	PLUG-O-RING	
	60	1,2	**9X-6458**	10	WASHER-HARD (10.2X22.5X3-MM THK)	

R-REMFG PART MAY BE AVAILABLE
Y-SEPARATE ILLUSTRATION

288-4419 **LINES GP-WATER** *(contd.)* **i02947066**

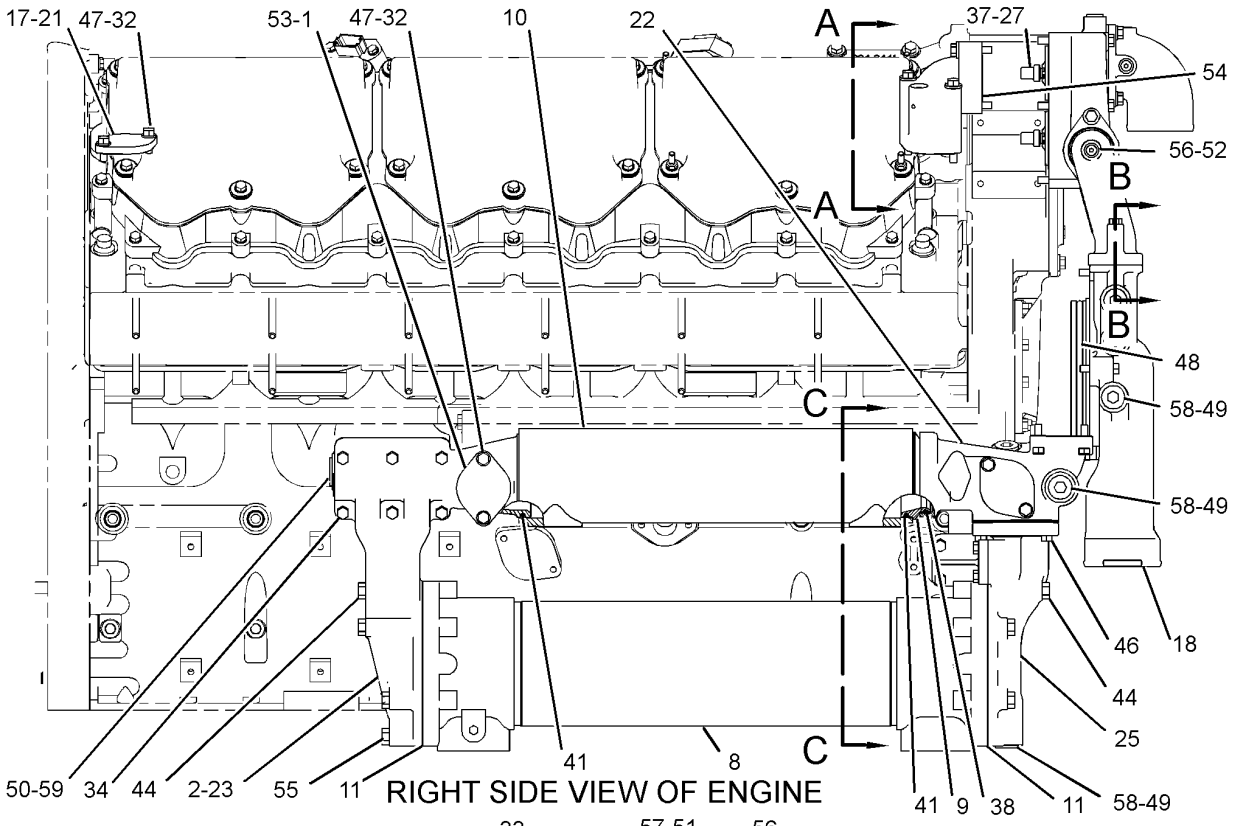

RIGHT SIDE VIEW OF ENGINE

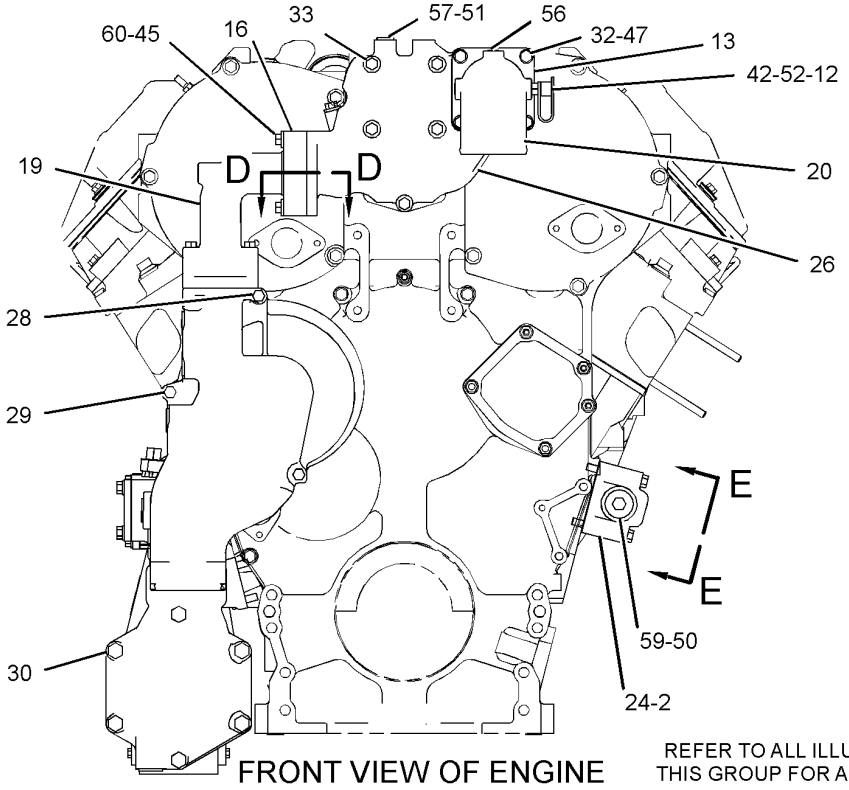

FRONT VIEW OF ENGINE

REFER TO ALL ILLUSTRATIONS OF THIS GROUP FOR AUXILIARY VIEWS

GRAPHIC #1

g01434247

288-4419 **LINES GP-WATER** *(contd.)* **i02947066**

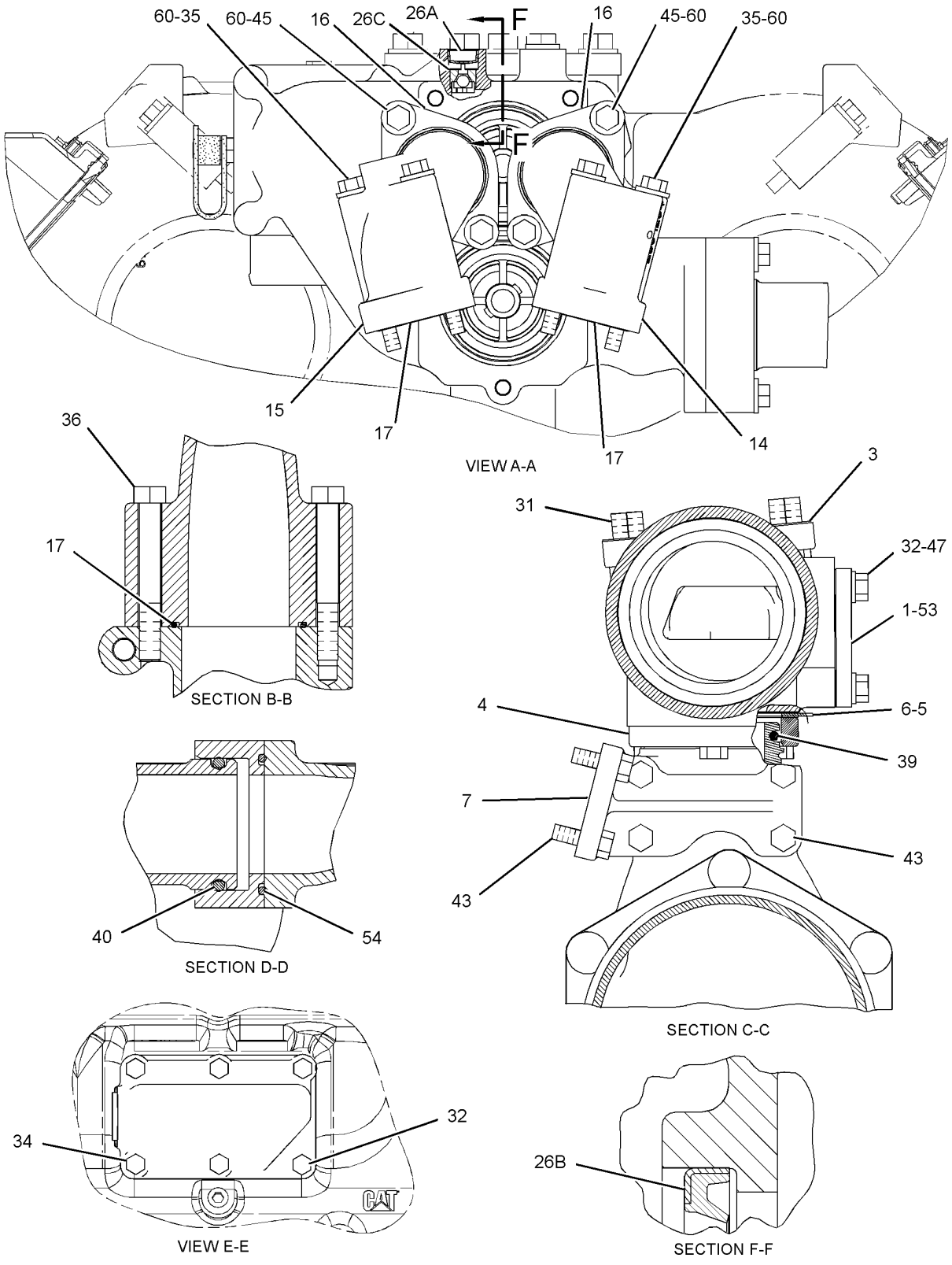

GRAPHIC #2 **<END>** g01434248

216-0657 PUMP GP-WATER*R

S/N: LJW2205-UP
PART OF 230-4172 PUMP GP-WATER
AN ATTACHMENT

SMCS-1361 **i02660164**

NOTE	REF NO	GRAPHIC REF	PART NUMBER	QTY	PART NAME 1 2 3 4 5 6 (PRODUCT LEVEL)	SEE PAGE
	1	1	**1A-1135**	1	BOLT (5/8-11X2-IN)	
	2	1	**4N-1948**	1	GEAR (43-TEETH)	
W	3	1	**108-7930**	1	BEARING AS-ROLLER	
W	4	1	**128-0317**	1	SEAL GP (WATER PUMP)	
W	5	1	**135-4928**	1	SHAFT-WATER PUMP	
W	6	1	**136-1107**	1	RETAINER	
W	7	1	**153-1256**	1	SEAL-LIP TYPE	
	8	1	**219-4455**	1	IMPELLER-PUMP	
	9	1	**219-4456**	1	HOUSING AS-PUMP	
	9A	1	**4M-1336**	1	FERRULE	
W	9B	1	**111-2721**	1	PLUG-FELT (WATER PUMP)	
	9C	1	**8T-6764**	1	PLUG-PIPE	
	10	1	**0S-1591**	1	BOLT (3/8-16X1.5-IN)	
	11	1	**1B-7182**	4	BOLT (5/16-18X1.25-IN)	
W	12	1	**5S-0581**	1	WASHER-HARD (17X38X8-MM THK)	
W	13	1	**9M-6527**	1	WASHER-HARD (10.2X25.5X5-MM THK)	
					AVAILABLE REPAIR KIT(S):	
W			**138-6744**	1	KIT-PUMP REBUILD (WATER)	

W-KIT MARKED W INCLUDES PARTS MARKED W

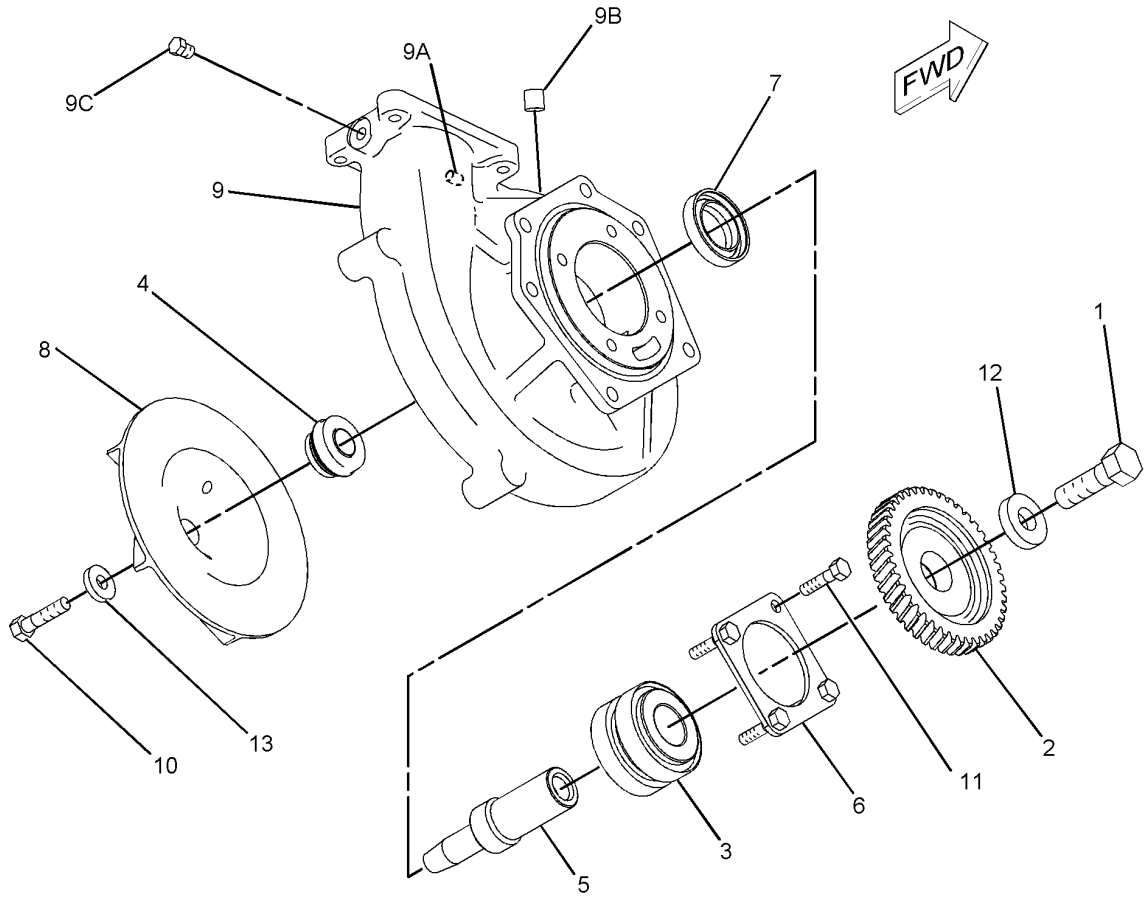

GRAPHIC #1 **<END>** g01051646

COOLING SYSTEM

230-4172 PUMP GP-WATER

S/N: LJW1-UP

PART OF 246-4283, 246-8228, 259-3142, 259-3143 ENGINE AR-COMPLETE

AN ATTACHMENT

SMCS-1361 **i02803400**

NOTE	REF NO	GRAPHIC REF	PART NUMBER	QTY	PART NAME 1 2 3 4 5 6 (PRODUCT LEVEL)	SEE PAGE
YR	1	1	**216-0657**	1	PUMP GP-WATER (BASIC)	116
	2	1	**1A-2029**	1	BOLT (3/8-16X1.125-IN)	
	3	1	**9S-8752**	4	NUT-FULL (3/8-16-THD)	
	4	1	**9X-7371**	1	SEAL-O-RING	

R-REMFG PART MAY BE AVAILABLE
Y-SEPARATE ILLUSTRATION

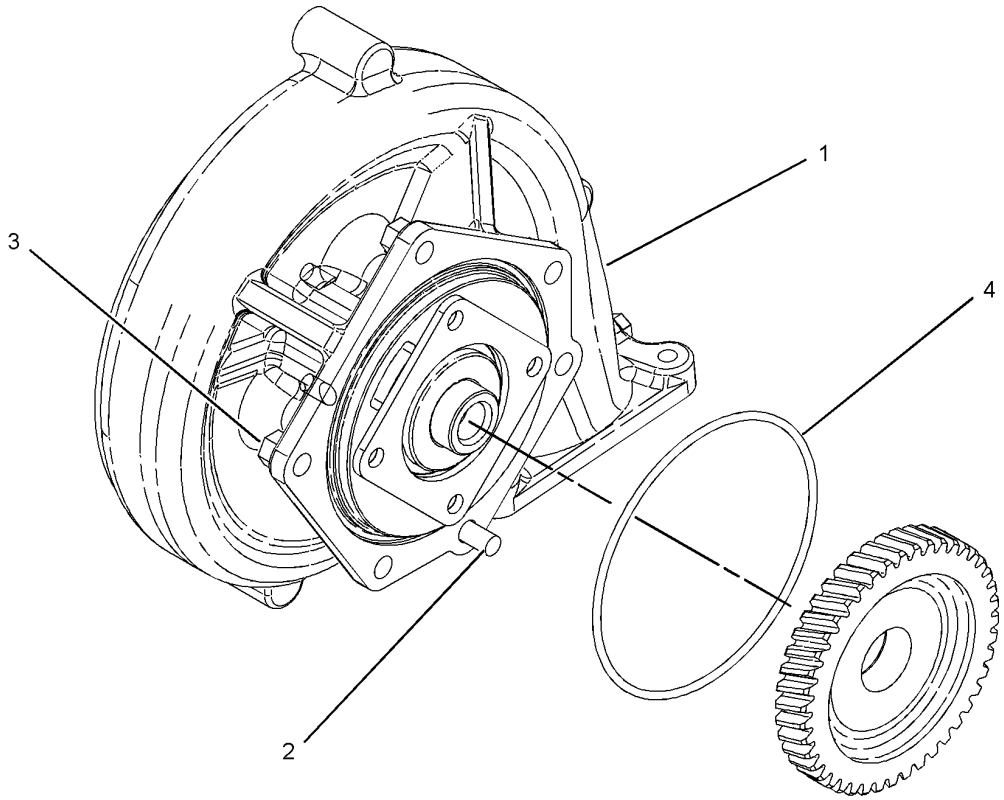

GRAPHIC #1 **<END>** g01052763

COOLING SYSTEM

279-0392 RADIATOR GP—STANDARD AMBIENT TEMPERATURE COOLING

S/N: 2211-UP

AN ATTACHMENT

SMCS-1353 **i02876917**

NOTE	REF NO	GRAPHIC REF	PART NUMBER	QTY	PART NAME 1 2 3 4 5 6 (PRODUCT LEVEL)	SEE PAGE
	1	1	**1P-4278**	28	CLAMP-HOSE	
	2	2	**6I-2431**	14	SEAL	
	3	2	**6I-2435**	14	SPACER (RUBBER)	
	4	1	**106-4572**	13	HOSE	
	5	2	**112-9486**	14	RETAINER	
	6	2	**279-0365**	1	TANK AS-RADIATOR BOTTOM	
	7	1	**279-0409**	1	BAFFLE AS	
I	8	1	**279-0411**	2	HOSE AS	
	9	1	**279-0425**	1	BAFFLE AS	
	10	2	**198-4780**	4	WASHER-HARD (17.5X32X8-MM THK)	
	11	1	**223-5120**	14	CORE AS-RADIATOR	
	12	1	**4D-9517**	2	CLIP	
	13	1	**6D-3479**	2	CLIP	
M	14	2	**7X-2553**	4	BOLT (M16X2X40-MM)	
	15	1	**7X-4780**	4	GROMMET	
	16	1,2	**7X-7729**	40	WASHER (11X25X3-MM THK)	
	17	1	**8T-4121**	4	WASHER-HARD (11X21X2.5-MM THK)	
M	18	1,2	**8T-4137**	16	BOLT (M10X1.5X20-MM)	
M	19	1	**8T-4186**	28	BOLT (M10X1.5X40-MM)	
D	20	2	**5P-7174**		SEAL (1.8-M)	
D	21	2	**5P-7211**		SEAL (1.96-M EACH)	

D-ORDER BY THE METER
I-REFER TO HYDRAULIC INFORMATION SYSTEM
M-METRIC PART

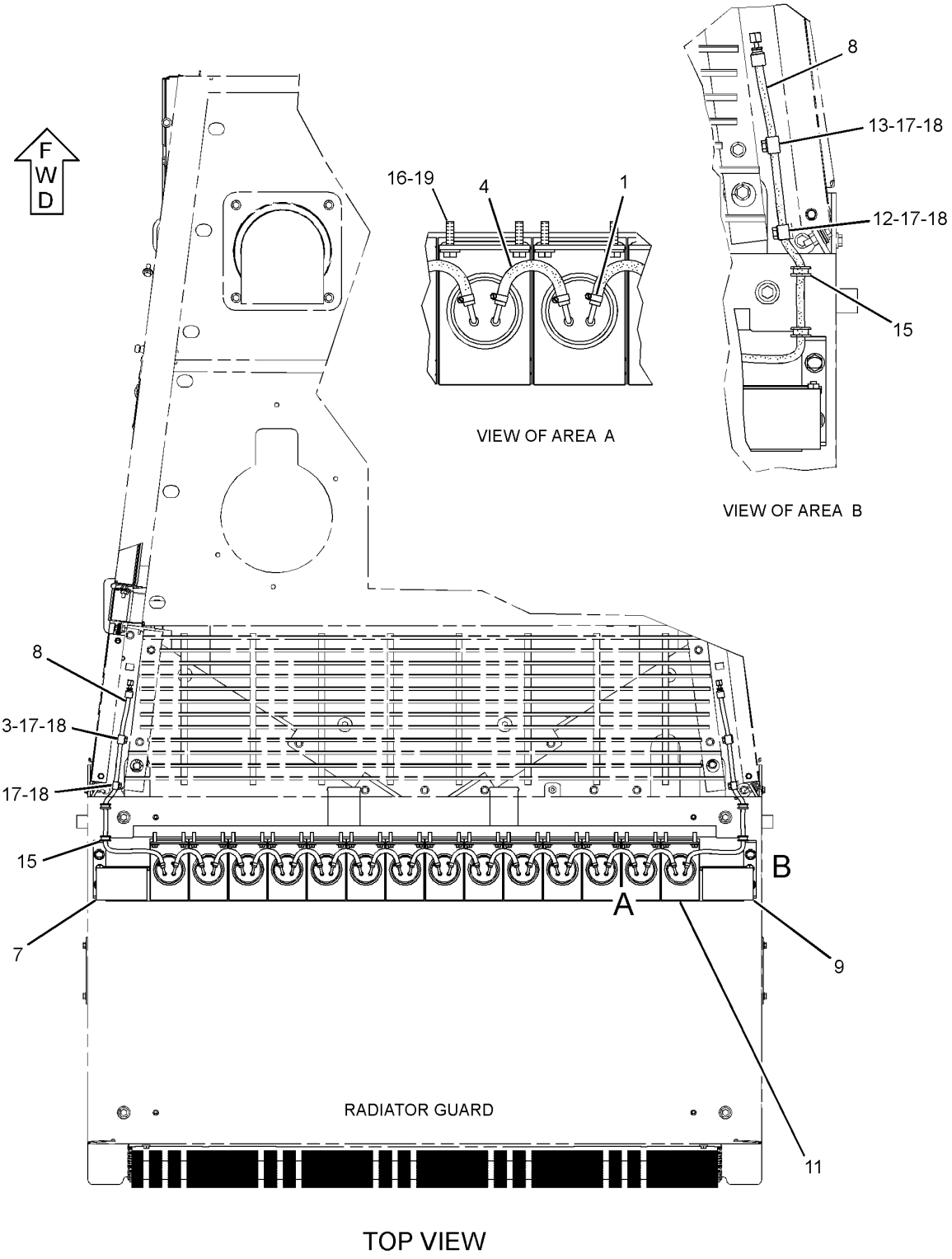

TOP VIEW

GRAPHIC #1 g01446376

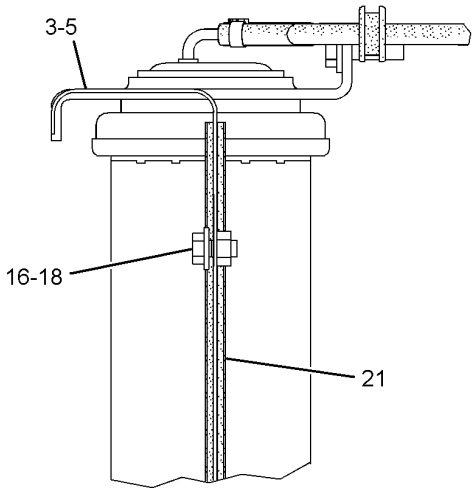

VIEW OF AREA C

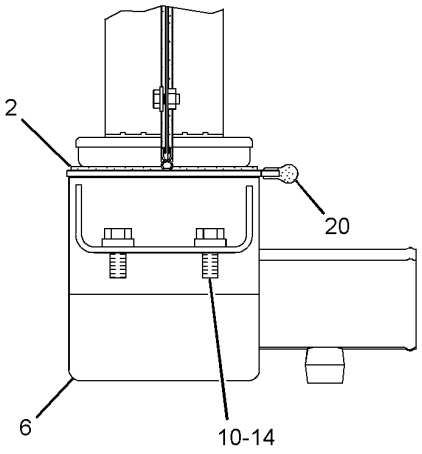

VIEW OF AREA D

RIGHT SIDE VIEW

GRAPHIC #2 **<END>** g01446377

279-0393 RADIATOR GP—HIGH AMBIENT TEMPERATURE COOLING

S/N: 2211-UP

AN ATTACHMENT

SMCS-1353 **i02876955**

NOTE	REF NO	GRAPHIC REF	PART NUMBER	QTY	PART NAME 1 2 3 4 5 6 (PRODUCT LEVEL)	SEE PAGE
	1	1	**1P-4278**	32	CLAMP-HOSE	
	2	2	**6I-2431**	16	SEAL	
	3	2	**6I-2435**	16	SPACER (RUBBER)	
	4	1	**106-4572**	15	HOSE	
	5	2	**112-9486**	16	RETAINER	
I	6	2	**167-7691**	2	HOSE AS	
	7	2	**279-0367**	1	TANK AS-RADIATOR BOTTOM	
	8	2	**198-4780**	4	WASHER-HARD (17.5X32X8-MM THK)	
	9	1	**223-5120**	16	CORE AS-RADIATOR	
	10	1	**4D-9517**	2	CLIP	
	11	1	**6D-3479**	2	CLIP	
M	12	2	**7X-2553**	4	BOLT (M16X2X40-MM)	
	13	1	**7X-4780**	4	GROMMET	
	14	1	**7X-7729**	32	WASHER (11X25X3-MM THK)	
	15	1	**8T-4121**	4	WASHER-HARD (11X21X2.5-MM THK)	
M	16	1	**8T-4137**	4	BOLT (M10X1.5X20-MM)	
M	17	1	**8T-4186**	32	BOLT (M10X1.5X40-MM)	
D	18	2	**5P-7174**		SEAL (1.82-M)	
D	19	2	**5P-7211**		SEAL (1.74-M EACH)	

D-ORDER BY THE METER
I-REFER TO HYDRAULIC INFORMATION SYSTEM
M-METRIC PART

279-0393 **RADIATOR GP** *(contd.)* **i02876955**

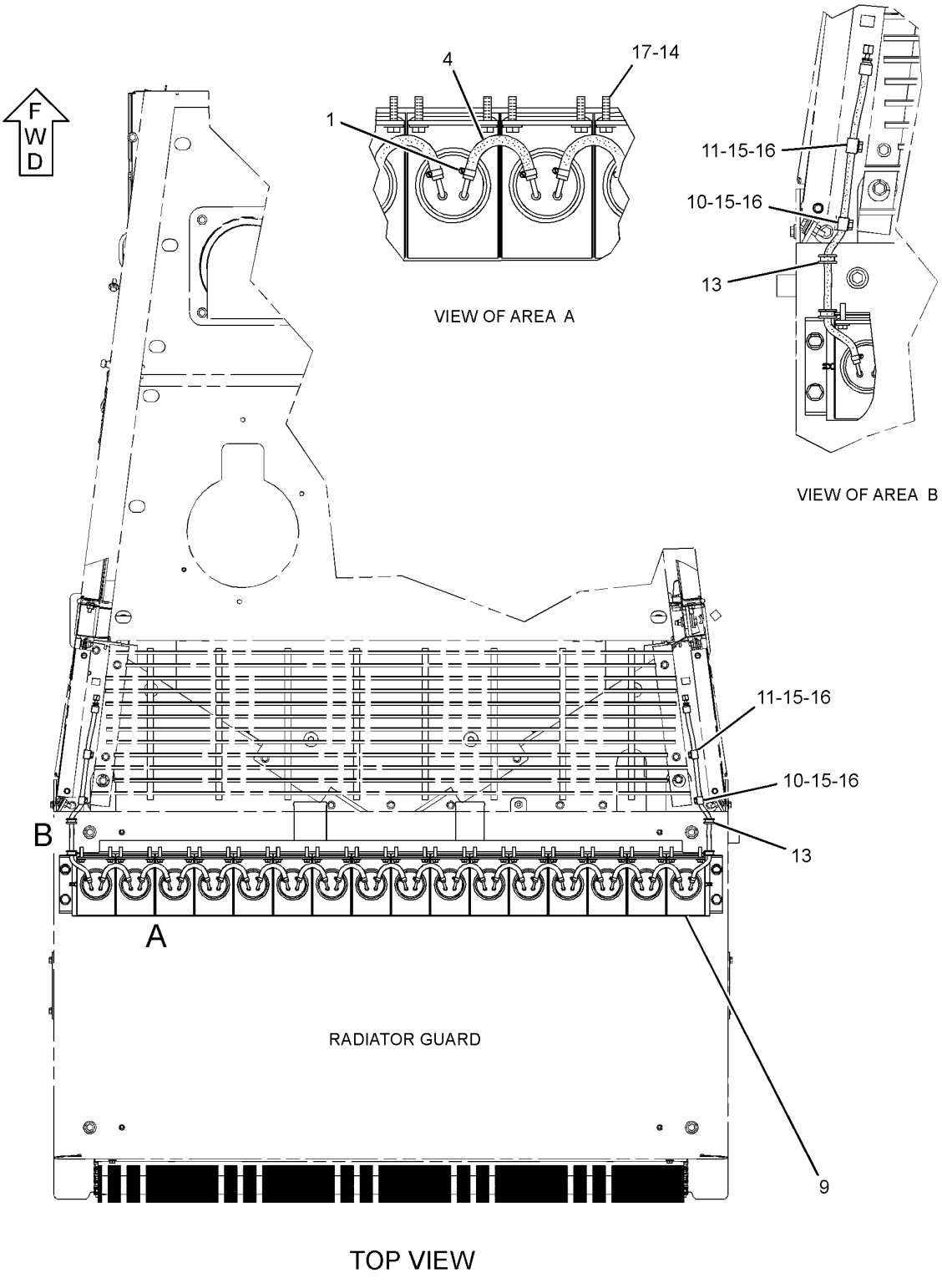

TOP VIEW

GRAPHIC #1 g01446450

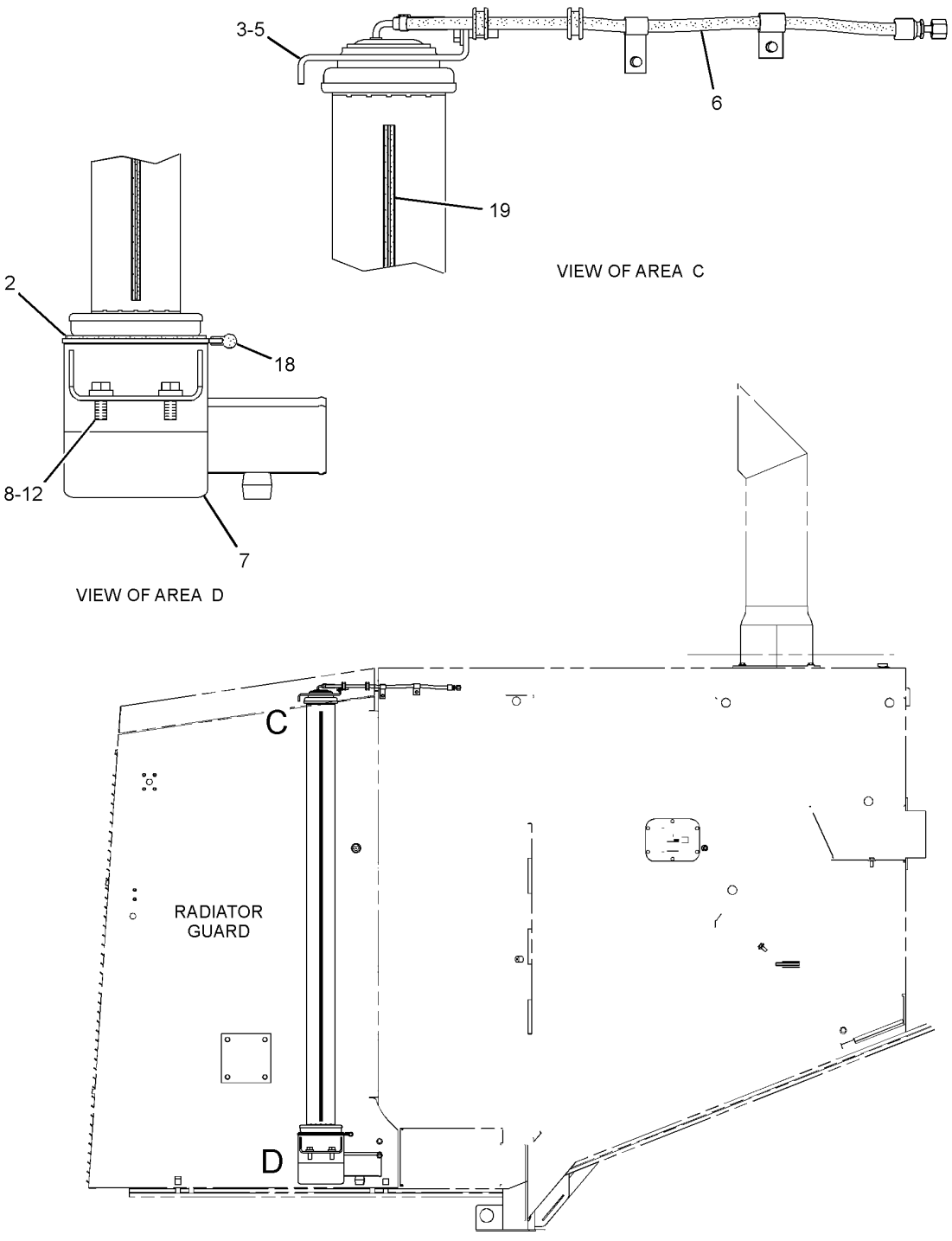

RIGHT SIDE VIEW

GRAPHIC #2 **<END>** g01446451

COOLING SYSTEM

279-0394 SHROUD GP-RADIATOR

S/N: 2211-UP

PART OF 262-2081 CHASSIS AR

SMCS-7272 **i02891003**

NOTE	REF NO	GRAPHIC REF	PART NUMBER	QTY	PART NAME 1 2 3 4 5 6 (PRODUCT LEVEL)	SEE PAGE
M	1	1	**096-4883**	8	LOCKNUT (M10X1.15-THD)	
	2	1	**111-8076**	4	BRACKET	
	3	1	**122-4594**	2	BAFFLE	
	4	1	**279-0415**	1	SHROUD AS	
	5	1	**279-0430**	1	BAFFLE AS	
M	6	1	**8T-4137**	4	BOLT (M10X1.5X20-MM)	
M	7	1	**8T-4186**	16	BOLT (M10X1.5X40-MM)	
M	8	1	**8T-4195**	17	BOLT (M10X1.5X30-MM)	
	9	1	**8T-4222**	45	WASHER-PLATED (11X32X2.5-MM THK)	
D	10	1	**5P-7211**		SEAL (1.65-M)	
D	10A	1	**5P-7211**		SEAL (1.83-M)	
D	10B	1	**5P-7211**		SEAL (1.92-M)	

D-ORDER BY THE METER
M-METRIC PART

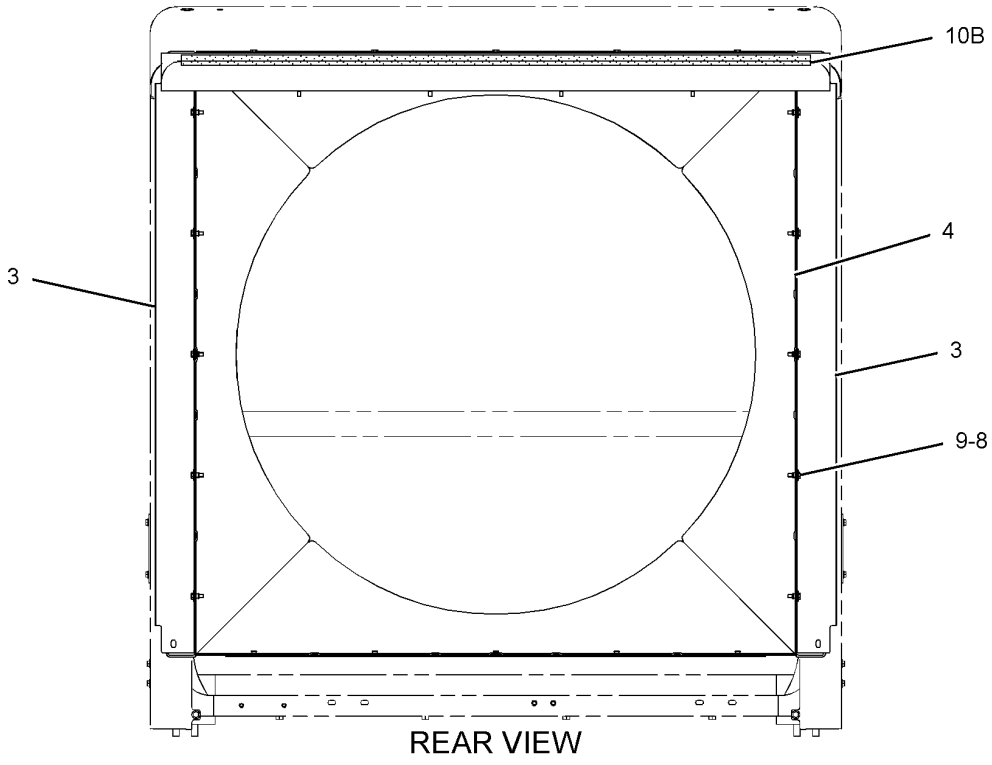

REAR VIEW

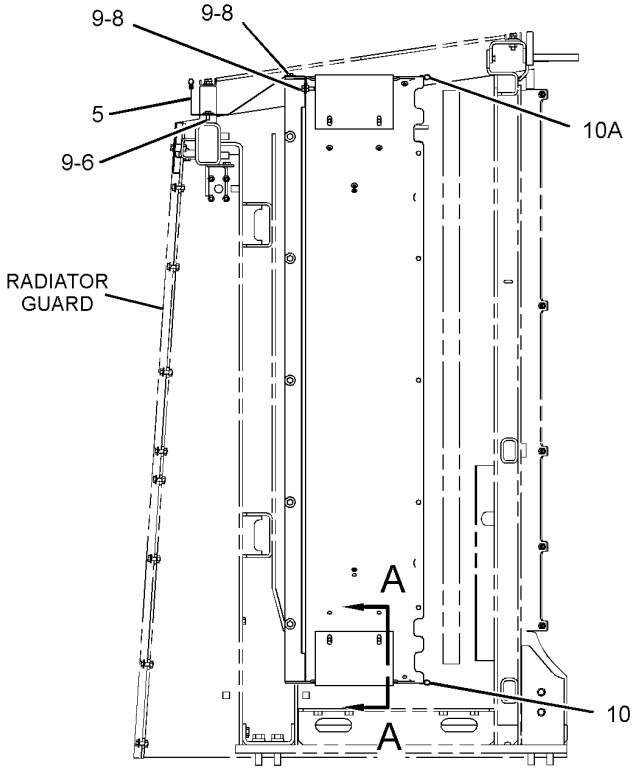

RIGHT SIDE VIEW

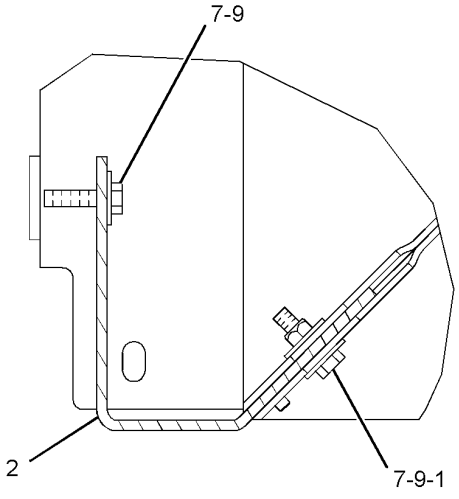

SECTION A-A

GRAPHIC #1 **<END>** g01444308

COOLING SYSTEM

279-0391 TANK GP-RADIATOR TOP

S/N: 2211-UP

PART OF 262-2081 CHASSIS AR

SMCS-1377 **i02885243**

NOTE	REF NO	GRAPHIC REF	PART NUMBER	QTY	PART NAME 1 2 3 4 5 6 (PRODUCT LEVEL)	SEE PAGE
	1	1	**1P-4278**	1	CLAMP-HOSE	
	2	1	**6L-2479**	2	BRACE	
	3	1	**6L-8617**	1	CAP-PRESSURE (7-PSI)	
	4	1	**7T-8331**	4	MOUNT AS	
	5	1	**9Y-9236**	1	GAUGE-SIGHT	
I	6	1	**103-1743**	1	HOSE AS	
I	7	1	**126-3508**	1	HOSE AS	
I	8	1	**140-5856**	1	HOSE AS	
	9	1	**159-8329**	1	BRACKET AS	
I	10	1	**196-3617**	1	HOSE AS	
	11	1	**279-0376**	1	TANK AS-COOLANT	
	12	1	**279-0408**	1	TUBE AS	
	13	1	**291-2275**	2	BRACKET AS	
I	14	1	**307-7490**	2	HOSE AS	
	15	1	**309-7748**	2	TUBE AS	
Y	16	1	*317-7744*	1	VALVE GP-RADIATOR DRAIN (COOLANT TANK SHUTOFF, DRAIN)	129
	17	1	**143-4535**	1	CLIP (SLOT)	
	18	1	**143-4536**	1	CLIP (TAB)	
	19	1	*148-8365*	1	ELBOW AS	
		1	**3J-1907**	1	SEAL-O-RING	
		1	**6V-8398**	1	SEAL-O-RING	
		1	**8T-6876**	1	ELBOW	
	20	1	*148-8370*	1	ELBOW AS	
		1	**6V-8398**	1	SEAL-O-RING	
		1	**6V-9851**	1	ELBOW	
	21	1	*155-6258*	1	ELBOW AS	
		1	**3D-2824**	1	SEAL-O-RING	
		1	**6V-8398**	1	SEAL-O-RING	
		1	**127-1647**	1	ELBOW	
	22	1	*164-7908*	1	ELBOW AS	
		1	**3J-7354**	1	SEAL-O-RING	
		1	**6V-8397**	1	SEAL-O-RING	
		1	**8T-7546**	1	ELBOW	
	23	1	*165-4925*	2	ELBOW AS	
					(EACH INCLUDES)	
		1	**2T-2171**	1	ELBOW	
		1	**6V-8398**	1	SEAL-O-RING	
	24	1	**289-9139**	2	CLAMP-BAND	
	25	1	**1S-0994**	4	CLIP	
	26	1	**3K-0360**	1	SEAL-O-RING	
	27	1	**3S-8664**	1	CLIP	
	28	1	**4D-7388**	5	CLIP	
	29	1	**4D-9517**	7	CLIP	
	30	1	**4J-5477**	4	SEAL-O-RING	
	31	1	**6V-3265**	6	CLIP	
	32	1	**6V-8397**	3	SEAL-O-RING	
	33	1	**6V-8398**	1	SEAL-O-RING	
	34	1	**6V-8625**	1	ELBOW	
	35	1	**6V-9830**	1	CAP AS	
	36	1	**7M-8485**	1	SEAL-O-RING	
	37	1	**7X-0590**	4	WASHER-HARD (13.5X44.5X6-MM THK)	
	38	1	**8C-6869**	1	CONNECTOR	
	39	1	**8S-0023**	1	CLIP (SLOT)	
	40	1	**8S-0024**	1	CLIP (TAB)	
	41	1	**8T-4121**	30	WASHER-HARD (11X21X2.5-MM THK)	

279-0391 **TANK GP-RADIATOR TOP** *(contd.)* **i02885243**

NOTE	REF NO	GRAPHIC REF	PART NUMBER	QTY	PART NAME 1 2 3 4 5 6 (PRODUCT LEVEL)	SEE PAGE
M	42	1	**8T-4133**	6	NUT (M10X1.5-THD)	
M	43	1	**8T-4136**	10	BOLT (M10X1.5X25-MM)	
M	44	1	**8T-4137**	13	BOLT (M10X1.5X20-MM)	
M	45	1	**8T-4195**	1	BOLT (M10X1.5X30-MM)	
M	46	1	**8T-4648**	4	BOLT (M12X1.75X70-MM)	
	47	1	**6D-4246**	1	CLIP	
E	48	1	**7Y-1976**		HOSE-WATER (170-CM)	
E	49	1	**146-7453**		HOSE (326-CM)	

E-ORDER BY THE CENTIMETER
I-REFER TO HYDRAULIC INFORMATION SYSTEM
M-METRIC PART
Y-SEPARATE ILLUSTRATION

279-0391 **TANK GP-RADIATOR TOP** *(contd.)* **i02885243**

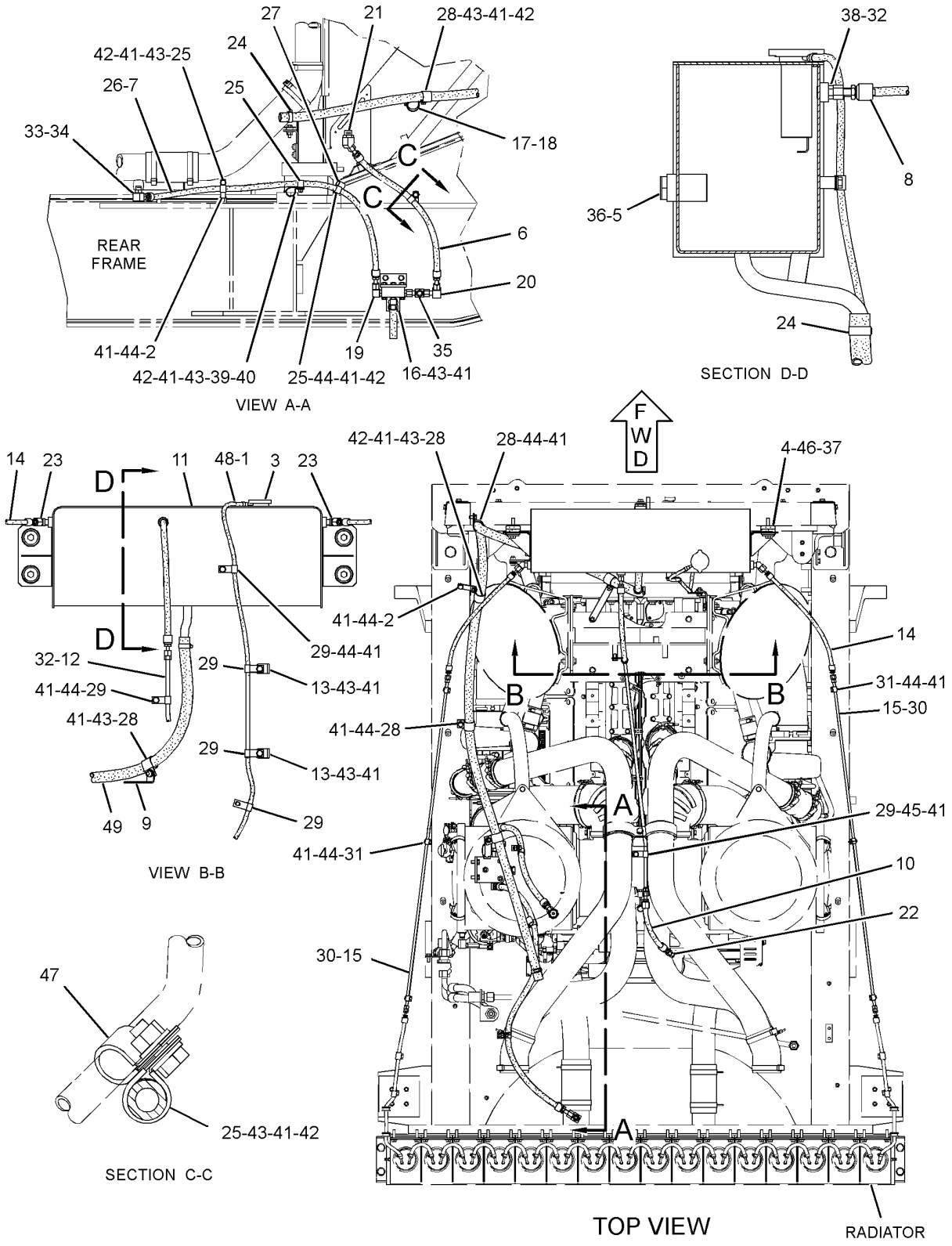

GRAPHIC #1 **<END>** g01438629

317-7744 VALVE GP-RADIATOR DRAIN—COOLANT TANK SHUTOFF

S/N: 2211-UP

PART OF 279-0391 TANK GP-RADIATOR TOP

SMCS-1353 **i02885677**

NOTE	REF NO	GRAPHIC REF	PART NUMBER	QTY	PART NAME 1 2 3 4 5 6 (PRODUCT LEVEL)	SEE PAGE
	1	1	**2S-3440**	1	CLAMP-HOSE	
	2	1	**6N-9590**	1	PLUG-DRAIN	
	3	1	**6V-0675**	1	ELBOW	
	4	1	**7E-9171**	1	ADAPTER-PLUG	
	5	1	**8M-7066**	1	GASKET	
	6	1	**117-3335**	1	BRACKET AS	
	7	1	*148-8444*	1	TEE AS-SWIVEL	
		1	**6V-8398**	2	SEAL-O-RING	
		1	**6V-9837**	1	TEE-SWIVEL	
	8	1	*150-4043*	2	CONNECTOR AS	
					(EACH INCLUDES)	
		1	**3J-1907**	1	SEAL-O-RING	
		1	**6V-8398**	1	SEAL-O-RING	
		1	**6V-9873**	1	CONNECTOR	
	9	1	**8T-4121**	3	WASHER-HARD (11X21X2.5-MM THK)	
M	10	1	**8T-4195**	1	BOLT (M10X1.5X30-MM)	
M	11	1	**8T-6466**	2	BOLT (M10X1.5X60-MM)	
G	12	1	**122-6872**		HOSE-HYDRAULIC (5.1-IN)	

G-ORDER BY THE INCH
M-METRIC PART

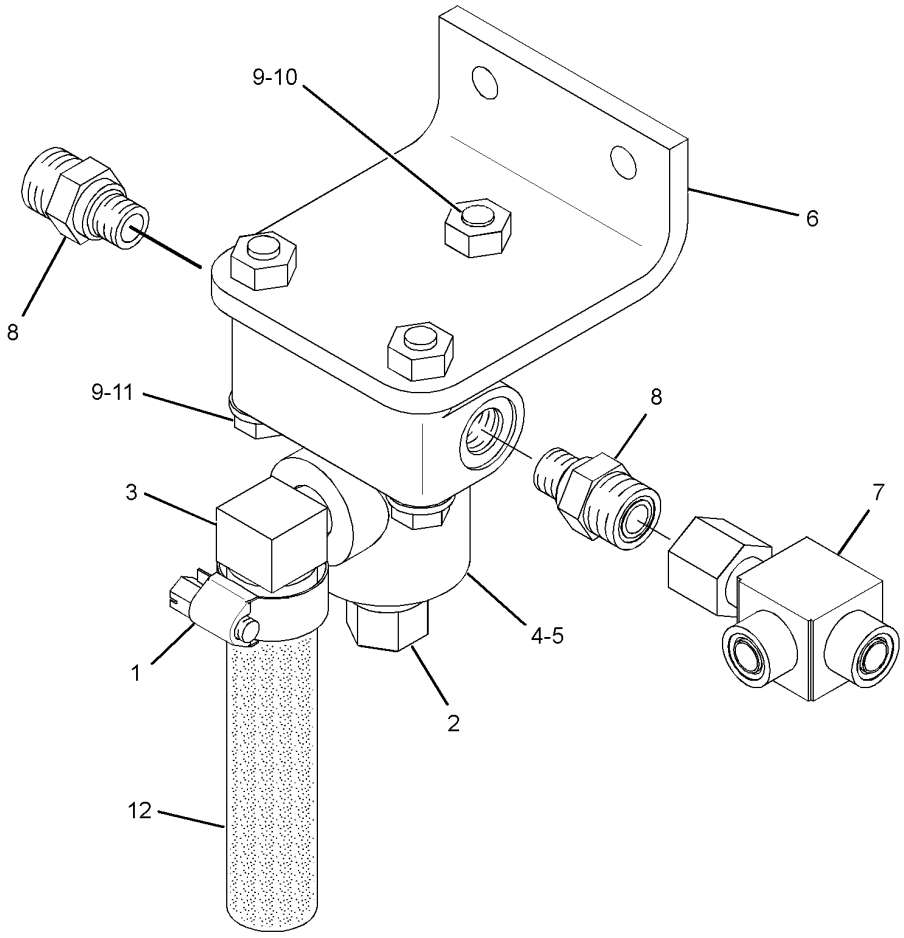

GRAPHIC #1 **<END>** g01437974

AIR INLET AND EXHAUST SYSTEM

279-0383 AFTERCOOLER GP-AIR

S/N: 2211-UP

PART OF 262-2081 CHASSIS AR

SMCS-1063 **i02885002**

NOTE	REF NO	GRAPHIC REF	PART NUMBER	QTY	PART NAME 1 2 3 4 5 6 (PRODUCT LEVEL)	SEE PAGE
	1	1	**7T-8331**	8	MOUNT AS	
	2	1	**219-5878**	8	SPACER (13X45X15-MM THK)	
	3	1	**280-0111**	2	CORE AS-AFTERCOOLER	
	4	1	**7G-8839**	8	SPACER (13.5X57X6-MM THK)	
	5	1	**7X-0590**	8	WASHER-HARD (13.5X44.5X6-MM THK)	
M	6	1	**8T-6868**	8	BOLT (M12X1.75X80-MM)	

M-METRIC PART

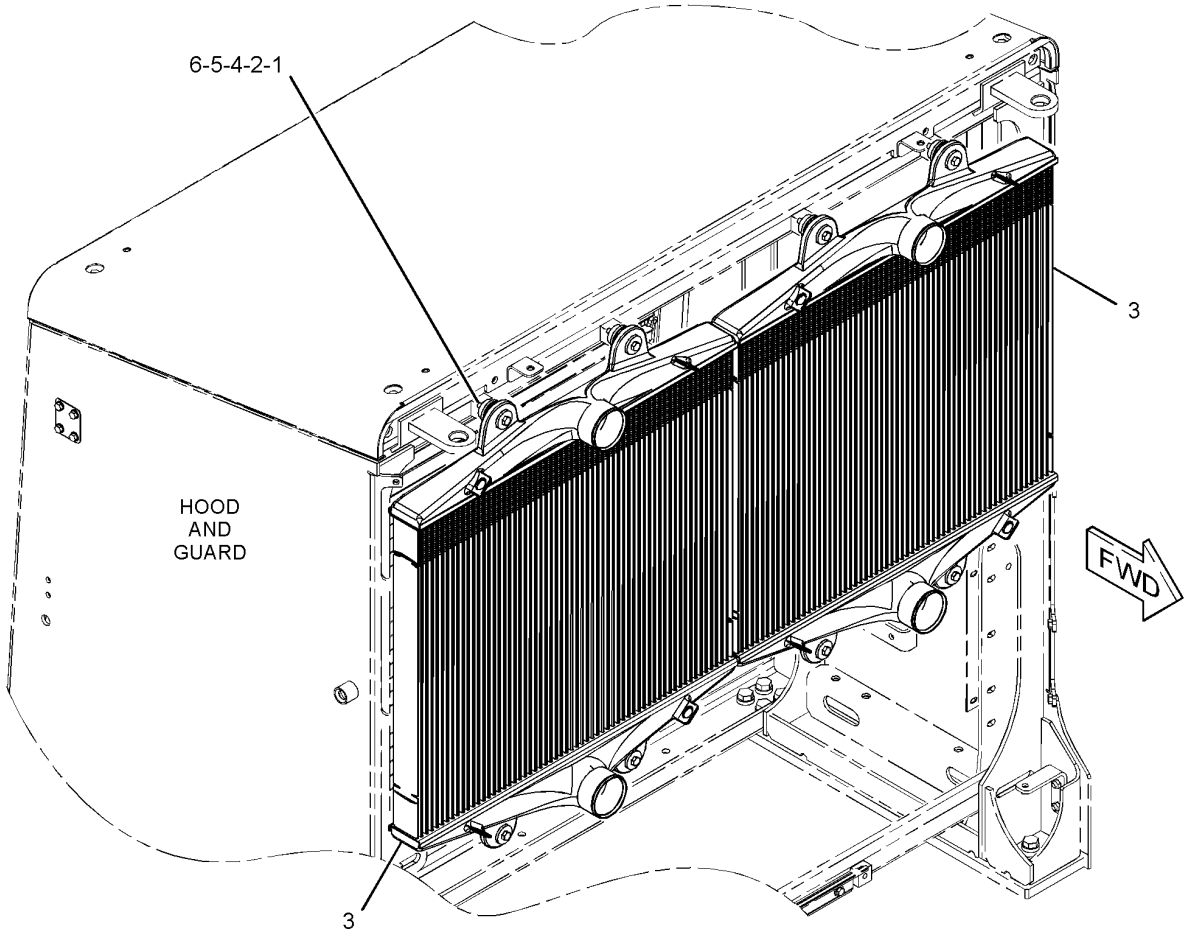

GRAPHIC #1 **<END>** g01449345

AIR INLET AND EXHAUST SYSTEM

275-1233 AIR CLEANER GP

S/N: 2211-UP

PART OF 246-4284 INSTALLATION AR-ENGINE

SMCS-1051, 1054 **i02885209**

NOTE	REF NO	GRAPHIC REF	PART NUMBER	QTY	PART NAME 1 2 3 4 5 6 (PRODUCT LEVEL)	SEE PAGE
	1	1	**2P-2508**	2	COVER AS-PRECLEANER	
	2	1	**3E-7447**	8	CLAMP-HOSE	
	3	1	**6N-3356**	4	HOSE	
	4	1	**7C-9770**	2	GASKET	
	5	1	**253-0980**	2	BODY AS-PRECLEANER	
	6	1	**282-8858**	2	TUBE-EXTENSION	
Y	7	1	**291-6801**	2	AIR CLEANER GP	133
M	8	1	**6V-7744**	20	LOCKNUT (M10X1.5-THD)	
	9	1	**8T-4121**	8	WASHER-HARD (11X21X2.5-MM THK)	
M	10	1	**8T-4137**	8	BOLT (M10X1.5X20-MM)	

M-METRIC PART
Y-SEPARATE ILLUSTRATION

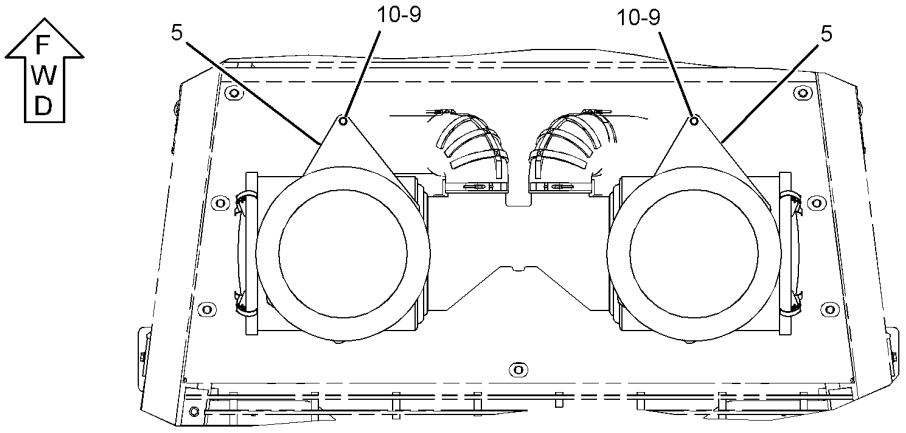

TOP VIEW

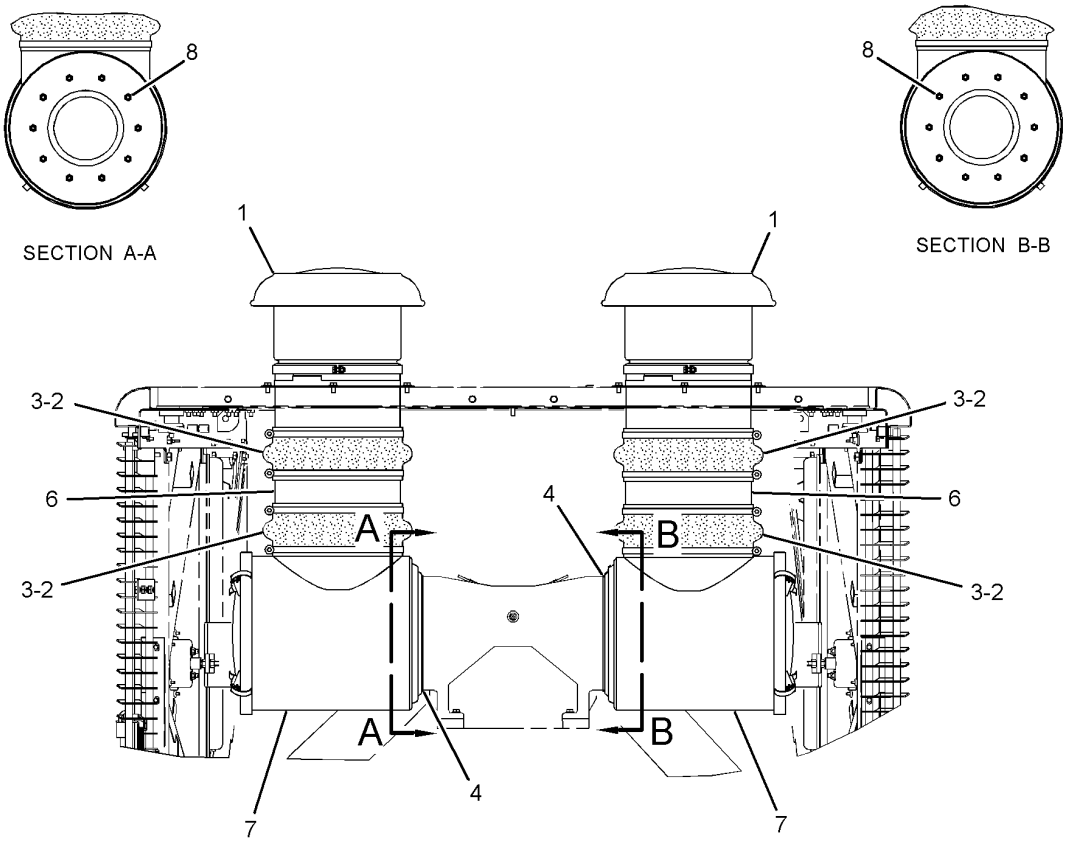

REAR VIEW

GRAPHIC #1 **<END>** g01443013

AIR INLET AND EXHAUST SYSTEM

291-6801 AIR CLEANER GP

S/N: 2211-UP

PART OF 275-1233 AIR CLEANER GP

SMCS-1051, 1054 **i02880217**

NOTE	REF NO	GRAPHIC REF	PART NUMBER	QTY	PART NAME 1 2 3 4 5 6 (PRODUCT LEVEL)	SEE PAGE
	1	1	**132-7168**	1	FILTER ELEMENT AS-AIR (PRIMARY)	
	2	1	**249-0945**	1	COVER AS	
		1	**165-5030**	1	SEAL-AIR CLEANER CUP	
	3	1	**106-3973**	1	FILTER ELEMENT AS-AIR (SECONDARY)	

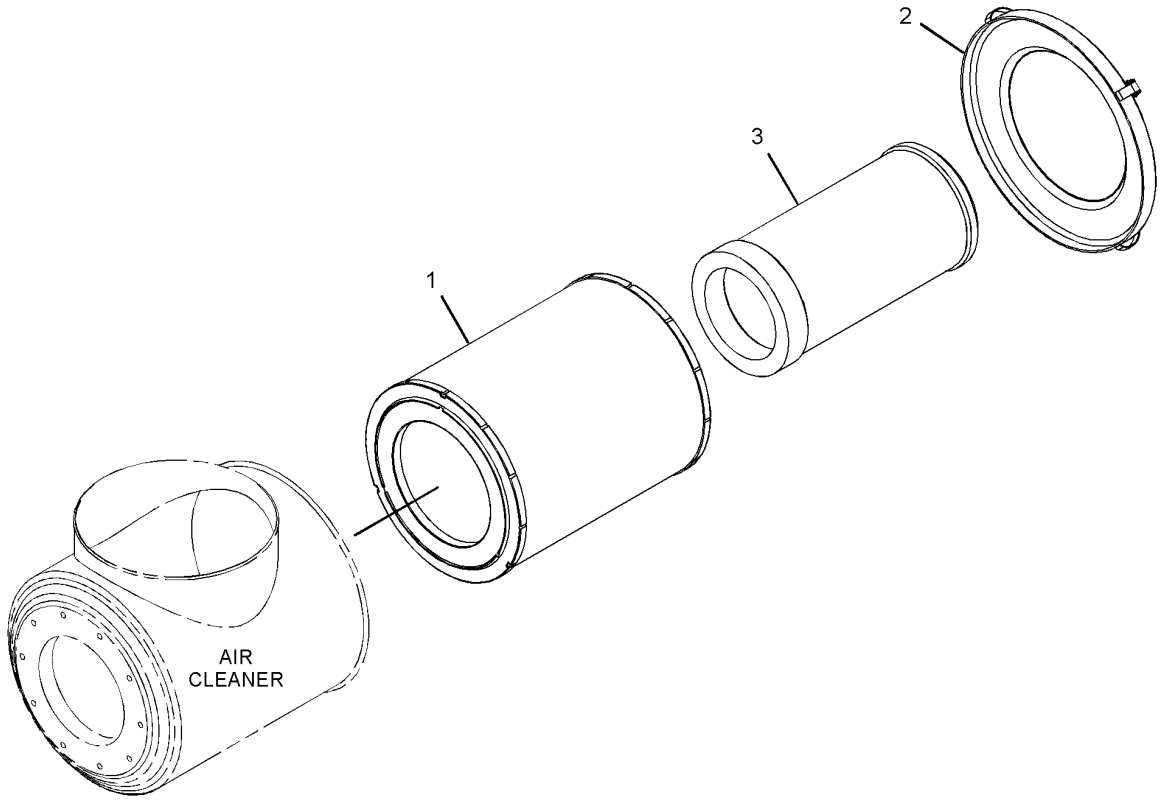

GRAPHIC #1 **<END>** g01435744

AIR INLET AND EXHAUST SYSTEM

275-1234 DUST EJECTOR GP

S/N: 2211-UP

PART OF 246-4284 INSTALLATION AR-ENGINE

SMCS-1068 **i02880542**

NOTE	REF NO	GRAPHIC REF	PART NUMBER	QTY	PART NAME 1 2 3 4 5 6 (PRODUCT LEVEL)	SEE PAGE
	1	1	**1S-1668**	2	TUBE-BYPASS	
	2	1	**5P-0597**	8	CLAMP-HOSE	
	3	1	**7L-8227**	2	HOSE	
E	4	1	**5P-1471**		HOSE (212-CM)	

E-ORDER BY THE CENTIMETER

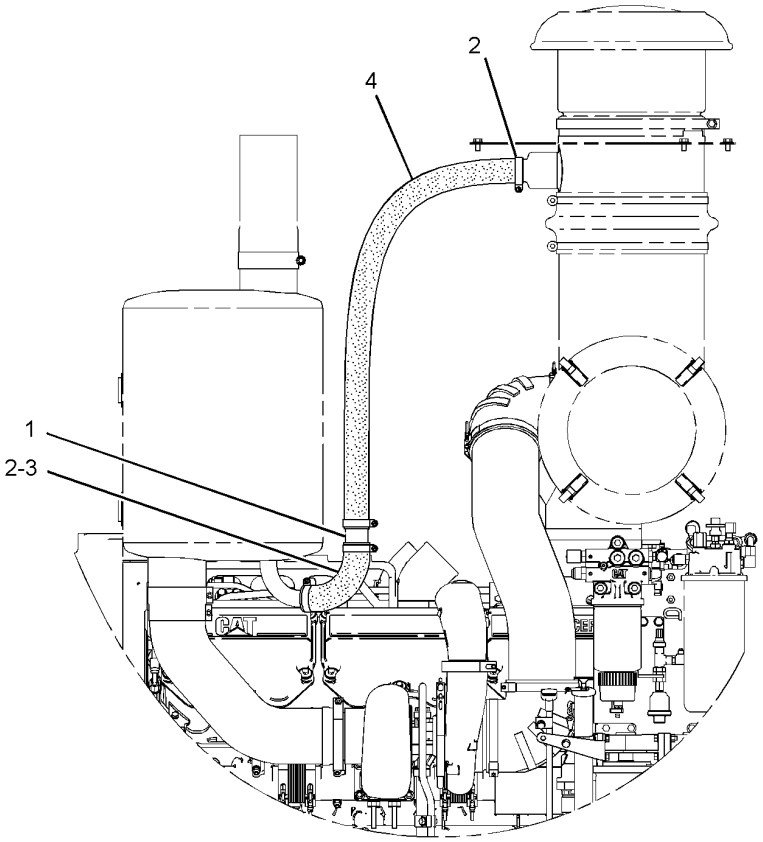

RIGHT SIDE OF ENGINE

GRAPHIC #1 **<END>** g01435303

AIR INLET AND EXHAUST SYSTEM

279-0389 LINES GP-AFTERCOOLER AIR

S/N: 2211-UP

PART OF 262-2081 CHASSIS AR

SMCS-1063, 1071 **i02938900**

NOTE	REF NO	GRAPHIC REF	PART NUMBER	QTY	PART NAME 1 2 3 4 5 6 (PRODUCT LEVEL)	SEE PAGE
	1	1	**7E-8630**	4	HOSE-AIR INLET	
	2	1	**217-1601**	4	HOSE-ELBOW	
	3	1	**262-0483**	2	CLAMP	
	4	1	**322-8285**	1	TUBE AS	
	5	1	**322-8286**	1	TUBE AS	
	6	1	**322-8287**	1	TUBE AS	
	7	1	**322-8288**	1	TUBE AS	
	8	1	**285-9362**	2	GUARD	
	9	1	**208-7448**	16	CLAMP	
M	10	1	**6V-7687**	1	LOCKNUT (M12X1.75-THD)	
M	11	1	**8T-4183**	1	BOLT (M12X1.75X40-MM)	
	12	1	**8T-4223**	2	WASHER-HARD (13.5X25.5X3-MM THK)	

M-METRIC PART

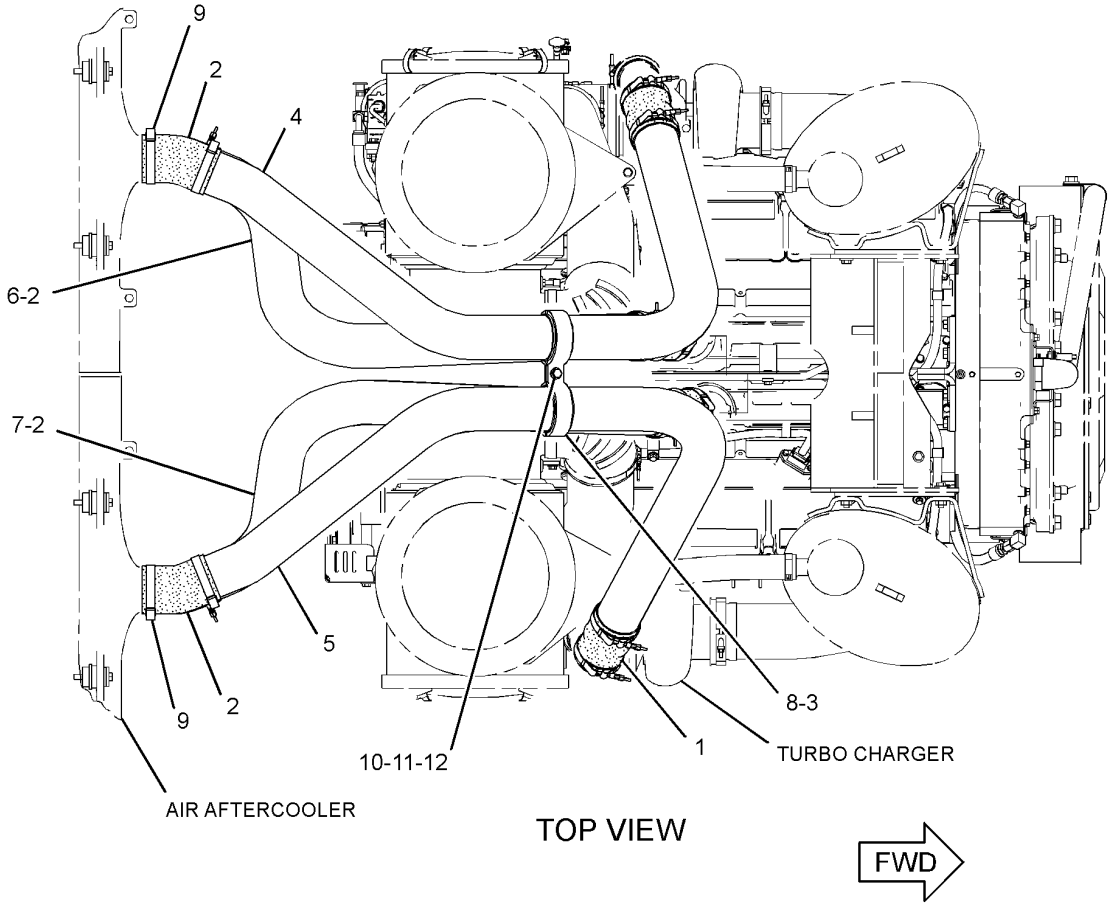

GRAPHIC #1 **<END>** g01443283

AIR INLET AND EXHAUST SYSTEM

275-1237 LINES GP-AIR—TURBOCHARGER INLET

S/N: 2211-UP

PART OF 246-4284 INSTALLATION AR-ENGINE

SMCS-1071 **i02870417**

NOTE	REF NO	GRAPHIC REF	PART NUMBER	QTY	PART NAME 1 2 3 4 5 6 (PRODUCT LEVEL)	SEE PAGE
	1	1	**3S-2093**	1	STRAP-CABLE	
	2	1	**8T-2362**	1	ADAPTER	
	3	1,2	**9N-0720**	4	ELBOW AS-AIR INLET	
	4	1	**105-7704**	1	TEE	
	5	1	**150-5030**	1	INDICATOR-AIR FILTER CHANGE	
	6	2	**253-1466**	1	ADAPTER-AIR	
	7	1	**273-7425**	1	HARNESS AS-SENSOR (TURBOCHARGER AIR INLET PRESS)	
	8	1	**274-6717**	1	SENSOR GP-PRESSURE	
	9	1	**286-2247**	1	TUBE AS	
	10	1	**291-6802**	1	BRACKET AS	
I	11	1	**292-8434**	1	HOSE AS	
	12	2	**292-9604**	2	SPACER	
	13	1	**300-2477**	1	TUBE AS	
	14	1	*148-8368*	1	ELBOW AS	
		1	**3J-1907**	1	SEAL-O-RING	
		1	**4J-5477**	1	SEAL-O-RING	
		1	**6V-8627**	1	ELBOW	
	15	2	*148-8369*	1	ELBOW AS	
		2	**3J-7354**	1	SEAL-O-RING	
		2	**4J-5477**	1	SEAL-O-RING	
		2	**6V-8628**	1	ELBOW	
	16	2	**198-4777**	4	WASHER-HARD (11X25X10-MM THK)	
	17	1,2	**233-8350**	8	CLAMP	
	18	1	**5P-7813**	1	SEAL-O-RING	
	19	1	**5P-9297**	1	CLIP	
	20	2	**6D-3479**	1	CLIP	
	21	1,2	**6V-5048**	3	SEAL-O-RING	
	22	1	**6V-5049**	1	SEAL-O-RING	
	23	1	**8L-2786**	1	SEAL-O-RING	
	24	2	**8T-4121**	7	WASHER-HARD (11X21X2.5-MM THK)	
M	25	2	**8T-4182**	4	BOLT (M10X1.5X45-MM)	
M	26	2	**8T-4195**	1	BOLT (M10X1.5X30-MM)	
M	27	2	**8T-4196**	4	BOLT (M10X1.5X35-MM)	
M	28	1	**8T-4971**	2	BOLT (M6X1X30-MM)	
M	29	2	**8T-5005**	2	BOLT (M10X1.5X70-MM)	
M	30	2	**8T-7004**	20	STUD-TAPERLOCK	
	31	2	**9S-8002**	2	PLUG-O-RING	
	32	1	**9X-8256**	2	WASHER (6.6X12X2-MM THK)	

I-REFER TO HYDRAULIC INFORMATION SYSTEM
M-METRIC PART

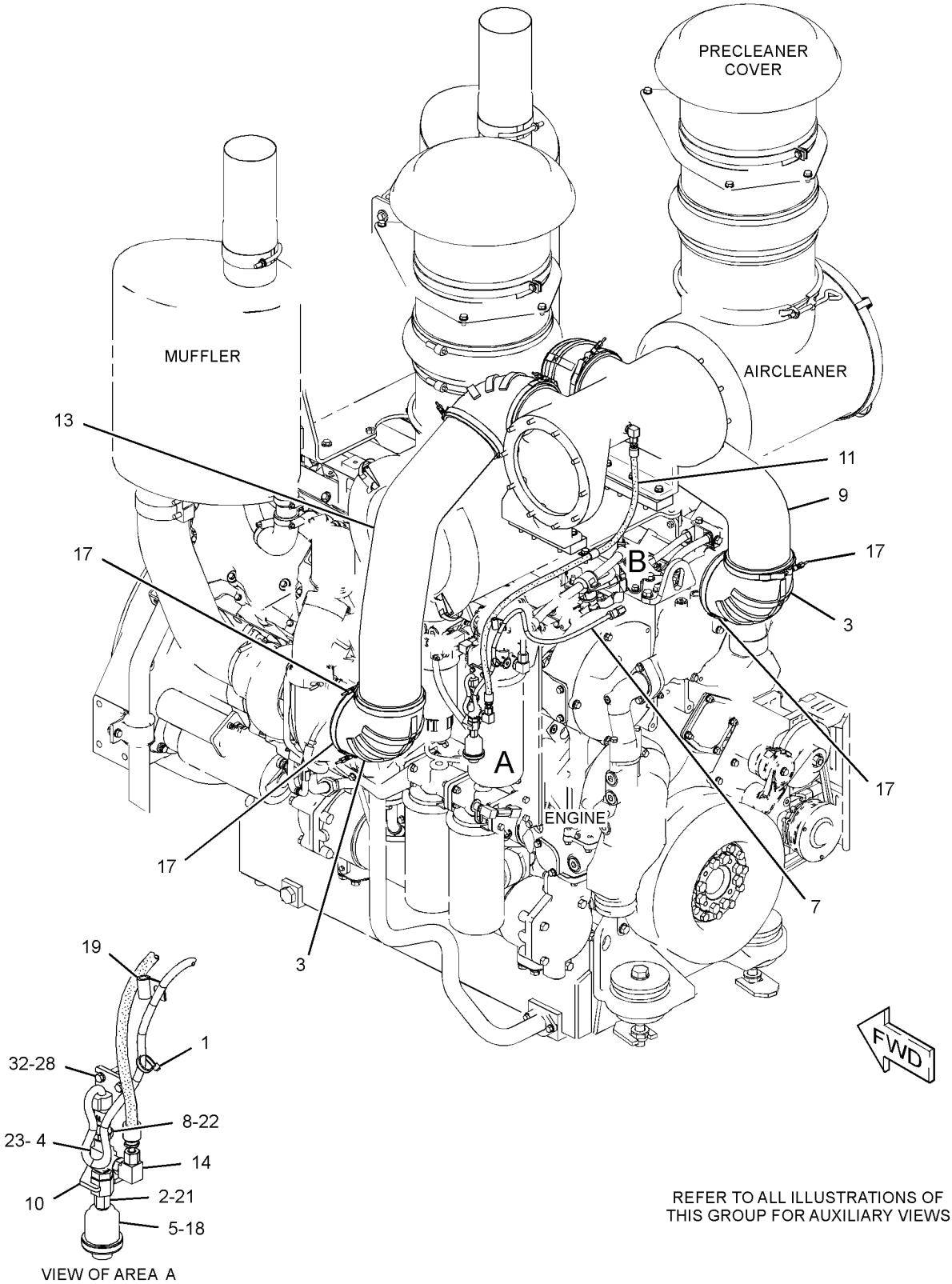

REFER TO ALL ILLUSTRATIONS OF THIS GROUP FOR AUXILIARY VIEWS

GRAPHIC #1

g01438758

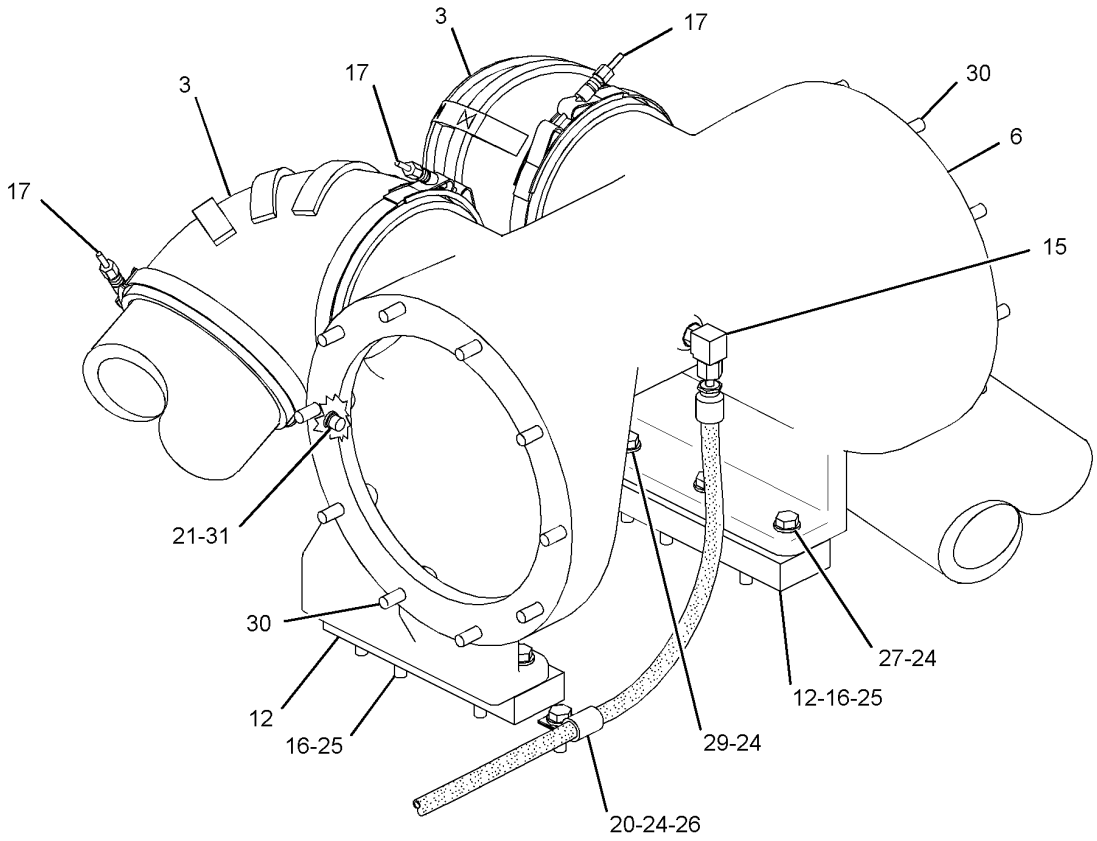

VIEW OF AREA B

GRAPHIC #2 **<END>** g01438812

AIR INLET AND EXHAUST SYSTEM

285-6532 LINES GP-AIR

S/N: LJW1-UP

PART OF 246-4283, 246-8228, 259-3142, 259-3143 ENGINE AR-COMPLETE AN ATTACHMENT

SMCS-1071 **i02866166**

NOTE	REF NO	GRAPHIC REF	PART NUMBER	QTY	PART NAME 1 2 3 4 5 6 (PRODUCT LEVEL)	SEE PAGE
	1	1	**127-0929**	2	CLAMP	
	2	1	**217-5684**	2	ELBOW	
	3	1	**217-8946**	1	ELBOW	
	4	1	**217-8947**	1	ELBOW (AFTERCOOLER, OUTLET)	
	5	1	**223-1998**	2	MANIFOLD-INLET	
	6	1	**226-5613**	2	GASKET	
	7	1	**2P-3213**	26	BOLT-WASHER HEAD (3/8-16X4.50-IN)	
	8	1	**2P-7557**	14	BOLT (3/8-16X3.75-IN)	
	10	1	**6L-3005**	2	CLAMP-BAND	
	11	1	**6V-4589**	1	SEAL-O-RING	
	12	1	**6V-5048**	3	SEAL-O-RING	
	13	1	**6V-6353**	2	SEAL-O-RING	
	14	1	**8C-3089**	2	SEAL-O-RING	
	15	1	**9S-8002**	3	PLUG-O-RING	
	17	1	**9S-8006**	1	PLUG-O-RING	

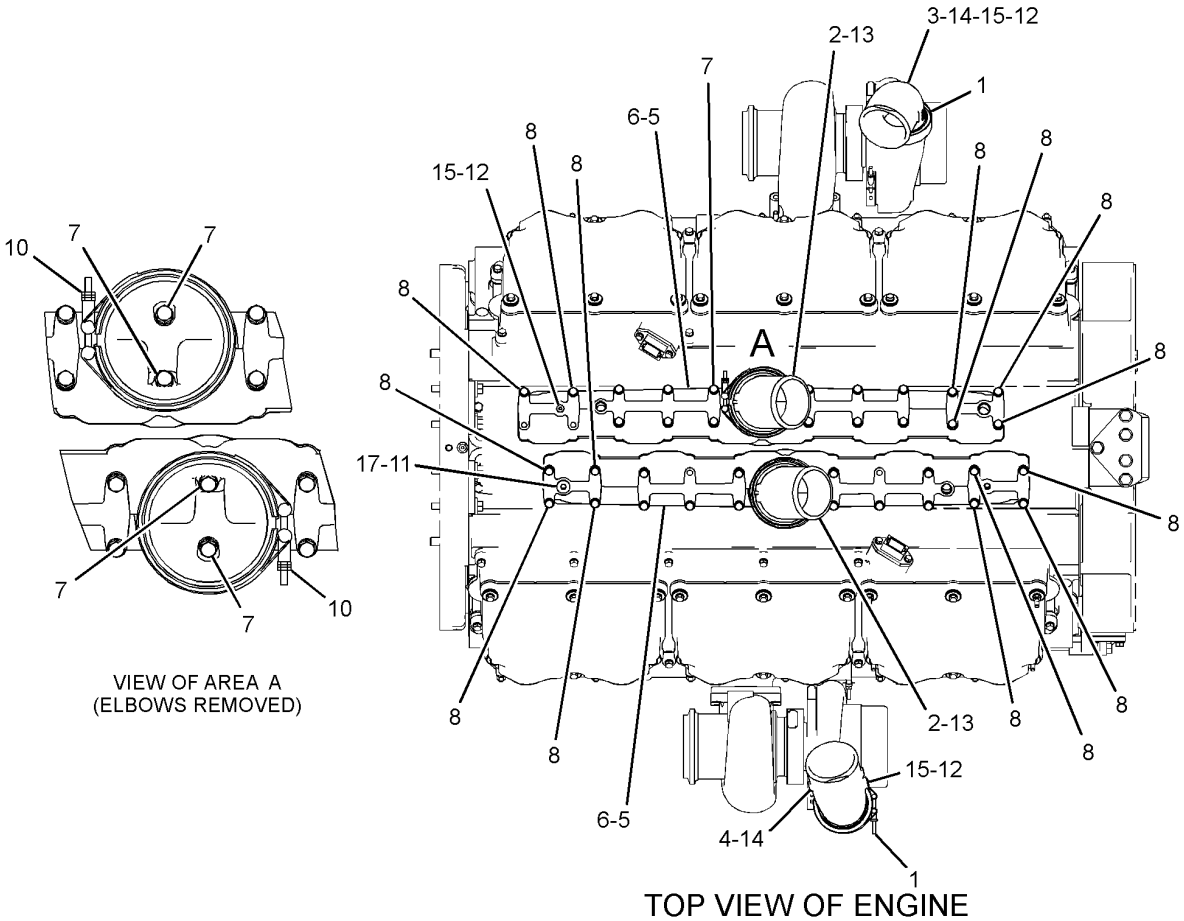

GRAPHIC #1 **<END>** g01435435

AIR INLET AND EXHAUST SYSTEM

217-5696 LINES GP-TURBOCHARGER AIR

S/N: 2211-UP

PART OF 246-4284 INSTALLATION AR-ENGINE

SMCS-1052, 1071 **i02375065**

NOTE	REF NO	GRAPHIC REF	PART NUMBER	QTY	PART NAME 1 2 3 4 5 6 (PRODUCT LEVEL)	SEE PAGE
	1	1	**9N-1941**	2	CLAMP-V-BAND	
					(EACH INCLUDES)	
		1	**8T-0122**	1	NUT-FULL (1/4-28-THD)	
	2	1	**217-5697**	1	TUBE AS	
	3	1	**217-5698**	1	TUBE AS	
	4	1	**241-9265**	2	CLAMP-MUFFLER	

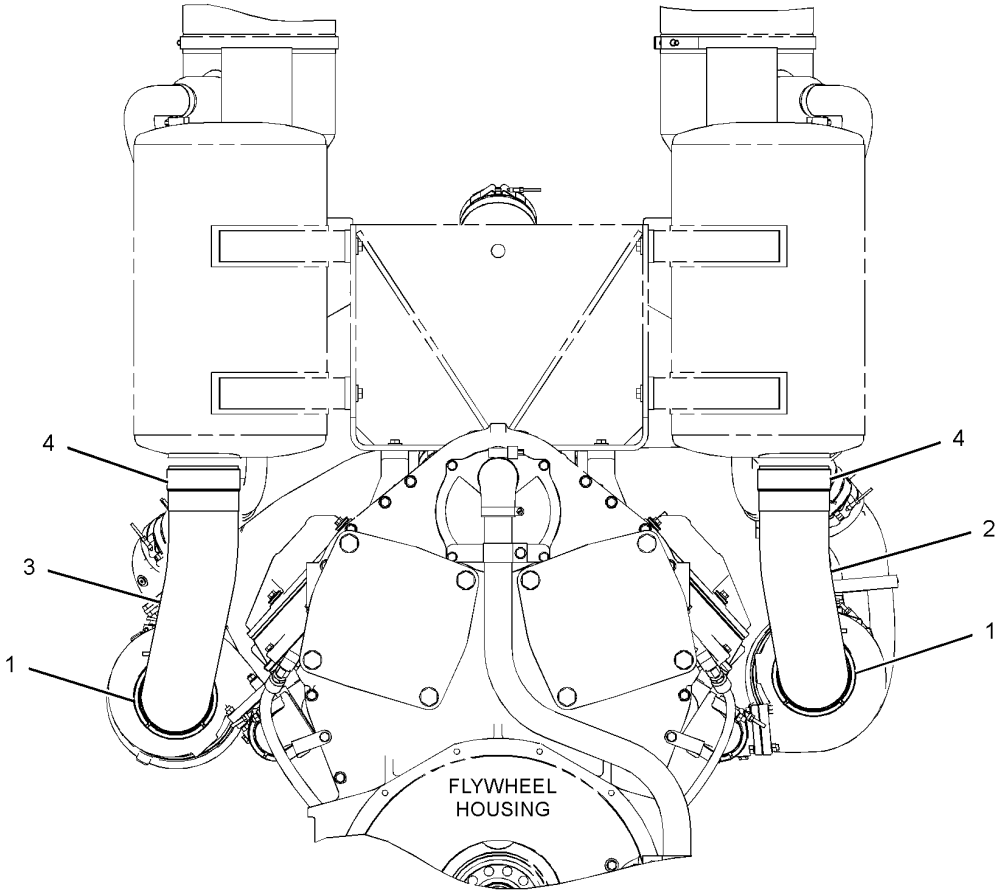

REAR VIEW

GRAPHIC #1 **<END>** g01210445

AIR INLET AND EXHAUST SYSTEM

253-2633 MANIFOLD GP-EXHAUST

S/N: LJW2195-UP

PART OF 259-3142, 259-3143 ENGINE AR-COMPLETE

AN ATTACHMENT

SMCS-1059 **i02947123**

NOTE	REF NO	GRAPHIC REF	PART NUMBER	QTY	PART NAME 1 2 3 4 5 6 (PRODUCT LEVEL)	SEE PAGE
	1	1	**2W-4474**	4	BRACKET	
	2	1	**8N-0879**	8	CLAMP	
	3	1	**108-3612**	16	SPACER (11.13X19.05X53-MM THK)	
	4	1	**114-9223**	8	SPACER (11.13X19.05X19-MM THK)	
	5	1	**243-3565**	8	SEAL-O-RING	
	6	1	**243-3566**	4	JOINT-EXPANSION	
	7	1	**250-6239**	4	MANIFOLD-EXHAUST (END)	
	8	1	**250-9205**	1	MANIFOLD-EXHAUST	
	9	1	**250-9207**	1	MANIFOLD-EXHAUST	
	10	1	**106-1793**	2	STUD-TAPERLOCK (3/8-16X2.36-IN)	
C	11	1	**239-1388**	12	GASKET	
	12	1	**2N-2766**	24	LOCKNUT (3/8-16-THD)	
	14	1	**5M-2894**	24	WASHER-HARD (10.2X18.5X2.5-MM THK)	
	15	1	**6B-2882**	8	SPACER (0.406X0.75X0.312-IN THK)	

C-CHANGE FROM PREVIOUS TYPE

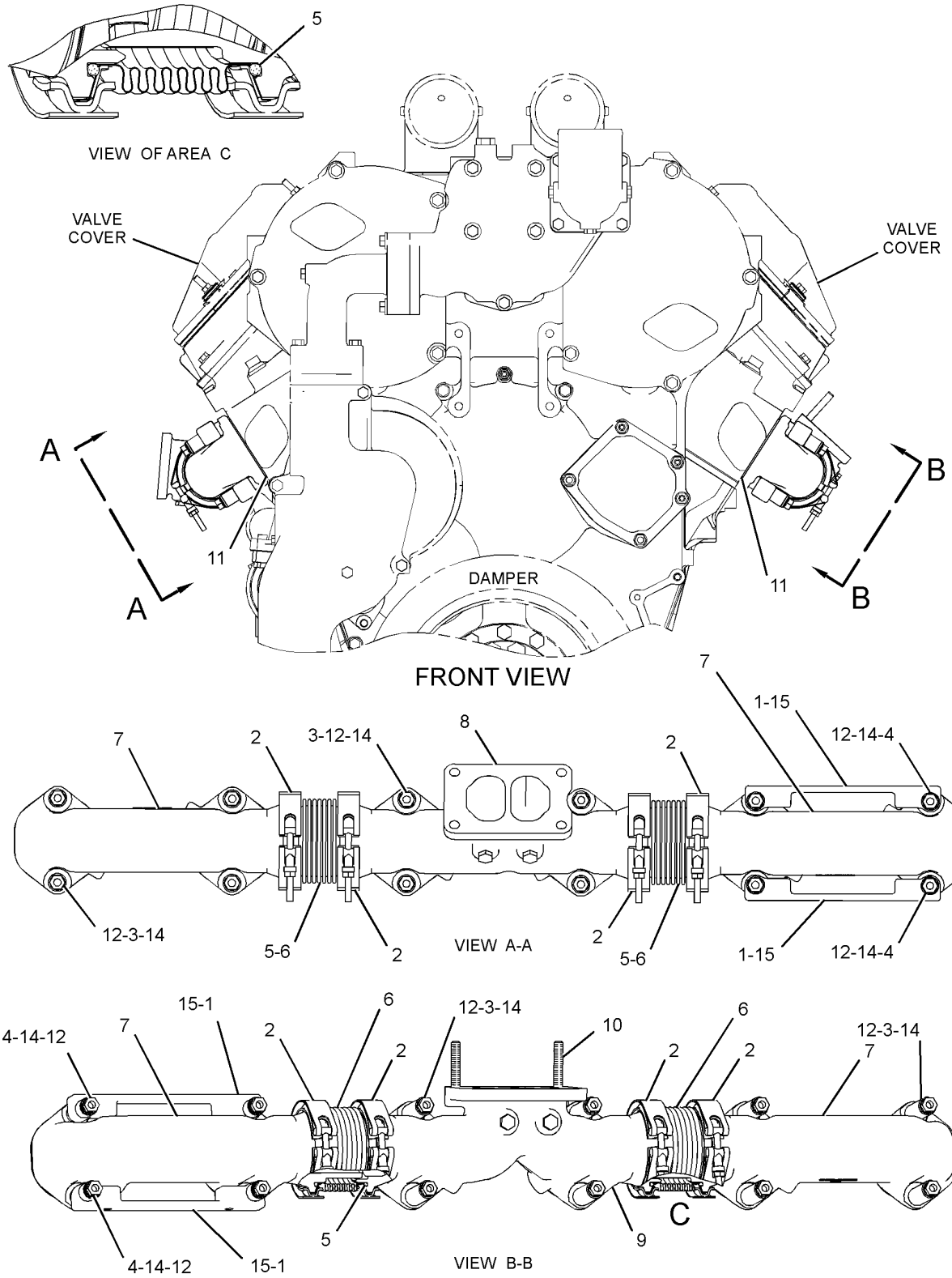

GRAPHIC #1 **<END>** g01267883

AIR INLET AND EXHAUST SYSTEM

295-0647 MANIFOLD GP-EXHAUST

S/N: LJW1-UP
PART OF 246-4283, 246-8228 ENGINE AR-COMPLETE
AN ATTACHMENT

SMCS-1059 **i02867173**

NOTE	REF NO	GRAPHIC REF	PART NUMBER	QTY	PART NAME 1 2 3 4 5 6 (PRODUCT LEVEL)	SEE PAGE
	1	1	**2W-4474**	8	BRACKET	
	2	1	**8N-0879**	8	CLAMP	
	3	1	**108-3612**	8	SPACER (11.13X19.05X53-MM THK)	
	4	1	**114-9223**	16	SPACER (11.13X19.05X19-MM THK)	
	5	1	**239-1388**	12	GASKET	
	6	1	**243-3565**	8	SEAL-O-RING	
	7	1	**243-3566**	4	JOINT-EXPANSION	
	8	1	**250-6239**	4	MANIFOLD-EXHAUST	
	9	1	**250-9205**	1	MANIFOLD-EXHAUST	
	10	1	**250-9207**	1	MANIFOLD-EXHAUST	
	11	1	**106-1793**	2	STUD-TAPERLOCK (3/8-16X2.36-IN)	
	12	1	**2N-2766**	24	LOCKNUT (3/8-16-THD)	
	13	1	**5M-2894**	24	WASHER-HARD (10.2X18.5X2.5-MM THK)	
	14	1	**6B-2882**	16	SPACER (0.406X0.75X0.312-IN THK)	

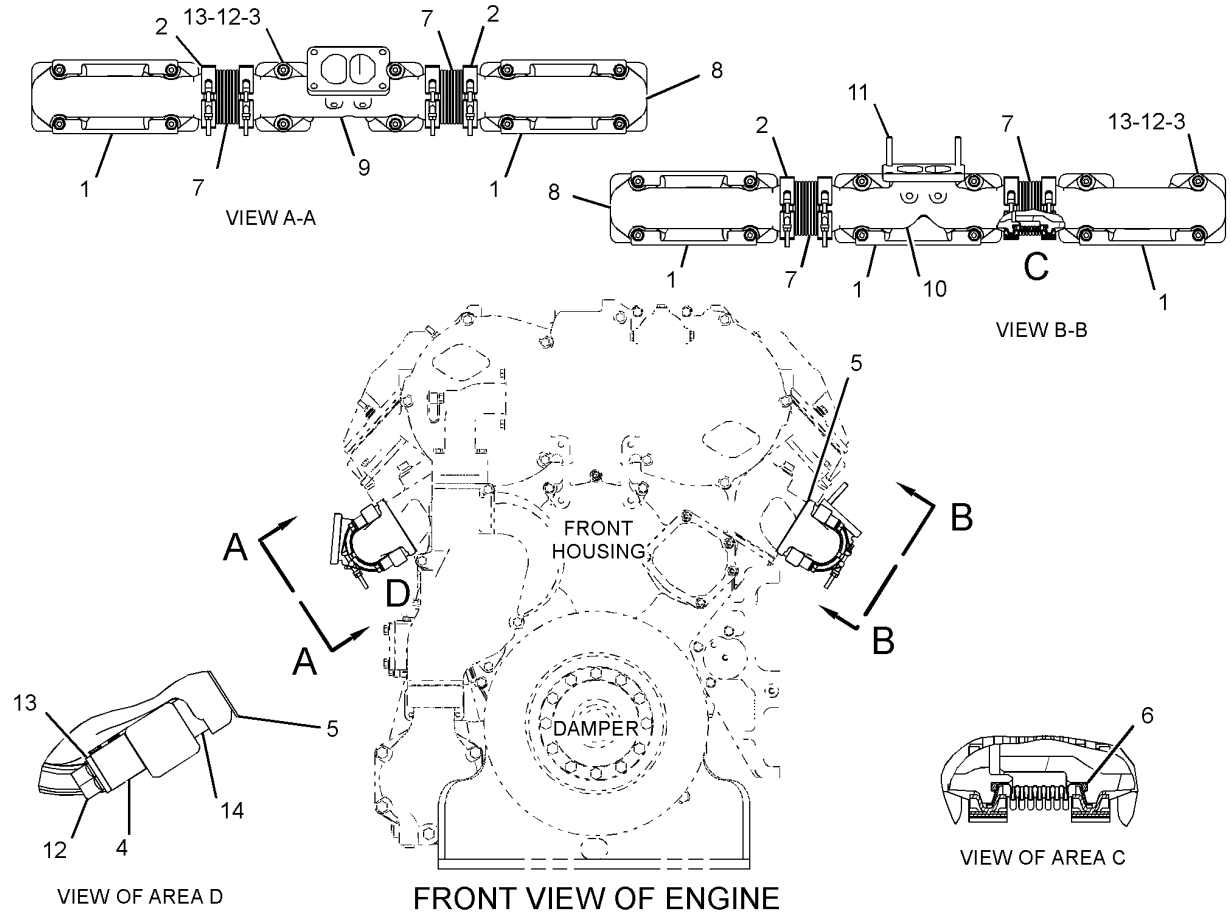

GRAPHIC #1 **<END>** g01429783

AIR INLET AND EXHAUST SYSTEM

275-1232 MUFFLER GP

S/N: 2211-UP

PART OF 246-4284 INSTALLATION AR-ENGINE

SMCS-1062 **i02878112**

NOTE	REF NO	GRAPHIC REF	PART NUMBER	QTY	PART NAME 1 2 3 4 5 6 (PRODUCT LEVEL)	SEE PAGE
	1	1	**224-3156**	1	MUFFLER AS	
	2	1	**224-3157**	1	MUFFLER AS	
	3	1	**291-6712**	2	PIPE-EXTENSION	
	4	1	**315-1263**	1	SUPPORT AS	
M		1	**8T-3490**	2	NUT-WELD (M10X1.5-THD)	
M		1	**9R-2613**	1	BOSS-WELD (M10X1.5X25-MM)	
M		1	**9T-6001**	2	BOSS (M10X1.5-THD)	
		1	**117-8721**	2	LUG (M10X1.5-THD)	
	5	1	**5P-1076**	8	WASHER-HARD (13.5X30X4-MM THK)	
	6	1	**7E-6455**	2	CLAMP	
	7	1	**7X-7729**	4	WASHER (11X25X3-MM THK)	
M	8	1	**8T-4194**	8	BOLT (M12X1.75X50-MM)	
M	9	1	**8T-4195**	4	BOLT (M10X1.5X30-MM)	

M-METRIC PART

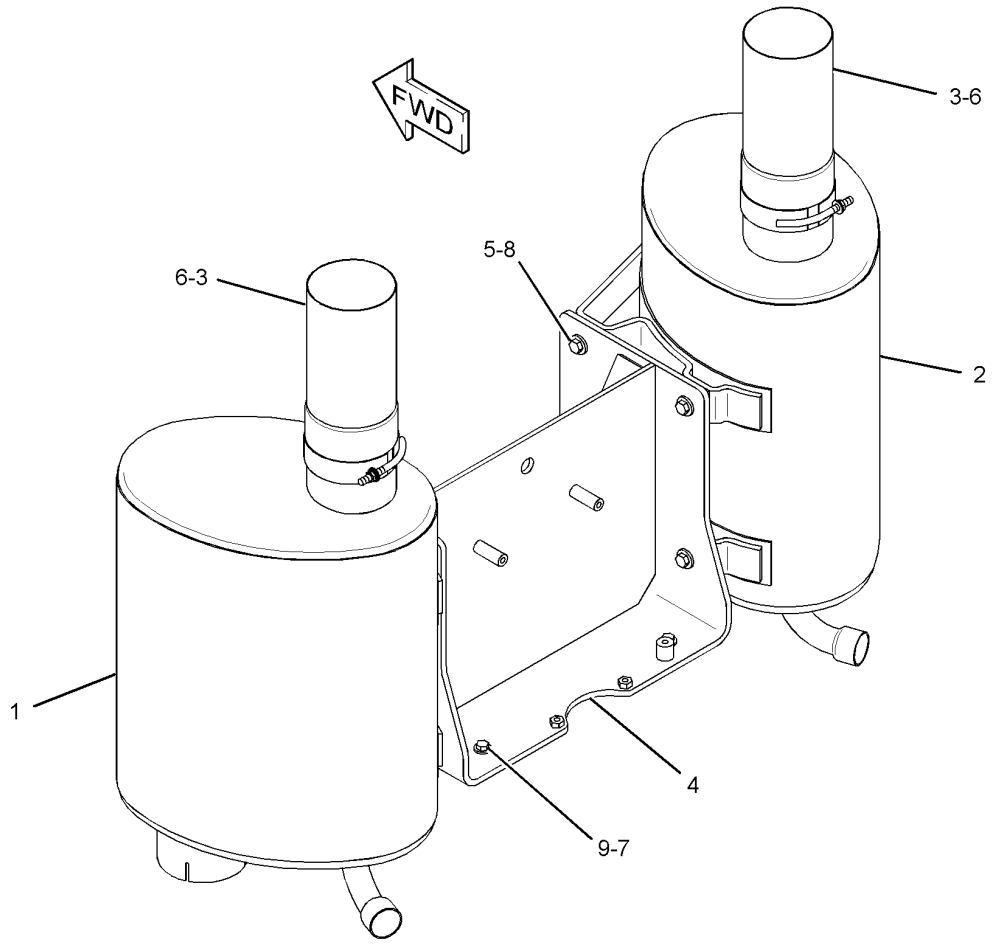

GRAPHIC #1 **<END>** g01442616

AIR INLET AND EXHAUST SYSTEM

234-4919 SHIELD GP-HEAT

S/N: 2211-UP

PART OF 246-4284 INSTALLATION AR-ENGINE

SMCS-1067 **i02044575**

NOTE	REF NO	GRAPHIC REF	PART NUMBER	QTY	PART NAME 1 2 3 4 5 6 (PRODUCT LEVEL)	SEE PAGE
	1	1	**237-9382**	2	SHIELD AS-HEAT	
	2	1	**8C-6876**	4	BOLT (5/16-18X1.625)	
	3	1	**8T-4224**	4	WASHER-HARD (8.8X16X2-MM THK)	

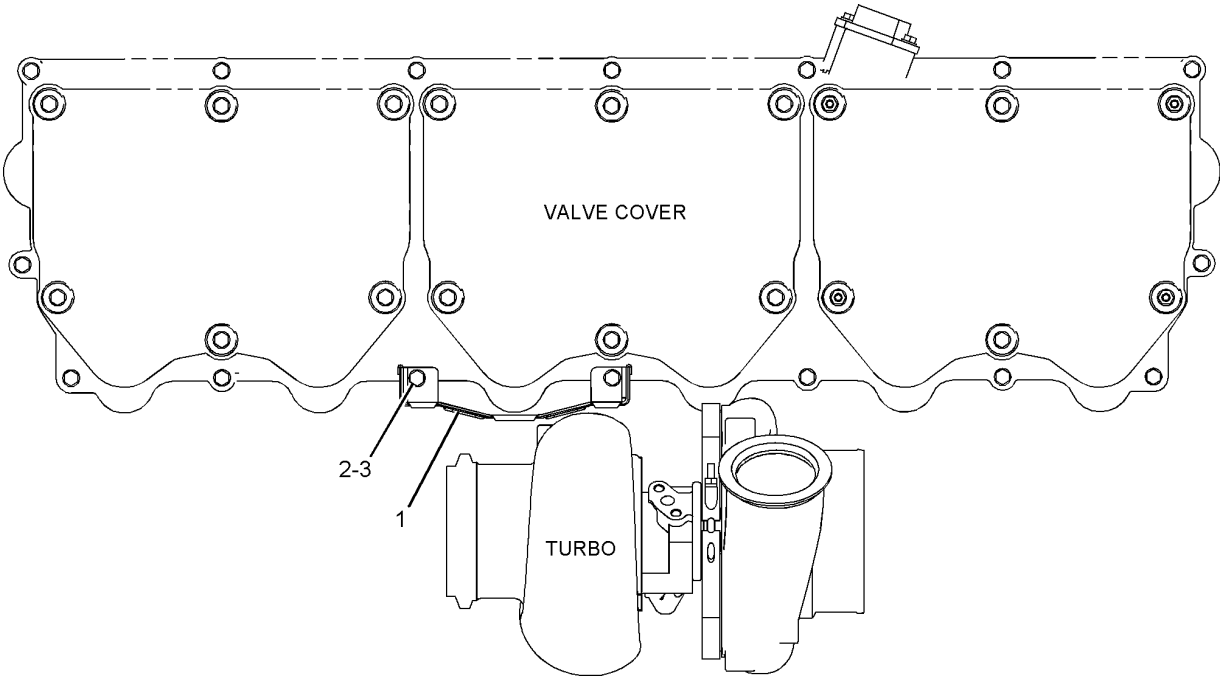

GRAPHIC #1

<END>

g01050829

AIR INLET AND EXHAUST SYSTEM

243-3864 SHIELD GP-HEAT

S/N: LJW2195-UP

PART OF 259-3142, 259-3143 ENGINE AR-COMPLETE

AN ATTACHMENT

SMCS-1067 **i02041200**

NOTE	REF NO	GRAPHIC REF	PART NUMBER	QTY	PART NAME 1 2 3 4 5 6 (PRODUCT LEVEL)	SEE PAGE
	1	1	**6N-9533**	2	SHIELD AS-HEAT	
	2	1	**0T-0102**	8	BOLT (3/8-16X0.625-IN)	
	3	1	**9X-6458**	8	WASHER-HARD (10.2X22.5X3-MM THK)	

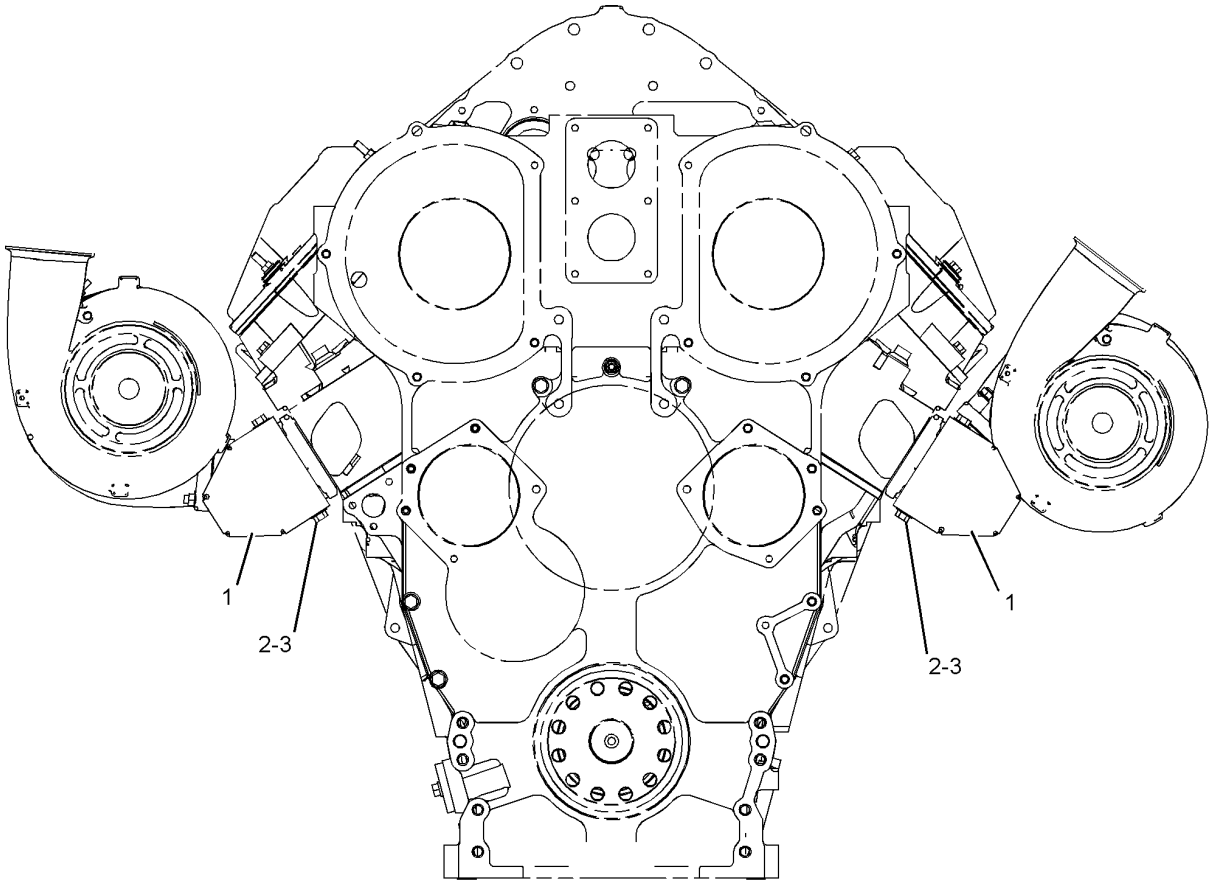

FRONT VIEW

GRAPHIC #1

<END>

g01051348

AIR INLET AND EXHAUST SYSTEM

292-2257 SHIELD GP-HEAT

S/N: LJW1-UP
PART OF 246-4283, 246-8228 ENGINE AR-COMPLETE
AN ATTACHMENT

SMCS-1067 **i02886596**

NOTE	REF NO	GRAPHIC REF	PART NUMBER	QTY	PART NAME 1 2 3 4 5 6 (PRODUCT LEVEL)	SEE PAGE
	1	1	**6N-9533**	3	SHIELD AS-HEAT	
	2	1	**299-4790**	1	SHIELD AS-HEAT	
	3	1	**300-3696**	2	PLATE	
	4	1	**0T-0102**	12	BOLT (3/8-16X0.625-IN)	
	5	1	**6V-8801**	4	NUT (3/8-16-THD)	
	6	1	**8T-4896**	12	WASHER-HARD (10.2X18.5X2.5-MM THK)	
	7	1	**9B-7237**	8	BOLT (3/8-16X1.25-IN)	
	8	1	**9X-6458**	12	WASHER-HARD (10.2X22.5X3-MM THK)	

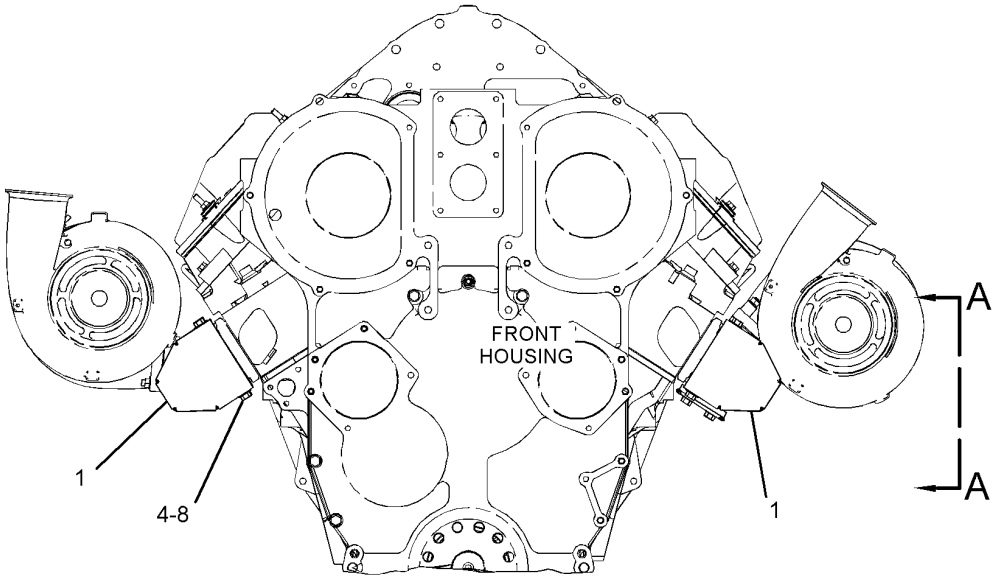

FRONT VIEW OF ENGINE

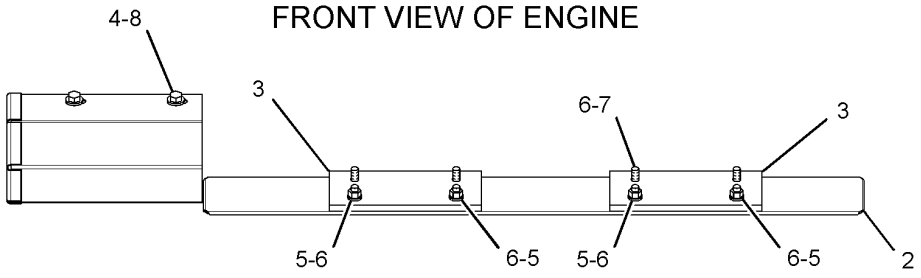

VIEW A-A

GRAPHIC #1 **<END>** g01452892

AIR INLET AND EXHAUST SYSTEM

234-5913 SUPPORT GP-AFTERCOOLER

S/N: LJW2195-UP
PART OF 246-4283 ENGINE AR-COMPLETE
AN ATTACHMENT

SMCS-1063 **i02390276**

NOTE	REF NO	GRAPHIC REF	PART NUMBER	QTY	PART NAME 1 2 3 4 5 6 (PRODUCT LEVEL)	SEE PAGE
	1	1	**219-6923**	1	BRACE	
	2	1	**224-3158**	1	BRACE	
C	3	1	**3B-1915**	8	BOLT (3/8-16X1.375-IN)	
C	4	1	**7N-1637**	4	STUD	
	5	1	**9X-6458**	12	WASHER-HARD (10.2X22.5X3-MM THK)	

C-CHANGE FROM PREVIOUS TYPE

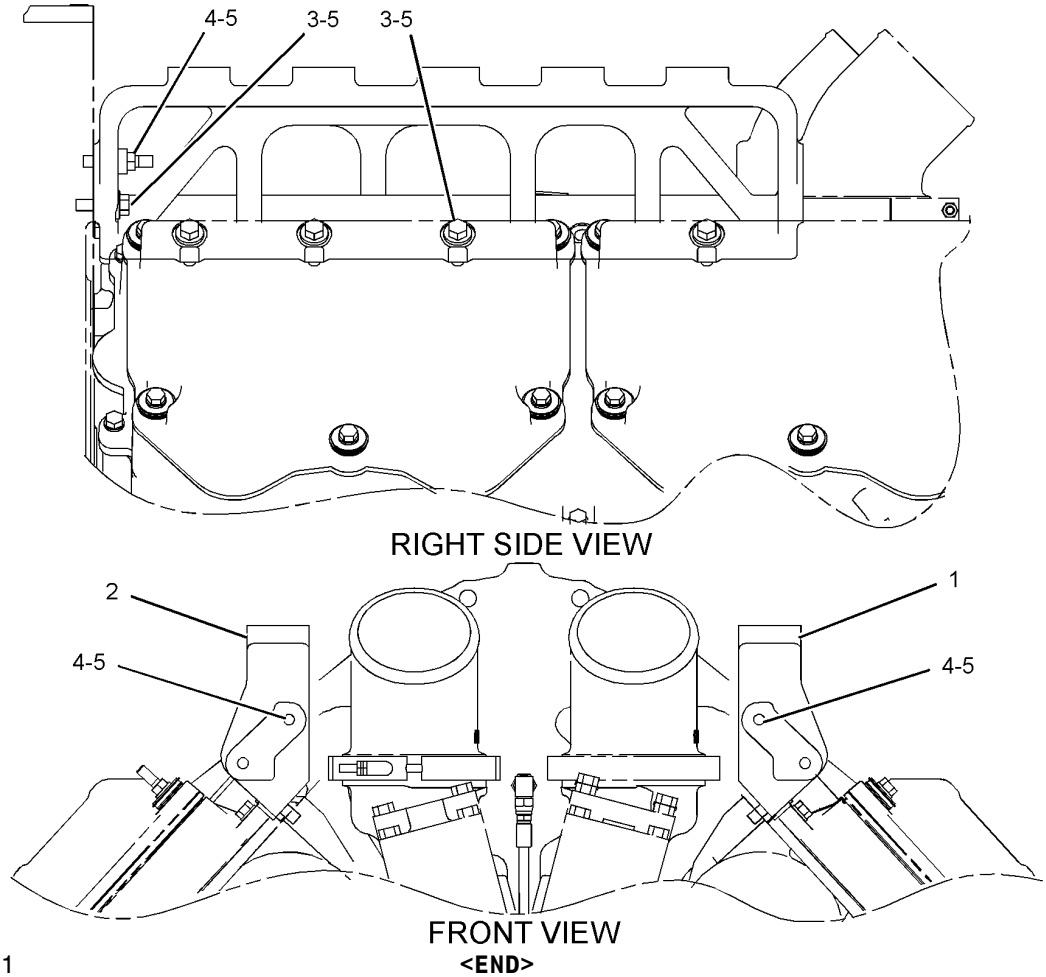

GRAPHIC #1

<END>

g01208367

AIR INLET AND EXHAUST SYSTEM

311-4119 SUPPORT GP-AFTERCOOLER

S/N: LJW1-UP

PART OF 246-8228, 259-3142, 259-3143 ENGINE AR-COMPLETE

AN ATTACHMENT

SMCS-1063 **i02859727**

NOTE	REF NO	GRAPHIC REF	PART NUMBER	QTY	PART NAME 1 2 3 4 5 6 (PRODUCT LEVEL)	SEE PAGE
	1	1	**219-6923**	1	BRACE	
	2	1	**224-3158**	1	BRACE	
	3	1	**3B-1915**	9	BOLT (3/8-16X1.375-IN)	
	4	1	**9X-6458**	9	WASHER-HARD (10.2X22.5X3-MM THK)	

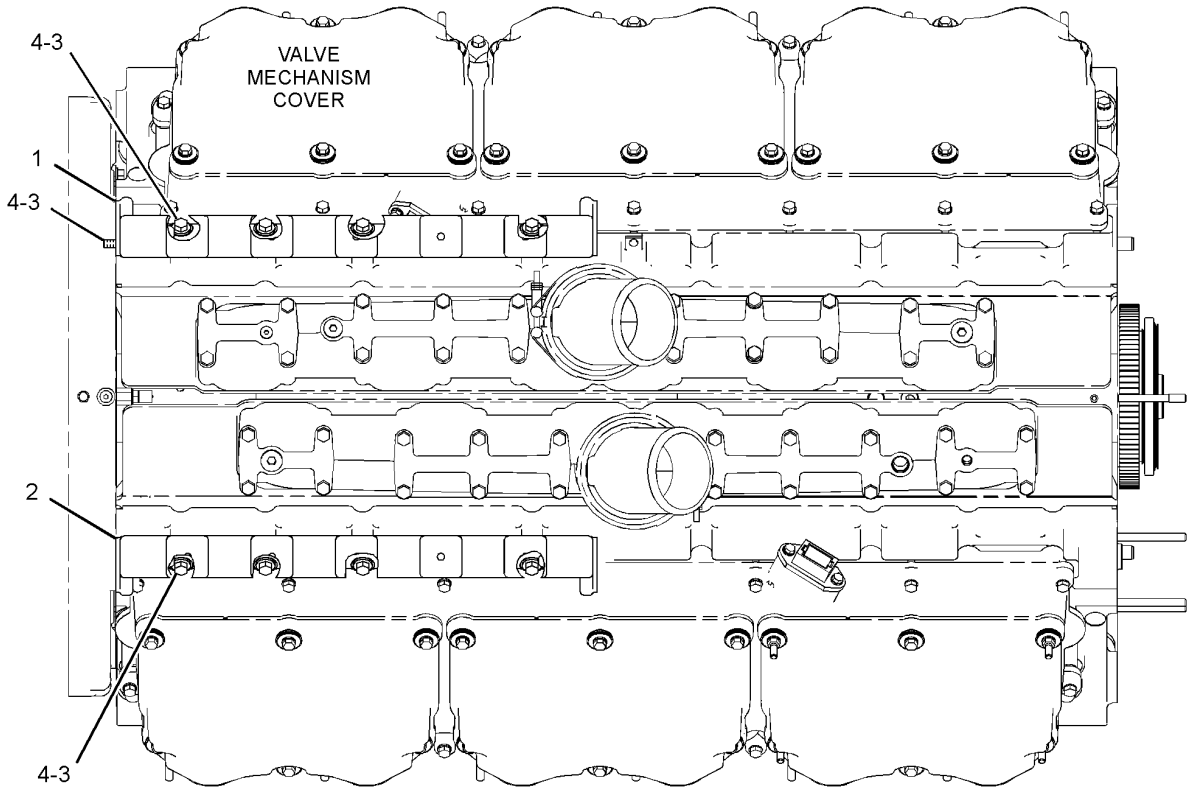

TOP VIEW OF ENGINE

GRAPHIC #1 **<END>** g01426979

AIR INLET AND EXHAUST SYSTEM

290-4621 TURBOCHARGER GP

S/N: LJW1-UP

PART OF 261-2303, 261-2304 ENGINE AR-CORE

AN ATTACHMENT

SMCS-1052, 1053 **i02875866**

NOTE	REF NO	GRAPHIC REF	PART NUMBER	QTY	PART NAME 1 2 3 4 5 6 (PRODUCT LEVEL)	SEE PAGE
	1	1	**1S-4295**	2	GASKET (TURBOCHARGER)	
	2	1	**114-9223**	2	SPACER (11.13X19.05X19-MM THK)	
Y	3	1	**302-7437**	1	TURBOCHARGER GP	151
Y	4	1	**302-7439**	1	TURBOCHARGER GP	152
	5	1	**2N-2765**	6	BOLT-HIGH TEMPERATURE (3/8-16X1.75-IN)	
	6	1	**2N-2766**	8	LOCKNUT (3/8-16-THD)	

Y-SEPARATE ILLUSTRATION

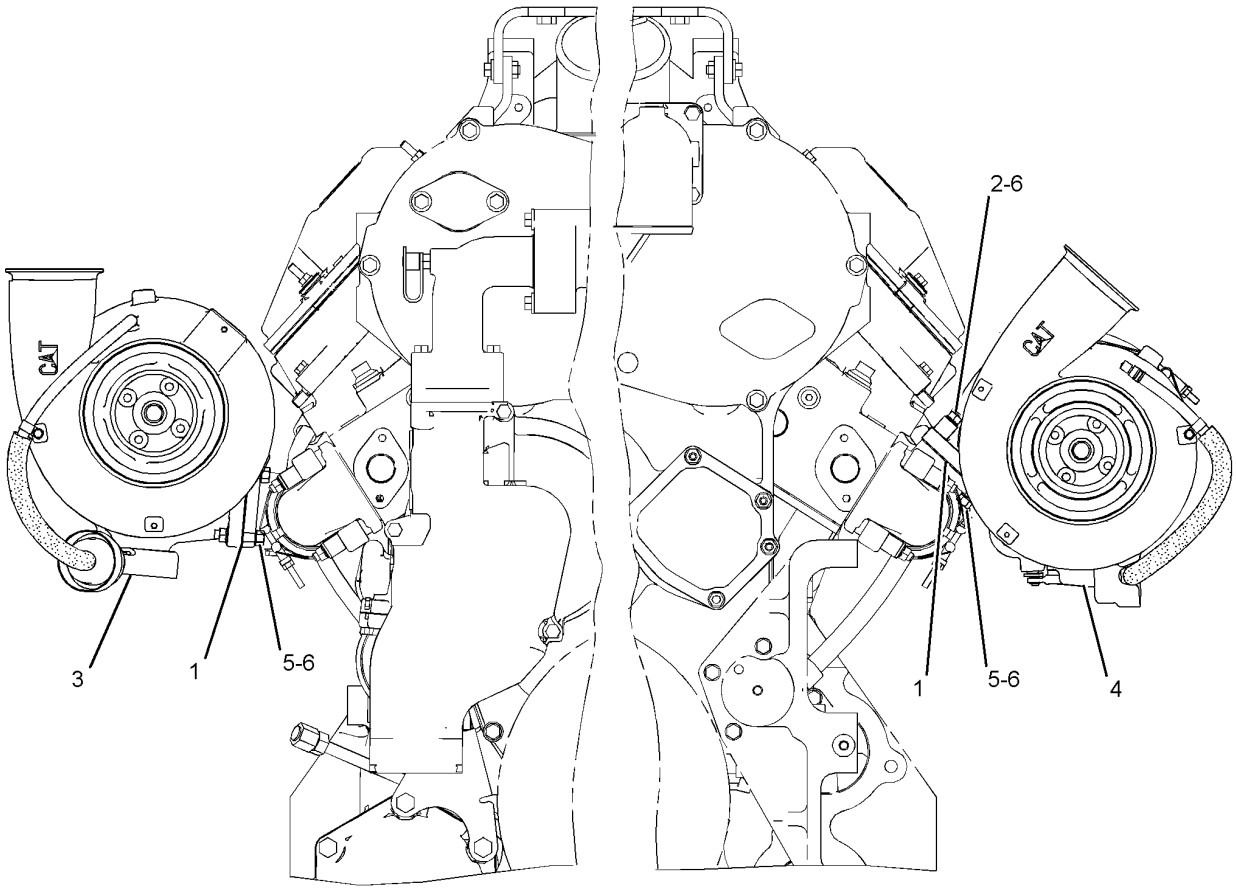

FRONT VIEW OF ENGINE

GRAPHIC #1

<END>

g01438121

AIR INLET AND EXHAUST SYSTEM

302-7437 TURBOCHARGER GP

S/N: LJW1-UP
PART OF 290-4621 TURBOCHARGER GP
AN ATTACHMENT

SMCS-1052, 1053 **i02886699**

NOTE	REF NO	GRAPHIC REF	PART NUMBER	QTY	PART NAME 1 2 3 4 5 6 (PRODUCT LEVEL)	SEE PAGE
	1	1	**9N-2038**	1	CLAMP AS-TURBINE	
		1	**7M-9918**	1	LOCKNUT (1/4-28-THD)	
	2	1	**161-6958**	1	CLIP-HOSE	
	3	1	**161-6963**	2	CLAMP	
	4	1	**268-2960**	1	CLAMP AS (COMPRESSOR)	
		1	**7M-9918**	1	LOCKNUT (1/4-28-THD)	
	5	1	**302-1409**	1	CARTRIDGE GP-TURBOCHARGER	
	6	1	**115-7087**	1	BOLT (M6X0.04X10.4-MM)	
E	7	1	**242-3360**		HOSE (45-CM)	
E	8	1	**258-4524**		SLEEVE (24-CM)	

E-ORDER BY THE CENTIMETER

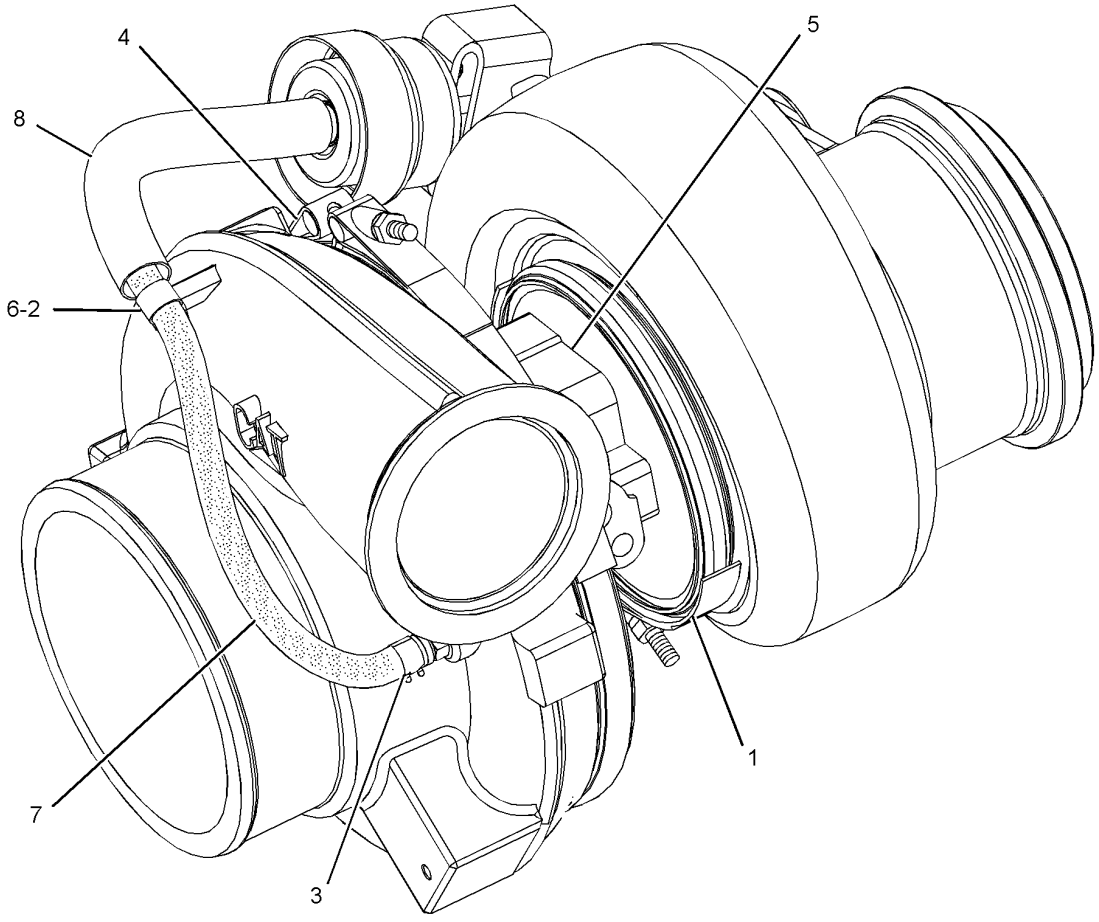

GRAPHIC #1 **<END>** g01438033

AIR INLET AND EXHAUST SYSTEM

302-7439 TURBOCHARGER GP

S/N: LJW1-UP

PART OF 290-4621 TURBOCHARGER GP

AN ATTACHMENT

SMCS-1052, 1053 **i02886592**

NOTE	REF NO	GRAPHIC REF	PART NUMBER	QTY	PART NAME 1 2 3 4 5 6 (PRODUCT LEVEL)	SEE PAGE
	1	1	**5P-4536**	1	ELBOW	
	2	1	**9N-2038**	1	CLAMP AS-TURBINE	
		1	**7M-9918**	1	LOCKNUT (1/4-28-THD)	
	3	1	**161-6958**	1	CLIP-HOSE	
	4	1	**161-6963**	2	CLAMP	
	5	1	**268-2960**	1	CLAMP AS (COMPRESSOR)	
		1	**7M-9918**	1	LOCKNUT (1/4-28-THD)	
	6	1	**302-1409**	1	CARTRIDGE GP-TURBOCHARGER	
	7	1	**115-7087**	1	BOLT (M6X0.04X10.4-MM)	
E	8	1	**242-3360**		HOSE (43-CM)	
E	9	1	**258-4524**		SLEEVE (31-CM)	

E-ORDER BY THE CENTIMETER

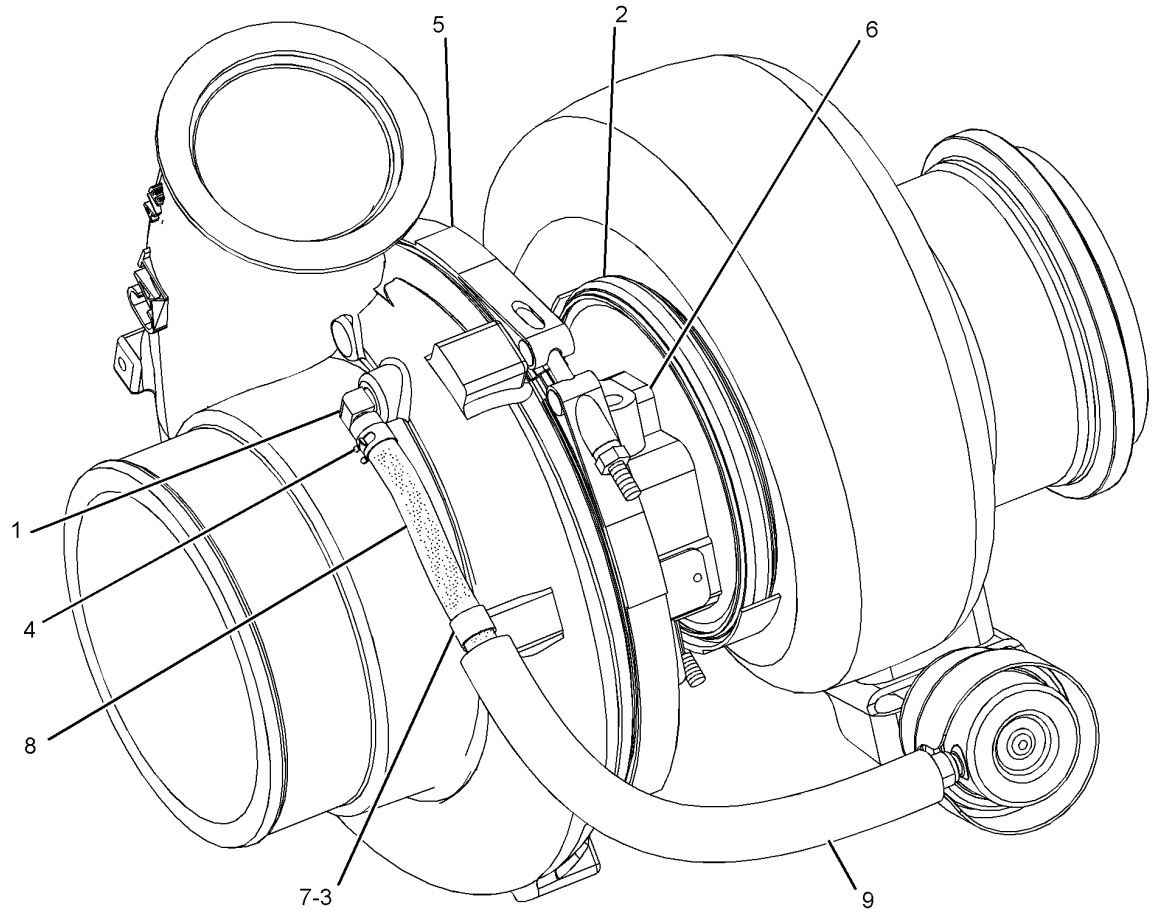

GRAPHIC #1 **<END>** g01438040

235-6114 ADAPTER GP-FAST FILL FUEL

S/N: 2211-UP

PART OF 279-5286, 281-0018 FUEL AR-FAST FILL

AN ATTACHMENT

SMCS-1710 **i02942001**

NOTE	REF NO	GRAPHIC REF	PART NUMBER	QTY	PART NAME 1 2 3 4 5 6 (PRODUCT LEVEL)	SEE PAGE
	1	1	**246-2641**	1	PADLOCK GP	
					(INCLUDES KEY)	
J	2	1	**7X-7700**	1	CAP AS-FILLER (FUEL TANK)	
		1	**9X-8600**	1	SEAL-O-RING	
	3	1	**9D-0630**	1	CAP-DUST	
	4	1	**188-5095**	1	VENT AS	
	5	1	**221-7693**	1	VALVE (FAST FILL FUEL)	
	6	1	**232-1767**	1	RECEIVER AS (FAST FILL FUEL)	
	7	1	**235-6115**	1	HOSE AS	
	8	1	**1H-8128**	1	SEAL-O-RING	
	9	1	**1J-9671**	2	SEAL-O-RING	
	10	1	**1P-4582**	2	FLANGE-HALF	
	11	1	**4J-0527**	1	SEAL-O-RING	
	12	1	**5H-6734**	1	SEAL-O-RING	
	13	1	**5P-2618**	2	CONNECTOR	
	14	1	**8M-2772**	1	CLIP	
M	15	1	**8T-0273**	4	BOLT-SOCKET HEAD (M12X1.75X40-MM)	
					AVAILABLE REPAIR KIT(S):	
J			**9X-2205**	1	KIT-CAP FILTER (FUEL TANK)	
					(INCLUDES FILTER AS, SCREW, VALVE, AND GASKETS)	

J-KIT MARKED J SERVICES PARTS MARKED J
M-METRIC PART

235-6114 **ADAPTER GP-FAST FILL FUEL** *(contd.)* **i02942001**

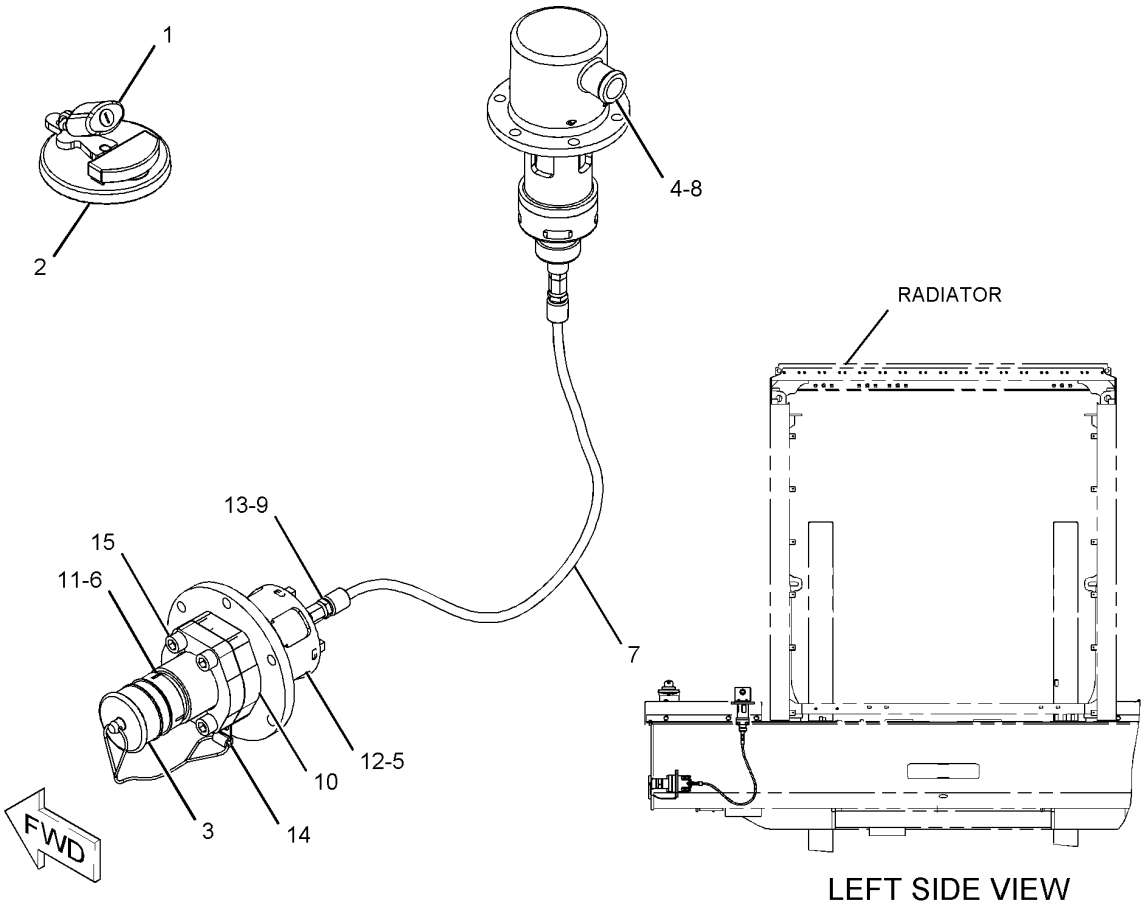

GRAPHIC #1 **<END>** g01066635

FUEL SYSTEM

281-0019 COOLER GP-FUEL

S/N: 2211-UP

PART OF 281-0017 FUEL AR-CONVENTIONAL FILL, 281-0018 FUEL AR-FAST FILL AN ATTACHMENT

SMCS-1712 **i02902955**

NOTE	REF NO	GRAPHIC REF	PART NUMBER	QTY	PART NAME 1 2 3 4 5 6 (PRODUCT LEVEL)	SEE PAGE
	1	1	**6N-8744**	4	MOUNT	
	2	1	**7X-0632**	4	WASHER-HARD (11X36X6-MM THK)	
	3	1	**271-0277**	1	CORE AS-FUEL COOLER	
	4	1	**289-9287**	2	BRACKET	
	5	1	**8T-4121**	10	WASHER-HARD (11X21X2.5-MM THK)	
M	6	1	**8T-4186**	4	BOLT (M10X1.5X40-MM)	
M	7	1	**8T-4195**	6	BOLT (M10X1.5X30-MM)	
	8	1	**8T-4222**	4	WASHER-PLATED (11X32X2.5-MM THK)	

M-METRIC PART

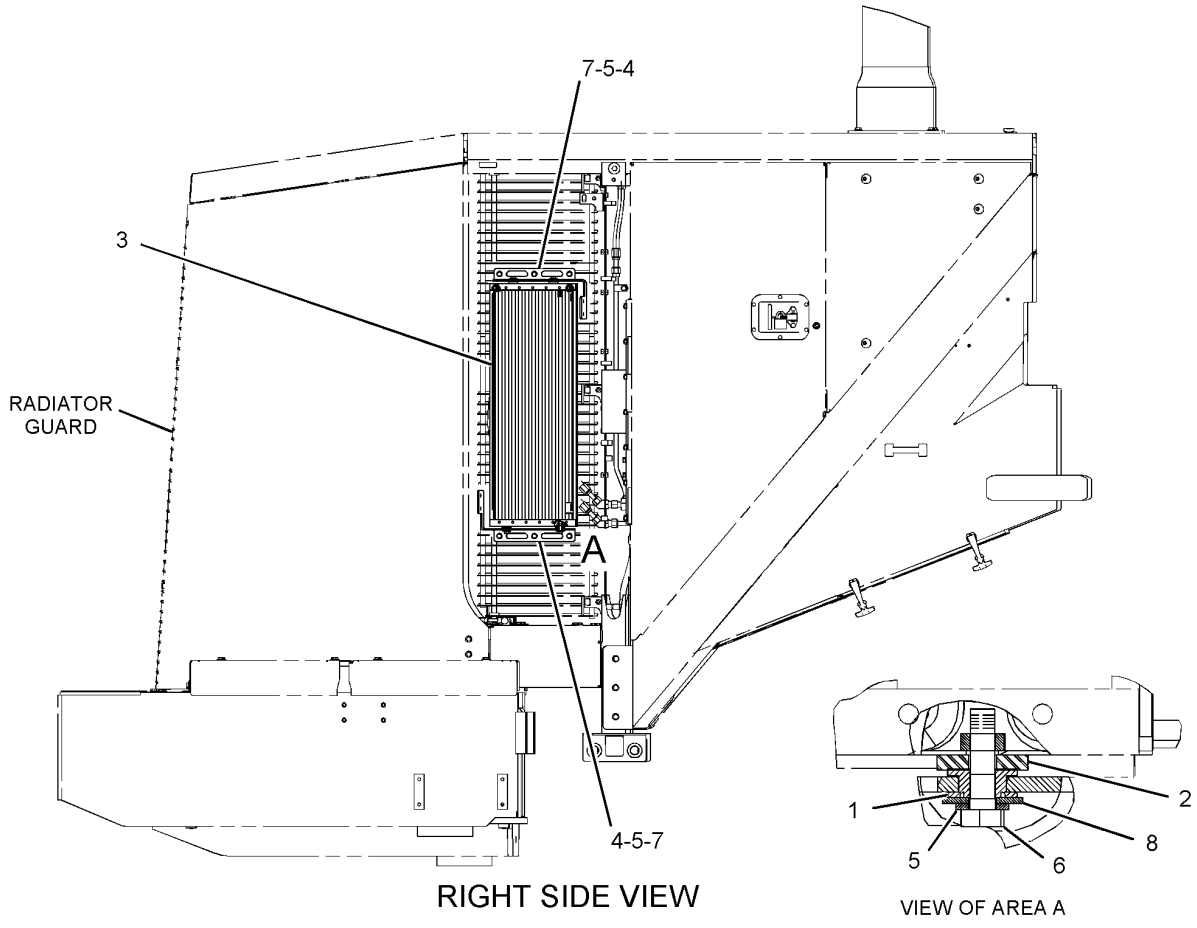

RIGHT SIDE VIEW

VIEW OF AREA A

GRAPHIC #1

<END>

g01449391

FUEL SYSTEM

281-0020 COOLER GP-FUEL

S/N: 2211-UP

PART OF 279-5286 FUEL AR-FAST FILL

AN ATTACHMENT

SMCS-1712 **i02890389**

NOTE	REF NO	GRAPHIC REF	PART NUMBER	QTY	PART NAME 1 2 3 4 5 6 (PRODUCT LEVEL)	SEE PAGE
	1	1	**6N-8744**	4	MOUNT	
	2	1	**7X-0632**	4	WASHER-HARD (11X36X6-MM THK)	
	3	1	**271-0277**	1	CORE AS-FUEL COOLER	
	4	1	**279-0143**	1	VALVE	
	5	1	**288-9763**	1	TUBE AS	
	6	1	**288-9764**	1	TUBE AS	
	7	1	**289-9287**	2	BRACKET	
	8	1	**228-7091**	2	SEAL-O-RING	
	9	1	*281-5977*	4	ADAPTER-FITTING	
					(EACH INCLUDES)	
		1	**6V-8642**	1	CONNECTOR	
		1	**228-7091**	1	SEAL-O-RING	
		1	**238-5081**	1	SEAL-O-RING	
M	10	1	**5C-7261**	2	NUT (M8X1.25-THD)	
	11	1	**5P-4116**	4	WASHER-HARD (8.8X20.5X2-MM THK)	
	12	1	**8T-4121**	10	WASHER-HARD (11X21X2.5-MM THK)	
M	13	1	**8T-4186**	4	BOLT (M10X1.5X40-MM)	
M	14	1	**8T-4195**	6	BOLT (M10X1.5X30-MM)	
	15	1	**8T-4222**	4	WASHER-PLATED (11X32X2.5-MM THK)	
M	16	1	**8T-6869**	2	BOLT (M8X1.25X60-MM)	

M-METRIC PART

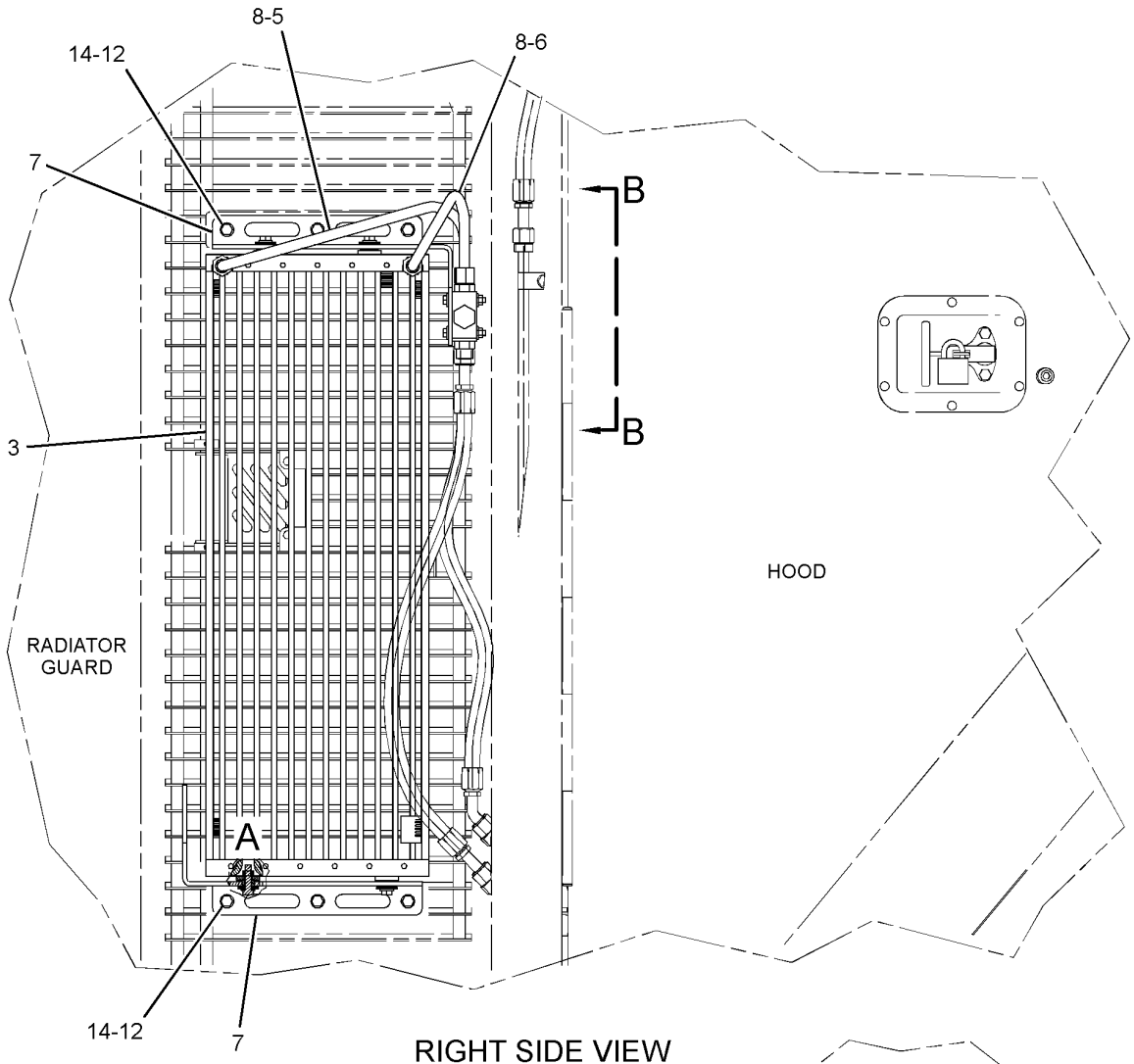

RIGHT SIDE VIEW

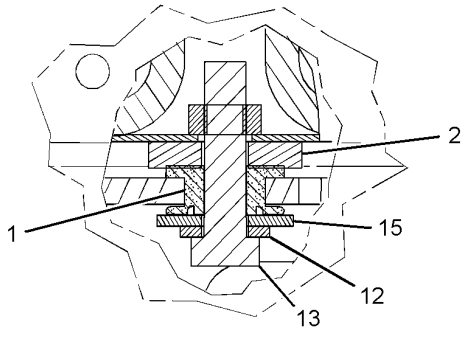

VIEW OF AREA A

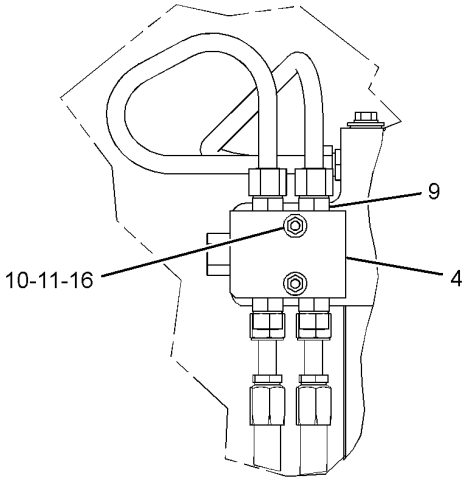

VIEW B-B

GRAPHIC #1 **<END>** g01443364

FUEL SYSTEM

238-8388 DRAIN GP-FUEL

S/N: 2211-UP

PART OF 246-4284 INSTALLATION AR-ENGINE

SMCS-1274 **i02337174**

NOTE	REF NO	GRAPHIC REF	PART NUMBER	QTY	PART NAME 1 2 3 4 5 6 (PRODUCT LEVEL)	SEE PAGE
	1	1	**3S-2093**	3	STRAP-CABLE	
	2	1	**5P-4961**	1	CLAMP-HOSE	
E	3	1	**8C-6959**		HOSE (50.9-CM)	
E	4	1	**103-2529**		HOSE (78.5-CM)	

E-ORDER BY THE CENTIMETER

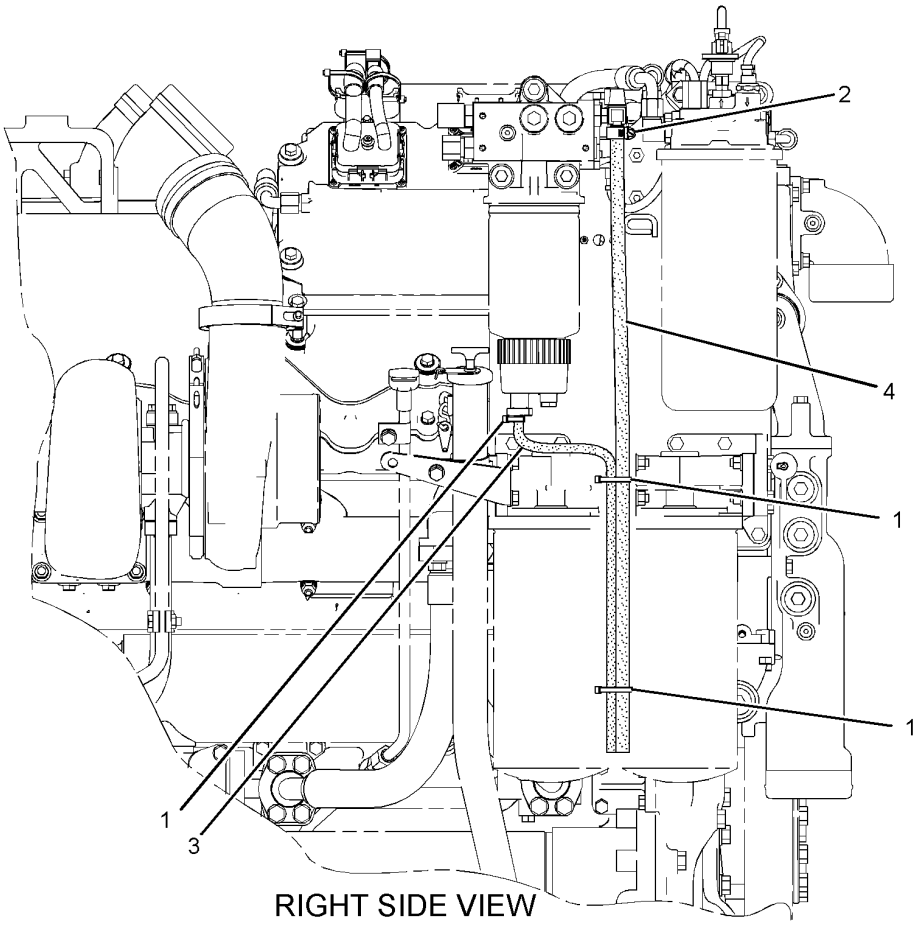

RIGHT SIDE VIEW
(OF ENGINE)

GRAPHIC #1

<END>

g01166464

174-9570 FILTER GP-WATER SEP & FUEL–PRIMARY

S/N: LJW1-UP

PART OF 252-1363 WATER SEP & FUEL PRM PUMP GP

AN ATTACHMENT

SMCS-1260, 1261, 1263 **i02408424**

NOTE	REF NO	GRAPHIC REF	PART NUMBER	QTY	PART NAME 1 2 3 4 5 6 (PRODUCT LEVEL)	SEE PAGE
	1	1	**1R-0770**	1	FILTER AS-WATER SEP & FUEL (PRIMARY)	
	1A	1	**220-8678**	1	SEAL-RING (FUEL, WATER SEPARATOR)	
	2	1	**270-5320**	1	BOWL AS (FUEL, WATER SEPARATOR)	

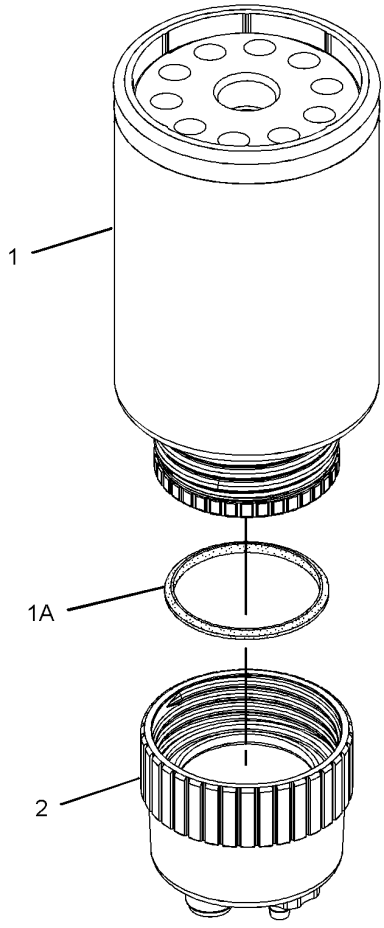

GRAPHIC #1 **<END>** g01179858

FUEL SYSTEM

281-0017 FUEL AR-CONVENTIONAL FILL

S/N: 2211-UP

CANNOT BE USED WITH 281-0018—PAGE 160, 279-5286—PAGE 160

AN ATTACHMENT

SMCS-1273, 1274 **i02902944**

NOTE	PART NUMBER	QTY	PART NAME 1 2 3 4 5 6 (PRODUCT LEVEL)	SEE PAGE
Y	*281-0019*	1	COOLER GP-FUEL	155
Y	*279-5283*	1	LINES GP-FUEL	161
	246-2641	1	PADLOCK GP	
	5P-8500	1	KEY	
	7X-7700	1	CAP AS-FILLER (FUEL TANK)	
	9X-2205	1	KIT-CAP FILTER (FUEL TANK)	
			(INCLUDES FILTER AS, SCREW, GASKETS & VALVE)	
	9X-8600	1	SEAL-O-RING	

Y-SEPARATE ILLUSTRATION

<END>

279-5286 FUEL AR-FAST FILL

S/N: 2211-UP

CANNOT BE USED WITH 281-0017—PAGE 160, 281-0018—PAGE 160

AN ATTACHMENT

SMCS-1710 **i02902946**

NOTE	PART NUMBER	QTY	PART NAME 1 2 3 4 5 6 (PRODUCT LEVEL)	SEE PAGE
Y	*235-6114*	1	ADAPTER GP-FAST FILL FUEL	153
Y	*281-0020*	1	COOLER GP-FUEL	156
Y	*279-5297*	1	HEATER GP-FUEL	213
Y	*289-9691*	1	LINES GP-FUEL	163

Y-SEPARATE ILLUSTRATION

<END>

281-0018 FUEL AR-FAST FILL

S/N: 2211-UP

CANNOT BE USED WITH 281-0017—PAGE 160, 279-5286—PAGE 160

AN ATTACHMENT

SMCS-1710 **i02902947**

NOTE	PART NUMBER	QTY	PART NAME 1 2 3 4 5 6 (PRODUCT LEVEL)	SEE PAGE
Y	*235-6114*	1	ADAPTER GP-FAST FILL FUEL	153
Y	*281-0019*	1	COOLER GP-FUEL	155
Y	*279-5283*	1	LINES GP-FUEL	161

Y-SEPARATE ILLUSTRATION

<END>

FUEL SYSTEM

279-5283 LINES GP-FUEL

S/N: 2211-UP

PART OF 281-0017 FUEL AR-CONVENTIONAL FILL, 281-0018 FUEL AR-FAST FILL AN ATTACHMENT

SMCS-1274 **i02902949**

NOTE	REF NO	GRAPHIC REF	PART NUMBER	QTY	PART NAME 1 2 3 4 5 6 (PRODUCT LEVEL)	SEE PAGE
	1	1	**122-5855**	1	SPACER (11.5X20X26-MM THK)	
	2	1	*281-5976*	1	ELBOW AS	
		1	**6V-8629**	1	ELBOW	
		1	**228-7092**	1	SEAL-O-RING	
		1	**238-5081**	1	SEAL-O-RING	
	3	1	*281-5983*	2	ELBOW AS	
					(EACH INCLUDES)	
		1	**6V-8989**	1	ELBOW	
		1	**228-7091**	2	SEAL-O-RING	
I	4	1	**283-1980**	1	HOSE AS	
I	5	1	**283-1981**	1	HOSE AS	
I	6	1	**283-1983**	1	HOSE AS	
I	7	1	**283-1984**	1	HOSE AS	
I	8	1	**283-1985**	1	HOSE AS	
I	9	1	**283-1986**	1	HOSE AS	
I	10	1	**283-1987**	1	HOSE AS	
	11	1	**283-1990**	1	TUBE AS	
	12	1	**283-1991**	1	TUBE AS	
	13	1	**283-1992**	1	TUBE AS	
	14	1	**283-1993**	1	TUBE AS	
I	15	1	**315-6123**	1	HOSE AS	
	16	1	**0S-1588**	1	BOLT (3/8-16X1.25-IN)	
	17	1	**190-4375**	4	WASHER (26X40X2-MM THK)	
	18	1	**228-7091**	8	SEAL-O-RING	
	19	1	**228-7092**	2	SEAL-O-RING	
	20	1	*281-5975*	1	ELBOW AS	
		1	**6V-8626**	1	ELBOW	
		1	**228-7091**	1	SEAL-O-RING	
		1	**238-5081**	1	SEAL-O-RING	
	21	1	*281-5984*	1	ELBOW AS	
		1	**8T-5389**	1	ELBOW	
		1	**228-7092**	1	SEAL-O-RING	
		1	**238-5081**	1	SEAL-O-RING	
	22	1	**4S-1962**	1	CLIP	
	23	1	**5K-9660**	4	CLIP	
	24	1	**5P-7468**	5	CLIP (SLOT)	
	25	1	**5P-7469**	5	CLIP (TAB)	
	26	1	**6D-4244**	2	CLIP	
	27	1	**6V-4349**	1	GROMMET	
	28	1	**6V-9170**	2	NUT-BULKHEAD (1-14-THD)	
	29	1	**6V-9852**	1	ELBOW	
	30	1	**8F-8513**	4	CLIP	
	31	1	**8T-4121**	13	WASHER-HARD (11X21X2.5-MM THK)	
M	32	1	**8T-4136**	6	BOLT (M10X1.5X25-MM)	
M	33	1	**8T-4137**	2	BOLT (M10X1.5X20-MM)	
M	34	1	**8T-4185**	1	BOLT (M10X1.5X50-MM)	
M	35	1	**8T-4195**	4	BOLT (M10X1.5X30-MM)	
	36	1	**8T-9518**	4	GROMMET	
	37	1	**9M-8406**	2	CLIP	

I-REFER TO HYDRAULIC INFORMATION SYSTEM
M-METRIC PART

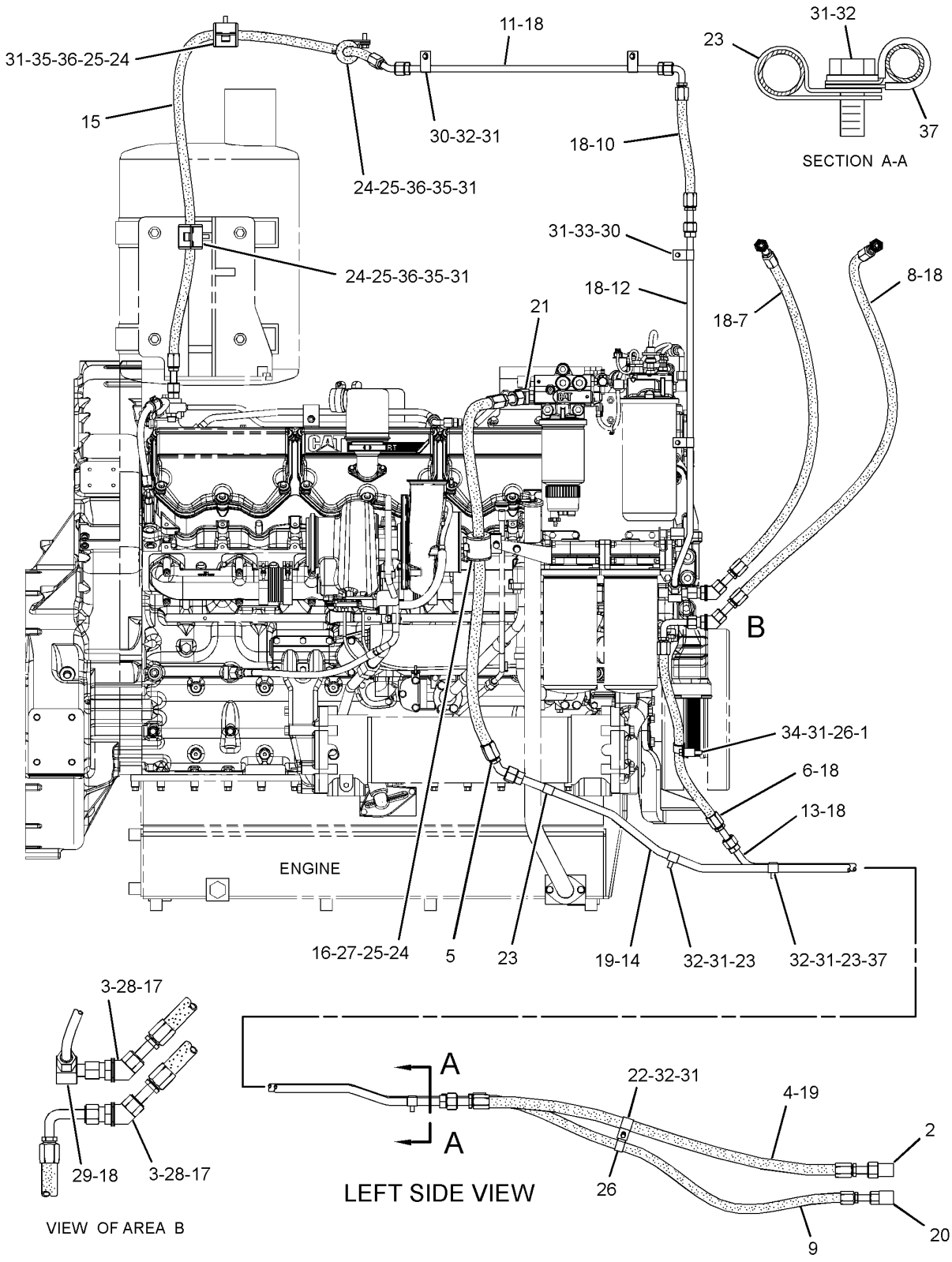

GRAPHIC #1 **<END>** g01445999

289-9691 LINES GP-FUEL

S/N: 2211-UP
PART OF 279-5286 FUEL AR-FAST FILL
AN ATTACHMENT

SMCS-1274 **i02890390**

NOTE	REF NO	GRAPHIC REF	PART NUMBER	QTY	PART NAME 1 2 3 4 5 6 (PRODUCT LEVEL)	SEE PAGE
	1	1	**122-5855**	1	SPACER (11.5X20X26-MM THK)	
	2	2	*281-5983*	2	ELBOW AS	
					(EACH INCLUDES)	
		2	**6V-8989**	1	ELBOW	
		2	**228-7091**	2	SEAL-O-RING	
I	3	1	**283-1980**	1	HOSE AS	
I	4	1	**283-1981**	1	HOSE AS	
I	5	1	**283-1983**	1	HOSE AS	
I	6	1	**283-1986**	1	HOSE AS	
I	7	1	**283-1987**	1	HOSE AS	
	8	1	**283-1990**	1	TUBE AS	
	9	1	**283-1991**	1	TUBE AS	
	10	1	**283-1992**	1	TUBE AS	
	11	1	**283-1993**	1	TUBE AS	
I	12	1	**289-9692**	1	HOSE AS	
I	13	1	**289-9693**	1	HOSE AS	
I	14	1	**315-6123**	1	HOSE AS	
	15	2	**190-4375**	4	WASHER	
	16	1	**228-7091**	6	SEAL-O-RING	
	17	1	**228-7092**	2	SEAL-O-RING	
	18	1	*281-5984*	1	ELBOW AS	
		1	**8T-5389**	1	ELBOW	
		1	**228-7092**	1	SEAL-O-RING	
		1	**238-5081**	1	SEAL-O-RING	
	19	1	**0S-1588**	1	BOLT (3/8-16X1.25-IN)	
	20	1	**4S-1962**	1	CLIP	
	21	1,2	**5K-9660**	4	CLIP	
	22	1,2	**5P-7468**	5	CLIP (SLOT)	
	23	1,2	**5P-7469**	5	CLIP (TAB)	
	24	1	**6D-4244**	2	CLIP	
	25	1	**6V-4349**	1	GROMMET	
	26	2	**6V-9170**	2	NUT-BULKHEAD (1-14-THD)	
	27	2	**6V-9852**	1	ELBOW	
	28	1,2	**8F-8513**	4	CLIP	
	29	1,2	**8T-4121**	13	WASHER-HARD (11X21X2.5-MM THK)	
M	30	1,2	**8T-4136**	6	BOLT (M10X1.5X25-MM)	
M	31	1,2	**8T-4137**	2	BOLT (M10X1.5X20-MM)	
M	32	1	**8T-4185**	1	BOLT (M10X1.5X50-MM)	
M	33	2	**8T-4195**	4	BOLT (M10X1.5X30-MM)	
	34	2	**8T-9518**	4	GROMMET	
	35	2	**9M-8406**	2	CLIP	

I-REFER TO HYDRAULIC INFORMATION SYSTEM
M-METRIC PART

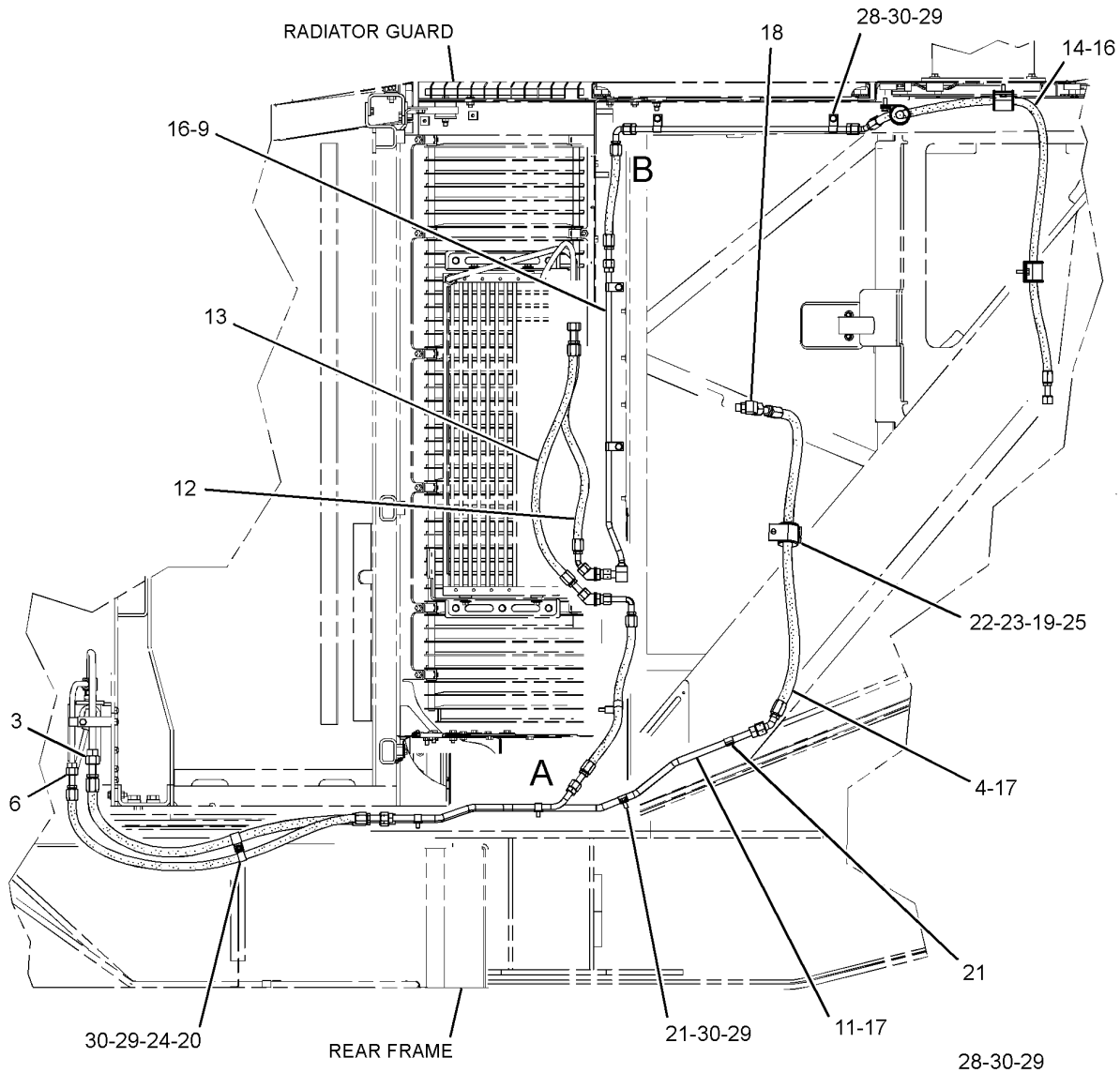

GRAPHIC #1 g01443172

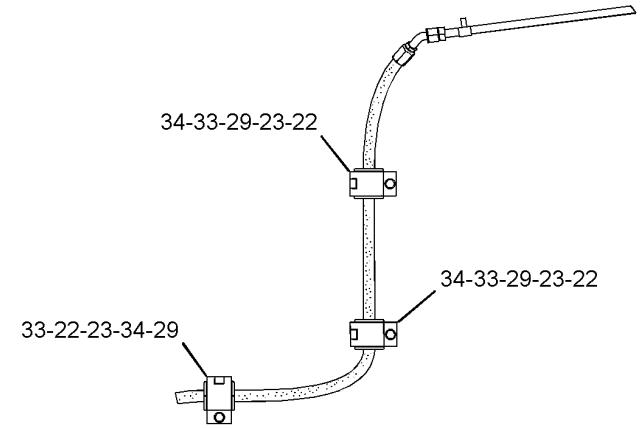

VIEW C-C

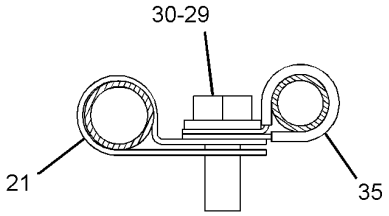

VIEW D-D

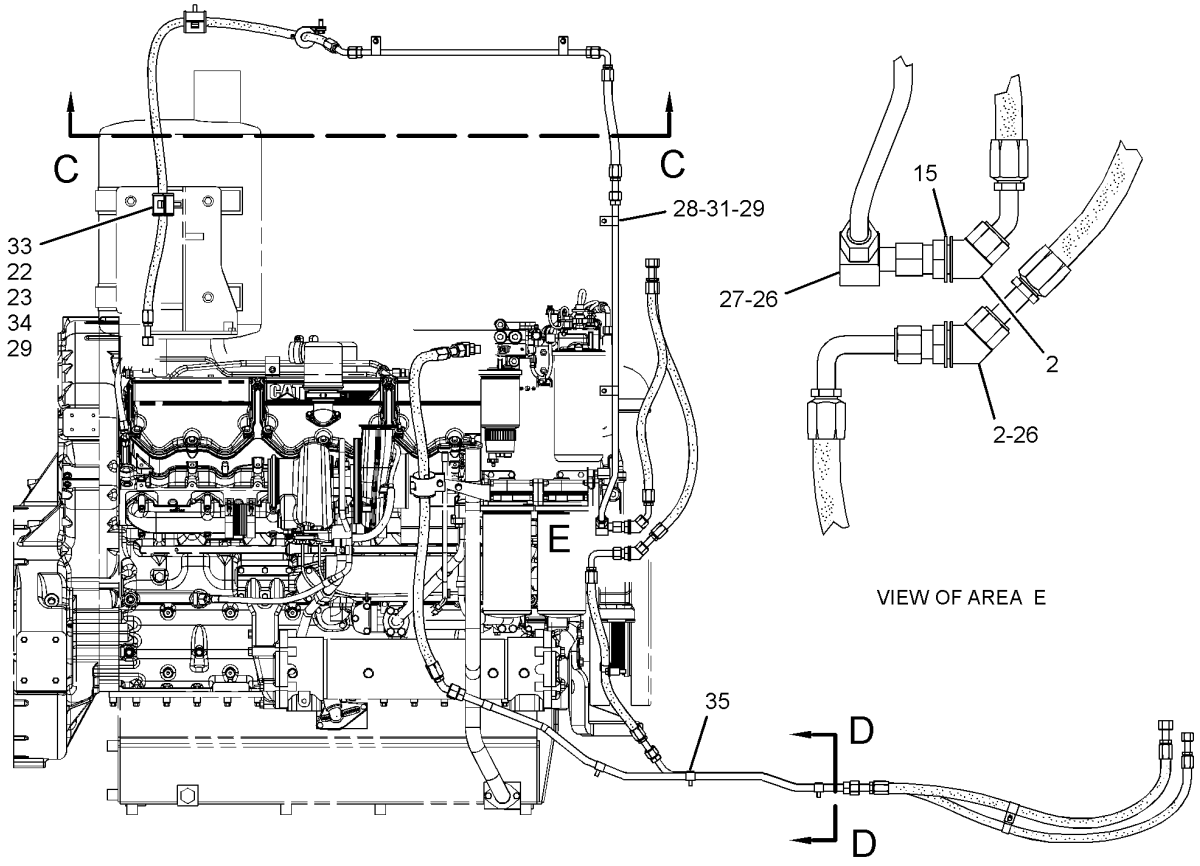

VIEW OF AREA E

LEFT SIDE VIEW OF ENGINE

GRAPHIC #2 **<END>** g01443174

FUEL SYSTEM

285-6534 LINES GP-FUEL FILTER

S/N: LJW2195-UP
PART OF 246-4283 ENGINE AR-COMPLETE
AN ATTACHMENT

SMCS-1261, 1274 **i02876694**

NOTE	REF NO	GRAPHIC REF	PART NUMBER	QTY	PART NAME 1 2 3 4 5 6 (PRODUCT LEVEL)	SEE PAGE
	1	1	**172-4211**	1	SPACER (10.5X22X50.8-MM THK)	
Y	2	1	**228-7381**	1	VALVE GP-CHECK (FUEL)	190
I	3	1	**235-0595**	1	HOSE AS	
	4	1	**236-4185**	1	PLATE	
	5	1	**237-4895**	1	MANIFOLD	
	6	1	**253-5236**	2	BRACKET	
	7	1	**256-3366**	1	BRACKET AS	
	8	1	**261-3647**	1	TUBE AS-FUEL LINES	
	9	1	**261-3648**	1	TUBE AS-FUEL LINES	
	10	1	**281-4780**	1	HOSE AS	
	11	1	**281-4781**	1	HOSE AS	
I	12	1	**291-6076**	2	HOSE AS	
	13	1	**030-7937**	4	CONNECTOR-PORT	
	14	1	**030-7942**	1	ELBOW	
	15	1	**030-7947**	1	ELBOW	
	16	1	**118-4728**	1	ELBOW	
	17	1	**0L-1351**	1	BOLT (3/8-16X0.875-IN)	
	18	1	**0S-0509**	2	BOLT (3/8-16X0.75-IN)	
	19	1	**0S-1590**	2	BOLT (3/8-16X2-IN)	
	20	1	**0S-1591**	2	BOLT (3/8-16X1.5-IN)	
	21	1	**0S-1619**	1	BOLT (3/8-16X3-IN)	
	22	1	**136-7227**	1	SEAL-O-RING	
	23	1	**174-5907**	2	CLIP	
	24	1	**183-4403**	2	CLIP	
	25	1	**1A-5183**	2	BOLT (3/8-16X4.75-IN)	
	26	1	**1B-2578**	2	NUT (3/8-16-THD)	
	27	1	**2P-7213**	1	TEE-BULKHEAD	
	28	1	**3E-4352**	2	WASHER-HARD (8.8X20.5X2.5-MM THK)	
	29	1	**5M-2894**	10	WASHER-HARD (10.2X18.5X2.5-MM THK)	
	30	1	**5S-0003**	2	NUT (5/16-18-THD)	
	31	1	**6D-3479**	1	CLIP	
	32	1	**6D-4246**	2	CLIP	
	33	1	**6M-7476**	1	ELBOW	
	34	1	**6V-5049**	6	SEAL-O-RING	
	35	1	**7F-2050**	1	LOCKNUT (3/4-16-THD)	
	36	1	**8B-9424**	2	CLAMP	
	37	1	**8L-2786**	2	SEAL-O-RING	
	38	1	**8S-9191**	2	BOLT (3/8-16X4-IN)	
	39	1	**9M-1974**	2	WASHER-HARD (8.8X16X2-MM THK)	
	40	1	**9M-8406**	1	CLIP	
	41	1	**9S-8005**	1	PLUG-O-RING	
	42	1	**9S-8752**	2	NUT-FULL (3/8-16-THD)	
	43	1	**9X-6458**	7	WASHER-HARD (10.2X22.5X3-MM THK)	

I-REFER TO HYDRAULIC INFORMATION SYSTEM
Y-SEPARATE ILLUSTRATION

285-6534 **LINES GP-FUEL FILTER** *(contd.)* **i02876694**

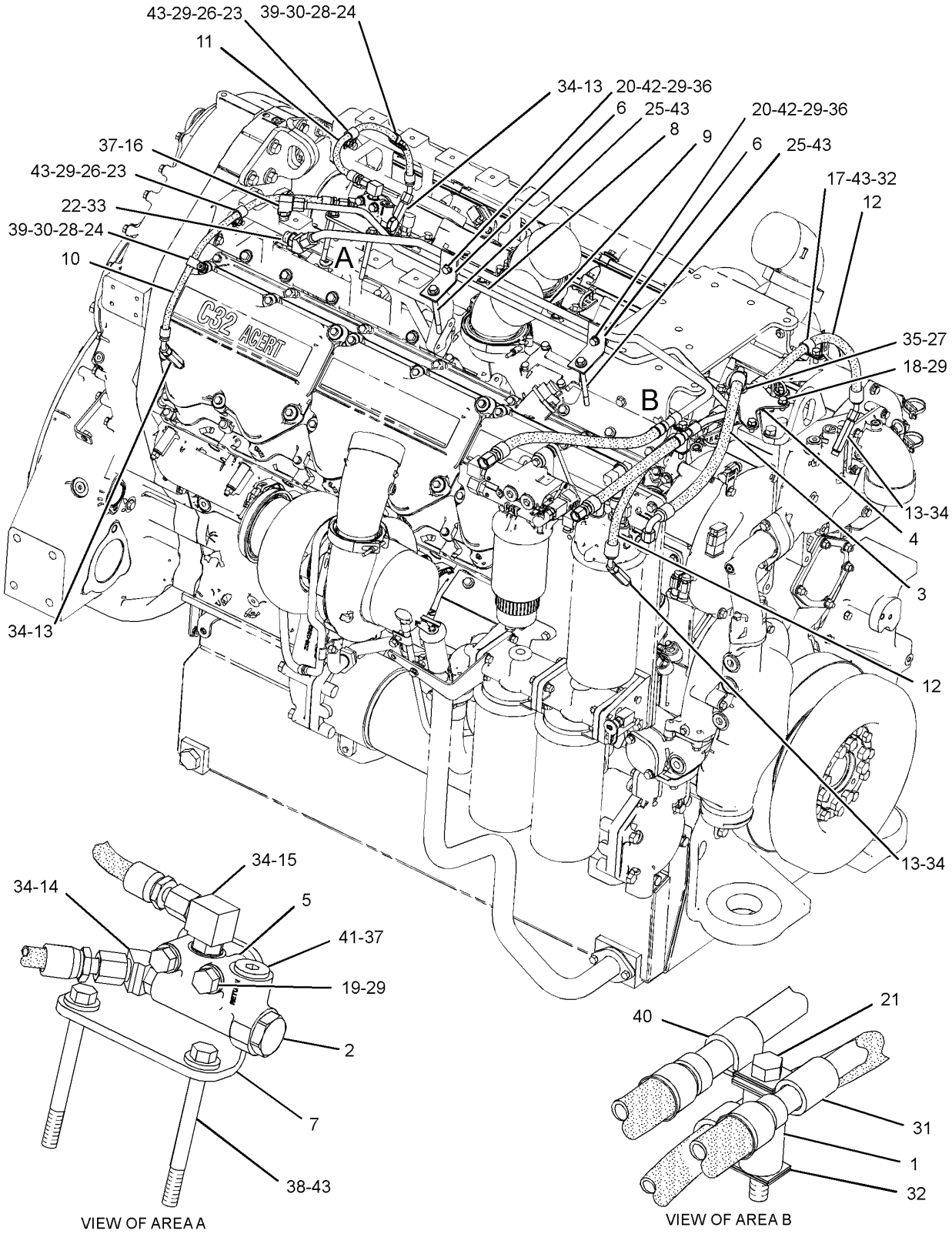

GRAPHIC #1 **<END>** g01447206

FUEL SYSTEM

317-9135 LINES GP-FUEL FILTER

S/N: LJW1-UP

PART OF 246-8228, 259-3142, 259-3143 ENGINE AR-COMPLETE

AN ATTACHMENT

TYPE 1

SMCS-1261, 1274 **i02952539**

NOTE	REF NO	GRAPHIC REF	PART NUMBER	QTY	PART NAME 1 2 3 4 5 6 (PRODUCT LEVEL)	SEE PAGE
	1	1	**7F-2050**	1	LOCKNUT (3/4-16-THD)	
	2	1	**090-8635**	2	SPACER (11X22X5-MM THK)	
	3	1	**127-5447**	1	SPACER (10.5X20X12-MM THK)	
	4	2	**144-4613**	1	ANGLE AS	
	5	2	**172-4211**	1	SPACER (10.5X22X50.8-MM THK)	
Y	6	2	**228-7381**	1	VALVE GP-CHECK (FUEL)	190
I	7	1	**232-9783**	1	HOSE AS	
I	8	1	**235-0599**	1	HOSE AS	
	9	1	**236-4185**	1	PLATE	
	10	1	**253-4331**	1	TUBE AS	
	11	1	**253-5236**	1	BRACKET	
	12	1	**256-6802**	1	TUBE AS	
	13	2	**299-9606**	1	PLATE AS	
I	14	1	**304-1247**	1	HOSE AS	
I	15	1	**304-1248**	1	HOSE AS	
I	16	1	**304-3587**	2	HOSE AS	
	17	2	**304-3588**	1	BRACKET	
	18	2	**314-3173**	1	MANIFOLD	
	19	2	**314-3174**	1	BRACKET AS	
	20	1	**030-7937**	4	CONNECTOR-PORT	
	21	2	**118-4728**	1	ELBOW	
	22	1	**0S-0509**	2	BOLT (3/8-16X0.75-IN)	
	23	2	**0S-1571**	2	BOLT (3/8-16X1.75-IN)	
	24	2	**0S-1590**	1	BOLT (3/8-16X2-IN)	
	25	1	**0S-1591**	1	BOLT (3/8-16X1.5-IN)	
	26	2	**0S-1619**	2	BOLT (3/8-16X3-IN)	
	27	2	**127-9258**	1	CONNECTOR	
	28	1	**1A-5183**	1	BOLT (3/8-16X4.75-IN)	
	29	2	**1W-1038**	1	STUD	
	30	2	**214-7568**	2	SEAL-O-RING	
	31	2	**2P-3210**	1	BOLT-WASHER HEAD	
	32	1	**2P-7213**	1	TEE-BULKHEAD	
	33	2	**2R-6806**	2	CONNECTOR-O-RING	
	34	1	**3E-6909**	1	CLIP	
	35	1	**3S-1546**	1	NUT-FULL (7/16-14-THD)	
	36	1,2	**5M-2894**	11	WASHER-HARD (10.2X18.5X2.5-MM THK)	
	37	2	**5P-7462**	1	CLIP (SLOT)	
	38	2	**5P-7463**	1	CLIP (TAB)	
	39	1,2	**5P-8244**	3	WASHER-HARD (12X22.5X2.5-MM THK)	
	40	2	**5T-6374**	1	SPACER (10.5X20X40-MM THK)	
	41	2	**6M-7476**	1	ELBOW	
	42	2	**6V-0683**	1	GROMMET	
	43	2	**6V-4589**	1	SEAL-O-RING	
	44	1	**6V-5049**	4	SEAL-O-RING	
	45	2	**7V-6571**	4	GROMMET	
	46	1	**8B-9424**	1	CLAMP	
	47	1,2	**8L-2786**	5	SEAL-O-RING	
	48	1	**8M-0505**	2	CONNECTOR	
	49	2	**8S-9191**	3	BOLT (3/8-16X4-IN)	
	50	2	**8T-1889**	4	CLIP (SLOT)	
	51	2	**8T-1890**	4	CLIP (TAB)	
	52	2	**8T-9382**	2	BOLT (7/16-14X1.25-IN)	
	53	1,2	**9M-8406**	2	CLIP	
	54	2	**9S-8005**	1	PLUG-O-RING	

317-9135 **LINES GP-FUEL FILTER** *(contd.)* **i02952539**

NOTE	REF NO	GRAPHIC REF	PART NUMBER	QTY	PART NAME 1 2 3 4 5 6 (PRODUCT LEVEL)	SEE PAGE
	55	1,2	**9S-8752**	4	NUT-FULL (3/8-16-THD)	
	56	1,2	**9X-6458**	6	WASHER-HARD (10.2X22.5X3-MM THK)	

I-REFER TO HYDRAULIC INFORMATION SYSTEM
Y-SEPARATE ILLUSTRATION

317-9135 **LINES GP-FUEL FILTER** *(contd.)* **i02952539**

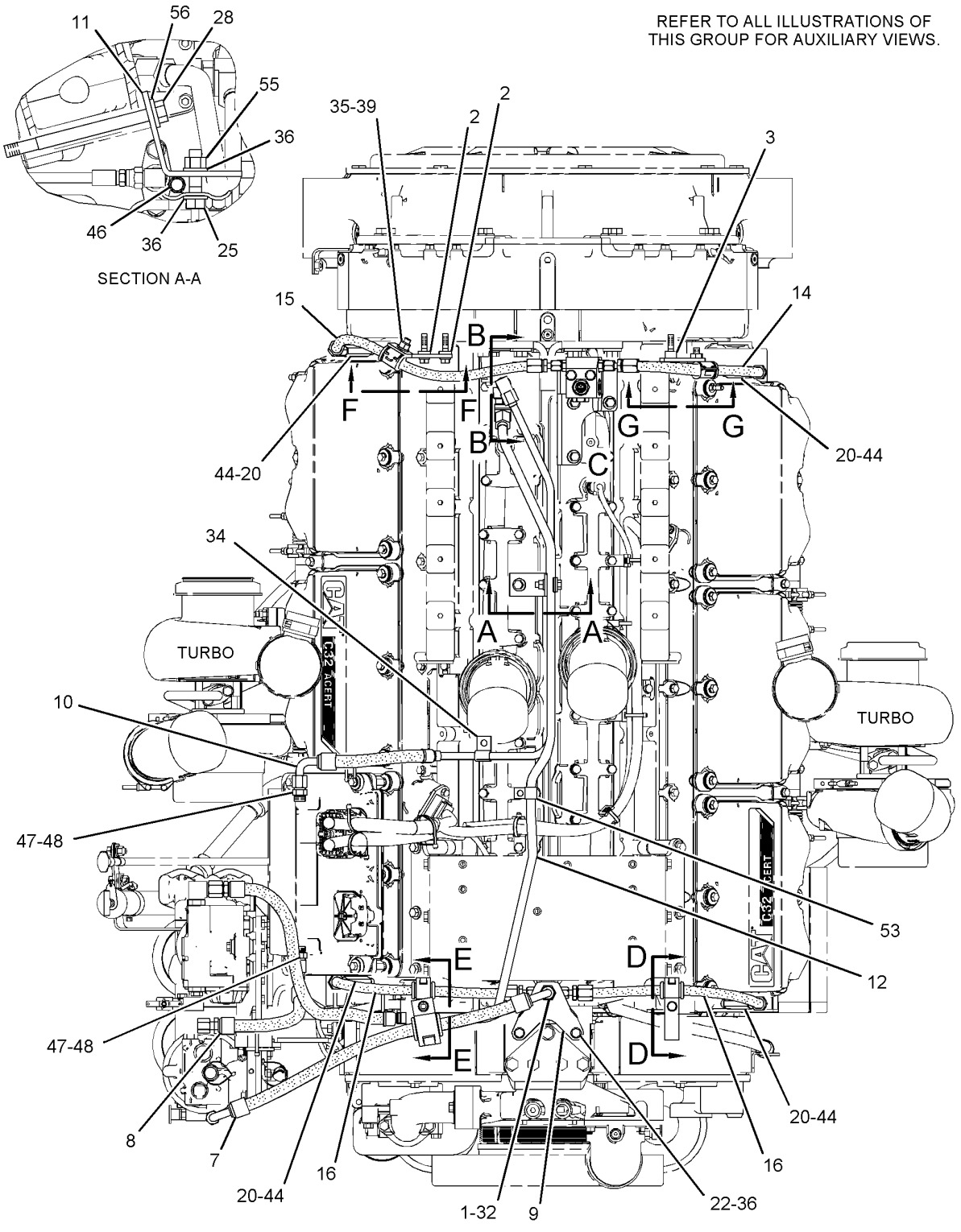

TOP VIEW OF ENGINE

GRAPHIC #1 g01449206

317-9135 **LINES GP-FUEL FILTER** *(contd.)* **i02952539**

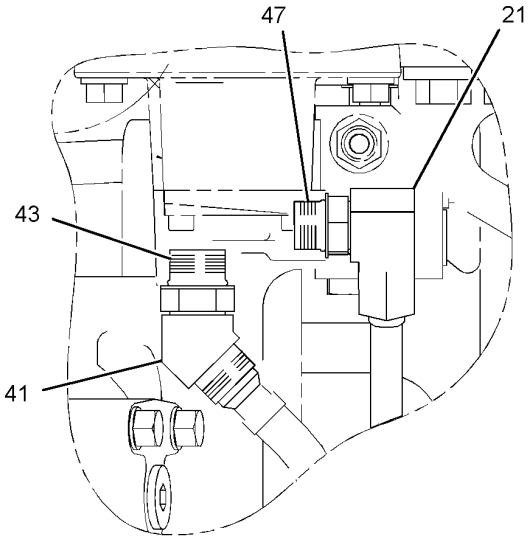

SECTION B-B

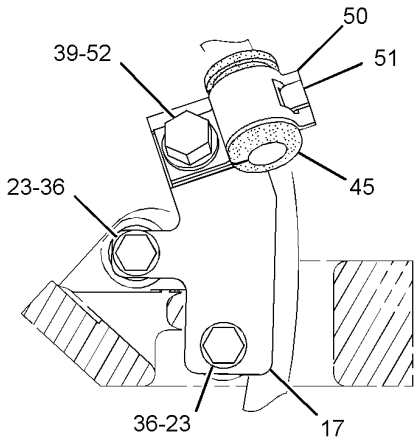

SECTION F-F

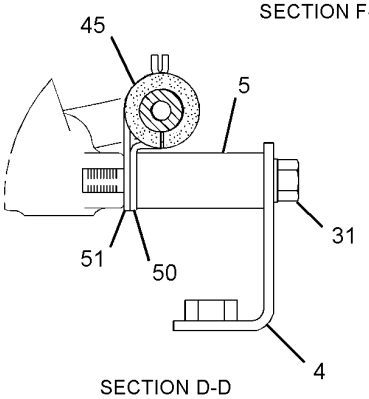

SECTION D-D

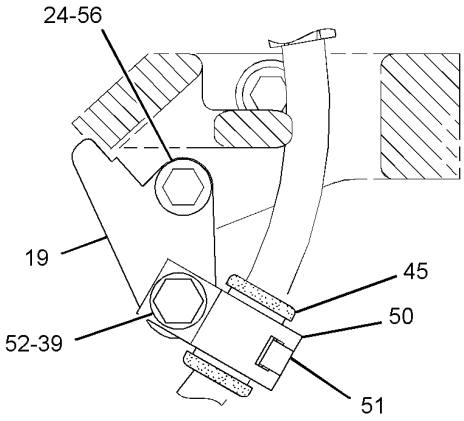

SECTION G-G

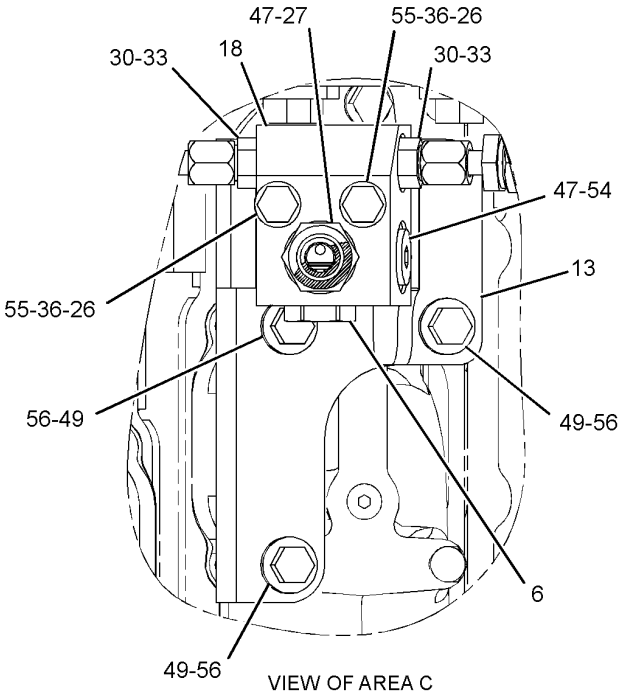

VIEW OF AREA C

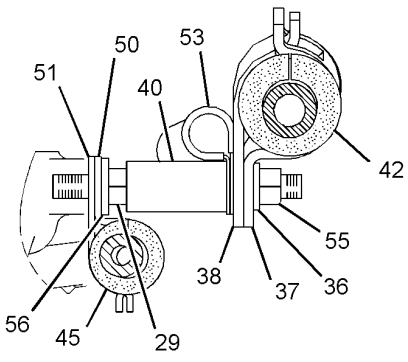

SECTION E-E

GRAPHIC #2 **<END>** g01449207

FUEL SYSTEM

317-9135 LINES GP-FUEL FILTER

S/N: LJW1-UP

PART OF 246-8228, 259-3142, 259-3143 ENGINE AR-COMPLETE

AN ATTACHMENT

TYPE 2

SMCS-1261, 1274 **i02948224**

NOTE	REF NO	GRAPHIC REF	PART NUMBER	QTY	PART NAME 1 2 3 4 5 6 (PRODUCT LEVEL)	SEE PAGE
C	1	1	**3K-1470**	1	SPACER (0.4X1X0.38-IN THK)	
C	2	2	**6L-2479**	2	BRACE	
	3	1	**7F-2050**	1	LOCKNUT (3/4-16-THD)	
	4	1	**090-8635**	2	SPACER (11X22X5-MM THK)	
	5	1	**127-5447**	1	SPACER (10.5X20X12-MM THK)	
	6	2	**144-4613**	1	ANGLE AS	
	7	2	**172-4211**	1	SPACER (10.5X22X50.8-MM THK)	
Y	8	2	**228-7381**	1	VALVE GP-CHECK (FUEL)	190
I	9	1	**232-9783**	1	HOSE AS	
I	10	1	**235-0599**	1	HOSE AS	
	11	1	**236-4185**	1	PLATE	
	12	1	**253-4331**	1	TUBE AS	
	13	1	**253-5236**	1	BRACKET	
	14	1	**256-6802**	1	TUBE AS	
	15	2	**299-9606**	1	PLATE AS	
	16	2	**304-3588**	1	BRACKET	
	17	2	**314-3173**	1	MANIFOLD	
	18	2	**314-3174**	1	BRACKET AS	
C	19	1	**322-7615**	1	HOSE AS	
C	20	1,2	**322-7616**	2	HOSE AS	
C	21	1	**322-7617**	1	HOSE AS	
	22	2	**118-4728**	1	ELBOW	
C	23	2	**0L-1351**	2	BOLT (3/8-16X0.875-IN)	
	24	1	**0S-0509**	2	BOLT (3/8-16X0.75-IN)	
	25	2	**0S-1571**	2	BOLT (3/8-16X1.75-IN)	
	26	2	**0S-1590**	1	BOLT (3/8-16X2-IN)	
C	27	1	**0S-1591**	2	BOLT (3/8-16X1.5-IN)	
	28	2	**0S-1619**	2	BOLT (3/8-16X3-IN)	
	29	2	**127-9258**	1	CONNECTOR	
C	30	2	**1A-2029**	1	BOLT (3/8-16X1.125-IN)	
	31	1	**1A-5183**	1	BOLT (3/8-16X4.75-IN)	
C	32	1	**1P-1376**	4	CONNECTOR-PORT	
	33	2	**1W-1038**	1	STUD	
C	34	1,2	**214-7568**	6	SEAL-O-RING	
	35	2	**2P-3210**	1	BOLT-WASHER HEAD	
	36	1	**2P-7213**	1	TEE-BULKHEAD	
	37	2	**2R-6806**	2	CONNECTOR-O-RING	
	38	1	**3E-6909**	1	CLIP	
	39	1	**3S-1546**	1	NUT-FULL (7/16-14-THD)	
C	40	1,2	**5M-2894**	13	WASHER-HARD (10.2X18.5X2.5-MM THK)	
	41	2	**5P-7462**	1	CLIP (SLOT)	
	42	2	**5P-7463**	1	CLIP (TAB)	
	43	1,2	**5P-8244**	3	WASHER-HARD (12X22.5X2.5-MM THK)	
	44	2	**5T-6374**	1	SPACER (10.5X20X40-MM THK)	
	45	2	**6M-7476**	1	ELBOW	
	46	2	**6V-0683**	1	GROMMET	
	47	2	**6V-4589**	1	SEAL-O-RING	
C	48	2	**7V-6571**	6	GROMMET	
	49	1	**8B-9424**	1	CLAMP	
	50	1,2	**8L-2786**	5	SEAL-O-RING	
	51	1	**8M-0505**	2	CONNECTOR	
	52	2	**8S-9191**	3	BOLT (3/8-16X4-IN)	
C	53	2	**8T-1889**	6	CLIP (SLOT)	
C	54	2	**8T-1890**	6	CLIP (TAB)	

317-9135 LINES GP-FUEL FILTER *(contd.)* i02948224

NOTE	REF NO	GRAPHIC REF	PART NUMBER	QTY	PART NAME 1 2 3 4 5 6 (PRODUCT LEVEL)	SEE PAGE
	55	2	**8T-9382**	2	BOLT (7/16-14X1.25-IN)	
	56	1,2	**9M-8406**	2	CLIP	
	57	2	**9S-8005**	1	PLUG-O-RING	
C	58	1,2	**9S-8752**	6	NUT-FULL (3/8-16-THD)	
C	59	1,2	**9X-6458**	10	WASHER-HARD (10.2X22.5X3-MM THK)	

C-CHANGE FROM PREVIOUS TYPE
I-REFER TO HYDRAULIC INFORMATION SYSTEM
Y-SEPARATE ILLUSTRATION

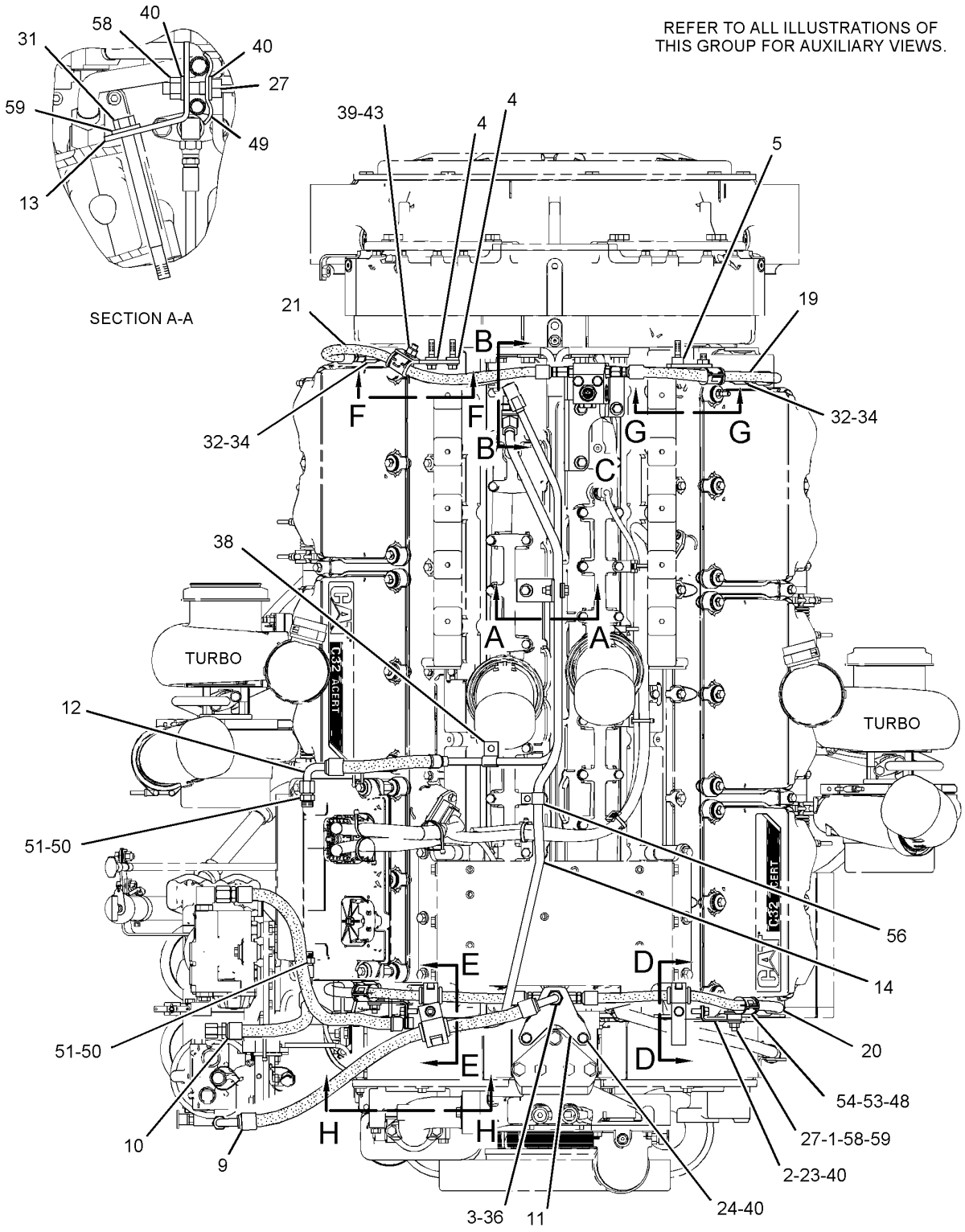

TOP VIEW OF ENGINE

GRAPHIC #1 g01463467

317-9135 **LINES GP-FUEL FILTER** *(contd.)* **i02948224**

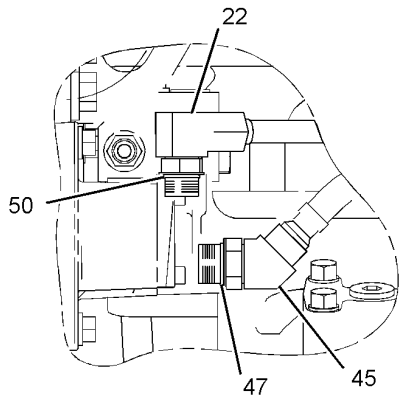

SECTION B-B

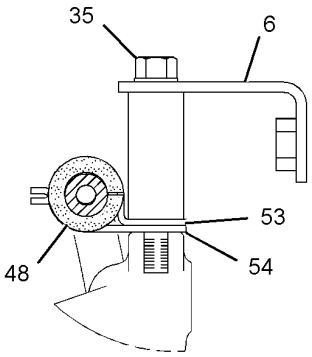

SECTION D-D

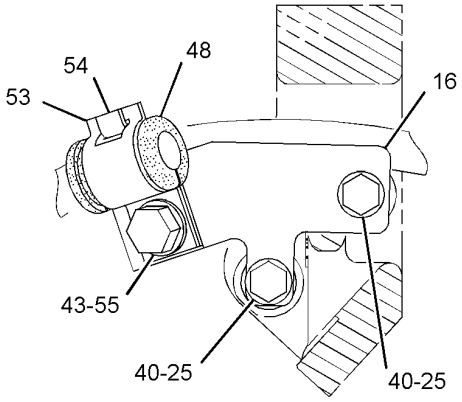

SECTION F-F

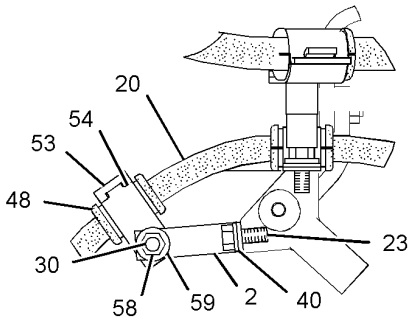

SECTION H-H

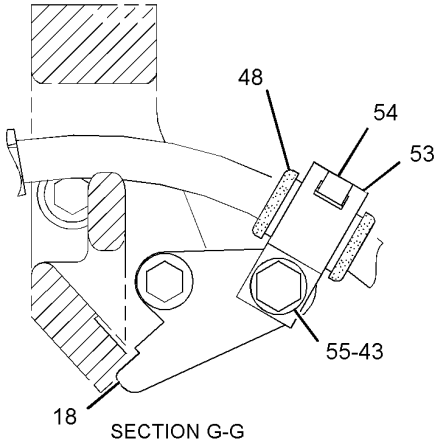

SECTION G-G

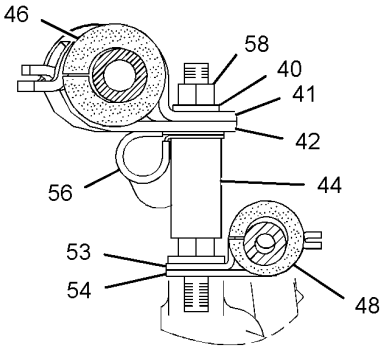

SECTION E-E

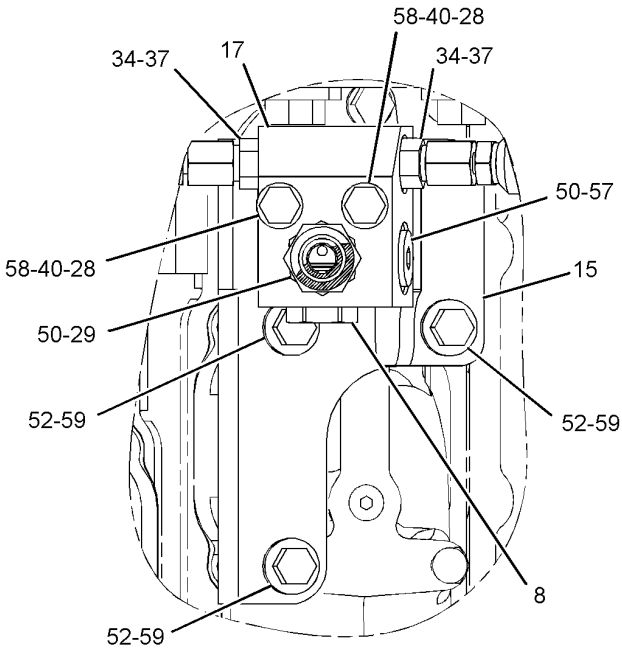

VIEW OF AREA C

GRAPHIC #2 **<END>** g01463469

FUEL SYSTEM

256-7941 MOUNTING GP-FUEL FILTER

S/N: LJW2195-3156
PART OF 246-4283 ENGINE AR-COMPLETE
AN ATTACHMENT

SMCS-1261, 1262 **i02949458**

NOTE	REF NO	GRAPHIC REF	PART NUMBER	QTY	PART NAME 1 2 3 4 5 6 (PRODUCT LEVEL)	SEE PAGE
	1	1,2	**3S-2093**	7	STRAP-CABLE	
	2	1	**6N-1127**	1	SHIELD	
	3	1	**9X-0262**	1	ADAPTER	
	4	2	**191-1782**	1	SPACER (8.5X12.7X38.2-MM THK)	
	5	2	**191-1783**	2	SPACER (8.5X12.7X87.3-MM THK)	
CY	6	1	*234-5013*	1	SENSOR GP-TEMPERATURE (FUEL)	267
	7	1	*201-4340*	1	PLUG AS	
		1	**6V-4589**	1	SEAL-O-RING	
		1	**9S-8006**	1	PLUG-O-RING	
	8	2	**217-5675**	1	BRACKET	
	9	1	**217-5676**	1	PLATE AS	
C	10	2	**276-3097**	1	HARNESS AS-SENSOR (FUEL PRESSURE)	
	11	1	**237-9307**	1	BASE AS-FUEL FILTER	
		1	**237-9323**	1	STUD	
Y	12	1	*239-2396*	1	SENSOR GP-PRESSURE (FUEL)	254
Y	13	1	**252-1363**	1	WATER SEP & FUEL PRM PUMP GP	191
CY	14	1	**275-1253**	1	SWITCH GP-PRESSURE (FUEL)	288
	15	2	**260-9234**	1	VALVE-SHUTOFF	
	16	1	**118-4728**	2	ELBOW	
	17	1	**030-7949**	1	ELBOW	
	18	1	**132-5789**	1	CLIP	
	19	1	**0S-1571**	1	BOLT (3/8-16X1.75-IN)	
	20	1,2	**0S-1588**	4	BOLT (3/8-16X1.25-IN)	
	21	2	**0S-1594**	2	BOLT (3/8-16X1-IN)	
	22	2	**1D-4539**	1	BOLT (5/16-18X2.5-IN)	
	23	1	**1R-0755**	1	FILTER AS-FUEL (ADVANCED EFFICIENCY) (SECONDARY)	
	24	1	**2A-4639**	1	BOLT (3/8-16X1.625-IN)	
	25	2	**3H-5932**	2	BOLT (5/16-18X4.5-IN)	
	26	1	**3P-1932**	1	ADAPTER	
	27	1,2	**5M-2894**	5	WASHER-HARD (10.2X18.5X2.5-MM THK)	
	28	1	**5P-1404**	1	ADAPTER-O-RING	
	29	1	**5P-9297**	1	CLIP	
	30	1	**6V-4589**	2	SEAL-O-RING	
	31	1	**6V-5048**	1	SEAL-O-RING	
	32	1	**214-7568**	2	SEAL-O-RING	
	34	1	**7F-9090**	2	SCREW-DRIVE (NO 8X3/8-IN)	
	35	1,2	**7X-0613**	3	WASHER-HARD (8.8X25.5X5-MM THK)	
	36	1,2	**8L-2786**	5	SEAL-O-RING	
	37	2	**8T-9655**	6	MOUNT-ISOLATION	
C	38	1	**9S-4190**	1	PLUG-O-RING	
	39	2	**9N-0869**	3	WASHER-HARD (8.8X25.5X2-MM THK)	
	40	1,2	**9S-8005**	2	PLUG-O-RING	
	41	1	**9X-6458**	3	WASHER-HARD (10.2X22.5X3-MM THK)	
	42	1	**2M-9780**	1	SEAL-O-RING	

C-CHANGE FROM PREVIOUS TYPE
Y-SEPARATE ILLUSTRATION

256-7941 **MOUNTING GP-FUEL FILTER** *(contd.)* **i02949458**

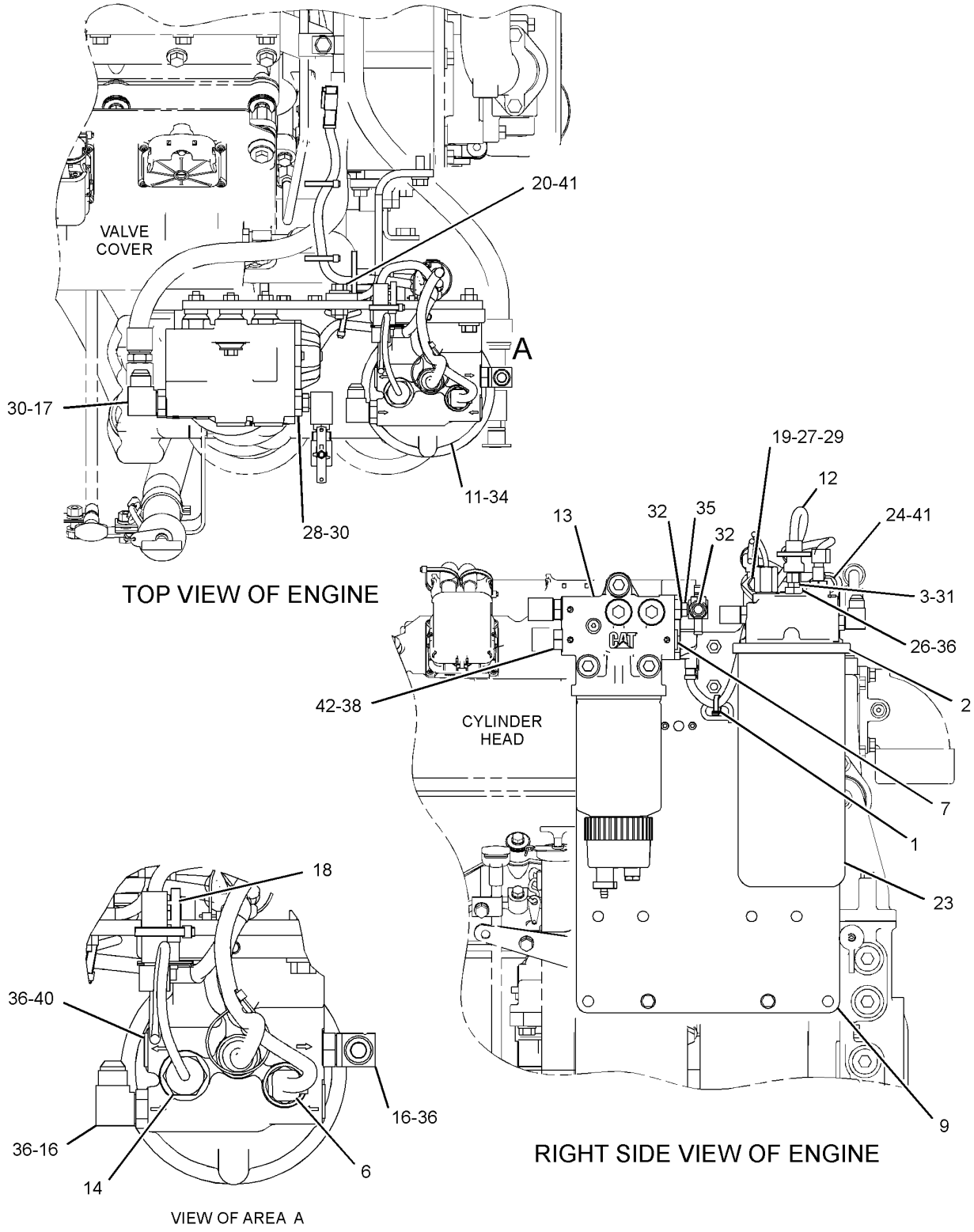

GRAPHIC #1 g01469854

256-7941 **MOUNTING GP-FUEL FILTER** *(contd.)* **i02949458**

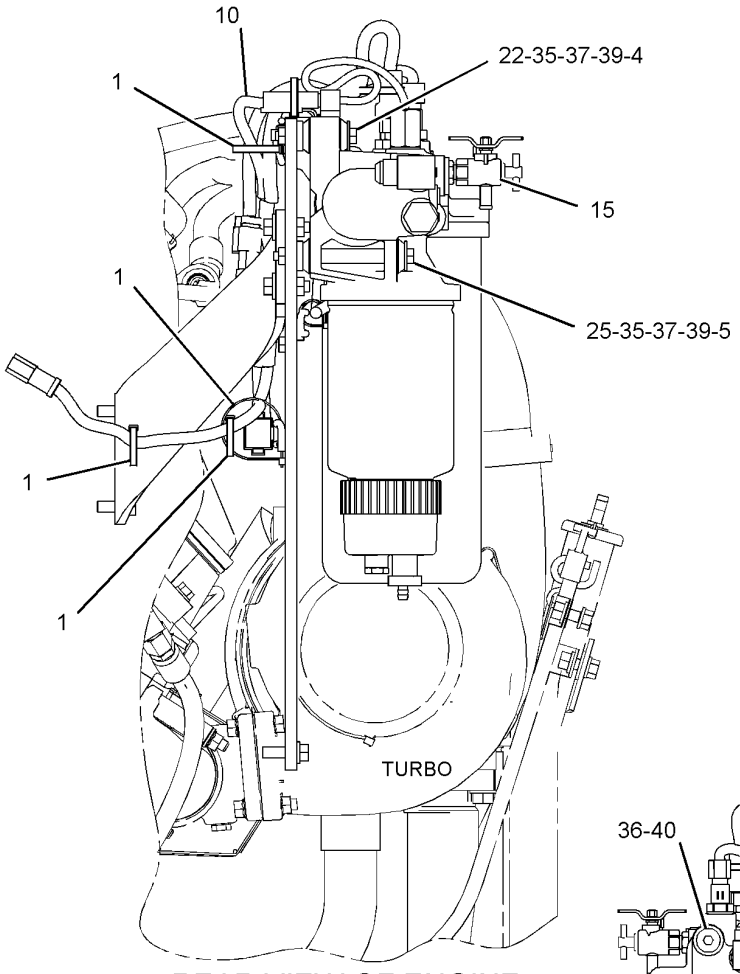

REAR VIEW OF ENGINE

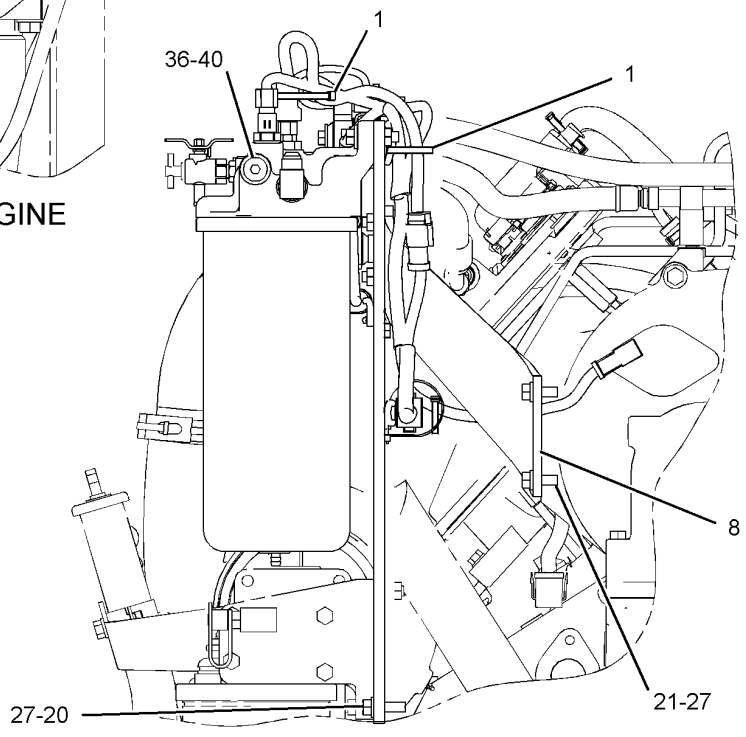

FRONT VIEW OF ENGINE

GRAPHIC #2 **<END>** g01469855

320-7496 MOUNTING GP-FUEL FILTER

S/N: LJW1-UP

PART OF 246-4283, 246-8228, 259-3142, 259-3143 ENGINE AR-COMPLETE

AN ATTACHMENT

SMCS-1261, 1262 **i02939447**

NOTE	REF NO	GRAPHIC REF	PART NUMBER	QTY	PART NAME 1 2 3 4 5 6 (PRODUCT LEVEL)	SEE PAGE
	1	1,2	**3S-2093**	7	STRAP-CABLE	
	2	1	**6N-1127**	1	SHIELD	
	3	1	**8T-9655**	6	MOUNT-ISOLATION	
	4	1	**9X-0262**	1	ADAPTER	
	5	2	**124-3019**	1	BRACKET AS	
M		2	**8T-3490**	1	NUT-WELD (M10X1.5-THD)	
	6	2	**142-1657**	1	BRACKET AS	
M		2	**8T-3490**	1	NUT-WELD (M10X1.5-THD)	
	7	1	**191-1782**	1	SPACER (8.5X12.7X38.2-MM THK)	
	8	1	**191-1783**	2	SPACER (8.5X12.7X87.3-MM THK)	
	9	1	*201-4340*	1	PLUG AS	
		1	**6V-4589**	1	SEAL-O-RING	
		1	**9S-8006**	1	PLUG-O-RING	
	10	2	**217-5675**	1	BRACKET	
	11	1	**217-5676**	1	PLATE AS	
		1	**1F-0750**	4	NUT-WELD (3/8-16-THD)	
M		1	**6V-9632**	2	NUT-WELD (M6X1-THD)	
		1	**7T-1099**	3	LINK	
Y	12	2	*234-5013*	1	SENSOR GP-TEMPERATURE	267
	13	2	**237-9307**	1	BASE AS-FUEL FILTER	
		2	**201-4340**	1	PLUG AS	
		2	**237-9323**	1	STUD	
Y	14	1	*239-2396*	1	SENSOR GP-PRESSURE (ENGINE OIL)	254
Y	15	1	**252-1363**	1	WATER SEP & FUEL PRM PUMP GP	191
	16	2	**260-9234**	1	VALVE-SHUTOFF	
Y	17	2	**275-1253**	1	SWITCH GP-PRESSURE (FUEL FILTER)	288
	18	2	**276-3097**	1	HARNESS AS-SENSOR (FUEL PRESSURE)	
	19	2	**030-7948**	2	ELBOW	
	20	2	**030-7949**	1	ELBOW	
	21	2	**0S-1571**	1	BOLT (3/8-16X1.75-IN)	
	22	1,2	**0S-1588**	5	BOLT (3/8-16X1.25-IN)	
	23	2	**0S-1594**	2	BOLT (3/8-16X1-IN)	
	24	2	**130-5300**	2	CLIP	
	25	2	**132-5789**	1	CLIP	
	26	1	**1D-4539**	1	BOLT (5/16-18X2.5-IN)	
	27	1	**1R-0755**	1	FILTER AS-FUEL (ADVANCED EFFICIENCY) (SECONDARY)	
	28	1	**2A-4639**	1	BOLT (3/8-16X1.625-IN)	
	29	1	**2M-9780**	1	SEAL-O-RING	
	30	1	**3H-5932**	2	BOLT (5/16-18X4.5-IN)	
	31	1	**3P-1932**	1	ADAPTER	
	32	2	**4P-7581**	1	CLIP	
	33	1,2	**5M-2894**	6	WASHER-HARD (10.2X18.5X2.5-MM THK)	
	34	1	**5P-1404**	1	ADAPTER-O-RING	
	35	1,2	**6V-4589**	2	SEAL-O-RING	
	36	1	**6V-5048**	1	SEAL-O-RING	
	37	1	**6V-5049**	2	SEAL-O-RING	
	38	1	**6V-8076**	1	ELBOW	
	39	2	**7F-9090**	2	SCREW-DRIVE (NO 8X3/8-IN)	
	40	1	**7X-0613**	3	WASHER-HARD (8.8X25.5X5-MM THK)	
	41	1,2	**8L-2786**	5	SEAL-O-RING	
	42	2	**8T-4121**	1	WASHER-HARD (11X21X2.5-MM THK)	
M	43	2	**8T-4136**	1	BOLT (M10X1.5X25-MM)	
	44	1	**9N-0869**	3	WASHER-HARD (8.8X25.5X2-MM THK)	
	45	1	**9S-4190**	1	PLUG-O-RING	

320-7496 MOUNTING GP-FUEL FILTER *(contd.)* i02939447

NOTE	REF NO	GRAPHIC REF	PART NUMBER	QTY	PART NAME 1 2 3 4 5 6 (PRODUCT LEVEL)	SEE PAGE
	46	2	**9S-8005**	2	PLUG-O-RING	
	47	1,2	**9X-6458**	3	WASHER-HARD (10.2X22.5X3-MM THK)	

M-METRIC PART
Y-SEPARATE ILLUSTRATION

320-7496 **MOUNTING GP-FUEL FILTER** *(contd.)* **i02939447**

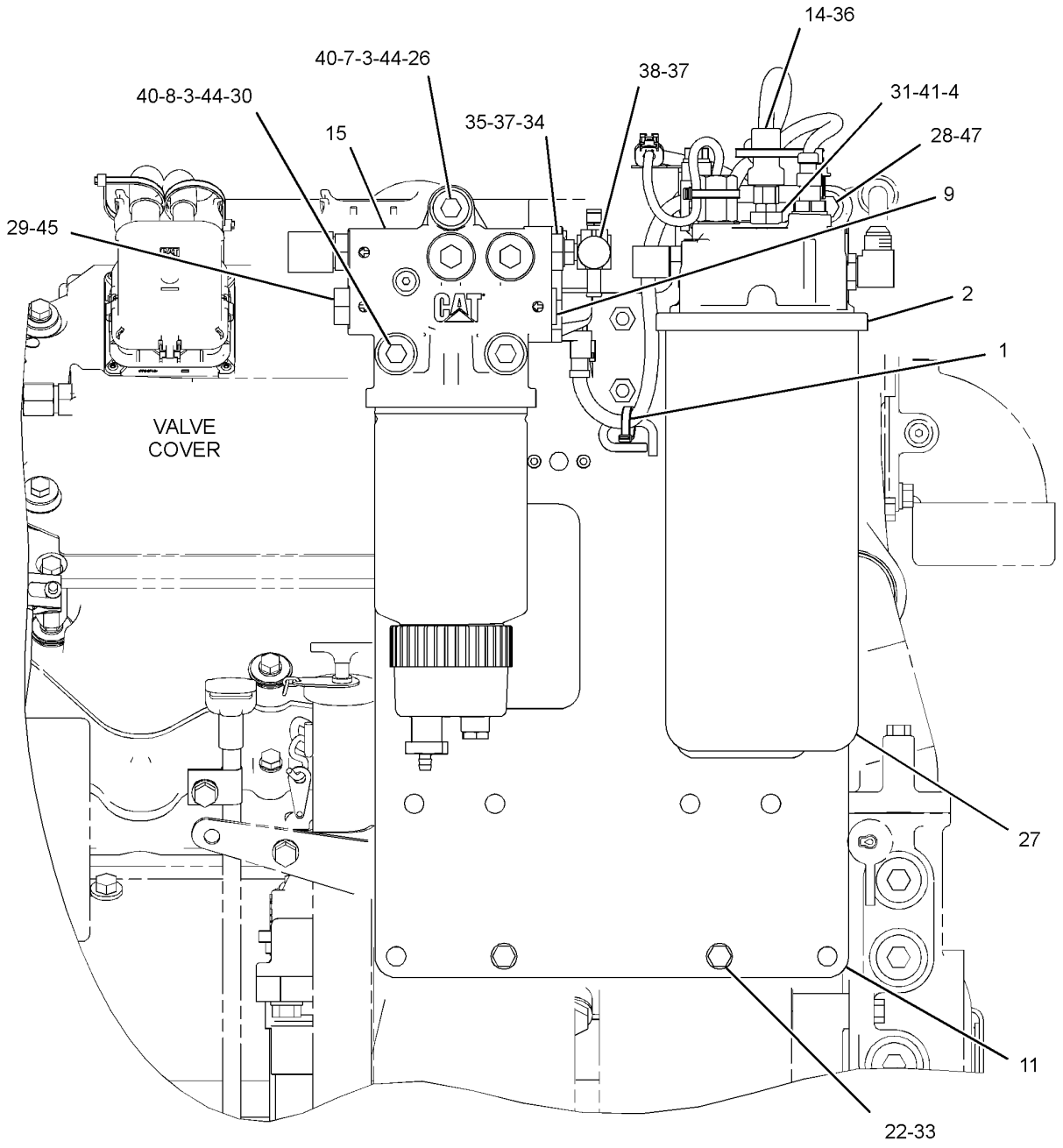

RIGHT SIDE VIEW

GRAPHIC #1 g01442608

320-7496 **MOUNTING GP-FUEL FILTER** *(contd.)* **i02939447**

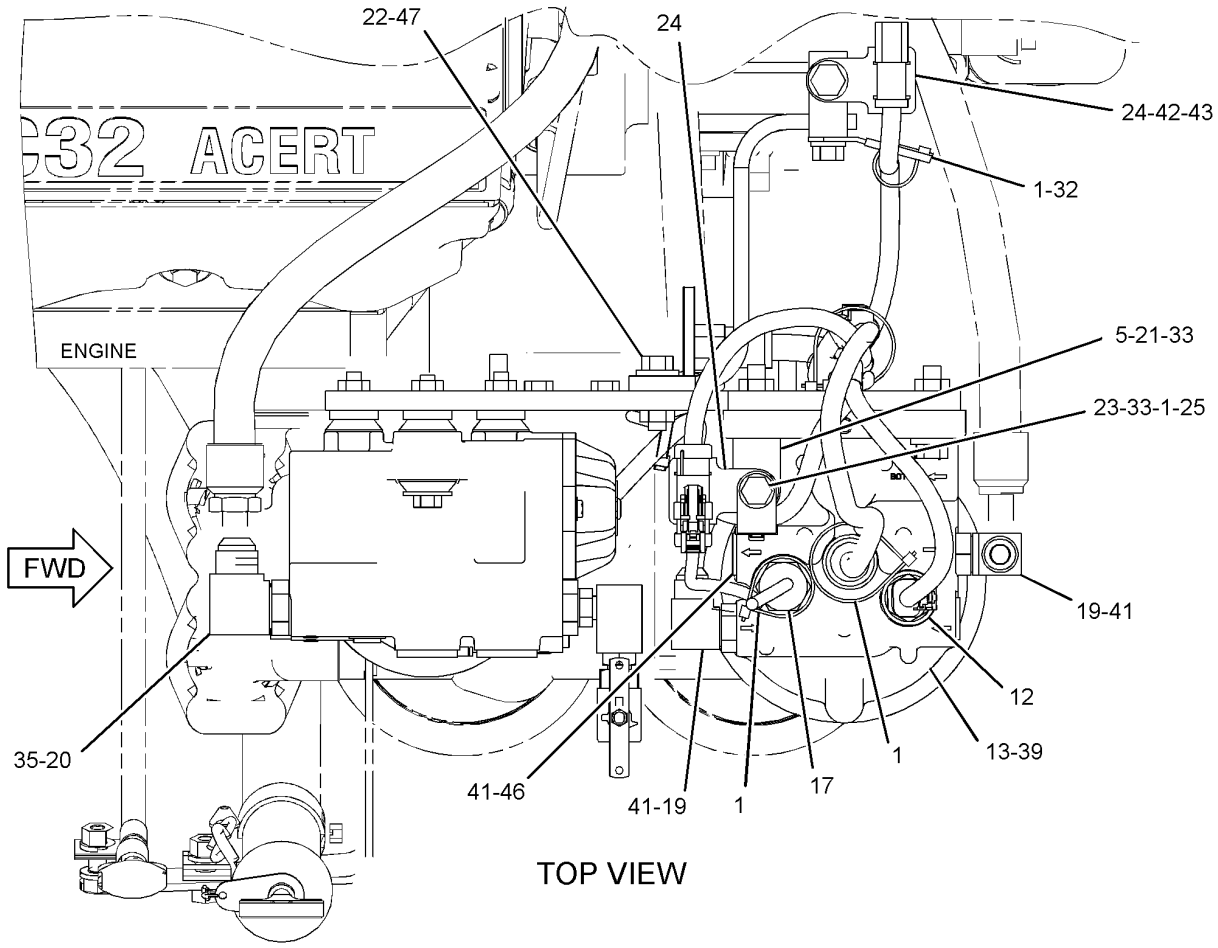

TOP VIEW

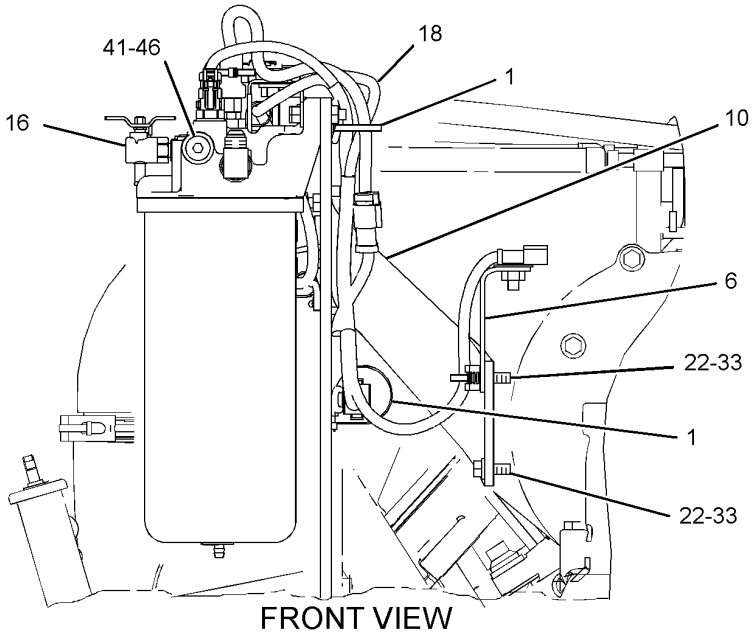

FRONT VIEW

GRAPHIC #2

<END>

g01442716

223-6421 PUMP & MTG GP-FUEL TRANSFER

S/N: LJW1-UP

PART OF 246-4283, 246-8228, 259-3142, 259-3143 ENGINE AR-COMPLETE AN ATTACHMENT

SMCS-1256 **i02504910**

NOTE	REF NO	GRAPHIC REF	PART NUMBER	QTY	PART NAME 1 2 3 4 5 6 (PRODUCT LEVEL)	SEE PAGE
CY	1	1	**286-2531**	1	PUMP GP-FUEL TRANSFER	185
	2	1	**3B-1915**	2	BOLT (3/8-16X1.375-IN)	
	3	1	**5M-2894**	2	WASHER-HARD (10.2X18.5X2.5-MM THK)	
	4	1	**8C-3089**	1	SEAL-O-RING	

C-CHANGE FROM PREVIOUS TYPE
Y-SEPARATE ILLUSTRATION

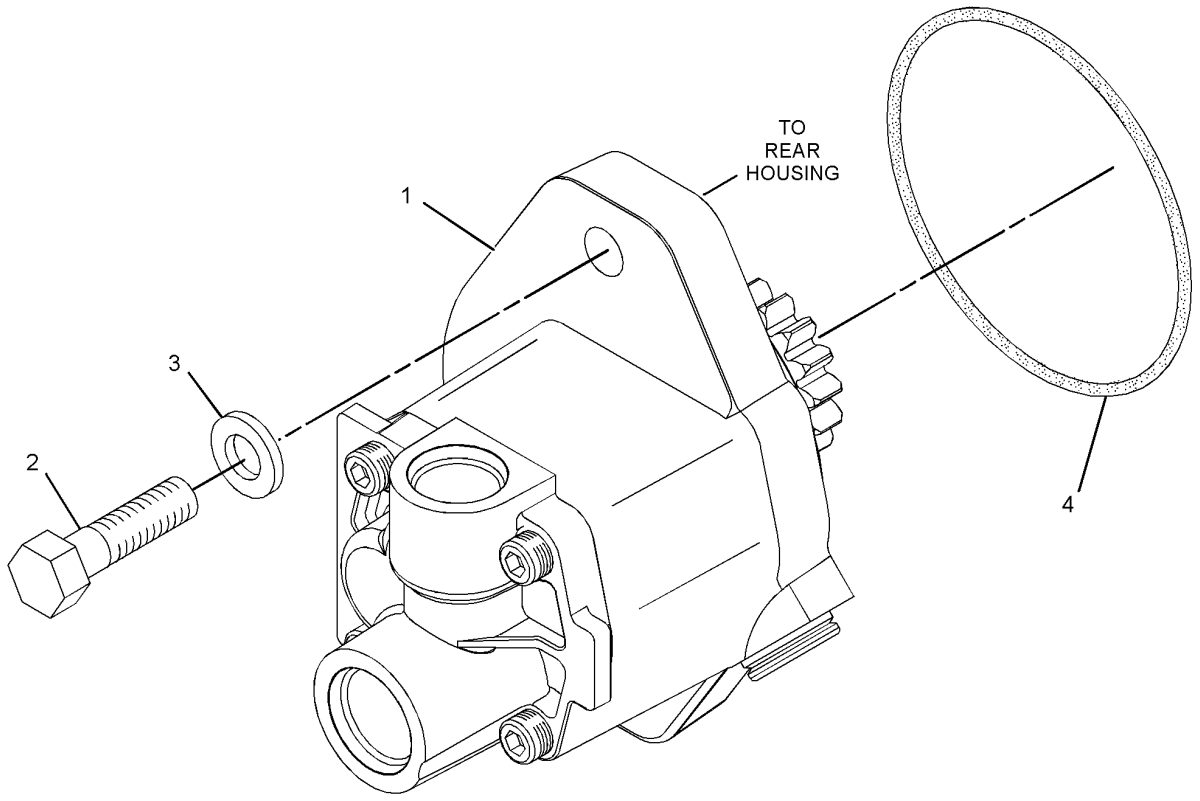

GRAPHIC #1 **<END>** g01265412

235-1401 PUMP GP-FUEL INJECTION

S/N: LJW1-UP

PART OF 261-2303, 261-2304 ENGINE AR-CORE

AN ATTACHMENT

SMCS-1251, 1290 **i02423636**

NOTE	REF NO	GRAPHIC REF	PART NUMBER	QTY	PART NAME 1 2 3 4 5 6 (PRODUCT LEVEL)	SEE PAGE
	1	1	**6I-0213**	1	CLAMP	
	2	1	**8S-9191**	1	BOLT (3/8-16X4-IN)	
	3	1	**100-5072**	1	SPACER (9.8X15.85X37.6-MM THK)	
CR	4	1	**253-0615**	1	INJECTOR GP-FUEL	
	4A	1	**230-3775**	1	SEAL-O-RING	
	4B	1	**230-3728**	1	SEAL-O-RING	
	4C	1	**9X-7317**	1	SEAL-O-RING	

C-CHANGE FROM PREVIOUS TYPE
R-REMFG PART MAY BE AVAILABLE

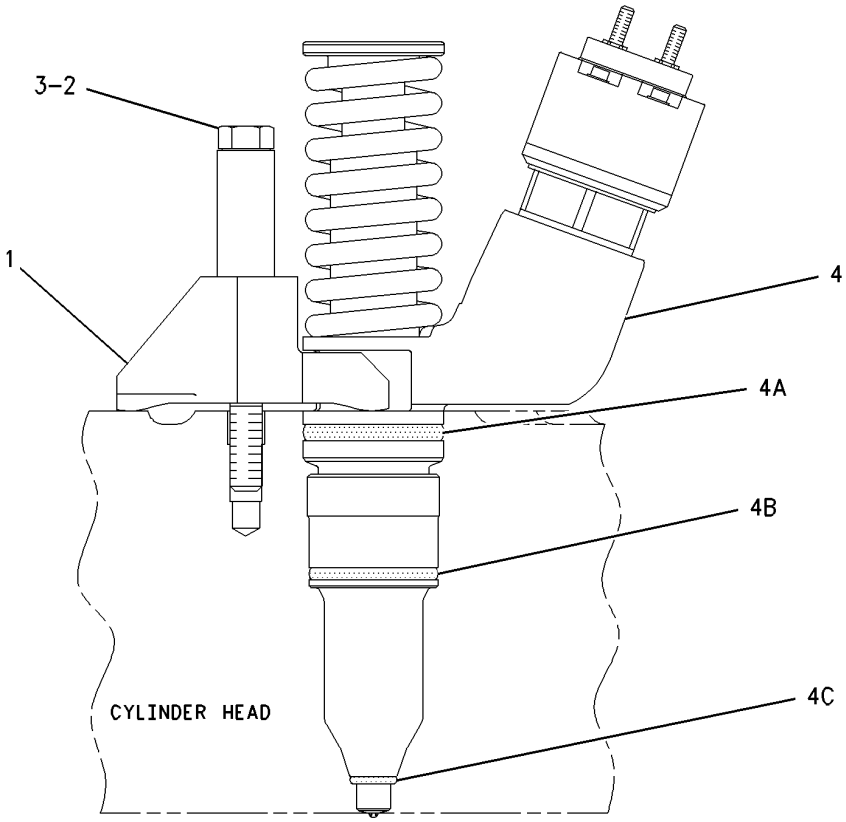

GRAPHIC #1 **<END>** g00900391

FUEL SYSTEM

286-2531 PUMP GP-FUEL TRANSFER

S/N: LJW1-UP
PART OF 223-6421 PUMP & MTG GP-FUEL TRANSFER
AN ATTACHMENT

SMCS-1256 **i02515758**

NOTE	REF NO	GRAPHIC REF	PART NUMBER	QTY	PART NAME 1 2 3 4 5 6 (PRODUCT LEVEL)	SEE PAGE
	1	1	**224-3242**	1	GEAR-FUEL PUMP (16-TEETH)	

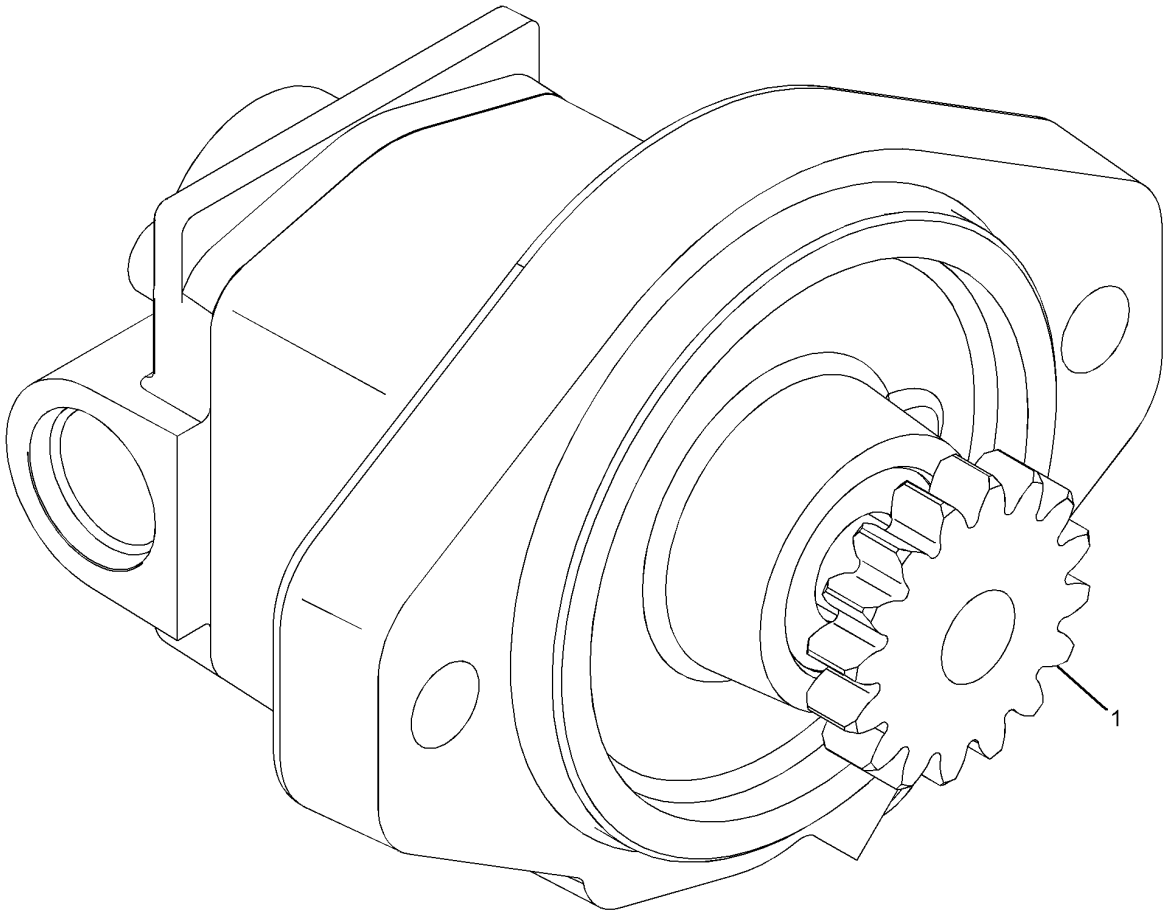

GRAPHIC #1 **<END>** g01258987

FUEL SYSTEM

290-0689 TANK GP-FUEL

S/N: 2211-UP

PART OF 279-5277 TANK & BUMPER AR-FUEL

SMCS-1273 **i02897892**

NOTE	REF NO	GRAPHIC REF	PART NUMBER	QTY	PART NAME 1 2 3 4 5 6 (PRODUCT LEVEL)	SEE PAGE
I	1	1	**116-7486**	1	HOSE AS	
	2	2	**1H-8306**	3	SCREW-PURGE (1/2-20X1.625-IN)	
	3	2	**6C-3060**	1	GASKET	
	4	1	**7V-0638**	8	SPACER (16X28X25-MM THK)	
	5	2	**8T-4986**	4	CLAMP-HOSE	
	6	1	**9P-7121**	1	STRAINER-FUEL	
	7	2	**114-3676**	2	HOSE	
	8	1	**156-9096**	1	SHEET-RH	
	9	1	**156-9099**	1	SHEET-LH	
	10	1	**163-6591**	1	SHEET-RH	
	11	1	**163-6593**	1	SHEET-LH	
	12	2	**164-3417**	1	COVER	
	13	1	**187-1679**	1	COVER	
I	14	2	**235-6116**	1	HOSE AS	
	15	1	**235-6117**	1	SHEET AS (RH)	
	16	1	**235-6118**	1	SHEET AS (LH)	
	17	2	**263-1029**	1	SENDER AS-FUEL LEVEL	
		2	**6C-3060**	1	GASKET	
		2	**138-0444**	1	KIT-REPAIR (FUEL LEVEL GAUGE)	
					(INCLUDES SENSOR AS, SCREWS, RECEPTACLE KIT & PIN)	
Y	18	1	*290-0690*	1	TANK GP-FUEL	189
M	19	1	**101-7404**	6	BOLT-SOCKET HEAD (M10X1.5X30-MM)	
	20	2	*148-8327*	1	CONNECTOR AS	
		2	**3D-2824**	1	SEAL-O-RING	
		2	**6V-8637**	1	CONNECTOR	
		2	**6V-9746**	1	SEAL-O-RING	
	21	2	*148-8347*	3	ELBOW AS	
					(EACH INCLUDES)	
		2	**3D-2824**	1	SEAL-O-RING	
		2	**6V-9007**	1	ELBOW	
		2	**6V-9746**	1	SEAL-O-RING	
	22	1	**1H-8128**	1	SEAL-O-RING	
	23	2	**5H-6734**	1	SEAL-O-RING	
	24	1,2	**5P-1076**	42	WASHER-HARD (13.5X30X4-MM THK)	
	25	1	**6V-1889**	5	CLIP	
M	26	2	**6V-7727**	6	BOLT (M6X1X16-MM)	
	27	2	**7M-8485**	3	SEAL-O-RING	
	28	1,2	**8T-4121**	17	WASHER-HARD (11X21X2.5-MM THK)	
M	29	1	**8T-4192**	26	BOLT (M12X1.75X25-MM)	
M	30	1,2	**8T-4195**	11	BOLT (M10X1.5X30-MM)	
	31	2	**8T-4205**	6	WASHER-HARD (7.2X14.5X2-MM THK)	
M	32	1,2	**8T-6868**	16	BOLT (M12X1.75X80-MM)	
	33	2	**9S-9334**	3	PLUG-O-RING	

I-REFER TO HYDRAULIC INFORMATION SYSTEM
M-METRIC PART
Y-SEPARATE ILLUSTRATION

290-0689 **TANK GP-FUEL** *(contd.)* **i02897892**

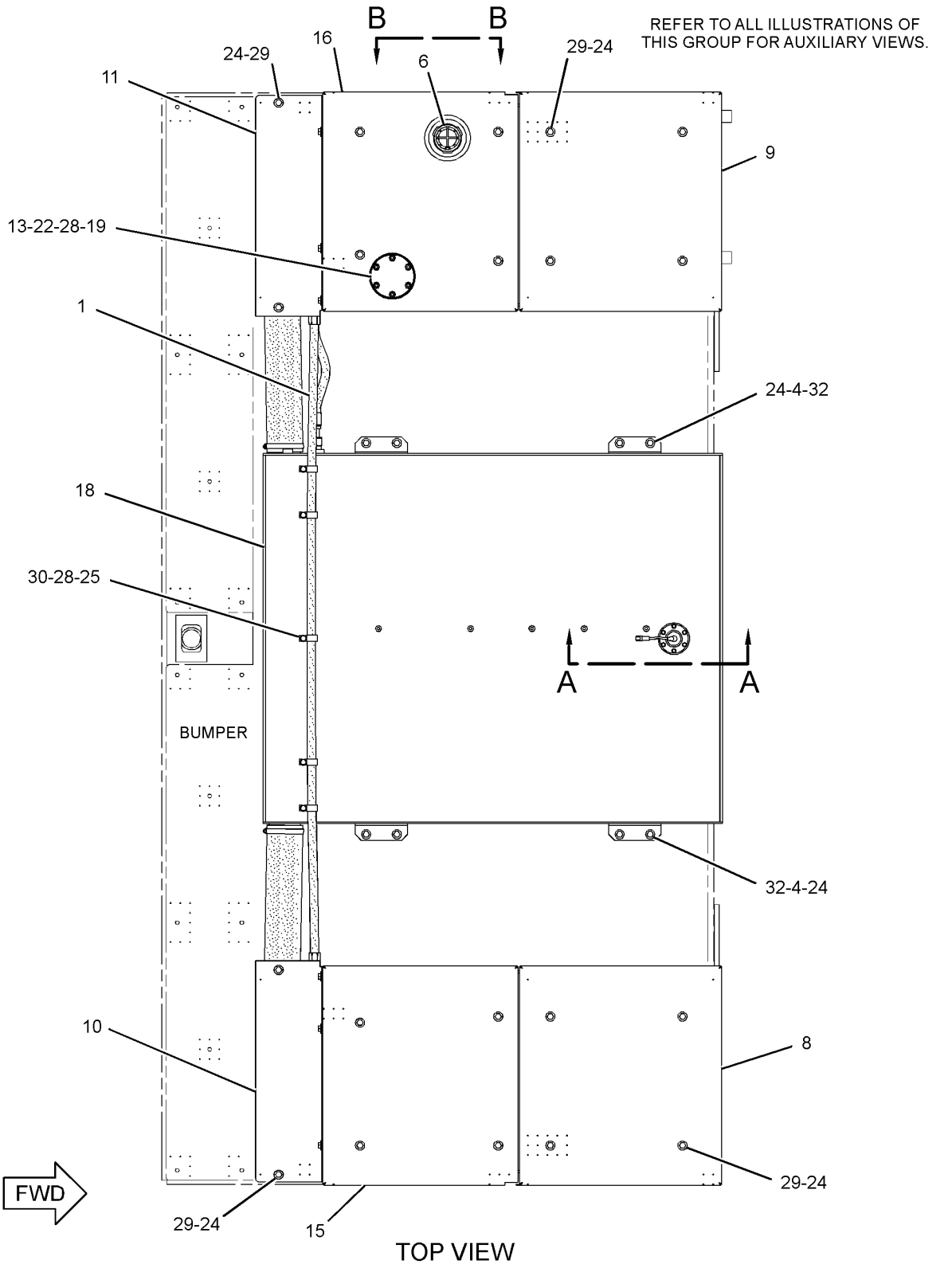

GRAPHIC #1 g01444434

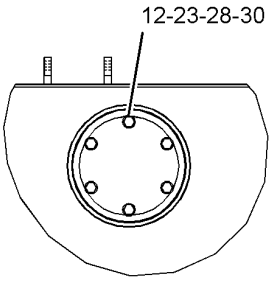

VIEW B-B

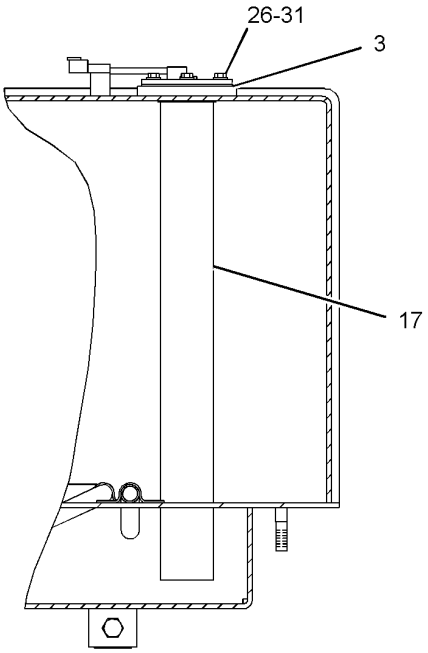

SECTION A-A

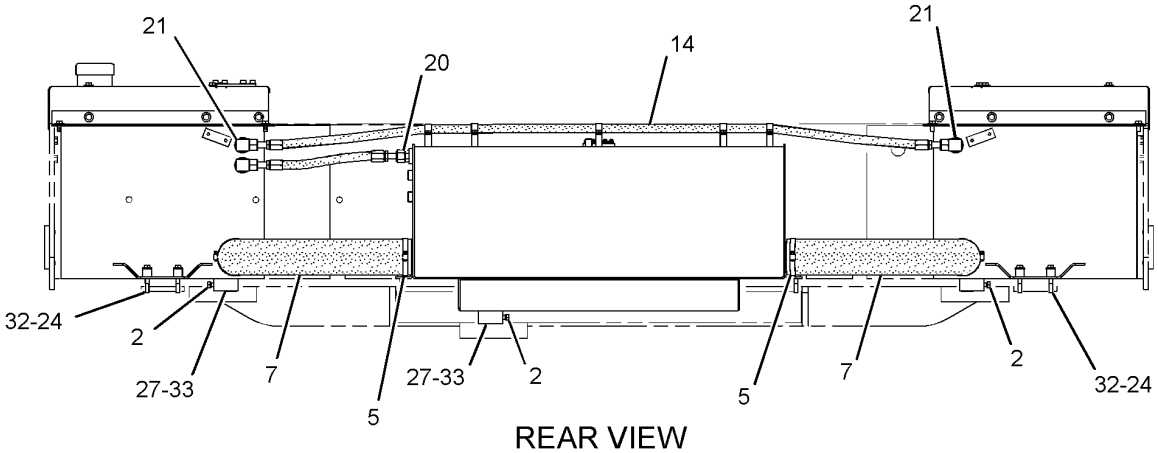

REAR VIEW

GRAPHIC #2 **<END>** g01444629

FUEL SYSTEM

290-0690 TANK GP-FUEL

S/N: 2211-UP

PART OF 290-0689 TANK GP-FUEL

SMCS-1273 **i02897893**

NOTE	REF NO	GRAPHIC REF	PART NUMBER	QTY	PART NAME 1 2 3 4 5 6 (PRODUCT LEVEL)	SEE PAGE
	1	1	**235-6103**	1	TANK AS-FUEL (LH)	
	2	1	**235-6104**	1	TANK AS-FUEL (RH)	
	3	1	**289-2986**	1	TANK AS-FUEL (CENTER)	

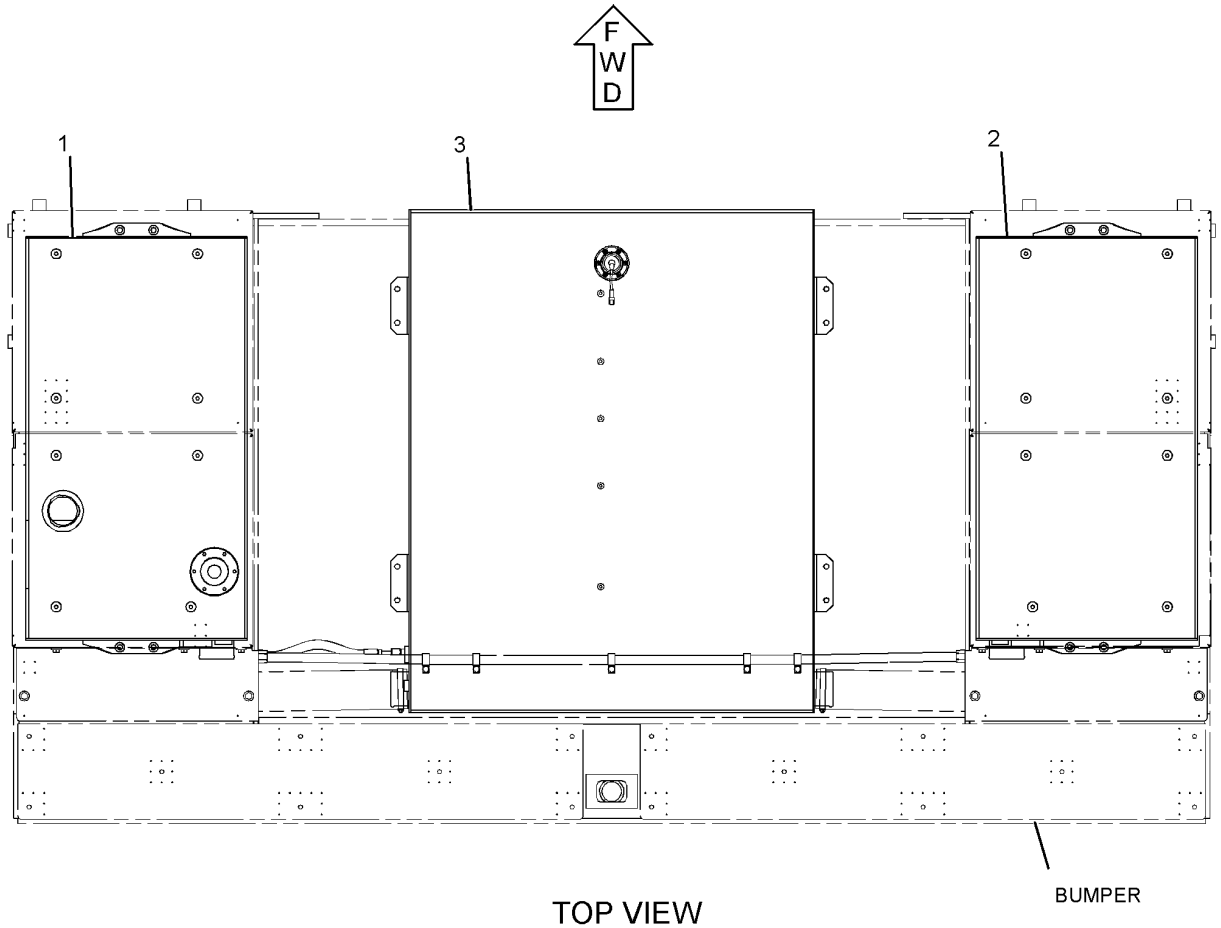

TOP VIEW

GRAPHIC #1

<END>

g01444610

228-7381 VALVE GP-CHECK–FUEL

S/N: LJW1-UP
PART OF 285-6534, 317-9135 LINES GP-FUEL FILTER AN ATTACHMENT

SMCS-1251, 1274 **i02048634**

NOTE	REF NO	GRAPHIC REF	PART NUMBER	QTY	PART NAME 1 2 3 4 5 6 (PRODUCT LEVEL)	SEE PAGE
	1	1	**033-6033**	1	SEAL-O-RING	
	2	1	**6V-4589**	1	SEAL-O-RING	
	3	1	**6V-6923**	1	RING-BACKUP	

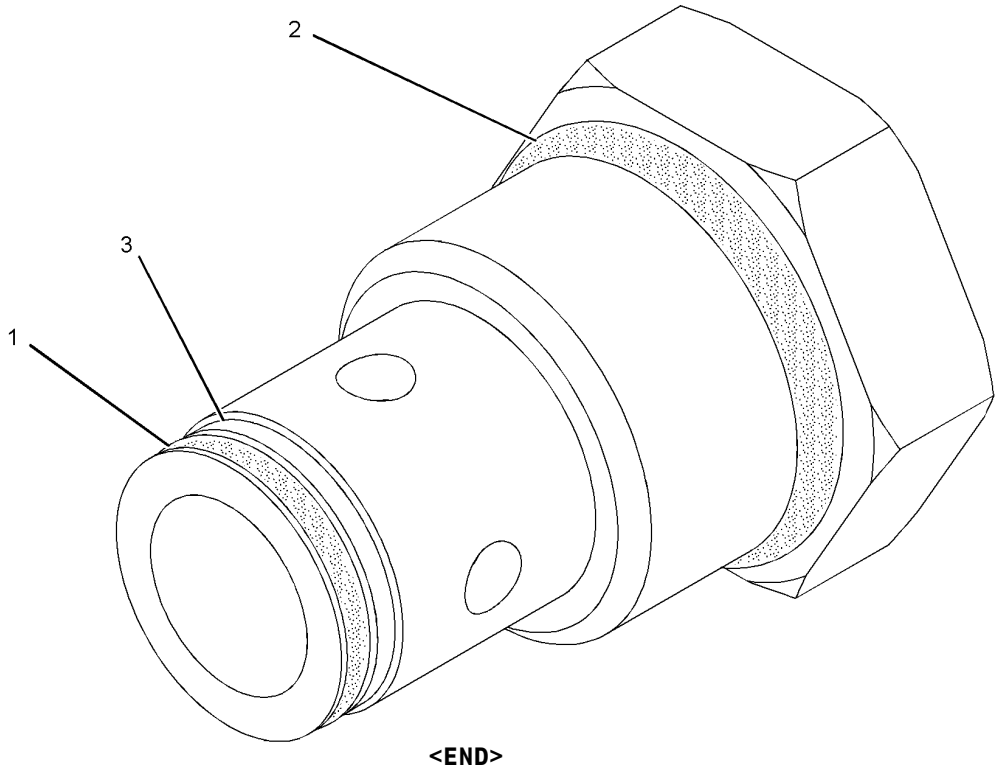

GRAPHIC #1 **<END>** g01051243

FUEL SYSTEM

252-1363 WATER SEP & FUEL PRM PUMP GP

S/N: LJW1-UP

PART OF 256-7941, 320-7496 MOUNTING GP-FUEL FILTER

AN ATTACHMENT

SMCS-1258, 1263 **i02939449**

NOTE	REF NO	GRAPHIC REF	PART NUMBER	QTY	PART NAME 1 2 3 4 5 6 (PRODUCT LEVEL)	SEE PAGE
Y	1	1	*174-9570*	1	FILTER GP-WATER SEP & FUEL (PRIMARY)	159
	2	1	**247-6050**	1	BASE GP-FUEL FILTER	

Y-SEPARATE ILLUSTRATION

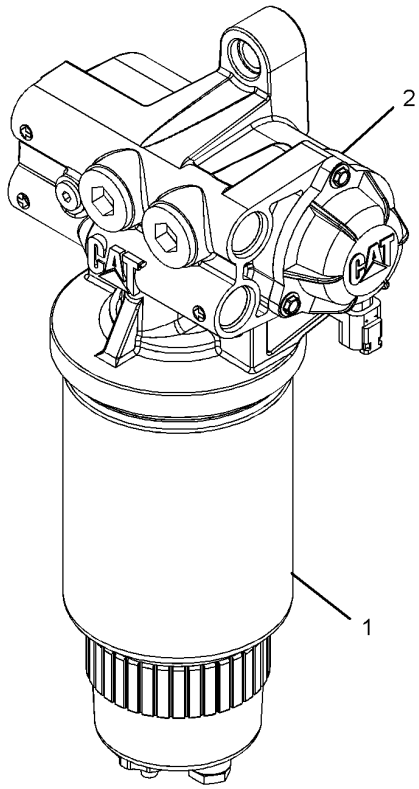

GRAPHIC #1 **<END>** g01119485

3E-6328 ALARM GP–ACTION

S/N: 2211-UP
24-VOLT
PART OF 280-9826 WIRING GP-CAB

SMCS-7400, 7402, 7407 **i02610072**

NOTE	REF NO	GRAPHIC REF	PART NUMBER	QTY	PART NAME 1 2 3 4 5 6 (PRODUCT LEVEL)	SEE PAGE
	1	1	**102-8802**	1	KIT-RECEPTACLE (2-PIN)	
					(INCLUDES RECEPTACLE AS & WEDGE)	
	2	1	**186-3735**	2	PIN-CONNECTOR (16-GA TO 18-GA)	
	3	1	**3E-3365**	1	WEDGE-RECEPTACLE LOCK (2-PIN)	

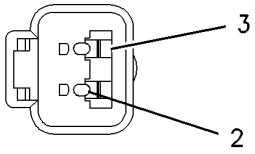

VIEW A–A

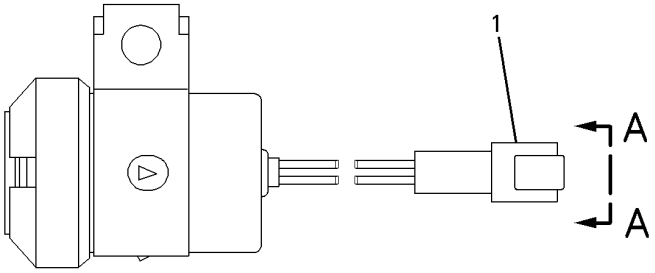

GRAPHIC #1 **<END>** g00826023

ELECTRICAL AND STARTING SYSTEM

316-6985 BATTERY & WIRING GP

S/N: 2211-UP

PART OF 316-6993 ELECTRICAL AR

SMCS-1401, 1402, 1408 **i02883142**

NOTE	REF NO	GRAPHIC REF	PART NUMBER	QTY	PART NAME 1 2 3 4 5 6 (PRODUCT LEVEL)	SEE PAGE
	1	1	**2B-0941**	1	SPACER (10.5X19X19-MM THK)	
	2	1,2,3	**2G-8767**	8	WASHER (10.5X60X3-MM THK)	
	3	3	**3E-8320**	1	PLATE-INSTRUCTION (BATTERY)	
	4	2,3	**3S-2093**	19	STRAP-CABLE	
	5	1,2,3	**6G-2256**	4	CLAMP	
	6	1,2,3	**6G-2263**	4	SPACER (10.5X19X28.5-MM THK)	
Y	7	2	**7N-0719**	1	SWITCH GP-DISCONNECT (BATTERY)	280
	8	3	**9U-1598**	3	FRAME AS (BATTERY HOLD-DOWN)	
	9	3	**116-4491**	1	BRACKET AS	
M		3	**8T-3490**	1	NUT-WELD (M10X1.5-THD)	
	10	3	**118-1277**	2	CABLE AS	
					(EACH INCLUDES)	
		3	**9G-0003**	1	COVER-TERMINAL (BLACK)	
		3	**9G-0004**	1	COVER-TERMINAL (RED)	
E		3	**159-8049**		CABLE (00-GA, RED) (20-CM)	
		3	**1M-6119**	1	BOLT (5/16-18X1.375-IN)	
		3	**1M-6120**	1	NUT (5/16-18-THD)	
	11	3	**121-7848**	2	PLATE	
	12	2	**125-8534**	1	PLATE AS	
	13	1	**142-3331**	1	BRACKET AS	
	14	3	**153-3734**	1	BRACKET AS	
M		3	**8T-3490**	1	NUT-WELD (M10X1.5-THD)	
	15	2	**153-5710**	4	BATTERY (12-VOLT, MAINTENANCE FREE)	
	16	1	**268-6322**	1	CABLE AS	
		1	**1M-6119**	1	BOLT (5/16-18X1.375-IN)	
		1	**1M-6120**	1	NUT (5/16-18-THD)	
		1	**8N-1725**	1	COVER-TERMINAL (RED)	
		1	**9X-9120**	1	BOOT (RED)	
		1	**9X-9825**	1	TERMINAL-CABLE (00-GA, 1/2-IN BOLT)	
E		1	**159-8049**		CABLE (00-GA, RED) (88-CM)	
	17	1	**268-6323**	1	CABLE AS	
		1	**1M-6119**	1	BOLT (5/16-18X1.375-IN)	
		1	**1M-6120**	1	NUT (5/16-18-THD)	
		1	**1S-7251**	1	TERMINAL-CABLE (00-GA, 1/2-IN BOLT)	
		1	**8N-0869**	1	COVER-TERMINAL (RED)	
		1	**8N-1725**	1	COVER-TERMINAL (RED)	
E		1	**159-8049**		CABLE (00-GA, RED) (35-CM)	
	18	3	**268-6325**	1	CABLE AS	
		3	**1M-6119**	1	BOLT (5/16-18X1.375-IN)	
		3	**1M-6120**	1	NUT (5/16-18-THD)	
		3	**1M-6119**	1	BOLT (5/16-18X1.375-IN)	
		3	**1M-6120**	1	NUT (5/16-18-THD)	
		3	**6T-0465**	1	COVER-TERMINAL (BLACK)	
		3	**7T-4925**	1	COVER-TERMINAL (BLACK)	
		3	**7T-9988**	1	COVER-TERMINAL (BLACK)	
		3	**031-9295**	1	TERMINAL-RING (0000-GA, 0.375-IN)	
E		3	**159-8054**		CABLE-ELECTRICAL (00-GA, BLACK) (187-CM)	
	19	2	**268-6326**	1	CABLE AS	
		2	**3L-7634**	2	TERMINAL-RING (0000-GA, 0.5-IN)	
		2	**9X-4519**	2	BOOT (RED)	
E		2	**159-8053**		CABLE-ELECTRICAL (00-GA, RED) (294-CM)	
	20	1	**268-6327**	1	CABLE AS	
		1	**1S-7251**	1	TERMINAL-CABLE (00-GA, 1/2-IN BOLT)	
		1	**1S-7252**	1	TERMINAL-CABLE (00-GA, 3/8-IN BOLT)	
		1	**6T-0465**	1	COVER-TERMINAL (BLACK)	
E		1	**159-8050**		CABLE (02-GA, BLACK) (57-CM)	

316-6985 **BATTERY & WIRING GP** *(contd.)* **i02883142**

NOTE	REF NO	GRAPHIC REF	PART NUMBER	QTY	PART NAME 1 2 3 4 5 6 (PRODUCT LEVEL)	SEE PAGE
	21	3	**284-8516**	1	FRAME AS (BATTERY HOLD-DOWN)	
	22	1	**306-1767**	1	BRACKET AS	
M		1	**8T-3490**	2	NUT-WELD (M10X1.5-THD)	
	23	3	**311-7583**	1	BRACKET AS	
M		3	**8T-3490**	1	NUT-WELD (M10X1.5-THD)	
	24	2	**311-7584**	1	RECEPTACLE AS	
		2	**1S-7251**	2	TERMINAL-CABLE (00-GA, 1/2-IN BOLT)	
E		2	**159-8049**		CABLE (00-GA, RED) (87-CM)	
E		2	**159-8050**		CABLE (02-GA, BLACK) (91-CM)	
	25	2	**311-7585**	1	CABLE AS	
		2	**1S-7251**	2	TERMINAL-CABLE (00-GA, 1/2-IN BOLT)	
		2	**8N-0869**	2	COVER-TERMINAL (RED)	
E		2	**159-8049**		CABLE (00-GA, RED) (197-CM)	
	26	2	**316-6986**	1	CABLE AS	
		2	**3L-7634**	1	TERMINAL-RING (0000-GA, 0.5-IN)	
E		2	**159-8054**		CABLE-ELECTRICAL (00-GA, BLACK) (116-CM)	
	27	2	**317-2730**	1	CABLE AS	
		2	**1S-7251**	2	TERMINAL-CABLE (00-GA, 1/2-IN BOLT)	
		2	**8N-0869**	2	COVER-TERMINAL (RED)	
E		2	**159-8049**		CABLE (00-GA, RED) (86-CM)	
	28	1,2,3	**2V-1771**	6	GROMMET	
	29	1,2	**4S-1962**	7	CLIP	
	30	2,3	**5G-6505**	6	WASHER (25X38X14-MM THK)	
	31	1,2,3	**5P-7462**	5	CLIP (SLOT)	
	32	1,2,3	**5P-7463**	5	CLIP (TAB)	
	33	1,2	**5P-8939**	7	GROMMET	
	34	1	**5S-7383**	1	BOLT (3/8-16X1.75-IN)	
	35	1,2,3	**6D-4246**	6	CLIP	
	36	1,2,3	**6V-0683**	5	GROMMET	
	37	2,3	**6V-8188**	12	NUT (1/2-13-THD)	
	38	2,3	**7F-0560**	12	WASHER (0.516X0.938X0.101-IN THK)	
	39	1,2,3	**7X-7729**	19	WASHER (11X25X3-MM THK)	
	40	2,3	**8C-6358**	2	BLOCK GP-JUNCTION (BATTERY)	
		2,3	**1D-5117**	3	NUT-JAM (1/2-13-THD)	
		2,3	**8T-3519**	3	BOLT-BRONZE (1/2-13X2-IN)	
	41	3	**8S-2634**	1	COVER AS	
M	42	3	**8T-0389**	8	LOCKNUT (M10X1.5-THD)	
	43	1,2,3	**8T-4121**	22	WASHER-HARD (11X21X2.5-MM THK)	
M	44	1,2,3	**8T-4136**	17	BOLT (M10X1.5X25-MM)	
M	45	1,2,3	**8T-4137**	10	BOLT (M10X1.5X20-MM)	
M	46	2	**8T-4185**	1	BOLT (M10X1.5X50-MM)	
M	47	1,2	**8T-4192**	2	BOLT (M12X1.75X25-MM)	
M	48	1,3	**8T-4195**	2	BOLT (M10X1.5X30-MM)	
	49	1,2	**8T-4223**	2	WASHER-HARD (13.5X25.5X3-MM THK)	
	50	3	**8T-4224**	4	WASHER-HARD (8.8X16X2-MM THK)	
	51	1	**8T-4896**	1	WASHER-HARD (10.2X18.5X2.5-MM THK)	
M	52	3	**8T-4908**	4	BOLT (M8X1.25X25-MM)	
M	53	1,3	**8T-6466**	3	BOLT (M10X1.5X60-MM)	
	54	3	**9M-4136**	1	SPACER (0.438X0.75X0.5-IN THK)	
	55	3	**9U-1399**	4	ROD	

E-ORDER BY THE CENTIMETER
M-METRIC PART
Y-SEPARATE ILLUSTRATION

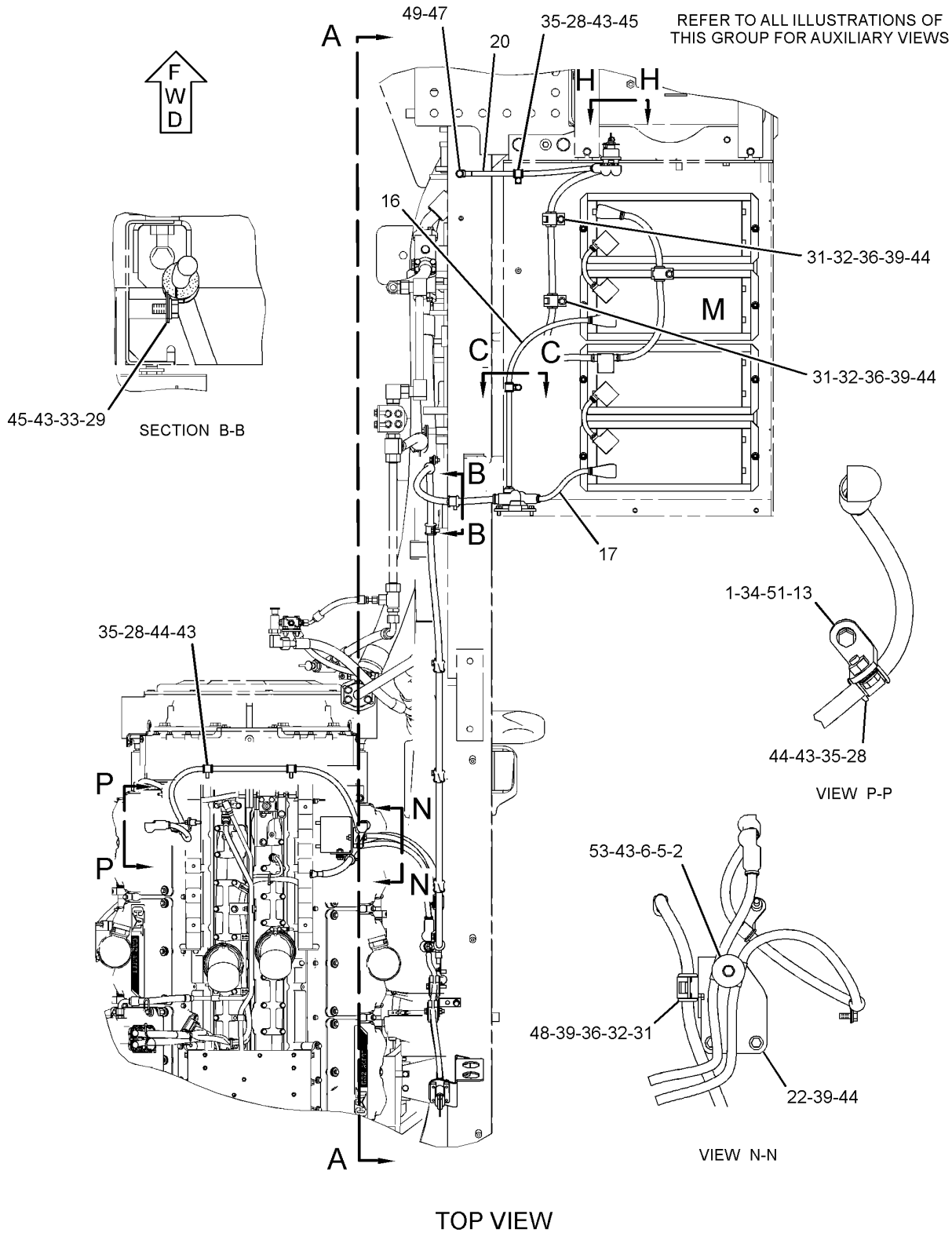

GRAPHIC #1 g01446854

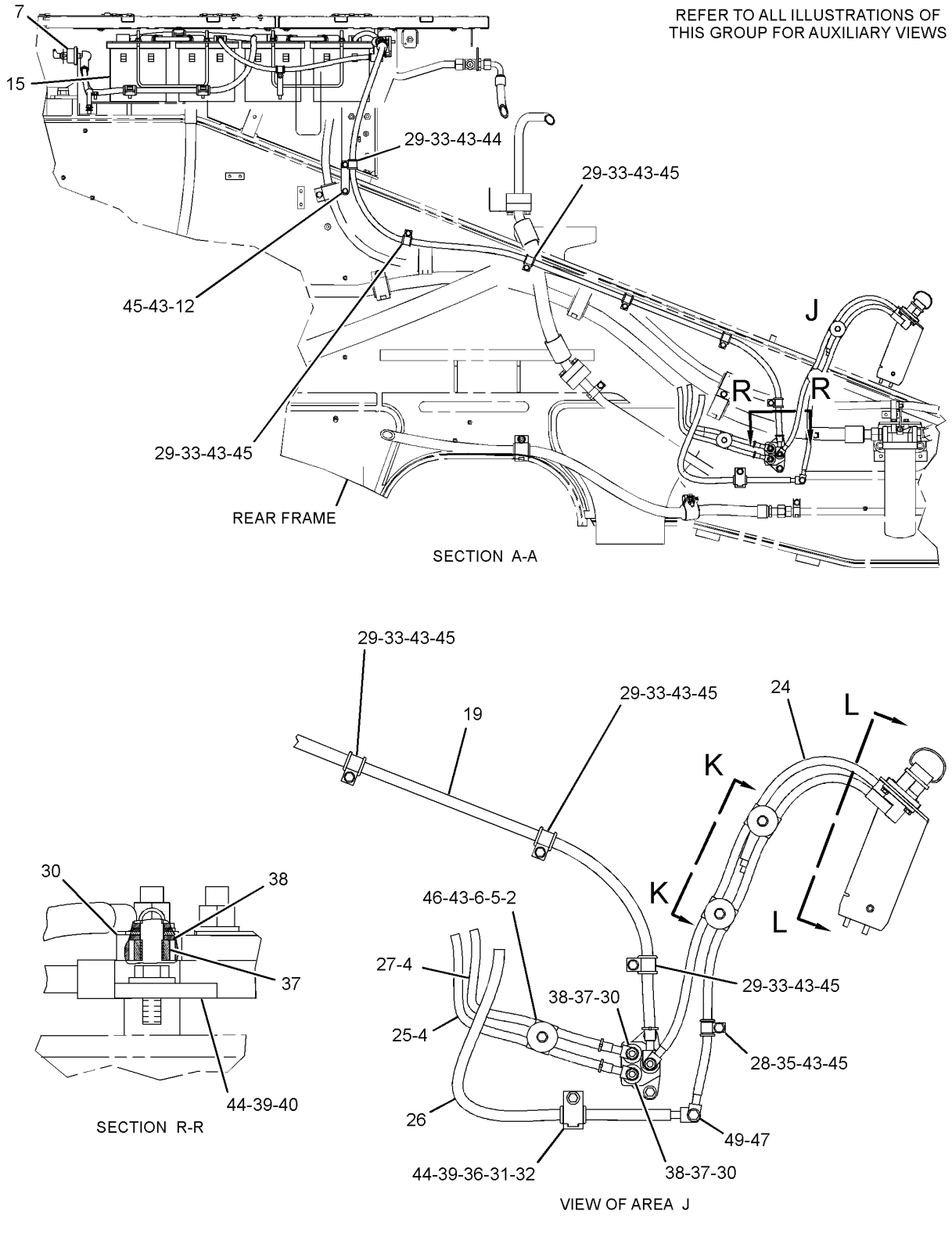

GRAPHIC #2 g01446855

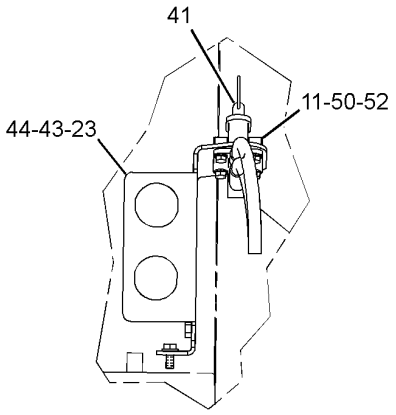

SECTION L-L

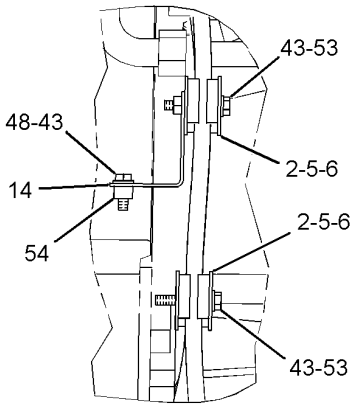

VIEW K-K

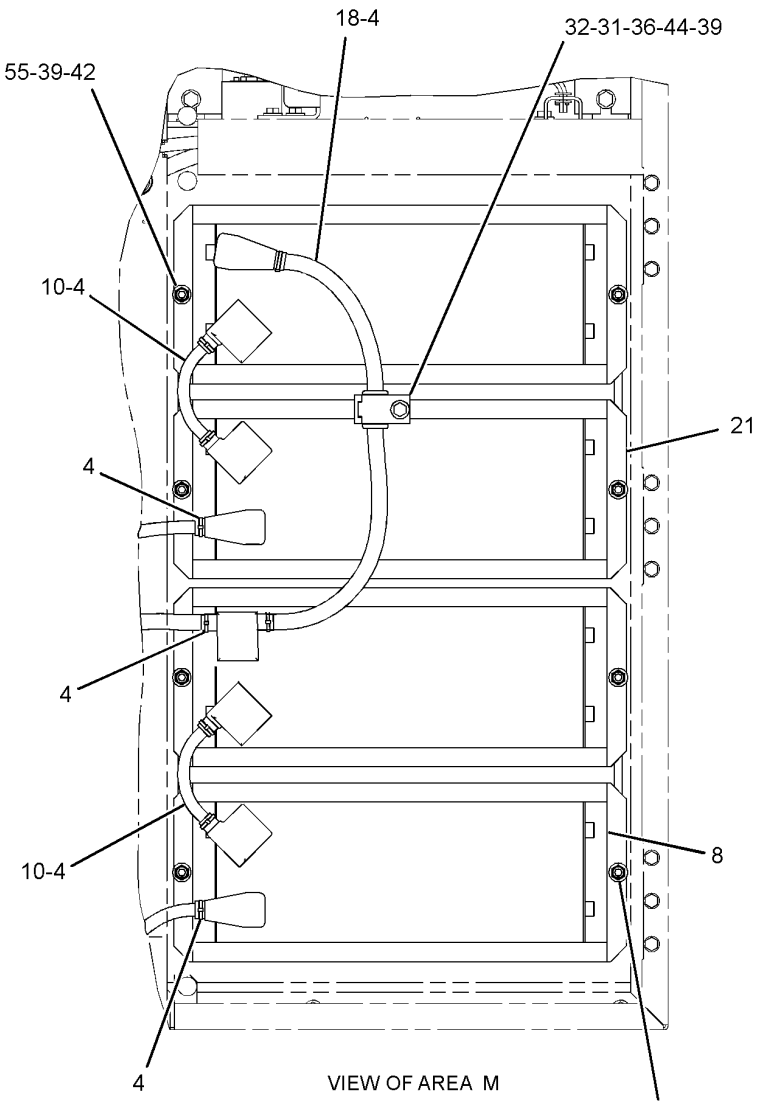

VIEW OF AREA M

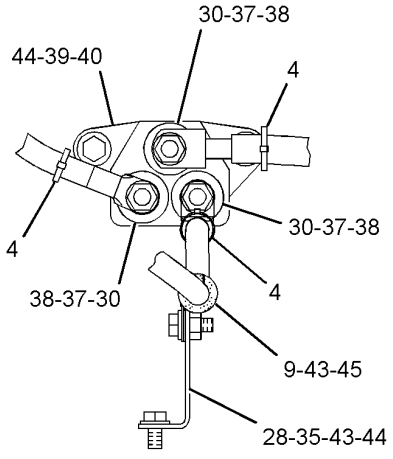

SECTION C-C

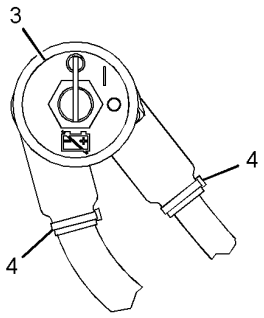

VIEW H-H

GRAPHIC #3 **<END>** g01447027

167-8984 BATTERY GP–CAES, RECHARGEABLE

S/N: 2211-UP
24-VOLT
PART OF 282-4892 WIRING GP-MACHINE
AN ATTACHMENT

SMCS-1401 **i02756703**

NOTE	REF NO	GRAPHIC REF	PART NUMBER	QTY	PART NAME 1 2 3 4 5 6 (PRODUCT LEVEL)	SEE PAGE
	1	1	**102-8803**	1	KIT-RECEPTACLE (3-PIN)	
					(INCLUDES RECEPTACLE AS AND WEDGE)	
	2	1	**155-2260**	1	KIT-CONNECTING PLUG (3-PIN)	
					(INCLUDES PLUG AS AND WEDGE)	
	3	1	**7X-6085**	1	GROMMET AS-SEAL	
		1	**5S-7348**	1	SCREW-MACHINE (6-32X0.375-IN)	

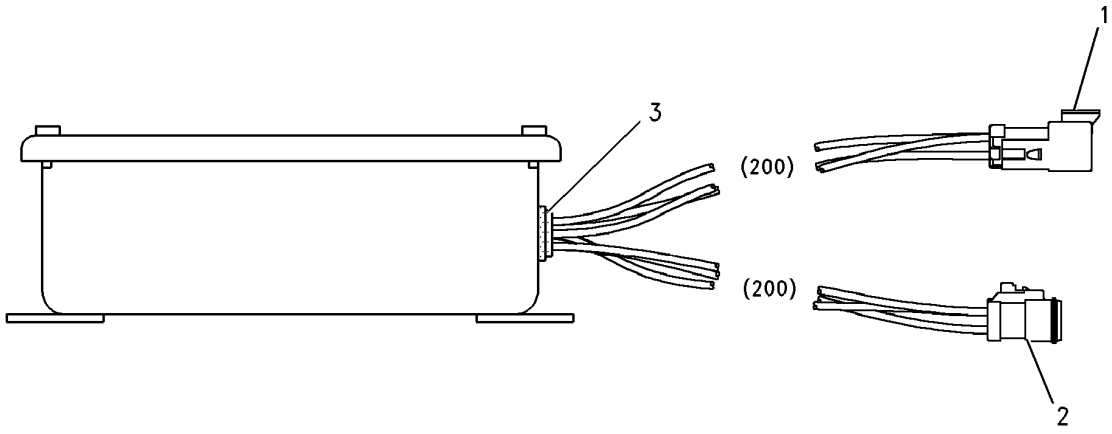

GRAPHIC #1 **<END>** g00989583

126-0182 BUFFER GP-SENSOR–FUEL LEVEL

S/N: 2211-UP

PART OF 282-5173 WIRING GP-BUMPER

SMCS-1408 **i02144777**

NOTE	REF NO	GRAPHIC REF	PART NUMBER	QTY	PART NAME 1 2 3 4 5 6 (PRODUCT LEVEL)	SEE PAGE
	1	1	**8T-8730**	2	SOCKET-CONNECTOR (16-GA TO 18-GA)	
BE	2	1	**9X-1813**		SLEEVE	
	3	1	**102-8803**	1	KIT-RECEPTACLE (3-PIN)	
					(INCLUDES RECEPTACLE AS & WEDGE)	
	4	1	**3E-3371**	1	WEDGE-RECEPTACLE LOCK (3-PIN)	
	5	1	**8T-8729**	3	PIN-CONNECTOR	
	6	1	**155-2270**	1	KIT-CONNECTING PLUG (2-PIN)	
					(INCLUDES PLUG AS & WEDGE)	
	7	1	**3E-3362**	1	WEDGE-PLUG LOCK (2-PIN)	

B-USE AS REQUIRED
E-ORDER BY THE CENTIMETER

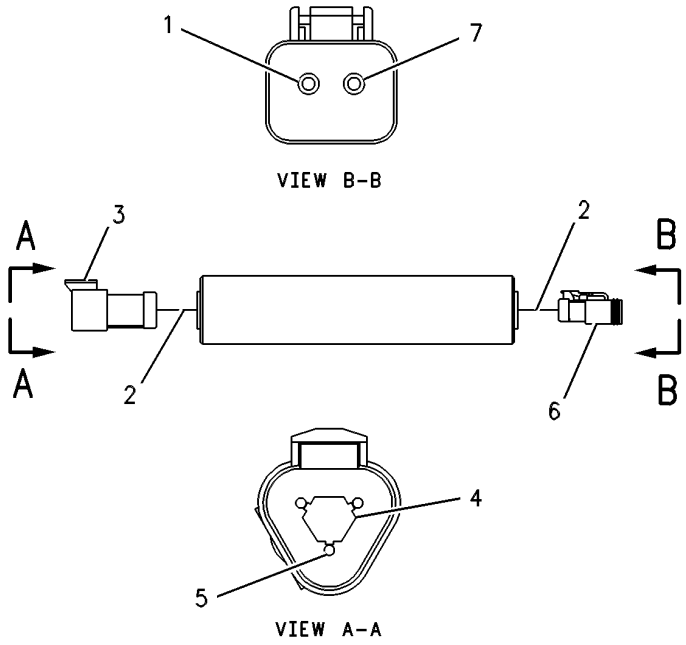

GRAPHIC #1 **<END>** g00255089

ELECTRICAL AND STARTING SYSTEM

282-5330 CAMERA AR–WORK AREA VISUAL SYSTEM

S/N: 2211-UP

AN ATTACHMENT

SMCS-7348 **i02902902**

NOTE	PART NUMBER	QTY	PART NAME 1 2 3 4 5 6 (PRODUCT LEVEL)	SEE PAGE
Y	*252-9529*	1	MOUNTING GP-CAMERA (WORK AREA VISUAL SYSTEM)	237
Y	*282-4890*	1	WIRING GP-CAMERA	309

Y-SEPARATE ILLUSTRATION

<END>

ELECTRICAL AND STARTING SYSTEM

251-7428 CONNECTION GP-ELECTRICAL

S/N: LJW1-UP

PART OF 246-4283, 246-8228, 259-3142, 259-3143 ENGINE AR-COMPLETE

AN ATTACHMENT

SMCS-1408 **i02425758**

NOTE	REF NO	GRAPHIC REF	PART NUMBER	QTY	PART NAME 1 2 3 4 5 6 (PRODUCT LEVEL)	SEE PAGE
	1	1	**101-6603**	2	CAP (STUD PROTECTOR)	
	2	1	**100-5725**	2	STUD (3/8-16X1.25-IN)	
	3	1	**5P-1075**	2	WASHER-HARD (10.2X22.5X3-MM THK)	
	4	1	**6V-8801**	2	NUT (3/8-16-THD)	
	5	1	**8T-4896**	4	WASHER-HARD (10.2X18.5X2.5-MM THK)	

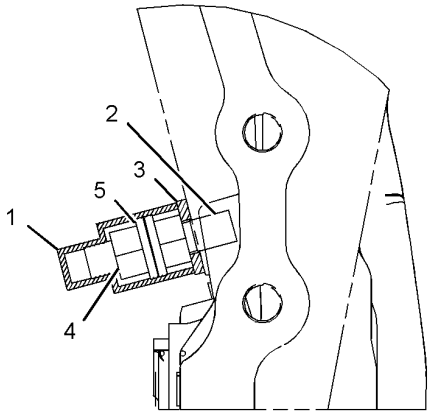

SECTION A-A

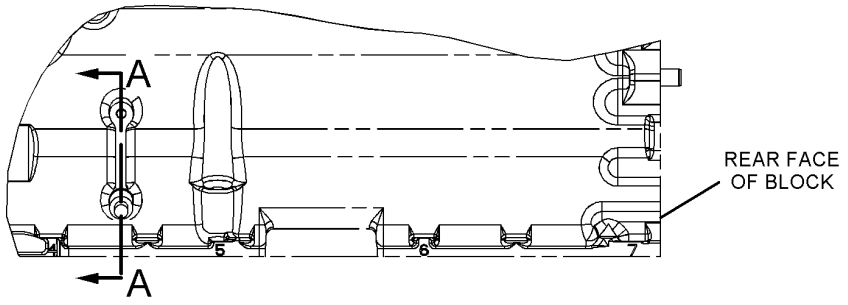

LEFT SIDE VIEW

GRAPHIC #1

<END>

g01051167

ELECTRICAL AND STARTING SYSTEM

241-0072 CONTROL & MTG GP-ENGINE ELEK

S/N: LJW1-UP

PART OF 246-8228, 259-3142, 259-3143 ENGINE AR-COMPLETE

AN ATTACHMENT

SMCS-1901, 7620 **i02299225**

NOTE	REF NO	GRAPHIC REF	PART NUMBER	QTY	PART NAME 1 2 3 4 5 6 (PRODUCT LEVEL)	SEE PAGE
	1	1	**6I-1418**	4	SPACER (8.2X12.7X28.7-MM THK)	
	2	1	**221-2616**	4	SPACER (5/16-2X1.85-IN)	
	3	1	**225-6309**	1	BRACKET	
	4	1	**239-7904**	1	CONTROL GP-ENGINE ELECTRONIC	
	5	1	**233-0891**	2	BRACKET AS	
	6	1	**4M-6425**	4	BOLT (5/16-18X1-IN)	
	7	1	**7X-0440**	4	BOLT (5/16-18X1.75-IN)	
	8	1	**8T-4224**	5	WASHER-HARD (8.8X16X2-MM THK)	
	9	1	**8T-9655**	8	MOUNT-ISOLATION	
	10	1	**9N-0869**	4	WASHER-HARD (8.8X25.5X2-MM THK)	

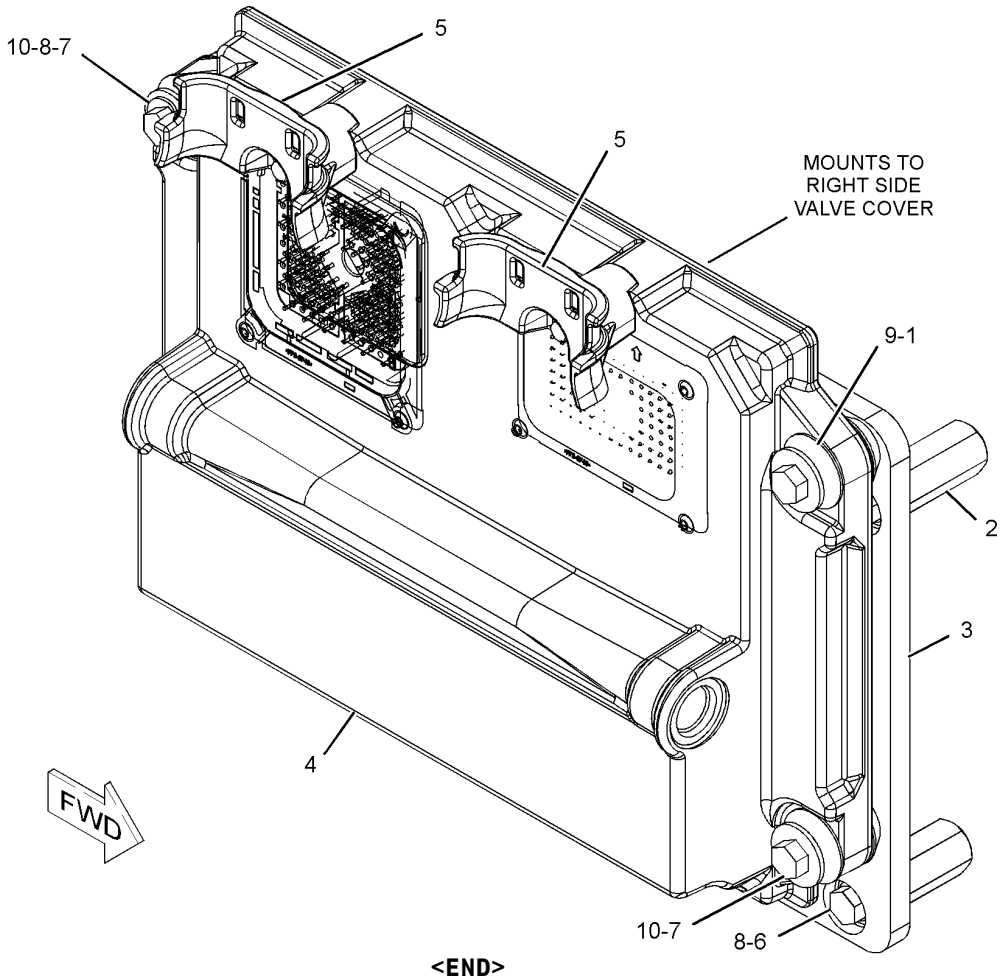

GRAPHIC #1 **<END>** g01152474

266-9851 CONTROL & MTG GP-ENGINE ELEK

S/N: LJW2195-UP
PART OF 246-4283 ENGINE AR-COMPLETE
AN ATTACHMENT

SMCS-1901, 7620 **i02948458**

NOTE	REF NO	GRAPHIC REF	PART NUMBER	QTY	PART NAME 1 2 3 4 5 6 (PRODUCT LEVEL)	SEE PAGE
	1	1	**6I-1418**	4	SPACER (8.2X12.7X28.7-MM THK)	
	2	1	**233-0891**	2	BRACKET AS	
					(EACH INCLUDES)	
M	2A	1	**232-1693**	1	BOLT-FLANGE HEAD (M6X1X35-MM)	
R	3	1	**262-2876**	1	CONTROL GP-ENGINE ELECTRONIC	
	4	1	**8C-6876**	4	BOLT (5/16-18X1.625-IN)	
	5	1	**8T-4224**	1	WASHER-HARD (8.8X16X2-MM THK)	
	6	1	**8T-9655**	8	MOUNT-ISOLATION	
	7	1	**9N-0869**	4	WASHER-HARD (8.8X25.5X2-MM THK)	

M-METRIC PART
R-REMFG PART MAY BE AVAILABLE

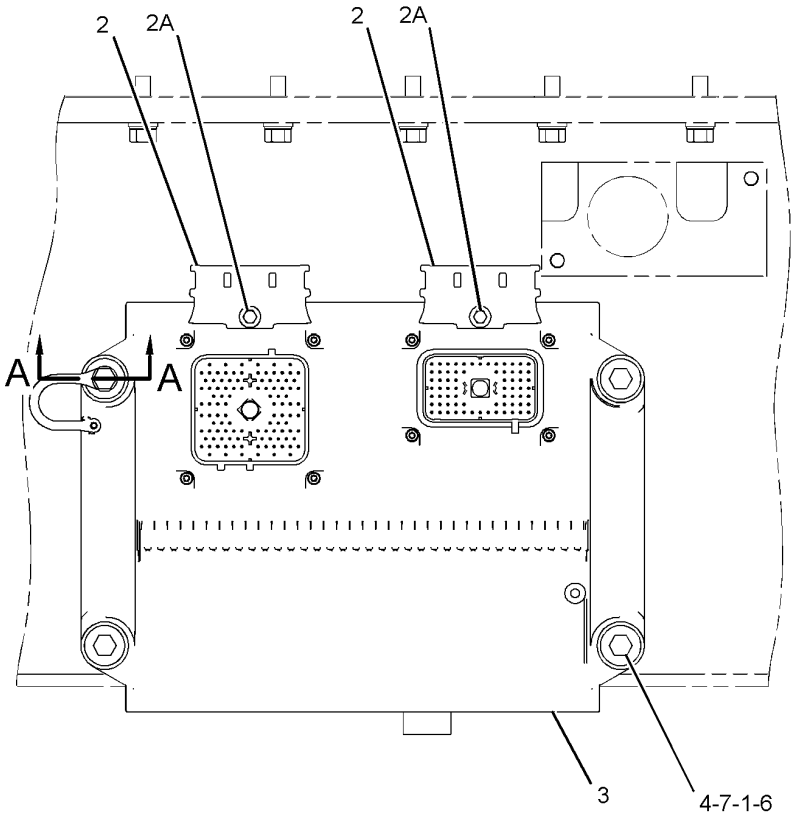

LEFT SIDE VIEW OF ENGINE

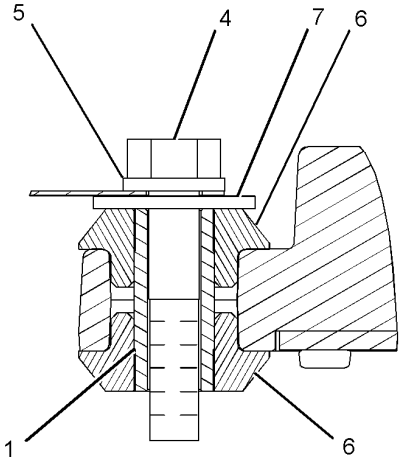

SECTION A-A

GRAPHIC #1 **<END>** g01432002

263-9088 CONTROL GP-COMMUNICATION–PRODUCT LINK 121SR

S/N: 2211-UP

PART OF 268-6645 WIRING GP-COMMUNICATION

AN ATTACHMENT

SMCS-7610, 7620 **i02868778**

NOTE	PART NUMBER	QTY	PART NAME 1 2 3 4 5 6 (PRODUCT LEVEL)	SEE PAGE
	311-8377	1	SOFTWARE GP-COMMUNICATION (PRODUCT LINK 121SR)	

<END>

160-4891 CONTROL GP-UNPROGRAMMED–VIMS*R

S/N: 2211-UP

PART OF 307-9914 WIRING GP-ELECTRONICS BAY

SMCS-7610 **i02064374**

NOTE	REF NO	GRAPHIC REF	PART NUMBER	QTY	PART NAME 1 2 3 4 5 6 (PRODUCT LEVEL)	SEE PAGE
	1	1	**7X-6315**	1	STRAP AS-GROUND	
	2	1	**184-2472**	1	SCREW-PAN HEAD (NO 8-32X9.52-MM)	
	3	1	**134-4126**	1	WASHER (4.52X8.28X0.76-MM THK)	
	4	1	**143-8480**	1	BATTERY GP-ELECTRONIC CONTROL (ROAD ANALYSIS/VIMS MAIN MODULE)	
M	5	1	**3E-6900**	1	BOLT (M5X0.8X12-MM)	

M-METRIC PART

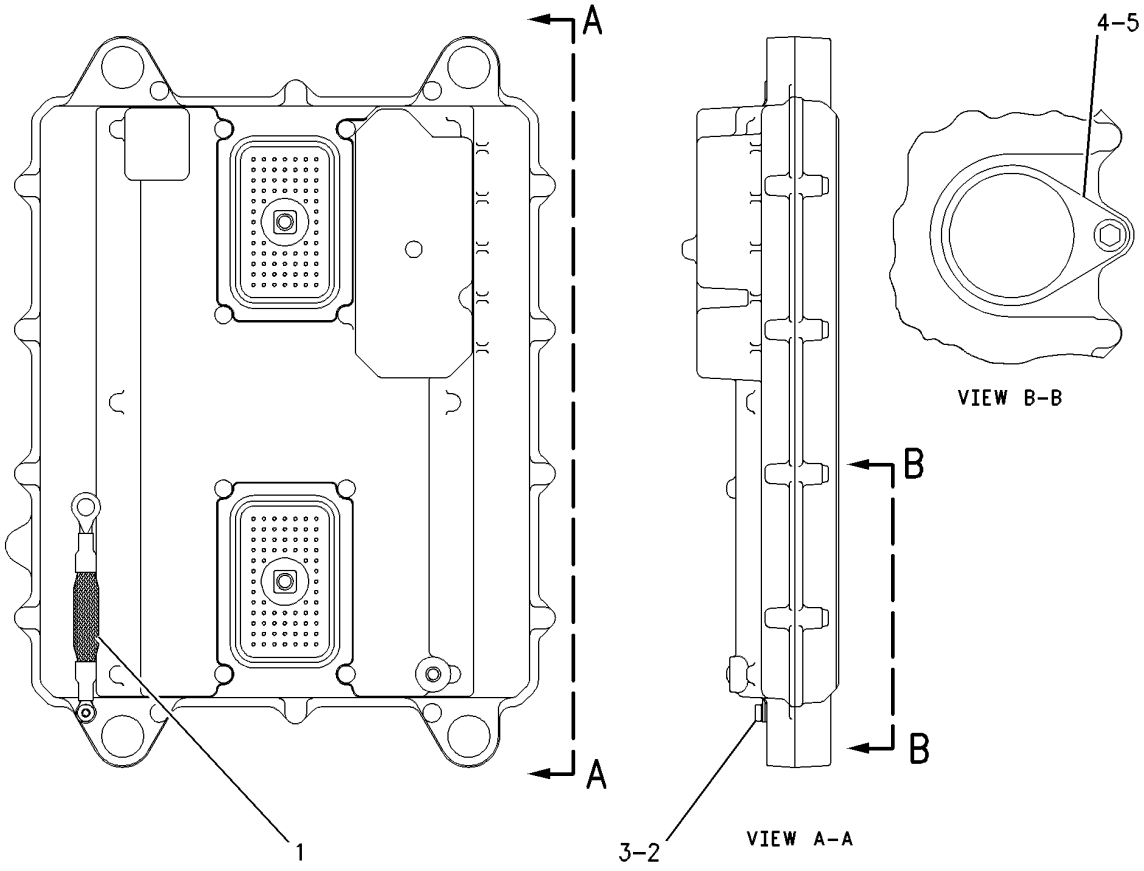

GRAPHIC #1 **<END>** g00582613

ELECTRICAL AND STARTING SYSTEM

316-6993 ELECTRICAL AR

S/N: 2211-UP

PART OF 262-2077 COMMON AR

SMCS-1408, 1429, 7402, 7406 **i02894343**

NOTE	PART NUMBER	QTY	PART NAME 1 2 3 4 5 6 (PRODUCT LEVEL)	SEE PAGE
Y	*316-6985*	1	BATTERY & WIRING GP	193
Y	*268-6345*	1	ELECTRONICS GP-POWER TRAIN	210
Y	*268-6320*	1	FASTENER GP-WIRING HARNESS (ELECTRONICS BAY)	212
Y	*268-8078*	1	LIGHTING GP-FLOOD (ROPS FRONT, REAR)	229
Y	*282-5120*	1	LIGHTING GP-FLOOD (REAR, STAIRWAY ACCESS)	231
Y	*282-5158*	1	LIGHTING GP-FLOOD (LIFT CYLINDER MOUNTED, FRONT)	232
Y	*282-9036*	1	LIGHTING GP-FLOOD (ENGINE COMPARTMENT LIGHTS)	234
Y	*296-6055*	1	LIGHTING GP-STOP (REAR)	236
Y	*312-3386*	1	WIRING GP-CHASSIS	310
Y	*307-9914*	1	WIRING GP-ELECTRONICS BAY	315
Y	*300-3620*	1	WIRING GP-ENGINE	322
Y	*316-6980*	1	WIRING GP-FRONT	328
Y	*316-6982*	1	WIRING GP-MACHINE	333
Y	*316-6984*	1	WIRING GP-POWER TRAIN	348
Y	*316-6983*	1	WIRING GP-REAR	350

Y-SEPARATE ILLUSTRATION

<END>

268-6591 ELECTRONICS GP-MONITOR—VIMS, ENGLISH, SPANISH

S/N: 2211-UP

AN ATTACHMENT

SMCS-7490, 7494, 7601, 7603, 7610, 7620 **i02900675**

NOTE	PART NUMBER	QTY	PART NAME 1 2 3 4 5 6 (PRODUCT LEVEL)	SEE PAGE
	282-5010	1	SOFTWARE GP-MONITOR (VIMS, ENGLISH, SPANISH)	
			-OR-	
	282-5011	1	SERVICE GP-MONITOR (VIMS, ENGLISH, SPANISH)	
			(OPTIONAL SERVICE REPLACEMENT)(INCLUDES CONTROL GP & SOFTWARE)	

<END>

268-6592 ELECTRONICS GP-MONITOR—VIMS, ENGLISH, GERMAN

S/N: 2211-UP

AN ATTACHMENT

SMCS-7490, 7494, 7601, 7603, 7610, 7620 **i02900677**

NOTE	PART NUMBER	QTY	PART NAME 1 2 3 4 5 6 (PRODUCT LEVEL)	SEE PAGE
	282-5012	1	SOFTWARE GP-MONITOR (VIMS, ENGLISH, GERMAN)	
			-OR-	
	282-5013	1	SERVICE GP-MONITOR (VIMS, ENGLISH, GERMAN)	
			(OPTIONAL SERVICE REPLACEMENT)(INCLUDES CONTROL GP & SOFTWARE)	

<END>

268-6593 ELECTRONICS GP-MONITOR—VIMS, ENGLISH, RUSSIAN

S/N: 2211-UP
AN ATTACHMENT

SMCS-7490, 7494, 7601, 7603, 7610, 7620 **i02900678**

NOTE	PART NUMBER	QTY	PART NAME 1 2 3 4 5 6 (PRODUCT LEVEL)	SEE PAGE
	282-5014	1	SOFTWARE GP-MONITOR (VIMS, ENGLISH, RUSSIAN)	
			-OR-	
	282-5015	1	SERVICE GP-MONITOR (VIMS, ENGLISH, RUSSIAN)	
			(OPTIONAL SERVICE REPLACEMENT)(INCLUDES CONTROL GP & SOFTWARE)	

<END>

268-6594 ELECTRONICS GP-MONITOR—VIMS, ENGLISH, GREEK

S/N: 2211-UP
AN ATTACHMENT

SMCS-7490, 7494, 7601, 7603, 7610, 7620 **i02900679**

NOTE	PART NUMBER	QTY	PART NAME 1 2 3 4 5 6 (PRODUCT LEVEL)	SEE PAGE
	282-5016	1	SOFTWARE GP-MONITOR (VIMS, ENGLISH, GREEK)	
			-OR-	
	282-5017	1	SERVICE GP-MONITOR (VIMS, ENGLISH, GREEK)	
			(OPTIONAL SERVICE REPLACEMENT)(INCLUDES CONTROL GP & SOFTWARE)	

<END>

268-6595 ELECTRONICS GP-MONITOR—VIMS, ENGLISH, DUTCH

S/N: 2211-UP
AN ATTACHMENT

SMCS-7490, 7494, 7601, 7603, 7610, 7620 **i02900681**

NOTE	PART NUMBER	QTY	PART NAME 1 2 3 4 5 6 (PRODUCT LEVEL)	SEE PAGE
	282-5018	1	SOFTWARE GP-MONITOR (VIMS, ENGLISH, DUTCH)	
			OR-	
	282-5019	1	SERVICE GP-MONITOR (VIMS, ENGLISH, DUTCH)	
			(OPTIONAL SERVICE REPLACEMENT)(INCLUDES CONTROL GP & SOFTWARE)	

<END>

268-6596 ELECTRONICS GP-MONITOR—VIMS, ENGLISH, ITALIAN

S/N: 2211-UP
AN ATTACHMENT

SMCS-7490, 7494, 7601, 7603, 7610, 7620 **i02900682**

NOTE	PART NUMBER	QTY	PART NAME 1 2 3 4 5 6 (PRODUCT LEVEL)	SEE PAGE
	282-5020	1	SOFTWARE GP-MONITOR (VIMS, ENGLISH, ITALIAN)	
			-OR-	
	282-5021	1	SERVICE GP-MONITOR (VIMS, ENGLISH, ITALIAN)	
			(OPTIONAL SERVICE REPLACEMENT)(INCLUDES CONTROL GP & SOFTWARE)	

<END>

268-6597 ELECTRONICS GP-MONITOR—VIMS, ENGLISH, FRENCH

S/N: 2211-UP

AN ATTACHMENT

SMCS-7490, 7494, 7601, 7603, 7610, 7620 **i02900683**

NOTE	PART NUMBER	QTY	PART NAME 1 2 3 4 5 6 (PRODUCT LEVEL)	SEE PAGE
	282-5022	1	SOFTWARE GP-MONITOR (VIMS, ENGLISH, FRENCH)	
			-OR-	
	282-5023	1	SERVICE GP-MONITOR (VIMS, ENGLISH, FRENCH)	
			(OPTIONAL SERVICE REPLACEMENT)(INCLUDES CONTROL GP & SOFTWARE)	

<END>

268-6598 ELECTRONICS GP-MONITOR— VIMS, ENGLISH, PORTUGUESE

S/N: 2211-UP

AN ATTACHMENT

SMCS-7490, 7494, 7601, 7603, 7610, 7620 **i02900684**

NOTE	PART NUMBER	QTY	PART NAME 1 2 3 4 5 6 (PRODUCT LEVEL)	SEE PAGE
	282-5024	1	SOFTWARE GP-MONITOR (VIMS, ENGLISH, PORTUGUESE)	
			-OR-	
	282-5025	1	SERVICE GP-MONITOR (VIMS, ENGLISH, PORTUGUESE)	
			(OPTIONAL SERVICE REPLACEMENT)(INCLUDES CONTROL GP & SOFTWARE)	

<END>

268-6599 ELECTRONICS GP-MONITOR—VIMS, ENGLISH, SWEDISH

S/N: 2211-UP

AN ATTACHMENT

SMCS-7490, 7494, 7601, 7603, 7610, 7620 **i02900685**

NOTE	PART NUMBER	QTY	PART NAME 1 2 3 4 5 6 (PRODUCT LEVEL)	SEE PAGE
	282-5026	1	SOFTWARE GP-MONITOR (VIMS, ENGLISH, SWEDISH)	
			-OR-	
	282-5027	1	SERVICE GP-MONITOR (VIMS, ENGLISH, SWEDISH)	
			(OPTIONAL SERVICE REPLACEMENT)(INCLUDES CONTROL GP & SOFTWARE)	

<END>

268-6600 ELECTRONICS GP-MONITOR–VIMS, ENGLISH, CZECHOSLOVAKIAN

S/N: 2211-UP

AN ATTACHMENT

SMCS-7490, 7494, 7601, 7603, 7610, 7620 **i02900686**

NOTE	PART NUMBER	QTY	PART NAME 1 2 3 4 5 6 (PRODUCT LEVEL)	SEE PAGE
	282-5028	1	SOFTWARE GP-MONITOR (VIMS, ENGLISH, CZECHOSLOVAKIAN)	
			-OR-	
	282-5029	1	SERVICE GP-MONITOR (VIMS, ENGLISH, CZECHOSLOVAKIAN)	
			(OPTIONAL SERVICE REPLACEMENT)(INCLUDES CONTROL GP & SOFTWARE)	
			<END>	

268-6601 ELECTRONICS GP-MONITOR–VIMS, ENGLISH, NORWEGIAN

S/N: 2211-UP

AN ATTACHMENT

SMCS-7490, 7494, 7601, 7603, 7610, 7620 **i02900687**

NOTE	PART NUMBER	QTY	PART NAME 1 2 3 4 5 6 (PRODUCT LEVEL)	SEE PAGE
	282-5030	1	SOFTWARE GP-MONITOR (VIMS, ENGLISH, NORWEGIAN)	
			-OR-	
	282-5031	1	SERVICE GP-MONITOR (VIMS, ENGLISH, NORWEGIAN)	
			(OPTIONAL SERVICE REPLACEMENT)(INCLUDES CONTROL GP & SOFTWARE)	
			<END>	

268-6602 ELECTRONICS GP-MONITOR–VIMS, ENGLISH, FINNISH

S/N: 2211-UP

AN ATTACHMENT

SMCS-7490, 7494, 7601, 7603, 7610, 7620 **i02900688**

NOTE	PART NUMBER	QTY	PART NAME 1 2 3 4 5 6 (PRODUCT LEVEL)	SEE PAGE
	282-5032	1	SOFTWARE GP-MONITOR (VIMS, ENGLISH, FINNISH)	
			-OR-	
	282-5033	1	SERVICE GP-MONITOR (VIMS, ENGLISH, FINNISH)	
			(OPTIONAL SERVICE REPLACEMENT)(INCLUDES CONTROL GP & SOFTWARE)	
			<END>	

ELECTRICAL AND STARTING SYSTEM

268-6603 ELECTRONICS GP-MONITOR–VIMS, ENGLISH, ICELANDIC

S/N: 2211-UP

AN ATTACHMENT

SMCS-7490, 7494, 7601, 7603, 7610, 7620 **i02900689**

NOTE	PART NUMBER	QTY	PART NAME 1 2 3 4 5 6 (PRODUCT LEVEL)	SEE PAGE
	282-5034	1	SOFTWARE GP-MONITOR (VIMS, ENGLISH, ICELANDIC)	
			-OR-	
	282-5035	1	SERVICE GP-MONITOR (VIMS, ENGLISH, ICELANDIC)	
			(OPTIONAL SERVICE REPLACEMENT)(INCLUDES CONTROL GP & SOFTWARE)	

<END>

268-6604 ELECTRONICS GP-MONITOR–VIMS, ENGLISH, DANISH

S/N: 2211-UP

AN ATTACHMENT

SMCS-7490, 7494, 7601, 7603, 7610, 7620 **i02900690**

NOTE	PART NUMBER	QTY	PART NAME 1 2 3 4 5 6 (PRODUCT LEVEL)	SEE PAGE
	282-5036	1	SOFTWARE GP-MONITOR (VIMS, ENGLISH, DANISH)	
			-OR-	
	282-5037	1	SERVICE GP-MONITOR (VIMS, ENGLISH, DANISH)	
			(OPTIONAL SERVICE REPLACEMENT)(INCLUDES CONTROL GP & SOFTWARE)	

<END>

268-6345 ELECTRONICS GP-POWER TRAIN

S/N: 2211-UP

PART OF 316-6993 ELECTRICAL AR

SMCS-4800, 4808, 7610, 7620 **i02895209**

NOTE	PART NUMBER	QTY	PART NAME 1 2 3 4 5 6 (PRODUCT LEVEL)	SEE PAGE
	282-4352	1	SOFTWARE GP-POWER TRAIN	
			-OR-	
	282-4353	1	SERVICE GP-POWER TRAIN	
			(OPTIONAL SERVICE REPLACEMENT) (INCLUDES CONTROL GP & SOFTWARE)	

<END>

307-8352 ENCLOSURE GP-ELECTRONICS BAY

S/N: 2211-UP

PART OF 307-9914 WIRING GP-ELECTRONICS BAY

i02897712

NOTE	REF NO	GRAPHIC REF	PART NUMBER	QTY	PART NAME 1 2 3 4 5 6 (PRODUCT LEVEL)	SEE PAGE
	1	1	**185-1721**	3	PLATE AS	
	2	1	**4E-8266**	4	BOSS (M6X1X19-MM)	
	3	1	**5C-9855**	12	BOSS (M8X1.25X19-MM)	
M	4	1	**6V-9632**	21	NUT-WELD (M6X1-THD)	
M	5	1	**8T-3490**	18	NUT-WELD (M10X1.5-THD)	
M	6	1	**8T-3597**	9	NUT-WELD (M12X1.75-THD)	
M	7	1	**8T-3635**	4	STUD-WELD (M12X1.75X34.93-MM OAL)	
M	8	1	**8T-8874**	4	NUT-WELD (M5X0.8-THD)	

M-METRIC PART

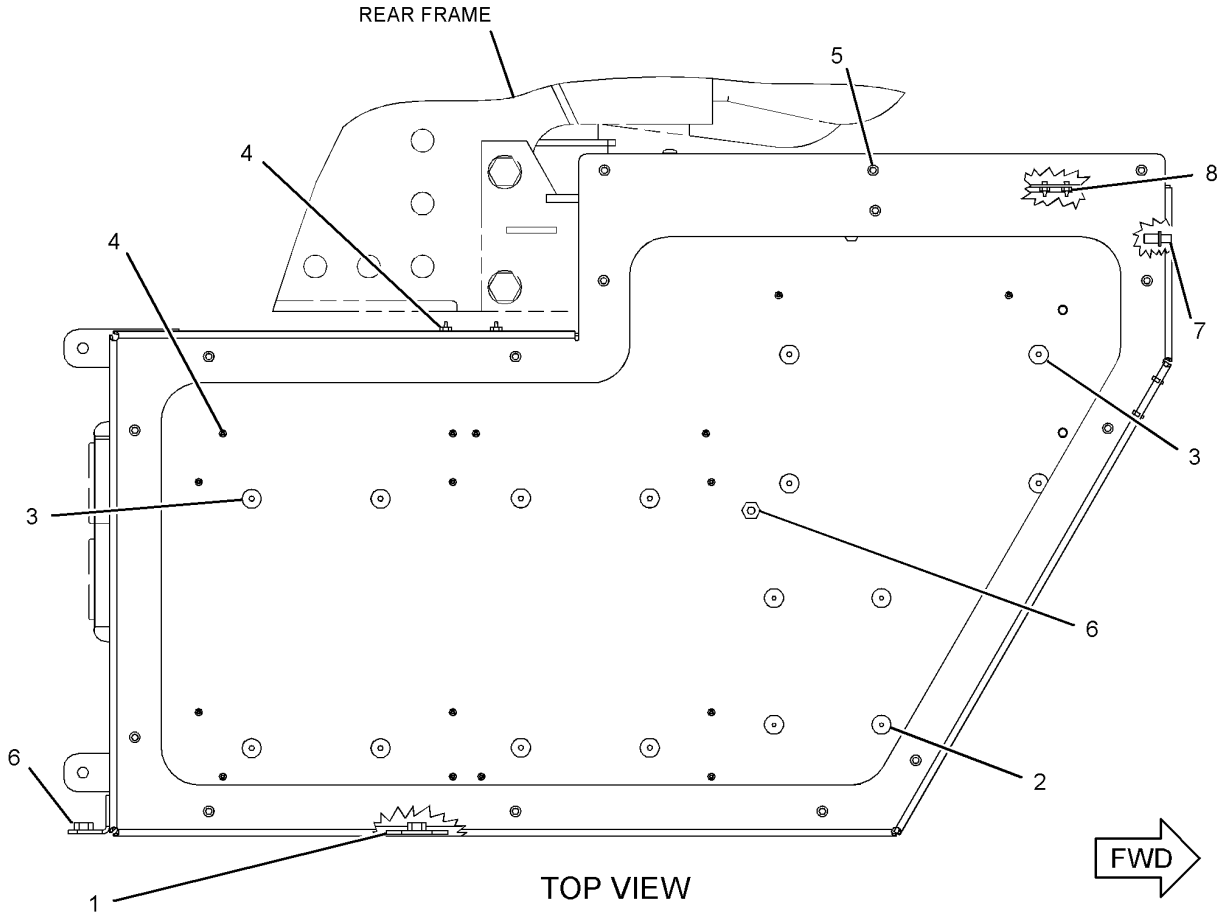

TOP VIEW

GRAPHIC #1

<END>

g01443407

ELECTRICAL AND STARTING SYSTEM

268-6320 FASTENER GP-WIRING HARNESS–ELECTRONICS BAY

S/N: 2211-UP

PART OF 316-6993 ELECTRICAL AR

SMCS-1408, 7553 **i02886732**

NOTE	REF NO	GRAPHIC REF	PART NUMBER	QTY	PART NAME 1 2 3 4 5 6 (PRODUCT LEVEL)	SEE PAGE
	1	1	**8R-6359**	1	STRAP AS	
	2	1	**289-0439**	1	SHEET AS	
	3	1	**8T-4121**	3	WASHER-HARD (11X21X2.5-MM THK)	
M	4	1	**8T-4137**	3	BOLT (M10X1.5X20-MM)	
M	5	1	**8T-4139**	3	BOLT (M12X1.75X30-MM)	
M	6	1	**8T-4183**	2	BOLT (M12X1.75X40-MM)	
	7	1	**8T-4223**	7	WASHER-HARD (13.5X25.5X3-MM THK)	
M	8	1	**8T-4244**	2	NUT (M12X1.75-THD)	

M-METRIC PART

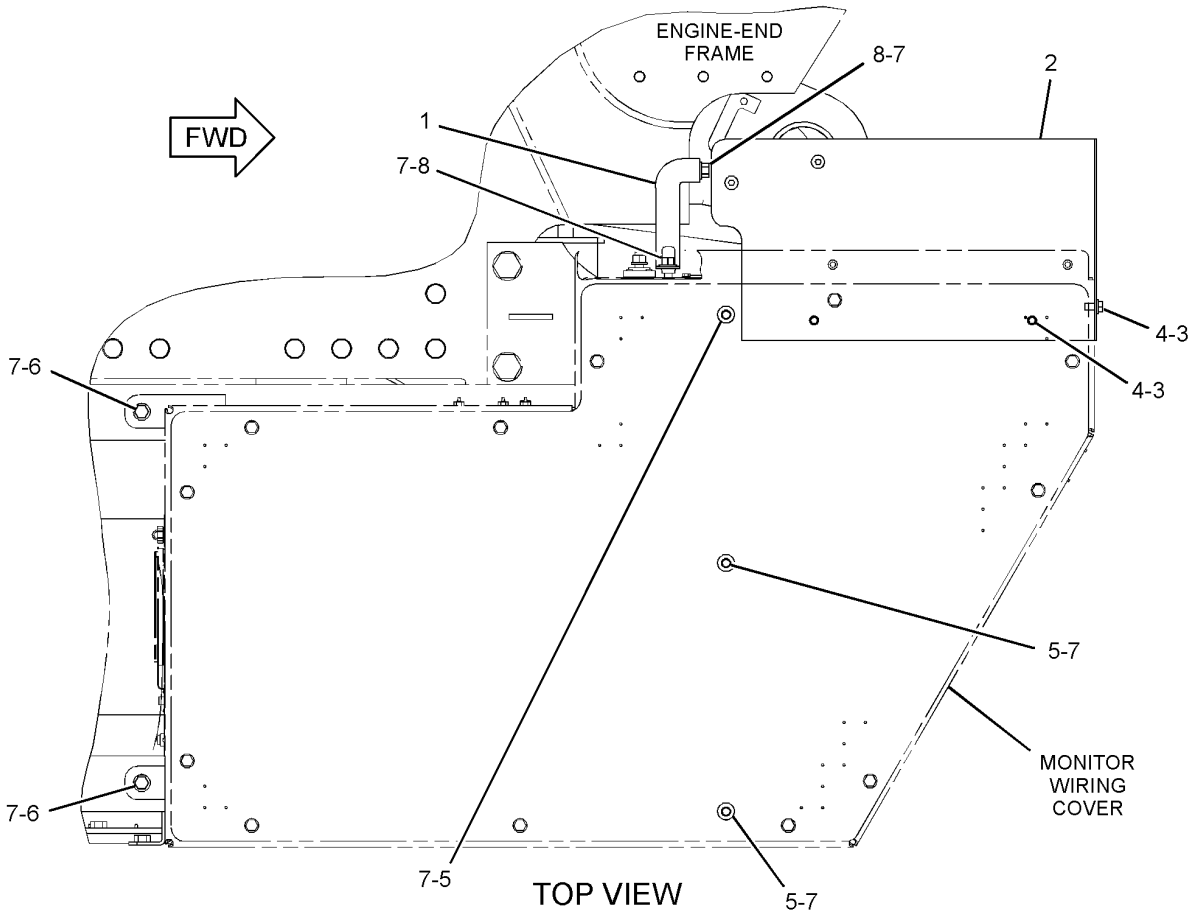

GRAPHIC #1 **<END>** g01438158

279-5297 HEATER GP-FUEL

S/N: 2211-UP
PART OF 279-5286 FUEL AR-FAST FILL
AN ATTACHMENT

SMCS-1296 **i02890388**

NOTE	REF NO	GRAPHIC REF	PART NUMBER	QTY	PART NAME 1 2 3 4 5 6 (PRODUCT LEVEL)	SEE PAGE
	1	1	**288-9760**	1	TUBE AS	
	2	1	**288-9762**	1	TUBE AS	
Y	3	1	*289-0781*	1	HEATER GP-FUEL	214
	4	1	*281-5977*	1	ADAPTER-FITTING	
		1	**6V-8642**	1	CONNECTOR	
		1	**228-7091**	1	SEAL-O-RING	
		1	**238-5081**	1	SEAL-O-RING	
	5	1	*281-5978*	1	CONNECTOR AS	
		1	**6V-8640**	1	CONNECTOR	
		1	**228-7092**	1	SEAL-O-RING	
		1	**238-5081**	1	SEAL-O-RING	
	6	1	**5K-9660**	1	CLIP	
	7	1	**7X-7729**	3	WASHER (11X25X3-MM THK)	
	8	1	**8F-8513**	1	CLIP	
	9	1	**8T-4121**	2	WASHER-HARD (11X21X2.5-MM THK)	
M	10	1	**8T-4133**	1	NUT (M10X1.5-THD)	
M	11	1	**8T-4185**	3	BOLT (M10X1.5X50-MM)	
M	12	1	**8T-4195**	1	BOLT (M10X1.5X30-MM)	

M-METRIC PART
Y-SEPARATE ILLUSTRATION

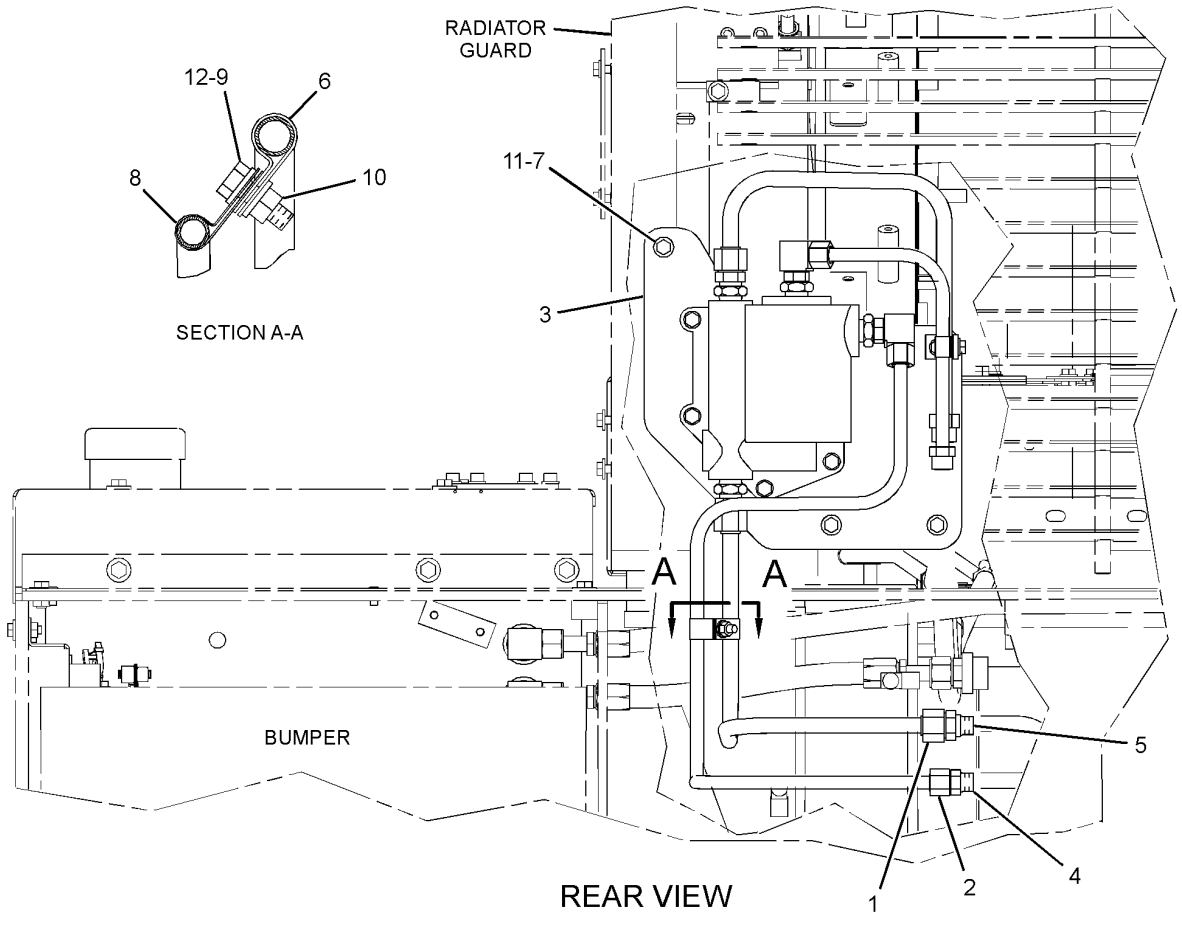

GRAPHIC #1 **<END>** g01443230

289-0781 HEATER GP-FUEL

S/N: 2211-UP
PART OF 279-5297 HEATER GP-FUEL
AN ATTACHMENT

SMCS-1296 **i02896527**

NOTE	REF NO	GRAPHIC REF	PART NUMBER	QTY	PART NAME 1 2 3 4 5 6 (PRODUCT LEVEL)	SEE PAGE
J	1	1	**7W-5300**	1	HEATER AS-FUEL	
	2	1	**9X-9365**	1	BRACKET	
	3	1	**288-9759**	1	TUBE AS	
	4	1	**288-9761**	1	TUBE AS	
	5	1	**294-9301**	1	PLATE AS	
		1	**5G-6397**	2	BOSS	
M		1	**8T-3490**	5	NUT-WELD (M10X1.5-THD)	
	6	1	**141-7280**	4	ADAPTER	
	7	1	**228-7091**	1	SEAL-O-RING	
	8	1	**228-7092**	1	SEAL-O-RING	
	9	1	*281-5975*	2	ELBOW AS	
					(EACH INCLUDES)	
		1	**6V-8626**	1	ELBOW	
		1	**228-7091**	1	SEAL-O-RING	
		1	**238-5081**	1	SEAL-O-RING	
	10	1	*281-5978*	2	CONNECTOR AS	
					(EACH INCLUDES)	
		1	**6V-8640**	1	CONNECTOR	
		1	**228-7092**	1	SEAL-O-RING	
		1	**238-5081**	1	SEAL-O-RING	
	11	1	**5K-9660**	1	CLIP	
	12	1	**8F-8513**	1	CLIP	
	13	1	**8T-4121**	7	WASHER-HARD (11X21X2.5-MM THK)	
M	14	1	**8T-4133**	1	NUT (M10X1.5-THD)	
M	15	1	**8T-4185**	4	BOLT (M10X1.5X50-MM)	
M	16	1	**8T-4195**	2	BOLT (M10X1.5X30-MM)	
					AVAILABLE REPAIR KIT(S):	
J			**138-1240**	1	KIT-ADAPTER (FUEL HEATER)	
					(INCLUDES ADAPTER SEAL & FUEL INLET ADAPTER)	

J-KIT MARKED J SERVICES PART MARKED J
M-METRIC PART

289-0781 **HEATER GP-FUEL** *(contd.)* **i02896527**

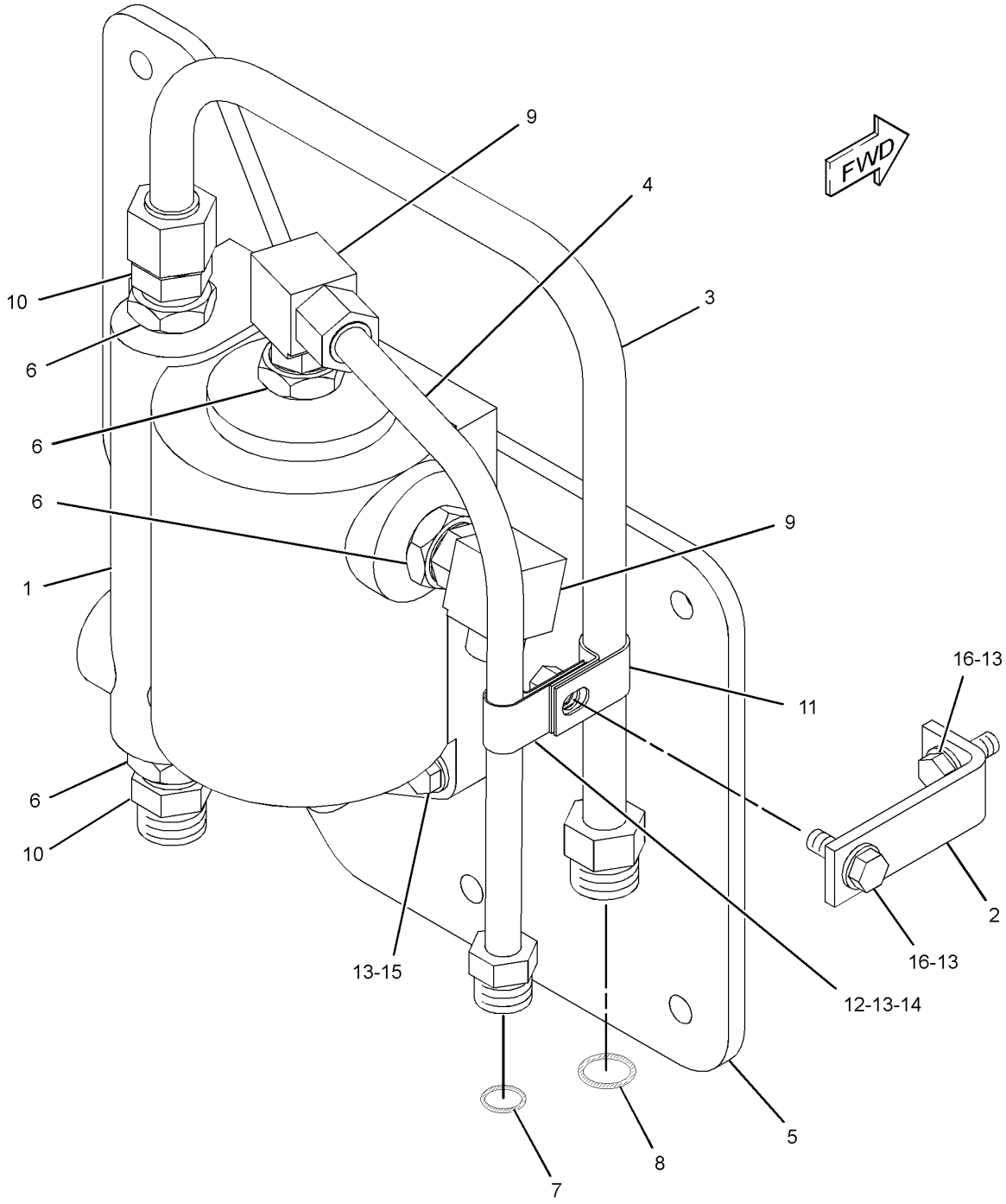

GRAPHIC #1 **<END>** g01444006

ELECTRICAL AND STARTING SYSTEM

238-6475 HEATER GP-JACKET WATER

S/N: 2211-UP

AN ATTACHMENT

SMCS-1383 **i02024922**

NOTE	REF NO	GRAPHIC REF	PART NUMBER	QTY	PART NAME 1 2 3 4 5 6 (PRODUCT LEVEL)	SEE PAGE
	1	1	**6N-1604**	2	CAP AS-DUST	
	2	1	**9N-5253**	2	CORD AS-JACKET WATER HEATER (120-VOLT)	
	3	1	**230-3525**	2	ELEMENT AS-JACKET WATER HEATER (120-VOLT, 1500-WATT)	
	4	1	**6V-5064**	2	SEAL-O-RING	

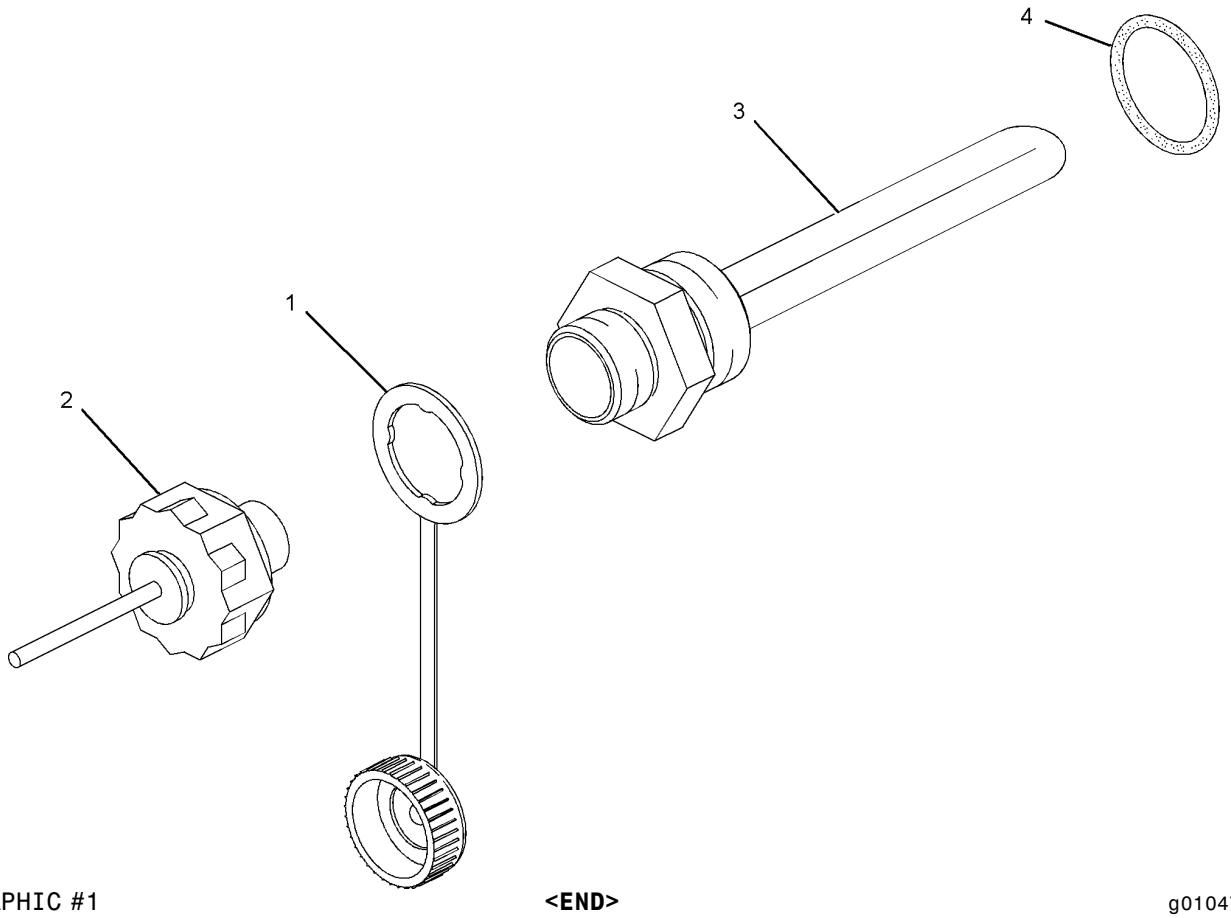

GRAPHIC #1 **<END>** g01047372

274-9446 HEATER GP-JACKET WATER

S/N: 2211-UP

AN ATTACHMENT

SMCS-1383 **i02962905**

NOTE	REF NO	GRAPHIC REF	PART NUMBER	QTY	PART NAME 1 2 3 4 5 6 (PRODUCT LEVEL)	SEE PAGE
	1	1	**4N-8227**	2	CORD AS-JACKET WATER HEATER (220-VOLT)	
	2	1	**6N-1604**	2	CAP AS-DUST	
	3	1	**239-8051**	2	ELEMENT AS-JACKET WATER HEATER (240-VOLT, 1500-WATT)	
	4	1	**6V-5064**	2	SEAL-O-RING	
QUANTITIES SHOWN ARE THOSE REQUIRED FOR BOTH LH AND RH SIDES						

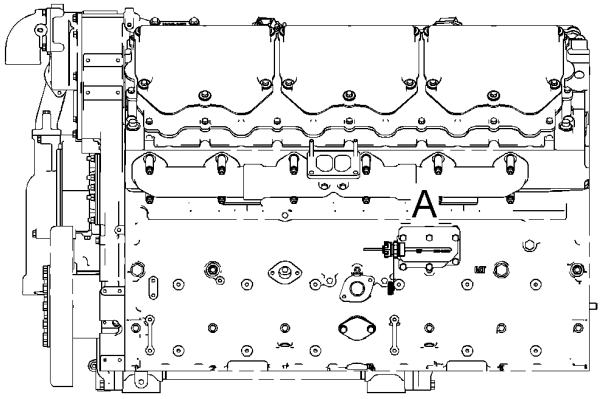

LEFT SIDE VIEW

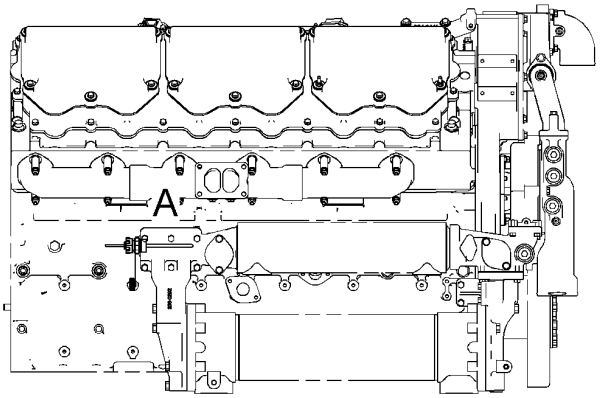

RIGHT SIDE VIEW

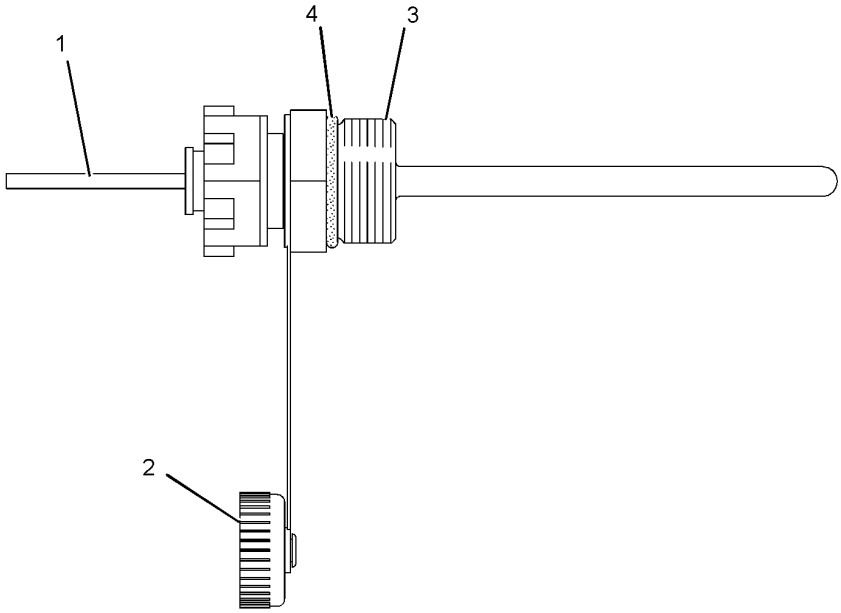

VIEW OF AREA A

GRAPHIC #1 **<END>** g01215189

ELECTRICAL AND STARTING SYSTEM

282-5331 INSTALLATION AR-CAES

S/N: 2211-UP

AN ATTACHMENT

SMCS-7604 **i02902438**

NOTE	PART NUMBER	QTY	PART NAME 1 2 3 4 5 6 (PRODUCT LEVEL)	SEE PAGE
Y	*252-6457*	1	MOUNTING GP-MONITOR (CAES)	841
Y	*282-4892*	1	WIRING GP-MACHINE	330

Y-SEPARATE ILLUSTRATION

<END>

282-9087 INSTALLATION AR-COMMUNICATION—PRODUCT LINK

S/N: 2211-UP

AN ATTACHMENT

SMCS-7606 **i02939667**

NOTE	PART NUMBER	QTY	PART NAME 1 2 3 4 5 6 (PRODUCT LEVEL)	SEE PAGE
Y	*268-6645*	1	WIRING GP-COMMUNICATION (PRODUCT LINK)	312
	307-0047	1	FILM-INFORMATION (PRODUCT LINK, READ OMM)	
			(INSIDE CAB ON LEFT FRONT METAL POST ("A" POST) DIRECTLY BENEATH WARNING FILM)	
	260-7652	1	FILM-WARNING (PRODUCT LINK 300, U.S.)	
			(INSIDE CAB ON LEFT FRONT METAL POST ("A" POST) 1200-MM ABOVE CAB FLOOR)	

Y-SEPARATE ILLUSTRATION

<END>

282-9089 INSTALLATION AR-COMMUNICATION—PRODUCT LINK

S/N: 2211-UP

AN ATTACHMENT

SMCS-7606 **i02939666**

NOTE	PART NUMBER	QTY	PART NAME 1 2 3 4 5 6 (PRODUCT LEVEL)	SEE PAGE
Y	*268-6645*	1	WIRING GP-COMMUNICATION (PRODUCT LINK)	312
	307-0047	1	FILM-INFORMATION (PRODUCT LINK, READ OMM)	
			(INSIDE CAB ON LEFT FRONT METAL POST ("A" POST) DIRECTLY BENEATH WARNING FILM)	
	260-7653	1	FILM-WARNING (PRODUCT LINK 300, INTL)	
			(INSIDE CAB ON LEFT FRONT METAL POST ("A" POST) 1200-MM ABOVE CAB FLOOR)	

Y-SEPARATE ILLUSTRATION

<END>

3E-6389 LAMP GP-DOME

S/N: 2211-UP
24-VOLT. WITH SWITCH
PART OF 275-3639 CAB GP, 280-9826 WIRING GP-CAB

SMCS-1433 **i02656852**

NOTE	REF NO	GRAPHIC REF	PART NUMBER	QTY	PART NAME 1 2 3 4 5 6 (PRODUCT LEVEL)	SEE PAGE
	1	1	**7N-9943**	1	LAMP (24-VOLT)	
	2	1	**102-8803**	1	KIT-RECEPTACLE (3-PIN)	
					(INCLUDES RECEPTACLE AS & WEDGE)	
	3	1	**186-3735**	3	PIN-CONNECTOR (16-GA TO 18-GA)	
	4	1	**7T-0020**	1	LENS-DOME LAMP	

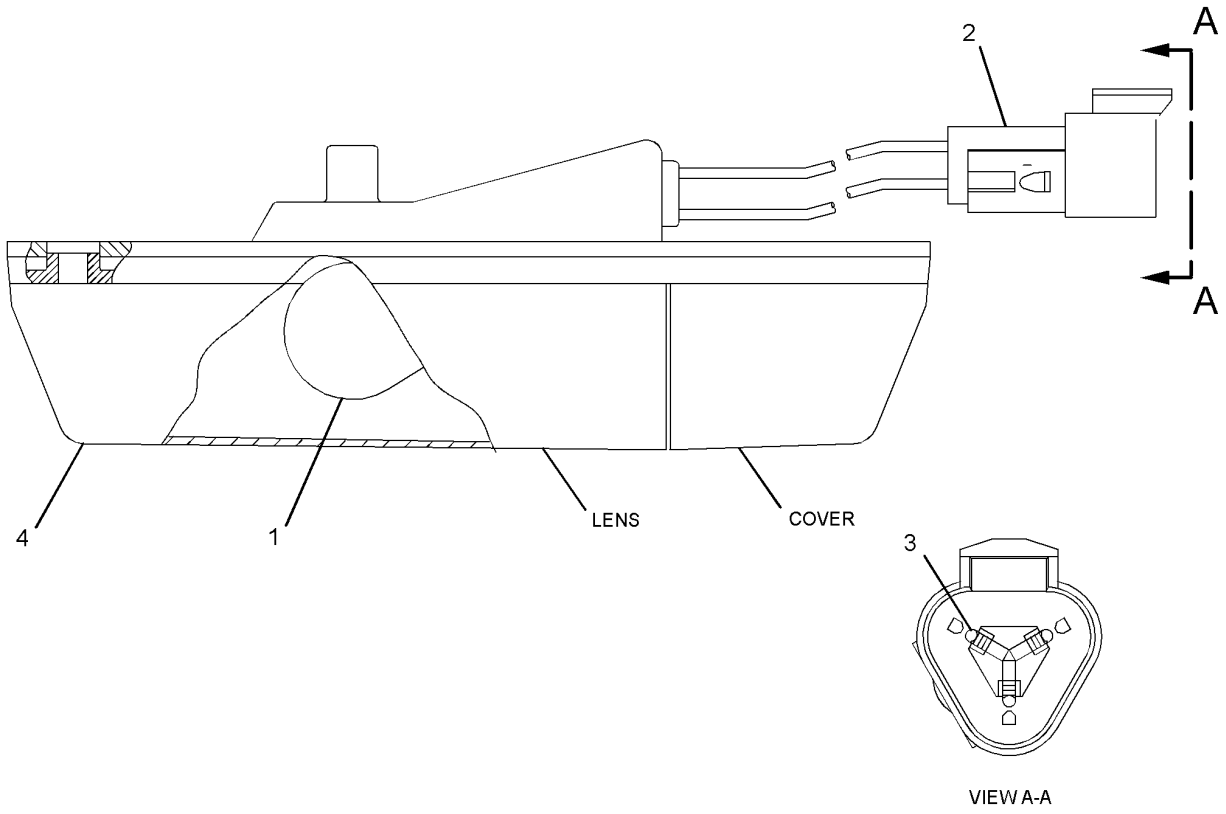

GRAPHIC #1 **<END>** g01270113

147-0319 LAMP GP-FLOOD

S/N: 2211-UP
24-VOLT, 65-WATT
PART OF 227-3015 LIGHTING GP-FLOOD

SMCS-1434 **i02473923**

NOTE	REF NO	GRAPHIC REF	PART NUMBER	QTY	PART NAME 1 2 3 4 5 6 (PRODUCT LEVEL)	SEE PAGE
	1	1	**9X-3463**	1	LAMP-HALOGEN (24-VOLT, 65-WATT)	
	2	1	**158-0250**	1	BODY AS-LAMP	
	3	1	**158-0248**	1	LENS AS (FLOODLIGHT)	
	4	1	**158-0252**	1	BEZEL	
	5	1	**188-8849**	2	CLAMP	

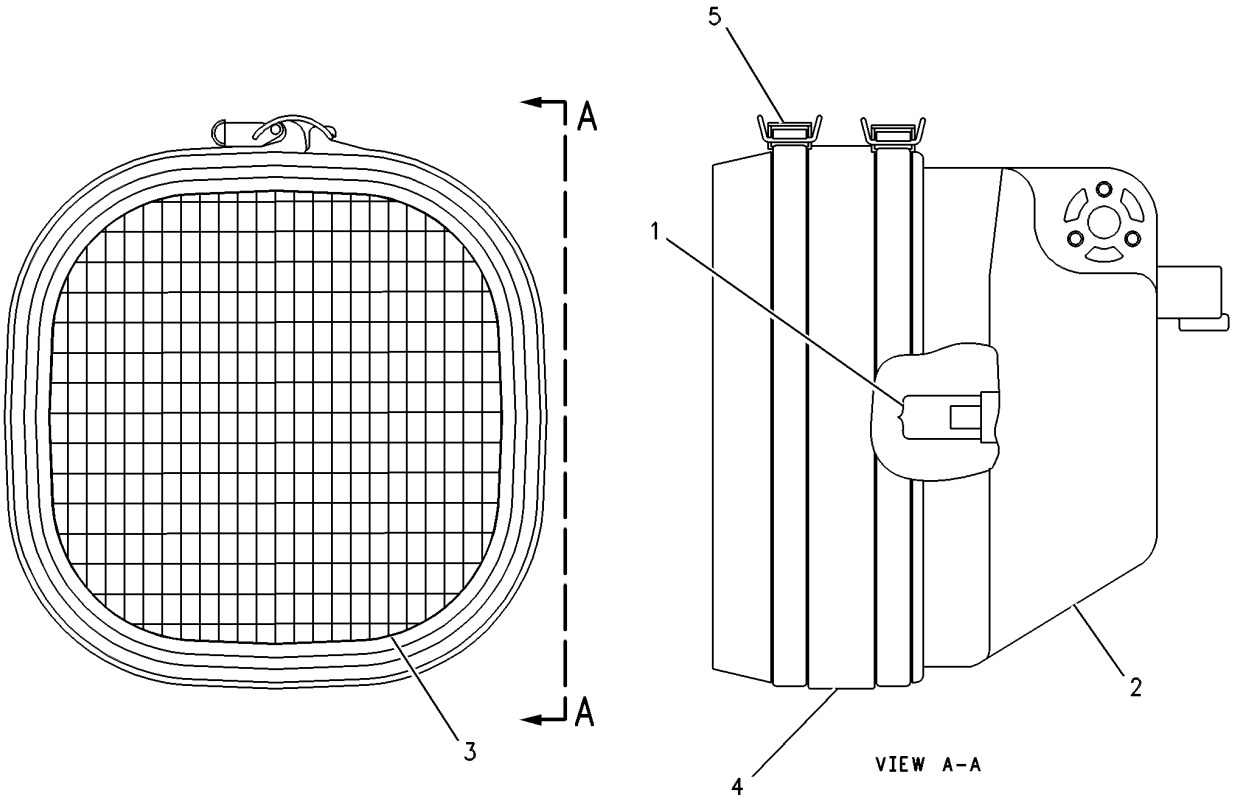

GRAPHIC #1 **<END>** g00458549

153-2073 LAMP GP-FLOOD

S/N: 2211-UP
24-VOLT, 65-WATT
PART OF 282-5120 LIGHTING GP-FLOOD

SMCS-1434 **i02430826**

NOTE	REF NO	GRAPHIC REF	PART NUMBER	QTY	PART NAME 1 2 3 4 5 6 (PRODUCT LEVEL)	SEE PAGE
	1	1	**9X-3463**	1	LAMP-HALOGEN (24-VOLT, 65-WATT)	
	2	1	**158-0250**	1	BODY AS-LAMP	
	3	1	**158-0248**	1	LENS AS (FLOODLIGHT)	
	4	1	**158-0252**	1	BEZEL	
	5	1	**188-8849**	2	CLAMP	

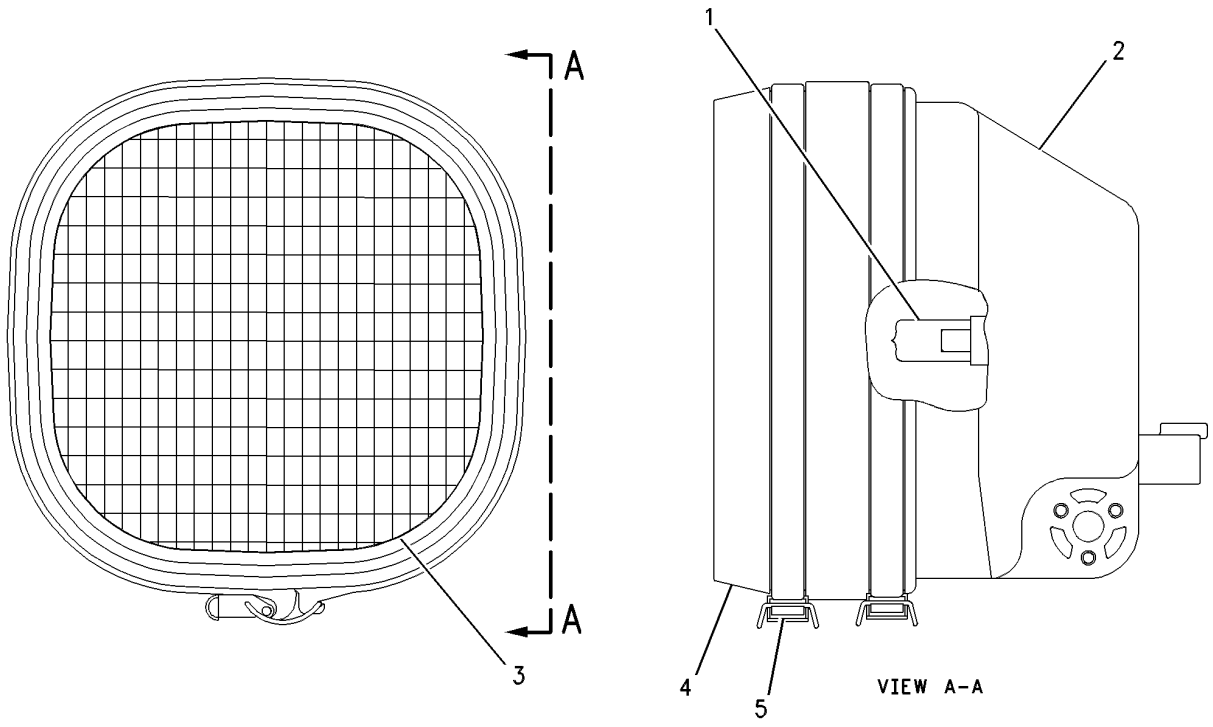

GRAPHIC #1 **<END>** g00449633

219-6485 LAMP GP-FLOOD

S/N: 2211-UP
24-VOLT
PART OF 282-5120, 282-9036 LIGHTING GP-FLOOD

SMCS-1434 **i02890506**

NOTE	REF NO	GRAPHIC REF	PART NUMBER	QTY	PART NAME 1 2 3 4 5 6 (PRODUCT LEVEL)	SEE PAGE
	1	1	**9X-3463**	1	LAMP-HALOGEN (24-VOLT, 65-WATT)	
	2	1	**9X-4244**	2	SCREW-SPECIAL	
	4	1	**202-6614**	1	LENS AS (FLOODLIGHT)	
	5	1	**175-4292**	1	BODY AS	
	6	1	**164-7556**	1	BRACKET (LAMP RETAINING)	
	7	1	**247-4285**	1	BOLT (M8X1.25X50-MM)	
M	8	1	**6V-9189**	1	LOCKNUT (M8X1.25-THD)	
	9	1	**8T-4224**	2	WASHER-HARD (8.8X16X2-MM THK)	
	10	1	**175-4291**	1	BRACKET AS	

M-METRIC PART

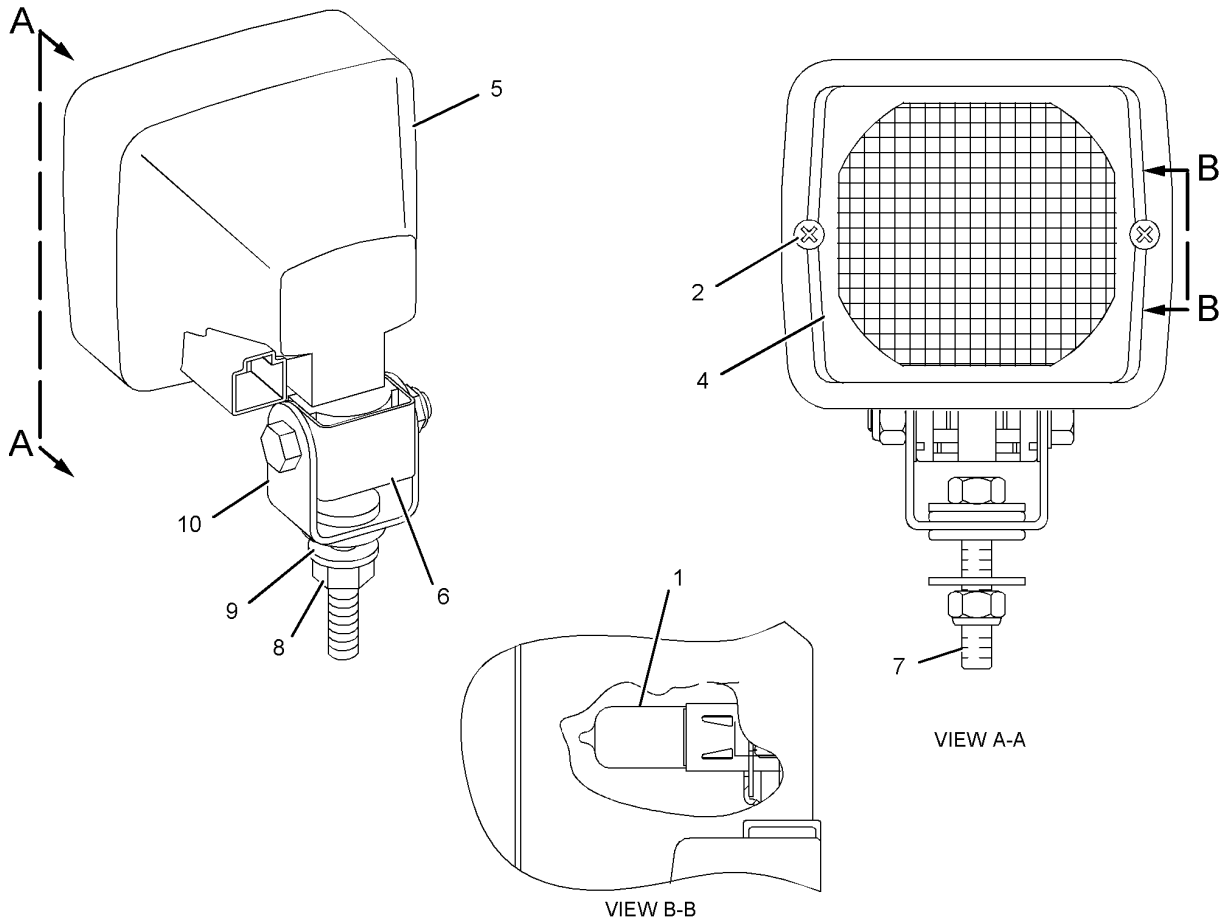

GRAPHIC #1 **<END>** g01146647

157-0305 LAMP GP-HEAD—HIGH BEAM

S/N: 2211-UP
24-VOLT
PART OF 268-8078 LIGHTING GP-FLOOD

SMCS-1429 **i02237572**

NOTE	REF NO	GRAPHIC REF	PART NUMBER	QTY	PART NAME 1 2 3 4 5 6 (PRODUCT LEVEL)	SEE PAGE
	1	1	**188-8849**	2	CLAMP	
	2	1	**9X-3463**	1	LAMP-HALOGEN (24-VOLT, 65-WATT)	
	3	1	**158-0250**	1	BODY AS-LAMP	
	4	1	**158-0249**	1	LENS AS (HEADLIGHT, HIGH BEAM)	
	5	1	**158-0252**	1	BEZEL	

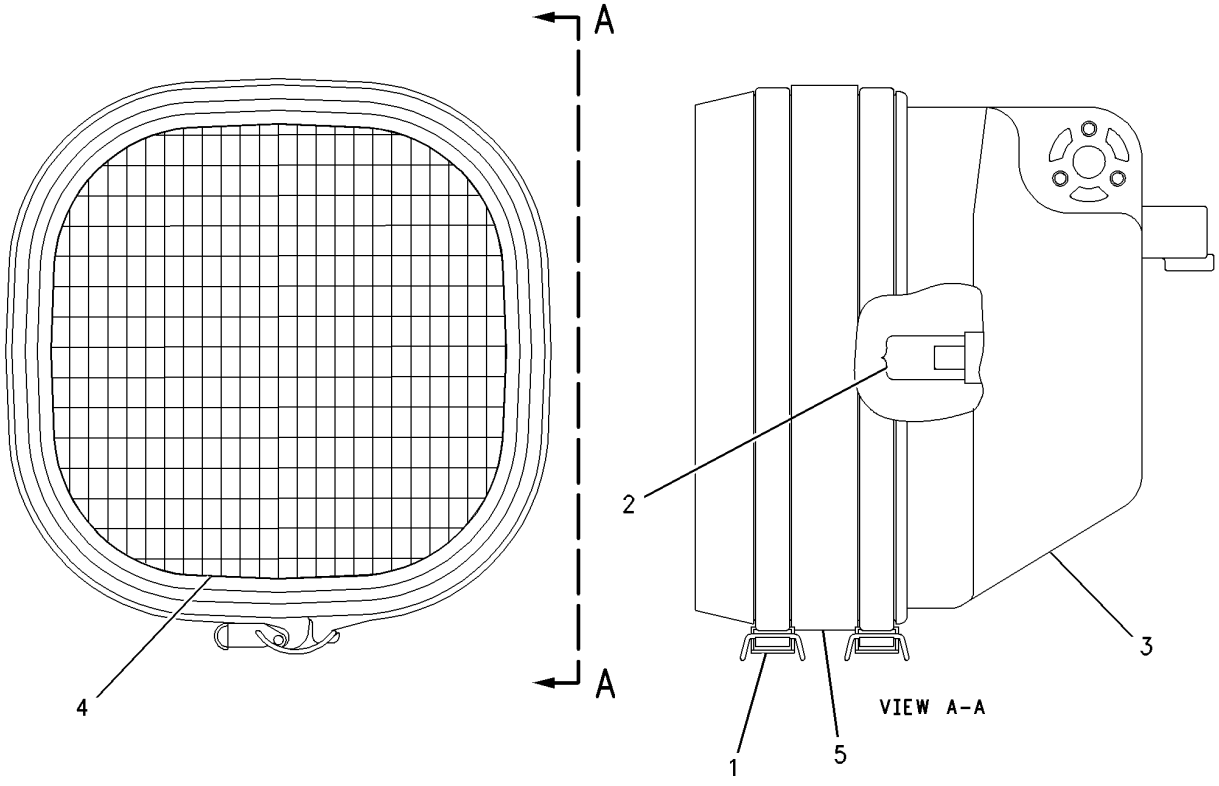

GRAPHIC #1 **<END>** g00725230

161-0908 LAMP GP-HEAD—LOW BEAM

S/N: 2211-UP
24-VOLT
PART OF 176-4161 LIGHTING GP-AUXILIARY

SMCS-1429 **i02298208**

NOTE	REF NO	GRAPHIC REF	PART NUMBER	QTY	PART NAME 1 2 3 4 5 6 (PRODUCT LEVEL)	SEE PAGE
	1	1	**188-8849**	2	CLAMP	
	2	1	**9X-3463**	1	LAMP-HALOGEN (24-VOLT, 65-WATT)	
	3	1	**158-0250**	1	BODY AS-LAMP	
	4	1	**162-2077**	1	LENS AS (HEADLIGHT, LOW BEAM)	
	5	1	**158-0252**	1	BEZEL	

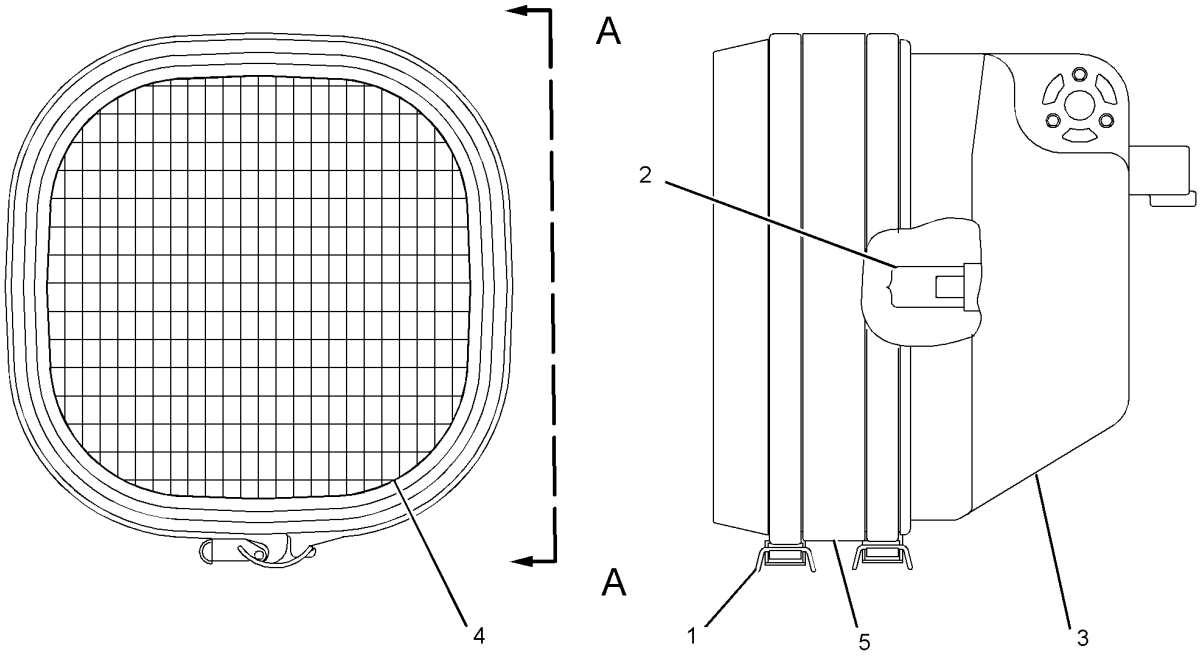

VIEW A-A

GRAPHIC #1 **<END>** g01151016

135-0426 LAMP GP-SIGNAL–STOP, TAIL

S/N: 2211-UP
24-VOLT
PART OF 296-6055 LIGHTING GP-STOP

SMCS-1430 **i02427577**

NOTE	REF NO	GRAPHIC REF	PART NUMBER	QTY	PART NAME 1 2 3 4 5 6 (PRODUCT LEVEL)	SEE PAGE
	1	1	**102-8803**	1	KIT-RECEPTACLE (3-PIN)	
					(INCLUDES RECEPTACLE AS & WEDGE)	
	2	1	**186-3735**	3	PIN-CONNECTOR (16-GA TO 18-GA)	

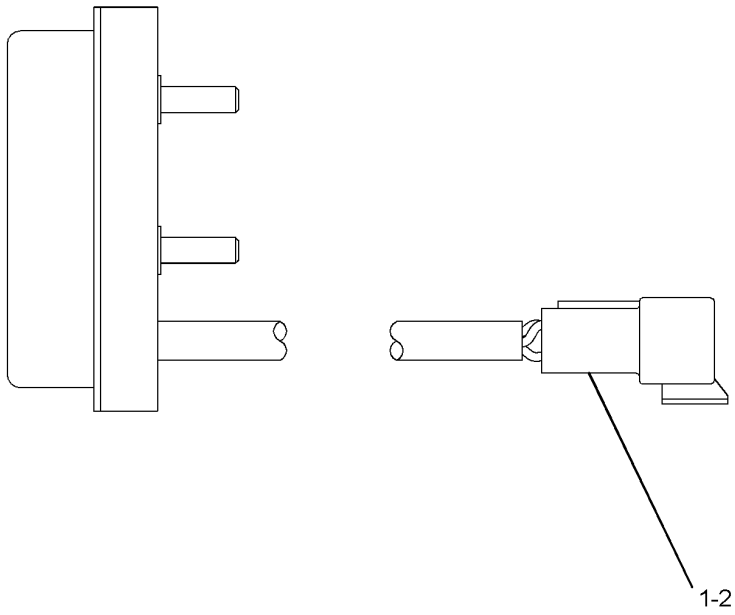

GRAPHIC #1 **<END>** g01213248

176-4161 LIGHTING GP-AUXILIARY—FRONT, INSIDE POSITION

S/N: 2211-UP

PART OF 282-5158 LIGHTING GP-FLOOD

SMCS-1429 **i02106536**

NOTE	REF NO	GRAPHIC REF	PART NUMBER	QTY	PART NAME 1 2 3 4 5 6 (PRODUCT LEVEL)	SEE PAGE
	1	1	**9W-4361**	4	MOUNT-FLEXIBLE	
	2	1	**114-2368**	1	GUARD AS	
		1	**7T-1099**	1	LINK	
	3	1	**140-1088**	1	BRACKET AS	
M		1	**8T-3490**	1	NUT-WELD (M10X1.5-THD)	
Y	4	1	**161-0908**	1	LAMP GP-HEAD (24-VOLT, LOW BEAM)	225
M	5	1	**5C-7261**	1	NUT (M8X1.25-THD)	
	6	1	**5P-1075**	8	WASHER-HARD (10.2X22.5X3-MM THK)	
	7	1	**6V-8801**	8	NUT (3/8-16-THD)	
	8	1	**8T-4121**	1	WASHER-HARD (11X21X2.5-MM THK)	
M	9	1	**8T-4137**	1	BOLT (M10X1.5X20-MM)	
	10	1	**8T-4224**	2	WASHER-HARD (8.8X16X2-MM THK)	
M	11	1	**8T-6869**	1	BOLT (M8X1.25X60-MM)	

M-METRIC PART
Y-SEPARATE ILLUSTRATION

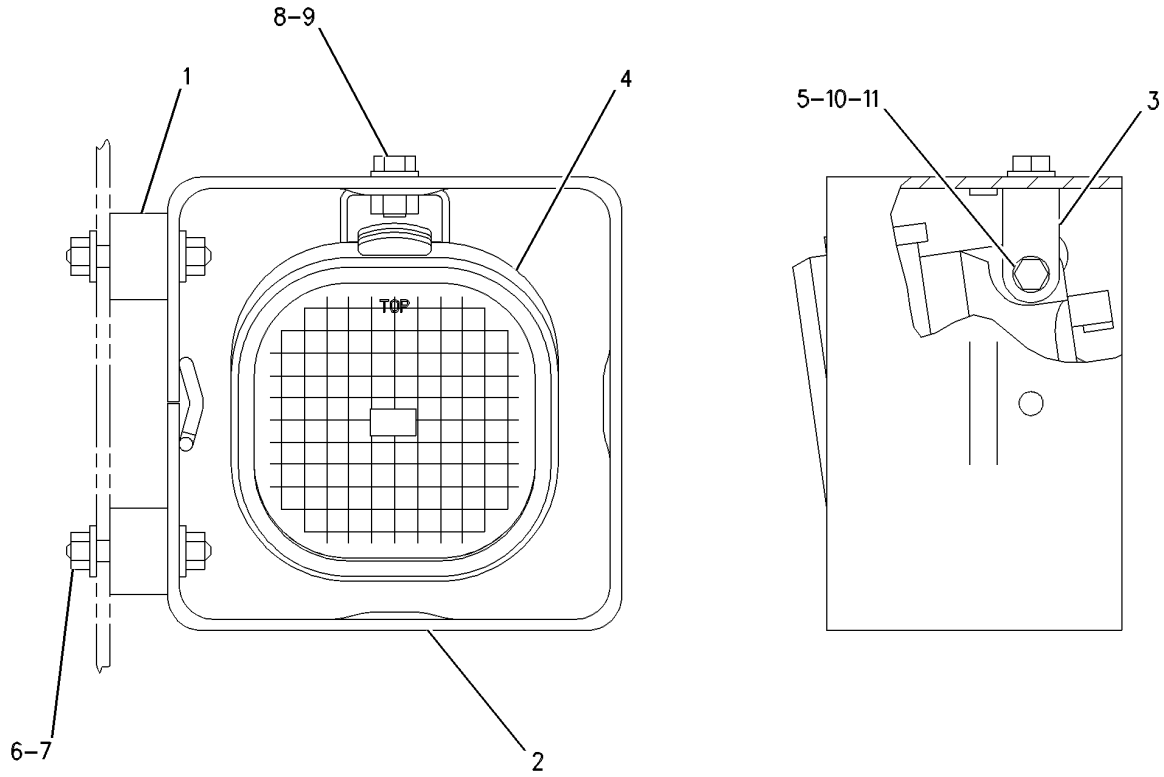

LEFT HAND MOUNT SHOWN

GRAPHIC #1 **<END>** g00608921

227-3015 LIGHTING GP-FLOOD—FRONT, OUTSIDE POSITION

S/N: 2211-UP

PART OF 282-5158 LIGHTING GP-FLOOD

SMCS-1434 **i02038078**

NOTE	REF NO	GRAPHIC REF	PART NUMBER	QTY	PART NAME 1 2 3 4 5 6 (PRODUCT LEVEL)	SEE PAGE
	1	1	**9W-4361**	4	MOUNT-FLEXIBLE	
	2	1	**140-1088**	1	BRACKET AS	
M		1	**8T-3490**	1	NUT-WELD (M10X1.5-THD)	
Y	3	1	**147-0319**	1	LAMP GP-FLOOD (24-VOLT, 65-WATT)	221
	4	1	**227-5444**	1	GUARD AS	
		1	**7T-1099**	1	LINK	
M		1	**8T-3490**	4	NUT-WELD (M10X1.5-THD)	
M	5	1	**5C-7261**	1	NUT (M8X1.25-THD)	
	6	1	**5P-1075**	8	WASHER-HARD (10.2X22.5X3-MM THK)	
	7	1	**6V-8801**	8	NUT (3/8-16-THD)	
	8	1	**8T-4121**	1	WASHER-HARD (11X21X2.5-MM THK)	
M	9	1	**8T-4137**	1	BOLT (M10X1.5X20-MM)	
	10	1	**8T-4224**	2	WASHER-HARD (8.8X16X2-MM THK)	
M	11	1	**8T-6869**	1	BOLT (M8X1.25X60-MM)	

M-METRIC PART
Y-SEPARATE ILLUSTRATION

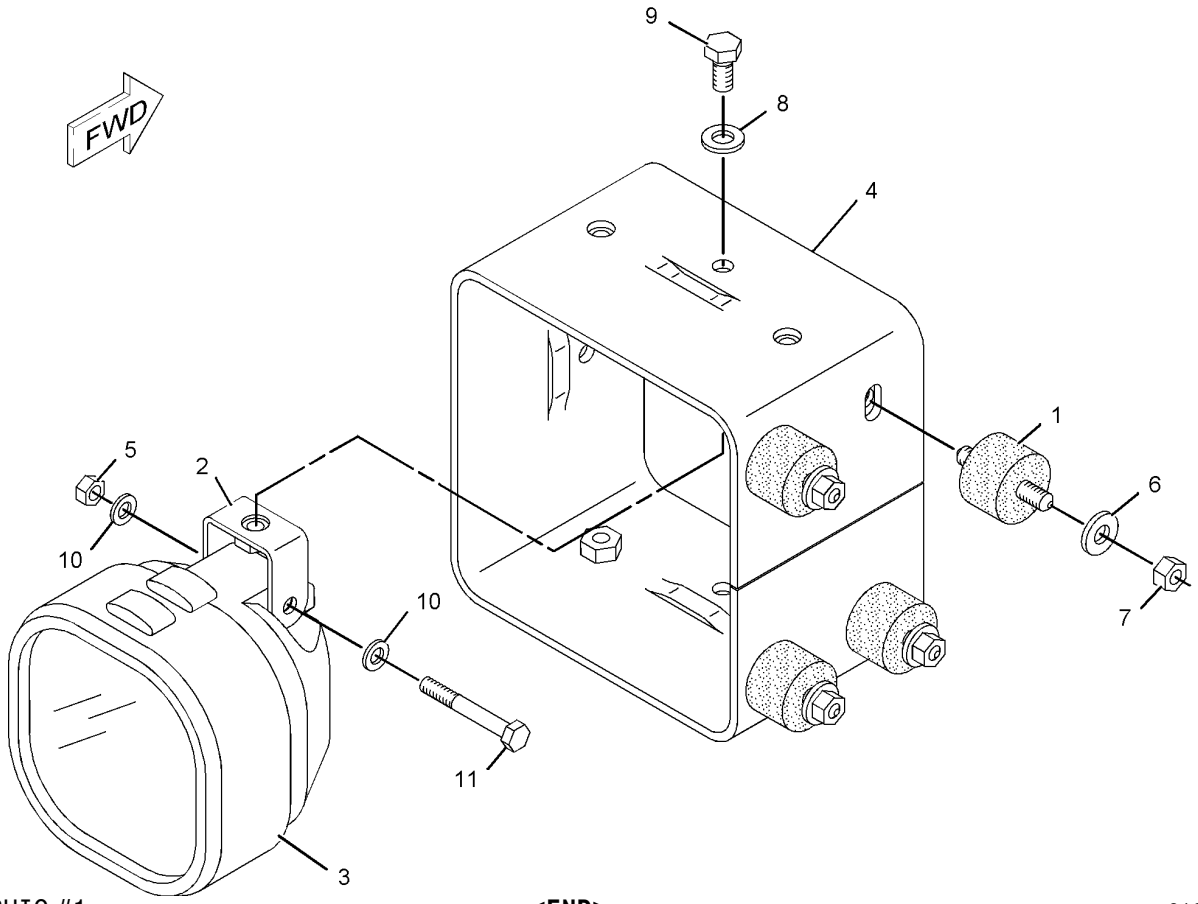

GRAPHIC #1 **<END>** g01048595

268-8078 LIGHTING GP-FLOOD—ROPS FRONT, REAR

S/N: 2211-UP

PART OF 316-6993 ELECTRICAL AR

SMCS-1434 **i02883753**

NOTE	REF NO	GRAPHIC REF	PART NUMBER	QTY	PART NAME 1 2 3 4 5 6 (PRODUCT LEVEL)	SEE PAGE
	1	1	**4E-9625**	1	BRACKET AS (RH)	
		1	**7T-1099**	1	LINK	
		1	**8Y-3925**	1	BOSS (3/8-16X1.2-IN)	
	2	1	**9U-0833**	1	BRACKET AS (LH)	
		1	**7T-1099**	1	LINK	
		1	**8Y-3925**	1	BOSS (3/8-16X1.2-IN)	
Y	3	1	**157-0305**	4	LAMP GP-HEAD (24-VOLT, HIGH BEAM)	224
	4	1	**174-7594**	4	BRACKET	
M	5	1	**5C-7261**	4	NUT (M8X1.25-THD)	
	6	1	**8T-4121**	8	WASHER-HARD (11X21X2.5-MM THK)	
M	7	1	**8T-4137**	8	BOLT (M10X1.5X20-MM)	
	8	1	**8T-4224**	8	WASHER-HARD (8.8X16X2-MM THK)	
M	9	1	**8T-6869**	4	BOLT (M8X1.25X60-MM)	

M-METRIC PART
Y-SEPARATE ILLUSTRATION

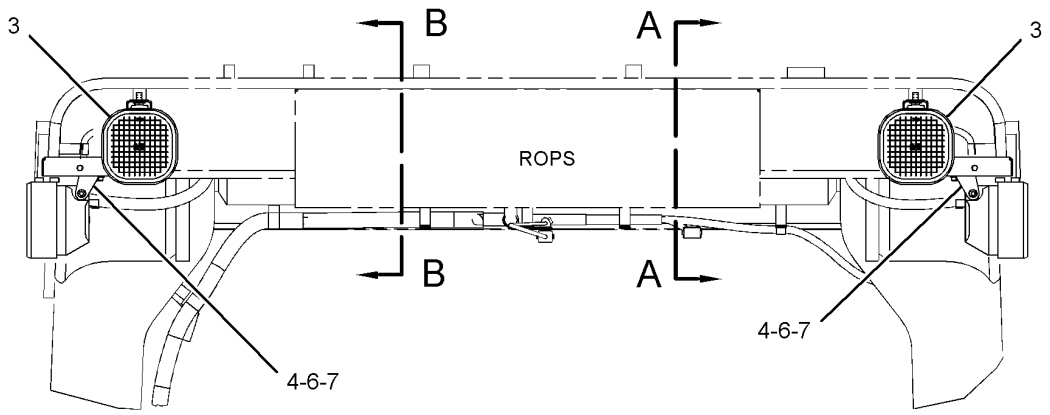

FRONT VIEW

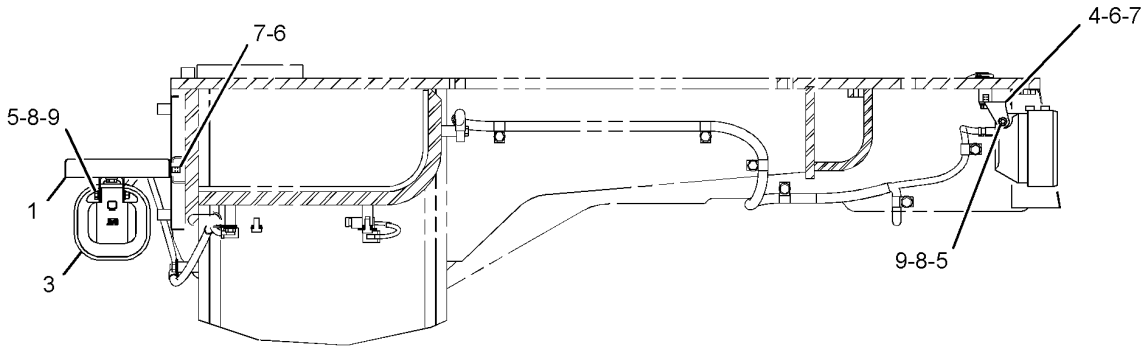

VIEW A-A

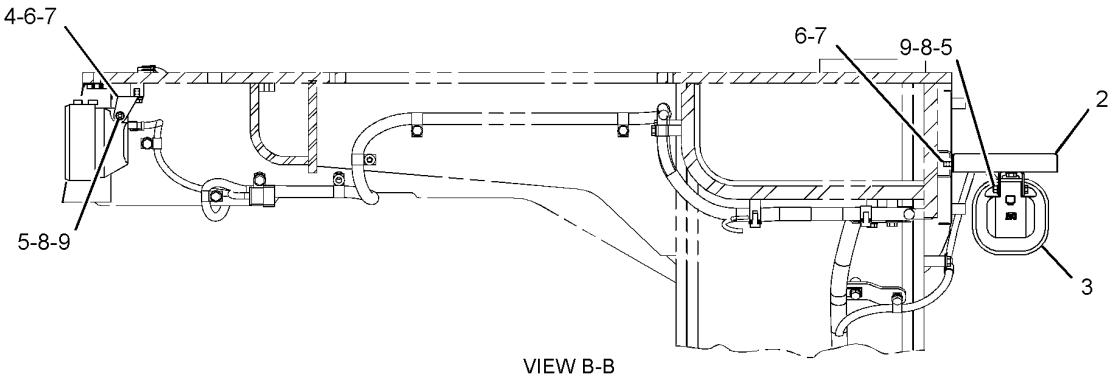

VIEW B-B

GRAPHIC #1 **<END>** g01447256

282-5120 LIGHTING GP-FLOOD—REAR, STAIRWAY ACCESS

S/N: 2211-UP

PART OF 316-6993 ELECTRICAL AR

SMCS-1434 **i02881202**

NOTE	REF NO	GRAPHIC REF	PART NUMBER	QTY	PART NAME 1 2 3 4 5 6 (PRODUCT LEVEL)	SEE PAGE
	1	1	**8R-7102**	2	BRACKET AS	
					(EACH INCLUDES)	
M		1	**6V-9632**	1	NUT-WELD (M6X1-THD)	
	2	1	**140-1088**	2	BRACKET AS	
					(EACH INCLUDES)	
M		1	**8T-3490**	1	NUT-WELD (M10X1.5-THD)	
Y	3	1	**153-2073**	2	LAMP GP-FLOOD (24-VOLT, 65-WATT)	222
Y	4	1	**219-6485**	2	LAMP GP-FLOOD (24-VOLT)	223
M	5	1	**5C-7261**	2	NUT (M8X1.25-THD)	
	6	1	**8T-4121**	6	WASHER-HARD (11X21X2.5-MM THK)	
M	7	1	**8T-4136**	6	BOLT (M10X1.5X25-MM)	
	8	1	**8T-4224**	4	WASHER-HARD (8.8X16X2-MM THK)	
M	9	1	**8T-6869**	2	BOLT (M8X1.25X60-MM)	

M-METRIC PART
Y-SEPARATE ILLUSTRATION

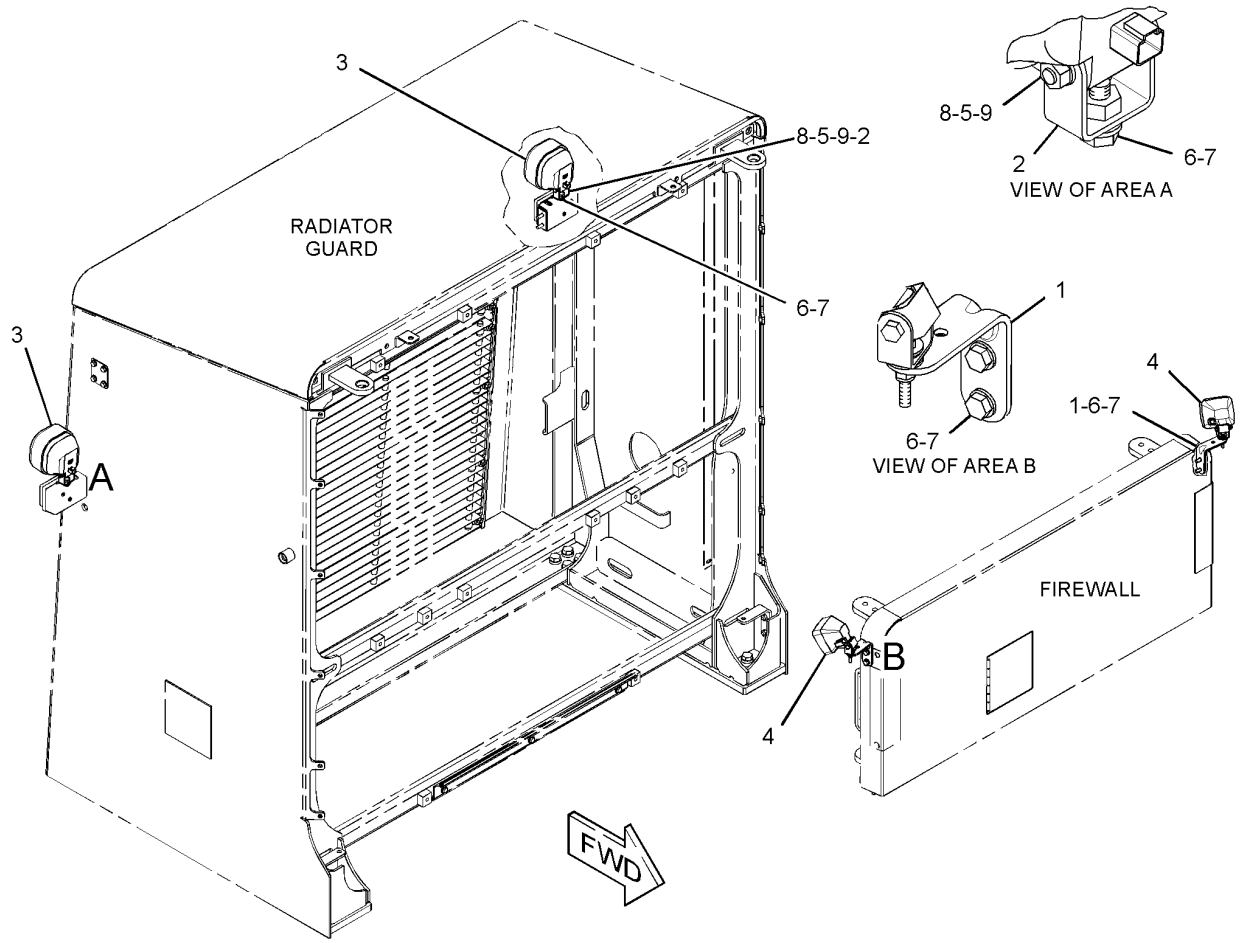

GRAPHIC #1 **<END>** g01436943

282-5158 LIGHTING GP-FLOOD—LIFT CYLINDER MOUNTED, FRONT

S/N: 2211-UP

PART OF 316-6993 ELECTRICAL AR

SMCS-1434 **i02885013**

NOTE	REF NO	GRAPHIC REF	PART NUMBER	QTY	PART NAME 1 2 3 4 5 6 (PRODUCT LEVEL)	SEE PAGE
	1	1	**9X-6772**	8	STRAP-CABLE	
	2	1	**163-1201**	1	HORN AS (24-VOLT, LOW TONE)	
	3	1	**170-6101**	2	BRACKET AS	
	4	1	**174-7875**	1	HORN AS (24-VOLT, HIGH TONE)	
Y	5	1	*176-4161*	2	LIGHTING GP-AUXILIARY (FRONT, INSIDE POSITION)	227
	6	1	**176-6668**	2	HARNESS AS-LIGHTING (INBOARD FLOODLIGHTS, FRONT)	
Y	7	1	*227-3015*	2	LIGHTING GP-FLOOD (FRONT, OUTSIDE POSITION)	228
	8	1	**267-6732**	2	BRACKET AS	
	9	1	**290-4058**	2	HARNESS AS-FRONT (FLOODLIGHTS, HORN)	
	10	1	**124-0174**	2	CLIP	
	11	1	**130-5300**	4	CLIP	
	12	1	**147-0385**	2	CLIP	
	13	1	**2N-2107**	8	CLIP	
	14	1	**5C-6565**	6	BOLT (1/2-13X1.125-IN)	
	15	1	**6P-4467**	4	GROMMET	
	16	1	**8T-4121**	8	WASHER-HARD (11X21X2.5-MM THK)	
M	17	1	**8T-4133**	2	NUT (M10X1.5-THD)	
M	18	1	**8T-4136**	6	BOLT (M10X1.5X25-MM)	
M	19	1	**8T-4189**	2	BOLT (M8X1.25X20-MM)	
	20	1	**8T-4223**	14	WASHER-HARD (13.5X25.5X3-MM THK)	
	21	1	**8T-4224**	2	WASHER-HARD (8.8X16X2-MM THK)	
	22	1	**8T-4835**	8	BOLT (1/2-13X2-IN)	

M-METRIC PART
Y-SEPARATE ILLUSTRATION

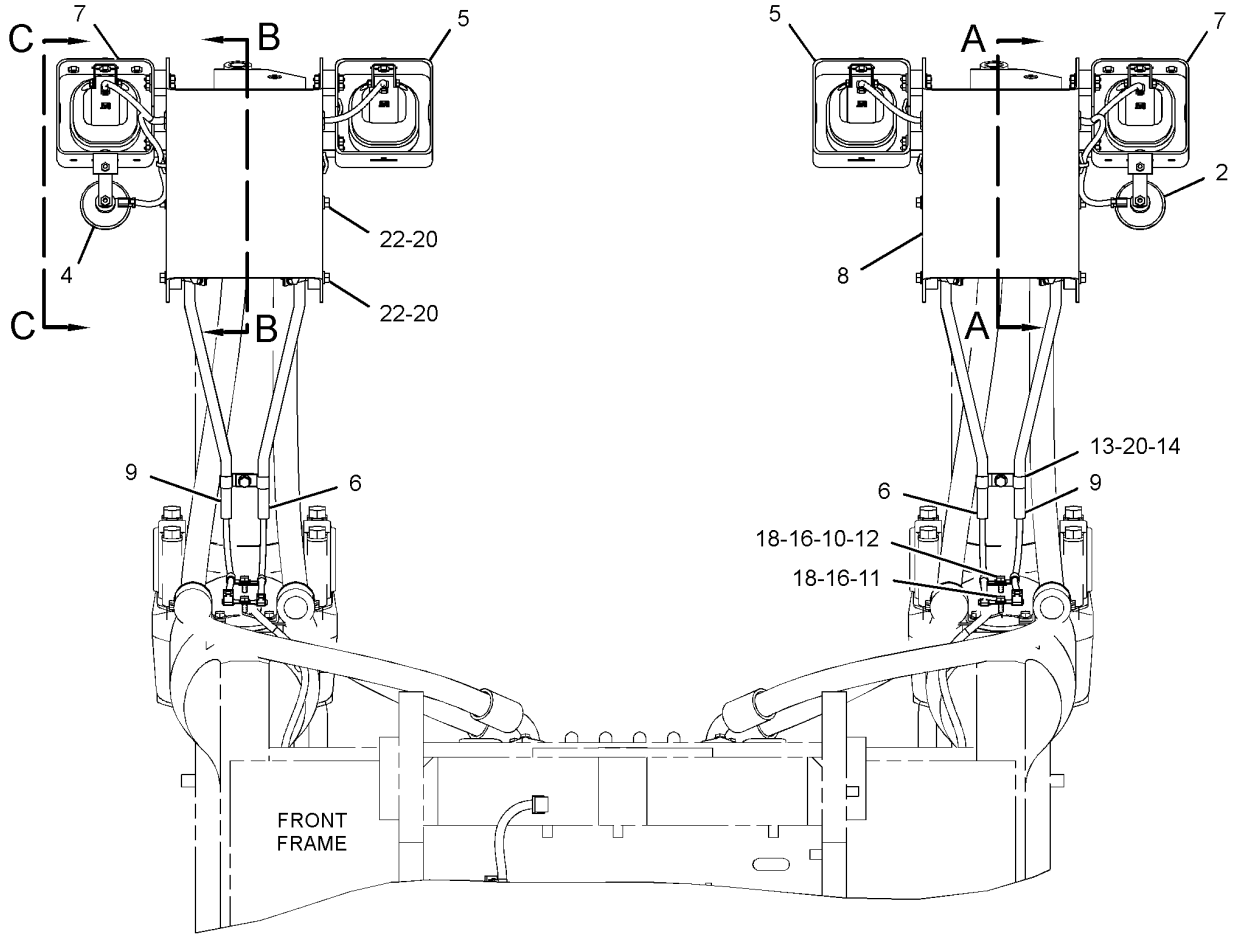

REAR VIEW

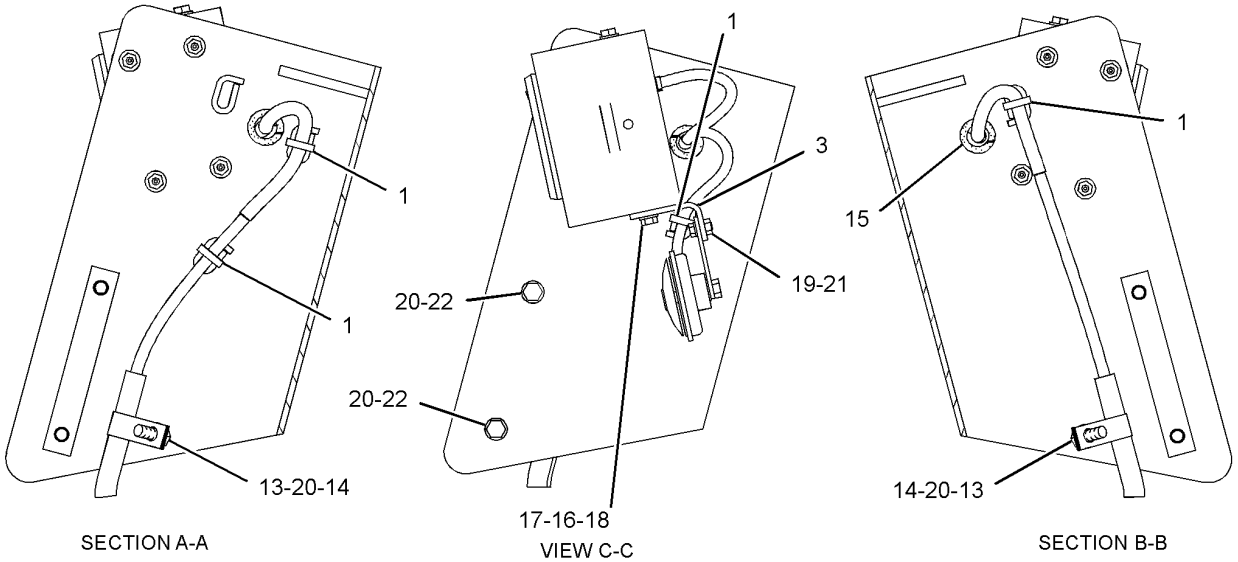

GRAPHIC #1

<END>

g01447967

282-9036 LIGHTING GP-FLOOD—ENGINE COMPARTMENT LIGHTS

S/N: 2211-UP

PART OF 316-6993 ELECTRICAL AR

SMCS-1434 **i02883141**

NOTE	REF NO	GRAPHIC REF	PART NUMBER	QTY	PART NAME 1 2 3 4 5 6 (PRODUCT LEVEL)	SEE PAGE
	1	1	**8R-9137**	2	ANGLE	
Y	2	1	**219-6485**	2	LAMP GP-FLOOD (24-VOLT)	223
	3	1	**8T-4121**	2	WASHER-HARD (11X21X2.5-MM THK)	
M	4	1	**8T-4137**	2	BOLT (M10X1.5X20-MM)	

M-METRIC PART
Y-SEPARATE ILLUSTRATION

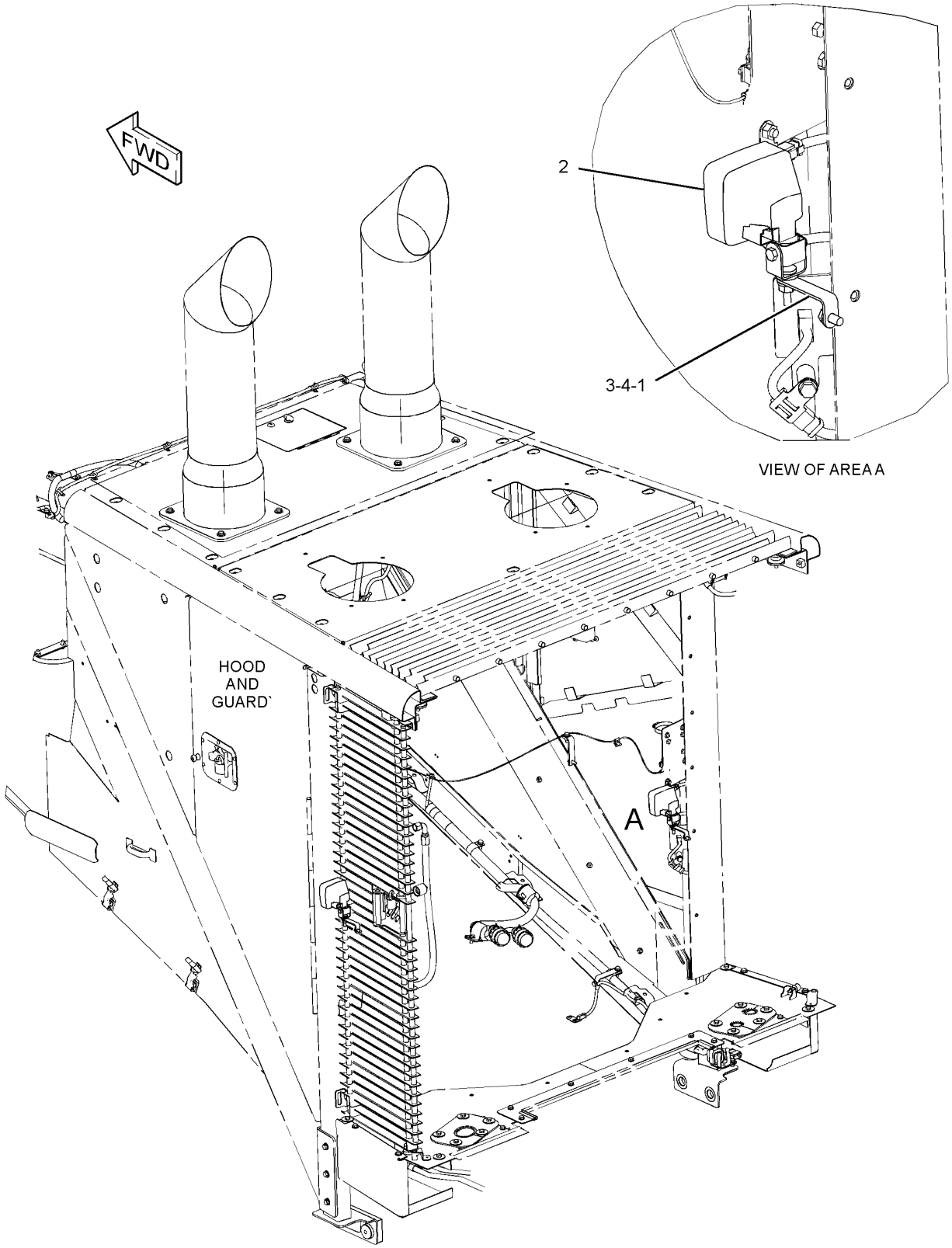

GRAPHIC #1 **<END>** g01439342

ELECTRICAL AND STARTING SYSTEM

296-6055 LIGHTING GP-STOP

S/N: 2211-UP

PART OF 316-6993 ELECTRICAL AR

SMCS-1432 **i02673386**

NOTE	REF NO	GRAPHIC REF	PART NUMBER	QTY	PART NAME 1 2 3 4 5 6 (PRODUCT LEVEL)	SEE PAGE
	1	1	**4E-8975**	1	BRACKET	
	2	1	**4E-8976**	1	BRACKET	
	3	1	**4E-9924**	1	COVER (RH)	
	4	1	**4E-9925**	1	COVER (LH)	
Y	5	1	**135-0426**	2	LAMP GP-SIGNAL (24-VOLT, STOP, TAIL)	226
	6	1	**230-8152**	4	SPACER	
	7	1	**230-9715**	2	CLIP AS	
M	8	1	**5C-2890**	2	NUT (M6X1-THD)	
	9	1	**8T-4121**	4	WASHER-HARD (11X21X2.5-MM THK)	
M	10	1	**8T-4195**	4	BOLT (M10X1.5X30-MM)	
	11	1	**8T-4205**	2	WASHER-HARD (7.2X14.5X2-MM THK)	
M	12	1	**8T-6411**	4	SCREW-MACHINE (M6X1X12-MM)	

M-METRIC PART
Y-SEPARATE ILLUSTRATION

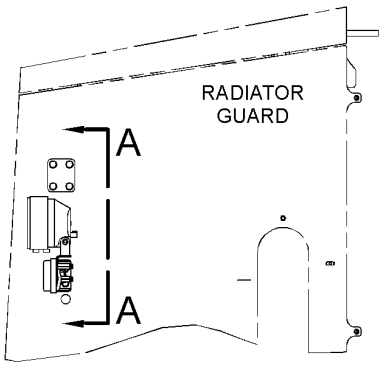

RIGHT SIDE VIEW

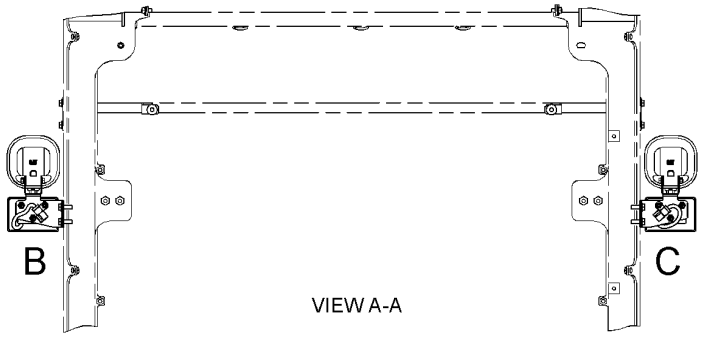

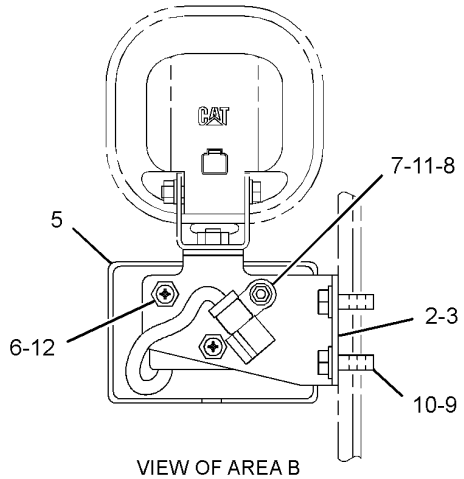

VIEW OF AREA B

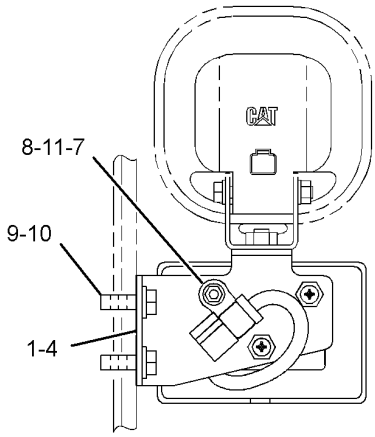

VIEW OF AREA C

GRAPHIC #1 **<END>** g01353250

252-9529 MOUNTING GP-CAMERA—WORK AREA VISUAL SYSTEM

S/N: 2211-UP
PART OF 282-5330 CAMERA AR
AN ATTACHMENT

SMCS-7348 **i02946640**

NOTE	REF NO	GRAPHIC REF	PART NUMBER	QTY	PART NAME 1 2 3 4 5 6 (PRODUCT LEVEL)	SEE PAGE
M	1	1	**9X-2616**	2	SCREW-SOCKET (M8X1.25X16-MM)	
	2	1	**250-1817**	1	BRACKET	
	3	1	**251-4157**	1	MODULE GP-DISPLAY (WORK AREA VISUAL SYSTEM)	
		1	**280-2690**	1	HARNESS AS-MONITOR (WORK AREA VISUAL SYSTEM)	
		1	**8T-8737**	1	PLUG-SEAL	
		1	**102-8804**	1	KIT-RECEPTACLE (4-PIN)	
					(INCLUDES RECEPTACLE AS & WEDGE)	
		1	**186-3735**	5	PIN-CONNECTOR (16-GA TO 18-GA)	
	4	1	**251-4243**	1	CONNECTOR GP-ELECTRONIC	
	5	1	**1V-3593**	1	CLIP	
B	6	1	**4B-4274**	16	WASHER (5.5X13X1.2-MM THK)	
	7	1	**7K-1181**	10	STRAP-CABLE	
M	8	1	**8T-0288**	4	BOLT (M5X0.8X12-MM)	
	9	1	**8T-4224**	2	WASHER-HARD (8.8X16X2-MM THK)	
	10	1	**9G-4191**	1	GROMMET	

B-USE AS REQUIRED
M-METRIC PART

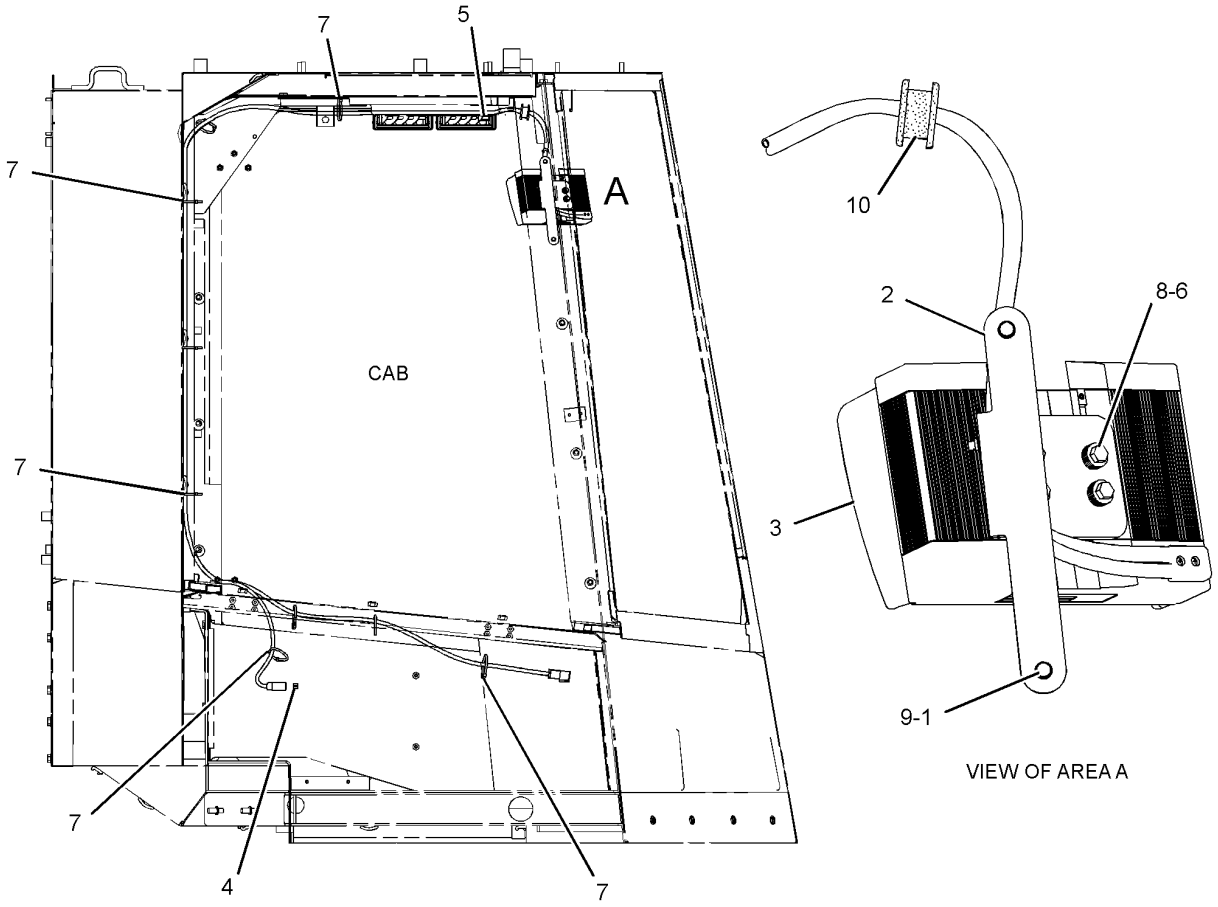

RIGHT SIDE VIEW

GRAPHIC #1 **<END>** g01447820

285-6531 SENSOR GP-ENGINE

S/N: LJW2195-UP
PART OF 246-4283 ENGINE AR-COMPLETE
AN ATTACHMENT

SMCS-1718, 1906, 1907, 1912, 1917, 1923, 1924, 1928, 1929, 7400 **i02877276**

NOTE	REF NO	GRAPHIC REF	PART NUMBER	QTY	PART NAME 1 2 3 4 5 6 (PRODUCT LEVEL)	SEE PAGE
	1	1,2	**3S-2093**	9	STRAP-CABLE	
	2	2	**8K-4739**	1	ADAPTER	
	3	2	**9X-0262**	2	ADAPTER	
	4	1	**9X-6772**	1	STRAP-CABLE	
	5	1	**9X-8403**	1	ELBOW	
	6	2	**125-5835**	1	FILTER	
Y	7	1,2	**163-7882**	4	SENSOR GP-EXHAUST TEMPERATURE (TURBOCHARGER INLET)	245
Y	8	1	**172-8660**	2	SWITCH GP-LIQUID LEVEL (ENGINE OIL)	283
	9	2	**179-2805**	1	BRACKET	
Y	10	1	**230-7149**	1	SENSOR GP-SPEED (CRANKSHAFT)	261
Y	11	2	*234-5012*	1	SENSOR GP-TEMPERATURE (COOLANT)	266
Y	12	2	*234-5013*	2	SENSOR GP-TEMPERATURE (INLET AIR)	267
Y	13	2	*239-2397*	1	SENSOR GP-SPEED (CRANKSHAFT)	262
Y	14	2	*266-8650*	2	SENSOR GP-PRESSURE (BOOST)	255
	15	1	*275-7852*	1	BRACKET AS	
M		1	**8T-3490**	1	NUT-WELD (M10X1.5-THD)	
Y	16	2	*276-8548*	1	SENSOR GP-PRESSURE (ATMOSPHERIC)	256
Y	17	1	*276-9067*	1	SENSOR GP-PRESSURE (ENGINE OIL)	257
	18	1,2	**0S-0509**	2	BOLT (3/8-16X0.75-IN)	
	19	1	**0S-1591**	1	BOLT (3/8-16X1.5-IN)	
	20	1,2	**0S-1594**	3	BOLT (3/8-16X1-IN)	
	21	1,2	**132-5789**	6	CLIP	
	22	2	**205-8125**	1	CLIP	
	23	1,2	**2H-3755**	2	BOLT (5/16-18X0.43-IN)	
	24	1	**2M-9780**	2	SEAL-O-RING	
	25	1	**4S-1962**	2	CLIP	
	26	1,2	**5M-2894**	10	WASHER-HARD (10.2X18.5X2.5-MM THK)	
	27	1	**5M-3062**	1	BOLT (3/8-16X0.75-IN)	
	28	1	**5P-1404**	1	ADAPTER-O-RING	
	29	1,2	**6V-4589**	2	SEAL-O-RING	
	30	2	**6V-5048**	2	SEAL-O-RING	
	31	1	**6V-5049**	1	SEAL-O-RING	
	32	1,2	**9M-1974**	2	WASHER-HARD (8.8X16X2-MM THK)	
	33	1,2	**9S-8752**	3	NUT-FULL (3/8-16-THD)	

M-METRIC PART
Y-SEPARATE ILLUSTRATION

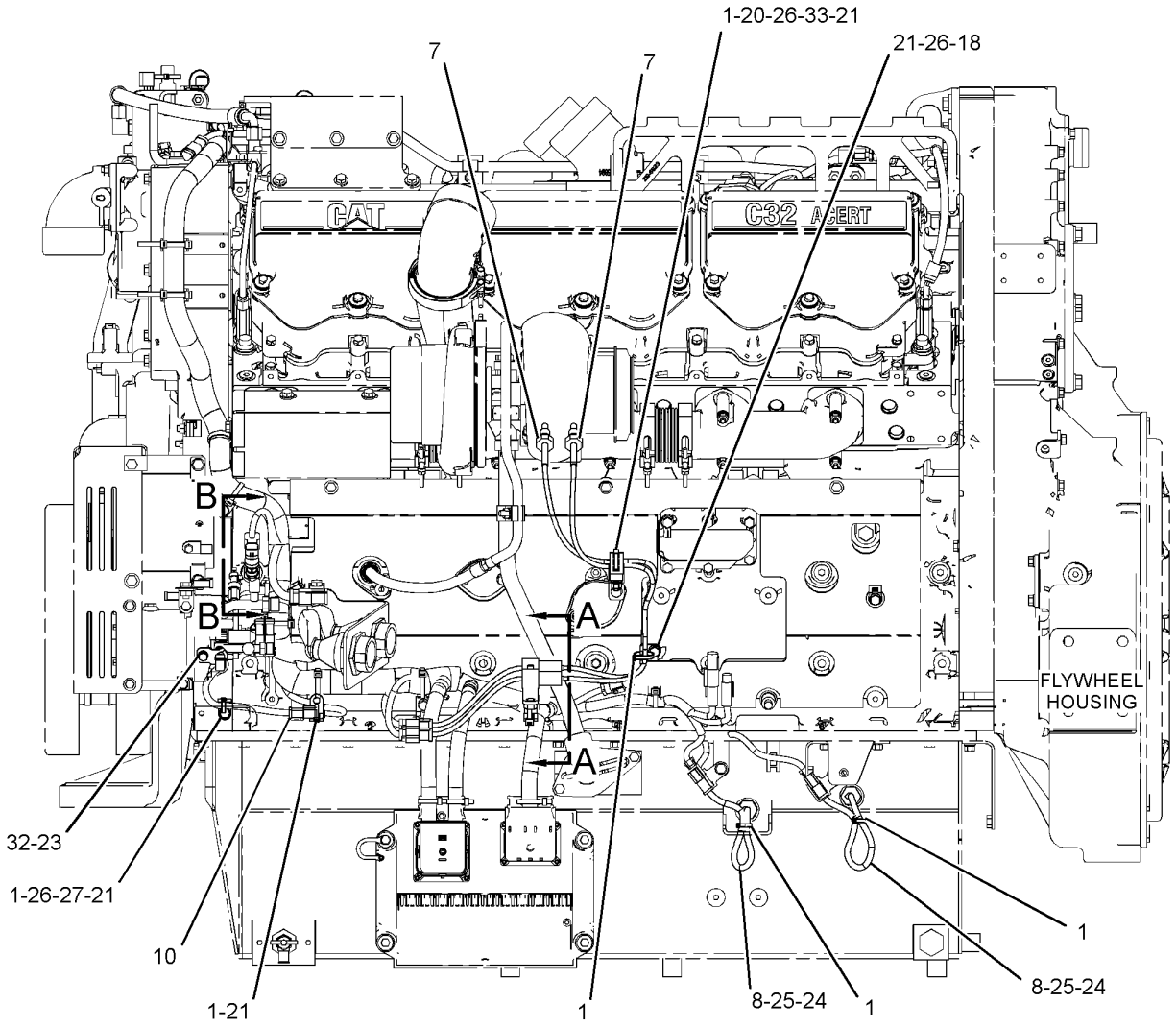

LEFT SIDE VIEW OF ENGINE

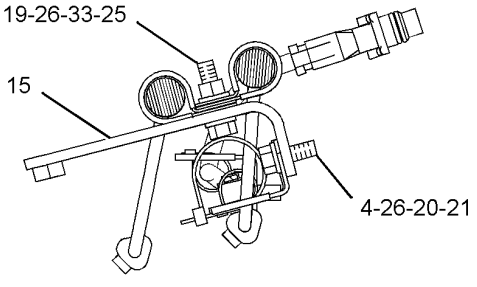

SECTION A-A

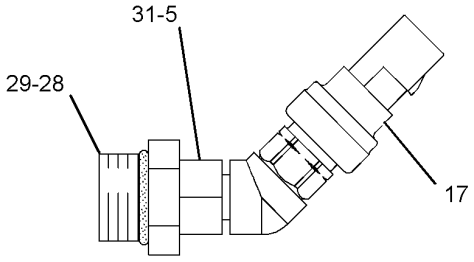

SECTION B-B

GRAPHIC #1 g01432652

285-6531 **SENSOR GP-ENGINE** *(contd.)* **i02877276**

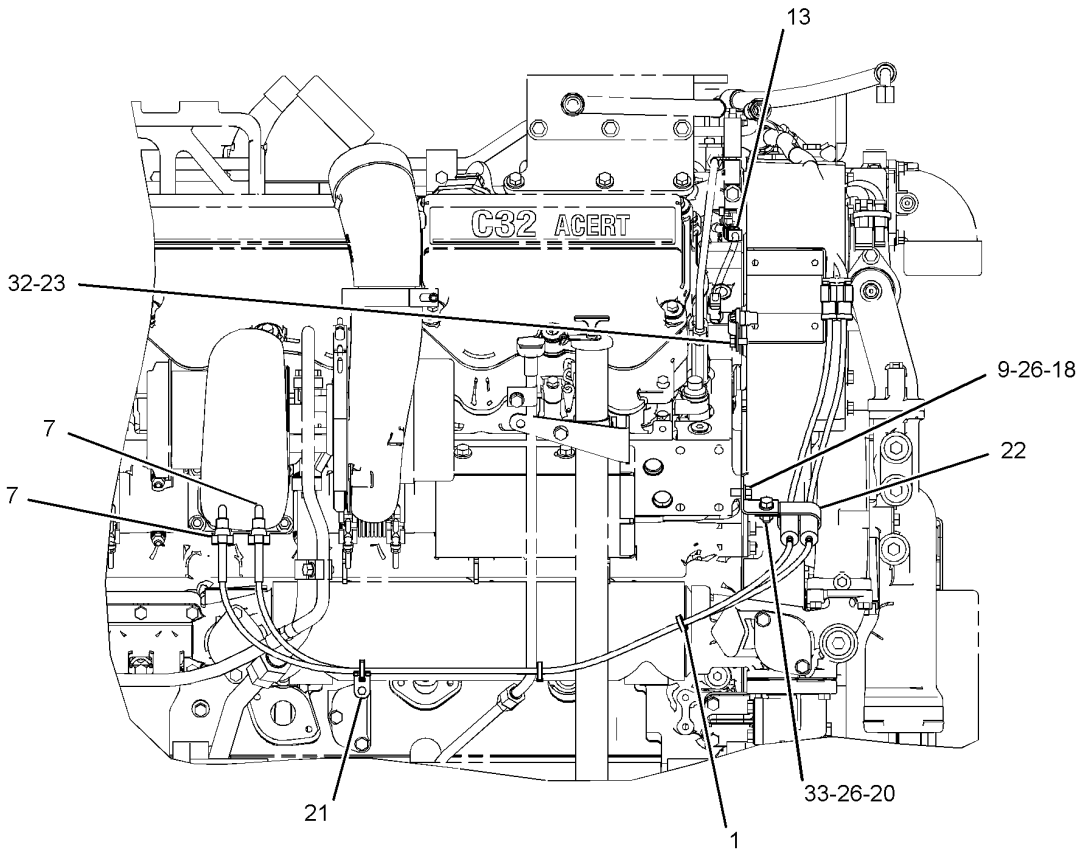

RIGHT SIDE VIEW OF ENGINE

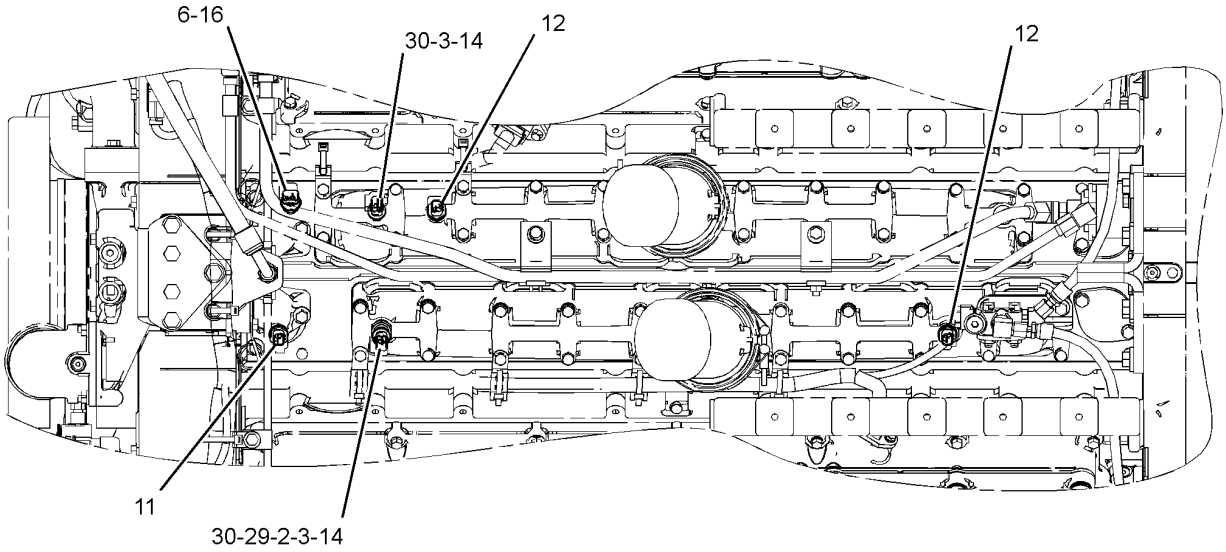

TOP VIEW OF ENGINE

GRAPHIC #2 **<END>** g01432654

303-2219 SENSOR GP-ENGINE

S/N: LJW1-UP

PART OF 246-8228, 259-3142, 259-3143 ENGINE AR-COMPLETE

AN ATTACHMENT

SMCS-1718, 1906, 1907, 1912, 1917, 1923, 1924, 1928, 1929, 7400

i02940186

NOTE	REF NO	GRAPHIC REF	PART NUMBER	QTY	PART NAME 1 2 3 4 5 6 (PRODUCT LEVEL)	SEE PAGE
	1	1	**3E-5276**	1	ADAPTER	
	2	1,2	**3S-2093**	6	STRAP-CABLE	
	3	3	**8K-4739**	1	ADAPTER	
	4	3	**9X-0262**	2	ADAPTER	
	5	1	**116-4491**	1	BRACKET AS	
M	5A	1	**8T-3490**	1	NUT-WELD (M10X1.5-THD)	
	6	2	**121-1340**	1	ANGLE AS	
M	6A	2	**8T-3490**	1	NUT-WELD (M10X1.5-THD)	
	7	3	**125-5835**	1	FILTER	
	8	1	**204-1611**	2	STRAP-CABLE	
Y	9	3	*234-5012*	1	SENSOR GP-TEMPERATURE (COOLANT)	266
Y	10	3	*234-5013*	2	SENSOR GP-TEMPERATURE (INTAKE AIR TEMPERATURE)	267
	11	1,2	**261-6847**	4	ADAPTER	
	12	1,2	*261-6848*	4	SENSOR GP-EXHAUST TEMPERATURE (TURBOCHARGER, RH, LH)	
Y	13	3	*266-8650*	2	SENSOR GP-PRESSURE (BOOST)	255
Y	14	3	*276-8548*	1	SENSOR GP-PRESSURE (ATMOSPHERIC)	256
Y	15	1	*276-9067*	1	SENSOR GP-PRESSURE (ENGINE OIL)	257
Y	16	1	**279-9828**	1	SENSOR GP-SPEED (CRANKSHAFT)	263
Y	17	2	**279-9829**	1	SENSOR GP-SPEED (CAM GEAR)	264
Y	18	1	**306-6875**	2	SENSOR GP-LIQUID LEVEL (ENGINE OIL LEVEL)	246
	19	1	**0S-0509**	1	BOLT (3/8-16X0.75-IN)	
	20	1,2	**117-1385**	2	SEAL-O-RING	
	21	1,2	**132-5789**	2	CLIP	
	22	1,2	**205-8125**	2	CLIP	
	23	1,2	**2H-3755**	2	BOLT (5/16-18X0.43-IN)	
	24	1	**5M-2894**	1	WASHER-HARD (10.2X18.5X2.5-MM THK)	
M	25	2	**6V-1820**	1	BOLT (M10X1.5X30-MM)	
	26	1,3	**6V-4589**	4	SEAL-O-RING	
	27	3	**6V-5048**	2	SEAL-O-RING	
	28	1,2	**3E-4353**	2	WASHER-HARD (11X25X3-MM THK)	
	29	1,2	**9M-1974**	2	WASHER-HARD (8.8X16X2-MM THK)	
M	30	1	**6V-6317**	1	BOLT (M10X1.5X20-MM)	

M-METRIC PART
Y-SEPARATE ILLUSTRATION

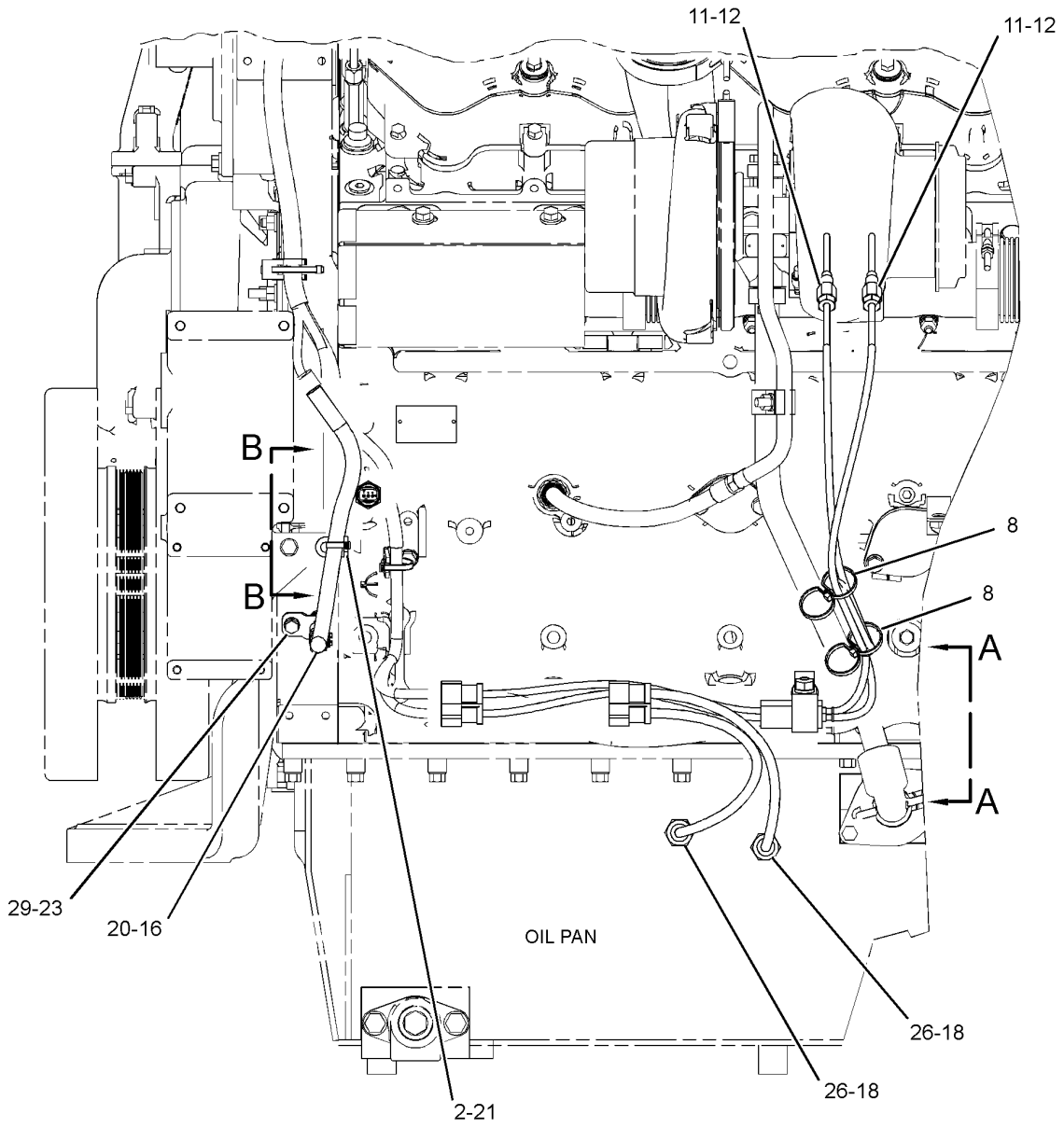

LEFT SIDE VIEW OF ENGINE

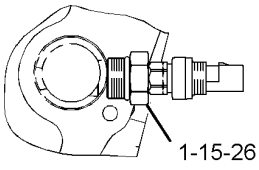

SECTION B-B

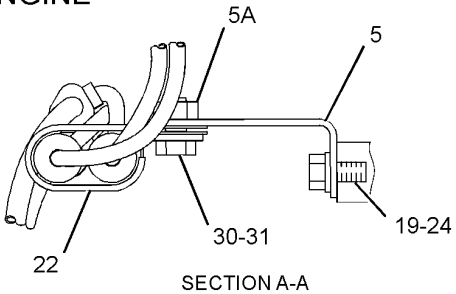

SECTION A-A

GRAPHIC #1 g01458549

303-2219 **SENSOR GP-ENGINE** *(contd.)* **i02940186**

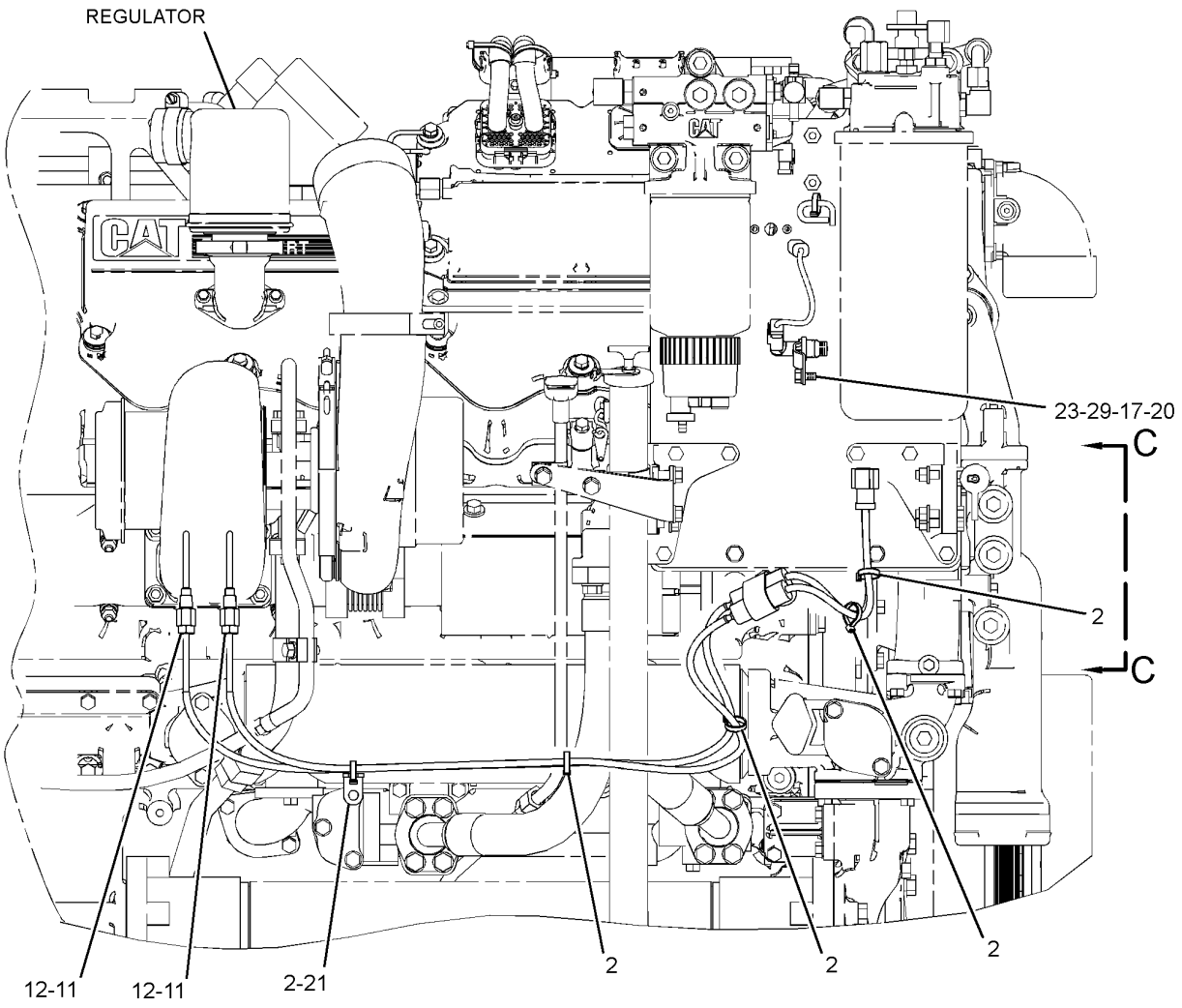

RIGHT SIDE VIEW OF ENGINE

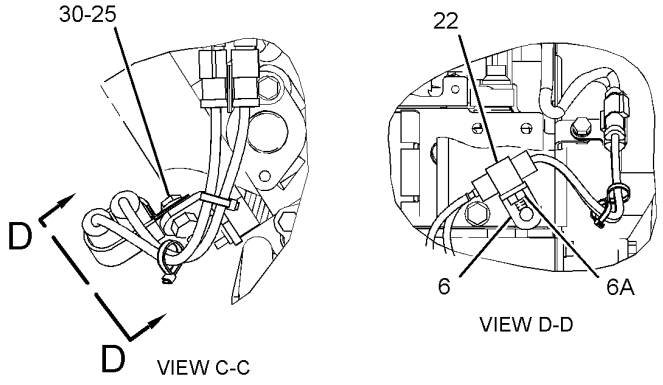

GRAPHIC #2 g01458551

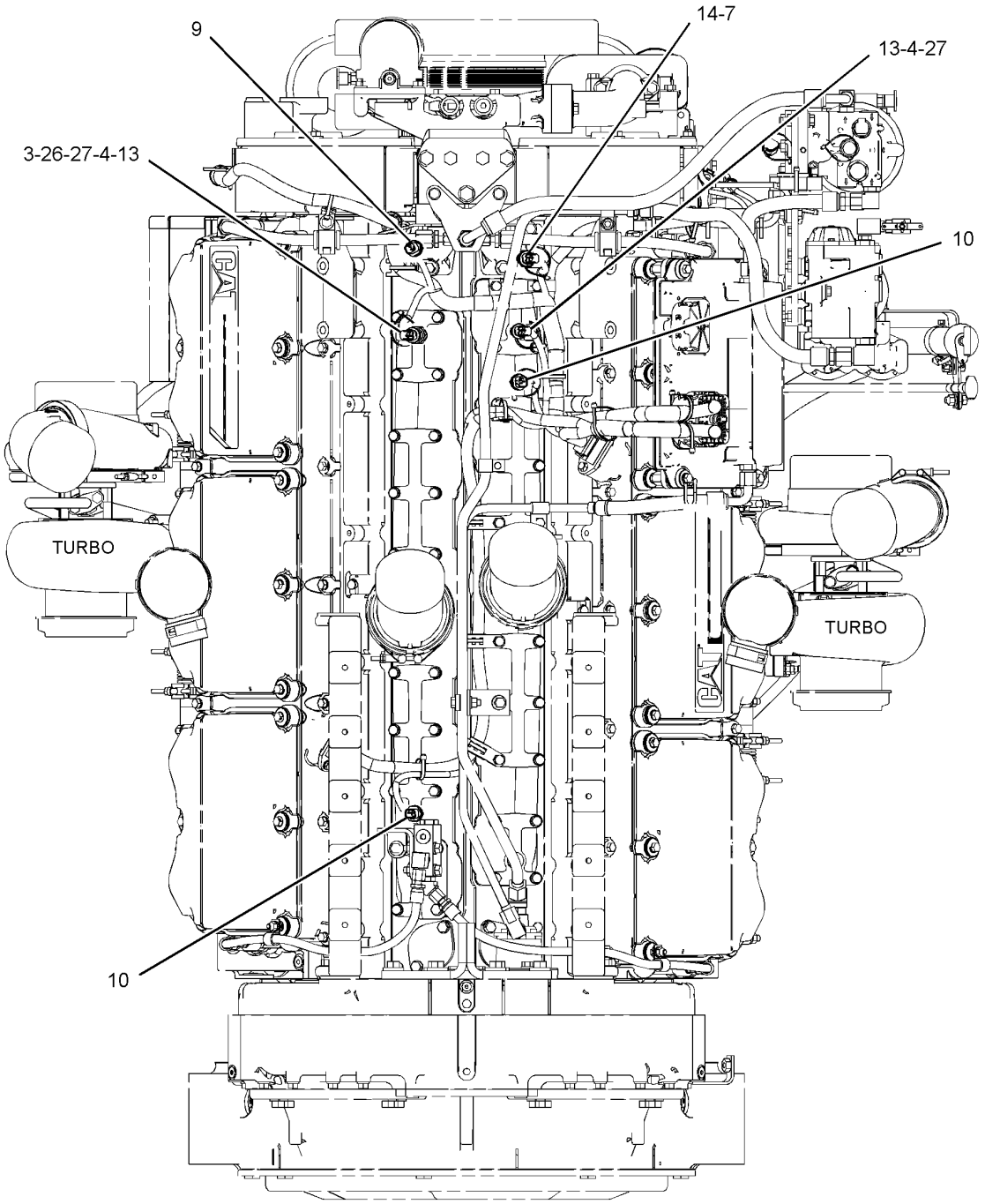

TOP VIEW OF ENGINE

GRAPHIC #3 **<END>** g01430750

ELECTRICAL AND STARTING SYSTEM

163-7882 SENSOR GP-EXHAUST TEMPERATURE

S/N: LJW2195-UP

PART OF 285-6531 SENSOR GP-ENGINE

AN ATTACHMENT

SMCS-1919 **i02706107**

NOTE	REF NO	GRAPHIC REF	PART NUMBER	QTY	PART NAME 1 2 3 4 5 6 (PRODUCT LEVEL)	SEE PAGE
	1	1	**261-6847**	1	ADAPTER	

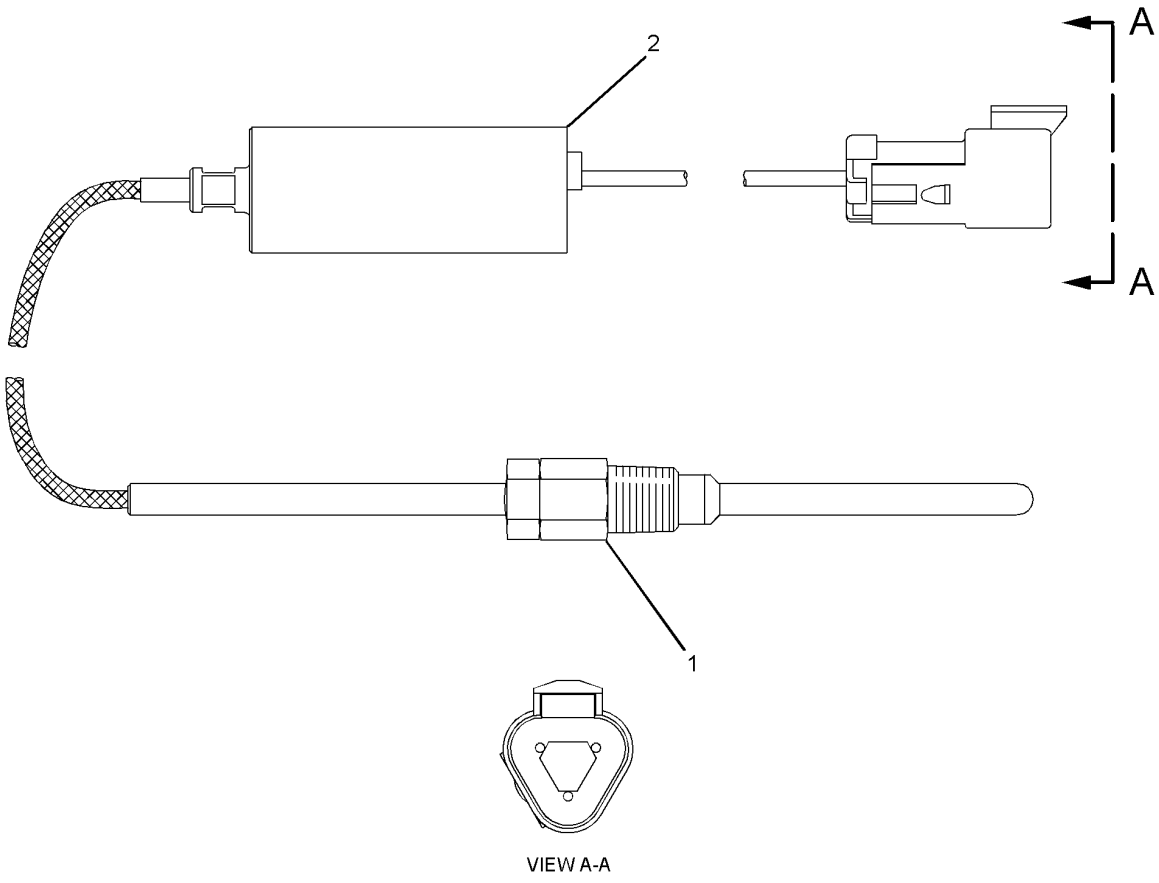

GRAPHIC #1 **<END>** g01353943

ELECTRICAL AND STARTING SYSTEM

306-6875 SENSOR GP-LIQUID LEVEL

S/N: 2211-UP; LJW1-UP
PART OF 303-2219 SENSOR GP-ENGINE, 316-6982 WIRING GP-MACHINE, 291-0530, 291-1072 WIRING GP-OIL RENEWAL SYSTEM
ALSO AN ATTACHMENT

SMCS-7422 **i02859730**

NOTE	REF NO	GRAPHIC REF	PART NUMBER	QTY	PART NAME 1 2 3 4 5 6 (PRODUCT LEVEL)	SEE PAGE
	1	1	**102-8803**	1	KIT-RECEPTACLE (3-PIN)	
					(INCLUDES RECEPTACLE AS & WEDGE)	
	2	1	**186-3735**	3	PIN-CONNECTOR (16-GA TO 18-GA)	

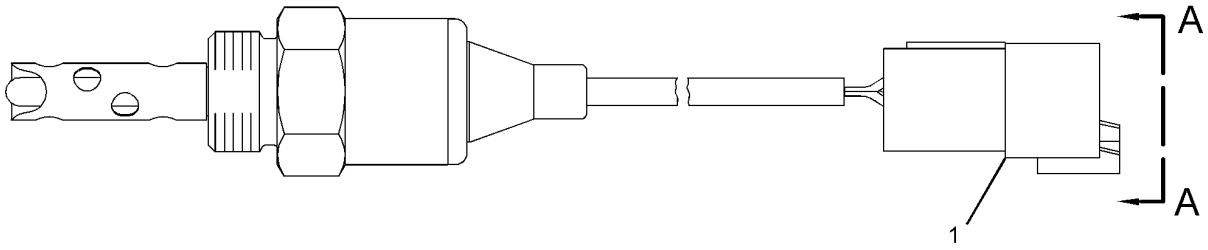

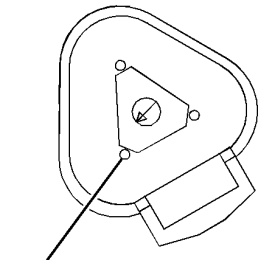

VIEW A-A

GRAPHIC #1 **<END>** g01428055

266-1466 SENSOR GP-POSITION

S/N: 2211-UP

PART OF 305-5532 BASE GP-FOOT BRAKE

SMCS-4269, 5702, 5736, 5737, 7494 **i02660265**

NOTE	REF NO	GRAPHIC REF	PART NUMBER	QTY	PART NAME 1 2 3 4 5 6 (PRODUCT LEVEL)	SEE PAGE
	1	1	**3E-3371**	1	WEDGE-RECEPTACLE LOCK (3-PIN)	
	2	1	**102-8803**	1	KIT-RECEPTACLE (3-PIN)	
					(INCLUDES RECEPTACLE AS AND WEDGE)	

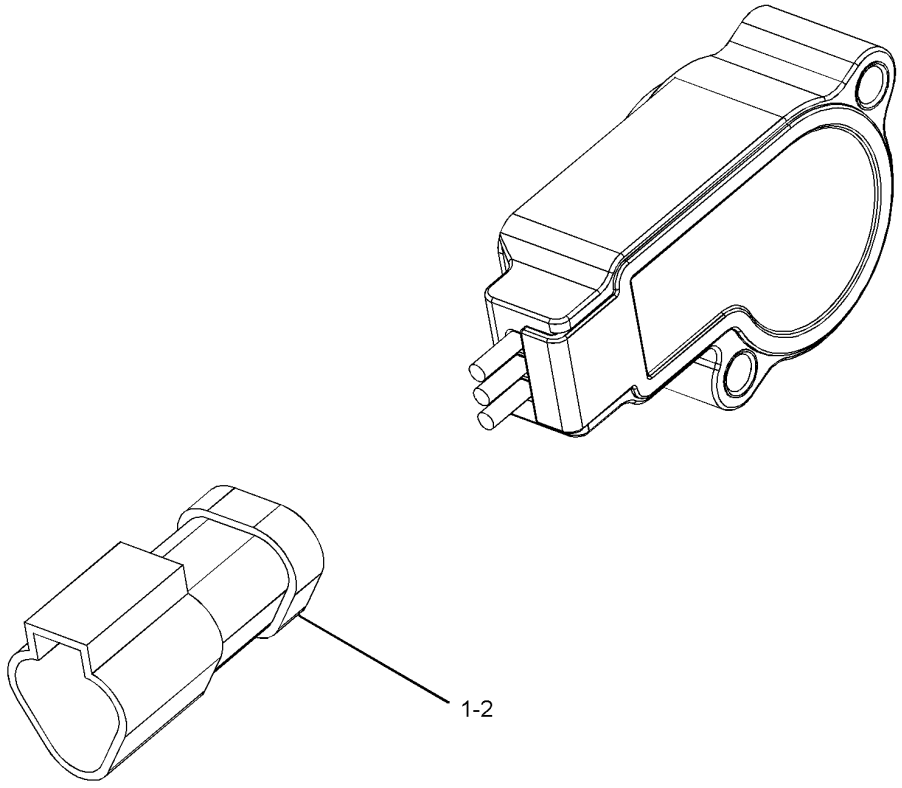

GRAPHIC #1 **<END>** g01262722

167-1709 SENSOR GP-PRESSURE

S/N: 2211-UP

PART OF 316-6984 WIRING GP-POWER TRAIN

SMCS-1408, 1925, 7494 **i02867987**

NOTE	REF NO	GRAPHIC REF	PART NUMBER	QTY	PART NAME 1 2 3 4 5 6 (PRODUCT LEVEL)	SEE PAGE
BE	1	1	**9X-1813**		SLEEVE	
	2	1	**155-2260**	1	KIT-CONNECTING PLUG (3-PIN)	
					(INCLUDES PLUG AS AND WEDGE)	
	3	1	**9X-3402**	3	SOCKET-CONNECTOR (16-GA TO 18-GA)	
	4	1	**3E-3368**	1	WEDGE-PLUG LOCK (3-PIN)	

B-USE AS REQUIRED
E-ORDER BY THE CENTIMETER

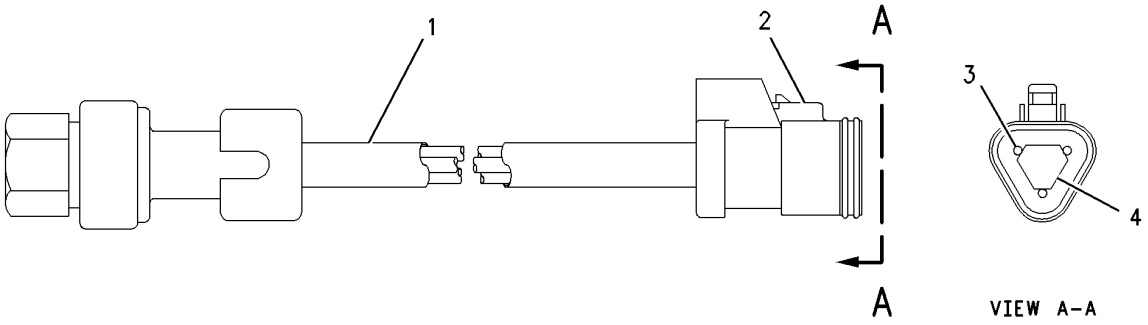

GRAPHIC #1 **<END>** g00888131

194-6725 SENSOR GP-PRESSURE

S/N: LJW1-UP
PART OF 239-2396 SENSOR GP-PRESSURE
AN ATTACHMENT

SMCS-1408, 1925, 7494 **i02871315**

NOTE	REF NO	GRAPHIC REF	PART NUMBER	QTY	PART NAME 1 2 3 4 5 6 (PRODUCT LEVEL)	SEE PAGE
BE	1	1	**9X-1813**		SLEEVE	
	2	1	**155-2260**	1	KIT-CONNECTING PLUG (3-PIN)	
					(INCLUDES PLUG AS, INTERFACE SEAL & WEDGE)	
	3	1	**194-5226**	3	WIRE AS-HARNESS (16-GA TO 18-GA)	
	4	1	**3E-3368**	1	WEDGE-PLUG LOCK (3-PIN)	

B-USE AS REQUIRED
E-ORDER BY THE CENTIMETER

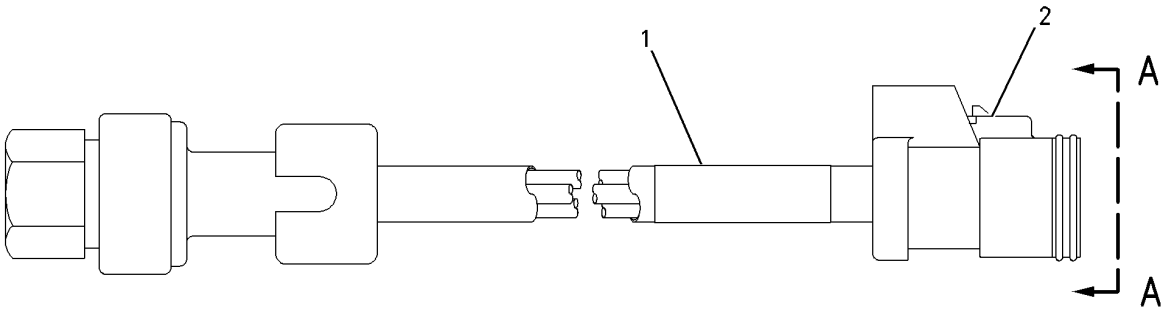

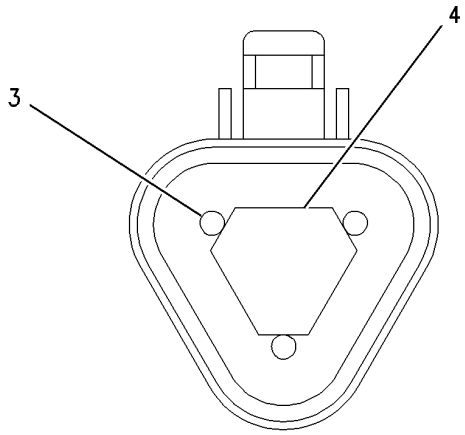

VIEW A-A

GRAPHIC #1 **<END>** g00851220

ELECTRICAL AND STARTING SYSTEM

221-3406 SENSOR GP-PRESSURE

S/N: 2211-UP

PART OF 316-6982 WIRING GP-MACHINE

SMCS-1408, 1925, 7494 **i02003755**

NOTE	REF NO	GRAPHIC REF	PART NUMBER	QTY	PART NAME 1 2 3 4 5 6 (PRODUCT LEVEL)	SEE PAGE
	1	1	**155-2260**	1	KIT-CONNECTING PLUG (3-PIN)	
	2	1	*180-9340*	3	SOCKET-CONNECTOR	
	3	1	**155-2276**	1	WEDGE-PLUG LOCK (3-PIN)	

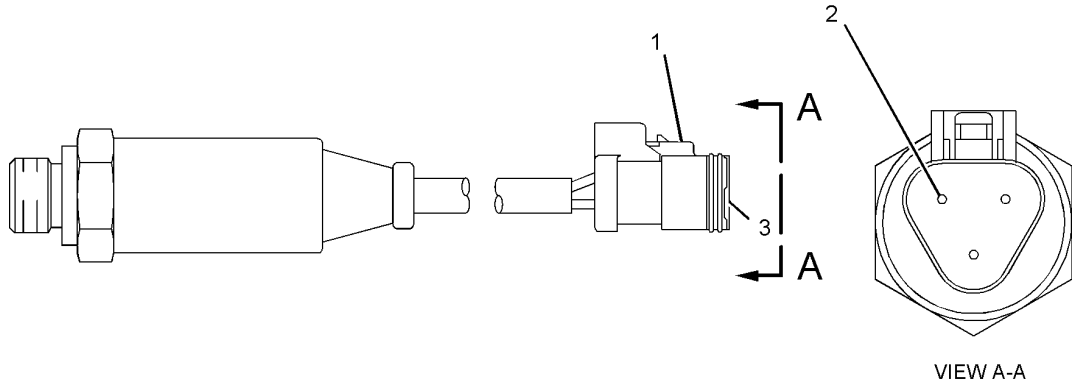

VIEW A-A

GRAPHIC #1 **<END>** g01037697

ELECTRICAL AND STARTING SYSTEM

221-3415 SENSOR GP-PRESSURE

S/N: 2211-UP

PART OF 316-6982 WIRING GP-MACHINE

SMCS-1408, 1925, 7494 **i02095704**

NOTE	REF NO	GRAPHIC REF	PART NUMBER	QTY	PART NAME 1 2 3 4 5 6 (PRODUCT LEVEL)	SEE PAGE
	1	1	**155-2260**	1	KIT-CONNECTING PLUG (3-PIN)	
					(INCLUDES PLUG AS AND WEDGE)	
	2	1	*180-9340*	3	SOCKET-CONNECTOR	
		1	**194-5226**	1	WIRE AS-HARNESS (16-GA TO 18-GA)	
	3	1	**155-2276**	1	WEDGE-PLUG LOCK (3-PIN)	

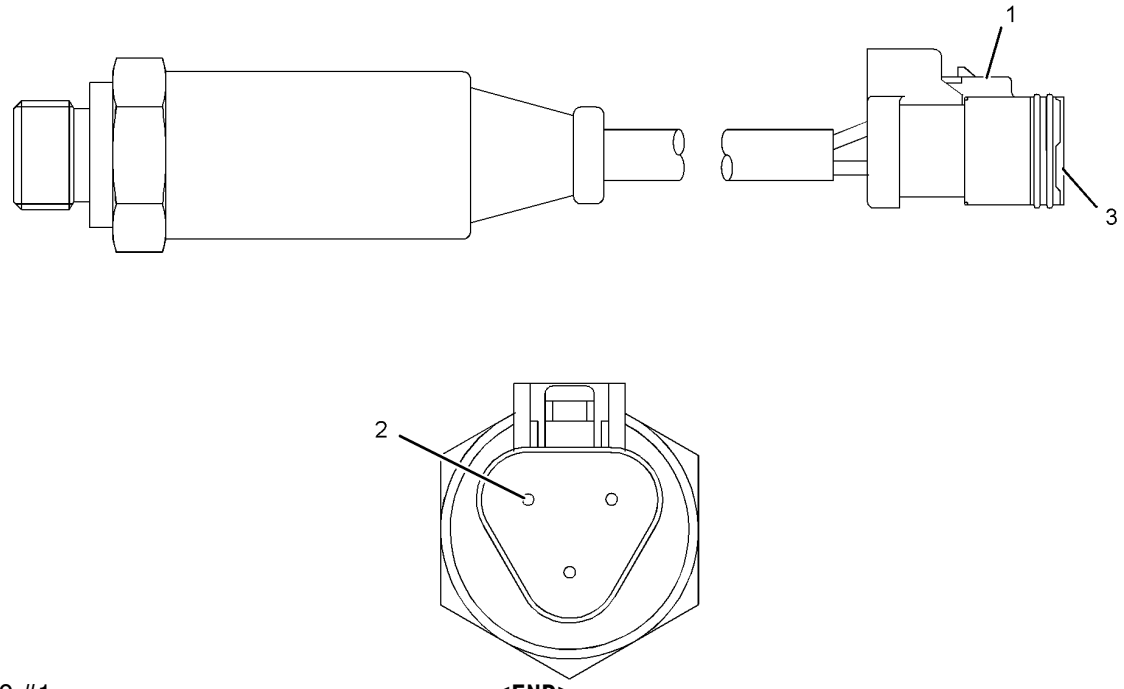

GRAPHIC #1

<END>

g01069060

224-8496 SENSOR GP-PRESSURE

S/N: 2211-UP

PART OF 273-7150 CONTROL GP-SERVICE BRAKE, 316-6982 WIRING GP-MACHINE

SMCS-1408, 1925, 7494 **i02864122**

NOTE	REF NO	GRAPHIC REF	PART NUMBER	QTY	PART NAME 1 2 3 4 5 6 (PRODUCT LEVEL)	SEE PAGE
E	1	1	**9X-1813**		SLEEVE (34-CM)	
	2	1	**155-2260**	1	KIT-CONNECTING PLUG (3-PIN)	
					(INCLUDES PLUG AS, WEDGE & INTERFACE SEAL)	
	3	1	**180-9340**	3	SOCKET-CONNECTOR	

E-ORDER BY THE CENTIMETER

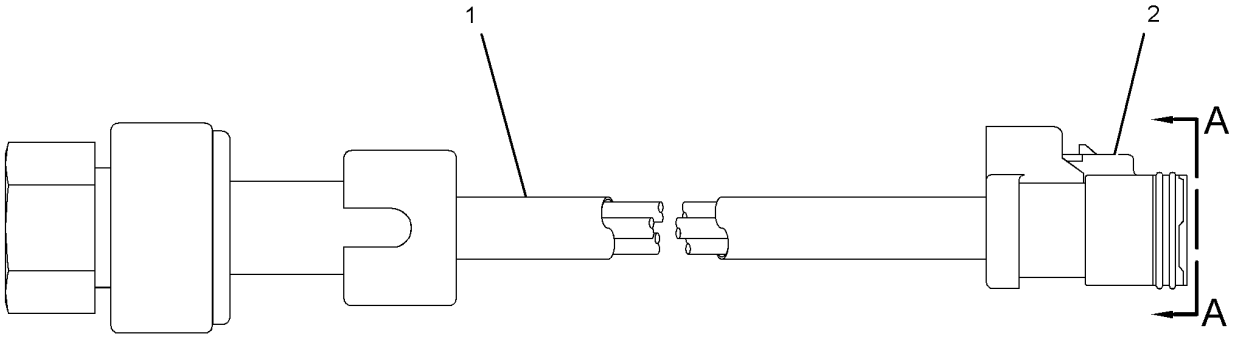

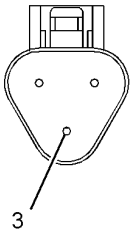

VIEW OF AREA A

GRAPHIC #1 **<END>** g01431595

ELECTRICAL AND STARTING SYSTEM

224-8497 SENSOR GP-PRESSURE

S/N: 2211-UP

PART OF 316-6982 WIRING GP-MACHINE

SMCS-1408, 1925, 7494 **i02864131**

NOTE	REF NO	GRAPHIC REF	PART NUMBER	QTY	PART NAME 1 2 3 4 5 6 (PRODUCT LEVEL)	SEE PAGE
E	1	1	**9X-1813**		SLEEVE (34-CM)	
	2	1	**102-8803**	1	KIT-RECEPTACLE (3-PIN)	
					(INCLUDES RECEPTACLE AS & WEDGE)	
	3	1	**180-9339**	3	PIN-CONNECTOR	

E-ORDER BY THE CENTIMETER

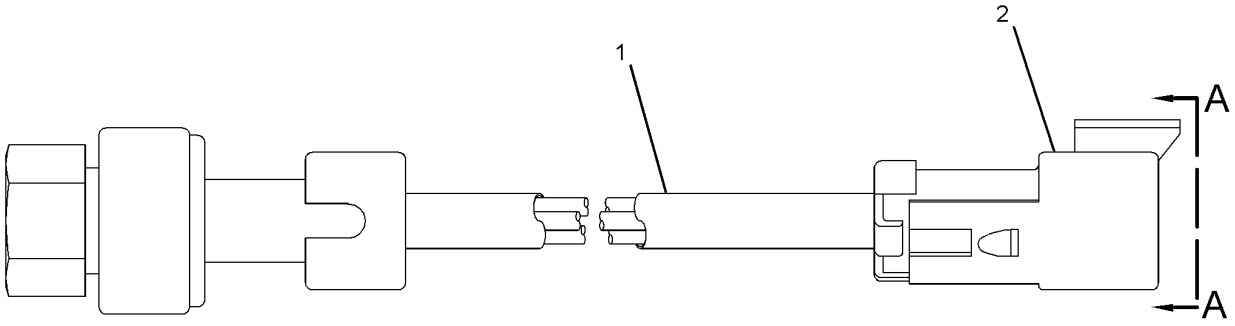

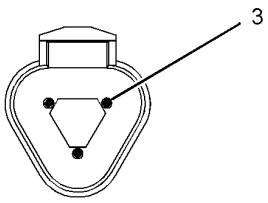

VIEW A-A

GRAPHIC #1 **<END>** g01431597

239-2396 SENSOR GP-PRESSURE

S/N: LJW1-UP

PART OF 256-7941, 320-7496 MOUNTING GP-FUEL FILTER AN ATTACHMENT

SMCS-1408, 1925, 7494 **i02870189**

NOTE	REF NO	GRAPHIC REF	PART NUMBER	QTY	PART NAME 1 2 3 4 5 6 (PRODUCT LEVEL)	SEE PAGE
Y	1	1	**194-6725**	1	SENSOR GP-PRESSURE	249
	2	1	**6V-5048**	1	SEAL-O-RING	

Y-SEPARATE ILLUSTRATION

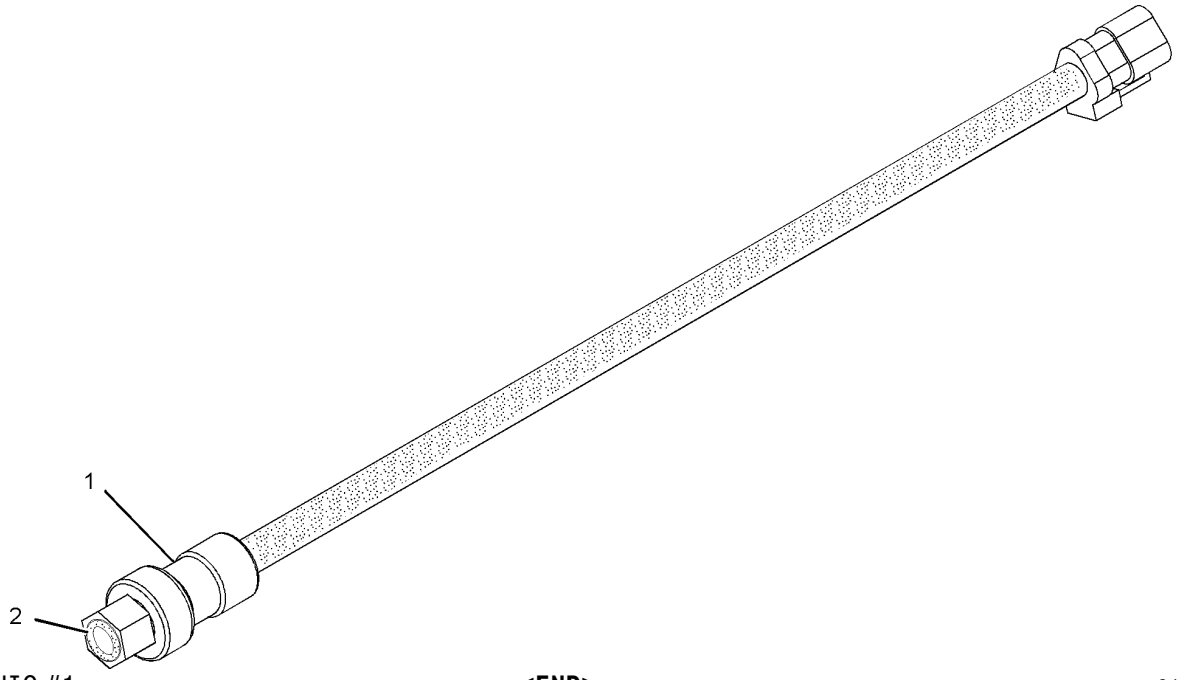

GRAPHIC #1 **<END>** g01019323

266-8650 SENSOR GP-PRESSURE

S/N: LJW1-UP
AMPSEAL CONNECTOR
PART OF 285-6531, 303-2219 SENSOR GP-ENGINE
AN ATTACHMENT

SMCS-1408, 1925, 7494 **i02424225**

NOTE	REF NO	GRAPHIC REF	PART NUMBER	QTY	PART NAME 1 2 3 4 5 6 (PRODUCT LEVEL)	SEE PAGE
	1	1	**276-6793**	1	SENSOR GP-PRESSURE	
	2	1	**6V-5048**	1	SEAL-O-RING	

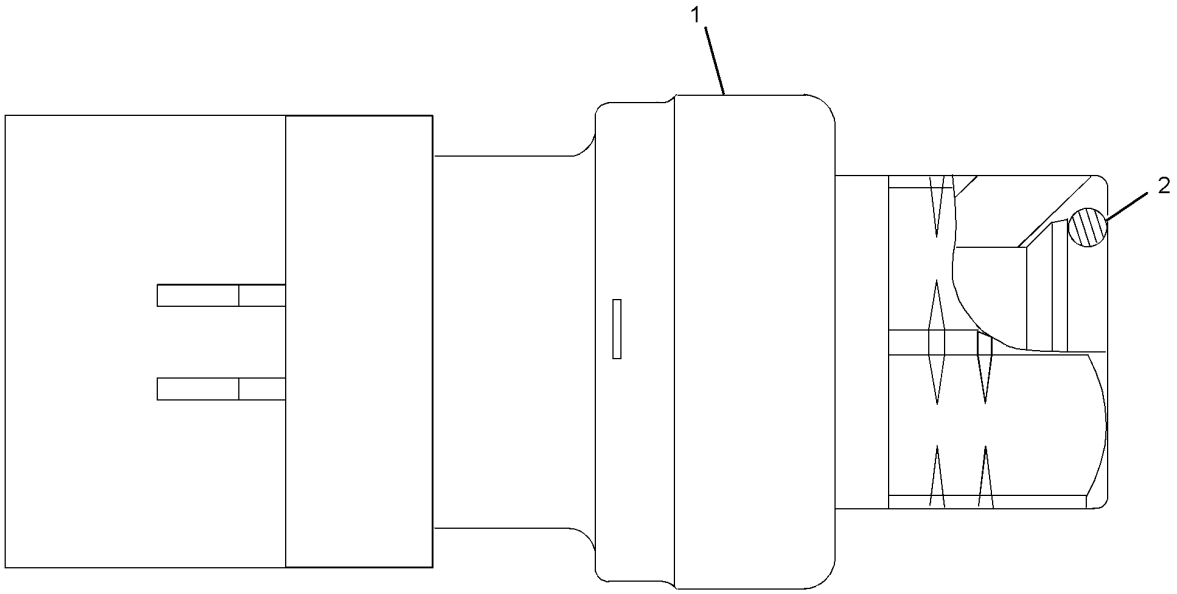

GRAPHIC #1 **<END>** g01164254

276-8548 SENSOR GP-PRESSURE

S/N: LJW1-UP
AMPSEAL CONNECTOR
PART OF 285-6531, 303-2219 SENSOR GP-ENGINE
AN ATTACHMENT

SMCS-1408, 1925, 7494 **i02565088**

NOTE	REF NO	GRAPHIC REF	PART NUMBER	QTY	PART NAME 1 2 3 4 5 6 (PRODUCT LEVEL)	SEE PAGE
	1	1	**274-6717**	1	SENSOR GP-PRESSURE	
	2	1	**6V-5049**	1	SEAL-O-RING	

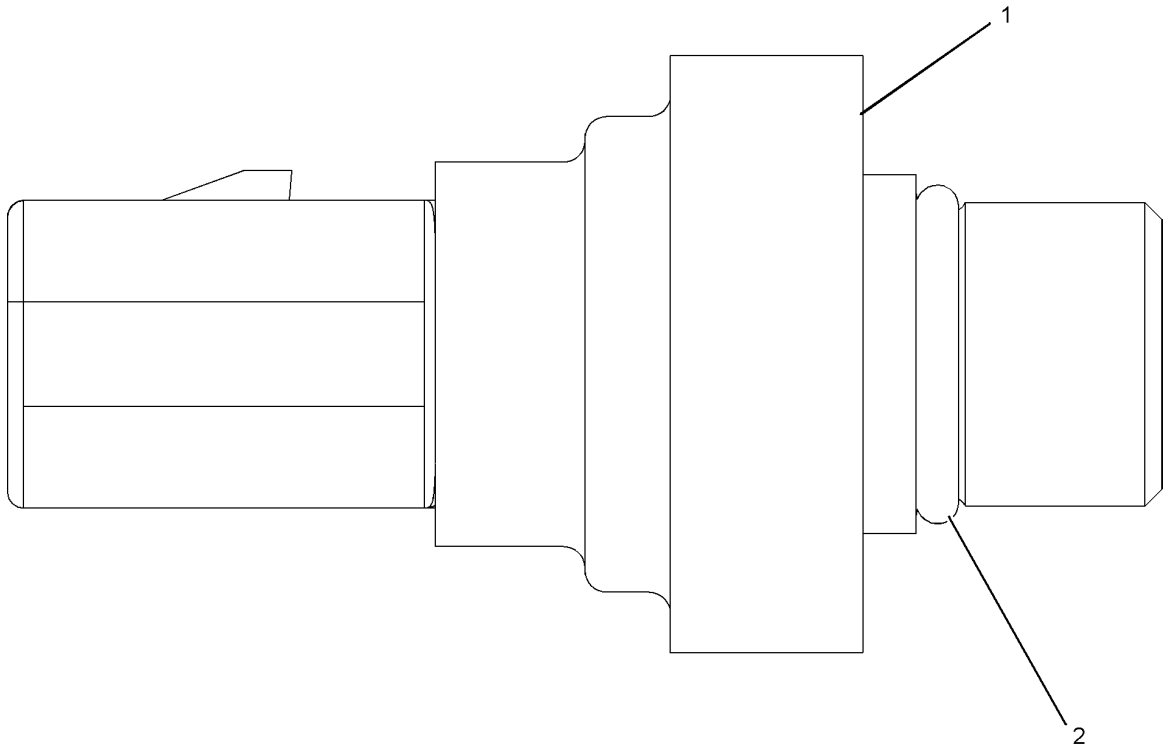

GRAPHIC #1 **<END>** g01064278

276-9067 SENSOR GP-PRESSURE

S/N: LJW1-UP
AMPSEAL CONNECTOR
PART OF 285-6531, 303-2219 SENSOR GP-ENGINE
AN ATTACHMENT

SMCS-1408, 1925, 7494 **i02658634**

NOTE	REF NO	GRAPHIC REF	PART NUMBER	QTY	PART NAME 1 2 3 4 5 6 (PRODUCT LEVEL)	SEE PAGE
	1	1	**274-6719**	1	SENSOR GP-PRESSURE	
	2	1	**6V-5048**	1	SEAL-O-RING	

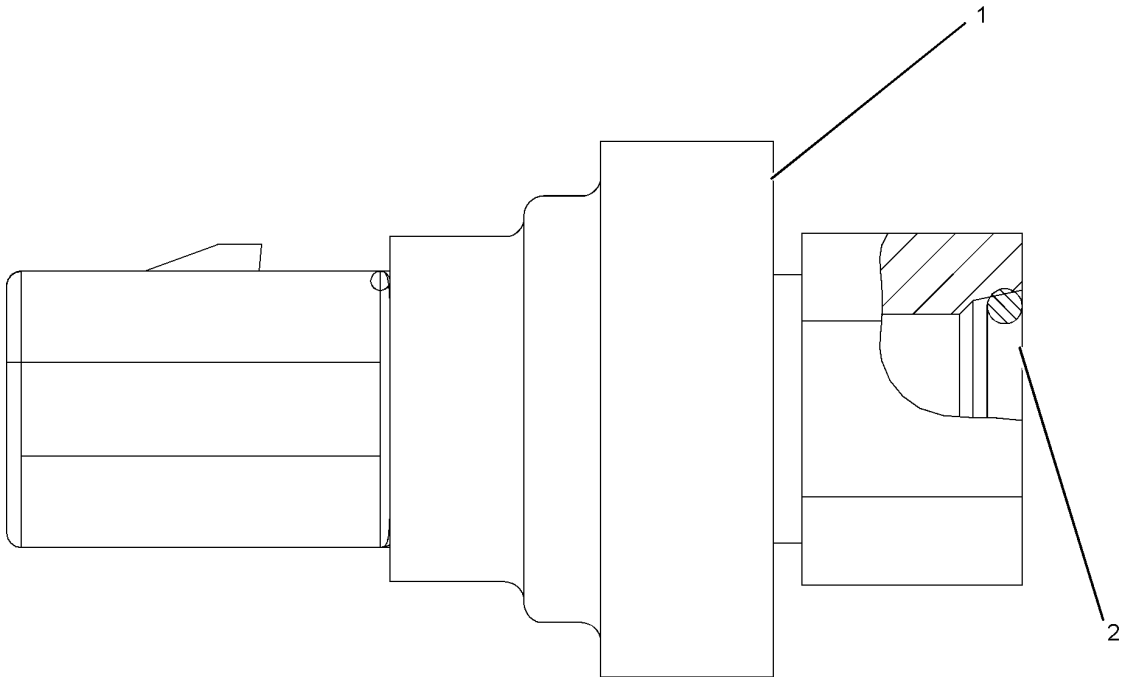

GRAPHIC #1 **<END>** g01064378

122-8863 SENSOR GP-SPEED

S/N: K2K1-UP

PART OF 283-7689 GEAR GP-INPUT TRANSFER

SMCS-1907, 1912, 3175, 4803, 7493 **i01499903**

NOTE	REF NO	GRAPHIC REF	PART NUMBER	QTY	PART NAME 1 2 3 4 5 6 (PRODUCT LEVEL)	SEE PAGE
	1	1	**171-5349**	1	STRAP-MARKER	
	2	1	**102-8802**	1	KIT-RECEPTACLE (2-PIN) (INCLUDES RECEPTACLE AS & WEDGE)	
	3	1	**186-3735**	2	PIN-CONNECTOR (16-GA TO 18-GA)	
	4	1	**3E-3365**	1	WEDGE-RECEPTACLE LOCK (2-PIN)	
BE	5	1	**9X-1386**		SLEEVE	

B-USE AS REQUIRED
E-ORDER BY THE CENTIMETER

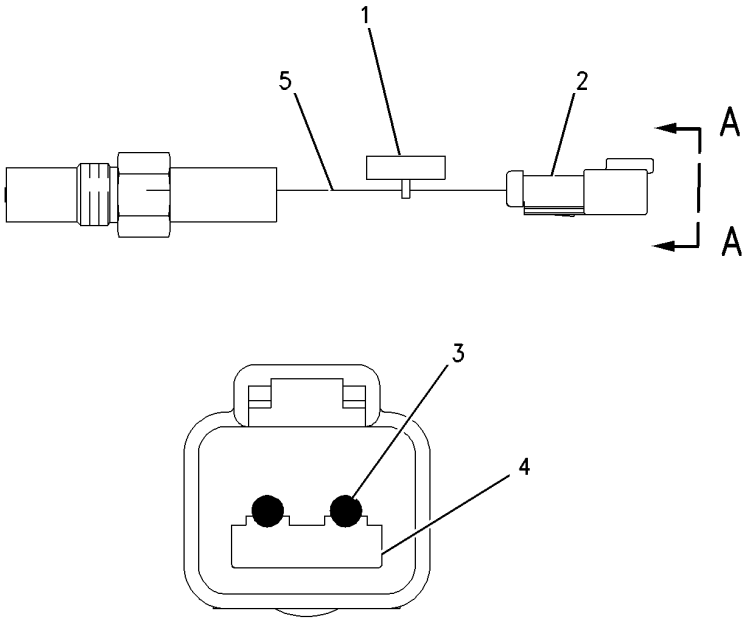

VIEW A-A

GRAPHIC #1 **<END>** g00778343

201-6615 SENSOR GP-SPEED

S/N: LJW2195-UP
PART OF 230-7149 SENSOR GP-SPEED
AN ATTACHMENT

SMCS-1907, 1912, 3175, 4803, 7493 **i02945649**

NOTE	REF NO	GRAPHIC REF	PART NUMBER	QTY	PART NAME 1 2 3 4 5 6 (PRODUCT LEVEL)	SEE PAGE
	1	1	**133-0260**	1	BRACKET	
	2	1	**188-9429**	1	HARNESS AS-SENSOR (SPEED)	

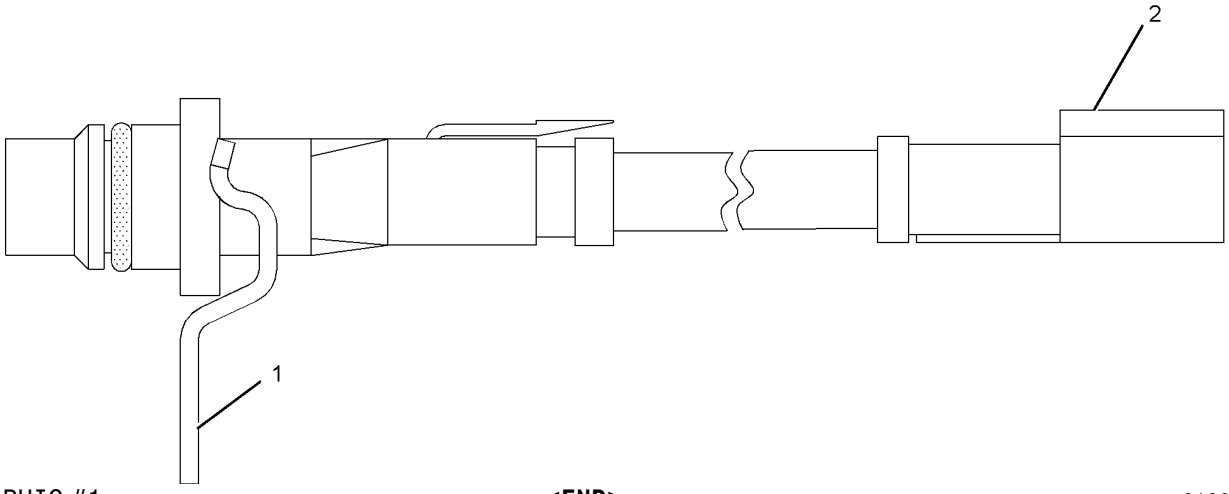

GRAPHIC #1 **<END>** g01009894

ELECTRICAL AND STARTING SYSTEM

201-6616 SENSOR GP-SPEED

S/N: LJW2195-UP
PART OF 239-2397 SENSOR GP-SPEED
AN ATTACHMENT

SMCS-1907, 1912, 3175, 4803, 7493 **i02945655**

NOTE	REF NO	GRAPHIC REF	PART NUMBER	QTY	PART NAME 1 2 3 4 5 6 (PRODUCT LEVEL)	SEE PAGE
	1	1	**264-7786**	1	BRACKET	
	2	1	**189-0852**	1	HARNESS AS-WIRING (SPEED SENSOR)	

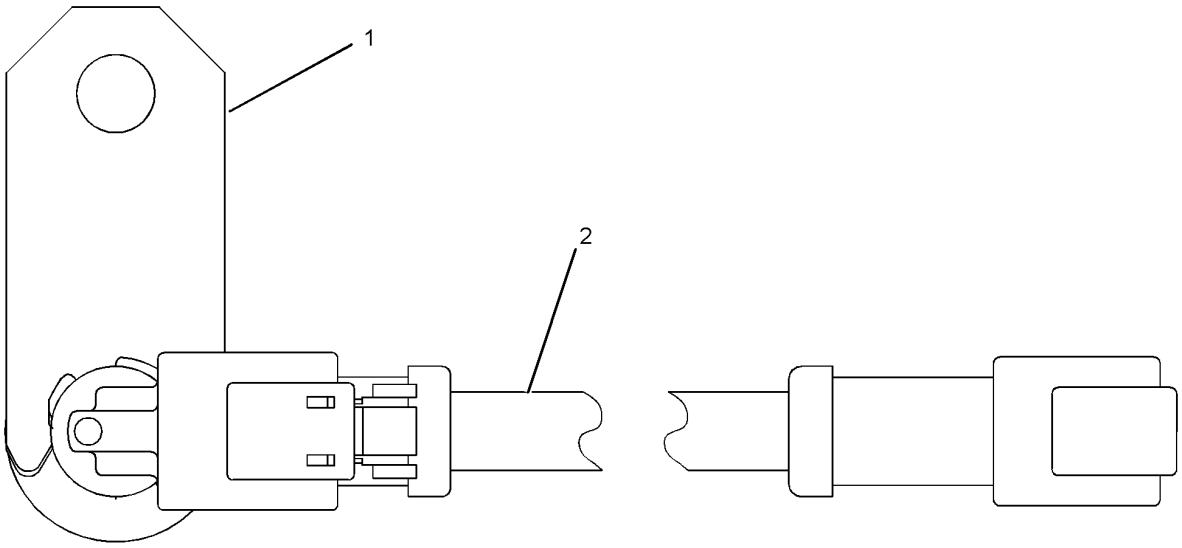

GRAPHIC #1 **<END>** g01184106

230-7149 SENSOR GP-SPEED

S/N: LJW2195-UP
PART OF 285-6531 SENSOR GP-ENGINE
AN ATTACHMENT

SMCS-1907, 1912, 3175, 4803, 7493 **i02768022**

NOTE	REF NO	GRAPHIC REF	PART NUMBER	QTY	PART NAME 1 2 3 4 5 6 (PRODUCT LEVEL)	SEE PAGE
Y	1	1	**201-6615**	1	SENSOR GP-SPEED	259
	2	1	**228-4947**	1	SEAL-O-RING	

Y-SEPARATE ILLUSTRATION

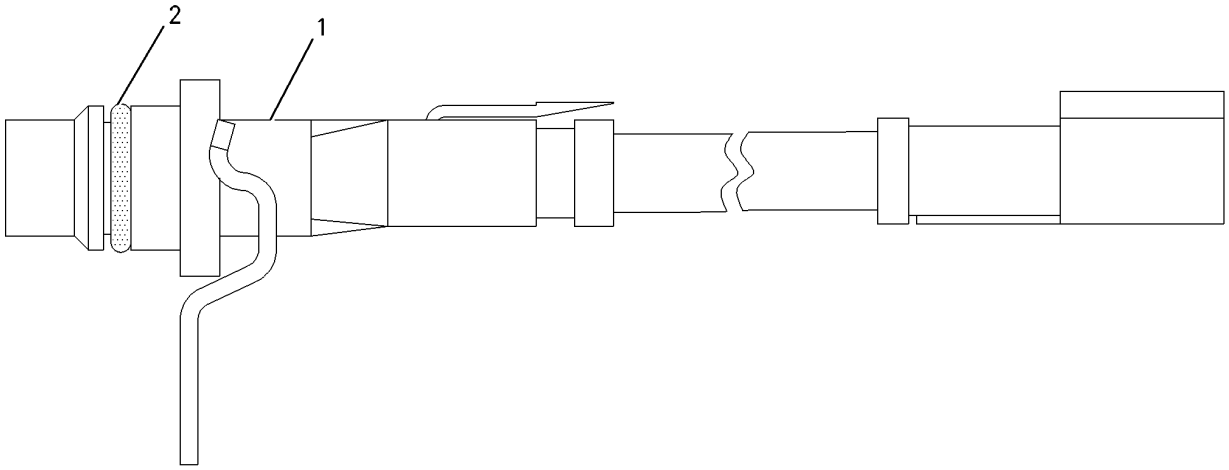

GRAPHIC #1 **<END>** g01007584

239-2397 SENSOR GP-SPEED

S/N: LJW2195-UP
PART OF 285-6531 SENSOR GP-ENGINE
AN ATTACHMENT

SMCS-1907, 1912, 3175, 4803, 7493 **i02870198**

NOTE	REF NO	GRAPHIC REF	PART NUMBER	QTY	PART NAME 1 2 3 4 5 6 (PRODUCT LEVEL)	SEE PAGE
	1	1	**228-4947**	1	SEAL-O-RING	
Y	2	1	**201-6616**	1	SENSOR GP-SPEED	260

Y-SEPARATE ILLUSTRATION

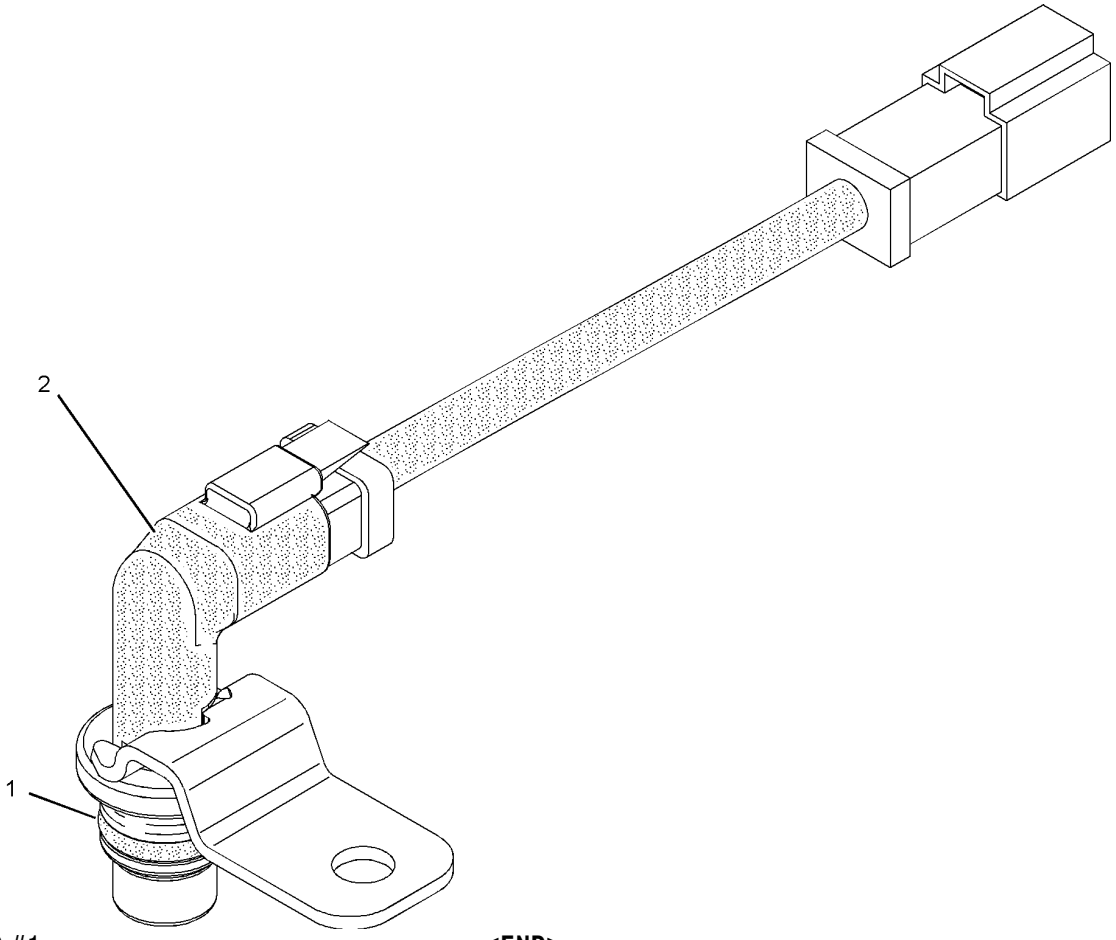

GRAPHIC #1 **<END>** g01019337

279-9828 SENSOR GP-SPEED

S/N: LJW1-UP

PART OF 303-2219 SENSOR GP-ENGINE

AN ATTACHMENT

SMCS-1907, 1912, 3175, 4803, 7493 **i02660096**

NOTE	REF NO	GRAPHIC REF	PART NUMBER	QTY	PART NAME 1 2 3 4 5 6 (PRODUCT LEVEL)	SEE PAGE
	1	1	*280-8706*	1	HARNESS AS-SENSOR	
		1	**180-9339**	2	PIN-CONNECTOR	
		1	**230-4012**	1	RECEPTACLE AS-CONNECTOR (2-PIN)	

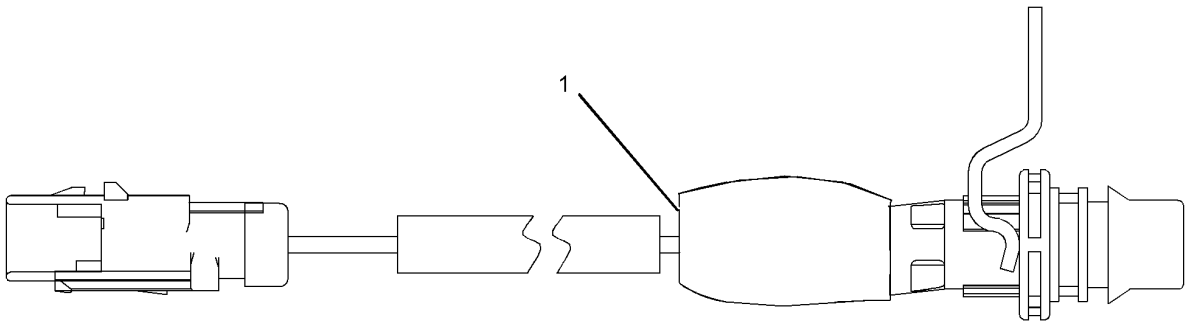

GRAPHIC #1 **<END>** g01336482

279-9829 SENSOR GP-SPEED

S/N: LJW1-UP

PART OF 303-2219 SENSOR GP-ENGINE

AN ATTACHMENT

SMCS-1907, 1912, 3175, 4803, 7493 **i02660685**

NOTE	REF NO	GRAPHIC REF	PART NUMBER	QTY	PART NAME 1 2 3 4 5 6 (PRODUCT LEVEL)	SEE PAGE
	1	1	*280-8707*	1	HARNESS AS-SENSOR	
		1	**180-9339**	2	PIN-CONNECTOR	
		1	**230-4012**	1	RECEPTACLE AS-CONNECTOR (2-PIN)	

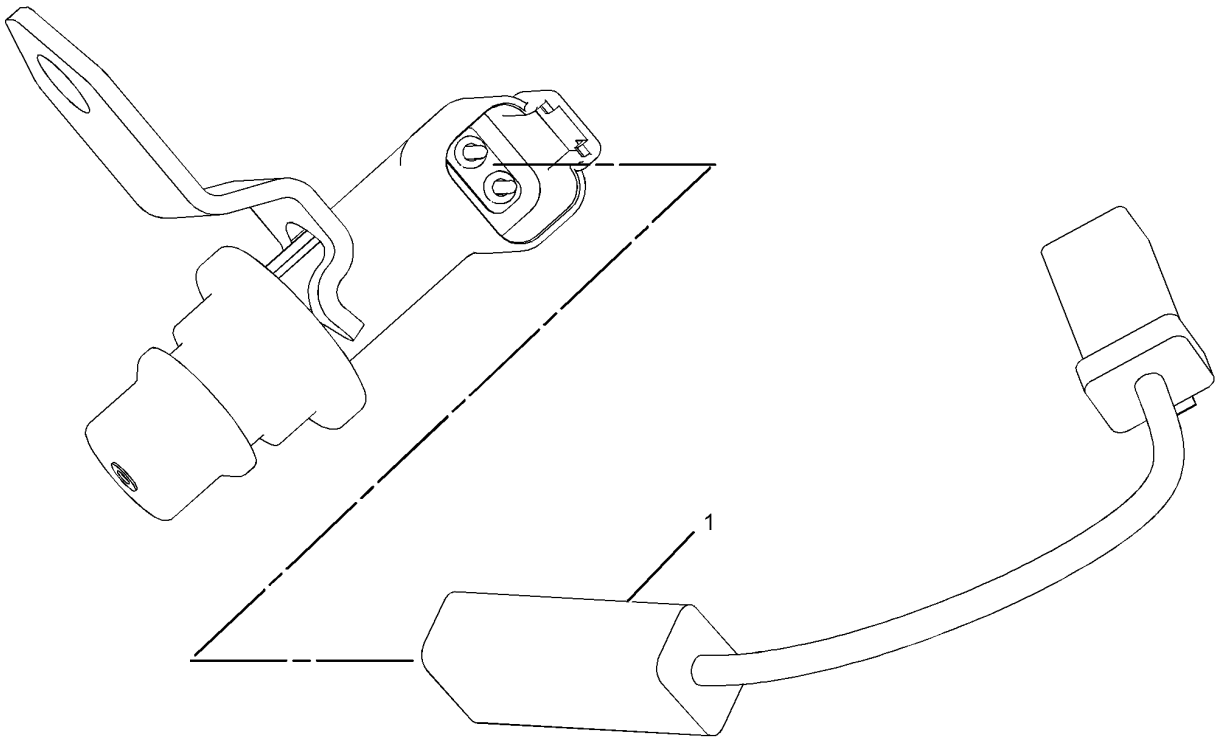

GRAPHIC #1 **<END>** g01336621

195-2150 SENSOR GP-TEMPERATURE

S/N: 2211-UP

PART OF 316-6984 WIRING GP-POWER TRAIN

SMCS-1408, 1906, 1919, 1921, 1922, 1928, 1929, 301T, 3194, 429T, 509T

i02231071

NOTE	REF NO	GRAPHIC REF	PART NUMBER	QTY	PART NAME 1 2 3 4 5 6 (PRODUCT LEVEL)	SEE PAGE
BH	2	1	**153-5043**		SLEEVE (4-DM)	
	3	1	**102-8802**	1	KIT-RECEPTACLE (2-PIN)	
					(INCLUDES RECEPTACLE AS AND WEDGE)	
	4	1	**186-3735**	2	PIN-CONNECTOR (16-GA TO 18-GA)	
	5	1	**3E-3365**	1	WEDGE-RECEPTACLE LOCK (2-PIN)	

B-USE AS REQUIRED
H-ORDER BY THE DECIMETER

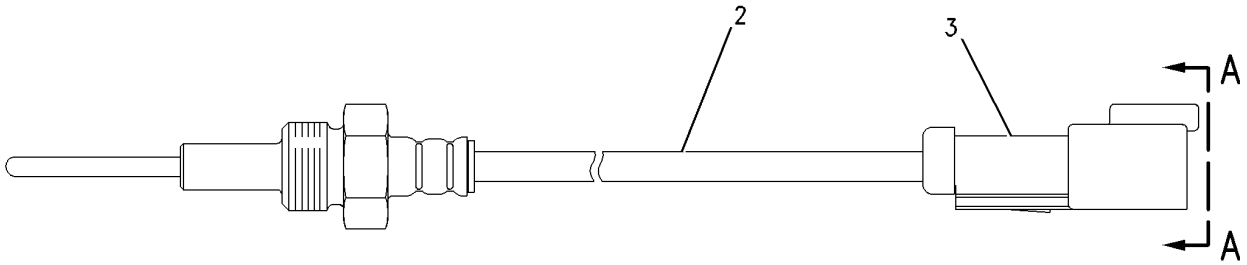

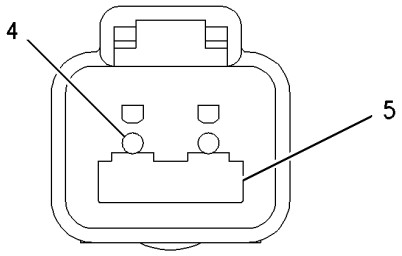

VIEW A-A

GRAPHIC #1

<END>

g00857794

234-5012 SENSOR GP-TEMPERATURE

S/N: LJW1-UP
AMPSEAL CONNECTOR
PART OF 285-6531, 303-2219 SENSOR GP-ENGINE
AN ATTACHMENT

SMCS-1408, 1906, 1919, 1921, 1922, 1928, 1929, 301T, 3194, 429T, 509T

i02660829

NOTE	REF NO	GRAPHIC REF	PART NUMBER	QTY	PART NAME 1 2 3 4 5 6 (PRODUCT LEVEL)	SEE PAGE
	1	1	**256-6453**	1	SENSOR AS-TEMPERATURE	
	2	1	**6V-6609**	1	SEAL-O-RING	

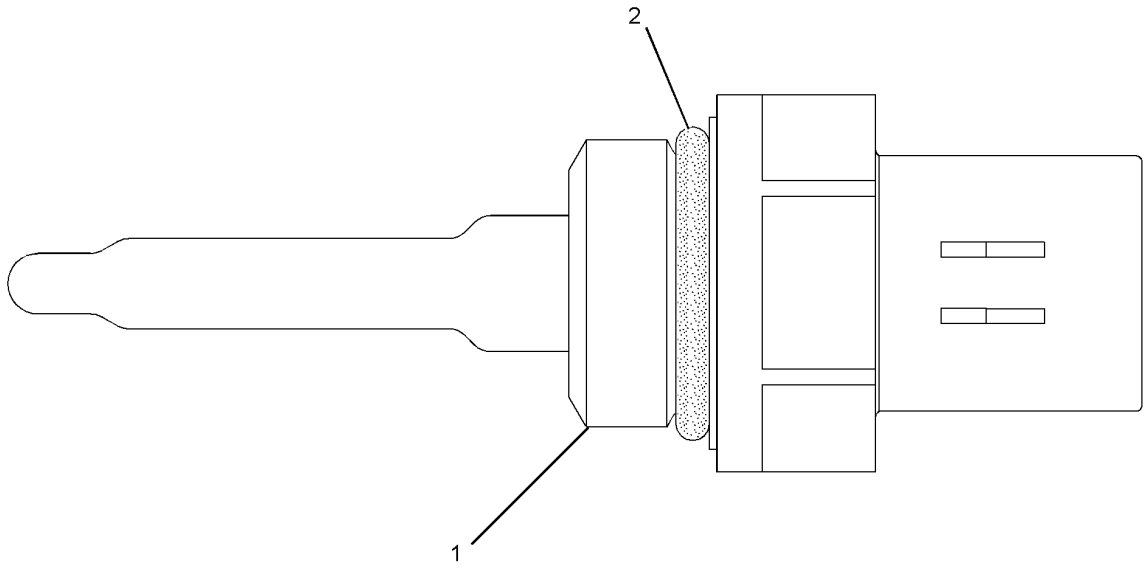

GRAPHIC #1

<END>

g01164284

234-5013 SENSOR GP-TEMPERATURE

S/N: LJW1-UP
AMPSEAL CONNECTOR
PART OF 256-7941, 320-7496 MOUNTING GP-FUEL FILTER, 285-6531, 303-2219 SENSOR GP-ENGINE
AN ATTACHMENT

SMCS-1408, 1906, 1919, 1921, 1922, 1928, 1929, 301T, 3194, 429T, 509T

i02857732

NOTE	REF NO	GRAPHIC REF	PART NUMBER	QTY	PART NAME 1 2 3 4 5 6 (PRODUCT LEVEL)	SEE PAGE
	1	1	**256-6453**	1	SENSOR AS-TEMPERATURE	
	2	1	**8L-2786**	1	SEAL-O-RING	

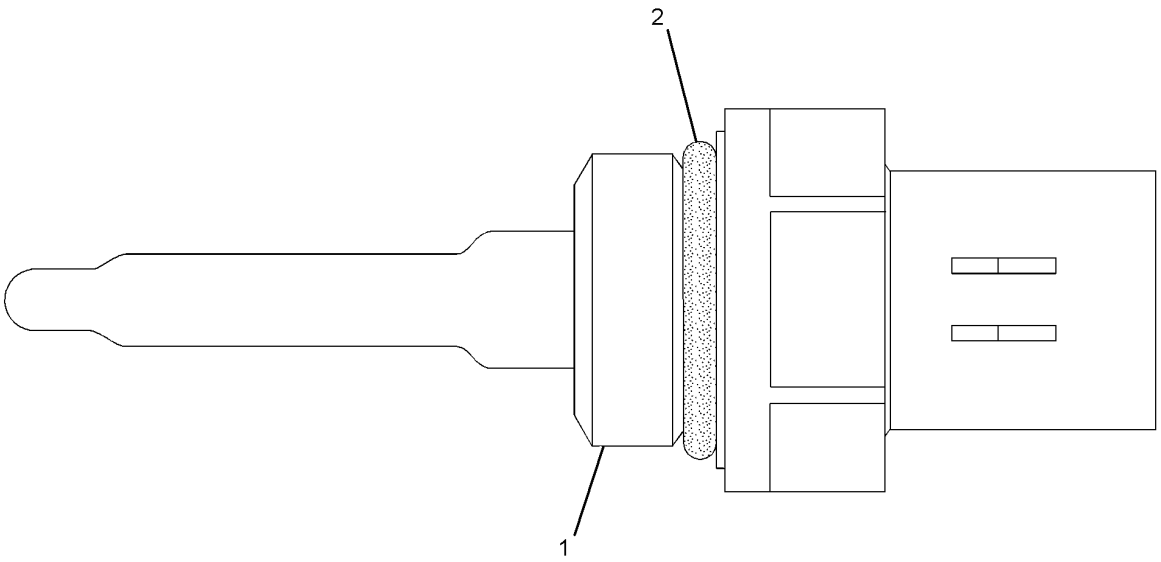

GRAPHIC #1

<END>

g01164268

288-8390 SENSOR GP-TEMPERATURE

S/N: 2211-UP

PART OF 316-6980 WIRING GP-FRONT, 316-6982 WIRING GP-MACHINE, 316-6984 WIRING GP-POWER TRAIN

SMCS-1408, 1906, 1919, 1921, 1922, 1928, 1929, 301T, 3194, 429T, 509T

i02864132

NOTE	REF NO	GRAPHIC REF	PART NUMBER	QTY	PART NAME 1 2 3 4 5 6 (PRODUCT LEVEL)	SEE PAGE
E	1	1	**9X-1813**		SLEEVE (33-CM)	
	2	1	**8T-8737**	1	PLUG-SEAL	

E-ORDER BY THE CENTIMETER

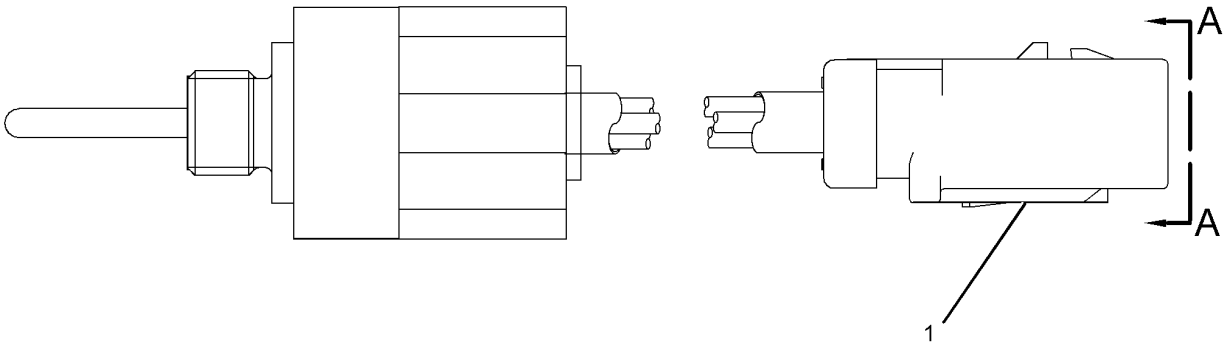

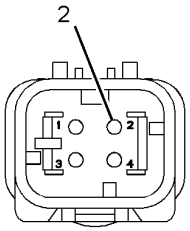

VIEW A-A

GRAPHIC #1 **<END>** g01431598

308-8448 SENSOR GP-TEMPERATURE

S/N: 2211-UP

PART OF 316-6982 WIRING GP-MACHINE

SMCS-1408, 1906, 1919, 1921, 1922, 1928, 1929, 301T, 3194, 429T, 509T

i02864147

NOTE	REF NO	GRAPHIC REF	PART NUMBER	QTY	PART NAME 1 2 3 4 5 6 (PRODUCT LEVEL)	SEE PAGE
	1	1	**8T-8737**	1	PLUG-SEAL	
E	2	1	**9X-1813**		SLEEVE (31-CM)	
	3	1	**243-4507**	1	RECEPTACLE AS-CONNECTOR (4-PIN)	
	4	1	**186-3735**	1	PIN-CONNECTOR (16-GA TO 18-GA)	

E-ORDER BY THE CENTIMETER

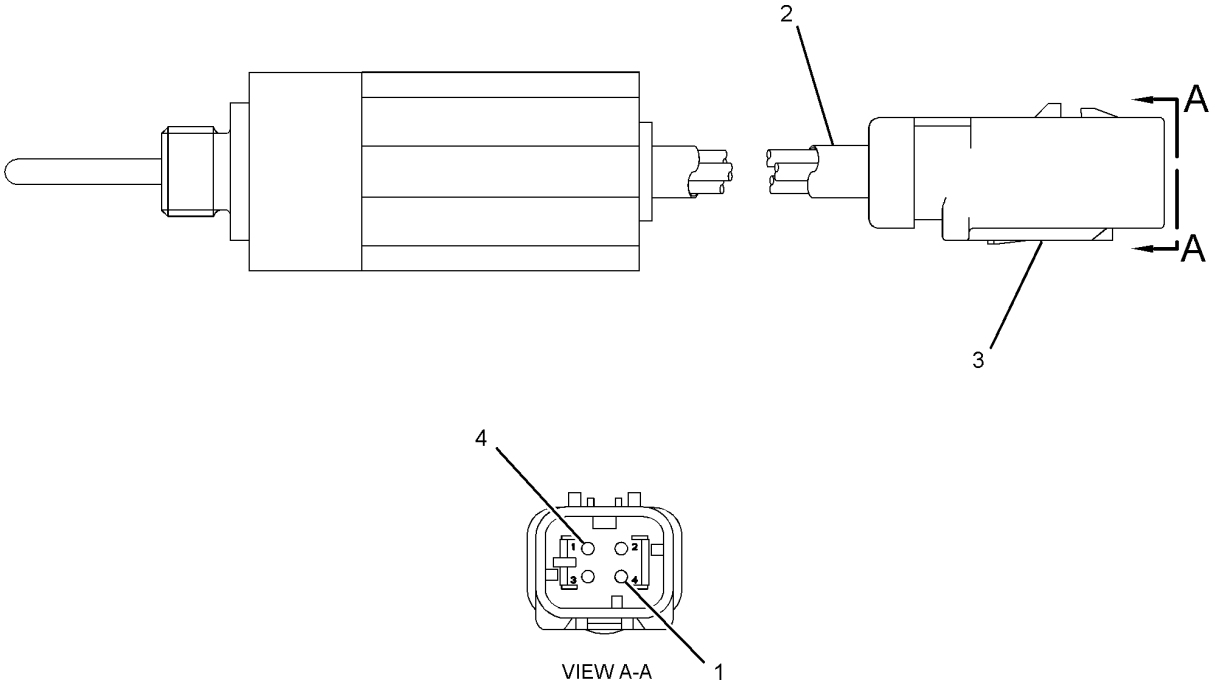

GRAPHIC #1

<END>

g01431599

ELECTRICAL AND STARTING SYSTEM

279-5276 STARTING AID GP-ETHER

S/N: 2211-UP

PART OF 262-2081 CHASSIS AR

SMCS-1456 **i02884988**

NOTE	REF NO	GRAPHIC REF	PART NUMBER	QTY	PART NAME 1 2 3 4 5 6 (PRODUCT LEVEL)	SEE PAGE
	1	1	**9X-6772**	2	STRAP-CABLE	
	2	1	*148-8331*	2	CONNECTOR AS	
					(EACH INCLUDES)	
		1	**3J-1907**	1	SEAL-O-RING	
		1	**3Y-2888**	1	CONNECTOR	
Y	3	1	**239-1134**	1	VALVE GP-ETHER STARTING (24-VOLT)	291
	4	1	**266-9843**	1	PLATE AS	
	5	1	**268-1565**	2	ELBOW	
	6	1	**273-8708**	1	FITTING	
	7	1	**312-1121**	1	BRACKET AS	
	8	1	**312-1122**	1	HOSE AS	
	9	1	**312-1123**	1	HOSE AS	
	10	1	**312-1124**	1	HOSE AS	
	11	1	**130-5300**	1	CLIP	
	12	1	**133-9660**	1	UNION-FLARED	
	13	1	**273-8710**	2	ATOMIZER AS	
	14	1	**4D-9517**	1	CLIP	
	15	1	**7N-2059**	1	CLAMP AS	
	16	1	**8M-2772**	7	CLIP	
	17	1	**8T-4121**	11	WASHER-HARD (11X21X2.5-MM THK)	
M	18	1	**8T-4133**	1	NUT (M10X1.5-THD)	
M	19	1	**8T-4136**	2	BOLT (M10X1.5X25-MM)	
M	20	1	**8T-4137**	2	BOLT (M10X1.5X20-MM)	
M	21	1	**8T-4189**	8	BOLT (M8X1.25X20-MM)	
M	22	1	**8T-4195**	6	BOLT (M10X1.5X30-MM)	
	23	1	**8T-4224**	8	WASHER-HARD (8.8X16X2-MM THK)	
AF			**265-3698**	1	CYLINDER AS-ETHER (U.S.)	
					(MUST BE PROCURED LOCALLY FROM YOUR CATERPILLAR DEALER)	

A-NOT PART OF THIS GROUP
F-NOT SHOWN
M-METRIC PART
Y-SEPARATE ILLUSTRATION

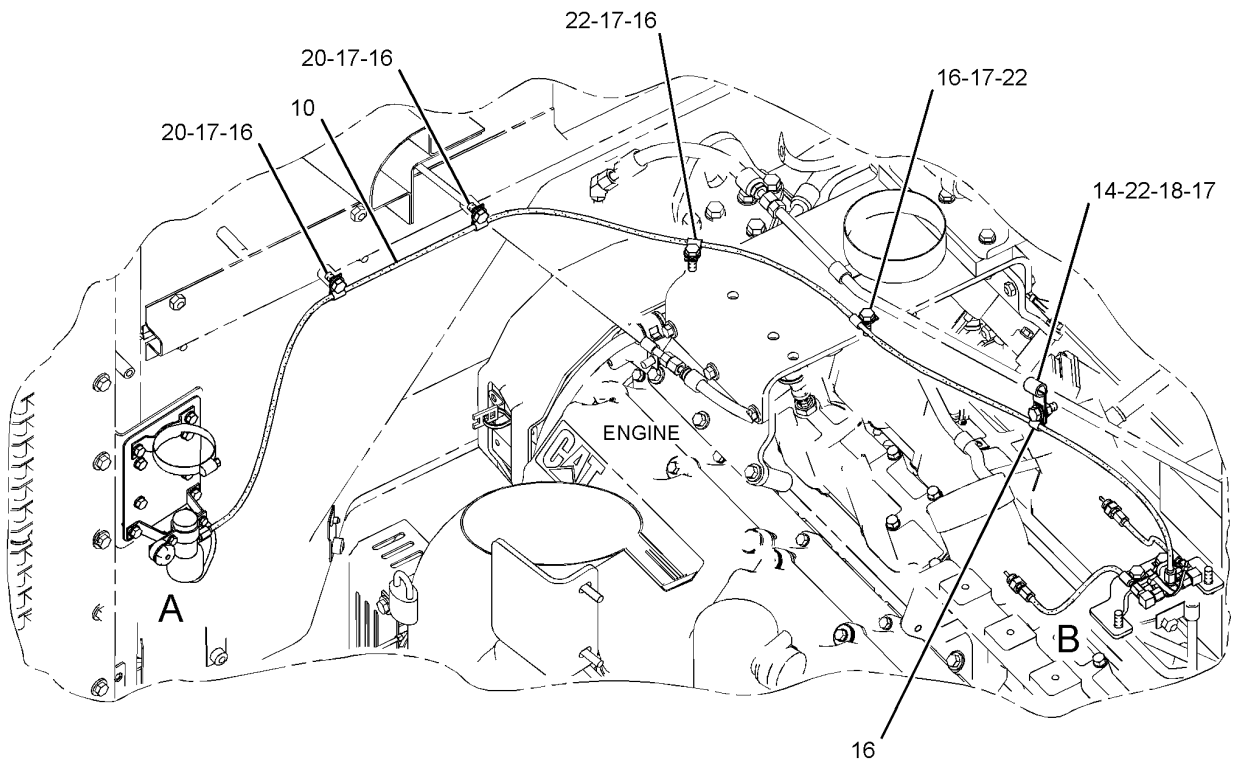

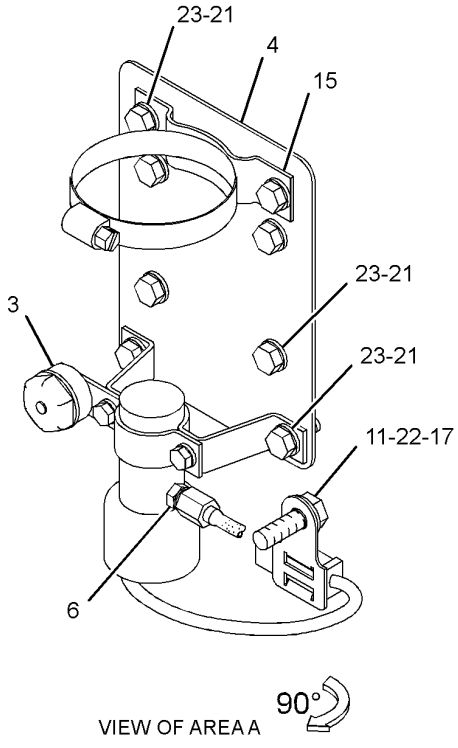

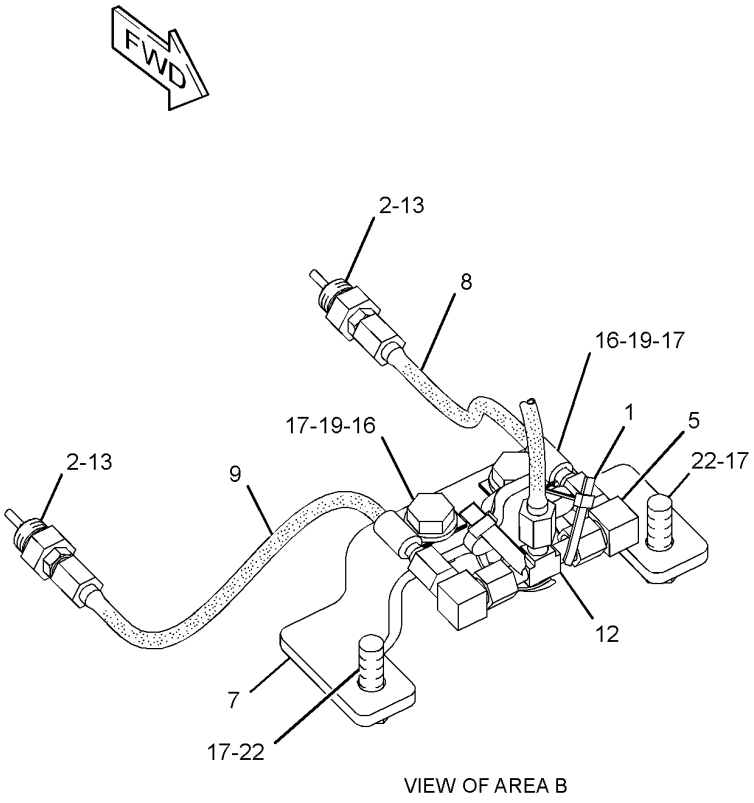

GRAPHIC #1 **<END>** g01448841

ELECTRICAL AND STARTING SYSTEM

6V-0885 STARTING MOTOR GP-ELECTRIC

S/N: 2211-UP
24-VOLT
PART OF 252-8716 STARTING MOTOR GP-ELECTRIC
FIELD REPLACEMENT ORDER 237-1962—PAGE 275

SMCS-1453 **i02895965**

NOTE	REF NO	GRAPHIC REF	PART NUMBER	QTY	PART NAME 1 2 3 4 5 6 (PRODUCT LEVEL)	SEE PAGE
	1	1	**7M-0326**	1	CONNECTOR	
	2	1	**9H-3757**	2	WASHER (0.516X1X0.094-IN THK)	
	3	1	**1S-7446**	3	SCREW-MACHINE (8-32X0.437-IN)	
	4	1	**8C-9660**	3	WASHER (4.6X7.9X0.8-MM THK)	
	5	1	**9S-2544**	9	SCREW-HEX HEAD (8-32X11.13-MM)	
	6	1	**7M-0327**	1	WASHER-THRUST (17.4X25.4X1.6-MM THK)	
	7	1	**3T-3418**	1	FRAME AS-END	
	7A	1	**3T-3424**	1	PLUG-FELT	
	7B	1	**3T-3423**	1	CUP	
	7C	1	**9G-4101**	1	BUSHING-END	
	8	1	**3T-9525**	1	PLATE AS-BRUSH	
	8A	1	**9F-5599**	12	LOCKWASHER	
	8B	1	**6T-0371**	1	INSULATOR	
	8C	1	**6T-0363**	6	HOLDER AS-BRUSH (STARTING MOTOR)	
					(EACH INCLUDES)	
	8D	1	**3T-9494**	1	SPRING (STARTING MOTOR BRUSH)	
	8E	1	**3T-4709**	3	PLATE	
	8F	1	**3T-4710**	3	PLATE	
	8G	1	**2L-6679**	3	PLATE-INSULATOR	
	8H	1	**7F-3525**	6	WASHER-BUSHING (0.207X0.39X0.09-IN THK)	
	8J	1	**6T-0372**	1	PLATE	
	8K	1	**5P-6298**	12	SCREW-MACHINE (10-32X0.5-IN)	
	9	1	**7F-3491**	2	WASHER (0.516X1X0.094-IN THK)	
	10	1	**3T-3422**	1	WIRE AS	
	11	1	**2J-8163**	2	SEAL-O-RING	
	12	1	**7X-3373**	1	BOLT (5/16-18X0.88-IN)	
B	13	1	**3T-3434**	6	PLUG	
	14	1	**5J-5314**	5	BOLT (5/16-18X1.5-IN)	
	15	1	**3L-3380**	1	BUSHING-TERMINAL	
	16	1	**036-9821**	1	WASHER	
	17	1	**4M-1828**	1	RETAINER-SPRING	
	18	1	**306-3998**	1	BOOT-RUBBER	
	19	1	**4M-1827**	1	RETAINER-SPRING	
	20	1	**9M-7609**	1	SPRING (SHIFT LEVER)	
	21	1	**8C-3089**	1	SEAL-O-RING	
	22	1	**4M-1853**	1	LEVER AS-SHIFT	
	23	1	**5M-3034**	1	LOCKNUT (5/16-24-THD)	
	24	1	**7L-2894**	4	GASKET	
	25	1	**4M-1831**	4	PLUG-LEVER HOUSING	
	26	1	**4M-1854**	1	SHAFT-LEVER	
	27	1	**1H-1023**	1	SEAL-O-RING	
	28	1	**2D-6392**	1	SEAL-O-RING	
	29	1	**7T-3974**	1	HOUSING AS-DRIVE	
	30	1	**6N-3826**	1	DRIVE AS-MOTOR	
	31	1	**2H-3429**	2	RING-RETAINING	
	32	1	**6V-1322**	4	BOLT (1/4-20X0.375-IN)	
	33	1	**8T-4205**	4	WASHER-HARD (7.2X14.5X2-MM THK)	
	34	1	**6N-3279**	1	INSULATOR	
	35	1	**036-9823**	13	BOLT (1/4-28X1-IN)	
	36	1	**1M-9971**	1	SPACER (0.835X1.72X0.188-IN THK)	
	37	1	**1H-2629**	3	STRIP-INSULATION	
	38	1	**7M-0324**	1	COIL AS-FIELD	
	39	1	**3R-8797**	12	SCREW & WASHER AS	
	40	1	**7F-3488**	6	SHOE-POLE	

6V-0885 STARTING MOTOR GP-ELECTRIC *(contd.)* i02895965

NOTE	REF NO	GRAPHIC REF	PART NUMBER	QTY	PART NAME 1 2 3 4 5 6 (PRODUCT LEVEL)	SEE PAGE
	41	1	**7M-8651**	1	ARMATURE AS	
	42	1	**7M-0325**	1	INSULATOR	
	43	1	**3T-9524**	6	BRUSH AS	
	44	1	**3N-3763**	1	KIT-TERMINAL (STARTING MOTOR)	
					(INCLUDES BUSHINGS AND WASHERS)	
	45	1	**125-6535**	1	COVER-STARTING MOTOR	
	46	1	**3R-8801**	1	CLAMP	
	47	1	**8F-1434**	2	LOCKWASHER	
	48	1	**6V-8188**	6	NUT (1/2-13-THD)	
	49	1	**7X-0562**	6	WASHER-HARD (13.5X19X0.8-MM THK)	
	50	1	**4B-2049**	6	NUT (10-32-THD)	
	51	1	**8T-0328**	10	WASHER-HARD (5.5X10X1-MM THK)	
	52	1	**3T-9494**	6	SPRING (STARTING MOTOR BRUSH)	
	53	1	**3E-7771**	1	HOUSING AS	
	55	1	**3T-3424**	2	PLUG-FELT	
	56	1	**3T-3423**	2	CUP	
	57	1	**1M-9968**	1	BUSHING	
	58	1	**2F-6678**	1	SEAL-LIP TYPE	
	59	1	**4L-2729**	1	WASHER (0.844X1.9X0.188-IN THK)	
	60	1	**4M-1896**	1	BUSHING-TERMINAL	
	61	1	**045-4065**	4	SCREW-MACHINE (10-32X0.75-IN)	
	62	1	**125-6537**	1	INSULATOR	
	63	1	**7T-9123**	1	GASKET-PLATE	
	64	1	**125-6536**	1	TERMINAL AS	
C	65	1	**318-2082**	1	SOLENOID AS-STARTING MOTOR (24-VOLT)	

B-USE AS REQUIRED
C-CHANGE FROM PREVIOUS TYPE

6V-0885 STARTING MOTOR GP-ELECTRIC *(contd.)* i02895965

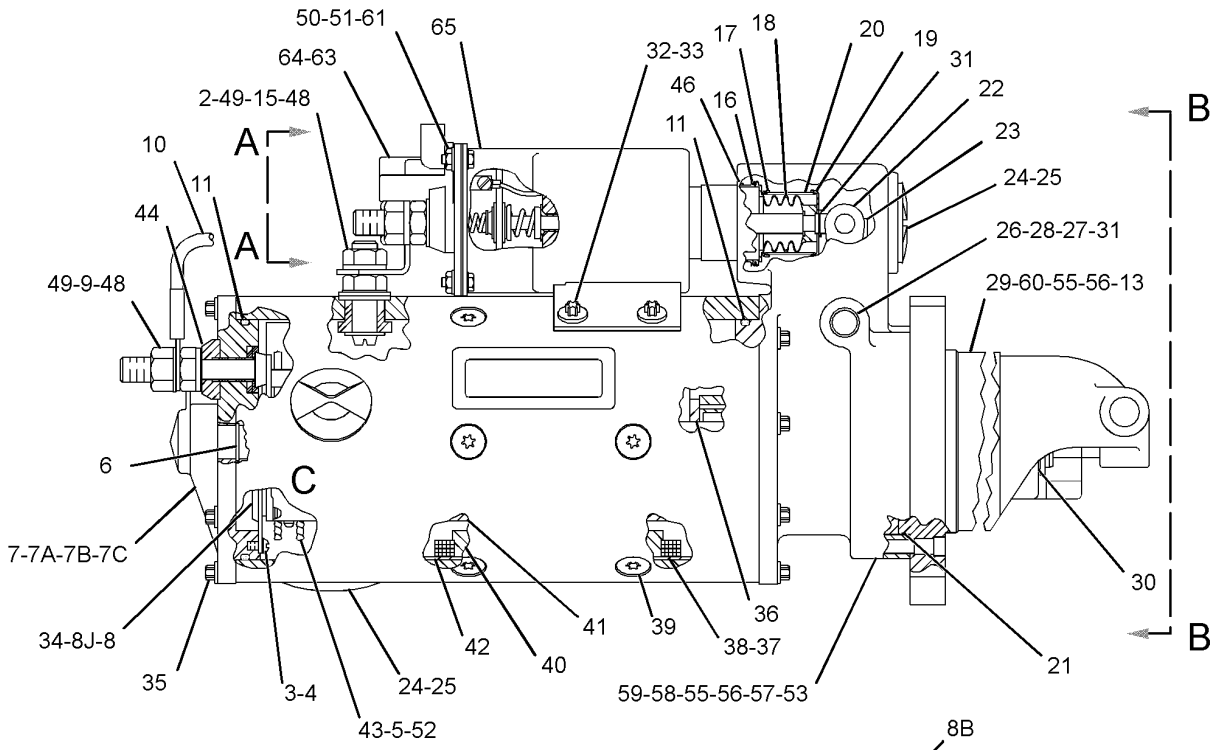

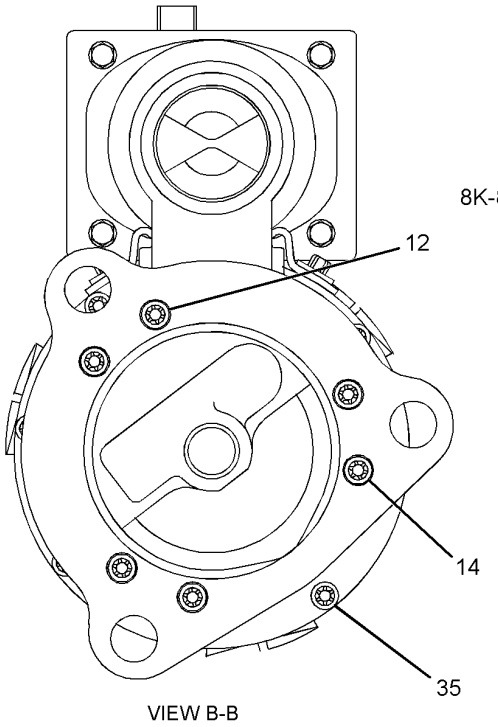

VIEW B-B

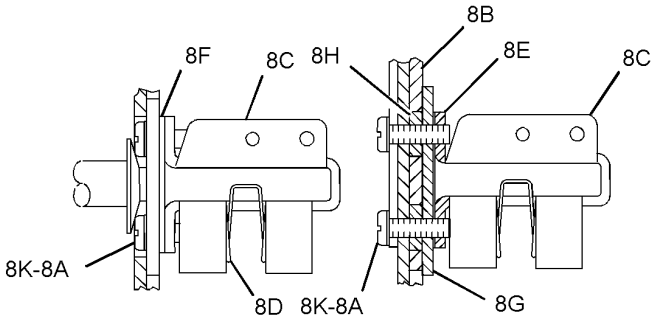

VIEW OF AREA C

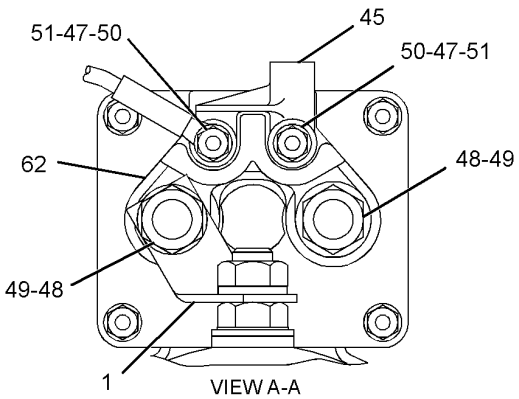

VIEW A-A

GRAPHIC #1 **<END>** g01244465

237-1962 STARTING MOTOR GP-ELECTRIC*R

S/N: 2211-UP

24-VOLT

PART OF 252-8716 STARTING MOTOR GP-ELECTRIC

FIELD REPLACEMENT FOR 6V-0885—PAGE 272

SMCS-1453 **i02927711**

NOTE	REF NO	GRAPHIC REF	PART NUMBER	QTY	PART NAME 1 2 3 4 5 6 (PRODUCT LEVEL)	SEE PAGE
	1	1	**7M-0326**	1	CONNECTOR	
	2	1	**9H-3757**	2	WASHER (0.516X1X0.094-IN THK)	
	3	1	**1S-7446**	3	SCREW-MACHINE (8-32X0.437-IN)	
	4	1	**8C-9660**	3	WASHER (4.6X7.9X0.8-MM THK)	
	5	1	**9S-2544**	9	SCREW-HEX HEAD (8-32X11.13-MM)	
	6	1	**7M-0327**	1	WASHER-THRUST (17.4X25.4X1.6-MM THK)	
	7	1	**3T-3418**	1	FRAME AS-END	
		1	**3T-3423**	1	CUP	
		1	**3T-3424**	1	PLUG-FELT	
		1	**9G-4101**	1	BUSHING-END	
	8	1	**3T-9525**	1	PLATE AS-BRUSH	
	8A	1	**6T-0371**	1	INSULATOR	
	8B	1	**5P-6298**	12	SCREW-MACHINE (10-32X0.5-IN)	
		1	**9F-5599**	12	LOCKWASHER	
	8C	1	**7F-3525**	6	WASHER-BUSHING (0.207X0.39X0.09-IN THK)	
	8D	1	**6T-0372**	1	PLATE	
	8E	1	**3T-4709**	3	PLATE	
	8F	1	**2L-6679**	3	PLATE-INSULATOR	
	8G	1	**3T-4710**	3	PLATE	
	8H	1	**6T-0363**	6	HOLDER AS-BRUSH (STARTING MOTOR)	
					(EACH INCLUDES)	
	8J	1	**3T-9494**	1	SPRING	
	9	1	**7F-3491**	2	WASHER (0.516X1X0.094-IN THK)	
	10	1	**3T-3422**	1	WIRE AS (STARTING MOTOR)	
	11	1	**2J-8163**	2	SEAL-O-RING	
	12	1	**7X-3373**	1	BOLT (5/16-18X0.88-IN)	
	13	1	**3T-3434**	6	PLUG	
	14	1	**5J-5314**	5	BOLT (5/16-18X1.5-IN)	
	15	1	**3L-3380**	1	BUSHING-TERMINAL	
	16	1	**036-9821**	1	WASHER	
	17	1	**4M-1828**	1	RETAINER-SPRING	
	18	1	**306-3998**	1	BOOT-RUBBER	
	19	1	**9M-7609**	1	SPRING (SHIFT LEVER)	
	20	1	**4M-1827**	1	RETAINER-SPRING	
	21	1	**8C-3089**	1	SEAL-O-RING	
	22	1	**4M-1853**	1	LEVER AS-SHIFT	
	23	1	**5M-3034**	1	LOCKNUT (5/16-24-THD)	
	24	1	**7L-2894**	4	GASKET	
	25	1	**4M-1831**	4	PLUG-LEVER HOUSING	
	26	1	**4M-1854**	1	SHAFT-LEVER	
	27	1	**1H-1023**	1	SEAL-O-RING	
	28	1	**2D-6392**	1	SEAL-O-RING	
	29	1	**7T-3974**	1	HOUSING AS-DRIVE	
	30	1	**6N-3826**	1	DRIVE AS-MOTOR	
	31	1	**2H-3429**	2	RING-RETAINING	
	32	1	**6V-1322**	4	BOLT (1/4-20X0.375-IN)	
	33	1	**8T-4205**	4	WASHER-HARD (7.2X14.5X2-MM THK)	
	34	1	**6N-3279**	1	INSULATOR	
	35	1	**036-9823**	13	BOLT (1/4-28X1-IN)	
	36	1	**1M-9971**	1	SPACER (0.835X1.72X0.188-IN THK)	
	37	1	**1H-2629**	3	STRIP-INSULATION	
	38	1	**7M-0324**	1	COIL AS-FIELD	
	39	1	**3R-8797**	12	SCREW & WASHER AS	
	40	1	**7F-3488**	6	SHOE-POLE	

237-1962 STARTING MOTOR GP-ELECTRIC *(contd.)* i02927711

NOTE	REF NO	GRAPHIC REF	PART NUMBER	QTY	PART NAME 1 2 3 4 5 6 (PRODUCT LEVEL)	SEE PAGE
	41	1	**7M-8651**	1	ARMATURE AS	
	42	1	**7M-0325**	1	INSULATOR	
	43	1	**3T-9524**	6	BRUSH AS	
	44	1	**3N-3763**	1	KIT-TERMINAL (STARTING MOTOR)	
					(INCLUDES BUSHINGS & WASHERS)	
	45	1	**125-6537**	1	INSULATOR	
	46	1	**3R-8801**	1	CLAMP	
	47	1	**8F-1434**	2	LOCKWASHER	
	48	1	**6V-8188**	6	NUT (1/2-13-THD)	
	49	1	**7X-0562**	6	WASHER-HARD (13.5X19X0.8-MM THK)	
	50	1	**4B-2049**	6	NUT (10-32-THD)	
	51	1	**8T-0328**	10	WASHER-HARD (5.5X10X1-MM THK)	
	52	1	**3T-9494**	6	SPRING (STARTING MOTOR)	
	53	1	**3E-7771**	1	HOUSING AS	
	54	1	**9G-4101**	1	BUSHING-END	
	55	1	**3T-3424**	3	PLUG-FELT	
	56	1	**3T-3423**	3	CUP	
	57	1	**1M-9968**	1	BUSHING	
	58	1	**2F-6678**	1	SEAL-LIP TYPE	
	59	1	**4L-2729**	1	WASHER (0.844X1.9X0.188-IN THK)	
	60	1	**4M-1896**	1	BUSHING-TERMINAL	
	61	1	**045-4065**	4	SCREW-MACHINE (10-32X0.75-IN)	
	62	1	**125-6535**	1	COVER-STARTING MOTOR	
	63	1	**7T-9123**	1	GASKET-PLATE	
	64	1	**318-2082**	1	SOLENOID AS-STARTING MOTOR (24-VOLT)	
	65	1	**125-6536**	1	TERMINAL AS	

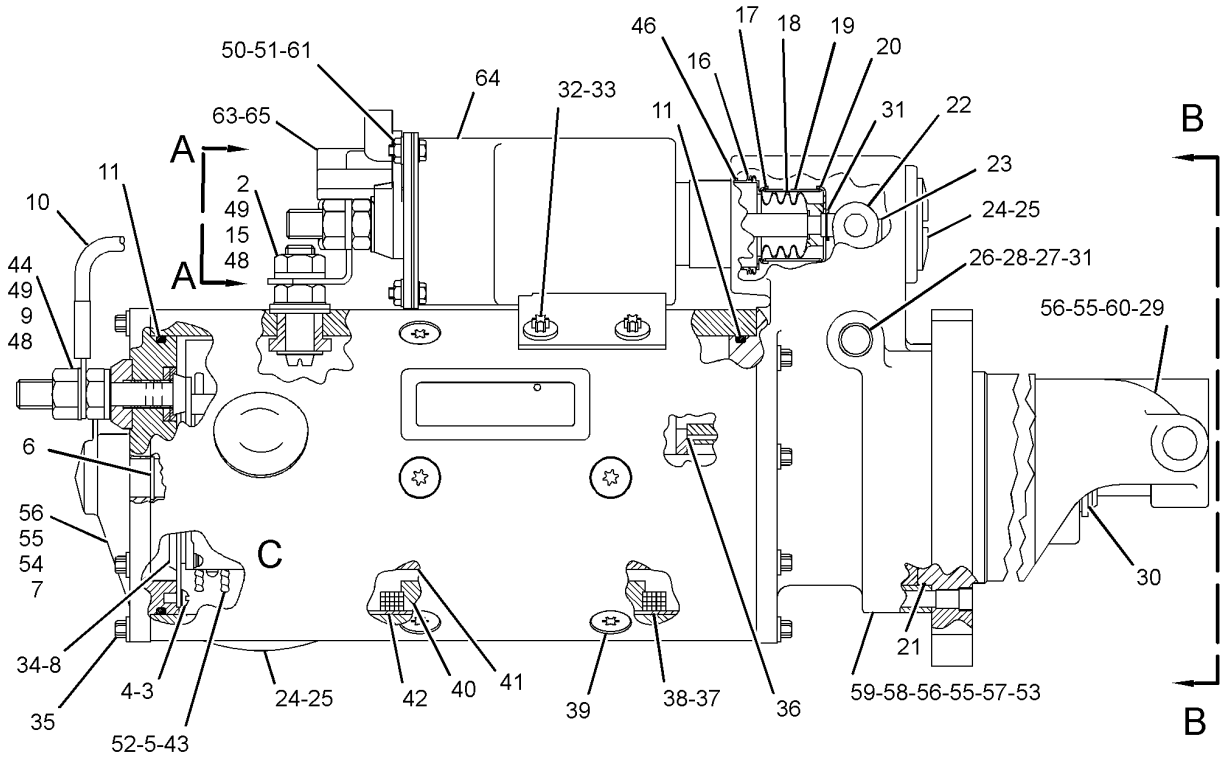

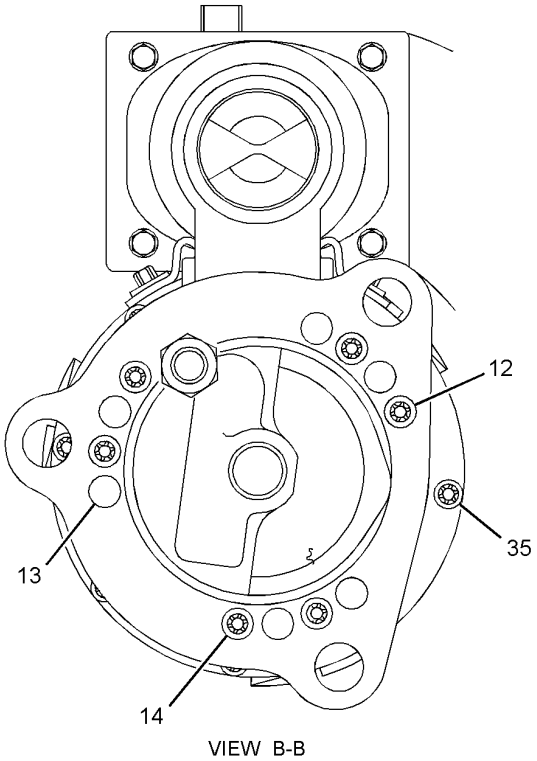

VIEW B-B

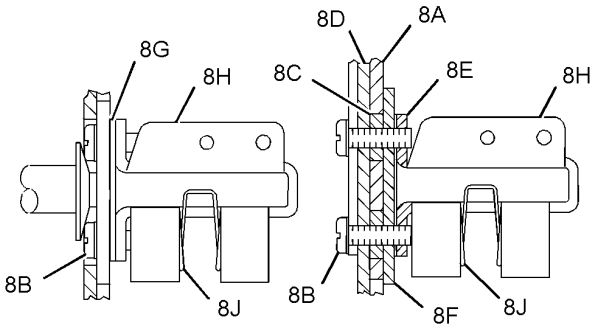

VIEW OF AREA C

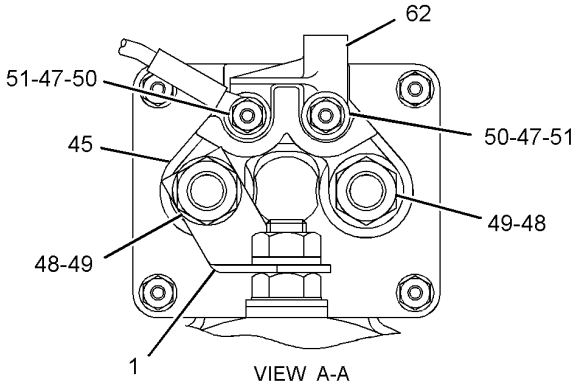

VIEW A-A

GRAPHIC #1 **<END>** g01453239

252-8716 STARTING MOTOR GP-ELECTRIC–DUAL

S/N: 2211-UP
24-VOLT
PART OF 246-4284 INSTALLATION AR-ENGINE

SMCS-1453 **i02866395**

NOTE	REF NO	GRAPHIC REF	PART NUMBER	QTY	PART NAME 1 2 3 4 5 6 (PRODUCT LEVEL)	SEE PAGE
	1	1	**4N-1059**	2	GASKET	
Y	2	1	**6V-0885**	1	STARTING MOTOR GP-ELECTRIC (24-VOLT)	272
	3	1	**306-8156**	2	STRAP AS-GROUND	
YR	4	1	**237-1962**	1	STARTING MOTOR GP-ELECTRIC (24-VOLT)	275
	5	1	**8S-2332**	6	BOLT-12 POINT HEAD (5/8-11X1.75-IN)	

R-REMFG PART MAY BE AVAILABLE
Y-SEPARATE ILLUSTRATION

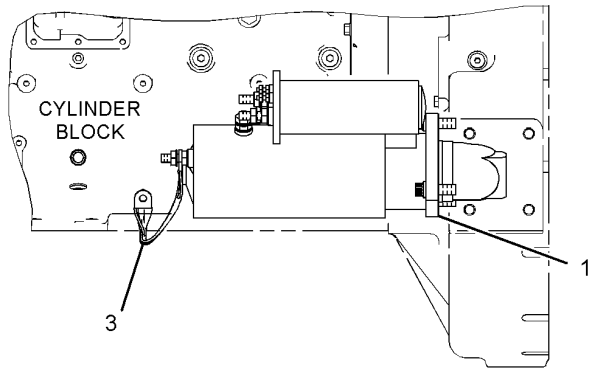

LEFT SIDE VIEW OF ENGINE

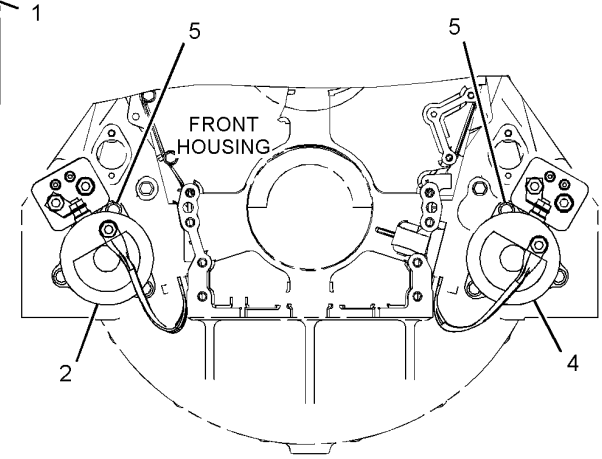

FRONT VIEW OF ENGINE

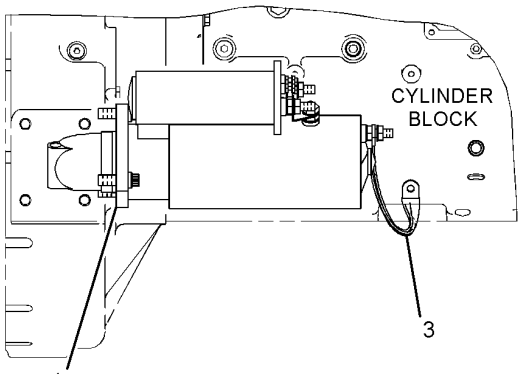

RIGHT SIDE VIEW OF ENGINE

GRAPHIC #1 **<END>** g01444683

164-7577 SWITCH GP-BYPASS—POWER TRAIN OIL FILTER

S/N: 2211-UP

PART OF 316-6982 WIRING GP-MACHINE

SMCS-1408, 1435 **i02895344**

NOTE	REF NO	GRAPHIC REF	PART NUMBER	QTY	PART NAME 1 2 3 4 5 6 (PRODUCT LEVEL)	SEE PAGE
BE	1	1	**9X-1813**		SLEEVE	
	2	1	**102-8802**	1	KIT-RECEPTACLE (2-PIN)	
					(INCLUDES RECEPTACLE AS AND WEDGE)	
	3	1	**186-3735**	2	PIN-CONNECTOR (16-GA TO 18-GA)	
	4	1	**3E-3365**	1	WEDGE-RECEPTACLE LOCK (2-PIN)	
	5	1	**3D-2824**	1	SEAL-O-RING	

B-USE AS REQUIRED
E-ORDER BY THE CENTIMETER

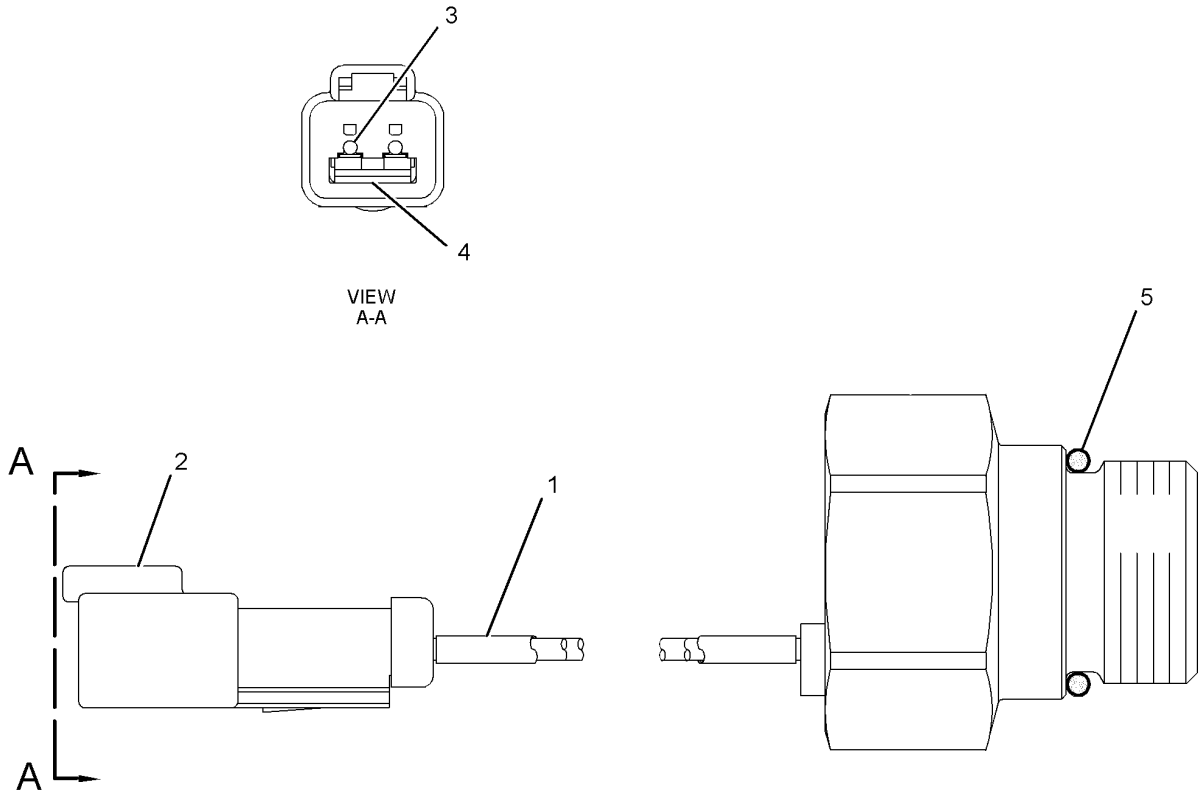

GRAPHIC #1 **<END>** g01346436

7N-0719 SWITCH GP-DISCONNECT–BATTERY

S/N: 2211-UP

PART OF 316-6985 BATTERY & WIRING GP

SMCS-1411 **i02499147**

NOTE	REF NO	GRAPHIC REF	PART NUMBER	QTY	PART NAME 1 2 3 4 5 6 (PRODUCT LEVEL)	SEE PAGE
	1	1	**8H-5306**	1	KEY (BATTERY DISCONNECT)	
	2	1	**8H-5303**	1	NUT (3/4-16-THD)	
	3	1	**2H-3922**	2	LOCKWASHER	
	4	1	**9F-5644**	2	LOCKWASHER	
	5	1	**6F-7045**	2	NUT-FULL (3/8-24-THD)	

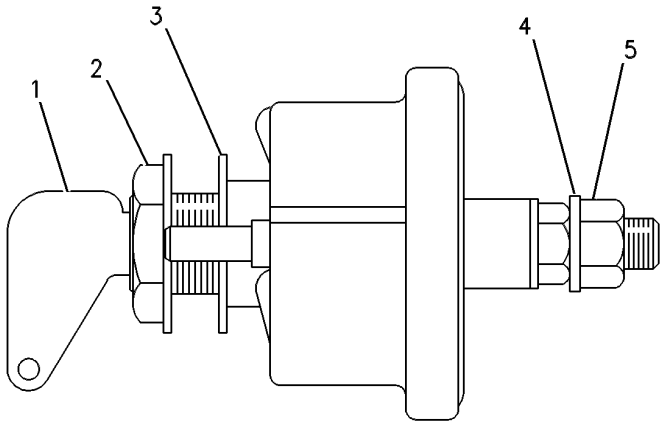

GRAPHIC #1 **<END>** g00117885

282-4332 SWITCH GP-ENGINE BRAKE

S/N: 2211-UP
PART OF 279-9490, 279-9491 ENGINE AR
AN ATTACHMENT

SMCS-7332 **i02946642**

NOTE	REF NO	GRAPHIC REF	PART NUMBER	QTY	PART NAME 1 2 3 4 5 6 (PRODUCT LEVEL)	SEE PAGE
	1	1	**8J-2357**	1	SPRING	
	2	1	**185-6690**	1	SWITCH AS-FOOT (ENGINE BRAKE)	
		1	**186-3735**	3	PIN-CONNECTOR (16-GA TO 18-GA)	
		1	**102-8803**	1	KIT-RECEPTACLE (3-PIN)	
					(INCLUDES RECEPTACLE AS & WEDGE)	
	3	1	**195-2251**	1	BRACKET AS	
M		1	**6V-9632**	1	NUT-WELD (M6X1-THD)	
	4	1	**195-2271**	1	PEDAL AS	
M	5	1	**5C-2890**	1	NUT (M6X1-THD)	
M	6	1	**5C-7261**	1	NUT (M8X1.25-THD)	
	7	1	**5H-6555**	2	LOCKWASHER	
M	8	1	**6V-7357**	1	BOLT (M6X1X25-MM)	
	9	1	**8M-2772**	1	CLIP	
M	10	1	**8T-4177**	1	BOLT (M8X1.25X90-MM)	
	11	1	**8T-4224**	6	WASHER-HARD (8.8X16X2-MM THK)	
M	12	1	**8T-4908**	4	BOLT (M8X1.25X25-MM)	
	13	1	**9X-6258**	2	SCREW-MACHINE (6-32X0.5-IN)	

M-METRIC PART

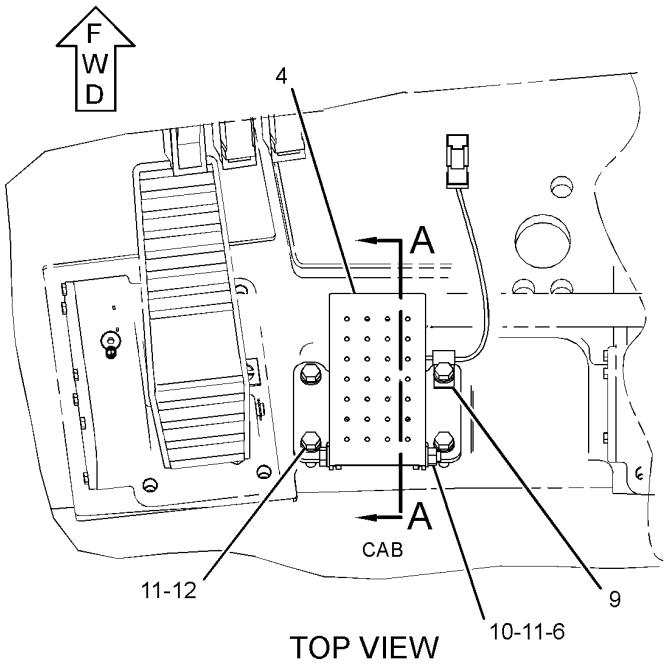

TOP VIEW

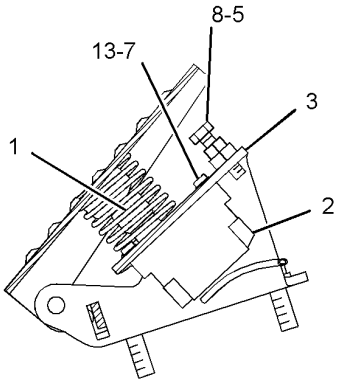

SECTION A-A

GRAPHIC #1 **<END>** g01445466

171-3759 SWITCH GP-LIMIT–STIC LOCKOUT CONTROL

S/N: 2211-UP

PART OF 280-9826 WIRING GP-CAB

SMCS-1435 **i02414046**

NOTE	REF NO	GRAPHIC REF	PART NUMBER	QTY	PART NAME 1 2 3 4 5 6 (PRODUCT LEVEL)	SEE PAGE
	2	1	**144-1636**	3	PIN-CONNECTOR (14-GA TO 18-GA)	
	3	1	**3E-3377**	1	WEDGE-RECEPTACLE LOCK (4-PIN)	
	4	1	**102-8804**	1	KIT-RECEPTACLE (4-PIN)	
					(INCLUDES RECEPTACLE AS AND WEDGE)	
E	5	1	**9X-1386**		SLEEVE (17-CM)	
E	6	1	**125-7874**		TUBE-HEAT SHRINK (5.72-MM DIA) (8-CM)	
D	7	1	**6V-1614**		TUBE-HEAT SHRINK (9.52-MM DIA) (0.1-M)	
D	8	1	**5P-5677**		WIRE (18-GA, BLACK) (0.8-M)	
	9	1	**9G-3695**	1	PLUG	

D-ORDER BY THE METER
E-ORDER BY THE CENTIMETER

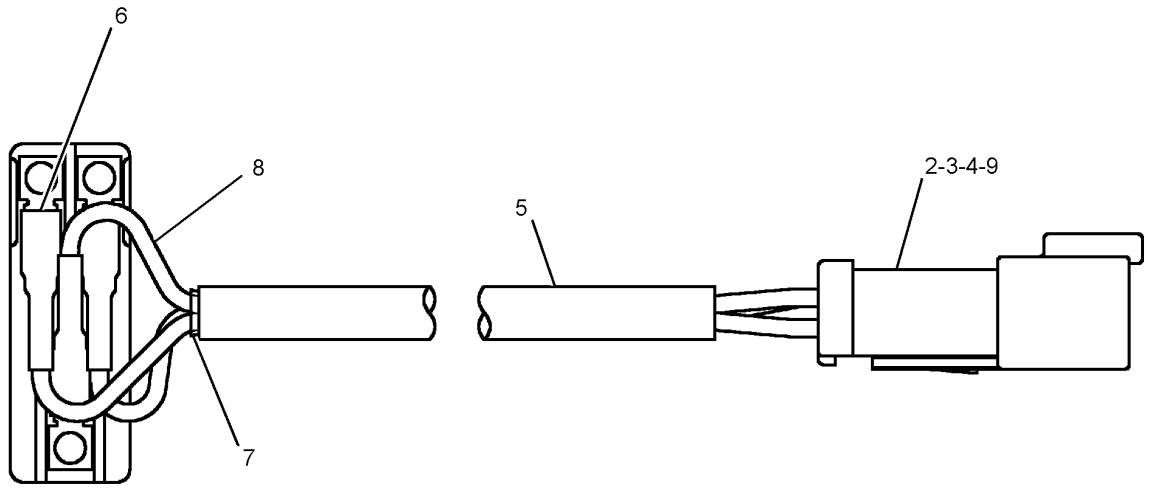

GRAPHIC #1 **<END>** g01231938

172-8660 SWITCH GP-LIQUID LEVEL–ENGINE OIL PAN, OIL TANK

S/N: 2211-UP; LJW2195-UP

PART OF 285-6531 SENSOR GP-ENGINE, 291-0530 WIRING GP-OIL RENEWAL SYSTEM AN ATTACHMENT

SMCS-7422 **i02863567**

NOTE	REF NO	GRAPHIC REF	PART NUMBER	QTY	PART NAME 1 2 3 4 5 6 (PRODUCT LEVEL)	SEE PAGE
	1	1	**102-8802**	1	KIT-RECEPTACLE (2-PIN)	
					(INCLUDES RECEPTACLE AS AND WEDGE)	
	2	1	**9X-3401**	2	PIN-CONNECTOR (16-GA TO 18-GA)	

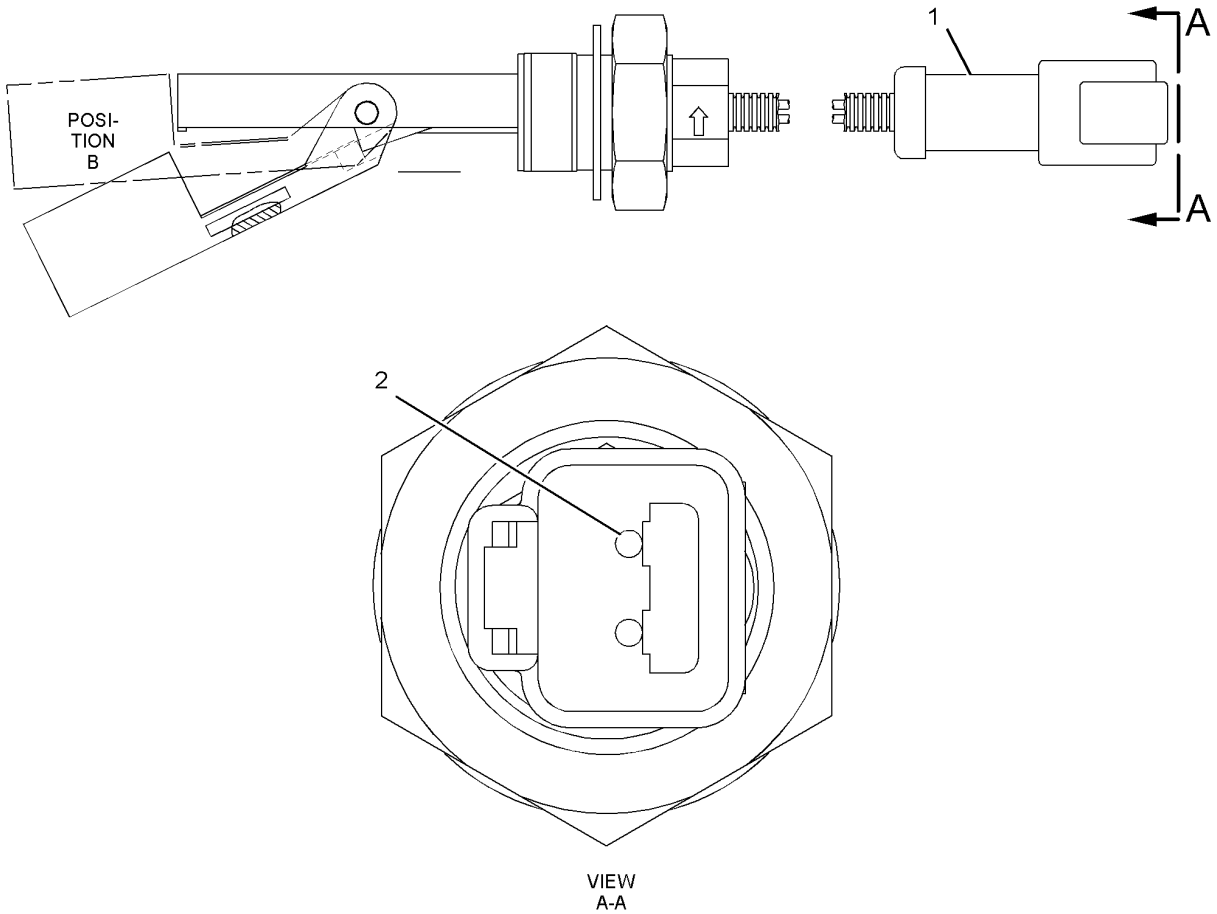

GRAPHIC #1 **<END>** g01354525

3E-0075 SWITCH GP-MAGNETIC—START RELAY

S/N: 2211-UP
24-VOLT
PART OF 307-9914 WIRING GP-ELECTRONICS BAY
FIELD REPLACEMENT FOR 175-2324—PAGE 286, 175-2322—PAGE 285

SMCS-7499 **i02425202**

NOTE	PART NUMBER	QTY	PART NAME 1 2 3 4 5 6 (PRODUCT LEVEL)	SEE PAGE
Y	*175-2322*	1	SWITCH GP-MAGNETIC (24-VOLT)	285
			—OR—	
Y	*175-2324*	1	SWITCH GP-MAGNETIC (24-VOLT)	286
Y-SEPARATE ILLUSTRATION				

<END>

175-2322 SWITCH GP-MAGNETIC–START RELAY

S/N: 2211-UP
24-VOLT
PART OF 3E-0075 SWITCH GP-MAGNETIC
FIELD REPLACEMENT ORDER 3E-0075–PAGE 284

SMCS-7499 **i02767725**

NOTE	REF NO	GRAPHIC REF	PART NUMBER	QTY	PART NAME 1 2 3 4 5 6 (PRODUCT LEVEL)	SEE PAGE
	1	1	**102-8802**	1	KIT-RECEPTACLE (2-PIN)	
					(INCLUDES RECEPTACLE AS AND WEDGE)	
	2	1	**186-3735**	2	PIN-CONNECTOR (16-GA TO 18-GA)	
	3	1	**1H-3338**	2	LOCKWASHER	
	4	1	**012-0380**	2	LOCKWASHER	
M	5	1	**5C-2890**	2	NUT (M6X1-THD)	
E	6	1	**9X-1813**		SLEEVE (16-CM)	

E-ORDER BY THE CENTIMETER
M-METRIC PART

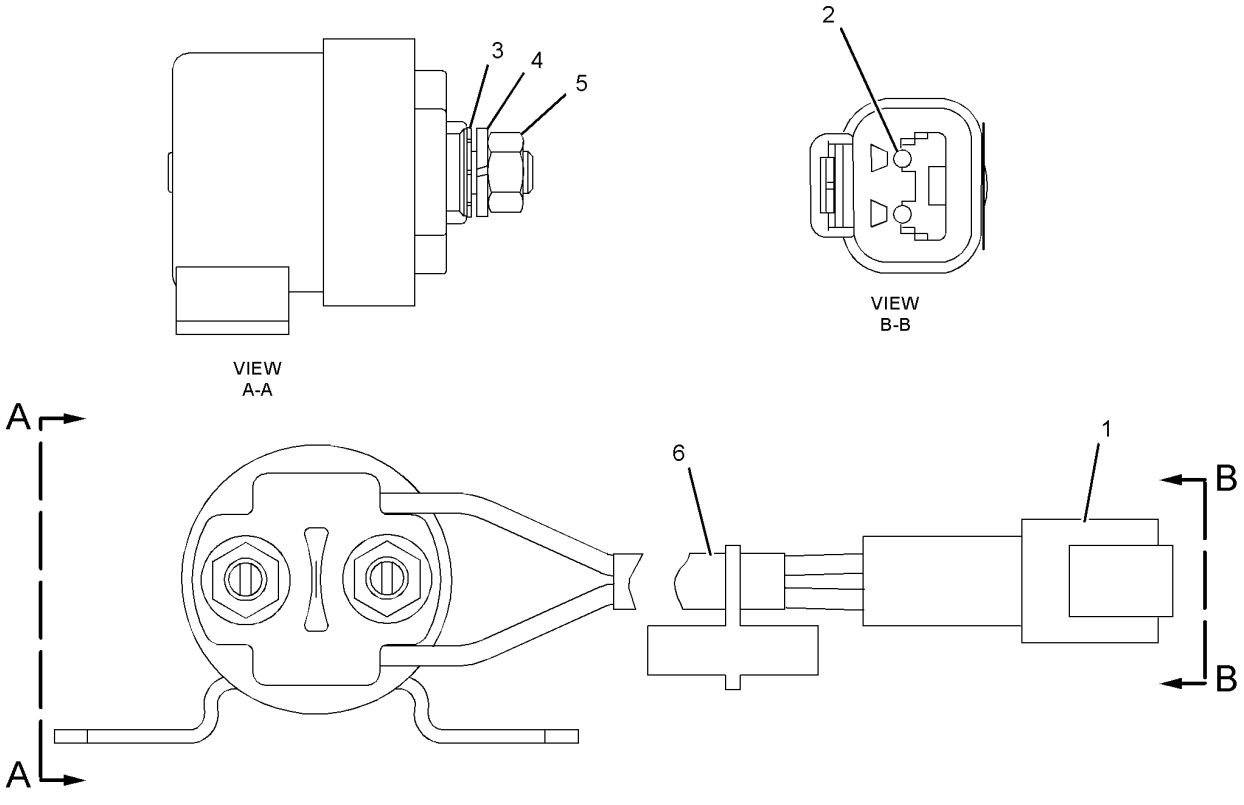

GRAPHIC #1 **<END>** g01126375

175-2324 SWITCH GP-MAGNETIC—START RELAY

S/N: 2211-UP
24-VOLT
PART OF 3E-0075 SWITCH GP-MAGNETIC
FIELD REPLACEMENT ORDER 3E-0075—PAGE 284

SMCS-7499 **i02767727**

NOTE	REF NO	GRAPHIC REF	PART NUMBER	QTY	PART NAME 1 2 3 4 5 6 (PRODUCT LEVEL)	SEE PAGE
	1	1	**3E-7277**	1	SWITCH AS-MAGNETIC (24-VOLT) (START RELAY)	
	2	1	**102-8802**	1	KIT-RECEPTACLE (2-PIN)	
					(INCLUDES RECEPTACLE AS AND WEDGE)	
	3	1	**186-3735**	2	PIN-CONNECTOR (16-GA TO 18-GA)	
	4	1	**1H-3338**	2	LOCKWASHER	
	5	1	**012-0380**	2	LOCKWASHER	
M	6	1	**5C-2890**	2	NUT (M6X1-THD)	
E	7	1	**9X-1813**		SLEEVE (16-CM)	

E-ORDER BY THE CENTIMETER
M-METRIC PART

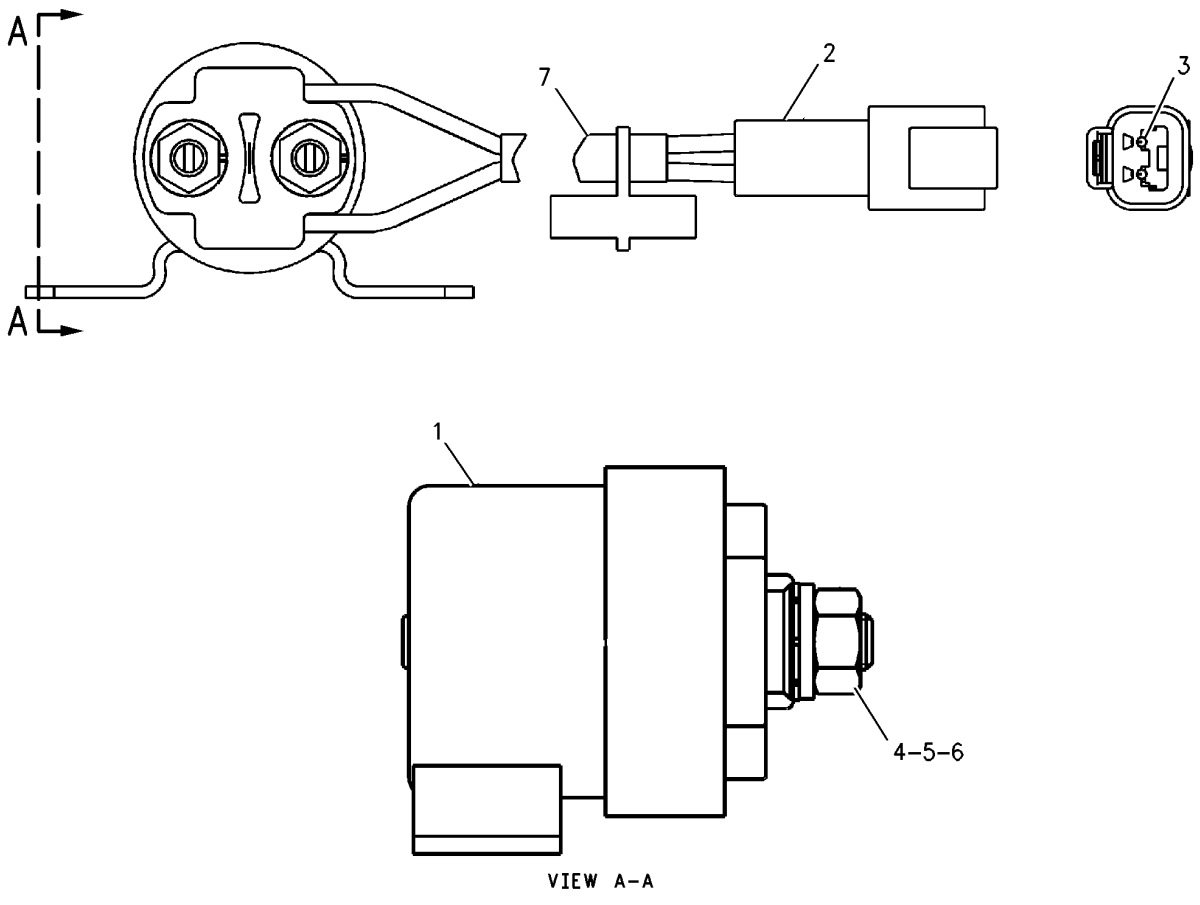

VIEW A-A

GRAPHIC #1 **<END>** g00985960

241-8368 SWITCH GP-MAGNETIC—MAIN RELAY

S/N: 2211-UP
24-VOLT
PART OF 307-9914 WIRING GP-ELECTRONICS BAY

SMCS-7499 **i02325242**

NOTE	REF NO	GRAPHIC REF	PART NUMBER	QTY	PART NAME 1 2 3 4 5 6 (PRODUCT LEVEL)	SEE PAGE
	1	1	**155-2270**	1	KIT-CONNECTING PLUG (2-PIN)	
					(INCLUDES PLUG AS, WEDGE & INTERFACE SEAL)	
	2	1	**4F-2294**	2	NUT-JAM (5/16-24-THD)	
	3	1	**186-3736**	2	SOCKET-CONNECTOR (16-GA TO 18-GA)	

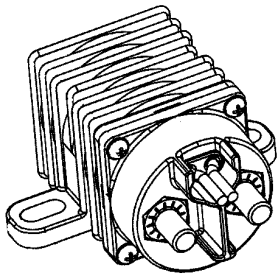

ISOMETRIC VIEW

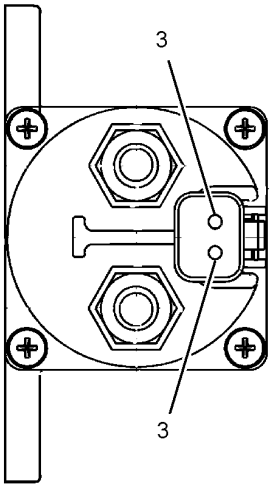

VIEW A-A

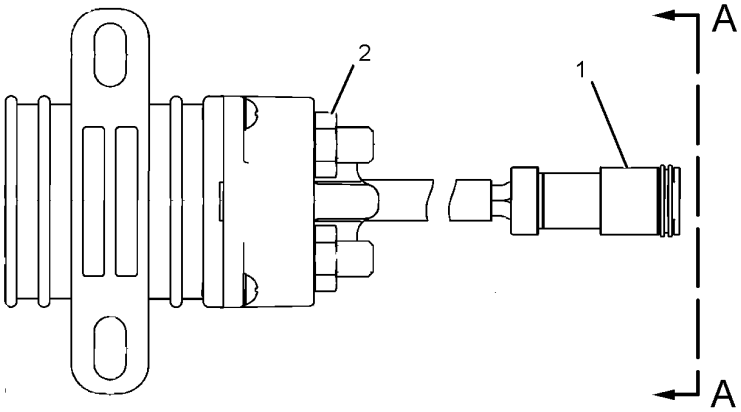

GRAPHIC #1 **<END>** g01077362

275-1253 SWITCH GP-PRESSURE–FUEL FILTER

S/N: LJW1-UP
AMPSEAL CONNECTOR
PART OF 256-7941, 320-7496 MOUNTING GP-FUEL FILTER
AN ATTACHMENT

SMCS-1435 **i02813653**

NOTE	REF NO	GRAPHIC REF	PART NUMBER	QTY	PART NAME 1 2 3 4 5 6 (PRODUCT LEVEL)	SEE PAGE
	1	1	**230-4011**	1	PLUG AS-CONNECTOR (2-PIN)	
E	2	1	**9X-1813**		SLEEVE	
	3	1	**6V-4589**	1	SEAL-O-RING	
	4	1	**7L-9061**	1	SEAL-O-RING	
	5	1	**144-1636**	2	PIN-CONNECTOR (14-GA TO 18-GA)	

E-ORDER BY THE CENTIMETER

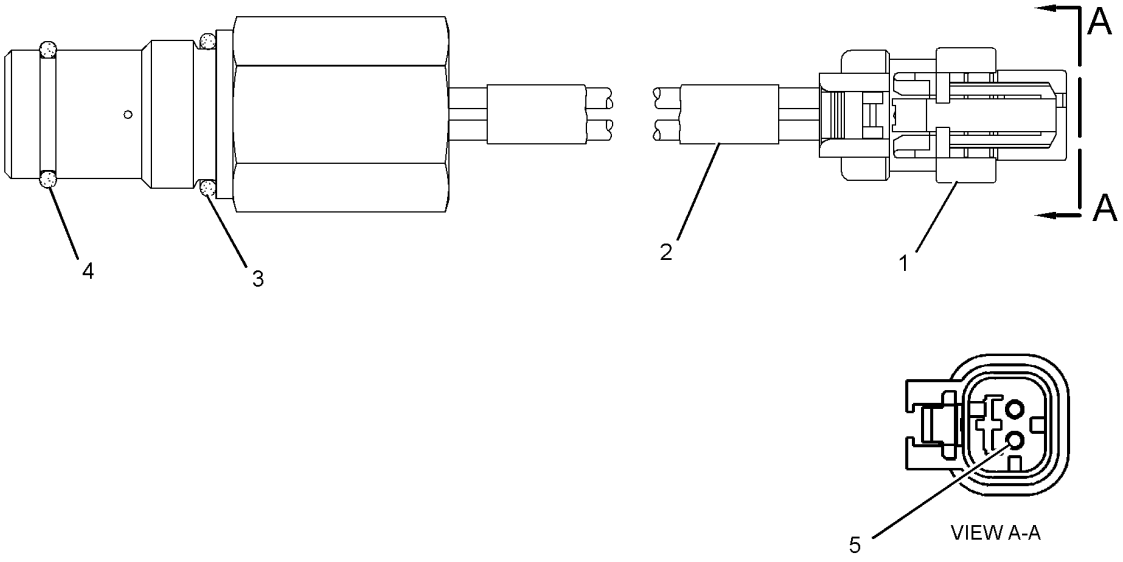

GRAPHIC #1 **<END>** g01238534

165-5970 SWITCH GP-TOGGLE–FUEL PRIMING PUMP ON, OFF

S/N: 2211-UP

PART OF 316-6982 WIRING GP-MACHINE

SMCS-7332 **i02612568**

NOTE	REF NO	GRAPHIC REF	PART NUMBER	QTY	PART NAME 1 2 3 4 5 6 (PRODUCT LEVEL)	SEE PAGE
	1	1	**6T-3631**	2	NUT-HEX (15/32-32-THD)	
	2	1	**6T-3632**	1	LOCKWASHER	
	3	1	**6T-3633**	1	RING-LOCKING	
	4	1	**102-8803**	1	KIT-RECEPTACLE (3-PIN)	
					(INCLUDES RECEPTACLE AS & WEDGE)	
	5	1	**3E-3371**	1	WEDGE-RECEPTACLE LOCK (3-PIN)	
	6	1	**186-3735**	3	PIN-CONNECTOR (16-GA TO 18-GA)	

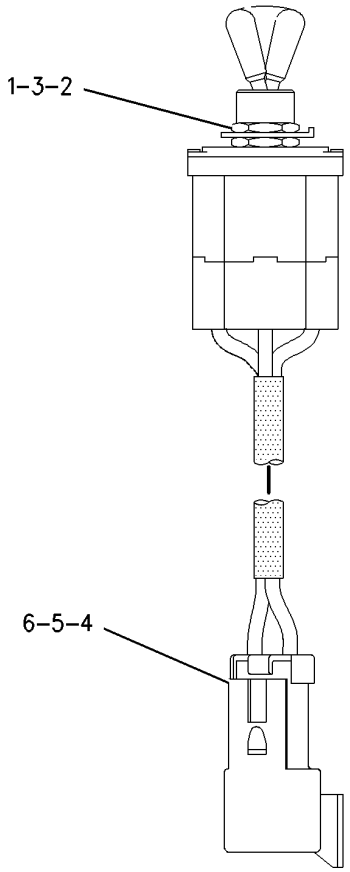

GRAPHIC #1 **<END>** g00749466

3E-0155 SWITCH GP-WIPER–INTERMITTENT–FRONT, REAR

S/N: 2211-UP

24 VOLT

PART OF 280-9826 WIRING GP-CAB

SMCS-7332 **i02935205**

NOTE	REF NO	GRAPHIC REF	PART NUMBER	QTY	PART NAME 1 2 3 4 5 6 (PRODUCT LEVEL)	SEE PAGE
	1	1	**110-7886**	1	SWITCH AS-WIPER (24-VOLT) (FRONT INTERMITTENT)	
	1A	1	**2H-3920**	1	LOCKWASHER	
	1B	1	**3E-3389**	1	WEDGE-RECEPTACLE LOCK	
	1C	1	**6V-8369**	1	NUT (7/16-28-THD)	
	1D	1	**8T-8737**	1	PLUG-SEAL	
C	1E	1	**9W-0852**	4	PIN-CONNECTOR (14-GA)	
C	1F	1	**102-8806**	1	KIT-RECEPTACLE (8-PIN)	
					(INCLUDES RECEPTACLE AS & WEDGE)	
	1G	1	**186-3735**	3	PIN-CONNECTOR (16-GA TO 18-GA)	
	2	1	**7T-9302**	1	KNOB (WIPER, WASHER)	

C-CHANGE FROM PREVIOUS TYPE

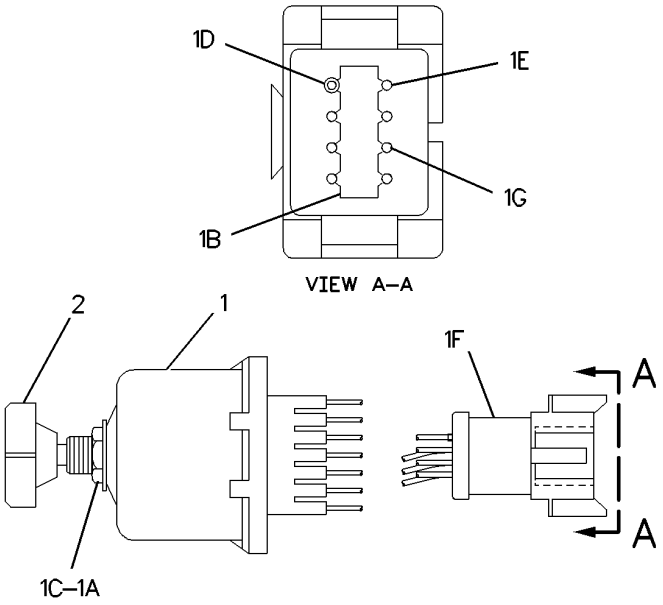

GRAPHIC #1 **<END>** g00899239

239-1134 VALVE GP-ETHER STARTING

S/N: 2211-UP
24-VOLT
PART OF 279-5276 STARTING AID GP-ETHER

SMCS-1456 **i02743318**

NOTE	REF NO	GRAPHIC REF	PART NUMBER	QTY	PART NAME 1 2 3 4 5 6 (PRODUCT LEVEL)	SEE PAGE
	1	1	**7N-9801**	1	GASKET	
	2	1	**102-8802**	1	KIT-RECEPTACLE (2-PIN)	
					(INCLUDES RECEPTACLE AS & WEDGE)	
	3	1	**186-3735**	2	PIN-CONNECTOR (16-GA TO 18-GA)	

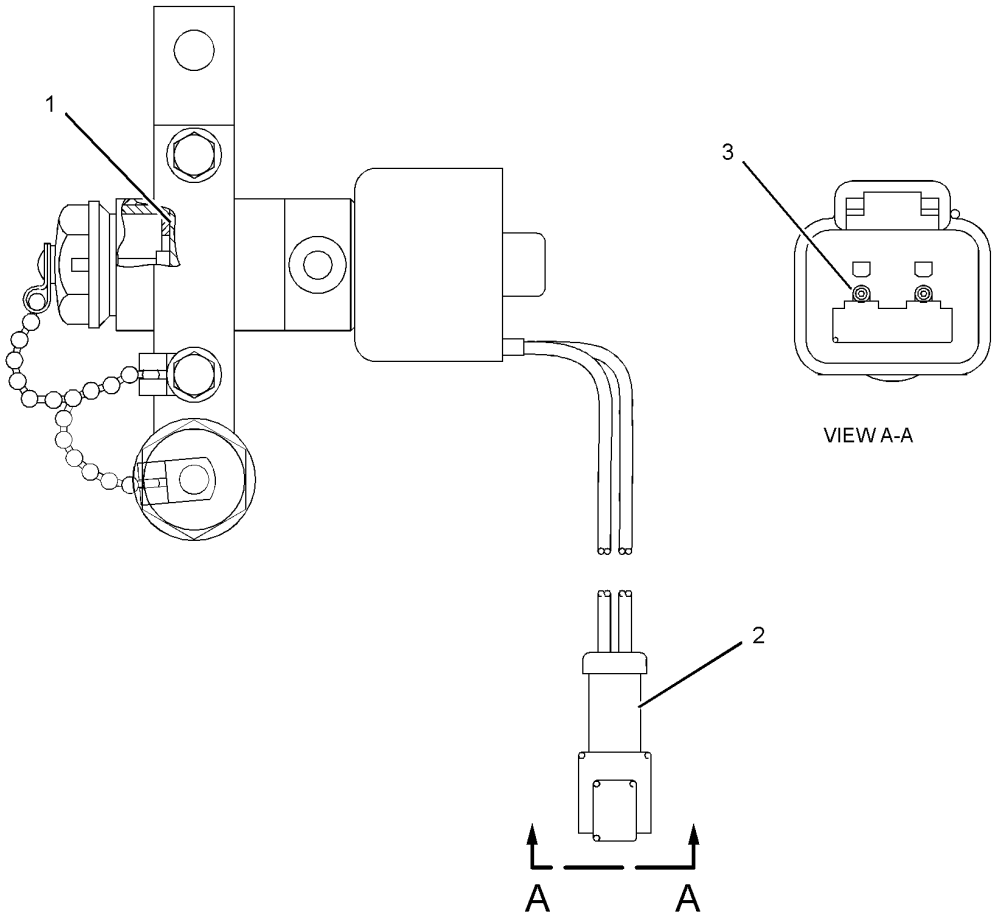

GRAPHIC #1 **<END>** g01375620

290-0346 WIRING GP-AUTOLUBE CONTROL

S/N: 2211-UP

PART OF 284-2855, 284-2861 LUBRICATION AR-AUTOMATIC AN ATTACHMENT

SMCS-1408, 7540 **i02940228**

NOTE	REF NO	GRAPHIC REF	PART NUMBER	QTY	PART NAME 1 2 3 4 5 6 (PRODUCT LEVEL)	SEE PAGE
	1	1	**310-7923**	1	HARNESS AS-POWER (AUTOMATIC LUBRICATION CONTROL)	
	2	1	**130-5300**	1	CLIP	
	3	1	**160-8708**	1	BRACKET AS	
	4	1	**6V-3265**	7	CLIP	
	5	1	**8T-4121**	8	WASHER-HARD (11X21X2.5-MM THK)	
M	6	1	**8T-4136**	3	BOLT (M10X1.5X25-MM)	
M	7	1	**8T-4137**	5	BOLT (M10X1.5X20-MM)	

M-METRIC PART

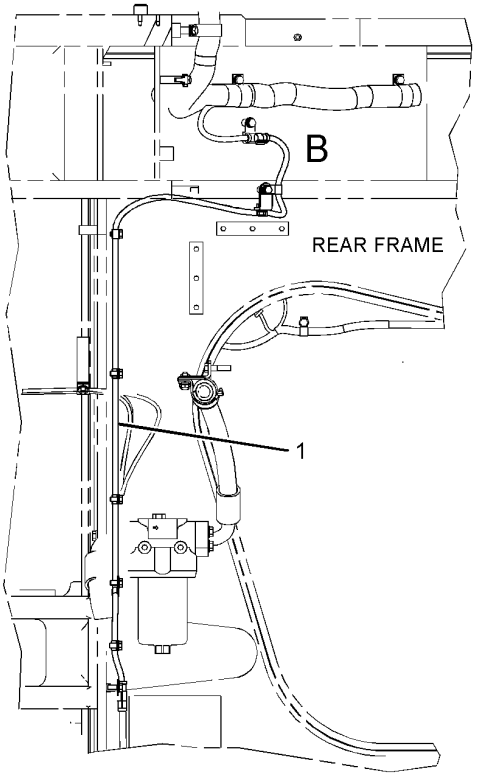

VIEW A-A

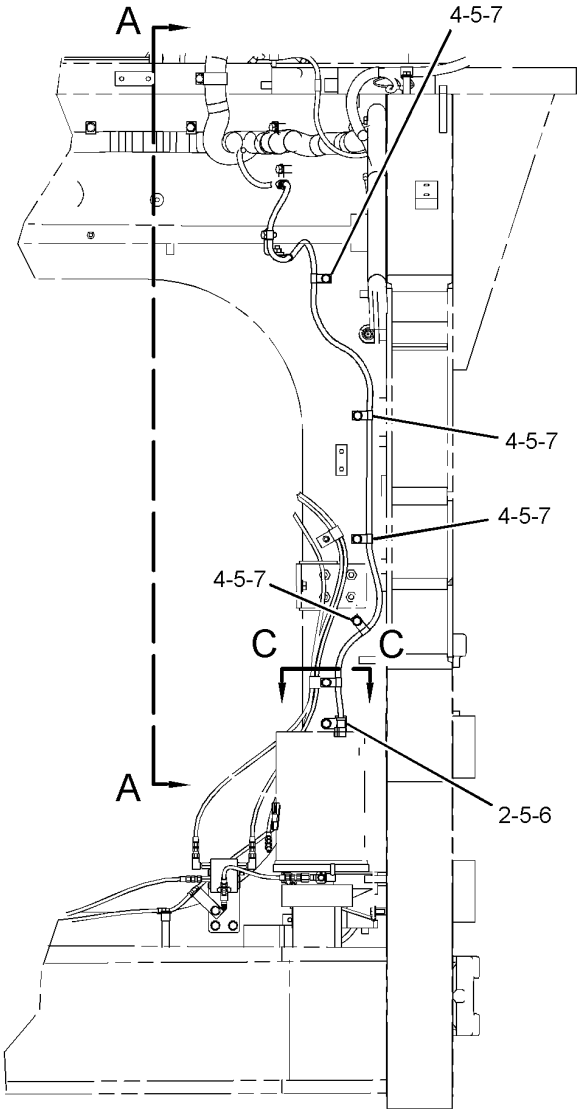

REAR VIEW

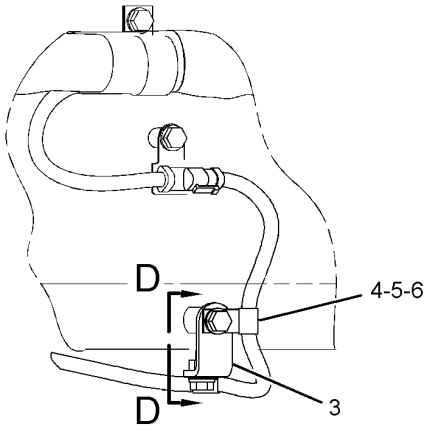

VIEW OF AREA B

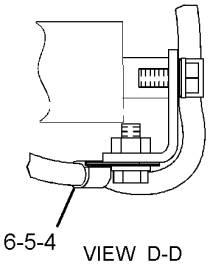

VIEW D-D

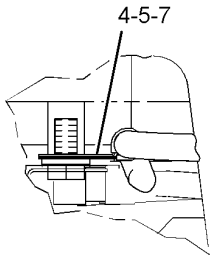

VIEW C-C

GRAPHIC #1 **<END>** g01447786

282-5173 WIRING GP-BUMPER

S/N: 2211-UP

PART OF 279-5277 TANK & BUMPER AR-FUEL

SMCS-1408 **i02939670**

NOTE	REF NO	GRAPHIC REF	PART NUMBER	QTY	PART NAME 1 2 3 4 5 6 (PRODUCT LEVEL)	SEE PAGE
	1	3	**0A-3721**	1	CLIP	
	2	2	**3E-5169**	1	GUARD-SWITCH (GROUND LEVEL SHUTDOWN)	
	3	2	**246-2641**	2	PADLOCK GP	
					(EACH INCLUDES)	
		2	**5P-8500**	1	KEY	
	4	1	**7W-8106**	1	SPACER (11.13X19.05X15-MM THK)	
	5	2	**8D-9537**	1	CAP AS (DUST)	
	6	2,3	**9X-6772**	7	STRAP-CABLE	
	7	2	**109-0361**	1	FILM-INSTRUCTION (ENGINE SHUTDOWN)	
	8	2	**110-7887**	1	SWITCH AS-START (KEY)	
		2	**7T-6799**	1	NUT-MOUNTING (1-32-THD)	
		2	**102-8804**	1	KIT-RECEPTACLE (4-PIN)	
					(INCLUDES RECEPTACLE AS AND WEDGE)	
		2	**186-3735**	4	PIN-CONNECTOR (16-GA TO 18-GA)	
Y	9	3	**126-0182**	1	BUFFER GP-SENSOR (FUEL LEVEL)	199
	10	1	**134-8297**	1	BRACKET AS	
M		1	**8T-3490**	1	NUT-WELD (M10X1.5-THD)	
	11	2	**157-7191**	1	BASE AS-INDICATOR (STARTING MOTOR LOCKOUT)	
		2	**102-8803**	1	KIT-RECEPTACLE (3-PIN)	
					(INCLUDES RECEPTACLE AS AND WEDGE)	
D		2	**5P-5623**		WIRE-ELECTRICAL (16-GA, BLACK) (0.6-M)	
E		2	**8C-7329**		TUBE-HEAT SHRINK (4.8-MM DIA) (9-CM)	
		2	**186-3735**	3	PIN-CONNECTOR (16-GA TO 18-GA)	
	12	2	**163-1883**	1	LAMP (24-VOLT)	
	13	2	**173-8481**	1	HARNESS AS-PANEL (GROUND LEVEL SHUTDOWN)	
	14	2	**180-9900**	1	CAP AS	
		2	**5P-7958**	1	SLEEVE-CABLE SPLICE	
		2	**8C-6354**	1	CAP-RECEPTACLE	
		2	**179-9392**	1	LANYARD	
	15	1	**229-3177**	1	PLATE AS	
		1	**6V-6716**	2	RIVET-TRUSS HEAD	
		1	**109-1645**	1	CLIP	
	16	2	**235-2761**	1	GASKET	
	17	2	**250-2298**	1	LAMP AS (AMBER, LED, 24-VOLT)	
		2	**186-3735**	2	PIN-CONNECTOR (16-GA TO 18-GA)	
	18	2	**251-8326**	1	FILM-IDENTIFICATION (STARTING MOTOR LOCKOUT)	
	19	2	**251-8327**	1	FILM-IDENTIFICATION (TRANSMISSION LOCKOUT)	
	20	2	**252-1763**	2	PIN AS	
					(EACH INCLUDES)	
		2	**5P-7958**	1	SLEEVE-CABLE SPLICE	
		2	**179-9392**	1	LANYARD	
		2	**252-1765**	1	PIN AS	
	21	2	**253-7801**	1	FILM-IDENTIFICATION (STAIRWAY LIGHTS)	
	22	2	**276-2332**	1	SWITCH AS-TOGGLE (TRANSMISSION LOCKOUT)	
		2	**3E-3383**	1	WEDGE-RECEPTACLE LOCK (6-PIN)	
		2	**186-3735**	6	PIN-CONNECTOR (16-GA TO 18-GA)	
		2	**102-8805**	1	KIT-RECEPTACLE (6-PIN)	
					(INCLUDES RECEPTACLE AS AND WEDGE)	
	23	3	**301-2979**	1	SWITCH AS-TOGGLE (GROUND LEVEL SHUTDOWN)	
	23A	3	**301-2979**	1	SWITCH AS-TOGGLE (STARTING MOTOR LOCKOUT)	
	23B	2	**301-2979**	1	SWITCH AS-TOGGLE (STAIRWAY ACCESS LIGHTS)	
					(EACH SWITCH AS INCLUDES)	
		2	**3E-3371**	1	WEDGE-RECEPTACLE LOCK (3-PIN)	
		2	**186-3735**	3	PIN-CONNECTOR (16-GA TO 18-GA)	
		2	**102-8804**	1	KIT-RECEPTACLE (4-PIN)	
					(INCLUDES RECEPTACLE AS AND WEDGE)	

282-5173 **WIRING GP-BUMPER** *(contd.)* **i02939670**

NOTE	REF NO	GRAPHIC REF	PART NUMBER	QTY	PART NAME 1 2 3 4 5 6 (PRODUCT LEVEL)	SEE PAGE
	24	1	**310-7915**	1	HARNESS AS-BUMPER	
	25	2	**313-1313**	1	BRACKET AS	
M		2	**6V-9632**	1	NUT-WELD (M6X1-THD)	
M		2	**8T-3490**	4	NUT-WELD (M10X1.5-THD)	
M		2	**9R-2613**	3	BOSS-WELD (M10X1.5X25-MM)	
	26	2	**314-3254**	1	FILM-SERVICE	
	27	2	**096-5962**	8	WASHER-HARD (3.4X7X0.8-MM THK)	
M	28	2	**129-3178**	2	LOCKNUT (M6X1-THD)	
	29	2,3	**130-5300**	10	CLIP	
	30	2	**147-0385**	1	CLIP	
	31	1,2	**1S-0994**	4	CLIP	
M	32	2	**3C-6969**	8	NUT (M3X0.5-THD)	
	33	2	**4P-8134**	1	CLIP	
	34	3	**5P-9085**	1	CLIP	
	35	3	**5P-9297**	2	CLIP	
	36	1,2,3	**6D-4246**	6	CLIP	
M	37	2	**6V-9671**	4	SCREW-MACHINE (M3X0.5X12-MM)	
M	38	2	**7X-7656**	1	SCREW-MACHINE	
	39	2	**7X-7729**	4	WASHER (11X25X3-MM THK)	
M	40	2	**8T-0265**	4	SCREW-MACHINE (M3X0.5X16-MM)	
	41	1,2,3	**8T-4121**	21	WASHER-HARD (11X21X2.5-MM THK)	
M	42	1,2,3	**8T-4137**	20	BOLT (M10X1.5X20-MM)	
M	43	1,2	**8T-4196**	5	BOLT (M10X1.5X35-MM)	
M	44	2	**8T-6411**	2	SCREW-MACHINE (M6X1X12-MM)	
D	45	2	**5P-5952**		SEAL (0.4-M EACH)	

D-ORDER BY THE METER
E-ORDER BY THE CENTIMETER
M-METRIC PART
Y-SEPARATE ILLUSTRATION

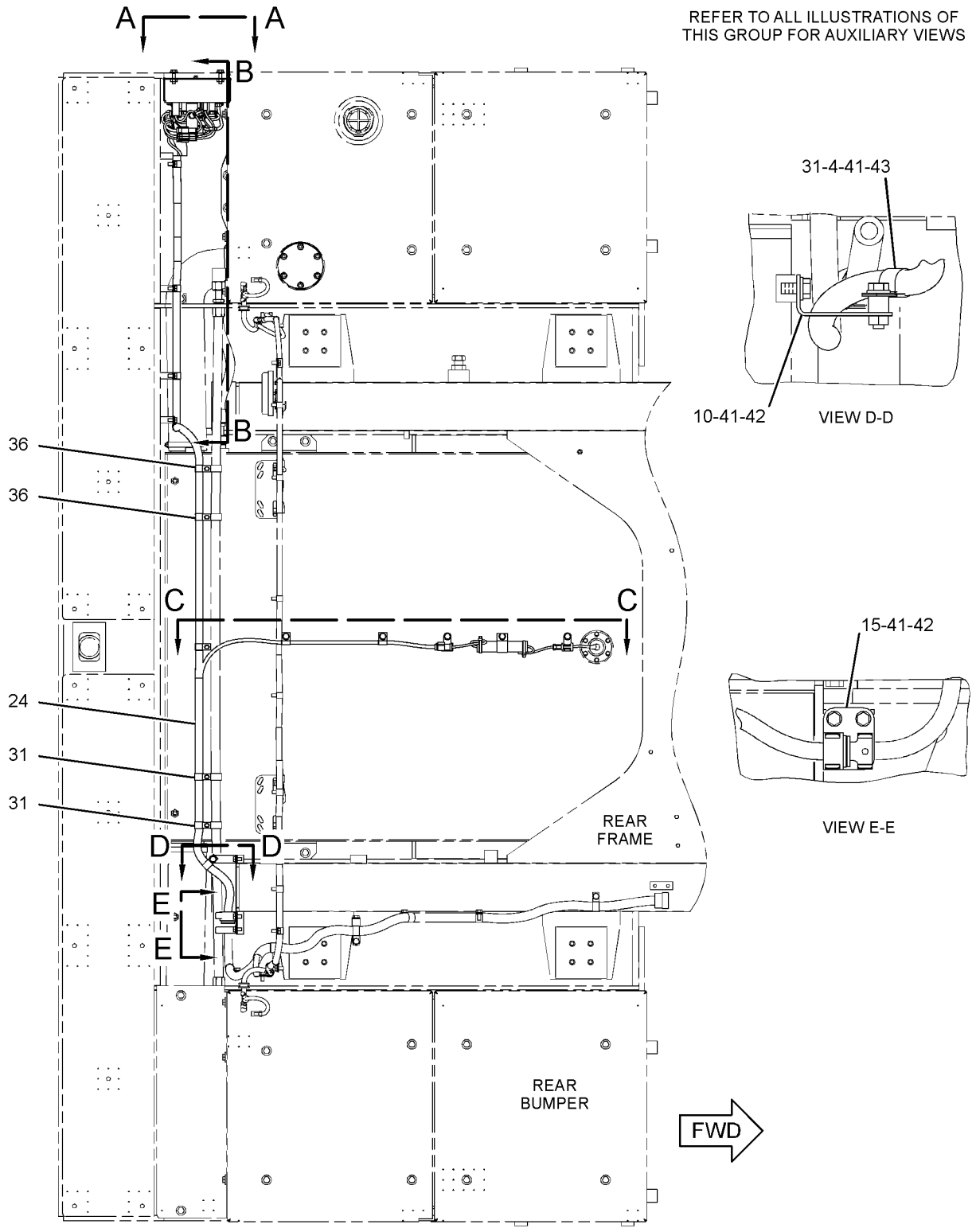

TOP VIEW

GRAPHIC #1

g01441344

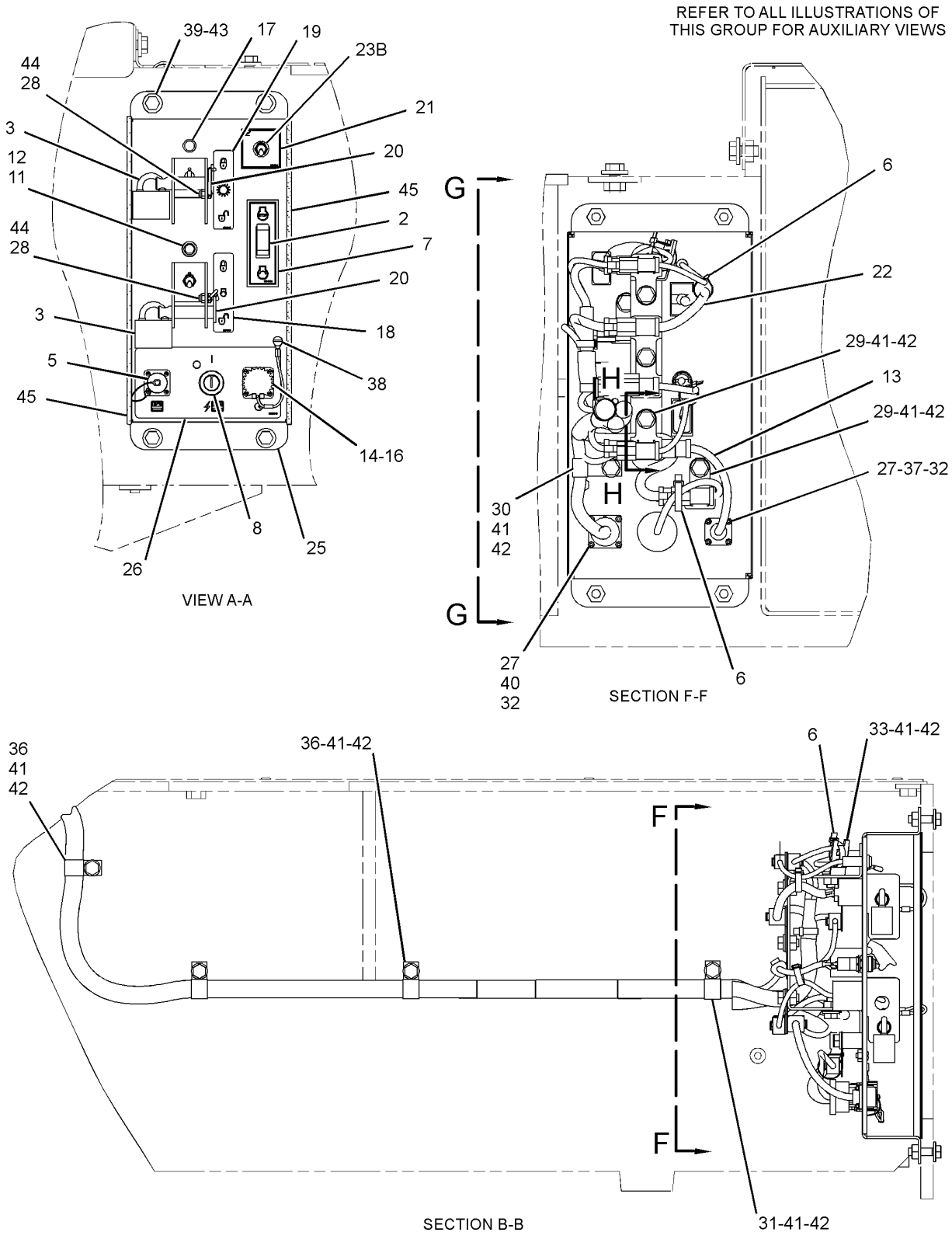

GRAPHIC #2

g01441345

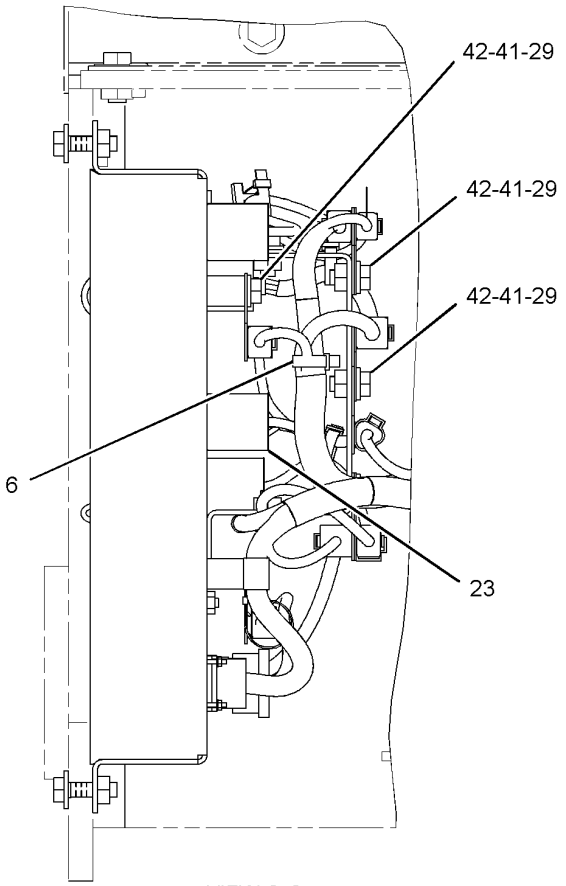

VIEW G-G

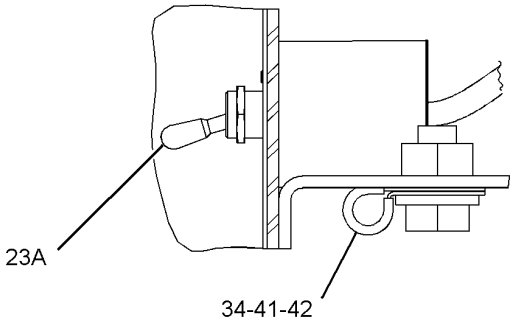

SECTION H-H

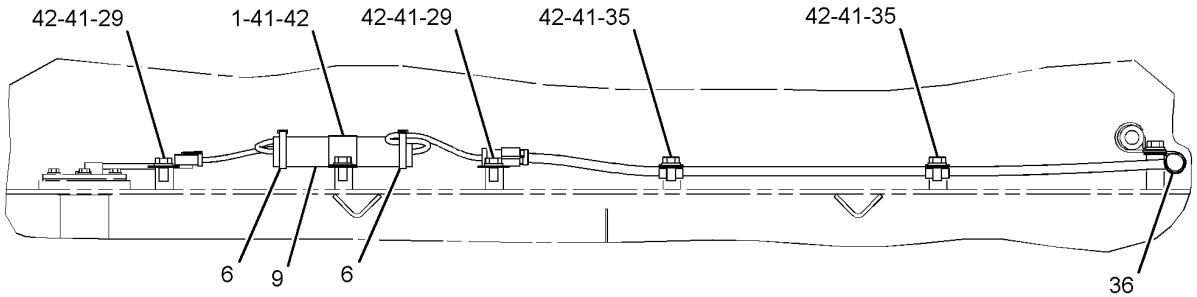

SECTION C-C

GRAPHIC #3 **<END>** g01441346

280-9826 WIRING GP-CAB

S/N: 2211-UP

PART OF 280-7084 CAB AR

SMCS-1408, 7301 **i02942046**

NOTE	REF NO	GRAPHIC REF	PART NUMBER	QTY	PART NAME 1 2 3 4 5 6 (PRODUCT LEVEL)	SEE PAGE
	1	4	**2P-4339**	1	NUT-JAM (7/16-28-THD)	
	2	4	**2V-0099**	3	KNOB-CONTROL (PANEL ROTARY SWITCHES)	
	3	4	**3E-0109**	6	PLUG (ROCKER SWITCH)	
Y	4	4	**3E-0155**	1	SWITCH GP-WIPER (24-VOLT, INTERMITTENT) (FRONT)	290
Y	4A	4	**3E-0155**	1	SWITCH GP-WIPER (24-VOLT, INTERMITTENT) (REAR)	290
	5	5	**3E-5165**	1	CAP AS-PROTECTION	
	6	6	**3E-5239**	1	RELAY AS (24-VOLT) (SINGLE TILT)	
	7	4	**3E-5275**	1	SWITCH AS-ROTARY (WIPER, WASHER) (QUARTER WINDOW)	
		4	**2H-3920**	1	LOCKWASHER	
		4	**155-2265**	2	KIT-CONNECTING PLUG (8-PIN)	
					(EACH KIT INCLUDES PLUG AS AND WEDGE)	
		4	**6V-8369**	1	NUT (7/16-28-THD)	
		4	**7T-9302**	1	KNOB (WIPER, WASHER)	
		4	**186-3736**	1	SOCKET-CONNECTOR (16-GA TO 18-GA)	
		4	**014-0816**	1	SETSCREW (8-32X0.5-IN)	
Y	8	7	**3E-6328**	1	ALARM GP (24-VOLT) (ACTION)	192
Y	9	1	**3E-6389**	1	LAMP GP-DOME (24-VOLT)	220
	10	5	**3S-2093**	2	STRAP-CABLE	
	11	3	**4E-9055**	1	GASKET	
	12	4	**6P-3236**	1	SWITCH AS-ROTARY (FAN BLOWER SPEED)	
		4	**6V-8362**	5	SCREW-MACHINE (8-32X0.31-IN)	
		4	**9B-7233**	5	LOCKWASHER	
	13	5	**6V-6457**	1	MODULE GP-SPEEDOMETER & TACH	
		5	**102-8805**	2	KIT-RECEPTACLE (6-PIN)	
					(EACH KIT INCLUDES RECEPTACLE AS AND WEDGE)	
		5	**186-3735**	6	PIN-CONNECTOR (16-GA TO 18-GA)	
	14	5	**6V-9497**	4	WASHER-HARD (3.2X6X0.5-MM THK)	
	15	1,2,3, 4,5,6,7	**7K-1181**	38	STRAP-CABLE	
	16	1	**8X-5802**	1	STRAP AS-GROUND	
	17	1	**8Y-6335**	1	LAMP-INTERIOR	
	18	3	**9U-4989**	2	PLATE	
	19	3	**9U-4990**	2	GASKET	
	20	5	**106-4454**	1	PLATE	
	22	4,5	**110-2079**	11	LAMP (24-VOLT)	
	23	4	**117-2311**	1	RECEPTACLE AS-POWER (12-VOLT)	
	24	4	**123-6383**	1	SWITCH AS-ROTARY (REDUCED RIMPULL SELECT)	
		4	**3E-3383**	1	WEDGE-RECEPTACLE LOCK (6-PIN)	
		4	**8T-8737**	1	PLUG-SEAL	
		4	**9W-0852**	5	PIN-CONNECTOR (14-GA)	
		4	**102-8805**	1	KIT-RECEPTACLE (6-PIN)	
					(INCLUDES RECEPTACLE AS AND WEDGE)	
	25	5	**123-8681**	1	HARNESS AS-MONITOR (VIMS MAIN MODULE)	
	26	1	**124-3019**	1	BRACKET AS	
M		1	**8T-3490**	1	NUT-WELD (M10X1.5-THD)	
	27	4	**128-6157**	1	PLATE	
	28	5	**129-7701**	1	PLATE AS	
	29	7	**135-3311**	1	RESISTOR AS	
		7	**102-8802**	1	KIT-RECEPTACLE (2-PIN)	
					(INCLUDES PLUG AS AND WEDGE)	
		7	**186-3735**	2	PIN-CONNECTOR (16-GA TO 18-GA)	
	30	3	**142-1657**	1	BRACKET AS	
M		3	**8T-3490**	1	NUT-WELD (M10X1.5-THD)	
	31	5	**163-1876**	1	LAMP (24-VOLT)	
	32	5	**163-1878**	5	LAMP (24-VOLT)	

280-9826 **WIRING GP-CAB** *(contd.)* **i02942046**

NOTE	REF NO	GRAPHIC REF	PART NUMBER	QTY	PART NAME 1 2 3 4 5 6 (PRODUCT LEVEL)	SEE PAGE
Y	33	5	**166-6928**	1	MODULE GP-QUAD GAUGE	833
	34	4	**170-1312**	1	SWITCH AS-ROCKER (STAIRWAY ACCESS LIGHT)	
	35	7	**170-1821**	1	SWITCH AS-PUSH BUTTON (HORN)	
		7	**6F-0253**	1	LOCKWASHER	
		7	**186-3735**	2	PIN-CONNECTOR (16-GA TO 18-GA)	
		7	**172-3511**	1	NUT (5/8-24-THD)	
Y	36	6	**171-3759**	1	SWITCH GP-LIMIT (STIC LOCKOUT CONTROL)	282
	37	4	**174-3016**	1	PLUG AS-CONNECTOR (3-PIN)	
	38	4	**174-7580**	1	SWITCH GP-KEY (START)	
		4	**7T-6799**	1	NUT-MOUNTING (1-32-THD)	
		4	**102-8804**	1	KIT-RECEPTACLE (4-PIN)	
					(INCLUDES RECEPTACLE AS AND WEDGE)	
		4	**186-3735**	4	PIN-CONNECTOR (16-GA TO 18-GA)	
Y	39	5	**179-1730**	1	MODULE GP-MESSAGE CENTER (VIMS)	831
	40	4	**180-9900**	1	CAP AS	
		4	**5P-7958**	1	SLEEVE-CABLE SPLICE	
		4	**8C-6354**	1	CAP-RECEPTACLE	
		4	**179-9392**	1	LANYARD	
	41	3	**188-0556**	1	COVER	
	42	7	**188-3983**	1	SWITCH AS-PUSH BUTTON (THROTTLE LOCK RESUME)	
		7	**3K-0835**	1	NUT (5/8-24-THD)	
		7	**6F-0253**	1	LOCKWASHER	
		7	**155-2260**	1	KIT-CONNECTING PLUG (3-PIN)	
					(INCLUDES PLUG AS AND WEDGE)	
		7	**186-3736**	3	SOCKET-CONNECTOR (16-GA TO 18-GA)	
	43	7	**188-3984**	1	SWITCH AS-PUSH BUTTON (THROTTLE LOCK SET)	
		7	**3E-3371**	1	WEDGE-RECEPTACLE LOCK (3-PIN)	
		7	**3K-0835**	1	NUT (5/8-24-THD)	
		7	**6F-0253**	1	LOCKWASHER	
		7	**102-8803**	1	KIT-RECEPTACLE (3-PIN)	
					(INCLUDES RECEPTACLE AS & WEDGE)	
		7	**186-3735**	3	PIN-CONNECTOR (16-GA TO 18-GA)	
	44	4	**198-6570**	1	LIGHTER GP (12-VOLT)	
		4	**198-6571**	1	ELEMENT AS (CIGARETTE LIGHTER)	
	45	1	**209-0381**	1	CONVERTER-POWER (24-VOLT TO 12-VOLT)	
	46	6	**218-4935**	1	SUPPRESSOR-ARC	
	47	7	**219-9533**	1	SWITCH AS-ROCKER (HYDRAULIC LOCKOUT)	
	48	4	**223-8969**	1	SWITCH AS-ROCKER (TORQUE CONVERTER LOCKUP CLUTCH)	
	49	4	**223-8970**	1	SWITCH AS-ROCKER (QUICKSHIFT)	
	50	4	**223-8973**	1	SWITCH AS-ROCKER (RUNNING LIGHTS)	
	51	4	**223-8982**	1	SWITCH AS-ROCKER (THROTTLE LOCK ENABLE)	
	52	7	**241-4854**	1	SWITCH AS-ROCKER (TILT, TIP FUNCTION)	
	53	6	**283-5248**	1	HARNESS AS-CAB (INSIDE, REAR)	
	54	6	**283-6480**	1	HARNESS AS-OPERATOR CONTROLS (IMPLEMENT CONTROLS POD)	
	55	4	**291-2165**	1	POTENTIOMETER AS (TEMPERATURE CONTROL)	
		4	**102-8803**	1	KIT-RECEPTACLE (3-PIN)	
					(INCLUDES RECEPTACLE AS & WEDGE)	
		4	**186-3735**	1	PIN-CONNECTOR (16-GA TO 18-GA)	
		4	**236-8722**	1	WASHER (10.5X22.2X1.6-MM THK)	
	56	1	**305-5629**	1	LAMP (VIMS, LED, WHITE)	
	57	5	**316-4947**	1	HARNESS AS-PANEL (FRONT)	
	58	4	**316-4948**	1	HARNESS AS-PANEL (SIDE, RH)	
	59	3	**316-4949**	1	HARNESS AS-CAB (LOWER)	
	60	1	**316-4950**	1	HARNESS AS-OPERATOR CONTROLS (QUARTER WINDOW WIPER)	
	61	2	**316-4951**	1	HARNESS AS-OPERATOR CONTROLS (REAR WINDOW WIPER)	
	62	2	**316-9310**	1	HARNESS AS-OPERATOR CONTROLS (WINDOW WASHER)	

280-9826 **WIRING GP-CAB** *(contd.)* **i02942046**

NOTE	REF NO	GRAPHIC REF	PART NUMBER	QTY	PART NAME 1 2 3 4 5 6 (PRODUCT LEVEL)	SEE PAGE
	63	1	**030-9613**	6	SCREW-FORMING (10-24X0.37-IN)	
M	64	3	**096-4884**	2	LOCKNUT (M12X1.75-THD)	
	65	4	**096-6166**	1	WASHER-HARD (4.5X9X1-MM THK)	
	66	5	**107-1964**	8	SCREW-PAN HEAD (6-19X0.5-IN)	
	67	2	**124-1479**	2	CLIP	
	68	5,6,7	**130-5300**	9	CLIP	
	69	1,3	**139-1398**	3	CLIP	
	70	1,3	**174-5907**	9	CLIP	
	71	4	**223-8975**	1	SWITCH AS-ROCKER (24-VOLT) (FLOODLIGHTS, REAR)	
	71A	4	**223-8975**	1	SWITCH AS-ROCKER (24-VOLT) (FLOODLIGHTS, FRONT)	
	72	1	**223-8977**	1	SWITCH AS-ROCKER (INTERIOR LIGHT)	
Y	73	4	**297-1401**	1	MODULE GP-MONITOR KEYPAD	832
	74	6	**1P-7326**	2	WASHER (4.32X9.52X1.52-MM THK)	
	75	7	**102-8802**	1	KIT-RECEPTACLE (2-PIN)	
					(INCLUDES RECEPTACLE AS & WEDGE)	
	76	6,7	**3S-8665**	2	CLIP	
	77	4	**3S-9557**	4	SCREW-PAN HEAD (4-40X0.5-IN)	
	78	3	**4D-7794**	1	CLIP	
	79	3,4,5,7	**4P-7581**	6	CLIP	
	80	2,5	**4P-8134**	2	CLIP	
	81	7	**4S-1962**	3	CLIP	
M	82	7	**5C-2890**	1	NUT (M6X1-THD)	
M	83	6	**5C-9553**	1	BOLT (M6X1X16-MM)	
	84	7	**5K-3294**	1	CLIP	
	85	5	**5S-4245**	4	SCREW-MACHINE (4-40X0.5-IN)	
	86	5	**6B-4540**	4	NUT (4-40-THD)	
	87	3	**6D-3479**	1	CLIP	
	88	3	**6D-4636**	1	CLIP	
	89	3	**6V-2687**	16	SCREW-PAN HEAD (10-24X1-IN)	
M	90	6	**6V-9505**	2	SCREW-MACHINE (M3X0.5X25-MM)	
M	91	4	**7Y-7256**	4	SCREW-TRUSS HEAD (M4X0.7-MM)	
	92	1,3,4, 5,6,7	**8T-4121**	18	WASHER-HARD (11X21X2.5-MM THK)	
M	93	4,6,7	**8T-4133**	4	NUT (M10X1.5-THD)	
M	94	1,3,7	**8T-4136**	6	BOLT (M10X1.5X25-MM)	
M	95	3,4,6,7	**8T-4137**	10	BOLT (M10X1.5X20-MM)	
M	96	3	**8T-4189**	4	BOLT (M8X1.25X20-MM)	
M	97	3	**8T-4200**	4	BOLT (M8X1.25X16-MM)	
	98	7	**8T-4205**	1	WASHER-HARD (7.2X14.5X2-MM THK)	
	99	3	**8T-4222**	1	WASHER-PLATED (11X32X2.5-MM THK)	
	100	3	**8T-4223**	2	WASHER-HARD (13.5X25.5X3-MM THK)	
	101	3	**8T-4224**	8	WASHER-HARD (8.8X16X2-MM THK)	
	102	6,7	**9M-4972**	2	CLIP	
	103	3	**9M-8406**	1	CLIP	
M	104	5	**9X-2039**	2	SCREW-TRUSS HEAD (M10X1.5X35-MM)	
M	105	5	**9X-2042**	4	SCREW-TRUSS HEAD (M6X1X12-MM)	
M	106	5,7	**9X-2044**	3	SCREW-TRUSS HEAD (M6X1X16-MM)	
M	107	5	**9X-2045**	2	SCREW-TRUSS HEAD (M6X1X20-MM)	
	108	3	**9X-8250**	2	CLIP	
	109	5,6	**9X-8256**	7	WASHER (6.6X12X2-MM THK)	
D	110	6	**5C-8465**		SEAL (6-DM)	

D-ORDER BY THE METER
M-METRIC PART
Y-SEPARATE ILLUSTRATION

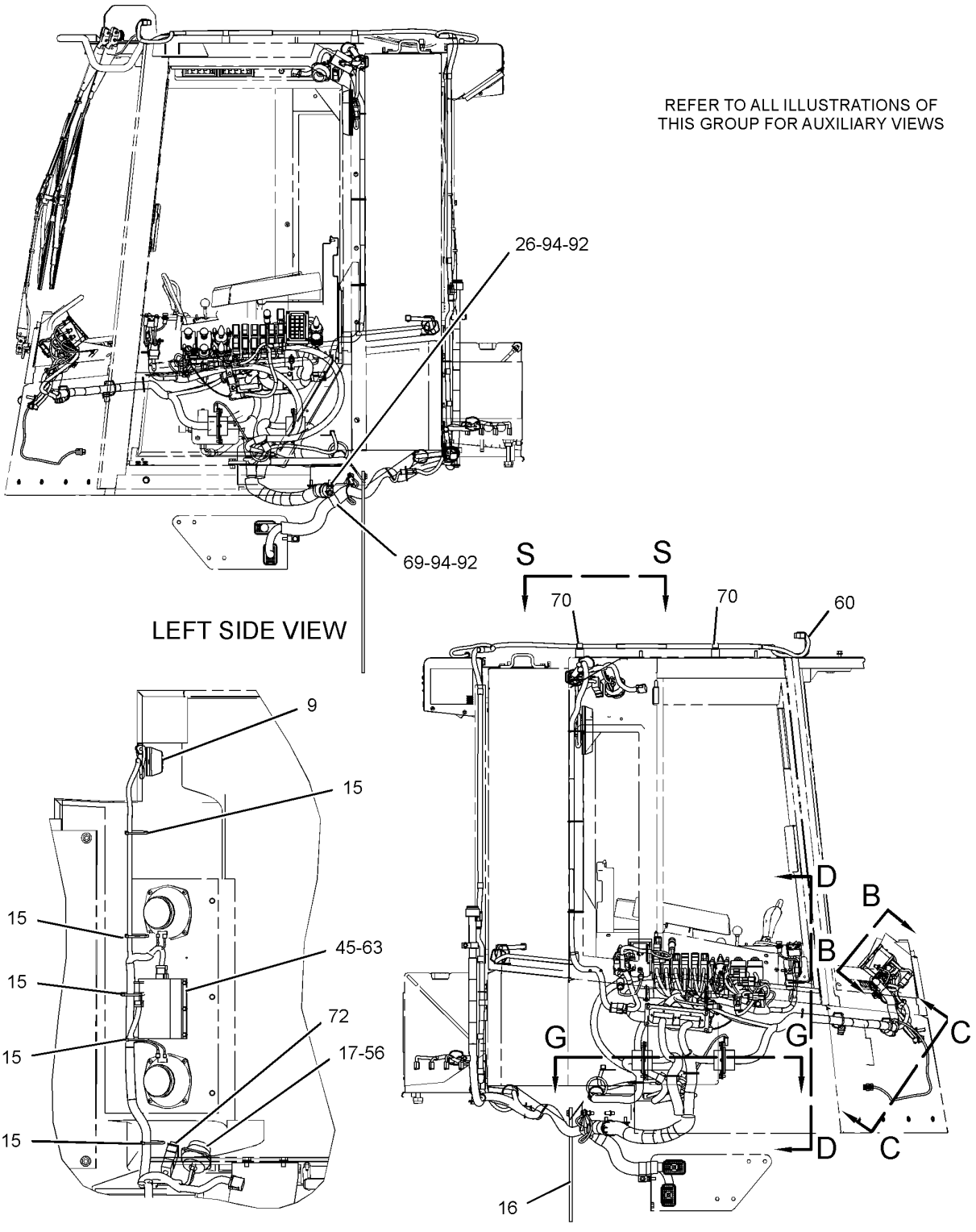

GRAPHIC #1

g01441279

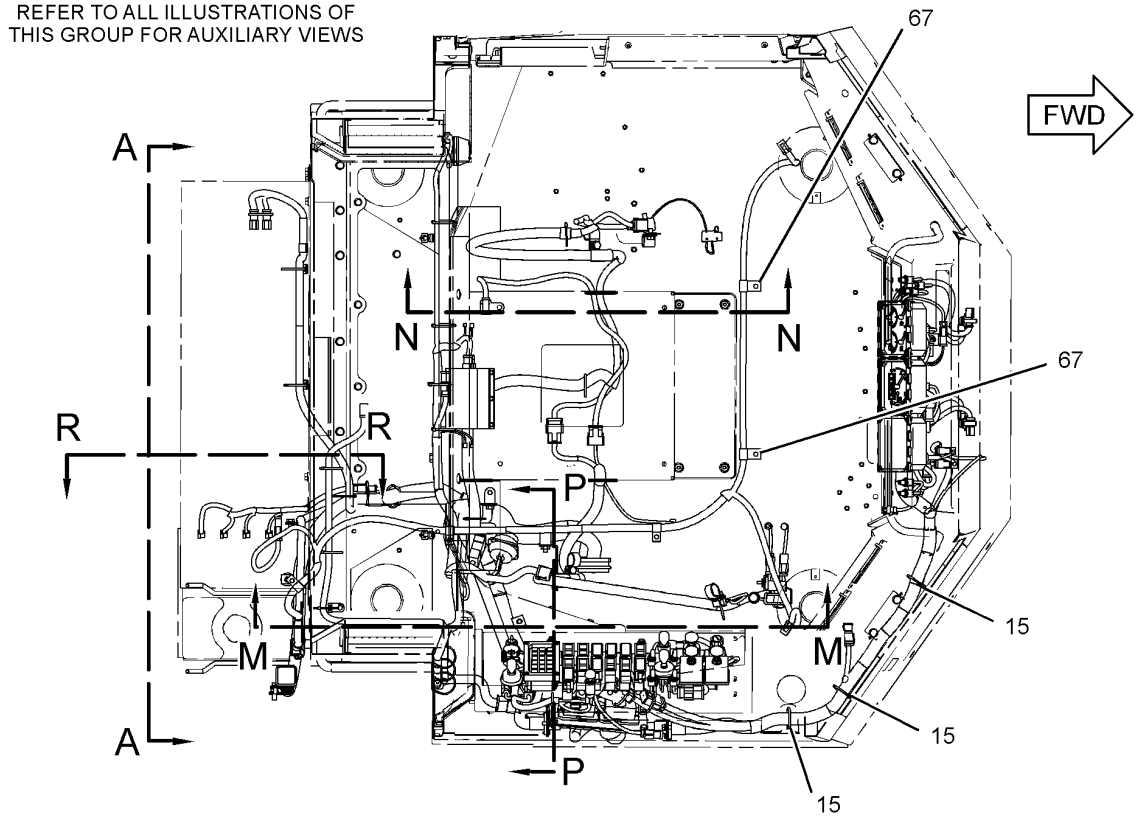

TOP VIEW

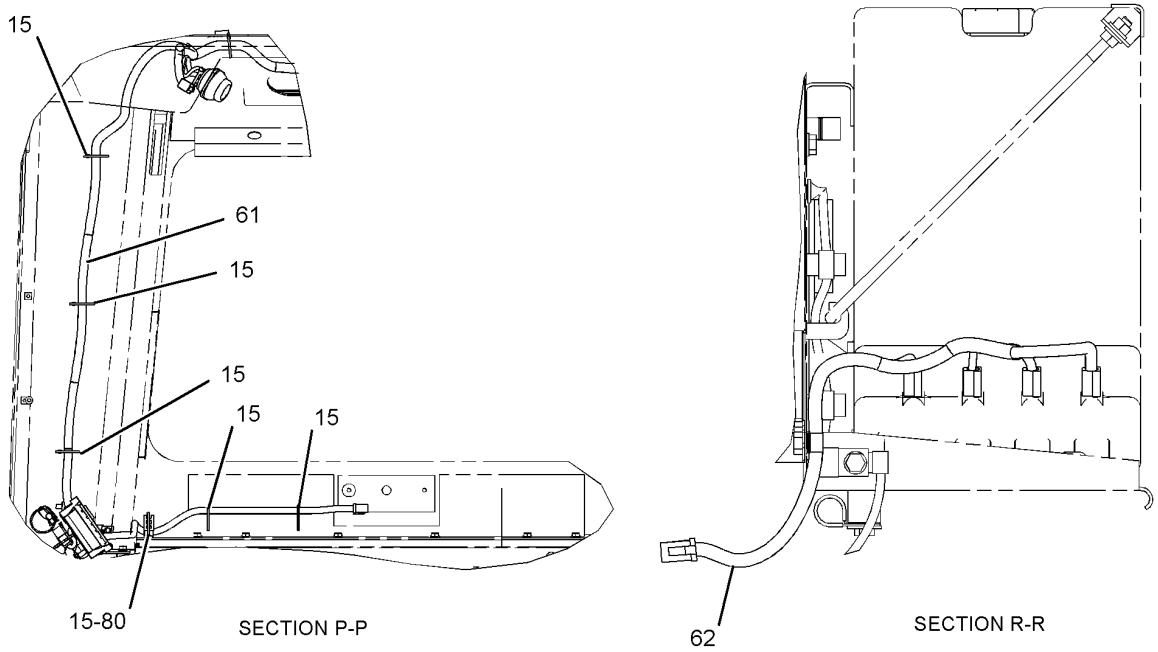

SECTION P-P

SECTION R-R

GRAPHIC #2

g01441282

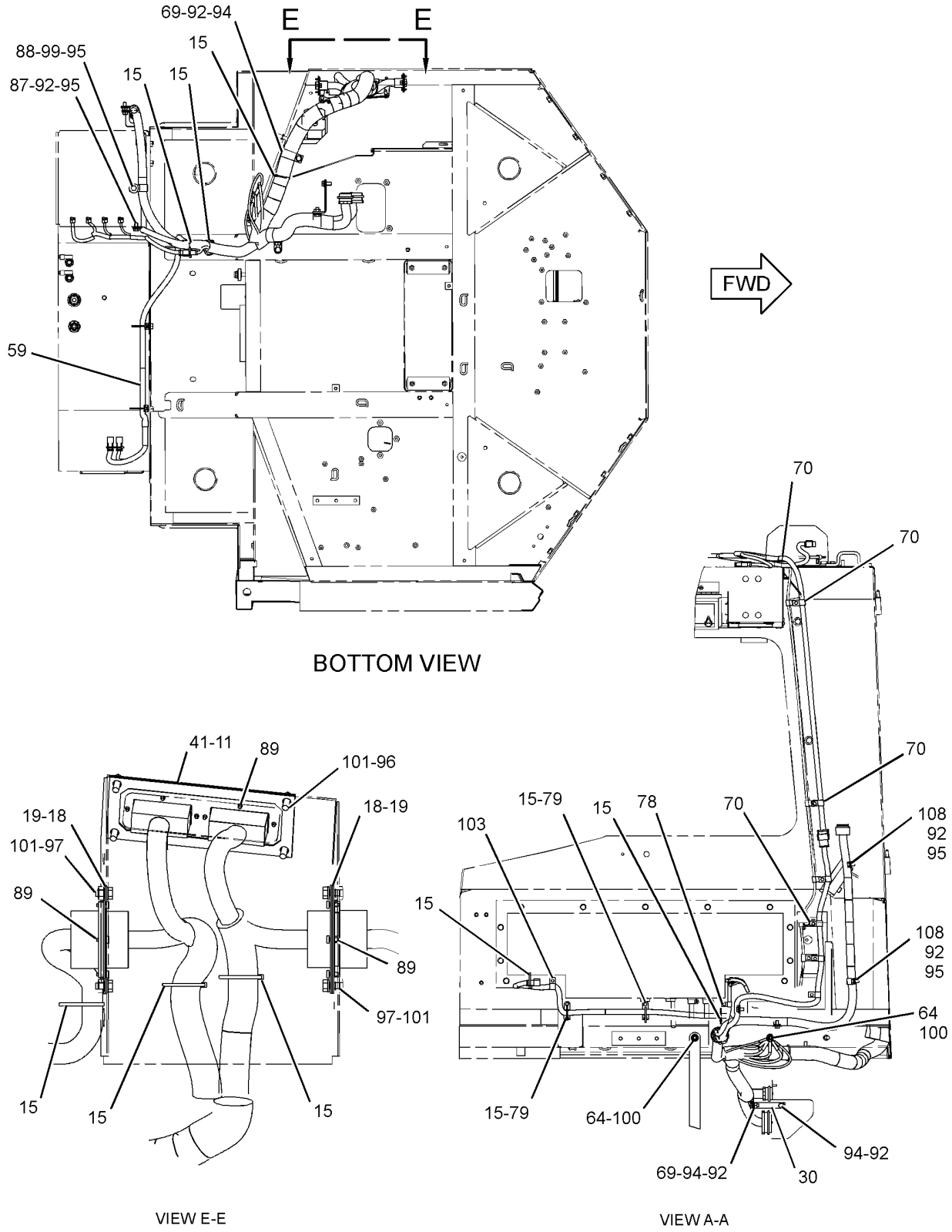

GRAPHIC #3

g01441284

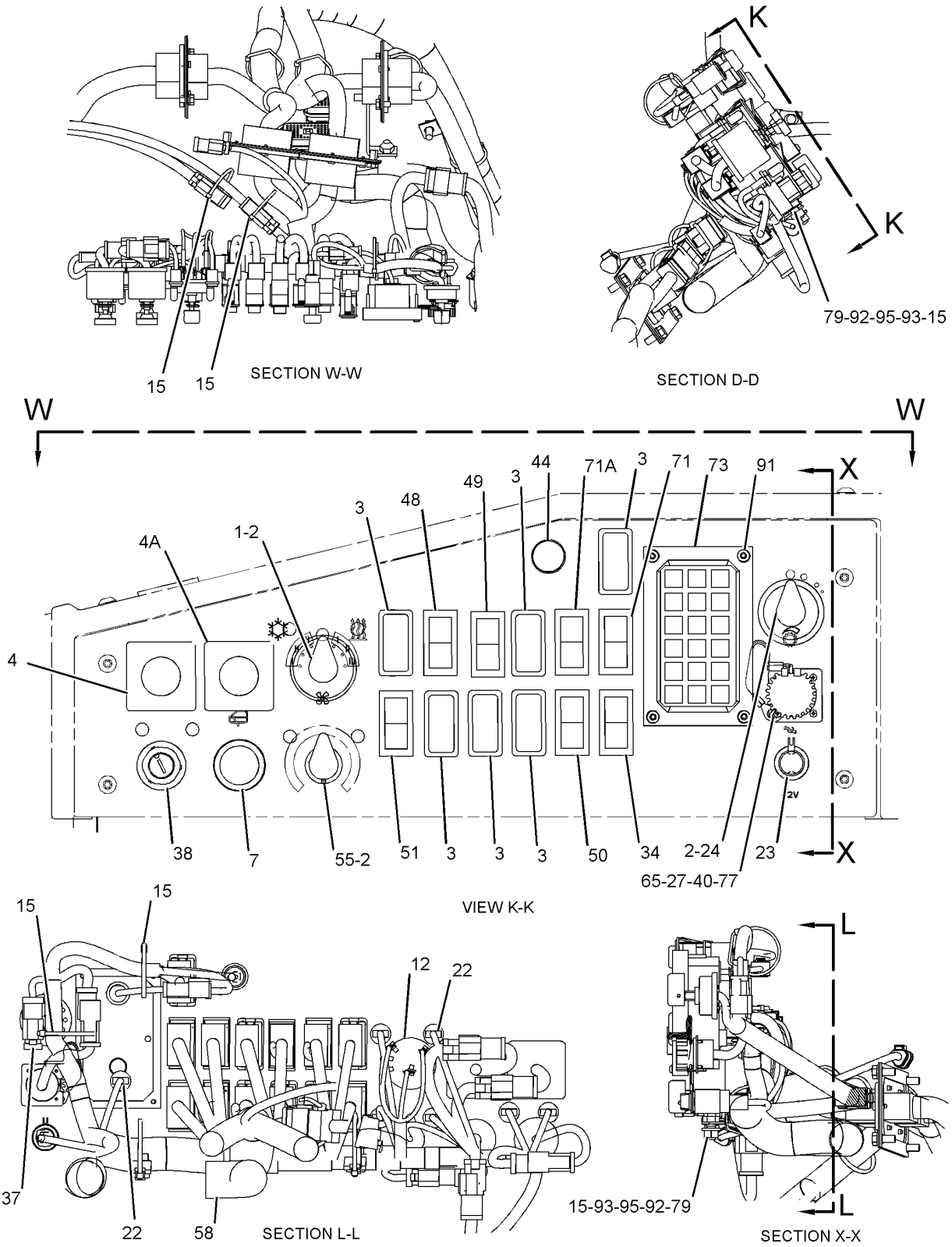

GRAPHIC #4 g01458187

REFER TO ALL ILLUSTRAIONS OF
THIS GROUP FOR AUXILIARY VIEWS

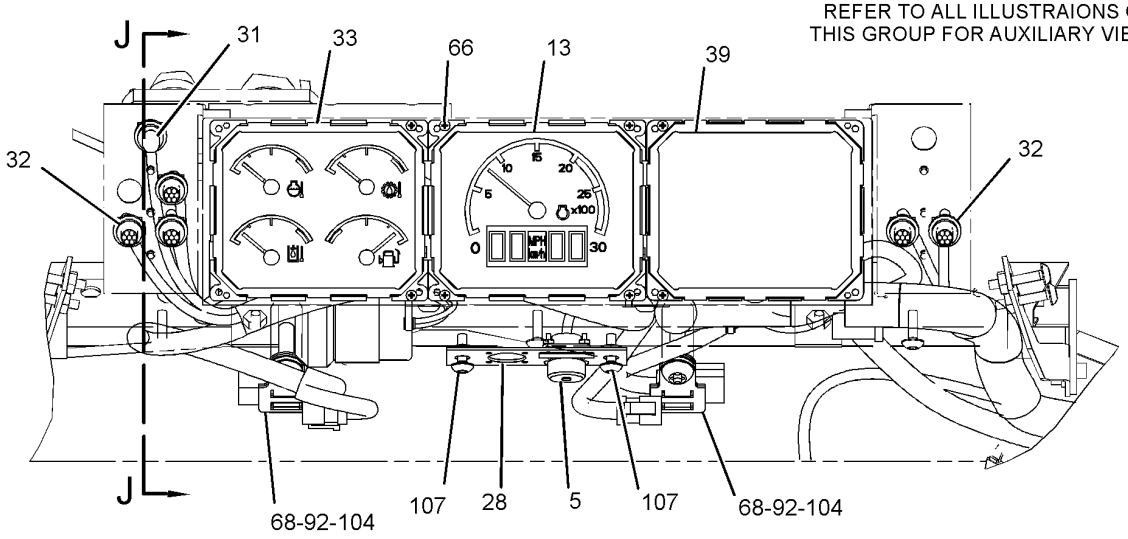

VIEW B-B

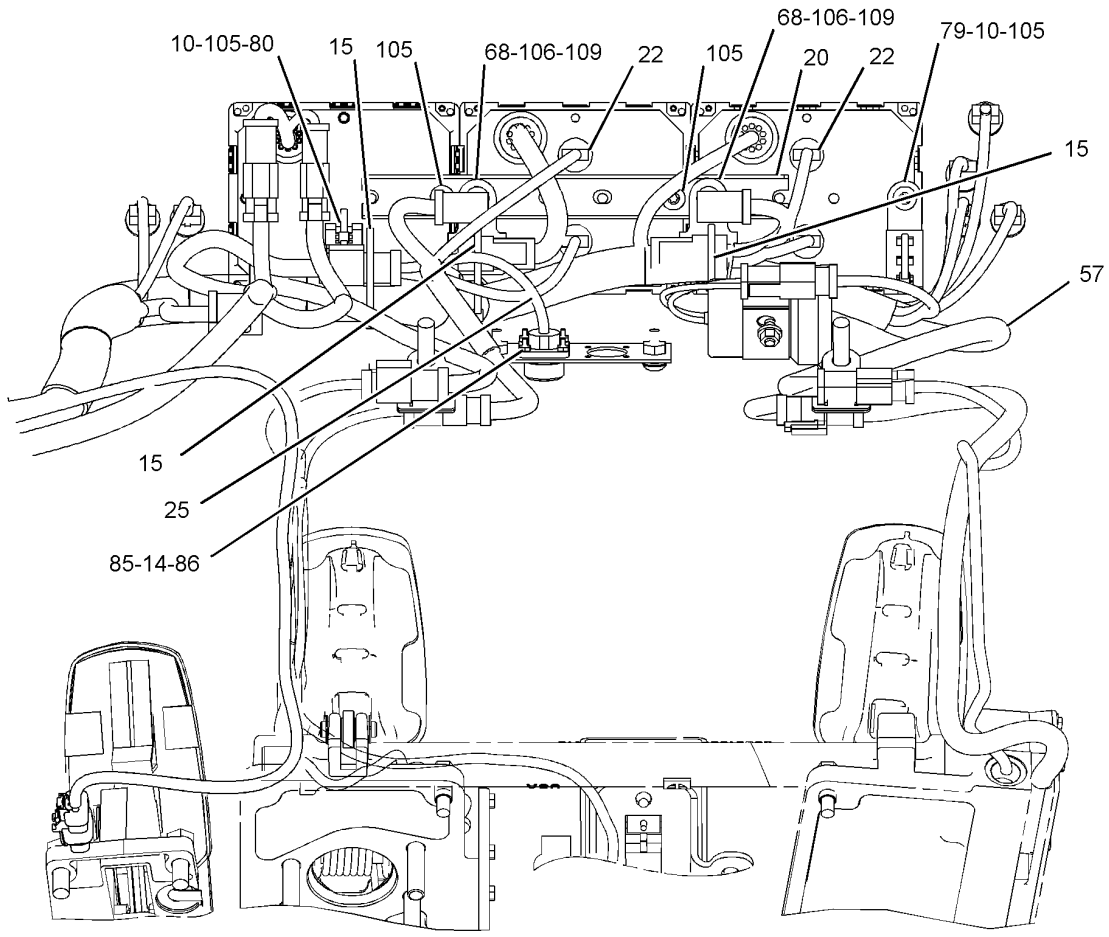

VIEW C-C

GRAPHIC #5

g01441287

REFER TO ALL ILLUSTRATIONS OF
THIS GROUP FOR AUXILIARY VIEWS

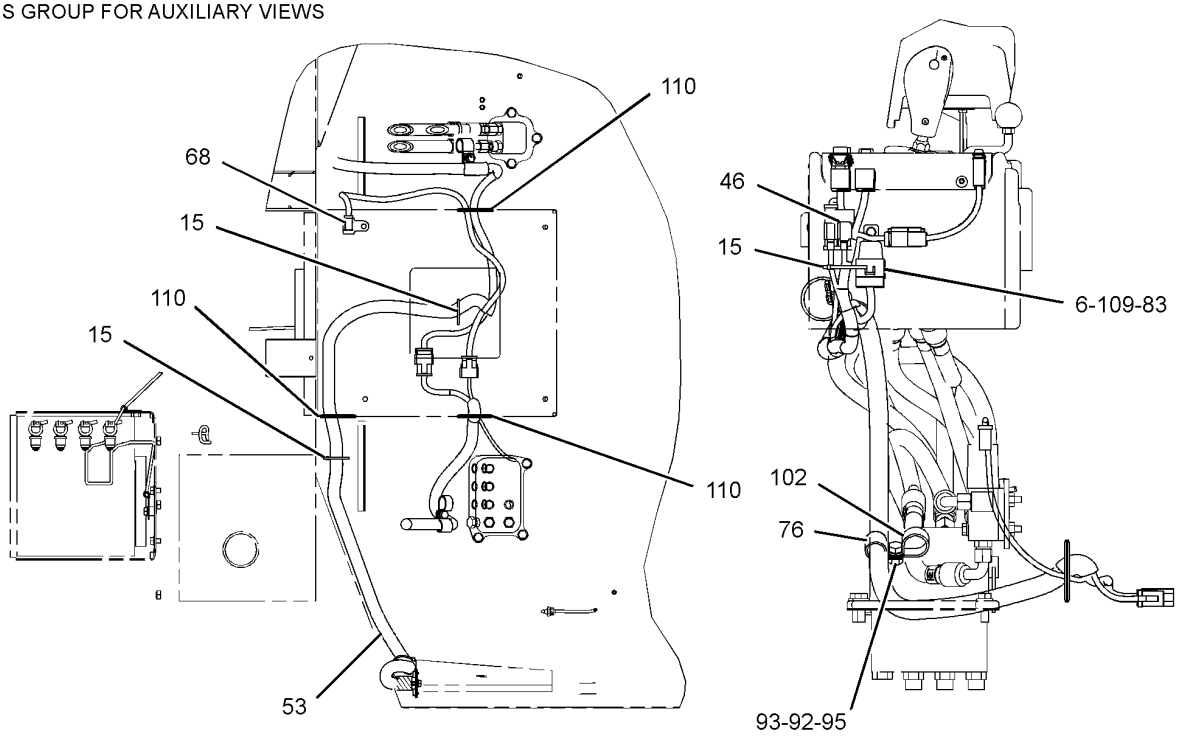

SECTION G-G

VIEW U-U

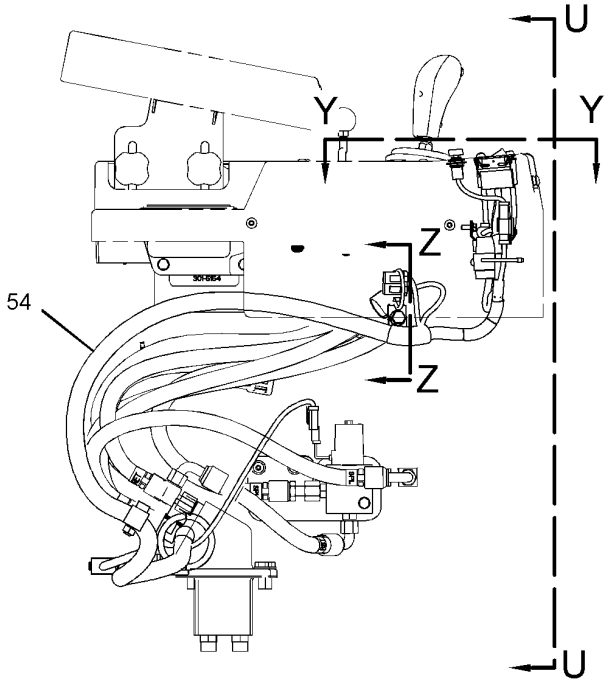

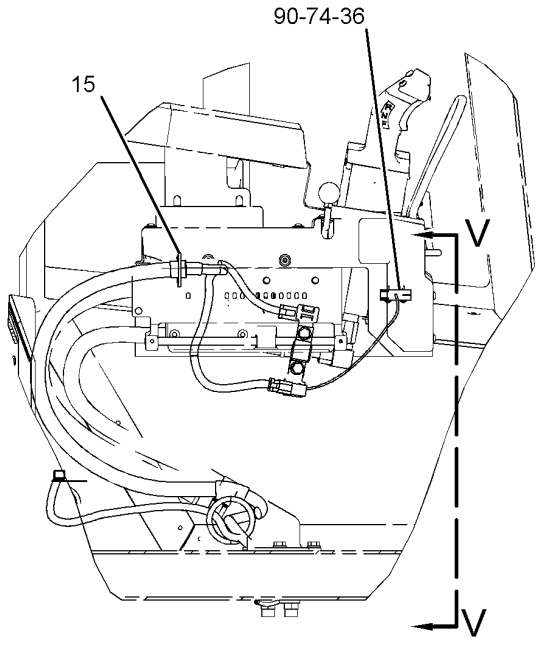

SECTION M-M

SECTION N-N

GRAPHIC #6

g01441288

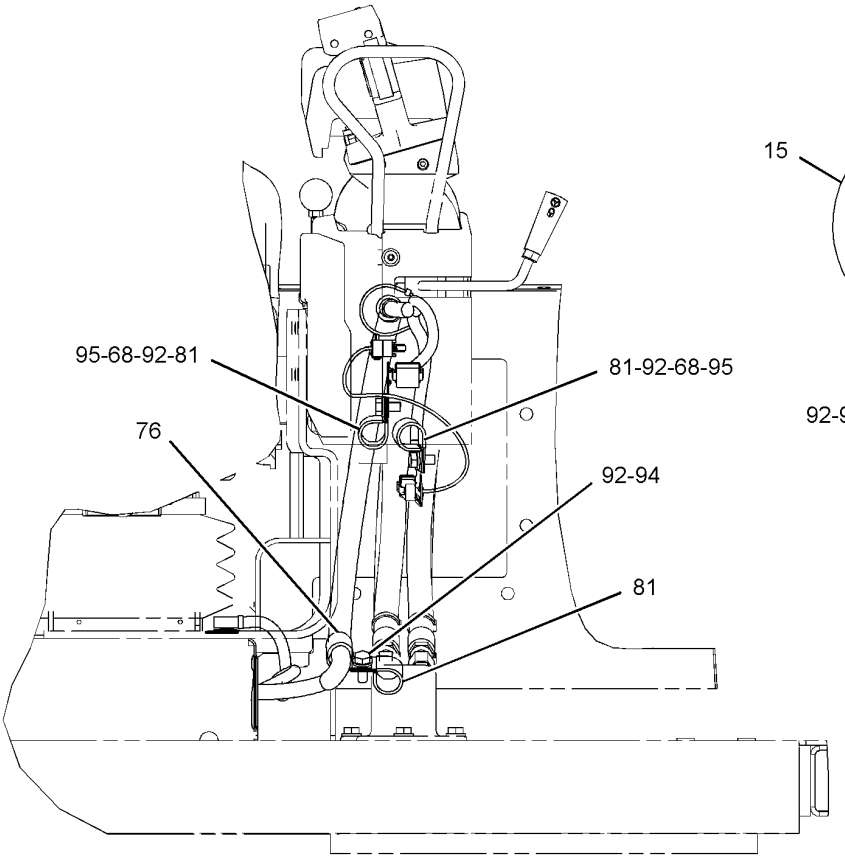

VIEW V-V

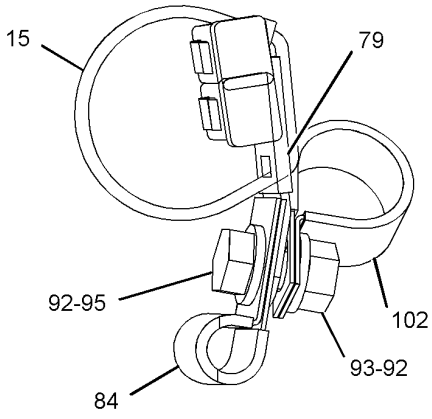

SECTION Z-Z

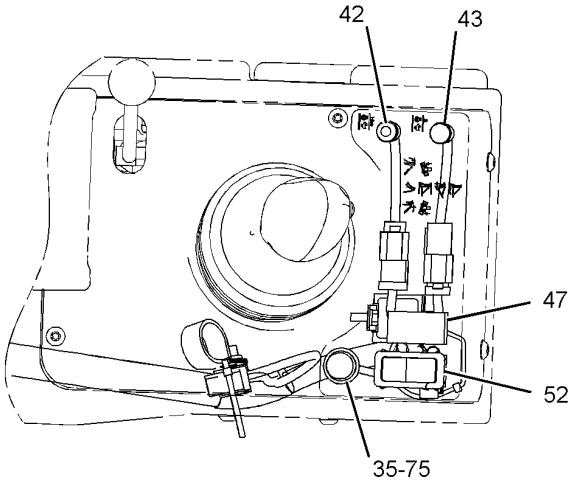

VIEW Y-Y

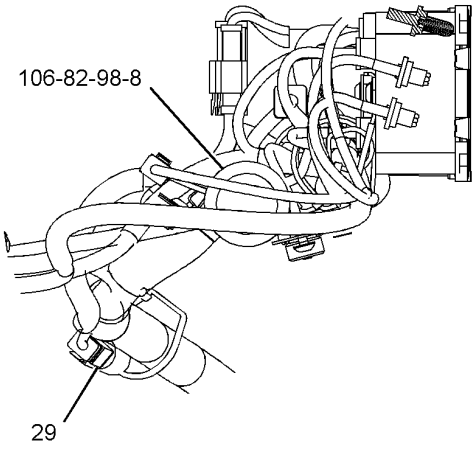

SECTION J-J

GRAPHIC #7 **<END>** g01441289

282-4890 WIRING GP-CAMERA

S/N: 2211-UP
PART OF 282-5330 CAMERA AR
AN ATTACHMENT

SMCS-1408, 7348 **i02902437**

NOTE	REF NO	GRAPHIC REF	PART NUMBER	QTY	PART NAME 1 2 3 4 5 6 (PRODUCT LEVEL)	SEE PAGE
	1	1	**9X-6772**	38	STRAP-CABLE	
J	2	1	**251-4160**	1	CAMERA GP (115-DEG, COLOR)	
	3	1	**251-8248**	1	CABLE AS-COMMUNICATION (5-M)	
	4	1	**261-3223**	2	CABLE AS-COMMUNICATION (3-M)	
	5	1	**290-0106**	1	BRACKET	
	6	1	**7X-7729**	2	WASHER (11X25X3-MM THK)	
	7	1	**8M-2772**	1	CLIP	
	8	1	**8T-4121**	1	WASHER-HARD (11X21X2.5-MM THK)	
M	9	1	**8T-4136**	2	BOLT (M10X1.5X25-MM)	
M	10	1	**8T-4137**	1	BOLT (M10X1.5X20-MM)	
					AVAILABLE REPAIR KIT(S):	
J			**251-4162**	1	KIT-BRACKET (CAMERA)	
					(INCLUDES BOLTS, BRACKET, LOCKNUTS,GASKET & ALLENKEY)	

J-KITS MARKED J SERVICES PARTS MARKED J
M-METRIC PART

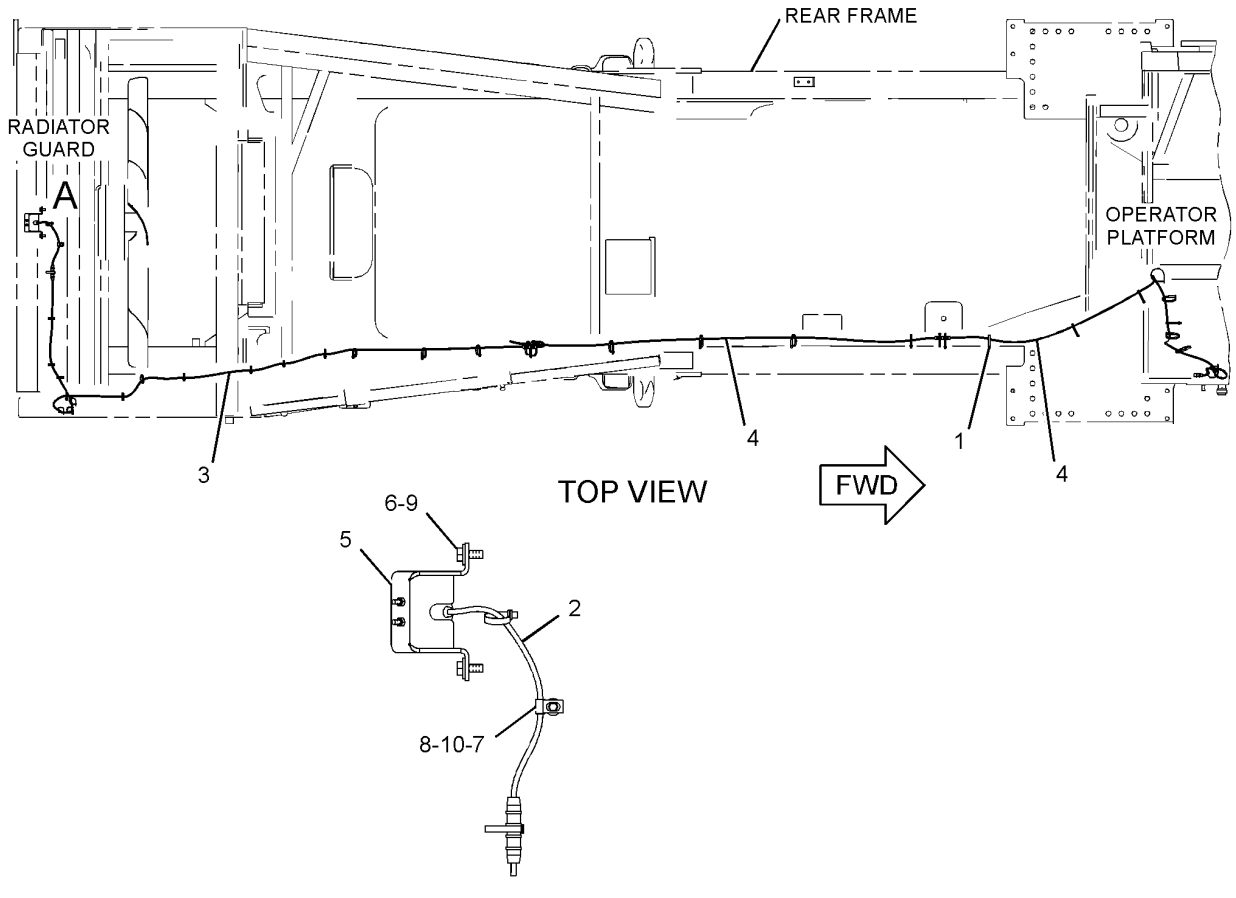

VIEW OF AREA A

GRAPHIC #1 **<END>** g01448931

ELECTRICAL AND STARTING SYSTEM

312-3386 WIRING GP-CHASSIS

S/N: 2211-UP

PART OF 316-6993 ELECTRICAL AR

SMCS-1408 **i02894347**

NOTE	REF NO	GRAPHIC REF	PART NUMBER	QTY	PART NAME 1 2 3 4 5 6 (PRODUCT LEVEL)	SEE PAGE
	1	1	**9X-6772**	3	STRAP-CABLE	
	2	1	**150-8380**	1	BRACKET AS	
M		1	**8T-3490**	1	NUT-WELD (M10X1.5-THD)	
	3	1	**221-3405**	1	SENSOR GP-PRESSURE (IMPLEMENT PUMP OIL, RH)	
		1	**155-2260**	1	KIT-CONNECTING PLUG (3-PIN)	
					(INCLUDES PLUG AS AND WEDGE)	
		1	**180-9340**	3	SOCKET-CONNECTOR	
	4	1	**253-2673**	3	SWITCH AS-PRESSURE (DIFFERENTIAL)	
		1	**102-8802**	1	KIT-RECEPTACLE (2-PIN)	
					(INCLUDES RECEPTACLE AS AND WEDGE)	
		1	**3J-1907**	1	SEAL-O-RING	
		1	**5F-9144**	1	SEAL-O-RING	
		1	**186-3735**	1	PIN-CONNECTOR (16-GA TO 18-GA)	
E		1	**9X-1813**		SLEEVE (14-CM)	
	5	1	**287-1731**	1	BRACKET AS	
	6	1	**310-7896**	1	HARNESS AS-PLATFORM (FILTER, PUMP BYPASS SWITCHES)	
	7	1	**130-5300**	3	CLIP	
	8	1	**130-5301**	2	CLIP	
	9	1	**147-0385**	2	CLIP	
	10	1	*148-8407*	1	PLUG AS	
		1	**3J-1907**	1	SEAL-O-RING	
		1	**9S-4191**	1	PLUG-O-RING	
	11	1	**3J-1907**	4	SEAL-O-RING	
	12	1	**4D-8123**	1	CLIP	
	13	1	**4D-9517**	2	CLIP	
	14	1	**5F-9144**	3	SEAL-O-RING	
	15	1	**6V-2383**	1	CLIP	
	16	1	**6V-3265**	2	CLIP	
	17	1	**8M-2770**	4	CLIP	
	18	1	**8T-4121**	16	WASHER-HARD (11X21X2.5-MM THK)	
M	19	1	**8T-4136**	15	BOLT (M10X1.5X25-MM)	
M	20	1	**8T-4137**	1	BOLT (M10X1.5X20-MM)	

E-ORDER BY THE CENTIMETER
M-METRIC PART

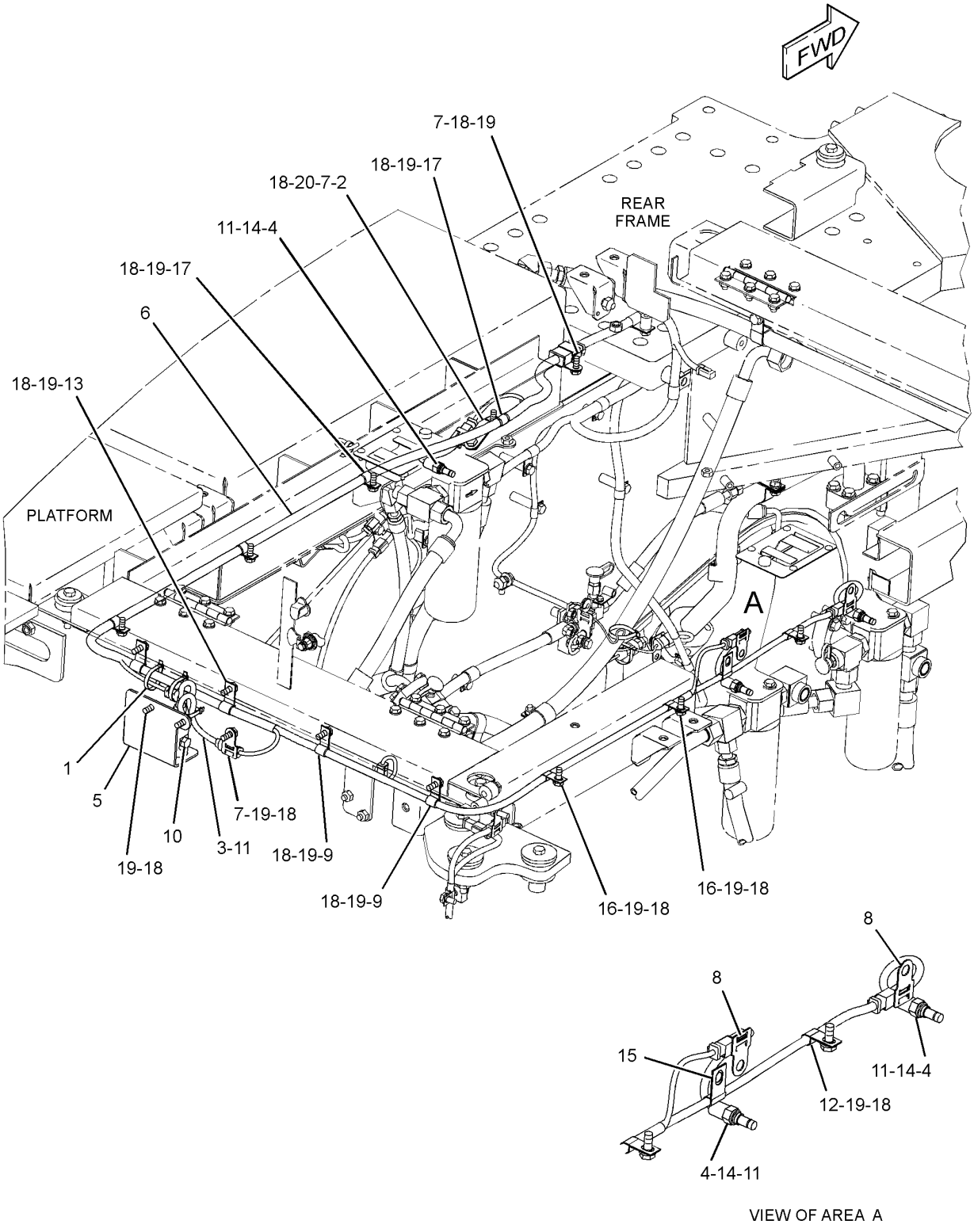

GRAPHIC #1 **<END>** g01443442

268-6645 WIRING GP-COMMUNICATION–PRODUCT LINK

S/N: 2211-UP

PART OF 282-9087, 282-9089 INSTALLATION AR-COMMUNICATION

AN ATTACHMENT

SMCS-1408, 7606 **i02946645**

NOTE	REF NO	GRAPHIC REF	PART NUMBER	QTY	PART NAME 1 2 3 4 5 6 (PRODUCT LEVEL)	SEE PAGE
	1	1	**8C-5607**	8	MOUNT-ISOLATION	
	2	1	**8C-5608**	4	SPACER (6.5X9.5X25.4-MM THK)	
	3	1	**9X-6772**	12	STRAP-CABLE	
	4	1	**311-8376**	1	SERVICE GP-COMMUNICATION (PRODUCT LINK 300)	
Y	5	1	**263-9088**	1	CONTROL GP-COMMUNICATION (PRODUCT LINK 121SR)	204
	6	1	**268-6646**	1	HARNESS AS-CONTROL (PRODUCT LINK)	
	7	1	**270-8544**	1	BRACKET AS	
	8	1	**290-2227**	1	PLATE AS	
M		1	**6V-9632**	4	NUT-WELD (M6X1-THD)	
	9	1	**310-2391**	1	ANTENNA AS	
	10	1	**4P-7581**	1	CLIP	
M	11	1	**6V-8490**	4	BOLT (M6X1X25-MM)	
M	12	1	**8C-8451**	4	BOLT (M6X1X40-MM)	
	13	1	**8T-4121**	4	WASHER-HARD (11X21X2.5-MM THK)	
M	14	1	**8T-4136**	2	BOLT (M10X1.5X25-MM)	
M	15	1	**8T-4137**	2	BOLT (M10X1.5X20-MM)	
	16	1	**9X-6165**	4	WASHER (6.5X22X2.5-MM THK)	
	17	1	**9X-8256**	4	WASHER (6.6X12X2-MM THK)	

M-METRIC PART
Y-SEPARATE ILLUSTRATION

268-6645 **WIRING GP-COMMUNICATION** *(contd.)* **i02946645**

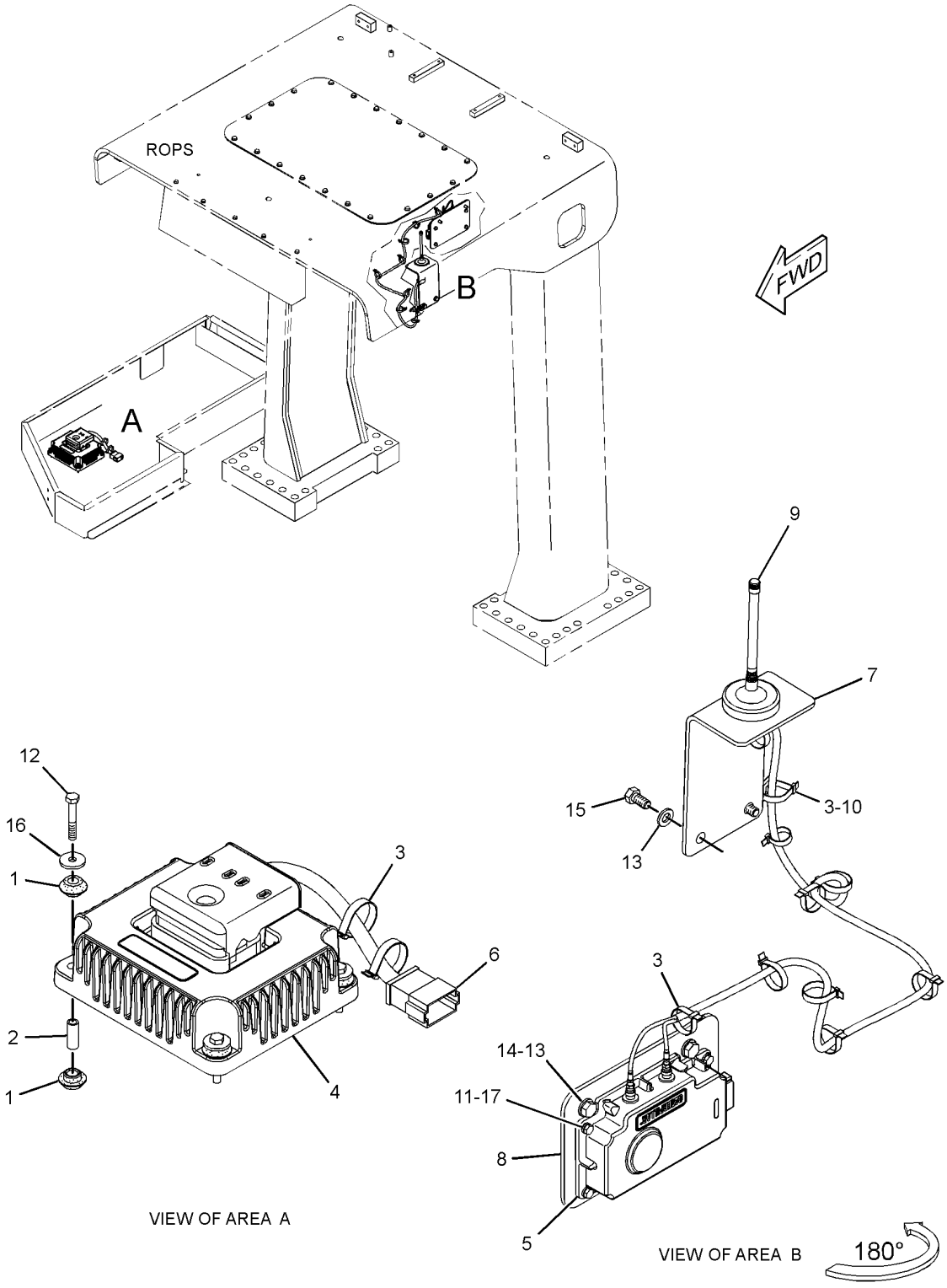

GRAPHIC #1 **<END>** g01442637

ELECTRICAL AND STARTING SYSTEM

284-1177 WIRING GP-CONVERTER

S/N: 2211-UP

AN ATTACHMENT

SMCS-1421 **i02946646**

NOTE	REF NO	GRAPHIC REF	PART NUMBER	QTY	PART NAME 1 2 3 4 5 6 (PRODUCT LEVEL)	SEE PAGE
	1	1	**7K-1181**	1	STRAP-CABLE	
	2	1	**209-0381**	1	CONVERTER-POWER (24-VOLT TO 12-VOLT)	
	3	1	**283-7188**	1	HARNESS AS-CAB (POWER CONVERTER)	
	4	1	**6V-2687**	6	SCREW-PAN HEAD (10-24X1-IN)	

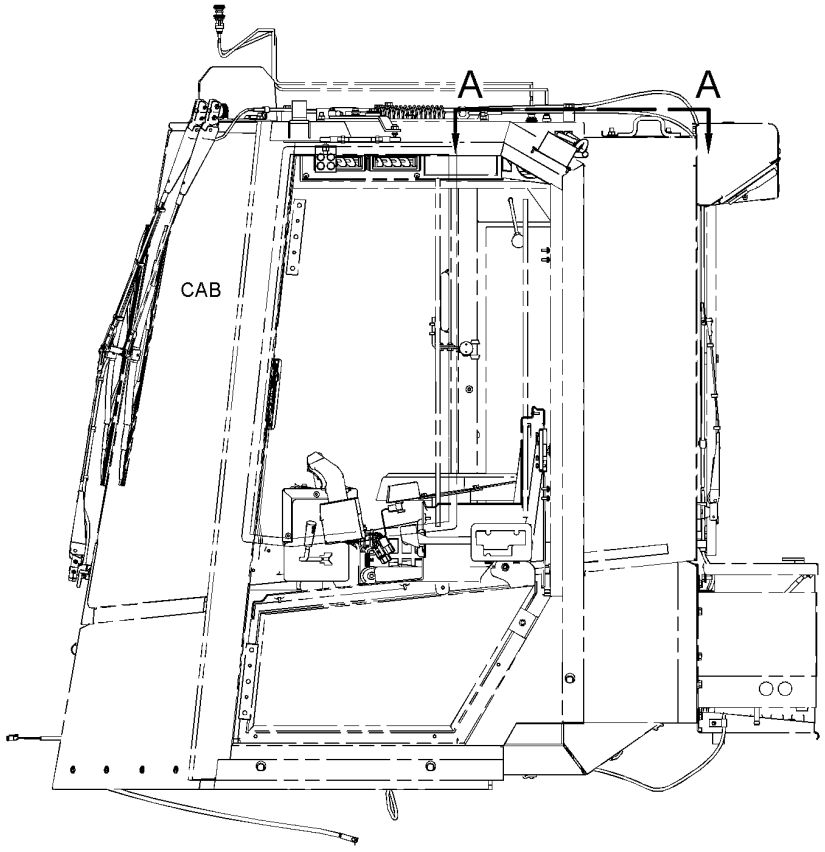

LEFT SIDE VIEW

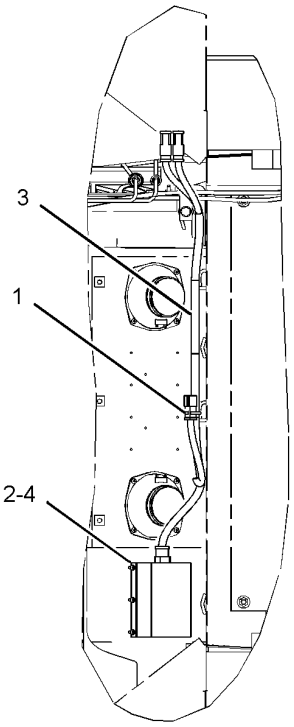

SECTION A-A

GRAPHIC #1 **<END>** g01449442

ELECTRICAL AND STARTING SYSTEM

307-9914 WIRING GP-ELECTRONICS BAY

S/N: 2211-UP

PART OF 316-6993 ELECTRICAL AR

SMCS-1408, 7610, 7620 **i02894348**

NOTE	REF NO	GRAPHIC REF	PART NUMBER	QTY	PART NAME 1 2 3 4 5 6 (PRODUCT LEVEL)	SEE PAGE
	1	1	**3D-2435**	1	GASKET	
Y	2	2	**3E-0075**	1	SWITCH GP-MAGNETIC (24-VOLT DC) (START RELAY 1)	284
Y	2A	2	**3E-0075**	1	SWITCH GP-MAGNETIC (24-VOLT DC) (START RELAY 2)	284
	3	1	**3E-5239**	1	RELAY AS (24-VOLT) (HORN)	
	3A	1	**3E-5239**	1	RELAY AS (24-VOLT) (INTERMEDIATE START RELAY)	
	3B	1	**3E-5239**	1	RELAY AS (24-VOLT) (FENDER FLOODLIGHTS)	
	3C	1	**3E-5239**	1	RELAY AS (24-VOLT) (HEATED MIRRORS)	
	3D	1	**3E-5239**	1	RELAY AS (24-VOLT) (ROPS HID LIGHTS)	
	3E	1	**3E-5239**	1	RELAY AS (24-VOLT) (BACKLIGHT)	
	3F	1	**3E-5239**	1	RELAY AS (24-VOLT) (BACKUP ALARM)	
	3G	1	**3E-5239**	1	RELAY AS (24-VOLT) (AIR CONDITIONER PRECLEANER)	
	4	2	**6I-1418**	4	SPACER (8.2X12.7X28.7-MM THK)	
	5	2	**7I-3652**	1	STRIP	
	6	2	**7V-9275**	1	STRAP	
	7	2	**8T-3518**	2	NUT-FULL (1/2-13-THD)	
	8	2	**8T-9655**	16	MOUNT-ISOLATION	
	9	1,2	**9X-6772**	61	STRAP-CABLE	
	10	2	**113-8490**	24	FUSE (10-AMPERE)	
	11	2	**113-8491**	15	FUSE (15-AMPERE)	
	12	2	**113-8492**	1	FUSE (20-AMPERE)	
	13	2	**116-7471**	1	PULLER-MINIFUSE	
	14	2	**133-3489**	1	PLATE AS	
		2	**9D-4439**	4	STUD-WELD (3/8-16X1-IN)	
	15	2	**145-0487**	4	SPACER (8.2X12.7X43.6-MM)	
YR	16	2	**160-4891**	1	CONTROL GP-UNPROGRAMMED (VIMS)	205
	17	2	**187-6415**	8	TUBE	
	18	2	**187-8674**	1	BLOCK AS-JUNCTION	
	19	2	**187-8675**	1	GASKET	
	20	1	**234-5925**	3	GASKET	
Y	21	2	**241-8368**	1	SWITCH GP-MAGNETIC (24-VOLT) (MAIN RELAY)	287
	22	1	**258-4142**	1	BAR-BUS	
	23	1	**279-5295**	1	COVER AS-ELECTRONICS BAY	
	24	2	**286-3055**	1	WIRE AS	
	25	2	**286-3056**	1	WIRE AS	
Y	27	1	**307-8352**	1	ENCLOSURE GP-ELECTRONICS BAY	211
	28	1	**307-9915**	1	HARNESS AS-CONTROL (ELECTRONICS BAY)	
	29	1	**309-1271**	2	GASKET	
	30	2	**309-1272**	2	GASKET	
	31	2	**309-1273**	1	GASKET	
	32	2	**316-5711**	1	WIRE AS	
	33	2	**322-3621**	1	CONTROL GP-UNPROGRAMMED (POWER TRAIN)	
	34	2	**107-3727**	4	SCREW-PAN HEAD	
	35	2	**171-2212**	1	CIRCUIT BREAKER AS (105-AMPERE) (START)	
	35A	2	**171-2212**	1	CIRCUIT BREAKER AS (105-AMPERE) (MAIN)	
					(EACH CIRCUIT BREAKER AS INCLUDES)	
		2	**6V-8187**	2	NUT (1/4-28-THD)	
		2	**8T-4205**	2	WASHER-HARD (7.2X14.5X2-MM THK)	
		2	**253-2111**	2	LOCKWASHER	
	36	1	**1H-3244**	3	LOCKWASHER	
	37	2	**3D-9799**	4	SCREW-MACHINE (8-32X0.875-IN)	
	38	2	**3T-2662**	1	CIRCUIT BREAKER AS (15-AMPERE) (RUNNING LIGHTS)	
		2	**6V-8376**	2	SCREW-MACHINE (8-32X0.25-IN)	
		2	**9B-7233**	2	LOCKWASHER	
	39	2	**4B-1240**	4	SCREW-MACHINE (10-32X1-IN)	
	40	2	**4B-4274**	4	WASHER (5.5X13X1.2-MM THK)	
	41	1	**4B-4863**	2	WASHER (4.7X11X1.2-MM THK)	

307-9914 **WIRING GP-ELECTRONICS BAY** *(contd.)* **i02894348**

NOTE	REF NO	GRAPHIC REF	PART NUMBER	QTY	PART NAME 1 2 3 4 5 6 (PRODUCT LEVEL)	SEE PAGE
	42	2	**4P-8134**	3	CLIP	
M	43	1	**5C-2890**	3	NUT (M6X1-THD)	
	44	2	**6T-3642**	1	CIRCUIT BREAKER AS (10-AMPERE) (KEY SWITCH)	
		2	**6V-8376**	2	SCREW-MACHINE (8-32X0.25-IN)	
		2	**9B-7233**	2	LOCKWASHER	
	45	2	**6V-8801**	3	NUT (3/8-16-THD)	
	46	2	**7F-0560**	2	WASHER (0.516X0.938X0.101-IN THK)	
	47	2	**7X-0589**	3	WASHER-HARD (12X28.5X5-MM THK)	
M	48	2	**7X-0818**	4	BOLT (M8X1.25X45-MM)	
M	49	2	**8C-6364**	4	BOLT-SOCKET HEAD (M5X0.8X14-MM)	
	50	2	**8T-0328**	4	WASHER-HARD (5.5X10X1-MM THK)	
	51	1	**8T-4121**	12	WASHER-HARD (11X21X2.5-MM THK)	
M	52	1	**8T-4138**	12	BOLT (M6X1X20-MM)	
M	53	1	**8T-4195**	12	BOLT (M10X1.5X30-MM)	
	54	1	**8T-4205**	3	WASHER-HARD (7.2X14.5X2-MM THK)	
	55	1	**8T-4223**	3	WASHER-HARD (13.5X25.5X3-MM THK)	
M	56	1	**8T-4244**	3	NUT (M12X1.75-THD)	
	57	2	**8T-4896**	3	WASHER-HARD (10.2X18.5X2.5-MM THK)	
M	58	2	**8T-6869**	4	BOLT (M8X1.25X60-MM)	
	59	1	**9F-9327**	8	SCREW-MACHINE (10-32X0.375-IN)	
	60	2	**9N-0869**	8	WASHER-HARD (8.8X25.5X2-MM THK)	
M	61	2	**9X-2042**	27	SCREW-TRUSS HEAD (M6X1X12-MM)	
M	62	2	**9X-2044**	2	SCREW-TRUSS HEAD (M6X1X16-MM)	
	63	1,2	**9X-8256**	14	WASHER (6.6X12X2-MM THK)	
E	64	2	**177-4122**		SEAL (358-CM)	
E	65	2	**103-2543**		SEAL (3-CM)	

E-ORDER BY THE CENTIMETER
M-METRIC PART
R-REMFG PART MAY BE AVAILABLE
Y-SEPARATE ILLUSTRATION

307-9914 **WIRING GP-ELECTRONICS BAY** *(contd.)* **i02894348**

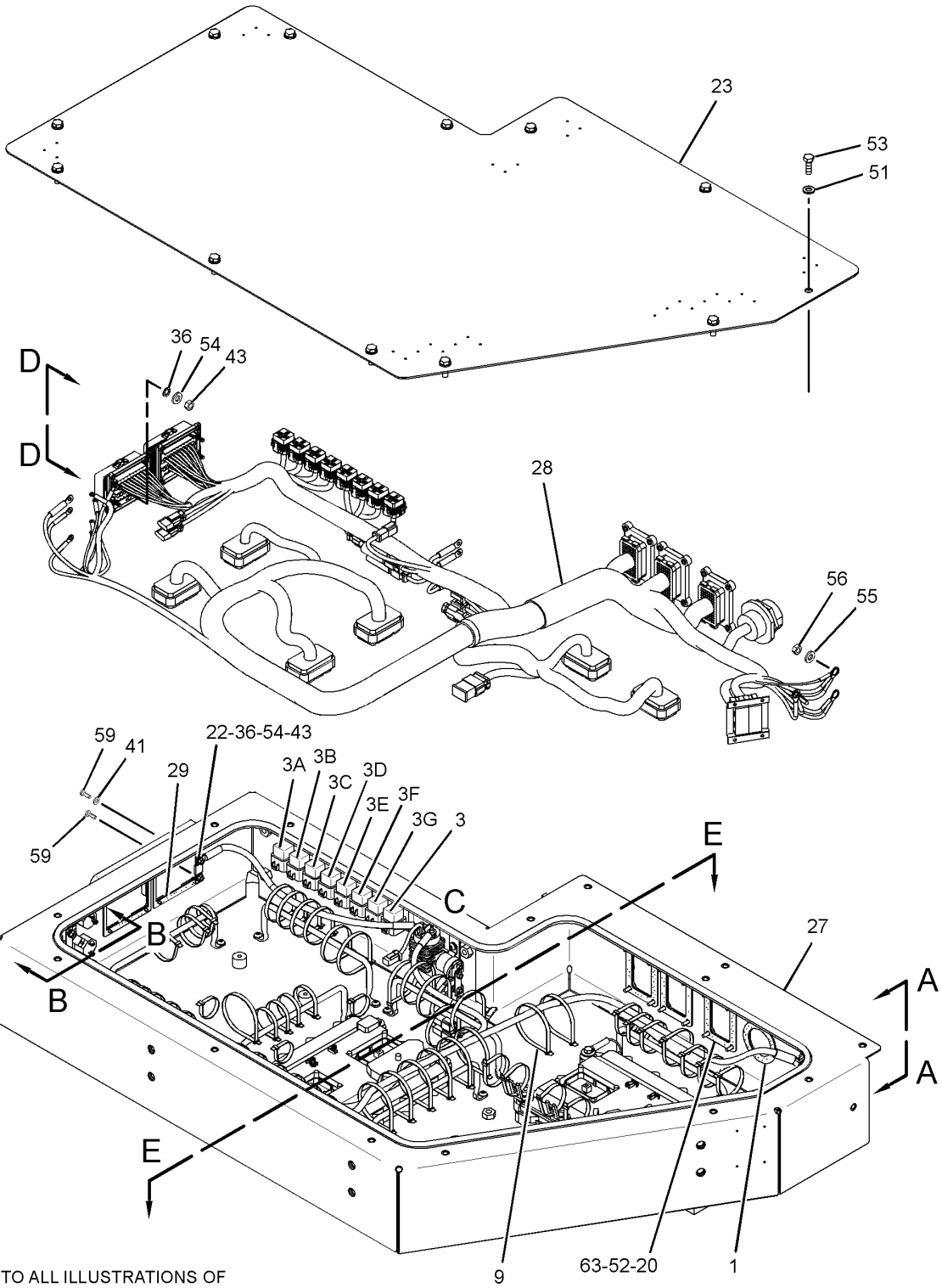

REFER TO ALL ILLUSTRATIONS OF THIS GROUP FOR AUXILIARY VIEWS

GRAPHIC #1 g01443562

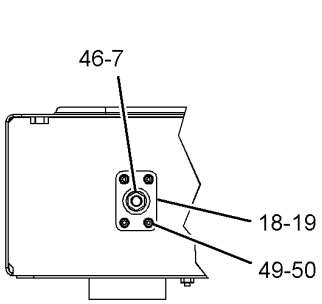

VIEW A-A

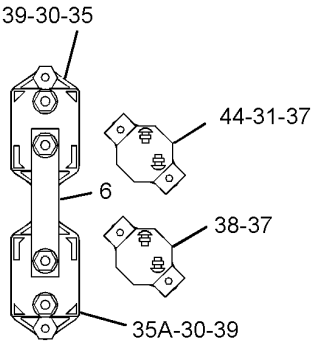

VIEW B-B

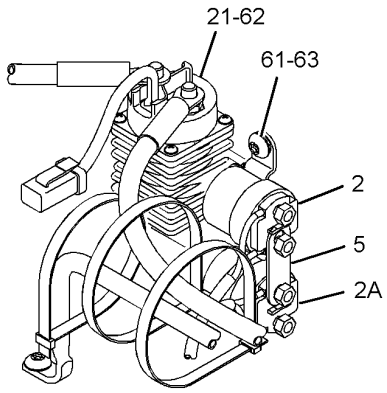

VIEW OF AREA C

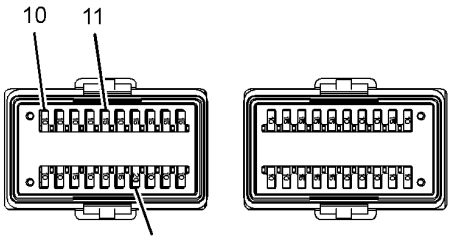

VIEW D-D

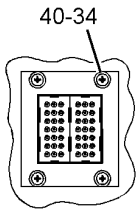

VIEW F-F

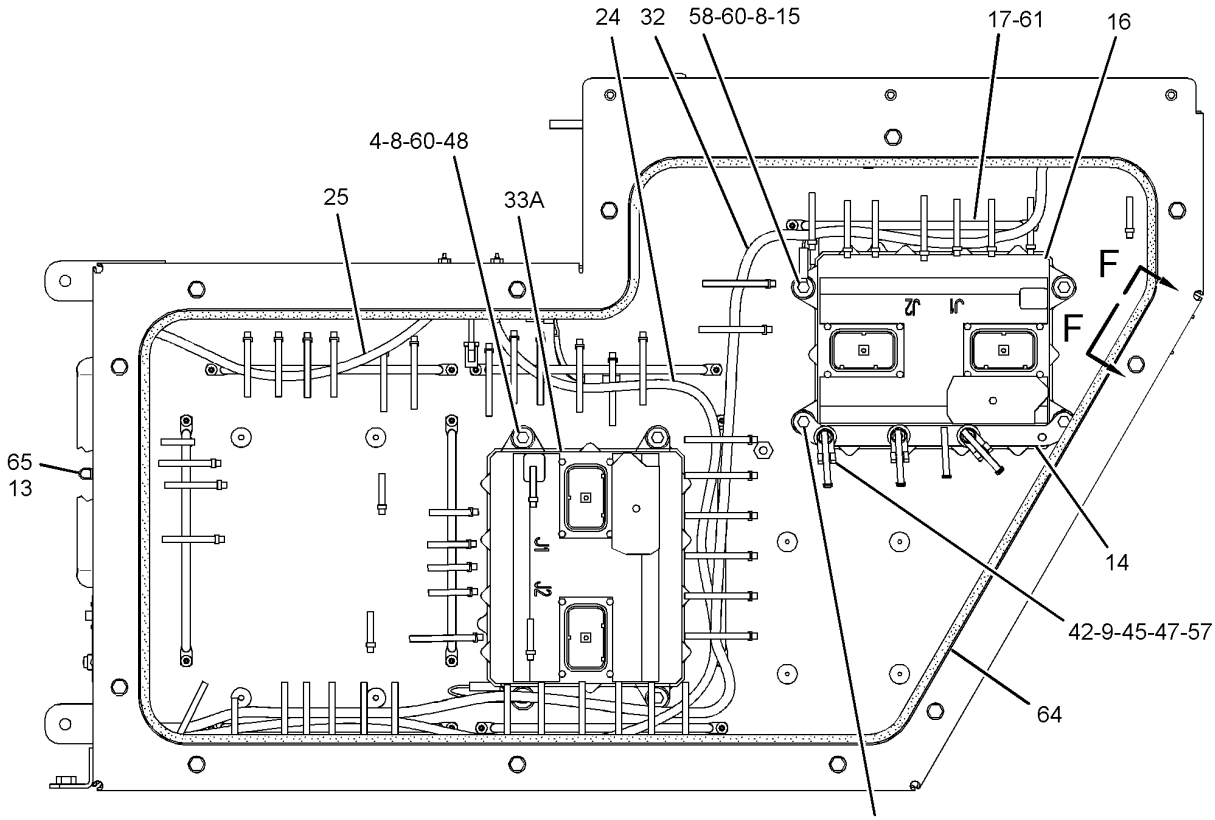

VIEW E-E

GRAPHIC #2 **<END>** g01443563

ELECTRICAL AND STARTING SYSTEM

291-2837 WIRING GP-ENGINE

S/N: LJW2195-UP
PART OF 246-4283 ENGINE AR-COMPLETE
AN ATTACHMENT

SMCS-1403, 1408 **i02877275**

NOTE	REF NO	GRAPHIC REF	PART NUMBER	QTY	PART NAME 1 2 3 4 5 6 (PRODUCT LEVEL)	SEE PAGE
	1	2	**8M-9124**	1	WASHER (10X22.5X8-MM THK)	
	2	1,2	**9X-6772**	24	STRAP-CABLE	
	3	2	**116-4491**	1	BRACKET AS	
M		2	**8T-3490**	1	NUT-WELD (M10X1.5-THD)	
	4	2	**124-3019**	1	BRACKET AS	
M		2	**8T-3490**	1	NUT-WELD (M10X1.5-THD)	
	5	2	**140-2978**	1	BRACKET AS	
M		2	**8T-3490**	1	NUT-WELD (M10X1.5-THD)	
	6	2	**278-7103**	1	BRACKET	
	7	1	**285-3338**	1	HARNESS AS-ENGINE	
	8	2	**099-3607**	1	WASHER-HARD (10.2X30X3.2-MM THK)	
	9	1	**0L-1351**	1	BOLT (3/8-16X0.875-IN)	
	10	2	**0S-0509**	7	BOLT (3/8-16X0.75-IN)	
	11	2	**0S-1590**	1	BOLT (3/8-16X2-IN)	
	12	2	**0S-1591**	2	BOLT (3/8-16X1.5-IN)	
	13	2	**0S-1617**	1	BOLT (5/16-18X0.75-IN)	
	14	2	**130-5300**	10	CLIP	
	15	1,2	**132-5789**	15	CLIP	
	16	2	**272-1777**	4	WASHER-HARD (11X18.5X15-MM THK)	
	17	2	**4L-9337**	1	BOLT (3/8-16X1.5-IN)	
	18	1,2	**4P-7581**	6	CLIP	
	19	2	**5M-2894**	10	WASHER-HARD (10.2X18.5X2.5-MM THK)	
	20	2	**5P-4116**	1	WASHER-HARD (8.8X20.5X2-MM THK)	
	21	2	**8T-4121**	2	WASHER-HARD (11X21X2.5-MM THK)	
M	22	2	**8T-4136**	2	BOLT (M10X1.5X25-MM)	
	23	2	**8T-4896**	1	WASHER-HARD (10.2X18.5X2.5-MM THK)	
	24	1	**9X-6458**	1	WASHER-HARD (10.2X22.5X3-MM THK)	

M-METRIC PART

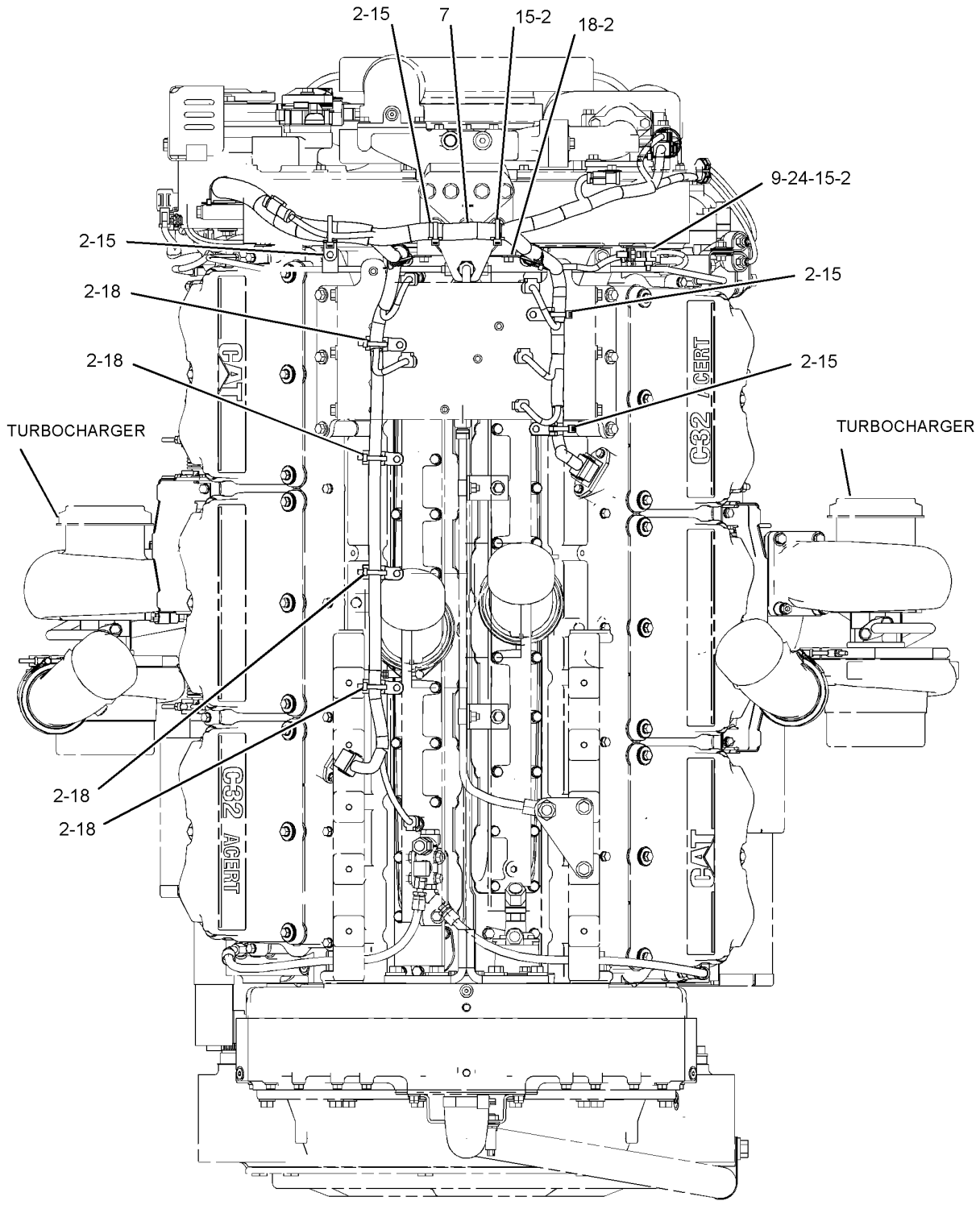

TOP VIEW OF ENGINE

GRAPHIC #1 g01433440

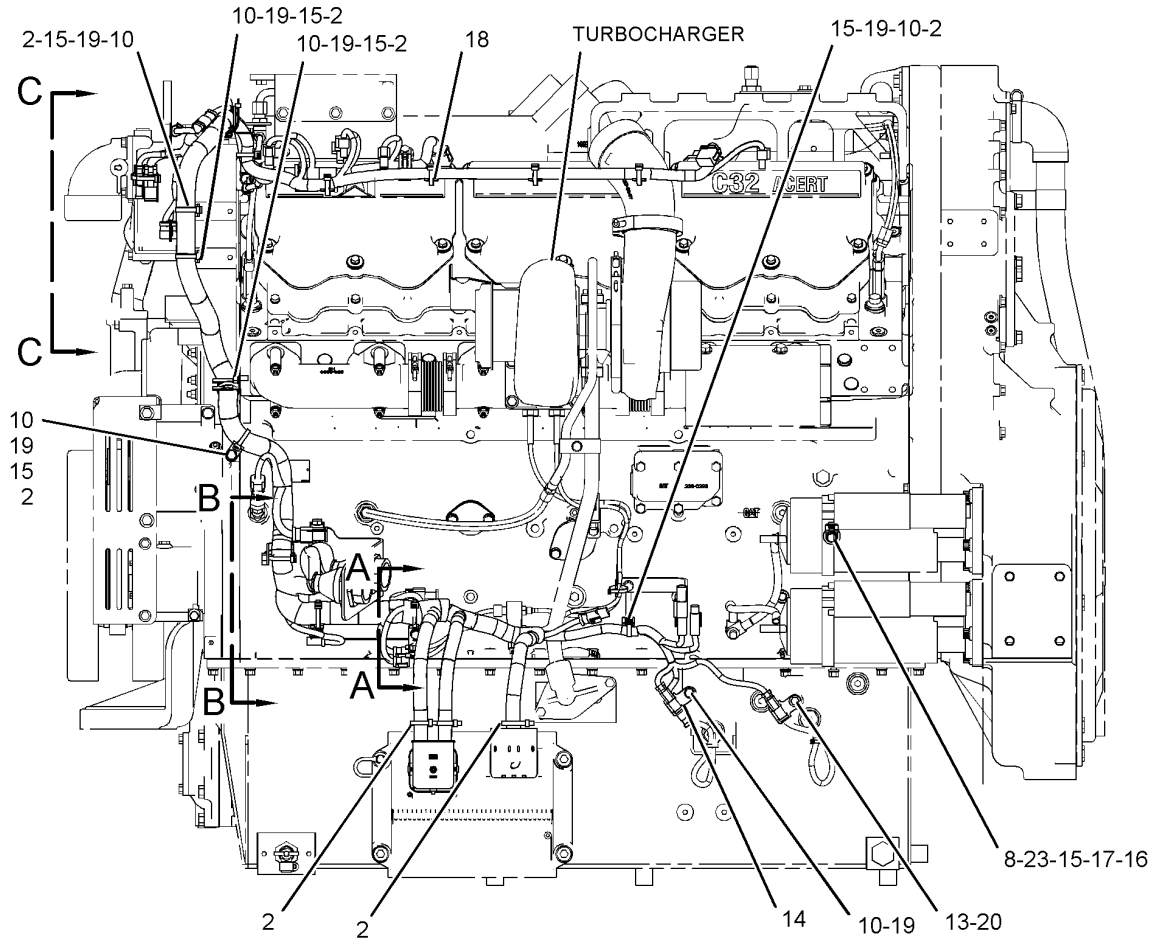

LEFT SIDE VIEW OF ENGINE

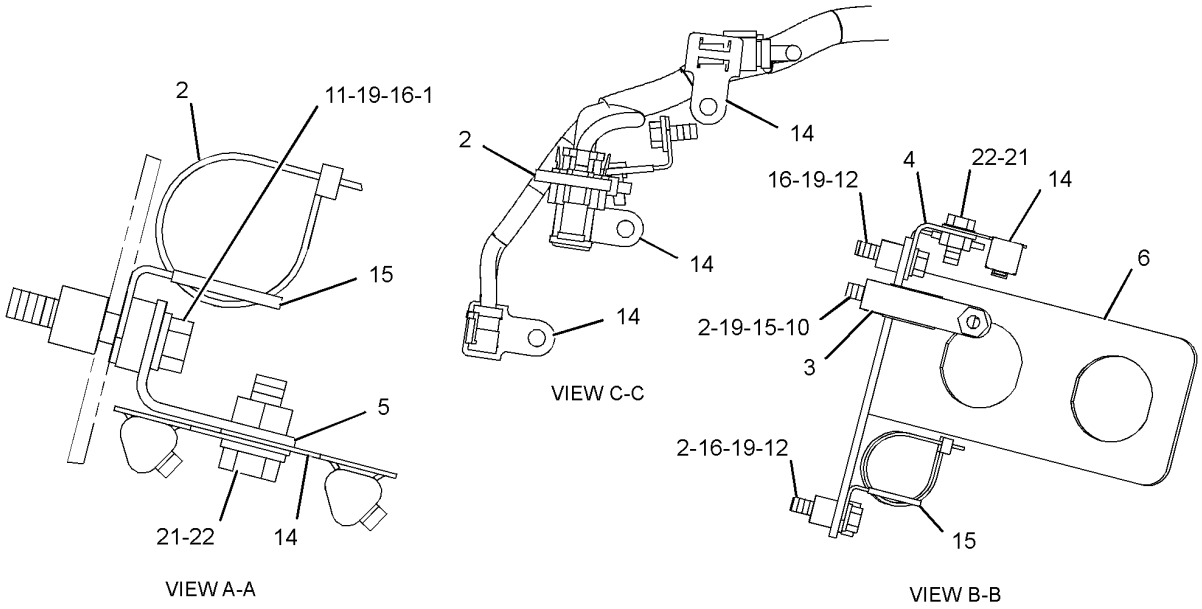

GRAPHIC #2 **<END>** g01433442

ELECTRICAL AND STARTING SYSTEM

300-3620 WIRING GP-ENGINE

S/N: 2211-UP

PART OF 316-6993 ELECTRICAL AR

SMCS-1403, 1408 **i02883139**

NOTE	REF NO	GRAPHIC REF	PART NUMBER	QTY	PART NAME 1 2 3 4 5 6 (PRODUCT LEVEL)	SEE PAGE
	1	1,2	**9X-6772**	9	STRAP-CABLE	
	2	1,2	**124-3019**	5	BRACKET AS	
					(EACH INCLUDES)	
M		1,2	**8T-3490**	1	NUT-WELD (M10X1.5-THD)	
	3	1,2	**144-4613**	2	ANGLE AS	
	4	2	**189-3761**	1	BRACKET AS	
M		2	**8T-3490**	1	NUT-WELD (M10X1.5-THD)	
	5	2	**200-6345**	2	MOUNT (DUAL SWIVEL)	
	6	2	**204-2281**	4	STRAP-TIE	
	7	1	**298-3617**	1	CABLE AS	
		1	**8T-8827**	1	BOOT	
		1	**030-1708**	1	TERMINAL-RING	
E		1	**159-8047**		CABLE-ELECTRICAL (0-GA, RED) (122-CM)	
B		1	**1P-0810**		TAPE-ELECTRICAL	
		1	**189-1899**	1	TERMINAL-RING	
	8	1	**300-3621**	1	HARNESS AS-ENGINE	
	9	1,2	**130-5300**	3	CLIP	
	10	2	**132-5789**	3	CLIP	
	11	2	**1S-0994**	2	CLIP	
	12	1,2	**4D-7735**	2	CLIP	
	13	1	**4D-9517**	2	CLIP	
	14	2	**4P-7581**	2	CLIP	
	15	1,2	**5M-3062**	7	BOLT (3/8-16X0.75-IN)	
	16	2	**5P-9085**	5	CLIP	
	17	2	**5S-7379**	3	BOLT (3/8-16X0.875-IN)	
	18	1	**6D-4244**	4	CLIP	
	19	1,2	**6D-4636**	4	CLIP	
	20	1,2	**6V-0826**	4	GROMMET	
	21	1	**8M-2770**	1	CLIP	
	22	1,2	**8T-4121**	13	WASHER-HARD (11X21X2.5-MM THK)	
M	23	1,2	**8T-4136**	7	BOLT (M10X1.5X25-MM)	
M	24	1,2	**8T-4137**	6	BOLT (M10X1.5X20-MM)	
	25	1,2	**8T-4896**	8	WASHER-HARD (10.2X18.5X2.5-MM THK)	
	26	2	**154-6626**	1	BRACKET AS	

B-USE AS REQUIRED
E-ORDER BY THE CENTIMETER
M-METRIC PART

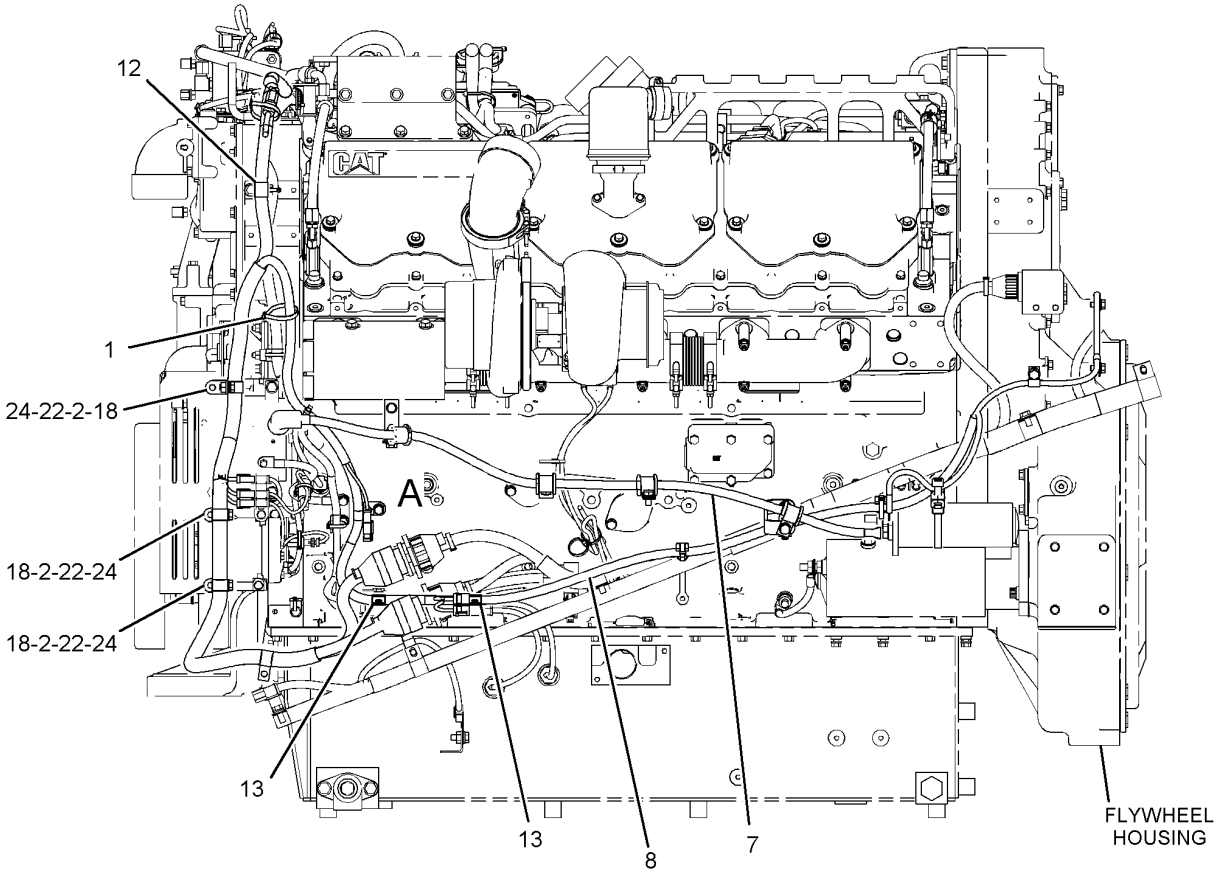

LEFT SIDE VIEW OF ENGINE

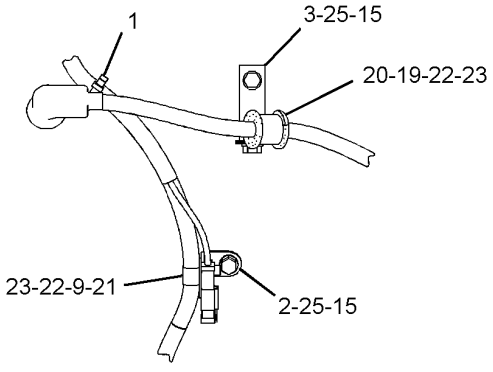

VIEW OF AREA A

GRAPHIC #1 g01438663

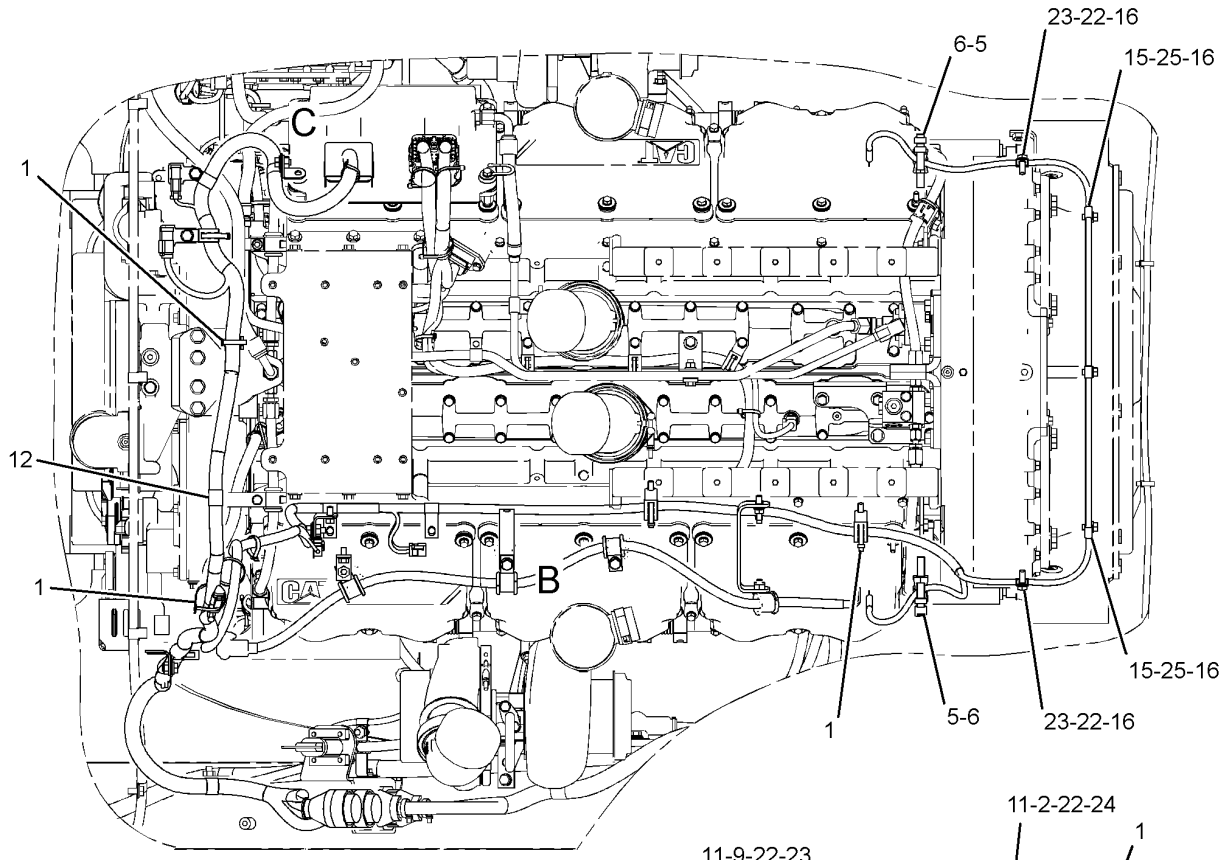

TOP VIEW

FWD

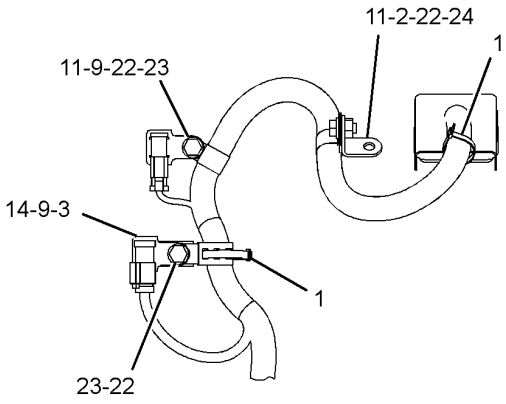

VIEW OF AREA C

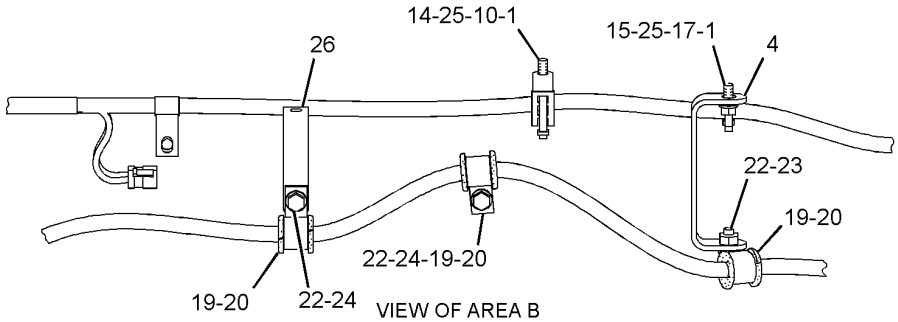

VIEW OF AREA B

GRAPHIC #2

<END>

g01438664

303-2218 WIRING GP-ENGINE ELECTRONIC

S/N: LJW1-UP

PART OF 246-8228, 259-3142, 259-3143 ENGINE AR-COMPLETE

AN ATTACHMENT

SMCS-1408, 1901 **i02940234**

NOTE	REF NO	GRAPHIC REF	PART NUMBER	QTY	PART NAME 1 2 3 4 5 6 (PRODUCT LEVEL)	SEE PAGE
	1	1,2	**3S-2093**	24	STRAP-CABLE	
	2	2	**116-4491**	2	BRACKET AS	
M		2	**8T-3490**	1	NUT-WELD (M10X1.5-THD)	
	3	1,2	**124-3019**	2	BRACKET AS	
M		1,2	**8T-3490**	1	NUT-WELD (M10X1.5-THD)	
	4	1	**318-6975**	1	HARNESS AS-ENGINE (ELECTRONIC CONTROL MODULE)	
	5	1	**067-2551**	2	CLIP	
	6	1,2	**0S-0509**	3	BOLT (3/8-16X0.75-IN)	
	7	1	**130-5300**	6	CLIP	
	8	1,2	**132-5789**	4	CLIP	
	9	2	**272-1777**	2	WASHER-HARD (11X18.5X15-MM THK)	
	10	2	**3B-1915**	2	BOLT (3/8-16X1.375-IN)	
	11	1	**4K-8864**	1	CLIP	
	12	1	**4P-7581**	4	CLIP	
	13	1	**4P-7582**	2	CLIP	
	14	2	**4P-8134**	1	CLIP	
	15	1,2	**5M-2894**	7	WASHER-HARD (10.2X18.5X2.5-MM THK)	
	16	1	**5M-3062**	1	BOLT (3/8-16X0.75-IN)	
	17	2	**5P-9299**	1	CLIP	
	18	2	**8T-4121**	4	WASHER-HARD (11X21X2.5-MM THK)	
M	19	2	**8T-4136**	3	BOLT (M10X1.5X25-MM)	
M	20	2	**8T-4137**	2	BOLT (M10X1.5X20-MM)	

M-METRIC PART

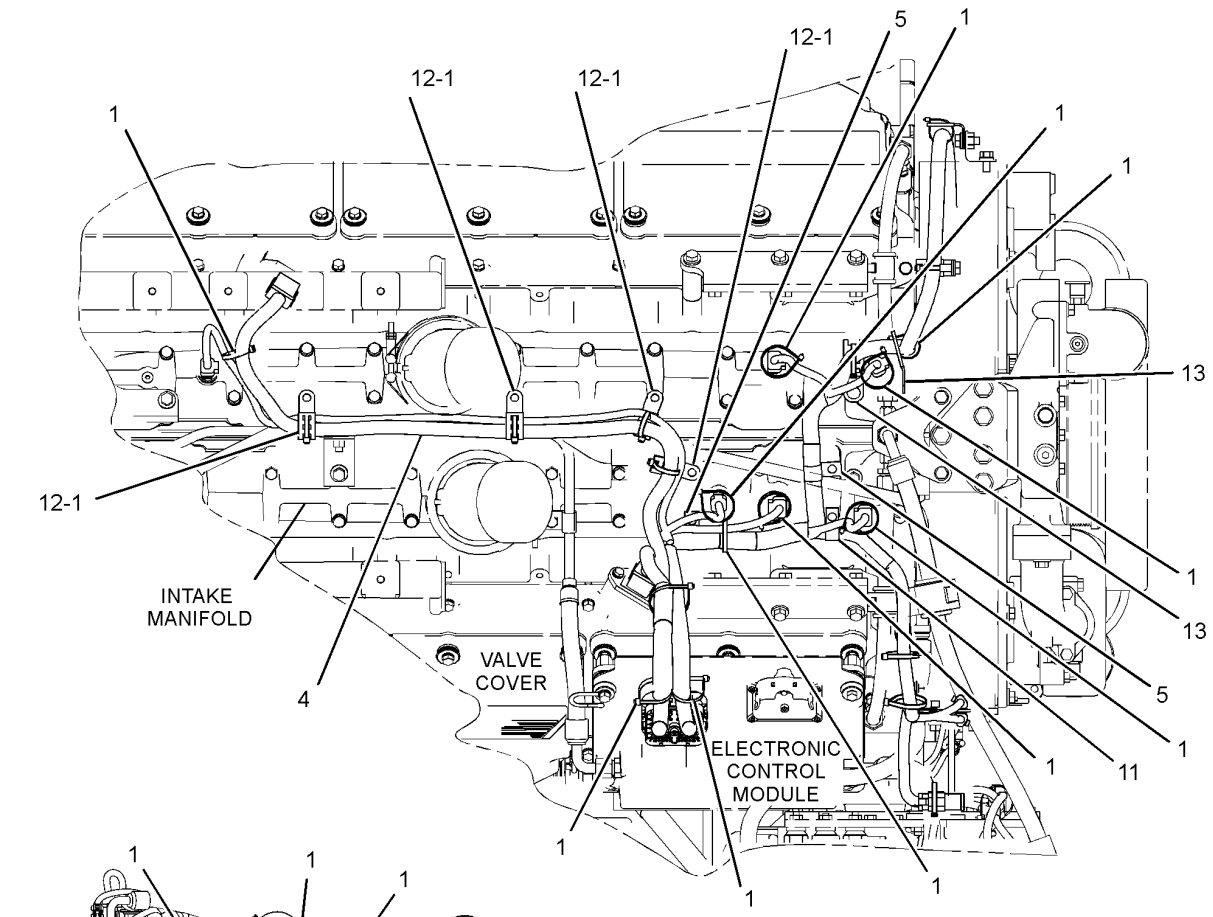

TOP VIEW OF ENGINE

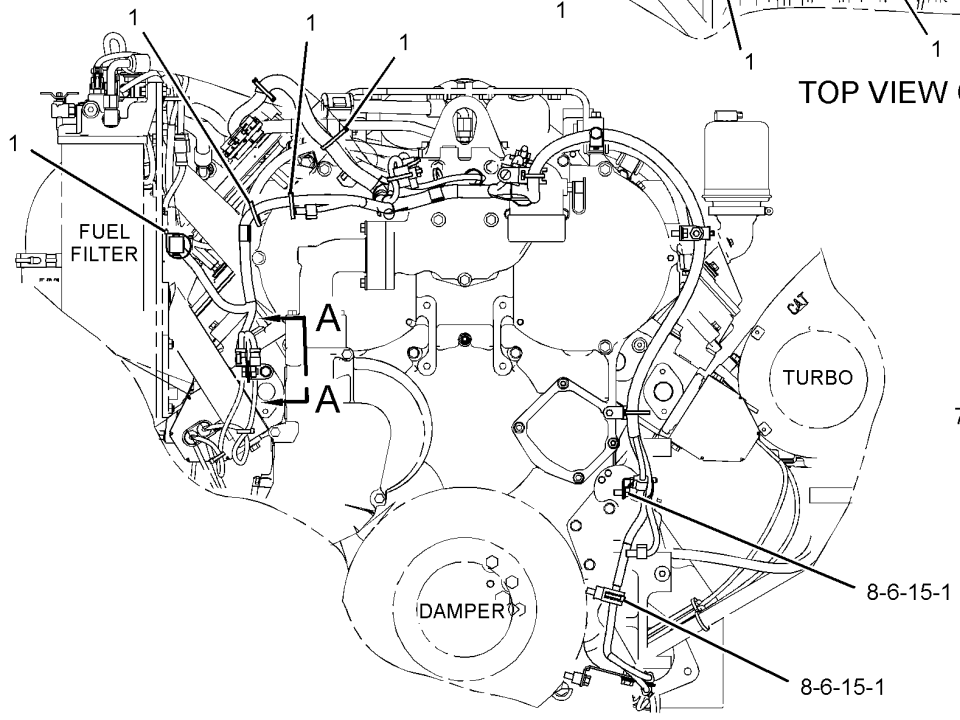

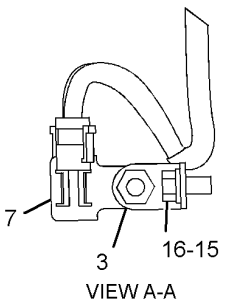

VIEW A-A

FRONT VIEW OF ENGINE

GRAPHIC #1 g01430812

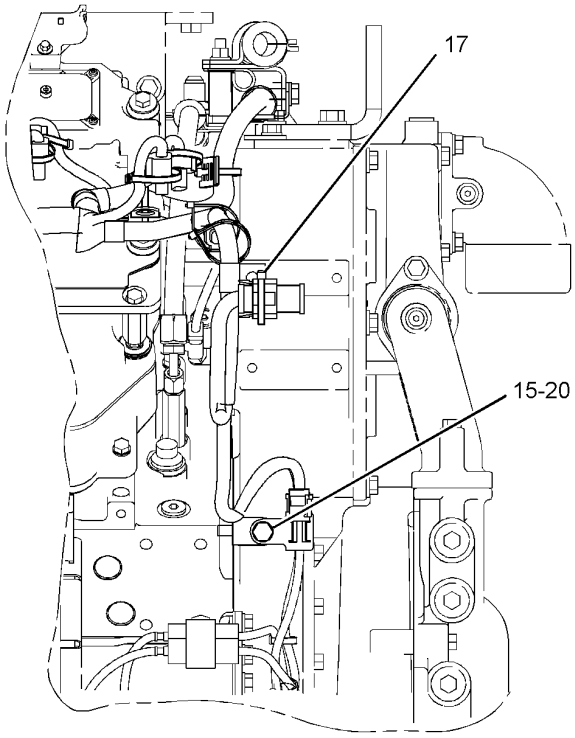

RIGHT SIDE VIEW OF ENGINE

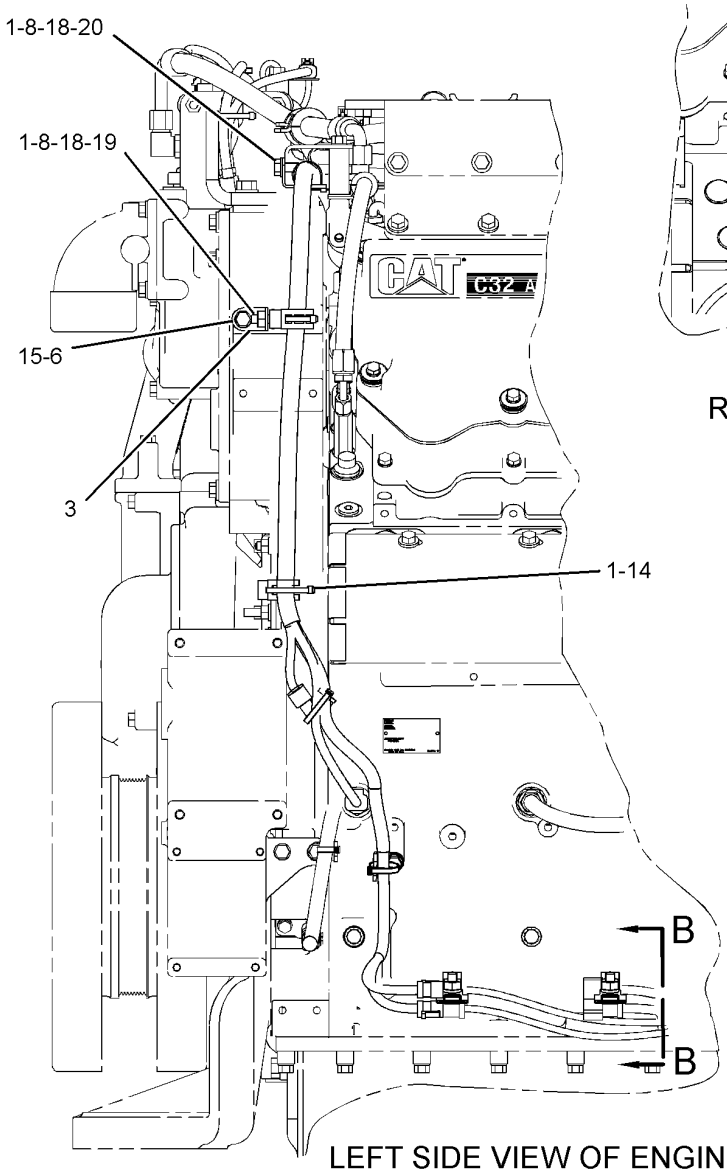

LEFT SIDE VIEW OF ENGINE

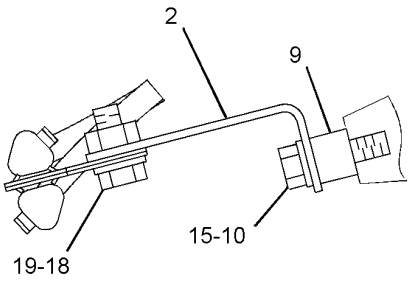

VIEW B-B

GRAPHIC #2 **<END>** g01430813

ELECTRICAL AND STARTING SYSTEM

316-6980 WIRING GP-FRONT

S/N: 2211-UP

PART OF 316-6993 ELECTRICAL AR

SMCS-5734 **i02894344**

NOTE	REF NO	GRAPHIC REF	PART NUMBER	QTY	PART NAME 1 2 3 4 5 6 (PRODUCT LEVEL)	SEE PAGE
	1	1	**9X-6772**	5	STRAP-CABLE	
	2	1	**108-9422**	2	BRACKET AS	
					(EACH INCLUDES)	
M		1	**8T-3490**	1	NUT-WELD (M10X1.5-THD)	
	3	1	**136-9699**	1	BRACKET AS	
	4	1	**144-4613**	1	ANGLE AS	
	5	1	**200-6345**	1	MOUNT (DUAL SWIVEL)	
	6	1	**204-2281**	2	STRAP-TIE	
Y	7	1	**288-8390**	1	SENSOR GP-TEMPERATURE (FRONT AXLE OIL)	268
	8	1	**312-9081**	1	HARNESS AS-AXLE (FRONT, TEMPERATURE SENSOR)	
	9	1	**313-7574**	1	HARNESS AS-FRONT (AXLE, CONTROL VALVE, LIGHTS)	
	10	1	**313-7575**	1	HARNESS AS-FRONT CHASSIS (MAIN)	
	11	1	**033-8248**	7	CLIP	
	12	1	**130-5300**	3	CLIP	
	13	1	**3J-1907**	1	SEAL-O-RING	
	14	1	**4D-8123**	1	CLIP	
	15	1	**4K-8302**	2	CLIP	
	16	1	**4K-8864**	6	CLIP	
	17	1	**4P-7428**	2	CLIP	
	18	1	**5P-7468**	2	CLIP (SLOT)	
	19	1	**5P-7469**	2	CLIP (TAB)	
	20	1	**5P-8444**	2	GROMMET	
	21	1	**5P-9085**	4	CLIP	
	22	1	**5P-9297**	1	CLIP	
	23	1	**7V-6571**	2	GROMMET	
	24	1	**7X-7729**	3	WASHER (11X25X3-MM THK)	
	25	1	**8M-2770**	6	CLIP	
	26	1	**8M-2773**	1	CLIP	
	27	1	**8T-4121**	29	WASHER-HARD (11X21X2.5-MM THK)	
M	28	1	**8T-4133**	1	NUT (M10X1.5-THD)	
M	29	1	**8T-4136**	6	BOLT (M10X1.5X25-MM)	
M	30	1	**8T-4137**	23	BOLT (M10X1.5X20-MM)	
M	31	1	**8T-4196**	2	BOLT (M10X1.5X35-MM)	
	32	1	**8T-4223**	2	WASHER-HARD (13.5X25.5X3-MM THK)	
	33	1	**8T-9383**	2	BOLT (1/2-13X0.75-IN)	

M-METRIC PART
Y-SEPARATE ILLUSTRATION

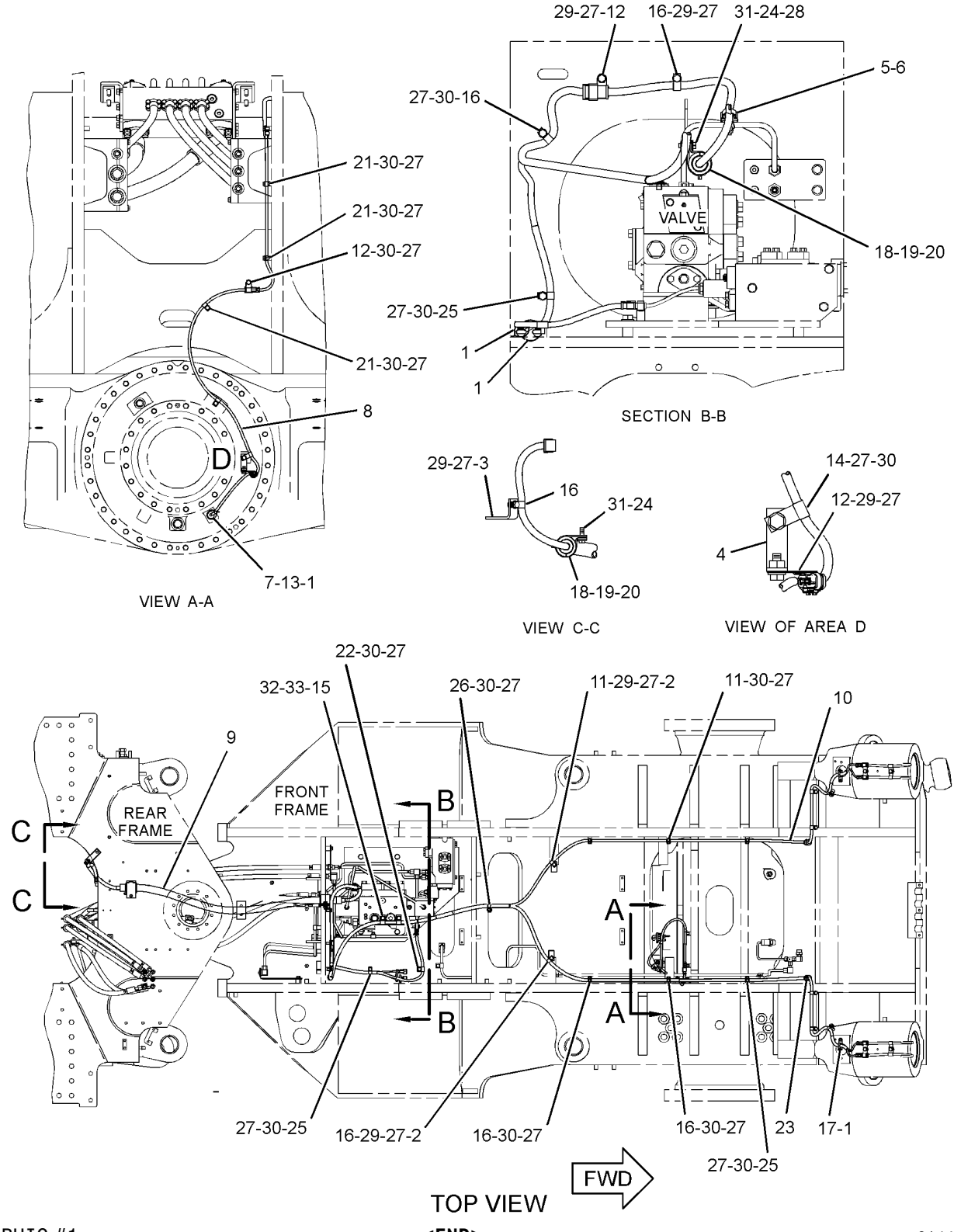

GRAPHIC #1

<END>

g01443942

282-4892 WIRING GP-MACHINE

S/N: 2211-UP
PART OF 282-5331 INSTALLATION AR-CAES
AN ATTACHMENT

SMCS-1408 **i02940247**

NOTE	REF NO	GRAPHIC REF	PART NUMBER	QTY	PART NAME 1 2 3 4 5 6 (PRODUCT LEVEL)	SEE PAGE
	1	2	**9X-6772**	1	STRAP-CABLE	
	2	2	**144-4613**	1	ANGLE AS	
Y	3	2	**167-8984**	1	BATTERY GP (CAES, RECHARGEABLE, 24-VOLT)	198
	4	2	**252-8014**	1	BRACKET AS	
M		2	**6V-9632**	3	NUT-WELD (M6X1-THD)	
	5	1	**253-2587**	1	PLATE AS	
M		1	**8T-3490**	1	NUT-WELD (M10X1.5-THD)	
M		1	**165-8718**	4	NUT-WELD (M4X0.07-THD)	
	6	1	**266-9378**	1	BRACKET AS	
M		1	**8T-3490**	1	NUT-WELD (M10X1.5-THD)	
	7	2	**287-8187**	1	HARNESS AS-CONTROL (CAES, ROPS SIDE)	
	8	1	**310-7924**	1	HARNESS AS-CONTROL (CAES RECEIVER)	
	9	1	**033-8248**	1	CLIP	
M	10	2	**112-8372**	4	BOLT (M4X0.7X16-MM)	
	11	2	**130-5300**	2	CLIP	
	12	2	**4D-9517**	1	CLIP	
	13	1	**6D-3479**	5	CLIP	
	14	1,2	**8T-4121**	13	WASHER-HARD (11X21X2.5-MM THK)	
M	15	1,2	**8T-4136**	4	BOLT (M10X1.5X25-MM)	
M	16	1,2	**8T-4137**	9	BOLT (M10X1.5X20-MM)	
	17	2	**9X-8256**	4	WASHER (6.6X12X2-MM THK)	

M-METRIC PART
Y-SEPARATE ILLUSTRATION

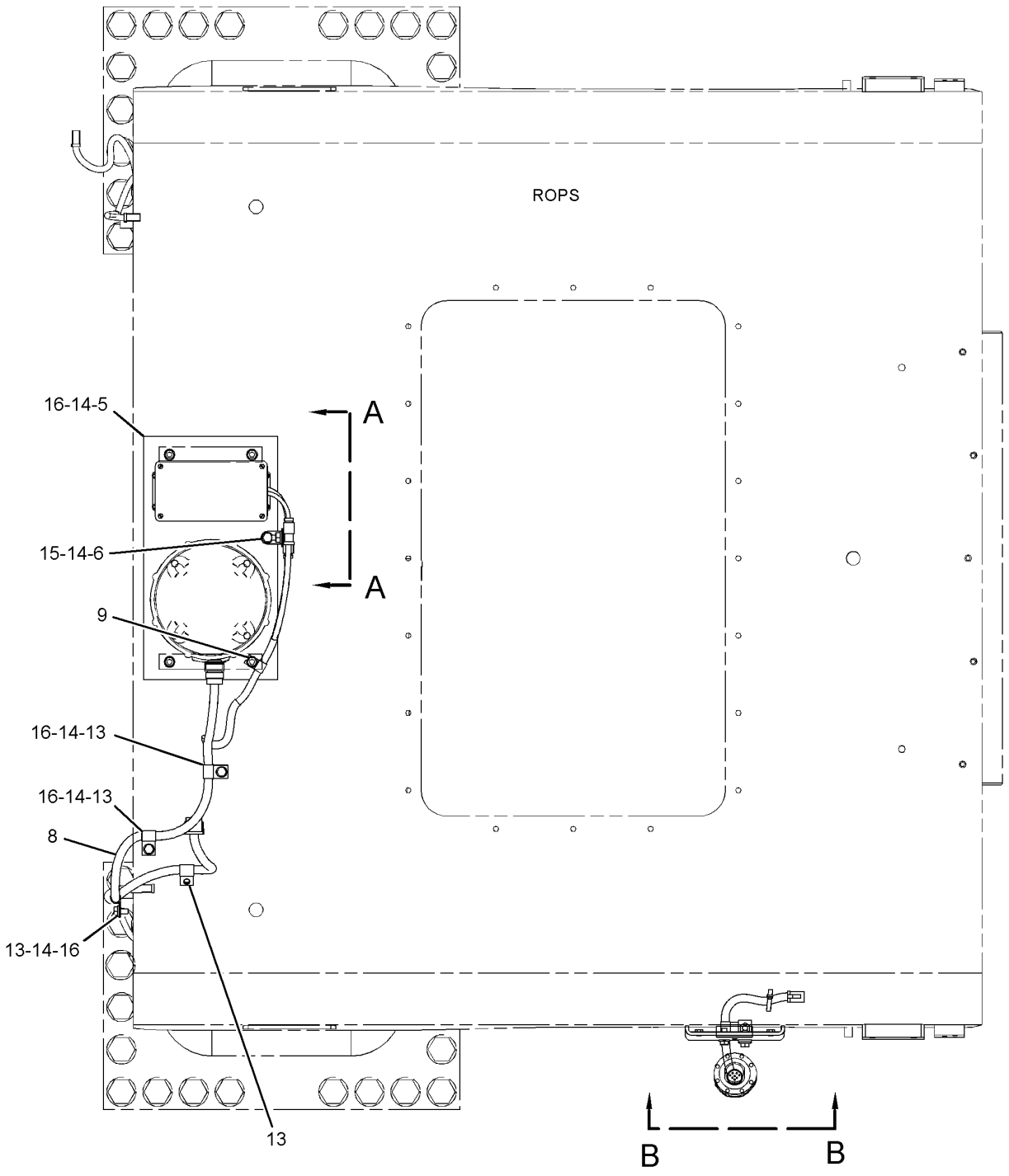

REFER TO ALL ILLUSTRATIONS OF
THIS GROUP FOR AUXILIARY VIEWS

GRAPHIC #1 g01445771

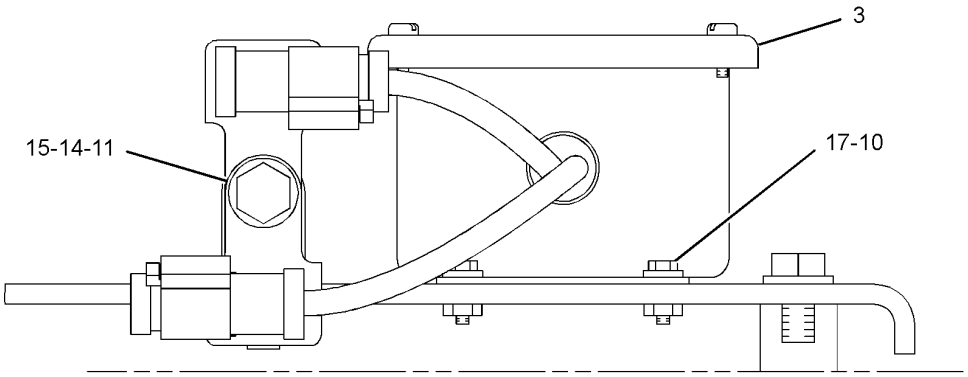

VIEW A-A

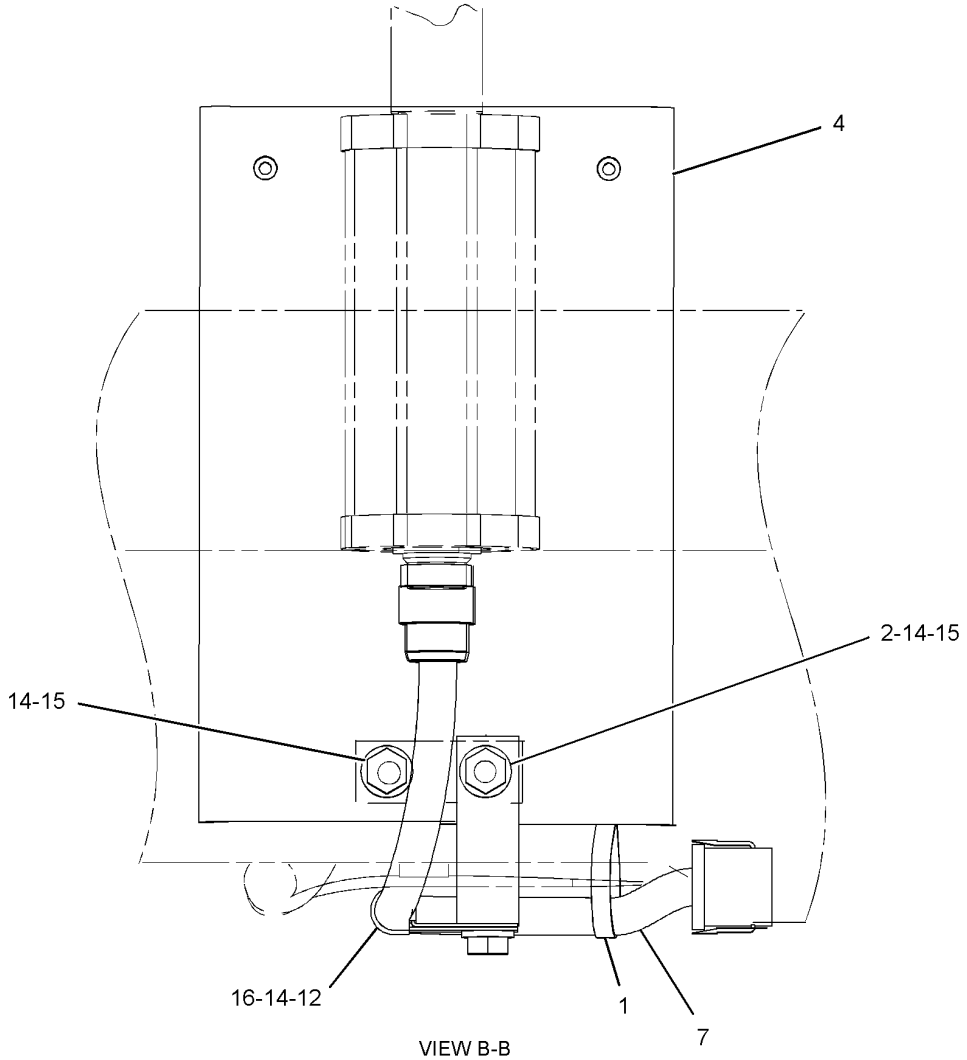

VIEW B-B

GRAPHIC #2 **<END>** g01445772

316-6982 WIRING GP-MACHINE

S/N: 2211-UP

PART OF 316-6993 ELECTRICAL AR

SMCS-1408 **i02939673**

NOTE	REF NO	GRAPHIC REF	PART NUMBER	QTY	PART NAME 1 2 3 4 5 6 (PRODUCT LEVEL)	SEE PAGE
	1	6	**4H-1225**	1	WASHER (11X22X6-MM THK)	
	2	10	**5I-4376**	1	FITTING	
	3	10	**6V-0852**	1	CAP-DUST	
	4	10	**8J-9990**	1	PLUG-ORIFICE	
	5	10	**9C-2372**	1	PLATE	
	6	2,3,4, 5,6,7, 8,10	**9X-6772**	27	STRAP-CABLE	
	7	10	**067-3045**	1	CLIP	
	8	1	**116-4491**	2	BRACKET AS	
					(EACH INCLUDES)	
M		1	**8T-3490**	1	NUT-WELD (M10X1.5-THD)	
	9	3,10	**118-6878**	1	BRACKET AS	
	10	4,7,8	**124-3019**	5	BRACKET AS	
					(EACH INCLUDES)	
M		4,7,8	**8T-3490**	1	NUT-WELD (M10X1.5-THD)	
	11	5,8,10	**142-1657**	5	BRACKET AS	
					(EACH INCLUDES)	
M		5,8,10	**8T-3490**	1	NUT-WELD (M10X1.5-THD)	
	12	5	**144-4613**	1	ANGLE AS	
	13	6	**158-6634**	1	SWITCH AS-TOGGLE (ENGINE COMPARTMENT LIGHTS, RH)	
	13A	6	**158-6634**	1	SWITCH AS-TOGGLE (ENGINE COMPARTMENT LIGHTS, LH)	
					(EACH SWITCH AS INCLUDES)	
		6	**3E-3377**	1	WEDGE-RECEPTACLE LOCK (4-PIN)	
		6	**6T-3631**	2	NUT-HEX (15/32-32-THD)	
		6	**6T-3632**	1	LOCKWASHER	
		6	**6T-3633**	1	RING-LOCKING	
		6	**9G-3695**	1	PLUG	
		6	**102-8804**	1	KIT-RECEPTACLE (4-PIN)	
					(INCLUDES RECEPTACLE AS AND WEDGE)	
		6	**186-3735**	3	PIN-CONNECTOR (16-GA TO 18-GA)	
Y	14	5,10	**164-7577**	2	SWITCH GP-BYPASS (POWER TRAIN OIL FILTER)	279
Y	15	6	**165-5970**	1	SWITCH GP-TOGGLE (FUEL PRIMING PUMP ON, OFF)	289
	16	4	**175-3244**	1	SWITCH AS-PRESSURE (BRAKE ACCUMULATOR CHARGE)	
		4	**102-8803**	1	KIT-RECEPTACLE (3-PIN)	
					(INCLUDES RECEPTACLE AS AND WEDGE)	
D		4	**5P-6008**		TUBE (6.35-MM DIA) (2-DM)	
		4	**186-3735**	3	PIN-CONNECTOR (16-GA TO 18-GA)	
D		4	**8T-5677**		SLEEVE (0.6-M)	
	17	3,4	**193-5576**	3	BRACKET AS	
	18	9	**197-6453**	1	BRACKET AS	
Y	19	10	**221-3406**	1	SENSOR GP-PRESSURE (STEERING PUMP OIL, LH)	250
Y	20	5	**221-3415**	1	SENSOR GP-PRESSURE (TC IMPELLER CLUTCH OIL)	251
Y	21	3	**224-8496**	1	SENSOR GP-PRESSURE (IMPLEMENT PILOT OIL)	252
Y	22	8	**224-8497**	1	SENSOR GP-PRESSURE (STEERING PILOT OIL)	253
I	23	10	**224-9270**	1	HOSE AS	
	24	2,5,10	**229-3177**	3	PLATE AS	
					(EACH INCLUDES)	
		2,5,10	**6V-6716**	2	RIVET-TRUSS HEAD	
		2,5,10	**109-1645**	1	CLIP	
	25	9	**229-5133**	1	BRACKET AS	
M		9	**8T-3490**	1	NUT-WELD (M10X1.5-THD)	
	26	5	**230-9804**	1	BRACKET AS	
	27	10	**234-5925**	2	GASKET	
	28	6	**252-6959**	1	BRACKET AS	

316-6982 **WIRING GP-MACHINE** *(contd.)* **i02939673**

NOTE	REF NO	GRAPHIC REF	PART NUMBER	QTY	PART NAME 1 2 3 4 5 6 (PRODUCT LEVEL)	SEE PAGE
		6	**4E-0019**	1	BOSS (M10X1.5-THD)	
	29	9	**281-8977**	1	BRACKET AS	
M		9	**7X-0750**	1	BOSS-WELD (M10X1.5X55-MM)	
M		9	**8T-3490**	2	NUT-WELD (M10X1.5-THD)	
Y	30	4	**288-8390**	1	SENSOR GP-TEMPERATURE (STEERING, BRAKE OIL)	268
Y	30A	8	**288-8390**	1	SENSOR GP-TEMPERATURE (REAR AXLE OIL)	268
Y	30B	7	**288-8390**	1	SENSOR GP-TEMPERATURE (IMPLEMENT, HYDRAULIC FAN OIL)	268
Y	31	4	**306-6875**	1	SENSOR GP-LIQUID LEVEL (IMPLEMENT, HYDRAULIC FAN TANK)	246
Y	31A	4	**306-6875**	1	SENSOR GP-LIQUID LEVEL (STEERING, BRAKE HYDRAULIC TANK)	246
Y	32	9	**308-8448**	1	SENSOR GP-TEMPERATURE (AMBIENT AIR)	269
	33	7	**310-7898**	1	HARNESS AS-HYDRAULIC TANK (IMPLEMENT, HYDRAULIC FAN)	
	34	5	**310-7899**	1	HARNESS AS-CHASSIS (FRAME, LH)	
	35	2	**310-7900**	1	HARNESS AS-CHASSIS (MAIN)	
	36	4	**310-7901**	1	HARNESS AS-HYDRAULIC TANK (STEERING, BRAKE)	
	37	6	**310-7902**	1	HARNESS AS-LIGHTING (ENGINE ENCLOSURE, ETHER)	
	38	7	**310-7903**	1	HARNESS AS-BRAKE (PARKING, SWITCH)	
	39	9	**313-4134**	1	HARNESS AS-PLATFORM (ELECTRONICS BAY TO CAB)	
	40	8	**313-4443**	1	HARNESS AS-AXLE (REAR)	
	41	5	**314-7595**	1	HARNESS AS-AXLE (AXLE OIL COOLER)	
	42	7	**317-7081**	1	HARNESS AS-REAR CHASSIS (OIL RENEWAL SYSTEM)	
	43	7	**317-7082**	1	HARNESS AS-HOOD (STAIRWAY LIGHTS)	
	44	3,4,6,8	**033-8248**	4	CLIP	
	45	7	**118-8078**	2	CLIP	
	46	10	**119-5708**	1	CLIP	
	47	10	**124-0174**	1	CLIP	
	48	3,7	**124-1479**	2	CLIP	
	49	1,3,4, 5,6,7, 8,9,10	**130-5300**	37	CLIP	
	50	3,4,5	**130-5301**	3	CLIP	
	51	3	**139-1398**	2	CLIP	
	52	4,5,7,8	**147-0385**	4	CLIP	
	53	10	*148-8378*	1	ELBOW AS	
		10	**3J-1907**	1	SEAL-O-RING	
		10	**6V-8397**	1	SEAL-O-RING	
		10	**6V-8724**	1	ELBOW	
	54	5	*148-8407*	1	PLUG AS	
		5	**3J-1907**	1	SEAL-O-RING	
		5	**9S-4191**	1	PLUG-O-RING	
	55	10	*149-5452*	1	UNION AS	
		10	**6V-8397**	2	SEAL-O-RING	
		10	**6V-8994**	1	UNION	
	56	9,10	**149-7738**	4	CLIP	
	57	6	**252-6961**	1	FILM-IDENTIFICATION (WORK LIGHT)	
	58	6	**252-8538**	1	FILM-IDENTIFICATION (FUEL PRIMING, ENG SERV LIGHT)	
	59	6	**269-0105**	1	BRACKET AS	
	60	9	**2P-1293**	1	LOCKNUT (1-3/16-12-THD)	
	61	3,4,5, 7,8,9, 10	**3J-1907**	10	SEAL-O-RING	
	62	3,8	**3J-7354**	2	SEAL-O-RING	
	63	2,10	**3S-8664**	3	CLIP	
	64	3,7	**4D-7388**	5	CLIP	
	65	8	**4D-8123**	1	CLIP	
	66	5,10	**4D-9517**	2	CLIP	

316-6982 **WIRING GP-MACHINE** *(contd.)* **i02939673**

NOTE	REF NO	GRAPHIC REF	PART NUMBER	QTY	PART NAME 1 2 3 4 5 6 (PRODUCT LEVEL)	SEE PAGE
	67	3,5,6, 7,10	**4K-8864**	6	CLIP (SLOT)	
	68	3,8	**4P-7581**	2	CLIP (LADDER)	
	69	10	**4S-1936**	1	CLIP	
	70	1,8	**4S-1962**	3	CLIP	
M	71	7	**5C-9553**	2	BOLT (M6X1X16-MM)	
	72	4	**5K-3294**	1	CLIP	
	73	3	**5K-4778**	1	CLIP	
	74	2	**5P-7854**	1	CLIP	
	75	7	**5P-8439**	2	GROMMET	
	76	3,4,5, 8,10	**5P-9085**	14	CLIP (SLOT)	
	77	4,7	**5P-9297**	2	CLIP (SLOT)	
	78	7,10	**5P-9299**	3	CLIP	
	79	5	**6D-3479**	2	CLIP	
	80	9	**6D-4244**	1	CLIP	
	81	8	**6V-2383**	1	CLIP	
	82	7	**6V-3265**	1	CLIP (SLOT)	
	83	9	**6V-3510**	1	ADAPTER	
	84	10	**6V-3965**	1	COUPLER-QUICK DISCONNECT	
	85	4	**6V-4589**	2	SEAL-O-RING	
	86	10	**6V-9168**	1	NUT (11/16-16-THD)	
	87	3,9	**7D-1553**	3	CLIP	
	88	3,4	**7D-7233**	3	CLIP	
	89	1	**7X-7729**	1	WASHER (11X25X3-MM THK)	
	90	3,6	**8M-2770**	13	CLIP	
	91	5,10	**8M-2773**	2	CLIP	
	92	1,2,3, 4,5,6, 7,8,9, 10	**8T-4121**	133	WASHER-HARD (11X21X2.5-MM THK)	
M	93	1,3,4, 5,6,7, 8,9,10	**8T-4136**	48	BOLT (M10X1.5X25-MM)	
M	94	1,2,3, 4,5,6, 7,8,9, 10	**8T-4137**	86	BOLT (M10X1.5X20-MM)	
M	95	9	**8T-4138**	8	BOLT (M6X1X20-MM)	
M	96	5	**8T-4139**	1	BOLT (M12X1.75X30-MM)	
	97	5	**8T-4223**	1	WASHER-HARD (13.5X25.5X3-MM THK)	
	98	3,8	**9X-0261**	2	ADAPTER	
	99	1,2,4,5	**9X-8250**	4	CLIP	
	100	7,9	**9X-8256**	10	WASHER (6.6X12X2-MM THK)	

D-ORDER BY THE METER
I-REFER TO HYDRAULIC INFORMATION SYSTEM
M-METRIC PART
Y-SEPARATE ILLUSTRATION

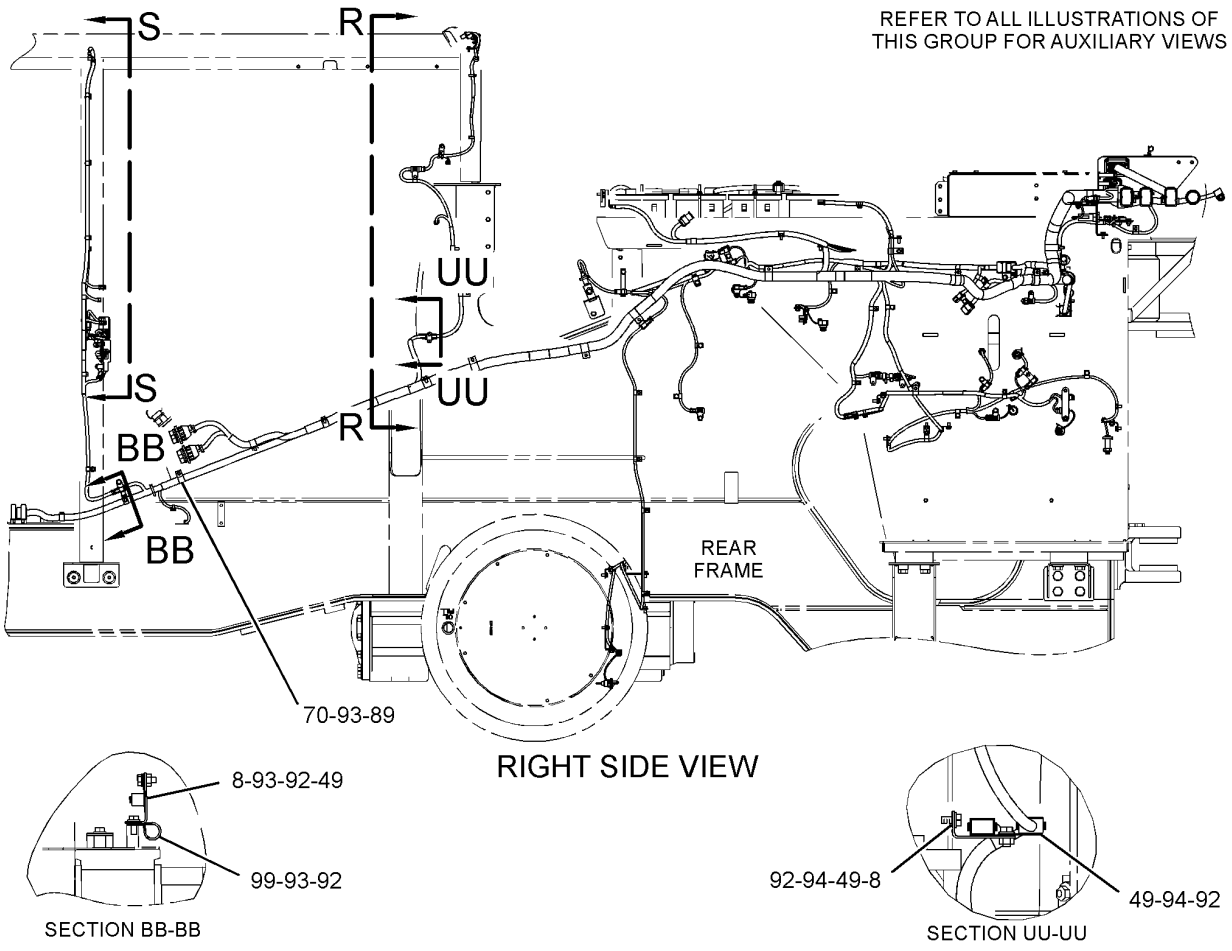

GRAPHIC #1 g01451710

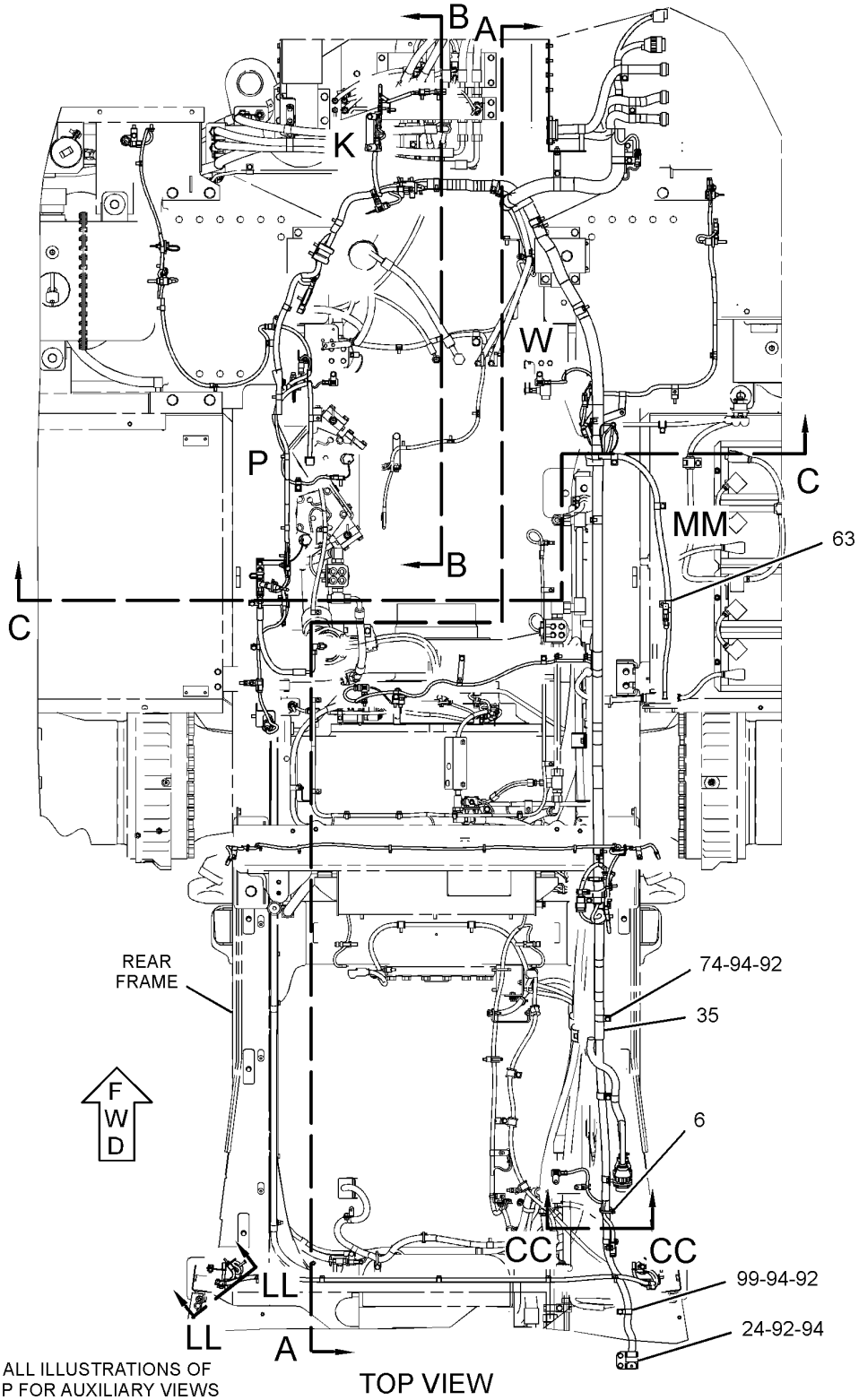

GRAPHIC #2 g01451643

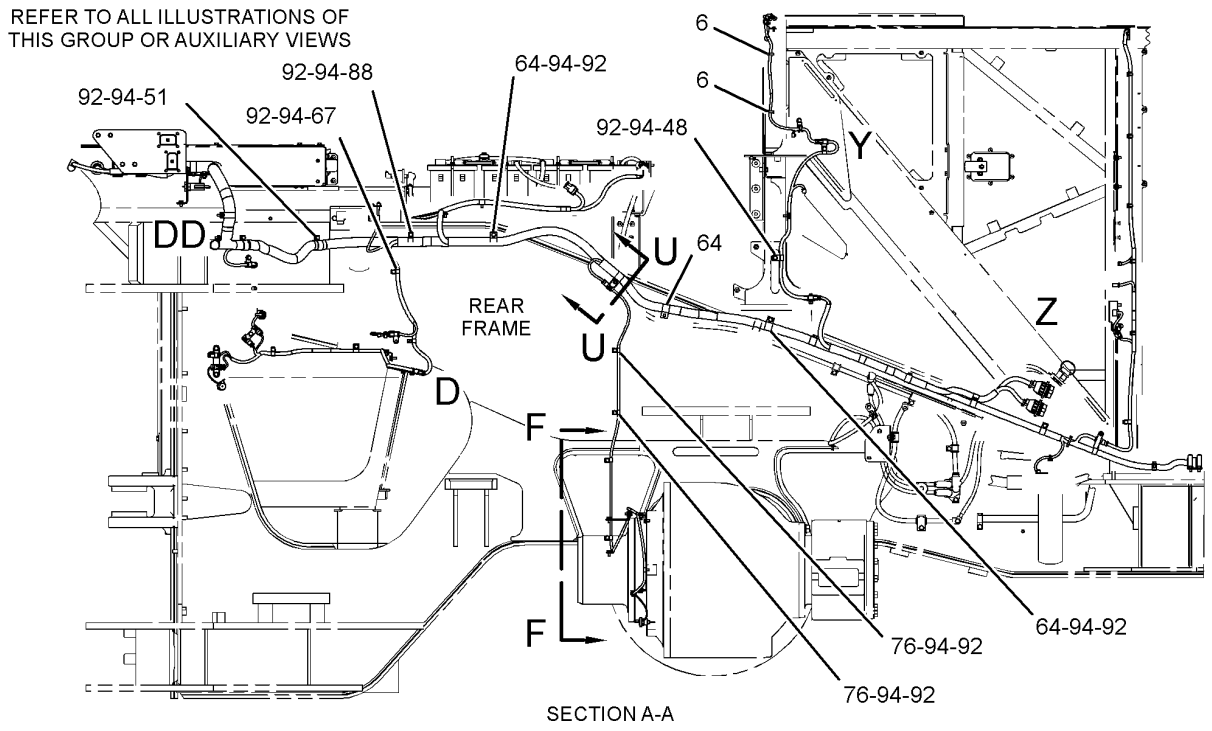

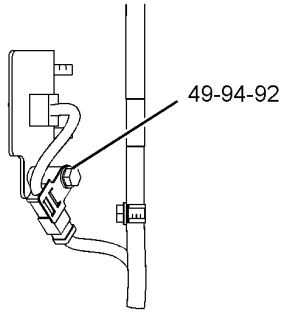

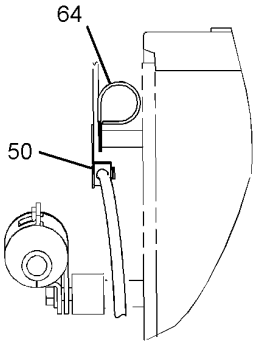

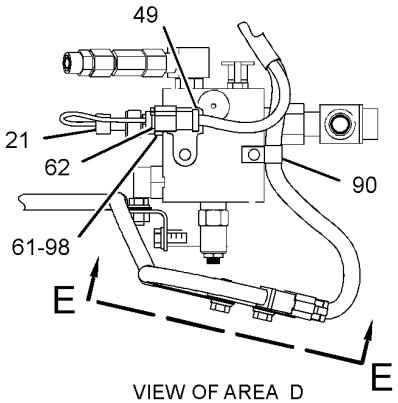

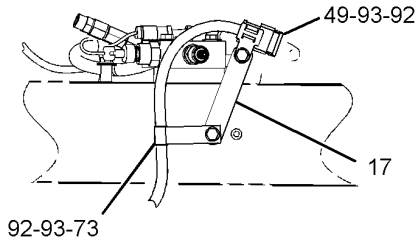

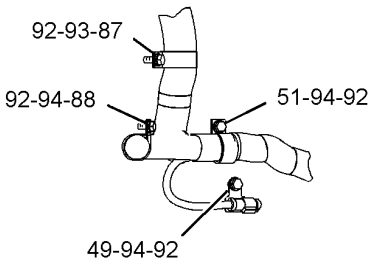

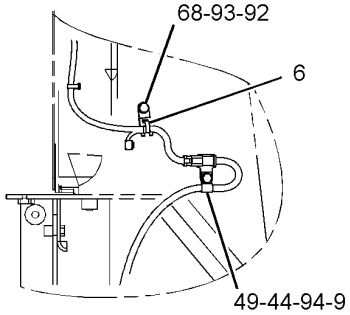

GRAPHIC #3

g01451675

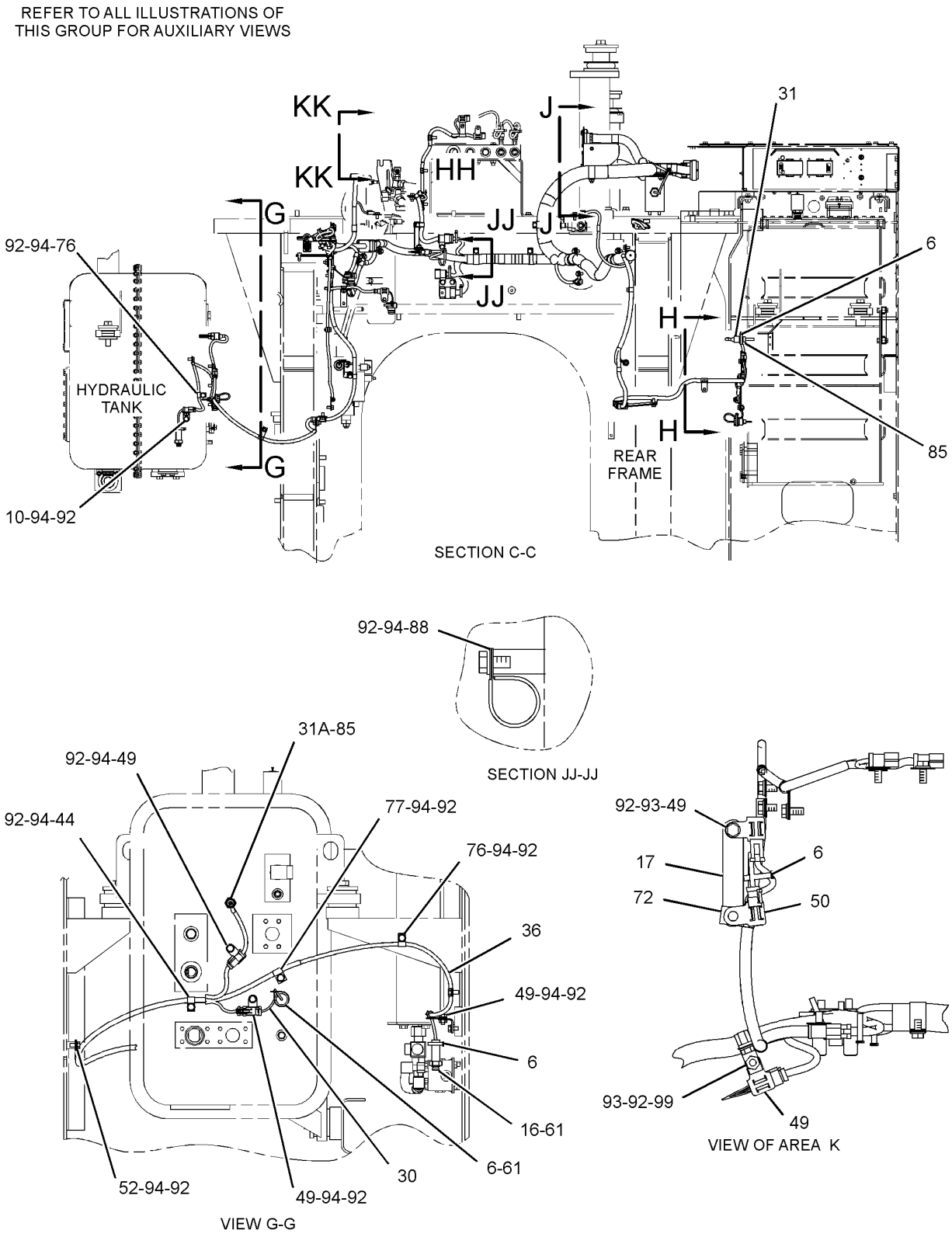

GRAPHIC #4 g01451192

REFER TO ALL ILLUSTRATIONS OF
THIS GROUP FOR AUXILIARY VIEWS

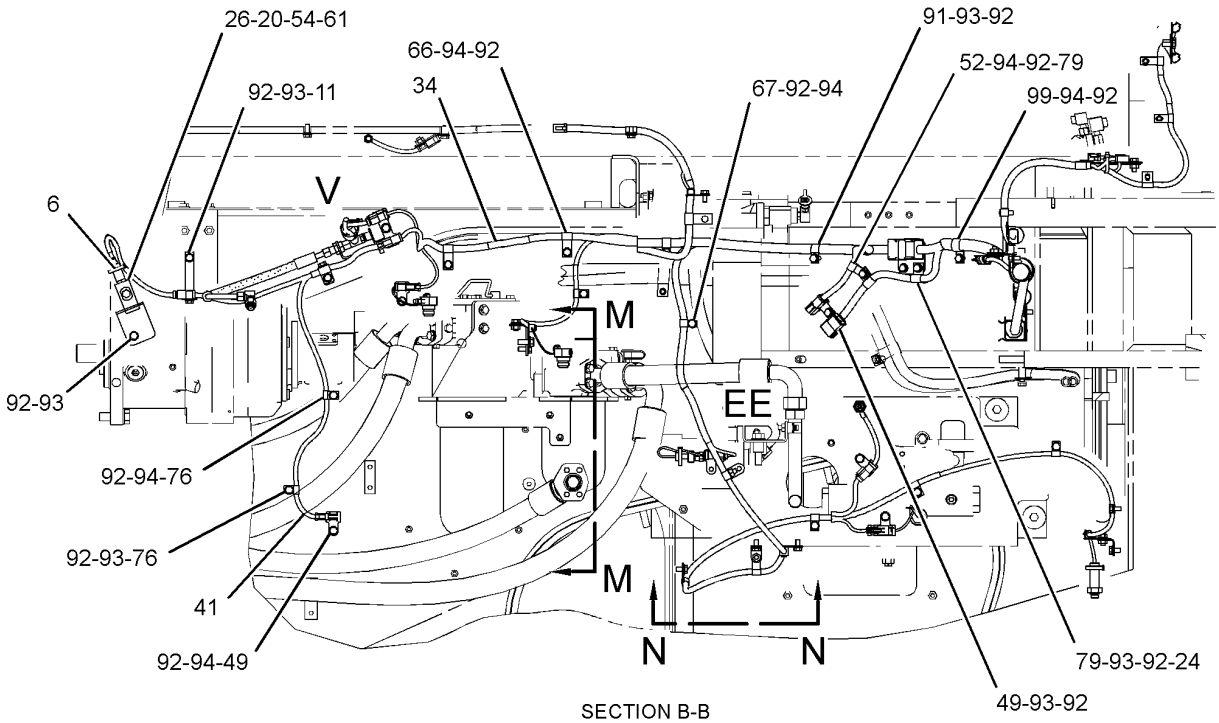

SECTION B-B

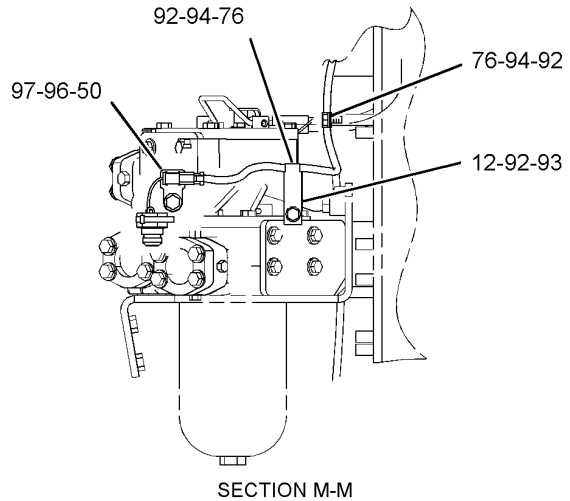

SECTION M-M

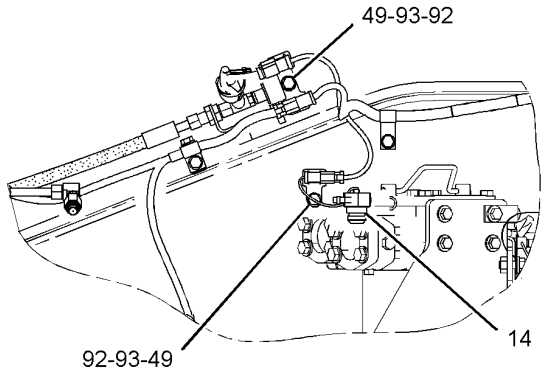

VIEW OF AREA V

GRAPHIC #5

g01451863

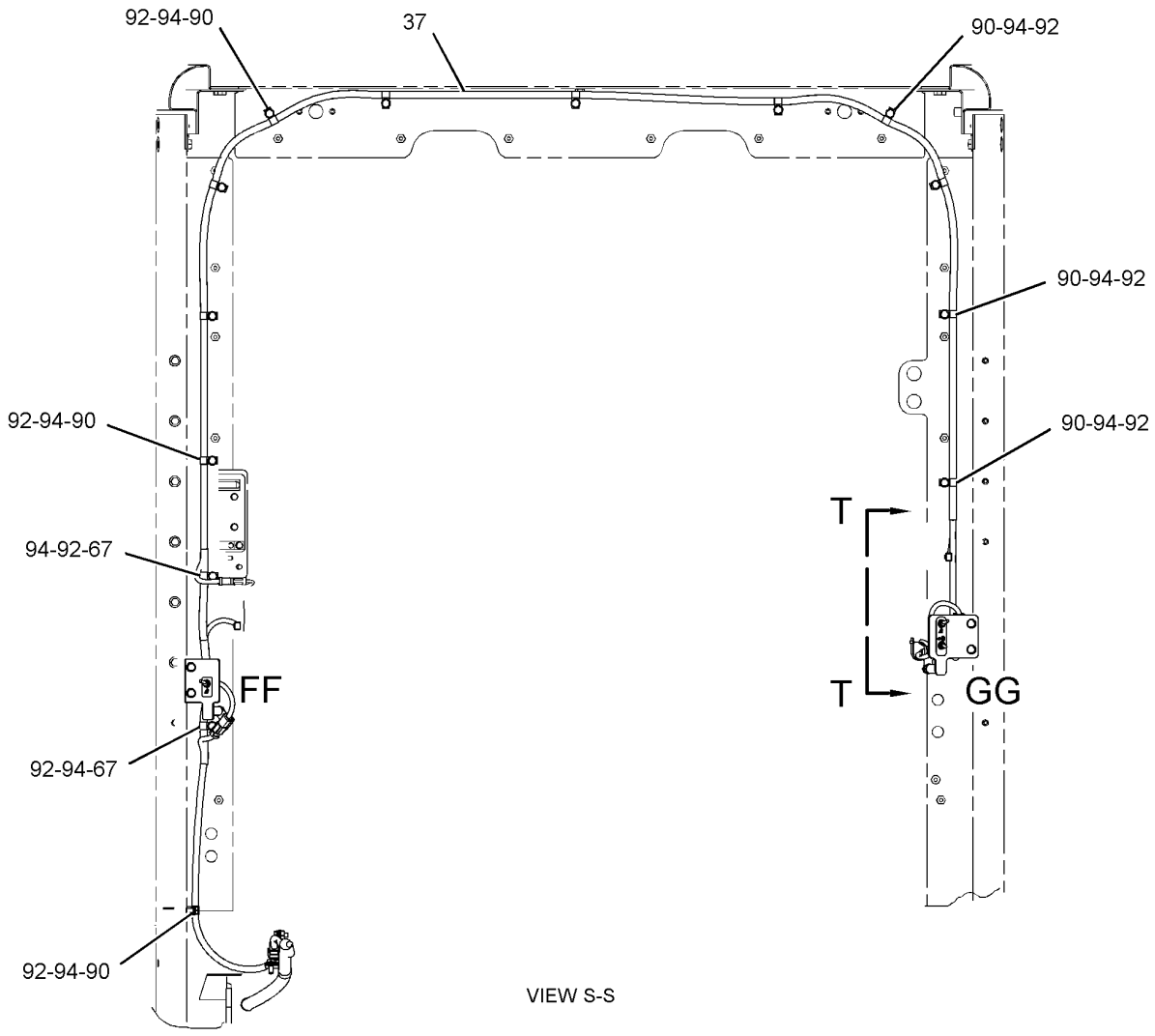

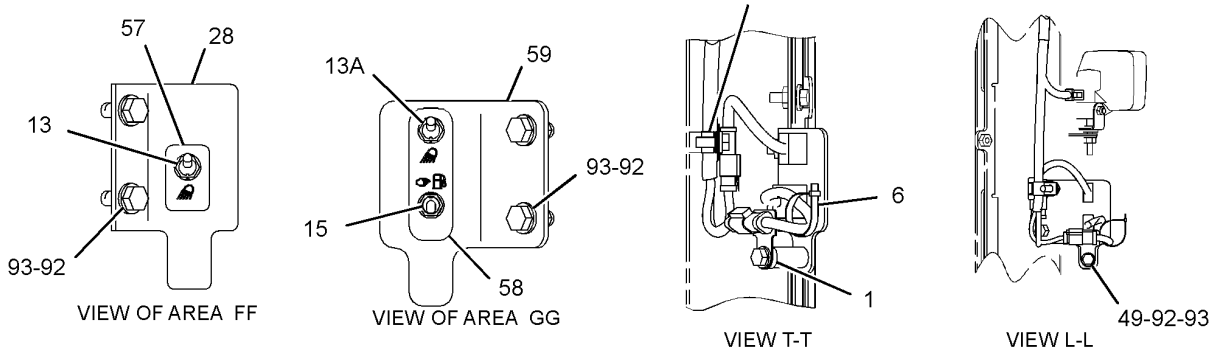

GRAPHIC #6

g01451862

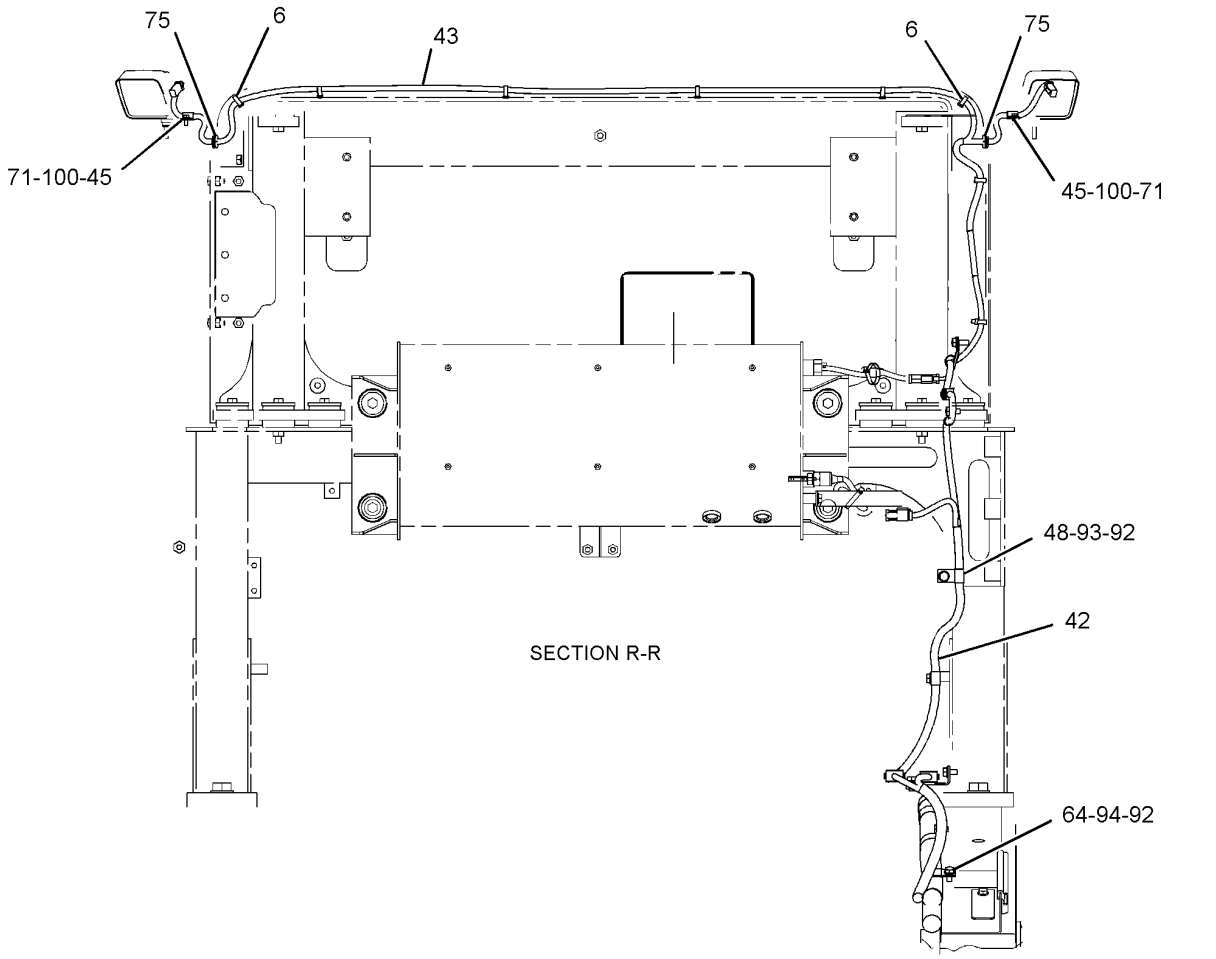

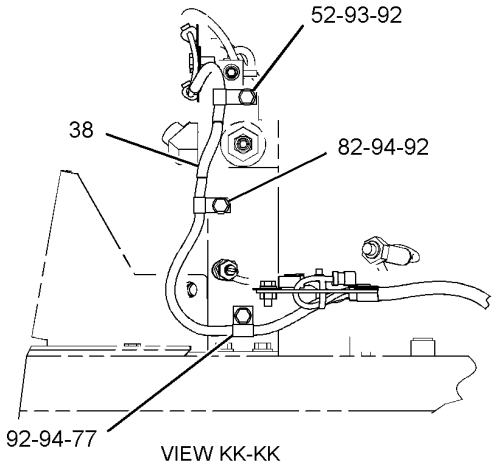

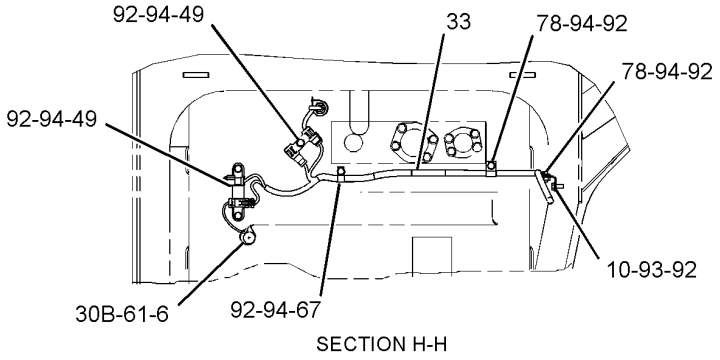

GRAPHIC #7 g01451861

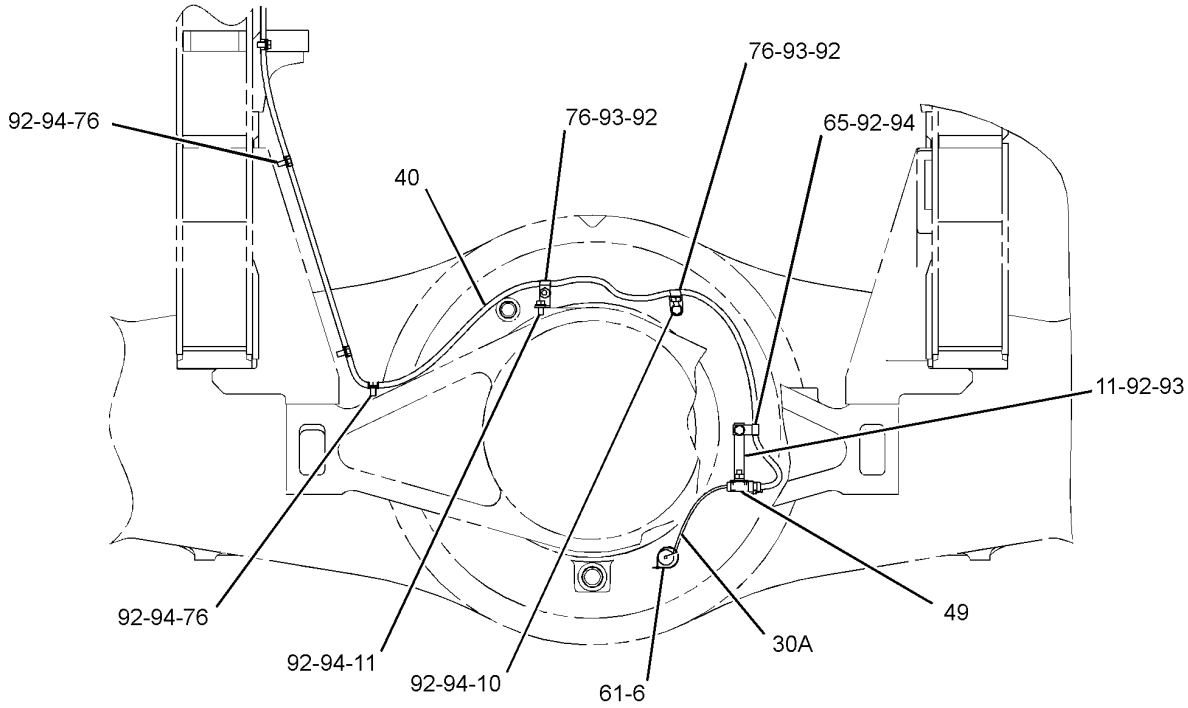

VIEW F-F

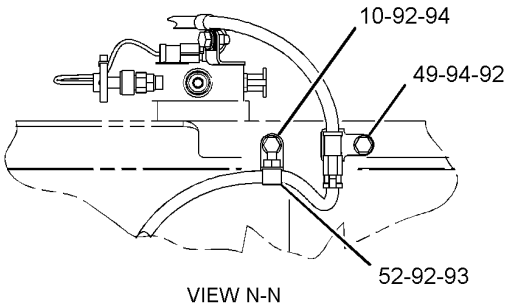

VIEW N-N

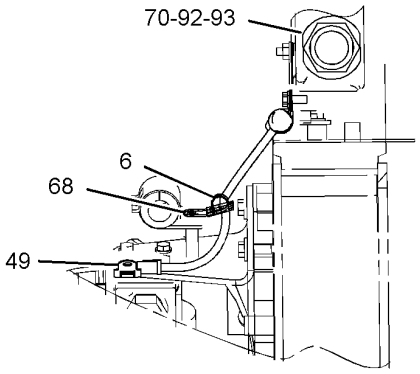

SECTION CC-CC

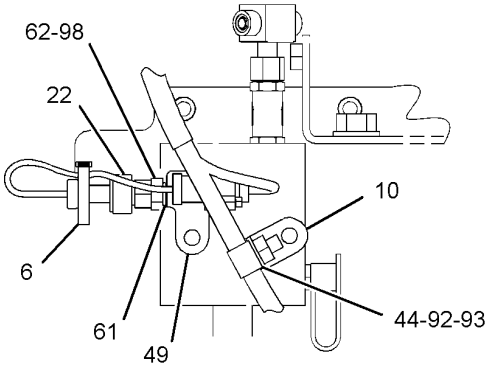

VIEW OF AREA EE

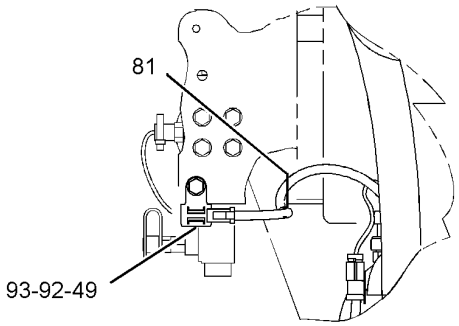

VIEW OF AREA W

GRAPHIC #8 g01451190

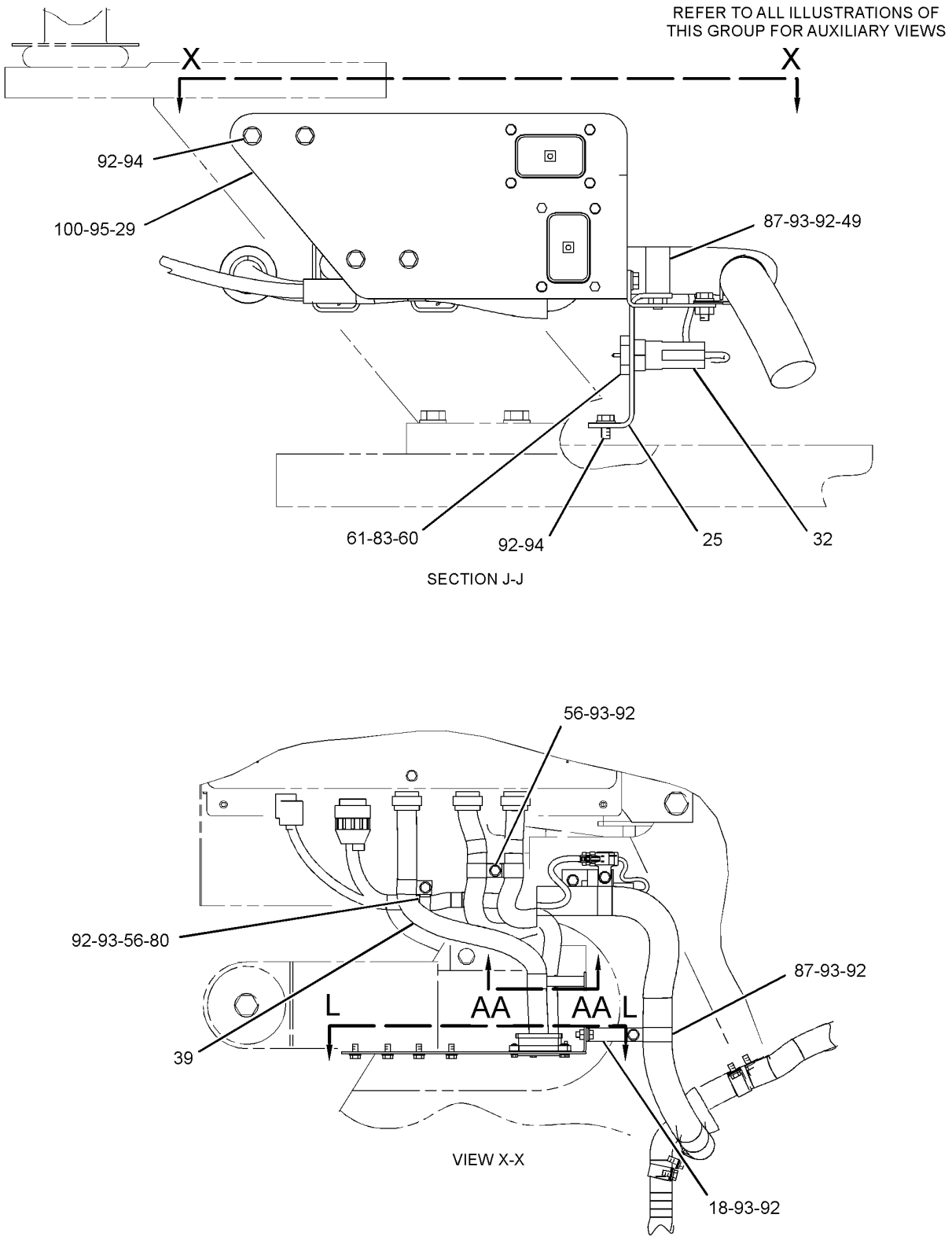

GRAPHIC #9 g01451587

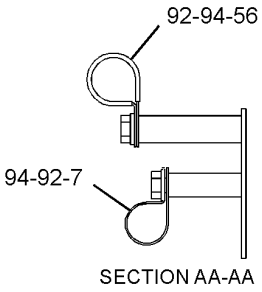

SECTION AA-AA

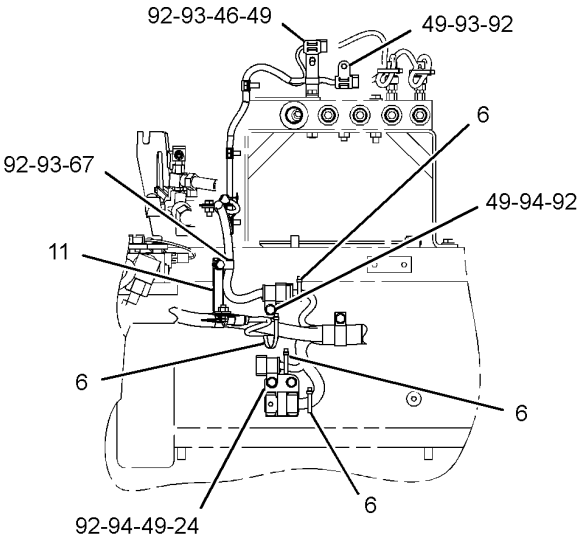

VIEW OF AREA HH

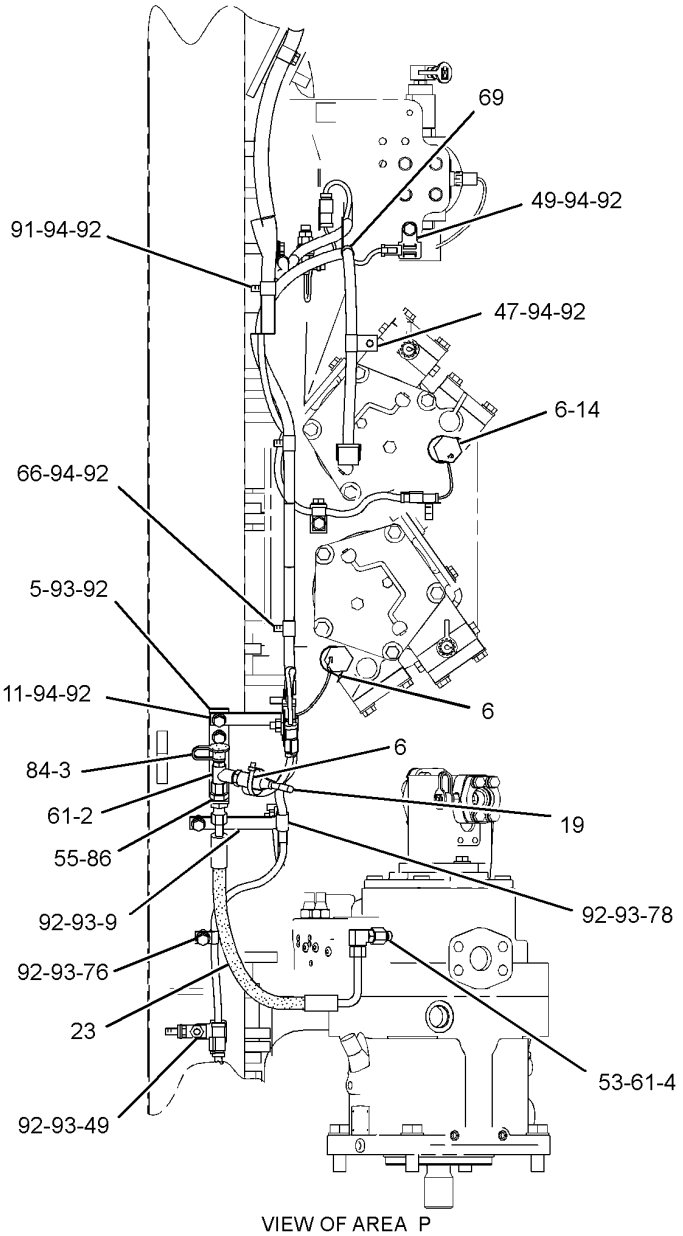

VIEW OF AREA P

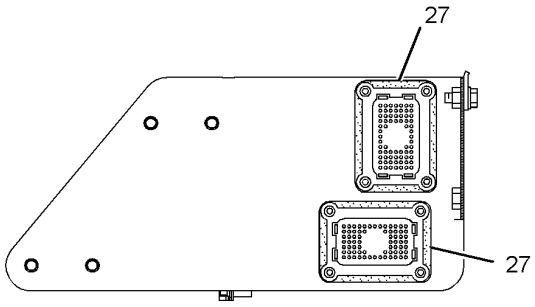

SECTION L-L

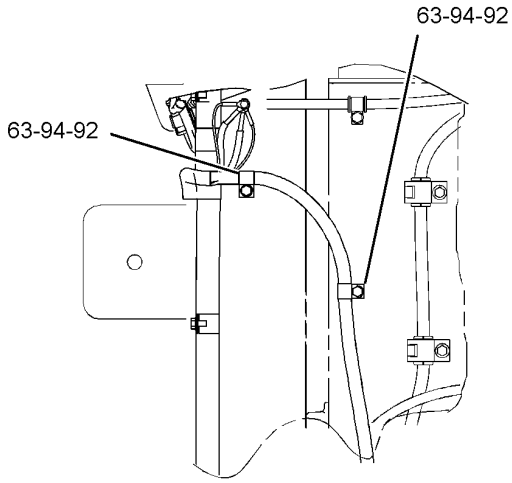

VIEW OF AREA MM

GRAPHIC #10 **<END>** g01451191

291-0530 WIRING GP-OIL RENEWAL SYSTEM–SERVICE CENTER

S/N: 2211-UP
PART OF 282-9064 RENEWAL AR-OIL
AN ATTACHMENT

SMCS-1349, 1408 **i02939844**

NOTE	REF NO	GRAPHIC REF	PART NUMBER	QTY	PART NAME 1 2 3 4 5 6 (PRODUCT LEVEL)	SEE PAGE
	1	1	**9C-9458**	1	BRACKET AS	
	2	1	**9X-6772**	2	STRAP-CABLE	
Y	3	1	**172-8660**	1	SWITCH GP-LIQUID LEVEL (OIL RENEWAL METERING TANK)	283
Y	4	1	**306-6875**	1	SENSOR GP-LIQUID LEVEL (OIL RENEWAL METERING TANK)	246
	5	1	**130-5300**	2	CLIP	
	6	1	**2M-9780**	1	SEAL-O-RING	
	7	1	**6V-4589**	1	SEAL-O-RING	
	8	1	**8T-4121**	3	WASHER-HARD (11X21X2.5-MM THK)	
M	9	1	**8T-4136**	1	BOLT (M10X1.5X25-MM)	
M	10	1	**8T-4137**	2	BOLT (M10X1.5X20-MM)	

M-METRIC PART
Y-SEPARATE ILLUSTRATION

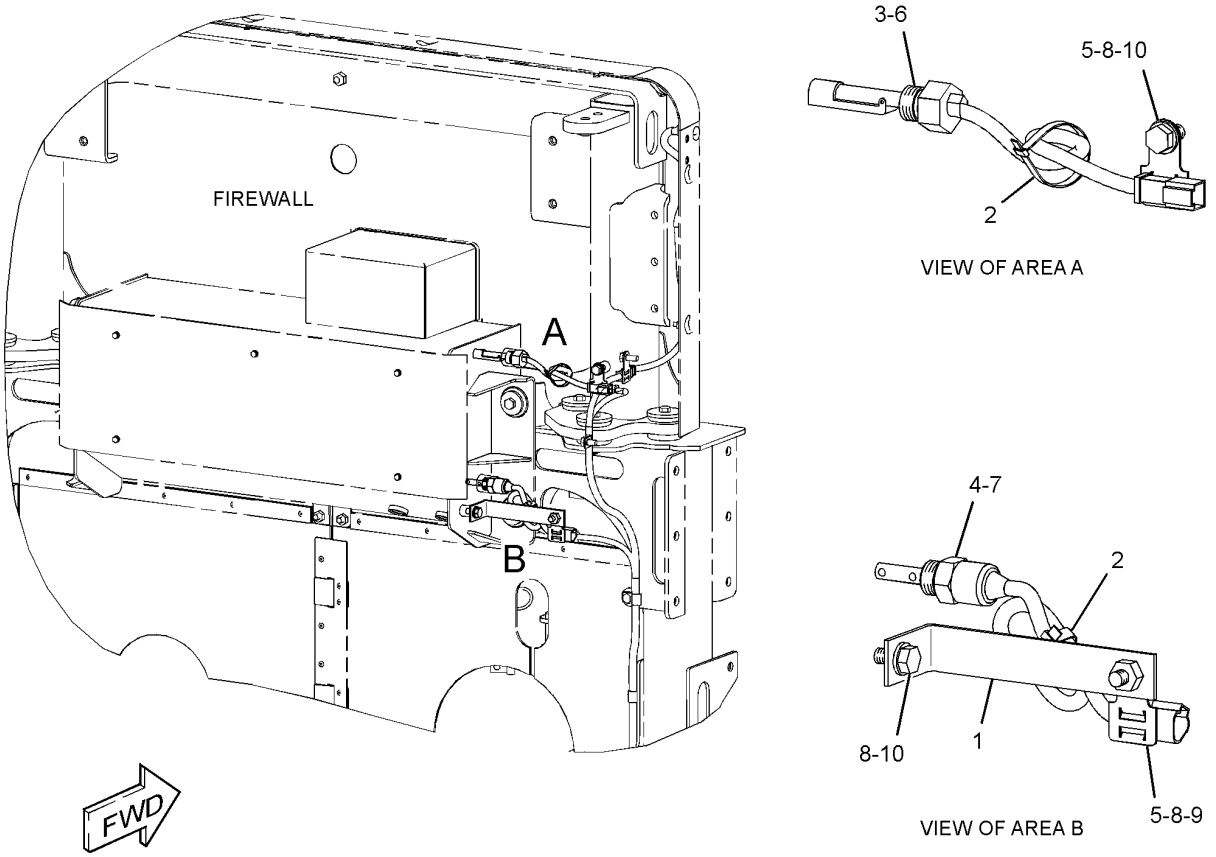

GRAPHIC #1 **<END>** g01450184

291-1072 WIRING GP-OIL RENEWAL SYSTEM–
ENGINE OIL METERING TANK
S/N: 2211-UP
PART OF 280-8930 RENEWAL AR-OIL
AN ATTACHMENT

SMCS-1349, 1408 **i02939846**

NOTE	REF NO	GRAPHIC REF	PART NUMBER	QTY	PART NAME 1 2 3 4 5 6 (PRODUCT LEVEL)	SEE PAGE
	1	1	**9C-9458**	1	BRACKET AS	
	2	1	**9X-6772**	1	STRAP-CABLE	
Y	3	1	**306-6875**	1	SENSOR GP-LIQUID LEVEL (OIL RENEWAL METERING TANK)	246
	4	1	**130-5300**	1	CLIP	
	5	1	*148-8410*	1	PLUG AS	
		1	**2M-9780**	1	SEAL-O-RING	
		1	**9S-4190**	1	PLUG-O-RING	
	6	1	**6V-4589**	1	SEAL-O-RING	
	7	1	**8T-4121**	2	WASHER-HARD (11X21X2.5-MM THK)	
M	8	1	**8T-4136**	1	BOLT (M10X1.5X25-MM)	
M	9	1	**8T-4137**	1	BOLT (M10X1.5X20-MM)	

M-METRIC PART
Y-SEPARATE ILLUSTRATION

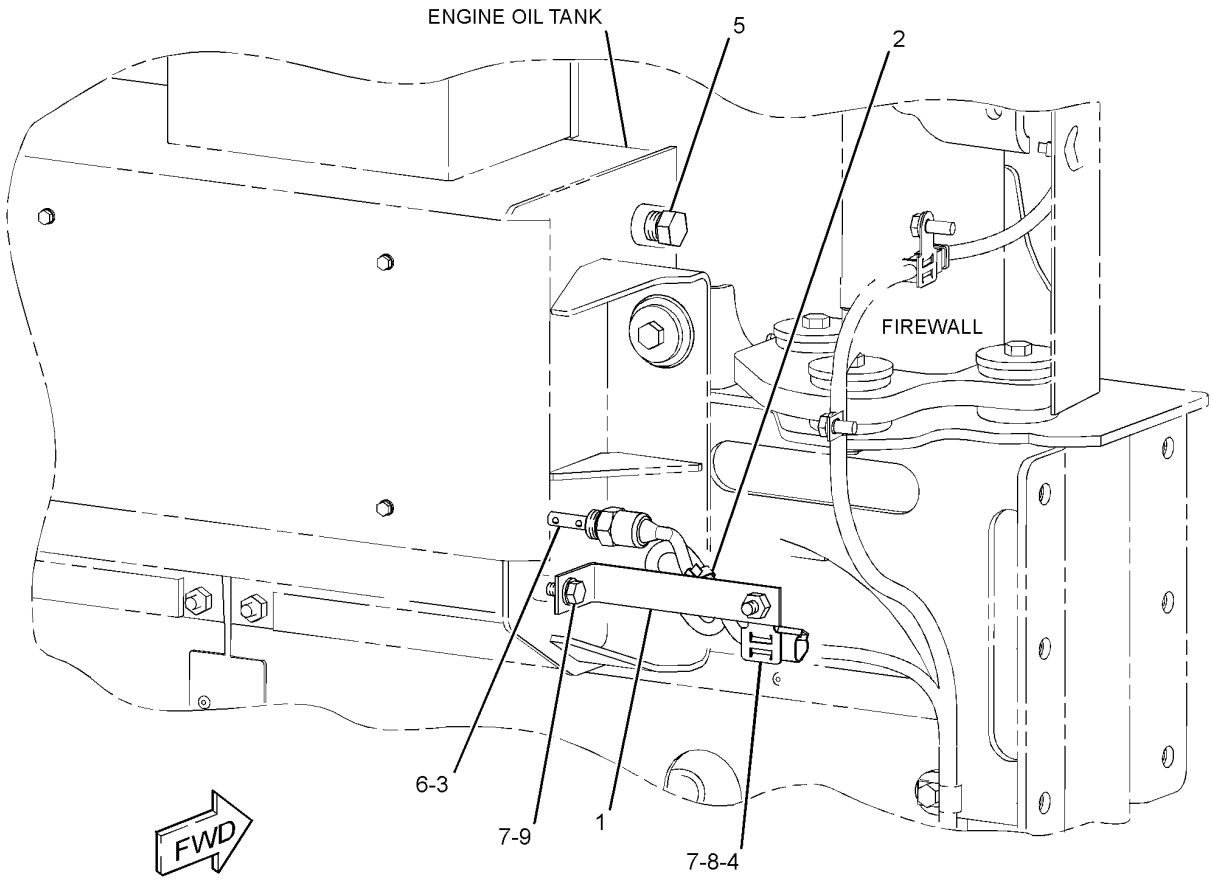

GRAPHIC #1 **<END>** g01447576

ELECTRICAL AND STARTING SYSTEM

316-6984 WIRING GP-POWER TRAIN

S/N: 2211-UP

PART OF 316-6993 ELECTRICAL AR

SMCS-1408, 1634 **i02963140**

NOTE	REF NO	GRAPHIC REF	PART NUMBER	QTY	PART NAME 1 2 3 4 5 6 (PRODUCT LEVEL)	SEE PAGE
	1	1	**3T-3454**	1	BELL-END	
	2	1	**3T-3622**	1	CLAMP	
	3	1	**6D-7889**	1	SEAL-O-RING	
	4	1	**6V-0852**	1	CAP-DUST	
	5	1	**9X-6772**	8	STRAP-CABLE	
	6	1	**124-3019**	2	BRACKET AS	
					(EACH INCLUDES)	
M		1	**8T-3490**	1	NUT-WELD (M10X1.5-THD)	
	7	1	**146-5230**	1	BRACKET AS	
M		1	**8T-3612**	1	NUT-WELD (M8X1.25-THD)	
	8	1	**160-0564**	1	BRACKET AS	
Y	9	1	**167-1709**	1	SENSOR GP-PRESSURE (HYDRAULIC FAN PUMP OIL)	248
	10	1	**174-4613**	1	ANGLE AS	
	11	1	**193-1034**	7	BRACKET AS	
Y	12	1	**195-2150**	1	SENSOR GP-TEMPERATURE (TORQUE CONVERTER OIL)	265
	13	1	**204-2281**	2	STRAP-TIE	
Y	14	1	**217-2708**	1	VALVE GP-MODULATING (24-VOLT) (TC IMPELLER CLUTCH)	451
	15	1	**228-8989**	1	RESISTOR AS	
Y	16	1	**288-8390**	1	SENSOR GP-TEMPERATURE (TRANSMISSION SUMP OIL)	268
	17	1	**289-0672**	1	BRACKET	
	18	1	**310-7910**	1	HARNESS AS-TRANSMISSION (SPEED SENSORS)	
	19	1	**310-7911**	1	HARNESS AS-TRANSMISSION (TORQUE CONVERTER)	
	20	1	**315-6643**	1	BRACKET AS	
M		1	**8T-3490**	1	NUT-WELD (M10X1.5-THD)	
	21	1	**130-5300**	4	CLIP	
	22	1	**136-0853**	1	ADAPTER	
	23	1	**204-8000**	2	ANCHOR-TIE	
	24	1	**5P-2228**	1	BOLT (1/2-13X1-IN)	
	25	1	**2A-1314**	1	SPACER (16.7X23.8X25.4-MM THK)	
	26	1	**3J-1907**	2	SEAL-O-RING	
	27	1	**8T-4223**	1	WASHER-HARD (13.5X25.5X3-MM THK)	
	28	1	**5P-9085**	4	CLIP	
	29	1	**5P-9297**	10	CLIP	
	30	1	**6D-3479**	4	CLIP	
	31	1	**6V-3265**	2	CLIP	
	32	1	**214-7568**	2	SEAL-O-RING	
	33	1	**7J-0204**	1	SEAL-O-RING	
	34	1	**7X-0344**	1	BOLT (5/8-11X1.375-IN)	
	35	1	**8M-2770**	4	CLIP	
	36	1	**8M-2773**	1	CLIP	
	37	1	**8T-4121**	26	WASHER-HARD (11X21X2.5-MM THK)	
	38	1	**8T-4122**	1	WASHER-HARD (17X32X3.5-MM THK)	
M	39	1	**8T-4133**	2	NUT (M10X1.5-THD)	
M	40	1	**8T-4136**	6	BOLT (M10X1.5X25-MM)	
M	41	1	**8T-4137**	20	BOLT (M10X1.5X20-MM)	
M	42	1	**8T-4140**	1	BOLT (M16X2X60-MM)	
M	43	1	**8T-4183**	2	BOLT (M12X1.75X40-MM)	
M	44	1	**8T-4189**	1	BOLT (M8X1.25X20-MM)	
	45	1	**8T-4224**	3	WASHER-HARD (8.8X16X2-MM THK)	
M	46	1	**8T-6869**	2	BOLT (M8X1.25X60-MM)	
	47	1	**8T-6871**	1	BOLT (5/8-11X2.5-IN)	
	48	1	**9M-8406**	1	CLIP	
	49	1	**7W-7381**	1	FITTING-OUTLET	

M-METRIC PART
Y-SEPARATE ILLUSTRATION

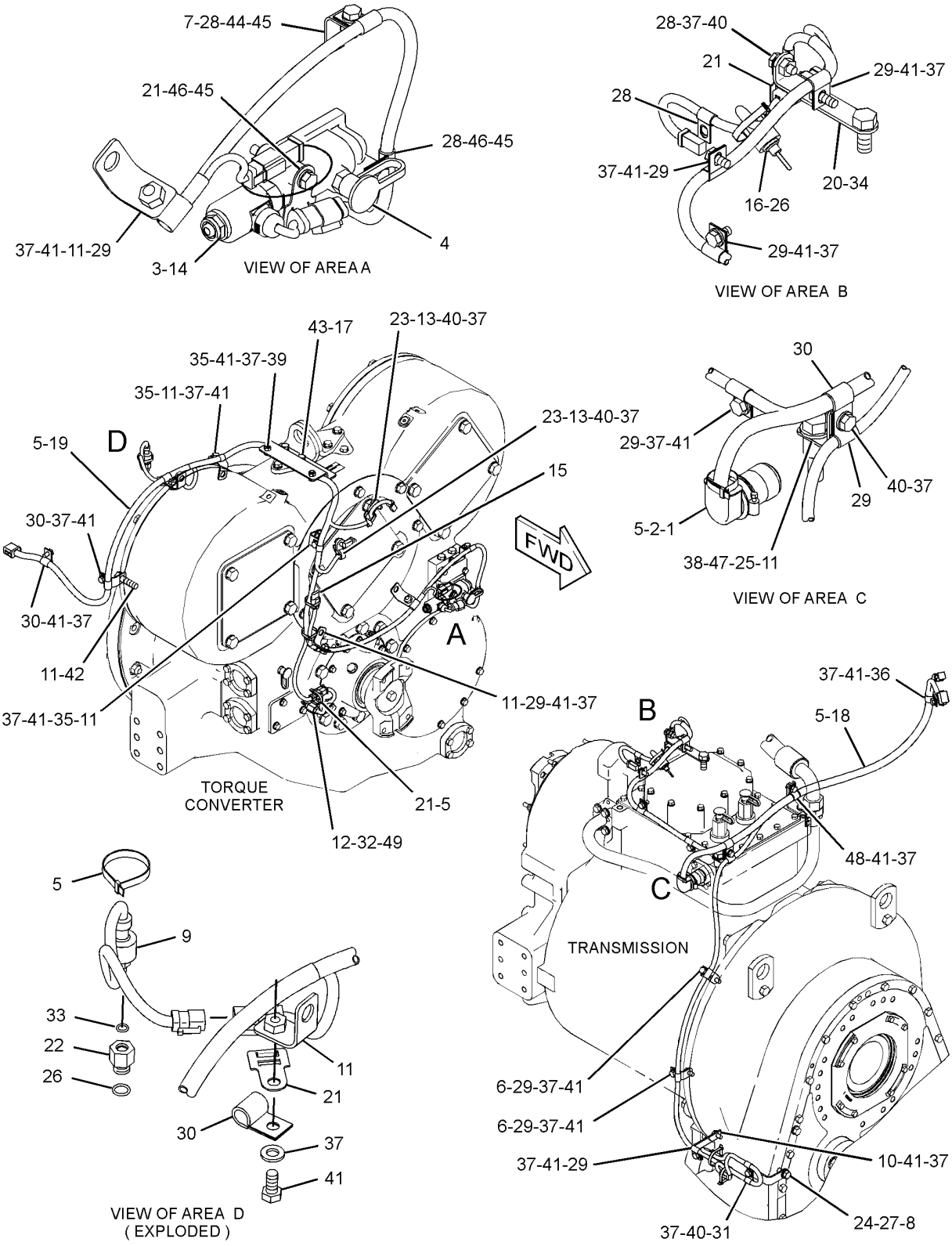

GRAPHIC #1 **<END>** g01447496

ELECTRICAL AND STARTING SYSTEM

316-6983 WIRING GP-REAR

S/N: 2211-UP

PART OF 316-6993 ELECTRICAL AR

SMCS-1408 **i02939856**

NOTE	REF NO	GRAPHIC REF	PART NUMBER	QTY	PART NAME 1 2 3 4 5 6 (PRODUCT LEVEL)	SEE PAGE
	1	2	**9X-6772**	1	STRAP-CABLE	
	2	2	**160-0564**	1	BRACKET AS	
	3	1	**208-5021**	1	LAMP GP-SIGNAL (VIMS, LED, BLUE)	
		1	**102-8802**	1	KIT-RECEPTACLE (2-PIN)	
					(INCLUDES RECEPTACLE AS AND WEDGE)	
		1	**186-3735**	2	PIN-CONNECTOR (16-GA TO 18-GA)	
	4	1	**213-9100**	2	ALARM GP (BACKUP)	
					(EACH INCLUDES)	
		1	**102-8802**	1	KIT-RECEPTACLE (2-PIN)	
					(INCLUDES RECEPTACLE AS AND WEDGE)	
D		1	**5P-5623**		WIRE-ELECTRICAL (16-GA, BLACK) (4-DM)	
E		1	**9X-1813**		SLEEVE (31-CM)	
		1	**186-3735**	1	PIN-CONNECTOR (16-GA TO 18-GA)	
	5	1	**310-7908**	1	HARNESS AS-REAR CHASSIS	
	6	1,2	**130-5300**	3	CLIP	
	7	2	**1S-0994**	1	CLIP	
	8	2	**4K-8864**	4	CLIP	
M	9	2	**5C-2890**	3	NUT (M6X1-THD)	
	10	1,2	**5P-9085**	2	CLIP	
	11	1,2	**5P-9299**	7	CLIP	
	12	2	**7X-4780**	2	GROMMET	
	13	2	**7X-7729**	1	WASHER (11X25X3-MM THK)	
	14	2	**8M-2773**	1	CLIP	
	15	1,2	**8T-4121**	30	WASHER-HARD (11X21X2.5-MM THK)	
M	16	1,2	**8T-4133**	2	NUT (M10X1.5-THD)	
M	17	2	**8T-4136**	7	BOLT (M10X1.5X25-MM)	
M	18	1,2	**8T-4137**	22	BOLT (M10X1.5X20-MM)	
	19	1	**9M-8406**	4	CLIP	
	20	2	**9X-6165**	1	WASHER (6.5X22X2.5-MM THK)	
	21	2	**9X-7344**	2	GROMMET	
	22	2	**9X-8250**	5	CLIP	
	23	2	**9X-8256**	2	WASHER (6.6X12X2-MM THK)	

D-ORDER BY THE METER
E-ORDER BY THE CENTIMETER
M-METRIC PART

REFER TO ALL ILLUSTRATIONS OF
THIS GROUP FOR AUXILIARY VIEWS

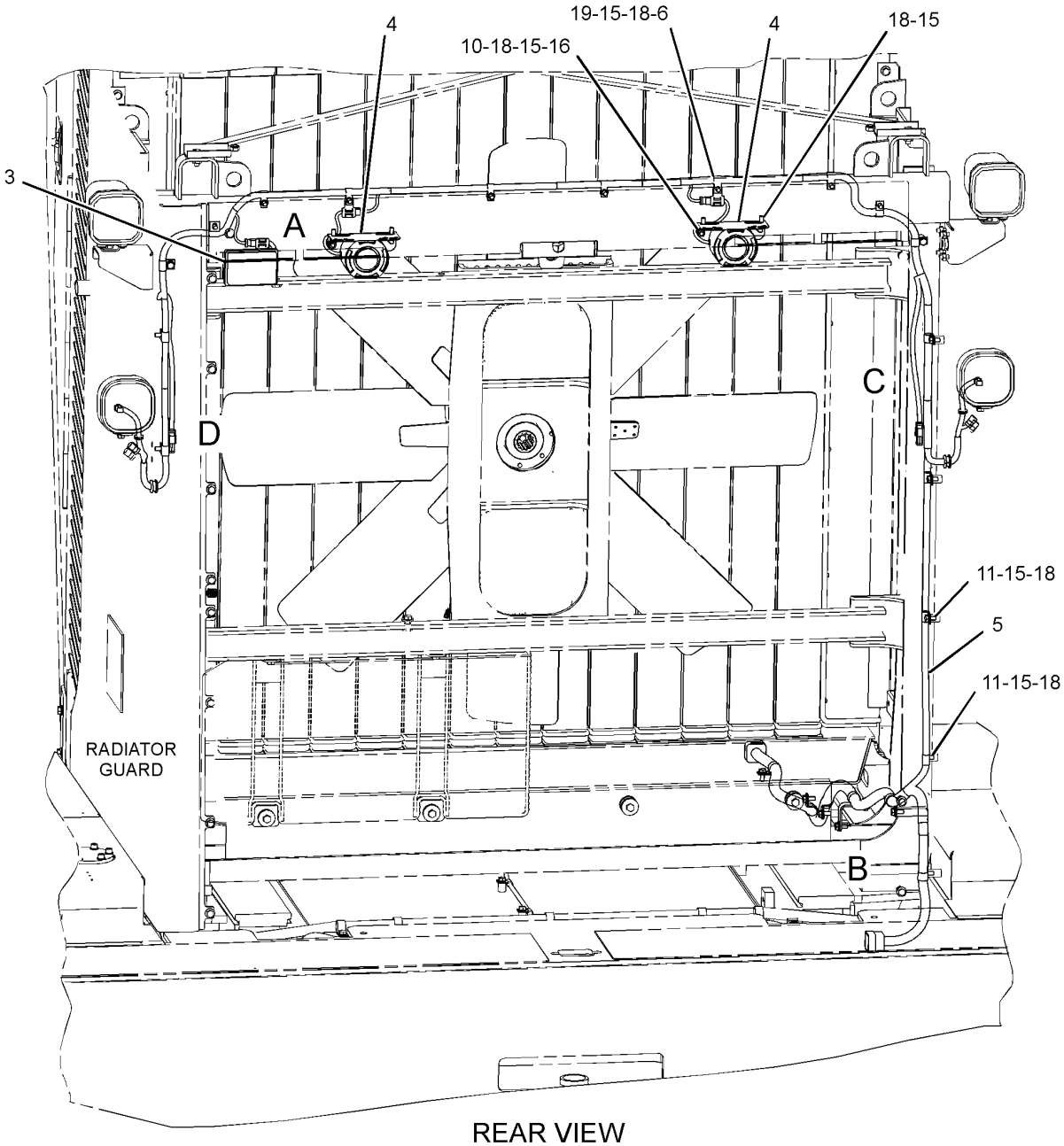

REAR VIEW
(UPPER LEFT)

GRAPHIC #1 g01437642

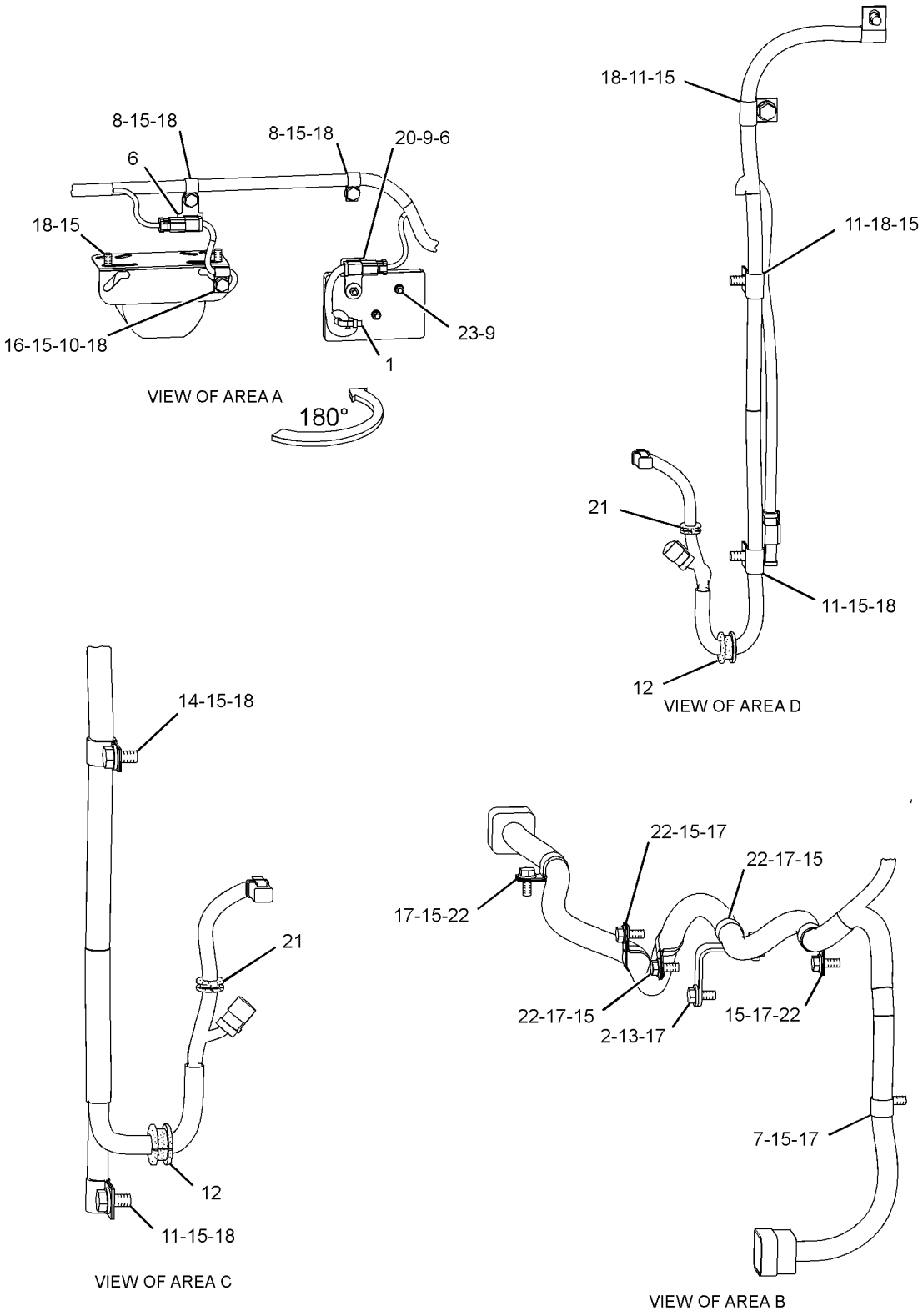

GRAPHIC #2 **<END>** g01437643

282-5107 WIRING GP-ROPS

S/N: 2211-UP

PART OF 247-3066 ROPS AR

SMCS-1408 **i02939857**

NOTE	REF NO	GRAPHIC REF	PART NUMBER	QTY	PART NAME 1 2 3 4 5 6 (PRODUCT LEVEL)	SEE PAGE
	1	2,3	**9X-6772**	17	STRAP-CABLE	
	2	2	**162-9245**	1	BRACKET AS	
	3	2	**229-3177**	1	PLATE AS	
		2	**6V-6716**	2	RIVET-TRUSS HEAD	
		2	**109-1645**	1	CLIP	
	4	2	**290-2752**	1	BRACKET AS	
M		2	**8T-3490**	2	NUT-WELD (M10X1.5-THD)	
	5	1	**309-3568**	1	HARNESS AS-CHASSIS (ROPS)	
	6	2	**033-8248**	5	CLIP	
	7	2	**124-9633**	2	CLIP	
	8	2,3	**130-5300**	3	CLIP	
	9	2	**205-7299**	2	CLIP	
	10	2	**4P-7581**	1	CLIP	
	11	2	**6D-4244**	1	CLIP	
	12	2	**8M-2770**	1	CLIP	
	13	2,3	**8M-2773**	12	CLIP	
	14	2,3	**8T-4121**	28	WASHER-HARD (11X21X2.5-MM THK)	
M	15	2	**8T-4136**	1	BOLT (M10X1.5X25-MM)	
M	16	2,3	**8T-4137**	27	BOLT (M10X1.5X20-MM)	
	17	2,3	**9X-8250**	3	CLIP	

M-METRIC PART

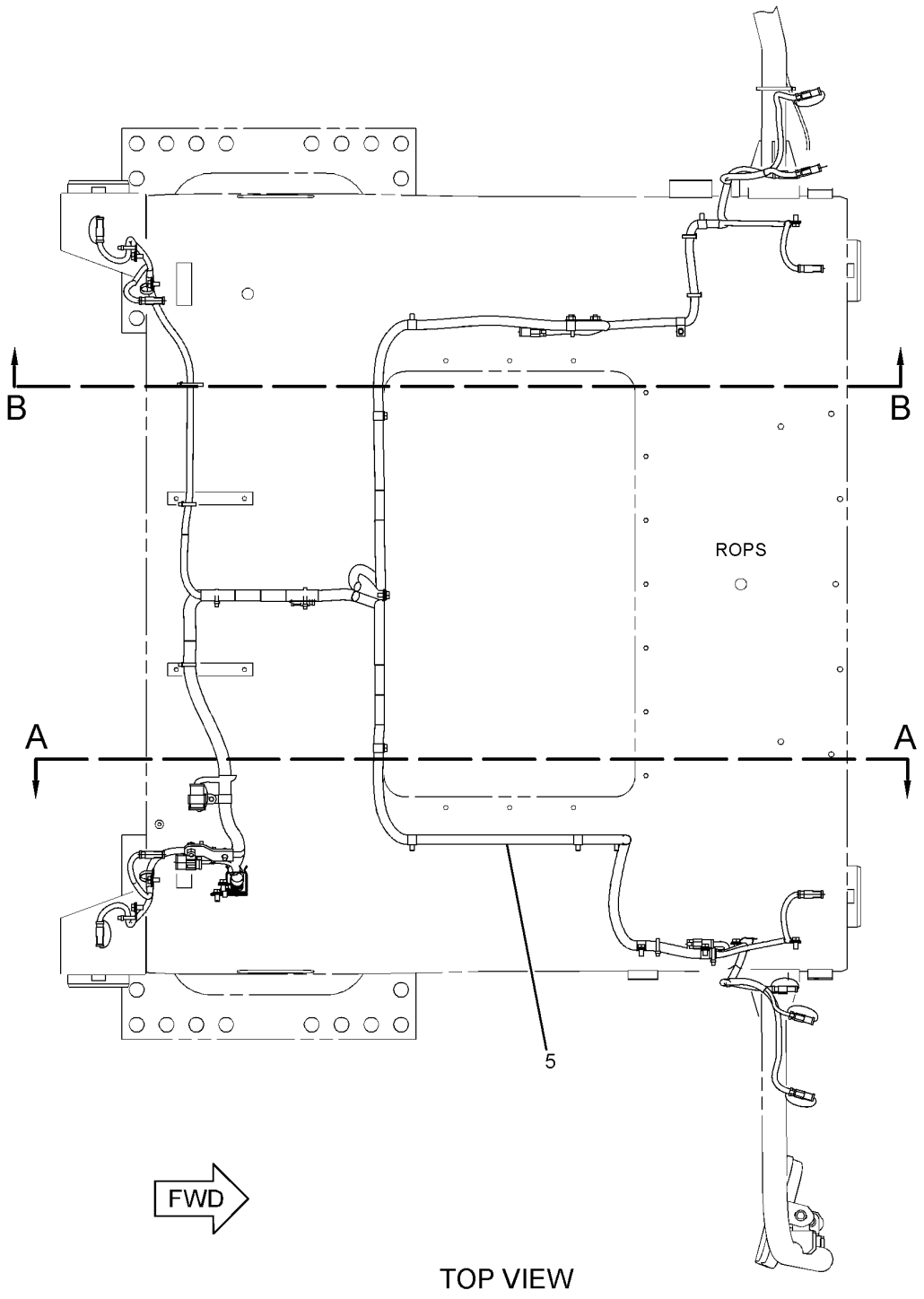

TOP VIEW

REFER TO ALL ILLUSTRATIONS OF
THIS GROUP FOR AUXILIARY VIEWS.

GRAPHIC #1 g01438982

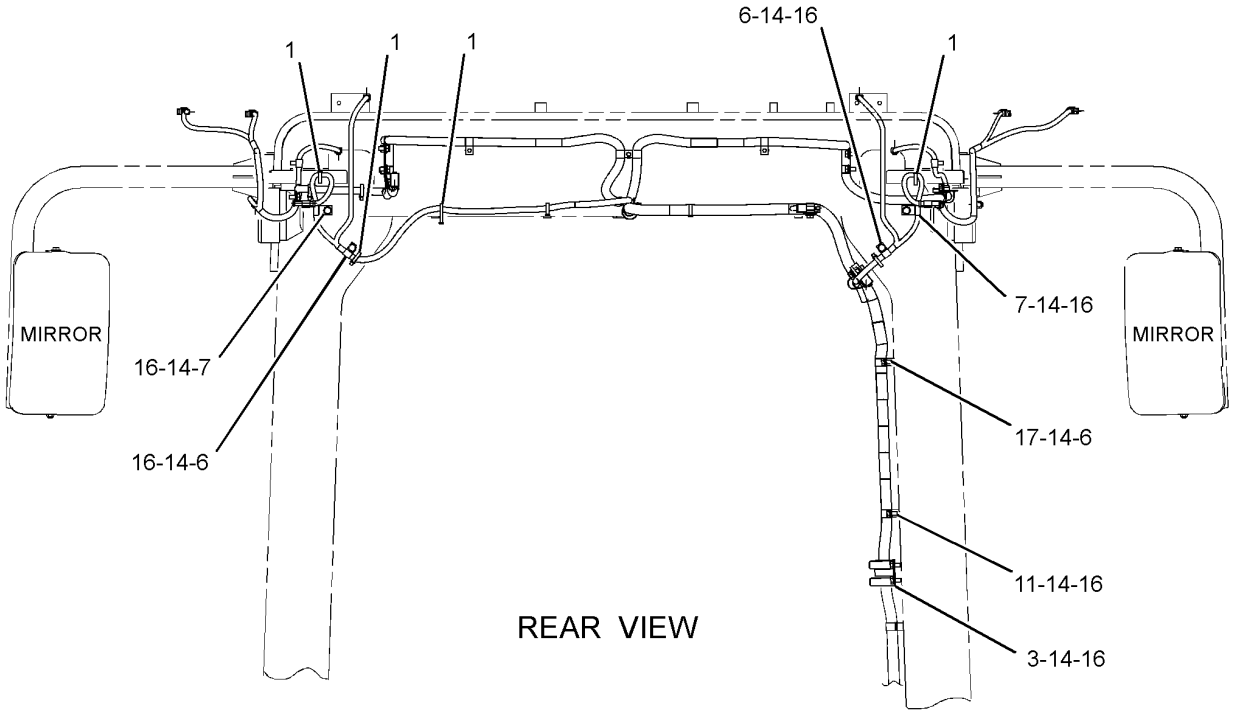

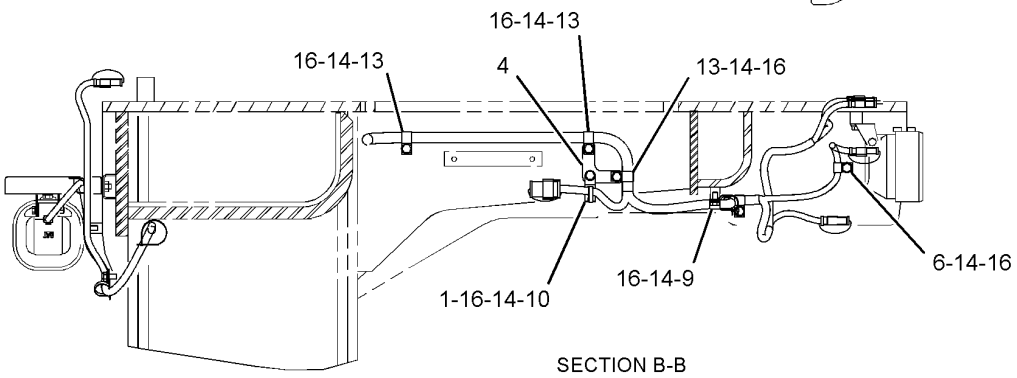

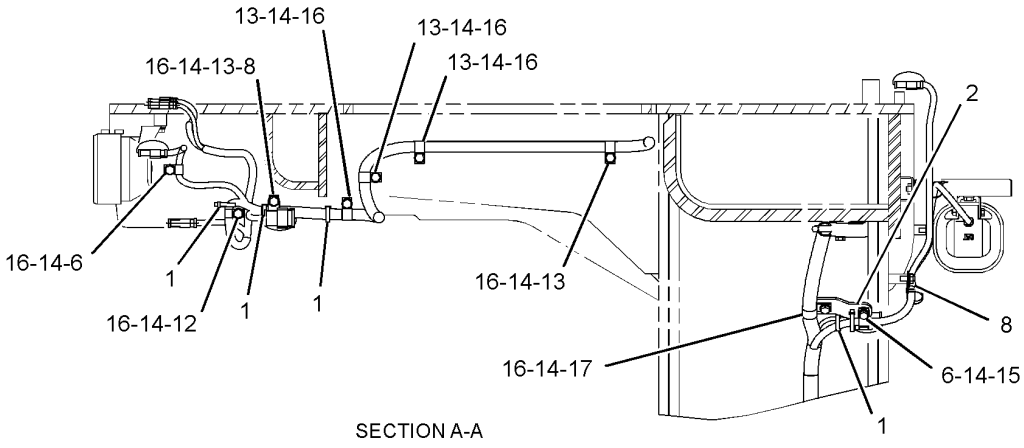

GRAPHIC #2 g01438984

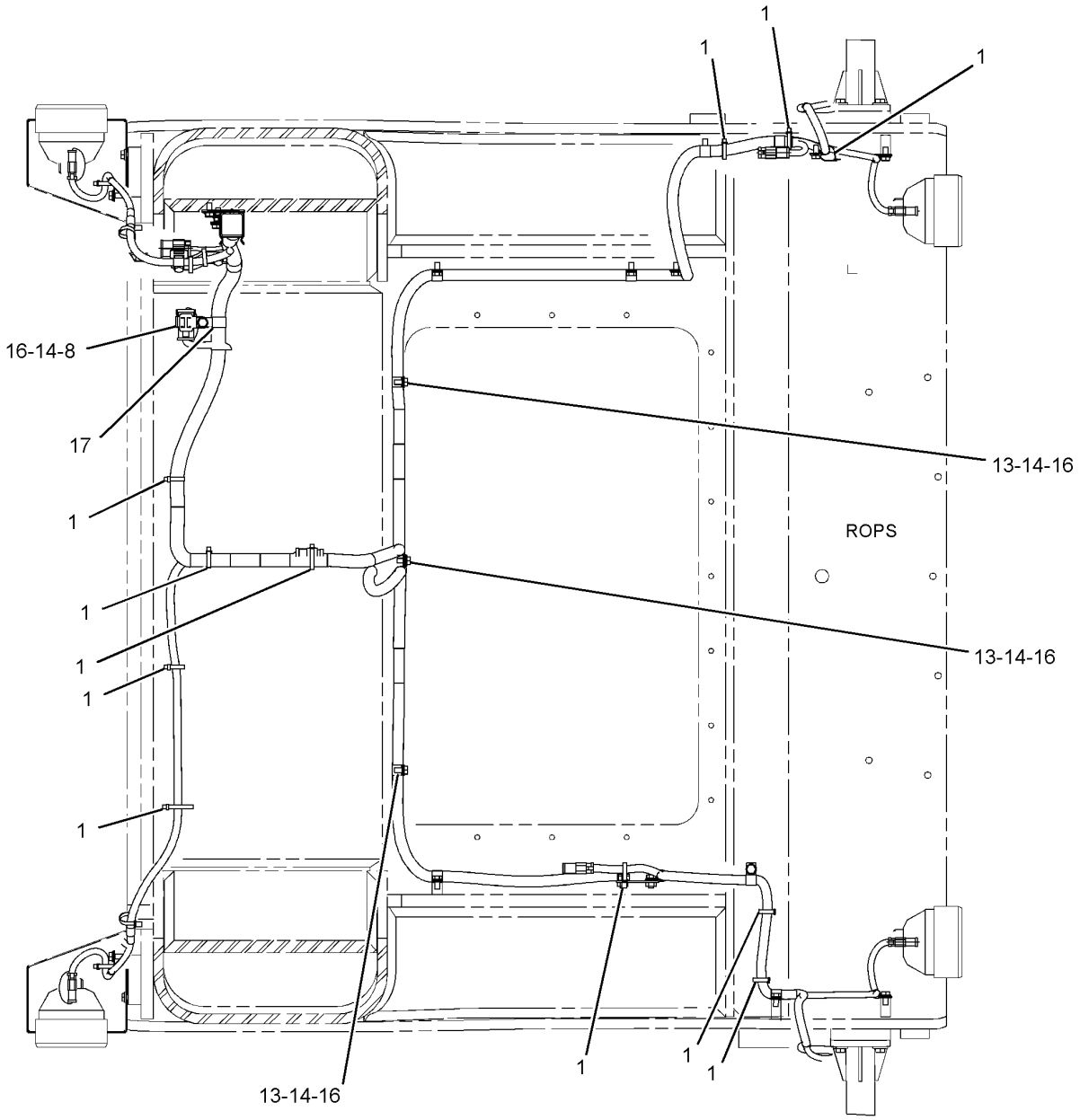

GRAPHIC #3 **<END>** g01439084

282-9066 WIRING GP-SERVICE CENTER—OIL RENEWAL

S/N: 2211-UP
PART OF 286-0856 SERVICE CENTER AR
AN ATTACHMENT

SMCS-1408, 7513 **i02901613**

NOTE	REF NO	GRAPHIC REF	PART NUMBER	QTY	PART NAME 1 2 3 4 5 6 (PRODUCT LEVEL)	SEE PAGE
	1	1	**157-7190**	2	BASE AS-INDICATOR (GREEN)	
					(EACH INCLUDES)	
		1	**102-8803**	1	KIT-RECEPTACLE (3-PIN)	
					(INCLUDES RECEPTACLE AS & WEDGE)	
E		1	**8C-7329**		TUBE-HEAT SHRINK (4.8-MM DIA) (9-CM)	
		1	**186-3735**	3	PIN-CONNECTOR (16-GA TO 18-GA)	
	2	1	**163-1884**	2	LAMP (24-VOLT) (GREEN)	
	3	1	**283-4860**	1	HARNESS AS-WIRING (SERVICE CENTER, AUTOLUBE)	
	4	1	**314-7594**	1	HARNESS AS-CONTROL (SERVICE CENTER, OIL RENEWAL)	
	5	1	**130-5300**	2	CLIP	
	6	1	**4D-8123**	1	CLIP	
	7	1	**5P-9297**	8	CLIP	
	8	1	**6V-3265**	1	CLIP	
	9	1	**8T-4121**	6	WASHER-HARD (11X21X2.5-MM THK)	
M	10	1	**8T-4136**	5	BOLT (M10X1.5X25-MM)	
M	11	1	**8T-4137**	1	BOLT (M10X1.5X20-MM)	

E-ORDER BY THE CENTIMETER
M-METRIC PART

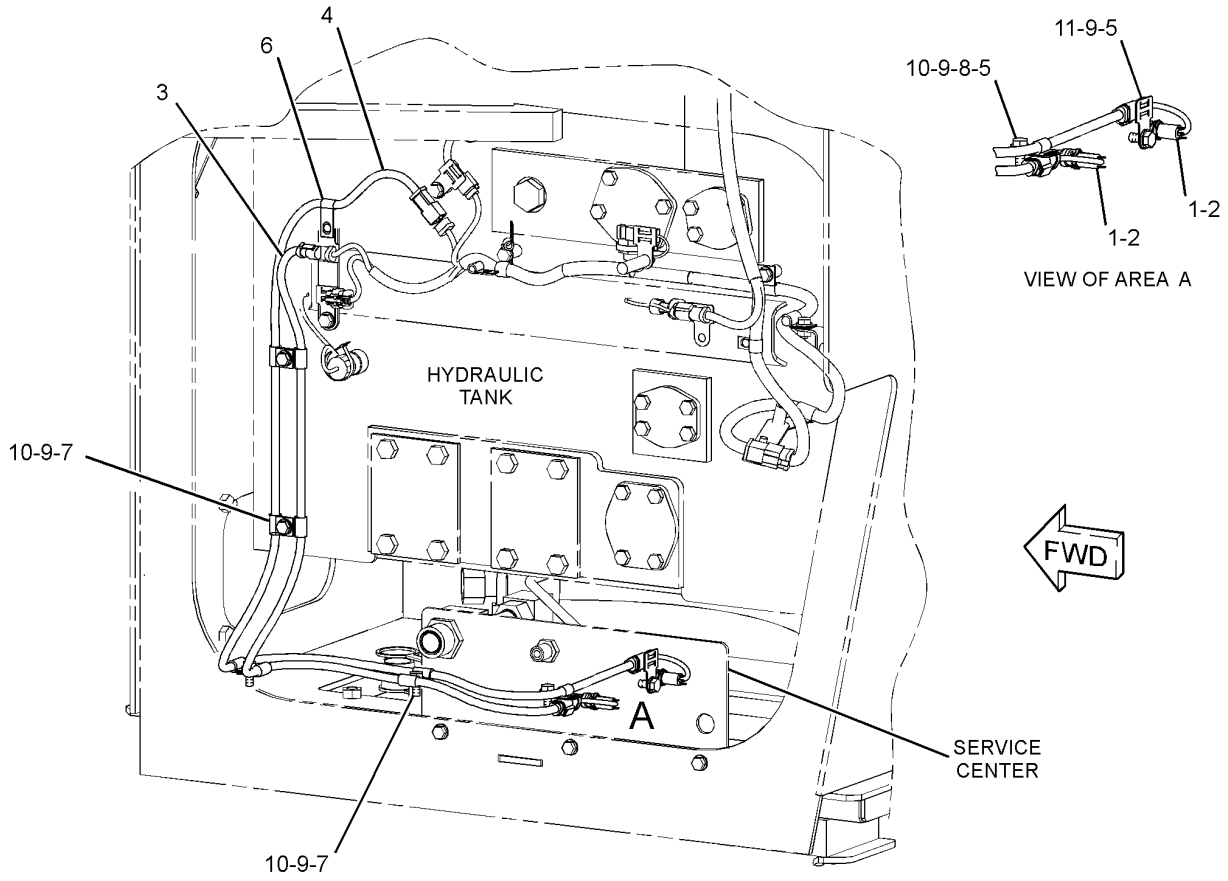

GRAPHIC #1 **<END>** g01447573

POWER TRAIN

280-3582 AXLE AR-FIXED—FRONT

S/N: 2211-UP

PART OF 262-2085 POWER TRAIN AR

SMCS-3013, 3278 **i02885304**

NOTE	PART NUMBER	QTY	PART NAME 1 2 3 4 5 6 (PRODUCT LEVEL)	SEE PAGE
Y	*107-0700*	1	AXLE GP-FIXED (FRONT)	359
Y	*316-8335*	1	DIFFERENTIAL & BEVEL GEAR GP	373
Y	*280-3580*	2	WHEEL GP-FINAL DRIVE & BRAKE	466

Y-SEPARATE ILLUSTRATION

<END>

280-3583 AXLE AR-OSCILLATING—REAR

S/N: 2211-UP

PART OF 262-2085 POWER TRAIN AR

SMCS-3013, 3278 **i02885306**

NOTE	PART NUMBER	QTY	PART NAME 1 2 3 4 5 6 (PRODUCT LEVEL)	SEE PAGE
Y	**316-9362**	1	AXLE GP-OSCILLATING (REAR)	361
Y	*316-8323*	1	DIFFERENTIAL & BEVEL GEAR GP	370
Y	*280-3580*	2	WHEEL GP-FINAL DRIVE & BRAKE	466

Y-SEPARATE ILLUSTRATION

<END>

107-0700 AXLE GP-FIXED–FRONT

S/N: 2211-UP

PART OF 280-3582 AXLE AR-FIXED

SMCS-3278 **i01380723**

NOTE	REF NO	GRAPHIC REF	PART NUMBER	QTY	PART NAME 1 2 3 4 5 6 (PRODUCT LEVEL)	SEE PAGE
	1	1	**107-0696**	2	SHAFT-AXLE	
	2	1	**113-1747**	1	HOUSING AS	
		1	**1V-6137**	2	DOWEL	
	3	1	**104-7006**	12	DOWEL-HOLLOW (35X45-MM)	
	4	1	**9S-4181**	1	PLUG-O-RING	
	5	1	**7M-8485**	2	SEAL-O-RING	
	6	1	**5P-4484**	1	PLUG-MAGNETIC	
	7	1	**2K-9062**	1	PIN-SPRING	
	8	1	**9X-8896**	8	BOLT (1-8X4-IN)	
	9	1	**9M-2828**	68	WASHER-HARD (28X44.5X6-MM THK)	
	10	1	**2J-3507**	60	NUT-FULL (1-8-THD)	

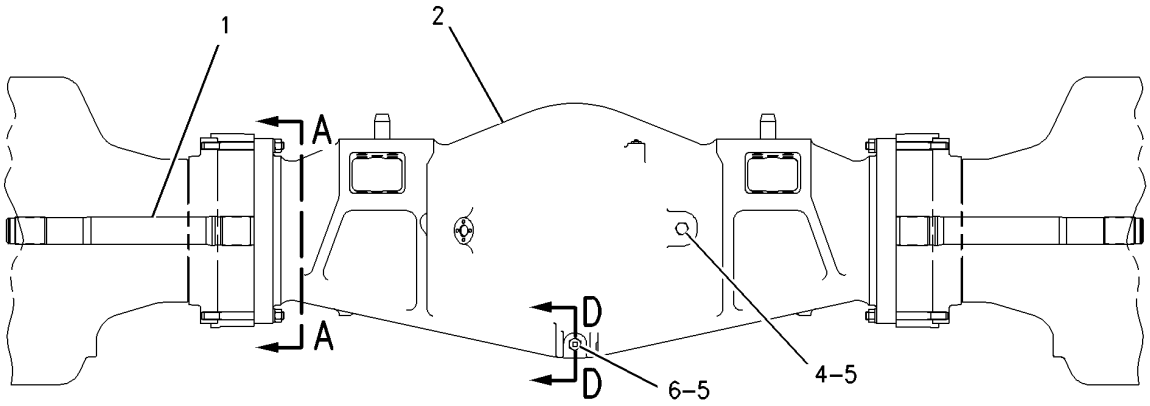

FRONT VIEW

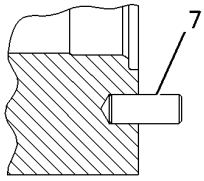

SECTION D-D

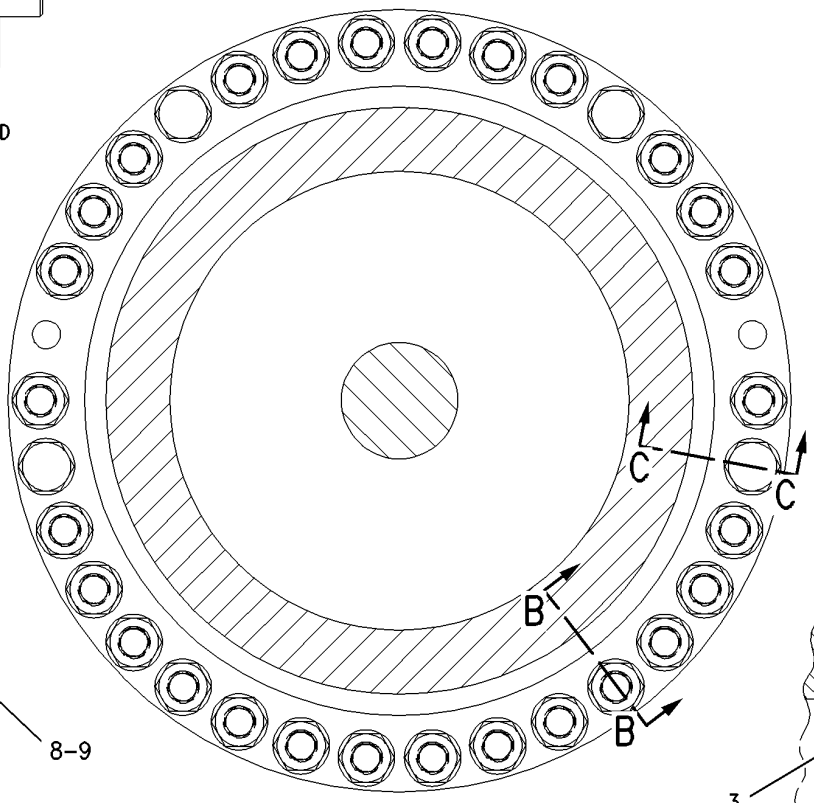

SECTION A-A

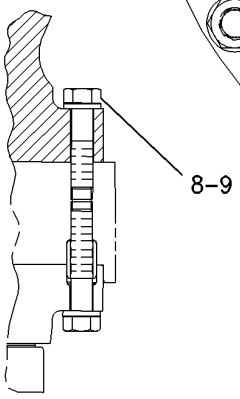

SECTION C-C

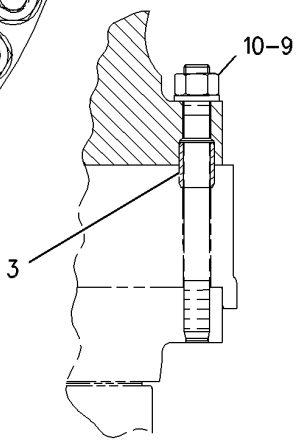

SECTION B-B

GRAPHIC #1 **<END>** g00729136

316-9362 AXLE GP-OSCILLATING—REAR

S/N: 2211-UP

PART OF 280-3583 AXLE AR-OSCILLATING

SMCS-3278 **i02881206**

NOTE	REF NO	GRAPHIC REF	PART NUMBER	QTY	PART NAME 1 2 3 4 5 6 (PRODUCT LEVEL)	SEE PAGE
	1	1	**1D-4608**	16	BOLT (3/4-10X2.75-IN)	
	2	2	**2V-2755**	1	PLATE-THRUST	
	3	1	**2V-2757**	1	COVER	
	4	2	**2V-2761**	1	RETAINER-BEARING	
	5	1	**104-7006**	8	DOWEL-HOLLOW (35X45-MM)	
	6	1	**107-0696**	2	SHAFT-AXLE	
	7	1	**113-5122**	2	DOWEL	
	8	2	**175-6364**	1	BEARING-SLEEVE	
	9	2	**175-6365**	1	BEARING-SLEEVE	
	10	2	**205-8347**	1	TRUNNION	
	11	1	**235-8668**	1	SUPPORT-TRUNNION	
	12	2	**273-5012**	3	SEAL-WIPER	
	13	1	**316-9360**	1	SUPPORT	
	14	1	**318-4637**	1	HOUSING AS	
M		1	**7X-0750**	2	BOSS-WELD (M10X1.5X55-MM)	
M		1	**9X-8487**	2	BOSS-WELD (M10X1.5X35-MM)	
	15	2	**1A-1460**	12	BOLT (1/2-13X2-IN)	
	16	2	**1D-4626**	16	BOLT (7/8-9X2.75-IN)	
	17	1	**2J-3507**	60	NUT-FULL (1-8-THD)	
	18	2	**2K-9062**	1	PIN-SPRING	
	19	2	**2M-0849**	12	WASHER-HARD (13.5X25.5X5-MM THK)	
	20	1,2	**2S-0115**	28	WASHER-HARD (20X36.5X5-MM THK)	
	21	1	**5M-6214**	1	PLUG-PIPE	
	22	2	**320-6751**	12	BOLT	
	23	2	**4V-4885**	2	BEARING-THRUST	
	24	2	**5P-2861**	1	SEAL-O-RING	
	25	2	**5P-4484**	1	PLUG-MAGNETIC	
	26	1	**6M-1622**	2	DOWEL	
	27	1,2	**7M-8485**	2	SEAL-O-RING	
	28	2	**9H-1031**	16	WASHER-HARD (24X41.5X6-MM THK)	
	29	1	**9M-2828**	68	WASHER-HARD (28X44.5X6-MM THK)	
	30	1	**9S-4181**	1	PLUG-O-RING	
	31	1	**9X-8896**	8	BOLT (1-8X4-IN)	
B	32	2	**6V-6640**		SEALANT	

B-USE AS REQUIRED
M-METRIC PART

316-9362 AXLE GP-OSCILLATING *(contd.)* **i02881206**

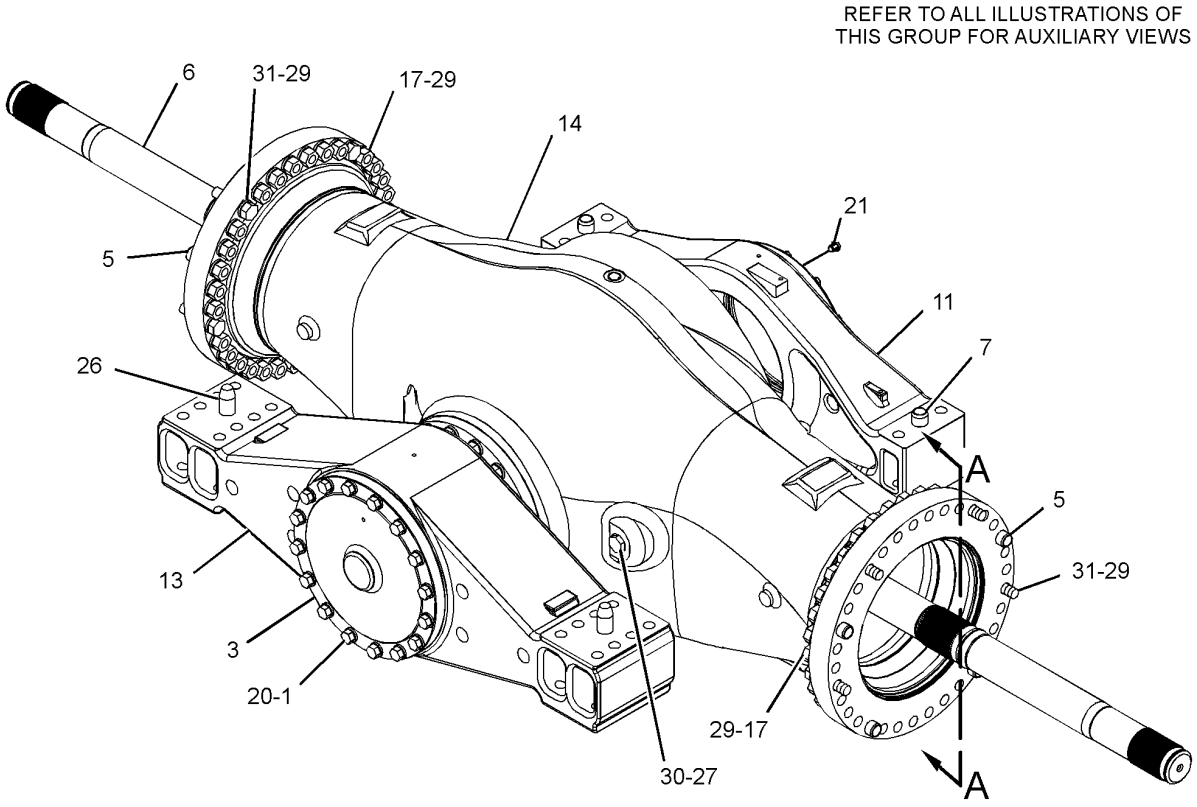

GRAPHIC #1 g01439045

316-9362 AXLE GP-OSCILLATING *(contd.)* **i02881206**

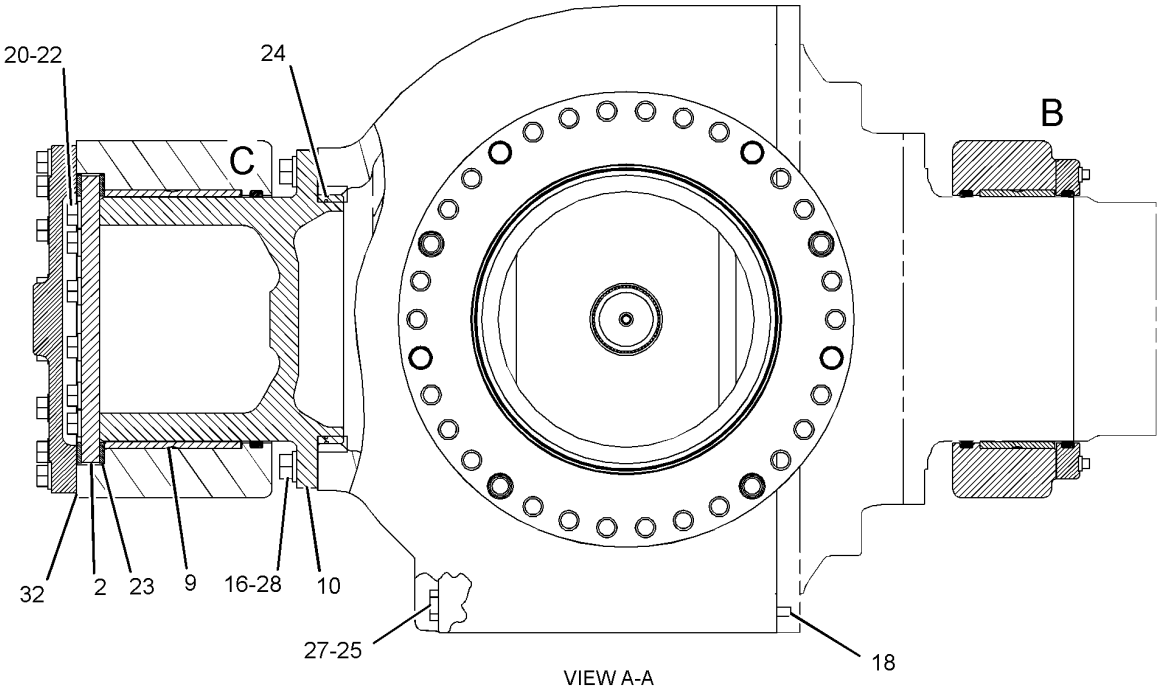

VIEW A-A

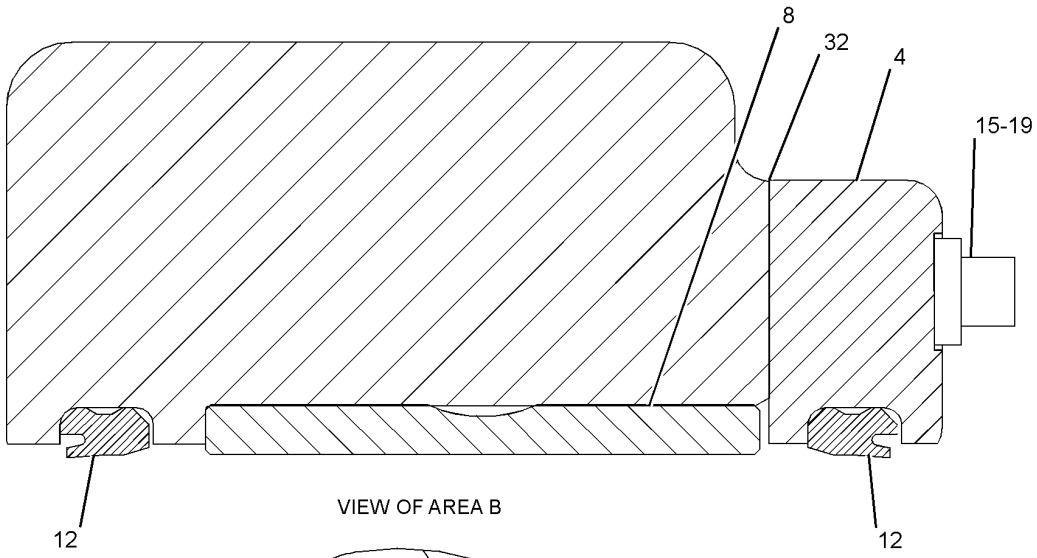

VIEW OF AREA B

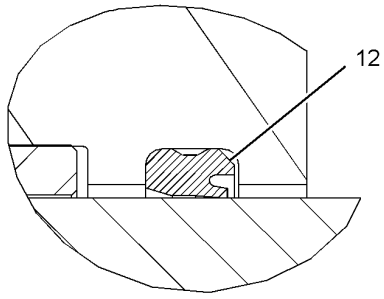

VIEW OF AREA C

GRAPHIC #2

<END>

g01439047

229-5371 BLOCK GP-HYDRAULIC—AXLE, FRONT

S/N: 2211-UP

PART OF 273-7400 LINES GP-AXLE OIL COOLER

SMCS-3016 **i01971997**

NOTE	REF NO	GRAPHIC REF	PART NUMBER	QTY	PART NAME 1 2 3 4 5 6 (PRODUCT LEVEL)	SEE PAGE
	1	1	**154-1924**	1	MANIFOLD	
K	2	1	*148-8324*	1	CONNECTOR AS	
		1	**3K-0360**	1	SEAL-O-RING	
		1	**6V-9746**	1	SEAL-O-RING	
		1	**6V-9874**	1	CONNECTOR	
	3	1	*148-8407*	1	PLUG AS	
		1	**3J-1907**	1	SEAL-O-RING	
		1	**9S-4191**	1	PLUG-O-RING	
	4	1	*169-7394*	1	CONNECTOR AS	
		1	**3K-0360**	1	SEAL-O-RING	
		1	**5K-9090**	1	SEAL-O-RING	
		1	**8C-3370**	1	CONNECTOR	
	5	1	**1P-4577**	2	FLANGE-HALF	
	6	1	**8T-4121**	4	WASHER-HARD (11X21X2.5-MM THK)	
M	7	1	**8T-4196**	4	BOLT (M10X1.5X35-MM)	

K-SEE MAST AR OR LIFT GP
M-METRIC PART

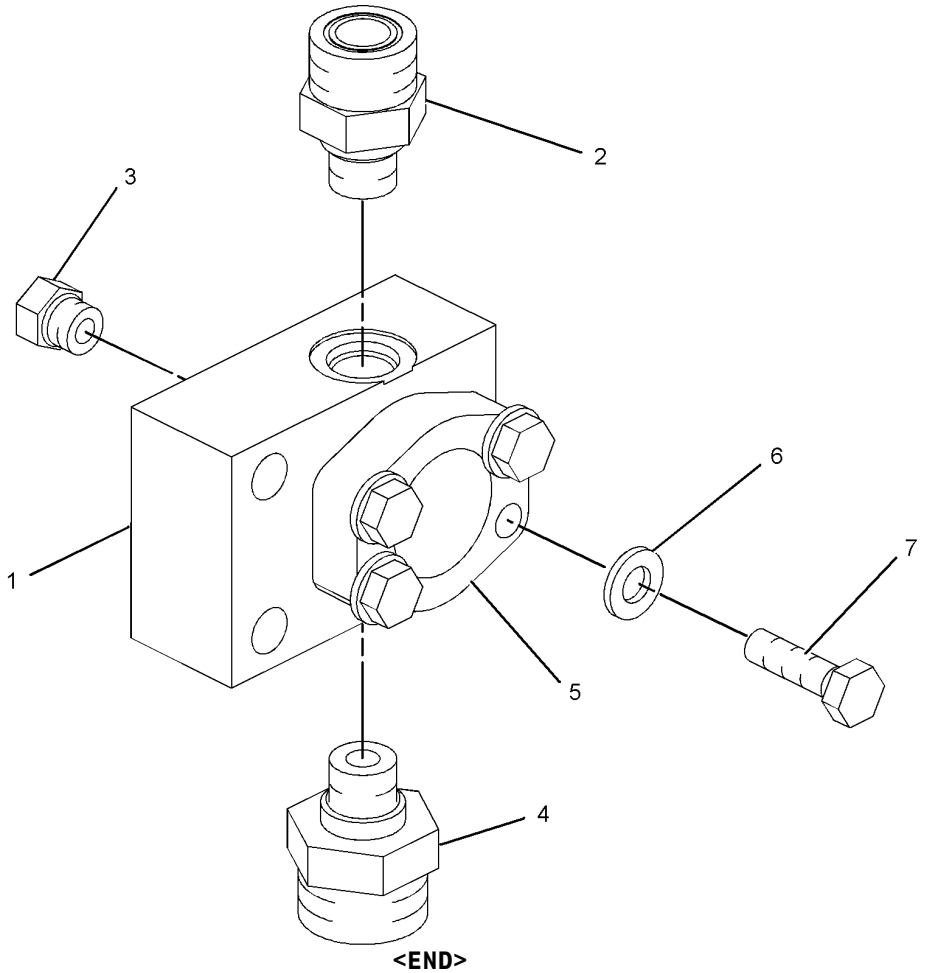

GRAPHIC #1 **<END>** g01048811

229-5373 BLOCK GP-HYDRAULIC—AXLE, REAR

S/N: 2211-UP

PART OF 273-7400 LINES GP-AXLE OIL COOLER

SMCS-3016 **i01972325**

NOTE	REF NO	GRAPHIC REF	PART NUMBER	QTY	PART NAME 1 2 3 4 5 6 (PRODUCT LEVEL)	SEE PAGE
	1	1	**231-3805**	1	MANIFOLD	
	2	1	*148-8324*	1	CONNECTOR AS	
		1	**3K-0360**	1	SEAL-O-RING	
		1	**6V-9746**	1	SEAL-O-RING	
		1	**6V-9874**	1	CONNECTOR	
	3	1	*148-8352*	1	ELBOW AS	
		1	**5K-9090**	1	SEAL-O-RING	
		1	**6V-9854**	1	ELBOW	
	4	1	*148-8392*	1	ELBOW AS	
		1	**6V-9746**	1	SEAL-O-RING	
		1	**6V-9853**	1	ELBOW	
	5	1	*148-8411*	1	PLUG AS	
		1	**3K-0360**	1	SEAL-O-RING	
		1	**9S-4185**	1	PLUG-O-RING	
	6	1	*169-7394*	1	CONNECTOR AS	
		1	**3K-0360**	1	SEAL-O-RING	
		1	**5K-9090**	1	SEAL-O-RING	
		1	**8C-3370**	1	CONNECTOR	
	7	1	**1P-4577**	2	FLANGE-HALF	
	8	1	**8T-4121**	4	WASHER-HARD (11X21X2.5-MM THK)	
M	9	1	**8T-4196**	4	BOLT (M10X1.5X35-MM)	

M-METRIC PART

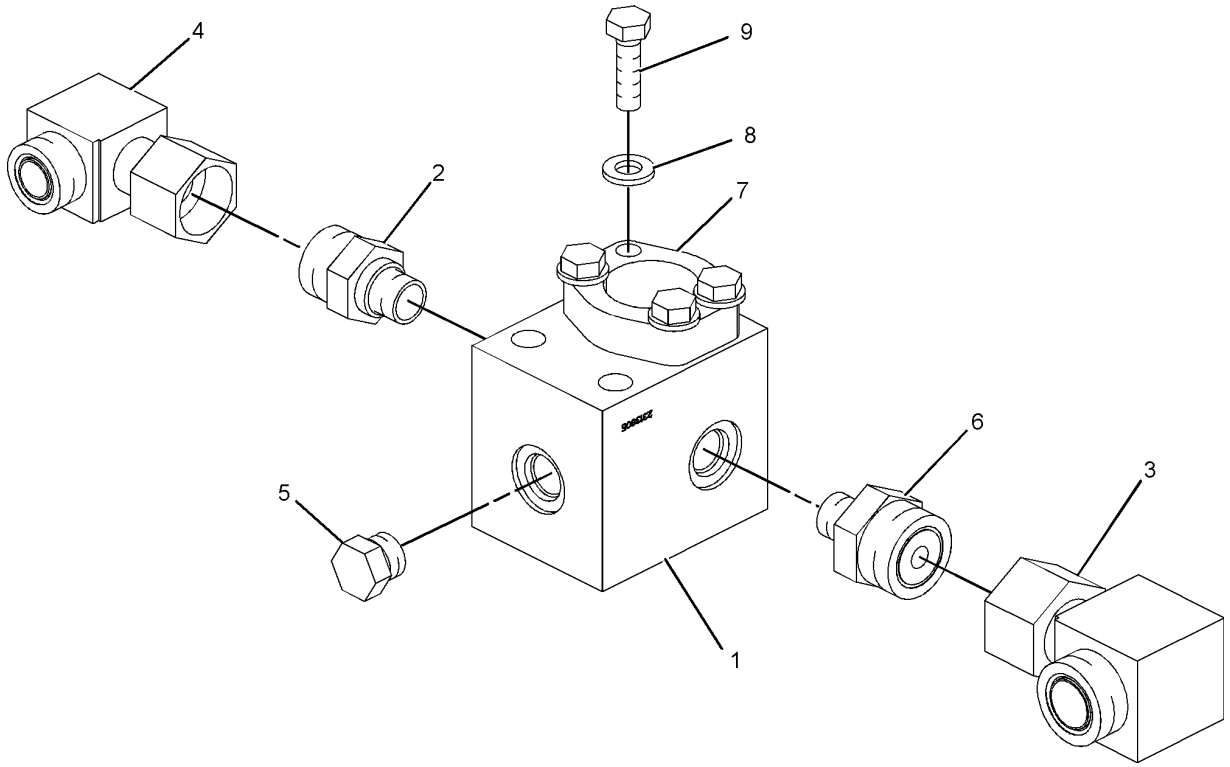

GRAPHIC #1 **<END>** g01048915

POWER TRAIN

6Y-6967 CASE & PARTS GP-PLANETARY

S/N: K2K1-UP

PART OF 283-7702 TRANSMISSION AR

SMCS-3064 **i02859760**

NOTE	REF NO	GRAPHIC REF	PART NUMBER	QTY	PART NAME 1 2 3 4 5 6 (PRODUCT LEVEL)	SEE PAGE
	1	1	**116-2012**	1	CASE AS-TRANS	
		1	**6I-8490**	1	TUBE	
		1	**7M-5839**	2	PLUG-CUP	
	2	1	**0S-1608**	10	BOLT (3/8-16X3.75-IN)	
	3	1	**0T-0065**	3	BOLT (3/8-16X3.5-IN)	
	4	1	**5M-2894**	6	WASHER-HARD (10.2X18.5X2.5-MM THK)	
	5	1	**8M-4992**	2	SEAL-O-RING	
	6	1	**8E-7253**	2	SLEEVE	
	7	1	**8M-8157**	4	SEAL-O-RING	
	8	1	**0L-1351**	14	BOLT (3/8-16X0.875-IN)	
	9	1	**8E-4929**	1	GASKET	
	10	1	**8E-4928**	1	COVER	
	11	1	**132-9875**	1	COVER AS	
		1	**1F-0750**	6	NUT-WELD (3/8-16-THD)	
	12	1	**8E-1717**	2	ADAPTER	
	13	1	**132-9877**	2	ADAPTER	
	14	1	**8E-7249**	1	GASKET	
	15	1	**9X-8885**	19	BOLT (3/4-10X2.25-IN)	
	16	1	**5P-8248**	23	WASHER-HARD (20X36.5X3.5-MM THK)	
	17	1	**3B-2968**	4	BOLT (3/4-10X3.5-IN)	
	18	1	**2P-8421**	2	ADAPTER-O-RING	
	19	1	**3D-2824**	1	SEAL-O-RING	
	20	1	**6V-0852**	4	CAP-DUST	
	21	1	**6V-3965**	4	COUPLER-QUICK DISCONNECT	
	22	1	**124-8149**	1	MANIFOLD	
	23	1	**3J-1907**	6	SEAL-O-RING	
	24	1	**4K-1388**	2	SEAL-O-RING	
	25	1	**9S-1018**	10	WASHER (9.73X19.05X0.84-MM THK)	
	26	1	**3S-0004**	5	WASHER (0.406X0.728X0.09-IN THK)	
	27	1	**124-3019**	3	BRACKET AS	
					(EACH INCLUDES)	
M		1	**8T-3490**	1	NUT-WELD (M10X1.5-THD)	
	28	1	**147-3150**	1	ANGLE AS	
M		1	**8T-3490**	1	NUT-WELD (M10X1.5-THD)	

M-METRIC PART

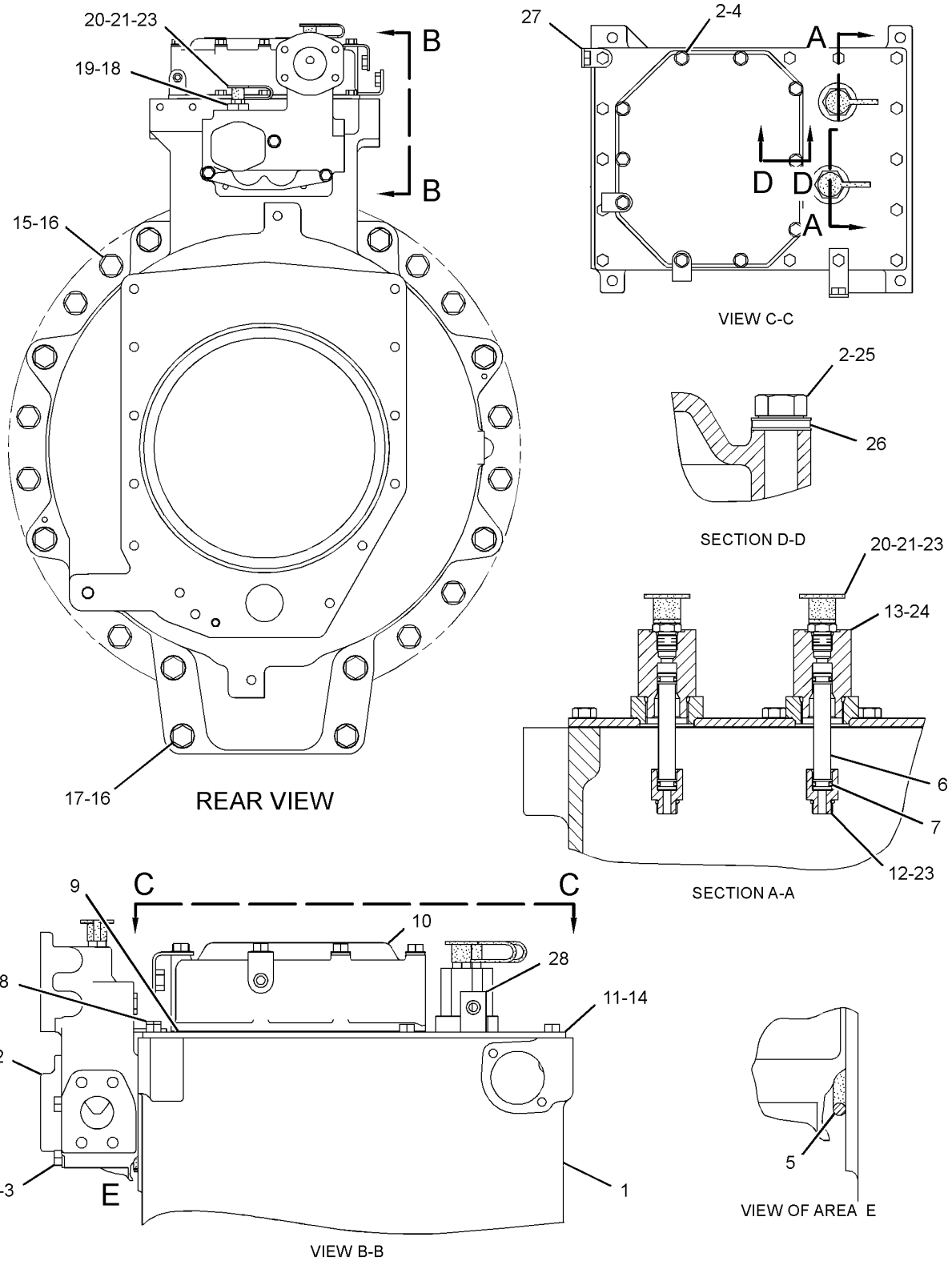

GRAPHIC #1 **<END>** g01426542

POWER TRAIN

283-7684 CASE GP-TRANSFER GEAR

S/N: K2K1-UP

PART OF 283-7683 GEAR GP-OUTPUT TRANSFER

SMCS-3075, 3159 **i02577878**

NOTE	REF NO	GRAPHIC REF	PART NUMBER	QTY	PART NAME 1 2 3 4 5 6 (PRODUCT LEVEL)	SEE PAGE
	1	1	*283-7685*	1	CASE AS-TRANSFER GEAR	
		1	**8E-5117**	1	COVER-TRANSFER GEAR	
		1	**1A-1460**	5	BOLT (1/2-13X2-IN)	
		1	**8M-8659**	2	DOWEL	
	2	1	**276-5416**	1	TUBE AS	
	3	1	**7M-5839**	1	PLUG-CUP	
	4	1	**6I-8055**	1	TUBE	
	5	1	**5K-9107**	1	BOLT-LOCKING (3/8-16X0.75-IN)	
	6	1	**5M-2894**	1	WASHER-HARD (10.2X18.5X2.5-MM THK)	
	7	1	**2S-7010**	1	CLIP	
	8	1	**115-9461**	1	TUBE	

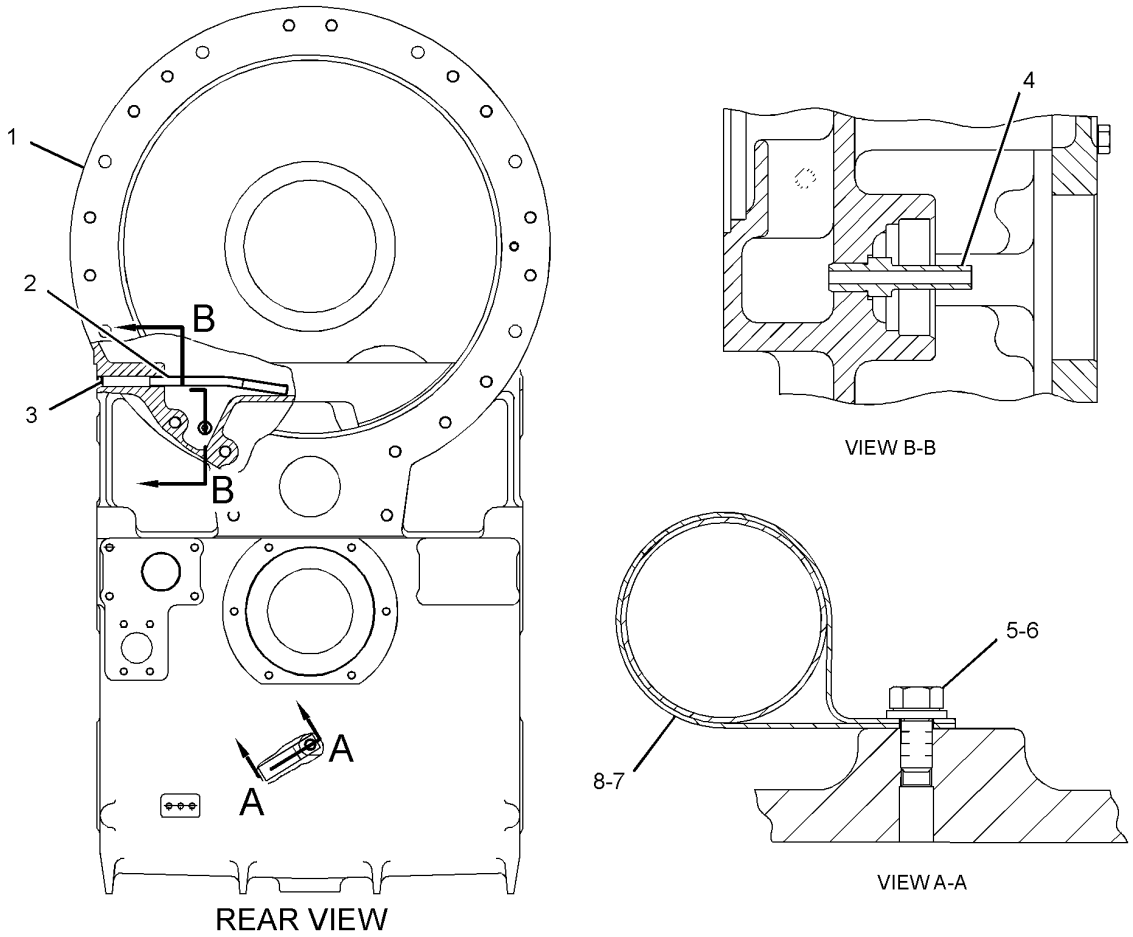

GRAPHIC #1 **<END>** g01366376

295-6903 CONTROL GP-TRANSMISSION HYD

S/N: K2K1-UP

PART OF 283-7702 TRANSMISSION AR

SMCS-3073, 3167 **i02887536**

NOTE	REF NO	GRAPHIC REF	PART NUMBER	QTY	PART NAME 1 2 3 4 5 6 (PRODUCT LEVEL)	SEE PAGE
Y	1	1	**295-6904**	1	VALVE GP-TRANSMISSION CONTROL	461
	2	1	**6B-1557**	4	BOLT (3/8-16X7.5-IN)	
	3	1	**5M-2894**	4	WASHER-HARD (10.2X18.5X2.5-MM THK)	
	4	1	**6P-4977**	2	SLEEVE	
	5	1	**8M-4432**	4	SEAL-O-RING	
	6	1	**141-8466**	1	RETAINER	
	7	1	**8L-5922**	1	BOLT-LOCKING (5/16-18X0.563-IN)	
	8	1	**104-6729**	1	RETAINER	
	9	1	**104-6730**	1	GASKET	
	10	1	**1A-2029**	2	BOLT (3/8-16X1.125-IN)	

Y-SEPARATE ILLUSTRATION

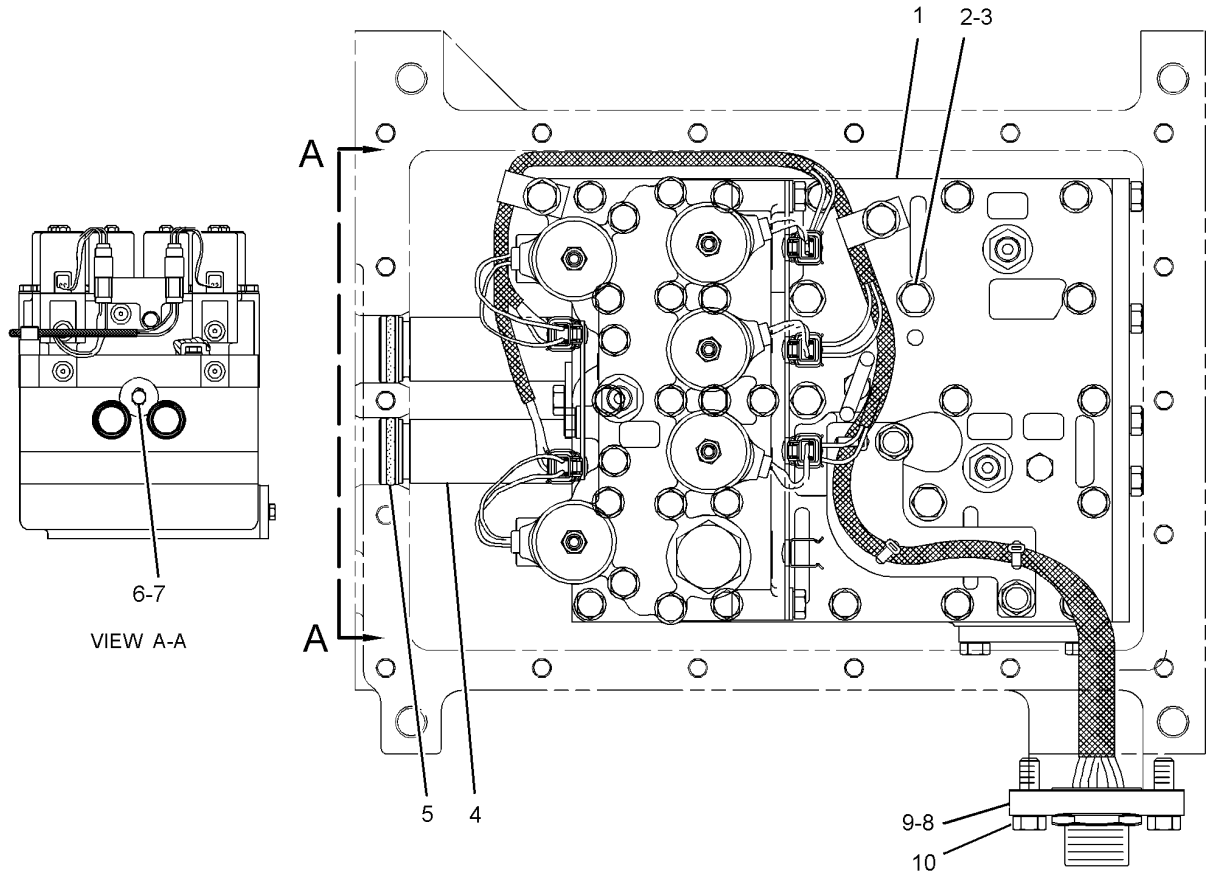

GRAPHIC #1 **<END>** g01437750

POWER TRAIN

316-8323 DIFFERENTIAL & BEVEL GEAR GP

S/N: 2211-UP

PART OF 280-3583 AXLE AR-OSCILLATING

SMCS-3254, 3256, 3258 **i02885688**

NOTE	REF NO	GRAPHIC REF	PART NUMBER	QTY	PART NAME 1 2 3 4 5 6 (PRODUCT LEVEL)	SEE PAGE
	1	1	**171-6803**	1	YOKE AS	
	1A	1	**2J-8163**	1	SEAL-O-RING	
	1B	1	**132-0348**	1	CUP-DUST	
	1C	1	**132-1183**	1	RING-RETAINING	
	1D	1	**171-6804**	1	GUARD	
Y	2	1	**316-8324**	1	DIFFERENTIAL & BEVEL GEAR GP (OSCILLATING AXLE)	371

Y-SEPARATE ILLUSTRATION

ITEMS MARKED "Z" IN GRAPHIC ARE NOT SERVICED SEPARATELY

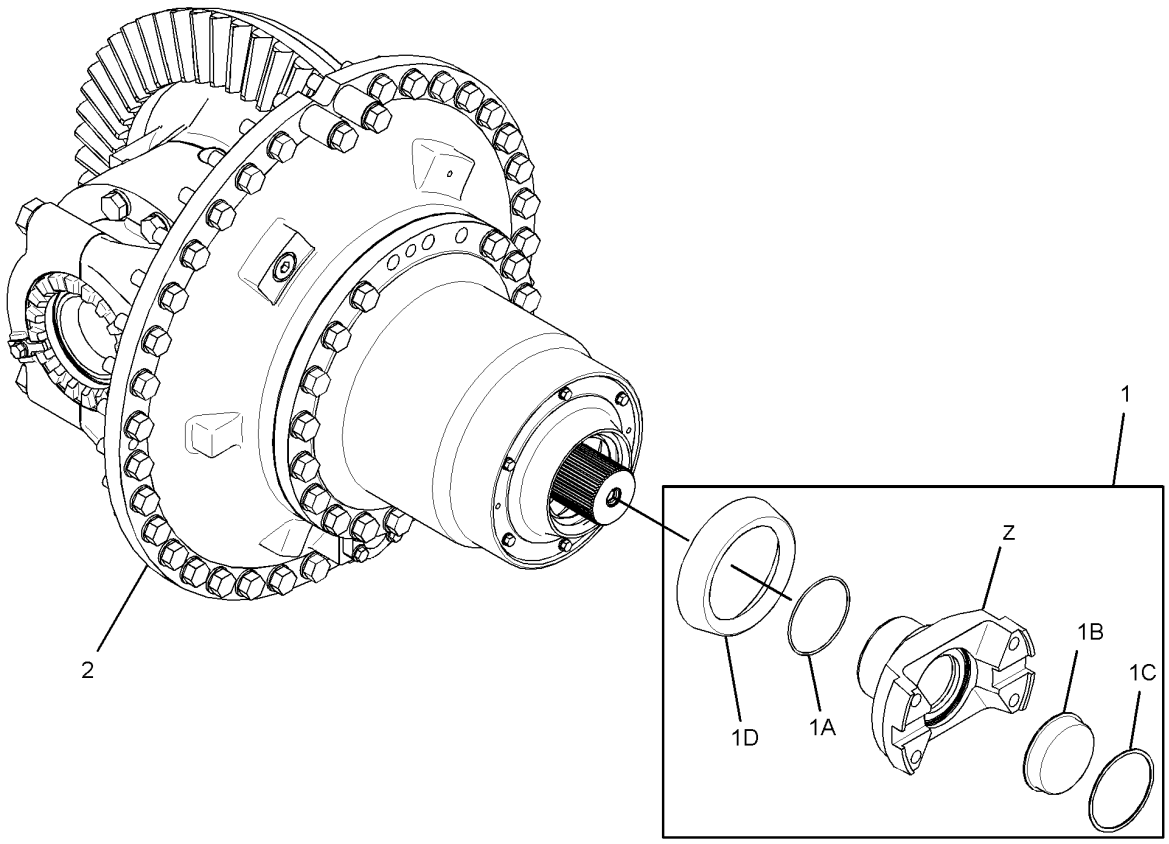

GRAPHIC #1 **<END>** g01437030

316-8324 DIFFERENTIAL & BEVEL GEAR GP—OSCILLATING AXLE

S/N: 2211-UP

PART OF 316-8323 DIFFERENTIAL & BEVEL GEAR GP

SMCS-3254, 3256, 3258 **i02885691**

NOTE	REF NO	GRAPHIC REF	PART NUMBER	QTY	PART NAME 1 2 3 4 5 6 (PRODUCT LEVEL)	SEE PAGE
	1	1	**1M-6573**	1	CUP-BEARING	
	2	1	**1V-2718**	1	SHIM PACK (INCLUDES 20-SHIMS)	
	3	1	**2J-7137**	1	CUP-BEARING	
	4	1	**5V-5669**	1	SHIM PACK (INCLUDES 15-SHIMS)	
	5	1	**6F-7035**	36	BOLT (7/8-14X2.25-IN)	
	6	1	**6W-8399**	1	NUT-ADJUSTMENT	
	7	1	**6W-8400**	1	NUT-ADJUSTMENT	
	8	1	**6W-8401**	1	PIN	
	9	1	**9K-4454**	2	LOCK	
Y	10	1	**120-0550**	1	DIFFERENTIAL GP	376
	11	1	**100-7418**	1	GEAR-BEVEL (53-TEETH)	
	11A	1	**129-6425**	1	SHAFT-PINION	
	12	1	**141-8570**	1	WASHER (110.4X155.2X7-MM)	
	13	1	**141-8571**	1	RETAINER-SEAL	
	14	1	**187-2017**	1	HOUSING	
	15	1	**245-3078**	1	NUT-STAKE	
	16	1	**316-8326**	1	CARRIER AS-DIFFERENTIAL	
		1	**4K-0684**	4	WASHER-HARD (34X55X6-MM THK)	
		1	**6V-2624**	4	BOLT (1-1/4-7X7-IN)	
		1	**7V-9514**	4	SLEEVE	
	17	1	**034-3557**	6	BOLT-LOCKING (3/8-16X1.125-IN)	
	18	1	**126-8181**	1	CONE-BEARING	
	19	1	**126-8182**	1	CUP-BEARING	
	20	1	**133-4296**	1	SEAL-LIP TYPE	
	21	1	**0S-1587**	4	BOLT (1/2-13X1.75-IN)	
	22	1	**1D-4626**	56	BOLT (7/8-9X2.75-IN)	
	23	1	**2D-6506**	1	SEAL-O-RING	
	24	1	**2H-3932**	1	SEAL-O-RING	
	25	1	**2M-3340**	1	SEAL-O-RING	
	26	1	**5K-8454**	2	BOLT (1/2-13X1.12-IN)	
	27	1	**5M-2894**	6	WASHER-HARD (10.2X18.5X2.5-MM THK)	
	28	1	**5P-7843**	1	CUP-BEARING	
	29	1	**5P-8245**	6	WASHER-HARD (13.5X25.5X3-MM THK)	
	30	1	**5P-8249**	94	WASHER-HARD (24X41.5X4-MM THK)	
	31	1	**5V-5670**	1	COVER	
	32	1	**7M-8485**	1	SEAL-O-RING	
	33	1	**2J-7138**	1	CONE	
	34	1	**124-9536**	1	CONE-BEARING	
	35	1	**8F-6230**	1	SEAL-O-RING	
	36	1	**9M-2744**	1	CONE-BEARING	
	37	1	**9S-9334**	1	PLUG-O-RING	
	38	1	**1V-7750**	2	SPACER (27X44.5X57-MM THK)	
	40	1	**9S-1351**	2	BOLT (7/8-9X5-IN)	

Y-SEPARATE ILLUSTRATION

316-8324 DIFFERENTIAL & BEVEL GEAR GP *(contd.)* i02885691

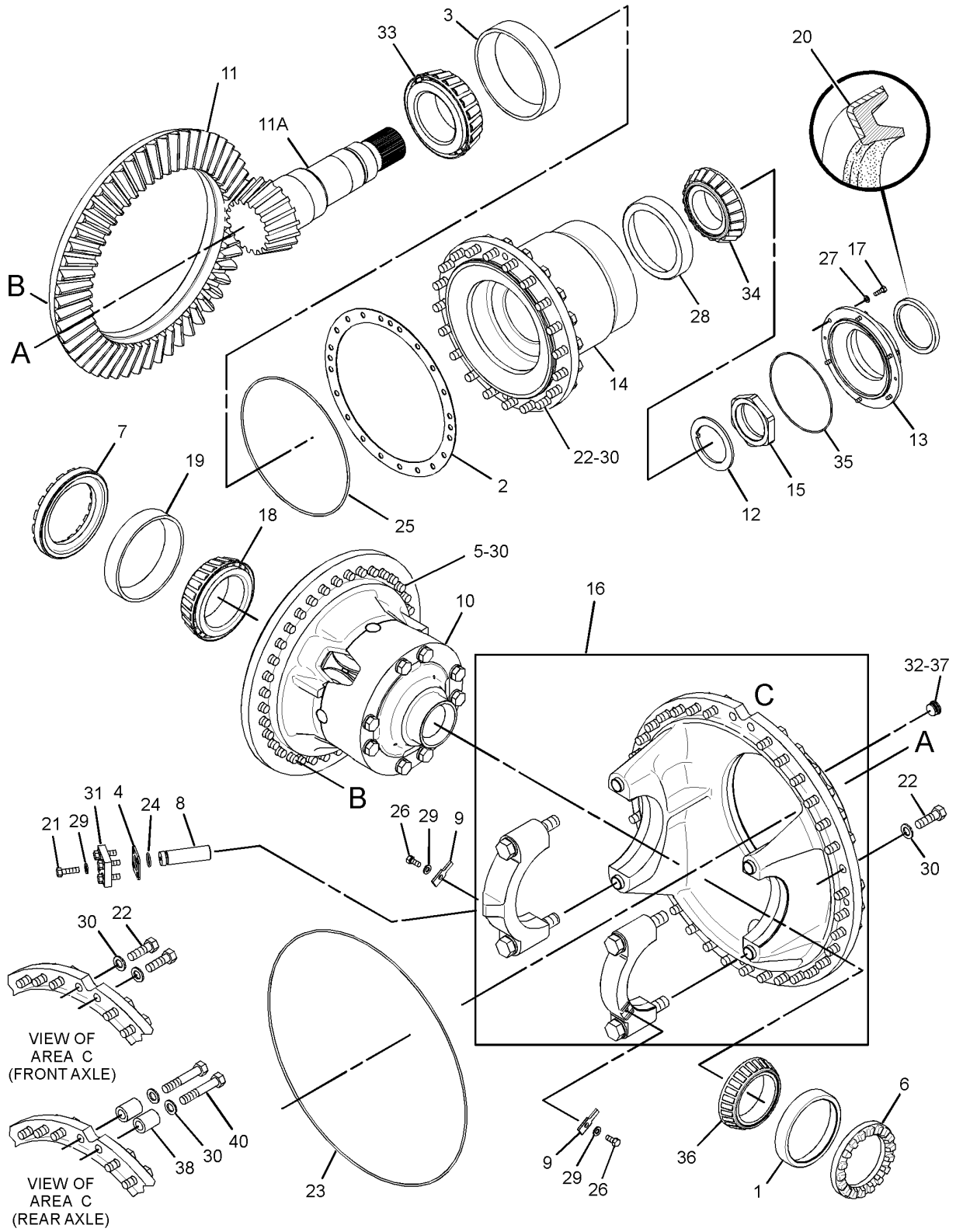

GRAPHIC #1 **<END>** g01446729

316-8335 DIFFERENTIAL & BEVEL GEAR GP

S/N: 2211-UP

PART OF 280-3582 AXLE AR-FIXED

SMCS-3254, 3256, 3258 **i02885690**

NOTE	REF NO	GRAPHIC REF	PART NUMBER	QTY	PART NAME 1 2 3 4 5 6 (PRODUCT LEVEL)	SEE PAGE
	1	1	**171-6803**	1	YOKE AS	
	1A	1	**2J-8163**	1	SEAL-O-RING	
	1B	1	**132-0348**	1	CUP-DUST	
	1C	1	**132-1183**	1	RING-RETAINING	
	1D	1	**171-6804**	1	GUARD	
Y	2	1	**316-8336**	1	DIFFERENTIAL & BEVEL GEAR GP (FIXED AXLE)	374

Y-SEPARATE ILLUSTRATION

ITEMS MARKED "Z" IN GRAPHIC ARE NOT SERVICED SEPARATELY

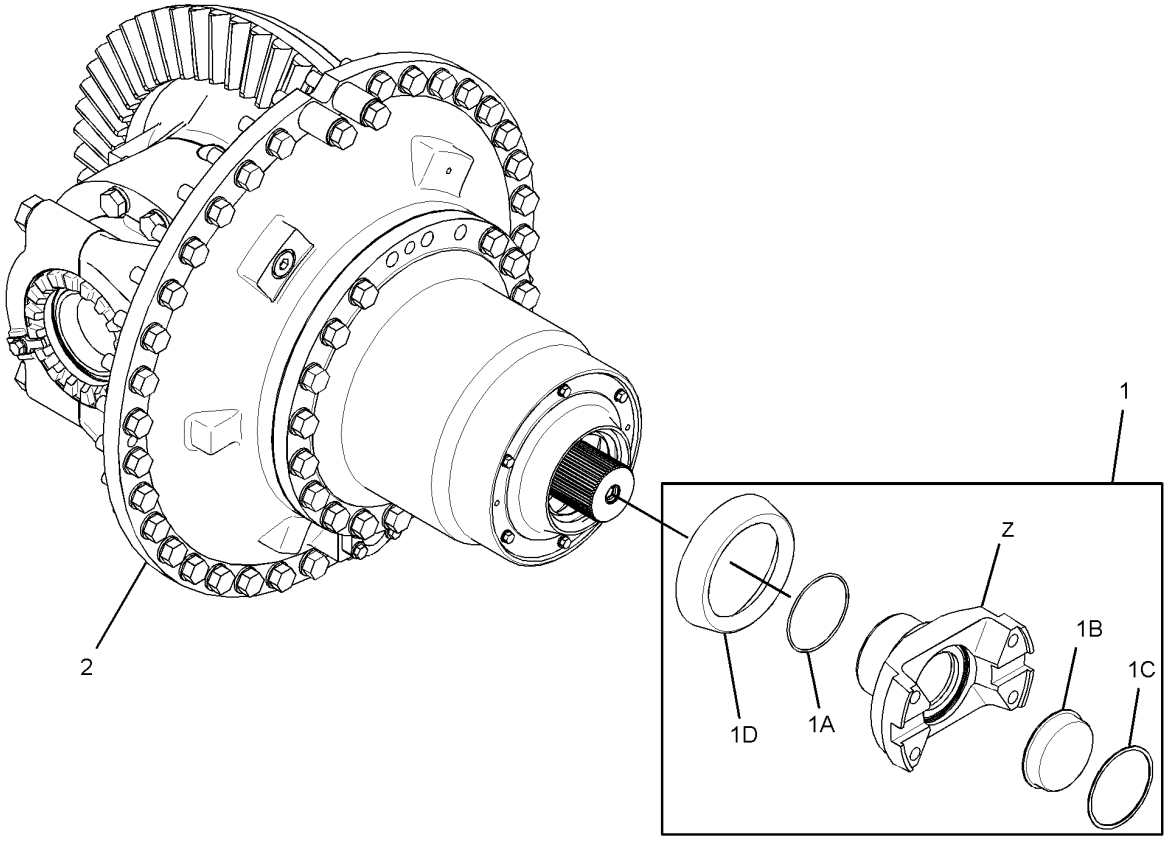

GRAPHIC #1 **<END>** g01437030

POWER TRAIN

316-8336 DIFFERENTIAL & BEVEL GEAR GP—FIXED AXLE

S/N: 2211-UP

PART OF 316-8335 DIFFERENTIAL & BEVEL GEAR GP

SMCS-3254, 3256, 3258 **i02885858**

NOTE	REF NO	GRAPHIC REF	PART NUMBER	QTY	PART NAME 1 2 3 4 5 6 (PRODUCT LEVEL)	SEE PAGE
	1	1	**1M-6573**	1	CUP-BEARING	
	2	1	**1V-2718**	1	SHIM PACK (INCLUDES 20-SHIMS)	
	3	1	**2J-7137**	1	CUP-BEARING	
	4	1	**5V-5669**	1	SHIM PACK (INCLUDES 15-SHIMS)	
	5	1	**6F-7035**	36	BOLT (7/8-14X2.25-IN)	
	6	1	**6W-8399**	1	NUT-ADJUSTMENT	
	7	1	**6W-8400**	1	NUT-ADJUSTMENT	
	8	1	**6W-8401**	1	PIN	
	9	1	**9K-4454**	2	LOCK	
Y	10	1	**120-0550**	1	DIFFERENTIAL GP	376
	11	1	**100-7418**	1	GEAR-BEVEL (53-TEETH)	
	11A	1	**129-6425**	1	SHAFT-PINION	
	12	1	**141-8570**	1	WASHER (110.4X155.2X7-MM)	
	13	1	**141-8571**	1	RETAINER-SEAL	
	14	1	**187-2017**	1	HOUSING	
	15	1	**245-3078**	1	NUT-STAKE	
	16	1	**316-8326**	1	CARRIER AS-DIFFERENTIAL	
		1	**4K-0684**	4	WASHER-HARD (34X55X6-MM THK)	
		1	**6V-2624**	4	BOLT (1-1/4-7X7-IN)	
		1	**7V-9514**	4	SLEEVE	
	17	1	**034-3557**	6	BOLT-LOCKING (3/8-16X1.125-IN)	
	18	1	**126-8181**	1	CONE-BEARING	
	19	1	**126-8182**	1	CUP-BEARING	
	20	1	**133-4296**	1	SEAL-LIP TYPE	
	21	1	**0S-1587**	4	BOLT (1/2-13X1.75-IN)	
	22	1	**1D-4626**	56	BOLT (7/8-9X2.75-IN)	
	23	1	**2D-6506**	1	SEAL-O-RING	
	24	1	**2H-3932**	1	SEAL-O-RING	
	25	1	**2M-3340**	1	SEAL-O-RING	
	26	1	**5K-8454**	2	BOLT (1/2-13X1.12-IN)	
	27	1	**5M-2894**	6	WASHER-HARD (10.2X18.5X2.5-MM THK)	
	28	1	**5P-7843**	1	CUP-BEARING	
	29	1	**5P-8245**	6	WASHER-HARD (13.5X25.5X3-MM THK)	
	30	1	**5P-8249**	94	WASHER-HARD (24X41.5X4-MM THK)	
	31	1	**5V-5670**	1	COVER	
	32	1	**7M-8485**	1	SEAL-O-RING	
	33	1	**2J-7138**	1	CONE	
	34	1	**124-9536**	1	CONE-BEARING	
	35	1	**8F-6230**	1	SEAL-O-RING	
	36	1	**9M-2744**	1	CONE-BEARING	
	37	1	**9S-9334**	1	PLUG-O-RING	
	38	1	**1V-7750**	2	SPACER (27X44.5X57-MM THK)	
	40	1	**9S-1351**	2	BOLT (7/8-9X5-IN)	

Y-SEPARATE ILLUSTRATION

316-8336 DIFFERENTIAL & BEVEL GEAR GP *(contd.)* i02885858

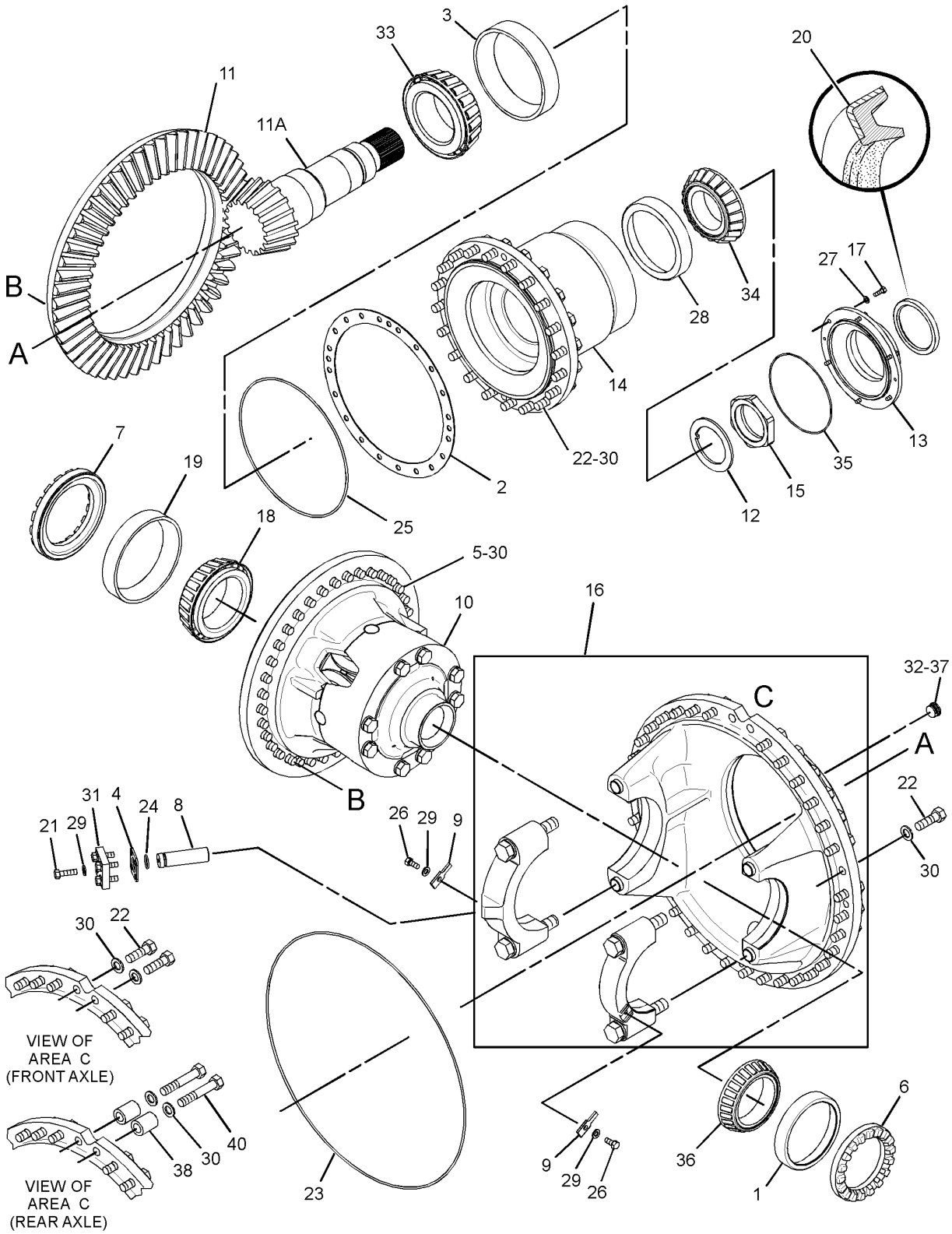

GRAPHIC #1 **<END>** g01446729

120-0550 DIFFERENTIAL GP

S/N: 2211-UP

PART OF 316-8324, 316-8336 DIFFERENTIAL & BEVEL GEAR GP

SMCS-3258 **i01395814**

NOTE	REF NO	GRAPHIC REF	PART NUMBER	QTY	PART NAME 1 2 3 4 5 6 (PRODUCT LEVEL)	SEE PAGE
	1	1	**120-0551**	1	CASE AS-DIFFERENTIAL	
Z	1A	1		1	CASE-DIFFERENTIAL	
Z	1B	1		1	CASE-DIFFERENTIAL	
M	1C	1	**6V-8198**	8	BOLT (M24X3.0X200MM)	
	1D	1	**9H-1031**	8	WASHER-HARD (24X41.5X6MM THK)	
	2	1	**9U-3295**	2	WASHER-GEAR THRUST	
M	3	1	**8C-7562**	4	SCREW-FLAT HEAD (M8X1.25X20.0MM)	
	4	1	**5T-5185**	4	PINION	
	5	1	**6W-8259**	2	GEAR-DIFFERENTIAL BEVEL (20 TEETH)	
	6	1	**4D-7534**	4	BEARING AS-ROLLER	
	7	1	**4D-7536**	4	LOCK-NUT	
	8	1	**9V-4373**	4	RETAINER	
	9	1	**2F-9064**	4	NUT (2-1/8-12 THD)	
	10	1	**9V-9840**	1	SPIDER	

M-METRIC PART
Z-NOT SERVICED SEPARATELY

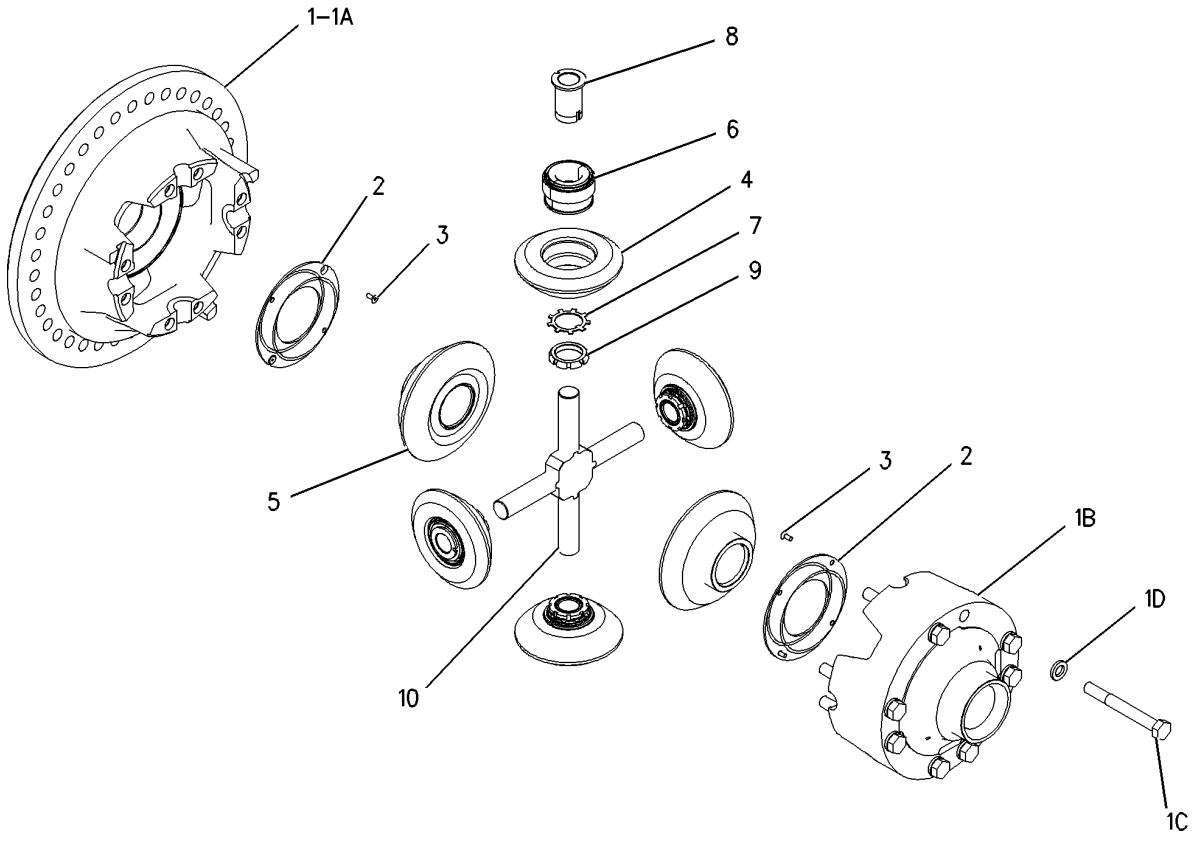

GRAPHIC #1 **<END>** g00737811

138-1509 DRAIN GP-ECOLOGY—POWER TRAIN OIL

S/N: K2K1-UP

PART OF 283-7683 GEAR GP-OUTPUT TRANSFER

SMCS-3260 **i02746602**

NOTE	REF NO	GRAPHIC REF	PART NUMBER	QTY	PART NAME 1 2 3 4 5 6 (PRODUCT LEVEL)	SEE PAGE
	1	1	**138-1510**	1	PLUG (TRANSMISSION OIL DRAIN)	
	2	1	**192-1023**	1	DRAIN AS	
		1	**077-3241**	1	SEAL-O-RING	
	3	1	**7M-8485**	1	SEAL-O-RING	

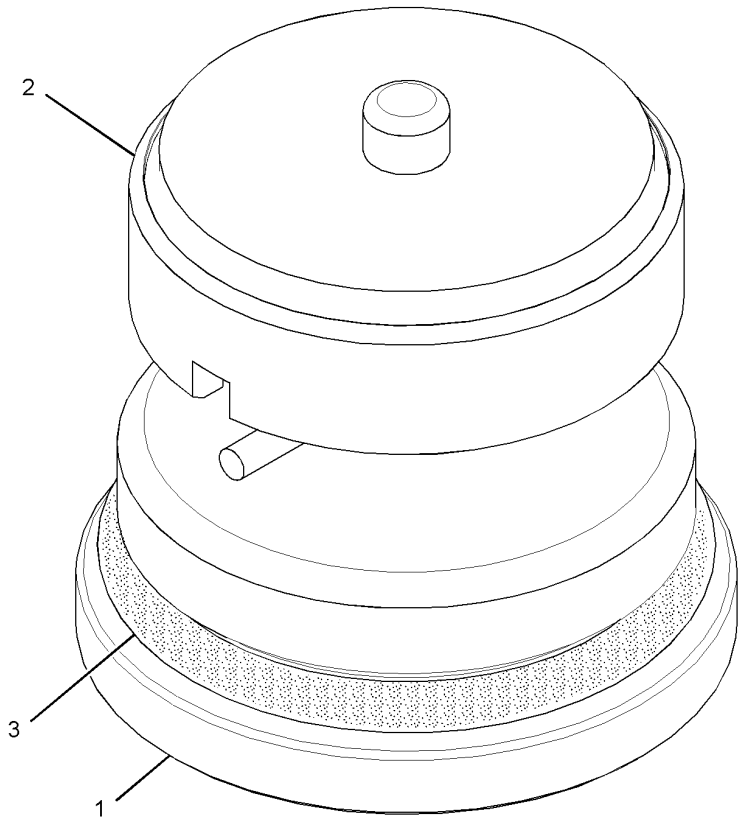

GRAPHIC #1 **<END>** g01298016

282-0839 FILTER & MTG GP-POWER TRAIN–
TORQUE CONVERTER, TRANSMISSION
S/N: 2211-UP
PART OF 268-8200 LINES GP-POWER TRAIN OIL

SMCS-3004, 3067 **i02886707**

NOTE	REF NO	GRAPHIC REF	PART NUMBER	QTY	PART NAME 1 2 3 4 5 6 (PRODUCT LEVEL)	SEE PAGE
	1	1	*164-5567*	2	COUPLER AS-QUICK DISCONNECT	
					(EACH INCLUDES)	
		1	**3J-1907**	1	SEAL-O-RING	
		1	**6V-3965**	1	COUPLER-QUICK DISCONNECT	
Y	2	1	*180-3377*	1	FILTER GP-OIL (TRANSMISSION CHARGING)	382
	3	1	**202-9728**	2	ADAPTER	
	4	1	**291-3010**	1	SUPPORT AS	
M		1	**8T-3490**	1	NUT-WELD (M10X1.5-THD)	
M		1	**8T-3597**	4	NUT-WELD (M12X1.75-THD)	
Y	5	1	*133-1295*	1	FILTER GP-OIL (TORQUE CONVERTER CHARGING)	380
	6	1	*148-8313*	2	ADAPTER AS	
					(EACH INCLUDES)	
		1	**3K-0360**	1	SEAL-O-RING	
		1	**5P-6944**	1	ADAPTER	
	7	1	*148-8407*	3	PLUG AS	
					(EACH INCLUDES)	
		1	**3J-1907**	1	SEAL-O-RING	
		1	**9S-4191**	1	PLUG-O-RING	
	8	1	*155-3624*	3	PLUG AS	
					(EACH INCLUDES)	
		1	**3J-7354**	1	SEAL-O-RING	
		1	**9S-4182**	1	PLUG-O-RING	
	9	1	*164-5590*	2	VALVE AS-FLUID SAMPLING	
					(EACH INCLUDES)	
		1	**3J-7354**	1	SEAL-O-RING	
		1	**8C-3446**	1	VALVE-FLUID SAMPLING	
	10	1	**1P-4579**	8	FLANGE-HALF	
	11	1	**4J-0524**	2	SEAL-O-RING	
	12	1	**6V-0852**	2	CAP-DUST	
	13	1	**7X-7729**	8	WASHER (11X25X3-MM THK)	
	14	1	**8C-3447**	2	CAP-DUST	
M	15	1	**8T-4183**	8	BOLT (M12X1.75X40-MM)	
M	16	1	**8T-4195**	7	BOLT (M10X1.5X30-MM)	
M	17	1	**8T-4196**	1	BOLT (M10X1.5X35-MM)	
	18	1	**8T-4223**	16	WASHER-HARD (13.5X25.5X3-MM THK)	
M	19	1	**8T-4648**	8	BOLT (M12X1.75X70-MM)	

M-METRIC PART
Y-SEPARATE ILLUSTRATION

282-0839 **FILTER & MTG GP-POWER TRAIN** *(contd.)* **i02886707**

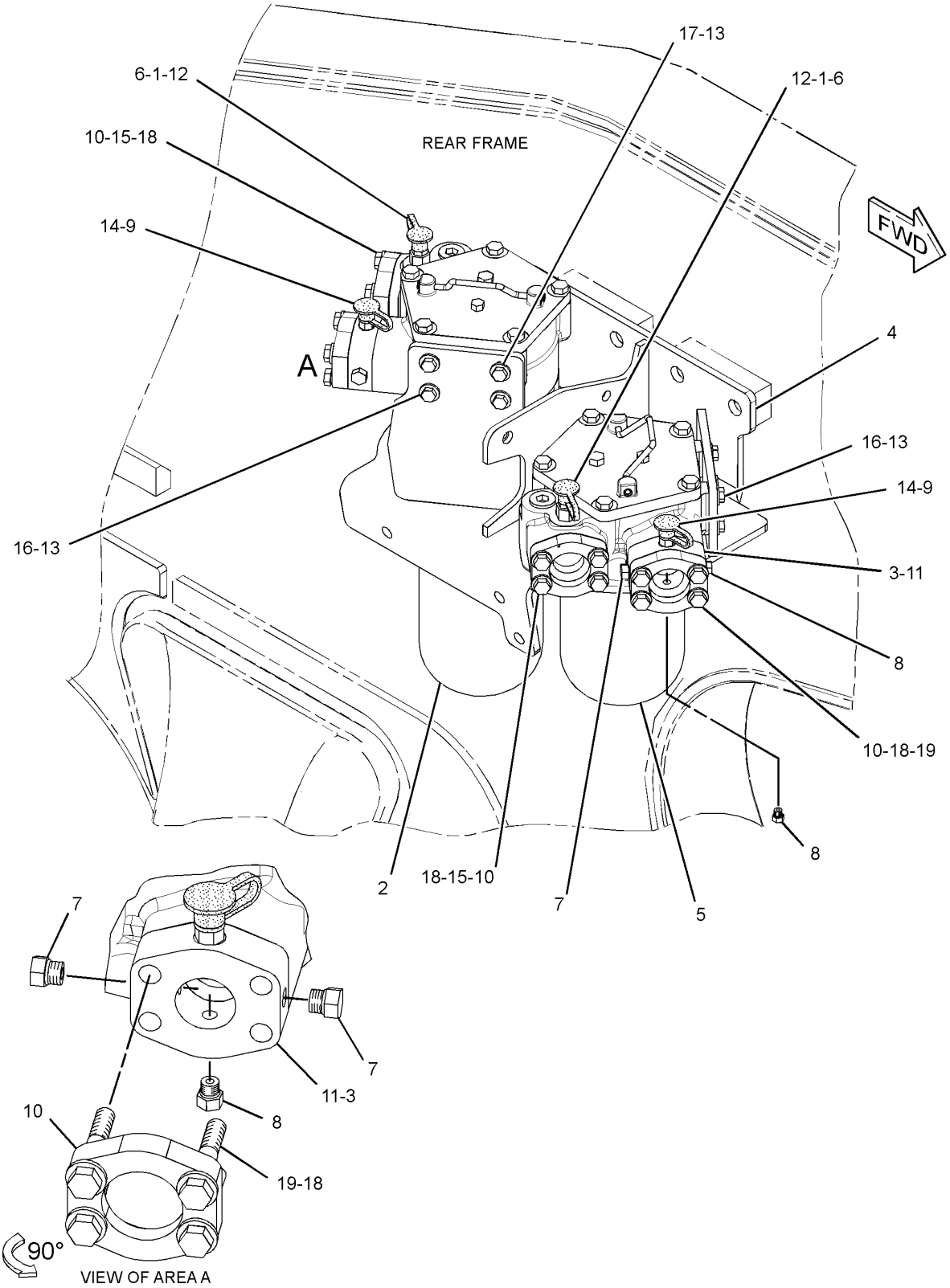

GRAPHIC #1 **<END>** g01437873

133-1295 FILTER GP-OIL—TORQUE CONVERTER CHARGING

S/N: 2211-UP

PART OF 282-0839 FILTER & MTG GP-POWER TRAIN

SMCS-3004, 3067 **i02274774**

NOTE	REF NO	GRAPHIC REF	PART NUMBER	QTY	PART NAME 1 2 3 4 5 6 (PRODUCT LEVEL)	SEE PAGE
M	1	1	**8T-4956**	5	BOLT (M12X1.75X35-MM)	
	2	1	**9S-4191**	1	PLUG-O-RING	
	3	1	**3J-1907**	1	SEAL-O-RING	
	4	1	**133-1276**	1	COVER AS	
		1	**133-8528**	1	STUD-TAPERLOCK	
	5	1	**2K-4472**	1	SEAL-O-RING	
	6	1	**6D-9157**	1	SEAL-O-RING	
	7	1	**202-9702**	1	HOUSING AS-FILTER	
	8	1	**132-8876**	1	FILTER ELEMENT AS-OIL (ULTRA HIGH EFFICIENCY) (POWER TRAIN)	
	9	1	**4L-4986**	1	LOCKNUT (7/8-14-THD)	
	10	1	**9S-4183**	1	PLUG-O-RING	
	11	1	**3D-2824**	2	SEAL-O-RING	
	12	1	**133-1299**	1	RETAINER	
	13	1	**133-2199**	1	SPRING	
	14	1	**6T-9222**	1	SPOOL	
	15	1	**9S-8008**	1	PLUG-O-RING	
	16	1	**9S-4182**	1	PLUG-O-RING	
	17	1	**3J-7354**	1	SEAL-O-RING	
	18	1	**9S-8005**	1	PLUG-O-RING	
	19	1	**3K-0360**	1	SEAL-O-RING	

M-METRIC PART

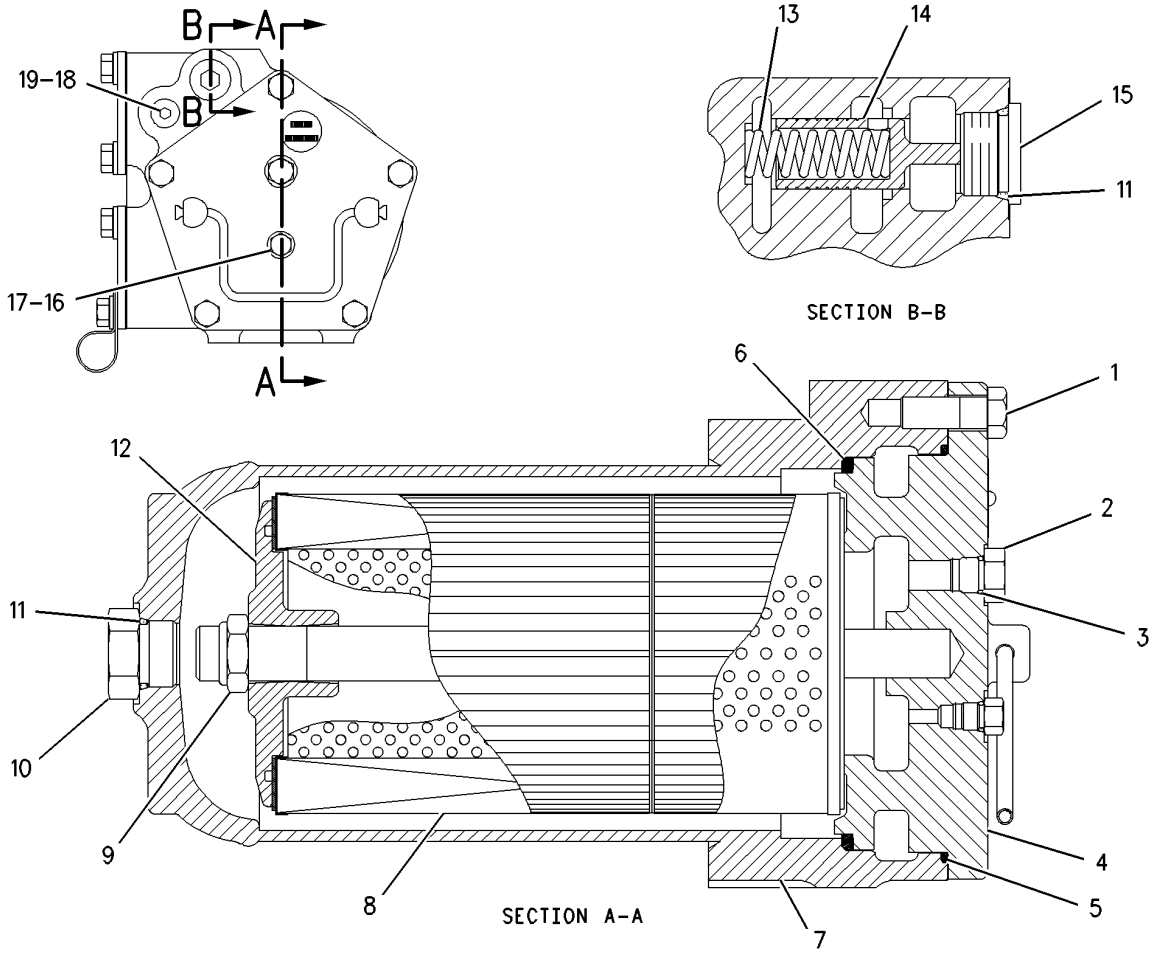

GRAPHIC #1 **<END>** g00796085

180-3377 FILTER GP-OIL—TRANSMISSION CHARGING

S/N: 2211-UP

PART OF 282-0839 FILTER & MTG GP-POWER TRAIN

SMCS-3004, 3067 **i02312861**

NOTE	REF NO	GRAPHIC REF	PART NUMBER	QTY	PART NAME 1 2 3 4 5 6 (PRODUCT LEVEL)	SEE PAGE
M	1	1	**8T-4956**	5	BOLT (M12X1.75X35-MM)	
	2	1	**9S-4191**	1	PLUG-O-RING	
	3	1	**3J-1907**	1	SEAL-O-RING	
	4	1	**8E-7683**	1	COVER AS	
		1	**8S-4784**	1	STUD-TAPERLOCK	
	5	1	**2K-4472**	1	SEAL-O-RING	
	6	1	**6D-9157**	1	SEAL-O-RING	
	7	1	**202-9708**	1	HOUSING AS-FILTER	
	8	1	**132-8876**	2	FILTER ELEMENT AS-OIL (ULTRA HIGH EFFICIENCY) (POWER TRAIN)	
	9	1	**202-8058**	1	RETAINER	
	10	1	**9X-0941**	1	LOCKNUT (1/2-13-THD)	
	11	1	**9S-4183**	1	PLUG-O-RING	
	12	1	**3D-2824**	2	SEAL-O-RING	
	13	1	**3S-9847**	1	RETAINER	
	14	1	**6T-9222**	1	SPOOL	
	15	1	**133-2199**	1	SPRING	
	16	1	**9S-8008**	1	PLUG-O-RING	
	17	1	**9S-4182**	1	PLUG-O-RING	
	18	1	**3J-7354**	1	SEAL-O-RING	
	19	1	**9S-8005**	1	PLUG-O-RING	
	20	1	**3K-0360**	1	SEAL-O-RING	
	21	1	**1H-8128**	1	SEAL-O-RING	

M-METRIC PART

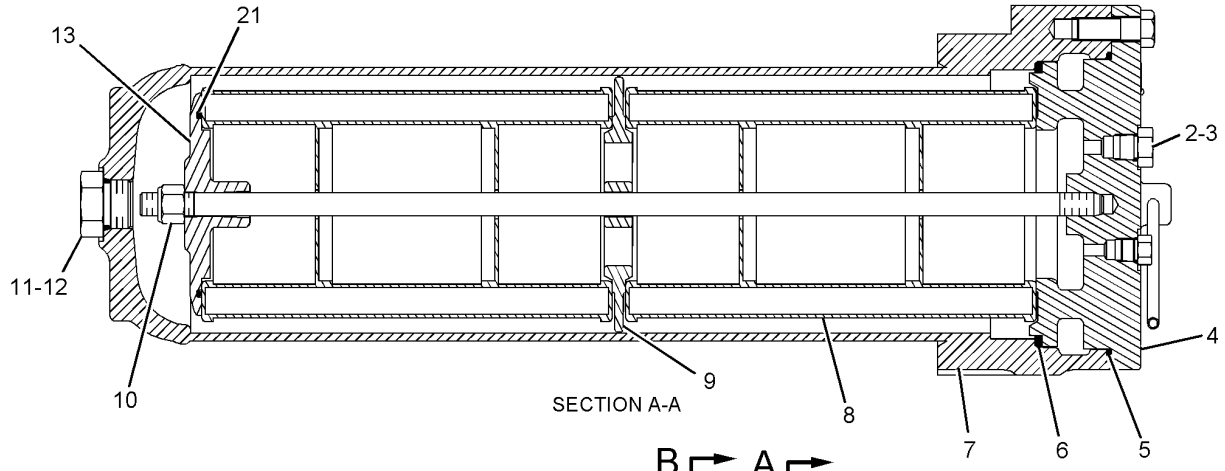

SECTION A-A

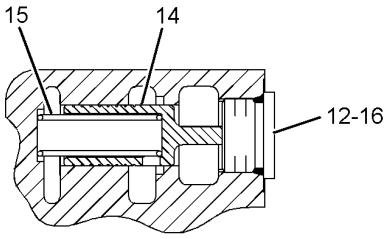

SECTION B-B

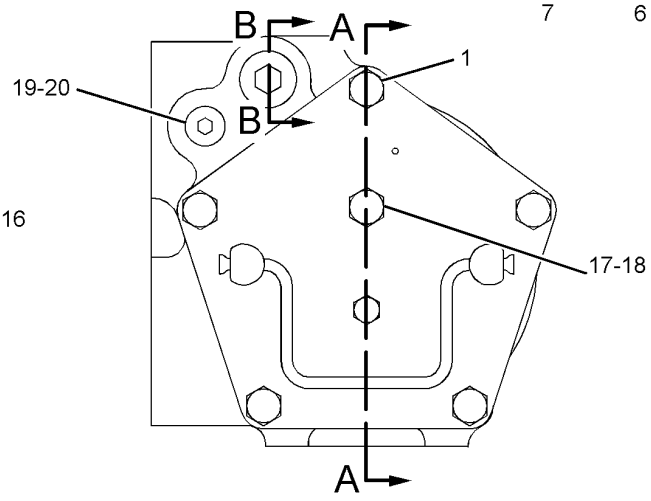

GRAPHIC #1 **<END>** g01097013

230-3633 FILTER GP-OIL–SCREEN–AXLE OIL COOLER

S/N: 2211-UP

PART OF 273-7400 LINES GP-AXLE OIL COOLER

SMCS-3004, 3067 **i02387652**

NOTE	REF NO	GRAPHIC REF	PART NUMBER	QTY	PART NAME 1 2 3 4 5 6 (PRODUCT LEVEL)	SEE PAGE
	1	1	**164-6709**	1	PLUG AS	
		1	**3J-1907**	1	SEAL-O-RING	
		1	**5F-9144**	1	SEAL-O-RING	
	2	1	**222-6713**	1	SCREEN AS-FILTER (AXLE OIL COOLER)	

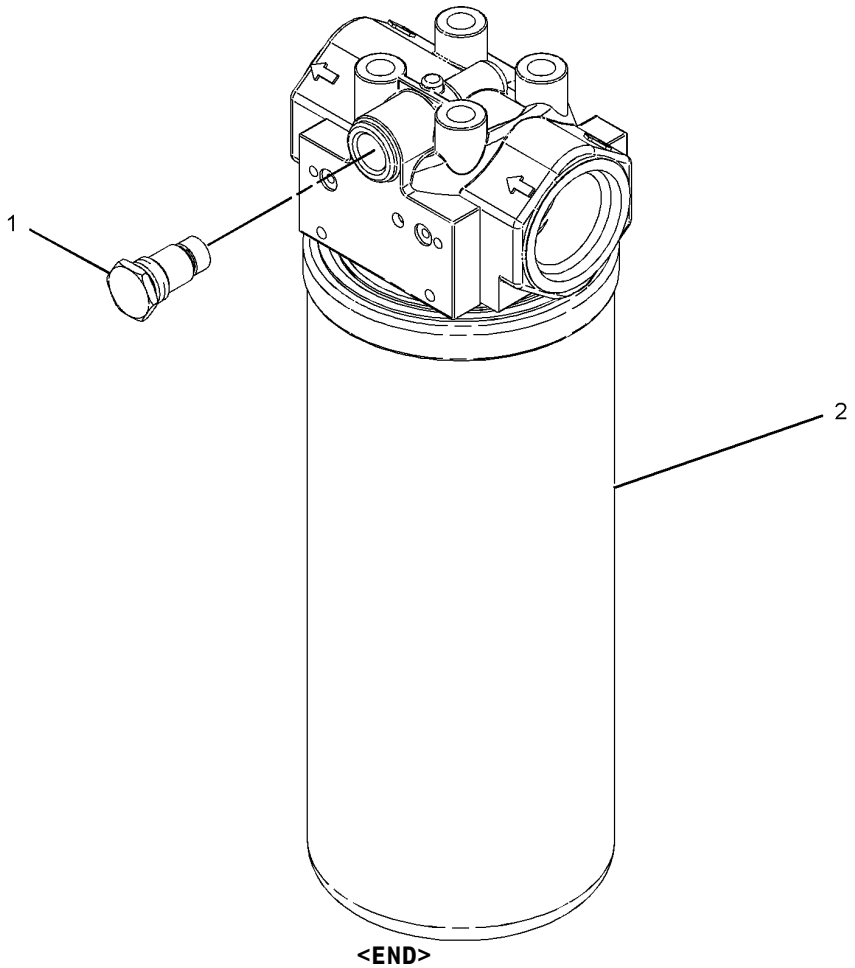

GRAPHIC #1 **<END>** g01048823

133-8649 GAUGE GP-SIGHT—POWER TRAIN OIL

S/N: 2211-UP

PART OF 268-8200 LINES GP-POWER TRAIN OIL

SMCS-7479 **i01112437**

NOTE	REF NO	GRAPHIC REF	PART NUMBER	QTY	PART NAME 1 2 3 4 5 6 (PRODUCT LEVEL)	SEE PAGE
	1	1	**124-0665**	1	GAUGE-LIQUID LEVEL	
	2	1	**124-0689**	2	ADAPTER	
	3	1	**124-2413**	1	PLATE	
	4	1	**6V-8397**	1	SEAL-O-RING	
	5	1	**6V-9168**	2	NUT (11/16-16-THD)	

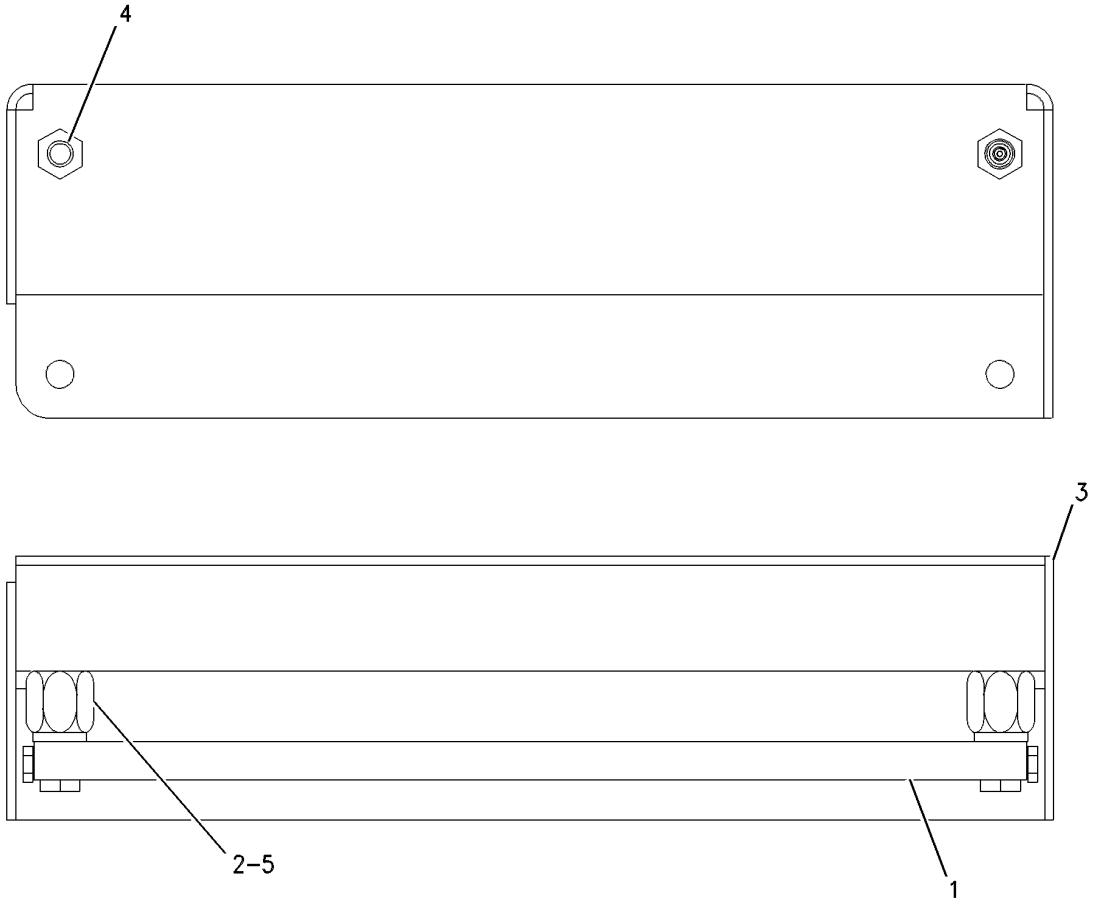

GRAPHIC #1 **<END>** g00599381

POWER TRAIN

283-7689 GEAR GP-INPUT TRANSFER

S/N: K2K1-UP

PART OF 283-7702 TRANSMISSION AR

SMCS-3159 **i02577861**

NOTE	REF NO	GRAPHIC REF	PART NUMBER	QTY	PART NAME 1 2 3 4 5 6 (PRODUCT LEVEL)	SEE PAGE
	1	1	**110-8403**	1	CAGE-BEARING	
	2	1	**111-6261**	1	MANIFOLD-LUBRICATION OIL	
B	3	1	**112-8633**	2	SHIM PACK (INCLUDES 11-SHIMS)	
	4	1	**112-9645**	1	TUBE AS	
	5	1	**112-9646**	1	TUBE AS	
Y	6	1	**122-8863**	1	SENSOR GP-SPEED (TRANSFER GEAR INPUT)	258
	7	1	**140-2802**	1	CAGE AS	
		1	**8T-5089**	1	PIN-SPRING	
	8	1	**162-9969**	1	YOKE AS	
		1	**2H-3934**	1	SEAL-O-RING	
		1	**8K-2692**	1	RING-RETAINING	
	9	1	**283-7688**	1	CASE AS-TRANSMISSION	
		1	**2D-6642**	2	BALL	
		1	**9M-4007**	1	DOWEL	
	10	1	**030-7947**	2	ELBOW	
	11	1	**109-7389**	1	GEAR-INPUT (56-TEETH)	
	12	1	**109-7390**	1	GEAR-OUTPUT (51-TEETH)	
	13	1	**129-3172**	6	STUD-MOUNTING (3/8-16X1.564-IN)	
	14	1	**130-5300**	1	CLIP	
	15	1	**1A-2029**	16	BOLT (3/8-16X1.125-IN)	
	16	1	**1B-7709**	12	BOLT (5/8-11X8-IN)	
	17	1	**1P-4693**	2	CUP-BEARING	
	18	1	**1P-4694**	2	CONE-BEARING	
	19	1	**216-0273**	1	SEAL-LIP TYPE	
	20	1	**3B-8453**	1	SEAL-O-RING	
	21	1	**3J-1907**	4	SEAL-O-RING	
	22	1	**3K-0360**	1	SEAL-O-RING	
	23	1	**4S-5898**	1	SEAL-O-RING	
	24	1	**5M-2894**	8	WASHER-HARD (10.2X18.5X2.5-MM THK)	
	25	1	**5P-2861**	1	SEAL-O-RING	
	26	1	**5P-8247**	12	WASHER-HARD (17X32X3.5-MM THK)	
	27	1	**6I-8849**	2	CONE-BEARING (TAPERED ROLLER)	
	28	1	**6I-8860**	2	CUP-BEARING	
	29	1	**6M-6853**	1	TEE-O-RING	
	30	1	**6V-1175**	1	SEAL-O-RING	
	31	1	**6V-1179**	1	SEAL-O-RING	
M	32	1	**6V-6317**	1	BOLT (M10X1.5X20-MM)	
	33	1	**8M-9024**	6	WASHER-HARD (10.2X22.5X5-MM THK)	
	34	1	**8T-4121**	1	WASHER-HARD (11X21X2.5-MM THK)	
	35	1	**9S-4191**	1	PLUG-O-RING	

B-USE AS REQUIRED
M-METRIC PART
Y-SEPARATE ILLUSTRATION

283-7689 **GEAR GP-INPUT TRANSFER** *(contd.)* **i02577861**

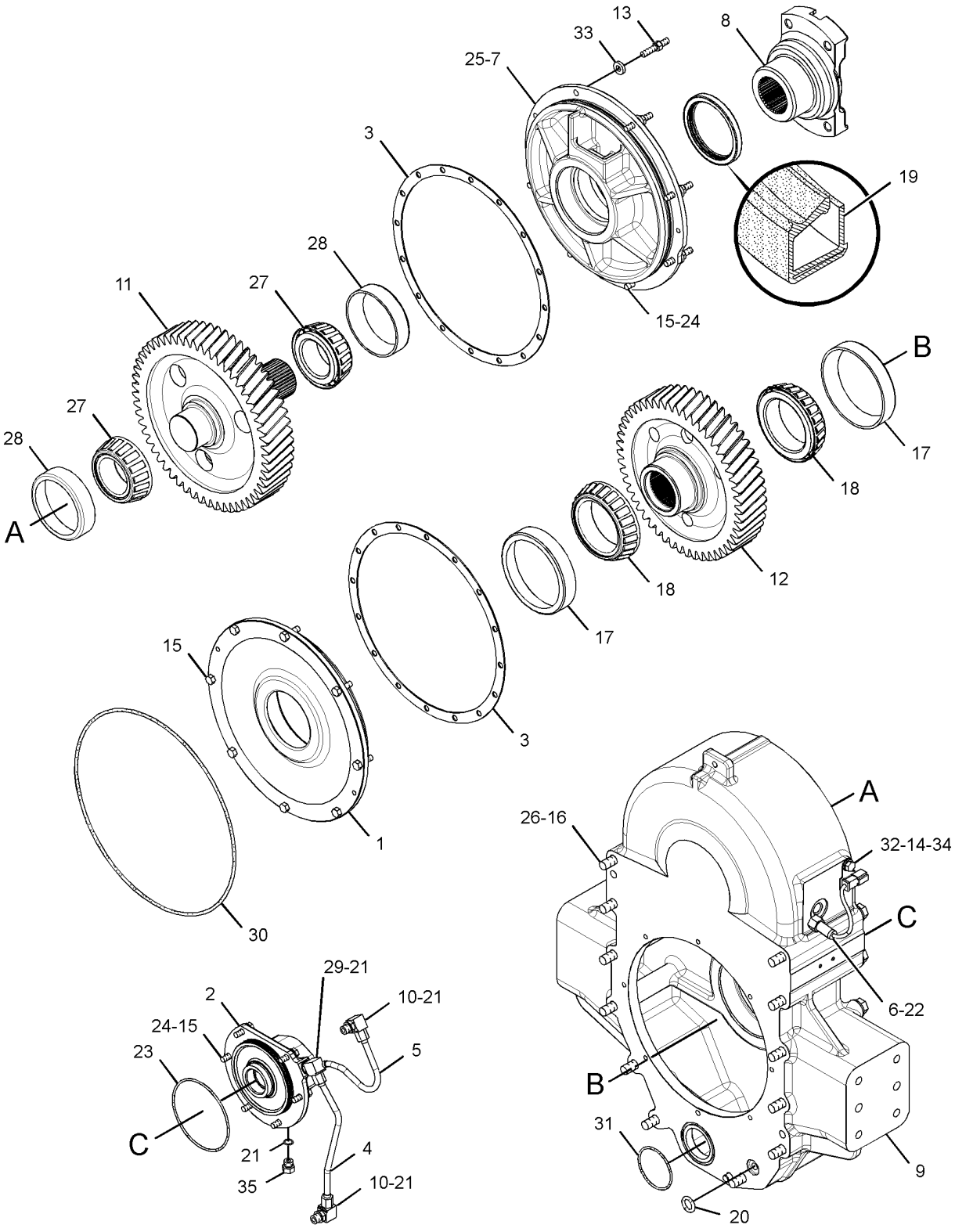

GRAPHIC #1 **<END>** g01367528

POWER TRAIN

283-7683 GEAR GP-OUTPUT TRANSFER

S/N: K2K1-UP

PART OF 283-7702 TRANSMISSION AR

SMCS-3075, 3159 **i02902456**

NOTE	REF NO	GRAPHIC REF	PART NUMBER	QTY	PART NAME 1 2 3 4 5 6 (PRODUCT LEVEL)	SEE PAGE
Y	1	2	**283-7684**	1	CASE GP-TRANSFER GEAR	368
	2	2	**6P-4213**	1	SHIM PACK (INCLUDES 15-SHIMS)	
	3	2	**5S-3618**	4	LOCK	
	4	2	**1A-2029**	8	BOLT (3/8-16X1.125-IN)	
	5	2	**6P-3313**	1	CAGE-BEARING	
	6	2	**320-7137**	1	BEARING AS-TAPERED ROLLER	
	7	2	**6I-9790**	4	DAMPER-BOLT	
	8	2	**8E-5920**	1	LOCK SET	
	9	2	**5F-3999**	1	SEAL-O-RING	
	10	2	**8E-5055**	1	COVER-IDLER SHAFT	
	11	2	**8M-8997**	2	SEAL-O-RING	
	12	2	**8F-4225**	2	BOLT (3/4-10X10-IN)	
	13	2	**5P-8248**	2	WASHER-HARD (20X36.5X3.5-MM THK)	
	14	1,2	**0S-1585**	11	BOLT (1/2-13X1.5-IN)	
	15	1,2	**5P-8245**	39	WASHER-HARD (13.5X25.5X3-MM THK)	
	16	2	**224-4820**	1	CAGE-BEARING	
	17	2	**140-7447**	1	RETAINER	
	18	2	**153-1229**	2	YOKE AS	
					(EACH INCLUDES)	
		2	**8R-9312**	1	GUARD	
	19	2	**1A-3103**	2	BOLT (3/4-16X3.75-IN)	
	20	2	**2V-2076**	2	RETAINER	
	21	2	**132-6598**	2	CUP-BEARING	
	22	2	**132-6597**	2	CONE-BEARING	
	23	2	**8E-7003**	1	SPACER	
	24	2	**7X-1548**	1	SEAL	
	25	2	**9S-4191**	1	PLUG-O-RING	
	26	2	**3J-1907**	1	SEAL-O-RING	
	27	2	**2J-0157**	2	SEAL-O-RING	
	28	2	**8E-5056**	1	GEAR-OUTPUT (84-TEETH)	
Y	29	2	**138-1509**	1	DRAIN GP-ECOLOGY (POWER TRAIN OIL)	377
	30	1	**0S-1594**	6	BOLT (3/8-16X1-IN)	
	31	1	**5M-2894**	6	WASHER-HARD (10.2X18.5X2.5-MM THK)	
	32	2	**8E-5050**	1	SHAFT-TRANSFER	
	33	2	**5P-3603**	1	RING	
	34	2	**5L-5773**	1	RACE-BEARING	
	35	1,2	**4L-9564**	3	SEAL-O-RING	
	36	2	**133-4296**	2	SEAL-LIP TYPE	
	37	2	**224-4819**	1	CAGE-BEARING	
	38	2	**5L-5772**	1	RACE & ROLLER AS	
	39	2	**114-9114**	1	SHAFT-IDLER	
	40	2	**8E-5052**	1	GEAR-IDLER (53-TEETH)	
	41	2	**3E-3212**	1	RING-RETAINING	
	42	2	**1P-4696**	2	CONE-BEARING	
	43	2	**1P-4695**	2	CUP-BEARING	
	44	2	**8E-5051**	1	GEAR-INPUT (52-TEETH)	
	45	1	**9S-8752**	8	NUT-FULL (3/8-16-THD)	
	46	1	**8P-3251**	2	COVER AS	
					(EACH INCLUDES)	
		1	**7B-3028**	2	SCREW-DRIVE (NO 4X3/16-IN)	
		1	**7S-2962**	1	WASHER-SPRING (52.3X82.5X9.1-MM THK)	
	47	1	**131-3718**	2	SEAL-O-RING	
	48	1	**9W-5531**	2	TUBE AS-SCREEN (MAGNETIC)	
					(EACH INCLUDES)	
		1	**8M-7160**	4	MAGNET	
	49	1	**3S-3875**	2	SCREEN-SUCTION	

283-7683 GEAR GP-OUTPUT TRANSFER *(contd.)* i02902456

NOTE	REF NO	GRAPHIC REF	PART NUMBER	QTY	PART NAME 1 2 3 4 5 6 (PRODUCT LEVEL)	SEE PAGE
	50	1	**115-1816**	1	HOUSING AS	
		1	**2M-1538**	8	STUD-TAPERLOCK (3/8-16X1.6-IN)	
	51	2	**0S-1587**	12	BOLT (1/2-13X1.75-IN)	
	52	1	**9X-8875**	4	BOLT (1/2-13X3.5-IN)	
	53	1	**8E-6678**	1	GEAR-PUMP (45-TEETH)	
	54	1	**5F-3144**	1	SEAL-O-RING	
	55	1	**8E-6830**	1	SHIM PACK (INCLUDES 14-SHIMS)	
	56	1	**8E-5641**	1	CAGE AS	
M		1	**8T-5414**	4	STUD (M12X1.75X50-MM)	
	57	1	**7K-8877**	2	CONE-BEARING	
	58	1	**0S-1595**	4	BOLT (1/2-13X1.25-IN)	
	59	1	**7K-8876**	2	CUP-BEARING	
	60	1	**3F-5792**	2	SEAL-O-RING	
	61	1	**8S-0617**	2	COVER	
	62	1	**1A-1460**	6	BOLT (1/2-13X2-IN)	
	63	1	**7X-0326**	12	BOLT (1/2-13X3-IN)	
B	64	1,2	**6V-6640**		SEALANT	
	65	1	**6T-7061**	2	EYE-LIFTING	
	66	1	**0S-1566**	2	BOLT (5/8-11X1.5-IN)	
	67	1	**9U-3238**	1	COVER	
	68	1	**2N-7007**	1	GASKET	
M	69	1	**6V-8149**	4	NUT (M12X1.75-THD)	
	70	1	**9X-8873**	3	BOLT (1/2-13X2.25-IN)	
	71	1	**170-4870**	1	BOLT (5/8-18X1-IN)	
	72	1	**5P-8247**	1	WASHER-HARD (17X32X3.5-MM THK)	
	78	1	**196-1185**	2	SENSOR GP-SPEED (TORQUE CONVERTER OUTPUT)	
					(EACH INCLUDES)	
		1	**102-8802**	1	KIT-RECEPTACLE (2-PIN)	
					(INCLUDES RECEPTACLE AS & WEDGE)	
		1	**186-3735**	2	PIN-CONNECTOR (16-GA TO 18-GA)	
E		1	**9X-1813**		SLEEVE (14-CM)	
		1	**171-5349**	1	STRAP-MARKER	
	79	1	**3K-0360**	2	SEAL-O-RING	

B-USE AS REQUIRED
E-ORDER BY THE CENTIMETER
M-METRIC PART
Y-SEPARATE ILLUSTRATION

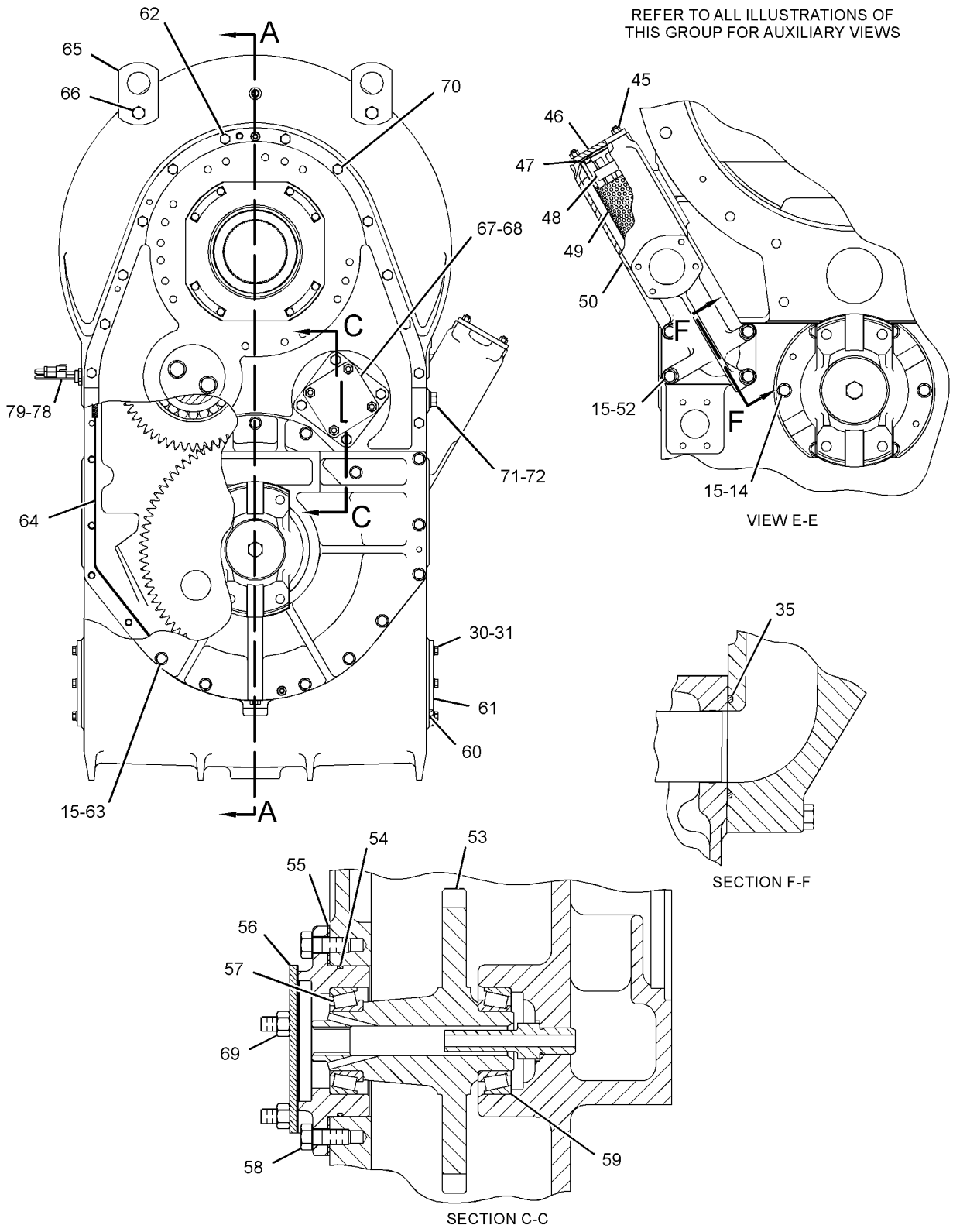

GRAPHIC #1

g01449485

REFER TO ALL ILLUSTRATIONS OF
THIS GROUP FOR AUXILIARY VIEWS

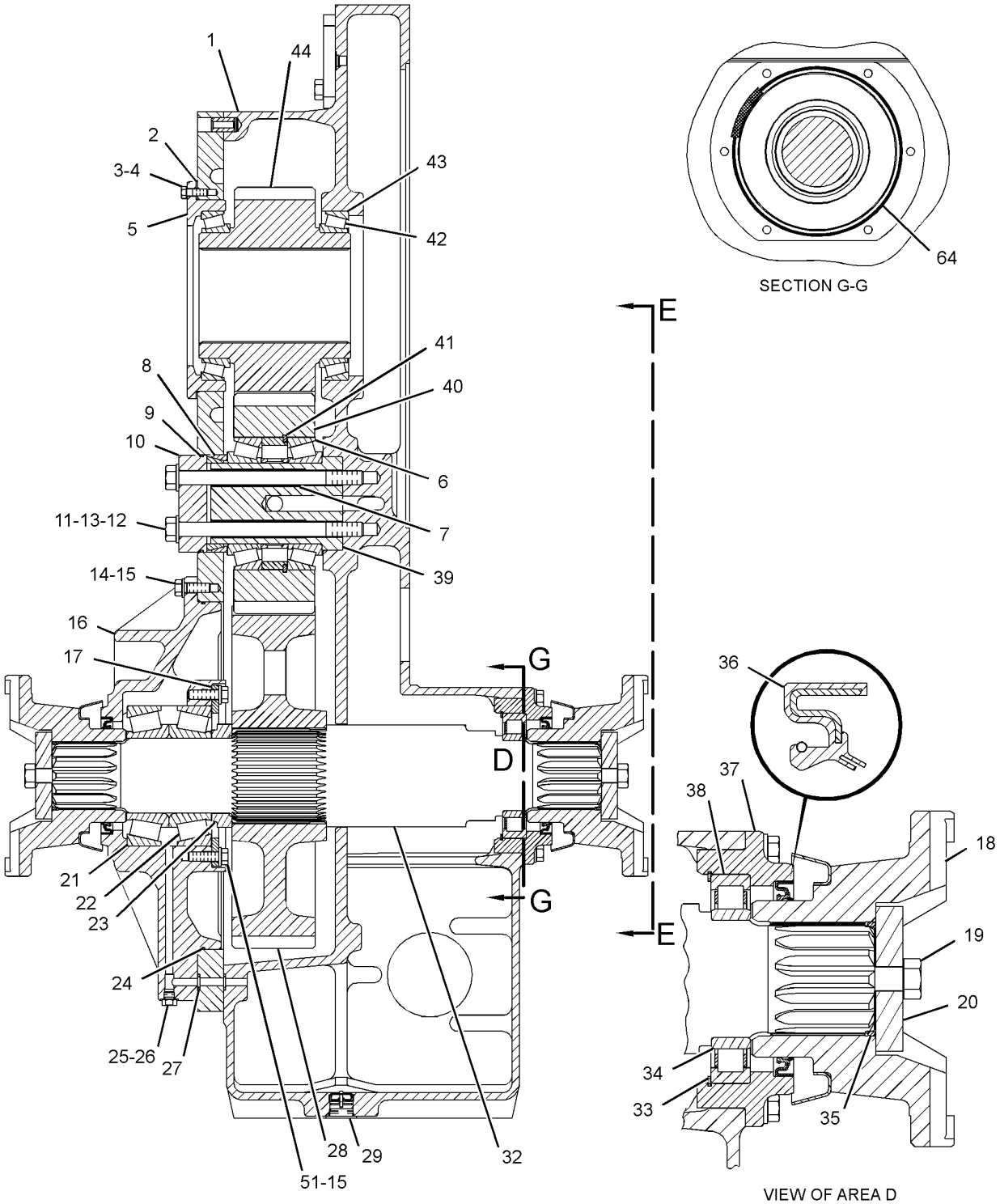

GRAPHIC #2 **<END>** g01449486

POWER TRAIN

273-7400 LINES GP-AXLE OIL COOLER

S/N: 2211-UP

PART OF 279-9400 HYDRAULIC AR

SMCS-1365, 3016 **i02927303**

NOTE	REF NO	GRAPHIC REF	PART NUMBER	QTY	PART NAME 1 2 3 4 5 6 (PRODUCT LEVEL)	SEE PAGE
	1	4	**1V-7750**	2	SPACER (27X44.5X57-MM THK)	
	2	2	**6C-9083**	2	SPACER	
	3	5	**6S-6251**	4	MOUNT	
	4	3	**6V-0852**	1	CAP-DUST	
	5	4	**8C-3451**	2	CAP-DUST	
	6	3,4	**8F-0492**	6	SPACER (0.531X1.125X0.625-IN THK)	
	7	3	**8X-5027**	1	ELBOW	
	8	5	**115-4831**	1	CORE AS-AXLE OIL COOLER	
	9	4	*148-8425*	2	TEE AS	
					(EACH INCLUDES)	
		4	**5K-9090**	1	SEAL-O-RING	
		4	**8T-4834**	1	TEE-SWIVEL ORIFICE	
	10	3	*148-8440*	1	TEE GP-ORFS	
		3	**3D-2824**	1	SEAL-O-RING	
		3	**6V-9746**	1	SEAL-O-RING	
		3	**8C-0569**	1	TEE-O-RING	
	11	3	*150-3058*	1	TEE AS	
		3	**3J-1907**	1	SEAL-O-RING	
		3	**8C-8431**	1	TEE	
	12	3	**151-2823**	1	ADAPTER	
	13	4	**173-9725**	2	BRACKET	
I	14	2	**187-7423**	1	HOSE AS	
	15	3,4	**197-3295**	8	FLANGE-HALF	
I	16	5	**203-7945**	1	HOSE AS	
	17	5	**219-5878**	4	SPACER (13X45X15-MM THK)	
Y	18	2	*229-5371*	1	BLOCK GP-HYDRAULIC (AXLE, FRONT)	364
Y	19	4	*229-5373*	1	BLOCK GP-HYDRAULIC (AXLE, REAR)	365
Y	20	4	**230-3633**	2	FILTER GP-OIL (SCREEN) (AXLE OIL COOLER)	384
Y	21	3	**257-5613**	1	MANIFOLD GP-CONTROL (AXLE OIL COOLER)	412
	22	5	**260-3789**	2	VALVE-BYPASS (AXLE OIL COOLER)	
I	23	3	**262-8513**	1	HOSE AS	
	24	3	**273-7398**	1	BRACKET AS	
I	25	2	**273-7399**	1	HOSE AS	
	26	5	**279-0400**	2	BRACKET AS	
Y	27	3	**287-0426**	1	VALVE GP-SEQUENCE (AXLE OIL COOLER)	755
I	28	4	**290-4829**	1	HOSE AS	
	29	4	**291-5614**	1	TUBE AS	
	30	4	**291-5615**	1	TUBE AS	
I	31	3	**291-5619**	1	HOSE AS	
	32	2	**291-5620**	1	TUBE AS	
	33	2	**291-5621**	1	TUBE AS	
	34	3	**291-5622**	1	TUBE AS	
	35	3	**291-5623**	1	TUBE AS	
	36	3	**291-5624**	1	TUBE AS	
	37	3	**291-5625**	1	TUBE AS	
I	38	4	**291-5631**	1	HOSE AS	
	39	3	**291-5633**	1	TUBE AS	
	40	3	**291-5634**	1	TUBE AS	
I	41	3	**291-6404**	1	HOSE AS	
I	42	3	**291-6773**	1	HOSE AS	
	43	3	**291-9150**	1	BRACKET AS	
	44	4	**292-0681**	1	BRACKET AS	
I	45	5	**313-1581**	1	HOSE AS	
I	46	3	**313-1582**	1	HOSE AS	
I	47	3	**313-1585**	1	HOSE AS	
	48	3	**313-2606**	1	TUBE AS	

273-7400 **LINES GP-AXLE OIL COOLER** *(contd.)* **i02927303**

NOTE	REF NO	GRAPHIC REF	PART NUMBER	QTY	PART NAME 1 2 3 4 5 6 (PRODUCT LEVEL)	SEE PAGE
	49	2	**313-5460**	1	PLATE	
	50	2	**313-5461**	1	PLATE	
I	51	3	**313-5836**	1	HOSE AS	
I	52	3	**314-6482**	1	HOSE AS	
I	53	5	**314-8003**	1	HOSE AS	
I	54	5	**314-8004**	1	HOSE AS	
	55	5	**314-8005**	1	TUBE AS	
	56	4	**314-8006**	1	TUBE AS	
	57	4	**314-8007**	1	TUBE AS	
	58	2	**315-4137**	1	BRACKET	
I	59	4	**315-4138**	1	HOSE AS	
I	60	3	**316-3297**	1	HOSE AS	
	61	2	**317-2743**	1	BRACKET AS	
M		2	**8T-3597**	2	NUT-WELD (M12X1.75-THD)	
I	62	2	**317-2876**	1	HOSE AS	
I	63	3	**317-5414**	1	HOSE AS	
I	64	2	**317-5602**	1	HOSE AS	
	65	4	**317-6095**	1	TUBE AS	
	66	5	**317-7089**	2	BRACKET	
I	67	3	**318-8319**	1	HOSE AS	
M	68	2	**096-9986**	4	BOLT (M12X1.75X55-MM)	
	69	3	**144-3935**	1	CLIP	
	70	4	*148-8305*	2	ADAPTER AS	
					(EACH INCLUDES)	
		4	**3J-1907**	1	SEAL-O-RING	
		4	**5P-9617**	1	ADAPTER	
	71	2,4	*148-8324*	2	CONNECTOR AS	
					(EACH INCLUDES)	
		2,4	**3K-0360**	1	SEAL-O-RING	
		2,4	**6V-9746**	1	SEAL-O-RING	
		2,4	**6V-9874**	1	CONNECTOR	
	72	3	*148-8327*	2	CONNECTOR AS	
					(EACH INCLUDES)	
		3	**3D-2824**	1	SEAL-O-RING	
		3	**6V-8637**	1	CONNECTOR	
		3	**6V-9746**	1	SEAL-O-RING	
	73	4	*148-8335*	1	CONNECTOR AS	
		4	**5K-9090**	1	SEAL-O-RING	
		4	**6V-8635**	1	CONNECTOR	
		4	**7M-8485**	1	SEAL-O-RING	
	74	5	*148-8339*	2	CONNECTOR AS	
					(EACH INCLUDES)	
		5	**6V-8716**	1	CONNECTOR	
		5	**6V-9746**	1	SEAL-O-RING	
		5	**7M-8485**	1	SEAL-O-RING	
	75	5	*148-8347*	4	ELBOW AS	
					(EACH INCLUDES)	
		5	**3D-2824**	1	SEAL-O-RING	
		5	**6V-9007**	1	ELBOW	
		5	**6V-9746**	1	SEAL-O-RING	
	76	2,4	*148-8352*	2	ELBOW AS	
					(EACH INCLUDES)	
		2,4	**5K-9090**	1	SEAL-O-RING	
		2,4	**6V-9854**	1	ELBOW	
	77	4,5	*148-8357*	5	ELBOW AS	
					(EACH INCLUDES)	
		4,5	**5K-9090**	1	SEAL-O-RING	
		4,5	**6V-9008**	1	ELBOW	
		4,5	**7M-8485**	1	SEAL-O-RING	

273-7400 LINES GP-AXLE OIL COOLER *(contd.)* i02927303

NOTE	REF NO	GRAPHIC REF	PART NUMBER	QTY	PART NAME 1 2 3 4 5 6 (PRODUCT LEVEL)	SEE PAGE
	78	3	*148-8360*	1	ELBOW AS	
		3	**6V-9182**	1	ELBOW	
		3	**6V-9746**	1	SEAL-O-RING	
		3	**7M-8485**	1	SEAL-O-RING	
	79	3	*148-8362*	2	ELBOW AS	
					(EACH INCLUDES)	
		3	**3D-2824**	1	SEAL-O-RING	
		3	**5K-9090**	1	SEAL-O-RING	
		3	**8T-6684**	1	ELBOW	
	80	2,3,4	*148-8392*	3	ELBOW AS	
					(EACH INCLUDES)	
		2,3,4	**6V-9746**	1	SEAL-O-RING	
		2,3,4	**6V-9853**	1	ELBOW	
	81	5	*148-8422*	1	TEE AS	
		5	**5K-9090**	1	SEAL-O-RING	
		5	**6V-9746**	1	SEAL-O-RING	
		5	**7M-8485**	1	SEAL-O-RING	
		5	**8T-6356**	1	TEE-O-RING PORT	
	82	3	*148-8435*	1	TEE AS	
		3	**3J-1907**	1	SEAL-O-RING	
		3	**6V-8397**	2	SEAL-O-RING	
		3	**6V-8781**	1	TEE-FACE SEAL	
	83	5	*148-8442*	1	TEE AS	
		5	**6V-9746**	2	SEAL-O-RING	
		5	**7M-8485**	1	SEAL-O-RING	
		5	**8T-1685**	1	TEE	
	84	3	*148-8449*	1	TEE AS-SWIVEL	
		3	**6V-9746**	2	SEAL-O-RING	
		3	**6V-9839**	1	TEE-SWIVEL	
	85	3	**149-7738**	1	CLIP	
	86	3	*150-4033*	1	TEE AS	
		3	**6V-9746**	2	SEAL-O-RING	
		3	**6V-9846**	1	TEE-SWIVEL	
	87	3	*150-4043*	1	CONNECTOR AS	
		3	**3J-1907**	1	SEAL-O-RING	
		3	**6V-8398**	1	SEAL-O-RING	
		3	**6V-9873**	1	CONNECTOR	
	88	3	*153-6237*	1	ELBOW AS	
		3	**3D-2824**	1	SEAL-O-RING	
		3	**6V-9004**	1	ELBOW	
		3	**6V-9746**	1	SEAL-O-RING	
	89	3	*155-3502*	1	ADAPTER AS	
		3	**3E-7403**	1	ADAPTER	
		3	**6V-8398**	1	SEAL-O-RING	
	90	3	*155-7327*	1	CONNECTOR AS	
		3	**3J-1907**	1	SEAL-O-RING	
		3	**5H-8853**	1	SEAL-O-RING	
		3	**6V-8636**	1	CONNECTOR	
	91	3	*164-5567*	1	COUPLER AS-QUICK DISCONNECT	
		3	**3J-1907**	1	SEAL-O-RING	
		3	**6V-3965**	1	COUPLER AS-QUICK DISCONNECT	
	92	4	*164-5590*	2	VALVE AS-FLUID SAMPLING	
					(EACH INCLUDES)	
		4	**3J-7354**	1	SEAL-O-RING	
		4	**8C-3446**	1	VALVE-FLUID SAMPLING	
	93	3	*164-9869*	1	CONNECTOR AS	
		3	**3J-1907**	1	SEAL-O-RING	
		3	**6V-8397**	1	SEAL-O-RING	
		3	**9X-2297**	1	CONNECTOR	

273-7400 LINES GP-AXLE OIL COOLER *(contd.)* i02927303

NOTE	REF NO	GRAPHIC REF	PART NUMBER	QTY	PART NAME 1 2 3 4 5 6 (PRODUCT LEVEL)	SEE PAGE
	94	3	*164-9904*	2	TEE AS	
					(EACH INCLUDES)	
		3	**2M-9780**	1	SEAL-O-RING	
		3	**6V-9746**	2	SEAL-O-RING	
		3	**122-9088**	1	TEE	
	95	2,4	*169-7394*	2	CONNECTOR AS	
					(EACH INCLUDES)	
		2,4	**3K-0360**	1	SEAL-O-RING	
		2,4	**5K-9090**	1	SEAL-O-RING	
		2,4	**8C-3370**	1	CONNECTOR	
	96	3	**198-4775**	2	WASHER-HARD (6.6X15X6-MM THK)	
	97	5	**198-4778**	4	WASHER-HARD (13.5X30X12-MM THK)	
	98	2,3	**1P-3704**	2	SEAL-RECTANGULAR	
	99	3	**1P-4578**	4	FLANGE-HALF	
	100	2,3	**1P-4579**	16	FLANGE-HALF	
	101	4	**1V-7753**	1	SPACER (0.546X0.841X1.75-IN THK)	
	102	2	**2S-4762**	1	CLIP	
	103	4	**301-7791**	1	CLIP (SLOT)	
	104	4	**301-7792**	1	CLIP (TAB)	
	105	3	**4D-7735**	1	CLIP	
	106	2,3,4	**4J-0520**	8	SEAL-O-RING	
	107	3,4	**4J-0522**	6	SEAL-O-RING	
	108	2,3	**4J-0524**	8	SEAL-O-RING	
	109	4	**5K-9090**	1	SEAL-O-RING	
	110	2,4	**5K-9660**	2	CLIP	
	111	5	**5P-1076**	6	WASHER-HARD (13.5X30X4-MM THK)	
	112	4	**5P-7462**	1	CLIP (SLOT)	
	113	4	**5P-7463**	1	CLIP (TAB)	
	114	3	**5P-7466**	1	CLIP (SLOT)	
	115	3	**5P-7467**	1	CLIP (TAB)	
	116	2,3,4	**5P-7468**	11	CLIP (SLOT)	
	117	2,3,4	**5P-7469**	11	CLIP (TAB)	
	118	2	**5P-7470**	2	CLIP (SLOT)	
	119	2	**5P-7471**	2	CLIP (TAB)	
	120	3	**5P-8112**	1	GROMMET	
	121	2	**5P-8182**	2	GROMMET	
	122	4	**5P-8249**	2	WASHER-HARD (24X41.5X4-MM THK)	
	123	2,4	**5P-8444**	3	GROMMET	
	124	2,4	**6D-4244**	2	CLIP	
	125	2	**6D-4246**	1	CLIP	
	126	4	**6V-0683**	1	GROMMET	
	127	3,4	**6V-1874**	8	GROMMET	
	128	3,5	**6V-1889**	3	CLIP	
	129	3	**6V-9832**	1	CAP AS	
	130	3	**7D-7233**	1	CLIP	
	131	5	**7G-8839**	4	SPACER (13.5X57X6-MM THK)	
	132	4	**7X-0390**	2	BOLT (7/8-9X5-IN)	
	133	5	**7X-0590**	4	WASHER-HARD (13.5X44.5X6-MM THK)	
M	134	3	**7X-2535**	2	BOLT (M6X1X60-MM)	
M	135	3	**7X-2539**	2	BOLT (M8X1.25X110-MM)	
M	136	4	**7X-2550**	2	BOLT (M12X1.75X110-MM)	
	137	3,4	**7X-3392**	16	WASHER-HARD (13.5X22.5X3-MM THK)	
	138	2,3,4	**8C-3206**	10	FLANGE-HALF	
	139	4	**8S-0023**	2	CLIP (SLOT)	
	140	4	**8S-0024**	2	CLIP (TAB)	
	141	4	**8T-1889**	4	CLIP (SLOT)	
	142	4	**8T-1890**	4	CLIP (TAB)	
	143	2,3,4,5	**8T-4121**	59	WASHER-HARD (11X21X2.5-MM THK)	
M	144	3,5	**8T-4133**	6	NUT (M10X1.5-THD)	

273-7400 **LINES GP-AXLE OIL COOLER** *(contd.)* **i02927303**

NOTE	REF NO	GRAPHIC REF	PART NUMBER	QTY	PART NAME 1 2 3 4 5 6 (PRODUCT LEVEL)	SEE PAGE
M	145	2,3,4	**8T-4136**	15	BOLT (M10X1.5X25-MM)	
M	146	3	**8T-4137**	2	BOLT (M10X1.5X20-MM)	
M	147	2,4,5	**8T-4139**	20	BOLT (M12X1.75X30-MM)	
M	148	5	**8T-4178**	4	BOLT (M10X1.5X90-MM)	
M	149	2,3,4	**8T-4183**	32	BOLT (M12X1.75X40-MM)	
M	150	2,3,4	**8T-4184**	22	BOLT (M12X1.75X45-MM)	
M	151	2,4	**8T-4186**	8	BOLT (M10X1.5X40-MM)	
M	152	3,4	**8T-4194**	2	BOLT (M12X1.75X50-MM)	
M	153	2,3	**8T-4196**	18	BOLT (M10X1.5X35-MM)	
	154	2,3,4	**8T-4223**	80	WASHER-HARD (13.5X25.5X3-MM THK)	
	155	3	**8T-4224**	2	WASHER-HARD (8.8X16X2-MM THK)	
M	156	2,3,4	**8T-4244**	6	NUT (M12X1.75-THD)	
M	157	2,5	**8T-4648**	6	BOLT (M12X1.75X70-MM)	
M	158	2,3	**8T-4910**	8	BOLT (M12X1.75X60-MM)	
M	159	3,4,5	**8T-4956**	7	BOLT (M12X1.75X35-MM)	
M	160	3	**8T-5005**	6	BOLT (M10X1.5X70-MM)	
M	161	4	**8T-6868**	1	BOLT (M12X1.75X80-MM)	
E	162	2	**206-2737**		GUARD-HOSE (44-CM)	
E	162A	2	**206-2737**		GUARD-HOSE (73-CM)	
E	162B	2	**206-2737**		GUARD-HOSE (79-CM)	

E-ORDER BY THE CENTIMETER
I-REFER TO HYDRAULIC INFORMATION SYSTEM
M-METRIC PART
Y-SEPARATE ILLUSTRATION

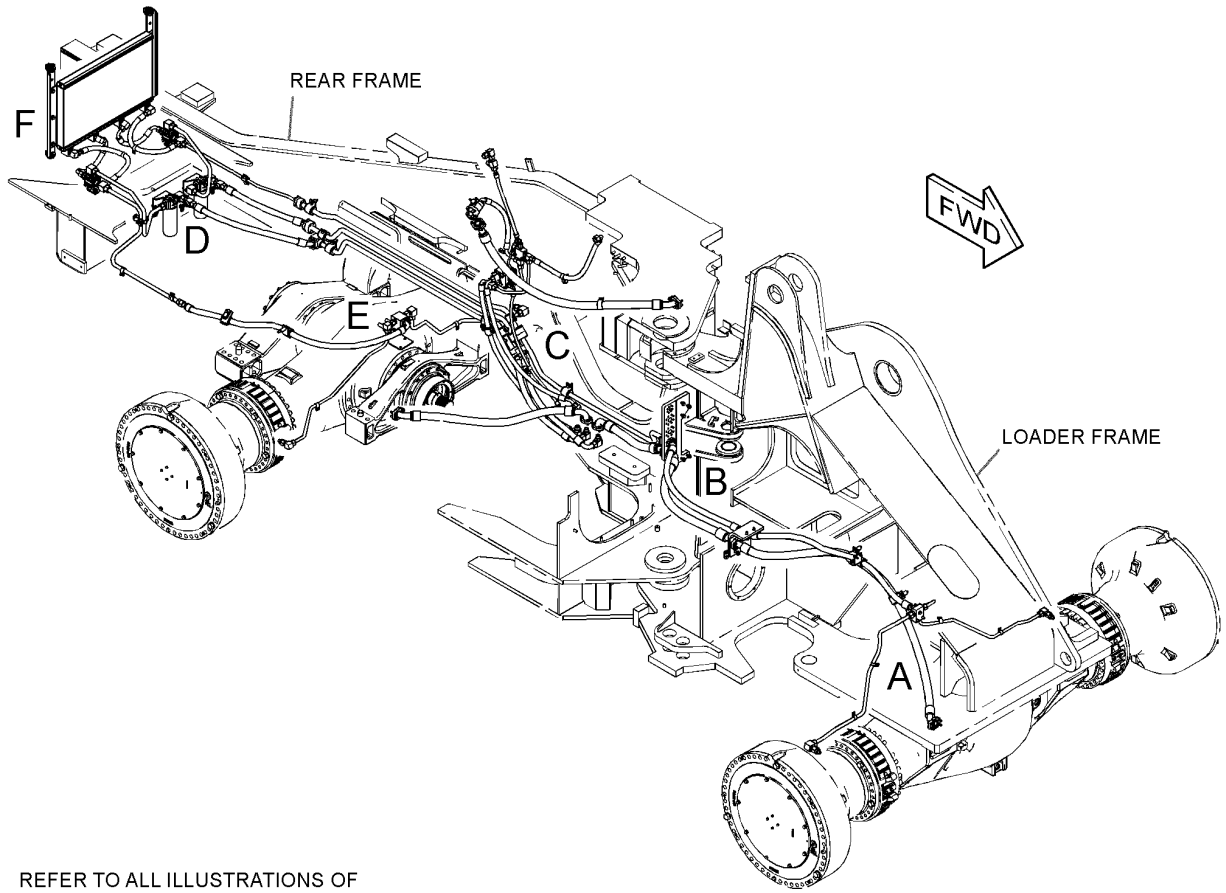

REFER TO ALL ILLUSTRATIONS OF THIS GROUP FOR AUXILIARY VIEWS

GRAPHIC #1 g01449242

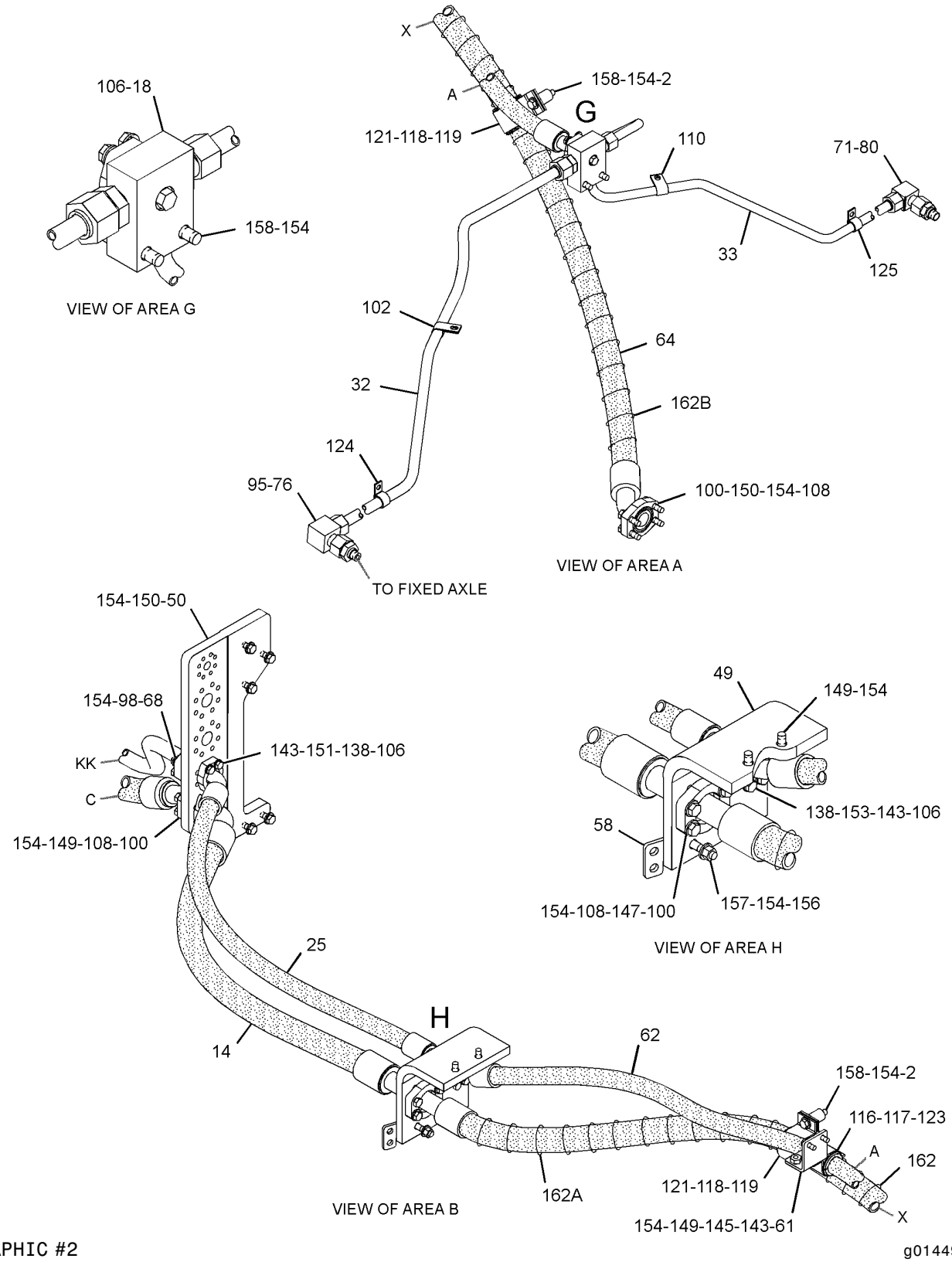

GRAPHIC #2

g01449247

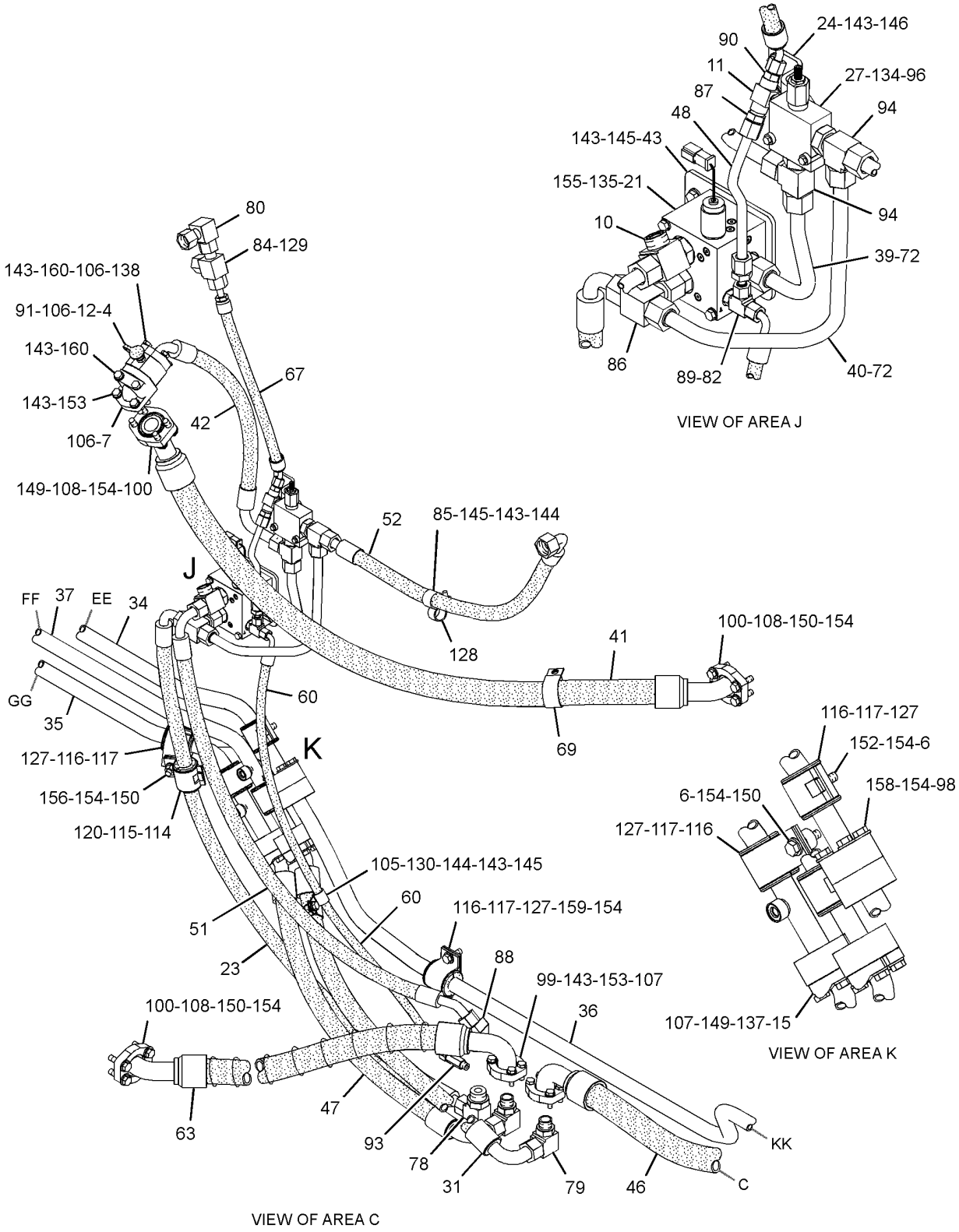

GRAPHIC #3 g01449244

273-7400 **LINES GP-AXLE OIL COOLER** *(contd.)* **i02927303**

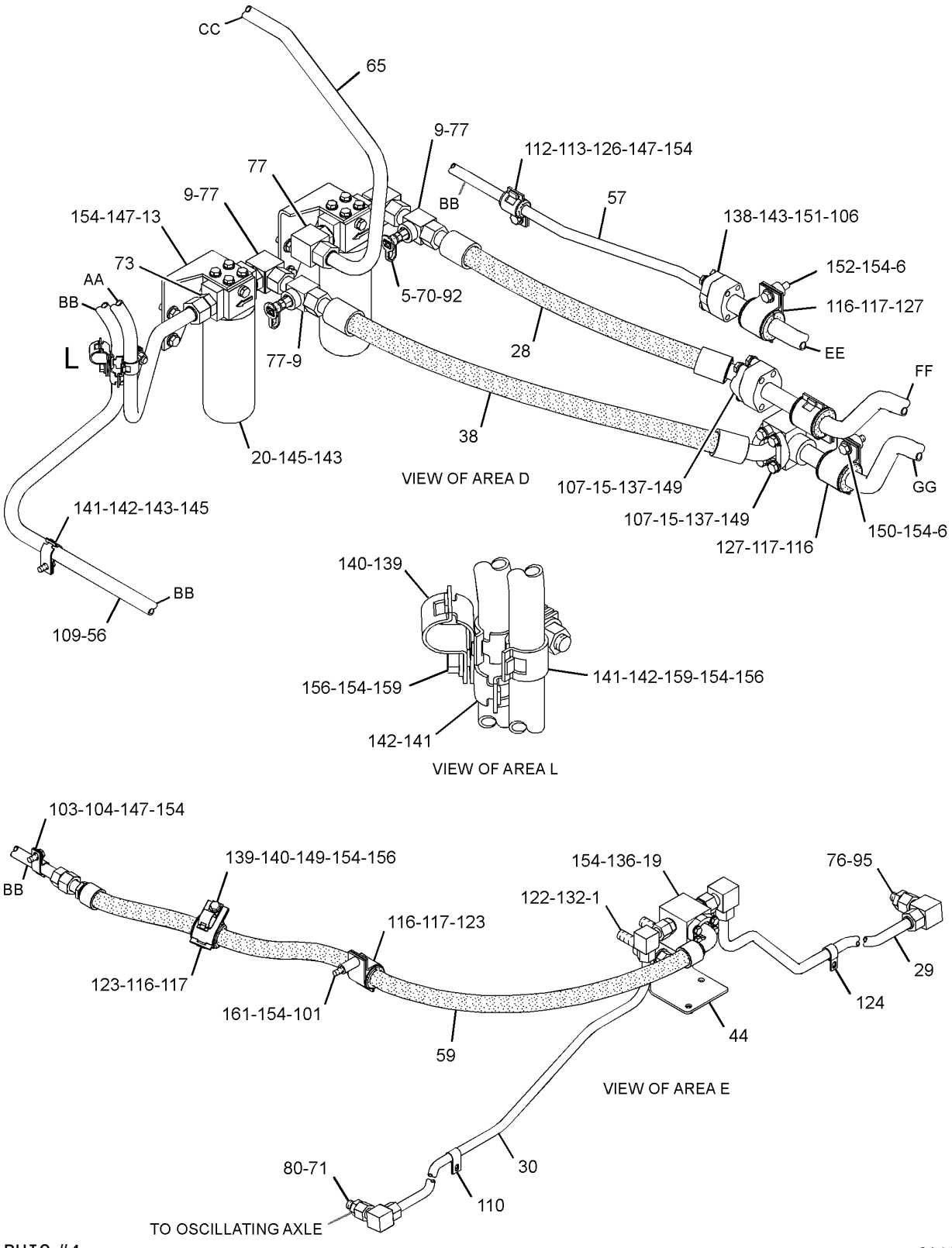

GRAPHIC #4 g01449243

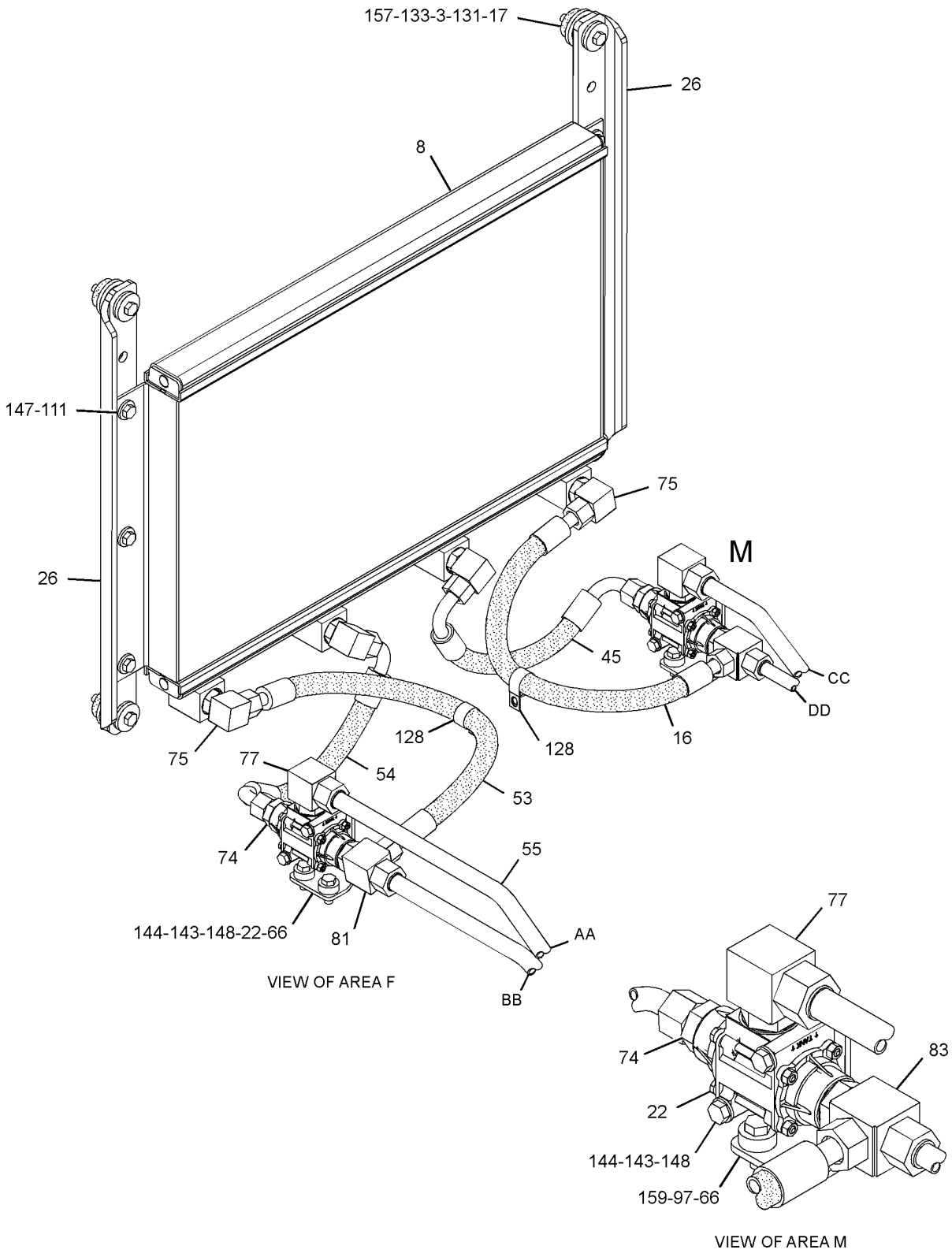

GRAPHIC #5 **<END>** g01449249

312-3529 LINES GP-AXLE VENT—REAR

S/N: 2211-UP

PART OF 262-2085 POWER TRAIN AR

SMCS-3260, 5118 **i02881200**

NOTE	REF NO	GRAPHIC REF	PART NUMBER	QTY	PART NAME 1 2 3 4 5 6 (PRODUCT LEVEL)	SEE PAGE
	1	1	**215-9632**	1	SPACER (12X20X20-MM THK)	
I	2	1	**275-7769**	1	HOSE AS	
	3	1	**312-3531**	1	PLATE AS	
		1	**7J-5225**	2	FITTING (1-1/16-12-THD)	
	4	1	**312-3552**	1	TUBE AS	
	5	1	*148-8318*	1	CONNECTOR AS	
		1	**3K-0360**	1	SEAL-O-RING	
		1	**6V-8397**	1	SEAL-O-RING	
		1	**6V-8634**	1	CONNECTOR	
	6	1	*148-8381*	1	ELBOW AS	
		1	**3D-2824**	1	SEAL-O-RING	
		1	**6V-8398**	1	SEAL-O-RING	
		1	**8T-5429**	1	ELBOW	
	7	1	**220-0812**	1	VALVE-BREAKER RELIEF	
	8	1	**6V-8398**	1	SEAL-O-RING	
	9	1	**8M-2770**	4	CLIP	
	10	1	**8T-4121**	3	WASHER-HARD (11X21X2.5-MM THK)	
M	11	1	**8T-4137**	2	BOLT (M10X1.5X20-MM)	
M	12	1	**8T-4182**	1	BOLT (M10X1.5X45-MM)	

I-REFER TO HYDRAULIC INFORMATION SYSTEM
M-METRIC PART

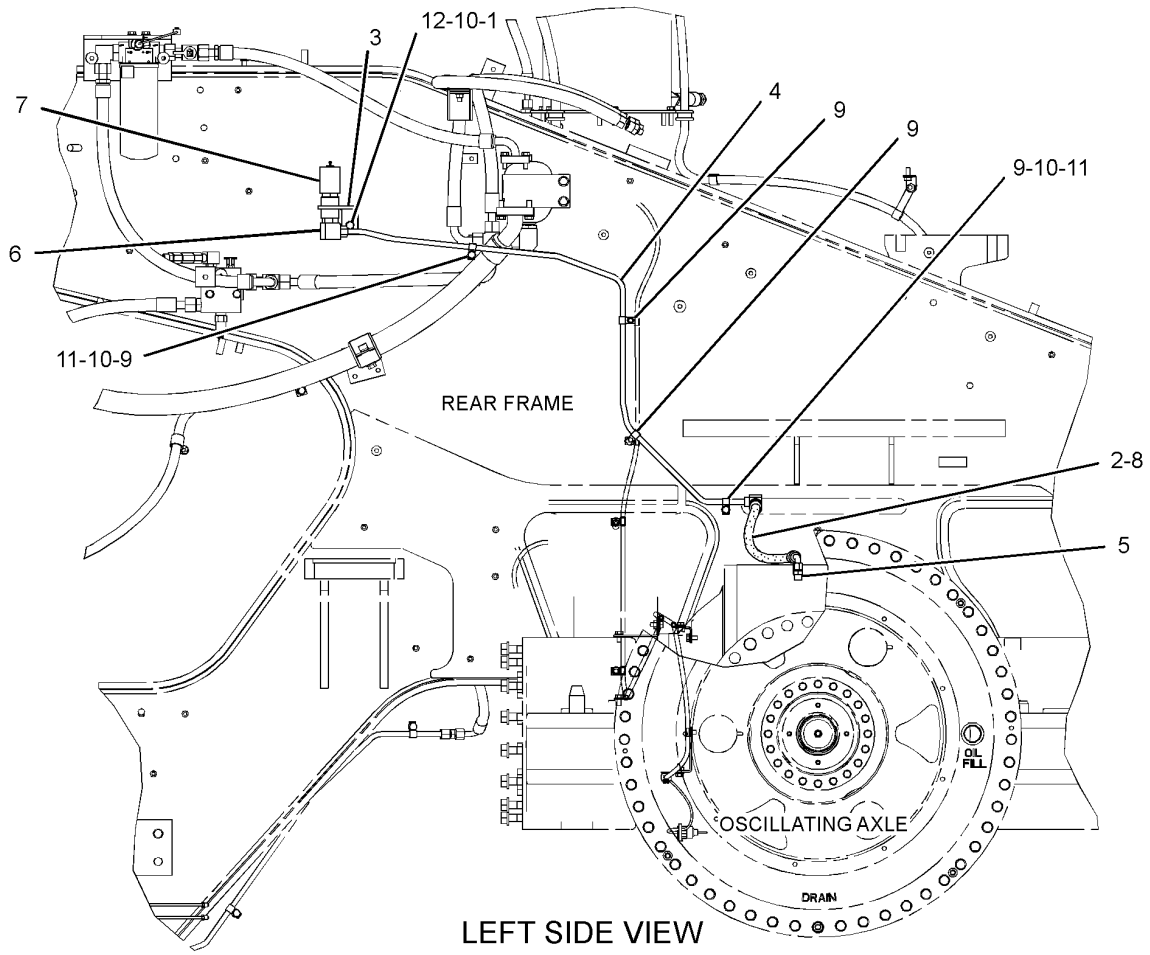

LEFT SIDE VIEW

GRAPHIC #1 **<END>** g01443166

POWER TRAIN

315-4144 LINES GP-AXLE VENT–FRONT

S/N: 2211-UP

PART OF 262-2085 POWER TRAIN AR

SMCS-3260, 5118 **i02894346**

NOTE	REF NO	GRAPHIC REF	PART NUMBER	QTY	PART NAME 1 2 3 4 5 6 (PRODUCT LEVEL)	SEE PAGE
	1	1	**312-3531**	1	PLATE AS	
		1	**7J-5225**	2	FITTING (1-1/16-12-THD)	
	2	1	**315-4145**	1	TUBE AS	
	3	1	*148-8328*	1	CONNECTOR AS	
		1	**3D-2824**	1	SEAL-O-RING	
		1	**6V-8398**	1	SEAL-O-RING	
		1	**6V-8633**	1	CONNECTOR	
	4	1	*150-4043*	1	CONNECTOR AS	
		1	**3J-1907**	1	SEAL-O-RING	
		1	**6V-8398**	1	SEAL-O-RING	
		1	**6V-9873**	1	CONNECTOR	
	5	1	*150-4046*	1	ADAPTER AS	
		1	**2M-9780**	1	SEAL-O-RING	
		1	**5P-1404**	1	ADAPTER-O-RING	
	6	1	**206-5017**	1	SPACER (11X20X5-MM THK)	
	7	1	**220-0812**	1	VALVE-BREAKER RELIEF (HYDRAULIC TANK)	
	8	1	**3D-2824**	1	SEAL-O-RING	
	9	1	**4B-0418**	1	CLIP	
	10	1	**8T-4121**	2	WASHER-HARD (11X21X2.5-MM THK)	
M	11	1	**8T-4136**	1	BOLT (M10X1.5X25-MM)	
M	12	1	**8T-4195**	1	BOLT (M10X1.5X30-MM)	

M-METRIC PART

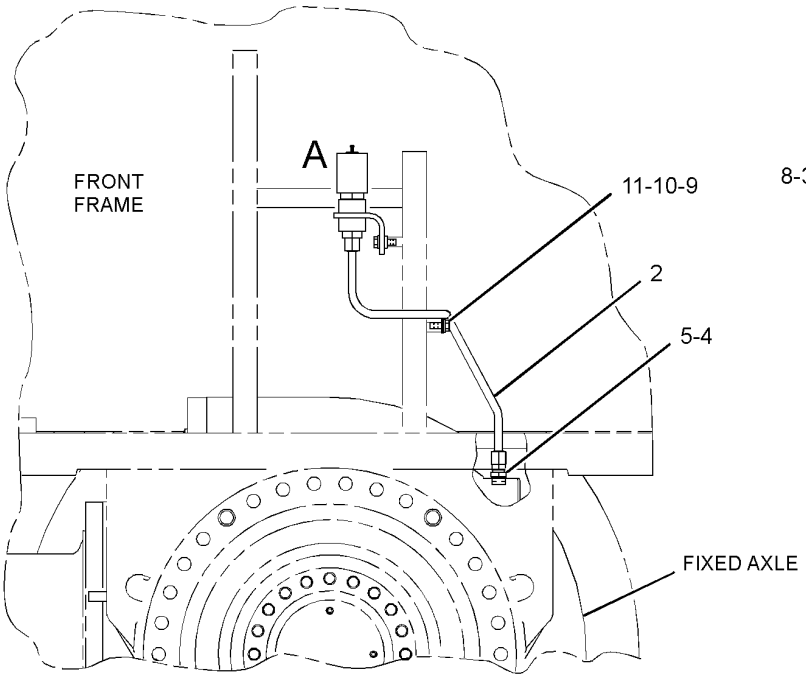

RIGHT SIDE VIEW

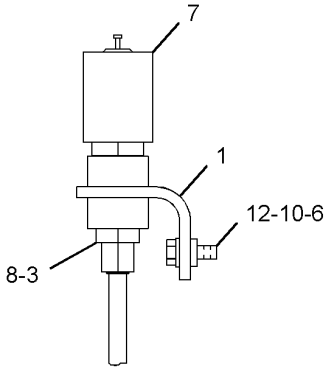

VIEW OF AREA A

GRAPHIC #1 **<END>** g01442984

POWER TRAIN

268-8200 LINES GP-POWER TRAIN OIL

S/N: 2211-UP

PART OF 262-2085 POWER TRAIN AR

SMCS-3016 **i02887921**

NOTE	REF NO	GRAPHIC REF	PART NUMBER	QTY	PART NAME 1 2 3 4 5 6 (PRODUCT LEVEL)	SEE PAGE
Y	1	3	*1N-4296*	1	PROTECTION GP-VANDALISM	915
	2	1,2	**4H-6112**	2	BREATHER AS (POWER TRAIN)	
	3	2	**5H-4744**	1	SPACER (7/16-IN THK)	
Y	4	3	**6I-8563**	1	VALVE GP-TORQUE CONV PRIORITY	459
	5	4	**6W-2342**	1	SPACER	
	6	3	**7S-1801**	1	ANCHOR-CHAIN	
Y	7	4	**8E-9727**	1	VALVE GP-RELIEF (TORQUE CONVERTER OUTLET PRESS)	452
	8	3	**8T-6703**	4	CLAMP-HOSE	
Y	9	1	*133-8649*	1	GAUGE GP-SIGHT (POWER TRAIN OIL)	385
	10	4	**154-9716**	1	BRACKET AS	
M		4	**8T-3490**	1	NUT-WELD (M10X1.5-THD)	
	11	1,2	**159-7630**	2	JUNCTION BLOCK	
I	12	1	**160-4001**	1	HOSE AS	
	13	3,4	**197-3295**	4	FLANGE-HALF	
	14	3	**230-3379**	1	CONNECTOR AS	
		3	**3J-1907**	1	SEAL-O-RING	
		3	**6V-8398**	1	SEAL-O-RING	
	15	2	**235-2477**	1	SEAL-RECTANGULAR	
	16	3	**243-2746**	1	HOSE	
	17	1	**259-8137**	4	WASHER-HARD (17.5X32X22-MM THK)	
I	18	1	**268-8176**	1	HOSE AS	
Y	19	3	*279-6750*	1	PUMP GP-TRANSMISSION	423
	20	4	**280-0002**	1	ADAPTER	
	21	3	**282-0835**	1	MANIFOLD	
Y	22	1	*282-0839*	1	FILTER & MTG GP-POWER TRAIN (TORQUE CONVERTER, TRANSMISSION)	378
	23	2	**282-0841**	1	HOSE AS	
I	24	2	**282-0842**	1	HOSE AS	
I	25	3	**282-0843**	1	HOSE AS	
I	26	1	**291-3011**	1	HOSE AS	
I	27	3	**306-6837**	1	HOSE AS	
I	28	1	**306-6871**	1	HOSE AS	
	29	3	**312-2921**	1	TUBE AS	
	30	2	**312-3571**	1	BRACKET AS	
M		2	**8T-3490**	2	NUT-WELD (M10X1.5-THD)	
I	31	2	**312-7680**	1	HOSE AS	
	32	3	**313-4411**	1	TUBE AS	
	33	3	**313-5299**	1	BRACKET AS	
M		3	**8T-3597**	1	NUT-WELD (M12X1.75-THD)	
	34	3	**313-5403**	1	TUBE	
	35	2	**314-6153**	1	TUBE AS	
I	36	1	**315-4146**	1	HOSE AS	
	37	2	**316-8693**	1	HOSE AS	
I	38	2	**316-8694**	1	HOSE AS	
I	39	3	**316-8695**	1	HOSE AS	
I	40	4	**317-2688**	1	HOSE AS	
I	41	3	**317-6104**	1	HOSE AS	
	42	4	**318-4247**	1	BRACKET AS	
M		4	**8T-3597**	1	NUT-WELD (M12X1.75-THD)	
	43	2	**033-6031**	1	SEAL-O-RING	
	44	2	*148-8336*	1	CONNECTOR AS	
		2	**3J-1907**	1	SEAL-O-RING	
		2	**6V-8397**	1	SEAL-O-RING	
		2	**6V-8636**	1	CONNECTOR	
	45	1,2	*148-8353*	2	ELBOW AS	
					(EACH INCLUDES)	

268-8200 LINES GP-POWER TRAIN OIL *(contd.)* i02887921

NOTE	REF NO	GRAPHIC REF	PART NUMBER	QTY	PART NAME 1 2 3 4 5 6 (PRODUCT LEVEL)	SEE PAGE
		1,2	**3J-1907**	1	SEAL-O-RING	
		1,2	**6V-8397**	1	SEAL-O-RING	
		1,2	**6V-9001**	1	ELBOW	
	46	4	*148-8364*	1	ELBOW AS	
		4	**3K-0360**	1	SEAL-O-RING	
		4	**6V-8398**	1	SEAL-O-RING	
		4	**6V-8625**	1	ELBOW	
	47	1	*148-8378*	2	ELBOW AS	
					(EACH INCLUDES)	
		1	**3J-1907**	1	SEAL-O-RING	
		1	**6V-8397**	1	SEAL-O-RING	
		1	**6V-8724**	1	ELBOW	
	48	2	*148-8434*	1	TEE AS	
		2	**6V-8397**	2	SEAL-O-RING	
		2	**6V-9843**	1	TEE-SWIVEL	
	49	3	*164-4180*	1	PLUG AS	
		3	**7M-8485**	1	SEAL-O-RING	
		3	**9S-4181**	1	PLUG-O-RING	
	50	2	**174-3469**	1	BRACKET AS	
	51	3	**1M-5123**	2	TUBE	
	52	3	**1P-3704**	1	SEAL-RECTANGULAR	
	53	4	**1P-4578**	2	FLANGE-HALF	
	54	2,3,4	**1P-4579**	8	FLANGE-HALF	
	55	1,2,3,4	**1P-4582**	14	FLANGE-HALF	
	56	2	**1P-4584**	2	FLANGE-HALF	
	57	4	**1P-4585**	2	FLANGE-HALF	
	58	2,4	**1S-0994**	3	CLIP	
	59	3	**1S-6420**	2	CLIP	
	60	2	**2A-1314**	1	SPACER (16.7X23.8X25.4-MM THK)	
	61	2,3	**4D-2886**	3	CLIP	
	62	3,4	**4J-0522**	5	SEAL-O-RING	
	63	1,2,3,4	**4J-0524**	8	SEAL-O-RING	
	64	1	**4J-0527**	1	SEAL-O-RING	
	65	2,3	**5P-7468**	2	CLIP (SLOT)	
	66	2,3	**5P-7469**	2	CLIP (TAB)	
	67	2,4	**5P-7470**	3	CLIP (SLOT)	
	68	2,4	**5P-7471**	3	CLIP (TAB)	
	69	2,4	**5P-7703**	2	GROMMET	
	70	4	**5P-8182**	1	GROMMET	
	71	2,3	**5P-8444**	2	GROMMET	
	72	2	**5P-9085**	1	CLIP	
	73	2,3,4	**6V-4368**	6	SEAL-O-RING	
	74	4	**6V-8001**	1	SEAL-O-RING	
	75	1	**6V-8397**	1	SEAL-O-RING	
	76	2	**6V-8400**	1	SEAL-O-RING	
	77	4	**7X-0353**	1	BOLT (5/8-11X4.25-IN)	
M	78	3	**7X-2549**	4	BOLT (M12X1.75X100-MM)	
	79	3,4	**7X-3392**	8	WASHER-HARD (13.5X22.5X3-MM THK)	
	80	4	**8M-4443**	1	SEAL-O-RING	
	81	3	**8M-4986**	1	SEAL-O-RING	
	82	3	**8M-5127**	1	SEAL-O-RING	
	83	4	**8M-5254**	1	SEAL-O-RING	
	84	4	**8M-8157**	1	SEAL-O-RING	
	85	2	**8M-8788**	1	CLIP	
	86	2	**8S-0023**	1	CLIP (SLOT)	
	87	2	**8S-0024**	1	CLIP (TAB)	
	88	2,3,4	**8T-4121**	19	WASHER-HARD (11X21X2.5-MM THK)	
	89	2,4	**8T-4122**	2	WASHER-HARD (17X32X3.5-MM THK)	
M	90	2	**8T-4133**	2	NUT (M10X1.5-THD)	

268-8200 **LINES GP-POWER TRAIN OIL** *(contd.)* **i02887921**

NOTE	REF NO	GRAPHIC REF	PART NUMBER	QTY	PART NAME 1 2 3 4 5 6 (PRODUCT LEVEL)	SEE PAGE
M	91	4	**8T-4136**	1	BOLT (M10X1.5X25-MM)	
M	92	3	**8T-4137**	1	BOLT (M10X1.5X20-MM)	
M	93	1,2	**8T-4139**	5	BOLT (M12X1.75X30-MM)	
M	94	1	**8T-4140**	4	BOLT (M16X2X60-MM)	
M	95	3,4	**8T-4178**	8	BOLT (M10X1.5X90-MM)	
M	96	2,3,4	**8T-4183**	44	BOLT (M12X1.75X40-MM)	
M	97	3	**8T-4192**	1	BOLT (M12X1.75X25-MM)	
M	98	4	**8T-4193**	4	BOLT (M16X2X50-MM)	
M	99	2,4	**8T-4194**	5	BOLT (M12X1.75X50-MM)	
M	100	2	**8T-4195**	1	BOLT (M10X1.5X30-MM)	
M	101	2,4	**8T-4196**	6	BOLT (M10X1.5X35-MM)	
	102	1,2,3,4	**8T-4223**	75	WASHER-HARD (13.5X25.5X3-MM THK)	
M	103	2	**8T-4244**	1	NUT (M12X1.75-THD)	
	104	1	**8T-4835**	4	BOLT (1/2-13X2-IN)	
M	105	1,2,3	**8T-4910**	6	BOLT (M12X1.75X60-MM)	
M	106	2,3,4	**8T-4956**	3	BOLT (M12X1.75X35-MM)	
M	107	3	**8T-5001**	2	BOLT (M12X1.75X130-MM)	
M	108	4	**8T-6868**	4	BOLT (M12X1.75X80-MM)	
	109	2	**8T-6871**	1	BOLT (5/8-11X2.5-IN)	
	110	1	**8T-8919**	4	BOLT (1/2-13X1.75-IN)	
	111	4	**9C-6034**	1	SPACER (18.9X26.7X76.2-MM THK)	
	112	4	**9X-8257**	4	WASHER (17.5X30X3.5-MM THK)	
E	113	2	**206-2737**		GUARD-HOSE (100-CM)	

E-ORDER BY THE CENTIMETER
I-REFER TO HYDRAULIC INFORMATION SYSTEM
M-METRIC PART
Y-SEPARATE ILLUSTRATION

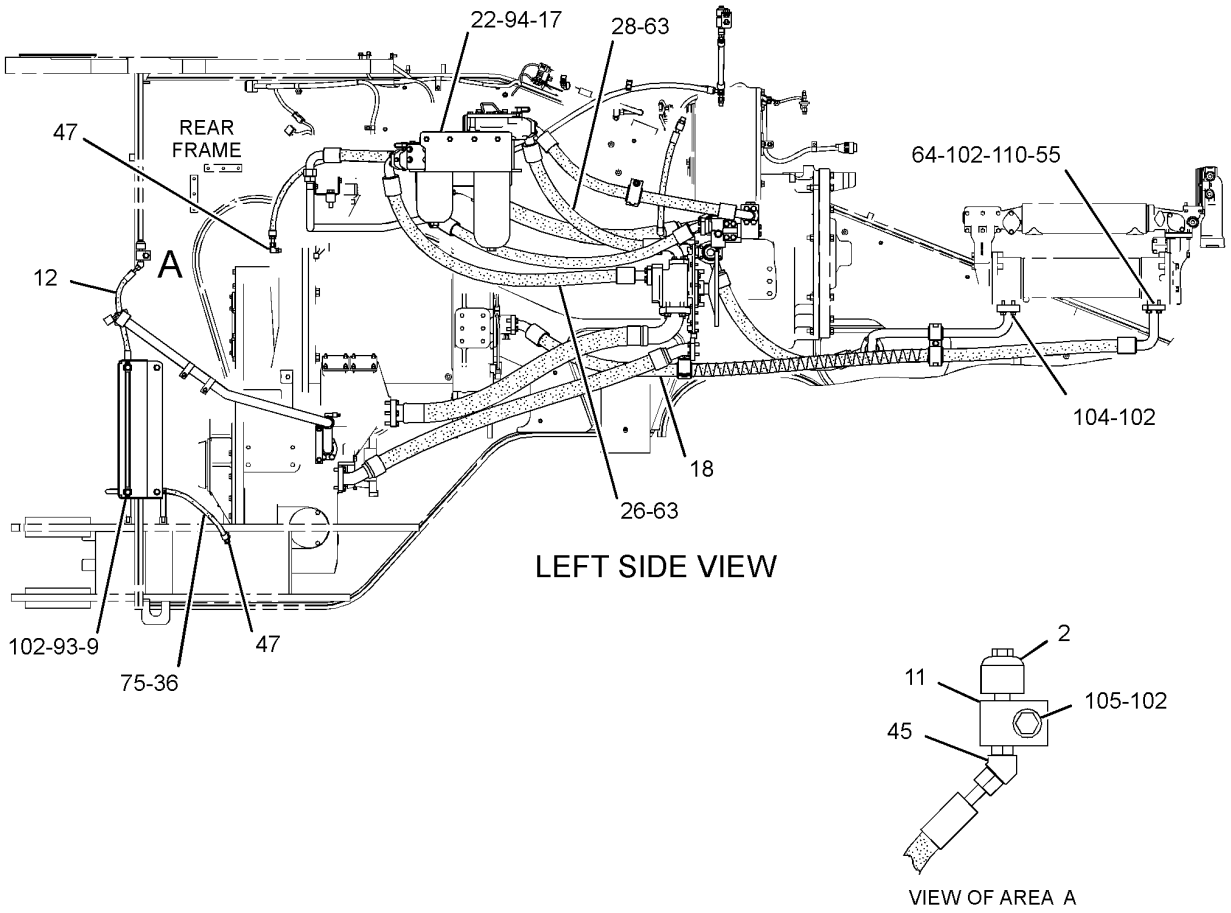

GRAPHIC #1

g01449449

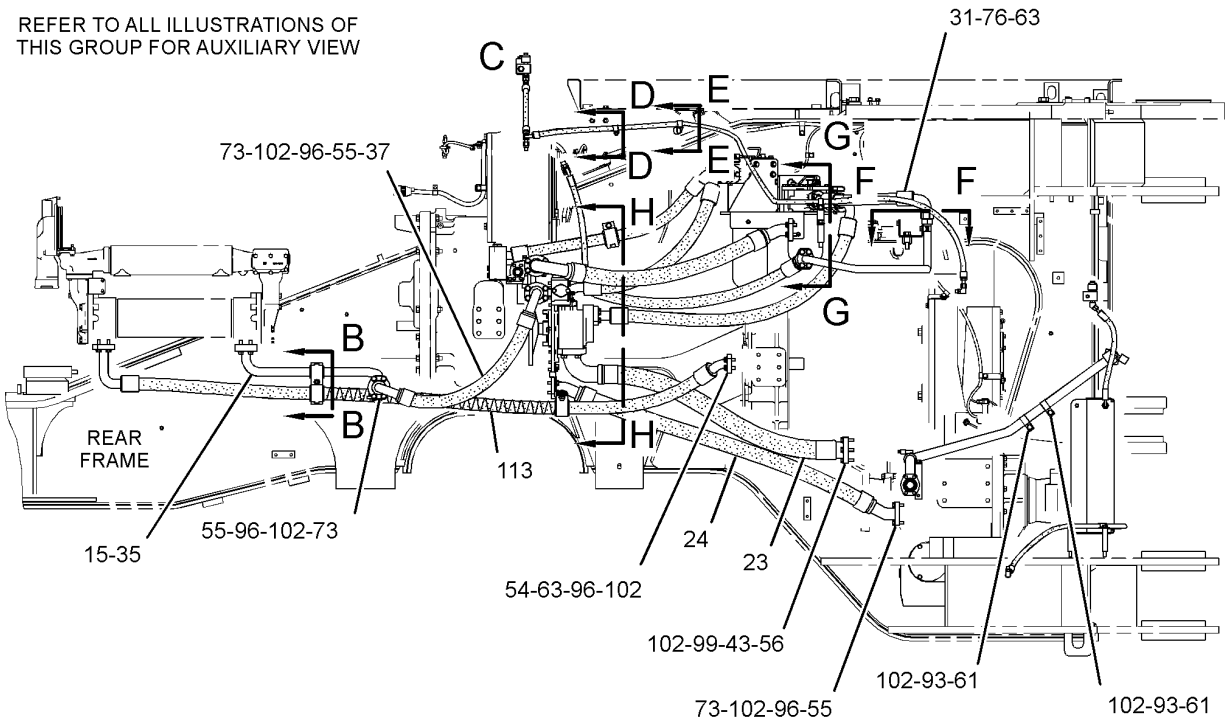

RIGHT SIDE VIEW

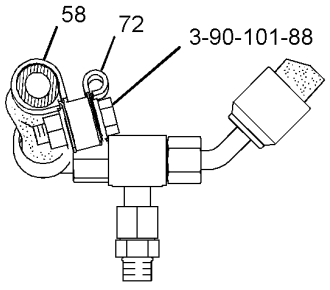

SECTION E-E

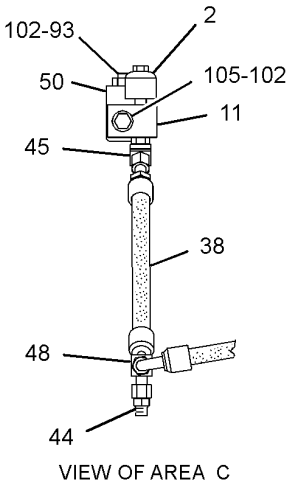

VIEW OF AREA C

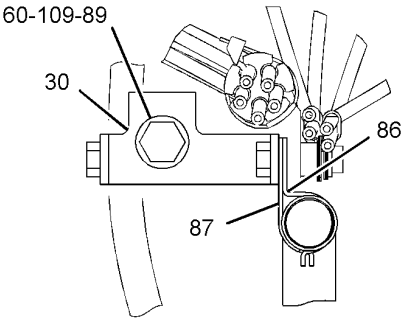

SECTION F-F

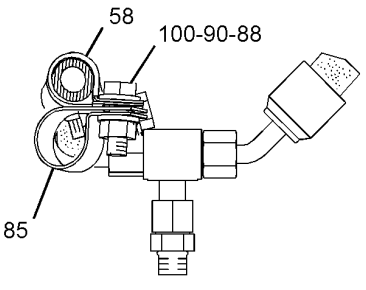

SECTION D-D

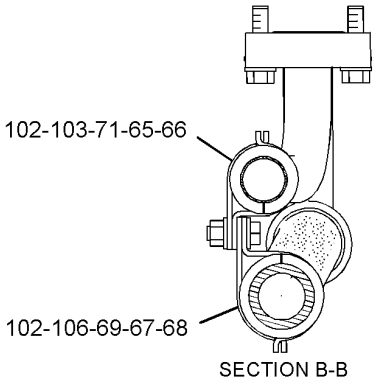

SECTION B-B

GRAPHIC #2 g01450395

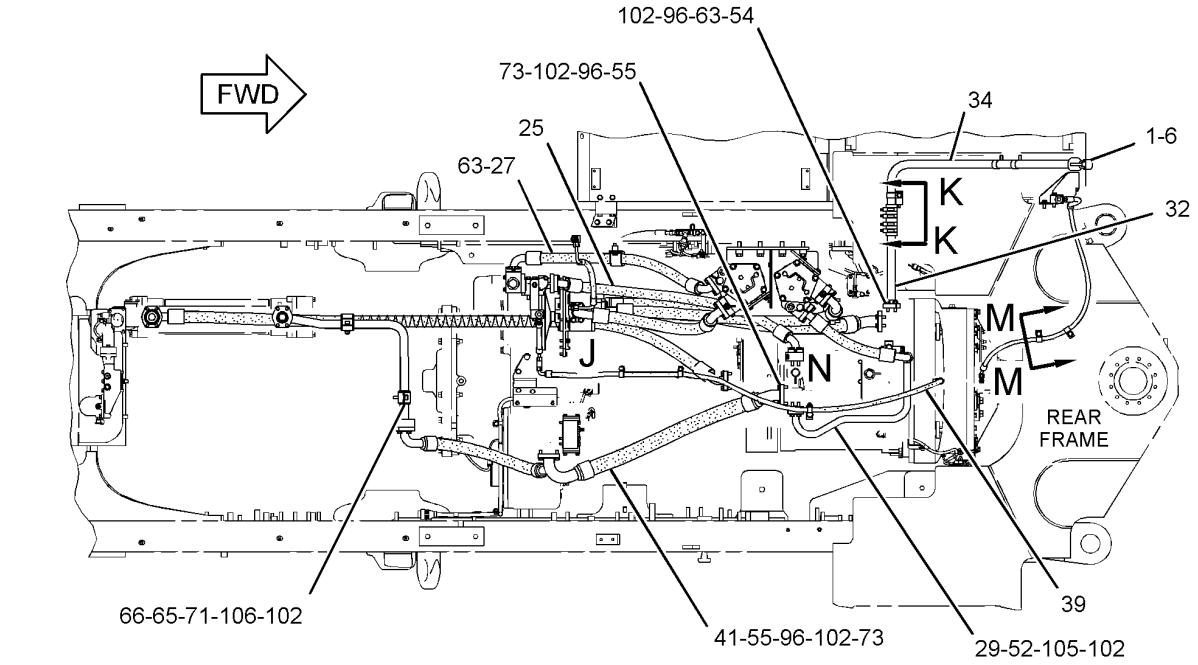

TOP VIEW

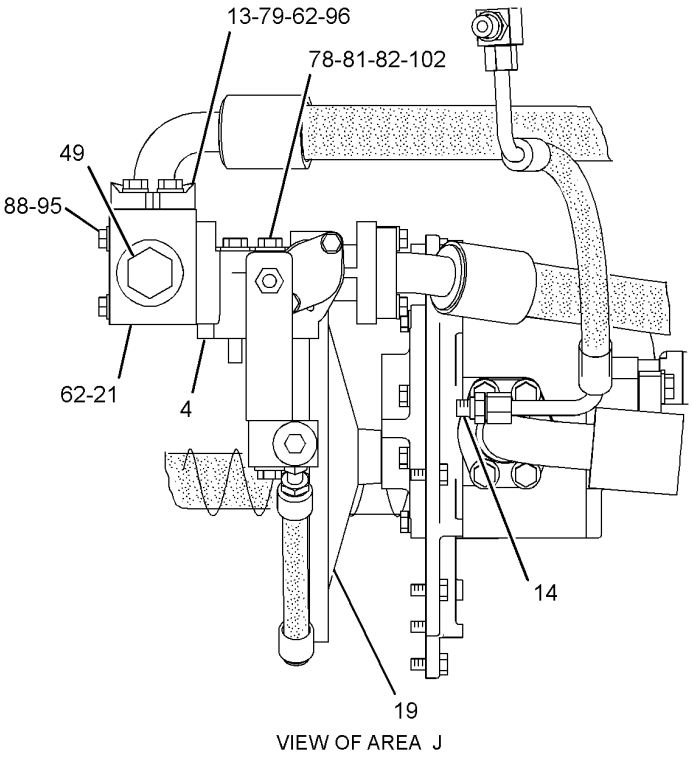

VIEW OF AREA J

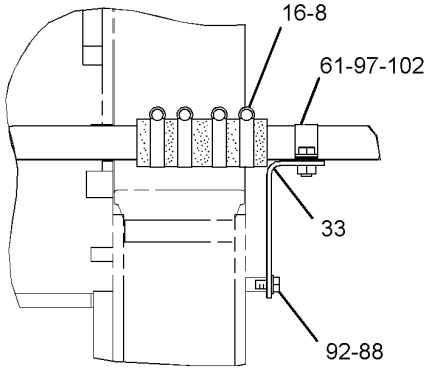

VIEW K-K

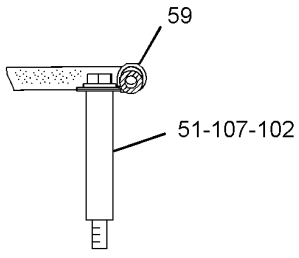

SECTION M-M

GRAPHIC #3 g01450397

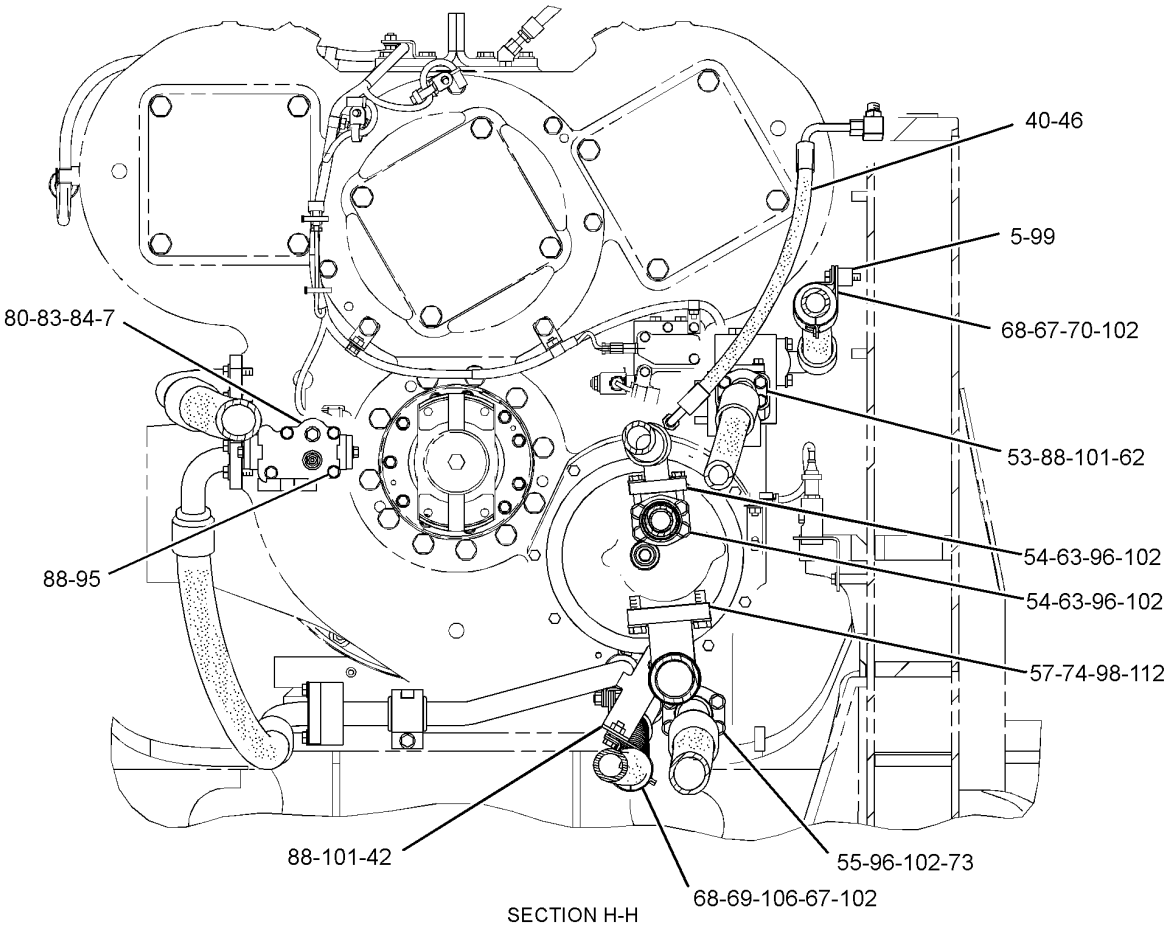

SECTION H-H

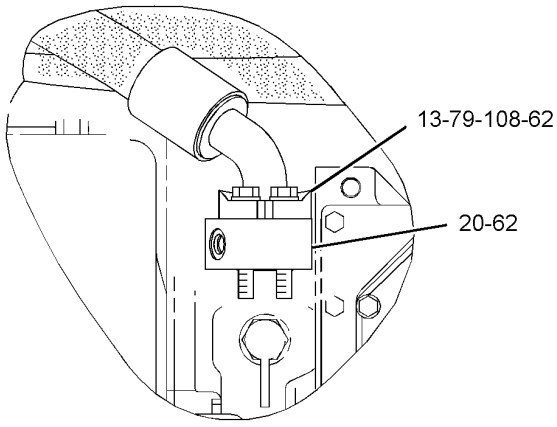

VIEW OF AREA N

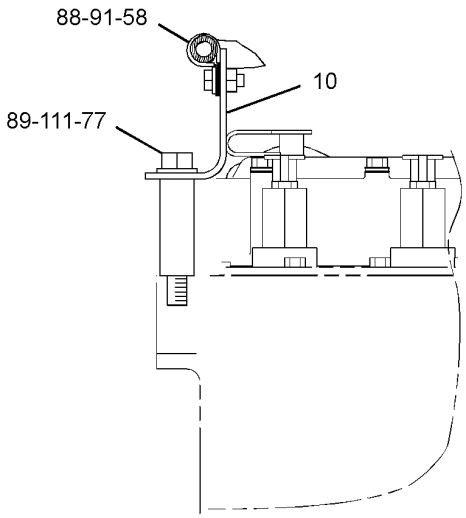

SECTION G-G

GRAPHIC #4 **<END>** g01450628

257-5613 MANIFOLD GP-CONTROL–AXLE OIL COOLER

S/N: 2211-UP
CUSTOM
PART OF 273-7400 LINES GP-AXLE OIL COOLER

SMCS-3206, 3272, 5137 **i02934475**

NOTE	REF NO	GRAPHIC REF	PART NUMBER	QTY	PART NAME 1 2 3 4 5 6 (PRODUCT LEVEL)	SEE PAGE
	1	1	**9S-8001**	6	PLUG-O-RING	
	2	1	**4J-7533**	6	SEAL-O-RING	
	3	1	**166-8497**	1	VALVE GP-DIVERTER (AXLE COOLER MOTOR PILOT OIL)	
Y	4	1	**201-0950**	1	VALVE GP-SOLENOID (AXLE OCLR ACTIVATE, DEACTIVATE)	458

Y-SEPARATE ILLUSTRATION

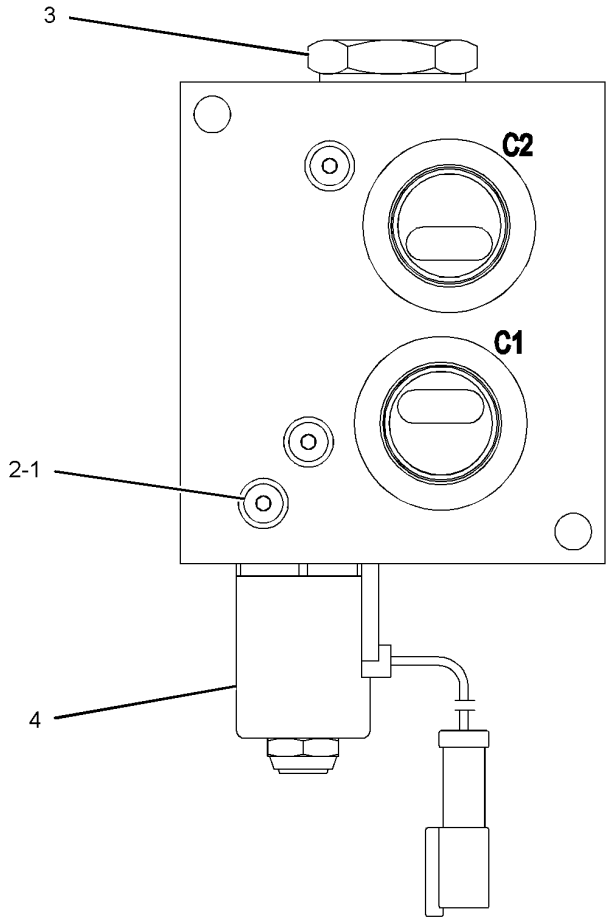

GRAPHIC #1 **<END>** g01329481

POWER TRAIN

118-9732 MOUNTING GP-AXLE

S/N: 2211-UP

PART OF 262-2085 POWER TRAIN AR

SMCS-3268, 3278 **i02888143**

NOTE	REF NO	GRAPHIC REF	PART NUMBER	QTY	PART NAME 1 2 3 4 5 6 (PRODUCT LEVEL)	SEE PAGE
	1	1	**6V-1734**	20	BOLT (1-1/4-7X14-IN)	
	2	1	**142-7074**	22	BOLT	
	3	1	**3K-9770**	20	NUT-FULL (1-1/4-7-THD)	
	4	1	**4K-0684**	40	WASHER-HARD (34X55X6-MM THK)	
	5	1	**9M-2828**	22	WASHER-HARD (28X44.5X6-MM THK)	

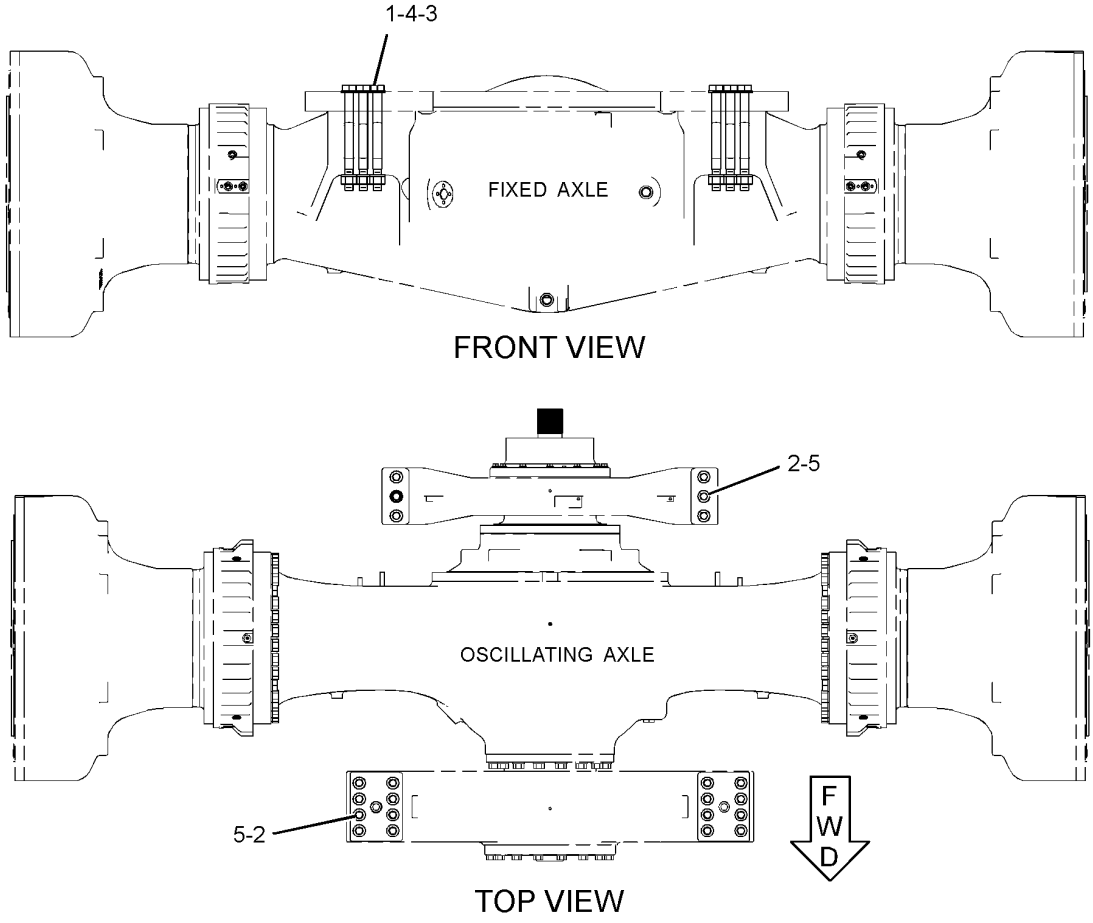

GRAPHIC #1

<END>

g01440620

127-2967 MOUNTING GP-RIM

S/N: 2211-UP
PART OF 127-2966 RIM AR
AN ATTACHMENT

SMCS-4202, 4209 **i00746383**

NOTE	PART NUMBER	QTY	PART NAME 1 2 3 4 5 6 (PRODUCT LEVEL)	SEE PAGE
	9X-8898	46	BOLT (1-8X5-IN)	
	2J-3507	2	NUT-FULL (1-8-THD)	
	138-8698	2	ROD	
	5P-8250	48	WASHER (28X49X5-MM THK)	

<END>

109-6869 MOUNTING GP-TORQUE CONVERTER

S/N: 2211-UP
PART OF 262-2085 POWER TRAIN AR

SMCS-3101 **i01057759**

NOTE	PART NUMBER	QTY	PART NAME 1 2 3 4 5 6 (PRODUCT LEVEL)	SEE PAGE
	7X-0346	16	BOLT (5/8-11X2-IN)	
	8T-4122	16	WASHER-HARD (17X32X3.5-MM THK)	

<END>

POWER TRAIN

6Y-6966 PLANETARY GP-TRANSMISSION

S/N: K2K1-UP

PART OF 283-7702 TRANSMISSION AR

SMCS-3160 **i02474547**

NOTE	REF NO	GRAPHIC REF	PART NUMBER	QTY	PART NAME 1 2 3 4 5 6 (PRODUCT LEVEL)	SEE PAGE
	1	1	**7S-7018**	1	RING-SEAL METAL	
	2	1	**8E-7184**	1	SHAFT AS-INPUT	
		1	**9M-2001**	1	DOWEL	
	3	1	**7G-7741**	1	PLATE-END	
R	4	1	**3P-7584**	13	PLATE-CLUTCH	
	5	1	**8E-0985**	17	DISC AS-CLUTCH	
	6	1	**3P-7613**	1	RING-SEAL	
	7	1	**0S-1594**	8	BOLT (3/8-16X1-IN)	
			4M-5397	4	LOCKNUT	
	8	1	**123-4934**	1	HOUSING-CLUTCH	
	9	1	**133-3780**	1	HOUSING AS	
		1	**4D-8148**	4	DOWEL	
	10	1	**1N-5410**	1	RING-RETAINING	
	11	1	**8P-5839**	1	HOUSING-CLUTCH	
	12	1	**278-9838**	1	HOUSING AS-SUPPORT	
		1	**4D-8148**	2	DOWEL	
		1	**8B-6375**	1	DOWEL	
	13	1	**5D-6428**	2	SEAL-O-RING	
	14	1	**9S-8010**	1	PLUG	
			2S-4078	1	SEAL-O-RING	
	15	1	**6Y-7260**	1	SHAFT AS-OUTPUT	
		1	**4S-8537**	1	DOWEL	
	16	1	**1T-0766**	2	BEARING-SLEEVE	
	17	1	**8F-6230**	2	SEAL-O-RING	
	18	1	**175-2620**	1	PISTON-CLUTCH	
			9G-9558	1	RING-SEAL	
	19		**175-2621**	1	PISTON-CLUTCH	
	20		**8P-7246**	1	GEAR AS-SUN (38-TEETH)	
			4S-8537	1	DOWEL	
	21		**4M-1708**	1	RING	
	22	2	**7G-7745**	2	PISTON-CLUTCH	
			8P-6292	2	RING-SEAL	
	23	2	**3P-7564**	1	GEAR-SUN (47-TEETH)	
	24	2	**3P-7006**	1	CARRIER-PLANETARY	
	25		**6Y-7269**	1	HOUSING AS-ROTATION	
			7M-8480	2	DOWEL	
			7M-5130	1	PIN-SPRING	
			9G-0647	1	CARRIER-RING	
			4S-8541	1	DOWEL	
	26		**3P-7570**	1	RING-SEAL (EXTERNAL)	
	27		**8P-9569**	1	RING-SEAL (INTERNAL)	
	28		**6I-9790**	17	DAMPER-BOLT	
	29		**148-9643**	2	RING-SEAL	
	30		**6V-6458**	3	RING-RETAINING	
	31	2	**3E-4371**	1	RING-RETAINING	
	32		**5P-1669**	1	BALL BEARING	
	33	2	**9S-8008**	2	PLUG-O-RING	
			3D-2824	2	SEAL-O-RING	
	34		**1B-2524**	12	PIN	
	35		**3P-7566**	12	SPRING	
	36		**3P-7832**	6	DOWEL	
	37		**3P-7558**	4	SHAFT AS-PLANETARY	
					(EACH INCLUDES)	
			3S-0036	1	PLUG-CORE	
	38	2	**7G-3467**	4	GEAR-PLANETARY (20-TEETH)	
			5M-7925	4	BEARING AS-ROLLER	

6Y-6966 **PLANETARY GP-TRANSMISSION** *(contd.)* **i02474547**

NOTE	REF NO	GRAPHIC REF	PART NUMBER	QTY	PART NAME 1 2 3 4 5 6 (PRODUCT LEVEL)	SEE PAGE
	39	2	**8E-8310**	8	DISC-THRUST	
	40		**9H-5537**	24	SPRING	
	41		**3S-2708**	5	PIN-SPRING	
C	42		**0S-0509**	4	BOLT (3/8-16X0.75-IN)	
C			**5S-5880**	2	LOCKNUT	
C			**3P-7601**	2	PLATE-LOCK	
	43		**3P-7576**	6	DOWEL	
	44		**105-9639**	4	SHAFT-PLANETARY	
	45		**5P-6727**	1	BALL BEARING	
	46		**5P-5296**	1	RING-RETAINING	
	47		**3K-2559**	1	RING-RETAINING	
	48		**5P-6726**	1	RING-RETAINING	
	49		**148-6559**	1	BALL BEARING	
	50		**8P-3133**	1	HUB	
	51		**7B-3235**	7	BOLT (1/2-13X1.375-IN)	
			5P-8245	7	WASHER-HARD (13.5X25.5X3-MM THK)	
	52		**9U-9498**	1	CAGE-BEARING	
	53		**6Y-5877**	1	PISTON-CLUTCH	
	54		**8P-6302**	1	PILOT-TRANSMISSION	
	55		**8P-3134**	1	GEAR-SUN (28-TEETH)	
	56	3	**3S-8035**	2	RING-SEAL	
	57		**212-5023**	2	BALL BEARING	
	58		**3P-7149**	1	CAGE-BEARING	
	59		**9W-9143**	1	GEAR-COUPLING (80-TEETH)	
C	60		**115-0761**	1	CARRIER AS	
	61	3	**5P-1670**	17	BOLT (3/4-10X18.5-IN)	
			2S-0115	17	WASHER-HARD (20X36.5X5-MM THK)	
	62	3	**7G-7744**	1	HOUSING AS-CLUTCH	
		3	**4D-8148**	1	DOWEL	
	63		**5P-6651**	1	RING-RETAINING	
	64		**8P-6222**	1	GEAR-RING (82-TEETH)	
	65		**105-9788**	1	CARRIER-PLANETARY	
	66	3	**3P-7563**	1	GEAR-SUN (38-TEETH)	
	67	3	**3P-7586**	1	GEAR-RING (82-TEETH)	
	68		**3P-7575**	1	GEAR-RING (85-TEETH)	
R	69	3	**3P-7447**	4	PLATE-CLUTCH	
	70	3	**169-7055**	5	DISC-CLUTCH	
	71	3	**1D-4569**	12	BOLT (1/2-13X4.25-IN)	
			1T-0808	12	WASHER (0.516X0.812X0.09-IN THK)	
	72	3	**8P-7243**	1	CARRIER-RING	
			6F-0155	2	RING-METAL SEAL	
	73		**7G-3470**	8	GEAR-PLANETARY (22-TEETH)	
	74	3	**8E-8316**	24	DISC-THRUST	
	75		**1P-3958**	8	ROLLER AS-SPECIAL	
	76		**4M-5016**	24	SPRING	
	77		**2S-8924**	12	PIN	
	78		**3P-7612**	4	RING-SEAL	
	79	3	**7G-3468**	4	GEAR-PLANETARY (26-TEETH)	
	80	3	**1S-9110**	8	ROLLER AS	
	82		**2H-9445**	8	PIN-SPRING	
	83	3	**8P-7242**	4	SHAFT AS-PLANETARY	
					(EACH INCLUDES)	
		3	**2A-3746**	4	PLUG-CUP	
	84	3	**0S-1590**	6	BOLT (3/8-16X2-IN)	
			5M-2894	6	WASHER-HARD (10.2X18.5X2.5-MM THK)	
	85		**5H-5672**	2	SEAL-O-RING	
	86		**3B-8453**	2	SEAL-O-RING	
C	87		**115-0764**	1	RING-LOCK	
C	88		**115-0762**	1	GEAR-COUPLING	

C-CHANGE FROM PREVIOUS TYPE
R-REMFG PART MAY BE AVAILABLE

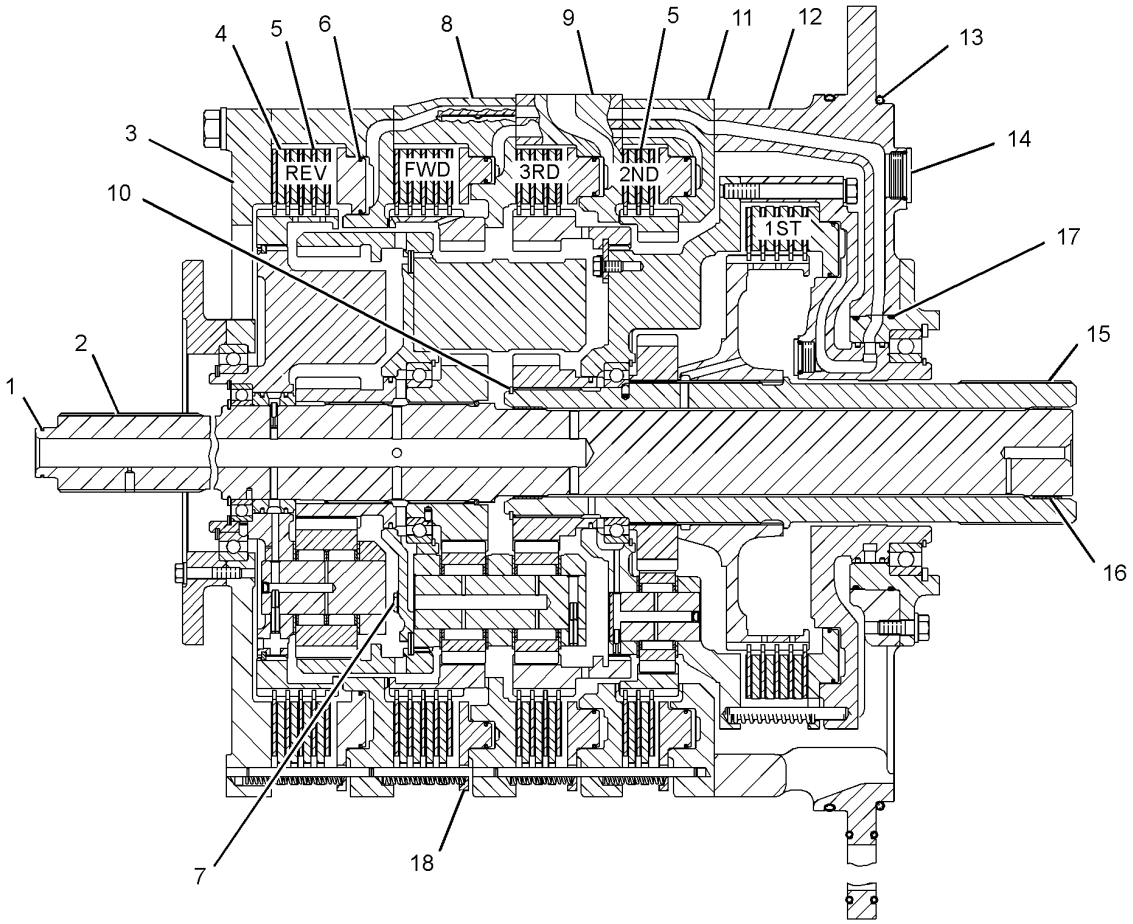

GRAPHIC #1 g01155326

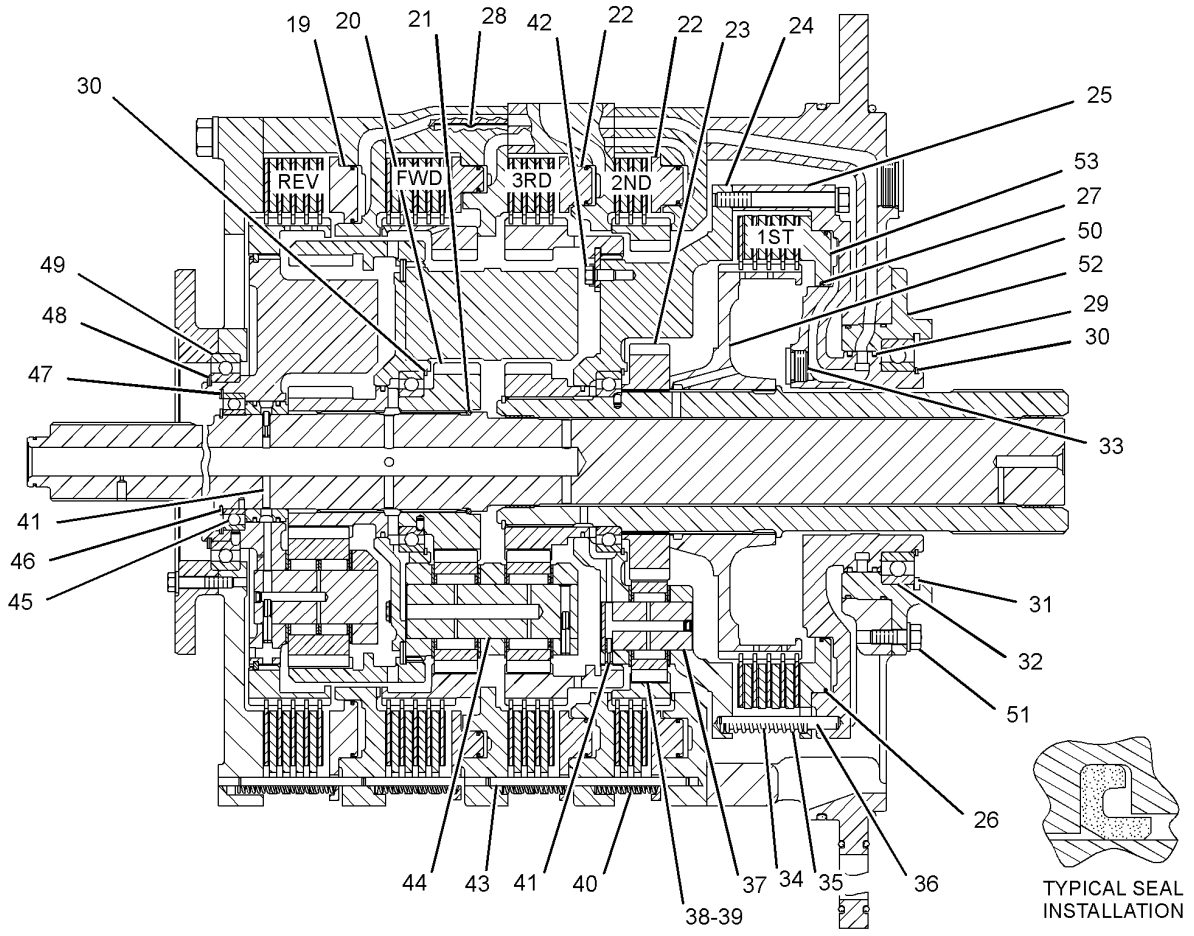

GRAPHIC #2

g01155327

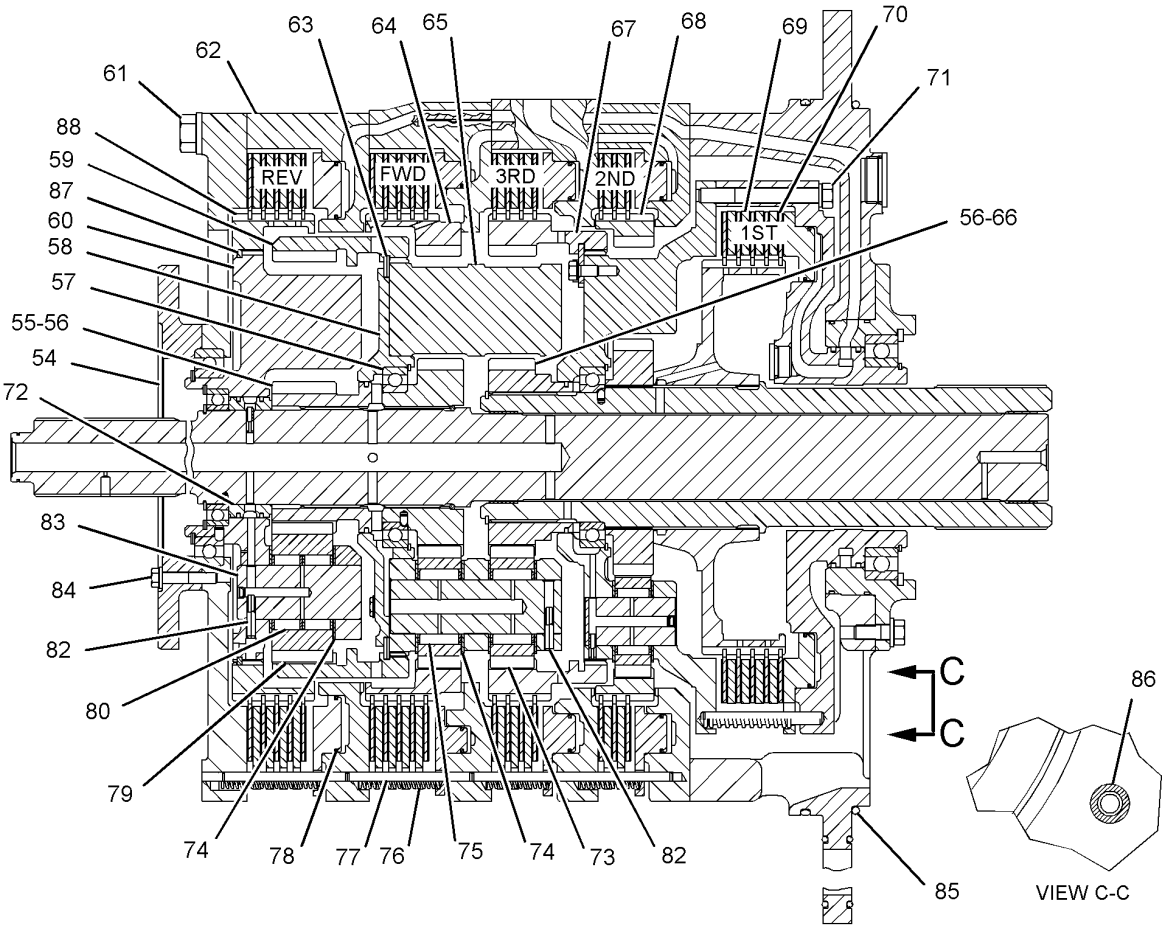

GRAPHIC #3 **<END>** g01155328

POWER TRAIN

262-2085 POWER TRAIN AR

S/N: 2211-UP

PART OF 262-2077 COMMON AR

SMCS-3000, 4000 **i02897732**

NOTE	PART NUMBER	QTY	PART NAME 1 2 3 4 5 6 (PRODUCT LEVEL)	SEE PAGE
Y	*280-3582*	1	AXLE AR-FIXED (FRONT)	358
Y	*280-3583*	1	AXLE AR-OSCILLATING (REAR)	358
Y	**294-7730**	1	BRAKE GP-PARKING	564
Y	*315-4144*	1	LINES GP-AXLE VENT (FRONT)	403
Y	*268-8200*	1	LINES GP-POWER TRAIN OIL	405
Y	*312-3529*	1	LINES GP-AXLE VENT (REAR)	401
Y	*118-9732*	1	MOUNTING GP-AXLE	413
Y	*109-6869*	1	MOUNTING GP-TORQUE CONVERTER	414
Y	*112-5452*	1	SHAFT GP-DRIVE	428
Y	*288-2730*	1	SHAFT GP-INPUT DRIVE	430
Y	**277-5743**	1	TORQUE CONVERTER & HOUSING GP (LOCKUP)	439
Y	*283-7702*	1	TRANSMISSION AR	445
Y	*112-4811*	1	VALVE & MTG GP-LOCKUP CLUTCH (TORQUE CONVERTER)	449

Y-SEPARATE ILLUSTRATION

<END>

301-9799 PUMP & MOTOR GP-AXLE OIL CLR

S/N: 2211-UP

PART OF 273-7395 PUMP & MTG GP-AXLE OIL COOLER

SMCS-5061, 506G, 5073 **i02895592**

NOTE	REF NO	GRAPHIC REF	PART NUMBER	QTY	PART NAME 1 2 3 4 5 6 (PRODUCT LEVEL)	SEE PAGE
J	1	1	**304-9379**	1	PUMP GP-GEAR (AXLE OIL COOLER)	
		1	**154-3031**	2	SEAL	
		1	**293-3334**	2	SEAL-LIP TYPE	
	2	1	**305-3143**	1	KIT-BRACKET (INCLUDES TWO BRACKETS)	
					AVAILABLE REPAIR KIT(S):	
J			**305-3144**	1	KIT-SEAL	
					(INCLUDES SHAFT SEALS, O-RING SEALS, E-RING SEALS, BACK-UP RINGS, & DISTANCE PLATE SEALS)	
			305-3139	1	KIT-SEAL	
					(INCLUDES O-RINGS, E-RING SEALS, E-RING RETAINERS, & O-RING PILOT)	

J-KIT MARKED J SERVICES PART MARKED J

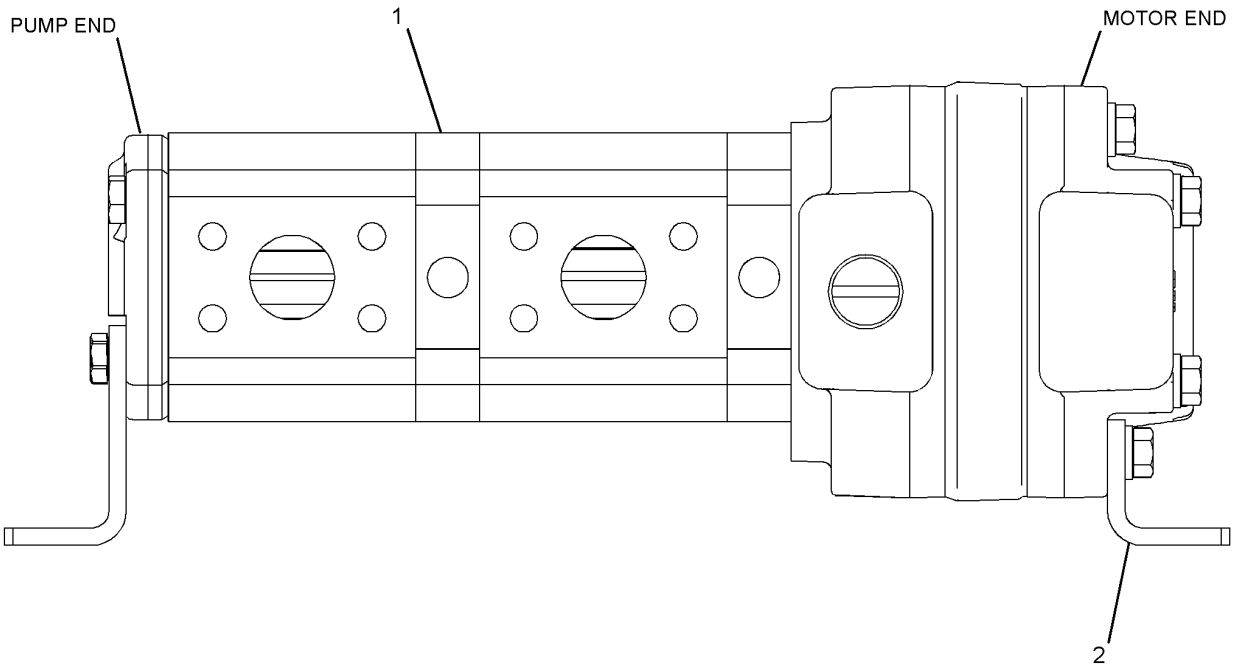

GRAPHIC #1 **<END>** g01444268

POWER TRAIN

273-7395 PUMP & MTG GP-AXLE OIL COOLER

S/N: 2211-UP

PART OF 279-9400 HYDRAULIC AR

SMCS-5073 **i02895596**

NOTE	REF NO	GRAPHIC REF	PART NUMBER	QTY	PART NAME 1 2 3 4 5 6 (PRODUCT LEVEL)	SEE PAGE
Y	1	1	**301-9799**	1	PUMP & MOTOR GP-AXLE OIL CLR	421
	2	1	**198-4777**	4	WASHER-HARD (11X25X10-MM THK)	
M	3	1	**8T-4196**	4	BOLT (M10X1.5X35-MM)	

M-METRIC PART
Y-SEPARATE ILLUSTRATION

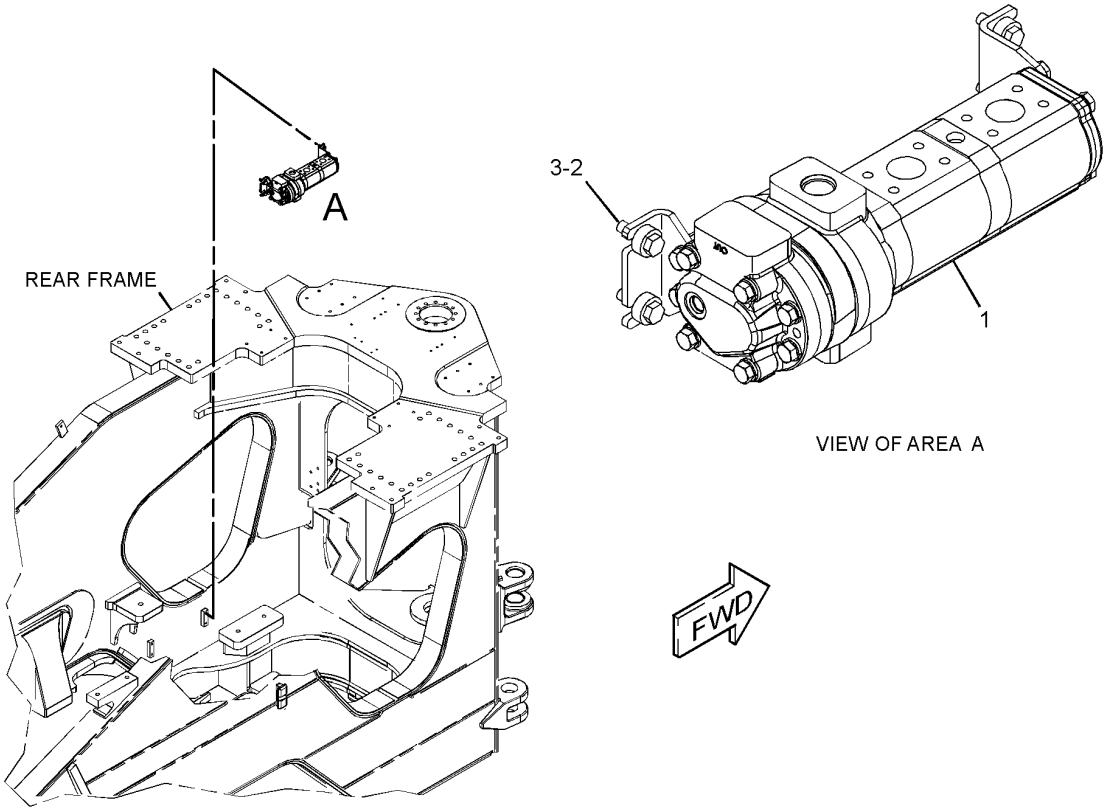

GRAPHIC #1 **<END>** g01446140

POWER TRAIN

279-6750 PUMP GP-TRANSMISSION

S/N: 2211-UP

PART OF 268-8200 LINES GP-POWER TRAIN OIL

SMCS-3066 **i02830197**

NOTE	REF NO	GRAPHIC REF	PART NUMBER	QTY	PART NAME 1 2 3 4 5 6 (PRODUCT LEVEL)	SEE PAGE
	1	1	**115-2054**	1	GEAR-OIL PUMP DRIVE (57-TEETH)	
	2	1	**2K-0337**	1	LOCKNUT (3/4-16-THD)	
	3	1	**4S-9134**	1	WASHER-HARD (20X30X3-MM THK)	
	4	1	**1B-8714**	1	KEY-WOODRUFF (TRANSMISSION PUMP)	
	5	1	**6Y-9347**	1	GASKET	
Y	6	1	**279-6751**	1	PUMP GP-TRANSMISSION	424
M	7	1	**8T-4136**	11	BOLT (M10X1.5X25-MM)	

M-METRIC PART
Y-SEPARATE ILLUSTRATION

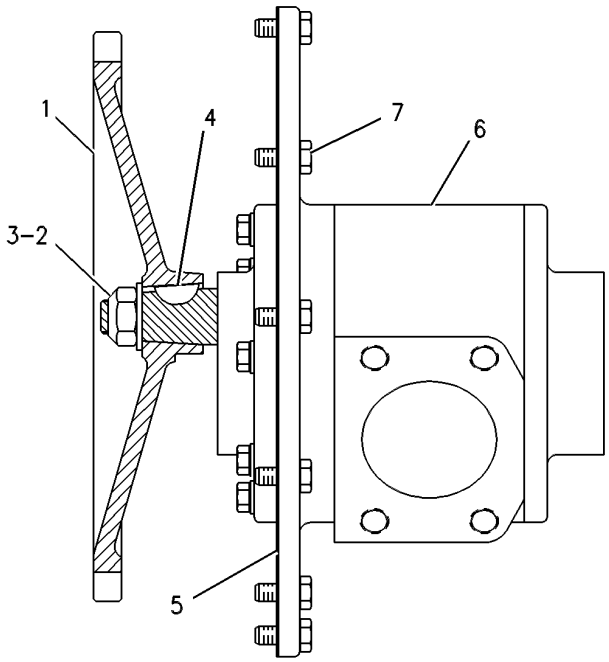

GRAPHIC #1 **<END>** g00256163

POWER TRAIN

279-6751 PUMP GP-TRANSMISSION

S/N: 2211-UP

PART OF 279-6750 PUMP GP-TRANSMISSION

SMCS-3066 **i02400365**

NOTE	REF NO	GRAPHIC REF	PART NUMBER	QTY	PART NAME 1 2 3 4 5 6 (PRODUCT LEVEL)	SEE PAGE
	1	1	**3S-0004**	6	WASHER (0.406X0.728X0.09-IN THK)	
	2	1	**4D-2212**	2	GEAR (12-TEETH)	
	3	1	**6Y-9816**	1	MANIFOLD AS-PUMP	
		1	**5M-3320**	2	BEARING-SLEEVE	
	5	1	**115-7077**	1	GEAR AS-OIL PUMP (8-TEETH)	
	6	1	**143-8378**	1	COVER AS-OIL PUMP	
		1	**131-0167**	2	BEARING-SLEEVE (31.87X35.01X36.5-MM)	
	7	1	**144-3004**	1	GEAR AS-OIL PUMP (8-TEETH)	
	9	1	**279-6752**	1	BODY AS-OIL PUMP	
		1	**1M-3909**	2	BEARING-SLEEVE	
		1	**8M-8489**	2	DOWEL	
	10	1	**279-6757**	1	BODY AS-OIL PUMP	
		1	**8M-8489**	4	DOWEL	
	11	1	**1B-8736**	1	KEY-WOODRUFF	
	12	1	**2D-8009**	3	SEAL-O-RING	
M	13	1	**7X-2546**	4	BOLT (M10X1.5X180-MM)	
M	14	1	**8T-5005**	2	BOLT (M10X1.5X70-MM)	

M-METRIC PART

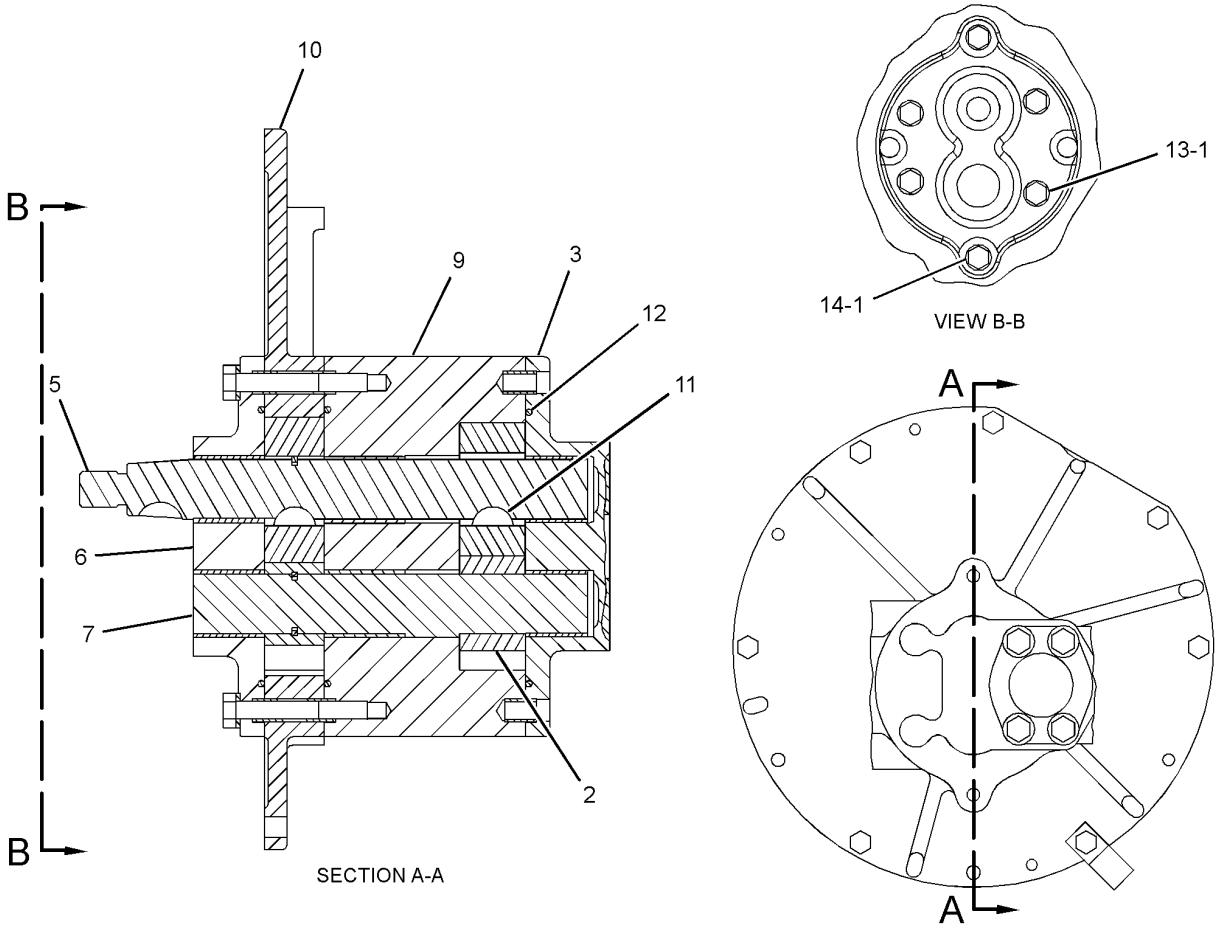

GRAPHIC #1 **<END>** g01240314

127-2966 RIM AR

S/N: 2211-UP

PART OF 127-2964, 136-0871, 136-0872, 136-7334, 147-9632, 148-3460, 165-6171, 165-6175, 170-7326, 170-8004, 204-9241, 245-5772, 247-3310, 266-8654, 268-5965, 276-3464, 303-6329, 308-3544, 313-4121 TIRE & RIM AR

AN ATTACHMENT

SMCS-4209 **i02104168**

NOTE	PART NUMBER	QTY	PART NAME 1 2 3 4 5 6 (PRODUCT LEVEL)	SEE PAGE
Y	*127-2967*	1	MOUNTING GP-RIM	414
Y	*112-5727*	4	RIM GP-DEMOUNTABLE	426

Y-SEPARATE ILLUSTRATION

<END>

112-5727 RIM GP-DEMOUNTABLE

S/N: 2211-UP
36X45
PART OF 127-2966 RIM AR
AN ATTACHMENT

SMCS-4209 **i01662945**

NOTE	REF NO	GRAPHIC REF	PART NUMBER	QTY	PART NAME 1 2 3 4 5 6 (PRODUCT LEVEL)	SEE PAGE
Y	1	1	*205-0162*	1	RIM GP-DEMOUNTABLE	427
	2	1	**5T-9797**	1	VALVE GP-TIRE	
	3	1	**6F-3930**	1	CORE-VALVE	
	4	1	**6J-3134**	1	SEAL-O-RING	
	5	1	**9K-7951**	1	CAP-VALVE (STEM)	
	6	1	**2D-2508**	1	GROMMET	
	7	1	**5T-9866**	1	LOCKNUT (11/16-24-THD)	
	8	1	**3V-2695**	1	SEAL-O-RING	

Y-SEPARATE ILLUSTRATION

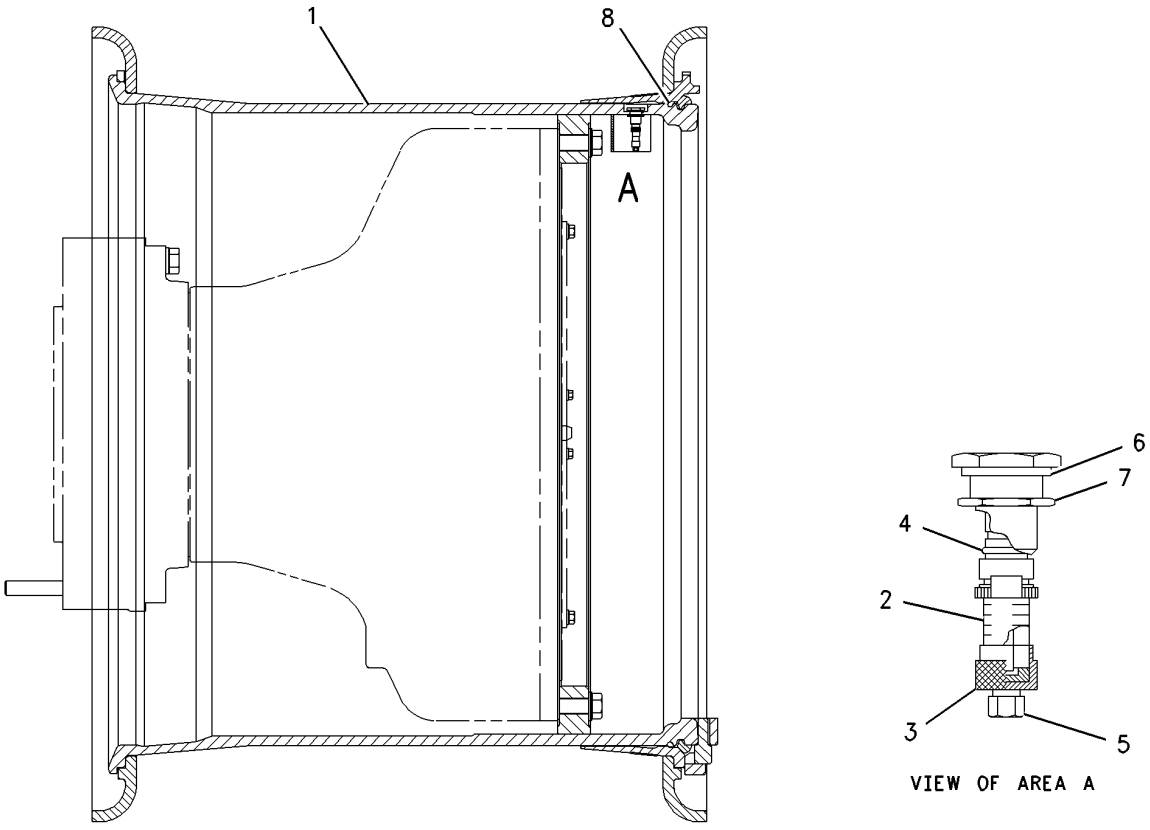

GRAPHIC #1 **<END>** g00858336

205-0162 RIM GP-DEMOUNTABLE

S/N: 2211-UP
36X45
PART OF 112-5727 RIM GP-DEMOUNTABLE
AN ATTACHMENT

SMCS-4209 **i01649872**

NOTE	REF NO	GRAPHIC REF	PART NUMBER	QTY	PART NAME 1 2 3 4 5 6 (PRODUCT LEVEL)	SEE PAGE
	1	1	**8X-1091**	1	LOCK RING	
	2	1	**8X-5271**	1	KEY-DRIVER	
	3	1	**112-5728**	1	RIM AS	
	4	1	**125-9530**	2	FLANGE	
	5	1	**190-6404**	1	BAND-BEAD SEAT	

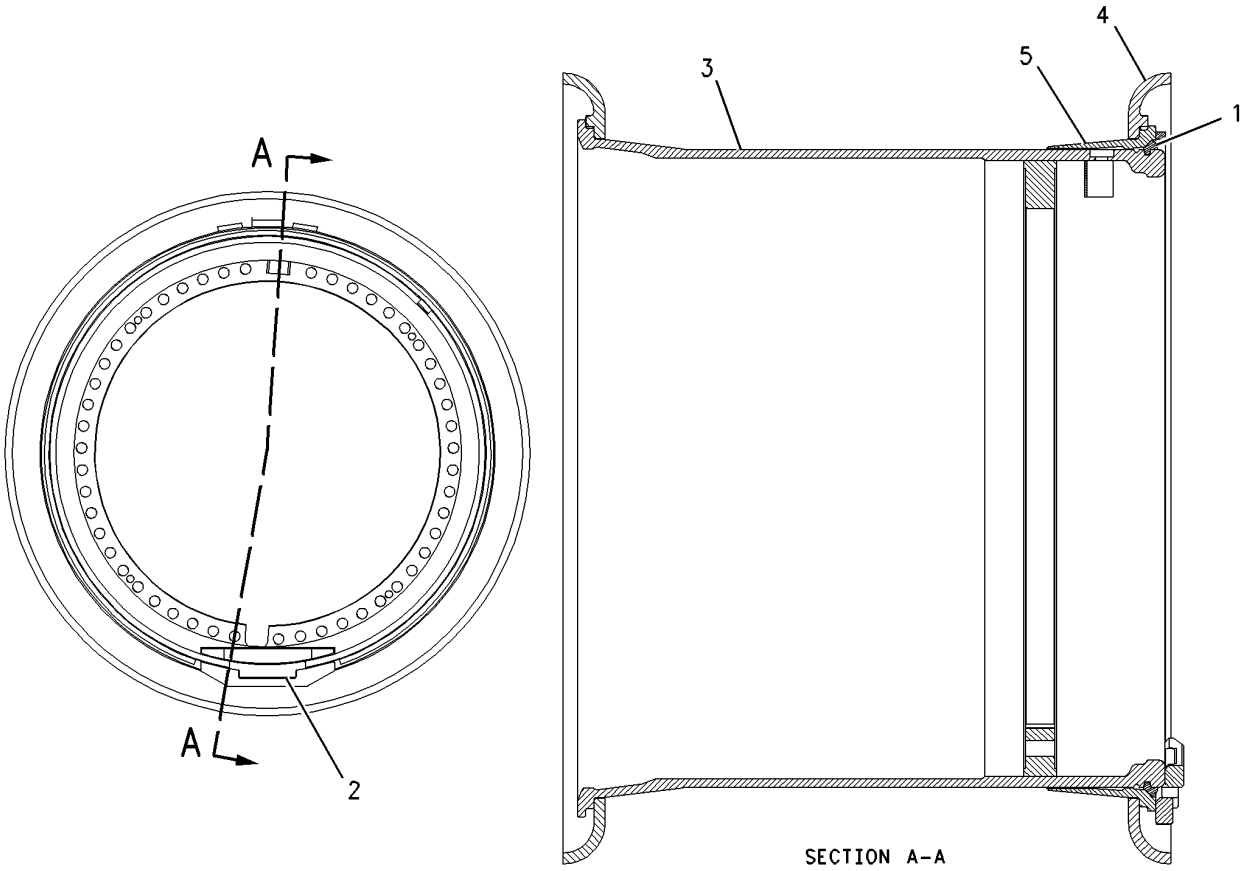

GRAPHIC #1 **<END>** g00858330

POWER TRAIN

112-5452 SHAFT GP-DRIVE

S/N: 2211-UP

PART OF 262-2085 POWER TRAIN AR

SMCS-3253 **i02106773**

NOTE	REF NO	GRAPHIC REF	PART NUMBER	QTY	PART NAME 1 2 3 4 5 6 (PRODUCT LEVEL)	SEE PAGE
	1	1	**1V-0061**	1	RETAINER-BEARING	
	2	1	**4E-4377**	1	CAGE-BEARING	
	3	1	**1H-8278**	1	SEAL-O-RING	
M	4	1	**6V-8004**	6	BOLT (M12X1.75X120-MM)	
	5	1	**5P-3087**	2	CUP-BEARING	
	6	1	**6K-2430**	2	SEAL-LIP TYPE	
	7	1	**2V-2072**	1	GUARD	
	8	1	**5P-8245**	18	WASHER-HARD (13.5X25.5X3-MM THK)	
M	9	1	**6V-8149**	6	NUT (M12X1.75-THD)	
M	10	1	**6V-8675**	6	BOLT (M12X1.75X35-MM)	
	11	1	**5P-3088**	2	CONE-BEARING	
M	12	1	**9X-6480**	20	BOLT (M20X2.5X90-MM)	
	13	1	**4L-9564**	1	SEAL-O-RING	
M	14	1	**112-3927**	1	BOLT (M20X2.5X90-MM)	
	15	1	**8R-8513**	1	RETAINER	
YR	16	1	**130-2372**	1	UNIVERSAL JOINT GP (REAR)	446
CY	17	1	**168-1916**	1	SLIP JOINT GP (CENTER)	431
YR	18	1	**130-2374**	1	UNIVERSAL JOINT GP (FRONT)	447
	19	1	**2V-2077**	1	SPACER	
	20	1	**112-5460**	1	YOKE AS	
		1	**8R-9312**	1	GUARD	
	21	1	**3B-8489**	1	FITTING-GREASE (DRIVE SHAFT SUPPORT BEARING)	

C-CHANGE FROM PREVIOUS TYPE
M-METRIC PART
R-REMFG PART MAY BE AVAILABLE
Y-SEPARATE ILLUSTRATION

112-5452 **SHAFT GP-DRIVE** *(contd.)* **i02106773**

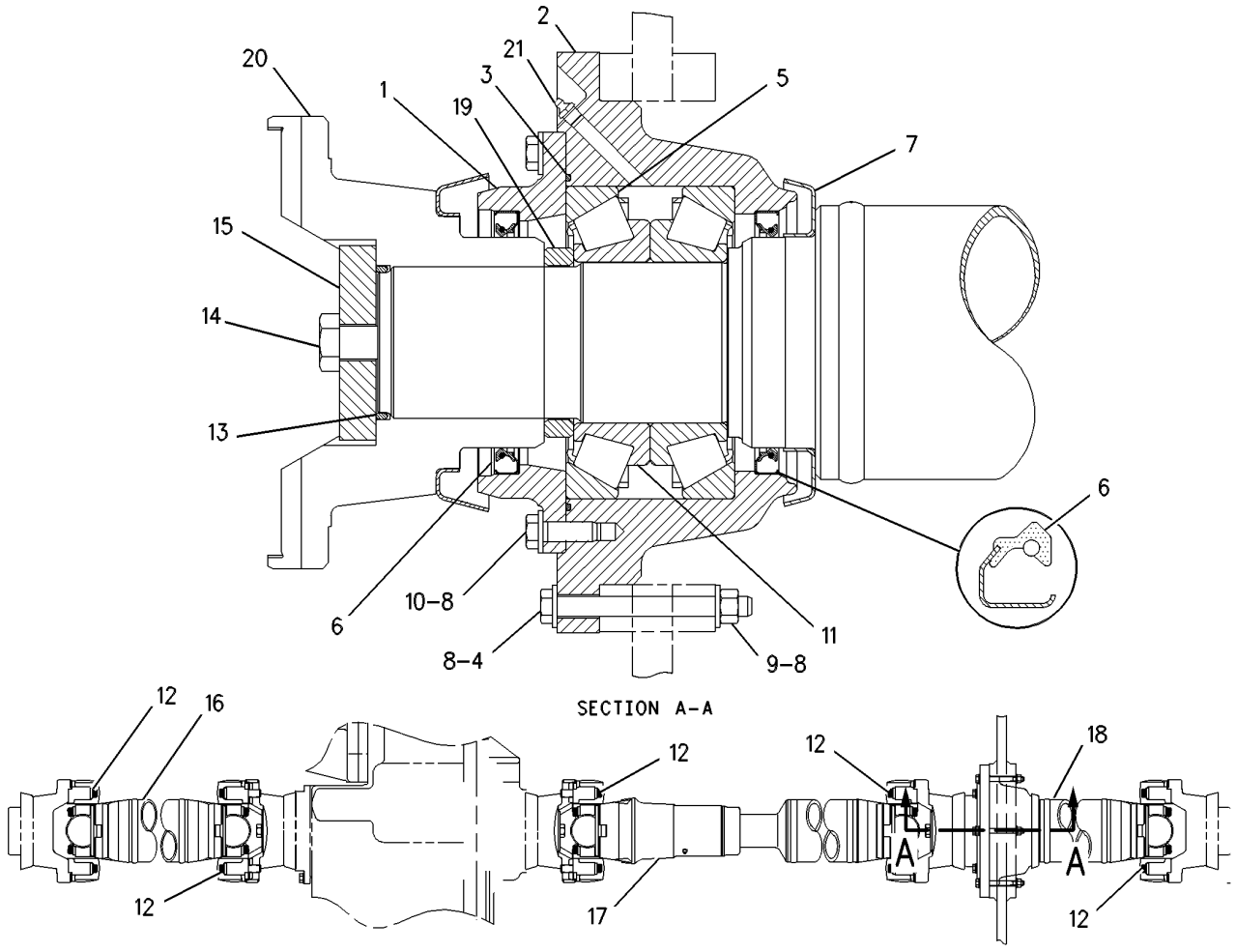

GRAPHIC #1 **<END>** g00629375

POWER TRAIN

288-2730 SHAFT GP-INPUT DRIVE

S/N: 2211-UP

PART OF 262-2085 POWER TRAIN AR

SMCS-3253 **i02886416**

NOTE	REF NO	GRAPHIC REF	PART NUMBER	QTY	PART NAME 1 2 3 4 5 6 (PRODUCT LEVEL)	SEE PAGE
Y	1	1	**288-2731**	1	UNIVERSAL JOINT GP (INPUT DRIVESHAFT)	448
M	2	1	**8T-0281**	8	BOLT (M16X2X80-MM)	

M-METRIC PART
Y-SEPARATE ILLUSTRATION

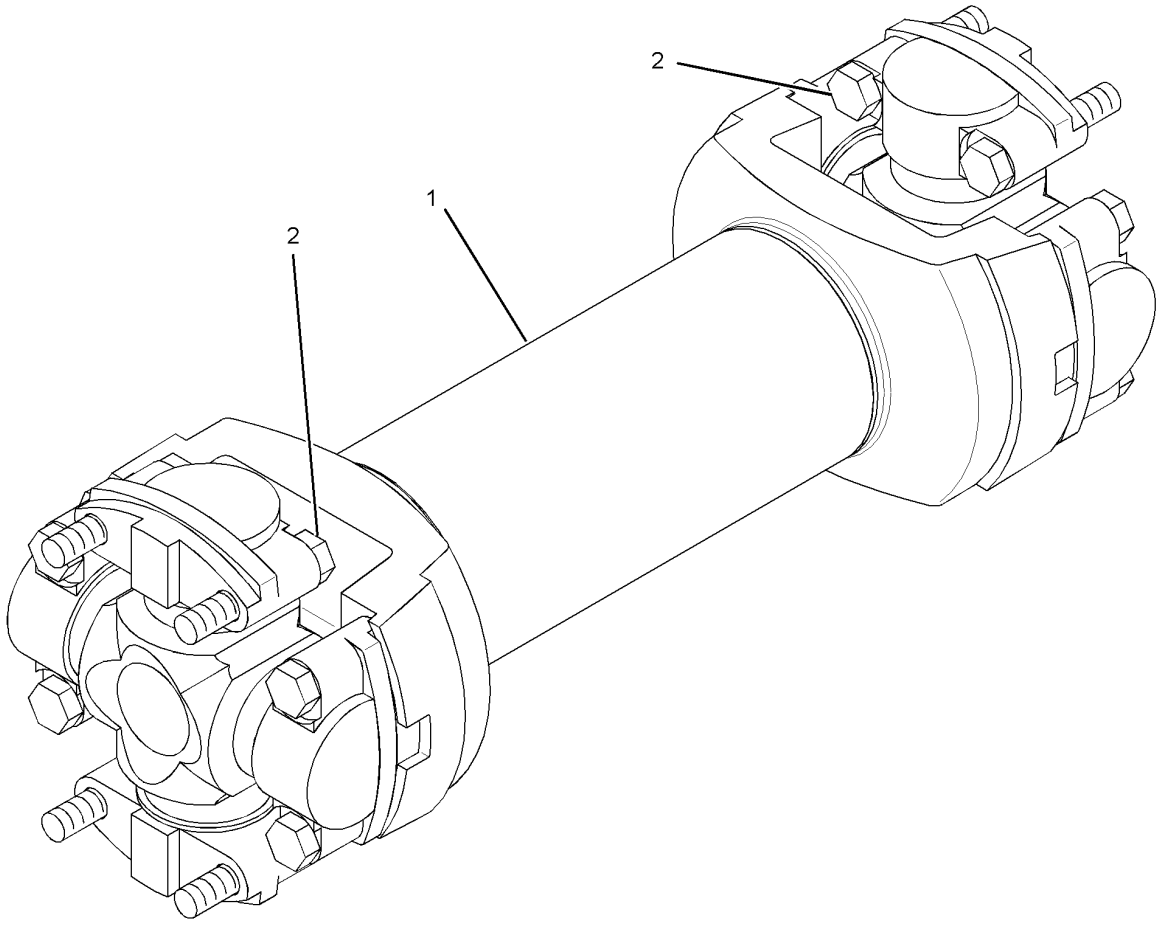

GRAPHIC #1 **<END>** g01438190

168-1916 SLIP JOINT GP–CENTER

S/N: 2211-UP

PART OF 112-5452 SHAFT GP-DRIVE

SMCS-3251 **i02110428**

NOTE	REF NO	GRAPHIC REF	PART NUMBER	QTY	PART NAME 1 2 3 4 5 6 (PRODUCT LEVEL)	SEE PAGE
	1	1	**146-4251**	1	SHAFT AS	
	1A	1	**1K-6853**	1	FITTING	
	1B	1	**5M-6214**	1	PLUG-PIPE	
	1C	1	**5P-6414**	1	RING-RETAINING	
	1D	1	**5T-9482**	1	KIT-SEAL	
	1E	1	**132-1183**	1	RING-RETAINING	
	1F	1	**168-1917**	1	CUP-DUST	
	1G	1	**3B-8489**	1	FITTING-GREASE (DRIVE SHAFT SLIP JOINT)	
Y	2	1	**8R-7036**	2	SPIDER & BEARING GP	432
M	3	1	**9X-6480**	8	BOLT (M20X2.5X90-MM)	

M-METRIC PART
Y-SEPARATE ILLUSTRATION

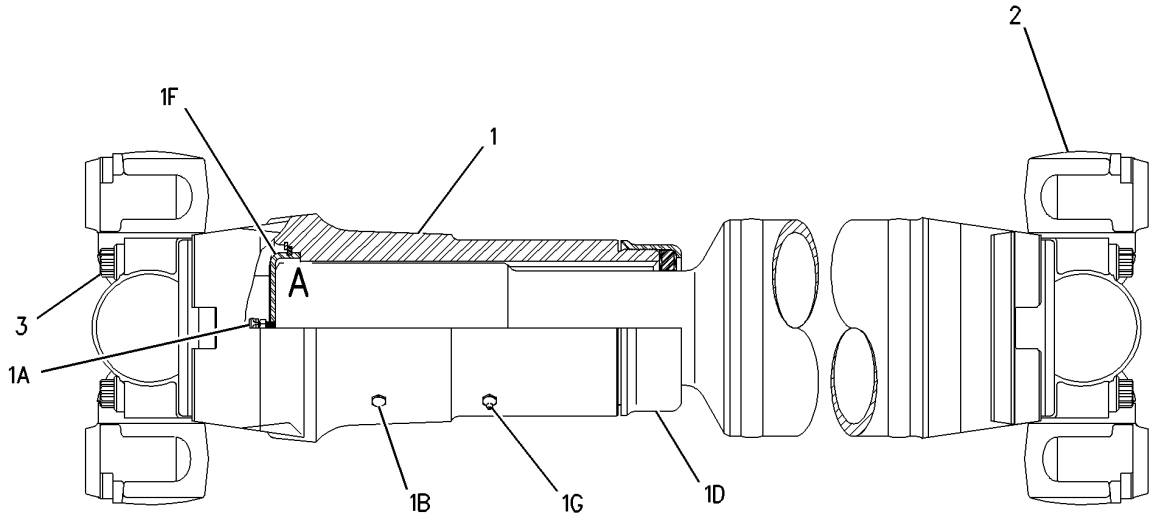

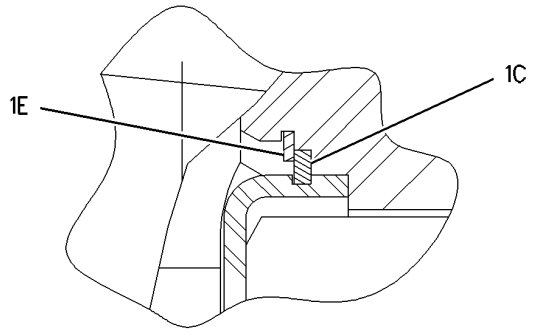

VIEW OF AREA A

GRAPHIC #1 **<END>** g00918363

POWER TRAIN

8R-7036 SPIDER & BEARING GP

S/N: 2211-UP

PART OF 168-1916 SLIP JOINT GP

SMCS-3251, 3253 **i02169337**

NOTE	PART NUMBER	QTY	PART NAME 1 2 3 4 5 6 (PRODUCT LEVEL)	SEE PAGE
	8R-7034	1	SPIDER & BEARING GP	
			—OR—	
	8X-0432	1	SPIDER & BEARING GP	

<END>

109-6861 SUPPORT GP-TRANSMISSION

S/N: 2211-UP

PART OF 262-2081 CHASSIS AR

SMCS-3082 **i00743426**

NOTE	REF NO	GRAPHIC REF	PART NUMBER	QTY	PART NAME 1 2 3 4 5 6 (PRODUCT LEVEL)	SEE PAGE
	1	1	**4E-9716**	2	BRACKET AS-MOUNTING	
					(EACH INCLUDES)	
		1	**8B-6349**	2	DOWEL	
	2	1	**6Y-9980**	6	MOUNT AS	
	3	1	**7Y-1030**	2	SUPPORT AS	
	4	1	**9W-7385**	6	SLEEVE	
	5	1	**9W-7388**	6	WASHER (26X144X12-MM THK)	
	6	1	**112-6192**	2	BRACKET AS-MOUNTING	
					(EACH INCLUDES)	
		1	**8B-6349**	2	DOWEL	
M	7	1	**7X-2465**	2	BOLT (M24X3X180-MM)	
	8	1	**8T-4123**	8	WASHER (22X35X3.5-MM THK)	
	9	1	**8T-4167**	8	WASHER-HARD (26X44X4-MM THK)	
M	10	1	**8T-4193**	8	BOLT (M16X2X50-MM)	
M	11	1	**8T-4649**	4	BOLT (M24X3X140-MM)	
M	12	1	**8T-6430**	8	BOLT (M20X2.5X50-MM)	
	13	1	**9X-8257**	8	WASHER (17.5X30X3.5-MM THK)	

M-METRIC PART

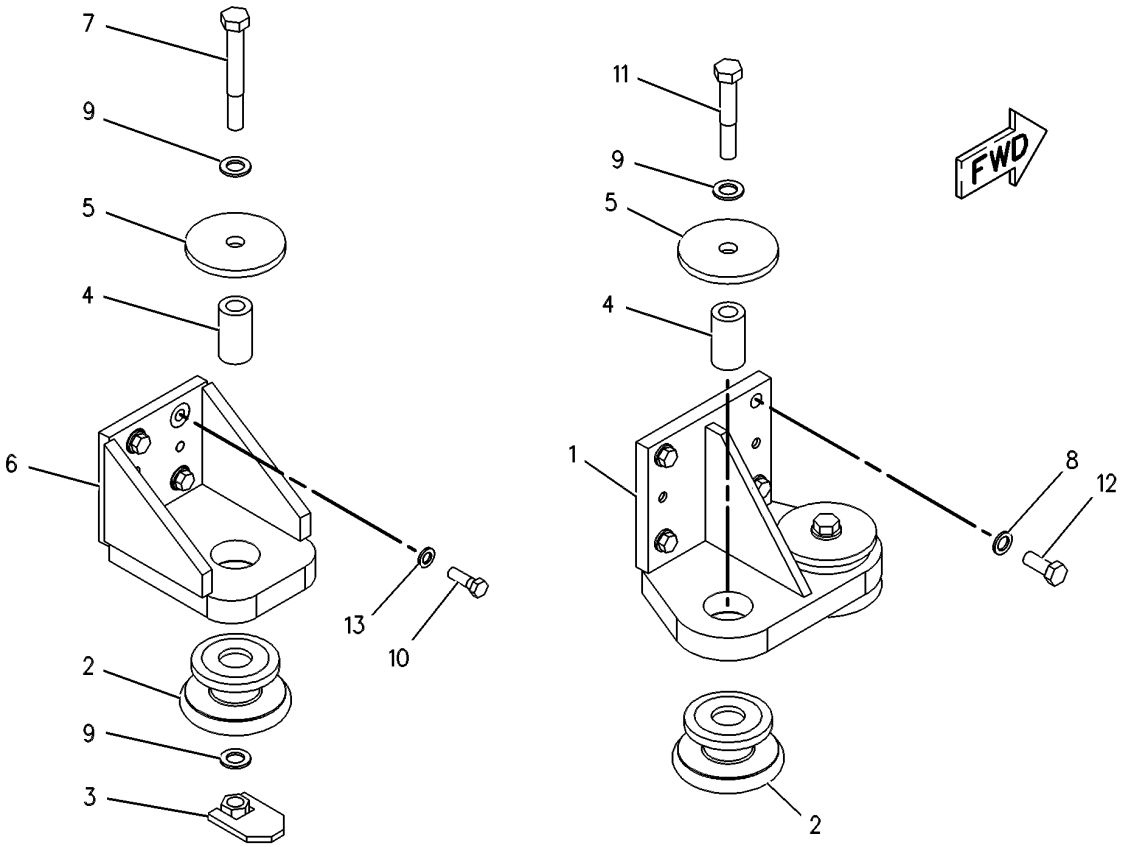

GRAPHIC #1 **<END>** g00254868

POWER TRAIN

127-2964 TIRE & RIM AR

S/N: 2211-UP
AN ATTACHMENT

SMCS-4202 **i02104166**

NOTE	PART NUMBER	QTY	PART NAME 1 2 3 4 5 6 (PRODUCT LEVEL)	SEE PAGE
Y	*127-2966*	1	RIM AR	425
	127-2973	4	TIRE (45/65-R45)	

Y-SEPARATE ILLUSTRATION

<END>

136-0871 TIRE & RIM AR

S/N: 2211-UP
AN ATTACHMENT

SMCS-4202 **i02104190**

NOTE	PART NUMBER	QTY	PART NAME 1 2 3 4 5 6 (PRODUCT LEVEL)	SEE PAGE
Y	*127-2966*	1	RIM AR	425
	136-0874	4	TIRE (45/65-45)	

Y-SEPARATE ILLUSTRATION

<END>

136-0872 TIRE & RIM AR

S/N: 2211-UP
AN ATTACHMENT

SMCS-4202 **i02104217**

NOTE	PART NUMBER	QTY	PART NAME 1 2 3 4 5 6 (PRODUCT LEVEL)	SEE PAGE
Y	*127-2966*	1	RIM AR	425
	136-0875		TIRE (45/65-45)	

Y-SEPARATE ILLUSTRATION

<END>

136-7334 TIRE & RIM AR

S/N: 2211-UP
AN ATTACHMENT

SMCS-4202 **i02104225**

NOTE	PART NUMBER	QTY	PART NAME 1 2 3 4 5 6 (PRODUCT LEVEL)	SEE PAGE
Y	*127-2966*	1	RIM AR	425
	124-8402	4	TIRE (45/65-45)	

Y-SEPARATE ILLUSTRATION

<END>

147-9632 TIRE & RIM AR

S/N: 2211-UP
AN ATTACHMENT

SMCS-4202 **i02104226**

NOTE	PART NUMBER	QTY	PART NAME 1 2 3 4 5 6 (PRODUCT LEVEL)	SEE PAGE
Y	*127-2966*	1	RIM AR	425
	147-9631	4	TIRE (45/65-45)	

Y-SEPARATE ILLUSTRATION

<END>

148-3460 TIRE & RIM AR

S/N: 2211-UP
AN ATTACHMENT

SMCS-4202 **i02104228**

NOTE	PART NUMBER	QTY	PART NAME 1 2 3 4 5 6 (PRODUCT LEVEL)	SEE PAGE
Y	*127-2966*	1	RIM AR	425
	148-3458	4	TIRE (45/65-45)	

Y-SEPARATE ILLUSTRATION

<END>

165-6171 TIRE & RIM AR

S/N: 2211-UP
AN ATTACHMENT

SMCS-4202 **i02104229**

NOTE	PART NUMBER	QTY	PART NAME 1 2 3 4 5 6 (PRODUCT LEVEL)	SEE PAGE
Y	*127-2966*	1	RIM AR	425
	165-6169	4	TIRE (45/65-45)	

Y-SEPARATE ILLUSTRATION

<END>

165-6175 TIRE & RIM AR

S/N: 2211-UP
AN ATTACHMENT

SMCS-4202 **i02104049**

NOTE	PART NUMBER	QTY	PART NAME 1 2 3 4 5 6 (PRODUCT LEVEL)	SEE PAGE
Y	*127-2966*	1	RIM AR	425
	165-6168	4	TIRE (45/65-R45)	

Y-SEPARATE ILLUSTRATION

<END>

170-7326 TIRE & RIM AR

S/N: 2211-UP
AN ATTACHMENT

SMCS-4202 **i02104048**

NOTE	PART NUMBER	QTY	PART NAME 1 2 3 4 5 6 (PRODUCT LEVEL)	SEE PAGE
Y	*127-2966*	1	RIM AR	425
	170-7325	4	TIRE (45/65-R45)	

Y-SEPARATE ILLUSTRATION

<END>

170-8004 TIRE & RIM AR

S/N: 2211-UP
AN ATTACHMENT

SMCS-4202 **i02104050**

NOTE	PART NUMBER	QTY	PART NAME 1 2 3 4 5 6 (PRODUCT LEVEL)	SEE PAGE
Y	*127-2966*	1	RIM AR	425
	170-8003	4	TIRE (45/65-R45)	

Y-SEPARATE ILLUSTRATION

<END>

204-9241 TIRE & RIM AR

S/N: 2211-UP
AN ATTACHMENT

SMCS-4202 **i02110513**

NOTE	PART NUMBER	QTY	PART NAME 1 2 3 4 5 6 (PRODUCT LEVEL)	SEE PAGE
Y	*127-2966*	1	RIM AR	425
	204-9240	4	TIRE (45/65-R45)	

Y-SEPARATE ILLUSTRATION

<END>

245-5772 TIRE & RIM AR

S/N: 2211-UP
AN ATTACHMENT

SMCS-4202 **i02110514**

NOTE	PART NUMBER	QTY	PART NAME 1 2 3 4 5 6 (PRODUCT LEVEL)	SEE PAGE
Y	*127-2966*	1	RIM AR	425
	245-5771	4	TIRE (45/65-R45)	

Y-SEPARATE ILLUSTRATION

<END>

247-3310 TIRE & RIM AR

S/N: 2211-UP
AN ATTACHMENT

SMCS-4202 **i02110515**

NOTE	PART NUMBER	QTY	PART NAME 1 2 3 4 5 6 (PRODUCT LEVEL)	SEE PAGE
Y	*127-2966*	1	RIM AR	425
	247-3309	4	TIRE (45/65-R45)	

Y-SEPARATE ILLUSTRATION

<END>

266-8654 TIRE & RIM AR

S/N: 2211-UP
AN ATTACHMENT

SMCS-4202 **i02464371**

NOTE	PART NUMBER	QTY	PART NAME 1 2 3 4 5 6 (PRODUCT LEVEL)	SEE PAGE
Y	*127-2966*	1	RIM AR	425
	266-8653	4	TIRE (45/65-45)	

Y-SEPARATE ILLUSTRATION

<END>

268-5965 TIRE & RIM AR

S/N: 2211-UP
AN ATTACHMENT

SMCS-4202 **i02446501**

NOTE	PART NUMBER	QTY	PART NAME 1 2 3 4 5 6 (PRODUCT LEVEL)	SEE PAGE
Y	*127-2966*	1	RIM AR	425
	268-5964	4	TIRE (45/65-45)	

Y-SEPARATE ILLUSTRATION

<END>

276-3464 TIRE & RIM AR

S/N: 2211-UP
AN ATTACHMENT

SMCS-4202 **i02577971**

NOTE	PART NUMBER	QTY	PART NAME 1 2 3 4 5 6 (PRODUCT LEVEL)	SEE PAGE
Y	*127-2966*	1	RIM AR	425
	271-1751	4	TIRE (45/65-45)	

Y-SEPARATE ILLUSTRATION

<END>

POWER TRAIN

303-6329 TIRE & RIM AR

S/N: 2211-UP
AN ATTACHMENT

SMCS-4202 **i02650466**

NOTE	PART NUMBER	QTY	PART NAME 1 2 3 4 5 6 (PRODUCT LEVEL)	SEE PAGE
Y	*127-2966*	1	RIM AR	425
	303-6330	4	TIRE (45/65-45)	

Y-SEPARATE ILLUSTRATION

<END>

308-3544 TIRE & RIM AR

S/N: 2211-UP
AN ATTACHMENT

SMCS-4202 **i02897602**

NOTE	PART NUMBER	QTY	PART NAME 1 2 3 4 5 6 (PRODUCT LEVEL)	SEE PAGE
Y	*127-2966*	1	RIM AR	425
	308-3543	4	TIRE (45/65-45)	

Y-SEPARATE ILLUSTRATION

<END>

313-4121 TIRE & RIM AR

S/N: 2211-UP
AN ATTACHMENT

SMCS-4202 **i02902439**

NOTE	PART NUMBER	QTY	PART NAME 1 2 3 4 5 6 (PRODUCT LEVEL)	SEE PAGE
Y	*127-2966*	1	RIM AR	425
	311-7651	4	TIRE (45/65-45)	

Y-SEPARATE ILLUSTRATION

<END>

277-5743 TORQUE CONVERTER & HOUSING GP–LOCKUP

S/N: 2211-UP

PART OF 262-2085 POWER TRAIN AR

SMCS-3101, 3105 **i02897736**

NOTE	REF NO	GRAPHIC REF	PART NUMBER	QTY	PART NAME 1 2 3 4 5 6 (PRODUCT LEVEL)	SEE PAGE
	1	1	**6T-1740**	1	ORIFICE	
	2	1	**6V-0852**	1	CAP-DUST	
	3	1	**7X-7816**	1	PLATE-SERIAL NUMBER (TRANSMISSION)	
	4	1	**8J-6815**	3	PLUG-ORIFICE	
	5	1	**109-9940**	1	ADAPTER-PUMP	
	6	1	**110-0045**	1	ADAPTER-PUMP	
	7	1	**110-0288**	1	ADAPTER-SPLINE	
	8	1	**110-0289**	1	ADAPTER-SPLINE	
	9	1	**110-2136**	1	GEAR-IDLER (66-TEETH)	
	10	1	**110-2137**	2	GEAR-PUMP DRIVE (66-TEETH)	
	11	1	**111-4486**	2	SHIM PACK (INCLUDES 10-SHIMS)	
	12	1	**212-8739**	1	MANIFOLD	
	13	1	**230-1550**	1	EYE AS-LIFTING	
	14	1	**249-7280**	3	PLUG-PIPE	
	15	1	**277-5739**	1	HOUSING AS-TORQUE CONVERTER	
		1	**1F-1006**	2	DOWEL	
		1	**4B-9784**	3	BALL	
	16	1	**277-5745**	1	ADAPTER-PUMP	
	17	1	**277-8995**	3	SEAL-LIP TYPE	
	18	1	**281-2211**	1	SHIM PACK (INCLUDES 10-SHIMS)	
Y	19	1	**284-1453**	1	TORQUE CONVERTER GP-LOCKUP	441
	20	1	**289-9352**	1	ADAPTER-PUMP	
	21	1	**135-9941**	1	ADAPTER	
	22	1	**2M-3340**	4	SEAL-O-RING	
	23	1	**3D-2824**	1	SEAL-O-RING	
	24	1	**3J-1907**	4	SEAL-O-RING	
	25	1	**3J-7354**	1	SEAL-O-RING	
	26	1	**3P-1155**	1	SEAL-O-RING	
	27	1	**5F-3999**	1	SEAL-O-RING	
	28	1	**5P-3723**	6	CONE-BEARING	
	29	1	**5P-8211**	2	SEAL-O-RING	
	30	1	**5P-9035**	1	SEAL-O-RING	
	31	1	**6D-7690**	6	CUP-BEARING	
	32	1	**6V-2406**	1	SEAL-O-RING	
	33	1	**6V-3965**	1	COUPLER-QUICK DISCONNECT	
	34	1	**7L-9061**	5	SEAL-O-RING	
	35	1	**7M-8485**	2	SEAL-O-RING	
	36	1	**7T-4083**	1	RING	
M	37	1	**7X-0818**	4	BOLT (M8X1.25X45-MM)	
	38	1	**7X-2495**	2	RING-RETAINING	
M	39	1	**7X-2553**	2	BOLT (M16X2X40-MM)	
M	40	1	**7X-2563**	11	BOLT (M20X2.5X60-MM)	
	41	1	**8L-2786**	3	SEAL-O-RING	
	42	1	**8T-4123**	11	WASHER (22X35X3.5-MM THK)	
M	43	1	**8T-4139**	6	BOLT (M12X1.75X30-MM)	
M	44	1	**8T-4193**	21	BOLT (M16X2X50-MM)	
	45	1	**8T-4223**	6	WASHER-HARD (13.5X25.5X3-MM THK)	
	46	1	**8T-4224**	6	WASHER-HARD (8.8X16X2-MM THK)	
M	47	1	**8T-4908**	2	BOLT (M8X1.25X25-MM)	
	48	1	**9H-6832**	1	SEAL-O-RING	
	49	1	**9S-4181**	2	PLUG-O-RING	
	50	1	**9S-4185**	1	PLUG-O-RING	
	51	1	**9S-4191**	3	PLUG-O-RING	
	52	1	**9S-8005**	2	PLUG-O-RING	
	53	1	**9X-8257**	23	WASHER (17.5X30X3.5-MM THK)	

277-5743 TORQUE CONVERTER & HOUSING GP *(contd.)* i02897736

M-METRIC PART
Y-SEPARATE ILLUSTRATION

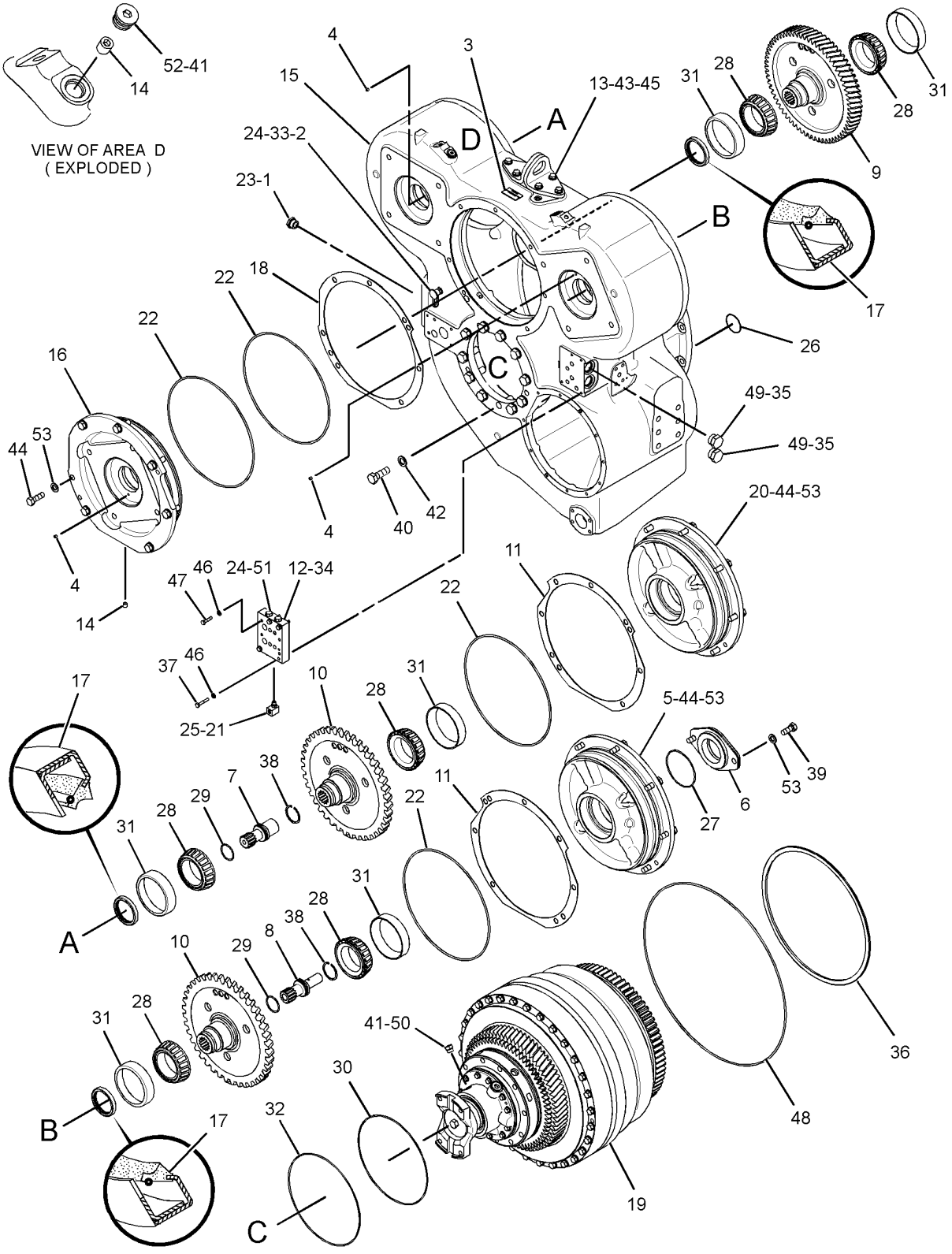

GRAPHIC #1 **<END>** g01448195

POWER TRAIN

284-1453 TORQUE CONVERTER GP-LOCKUP

S/N: T2G1-UP

PART OF 277-5743 TORQUE CONVERTER & HOUSING GP

SMCS-3101 **i02897740**

NOTE	REF NO	GRAPHIC REF	PART NUMBER	QTY	PART NAME 1 2 3 4 5 6 (PRODUCT LEVEL)	SEE PAGE
	1	2	**1T-1209**	1	CARRIER-RING	
	2	1	**1T-1232**	2	RING-RETAINING	
	3	1	**1T-1235**	1	CAM-FREEWHEEL	
	4	1	**1T-1244**	4	WASHER	
	5	1	**1T-1248**	1	SLEEVE-WEAR	
	6	2	**1T-1254**	2	WASHER	
	7	1	**1T-1257**	2	SPRING	
	8	1	**1T-1566**	1	BEARING-THRUST	
	9	1	**1T-1646**	2	PLATE	
	10	1	**1T-1754**	22	ROLLER-FREEWHEEL	
	11	2	**1T-1821**	1	CARRIER-RING	
	12	1	**1T-1855**	1	RACE-FREEWHEEL	
	13	1	**1T-1897**	1	PLATE-CLUTCH	
	14	1	**1T-1898**	1	PLATE-BACKING	
	15	2	**1T-1925**	1	GASKET	
	16	1	**1T-2042**	1	SLEEVE	
	17	1	**1T-2043**	1	RACE-THRUST BEARING	
	18	1	**1T-2044**	4	PIN-THRUST RACE	
	19	2	**3P-1669**	1	RETAINER (SHAFT)	
	20	1	**3P-9497**	1	PLUG-ORIFICE	
	21	1	**5P-4055**	1	BEARING-THRUST	
	22	2	**6I-8597**	3	DISC-FRICTION	
	23	2	**6Y-6370**	2	RING-SEAL	
	24	2	**6Y-7198**	2	PLATE-CLUTCH	
	25	2	**6Y-8167**	1	WASHER-THRUST (217X280X4.5-MM THK)	
	26	1	**8E-4295**	1	PISTON-CLUTCH	
	27	1	**8E-8328**	2	DISC-FRICTION	
	28	1	**8P-5696**	1	TURBINE-CONVERTER	
	29	1	**109-3482**	1	IMPELLER-CONVERTER	
	30	1	**110-2133**	1	SHAFT-OUTPUT	
	31	2	**110-2135**	1	GEAR-DRIVE (71-TEETH)	
	32	2	**110-2138**	1	GEAR-DRIVE (69-TEETH)	
	33	2	**110-2141**	1	YOKE	
	34	2	**110-2142**	1	RETAINER-BEARING	
	35	1	**110-2144**	1	HOUSING-CLUTCH	
	36	1	**110-2145**	1	PLATE-CLUTCH BACKING	
	37	1	**110-8849**	1	HUB AS	
		1	**1T-1253**	1	BEARING-SLEEVE	
		1	**4L-3395**	4	DOWEL	
	38	1	**110-8850**	1	HUB-IMPELLER	
	39	2	**110-8852**	3	RING-SEAL	
	40	1	**111-1275**	1	PLATE-CLAMP	
	41	2	**123-5255**	1	PISTON-CLUTCH	
	42	1	**130-3639**	1	SLEEVE	
	43	1	**130-3640**	1	RACE-THRUST BEARING	
	44	1	**133-9926**	1	STATOR-CONVERTER	
	45	1	**141-0408**	1	PILOT-FLYWHEEL	
	46	1	**141-0409**	1	PLATE-RETAINER	
	47	1	**141-5950**	1	CAGE-ROLLER	
	48	2	**141-8205**	1	CARRIER-SUPPORT	
	49	2	**141-8387**	1	CARRIER-RING	
	50	2	**155-5293**	1	ADAPTER AS-CLUTCH	
		2	**3B-2225**	2	DOWEL	
		2	**110-8839**	1	BEARING-SLEEVE	
		2	**155-5716**	4	DOWEL	
	51	2	**155-5715**	2	PLATE-THRUST	

284-1453 TORQUE CONVERTER GP-LOCKUP *(contd.)* i02897740

NOTE	REF NO	GRAPHIC REF	PART NUMBER	QTY	PART NAME 1 2 3 4 5 6 (PRODUCT LEVEL)	SEE PAGE
	52	2	**155-6189**	1	HOUSING AS	
		2	**155-5716**	2	DOWEL	
	53	1	**188-2595**	1	RING-SNAP	
	54	2	**223-9743**	1	SEAL-LIP TYPE	
	55	2	**282-2424**	1	SPACER-SPECIAL	
	56	1	**0S-0509**	12	BOLT (3/8-16X0.75-IN)	
	57	1	**0S-1595**	12	BOLT (1/2-13X1.25-IN)	
	58	2	**0S-1618**	6	BOLT (5/16-18X1-IN)	
	59	2	**113-5945**	2	RING-SEAL	
	60	2	**122-9978**	1	RING-SEAL	
	61	2	**124-6348**	1	RACE-ROLLER	
	62	1,2	**128-1663**	2	RING-SEAL	
	63	1	**141-0410**	1	WASHER-SPRING (76X127X10.5-MM THK)	
	64	1	**1T-1365**	1	CARRIER-RING	
	65	2	**2H-2255**	1	DOWEL	
	66	1	**3D-4603**	1	PLUG-PIPE	
	67	1	**3L-1824**	1	BALL BEARING	
	68	1	**3S-0142**	1	RING-SEAL	
	69	1	**3S-1282**	1	RING-SEAL	
	70	1	**4K-5175**	20	BOLT-12 POINT HEAD (1/2-13X1.5-IN)	
	71	2	**4M-5227**	1	BALL BEARING	
	72	2	**5H-2824**	1	SEAL-O-RING	
	73	2	**5P-6408**	1	BEARING-INNER	
	74	1,2	**5P-8245**	42	WASHER-HARD (13.5X25.5X3-MM THK)	
	75	2	**7L-3385**	1	SEAL-O-RING	
	76	2	**7S-6892**	1	RING-SEAL	
	77	2	**7X-0349**	1	BOLT (5/8-11X3-IN)	
	78	1	**8L-2786**	2	SEAL-O-RING	
	79	2	**8T-4896**	11	WASHER-HARD (10.2X18.5X2.5-MM THK)	
	80	2	**9B-7237**	11	BOLT (3/8-16X1.25-IN)	
	81	1	**9S-4185**	2	PLUG-O-RING	
	82	2	**9S-8008**	1	PLUG-O-RING	
	83	2	**9S-9739**	12	BOLT (1/2-13X2.7-IN)	
	84	1	**9X-8873**	3	BOLT (1/2-13X2.25-IN)	
	85	2	**9X-8876**	30	BOLT (1/2-13X4.75-IN)	
	86	2	**9X-8883**	12	BOLT (5/8-11X2.75-IN)	

284-1453 TORQUE CONVERTER GP-LOCKUP *(contd.)* i02897740

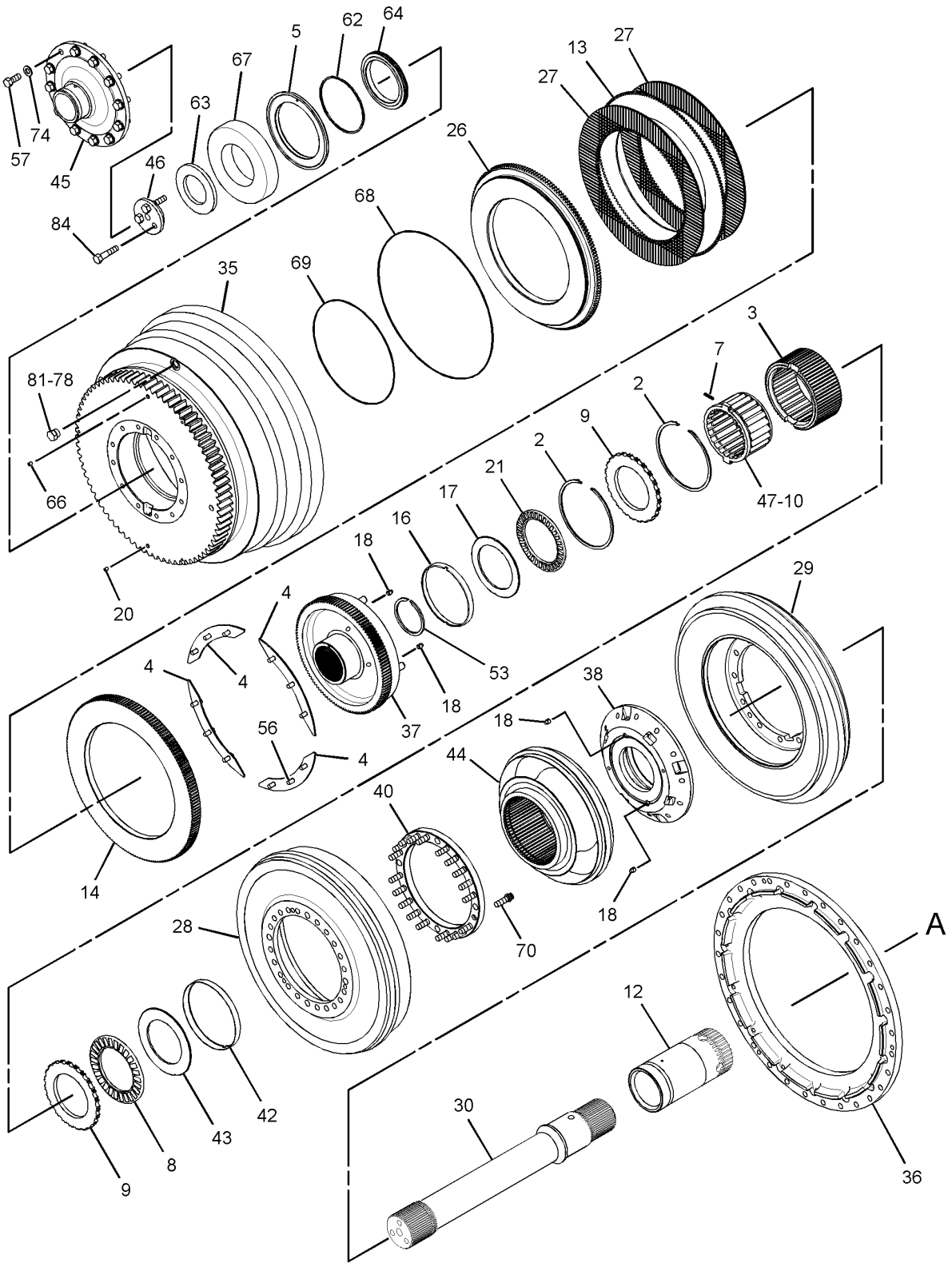

GRAPHIC #1 g01447098

284-1453 TORQUE CONVERTER GP-LOCKUP *(contd.)* i02897740

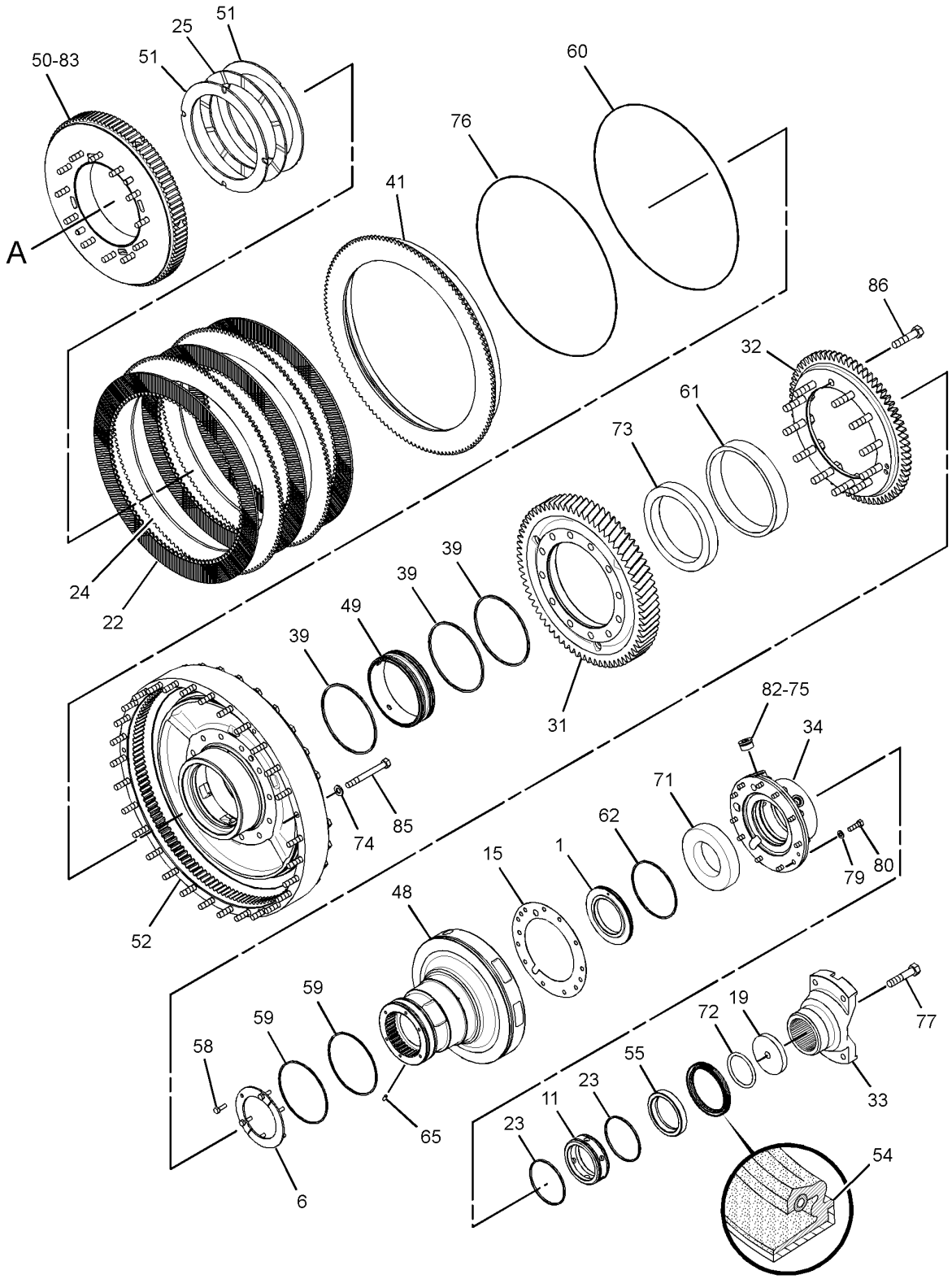

GRAPHIC #2 **<END>** g01447099

283-7702 TRANSMISSION AR

S/N: K2K1-UP

PART OF 262-2085 POWER TRAIN AR

SMCS-3030 **i02888146**

NOTE	PART NUMBER	QTY	PART NAME 1 2 3 4 5 6 (PRODUCT LEVEL)	SEE PAGE
Y	*6Y-6967*	1	CASE & PARTS GP-PLANETARY	366
Y	*295-6903*	1	CONTROL GP-TRANSMISSION HYD	369
Y	*283-7689*	1	GEAR GP-INPUT TRANSFER	386
Y	*283-7683*	1	GEAR GP-OUTPUT TRANSFER	388
Y	*6Y-6966*	1	PLANETARY GP-TRANSMISSION	415

Y-SEPARATE ILLUSTRATION

<END>

130-2372 UNIVERSAL JOINT GP–REAR*R

S/N: 2211-UP

PART OF 112-5452 SHAFT GP-DRIVE

SMCS-3251, 3253 **i00746386**

NOTE	REF NO	GRAPHIC REF	PART NUMBER	QTY	PART NAME 1 2 3 4 5 6 (PRODUCT LEVEL)	SEE PAGE
	1	1	**8X-0432**	2	SPIDER & BEARING GP	
	2	1	**130-2375**	1	SHAFT	
M	3	1	**9X-6480**	8	BOLT (M20X2.5X90-MM)	

M-METRIC PART

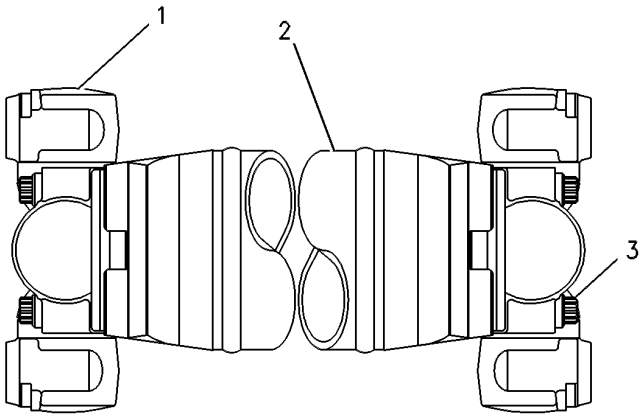

GRAPHIC #1 **<END>** g00256213

130-2374 UNIVERSAL JOINT GP–FRONT*R

S/N: 2211-UP

PART OF 112-5452 SHAFT GP-DRIVE

SMCS-3251, 3253 **i00746388**

NOTE	REF NO	GRAPHIC REF	PART NUMBER	QTY	PART NAME 1 2 3 4 5 6 (PRODUCT LEVEL)	SEE PAGE
	1	1	**8X-0432**	1	SPIDER & BEARING GP	
M	2	1	**9X-6480**	4	BOLT (M20X2.5X90-MM)	
	3	1	**130-2373**	1	SHAFT	

M-METRIC PART

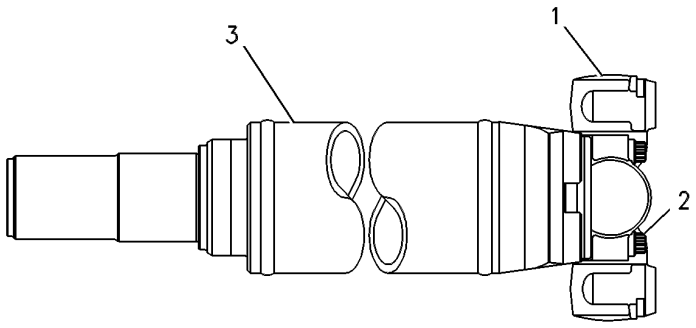

GRAPHIC #1 **<END>** g00256214

288-2731 UNIVERSAL JOINT GP—INPUT DRIVESHAFT

S/N: 2211-UP

PART OF 288-2730 SHAFT GP-INPUT DRIVE

SMCS-3251, 3253 **i02886417**

NOTE	REF NO	GRAPHIC REF	PART NUMBER	QTY	PART NAME 1 2 3 4 5 6 (PRODUCT LEVEL)	SEE PAGE
	1	1	**106-0933**	2	SPIDER & BEARING GP	
	2	1	**288-2732**	1	SHAFT-DRIVE	
M	3	1	**8T-0281**	8	BOLT (M16X2X80-MM)	

M-METRIC PART

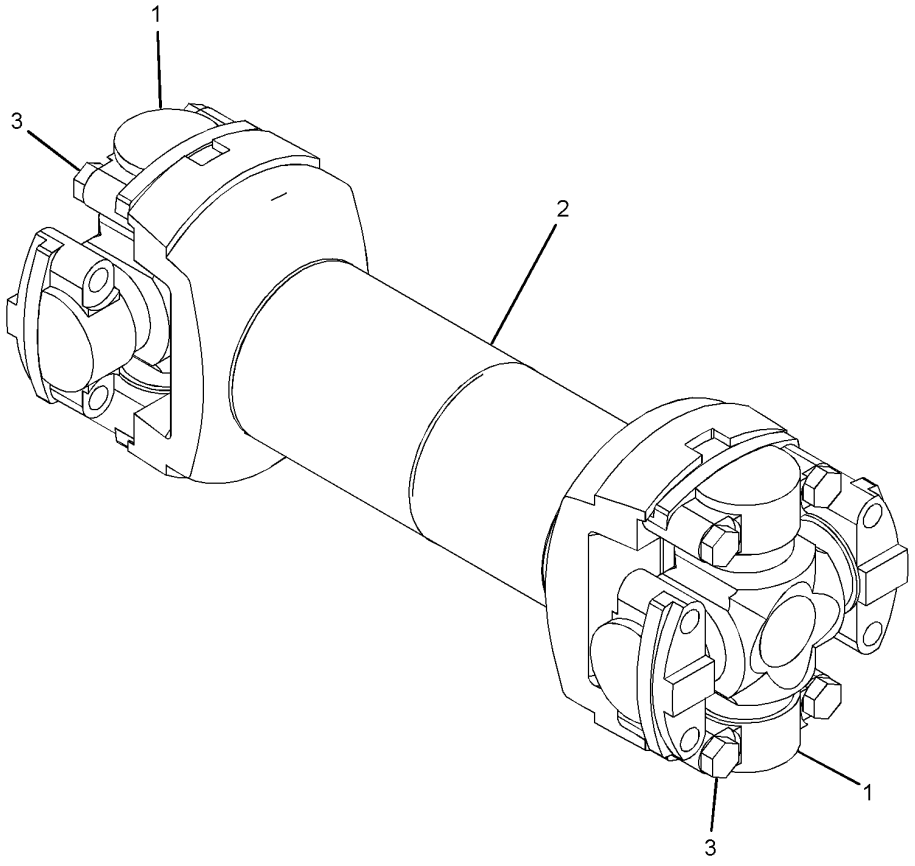

GRAPHIC #1 **<END>** g01438325

112-4811 VALVE & MTG GP-LOCKUP CLUTCH–TORQUE CONVERTER

S/N: 2211-UP

PART OF 262-2085 POWER TRAIN AR

SMCS-3124, 3139 **i02535397**

NOTE	REF NO	GRAPHIC REF	PART NUMBER	QTY	PART NAME 1 2 3 4 5 6 (PRODUCT LEVEL)	SEE PAGE
M	1	1	**8T-6869**	2	BOLT (M8X1.25X60-MM)	
	2	1	**8T-4224**	2	WASHER-HARD (8.8X16X2-MM THK)	
CY	3	1	**216-5342**	1	VALVE GP-MODULATING (24-VOLT) (TORQUE CONVERTER LOCKUP CLUTCH)	450
	4	1	**6D-7889**	1	SEAL-O-RING	
	5	1	**6V-0852**	1	CAP-DUST	

C-CHANGE FROM PREVIOUS TYPE
M-METRIC PART
Y-SEPARATE ILLUSTRATION

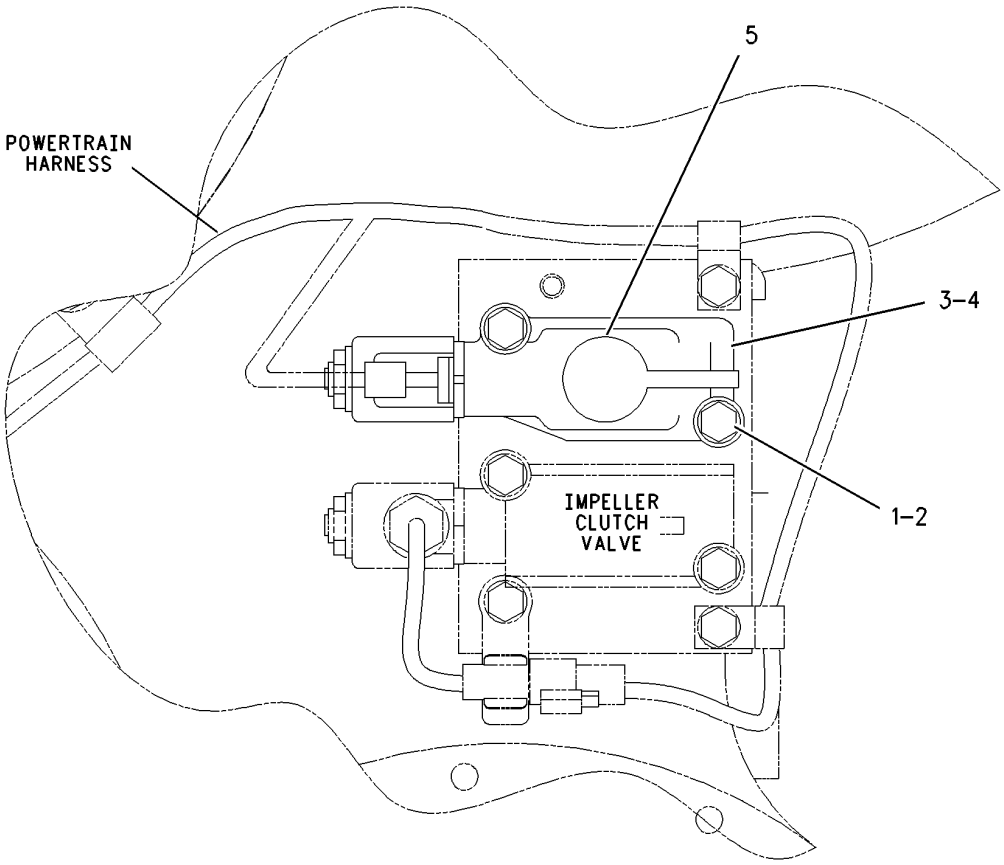

FRONT VIEW

GRAPHIC #1 **<END>** g00946681

216-5342 VALVE GP-MODULATING–
TORQUE CONVERTER LOCKUP CLUTCH
S/N: 2211-UP
24-VOLT
PART OF 112-4811 VALVE & MTG GP-LOCKUP CLUTCH

SMCS-3139 **i02300836**

NOTE	REF NO	GRAPHIC REF	PART NUMBER	QTY	PART NAME 1 2 3 4 5 6 (PRODUCT LEVEL)	SEE PAGE
	1	1	**6V-3965**	1	COUPLER-QUICK DISCONNECT	
	2	1	**226-9622**	1	COIL AS (24-VOLT)	
	4	1	**164-2108**	1	WASHER (13.03X25.4X2.38-MM THK)	
	5	1	**167-9524**	1	NUT-SELF-LOCKING (1/2-28-THD)	
	6	1	**3J-1907**	1	SEAL-O-RING	
	7	1	**112-5282**	1	SEAL-O-RING	
	8	1	**117-2983**	1	SEAL-O-RING	

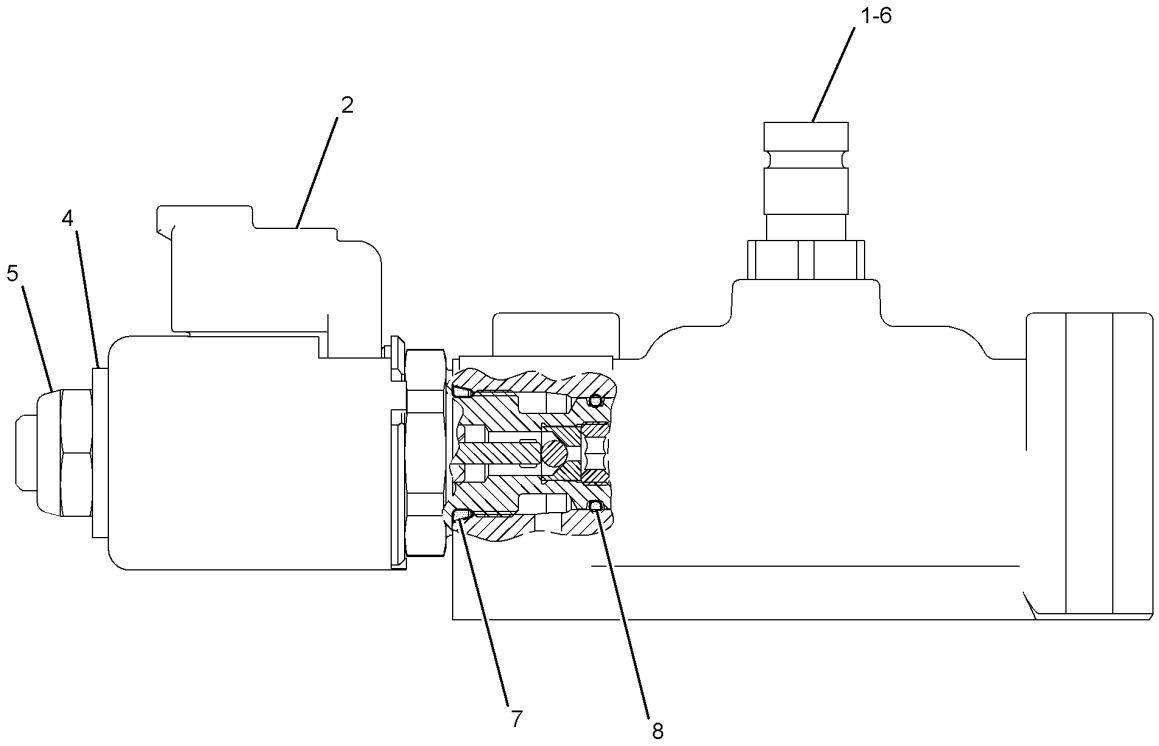

GRAPHIC #1 **<END>** g01152214

217-2708 VALVE GP-MODULATING–TC IMPELLER CLUTCH

S/N: 2211-UP

24-VOLT

PART OF 316-6984 WIRING GP-POWER TRAIN

SMCS-3139 **i02304978**

NOTE	REF NO	GRAPHIC REF	PART NUMBER	QTY	PART NAME 1 2 3 4 5 6 (PRODUCT LEVEL)	SEE PAGE
	1	1	**6V-3965**	1	COUPLER-QUICK DISCONNECT	
	2	1	**167-9524**	1	NUT-SELF-LOCKING (1/2-28-THD)	
	3	1	**245-7465**	1	COIL AS	
Z	4	1		1	VALVE AS	
	5	1	**187-2710**	1	WASHER	
	6	1	**3J-1907**	1	SEAL-O-RING	

Z-NOT SERVICED SEPARATELY

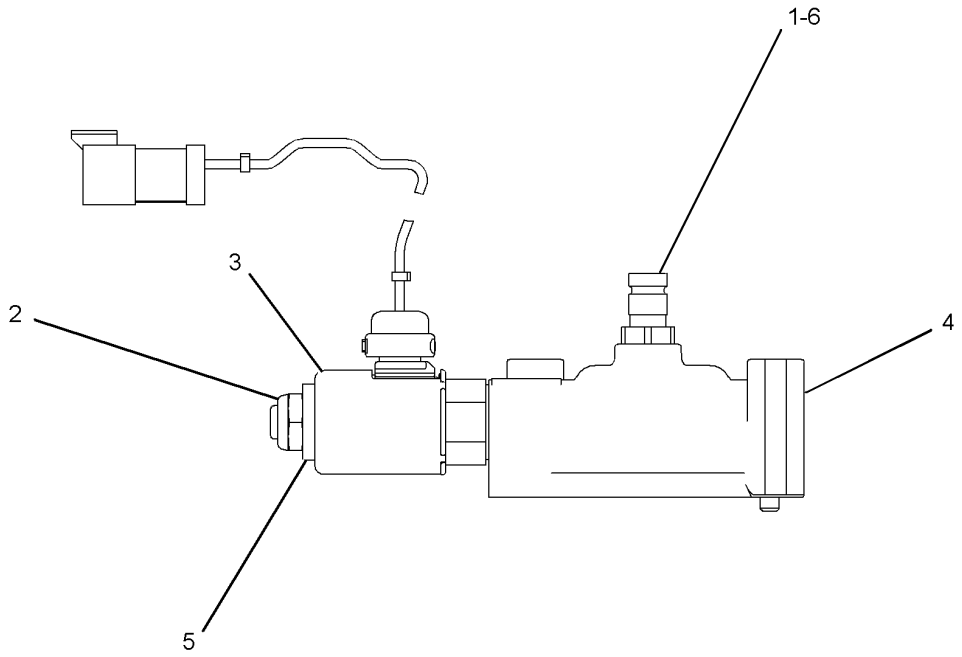

GRAPHIC #1 **<END>** g01154415

8E-9727 VALVE GP-RELIEF–TORQUE CONVERTER OUTLET PRESS

S/N: 2211-UP

PART OF 268-8200 LINES GP-POWER TRAIN OIL

SMCS-3133, 3182, 3210, 3213 **i01988742**

NOTE	REF NO	GRAPHIC REF	PART NUMBER	QTY	PART NAME 1 2 3 4 5 6 (PRODUCT LEVEL)	SEE PAGE
	1	1	**4M-8239**	2	COVER	
	2	1	**8M-4986**	2	SEAL-O-RING	
	3	1	**2P-4538**	1	SPOOL AS-RELIEF	
	4	1	**5M-9548**	1	SPRING	
	5	1	**1L-3162**	1	RING-RETAINING	
		1	**8M-2537**	1	RETAINER	
	6	1	**9M-4313**	1	POPPET	
	7	1	**6V-3965**	1	COUPLER-QUICK DISCONNECT	
		1	**3J-1907**	1	SEAL-O-RING	
	8	1	**2P-5711**	1	SPRING	
B	9	1	**5M-9623**	3	SHIM (0.9-MM THK)	
B		1	**5M-9624**	1	SHIM (0.25-MM THK)	
	10	1	**0S-1594**	4	BOLT (3/8-16X1-IN)	
		1	**5M-2894**	4	WASHER-HARD (10.2X18.5X2.5-MM THK)	
	11	1	**6V-0852**	1	CAP-DUST	

B-USE AS REQUIRED

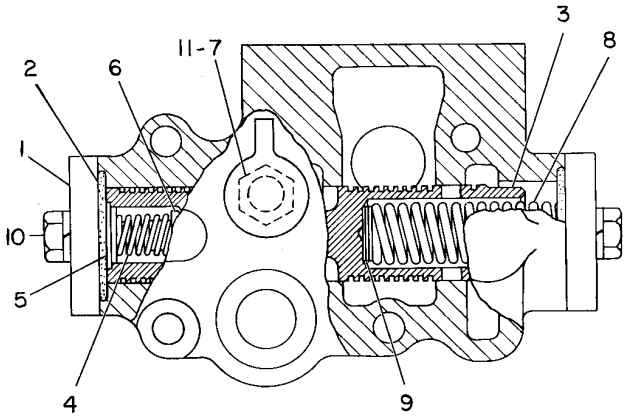

GRAPHIC #1 **<END>** g00082116

8E-6398 VALVE GP-SELECTOR—TRANSMISSION

S/N: K2K1-UP

PART OF 295-6904 VALVE GP-TRANSMISSION CONTROL

SMCS-3157 **i01692384**

NOTE	REF NO	GRAPHIC REF	PART NUMBER	QTY	PART NAME 1 2 3 4 5 6 (PRODUCT LEVEL)	SEE PAGE
	1	1	**8E-6255**	1	MANIFOLD-BOTTOM	
	2	1	**2S-4872**	1	STOP	
	3	1	**6Y-0725**	1	SPOOL-SELECTOR	
	4	1	**6Y-0726**	2	RETAINER	
	5	1	**6I-9519**	1	SPRING	
	6	1	**6Y-0729**	1	STOP	
	7	1	**7S-6997**	1	COVER	
	8	1	**2B-2695**	2	BOLT (5/16-18X0.875-IN)	
	9	1	**5P-6261**	1	RING-RETAINING	
	10	1	**8H-9189**	1	DOWEL	
	11	1	**6J-2419**	1	SEAL-O-RING	

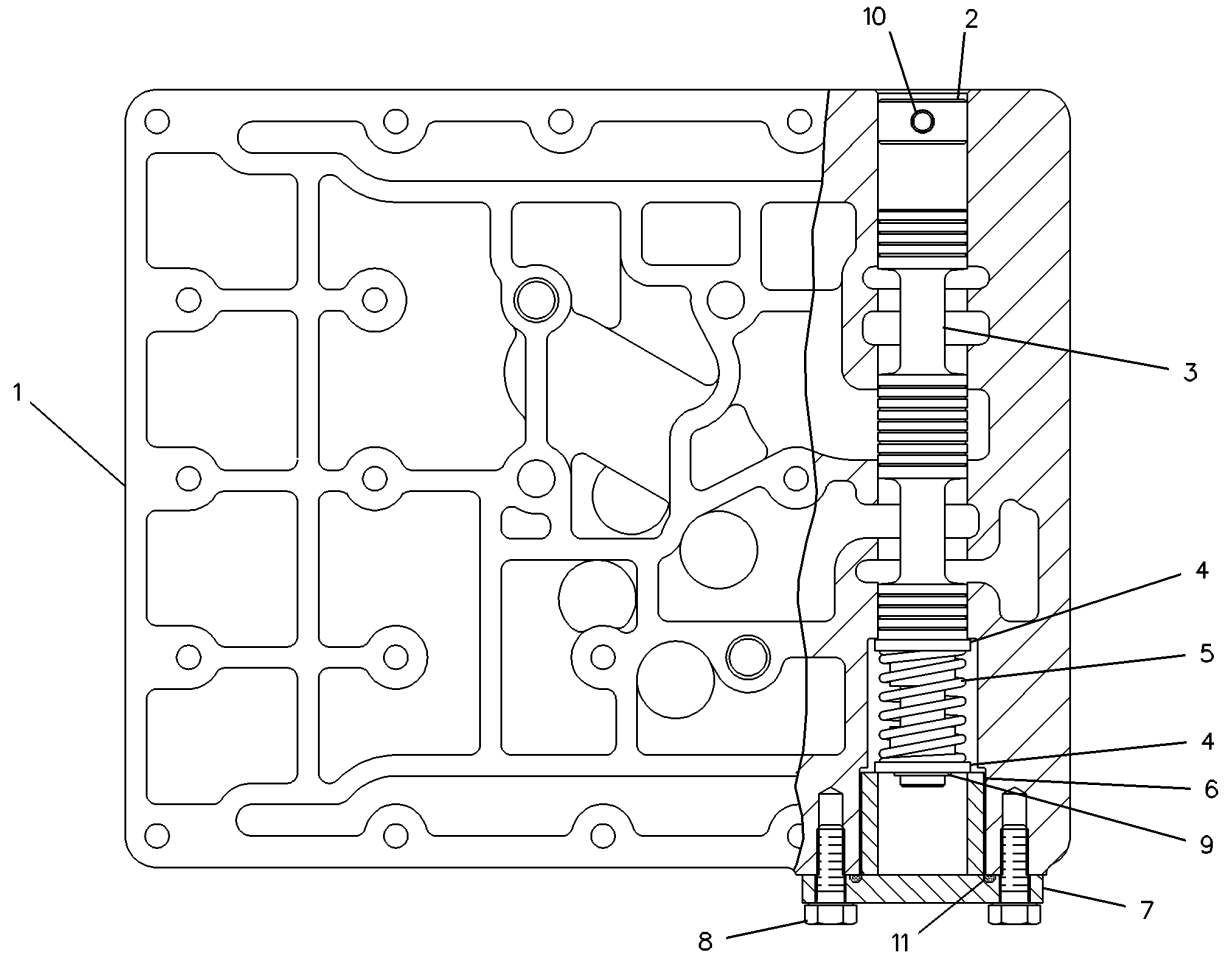

GRAPHIC #1 **<END>** g00119290

117-5860 VALVE GP-SELECTOR & PRESS CONT—TRANSMISSION

S/N: K2K1-UP

PART OF 295-6904 VALVE GP-TRANSMISSION CONTROL

SMCS-3083 **i02317492**

NOTE	REF NO	GRAPHIC REF	PART NUMBER	QTY	PART NAME 1 2 3 4 5 6 (PRODUCT LEVEL)	SEE PAGE
	1	1	**8P-9296**	2	ORIFICE-PLUG	
	2	1	**6Y-0728**	1	COVER	
	3	1	**2B-2695**	5	BOLT (5/16-18X0.875-IN)	
	4	1	**238-5508**	1	PLUG AS	
		1	**215-7183**	1	ORIFICE-SCREEN	
		1	**8L-2779**	1	SEAL-O-RING	
	5	1	**6P-4978**	1	SPRING	
	7	1	**6P-4940**	1	STOP	
	8	1	**9W-5567**	1	SPOOL AS-RELIEF	
		1	**3D-8317**	1	RING-RETAINING	
		1	**4B-9880**	1	BALL	
		1	**4M-2381**	1	SPRING	
		1	**8M-1013**	1	RETAINER	
	9	1	**9W-5568**	1	SLUG	
	10	1	**6Y-0724**	1	SPOOL-SPEED SELECTOR	
	11	1	**7G-4842**	1	SPRING	
	12	1	**9P-3041**	1	SPRING	
	13	1	**6Y-0726**	4	RETAINER	
	14	1	**6I-9519**	2	SPRING	
	15	1	**6Y-0727**	2	STOP	
	16	1	**4J-0521**	2	SEAL-O-RING	
	17	1	**6P-4943**	1	SPOOL-RATIO	
	18	1	**6F-6673**	2	SEAL-O-RING	
	19	1	**8E-6433**	1	SPOOL-DIFFERENTIAL	
B	20	1	**5M-9622**	1	SHIM (1.6-MM THK)	
B	21	1	**5M-9623**	1	SHIM (0.9-MM THK)	
B	22	1	**5M-9624**	3	SHIM (0.25-MM THK)	
	23	1	**6P-9785**	1	SPRING	
	24	1	**3P-8485**	1	RING-RETAINING	
	25	1	**6P-9786**	1	RETAINER	
	26	1	**6P-9784**	1	SPRING	
	27	1	**6P-9783**	1	SPRING	
	28	1	**8E-3026**	1	PISTON-LOAD	
	29	1	**2S-4872**	1	STOP	
	30	1	**5P-6261**	2	RING-RETAINING	
	31	1	**6Y-0725**	1	SPOOL-SELECTOR	
	32	1	**5S-7816**	1	SLUG	
	33	1	**2S-0696**	2	DOWEL	
	34	1	**6Y-0744**	1	STOP	

B-USE AS REQUIRED

117-5860 VALVE GP-SELECTOR & PRESS CONT *(contd.)* i02317492

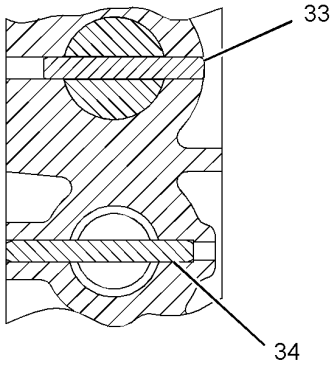

SECTION B-B

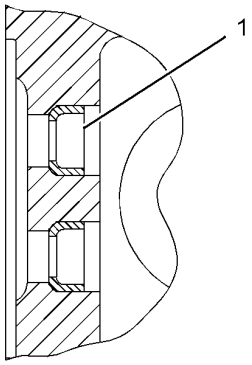

SECTION C-C

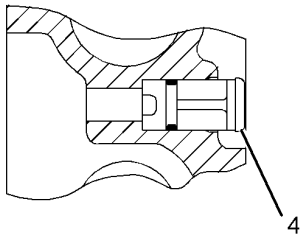

SECTION A-A

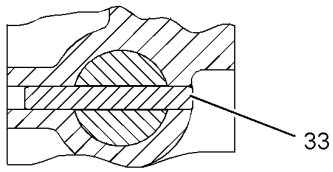

SECTION D-D

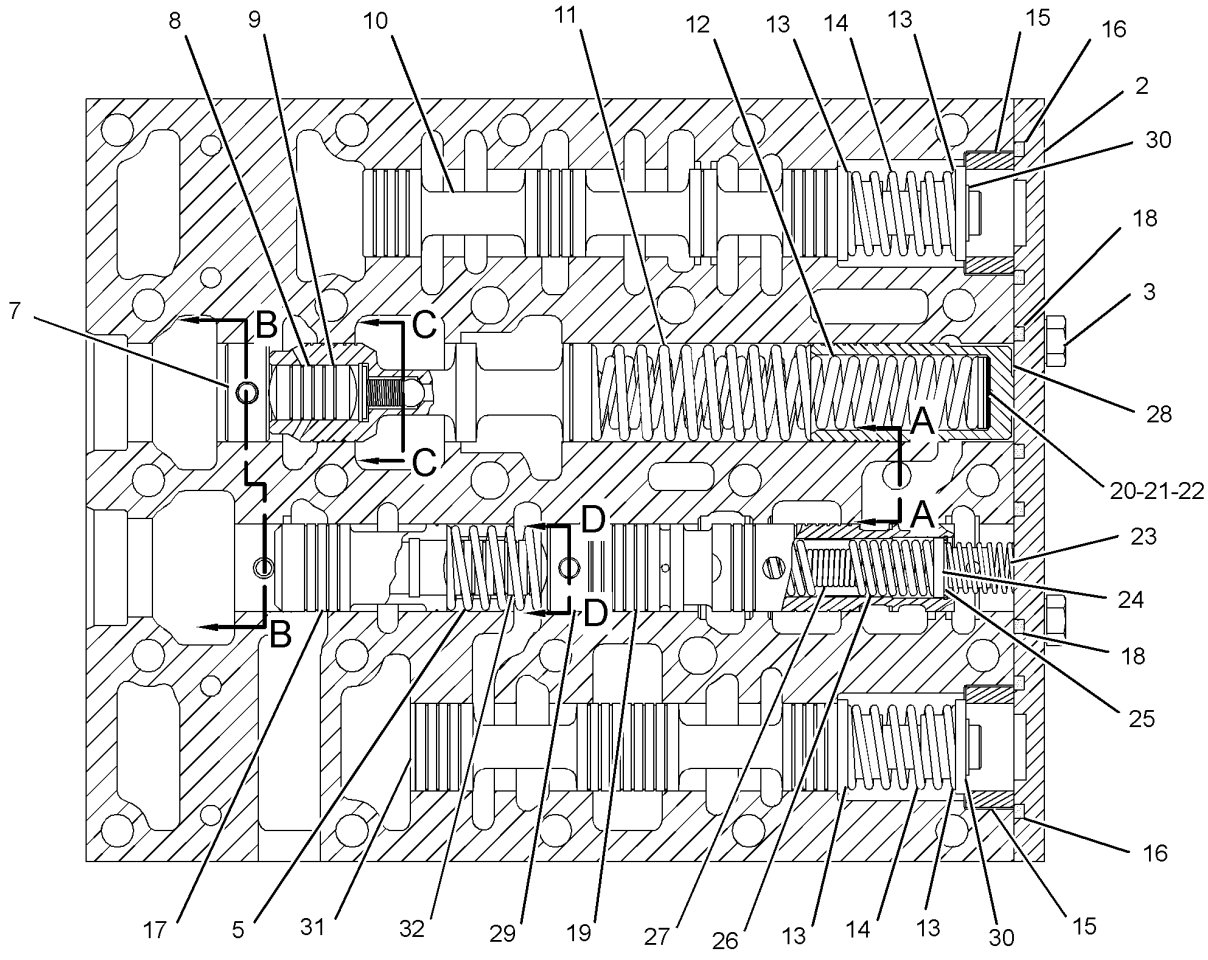

GRAPHIC #1 **<END>** g01158658

147-5399 VALVE GP-SOLENOID

S/N: K2K1-UP

12 VOLT DC

PART OF 295-6904 VALVE GP-TRANSMISSION CONTROL

SMCS-3174, 4804, 4805, 5479 **i02820095**

NOTE	REF NO	GRAPHIC REF	PART NUMBER	QTY	PART NAME 1 2 3 4 5 6 (PRODUCT LEVEL)	SEE PAGE
	1	1	**107-8611**	1	CARTRIDGE AS	
		1	**111-0343**	1	LOCKNUT (5/16-18-THD)	
		1	**149-5628**	1	WASHER (8.3X38.1X1.2-MM THK)	
	2	1	**218-9901**	1	COIL AS	
		1	**1S-9593**	2	STRAP-CABLE	
		1	**186-3736**	2	SOCKET-CONNECTOR (16-GA TO 18-GA)	
		1	**155-2270**	1	KIT-CONNECTING PLUG (2-PIN)	
					(INCLUDES PLUG AS, WEDGE, & INTERFACE SEAL)	
	3	1	**149-5628**	1	WASHER (8.3X38.1X1.2-MM THK)	
	4	1	**111-0343**	1	LOCKNUT (5/16-18-THD)	
					AVAILABLE REPAIR KIT(S):	
			100-4083	1	KIT-SEAL	
					(INCLUDES SEALS & RINGS)	

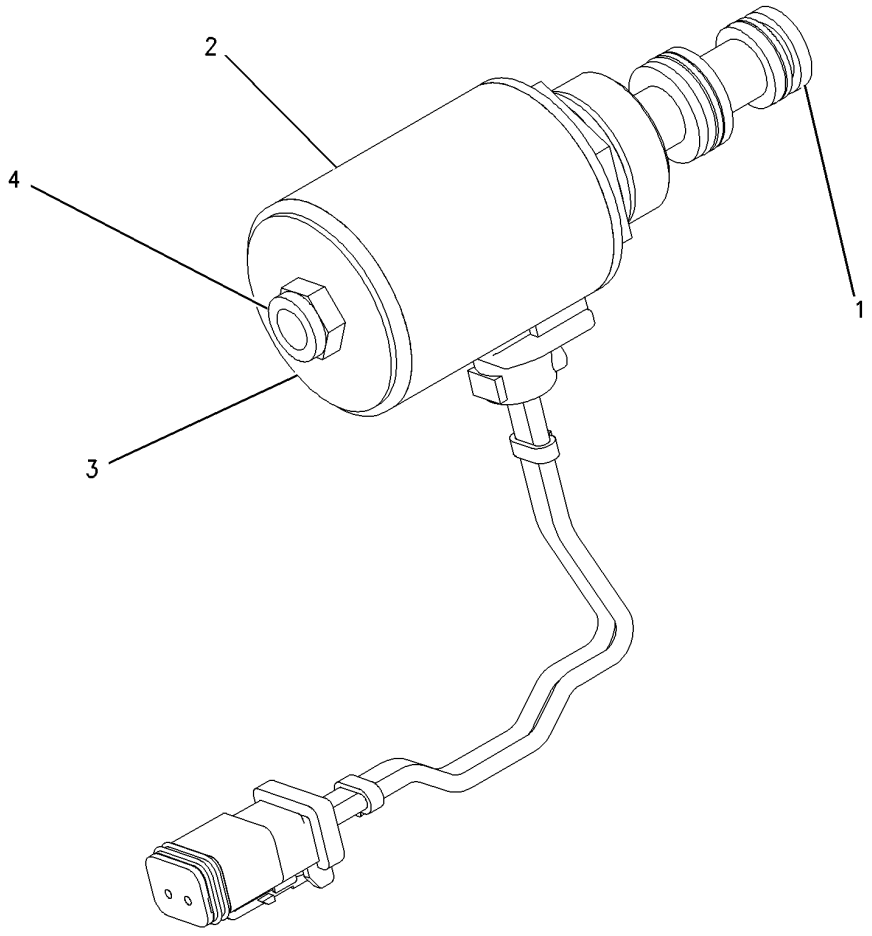

GRAPHIC #1 **<END>** g00747733

POWER TRAIN

152-8385 VALVE GP-SOLENOID

S/N: 2211-UP

24-VOLT

PART OF 152-2698 VALVE & MTG GP-SOLENOID

SMCS-3174, 4804, 4805, 5479 **i02656884**

NOTE	REF NO	GRAPHIC REF	PART NUMBER	QTY	PART NAME 1 2 3 4 5 6 (PRODUCT LEVEL)	SEE PAGE
	1	1	**152-8383**	1	CARTRIDGE AS	
	1A	1	**8C-9987**	1	WASHER (8.3X28X2.5-MM THK)	
	1B	1	**111-0343**	1	LOCKNUT (5/16-18-THD)	
	2	1	**189-0189**	1	COIL AS	
B	2A	1	**1S-9593**	2	STRAP-CABLE	
	2B	1	**102-8802**	1	KIT-RECEPTACLE (2-PIN)	
					(INCLUDES RECEPTACLE AS & WEDGE)	
		1	**3E-3365**	1	WEDGE-RECEPTACLE LOCK (2-PIN)	
		1	**186-3735**	2	PIN-CONNECTOR (16-GA TO 18-GA)	
					AVAILABLE REPAIR KIT(S):	
			8J-9348		KIT-SEAL (SOLENOID VALVE)	
					(INCLUDES SEALS & O-RINGS)	

B-USE AS REQUIRED

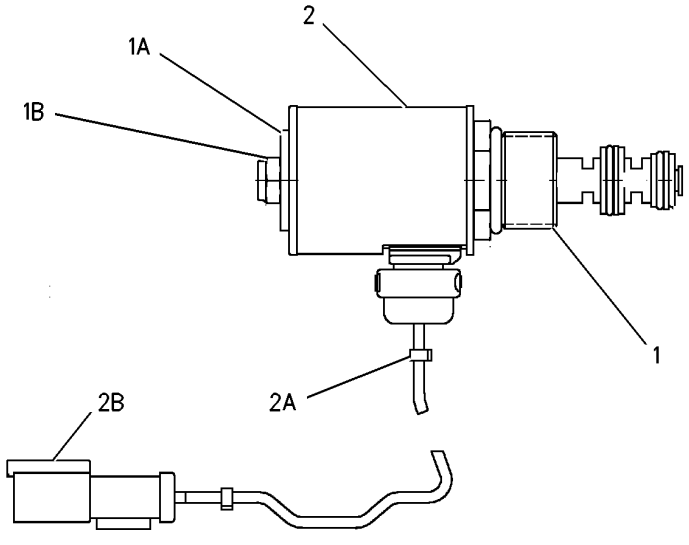

GRAPHIC #1 **<END>** g00837831

201-0950 VALVE GP-SOLENOID

S/N: 2211-UP

PART OF 257-5613 MANIFOLD GP-CONTROL

SMCS-3174, 4804, 4805, 5479 **i02855870**

NOTE	REF NO	GRAPHIC REF	PART NUMBER	QTY	PART NAME 1 2 3 4 5 6 (PRODUCT LEVEL)	SEE PAGE
	1	1	**122-1133**	1	COIL AS (24-VOLT)	
		1	**1S-9593**	2	STRAP-CABLE	
		1	**186-3735**	2	PIN-CONNECTOR (16-GA TO 18-GA)	
		1	**102-8802**	1	KIT-RECEPTACLE (2-PIN)	
					(KIT INCLUDES RECEPTACLE AS & WEDGE)	
	2	1	**156-5970**	1	NUT (1/2-20-THD)	
	3	1	**171-8772**	1	VALVE AS-SOLENOID	
		1	**156-5970**	1	NUT (1/2-20-THD)	
					AVAILABLE REPAIR KIT(S):	
			195-7430		KIT-SEAL (SOLENOID VALVE)	
					(INCLUDES SEAL-O-RINGS & BACKUP RINGS)	

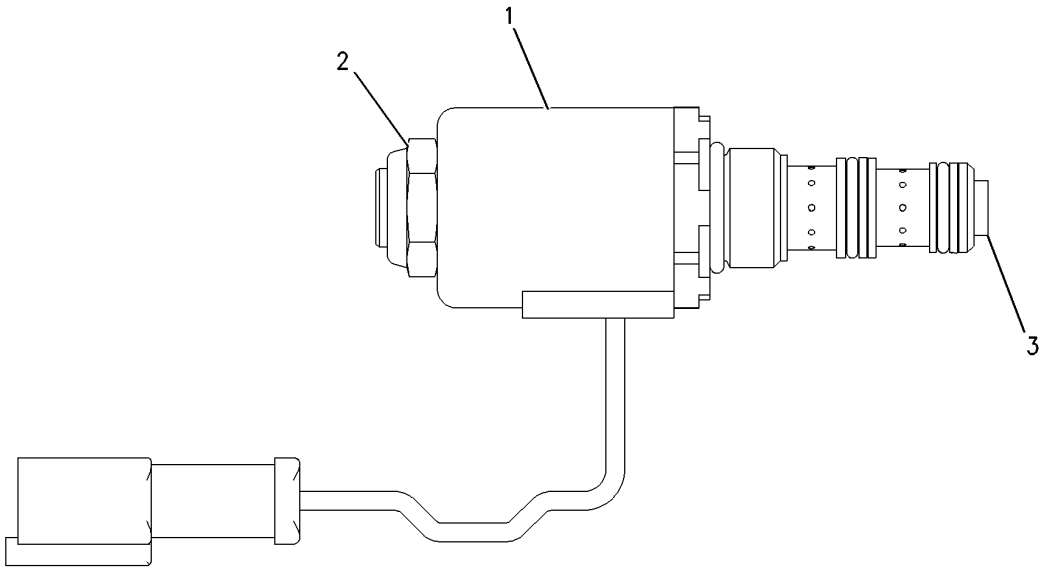

GRAPHIC #1 **<END>** g00888488

POWER TRAIN

6I-8563 VALVE GP-TORQUE CONV PRIORITY

S/N: 2211-UP

PART OF 268-8200 LINES GP-POWER TRAIN OIL

SMCS-3180 **i01197566**

NOTE	REF NO	GRAPHIC REF	PART NUMBER	QTY	PART NAME 1 2 3 4 5 6 (PRODUCT LEVEL)	SEE PAGE
	1	1	**0S-1594**	2	BOLT (3/8-16X1-IN)	
		1	**5M-2894**	2	WASHER-HARD (10.2X18.5X2.5-MM THK)	
	2	1	**6I-8564**	1	BODY AS-VALVE	
		1	**2D-6642**	2	BALL	
	3	1	**3P-4053**	1	SPRING	
	4	1	**2S-9750**	1	COVER	
	5	1	**8M-5249**	1	SEAL-O-RING	
	6	1	**2M-7041**	1	SLUG	
	7	1	**1P-9699**	1	STOP	
	8	1	**8H-9513**	1	DOWEL	
	9	1	**8M-4446**	1	SEAL-O-RING	
	10	1	**5S-4437**	1	SPOOL AS	
	11	1	**4M-2381**	1	SPRING	
		1	**4B-9880**	1	BALL	
	12	1	**3D-8317**	1	RING-RETAINING	
		1	**8M-1013**	1	RETAINER	
	13	1	**5M-9624**	6	SHIM (0.25-MM THK)	
	14	1	**6V-3965**	1	COUPLER-QUICK DISCONNECT	
C	15	1	**3J-1907**	2	SEAL-O-RING	
C	16	1	**6V-0852**	1	CAP-DUST	
C	17	1	**6V-0484**	1	ADAPTER-O-RING	

C-CHANGE FROM PREVIOUS TYPE

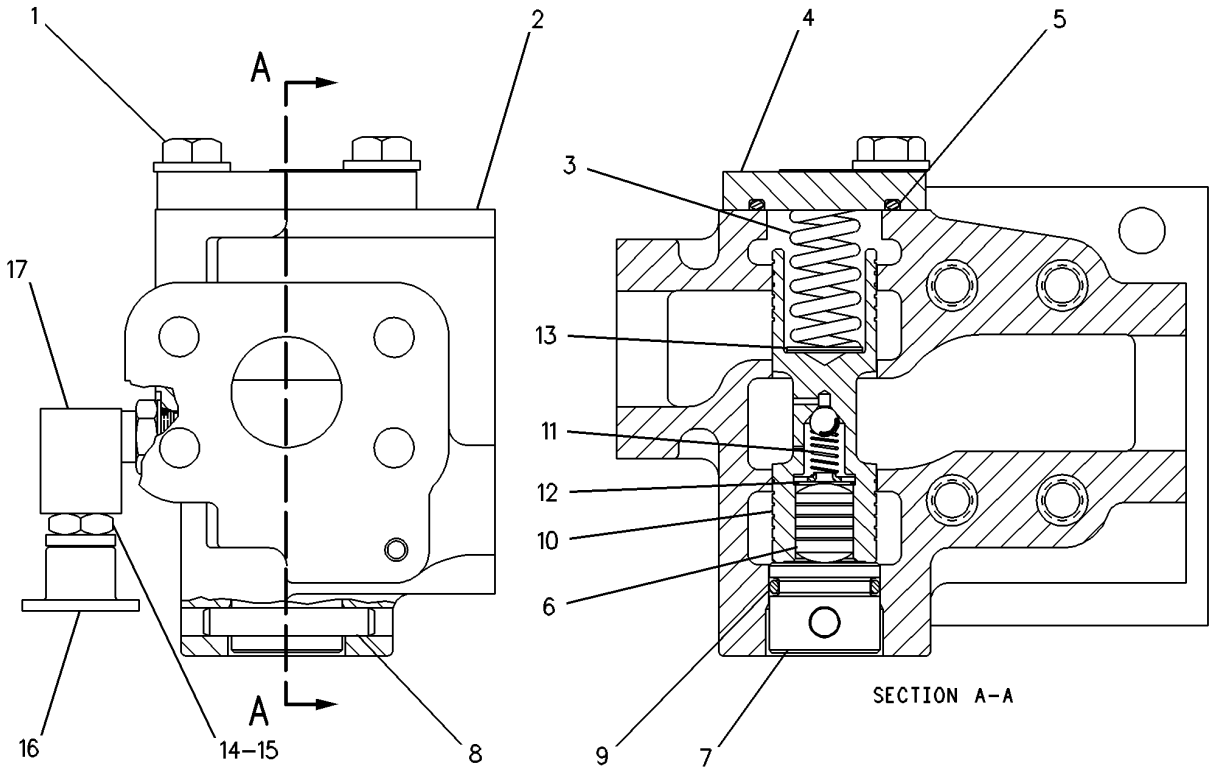

GRAPHIC #1 **<END>** g00083662

295-6904 VALVE GP-TRANSMISSION CONTROL

S/N: K2K1-UP

PART OF 295-6903 CONTROL GP-TRANSMISSION HYD

SMCS-3073, 3167 **i02927272**

NOTE	REF NO	GRAPHIC REF	PART NUMBER	QTY	PART NAME 1 2 3 4 5 6 (PRODUCT LEVEL)	SEE PAGE
Y	1	2	**8E-6398**	1	VALVE GP-SELECTOR (TRANSMISSION)	453
	2	2	**8E-4320**	1	PLATE	
Y	3	2	**117-5860**	1	VALVE GP-SELECTOR & PRESS CONT (TRANSMISSION)	454
	4	2	**106-0553**	1	MANIFOLD-TOP	
	5	2	**8E-4387**	1	MANIFOLD	
	6	2	**8E-7841**	1	CLIP AS-CONNECTING	
	7	2	**2B-2695**	3	BOLT (5/16-18X0.875-IN)	
	8	1,2	**9M-1974**	34	WASHER-HARD (8.8X16X2-MM THK)	
	9	2	**1D-4540**	10	BOLT (5/16-18X2.75-IN)	
	10	1	**5L-1761**	21	BOLT (5/16-18X5.5-IN)	
	11	2	**9S-8007**	12	PLUG	
	12	1,2	**7J-0204**	13	SEAL-O-RING	
Y	13	1	**147-5399**	5	VALVE GP-SOLENOID (TRANSMISSION CLUTCH)	456
	14	1	**254-2298**	1	HARNESS AS-TRANSMISSION (CLUTCH SOLENOIDS)	
	15	1	**8E-7842**	1	CLIP AS-CONNECTING	
	16	1	**6V-3965**	3	COUPLER-QUICK DISCONNECT	
	17	1	**0S-1588**	4	BOLT (3/8-16X1.25-IN)	
	18	1	**3J-1907**	3	SEAL-O-RING	
	19	1	**1L-5081**	4	SPACER (0.41X0.75X0.56-IN THK)	
	20	1	**5M-2894**	4	WASHER-HARD (10.2X18.5X2.5-MM THK)	
	21	2	**5S-0003**	1	NUT (5/16-18-THD)	
	22	1	**8M-2772**	2	CLIP	
	23	2	**1P-7404**	1	EYEBOLT (5/16-18X1.15-IN)	
	25	1	**6Y-0789**	1	PLUG	
	26	1	**3D-2824**	1	SEAL-O-RING	
	27	1	**3P-0647**	1	SEAL-O-RING	
	28	1	**1N-5999**	1	PLUG	

Y-SEPARATE ILLUSTRATION

295-6904 VALVE GP-TRANSMISSION CONTROL *(contd.)* i02927272

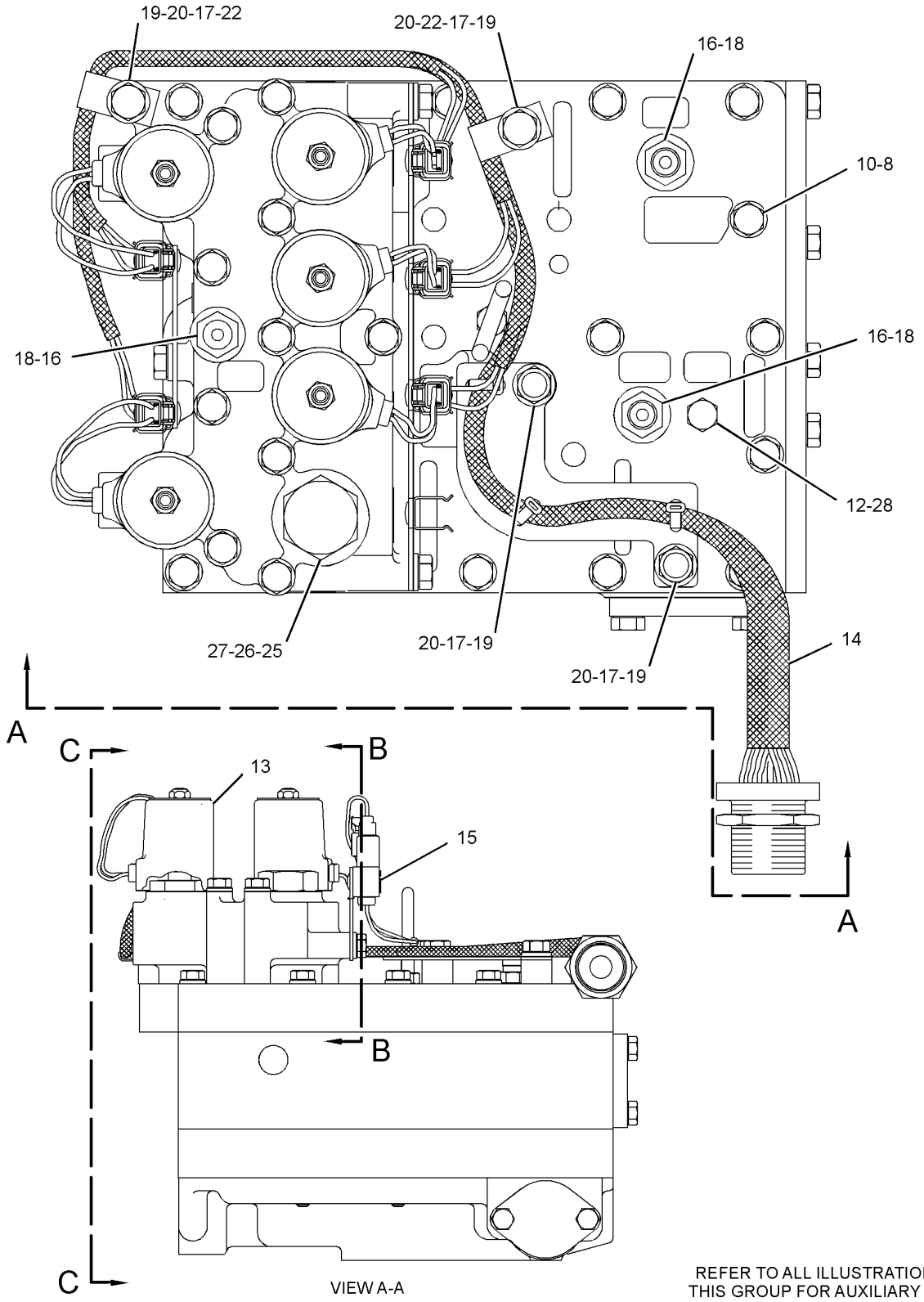

REFER TO ALL ILLUSTRATIONS OF THIS GROUP FOR AUXILIARY VIEWS

GRAPHIC #1

g01439364

295-6904 VALVE GP-TRANSMISSION CONTROL *(contd.)* **i02927272**

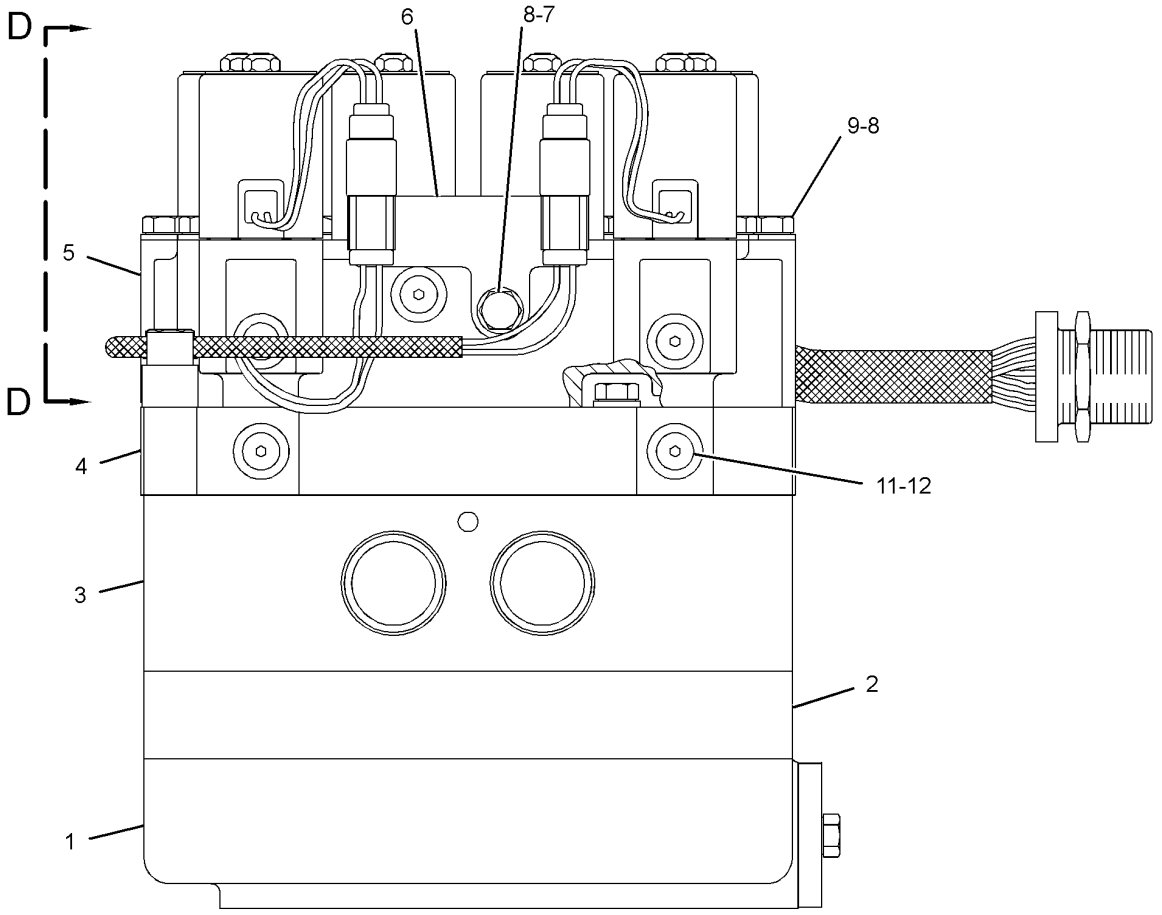

VIEW C-C

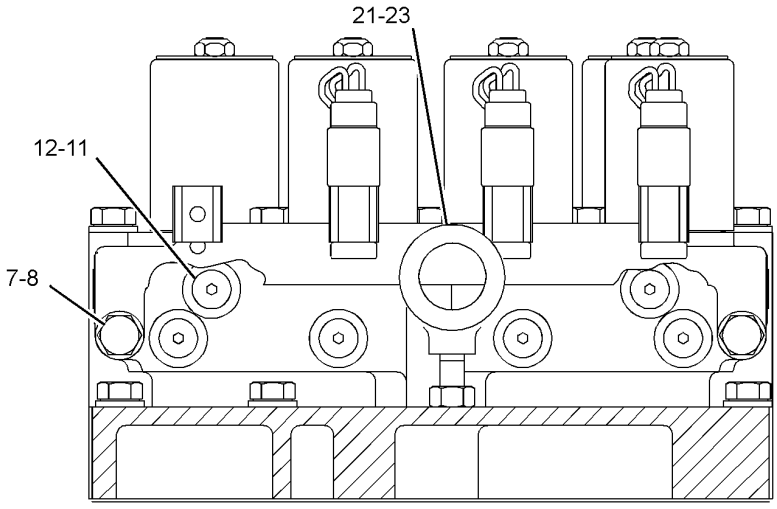

SECTION B-B

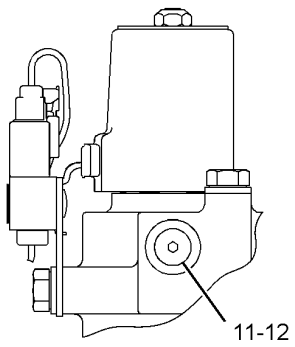

VIEW D-D

GRAPHIC #2 **<END>** g01437924

107-0701 WHEEL & FINAL DRIVE GP

S/N: 2211-UP

PART OF 280-3580 WHEEL GP-FINAL DRIVE & BRAKE

SMCS-4001, 4051 **i02686475**

NOTE	REF NO	GRAPHIC REF	PART NUMBER	QTY	PART NAME 1 2 3 4 5 6 (PRODUCT LEVEL)	SEE PAGE
R	1	1	**131-1296**	1	SPINDLE	
	2	1	**195-3495**	1	SEAL GP-DUO-CONE	
	3	1	**126-5859**	1	CONE	
	4	1	**126-5860**	1	CUP-TAPERED	
	5	1	**107-0692**	1	WHEEL	
	6	1	**111-9177**	1	SPACER	
	7	1	**142-7073**	4	BOLT-SOCKET HEAD	
	8	1	**8T-8917**	9	BOLT (1/2-13X1.25-IN)	
	9	1	**8T-4223**	9	WASHER-HARD (13.5X25.5X3-MM THK)	
	10	1	**6W-1140**	6	WASHER-THRUST	
	11	1	**127-9504**	3	GEAR-PLANETARY (34-TEETH)	
B	12	1	**107-0695**	1	SHIM PACK (INCLUDES 16-SHIMS)	
	13	1	**162-8304**	1	GEAR-SUN (15-TEETH)	
	14	1	**191-6265**	20	BOLT	
	15	1	**112-2165**	1	COVER AS	
B		1	**1U-8846**	1	SEALANT-GASKET	
		1	**8T-4896**	4	WASHER-HARD (10.2X18.5X2.5-MM THK)	
		1	**034-3557**	4	BOLT-LOCKING (3/8-16X1.125-IN)	
		1	**107-0704**	1	PLATE	
	16	1	**9H-6832**	1	SEAL-O-RING	
	17	1	**127-9799**	1	CARRIER-PLANETARY	
	18	1	**111-1503**	1	SEAL-O-RING	
	19	1	**5K-7696**	1	PLUG	
	20	1	**3J-1907**	1	SEAL-O-RING	
	21	1	**107-0689**	1	GEAR-RING (87-TEETH)	
	22	1	**107-0691**	1	HUB	
	23	1	**111-7759**	1	RETAINER	
	24	1	**111-0897**	1	CONE-BEARING	
	25	1	**111-0898**	1	CUP-BEARING	
	26	1	**107-0698**	1	RING-RETAINING	
	27	1	**034-4160**	6	BOLT-LOCKING (5/16-18X1-IN)	
	28	1	**8E-9571**	6	WASHER-HARD (8.8X16X7-MM THK)	
	29	1	**108-1554**	3	BEARING-SLEEVE	
	30	1	**6T-5545**	3	DOWEL	
	31	1	**297-3032**	3	SHAFT	
	32	1	**6V-0439**	1	PLUG-MAGNETIC	
	33	1	**2S-4078**	1	SEAL-O-RING	
	34	1	**1V-6659**	1	RING-RETAINING	
	35	1	**6V-1746**	2	DOWEL	

B-USE AS REQUIRED
R-REMFG PART MAY BE AVAILABLE

107-0701 **WHEEL & FINAL DRIVE GP** ***(contd.)*** **i02686475**

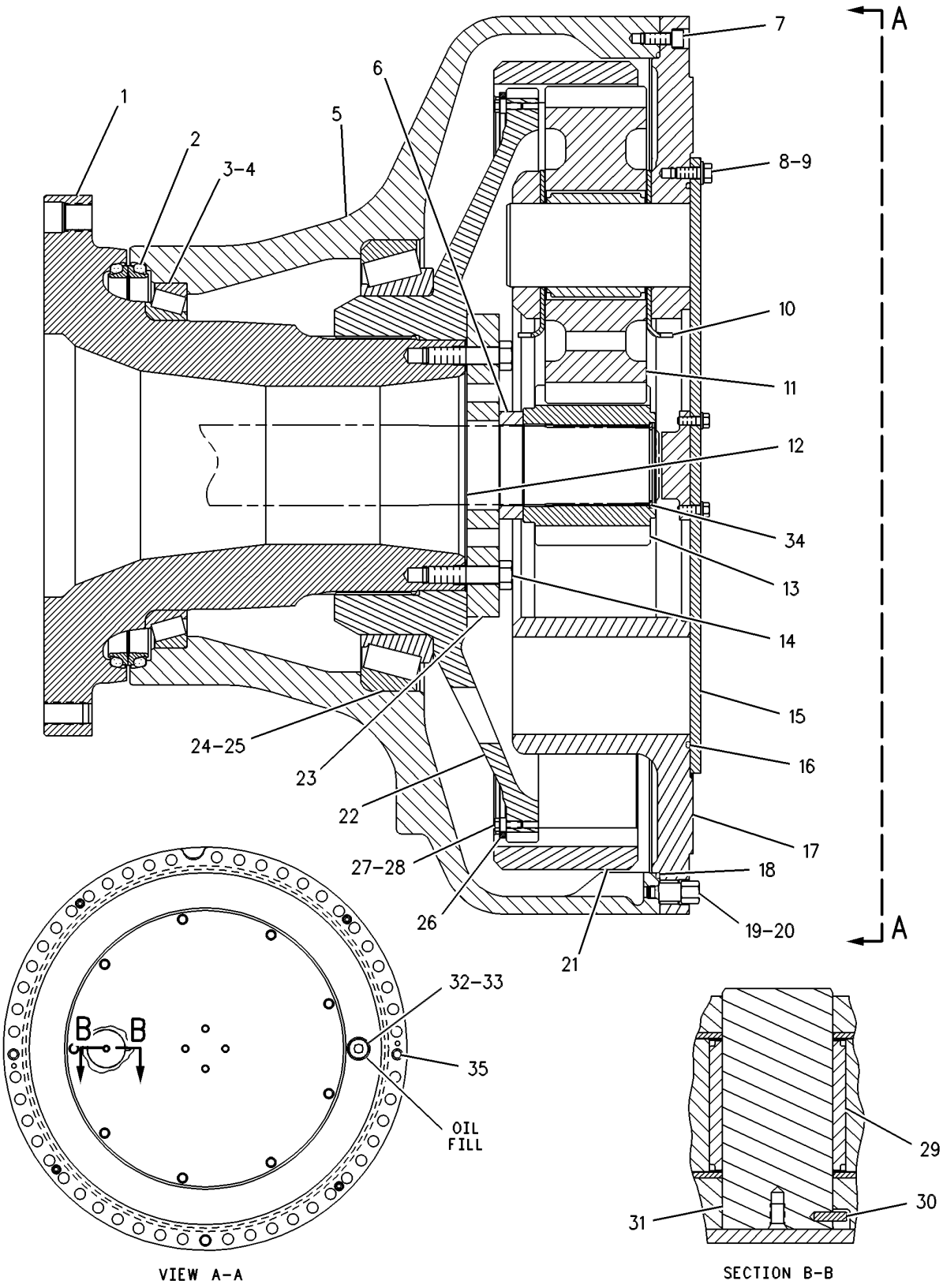

GRAPHIC #1 **<END>** g00259308

280-3580 WHEEL GP-FINAL DRIVE & BRAKE

S/N: 2211-UP

PART OF 280-3582 AXLE AR-FIXED, 280-3583 AXLE AR-OSCILLATING

SMCS-4001 **i02885689**

NOTE	REF NO	GRAPHIC REF	PART NUMBER	QTY	PART NAME 1 2 3 4 5 6 (PRODUCT LEVEL)	SEE PAGE
Y	1	1	*275-0080*	1	BRAKE GP-SERVICE	566
Y	2	1	**107-0701**	1	WHEEL & FINAL DRIVE GP	464
	3	1	**1D-4642**	4	BOLT (1-8X5-IN)	
	4	1	**9M-2828**	4	WASHER-HARD (28X44.5X6-MM THK)	
	5	1	**112-2470**	30	STUD-TAPERLOCK	

Y-SEPARATE ILLUSTRATION

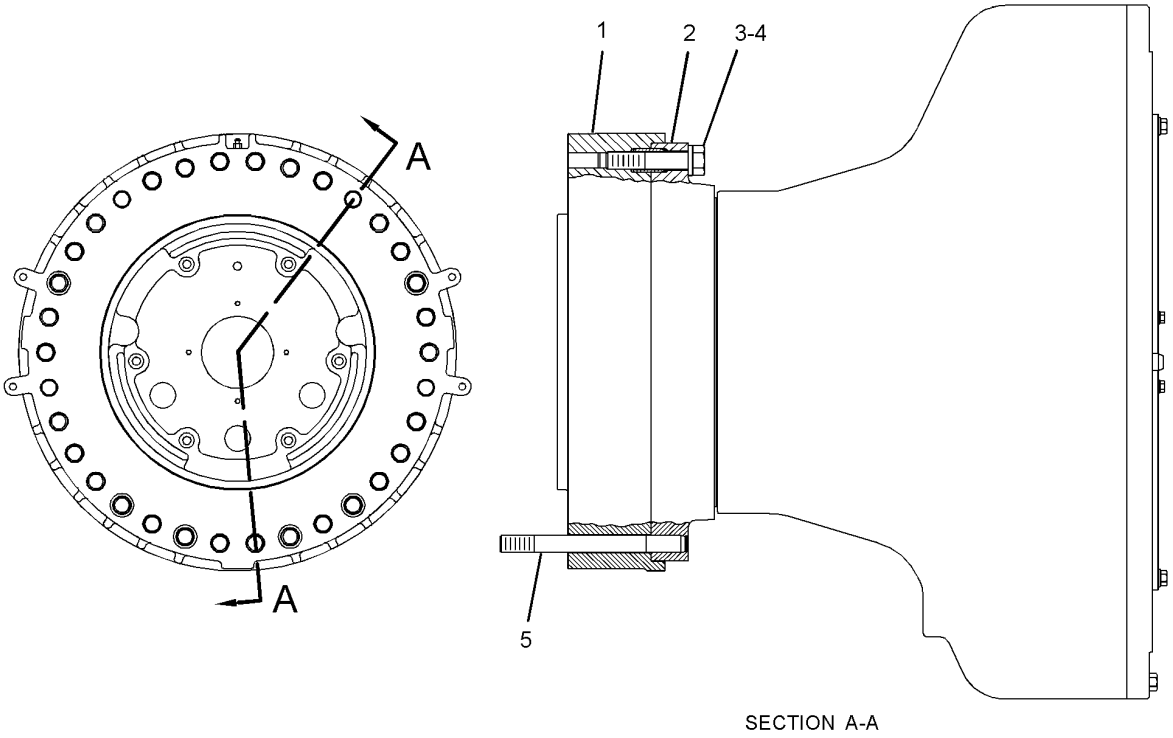

SECTION A-A

GRAPHIC #1 **<END>** g01438429

FRAME AND BODY

210-2665 COVER GP-ACCESS—FRONT FRAME

S/N: 2211-UP

PART OF 262-2081 CHASSIS AR

SMCS-726A **i01848436**

NOTE	REF NO	GRAPHIC REF	PART NUMBER	QTY	PART NAME 1 2 3 4 5 6 (PRODUCT LEVEL)	SEE PAGE
	1	1	**9G-2776**	2	LATCH AS	
					(EACH INCLUDES)	
		1	**126-7168**	1	LOCK AS	
		1	**7F-9223**	1	LOCKWASHER	
		1	**8T-5004**	1	SCREW-MACHINE (1/4-28X0.375-IN)	
	2	1	**210-2667**	1	COVER AS (LH)	
	3	1	**210-2668**	1	COVER AS (RH)	
	4	1	**210-2671**	4	HINGE	
	5	1	**210-3226**	2	PAWL	
	6	1	**215-3210**	1	COVER AS	
M		1	**8T-3490**	4	NUT-WELD (M10X1.5-THD)	
	7	1	**223-4889**	1	PLATE AS	
	8	1	**215-3212**	1	COVER AS	
M		1	**8T-3490**	4	NUT-WELD (M10X1.5-THD)	
M	9	1	**5C-2890**	6	NUT (M6X1-THD)	
	10	1	**5P-4115**	12	WASHER-HARD (7.2X19X2-MM THK)	
	11	1	**8T-4121**	32	WASHER-HARD (11X21X2.5-MM THK)	
M	12	1	**8T-4133**	4	NUT (M10X1.5-THD)	
M	13	1	**8T-4137**	20	BOLT (M10X1.5X20-MM)	
M	14	1	**8T-4138**	6	BOLT (M6X1X20-MM)	
M	15	1	**8T-4182**	8	BOLT (M10X1.5X45-MM)	
M	16	1	**8T-4185**	4	BOLT (M10X1.5X50-MM)	

M-METRIC PART

210-2665 **COVER GP-ACCESS** *(contd.)* **i01848436**

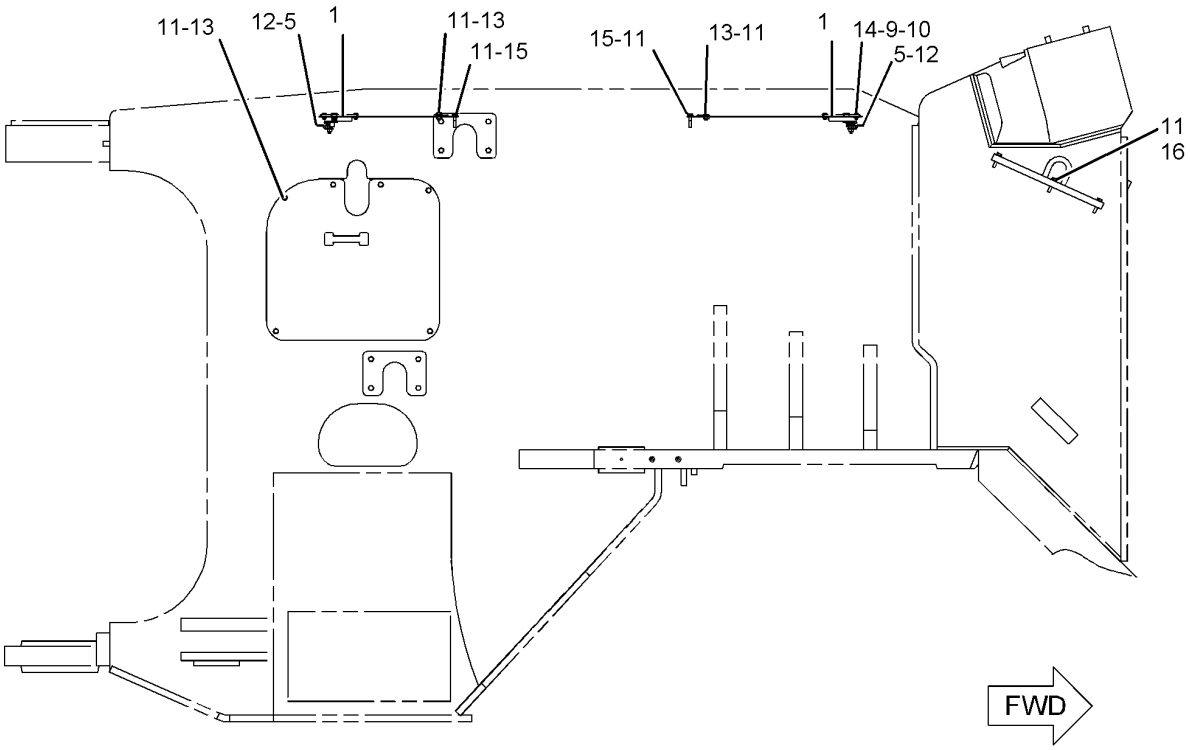

RIGHT SIDE VIEW

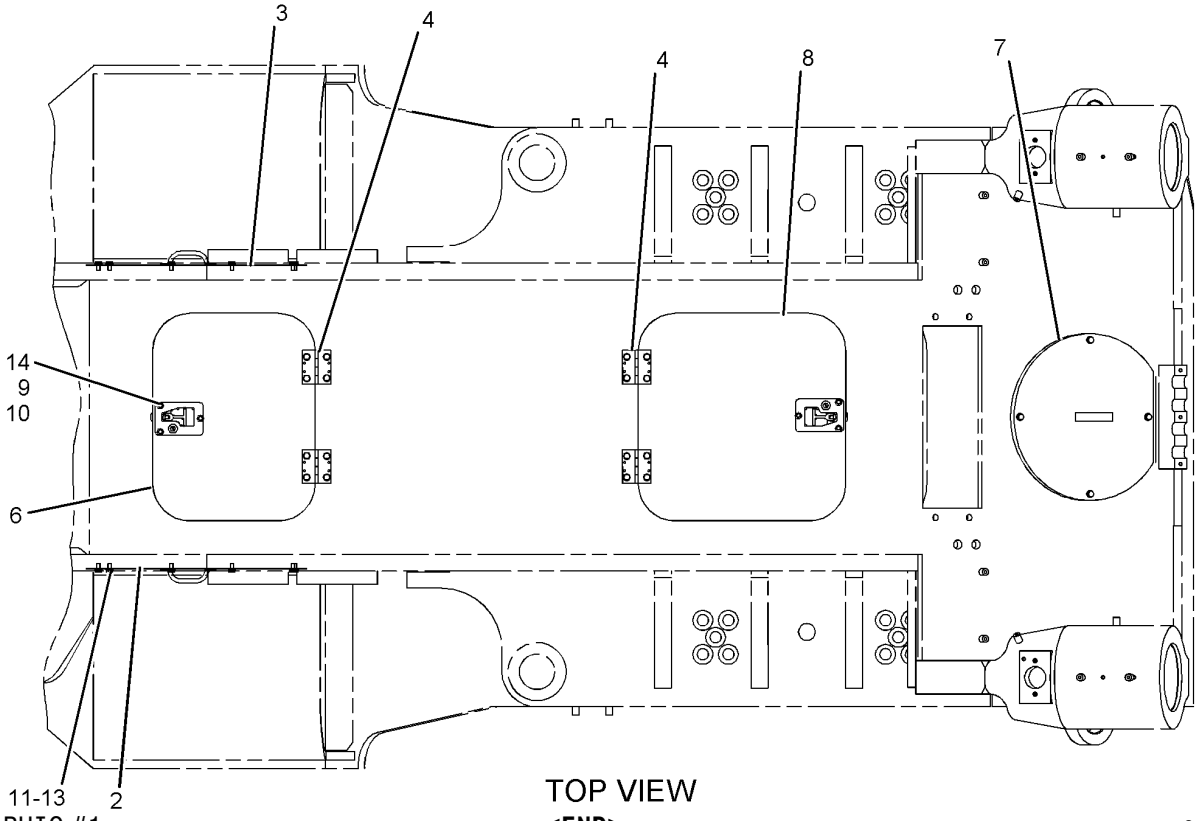

TOP VIEW

GRAPHIC #1

<END>

g01051789

FRAME AND BODY

284-1145 DOOR GP-ACCESS—HOOD SIDE

S/N: 2211-UP

PART OF 279-5282 HOOD & GUARD GP

SMCS-7273 **i02885675**

NOTE	REF NO	GRAPHIC REF	PART NUMBER	QTY	PART NAME 1 2 3 4 5 6 (PRODUCT LEVEL)	SEE PAGE
	1	1	**6V-2370**	12	RIVET-POP	
	2	1	**9R-8538**	2	PLUNGER (LATCH)	
	3	1	**101-4183**	2	PLATE	
	4	1	**160-1023**	2	PAWL	
	5	1	**160-6328**	2	LATCH AS	
					(EACH INCLUDES)	
		1	**6H-3956**	1	PIN	
		1	**7X-0766**	1	SPRING-LATCH	
		1	**8Y-3966**	1	WASHER (14.7X35X1.57-MM THK)	
		1	**8Y-3998**	1	HANDLE-LATCH	
		1	**8Y-3999**	1	BRACKET-MOUNTING	
		1	**166-7209**	1	SHAFT	
	6	1	**316-7311**	2	PLATE AS	
M	7	1	**139-6366**	4	NUT (M14X2-THD)	
	8	1	**284-1146**	1	DOOR AS (LH)	
	9	1	**284-1147**	1	DOOR AS (RH)	
M	10	1	**5C-2890**	2	NUT (M6X1-THD)	
	11	1	**5P-4115**	6	WASHER-HARD (7.2X19X2-MM THK)	
M	12	1	**6V-7744**	4	LOCKNUT (M10X1.5-THD)	
	13	1	**7X-7729**	4	WASHER (11X25X3-MM THK)	
M	14	1	**8T-4195**	4	BOLT (M10X1.5X30-MM)	
M	15	1	**8T-4970**	4	BOLT (M6X1X14-MM)	
M	16	1	**8T-4971**	2	BOLT (M6X1X30-MM)	
D	17	1	**5P-7483**		SEAL (1.7-M)	

D-ORDER BY THE METER
M-METRIC PART

284-1145 **DOOR GP-ACCESS** *(contd.)* **i02885675**

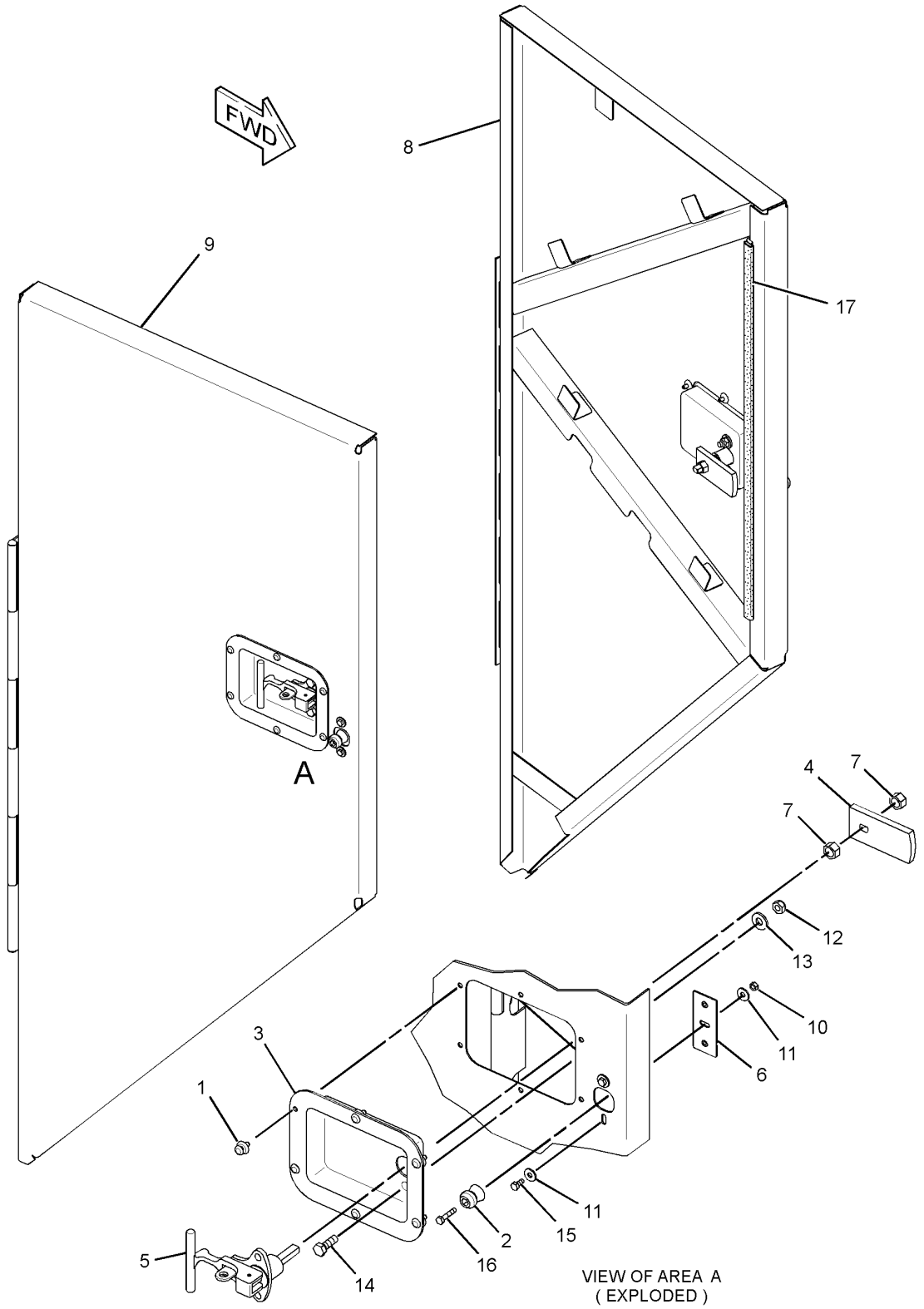

GRAPHIC #1 **<END>** g01437953

FRAME AND BODY

131-8125 DRAWBAR GP

S/N: 2211-UP

PART OF 170-1931 MOUNTING GP-BUMPER

SMCS-7105, 7119 **i00746572**

NOTE	REF NO	GRAPHIC REF	PART NUMBER	QTY	PART NAME 1 2 3 4 5 6 (PRODUCT LEVEL)	SEE PAGE
	1	1	**1V-0134**	1	PIN	
	2	1	**6V-8188**	1	NUT (1/2-13-THD)	
	3	1	**4V-1074**	1	PLATE	
	4	1	**117-0307**	1	HANDLE AS	
	5	1	**8T-4223**	1	WASHER-HARD (13.5X25.5X3-MM THK)	

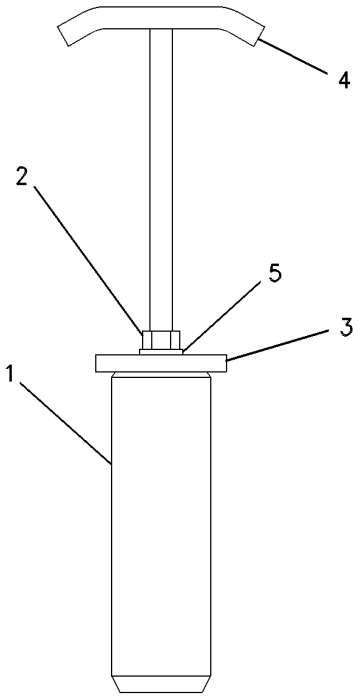

GRAPHIC #1 **<END>** g00295887

109-6908 ENCLOSURE GP-HYDRAULIC TANK–LH

S/N: 2211-UP

PART OF 262-2081 CHASSIS AR

SMCS-5056 **i01504475**

NOTE	REF NO	GRAPHIC REF	PART NUMBER	QTY	PART NAME 1 2 3 4 5 6 (PRODUCT LEVEL)	SEE PAGE
	1	1	**118-9446**	1	BRACKET AS	
M		1	**8T-3597**	6	NUT-WELD (M12X1.75-THD)	
	2	1	**196-4225**	1	BRACKET AS	
	3	1	**196-9655**	1	BRACKET AS	
CY	4	1	*201-4768*	1	ENCLOSURE GP-HYDRAULIC TANK (LH)	474
	5	1	**150-1280**	12	WASHER-HARD (26X44X22-MM THK)	
M	6	1	**7X-2576**	16	BOLT (M24X3X70-MM)	
	7	1	**8T-1482**	4	WASHER-HARD (26X50X8-MM THK)	
M	8	1	**8T-4139**	4	BOLT (M12X1.75X30-MM)	
	9	1	**8T-4167**	8	WASHER-HARD (26X44X4-MM THK)	
	10	1	**8T-4223**	4	WASHER-HARD (13.5X25.5X3-MM THK)	
M	11	1	**8T-5379**	4	BOLT (M24X3X50-MM)	

C-CHANGE FROM PREVIOUS TYPE
M-METRIC PART
Y-SEPARATE ILLUSTRATION

109-6908 **ENCLOSURE GP-HYDRAULIC TANK** *(contd.)* **i01504475**

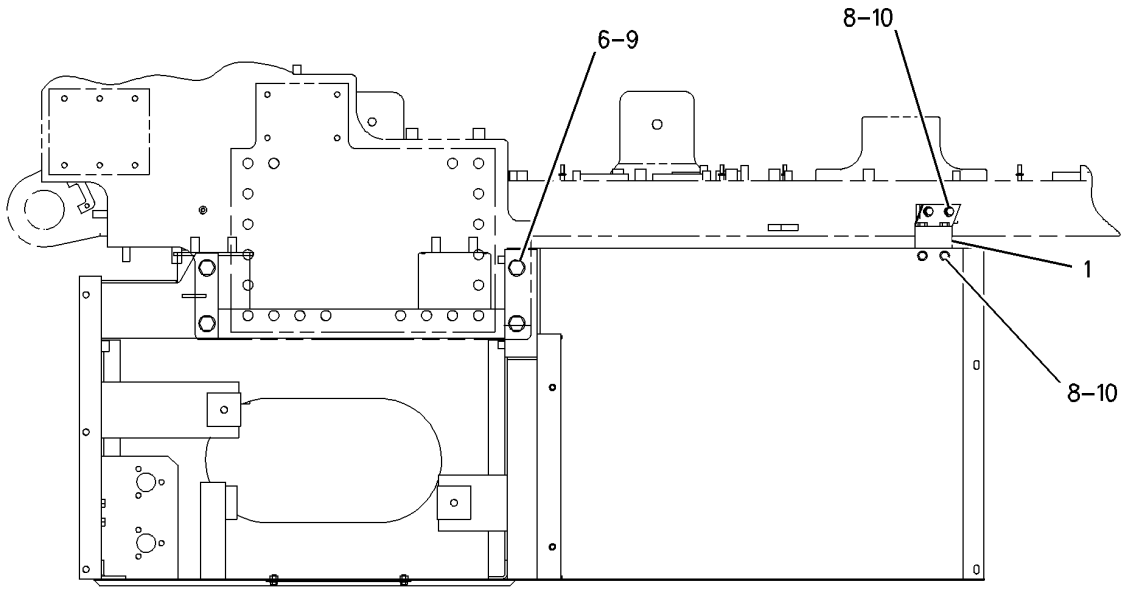

TOP VIEW

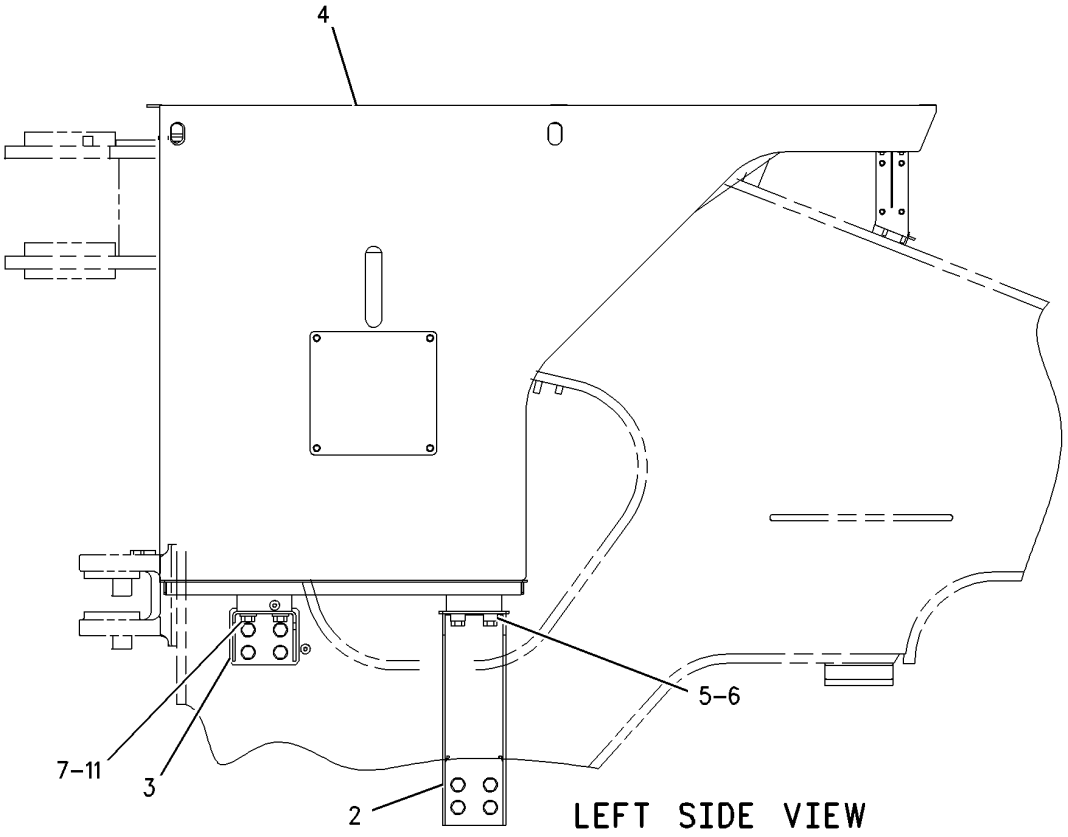

LEFT SIDE VIEW

GRAPHIC #1 **<END>** g00782366

FRAME AND BODY

201-4768 ENCLOSURE GP-HYDRAULIC TANK

S/N: 2211-UP

LH

PART OF 109-6908 ENCLOSURE GP-HYDRAULIC TANK

SMCS-5056 **i01504476**

NOTE	REF NO	GRAPHIC REF	PART NUMBER	QTY	PART NAME 1 2 3 4 5 6 (PRODUCT LEVEL)	SEE PAGE
	1	1	**201-4748**	1	COVER	
	2	1	**201-4750**	1	ENCLOSURE AS	
	3	1	**8T-4121**	4	WASHER-HARD (11X21X2.5-MM THK)	
M	4	1	**8T-4137**	4	BOLT (M10X1.5X20-MM)	

M-METRIC PART

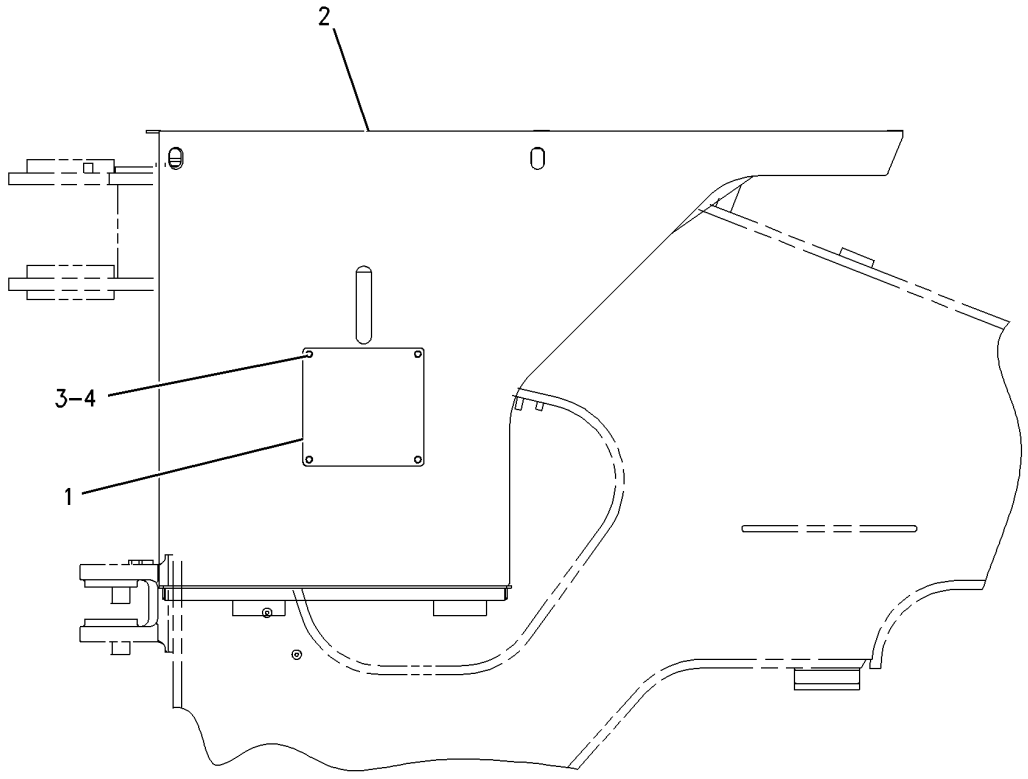

LEFT SIDE VIEW

GRAPHIC #1 **<END>** g00782227

279-5278 ENCLOSURE GP-HYDRAULIC TANK–RH

S/N: 2211-UP

PART OF 262-2081 CHASSIS AR

SMCS-5056 **i02890999**

NOTE	REF NO	GRAPHIC REF	PART NUMBER	QTY	PART NAME 1 2 3 4 5 6 (PRODUCT LEVEL)	SEE PAGE
	1	1	**168-1793**	1	BRACKET AS	
	2	1	**284-3334**	1	ENCLOSURE AS-HYDRAULIC TANK	
	3	1	**284-3335**	2	CHANNEL AS	
	4	1	**284-3350**	1	BRACKET	
	5	1	**285-4085**	1	BRACKET	
	6	1	**286-7260**	1	PLATE	
	7	1	**288-9063**	1	BRACKET AS	
	8	1	**150-1280**	12	WASHER-HARD (26X44X22-MM THK)	
	9	1	**5P-1076**	4	WASHER-HARD (13.5X30X4-MM THK)	
M	10	1	**7X-2576**	16	BOLT (M24X3X70-MM)	
	11	1	**8T-1482**	4	WASHER-HARD (26X50X8-MM THK)	
M	12	1	**8T-4139**	14	BOLT (M12X1.75X30-MM)	
	13	1	**8T-4167**	4	WASHER-HARD (26X44X4-MM THK)	
	14	1	**8T-4223**	14	WASHER-HARD (13.5X25.5X3-MM THK)	
M	15	1	**8T-4956**	4	BOLT (M12X1.75X35-MM)	
M	16	1	**8T-5379**	4	BOLT (M24X3X50-MM)	

M-METRIC PART

279-5278 **ENCLOSURE GP-HYDRAULIC TANK** *(contd.)* **i02890999**

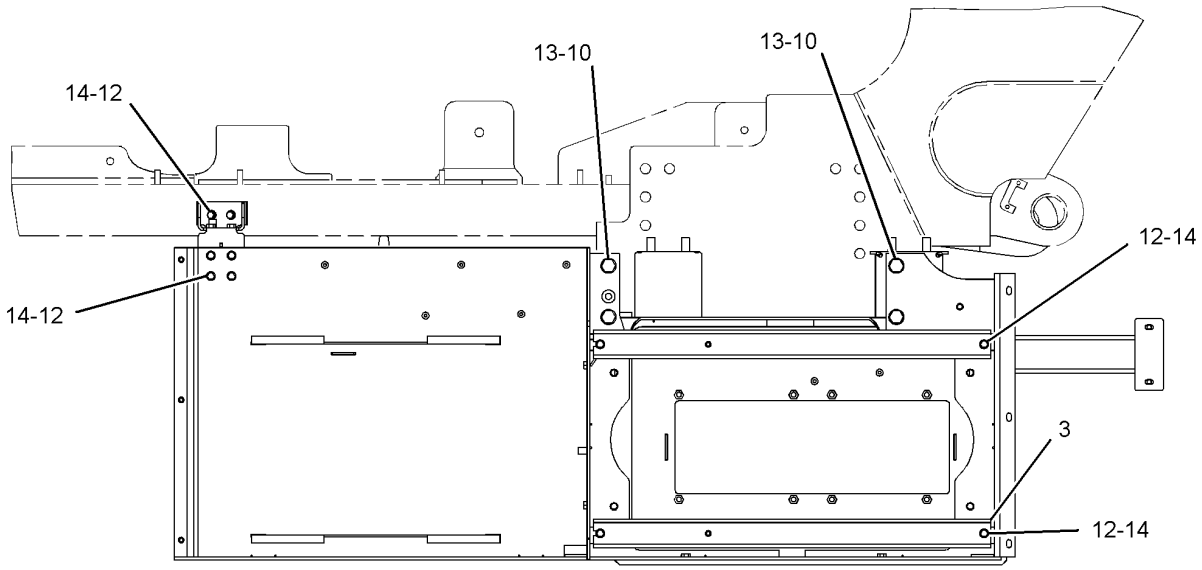

TOP VIEW

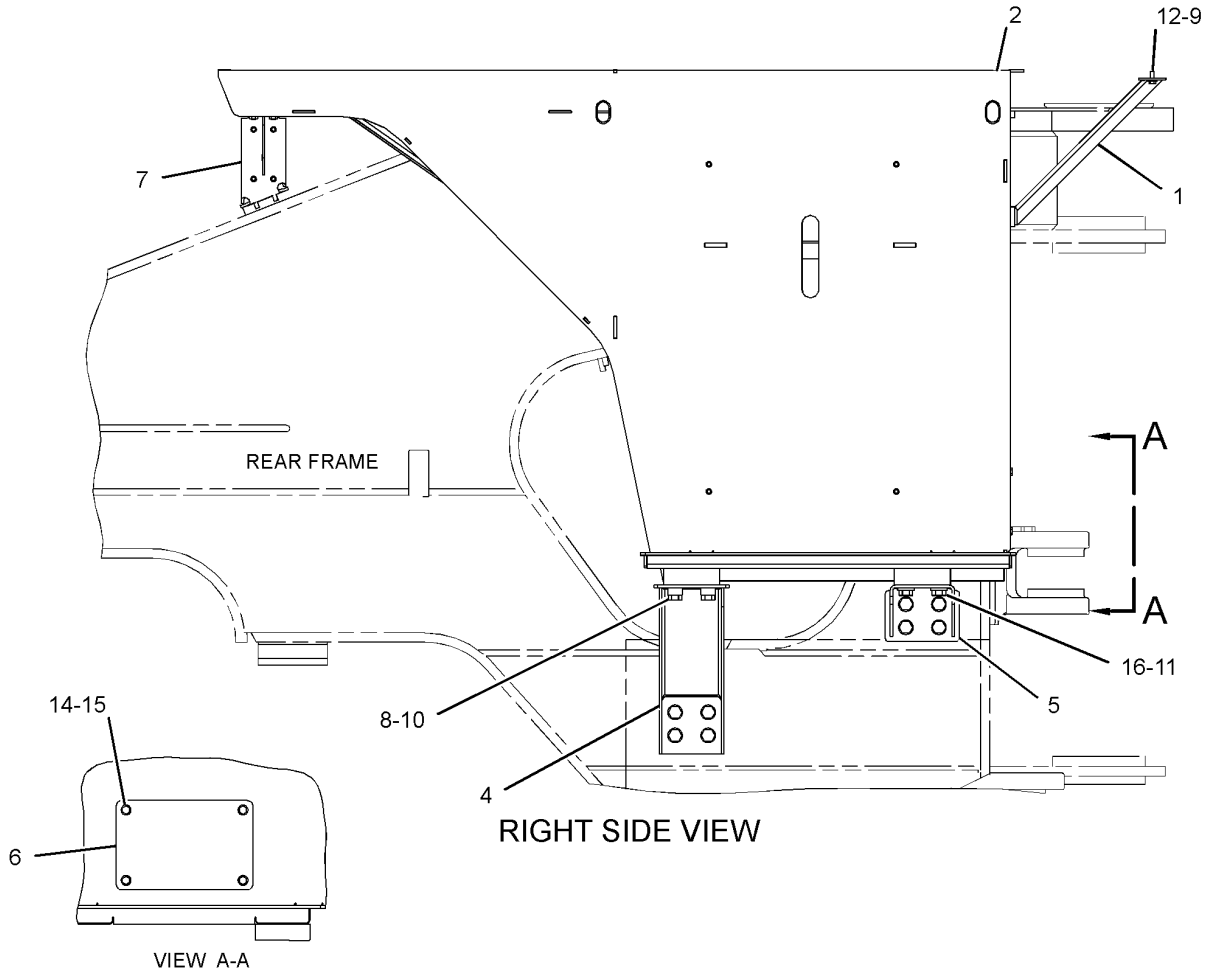

RIGHT SIDE VIEW

VIEW A-A

GRAPHIC #1 **<END>** g01443862

FRAME AND BODY

283-6468 FENDER GP

S/N: 2211-UP

AN ATTACHMENT

SMCS-7252 **i02901540**

NOTE	REF NO	GRAPHIC REF	PART NUMBER	QTY	PART NAME 1 2 3 4 5 6 (PRODUCT LEVEL)	SEE PAGE
	1	1	**210-7334**	1	SHEET AS (RH)	
	2	1	**210-7337**	1	SHEET AS (LH)	
	3	1	**210-7339**	1	SHEET AS (RH)	
	4	1	**210-7690**	1	SHEET AS (RH)	
	5	1	**210-7694**	1	SHEET AS (LH)	
	6	1	**210-7696**	1	SHEET AS (RH)	
	7	1	**210-7698**	1	SHEET AS (LH)	
	8	1	**210-7701**	1	SHEET AS (LH)	
	9	2	**210-7715**	2	FLAP	
	10	2	**210-7716**	1	SHEET AS (RH)	
	11	2	**210-7718**	1	SHEET AS (LH)	
	12	2	**210-7720**	2	FLAP	
	13	3	**211-4337**	2	STRIP	
	14	1	**212-3181**	1	SHEET	
	15	1	**212-3183**	2	ANGLE	
	16	1,2	**212-3184**	2	STRIP	
	17	2	**212-3185**	2	FLAP	
	18	1	**215-1851**	1	SHEET (LH)	
	19	1	**215-1852**	2	SHEET	
	20	1	**215-1854**	1	SHEET AS (RH)	
	21	1	**215-1855**	1	SHEET AS (LH)	
Y	22	1	*283-6469*	1	LADDER GP (STAIRWAY, HANDRAILS, RH)	521
	23	1	**284-0613**	1	SHEET	
	24	1	**284-0614**	1	SHEET	
	25	1	**284-0615**	1	SHEET AS	
	26	1	**284-0616**	1	SHEET AS	
	27	1	**284-0617**	1	SHEET AS	
	28	1	**284-0618**	1	SHEET AS	
	29	3	**174-5807**	22	RIVET-POP	
	30	3	**211-4338**	4	STRIP	
	31	2	**5P-1076**	6	WASHER-HARD (13.5X30X4-MM THK)	
	32	3	**6B-2882**	10	SPACER (0.406X0.75X0.312-IN THK)	
	33	1,2,3	**7X-7729**	176	WASHER (11X25X3-MM THK)	
M	34	1,2,3	**8T-4133**	90	NUT (M10X1.5-THD)	
M	35	1,2,3	**8T-4136**	70	BOLT (M10X1.5X25-MM)	
M	36	2	**8T-4139**	6	BOLT (M12X1.75X30-MM)	
M	37	1,3	**8T-4195**	44	BOLT (M10X1.5X30-MM)	

M-METRIC PART
Y-SEPARATE ILLUSTRATION

REFER TO ALL ILLUSTRATIONS OF
THIS GROUP FOR AUXILIARY VIEWS

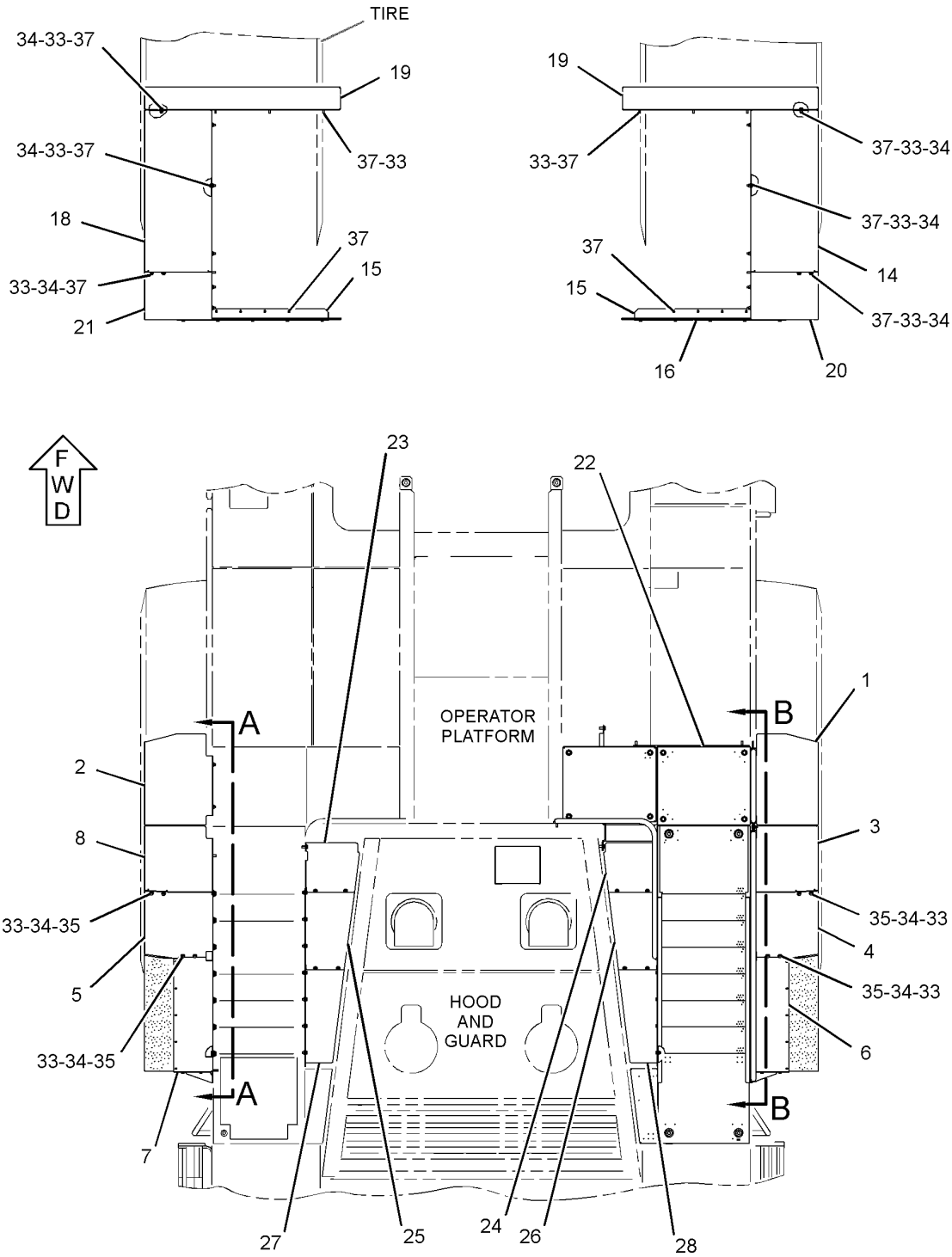

TOP VIEW

GRAPHIC #1 g01448378

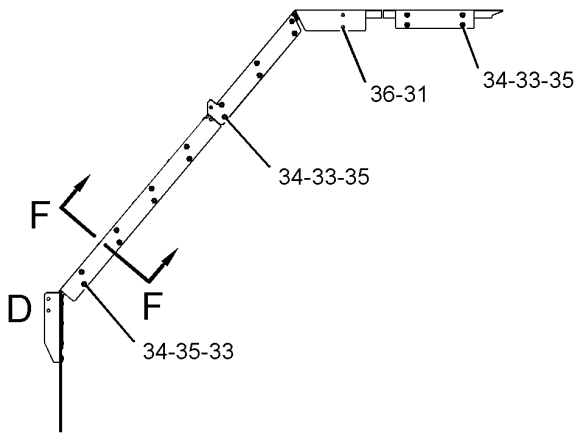

VIEW A-A

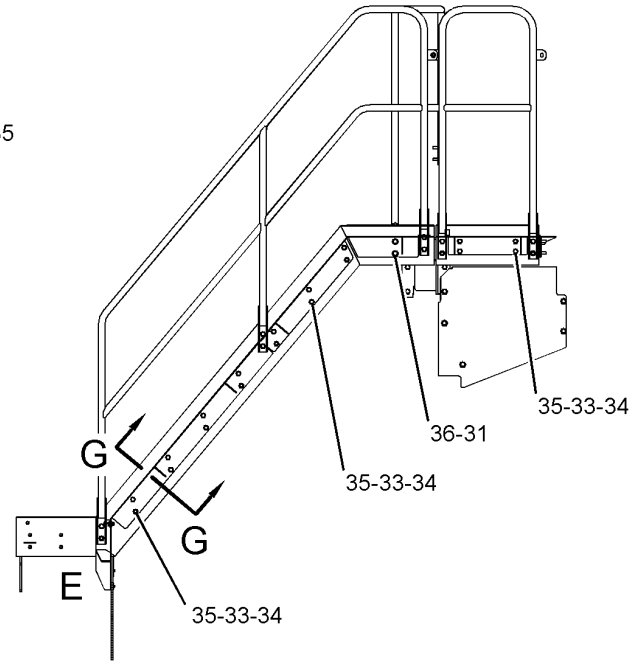

SECTION B-B

REFER TO ALL ILLUSTRATIONS OF THIS GROUP FOR AUXILIARY VIEWS

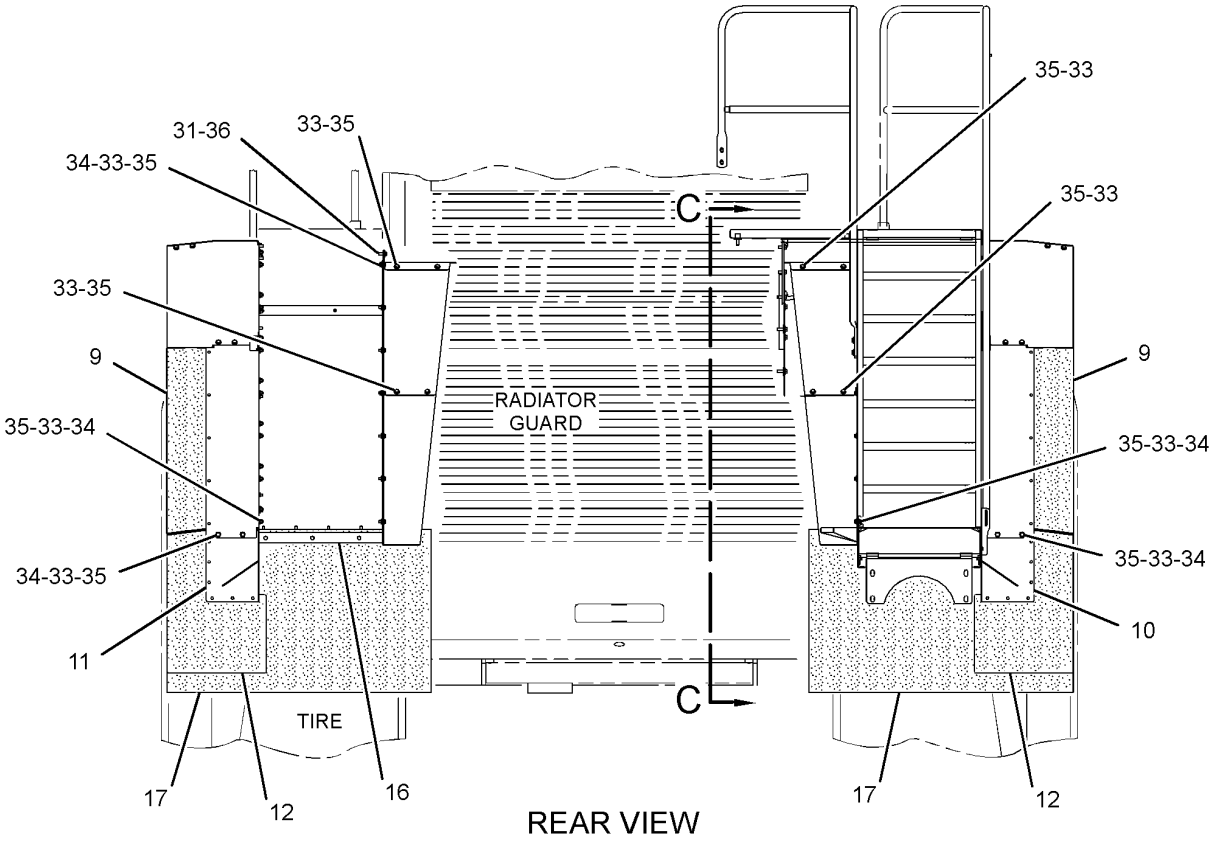

REAR VIEW

GRAPHIC #2

g01448379

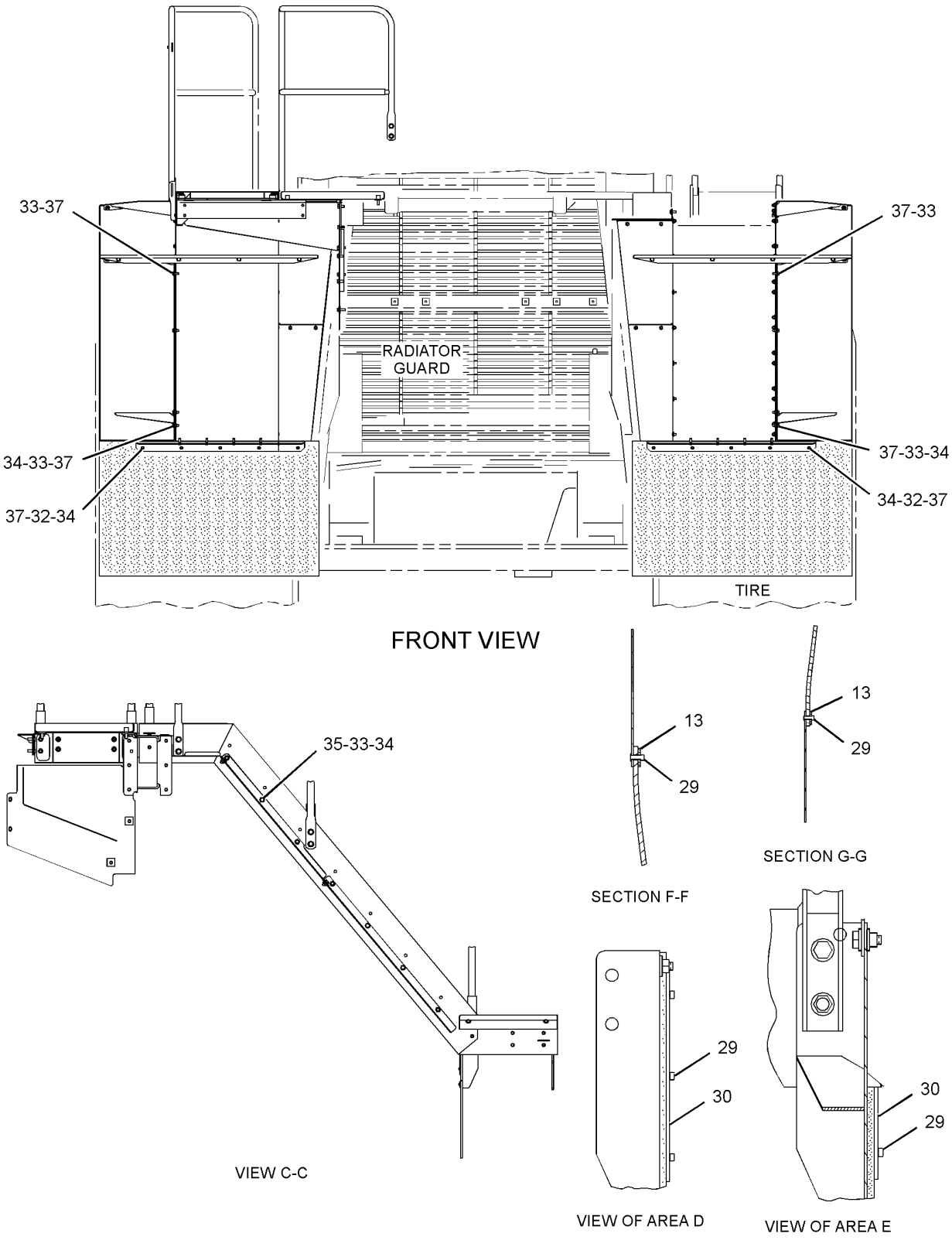

GRAPHIC #3 **<END>** g01449802

FRAME AND BODY

109-6845 FENDER GP-FRONT

S/N: 2211-UP

PART OF 262-2081 CHASSIS AR

SMCS-7252 **i02940027**

NOTE	REF NO	GRAPHIC REF	PART NUMBER	QTY	PART NAME 1 2 3 4 5 6 (PRODUCT LEVEL)	SEE PAGE
	1	1	**212-2293**	1	FENDER AS-FRONT (RH)	
	2	1	**212-2294**	1	FENDER AS-FRONT (LH)	
M	3	1	**7X-2563**	16	BOLT (M20X2.5X60-MM)	
	4	1	**198-4769**	16	WASHER (22X40X10-MM THK)	

M-METRIC PART

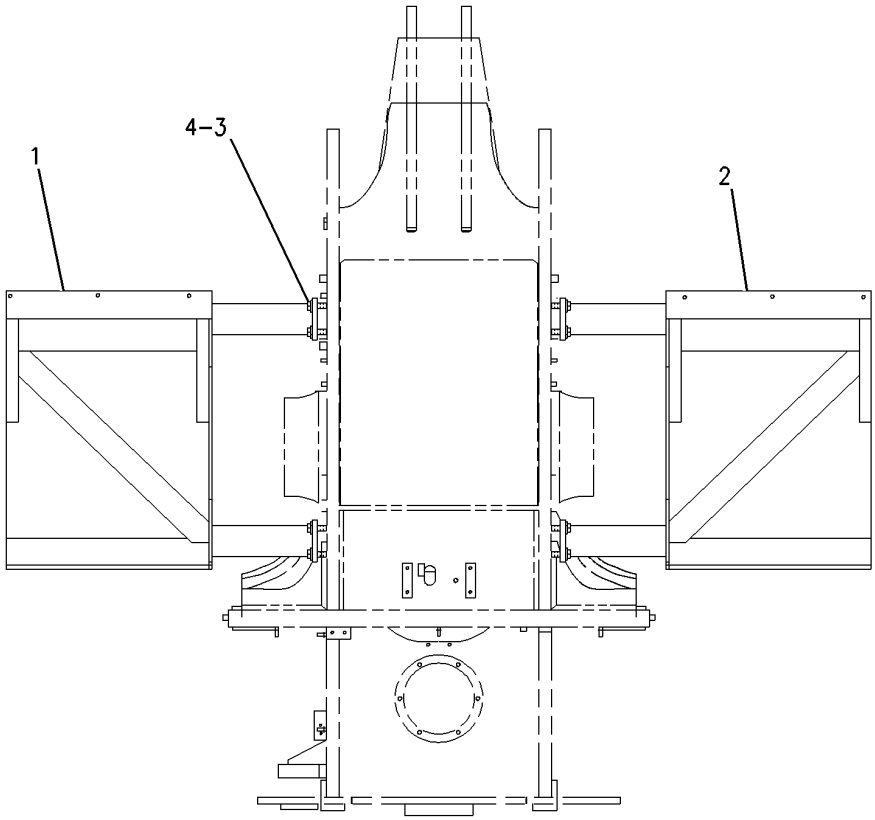

FRONT VIEW

GRAPHIC #1 **<END>** g00897742

FRAME AND BODY

283-6467 FENDER GP-ROADING

S/N: 2211-UP

FIELD INSTALLATION

SMCS-7252 **i02902441**

NOTE	REF NO	GRAPHIC REF	PART NUMBER	QTY	PART NAME 1 2 3 4 5 6 (PRODUCT LEVEL)	SEE PAGE
	1	1	**210-7334**	1	SHEET AS (RH)	
	2	1	**210-7337**	1	SHEET AS (LH)	
	3	1	**210-7339**	1	SHEET AS (RH)	
	4	1	**210-7690**	1	SHEET AS (RH)	
	5	1	**210-7694**	1	SHEET AS (LH)	
	6	1	**210-7696**	1	SHEET AS (RH)	
	7	1	**210-7698**	1	SHEET AS (LH)	
	8	1	**210-7701**	1	SHEET AS (LH)	
	9	2	**210-7715**	2	FLAP	
	10	2	**210-7716**	1	SHEET AS (RH)	
	11	2	**210-7718**	1	SHEET AS (LH)	
	12	2	**210-7720**	2	FLAP	
	13	3	**211-4337**	2	STRIP	
	14	1	**212-3181**	1	SHEET	
	15	1	**212-3183**	2	ANGLE	
	16	2	**212-3184**	2	STRIP	
	17	2	**212-3185**	2	FLAP	
	18	1	**215-1851**	1	SHEET (LH)	
	19	1	**215-1852**	2	SHEET	
	20	1	**215-1854**	1	SHEET AS (RH)	
	21	1	**215-1855**	1	SHEET AS (LH)	
	22	1	**284-0613**	1	SHEET	
	23	1	**284-0614**	1	SHEET	
	24	1	**284-0615**	1	SHEET AS	
	25	1	**284-0616**	1	SHEET AS	
	26	1	**284-0617**	1	SHEET AS	
	27	1	**284-0618**	1	SHEET AS	
	28	3	**174-5807**	22	RIVET-POP	
	29	3	**211-4338**	4	STRIP	
	30	2,3	**5P-1076**	6	WASHER-HARD (13.5X30X4-MM THK)	
	31	3	**6B-2882**	10	SPACER (0.406X0.75X0.312-IN THK)	
	32	1,2,3	**7X-7729**	176	WASHER (11X25X3-MM THK)	
M	33	1,2,3	**8T-4133**	90	NUT (M10X1.5-THD)	
M	34	1,2,3	**8T-4136**	70	BOLT (M10X1.5X25-MM)	
M	35	2,3	**8T-4139**	6	BOLT (M12X1.75X30-MM)	
M	36	1,3	**8T-4195**	44	BOLT (M10X1.5X30-MM)	

M-METRIC PART

REFER TO ALL ILLUSTRATIONS OF
THIS GROUP FOR AUXILIARY VIEWS

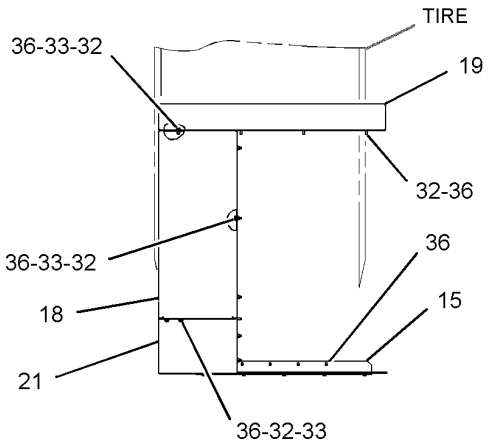

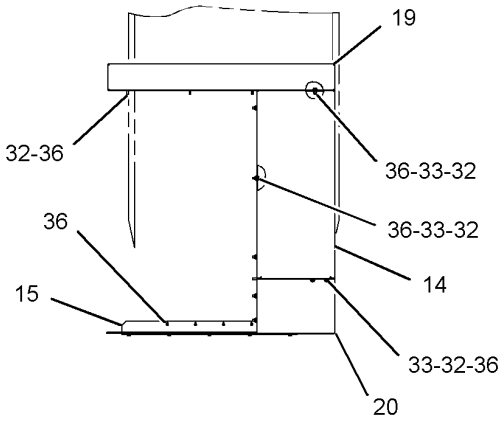

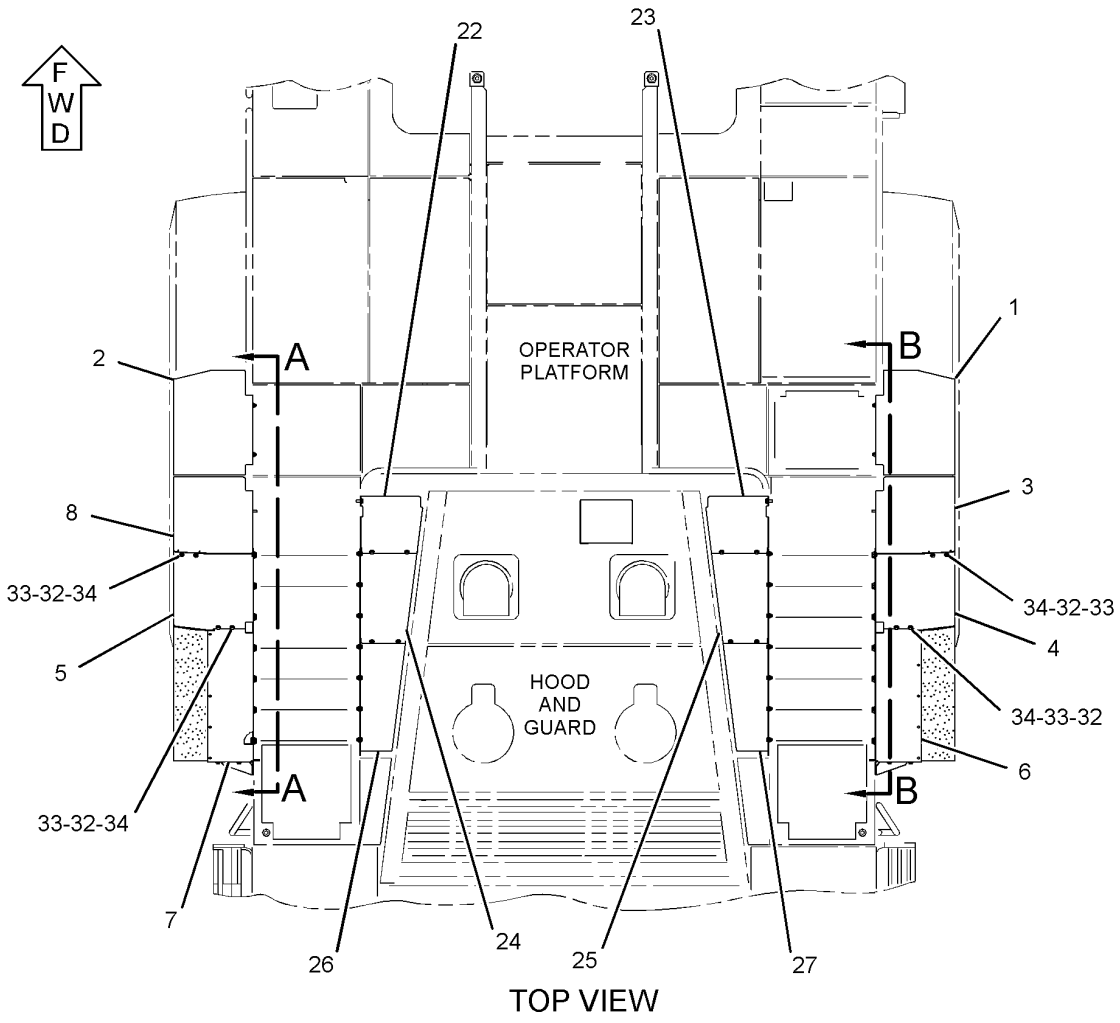

TOP VIEW

GRAPHIC #1 g01448315

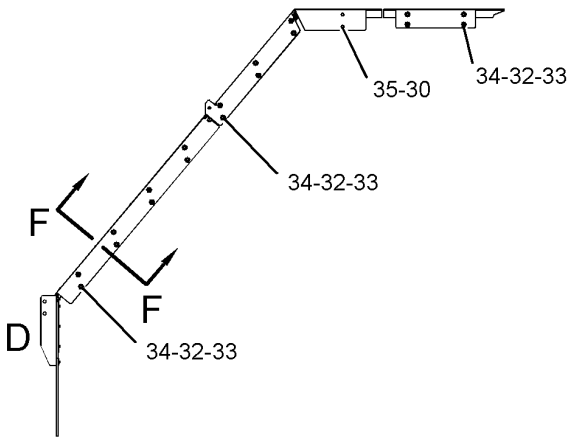

VIEW A-A

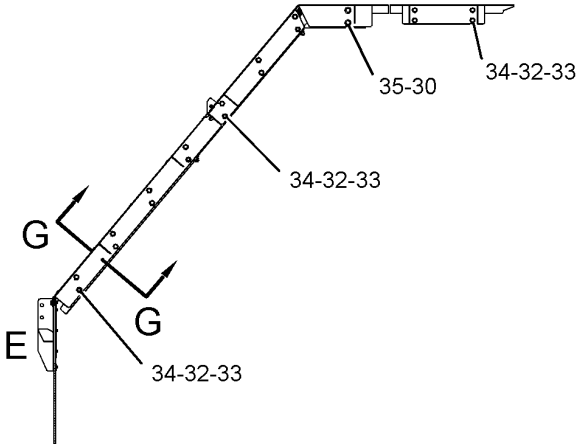

SECTION B-B

REFER TO ALL ILLUSTRATIONS OF
THIS GROUP FOR AUXILIARY VIEWS

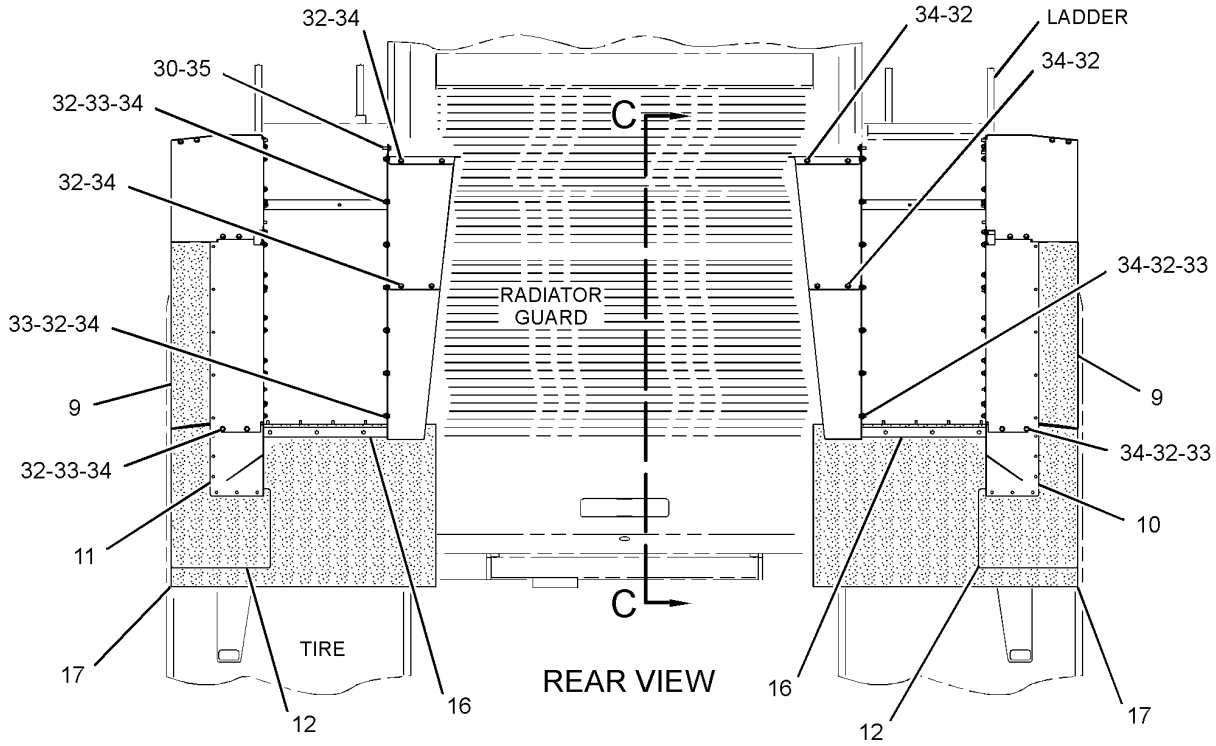

GRAPHIC #2

g01448316

283-6467 **FENDER GP-ROADING** *(contd.)* **i02902441**

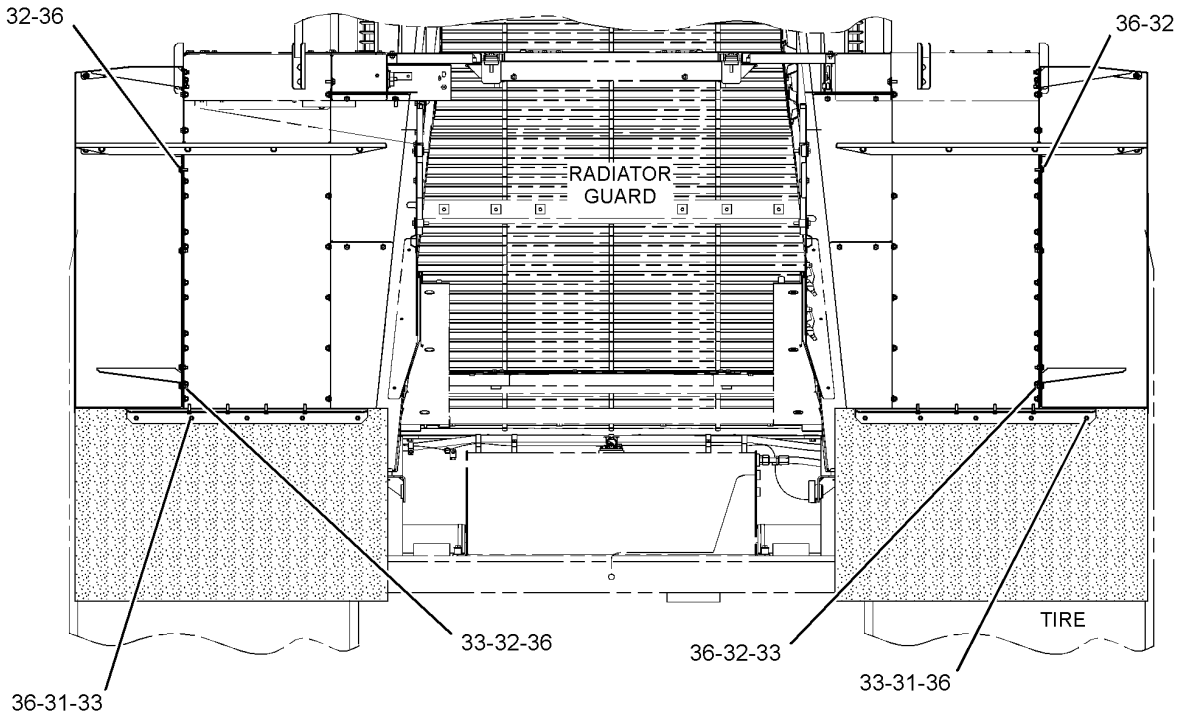

FRONT VIEW

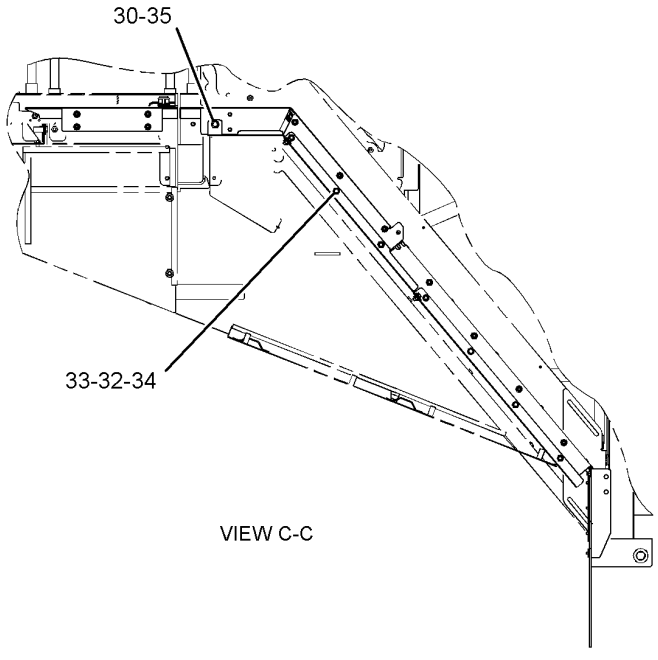

VIEW C-C

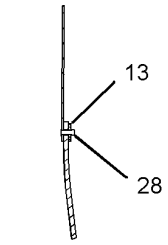

SECTION F-F

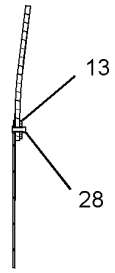

SECTION G-G

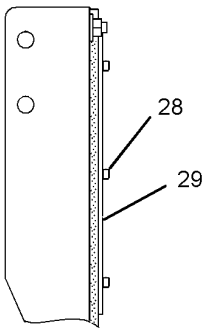

VIEW OF AREA D

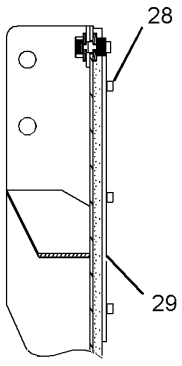

VIEW OF AREA E

GRAPHIC #3 **<END>** g01448754

FRAME AND BODY

279-5280 FIREWALL GP

S/N: 2211-UP

PART OF 262-2081 CHASSIS AR

SMCS-7262 **i02885251**

NOTE	REF NO	GRAPHIC REF	PART NUMBER	QTY	PART NAME 1 2 3 4 5 6 (PRODUCT LEVEL)	SEE PAGE
	1	1	**5R-5927**	6	WASHER (14X65X6-MM THK)	
	2	1	*8C-3468*	1	LOCK AS-CYLINDER	
		1	**226-0291**	1	LOCK AS	
		1	**226-0322**	1	CAM-LOCK	
	3	1	**8G-0841**	6	MOUNT AS	
	4	1	**125-8176**	1	CAM-LATCH	
	5	1	**174-6381**	1	LATCH AS	
	6	1	**281-4047**	1	BAFFLE AS	
		1	**4B-4274**	9	WASHER (5.5X13X1.2-MM THK)	
		1	**7D-8635**	9	RIVET	
	7	1	**281-4065**	1	BAFFLE AS	
		1	**4B-4274**	9	WASHER (5.5X13X1.2-MM THK)	
		1	**7D-8635**	9	RIVET	
	8	1	**281-4067**	1	BRACKET AS	
	9	1	**285-9347**	1	SUPPORT AS	
	10	1	**285-9348**	1	SUPPORT AS	
	11	1	**285-9349**	1	PANEL AS	
	12	1	**307-0144**	2	SHEET	
	13	1	**198-4777**	2	WASHER-HARD (11X25X10-MM THK)	
M	14	1	**7X-2576**	4	BOLT (M24X3X70-MM)	
	15	1	**7X-7729**	12	WASHER (11X25X3-MM THK)	
	16	1	**8T-4121**	8	WASHER-HARD (11X21X2.5-MM THK)	
M	17	1	**8T-4136**	22	BOLT (M10X1.5X25-MM)	
M	18	1	**8T-4139**	5	BOLT (M12X1.75X30-MM)	
	19	1	**8T-4167**	4	WASHER-HARD (26X44X4-MM THK)	
	20	1	**8T-4223**	5	WASHER-HARD (13.5X25.5X3-MM THK)	
M	21	1	**8T-6868**	6	BOLT (M12X1.75X80-MM)	

M-METRIC PART

279-5280 **FIREWALL GP** *(contd.)* **i02885251**

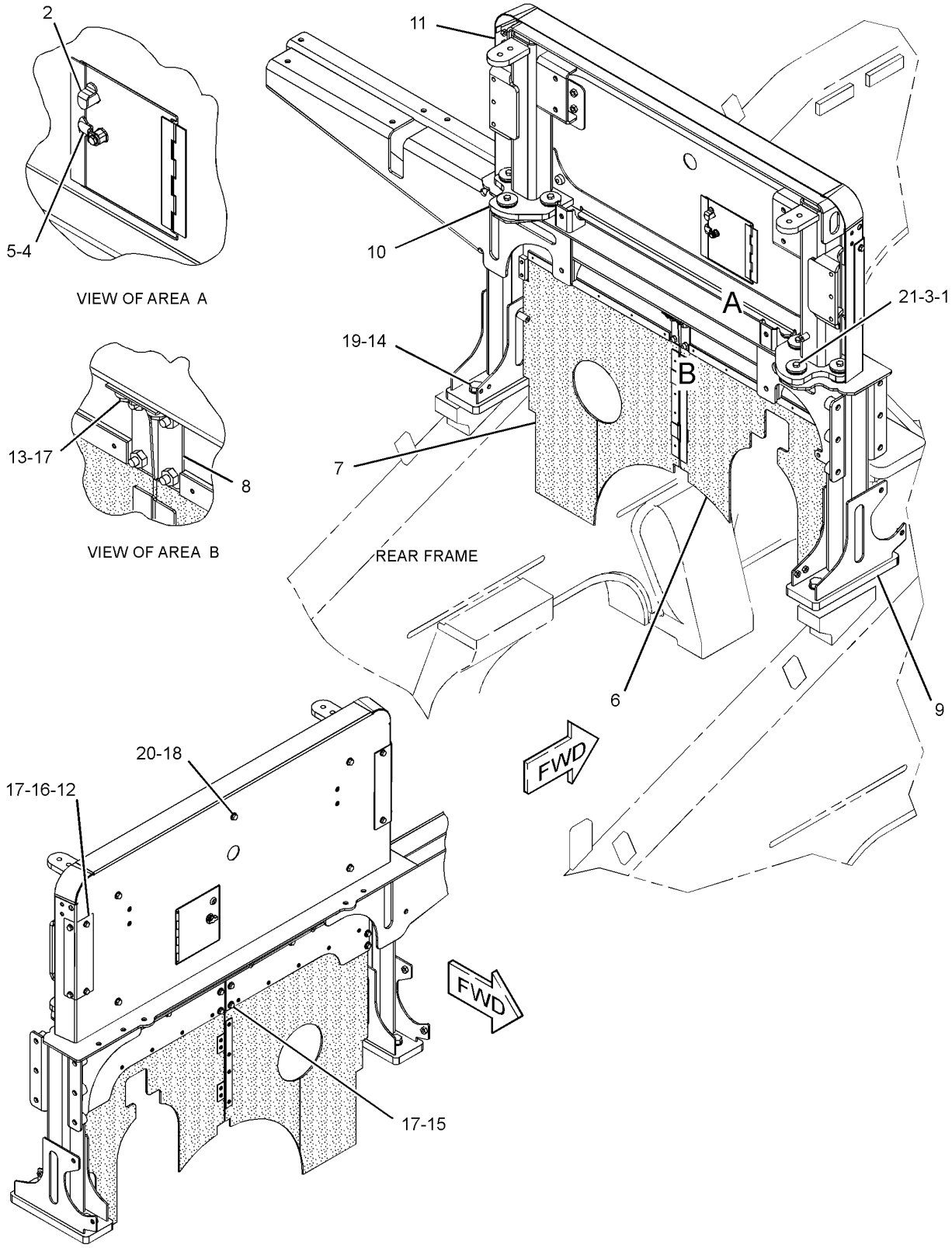

GRAPHIC #1 **<END>** g01444244

FRAME AND BODY

273-0225 FRAME AS-FR0NT

S/N: 2211-UP

PART OF 262-2081 CHASSIS AR

SMCS-7051 **i02883762**

NOTE	REF NO	GRAPHIC REF	PART NUMBER	QTY	PART NAME 1 2 3 4 5 6 (PRODUCT LEVEL)	SEE PAGE
	1	2	**6E-0804**	2	BEARING-SLEEVE	
	2	1,2	**7K-1972**	2	EYE	
	3	1	**8P-6048**	1	TRUNNION	
	4	1	**9J-2606**	2	BEARING (SLEEVE)	
	5	1	**9J-2607**	2	BEARING (SLEEVE)	
	6	1,2	**123-3363**	4	PLATE	
	8	2	**171-8862**	1	BLOCK	
	9	1	**177-3203**	1	BAR	
	51	2	**4E-0019**	3	BOSS (M10X1.5-THD)	
	52	2	**7Y-2522**	1	PLATE	
	53	2	**8X-5963**	1	BLOCK	
	54	2	**9C-6809**	1	BLOCK (M10X1.5-THD)	
M	55	1,2	**9R-2613**	78	BOSS-WELD (M10X1.5X25-MM)	
M	56	1	**9R-2640**	2	BOSS (M12X1.75X25-MM)	
	57	1	**9U-0853**	1	BAR	

M-METRIC PART

273-0225 FRAME AS-FRONT *(contd.)* **i02883762**

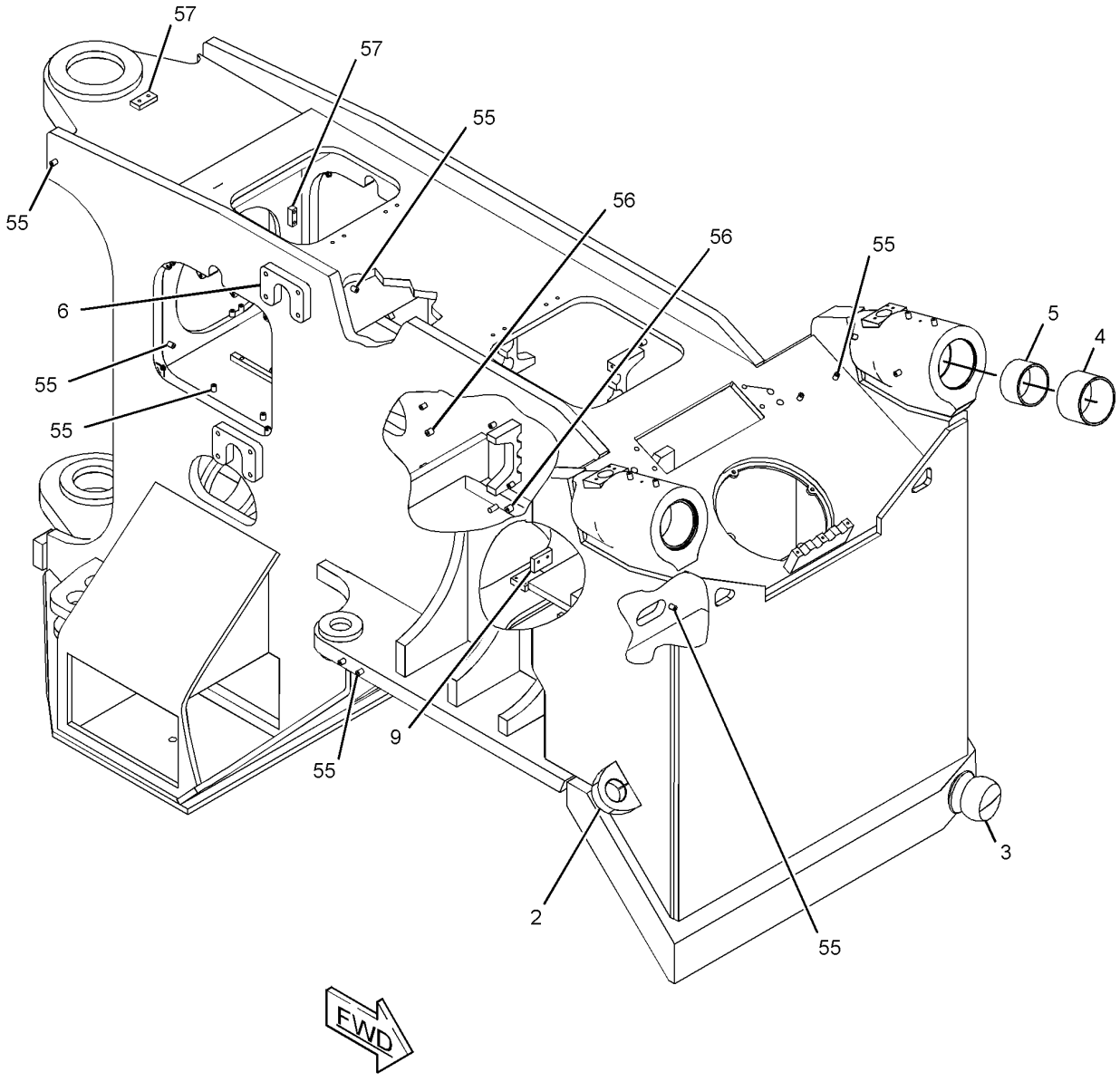

GRAPHIC #1 g01438414

273-0225 FRAME AS-FRONT *(contd.)* **i02883762**

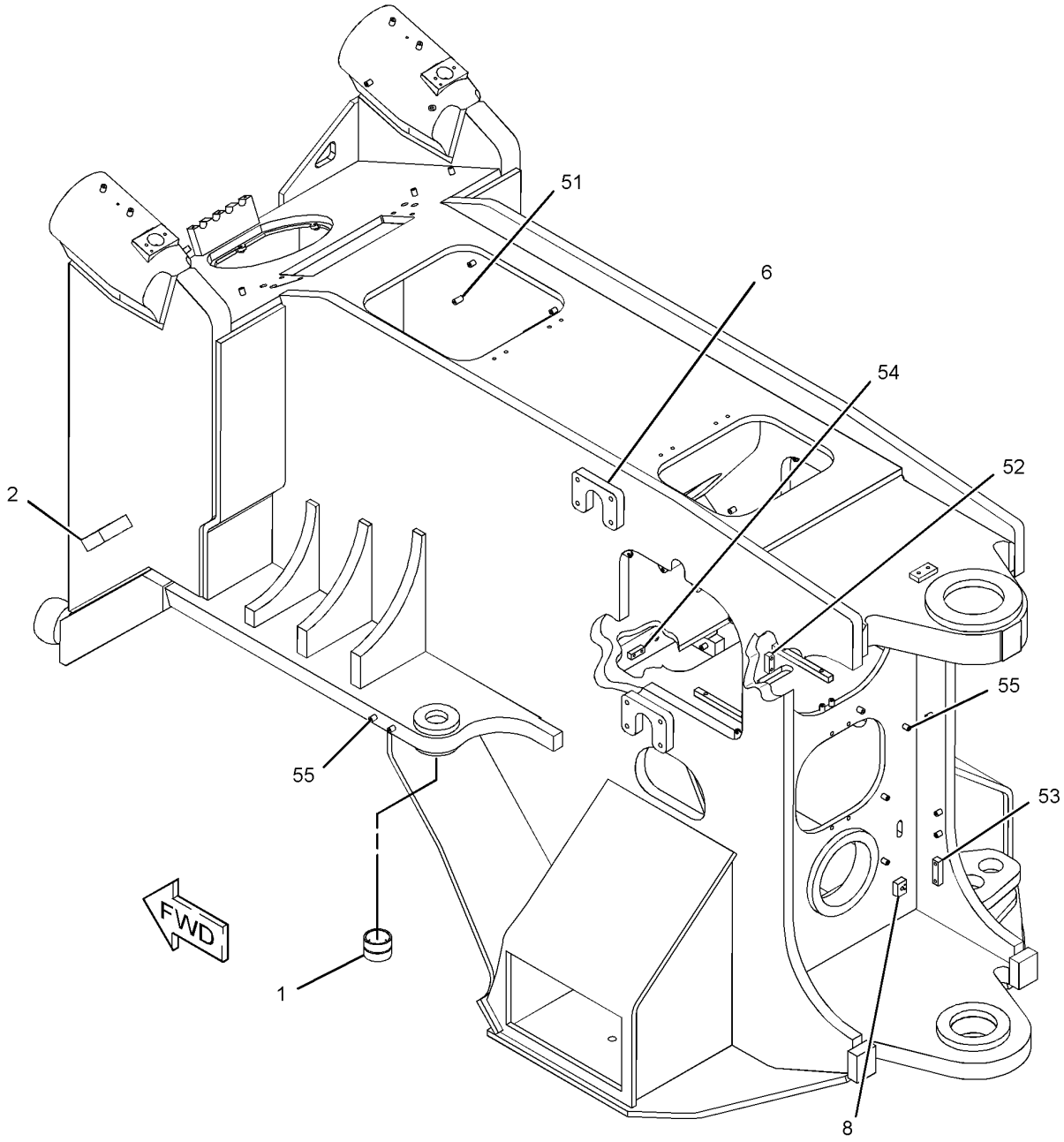

GRAPHIC #2 **<END>** g01438415

FRAME AND BODY

290-2690 FRAME AS-REAR

S/N: 2211-UP

PART OF 262-2081 CHASSIS AR

SMCS-7051 **i02896340**

NOTE	REF NO	GRAPHIC REF	PART NUMBER	QTY	PART NAME 1 2 3 4 5 6 (PRODUCT LEVEL)	SEE PAGE
	1	2	**4E-8079**	2	RETAINER	
M	2	1,4	**8X-4711**	3	BOSS AS (M12X1.75X20-MM)	
	3	1	**140-7770**	2	BRACKET AS	
					(EACH INCLUDES)	
		1	**4E-8078**	2	BEARING-SLEEVE	
	4	2	**171-8862**	1	BLOCK	
	5	2,3,4	**178-0711**	6	PLATE	
	6	1	**273-0213**	1	BRACKET AS	
	7	1	**276-7550**	2	BRACKET AS	
	8	1	**278-8389**	1	CROSSMEMBER AS	
	10	1	**318-1933**	1	HITCH AS-UPPER	
M		1	**7X-0750**	2	BOSS-WELD (M10X1.5X55-MM)	
M		1	**7X-0752**	3	BOSS-WELD (M10X1.5X65-MM OAL)	
M		1	**8T-3851**	9	BOSS-WELD (M10X1.5X17.5-MM)	
M		1	**8T-4935**	2	BOSS-WELD (M10X1.5X45-MM)	
		1	**9C-6809**	2	BLOCK (M10X1.5-THD)	
		1	**9R-4595**	1	BOSS (M12X1.75X30-MM)	
	11	2	**318-1934**	1	HITCH AS-LOWER	
	12	1	**090-8247**	2	BLOCK	
	13	3	**4I-5228**	2	PLATE	
	14	3	**4I-6289**	1	PLATE	
	15	1	**5I-3333**	1	PLATE	
M	16	3,4	**7X-0750**	11	BOSS-WELD (M10X1.5X55-MM)	
M	17	1,2,3,4	**7X-0752**	16	BOSS-WELD (M10X1.5X65-MM OAL)	
M	18	4	**7Y-8763**	1	BOSS (M10X1.5X25-MM)	
M	19	2,4	**8T-3635**	1	STUD-WELD (M12X1.75X34.93-MM OAL)	
M	20	1,2,3	**8T-3851**	59	BOSS-WELD (M10X1.5X17.5-MM)	
M	21	1,2,3,4	**8T-4935**	28	BOSS-WELD (M10X1.5X45-MM)	
	22	4	**8X-5952**	1	BLOCK	
	23	1	**8X-5963**	2	BLOCK	
	24	3	**9C-4935**	1	PLATE	
	25	1,2,4	**9C-6809**	5	BLOCK (M10X1.5-THD)	
	26	1	**9C-7863**	4	BLOCK	
	27	1	**9C-7929**	1	BLOCK	
M	28	1	**9R-2613**	6	BOSS-WELD (M10X1.5X25-MM)	
M	29	1,3,4	**9R-2640**	7	BOSS (M12X1.75X25-MM)	
M	30	1,4	**9R-3845**	5	BOSS (M12X1.75X38-MM)	
	31	1,2,3,4	**9R-4595**	16	BOSS (M12X1.75X30-MM)	
	32	1,2,3	**9T-5663**	6	BLOCK	
	33	3,4	**9T-6943**	5	BLOCK	
	34	3	**9U-1793**	4	BLOCK	
M	35	3	**9X-8487**	1	BOSS-WELD (M10X1.5X35-MM)	

M-METRIC PART

290-2690 FRAME AS-REAR *(contd.)* **i02896340**

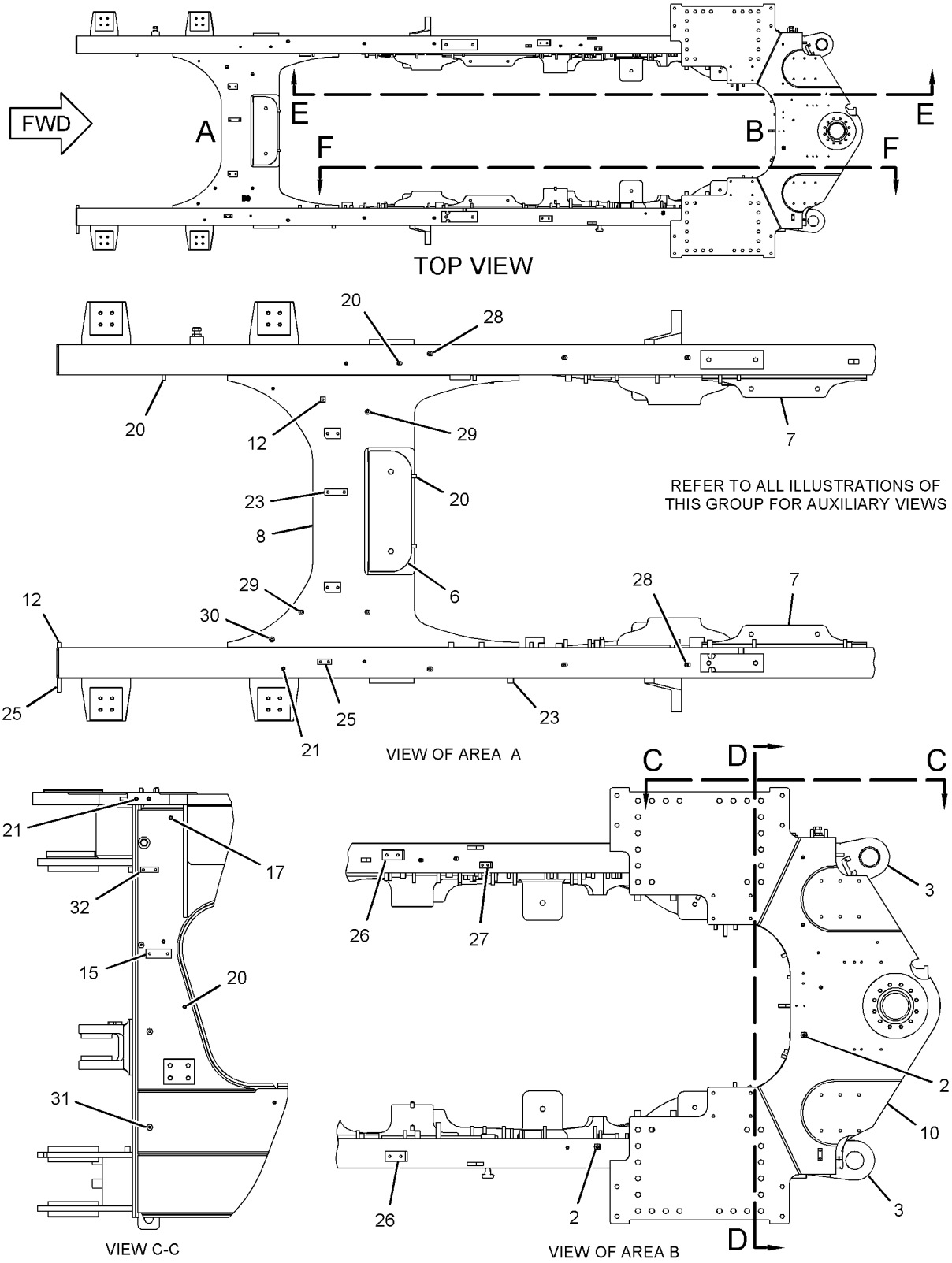

GRAPHIC #1

g01448054

290-2690 FRAME AS-REAR *(contd.)* **i02896340**

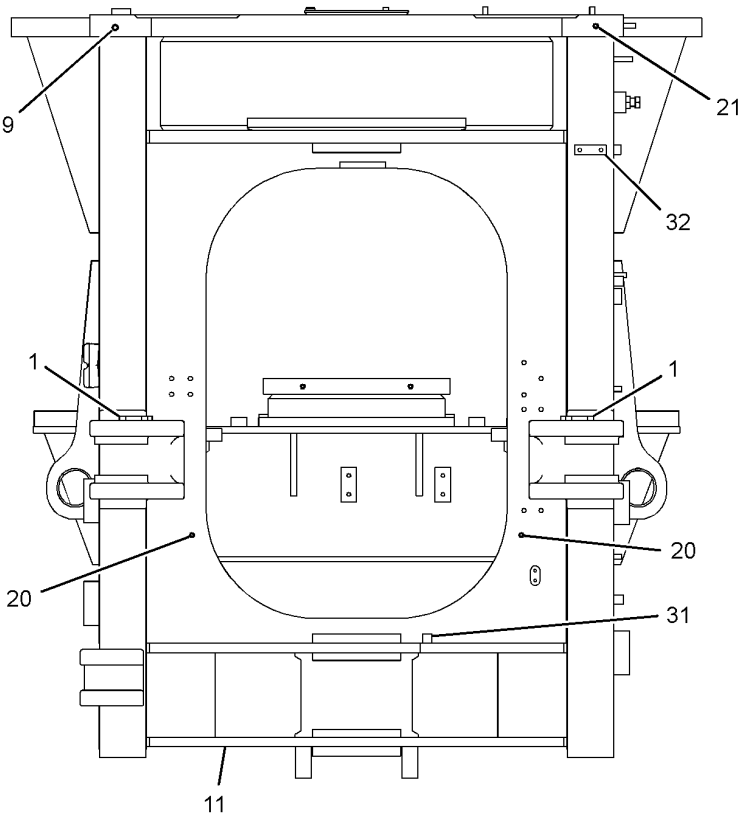

FRONT VIEW

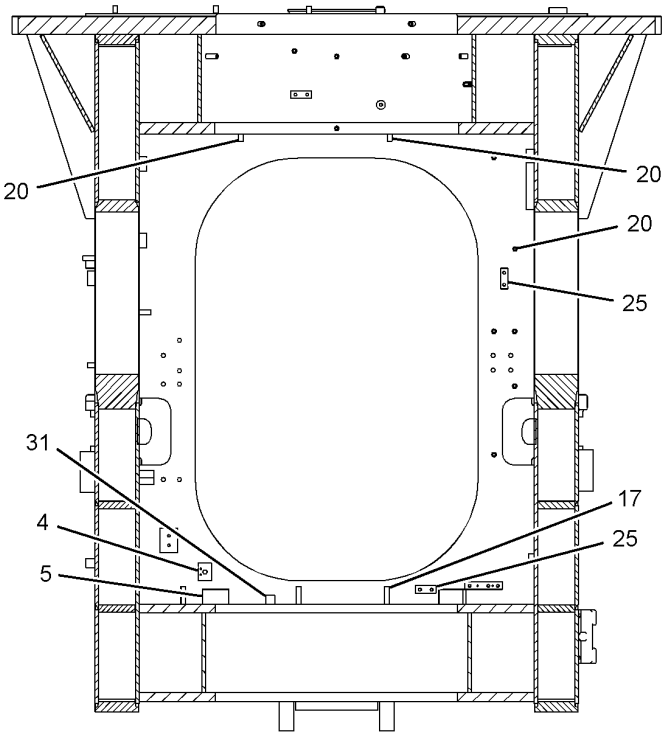

SECTION D-D

GRAPHIC #2

g01448063

290-2690 FRAME AS-REAR *(contd.)* i02896340

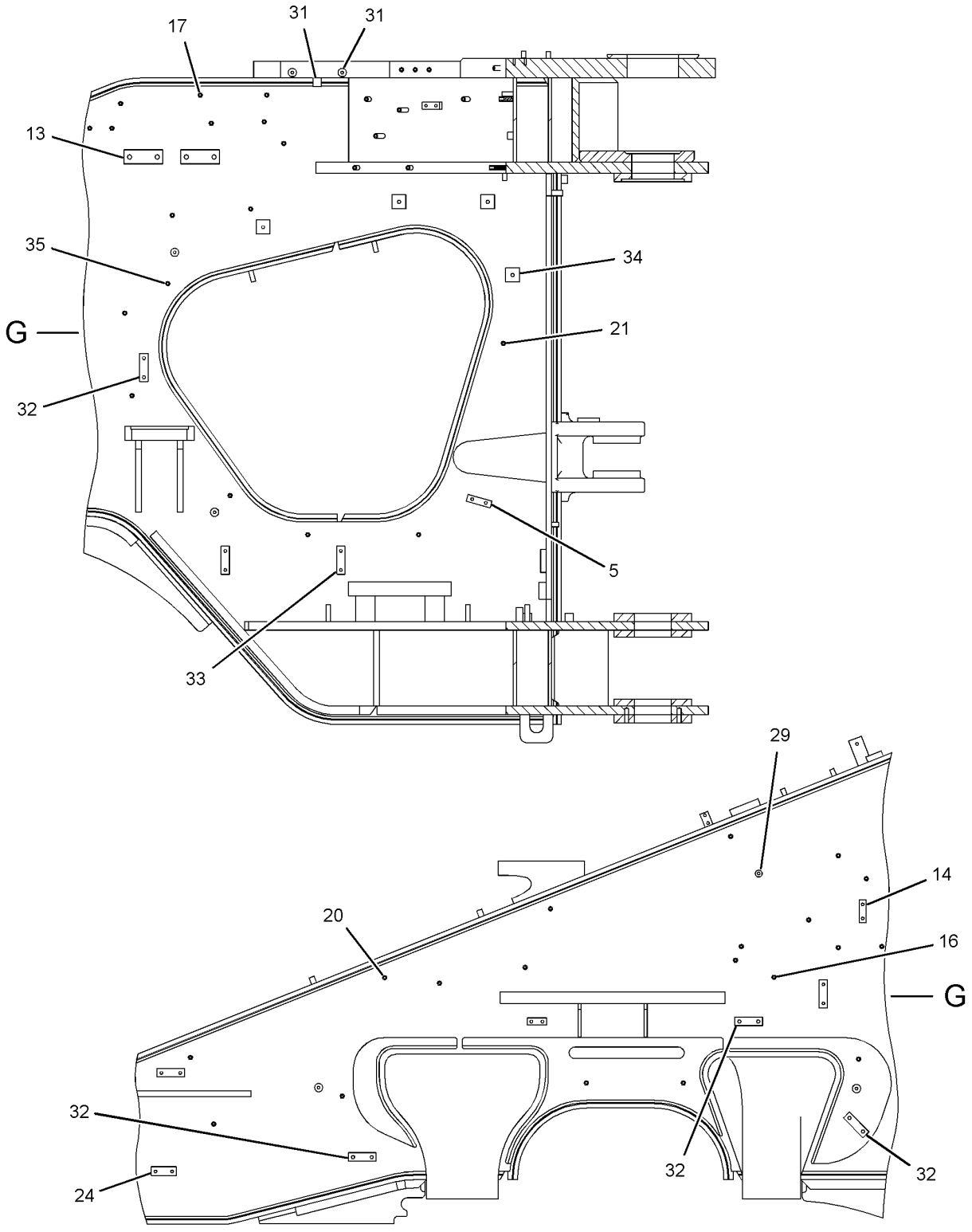

SECTION E-E

GRAPHIC #3 g01448399

290-2690 FRAME AS-REAR *(contd.)* **i02896340**

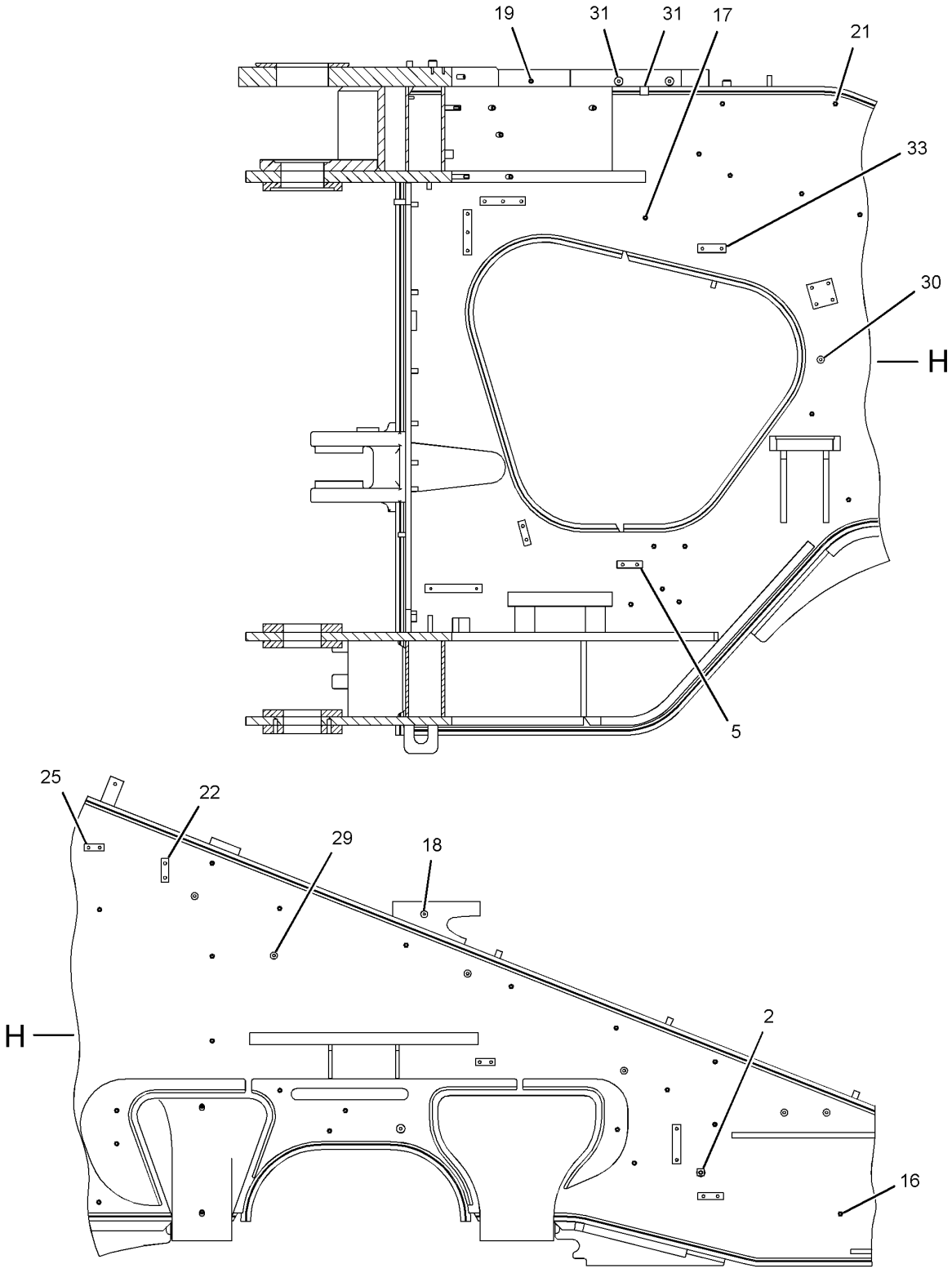

SECTION F-F

GRAPHIC #4 **<END>** g01448400

FRAME AND BODY

279-5281 GUARD GP-CRANKCASE

S/N: 2211-UP

PART OF 262-2081 CHASSIS AR

SMCS-7151 **i02885259**

NOTE	REF NO	GRAPHIC REF	PART NUMBER	QTY	PART NAME 1 2 3 4 5 6 (PRODUCT LEVEL)	SEE PAGE
	1	1	**145-7226**	1	GUARD AS	
		1	**1K-6932**	2	PIN	
	2	1	**185-9956**	2	PLATE	
	3	1	**290-3977**	2	GUARD	
M	4	1	**100-4982**	12	BOLT-SELF-LOCKING (M16X2X45-MM)	
	5	1	**7X-0595**	16	WASHER-HARD (17X30X8-MM THK)	
M	6	1	**7X-2553**	4	BOLT (M16X2X40-MM)	

M-METRIC PART

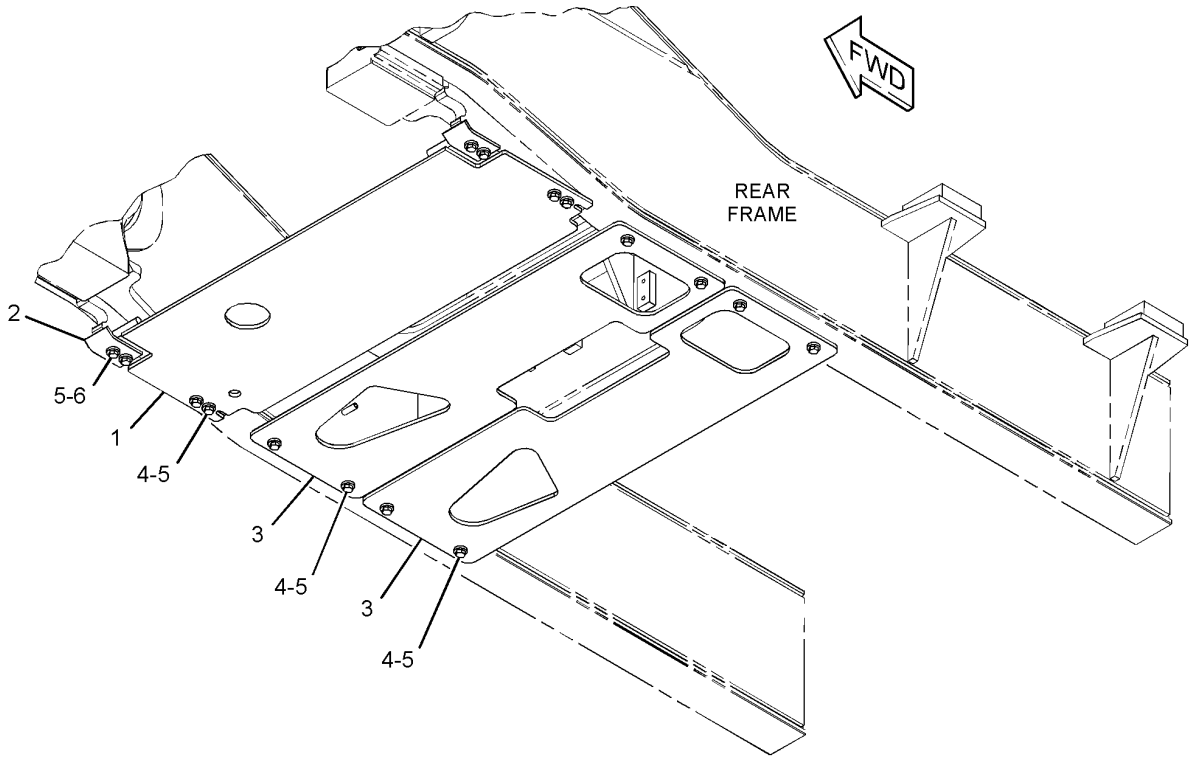

GRAPHIC #1 **<END>** g01437969

317-9133 GUARD GP-POWER TRAIN

S/N: 2211-UP

PART OF 262-2081 CHASSIS AR

SMCS-7153 **i02891348**

NOTE	REF NO	GRAPHIC REF	PART NUMBER	QTY	PART NAME 1 2 3 4 5 6 (PRODUCT LEVEL)	SEE PAGE
	1	1	**7T-3264**	2	SPACER (22.22X44.45X40-MM THK)	
	2	1	**8V-1715**	4	SPACER (20.5X35X12-MM THK)	
	3	1	**116-8716**	1	GUARD AS	
	4	1	**137-3566**	2	PLATE	
	5	1	**224-7680**	1	GUARD AS	
	6	1	**242-0315**	2	SPACER (25.5X44.5X47-MM THK)	
	7	1	**317-9193**	1	GUARD	
	8	1	**5V-1498**	6	LOCKNUT (3/8-16-THD)	
	9	1	**7X-0389**	2	BOLT (7/8-9X4.75-IN)	
	10	1	**8T-4123**	2	WASHER (22X35X3.5-MM THK)	
M	11	1	**8T-4141**	2	BOLT (M20X2.5X70-MM)	
M	12	1	**8T-6430**	4	BOLT (M20X2.5X50-MM)	

M-METRIC PART

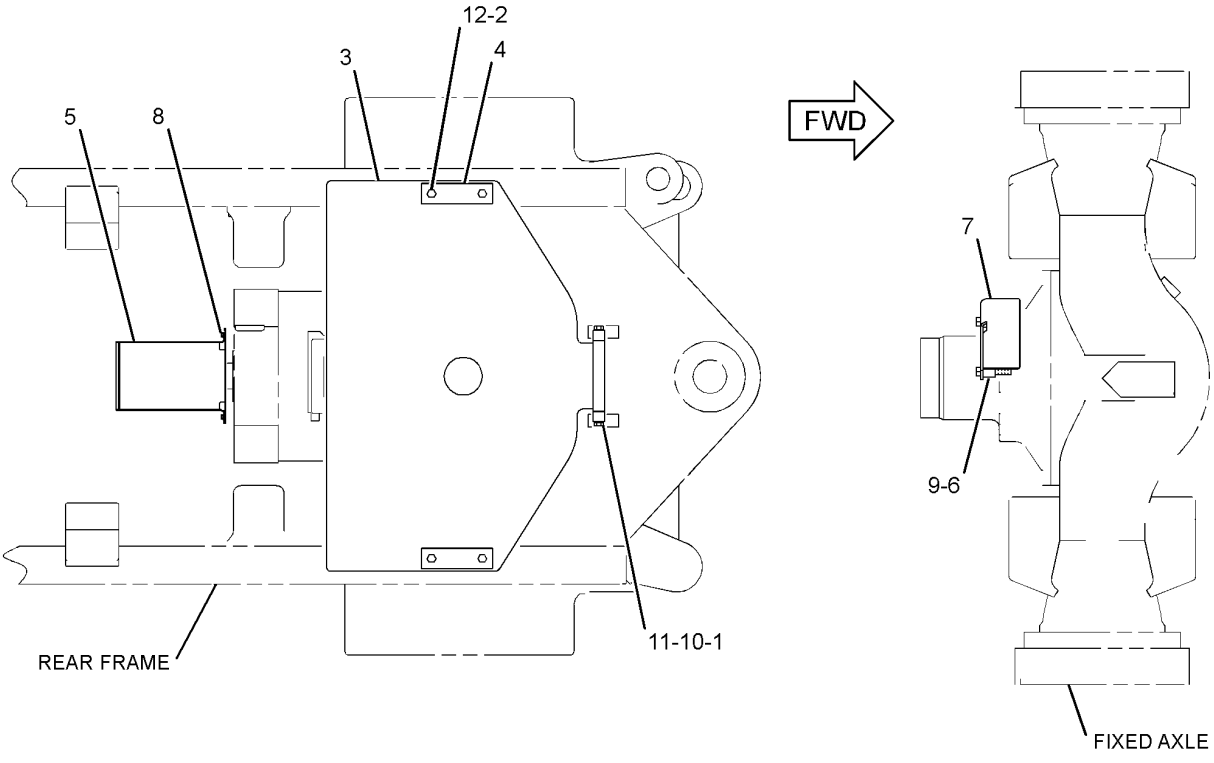

BOTTOM VIEW

GRAPHIC #1 **<END>** g01449907

FRAME AND BODY

279-0387 GUARD GP-RADIATOR

S/N: 2211-UP

PART OF 262-2081 CHASSIS AR

SMCS-7155 **i02880435**

NOTE	REF NO	GRAPHIC REF	PART NUMBER	QTY	PART NAME 1 2 3 4 5 6 (PRODUCT LEVEL)	SEE PAGE
	1	1	**8Y-5743**	2	SOCKET-LATCH	
	2	1	**228-2826**	1	COVER AS	
	3	1	**279-0361**	1	GUARD AS-RADIATOR	
		1	**4E-0019**	2	BOSS (M10X1.5-THD)	
		1	**090-8247**	1	BLOCK	
	4	1	**279-0427**	2	GRILL AS	
	5	1	**279-0437**	1	BAFFLE	
	6	1	**279-0438**	2	BRACKET AS	
	7	1	**291-2998**	1	CHANNEL AS	
		1	**9M-4594**	2	SPACER (0.406X0.875X0.75-IN THK)	
	8	1	**297-0831**	2	COVER	
	10	1	**2J-1410**	2	COVER	
M	11	1	**5C-9553**	2	BOLT (M6X1X16-MM)	
	12	1	**5P-1076**	4	WASHER-HARD (13.5X30X4-MM THK)	
	13	1	**5P-4115**	2	WASHER-HARD (7.2X19X2-MM THK)	
	14	1	**7X-7729**	27	WASHER (11X25X3-MM THK)	
	15	1	**8T-4121**	16	WASHER-HARD (11X21X2.5-MM THK)	
M	16	1	**8T-4137**	11	BOLT (M10X1.5X20-MM)	
M	17	1	**8T-4141**	8	BOLT (M20X2.5X70-MM)	
M	18	1	**8T-4186**	6	BOLT (M10X1.5X40-MM)	
M	19	1	**8T-4187**	8	BOLT (M20X2.5X80-MM)	
M	20	1	**8T-4195**	26	BOLT (M10X1.5X30-MM)	
M	21	1	**8T-4956**	4	BOLT (M12X1.75X35-MM)	
D	22	1	**5P-7211**		SEAL (0.9-M EACH)	

D-ORDER BY THE METER
M-METRIC PART

279-0387 **GUARD GP-RADIATOR** *(contd.)* **i02880435**

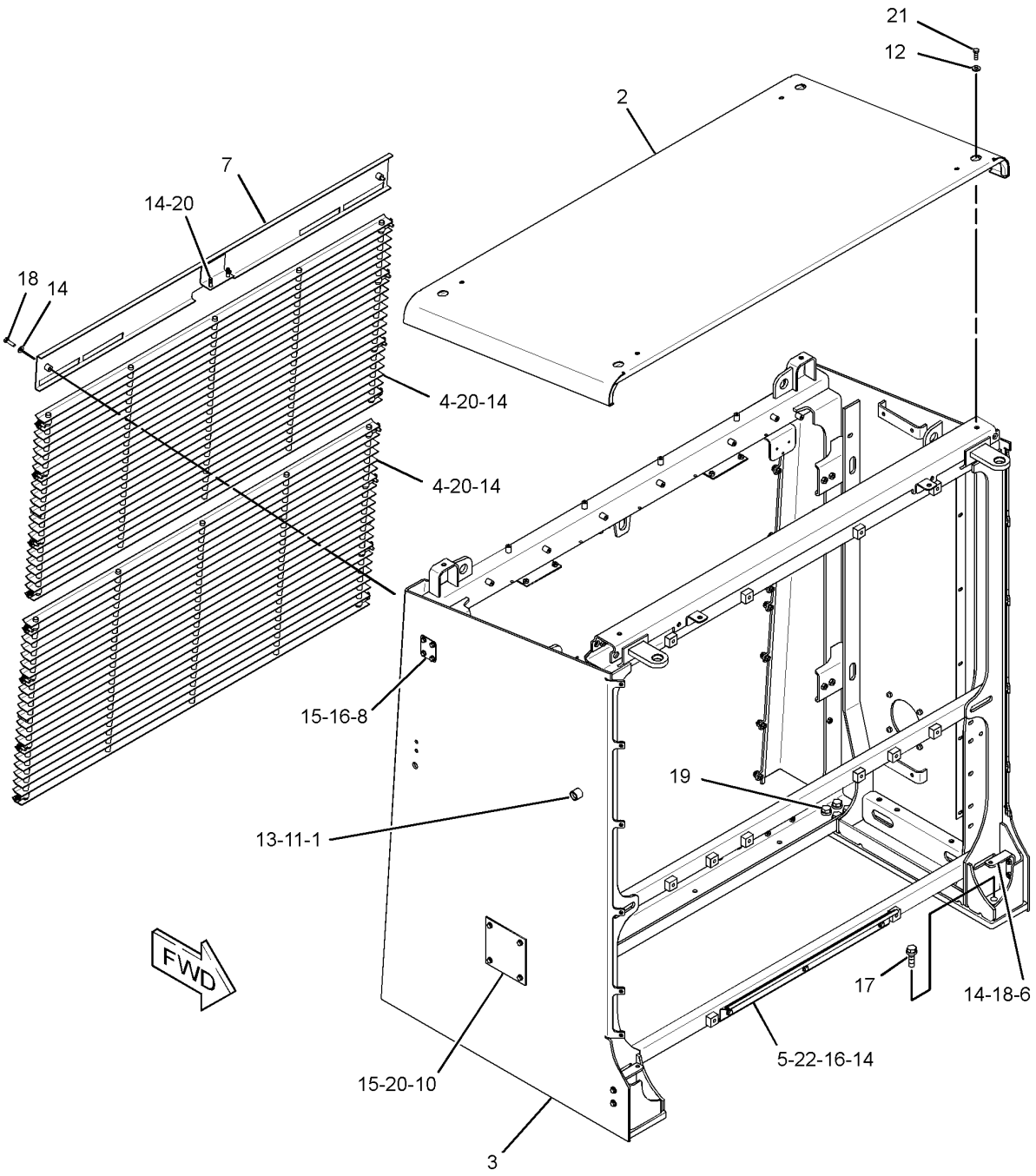

GRAPHIC #1 **<END>** g01435114

FRAME AND BODY

283-6456 HANDRAIL GP–RH

S/N: 2211-UP

AN ATTACHMENT

SMCS-7256 **i02902440**

NOTE	REF NO	GRAPHIC REF	PART NUMBER	QTY	PART NAME 1 2 3 4 5 6 (PRODUCT LEVEL)	SEE PAGE
	1	1	**186-1654**	1	BRACKET AS	
	2	1	**265-4465**	1	SHEET AS	
	3	1	**265-4466**	1	PANEL AS	
	4	1	**265-4468**	1	PLATE	
	5	1	**289-4799**	1	PANEL AS (RH)	
Y	6	1	*301-5800*	1	HARDWARE GP-HANDRAIL MOUNTING	507
	7	1	**301-5801**	1	HANDRAIL AS	
	8	1	**5P-1076**	11	WASHER-HARD (13.5X30X4-MM THK)	
M	9	1	**6V-8197**	4	BOLT (M12X1.75X40-MM)	
	10	1	**7X-0515**	8	WASHER-HARD (17X35X5-MM THK)	
M	11	1	**7X-2552**	4	BOLT (M16X2X30-MM)	
M	12	1	**7X-2553**	3	BOLT (M16X2X40-MM)	
M	13	1	**8T-4139**	3	BOLT (M12X1.75X30-MM)	
	14	1	**8T-4223**	1	WASHER-HARD (13.5X25.5X3-MM THK)	
M	15	1	**8T-4244**	1	NUT (M12X1.75-THD)	
M	16	1	**8T-4910**	4	BOLT (M12X1.75X60-MM)	

M-METRIC PART
Y-SEPARATE ILLUSTRATION

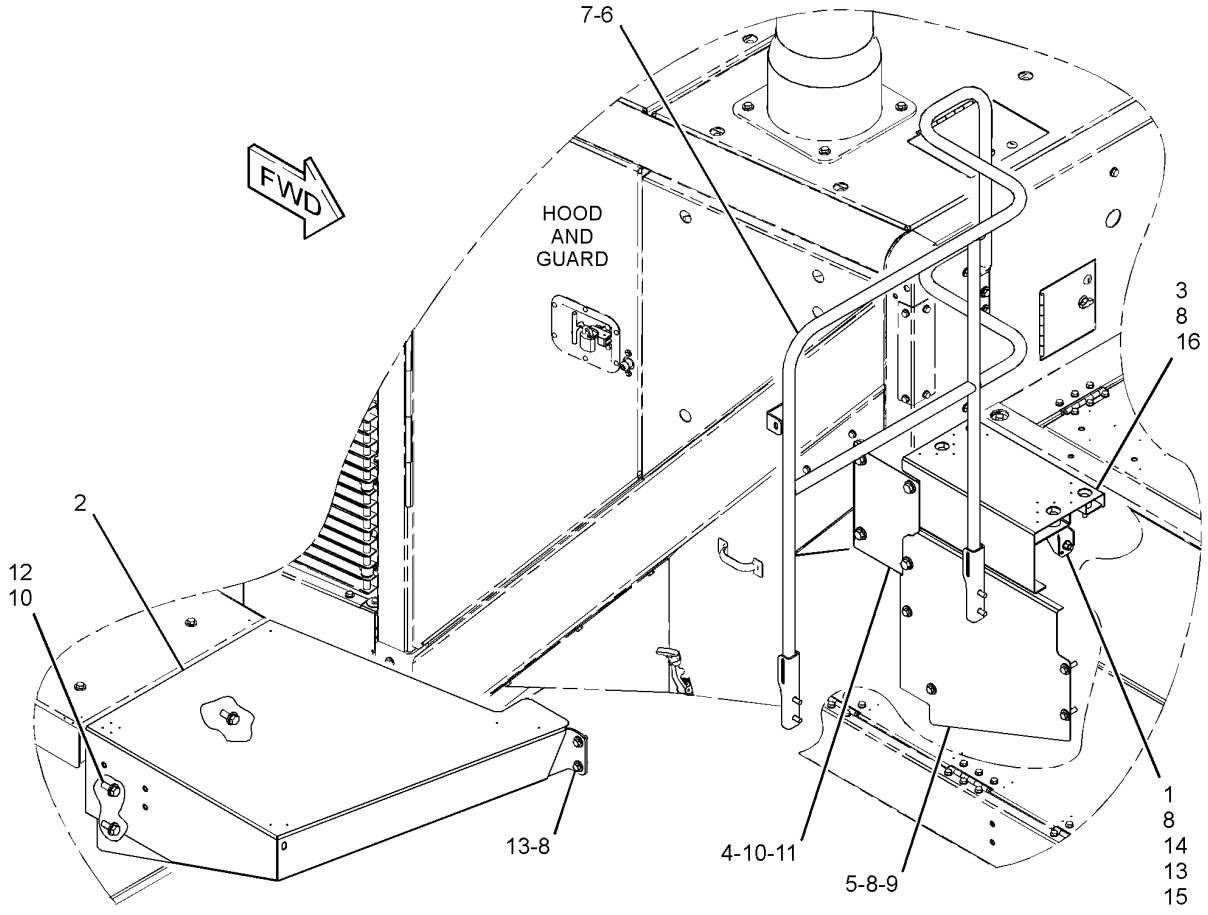

GRAPHIC #1 **<END>** g01448241

FRAME AND BODY

301-5788 HANDRAIL GP

S/N: 2211-UP

PART OF 283-6455 LADDER GP

SMCS-7256 **i02942106**

NOTE	REF NO	GRAPHIC REF	PART NUMBER	QTY	PART NAME 1 2 3 4 5 6 (PRODUCT LEVEL)	SEE PAGE
	1	1	**300-6343**	2	HANDLE (RH)	
	2	1	**300-6344**	2	HANDLE (LH)	
	3	1	**301-5790**	1	LADDER AS (RH)	
	4	1	**301-5792**	1	HANDRAIL AS (LH)	
	5	1	**301-5793**	1	HANDRAIL AS (RH)	
		1	**161-8900**	1	CONNECTOR	
		1	**161-9901**	1	SNAP	
		1	**220-6079**	1	CHAIN	
	6	1	**301-5794**	1	HANDRAIL AS (LH)	
	7	1	**301-5795**	1	HANDRAIL AS (RH)	
	8	1	**301-5796**	1	HANDRAIL AS (LH)	
	9	1	**301-5797**	1	HANDRAIL AS (LH)	
	10	1	**301-5799**	1	HANDRAIL AS (LH)	

301-5788 **HANDRAIL GP** ***(contd.)*** **i02942106**

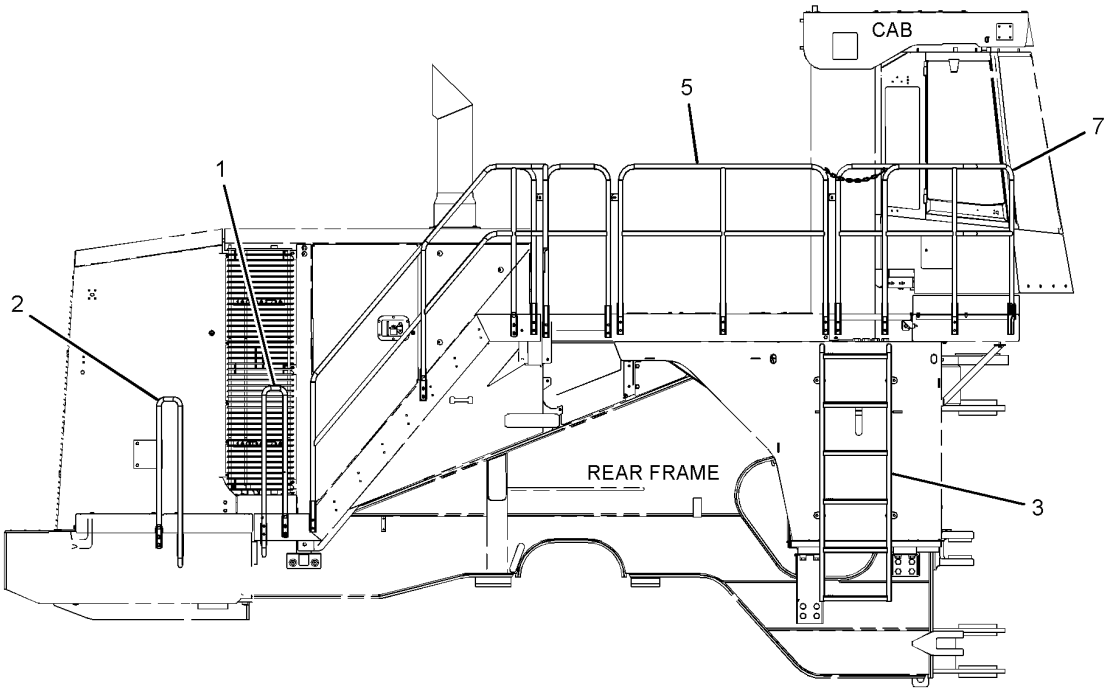

RIGHT SIDE VIEW

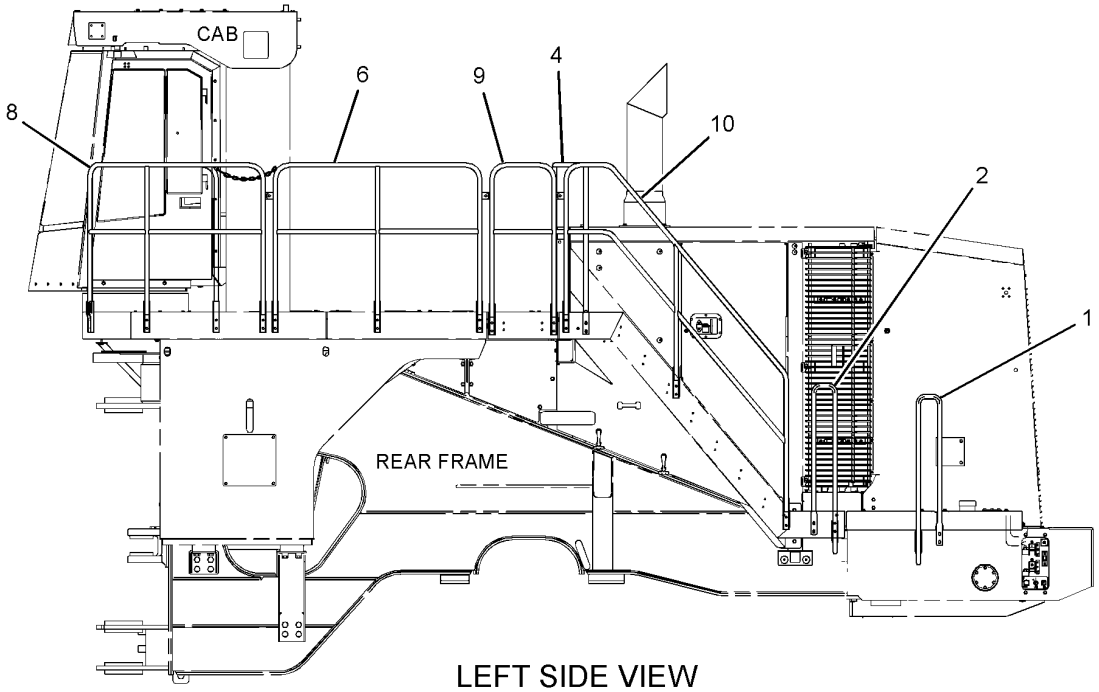

LEFT SIDE VIEW

GRAPHIC #1 **<END>** g01447813

FRAME AND BODY

301-5802 HANDRAIL GP–STAIRS, RH

S/N: 2211-UP
PART OF 283-6469 LADDER GP
AN ATTACHMENT

SMCS-7256 **i02887650**

NOTE	REF NO	GRAPHIC REF	PART NUMBER	QTY	PART NAME 1 2 3 4 5 6 (PRODUCT LEVEL)	SEE PAGE
	1	1	**301-5791**	1	HANDRAIL AS (RH)	
	2	1	**301-5797**	1	HANDRAIL AS (LH)	
	3	1	**301-5798**	1	HANDRAIL AS (RH)	

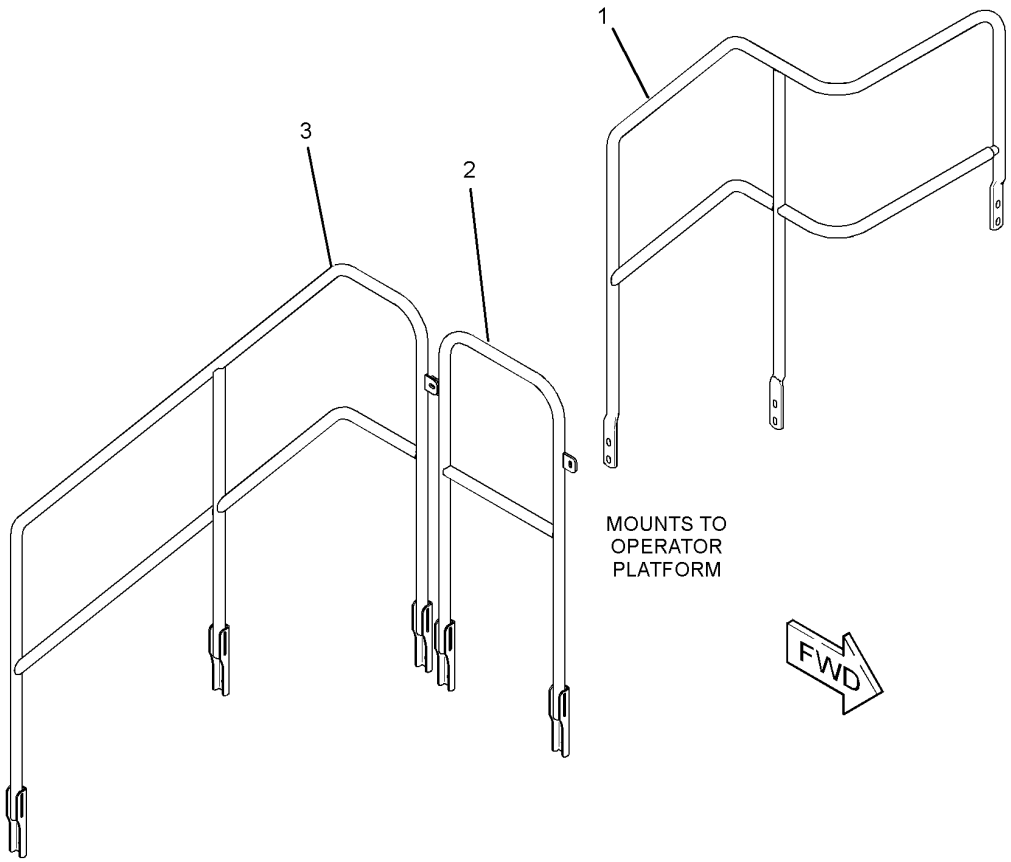

GRAPHIC #1 **<END>** g01438341

FRAME AND BODY

301-5804 HANDRAIL GP–FRONT

S/N: 2211-UP
PART OF 237-7944 WALKWAY GP
AN ATTACHMENT

SMCS-7256 **i02902987**

NOTE	REF NO	GRAPHIC REF	PART NUMBER	QTY	PART NAME 1 2 3 4 5 6 (PRODUCT LEVEL)	SEE PAGE
	1	1	**299-2430**	1	HANDRAIL AS	
	2	1	**301-5806**	1	HANDRAIL AS (RH)	
	3	1	**301-5807**	1	HANDRAIL AS (LH)	

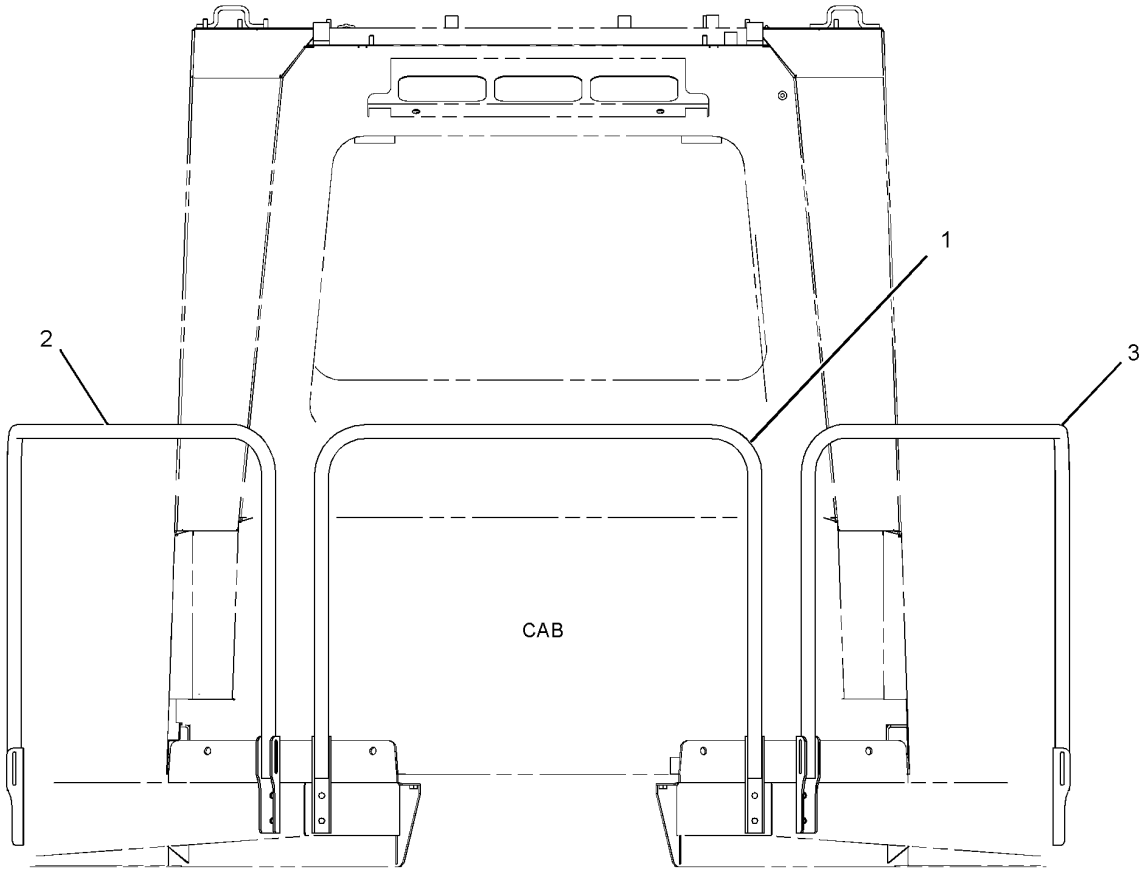

FRONT VIEW

GRAPHIC #1 **<END>** g01447016

301-5789 HARDWARE GP-HANDRAIL MOUNTING

S/N: 2211-UP

PART OF 283-6455 LADDER GP

SMCS-7050, 7256, 7553 **i02888024**

NOTE	REF NO	GRAPHIC REF	PART NUMBER	QTY	PART NAME 1 2 3 4 5 6 (PRODUCT LEVEL)	SEE PAGE
	1	1	**5P-1076**	26	WASHER-HARD (13.5X30X4-MM THK)	
	2	1	**7X-7729**	8	WASHER (11X25X3-MM THK)	
M	3	1	**8T-4133**	4	NUT (M10X1.5-THD)	
M	4	1	**8T-4139**	34	BOLT (M12X1.75X30-MM)	
M	5	1	**8T-4183**	18	BOLT (M12X1.75X40-MM)	
M	6	1	**8T-4194**	8	BOLT (M12X1.75X50-MM)	
M	7	1	**8T-4195**	4	BOLT (M10X1.5X30-MM)	
	8	1	**8T-4223**	34	WASHER-HARD (13.5X25.5X3-MM THK)	

M-METRIC PART

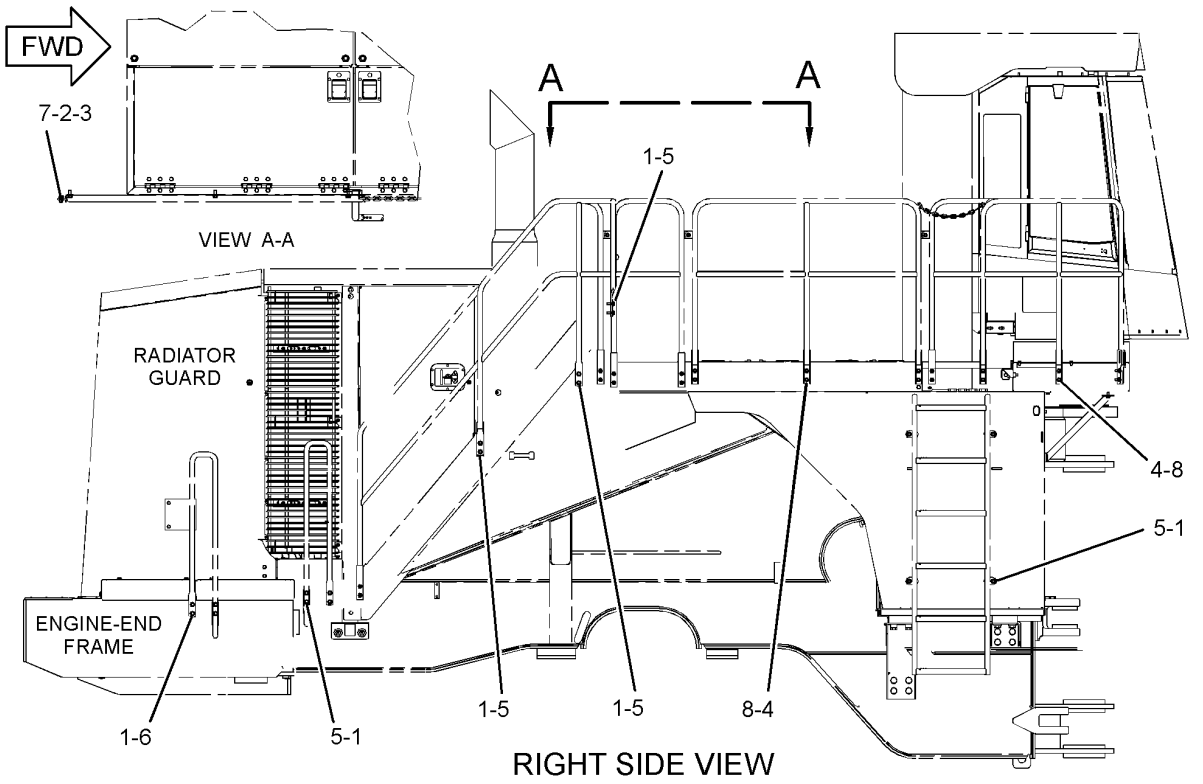

RIGHT SIDE VIEW

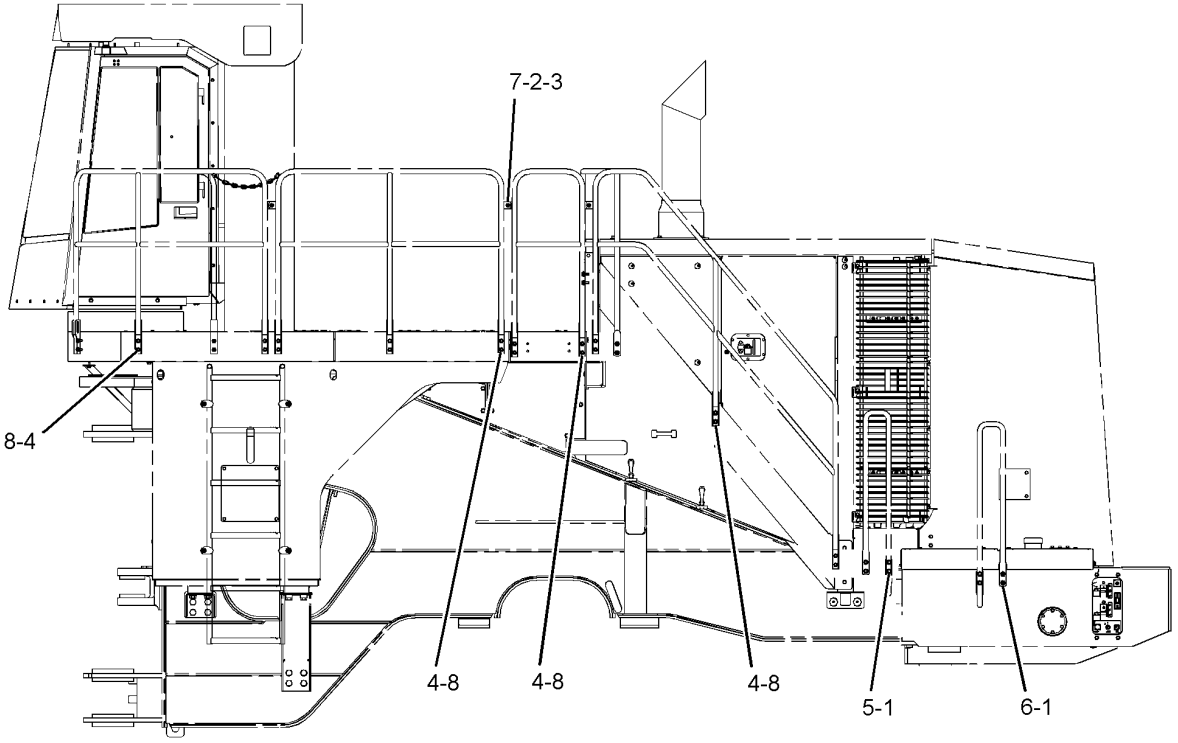

LEFT SIDE VIEW

GRAPHIC #1 **<END>** g01438091

FRAME AND BODY

301-5800 HARDWARE GP-HANDRAIL MOUNTING

S/N: 2211-UP
PART OF 283-6456 HANDRAIL GP
AN ATTACHMENT

SMCS-7050, 7256, 7553 **i02902442**

NOTE	REF NO	GRAPHIC REF	PART NUMBER	QTY	PART NAME 1 2 3 4 5 6 (PRODUCT LEVEL)	SEE PAGE
	1	1	**5P-1076**	2	WASHER-HARD (13.5X30X4-MM THK)	
M	2	1	**8T-4139**	4	BOLT (M12X1.75X30-MM)	
M	3	1	**8T-4183**	2	BOLT (M12X1.75X40-MM)	
	4	1	**8T-4223**	4	WASHER-HARD (13.5X25.5X3-MM THK)	

M-METRIC PART

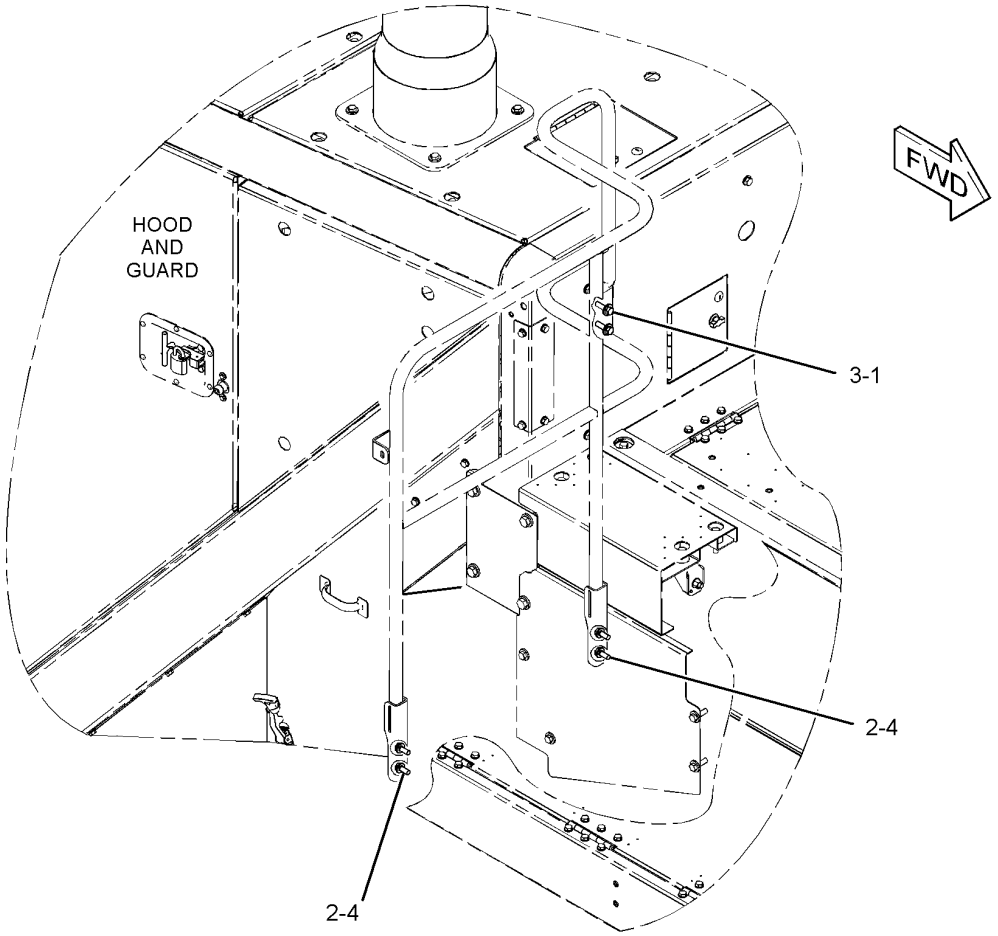

GRAPHIC #1 **<END>** g01448619

FRAME AND BODY

301-5803 HARDWARE GP-HANDRAIL MOUNTING

S/N: 2211-UP
PART OF 283-6469 LADDER GP
AN ATTACHMENT

SMCS-7050, 7256, 7553 **i02887651**

NOTE	REF NO	GRAPHIC REF	PART NUMBER	QTY	PART NAME 1 2 3 4 5 6 (PRODUCT LEVEL)	SEE PAGE
	1	1	**5P-1076**	6	WASHER-HARD (13.5X30X4-MM THK)	
	2	1	**7X-7729**	2	WASHER (11X25X3-MM THK)	
M	3	1	**8T-4133**	1	NUT (M10X1.5-THD)	
M	4	1	**8T-4139**	10	BOLT (M12X1.75X30-MM)	
M	5	1	**8T-4183**	6	BOLT (M12X1.75X40-MM)	
M	6	1	**8T-4195**	1	BOLT (M10X1.5X30-MM)	
	7	1	**8T-4223**	10	WASHER-HARD (13.5X25.5X3-MM THK)	

M-METRIC PART

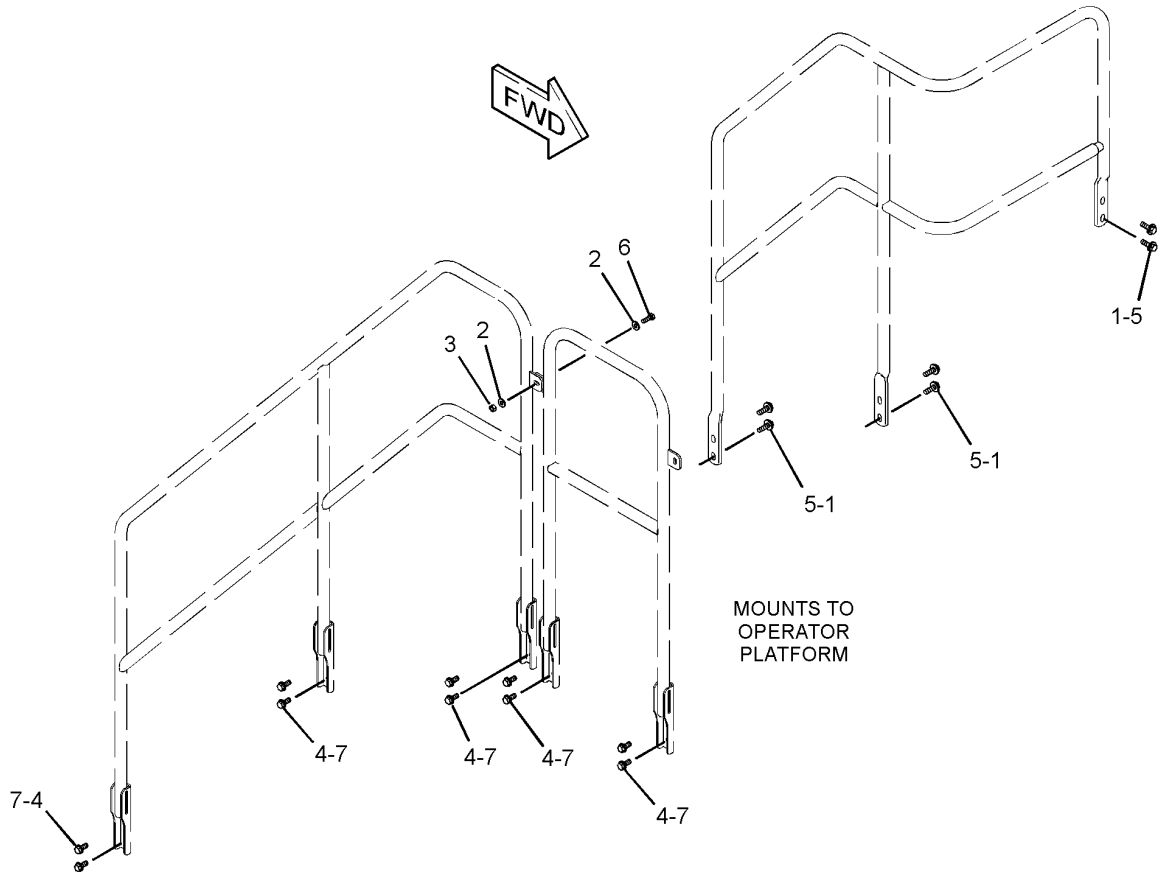

GRAPHIC #1 **<END>** g01438392

301-5805 HARDWARE GP-HANDRAIL MOUNTING

S/N: 2211-UP
PART OF 237-7944 WALKWAY GP
AN ATTACHMENT

SMCS-7050, 7256, 7553 **i02902986**

NOTE	REF NO	GRAPHIC REF	PART NUMBER	QTY	PART NAME 1 2 3 4 5 6 (PRODUCT LEVEL)	SEE PAGE
	1	1	**115-3580**	4	PLATE	
	2	1	**5P-1076**	8	WASHER-HARD (13.5X30X4-MM THK)	
	3	1	**5P-7468**	8	CLIP (SLOT)	
	4	1	**5P-7469**	8	CLIP (TAB)	
	5	1	**6V-1874**	8	GROMMET	
M	6	1	**8T-4139**	12	BOLT (M12X1.75X30-MM)	
M	7	1	**8T-4183**	8	BOLT (M12X1.75X40-MM)	
	8	1	**8T-4223**	20	WASHER-HARD (13.5X25.5X3-MM THK)	
M	9	1	**8T-4244**	8	NUT (M12X1.75-THD)	

M-METRIC PART

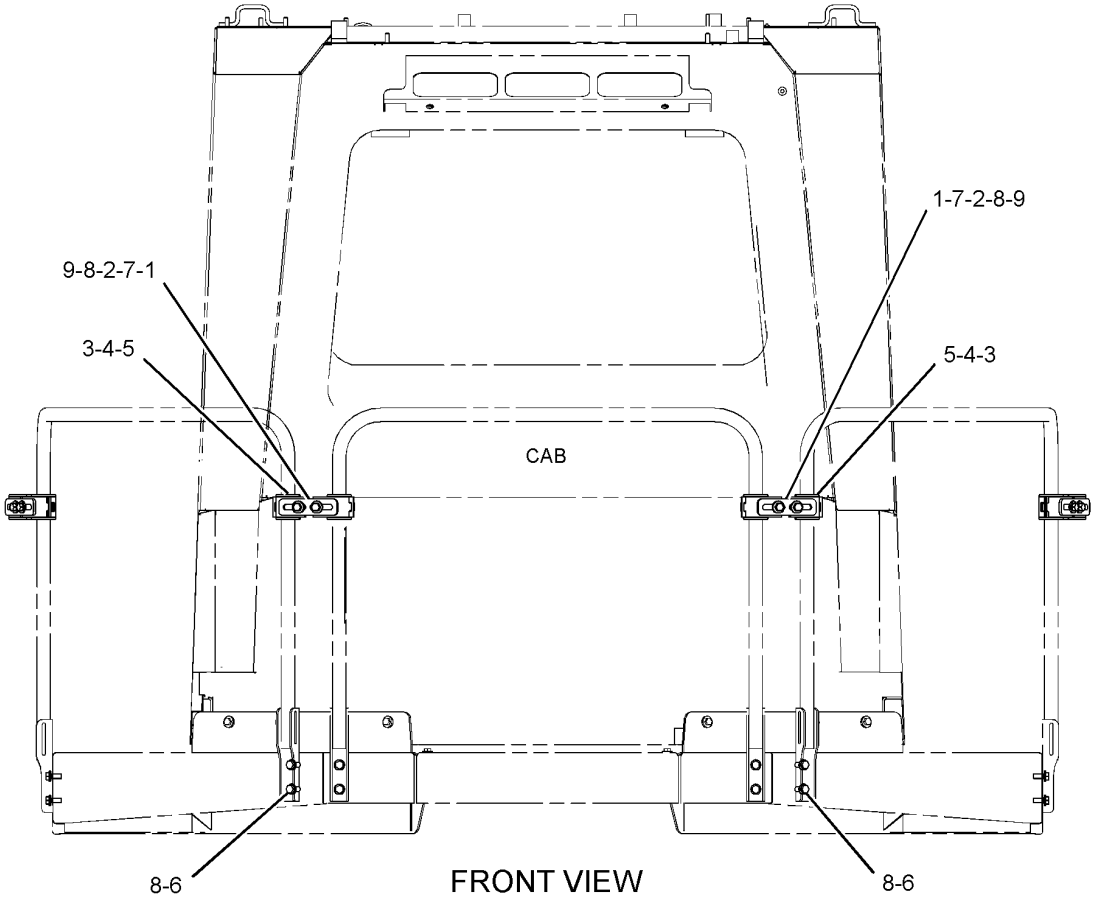

GRAPHIC #1

<END>

g01447055

FRAME AND BODY

290-2691 HITCH GP-ARTICULATING

S/N: 2211-UP

PART OF 262-2081 CHASSIS AR

SMCS-7057, 7100 **i02888776**

NOTE	REF NO	GRAPHIC REF	PART NUMBER	QTY	PART NAME 1 2 3 4 5 6 (PRODUCT LEVEL)	SEE PAGE
	1	1	**1V-8443**	1	SPACER	
	2	1	**4B-4550**	2	FITTING-PRESSURE RELIEF	
	3	1	**4E-8152**	1	PIN	
	4	1	**4E-8153**	1	PLATE	
	5	1	**4E-8155**	1	CAP-LOWER	
	6	1	**5P-2673**	2	SEAL-LIP TYPE	
	7	1	**5P-9609**	2	SEAL-LIP TYPE	
	8	1	**8G-5258**	4	SPACER (17X35X20-MM THK)	
	9	1	**087-3533**	1	CAP	
	10	1	**148-5652**	1	PLATE	
	11	1	**174-1485**	1	PLATE	
M	12	1	**106-4175**	12	BOLT (M20X2.5X60-MM)	
	13	1	**117-0292**	1	SHIM PACK (INCLUDES 26-SHIMS)	
	14	1	**1B-6577**	2	CONE-BEARING	
	15	1	**2J-2152**	2	CUP-BEARING	
	16	1	**4E-8154**	1	CAP-UPPER	
	17	1	**4E-8156**	1	SHIM PACK (INCLUDES 26-SHIMS)	
	18	1	**4E-8157**	1	SHIM PACK (INCLUDES 26-SHIMS)	
	19	1	**4E-8158**	1	PIN	
	20	1	**4E-8160**	1	CAP-UPPER	
	21	1	**4E-8161**	1	CAP-LOWER	
	22	1	**4E-8162**	1	SHIM PACK (INCLUDES 26-SHIMS)	
	23	1	**5D-7449**	2	CUP-BEARING	
	24	1	**5F-1248**	2	CONE-BEARING	
	25	1	**5P-8247**	12	WASHER-HARD (17X32X3.5-MM THK)	
M	26	1	**6C-5303**	12	BOLT (M16X2X200-MM)	
	27	1	**7X-0583**	4	WASHER-HARD (17X45X6-MM THK)	
M	28	1	**8T-0281**	12	BOLT (M16X2X80-MM)	
	29	1	**8T-4122**	16	WASHER-HARD (17X32X3.5-MM THK)	
	30	1	**8T-4123**	12	WASHER (22X35X3.5-MM THK)	
	31	1	**8T-4223**	9	WASHER-HARD (13.5X25.5X3-MM THK)	
M	32	1	**8T-4956**	3	BOLT (M12X1.75X35-MM)	
M	33	1	**8T-7338**	8	BOLT (M16X2X45-MM)	
M	34	1	**8T-7930**	6	BOLT (M12X1.75X160-MM)	

M-METRIC PART

290-2691 HITCH GP-ARTICULATING *(contd.)* i02888776

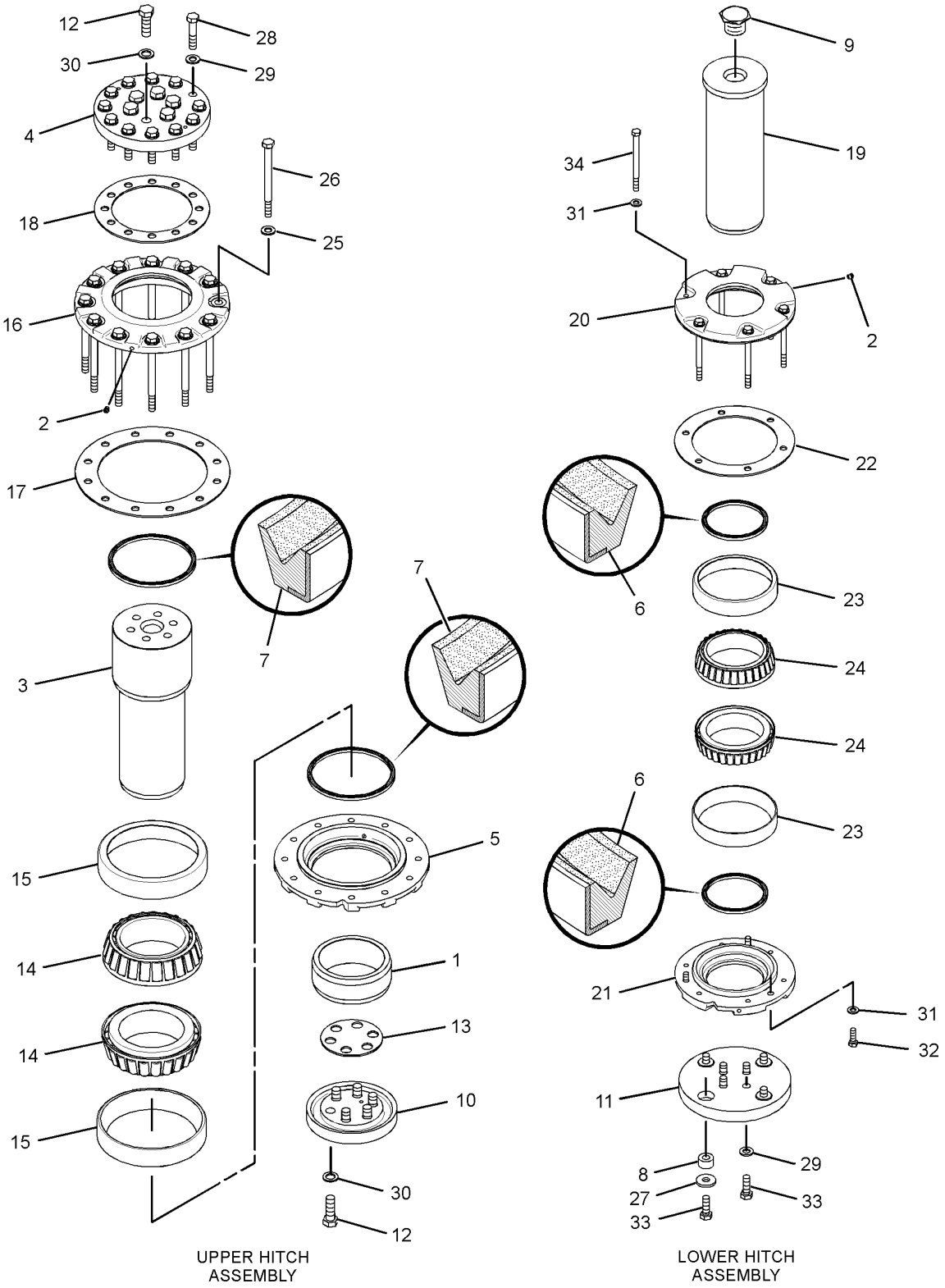

GRAPHIC #1 **<END>** g01444033

FRAME AND BODY

279-5282 HOOD & GUARD GP

S/N: 2211-UP

PART OF 262-2081 CHASSIS AR

SMCS-7251 **i02940019**

NOTE	REF NO	GRAPHIC REF	PART NUMBER	QTY	PART NAME 1 2 3 4 5 6 (PRODUCT LEVEL)	SEE PAGE
	1	3	**4H-1225**	10	WASHER (11X22X6-MM THK)	
	2	2	**246-2641**	2	PADLOCK GP	
					(EACH INCLUDES)	
		2	**5P-8500**	1	KEY	
	3	1,3	**5R-5927**	6	WASHER (14X65X6-MM THK)	
	4	3	**5V-3854**	6	BUMPER	
	5	1	**6B-6205**	14	SPACER (0.438X0.875X1.281-IN THK)	
	6	1,3	**7T-8331**	16	MOUNT AS	
	7	1	**8G-0841**	2	MOUNT AS	
	8	3	**159-2791**	2	STACK AS-EXHAUST	
	9	3	**242-3633**	2	BOSS	
	10	1	**280-7144**	1	RAIL AS (LH)	
	11	1	**280-7145**	1	RAIL AS (RH)	
Y	12	2	**284-1145**	1	DOOR GP-ACCESS (HOOD SIDE)	469
	13	2	**284-1148**	1	PANEL AS (LH)	
	14	2	**284-1149**	1	PANEL AS (RH)	
	15	2	**284-1150**	1	SUPPORT AS (LH)	
	16	2	**284-1151**	1	SUPPORT AS (RH)	
	17	2	**284-1154**	1	SUPPORT AS (LH)	
	18	2	**284-1155**	1	SUPPORT AS (RH)	
	19	1	**284-2809**	1	GRILL AS-TOP	
	20	3	**285-9354**	2	BRACKET	
	21	1	**286-4537**	1	PLATE AS	
	22	1	**286-4538**	1	PLATE AS	
	23	3	**287-2118**	1	PANEL AS (RH)	
	24	3	**287-2119**	1	PANEL AS (LH)	
	25	3	**287-2120**	1	PLATE AS	
	26	2	**287-2121**	1	PANEL (RH)	
	27	2	**287-2122**	1	PANEL (LH)	
	28	3	**287-2124**	1	PLATE AS	
	29	3	**287-7911**	2	PLATE AS	
	30	3	**289-2763**	1	SHEET	
	31	3	**290-4178**	1	BAFFLE	
	32	3	**290-4179**	1	BAFFLE	
	33	2	**294-7765**	1	GRILL AS (LH)	
	34	2	**294-7766**	1	GRILL AS (RH)	
	35	1	**308-2031**	1	PLATE AS	
	36	1	**308-2032**	1	PLATE AS	
	37	1	**308-2035**	1	PANEL AS-HOOD (TOP, REAR)	
Y	38	1	**309-5553**	1	PANEL GP-HOOD (TOP, FRONT)	542
Y	39	2	**316-0025**	1	LATCH GP (LH)	819
Y	40	2	**316-0026**	1	PANEL GP-HOOD (LH)	544
	41	3	**316-1967**	2	BRACKET AS	
	42	1,3	**198-4777**	6	WASHER-HARD (11X25X10-MM THK)	
	43	2	**5G-3676**	24	GROMMET	
	44	3	**5P-1076**	8	WASHER-HARD (13.5X30X4-MM THK)	
M	45	1	**6V-7687**	14	LOCKNUT (M12X1.75-THD)	
	46	1	**7X-0590**	12	WASHER-HARD (13.5X44.5X6-MM THK)	
	47	1,2,3	**7X-7729**	26	WASHER (11X25X3-MM THK)	
	48	2	**8T-1889**	24	CLIP (SLOT)	
	49	2	**8T-1890**	24	CLIP (TAB)	
	50	1,2,3	**8T-4121**	86	WASHER-HARD (11X21X2.5-MM THK)	
M	51	3	**8T-4136**	6	BOLT (M10X1.5X25-MM)	
M	52	3	**8T-4137**	6	BOLT (M10X1.5X20-MM)	
M	53	2	**8T-4139**	6	BOLT (M12X1.75X30-MM)	
M	54	1,3	**8T-4183**	12	BOLT (M12X1.75X40-MM)	

279-5282 **HOOD & GUARD GP** *(contd.)* **i02940019**

NOTE	REF NO	GRAPHIC REF	PART NUMBER	QTY	PART NAME 1 2 3 4 5 6 (PRODUCT LEVEL)	SEE PAGE
M	55	2	**8T-4184**	6	BOLT (M12X1.75X45-MM)	
M	56	1,3	**8T-4186**	8	BOLT (M10X1.5X40-MM)	
M	57	2	**8T-4194**	4	BOLT (M12X1.75X50-MM)	
M	58	1,2,3	**8T-4195**	98	BOLT (M10X1.5X30-MM)	
	59	1,2	**8T-4223**	34	WASHER-HARD (13.5X25.5X3-MM THK)	
	60	3	**8T-4226**	14	WASHER-PLATED (10.5X45X3-MM THK)	
M	61	1	**8T-4648**	12	BOLT (M12X1.75X70-MM)	
M	62	3	**8T-4910**	4	BOLT (M12X1.75X60-MM)	
M	63	1	**8T-5005**	10	BOLT (M10X1.5X70-MM)	
M	64	1	**8T-6466**	4	BOLT (M10X1.5X60-MM)	
M	65	1	**8T-6868**	2	BOLT (M12X1.75X80-MM)	
D	66	3	**5P-7211**		SEAL (0.08-M EACH)	
D	66A	3	**5P-7211**		SEAL (0.9-M)	
D	67	3	**5P-7483**		SEAL (1.1-M EACH)	
D	67A	2	**5P-7483**		SEAL (1.3-M)	
D	67B	2	**5P-7483**		SEAL (1.6-M)	
E	68	3	**146-4325**		SEAL (35-CM EACH)	

D-ORDER BY THE METER
E-ORDER BY THE CENTIMETER
M-METRIC PART
Y-SEPARATE ILLUSTRATION

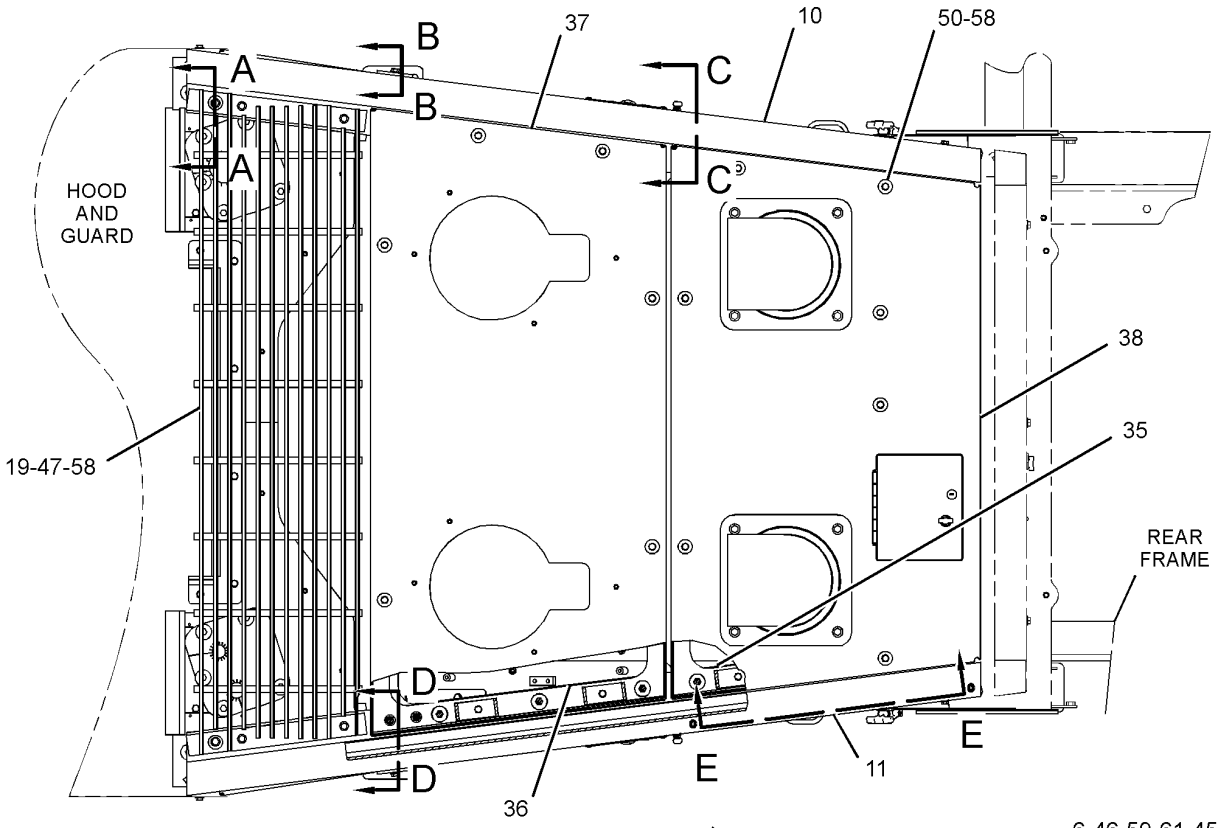

TOP VIEW FWD

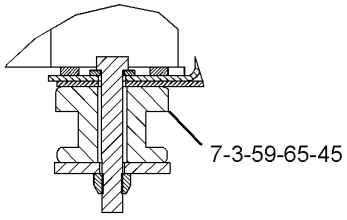

SECTION A-A

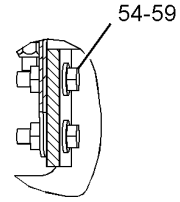

SECTION B-B

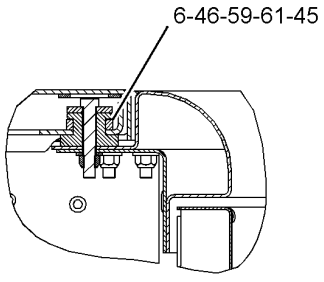

SECTION C-C

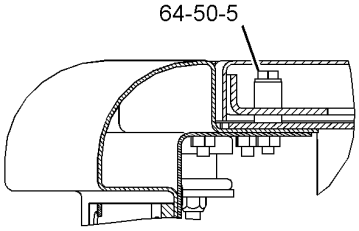

SECTION D-D

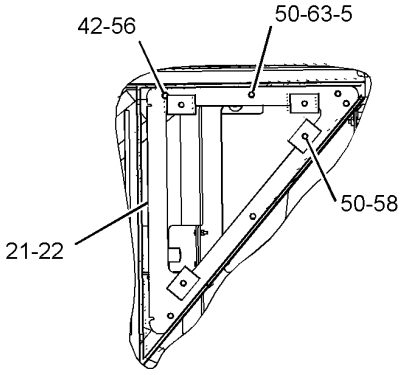

SECTION E-E

GRAPHIC #1 g01440863

279-5282 **HOOD & GUARD GP** *(contd.)* **i02940019**

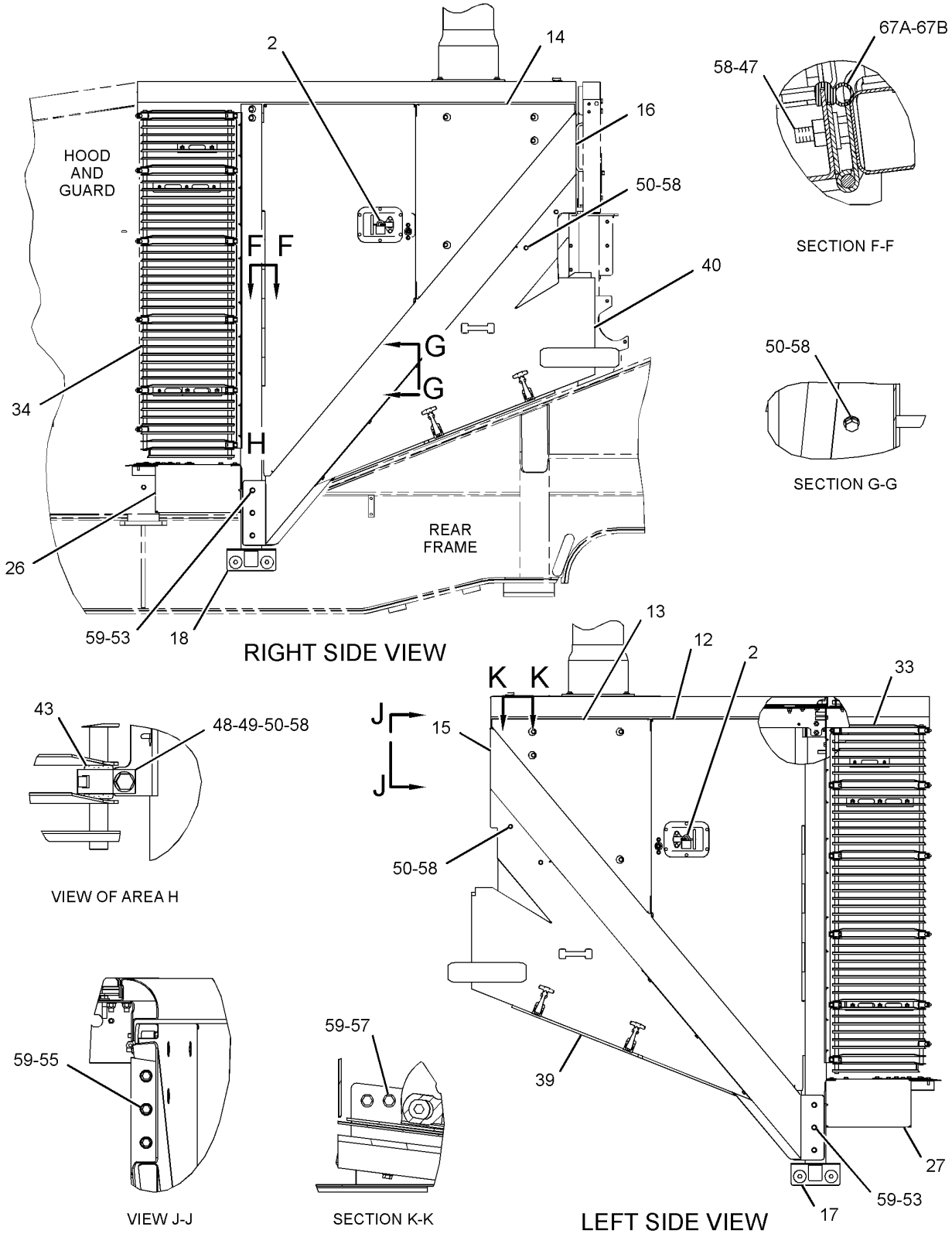

GRAPHIC #2

g01440864

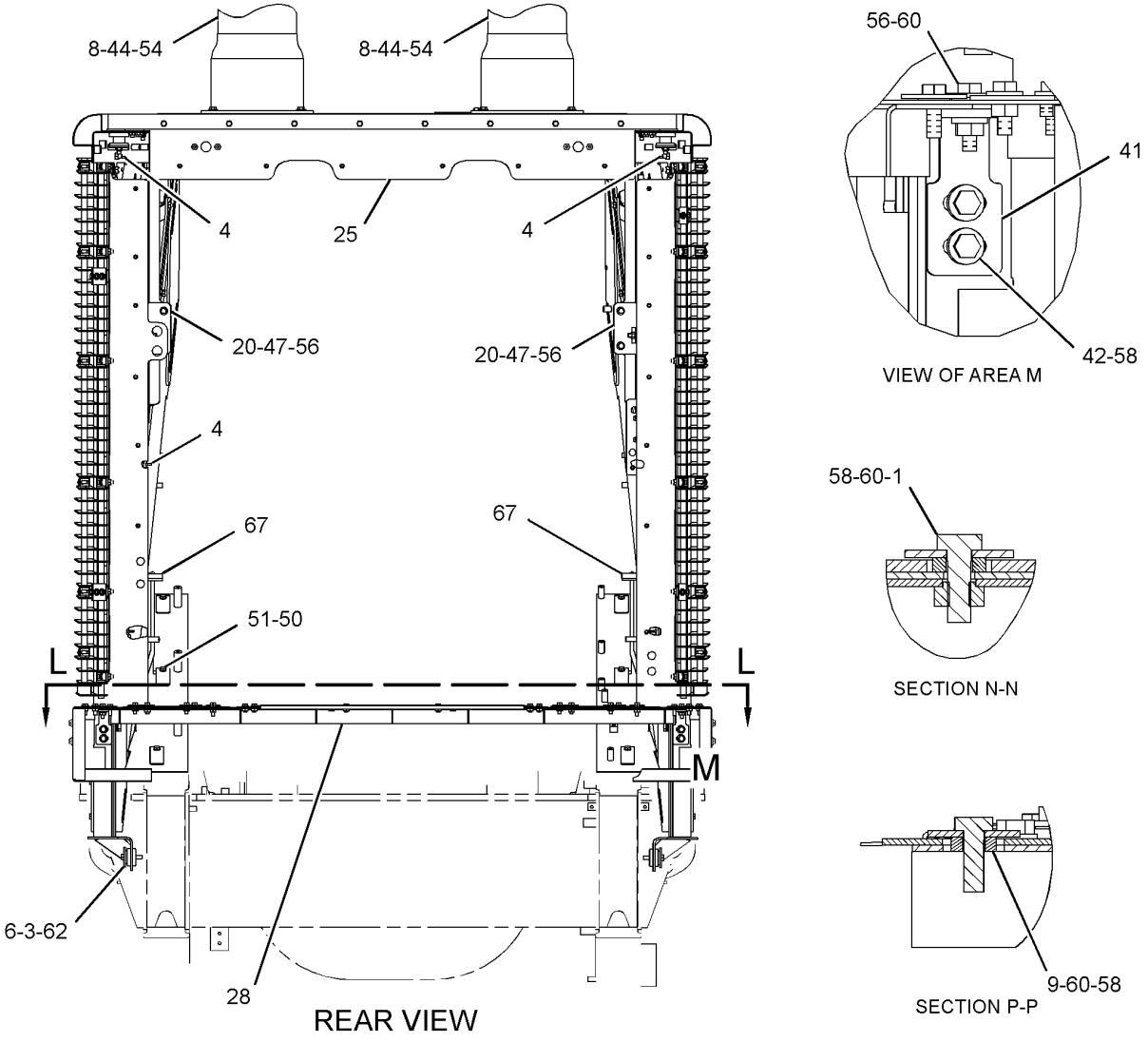

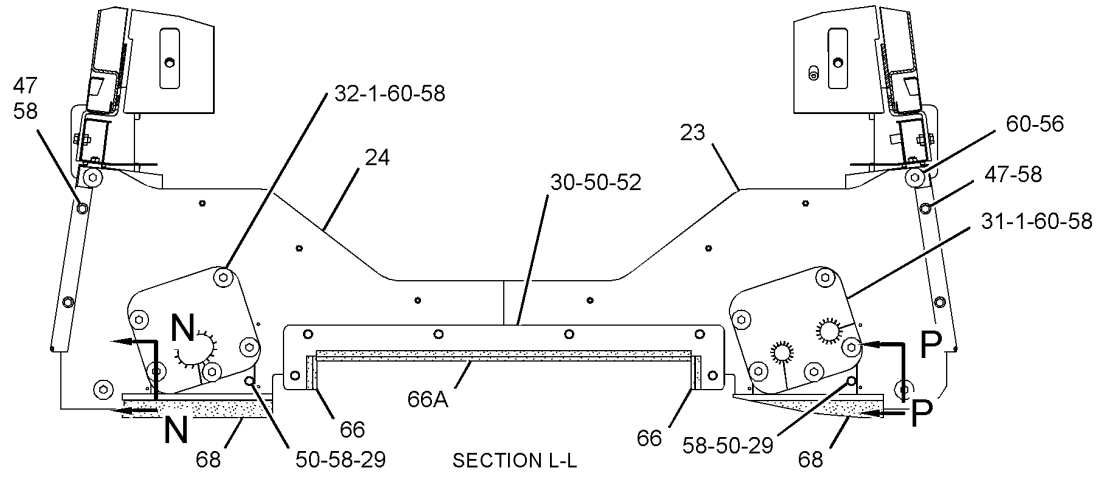

GRAPHIC #3 **<END>** g01440865

281-4051 INSULATION GP-RADIATOR SHIELD–
TOP, SOUND SUPPRESSION
S/N: 2211-UP
PART OF 281-4050 SHIELD GP-RADIATOR
AN ATTACHMENT

SMCS-1353 **i02901609**

NOTE	REF NO	GRAPHIC REF	PART NUMBER	QTY	PART NAME 1 2 3 4 5 6 (PRODUCT LEVEL)	SEE PAGE
	1	1	**133-1643**	30	SPACER (8.1X13X22.2-MM THK)	
	2	1	**133-1645**	15	WASHER (7.2X19.1X3.1-MM THK)	
	3	1	**148-8240**	15	CLIP	
	4	1	**281-4055**	1	INSULATION	
	5	1	**281-4056**	1	INSULATION	
	6	1	**281-4057**	2	INSULATION	
	7	1	**281-4058**	1	INSULATION	
	8	1	**281-4059**	1	INSULATION	
	9	1	**288-4778**	1	SHIELD AS	
		1	**148-2565**	6	BRACKET AS	
					(EACH INCLUDES)	
M		1	**9R-2613**	1	BOSS-WELD (M10X1.5X25-MM)	
	10	1	**7X-0603**	15	WASHER-HARD (9.9X35X2.5-MM THK)	

M-METRIC PART

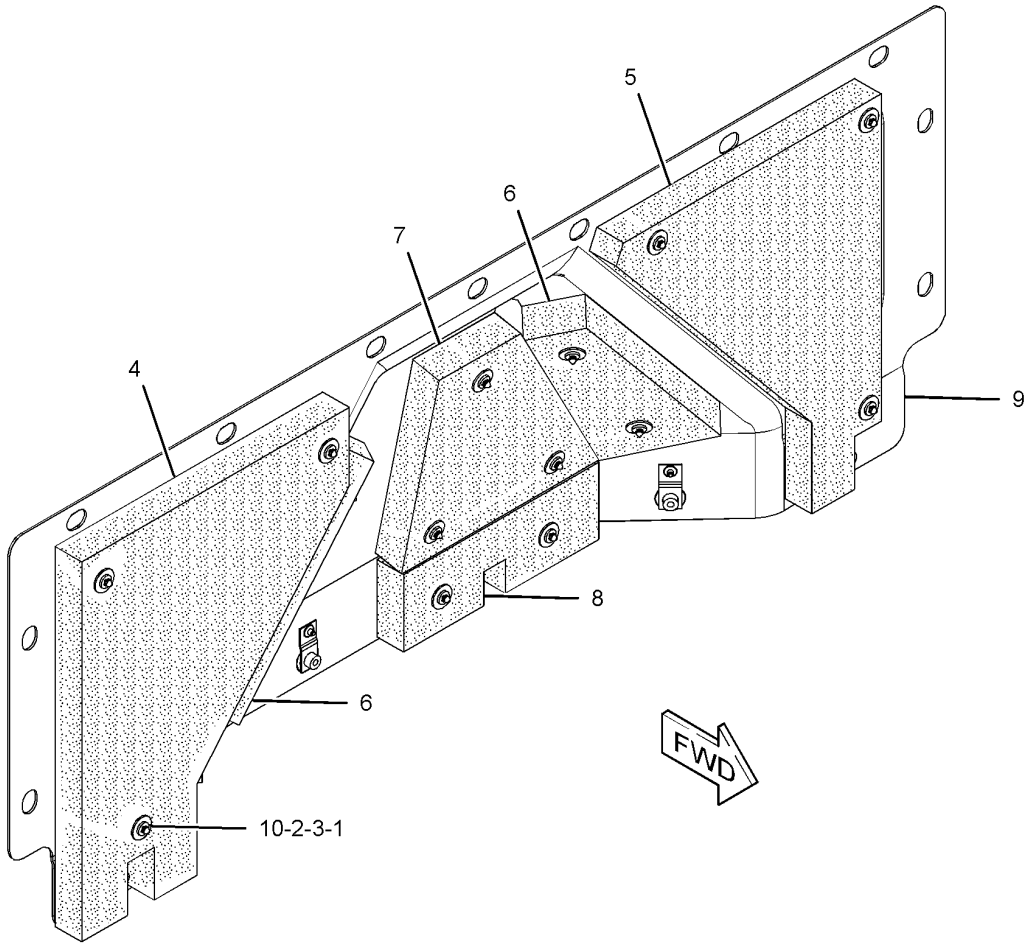

GRAPHIC #1 **<END>** g01445850

FRAME AND BODY

281-4052 INSULATION GP-RADIATOR SHIELD–BOTTOM, SOUND SUPPRESSION

S/N: 2211-UP

PART OF 281-4050 SHIELD GP-RADIATOR

AN ATTACHMENT

SMCS-1353 **i02902455**

NOTE	REF NO	GRAPHIC REF	PART NUMBER	QTY	PART NAME 1 2 3 4 5 6 (PRODUCT LEVEL)	SEE PAGE
	1	1	**133-1643**	20	SPACER (8.1X13X22.2-MM THK)	
	2	1	**133-1645**	10	WASHER (7.2X19.1X3.1-MM THK)	
	3	1	**148-8240**	10	CLIP	
	4	1	**281-4072**	1	INSULATION	
	5	1	**281-4073**	1	INSULATION	
	6	1	**281-4074**	1	INSULATION (LH)	
	7	1	**288-4779**	1	SHIELD	
	8	1	**315-8429**	1	INSULATION	
	9	1	**7X-0603**	10	WASHER-HARD (9.9X35X2.5-MM THK)	

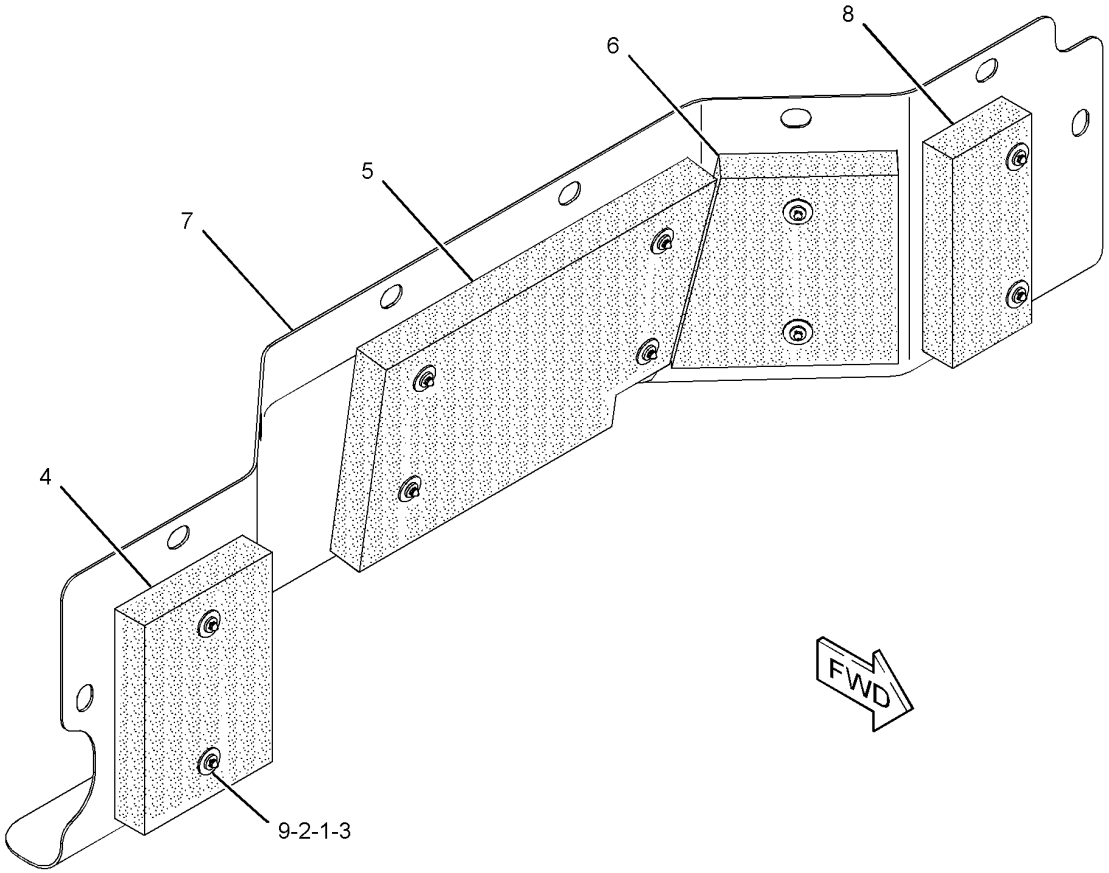

GRAPHIC #1 **<END>** g01445811

283-6455 LADDER GP–STAIRWAY, HANDRAILS, LH

S/N: 2211-UP

PART OF 262-2081 CHASSIS AR

SMCS-7254 **i02895601**

NOTE	REF NO	GRAPHIC REF	PART NUMBER	QTY	PART NAME 1 2 3 4 5 6 (PRODUCT LEVEL)	SEE PAGE
	1	1	**7T-8331**	4	MOUNT AS	
	2	1	**118-8606**	1	HANDRAIL AS	
	3	1	**151-1702**	4	SPACER	
	4	1	**289-1509**	1	STAIR AS	
M		1	**8T-3597**	12	NUT-WELD (M12X1.75-THD)	
		1	**149-2052**	2	PLATE AS	
		1	**185-1721**	2	PLATE AS	
	5	1	**289-1512**	1	PLATE AS (LH)	
	6	1	**289-2013**	1	BRACKET AS	
M		1	**8T-3597**	2	NUT-WELD (M12X1.75-THD)	
Y	7	1	*289-2984*	2	STEP GP	550
Y	8	1	*301-5788*	1	HANDRAIL GP	501
Y	9	1	*301-5789*	1	HARDWARE GP-HANDRAIL MOUNTING	505
	10	1	**5P-1076**	8	WASHER-HARD (13.5X30X4-MM THK)	
	11	1	**7X-0590**	4	WASHER-HARD (13.5X44.5X6-MM THK)	
	12	1	**7X-7729**	2	WASHER (11X25X3-MM THK)	
M	13	1	**8T-4140**	4	BOLT (M16X2X60-MM)	
M	14	1	**8T-4183**	2	BOLT (M12X1.75X40-MM)	
M	15	1	**8T-4194**	8	BOLT (M12X1.75X50-MM)	
M	16	1	**8T-4195**	2	BOLT (M10X1.5X30-MM)	
	17	1	**8T-4223**	2	WASHER-HARD (13.5X25.5X3-MM THK)	
M	18	1	**8T-4648**	2	BOLT (M12X1.75X70-MM)	
M	19	1	**8T-4910**	2	BOLT (M12X1.75X60-MM)	

M-METRIC PART
Y-SEPARATE ILLUSTRATION

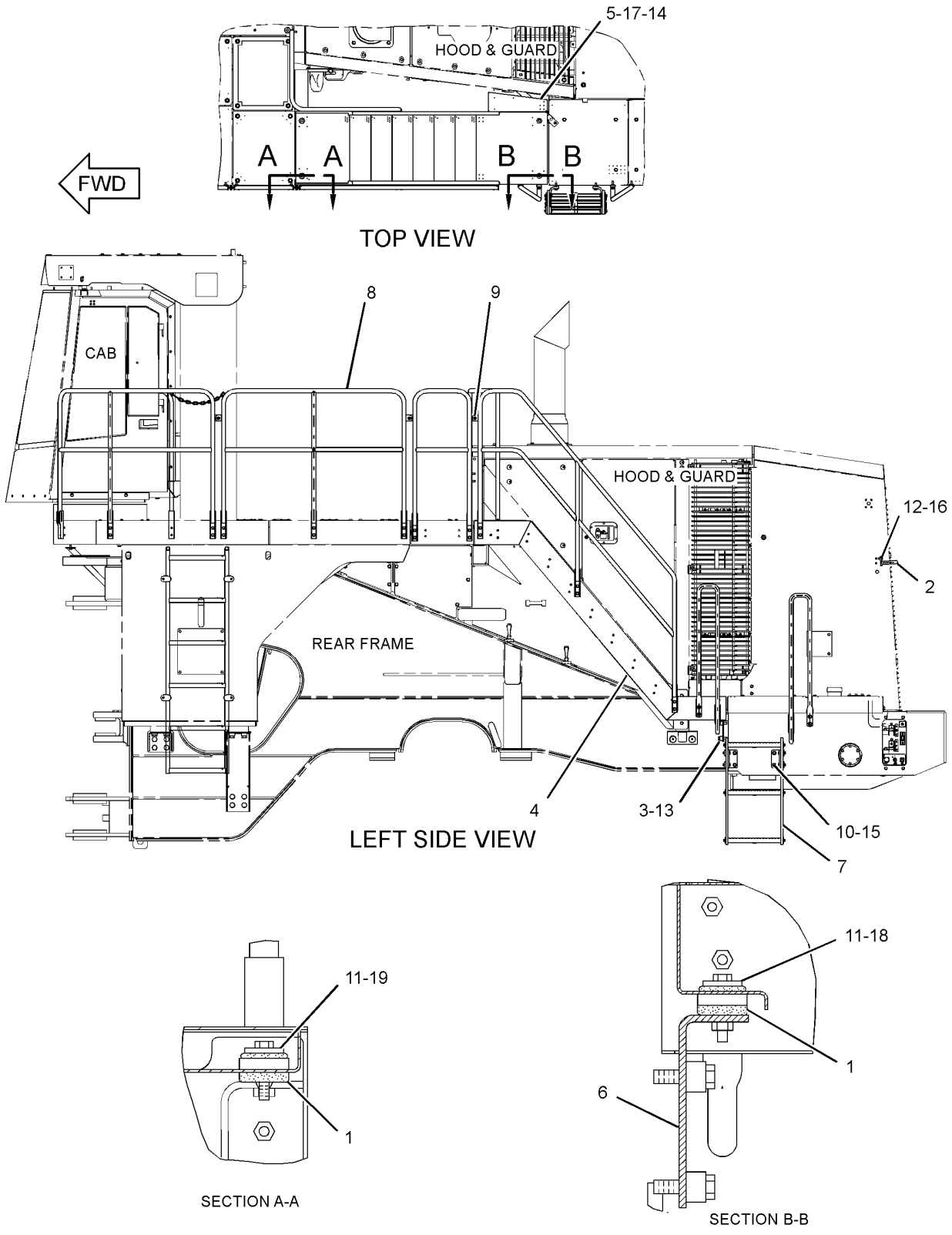

GRAPHIC #1 **<END>** g01444021

283-6469 LADDER GP–STAIRWAY, HANDRAILS, RH

S/N: 2211-UP
PART OF 283-6468 FENDER GP
AN ATTACHMENT

SMCS-7254 **i02887649**

NOTE	REF NO	GRAPHIC REF	PART NUMBER	QTY	PART NAME 1 2 3 4 5 6 (PRODUCT LEVEL)	SEE PAGE
	1	1,2	**7T-8331**	4	MOUNT AS	
	2	2	**9R-7216**	6	SPACER (20X40X20-MM THK)	
	3	1	**151-1702**	4	SPACER	
	4	2	**155-5285**	1	BRACKET AS	
M		2	**8T-3597**	3	NUT-WELD (M12X1.75-THD)	
	5	1	**210-7710**	1	PANEL AS	
	6	1	**289-1509**	1	STAIR AS	
M		1	**8T-3597**	12	NUT-WELD (M12X1.75-THD)	
		1	**149-2052**	2	PLATE AS	
		1	**185-1721**	2	PLATE AS	
	7	1	**289-1513**	1	PLATE AS (RH)	
	8	1	**289-2013**	1	BRACKET AS	
M		1	**8T-3597**	2	NUT-WELD (M12X1.75-THD)	
	9	2	**289-3480**	1	PLATE AS	
M		2	**8T-3597**	5	NUT-WELD (M12X1.75-THD)	
	10	2	**289-3806**	1	PANEL AS	
	11	2	**289-4799**	1	PANEL AS (RH)	
Y	12	2	*301-5802*	1	HANDRAIL GP (STAIRS, RH)	503
Y	13	2	*301-5803*	1	HARDWARE GP-HANDRAIL MOUNTING	508
	14	1,2	**5P-1076**	16	WASHER-HARD (13.5X30X4-MM THK)	
	15	1,2	**7X-0590**	4	WASHER-HARD (13.5X44.5X6-MM THK)	
M	16	2	**7X-2554**	6	BOLT (M16X2X70-MM)	
M	17	1,2	**8T-4139**	8	BOLT (M12X1.75X30-MM)	
M	18	1	**8T-4140**	4	BOLT (M16X2X60-MM)	
M	19	2	**8T-4183**	2	BOLT (M12X1.75X40-MM)	
	20	1	**8T-4223**	2	WASHER-HARD (13.5X25.5X3-MM THK)	
M	21	1	**8T-4648**	2	BOLT (M12X1.75X70-MM)	
M	22	1,2	**8T-4910**	10	BOLT (M12X1.75X60-MM)	

M-METRIC PART
Y-SEPARATE ILLUSTRATION

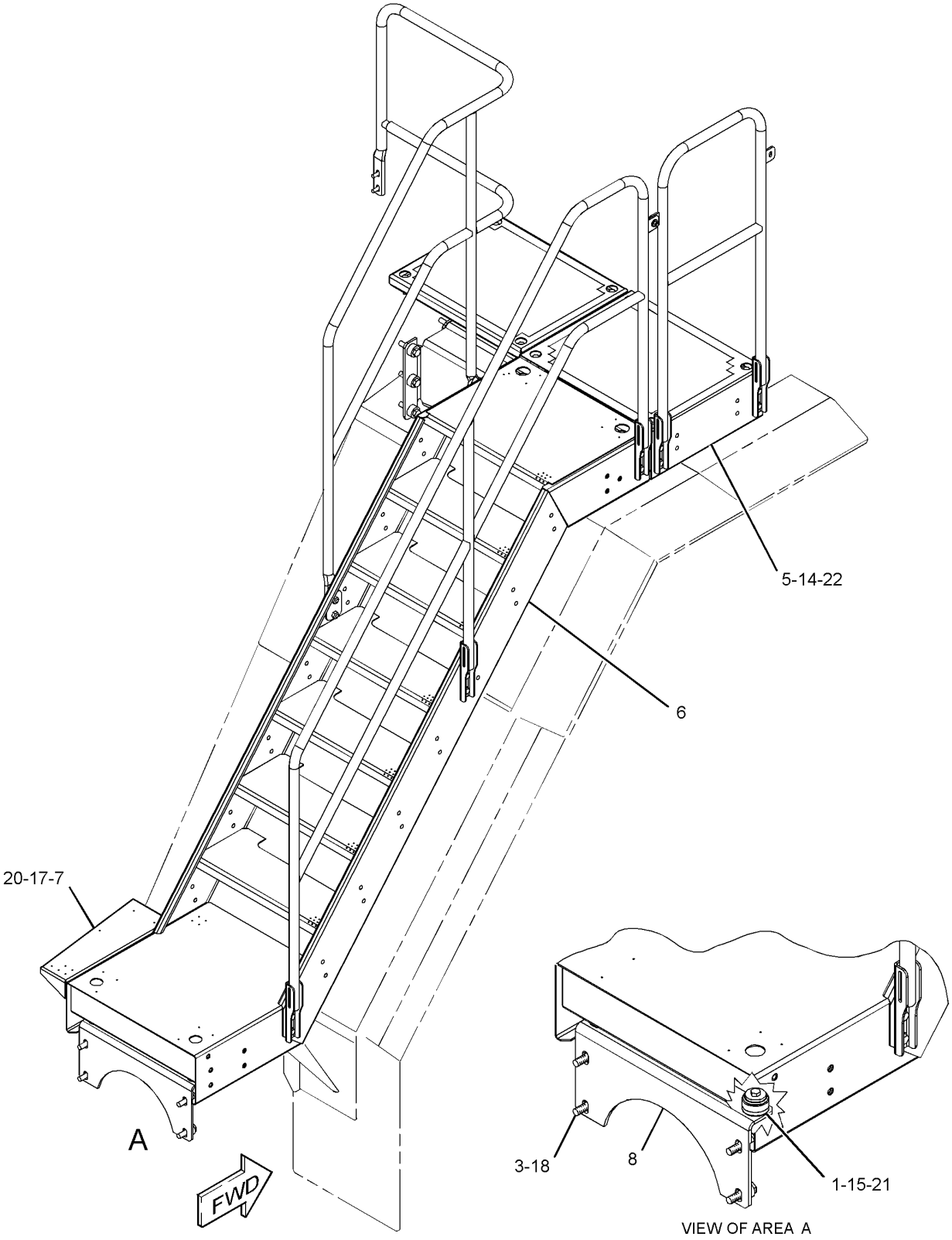

GRAPHIC #1

g01444168

283-6469 **LADDER GP** *(contd.)* **i02887649**

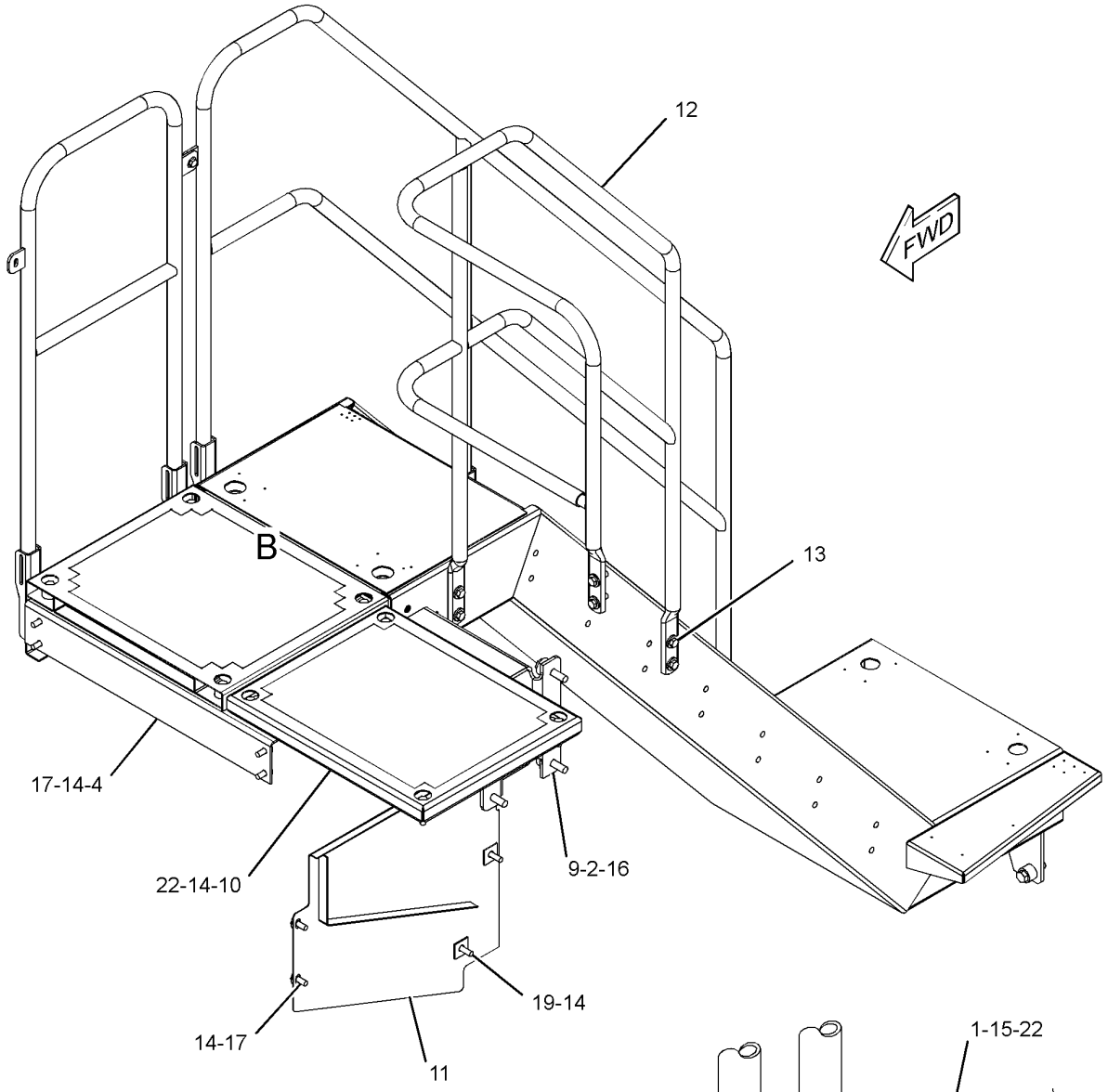

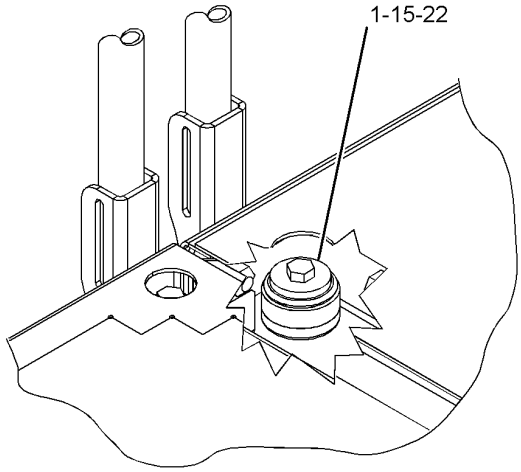

VIEW OF AREA B

GRAPHIC #2 **<END>** g01444223

FRAME AND BODY

289-3240 LINES GP-AUTOMATIC LUBRICATION

S/N: 2211-UP

PART OF 284-2855 LUBRICATION AR-AUTOMATIC

AN ATTACHMENT

SMCS-7510, 7540 **i02902970**

NOTE	REF NO	GRAPHIC REF	PART NUMBER	QTY	PART NAME 1 2 3 4 5 6 (PRODUCT LEVEL)	SEE PAGE
	1	1	**2B-0941**	1	SPACER (10.5X19X19-MM THK)	
	2	2	**3B-8489**	5	FITTING-GREASE	
	3	1	**4B-4550**	1	FITTING-PRESSURE RELIEF	
	5	1,2	**5P-3422**	7	TEE-PIPE	
	6	1	**6L-3616**	2	CONNECTOR	
	7	1	**091-0081**	1	SPACER (10.5X20X10-MM THK)	
	8	1	**121-1343**	1	PLATE AS	
M		1	**8T-3490**	1	NUT-WELD (M10X1.5-THD)	
	9	2	**134-7435**	1	FITTING-GREASE	
	10	1	**144-4613**	1	ANGLE AS	
I	11	1	**179-6970**	1	HOSE AS	
	12	2	**189-7535**	1	HOSE AS	
	13	1	**189-7540**	1	HOSE AS	
Y	14	1	*227-3292*	1	TANK GP-GREASE	556
	15	1	**282-3279**	1	TUBE AS	
	16	1	**282-3280**	1	TUBE AS	
	17	2	**285-0961**	1	TUBE AS	
Y	18	2	*288-5863*	1	LINES GP-LUBRICATION (LIFT CYL, STEERING CYL, HITCH)	537
Y	19	1	*288-5864*	1	LINES GP-LUBRICATION (STEERING CYLINDERS, TRUNNIONS)	538
	20	2	**291-0426**	1	TUBE AS	
	21	1	**291-0433**	1	PLATE	
	22	2	*148-8419*	1	REDUCER AS	
		2	**4J-5477**	1	SEAL-O-RING	
		2	**6V-8935**	1	REDUCER-O-RING	
	23	2	*153-6257*	1	UNION AS	
		2	**6V-8398**	2	SEAL-O-RING	
		2	**6V-9808**	1	UNION	
	24	2	*171-6731*	1	CONNECTOR AS	
		2	**6V-8398**	1	SEAL-O-RING	
		2	**8C-6871**	1	CONNECTOR	
	25	2	**3B-6494**	1	ELBOW	
	26	1	**3B-6552**	2	ELBOW	
	27	2	**3B-7285**	1	NIPPLE-PIPE	
	28	1	**3P-9847**	2	CLIP	
	29	1,2	**4D-8123**	11	CLIP	
	30	2	**4M-5317**	1	BUSHING-REDUCING	
	31	1	**4M-8973**	1	ELBOW	
	32	2	**5K-5068**	1	FITTING-PIPE	
	33	1	**5P-9085**	3	CLIP	
	34	2	**6D-4244**	1	CLIP	
	35	2	**6D-4246**	1	CLIP	
	36	1	**6K-6967**	2	ADAPTER-PIPE	
	37	2	**6V-8398**	1	SEAL-O-RING	
	38	2	**6V-8554**	1	NUT (13/16-16-THD)	
	39	2	**6V-9169**	1	NUT-BULKHEAD (13/16-16-THD)	
	40	2	**7D-1728**	1	CLIP	
M	41	1,2	**7X-2534**	4	BOLT (M6X1X50-MM)	
	42	2	**8B-4884**	1	ELBOW	
	43	2	**8L-5008**	1	ELBOW-PIPE	
	44	2	**8M-2772**	2	CLIP	
	45	1,2	**8T-4121**	21	WASHER-HARD (11X21X2.5-MM THK)	
	46	2	**8T-4128**	1	ADAPTER	
M	47	1,2	**8T-4133**	4	NUT (M10X1.5-THD)	

289-3240 **LINES GP-AUTOMATIC LUBRICATION** *(contd.)* **i02902970**

NOTE	REF NO	GRAPHIC REF	PART NUMBER	QTY	PART NAME 1 2 3 4 5 6 (PRODUCT LEVEL)	SEE PAGE
M	48	1,2	**8T-4136**	13	BOLT (M10X1.5X25-MM)	
M	49	1	**8T-4137**	1	BOLT (M10X1.5X20-MM)	
M	50	1	**8T-4182**	1	BOLT (M10X1.5X45-MM)	
M	51	1	**8T-4196**	2	BOLT (M10X1.5X35-MM)	
	52	1	**8T-4224**	2	WASHER-HARD (8.8X16X2-MM THK)	
M	53	1	**8T-7547**	2	BOLT (M8X1.25X30-MM)	
	54	1,2	**9X-8256**	4	WASHER (6.6X12X2-MM THK)	

I-REFER TO HYDRAULIC INFORMATION SYSTEM
M-METRIC PART
Y-SEPARATE ILLUSTRATION

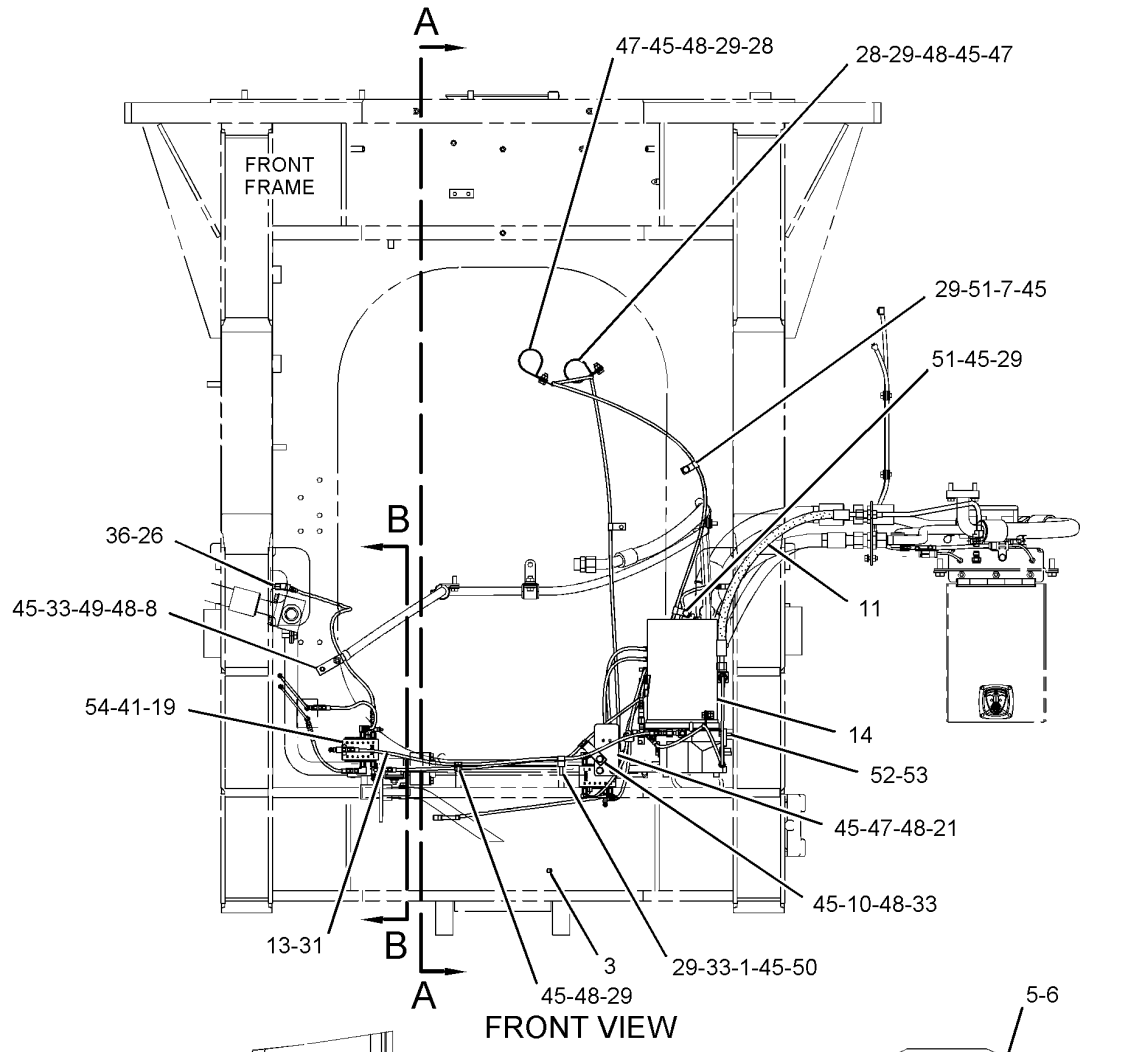

GRAPHIC #1

g01448120

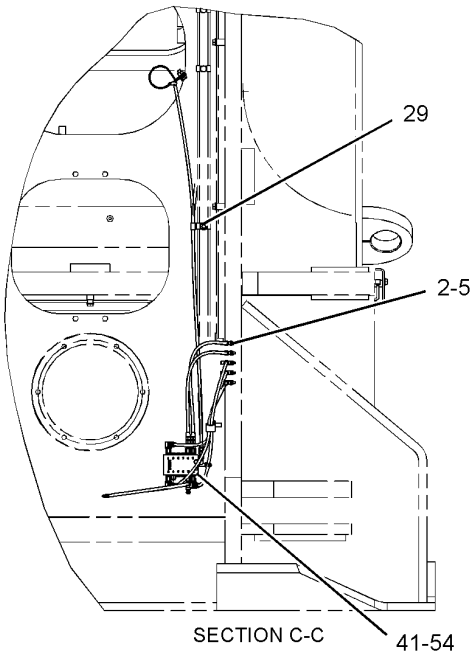

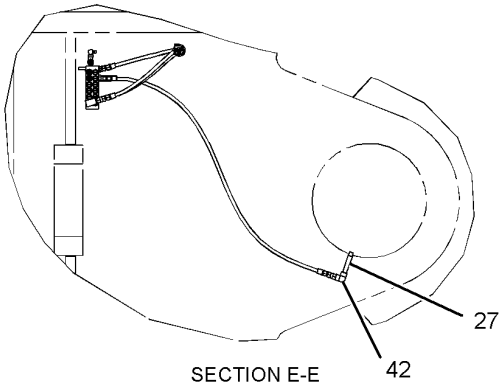

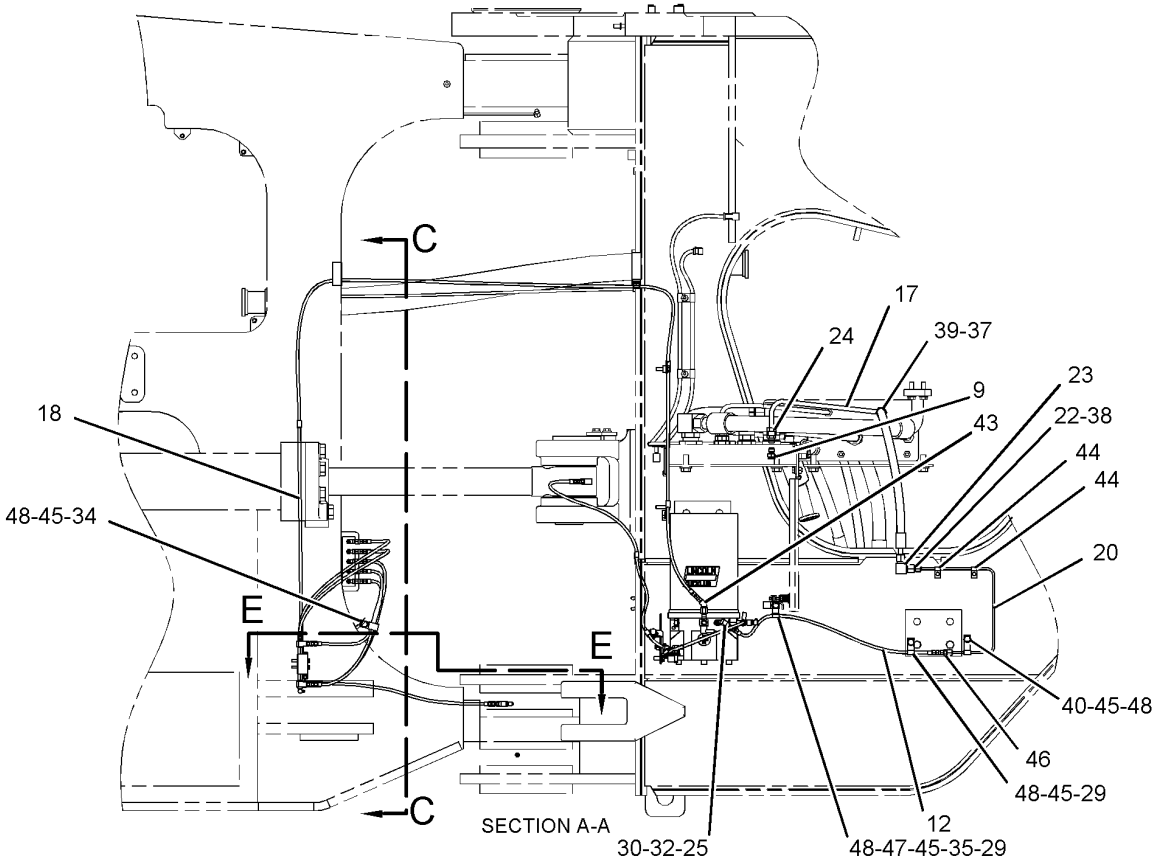

GRAPHIC #2 **<END>** g01448196

FRAME AND BODY

289-3241 LINES GP-AUTOMATIC LUBRICATION

S/N: 2211-UP

PART OF 284-2861 LUBRICATION AR-AUTOMATIC

AN ATTACHMENT

SMCS-7510, 7540 **i02902974**

NOTE	REF NO	GRAPHIC REF	PART NUMBER	QTY	PART NAME 1 2 3 4 5 6 (PRODUCT LEVEL)	SEE PAGE
	1	1	**2B-0941**	1	SPACER (10.5X19X19-MM THK)	
	2	2	**3B-8489**	5	FITTING-GREASE	
	3	2	**4B-4550**	1	FITTING-PRESSURE RELIEF	
	4	1,2	**5P-3422**	7	TEE-PIPE	
	5	1	**6L-3616**	2	CONNECTOR	
	6	1	**091-0081**	1	SPACER (10.5X20X10-MM THK)	
	7	1	**121-1343**	1	PLATE AS	
M		1	**8T-3490**	1	NUT-WELD (M10X1.5-THD)	
	8	1	**144-4613**	1	ANGLE AS	
	9	1	**189-7540**	1	HOSE AS	
Y	10	1	*227-3292*	1	TANK GP-GREASE	556
	11	1	**282-3279**	1	TUBE AS	
	12	1	**282-3280**	1	TUBE AS	
Y	13	2	*288-5863*	1	LINES GP-LUBRICATION (LIFT CYL, STEERING CYL, HITCH)	537
Y	14	1	*288-5864*	1	LINES GP-LUBRICATION (STEERING CYLINDERS, TRUNNIONS)	538
	15	1	**291-0433**	1	PLATE	
	16	1	**3B-6552**	2	ELBOW	
	17	2	**3B-7285**	1	NIPPLE-PIPE	
	18	1	**3P-9847**	2	CLIP	
	19	1,2	**4D-8123**	9	CLIP	
	20	1	**4M-8973**	1	ELBOW	
	21	1	**5P-9085**	3	CLIP	
	22	2	**6D-4244**	1	CLIP	
	23	1	**6K-6967**	2	ADAPTER-PIPE	
M	24	1,2	**7X-2534**	4	BOLT (M6X1X50-MM)	
	25	2	**8B-4884**	1	ELBOW	
	26	2	**8L-5008**	1	ELBOW-PIPE	
	27	1,2	**8T-4121**	17	WASHER-HARD (11X21X2.5-MM THK)	
M	28	1	**8T-4133**	3	NUT (M10X1.5-THD)	
M	29	1,2	**8T-4136**	10	BOLT (M10X1.5X25-MM)	
M	30	1	**8T-4137**	1	BOLT (M10X1.5X20-MM)	
M	31	1	**8T-4182**	1	BOLT (M10X1.5X45-MM)	
M	32	1,2	**8T-4196**	2	BOLT (M10X1.5X35-MM)	
	33	1	**8T-4224**	2	WASHER-HARD (8.8X16X2-MM THK)	
M	34	1	**8T-7547**	2	BOLT (M8X1.25X30-MM)	
	35	1,2	**9X-8256**	4	WASHER (6.6X12X2-MM THK)	

M-METRIC PART
Y-SEPARATE ILLUSTRATION

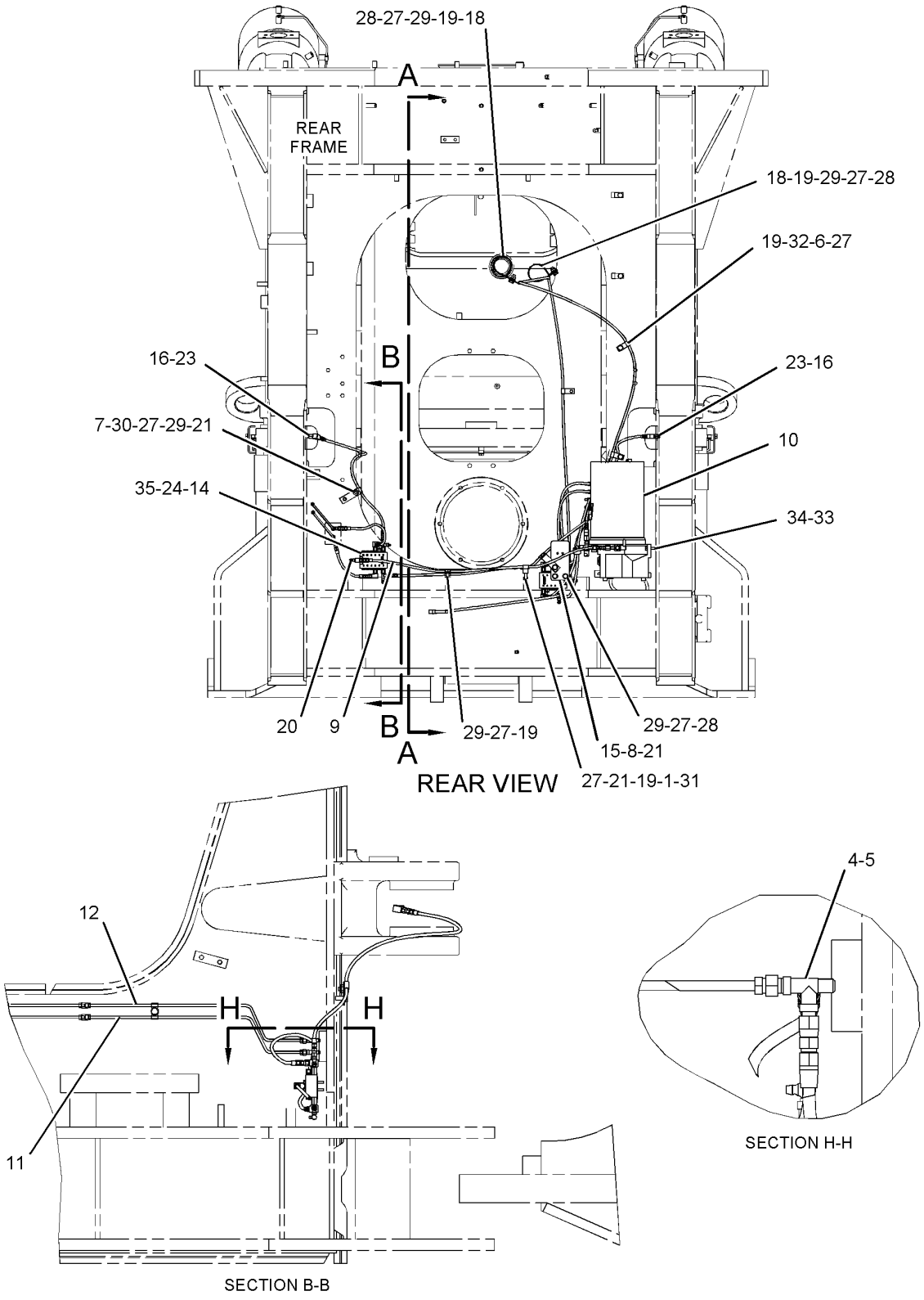

GRAPHIC #1 g01447539

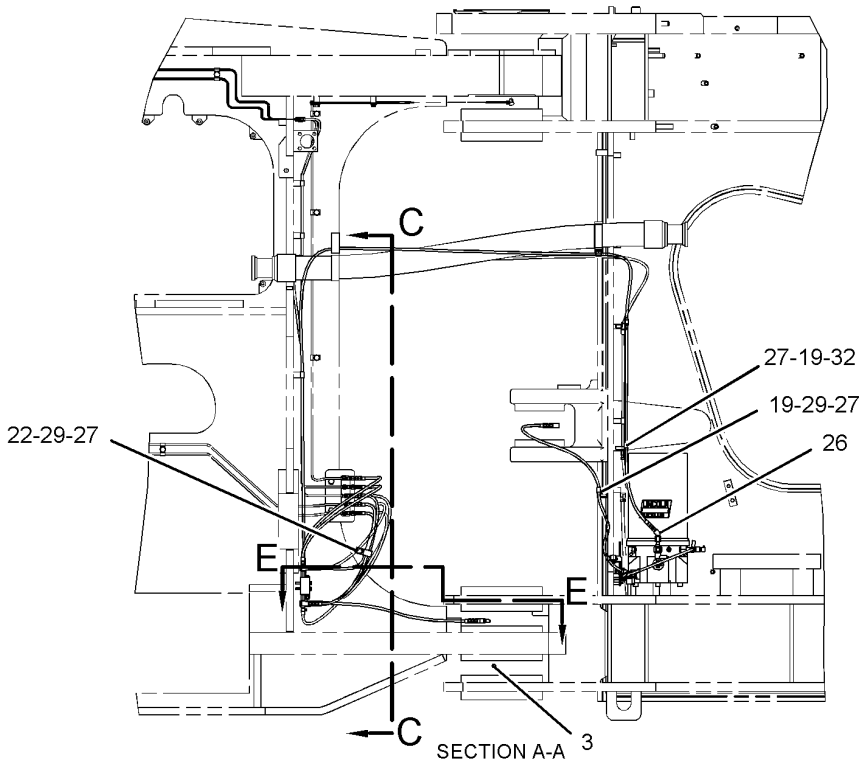

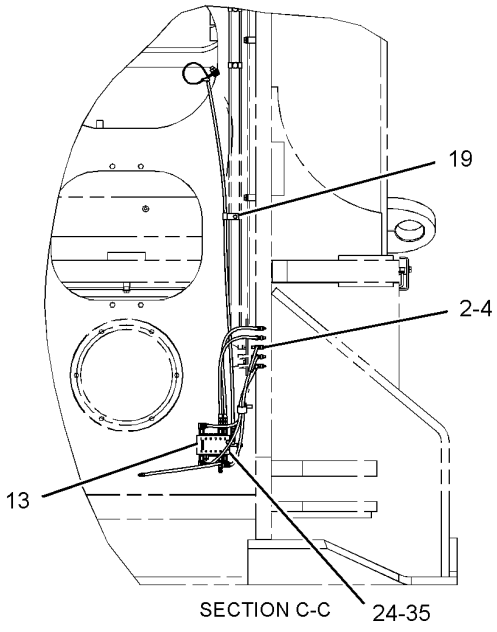

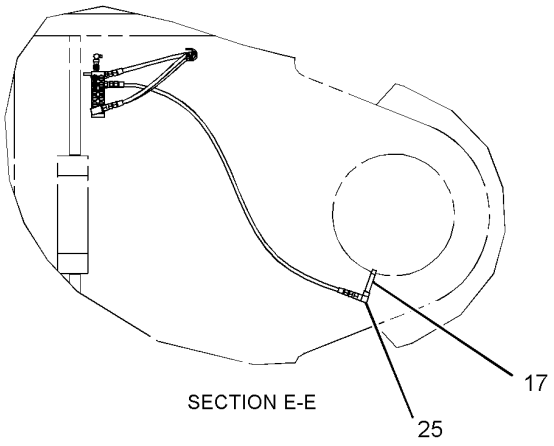

GRAPHIC #2 **<END>** g01447710

FRAME AND BODY

284-2859 LINES GP-GREASE

S/N: 2211-UP

PART OF 262-2081 CHASSIS AR

SMCS-7510 **i02897741**

NOTE	REF NO	GRAPHIC REF	PART NUMBER	QTY	PART NAME 1 2 3 4 5 6 (PRODUCT LEVEL)	SEE PAGE
	1	1,2,4	**5K-9242**	18	UNION-FLARED	
	2	1,2,3,4	**5K-9243**	12	ELBOW-FLARED	
	3	2	**180-1465**	1	TUBE AS	
	4	2	**180-1466**	2	TUBE AS	
	5	2	**180-1467**	1	TUBE AS	
	6	1	**180-1468**	1	TUBE AS	
	7	1	**180-1469**	1	TUBE AS	
	8	3	**180-1470**	1	TUBE AS	
	9	1	**180-1471**	1	TUBE AS	
	10	4	**180-1472**	1	TUBE AS	
	11	1	**180-1473**	1	TUBE AS	
	12	1	**180-1474**	1	TUBE AS	
	13	4	**180-1475**	1	TUBE AS	
	14	1	**180-1476**	1	TUBE AS	
	15	4	**180-1477**	1	TUBE AS	
	16	4	**180-1478**	1	TUBE AS	
	17	4	**180-1479**	1	TUBE AS	
	18	2	**180-1480**	1	TUBE AS	
	19	1	**180-2431**	1	TUBE AS	
	20	4	**180-2433**	1	PLATE	
	21	4	**180-2434**	1	PLATE	
	22	1	**192-5017**	2	BRACKET AS	
	23	3	**227-3284**	1	PLATE AS	
	24	1	**282-3252**	1	TUBE AS	
	25	1	**282-3253**	1	TUBE AS	
	26	1	**282-3254**	1	TUBE AS	
	27	1	**282-3255**	1	TUBE AS	
	28	1	**282-3256**	1	TUBE AS	
	29	3	**4K-3026**	5	EXTENSION	
	30	1	**7D-1728**	2	CLIP	
	31	2	**7V-6571**	2	GROMMET	
	32	1,2,3,4	**8M-2772**	50	CLIP	
	33	1,2,3,4	**8T-4121**	39	WASHER-HARD (11X21X2.5-MM THK)	
M	34	1	**8T-4136**	9	BOLT (M10X1.5X25-MM)	
M	35	1,2,3,4	**8T-4137**	30	BOLT (M10X1.5X20-MM)	

M-METRIC PART

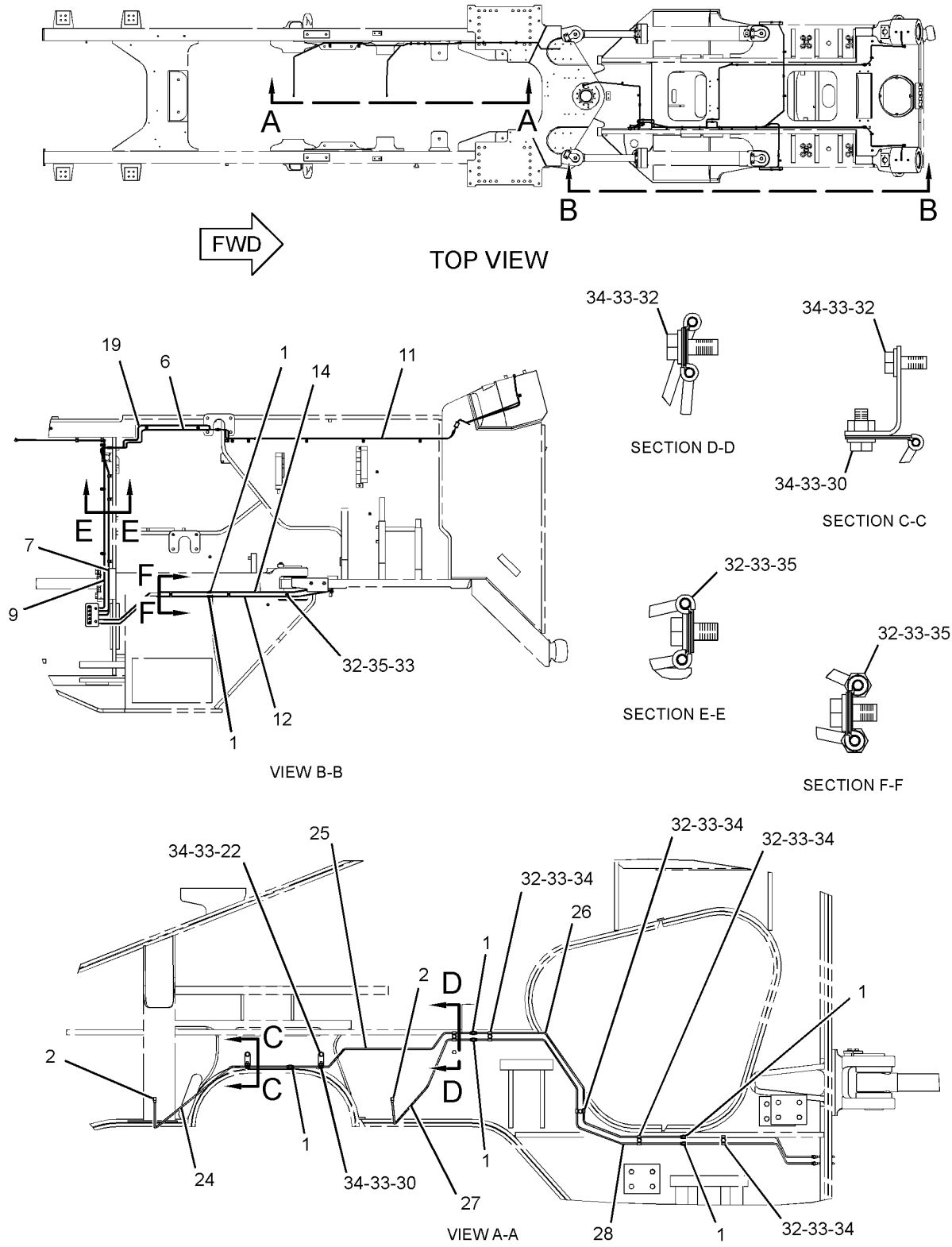

GRAPHIC #1

g01449424

REFER TO ALL ILLUSTRATIONS OF
THIS GROUP FOR AUXILIARY VIEWS.

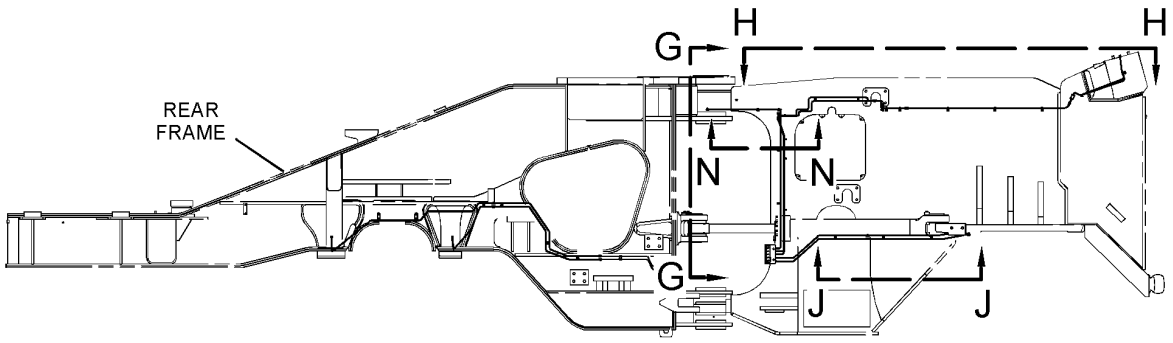

RIGHT SIDE VIEW

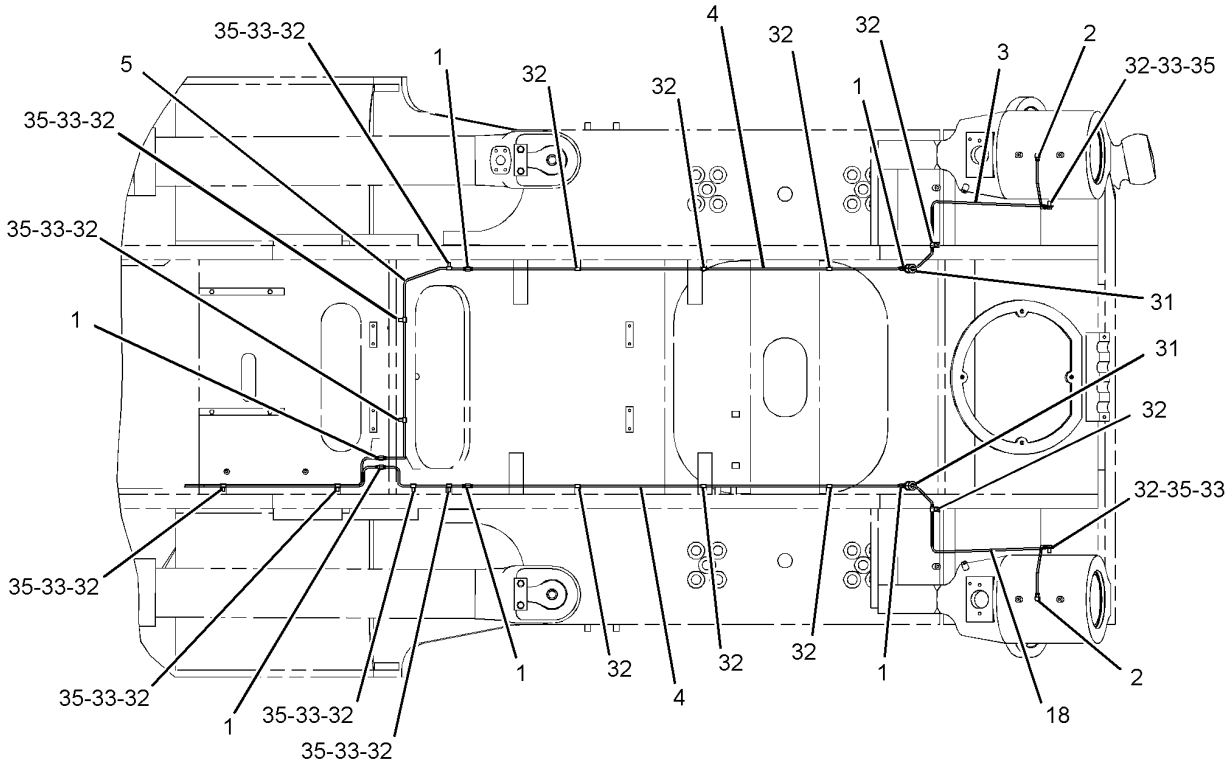

VIEW H-H

GRAPHIC #2 g01449592

284-2859 **LINES GP-GREASE** *(contd.)* **i02897741**

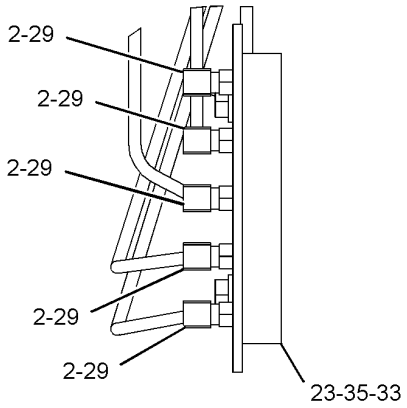

VIEW OF AREA K

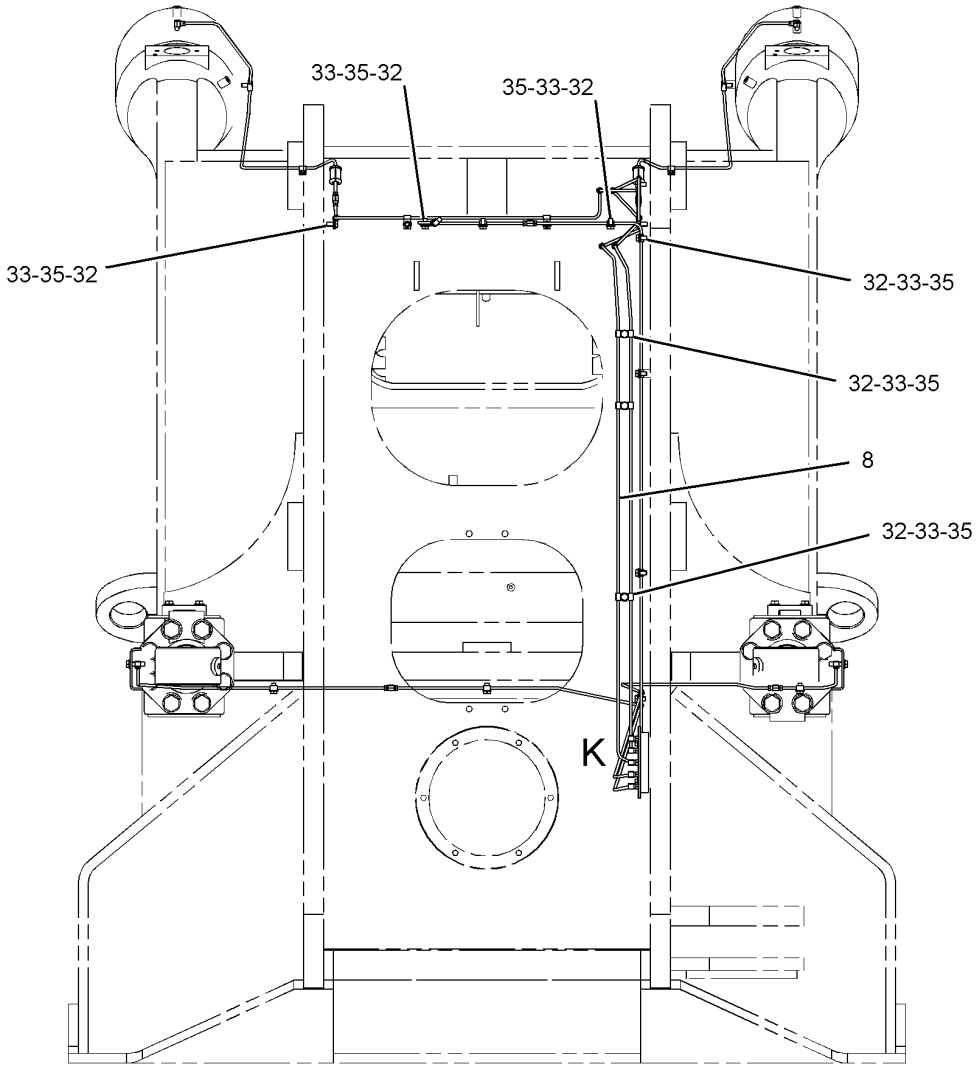

VIEW G-G

GRAPHIC #3

g01449419

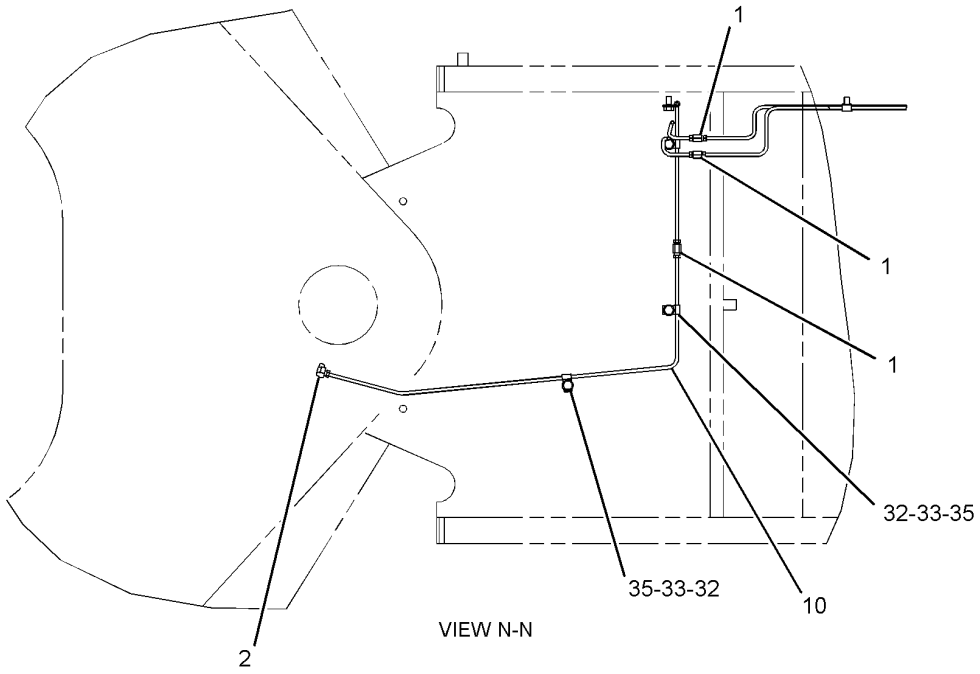

VIEW N-N

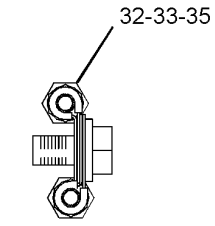

SECTION M-M

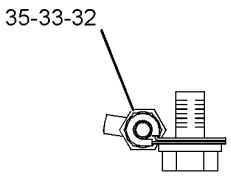

SECTION L-L

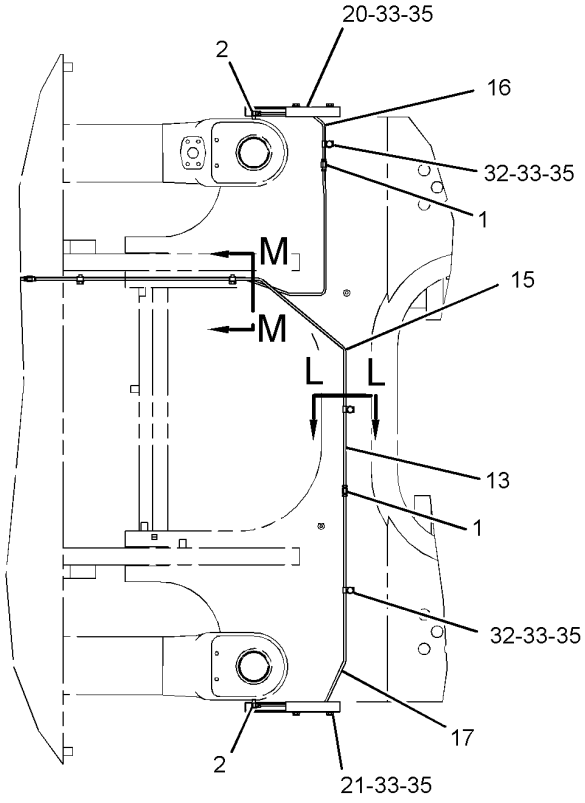

VIEW J-J

GRAPHIC #4 **<END>** g01449422

FRAME AND BODY

284-2860 LINES GP-GREASE

S/N: 2211-UP

AN ATTACHMENT

SMCS-7510 **i02902943**

NOTE	REF NO	GRAPHIC REF	PART NUMBER	QTY	PART NAME 1 2 3 4 5 6 (PRODUCT LEVEL)	SEE PAGE
	1	1	**3B-8489**	6	FITTING-GREASE	
	2	1	**4B-8440**	2	FITTING-GREASE	
	3	1	**6L-3616**	2	CONNECTOR	
	4	1	**282-3268**	1	TUBE AS	
	5	1	**282-3269**	1	TUBE AS	

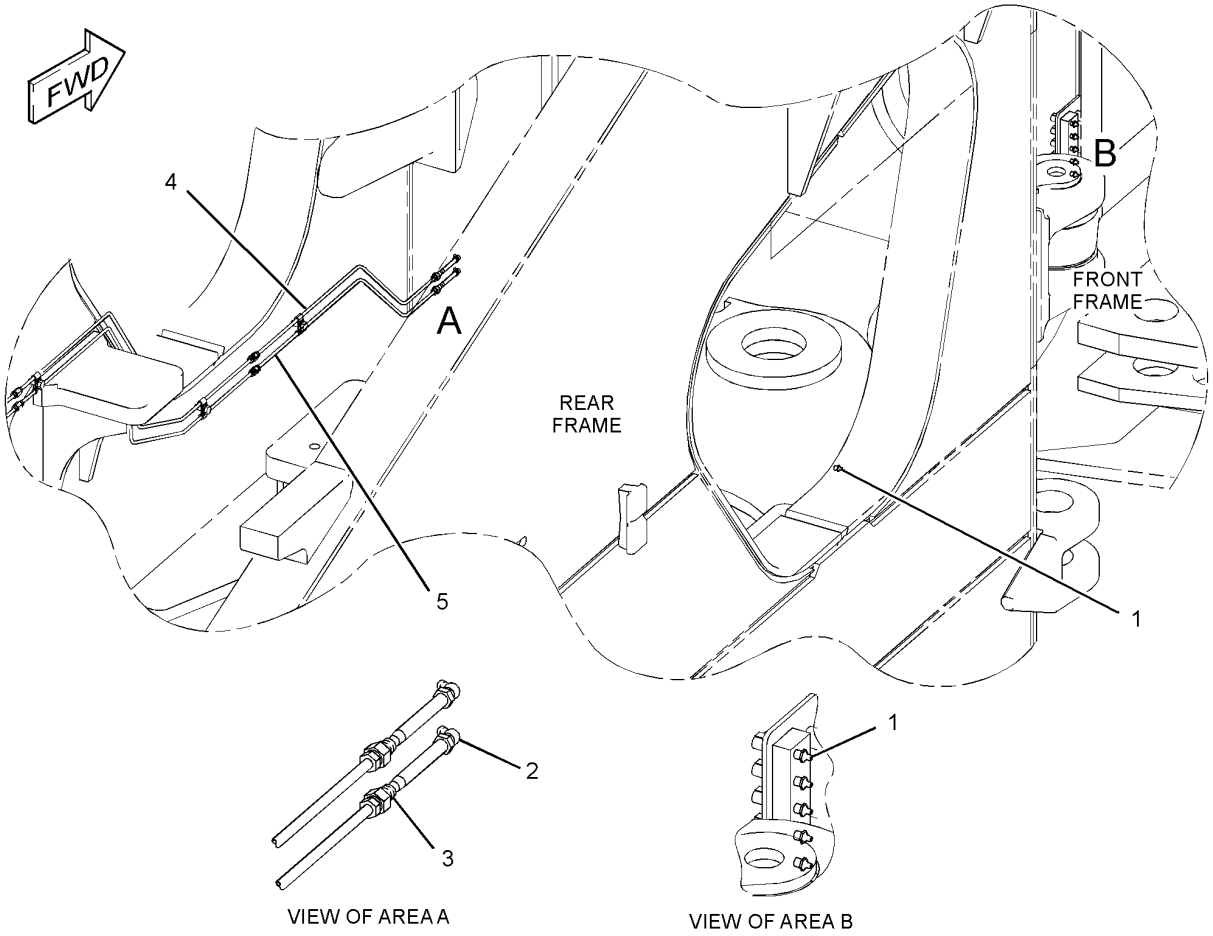

GRAPHIC #1 **<END>** g01449550

288-5863 LINES GP-LUBRICATION–
LIFT CYLINDERS, STEERING CYLINDERS, ARTICULATED HITCH
S/N: 2211-UP
PART OF 289-3240, 289-3241 LINES GP-AUTOMATIC LUBRICATION
AN ATTACHMENT

SMCS-7510, 7540 **i02894352**

NOTE	REF NO	GRAPHIC REF	PART NUMBER	QTY	PART NAME 1 2 3 4 5 6 (PRODUCT LEVEL)	SEE PAGE
	1	1	**189-7535**	1	HOSE AS	
	2	1	**189-7541**	1	HOSE AS	
	3	1	**189-7542**	1	HOSE AS	
	4	1	**189-7543**	1	HOSE AS	
	5	1	**189-7546**	1	HOSE AS	
	6	1	**189-7547**	1	HOSE AS	
	7	1	**224-3956**	1	HOSE AS	
Y	8	1	**227-3282**	1	VALVE GP-LUBE DISTRIBUTION (12-INJECTOR)	557
	9	1	**3B-6552**	1	ELBOW	

Y-SEPARATE ILLUSTRATION

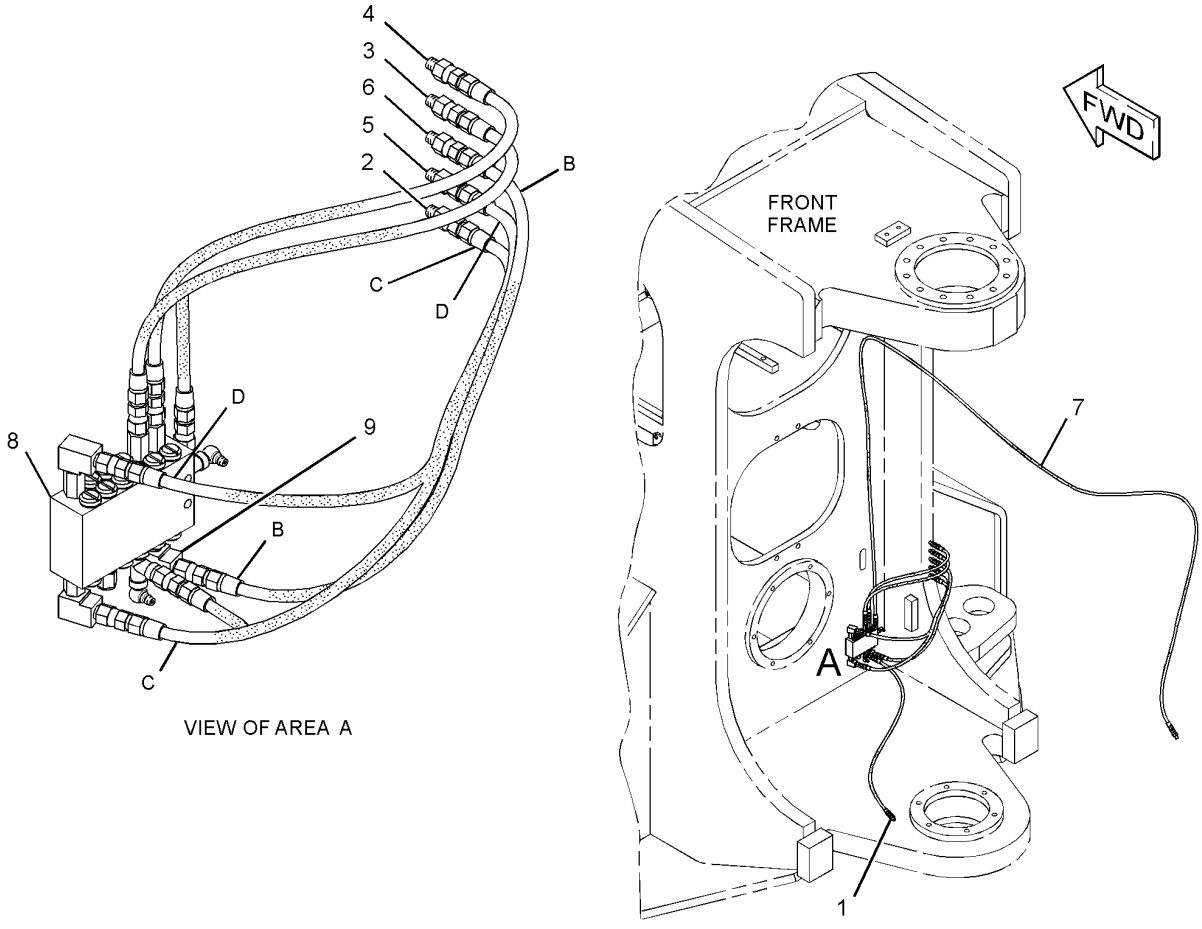

GRAPHIC #1 **<END>** g01444504

288-5864 LINES GP-LUBRICATION–
STEERING CYLINDERS, TRUNNIONS
S/N: 2211-UP
PART OF 289-3240, 289-3241 LINES GP-AUTOMATIC LUBRICATION
AN ATTACHMENT

SMCS-7510, 7540 **i02900653**

NOTE	REF NO	GRAPHIC REF	PART NUMBER	QTY	PART NAME 1 2 3 4 5 6 (PRODUCT LEVEL)	SEE PAGE
	1	1	**183-5512**	1	HOSE AS	
	2	1	**189-7552**	1	HOSE AS	
	3	1	**224-3957**	1	HOSE AS	
Y	4	1	**288-5860**	1	VALVE GP-LUBE DISTRIBUTION (12-INJECTOR)	558
	5	1	**288-5869**	1	HOSE AS	

Y-SEPARATE ILLUSTRATION

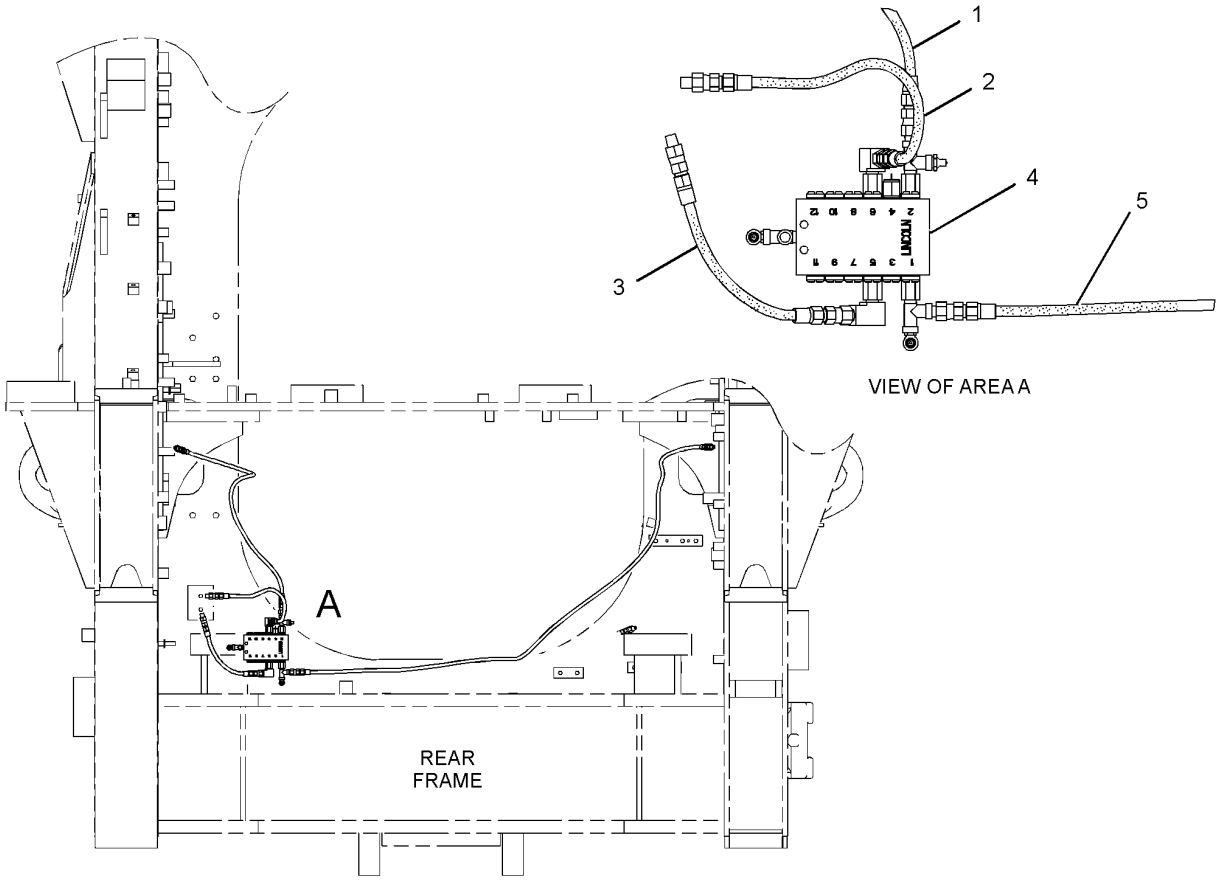

REAR VIEW

GRAPHIC #1 **<END>** g01449723

109-6839 LINK GP-STEERING FRAME LOCK

S/N: 2211-UP

PART OF 262-2081 CHASSIS AR

SMCS-7506 **i00738093**

NOTE	REF NO	GRAPHIC REF	PART NUMBER	QTY	PART NAME 1 2 3 4 5 6 (PRODUCT LEVEL)	SEE PAGE
	1	1	**124-3819**	1	LINK	
	2	1	**124-3820**	2	PIN	
	3	1	**1J-2919**	2	COTTER	

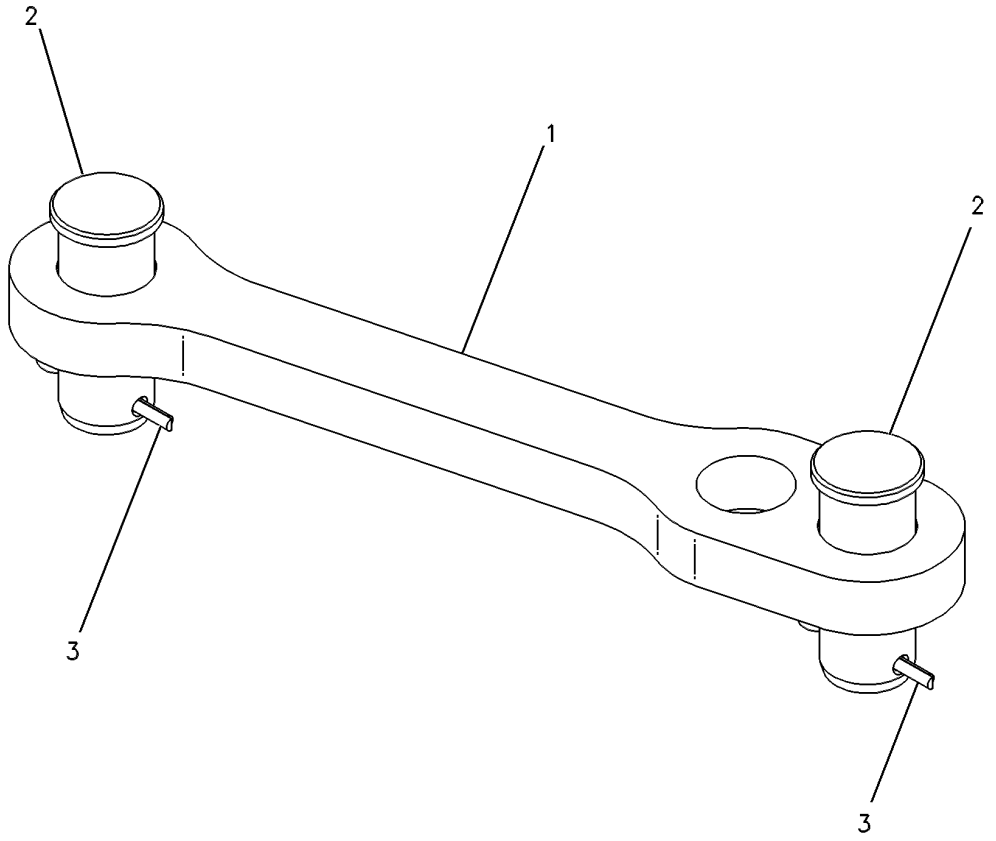

GRAPHIC #1 **<END>** g00255024

284-2855 LUBRICATION AR-AUTOMATIC

S/N: 2211-UP

CANNOT BE USED WITH 286-0856—PAGE 917, 284-2861—PAGE 540, 284-2860—PAGE 536

AN ATTACHMENT

SMCS-7540 **i02901632**

NOTE	PART NUMBER	QTY	PART NAME 1 2 3 4 5 6 (PRODUCT LEVEL)	SEE PAGE
Y	*289-3240*	1	LINES GP-AUTOMATIC LUBRICATION	524
Y	*290-0346*	1	WIRING GP-AUTOLUBE CONTROL	292

Y-SEPARATE ILLUSTRATION

<END>

284-2861 LUBRICATION AR-AUTOMATIC

S/N: 2211-UP

CANNOT BE USED WITH 286-0856—PAGE 917, 284-2855—PAGE 540, 284-2860—PAGE 536

AN ATTACHMENT

SMCS-7540 **i02901631**

NOTE	PART NUMBER	QTY	PART NAME 1 2 3 4 5 6 (PRODUCT LEVEL)	SEE PAGE
Y	*289-3241*	1	LINES GP-AUTOMATIC LUBRICATION	528
Y	*290-0346*	1	WIRING GP-AUTOLUBE CONTROL	292

Y-SEPARATE ILLUSTRATION

<END>

170-1931 MOUNTING GP-BUMPER

S/N: 2211-UP

PART OF 262-2081 CHASSIS AR

SMCS-7156 **i02861202**

NOTE	REF NO	GRAPHIC REF	PART NUMBER	QTY	PART NAME 1 2 3 4 5 6 (PRODUCT LEVEL)	SEE PAGE
B	1	1	**092-0596**	8	SHIM (1-MM THK)	
	2	1	**246-2641**	1	PADLOCK GP	
		1	**5P-8500**	1	KEY	
M	3	1	**8T-5878**	16	BOLT (M24X3X80-MM)	
	4	1	**7X-0616**	16	WASHER-HARD (28X57X6-MM THK)	
	5	1	**124-3080**	2	COVER	
Y	6	1	*131-8125*	1	DRAWBAR GP	471
	7	1	**5P-1076**	4	WASHER-HARD (13.5X30X4-MM THK)	
	8	1	**6M-1622**	2	DOWEL	
M	9	1	**8T-4183**	4	BOLT (M12X1.75X40-MM)	
B	10	1	**5R-3768**	4	PLATE	

B-USE AS REQUIRED
M-METRIC PART
Y-SEPARATE ILLUSTRATION

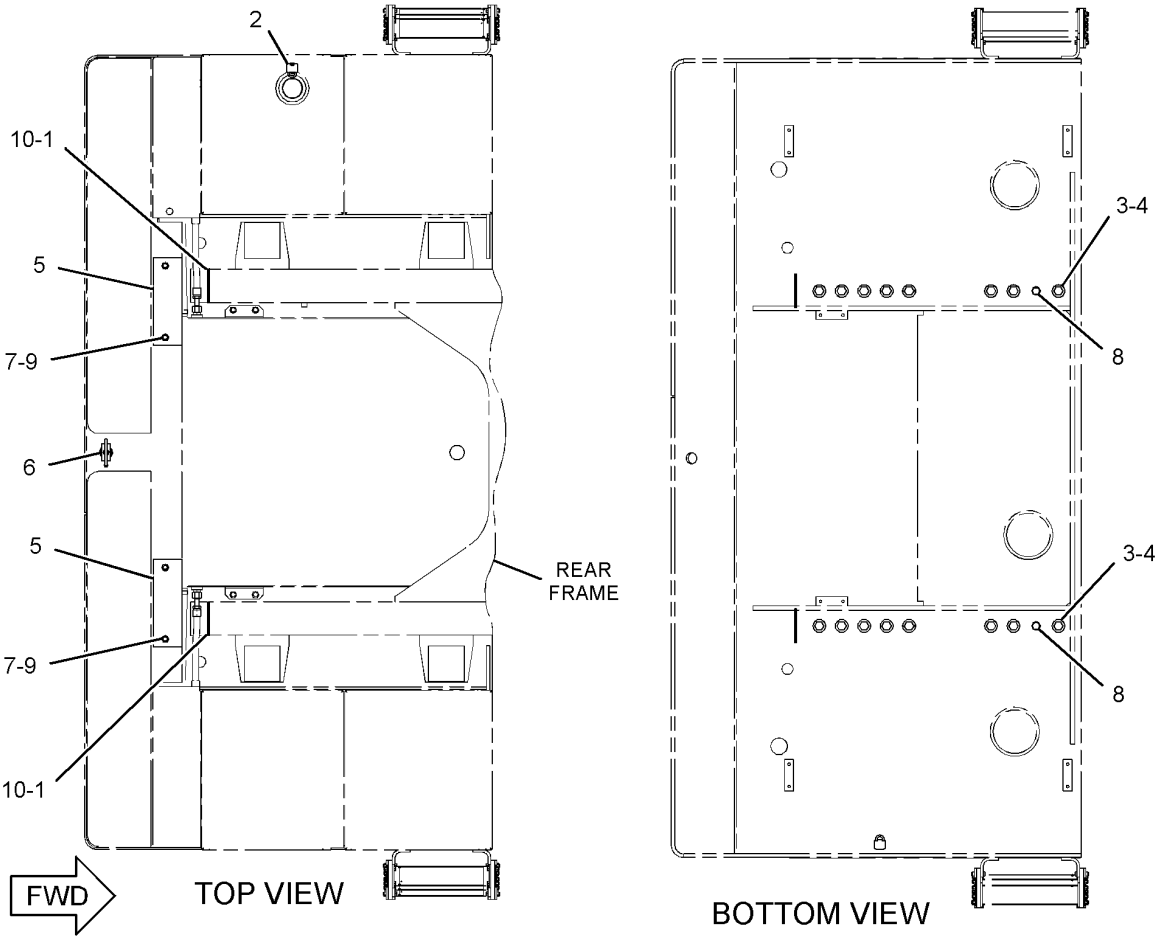

GRAPHIC #1 **<END>** g01438962

309-5553 PANEL GP-HOOD–TOP, FRONT

S/N: 2211-UP

PART OF 279-5282 HOOD & GUARD GP

SMCS-7251 **i02890997**

NOTE	REF NO	GRAPHIC REF	PART NUMBER	QTY	PART NAME 1 2 3 4 5 6 (PRODUCT LEVEL)	SEE PAGE
	1	1	**8C-3468**	1	LOCK AS-CYLINDER	
	2	1	**125-8176**	1	CAM-LATCH	
	3	1	**174-6381**	1	LATCH AS	
	4	1	**308-2036**	1	PANEL AS-TOP	

309-5553 **PANEL GP-HOOD** *(contd.)* **i02890997**

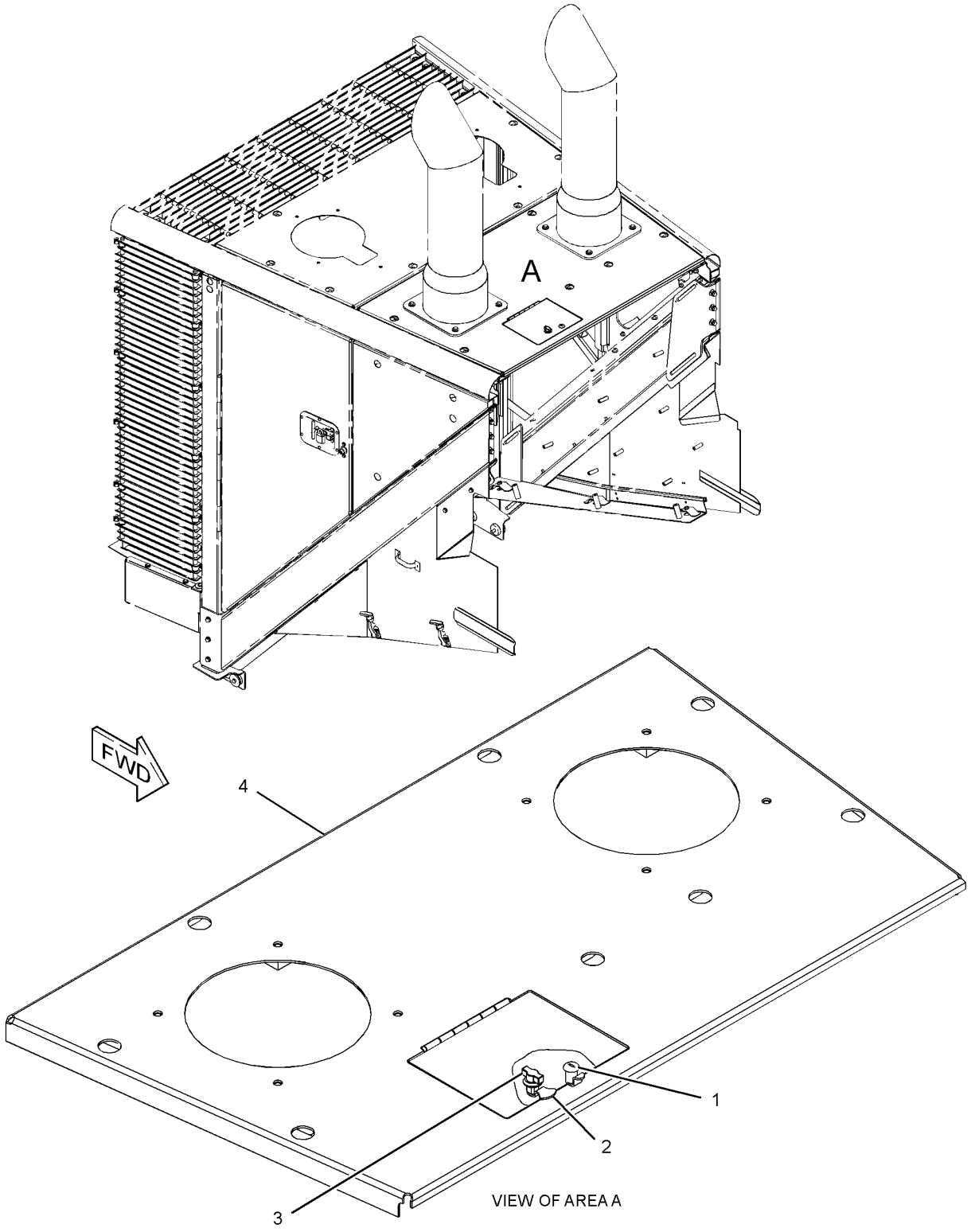

GRAPHIC #1 **<END>** g01447393

FRAME AND BODY

316-0026 PANEL GP-HOOD

S/N: 2211-UP

PART OF 279-5282 HOOD & GUARD GP

SMCS-7251 **i02890990**

NOTE	REF NO	GRAPHIC REF	PART NUMBER	QTY	PART NAME 1 2 3 4 5 6 (PRODUCT LEVEL)	SEE PAGE
	1	1	**284-1152**	1	PANEL AS (LH)	
	2	1	**284-1153**	1	PANEL AS (RH)	
	3	1	**315-9971**	4	KEEPER	
	4	1	**6V-2491**	8	RIVET-POP	

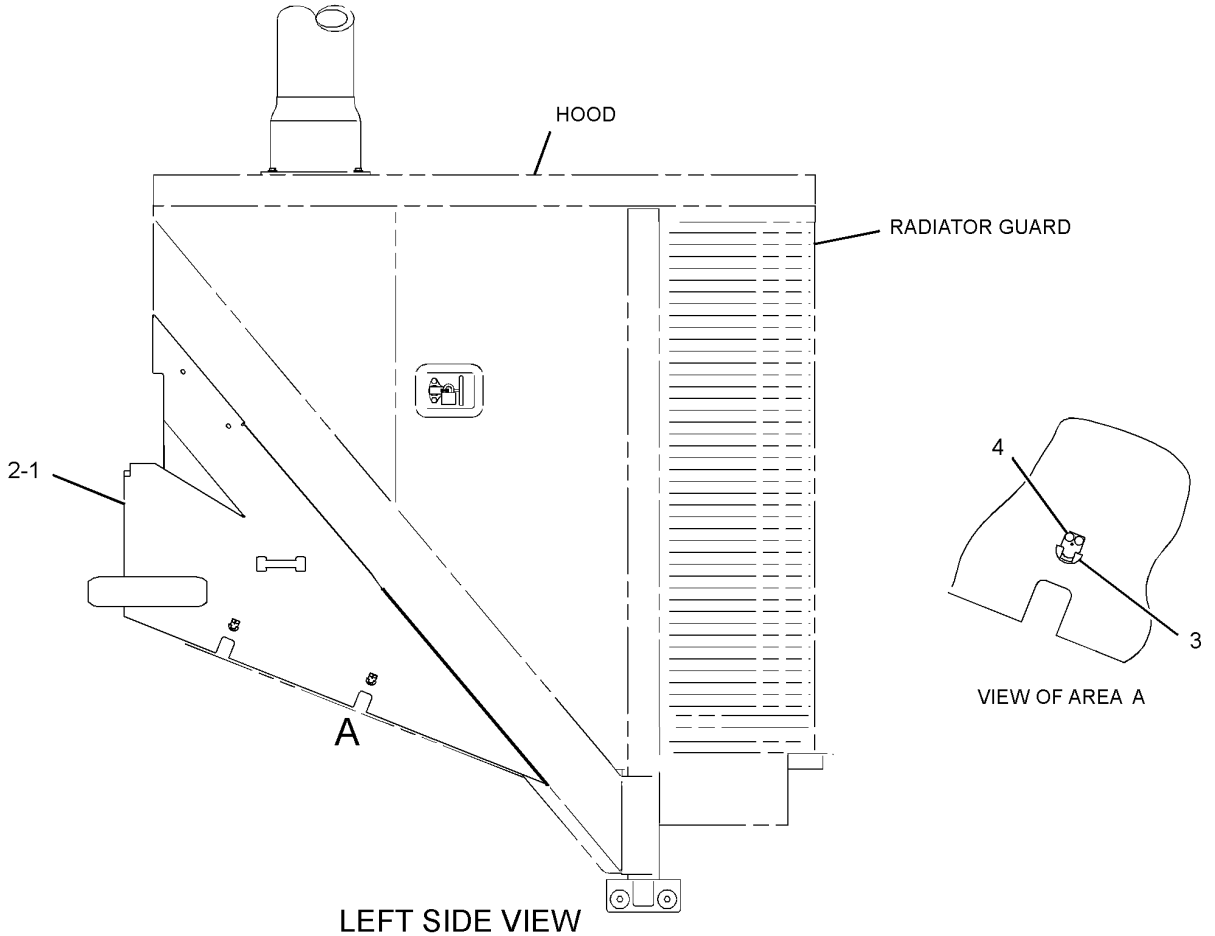

GRAPHIC #1 **<END>** g01444402

279-0390 SHIELD GP-ENGINE COMPARTMENT

S/N: 2211-UP
PART OF 281-4090 SUPPRESSION AR-SOUND
AN ATTACHMENT

SMCS-7154, 7263 **i02888128**

NOTE	REF NO	GRAPHIC REF	PART NUMBER	QTY	PART NAME 1 2 3 4 5 6 (PRODUCT LEVEL)	SEE PAGE
	1	1	**4H-1225**	19	WASHER (11X22X6-MM THK)	
	2	1	**288-4778**	1	SHIELD AS	
		1	**148-2565**	6	BRACKET AS	
					(EACH INCLUDES)	
M		1	**9R-2613**	1	BOSS-WELD (M10X1.5X25-MM)	
	3	1	**288-4779**	1	SHIELD	
	4	1	**288-4781**	1	PLATE AS	
	5	1	**288-4782**	1	CHANNEL AS	
	6	1	**288-4783**	1	CHANNEL AS	
	7	1	**314-5809**	1	PLATE AS	
	8	1	**314-5810**	1	PLATE AS	
	9	1	**7X-7729**	31	WASHER (11X25X3-MM THK)	
M	10	1	**8T-4136**	6	BOLT (M10X1.5X25-MM)	
M	11	1	**8T-4137**	25	BOLT (M10X1.5X20-MM)	
M	12	1	**8T-4195**	25	BOLT (M10X1.5X30-MM)	
	13	1	**8T-4226**	25	WASHER-PLATED (10.5X45X3-MM THK)	
D	14	1	**5P-7211**		SEAL (1.6-M)	
D	14A	1	**5P-7211**		SEAL (0.58-M EACH)	

D-ORDER BY THE METER
M-METRIC PART

279-0390 **SHIELD GP-ENGINE COMPARTMENT** *(contd.)* **i02888128**

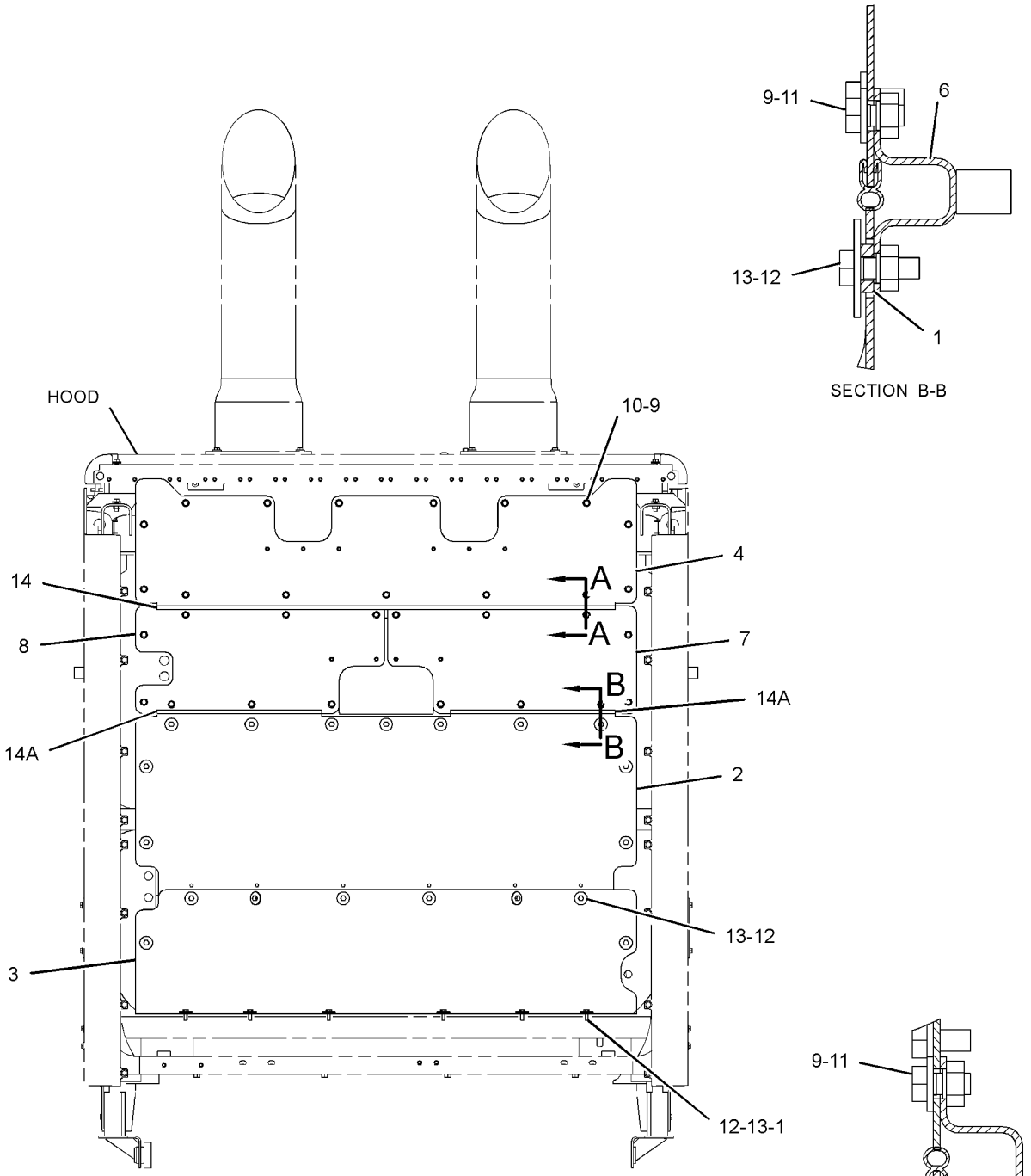

GRAPHIC #1 **<END>** g01444003

281-4050 SHIELD GP-RADIATOR—SOUND SUPPRESSION

S/N: 2211-UP
PART OF 279-5288 SUPPRESSION AR-SOUND
AN ATTACHMENT

SMCS-1353 **i02940040**

NOTE	REF NO	GRAPHIC REF	PART NUMBER	QTY	PART NAME 1 2 3 4 5 6 (PRODUCT LEVEL)	SEE PAGE
	1	1	**4H-1225**	19	WASHER (11X22X6-MM THK)	
Y	2	1	**281-4051**	1	INSULATION GP-RADIATOR SHIELD (TOP, SOUND SUPPRESSION)	517
Y	3	1	**281-4052**	1	INSULATION GP-RADIATOR SHIELD (BOTTOM, SOUND SUPPRESSION)	518
	4	1	**281-4053**	1	INSULATION	
	5	1	**288-4781**	1	PLATE AS	
	6	1	**288-4782**	1	CHANNEL AS	
	7	1	**288-4783**	1	CHANNEL AS	
	8	1	**314-5809**	1	PLATE AS	
	9	1	**314-5810**	1	PLATE AS	
	10	1	**317-7393**	1	INSULATION	
	11	1	**317-7394**	1	INSULATION	
	12	1	**7X-7729**	31	WASHER (11X25X3-MM THK)	
M	13	1	**8T-4136**	6	BOLT (M10X1.5X25-MM)	
M	14	1	**8T-4137**	33	BOLT (M10X1.5X20-MM)	
M	15	1	**8T-4195**	25	BOLT (M10X1.5X30-MM)	
	16	1	**8T-4222**	8	WASHER-PLATED (11X32X2.5-MM THK)	
	17	1	**8T-4226**	25	WASHER-PLATED (10.5X45X3-MM THK)	
D	18	1	**5P-7211**		SEAL (1.6-M)	
D	18A	1	**5P-7211**		SEAL (0.6-M EACH)	

D-ORDER BY THE METER
M-METRIC PART
Y-SEPARATE ILLUSTRATION

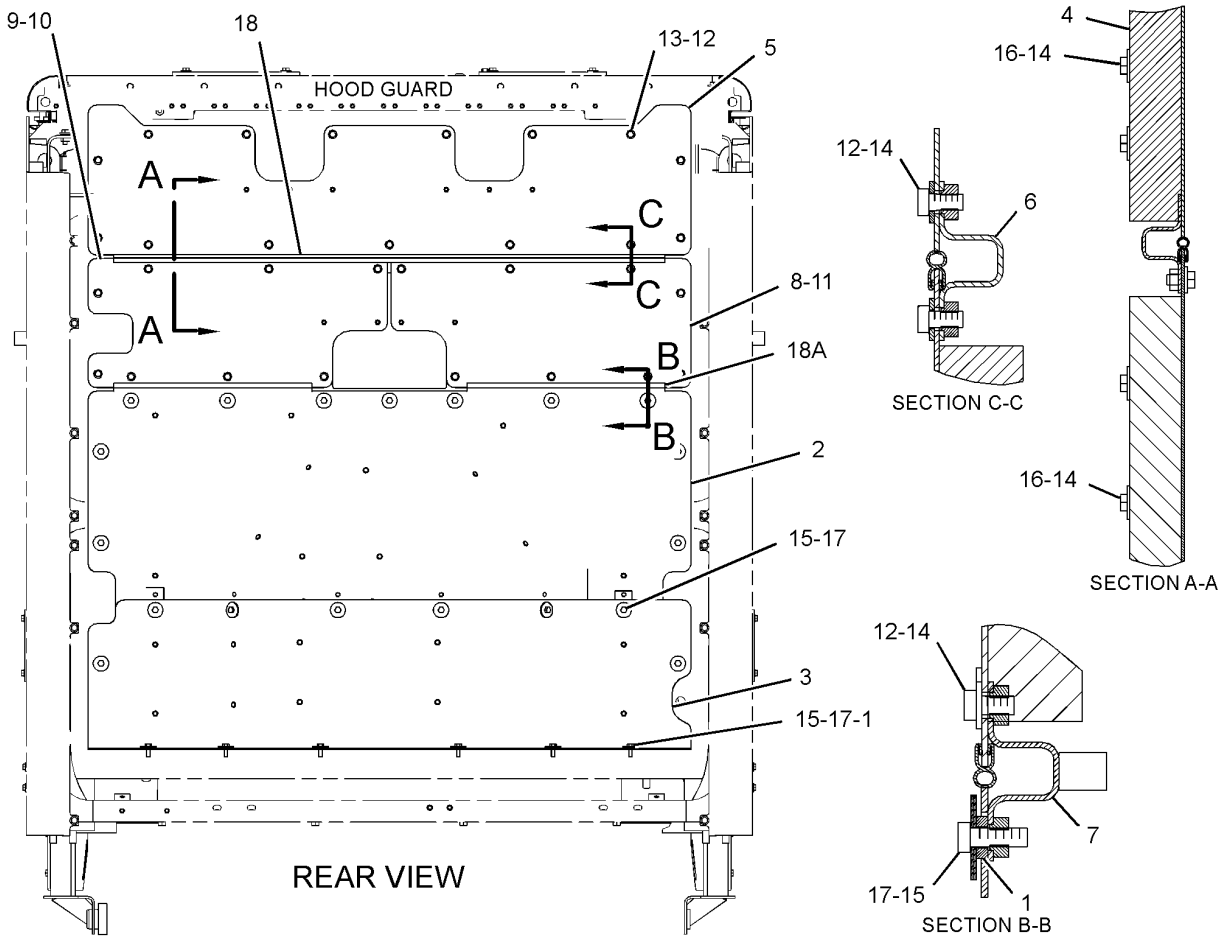

GRAPHIC #1

<END>

g01446728

FRAME AND BODY

160-7555 STEP GP

S/N: 2211-UP
CANNOT BE USED WITH 237-7944 WALKWAY GP
AN ATTACHMENT

SMCS-7254 **i00929588**

NOTE	REF NO	GRAPHIC REF	PART NUMBER	QTY	PART NAME 1 2 3 4 5 6 (PRODUCT LEVEL)	SEE PAGE
	1	1	**128-6757**	1	STEP AS	
	2	1	**128-6758**	1	STEP AS	
	3	1	**8T-4121**	4	WASHER-HARD (11X21X2.5-MM THK)	
M	4	1	**8T-4195**	4	BOLT (M10X1.5X30-MM)	

M-METRIC PART

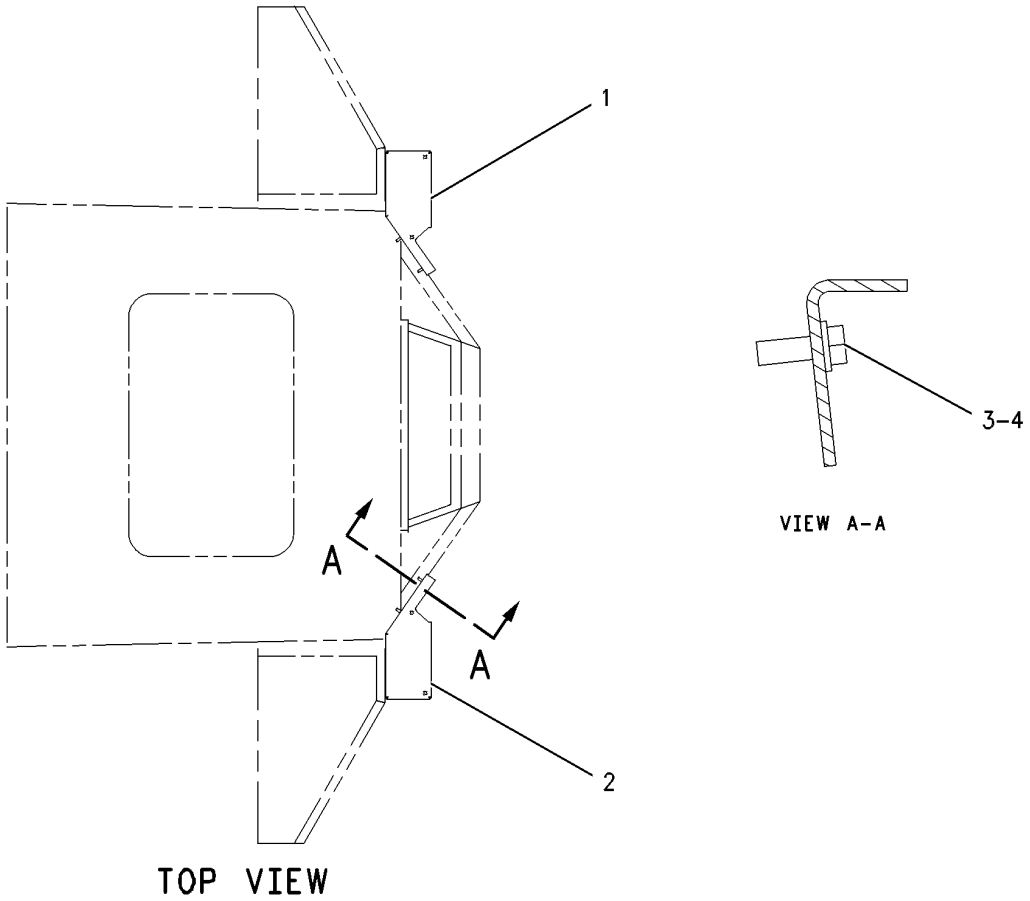

GRAPHIC #1 **<END>** g00606767

FRAME AND BODY

289-2984 STEP GP

S/N: 2211-UP

PART OF 283-6455 LADDER GP

SMCS-7254 **i02572876**

NOTE	REF NO	GRAPHIC REF	PART NUMBER	QTY	PART NAME 1 2 3 4 5 6 (PRODUCT LEVEL)	SEE PAGE
	1	1	**4V-9803**	6	PLATE	
	2	1	**112-4558**	4	PLATE	
	3	1	**135-5154**	2	BRACKET	
	4	1	**188-0869**	3	STEP AS	
	5	1	**289-2985**	2	SUPPORT-STEP (RUBBER)	
M	6	1	**6V-7687**	20	LOCKNUT (M12X1.75-THD)	
M	7	1	**8T-4183**	12	BOLT (M12X1.75X40-MM)	
M	8	1	**8T-4194**	8	BOLT (M12X1.75X50-MM)	

M-METRIC PART

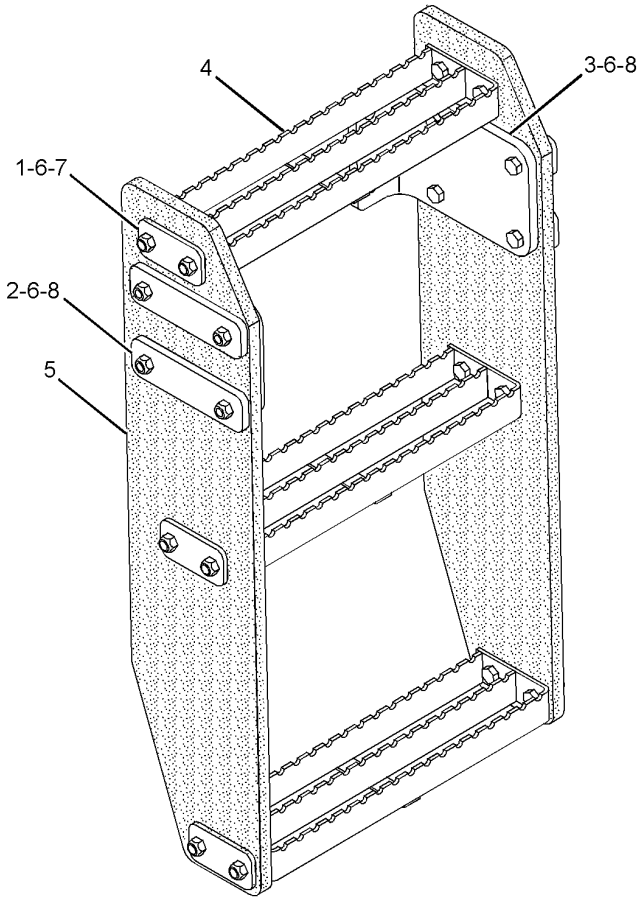

GRAPHIC #1 **<END>** g01290049

279-5288 SUPPRESSION AR-SOUND

S/N: 2211-UP
PART OF 317-7017 ENGINE AR
CANNOT BE USED WITH 281-4090—PAGE 551
AN ATTACHMENT

SMCS-7261 **i02896961**

NOTE	PART NUMBER	QTY	PART NAME 1 2 3 4 5 6 (PRODUCT LEVEL)	SEE PAGE
Y	*281-4050*	1	SHIELD GP-RADIATOR (SOUND SUPPRESSION)	547
Y	*281-4040*	1	SUPPRESSION GP-SOUND (HOOD TOP, SIDE)	552
Y-SEPARATE ILLUSTRATION				

<END>

281-4090 SUPPRESSION AR-SOUND—ENGINE COMPARTMENT SHIELD

S/N: 2211-UP
PART OF 279-9490, 317-7016 ENGINE AR
CANNOT BE USED WITH 279-5288—PAGE 551
AN ATTACHMENT

SMCS-7261 **i02901607**

NOTE	PART NUMBER	QTY	PART NAME 1 2 3 4 5 6 (PRODUCT LEVEL)	SEE PAGE
Y	*279-0390*	1	SHIELD GP-ENGINE COMPARTMENT	545
Y-SEPARATE ILLUSTRATION				

<END>

281-4040 SUPPRESSION GP-SOUND—HOOD TOP, SIDE

S/N: 2211-UP

PART OF 279-5288 SUPPRESSION AR-SOUND

AN ATTACHMENT

SMCS-7076, 7261 **i02927414**

NOTE	REF NO	GRAPHIC REF	PART NUMBER	QTY	PART NAME 1 2 3 4 5 6 (PRODUCT LEVEL)	SEE PAGE
	1	2	**281-4036**	1	INSULATION (HOOD SIDE, UPPER, REAR, LH)	
	2	2	**281-4037**	1	INSULATION (HOOD SIDE, UPPER, CENTER, LH)	
	3	2	**281-4038**	1	INSULATION (HOOD SIDE, LOWER, REAR, LH)	
	4	2	**281-4039**	1	INSULATION (HOOD SIDE, UPPER, FRONT, LH)	
	5	2	**281-4041**	1	INSULATION (HOOD SIDE, CENTER, LH)	
	6	2	**281-4042**	1	INSULATION (HOOD SIDE, LOWER, FRONT, RH)	
	7	2	**281-4043**	1	INSULATION (HOOD SIDE, LOWER, FRONT, LH)	
	8	2	**281-4075**	1	INSULATION (HOOD SIDE, UPPER, REAR, RH)	
	9	2	**281-4076**	1	INSULATION (HOOD SIDE, UPPER, CENTER, RH)	
	10	2	**281-4077**	1	INSULATION (HOOD SIDE, LOWER, REAR, RH)	
	11	2	**281-4078**	1	INSULATION (HOOD SIDE, UPPER, FRONT, RH)	
	12	2	**281-4079**	1	INSULATION (HOOD SIDE, CENTER, RH)	
	13	1	**308-3103**	1	INSULATION (HOOD TOP, FRONT, RH)	
	14	1	**309-5554**	1	INSULATION (HOOD TOP, FRONT, LH)	
	15	1	**309-5555**	1	INSULATION (HOOD TOP, BETWEEN MUFFLERS)	
	16	1	**309-5556**	1	INSULATION (HOOD TOP, REAR, LH AIR CLEANER)	
	17	1	**310-4073**	1	INSULATION (HOOD TOP, REAR, RH AIR CLEANER)	
	18	1	**310-4074**	1	INSULATION (HOOD TOP, REAR, LH AIR CLEANER)	
	19	1	**310-4075**	1	INSULATION (HOOD TOP, REAR, RH AIR CLEANER)	
	20	1	**321-6115**	1	INSULATION (HOOD TOP, CENTER)	
M	21	1,2	**8T-4137**	40	BOLT (M10X1.5X20-MM)	
	22	1,2	**8T-4222**	40	WASHER-PLATED (11X32X2.5-MM THK)	

M-METRIC PART

281 - 4040 **SUPPRESSION GP - SOUND** *(contd.)* **i02927414**

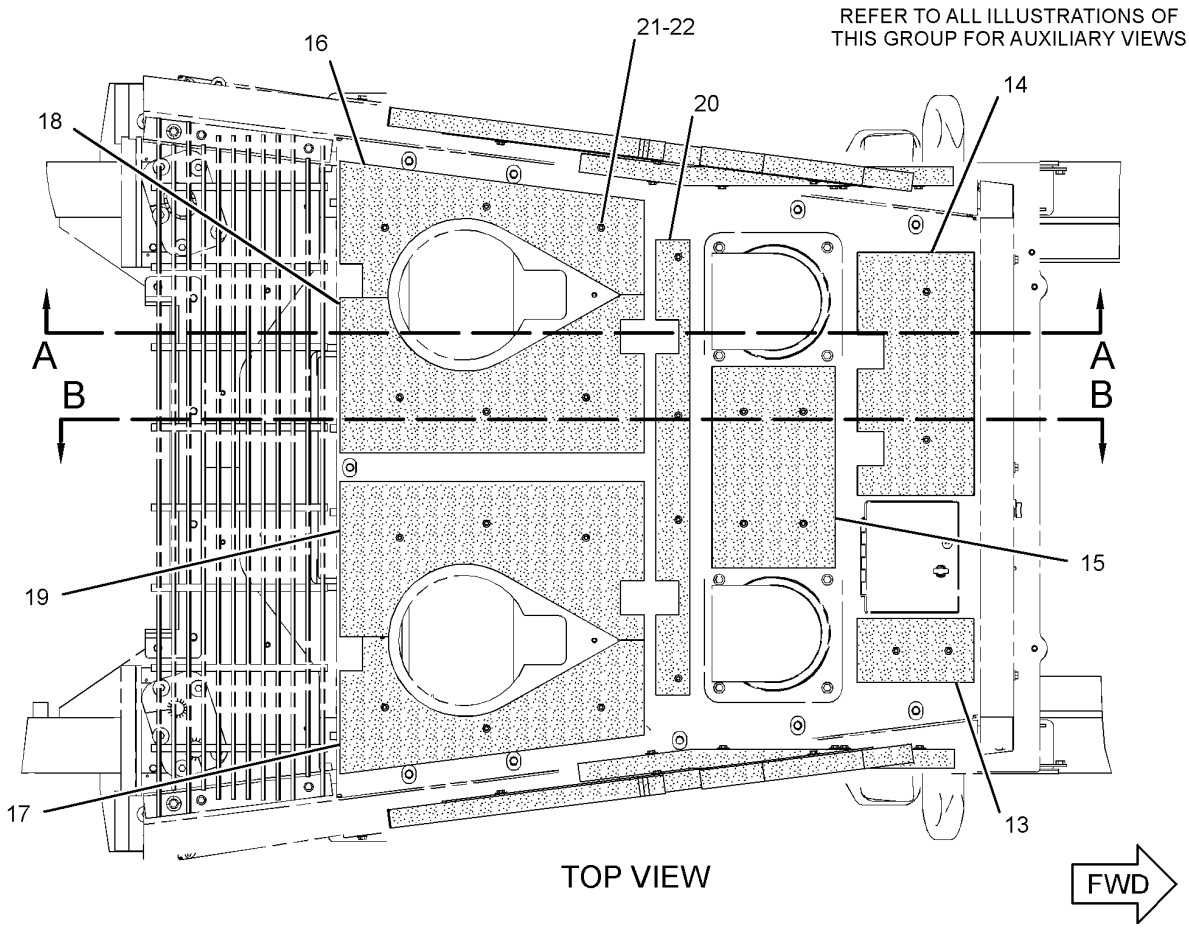

GRAPHIC #1

g01445805

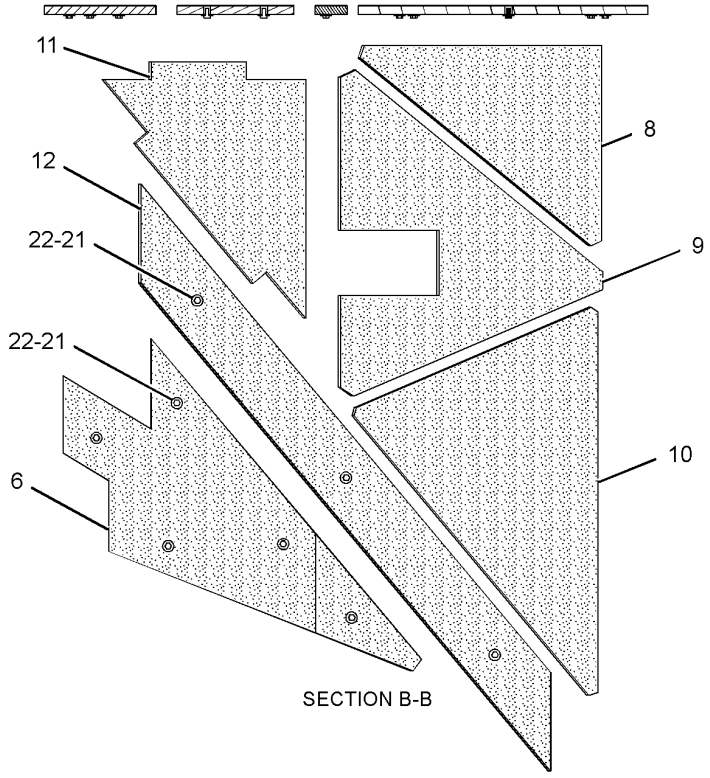

SECTION B-B

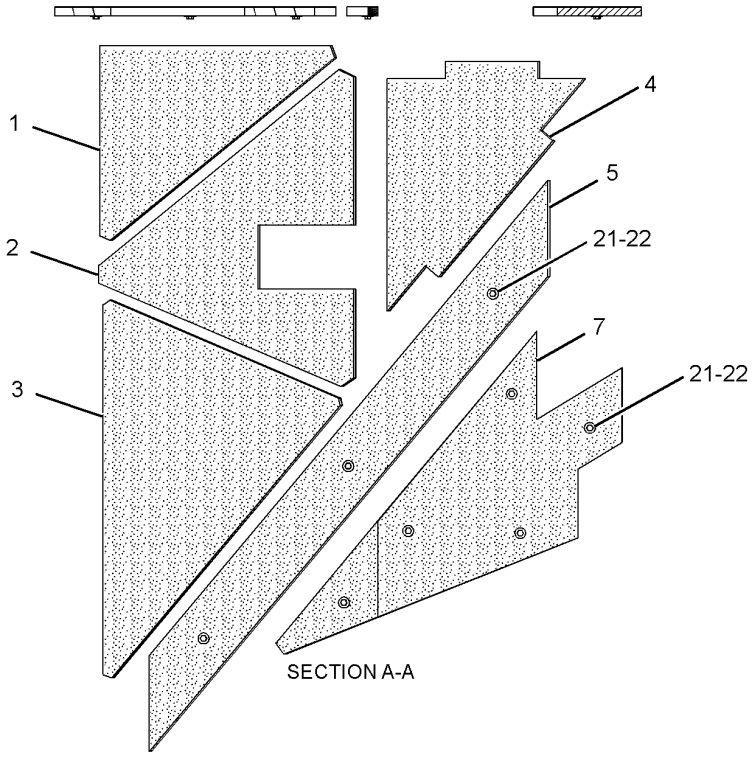

SECTION A-A

GRAPHIC #2 **<END>** g01446715

FRAME AND BODY

279-5277 TANK & BUMPER AR-FUEL

S/N: 2211-UP

PART OF 262-2081 CHASSIS AR

SMCS-1273, 7156 **i02891002**

NOTE	PART NUMBER	QTY	PART NAME 1 2 3 4 5 6 (PRODUCT LEVEL)	SEE PAGE
Y	*290-0689*	1	TANK GP-FUEL	186
Y	*282-5173*	1	WIRING GP-BUMPER	294
	282-0832	1	BUMPER AS	
	6V-1635	16	RIVET-POP	
	170-1633	2	PLATE	

Y-SEPARATE ILLUSTRATION

<END>

FRAME AND BODY

227-3292 TANK GP-GREASE

S/N: 2211-UP

PART OF 289-3240, 289-3241 LINES GP-AUTOMATIC LUBRICATION AN ATTACHMENT

SMCS-7540 **i02900585**

NOTE	REF NO	GRAPHIC REF	PART NUMBER	QTY	PART NAME 1 2 3 4 5 6 (PRODUCT LEVEL)	SEE PAGE
	1	1	**157-2017**	2	VALVE AS-RELIEF (GREASE PRESSURE)	
	2	1	**189-8069**	1	TANK GP-GREASE	
	3	1	**155-2260**	1	KIT-CONNECTING PLUG (3-PIN)	

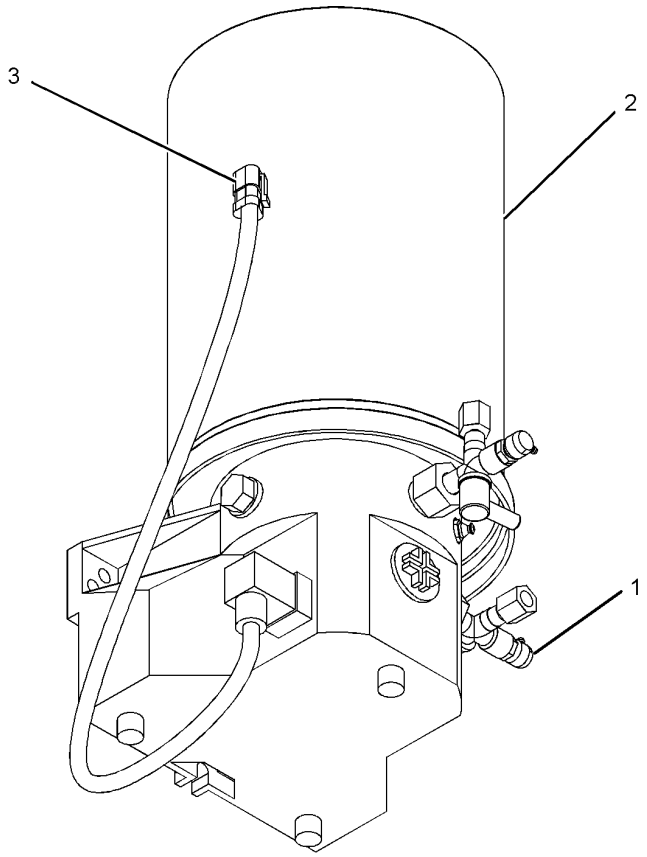

GRAPHIC #1 g01075724

<END>

227-3282 VALVE GP-LUBE DISTRIBUTION–12-INJECTOR

S/N: 2211-UP
PART OF 288-5863 LINES GP-LUBRICATION
AN ATTACHMENT

SMCS-7540 **i02111009**

NOTE	REF NO	GRAPHIC REF	PART NUMBER	QTY	PART NAME 1 2 3 4 5 6 (PRODUCT LEVEL)	SEE PAGE
	1	1	**3B-8488**	2	FITTING-GREASE	
	2	1	**5P-3422**	2	TEE-PIPE	
	3	1	**171-8868**	1	VALVE AS-LUBE DISTRIBUTION	
	4	1	**171-8869**	6	GASKET	
	5	1	**171-8870**	6	PLUG	
	6	1	**155-2478**	6	ADAPTER	
	7	1	**3B-6552**	2	ELBOW	

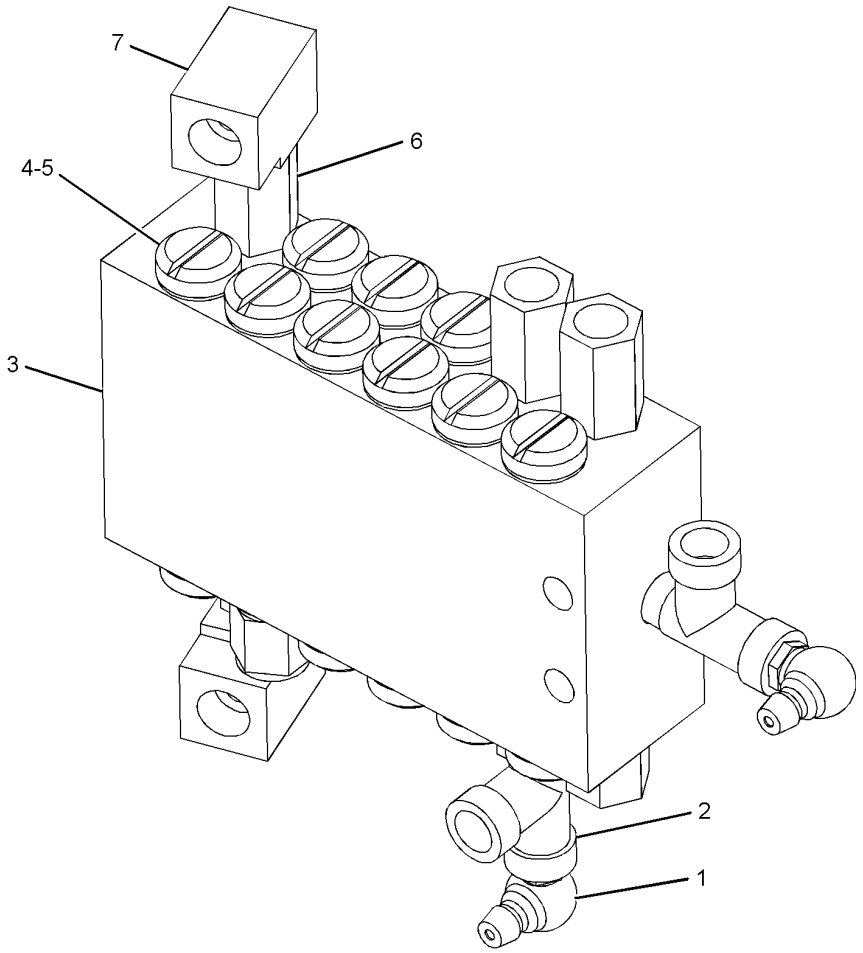

GRAPHIC #1 **<END>** g01075865

FRAME AND BODY

288-5860 VALVE GP-LUBE DISTRIBUTION–12-INJECTOR

S/N: 2211-UP

PART OF 288-5864 LINES GP-LUBRICATION

AN ATTACHMENT

SMCS-7540 **i02900676**

NOTE	REF NO	GRAPHIC REF	PART NUMBER	QTY	PART NAME 1 2 3 4 5 6 (PRODUCT LEVEL)	SEE PAGE
	1	1	**3B-8488**	2	FITTING-GREASE	
	2	1	**3B-8489**	1	FITTING-GREASE	
	3	1	**5P-3422**	3	TEE-PIPE	
	4	1	**171-8868**	1	VALVE AS-LUBE DISTRIBUTION	
	5	1	**171-8869**	8	GASKET	
	6	1	**171-8870**	8	PLUG	
	7	1	**155-2478**	4	ADAPTER	
	8	1	**3B-6552**	2	ELBOW	

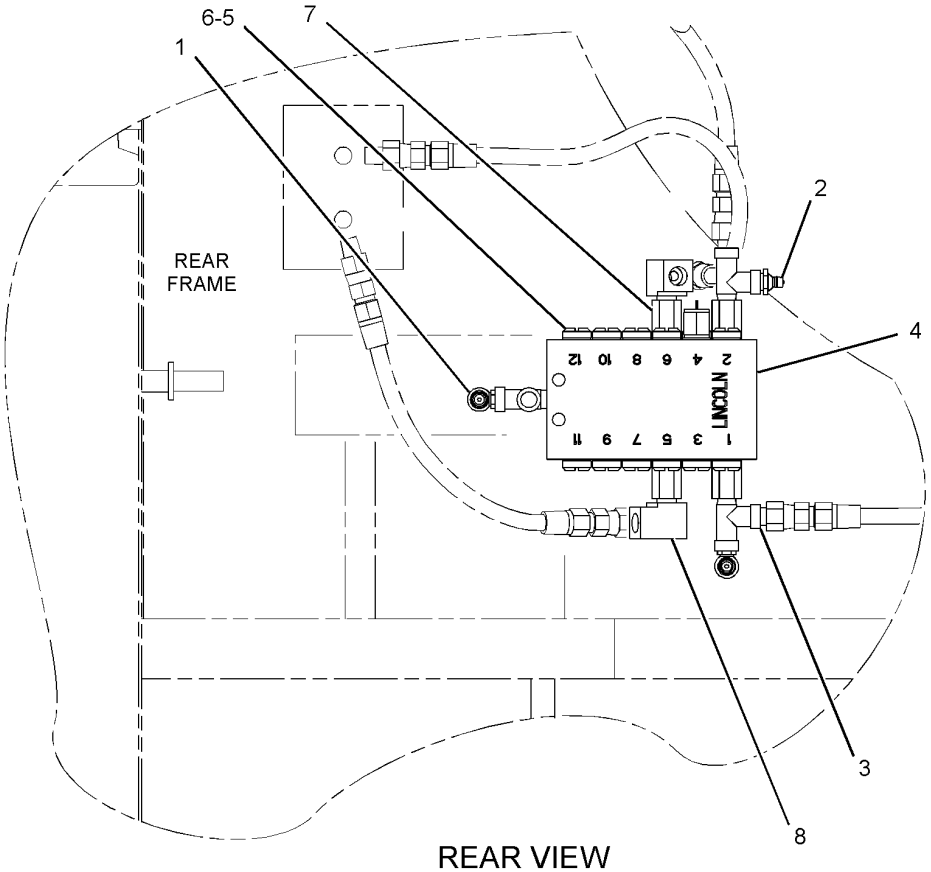

REAR VIEW

GRAPHIC #1 **<END>** g01447887

237-7944 WALKWAY GP

S/N: 2211-UP

CANNOT BE USED WITH 160-7555—PAGE 549

AN ATTACHMENT

SMCS-7255 **i02901576**

NOTE	REF NO	GRAPHIC REF	PART NUMBER	QTY	PART NAME 1 2 3 4 5 6 (PRODUCT LEVEL)	SEE PAGE
	1	1	**237-7952**	1	SHEET AS	
M		1	**8T-3490**	1	NUT-WELD (M10X1.5-THD)	
	2	1	**249-0926**	1	PLATFORM AS (RH)	
	3	1	**249-0927**	1	PLATFORM AS (LH)	
					(EACH PLATFORM AS INCLUDES)	
M		1	**8T-3490**	4	NUT-WELD (M10X1.5-THD)	
M		1	**8T-3597**	4	NUT-WELD (M12X1.75-THD)	
		1	**149-2052**	1	PLATE AS	
CY	4	1	*301-5804*	1	HANDRAIL GP (FRONT)	504
CY	5	1	*301-5805*	1	HARDWARE GP-HANDRAIL MOUNTING	509
	6	1	**7X-7729**	8	WASHER (11X25X3-MM THK)	
	7	1	**8T-2561**	8	WASHER-HARD (10.5X28.5X5-MM THK)	
M	8	1	**8T-4195**	16	BOLT (M10X1.5X30-MM)	

C-CHANGE FROM PREVIOUS TYPE
M-METRIC PART
Y-SEPARATE ILLUSTRATION

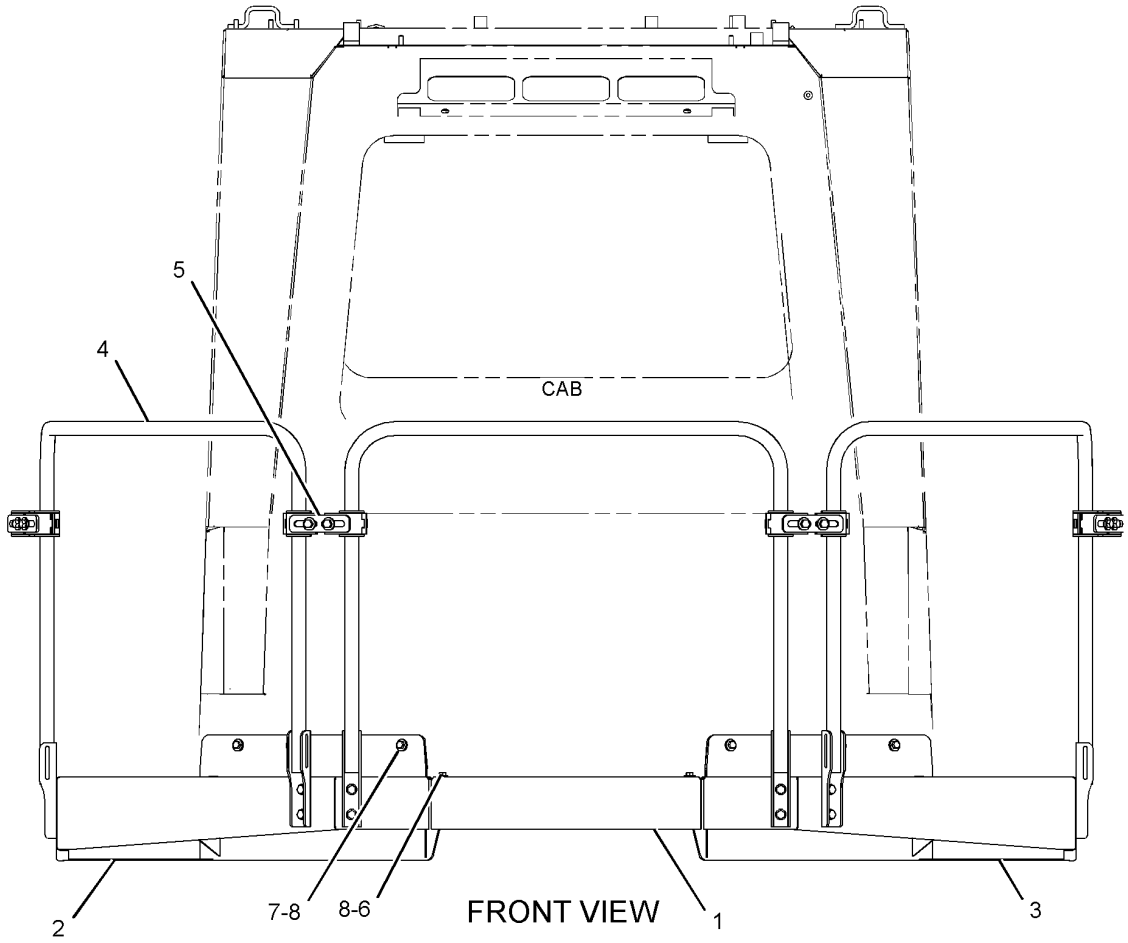

GRAPHIC #1

<END>

g01446847

220-2718 ACCUMULATOR GP-BRAKE—CHARGED

S/N: 2211-UP

PART OF 273-7150 CONTROL GP-SERVICE BRAKE

FIELD REPLACEMENT ORDER 220-2719—PAGE 561

SMCS-4263 **i01756443**

NOTE	REF NO	GRAPHIC REF	PART NUMBER	QTY	PART NAME 1 2 3 4 5 6 (PRODUCT LEVEL)	SEE PAGE
	1	1	**069-2535**	1	VALVE-GAS	
	2	1	**111-9110**	1	PROTECTOR-GAS VALVE	
	3	1	**135-7123**	1	PISTON	
	4	1	**1J-9671**	1	SEAL-O-RING	
	5	1	**5M-3062**	2	BOLT (3/8-16X0.75-IN)	
	6	1	**170-0493**	1	KIT-SEAL	
					(INCLUDES 4 SEAL-O-RINGS, 4 BACKUP WASHERS, 2 PISTON RINGS & PISTON SEAL)	

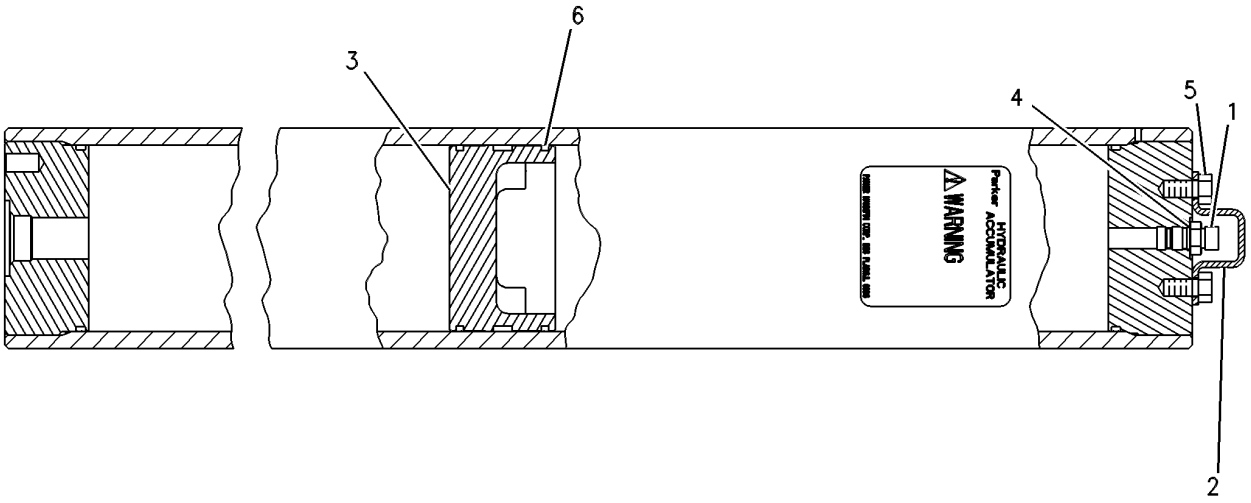

GRAPHIC #1 **<END>** g00293101

BRAKING SYSTEM

220-2719 ACCUMULATOR GP-BRAKE—UNCHARGED

S/N: 2211-UP

FIELD REPLACEMENT FOR 220-2718 ACCUMULATOR GP-BRAKE

SMCS-4263 **i01756383**

NOTE	REF NO	GRAPHIC REF	PART NUMBER	QTY	PART NAME 1 2 3 4 5 6 (PRODUCT LEVEL)	SEE PAGE
	1	1	**069-2535**	1	VALVE-GAS	
	2	1	**111-9110**	1	PROTECTOR-GAS VALVE	
	3	1	**135-7123**	1	PISTON	
	4	1	**1J-9671**	1	SEAL-O-RING	
	5	1	**5M-3062**	2	BOLT (3/8-16X0.75-IN)	
	6	1	**170-0493**	1	KIT-SEAL	
					(INCLUDES 4 SEAL-O-RINGS, 4 BACKUP WASHERS, 2 PISTON RINGS & PISTON SEAL)	

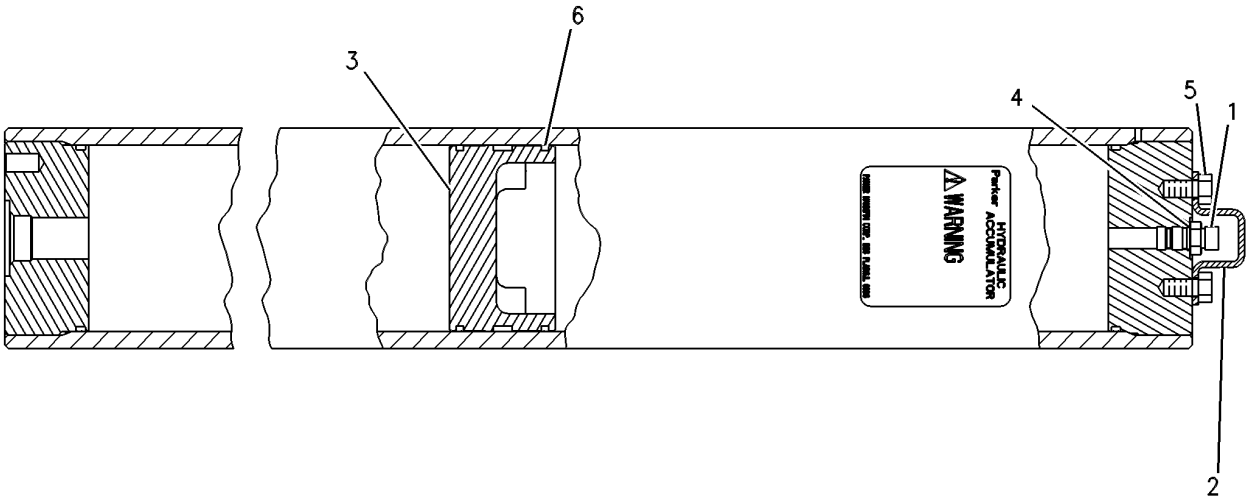

GRAPHIC #1 **<END>** g00293101

BRAKING SYSTEM

305-5532 BASE GP-FOOT BRAKE–PEDAL, LH

S/N: 2211-UP

PART OF 305-5531 CONTROL GP-FOOT BRAKE

SMCS-4269 **i02860373**

NOTE	REF NO	GRAPHIC REF	PART NUMBER	QTY	PART NAME 1 2 3 4 5 6 (PRODUCT LEVEL)	SEE PAGE
	1	1	**4E-9664**	1	PIN	
	2	1	**009-3101**	2	RING-RETAINING	
	3	1	**105-6117**	1	SWITCH AS-LIMIT (STOP LIGHT)	
	4	1	**115-2247**	1	SPRING	
M	5	1	**153-6273**	1	SETSCREW	
	6	1	**163-3926**	1	ROLLER	
	7	1	**200-2217**	1	COVER	
	8	1	**200-2218**	1	BRACKET AS-ADJUSTABLE SWITCH	
	9	1	**200-2219**	6	BOLT	
	10	1	**200-2220**	1	SEAL	
Y	11	1	**266-1466**	1	SENSOR GP-POSITION (ROTARY)	247
	12	1	**292-9802**	1	COVER	
	13	1	**305-0015**	1	PEDAL	
M	14	1	**125-3295**	2	SCREW-PAN HEAD (M2.5X0.45X12-MM)	
	15	1	**206-7316**	1	PIN	
	16	1	**306-3011**	1	HARNESS AS-BRAKE (STOP LIGHT)	
M	17	1	**8T-2899**	2	SCREW-MACHINE (M2.5X0.45X6-MM)	

M-METRIC PART
Y-SEPARATE ILLUSTRATION

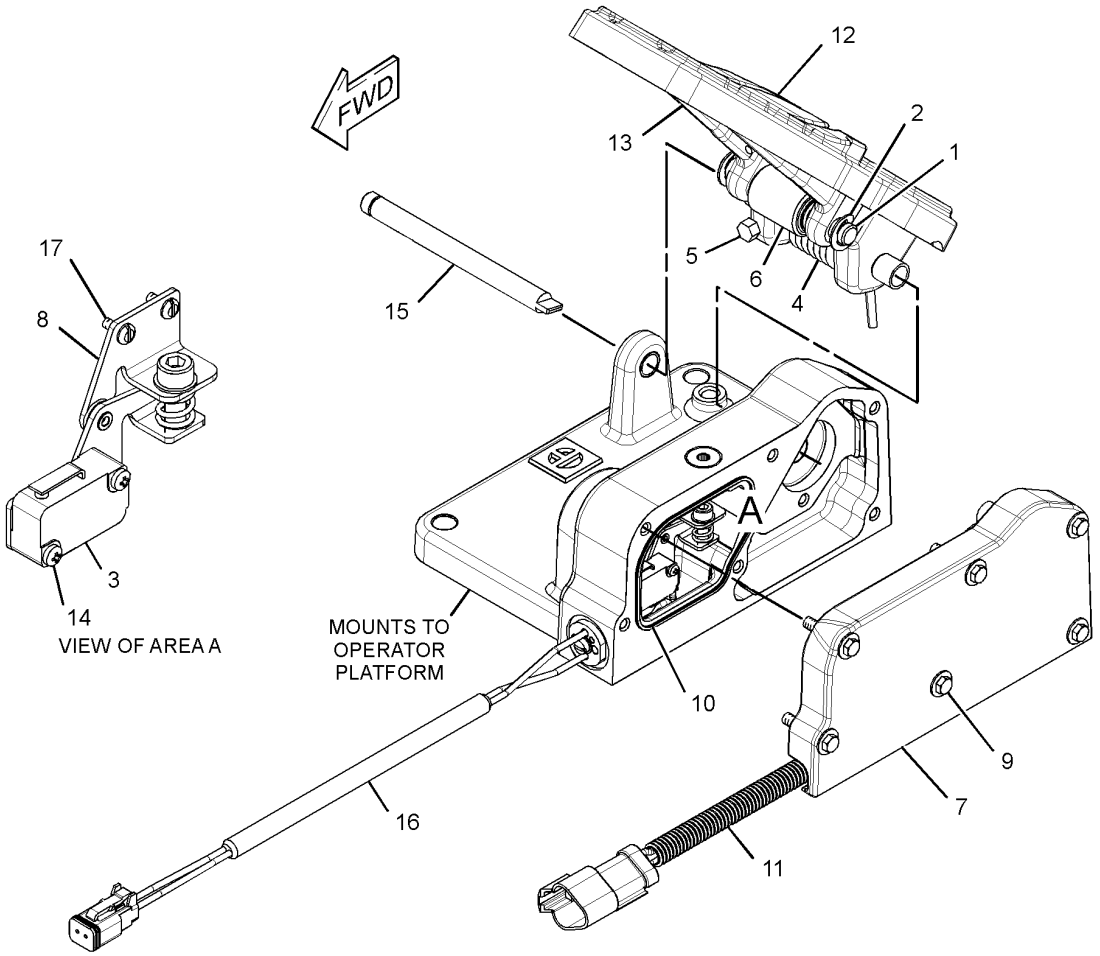

GRAPHIC #1 **<END>** g01435624

BRAKING SYSTEM

305-5533 BASE GP-FOOT BRAKE–PEDAL, RH

S/N: 2211-UP

PART OF 305-5531 CONTROL GP-FOOT BRAKE

SMCS-4269 **i02940885**

NOTE	REF NO	GRAPHIC REF	PART NUMBER	QTY	PART NAME 1 2 3 4 5 6 (PRODUCT LEVEL)	SEE PAGE
	1	1	**4E-9664**	1	PIN	
	2	1	**009-3101**	3	RING-RETAINING	
M	3	1	**125-3295**	2	SCREW-PAN HEAD (M2.5X0.45X12-MM)	
	4	1	**128-0606**	1	COVER	
	5	1	**128-0607**	1	SEAL	
	6	1	**148-5581**	1	INSULATOR	
M	7	1	**153-6273**	1	SETSCREW	
	8	1	**167-4348**	1	SPRING	
	9	1	**200-7914**	1	SHAFT AS	
	10	1	**205-3582**	1	ROLLER	
	11	1	**292-9802**	1	COVER	
	12	1	**305-0015**	1	PEDAL	
	13	1	**306-3012**	1	HARNESS AS-SWITCH (THROTTLE LOCK DEACTIVATION)	
		1	**127-4988**	1	SWITCH AS-LIMIT (SINGLE POLE) (THROTTLE LOCK DEACTIVATION)	
	14	1	**5M-6755**	3	SCREW-MACHINE (10-24X0.562-IN)	
	15	1	**8S-2225**	1	SEAL-LIP TYPE	

M-METRIC PART

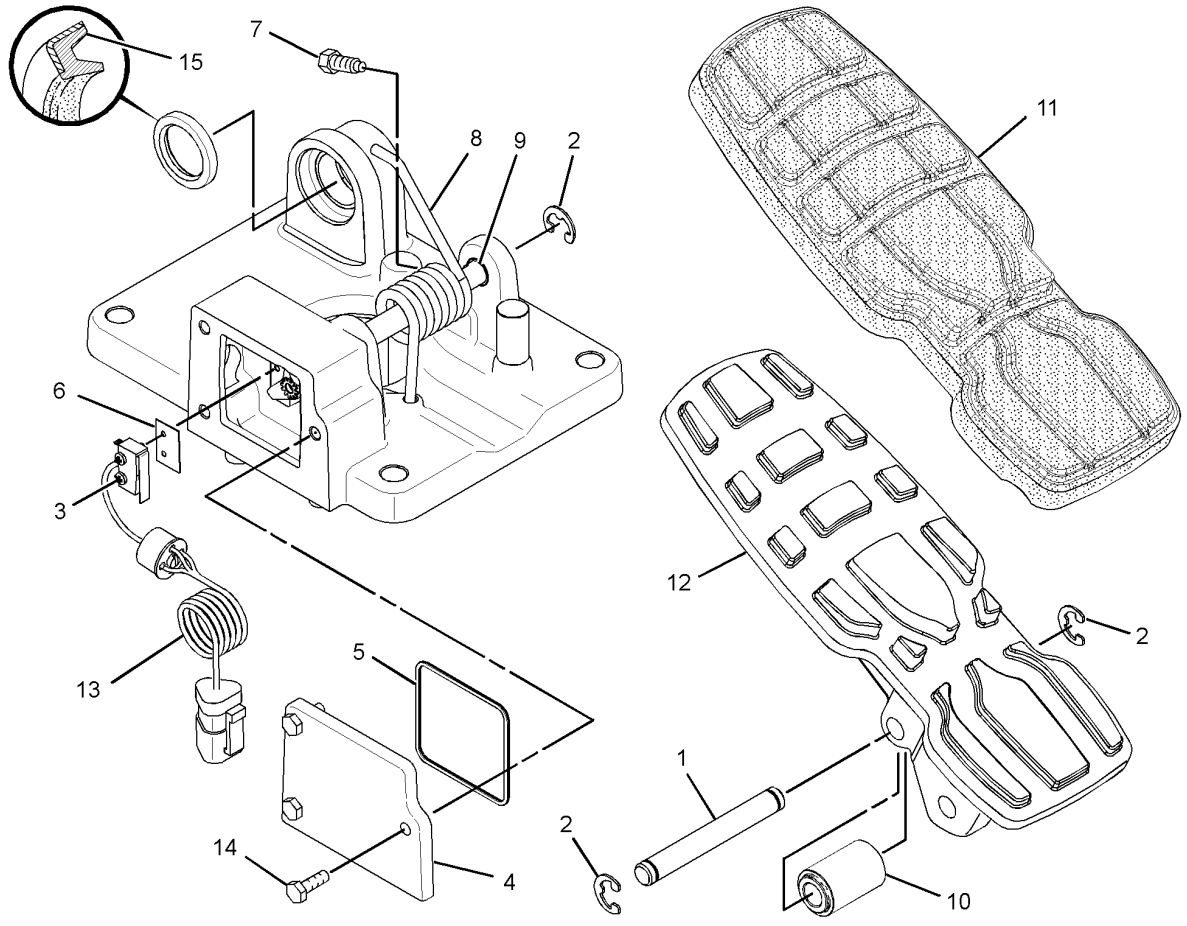

GRAPHIC #1 **<END>** g01436165

BRAKING SYSTEM

294-7730 BRAKE GP-PARKING

S/N: 2211-UP

PART OF 262-2085 POWER TRAIN AR

SMCS-4267 **i02886728**

NOTE	REF NO	GRAPHIC REF	PART NUMBER	QTY	PART NAME 1 2 3 4 5 6 (PRODUCT LEVEL)	SEE PAGE
	1	1	**1V-8279**	6	DISC AS-BRAKE	
	2	1	**3S-1262**	1	RETAINER	
	3	1	**4B-4158**	4	SCREW-DRIVE (3/16X0.25-IN)	
	4	1	**4E-8540**	1	PLATE-RETAINING	
	5	1	**5H-3701**	1	SCREW-PURGE (7/16-20-THD)	
	6	1	**7S-4002**	1	PLATE-WARNING (BRAKE)	
	7	1	**7V-5231**	1	HUB	
	8	1	**146-3748**	1	CAGE AS-BEARING	
		1	**8S-0490**	4	SHAFT	
	9	1	**162-9733**	1	PLATE	
	10	1	**169-4670**	9	SPRING	
	11	1	**172-0844**	7	PLATE-CLUTCH	
	12	1	**177-1483**	1	SEAL-LIP TYPE	
	13	1	**201-1424**	6	SPACER	
	14	1	**201-1425**	3	PISTON	
	15	1	**201-1426**	1	HOUSING-BRAKE	
	16	1	**257-7857**	1	SHAFT-BRAKE	
	17	1	**170-6712**	3	RING-BACKUP	
	18	1	**171-1391**	3	SEAL	
	19	1	**2H-2665**	1	SEAL-O-RING	
	20	1	**3K-2518**	1	BALL BEARING	
	21	1	**3K-2556**	1	RING-RETAINING	
M	22	1	**6V-5696**	1	BOLT (M12X1.75X80-MM)	
	23	1	**7K-9204**	3	SEAL-LIP TYPE	
M	24	1	**7X-2558**	2	BOLT (M16X2X150-MM)	
M	25	1	**8T-4139**	3	BOLT (M12X1.75X30-MM)	
	26	1	**8T-4223**	9	WASHER-HARD (13.5X25.5X3-MM THK)	
M	27	1	**8T-5001**	6	BOLT (M12X1.75X130-MM)	
M	28	1	**8T-6385**	17	BOLT (M16X2X180-MM)	
	29	1	**9X-8257**	19	WASHER (17.5X30X3.5-MM THK)	
B	30	1	**6V-6640**		SEALANT	

B-USE AS REQUIRED
M-METRIC PART

294-7730 BRAKE GP-PARKING *(contd.)* **i02886728**

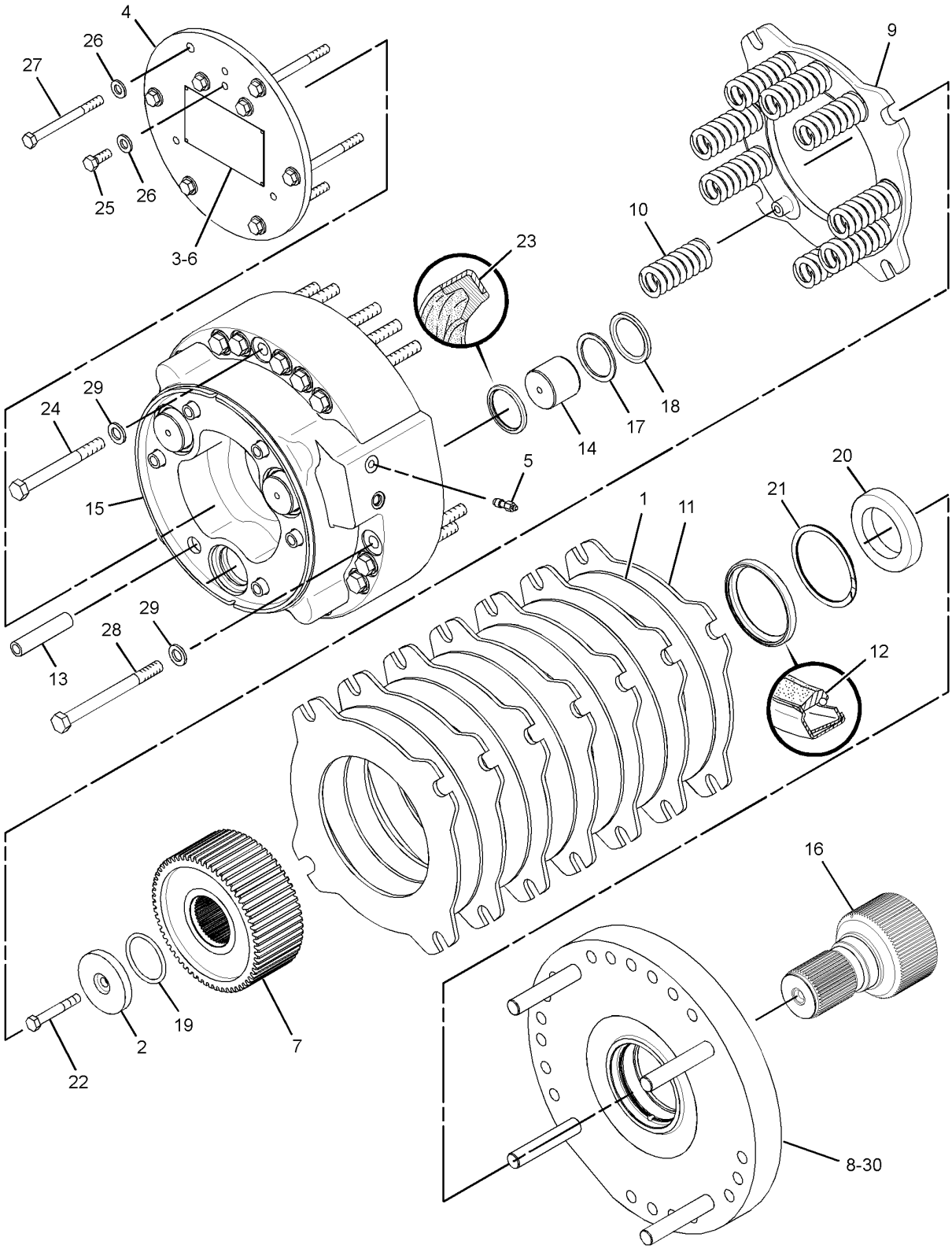

GRAPHIC #1 **<END>** g01438759

BRAKING SYSTEM

275-0080 BRAKE GP-SERVICE

S/N: 2211-UP

PART OF 280-3580 WHEEL GP-FINAL DRIVE & BRAKE

SMCS-4251 **i02603512**

NOTE	REF NO	GRAPHIC REF	PART NUMBER	QTY	PART NAME 1 2 3 4 5 6 (PRODUCT LEVEL)	SEE PAGE
	1	1	**5H-3701**	1	SCREW-PURGE (7/16-20-THD)	
	2	1	**8V-3609**	6	SPRING-RETRACTOR	
	3	1	**9U-1734**	1	PISTON	
	4	1	**9U-1738**	4	DISC-FRICTION	
	5	1	**9U-1739**	5	PLATE-OUTER	
	6	1	**9U-1741**	1	RING-RETAINING	
	7	1	**9U-1742**	1	SEAL-O-RING	
	8	1	**104-7006**	8	DOWEL-HOLLOW (35X45-MM)	
	9	1	**132-6532**	1	HUB	
	10	1	**133-0992**	1	WASHER-THRUST (109X184.4X5.72-MM THK)	
	11	1	**241-8636**	1	PLATE	
	12	1	**245-1093**	1	ANCHOR-BRAKE	
	13	1	**115-5658**	1	SEAL	
	14	1	**3K-0360**	6	SEAL-O-RING	
	15	1	**5M-6200**	1	SEAL-O-RING	
	16	1	**6M-9155**	6	PIN	
	17	1	**7V-8346**	6	SPRING-GUIDE	
M	18	1	**8C-7562**	4	SCREW-FLAT HEAD (M8X1.25X20-MM)	
M	19	1	**8T-0722**	2	BOLT-LOCKING (M10X1.5X30-MM)	
	20	1	**8T-4121**	2	WASHER-HARD (11X21X2.5-MM THK)	
	21	1	**9M-5892**	1	SEAL-O-RING	
	22	1	**9S-4185**	2	PLUG-O RING	
	23	1	**9S-8005**	4	PLUG-O RING	

M-METRIC PART

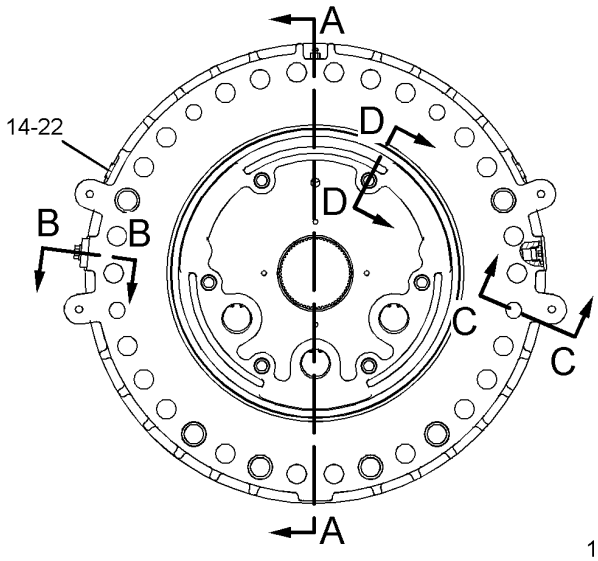

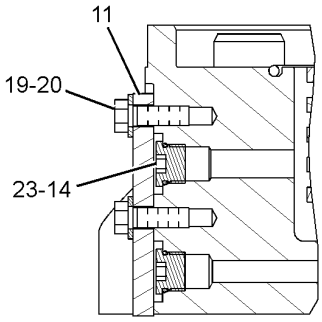

SECTION B-B

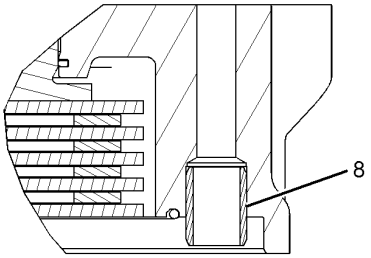

SECTION C-C

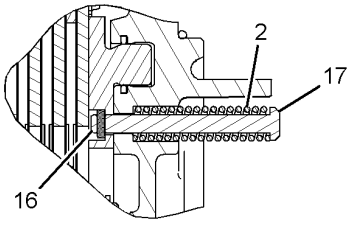

SECTION D-D

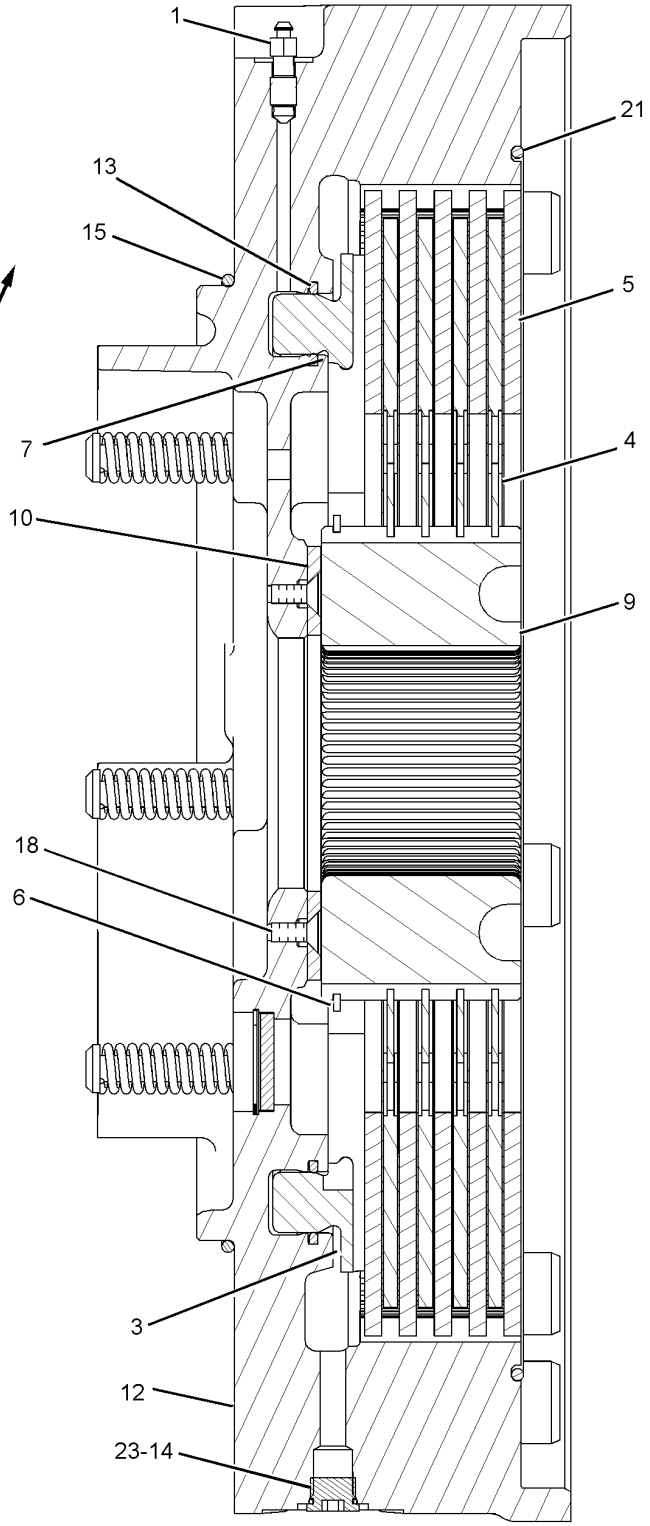

SECTION A-A

GRAPHIC #1 **<END>** g01303483

BRAKING SYSTEM

305-5531 CONTROL GP-FOOT BRAKE

S/N: 2211-UP

PART OF 280-7084 CAB AR

SMCS-4269 **i02860375**

NOTE	REF NO	GRAPHIC REF	PART NUMBER	QTY	PART NAME 1 2 3 4 5 6 (PRODUCT LEVEL)	SEE PAGE
	1	1	**251-4630**	1	SHAFT AS	
Y	2	1	**305-5532**	1	BASE GP-FOOT BRAKE (PEDAL, LH)	562
Y	3	1	**305-5533**	1	BASE GP-FOOT BRAKE (PEDAL, RH)	563
M	4	1	**8T-7547**	6	BOLT (M8X1.25X30-MM)	

M-METRIC PART
Y-SEPARATE ILLUSTRATION

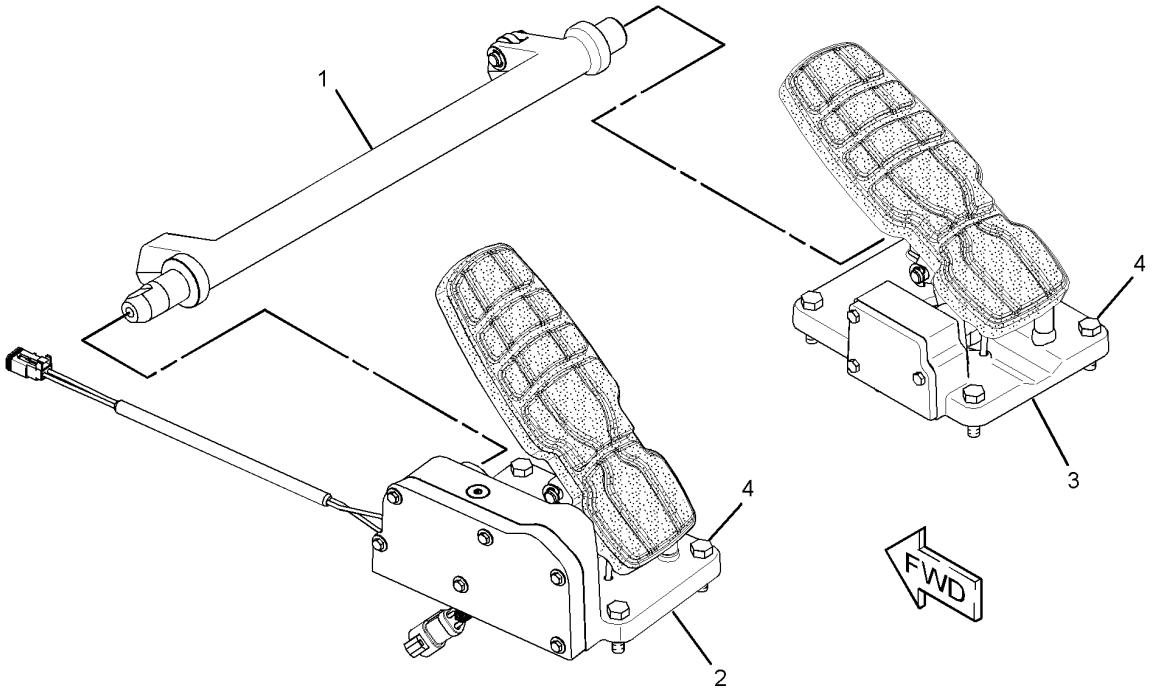

GRAPHIC #1 **<END>** g01436376

BRAKING SYSTEM

4E-6401 CONTROL GP-PARKING BRAKE

S/N: 2211-UP

PART OF 280-7084 CAB AR

SMCS-4282, 4284 **i01057763**

NOTE	REF NO	GRAPHIC REF	PART NUMBER	QTY	PART NAME 1 2 3 4 5 6 (PRODUCT LEVEL)	SEE PAGE
	1	1	**122-1671**	1	KNOB	
M	2	1	**5C-2874**	1	NUT (M5X0.8-THD)	
	3	1	**3E-6367**	1	CABLE AS-PARKING BRAKE CONTROL	
M	4	1	**5C-2890**	1	NUT (M6X1-THD)	
	5	1	**096-0067**	1	PIN-CLEVIS	
	6	1	**5B-9192**	1	PIN-COTTER	
	7	1	**9U-0830**	1	END-YOKE ROD	
	8	1	**3S-2093**	2	STRAP-CABLE	
	9	1	**9U-0178**	1	BRACKET	
	10	1	**9U-0200**	1	BLOCK	
M	11	1	**5C-7261**	2	NUT (M8X1.25-THD)	
		1	**8T-4224**	2	WASHER-HARD (8.8X16X2-MM THK)	

M-METRIC PART

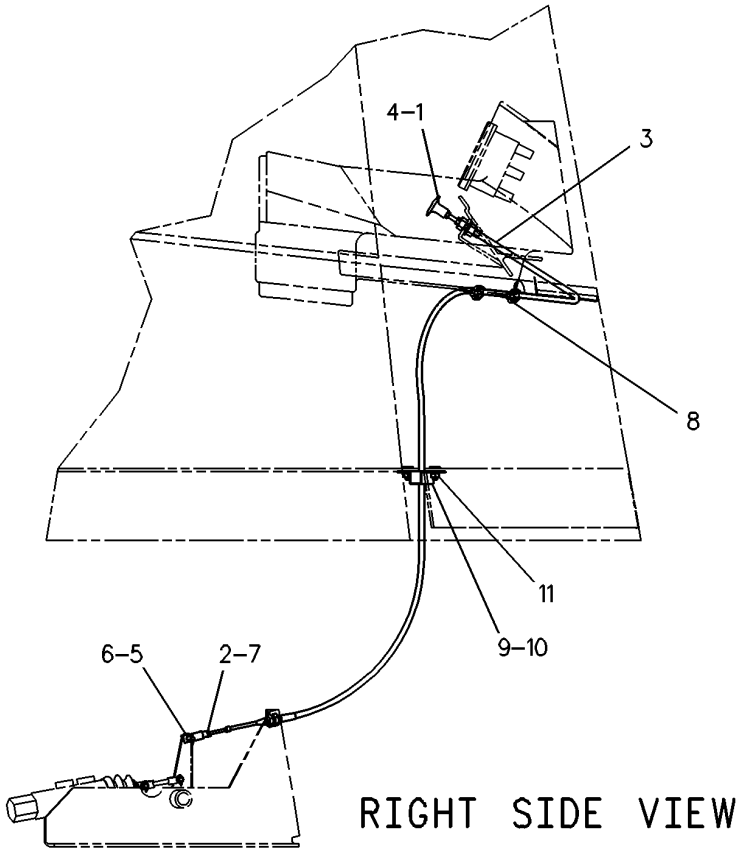

GRAPHIC #1 **<END>** g00119781

BRAKING SYSTEM

273-7150 CONTROL GP-SERVICE BRAKE

S/N: 2211-UP

PART OF 279-9400 HYDRAULIC AR

SMCS-4257, 4258, 4263, 4265, 4269, 4280 **i02866165**

NOTE	REF NO	GRAPHIC REF	PART NUMBER	QTY	PART NAME 1 2 3 4 5 6 (PRODUCT LEVEL)	SEE PAGE
	1	4	**1F-1609**	8	SPACER (13.5X25.4X39.7-MM THK)	
I	2	3	**2T-2141**	1	HOSE AS	
	3	1,5	**6V-0852**	2	CAP-DUST	
I	4	3	**6W-9117**	1	HOSE AS	
I	5	3	**8W-3796**	1	HOSE AS	
I	6	3	**8W-9815**	1	HOSE AS	
I	7	3	**8X-5562**	1	HOSE AS	
	8	6	**8X-9391**	1	BRACKET AS	
	9	4	**9R-2216**	2	BOSS	
	10	3	**9T-1013**	1	VALVE AS-CHECK	
		3	**3K-0360**	1	SEAL-O-RING	
		3	**6V-8398**	1	SEAL-O-RING	
	11	3	**9X-0262**	2	ADAPTER	
	12	6	**9X-6772**	2	STRAP-CABLE	
	13	3,6	**101-9083**	3	BRACKET AS	
	14	5	**115-2516**	2	BLOCK	
	15	3	**115-8035**	1	MANIFOLD-BRAKE	
I	16	2	**116-6763**	1	HOSE AS	
	17	3	**116-9353**	1	PLATE	
	18	3	**117-5992**	1	BRACKET	
I	19	4	**118-1045**	1	HOSE AS	
	20	4	**118-9901**	1	SPACER (12X20X10-MM THK)	
	21	1	**125-2706**	1	PLATE AS	
I	22	4	**130-5456**	1	HOSE AS	
	23	3	**135-7896**	1	CLAMP AS	
	24	6	**160-0564**	2	BRACKET AS	
	25	1	*164-6874*	1	FITTING AS-ELBOW	
		1	**3J-1907**	1	SEAL-O-RING	
		1	**085-7356**	1	FITTING	
	26	3	*165-6365*	1	FITTING AS	
		3	**3J-1907**	1	SEAL-O-RING	
		3	**7W-7381**	1	FITTING-OUTLET	
I	27	3	**169-9508**	1	HOSE AS	
I	28	3	**172-5667**	1	HOSE AS	
I	29	3	**176-5667**	1	HOSE AS	
I	30	2	**219-2913**	1	HOSE AS	
Y	31	3	*220-2718*	2	ACCUMULATOR GP-BRAKE (CHARGED)	560
Y	32	6	**224-8496**	1	SENSOR GP-PRESSURE (FRONT AXLE BRAKE OIL)	252
Y	32A	6	**224-8496**	1	SENSOR GP-PRESSURE (REAR AXLE BRAKE OIL)	252
	33	4	**230-7679**	1	GUARD AS (RH)	
	34	4	**230-7680**	1	GUARD AS (LH)	
	35	3	*260-9204*	2	ELBOW AS	
					(EACH INCLUDES)	
		3	**6V-9746**	1	SEAL-O-RING	
		3	**7M-8485**	1	SEAL-O-RING	
		3	**260-9203**	1	ELBOW (90-DEG)	
	36	1	**264-8082**	1	TUBE AS	
	37	4	**264-8084**	1	TUBE AS	
	38	5	**264-8086**	1	TUBE AS	
	39	4	**264-8087**	1	TUBE AS	
	40	4	**264-8088**	1	TUBE AS	
J	41	3	**269-3289**	1	VALVE GP-BRAKE CONTROL (SERVICE)	
I	42	2	**272-5903**	1	HOSE AS	
I	43	3	**272-5911**	1	HOSE AS	
I	44	3	**272-5912**	1	HOSE AS	
Y	45	5	**273-7143**	1	VALVE & MTG GP-BRAKE CONTROL (PARKING)	589

273-7150 CONTROL GP-SERVICE BRAKE *(contd.)* i02866165

NOTE	REF NO	GRAPHIC REF	PART NUMBER	QTY	PART NAME 1 2 3 4 5 6 (PRODUCT LEVEL)	SEE PAGE
I	46	1	**273-7144**	1	HOSE AS	
I	47	3	**273-7152**	1	HOSE AS	
L	48	2	**273-8751**	1	MANIFOLD GP-CONTROL (BRAKE ACCUMULATOR CHARGE)	
	49	4	**279-6543**	1	GUARD AS (LH)	
	50	4	**279-6544**	1	GUARD AS (RH)	
	51	1,5	**284-7623**	2	SPACER (12.7X21X12-MM THK)	
I	52	3	**288-9214**	1	HOSE AS	
I	53	3	**288-9217**	1	HOSE AS	
I	54	3	**288-9218**	1	HOSE AS	
	55	3	**288-9219**	1	TUBE AS	
	56	3	**288-9220**	1	TUBE AS	
	57	1	**288-9221**	1	TUBE AS	
	58	4	**288-9222**	1	TUBE AS	
	59	3	**288-9223**	1	BRACKET AS	
	60	6	**288-9226**	1	BRACKET AS	
	61	2	**288-9228**	1	PLATE AS	
I	62	2	**314-4075**	1	HOSE AS	
I	63	1	**314-7943**	1	HOSE AS	
	64	2	**091-0081**	4	SPACER (10.5X20X10-MM THK)	
	65	3	*148-8305*	2	ADAPTER AS	
					(EACH INCLUDES)	
		3	**3J-1907**	1	SEAL-O-RING	
		3	**5P-9617**	1	ADAPTER	
	66	3	*148-8306*	1	ADAPTER AS	
		3	**5P-5777**	1	ADAPTER-O-RING	
		3	**7M-8485**	1	SEAL-O-RING	
	67	5	*148-8315*	2	CONNECTOR AS	
					(EACH INCLUDES)	
		5	**2M-9780**	1	SEAL-O-RING	
		5	**6V-8642**	1	CONNECTOR	
		5	**7J-9108**	1	SEAL-O-RING	
	68	2,3,6	*148-8327*	7	CONNECTOR AS	
					(EACH INCLUDES)	
		2,3,6	**3D-2824**	1	SEAL-O-RING	
		2,3,6	**6V-8637**	1	CONNECTOR	
		2,3,6	**6V-9746**	1	SEAL-O-RING	
	69	3	*148-8329*	1	CONNECTOR AS	
		3	**4K-1388**	1	SEAL-O-RING	
		3	**5K-9090**	1	SEAL-O-RING	
		3	**8T-6453**	1	CONNECTOR	
	70	2	*148-8336*	1	CONNECTOR AS	
		2	**3J-1907**	1	SEAL-O-RING	
		2	**6V-8397**	1	SEAL-O-RING	
		2	**6V-8636**	1	CONNECTOR	
	71	3	*148-8339*	4	CONNECTOR AS	
					(EACH INCLUDES)	
		3	**6V-8716**	1	CONNECTOR	
		3	**6V-9746**	1	SEAL-O-RING	
		3	**7M-8485**	1	SEAL-O-RING	
	72	2	*148-8340*	1	CONNECTOR AS	
		2	**3K-0360**	1	SEAL-O-RING	
		2	**6V-8398**	1	SEAL-O-RING	
		2	**6V-8639**	1	CONNECTOR	
	73	1	*148-8353*	1	ELBOW AS	
		1	**3J-1907**	1	SEAL-O-RING	
		1	**6V-8397**	1	SEAL-O-RING	
		1	**6V-9001**	1	ELBOW	
	74	3,6	*148-8357*	2	ELBOW AS	
					(EACH INCLUDES)	

273-7150 **CONTROL GP-SERVICE BRAKE** *(contd.)* **i02866165**

NOTE	REF NO	GRAPHIC REF	PART NUMBER	QTY	PART NAME 1 2 3 4 5 6 (PRODUCT LEVEL)	SEE PAGE
		3,6	**5K-9090**	1	SEAL-O-RING	
		3,6	**6V-9008**	1	ELBOW	
		3,6	**7M-8485**	1	SEAL-O-RING	
	75	4	*148-8362*	1	ELBOW AS	
		4	**3D-2824**	1	SEAL-O-RING	
		4	**5K-9090**	1	SEAL-O-RING	
		4	**8T-6684**	1	ELBOW	
	76	2	*148-8364*	1	ELBOW AS	
		2	**3K-0360**	1	SEAL-O-RING	
		2	**6V-8398**	1	SEAL-O-RING	
		2	**6V-8625**	1	ELBOW	
	77	2,3	*148-8370*	2	ELBOW AS	
					(EACH INCLUDES)	
		2,3	**6V-8398**	1	SEAL-O-RING	
		2,3	**6V-9851**	1	ELBOW	
	78	5	*148-8390*	2	ELBOW AS	
					(EACH INCLUDES)	
		5	**2M-9780**	1	SEAL-O-RING	
		5	**6V-8626**	1	ELBOW	
		5	**7J-9108**	1	SEAL-O-RING	
	79	2	*148-8392*	1	ELBOW AS	
		2	**6V-9746**	1	SEAL-O-RING	
		2	**6V-9853**	1	ELBOW	
	80	3	*148-8418*	2	REDUCER AS	
					(EACH INCLUDES)	
		3	**6V-8398**	1	SEAL-O-RING	
		3	**6V-8942**	1	REDUCER-O-RING	
	81	3	*148-8423*	1	TEE AS	
		3	**3J-1907**	1	SEAL-O-RING	
		3	**4J-5477**	1	SEAL-O-RING	
		3	**8T-3311**	1	TEE	
	82	3	*148-8449*	2	TEE AS-SWIVEL	
					(EACH INCLUDES)	
		3	**6V-9746**	2	SEAL-O-RING	
		3	**6V-9839**	1	TEE-SWIVEL	
	83	3	*148-8455*	4	UNION AS	
					(EACH INCLUDES)	
		3	**6V-8997**	1	UNION	
		3	**6V-9746**	2	SEAL-O-RING	
	84	3,6	**149-7738**	3	CLIP	
	85	3	*150-4043*	1	CONNECTOR AS	
		3	**3J-1907**	1	SEAL-O-RING	
		3	**6V-8398**	1	SEAL-O-RING	
		3	**6V-9873**	1	CONNECTOR	
	86	4	*150-4048*	4	ELBOW AS	
					(EACH INCLUDES)	
		4	**3K-0360**	1	SEAL-O-RING	
		4	**6V-8722**	1	ELBOW	
		4	**7J-9108**	1	SEAL-O-RING	
	87	6	*153-6237*	2	ELBOW AS	
					(EACH INCLUDES)	
		6	**3D-2824**	1	SEAL-O-RING	
		6	**6V-9004**	1	ELBOW	
		6	**6V-9746**	1	SEAL-O-RING	
	88	6	*153-6259*	2	TEE AS	
					(EACH INCLUDES)	
		6	**3D-2824**	1	SEAL-O-RING	
		6	**6V-8777**	1	TEE-FACE SEAL	
		6	**6V-9746**	2	SEAL-O-RING	

273-7150 CONTROL GP-SERVICE BRAKE *(contd.)* i02866165

NOTE	REF NO	GRAPHIC REF	PART NUMBER	QTY	PART NAME 1 2 3 4 5 6 (PRODUCT LEVEL)	SEE PAGE
	89	1,5	*164-5567*	2	COUPLER AS-QUICK DISCONNECT	
					(EACH INCLUDES)	
		1,5	**3J-1907**	1	SEAL-O-RING	
		1,5	**6V-3965**	1	COUPLER-QUICK DISCONNECT	
	90	2	*164-5606*	1	CONNECTOR AS	
		2	**3D-2824**	1	SEAL-O-RING	
		2	**6V-9746**	1	SEAL-O-RING	
		2	**8T-0078**	1	CONNECTOR	
	91	3	*171-6723*	1	ELBOW AS	
		3	**6V-9746**	1	SEAL-O-RING	
		3	**8T-8899**	1	ELBOW	
	92	6	*183-3407*	3	PLUG AS	
					(EACH INCLUDES)	
		6	**9S-8004**	1	PLUG-O-RING	
		6	**153-4906**	1	SEAL-O-RING	
	93	4	*185-2271*	2	CONNECTOR AS	
					(EACH INCLUDES)	
		4	**3D-2824**	1	SEAL-O-RING	
		4	**6V-9746**	1	SEAL-O-RING	
		4	**8T-9023**	1	CONNECTOR (O-RING)	
	94	3	**2P-1293**	4	LOCKNUT (1-3/16-12-THD)	
	95	3	**3J-7354**	4	SEAL-O-RING	
	96	3,6	**3P-2404**	5	CLIP	
	97	5	**4B-9302**	2	CLIP	
	98	4,6	**4D-7388**	3	CLIP	
	99	5	**4J-0520**	2	SEAL-O-RING	
	100	2	**4J-5267**	2	SEAL-O-RING	
	101	1	**5K-9090**	2	SEAL-O-RING	
	102	1,2	**5K-9660**	6	CLIP	
	103	4	**5P-1076**	8	WASHER-HARD (13.5X30X4-MM THK)	
	104	3	**5P-7462**	1	CLIP (SLOT)	
	105	3	**5P-7463**	1	CLIP (TAB)	
	106	1,5	**5P-7464**	3	CLIP (SLOT)	
	107	1,5	**5P-7465**	3	CLIP (TAB)	
	108	2,5	**5P-7466**	2	CLIP (SLOT)	
	109	2,5	**5P-7467**	2	CLIP (TAB)	
	110	5	**5P-7470**	1	CLIP (SLOT)	
	111	5	**5P-7471**	1	CLIP (TAB)	
	112	5	**5P-7703**	1	GROMMET	
	113	2	**5P-8112**	1	GROMMET	
	114	2	**6D-4246**	1	CLIP	
	115	3	**6V-0683**	1	GROMMET	
	116	3	**6V-1889**	2	CLIP	
	117	5	**6V-4349**	1	GROMMET	
	118	1,5	**6V-7359**	3	GROMMET	
	119	1	**6V-9746**	1	SEAL-O-RING	
	120	3	**6V-9828**	1	CAP AS	
	121	4	**7M-8798**	2	CLIP	
M	122	5	**7X-2550**	1	BOLT (M12X1.75X110-MM)	
	123	2,3,4,5	**7X-7729**	10	WASHER (11X25X3-MM THK)	
	124	5	**7Y-5756**	1	PIPE	
	125	2	**8C-3205**	4	FLANGE-HALF	
	126	5	**8C-3206**	4	FLANGE-HALF	
	127	4	**8F-8513**	2	CLIP	
	128	4	**8R-8087**	1	SPACER (11X22X28-MM THK)	
	129	1,2,3, 4,5,6	**8T-4121**	49	WASHER-HARD (11X21X2.5-MM THK)	
M	130	3	**8T-4133**	4	NUT (M10X1.5-THD)	
M	131	2,3,4, 5,6	**8T-4136**	20	BOLT (M10X1.5X25-MM)	

273-7150 **CONTROL GP-SERVICE BRAKE** *(contd.)* **i02866165**

NOTE	REF NO	GRAPHIC REF	PART NUMBER	QTY	PART NAME 1 2 3 4 5 6 (PRODUCT LEVEL)	SEE PAGE
M	132	1,2	**8T-4137**	5	BOLT (M10X1.5X20-MM)	
M	133	1,3	**8T-4139**	7	BOLT (M12X1.75X30-MM)	
M	134	3	**8T-4176**	3	BOLT (M12X1.75X90-MM)	
M	135	2	**8T-4178**	2	BOLT (M10X1.5X90-MM)	
M	136	2	**8T-4182**	4	BOLT (M10X1.5X45-MM)	
M	137	2,3,5	**8T-4183**	4	BOLT (M12X1.75X40-MM)	
M	138	1,5	**8T-4184**	2	BOLT (M12X1.75X45-MM)	
M	139	3,5	**8T-4192**	11	BOLT (M12X1.75X25-MM)	
M	140	6	**8T-4195**	2	BOLT (M10X1.5X30-MM)	
M	141	2,3,4,5	**8T-4196**	14	BOLT (M10X1.5X35-MM)	
	142	1,2,3,5	**8T-4223**	31	WASHER-HARD (13.5X25.5X3-MM THK)	
M	143	3,5	**8T-4244**	3	NUT (M12X1.75-THD)	
M	144	4	**8T-4648**	8	BOLT (M12X1.75X70-MM)	
M	145	4,5	**8T-6466**	7	BOLT (M10X1.5X60-MM)	
	146	3	**9X-6580**	2	NUT (1-3/16-12-THD)	
					AVAILABLE REPAIR KIT(S):	
J			**269-5922**	1	KIT-SEAL	
					(INCLUDES RINGS, BOOT AND CUP)	
L			**270-7627**	1	KIT-REPAIR	
					(INCLUDES RINGS)	

I-REFER TO HYDRAULIC INFORMATION SYSTEM
J-KIT MARKED J SERVICES PART MARKED J
L-KIT MARKED L SERVICES PART MARKED L
M-METRIC PART
Y-SEPARATE ILLUSTRATION

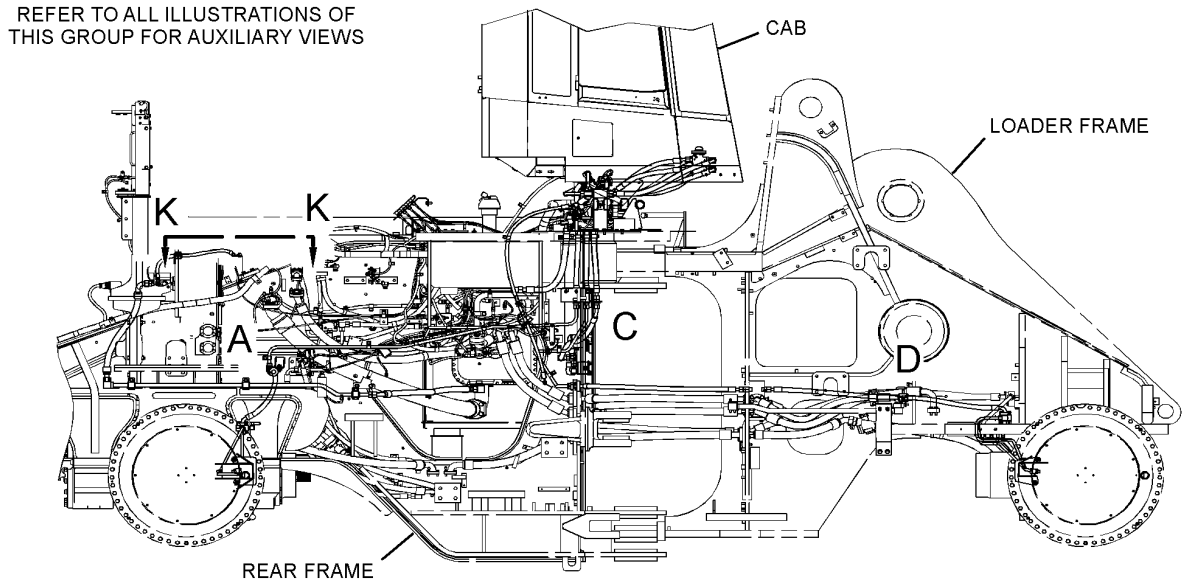

RIGHT SIDE VIEW

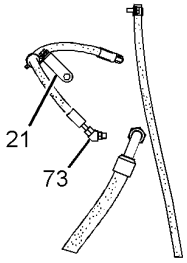

VIEW B-B

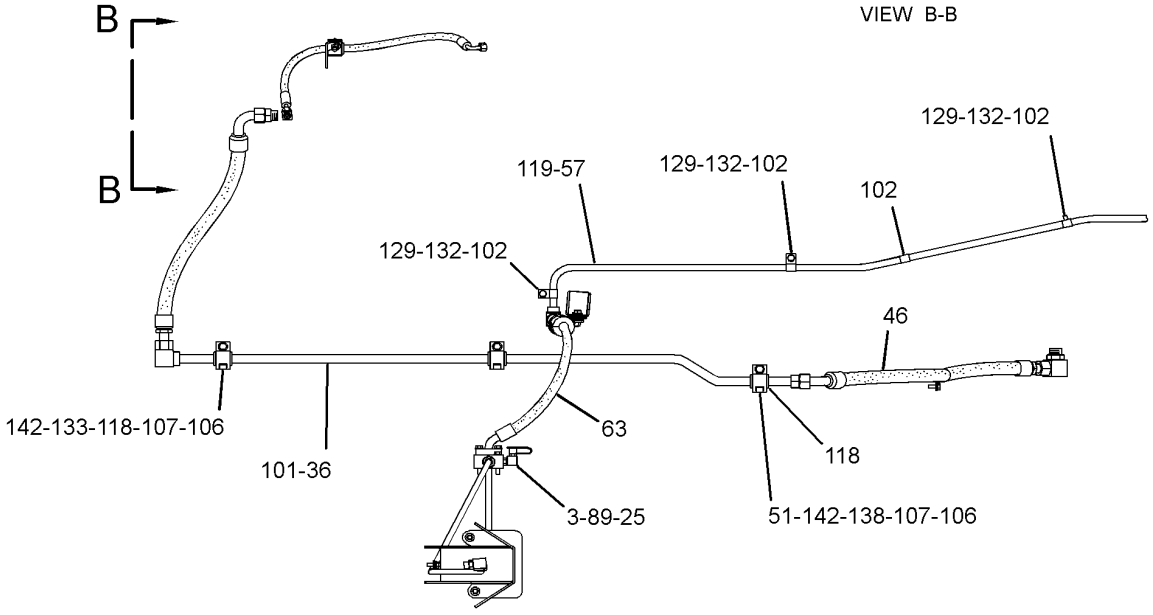

VIEW OF AREA A

GRAPHIC #1 g01443986

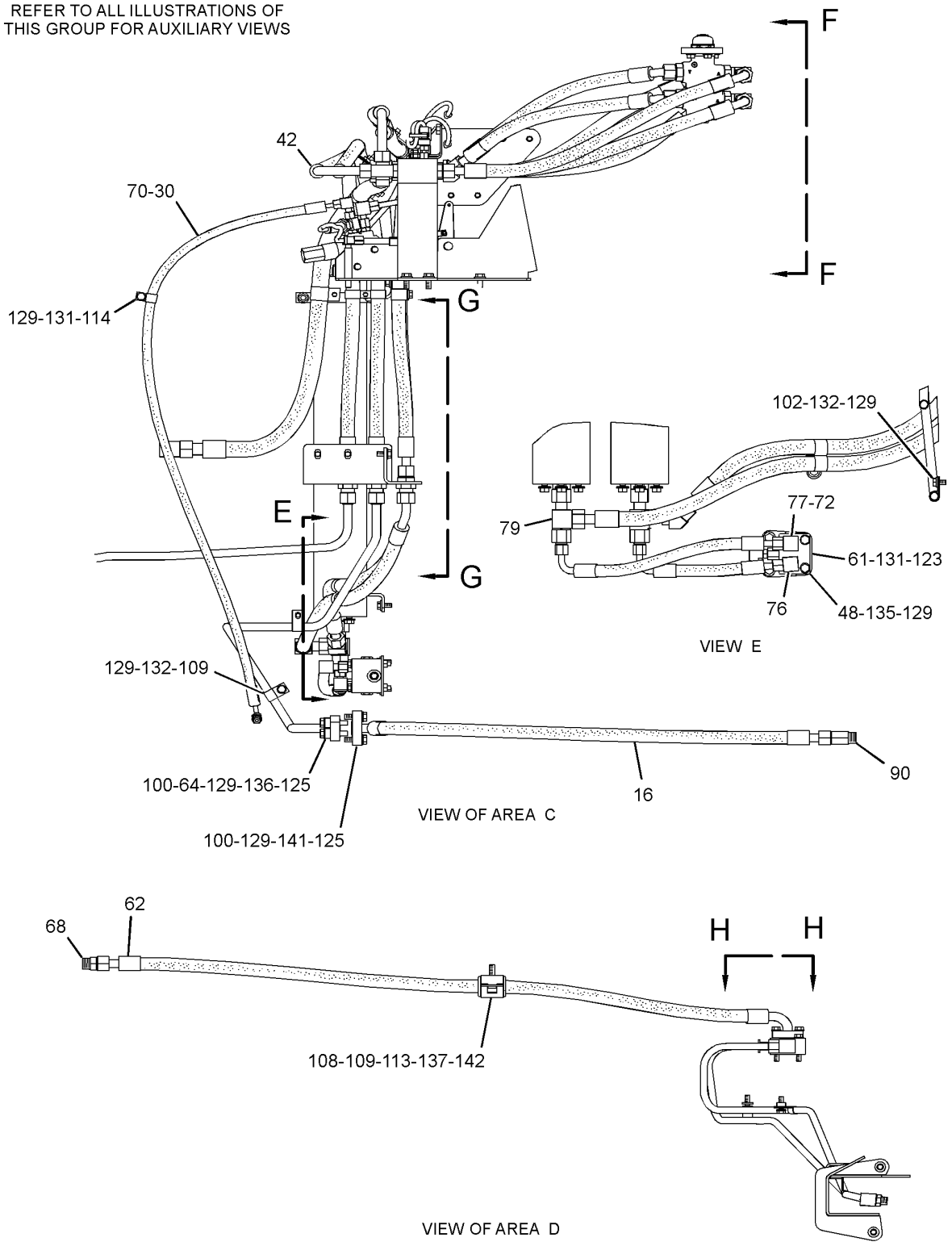

GRAPHIC #2 g01443989

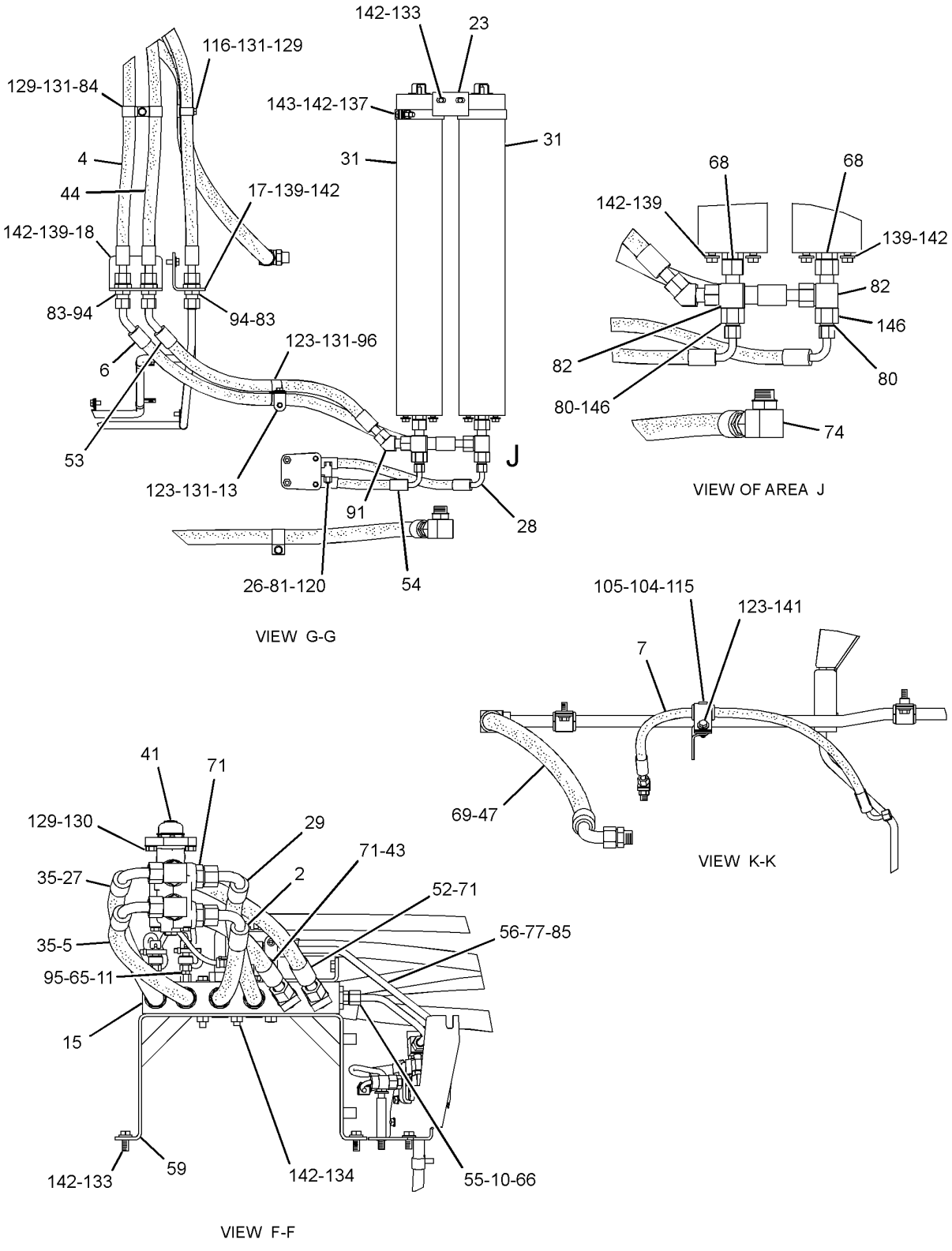

GRAPHIC #3 g01443991

REFER TO ALL ILLUSTRATIONS OF
THIS GROUP FOR AUXILIARY VIEWS

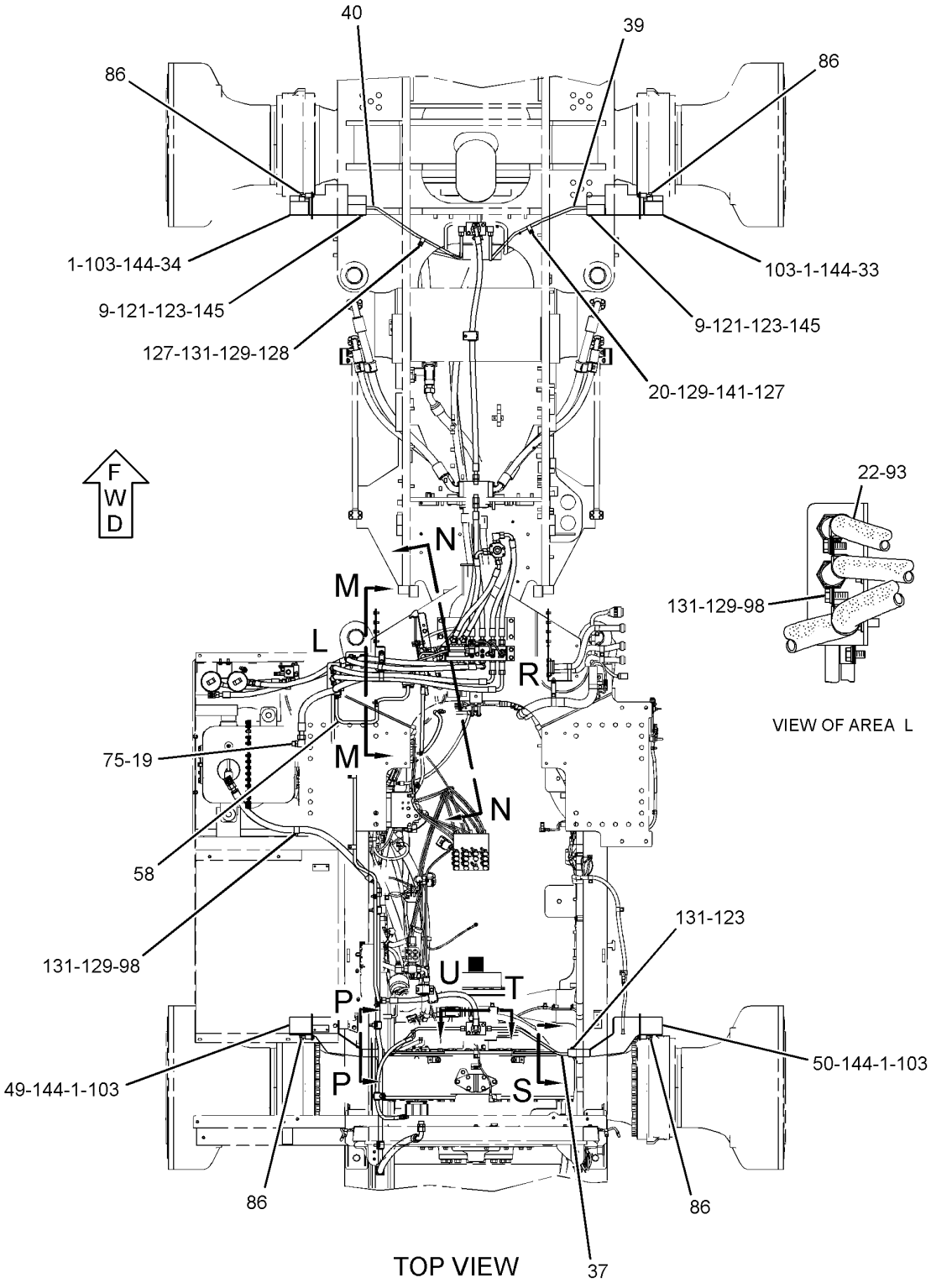

GRAPHIC #4

g01443992

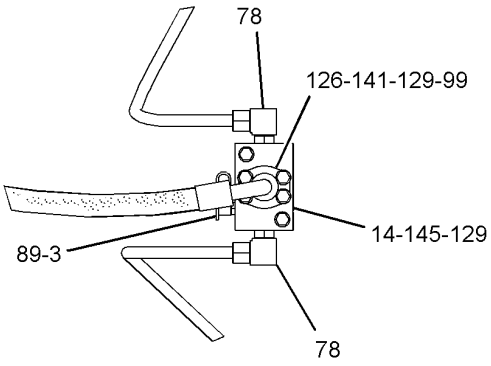

VIEW H-H

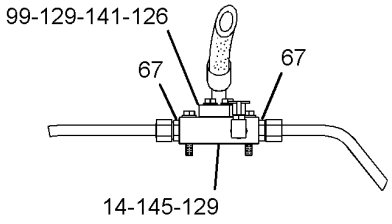

VIEW T

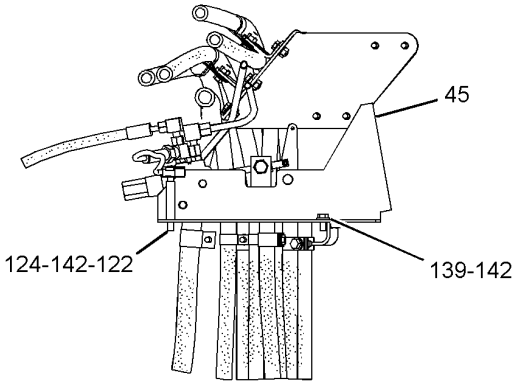

VIEW N-N

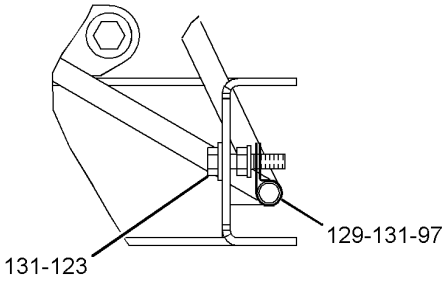

VIEW P-P

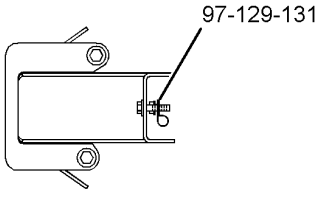

VIEW S

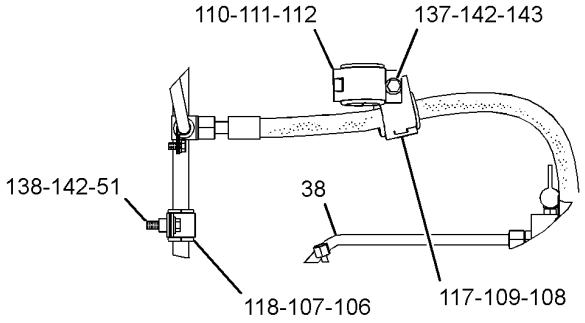

VIEW OF AREA U

GRAPHIC #5 g01444036

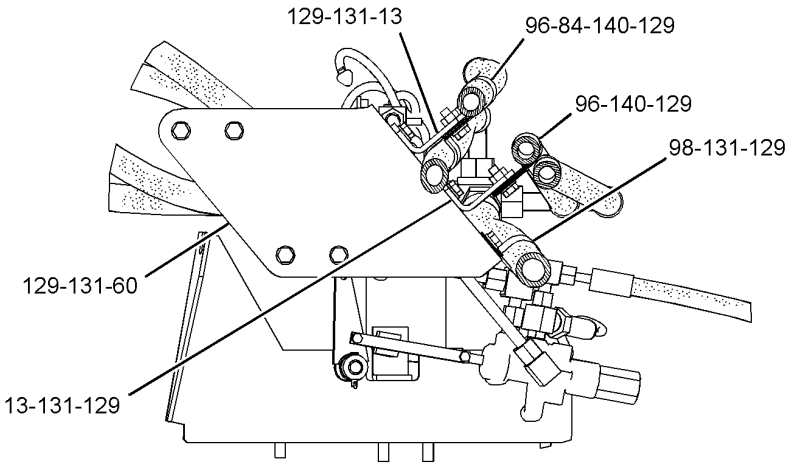

SECTION M-M

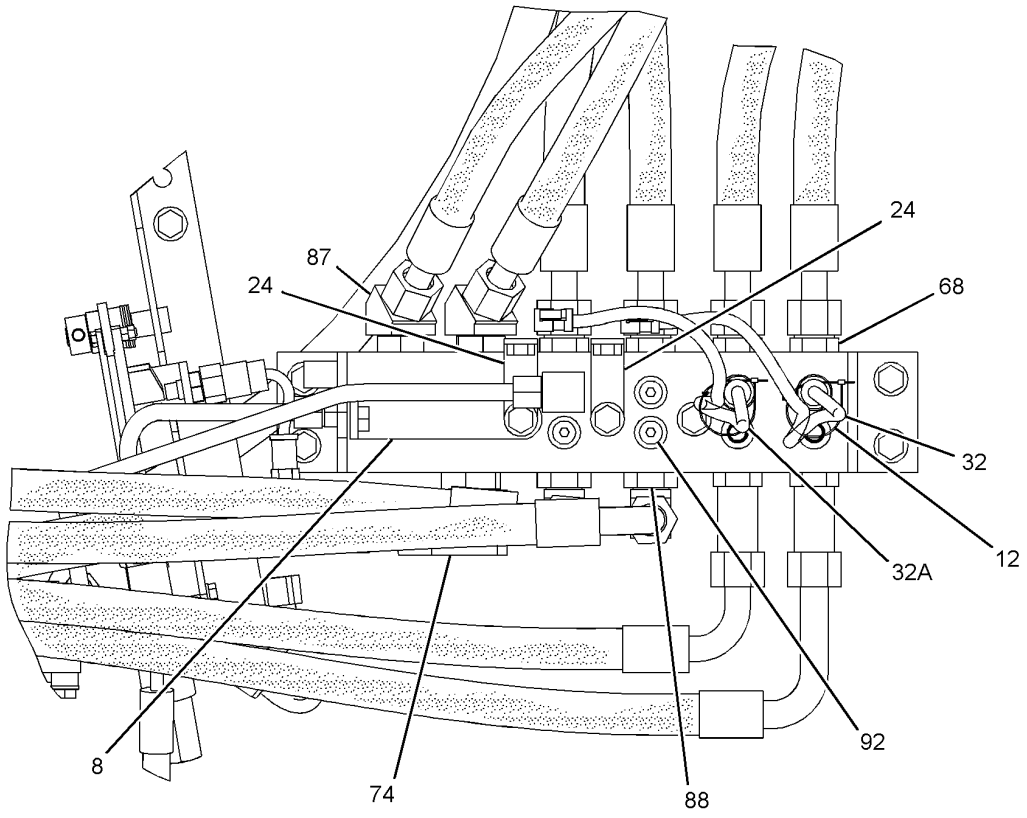

VIEW OF AREA R

GRAPHIC #6 **<END>** g01444418

BRAKING SYSTEM

268-8170 LINES GP-SERVICE BRAKE—STANDARD FILTRATION

S/N: 2211-UP
PART OF 283-2520 HYDRAULIC AR
AN ATTACHMENT

SMCS-4257 **i02887920**

NOTE	REF NO	GRAPHIC REF	PART NUMBER	QTY	PART NAME 1 2 3 4 5 6 (PRODUCT LEVEL)	SEE PAGE
	1	1	**154-9716**	1	BRACKET AS	
M		1	**8T-3490**	1	NUT-WELD (M10X1.5-THD)	
	2	1	*164-5586*	1	TEE AS	
		1	**6V-8398**	1	SEAL-O-RING	
		1	**7X-0871**	1	TEE	
I	3	1	**179-1247**	1	HOSE AS	
I	4	1	**253-0907**	1	HOSE AS	
	5	1	**279-6542**	1	TUBE AS	
	6	1	**284-7623**	1	SPACER (12.7X21X12-MM THK)	
	7	1	*148-8328*	1	CONNECTOR AS	
		1	**3D-2824**	1	SEAL-O-RING	
		1	**6V-8398**	1	SEAL-O-RING	
		1	**6V-8633**	1	CONNECTOR	
	8	1	*148-8364*	1	ELBOW AS	
		1	**3K-0360**	1	SEAL-O-RING	
		1	**6V-8398**	1	SEAL-O-RING	
		1	**6V-8625**	1	ELBOW	
	9	1	*148-8370*	1	ELBOW AS	
		1	**6V-8398**	1	SEAL-O-RING	
		1	**6V-9851**	1	ELBOW	
	10	1	**5P-1076**	1	WASHER-HARD (13.5X30X4-MM THK)	
	11	1	**6V-0826**	3	GROMMET	
	12	1	**6V-8398**	2	SEAL-O-RING	
	13	1	**7X-0589**	1	WASHER-HARD (12X28.5X5-MM THK)	
	14	1	**8T-1889**	3	CLIP (SLOT)	
	15	1	**8T-1890**	3	CLIP (TAB)	
	16	1	**8T-4121**	1	WASHER-HARD (11X21X2.5-MM THK)	
M	17	1	**8T-4136**	1	BOLT (M10X1.5X25-MM)	
M	18	1	**8T-4139**	1	BOLT (M12X1.75X30-MM)	
M	19	1	**8T-4183**	1	BOLT (M12X1.75X40-MM)	
M	20	1	**8T-4192**	1	BOLT (M12X1.75X25-MM)	
M	21	1	**8T-4196**	1	BOLT (M10X1.5X35-MM)	
	22	1	**8T-4223**	3	WASHER-HARD (13.5X25.5X3-MM THK)	
	23	1	**9X-8250**	1	CLIP	

I-REFER TO HYDRAULIC INFORMATION SYSTEM
M-METRIC PART

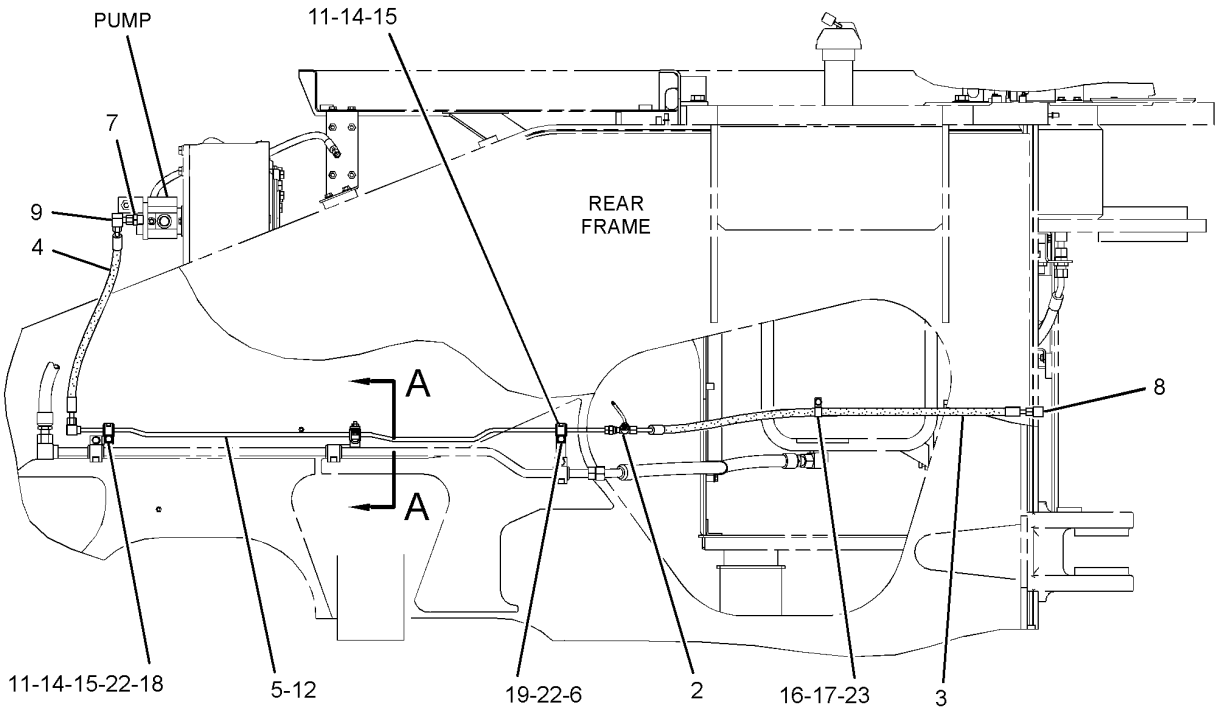

RIGHT SIDE VIEW

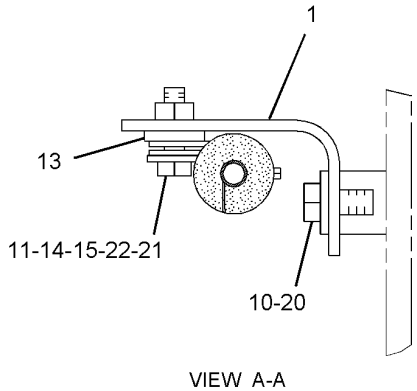

VIEW A-A

GRAPHIC #1 **<END>** g01438181

BRAKING SYSTEM

283-2523 LINES GP-SERVICE BRAKE–
BRAKE PUMP HIGH PRESSURE SCREEN, DELUXE FILTRATION
S/N: 2211-UP
PART OF 283-2525 HYDRAULIC AR
AN ATTACHMENT

SMCS-4257 **i02902172**

NOTE	REF NO	GRAPHIC REF	PART NUMBER	QTY	PART NAME 1 2 3 4 5 6 (PRODUCT LEVEL)	SEE PAGE
	1	1	**154-9716**	1	BRACKET AS	
M		1	**8T-3490**	1	NUT-WELD (M10X1.5-THD)	
	2	1	*164-5586*	1	TEE AS	
		1	**6V-8398**	1	SEAL-O-RING	
		1	**7X-0871**	1	TEE	
	3	1	**185-6371**	2	ADAPTER	
I	4	1	**253-0907**	1	HOSE AS	
I	5	1	**263-9998**	1	HOSE AS	
I	6	1	**275-4082**	1	HOSE AS	
	7	1	**275-4083**	1	PLATE	
	8	1	**279-6542**	1	TUBE AS	
	9	1	**284-7623**	1	SPACER (12.7X21X12-MM THK)	
Y	10	1	**288-5769**	1	SCREEN GP-HIGH PRESSURE (BRAKE PUMP)	588
M	11	1	**101-7402**	8	BOLT-SOCKET HEAD (M12X1.75X30-MM)	
	12	1	*148-8328*	2	CONNECTOR AS	
					(EACH INCLUDES)	
		1	**3D-2824**	1	SEAL-O-RING	
		1	**6V-8398**	1	SEAL-O-RING	
		1	**6V-8633**	1	CONNECTOR	
	13	1	*148-8364*	1	ELBOW AS	
		1	**3K-0360**	1	SEAL-O-RING	
		1	**6V-8398**	1	SEAL-O-RING	
		1	**6V-8625**	1	ELBOW	
	14	1	*148-8370*	1	ELBOW AS	
		1	**6V-8398**	1	SEAL-O-RING	
		1	**6V-9851**	1	ELBOW	
	15	1	*148-8381*	1	ELBOW AS	
		1	**3D-2824**	1	SEAL-O-RING	
		1	**6V-8398**	1	SEAL-O-RING	
		1	**8T-5429**	1	ELBOW	
	16	1	**1P-3705**	2	SEAL-RECTANGULAR	
	17	1	**5P-1076**	1	WASHER-HARD (13.5X30X4-MM THK)	
	18	1	**6V-0826**	3	GROMMET	
	19	1	**6V-8398**	2	SEAL-O-RING	
	20	1	**7D-1649**	1	WASHER-HARD (13.5X32X5-MM THK)	
	21	1	**8T-1889**	3	CLIP (SLOT)	
	22	1	**8T-1890**	3	CLIP (TAB)	
	23	1	**8T-4121**	3	WASHER-HARD (11X21X2.5-MM THK)	
M	24	1	**8T-4136**	1	BOLT (M10X1.5X25-MM)	
M	25	1	**8T-4137**	1	BOLT (M10X1.5X20-MM)	
M	26	1	**8T-4139**	2	BOLT (M12X1.75X30-MM)	
M	27	1	**8T-4183**	1	BOLT (M12X1.75X40-MM)	
M	28	1	**8T-4192**	2	BOLT (M12X1.75X25-MM)	
M	29	1	**8T-4196**	1	BOLT (M10X1.5X35-MM)	
	30	1	**8T-4223**	6	WASHER-HARD (13.5X25.5X3-MM THK)	
M	31	1	**8T-4956**	2	BOLT (M12X1.75X35-MM)	
	32	1	**9X-8250**	2	CLIP	

I-REFER TO HYDRAULIC INFORMATION SYSTEM
M-METRIC PART
Y-SEPARATE ILLUSTRATION

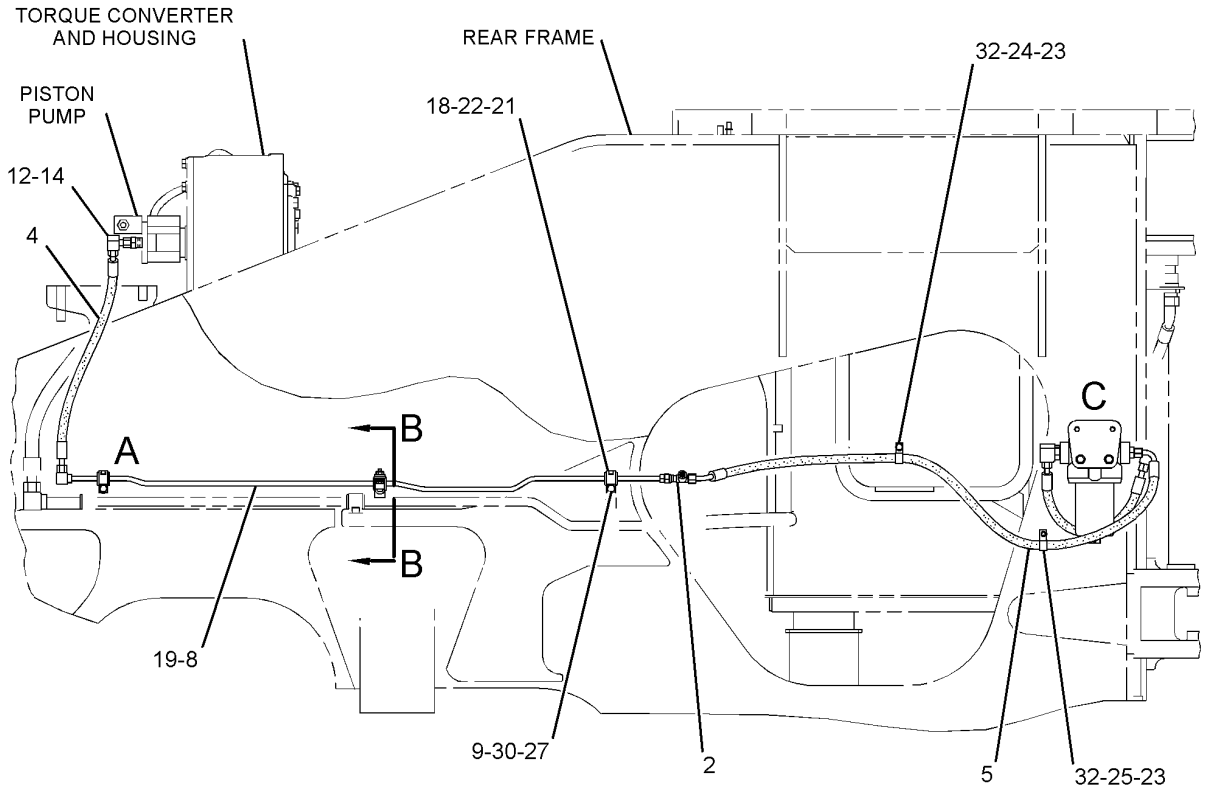

RIGHT SIDE VIEW

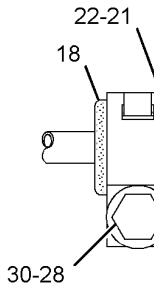

VIEW OF AREA A

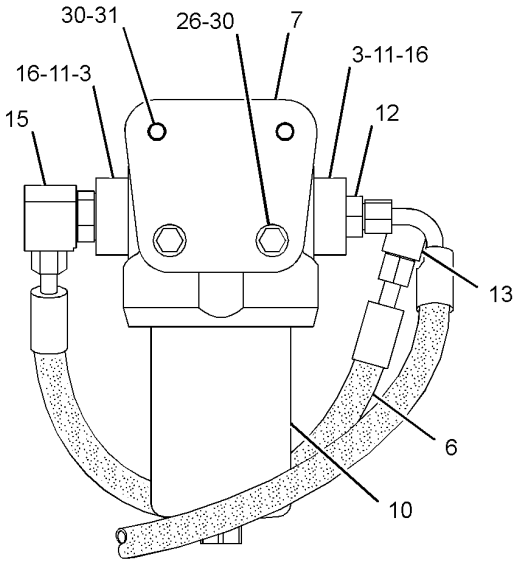

VIEW OF AREA C

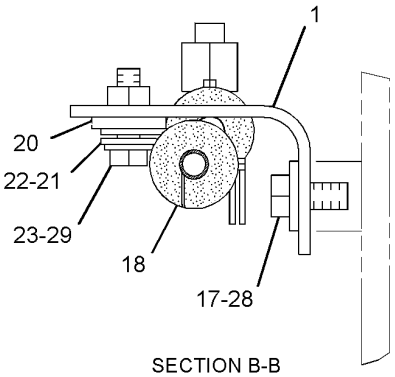

SECTION B-B

GRAPHIC #1 **<END>** g01447661

BRAKING SYSTEM

274-2350 PUMP & MTG GP-BRAKE

S/N: 2211-UP

PART OF 279-9400 HYDRAULIC AR

SMCS-4268 **i02876873**

NOTE	REF NO	GRAPHIC REF	PART NUMBER	QTY	PART NAME 1 2 3 4 5 6 (PRODUCT LEVEL)	SEE PAGE
	1	1	**6D-1004**	1	GASKET	
Y	2	1	**164-5486**	1	PUMP GP-PISTON (BRAKE)	586
	3	1	**8T-4121**	2	WASHER-HARD (11X21X2.5-MM THK)	
M	4	1	**8T-4195**	2	BOLT (M10X1.5X30-MM)	
	5	1	*148-8407*	1	PLUG AS	
		1	**3J-1907**	1	SEAL-O-RING	
		1	**9S-4191**	1	PLUG-O-RING	

M-METRIC PART
Y-SEPARATE ILLUSTRATION

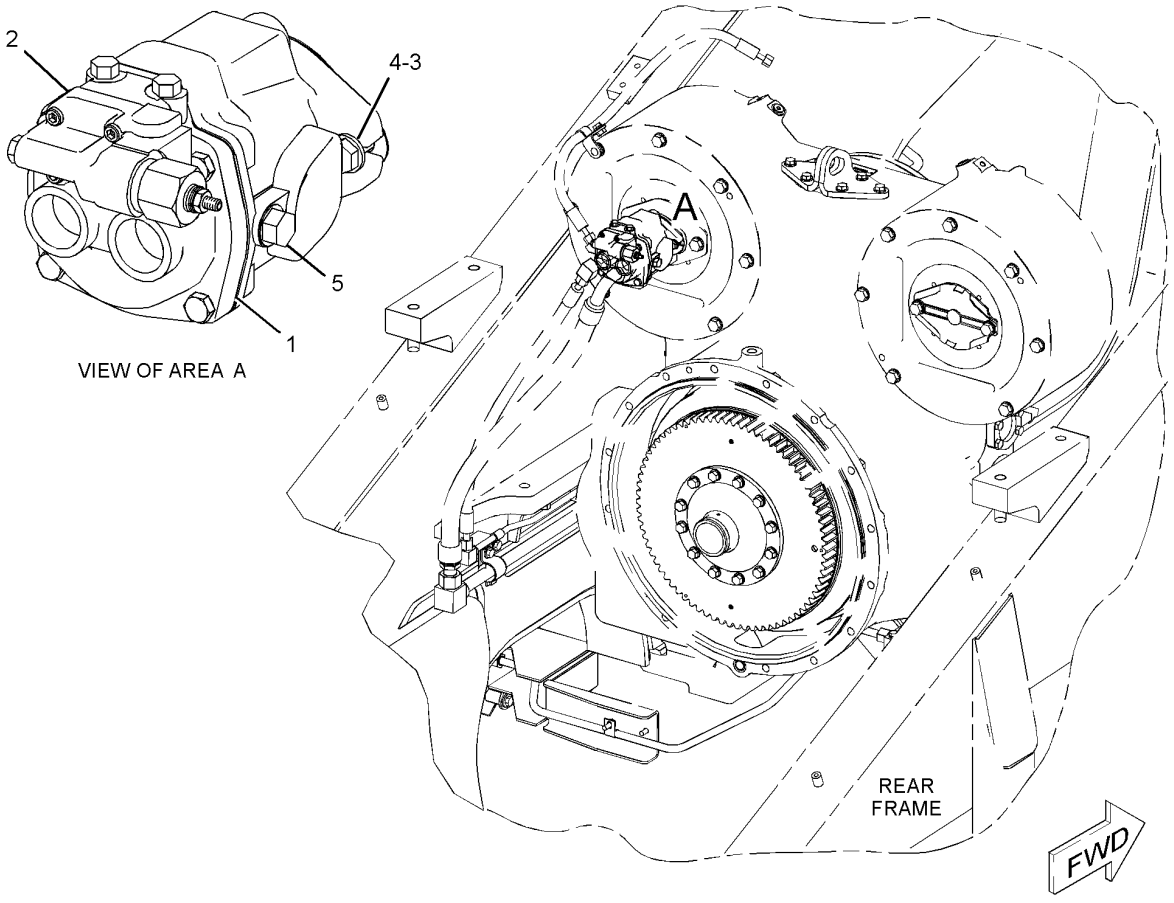

GRAPHIC #1 **<END>** g01438855

BRAKING SYSTEM

164-5486 PUMP GP-PISTON—BRAKE

S/N: 2211-UP

PART OF 274-2350 PUMP & MTG GP-BRAKE

SMCS-4268, 4306, 5070 **i01142235**

NOTE	PART NUMBER	QTY	PART NAME 1 2 3 4 5 6 (PRODUCT LEVEL)	SEE PAGE
	4F-2926	2	BEARING AS-NEEDLE	
	5L-1100	1	BEARING-THRUST	
	1B-7182	4	BOLT (5/16-18X1.25-IN)	
	4T-1907	1	BUTTON-PIVOT	
	4T-1906	1	COLLAR-SPRING	
	4T-1901	2	COVER-TRUNNION	
	3G-7426	1	GASKET	
	4T-1902	1	GASKET	
	104-5060	1	HOUSING AS-PUMP	
	4L-6944	1	BEARING AS-NEEDLE	
	104-5061	1	KIT-PUMP SEAL	
	6V-5341	1	PIN-SPRING	
	4T-1905	1	PISTON-CONTROL	
	4T-1904	1	PLATE AS	
	7F-7983	1	BEARING AS-NEEDLE	
	107-3203	1	PIN-GUIDE	
	9S-4191	1	PLUG-O-RING	
	4T-1897	2	RACE-BEARING	
	1S-8560	2	RACE-THRUST BEARING	
	8N-7294	2	RETAINER-PIN	
	2R-1230	1	RING-RETAINING	
	001-5600	2	RING-SNAP	
Y	**9T-4219**	1	ROTATING GP-PUMP	587
	3G-3721	4	SCREW	
	2D-6392	1	SEAL-O-RING	
	3E-6747	2	SEAL-O-RING	
	3J-1907	1	SEAL-O-RING	
	101-9613	1	SEAL-SHAFT	
	104-5967	1	SHAFT-PUMP	
	4T-1916	1	SPRING	
	4T-1908	1	SWASHPLATE	
Y	**4T-1909**	1	VALVE GP-PUMP CONTROL (PRESSURE COMPENSATOR) (BRAKE)	592
	4T-1915	1	WASHER (33.5X41.02X1.78-MM THK)	

Y-SEPARATE ILLUSTRATION

<END>

9T-4219 ROTATING GP-PUMP–BRAKE

S/N: 2211-UP

PART OF 164-5486 PUMP GP-PISTON

SMCS-5070 **i01294601**

NOTE	REF NO	GRAPHIC REF	PART NUMBER	QTY	PART NAME 1 2 3 4 5 6 (PRODUCT LEVEL)	SEE PAGE
	1	1	**8J-6273**	1	RING-RETAINING	
	2	1	**9T-4538**	2	WASHER	
	3	1	**9T-4539**	1	RETAINER	
	4	1	**9T-4541**	1	SPRING	
	5	1	**9T-4537**	3	PIN	
	6	1	**9T-4540**	1	PLATE-RETRACTION	
	7	1	**9T-4536**	1	WASHER-SPHERICAL	

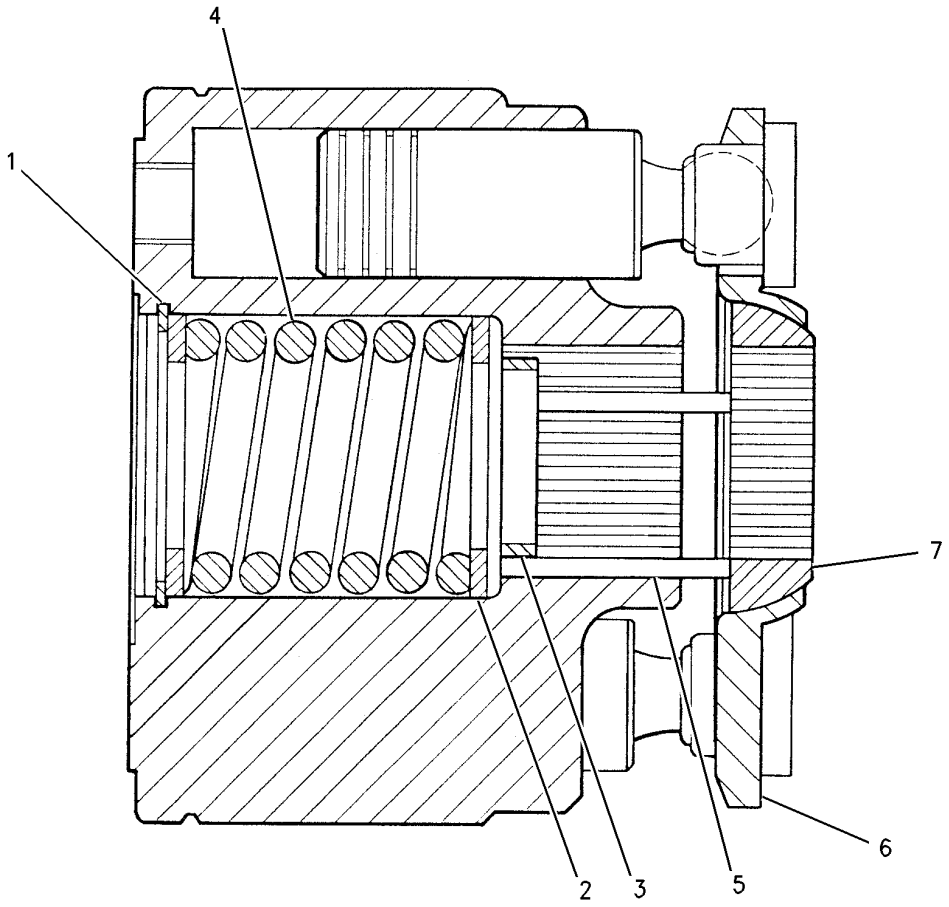

GRAPHIC #1 **<END>** g00686049

BRAKING SYSTEM

288-5769 SCREEN GP-HIGH PRESSURE

S/N: 2211-UP

PART OF 280-4340 LINES GP-HYDRAULIC FAN, 288-7135 LINES GP-SECONDARY STEERING, 283-2523 LINES GP-SERVICE BRAKE AN ATTACHMENT

SMCS-4295, 431F, 5068 **i02947054**

NOTE	REF NO	GRAPHIC REF	PART NUMBER	QTY	PART NAME 1 2 3 4 5 6 (PRODUCT LEVEL)	SEE PAGE
	1	1	**104-3895**	1	SCREEN AS-HIGH PRESSURE	
	2	1	**118-8310**	1	SEAL	
	3	1	**197-0027**	1	PLUG	
	4	1	**287-1502**	1	HOUSING	
	5	1	**1H-8128**	1	SEAL-O-RING	

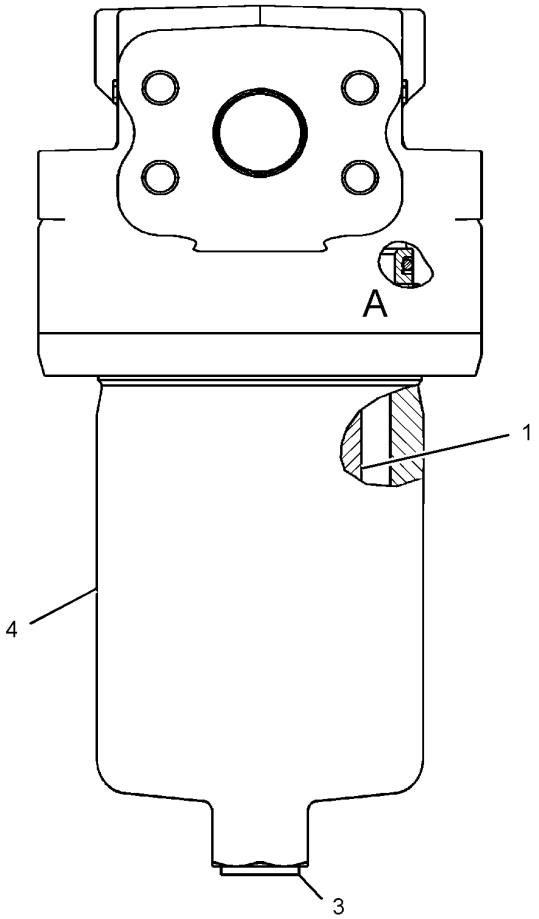

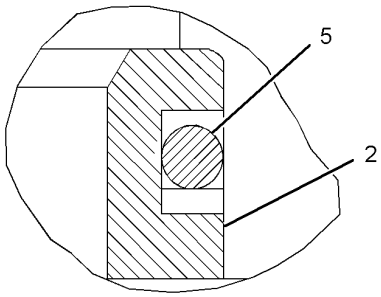

VIEW OF AREA A

GRAPHIC #1 **<END>** g01315447

273-7143 VALVE & MTG GP-BRAKE CONTROL—PARKING

S/N: 2211-UP

PART OF 273-7150 CONTROL GP-SERVICE BRAKE

SMCS-4265, 4282 **i02946652**

NOTE	REF NO	GRAPHIC REF	PART NUMBER	QTY	PART NAME 1 2 3 4 5 6 (PRODUCT LEVEL)	SEE PAGE
B	1	1	**1A-4790**	4	WASHER (16.7X31.8X1.6-MM THK)	
	2	1	**2V-7859**	1	BEARING	
	3	1	**3B-4607**	1	PIN-COTTER	
	4	1	**4B-2913**	1	PIN-CLEVIS	
	5	1	**4V-1541**	1	COLLAR	
	6	1	**5B-2183**	1	NUT-JAM (9/16-18-THD)	
	7	1	**5P-6724**	1	BEARING-ROLLER	
	8	1	**7I-4078**	1	LEVER AS	
	9	1	**8T-0741**	2	SEAL-LIP TYPE	
	10	1	**103-3587**	1	BRACKET AS	
Y	11	1	**106-1774**	1	VALVE GP-BRAKE CONTROL (PARKING)	591
	12	1	*150-4027*	1	TEE AS	
		1	**3E-2310**	1	TEE	
		1	**3J-1907**	1	SEAL-O-RING	
		1	**6V-8397**	1	SEAL-O-RING	
	13	1	**174-4312**	1	SWITCH AS-PRESSURE (PARKING BRAKE OIL)	
		1	**102-8803**	1	KIT-RECEPTACLE (3-PIN)	
					(INCLUDES RECEPTACLE AS AND WEDGE)	
D		1	**5P-6008**		TUBE (6.35-MM DIA) (0.2-M)	
D		1	**8T-5677**		SLEEVE (0.6-M)	
		1	**186-3735**	3	PIN-CONNECTOR (16-GA TO 18-GA)	
	14	1	**223-8425**	1	BLOCK AS	
	15	1	**223-8470**	1	STRIP	
	16	1	*148-8336*	1	CONNECTOR AS	
		1	**3J-1907**	1	SEAL-O-RING	
		1	**6V-8397**	1	SEAL-O-RING	
		1	**6V-8636**	1	CONNECTOR	
	17	1	*148-8365*	1	ELBOW AS	
		1	**3J-1907**	1	SEAL-O-RING	
		1	**6V-8398**	1	SEAL-O-RING	
		1	**8T-6876**	1	ELBOW	
	18	1	*148-8367*	1	ELBOW AS	
		1	**6V-8397**	1	SEAL-O-RING	
		1	**6V-9850**	1	ELBOW	
	19	1	*164-5544*	1	ELBOW AS	
		1	**3E-2333**	1	ELBOW	
		1	**6V-8398**	1	SEAL-O-RING	
	20	1	**171-7085**	1	SWITCH AS-LIMIT (PARKING BRAKE)	
		1	**3E-3377**	1	WEDGE-RECEPTACLE LOCK (4-PIN)	
		1	**186-3735**	4	PIN-CONNECTOR (16-GA TO 18-GA)	
E		1	**9X-1386**		SLEEVE (9-CM)	
		1	**102-8804**	1	KIT-RECEPTACLE (4-PIN)	
					(INCLUDES RECEPTACLE AS AND WEDGE)	
	21	1	**3J-1907**	1	SEAL-O-RING	
M	22	1	**5C-2890**	4	NUT (M6X1-THD)	
M	23	1	**8T-4189**	2	BOLT (M8X1.25X20-MM)	
	24	1	**8T-4224**	2	WASHER-HARD (8.8X16X2-MM THK)	
M	25	1	**8T-4971**	2	BOLT (M6X1X30-MM)	

B-USE AS REQUIRED
D-ORDER BY THE METER
E-ORDER BY THE CENTIMETER
M-METRIC PART
Y-SEPARATE ILLUSTRATION

273-7143 VALVE & MTG GP-BRAKE CONTROL *(contd.)* i02946652

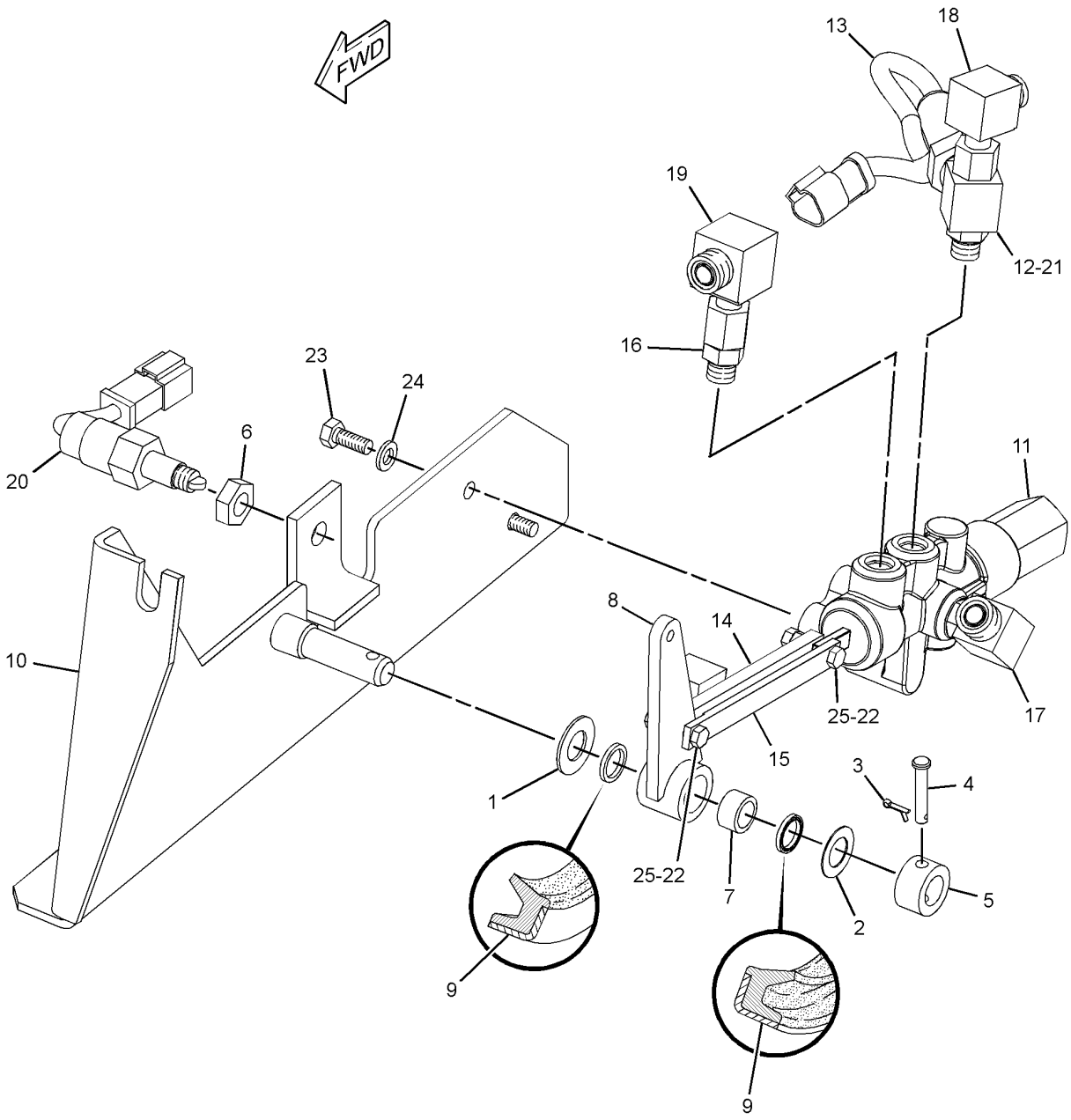

GRAPHIC #1 **<END>** g01435104

106-1774 VALVE GP-BRAKE CONTROL–PARKING

S/N: 2211-UP

PART OF 273-7143 VALVE & MTG GP-BRAKE CONTROL

SMCS-4265, 4282 **i02216715**

NOTE	REF NO	GRAPHIC REF	PART NUMBER	QTY	PART NAME 1 2 3 4 5 6 (PRODUCT LEVEL)	SEE PAGE
	1	1	**4J-7533**	2	SEAL-O-RING	
	2	1	**9S-8001**	2	PLUG-O-RING	
	3	1	**257-7676**	1	KIT-REPAIR	
					(INCLUDES BOOT, SEALS, RETAINING, DETENT BALLS AND SPRINGS)	

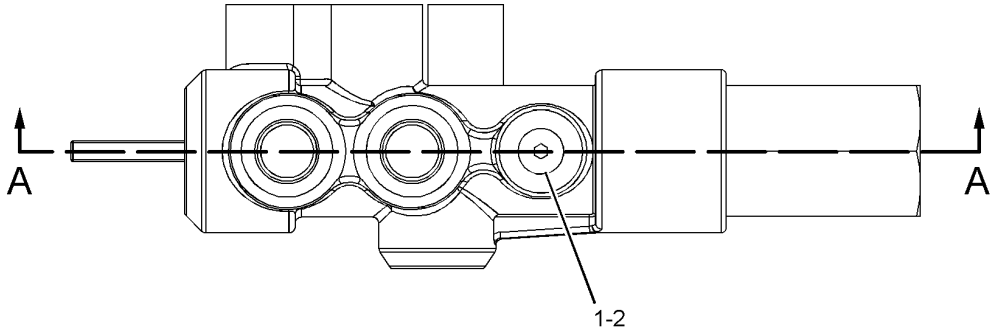

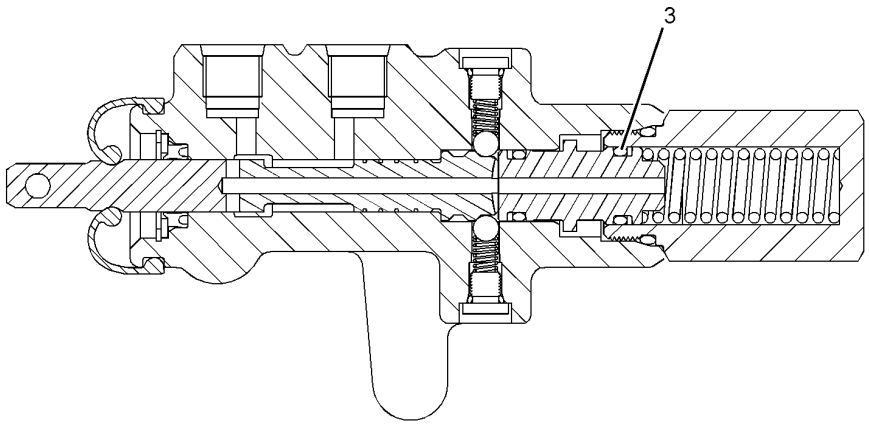

SECTION A-A

GRAPHIC #1 **<END>** g01118794

4T-1909 VALVE GP-PUMP CONTROL–PRESSURE COMPENSATOR–BRAKE

S/N: 2211-UP

PART OF 164-5486 PUMP GP-PISTON

SMCS-5455 **i01142185**

NOTE	REF NO	GRAPHIC REF	PART NUMBER	QTY	PART NAME 1 2 3 4 5 6 (PRODUCT LEVEL)	SEE PAGE
	1	1	**9S-8007**	1	PLUG-O-RING (3/8-24 THD)	
	2	1	**4T-1910**	1	CAP	
	3	1	**5P-8356**	1	SEAL-O-RING (21.89MM ID)	
	4	1	**3G-5423**	1	SPRING	
	5	1	**4T-1911**	1	CAP-SPRING	
	6	1	**3P-0647**	1	SEAL-O-RING (13.94MM ID)	
	7	1	**6F-0612**	1	NUT-JAM (1/4-28 THD)	
	8	1	**4T-1914**	1	SETSCREW-HEX SOCKET	
	9	1	**9T-4226**	1	CAP	
	10	1	**4T-1913**	1	CAP-SPRING	
	11	1	**7J-0204**	1	SEAL-O-RING (7.65MM ID)	

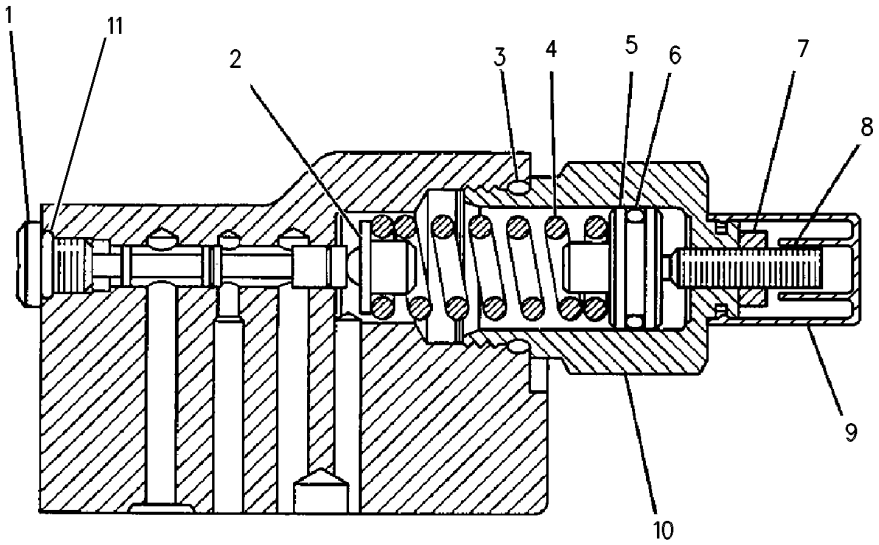

GRAPHIC #1 **<END>** g00605683

STEERING SYSTEM

164-6941 ACTUATOR GP-PUMP

S/N: 2211-UP

PART OF 224-2561 ACTUATOR GP-PUMP

SMCS-5078 **i01063502**

NOTE	REF NO	GRAPHIC REF	PART NUMBER	QTY	PART NAME 1 2 3 4 5 6 (PRODUCT LEVEL)	SEE PAGE
	1	1	**164-7141**	1	PISTON	
	2	1	**164-7145**	1	BUSHING	
	3	1	**6E-3869**	1	SPRING	
B	4	1	**164-7142**	1	ROD (159.2-MM)	
B	5	1	**164-7143**	1	ROD (159.4-MM)	
B	6	1	**164-7144**	1	ROD (159-MM)	

B-USE AS REQUIRED

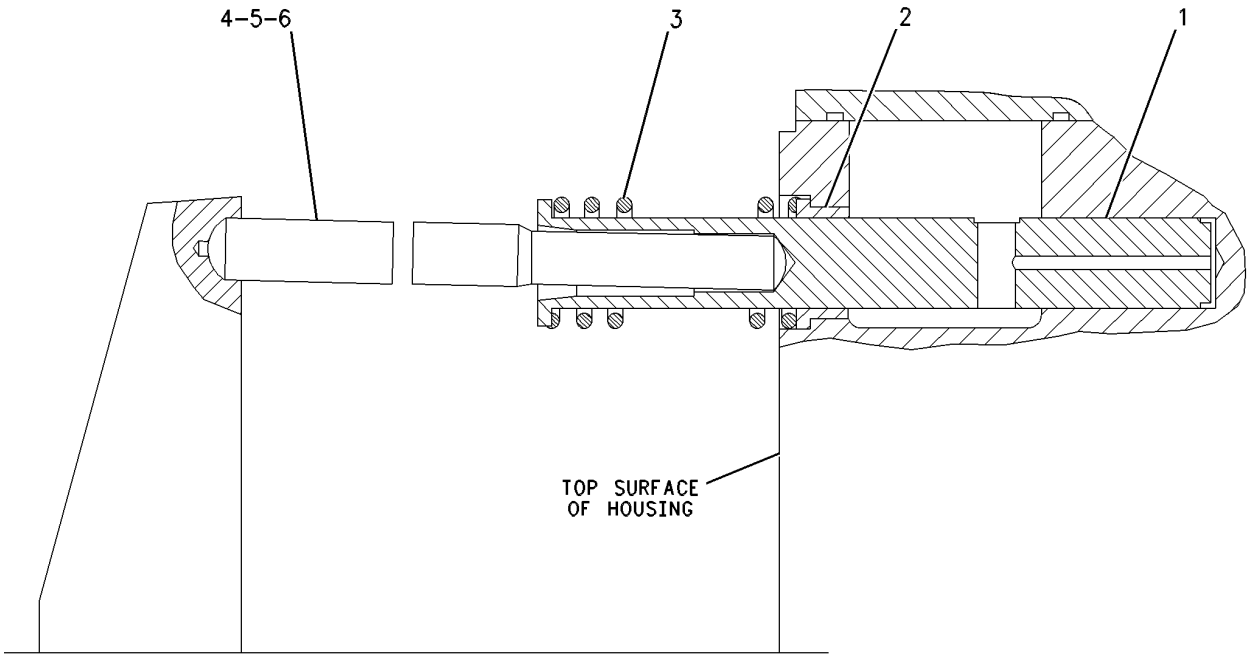

GRAPHIC #1 **<END>** g00554630

STEERING SYSTEM

224-2561 ACTUATOR GP-PUMP

S/N: 2211-UP

PART OF 216-4826 PUMP GP-PISTON

SMCS-5078 **i02064386**

NOTE	REF NO	GRAPHIC REF	PART NUMBER	QTY	PART NAME 1 2 3 4 5 6 (PRODUCT LEVEL)	SEE PAGE
	1	1	**224-2562**	1	PISTON	
	2	1	**165-9399**	1	ROD	
	3	1	**6E-3369**	1	FLANGE	
Y	4	1	**164-6941**	1	ACTUATOR GP-PUMP	593

Y-SEPARATE ILLUSTRATION

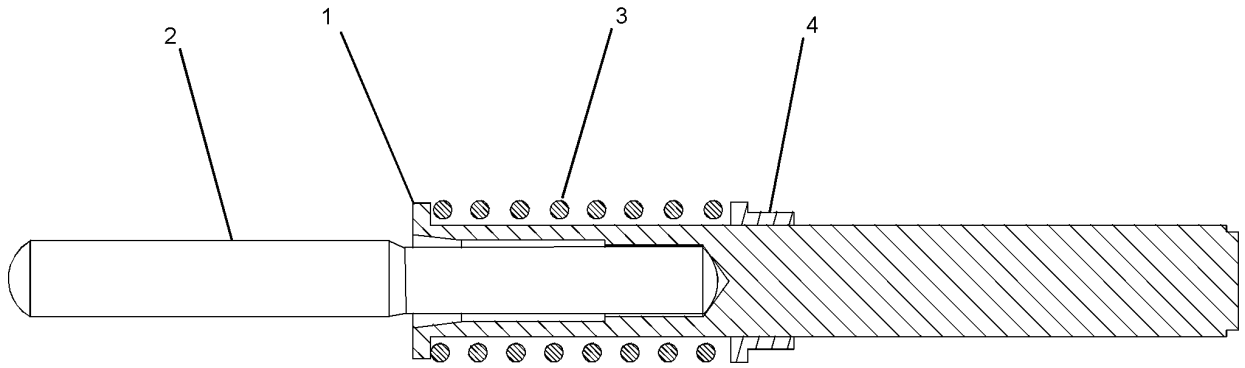

GRAPHIC #1 **<END>** g01062059

STEERING SYSTEM

249-4488 ACTUATOR GP-PUMP

S/N: 2211-UP

PART OF 216-4826 PUMP GP-PISTON

SMCS-5078 **i02069493**

NOTE	REF NO	GRAPHIC REF	PART NUMBER	QTY	PART NAME 1 2 3 4 5 6 (PRODUCT LEVEL)	SEE PAGE
	1	1	**249-4489**	1	PISTON	
	2	1	**6E-3872**	1	SPRING	
B	3	1	**165-9402**	1	ROD (152.2-MM)	
B		1	**165-9403**	1	ROD (151.8-MM)	
B		1	**165-9404**	1	ROD (152-MM)	
B		1	**165-9405**	1	ROD (152.4-MM)	

B-USE AS REQUIRED

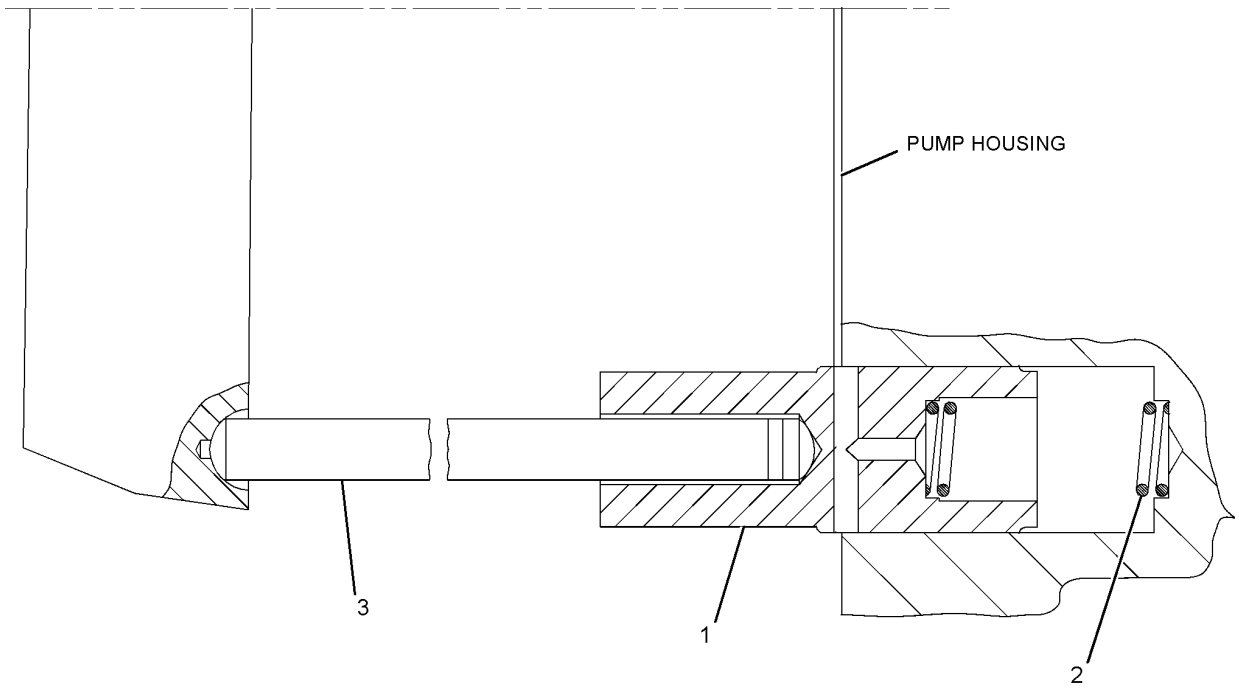

GRAPHIC #1 **<END>** g01060774

STEERING SYSTEM

164-6987 BARREL GP-PUMP—STEERING

S/N: 2211-UP

PART OF 164-6938 ROTATING GP-PUMP

SMCS-5070 **i02614699**

NOTE	REF NO	GRAPHIC REF	PART NUMBER	QTY	PART NAME 1 2 3 4 5 6 (PRODUCT LEVEL)	SEE PAGE
	1	1	**164-8165**	9	PISTON AS	
	2	1	**292-2956**	1	BARREL	
	3	1	**165-9359**	1	RETAINER	
	4	1	**165-9360**	1	GUIDE-BALL	
B	5	1	**165-9361**	2	SHIM (0.5-MM THK) (0.5MM THK)	
B	6	1	**165-9362**	2	SHIM (0.75-MM THK) (0.75MM THK)	
	7	1	**165-9363**	20	SPRING	

B-USE AS REQUIRED

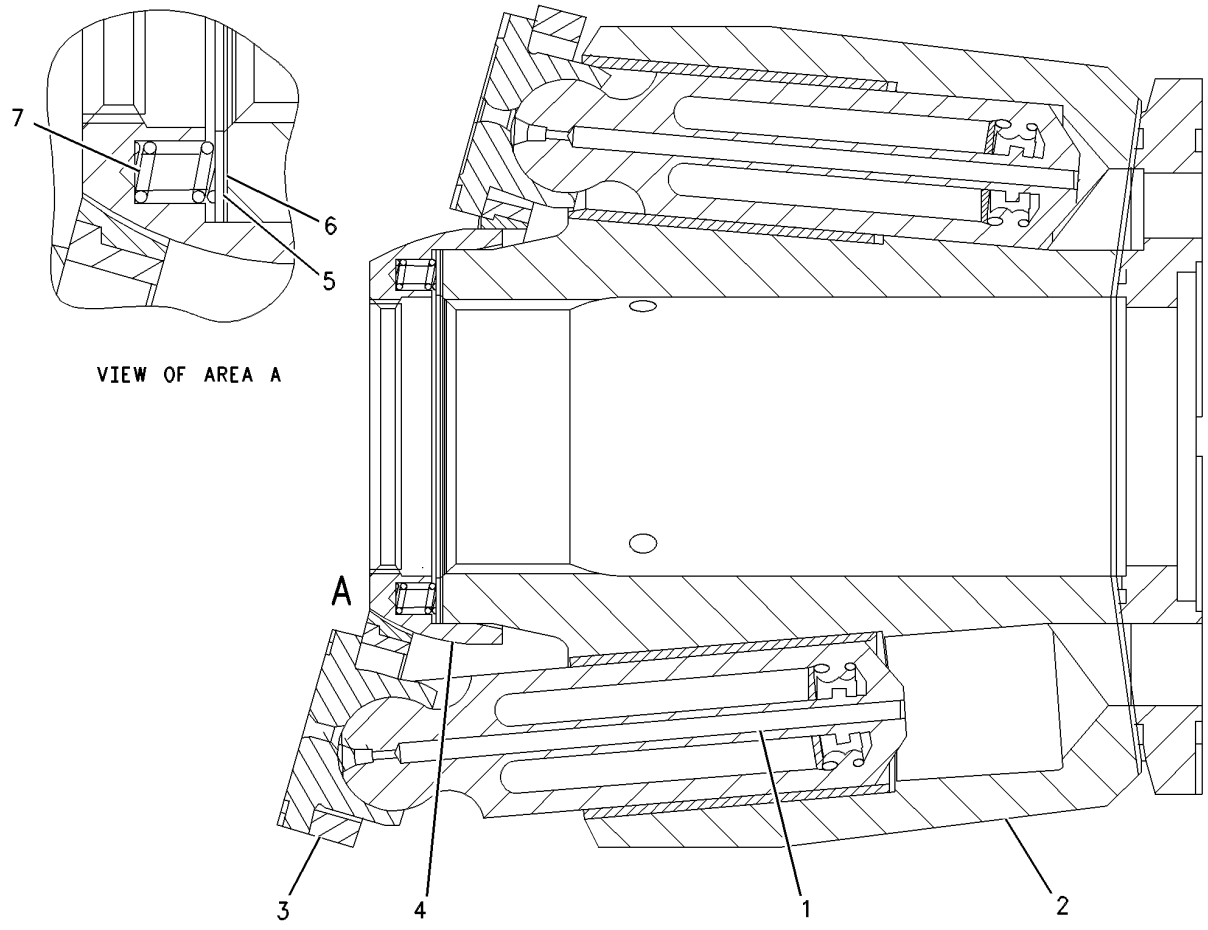

GRAPHIC #1 **<END>** g00554143

STEERING SYSTEM

283-4409 CYLINDER & MTG GP-STEERING

S/N: 2211-UP

PART OF 279-9400 HYDRAULIC AR

SMCS-4303 **i02888460**

NOTE	REF NO	GRAPHIC REF	PART NUMBER	QTY	PART NAME 1 2 3 4 5 6 (PRODUCT LEVEL)	SEE PAGE
	1	1	**4E-8080**	4	PIN AS	
	2	1	**7X-4803**	8	SEAL-LIP TYPE	
	3	1	**9D-6877**	2	PLATE	
	4	1	**115-9863**	2	RETAINER	
Y	5	1	**157-1352**	2	CYLINDER GP-STEERING	598
M	6	1	**8T-4184**	4	BOLT (M12X1.75X45-MM)	
M	7	1	**8T-4192**	4	BOLT (M12X1.75X25-MM)	
	8	1	**8T-4223**	8	WASHER-HARD (13.5X25.5X3-MM THK)	

M-METRIC PART
Y-SEPARATE ILLUSTRATION

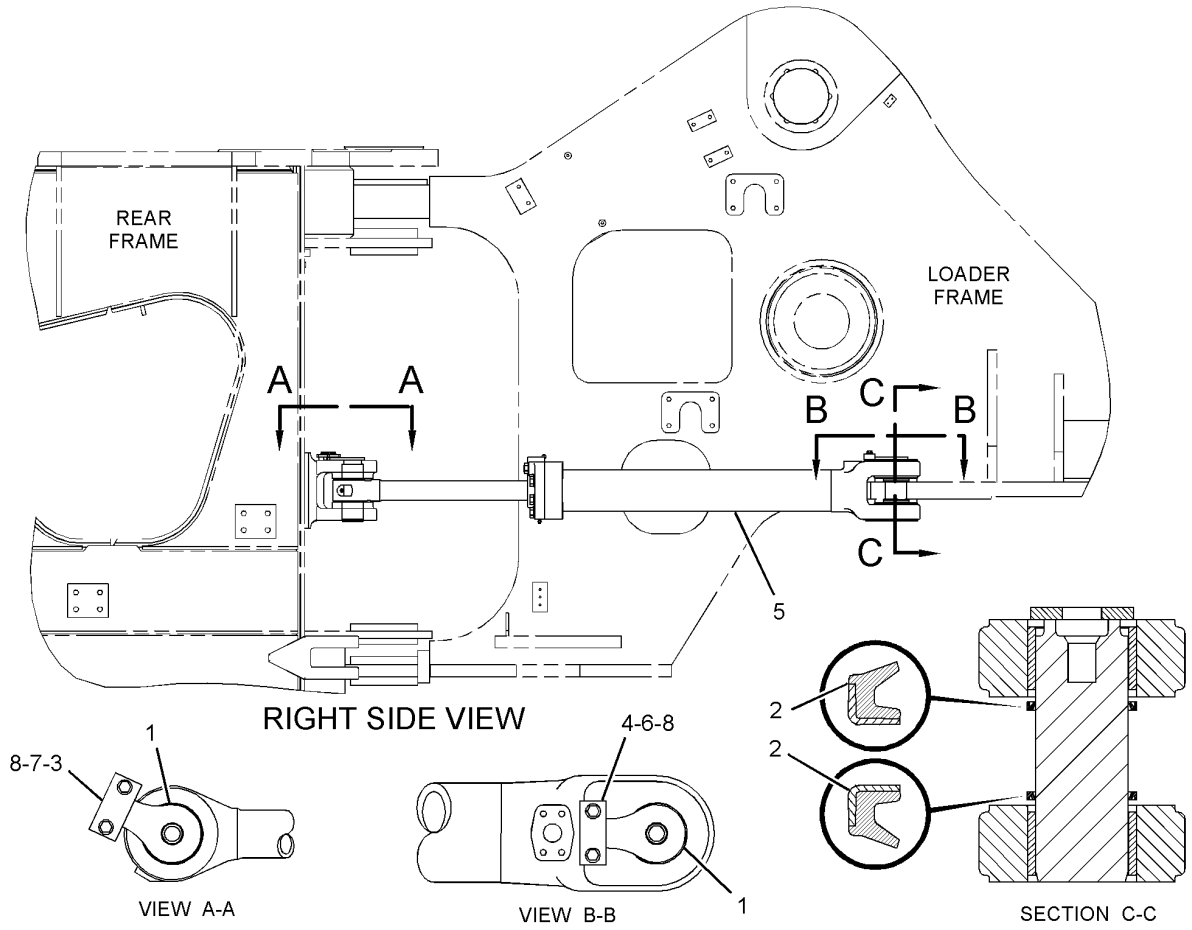

GRAPHIC #1 **<END>** g01438822

STEERING SYSTEM

157-1352 CYLINDER GP-STEERING

S/N: 2211-UP
139.7MM (5.5 IN) BORE X 1080MM (42.5 IN) STROKE
PART OF 283-4409 CYLINDER & MTG GP-STEERING

SMCS-4303 **i01969803**

NOTE	REF NO	GRAPHIC REF	PART NUMBER	QTY	PART NAME 1 2 3 4 5 6 (PRODUCT LEVEL)	SEE PAGE
R	1	1	**113-4388**	1	CYLINDER AS	
		1	**4E-8078**	2	BEARING-SLEEVE	
	2	1	**3J-6899**	1	LOCKNUT (2 1/4-12-THD)	
	3	1	**4J-4606**	1	RING-WEAR	
	4	1	**4T-5173**	1	SEAL	
	5	1	**6E-1249**	1	PISTON	
	6	1	**8J-1688**	1	SEAL-O-RING	
	7	1	**8J-1689**	1	RING-BACKUP	
	8	1	**8T-8376**	1	SEAL-HEAD	
	9	1	**6E-1250**	1	HEAD	
R	10	1	**113-4391**	1	ROD AS	
		1	**6E-0804**	1	BEARING-SLEEVE	
	11	1	**225-3285**	1	SEAL-WIPER	
	12	1	**167-2320**	1	SEAL-U-CUP	
	13	1	**167-2209**	1	SEAL AS-BUFFER	
	14	1	**8C-9101**	1	RING-WEAR	
M	15	1	**7X-2489**	2	BOLT (M24X3X100-MM)	
M	16	1	**8T-5878**	6	BOLT (M24X3X80-MM)	
	18	1	**8T-4167**	8	WASHER-HARD (26X44X4-MM THK)	

M-METRIC PART
R-REMFG PART MAY BE AVAILABLE

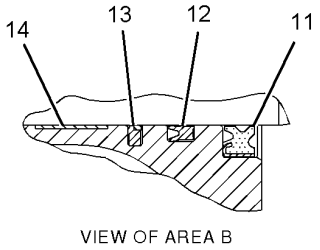

VIEW OF AREA B

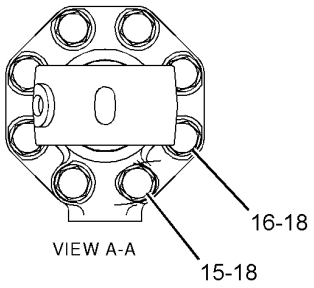

VIEW A-A

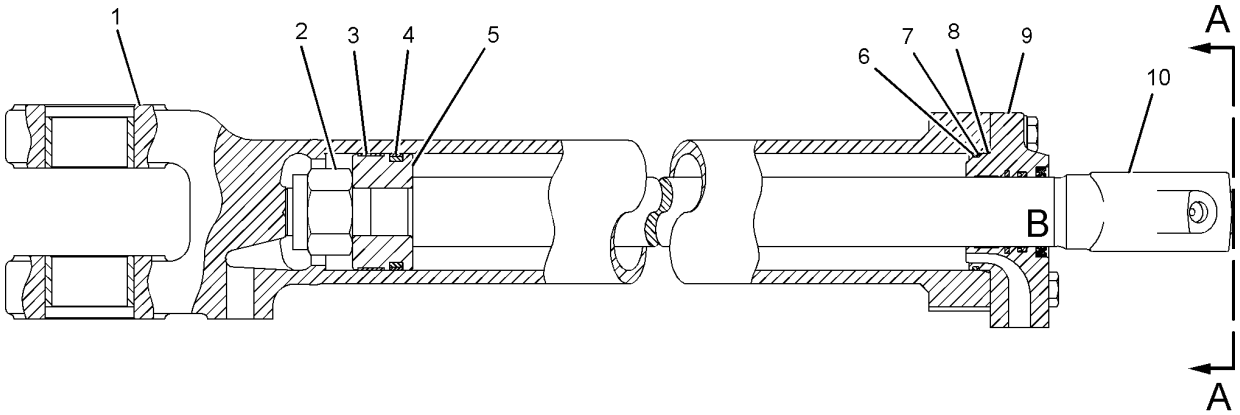

GRAPHIC #1 **<END>** g01057165

115-2129 FILTER GP-OIL–STEERING OIL COOLER, PILOT

S/N: 2211-UP

PART OF 273-7120 LINES GP-STEERING OIL COOLER

SMCS-5068 **i02419549**

NOTE	REF NO	GRAPHIC REF	PART NUMBER	QTY	PART NAME 1 2 3 4 5 6 (PRODUCT LEVEL)	SEE PAGE
	1	1	**126-1817**	1	FILTER-OIL (ULTRA HIGH EFFICIENCY)	
	2	1	**253-2673**	1	SWITCH AS-PRESSURE (OIL FILTER BYPASS)	
		1	**102-8802**	2	KIT-RECEPTACLE (2-PIN)	
					(EACH KIT INCLUDES RECEPTACLE AS AND WEDGE)	
		1	**8T-8729**	2	PIN-CONNECTOR	
E		1	**9X-1813**		SLEEVE (14-CM)	
	3	1	**3J-1907**	1	SEAL-O-RING	
	4	1	**5F-9144**	1	SEAL-O-RING	

E-ORDER BY THE CENTIMETER

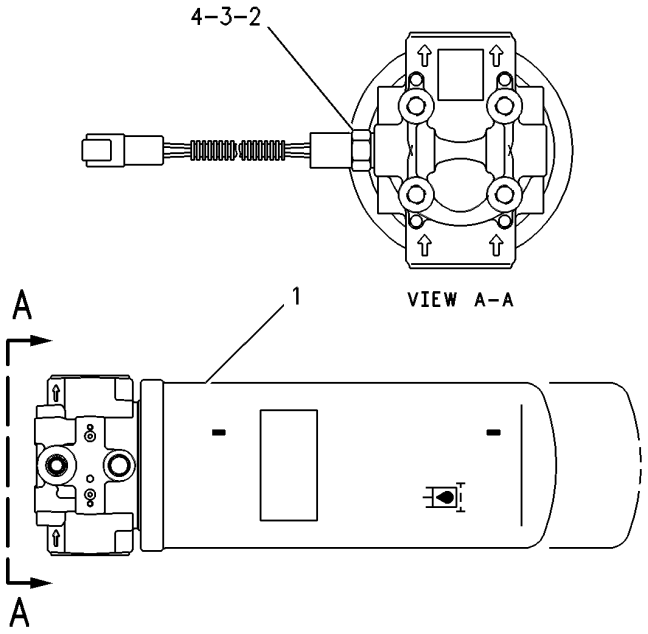

GRAPHIC #1 **<END>** g00255748

STEERING SYSTEM

166-4647 FILTER GP-OIL–CASE DRAIN

S/N: 2211-UP

PART OF 273-6275, 280-8833 FILTER & LINES GP-CASE DRAIN, 273-7130 LINES GP-STEERING

SMCS-5068, 5091, 5092 **i02397037**

NOTE	REF NO	GRAPHIC REF	PART NUMBER	QTY	PART NAME 1 2 3 4 5 6 (PRODUCT LEVEL)	SEE PAGE
	1	1	**1G-8878**	1	FILTER-OIL (ADVANCED EFFICIENCY) (CASE DRAIN)	
	2	1	**164-6709**	1	PLUG AS	

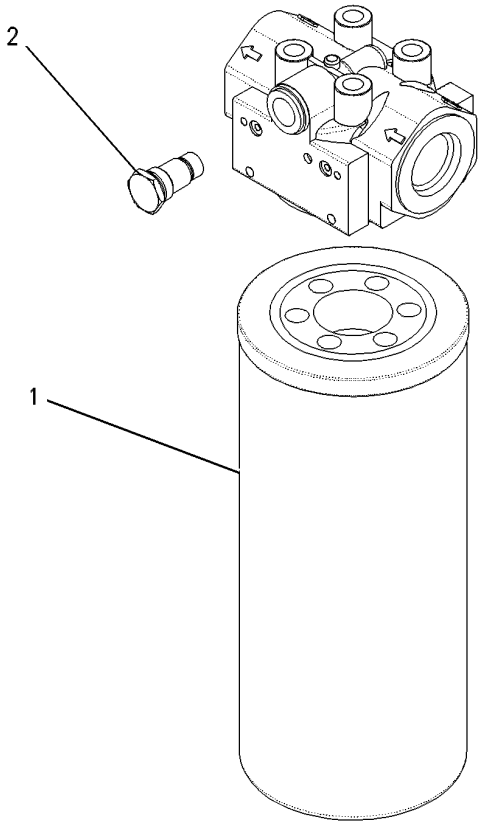

GRAPHIC #1 **<END>** g00545272

STEERING SYSTEM

164-6939 HEAD GP-PUMP—STEERING

S/N: 2211-UP

PART OF 216-4826 PUMP GP-PISTON

SMCS-5070 **i01144367**

NOTE	REF NO	GRAPHIC REF	PART NUMBER	QTY	PART NAME 1 2 3 4 5 6 (PRODUCT LEVEL)	SEE PAGE
	1	1	**6E-3866**	1	SEAT-VALVE	
	2	1	**164-7083**	1	HEAD	
	3	1	**9S-8004**	2	PLUG-O-RING	
	4	1	**6E-3873**	1	PLUG-ORIFICE	
	5	1	**9T-3940**	10	PLUG-BREAK OFF	
	6	1	**087-4772**	2	PLUG-O-RING	
	7	1	**5I-4277**	1	ORIFICE	
	8	1	**5I-4341**	2	DOWEL	
	9	1	**164-7084**	1	PIN	
	10	1	**6E-3874**	1	BEARING (RACE & ROLLER AS)(OUTER)	
	11	1	**3J-1907**	2	SEAL-O-RING	

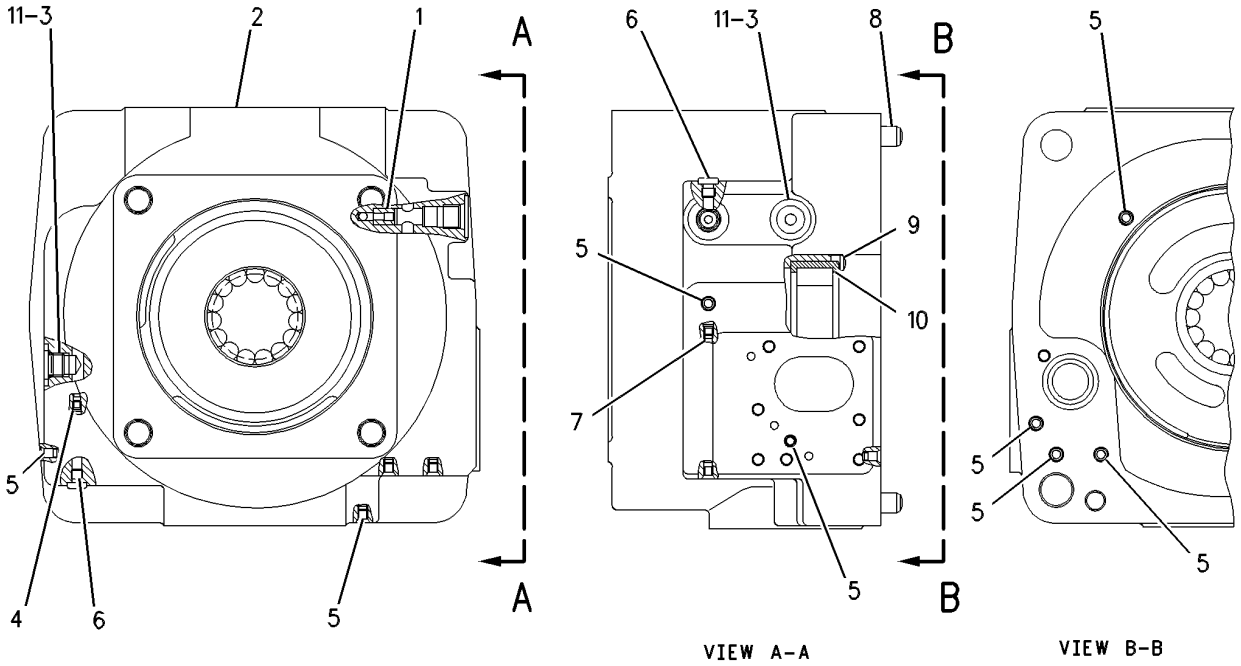

GRAPHIC #1 **<END>** g00608640

STEERING SYSTEM

284-4680 LINES GP-SECONDARY STEERING

S/N: 2211-UP
PART OF 283-2520 HYDRAULIC AR
AN ATTACHMENT

SMCS-4304 **i02946659**

NOTE	REF NO	GRAPHIC REF	PART NUMBER	QTY	PART NAME 1 2 3 4 5 6 (PRODUCT LEVEL)	SEE PAGE
	1	1	**230-5771**	1	SWITCH AS-PRESSURE (SECONDARY STEERING OIL)	
		1	**102-8803**	1	KIT-RECEPTACLE (3-PIN)	
					(INCLUDES RECEPTACLE AS & WEDGE)	
		1	**186-3735**	3	PIN-CONNECTOR (16-GA TO 18-GA)	
E		1	**9X-1813**		SLEEVE (30-CM)	
	2	1	**4E-0289**	1	ELBOW	
Y	3	1	**6E-3078**	1	VALVE GP-SELECTOR & PRESS CONT (SECONDARY STEERING)	653
	4	1	**6P-9592**	1	SPACER (0.438X1X0.72-IN THK)	
	5	1	**9X-6772**	1	STRAP-CABLE	
I	6	1	**116-3800**	1	HOSE AS	
I	7	1	**116-3801**	1	HOSE AS	
I	8	1	**152-9074**	1	HOSE AS	
	9	1	*168-1968*	1	TEE AS	
		1	**3J-1907**	1	SEAL-O-RING	
		1	**6V-8397**	1	SEAL-O-RING	
		1	**126-6872**	1	TEE	
	10	1	**275-7847**	1	TUBE AS	
	11	1	**290-0107**	1	HARNESS AS-SWITCH (SECONDARY STEERING)	
I	12	1	**318-8251**	1	HOSE AS	
	13	1	**130-5300**	1	CLIP	
	14	1	**144-3935**	1	CLIP	
	15	1	*148-8307*	1	ADAPTER AS	
		1	**3J-1907**	1	SEAL-O-RING	
		1	**5P-8874**	1	ADAPTER	
	16	1	*148-8346*	1	ELBOW AS	
		1	**3K-0360**	1	SEAL-O-RING	
		1	**6V-8398**	1	SEAL-O-RING	
		1	**8T-1686**	1	ELBOW	
	17	1	*148-8365*	2	ELBOW AS	
					(EACH INCLUDES)	
		1	**3J-1907**	1	SEAL-O-RING	
		1	**6V-8398**	1	SEAL-O-RING	
		1	**8T-6876**	1	ELBOW	
	18	1	*148-8426*	1	TEE AS	
		1	**3K-0360**	1	SEAL-O-RING	
		1	**6V-8397**	1	SEAL-O-RING	
		1	**6V-8398**	1	SEAL-O-RING	
		1	**8T-6696**	1	TEE-O-RING	
	19	1	*153-6241*	1	ELBOW AS	
		1	**6V-8398**	1	SEAL-O-RING	
		1	**8C-8989**	1	ELBOW	
	20	1	*155-3502*	1	ADAPTER AS	
		1	**3E-7403**	1	ADAPTER	
		1	**6V-8398**	1	SEAL-O-RING	
	21	1	**1P-4579**	4	FLANGE-HALF	
	22	1	**1S-0994**	1	CLIP	
	23	1	**3K-0360**	1	SEAL-O-RING	
	24	1	**4D-8123**	1	CLIP	
	25	1	**4J-0519**	1	SEAL-O-RING	
	26	1	**4J-0520**	2	SEAL-O-RING	
	27	1	**4J-0524**	2	SEAL-O-RING	
	28	1	**5P-4295**	4	CLIP	
	29	1	**5P-7468**	1	CLIP (SLOT)	
	30	1	**5P-7469**	1	CLIP (TAB)	

284-4680 **LINES GP-SECONDARY STEERING** *(contd.)* **i02946659**

NOTE	REF NO	GRAPHIC REF	PART NUMBER	QTY	PART NAME 1 2 3 4 5 6 (PRODUCT LEVEL)	SEE PAGE
	31	1	**5P-8444**	1	GROMMET	
	32	1	**6V-1889**	1	CLIP	
	33	1	**8C-3206**	4	FLANGE-HALF	
	34	1	**8S-0023**	2	CLIP (SLOT)	
	35	1	**8S-0024**	2	CLIP (TAB)	
	36	1	**8T-4121**	12	WASHER-HARD (11X21X2.5-MM THK)	
M	37	1	**8T-4133**	1	NUT (M10X1.5-THD)	
M	38	1	**8T-4139**	3	BOLT (M12X1.75X30-MM)	
M	39	1	**8T-4172**	2	BOLT (M10X1.5X80-MM)	
M	40	1	**8T-4184**	8	BOLT (M12X1.75X45-MM)	
M	41	1	**8T-4186**	1	BOLT (M10X1.5X40-MM)	
M	42	1	**8T-4196**	10	BOLT (M10X1.5X35-MM)	
	43	1	**8T-4223**	16	WASHER-HARD (13.5X25.5X3-MM THK)	
M	44	1	**8T-4244**	4	NUT (M12X1.75-THD)	
M	45	1	**8T-4956**	1	BOLT (M12X1.75X35-MM)	
M	46	1	**8T-6466**	2	BOLT (M10X1.5X60-MM)	
	47	1	**9X-2027**	4	WASHER (11X18X2-MM THK)	

E-ORDER BY THE CENTIMETER
I-REFER TO HYDRAULIC INFORMATION SYSTEM
M-METRIC PART
Y-SEPARATE ILLUSTRATION

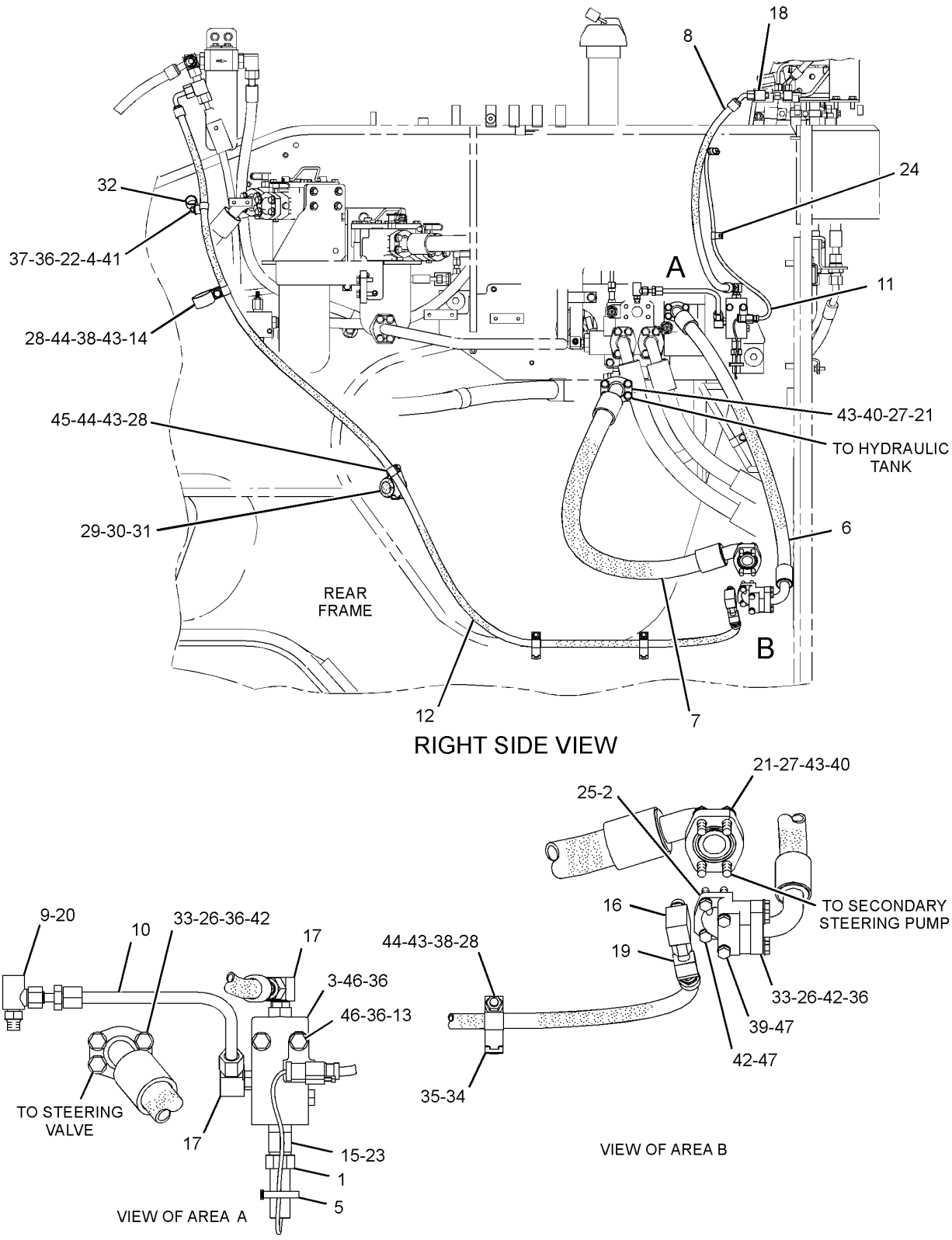

GRAPHIC #1 **<END>** g01448905

STEERING SYSTEM

288-7135 LINES GP-SECONDARY STEERING–
SECONDARY STEERING HIGH PRESSURE SCREEN, DELUXE FILTRATION
S/N: 2211-UP
PART OF 283-2525 HYDRAULIC AR
AN ATTACHMENT

SMCS-4304 **i02946660**

NOTE	REF NO	GRAPHIC REF	PART NUMBER	QTY	PART NAME 1 2 3 4 5 6 (PRODUCT LEVEL)	SEE PAGE
	1	1	**230-5771**	1	SWITCH AS-PRESSURE (SECONDARY STEERING OIL)	
		1	**102-8803**	1	KIT-RECEPTACLE (3-PIN)	
					(INCLUDES RECEPTACLE AS AND WEDGE)	
		1	**3E-3371**	1	WEDGE-RECEPTACLE LOCK (3-PIN)	
		1	**186-3735**	3	PIN-CONNECTOR (16-GA TO 18-GA)	
E		1	**9X-1813**		SLEEVE (30-CM)	
	2	2	**4E-0289**	1	ELBOW	
Y	3	1	**6E-3078**	1	VALVE GP-SELECTOR & PRESS CONT (SECONDARY STEERING)	653
	4	1	**6P-9592**	1	SPACER (0.438X1X0.72-IN THK)	
	5	1	**9X-6772**	1	STRAP-CABLE	
I	6	1	**116-3801**	1	HOSE AS	
	7	2	**142-3331**	1	BRACKET AS	
I	8	1	**152-9074**	1	HOSE AS	
	9	1	*168-1968*	1	TEE AS	
		1	**3J-1907**	1	SEAL-O-RING	
		1	**6V-8397**	1	SEAL-O-RING	
		1	**126-6872**	1	TEE	
	10	1	**275-7847**	1	TUBE AS	
Y	11	2	**288-5769**	1	SCREEN GP-HIGH PRESSURE (SECONDARY STEERING PUMP)	588
I	12	2	**288-7138**	1	HOSE AS	
I	13	2	**288-7139**	1	HOSE AS	
	14	1	**290-0107**	1	HARNESS AS-SWITCH (SECONDARY STEERING)	
	15	2	**290-6187**	1	BRACKET AS	
I	16	1	**318-8251**	1	HOSE AS	
	17	1	**130-5300**	1	CLIP	
	18	1	**144-3935**	1	CLIP	
	19	1	*148-8307*	1	ADAPTER AS	
		1	**3J-1907**	1	SEAL-O-RING	
		1	**5P-8874**	1	ADAPTER	
	20	2	*148-8346*	1	ELBOW AS	
		2	**3K-0360**	1	SEAL-O-RING	
		2	**6V-8398**	1	SEAL-O-RING	
		2	**8T-1686**	1	ELBOW	
	21	1	*148-8365*	2	ELBOW AS	
					(EACH INCLUDES)	
		1	**3J-1907**	1	SEAL-O-RING	
		1	**6V-8398**	1	SEAL-O-RING	
		1	**8T-6876**	1	ELBOW	
	22	1	*148-8426*	1	TEE AS	
		1	**3K-0360**	1	SEAL-O-RING	
		1	**6V-8397**	1	SEAL-O-RING	
		1	**6V-8398**	1	SEAL-O-RING	
		1	**8T-6696**	1	TEE-O-RING	
	23	1	*148-8449*	1	TEE AS-SWIVEL	
		1	**6V-9746**	2	SEAL-O-RING	
		1	**6V-9839**	1	TEE-SWIVEL	
	24	2	*153-6241*	1	ELBOW AS	
		2	**6V-8398**	1	SEAL-O-RING	
		2	**8C-8989**	1	ELBOW	
	25	1	*155-3502*	1	ADAPTER AS	
		1	**3E-7403**	1	ADAPTER	
		1	**6V-8398**	1	SEAL-O-RING	

288-7135 **LINES GP-SECONDARY STEERING** *(contd.)* **i02946660**

NOTE	REF NO	GRAPHIC REF	PART NUMBER	QTY	PART NAME 1 2 3 4 5 6 (PRODUCT LEVEL)	SEE PAGE
	26	1,2	**1P-3704**	2	SEAL-RECTANGULAR	
	27	1,2	**1P-4579**	4	FLANGE-HALF	
	28	1,2	**1P-5767**	4	FLANGE-HALF	
	29	1	**1S-0994**	1	CLIP	
	30	1	**3K-0360**	1	SEAL-O-RING	
	31	1	**4D-8123**	1	CLIP	
	32	2	**4J-0519**	1	SEAL-O-RING	
	33	1,2	**4J-0520**	2	SEAL-O-RING	
	34	1,2	**4J-0524**	2	SEAL-O-RING	
	35	1	**5P-4295**	4	CLIP	
	36	1,2	**5P-7468**	2	CLIP (SLOT)	
	37	1,2	**5P-7469**	2	CLIP (TAB)	
	38	1,2	**5P-8444**	2	GROMMET	
	39	1	**6V-1889**	1	CLIP	
	40	2	**7X-7729**	1	WASHER (11X25X3-MM THK)	
	41	1,2	**8C-3206**	4	FLANGE-HALF	
	42	1	**8S-0023**	2	CLIP (SLOT)	
	43	1	**8S-0024**	2	CLIP (TAB)	
	44	1,2	**8T-4121**	12	WASHER-HARD (11X21X2.5-MM THK)	
M	45	1	**8T-4133**	1	NUT (M10X1.5-THD)	
M	46	2	**8T-4172**	2	BOLT (M10X1.5X80-MM)	
M	47	1,2	**8T-4184**	8	BOLT (M12X1.75X45-MM)	
M	48	1	**8T-4186**	1	BOLT (M10X1.5X40-MM)	
M	49	1,2	**8T-4194**	13	BOLT (M12X1.75X50-MM)	
M	50	2	**8T-4195**	1	BOLT (M10X1.5X30-MM)	
M	51	1,2	**8T-4196**	10	BOLT (M10X1.5X35-MM)	
	52	1,2	**8T-4223**	30	WASHER-HARD (13.5X25.5X3-MM THK)	
M	53	1	**8T-4244**	4	NUT (M12X1.75-THD)	
M	54	1	**8T-4956**	6	BOLT (M12X1.75X35-MM)	
M	55	1	**8T-6466**	2	BOLT (M10X1.5X60-MM)	
	56	2	**9X-2027**	4	WASHER (11X18X2-MM THK)	

E-ORDER BY THE CENTIMETER
I-REFER TO HYDRAULIC INFORMATION SYSTEM
M-METRIC PART
Y-SEPARATE ILLUSTRATION

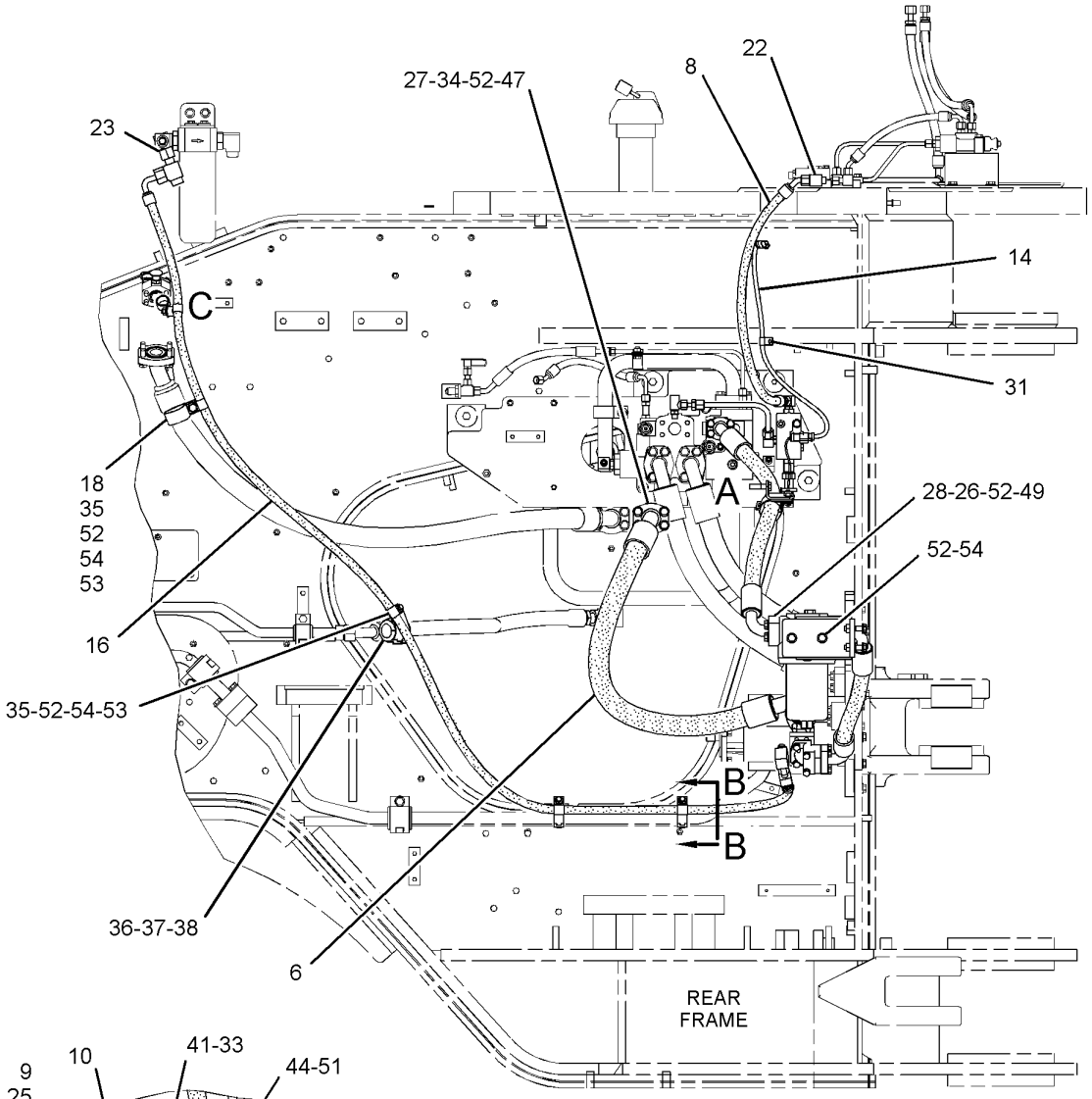

RIGHT SIDE VIEW

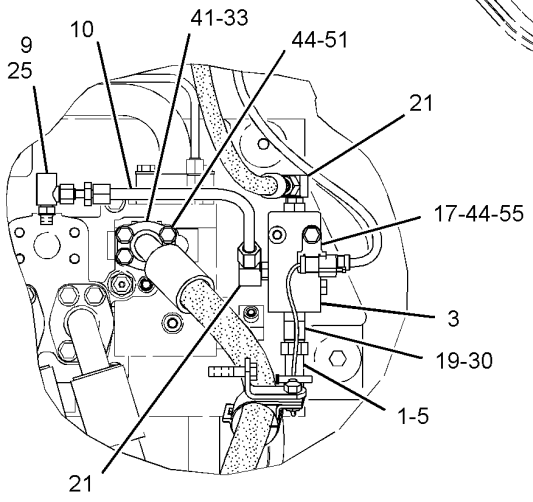

VIEW OF AREA A

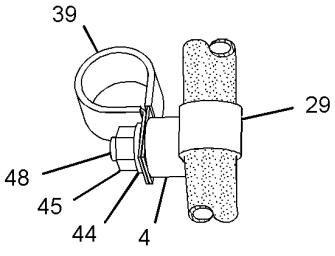

VIEW OF AREA C

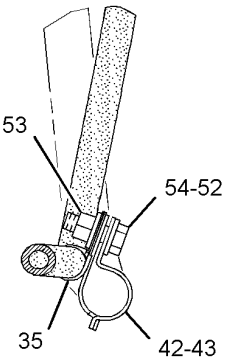

SECTION B-B

GRAPHIC #1

g01453997

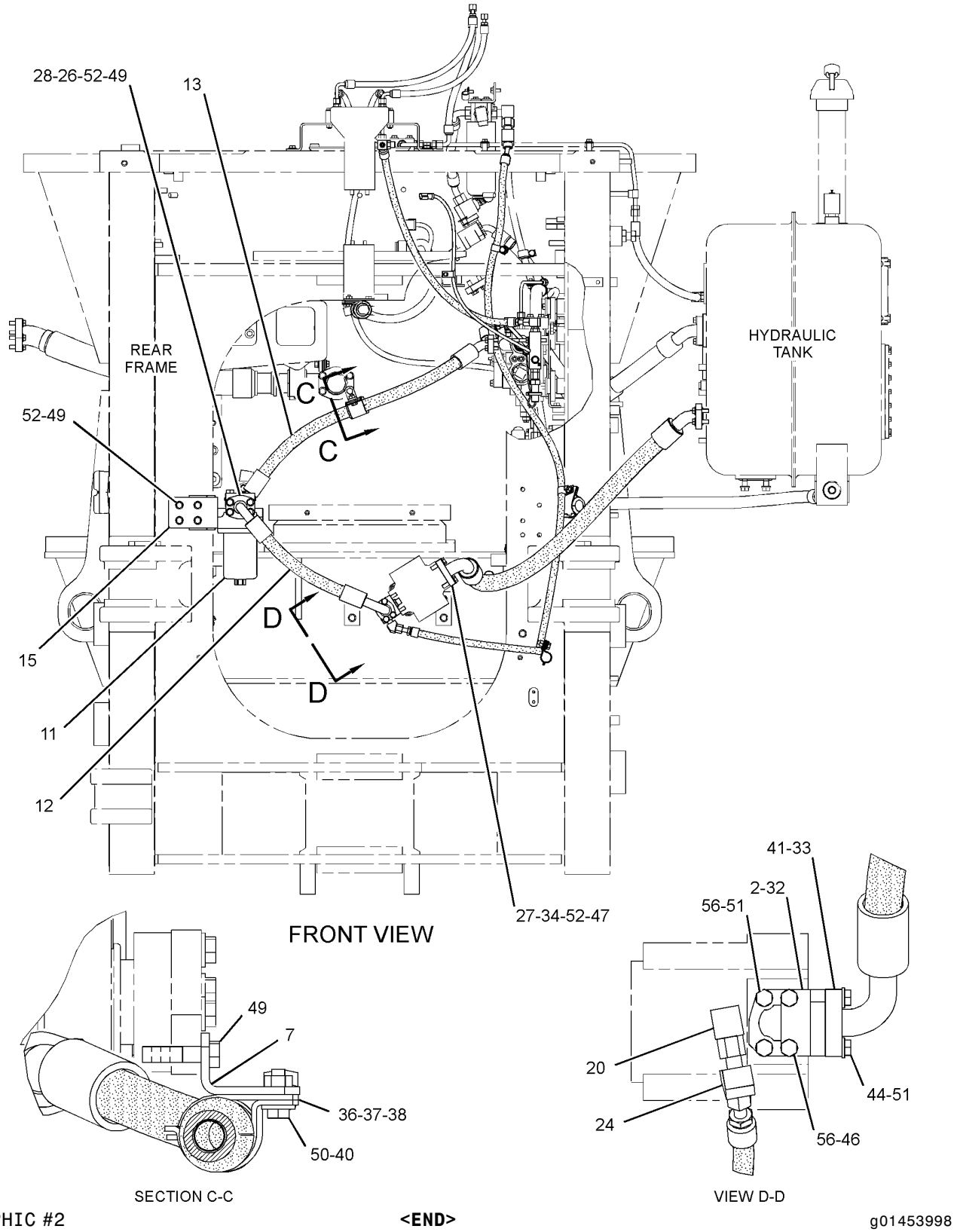

GRAPHIC #2 **<END>** g01453998

STEERING SYSTEM

268-8190 LINES GP-STEERING—STANDARD FILTRATION

S/N: 2211-UP
PART OF 283-2520 HYDRAULIC AR
AN ATTACHMENT

SMCS-4304 **i02902135**

NOTE	REF NO	GRAPHIC REF	PART NUMBER	QTY	PART NAME 1 2 3 4 5 6 (PRODUCT LEVEL)	SEE PAGE
	1	1	**8X-9391**	1	BRACKET AS	
I	2	1	**288-7136**	1	HOSE AS	
M	3	1	**099-0169**	4	BOLT (M16X2X55-MM)	
	4	1	**1P-3704**	1	SEAL-RECTANGULAR	
	5	1	**1P-3705**	1	SEAL-RECTANGULAR	
	6	1	**1P-5767**	2	FLANGE-HALF	
	7	1	**5P-8077**	2	FLANGE-HALF	
	8	1	**6V-1572**	1	CLIP (SLOT)	
	9	1	**6V-1573**	1	CLIP (TAB)	
	10	1	**6V-1875**	1	GROMMET	
	11	1	**8T-4121**	1	WASHER-HARD (11X21X2.5-MM THK)	
M	12	1	**8T-4194**	4	BOLT (M12X1.75X50-MM)	
M	13	1	**8T-4196**	1	BOLT (M10X1.5X35-MM)	
	14	1	**8T-4223**	4	WASHER-HARD (13.5X25.5X3-MM THK)	
	15	1	**9X-8257**	4	WASHER (17.5X30X3.5-MM THK)	

I-REFER TO HYDRAULIC INFORMATION SYSTEM
M-METRIC PART

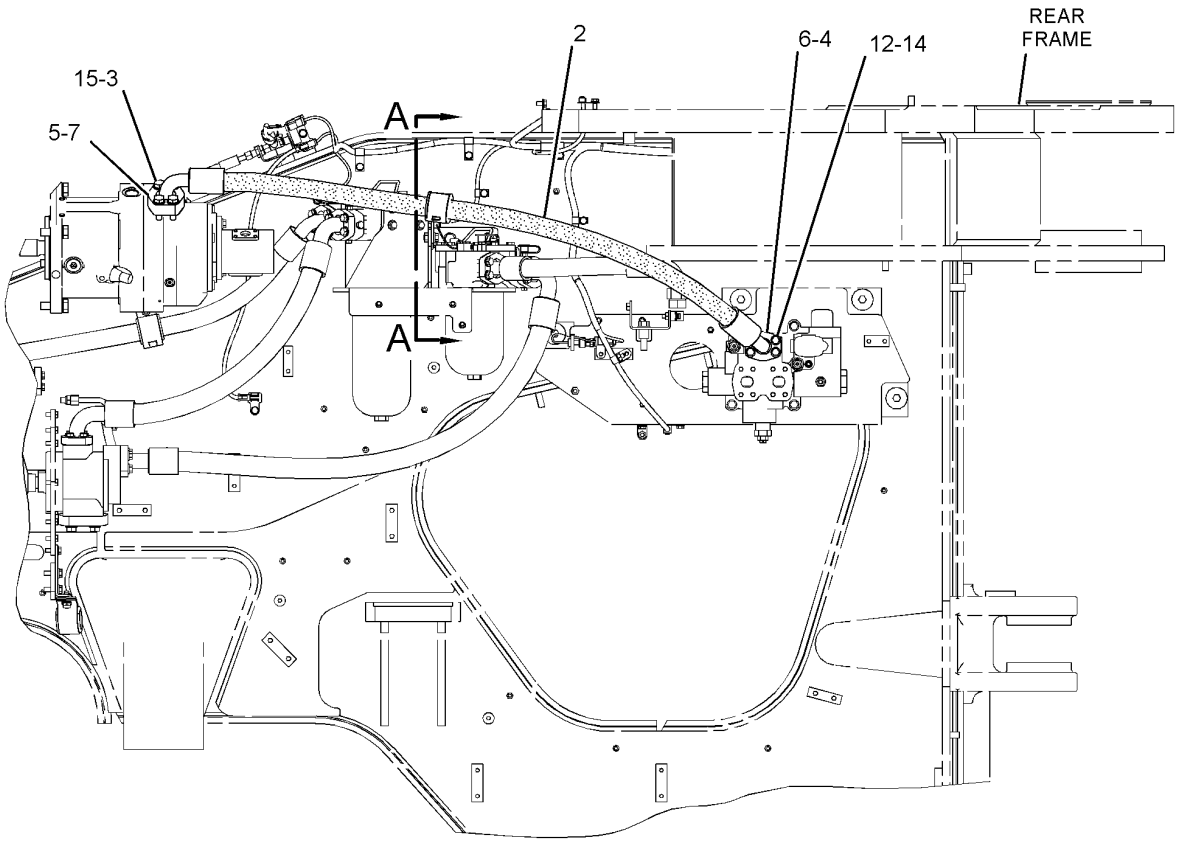

RIGHT SIDE VIEW

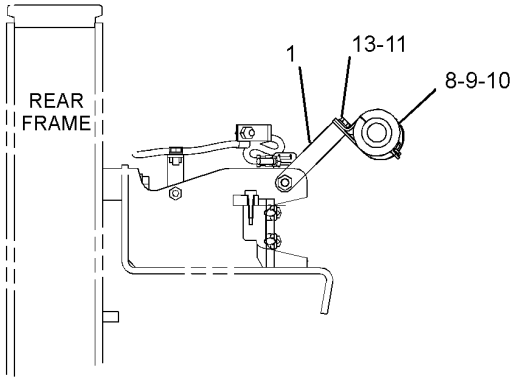

SECTION A-A

GRAPHIC #1 **<END>** g01447996

STEERING SYSTEM

273-7130 LINES GP-STEERING

S/N: 2211-UP

PART OF 279-9400 HYDRAULIC AR

SMCS-4304 **i02926829**

NOTE	REF NO	GRAPHIC REF	PART NUMBER	QTY	PART NAME 1 2 3 4 5 6 (PRODUCT LEVEL)	SEE PAGE
	1	2	**5V-7095**	1	BRACKET	
	2	1,2	**6V-0852**	4	CAP-DUST	
	3	2	**7K-1402**	1	BRACKET	
	4	2	**8C-8431**	1	TEE	
	5	1	**8F-0492**	8	SPACER (0.531X1.125X0.625-IN THK)	
Y	6	2	**9T-3096**	1	VALVE GP-CHECK (STEERING PILOT)	636
	7	1	**115-4696**	1	MANIFOLD	
I	8	2	**116-3802**	1	HOSE AS	
	9	2	**116-4084**	1	TUBE AS	
	10	2	**132-2453**	1	UNION	
I	11	2	**142-8165**	1	HOSE AS	
	12	2	*162-5709*	1	TEE AS	
		2	**6V-9746**	1	SEAL-O-RING	
		2	**109-6511**	1	TEE-O-RING	
		2	**7M-8485**	1	SEAL-O-RING	
	13	1,2	*164-5567*	4	COUPLER AS-QUICK DISCONNECT (EACH INCLUDES)	
		1,2	**3J-1907**	1	SEAL-O-RING	
		1,2	**6V-3965**	1	COUPLER-QUICK DISCONNECT	
Y	14	2	**166-4647**	1	FILTER GP-OIL (STEERING PUMP CASE DRAIN)	600
	15	2	**168-6355**	1	BRACKET	
	16	2	*241-6151*	1	TEE AS	
		2	**6V-9746**	2	SEAL-O-RING	
		2	**7M-8485**	1	SEAL-O-RING	
		2	**102-1384**	1	TEE-FACE SEAL	
I	17	2	**273-6296**	1	HOSE AS	
I	18	2	**288-7141**	1	HOSE AS	
I	19	2	**288-7142**	1	HOSE AS	
	20	1	**290-6192**	4	SUPPORT AS	
	21	1	**290-6193**	2	TUBE AS	
I	22	1	**290-6194**	1	HOSE AS	
I	23	1	**290-6195**	1	HOSE AS	
I	24	1	**290-6196**	1	HOSE AS	
I	25	1	**290-6197**	1	HOSE AS	
I	26	2	**290-6198**	2	HOSE AS	
	27	1	**307-6306**	1	TUBE AS	
I	28	2	**312-2932**	1	HOSE AS	
I	29	2	**312-2933**	1	HOSE AS	
	30	2	**312-2935**	1	HOSE AS	
	31	2	**312-2937**	1	BRACKET AS	
	32	2	**314-2843**	1	TUBE AS	
I	33	2	**314-7616**	1	HOSE AS	
	34	1	*148-8327*	1	CONNECTOR AS	
		1	**3D-2824**	1	SEAL-O-RING	
		1	**6V-8637**	1	CONNECTOR	
		1	**6V-9746**	1	SEAL-O-RING	
	35	2	*148-8360*	1	ELBOW AS	
		2	**6V-9182**	1	ELBOW	
		2	**6V-9746**	1	SEAL-O-RING	
		2	**7M-8485**	1	SEAL-O-RING	
	36	2	*153-6246*	1	TEE AS	
		2	**6V-8397**	3	SEAL-O-RING	
		2	**7X-0820**	1	TEE-UNION	
	37	2	*172-9287*	1	CONNECTOR AS	
		2	**3J-1907**	1	SEAL-O-RING	
		2	**6V-8397**	1	SEAL-O-RING	

STEERING SYSTEM

273-7130 **LINES GP-STEERING** *(contd.)* **i02926829**

NOTE	REF NO	GRAPHIC REF	PART NUMBER	QTY	PART NAME 1 2 3 4 5 6 (PRODUCT LEVEL)	SEE PAGE
		2	**7E-9898**	1	CONNECTOR	
	38	2	**214-7568**	2	SEAL-O-RING	
	39	2	**222-9151**	4	WASHER-HARD (11X32X5-MM THK)	
	40	2	**228-7089**	2	SEAL-O-RING	
	41	1	**1H-8128**	1	SEAL-O-RING	
	42	1	**1P-3703**	2	SEAL-RECTANGULAR	
	43	1,2	**1P-3704**	16	SEAL-RECTANGULAR	
	44	2	**1P-3705**	1	SEAL-RECTANGULAR	
	45	2	**1P-4579**	4	FLANGE-HALF	
	46	1,2	**1P-5767**	28	FLANGE-HALF	
	47	1	**1P-7016**	2	FLANGE-HALF	
	48	2	**1P-7017**	2	FLANGE-HALF	
	49	2	**1S-0994**	1	CLIP	
	50	2	**1W-5040**	1	WASHER-RETAINING (13.8X45.5X12-MM THK)	
	51	2	**2L-2685**	1	CLIP	
	52	2	**3J-1907**	2	SEAL-O-RING	
	53	1,2	**3P-2404**	2	CLIP	
	54	2	**3S-8664**	3	CLIP	
	55	2	**4H-9105**	1	SEAL-O-RING	
	56	2	**4J-0524**	2	SEAL-O-RING	
	57	1	**5P-1076**	6	WASHER-HARD (13.5X30X4-MM THK)	
	58	1	**5P-7468**	4	CLIP (SLOT)	
	59	1	**5P-7469**	4	CLIP (TAB)	
	60	1	**5P-8444**	2	GROMMET	
	61	1	**6V-0400**	4	FLANGE-HALF	
	62	1	**6V-1572**	2	CLIP (SLOT)	
	63	1	**6V-1573**	2	CLIP (TAB)	
	64	1	**6V-1875**	2	GROMMET	
	65	2	**6V-1889**	2	CLIP	
	66	2	**6V-8397**	2	SEAL-O-RING	
	67	2	**6V-8636**	1	CONNECTOR	
	68	2	**6V-9168**	1	NUT (11/16-16-THD)	
	69	2	**7K-1401**	1	CLIP	
	70	2	**7X-7729**	2	WASHER (11X25X3-MM THK)	
	71	2	**8H-1603**	1	CLIP	
	72	1,2	**8T-4121**	14	WASHER-HARD (11X21X2.5-MM THK)	
M	73	1,2	**8T-4133**	5	NUT (M10X1.5-THD)	
M	74	2	**8T-4136**	9	BOLT (M10X1.5X25-MM)	
M	75	2	**8T-4137**	3	BOLT (M10X1.5X20-MM)	
M	76	2	**8T-4139**	1	BOLT (M12X1.75X30-MM)	
M	77	1	**8T-4140**	8	BOLT (M16X2X60-MM)	
M	78	1,2	**8T-4184**	16	BOLT (M12X1.75X45-MM)	
M	79	1	**8T-4186**	2	BOLT (M10X1.5X40-MM)	
M	80	2	**8T-4193**	4	BOLT (M16X2X50-MM)	
M	81	1,2	**8T-4194**	64	BOLT (M12X1.75X50-MM)	
M	82	2	**8T-4196**	1	BOLT (M10X1.5X35-MM)	
	83	1,2	**8T-4223**	92	WASHER-HARD (13.5X25.5X3-MM THK)	
M	84	1	**8T-4244**	1	NUT (M12X1.75-THD)	
M	85	1	**8T-4648**	8	BOLT (M12X1.75X70-MM)	
M	86	1,2	**8T-4910**	6	BOLT (M12X1.75X60-MM)	
M	87	1,2	**8T-4956**	2	BOLT (M12X1.75X35-MM)	
	88	1	**8T-7087**	2	GROMMET	
	89	1	**8T-7529**	1	CLIP	
	90	1	**9M-2092**	1	SEAL-O-RING	
	91	2	**9X-2297**	1	CONNECTOR	
	92	1,2	**9X-8257**	14	WASHER (17.5X30X3.5-MM THK)	

I-REFER TO HYDRAULIC INFORMATION SYSTEM
M-METRIC PART
Y-SEPARATE ILLUSTRATION

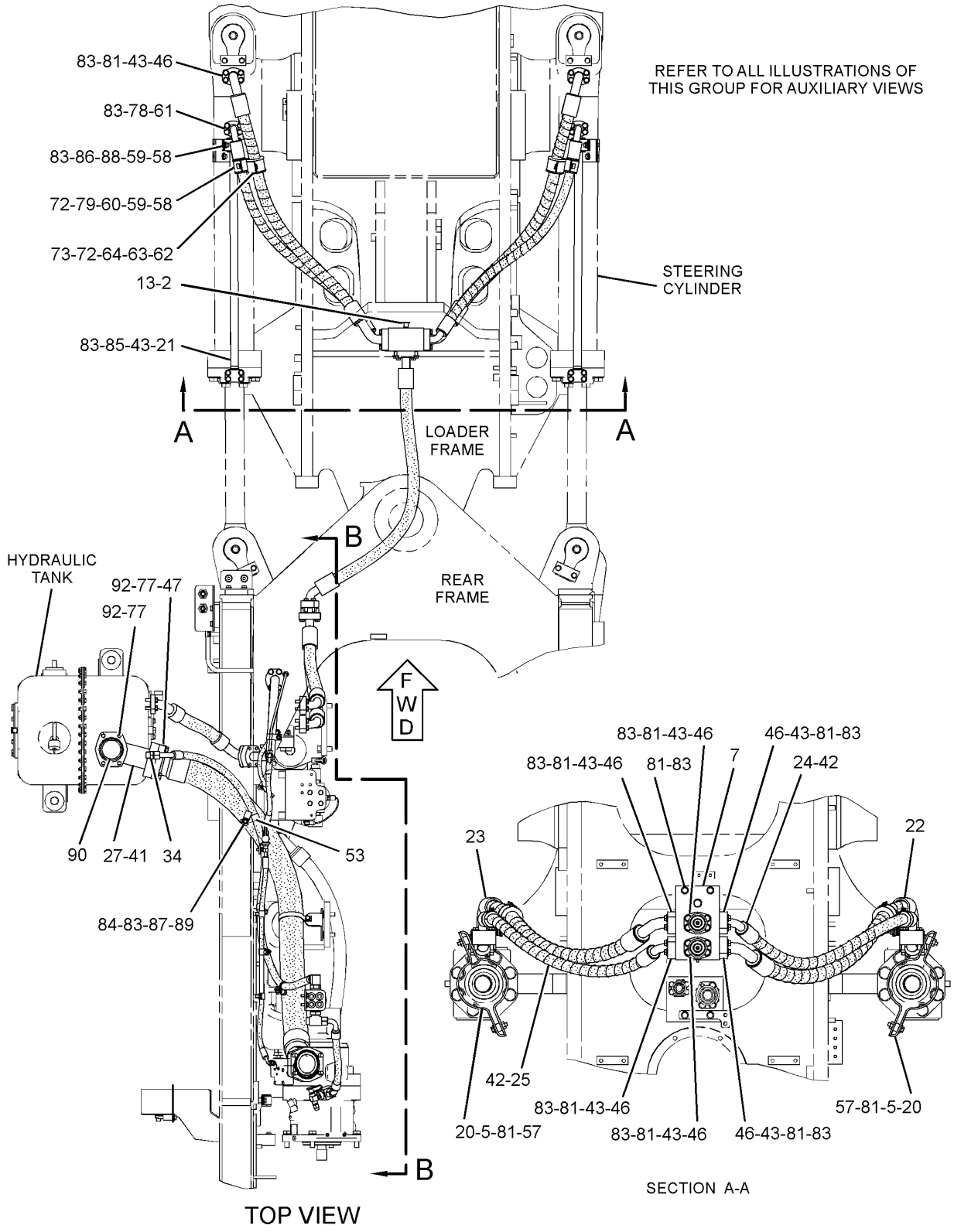

GRAPHIC #1 g01448554

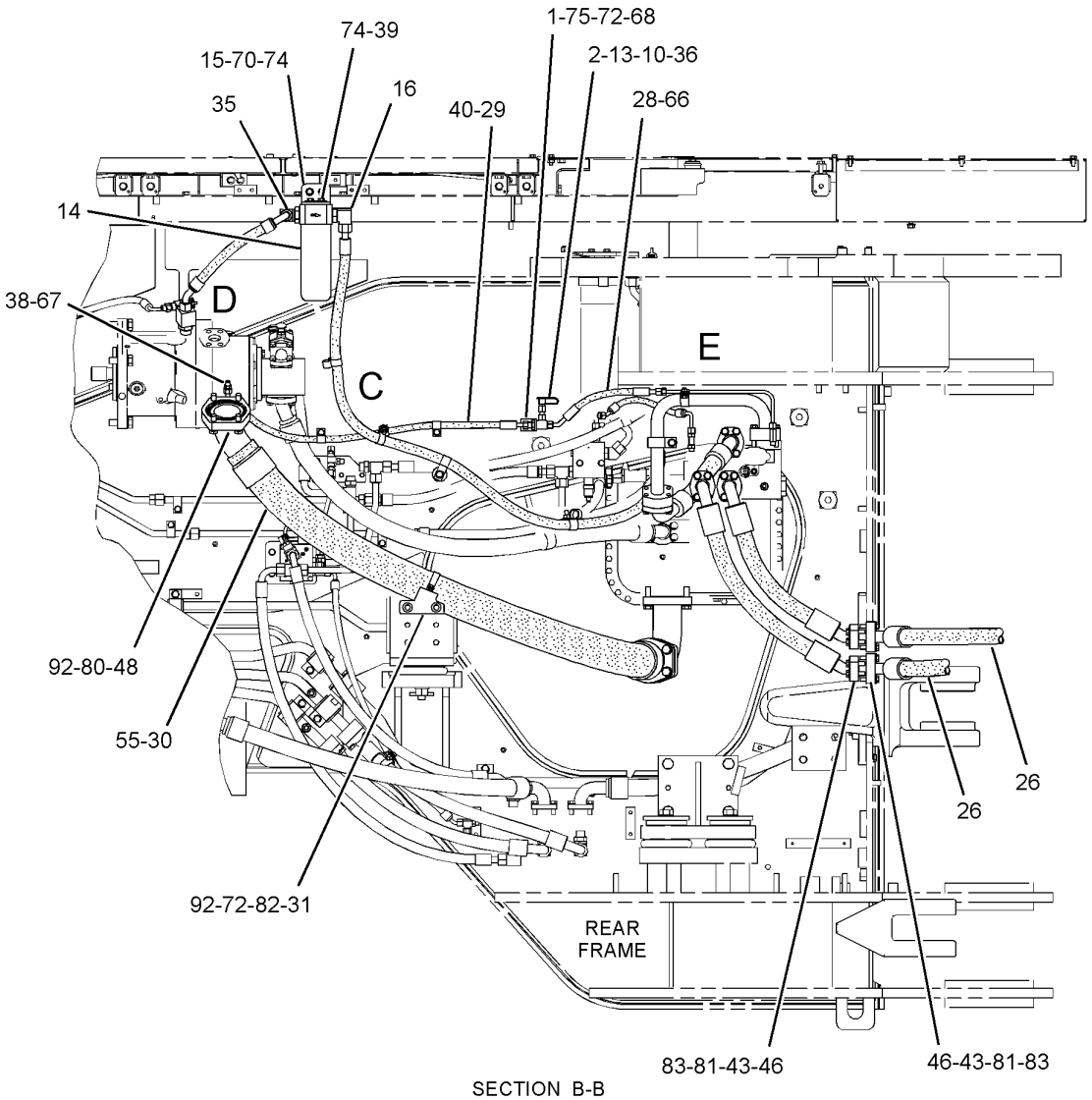

SECTION B-B

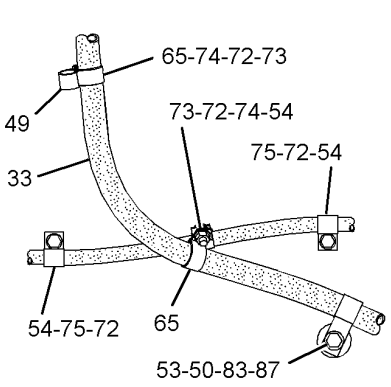

VIEW OF AREA C

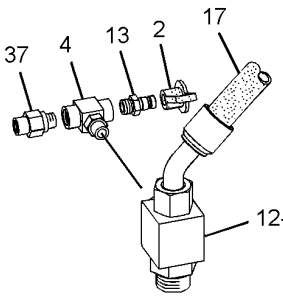

VIEW OF AREA D
(EXPLODED)

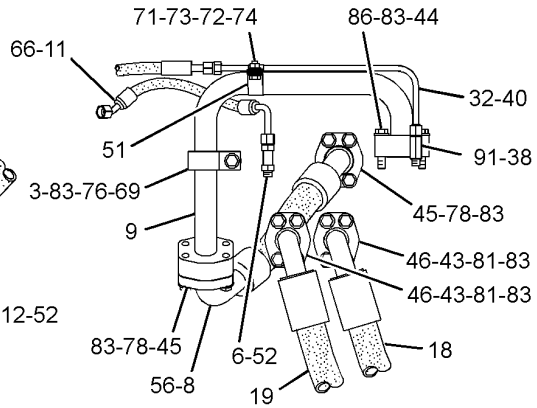

VIEW OF AREA E

GRAPHIC #2

<END>

g01448555

283-2524 LINES GP-STEERING–

STEERING PUMP HIGH PRESSURE SCREEN, DELUXE FILTRATION

S/N: 2211-UP

PART OF 283-2525 HYDRAULIC AR

AN ATTACHMENT

SMCS-4304 **i02927269**

NOTE	REF NO	GRAPHIC REF	PART NUMBER	QTY	PART NAME 1 2 3 4 5 6 (PRODUCT LEVEL)	SEE PAGE
I	1	1	**288-7137**	1	HOSE AS	
I	2	1	**288-7143**	1	HOSE AS	
	3	1	**290-6188**	1	PLATE	
M	4	1	**099-0169**	4	BOLT (M16X2X55-MM)	
	5	1	*162-0177*	1	PLUG AS	
		1	**3J-1907**	1	SEAL-O-RING	
		1	**9S-8004**	1	PLUG-O-RING	
Y	6	1	**174-4502**	1	SCREEN GP-HIGH PRESSURE (STEERING PUMP)	633
	7	1	**1P-3704**	1	SEAL-RECTANGULAR	
	8	1	**1P-3705**	3	SEAL-RECTANGULAR	
	9	1	**1P-5767**	2	FLANGE-HALF	
	10	1	**5P-1076**	4	WASHER-HARD (13.5X30X4-MM THK)	
	11	1	**5P-8077**	6	FLANGE-HALF	
M	12	1	**8T-4139**	2	BOLT (M12X1.75X30-MM)	
M	13	1	**8T-4140**	8	BOLT (M16X2X60-MM)	
M	14	1	**8T-4183**	2	BOLT (M12X1.75X40-MM)	
M	15	1	**8T-4194**	4	BOLT (M12X1.75X50-MM)	
	16	1	**8T-4223**	4	WASHER-HARD (13.5X25.5X3-MM THK)	
	17	1	**9X-8257**	12	WASHER (17.5X30X3.5-MM THK)	

I-REFER TO HYDRAULIC INFORMATION SYSTEM
M-METRIC PART
Y-SEPARATE ILLUSTRATION

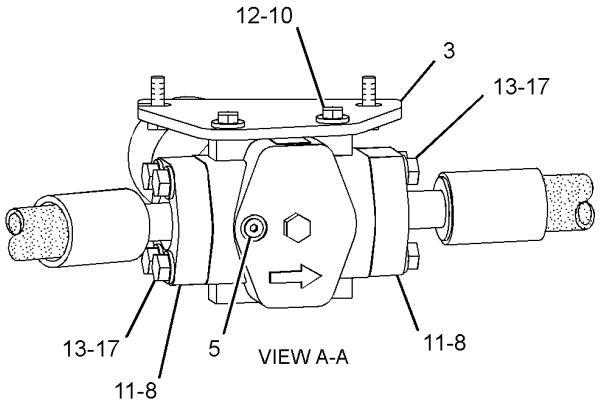

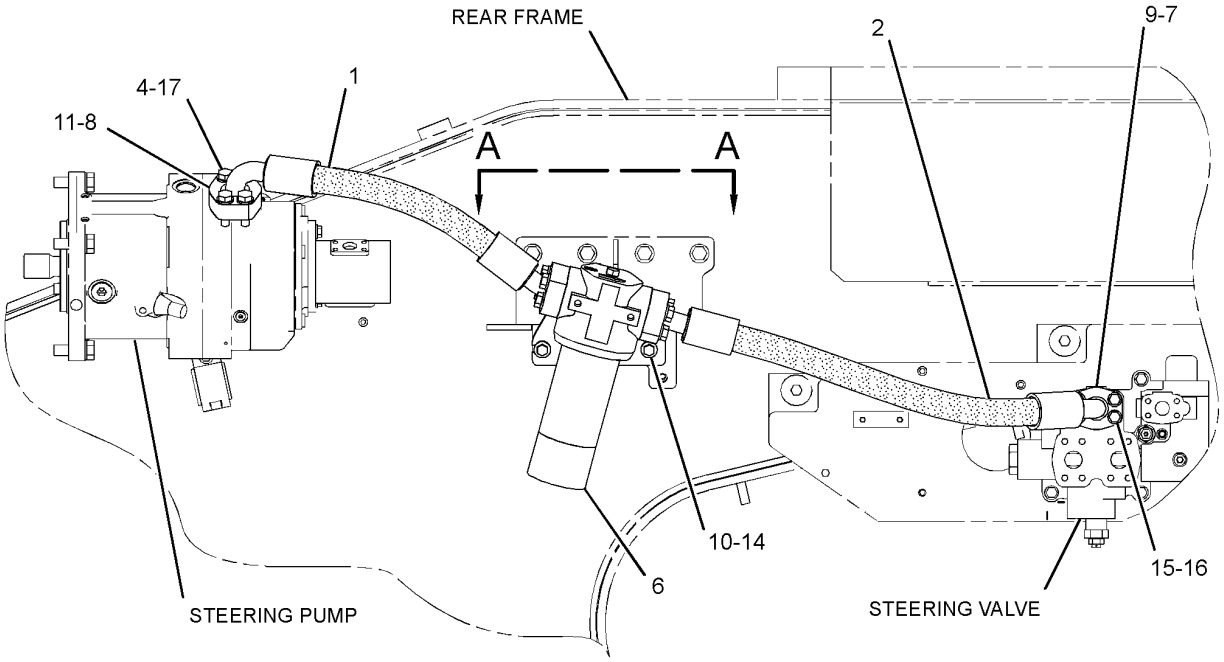

RIGHT SIDE VIEW

GRAPHIC #1 **<END>** g01448543

STEERING SYSTEM

273-7110 LINES GP-STEERING NEUTRALIZER

S/N: 2211-UP

PART OF 279-9400 HYDRAULIC AR

SMCS-4304, 4330 **i02859747**

NOTE	REF NO	GRAPHIC REF	PART NUMBER	QTY	PART NAME 1 2 3 4 5 6 (PRODUCT LEVEL)	SEE PAGE
I	1	2	**8X-9227**	1	HOSE AS	
I	2	2	**9U-4149**	1	HOSE AS	
I	3	1	**103-1739**	1	HOSE AS	
I	4	1	**108-5204**	1	HOSE AS	
	5	2	**116-4797**	1	BRACKET AS	
	6	2	**116-9331**	1	JUNCTION BLOCK	
I	7	2	**116-9333**	1	HOSE AS	
I	8	2	**128-4859**	1	HOSE AS	
	9	2	**128-8678**	1	SPACER (10.5X25X15-MM THK)	
Y	10	2	*133-7104*	1	VALVE GP-CHECK (STEERING QUAD)	638
Y	11	1	*133-7107*	1	STOP GP-STEERING	634
I	12	2	**146-5616**	2	HOSE AS	
Y	13	2	**146-7571**	2	VALVE GP-STEERING NEUTRALIZER (STIC STEERING)	659
	14	1	**271-4249**	1	HOSE AS	
	15	2	**286-1579**	1	TUBE AS	
	16	1	**287-4006**	1	TUBE AS	
	17	2	**287-4007**	1	TUBE AS	
	18	2	**287-8307**	1	TUBE AS	
	19	1,2	*148-8336*	6	CONNECTOR AS	
					(EACH INCLUDES)	
		1,2	**3J-1907**	1	SEAL-O-RING	
		1,2	**6V-8397**	1	SEAL-O-RING	
		1,2	**6V-8636**	1	CONNECTOR	
	20	2	*148-8340*	2	CONNECTOR AS	
					(EACH INCLUDES)	
		2	**3K-0360**	1	SEAL-O-RING	
		2	**6V-8398**	1	SEAL-O-RING	
		2	**6V-8639**	1	CONNECTOR	
	21	1	*148-8364*	1	ELBOW AS	
		1	**3K-0360**	1	SEAL-O-RING	
		1	**6V-8398**	1	SEAL-O-RING	
		1	**6V-8625**	1	ELBOW	
	22	1	*148-8367*	1	ELBOW AS	
		1	**6V-8397**	1	SEAL-O-RING	
		1	**6V-9850**	1	ELBOW	
	23	1,2	*148-8374*	3	ELBOW AS	
					(EACH INCLUDES)	
		1,2	**3K-0360**	1	SEAL-O-RING	
		1,2	**6V-8397**	1	SEAL-O-RING	
		1,2	**6V-8723**	1	ELBOW	
	24	2	*148-8433*	1	TEE AS	
		2	**6V-8397**	2	SEAL-O-RING	
		2	**6V-9836**	1	TEE-SWIVEL	
	25	2	**4M-5942**	1	CLIP	
	26	1	**5K-8451**	1	CLIP	
	27	2	**5P-9297**	1	CLIP	
	28	2	**5P-9299**	3	CLIP	
	29	1,2	**6V-8398**	2	SEAL-O-RING	
	30	2	**7X-3391**	1	WASHER-HARD (13.5X32X6-MM THK)	
	31	2	**7X-7729**	2	WASHER (11X25X3-MM THK)	
	32	1	**8M-2773**	2	CLIP	
	33	1,2	**8T-4121**	10	WASHER-HARD (11X21X2.5-MM THK)	
M	34	1,2	**8T-4137**	5	BOLT (M10X1.5X20-MM)	
M	35	1,2	**8T-4139**	5	BOLT (M12X1.75X30-MM)	
M	36	2	**8T-4183**	1	BOLT (M12X1.75X40-MM)	
M	37	2	**8T-4196**	1	BOLT (M10X1.5X35-MM)	

273-7110 LINES GP-STEERING NEUTRALIZER *(contd.)* i02859747

NOTE	REF NO	GRAPHIC REF	PART NUMBER	QTY	PART NAME 1 2 3 4 5 6 (PRODUCT LEVEL)	SEE PAGE
	38	1,2	**8T-4223**	6	WASHER-HARD (13.5X25.5X3-MM THK)	
	39	2	**8T-4224**	2	WASHER-HARD (8.8X16X2-MM THK)	
M	40	2	**8T-6466**	6	BOLT (M10X1.5X60-MM)	
M	41	2	**8T-6869**	2	BOLT (M8X1.25X60-MM)	

I-REFER TO HYDRAULIC INFORMATION SYSTEM
M-METRIC PART
Y-SEPARATE ILLUSTRATION

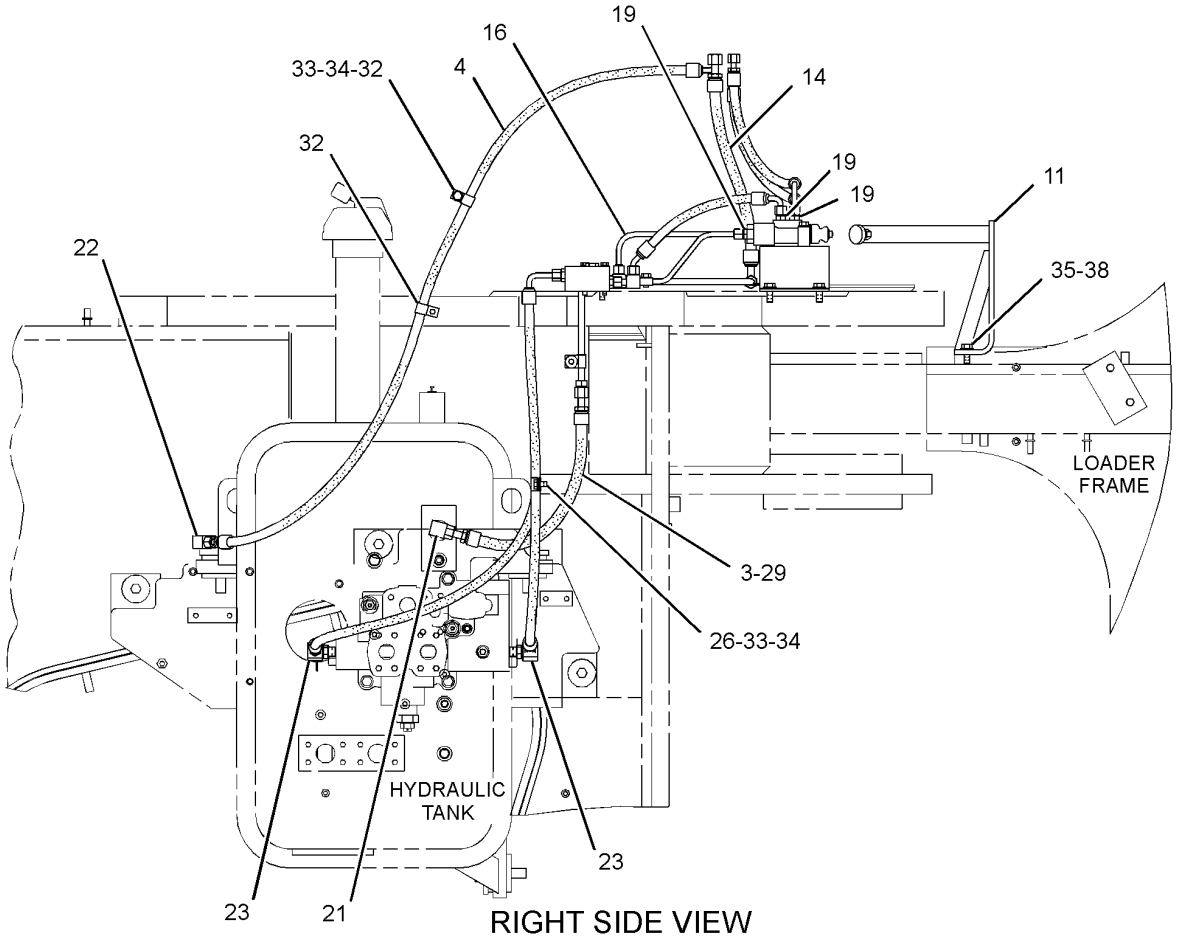

RIGHT SIDE VIEW

GRAPHIC #1 g01427359

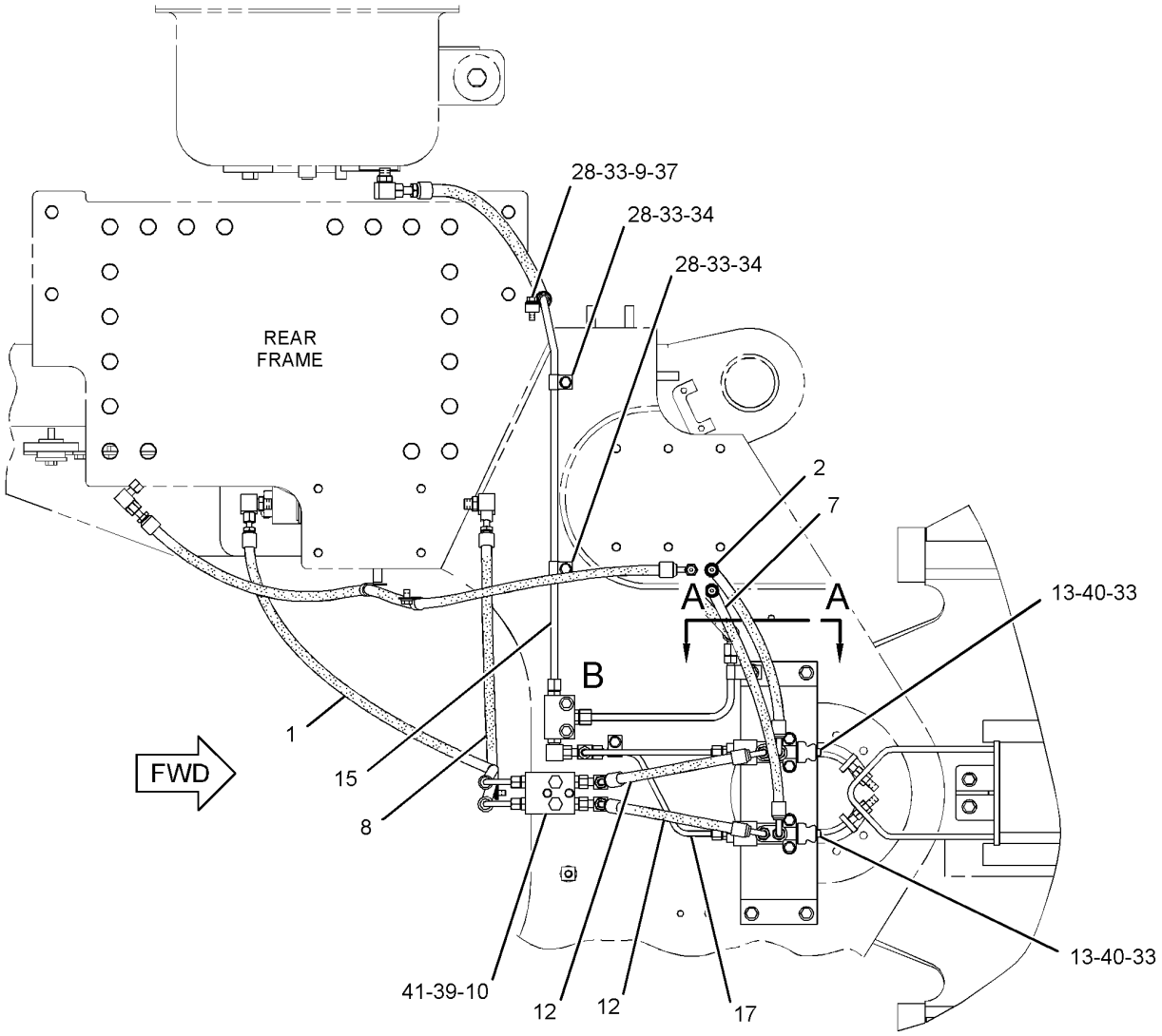

TOP VIEW

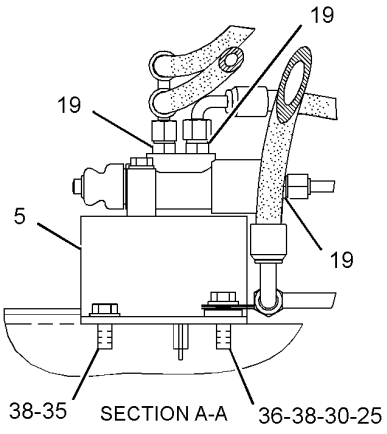

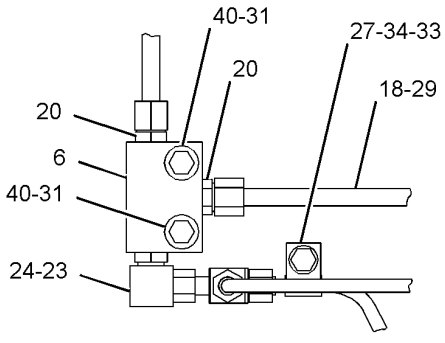

VIEW OF AREA B

GRAPHIC #2 **<END>** g01427369

STEERING SYSTEM

273-7120 LINES GP-STEERING OIL COOLER

S/N: 2211-UP

PART OF 279-9400 HYDRAULIC AR

SMCS-4304, 4346 **i02919517**

NOTE	REF NO	GRAPHIC REF	PART NUMBER	QTY	PART NAME 1 2 3 4 5 6 (PRODUCT LEVEL)	SEE PAGE
	1	1	**6V-0852**	1	CAP-DUST	
	2	1	**8C-3451**	1	CAP-DUST	
I	3	1	**8R-2014**	1	HOSE AS	
	4	1	**8T-6907**	1	VALVE AS-SHUTOFF	
	5	1	**9X-2488**	1	CLAMP-HOSE	
Y	6	1	**115-2129**	1	FILTER GP-OIL (STEERING OIL COOLER, PILOT)	599
I	7	1	**117-6715**	1	HOSE AS	
	8	1	**117-7734**	1	TEE-O-RING	
G	9	1	**9X-2349**	1	HOSE (10-IN)	
	10	1	*153-6261*	1	TEE AS	
		1	**6V-9746**	2	SEAL-O-RING	
		1	**8T-0083**	1	TEE-UNION	
	11	1	*164-5562*	1	CONNECTOR AS	
		1	**3J-1907**	1	SEAL-O-RING	
		1	**5P-1046**	1	CONNECTOR	
	12	1	*164-5567*	1	COUPLER AS-QUICK DISCONNECT	
		1	**3J-1907**	1	SEAL-O-RING	
		1	**6V-3965**	1	COUPLER AS-QUICK DISCONNECT	
Y	13	1	**164-7474**	1	VALVE GP-CHECK (STEERING COOLER FILTER BYPASS)	639
I	14	1	**185-6350**	1	HOSE AS	
Y	15	1	*185-9357*	1	VALVE GP-CHECK (STEERING OIL COOLER BYPASS)	642
I	16	1	**199-6253**	1	HOSE AS	
Y	17	1	**224-5741**	1	VALVE GP-RELIEF (STEERING PILOT)	652
	18	1	*250-1458*	1	TEE AS	
		1	**5K-9090**	1	SEAL-O-RING	
		1	**7M-8485**	1	SEAL-O-RING	
		1	**250-1457**	1	TEE	
	19	1	*260-9143*	1	ELBOW AS	
		1	**6V-9746**	1	SEAL-O-RING	
		1	**109-5825**	1	ELBOW	
	20	1	**288-8825**	1	PLATE	
	21	1	**288-8826**	1	BRACKET	
I	22	1	**288-8829**	1	HOSE AS	
I	23	1	**288-8830**	1	HOSE AS	
	24	1	**288-8833**	1	TUBE AS	
	25	1	**297-9731**	2	TUBE AS	
I	26	1	**311-3669**	1	HOSE AS	
I	27	1	**311-3670**	1	HOSE AS	
	28	1	**311-4935**	2	PLATE AS	
	29	1	**313-2482**	1	TUBE AS	
	30	1	**313-2483**	1	TUBE AS	
	31	1	**315-5866**	1	TUBE AS	
	32	1	**316-5208**	1	TUBE AS	
	33	1	**317-1596**	1	TUBE AS	
	34	1	**317-1600**	1	BRACKET AS	
	35	1	**317-5832**	1	TUBE AS	
	36	1	**133-3260**	2	SPACER (11X19X10-MM THK)	
	37	1	*148-8327*	1	CONNECTOR AS	
		1	**3D-2824**	1	SEAL-O-RING	
		1	**6V-8637**	1	CONNECTOR	
		1	**6V-9746**	1	SEAL-O-RING	
	38	1	*148-8357*	1	ELBOW AS	
		1	**5K-9090**	1	SEAL-O-RING	
		1	**6V-9008**	1	ELBOW	
		1	**7M-8485**	1	SEAL-O-RING	
	39	1	*148-8376*	1	ELBOW AS	

273-7120 LINES GP-STEERING OIL COOLER *(contd.)* i02919517

NOTE	REF NO	GRAPHIC REF	PART NUMBER	QTY	PART NAME 1 2 3 4 5 6 (PRODUCT LEVEL)	SEE PAGE
		1	**6V-8983**	1	ELBOW	
		1	**6V-9746**	2	SEAL-O-RING	
	40	1	*148-8434*	1	TEE AS	
		1	**6V-8397**	2	SEAL-O-RING	
		1	**6V-9843**	1	TEE-SWIVEL	
	41	1	*148-8455*	1	UNION AS	
		1	**6V-8997**	1	UNION	
		1	**6V-9746**	2	SEAL-O-RING	
	42	1	*153-6237*	1	ELBOW AS	
		1	**3D-2824**	1	SEAL-O-RING	
		1	**6V-9004**	1	ELBOW	
		1	**6V-9746**	1	SEAL-O-RING	
	43	1	*164-5574*	1	TEE AS	
		1	**3D-2824**	1	SEAL-O-RING	
		1	**6V-8784**	1	TEE-FACE SEAL	
		1	**6V-9746**	2	SEAL-O-RING	
	44	1	*164-5590*	1	VALVE AS-FLUID SAMPLING	
		1	**3J-7354**	1	SEAL-O-RING	
		1	**8C-3446**	1	VALVE-FLUID SAMPLING	
	45	1	*165-4933*	2	ELBOW AS	
					(EACH INCLUDES)	
		1	**6V-8990**	1	ELBOW	
		1	**6V-9746**	2	SEAL-O-RING	
	46	1	*169-5862*	1	ELBOW AS	
		1	**3J-1907**	1	SEAL-O-RING	
		1	**8C-6712**	1	ELBOW	
	47	1	*235-3584*	1	CONNECTOR AS	
		1	**3D-2824**	1	SEAL-O-RING	
		1	**6V-9746**	1	SEAL-O-RING	
		1	**235-3583**	1	CONNECTOR	
	48	1	**2P-1293**	6	LOCKNUT (1-3/16-12-THD)	
	49	1	**3J-1907**	1	SEAL-O-RING	
	50	1	**4H-7655**	4	CLAMP-TUBE	
	51	1	**4S-1962**	1	CLIP	
	52	1	**5K-9660**	10	CLIP	
	53	1	**5P-9757**	2	SEAL-O-RING	
	54	1	**6V-9746**	6	SEAL-O-RING	
	55	1	**7L-6463**	1	SPACER	
	56	1	**7M-8485**	1	SEAL-O-RING	
	57	1	**8T-4121**	23	WASHER-HARD (11X21X2.5-MM THK)	
M	58	1	**8T-4136**	10	BOLT (M10X1.5X25-MM)	
M	59	1	**8T-4137**	4	BOLT (M10X1.5X20-MM)	
M	60	1	**8T-4139**	3	BOLT (M12X1.75X30-MM)	
M	61	1	**8T-4186**	2	BOLT (M10X1.5X40-MM)	
M	62	1	**8T-4195**	4	BOLT (M10X1.5X30-MM)	
	63	1	**8T-4223**	3	WASHER-HARD (13.5X25.5X3-MM THK)	
M	64	1	**8T-6466**	2	BOLT (M10X1.5X60-MM)	
M	65	1	**8T-6685**	1	BOLT (M10X1.5X110-MM)	

G-ORDER BY THE INCH
I-REFER TO HYDRAULIC INFORMATION SYSTEM
M-METRIC PART
Y-SEPARATE ILLUSTRATION

273-7120 LINES GP-STEERING OIL COOLER *(contd.)* i02919517

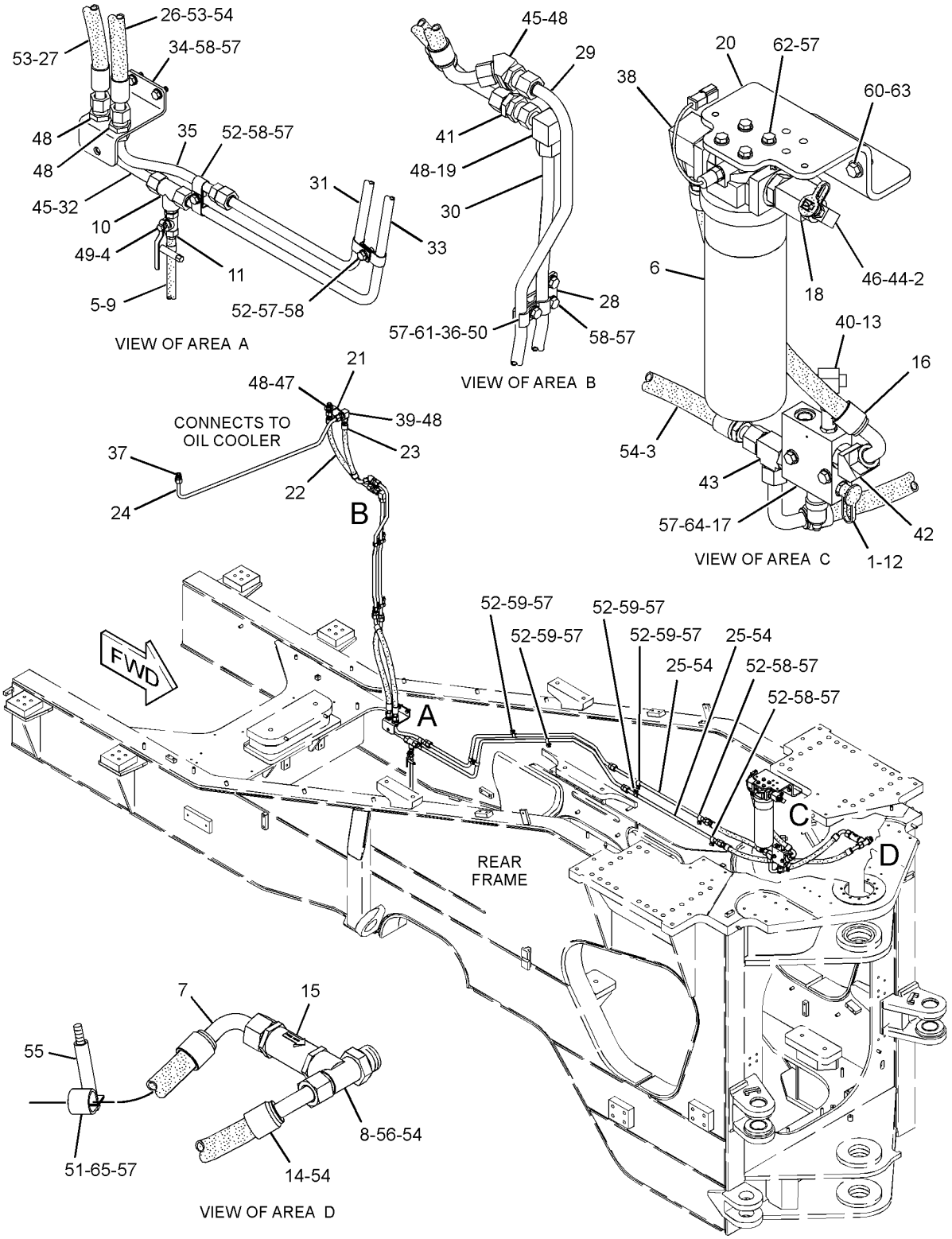

GRAPHIC #1 **<END>** g01437207

194-3286 PLUG GP-CONTROL VALVE–
PRESSURE, FLOW COMPENSATOR
S/N: 2211-UP
PART OF 176-7520 VALVE GP-PUMP CONTROL

SMCS-5086, 5117 **i02774580**

NOTE	REF NO	GRAPHIC REF	PART NUMBER	QTY	PART NAME 1 2 3 4 5 6 (PRODUCT LEVEL)	SEE PAGE
M	1	1	**5C-2873**	1	NUT (M12X1-THD)	
	2	1	**195-3324**	1	CAP	
	3	1	**195-3325**	1	RING	
	4	1	**3E-6761**	1	SEAL-O-RING	
	5	1	**187-8567**	1	SEAL-O-RING	
	6	1	**194-6849**	1	DISC	

M-METRIC PART

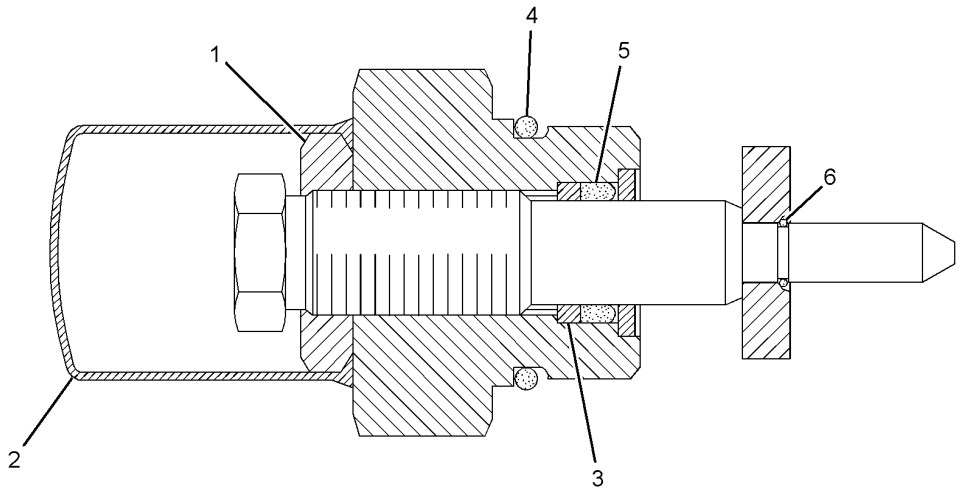

GRAPHIC #1 **<END>** g01388986

STEERING SYSTEM

285-3328 PUMP & MTG GP-SECONDARY STEER

S/N: 2211-UP

PART OF 279-9400 HYDRAULIC AR

SMCS-4324 **i02902998**

NOTE	REF NO	GRAPHIC REF	PART NUMBER	QTY	PART NAME 1 2 3 4 5 6 (PRODUCT LEVEL)	SEE PAGE
Y	1	1	**101-4007**	1	PUMP GP-GEAR (SECONDARY STEERING)	626
	2	1	**2N-7007**	1	GASKET	
	3	1	**7X-0599**	4	WASHER-HARD (13X20X2-MM THK)	
M	4	1	**8T-4244**	4	NUT (M12X1.75-THD)	

M-METRIC PART
Y-SEPARATE ILLUSTRATION

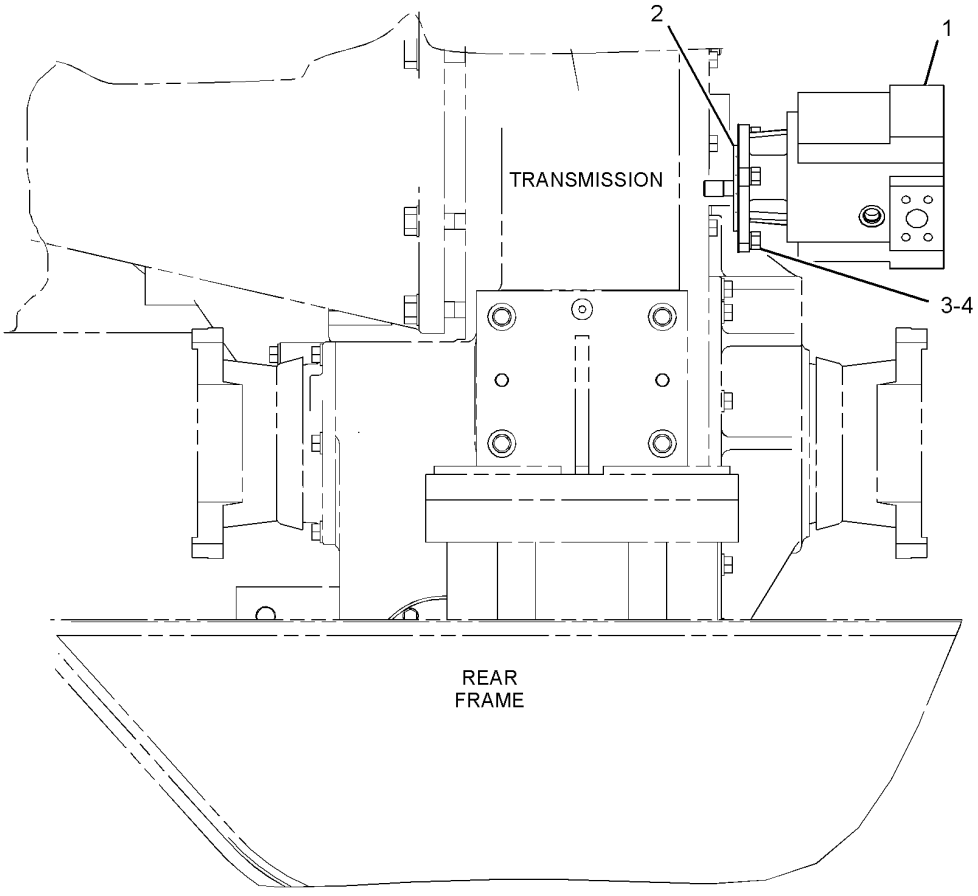

RIGHT SIDE VIEW

GRAPHIC #1

<END>

g01449425

STEERING SYSTEM

280-1708 PUMP & MTG GP-STEERING–
STEERING OIL COOLER, PILOT
S/N: 2211-UP
PART OF 279-9400 HYDRAULIC AR

SMCS-4306 **i02876874**

NOTE	REF NO	GRAPHIC REF	PART NUMBER	QTY	PART NAME 1 2 3 4 5 6 (PRODUCT LEVEL)	SEE PAGE
Y	1	1	**136-3965**	1	PUMP GP-GEAR (STEERING OIL COOLER, PILOT)	628
YR	2	1	**216-4826**	1	PUMP GP-PISTON (STEERING)	629
	3	1	**3K-0715**	1	SEAL-O-RING	
	4	1	**6F-4718**	1	SEAL-O-RING	
M	5	1	**7X-2563**	4	BOLT (M20X2.5X60-MM)	
	6	1	**8T-4123**	4	WASHER (22X35X3.5-MM THK)	
M	7	1	**8T-4139**	2	BOLT (M12X1.75X30-MM)	
	8	1	**8T-4223**	2	WASHER-HARD (13.5X25.5X3-MM THK)	

M-METRIC PART
R-REMFG PART MAY BE AVAILABLE
Y-SEPARATE ILLUSTRATION

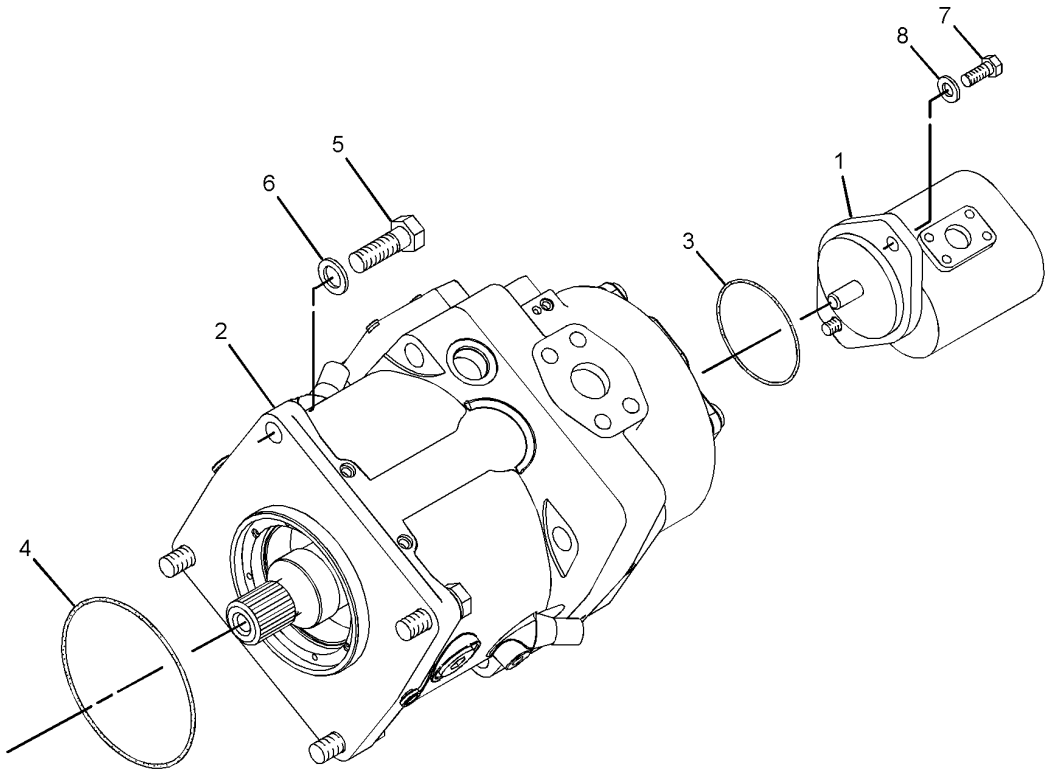

GRAPHIC #1 **<END>** g01435120

STEERING SYSTEM

101-4007 PUMP GP-GEAR–SECONDARY STEERING

S/N: 2211-UP

PART OF 285-3328 PUMP & MTG GP-SECONDARY STEER

SMCS-4268, 4306, 5073 **i00791343**

NOTE	REF NO	GRAPHIC REF	PART NUMBER	QTY	PART NAME 1 2 3 4 5 6 (PRODUCT LEVEL)	SEE PAGE
	1	1	**107-2885**	1	BODY AS	
	2	1	**107-2894**	1	FLANGE AS	
	3	1	**107-2892**	1	SHAFT-DRIVE	
	4	1	**4T-8761**	1	GEAR-IDLER (8 TEETH)	
	5	1	**4T-9298**	4	BUSHING-TERMINAL	
	6	1	**107-2887**	2	PISTON	
	7	1	**107-2886**	1	SPACER	
	8	1	**107-2890**	1	BODY-VALVE	
	9	1	**077-4639**	2	PLATE-ISOLATION	
	10	1	**077-4643**	2	PLATE-ISOLATION	
	11	1	**107-2884**	2	PLATE-ISOLATION	
	12	1	**6J-2386**	2	DOWEL	
	13	1	**107-2889**	2	SPACER	
	14	1	**107-2891**	2	PISTON	
	15	1	**107-2888**	2	SPRING	
	16	1	**107-2893**	2	SPRING	
	17	1	**0S-1595**	8	BOLT (1/2-13X1.25-IN)	
	18	1	**1B-2886**	6	BOLT (1/2-13X3.75-IN)	
	19	1	**5P-7213**	14	WASHER-HARD (13.5X20.5X2-MM THK)	
	20	1	**008-3214**	1	RING-RETAINING (INTERNAL)	
	21	1	**6E-2943**	1	PLUG	
	22	1	**8T-4657**	2	SEAL-LIP TYPE (22.22MM ID)	
					AVAILABLE REPAIR KIT(S):	
			107-2895	1	KIT-SEAL	

101-4007 PUMP GP-GEAR *(contd.)* **i00791343**

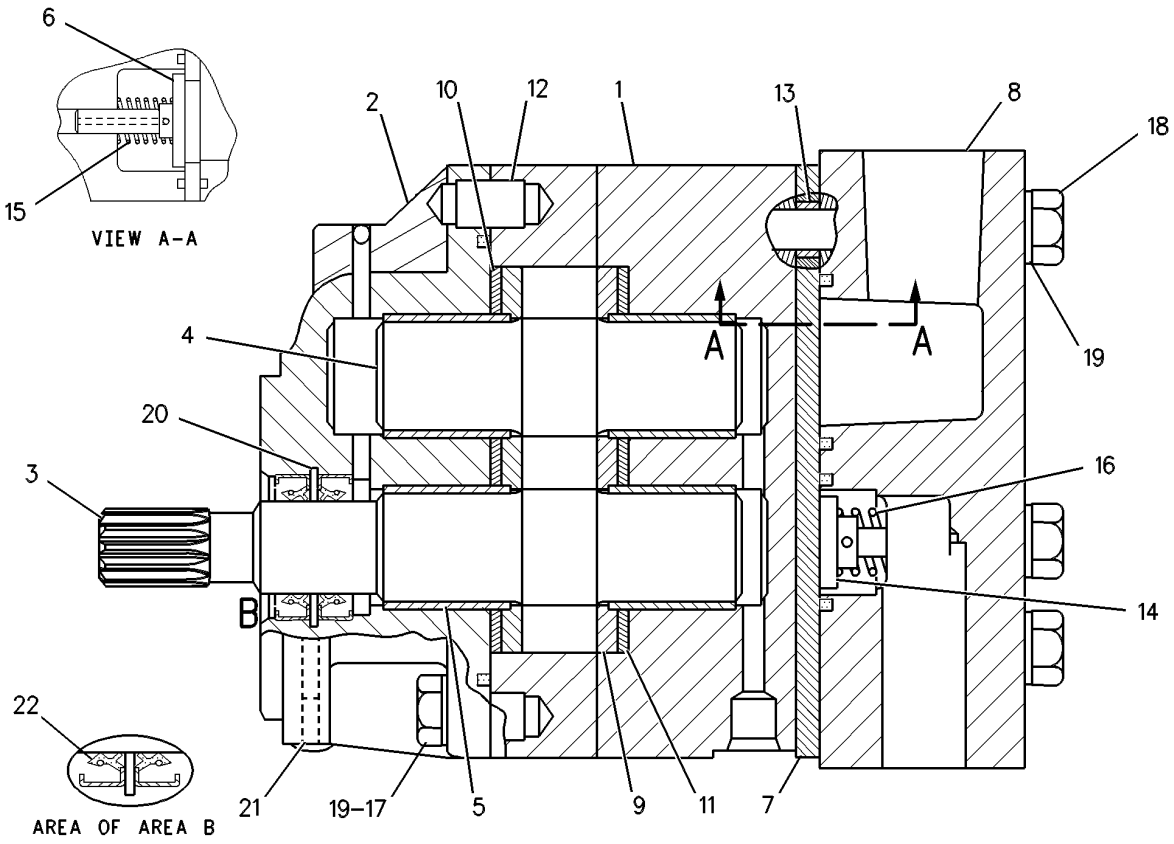

GRAPHIC #1 **<END>** g00368937

STEERING SYSTEM

136-3965 PUMP GP-GEAR–STEERING OIL COOLER, PILOT

S/N: 2211-UP

PART OF 280-1708 PUMP & MTG GP-STEERING

SMCS-4268, 4306, 5073 **i00747471**

NOTE	REF NO	GRAPHIC REF	PART NUMBER	QTY	PART NAME 1 2 3 4 5 6 (PRODUCT LEVEL)	SEE PAGE
	1	1	**135-3490**	1	COVER	
M	2	1	**8T-5412**	4	BOLT (M12X1.75X140-MM)	
	3	1	**135-3489**	1	KIT-SEAL	
	4	1	**109-1641**	1	RING-SNAP	
	5	1	**099-3095**	2	DOWEL	
	6	1	**136-3842**	1	FLANGE	

M-METRIC PART

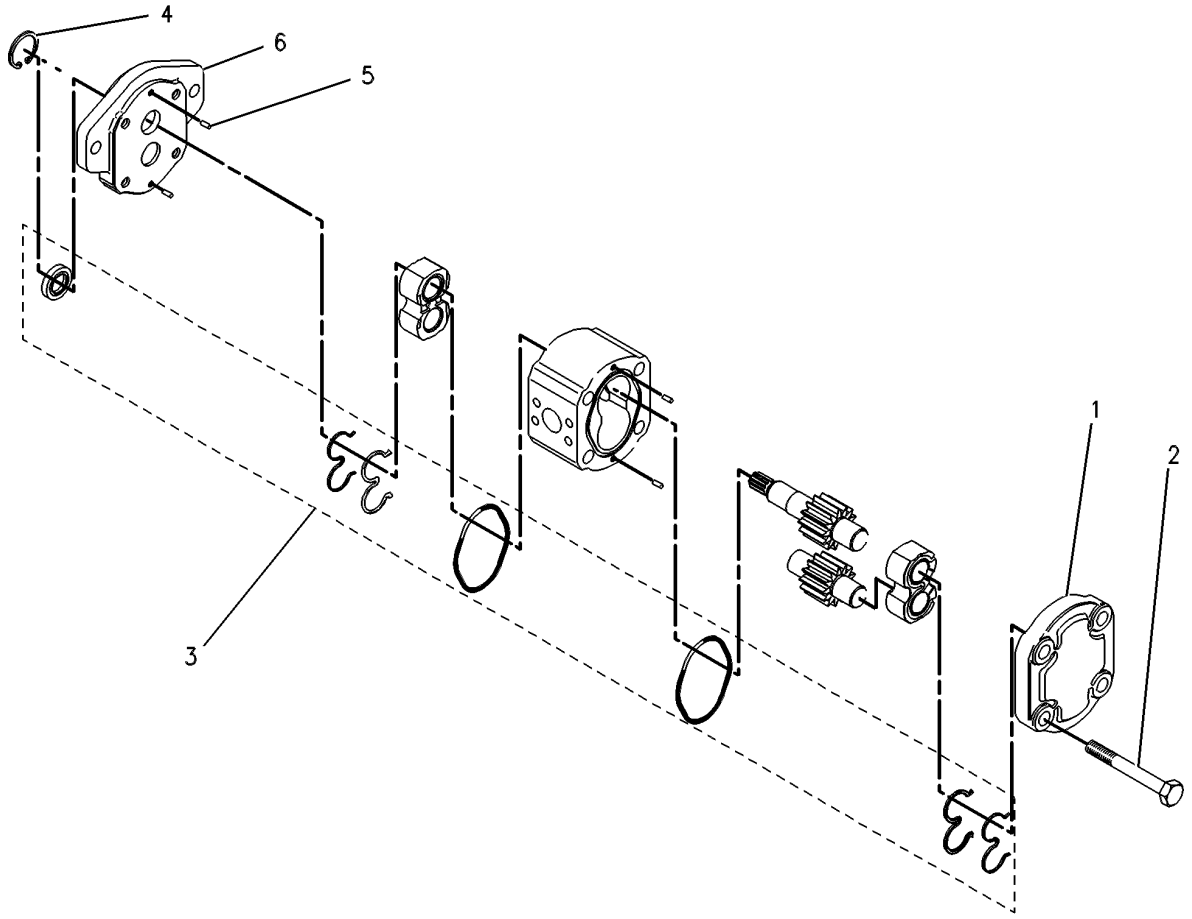

GRAPHIC #1 **<END>** g00263919

216-4826 PUMP GP-PISTON—STEERING*R

S/N: 2211-UP

PART OF 280-1708 PUMP & MTG GP-STEERING

SMCS-4268, 4306, 5070 **i02919628**

NOTE	REF NO	GRAPHIC REF	PART NUMBER	QTY	PART NAME 1 2 3 4 5 6 (PRODUCT LEVEL)	SEE PAGE
	1	1	**170-9900**	2	PIN	
Y	2	1	**164-6938**	1	ROTATING GP-PUMP (STEERING)	631
	3	1	**223-7629**	1	HOUSING	
	4	1	**170-9907**	2	PLUG	
	5	1	**145-3171**	2	LOCKNUT-SEAL	
	6	1	**145-3169**	2	PIN-THREADED	
	7	1	**5H-4909**	1	SEAL-O-RING	
Y	8	1	**6E-1024**	1	VALVE GP-PUMP CONTROL (PRESSURE, FLOW COMPENSATOR) (STEERING)	646
	9	1	**117-5716**	4	PIN	
M	10	1	**9T-3928**	4	PLUG AS	
					(EACH INCLUDES)	
		1	**187-8001**	1	SEAL	
Y	11	1	**164-6939**	1	HEAD GP-PUMP (STEERING)	601
	12	1	**183-3241**	1	FLANGE	
	13	1	**096-8058**	2	RING-RETAINING	
	14	1	**3K-0715**	1	SEAL-O-RING	
	15	1	**112-4630**	2	SCREW (1-5/16-THD)	
	16	1	**7M-8485**	2	SEAL-O-RING	
M	17	1	**177-0359**	4	BOLT-SOCKET HEAD (M22X25X90-MM)	
	18	1	**2H-3935**	1	SEAL-O-RING	
	19	1	**164-6944**	1	IMPELLER	
	20	1	**135-9991**	1	COUPLING	
M	21	1	**8T-4944**	4	BOLT-SOCKET HEAD (M16X2X40-MM)	
	22	1	**099-5845**	3	PLUG	
Y	23	1	**249-4488**	1	ACTUATOR GP-PUMP	595
Y	24	1	**224-2561**	1	ACTUATOR GP-PUMP	594

M-METRIC PART
Y-SEPARATE ILLUSTRATION

216-4826 PUMP GP-PISTON *(contd.)* i02919628

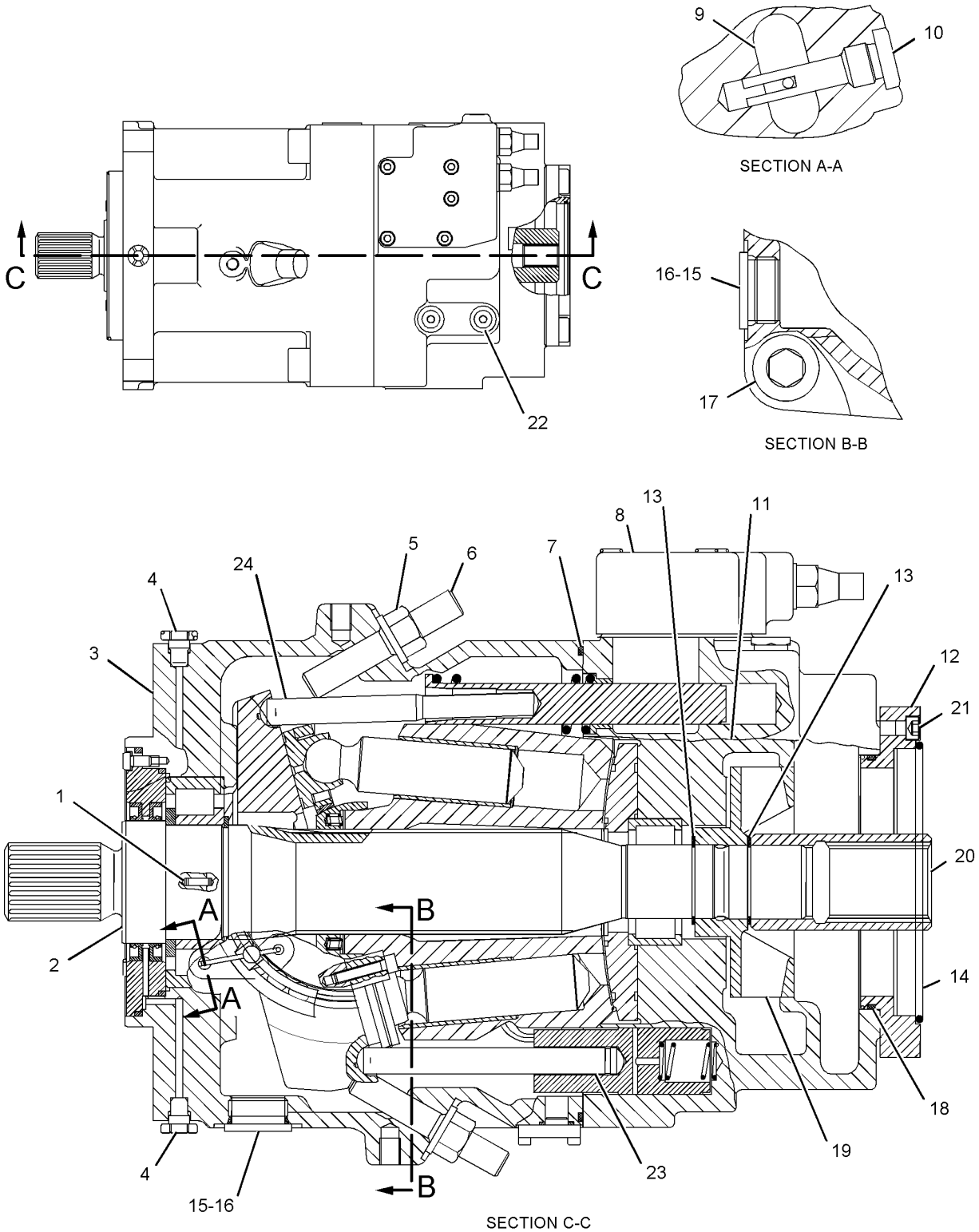

GRAPHIC #1 **<END>** g01060766

STEERING SYSTEM

164-6938 ROTATING GP-PUMP—STEERING

S/N: 2211-UP

PART OF 216-4826 PUMP GP-PISTON

SMCS-5070 **i02614702**

NOTE	REF NO	GRAPHIC REF	PART NUMBER	QTY	PART NAME 1 2 3 4 5 6 (PRODUCT LEVEL)	SEE PAGE
	1	1	**164-6983**	1	SHAFT	
M	2	1	**8U-7051**	4	SCREW (M6X1X12-MM)	
	3	1	**4I-5957**	4	RING	
	4	1	**4I-5956**	1	COVER	
	5	1	**6E-3840**	4	ROD	
	6	1	**145-3773**	4	ROLLER	
	7	1	**191-5592**	1	BEARING AS	
	8	1	**165-9354**	1	SWASHPLATE	
	9	1	**165-9356**	1	BEARING	
	10	1	**165-9357**	2	RETAINER	
M	11	1	**8T-8442**	4	BOLT-SOCKET HEAD (M6X1X30-MM)	
Y	12	1	**164-6987**	1	BARREL GP-PUMP (FAN DRIVE)	596
	13	1	**095-0929**	1	RING-RETAINING	
	14	1	**170-9901**	1	BEARING	
	15	1	**5F-3999**	1	SEAL-O-RING	
	16	1	**5H-3252**	1	SEAL-O-RING	
	17	1	**6E-3337**	2	SEAL-SHAFT	
	18	1	**292-2957**	1	PLATE-VALVE	

M-METRIC PART
Y-SEPARATE ILLUSTRATION

164-6938 ROTATING GP-PUMP *(contd.)* **i02614702**

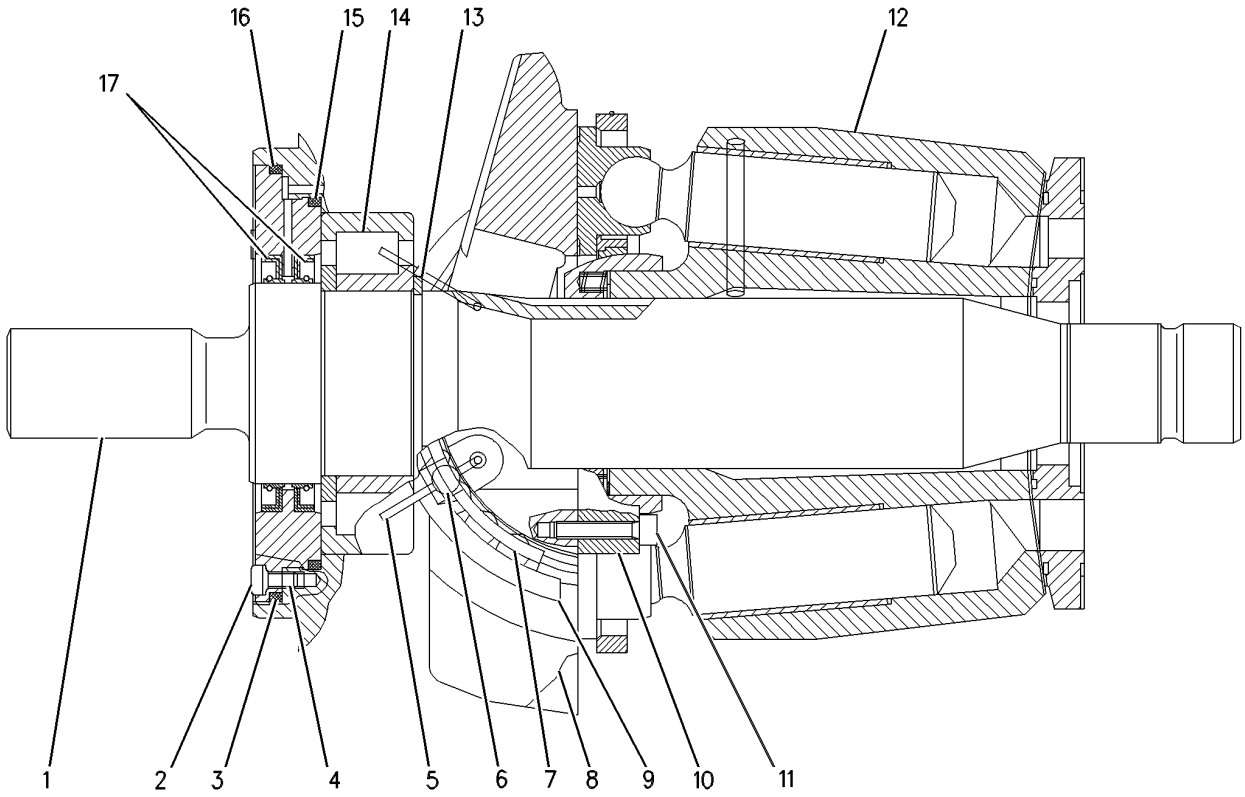

GRAPHIC #1 **<END>** g00553736

STEERING SYSTEM

174-4502 SCREEN GP-HIGH PRESSURE

S/N: 2211-UP

PART OF 288-8850 LINES GP-HYDRAULIC, 283-2524 LINES GP-STEERING AN ATTACHMENT

SMCS-4295, 431F, 5068 **i02946665**

NOTE	REF NO	GRAPHIC REF	PART NUMBER	QTY	PART NAME 1 2 3 4 5 6 (PRODUCT LEVEL)	SEE PAGE
	1	1	**1H-8128**	1	SEAL-O-RING	
	2	1	**197-0018**	1	RING-BACKUP	
	3	1	**104-3895**	1	SCREEN AS-HIGH PRESSURE	
	4	1	**197-0024**	1	HOUSING AS-SCREEN	
	5	1	**197-0027**	1	PLUG	

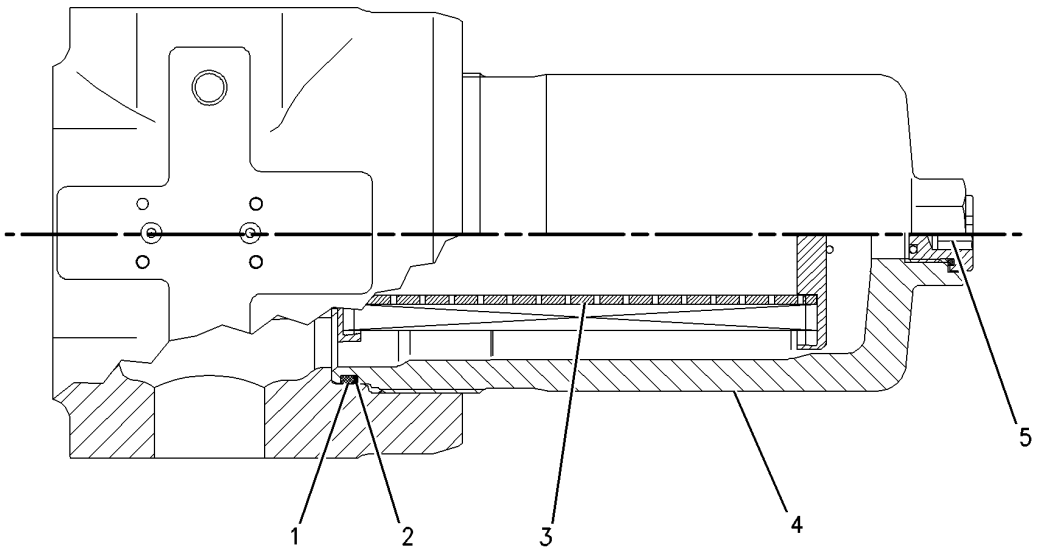

GRAPHIC #1 **<END>** g00835318

STEERING SYSTEM

133-7107 STOP GP-STEERING

S/N: 2211-UP

PART OF 273-7110 LINES GP-STEERING NEUTRALIZER

SMCS-7188 **i01962637**

NOTE	REF NO	GRAPHIC REF	PART NUMBER	QTY	PART NAME 1 2 3 4 5 6 (PRODUCT LEVEL)	SEE PAGE
	1	1	**8X-3467**	2	STUD AS	
C	2	1	**231-3518**	1	BRACKET AS	
M	3	1	**8T-3597**	2	NUT-WELD (M12X1.75 THD)	
M	4	1	**8T-4244**	2	NUT (M12X1.75-THD)	

C-CHANGE FROM PREVIOUS TYPE
M-METRIC PART

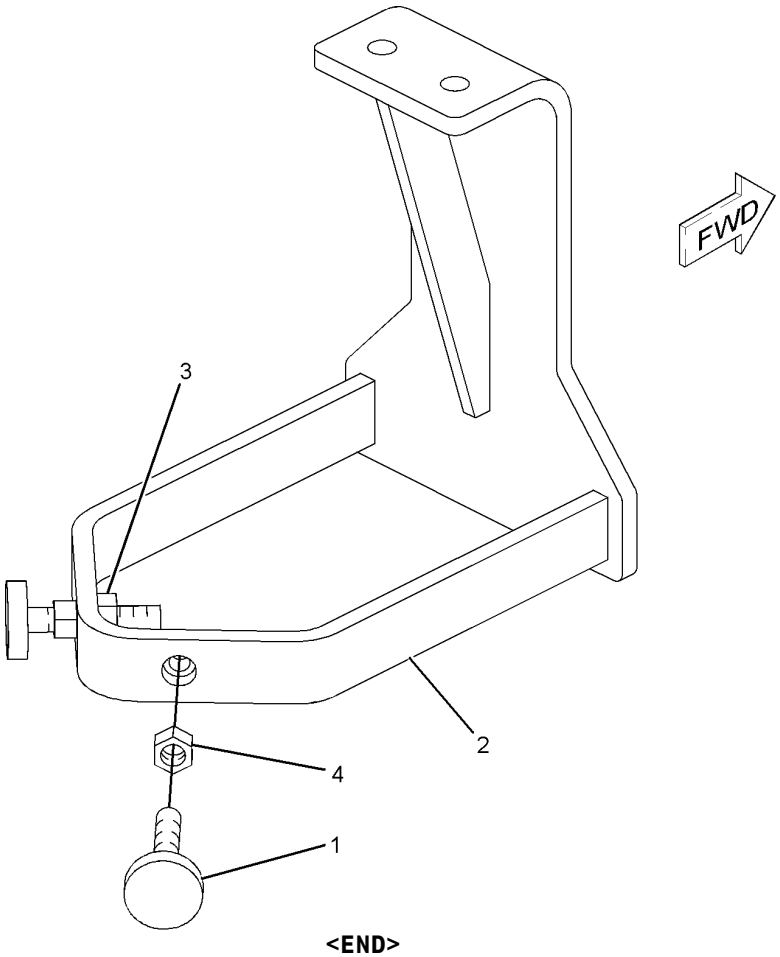

GRAPHIC #1 **<END>** g01025305

STEERING SYSTEM

288-7140 VALVE & MTG GP-STEERING–SECONDARY

S/N: 2211-UP
PART OF 283-2520, 283-2525 HYDRAULIC AR
AN ATTACHMENT

SMCS-4307, 4312, 4343 **i02900652**

NOTE	REF NO	GRAPHIC REF	PART NUMBER	QTY	PART NAME 1 2 3 4 5 6 (PRODUCT LEVEL)	SEE PAGE
	1	1	**7G-8839**	4	SPACER (13.5X57X6-MM THK)	
	2	1	**7T-8331**	4	MOUNT AS	
	3	1	**116-2886**	1	PLATE AS	
Y	4	1	**301-4616**	1	VALVE GP-STEERING (WITH SECONDARY STEERING)	655
	5	1	**8T-4223**	3	WASHER-HARD (13.5X25.5X3-MM THK)	
M	6	1	**8T-4910**	4	BOLT (M12X1.75X60-MM)	
M	7	1	**8T-5041**	3	BOLT (M12X1.75X120-MM)	

M-METRIC PART
Y-SEPARATE ILLUSTRATION

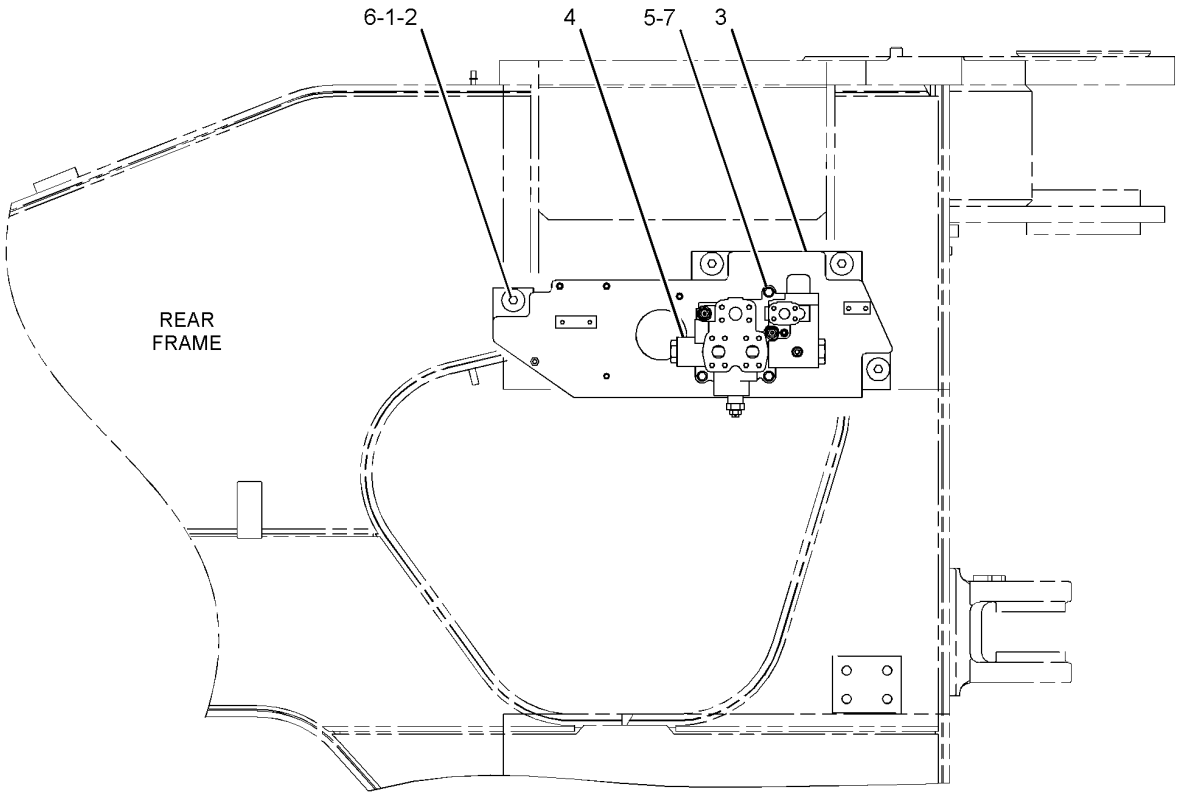

RIGHT SIDE VIEW

GRAPHIC #1 **<END>** g01447870

STEERING SYSTEM

9T-3096 VALVE GP-CHECK–STEERING PILOT

S/N: 2211-UP

PART OF 273-7130 LINES GP-STEERING

SMCS-4275, 5067 **i02333726**

NOTE	PART NUMBER	QTY	PART NAME 1 2 3 4 5 6 (PRODUCT LEVEL)	SEE PAGE
			(NO SERVICED PARTS)	

<END>

111-7775 VALVE GP-CHECK–STEERING QUAD

S/N: 2211-UP

PART OF 133-7104 VALVE GP-CHECK

SMCS-4275, 5067 **i01432551**

NOTE	REF NO	GRAPHIC REF	PART NUMBER	QTY	PART NAME 1 2 3 4 5 6 (PRODUCT LEVEL)	SEE PAGE
Y	1	1	**176-9369**	2	VALVE GP-CHECK (STEERING)	640
Y	2	1	**176-9371**	2	VALVE GP-CHECK (STEERING)	641

Y-SEPARATE ILLUSTRATION

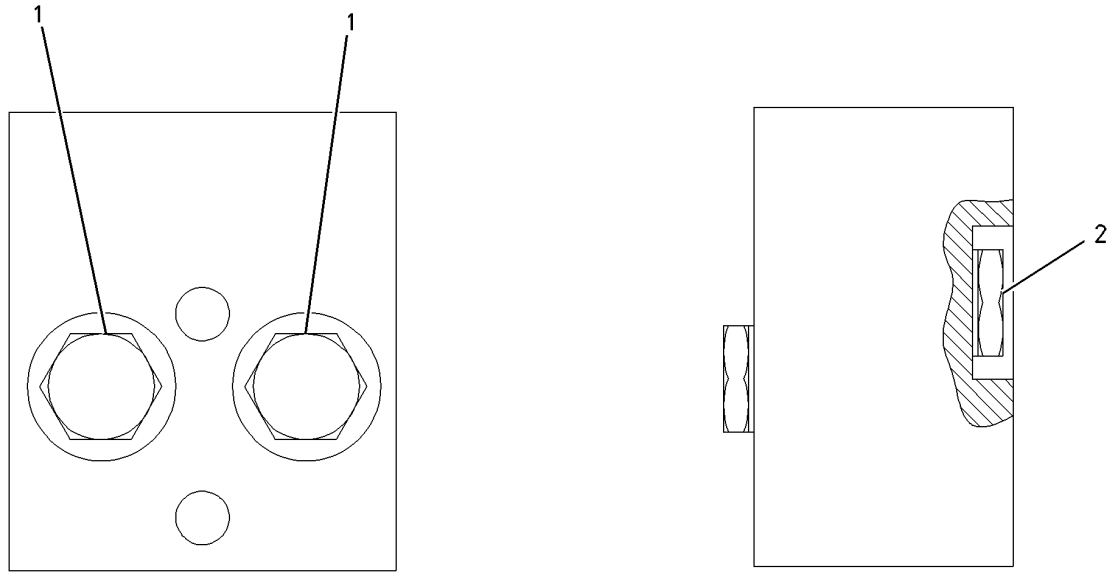

GRAPHIC #1 **<END>** g00707411

133-7104 VALVE GP-CHECK–STEERING QUAD

S/N: 2211-UP

PART OF 273-7110 LINES GP-STEERING NEUTRALIZER

SMCS-4275, 5067 **i01337503**

NOTE	REF NO	GRAPHIC REF	PART NUMBER	QTY	PART NAME 1 2 3 4 5 6 (PRODUCT LEVEL)	SEE PAGE
Y	1	1	**111-7775**	1	VALVE GP-CHECK (STEERING QUAD)	637
	2	1	*148-8318*	4	CONNECTOR AS	
					(EACH INCLUDES)	
		1	**6V-8634**	1	CONNECTOR	
		1	**6V-8397**	1	SEAL-O-RING	
		1	**3K-0360**	1	SEAL-O-RING	
	3	1	*148-8367*	2	ELBOW AS	
					(EACH INCLUDES)	
		1	**6V-9850**	1	ELBOW	
		1	**6V-8397**	1	SEAL-O-RING	

Y-SEPARATE ILLUSTRATION

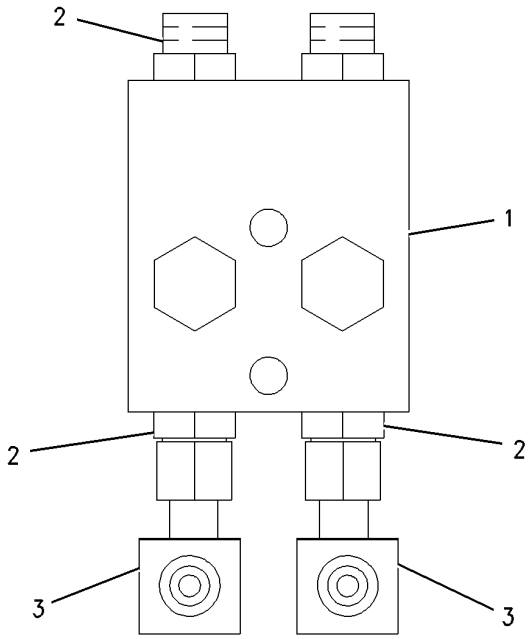

GRAPHIC #1 **<END>** g00637919

164-7474 VALVE GP-CHECK–STEERING CLR FLTR BYP, PILOT

S/N: 2211-UP

PART OF 273-7120 LINES GP-STEERING OIL COOLER

SMCS-4275, 5067 **i02399246**

NOTE	PART NUMBER	QTY	PART NAME 1 2 3 4 5 6 (PRODUCT LEVEL)	SEE PAGE
	3J-1907	1	SEAL-O-RING	
	6V-8397	1	SEAL-O-RING	
	9T-3096	1	VALVE GP-CHECK	

<END>

STEERING SYSTEM

176-9369 VALVE GP-CHECK—STEERING

S/N: 2211-UP

PART OF 111-7775 VALVE GP-CHECK

SMCS-4275, 5067 **i01432567**

NOTE	REF NO	GRAPHIC REF	PART NUMBER	QTY	PART NAME 1 2 3 4 5 6 (PRODUCT LEVEL)	SEE PAGE
	1	1	**3K-0360**	1	SEAL-O-RING	
	2	1	**161-6154**	1	SEAL-O-RING	
	3	1	**6E-0381**	1	RING-BACKUP	

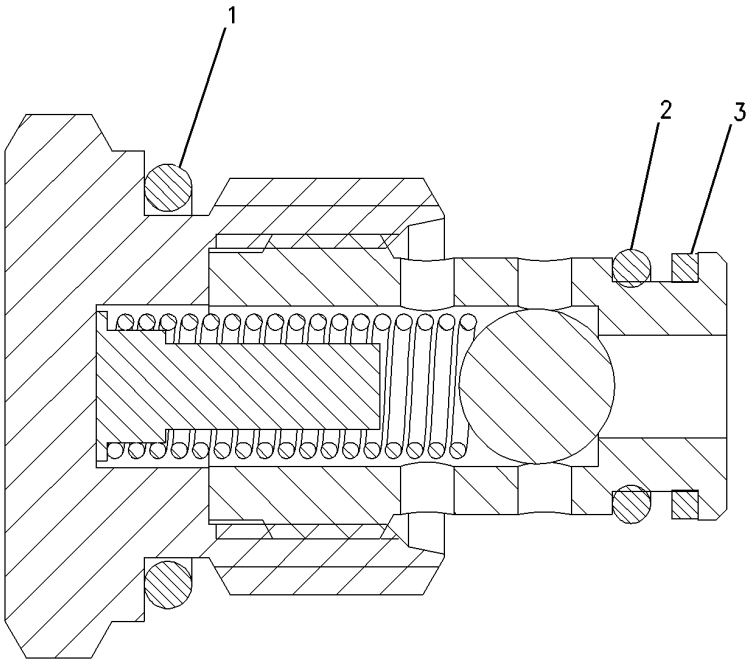

GRAPHIC #1 **<END>** g00707403

STEERING SYSTEM

176-9371 VALVE GP-CHECK–STEERING

S/N: 2211-UP

PART OF 111-7775 VALVE GP-CHECK

SMCS-4275, 5067 **i01432553**

NOTE	REF NO	GRAPHIC REF	PART NUMBER	QTY	PART NAME 1 2 3 4 5 6 (PRODUCT LEVEL)	SEE PAGE
	1	1	**3K-0360**	1	SEAL-O-RING	
	2	1	**161-6154**	1	SEAL-O-RING	
	3	1	**6E-0381**	1	RING-BACKUP	

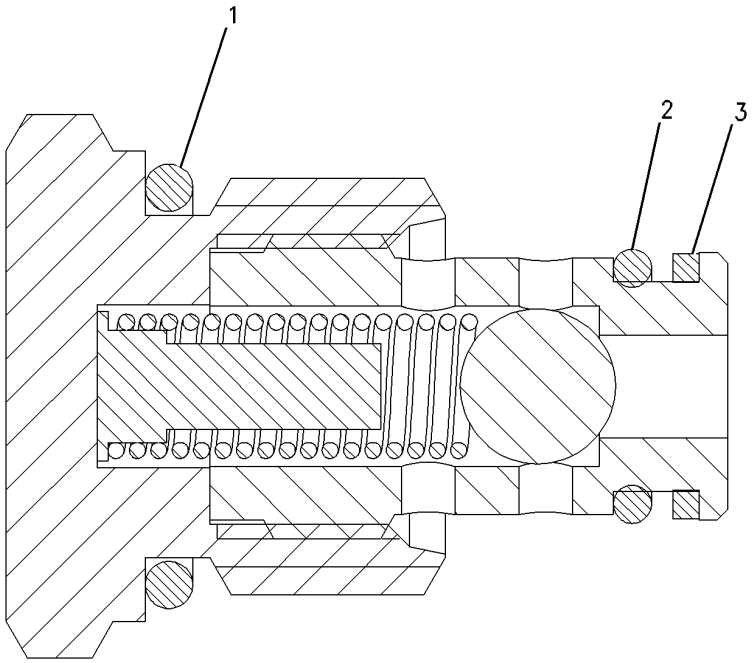

GRAPHIC #1 **<END>** g00707403

STEERING SYSTEM

185-9357 VALVE GP-CHECK—COOLER BYPASS

S/N: 2211-UP

PART OF 273-6250 LINES GP-HYDRAULIC FAN, 273-7120 LINES GP-STEERING OIL COOLER

SMCS-4275, 5067 **i02183379**

NOTE	REF NO	GRAPHIC REF	PART NUMBER	QTY	PART NAME 1 2 3 4 5 6 (PRODUCT LEVEL)	SEE PAGE
	1	1	**6E-1454**	1	VALVE GP-CHECK	
	2	1	**5K-9090**	1	SEAL-O-RING	
	3	1	**7M-8485**	1	SEAL-O-RING	

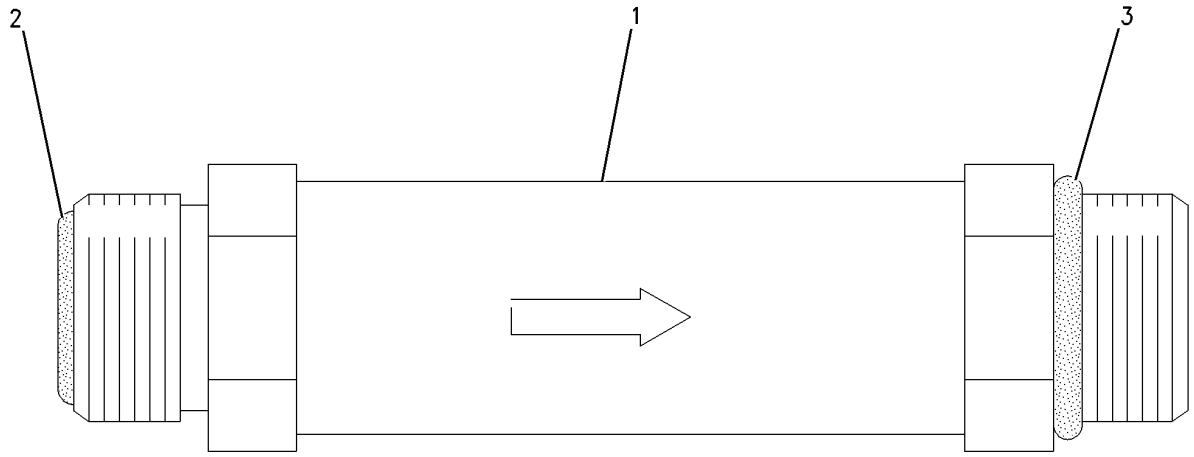

GRAPHIC #1 **<END>** g00703639

STEERING SYSTEM

249-5615 VALVE GP-PILOT—STIC STEERING

S/N: 2211-UP

PART OF 236-5240 CONTROL GP-STEERING

SMCS-4342 **i02155003**

NOTE	REF NO	GRAPHIC REF	PART NUMBER	QTY	PART NAME 1 2 3 4 5 6 (PRODUCT LEVEL)	SEE PAGE
	1	1	**104-4272**	1	BOOT	
	2	1	**104-4273**	1	CLAMP	
	3	1	**104-4256**	1	BRACKET	
	4	1	**104-4255**	1	HANDLE	
	5	1	**104-4270**	2	LINK-CONNECTING	
	6	1	**9F-6641**	1	BOLT (5/16-18X1.25-IN)	
	7	1	**104-4274**	1	SPACER	
	8	1	**104-4271**	1	DOWEL	
	9	1	**8M-6802**	2	SCREW-HEX SOCKET (1/4-20X1-IN)	
Y	10	1	**147-1238**	2	VALVE GP-PILOT CARTRIDGE	645
Y	11	1	**147-1237**	2	VALVE GP-PILOT CARTRIDGE	644
	12	1	**249-5616**	1	BRACKET	
B	13	1	**103-6319**	2	SHIM (20.32-MM)	

B-USE AS REQUIRED
Y-SEPARATE ILLUSTRATION

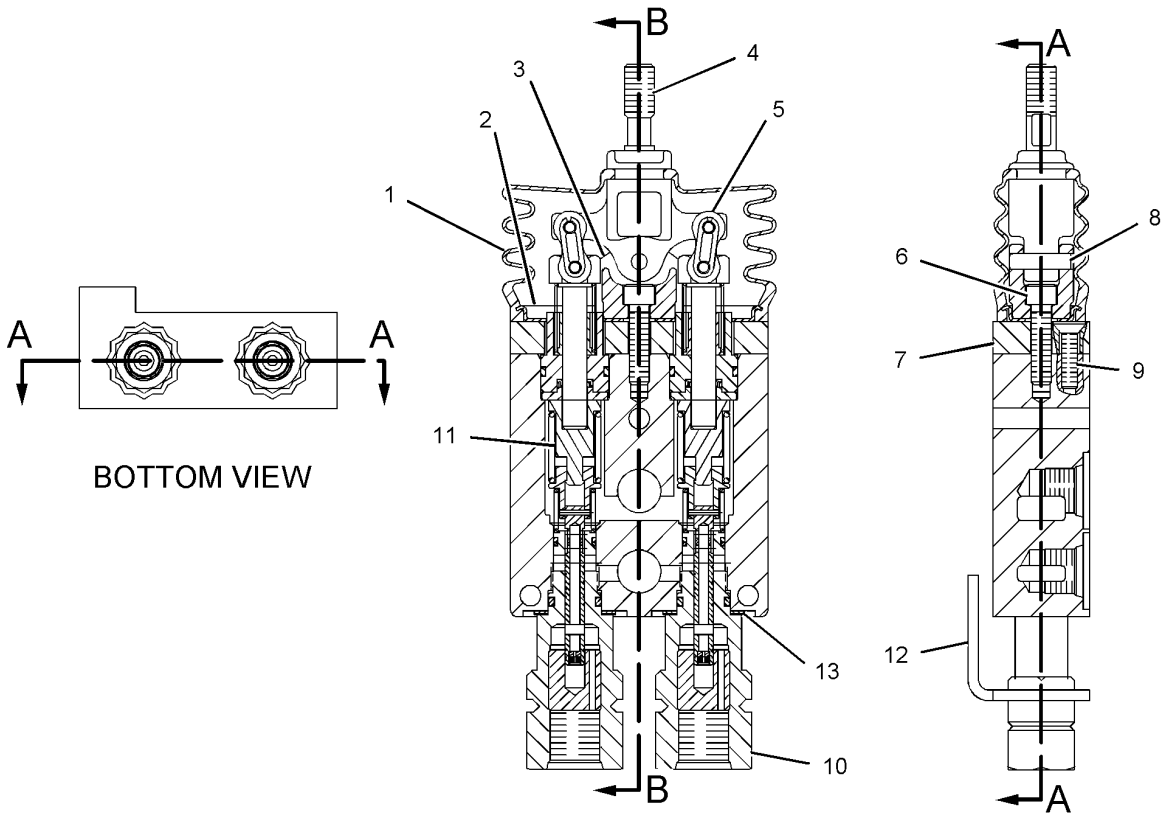

GRAPHIC #1

<END>

g01093767

STEERING SYSTEM

147-1237 VALVE GP-PILOT CARTRIDGE

S/N: 2211-UP

PART OF 249-5615 VALVE GP-PILOT

SMCS-4342 **i02741371**

NOTE	REF NO	GRAPHIC REF	PART NUMBER	QTY	PART NAME 1 2 3 4 5 6 (PRODUCT LEVEL)	SEE PAGE
	1	1	**103-7410**	1	PLUNGER	
	2	1	**5P-8356**	1	SEAL-O-RING	
J	3	1	**147-3061**	1	SEAL-SPOOL	
	4	1	**6E-0763**	1	RETAINER	
	5	1	**103-7407**	1	SPRING	
	6	1	**6E-3769**	1	PIN	
	7	1	**6E-3767**	1	SPRING	
					AVAILABLE REPAIR KIT(S):	
J			**1G-5928**	1	KIT-PLUNGER SEAL	
					(INCLUDES SEAL-O-RING)	

J-REPAIR KIT(S) MARKED J SERVICES PART(S) MARKED J

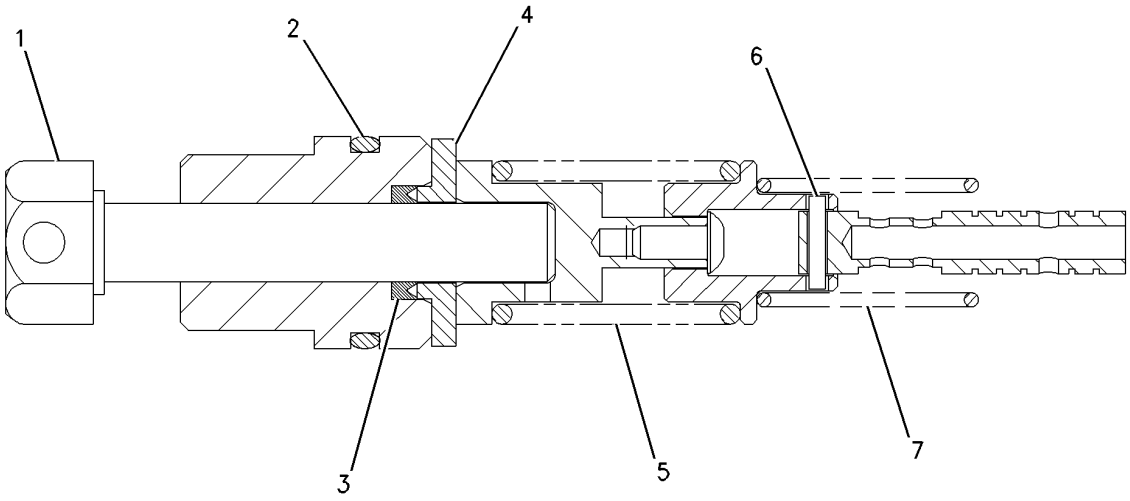

GRAPHIC #1 **<END>** g00751333

147-1238 VALVE GP-PILOT CARTRIDGE

S/N: 2211-UP

PART OF 249-5615 VALVE GP-PILOT

SMCS-4342 **i02187502**

NOTE	REF NO	GRAPHIC REF	PART NUMBER	QTY	PART NAME 1 2 3 4 5 6 (PRODUCT LEVEL)	SEE PAGE
B	1	1	**103-6318**	1	SHIM	
	2	1	**095-1519**	1	SEAL-O-RING	
	3	1	**6V-5758**	1	SEAL-O-RING	
	4	1	**6E-0770**	1	RING-BACKUP	
B	5	1	**103-6319**	1	SHIM	

B-USE AS REQUIRED

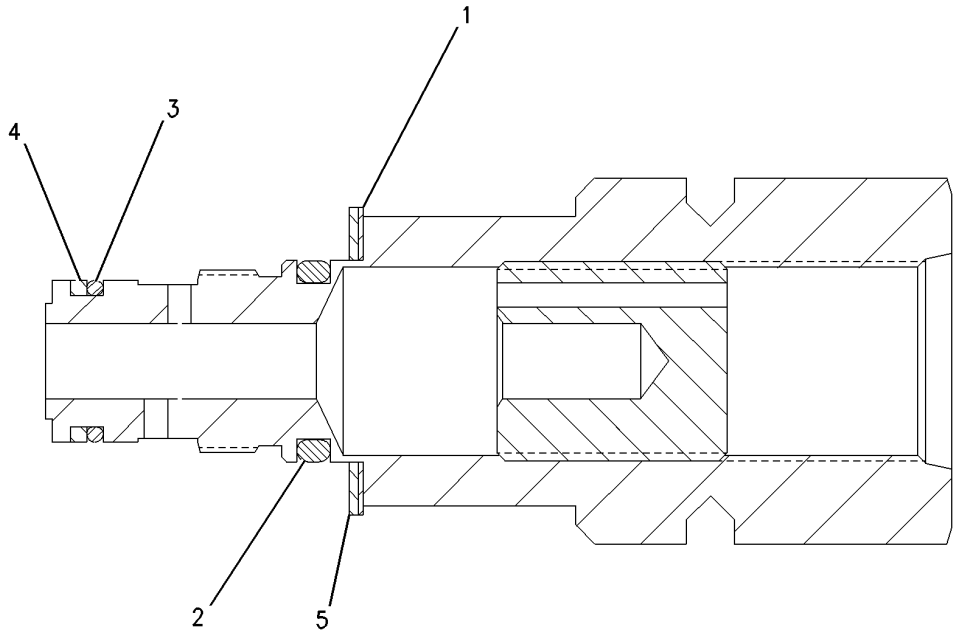

GRAPHIC #1 **<END>** g00751167

STEERING SYSTEM

6E-1024 VALVE GP-PUMP CONTROL–
PRESSURE, FLOW COMPENSATOR–STEERING
S/N: 2211-UP
PART OF 216-4826 PUMP GP-PISTON

SMCS-5455 **i02478752**

NOTE	REF NO	GRAPHIC REF	PART NUMBER	QTY	PART NAME 1 2 3 4 5 6 (PRODUCT LEVEL)	SEE PAGE
M	1	1	**3E-8025**	5	BOLT-SOCKET HEAD (M8X1.25X50-MM)	
	2	1	**5P-5874**	3	SEAL-O-RING	
	3	1	**6E-5412**	1	SEAL-O-RING	
	4	1	**120-4394**	5	PLUG-BREAK OFF	
Y	5	1	**6E-3850**	1	VALVE GP-PUMP CONTROL (FLOW COMPENSATOR) (STEERING)	647
CY	6	1	**281-0799**	1	VALVE GP-PUMP CONTROL (PRESSURE COMPENSATOR) (STEERING)	648

C-CHANGE FROM PREVIOUS TYPE
M-METRIC PART
Y-SEPARATE ILLUSTRATION

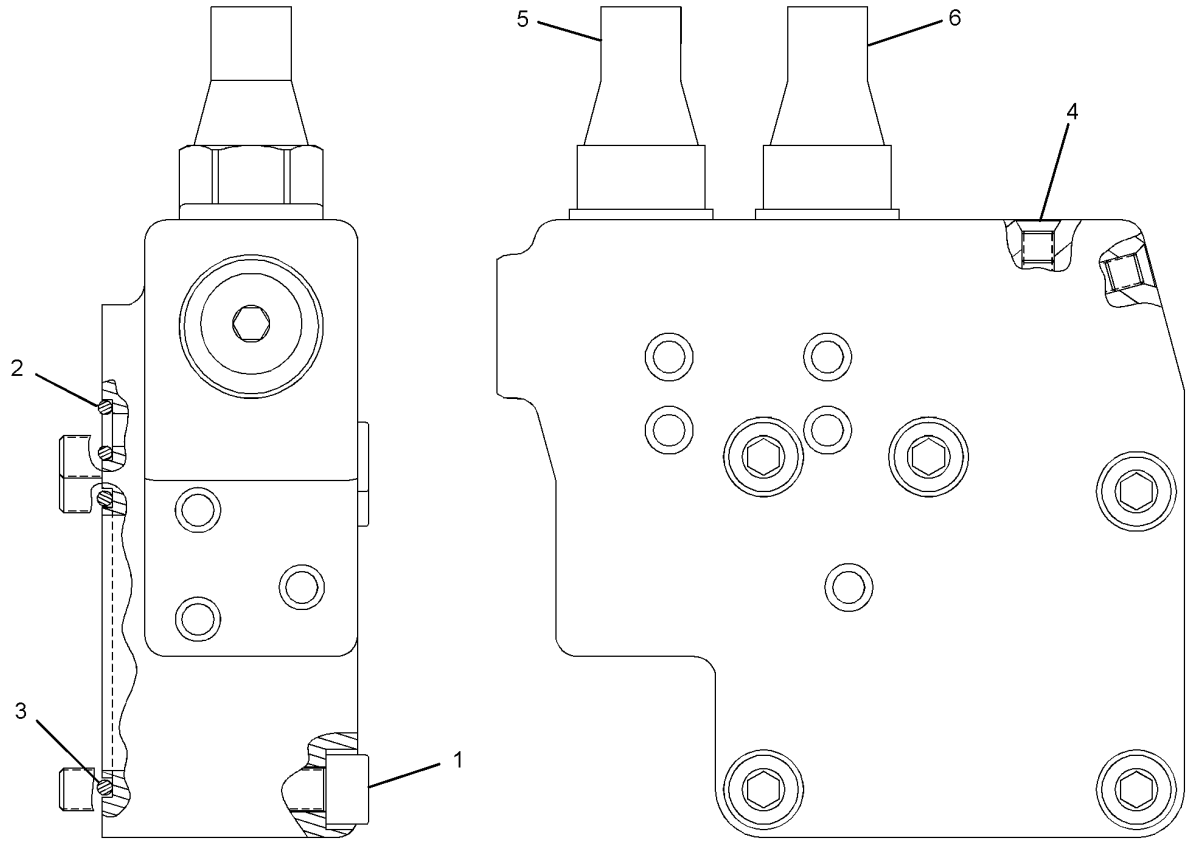

GRAPHIC #1 **<END>** g01253298

6E-3850 VALVE GP-PUMP CONTROL–FLOW COMPENSATOR–STEERING

S/N: 2211-UP

PART OF 6E-1024 VALVE GP-PUMP CONTROL

SMCS-5455 **i01830274**

NOTE	REF NO	GRAPHIC REF	PART NUMBER	QTY	PART NAME 1 2 3 4 5 6 (PRODUCT LEVEL)	SEE PAGE
	1	1	**6E-5582**	1	PLUG	
	2	1	**6E-5583**	1	SETSCREW	
M	3	1	**6E-1607**	1	LOCKNUT-SEALING	
	4	1	**6E-3855**	1	SPRING (INNER)	
	5	1	**6E-3852**	2	RETAINER-SPRING	
	6	1	**6E-3851**	1	PISTON	
	7	1	**165-9383**	1	SPRING (OUTER)	
	8	1	**6V-3922**	1	SEAL-O-RING	

M-METRIC PART

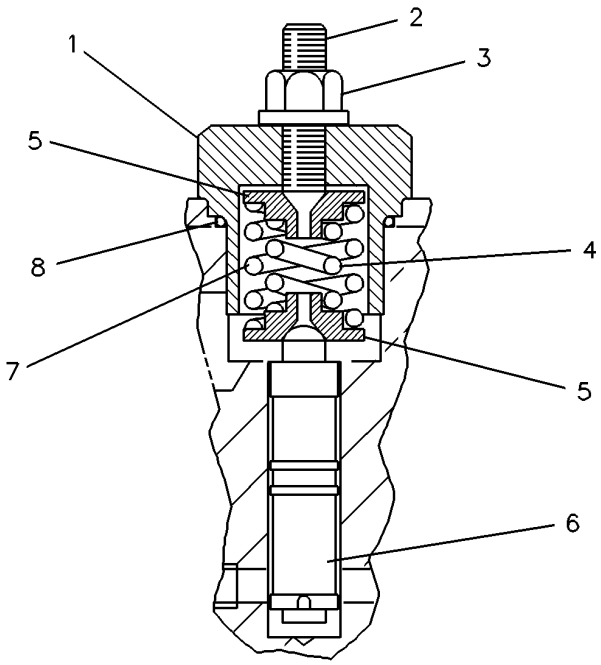

GRAPHIC #1 **<END>** g00082862

281-0799 VALVE GP-PUMP CONTROL–PRESSURE COMPENSATOR–STEERING

S/N: 2211-UP

PART OF 6E-1024 VALVE GP-PUMP CONTROL

SMCS-5455 **i02478775**

NOTE	REF NO	GRAPHIC REF	PART NUMBER	QTY	PART NAME 1 2 3 4 5 6 (PRODUCT LEVEL)	SEE PAGE
	1	1	**6V-3922**	1	SEAL-O-RING	
	2	1	**117-5899**	1	PLUG	
M	3	1	**204-1455**	1	NUT-SEALING (M8X1-THD)	
	4	1	**117-7524**	1	SETSCREW	
	5	1	**6E-3861**	2	RETAINER-SPRING	
	6	1	**179-6922**	1	SPRING	

M-METRIC PART

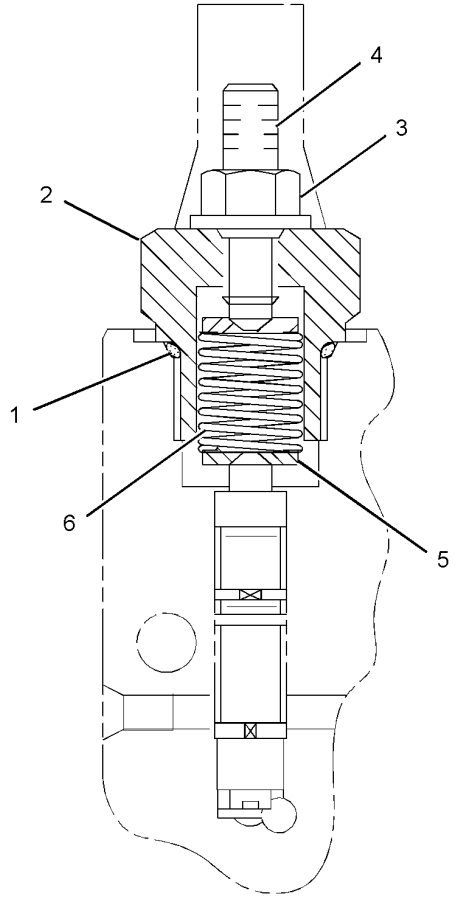

GRAPHIC #1 **<END>** g01242281

STEERING SYSTEM

6E-3986 VALVE GP-RELIEF–SECONDARY STEERING

S/N: 2211-UP

PART OF 301-4616 VALVE GP-STEERING

AN ATTACHMENT

SMCS-4322, 5069, 7428 **i02741377**

NOTE	REF NO	GRAPHIC REF	PART NUMBER	QTY	PART NAME 1 2 3 4 5 6 (PRODUCT LEVEL)	SEE PAGE
	1	1	**7X-4776**	2	RING-BACKUP	
	2	1	**8C-3097**	1	SEAL-O-RING	
	3	1	**3K-0360**	1	SEAL-O-RING	
					AVAILABLE REPAIR KIT(S):	
			6E-4753	1	KIT-SEAL	

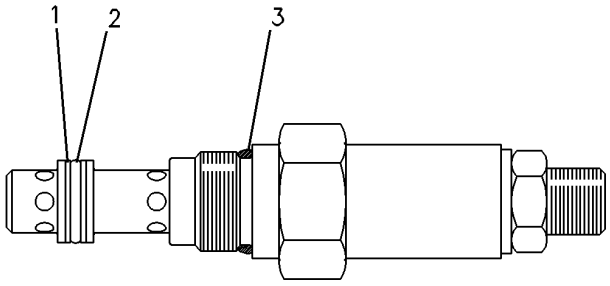

GRAPHIC #1 **<END>** g00119845

STEERING SYSTEM

100-4335 VALVE GP-RELIEF–PUMP BACKUP

S/N: 2211-UP

PART OF 301-4616 VALVE GP-STEERING

AN ATTACHMENT

SMCS-4322, 5069, 7428 **i02110593**

NOTE	REF NO	GRAPHIC REF	PART NUMBER	QTY	PART NAME 1 2 3 4 5 6 (PRODUCT LEVEL)	SEE PAGE
	1	1	**7M-8485**	2	SEAL-O-RING	
	2	1	**4J-0522**	1	SEAL-O-RING	
	3	1	**4T-2770**	1	SPRING	
	4	1	**3K-0360**	1	SEAL-O-RING	
	5	1	**4Y-5812**	1	PLATE	
	6	1	**6E-5510**	1	RETAINER AS	
	7	1	**9X-6395**	1	NUT (3/4-16-THD)	
	8	1	**6E-1127**	1	CAP	
	9	1	**8J-0331**	1	VALVE	
	10	1	**6E-6138**	1	VALVE GP-RELIEF (MAIN)	
		1	**8H-3532**	1	SPRING-VALVE	
	11	1	**7B-5684**	1	PIN	

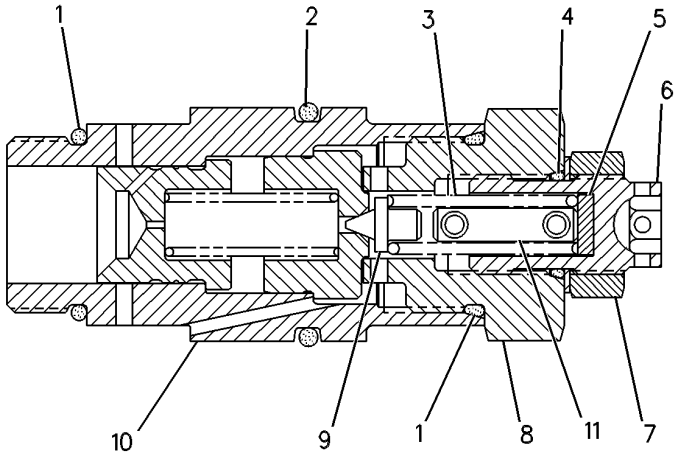

GRAPHIC #1 **<END>** g00121100

STEERING SYSTEM

224-5006 VALVE GP-RELIEF–STEERING PILOT

S/N: 2211-UP

PART OF 224-5741 VALVE GP-RELIEF

SMCS-4322, 5069, 7428 **i01869567**

NOTE	REF NO	GRAPHIC REF	PART NUMBER	QTY	PART NAME 1 2 3 4 5 6 (PRODUCT LEVEL)	SEE PAGE
	1	1	**6V-6923**	1	RING-BACKUP	
	2	1	**033-6033**	1	SEAL-O-RING	
	3	1	**2M-9780**	1	SEAL-O-RING	

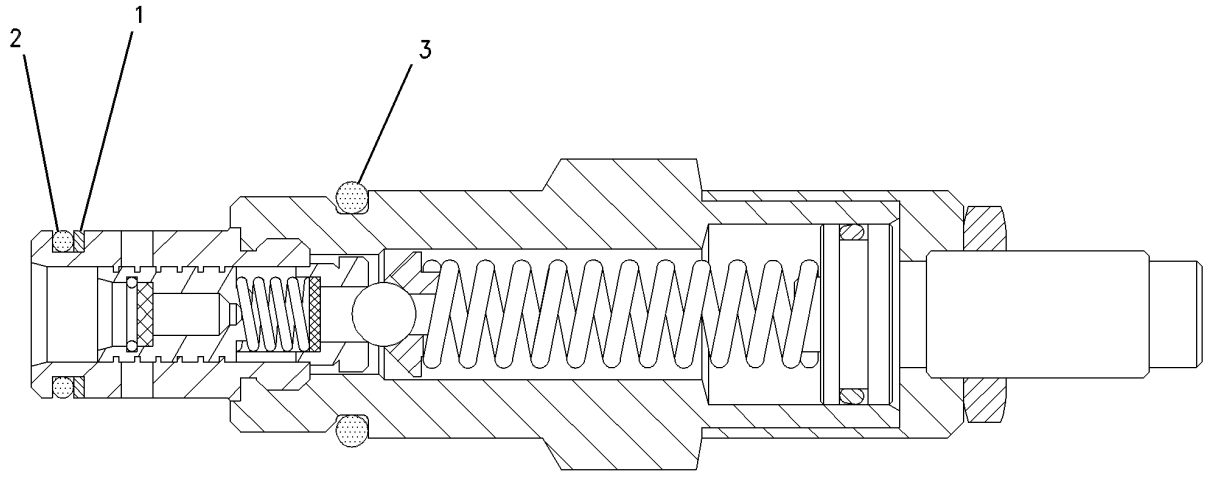

GRAPHIC #1 **<END>** g00356997

STEERING SYSTEM

224-5741 VALVE GP-RELIEF—STEERING PILOT

S/N: 2211-UP

PART OF 273-7120 LINES GP-STEERING OIL COOLER

SMCS-4322, 5069, 7428 **i02555640**

NOTE	REF NO	GRAPHIC REF	PART NUMBER	QTY	PART NAME 1 2 3 4 5 6 (PRODUCT LEVEL)	SEE PAGE
	1		**138-3815**	1	MANIFOLD	
	2		**3J-1907**	1	SEAL-O-RING	
	3		**9S-4191**	1	PLUG-O-RING	
Y	4		**224-5006**	1	VALVE GP-RELIEF (STEERING PILOT)	651

Y-SEPARATE ILLUSTRATION

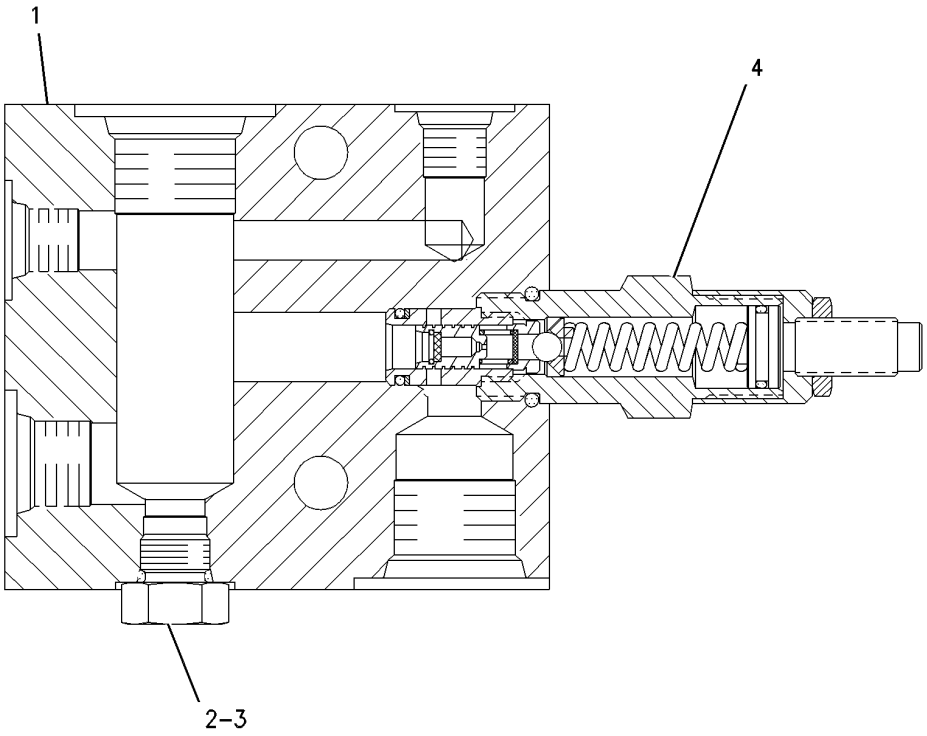

GRAPHIC #1 **<END>** g00371672

STEERING SYSTEM

6E-3078 VALVE GP-SELECTOR & PRESS CONT–

SECONDARY STEERING

S/N: 2211-UP

PART OF 284-4680, 288-7135 LINES GP-SECONDARY STEERING

AN ATTACHMENT

SMCS-4349 **i01327202**

NOTE	REF NO	GRAPHIC REF	PART NUMBER	QTY	PART NAME 1 2 3 4 5 6 (PRODUCT LEVEL)	SEE PAGE
	1	1	**7S-8553**	1	SPRING	
B	2	1	**5S-7001**	2	SPACER (7.54X14.15X0.9-MM THK)	
B		1	**5S-7018**	3	SPACER (7.54X14.15X0.25-MM THK)	
	3	1	**108-3866**	2	ADAPTER	
		1	**2M-9780**	2	SEAL-O-RING	

B-USE AS REQUIRED

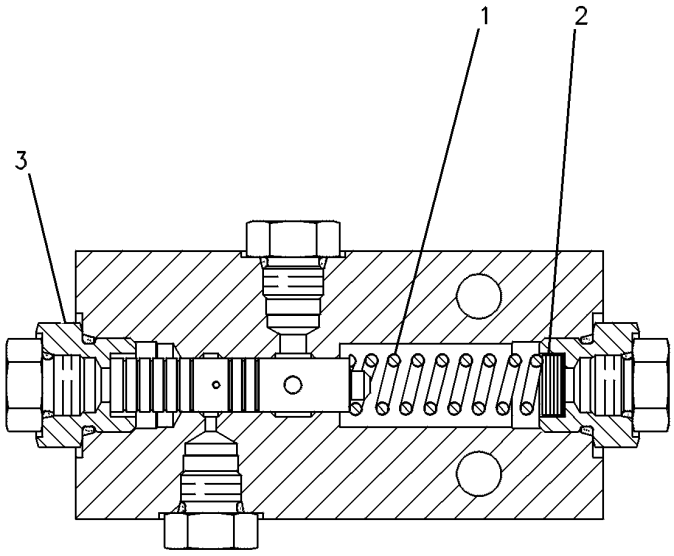

GRAPHIC #1 **<END>** g00085052

STEERING SYSTEM

4T-1860 VALVE GP-SHUTTLE

S/N: 2211-UP

PART OF 301-4616 VALVE GP-STEERING

AN ATTACHMENT

SMCS-4289 **i02441588**

NOTE	REF NO	GRAPHIC REF	PART NUMBER	QTY	PART NAME 1 2 3 4 5 6 (PRODUCT LEVEL)	SEE PAGE
	1	1	**4T-0925**	1	SEAT	
	2	1	**1M-6718**	1	BALL	
Z	3	1		1	VALVE	
	4	1	**6V-5324**	1	SEAL-O-RING	
	5	1	**147-6603**	1	SEAL-O-RING	
	6	1	**3J-1907**	1	SEAL-O-RING	
	7	1	**147-6604**	2	RING-BACKUP	
	8	1	**147-6605**	2	RING-BACKUP	

Z-NOT SERVICED SEPARATELY

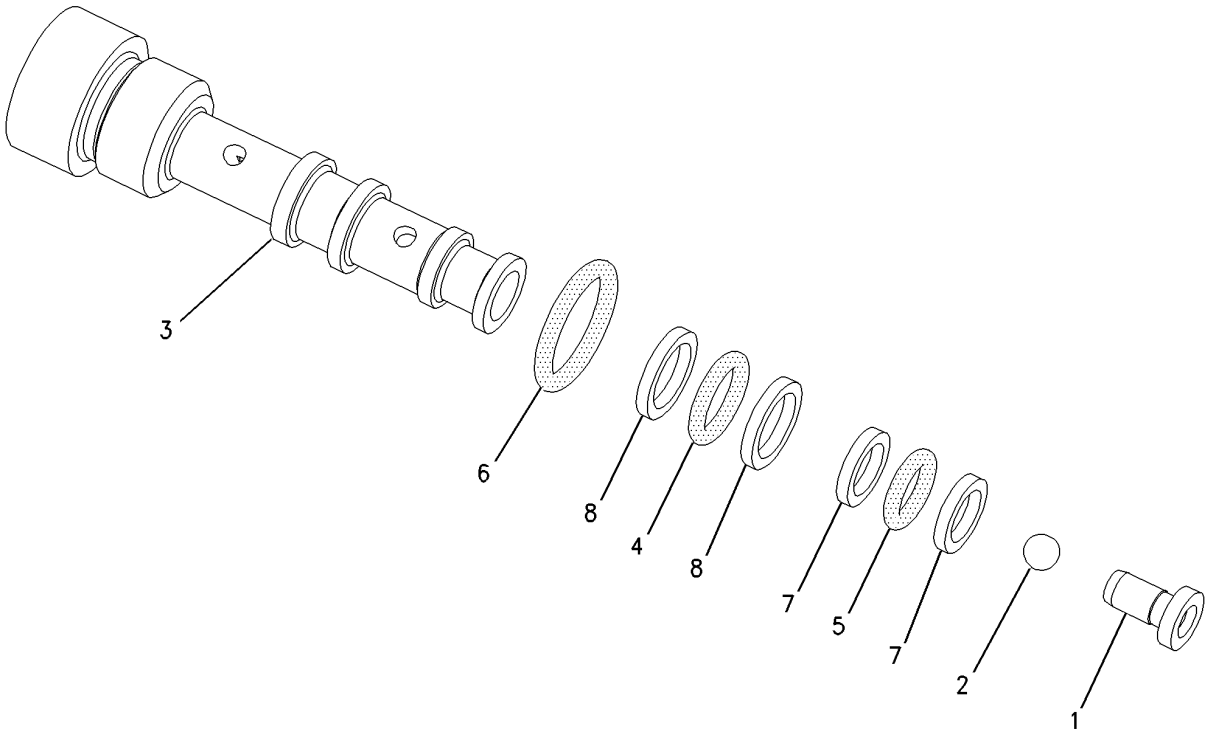

GRAPHIC #1 **<END>** g00775006

STEERING SYSTEM

301-4616 VALVE GP-STEERING—WITH SECONDARY STEERING

S/N: 2211-UP

PART OF 288-7140 VALVE & MTG GP-STEERING

AN ATTACHMENT

SMCS-4307 **i02910253**

NOTE	REF NO	GRAPHIC REF	PART NUMBER	QTY	PART NAME 1 2 3 4 5 6 (PRODUCT LEVEL)	SEE PAGE
	1	2	**1T-0936**	2	PLUG-PIPE	
	2	2	**1U-0323**	1	PLUG AS	
		2	**1U-0322**	1	BEARING-SLEEVE	
		2	**3G-2683**	1	PLUG	
	3	2	**2S-2596**	2	SPRING	
J	4	2	**2U-7345**	1	VALVE-DIVERTER (SECONDARY STEERING)	
Y	6	2	**4T-1860**	1	VALVE GP-SHUTTLE (LOAD SIGNAL, STEERING CYLINDER)	654
	7	1	**6E-3775**	1	RETAINER	
	8	2	*6E-3779*	2	PLUG AS	
					(EACH INCLUDES)	
		2	**7J-1089**	1	PLUG	
		2	**7M-5130**	1	PIN-SPRING	
	9	2	**6E-3780**	1	VALVE (PRIMARY STEERING PUMP CHECK)	
L	10	2	**6E-3985**	1	VALVE GP-RELIEF (STEERING CYLINDER CROSSOVER)	
	11	1	**6E-4499**	1	SPRING	
	12	1	**6E-4513**	1	ADAPTER-O-RING	
	13	1	**6E-4514**	1	ADAPTER-O-RING	
	14	1	**7J-2927**	1	WASHER (16.66X39.37X3.96-MM THK)	
	15	2	**7J-7423**	1	VALVE (SECONDARY STEERING PUMP CHECK)	
Y	16	1	**100-4335**	1	VALVE GP-RELIEF (PUMP BACKUP)	650
	20	2	**307-6457**	1	SCREEN AS	
	21	2	**307-6458**	1	SPRING	
	22	2	*148-8407*	3	PLUG AS	
					(EACH INCLUDES)	
		2	**3J-1907**	1	SEAL-O-RING	
		2	**9S-4191**	1	PLUG-O-RING	
	23	2	*148-8409*	3	PLUG AS	
					(EACH INCLUDES)	
		2	**3D-2824**	1	SEAL-O-RING	
		2	**9S-8008**	1	PLUG-O-RING	
	24	1,2	*155-3624*	14	PLUG AS	
					(EACH INCLUDES)	
		1,2	**3J-7354**	1	SEAL-O-RING	
		1,2	**9S-4182**	1	PLUG-O-RING	
	25	2	*162-0177*	1	PLUG AS	
		2	**3J-1907**	1	SEAL-O-RING	
		2	**9S-8004**	1	PLUG-O-RING	
	26	2	*183-7262*	1	PLUG AS	
		2	**2S-4078**	1	SEAL-O-RING	
		2	**9S-8010**	1	PLUG	
	27	1	**8T-4896**	1	WASHER-HARD (10.2X18.5X2.5-MM THK)	
	28	1	*183-7263*	1	PLUG AS	
		1	**3J-7354**	1	SEAL-O-RING	
		1	**9S-8002**	1	PLUG-O-RING	
	29	1	**1P-5767**	6	FLANGE-HALF	
	30	1	**292-4307**	1	RETAINER	
	31	1,2	**2S-4078**	2	SEAL-O-RING	
	32	2	**3J-1907**	2	SEAL-O-RING	
	33	2	**4B-9782**	2	BALL	
B	34	1	**4J-8224**	5	SHIM (0.254-MM THK)	
	35	2	**5J-3419**	1	SPRING	
B	36	1	**5J-4776**	1	SHIM (0.127-MM THK)	
Y	37	2	**6E-3986**	1	VALVE GP-RELIEF (SECONDARY STEERING)	649

301-4616 VALVE GP-STEERING *(contd.)* i02910253

NOTE	REF NO	GRAPHIC REF	PART NUMBER	QTY	PART NAME 1 2 3 4 5 6 (PRODUCT LEVEL)	SEE PAGE
N	38	2	**6E-4286**	1	VALVE GP-PRESSURE REDUCING (STEERING PILOT OIL REGULATOR)	
	39	1	**6E-4500**	1	SPRING	
	40	1	**6K-6307**	1	SEAL-O-RING	
	41	2	**7S-8491**	1	SPRING	
	42	2	**8C-3206**	2	FLANGE-HALF	
M	43	1	**8T-2223**	1	BOLT-SOCKET HEAD (M10X1.5X45-MM)	
	44	2	**8T-4121**	4	WASHER-HARD (11X21X2.5-MM THK)	
M	45	1	**8T-4194**	12	BOLT (M12X1.75X50-MM)	
M	46	2	**8T-4196**	4	BOLT (M10X1.5X35-MM)	
	47	1	**8T-4223**	12	WASHER-HARD (13.5X25.5X3-MM THK)	
	48	2	**9J-9821**	2	SEAT	
					AVAILABLE REPAIR KIT(S):	
J			**2U-7354**	1	KIT-SEAL (DIVERTER VALVE)	
					(INCLUDES SEAL-O-RINGS & BACK-UP RINGS)	
L			**6E-4288**	1	KIT-SEAL (CROSSOVER RELIEF VALVE)	
					(INCLUDES SEALS & RINGS)	
N			**6E-4287**	1	KIT-SEAL (PRESSURE REDUCING VALVE)	
					(INCLUDES SEALS & RINGS)	

B-USE AS REQUIRED
J-KIT MARKED J SERVICES PART MARKED J
L-KIT MARKED L SERVICE PART MARKED L
M-METRIC PART
N-KIT MARKED N SERVICES PART MARKED N
Y-SEPARATE ILLUSTRATION

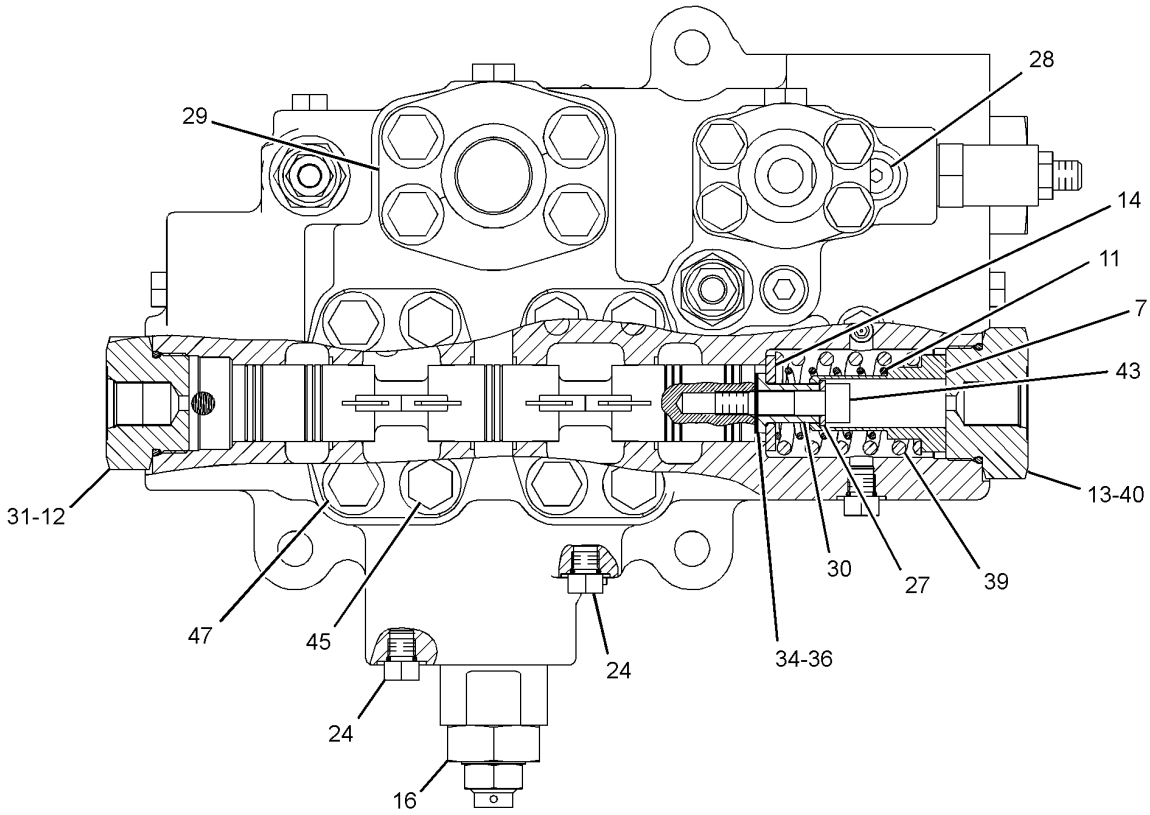

RIGHT SIDE VIEW

GRAPHIC #1 g01422728

301-4616 VALVE GP-STEERING *(contd.)* **i02910253**

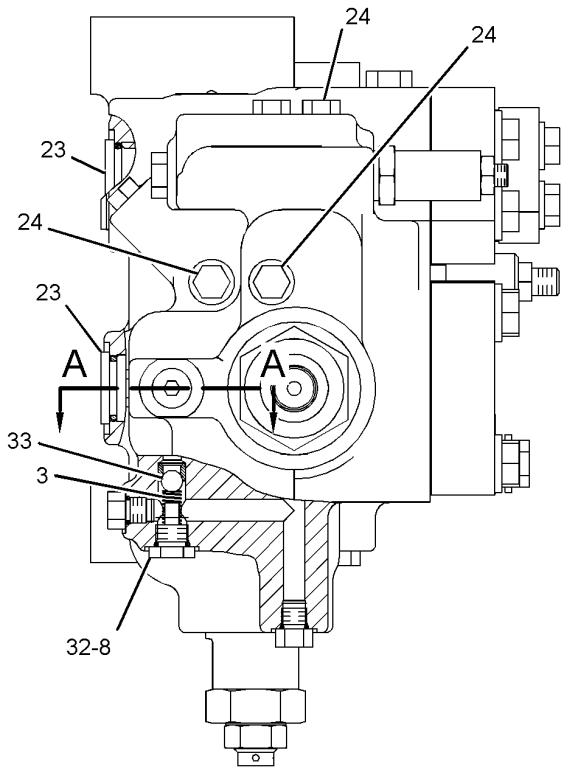

REAR VIEW

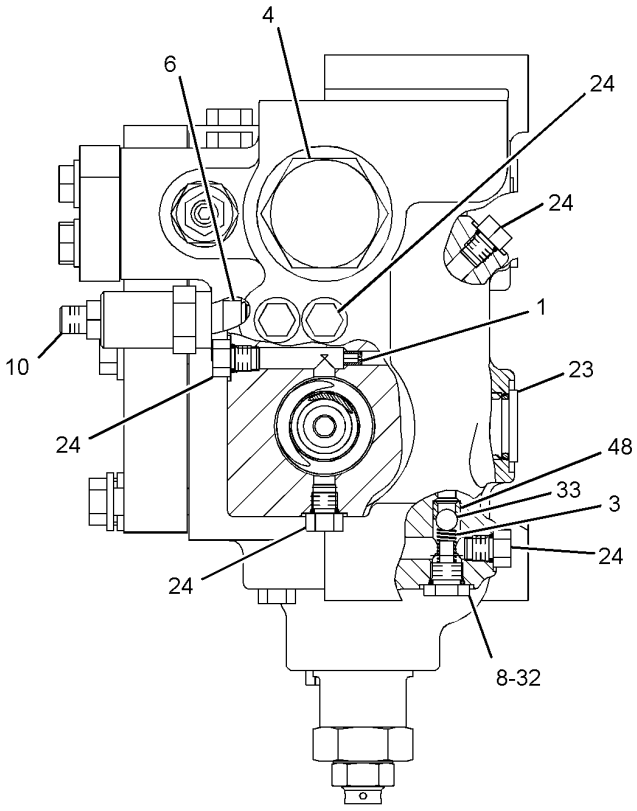

FRONT VIEW

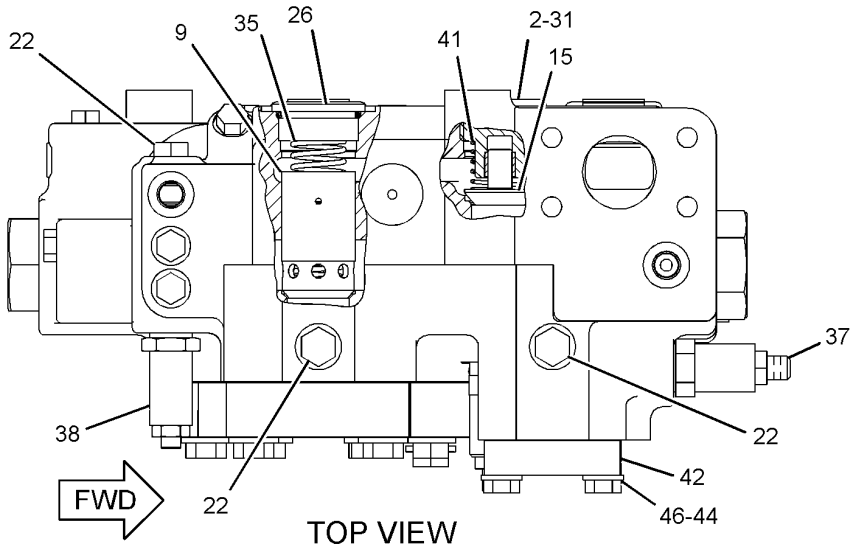

TOP VIEW

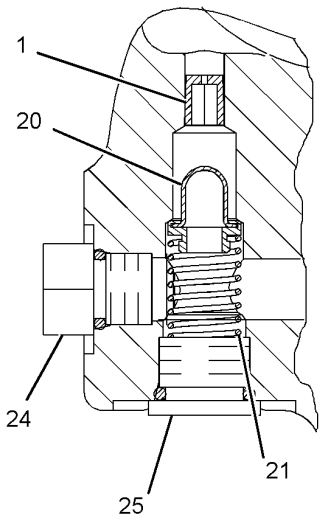

SECTION A-A

GRAPHIC #2 **<END>** g01424803

STEERING SYSTEM

146-7571 VALVE GP-STEERING NEUTRALIZER

S/N: 2211-UP

PART OF 273-7110 LINES GP-STEERING NEUTRALIZER

SMCS-4330 **i02624467**

NOTE	REF NO	GRAPHIC REF	PART NUMBER	QTY	PART NAME 1 2 3 4 5 6 (PRODUCT LEVEL)	SEE PAGE
	1	1	**6J-4568**	1	BOOT	
	2	1	**6V-1949**	1	SEAL-LIP TYPE	
	3	1	**3D-2824**	1	SEAL-O-RING	
	4	1	**5F-9035**	1	SPRING	

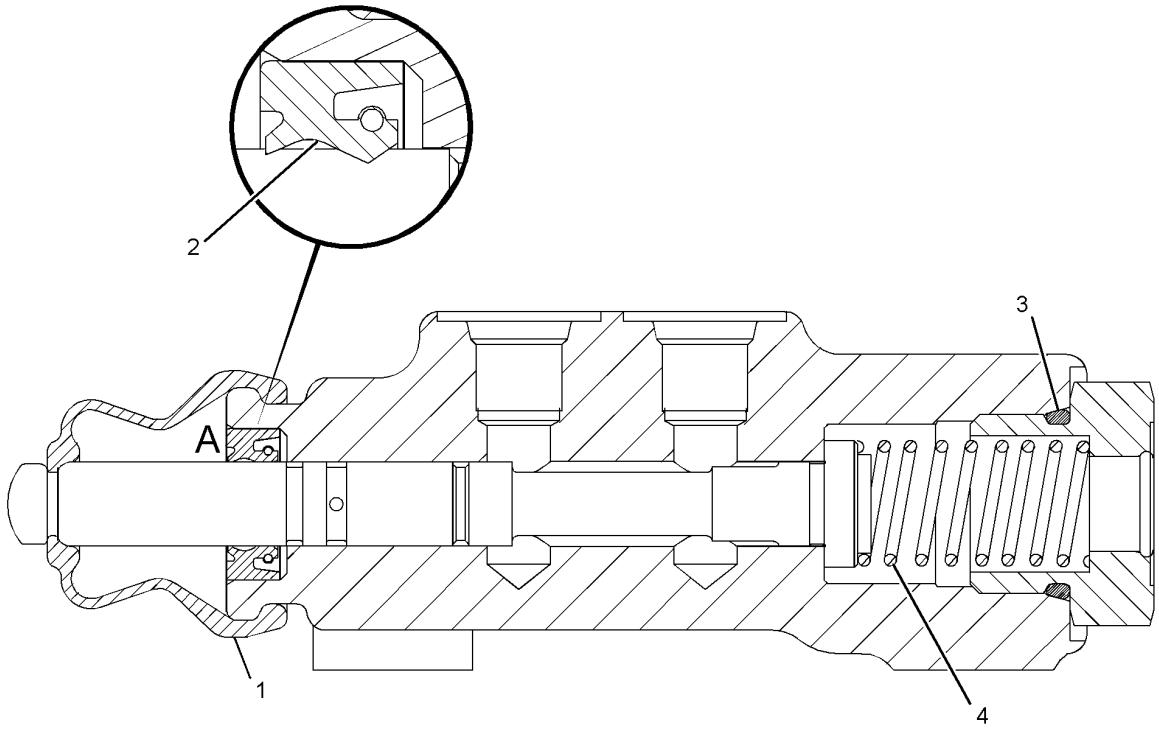

GRAPHIC #1 **<END>** g01317840

HYDRAULIC SYSTEM

279-0385 COOLER GP-HYD & STEERING OIL

S/N: 2211-UP

PART OF 262-2081 CHASSIS AR

SMCS-1374, 4346 **i02878138**

NOTE	REF NO	GRAPHIC REF	PART NUMBER	QTY	PART NAME 1 2 3 4 5 6 (PRODUCT LEVEL)	SEE PAGE
	1	1	**1M-6298**	8	CLAMP-MOUNTING	
	2	1	**1P-5411**	4	SLEEVE	
	3	1	**1P-5412**	8	BUSHING-TERMINAL	
	4	1	**3H-8726**	4	MOUNT AS	
	5	1	**190-7625**	1	CORE AS-STEERING OIL COOLER	
	6	1	**261-3853**	1	CORE AS-HYDRAULIC OIL COOLER	
	7	1	**261-6916**	4	SPACER (13.8X35X20-MM THK)	
	8	1	**279-0398**	1	PLATE AS	
M		1	**8T-3490**	4	NUT-WELD (M10X1.5-THD)	
M		1	**8T-3597**	3	NUT-WELD (M12X1.75-THD)	
	9	1	**279-0399**	1	PLATE AS	
M		1	**8T-3597**	7	NUT-WELD (M12X1.75-THD)	
	10	1	**279-0434**	1	SUPPORT AS	
	11	1	**279-0436**	2	PLATE AS	
					(EACH INCLUDES)	
		1	**127-1958**	1	SPACER (15X25X25-MM THK)	
	12	1	**5P-1076**	16	WASHER-HARD (13.5X30X4-MM THK)	
	13	1	**7X-0590**	4	WASHER-HARD (13.5X44.5X6-MM THK)	
M	14	1	**7X-2549**	2	BOLT (M12X1.75X100-MM)	
M	15	1	**7X-2550**	2	BOLT (M12X1.75X110-MM)	
	16	1	**8T-4121**	12	WASHER-HARD (11X21X2.5-MM THK)	
M	17	1	**8T-4136**	4	BOLT (M10X1.5X25-MM)	
M	18	1	**8T-4139**	4	BOLT (M12X1.75X30-MM)	
M	19	1	**8T-4172**	4	BOLT (M10X1.5X80-MM)	
M	20	1	**8T-4183**	8	BOLT (M12X1.75X40-MM)	
M	21	1	**8T-4194**	4	BOLT (M12X1.75X50-MM)	
M	22	1	**8T-5005**	4	BOLT (M10X1.5X70-MM)	

M-METRIC PART

279-0385 **COOLER GP-HYD & STEERING OIL** *(contd.)* **i02878138**

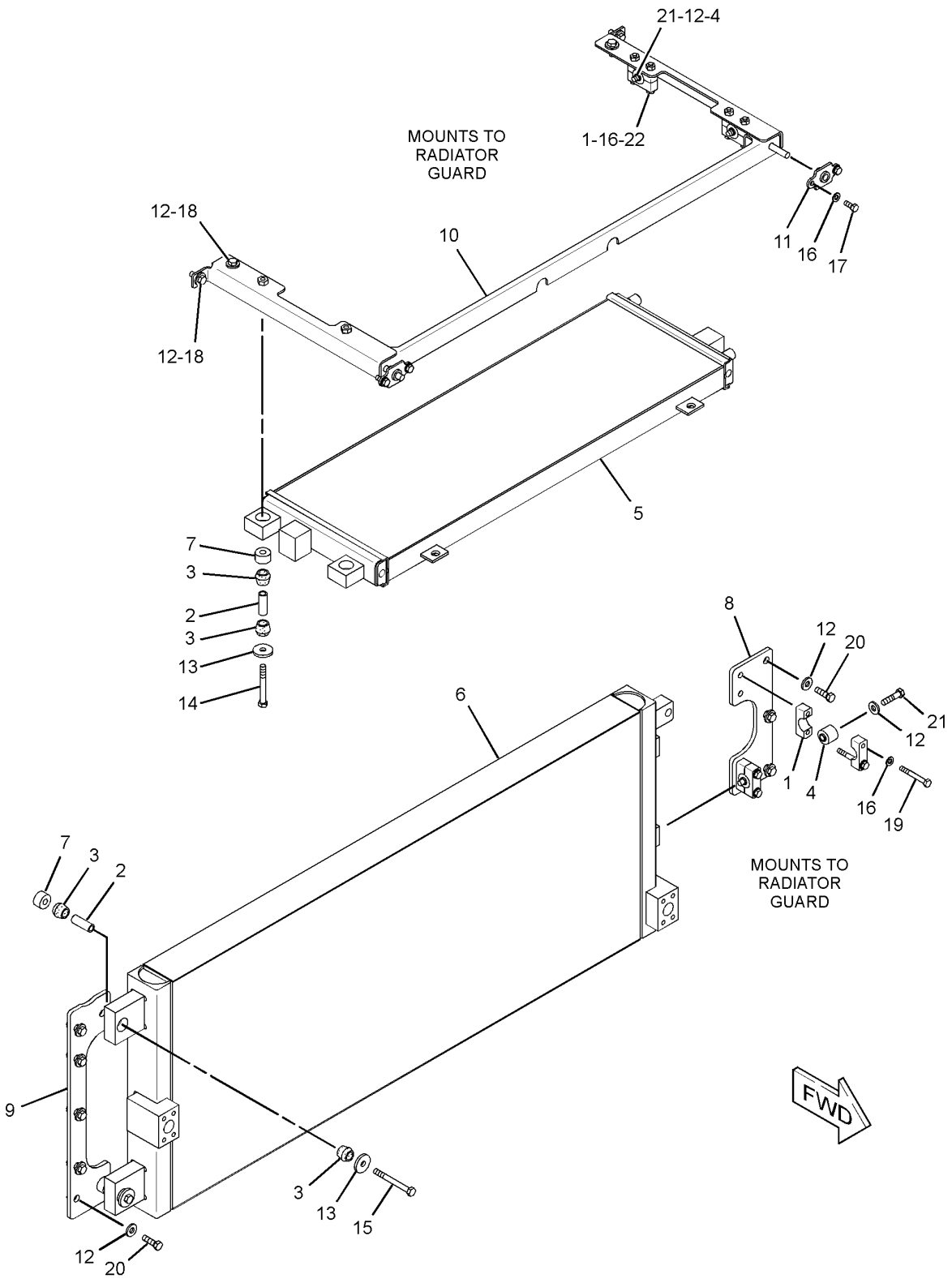

GRAPHIC #1 **<END>** g01442394

HYDRAULIC SYSTEM

283-4412 CYLINDER & MTG GP-LIFT

S/N: 2211-UP

PART OF 279-9400 HYDRAULIC AR

SMCS-5102 **i02902918**

NOTE	REF NO	GRAPHIC REF	PART NUMBER	QTY	PART NAME 1 2 3 4 5 6 (PRODUCT LEVEL)	SEE PAGE
	1	1	**5J-5365**	2	PIN	
	2	1	**9J-6001**	4	CAP AS	
		1	**9J-5942**	1	BEARING-SLEEVE	
	3	1	**231-6574**	2	YOKE	
Y	4	1	*290-5761*	1	CYLINDER GP-LIFT (LH)	668
Y	5	1	*290-5762*	1	CYLINDER GP-LIFT (RH)	669
	6	1	**4J-7083**	2	GASKET	
	7	1	**5P-9609**	2	SEAL-LIP TYPE	
	8	1	**7K-6413**	2	FLANGE	
	9	1	**7X-0394**	8	BOLT (7/8-9X7-IN)	
	10	1	**7X-0525**	8	WASHER-HARD (24X41.5X6-MM THK)	
M	11	1	**8T-4183**	4	BOLT (M12X1.75X40-MM)	
	12	1	**8T-4223**	4	WASHER-HARD (13.5X25.5X3-MM THK)	

M-METRIC PART
Y-SEPARATE ILLUSTRATION

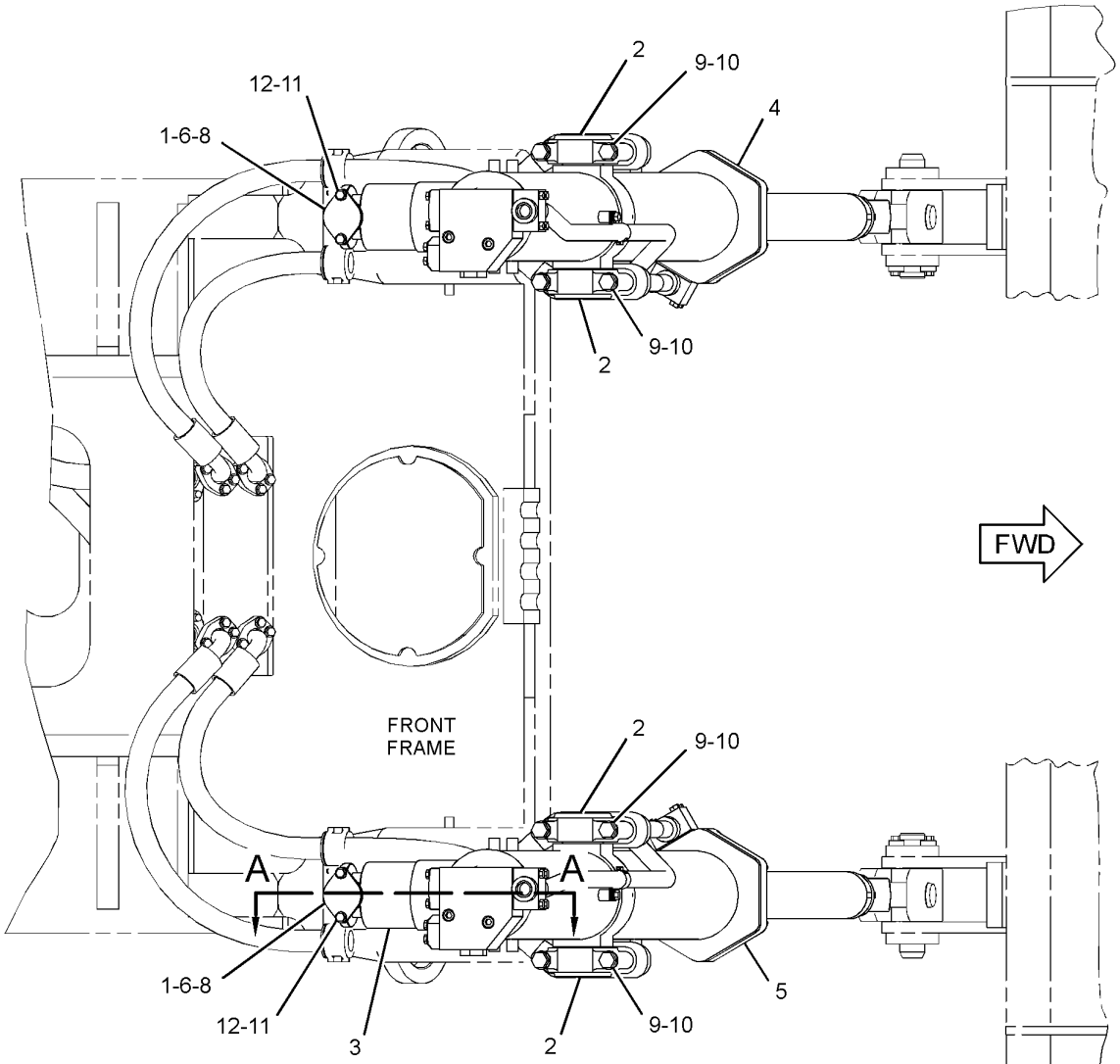

TOP VIEW

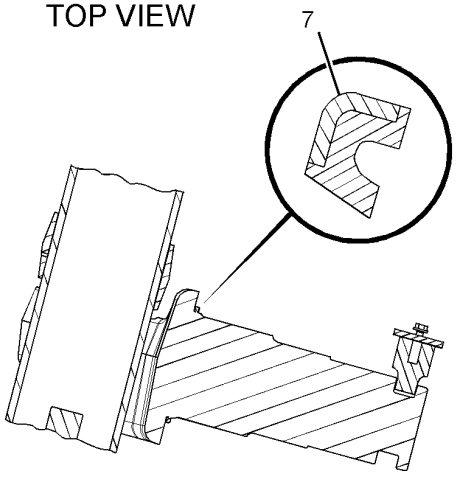

SECTION A-A

GRAPHIC #1 **<END>** g01448906

HYDRAULIC SYSTEM

153-9938 CYLINDER GP-LIFT–RH, QUICK DROP

S/N: 2211-UP

178MM (7 IN)BORE X 1760MM (69.3IN)STROKE

PART OF 290-5762 CYLINDER GP-LIFT

SMCS-5102 **i02894339**

NOTE	REF NO	GRAPHIC REF	PART NUMBER	QTY	PART NAME 1 2 3 4 5 6 (PRODUCT LEVEL)	SEE PAGE
	1	1	**252-6241**	1	NUT (2-1/4-12-THD)	
	2	1	**9J-0523**	1	WASHER (57.53X107.2X9.52-MM THK)	
	3	1	**252-0560**	1	PISTON AS	
		1	**9J-0520**	2	PLUNGER	
		1	**153-9921**	4	INSERT	
R	4	1	**9J-0513**	1	CYLINDER AS-LIFT	
		1	**1S-8241**	11	BOSS	
		1	**5J-1193**	4	BEARING-SLEEVE	
	5	1	**8J-1665**	1	SEAL-O-RING	
	6	1	**162-7210**	1	RING-BACKUP	
	7	1	**162-7757**	1	HEAD	
	8	1	**5P-8250**	6	WASHER (28X49X5-MM THK)	
	9	1	**1D-4641**	2	BOLT (1-8X4.5-IN)	
	10	1	**311-9320**	1	SEAL-U-CUP	
R	11	1	**6E-3914**	1	ROD AS	
		1	**1J-2192**	1	BUSHING	
	12	1	**311-9321**	1	SEAL-WIPER	
	13	1	**311-9319**	1	SEAL AS-BUFFER	
	14	1	**8T-1789**	1	SEAL AS	
	15	1	**9J-0711**	1	RING-WEAR	
	16	1	**8T-7538**	1	RING-WEAR	
	17	1	**6E-3917**	1	WASHER (70.23X107.2X9.52-MM THK)	
	20	1	**8T-8380**	1	SEAL-HEAD	
	21	1	**9X-8896**	4	BOLT (1-8X4-IN)	

R-REMFG PART MAY BE AVAILABLE

153-9938 CYLINDER GP-LIFT *(contd.)* **i02894339**

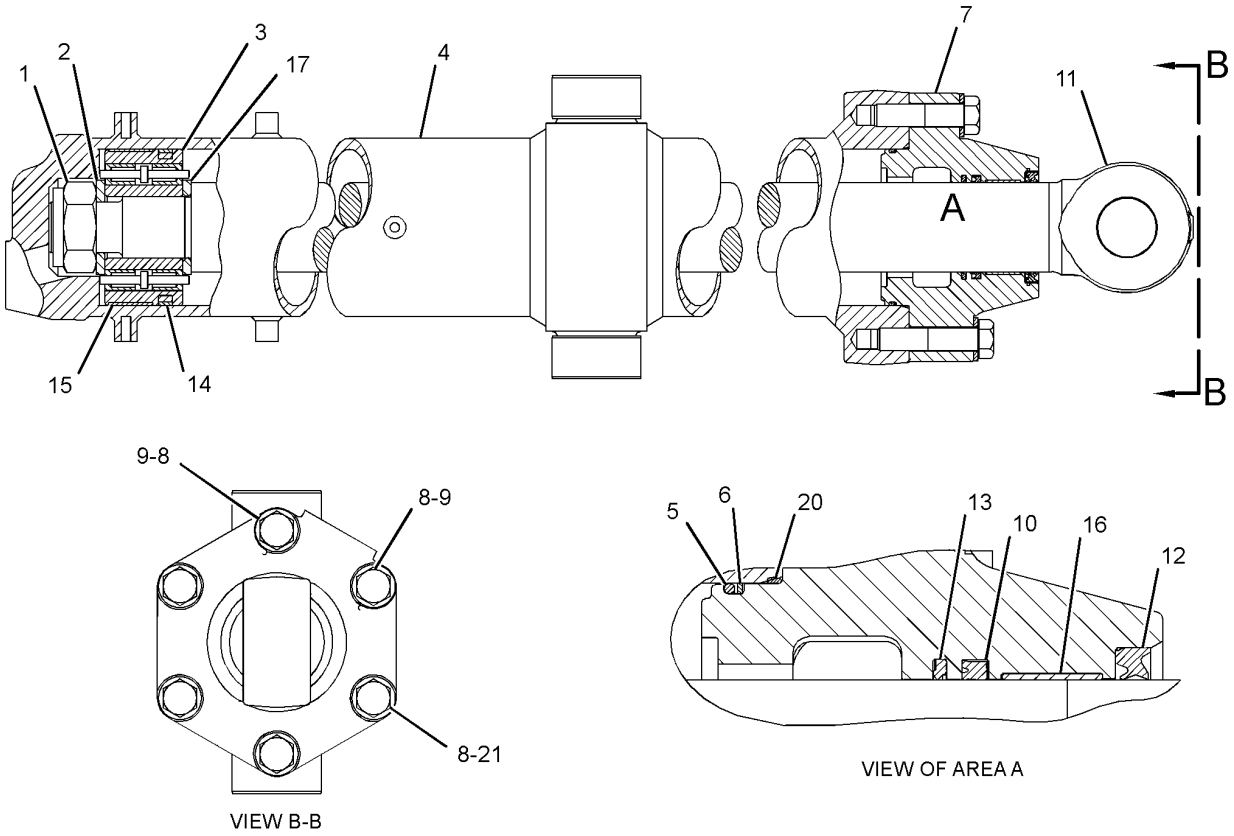

GRAPHIC #1 **<END>** g01456041

HYDRAULIC SYSTEM

153-9939 CYLINDER GP-LIFT—QUICK-DROP, LH

S/N: 2211-UP

177.8-MM (7-IN)BORE X 1759.5-MM (69.3-IN)STROKE

PART OF 290-5761 CYLINDER GP-LIFT

SMCS-5102 **i02894340**

NOTE	REF NO	GRAPHIC REF	PART NUMBER	QTY	PART NAME 1 2 3 4 5 6 (PRODUCT LEVEL)	SEE PAGE
	1	1	**252-6241**	1	NUT (2-1/4-12-THD)	
	2	1	**9J-0523**	1	WASHER (57.53X107.2X9.52-MM THK)	
	3	1	**252-0560**	1	PISTON AS	
	3A	1	**153-9921**	4	INSERT	
	3B	1	**9J-0520**	2	PLUNGER	
R	4	1	**9J-0513**	1	CYLINDER AS-LIFT	
	4A	1	**5J-1193**	2	BEARING-SLEEVE	
		1	**1S-8241**	10	BOSS	
	5	1	**9X-8896**	4	BOLT (1-8X4-IN)	
	6	1	**311-9320**	1	SEAL-U-CUP	
	7	1	**8J-1665**	1	SEAL-O-RING	
	8	1	**162-7210**	1	RING-BACKUP	
	9	1	**162-7757**	1	HEAD	
	10	1	**5P-8250**	6	WASHER (28X49X5-MM THK)	
	11	1	**1D-4641**	2	BOLT (1-8X4.5-IN)	
R	12	1	**6E-3914**	1	ROD AS	
	12A	1	**1J-2192**	1	BUSHING	
	13	1	**311-9321**	1	SEAL-WIPER	
	14	1	**311-9319**	1	SEAL AS-BUFFER	
	15	1	**8T-1789**	1	SEAL AS	
	16	1	**9J-0711**	1	RING-WEAR	
	17	1	**8T-7538**	1	RING-WEAR	
	18	1	**6E-3917**	1	WASHER (70.23X107.2X9.52-MM THK)	
	21	1	**8T-8380**	1	SEAL-HEAD	

R-REMFG PART MAY BE AVAILABLE

153-9939 CYLINDER GP-LIFT *(contd.)* i02894340

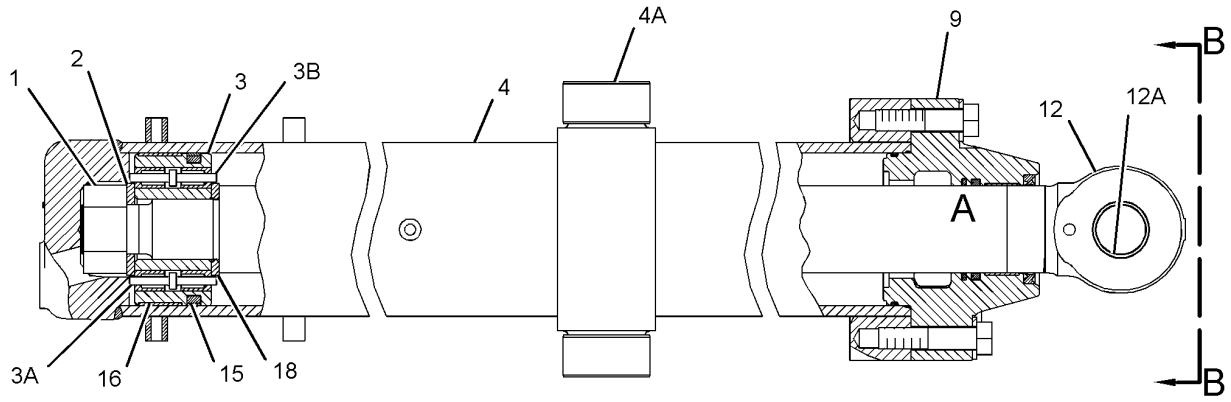

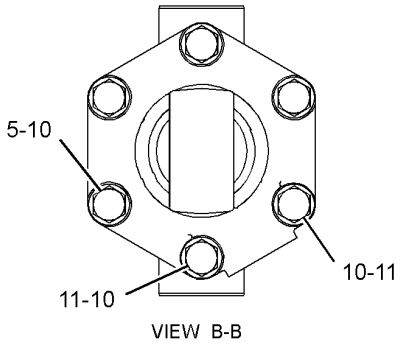

VIEW B-B

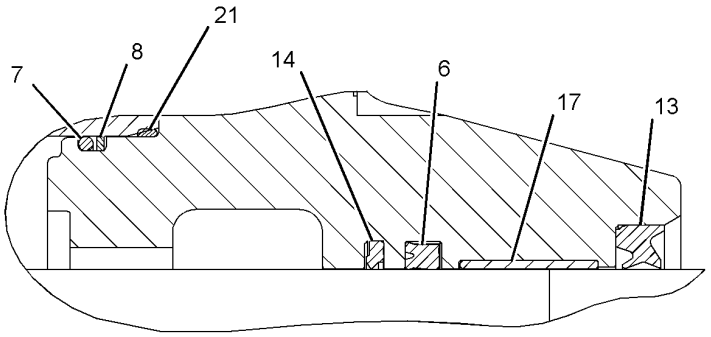

VIEW OF AREA A

GRAPHIC #1 **<END>** g01447883

HYDRAULIC SYSTEM

290-5761 CYLINDER GP-LIFT–LH

S/N: 2211-UP

PART OF 283-4412 CYLINDER & MTG GP-LIFT

SMCS-5102 **i02902978**

NOTE	REF NO	GRAPHIC REF	PART NUMBER	QTY	PART NAME 1 2 3 4 5 6 (PRODUCT LEVEL)	SEE PAGE
Y	1	1	**153-9939**	1	CYLINDER GP-LIFT (QUICK-DROP, LH)	666
	2	1	**290-5763**	1	MANIFOLD	
	3	1	**290-5764**	1	TUBE AS	
	4	1	*174-1530*	1	PLUG AS	
		1	**1N-5998**	1	PLUG	
		1	**6K-6307**	1	SEAL-O-RING	
	5	1	**0L-1329**	4	BOLT (1/2-13X3-IN)	
	6	1	**0S-1595**	2	BOLT (1/2-13X1.25-IN)	
	7	1	**1P-3705**	2	SEAL-RECTANGULAR	
	8	1	**1P-5767**	4	FLANGE-HALF	
	9	1	**5P-8245**	2	WASHER-HARD (13.5X25.5X3-MM THK)	
	10	1	**7F-8268**	1	SEAL-O-RING	
	11	1	**7S-8920**	2	CLIP (SLOT)	
	12	1	**7S-8921**	2	CLIP (TAB)	
M	13	1	**7Y-7992**	4	BOLT (M12X1.75X75-MM)	
	14	1	**8L-4743**	2	BOLT-SOCKET HEAD (5/8-11X4-IN)	
M	15	1	**8T-4194**	8	BOLT (M12X1.75X50-MM)	
	16	1	**8T-4223**	8	WASHER-HARD (13.5X25.5X3-MM THK)	

M-METRIC PART
Y-SEPARATE ILLUSTRATION

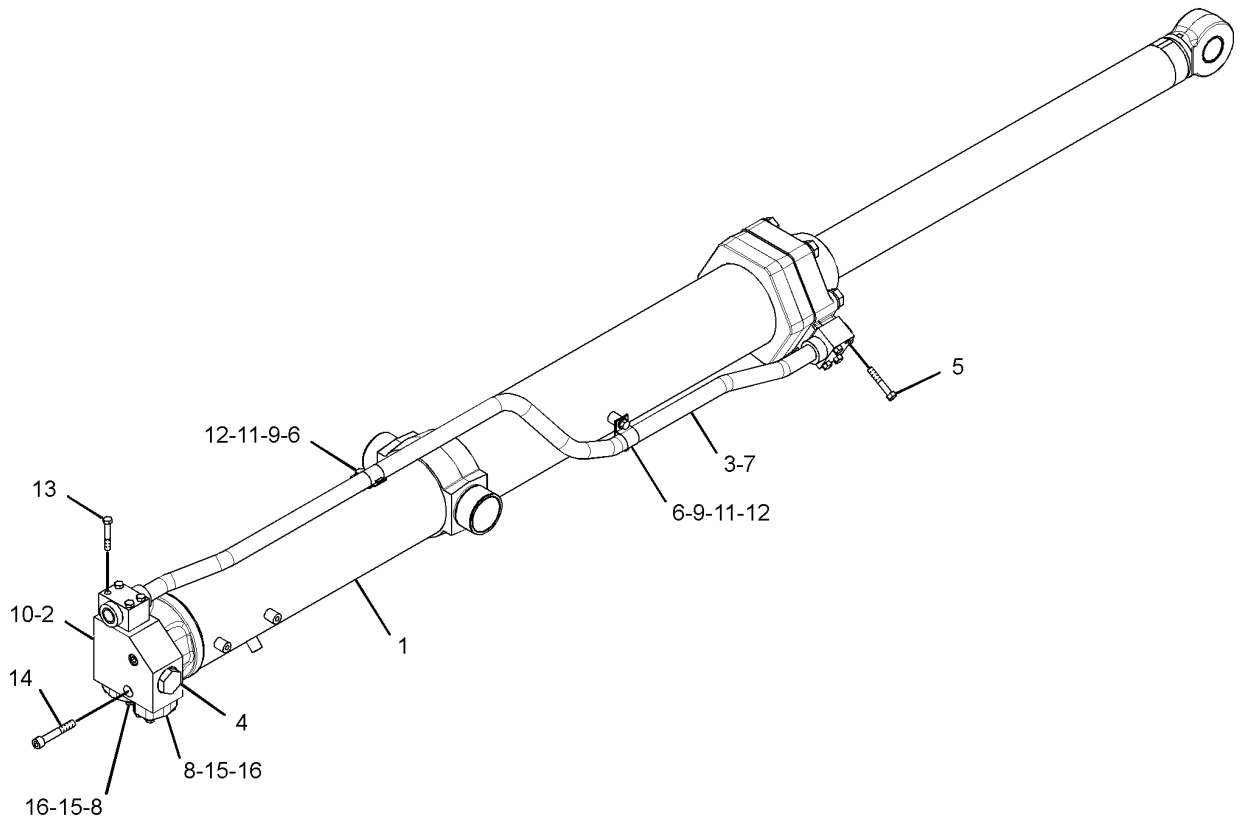

GRAPHIC #1 **<END>** g01447621

HYDRAULIC SYSTEM

290-5762 CYLINDER GP-LIFT–RH

S/N: 2211-UP

PART OF 283-4412 CYLINDER & MTG GP-LIFT

SMCS-5102 **i02902982**

NOTE	REF NO	GRAPHIC REF	PART NUMBER	QTY	PART NAME 1 2 3 4 5 6 (PRODUCT LEVEL)	SEE PAGE
Y	1	1	**153-9938**	1	CYLINDER GP-LIFT (QUICK-DROP, RH)	664
	2	1	**290-5763**	1	MANIFOLD	
	3	1	**290-5765**	1	TUBE AS	
	4	1	*174-1530*	1	PLUG AS	
		1	**1N-5998**	1	PLUG	
		1	**6K-6307**	1	SEAL-O-RING	
	5	1	**0L-1329**	4	BOLT (1/2-13X3-IN)	
	6	1	**0S-1595**	2	BOLT (1/2-13X1.25-IN)	
	7	1	**1P-3705**	2	SEAL-RECTANGULAR	
	8	1	**1P-5767**	4	FLANGE-HALF	
	9	1	**5P-8245**	2	WASHER-HARD (13.5X25.5X3-MM THK)	
	10	1	**7F-8268**	1	SEAL-O-RING	
	11	1	**7S-8920**	2	CLIP (SLOT)	
	12	1	**7S-8921**	2	CLIP (TAB)	
M	13	1	**7Y-7992**	4	BOLT (M12X1.75X75-MM)	
	14	1	**8L-4743**	2	BOLT-SOCKET HEAD (5/8-11X4-IN)	
M	15	1	**8T-4194**	8	BOLT (M12X1.75X50-MM)	
	16	1	**8T-4223**	8	WASHER-HARD (13.5X25.5X3-MM THK)	

M-METRIC PART
Y-SEPARATE ILLUSTRATION

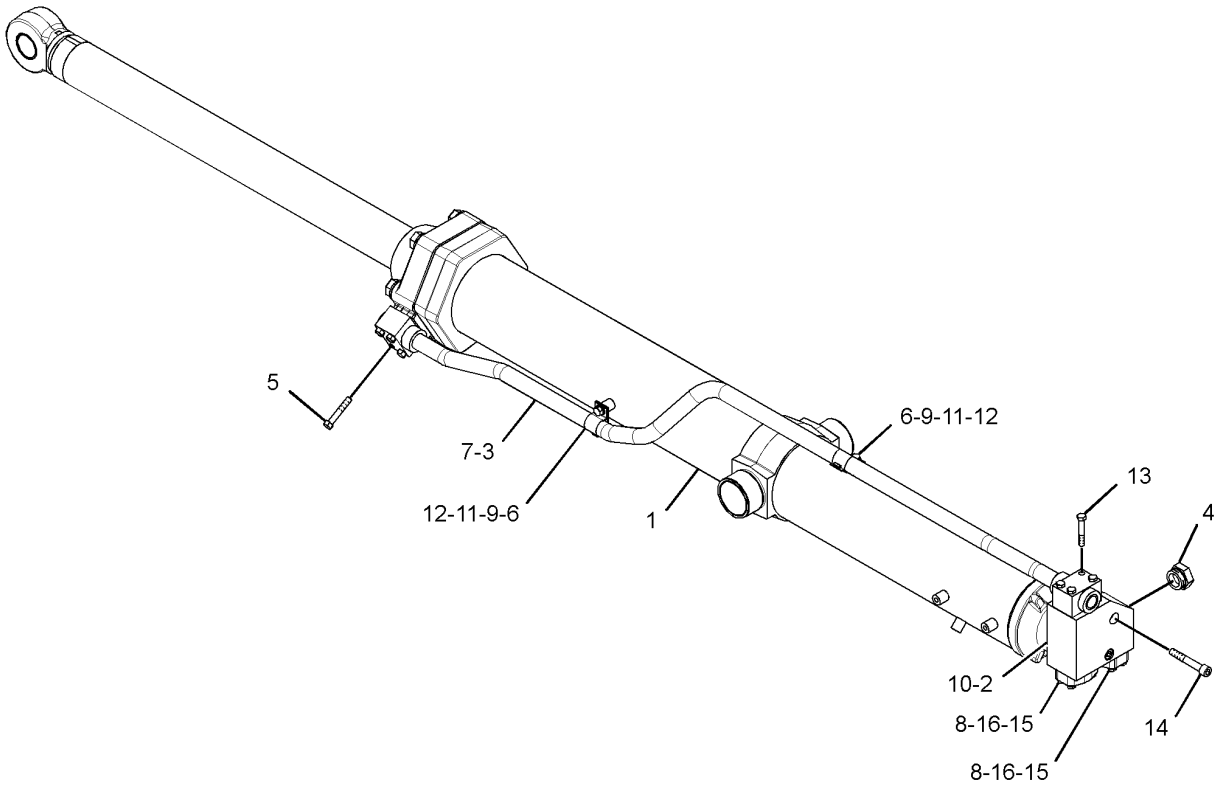

GRAPHIC #1 **<END>** g01447620

HYDRAULIC SYSTEM

308-2462 CYLINDER GP-TILT—LH—TILT, TIP FUNCTION

S/N: 2211-UP

266.7-MM (10.5-IN) BORE X 285.8-MM (11.3-IN) STROKE

PART OF 151-5217 PUSH ARM GP

SMCS-5104 **i02878658**

NOTE	REF NO	GRAPHIC REF	PART NUMBER	QTY	PART NAME 1 2 3 4 5 6 (PRODUCT LEVEL)	SEE PAGE
	1	1	**3B-8489**	3	FITTING-GREASE	
	2	1	**9J-1159**	1	RING-WEAR (260.3-MM ID)	
R	3	1	**9T-3718**	1	CYLINDER AS (LH)	
		1	**1U-2532**	2	BAR	
		1	**1U-3658**	1	HANDLE	
		1	**3G-7961**	1	LUG	
		1	**8J-8905**	2	RING-LOCK	
		1	**152-7554**	1	BEARING-SELF-ALIGNING	
R	4	1	**112-4055**	1	ROD AS	
		1	**8J-8905**	2	RING-LOCK	
		1	**152-7554**	1	BEARING-SELF-ALIGNING	
	5	1	**164-6497**	1	HEAD	
	6	1	**225-3287**	1	SEAL-WIPER	
Y	7	1	**316-6386**	1	PISTON GP-HYDRAULIC CYLINDER	716
	8	1	**157-7244**	1	RING-BACKUP	
	9	1	**167-2216**	1	SEAL AS-BUFFER	
	10	1	**167-2331**	1	SEAL-U-CUP	
	11	1	**3R-2300**	8	BOLT (1-1/4-7X4.5-IN)	
	12	1	**4K-0684**	8	WASHER-HARD (34X55X6-MM THK)	
	13	1	**4T-2576**	1	WASHER (82.93X146X11.94-MM THK)	
	14	1	**7J-9250**	1	LOCKNUT (3-1/4X12-THD)	
	15	1	**7X-4756**	1	SEAL	
	16	1	**8L-9241**	1	SEAL-O-RING	
	17	1	**8T-1796**	1	SEAL AS	
	18	1	**8T-7538**	1	RING-WEAR	

R-REMFG PART MAY BE AVAILABLE
Y-SEPARATE ILLUSTRATION

308-2462 CYLINDER GP-TILT *(contd.)* **i02878658**

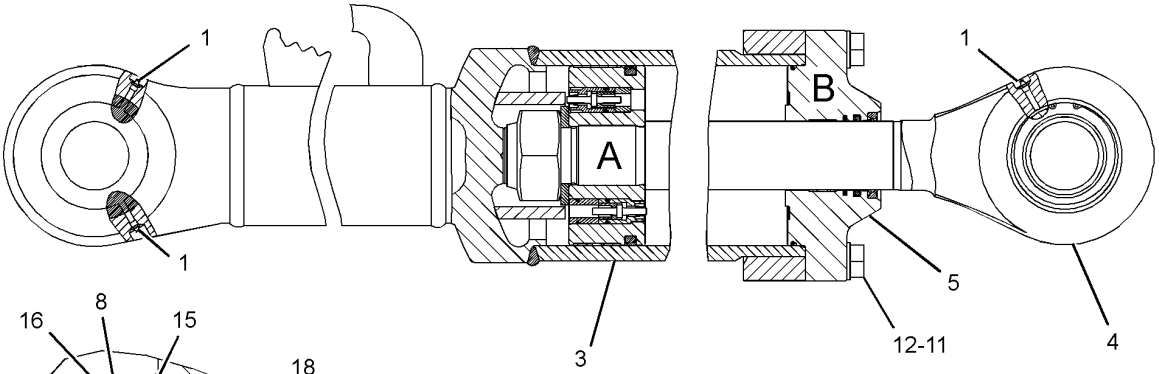

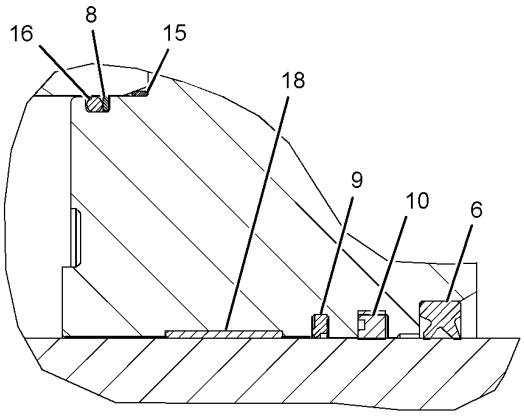

VIEW OF AREA B

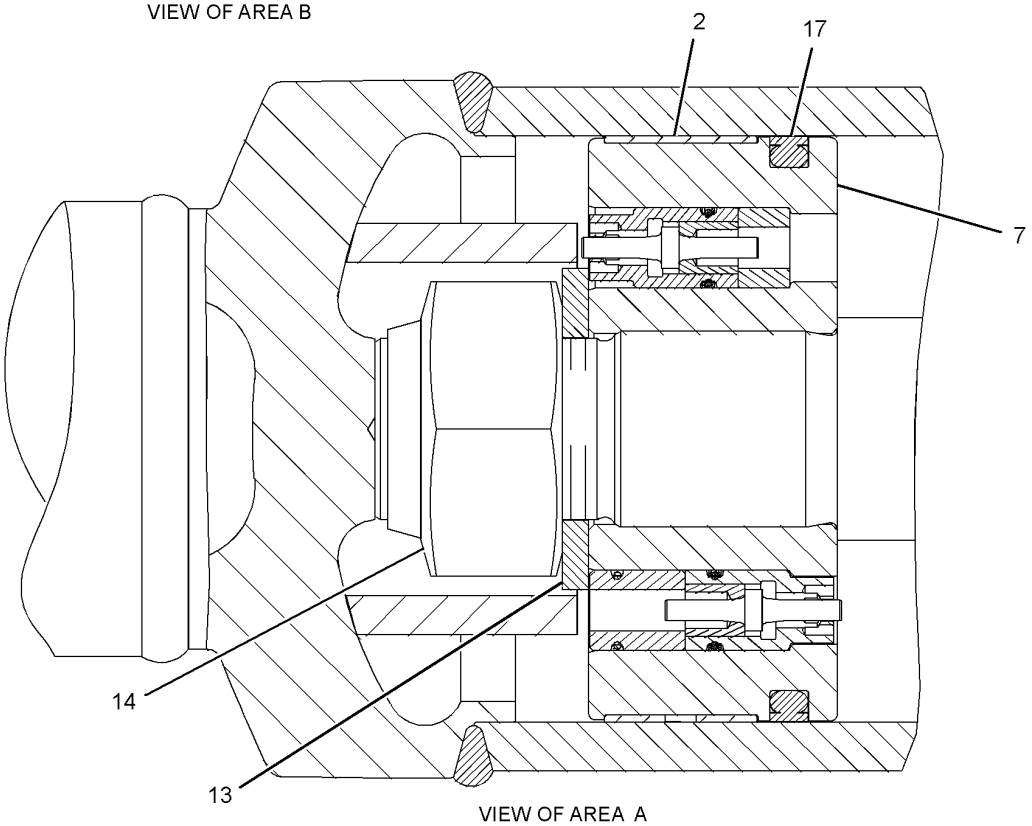

VIEW OF AREA A

GRAPHIC #1 **<END>** g01433114

HYDRAULIC SYSTEM

308-2464 CYLINDER GP-TILT—RH—TILT, TIP FUNCTION

S/N: 2211-UP

266.7-MM (10.5-IN) BORE X 285.8-MM (11.3-IN) STROKE

PART OF 151-5216 PUSH ARM GP

SMCS-5104 **i02878673**

NOTE	REF NO	GRAPHIC REF	PART NUMBER	QTY	PART NAME 1 2 3 4 5 6 (PRODUCT LEVEL)	SEE PAGE
	1	1	**3B-8489**	3	FITTING-GREASE	
	2	1	**9J-1159**	1	RING-WEAR (260.3-MM ID)	
R	3	1	**9T-3717**	1	CYLINDER AS (RH)	
		1	**1U-2532**	2	BAR	
		1	**1U-3658**	1	HANDLE	
		1	**3G-7961**	1	LUG	
		1	**8J-8905**	2	RING-LOCK	
		1	**152-7554**	1	BEARING-SELF-ALIGNING	
R	4	1	**112-4055**	1	ROD AS	
		1	**8J-8905**	2	RING-LOCK	
		1	**152-7554**	1	BEARING-SELF-ALIGNING	
	5	1	**164-6497**	1	HEAD	
	6	1	**225-3287**	1	SEAL-WIPER	
Y	7	1	**316-6386**	1	PISTON GP-HYDRAULIC CYLINDER	716
	8	1	**157-7244**	1	RING-BACKUP	
	9	1	**167-2216**	1	SEAL AS-BUFFER	
	10	1	**167-2331**	1	SEAL-U-CUP	
	11	1	**3R-2300**	8	BOLT (1-1/4-7X4.5-IN)	
	12	1	**4K-0684**	8	WASHER-HARD (34X55X6-MM THK)	
	13	1	**4T-2576**	1	WASHER (82.93X146X11.94-MM THK)	
	14	1	**7J-9250**	1	LOCKNUT (3-1/4X12-THD)	
	15	1	**7X-4756**	1	SEAL	
	16	1	**8L-9241**	1	SEAL-O-RING	
	17	1	**8T-1796**	1	SEAL AS	
	18	1	**8T-7538**	1	RING-WEAR	

R-REMFG PART MAY BE AVAILABLE
Y-SEPARATE ILLUSTRATION

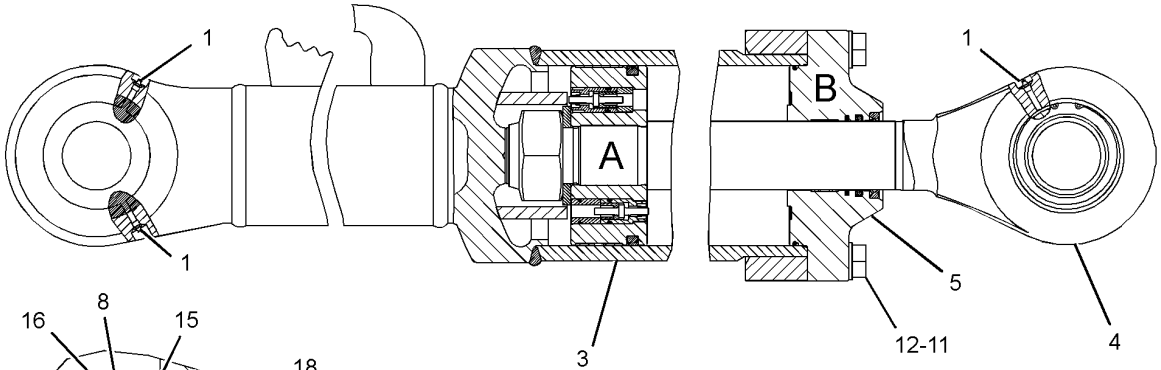

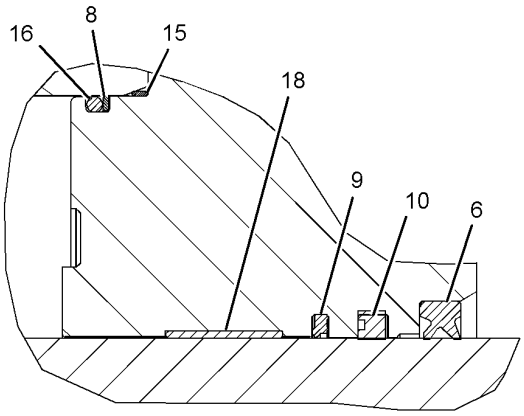

VIEW OF AREA B

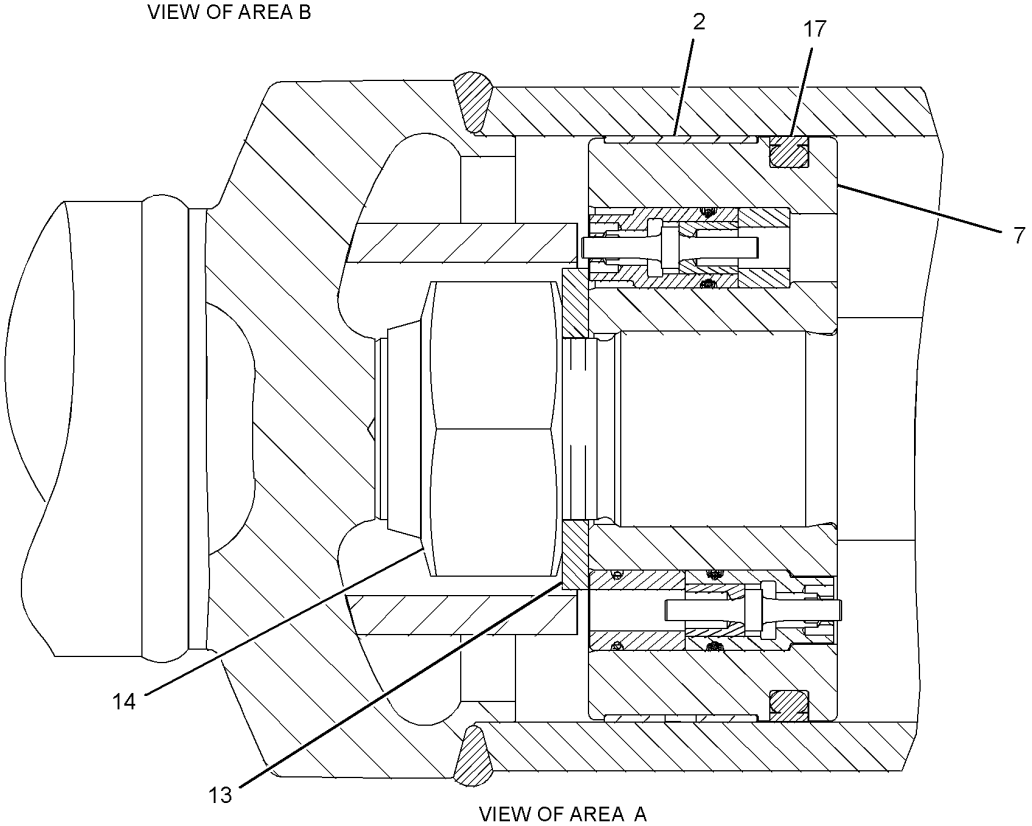

VIEW OF AREA A

GRAPHIC #1 **<END>** g01433114

273-6275 FILTER & LINES GP-CASE DRAIN–
HYDRAULIC FAN PUMP OIL
S/N: 2211-UP
PART OF 273-6250 LINES GP-HYDRAULIC FAN

SMCS-5057, 5091 **i02927266**

NOTE	REF NO	GRAPHIC REF	PART NUMBER	QTY	PART NAME 1 2 3 4 5 6 (PRODUCT LEVEL)	SEE PAGE
Y	1	1	**166-4647**	1	FILTER GP-OIL (HYDRAULIC FAN PUMP CASE DRAIN)	600
	2	1	**286-0182**	1	BRACKET	
	3	1	**291-6164**	1	TUBE AS	
	4	1	*148-8357*	1	ELBOW AS	
		1	**5K-9090**	1	SEAL-O-RING	
		1	**6V-9008**	1	ELBOW	
		1	**7M-8485**	1	SEAL-O-RING	
	5	1	*148-8422*	1	TEE AS	
		1	**5K-9090**	1	SEAL-O-RING	
		1	**6V-9746**	1	SEAL-O-RING	
		1	**7M-8485**	1	SEAL-O-RING	
		1	**8T-6356**	1	TEE-O-RING PORT	
	6	1	**7X-7729**	4	WASHER (11X25X3-MM THK)	
M	7	1	**8T-4136**	4	BOLT (M10X1.5X25-MM)	

M-METRIC PART
Y-SEPARATE ILLUSTRATION

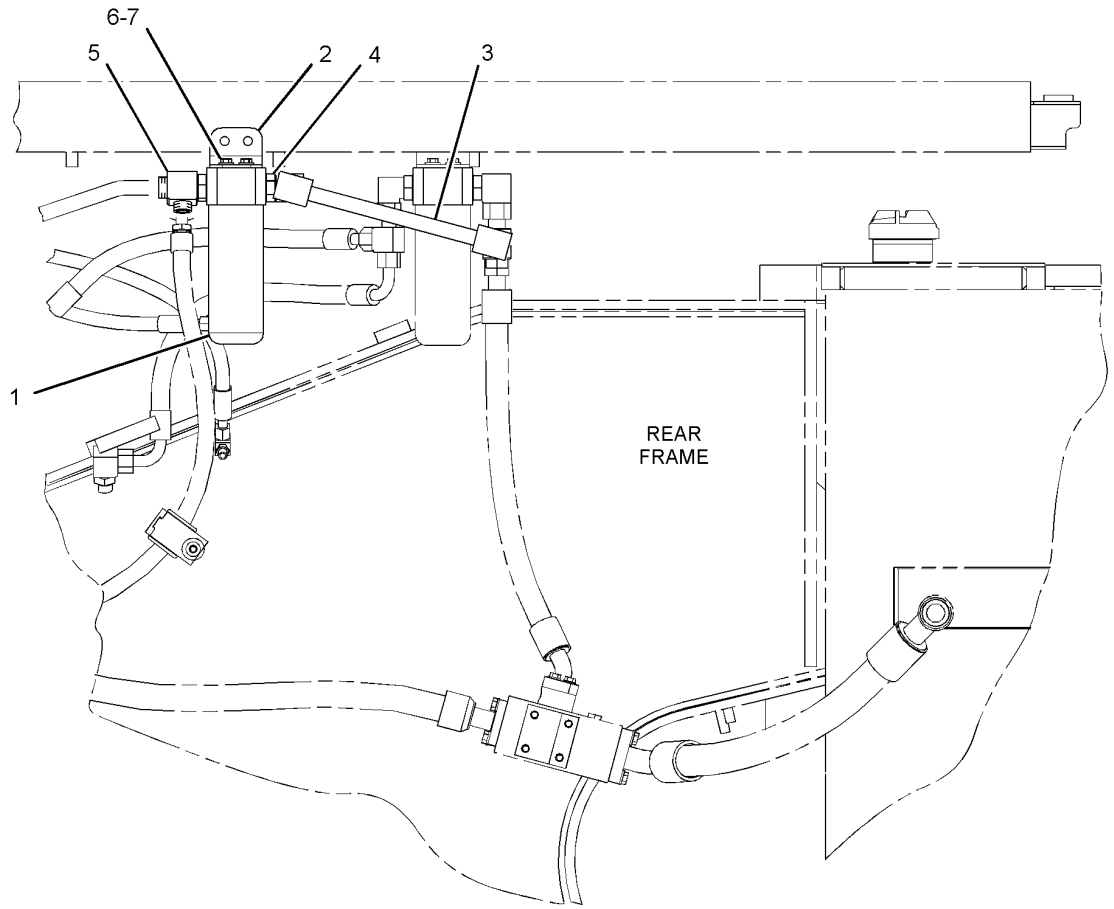

RIGHT SIDE VIEW

GRAPHIC #1 **<END>** g01427308

HYDRAULIC SYSTEM

280-8833 FILTER & LINES GP-CASE DRAIN–IMPLEMENT PUMP OIL

S/N: 2211-UP

PART OF 279-9400 HYDRAULIC AR

SMCS-5057, 5091 **i02926834**

NOTE	REF NO	GRAPHIC REF	PART NUMBER	QTY	PART NAME 1 2 3 4 5 6 (PRODUCT LEVEL)	SEE PAGE
	1	1	**3G-8607**	1	VALVE GP-CHECK (AIR PURGE)	
	2	1	**6V-0852**	1	CAP-DUST	
	3	1	*148-8443*	1	TEE AS	
		1	**3J-1907**	1	SEAL-O-RING	
		1	**6V-8397**	1	SEAL-O-RING	
		1	**7X-2459**	1	TEE-O-RING	
	4	1	*154-5231*	1	ADAPTER AS	
		1	**3J-1907**	1	SEAL-O-RING	
		1	**3K-0360**	1	SEAL-O-RING	
		1	**132-3726**	1	ADAPTER	
Y	5	1	**166-4647**	1	FILTER GP-OIL (IMPLEMENT PUMP CASE DRAIN)	600
	6	1	*250-1458*	1	TEE AS	
		1	**5K-9090**	1	SEAL-O-RING	
		1	**7M-8485**	1	SEAL-O-RING	
		1	**250-1457**	1	TEE	
	7	1	**286-0182**	1	BRACKET	
I	8	1	**288-8841**	1	HOSE AS	
	9	1	**288-8843**	1	BRACKET	
I	10	1	**288-8844**	1	HOSE AS	
I	11	1	**297-4803**	1	HOSE AS	
I	12	1	**317-1621**	1	HOSE AS	
	13	1	*148-8352*	1	ELBOW AS	
		1	**5K-9090**	1	SEAL-O-RING	
		1	**6V-9854**	1	ELBOW	
	14	1	*148-8357*	1	ELBOW AS	
		1	**5K-9090**	1	SEAL-O-RING	
		1	**6V-9008**	1	ELBOW	
		1	**7M-8485**	1	SEAL-O-RING	
	15	1	*148-8364*	2	ELBOW AS	
					(EACH INCLUDES)	
		1	**3K-0360**	1	SEAL-O-RING	
		1	**6V-8398**	1	SEAL-O-RING	
		1	**6V-8625**	1	ELBOW	
	16	1	*148-8367*	1	ELBOW AS	
		1	**6V-8397**	2	SEAL-O-RING	
		1	**6V-9850**	1	ELBOW	
	17	1	*148-8374*	1	ELBOW AS	
		1	**3K-0360**	1	SEAL-O-RING	
		1	**6V-8397**	1	SEAL-O-RING	
		1	**6V-8723**	1	ELBOW	
	18	1	*148-8429*	1	TEE AS	
		1	**5K-9090**	2	SEAL-O-RING	
		1	**6V-9840**	1	TEE-SWIVEL	
	19	1	*155-6344*	1	ELBOW AS	
		1	**5K-9090**	2	SEAL-O-RING	
		1	**6V-8991**	1	ELBOW	
	20	1	*164-5567*	1	COUPLER AS-QUICK DISCONNECT	
		1	**3J-1907**	1	SEAL-O-RING	
		1	**6V-3965**	1	COUPLER-QUICK DISCONNECT	
	21	1	*164-9904*	1	TEE AS	
		1	**2M-9780**	1	SEAL-O-RING	
		1	**6V-9746**	2	SEAL-O-RING	
		1	**122-9088**	1	TEE	
	22	1	**6V-9172**	1	NUT (1-7/16-12-THD)	
	23	1	**6V-9833**	1	CAP AS	

HYDRAULIC SYSTEM

280-8833 FILTER & LINES GP-CASE DRAIN *(contd.)* i02926834

NOTE	REF NO	GRAPHIC REF	PART NUMBER	QTY	PART NAME 1 2 3 4 5 6 (PRODUCT LEVEL)	SEE PAGE
	24	1	**7X-7729**	4	WASHER (11X25X3-MM THK)	
	25	1	**8T-4121**	2	WASHER-HARD (11X21X2.5-MM THK)	
M	26	1	**8T-4136**	6	BOLT (M10X1.5X25-MM)	
M	27	1	**8T-4139**	2	BOLT (M12X1.75X30-MM)	
	28	1	**8T-4223**	2	WASHER-HARD (13.5X25.5X3-MM THK)	

I-REFER TO HYDRAULIC INFORMATION SYSTEM
M-METRIC PART
Y-SEPARATE ILLUSTRATION

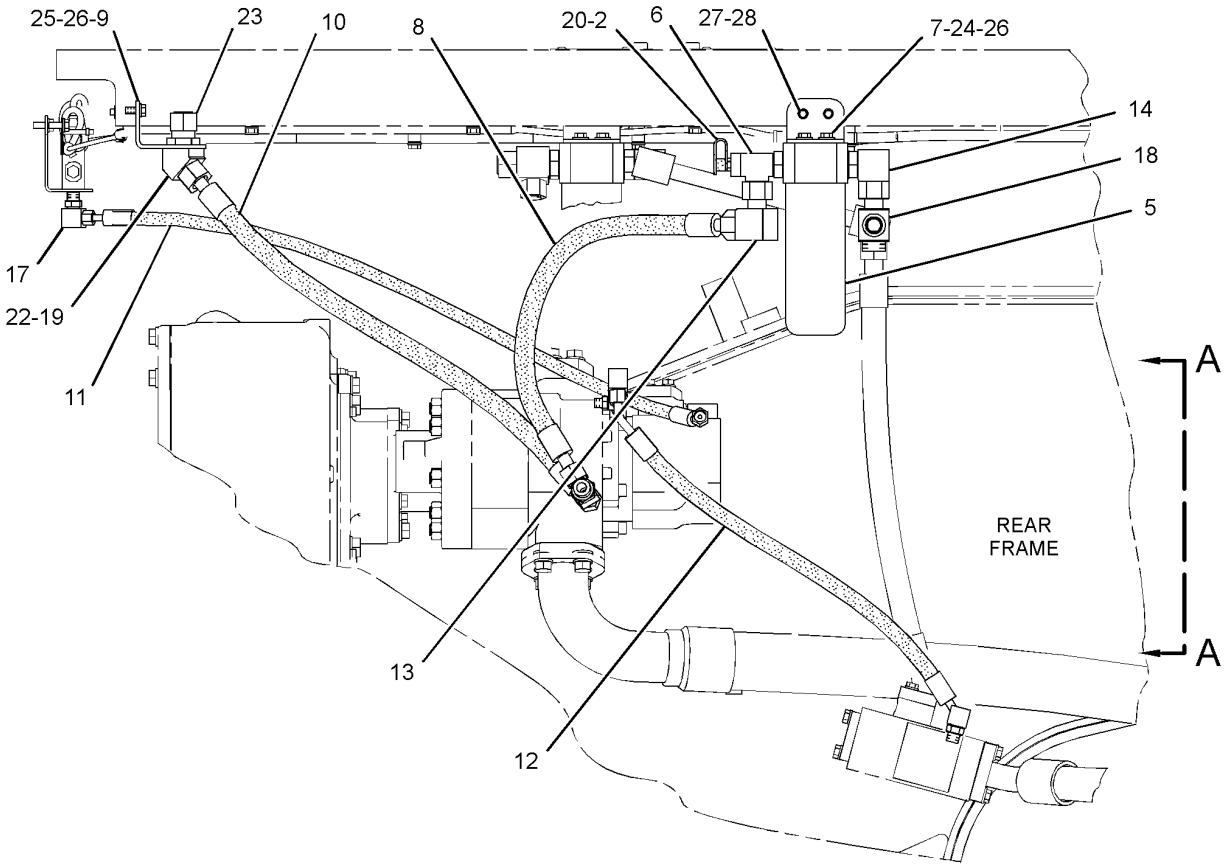

RIGHT SIDE VIEW

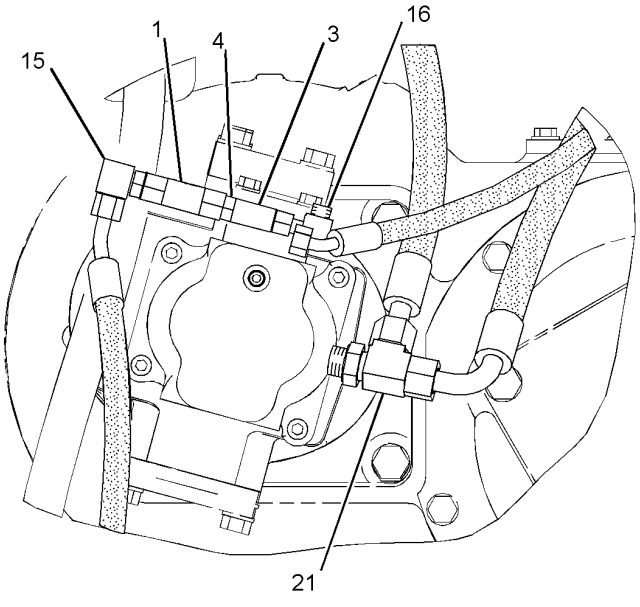

VIEW A-A

GRAPHIC #1 **<END>** g01449203

HYDRAULIC SYSTEM

280-3444 FILTER GP-OIL—HYDRAULIC FAN

S/N: 2211-UP

PART OF 273-6250 LINES GP-HYDRAULIC FAN

SMCS-5068, 5091, 5092 **i02859733**

NOTE	REF NO	GRAPHIC REF	PART NUMBER	QTY	PART NAME 1 2 3 4 5 6 (PRODUCT LEVEL)	SEE PAGE
	1	1	**207-5035**	1	FILTER ELEMENT AS-OIL (ULTRA HIGH EFFICIENCY)	
	2	1	**253-2673**	1	SWITCH AS-PRESSURE (OIL FILTER)	
		1	**102-8802**	1	KIT-RECEPTACLE (2-PIN)	
					(INCLUDES RECEPTACLE AS & WEDGE)	
		1	**186-3735**	2	PIN-CONNECTOR (16-GA TO 18-GA)	
E		1	**9X-1813**		SLEEVE (14-CM)	
	3	1	**3J-1907**	1	SEAL-O-RING	
	4	1	**5F-9144**	1	SEAL-O-RING	

E-ORDER BY THE CENTIMETER

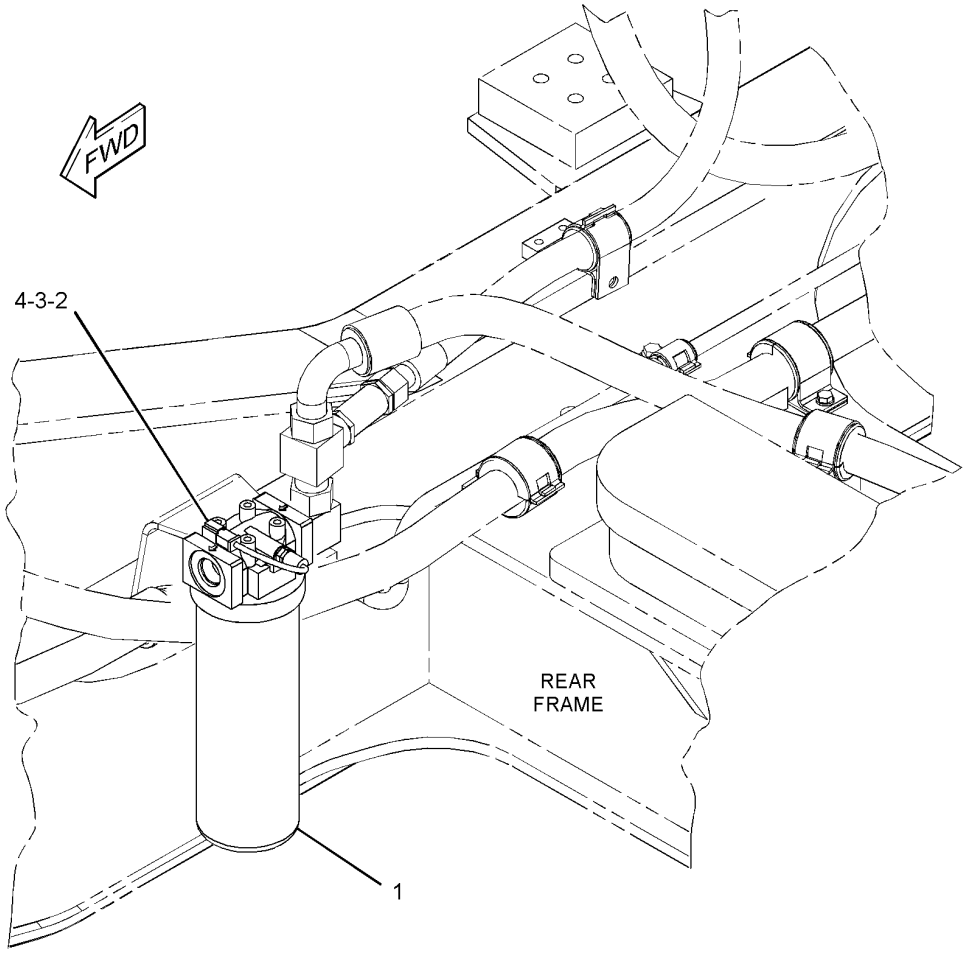

GRAPHIC #1 **<END>** g01428701

287-8402 FILTER GP-OIL–IMPLEMENT PILOT

S/N: 2211-UP

PART OF 279-9405 LINES GP-PILOT

SMCS-5068, 5091, 5092 **i02900125**

NOTE	REF NO	GRAPHIC REF	PART NUMBER	QTY	PART NAME 1 2 3 4 5 6 (PRODUCT LEVEL)	SEE PAGE
	1	1	**102-2828**	1	FILTER-OIL (ULTRA HIGH EFFICIENCY)	
	2	1	**253-2673**	1	SWITCH AS-PRESSURE (FILTER BYPASS)	
		1	**102-8802**	1	KIT-RECEPTACLE (2-PIN)	
					(INCLUDES RECEPTACLE AS & WEDGE)	
		1	**186-3735**	2	PIN-CONNECTOR (16-GA TO 18-GA)	
		1	**3J-1907**	1	SEAL-O-RING	
		1	**5F-9144**	1	SEAL-O-RING	
E		1	**9X-1813**		SLEEVE (14-CM)	
	3	1	**3J-1907**	1	SEAL-O-RING	
	4	1	**5F-9144**	1	SEAL-O-RING	

E-ORDER BY THE CENTIMETER

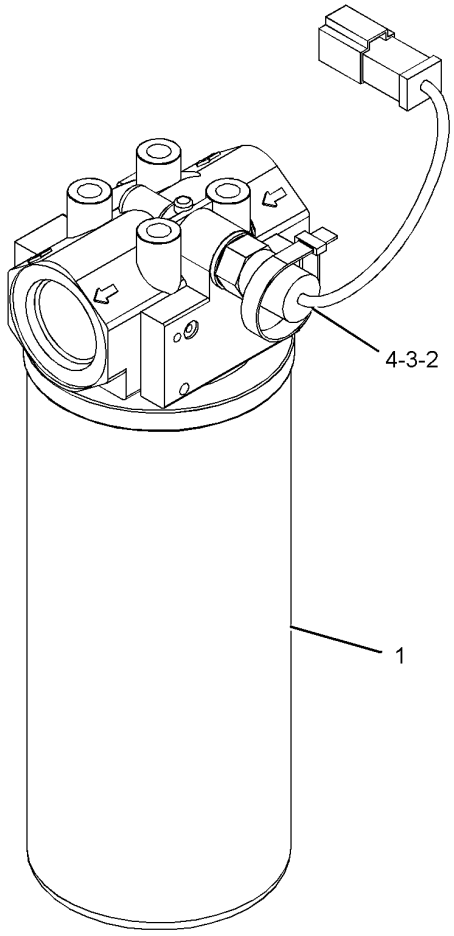

GRAPHIC #1 **<END>** g01447809

HYDRAULIC SYSTEM

290-6870 FITTING GP-HYDRAULIC

S/N: 2211-UP
PART OF 280-8930 RENEWAL AR-OIL
AN ATTACHMENT

SMCS-5057 **i02902174**

NOTE	REF NO	GRAPHIC REF	PART NUMBER	QTY	PART NAME 1 2 3 4 5 6 (PRODUCT LEVEL)	SEE PAGE
	1	1	**279-0103**	1	BRACKET AS	
M		1	**8T-3490**	1	NUT-WELD (M10X1.5-THD)	
	2	1	**315-6119**	1	HOSE AS	
	3	1	*148-8341*	1	CONNECTOR AS	
		1	**3D-2824**	1	SEAL-O-RING	
		1	**6V-8713**	1	CONNECTOR	
		1	**7J-9108**	1	SEAL-O-RING	
	4	1	*155-3504*	1	ELBOW AS	
		1	**2M-9780**	1	SEAL-O-RING	
		1	**6V-9003**	1	ELBOW	
		1	**7J-9108**	1	SEAL-O-RING	
	5	1	**1S-0994**	2	CLIP	
	6	1	**259-9094**	1	PLUG AS	
		1	**2M-9780**	1	SEAL-O-RING	
		1	**9S-4190**	1	PLUG-O-RING	
	7	1	**7X-0347**	1	BOLT (5/8-11X2.25-IN)	
	8	1	**7X-0515**	1	WASHER-HARD (17X35X5-MM THK)	
	9	1	**8T-4121**	2	WASHER-HARD (11X21X2.5-MM THK)	
M	10	1	**8T-4137**	2	BOLT (M10X1.5X20-MM)	

M-METRIC PART

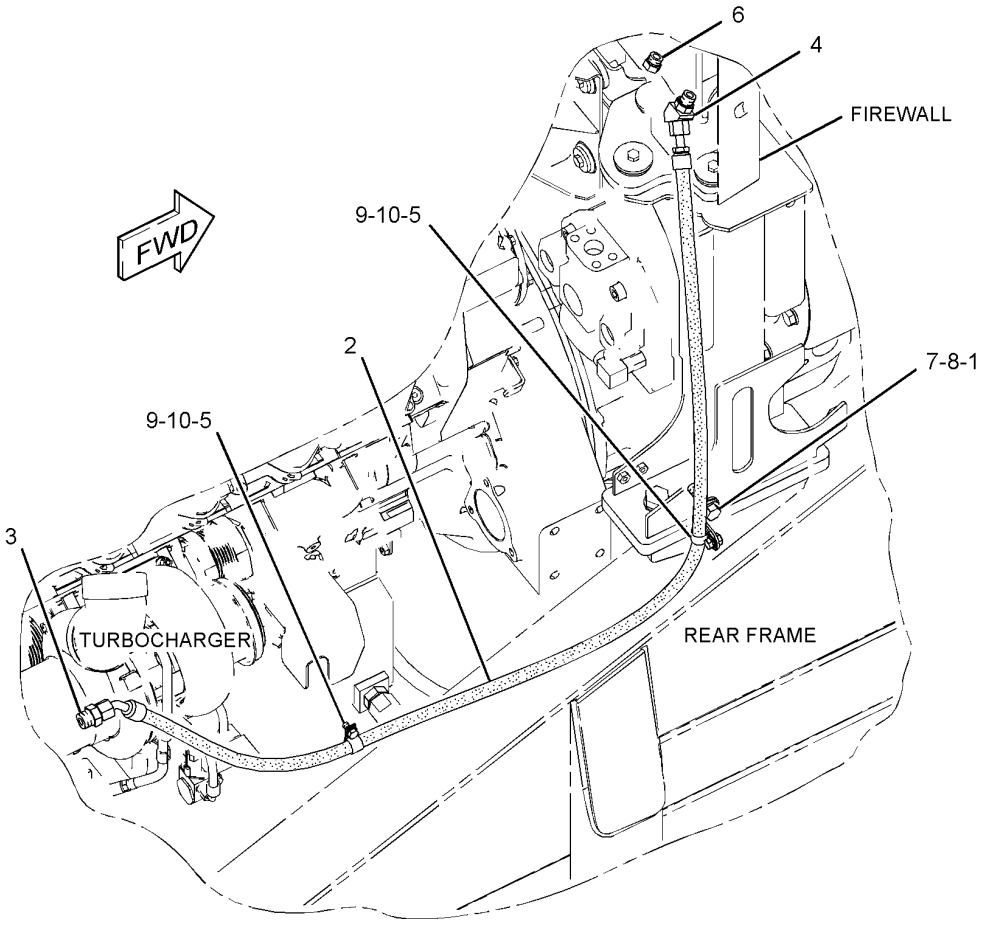

GRAPHIC #1 **<END>** g01447945

HYDRAULIC SYSTEM

279-9400 HYDRAULIC AR

S/N: 2211-UP

PART OF 262-2077 COMMON AR

SMCS-5051 **i02902910**

NOTE	PART NUMBER	QTY	PART NAME 1 2 3 4 5 6 (PRODUCT LEVEL)	SEE PAGE
Y	*273-7150*	1	CONTROL GP-SERVICE BRAKE	570
Y	*283-4412*	1	CYLINDER & MTG GP-LIFT	662
Y	*283-4409*	1	CYLINDER & MTG GP-STEERING	597
Y	*280-8833*	1	FILTER & LINES GP-CASE DRAIN (IMPLEMENT PUMP OIL)	675
Y	*273-7400*	1	LINES GP-AXLE OIL COOLER	392
Y	*280-9638*	1	LINES GP-DIAGNOSTIC (REMOTE PRESSURE TAPS)	909
Y	*280-8832*	1	LINES GP-HYDRAULIC (IMPLEMENT PUMP)	683
Y	*273-6250*	1	LINES GP-HYDRAULIC FAN	690
Y	*283-4411*	1	LINES GP-LIFT CYLINDER	699
Y	*279-9405*	1	LINES GP-PILOT	702
Y	*273-7130*	1	LINES GP-STEERING	611
Y	*273-7110*	1	LINES GP-STEERING NEUTRALIZER	617
Y	*273-7120*	1	LINES GP-STEERING OIL COOLER	620
Y	*280-1706*	1	LINES GP-TILT CYLINDER	712
Y	*273-6265*	1	MOTOR & MTG GP-HYDRAULIC FAN	714
Y	*273-7395*	1	PUMP & MTG GP-AXLE OIL COOLER	422
Y	*274-2350*	1	PUMP & MTG GP-BRAKE	585
Y	*273-6270*	1	PUMP & MTG GP-HYDRAULIC FAN	718
Y	*291-2666*	1	PUMP & MTG GP-IMPLEMENT	719
Y	*1C-7958*	1	PUMP & MTG GP-IMPLEMENT PILOT	721
Y	*285-3328*	1	PUMP & MTG GP-SECONDARY STEER	624
Y	*280-1708*	1	PUMP & MTG GP-STEERING (STEERING OIL COOLER, PILOT)	625
Y	*283-4413*	1	TANK & MTG GP-HYDRAULIC (STEERING, BRAKE)	730
Y	*283-4414*	1	TANK & MTG GP-HYDRAULIC (IMPLEMENT, HYDRAULIC FAN)	731
Y	*279-9397*	1	VALVE & MTG GP-MAIN CONTROL	739

Y-SEPARATE ILLUSTRATION

<END>

283-2520 HYDRAULIC AR–

SECONDARY STEERING, STANDARD FILTRATION

S/N: 2211-UP

CANNOT BE USED WITH 283-2525–PAGE 682

AN ATTACHMENT

SMCS-5051 **i02942246**

NOTE	PART NUMBER	QTY	PART NAME 1 2 3 4 5 6 (PRODUCT LEVEL)	SEE PAGE
Y	*283-2522*	1	LINES GP-HYDRAULIC (SEC STEERING, STD FILTRATION)	684
Y	*268-8165*	1	LINES GP-HYDRAULIC FAN (STANDARD FILTRATION)	688
Y	*284-4680*	1	LINES GP-SECONDARY STEERING	602
Y	*268-8170*	1	LINES GP-SERVICE BRAKE (STANDARD FILTRATION)	581
Y	*268-8190*	1	LINES GP-STEERING (STANDARD FILTRATION)	609
Y	*288-7140*	1	VALVE & MTG GP-STEERING (SECONDARY)	635

Y-SEPARATE ILLUSTRATION

<END>

HYDRAULIC SYSTEM

283-2525 HYDRAULIC AR—SECONDARY STEERING, DELUXE FILTRATION

S/N: 2211-UP

CANNOT BE USED WITH 283-2520—PAGE 681

AN ATTACHMENT

SMCS-5051 **i02901621**

NOTE	PART NUMBER	QTY	PART NAME 1 2 3 4 5 6 (PRODUCT LEVEL)	SEE PAGE
Y	*283-2523*	1	LINES GP-SERVICE BRAKE (BRAKE PUMP HP SCR, DLX FLTR)	583
Y	*288-8850*	1	LINES GP-HYDRAULIC (IMPL PUMP HP SCR, DLX FLTR)	686
Y	*280-4340*	1	LINES GP-HYDRAULIC FAN (FAN PMP, MTR HP SCR, DLX FLTR)	697
Y	*288-7135*	1	LINES GP-SECONDARY STEERING (SEC STEER PMP HP SCRN, DELUXE)	605
Y	*283-2524*	1	LINES GP-STEERING (STEER PMP HP SCRN, DLX FLTR)	615
Y	*288-7140*	1	VALVE & MTG GP-STEERING (SECONDARY)	635

Y-SEPARATE ILLUSTRATION

<END>

280-8832 LINES GP-HYDRAULIC—IMPLEMENT PUMP

S/N: 2211-UP

PART OF 279-9400 HYDRAULIC AR

SMCS-5057 **i02894354**

NOTE	REF NO	GRAPHIC REF	PART NUMBER	QTY	PART NAME 1 2 3 4 5 6 (PRODUCT LEVEL)	SEE PAGE
	1	1	**288-8838**	1	FLANGE	
	2	1	**288-8845**	1	HOSE AS	
	3	1	**1P-4585**	2	FLANGE-HALF	
	4	1	**1P-7016**	2	FLANGE-HALF	
	5	1	**2H-6338**	1	SEAL-O-RING	
	6	1	**4H-9105**	1	SEAL-O-RING	
M	7	1	**8T-0439**	4	BOLT-SOCKET HEAD (M16X2X30-MM)	
M	8	1	**8T-4193**	4	BOLT (M16X2X50-MM)	
	9	1	**9X-8257**	8	WASHER (17.5X30X3.5-MM THK)	
	10	1	**7X-0346**	4	BOLT (5/8-11X2-IN)	
	11	1	**9X-4611**	1	SEAL-O-RING	

M-METRIC PART

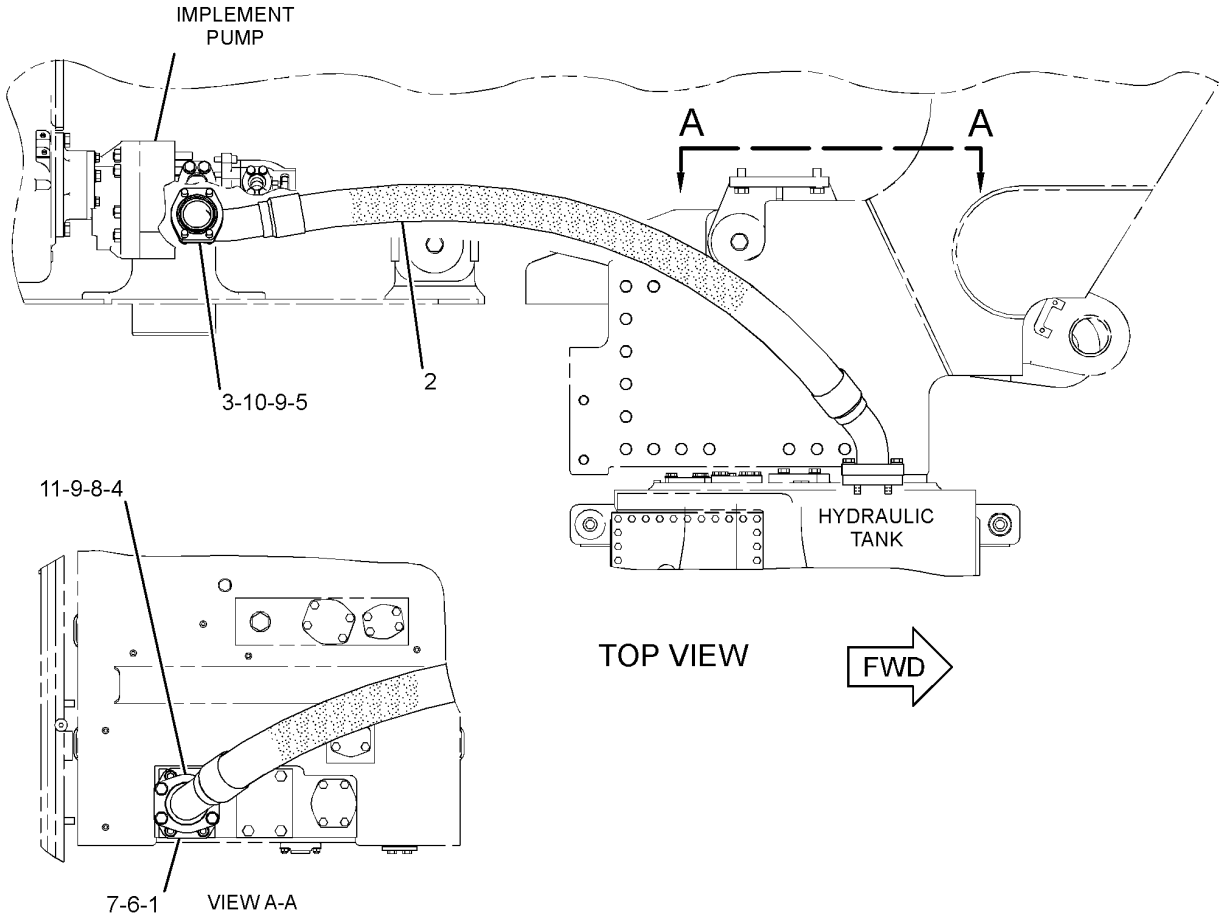

GRAPHIC #1 **<END>** g01442958

HYDRAULIC SYSTEM

283-2522 LINES GP-HYDRAULIC–
SECONDARY STEERING, STANDARD FILTRATION
S/N: 2211-UP
PART OF 283-2520 HYDRAULIC AR
AN ATTACHMENT

SMCS-5057 **i02902926**

NOTE	REF NO	GRAPHIC REF	PART NUMBER	QTY	PART NAME 1 2 3 4 5 6 (PRODUCT LEVEL)	SEE PAGE
I	1	1	**143-7861**	1	HOSE AS	
	2	1	**280-0035**	1	TUBE AS	
	3	1	**280-0068**	1	HOSE AS	
	4	1	**288-8846**	1	BRACKET AS	
I	5	1	**288-8848**	1	HOSE AS	
	6	1	**288-8854**	1	BRACKET AS	
I	7	1	**288-8861**	1	HOSE AS	
I	8	1	**288-8862**	1	HOSE AS	
I	9	1	**288-8864**	1	HOSE AS	
I	10	1	**291-2636**	1	HOSE AS	
M	11	1	**099-0169**	8	BOLT (M16X2X55-MM)	
	12	1	*148-8335*	1	CONNECTOR AS	
		1	**5K-9090**	1	SEAL-O-RING	
		1	**6V-8635**	1	CONNECTOR	
		1	**7M-8485**	1	SEAL-O-RING	
	13	1	*148-8339*	1	CONNECTOR AS	
		1	**6V-8716**	1	CONNECTOR	
		1	**6V-9746**	1	SEAL-O-RING	
		1	**7M-8485**	1	SEAL-O-RING	
	14	1	**193-2120**	2	GROMMET	
	15	1	**1P-3705**	4	SEAL-RECTANGULAR	
	16	1	**1P-4582**	2	FLANGE-HALF	
	17	1	**1P-4584**	6	FLANGE-HALF	
	18	1	**4J-0520**	2	SEAL-O-RING	
	19	1	**4J-0522**	1	SEAL-O-RING	
	20	1	**4J-0527**	1	SEAL-O-RING	
	21	1	**5P-1076**	5	WASHER-HARD (13.5X30X4-MM THK)	
	22	1	**5P-8077**	4	FLANGE-HALF	
	23	1	**6J-2680**	3	SEAL-O-RING	
	24	1	**6V-1867**	2	CLIP (SLOT)	
	25	1	**6V-1868**	2	CLIP (TAB)	
	26	1	**8C-3206**	4	FLANGE-HALF	
	27	1	**8T-4121**	8	WASHER-HARD (11X21X2.5-MM THK)	
M	28	1	**8T-4139**	2	BOLT (M12X1.75X30-MM)	
M	29	1	**8T-4183**	7	BOLT (M12X1.75X40-MM)	
M	30	1	**8T-4184**	12	BOLT (M12X1.75X45-MM)	
M	31	1	**8T-4196**	8	BOLT (M10X1.5X35-MM)	
	32	1	**8T-4223**	21	WASHER-HARD (13.5X25.5X3-MM THK)	
M	33	1	**8T-4956**	1	BOLT (M12X1.75X35-MM)	
	34	1	**8T-8919**	4	BOLT (1/2-13X1.75-IN)	
	35	1	**9X-8257**	8	WASHER (17.5X30X3.5-MM THK)	

I-REFER TO HYDRAULIC INFORMATION SYSTEM
M-METRIC PART

283-2522 **LINES GP-HYDRAULIC** *(contd.)* **i02902926**

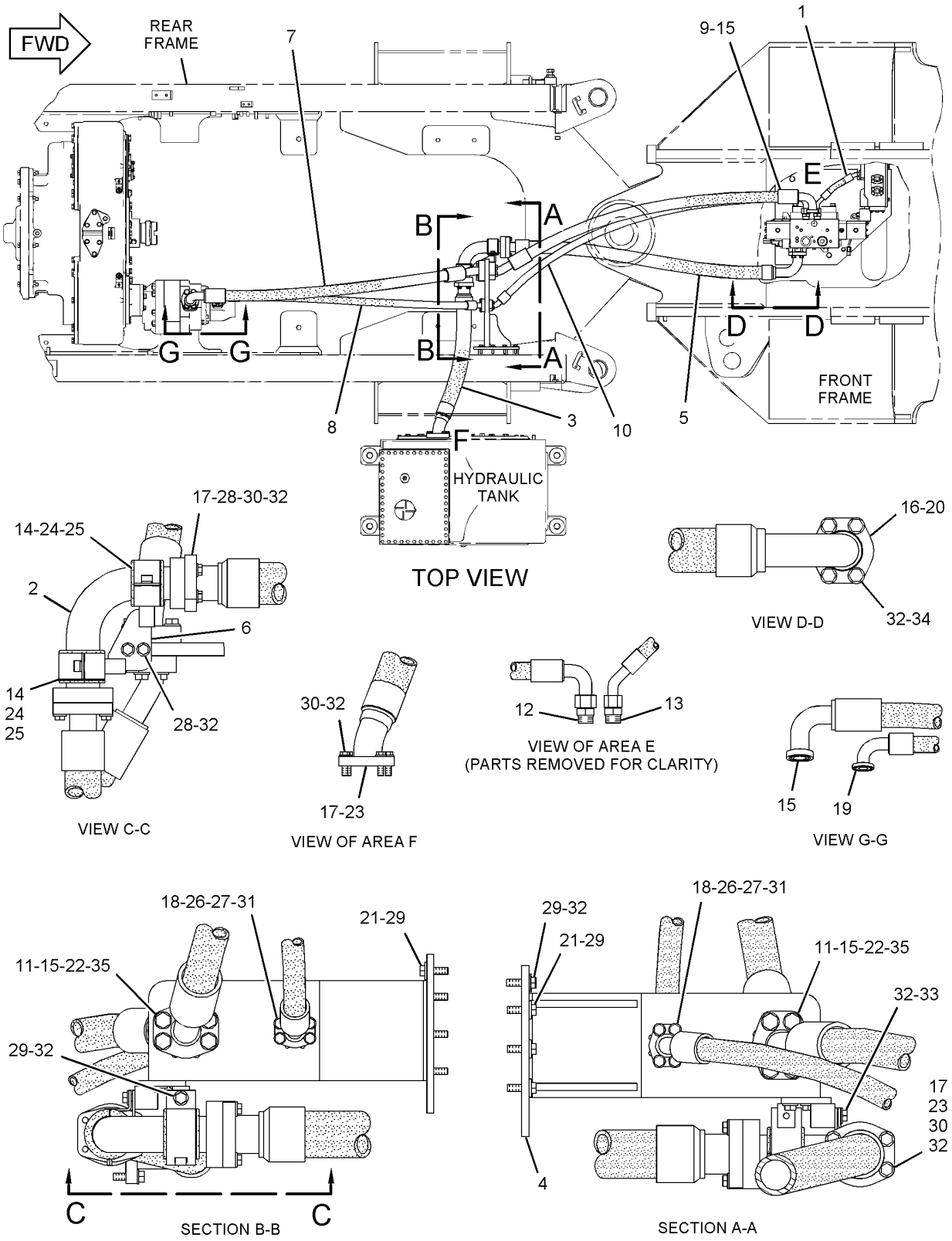

GRAPHIC #1 **<END>** g01447080

HYDRAULIC SYSTEM

288-8850 LINES GP-HYDRAULIC–
IMPLEMENT PUMP HIGH PRESSURE SCREEN, DELUXE FILTRATION
S/N: 2211-UP
PART OF 283-2525 HYDRAULIC AR
AN ATTACHMENT

SMCS-5057 **i02919516**

NOTE	REF NO	GRAPHIC REF	PART NUMBER	QTY	PART NAME 1 2 3 4 5 6 (PRODUCT LEVEL)	SEE PAGE
I	1	1	**143-7861**	1	HOSE AS	
	2	1	**212-7785**	2	ADAPTER	
	3	1	**280-0027**	1	BRACKET AS	
		1	**4I-6602**	1	BOSS (M12X1.75X20-MM)	
	4	1	**280-0035**	1	TUBE AS	
	5	1	**280-0068**	1	HOSE AS	
I	6	1	**288-8848**	1	HOSE AS	
I	7	1	**288-8849**	1	HOSE AS	
I	8	1	**288-8859**	1	HOSE AS	
I	9	1	**288-8860**	1	HOSE AS	
I	10	1	**288-8863**	1	HOSE AS	
	11	1	*148-8335*	1	CONNECTOR AS	
		1	**5K-9090**	1	SEAL-O-RING	
		1	**6V-8635**	1	CONNECTOR	
		1	**7M-8485**	1	SEAL-O-RING	
	12	1	*148-8339*	1	CONNECTOR AS	
		1	**6V-8716**	1	CONNECTOR	
		1	**6V-9746**	1	SEAL-O-RING	
		1	**7M-8485**	1	SEAL-O-RING	
Y	13	1	**174-4502**	2	SCREEN GP-HIGH PRESSURE (IMPLEMENT PUMP)	633
	14	1	**193-2120**	2	GROMMET	
	15	1	**1P-3705**	6	SEAL-RECTANGULAR	
	16	1	**1P-4577**	4	FLANGE-HALF	
	17	1	**1P-4582**	2	FLANGE-HALF	
	18	1	**1P-4584**	6	FLANGE-HALF	
	19	1	**4J-0520**	2	SEAL-O-RING	
	20	1	**4J-0522**	1	SEAL-O-RING	
	21	1	**4J-0527**	1	SEAL-O-RING	
	22	1	**5P-1076**	9	WASHER-HARD (13.5X30X4-MM THK)	
	23	1	**5P-8077**	4	FLANGE-HALF	
	24	1	**6J-2680**	3	SEAL-O-RING	
	25	1	**6V-1867**	2	CLIP (SLOT)	
	26	1	**6V-1868**	2	CLIP (TAB)	
	27	1	**8T-4121**	8	WASHER-HARD (11X21X2.5-MM THK)	
M	28	1	**8T-4139**	4	BOLT (M12X1.75X30-MM)	
M	29	1	**8T-4140**	8	BOLT (M16X2X60-MM)	
M	30	1	**8T-4183**	6	BOLT (M12X1.75X40-MM)	
M	31	1	**8T-4184**	12	BOLT (M12X1.75X45-MM)	
M	32	1	**8T-4196**	8	BOLT (M10X1.5X35-MM)	
	33	1	**8T-4223**	20	WASHER-HARD (13.5X25.5X3-MM THK)	
M	34	1	**8T-4244**	1	NUT (M12X1.75-THD)	
M	35	1	**8T-4944**	8	BOLT-SOCKET HEAD (M16X2X40-MM)	
M	36	1	**8T-4956**	2	BOLT (M12X1.75X35-MM)	
	37	1	**8T-8919**	4	BOLT (1/2-13X1.75-IN)	
	38	1	**9X-8257**	8	WASHER (17.5X30X3.5-MM THK)	

I-REFER TO HYDRAULIC INFORMATION SYSTEM
M-METRIC PART
Y-SEPARATE ILLUSTRATION

288-8850 **LINES GP-HYDRAULIC** *(contd.)* **i02919516**

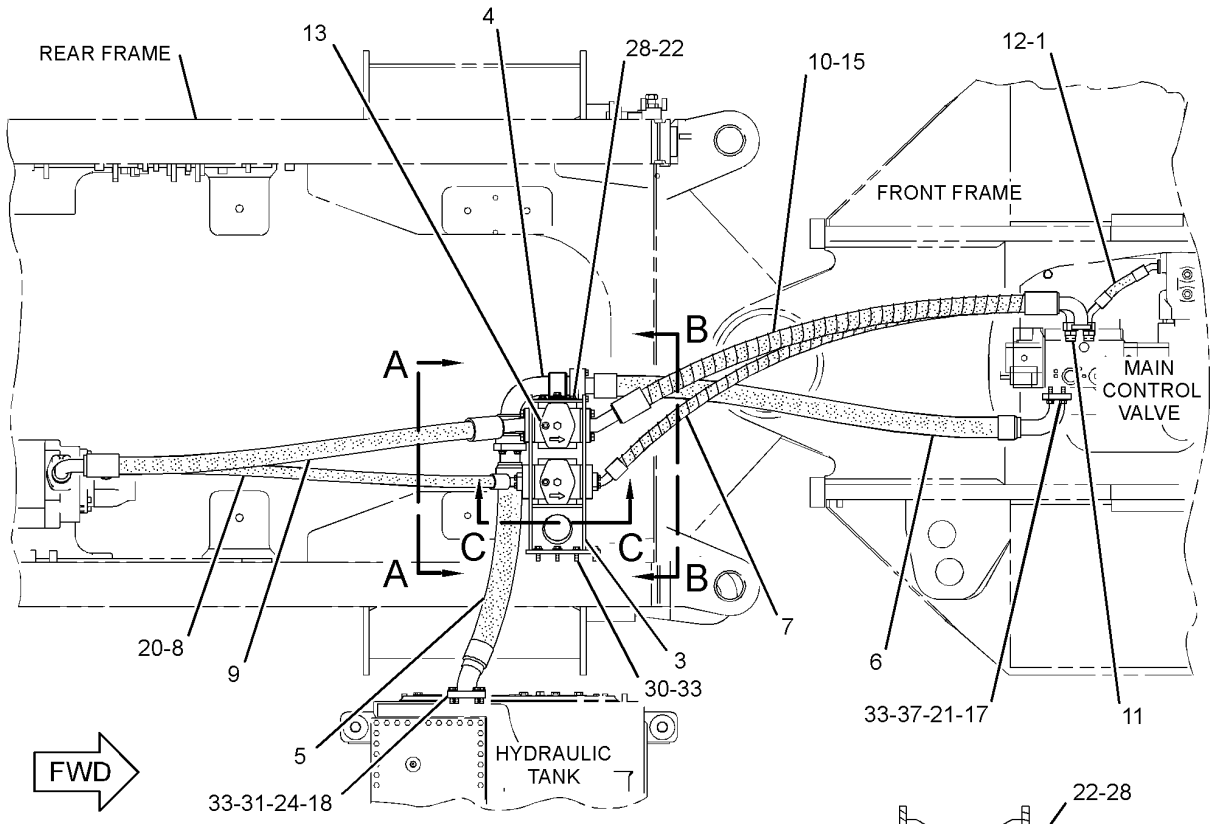

TOP VIEW

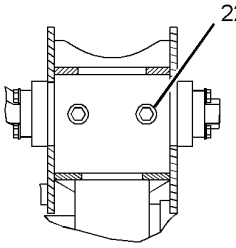

SECTION C-C

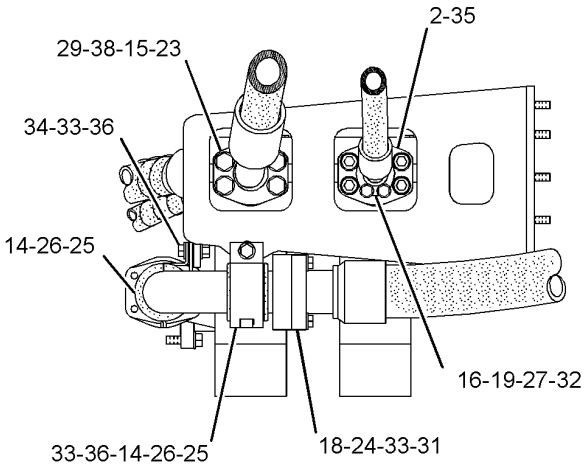

SECTION A-A

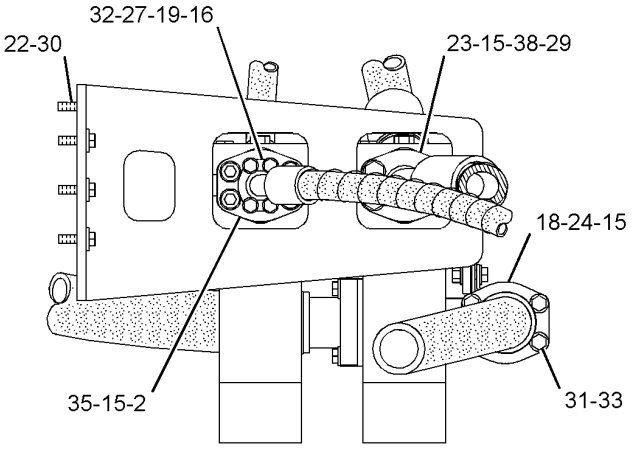

SECTION B-B

GRAPHIC #1 **<END>** g01443713

HYDRAULIC SYSTEM

268-8165 LINES GP-HYDRAULIC FAN–STANDARD FILTRATION

S/N: 2211-UP

PART OF 283-2520 HYDRAULIC AR

AN ATTACHMENT

SMCS-1386, 1387, 5057 **i02888028**

NOTE	REF NO	GRAPHIC REF	PART NUMBER	QTY	PART NAME 1 2 3 4 5 6 (PRODUCT LEVEL)	SEE PAGE
I	1	1	**314-7651**	1	HOSE AS	
I	2	1	**314-7652**	1	HOSE AS	
	3	1	**285-3789**	1	PLATE AS	
M		1	**8T-3490**	1	NUT-WELD (M10X1.5-THD)	
M		1	**8T-3597**	2	NUT-WELD (M12X1.75-THD)	
	4	1	**1P-3704**	2	SEAL-RECTANGULAR	
	5	1	**4J-0522**	2	SEAL-O-RING	
	6	1	**5P-7470**	1	CLIP (SLOT)	
	7	1	**5P-7471**	1	CLIP (TAB)	
	8	1	**5P-8182**	1	GROMMET	
M	9	1	**8T-4139**	1	BOLT (M12X1.75X30-MM)	
	10	1	**8T-4223**	10	WASHER-HARD (13.5X25.5X3-MM THK)	
	11	1	**1P-5767**	4	FLANGE-HALF	
	12	1	**6V-1572**	1	CLIP (SLOT)	
	13	1	**6V-1573**	1	CLIP (TAB)	
	14	1	**6V-1875**	1	GROMMET	
	15	1	**8T-4121**	1	WASHER-HARD (11X21X2.5-MM THK)	
M	16	1	**8T-4194**	8	BOLT (M12X1.75X50-MM)	
M	17	1	**8T-4196**	1	BOLT (M10X1.5X35-MM)	
M	18	1	**8T-4956**	1	BOLT (M12X1.75X35-MM)	

I-REFER TO HYDRAULIC INFORMATION SYSTEM
M-METRIC PART

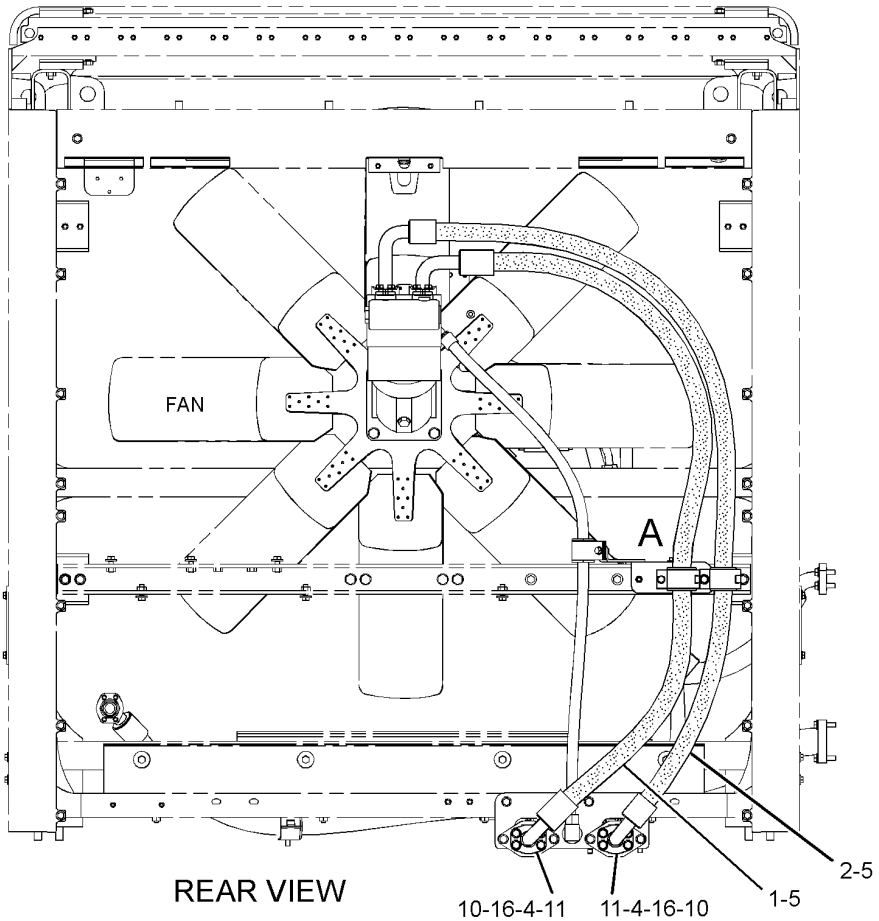

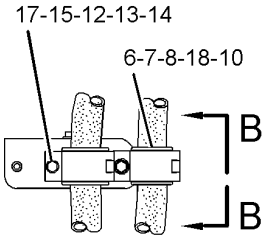

VIEW OF AREA A

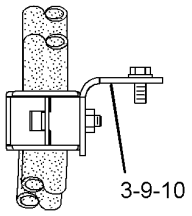

VIEW B-B

GRAPHIC #1

<END>

g01439789

HYDRAULIC SYSTEM

273-6250 LINES GP-HYDRAULIC FAN

S/N: 2211-UP

PART OF 279-9400 HYDRAULIC AR

SMCS-1386, 1387, 5057 **i02898021**

NOTE	REF NO	GRAPHIC REF	PART NUMBER	QTY	PART NAME 1 2 3 4 5 6 (PRODUCT LEVEL)	SEE PAGE
	1	1	**6V-0852**	1	CAP-DUST	
	2	3	**8B-9294**	1	SPACER (13.5X38X30-MM THK)	
	3	2	**8R-7723**	1	ADAPTER	
	4	1	**8X-9391**	1	BRACKET AS	
M		1	**8T-3490**	1	NUT-WELD (M10X1.5-THD)	
I	5	2	**115-5324**	1	HOSE AS	
	6	4	**138-1916**	1	TEE-BULKHEAD	
	7	1	*148-8443*	1	TEE AS	
		1	**3J-1907**	1	SEAL-O-RING	
		1	**6V-8397**	1	SEAL-O-RING	
		1	**7X-2459**	1	TEE-O-RING	
	8	1	*164-5567*	1	COUPLER AS-QUICK DISCONNECT	
		1	**3J-1907**	1	SEAL-O-RING	
		1	**6V-3965**	1	COUPLER-QUICK DISCONNECT	
	9	1	*164-6874*	1	FITTING AS-ELBOW	
		1	**3J-1907**	1	SEAL-O-RING	
		1	**085-7356**	1	FITTING	
I	10	1	**168-6827**	1	HOSE AS	
	11	1	*172-5277*	1	TEE AS	
		1	**3D-2824**	1	SEAL-O-RING	
		1	**6V-9746**	1	SEAL-O-RING	
		1	**8T-8901**	1	TEE-O-RING PORT	
Y	12	2	*185-9357*	1	VALVE GP-CHECK (HYDRAULIC OIL COOLER BYPASS)	642
	13	2	**197-3295**	2	FLANGE-HALF	
	14	4	**214-9429**	1	MANIFOLD	
Y	15	3	*273-6275*	1	FILTER & LINES GP-CASE DRAIN (HYDRAULIC FAN PUMP OIL)	674
Y	16	4	**280-1698**	1	VALVE & MTG GP-HYDRAULIC FAN	737
Y	17	2	**280-3444**	1	FILTER GP-OIL (HYDRAULIC FAN)	678
	18	2	**285-8414**	1	MANIFOLD	
	19	4	**285-9305**	1	TUBE AS	
	20	1	**286-0906**	1	ADAPTER	
	21	2	*297-7913*	1	ELBOW AS	
		2	**6V-8400**	1	SEAL-O-RING	
		2	**7M-8485**	1	SEAL-O-RING	
		2	**152-9840**	1	ELBOW	
I	22	2	**311-0812**	1	HOSE AS	
I	23	2	**311-2118**	1	HOSE AS	
I	24	2	**311-6177**	1	HOSE AS	
I	25	2	**311-6178**	1	HOSE AS	
	26	1	**313-5837**	1	TUBE AS	
I	27	1	**313-5838**	1	HOSE AS	
	28	1	**313-5840**	1	TUBE AS	
I	29	1	**313-5841**	1	HOSE AS	
I	30	2	**313-5842**	1	HOSE AS	
	31	2	**313-5843**	1	TUBE AS	
	32	1	**313-5844**	2	PLATE	
	33	1	**313-5847**	1	PLATE AS	
	34	4	**313-6401**	1	TUBE AS	
	35	1	**313-6402**	1	TUBE AS	
I	36	1	**313-9448**	1	HOSE AS	
	37	2	**314-8002**	1	TUBE AS	
	38	1	**314-8008**	1	MANIFOLD	
	39	1	**314-8009**	1	BRACKET	
	40	2	**315-4139**	1	TUBE AS	
	41	2	**315-4141**	1	TUBE AS	

273-6250 LINES GP-HYDRAULIC FAN *(contd.)* i02898021

NOTE	REF NO	GRAPHIC REF	PART NUMBER	QTY	PART NAME 1 2 3 4 5 6 (PRODUCT LEVEL)	SEE PAGE
	42	3	**316-6089**	1	BRACKET AS	
I	43	2	**317-3794**	1	HOSE AS	
	44	3	**317-6512**	1	PLATE AS	
	45	4	**318-4913**	1	PLATE AS	
	46	3	**081-6344**	1	SPACER (13.3X21.3X25-MM THK)	
	47	3	**130-8433**	1	GROMMET	
	48	1	*148-8309*	1	ADAPTER AS	
		1	**2P-8421**	1	ADAPTER-O-RING	
		1	**3D-2824**	1	SEAL-O-RING	
	49	2	*148-8333*	1	CONNECTOR AS	
		2	**6V-8400**	1	SEAL-O-RING	
		2	**7M-8485**	1	SEAL-O-RING	
		2	**8T-7927**	1	CONNECTOR	
	50	2	*148-8334*	1	CONNECTOR AS	
		2	**2S-4078**	1	SEAL-O-RING	
		2	**6V-8400**	1	SEAL-O-RING	
		2	**8T-3611**	1	CONNECTOR	
	51	2	*148-8356*	1	ELBOW AS	
		2	**2S-4078**	1	SEAL-O-RING	
		2	**6V-8400**	1	SEAL-O-RING	
		2	**6V-9009**	1	ELBOW	
	52	1	*148-8357*	1	ELBOW AS	
		1	**5K-9090**	1	SEAL-O-RING	
		1	**6V-9008**	1	ELBOW	
		1	**7M-8485**	1	SEAL-O-RING	
	53	1	*148-8371*	1	ELBOW AS	
		1	**6V-8397**	1	SEAL-O-RING	
		1	**8C-8988**	1	ELBOW	
	54	1	*148-8376*	1	ELBOW AS	
		1	**6V-8983**	1	ELBOW	
		1	**6V-9746**	2	SEAL-O-RING	
	55	1	*148-8387*	1	ELBOW AS	
		1	**6V-8400**	1	SEAL-O-RING	
		1	**6V-9855**	1	ELBOW	
	56	2	*148-8411*	1	PLUG AS	
		2	**3K-0360**	1	SEAL-O-RING	
		2	**9S-4185**	1	PLUG-O-RING	
	57	4	*148-8417*	1	REDUCER AS	
		4	**6V-8397**	1	SEAL-O-RING	
		4	**6V-8941**	1	REDUCER	
	58	1	*148-8433*	1	TEE AS	
		1	**6V-8397**	2	SEAL-O-RING	
		1	**6V-9836**	1	TEE-SWIVEL	
	59	2	**301-7791**	1	CLIP (SLOT)	
	60	2	**301-7792**	1	CLIP (TAB)	
	61	2	**1P-3703**	1	SEAL-RECTANGULAR	
	62	2,4	**1P-3704**	3	SEAL-RECTANGULAR	
	63	1,4	**1P-3705**	3	SEAL-RECTANGULAR	
	64	1	**1P-4578**	4	FLANGE-HALF	
	65	2	**1P-4579**	4	FLANGE-HALF	
	66	2,4	**1P-4584**	4	FLANGE-HALF	
	67	2,4	**1P-5767**	4	FLANGE-HALF	
	68	1,4	**2P-1293**	2	LOCKNUT (1-3/16-12-THD)	
	69	3	**3P-2404**	1	CLIP	
	70	2	**4J-0520**	1	SEAL-O-RING	
	71	1,2	**4J-0522**	4	SEAL-O-RING	
	72	2	**4J-0524**	2	SEAL-O-RING	
	73	1,4	**5K-9090**	2	SEAL-O-RING	
	74	1,3	**5P-1076**	8	WASHER-HARD (13.5X30X4-MM THK)	

273-6250 **LINES GP-HYDRAULIC FAN** *(contd.)* **i02898021**

NOTE	REF NO	GRAPHIC REF	PART NUMBER	QTY	PART NAME 1 2 3 4 5 6 (PRODUCT LEVEL)	SEE PAGE
	75	4	**5P-2424**	4	BOLT (1/2-13X2.25-IN)	
	76	2,3	**5P-7466**	4	CLIP (SLOT)	
	77	2,3	**5P-7467**	4	CLIP (TAB)	
	78	1	**5P-7468**	1	CLIP (SLOT)	
	79	1	**5P-7469**	1	CLIP (TAB)	
	80	2,3	**5P-7470**	3	CLIP (SLOT)	
	81	2,3	**5P-7471**	3	CLIP (TAB)	
	82	2,3	**5P-8112**	4	GROMMET	
	83	2,3	**5P-8182**	3	GROMMET	
	84	1,2	**5R-0939**	2	CLIP (TAB)	
	85	1,2	**5R-0940**	2	CLIP (SLOT)	
	86	2	**6J-2680**	2	SEAL-O-RING	
	87	1	**6V-4349**	1	GROMMET	
	88	3	**6V-4356**	1	CLIP (SLOT)	
	89	3	**6V-4357**	1	CLIP (TAB)	
	90	1,2	**6V-8400**	3	SEAL-O-RING	
	91	1,2,4	**6V-9746**	3	SEAL-O-RING	
	92	1	**7X-0531**	1	WASHER-HARD (31X52.5X6-MM THK)	
M	93	2	**7X-2549**	3	BOLT (M12X1.75X100-MM)	
	94	2	**7X-3392**	4	WASHER-HARD (13.5X22.5X3-MM THK)	
	95	2	**8C-3206**	2	FLANGE-HALF	
	96	3,4	**8K-4691**	4	CLAMP-HALF	
	97	1,2,3	**8S-0023**	6	CLIP (SLOT)	
	98	1,2,3	**8S-0024**	6	CLIP (TAB)	
	99	1,2,3,4	**8T-4121**	28	WASHER-HARD (11X21X2.5-MM THK)	
M	100	1	**8T-4133**	4	NUT (M10X1.5-THD)	
M	101	3,4	**8T-4136**	6	BOLT (M10X1.5X25-MM)	
M	102	1,3	**8T-4139**	9	BOLT (M12X1.75X30-MM)	
M	103	4	**8T-4176**	4	BOLT (M12X1.75X90-MM)	
M	104	1	**8T-4178**	4	BOLT (M10X1.5X90-MM)	
M	105	1,2,3,4	**8T-4183**	13	BOLT (M12X1.75X40-MM)	
M	106	1,2,3	**8T-4184**	10	BOLT (M12X1.75X45-MM)	
M	107	1	**8T-4186**	4	BOLT (M10X1.5X40-MM)	
M	108	1,2,3	**8T-4194**	9	BOLT (M12X1.75X50-MM)	
M	109	1,3	**8T-4195**	2	BOLT (M10X1.5X30-MM)	
M	110	1	**8T-4198**	4	BOLT (M10X1.5X100-MM)	
	111	1,2,3,4	**8T-4223**	64	WASHER-HARD (13.5X25.5X3-MM THK)	
M	112	2	**8T-4244**	1	NUT (M12X1.75-THD)	
M	113	3	**8T-4648**	1	BOLT (M12X1.75X70-MM)	
	114	2	**8T-4835**	4	BOLT (1/2-13X2-IN)	
M	115	1	**8T-4910**	8	BOLT (M12X1.75X60-MM)	
M	116	1,2,3,4	**8T-4956**	10	BOLT (M12X1.75X35-MM)	
M	117	2	**8T-5005**	4	BOLT (M10X1.5X70-MM)	
	118	4	**9X-6580**	1	NUT (1-3/16-12-THD)	

I-REFER TO HYDRAULIC INFORMATION SYSTEM
M-METRIC PART
Y-SEPARATE ILLUSTRATION

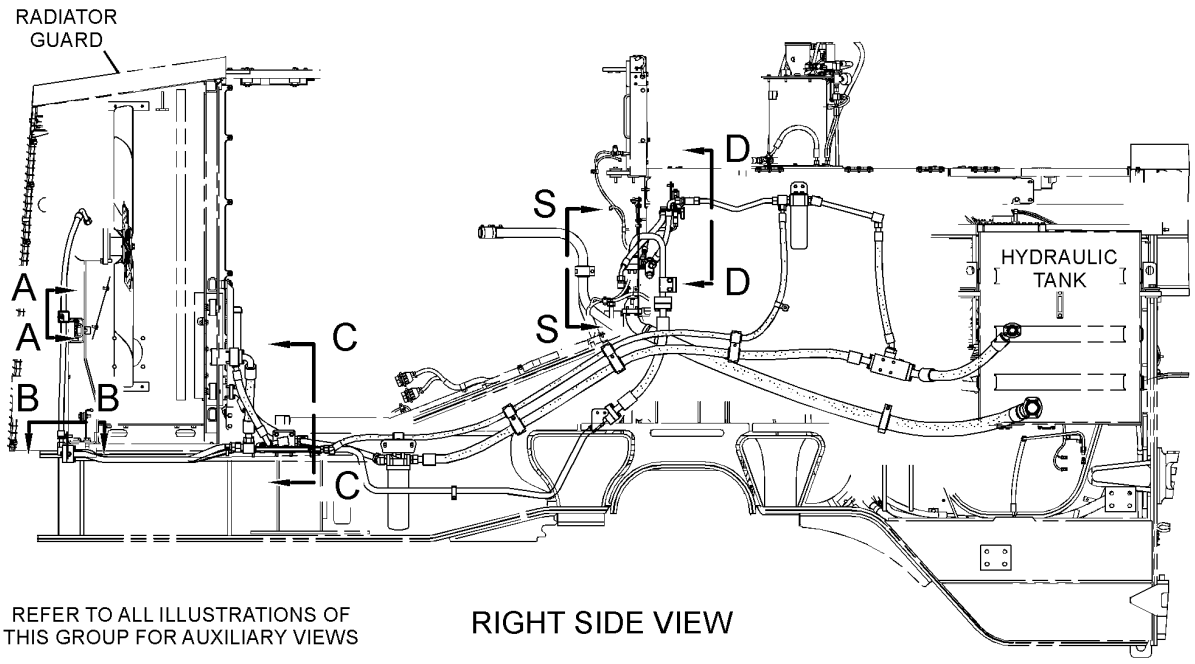

REFER TO ALL ILLUSTRATIONS OF THIS GROUP FOR AUXILIARY VIEWS

RIGHT SIDE VIEW

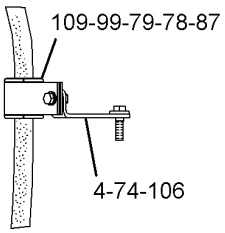

VIEW A-A

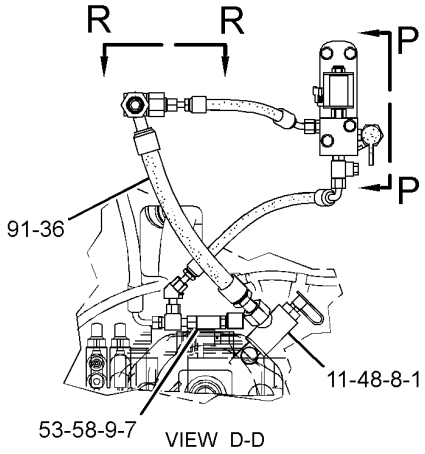

VIEW D-D

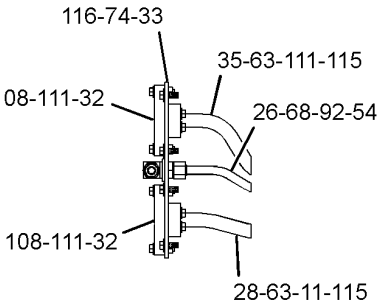

VIEW B-B

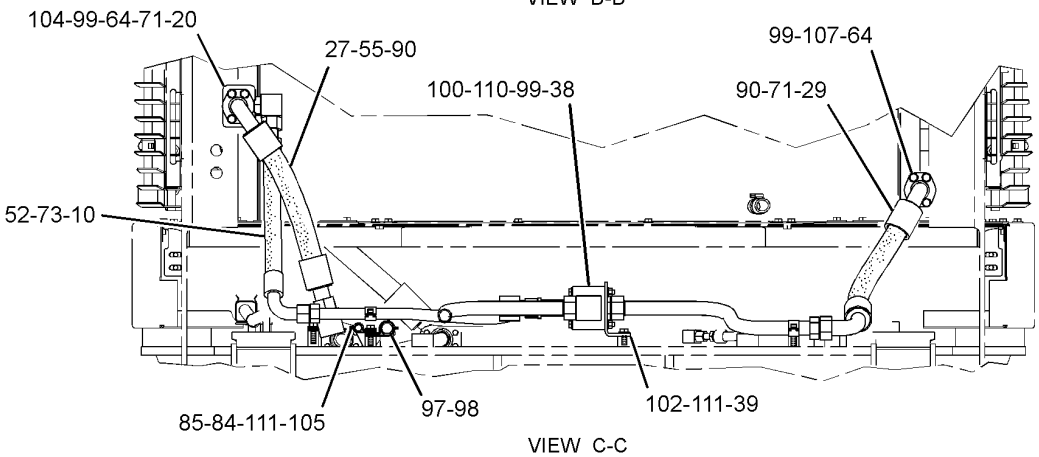

VIEW C-C

GRAPHIC #1

g01445125

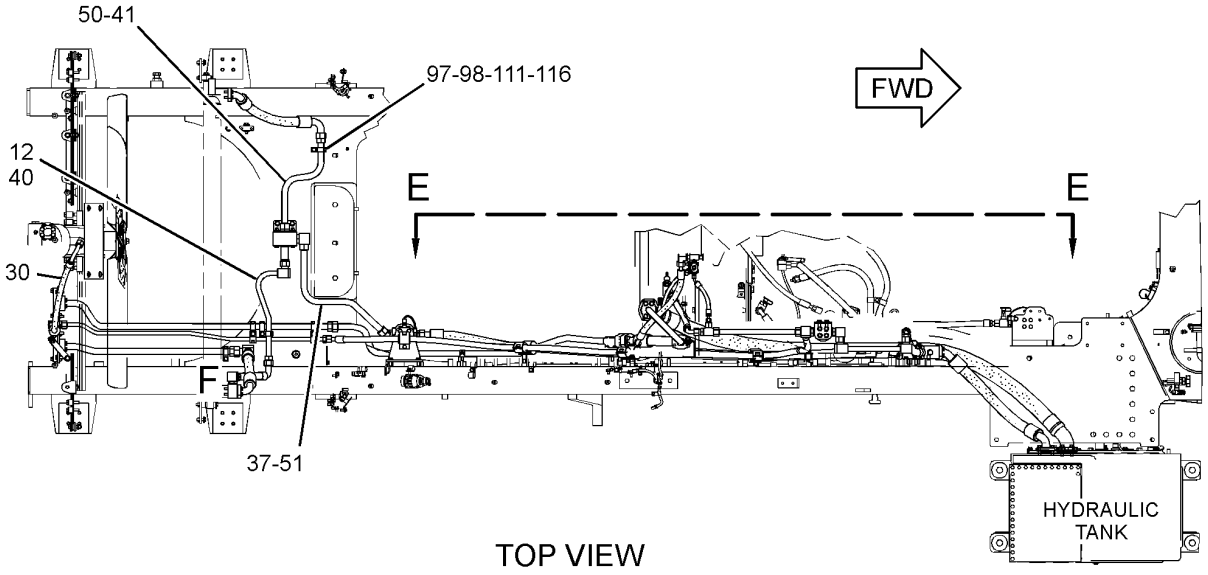

TOP VIEW

REFER TO ALL ILLUSTRATIONS OF THIS GROUP FOR AUXILIARY VIEWS

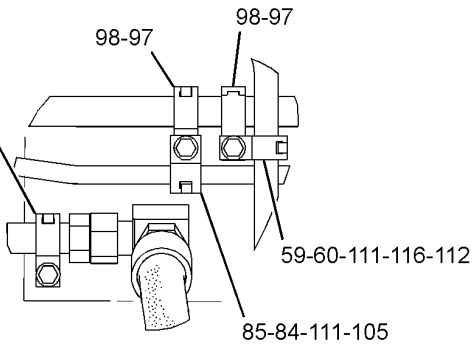

VIEW OF AREA F

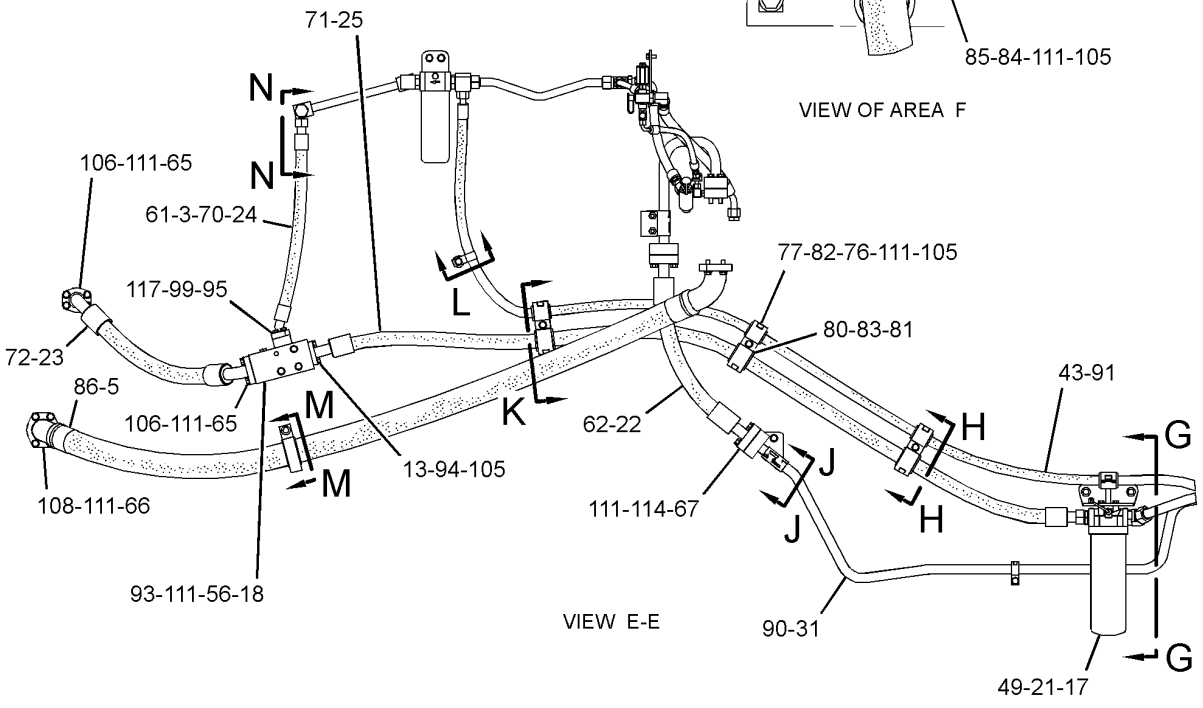

VIEW E-E

GRAPHIC #2

g01445126

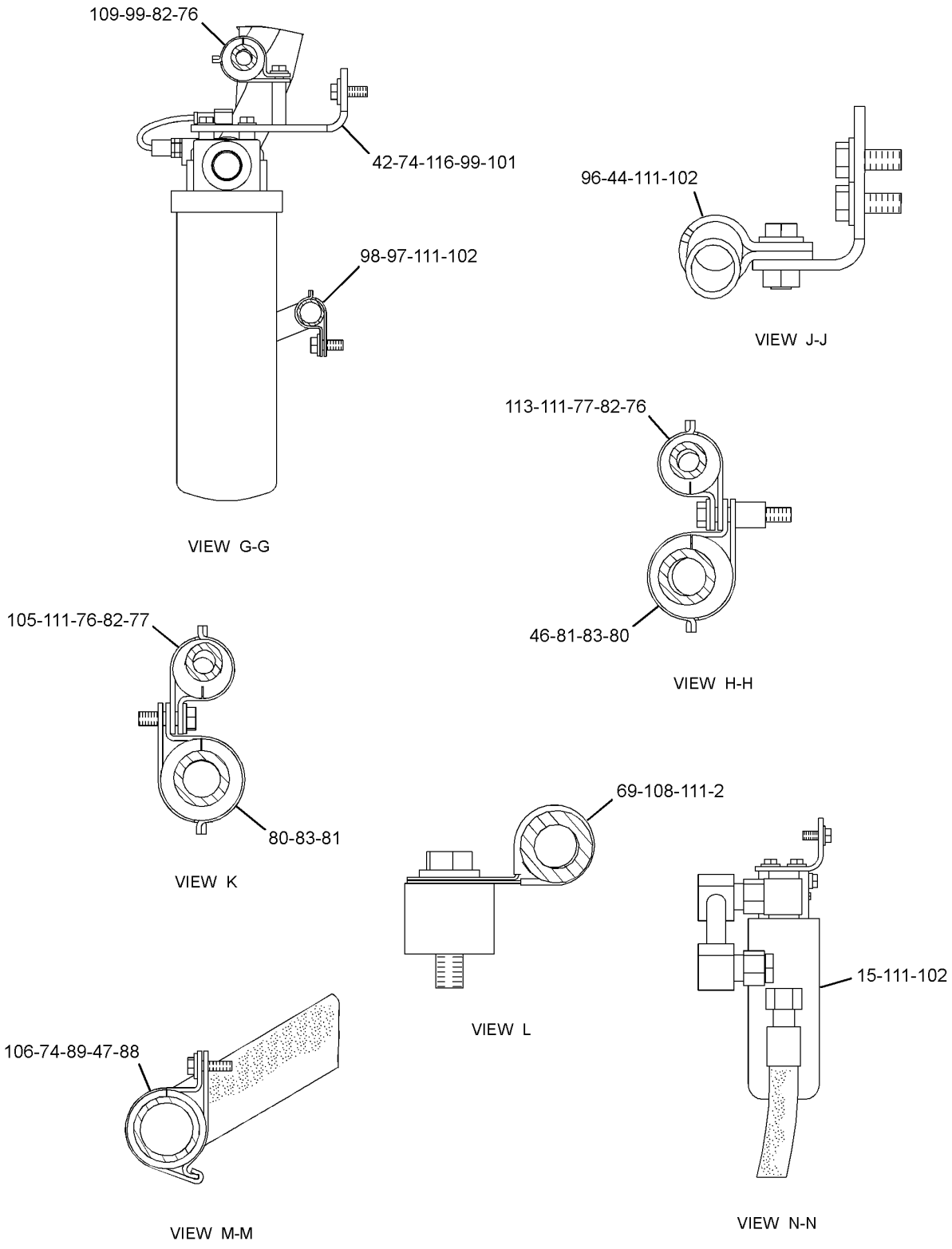

GRAPHIC #3 g01445128

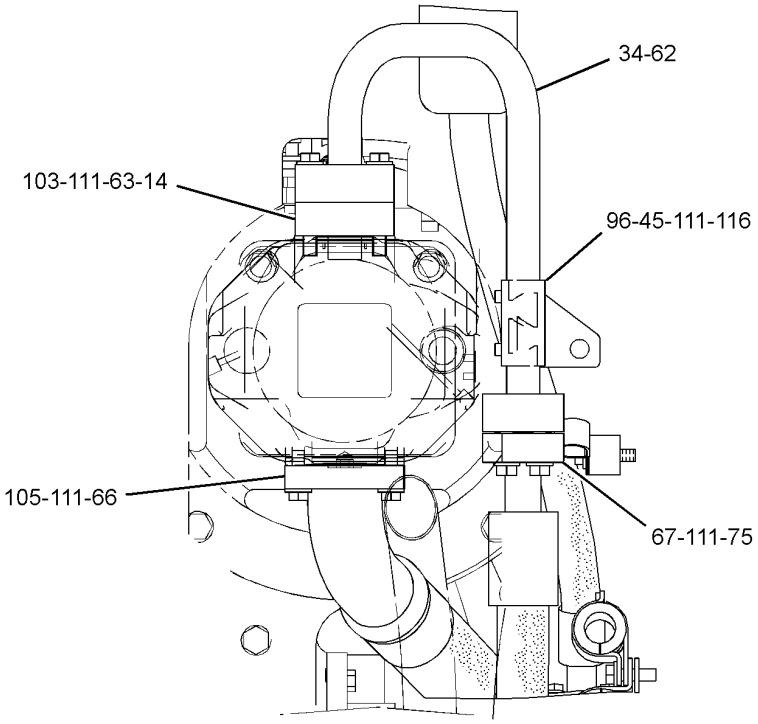

VIEW S-S

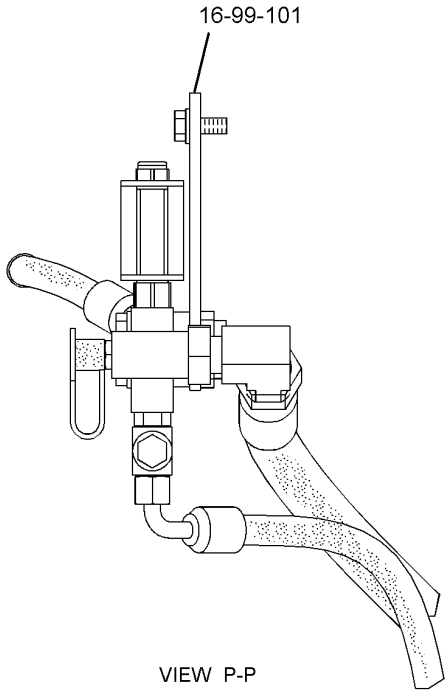

VIEW P-P

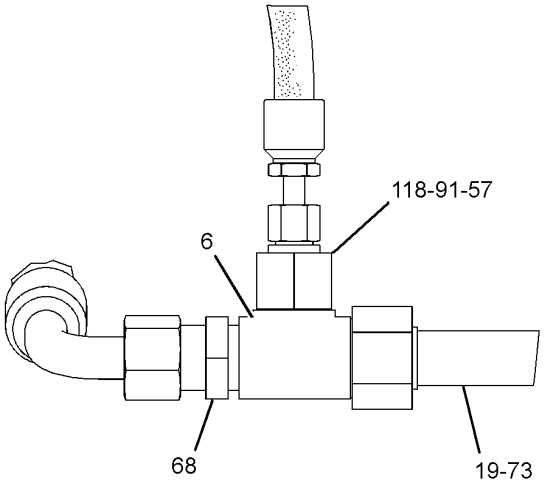

VIEW R-R

GRAPHIC #4 **<END>** g01445150

HYDRAULIC SYSTEM

280-4340 LINES GP-HYDRAULIC FAN–

HYDRAULIC FAN PUMP, MOTOR HIGH PRESSURE SCREENS, DELUXE FILTRATION

S/N: 2211-UP

PART OF 283-2525 HYDRAULIC AR

AN ATTACHMENT

SMCS-1386, 1387, 5057 **i02927268**

NOTE	REF NO	GRAPHIC REF	PART NUMBER	QTY	PART NAME 1 2 3 4 5 6 (PRODUCT LEVEL)	SEE PAGE
I	1	1	**314-7649**	1	HOSE AS	
I	2	1	**314-7650**	1	HOSE AS	
I	3	1	**285-2067**	1	HOSE AS	
	4	1	**285-2157**	2	BRACKET	
I	5	1	**286-9751**	1	HOSE AS	
Y	6	1	**288-5769**	2	SCREEN GP-HIGH PRESSURE (HYDRAULIC FAN PUMP, MOTOR)	588
	7	1	**1P-3704**	6	SEAL-RECTANGULAR	
	8	1	**1P-5767**	12	FLANGE-HALF	
	9	1	**4J-0522**	2	SEAL-O-RING	
	10	1	**5P-1076**	4	WASHER-HARD (13.5X30X4-MM THK)	
M	11	1	**8T-4139**	6	BOLT (M12X1.75X30-MM)	
M	12	1	**8T-4194**	24	BOLT (M12X1.75X50-MM)	
	13	1	**8T-4223**	26	WASHER-HARD (13.5X25.5X3-MM THK)	

I-REFER TO HYDRAULIC INFORMATION SYSTEM
M-METRIC PART
Y-SEPARATE ILLUSTRATION

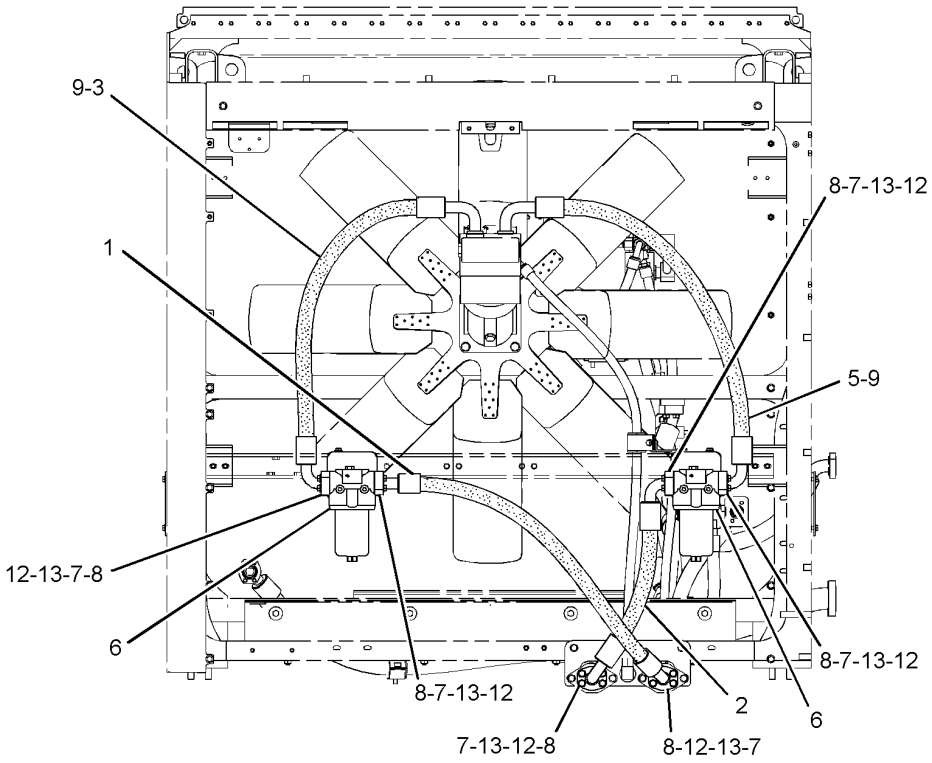

REAR VIEW

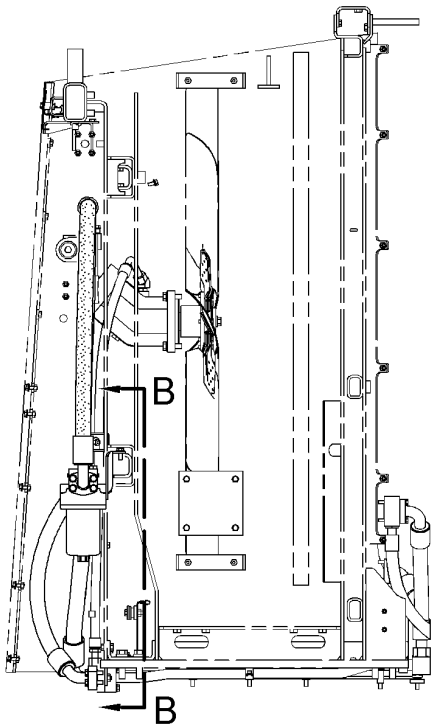

RIGHT SIDE VIEW

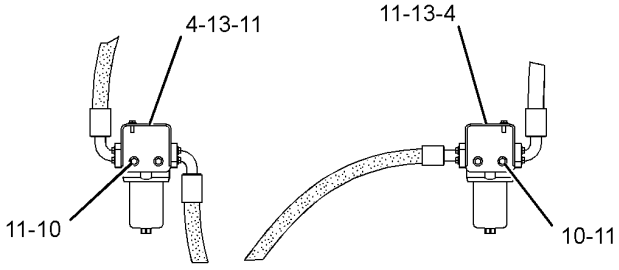

VIEW B-B

GRAPHIC #1 **<END>** g01448253

HYDRAULIC SYSTEM

283-4411 LINES GP-LIFT CYLINDER

S/N: 2211-UP

PART OF 279-9400 HYDRAULIC AR

SMCS-5057, 5102 **i02897739**

NOTE	REF NO	GRAPHIC REF	PART NUMBER	QTY	PART NAME 1 2 3 4 5 6 (PRODUCT LEVEL)	SEE PAGE
I	1	1	**143-7862**	1	HOSE AS	
	2	2	**160-0012**	4	CLIP (SLOT)	
	3	2	**160-0013**	4	CLIP (TAB)	
I	4	1	**212-3451**	1	HOSE AS	
I	5	2	**290-5766**	1	HOSE AS	
I	6	2	**290-5767**	1	HOSE AS	
I	7	2	**290-5768**	1	HOSE AS	
I	8	2	**290-5769**	1	HOSE AS	
	9	1	**168-6890**	1	CLIP (SLOT)	
	10	1	**168-6891**	1	CLIP (TAB)	
	11	2	**1P-3704**	8	SEAL-RECTANGULAR	
	12	1	**1P-3705**	4	SEAL-RECTANGULAR	
	13	2	**1P-5767**	8	FLANGE-HALF	
	14	2	**5P-8077**	4	FLANGE-HALF	
	15	1	**6V-1574**	5	GROMMET	
	16	2	**6V-1875**	4	GROMMET	
	17	2	**8T-4122**	8	WASHER-HARD (17X32X3.5-MM THK)	
M	18	2	**8T-4140**	8	BOLT (M16X2X60-MM)	
M	19	2	**8T-4194**	16	BOLT (M12X1.75X50-MM)	
	20	2	**8T-4223**	16	WASHER-HARD (13.5X25.5X3-MM THK)	

I-REFER TO HYDRAULIC INFORMATION SYSTEM
M-METRIC PART

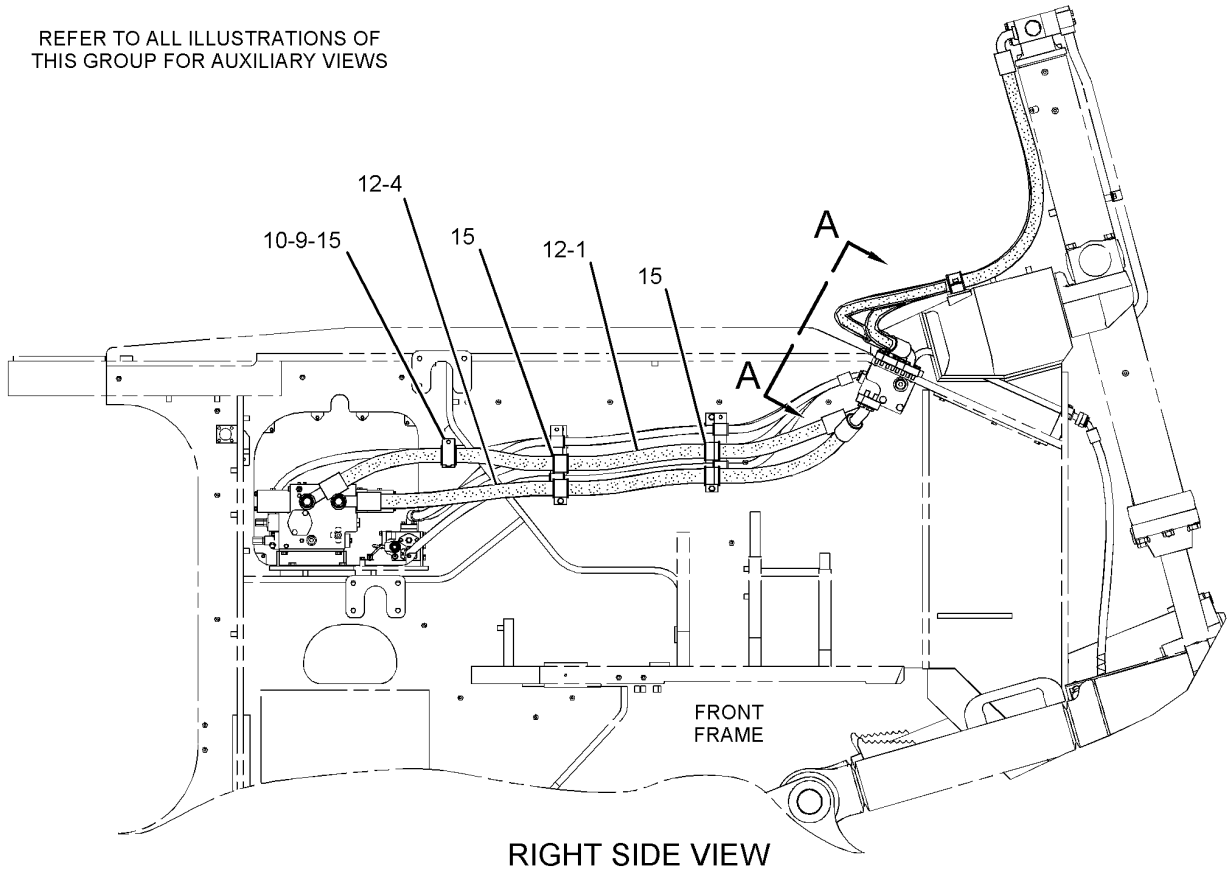

RIGHT SIDE VIEW

GRAPHIC #1 g01447788

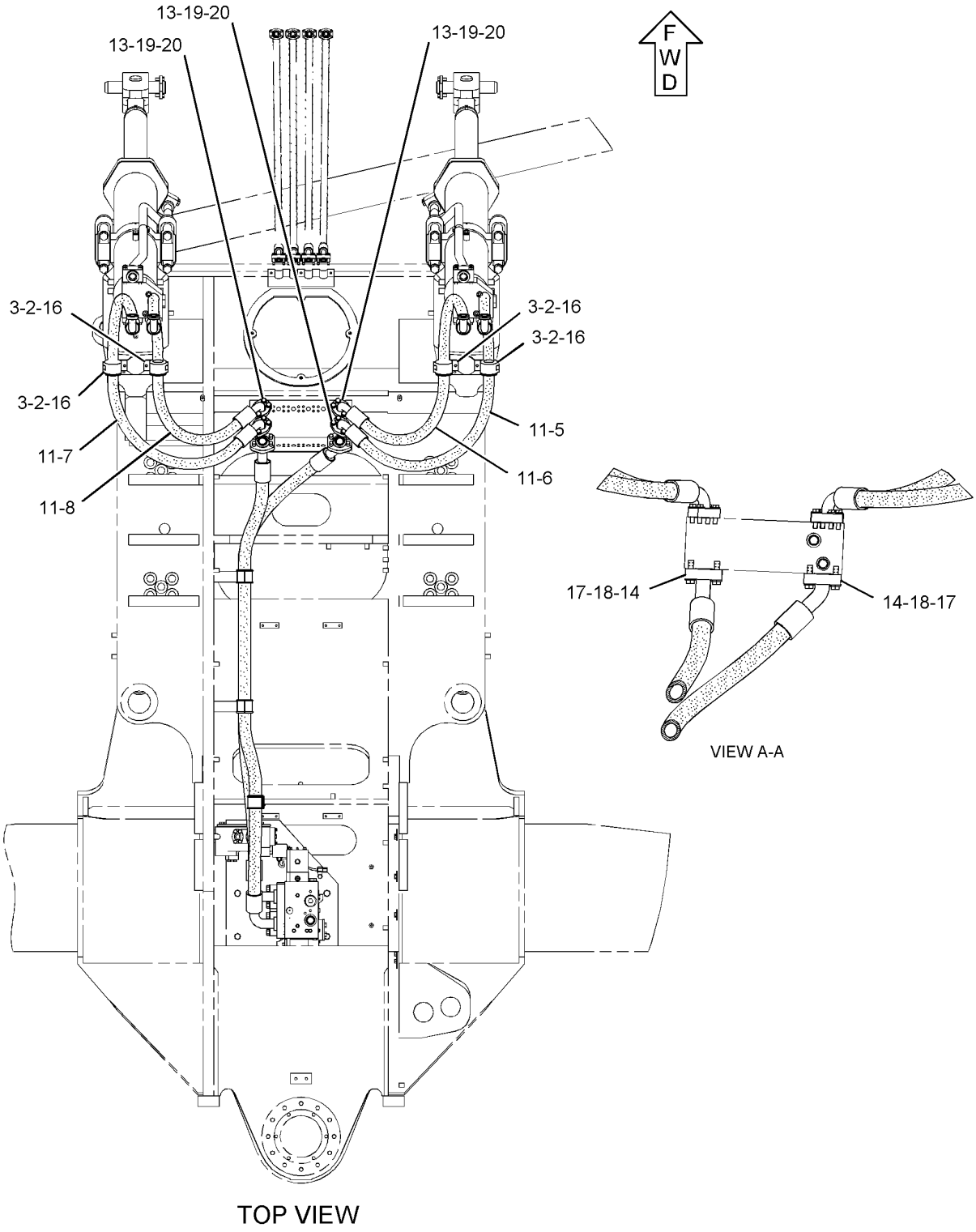

GRAPHIC #2 **<END>** g01447804

HYDRAULIC SYSTEM

279-9405 LINES GP-PILOT

S/N: 2211-UP

PART OF 279-9400 HYDRAULIC AR

SMCS-5057, 5059 **i02936437**

NOTE	REF NO	GRAPHIC REF	PART NUMBER	QTY	PART NAME 1 2 3 4 5 6 (PRODUCT LEVEL)	SEE PAGE
	1	1,4	**1V-1122**	3	TAG-IDENTIFICATION (LETTERS SPL)	
	2	1,4	**1V-1123**	3	TAG-IDENTIFICATION (LETTERS RET)	
	3	3	**2W-5331**	1	BRACKET	
	4	1	**6V-0852**	1	CAP-DUST	
	5	3	**6Y-8112**	1	SPACER (17X25X14-MM THK)	
	6	1,2	**7K-3971**	3	TAG-IDENTIFICATION (LETTER, NUMBER L1)	
	7	2,3	**7K-3972**	3	TAG-IDENTIFICATION (LETTER, NUMBER L2)	
	8	1,2,3	**7K-3974**	3	TAG-IDENTIFICATION (LETTER, NUMBER T1)	
	9	1,2	**7K-3975**	3	TAG-IDENTIFICATION (LETTER, NUMBER T2)	
	10	2	**8C-3451**	1	CAP-DUST	
I	11	1	**8I-4505**	1	HOSE AS	
I	12	1	**8W-0225**	1	HOSE AS	
Y	13	2	**112-1817**	1	VALVE GP-MANUAL (LOWERING CONTROL)	747
I	14	3	**113-7147**	1	HOSE AS	
Y	15	4	**114-4672**	1	VALVE GP-RELIEF (IMPLEMENT PILOT)	753
	16	1	**128-8678**	1	SPACER (10.5X25X15-MM THK)	
	17	3	*148-8430*	1	TEE AS	
		3	**6V-9746**	1	SEAL-O-RING	
		3	**7X-0873**	1	TEE	
I	18	1	**149-8720**	1	HOSE AS	
I	19	3	**151-6929**	1	HOSE AS	
	20	2	**153-7738**	1	BRACKET	
I	21	1	**155-5622**	1	HOSE AS	
I	22	1	**163-1485**	1	HOSE AS	
	23	4	**207-1810**	1	VALVE GP-CHECK (PILOT)	
I	24	1	**209-3299**	1	HOSE AS	
I	25	1	**239-9781**	1	HOSE AS	
	26	3	**249-7805**	1	VALVE GP-SHUTTLE	
Y	27	2	**287-8402**	1	FILTER GP-OIL (IMPLEMENT PILOT)	679
I	28	1	**288-8819**	1	HOSE AS	
	29	2	**288-8825**	1	PLATE	
	30	1	**288-8837**	1	PLATE	
I	31	3	**288-8839**	1	HOSE AS	
I	32	3	**288-8840**	1	HOSE AS	
	33	4	**290-4798**	1	BRACKET	
	34	1	**290-4799**	1	BRACKET AS	
M		1	**8T-3490**	6	NUT-WELD (M10X1.5-THD)	
I	35	1	**290-4801**	1	HOSE AS	
	36	3	**290-4803**	1	BRACKET	
I	37	1	**290-4804**	1	HOSE AS	
	38	2	**316-3298**	1	BRACKET AS	
M		2	**8T-3490**	1	NUT-WELD (M10X1.5-THD)	
	39	1	**290-4806**	1	TUBE AS	
	40	3	**290-4807**	1	TUBE AS	
	41	3	**290-4808**	1	TUBE AS	
	42	1	**290-4809**	1	TUBE AS	
	43	4	**290-4810**	1	TUBE AS	
	44	1	**290-4811**	1	TUBE AS	
	45	3	**290-4812**	1	TUBE AS	
	46	4	**290-4813**	1	TUBE AS	
	47	4	**290-4814**	1	TUBE AS	
	48	2	**290-4816**	1	TUBE AS	
	49	2	**290-4817**	1	TUBE AS	
	50	2	**290-4818**	1	TUBE AS	
	51	2	**290-4819**	1	TUBE AS	
	52	3	**290-4820**	1	PLATE	

279-9405 **LINES GP-PILOT** *(contd.)* **i02936437**

NOTE	REF NO	GRAPHIC REF	PART NUMBER	QTY	PART NAME 1 2 3 4 5 6 (PRODUCT LEVEL)	SEE PAGE
	53	2	**096-6166**	4	WASHER-HARD (4.5X9X1-MM THK)	
	54	4	*106-8715*	1	ELBOW AS	
		4	**3D-2824**	1	SEAL-O-RING	
		4	**6V-9746**	1	SEAL-O-RING	
		4	**8C-8400**	1	ELBOW	
	55	2	*148-8305*	1	ADAPTER AS	
		2	**3J-1907**	1	SEAL-O-RING	
		2	**5P-9617**	1	ADAPTER	
	56	3	*148-8309*	1	ADAPTER AS	
		3	**2P-8421**	1	ADAPTER-O-RING	
		3	**3D-2824**	1	SEAL-O-RING	
	57	4	*148-8327*	1	CONNECTOR AS	
		4	**3D-2824**	1	SEAL-O-RING	
		4	**6V-8637**	1	CONNECTOR	
		4	**6V-9746**	1	SEAL-O-RING	
	58	3	*148-8339*	1	CONNECTOR AS	
		3	**6V-8716**	1	CONNECTOR	
		3	**6V-9746**	1	SEAL-O-RING	
		3	**7M-8485**	1	SEAL-O-RING	
	59	1	*148-8354*	1	ELBOW AS	
		1	**3K-0360**	1	SEAL-O-RING	
		1	**6V-8398**	1	SEAL-O-RING	
		1	**6V-9002**	1	ELBOW	
	60	2	*148-8360*	1	ELBOW AS	
		2	**6V-9182**	1	ELBOW	
		2	**6V-9746**	1	SEAL-O-RING	
		2	**7M-8485**	1	SEAL-O-RING	
	61	1	*148-8364*	1	ELBOW AS	
		1	**3K-0360**	1	SEAL-O-RING	
		1	**6V-8398**	1	SEAL-O-RING	
		1	**6V-8625**	1	ELBOW	
	62	2	*148-8365*	4	ELBOW AS	
					(EACH INCLUDES)	
		2	**3J-1907**	1	SEAL-O-RING	
		2	**6V-8398**	1	SEAL-O-RING	
		2	**8T-6876**	1	ELBOW	
	63	3	*148-8375*	2	ELBOW AS	
					(EACH INCLUDES)	
		3	**6V-8398**	2	SEAL-O-RING	
		3	**6V-8981**	1	ELBOW	
	64	1,4	*148-8380*	2	ELBOW AS	
					(EACH INCLUDES)	
		1,4	**6V-8398**	2	SEAL-O-RING	
		1,4	**6V-8988**	1	ELBOW	
	65	3,4	*148-8427*	2	TEE AS	
					(EACH INCLUDES)	
		3,4	**6V-8398**	3	SEAL-O-RING	
		3,4	**8T-6895**	1	TEE-UNION	
	66	3	*148-8442*	1	TEE AS	
		3	**6V-9746**	2	SEAL-O-RING	
		3	**7M-8485**	1	SEAL-O-RING	
		3	**8T-1685**	1	TEE	
	67	1	*148-8444*	1	TEE AS-SWIVEL	
		1	**6V-8398**	2	SEAL-O-RING	
		1	**6V-9837**	1	TEE-SWIVEL	
	68	4	*148-8457*	2	UNION AS	
					(EACH INCLUDES)	
		4	**6V-8398**	2	SEAL-O-RING	
		4	**6V-8995**	1	UNION	

HYDRAULIC SYSTEM

279-9405 **LINES GP-PILOT** ***(contd.)*** **i02936437**

NOTE	REF NO	GRAPHIC REF	PART NUMBER	QTY	PART NAME 1 2 3 4 5 6 (PRODUCT LEVEL)	SEE PAGE
	69	3	*150-3028*	1	ELBOW AS	
		3	**3D-2824**	1	SEAL-O-RING	
		3	**6V-8397**	1	SEAL-O-RING	
		3	**6V-9343**	1	ELBOW	
	70	2,4	*150-4043*	4	CONNECTOR AS	
					(EACH INCLUDES)	
		2,4	**3J-1907**	1	SEAL-O-RING	
		2,4	**6V-8398**	1	SEAL-O-RING	
		2,4	**6V-9873**	1	CONNECTOR	
	71	3	*150-4050*	1	ELBOW AS	
		3	**3J-1907**	1	SEAL-O-RING	
		3	**8T-0788**	1	ELBOW	
	72	4	*153-6241*	1	ELBOW AS	
		4	**6V-8398**	1	SEAL-O-RING	
		4	**8C-8989**	1	ELBOW	
	73	1	*153-6258*	1	CONNECTOR AS	
		1	**3J-1907**	1	SEAL-O-RING	
		1	**6V-8398**	1	SEAL-O-RING	
		1	**8T-5050**	1	CONNECTOR	
	74	3	*164-5544*	1	ELBOW AS	
		3	**3E-2333**	1	ELBOW	
		3	**6V-8398**	1	SEAL-O-RING	
	75	1	*164-5567*	1	COUPLER AS-QUICK DISCONNECT	
		1	**3J-1907**	1	SEAL-O-RING	
		1	**6V-3965**	1	COUPLER AS-QUICK DISCONNECT	
	76	4	*164-5572*	1	UNION AS	
		4	**6V-8398**	2	SEAL-O-RING	
		4	**6V-8731**	1	UNION	
	77	2	*164-5590*	1	VALVE AS-FLUID SAMPLING	
		2	**3J-7354**	1	SEAL-O-RING	
		2	**8C-3446**	1	VALVE-FLUID SAMPLING	
	78	4	*171-6728*	1	ELBOW AS	
		4	**3K-0360**	1	SEAL-O-RING	
		4	**8T-0249**	1	ELBOW	
	79	3	**1P-3703**	1	SEAL-RECTANGULAR	
	80	3	**1P-4579**	4	FLANGE-HALF	
	81	3	**3G-8047**	2	GROMMET	
	82	3	**3G-8054**	2	CLIP (TAB)	
	83	3	**3G-8057**	2	CLIP (SLOT)	
	84	3	**3P-2404**	1	CLIP	
	85	3	**4J-0524**	2	SEAL-O-RING	
	86	1,2	**5P-7464**	7	CLIP (SLOT)	
	87	1,2	**5P-7465**	7	CLIP (TAB)	
	88	3	**5P-7468**	1	CLIP (SLOT)	
	89	3	**5P-7469**	1	CLIP (TAB)	
	90	1	**5P-7470**	1	CLIP (SLOT)	
	91	1	**5P-7471**	1	CLIP (TAB)	
	92	1	**5P-7703**	1	GROMMET	
	93	3	**5P-8444**	1	GROMMET	
	94	1,2,3,4	**5P-9299**	16	CLIP	
	95	1,2	**6V-1249**	7	GROMMET	
	96	2	**6V-1867**	2	CLIP (SLOT)	
	97	2	**6V-1868**	2	CLIP (TAB)	
	98	2	**6V-1869**	2	GROMMET	
	99	3	**6V-8397**	3	SEAL-O-RING	
	100	3,4	**6V-8398**	4	SEAL-O-RING	
	101	1,3,4	**6V-9169**	8	NUT-BULKHEAD (13/16-16-THD)	
	102	3	**7X-7729**	4	WASHER (11X25X3-MM THK)	
	103	3	**8C-3206**	2	FLANGE-HALF	

279-9405 **LINES GP-PILOT** *(contd.)* **i02936437**

NOTE	REF NO	GRAPHIC REF	PART NUMBER	QTY	PART NAME 1 2 3 4 5 6 (PRODUCT LEVEL)	SEE PAGE
M	104	2	**8T-0285**	4	SCREW-MACHINE (M4X0.7X12-MM)	
	105	1,2,3,4	**8T-4121**	39	WASHER-HARD (11X21X2.5-MM THK)	
M	106	2,3	**8T-4133**	5	NUT (M10X1.5-THD)	
M	107	1,2,3	**8T-4136**	9	BOLT (M10X1.5X25-MM)	
M	108	1,3,4	**8T-4137**	9	BOLT (M10X1.5X20-MM)	
M	109	2,3	**8T-4139**	7	BOLT (M12X1.75X30-MM)	
M	110	2	**8T-4182**	2	BOLT (M10X1.5X45-MM)	
M	111	1,3	**8T-4183**	9	BOLT (M12X1.75X40-MM)	
M	112	3	**8T-4185**	2	BOLT (M10X1.5X50-MM)	
M	113	3	**8T-4194**	1	BOLT (M12X1.75X50-MM)	
M	114	1,2	**8T-4195**	10	BOLT (M10X1.5X30-MM)	
M	115	3	**8T-4196**	4	BOLT (M10X1.5X35-MM)	
	116	1,2,3	**8T-4223**	21	WASHER-HARD (13.5X25.5X3-MM THK)	
M	117	1,3	**8T-4244**	3	NUT (M12X1.75-THD)	
M	118	3	**8T-4956**	1	BOLT (M12X1.75X35-MM)	
M	119	4	**8T-6466**	2	BOLT (M10X1.5X60-MM)	

I-REFER TO HYDRAULIC INFORMATION SYSTEM
M-METRIC PART
Y-SEPARATE ILLUSTRATION

REFER TO ALL ILLUSTRATIONS OF
THIS GROUP FOR AUXILIARY VIEWS

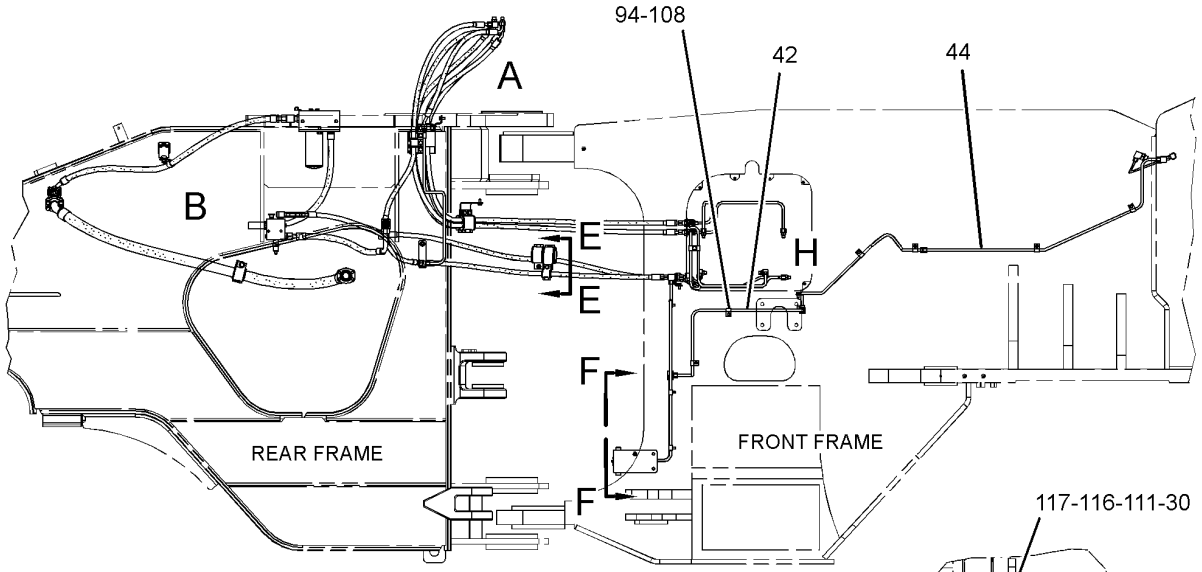

RIGHT SIDE VIEW

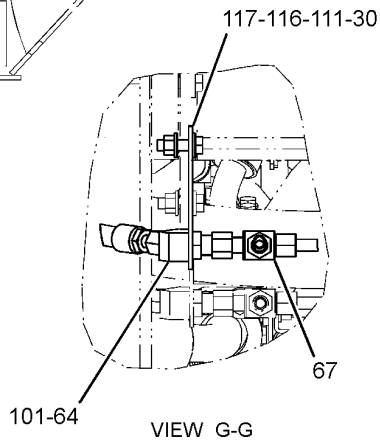

VIEW G-G

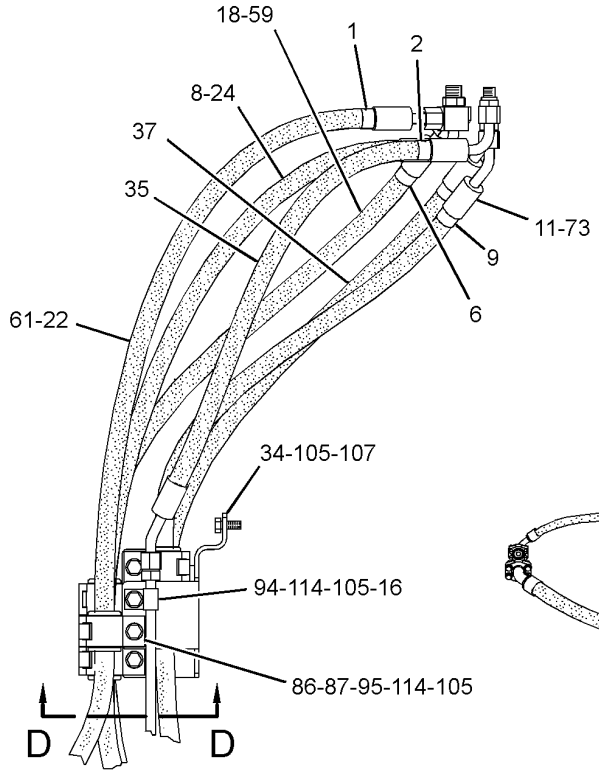

VIEW OF AREA A

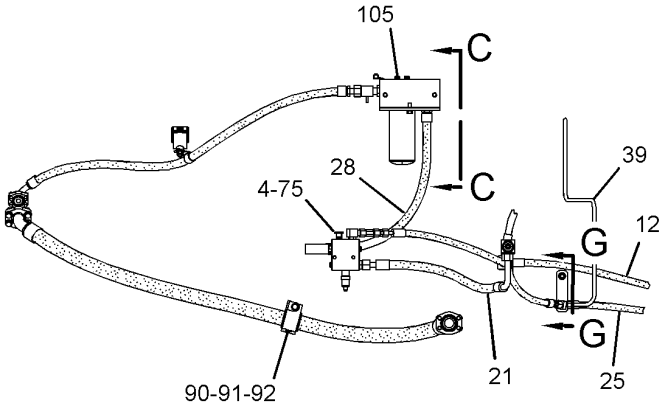

VIEW OF AREA B

GRAPHIC #1

g01449630

279-9405 **LINES GP-PILOT** *(contd.)* **i02936437**

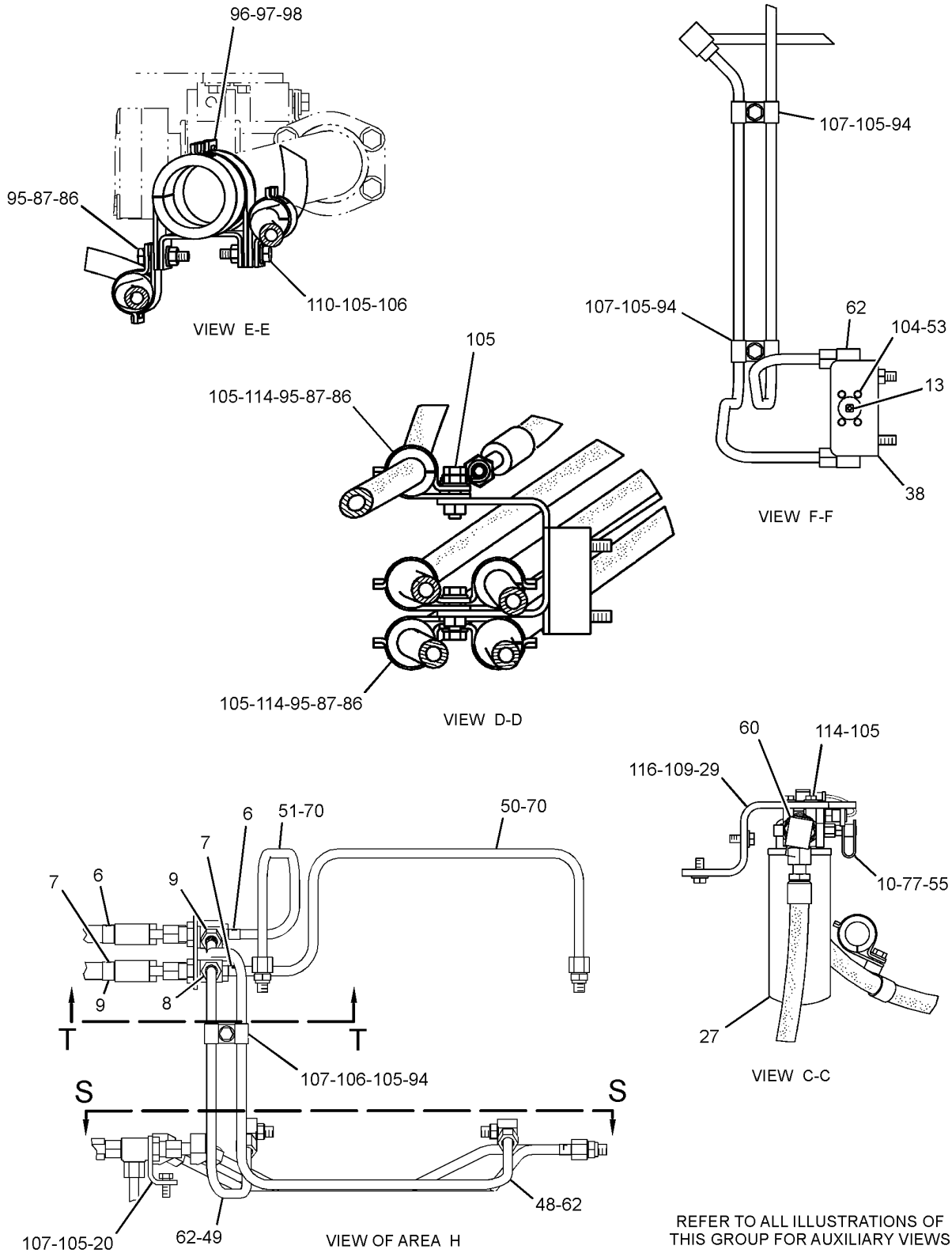

REFER TO ALL ILLUSTRATIONS OF THIS GROUP FOR AUXILIARY VIEWS

GRAPHIC #2

g01449633

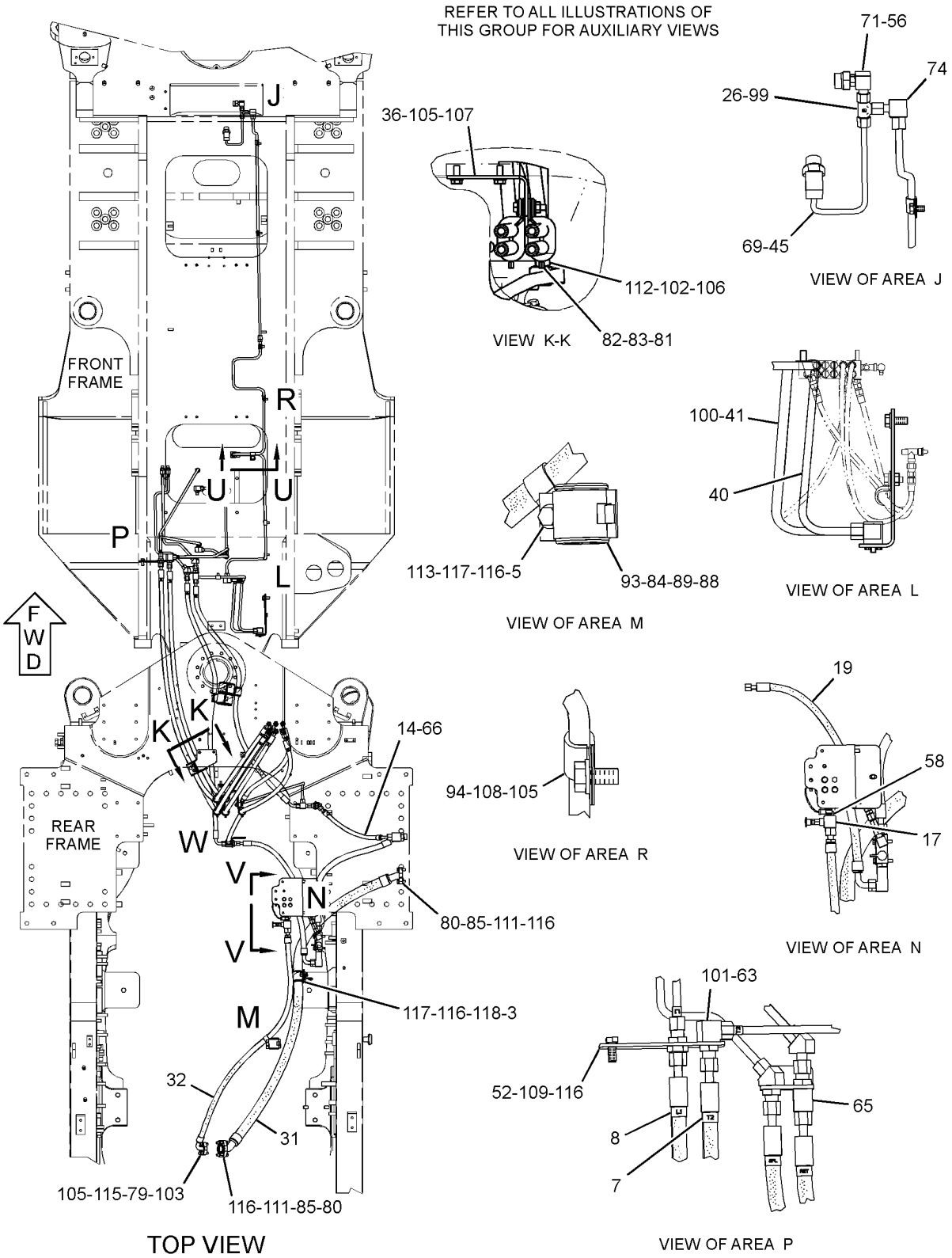

GRAPHIC #3 g01449635

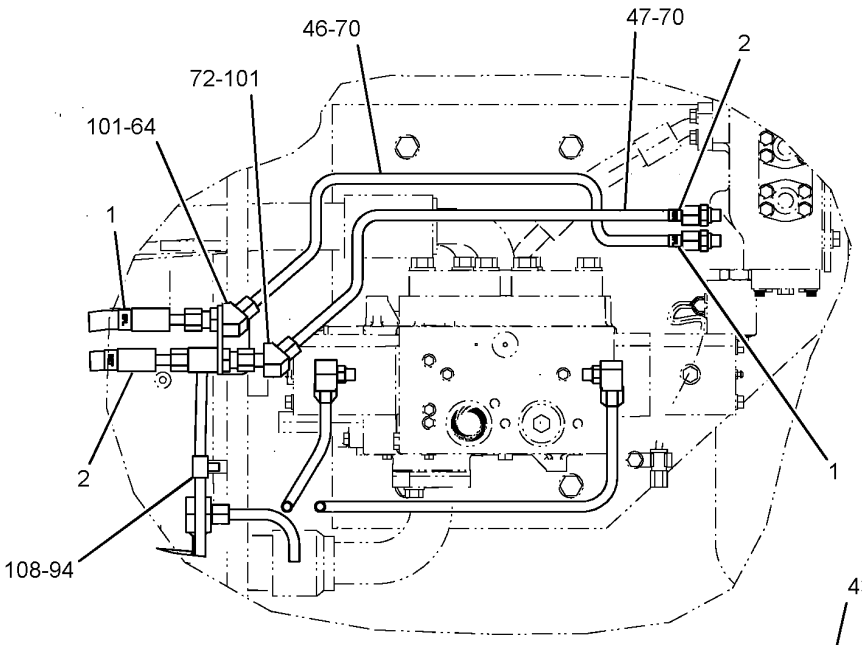

VIEW S-S

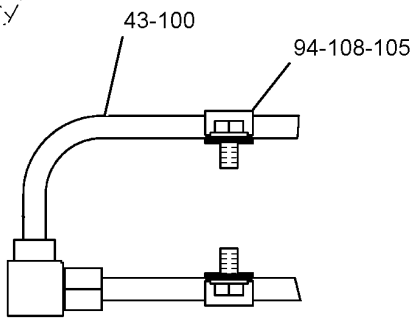

VIEW U-U

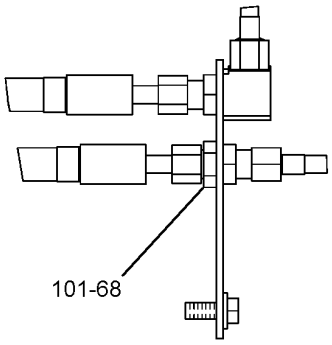

VIEW T-T

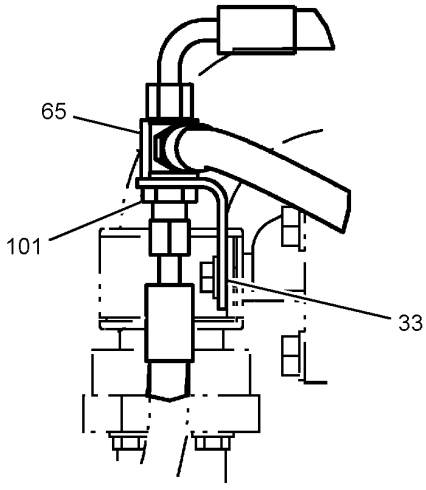

VIEW OF AREA W

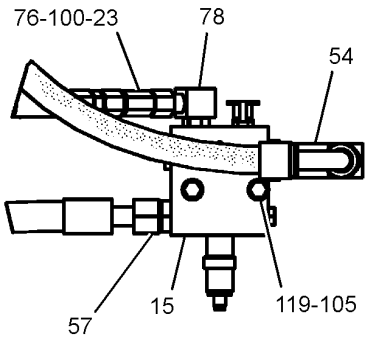

VIEW V-V

GRAPHIC #4 **<END>** g01449695

HYDRAULIC SYSTEM

213-3272 LINES GP-TILT CYLINDER

S/N: 2211-UP

PART OF 214-7136 BULLDOZER AR

SMCS-5057, 5104 **i01667222**

NOTE	REF NO	GRAPHIC REF	PART NUMBER	QTY	PART NAME 1 2 3 4 5 6 (PRODUCT LEVEL)	SEE PAGE
I	1	1	**143-7857**	4	HOSE AS	
I	2	1	**143-7858**	4	HOSE AS	
	3	1	**1P-4576**	24	FLANGE-HALF	
	4	1	**1P-4577**	8	FLANGE-HALF	
	5	1	**4J-0520**	4	SEAL-O-RING	
	6	1	**4J-5267**	12	SEAL-O-RING	
	7	1	**4L-9337**	32	BOLT (3/8-16X1.5-IN)	
	8	1	**8T-4896**	64	WASHER-HARD (10.2X18.5X2.5-MM THK)	
	9	1	**9B-7237**	32	BOLT (3/8-16X1.25-IN)	

I-REFER TO HYDRAULIC INFORMATION SYSTEM

213-3272 **LINES GP-TILT CYLINDER** *(contd.)* **i01667222**

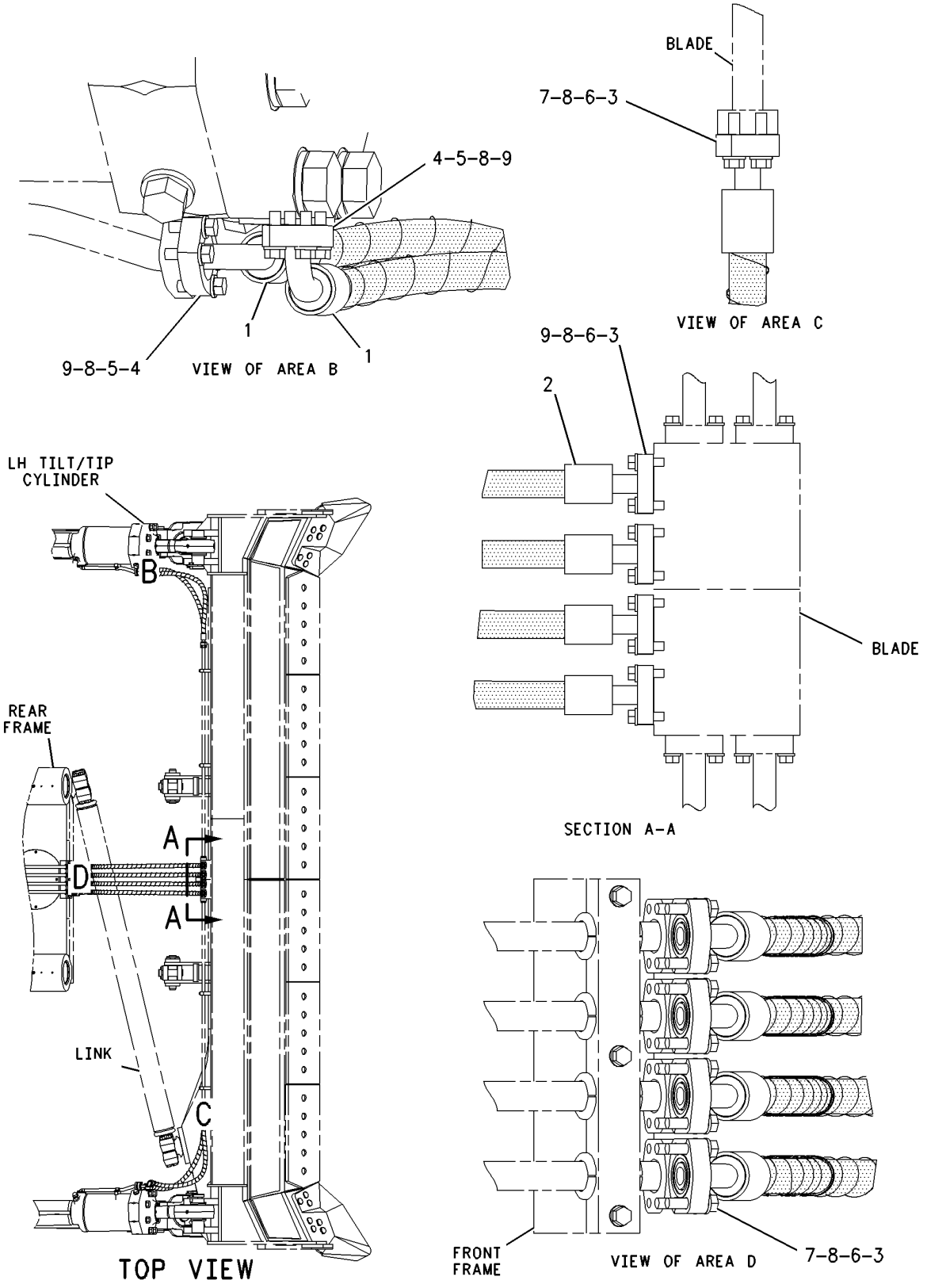

GRAPHIC #1 **<END>** g00862997

HYDRAULIC SYSTEM

280-1706 LINES GP-TILT CYLINDER

S/N: 2211-UP

PART OF 279-9400 HYDRAULIC AR

SMCS-5057, 5104 **i02894355**

NOTE	REF NO	GRAPHIC REF	PART NUMBER	QTY	PART NAME 1 2 3 4 5 6 (PRODUCT LEVEL)	SEE PAGE
I	1	1	**143-7864**	1	HOSE AS	
I	2	1	**143-7867**	1	HOSE AS	
I	3	1	**143-7868**	1	HOSE AS	
I	4	1	**143-7869**	1	HOSE AS	
	5	1	**209-4981**	1	PLATE	
	6	1	**211-3070**	1	MANIFOLD	
	7	1	**211-8705**	2	PLATE	
	8	1	**211-8723**	2	PLATE	
	9	1	**211-9917**	2	BRACKET AS	
	10	1	**290-5770**	4	TUBE AS	
	11	1	*148-8360*	1	ELBOW AS	
		1	**6V-9182**	1	ELBOW	
		1	**6V-9746**	1	SEAL-O-RING	
		1	**7M-8485**	1	SEAL-O-RING	
	12	1	*148-8409*	3	PLUG AS	
					(EACH INCLUDES)	
		1	**3D-2824**	1	SEAL-O-RING	
		1	**9S-8008**	1	PLUG-O-RING	
	13	1	**1P-4576**	24	FLANGE-HALF	
	14	1	**4J-5267**	15	SEAL-O-RING	
	15	1	**5H-4018**	4	COVER	
	16	1	**5P-7466**	1	CLIP (SLOT)	
	17	1	**5P-7467**	1	CLIP (TAB)	
	18	1	**5P-8112**	9	GROMMET	
	19	1	**5S-7382**	16	BOLT (3/8-16X1.375-IN)	
	20	1	**6V-7359**	4	GROMMET	
	21	1	**8T-4121**	35	WASHER-HARD (11X21X2.5-MM THK)	
M	22	1	**8T-4186**	3	BOLT (M10X1.5X40-MM)	
M	23	1	**8T-4193**	4	BOLT (M16X2X50-MM)	
M	24	1	**8T-4194**	5	BOLT (M12X1.75X50-MM)	
M	25	1	**8T-4196**	32	BOLT (M10X1.5X35-MM)	
	26	1	**8T-4223**	10	WASHER-HARD (13.5X25.5X3-MM THK)	
M	27	1	**8T-4244**	1	NUT (M12X1.75-THD)	
M	28	1	**8T-4648**	4	BOLT (M12X1.75X70-MM)	
M	29	1	**8T-4779**	8	BOLT (M16X2X35-MM)	
	30	1	**9X-2027**	16	WASHER (11X18X2-MM THK)	
	31	1	**9X-8257**	12	WASHER (17.5X30X3.5-MM THK)	

I-REFER TO HYDRAULIC INFORMATION SYSTEM
M-METRIC PART

280-1706 **LINES GP-TILT CYLINDER** *(contd.)* **i02894355**

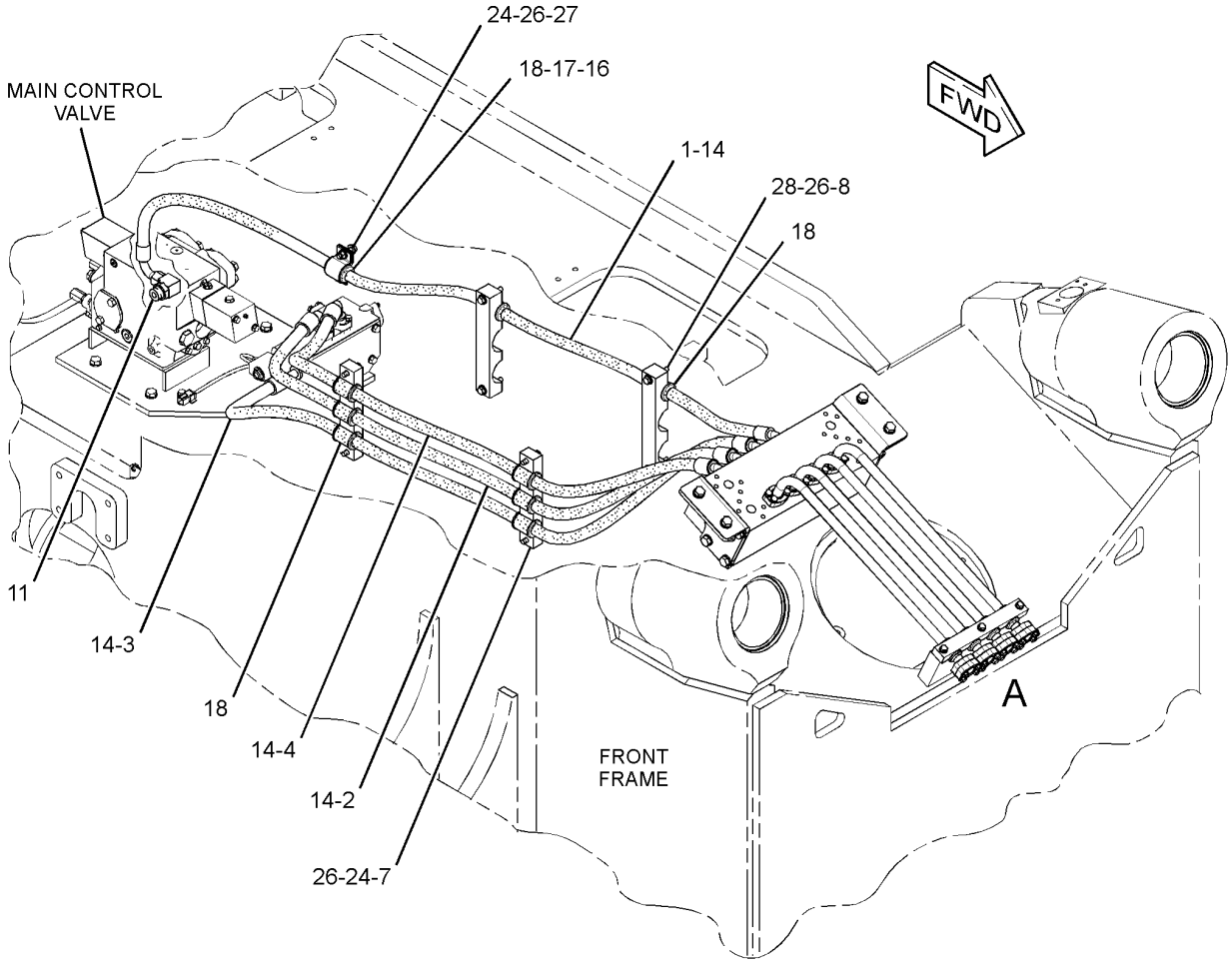

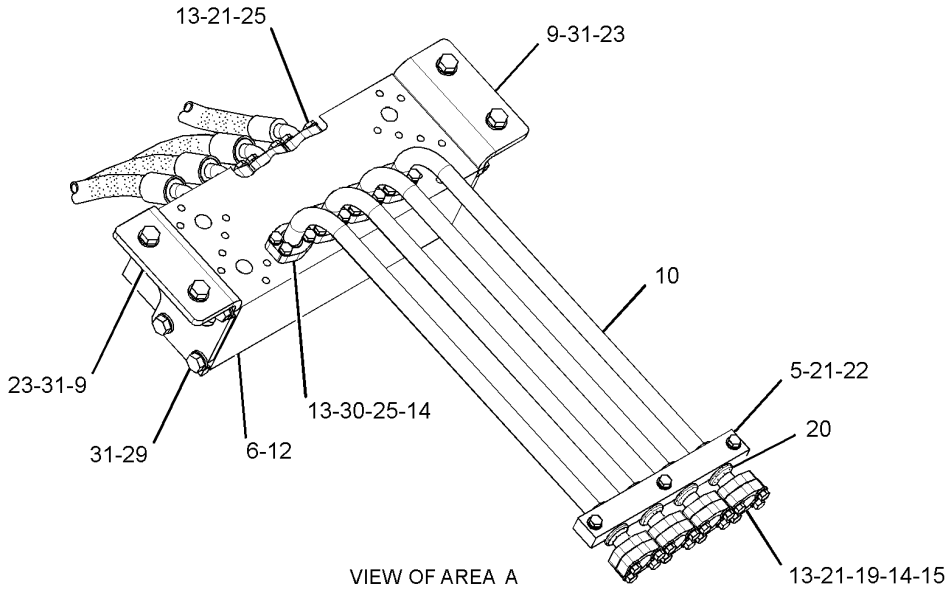

GRAPHIC #1 **<END>** g01442956

HYDRAULIC SYSTEM

273-6265 MOTOR & MTG GP-HYDRAULIC FAN

S/N: 2211-UP

PART OF 279-9400 HYDRAULIC AR

SMCS-1386 **i02859755**

NOTE	REF NO	GRAPHIC REF	PART NUMBER	QTY	PART NAME 1 2 3 4 5 6 (PRODUCT LEVEL)	SEE PAGE
Y	1	1	*101-9012*	1	VALVE GP-MAKEUP (HYDRAULIC FAN MOTOR)	746
YR	2	1	**159-7166**	1	MOTOR GP-PISTON (HYDRAULIC FAN)	715
	3	1	**197-3295**	4	FLANGE-HALF	
	4	1	*148-8410*	1	PLUG AS	
		1	**2M-9780**	1	SEAL-O-RING	
		1	**9S-4190**	1	PLUG-O-RING	
	5	1	*153-6244*	1	ELBOW AS	
		1	**2M-9780**	1	SEAL-O-RING	
		1	**6V-9746**	1	SEAL-O-RING	
		1	**8T-5389**	1	ELBOW	
	6	1	**4J-5573**	2	SEAL-O-RING	
	7	1	**7X-3392**	8	WASHER-HARD (13.5X22.5X3-MM THK)	
M	8	1	**8T-4193**	4	BOLT (M16X2X50-MM)	
M	9	1	**8T-4956**	8	BOLT (M12X1.75X35-MM)	
M	10	1	**8T-7058**	8	BOLT-SOCKET HEAD (M12X1.75X140-MM)	
	11	1	**9X-8257**	4	WASHER (17.5X30X3.5-MM THK)	

M-METRIC PART
R-REMFG PART MAY BE AVAILABLE
Y-SEPARATE ILLUSTRATION

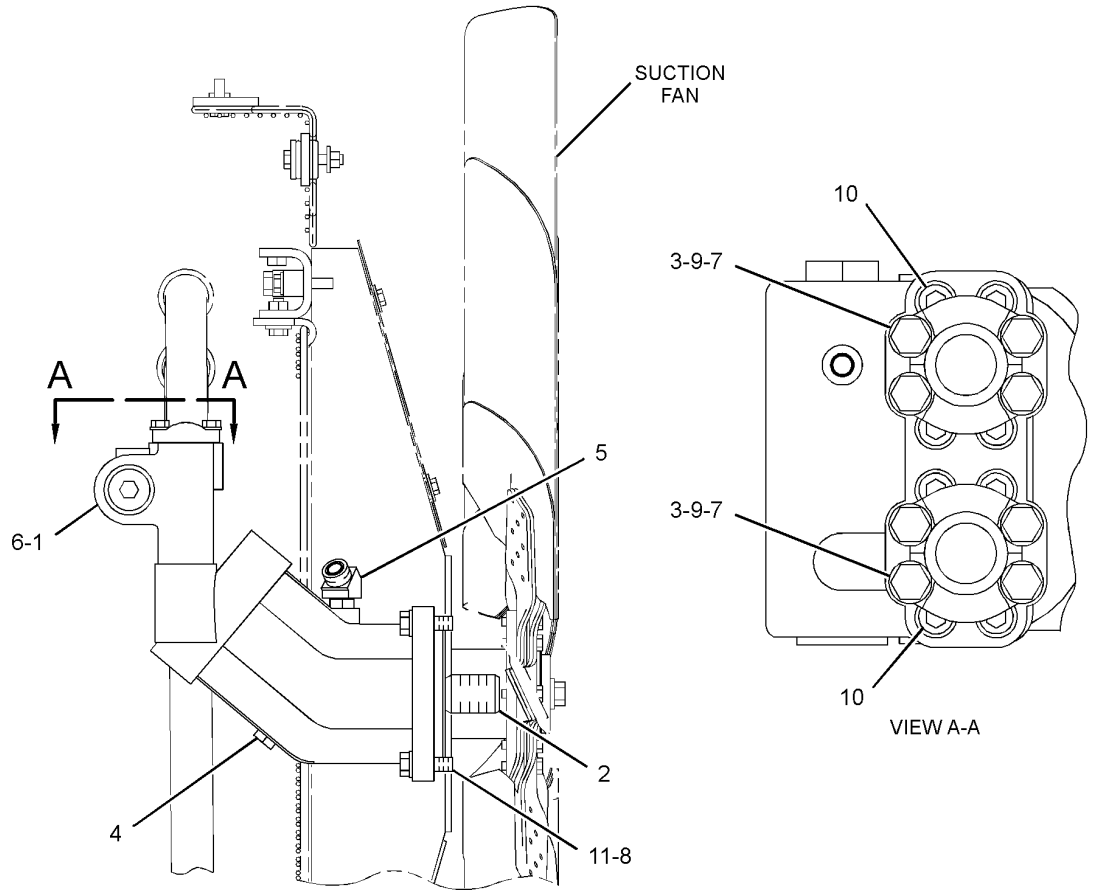

RIGHT SIDE VIEW

GRAPHIC #1 **<END>** g01424724

HYDRAULIC SYSTEM

159-7166 MOTOR GP-PISTON–HYDRAULIC FAN*R

S/N: 2211-UP

PART OF 273-6265 MOTOR & MTG GP-HYDRAULIC FAN

SMCS-1386, 5058 **i01655429**

NOTE	REF NO	GRAPHIC REF	PART NUMBER	QTY	PART NAME 1 2 3 4 5 6 (PRODUCT LEVEL)	SEE PAGE
	1	1	**9X-6497**	1	DOWEL	
M	2	1	**130-1673**	6	BOLT-SOCKET HEAD (M16X2X35-MM)	
	3	1	**111-9266**	1	HEAD	
	4	1	**8T-9527**	1	SEAL-O-RING	
	5	1	**6E-1682**	1	HOUSING	
	6	1	**2M-9780**	1	SEAL-O-RING	
	7	1	**9S-8006**	1	PLUG-O RING	
Y	8	1	**178-4005**	1	ROTATING GP-MOTOR (HYDRAULIC FAN)	727

M-METRIC PART
Y-SEPARATE ILLUSTRATION

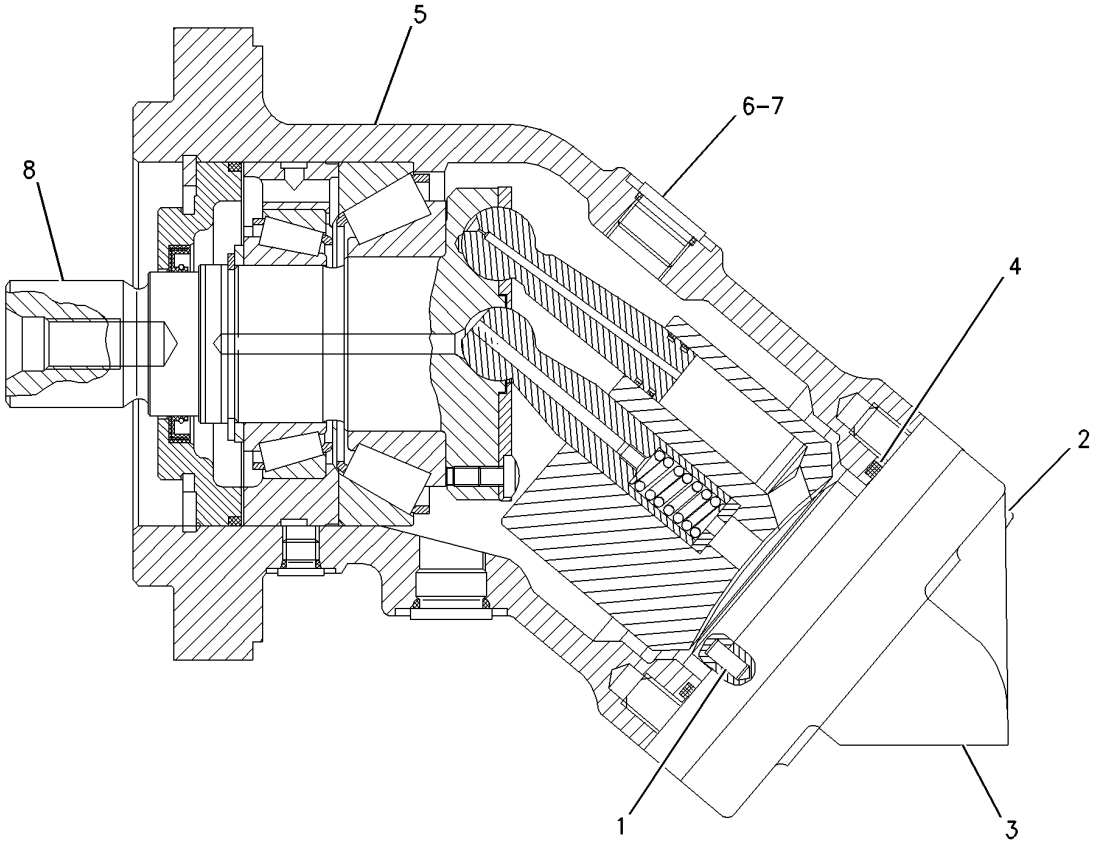

GRAPHIC #1 **<END>** g00854939

HYDRAULIC SYSTEM

316-6386 PISTON GP-HYDRAULIC CYLINDER

S/N: 2211-UP

PART OF 308-2462, 308-2464 CYLINDER GP-TILT

SMCS-5104 **i02878677**

NOTE	REF NO	GRAPHIC REF	PART NUMBER	QTY	PART NAME 1 2 3 4 5 6 (PRODUCT LEVEL)	SEE PAGE
	1	1	**1J-8569**	2	INSERT-PISTON	
	2	1	**4T-2578**	1	SPACER (19X36.4X23.6-MM THK)	
	3	1	**6E-1443**	2	INSERT	
	4	1	**6E-1444**	1	SPACER	
	5	1	**164-6426**	2	PLUNGER	
	7	1	**2H-3932**	3	SEAL-O-RING	
	8	1	**3K-8692**	4	RING-BACKUP	

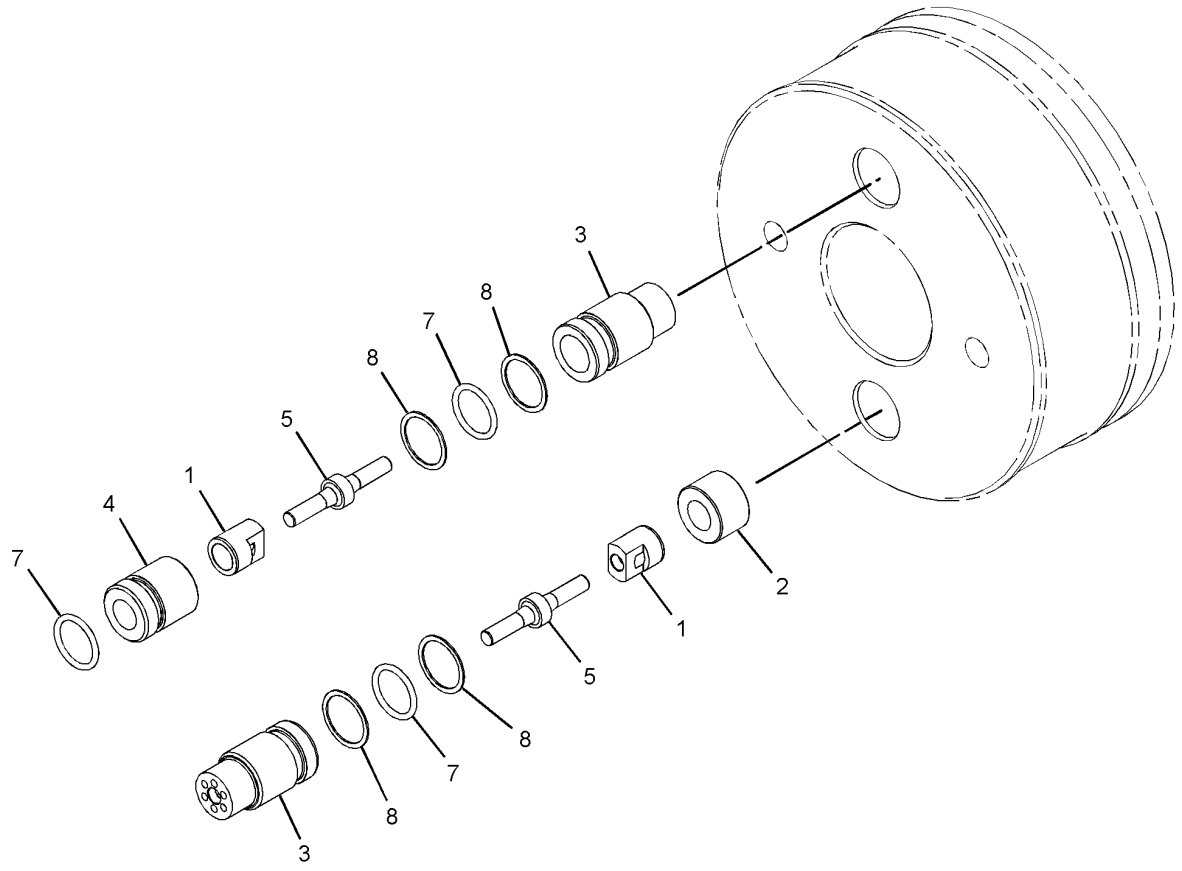

GRAPHIC #1 **<END>** g01433248

HYDRAULIC SYSTEM

259-3001 PIVOT GP-PILOT VALVE

S/N: 2211-UP

PART OF 260-7491 VALVE GP-PILOT

SMCS-5059 **i02308179**

NOTE	REF NO	GRAPHIC REF	PART NUMBER	QTY	PART NAME 1 2 3 4 5 6 (PRODUCT LEVEL)	SEE PAGE
	1	1	**146-6315**	3	PIN-ADJUSTMENT	
	2	1	**146-6317**	1	RETAINER	
	3	1	**159-3781**	1	SPRING	
	4	1	**199-7834**	1	DETENT AS	
		1	**8S-7499**	2	PIN-SPRING	
	5	1	**209-9723**	1	LEVER AS	
M	6	1	**191-8920**	2	BOLT-SOCKET HEAD (M6X1X12-MM)	
M	7	1	**5C-2890**	3	NUT (M6X1-THD)	

M-METRIC PART

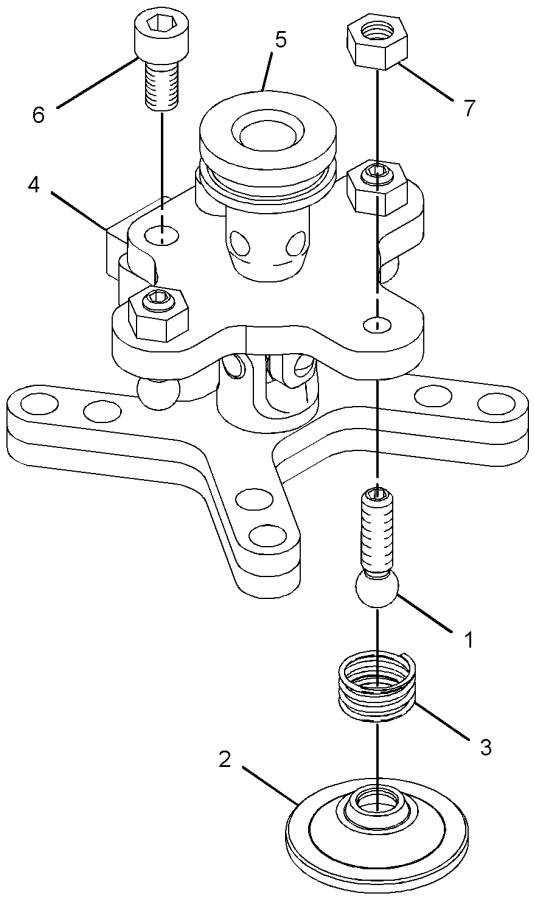

GRAPHIC #1 **<END>** g01219440

HYDRAULIC SYSTEM

273-6270 PUMP & MTG GP-HYDRAULIC FAN

S/N: 2211-UP

PART OF 279-9400 HYDRAULIC AR

SMCS-1387 **i02859754**

NOTE	REF NO	GRAPHIC REF	PART NUMBER	QTY	PART NAME 1 2 3 4 5 6 (PRODUCT LEVEL)	SEE PAGE
	1	1	*164-5640*	1	ELBOW AS	
		1	**3J-1907**	1	SEAL-O-RING	
		1	**6V-9746**	1	SEAL-O-RING	
		1	**127-9015**	1	ELBOW	
Y	2	1	**277-5566**	1	PUMP GP-PISTON (HYDRAULIC FAN)	725
	3	1	**6V-5553**	1	SEAL-O-RING	
M	4	1	**8T-4193**	4	BOLT (M16X2X50-MM)	
	5	1	**9X-8257**	4	WASHER (17.5X30X3.5-MM THK)	

M-METRIC PART
Y-SEPARATE ILLUSTRATION

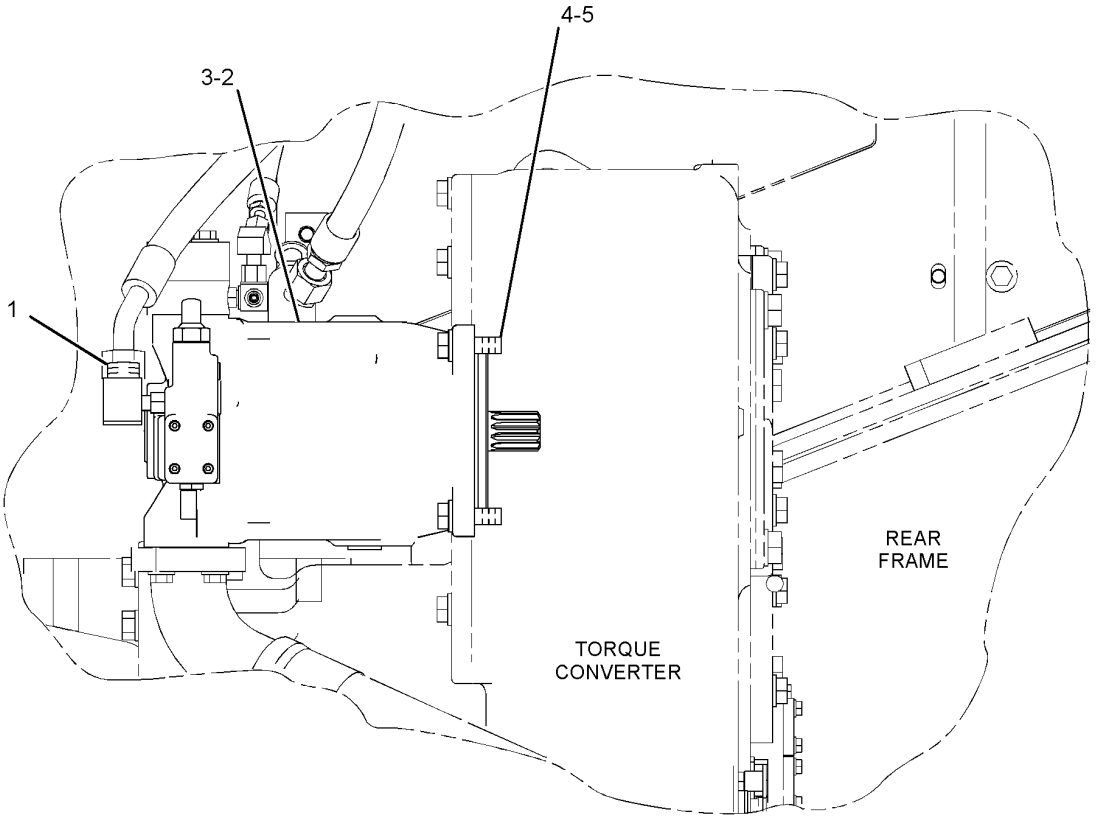

RIGHT SIDE VIEW

GRAPHIC #1 **<END>** g01424727

HYDRAULIC SYSTEM

291-2666 PUMP & MTG GP-IMPLEMENT

S/N: 2211-UP

PART OF 279-9400 HYDRAULIC AR

SMCS-5084 **i02894350**

NOTE	REF NO	GRAPHIC REF	PART NUMBER	QTY	PART NAME 1 2 3 4 5 6 (PRODUCT LEVEL)	SEE PAGE
	1	1	**7V-8532**	1	SPACER	
	2	1	**110-0288**	1	ADAPTER-SPLINE	
	3	1	**150-3745**	1	ADAPTER-PUMP	
	4	1	*196-2036*	1	TEE AS	
		1	**3K-0360**	1	SEAL-O-RING	
		1	**6V-8398**	1	SEAL-O-RING	
		1	**9X-2492**	1	TEE-O-RING	
Y	5	1	**227-9383**	1	PUMP GP-GEAR (IMPLEMENT)	723
	6	1	**1P-4578**	2	FLANGE-HALF	
	7	1	**4J-0522**	1	SEAL-O-RING	
	8	1	**5P-2566**	4	BOLT (1/2-13X1.5-IN)	
	9	1	**5P-8077**	2	FLANGE-HALF	
	10	1	**6F-4718**	1	SEAL-O-RING	
	11	1	**6V-8260**	1	SEAL-O-RING	
	12	1	**7X-0313**	4	BOLT (7/16-14X2.75-IN)	
	13	1	**7X-0346**	2	BOLT (5/8-11X2-IN)	
M	14	1	**7X-2563**	4	BOLT (M20X2.5X60-MM)	
	15	1	**8T-4122**	6	WASHER-HARD (17X32X3.5-MM THK)	
	16	1	**8T-4123**	4	WASHER (22X35X3.5-MM THK)	
	17	1	**8T-4223**	4	WASHER-HARD (13.5X25.5X3-MM THK)	
	18	1	**8T-5360**	4	WASHER (12X22.5X2.5-MM THK)	
	19	1	**8T-6871**	4	BOLT (5/8-11X2.5-IN)	

M-METRIC PART
Y-SEPARATE ILLUSTRATION

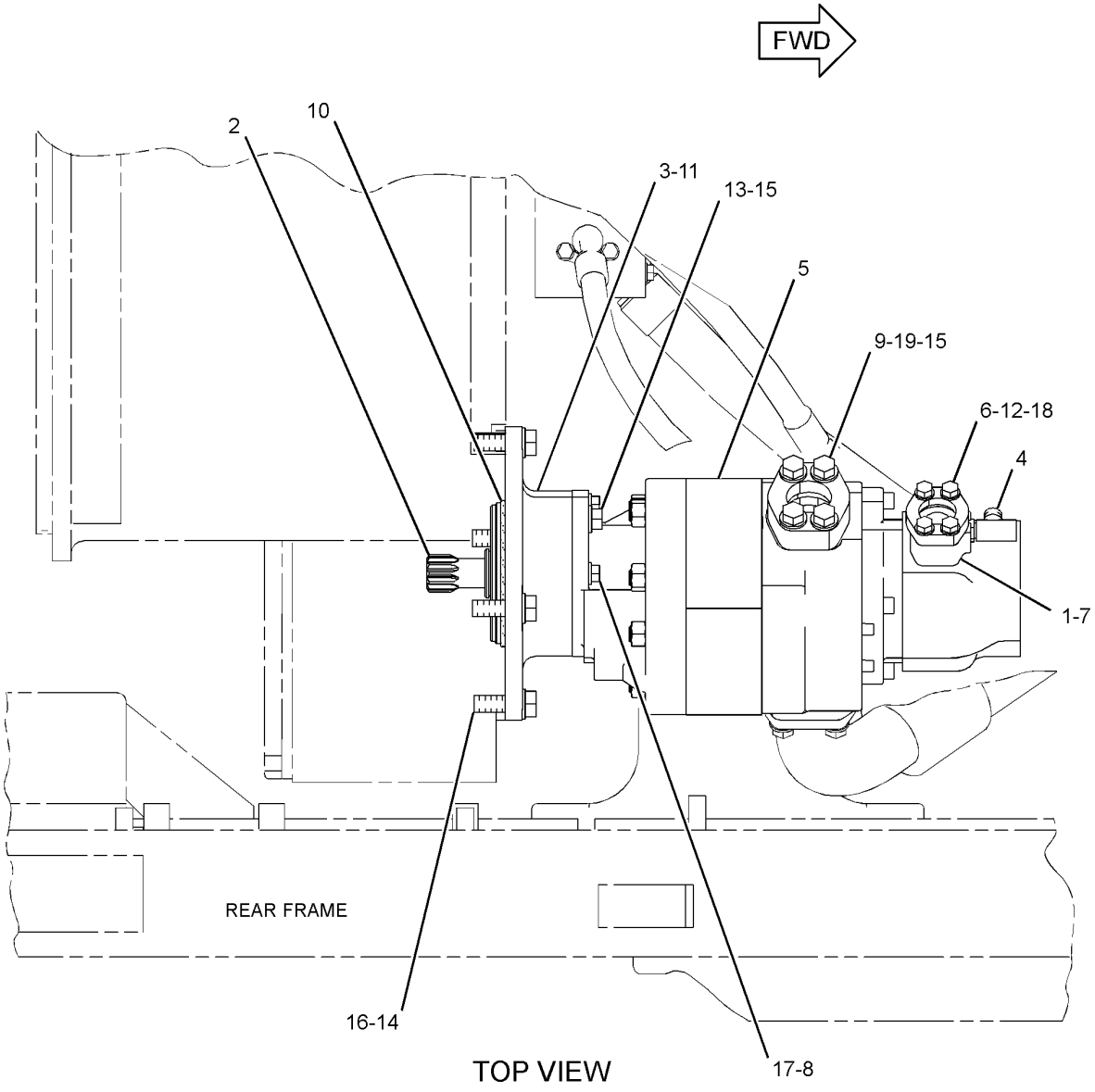

TOP VIEW

GRAPHIC #1 **<END>** g01447249

1C-7958 PUMP & MTG GP-IMPLEMENT PILOT

S/N: 2211-UP

PART OF 279-9400 HYDRAULIC AR

SMCS-5073, 5085 **i01178415**

NOTE	REF NO	GRAPHIC REF	PART NUMBER	QTY	PART NAME 1 2 3 4 5 6 (PRODUCT LEVEL)	SEE PAGE
	1	1	**1C-7827**	1	ADAPTER-PUMP	
	2	1	**1C-7826**	1	ADAPTER-SPLINE	
	3	1	**5S-4455**	1	RING-RETAINING	
	4	1	**5K-7792**	1	RING-RETAINING	
Y	5	1	**4Z-6291**	1	PUMP GP-GEAR (IMPLEMENT PILOT)	722
M	6	1	**8T-4956**	2	BOLT (M12X1.75X35-MM)	
	7	1	**8T-4223**	2	WASHER-HARD (13.5X25.5X3-MM THK)	
M	8	1	**8T-6430**	4	BOLT (M20X2.5X50-MM)	
	9	1	**8T-4123**	4	WASHER (22X35X3.5-MM THK)	
	10	1	**1H-6227**	1	SEAL-O-RING	

M-METRIC PART
Y-SEPARATE ILLUSTRATION

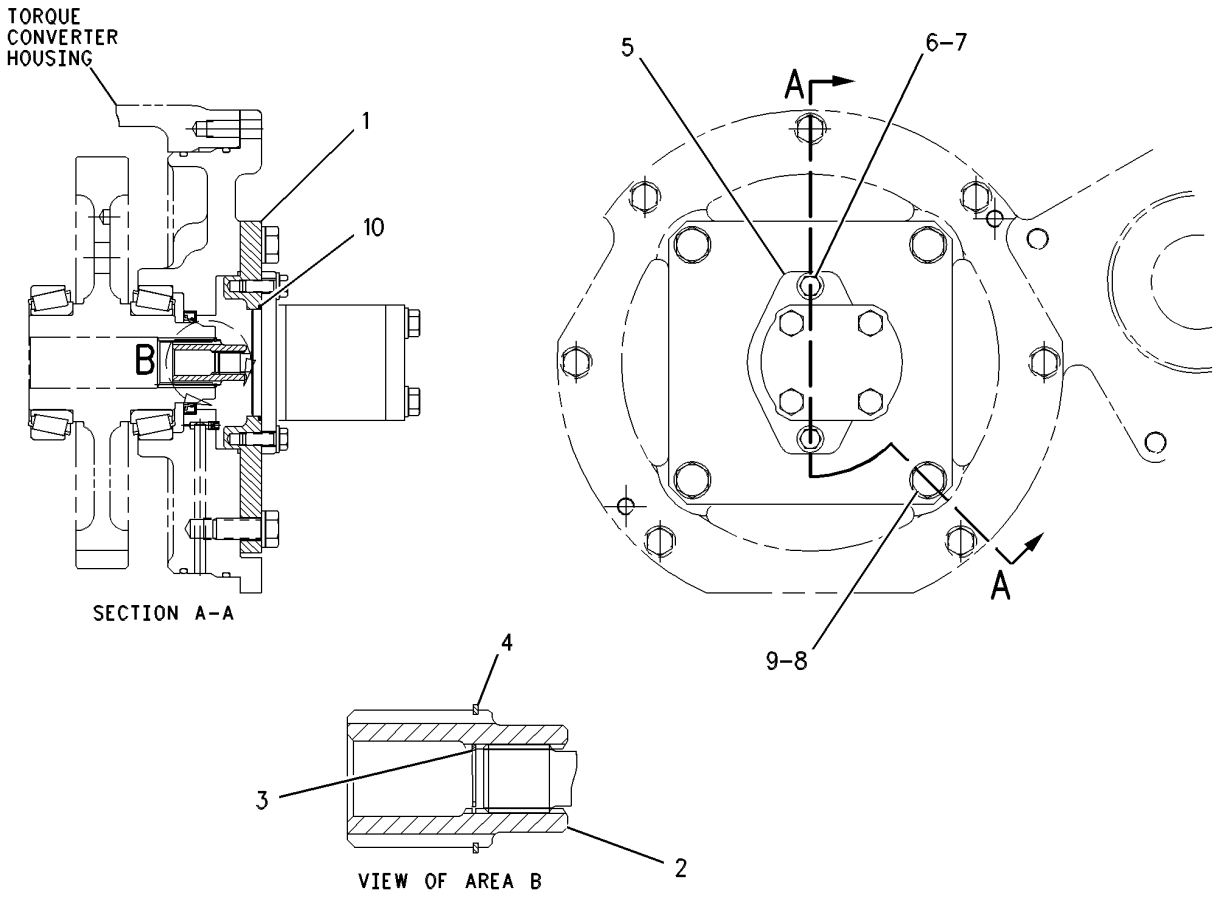

GRAPHIC #1 **<END>** g00357412

HYDRAULIC SYSTEM

4Z-6291 PUMP GP-GEAR–IMPLEMENT PILOT

S/N: 2211-UP

PART OF 1C-7958 PUMP & MTG GP-IMPLEMENT PILOT

SMCS-5073 **i00777195**

NOTE	REF NO	GRAPHIC REF	PART NUMBER	QTY	PART NAME 1 2 3 4 5 6 (PRODUCT LEVEL)	SEE PAGE
	1	1	**135-3490**	1	COVER	
M	2	1	**8T-5412**	4	BOLT (M12X1.75X140-MM)	
J	3	1	**135-3573**	1	SEAL-LIP TYPE	
J	4	1	**135-3489**	1	KIT-SEAL	
	5	1	**109-1641**	1	RING-SNAP	
	6	1	**099-3095**	1	DOWEL	
	7	1	**136-3842**	1	FLANGE	

J-KIT MARKED J INCLUDES PART MARKED J
M-METRIC PART

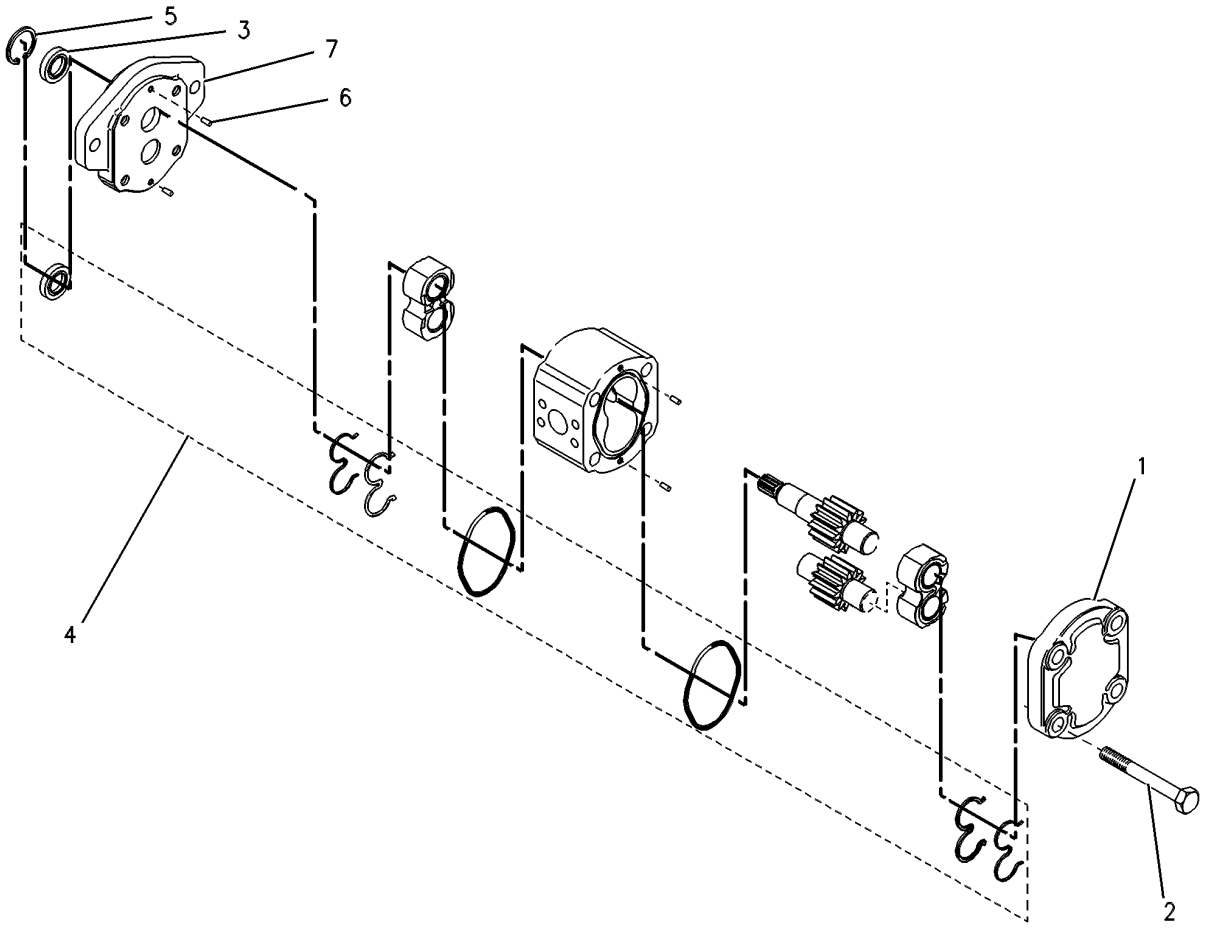

GRAPHIC #1 **<END>** g00347966

HYDRAULIC SYSTEM

227-9383 PUMP GP-GEAR–IMPLEMENT

S/N: 2211-UP

PART OF 291-2666 PUMP & MTG GP-IMPLEMENT

SMCS-5073 **i01952690**

NOTE	REF NO	GRAPHIC REF	PART NUMBER	QTY	PART NAME 1 2 3 4 5 6 (PRODUCT LEVEL)	SEE PAGE
	1	1	**9T-6909**	1	PLATE-GEAR	
	2	1	**231-9532**	1	BODY AS	
	3	1	**231-9533**	1	PLATE AS	
	4	1	**9T-6907**	1	FLANGE AS-RH	
	5	1	**9T-6910**	1	PLATE AS-BEARING	
	6	1	**9T-6905**	1	SHAFT	
	7	1	**9T-6913**	1	SHAFT-DRIVE	
	8	1	**9T-6906**	1	GEAR-IDLER	
	9	1	**4T-9176**	1	GEAR	
	10	1	**120-0241**	2	PLATE-PRESSURE	
	11	1	**4T-8729**	2	PLATE-PRESSURE	
	12	1	**4T-9425**	1	PLATE-ISOLATION	
	13	1	**4T-9426**	1	PLATE-ISOLATION	
	14	1	**077-4652**	2	RING-RETAINING	
J	15	1	**215-7636**	2	SEAL-LIP TYPE	
J	16	1	**4D-1736**	1	RING-RETAINING	
	17	1	**9T-2654**	4	DOWEL	
	18	1	**6J-2386**	4	DOWEL	
J	19	1	**6E-2943**	1	PLUG	
	20	1	**9S-8004**	2	PLUG-O-RING	
	21	1	**9J-4688**	1	COUPLING	
	22	1	**7M-4298**	8	STUD	
	23	1	**5S-2256**	4	BOLT (1/2-13X1.75-IN)	
	24	1	**2L-0041**	8	BOLT (1/2-13X2.25-IN)	
	25	1	**5H-1504**	8	WASHER-HARD (20X33.5X5-MM THK)	
	26	1	**6B-6682**	8	NUT-FULL (3/4-16-THD)	
					AVAILABLE REPAIR KIT(S):	
J			**231-9531**	1	KIT-SEAL	

J-KIT MARKED J INCLUDES PARTS MARKED J

227-9383 PUMP GP-GEAR *(contd.)* **i01952690**

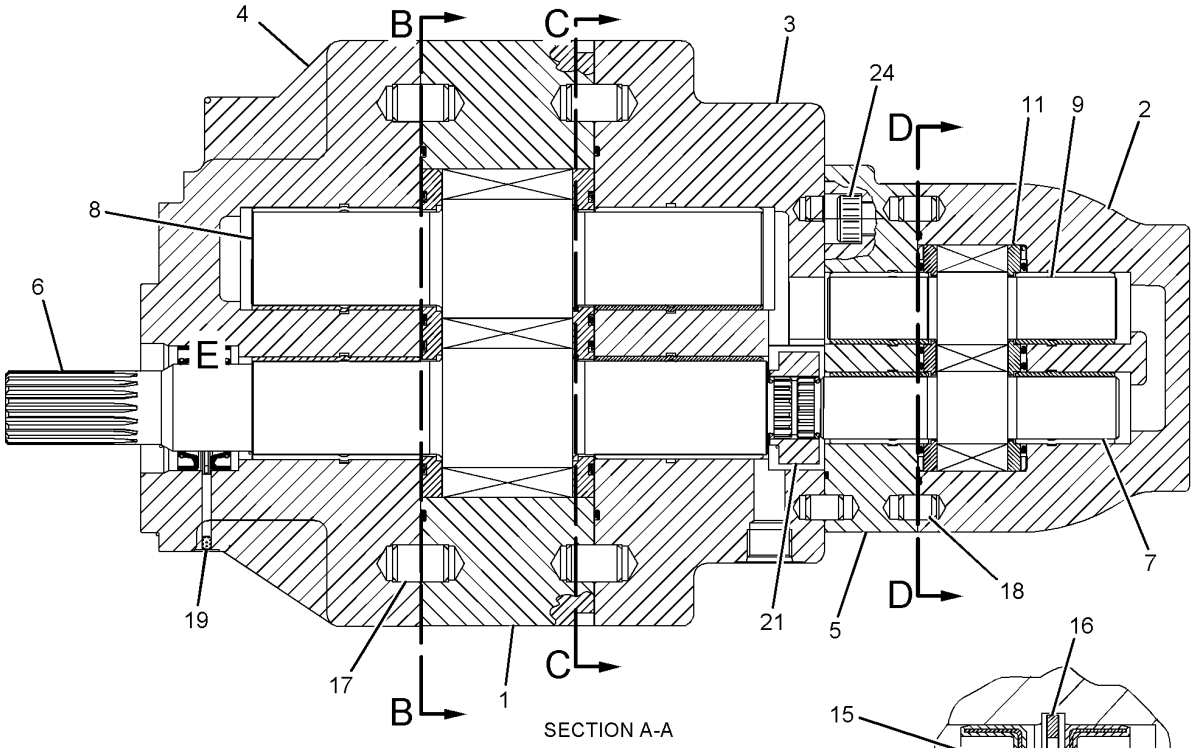

SECTION A-A

VIEW OF AREA E

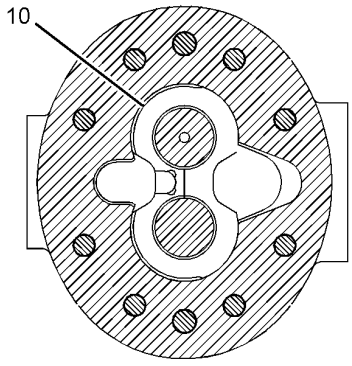

SECTION C-C

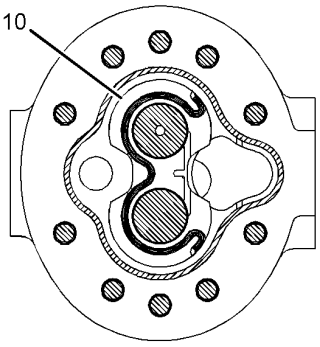

SECTION B-B

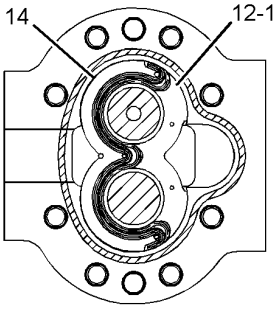

SECTION D-D

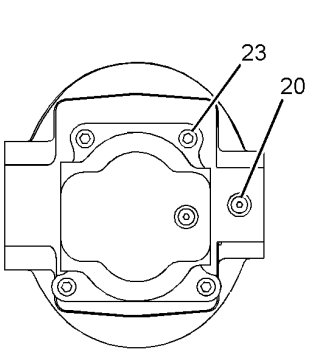

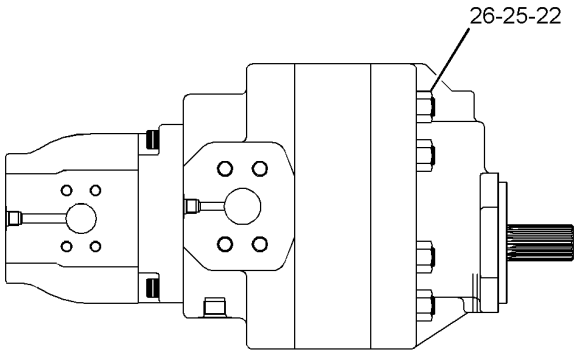

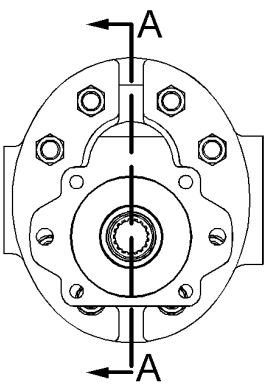

GRAPHIC #1 **<END>** g01029669

HYDRAULIC SYSTEM

277-5566 PUMP GP-PISTON—HYDRAULIC FAN

S/N: 2211-UP

PART OF 273-6270 PUMP & MTG GP-HYDRAULIC FAN

SMCS-5070 **i02859641**

NOTE	REF NO	GRAPHIC REF	PART NUMBER	QTY	PART NAME 1 2 3 4 5 6 (PRODUCT LEVEL)	SEE PAGE
	1	1	**095-0942**	1	RING-RETAINING	
	2	1	**176-7507**	2	BEARING-CRADLE	
M	3	1	**127-4832**	4	BOLT-SOCKET HEAD (M5X0.8X90-MM)	
Y	4	1	**290-0451**	1	ROTATING GP-PUMP	729
	5	1	**5P-9186**	4	SEAL-O-RING	
M	6	1	**7Y-0467**	4	BOLT-SOCKET HEAD (M18X2.5X55-MM)	
	7	1	**6Y-2736**	1	CONE-BEARING	
	8	1	**6Y-2737**	1	CUP-BEARING	
	9	1	**247-3761**	1	SPACER (45X3-MM THK)	
	10	1	**290-4175**	1	SEAL	
	11	1	**176-7511**	1	GUIDE-PLUNGER	
	12	1	**176-7512**	1	SPRING	
	13	1	**176-7513**	1	PLUNGER	
	14	1	**9S-8008**	1	PLUG-O-RING	
	15	1	**3D-2824**	1	SEAL-O-RING	
	16	1	**290-0842**	1	SHAFT	
	17	1	**1B-3908**	1	CONE-BEARING	
	18	1	**1B-3909**	1	CUP-BEARING	
	19	1	**203-1095**	2	SEAL	
	20	1	**290-0824**	1	SWASHPLATE	
	21	1	**176-7517**	1	PISTON-CONTROL	
	22	1	**176-7518**	1	GUIDE-PISTON	
	23	1	**7I-7555**	2	PLUG AS	
	24	1	**120-4394**	1	PLUG-BREAK OFF	
	25	1	**7X-2438**	1	DOWEL	
	26	1	**176-7692**	1	SLEEVE-STOP	
Y	27	1	**176-7520**	1	VALVE GP-PUMP CONTROL (PRESSURE COMPENSATOR)	752
J	28	1	**176-7521**	1	VALVE GP-PUMP CONTROL (PRESSURE, FLOW COMPENSATOR)	
	29	1	**033-6039**	10	SEAL-O-RING	
	30	1	**9S-8004**	1	PLUG-O-RING	
	31	1	**3J-1907**	1	SEAL-O-RING	
					AVAILABLE REPAIR KIT(S):	
J			**176-7696**	1	KIT-VALVE REPAIR	
					(INCLUDES PLUG AS, PLUG, SEAL-O-RINGS & RING-BACKUP)	

J-KIT MARKED J SERVICES PARTS MARKED J
M-METRIC PART
Y-SEPARATE ILLUSTRATION

277-5566 PUMP GP-PISTON *(contd.)* **i02859641**

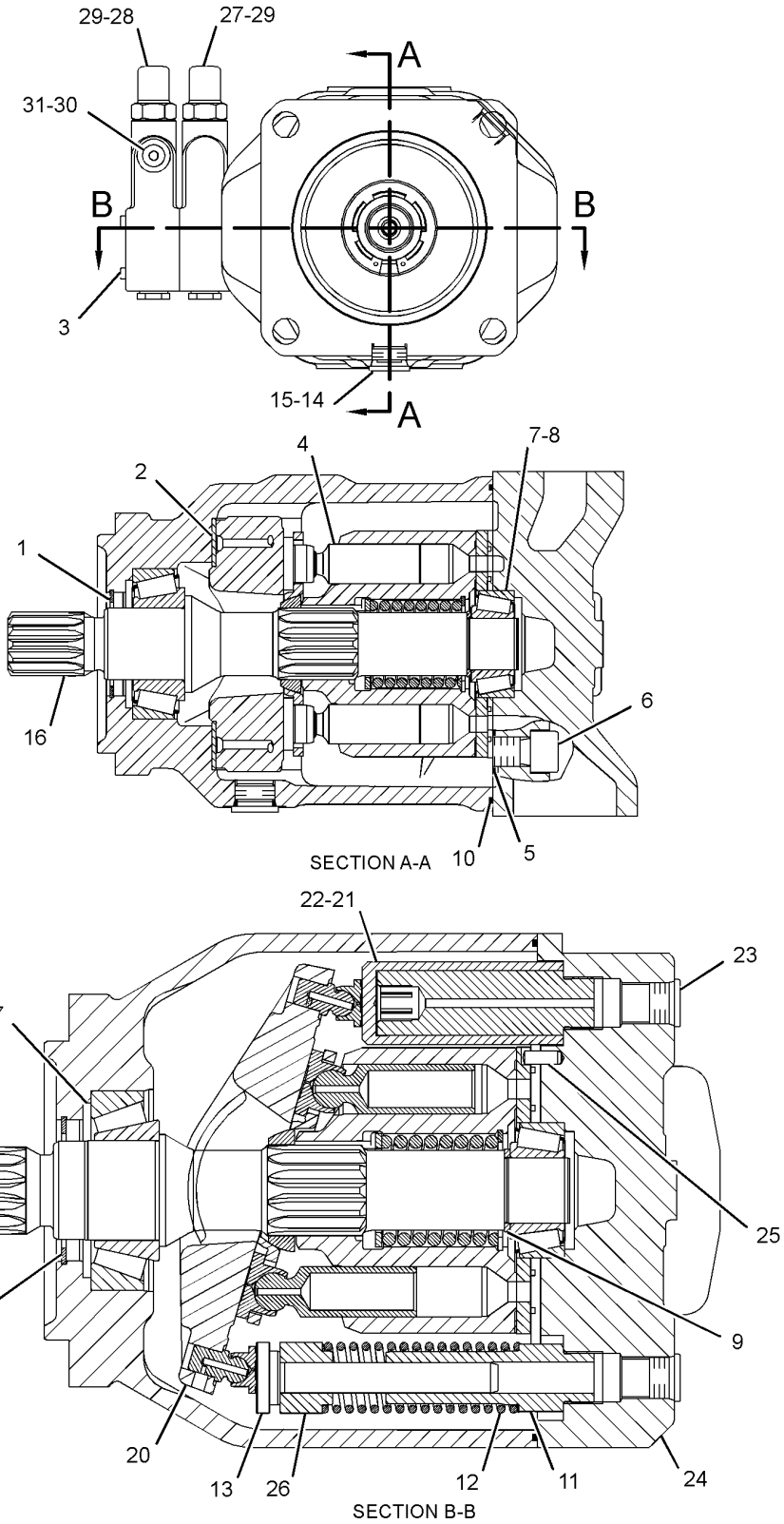

GRAPHIC #1 **<END>** g01429894

HYDRAULIC SYSTEM

178-4005 ROTATING GP-MOTOR—HYDRAULIC FAN

S/N: 2211-UP

PART OF 159-7166 MOTOR GP-PISTON

SMCS-1386, 5058 **i01655409**

NOTE	REF NO	GRAPHIC REF	PART NUMBER	QTY	PART NAME 1 2 3 4 5 6 (PRODUCT LEVEL)	SEE PAGE
	1	1	**178-3995**	1	SHAFT AS	
		1	**171-5995**	1	KIT-BEARING	
	2	1	**6E-1687**	1	COVER-FRONT	
	3	1	**9X-6574**	1	RING-RETAINING	
	4	1	**124-9913**	1	SEAL-SHAFT	
	5	1	**6V-7351**	1	SEAL-O-RING	
B	6	1	**6E-1704**	1	SHIM (0.2-MM THK)	
B	7	1	**6E-1705**	1	SHIM (0.3-MM THK)	
	8	1	**180-2436**	1	BARREL	
	9	1	**122-9799**	1	PLATE-PORT	
	10	1	**178-3997**	1	PIN	
	11	1	**165-6974**	7	PISTON AS	
					(EACH INCLUDES)	
		1	**9T-3745**	2	RING	
	12	1	**6E-1688**	1	DISC	
B	13	1	**124-9935**	1	SHIM (3.8-MM THK)	
B	14	1	**124-9936**	1	SHIM (3.9-MM THK)	
B	15	1	**124-9937**	1	SHIM (4-MM THK)	
B	16	1	**124-9934**	1	SHIM (3.7-MM THK)	
B	17	1	**124-9933**	1	SHIM (3.6-MM THK)	
B	18	1	**124-9932**	1	SHIM (3.5-MM THK)	
	19	1	**178-3998**	1	SPRING	
	20	1	**111-9265**	1	PLATE	
	21	1	**113-4418**	7	SCREW (M8X20-MM)	

B-USE AS REQUIRED

178-4005 ROTATING GP-MOTOR *(contd.)* **i01655409**

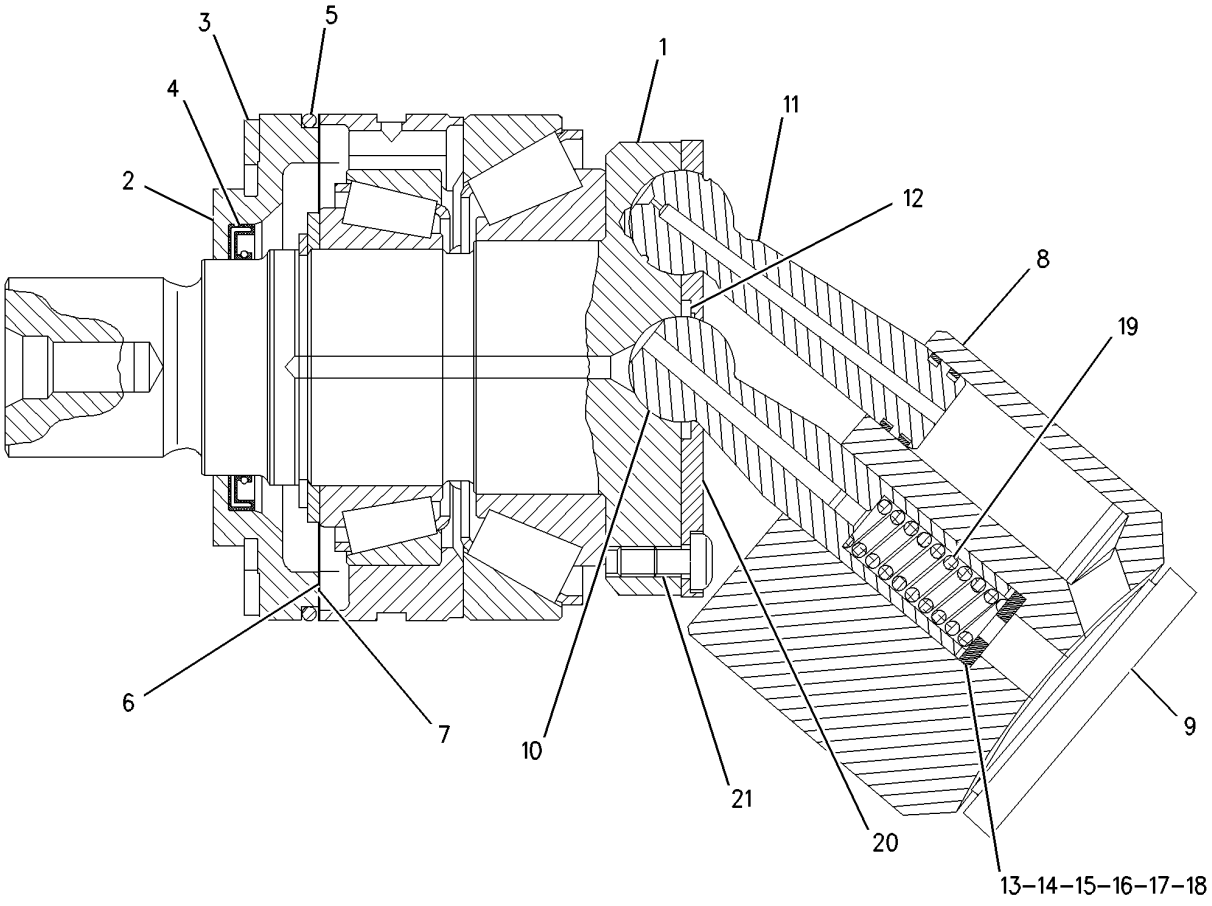

GRAPHIC #1 **<END>** g00854925

HYDRAULIC SYSTEM

290-0451 ROTATING GP-PUMP—HYDRAULIC FAN

S/N: 2211-UP

PART OF 277-5566 PUMP GP-PISTON

SMCS-1387, 5070, 5084 **i02859731**

NOTE	REF NO	GRAPHIC REF	PART NUMBER	QTY	PART NAME 1 2 3 4 5 6 (PRODUCT LEVEL)	SEE PAGE
	1	1	**191-7587**	9	PISTON AS	
	2	1	**248-4228**	1	BARREL	
	3	1	**290-0453**	1	PLATE	
	4	1	**290-0460**	1	PLATE	
	5	1	**290-0461**	1	BEARING	
	6	1	**191-7594**	1	SPRING	
	7	1	**191-7596**	3	PIN	
	8	1	**095-0939**	1	RING-RETAINING	
	9	1	**191-7597**	1	SPACER (55X3-MM THK)	

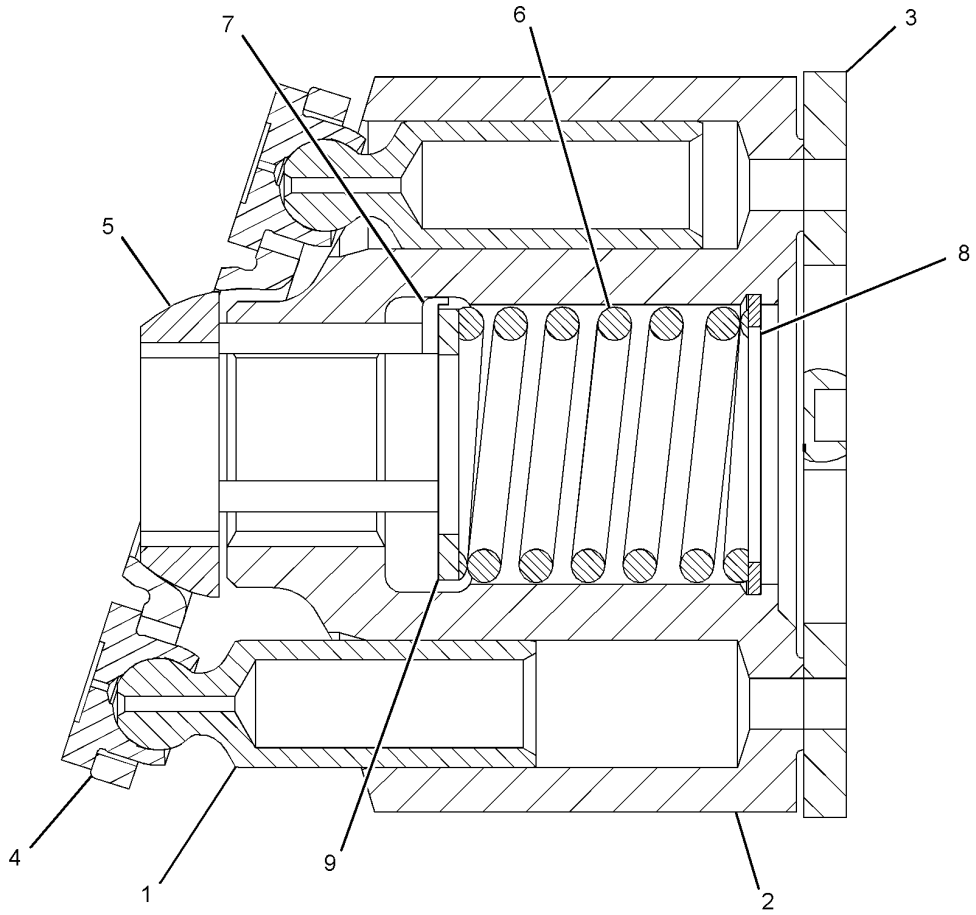

GRAPHIC #1 **<END>** g01427732

HYDRAULIC SYSTEM

283-4413 TANK & MTG GP-HYDRAULIC–STEERING, BRAKE

S/N: 2211-UP

PART OF 279-9400 HYDRAULIC AR

SMCS-5056 **i02902921**

NOTE	REF NO	GRAPHIC REF	PART NUMBER	QTY	PART NAME 1 2 3 4 5 6 (PRODUCT LEVEL)	SEE PAGE
Y	1	1	*6G-8390*	1	PROTECTION GP-VANDALISM	916
	2	1	**6T-1698**	6	MOUNT	
	3	1	**7Y-6371**	3	WASHER (22X85X10-MM THK)	
	4	1	**8T-4123**	3	WASHER (22X35X3.5-MM THK)	
	5	1	**220-0812**	1	VALVE-BREAKER RELIEF	
	6	1	**3D-2824**	1	SEAL-O-RING	
M	7	1	**7X-2564**	3	BOLT (M20X2.5X90-MM)	
Y	8	1	*282-3057*	1	TANK GP-HYDRAULIC (STEERING, BRAKE)	734

M-METRIC PART
Y-SEPARATE ILLUSTRATION

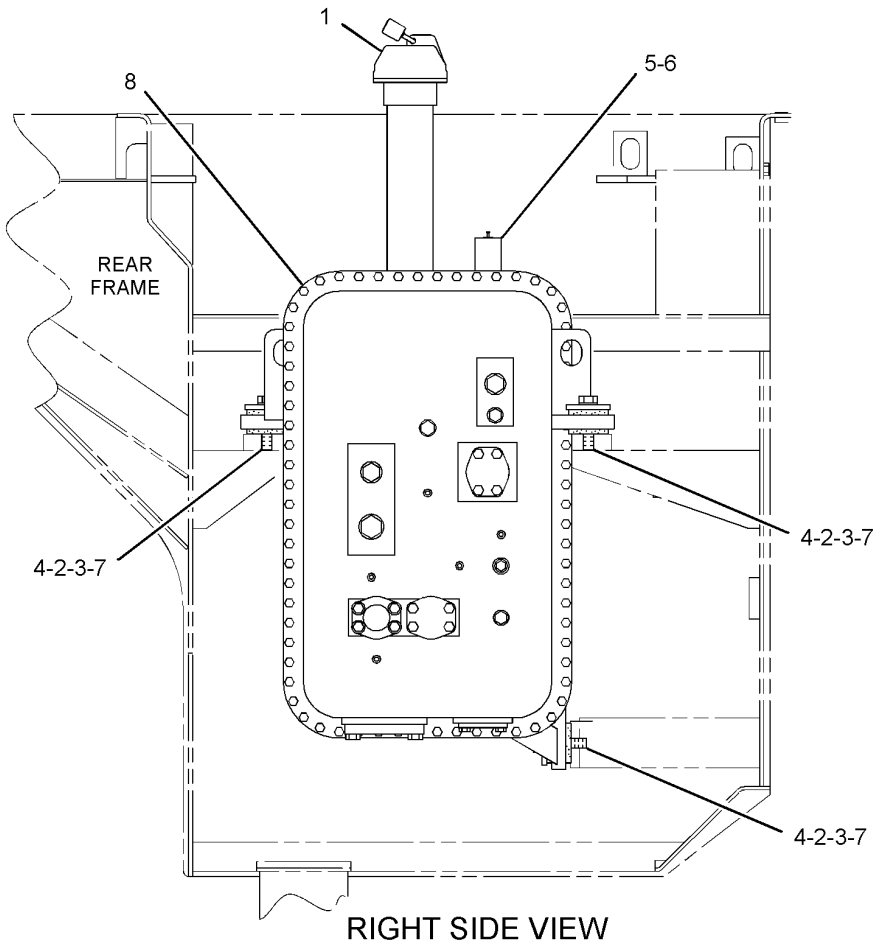

RIGHT SIDE VIEW

GRAPHIC #1

<END>

g01447000

283-4414 TANK & MTG GP-HYDRAULIC–
IMPLEMENT, HYDRAULIC FAN
S/N: 2211-UP
PART OF 279-9400 HYDRAULIC AR

SMCS-5056 **i02902923**

NOTE	REF NO	GRAPHIC REF	PART NUMBER	QTY	PART NAME 1 2 3 4 5 6 (PRODUCT LEVEL)	SEE PAGE
	1	1	**6T-1698**	8	MOUNT	
	2	1	**7Y-6371**	4	WASHER (22X85X10-MM THK)	
	3	1	**8T-4123**	4	WASHER (22X35X3.5-MM THK)	
Y	4	1	**276-8951**	1	TANK GP-HYDRAULIC (IMPLEMENT, HYDRAULIC FAN OIL)	732
	5	1	**220-0812**	1	VALVE-BREAKER RELIEF	
	6	1	**3D-2824**	1	SEAL-O-RING	
M	7	1	**7X-2564**	4	BOLT (M20X2.5X90-MM)	

M-METRIC PART
Y-SEPARATE ILLUSTRATION

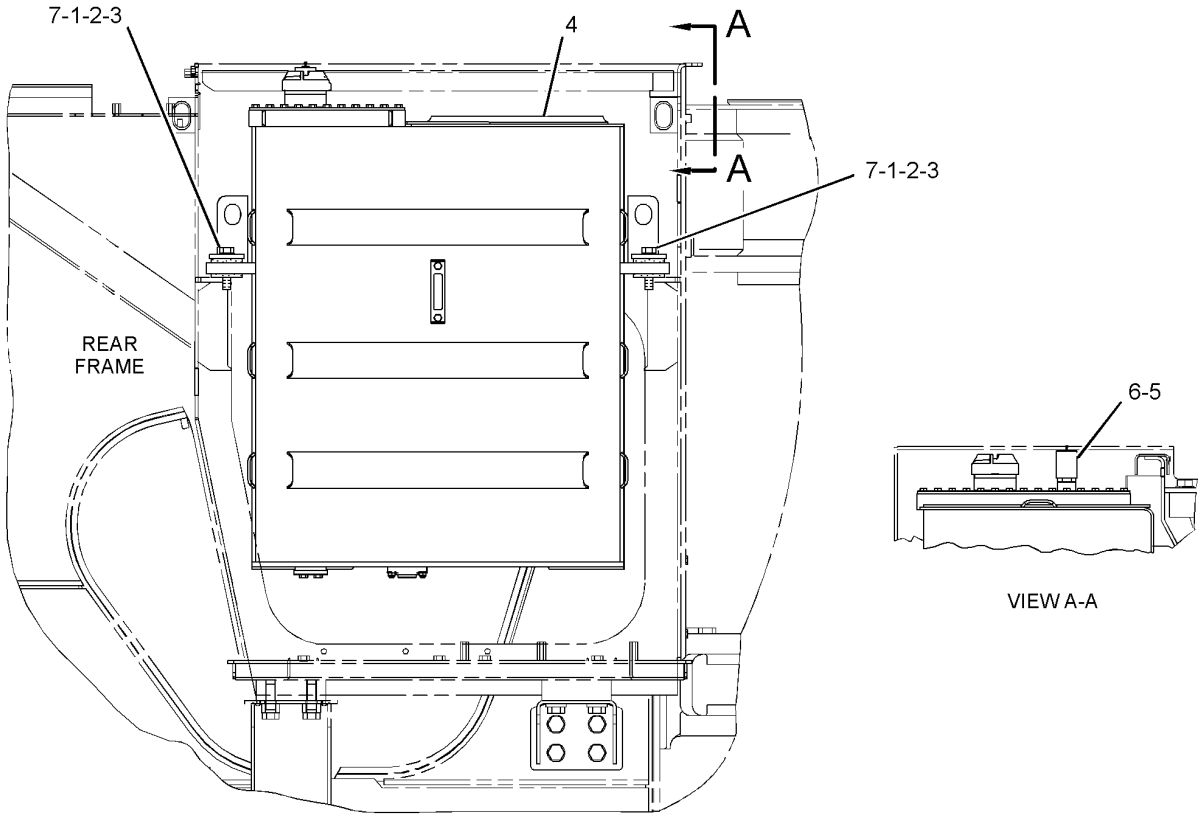

RIGHT SIDE VIEW

GRAPHIC #1 **<END>** g01447247

HYDRAULIC SYSTEM

276-8951 TANK GP-HYDRAULIC—IMPLEMENT, HYDRAULIC FAN OIL

S/N: 2211-UP

PART OF 283-4414 TANK & MTG GP-HYDRAULIC

SMCS-5056 **i02946661**

NOTE	REF NO	GRAPHIC REF	PART NUMBER	QTY	PART NAME 1 2 3 4 5 6 (PRODUCT LEVEL)	SEE PAGE
	1	1	**1U-2827**	1	GUIDE-VALVE	
	2	1	**3D-6678**	1	STRAINER AS (HYDRAULIC TANK FILL)	
	3	1	**4J-3754**	1	CAP-FILLER (HYDRAULIC TANK)	
	4	1	**4J-3816**	1	PLATE	
	5	1	**6E-5098**	2	BAFFLE AS	
					(EACH INCLUDES)	
		1	**1H-9689**	1	FLANGE	
		1	**6E-5102**	1	PLATE	
M		1	**6V-3822**	1	BOLT (M10X1.5X35-MM)	
	6	1	**6E-5101**	3	PLATE	
	7	1	**7B-2805**	1	RING-LOCK	
	8	1	**7B-3039**	1	SPRING	
	9	1	**8J-8782**	1	BODY-DRAIN VALVE	
	10	1	**8J-8783**	1	VALVE	
	11	1	**8T-3298**	1	SEAL-RECTANGULAR	
	12	1	**9J-7031**	1	PLUG-DRAIN	
	13	1	**9T-9227**	4	SCREEN AS (HYDRAULIC TANK)	
	14	1	**115-5875**	1	BAFFLE AS	
	15	1	**260-8636**	1	GAUGE-LIQUID LEVEL (SIGHT GLASS)	
	16	1	**276-8953**	1	TANK AS-HYDRAULIC	
	17	1	**288-1019**	1	COVER AS	
	18	1	**1H-7339**	1	SEAL-O-RING	
	19	1	**1H-9696**	2	SEAL-O-RING	
	20	1	**4J-3815**	1	GASKET	
	21	1	**5M-2057**	1	SEAL-O-RING	
	22	1	**6V-5839**	2	WASHER (11X21X2.5-MM THK)	
M	23	1	**6V-7611**	4	BOLT (M12X1.75X40-MM)	
M	24	1	**6V-7744**	5	LOCKNUT (M10X1.5-THD)	
M	25	1	**8T-0722**	4	BOLT-LOCKING (M10X1.5X30-MM)	
	26	1	**8T-2275**	1	BALL	
M	27	1	**8T-4136**	48	BOLT (M10X1.5X25-MM)	
	28	1	**238-8988**	1	GASKET	

M-METRIC PART

276-8951 TANK GP-HYDRAULIC *(contd.)* i02946661

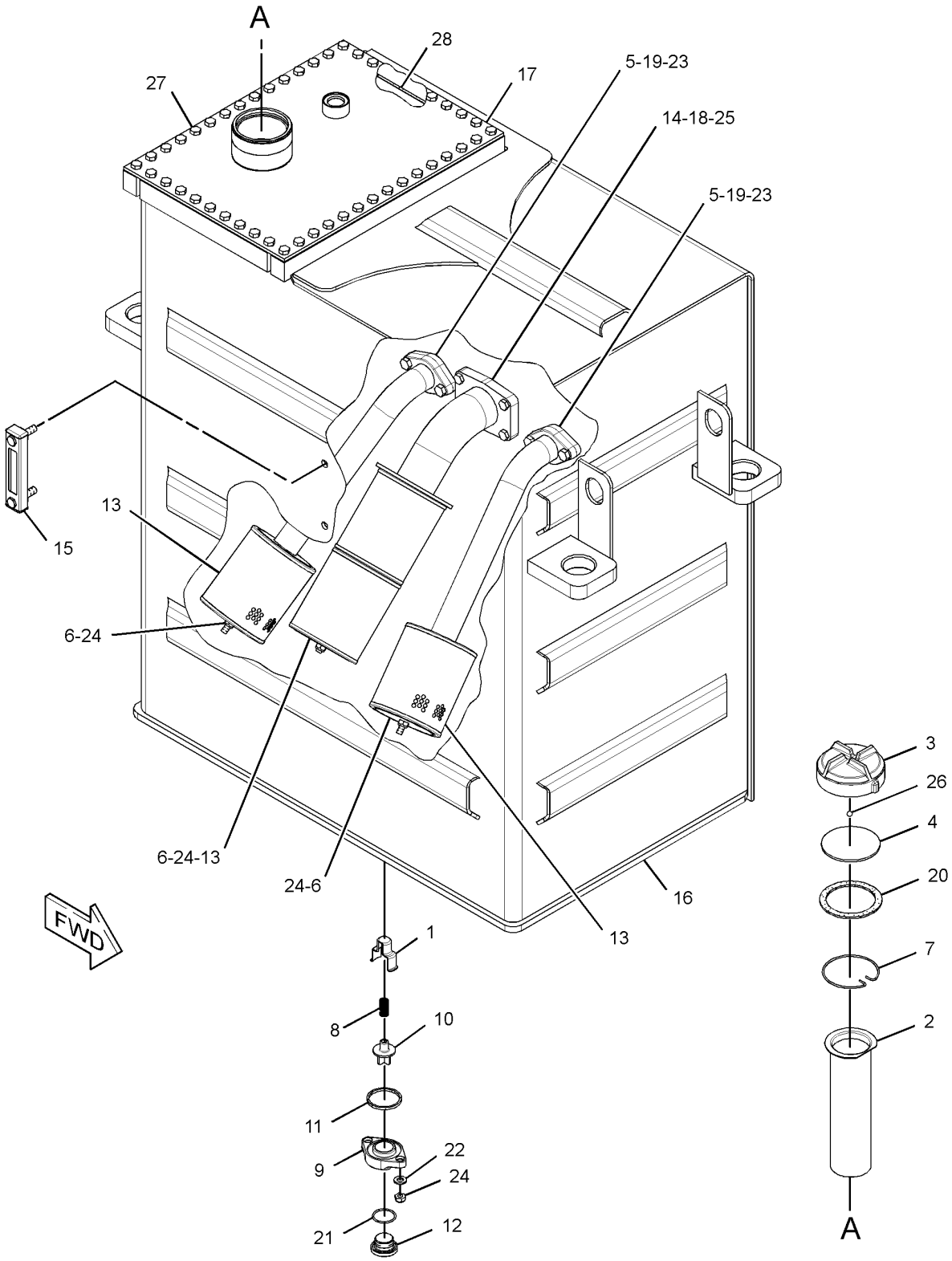

GRAPHIC #1 **<END>** g01427747

HYDRAULIC SYSTEM

282-3057 TANK GP-HYDRAULIC—STEERING, BRAKE

S/N: 2211-UP

PART OF 283-4413 TANK & MTG GP-HYDRAULIC

SMCS-5056 **i02946662**

NOTE	REF NO	GRAPHIC REF	PART NUMBER	QTY	PART NAME 1 2 3 4 5 6 (PRODUCT LEVEL)	SEE PAGE
	1	2	**1U-2827**	1	GUIDE-VALVE	
	2	1	**3D-6678**	1	STRAINER AS (HYDRAULIC TANK FILL)	
	3	1	**4J-3754**	1	CAP-FILLER (HYDRAULIC TANK)	
	4	1	**4J-3816**	1	PLATE	
	5	1	**5D-1901**	1	WASHER (106.5X126.5X2.5-MM THK)	
	6	2	**6E-4729**	1	BAFFLE AS	
		2	**6S-1179**	1	ELBOW	
M		2	**6V-3822**	1	BOLT (M10X1.5X35-MM)	
	7	1	**6E-4922**	1	STRAINER AS (HYDRAULIC TANK)	
		1	**6E-6549**	1	WASHER (11X27X6-MM THK)	
M		1	**6V-3822**	1	BOLT (M10X1.5X35-MM)	
	8	2	**260-8636**	1	GAUGE-LIQUID LEVEL (SIGHT GLASS) (HYDRAULIC TANK)	
	9	1	**7B-2805**	1	RING-LOCK	
	10	2	**7B-3039**	1	SPRING	
	11	1	**7J-2656**	1	SCREEN GP (HYDRAULIC TANK)	
	12	2	**8J-8782**	1	BODY-DRAIN VALVE (HYDRAULIC TANK)	
	13	2	**8J-8783**	1	VALVE (HYDRAULIC TANK DRAIN)	
	14	2	**8T-3298**	1	SEAL-RECTANGULAR	
	15	2	**9J-7031**	1	PLUG-DRAIN (HYDRAULIC TANK)	
	16	1	**9M-7394**	1	LEVER	
	17	2	**9T-9226**	1	PLATE	
	18	2	**9T-9227**	1	SCREEN AS (STEERING OIL)	
	19	1	**116-4681**	1	COVER-HYDRAULIC CAP	
	20	1	**118-8693**	2	SCREEN (HYDRAULIC)	
	21	1	**152-0110**	1	COVER	
	22	1	**317-8732**	1	TANK AS-HYDRAULIC	
	23	1	**238-1825**	1	GASKET	
	24	1	**282-3058**	1	TANK AS-HYDRAULIC	
	25	1	**1H-9696**	1	SEAL-O-RING	
	26	1	**1L-5072**	1	DOWEL	
	27	1	**1M-8649**	1	RING-RETAINING	
	28	1	**1P-4579**	2	FLANGE-HALF	
	29	2	**4J-0527**	1	SEAL-O-RING	
	30	1	**4J-3815**	1	GASKET	
	31	1	**4T-8698**	1	WASHER (12.2X62X3.5-MM THK)	
	32	2	**5M-2057**	1	SEAL-O-RING	
	33	1	**6E-6259**	1	GASKET	
	34	1	**6V-5839**	1	WASHER (11X21X2.5-MM THK)	
M	35	1	**6V-7732**	2	BOLT (M10X1.5X25-MM)	
M	36	1,2	**6V-7744**	74	LOCKNUT (M10X1.5-THD)	
M	37	2	**6V-8097**	4	BOLT (M12X1.75X30-MM)	
M	38	1	**6V-8455**	8	BOLT (M10X1.5X16-MM)	
	39	1	**8T-2275**	1	BALL	
	40	2	**8T-4121**	2	WASHER-HARD (11X21X2.5-MM THK)	
M	41	1	**8T-4136**	70	BOLT (M10X1.5X25-MM)	
M	42	2	**8T-4137**	20	BOLT (M10X1.5X20-MM)	
M	43	1	**8T-4183**	4	BOLT (M12X1.75X40-MM)	
	44	1	**8T-4223**	4	WASHER-HARD (13.5X25.5X3-MM THK)	

M-METRIC PART

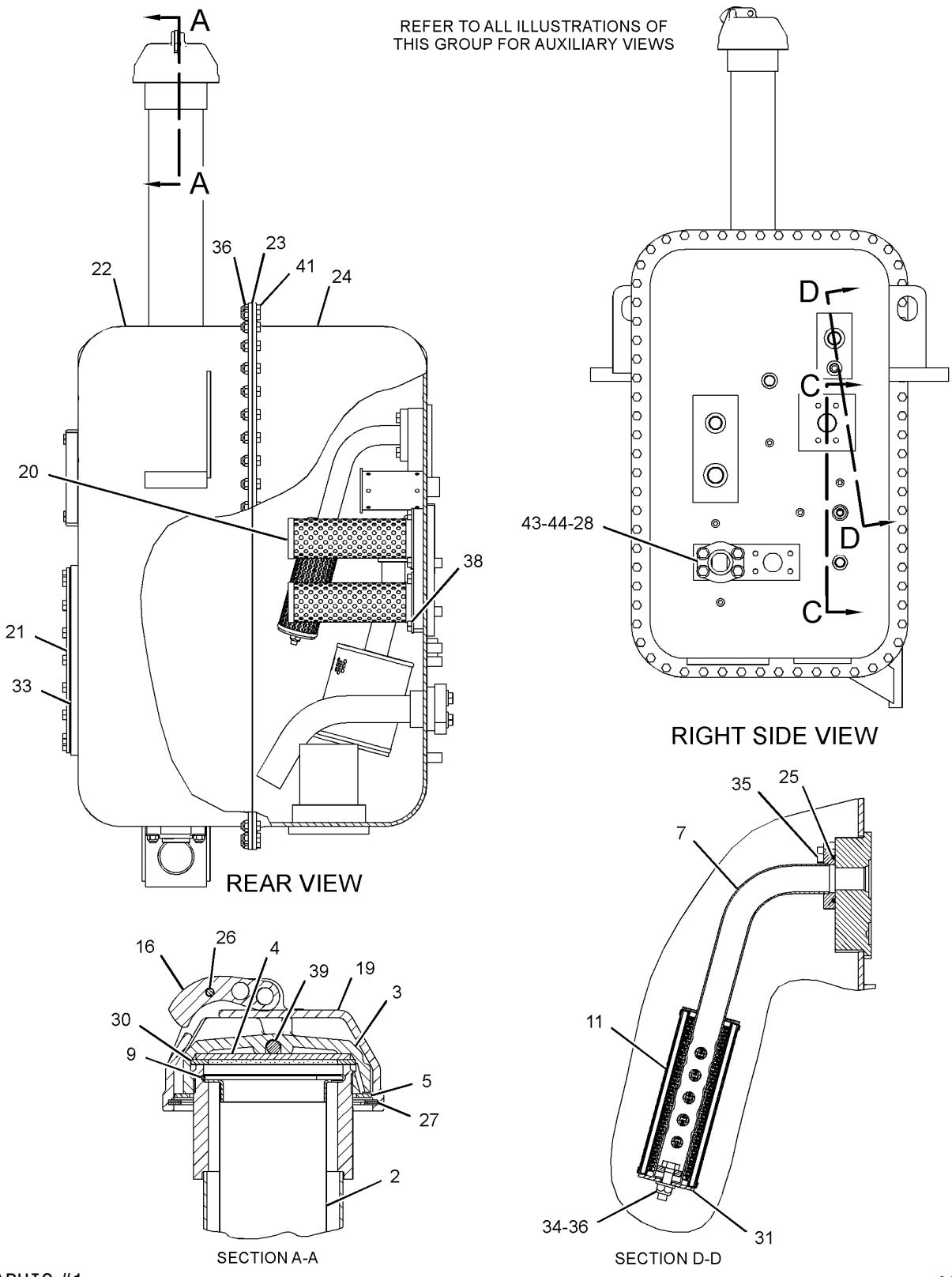

GRAPHIC #1

g01446790

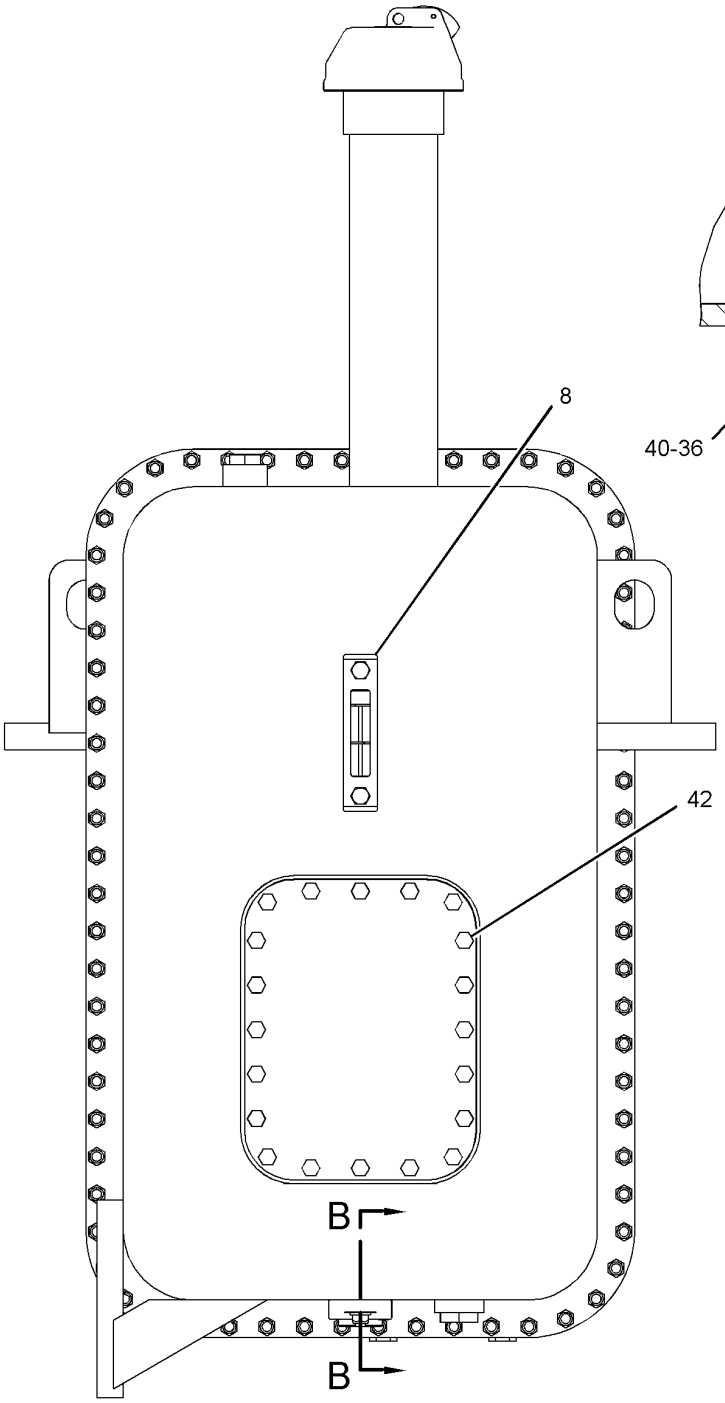

LEFT SIDE VIEW

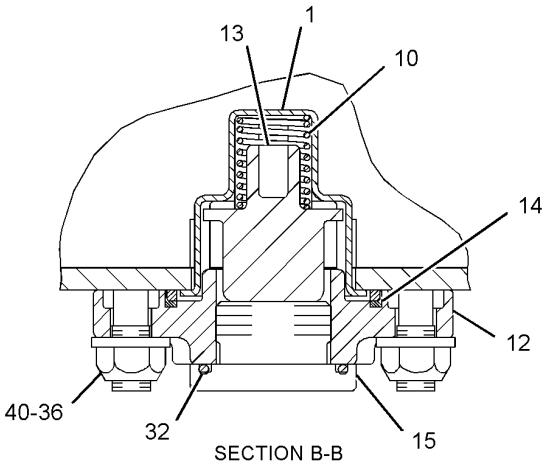

SECTION B-B

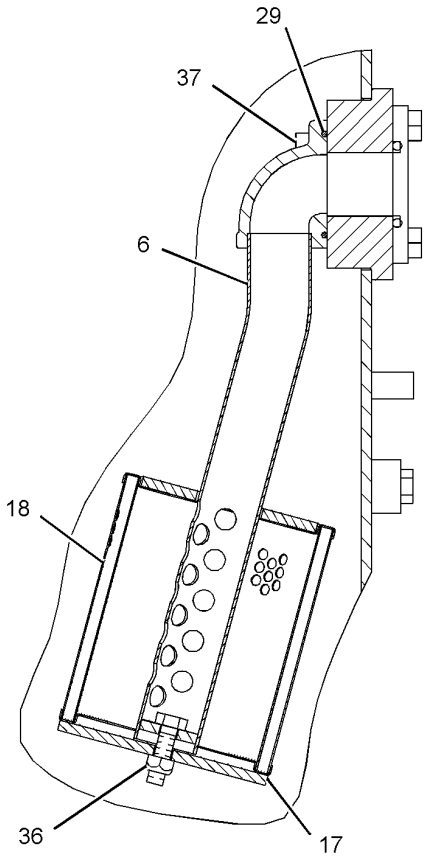

SECTION C-C

GRAPHIC #2 **<END>** g01446793

HYDRAULIC SYSTEM

280-1698 VALVE & MTG GP-HYDRAULIC FAN

S/N: 2211-UP

PART OF 273-6250 LINES GP-HYDRAULIC FAN

SMCS-5051, 5137, 5479 **i02859741**

NOTE	REF NO	GRAPHIC REF	PART NUMBER	QTY	PART NAME 1 2 3 4 5 6 (PRODUCT LEVEL)	SEE PAGE
	1	1	**6V-0852**	1	CAP-DUST	
	2	1	**118-9901**	2	SPACER (12X20X10-MM THK)	
I	3	1	**125-0971**	1	HOSE AS	
	4	1	*150-4027*	1	TEE AS	
		1	**3E-2310**	1	TEE	
		1	**3J-1907**	1	SEAL-O-RING	
		1	**6V-8397**	1	SEAL-O-RING	
	5	1	*164-5567*	1	COUPLER AS-QUICK DISCONNECT	
		1	**3J-1907**	1	SEAL-O-RING	
		1	**6V-3965**	1	COUPLER-QUICK DISCONNECT	
I	6	1	**164-9422**	1	HOSE AS	
Y	7	1	**191-8735**	1	VALVE GP-DEMAND FAN	745
	8	1	*217-5293*	1	TEE AS	
		1	**3J-1907**	1	SEAL-O-RING	
		1	**6V-1625**	1	TEE-O-RING	
	9	1	*244-3712*	1	PLUG AS	
		1	**9S-4191**	1	PLUG-O-RING	
		1	**214-7568**	1	SEAL-O-RING	
	10	1	**285-6583**	1	PLATE AS	
	11	1	*297-7998*	1	ELBOW AS	
		1	**087-4588**	1	ELBOW	
		1	**228-7092**	1	SEAL-O-RING	
		1	**238-5080**	1	SEAL-O-RING	
I	12	1	**313-5835**	1	HOSE AS	
	13	1	*148-8336*	1	CONNECTOR AS	
		1	**3J-1907**	1	SEAL-O-RING	
		1	**6V-8397**	1	SEAL-O-RING	
		1	**6V-8636**	1	CONNECTOR	
	14	1	**8T-4121**	2	WASHER-HARD (11X21X2.5-MM THK)	
M	15	1	**8T-6466**	2	BOLT (M10X1.5X60-MM)	

I-REFER TO HYDRAULIC INFORMATION SYSTEM
M-METRIC PART
Y-SEPARATE ILLUSTRATION

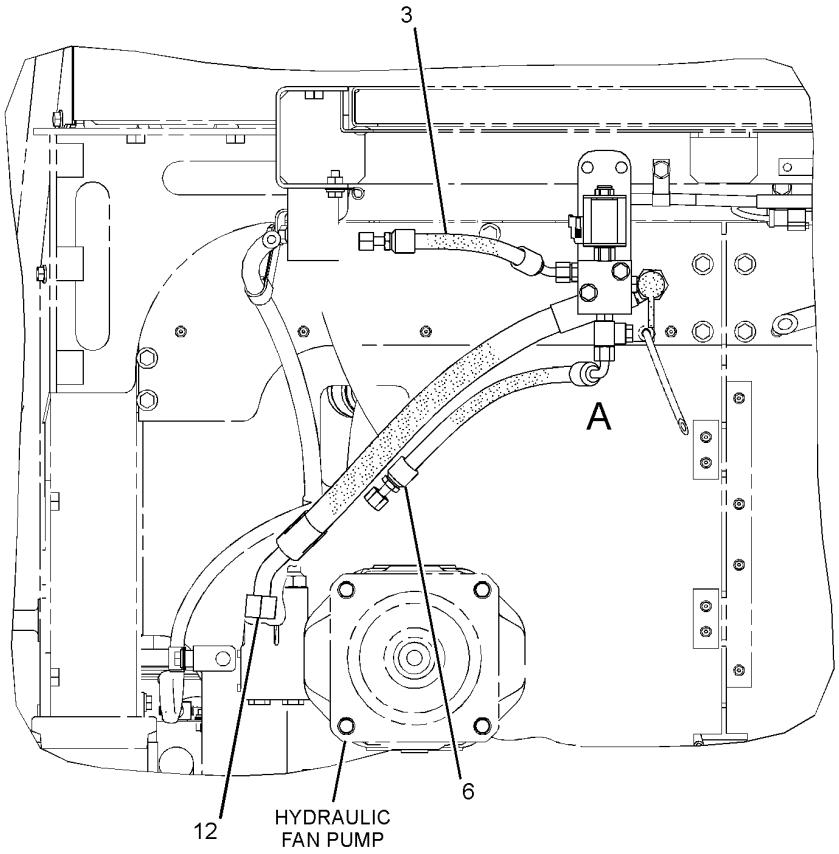

FRONT VIEW

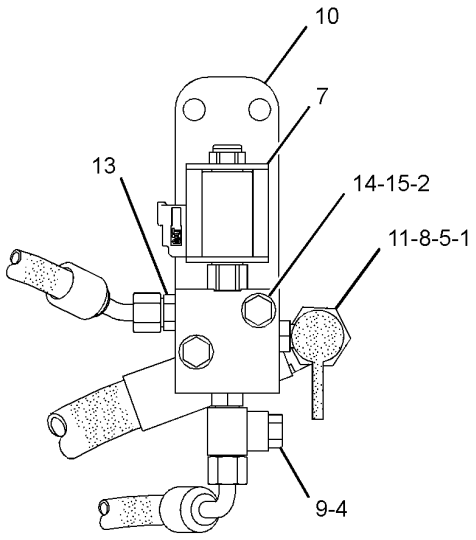

VIEW OF AREA A

GRAPHIC #1 **<END>** g01428066

HYDRAULIC SYSTEM

279-9397 VALVE & MTG GP-MAIN CONTROL

S/N: 2211-UP

PART OF 279-9400 HYDRAULIC AR

SMCS-5051 **i02897737**

NOTE	REF NO	GRAPHIC REF	PART NUMBER	QTY	PART NAME 1 2 3 4 5 6 (PRODUCT LEVEL)	SEE PAGE
	1	1	**8T-4121**	1	WASHER-HARD (11X21X2.5-MM THK)	
	2	1	**150-3748**	1	SUPPORT AS	
Y	3	1	**225-2321**	1	VALVE GP-TILT CONTROL (DUAL)	760
Y	4	1	**310-5654**	1	VALVE GP-CONTROL	741
	5	1	**115-3070**	1	CLIP AS-CONNECT (4-PIN)	
	6	1	**5C-6565**	3	BOLT (1/2-13X1.125-IN)	
M	7	1	**7X-2553**	4	BOLT (M16X2X40-MM)	
M	8	1	**8T-4137**	1	BOLT (M10X1.5X20-MM)	
	9	1	**8T-4223**	3	WASHER-HARD (13.5X25.5X3-MM THK)	
	10	1	**8T-5360**	3	WASHER (12X22.5X2.5-MM THK)	
	11	1	**8T-9380**	3	BOLT (7/16-14X1-IN)	
	12	1	**9X-8257**	4	WASHER (17.5X30X3.5-MM THK)	

M-METRIC PART
Y-SEPARATE ILLUSTRATION

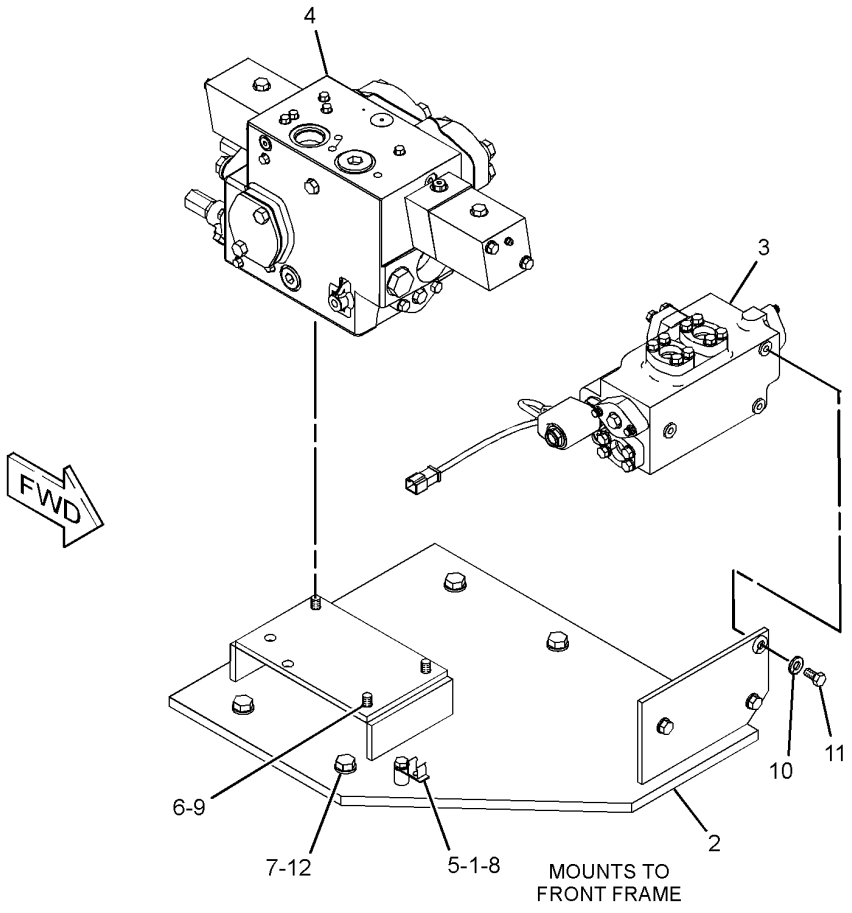

GRAPHIC #1 **<END>** g01449275

HYDRAULIC SYSTEM

152-2698 VALVE & MTG GP-SOLENOID–HYDRAULIC LOCKOUT

S/N: 2211-UP

PART OF 289-9496 CONTROL GP-PILOT OPERATED HYD

SMCS-4805, 5479 **i01618663**

NOTE	REF NO	GRAPHIC REF	PART NUMBER	QTY	PART NAME 1 2 3 4 5 6 (PRODUCT LEVEL)	SEE PAGE
Y	1	1	**152-8385**	1	VALVE GP-SOLENOID (24-VOLT)	457
	2	1	**7T-9745**	1	MANIFOLD-VALVE	

Y-SEPARATE ILLUSTRATION

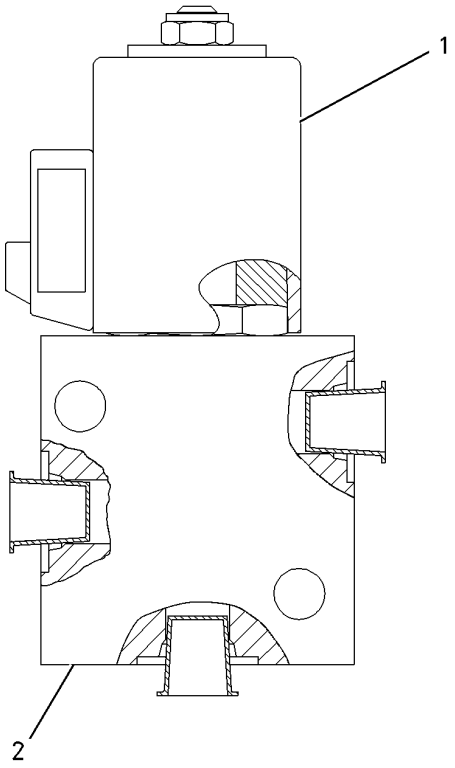

GRAPHIC #1 **<END>** g00732006

HYDRAULIC SYSTEM

310-5654 VALVE GP-CONTROL

S/N: 2211-UP

PART OF 279-9397 VALVE & MTG GP-MAIN CONTROL

SMCS-5051 **i02897742**

NOTE	REF NO	GRAPHIC REF	PART NUMBER	QTY	PART NAME 1 2 3 4 5 6 (PRODUCT LEVEL)	SEE PAGE
	1	2	**1U-1799**	2	PLUG	
	2	1	**1U-2164**	1	SPACER (40.5-MM THK)	
	3	2	**2J-6089**	1	SPRING	
	4	1	**2N-7029**	1	SPRING-CONTROL PIN	
	5	2	**3G-8163**	2	SCREW-ADJUSTMENT (3/8-24X1.5-IN)	
	6	2	**3G-8165**	2	NUT (5/8-18-THD)	
Y	8	1	**4T-4073**	1	VALVE GP-SHUTTLE	757
B	9	1,2	**5N-9016**	4	SHIM (0.25-MM THK)	
	10	2	**6J-2561**	2	VALVE-RELIEF POPPET	
	11	2	**7F-1585**	2	SPRING-SHUTOFF	
	12	2	**8J-4437**	1	SPRING	
	13	1,2	**8J-8621**	2	SPRING	
	14	1	**8M-1679**	1	SPRING	
	15	1,2	**9F-2167**	2	SCREW-PURGE (3/8-24X1.164-IN)	
	16	1	**9J-1709**	1	PLUG	
	17	1,2	**9J-1716**	2	COVER	
	18	1,2	**9J-1722**	2	RETAINER	
	19	2	**9J-5499**	1	SPRING	
	22	2	**9J-7271**	1	SEAT	
	23	2	**9J-8752**	1	SPRING	
	24	1	**9T-5982**	1	VALVE	
	25	2	**9T-8684**	2	VALVE	
	26	1	**9T-8685**	1	VALVE	
	27	2	**151-8098**	1	HOUSING	
B	28	2	**152-5559**	8	SHIM (0.95-MM THK)	
B	29	2	**152-7041**	15	SHIM (0.25-MM THK)	
	30	2	**155-7505**	1	SEAT	
	32	2	**172-5745**	1	HOUSING	
	33	2	**178-2312**	1	SPRING	
	34	1,2	**180-7154**	6	SHIM (1-MM THK)	
	35	1	**197-5035**	1	PISTON	
	36	1	**204-5116**	1	HOUSING	
	37	1	**204-5117**	1	RETAINER	
	38	2	**204-5118**	1	HOUSING	
	39	2	**204-5119**	1	RETAINER	
	40	2	**204-5120**	1	RETAINER	
	41	1	**204-5121**	1	RETAINER	
	42	1	*222-4737*	8	PLUG AS	
					(EACH INCLUDES)	
		1	**4J-7533**	1	SEAL-O-RING	
		1	**9S-4180**	1	PLUG	
	44	1	**241-2631**	1	HOUSING	
	45	1	**309-8767**	1	SPRING	
	48	2	**008-2103**	1	SEAL-O-RING	
	49	1	*148-8395*	1	PLUG AS	
		1	**3K-0360**	1	SEAL-O-RING	
		1	**9S-8005**	1	PLUG-O-RING	
	50	1,2	*148-8407*	2	PLUG AS	
					(EACH INCLUDES)	
		1,2	**3J-1907**	1	SEAL-O-RING	
		1,2	**9S-4191**	1	PLUG-O-RING	
	51	1	*162-0177*	2	PLUG AS	
					(EACH INCLUDES)	
		1	**3J-1907**	1	SEAL-O-RING	
		1	**9S-8004**	1	PLUG-O-RING	

310-5654 VALVE GP-CONTROL *(contd.)* i02897742

NOTE	REF NO	GRAPHIC REF	PART NUMBER	QTY	PART NAME 1 2 3 4 5 6 (PRODUCT LEVEL)	SEE PAGE
	52	1	*173-3993*	4	PLUG AS	
					(EACH INCLUDES)	
		1	**4J-7533**	1	SEAL-O-RING	
		1	**9S-8001**	1	PLUG-O-RING	
	53	2	*183-7262*	2	PLUG AS	
					(EACH INCLUDES)	
		2	**2S-4078**	1	SEAL-O-RING	
		2	**9S-8010**	1	PLUG	
	54	1	**1H-5728**	1	SEAL-O-RING	
	55	1	*207-7899*	1	PLUG AS	
		1	**4K-1388**	1	SEAL-O-RING	
		1	**9S-4188**	1	PLUG	
	56	2	**2M-9780**	2	SEAL-O-RING	
	57	1	**3D-2824**	1	SEAL-O-RING	
	58	2	**3F-4479**	2	PIN-SPRING	
	59	2	**3G-8164**	2	NUT (3/8-24-THD)	
	60	1	**3J-1907**	1	SEAL-O-RING	
	61	1,2	**4J-0522**	2	SEAL-O-RING	
	62	2	**4J-0523**	2	SEAL-O-RING	
	63	1,2	**4L-9337**	4	BOLT (3/8-16X1.5-IN)	
	64	1,2	**5H-8848**	2	SEAL-O-RING	
	65	1	**5P-7684**	1	PLUG	
	66	1	**5P-8077**	6	FLANGE-HALF	
	67	2	**6J-3134**	2	SEAL-O-RING	
	68	1	**6K-6307**	1	SEAL-O-RING	
	69	2	**7X-0297**	2	BOLT (3/8-16X5.75-IN)	
	70	1	**7X-0300**	2	BOLT (3/8-16X6.5-IN)	
	71	1	**7X-0347**	12	BOLT (5/8-11X2.25-IN)	
	72	2	**7X-0515**	2	WASHER-HARD (17X35X5-MM THK)	
	73	2	**8F-6711**	1	SEAL-O-RING	
	74	1	**8T-4122**	12	WASHER-HARD (17X32X3.5-MM THK)	
	75	1,2	**8T-4896**	4	WASHER-HARD (10.2X18.5X2.5-MM THK)	
	76	2	**8T-6871**	2	BOLT (5/8-11X2.5-IN)	
	77	2	**9B-7237**	2	BOLT (3/8-16X1.25-IN)	
	78	2	**9T-5734**	4	SPACER (1.2-MM THK)	
					PARTS SHOWN IN GRAPHIC(S) WITHOUT A REFERENCE NUMBER ARE NOT SERVICED SEPARATELY	

B-USE AS REQUIRED
Y-SEPARATE ILLUSTRATION

310-5654 VALVE GP-CONTROL *(contd.)* i02897742

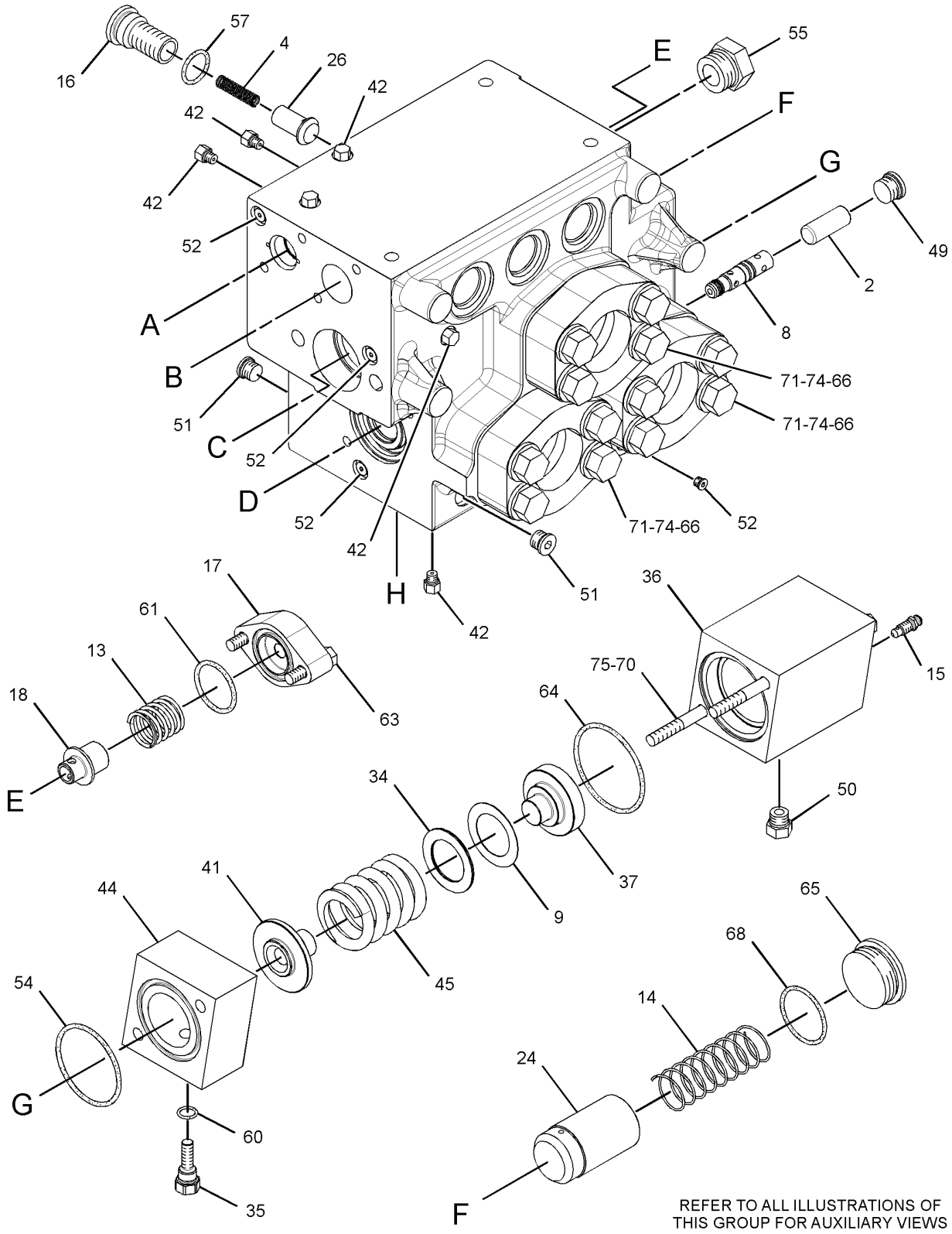

REFER TO ALL ILLUSTRATIONS OF THIS GROUP FOR AUXILIARY VIEWS

GRAPHIC #1

g01449075

310-5654 VALVE GP-CONTROL *(contd.)* **i02897742**

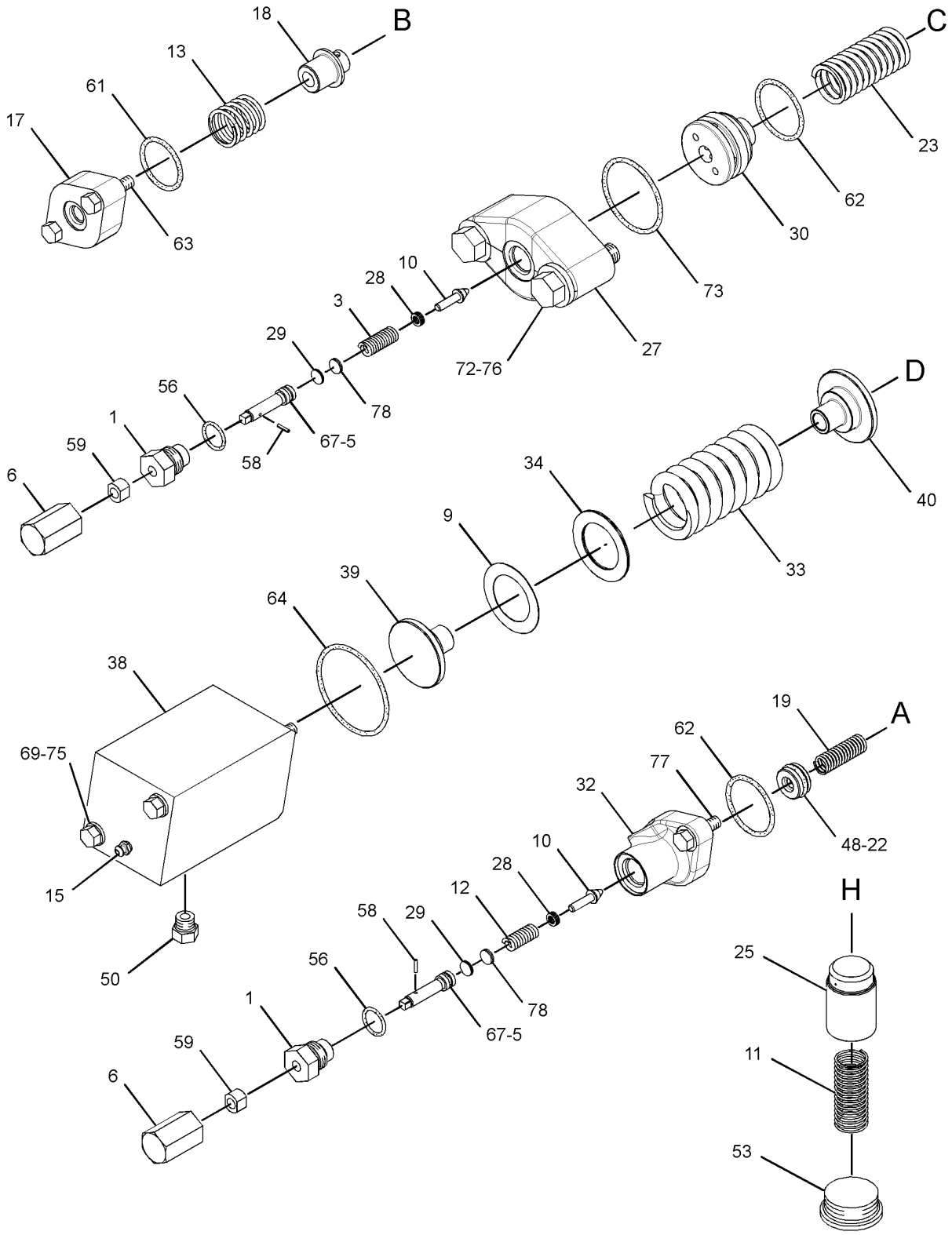

GRAPHIC #2 **<END>** g01449076

HYDRAULIC SYSTEM

191-8735 VALVE GP-DEMAND FAN

S/N: 2211-UP

PART OF 280-1698 VALVE & MTG GP-HYDRAULIC FAN

SMCS-5264, 5479 **i02215797**

NOTE	REF NO	GRAPHIC REF	PART NUMBER	QTY	PART NAME 1 2 3 4 5 6 (PRODUCT LEVEL)	SEE PAGE
	1	1	**3E-3584**	1	MANIFOLD	
Y	2	1	**183-7595**	1	VALVE GP-SOLENOID (24-VOLT) (DEMAND FAN)	759

Y-SEPARATE ILLUSTRATION

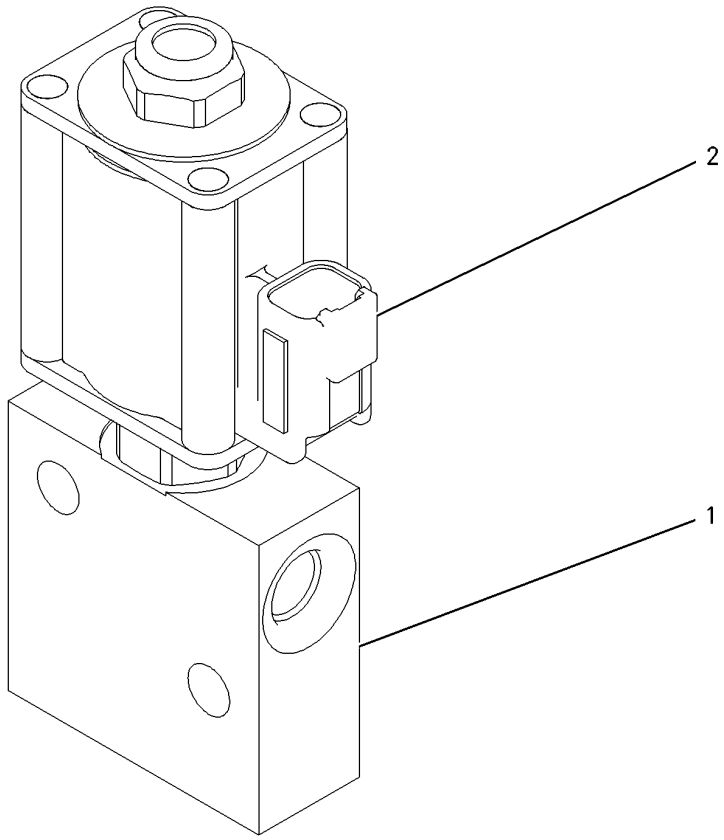

GRAPHIC #1 **<END>** g00714048

101-9012 VALVE GP-MAKEUP—HYDRAULIC FAN MOTOR

S/N: 2211-UP

PART OF 273-6265 MOTOR & MTG GP-HYDRAULIC FAN

SMCS-5080 **i00173903**

NOTE	REF NO	GRAPHIC REF	PART NUMBER	QTY	PART NAME 1 2 3 4 5 6 (PRODUCT LEVEL)	SEE PAGE
	1	1	**104-7376**	1	BODY	
	2	1	**1U-0323**	1	PLUG AS	
		1	**1U-0322**	1	BEARING-SLEEVE	
		1	**3G-2683**	1	PLUG	
	3	1	**2S-4078**	1	SEAL-O-RING	
	4	1	**7S-8491**	1	SPRING	
	5	1	**7J-7423**	1	VALVE	

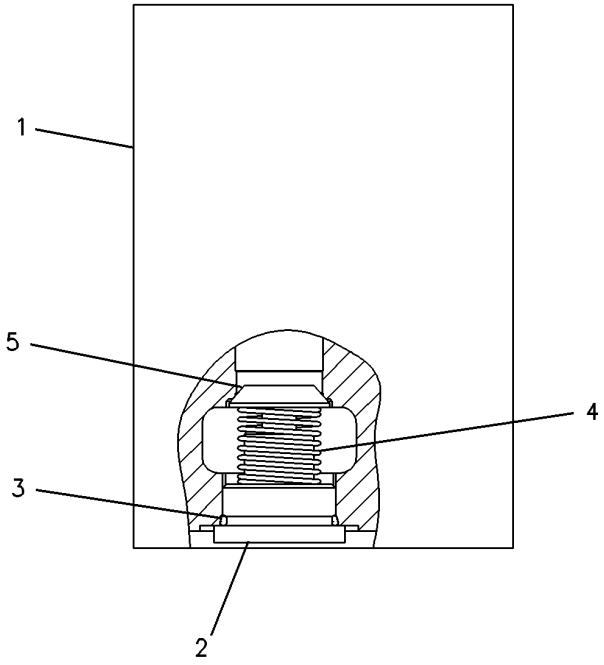

GRAPHIC #1 **<END>** g00119799

HYDRAULIC SYSTEM

112-1817 VALVE GP-MANUAL—LOWERING CONTROL

S/N: 2211-UP

PART OF 279-9405 LINES GP-PILOT

SMCS-5001, 5130, 5147 **i02903081**

NOTE	PART NUMBER	QTY	PART NAME 1 2 3 4 5 6 (PRODUCT LEVEL)	SEE PAGE
J	*202-0671*	1	VALVE GP-MANUAL (COUPLER PIN, LIFT ARM LWR CONT)	
			—OR—	
J	*202-0673*	1	VALVE GP-MANUAL (COUPLER PIN, LIFT ARM LWR CONT)	
			—OR—	
J	*202-0674*	1	VALVE GP-MANUAL (COUPLER PIN, LIFT ARM LWR CONT)	
			AVAILABLE REPAIR KIT(S):	
J	**112-9861**	1	KIT-SEAL (DEAD ENGINE LOWERING)	
			(INCLUDES SEALS, CONNECTORS & THRUST RING)	
J-KIT MARKED J SERVICES PARTS MARKED J				

<END>

HYDRAULIC SYSTEM

260-7491 VALVE GP-PILOT—JOYSTICK, 3-FUNCTION

S/N: 2211-UP

PART OF 289-9496 CONTROL GP-PILOT OPERATED HYD

SMCS-5059 **i02895397**

NOTE	REF NO	GRAPHIC REF	PART NUMBER	QTY	PART NAME 1 2 3 4 5 6 (PRODUCT LEVEL)	SEE PAGE
	1	1	**141-4852**	1	BOOT	
	2	1	**145-2334**	1	ADAPTER	
Y	3	1	**148-9562**	1	CONTROL GP-HANDLE (LIFT, TILT, TIP)	798
	4	1	**163-5512**	4	GROMMET	
Y	5	1	**170-8513**	2	VALVE GP-PILOT CARTRIDGE	750
	6	1	**200-5003**	8	SHIM (0.25-MM THK)	
Y	7	1	**203-3312**	2	VALVE GP-PILOT CARTRIDGE	751
	8	1	**203-6650**	1	ROD	
	9	1	**206-2800**	1	PLATE-DETENT	
	11	1	**213-9182**	1	PLATE AS	
Y	12	1	**259-3001**	1	PIVOT GP-PILOT VALVE	717
	14	1	**136-9297**	1	PLATE	
	15	1	**136-9298**	1	RETAINER	
	16	1	**137-9755**	2	COIL AS-DETENT (24-VOLT DC)	
					(EACH INCLUDES)	
		1	**6V-2689**	2	TUBE-HEAT SHRINK (6.35-MM DIA)	
		1	**186-3735**	2	PIN-CONNECTOR (16-GA TO 18-GA)	
	17	1	**149-5470**	1	PLATE	
M	18	1	**150-1293**	2	SCREW-BUTTON HEAD (M4X0.7X12-MM)	
	19	1	*183-7263*	8	PLUG AS	
					(EACH INCLUDES)	
		1	**3J-7354**	1	SEAL-O-RING	
		1	**9S-8002**	1	PLUG-O-RING	
M	20	1	**191-8921**	4	BOLT-SOCKET HEAD (M6X1X25-MM)	
M	23	1	**6V-7687**	1	LOCKNUT (M12X1.75-THD)	
	24	1	**8L-2786**	1	SEAL-O-RING	
F			**102-8802**	2	KIT-RECEPTACLE (2-PIN)	
					(EACH INCLUDES RECEPTACLE AS & WEDGE)	

F-NOT SHOWN
M-METRIC PART
Y-SEPARATE ILLUSTRATION

260-7491 VALVE GP-PILOT *(contd.)* **i02895397**

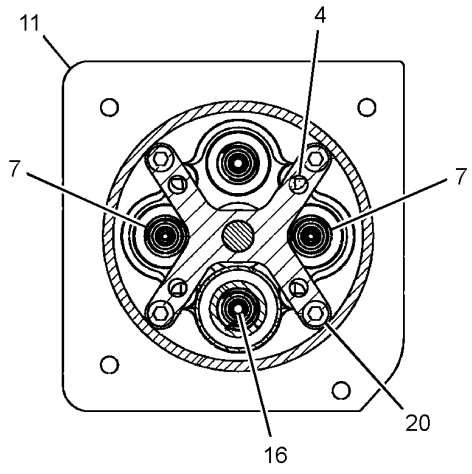

SECTION C-C

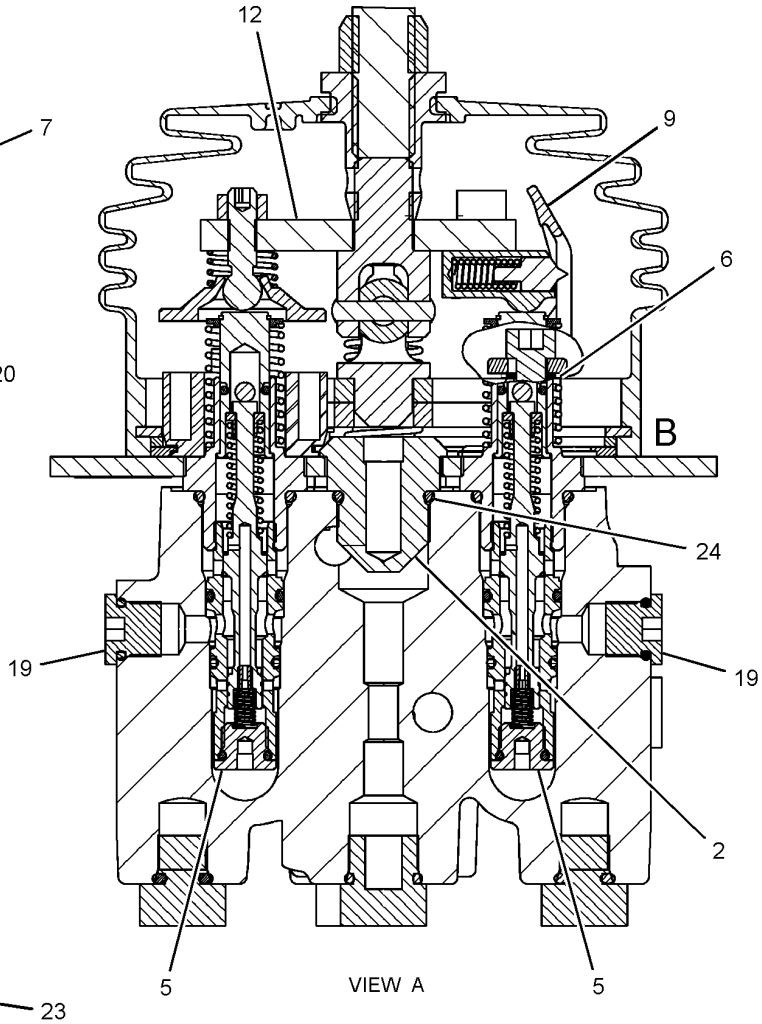

VIEW A

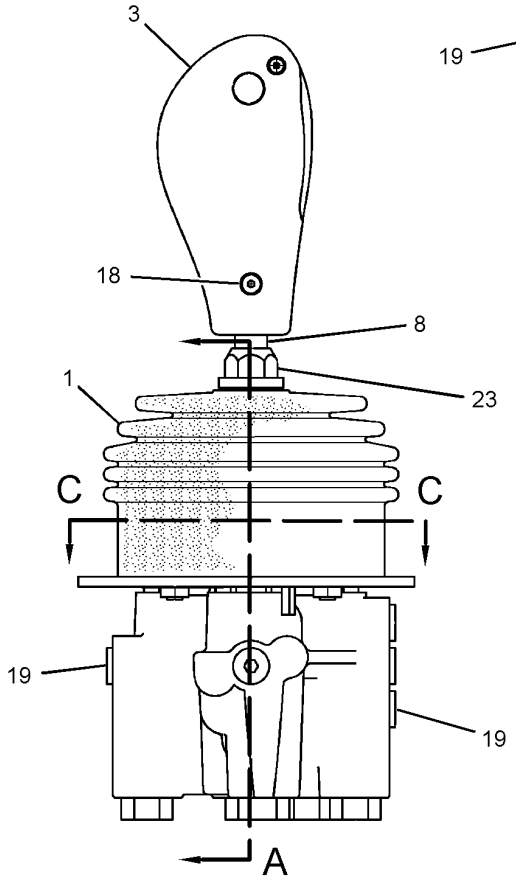

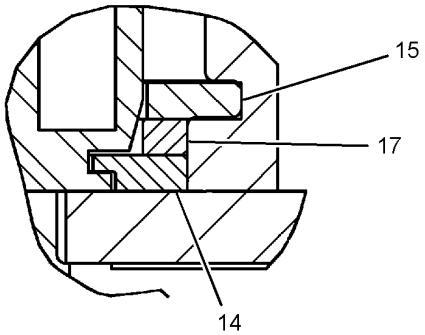

VIEW OF AREA B

GRAPHIC #1 **<END>** g01447211

HYDRAULIC SYSTEM

170-8513 VALVE GP-PILOT CARTRIDGE

S/N: 2211-UP

PART OF 260-7491 VALVE GP-PILOT

SMCS-5059 **i02568074**

NOTE	REF NO	GRAPHIC REF	PART NUMBER	QTY	PART NAME 1 2 3 4 5 6 (PRODUCT LEVEL)	SEE PAGE
	1	1	**146-6319**	1	RETAINER	
	2	1	**153-8925**	1	STOP	
	3	1	**153-8926**	1	SPRING	
	4	1	**157-2152**	1	SPRING	
	5	1	**2H-3429**	1	RING-RETAINING	
	6	1	**3K-0360**	1	SEAL-O-RING	
	7	1	**4K-2039**	1	SEAL-O-RING	
	8	1	**6M-5062**	1	SEAL-O-RING	
	9	1	**7J-0204**	1	SEAL-O-RING	
					PARTS SHOWN IN GRAPHIC(S) WIHTOUT A REFERENCE NUMBER ARE NOT SERVICED SEPERATELY	

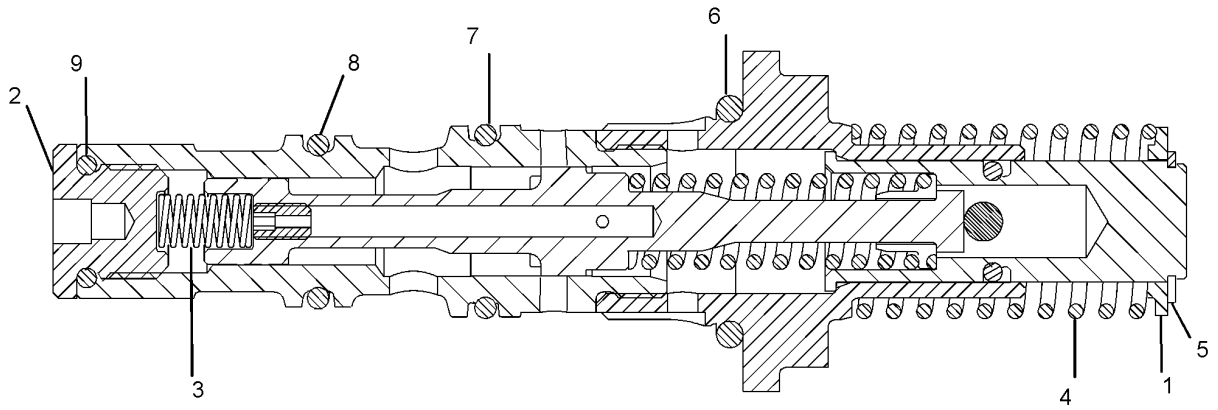

GRAPHIC #1 **<END>** g01311754

HYDRAULIC SYSTEM

203-3312 VALVE GP-PILOT CARTRIDGE

S/N: 2211-UP

PART OF 260-7491 VALVE GP-PILOT

SMCS-5059 **i02410096**

NOTE	REF NO	GRAPHIC REF	PART NUMBER	QTY	PART NAME 1 2 3 4 5 6 (PRODUCT LEVEL)	SEE PAGE
	1	1	**116-4527**	1	ORIFICE	
	3	1	**146-6316**	2	RETAINER	
	5	1	**146-6319**	1	RETAINER	
	6	1	**153-8925**	1	STOP	
	7	1	**153-8926**	1	SPRING	
	8	1	**191-3028**	1	CAGE	
	9	1	**191-3029**	1	SPOOL	
	10	1	**203-3313**	1	SPRING	
	11	1	**157-2152**	1	SPRING	
	12	1	**2H-3429**	1	RING-RETAINING	
	13	1	**1M-6718**	1	BALL	
	14	1	**3K-0360**	1	SEAL-O-RING	
	15	1	**4K-2039**	1	SEAL-O-RING	
	16	1	**6M-5062**	1	SEAL-O-RING	
	17	1	**259-0509**	1	SEAL-O-RING	
	18	1	**7J-0204**	1	SEAL-O-RING	

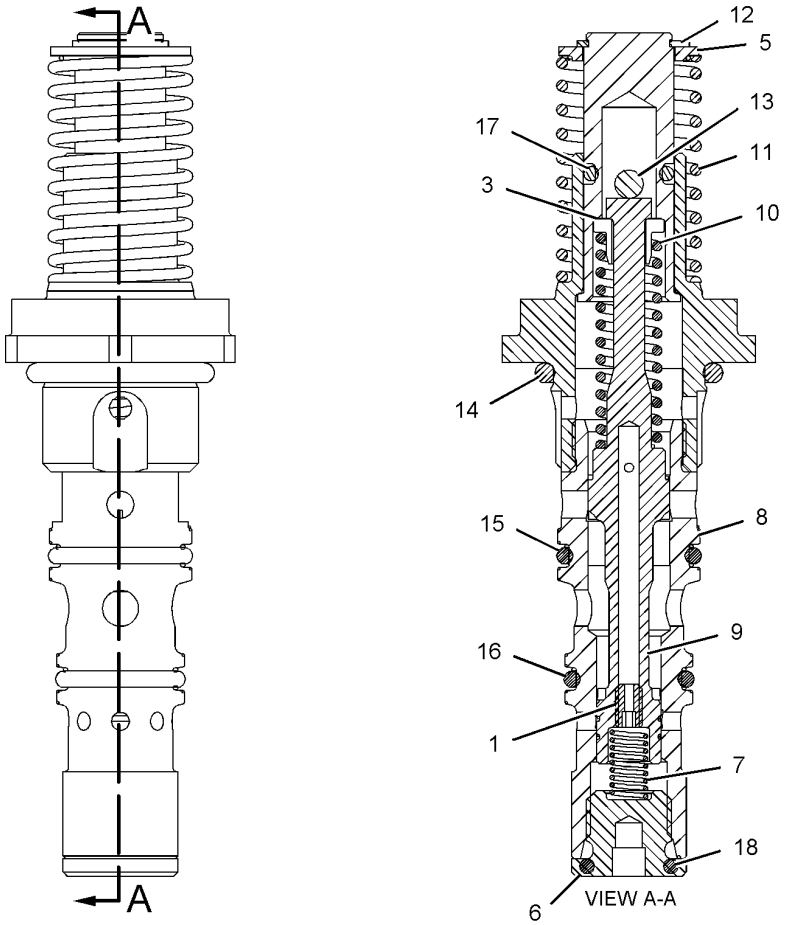

GRAPHIC #1 **<END>** g01050122

176-7520 VALVE GP-PUMP CONTROL–PRESSURE COMPENSATOR–
HYDRAULIC FAN
S/N: 2211-UP
PART OF 277-5566 PUMP GP-PISTON

SMCS-5455 **i02741372**

NOTE	REF NO	GRAPHIC REF	PART NUMBER	QTY	PART NAME 1 2 3 4 5 6 (PRODUCT LEVEL)	SEE PAGE
JY	1	1	**194-3286**	1	PLUG GP-CONTROL VALVE (PRESSURE COMPENSATOR)	623
	2	1	**194-3285**	1	RETAINER	
J	3	1	**194-3287**	1	PLUG	
	4	1	**194-3288**	1	SPRING	
	5	1	**194-3289**	1	SPRING	
J	6	1	**6V-5142**	1	SEAL-O-RING	
					AVAILABLE REPAIR KIT(S):	
J			**191-7607**	1	KIT-VALVE REPAIR (PRESSURE COMPENSATOR VALVE)	
					(INCLUDES PLUG ASSEMBLIES, SEAL-O-RINGS, RING-BACKUP, & PARTS MARKED J)	

J-KIT MARKED J SERVICES PARTS MARKED J
Y-SEPARATE ILLUSTRATION

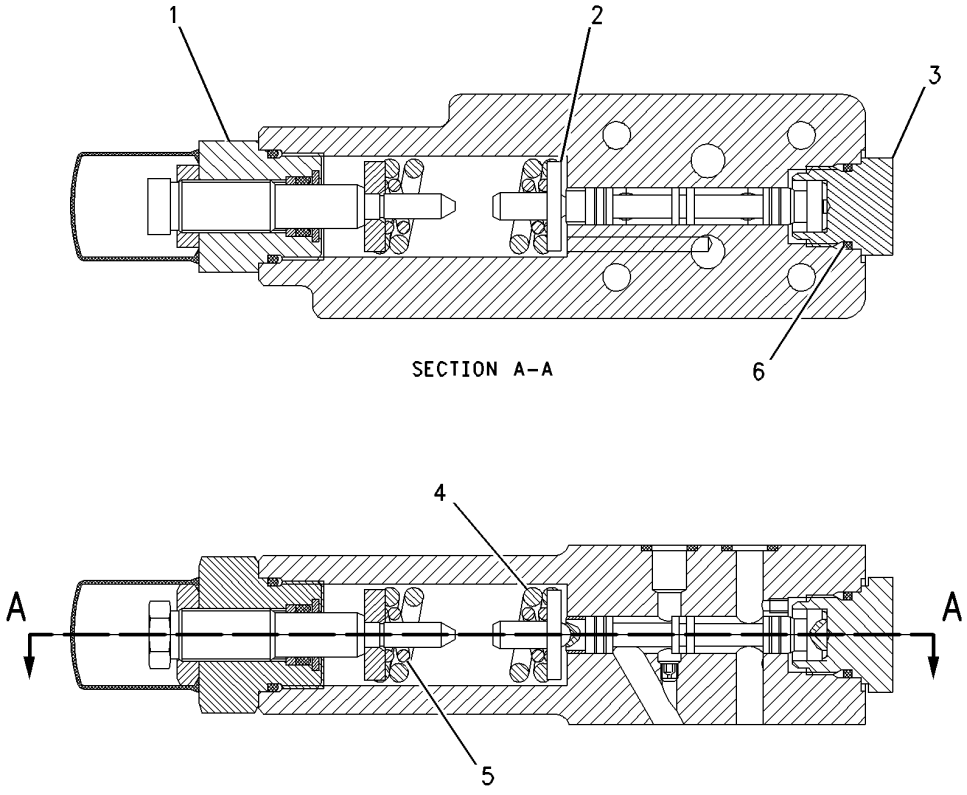

GRAPHIC #1 **<END>** g00751359

HYDRAULIC SYSTEM

114-4672 VALVE GP-RELIEF–IMPLEMENT PILOT

S/N: 2211-UP

PART OF 279-9405 LINES GP-PILOT

SMCS-5069, 5117 **i01178485**

NOTE	REF NO	GRAPHIC REF	PART NUMBER	QTY	PART NAME 1 2 3 4 5 6 (PRODUCT LEVEL)	SEE PAGE
	1	1	**138-3815**	1	MANIFOLD	
	2	1	**3J-1907**	1	SEAL-O-RING	
	3	1	**9S-4191**	1	PLUG-O-RING	
Y	4	1	**156-4253**	1	VALVE GP-RELIEF (PILOT)	754

Y-SEPARATE ILLUSTRATION

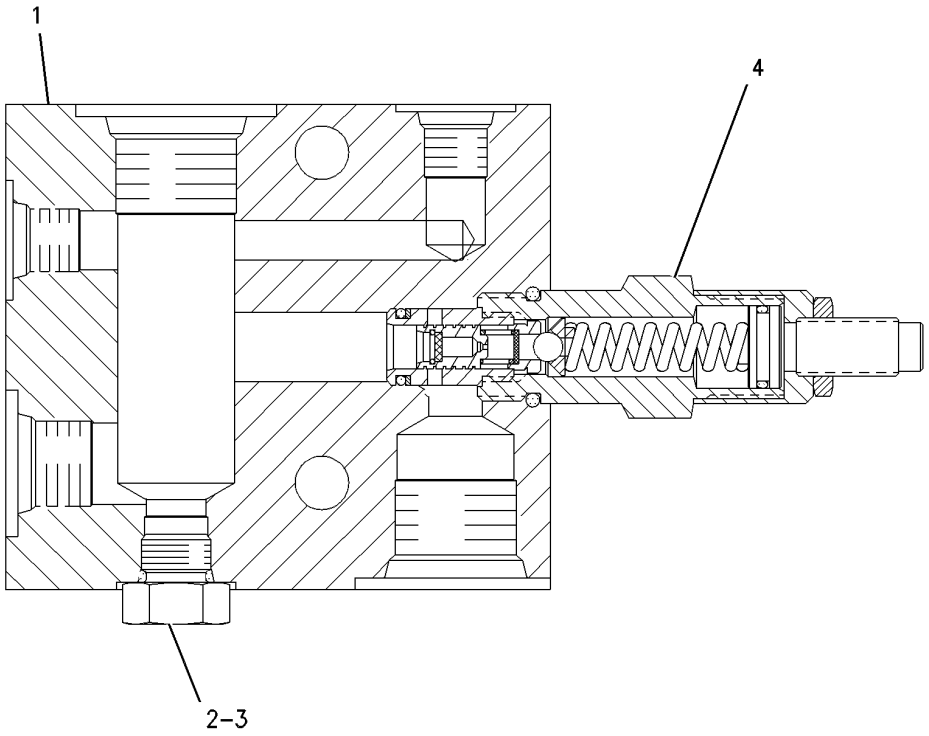

GRAPHIC #1 **<END>** g00371672

156-4253 VALVE GP-RELIEF–IMPLEMENT PILOT

S/N: 2211-UP

PART OF 114-4672 VALVE GP-RELIEF

SMCS-5069, 5117 **i00765905**

NOTE	REF NO	GRAPHIC REF	PART NUMBER	QTY	PART NAME 1 2 3 4 5 6 (PRODUCT LEVEL)	SEE PAGE
	1	1	**6V-6923**	1	RING-BACKUP	
	2	1	**033-6033**	1	SEAL-O-RING	
	3	1	**2M-9780**	1	SEAL-O-RING	

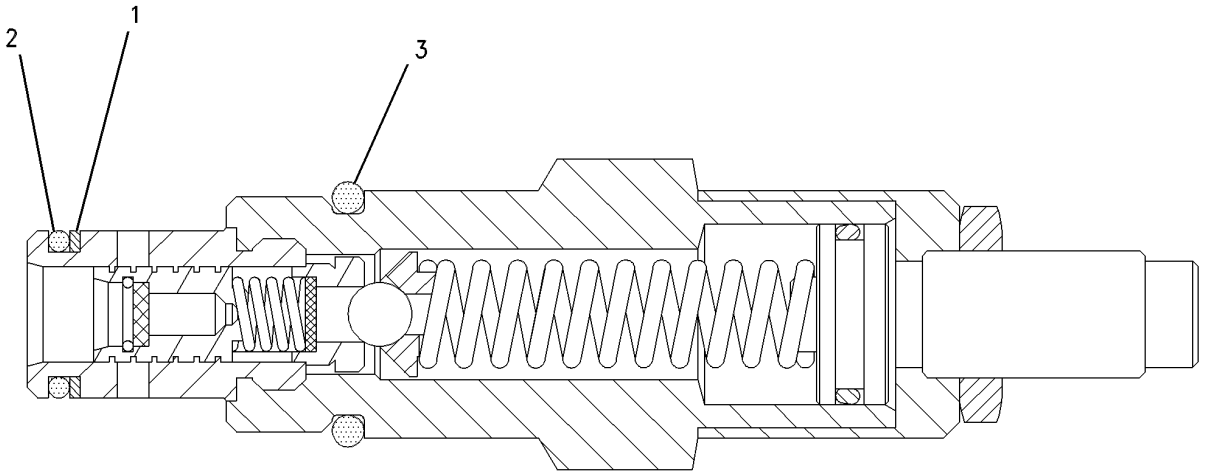

GRAPHIC #1 **<END>** g00356997

HYDRAULIC SYSTEM

287-0426 VALVE GP-SEQUENCE–AXLE OIL COOLER

S/N: 2211-UP

PART OF 273-7400 LINES GP-AXLE OIL COOLER

SMCS-5051, 5059 **i02891343**

NOTE	REF NO	GRAPHIC REF	PART NUMBER	QTY	PART NAME 1 2 3 4 5 6 (PRODUCT LEVEL)	SEE PAGE
Y	1	1	**289-9640**	1	VALVE GP-SEQUENCE (AXLE OIL COOLER)	756
	2	1	**287-0428**	1	BODY	

Y-SEPARATE ILLUSTRATION

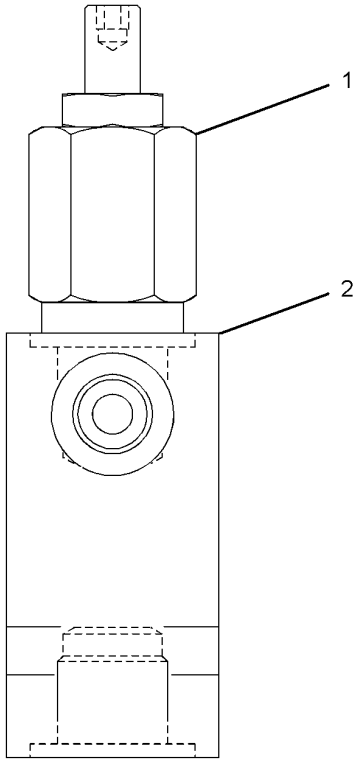

GRAPHIC #1 **<END>** g01448560

289-9640 VALVE GP-SEQUENCE–AXLE OIL COOLER

S/N: 2211-UP

PART OF 287-0426 VALVE GP-SEQUENCE

SMCS-5051, 5059 **i02902180**

NOTE	REF NO	GRAPHIC REF	PART NUMBER	QTY	PART NAME 1 2 3 4 5 6 (PRODUCT LEVEL)	SEE PAGE
	1	1	**2M-9780**	1	SEAL-O-RING	
	2	1	**095-1751**	1	SEAL-O-RING	
	3	1	**169-1616**	2	RING-BACKUP	
					AVAILABLE REPAIR KIT(S):	
			200-6283	1	KIT-SEAL	
					(INCLUDES SEAL-O-RINGS & BACKUP RINGS)	

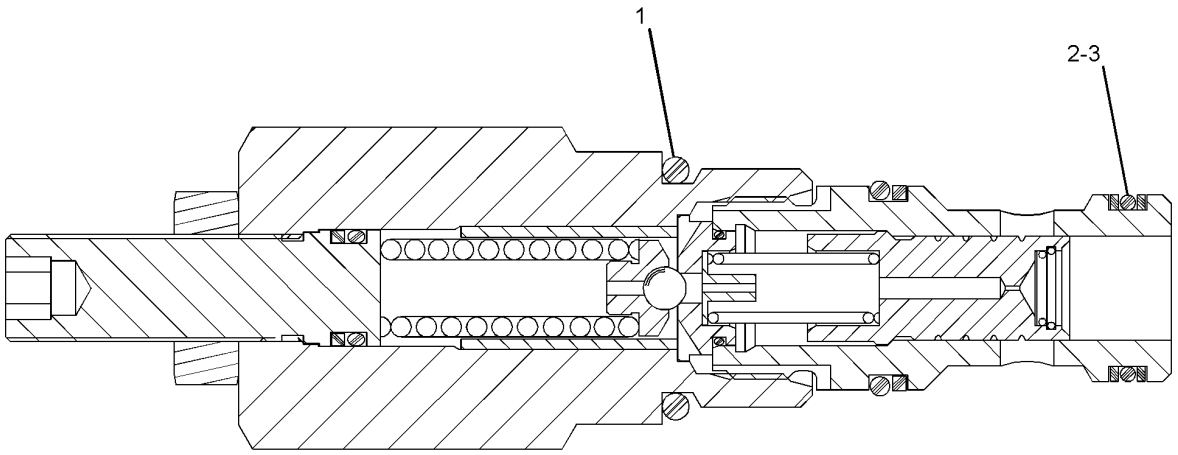

GRAPHIC #1 **<END>** g01448587

HYDRAULIC SYSTEM

4T-4073 VALVE GP-SHUTTLE

S/N: 2211-UP

PART OF 310-5654 VALVE GP-CONTROL

SMCS-5079 **i01564592**

NOTE	REF NO	GRAPHIC REF	PART NUMBER	QTY	PART NAME 1 2 3 4 5 6 (PRODUCT LEVEL)	SEE PAGE
	1	1	**033-6039**	1	SEAL-O-RING	
	2	1	**8L-2777**	1	SEAL-O-RING	
	3	1	**6E-0382**	2	RING-BACKUP	
	4	1	**6E-0381**	2	RING-BACKUP	

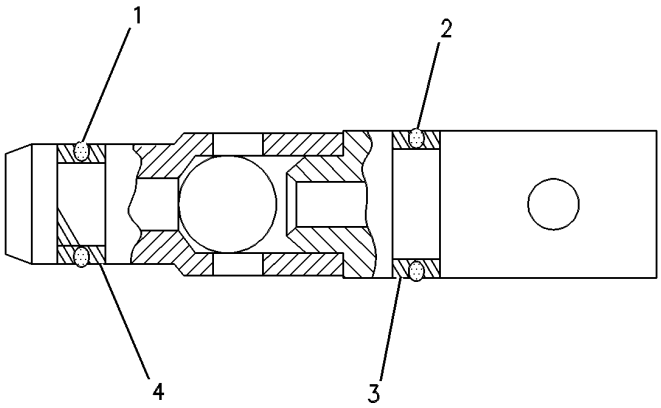

GRAPHIC #1 **<END>** g00279740

HYDRAULIC SYSTEM

3E-9205 VALVE GP-SOLENOID

S/N: 2211-UP

24-VOLT

PART OF 225-2321 VALVE GP-TILT CONTROL

SMCS-5132, 5479 **i02953621**

NOTE	REF NO	GRAPHIC REF	PART NUMBER	QTY	PART NAME 1 2 3 4 5 6 (PRODUCT LEVEL)	SEE PAGE
	1	1	**6T-9244**	1	CARTRIDGE AS	
	2	1	**3E-8581**	1	COIL AS	
	3	1	**102-8804**	1	KIT-RECEPTACLE (4-PIN)	
					(INCLUDES RECEPTACLE AS & WEDGE)	
		1	**3E-3377**	1	WEDGE-RECEPTACLE LOCK (4-PIN)	
		1	**186-3735**	4	PIN-CONNECTOR (16-GA TO 18-GA)	
	4	1	**1S-9593**	2	STRAP-CABLE	
	5	1	**157-2284**	1	LOCKNUT-SPECIAL (5/8-18-THD)	
	6	1	**160-5843**	1	WASHER (16.8X38.1X0.5-MM THK)	
	7	1	**160-5844**	1	WASHER-SPRING (16.3X31.5X1.85-MM THK)	
					AVAILABLE REPAIR KIT(S):	
			126-5948	1	KIT-SEAL (SOLENOID VALVE)	
					(INCLUDES SEAL-O-RINGS & RINGS)	

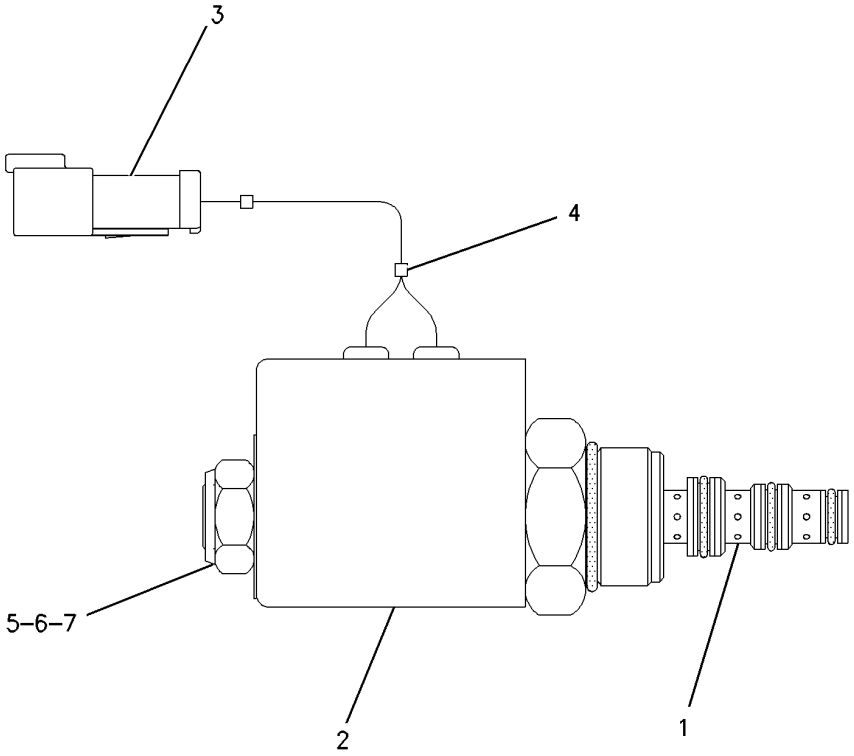

GRAPHIC #1 **<END>** g00657410

HYDRAULIC SYSTEM

183-7595 VALVE GP-SOLENOID

S/N: 2211-UP

PART OF 191-8735 VALVE GP-DEMAND FAN

SMCS-5132, 5479 **i02279507**

NOTE	REF NO	GRAPHIC REF	PART NUMBER	QTY	PART NAME 1 2 3 4 5 6 (PRODUCT LEVEL)	SEE PAGE
	1	1	**146-3728**	1	WASHER-SPRING	
	2	1	**187-8191**	1	COIL AS	
Z	3	1		1	CARTRIDGE AS	
Z	4	1		1	ADAPTER AS	

Z-NOT SERVICED SEPARATELY

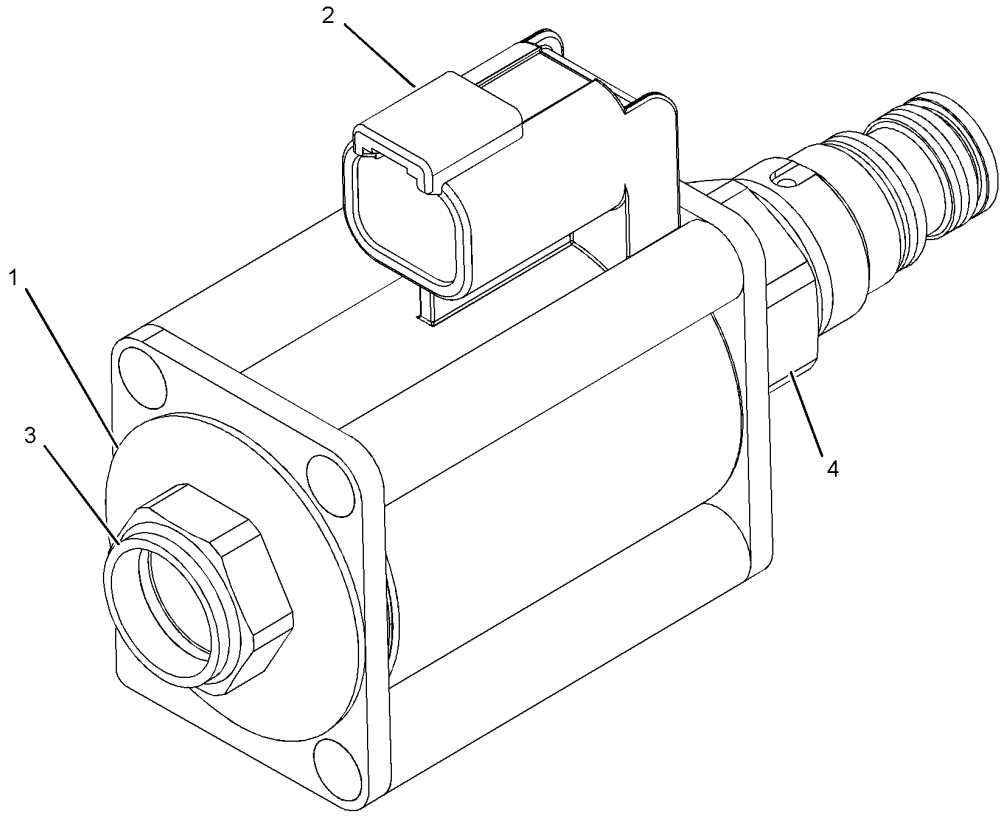

GRAPHIC #1 **<END>** g01141533

HYDRAULIC SYSTEM

225-2321 VALVE GP-TILT CONTROL–DUAL

S/N: 2211-UP

PART OF 279-9397 VALVE & MTG GP-MAIN CONTROL

SMCS-5051, 5123 **i02232534**

NOTE	REF NO	GRAPHIC REF	PART NUMBER	QTY	PART NAME 1 2 3 4 5 6 (PRODUCT LEVEL)	SEE PAGE
Y	1	1	**3E-9205**	1	VALVE GP-SOLENOID (24-VOLT) (DUAL TILT)	758
	4	1	**8J-8621**	2	SPRING	
	5	1	**9J-1722**	1	RETAINER	
	7	1	**223-4443**	2	COVER	
	8	1	**223-4445**	1	RETAINER	
	10	1	**1P-4576**	6	FLANGE-HALF	
	11	1	**1P-4577**	2	FLANGE-HALF	
	12	1	**3V-2431**	4	WASHER (10.2X16X2-MM THK)	
	13	1	**4J-0522**	2	SEAL-O-RING	
	14	1	**5P-0076**	4	BOLT-12 POINT HEAD (3/8-16X1.5-IN)	
	15	1	**5S-7382**	16	BOLT (3/8-16X1.375-IN)	
	16	1	**8T-4896**	16	WASHER-HARD (10.2X18.5X2.5-MM THK)	
	17	1	**173-3993**	4	PLUG AS	
	18	1	**162-0177**	1	PLUG AS	

Y-SEPARATE ILLUSTRATION

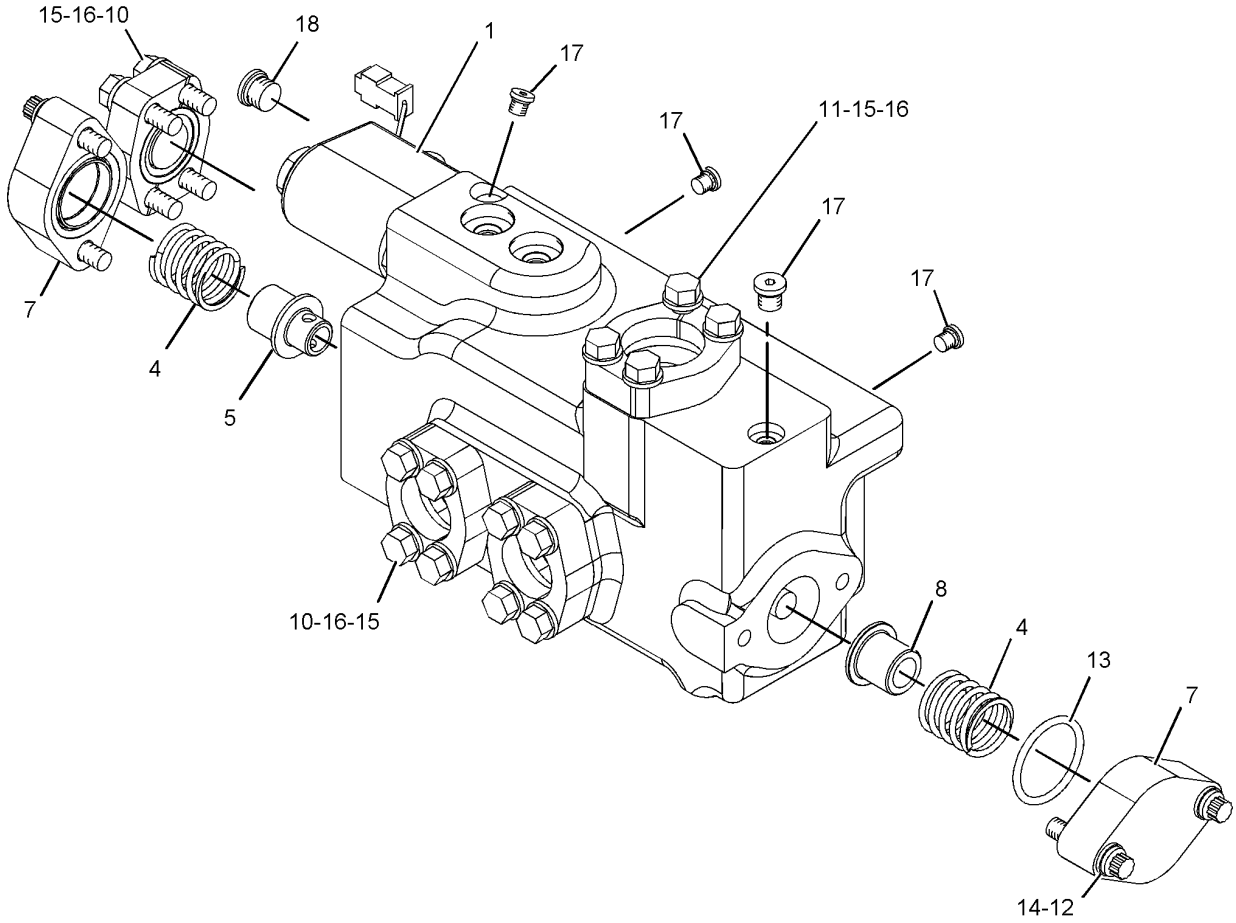

GRAPHIC #1 **<END>** g01126501

IMPLEMENTS

214-7136 BULLDOZER AR

S/N: 2211-UP

PART OF 262-2077 COMMON AR

SMCS-6050 **i01702363**

NOTE	PART NUMBER	QTY	PART NAME 1 2 3 4 5 6 (PRODUCT LEVEL)	SEE PAGE
Y	*213-3272*	1	LINES GP-TILT CYLINDER (FRONT FRAME)	710
Y	*153-0310*	1	LINK GP-STABILIZER	762
	213-7542	1	MOUNTING GP-TRUNNION	
Y	*214-7893*	1	PIN GP-BULLDOZER	763
Y	*151-5216*	1	PUSH ARM GP (RH)	765
Y	*151-5217*	1	PUSH ARM GP (LH)	767
Y	*151-5220*	1	TRUNNION GP-BULLDOZER	769

Y-SEPARATE ILLUSTRATION

<END>

IMPLEMENTS

153-0310 LINK GP-STABILIZER

S/N: 2211-UP

PART OF 214-7136 BULLDOZER AR

SMCS-6071, 7203 **i01185453**

NOTE	REF NO	GRAPHIC REF	PART NUMBER	QTY	PART NAME 1 2 3 4 5 6 (PRODUCT LEVEL)	SEE PAGE
B	1	1	**3G-9401**	52	SHIM (.8MM THK)	
	2	1	**7T-4971**	2	CAP-BEARING	
	3	1	**153-0312**	1	LINK AS	
		1	**9J-2587**	2	BEARING AS	
		1	**4T-5255**	1	CAP-BEARING	
	4	1	**2J-3507**	8	NUT-FULL (1-8 THD)	
	5	1	**7X-0418**	8	BOLT (1-8X9.5IN)	

B-USE AS REQUIRED

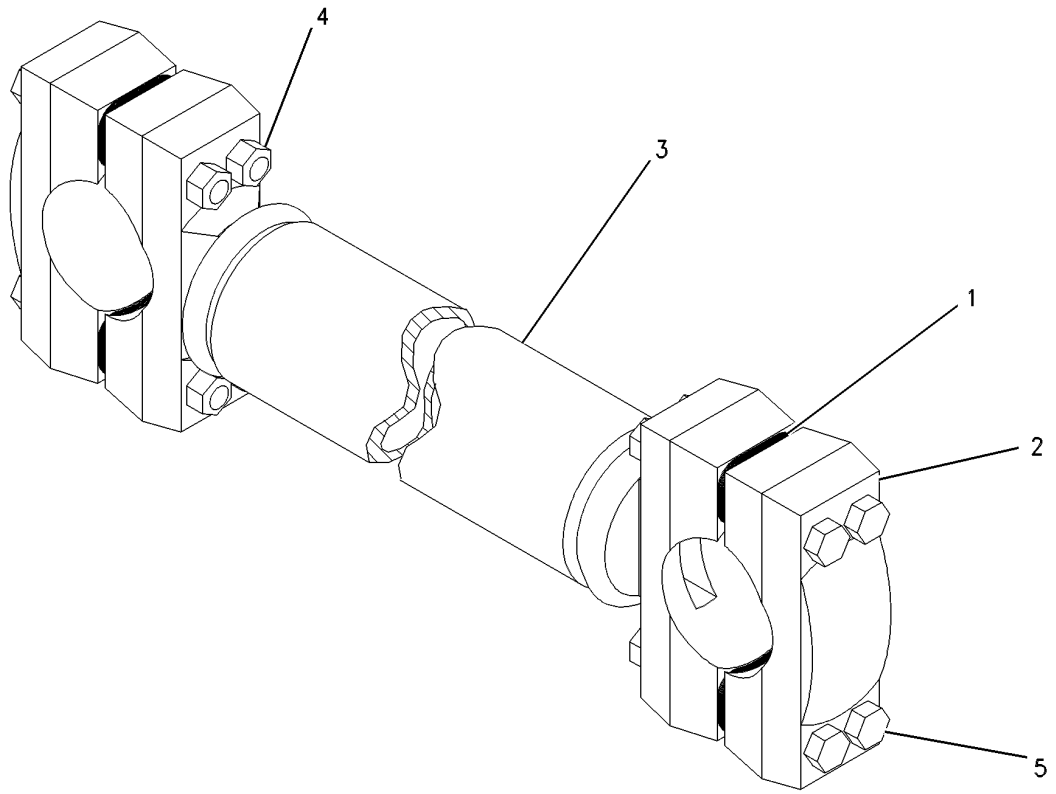

GRAPHIC #1 **<END>** g00357396

IMPLEMENTS

214-7893 PIN GP-BULLDOZER

S/N: 2211-UP

PART OF 214-7136 BULLDOZER AR

SMCS-5104, 6061, 6065, 6066 **i01667581**

NOTE	REF NO	GRAPHIC REF	PART NUMBER	QTY	PART NAME 1 2 3 4 5 6 (PRODUCT LEVEL)	SEE PAGE
	1	1	**3G-5336**	4	SPACER	
	2	1	**4T-3797**	2	CONNECTOR	
	3	1	**6J-5985**	2	PIN	
	4	1	**6J-5986**	4	RETAINER	
	5	1	**9J-2364**	4	PIN	
	6	1	**9J-2365**	6	RETAINER	
	7	1	**9J-2593**	2	PIN	
	8	1	**9W-2939**	2	PIN	
	9	1	**122-4681**	2	CONNECTOR AS	
					(EACH INCLUDES)	
		1	**1J-5304**	4	BEARING-SLEEVE	
	10	1	**7X-0379**	12	BOLT (7/8-9X1.50 IN)	
	11	1	**8T-8917**	8	BOLT (1/2-13X1.25 IN)	

214-7893 **PIN GP-BULLDOZER** *(contd.)* **i01667581**

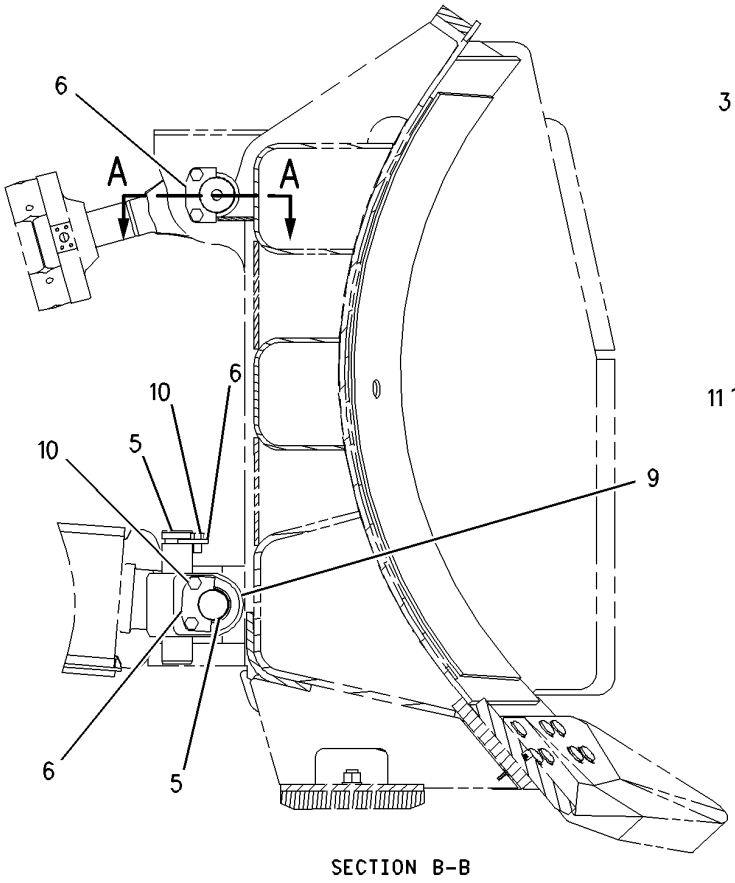

SECTION B-B

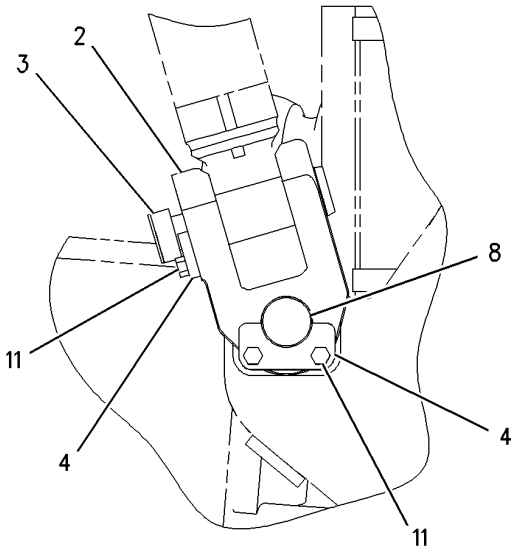

SECTION C-C

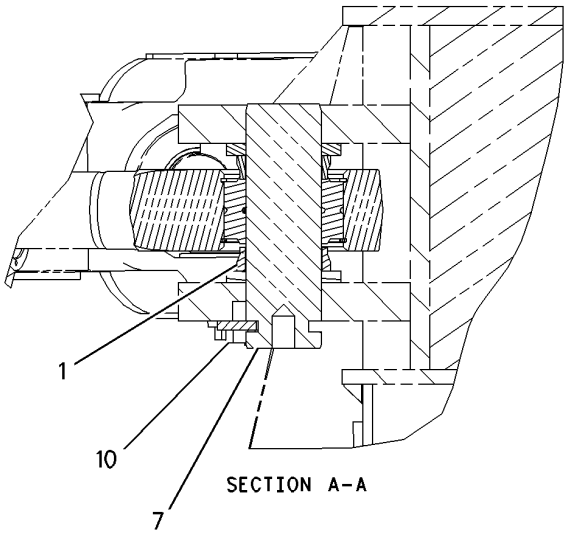

SECTION A-A

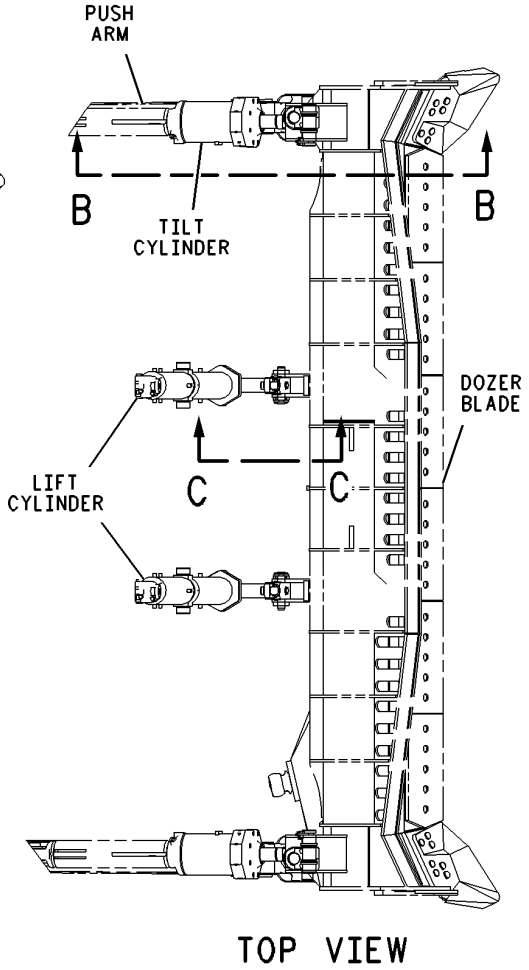

TOP VIEW

GRAPHIC #1 **<END>** g00862869

151-5216 PUSH ARM GP–RH

S/N: 2211-UP

PART OF 214-7136 BULLDOZER AR

SMCS-6061 **i02895366**

NOTE	REF NO	GRAPHIC REF	PART NUMBER	QTY	PART NAME 1 2 3 4 5 6 (PRODUCT LEVEL)	SEE PAGE
B	1	1	**3G-0053**	26	SHIM (0.8-MM THK)	
	2	1	**3G-6623**	1	TUBE AS (RH)	
	3	1	**5P-2228**	2	BOLT (1/2-13X1-IN)	
	4	1	**8J-3146**	1	CLAMP	
	5	1	**9J-1433**	1	CAP-BEARING	
	7	1	**9J-2365**	1	RETAINER	
	8	1	**9J-2366**	1	PIN	
CY	9	1	**308-2464**	1	CYLINDER GP-TILT (RH) (TILT, TIP FUNCTION)	672
	10	1	**151-5218**	1	PUSH ARM AS (RH)	
	10A	1	**1U-2247**	1	BRACKET AS	
	10B	1	**9D-1024**	1	PLATE	
	10C	1	**4T-3766**	1	BRACKET AS	
	10D	1	**1J-5304**	2	BEARING-SLEEVE	
	10E	1	**4T-6767**	1	BEARING AS	
		1	**9J-1433**	1	CAP-BEARING	
	11	1	**3G-6251**	1	GUARD AS (RH)	
	12	1	**4J-0520**	1	SEAL-O-RING	
	13	1	**4L-6454**	2	BOLT (3/8-16X1-IN)	
	14	1	**7H-7539**	4	NUT-FULL (1-1/4-12-THD)	
	15	1	**7X-0379**	2	BOLT (7/8-9X1.5-IN)	
	16	1	**7X-0380**	2	BOLT (7/8-9X1.75-IN)	
	17	1	**7X-0383**	2	BOLT (7/8-9X2.75-IN)	
	18	1	**7X-0572**	4	WASHER-HARD (24X44.5X6-MM THK)	
	19	1	**7H-3579**	4	BOLT (1-1/4-12X12-IN)	
	20	1	**8T-2501**	2	BOLT (3/8-16X2-IN)	

B-USE AS REQUIRED
C-CHANGE FROM PREVIOUS TYPE
Y-SEPARATE ILLUSTRATION

151-5216 **PUSH ARM GP** *(contd.)* **i02895366**

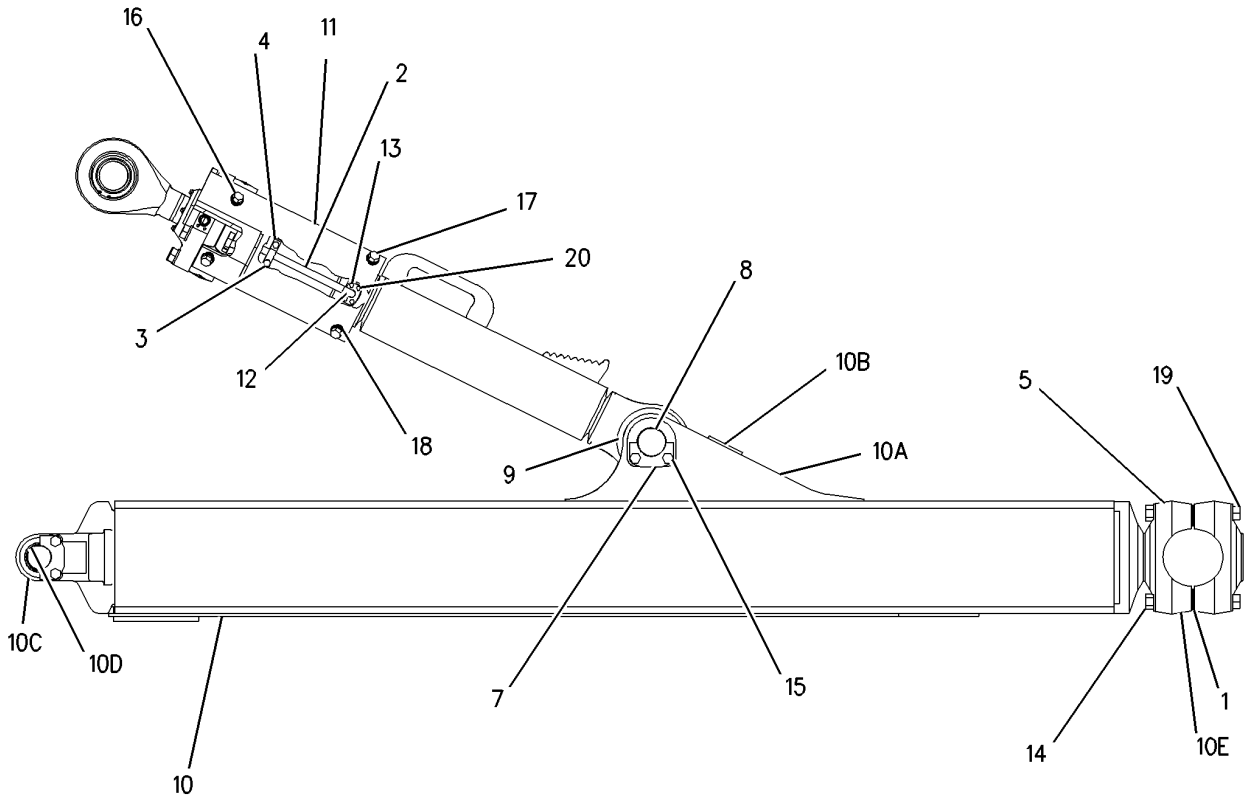

GRAPHIC #1 **<END>** g00985026

151-5217 PUSH ARM GP–LH

S/N: 2211-UP

PART OF 214-7136 BULLDOZER AR

SMCS-6061 **i02895374**

NOTE	REF NO	GRAPHIC REF	PART NUMBER	QTY	PART NAME 1 2 3 4 5 6 (PRODUCT LEVEL)	SEE PAGE
B	1	1	**3G-0053**	2	SHIM (0.8-MM THK)	
	2	1	**8J-3146**	1	CLAMP	
	3	1	**9J-1433**	1	CAP-BEARING	
	5	1	**9J-2365**	1	RETAINER	
	6	1	**9J-2366**	1	PIN	
CY	7	1	**308-2462**	1	CYLINDER GP-TILT (LH) (TILT, TIP FUNCTION)	670
	8	1	**9W-5570**	1	TUBE AS-LH	
	9	1	**9W-5571**	1	GUARD AS	
	10	1	**151-5219**	1	PUSH ARM AS	
	10A	1	**1U-2248**	1	BRACKET AS	
	10B	1	**9D-1024**	1	PLATE	
	10C	1	**4T-3766**	1	BRACKET AS	
	10D	1	**1J-5304**	2	BEARING-SLEEVE	
	10E	1	**4T-6767**	1	BEARING AS	
	10F	1	**9J-1433**	1	CAP-BEARING	
	11	1	**4J-0520**	1	SEAL-O-RING	
	12	1	**4L-6454**	2	BOLT (3/8-16X1-IN)	
	13	1	**7H-7539**	4	NUT-FULL (1-1/4-12-THD)	
	14	1	**5P-2228**	2	BOLT (1/2-13X1-IN)	
	15	1	**7X-0379**	2	BOLT (7/8-9X1.5-IN)	
	16	1	**7X-0380**	2	BOLT (7/8-9X1.75-IN)	
	17	1	**7X-0383**	2	BOLT (7/8-9X2.75-IN)	
	18	1	**7X-0572**	4	WASHER-HARD (24X44.5X6-MM THK)	
	19	1	**7H-3579**	4	BOLT (1-1/4-12X12-IN)	
	20	1	**8T-2501**	2	BOLT (3/8-16X2-IN)	

B-USE AS REQUIRED
C-CHANGE FROM PREVIOUS TYPE
Y-SEPARATE ILLUSTRATION

151-5217 **PUSH ARM GP** *(contd.)* **i02895374**

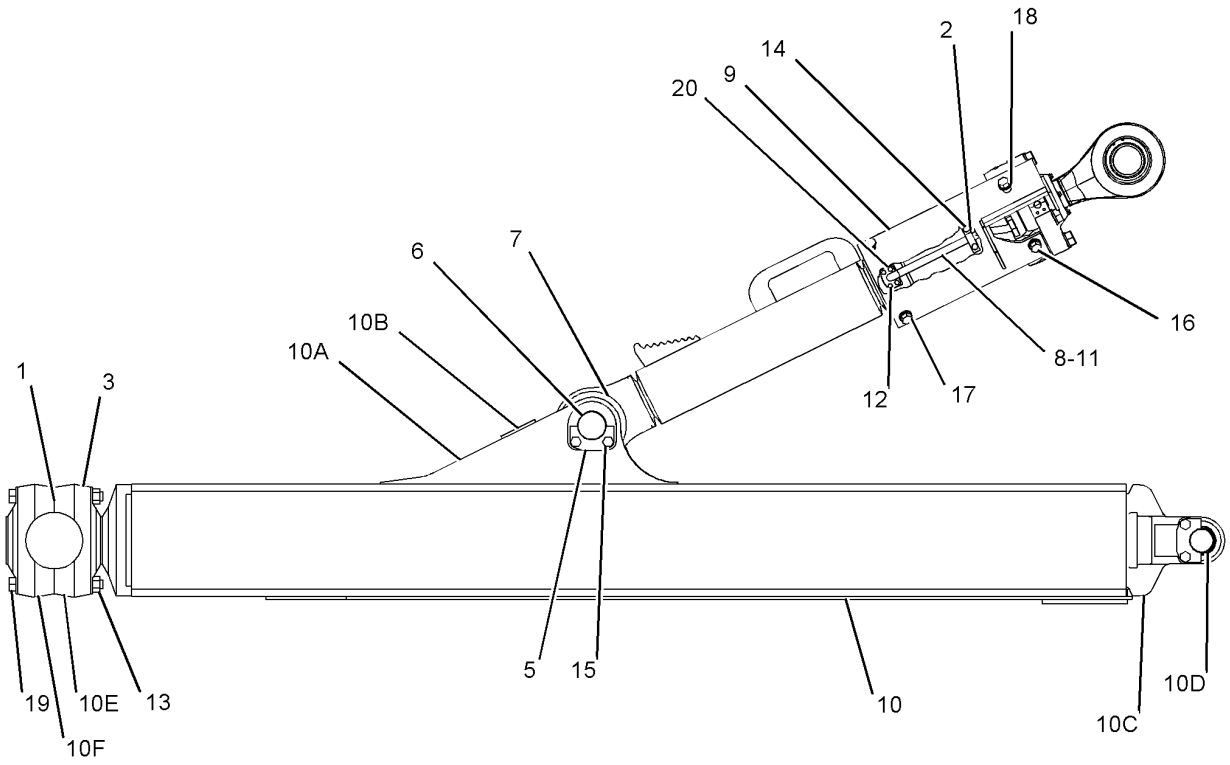

GRAPHIC #1 **<END>** g01148986

IMPLEMENTS

151-5220 TRUNNION GP-BULLDOZER

S/N: 2211-UP

PART OF 214-7136 BULLDOZER AR

SMCS-6069 **i01185456**

NOTE	REF NO	GRAPHIC REF	PART NUMBER	QTY	PART NAME 1 2 3 4 5 6 (PRODUCT LEVEL)	SEE PAGE
	1	1	**107-7523**	2	TRUNNION AS	
	2	1	**8T-9398**	8	BOLT (3/4-10X1.75IN)	
	3	1	**106-9036**	1	BEARING-SPHERICAL	
	4	1	**106-9037**	1	RETAINER	
	5	1	**153-7954**	1	BEAM-PUSH	
	6	1	**153-7955**	2	PLATE-ADAPTER	
	7	1	**7L-9198**	28	BOLT	
	8	1	**7X-0406**	24	BOLT (1-8X3IN)	

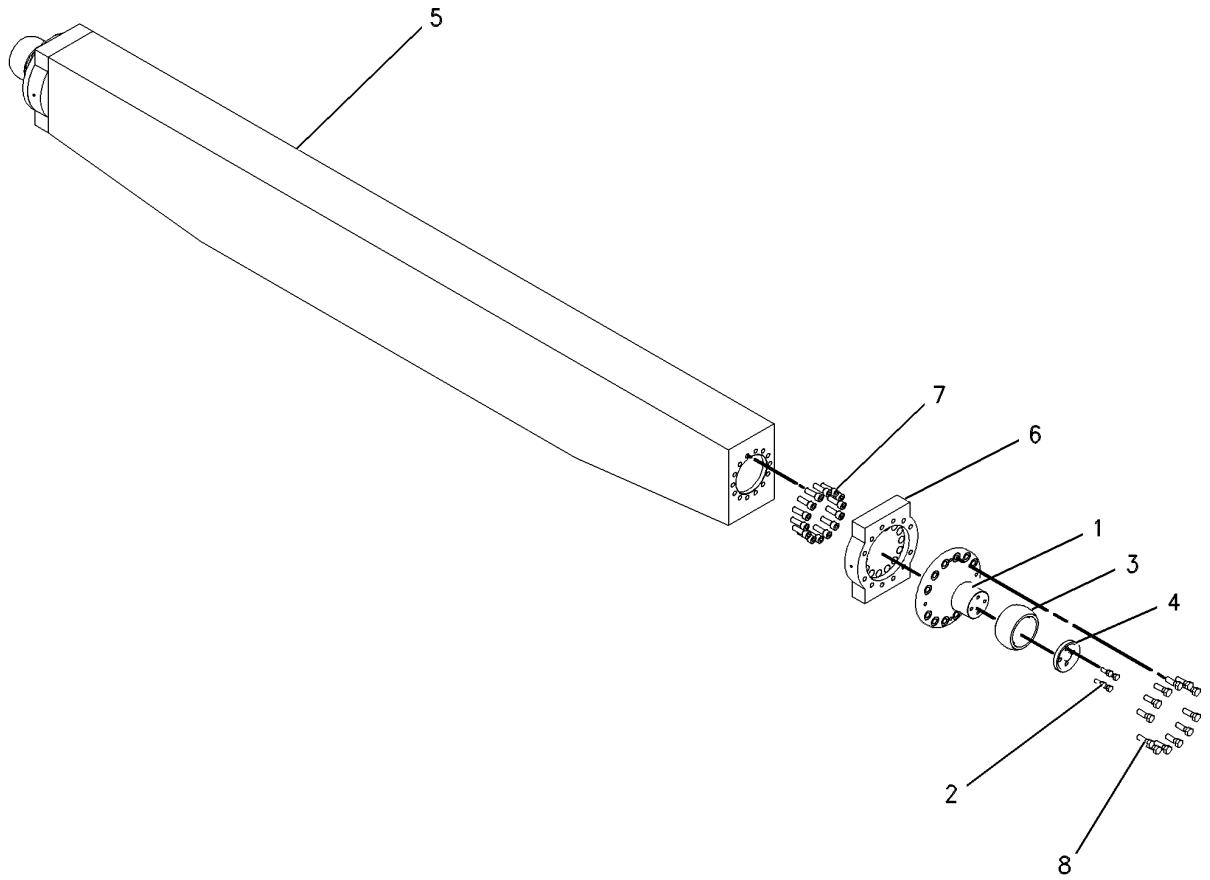

GRAPHIC #1 **<END>** g00350732

WORK TOOLS

155-6603 BLADE AS-COAL

S/N: 2211-UP
PART OF 153-2113 BLADE GP-COAL
AN ATTACHMENT

SMCS-6060 **i00785082**

NOTE	PART NUMBER	QTY	PART NAME 1 2 3 4 5 6 (PRODUCT LEVEL)	SEE PAGE
	1J-5304	4	BEARING-SLEEVE	
	153-6972	2	PLATE-BLOCK PORT	
	155-9574	2	PLATE-SIDE WEAR	
	8P-6048	1	TRUNNION	

<END>

155-6602 BLADE AS-SEMI-UNIVERSAL

S/N: 2211-UP
PART OF 153-2112 BLADE GP-SEMI-UNIVERSAL
AN ATTACHMENT

SMCS-6060, 6078 **i01186011**

NOTE	PART NUMBER	QTY	PART NAME 1 2 3 4 5 6 (PRODUCT LEVEL)	SEE PAGE
	1J-5304	4	BEARING-SLEEVE	
	153-6972	2	PLATE	
	153-9271	2	PLATE	
	153-9272	2	PLATE-WEAR	
	8P-6048	1	TRUNNION	

<END>

158-8739 BLADE AS-SEMI-UNIVERSAL–HEAVY-DUTY

S/N: 2211-UP

PART OF 158-4534 BLADE GP-SEMI-UNIVERSAL

AN ATTACHMENT

SMCS-6060, 6078 **i02169829**

NOTE	REF NO	GRAPHIC REF	PART NUMBER	QTY	PART NAME 1 2 3 4 5 6 (PRODUCT LEVEL)	SEE PAGE
	1	1	**171-4812**	2	PLATE-LIFT LUG	
	2	1	**8P-6048**	1	TRUNNION	
	3	1	**153-6972**	2	PLATE (BLK PORT)	
	4	1	**158-8732**	2	PLATE-SIDE WEAR	
	5	1	**158-8733**	2	PLATE-SIDE WEAR	
	6	1	**158-8738**	1	PLATE (LINER WING LH)	
	7	1	**158-8734**	2	PLATE-SIDE WEAR	
	8	1	**158-8735**	1	PLATE (LINER CTR RH)	
	9	1	**158-8736**	1	PLATE (LINER CTR LH)	
	10	1	**158-8737**	1	PLATE (LINER WING RH)	

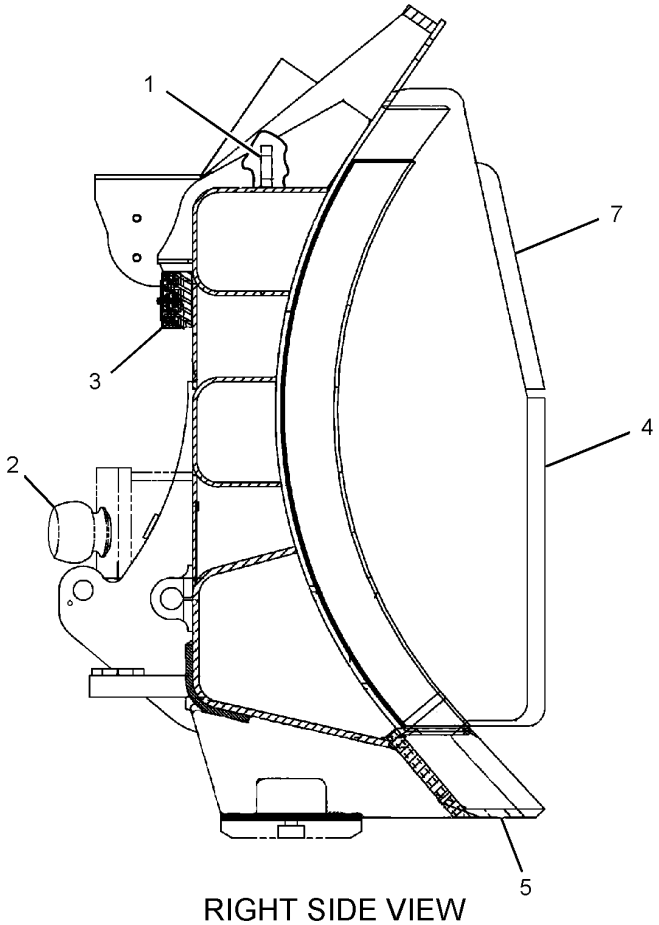

RIGHT SIDE VIEW

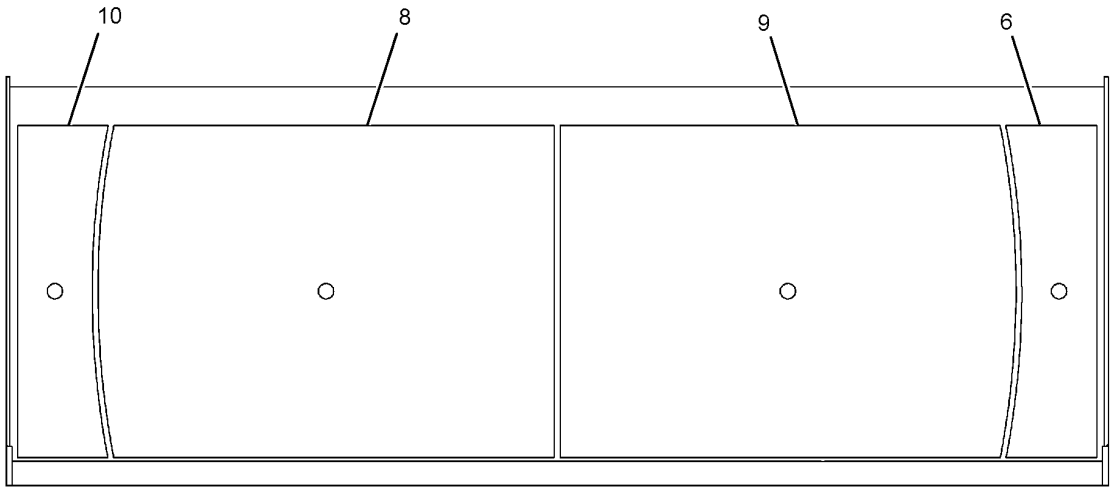

FRONT VIEW
(LINER PLATE DETAIL)

GRAPHIC #1 **<END>** g01359570

WORK TOOLS

153-2113 BLADE GP-COAL

S/N: 2211-UP

AN ATTACHMENT

SMCS-6060 **i02079361**

NOTE	REF NO	GRAPHIC REF	PART NUMBER	QTY	PART NAME 1 2 3 4 5 6 (PRODUCT LEVEL)	SEE PAGE
	1	1	**4J-5267**	4	SEAL-O-RING	
	2	1	**0S-1588**	16	BOLT (3/8-16X1.25-IN)	
	3	1	**5M-2894**	20	WASHER-HARD (10.2X18.5X2.5-MM THK)	
	4	1	**153-9270**	4	TUBE AS-HYDRAULIC	
	5	1	**3R-2299**	35	BOLT (1-1/4-7X3-IN)	
	6	1	**3K-9770**	35	NUT-FULL (1-1/4-7-THD)	
	7	1	**4K-0684**	35	WASHER-HARD (34X55X6-MM THK)	
	8	1	**4J-9208**	47	BOLT-PLOW (1-8X3.5-IN)	
	9	1	**2J-3507**	47	NUT-FULL (1-8-THD)	
	10	1	**5P-8250**	47	WASHER (28X49X5-MM THK)	
	11	1	**7J-2966**	3	EDGE-CUTTING	
	12	1	**135-9671**	2	EDGE-CUTTING	
	13	1	**135-9672**	1	EDGE-CUTTING	
	14	1	**135-9673**	1	EDGE-CUTTING	
	15	1	**0S-1571**	4	BOLT (3/8-16X1.75-IN)	
	16	1	**153-6974**	4	PLATE-CLAMP TOP	
	17	1	**135-9668**	5	SOLE	
Y	18	1	*155-6603*	1	BLADE AS-COAL	770
	19	1	**177-1744**	8	PLATE-PORT COVER	
	20	1	**0S-0509**	32	BOLT (3/8-16X0.75-IN)	
	21	1	**4J-8996**	8	SEAL-O-RING	

Y-SEPARATE ILLUSTRATION

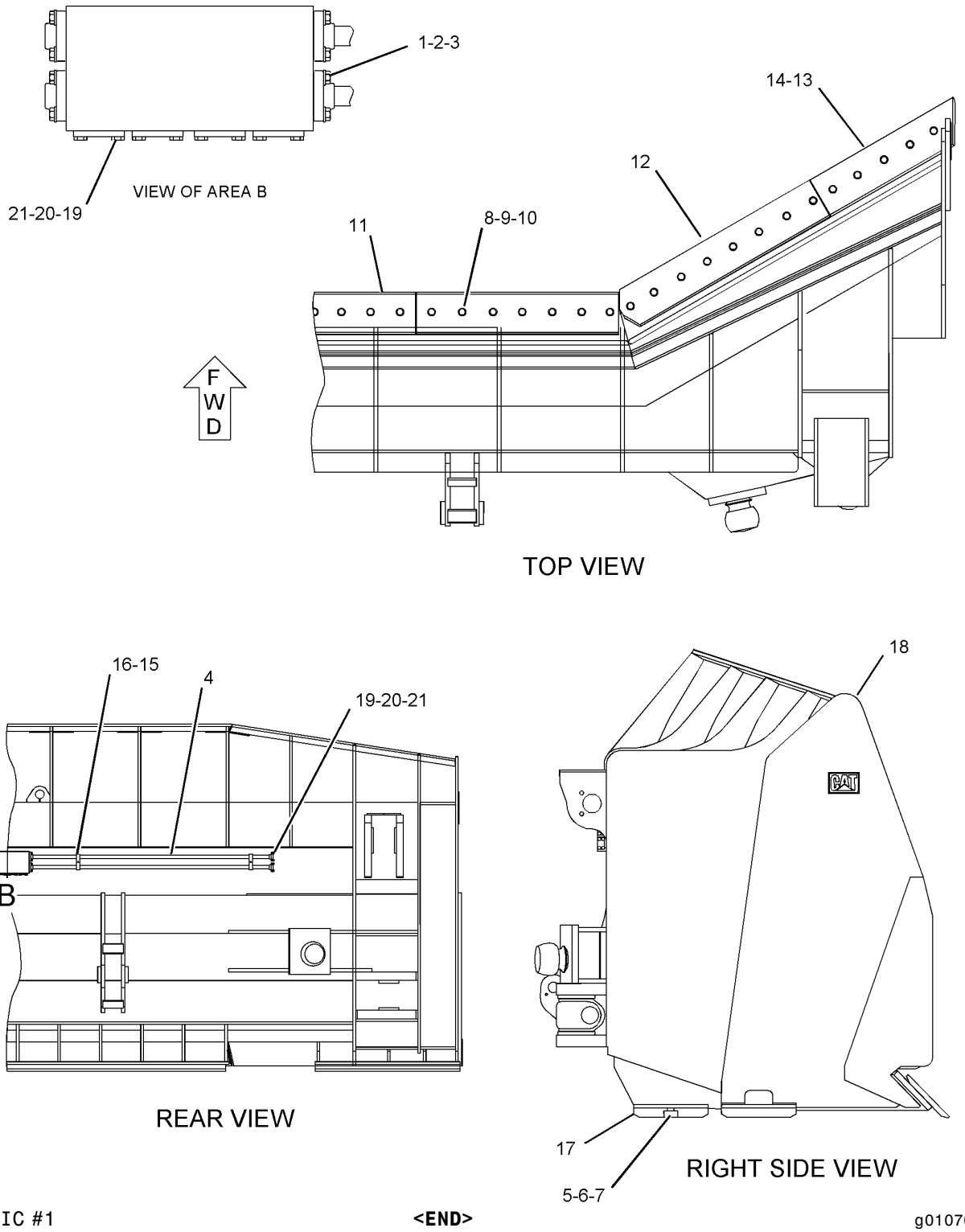

GRAPHIC #1 **<END>** g01070641

WORK TOOLS

153-2112 BLADE GP-SEMI-UNIVERSAL

S/N: 2211-UP

AN ATTACHMENT

SMCS-6060, 6078 **i01186099**

NOTE	PART NUMBER	QTY	PART NAME 1 2 3 4 5 6 (PRODUCT LEVEL)	SEE PAGE
	8E-4198	1	BIT-END (LH) (LH)	
	8E-4199	1	BIT-END (RH) (RH)	
Y	*155-6602*	1	BLADE AS-SEMI-UNIVERSAL	770
	3R-2299	28	BOLT (1-1/4-7X3-IN)	
	0S-1588	16	BOLT (3/8-16X1.25-IN)	
	0S-1571	4	BOLT (3/8-16X1.75-IN)	
	0S-0509	32	BOLT (3/8-16X0.75-IN)	
	5P-8823	44	BOLT-PLOW (1-1/4-7X4.13-IN)	
	9W-6658	4	EDGE-CUTTING (CENTER)	
	9W-6657	2	EDGE-CUTTING (END)	
	3K-9770	72	NUT-FULL (1-1/4-7-THD)	
	153-6974	4	PLATE-CLAMP TOP	
	177-1744	8	PLATE-PORT COVER	
	4J-5267	4	SEAL-O-RING	
	4J-8996	8	SEAL-O-RING	
	135-9668	4	SOLE	
	153-9270	4	TUBE AS-HYDRAULIC	
	4K-0684	72	WASHER-HARD (34X55X6-MM THK)	
	5M-2894	20	WASHER-HARD (10.2X18.5X2.5-MM THK)	

Y-SEPARATE ILLUSTRATION

<END>

WORK TOOLS

158-4534 BLADE GP-SEMI-UNIVERSAL

S/N: 2211-UP

AN ATTACHMENT

SMCS-6060, 6078 **i01186253**

NOTE	REF NO	GRAPHIC REF	PART NUMBER	QTY	PART NAME 1 2 3 4 5 6 (PRODUCT LEVEL)	SEE PAGE
	1	1	**135-9668**	4	SOLE	
	2	1	**3R-2299**	28	BOLT (1-1/4-7X3-IN)	
F		1	**5P-8823**	44	BOLT-PLOW (1-1/4-7X4.13-IN)	
	4	1	**3K-9770**	72	NUT-FULL (1-1/4-7-THD)	
	5	1	**4K-0684**	72	WASHER-HARD (34X55X6-MM THK)	
	6	1	**9W-6658**	4	EDGE-CUTTING	
	7	1	**153-9270**	4	TUBE AS-HYDRAULIC	
	8	1	**4J-5267**	4	SEAL-O-RING	
	9	1	**0S-1588**	16	BOLT (3/8-16X1.25-IN)	
	10	1	**5M-2894**	20	WASHER-HARD (10.2X18.5X2.5-MM THK)	
	11	1	**0S-1571**	4	BOLT (3/8-16X1.75-IN)	
	12	1	**153-6974**	4	PLATE-CLAMP TOP	
	13	1	**8E-4198**	1	BIT-END (LH)	
	14	1	**9W-6657**	2	EDGE-CUTTING	
	15	1	**8E-4199**	1	BIT-END (RH)	
Y	16	1	*158-8739*	1	BLADE AS-SEMI-UNIVERSAL	771
	17	1	**177-1744**	8	PLATE-PORT COVER	
	18	1	**0S-0509**	32	BOLT (3/8-16X0.75-IN)	
	19	1	**4J-8996**	8	SEAL-O-RING	

F-NOT SHOWN
Y-SEPARATE ILLUSTRATION

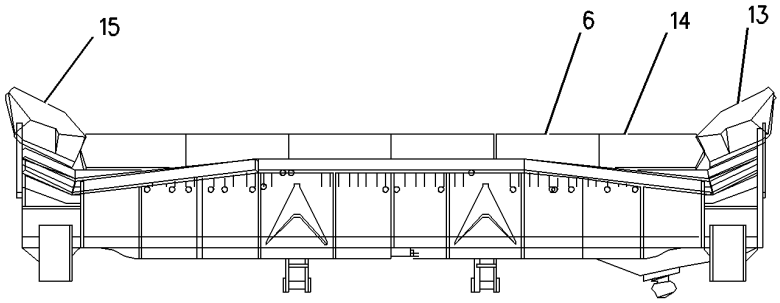

TOP VIEW

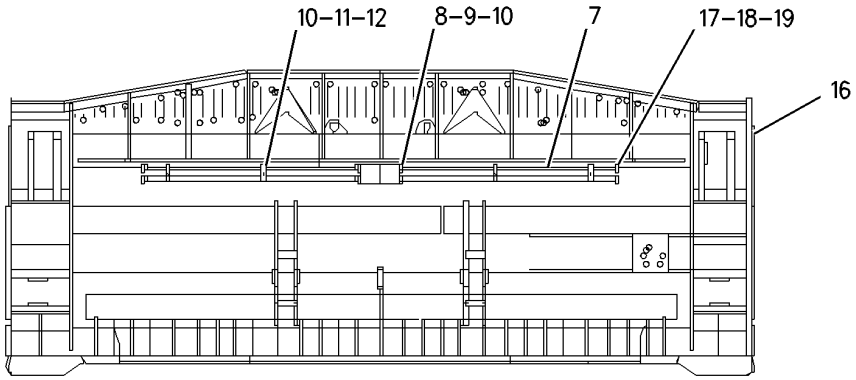

REAR VIEW

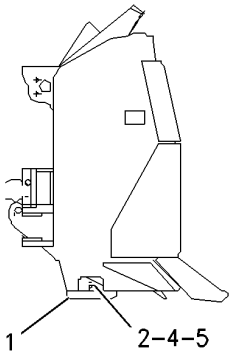

RIGHT SIDE VIEW

GRAPHIC #1 **<END>** g00667497

OPERATOR STATION

292-2932 ACCUMULATOR & MTG GP-REFRIG

S/N: 2211-UP

PART OF 283-0135 LINES GP-AIR CONDITIONER

SMCS-1808, 7320 **i02891345**

NOTE	REF NO	GRAPHIC REF	PART NUMBER	QTY	PART NAME 1 2 3 4 5 6 (PRODUCT LEVEL)	SEE PAGE
	1	1	**8S-6109**	1	CLIP (SLOT)	
	2	1	**217-7742**	1	GROMMET	
	3	1	**257-3227**	1	RECEIVER DRYER AS (REFRIGERANT)	
		1	**189-1707**	1	ORIFICE AS-AIR CONDITIONER	
	4	1	**274-5909**	1	ACCUMULATOR-REFRIGERANT	
	5	1	**292-2351**	1	BRACKET AS	
I	6	1	**292-2929**	1	HOSE AS	
I	7	1	**292-2931**	1	HOSE AS	
	8	1	**5P-3929**	1	COUPLING AS-REFRIGERANT	
		1	**8F-9206**	1	SEAL-O-RING	
		1	**107-4397**	1	VALVE AS	
	9	1	**5P-3948**	1	COUPLING AS-REFRIGERANT	
		1	**7F-8607**	1	SEAL-O-RING	
		1	**107-4399**	1	VALVE AS	
	10	1	**7X-7729**	1	WASHER (11X25X3-MM THK)	
	11	1	**7X-7910**	1	CLIP	
	12	1	**7X-7911**	1	CLIP	
	13	1	**8S-6110**	1	CLIP (TAB)	
	14	1	**8T-4121**	1	WASHER-HARD (11X21X2.5-MM THK)	
M	15	1	**8T-4196**	2	BOLT (M10X1.5X35-MM)	
	16	1	**9X-7381**	1	SEAL-O-RING	
	17	1	**9X-7383**	2	SEAL-O-RING	
	18	1	**9X-7384**	1	SEAL-O-RING	

I-REFER TO HYDRAULIC INFORMATION SYSTEM
M-METRIC PART

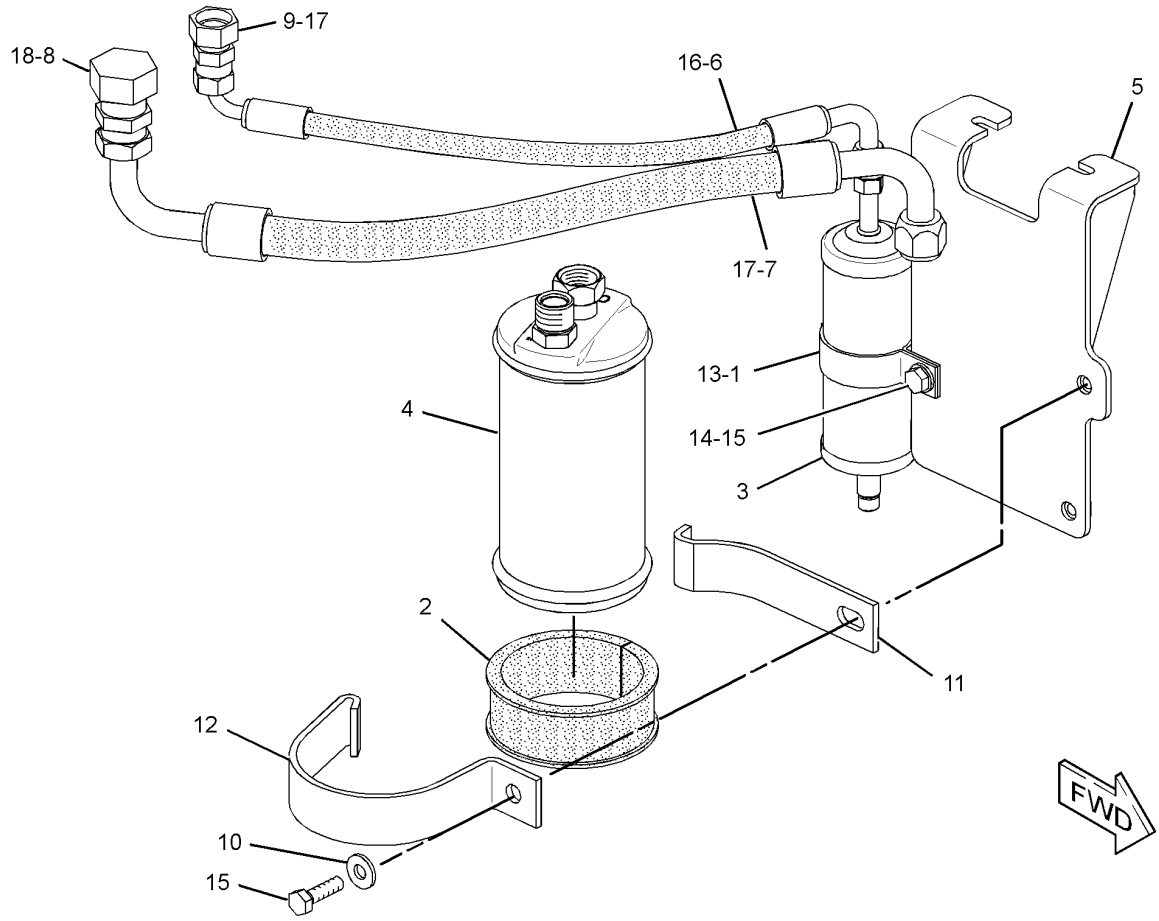

GRAPHIC #1 **<END>** g01444498

OPERATOR STATION

173-1028 ADJUSTER GP-SEAT

S/N: 2211-UP
PART OF 178-7910, 285-8423 SEAT GP
ALSO AN ATTACHMENT

SMCS-7321 **i02387199**

NOTE	REF NO	GRAPHIC REF	PART NUMBER	QTY	PART NAME 1 2 3 4 5 6 (PRODUCT LEVEL)	SEE PAGE
	1	1	**4V-8256**	4	SPRING	
	2	1	**117-4492**	1	ROD	
	3	1	**136-1544**	1	LATCH AS-LH	
	4	1	**156-5545**	1	LATCH AS-RH	
	5	1	**164-4531**	1	ROD	
	6	1	**170-1112**	1	PLATE AS	
	7	1	**170-1114**	1	HANDLE (SLIDE ADJUSTMENT)	
	8	1	**170-1115**	1	HANDLE (TILT ADJUSTMENT)	
	9	1	**132-0338**	2	WASHER-PLASTIC (13X31.7X0.8-MM THK)	
	10	1	**2K-4973**	2	LOCKNUT (3/8-16 THD)	
	11	1	**7X-0608**	2	WASHER-HARD (10.2X16X2-MM THK)	

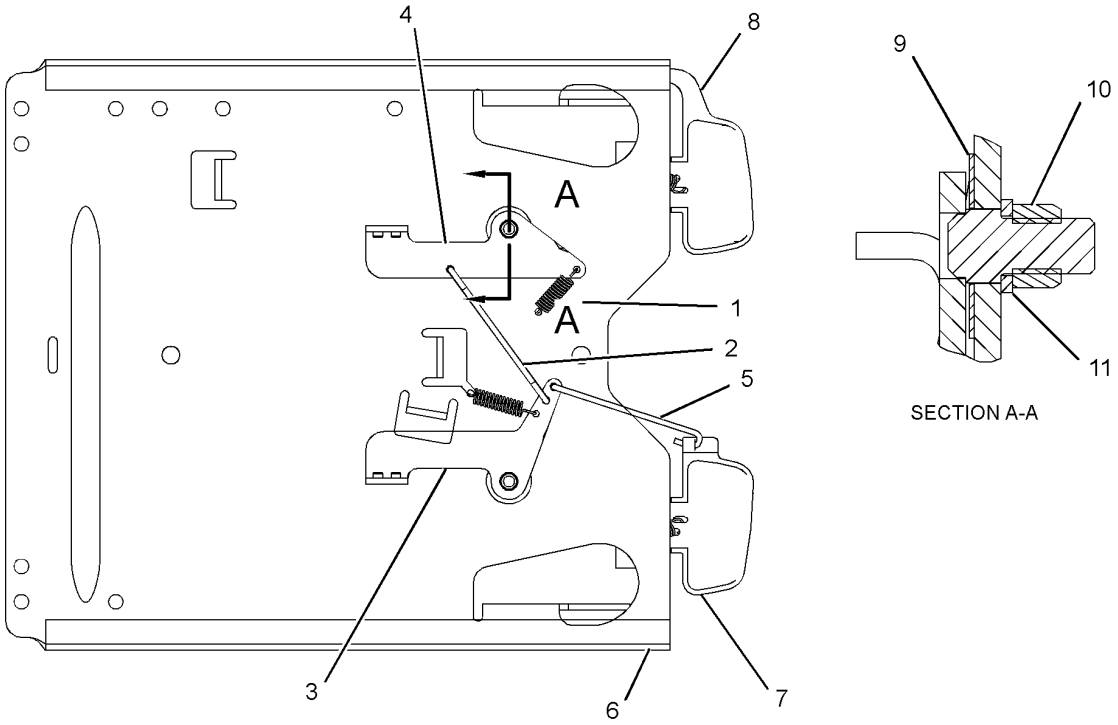

BOTTOM VIEW

GRAPHIC #1 **<END>** g01191495

OPERATOR STATION

237-3970 AIR COMPRESSOR GP-SEAT

S/N: 2211-UP

FOR OPTIONAL FIELD REPLACEMENT ORDER 214-0783 COMPRESSOR, 211-5358 CONDUIT(100-CM) & 5P-6010 TUBE (1-M), PROVIDES HEAVY DUTY SEAT COMPRESSOR PART OF 277-8032 SUSPENSION GP-SEAT ALSO AN ATTACHMENT

SMCS-731S, 7324 **i02012095**

NOTE	REF NO	GRAPHIC REF	PART NUMBER	QTY	PART NAME 1 2 3 4 5 6 (PRODUCT LEVEL)	SEE PAGE
					(NO SERVICED PARTS)	

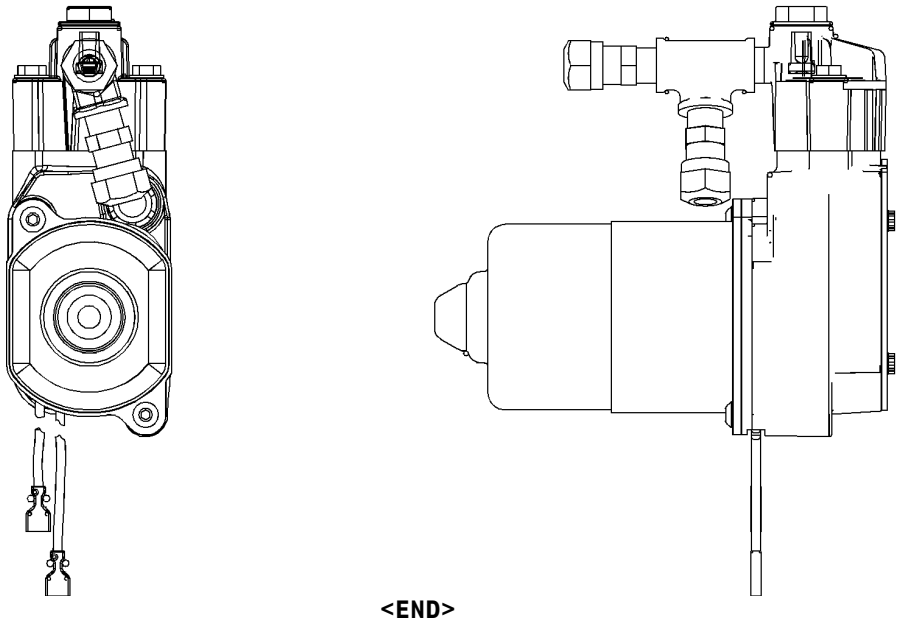

GRAPHIC #1

<END>

g01040576

OPERATOR STATION

242-8026 AIR CONDITIONER AR

S/N: 2211-UP

PART OF 280-7084 CAB AR

SMCS-7320 **i02889663**

NOTE	PART NUMBER	QTY	PART NAME 1 2 3 4 5 6 (PRODUCT LEVEL)	SEE PAGE
Y	*247-4951*	1	AIR CONDITIONER GP	783
Y	*242-5333*	1	DUCT GP-CAB AIR	815
Y	*315-9896*	1	FILTER GP-CAB AIR	816

Y-SEPARATE ILLUSTRATION

<END>

OPERATOR STATION

247-4951 AIR CONDITIONER GP

S/N: 2211-UP

PART OF 242-8026 AIR CONDITIONER AR

SMCS-7320 **i02933485**

NOTE	REF NO	GRAPHIC REF	PART NUMBER	QTY	PART NAME 1 2 3 4 5 6 (PRODUCT LEVEL)	SEE PAGE
	1	1	**130-3307**	1	COIL AS-HEATER	
	2	1	**3E-6282**	1	COIL AS-EVAPORATOR	
	3	1	**316-1927**	1	MOTOR AS-BLOWER	
		1	**102-8802**	1	KIT-RECEPTACLE (2-PIN)	
					(KIT INCLUDES RECEPTACLE AS & WEDGE)	
		1	**9W-0852**	2	PIN-CONNECTOR (14-GA)	
	4	1	**8P-5141**	2	PLATE-ORIFICE	
	5	2	**3E-6280**	1	COVER	
E	6	2	**136-1953**		HOSE (30-CM)	
E	6A	1	**136-1953**		HOSE (18-CM)	
	7	2	**3E-6147**	1	INSULATION	
	8	1	**3E-7252**	1	INSULATION	
	9	1	**3E-7253**	2	INSULATION	
	10	1	**130-3590**	2	INSULATION	
	11	1	**3E-7255**	2	INSULATION	
	12	1	**3E-7256**	1	INSULATION	
	13	1	**3E-7257**	1	INSULATION	
D	14	1	**5P-5926**		SEAL (1.2-M)	
	15	2	**3E-7258**	1	INSULATION	
D	16	1	**5P-5672**		SEAL (0.3-M)	
	17	1	**5P-3945**	1	CAP	
	18	1	**5P-3950**	1	CAP	
	19	1	**9X-7381**	1	SEAL-O-RING	
	20	1	**9X-7383**	1	SEAL-O-RING	
	21	1	**9X-7384**	1	SEAL-O-RING	
	22	1	**3E-0400**	2	BLOWER AS	
					(EACH INCLUDES)	
		1	**037-4838**	1	CLAMP	
D	23	1	**5P-7070**		INSULATION-STRIP (0.7-M)	
	24	1	**5P-6670**	2	FILM-INSTRUCTION (WATER IN, WATER OUT)	
	25	1	**6P-8855**	2	TUBE	
	26	1	**7K-3176**	1	COUPLING AS-REFRIGERANT (SELF SEALING)	
		1	**107-4393**	1	VALVE AS	
		1	**107-4394**	1	GASKET	
	27	1	**2H-3924**	2	LOCKWASHER	
	28	1	**5P-3928**	1	COUPLING AS-REFRIGERANT (SELF SEALING)	
		1	**107-4395**	1	VALVE AS	
		1	**107-4396**	1	GASKET	
	29	1	**6V-1668**	2	WASHER (6.5X29.1X3-MM THK)	
	30	1	**3E-6145**	1	TUBE AS	
	31	1	**3E-6144**	1	TUBE AS	
	32	1	**9X-7382**	1	SEAL-O-RING	
	33	1,2	**3S-2093**	3	STRAP-CABLE	
	34	1	**9X-2488**	4	CLAMP-HOSE	
M	35	2	**8T-4137**	16	BOLT (M10X1.5X20-MM)	
	36	2	**8T-4121**	16	WASHER-HARD (11X21X2.5-MM THK)	
M	37	1	**7X-0490**	1	BOLT (M6X200-MM)	
M	38	1	**8T-4189**	3	BOLT (M8X1.25X20-MM)	
	39	1	**5P-4116**	3	WASHER-HARD (8.8X20.5X2-MM THK)	
	40	1	**6L-7159**	2	SCREW-MACHINE (8-32X0.313-IN)	
	41	1	**3B-4501**	2	LOCKWASHER	
M	42	1	**6V-7728**	1	BOLT (M6X1X45-MM)	
M	43	1	**6V-8837**	4	BOLT (M6X1X16-MM)	
	44	1,2	**8T-4205**	14	WASHER-HARD (7.2X14.5X2-MM THK)	
	45	1	**2H-3925**	2	LOCKWASHER	
M	46	1	**5C-2890**	6	NUT (M6X1-THD)	

OPERATOR STATION

247-4951 **AIR CONDITIONER GP** *(contd.)* **i02933485**

NOTE	REF NO	GRAPHIC REF	PART NUMBER	QTY	PART NAME 1 2 3 4 5 6 (PRODUCT LEVEL)	SEE PAGE
	47	1	**2D-6235**	1	LOCKNUT (1/4-20-THD)	
	48	1	**5B-6565**	2	NUT	
	49	1	**6V-9170**	2	NUT-BULKHEAD (1-14-THD)	
	50	1	**8C-4586**	2	CLAMP	
	51	1	**3E-5464**	1	SWITCH AS-TEMPERATURE (AIR CONDITIONER)	
	52	1	**9G-1950**	1	RESISTOR	
	53	1	*247-0345*	1	HARNESS AS-HEATER & AIR COND	
		1	**3S-2093**	10	STRAP-CABLE	
		1	**155-2270**	2	KIT-CONNECTING PLUG (2-PIN)	
		1	**155-2271**	1	KIT-CONNECTING PLUG (4-PIN)	
		1	**155-2274**	1	KIT-CONNECTING PLUG (6-PIN)	
					(EACH KIT INCLUDES PLUG AS, WEDGE & INTERFACE SEAL)	
	54	1	**130-3304**	1	CASE AS	
		1	**3E-0417**	1	PAN-CONDENSATE	
		1	**6K-3274**	4	PLATE-RIVET	
M		1	**6V-9632**	2	NUT-WELD (M6X1-THD)	
		1	**7T-1099**	4	LINK	
M		1	**7X-2478**	5	NUT-WELD (M8X1.25-THD)	
		1	**033-7291**	4	RIVET	
	55	1	**3E-6277**	1	HOUSING AS	
	56	2	**239-5535**	1	VALVE AS-FLOW CONTROL (WATER)	
		2	**4B-4863**	4	WASHER (4.7X11X1.2-MM THK)	
		2	**4M-6582**	1	SEAL-O-RING	
		2	**124-0312**	4	SCREW-PAN HEAD (8-16X0.32-IN)	
M	57	2	**8T-4171**	2	BOLT (M6X1X12-MM)	
	58	1	**239-9368**	1	RESISTOR AS	
	59	2	**4M-6582**	1	SEAL-O-RING	
	60	2	**242-2455**	1	BRACKET	
	61	1	**3T-6774**	1	GROMMET	
D	62	1	**5P-5908**		SEAL (0.2-M)	
	64	1	**9X-2185**	4	SCREW (8-15X11.11-MM)	

D-ORDER BY THE METER
E-ORDER BY THE CENTIMETER
M-METRIC PART

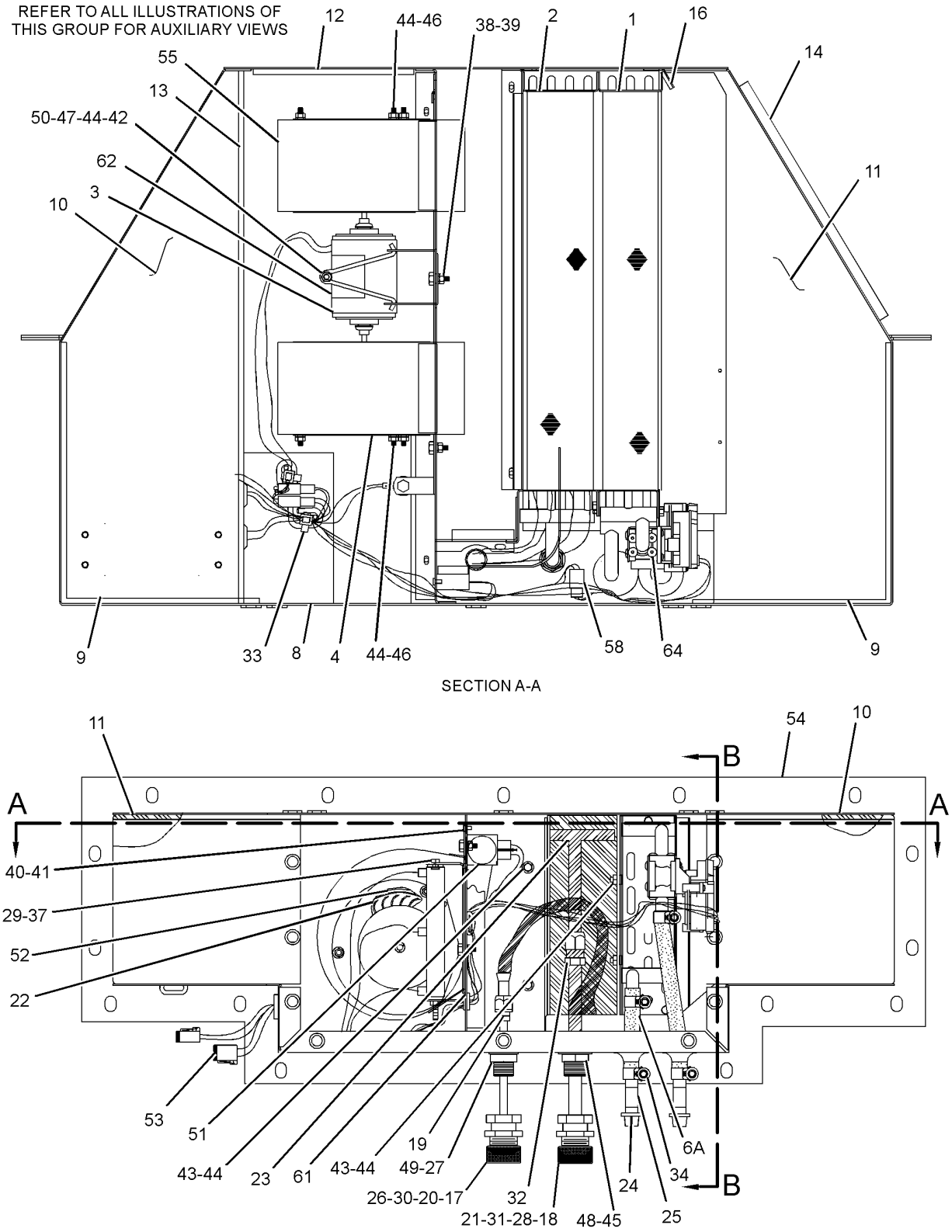

GRAPHIC #1 g01311643

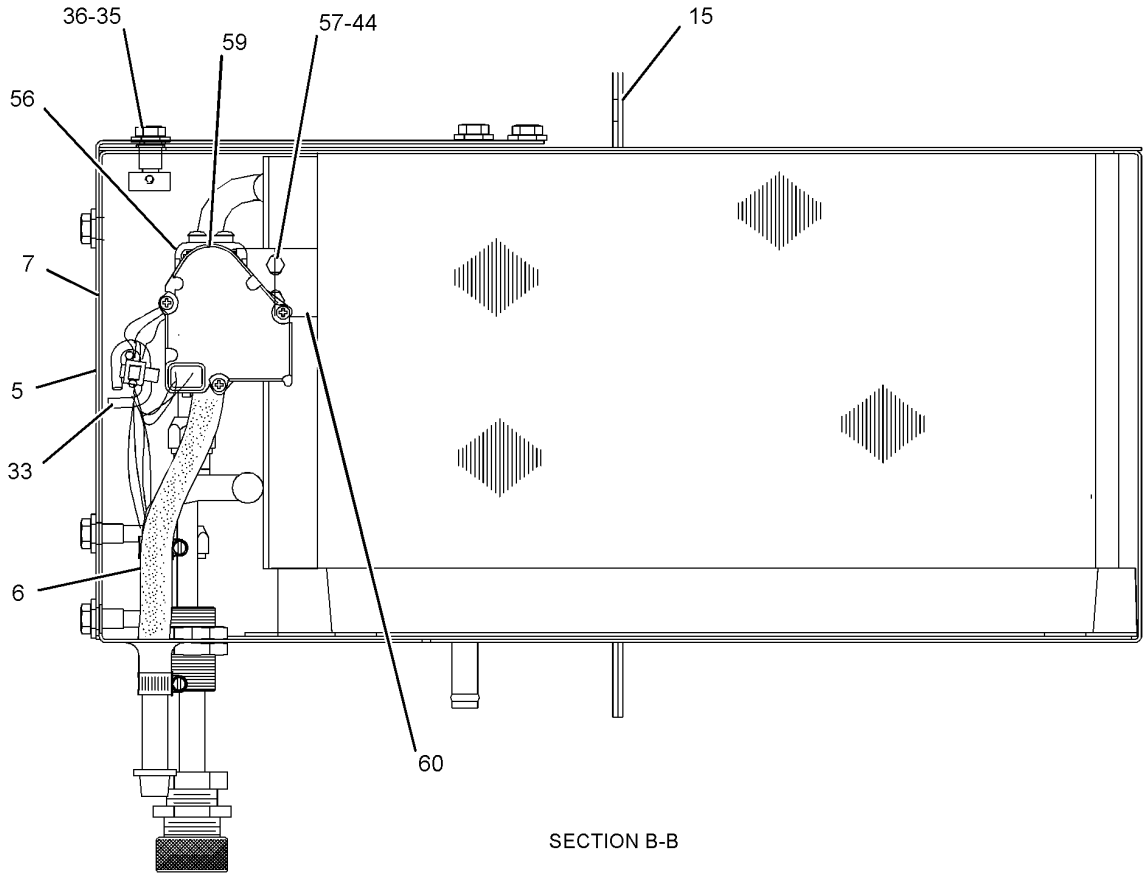

SECTION B-B

GRAPHIC #2 **<END>** g01311687

OPERATOR STATION

214-7635 ARM GP-WINDOW WIPER–FRONT

S/N: 2211-UP

PART OF 242-1901 WIPER & WASHER GP-WINDOW

SMCS-7305 **i02023666**

NOTE	REF NO	GRAPHIC REF	PART NUMBER	QTY	PART NAME 1 2 3 4 5 6 (PRODUCT LEVEL)	SEE PAGE
M	1	1	**191-8921**	4	BOLT-SOCKET HEAD (M6X1X25-MM)	
	2	1	**227-7392**	4	WASHER (6.3X10.3X0.4-MM THK)	
M	3	1	**6V-8225**	4	NUT (M6X1-THD)	
	4	1	**136-3190**	1	NOZZLE AS-WASHER	
	5	1	**136-3188**	3	CLIP	

M-METRIC PART

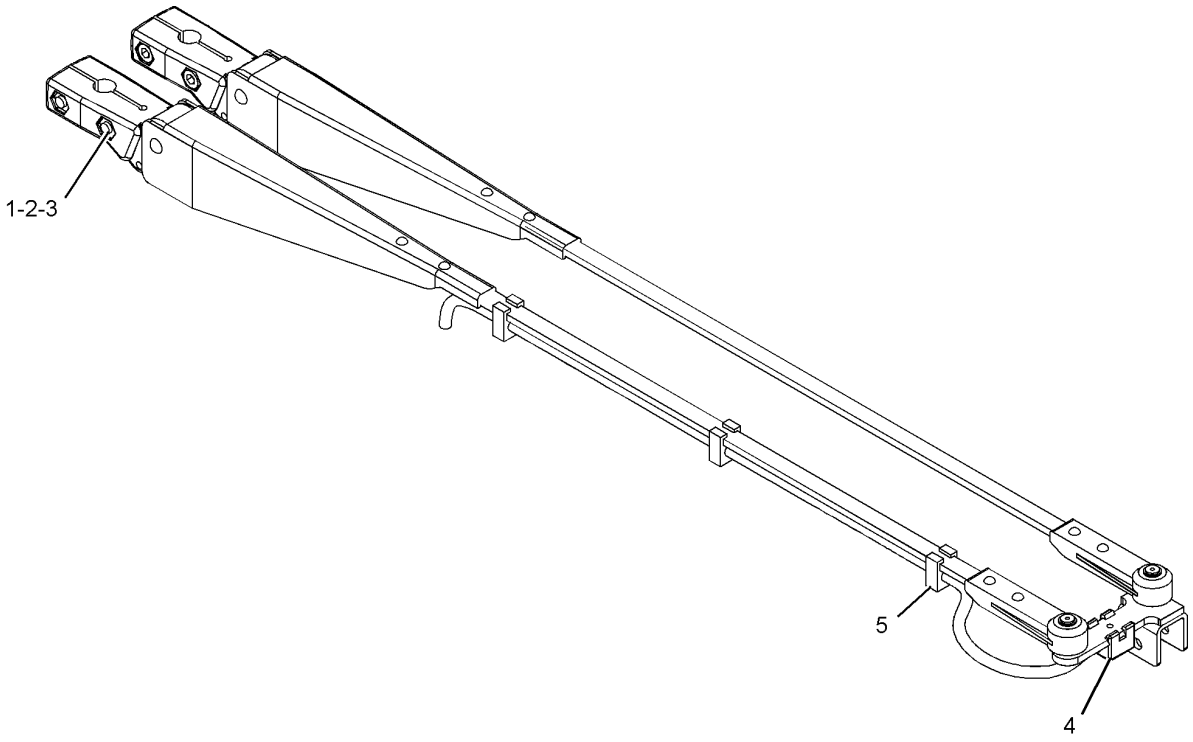

GRAPHIC #1 **<END>** g01021918

OPERATOR STATION

242-1903 BOX GP-STORAGE

S/N: 2211-UP

PART OF 280-7084 CAB AR

SMCS-7268 **i02148166**

NOTE	REF NO	GRAPHIC REF	PART NUMBER	QTY	PART NAME 1 2 3 4 5 6 (PRODUCT LEVEL)	SEE PAGE
	1	1	**3V-7689**	1	HANDLE AS	
	2	1	**164-0427**	1	MAT	
	3	1	**164-0431**	1	SHEET	
	4	1	**242-3493**	1	COVER AS-ACCESS	
	5	1	**242-3494**	1	BOX AS	
Y	6	1	*251-0124*	1	BOX GP-STORAGE	789
	7	1	**8T-4121**	5	WASHER-HARD (11X21X2.5-MM THK)	
M	8	1	**8T-4137**	2	BOLT (M10X1.5X20-MM)	
M	9	1	**8T-4185**	3	BOLT (M10X1.5X50-MM)	
M	10	1	**8T-4189**	8	BOLT (M8X1.25X20-MM)	
	11	1	**8T-4224**	8	WASHER-HARD (8.8X16X2-MM THK)	
	12	1	**8V-7010**	2	BUMPER	

M-METRIC PART
Y-SEPARATE ILLUSTRATION

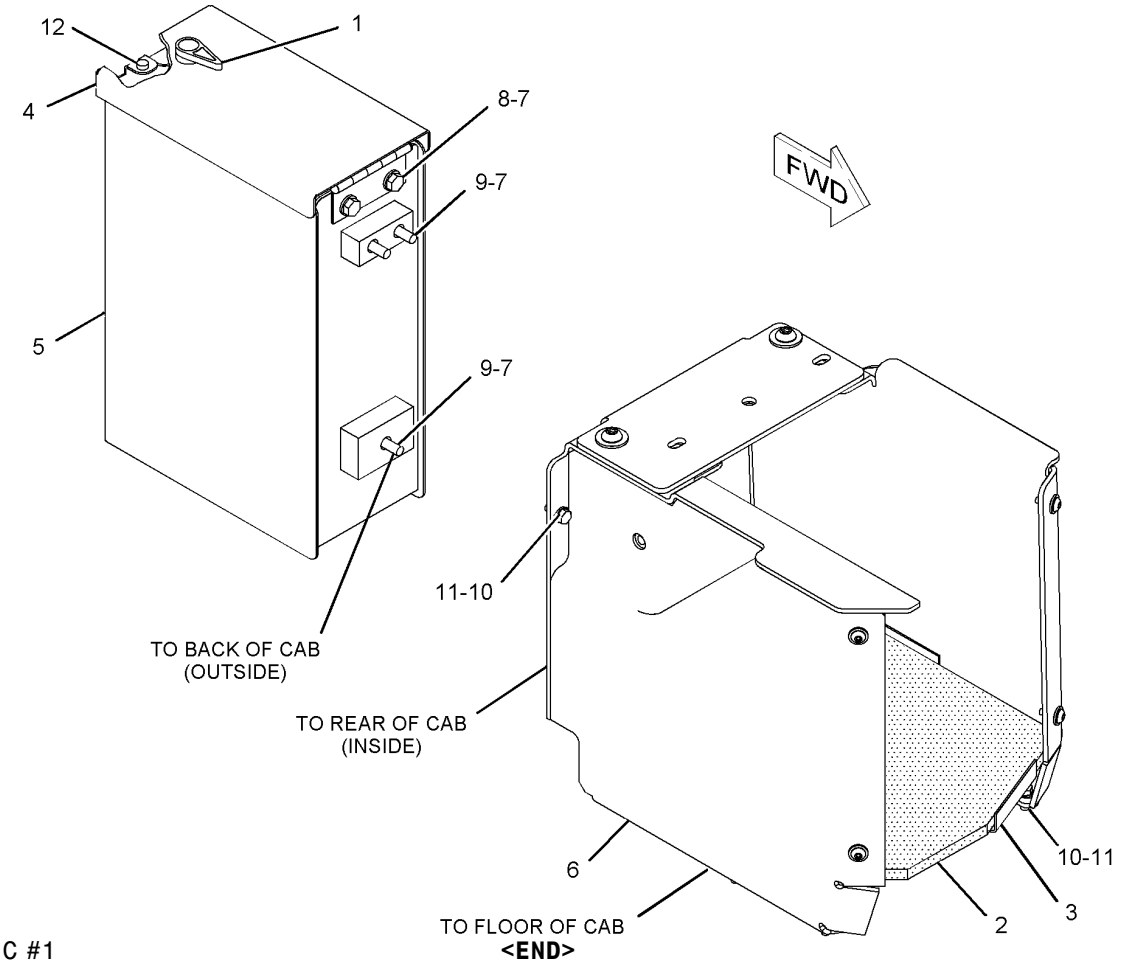

GRAPHIC #1

<END>

g01091204

OPERATOR STATION

251-0124 BOX GP-STORAGE

S/N: 2211-UP

PART OF 242-1903 BOX GP-STORAGE

SMCS-7268 **i02661668**

NOTE	REF NO	GRAPHIC REF	PART NUMBER	QTY	PART NAME 1 2 3 4 5 6 (PRODUCT LEVEL)	SEE PAGE
	1	1	**251-6484**	1	BOX AS (FRONT)	
	2	1	**251-6499**	1	PLATE AS	
M		1	**8T-3490**	1	NUT-WELD (M10X1.5-THD)	
	3	1	**251-0123**	1	BOX AS	
	4	1	**8T-4222**	2	WASHER-PLATED (11X32X2.5-MM THK)	
	5	1	**9X-2038**	4	WASHER (7X19X2-MM THK)	
M	6	1	**9X-2040**	2	SCREW-TRUSS HEAD (M10X1.5X25-MM)	
M	7	1	**9X-2045**	4	SCREW-TRUSS HEAD (M6X1X20-MM)	

M-METRIC PART

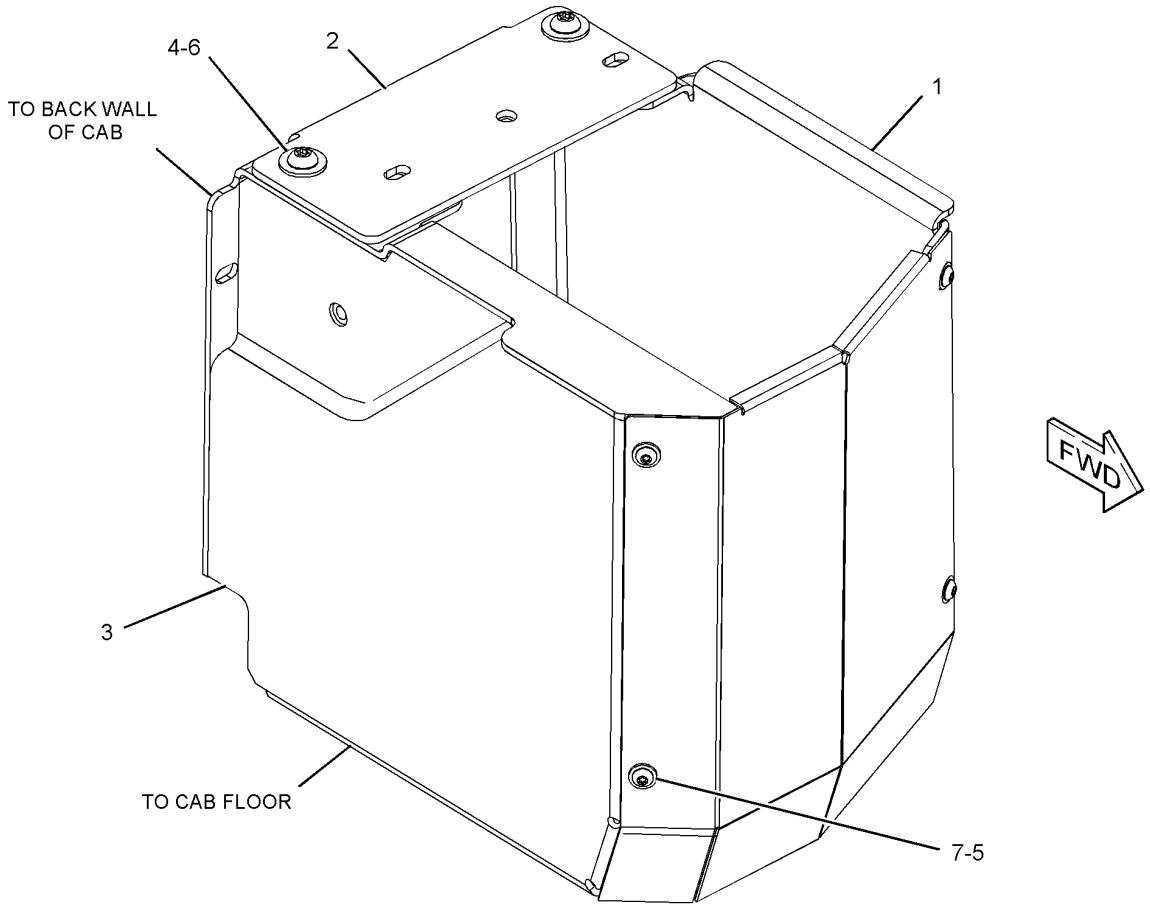

GRAPHIC #1 **<END>** g01351271

OPERATOR STATION

267-5292 CAB & PLATFORM GP

S/N: 2211-UP

PART OF 280-7084 CAB AR

SMCS-7253, 7301 **i02878190**

NOTE	REF NO	GRAPHIC REF	PART NUMBER	QTY	PART NAME 1 2 3 4 5 6 (PRODUCT LEVEL)	SEE PAGE
	1	1	**4E-6509**	1	SEAL	
	2	1	**4E-6510**	1	SEAL	
Y	3	1	**123-8701**	1	DOOR GP-CAB (LH)	813
Y	4	1	*242-0340*	1	PLATFORM GP-OPERATOR	853
	5	1	**250-2980**	1	FRAME GP-DOOR	
	6	1	**256-2454**	2	SEAL	
Y	7	1	*267-3445*	1	CAB GP	793
	8	1	**8T-4121**	32	WASHER-HARD (11X21X2.5-MM THK)	
M	9	1	**8T-4191**	14	BOLT (M10X1.5X16-MM)	
M	10	1	**8T-4196**	18	BOLT (M10X1.5X35-MM)	
E	11	1	**103-2554**		SEAL (500-CM)	

E-ORDER BY THE CENTIMETER
M-METRIC PART
Y-SEPARATE ILLUSTRATION

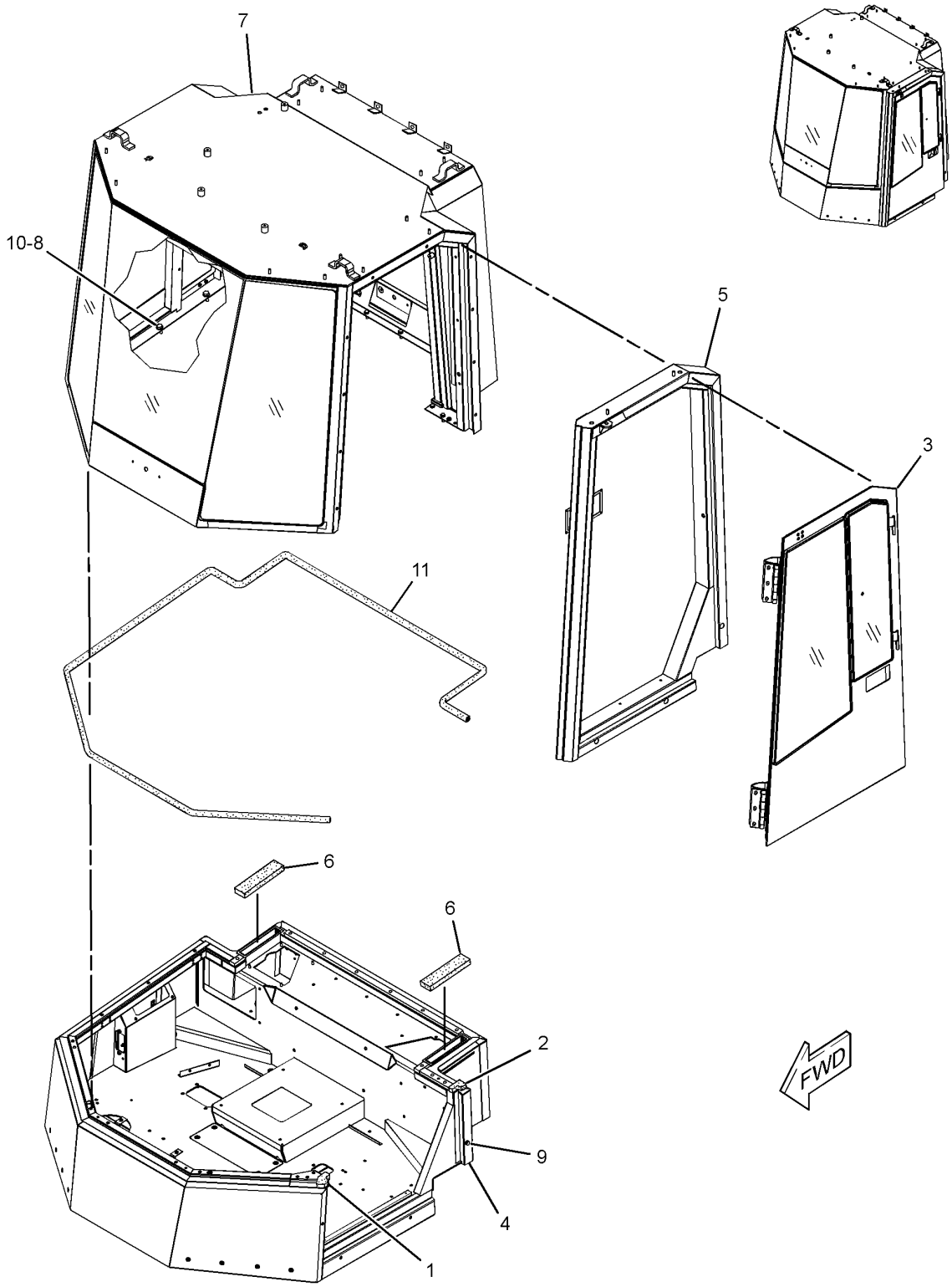

GRAPHIC #1 **<END>** g01442407

OPERATOR STATION

280-7084 CAB AR

S/N: 2211-UP

PART OF 280-7083 OPERATOR AR

SMCS-7301 **i02895549**

NOTE	PART NUMBER	QTY	PART NAME 1 2 3 4 5 6 (PRODUCT LEVEL)	SEE PAGE
Y	*242-8026*	1	AIR CONDITIONER AR	782
Y	*242-1903*	1	BOX GP-STORAGE	788
Y	*267-5292*	1	CAB & PLATFORM GP	790
Y	*305-5531*	1	CONTROL GP-FOOT BRAKE	568
Y	*4E-6401*	1	CONTROL GP-PARKING BRAKE	569
Y	*289-9496*	1	CONTROL GP-PILOT OPERATED HYD (JOYSTICK, 3-FUNCTION)	799
Y	*236-5240*	1	CONTROL GP-STEERING	802
Y	*4E-8413*	1	CONTROL GP-STIC	804
Y	*236-5241*	1	CONTROL GP-STIC LOCKOUT	807
Y	*282-2828*	1	INSTALLATION GP-RADIO	818
Y	*250-9306*	1	LATCH GP-CAB DOOR & WINDOW	820
Y	*275-3638*	1	LINER GP-CAB	823
Y	*9U-2675*	1	MOUNTING GP-ANTENNA (RADIO)	838
Y	*236-5224*	1	PANEL GP-INSTRUMENT (SIDE)	849
Y	*286-7231*	1	PANEL GP-INSTRUMENT (FRONT)	850
Y	*239-4058*	1	PEDAL GP-GOVERNOR	852
Y	*117-1410*	1	SEALING GP-GLASS	869
Y	*250-9976*	1	SEAT GP	874
Y	**219-8090**	1	SEAT GP-SUSPENSION	881
Y	*250-9873*	1	SPRING GP-CAB DOOR	884
Y	*238-9083*	1	SUPPORT GP-HYDRAULIC CONTROL	886
Y	*178-3904*	1	SUPPORT GP-SEAT	889
Y	*171-3897*	1	SUPPORT GP-STEERING CONTROL	890
Y	*242-1901*	1	WIPER & WASHER GP-WINDOW	896
Y	*236-5417*	1	WIPER GP-WINDOW (FRONT QUARTER)	899
Y	*280-9826*	1	WIRING GP-CAB	299

Y-SEPARATE ILLUSTRATION

<END>

OPERATOR STATION

267-3445 CAB GP

S/N: 2211-UP

PART OF 267-5292 CAB & PLATFORM GP

SMCS-7301 **i02880055**

NOTE	REF NO	GRAPHIC REF	PART NUMBER	QTY	PART NAME 1 2 3 4 5 6 (PRODUCT LEVEL)	SEE PAGE
	1	1	**8R-0739**	4	WASHER (10X18X1-MM THK)	
	2	1	**108-1615**	2	HINGE-RH	
	3	1	**115-8388**	1	GLASS (FRONT)	
	4	1	**115-8389**	1	GLASS-CAB (FRONT QUARTER, RH)	
	5	1	**115-8390**	1	GLASS-CAB (FRONT QUARTER, LH)	
	6	1	**115-8391**	1	GLASS (REAR)	
	7	1	**123-3154**	1	GLASS (RIGHT REAR SIDE)	
	8	1	*250-0777*	1	DOOR GP-CAB (RH)	
E		1	**3E-3000**		SEAL (308-CM)	
		1	**250-0775**	1	FRAME AS	
		1	**250-0776**	1	GLASS (CAB DOOR)	
	9	1	**267-3532**	1	CAB AS	
	10	1	**4E-0339**	2	PIN	
M	11	1	**6V-8210**	4	BOLT (M8X1.25X16-MM)	
	12	1	**8T-4224**	4	WASHER-HARD (8.8X16X2-MM THK)	
	13	1	**9X-3994**	6	PLUG	

E-ORDER BY THE CENTIMETER
M-METRIC PART

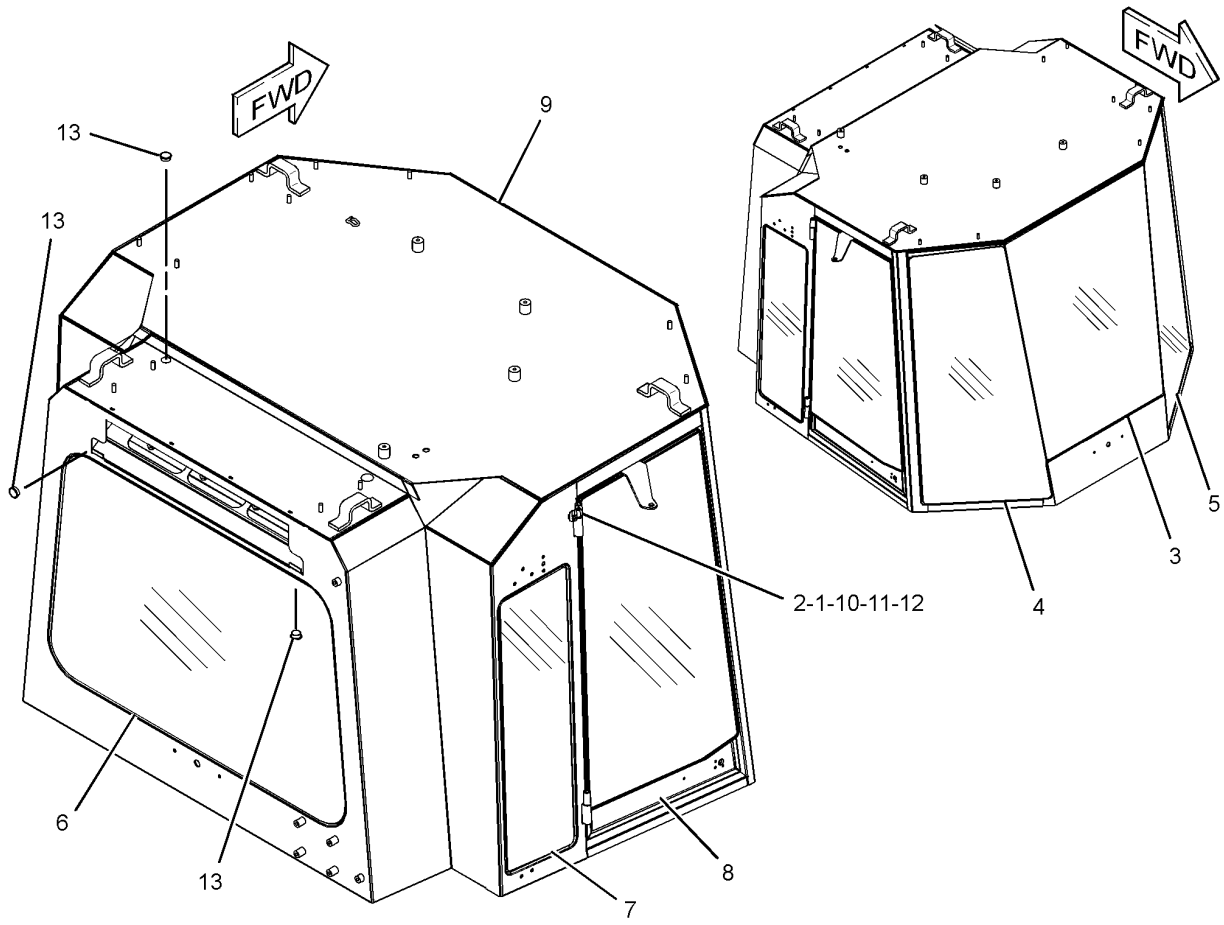

GRAPHIC #1 **<END>** g01442436

OPERATOR STATION

275-3639 CAB GP–ANTENNA, AIR FILTER, DUCTS, GRAB HANDLES

S/N: 2211-UP

PART OF 262-2081 CHASSIS AR

SMCS-7301 **i02869626**

NOTE	REF NO	GRAPHIC REF	PART NUMBER	QTY	PART NAME 1 2 3 4 5 6 (PRODUCT LEVEL)	SEE PAGE
Y	1	1	**3E-6389**	1	LAMP GP-DOME (24-VOLT)	220
	2	1	**3S-2093**	3	STRAP-CABLE	
	3	1	**4E-1411**	1	BUSHING-TERMINAL	
	4	1	**4E-7204**	1	COVER AS	
		1	**2R-2376**	2	WASHER (7X16X0.8-MM THK)	
		1	**7K-3262**	2	SCREW (THUMB)	
	5	1	**4E-7205**	1	SEAL	
	6	1	**4E-9640**	1	HANDLE	
	7	1	**6V-8928**	1	HOOK-COAT	
	8	1	**7T-4306**	2	LOUVER AS	
M	9	1	**8T-5027**	8	NUT (M6X1-THD)	
	10	1	**8Y-6352**	3	LOUVER AS	
	11	1	**8Y-6388**	10	LOUVER AS-VENT	
	12	1	**9U-1301**	1	HANDHOLD (LH)	
	13	1	**9U-2330**	2	MOUNT-ANTENNA	
	14	1	**9U-2331**	1	ANTENNA AS (COMMUNICATION RADIO)	
	15	1	**9U-2332**	1	ANTENNA AS (CB)	
	16	1	**9U-2670**	1	HANDHOLD (RH)	
	17	1	**9X-8216**	1	FILTER ELEMENT-CAB AIR (STANDARD EFFICIENCY)	
	18	1	**123-8721**	1	DUCT	
	19	1	**123-8722**	1	DUCT AS	
	20	1	**123-8724**	1	INSULATION-LH	
	21	1	**123-8725**	1	INSULATION-RH	
	22	1	**138-8630**	1	DUCT AS	
		1	**3V-4694**	2	PLUG-BUTTON	
		1	**136-7403**	1	INSULATION	
		1	**136-7406**	2	INSULATION	
	23	1	**205-3076**	1	COVER AS	
		1	**110-7524**	1	BUTTON	
	24	1	**213-4262**	1	SEAL AS	
	25	1	**251-4645**	1	PANEL-REAR	
	26	1	**251-4646**	1	HEADLINER	
	27	1	**251-6492**	1	STRIP	
	28	1	**104-2091**	20	SCREW-FLAT HEAD (NO 6X0.5-IN)	
	29	1	**5L-6766**	1	PLUG	
	30	1	**8T-4121**	28	WASHER-HARD (11X21X2.5-MM THK)	
M	31	1	**8T-4133**	4	NUT (M10X1.5-THD)	
M	32	1	**8T-4183**	2	BOLT (M12X1.75X40-MM)	
M	33	1	**8T-4189**	6	BOLT (M8X1.25X20-MM)	
M	34	1	**8T-4191**	4	BOLT (M10X1.5X16-MM)	
M	35	1	**8T-4196**	20	BOLT (M10X1.5X35-MM)	
	36	1	**8T-4223**	2	WASHER-HARD (13.5X25.5X3-MM THK)	
	37	1	**8T-4896**	6	WASHER-HARD (10.2X18.5X2.5-MM THK)	
M	38	1	**9X-1046**	3	SCREW (M4X0.7X18-MM)	
M	39	1	**9X-2042**	3	SCREW-TRUSS HEAD (M6X1X12-MM)	
M	40	1	**9X-2045**	3	SCREW-TRUSS HEAD (M6X1X20-MM)	
L	41	1	**090-4808**		SEAL (29.5-DM EACH)	
E	42	1	**103-2543**		SEAL (193-CM)	
	43	1	**251-4245**	1	FLOOR MAT	
M	44	1	**111-4627**	6	SCREW-MACHINE (M6X1X30-MM)	

E-ORDER BY THE CENTIMETER
L-ORDER BY THE DECIMETER
M-METRIC PART
Y-SEPARATE ILLUSTRATION

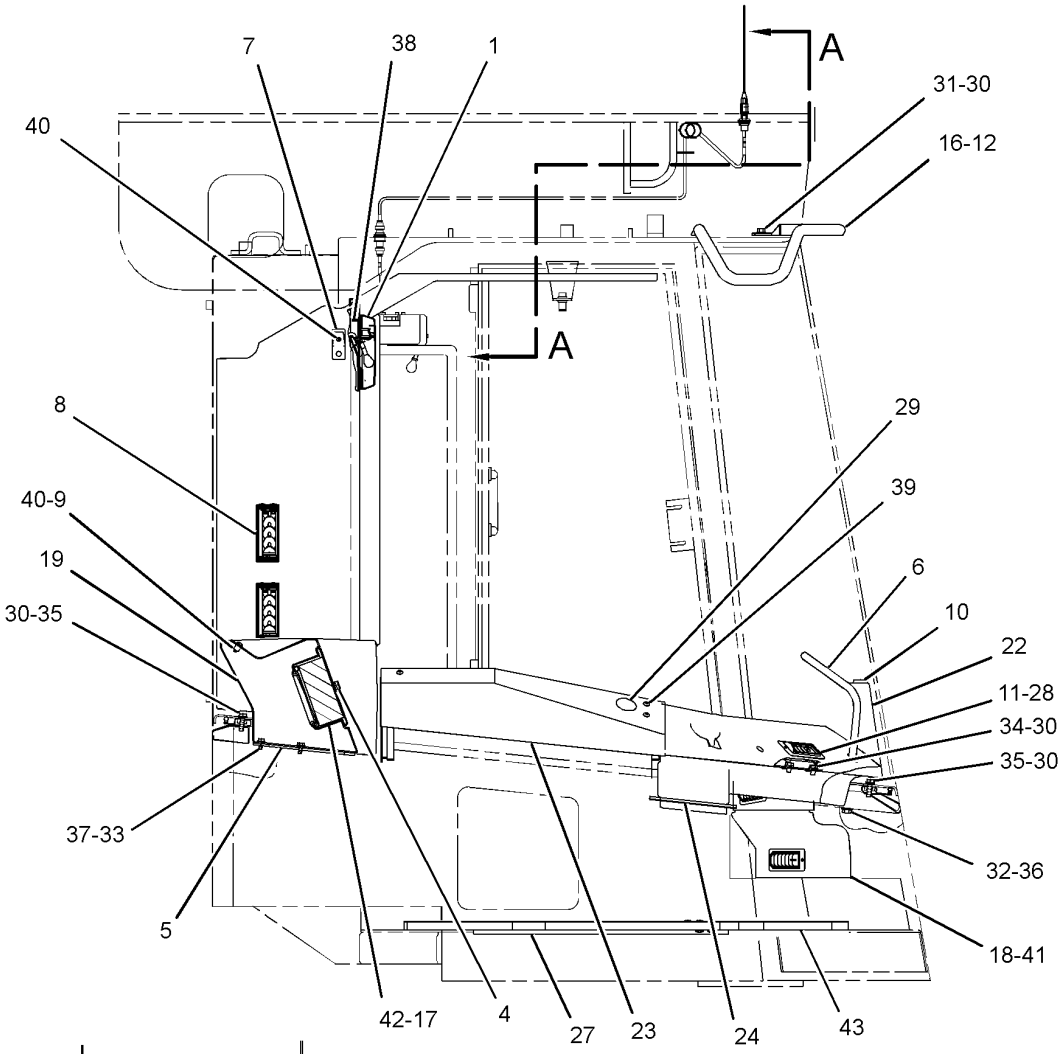

RIGHT SIDE VIEW

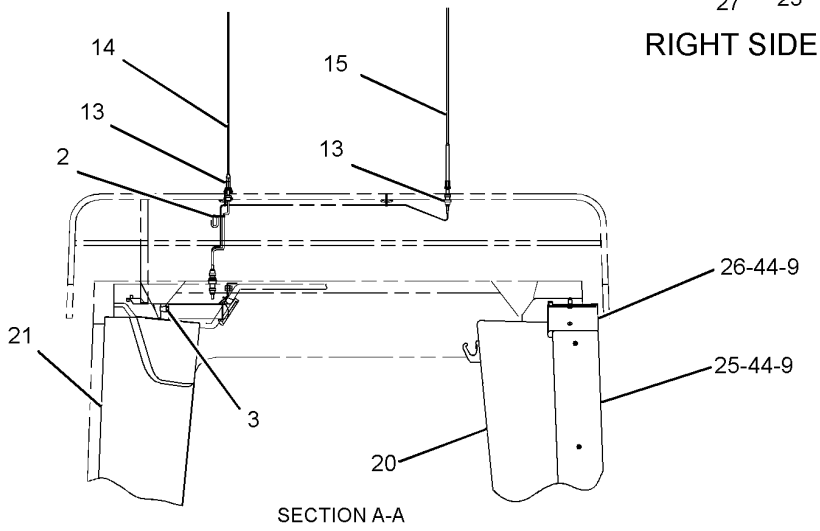

SECTION A-A

GRAPHIC #1 **<END>** g01439040

OPERATOR STATION

277-7245 COMPRESSOR GP-REFRIGERANT

S/N: 2211-UP; LJW2195-UP
PART OF 291-2838 ACCESSORY GP-ENGINE
ALSO AN ATTACHMENT

SMCS-1802 **i02840011**

NOTE	REF NO	GRAPHIC REF	PART NUMBER	QTY	PART NAME 1 2 3 4 5 6 (PRODUCT LEVEL)	SEE PAGE
	1	1	**126-1767**	2	PIN-CONNECTOR (14-GA)	
	2	1	**102-8802**	1	KIT-RECEPTACLE (2-PIN)	
					(INCLUDES RECEPTACLE AS & WEDGE)	
	3	1	**314-4018**	1	VALVE AS	
	4	1	**7T-4532**	1	PLUG AS	
	5	1	**9X-7385**	2	SEAL-O-RING	

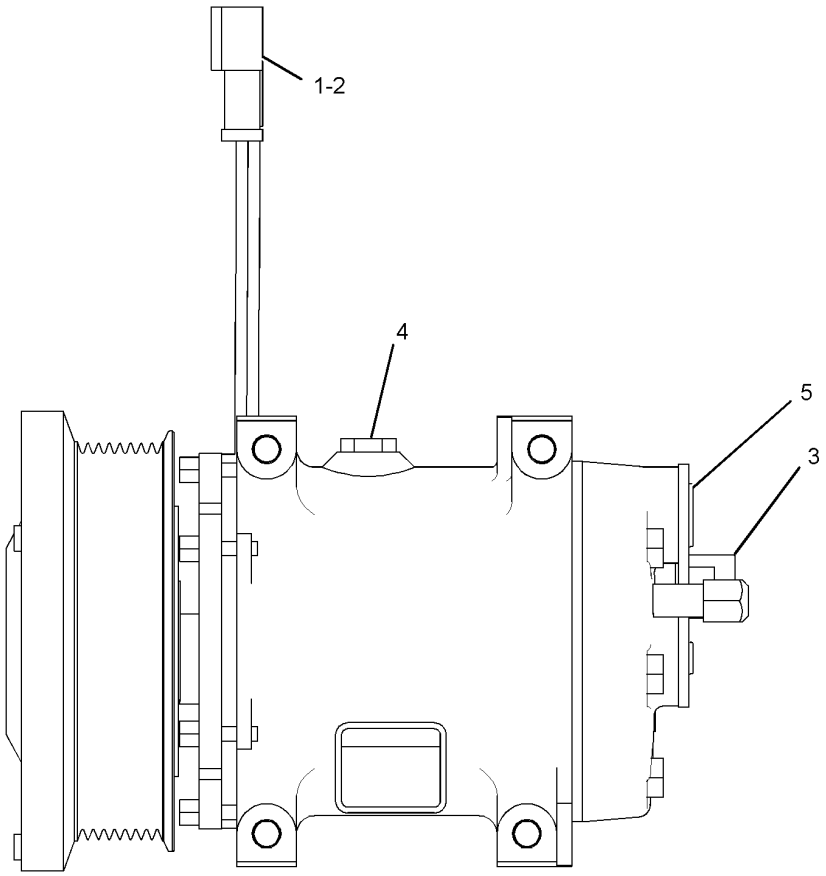

GRAPHIC #1 **<END>** g01445973

OPERATOR STATION

279-0384 CONDENSER & MTG GP-REFRIGERANT

S/N: 2211-UP

PART OF 262-2081 CHASSIS AR

SMCS-1805 **i02878401**

NOTE	REF NO	GRAPHIC REF	PART NUMBER	QTY	PART NAME 1 2 3 4 5 6 (PRODUCT LEVEL)	SEE PAGE
	1	1	**243-2289**	4	MOUNT AS	
	2	1	**244-8840**	1	CORE AS-CONDENSER (REFRIGERANT)	
	3	1	**279-0439**	1	PLATE	
	4	1	**279-0440**	1	PLATE	
	5	1	**7X-7729**	4	WASHER (11X25X3-MM THK)	
M	6	1	**8T-4136**	4	BOLT (M10X1.5X25-MM)	
M	7	1	**8T-4196**	4	BOLT (M10X1.5X35-MM)	
	8	1	**8T-4226**	4	WASHER-PLATED (10.5X45X3-MM THK)	

M-METRIC PART

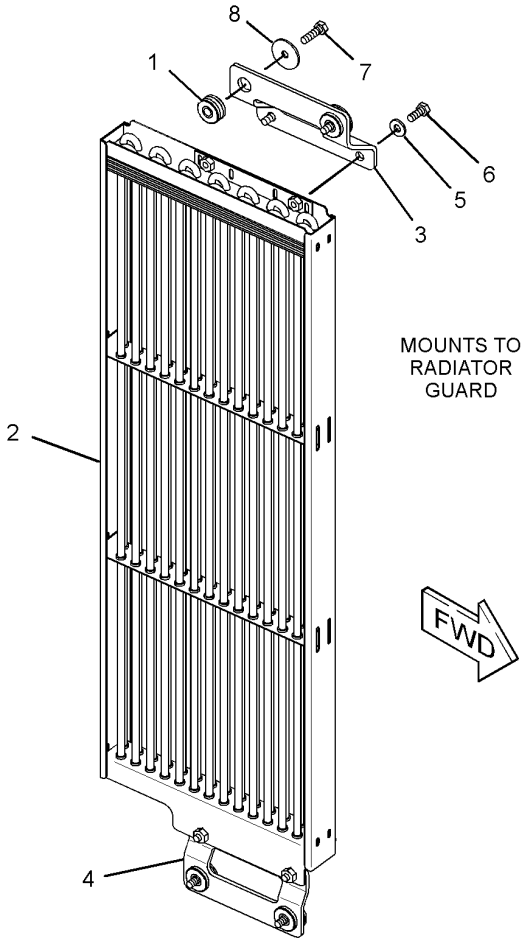

GRAPHIC #1

<END>

g01442324

OPERATOR STATION

148-9562 CONTROL GP-HANDLE–LIFT, TILT, TIP W/DOWNSHIFT

S/N: 2211-UP

PART OF 260-7491 VALVE GP-PILOT

SMCS-5063, 5705 **i02190114**

NOTE	REF NO	GRAPHIC REF	PART NUMBER	QTY	PART NAME 1 2 3 4 5 6 (PRODUCT LEVEL)	SEE PAGE
	1	1	**186-3735**	2	PIN-CONNECTOR (16-GA TO 18-GA)	
Z	2	1		1	SWITCH (DOWNSHIFT)	

Z-NOT SERVICED SEPARATELY

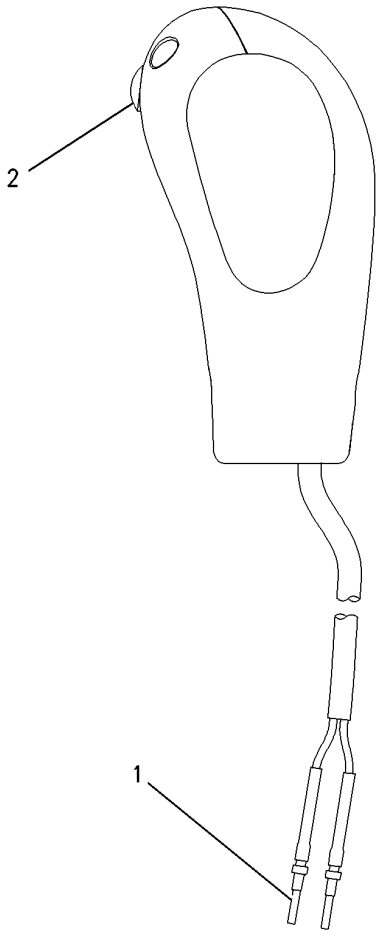

GRAPHIC #1 **<END>** g00950000

OPERATOR STATION

289-9496 CONTROL GP-PILOT OPERATED HYD–
JOYSTICK, 3-FUNCTION
S/N: 2211-UP
PART OF 280-7084 CAB AR

SMCS-5063 **i02919513**

NOTE	REF NO	GRAPHIC REF	PART NUMBER	QTY	PART NAME 1 2 3 4 5 6 (PRODUCT LEVEL)	SEE PAGE
	1	2	**1V-1122**	4	TAG-IDENTIFICATION (LETTERS SPL)	
	2	1,2	**1V-1123**	4	TAG-IDENTIFICATION (LETTERS RET)	
	3	2	**3E-8060**	1	FILM-IDENTIFICATION (LOCK)	
	4	1	**4E-3440**	1	MANIFOLD	
	5	1	**4E-3445**	1	SEAL	
	6	2	**7K-3971**	2	TAG-IDENTIFICATION (LETTER, NUMBER L1)	
	7	2	**7K-3972**	2	TAG-IDENTIFICATION (LETTER, NUMBER L2)	
	8	2	**7K-3974**	2	TAG-IDENTIFICATION (LETTER, NUMBER T1)	
	9	2	**7K-3975**	2	TAG-IDENTIFICATION (LETTER, NUMBER T2)	
Y	10	1	**152-2698**	1	VALVE & MTG GP-SOLENOID (HYDRAULIC LOCKOUT)	740
	11	1,2	**163-8811**	16	CLAMP	
	12	1	**238-9088**	1	COVER	
	13	1	**238-9089**	1	FILM-CONTROL (THROTTLE LOCK, HYDRAULIC, HORN)	
I	14	2	**240-7649**	4	HOSE AS	
I	15	2	**240-7650**	1	HOSE AS	
I	16	2	**240-7651**	1	HOSE AS	
Y	17	1	**260-7491**	1	VALVE GP-PILOT (JOYSTICK, 3-FUNCTION)	748
	18	1	**275-7766**	1	BRACKET AS	
	19	1	**275-7768**	1	PLATE	
I	20	2	**275-7769**	1	HOSE AS	
I	21	1	**275-7771**	1	HOSE AS	
	22	1,2	*148-8336*	9	CONNECTOR AS	
					(EACH INCLUDES)	
		1,2	**3J-1907**	1	SEAL-O-RING	
		1,2	**6V-8397**	1	SEAL-O-RING	
		1,2	**6V-8636**	1	CONNECTOR	
	23	1	*148-8340*	12	CONNECTOR AS	
					(EACH INCLUDES)	
		1	**3K-0360**	1	SEAL-O-RING	
		1	**6V-8398**	1	SEAL-O-RING	
		1	**6V-8639**	1	CONNECTOR	
	24	1	**3K-0360**	4	SEAL-O-RING	
	25	1,2	**6V-8397**	2	SEAL-O-RING	
	26	1	**6V-9836**	1	TEE-SWIVEL	
	27	1	**6V-9850**	1	ELBOW	
	28	1	**8T-4121**	3	WASHER-HARD (11X21X2.5-MM THK)	
M	29	1	**8T-4195**	3	BOLT (M10X1.5X30-MM)	
	30	1	**8T-4224**	2	WASHER-HARD (8.8X16X2-MM THK)	
M	31	1	**8T-6870**	2	BOLT (M8X1.25X70-MM)	
	32	1	**9S-4185**	4	PLUG-O-RING	
	33	1	**9X-2038**	2	WASHER (7X19X2-MM THK)	
M	34	1	**9X-2044**	10	SCREW-TRUSS HEAD (M6X1X16-MM)	
M	35	1	**9X-2045**	2	SCREW-TRUSS HEAD (M6X1X20-MM)	
G	36	2	**160-2243**		SLEEVE-ABRASION (26.4-IN)	
G	36A	2	**160-2243**		SLEEVE-ABRASION (21.65-IN EACH)	
G	36B	2	**160-2243**		SLEEVE-ABRASION (24-IN EACH)	
G	36C	2	**160-2243**		SLEEVE-ABRASION (25-IN)	

G-ORDER BY THE INCH
I-REFER TO HYDRAULIC INFORMATION SYSTEM
M-METRIC PART
Y-SEPARATE ILLUSTRATION

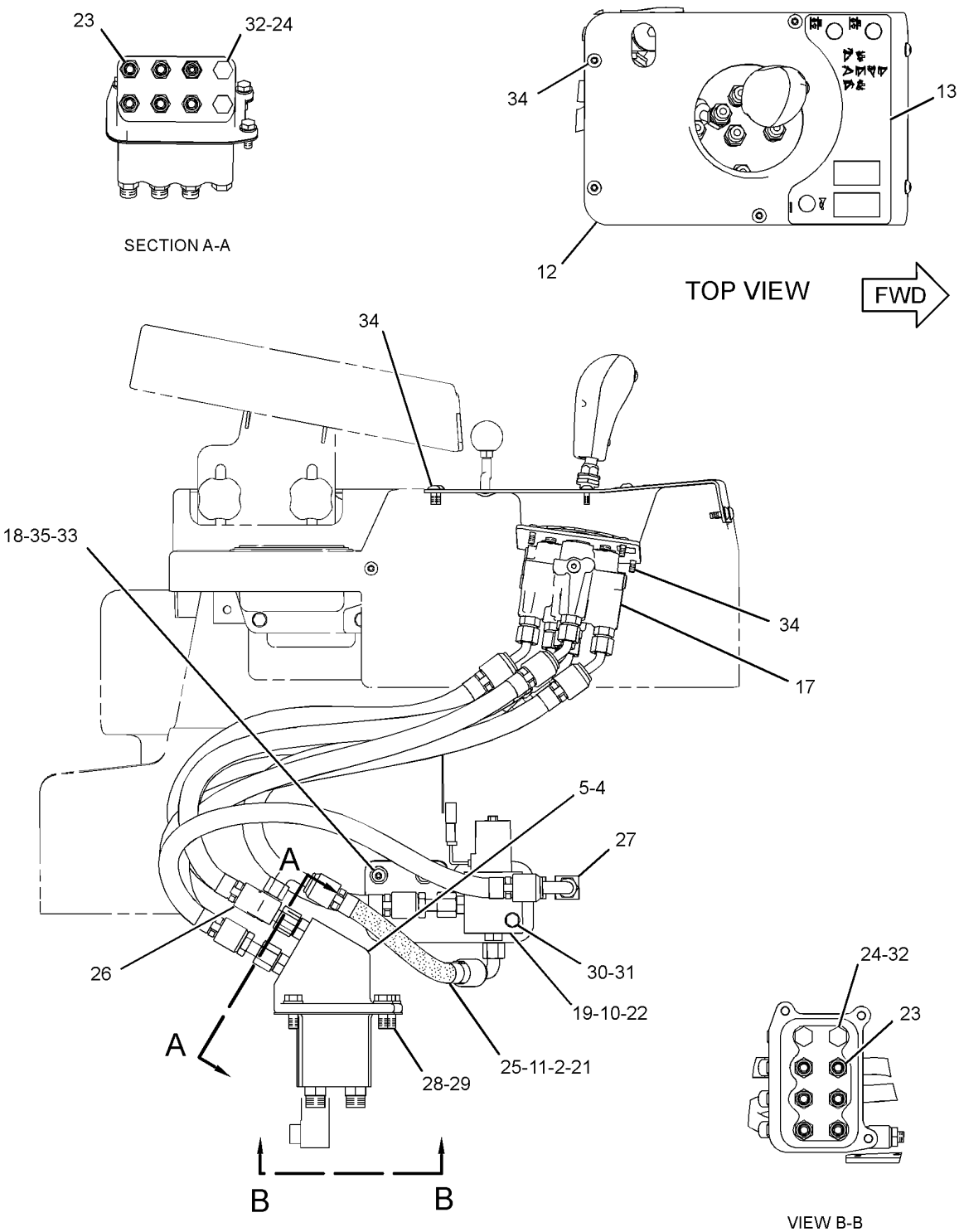

GRAPHIC #1 g01446810

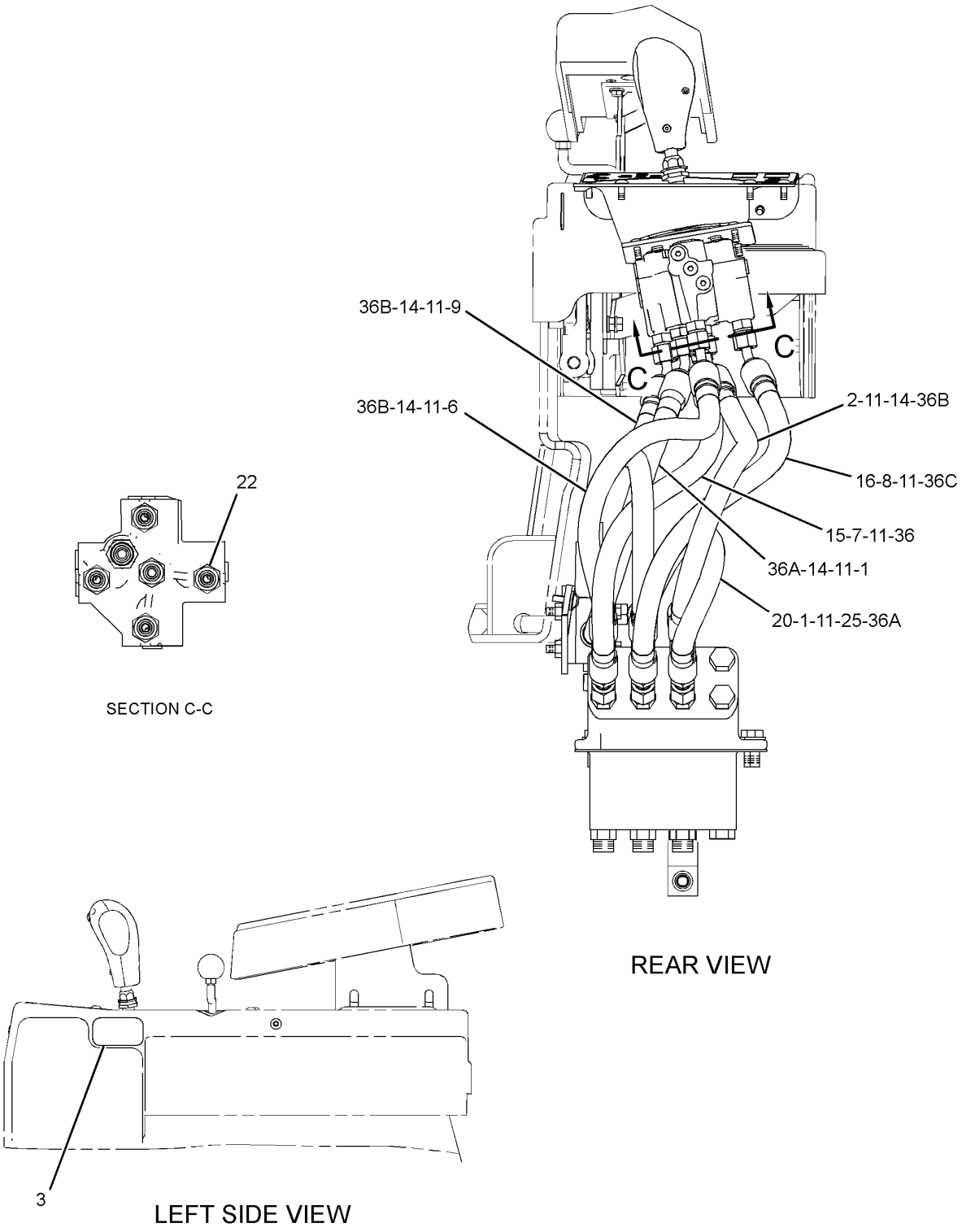

GRAPHIC #2 **<END>** g01447209

OPERATOR STATION

236-5240 CONTROL GP-STEERING

S/N: 2211-UP

PART OF 280-7084 CAB AR

SMCS-4304, 4309, 4310, 4338 **i02498167**

NOTE	REF NO	GRAPHIC REF	PART NUMBER	QTY	PART NAME 1 2 3 4 5 6 (PRODUCT LEVEL)	SEE PAGE
G	1	1	**160-2243**		SLEEVE-ABRASION (37.1-IN EACH)	
G	1A	1	**160-2243**		SLEEVE-ABRASION (35.8-IN EACH)	
	2	1	**4E-3439**	1	MANIFOLD	
	3	1	**4E-3441**	1	PAD	
I	4	1	**4E-6867**	2	HOSE AS	
I	5	1	**098-6814**	2	HOSE AS	
	6	1	**163-8811**	8	CLAMP	
Y	7	1	**249-5615**	1	VALVE GP-PILOT (STIC STEERING)	643
	8	1	**136-3607**	2	ELBOW	
	9	1	**3K-0360**	8	SEAL-O-RING	
	10	1	**6D-4247**	2	CLIP	
	11	1	**6V-8398**	8	SEAL-O-RING	
	12	1	**6V-8625**	2	ELBOW	
	13	1	**6V-8639**	4	CONNECTOR	
	14	1	**8T-4121**	5	WASHER-HARD (11X21X2.5-MM THK)	
M	15	1	**8T-4136**	2	BOLT (M10X1.5X25-MM)	
M	16	1	**8T-4195**	3	BOLT (M10X1.5X30-MM)	
	17	1	*204-0317*	1	CONNECTOR AS	
		1	**3K-0360**	1	SEAL-O-RING	
		1	**6V-8397**	1	SEAL-O-RING	
		1	**092-3635**	1	CONNECTOR	
	18	1	*148-8318*	2	CONNECTOR AS	
					(EACH INCLUDES)	
		1	**3K-0360**	1	SEAL-O-RING	
		1	**6V-8397**	1	SEAL-O-RING	
		1	**6V-8634**	1	CONNECTOR	
	19	1	*148-8340*	1	CONNECTOR AS	
		1	**3K-0360**	1	SEAL-O-RING	
		1	**6V-8398**	1	SEAL-O-RING	
		1	**6V-8639**	1	CONNECTOR	

G-ORDER BY THE INCH
I-REFER TO HYDRAULIC INFORMATION SYSTEM
M-METRIC PART
Y-SEPARATE ILLUSTRATION

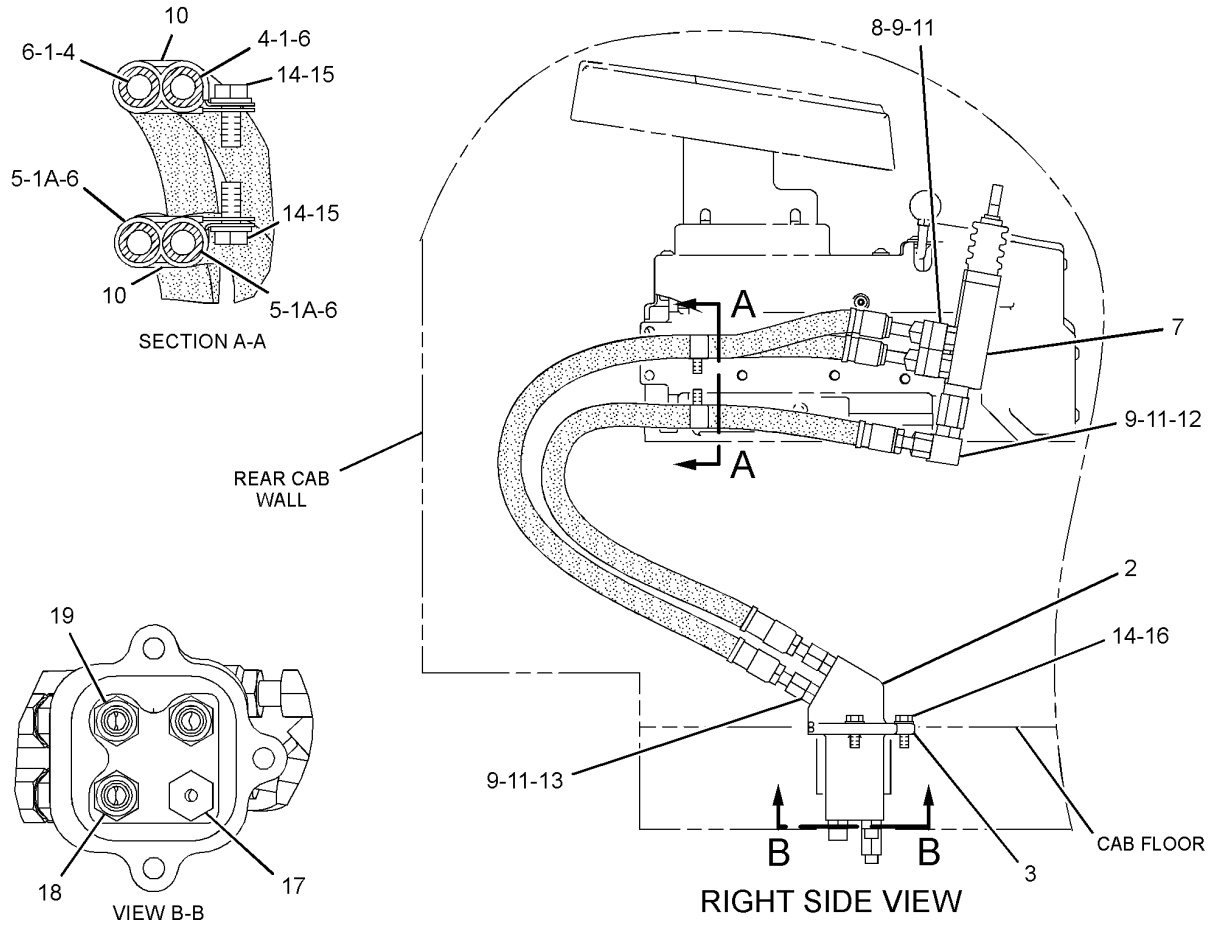

GRAPHIC #1

<END>

g01262496

OPERATOR STATION

4E-8413 CONTROL GP-STIC

S/N: 2211-UP

PART OF 280-7084 CAB AR

SMCS-3033 **i02364975**

NOTE	REF NO	GRAPHIC REF	PART NUMBER	QTY	PART NAME 1 2 3 4 5 6 (PRODUCT LEVEL)	SEE PAGE
	1	1	**4E-7520**	1	BASE	
	2	1	**4E-7627**	1	HOUSING	
	3	1	**4E-7628**	1	COVER	
Y	4	1	**177-4113**	1	CONTROL GP-STIC	805
M	5	1	**6V-7687**	1	LOCKNUT (M12X1.75-THD)	
M	6	1	**8T-0269**	4	BOLT-SOCKET HEAD (M6X1X20-MM)	
M	7	1	**8T-0723**	2	SETSCREW-SOCKET	
M	8	1	**8T-4138**	4	BOLT (M6X1X20-MM)	

M-METRIC PART
Y-SEPARATE ILLUSTRATION

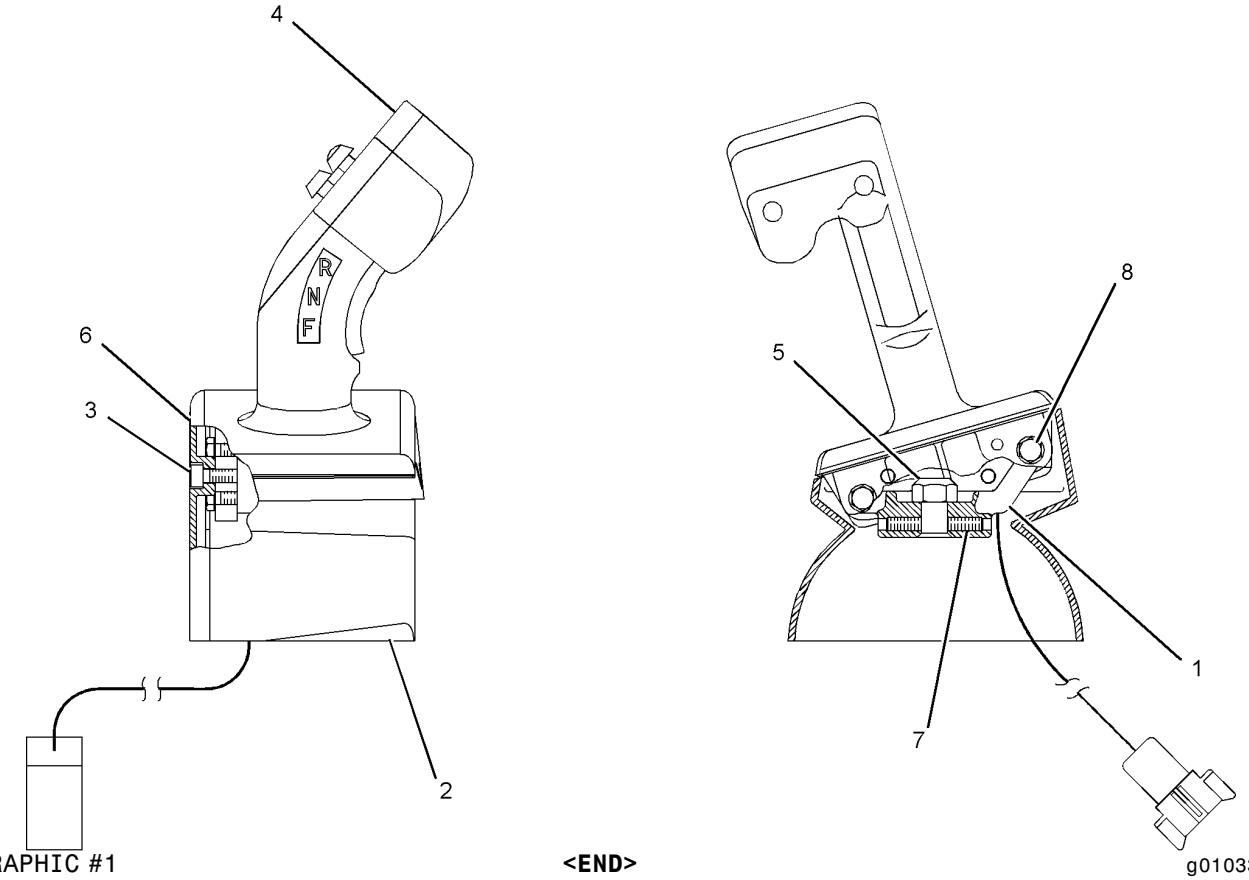

GRAPHIC #1

<END>

g01033706

OPERATOR STATION

177-4113 CONTROL GP-STIC

S/N: 2211-UP

PART OF 4E-8413 CONTROL GP-STIC

SMCS-3033 **i02273243**

NOTE	REF NO	GRAPHIC REF	PART NUMBER	QTY	PART NAME 1 2 3 4 5 6 (PRODUCT LEVEL)	SEE PAGE
	1	1	**160-3518**	1	KIT-RECEPTACLE (8-PIN)	
					(INCLUDES RECEPTACLE AS AND WEDGE)	
	2	1	**177-4112**	1	SWITCH GP-TRANSMISSION	
	2A	1	**177-2374**	1	SWITCH AS-ROCKER (TRANSMISSION DIRECTION)	
		1	**5S-4246**	2	LOCKWASHER	
		1	**8T-8729**	3	PIN-CONNECTOR	
		1	**9X-8917**	2	SCREW-MACHINE (4-40X9.52-MM)	
		1	**096-5962**	2	WASHER-HARD (3.4X7X0.8-MM THK)	
		1	**105-8029**	1	ACTUATOR	
	2B	1	**159-8664**	1	SWITCH AS (TRANSMISSION UPSHIFT)	
	2C	1	**159-8665**	1	SWITCH AS (TRANSMISSION DOWNSHIFT)	
					(EACH SWITCH AS INCLUDES)	
		1	**3K-0835**	1	NUT (5/8-24-THD)	
		1	**6F-0253**	1	LOCKWASHER	
		1	**8T-8729**	2	PIN-CONNECTOR	
	3	1	**3E-3389**	1	WEDGE-RECEPTACLE LOCK	
	4	1	**105-9073**	1	GRIP	
M	5	1	**7Y-3173**	2	SCREW-BUTTON HEAD (M4X0.7X12-MM)	
	6	1	**8C-7508**	2	LOCKWASHER	
	7	1	**8C-9660**	2	WASHER (4.6X7.9X0.8-MM THK)	

M-METRIC PART

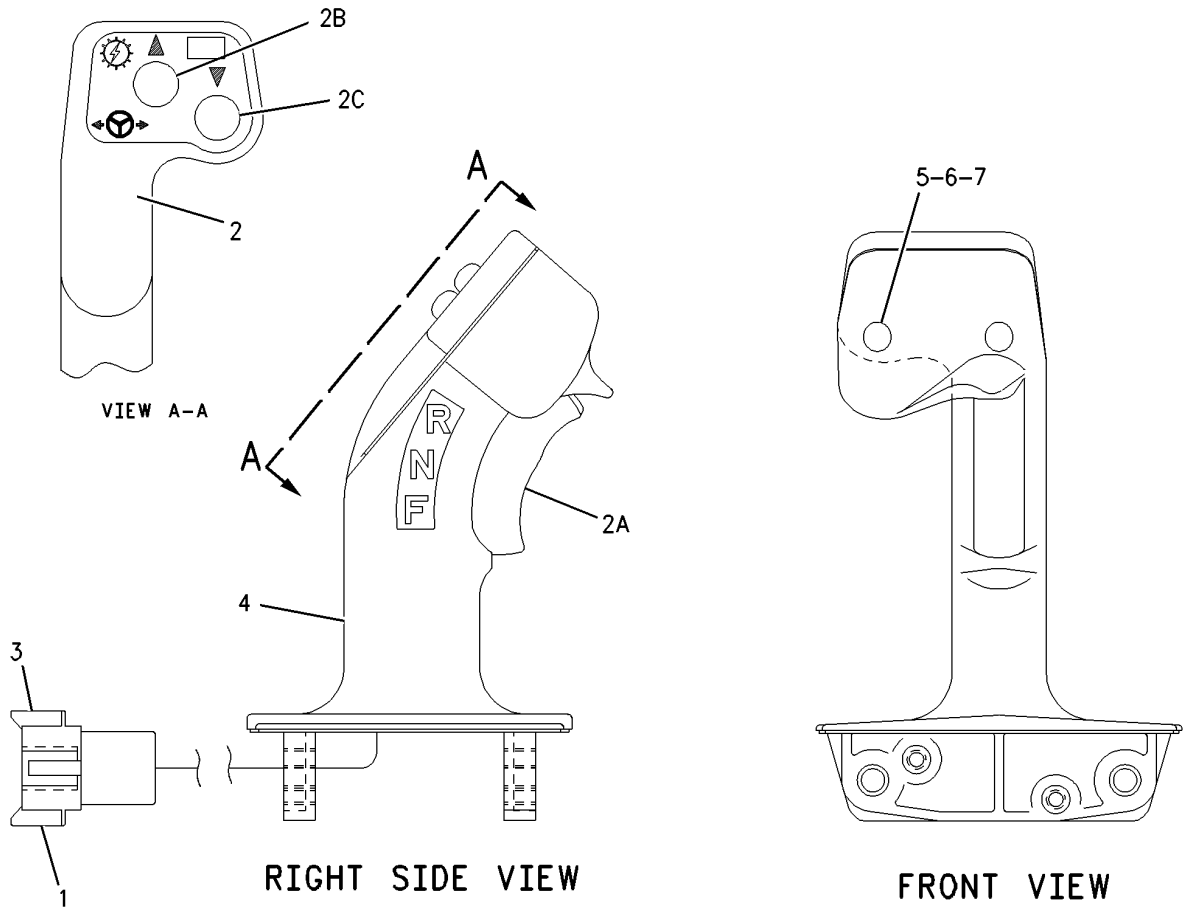

GRAPHIC #1 **<END>** g00898020

OPERATOR STATION

236-5241 CONTROL GP-STIC LOCKOUT

S/N: 2211-UP

PART OF 280-7084 CAB AR

SMCS-3034 **i02411297**

NOTE	REF NO	GRAPHIC REF	PART NUMBER	QTY	PART NAME 1 2 3 4 5 6 (PRODUCT LEVEL)	SEE PAGE
	1	1	**2V-4387**	1	SPACER (10.312X25.4X23.11-MM THK)	
	2	1	**8T-4224**	6	WASHER-HARD (8.8X16X2-MM THK)	
	3	1	**4E-8557**	1	SHAFT AS	
	4	1	**4E-8561**	1	CAM	
	5	1	**188-2048**	1	KNOB	
	6	1	**6L-8598**	2	RING-RETAINING	
	7	1	**8C-3442**	1	SPRING-COIL	
M	8	1	**5C-7423**	4	SCREW (M6X1X16-MM)	
	9	1	**144-7766**	1	LEVER AS-STIC STEER LOCKOUT	
	10	1	**145-8951**	1	PLATE AS	
	11	1	**145-8952**	1	PLATE AS	
M		1	**3E-6908**	2	STUD-WELD (M8X1.25X20-MM)	
	12	1	**151-6427**	2	BEARING	
	13	1	**170-0456**	1	GUARD AS	
	14	1	**204-3611**	1	PLATE AS	
M	15	1	**8T-4177**	1	BOLT (M8X1.25X90-MM)	
M	16	1	**8T-4133**	3	NUT (M10X1.5-THD)	
	17	1	**4D-7794**	1	CLIP	
	18	1	**4E-8560**	2	KEY-SQUARE	
M	19	1	**5C-7261**	2	NUT (M8X1.25-THD)	
M	20	1	**5C-9553**	2	BOLT (M6X1X16-MM)	
M	21	1	**6V-5220**	2	BOLT (M8X1.25X65-MM)	

M-METRIC PART

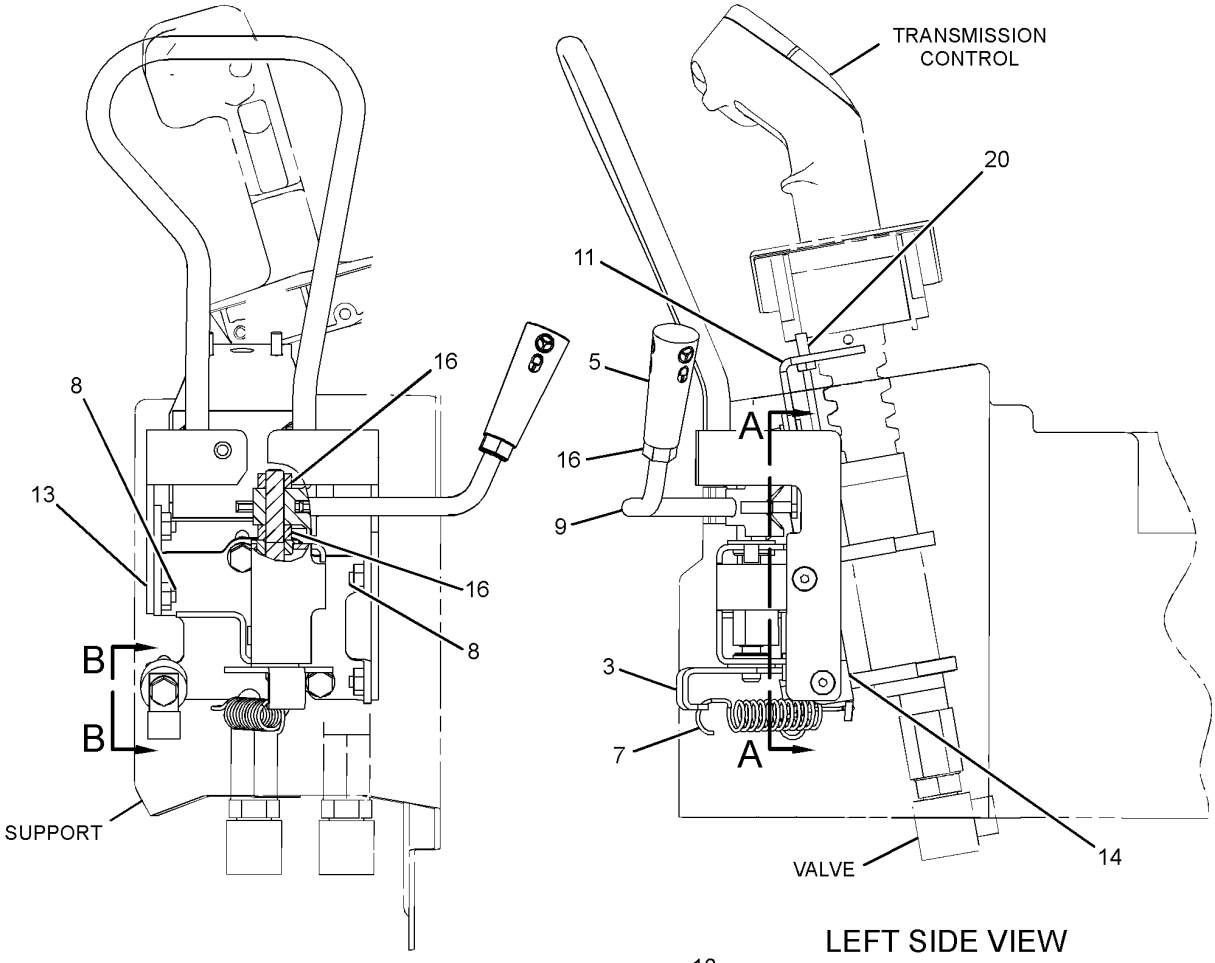

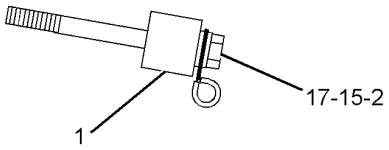

VIEW B-B

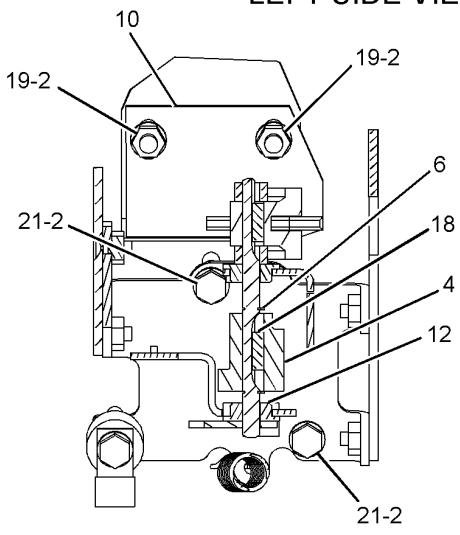

SECTION A-A

GRAPHIC #1 **<END>** g01211972

OPERATOR STATION

242-0389 COVER GP-CAB

S/N: 2211-UP

PART OF 280-7083 OPERATOR AR

SMCS-7301 **i02148116**

NOTE	REF NO	GRAPHIC REF	PART NUMBER	QTY	PART NAME 1 2 3 4 5 6 (PRODUCT LEVEL)	SEE PAGE
	1	1	**4E-8984**	2	COVER AS	
	2	1	**4E-8996**	1	COVER	
	3	1	**4E-9056**	1	GASKET	
	4	1	**242-3488**	2	COVER	
	5	1	**242-3489**	2	GASKET	
M	6	1	**5C-7261**	4	NUT (M8X1.25-THD)	
M	7	1	**8T-4200**	8	BOLT (M8X1.25X16-MM)	
	8	1	**8T-4224**	12	WASHER-HARD (8.8X16X2-MM THK)	
M	9	1	**9X-2045**	2	SCREW-TRUSS HEAD (M6X1X20-MM)	

M-METRIC PART

242-0389 **COVER GP-CAB** *(contd.)* **i02148116**

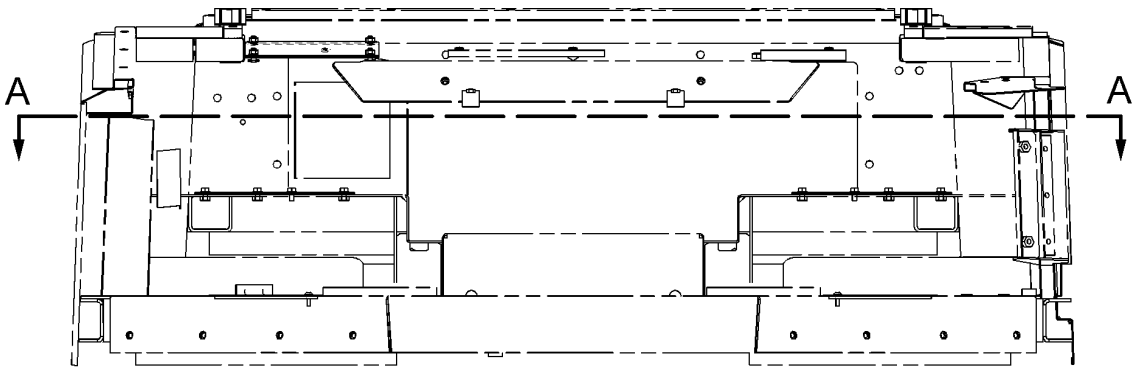

FRONT VIEW

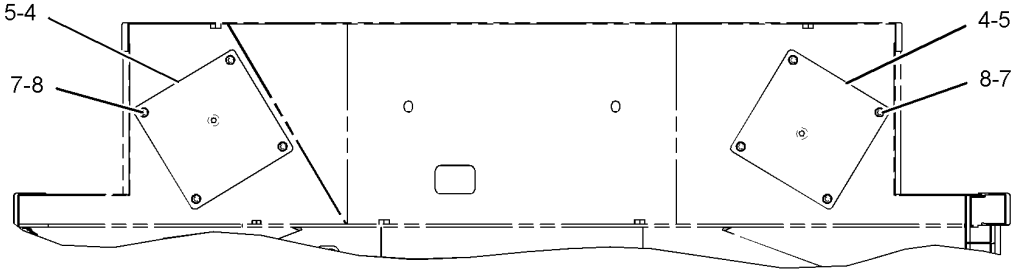

SECTION A-A

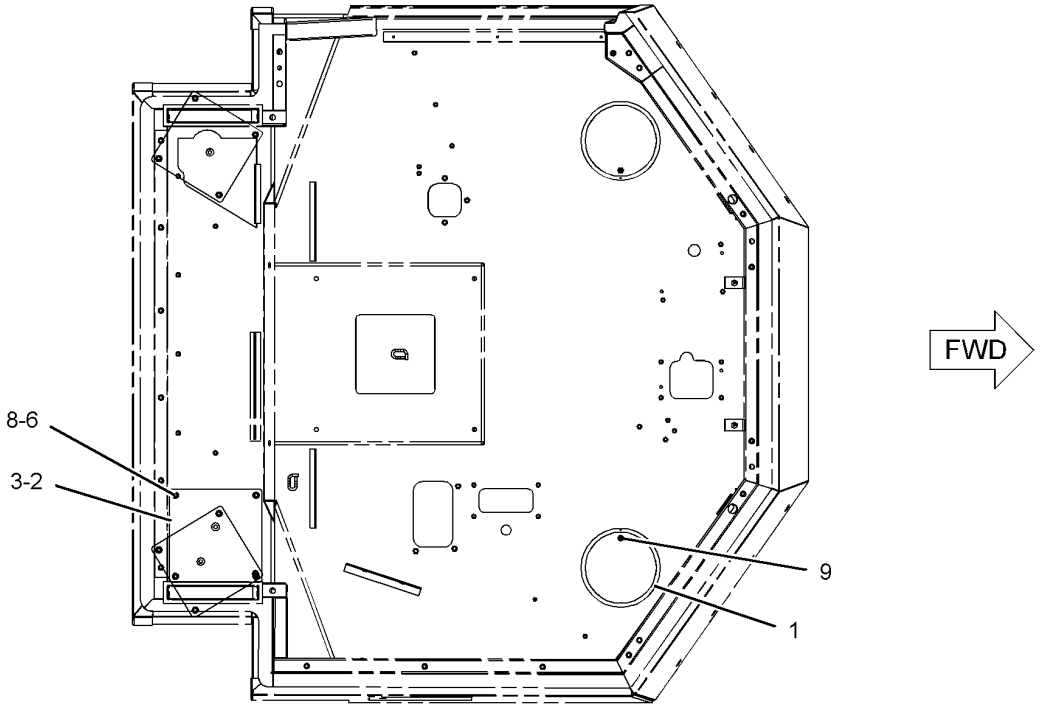

TOP VIEW

GRAPHIC #1

<END>

g01091247

OPERATOR STATION

289-3809 DOOR GP-ACCESS—PLATFORM, INNER, RH

S/N: 2211-UP

PART OF 279-5284 PLATFORM GP-OPERATOR

SMCS-7273 **i02891001**

NOTE	REF NO	GRAPHIC REF	PART NUMBER	QTY	PART NAME 1 2 3 4 5 6 (PRODUCT LEVEL)	SEE PAGE
	1	1	**3B-4610**	2	PIN-COTTER	
	2	1	**4E-4450**	2	ROD AS	
					(EACH INCLUDES)	
		1	**8T-4121**	3	WASHER-HARD (11X21X2.5-MM THK)	
	3	1	**9U-1169**	2	BRACKET	
	4	1	**113-6003**	2	DOOR AS	
					(EACH INCLUDES)	
		1	**6V-2370**	4	RIVET-POP	
M		1	**8T-3597**	4	NUT-WELD (M12X1.75-THD)	
		1	**9X-2299**	1	LATCH AS	
	5	1	**119-1151**	4	HINGE AS	
	6	1	**289-3810**	1	FRAME AS	
M		1	**8T-3490**	9	NUT-WELD (M10X1.5-THD)	
M		1	**8T-3597**	17	NUT-WELD (M12X1.75-THD)	
		1	**9C-7929**	2	BLOCK	
M		1	**9R-2613**	7	BOSS-WELD (M10X1.5X25-MM)	
	7	1	**2V-3726**	8	BUMPER	
	8	1	**7X-7729**	4	WASHER (11X25X3-MM THK)	
	9	1	**8T-4121**	26	WASHER-HARD (11X21X2.5-MM THK)	
M	10	1	**8T-4136**	28	BOLT (M10X1.5X25-MM)	

M-METRIC PART

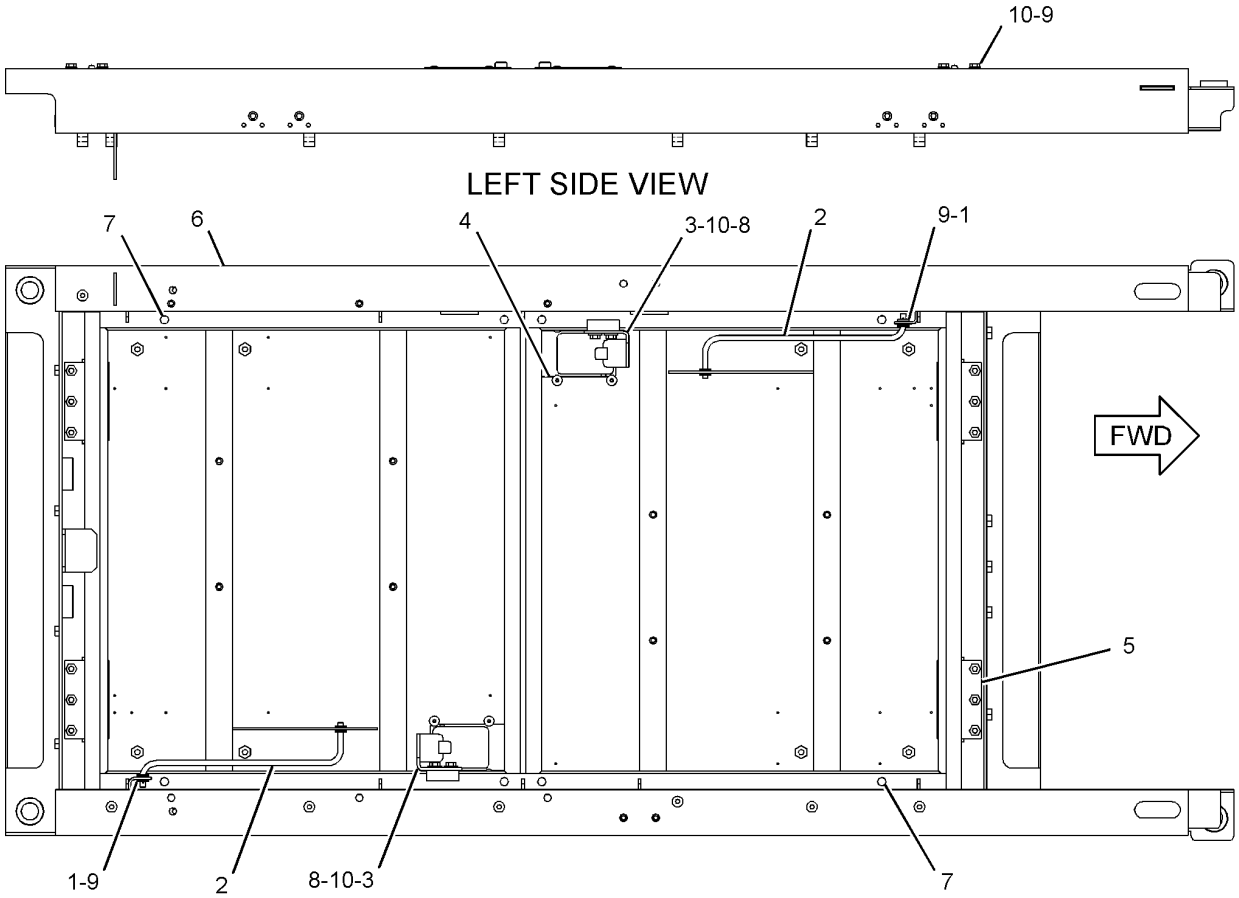

GRAPHIC #1 **<END>** g01444411

OPERATOR STATION

307-6567 DOOR GP-ACCESS—PLATFORM, OUTER, RH

S/N: 2211-UP

PART OF 279-5284 PLATFORM GP-OPERATOR

SMCS-7273 **i02891000**

NOTE	REF NO	GRAPHIC REF	PART NUMBER	QTY	PART NAME 1 2 3 4 5 6 (PRODUCT LEVEL)	SEE PAGE
	1	1	**119-1151**	4	HINGE AS	
	2	1	**307-6350**	1	DOOR AS	
		1	**6V-2370**	4	RIVET-POP	
		1	**9X-2299**	1	LATCH AS	
	3	1	**311-7827**	1	DOOR AS	
		1	**6V-2370**	4	RIVET-POP	
		1	**9X-2299**	1	LATCH AS	
	4	1	**8T-4121**	12	WASHER-HARD (11X21X2.5-MM THK)	
M	5	1	**8T-4136**	12	BOLT (M10X1.5X25-MM)	

M-METRIC PART

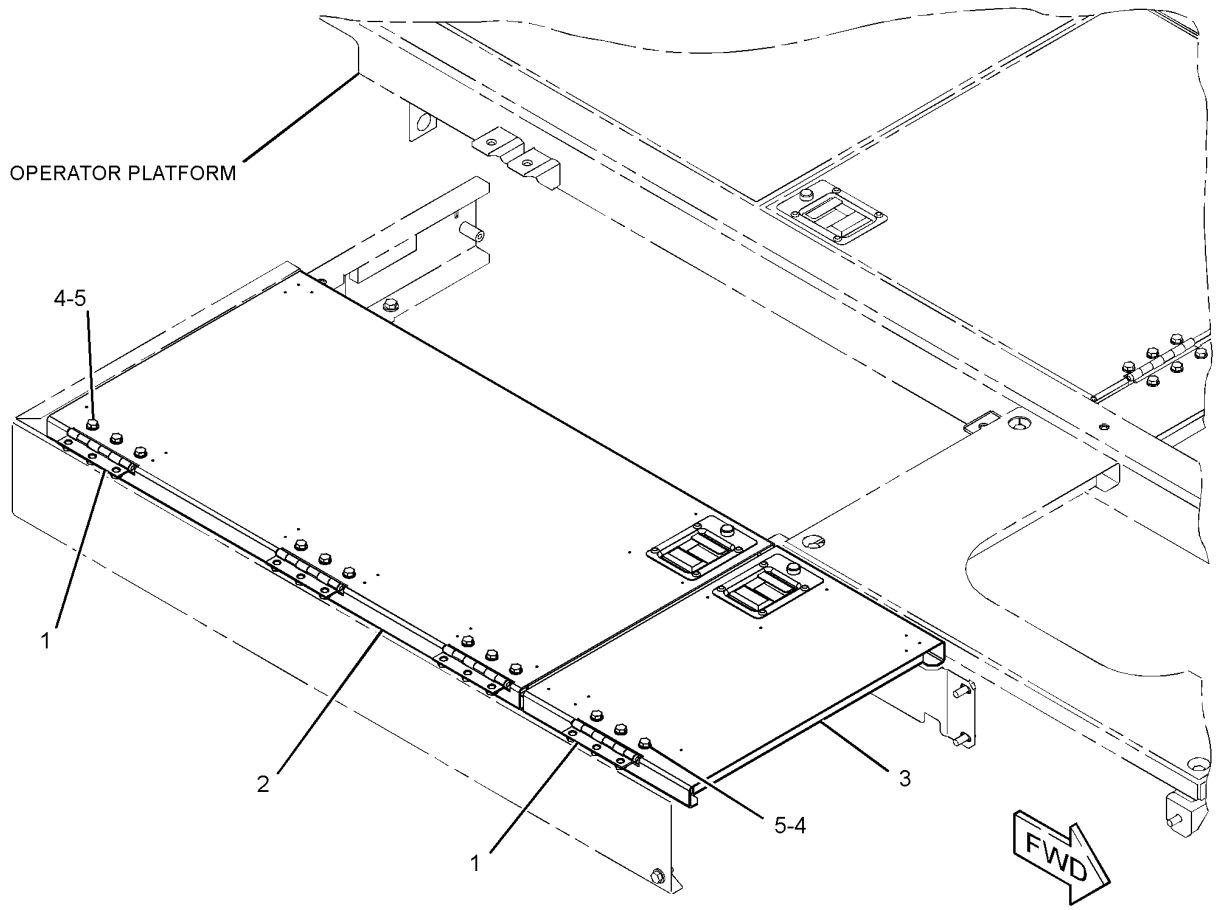

GRAPHIC #1 **<END>** g01443962

OPERATOR STATION

123-8701 DOOR GP-CAB—LH

S/N: 2211-UP

PART OF 267-5292 CAB & PLATFORM GP

SMCS-7308 **i02336464**

NOTE	REF NO	GRAPHIC REF	PART NUMBER	QTY	PART NAME 1 2 3 4 5 6 (PRODUCT LEVEL)	SEE PAGE
M	1	1	**9X-2044**	4	SCREW-TRUSS HEAD (M6X1X16-MM)	
	2	1	**4E-7449**	1	DOOR AS	
BE		1	**3E-3000**		SEAL	
		1	**4E-5718**	1	GLASS	
		1	**4E-5705**	1	HANDHOLD	
	3	1	**4E-7450**	2	HINGE AS	
	4	1	**4E-5720**	1	FRAME AS	
BE		1	**3E-3000**		SEAL	
		1	**4E-5719**	1	GLASS-CAB (DOOR)	
	5	1	**4E-5724**	2	WASHER (7X12X1-MM THK)	
	6	1	**4E-5722**	2	HINGE	
	7	1	**9X-6165**	4	WASHER (6.5X22X2.5-MM THK)	
M	8	1	**8T-4196**	6	BOLT (M10X1.5X35-MM)	
	9	1	**8T-4121**	12	WASHER-HARD (11X21X2.5-MM THK)	
M	10	1	**8T-4137**	6	BOLT (M10X1.5X20-MM)	
D	11	1	**6V-0352**		SEAL (0.2-M)	

B-USE AS REQUIRED
D-ORDER BY THE METER
E-ORDER BY THE CENTIMETER
M-METRIC PART

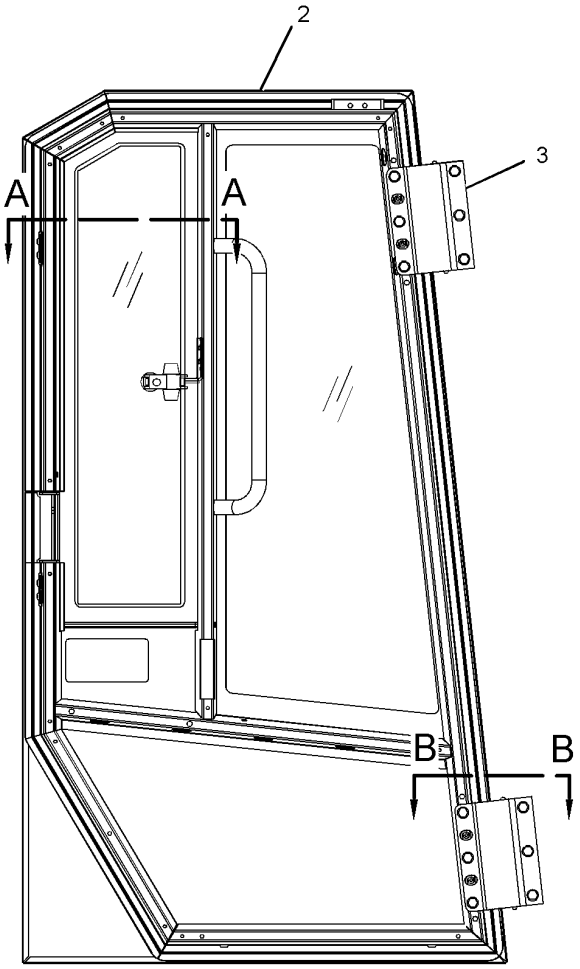

RIGHT SIDE VIEW
(INSIDE LEFT DOOR)

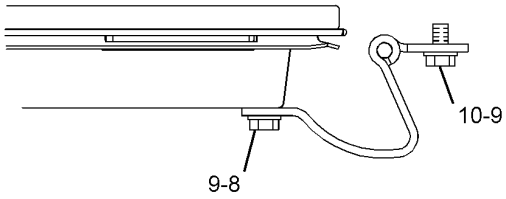

SECTION B-B

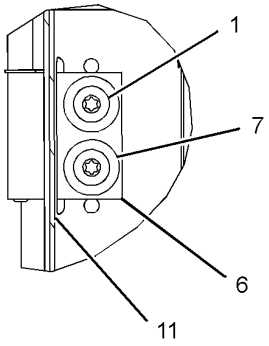

SECTION C-C

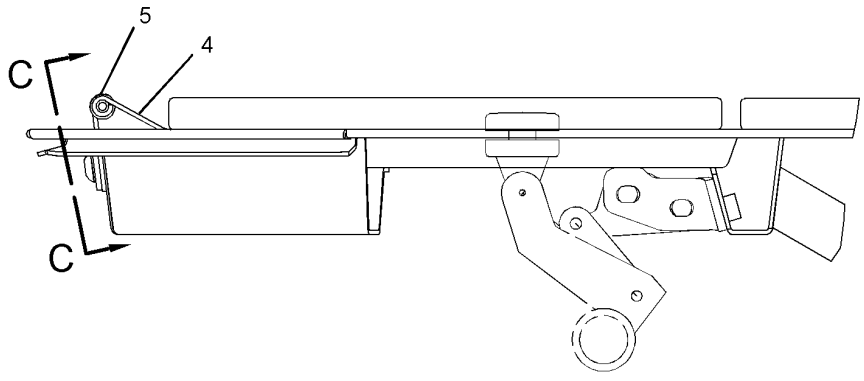

SECTION A-A

GRAPHIC #1 **<END>** g01201828

OPERATOR STATION

242-5333 DUCT GP-CAB AIR

S/N: 2211-UP

PART OF 242-8026 AIR CONDITIONER AR

SMCS-734D **i02861203**

NOTE	REF NO	GRAPHIC REF	PART NUMBER	QTY	PART NAME 1 2 3 4 5 6 (PRODUCT LEVEL)	SEE PAGE
	1	1	**4E-9152**	1	PLATE	
	2	1	**5D-1026**	1	CLAMP-HOSE	
	3	1	**7T-4306**	2	LOUVER AS	
	4	1	**123-8715**	1	DUCT	
	5	1	**123-8716**	1	DUCT	
	6	1	**242-5331**	1	DUCT	
	7	1	**8R-0126**	2	WASHER (12.2X50X3-MM THK)	
	8	1	**8T-4121**	20	WASHER-HARD (11X21X2.5-MM THK)	
M	9	1	**8T-4137**	18	BOLT (M10X1.5X20-MM)	
M	10	1	**8T-4189**	2	BOLT (M8X1.25X20-MM)	
M	11	1	**8T-4191**	2	BOLT (M10X1.5X16-MM)	
D	12	1	**5P-5969**		SEAL (1.3-M)	
E	13	1	**8T-9005**		SEAL (144-CM)	
D	14	1	**5P-6129**		TUBE (0.2-M)	

D-ORDER BY THE METER
E-ORDER BY THE CENTIMETER
M-METRIC PART

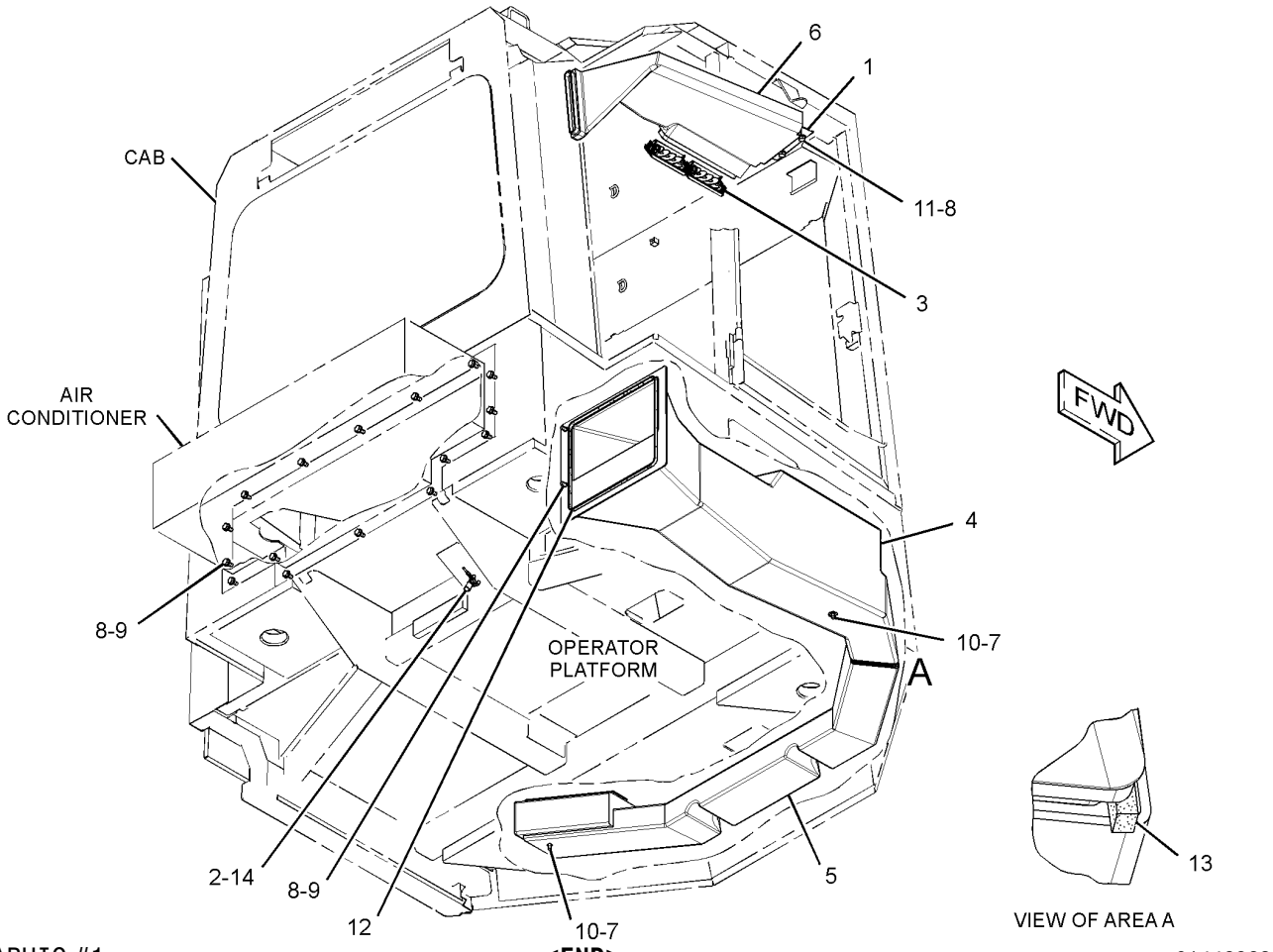

GRAPHIC #1

<END>

g01448923

OPERATOR STATION

315-9896 FILTER GP-CAB AIR

S/N: 2211-UP

PART OF 242-8026 AIR CONDITIONER AR

SMCS-7342 **i02870418**

NOTE	REF NO	GRAPHIC REF	PART NUMBER	QTY	PART NAME 1 2 3 4 5 6 (PRODUCT LEVEL)	SEE PAGE
	1	1	**2R-2376**	1	WASHER (7X16X0.8-MM THK)	
	2	1	**3V-7689**	3	HANDLE AS	
	3	1	**3W-3465**	1	SCREW	
	4	1	**9X-8216**	1	FILTER ELEMENT-CAB AIR (STANDARD EFFICIENCY)	
	5	1	**133-9399**	1	GROMMET	
	6	1	**199-7856**	1	SHEET AS	
	7	1	**251-6556**	1	SHEET	
	8	1	**251-6557**	1	DOOR AS	
E		1	**3E-6602**		SEAL (205-CM)	
		1	**4E-7412**	1	HINGE	
	9	1	**315-9894**	1	GASKET	
	10	1	**315-9897**	1	SHEET AS	
M	11	1	**129-3178**	1	LOCKNUT (M6X1-THD)	
	12	1	**2M-4009**	4	PLUG-BUTTON	
	13	1	**2V-3726**	1	BUMPER	
	14	1	**3N-4809**	2	PLUG-BUTTON	
M	15	1	**5C-2890**	6	NUT (M6X1-THD)	
	16	1	**6V-1668**	1	WASHER (6.5X29.1X3-MM THK)	
M	17	1	**7X-2535**	1	BOLT (M6X1X60-MM)	
	18	1	**7X-7729**	4	WASHER (11X25X3-MM THK)	
M	19	1	**8T-4136**	4	BOLT (M10X1.5X25-MM)	
	20	1	**8T-4223**	3	WASHER-HARD (13.5X25.5X3-MM THK)	
M	21	1	**9X-2042**	7	SCREW-TRUSS HEAD (M6X1X12-MM)	
	22	1	**9X-8256**	7	WASHER (6.6X12X2-MM THK)	
D	23	1	**6V-0352**	8	SEAL (0.2-M EACH)	
D	23A	1	**6V-0352**		SEAL (0.4-M)	

D-ORDER BY THE METER
E-ORDER BY THE CENTIMETER
M-METRIC PART

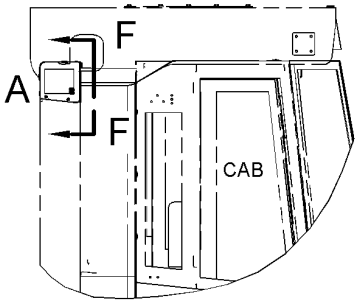

RIGHT SIDE VIEW

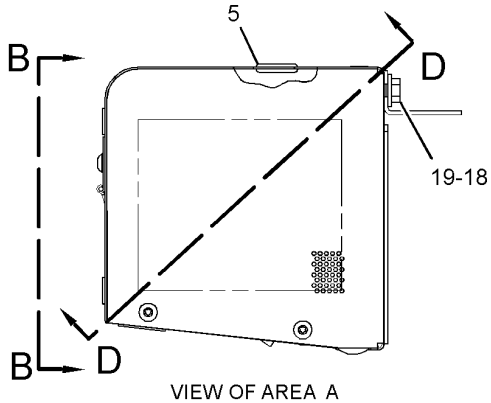

VIEW OF AREA A

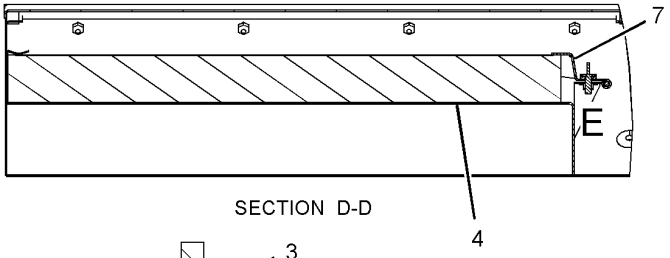

SECTION D-D

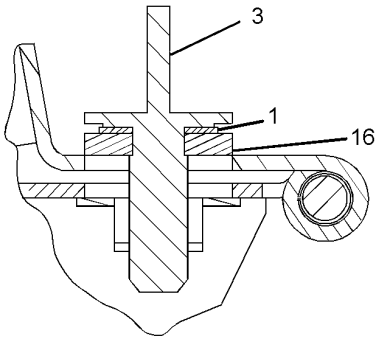

VIEW OF AREA E

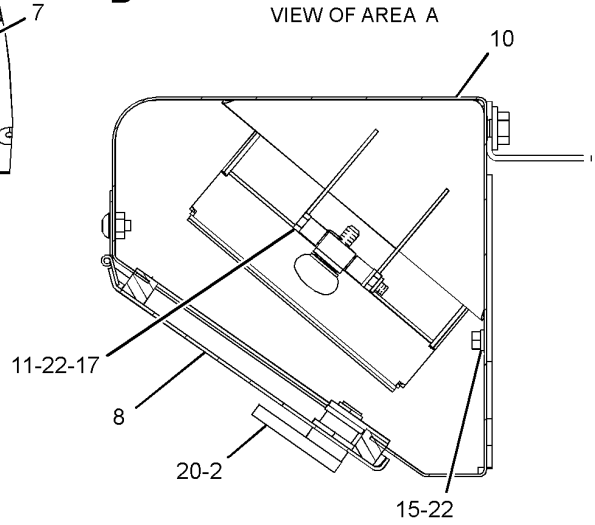

SECTION C-C

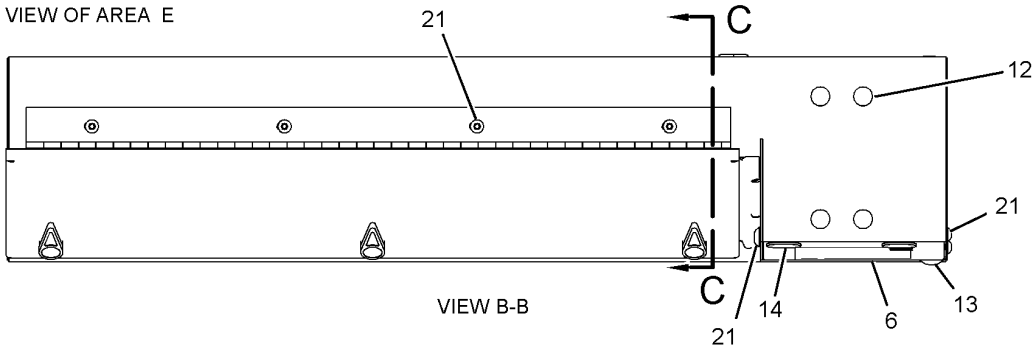

VIEW B-B

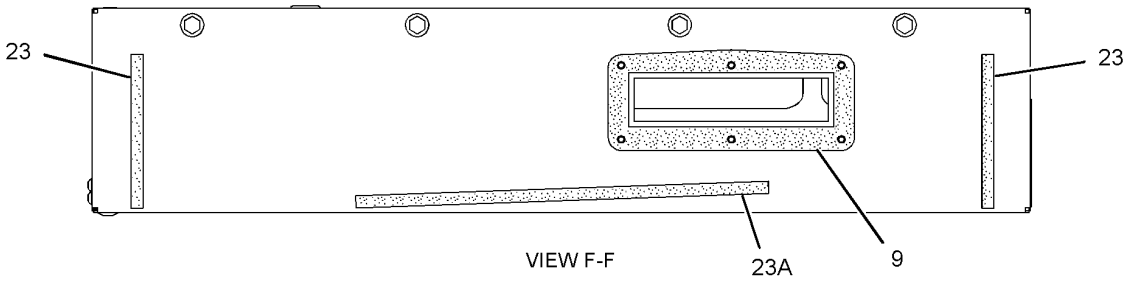

VIEW F-F

GRAPHIC #1 **<END>** g01439452

OPERATOR STATION

282-2828 INSTALLATION GP-RADIO

S/N: 2211-UP

PART OF 280-7084 CAB AR

SMCS-7338 **i02866191**

NOTE	REF NO	GRAPHIC REF	PART NUMBER	QTY	PART NAME 1 2 3 4 5 6 (PRODUCT LEVEL)	SEE PAGE
	1	1	**282-2829**	1	BRACKET AS	
		1	**7T-1099**	2	LINK	
	2	1	**1V-6341**	4	SEAL	
M	3	1	**3E-6924**	6	SCREW-TRUSS HEAD (M6X1X50-MM)	
	4	1	**4E-8035**	1	PANEL-TRIM	
	5	1	**4E-8038**	1	HANGER AS	
	6	1	**4E-8917**	1	PLATE AS	
M		1	**6V-9632**	6	NUT-WELD (M6X1-THD)	
	7	1	**4E-9151**	1	CLAMP	
	8	1	**6B-4196**	4	WASHER-THRUST (16.25X26.97X2.36-MM THK)	
	9	1	**6T-7695**	2	SPEAKER AS-RADIO	
	10	1	**9U-2327**	2	CONNECTOR	
	11	1	**9U-2328**	1	CABLE AS-COAXIAL	
	12	1	**9U-2329**	1	CABLE AS-COAXIAL	
	13	1	**9U-8263**	1	COVER	
	14	1	**6V-2687**	8	SCREW-PAN HEAD (10-24X1-IN)	
M	15	1	**7Y-3173**	2	SCREW-BUTTON HEAD (M4X0.7X12-MM)	
	16	1	**8T-4121**	8	WASHER-HARD (11X21X2.5-MM THK)	
M	17	1	**8T-4191**	8	BOLT (M10X1.5X16-MM)	

M-METRIC PART

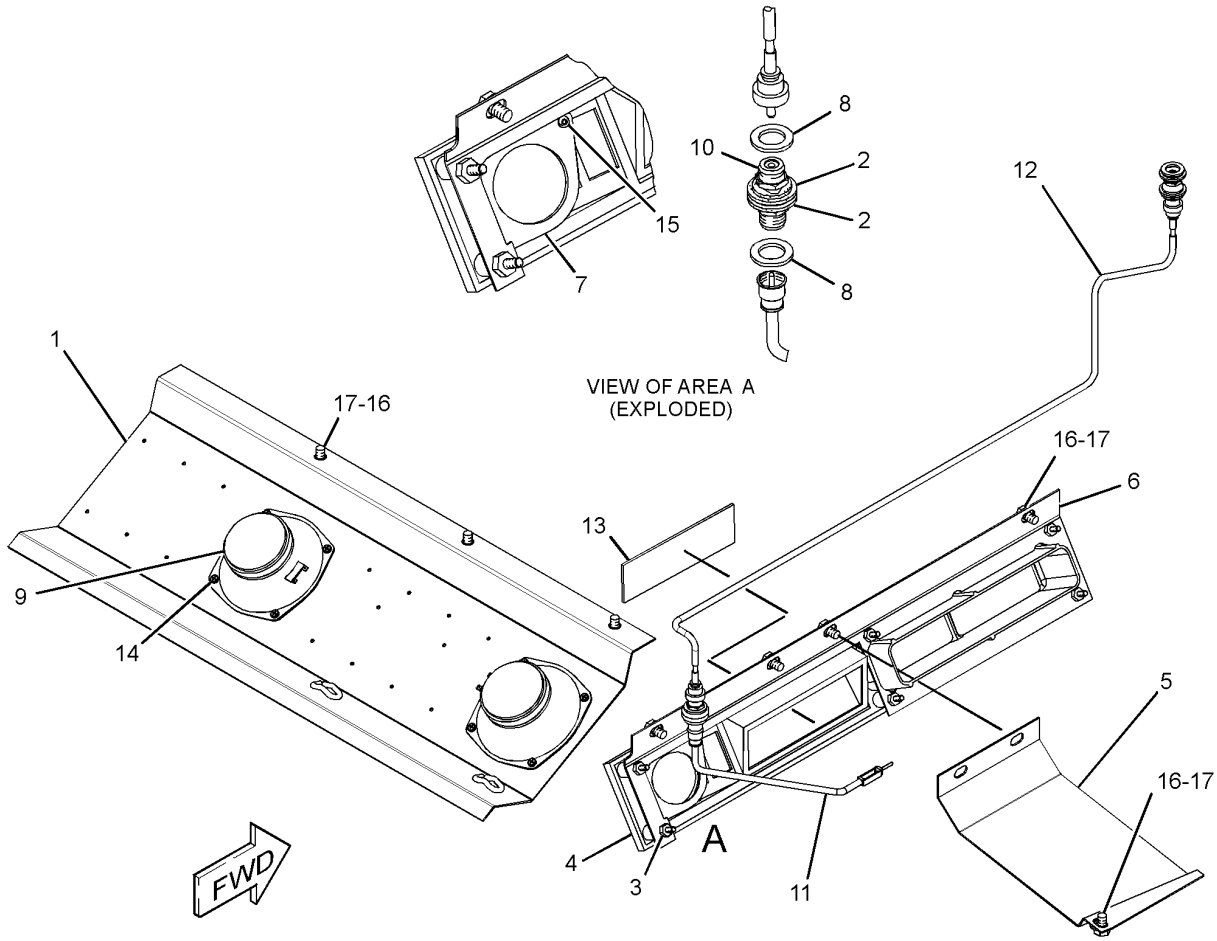

GRAPHIC #1 **<END>** g01436655

OPERATOR STATION

316-0025 LATCH GP—LH—HOOD SIDE

S/N: 2211-UP

PART OF 279-5282 HOOD & GUARD GP

SMCS-7251, 7308 **i02915536**

NOTE	REF NO	GRAPHIC REF	PART NUMBER	QTY	PART NAME 1 2 3 4 5 6 (PRODUCT LEVEL)	SEE PAGE
	1	1	**288-9204**	1	PLATE AS	
	2	1	**315-9970**	2	LATCH	
	3	1	**6V-2491**	4	RIVET-POP	

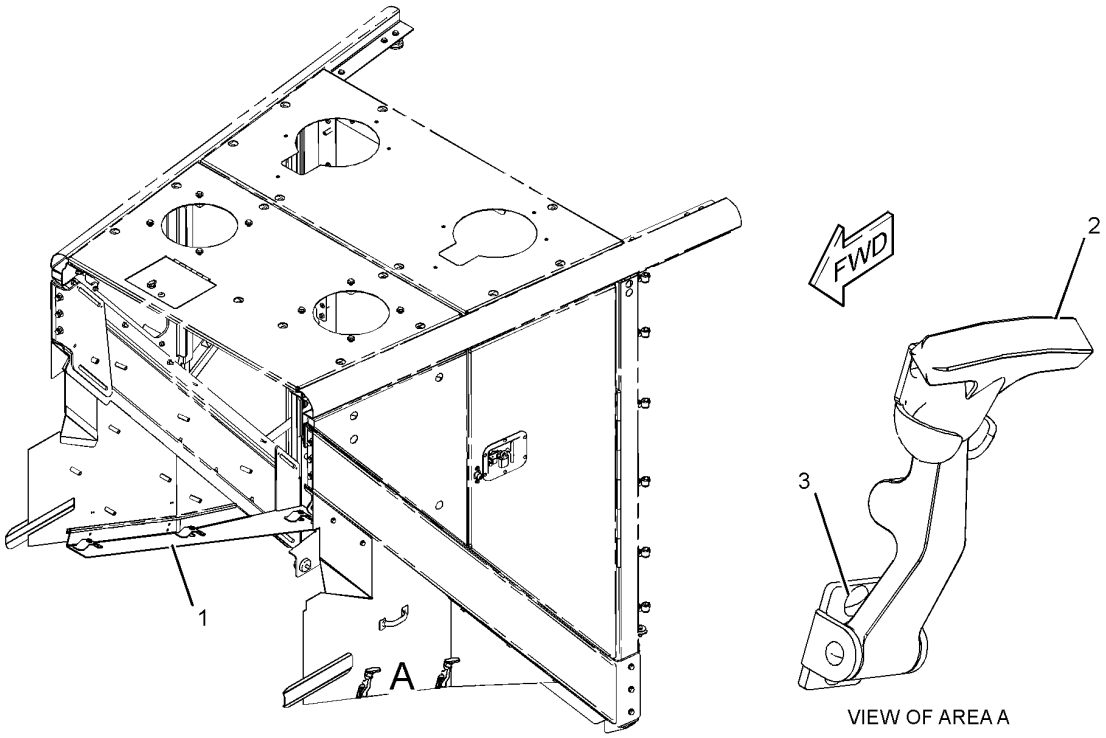

VIEW OF AREA A

GRAPHIC #1 **<END>** g01450012

OPERATOR STATION

250-9306 LATCH GP-CAB DOOR & WINDOW

S/N: 2211-UP

PART OF 280-7084 CAB AR

SMCS-7308, 7310 **i02753625**

NOTE	REF NO	GRAPHIC REF	PART NUMBER	QTY	PART NAME 1 2 3 4 5 6 (PRODUCT LEVEL)	SEE PAGE
	1	2	**4E-5725**	1	PLATE	
	2	2	**4E-5726**	1	PLATE AS	
M		2	**6V-9632**	2	NUT-WELD (M6X1-THD)	
	3	2	**4E-7451**	2	PLATE	
	4	2	**4E-7748**	1	BRACKET AS	
M		2	**6V-9632**	2	NUT-WELD (M6X1-THD)	
	5	2	**4E-7749**	1	COVER	
	6	1	**4E-7839**	1	BRACKET AS	
M		1	**8T-3612**	1	NUT-WELD (M8X1.25-THD)	
	7	2	**4E-9536**	4	PLATE	
	8	2	**4E-9537**	2	PLATE	
	9	1,2	**6V-7636**	4	PIN AS-SPRING	
	10	2	**7X-2497**	1	HANDLE-DOOR	
	11	1	**8C-7529**	1	STRIKER AS-LATCH	
	13	1,2	**8T-4157**	2	STRIKER AS	
					(EACH INCLUDES)	
		1,2	**8T-4158**	1	WASHER-SPECIAL (CONICAL)	
	14	2	**147-3019**	2	BRACKET	
	15	2	**8Y-5748**	1	LATCH AS	
	16	2	**8Y-5749**	1	ROD AS	
	17	2	**8Y-8294**	1	LATCH AS-WINDOW	
	18	2	**8Y-8296**	1	HANDLE AS	
		2	**8Y-4501**	1	SPRING-HANDLE	
	19	2	**8Y-8318**	1	LINK-CONNECTING	
	20	2	**8Y-8320**	1	LATCH AS-DOOR	
M	21	2	**9X-2546**	2	BOLT (M6X1X20-MM)	
	22	1	**108-5471**	1	CLEVIS	
	24	1	**242-9508**	1	LATCH AS	
	25	1	**250-0769**	1	LATCH AS	
	26	1	**250-0770**	1	LINK-TAG	
	27	1	**250-0771**	1	LINKAGE AS	
	28	1	**250-4568**	1	GASKET	
M	30	1	**096-4884**	1	LOCKNUT (M12X1.75-THD)	
	31	2	**109-6945**	1	PIN-SPRING	
M	32	1	**3E-8020**	5	SCREW-TRUSS HEAD (M6X1X25-MM)	
	34	1	**4E-1384**	1	BUMPER-CONICAL	
M	35	2	**5C-2890**	2	NUT (M6X1-THD)	
M	36	1,2	**5C-7261**	2	NUT (M8X1.25-THD)	
M	37	1,2	**5C-9553**	7	BOLT (M6X1X16-MM)	
M	38	2	**8T-4180**	4	SCREW-MACHINE (M5X0.8X20-MM)	
	39	1	**6V-8801**	1	NUT (3/8-16-THD)	
	40	1	**7X-0546**	1	WASHER-HARD (12X25.5X2-MM THK)	
	41	2	**7X-3310**	1	KNOB-BALL	
M	42	2	**8C-3210**	1	BOLT (M6X1X16-MM)	
M	43	2	**8T-4181**	8	BOLT (M6X1X20-MM)	
	44	1,2	**8T-4205**	13	WASHER-HARD (7.2X14.5X2-MM THK)	
	45	1	**8T-4223**	1	WASHER-HARD (13.5X25.5X3-MM THK)	
M	47	1	**9X-2042**	1	SCREW-TRUSS HEAD (M6X1X12-MM)	
M	48	1,2	**9X-2044**	9	SCREW-TRUSS HEAD (M6X1X16-MM)	
M	49	1	**9X-2045**	4	SCREW-TRUSS HEAD (M6X1X20-MM)	
E	50	1	**103-2554**		SEAL (350-CM)	
E	50A	2	**103-2554**		SEAL (240-CM)	
E	50B	2	**103-2554**		SEAL (450-CM)	
	51	2	**5P-0537**	4	WASHER-HARD (7.2X14.5X2-MM THK)	

E-ORDER BY THE CENTIMETER
M-METRIC PART

REFER TO ALL ILLUSTRATIONS OF THIS GROUP FOR AUXILIARY VIEWS

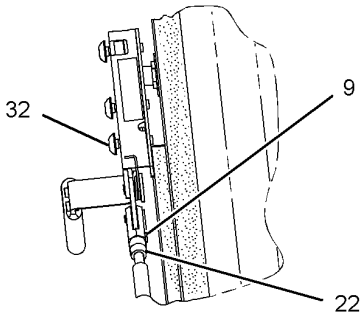

VIEW OF AREA H

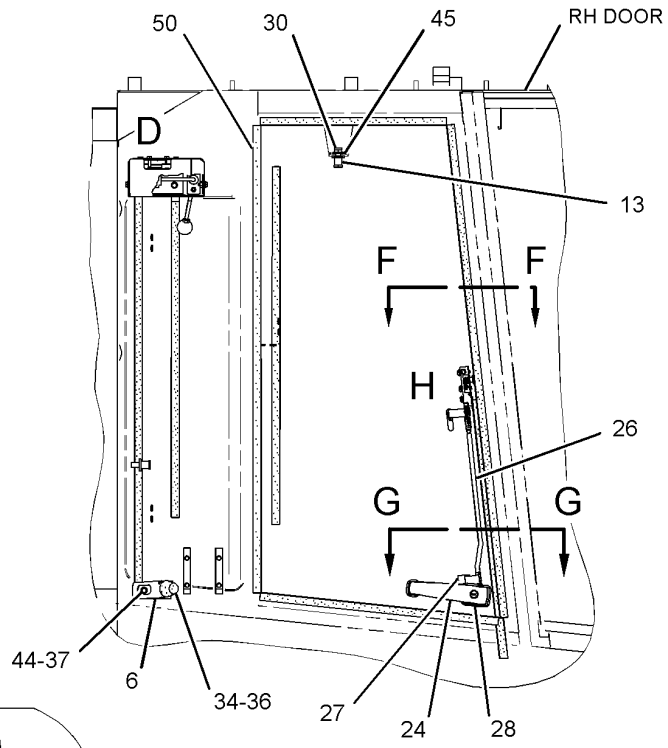

RIGHT SIDE VIEW

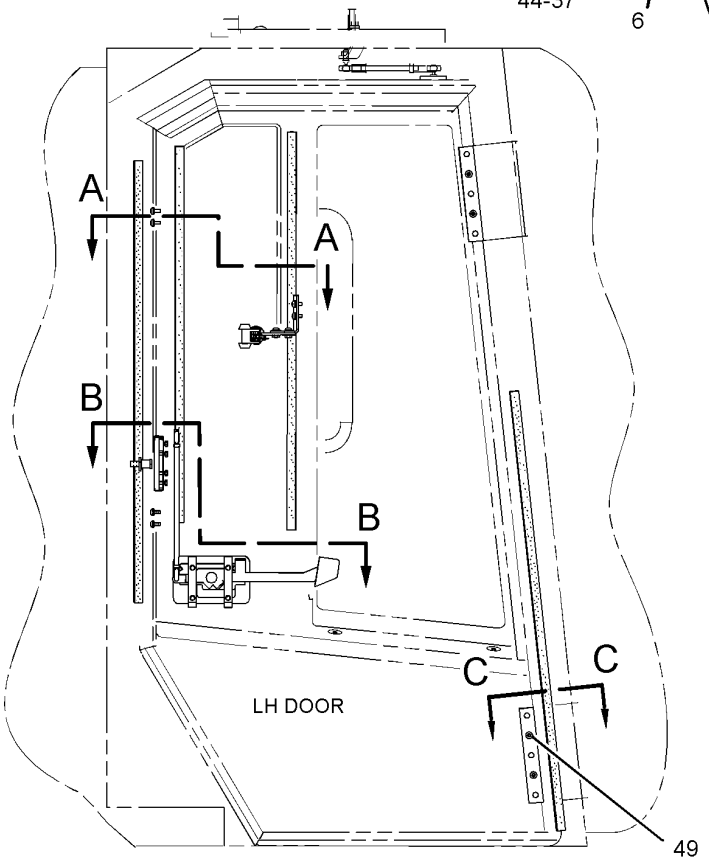

RIGHT SIDE VIEW
(INSIDE LEFT DOOR)

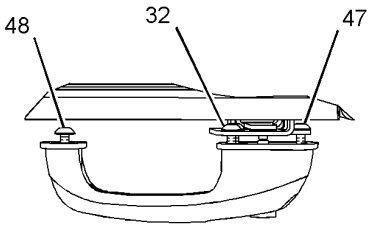

SECTION G-G

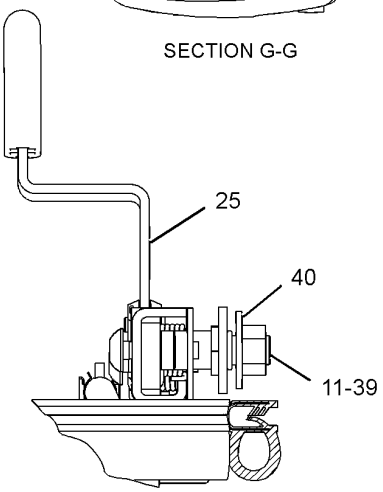

SECTION F-F

GRAPHIC #1

g01389339

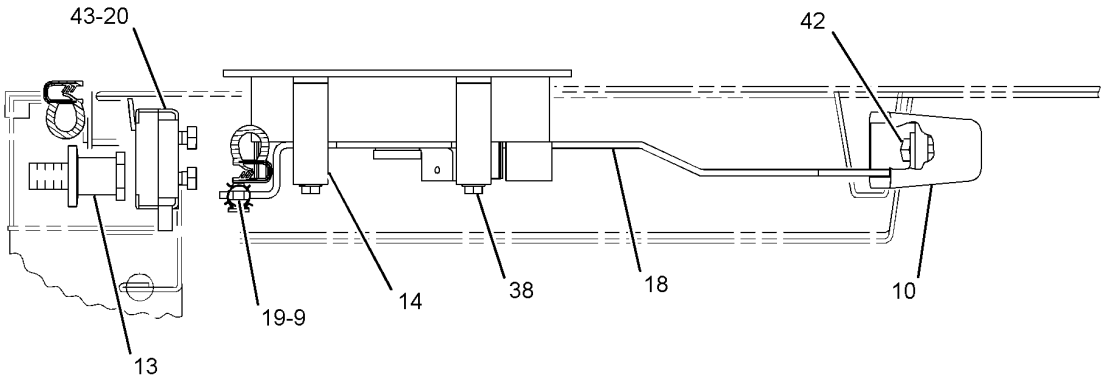

SECTION B-B

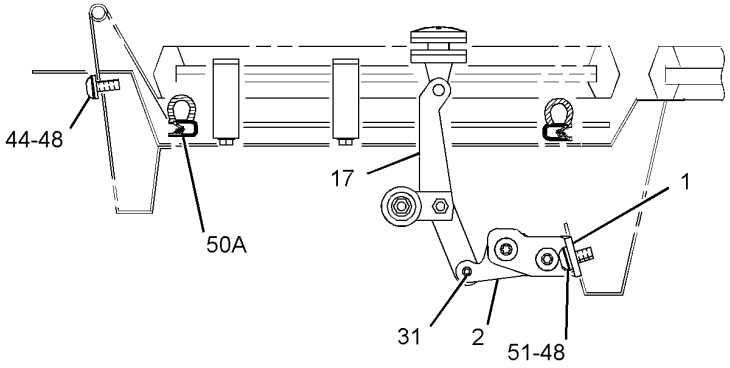

SECTION A-A

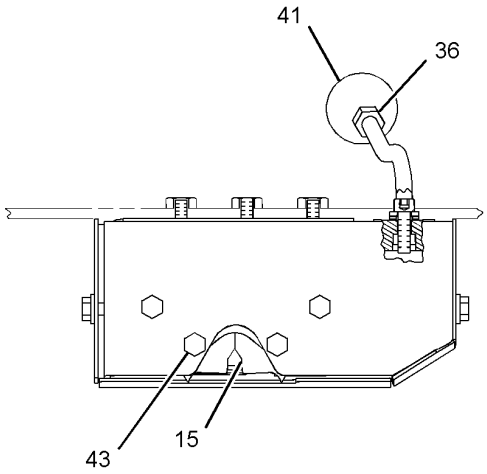

VIEW E-E

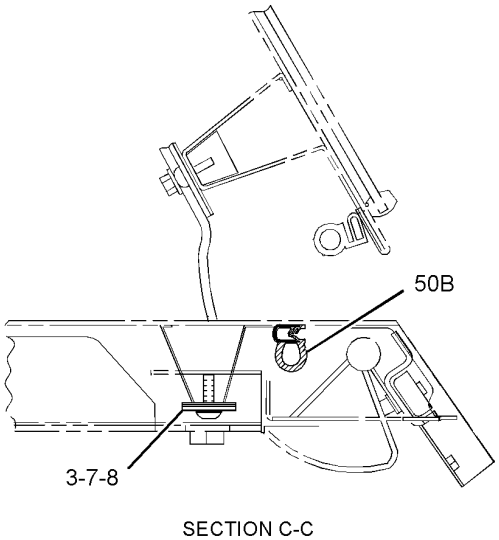

SECTION C-C

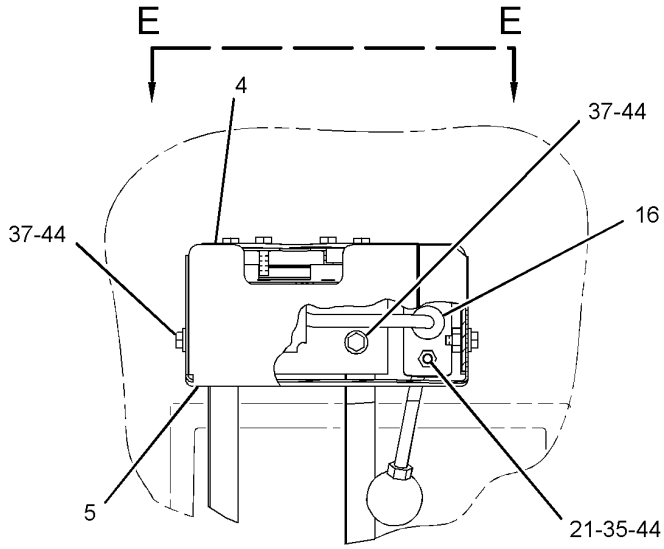

VIEW OF AREA D

GRAPHIC #2 **<END>** g01389340

OPERATOR STATION

275-3638 LINER GP-CAB

S/N: 2211-UP

PART OF 280-7084 CAB AR

SMCS-7329 **i02869624**

NOTE	REF NO	GRAPHIC REF	PART NUMBER	QTY	PART NAME 1 2 3 4 5 6 (PRODUCT LEVEL)	SEE PAGE
	1	1	**123-8696**	1	INSULATION	
	2	1	**266-3597**	1	HANGER AS	
B	3	2	**5P-0537**	3	WASHER-HARD (7.2X14.5X2-MM THK)	
BM	4	2	**5C-2890**	1	NUT (M6X1-THD)	
	5	3	**146-3095**	1	PANEL AS	
	6	2	**9U-1860**	2	BRACKET	
	7	2	**146-3096**	1	LINER-CAB	
	8	2	**123-8690**	1	LINER-CAB	
	9	3	**6V-2687**	2	SCREW-PAN HEAD (10-24X1-IN)	
	10	1	**266-3600**	1	HANGER AS (REAR)	
	11	1	**198-4419**	1	INSULATION	
	12	1	**123-8687**	1	PANEL	
	14	1	**123-8685**	1	PANEL AS-TRIM	
	15	2	**9U-1866**	2	ANGLE	
BM	16	2	**5C-9553**	3	BOLT (M6X1X16-MM)	
	17	3	**8T-4205**	2	WASHER-HARD (7.2X14.5X2-MM THK)	
	18	3	**9U-1217**	1	COVER	
	19	3	**8T-4121**	8	WASHER-HARD (11X21X2.5-MM THK)	
M	20	3	**8T-4191**	2	BOLT (M10X1.5X16-MM)	
	24	3	**123-8703**	1	PANEL-TRIM	
BM	25	1,2,3	**9X-2044**	9	SCREW-TRUSS HEAD (M6X1X16-MM)	
	26	3	**123-8702**	1	PANEL AS-SOUND SUPPRESSION	
		3	**4E-8293**	3	FASTENER	
M	27	1	**127-2170**	3	SCREW-TRUSS HEAD (M8X1.25X20-MM)	
	28	1	**9D-3767**	4	PLUG-BUTTON	
M	29	1	**9X-2041**	8	SCREW-TRUSS HEAD (M10X1.5X20-MM)	
	30	1	**250-0765**	1	COVER	
M	31	3	**9X-2040**	2	SCREW-TRUSS HEAD (M10X1.5X25-MM)	
	32	2	**146-2614**	3	BUTTON	
	33	1	**178-4323**	1	CAP	
	34	1	**250-0767**	1	COVER	
	35	1	**250-4570**	1	COVER	
D	36	1	**6V-3987**		SEAL (1-M)	
M	38	2	**8T-0269**	1	BOLT-SOCKET HEAD (M6X1X20-MM)	
M	39	1	**9X-2042**	6	SCREW-TRUSS HEAD (M6X1X12-MM)	
	40	1,2	**4E-8722**	3	NUT (RETAINER)	

B-USE AS REQUIRED
D-ORDER BY THE METER
M-METRIC PART

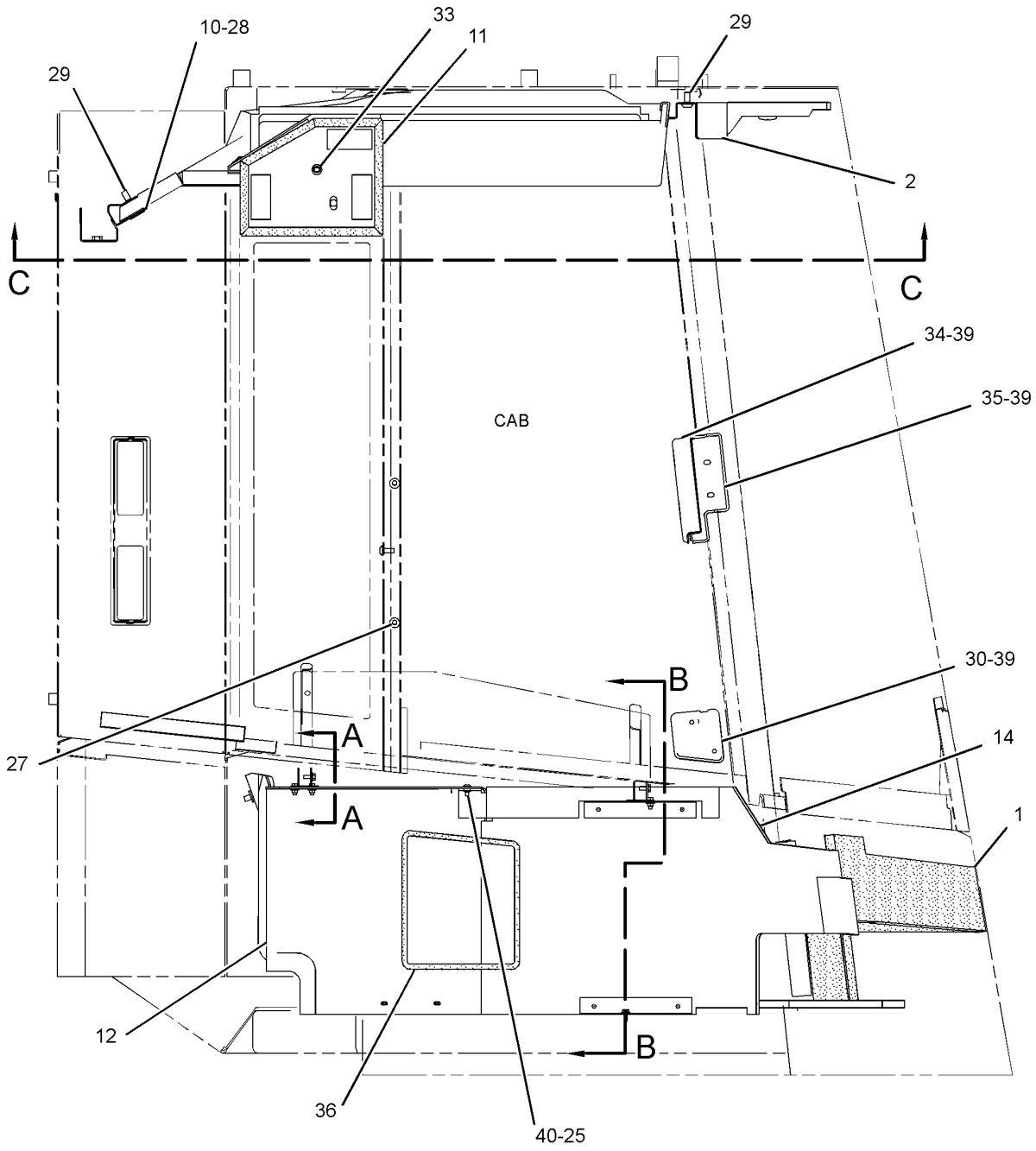

RIGHT SIDE VIEW

REFER TO ALL ILLUSTRATIONS OF
THIS GROUP FOR AUXILIARY VIEWS

GRAPHIC #1

g01365057

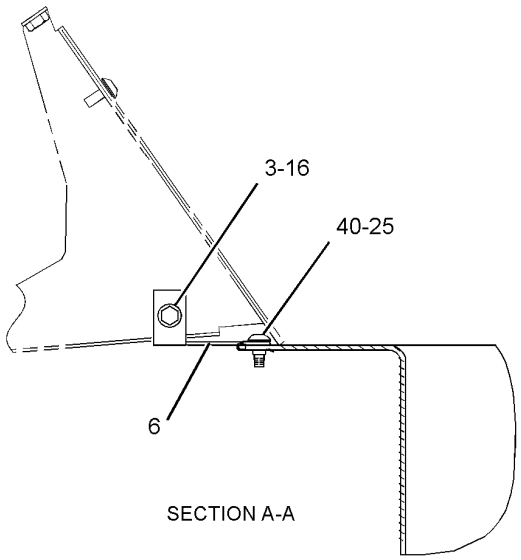

SECTION A-A

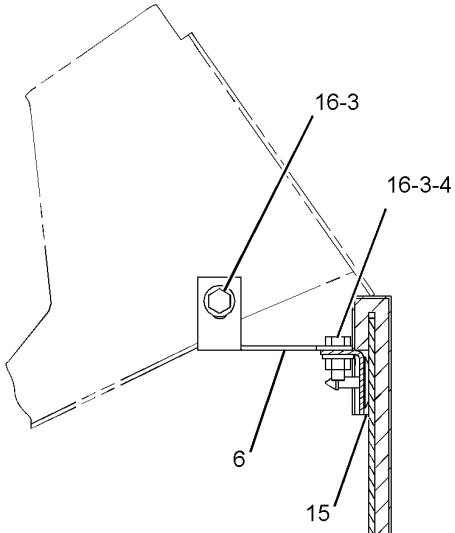

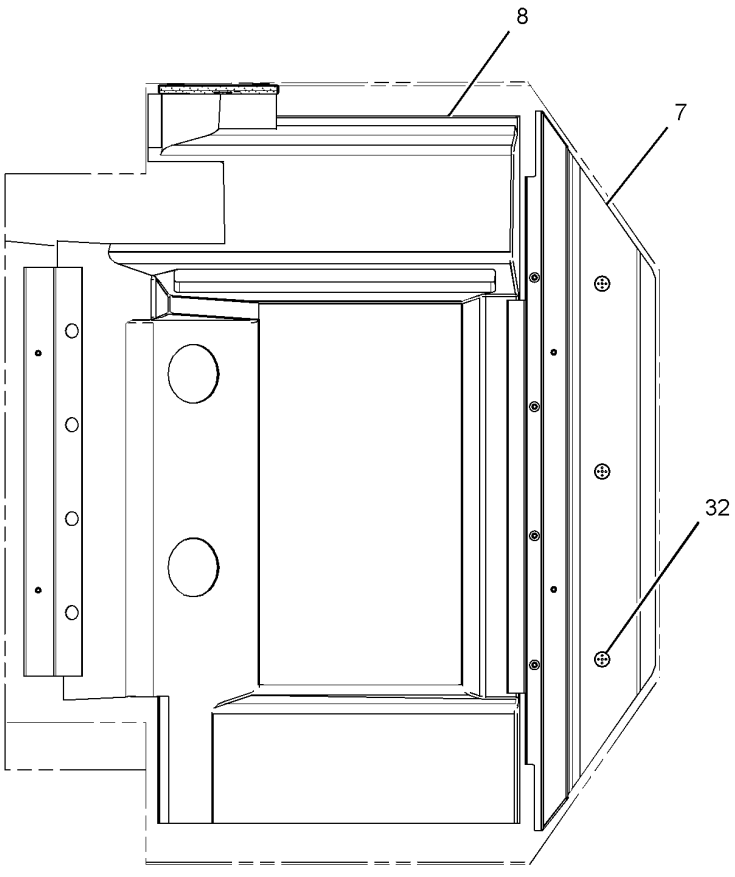

VIEW C-C

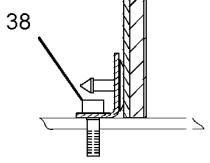

SECTION B-B

GRAPHIC #2

g01365062

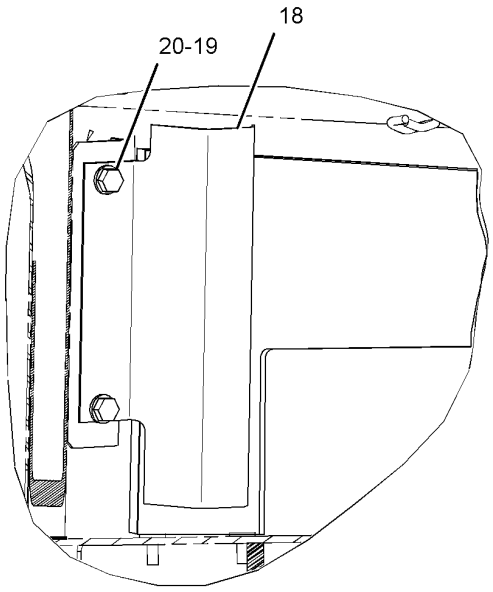

VIEW G-G

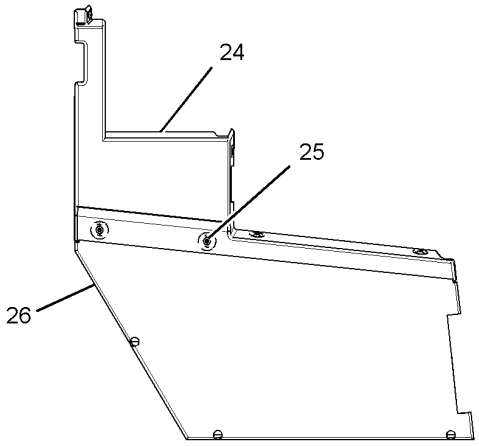

VIEW H-H

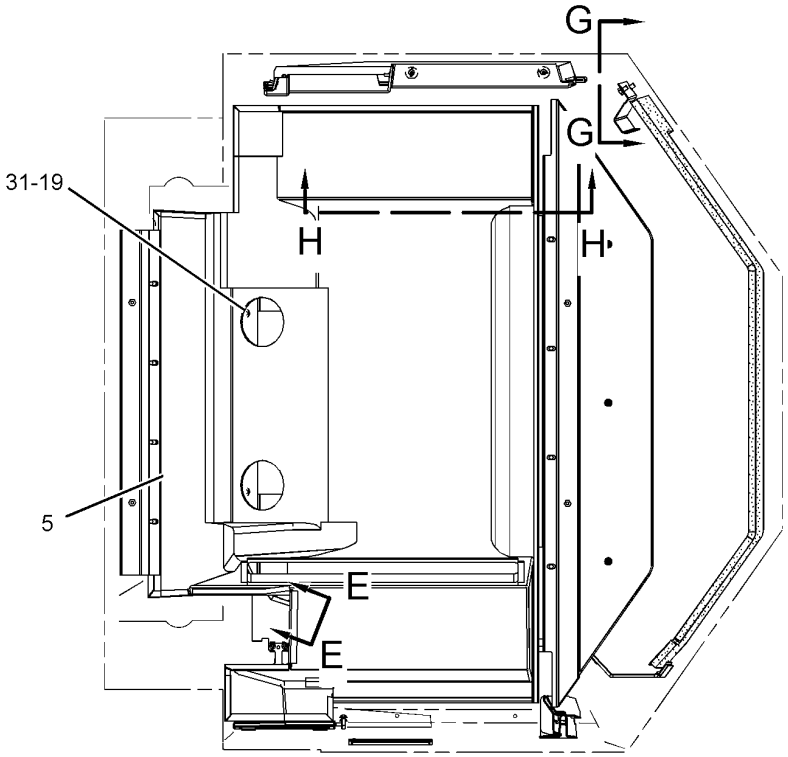

TOP VIEW

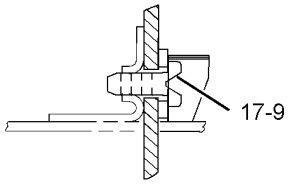

SECTION E-E

GRAPHIC #3 **<END>** g01446750

OPERATOR STATION

283-0135 LINES GP-AIR CONDITIONER

S/N: 2211-UP

PART OF 262-2081 CHASSIS AR

SMCS-1808 **i02891344**

NOTE	REF NO	GRAPHIC REF	PART NUMBER	QTY	PART NAME 1 2 3 4 5 6 (PRODUCT LEVEL)	SEE PAGE
	1	1	**2M-6102**	1	PIPE	
	2	1	**6D-2667**	9	CLIP	
	3	1	**7K-3176**	2	COUPLING AS-REFRIGERANT (SELF SEALING)	
					(EACH INCLUDES)	
		1	**107-4393**	1	VALVE AS	
		1	**107-4394**	1	GASKET	
	4	1	**219-0944**	1	FITTING GP-AIR CONDITIONER	
		1	**3E-4051**	1	CAP-SEAL	
		1	**3E-4057**	1	VALVE AS	
		1	**180-7180**	1	CORE-VALVE	
		1	**221-2389**	1	CAP-SEAL	
I	5	1	**289-4129**	1	HOSE AS	
I	6	1	**289-4130**	1	HOSE AS	
Y	7	1	*292-2932*	1	ACCUMULATOR & MTG GP-REFRIG	778
I	8	1	**314-5456**	1	HOSE AS	
I	9	1	**314-5457**	1	HOSE AS	
	10	1	**316-4915**	1	BRACKET	
I	11	1	**316-8727**	1	HOSE AS	
	12	1	**067-3045**	1	CLIP	
	13	1	**1P-6356**	1	PLATE	
	14	1	**2B-0941**	1	SPACER (10.5X19X19-MM THK)	
	15	1	**3E-4066**	1	FITTING AS-AIR CONDITIONER	
	16	1	**5P-3948**	2	COUPLING AS-REFRIGERANT	
					(EACH INCLUDES)	
		1	**7F-8607**	1	SEAL-O-RING	
		1	**107-4399**	1	VALVE AS	
	17	1	**6K-8178**	1	CLIP	
	18	1	**7K-3304**	2	NUT-JAM (1-20-THD)	
	19	1	**8T-2561**	1	WASHER-HARD (10.5X28.5X5-MM THK)	
	20	1	**8T-4121**	15	WASHER-HARD (11X21X2.5-MM THK)	
M	21	1	**8T-4133**	2	NUT (M10X1.5-THD)	
M	22	1	**8T-4136**	8	BOLT (M10X1.5X25-MM)	
M	23	1	**8T-4137**	4	BOLT (M10X1.5X20-MM)	
M	24	1	**8T-4182**	1	BOLT (M10X1.5X45-MM)	
M	25	1	**8T-4186**	1	BOLT (M10X1.5X40-MM)	
M	26	1	**8T-6466**	1	BOLT (M10X1.5X60-MM)	
	27	1	**9X-7380**	2	SEAL-O-RING	
	28	1	**9X-7381**	2	SEAL-O-RING	
	29	1	**9X-7382**	1	SEAL-O-RING	
	30	1	**9X-7383**	5	SEAL-O-RING	
	31	1	**9X-7385**	2	SEAL-O-RING	
E	32	1	**7I-1024**		GUARD (HOSE) (42-CM)	

E-ORDER BY THE CENTIMETER
I-REFER TO HYDRAULIC INFORMATION SYSTEM
M-METRIC PART
Y-SEPARATE ILLUSTRATION

283-0135 **LINES GP-AIR CONDITIONER** *(contd.)* **i02891344**

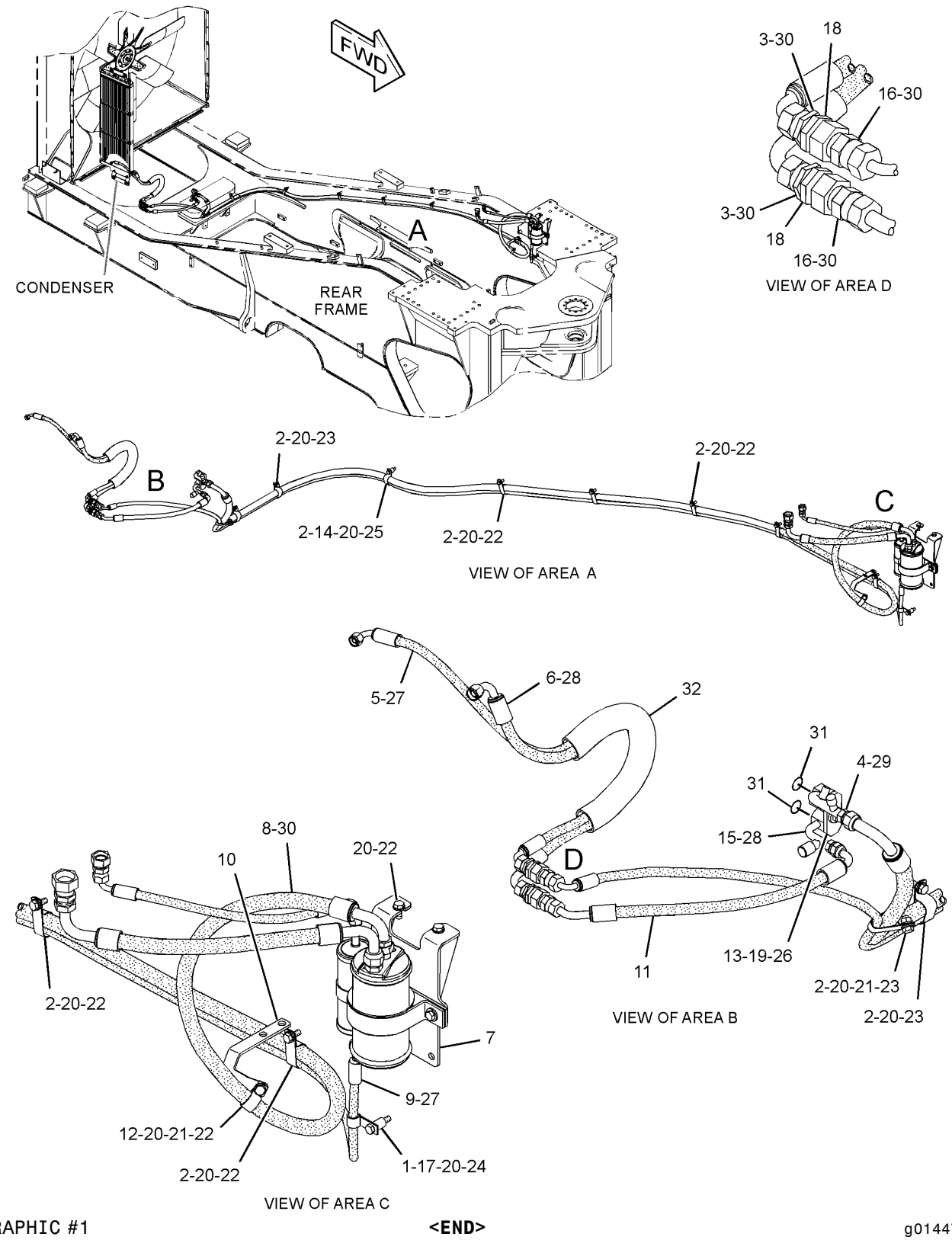

GRAPHIC #1 **<END>** g01447733

OPERATOR STATION

273-7160 LINES GP-CAB HEATER

S/N: 2211-UP

PART OF 262-2081 CHASSIS AR

SMCS-7304 **i02888124**

NOTE	REF NO	GRAPHIC REF	PART NUMBER	QTY	PART NAME 1 2 3 4 5 6 (PRODUCT LEVEL)	SEE PAGE
	1	1	**6V-7238**	2	VALVE-SHUTOFF	
	2	1	**9X-2488**	4	CLAMP-HOSE	
	3	1	**144-4613**	1	ANGLE AS	
	4	1	*155-7321*	2	ADAPTER AS	
					(EACH INCLUDES)	
		1	**3D-2824**	1	SEAL-O-RING	
		1	**6V-1722**	1	ADAPTER-O-RING	
	5	1	**3K-0360**	2	SEAL-O-RING	
	6	1	**4D-7388**	1	CLIP	
	7	1	**6D-1641**	12	CLIP	
	8	1	**8T-4121**	8	WASHER-HARD (11X21X2.5-MM THK)	
M	9	1	**8T-4133**	1	NUT (M10X1.5-THD)	
M	10	1	**8T-4136**	6	BOLT (M10X1.5X25-MM)	
M	11	1	**8T-4195**	1	BOLT (M10X1.5X30-MM)	
E	12	1	**5P-0767**		HOSE (721.7-CM)	
E	12A	1	**5P-0767**		HOSE (744.4-CM)	

E-ORDER BY THE CENTIMETER
M-METRIC PART

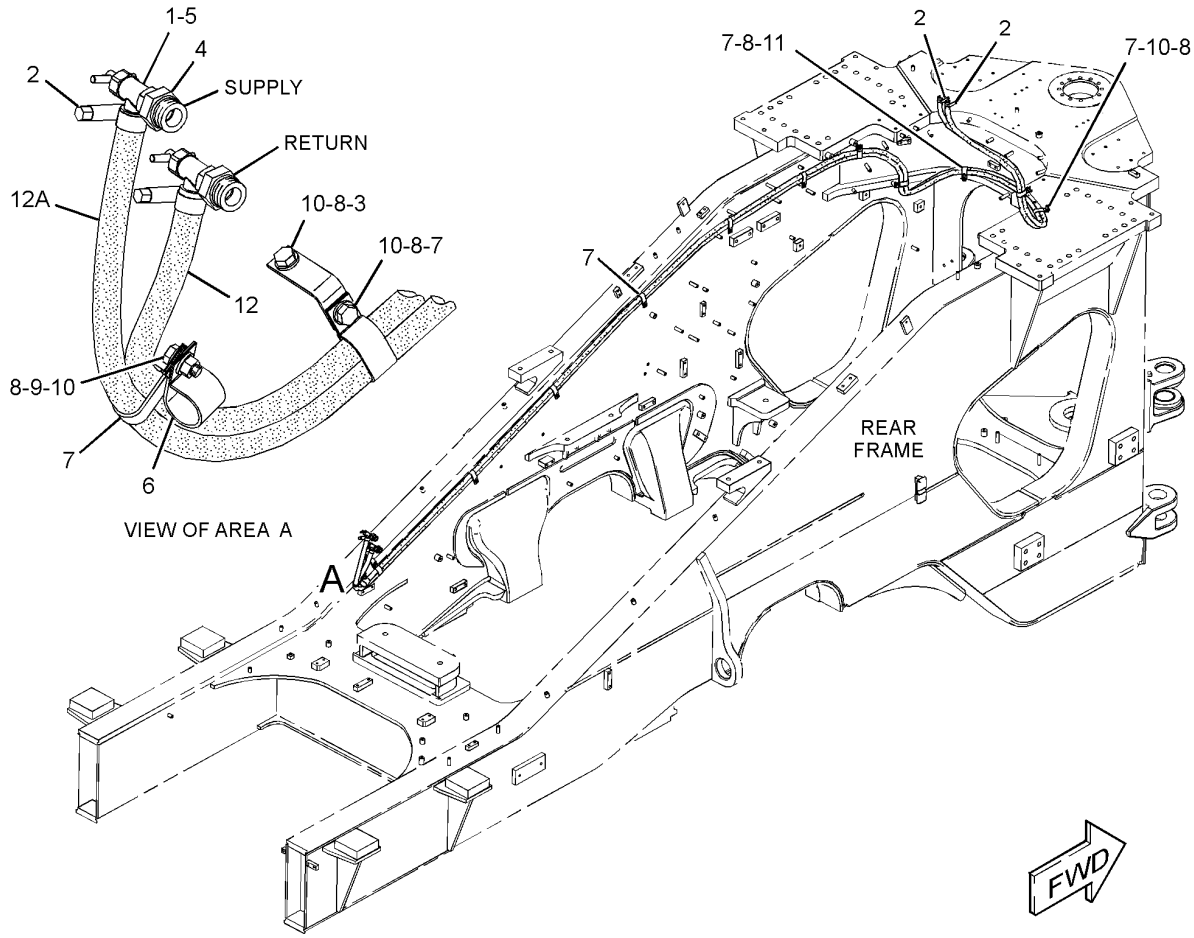

GRAPHIC #1 **<END>** g01439724

OPERATOR STATION

106-4143 MIRROR GP-REAR VIEW

S/N: 2211-UP

PART OF 143-3604 MIRROR GP-REAR VIEW

SMCS-7319 **i02880275**

NOTE	REF NO	GRAPHIC REF	PART NUMBER	QTY	PART NAME 1 2 3 4 5 6 (PRODUCT LEVEL)	SEE PAGE
	1	1	**5P-6879**	1	MIRROR	
	2	1	**7U-1903**	1	SUPPORT	
	3	1	**5P-7468**	2	CLIP (SLOT)	
	4	1	**5P-7469**	2	CLIP (TAB)	
	5	1	**6K-5290**	2	CLIP (TAB)	
	6	1	**6K-5291**	2	CLIP (SLOT)	
	7	1	**6V-1874**	2	GROMMET	
	8	1	**7X-0563**	1	WASHER-HARD (12X35X8-MM THK)	
	9	1	**7X-7729**	8	WASHER (11X25X3-MM THK)	
	10	1	**8F-0492**	1	SPACER (0.531X1.125X0.625-IN THK)	
M	11	1	**8T-0389**	4	LOCKNUT (M10X1.5-THD)	
M	12	1	**8T-4185**	2	BOLT (M10X1.5X50-MM)	
M	13	1	**8T-4195**	2	BOLT (M10X1.5X30-MM)	

M-METRIC PART

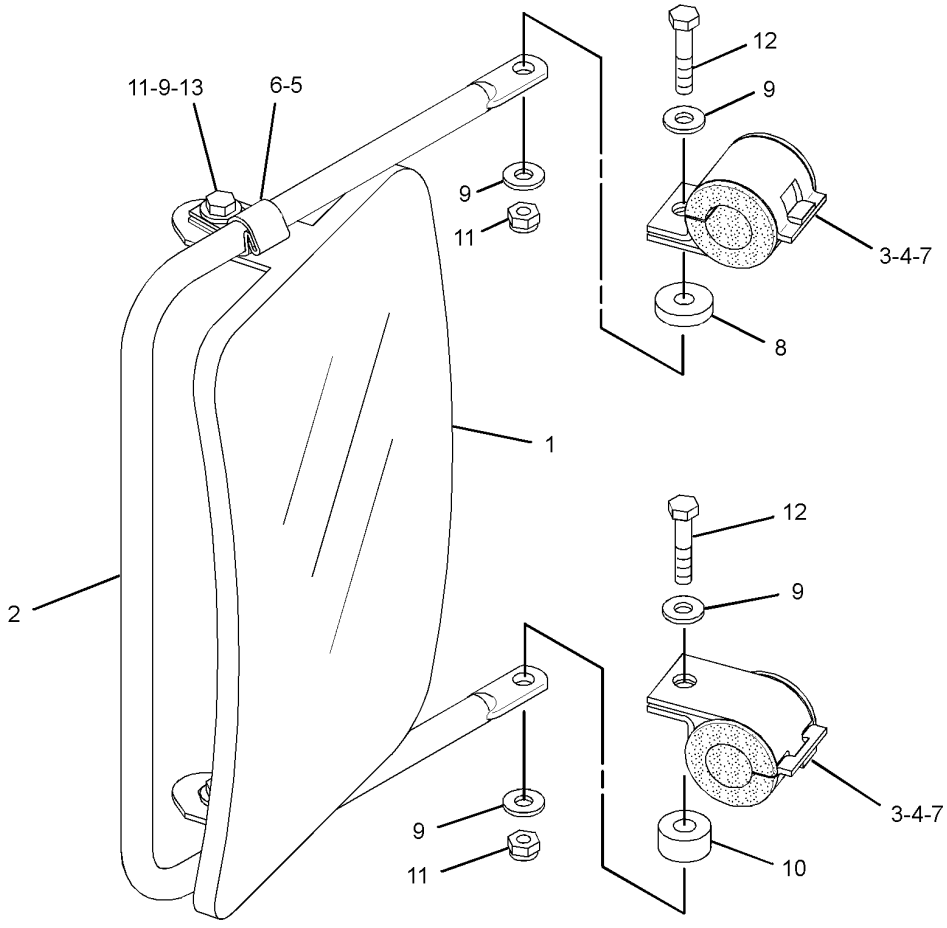

GRAPHIC #1 **<END>** g01435116

OPERATOR STATION

143-3604 MIRROR GP-REAR VIEW

S/N: 2211-UP

PART OF 262-2081 CHASSIS AR

SMCS-7319 **i00747874**

NOTE	PART NUMBER	QTY	PART NAME 1 2 3 4 5 6 (PRODUCT LEVEL)	SEE PAGE
Y	*106-4143*	2	MIRROR GP-REAR VIEW	830
Y-SEPARATE ILLUSTRATION				

<END>

179-1730 MODULE GP-MESSAGE CENTER

S/N: 2211-UP

PART OF 280-9826 WIRING GP-CAB

SMCS-7601 **i01700597**

NOTE	PART NUMBER	QTY	PART NAME 1 2 3 4 5 6 (PRODUCT LEVEL)	SEE PAGE
	186-1681	1	CONTROL AS-ELECTRONIC	
	102-8802	1	KIT-RECEPTACLE (2-PIN)	
			(INCLUDES RECEPTACLE AS & WEDGE)	
	102-8805	1	KIT-RECEPTACLE (6-PIN)	
			(INCLUDES RECEPTACLE AS & WEDGE)	

<END>

OPERATOR STATION

297-1401 MODULE GP-MONITOR KEYPAD

S/N: 2211-UP

PART OF 280-9826 WIRING GP-CAB

SMCS-7601 **i02646883**

NOTE	REF NO	GRAPHIC REF	PART NUMBER	QTY	PART NAME 1 2 3 4 5 6 (PRODUCT LEVEL)	SEE PAGE
	1	1	*125-0368*	1	BOARD AS	
		1	**4B-1218**	1	SCREW-MACHINE (6-32X0.25-IN)	
		1	**4B-2041**	1	NUT (6-32-THD)	
	2	1	**102-8804**	1	KIT-RECEPTACLE (4-PIN)	
					(INCLUDES RECEPTACLE AS AND WEDGE)	
	3	1	**186-3735**	3	PIN-CONNECTOR (16-GA TO 18-GA)	
	4	1	**8T-8737**	1	PLUG-SEAL	
	5	1	**3E-3377**	1	WEDGE-RECEPTACLE LOCK (4-PIN)	
	6	1	**301-0414**	1	FILM-KEYPAD	

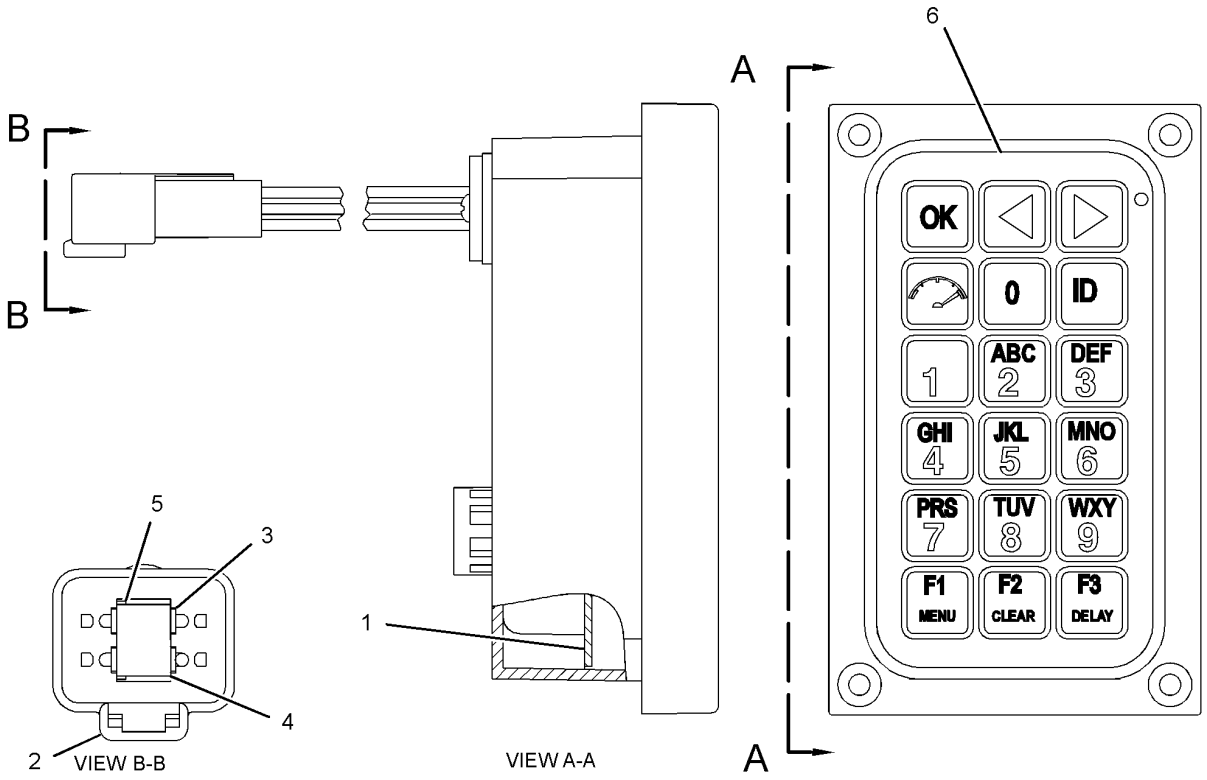

GRAPHIC #1 **<END>** g01330214

OPERATOR STATION

166-6928 MODULE GP-QUAD GAUGE

S/N: 2211-UP

PART OF 280-9826 WIRING GP-CAB

SMCS-7450, 7451, 7490, 7601 **i02023668**

NOTE	REF NO	GRAPHIC REF	PART NUMBER	QTY	PART NAME 1 2 3 4 5 6 (PRODUCT LEVEL)	SEE PAGE
	1	1	**102-8805**	1	KIT-RECEPTACLE (6-PIN)	
					(INCLUDES RECEPTACLE AS & WEDGE)	
	2	1	**8T-8729**	6	PIN-CONNECTOR	

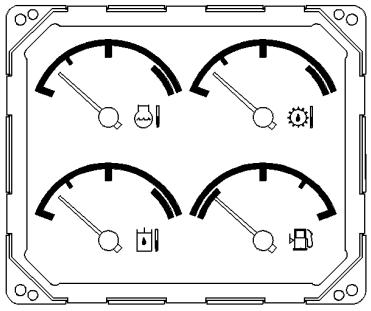

VIEW B-B

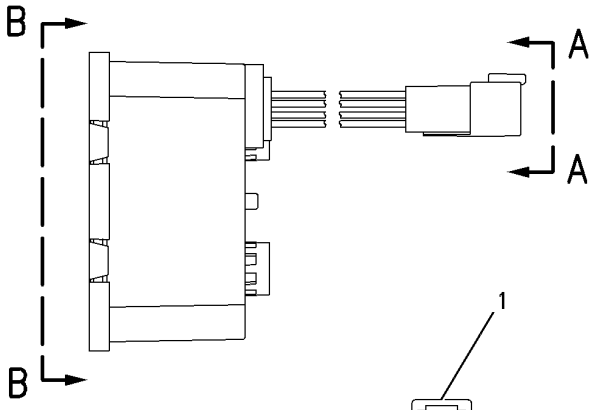

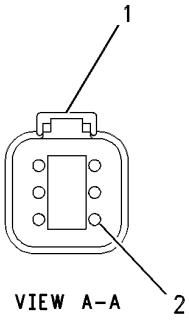

VIEW A-A

GRAPHIC #1 **<END>** g00587276

OPERATOR STATION

155-5784 MOTOR GP-WINDOW WIPER–REAR

S/N: 2211-UP

24-VOLT

PART OF 242-1901 WIPER & WASHER GP-WINDOW

SMCS-7305 **i02909912**

NOTE	REF NO	GRAPHIC REF	PART NUMBER	QTY	PART NAME 1 2 3 4 5 6 (PRODUCT LEVEL)	SEE PAGE
	1	1	**135-0611**	1	MOTOR GP-WINDOW WIPER (24-VOLT, 2-SPEED)	
		1	**102-8805**	1	KIT-RECEPTACLE (6-PIN)	
					(INCLUDES RECEPTACLE AS & WEDGE)	
		1	**8T-8737**	1	PLUG-SEAL	
		1	**186-3735**	5	PIN-CONNECTOR (16-GA TO 18-GA)	
	2	1	**206-5823**	1	CAP	

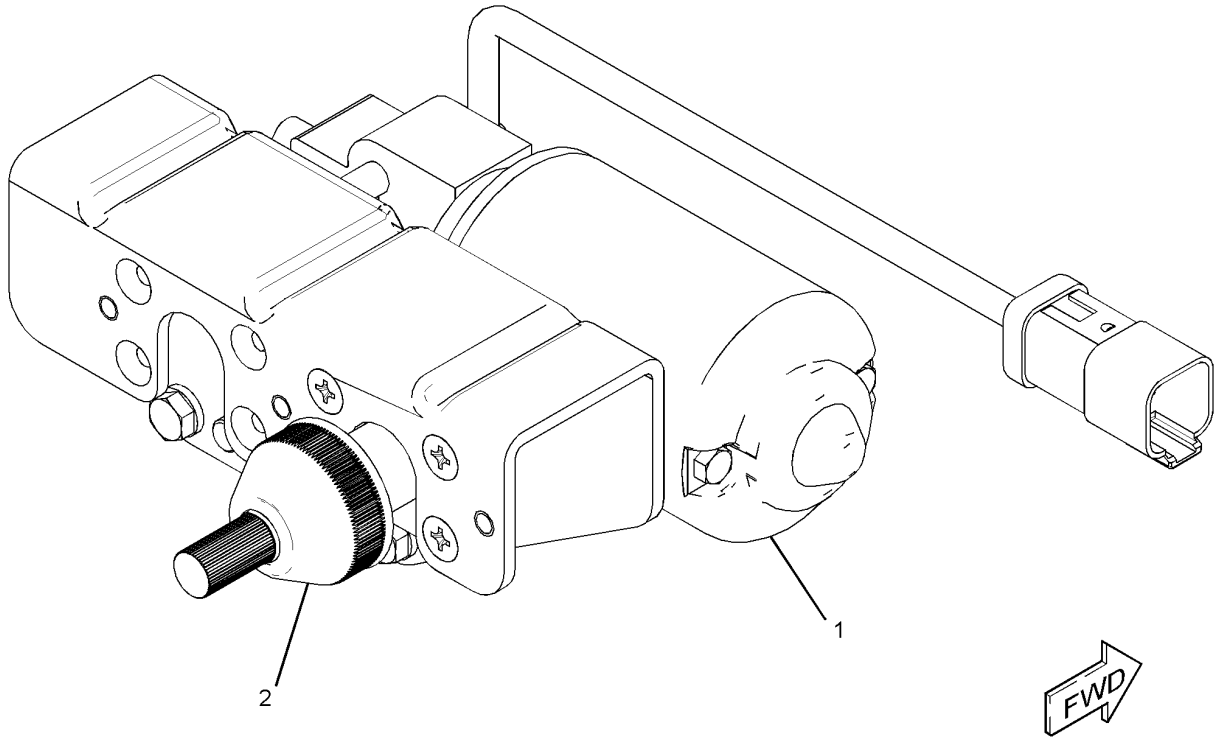

GRAPHIC #1 **<END>** g01423589

OPERATOR STATION

185-2154 MOTOR GP-WINDOW WIPER—FRONT

S/N: 2211-UP

PART OF 242-1901 WIPER & WASHER GP-WINDOW

SMCS-7305 **i02148154**

NOTE	REF NO	GRAPHIC REF	PART NUMBER	QTY	PART NAME 1 2 3 4 5 6 (PRODUCT LEVEL)	SEE PAGE
	1	1	**102-8805**	1	KIT-RECEPTACLE (6-PIN)	
					(INCLUDES RECEPTACLE AS AND WEDGE)	
	2	1	**8T-8737**	1	PLUG-SEAL	
	3	1	**186-3735**	5	PIN-CONNECTOR (16-GA TO 18-GA)	

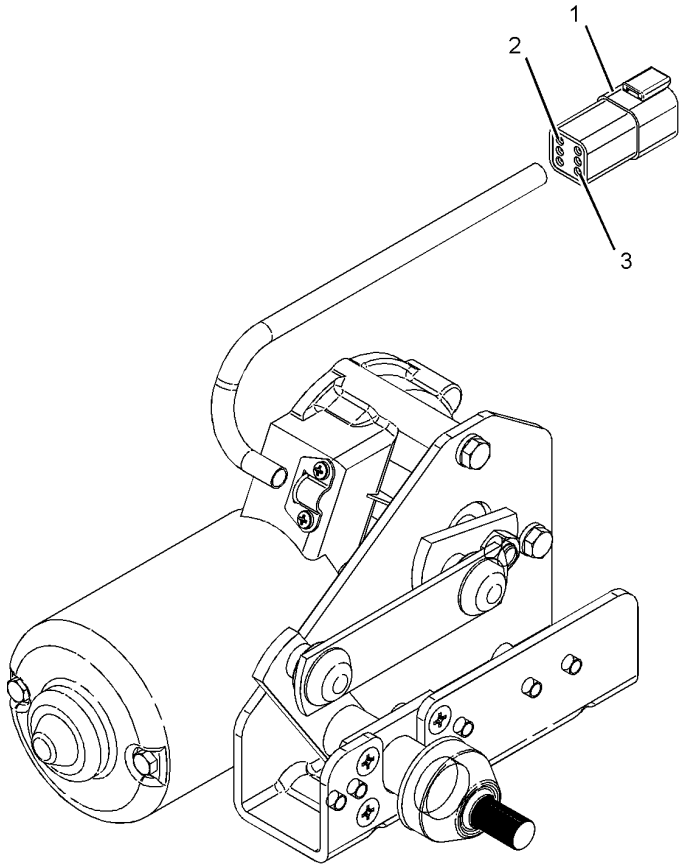

GRAPHIC #1 **<END>** g01091515

OPERATOR STATION

190-3445 MOTOR GP-WINDOW WIPER—FRONT QUARTER, RH

S/N: 2211-UP

PART OF 236-5417 WIPER GP-WINDOW

SMCS-7305 **i02357404**

NOTE	REF NO	GRAPHIC REF	PART NUMBER	QTY	PART NAME 1 2 3 4 5 6 (PRODUCT LEVEL)	SEE PAGE
	1	1	**102-8805**	1	KIT-RECEPTACLE (6-PIN)	
					(INCLUDES RECEPTACLE AS AND WEDGE)	
	2	1	**8T-8737**	1	PLUG-SEAL	
	3	1	**186-3735**	5	PIN-CONNECTOR (16-GA TO 18-GA)	
	4	1	**206-5823**	2	CAP	
	5	1	**135-0611**	1	MOTOR GP-WINDOW WIPER (24-VOLT, 2-SPEED)	

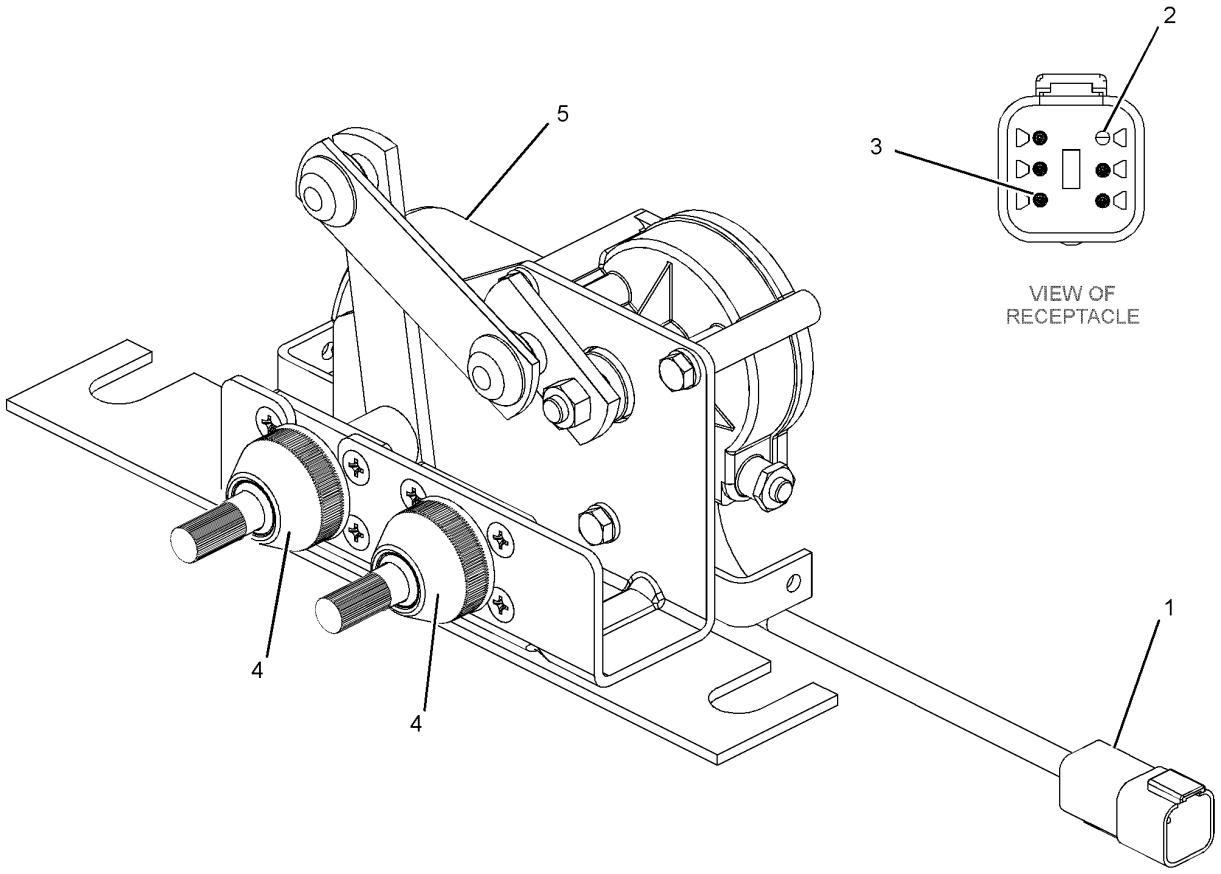

GRAPHIC #1 **<END>** g01177552

OPERATOR STATION

190-3446 MOTOR GP-WINDOW WIPER—FRONT QUARTER, LH

S/N: 2211-UP

PART OF 236-5417 WIPER GP-WINDOW

SMCS-7305 **i02357399**

NOTE	REF NO	GRAPHIC REF	PART NUMBER	QTY	PART NAME 1 2 3 4 5 6 (PRODUCT LEVEL)	SEE PAGE
	1	1	**102-8805**	1	KIT-RECEPTACLE (6-PIN)	
					(INCLUDES RECEPTACLE AS AND WEDGE)	
	2	1	**206-5823**	2	CAP	
	3	1	**186-3735**	5	PIN-CONNECTOR (16-GA TO 18-GA)	
	4	1	**8T-8737**	1	PLUG-SEAL	
	5	1	**222-5376**	1	MOTOR GP-WINDOW WIPER (24-VOLT, 2-SPEED)	

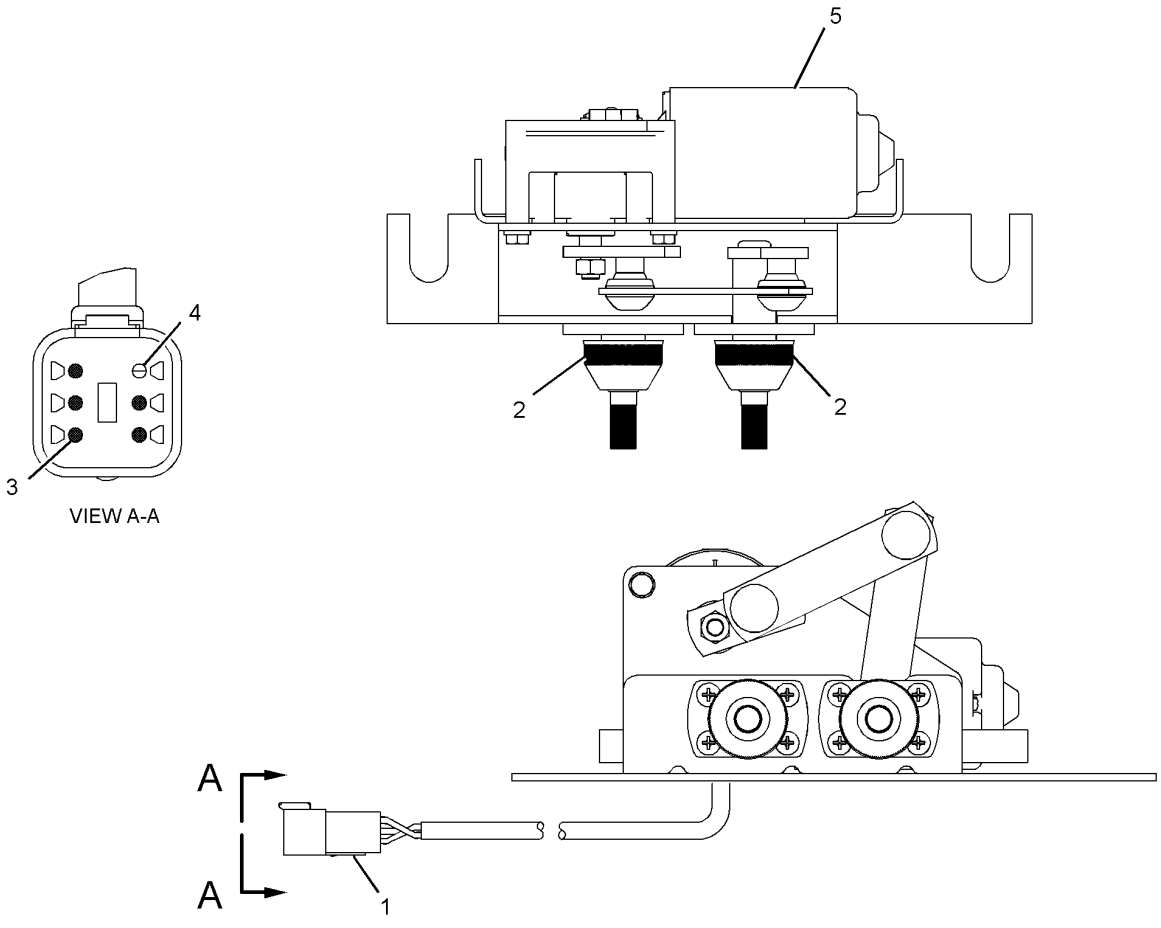

GRAPHIC #1 **<END>** g01177545

OPERATOR STATION

9U-2675 MOUNTING GP-ANTENNA–RADIO

S/N: 2211-UP

PART OF 280-7084 CAB AR

SMCS-7338, 7606 **i02115121**

NOTE	REF NO	GRAPHIC REF	PART NUMBER	QTY	PART NAME 1 2 3 4 5 6 (PRODUCT LEVEL)	SEE PAGE
	1	1	**9U-2334**	1	CABLE AS-COAXIAL	
	2	1	**131-0722**	1	CABLE AS-COAXIAL	
	3	1	**7K-1181**	1	STRAP-CABLE	

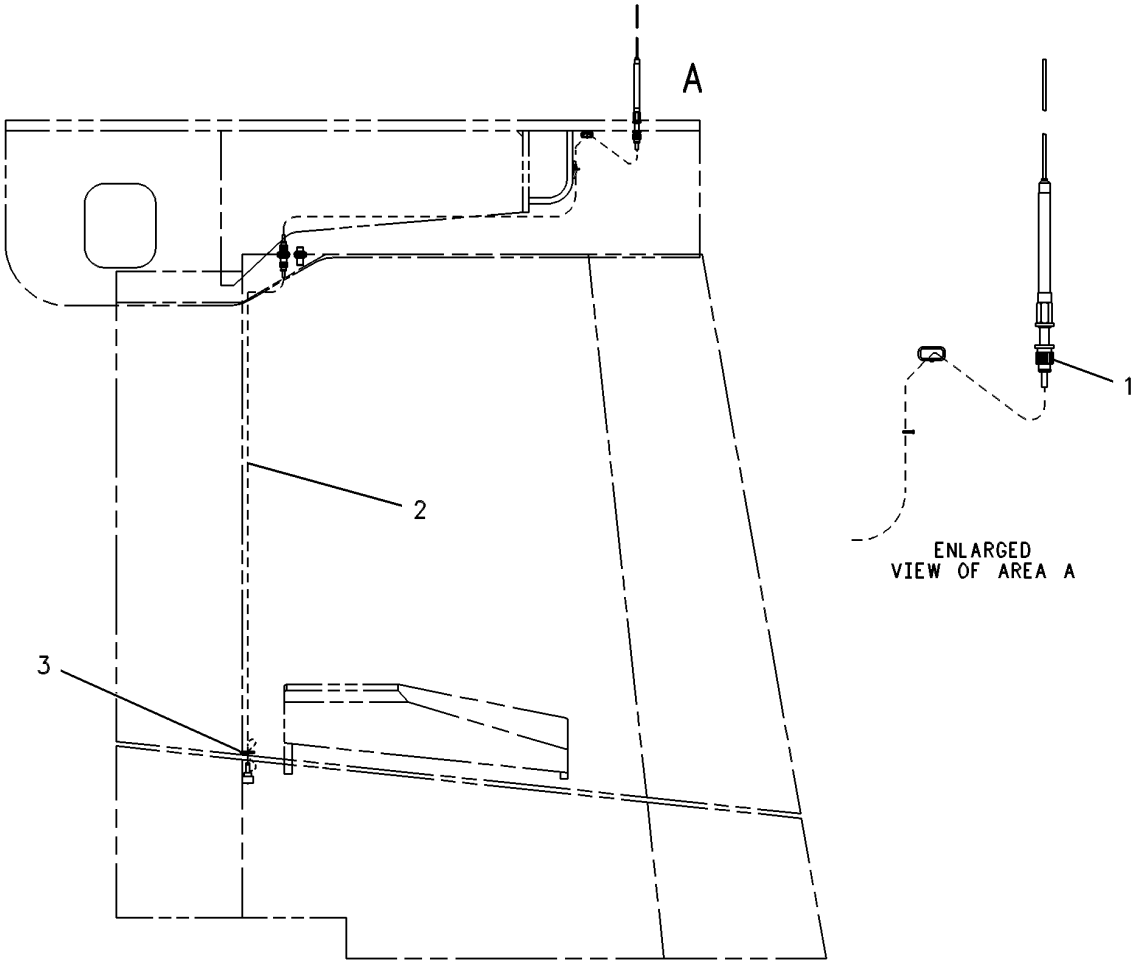

GRAPHIC #1 **<END>** g00121415

OPERATOR STATION

314-6934 MOUNTING GP-ANTENNA

S/N: 2211-UP

AN ATTACHMENT

SMCS-7338, 7606 **i02900438**

NOTE	REF NO	GRAPHIC REF	PART NUMBER	QTY	PART NAME 1 2 3 4 5 6 (PRODUCT LEVEL)	SEE PAGE
	1	1,2	**3S-2093**	8	STRAP-CABLE	
	2	2	**116-5792**	1	GROMMET	
	3	1	**284-9055**	1	ANTENNA AS	
	4	2	**296-7575**	1	PLATE AS	
	5	2	**305-3449**	1	BRACKET	
	6	1	**4P-7581**	1	CLIP	
M	7	1	**6V-2313**	2	BOLT (M5X0.8X30-MM)	
	8	2	**7X-7729**	1	WASHER (11X25X3-MM THK)	
	9	1	**8T-4121**	2	WASHER-HARD (11X21X2.5-MM THK)	
M	10	1,2	**8T-4136**	3	BOLT (M10X1.5X25-MM)	
	11	1	**9X-8256**	2	WASHER (6.6X12X2-MM THK)	

M-METRIC PART

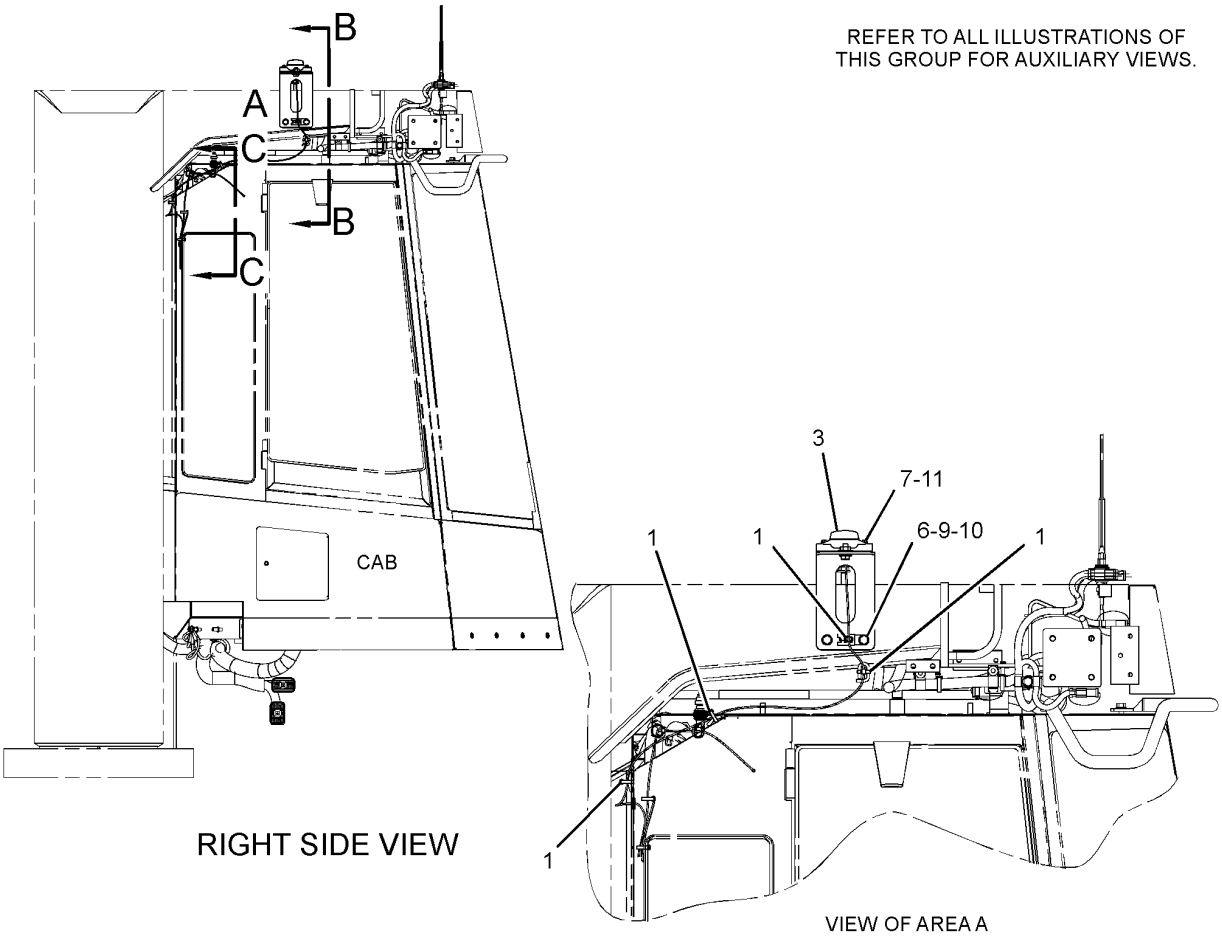

GRAPHIC #1 g01447111

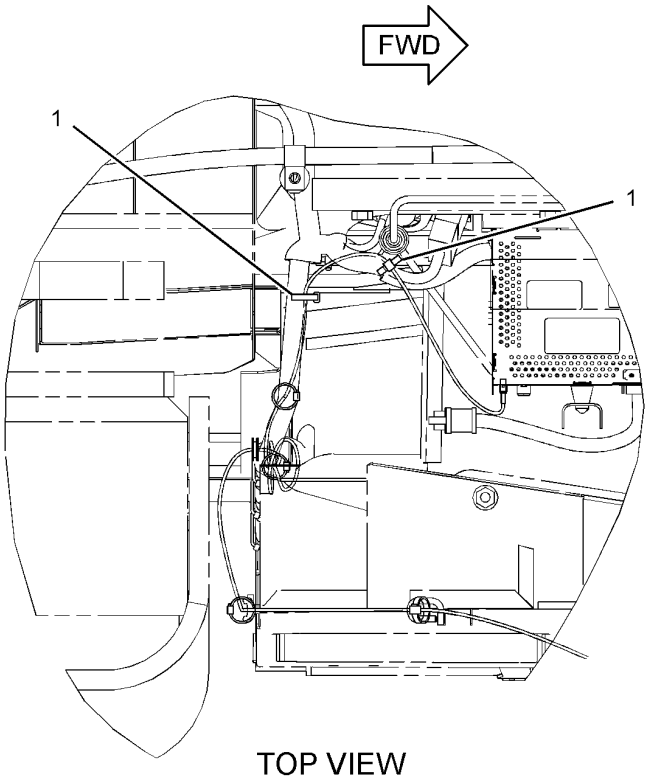

TOP VIEW

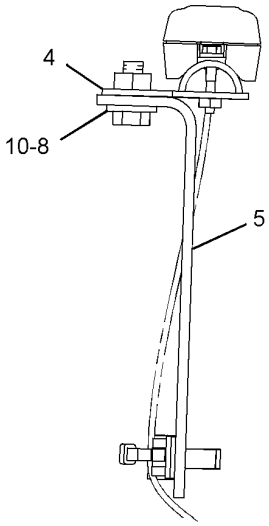

VIEW B-B

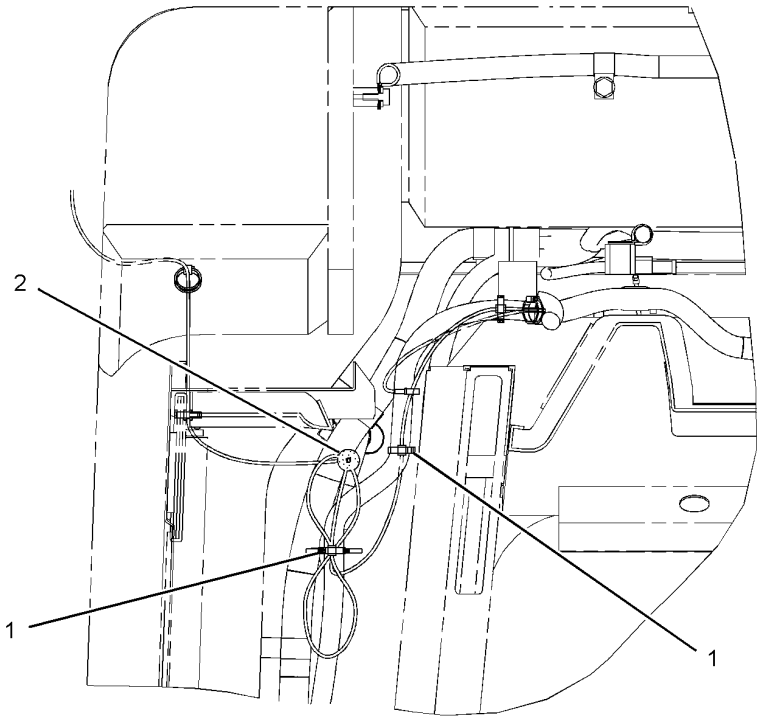

SECTION C-C

GRAPHIC #2 **<END>** g01447290

OPERATOR STATION

252-6457 MOUNTING GP-MONITOR—CAES

S/N: 2211-UP

PART OF 282-5331 INSTALLATION AR-CAES

AN ATTACHMENT

SMCS-7604 **i02761968**

NOTE	REF NO	GRAPHIC REF	PART NUMBER	QTY	PART NAME 1 2 3 4 5 6 (PRODUCT LEVEL)	SEE PAGE
C	1	1	**7K-1181**	5	STRAP-CABLE	
C	2	1	**8C-5607**	8	MOUNT-ISOLATION	
C	3	1	**8C-5608**	4	SPACER (6.5X9.5X25.4-MM THK)	
	4	1	**167-8712**	1	ALARM (CAES)	
C	5	1	**240-5283**	1	HARNESS AS-WIRING (FERRITE)	
	6	1	**245-1435**	1	HARNESS AS-MONITOR (CAES)	
		1	**102-8802**	1	KIT-RECEPTACLE (2-PIN)	
		1	**102-8801**	1	KIT-RECEPTACLE (12-PIN)	
		1	**102-8805**	1	KIT-RECEPTACLE (6-PIN)	
		1	**102-8806**	1	KIT-RECEPTACLE (8-PIN)	
					(EACH RECEPTACLE KIT INCLUDES RECEPTACLE AS & WEDGE)	
		1	**9X-6772**	2	STRAP-CABLE	
		1	**126-1774**	1	COVER-CONNECTOR	
		1	**155-2265**	1	KIT-CONNECTING PLUG (8-PIN)	
		1	**155-2270**	1	KIT-CONNECTING PLUG (2-PIN)	
		1	**155-2274**	1	KIT-CONNECTING PLUG (6-PIN)	
					(EACH PLUG KIT INCLUDES PLUG AS, INTERFACE SEAL & WEDGE)	
		1	**160-7689**	1	PLUG AS-CONNECTOR (70-PIN)	
C	7	1	**293-3533**	1	PLATE AS	
C	8	1	**293-3537**	1	PLATE AS	
C	9	1	**306-0310**	1	PLATE AS	
C	10	1	**132-5789**	1	CLIP	
C	11	1	**156-6175**	1	CLIP	
C	12	1	**2V-8259**	1	GROMMET	
C	13	1	**4M-5282**	4	BOLT (1/4-20X1.5-IN)	
C	14	1	**8T-4121**	2	WASHER-HARD (11X21X2.5-MM THK)	
CM	15	1	**8T-4137**	2	BOLT (M10X1.5X20-MM)	
CM	16	1	**8T-4138**	4	BOLT (M6X1X20-MM)	
C	17	1	**9X-6165**	4	WASHER (6.5X22X2.5-MM THK)	
C	18	1	**9X-8256**	4	WASHER (6.6X12X2-MM THK)	

C-CHANGE FROM PREVIOUS TYPE
M-METRIC PART

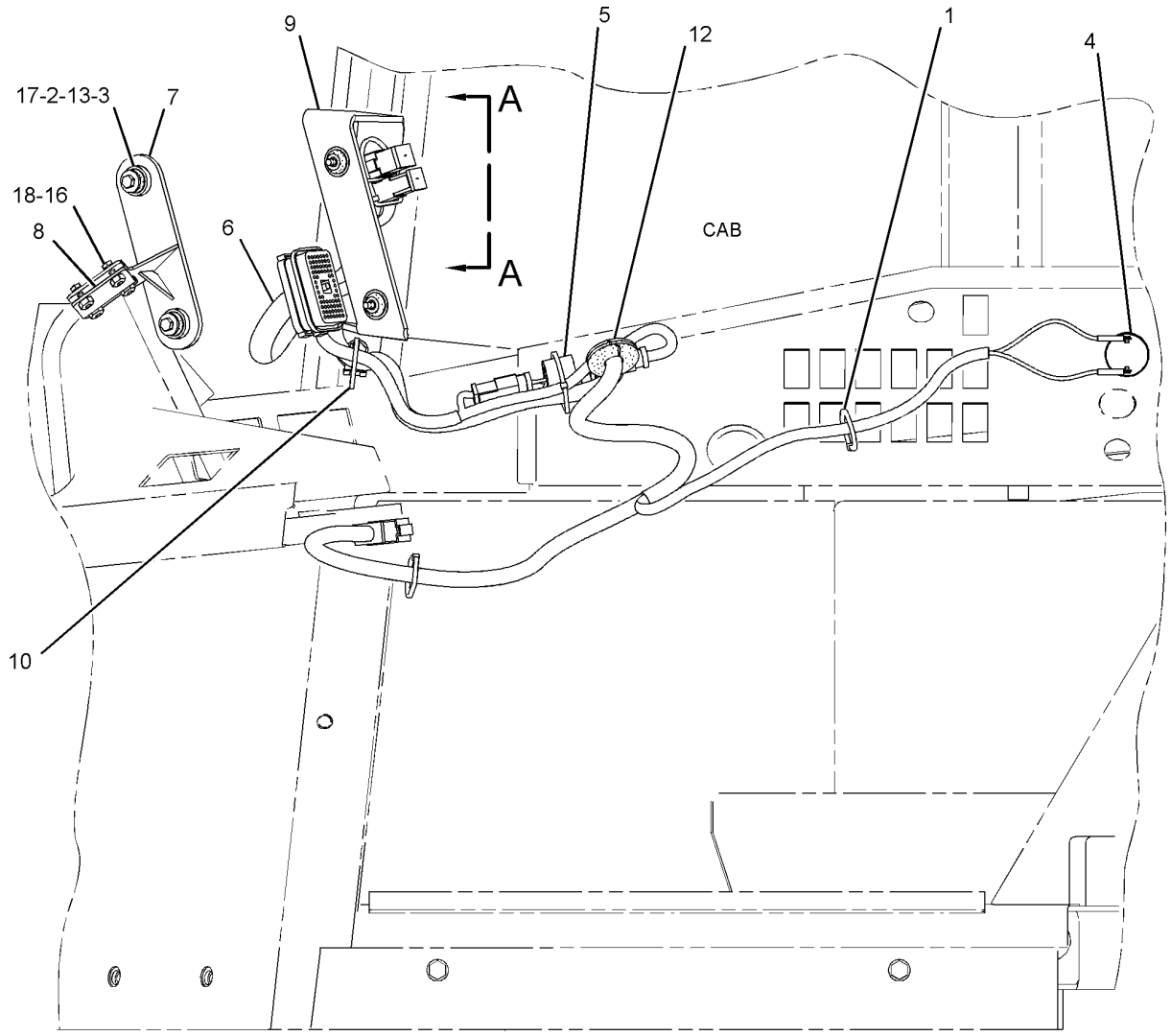

LEFT SIDE VIEW

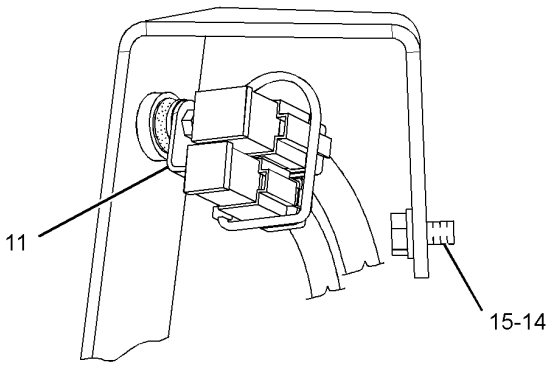

VIEW A-A

GRAPHIC #1 **<END>** g01404397

OPERATOR STATION

109-6852 MOUNTING GP-PLATFORM

S/N: 2211-UP

PART OF 262-2081 CHASSIS AR

SMCS-7253 **i00743357**

NOTE	REF NO	GRAPHIC REF	PART NUMBER	QTY	PART NAME 1 2 3 4 5 6 (PRODUCT LEVEL)	SEE PAGE
	1	1	**9W-7385**	4	SLEEVE	
	2	1	**9W-7388**	6	WASHER (26X144X12-MM THK)	
	3	1	**9W-9941**	4	MOUNT AS	
	4	1	**112-7057**	2	SUPPORT AS	
					(EACH INCLUDES)	
M		1	**8T-3597**	1	NUT-WELD (M12X1.75-THD)	
	5	1	**112-7058**	2	SUPPORT AS	
					(EACH INCLUDES)	
		1	**9C-4935**	2	PLATE	
M	6	1	**8T-4140**	20	BOLT (M16X2X60-MM)	
	7	1	**8T-4167**	4	WASHER-HARD (26X44X4-MM THK)	
M	8	1	**8T-4649**	4	BOLT (M24X3X140-MM)	
	9	1	**9X-8257**	20	WASHER (17.5X30X3.5-MM THK)	

M-METRIC PART

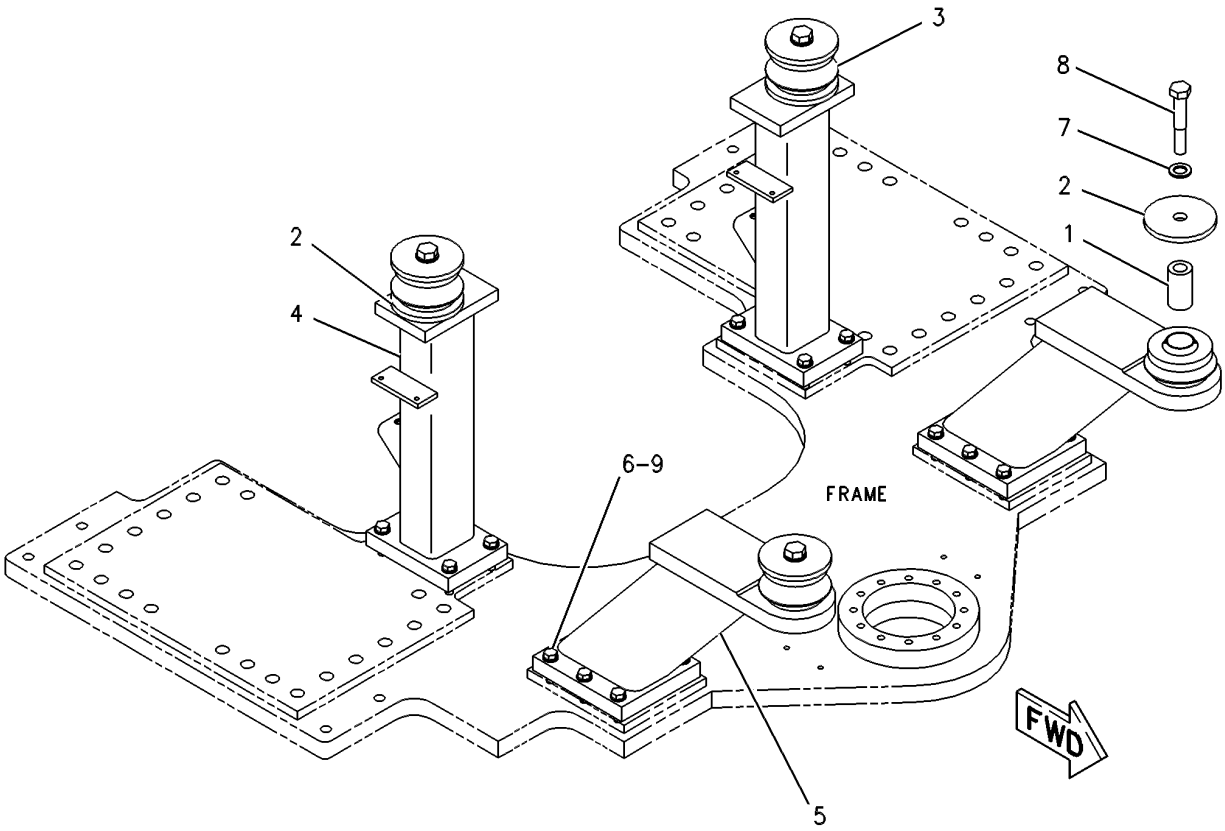

GRAPHIC #1 **<END>** g00254864

OPERATOR STATION

247-3069 MOUNTING GP-ROPS

S/N: 2211-UP

PART OF 262-2081 CHASSIS AR

SMCS-7266 **i02652016**

NOTE	REF NO	GRAPHIC REF	PART NUMBER	QTY	PART NAME 1 2 3 4 5 6 (PRODUCT LEVEL)	SEE PAGE
	1	1	**3S-7023**	40	WASHER (34X57X6-MM THK)	
M	2	1	**8C-3236**	40	BOLT (M30X3.5X160-MM)	

M-METRIC PART

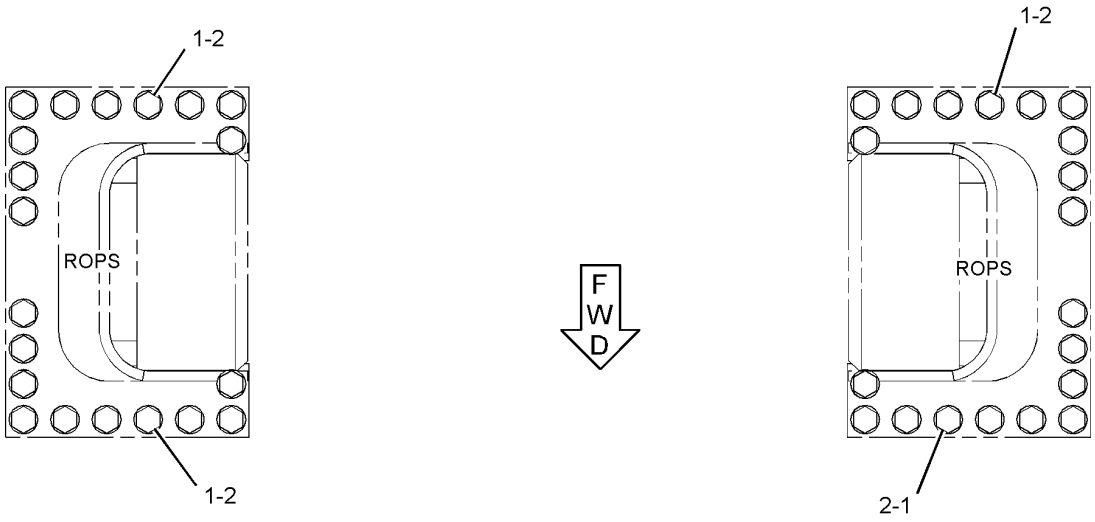

TOP VIEW

GRAPHIC #1 **<END>** g01338236

OPERATOR STATION

280-7083 OPERATOR AR

S/N: 2211-UP

PART OF 262-2081 CHASSIS AR

SMCS-7301 **i02895510**

NOTE	PART NUMBER	QTY	PART NAME 1 2 3 4 5 6 (PRODUCT LEVEL)	SEE PAGE
Y	*280-7084*	1	CAB AR	792
Y	*242-0389*	1	COVER GP-CAB	809

Y-SEPARATE ILLUSTRATION

<END>

OPERATOR STATION

292-9241 PAN GP-BACKREST

S/N: 2211-UP

PART OF 178-7910 SEAT GP

SMCS-7312 **i02706852**

NOTE	REF NO	GRAPHIC REF	PART NUMBER	QTY	PART NAME 1 2 3 4 5 6 (PRODUCT LEVEL)	SEE PAGE
	1	1	**164-4883**	1	KNOB-LUMBAR	
	2	1	**250-4628**	3	PLUG	
	3	1	**292-6097**	1	CUSHION AS-BACK	
	4	1	*299-2277*	1	PAN GP-BACKREST	
		1	**4K-9429**	2	RIVET-POP	
		1	**136-1543**	1	PLATE AS-LUMBAR	
		1	**261-5694**	1	PAN AS-BACKREST	
	5	1	**5P-0537**	2	WASHER-HARD (7.2X14.5X2-MM THK)	
	6	1	**6V-8969**	2	SCREW-BUTTON HEAD (1/4-20X0.5-IN)	
	7	1	**8T-7566**	1	PIN-SPRING	

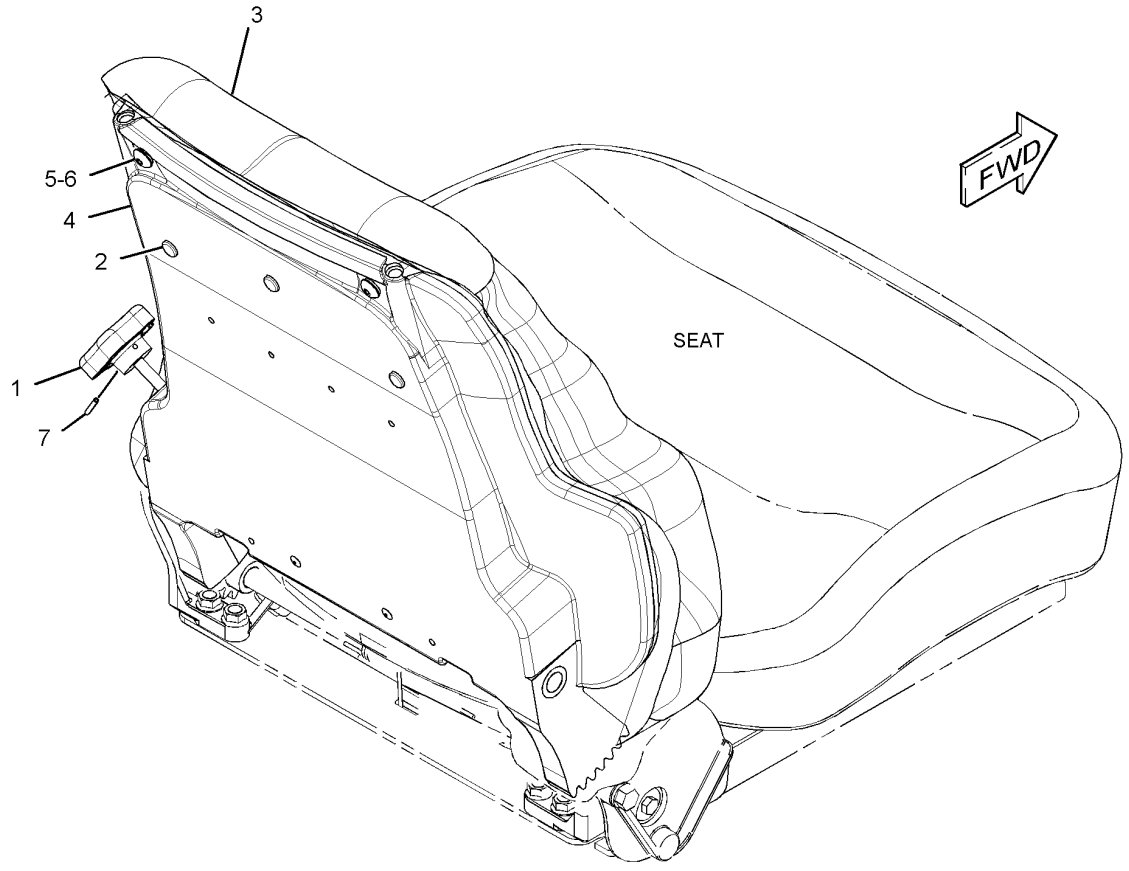

GRAPHIC #1 **<END>** g01378487

OPERATOR STATION

301-4162 PAN GP-BACKREST

S/N: 2211-UP
PART OF 285-8423 SEAT GP
AN ATTACHMENT

SMCS-7312 **i02902994**

NOTE	REF NO	GRAPHIC REF	PART NUMBER	QTY	PART NAME 1 2 3 4 5 6 (PRODUCT LEVEL)	SEE PAGE
	1	1	**164-4883**	1	KNOB-LUMBAR	
	2	1	**250-4628**	3	PLUG	
	3	1	**292-6107**	1	CUSHION AS-BACK	
	4	1	*299-2277*	1	PAN GP-BACKREST	
		1	**4K-9429**	2	RIVET-POP	
		1	**136-1543**	1	PLATE AS-LUMBAR	
		1	**261-5694**	1	PAN AS-BACKREST	
	5	1	**5P-0537**	2	WASHER-HARD (7.2X14.5X2-MM THK)	
	6	1	**6V-8969**	2	SCREW-BUTTON HEAD (1/4-20X0.5-IN)	
	7	1	**8T-7566**	1	PIN-SPRING	

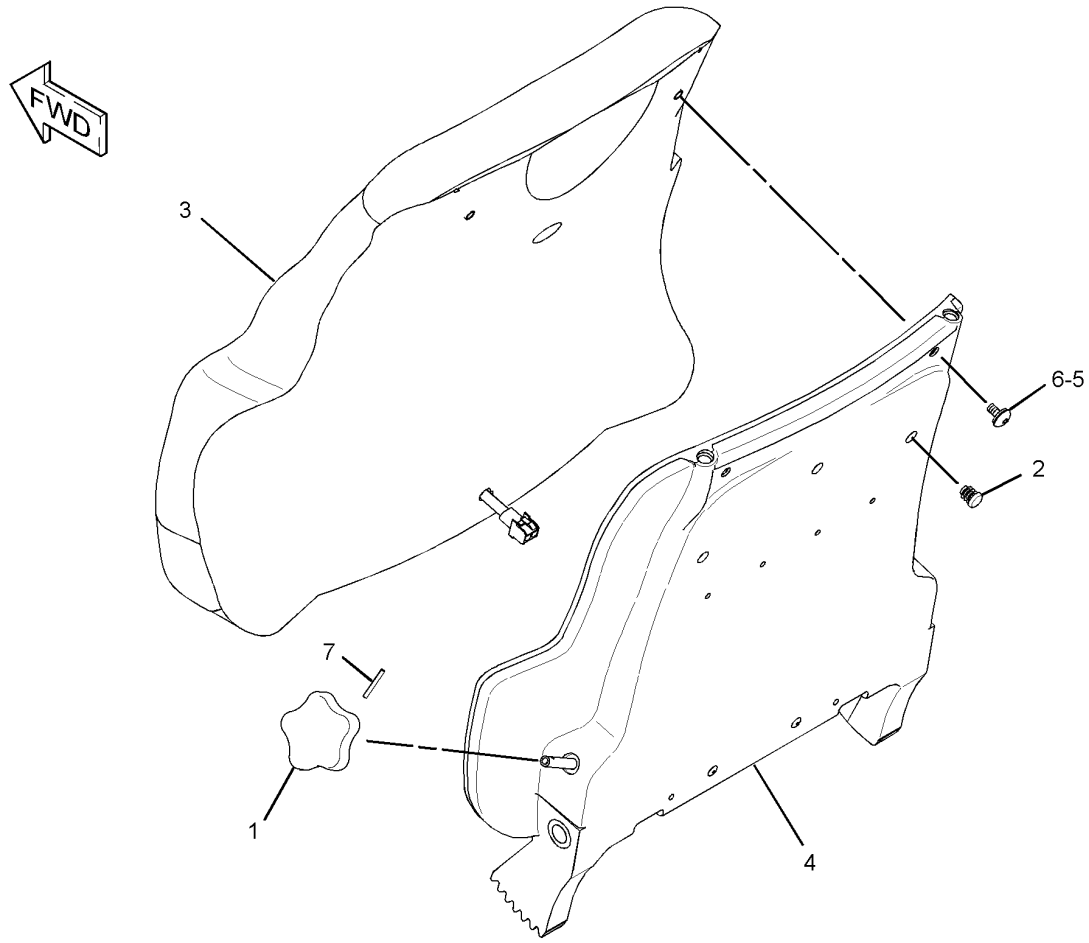

GRAPHIC #1 **<END>** g01449552

OPERATOR STATION

241-5785 PAN GP-SEAT

S/N: 2211-UP
PART OF 285-8423 SEAT GP
AN ATTACHMENT

SMCS-7312 **i02757228**

NOTE	REF NO	GRAPHIC REF	PART NUMBER	QTY	PART NAME 1 2 3 4 5 6 (PRODUCT LEVEL)	SEE PAGE
	1	1	**3S-2093**	2	STRAP-CABLE	
	2	1	**246-4304**	1	CUSHION AS-SEAT	
	3	1	**246-4306**	1	HOUSING-SWITCH	
	4	1	**246-4307**	1	HARNESS AS-WIRING (HEATED SEAT)	
	5	1	**262-1352**	1	PAN-SEAT	
	6	1	**266-9281**	2	CLIP	
	7	1	**8T-9082**	6	RIVET-POP	

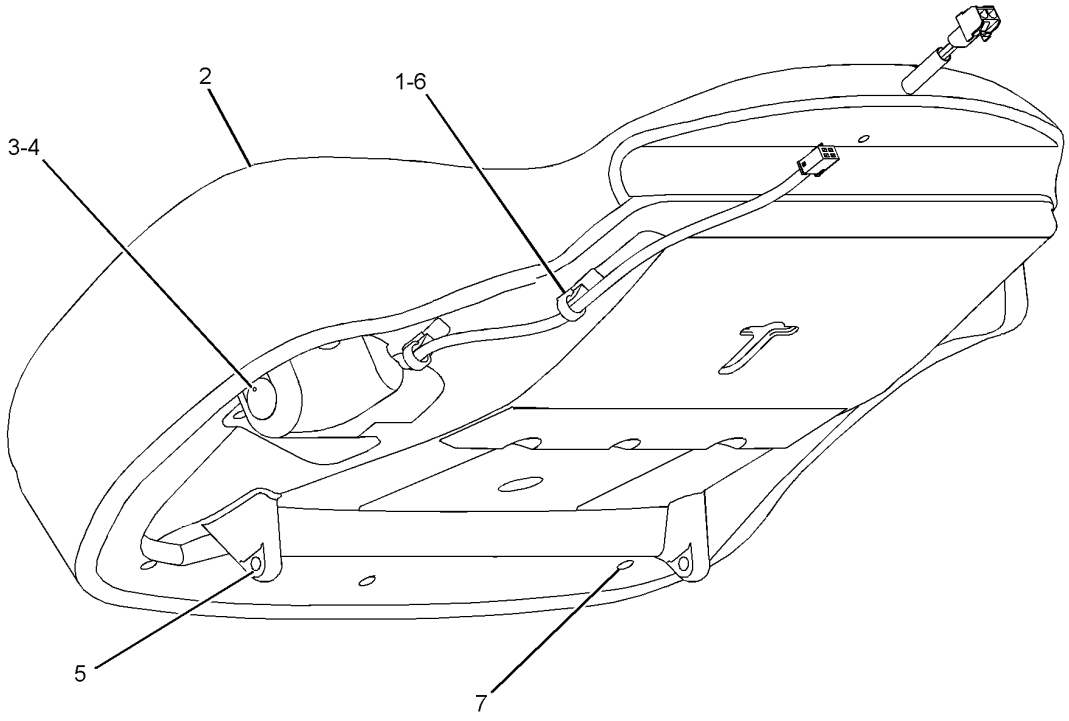

GRAPHIC #1 **<END>** g01260044

OPERATOR STATION

236-5224 PANEL GP-INSTRUMENT–SIDE

S/N: 2211-UP

PART OF 280-7084 CAB AR

SMCS-7451 **i02706429**

NOTE	REF NO	GRAPHIC REF	PART NUMBER	QTY	PART NAME 1 2 3 4 5 6 (PRODUCT LEVEL)	SEE PAGE
	1	1	**213-3056**	1	BRACKET AS	
M		1	**6V-9632**	3	NUT-WELD (M6X1-THD)	
	2	1	**213-3057**	1	BRACKET AS	
M		1	**6V-9632**	5	NUT-WELD (M6X1-THD)	
	3	1	**241-6416**	1	PANEL AS	
M		1	**6A-7844**	4	NUT-WELD	
	4	1	**241-8244**	1	FILM-DASH	
M	5	1	**8T-4138**	8	BOLT (M6X1X20-MM)	
	6	1	**8T-4205**	8	WASHER-HARD (7.2X14.5X2-MM THK)	
M	7	1	**9X-2044**	4	SCREW-TRUSS HEAD (M6X1X16-MM)	

M-METRIC PART

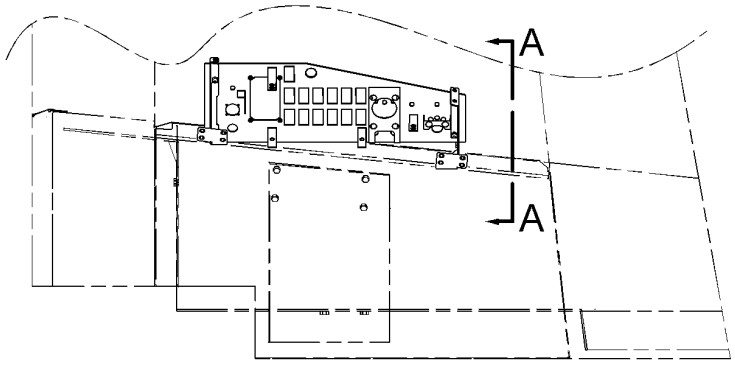

RIGHT SIDE VIEW

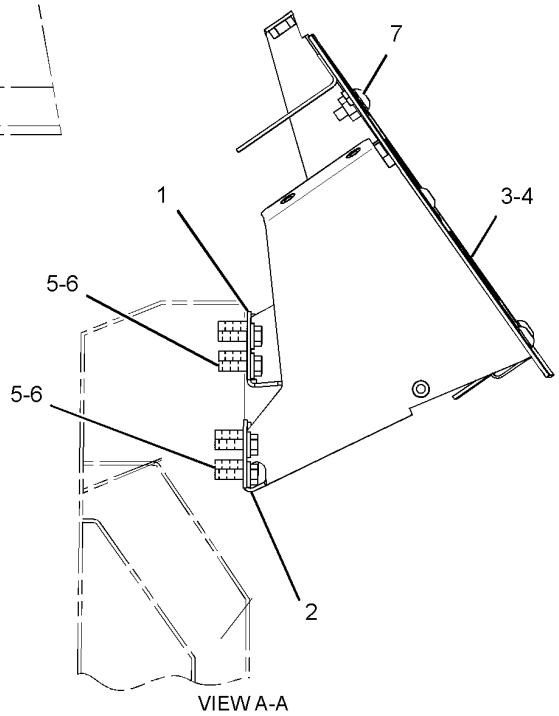

VIEW A-A

GRAPHIC #1 **<END>** g01359647

OPERATOR STATION

286-7231 PANEL GP-INSTRUMENT–FRONT

S/N: 2211-UP

PART OF 280-7084 CAB AR

SMCS-7451 **i02866188**

NOTE	REF NO	GRAPHIC REF	PART NUMBER	QTY	PART NAME 1 2 3 4 5 6 (PRODUCT LEVEL)	SEE PAGE
	1	1	**4E-8537**	1	PANEL-INSTRUMENT	
	2	1	**4E-8937**	1	BRACKET AS	
M		1	**6V-9632**	2	NUT-WELD (M6X1-THD)	
	3	1	**4E-8940**	1	BRACKET AS	
M		1	**6V-9632**	2	NUT-WELD (M6X1-THD)	
	4	1	**100-5568**	1	BEZEL	
	5	1	**125-0053**	1	FILM-FACE (LH)	
	6	1	**125-0054**	1	FILM-FACE (RH)	
	7	1	**129-7700**	1	PANEL	
	8	1	**141-8143**	1	PANEL	
	9	1	**141-8144**	1	PLATE AS	
M		1	**6V-9632**	2	NUT-WELD (M6X1-THD)	
	10	1	**141-8145**	1	PLATE AS (LH)	
M		1	**9X-2032**	1	NUT-WELD (M4X0.7-THD)	
	11	1	**141-8146**	1	PLATE AS (RH)	
M		1	**9X-2032**	1	NUT-WELD (M4X0.7-THD)	
M	12	1	**5C-9553**	2	BOLT (M6X1X16-MM)	
	13	1	**6V-5839**	2	WASHER (11X21X2.5-MM THK)	
M	14	1	**7X-3319**	6	SCREW-HEX SOCKET (M4X0.7X6-MM)	
M	15	1	**7Y-7256**	4	SCREW-TRUSS HEAD (M4X0.7-MM)	
M	16	1	**8T-4191**	2	BOLT (M10X1.5X16-MM)	
	17	1	**8T-4205**	2	WASHER-HARD (7.2X14.5X2-MM THK)	
M	18	1	**9X-2042**	2	SCREW-TRUSS HEAD (M6X1X12-MM)	
M	19	1	**9X-2045**	5	SCREW-TRUSS HEAD (M6X1X20-MM)	
M	20	1	**9X-2046**	4	SCREW-TRUSS HEAD (M6X1X35-MM)	

M-METRIC PART

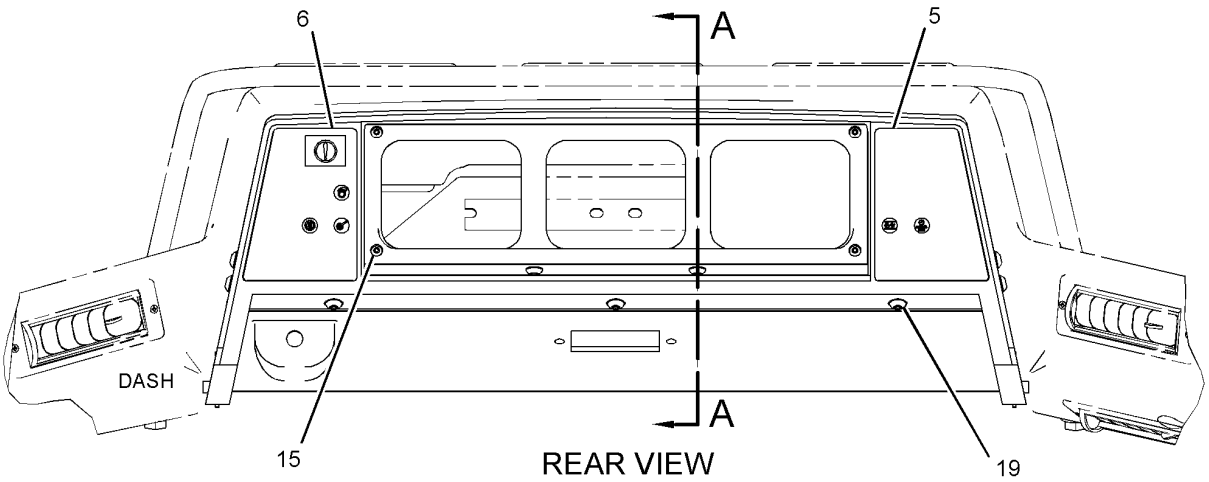

REAR VIEW

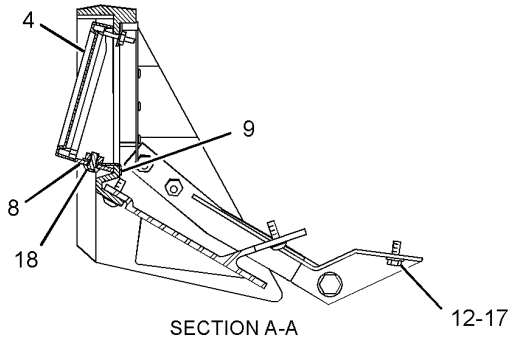

SECTION A-A

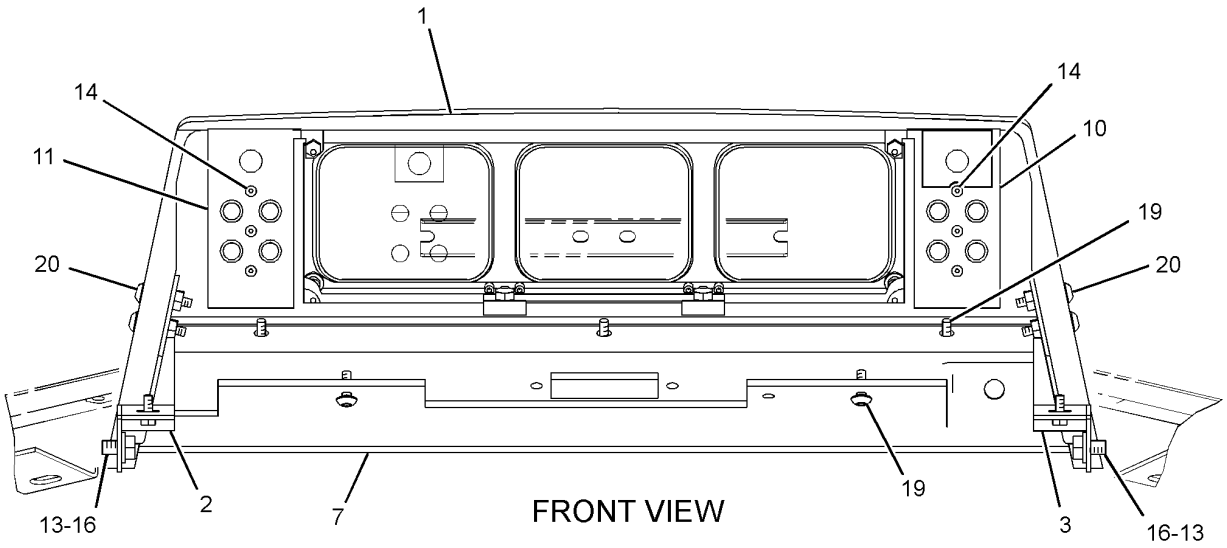

FRONT VIEW

GRAPHIC #1 **<END>** g01429448

OPERATOR STATION

239-4058 PEDAL GP-GOVERNOR

S/N: 2211-UP

PART OF 280-7084 CAB AR

SMCS-1276 **i02960227**

NOTE	REF NO	GRAPHIC REF	PART NUMBER	QTY	PART NAME 1 2 3 4 5 6 (PRODUCT LEVEL)	SEE PAGE
	1	1	*262-5778*	1	PEDAL GP-GOVERNOR	
		1	**269-1983**	1	SENSOR GP-POSITION	
		1	**292-9802**	1	COVER	
M	2	1	**6V-2317**	4	BOLT (M8X1.25X30-MM)	
	3	1	**8T-4224**	4	WASHER-HARD (8.8X16X2-MM THK)	

M-METRIC PART

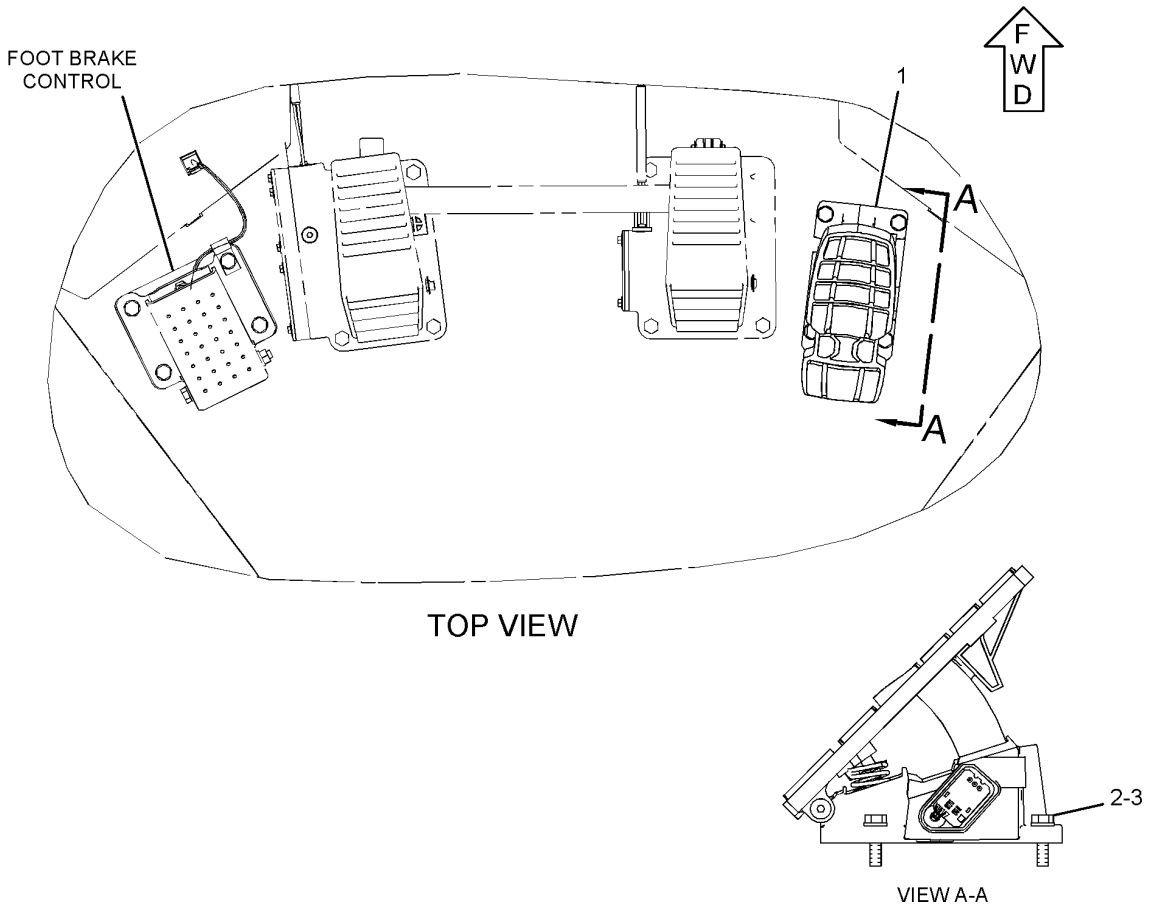

GRAPHIC #1 **<END>** g01439912

OPERATOR STATION

242-0340 PLATFORM GP-OPERATOR

S/N: 2211-UP

PART OF 267-5292 CAB & PLATFORM GP

SMCS-7253 **i02458828**

NOTE	REF NO	GRAPHIC REF	PART NUMBER	QTY	PART NAME 1 2 3 4 5 6 (PRODUCT LEVEL)	SEE PAGE
	1	1	**4E-8995**	1	DOOR AS	
		1	**6W-8906**	1	LATCH AS	
		1	**8R-6128**	1	HINGE	
	2	1	**242-2527**	1	PLATFORM AS	
	3	1	**250-1812**	1	PANEL-ACCESS	
	4	1	**5P-4116**	4	WASHER-HARD (8.8X20.5X2-MM THK)	
M	5	1	**7Y-9099**	4	SCREW-TRUSS HEAD (M8X1.25X25-MM)	
M	6	1	**9X-2042**	2	SCREW-TRUSS HEAD (M6X1X12-MM)	

M-METRIC PART

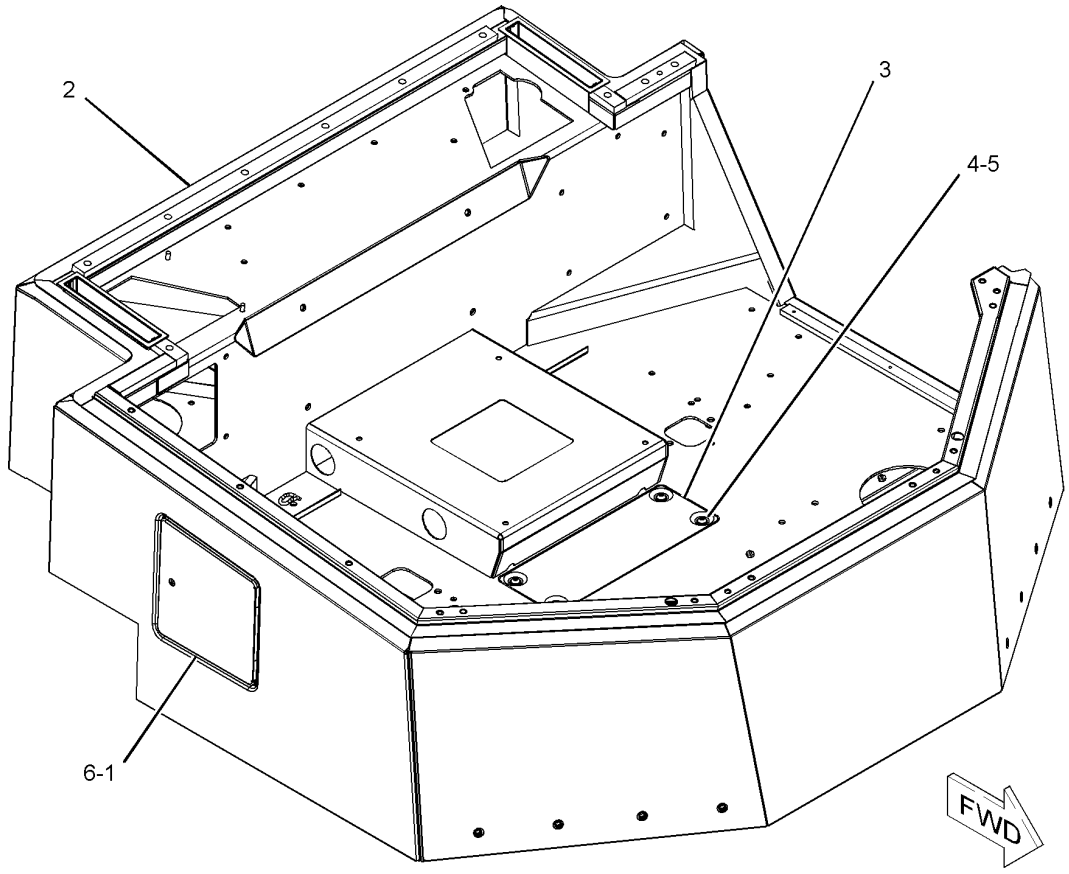

GRAPHIC #1 **<END>** g01091224

OPERATOR STATION

279-5284 PLATFORM GP-OPERATOR

S/N: 2211-UP

PART OF 262-2081 CHASSIS AR

SMCS-7253 **i02905386**

NOTE	REF NO	GRAPHIC REF	PART NUMBER	QTY	PART NAME 1 2 3 4 5 6 (PRODUCT LEVEL)	SEE PAGE
	1	1	**1K-8850**	1	SPRING	
	2	2	**3B-4610**	2	PIN-COTTER	
	3	1	**7T-8331**	4	MOUNT AS	
	4	1,2	**9M-5884**	6	BUMPER	
	5	2	**9U-1168**	1	BRACKET	
	6	2	**9U-1169**	1	BRACKET	
	7	1	**113-6026**	1	COVER AS (RH)	
	8	1	**113-6027**	1	COVER AS (LH)	
	9	1	**113-6030**	2	PANEL AS	
	10	1	**113-6064**	1	PANEL AS	
	11	1	**113-6304**	1	PANEL AS	
		1	**3R-9322**	1	HINGE	
		1	**4K-8501**	2	CLIP	
	12	2	**117-3158**	2	ROD AS	
	13	1	**117-4729**	1	COVER	
	14	2	**124-4330**	1	SHEET-LH	
	15	2	**124-4331**	1	SHEET-RH	
	16	1	**124-4834**	2	COVER	
	17	1	**186-1654**	16	BRACKET AS	
	18	2	**186-1723**	1	BRACKET AS	
	19	1	**210-7710**	1	PANEL AS	
	20	1	**288-8802**	1	CHANNEL AS	
	21	2	**288-9154**	1	SUPPORT AS	
	22	1	**289-3806**	1	PANEL AS	
Y	23	1	*289-3809*	1	DOOR GP-ACCESS (PLATFORM, INNER, RH)	811
	24	2	**289-8459**	1	PANEL AS (LH)	
Y	25	1	*307-6567*	1	DOOR GP-ACCESS (PLATFORM, OUTER, RH)	812
	26	1,2	**5P-1076**	31	WASHER-HARD (13.5X30X4-MM THK)	
	27	1	**7X-0590**	4	WASHER-HARD (13.5X44.5X6-MM THK)	
	28	2	**7X-7729**	4	WASHER (11X25X3-MM THK)	
	29	1	**8T-4121**	26	WASHER-HARD (11X21X2.5-MM THK)	
M	30	1,2	**8T-4136**	28	BOLT (M10X1.5X25-MM)	
M	31	1,2	**8T-4139**	43	BOLT (M12X1.75X30-MM)	
	32	1,2	**8T-4223**	32	WASHER-HARD (13.5X25.5X3-MM THK)	
M	33	1	**8T-4648**	4	BOLT (M12X1.75X70-MM)	
M	34	1	**8T-4910**	20	BOLT (M12X1.75X60-MM)	

M-METRIC PART
Y-SEPARATE ILLUSTRATION

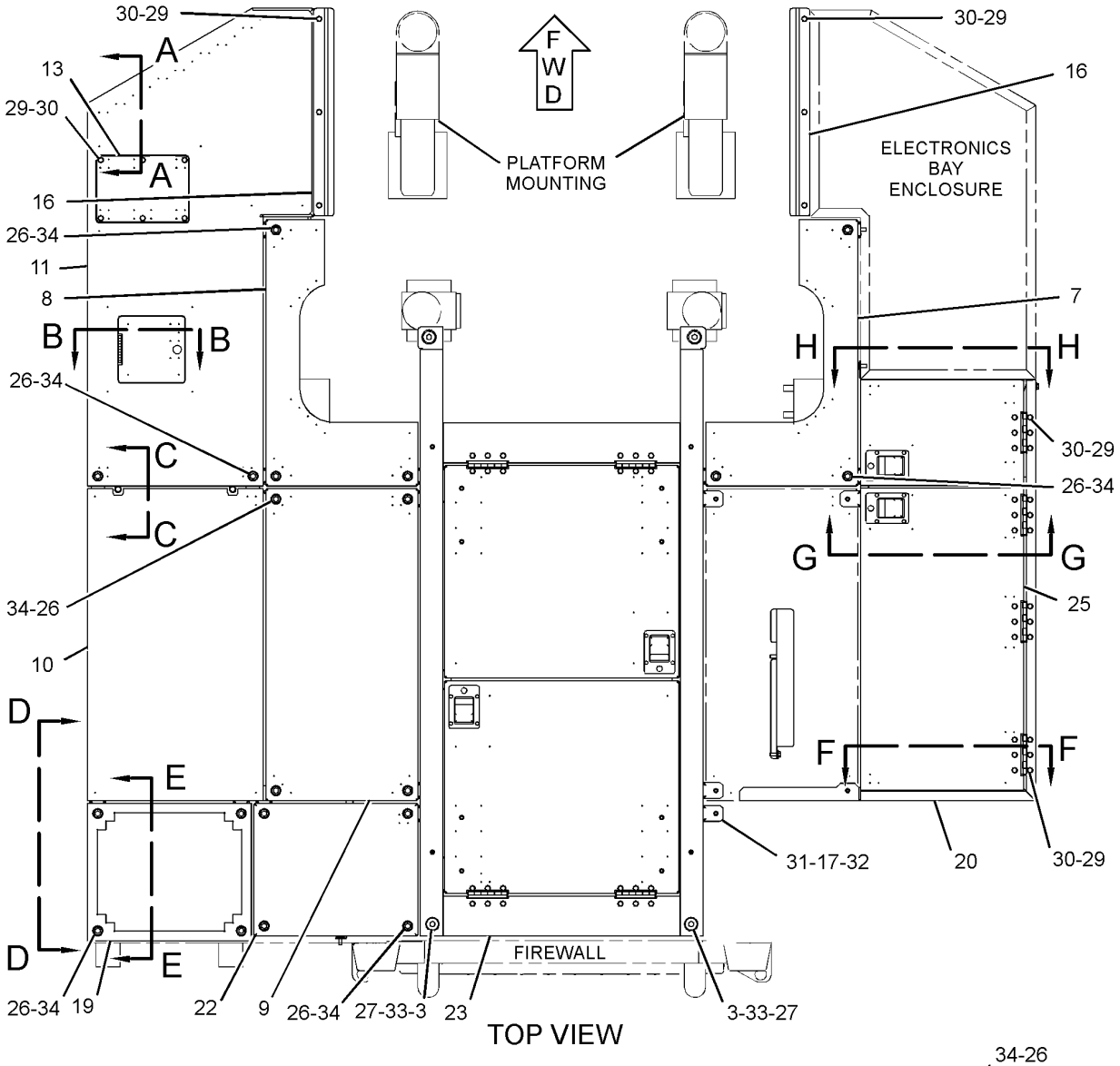

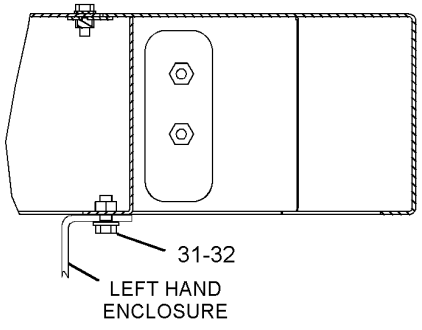

SECTION A-A

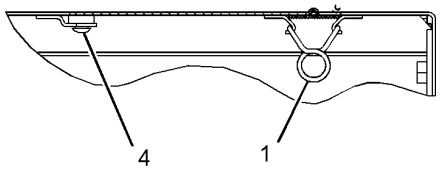

SECTION B-B

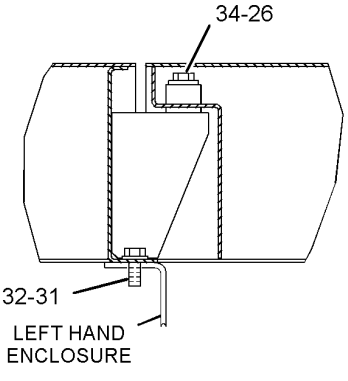

SECTION C-C

REFER TO ALL ILLUSTRATIONS OF THIS GROUP FOR AUXILIARY VIEWS

GRAPHIC #1

g01444474

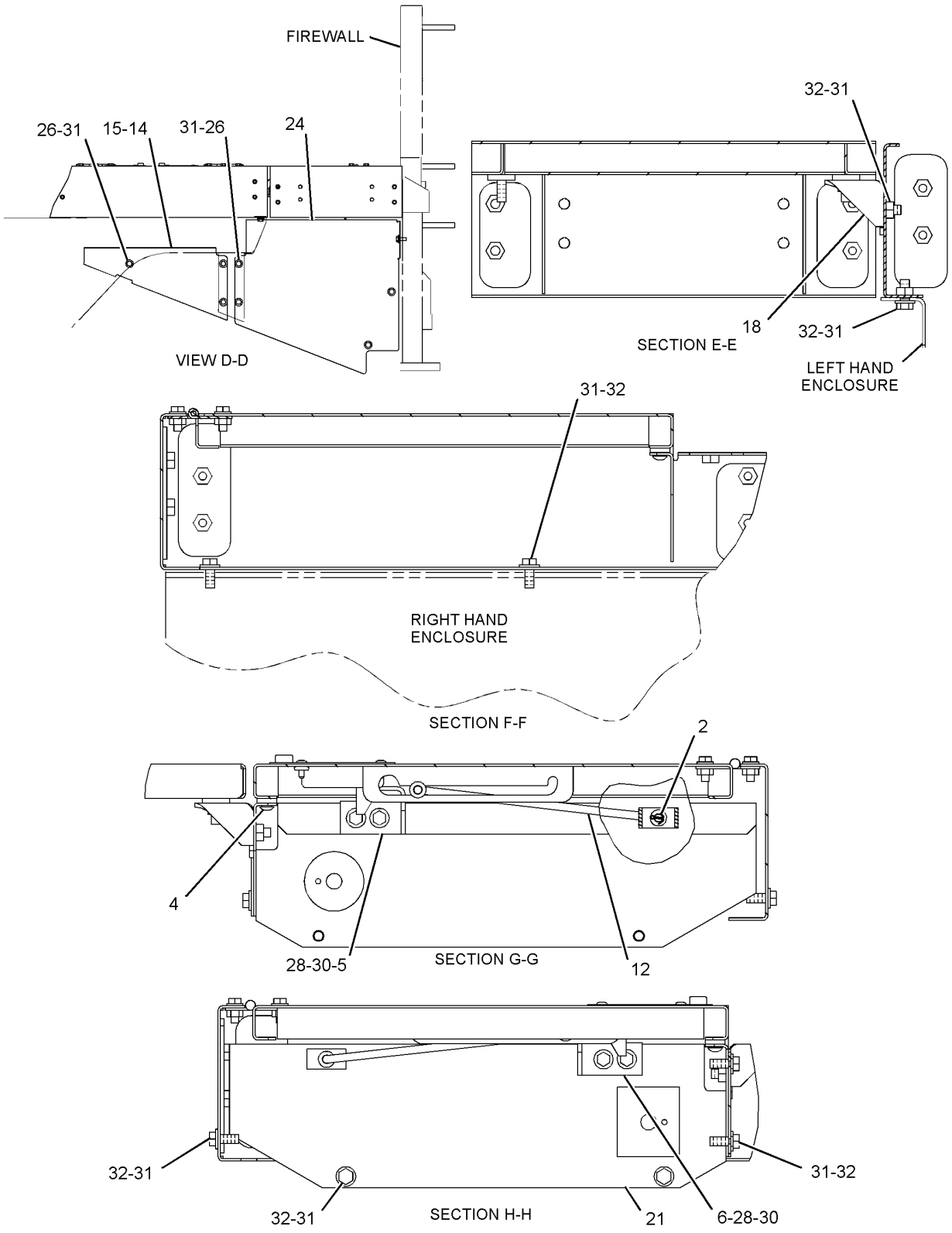

GRAPHIC #2 **<END>** g01444475

OPERATOR STATION

317-2718 PLATFORM GP-OPERATOR

S/N: 2211-UP

PART OF 262-2081 CHASSIS AR

SMCS-7253 **i02892185**

NOTE	REF NO	GRAPHIC REF	PART NUMBER	QTY	PART NAME 1 2 3 4 5 6 (PRODUCT LEVEL)	SEE PAGE
	1	1	**113-6030**	1	PANEL AS	
	2	1	**5P-1076**	4	WASHER-HARD (13.5X30X4-MM THK)	
M	3	1	**8T-4910**	4	BOLT (M12X1.75X60-MM)	

M-METRIC PART

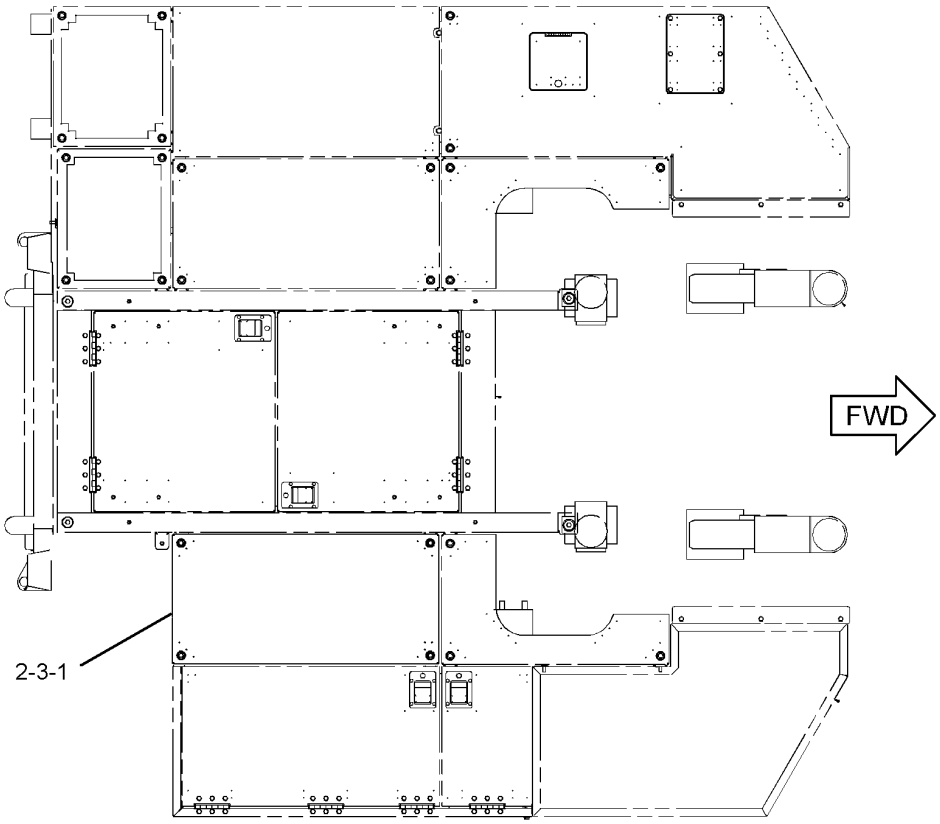

TOP VIEW

GRAPHIC #1 **<END>** g01444510

OPERATOR STATION

258-0959 PRECLEANER AR-CAB AIR

S/N: 2211-UP

AN ATTACHMENT

SMCS-7311, 7342 **i02154890**

NOTE	PART NUMBER	QTY	PART NAME 1 2 3 4 5 6 (PRODUCT LEVEL)	SEE PAGE
Y	*232-2597*	1	PRECLEANER GP-CAB AIR	859

Y-SEPARATE ILLUSTRATION

<END>

OPERATOR STATION

232-2597 PRECLEANER GP-CAB AIR

S/N: 2211-UP

PART OF 258-0959 PRECLEANER AR-CAB AIR

AN ATTACHMENT

SMCS-7311, 7316 **i02888144**

NOTE	REF NO	GRAPHIC REF	PART NUMBER	QTY	PART NAME 1 2 3 4 5 6 (PRODUCT LEVEL)	SEE PAGE
	1	1	**3S-2093**	1	STRAP-CABLE	
	2	1	**201-3300**	1	MOTOR GP-BLOWER (CAB AIR)	
		1	**102-8802**	1	KIT-RECEPTACLE (2-PIN)	
					(INCLUDES RECEPTACLE AS AND WEDGE)	
		1	**186-3735**	2	PIN-CONNECTOR (16-GA TO 18-GA)	
		1	**197-1932**	1	MOTOR AS-BLOWER (24-VOLT, CAB AIR)	
	3	1	**117-8929**	4	WASHER (6.6X22X2-MM THK)	
M	4	1	**9X-2042**	4	SCREW-TRUSS HEAD (M6X1X12-MM)	

M-METRIC PART

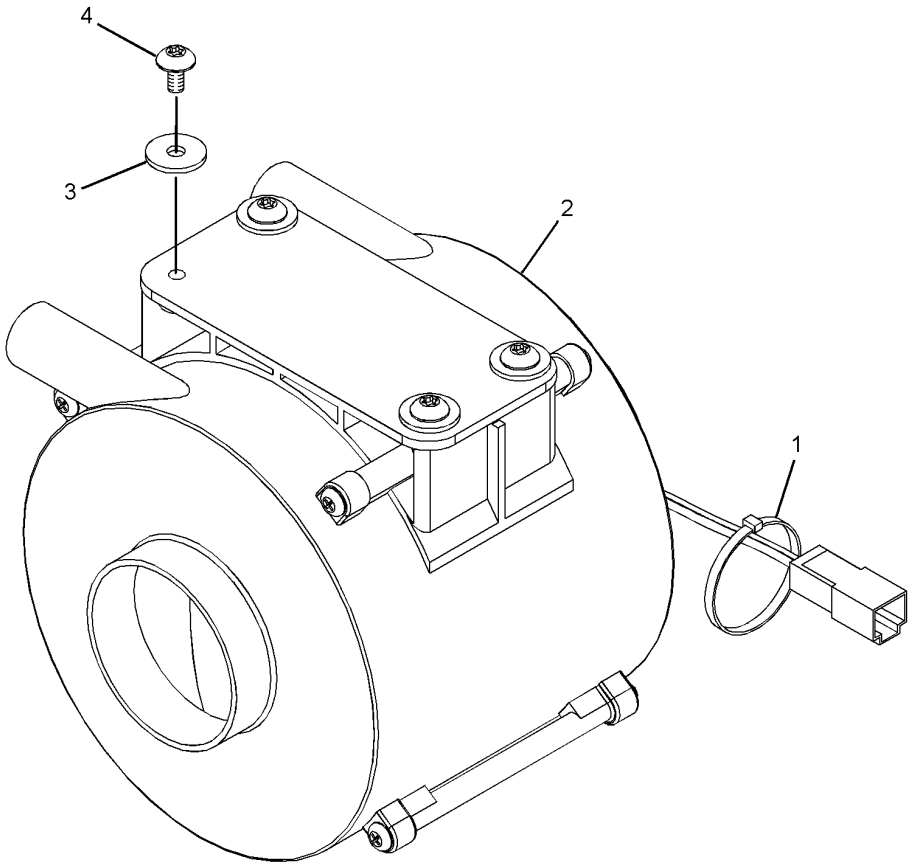

GRAPHIC #1 **<END>** g01440017

OPERATOR STATION

241-4936 RADIO GP–AM/FM/WB/CD PLAYER

S/N: 2211-UP

PART OF 288-1744 RADIO GP

AN ATTACHMENT

SMCS-7338 **i02743358**

NOTE	REF NO	GRAPHIC REF	PART NUMBER	QTY	PART NAME 1 2 3 4 5 6 (PRODUCT LEVEL)	SEE PAGE
	1	1	**142-9681**	1	KNOB-SELECT (RADIO)	
	2	1	**192-7054**	1	SLEEVE	

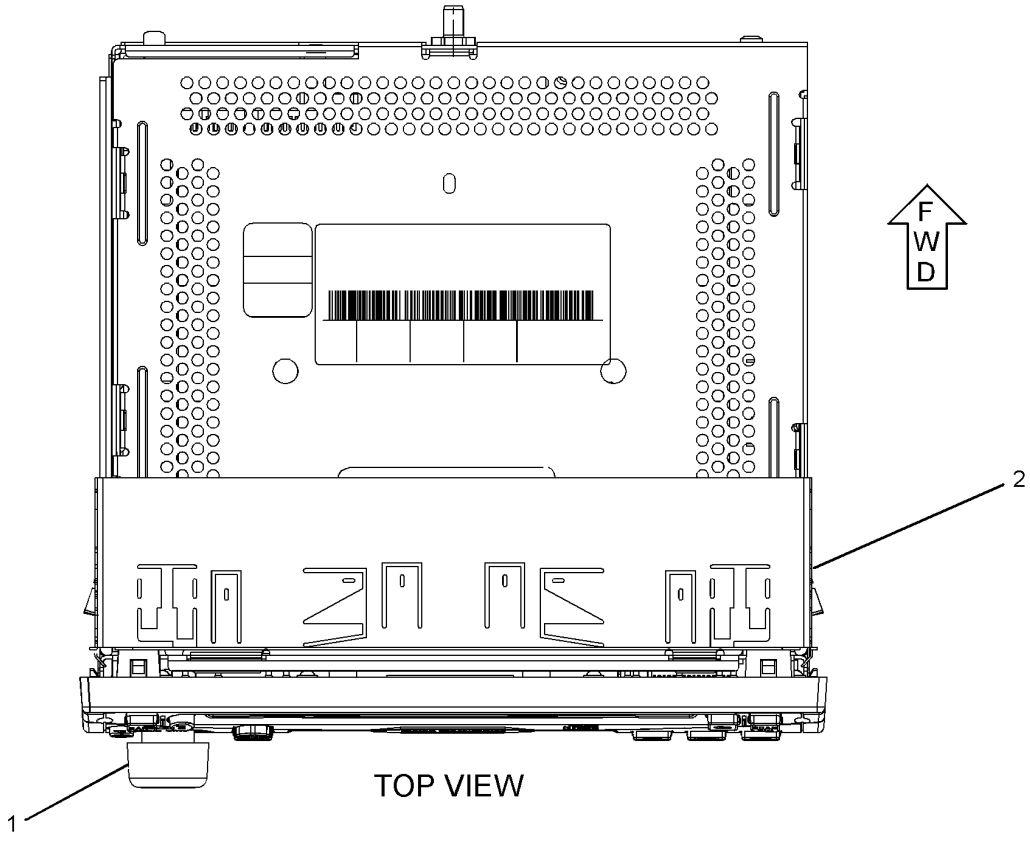

TOP VIEW

GRAPHIC #1 **<END>** g01230279

OPERATOR STATION

284-8955 RADIO GP–AM/FM/WB/SIRIUS/ CD PLAYER

S/N: 2211-UP

PART OF 294-0991 RADIO GP

AN ATTACHMENT

SMCS-7338 **i02651605**

NOTE	REF NO	GRAPHIC REF	PART NUMBER	QTY	PART NAME 1 2 3 4 5 6 (PRODUCT LEVEL)	SEE PAGE
	1	1	**142-9681**	1	KNOB-SELECT (RADIO)	
	2	1	**192-7054**	1	SLEEVE	

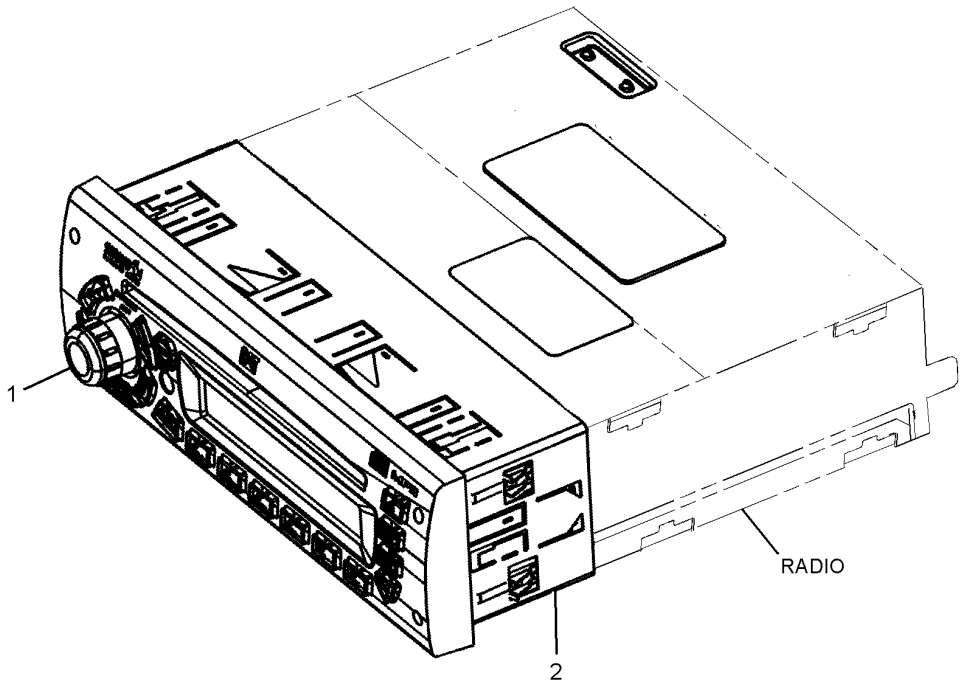

GRAPHIC #1 **<END>** g01289705

OPERATOR STATION

288-1743 RADIO GP–AM/FM/WB

S/N: 2211-UP

AN ATTACHMENT

SMCS-7338 **i02629176**

NOTE	PART NUMBER	QTY	PART NAME 1 2 3 4 5 6 (PRODUCT LEVEL)	SEE PAGE
	136-5490	1	BUSHING (RADIO MOUNT)	
	200-5728	1	HARNESS AS-RADIO	
	160-3518	1	KIT-RECEPTACLE (8-PIN)	
			(INCLUDES RECEPTACLE AS AND WEDGE)	
	172-8037	1	CONNECTOR (RADIO)	
	172-8039	1	TERMINAL (RADIO)	
	200-5729	1	RADIO GP (AM/FM/WB)	

<END>

288-1744 RADIO GP–AM/FM/WB/CD PLAYER

S/N: 2211-UP

AN ATTACHMENT

SMCS-7338 **i02940243**

NOTE	PART NUMBER	QTY	PART NAME 1 2 3 4 5 6 (PRODUCT LEVEL)	SEE PAGE
Y	**241-4936**	1	RADIO GP (AM/FM/WB/CD PLAYER)	860
	136-5490	1	BUSHING (RADIO MOUNT)	
	200-5728	1	HARNESS AS-RADIO	

Y-SEPARATE ILLUSTRATION

<END>

288-1745 RADIO GP–AM/FM/CD PLAYER

S/N: 2211-UP

AN ATTACHMENT

SMCS-7338 **i02629832**

NOTE	PART NUMBER	QTY	PART NAME 1 2 3 4 5 6 (PRODUCT LEVEL)	SEE PAGE
	136-5490	1	BUSHING (RADIO MOUNT)	
	200-5728	1	HARNESS AS-RADIO	
	160-3518	1	KIT-RECEPTACLE (8-PIN)	
			(INCLUDES RECEPTACLE AS AND WEDGE)	
	169-6326	1	RADIO GP (AM/FM CD PLAYER)	
	142-9681	1	KNOB-SELECT	
	192-7054	1	SLEEVE	

<END>

OPERATOR STATION

294-0990 RADIO GP–AM/FM/WB/XM/ CD PLAYER

S/N: 2211-UP

AN ATTACHMENT

SMCS-7338 **i02567882**

NOTE	REF NO	GRAPHIC REF	PART NUMBER	QTY	PART NAME 1 2 3 4 5 6 (PRODUCT LEVEL)	SEE PAGE
	1	1	**136-5490**	1	BUSHING (RADIO MOUNT)	
	2	1	**200-5728**	1	HARNESS AS-RADIO	
		1	**160-3518**	1	KIT-RECEPTACLE (8-PIN)	
					(INCLUDES RECEPTACLE AS & WEDGE)	
	3	1	**284-8954**	1	RADIO GP (AM/FM/WB/XM/ CD PLAYER)	
		1	**142-9681**	1	KNOB-SELECT	
		1	**192-7054**	1	SLEEVE	

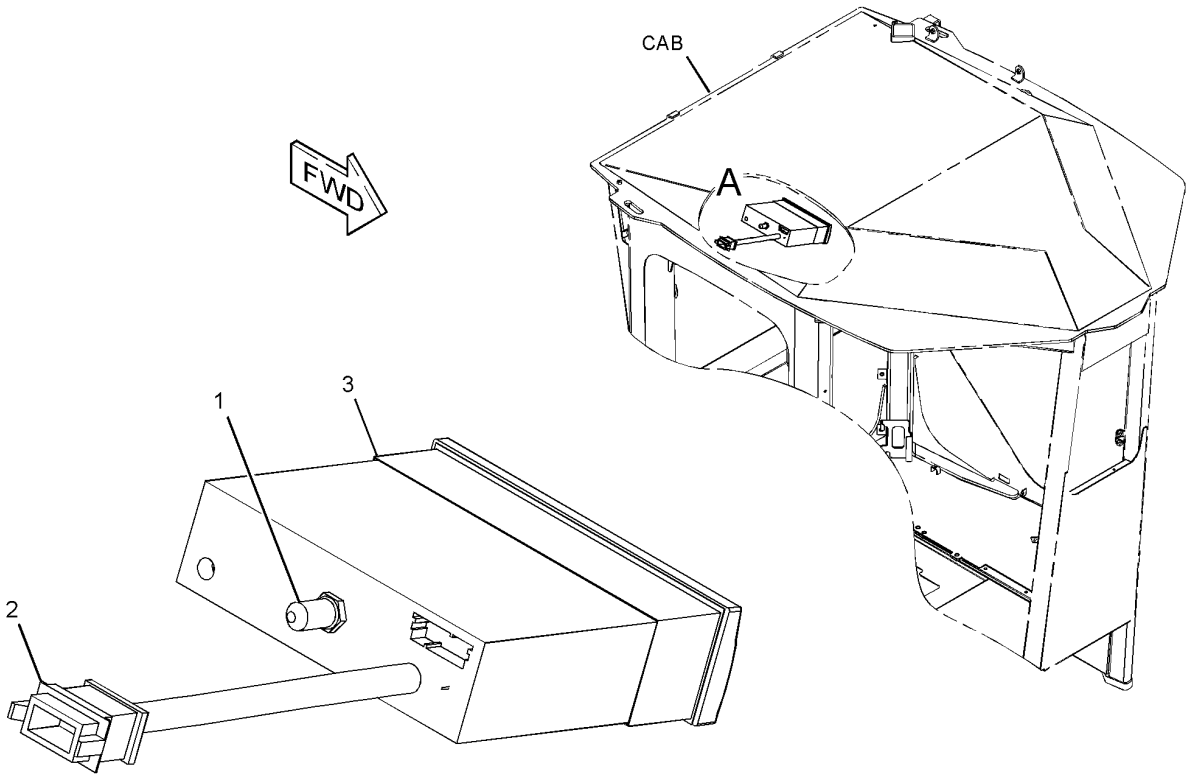

VIEW OF AREA A

GRAPHIC #1 **<END>** g01287887

OPERATOR STATION

294-0991 RADIO GP–AM/FM/WB/SIRIUS/ CD PLAYER

S/N: 2211-UP

AN ATTACHMENT

SMCS-7338 **i02651631**

NOTE	REF NO	GRAPHIC REF	PART NUMBER	QTY	PART NAME 1 2 3 4 5 6 (PRODUCT LEVEL)	SEE PAGE
	1	1	**136-5490**	1	BUSHING (RADIO MOUNT)	
	2	1	**200-5728**	1	HARNESS AS-RADIO	
		1	**160-3518**	1	KIT-RECEPTACLE (8-PIN)	
					(INCLUDES RECEPTACLE AS & WEDGE)	
Y	3	1	**284-8955**	1	RADIO GP (AM/FM/WB/SIRIUS/CD PLAYER)	861

Y-SEPARATE ILLUSTRATION

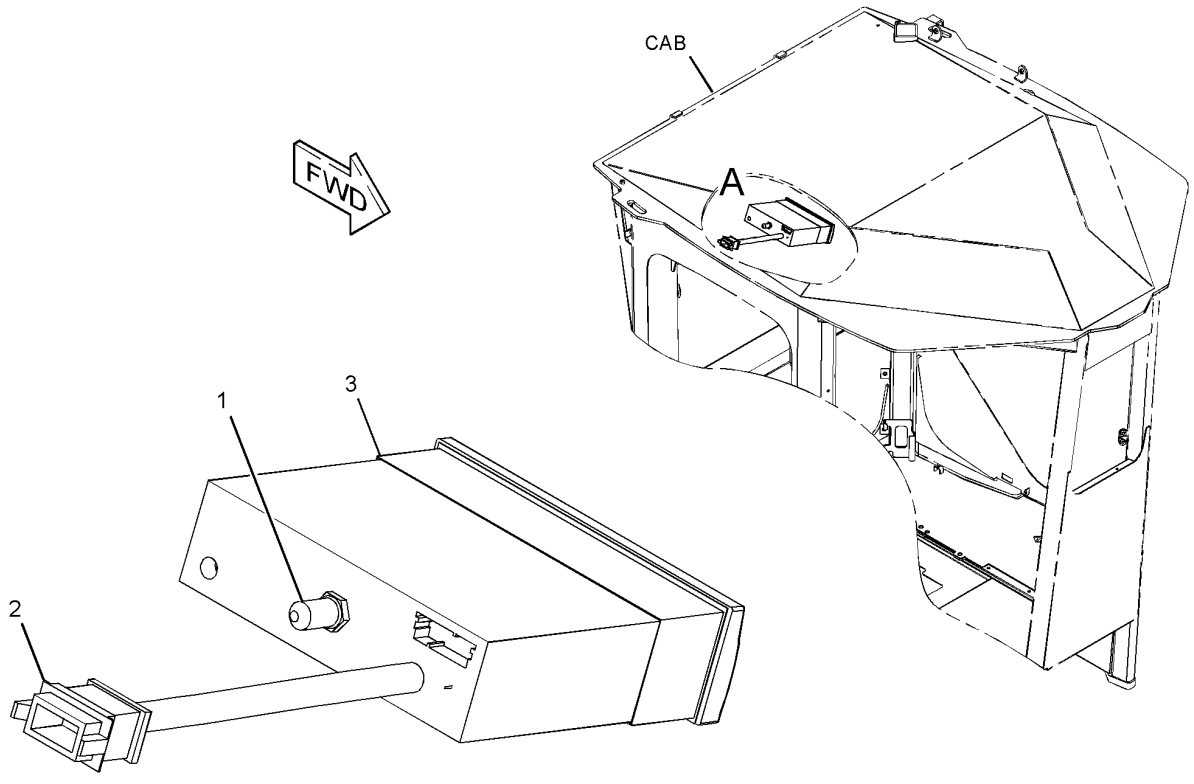

VIEW OF AREA A

GRAPHIC #1 **<END>** g01287793

OPERATOR STATION

210-2270 RECLINER GP-SEAT

S/N: 2211-UP
PART OF 178-7910, 285-8423 SEAT GP
ALSO AN ATTACHMENT

SMCS-7312 **i02709288**

NOTE	REF NO	GRAPHIC REF	PART NUMBER	QTY	PART NAME 1 2 3 4 5 6 (PRODUCT LEVEL)	SEE PAGE
	1	1	**177-1862**	1	BRACKET (SEAT BELT)	
	2	1	**210-2262**	1	BRACKET AS	
	3	1	**210-2263**	1	BRACKET AS	
	4	1	**210-2266**	1	GEAR-LOCK (14-TEETH)	
	5	1	**293-2911**	1	SHAFT AS	
		1	**2L-5893**	2	PIN-SPRING	
		1	**170-8590**	1	SPRING	
	6	1	**217-7933**	1	LATCH	
	7	1	**236-5197**	1	SPRING	
	8	1	**031-0214**	1	BOLT-LOCKING (1/4-20X0.5-IN)	
	9	1	**101-2867**	1	WASHER-HARD (7.2X25X2-MM THK)	
	10	1	**4M-6425**	1	BOLT (5/16-18X1-IN)	
	11	1	**5M-2894**	1	WASHER-HARD (10.2X18.5X2.5-MM THK)	
	12	1	**5S-7383**	1	BOLT (3/8-16X1.75-IN)	
	13	1	**8T-4224**	1	WASHER-HARD (8.8X16X2-MM THK)	

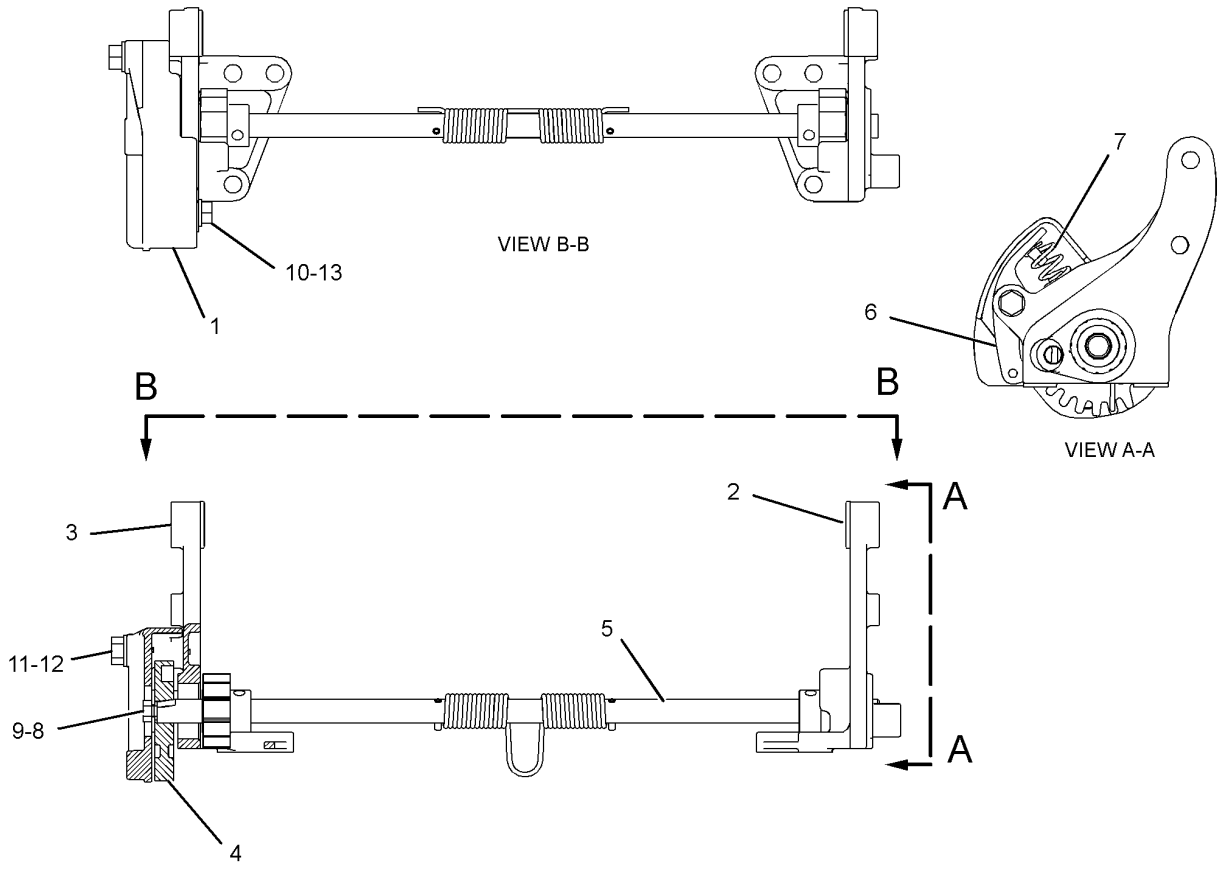

GRAPHIC #1 **<END>** g01296294

OPERATOR STATION

247-3066 ROPS AR

S/N: 2211-UP

PART OF 262-2081 CHASSIS AR

SMCS-7323 **i02890996**

NOTE	PART NUMBER	QTY	PART NAME 1 2 3 4 5 6 (PRODUCT LEVEL)	SEE PAGE
Y	*247-3076*	1	ROPS GP	867
Y	*282-5107*	1	WIRING GP-ROPS	353

Y-SEPARATE ILLUSTRATION

<END>

OPERATOR STATION

247-3076 ROPS GP

S/N: 2211-UP

PART OF 247-3066 ROPS AR

SMCS-7323 **i02890994**

NOTE	REF NO	GRAPHIC REF	PART NUMBER	QTY	PART NAME 1 2 3 4 5 6 (PRODUCT LEVEL)	SEE PAGE
	1	1	**4E-5662**	1	PLATE	
	2	1	**9U-3663**	1	PLATE AS	
	3	1	**302-5176**	1	COVER AS	
	4	1	**247-3078**	1	CANOPY AS	
	5	1	**5P-8245**	20	WASHER-HARD (13.5X25.5X3-MM THK)	
M	6	1	**6V-3822**	5	BOLT (M10X1.5X35-MM)	
	7	1	**6V-5839**	5	WASHER (11X21X2.5-MM THK)	
M	8	1	**6V-8675**	20	BOLT (M12X1.75X35-MM)	

M-METRIC PART

OPERATOR STATION

247-3076 **ROPS GP** *(contd.)* **i02890994**

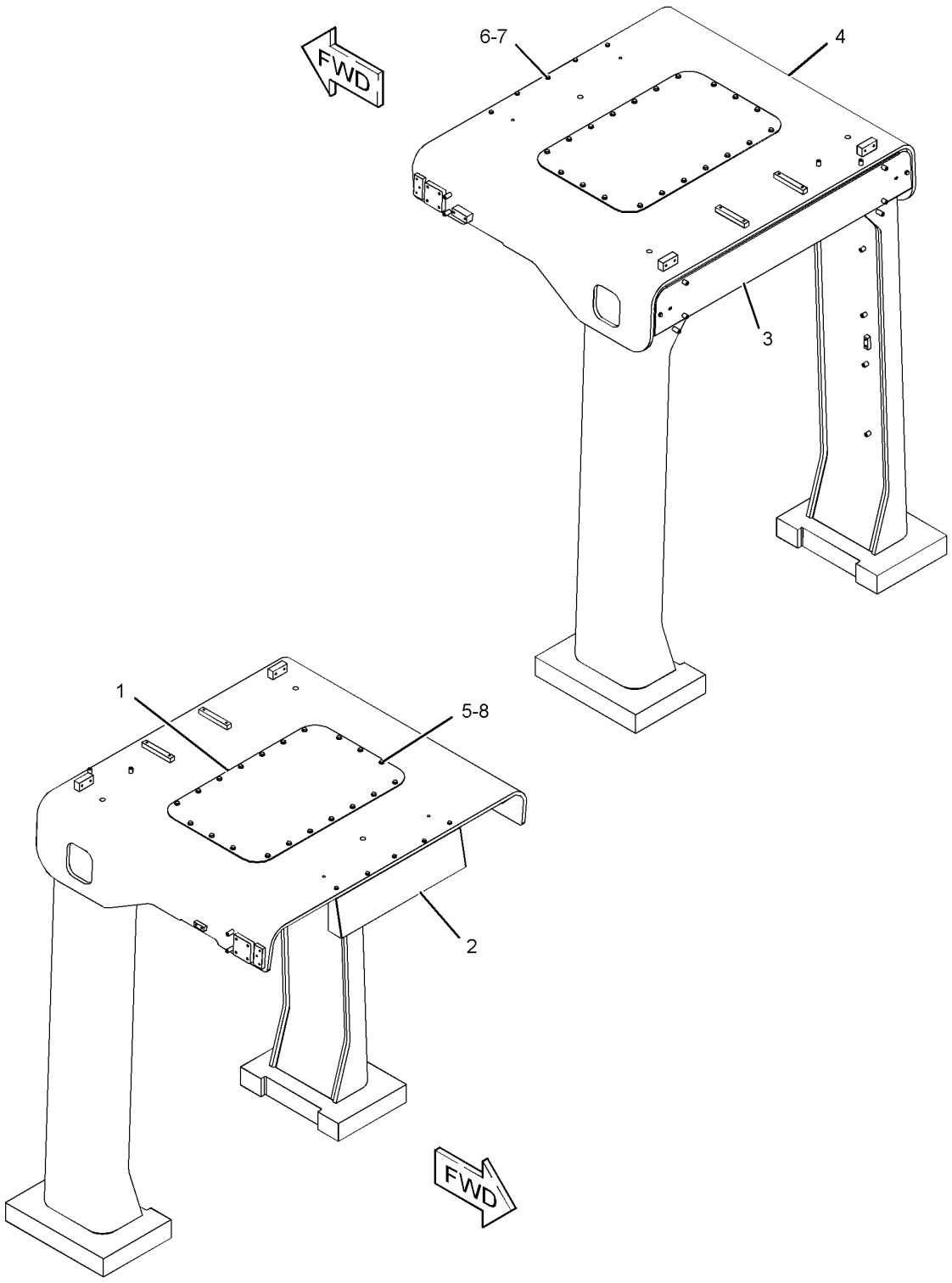

GRAPHIC #1 **<END>** g01447479

OPERATOR STATION

117-1410 SEALING GP-GLASS

S/N: 2211-UP

PART OF 280-7084 CAB AR

SMCS-7310, 7340 **i02737077**

NOTE	PART NUMBER	QTY	PART NAME 1 2 3 4 5 6 (PRODUCT LEVEL)	SEE PAGE
B	**311-3898**	1	ADHESIVE	

B-USE AS REQUIRED

<END>

OPERATOR STATION

222-0345 SEAT BELT GP–RETRACTABLE

S/N: 2211-UP
PART OF 285-8424 SEAT GP
AN ATTACHMENT

SMCS-7327 **i02389285**

NOTE	REF NO	GRAPHIC REF	PART NUMBER	QTY	PART NAME 1 2 3 4 5 6 (PRODUCT LEVEL)	SEE PAGE
					(NO SERVICED PARTS)	

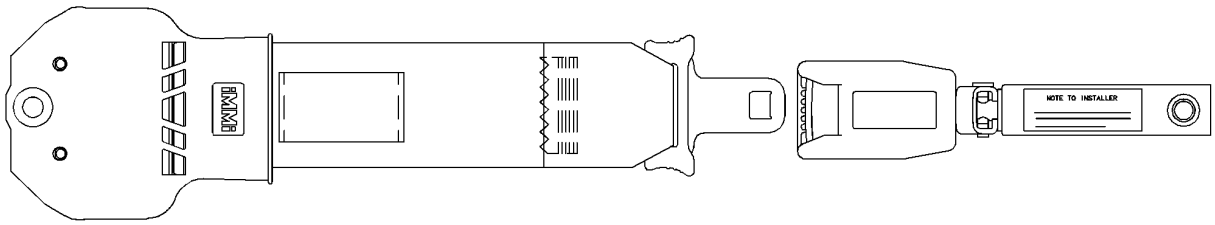

GRAPHIC #1 **<END>** g01196135

OPERATOR STATION

178-7910 SEAT GP—CLOTH

S/N: 2211-UP

PART OF 185-9726 SEAT GP

SMCS-7312 **i02784474**

NOTE	REF NO	GRAPHIC REF	PART NUMBER	QTY	PART NAME 1 2 3 4 5 6 (PRODUCT LEVEL)	SEE PAGE
	1	1	**218-0861**	1	PAN AS	
	1A	1	**8T-9082**	5	RIVET-POP	
	1B	1	**217-9049**	1	CUSHION AS	
	2	1	**143-1288**	8	LOCKNUT-FLANGE (3/8-16-THD)	
	3	1	**171-1230**	6	SCREW-BUTTON HEAD (3/8-16X1-IN)	
	4	1	**171-6682**	1	BAR	
	5	1	**172-2416**	2	PIN	
Y	6	1	*173-1028*	1	ADJUSTER GP-SEAT	780
	7	1	**177-1863**	2	BOLT-PIVOT (3/8-16X2.89-IN)	
Y	8	1	*210-2270*	1	RECLINER GP-SEAT	865
CY	9	1	*292-9241*	1	PAN GP-BACKREST	846
	10	1	**184-2298**	1	ROD	
	11	1	**184-2299**	4	WASHER (7X25.4X2.54-MM THK)	
	12	1	**095-0843**	2	PIN-COTTER	
	14	1	**5V-1496**	2	RETAINER	
	15	1	**6V-7646**	2	WASHER-HARD (7.2X25X2-MM THK)	
	16	1	**8T-0328**	1	WASHER-HARD (5.5X10X1-MM THK)	
	17	1	**8T-4205**	1	WASHER-HARD (7.2X14.5X2-MM THK)	
C	18	1	**294-5042**	2	SPACER (11.1X19.5X9.67-MM THK)	

C-CHANGE FROM PREVIOUS TYPE
Y-SEPARATE ILLUSTRATION

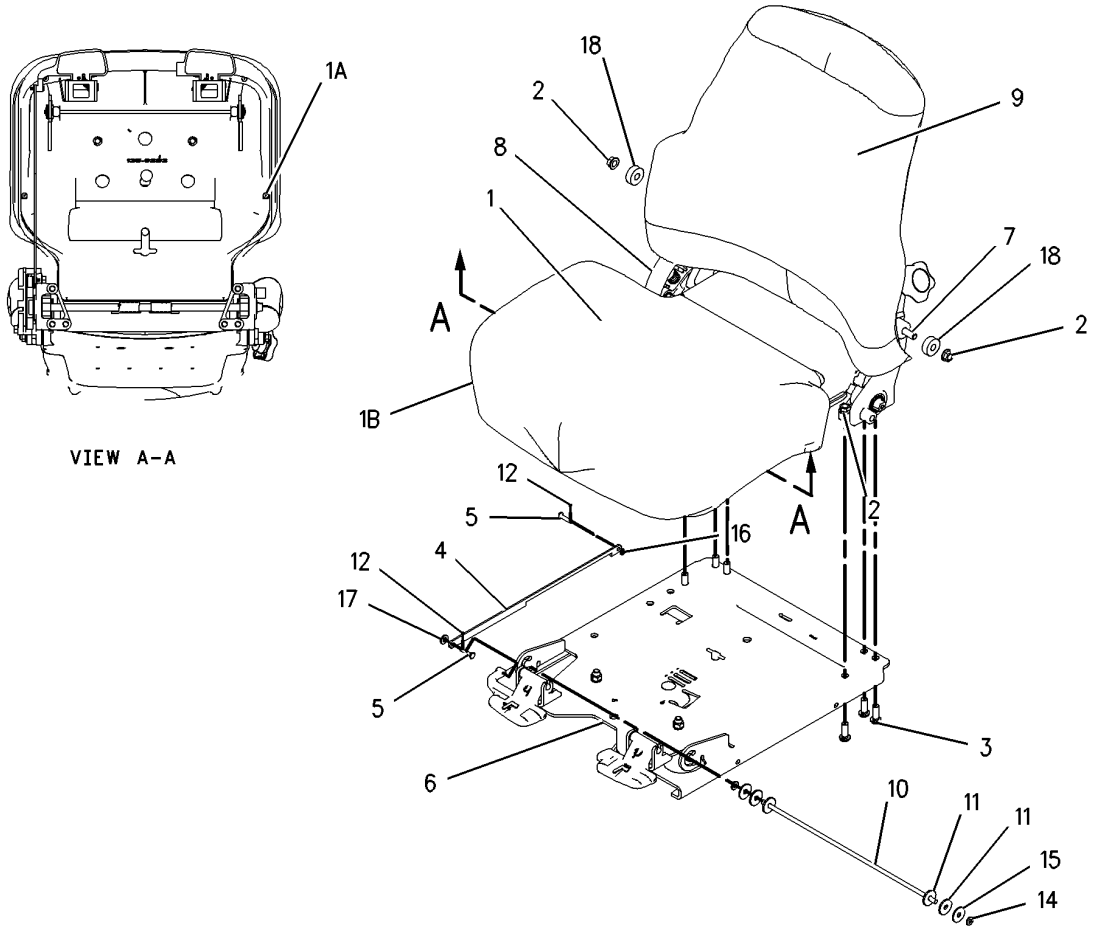

GRAPHIC #1 **<END>** g00739610

OPERATOR STATION

185-9726 SEAT GP–CLOTH

S/N: 2211-UP

PART OF 219-8090 SEAT GP-SUSPENSION

SMCS-7312 **i02094203**

NOTE	REF NO	GRAPHIC REF	PART NUMBER	QTY	PART NAME 1 2 3 4 5 6 (PRODUCT LEVEL)	SEE PAGE
C	1	1	**229-1494**	1	EXTENSION GP-BACKREST (CLOTH)	
	1A	1	**117-4491**	1	ROD	
	2	1	**177-4937**	1	SPACER (11.7X19.8X20.3-MM THK)	
Y	3	1	**178-7910**	1	SEAT GP (CLOTH)	871
C	4	1	**205-6388**	1	BOLT (7/16-20X1.75-IN)	
C	5	1	**0T-0244**	1	BOLT (7/16-20X1.25-IN)	
C	6	1	**222-0345**	1	SEAT BELT GP (RETRACTABLE)	

C-CHANGE FROM PREVIOUS TYPE
Y-SEPARATE ILLUSTRATION

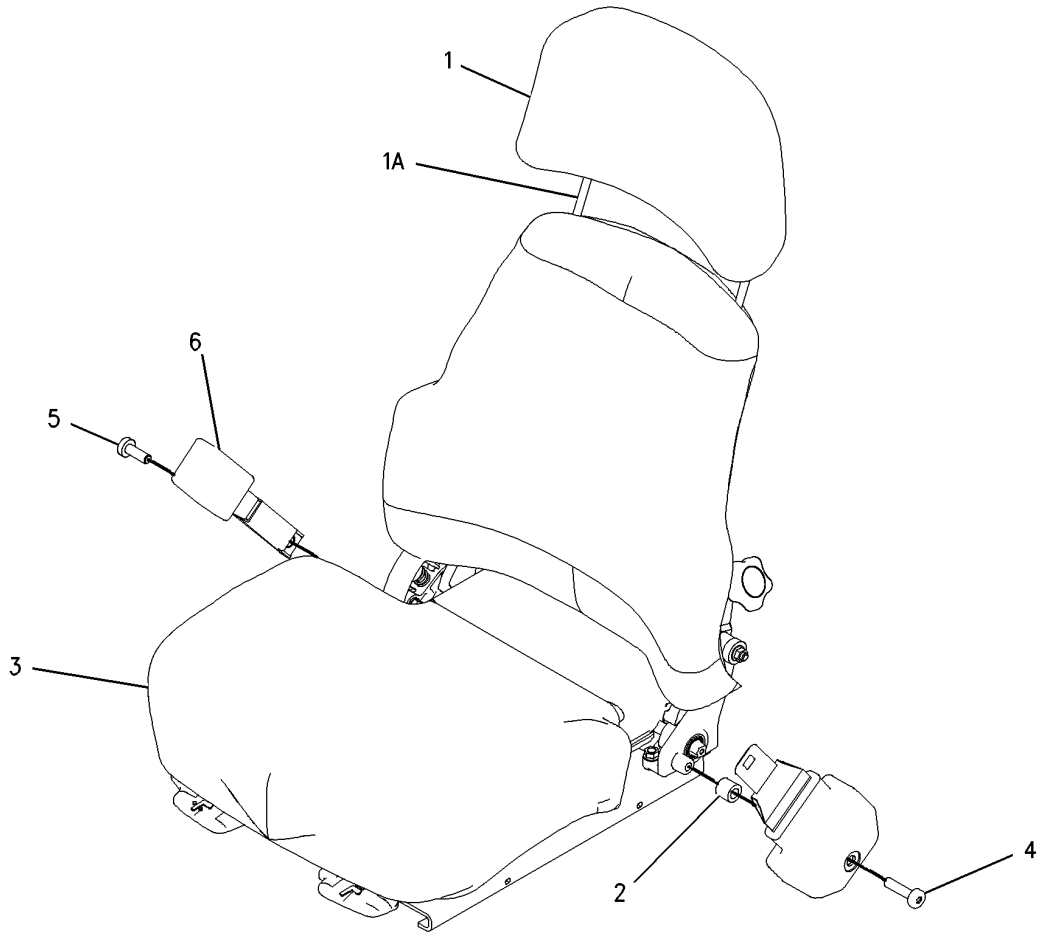

GRAPHIC #1 **<END>** g00672937

OPERATOR STATION

250-9976 SEAT GP

S/N: 2211-UP

PART OF 280-7084 CAB AR

SMCS-7312 **i02869621**

NOTE	REF NO	GRAPHIC REF	PART NUMBER	QTY	PART NAME 1 2 3 4 5 6 (PRODUCT LEVEL)	SEE PAGE
Y	1	1	**248-7511**	1	SEAT GP-COMPANION	879
	2	1	**206-1749**	1	SEAT BELT	
	3	1	**8T-4222**	3	WASHER-PLATED (11X32X2.5-MM THK)	
	4	1	**8T-8916**	2	BOLT (7/16-14X1.5-IN)	
	5	1	**8T-4223**	2	WASHER-HARD (13.5X25.5X3-MM THK)	
M	6	1	**9X-2039**	3	SCREW-TRUSS HEAD (M10X1.5X35-MM)	

M-METRIC PART
Y-SEPARATE ILLUSTRATION

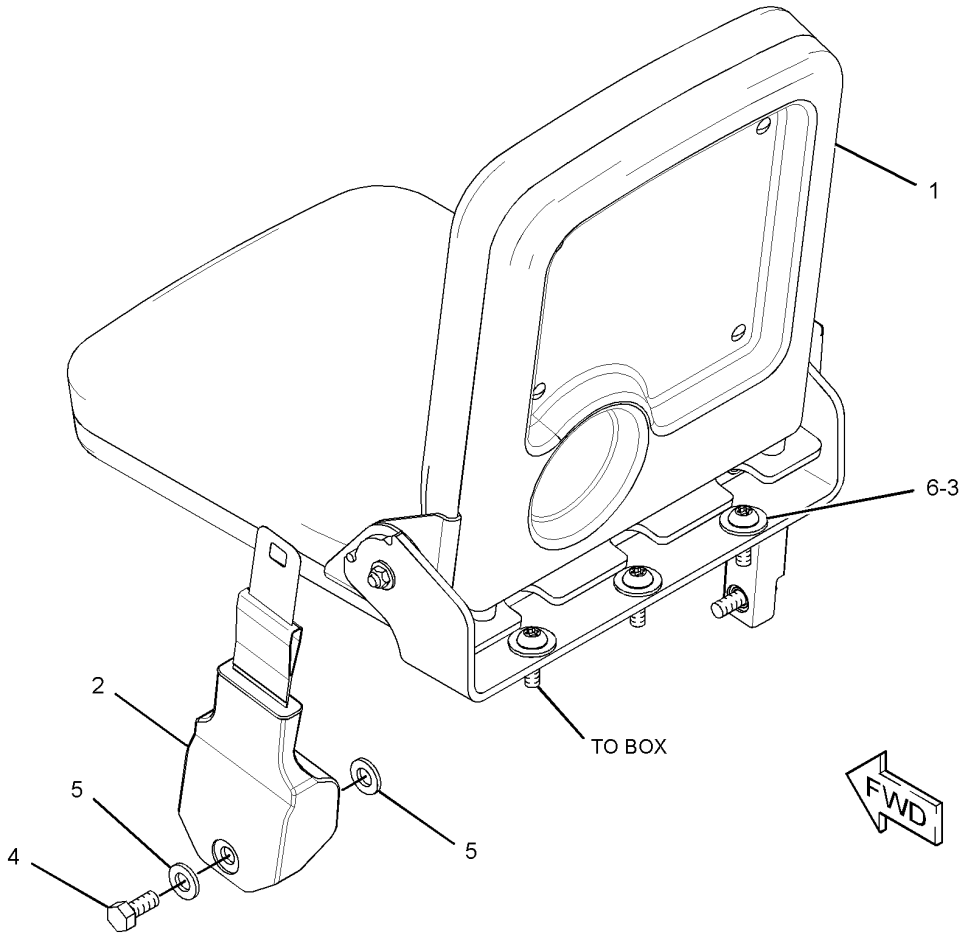

GRAPHIC #1 **<END>** g01432125

OPERATOR STATION

285-8423 SEAT GP–CLOTH, HEATED

S/N: 2211-UP

PART OF 285-8424 SEAT GP

AN ATTACHMENT

SMCS-7312 **i02902934**

NOTE	REF NO	GRAPHIC REF	PART NUMBER	QTY	PART NAME 1 2 3 4 5 6 (PRODUCT LEVEL)	SEE PAGE
	1	1	**143-1288**	8	LOCKNUT-FLANGE (3/8-16-THD)	
	2	1	**171-1230**	6	SCREW-BUTTON HEAD (3/8-16X1-IN)	
	3	1	**171-6682**	1	BAR	
	4	1	**172-2416**	2	PIN	
Y	5	1	*173-1028*	1	ADJUSTER GP-SEAT	780
	6	1	**177-1863**	2	BOLT-PIVOT (3/8-16X2.89-IN)	
	7	1	**184-2298**	1	ROD	
	8	1	**184-2299**	4	WASHER (7X25.4X2.54-MM THK)	
Y	9	1	*210-2270*	1	RECLINER GP-SEAT	865
Y	10	1	**241-5785**	1	PAN GP-SEAT	848
	11	1	**294-5042**	2	SPACER (11.1X19.5X9.67-MM THK)	
Y	12	1	*301-4162*	1	PAN GP-BACKREST	847
	13	1	**095-0843**	2	PIN-COTTER	
	14	1	**5V-1496**	2	RETAINER	
	15	1	**6V-7646**	2	WASHER-HARD (7.2X25X2-MM THK)	
	16	1	**8T-0328**	1	WASHER-HARD (5.5X10X1-MM THK)	
	17	1	**8T-4205**	1	WASHER-HARD (7.2X14.5X2-MM THK)	

Y-SEPARATE ILLUSTRATION

285-8423 SEAT GP *(contd.)* **i02902934**

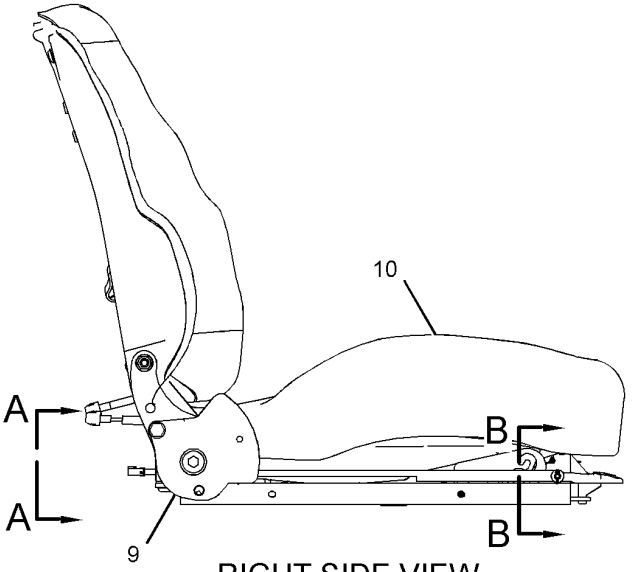

RIGHT SIDE VIEW

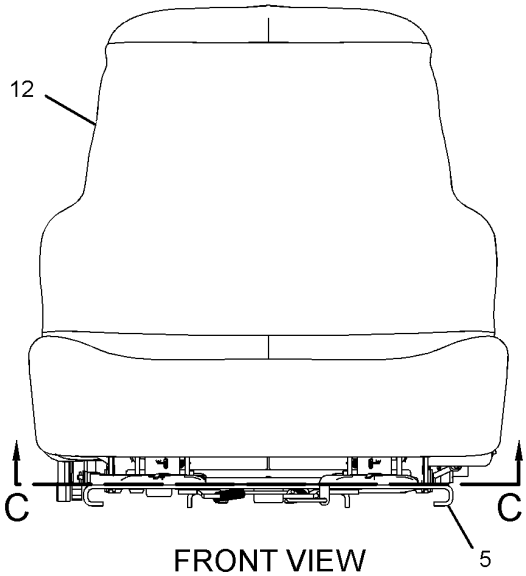

FRONT VIEW

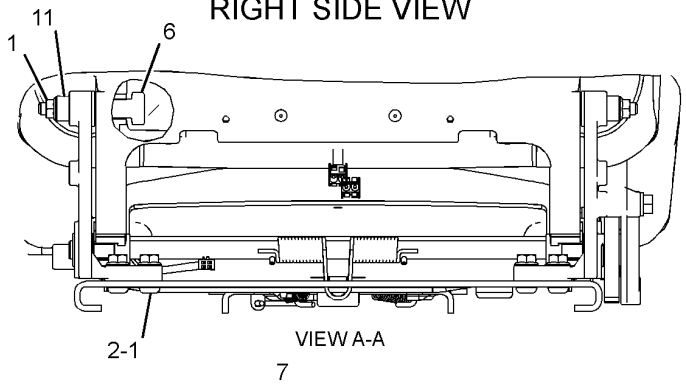

VIEW A-A

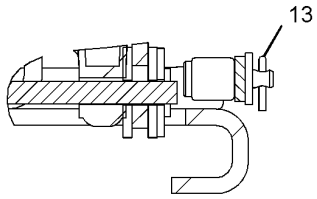

SECTION B-B

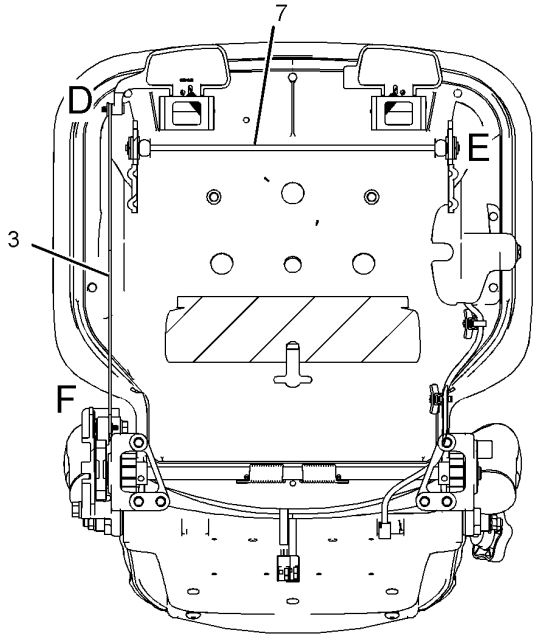

SECTION C-C

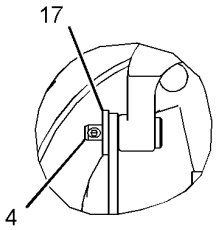

VIEW OF AREA D

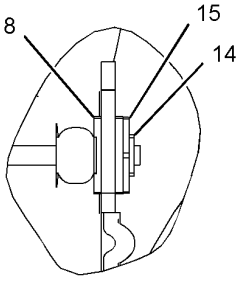

VIEW OF AREA E

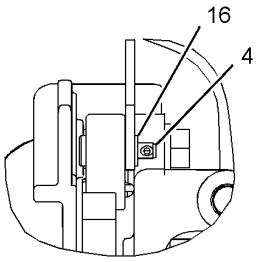

VIEW OF AREA F

GRAPHIC #1 **<END>** g01451853

OPERATOR STATION

285-8424 SEAT GP–CLOTH, HEATED

S/N: 2211-UP

PART OF 285-8425 SEAT GP-SUSPENSION

AN ATTACHMENT

SMCS-7312 **i02902959**

NOTE	REF NO	GRAPHIC REF	PART NUMBER	QTY	PART NAME 1 2 3 4 5 6 (PRODUCT LEVEL)	SEE PAGE
	1	1	**177-4937**	1	SPACER (11.7X19.8X20.3-MM THK)	
Y	2	1	**222-0345**	1	SEAT BELT GP (RETRACTABLE)	870
	3	1	**229-1494**	1	EXTENSION GP-BACKREST (CLOTH)	
Y	4	1	**285-8423**	1	SEAT GP (CLOTH, HEATED)	875
	5	1	**0T-0244**	1	BOLT (7/16-20X1.25-IN)	
	6	1	**205-6388**	1	BOLT (7/16-20X1.75-IN)	

Y-SEPARATE ILLUSTRATION

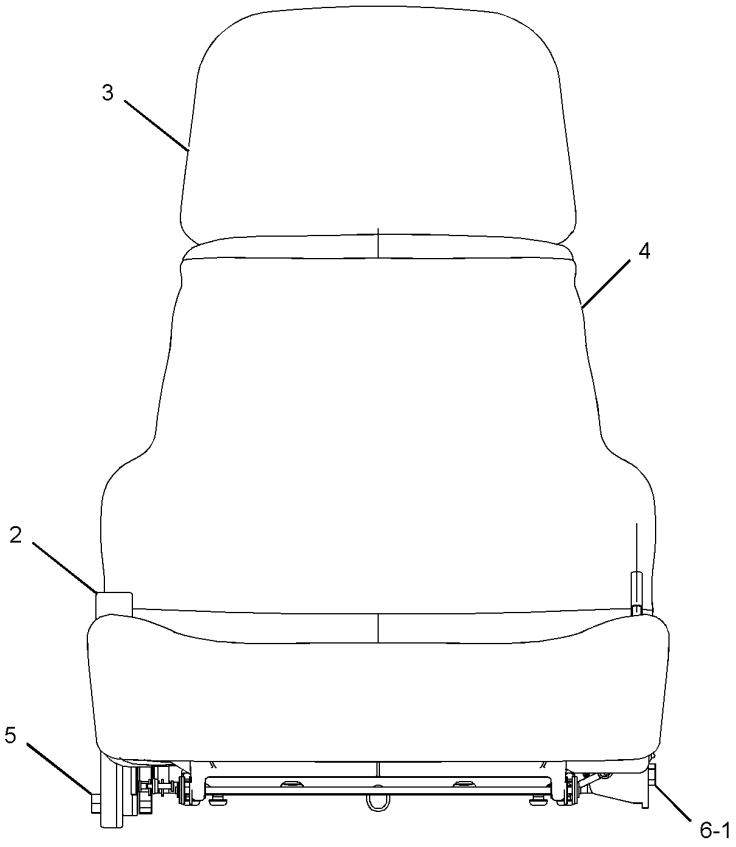

FRONT VIEW

GRAPHIC #1 **<END>** g01451877

OPERATOR STATION

248-7500 SEAT GP-COMPANION

S/N: 2211-UP

PART OF 248-7511 SEAT GP-COMPANION

SMCS-7312 **i02718539**

NOTE	REF NO	GRAPHIC REF	PART NUMBER	QTY	PART NAME 1 2 3 4 5 6 (PRODUCT LEVEL)	SEE PAGE
	1	1	**248-7505**	1	CUSHION AS	
	2	1	**248-7508**	1	COVER	
	3	1	**174-5807**	4	RIVET-POP	

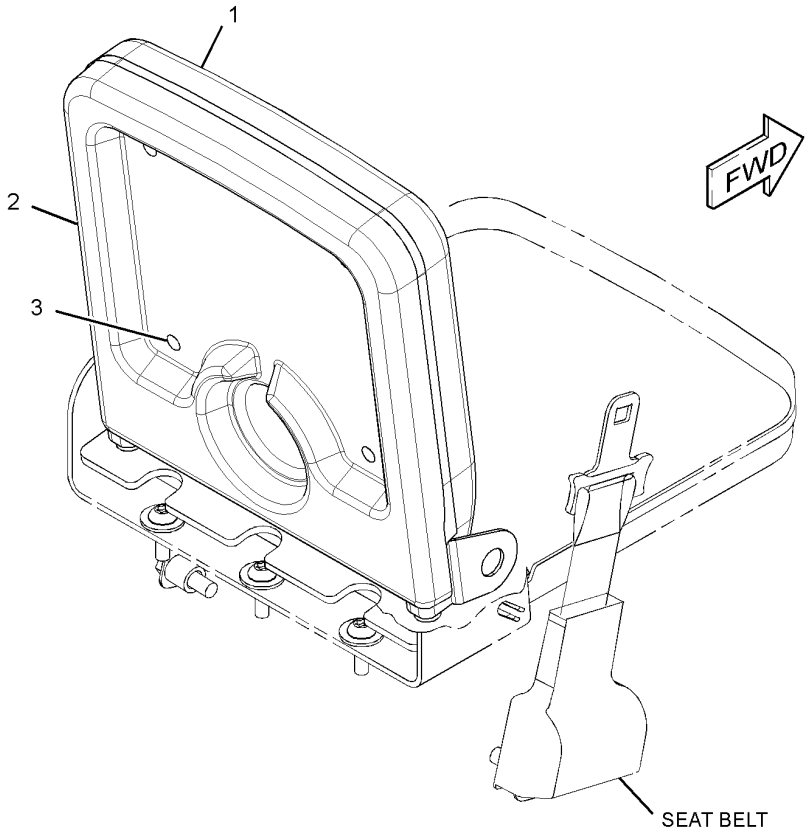

GRAPHIC #1 **<END>** g01369454

OPERATOR STATION

248-7511 SEAT GP-COMPANION

S/N: 2211-UP

PART OF 250-9976 SEAT GP

SMCS-7312 **i02861201**

NOTE	REF NO	GRAPHIC REF	PART NUMBER	QTY	PART NAME 1 2 3 4 5 6 (PRODUCT LEVEL)	SEE PAGE
Y	1	1	**248-7500**	1	SEAT GP-COMPANION	878
J	2	1	**248-7509**	2	SPACER (11.4X17.5X10.4-MM THK)	
	3	1	**248-7513**	1	BRACKET AS	
Y	4	1	**255-2713**	1	SEAT GP-COMPANION	880
CJ	5	1	**279-5626**	2	WASHER-SPRING	
CJ	6	1	**260-6707**	2	BOLT-SOCKET HEAD (M10X1.5X35-MM)	
CJ	7	1	**6V-5839**	2	WASHER (11X21X2.5-MM THK)	
CJM	8	1	**6V-7744**	2	LOCKNUT (M10X1.5-THD)	
J	9	1	**266-3155**	4	SPACER	
					AVAILABLE REPAIR KIT(S):	
J			**300-1180**	1	KIT-HARDWARE	

C-CHANGE FROM PREVIOUS TYPE
J-KIT MARKED J INCLUDES PART(S) MARKED J
M-METRIC PART
Y-SEPARATE ILLUSTRATION

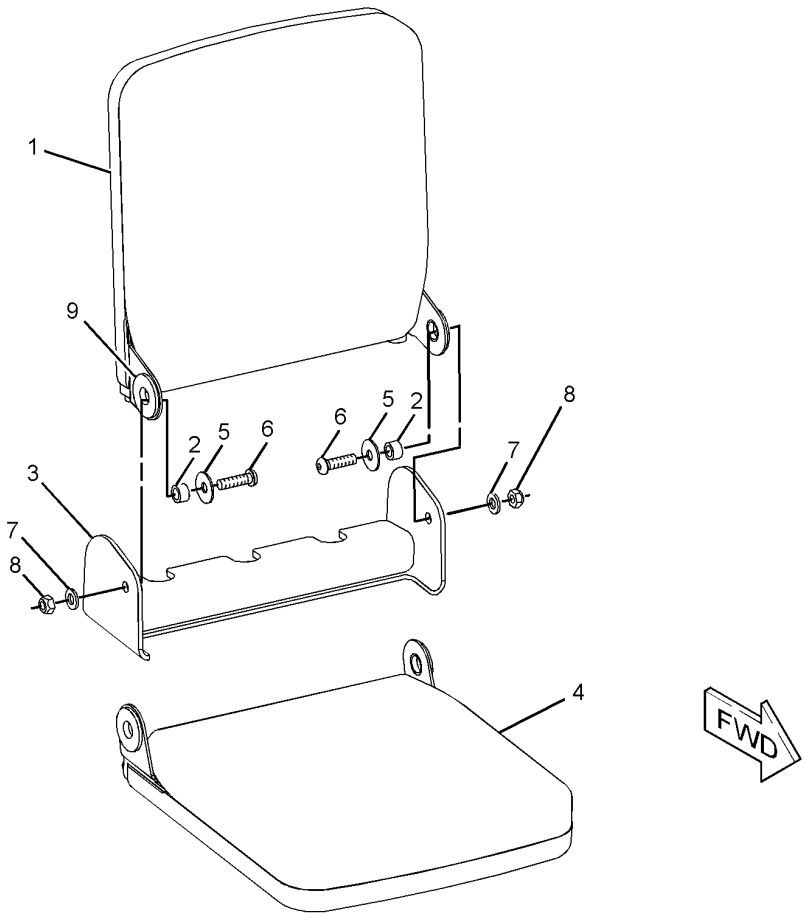

GRAPHIC #1 **<END>** g01446429

OPERATOR STATION

255-2713 SEAT GP-COMPANION

S/N: 2211-UP

PART OF 248-7511 SEAT GP-COMPANION

SMCS-7312 **i02719991**

NOTE	REF NO	GRAPHIC REF	PART NUMBER	QTY	PART NAME 1 2 3 4 5 6 (PRODUCT LEVEL)	SEE PAGE
	1	1	**255-2712**	1	COVER	
	2	1	**255-2714**	1	CUSHION AS	
	3	1	**174-5807**	4	RIVET-POP	

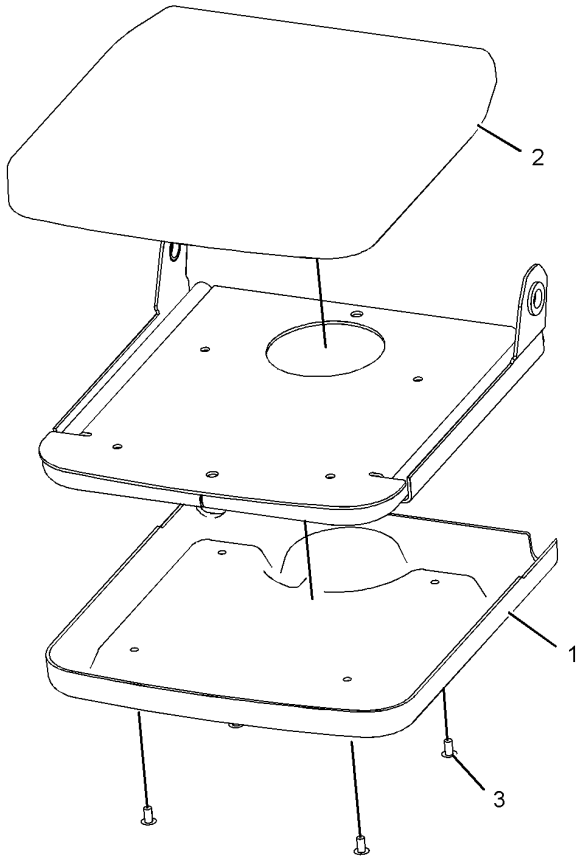

GRAPHIC #1 **<END>** g01368190

OPERATOR STATION

219-8090 SEAT GP-SUSPENSION

S/N: 2211-UP

PART OF 280-7084 CAB AR

SMCS-7324, 7336 **i02409873**

NOTE	REF NO	GRAPHIC REF	PART NUMBER	QTY	PART NAME 1 2 3 4 5 6 (PRODUCT LEVEL)	SEE PAGE
JZ	1	1		4	BLOCK-SLIDER	
J	2	1	**173-5787**	4	SETSCREW (1/4-20-THD)	
Y	3	1	**185-9726**	1	SEAT GP (CLOTH)	873
Y	4	1	**277-8032**	1	SUSPENSION GP-SEAT	893
J	5	1	**203-7703**	2	WASHER-HARD (10.2X22.22X2.38-MM THK)	
J	6	1	**4F-4879**	1	BOLT (3/8-16X0.5-IN)	
					AVAILABLE REPAIR KIT(S):	
J			**173-7035**		KIT-SLIDER BLOCK	

J-KIT MARKED J INCLUDES PARTS MARKED J
Y-SEPARATE ILLUSTRATION
Z-NOT SERVICED SEPARATELY

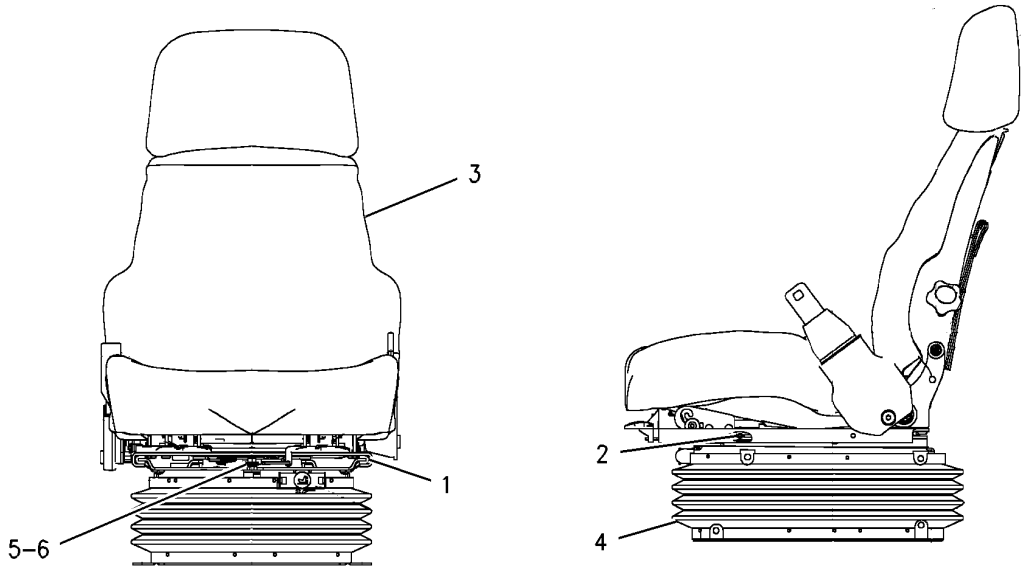

GRAPHIC #1 **<END>** g00909437

OPERATOR STATION

285-8425 SEAT GP-SUSPENSION–HEATED

S/N: 2211-UP

PART OF 296-3999 SEAT GP-SUSPENSION

AN ATTACHMENT

SMCS-7324, 7336 **i02902992**

NOTE	REF NO	GRAPHIC REF	PART NUMBER	QTY	PART NAME 1 2 3 4 5 6 (PRODUCT LEVEL)	SEE PAGE
J	1	1	**4F-4879**	1	BOLT (3/8-16X0.5-IN)	
J	2	1	**173-5787**	4	SETSCREW (1/4-20-THD)	
J	3	1	**203-7703**	2	WASHER-HARD (10.2X22.22X2.38-MM THK)	
Y	4	1	**277-8032**	1	SUSPENSION GP-SEAT	893
Y	5	1	**285-8424**	1	SEAT GP (CLOTH, HEATED)	877
					PARTS SHOWN IN GRAPHIC(S) WITHOUT A REFERENCE NUMBER ARE NOT SERVICED SEPARATELY	
					AVAILABLE REPAIR KIT(S):	
J			**173-7035**	1	KIT-SLIDER BLOCK (SUSPENSION SEAT)	
					(INCLUDES SLIDER BLOCKS)	

J-KIT MARKED J INCLUDES PARTS MARKED J
Y-SEPARATE ILLUSTRATION

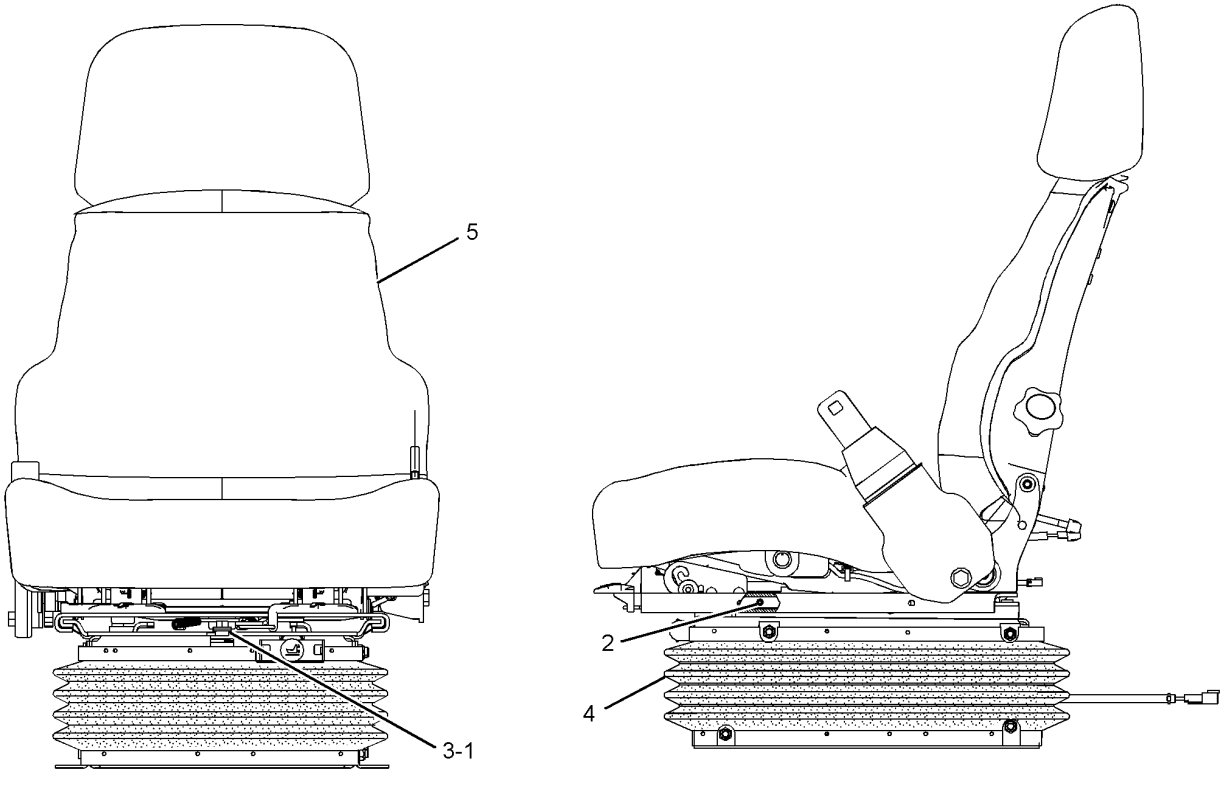

FRONT VIEW LEFT SIDE VIEW

GRAPHIC #1 **<END>** g01451451

OPERATOR STATION

296-3999 SEAT GP-SUSPENSION

S/N: 2211-UP

AN ATTACHMENT

SMCS-7324, 7336 **i02902983**

NOTE	REF NO	GRAPHIC REF	PART NUMBER	QTY	PART NAME 1 2 3 4 5 6 (PRODUCT LEVEL)	SEE PAGE
Y	1	1	**285-8425**	1	SEAT GP-SUSPENSION (HEATED)	882

Y-SEPARATE ILLUSTRATION

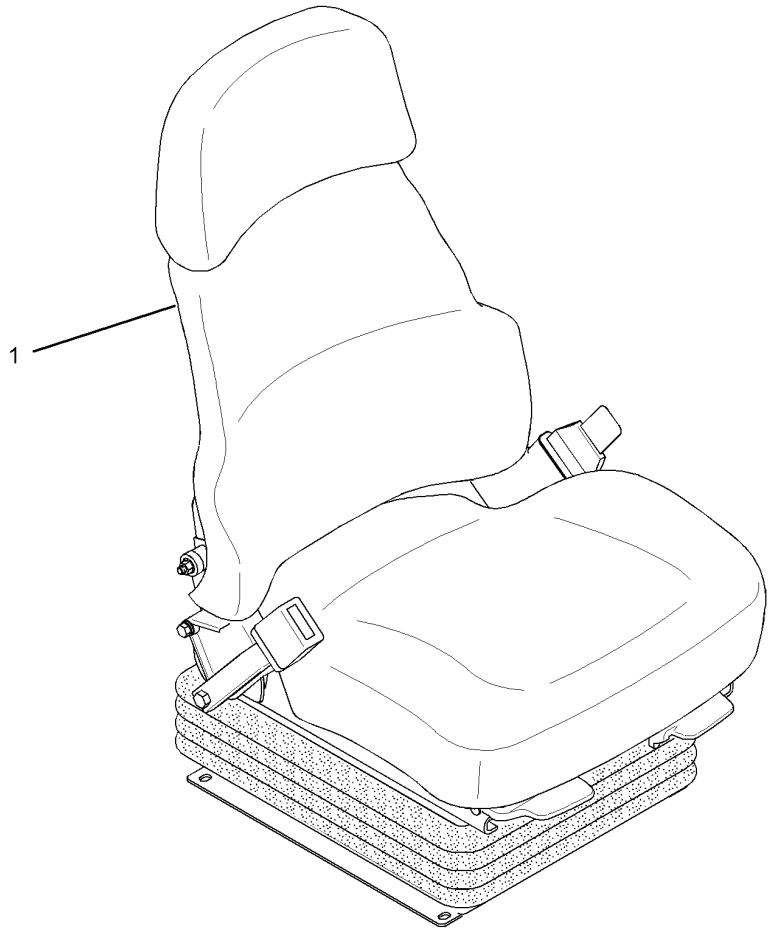

GRAPHIC #1 **<END>** g01449430

OPERATOR STATION

250-9873 SPRING GP-CAB DOOR

S/N: 2211-UP

PART OF 280-7084 CAB AR

SMCS-7308 **i02624812**

NOTE	REF NO	GRAPHIC REF	PART NUMBER	QTY	PART NAME 1 2 3 4 5 6 (PRODUCT LEVEL)	SEE PAGE
	1	1	**4D-9128**	1	WASHER (0.438X0.94X0.162-MM THK)	
	2	1	**4E-8318**	1	BEARING	
	3	1	**4E-8319**	1	BRACKET	
	4	1	**4E-8325**	1	CAM AS	
	5	1	**4E-8329**	1	SPACER (10.5X16.545X34-MM THK)	
	6	1	**4E-8338**	1	LEVER AS	
		1	**2K-2140**	1	SPACER (0.875X1.5X0.63-IN THK)	
	7	1	**4E-8340**	1	SPRING	
	8	1	**4H-3820**	1	SPRING-LATCH	
	9	1	**5P-0372**	1	LOCK PIN	
	10	1	**6D-3886**	1	BALL BEARING	
	11	1	**7P-4937**	1	BOSS	
	12	1	**8T-4766**	2	ROD END	
	13	1	**9R-5008**	4	SPACER (11X20X6-MM THK)	
	14	1	**113-9789**	1	ROD	
	15	1	**250-9876**	1	SHEET AS	
	16	1	**2D-9535**	1	GROMMET	
	17	1	**8N-5001**	1	EYEBOLT	
	18	1	**4E-8320**	1	PIN	
M	19	1	**5C-7261**	1	NUT (M8X1.25-THD)	
M	20	1	**6V-7357**	1	BOLT (M6X1X25-MM)	
M	21	1	**8T-3647**	1	BOLT (M8X1.25X80-MM)	
	22	1	**8T-4121**	8	WASHER-HARD (11X21X2.5-MM THK)	
M	23	1	**8T-4133**	9	NUT (M10X1.5-THD)	
M	24	1	**8T-4136**	5	BOLT (M10X1.5X25-MM)	
	25	1	**8T-4205**	1	WASHER-HARD (7.2X14.5X2-MM THK)	
	26	1	**8T-4222**	1	WASHER-PLATED (11X32X2.5-MM THK)	
	27	1	**8T-4224**	2	WASHER-HARD (8.8X16X2-MM THK)	
M	28	1	**8T-4908**	1	BOLT (M8X1.25X25-MM)	
	29	1	**6V-8189**	2	NUT (5/16-18-THD)	

M-METRIC PART

250-9873 **SPRING GP-CAB DOOR** *(contd.)* **i02624812**

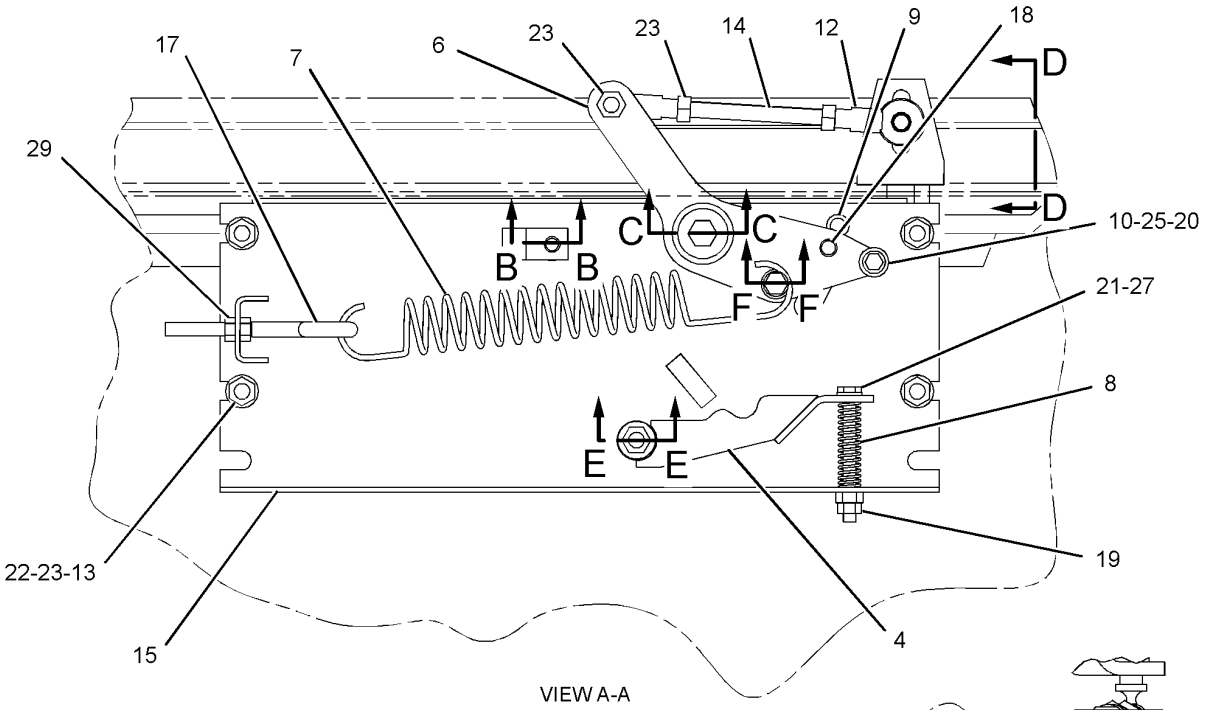

VIEW A-A

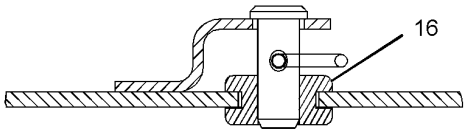

SECTION B-B

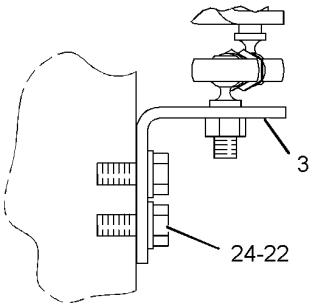

SECTION D-D

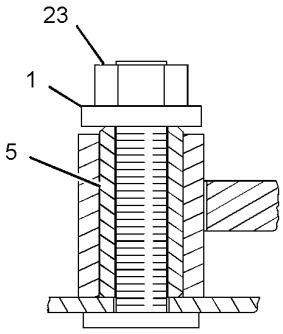

SECTION E-E

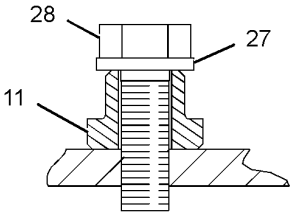

SECTION F-F

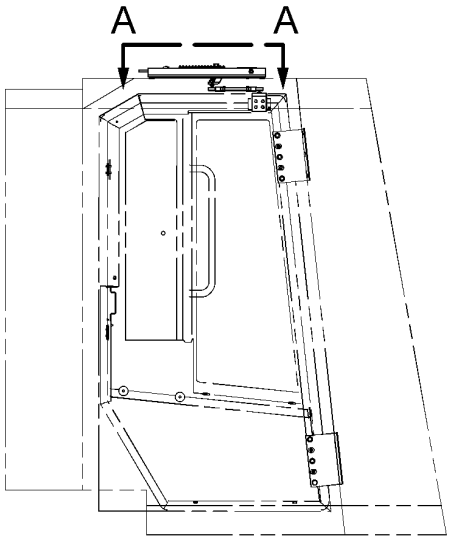

RIGHT SIDE VIEW

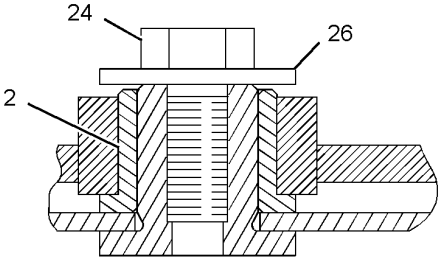

SECTION C-C

GRAPHIC #1 **<END>** g01315538

OPERATOR STATION

238-9083 SUPPORT GP-HYDRAULIC CONTROL

S/N: 2211-UP

PART OF 280-7084 CAB AR

SMCS-5258 **i02894356**

NOTE	REF NO	GRAPHIC REF	PART NUMBER	QTY	PART NAME 1 2 3 4 5 6 (PRODUCT LEVEL)	SEE PAGE
	1	2	**3K-4897**	1	PIN-SPRING	
	2	2	**4E-6523**	1	SUPPORT-SLIDE	
	3	1	**4E-6526**	1	CUSHION AS (RH)	
	4	1	**4E-8722**	6	NUT (RETAINER)	
	5	2	**4E-9173**	2	SHAFT-CONTROL	
C	6	2	**4E-9174**	4	BEARING	
	7	1	**5P-5454**	1	ASHTRAY	
	8	1	**5P-5824**	1	HOLDER	
M	9	2	**6V-9327**	4	SETSCREW-SOCKET (M6X1-THD)	
	10	2	**7V-0445**	1	SPRING	
	11	1	**7X-3310**	1	KNOB-BALL	
	12	1	**9U-0952**	1	PIN	
	13	1	**9U-0953**	1	GUIDE	
	14	2	**9U-0954**	1	STUD	
	15	2	**9U-0955**	1	PIN	
C	16	1	**301-5154**	1	PLATE AS	
C	17	2	**9U-3925**	8	RING-RETAINING	
	18	2	**9U-3926**	6	STOP	
	20	1	**9U-4551**	1	LEVER AS	
M	21	2	**8T-4195**	4	BOLT (M10X1.5X30-MM)	
	23	1	**176-3894**	1	BRACKET AS	
	24	1	**176-3895**	1	BRACKET AS (RH)	
	25	1	**189-1987**	1	SUPPORT-COVER	
	26	2	**203-0328**	1	SPACER (16X19X9-MM THK)	
	27	2	**208-1015**	1	BRACKET AS	
	28	1	**211-4942**	2	KNOB AS	
	29	1	**238-9085**	1	SUPPORT AS	
	30	1	**238-9087**	1	COVER	
	31	2	**238-9091**	1	CUSHION AS	
M	32	1	**5C-7261**	2	NUT (M8X1.25-THD)	
M	33	1	**5C-9553**	4	BOLT (M6X1X16-MM)	
M	34	2	**6R-7653**	2	SCREW (M6X1X15-MM)	
	35	1	**7X-0575**	2	WASHER-HARD (10.2X22.5X5-MM THK)	
M	36	1,2	**8T-4189**	5	BOLT (M8X1.25X20-MM)	
	37	1	**8T-4205**	4	WASHER-HARD (7.2X14.5X2-MM THK)	
	38	1	**8T-4224**	7	WASHER-HARD (8.8X16X2-MM THK)	
M	39	1	**8T-7547**	2	BOLT (M8X1.25X30-MM)	
	40	2	**9X-2027**	1	WASHER (11X18X2-MM THK)	
M	41	1,2	**9X-2044**	6	SCREW-TRUSS HEAD (M6X1X16-MM)	

C-CHANGE FROM PREVIOUS TYPE
M-METRIC PART

238-9083 **SUPPORT GP-HYDRAULIC CONTROL** *(contd.)* **i02894356**

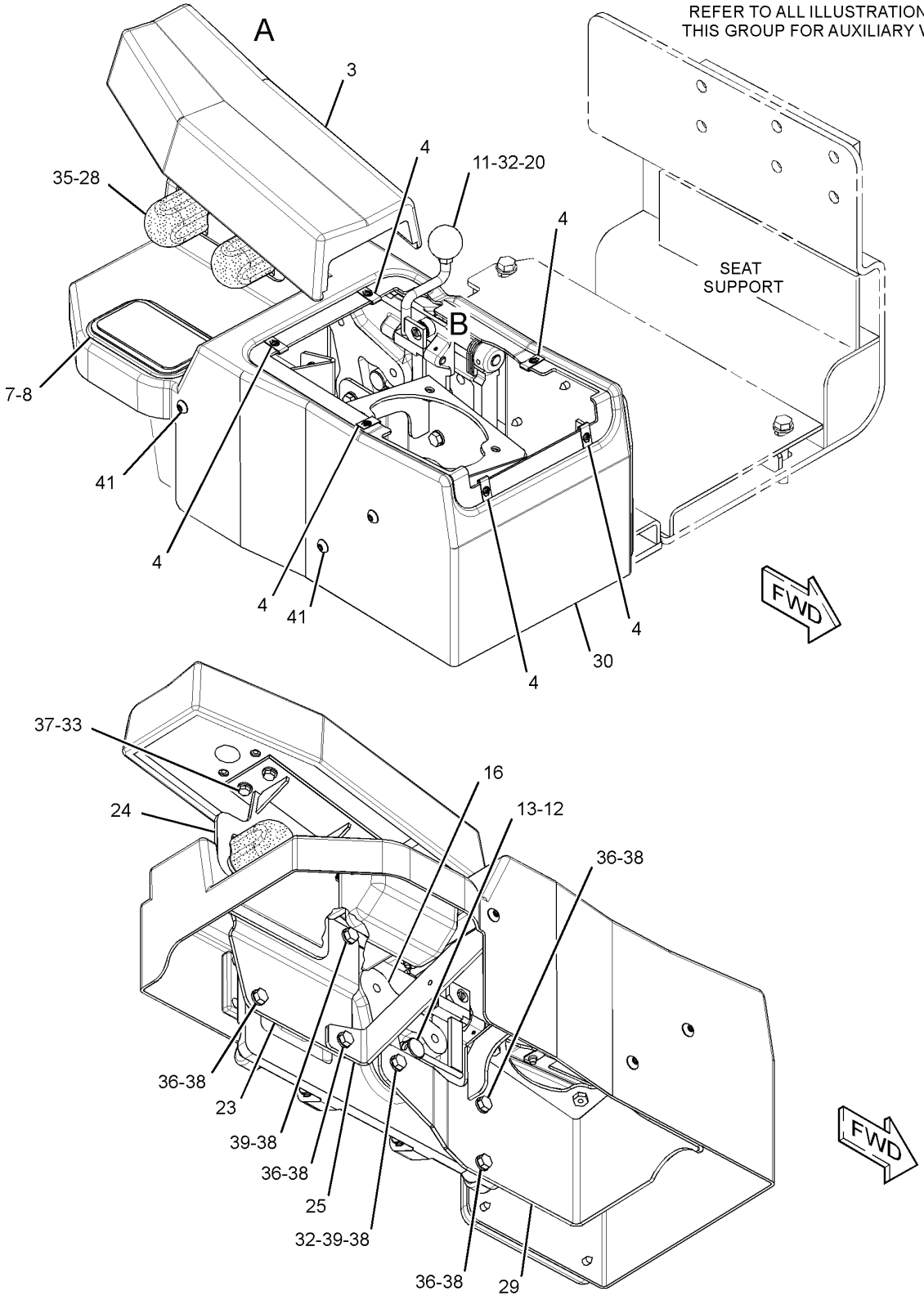

GRAPHIC #1 g01449185

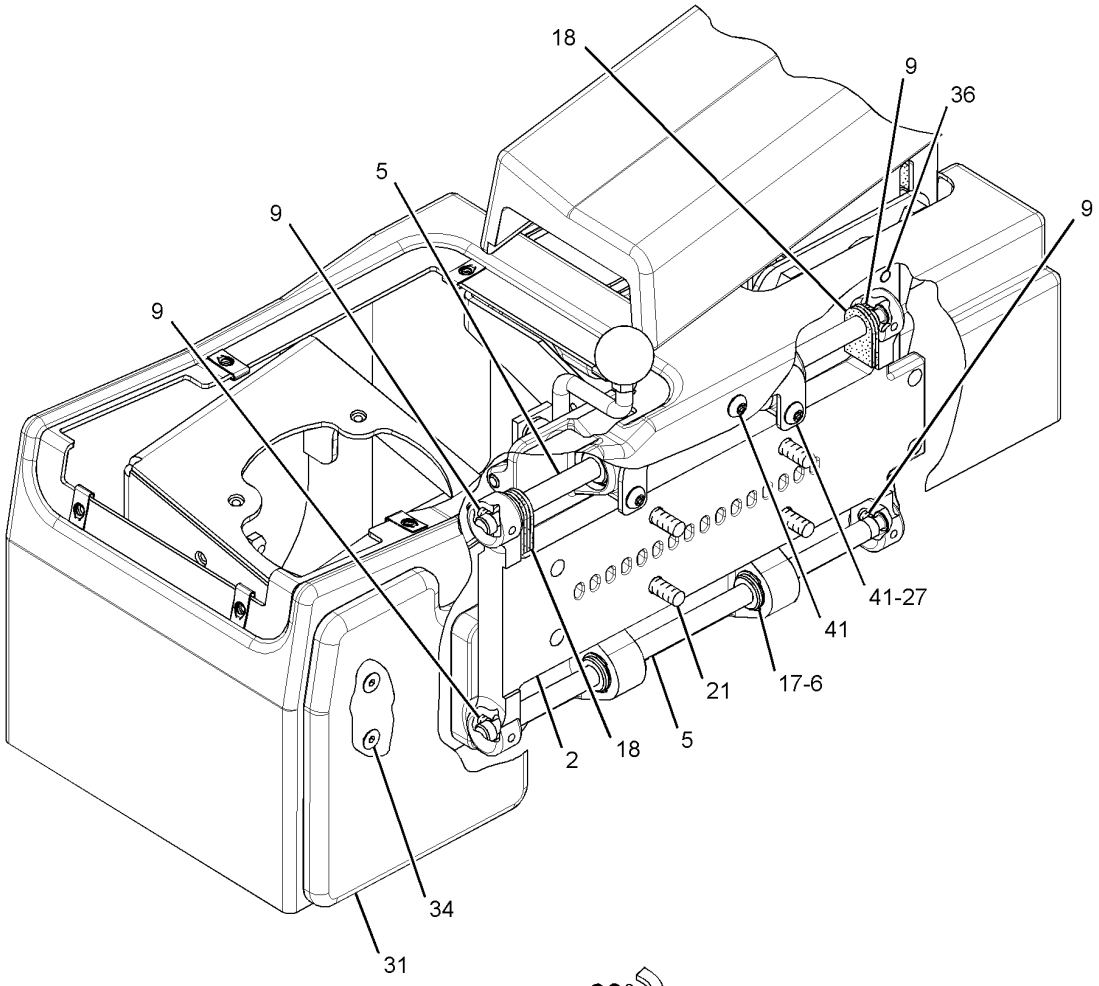

VIEW OF AREA A

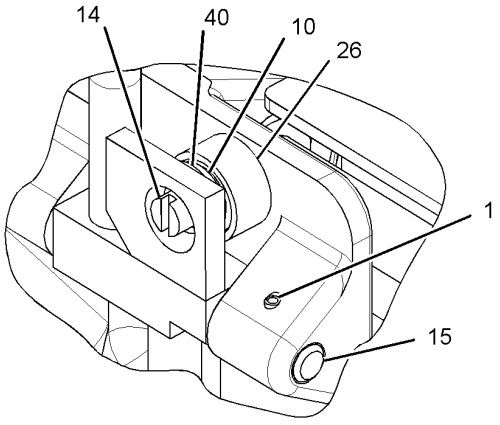

VIEW OF AREA B

GRAPHIC #2 **<END>** g01449186

OPERATOR STATION

178-3904 SUPPORT GP-SEAT

S/N: 2211-UP

PART OF 280-7084 CAB AR

SMCS-7321 **i02085764**

NOTE	REF NO	GRAPHIC REF	PART NUMBER	QTY	PART NAME 1 2 3 4 5 6 (PRODUCT LEVEL)	SEE PAGE
	1	1	**178-3905**	1	BRACKET AS	
M		1	**6V-9632**	2	NUT-WELD (M6X1-THD)	
C	2	1	**171-9683**	1	BRACKET AS	
M	3	1	**168-4510**	4	BOLT (M10X1.5X70-MM)	
	4	1	**8T-4121**	4	WASHER-HARD (11X21X2.5-MM THK)	

C-CHANGE FROM PREVIOUS TYPE
M-METRIC PART

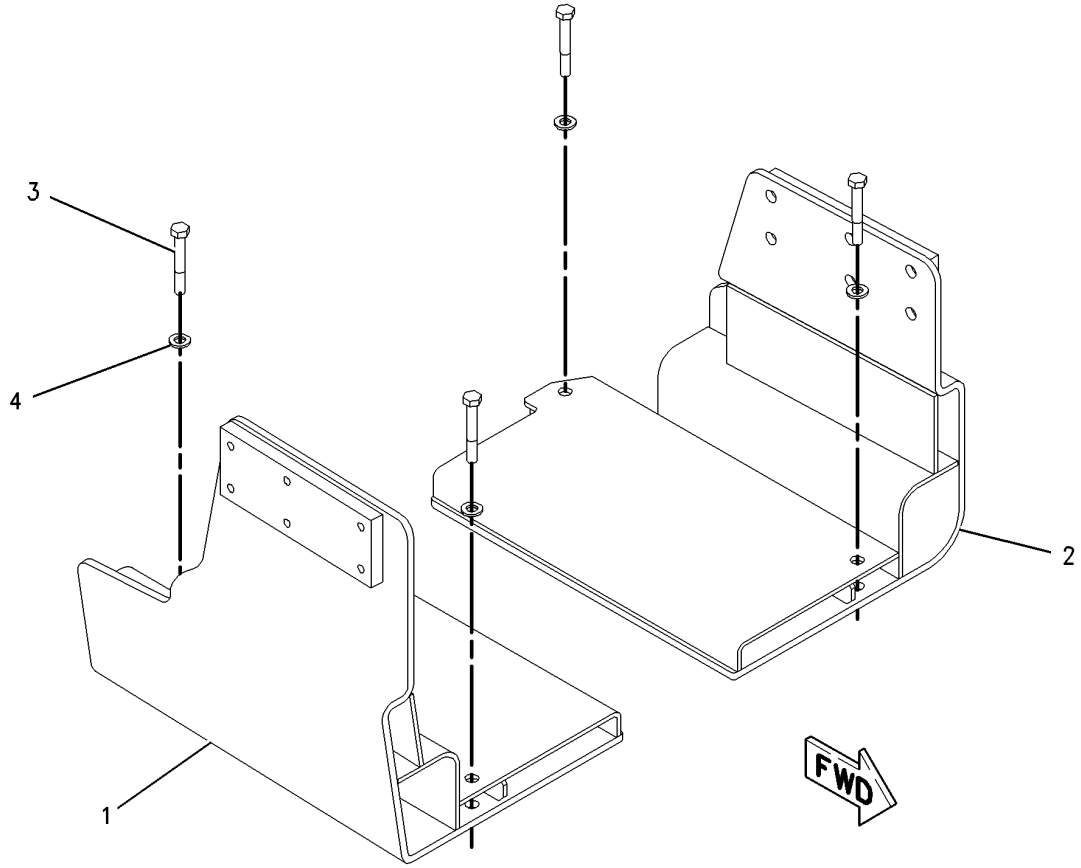

GRAPHIC #1 **<END>** g00851604

OPERATOR STATION

171-3897 SUPPORT GP-STEERING CONTROL

S/N: 2211-UP

PART OF 280-7084 CAB AR

SMCS-5258 **i02346760**

NOTE	REF NO	GRAPHIC REF	PART NUMBER	QTY	PART NAME 1 2 3 4 5 6 (PRODUCT LEVEL)	SEE PAGE
	1	2	**3G-4711**	1	SPRING	
B	2	2	**4B-4276**	8	WASHER (7X16X1.6-MM THK)	
	3	1	**4E-6335**	1	CUSHION AS (LH)	
	4	2	**4E-6439**	1	LEVER AS	
	5	2	**4E-6444**	1	ROD	
	6	2	**4E-6445**	1	PIN	
	7	2	**4E-6446**	1	GUIDE	
	8	2	**4E-6523**	1	SUPPORT-SLIDE	
	9	2	**4E-7163**	1	SLIDER	
	10	1	**4E-8722**	5	NUT	
	11	2	**4E-9173**	2	SHAFT-CONTROL	
	12	2	**4E-9174**	2	BEARING	
	13	2	**6E-0923**	1	SPACER (15.2-MM THK)	
	14	2	**9U-3925**	4	RING-RETAINING	
	15	2	**9U-3926**	6	STOP	
	16	2	**9U-3927**	1	BEARING	
B	17	2	**137-6841**	2	SHIM (0.2-MM THK)	
	18	1	**166-4731**	1	HOUSING	
	19	1	**166-4732**	1	HOUSING	
	20	1	**170-0696**	1	BRACKET AS	
M	20A	1	**6V-9632**	2	NUT-WELD (M6X1-THD)	
	21	1	**170-0971**	1	CUSHION AS	
	22	1	**170-0977**	1	BRACKET AS	
	23	2	**170-0979**	1	PLATE AS	
M	23A	2	**8T-3490**	2	NUT-WELD (M10X1.5-THD)	
	24	1	**211-4942**	2	KNOB AS	
	25	1	**170-8540**	1	BRACKET AS	
M	25A	1	**6V-9632**	2	NUT-WELD (M6X1-THD)	
	26	2	**013-8502**	1	LOCKWASHER	
M	27	2	**095-0758**	1	SCREW-MACHINE (M6X1X14-MM)	
M	28	2	**098-5747**	1	NUT-THIN (M16X2-THD)	
	29	2	**1J-5799**	1	PIN-SPRING	
M	30	1	**5C-7261**	1	NUT (M8X1.25-THD)	
M	31	2	**6V-9327**	4	SETSCREW-SOCKET	
M	32	2	**7X-2534**	1	BOLT (M6X1X50-MM)	
	33	1	**7X-3310**	1	KNOB-BALL	
M	34	2	**8T-4134**	1	NUT (M6X1-THD)	
M	35	1	**8T-4138**	4	BOLT (M6X1X20-MM)	
M	36	1	**8T-4189**	2	BOLT (M8X1.25X20-MM)	
M	37	2	**8T-4195**	6	BOLT (M10X1.5X30-MM)	
M	38	2	**8T-4200**	2	BOLT (M8X1.25X16-MM)	
	39	1	**8T-4205**	4	WASHER-HARD (7.2X14.5X2-MM THK)	
	40	1,2	**8T-4224**	4	WASHER-HARD (8.8X16X2-MM THK)	
M	41	2	**8T-4244**	1	NUT (M12X1.75-THD)	
	42	1	**9X-2038**	11	WASHER (7X19X2-MM THK)	
M	43	1	**9X-2043**	11	SCREW-TRUSS HEAD (M6X1X14-MM)	

B-USE AS REQUIRED
M-METRIC PART

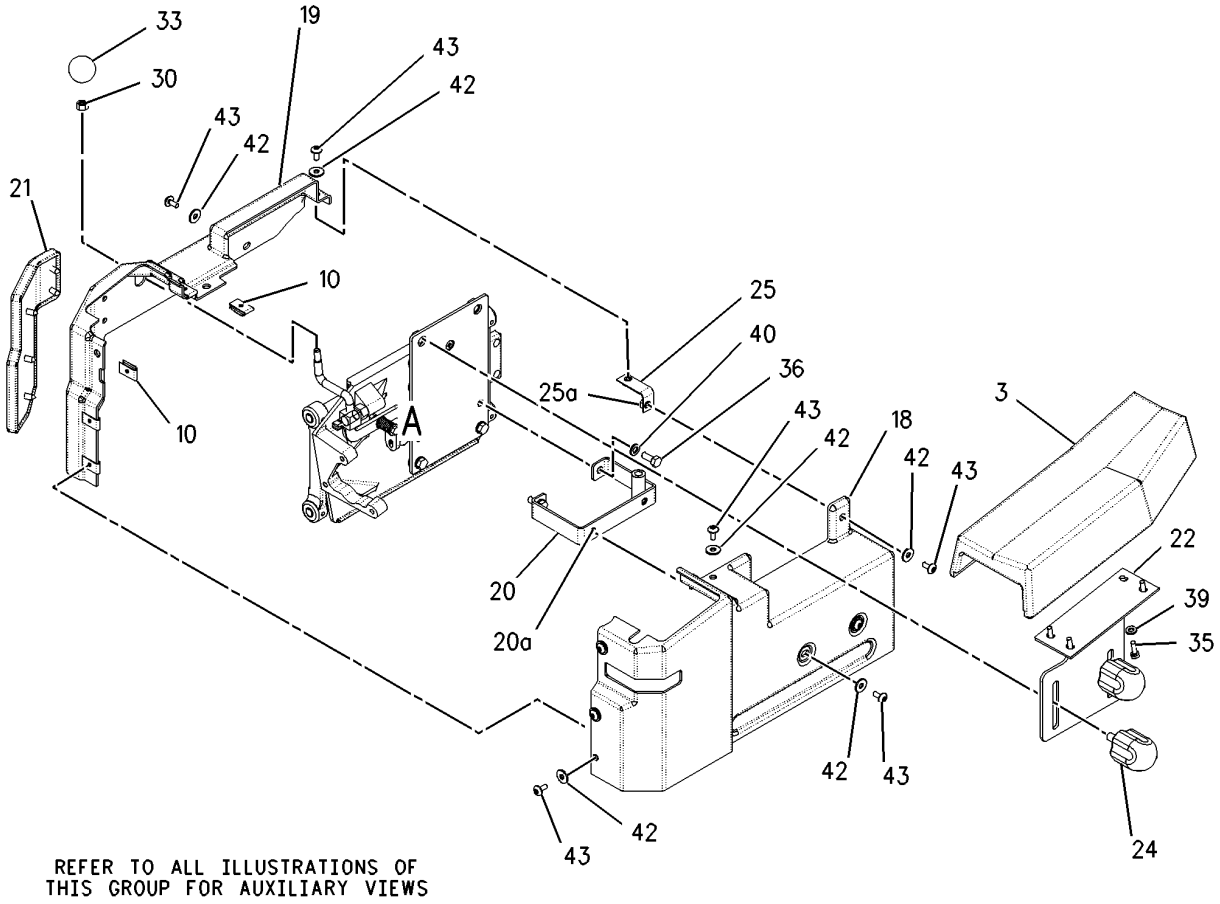

GRAPHIC #1 g00835251

171-3897 **SUPPORT GP-STEERING CONTROL** *(contd.)* **i02346760**

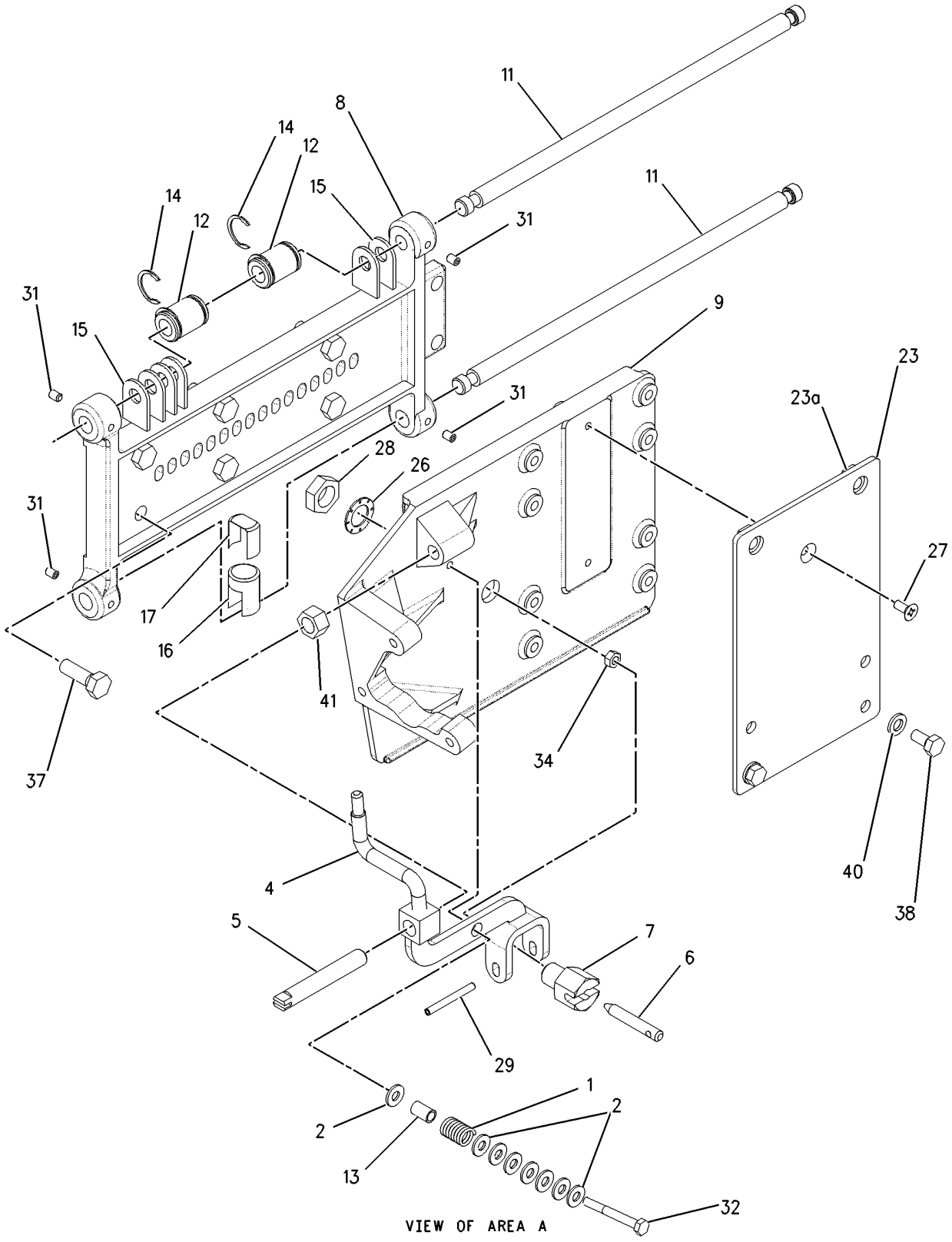

GRAPHIC #2 **<END>** g00742840

OPERATOR STATION

277-8032 SUSPENSION GP-SEAT—AIR

S/N: 2211-UP

PART OF 219-8090, 285-8425 SEAT GP-SUSPENSION

ALSO AN ATTACHMENT

SMCS-7324 **i02396917**

NOTE	REF NO	GRAPHIC REF	PART NUMBER	QTY	PART NAME 1 2 3 4 5 6 (PRODUCT LEVEL)	SEE PAGE
	1	1	**3P-9900**	5	WASHER (10.5X30X3-MM THK)	
	2	1	**4B-4278**	2	WASHER (10.2X20.5X1.6-MM THK)	
	3	1	**4V-8577**	12	BEARING	
	4	1	**8L-8413**	1	STRAP-CABLE	
	5	1	**101-0003**	33	FASTENER	
	6	1	**145-0326**	1	FILM-INSTRUCTION (SEAT ADJUSTMENT)	
	7	1	**164-1234**	1	PLATE	
	8	1	**169-7380**	1	BOLT-SOCKET HEAD (3/8-16X0.375-IN)	
	9	1	**186-5107**	2	SCREW-DRIVE (NO 8X1.25-IN)	
	10	1	**192-7752**	4	SHAFT AS	
	11	1	**192-7755**	1	HOUSING AS	
	12	1	**192-7760**	1	SHAFT	
	13	1	**192-7767**	1	SCISSORS AS	
	14	1	**192-7783**	1	TOGGLE AS	
	15	1	**192-7787**	1	TOGGLE AS	
	16	1	**192-7790**	1	HOUSING AS	
	17	1	**192-7795**	1	BOOT	
	18	1	**192-7805**	1	HARNESS AS-VALVE (SEAT AIR COMPRESSOR)	
		1	**102-8802**	1	KIT-RECEPTACLE (2-PIN)	
	19	1	**192-7810**	1	SPRING AS-AIR	
		1	**5P-4423**	1	ELBOW	
	20	1	**192-7812**	1	BOLT-SHOULDER (3/8-16X2-IN)	
	21	1	**192-7820**	3	BUMPER	
	22	1	**192-7822**	1	SHAFT	
	23	1	**237-3943**	1	BRACKET	
Y	24	1	**237-3970**	1	AIR COMPRESSOR GP-SEAT	781
	25	1	**1H-8296**	1	SCREW-MACHINE (3/8-16X0.52-IN)	
	26	1	**2K-4973**	8	LOCKNUT (3/8-16-THD)	
	27	1	**3J-4818**	1	LOCKWASHER	
M	28	1	**5C-2890**	3	NUT (M6X1-THD)	
	29	1	**8T-9371**	1	BOLT (3/8-16X0.5-IN)	
E	30	1	**211-5358**		CONDUIT-FLEXIBLE (26.7-CM)	
E	30A	1	**211-5358**		CONDUIT-FLEXIBLE (35.6-CM)	
D	31	1	**5P-6010**		TUBE (0.267-M)	
D	31A	1	**5P-6010**		TUBE (0.356-M)	
					AVAILABLE REPAIR KIT(S):	
			192-7799	1	KIT-AIR VALVE	
					(INCLUDES FITTING, LOCKWASHER, NUT, VALVE & KNOB AS)	
			192-7848	1	KIT-SHOCK ABSORBER	
					(SHOCK ABSORBER, BEARINGS, WASHERS, BOLTS, LOCKNUT, & LOCKWASHER)	
			211-9294	1	KIT-TETHER	
					(INCLUDES TETHER)	

D-ORDER BY THE METER
E-ORDER BY THE CENTIMETER
M-METRIC PART
Y-SEPARATE ILLUSTRATION

277-8032 **SUSPENSION GP-SEAT** *(contd.)* **i02396917**

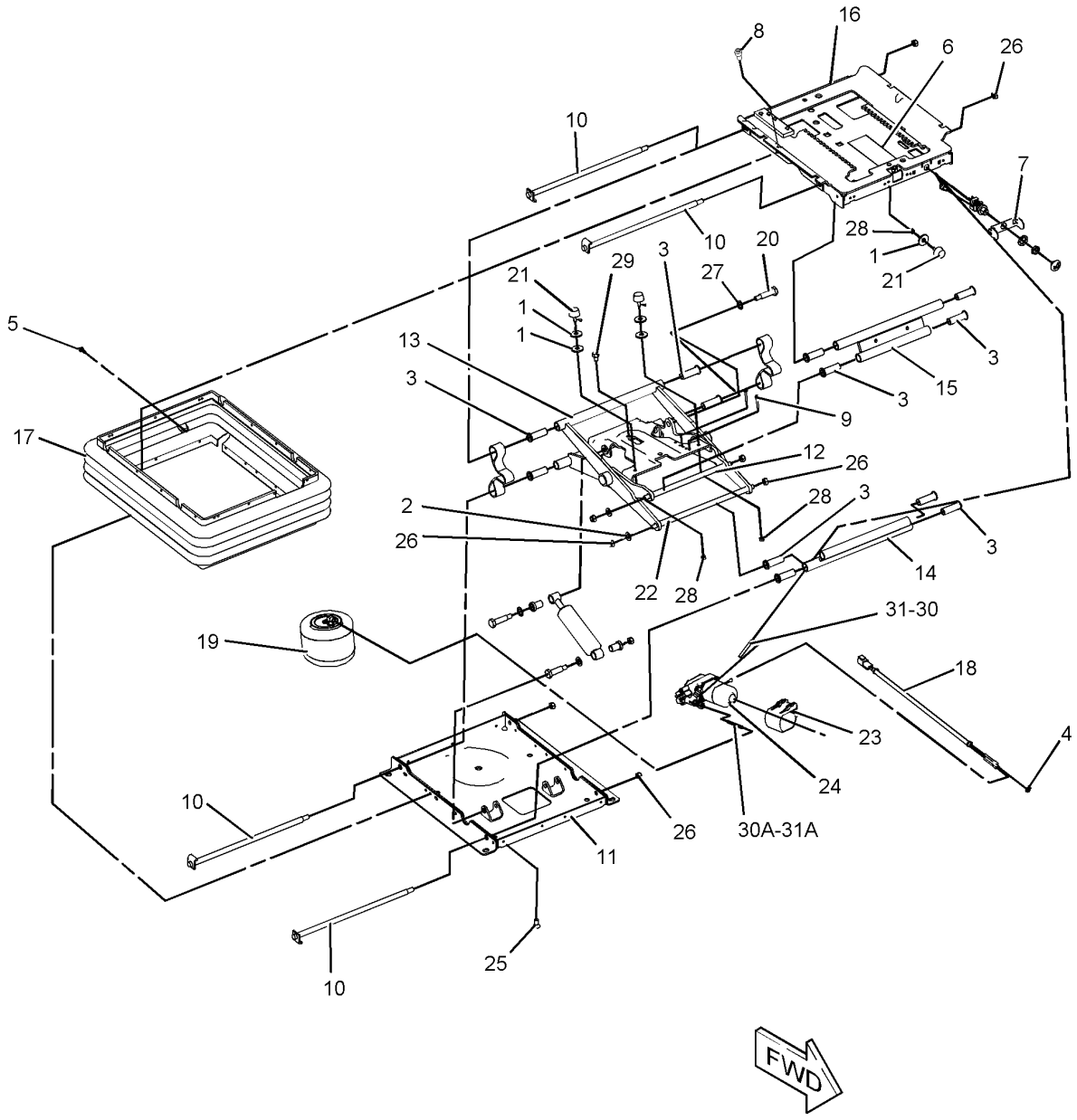

GRAPHIC #1 **<END>** g01218573

OPERATOR STATION

242-1915 WASHER GP-WINDOW

S/N: 2211-UP

PART OF 242-1901 WIPER & WASHER GP-WINDOW

SMCS-7306 **i02148157**

NOTE	REF NO	GRAPHIC REF	PART NUMBER	QTY	PART NAME 1 2 3 4 5 6 (PRODUCT LEVEL)	SEE PAGE
	1	1	**7T-8890**	4	PUMP AS-WASHER	
	2	1	**8E-8292**	1	CAP-VENTED (WINDOW WASHER)	
	3	1	**8T-5913**	4	SCREEN-FILTER	
	4	1	**8T-5914**	4	GROMMET	
	5	1	**242-1921**	1	RESERVOIR	

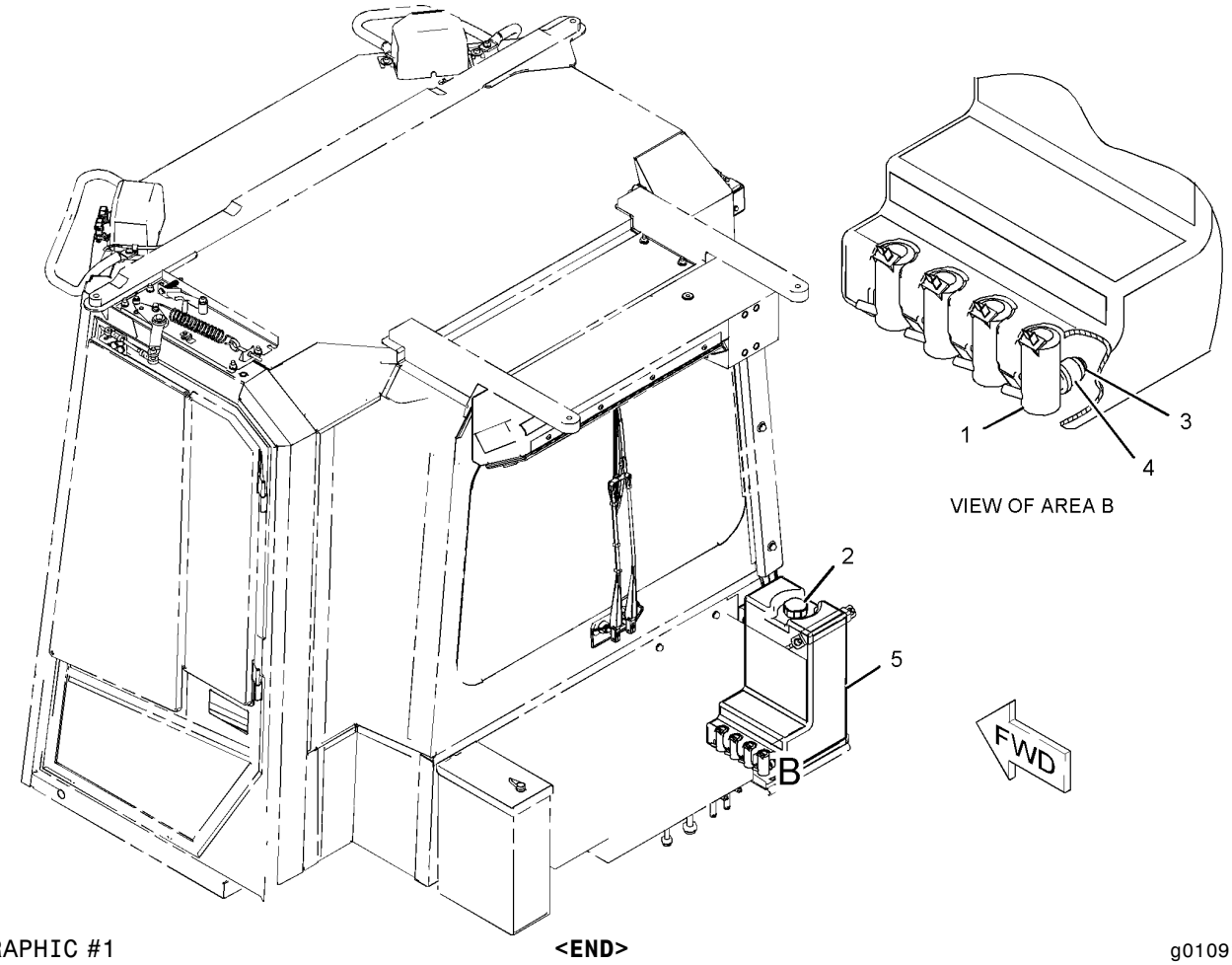

GRAPHIC #1 **<END>** g01091336

OPERATOR STATION

242-1901 WIPER & WASHER GP-WINDOW—FRONT, REAR

S/N: 2211-UP

PART OF 280-7084 CAB AR

SMCS-7305, 7306 **i02713466**

NOTE	REF NO	GRAPHIC REF	PART NUMBER	QTY	PART NAME 1 2 3 4 5 6 (PRODUCT LEVEL)	SEE PAGE
	1	1	**3S-2093**	6	STRAP-CABLE	
	2	1	**6V-5851**	1	BLADE AS-WIPER (400-MM) (REAR)	
	3	1	**6V-7419**	1	BLADE AS-WIPER (700-MM) (FRONT)	
	4	1	**8T-5400**	4	CONNECTOR AS	
	5	1	**9N-1713**	2	WASHER	
	6	1	**9U-0838**	1	MAT	
	7	1	**155-5779**	2	WIPER PIVOT AS	
Y	8	1	**155-5784**	1	MOTOR GP-WINDOW WIPER (24-VOLT) (REAR)	834
Y	9	1	**185-2154**	1	MOTOR GP-WINDOW WIPER (24-VOLT) (FRONT)	835
	10	1	**185-2155**	1	ARM AS-WIPER	
Y	11	1	**214-7635**	1	ARM GP-WINDOW WIPER (FRONT)	787
	12	1	**242-1912**	1	SHEET AS	
M		1	**8T-3490**	1	NUT-WELD (M10X1.5-THD)	
		1	**8Y-3925**	1	BOSS (3/8-16X1.2-IN)	
	13	1	**242-1913**	1	ANGLE AS	
	14	1	**242-1914**	1	ROD	
Y	15	1	*242-1915*	1	WASHER GP-WINDOW	895
	16	1	**5P-8525**	1	GROMMET	
	17	1	**6V-3265**	1	CLIP	
M	19	1	**6V-7357**	2	BOLT (M6X1X25-MM)	
	21	1	**8T-4121**	8	WASHER-HARD (11X21X2.5-MM THK)	
M	22	1	**8T-4133**	4	NUT (M10X1.5-THD)	
M	24	1	**8T-4191**	4	BOLT (M10X1.5X16-MM)	
E	25	1	**144-0195**		HOSE (83-CM EACH)	
E	25A	1	**144-0195**		HOSE (122-CM)	
E	25B	1	**144-0195**		HOSE (234-CM)	

E-ORDER BY THE CENTIMETER
M-METRIC PART
Y-SEPARATE ILLUSTRATION

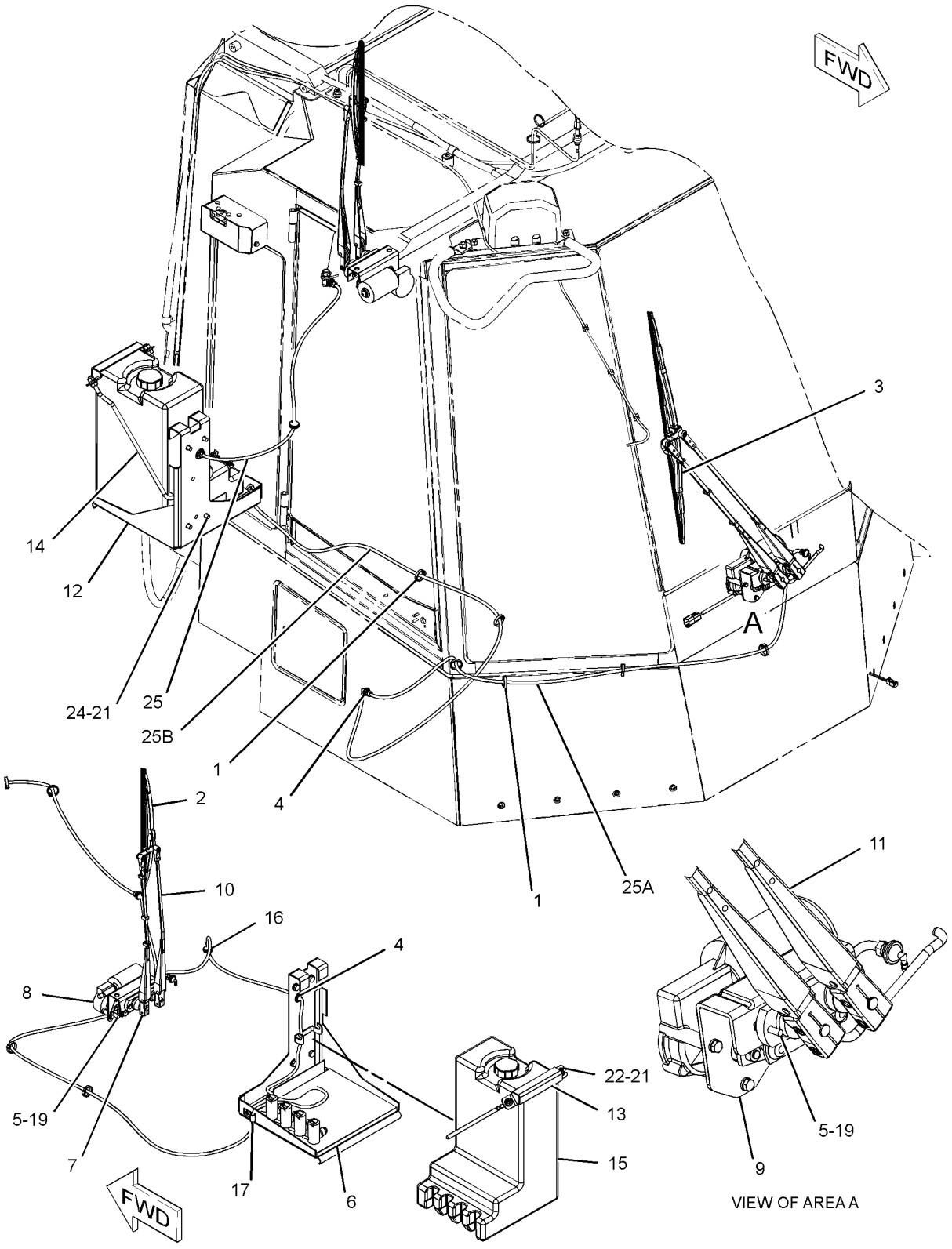

GRAPHIC #1 **<END>** g01372530

OPERATOR STATION

214-7636 WIPER GP-WINDOW—FRONT QUARTER

S/N: 2211-UP

PART OF 236-5417 WIPER GP-WINDOW

SMCS-7305 **i02679606**

NOTE	REF NO	GRAPHIC REF	PART NUMBER	QTY	PART NAME 1 2 3 4 5 6 (PRODUCT LEVEL)	SEE PAGE
M	1	1	**191-8921**	4	BOLT-SOCKET HEAD (M6X1X25-MM)	
	2	1	**227-7392**	4	WASHER (6.3X10.3X0.4-MM THK)	
M	3	1	**6V-8225**	4	NUT (M6X1-THD)	
	4	1	**136-3190**	1	NOZZLE AS-WASHER	
	5	1	**136-3188**	3	CLIP	

M-METRIC PART

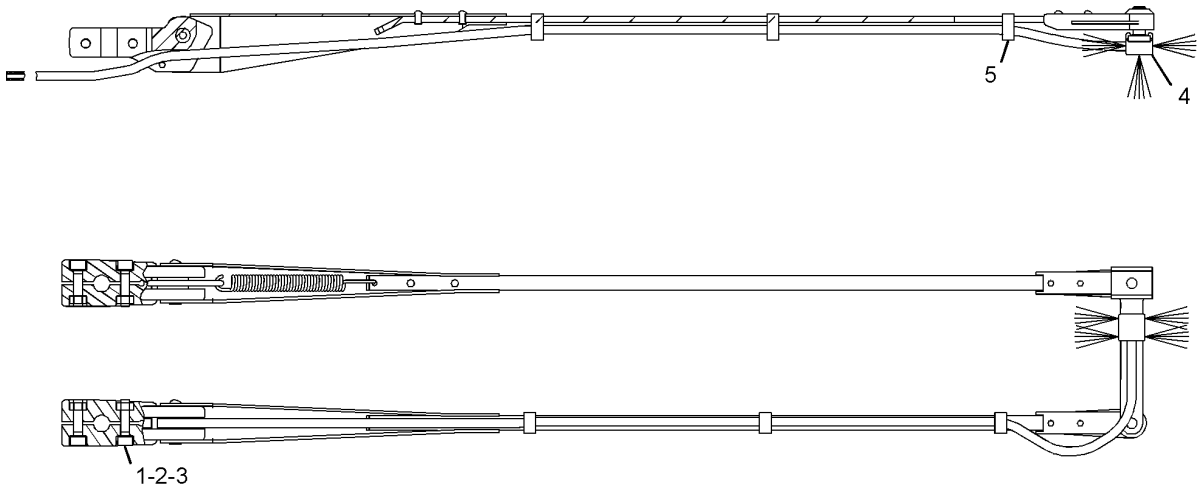

GRAPHIC #1 **<END>** g01040138

OPERATOR STATION

236-5417 WIPER GP-WINDOW—FRONT QUARTER

S/N: 2211-UP

PART OF 280-7084 CAB AR

SMCS-7305 **i02956582**

NOTE	REF NO	GRAPHIC REF	PART NUMBER	QTY	PART NAME 1 2 3 4 5 6 (PRODUCT LEVEL)	SEE PAGE
	1	2	**3V-3263**	4	CONNECTOR (HOSE)	
	2	1	**6V-7419**	2	BLADE AS-WIPER (700-MM) (SIDE WINDOW)	
	3	2	**9U-0124**	1	CHANNEL	
	4	2	**9U-0125**	1	STRIP AS	
M		2	**8T-3490**	3	NUT-WELD (M10X1.5-THD)	
		2	**8Y-3925**	3	BOSS (3/8-16X1.2-IN)	
Y	5	2	**190-3445**	1	MOTOR GP-WINDOW WIPER (FRONT QUARTER, RH)	836
Y	6	2	**190-3446**	1	MOTOR GP-WINDOW WIPER (FRONT QUARTER, LH)	837
	7	2	**204-3561**	2	COVER	
Y	8	1	**214-7636**	2	WIPER GP-WINDOW (FRONT QUARTER)	898
	9	1	**033-8248**	2	CLIP	
	10	1,2	**174-5907**	9	CLIP	
	11	2	**2V-3216**	2	CLIP	
	12	1,2	**5P-9297**	3	CLIP	
	13	1,2	**6V-3265**	13	CLIP	
	14	1,2	**7N-3718**	6	CLIP	
	15	1,2	**8T-4121**	15	WASHER-HARD (11X21X2.5-MM THK)	
M	16	2	**8T-4133**	4	NUT (M10X1.5-THD)	
M	17	1,2	**8T-4137**	8	BOLT (M10X1.5X20-MM)	
M	18	2	**8T-4191**	6	BOLT (M10X1.5X16-MM)	
M	19	1	**8T-4196**	1	BOLT (M10X1.5X35-MM)	
	20	2	**8T-4222**	4	WASHER-PLATED (11X32X2.5-MM THK)	
	21	1	**9R-5383**	1	BOSS (11X25X20-MM THK)	
M	22	1,2	**9X-2042**	4	SCREW-TRUSS HEAD (M6X1X12-MM)	
E	23	1	**144-0195**		HOSE (97-CM)	
E	23A	1	**144-0195**		HOSE (84.5-CM)	
E	23B	1	**144-0195**		HOSE (313-CM)	
E	23C	1	**144-0195**		HOSE (233-CM)	

E-ORDER BY THE CENTIMETER
M-METRIC PART
Y-SEPARATE ILLUSTRATION

REFER TO ALL ILLUSTRATIONS OF
THIS GROUP FOR AUXILIARY VIEWS

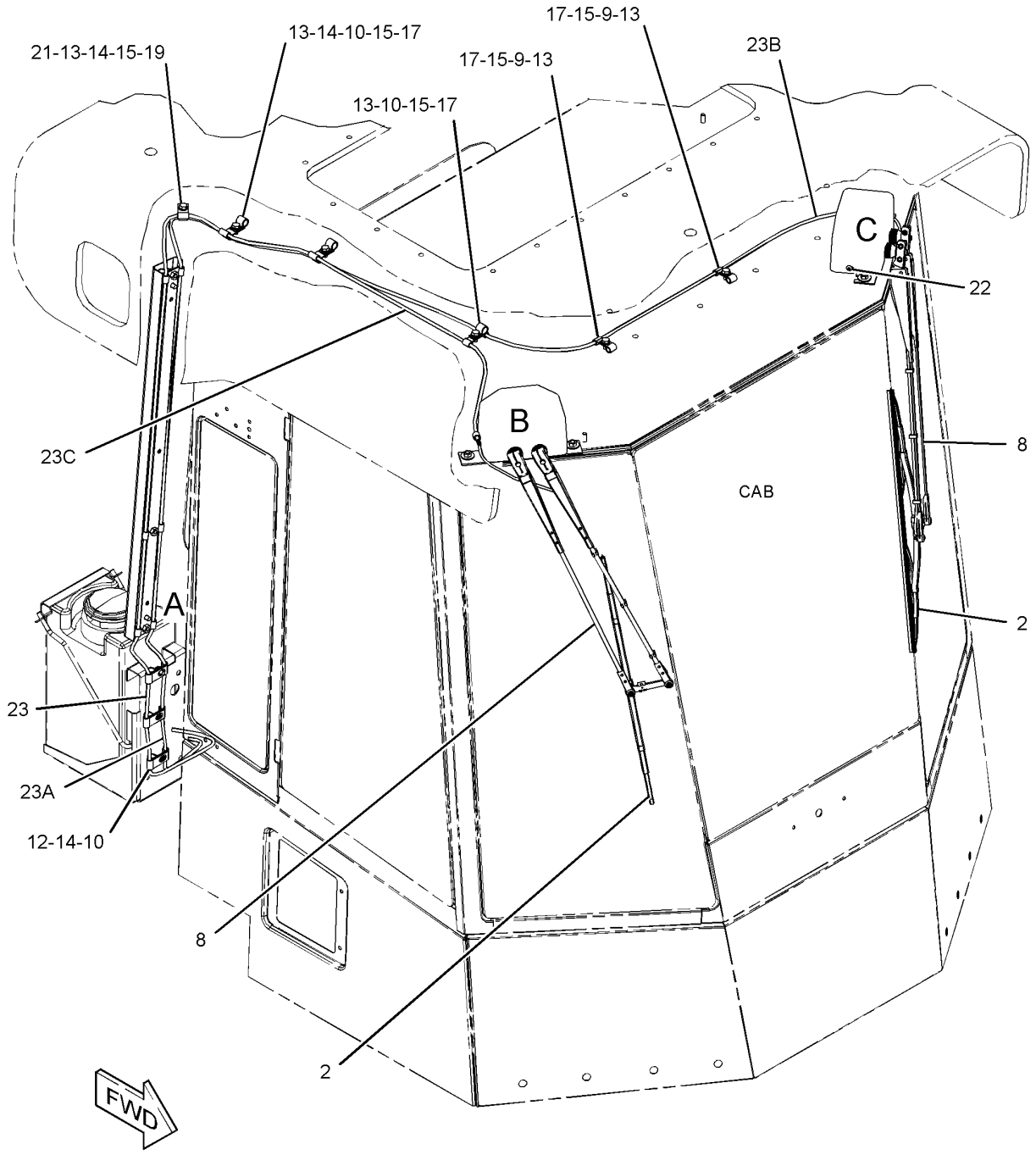

GRAPHIC #1 g01449849

236-5417 **WIPER GP-WINDOW** *(contd.)* **i02956582**

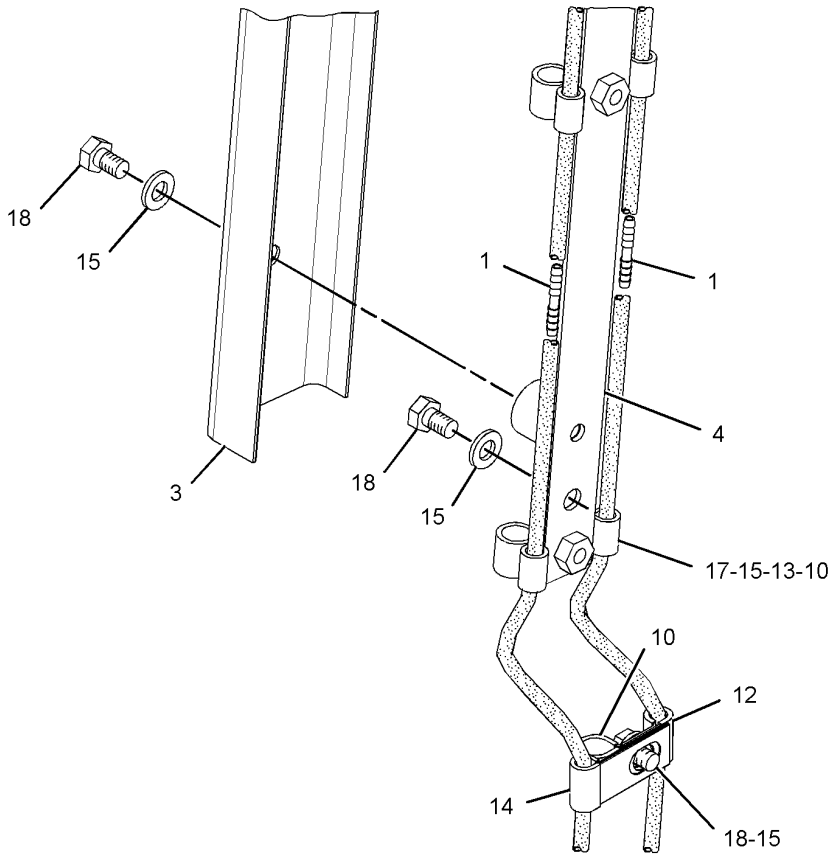

VIEW OF AREA A

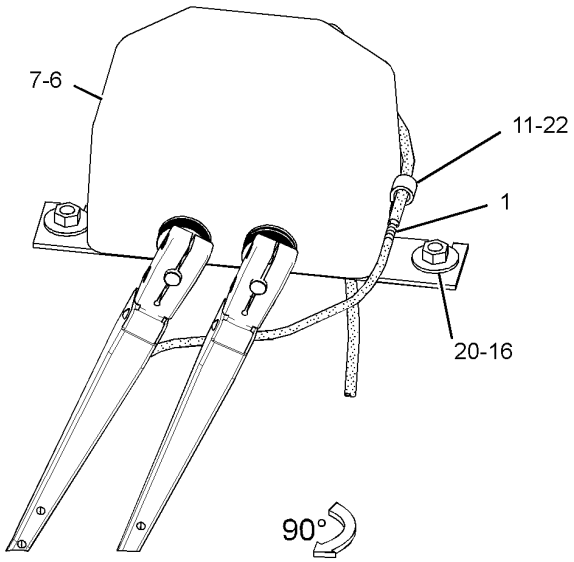

VIEW OF AREA C

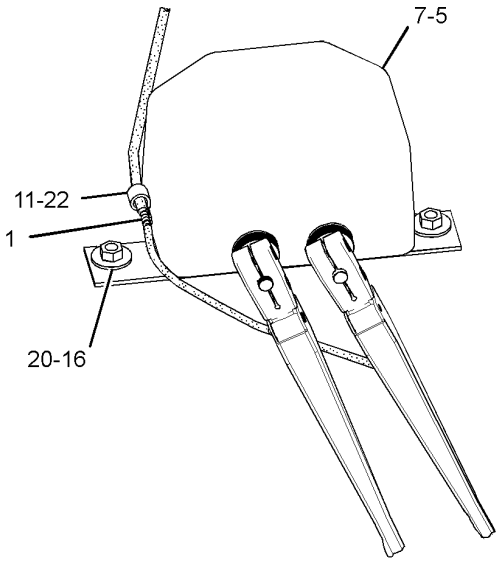

VIEW OF AREA B

GRAPHIC #2 **<END>** g01449850

SERVICE EQUIPMENT AND SUPPLIES

292-0668 ENCLOSURE GP-SERVICE CENTER

S/N: 2211-UP

PART OF 279-5292 SERVICE CENTER GP

AN ATTACHMENT

SMCS-7554 **i02902178**

NOTE	REF NO	GRAPHIC REF	PART NUMBER	QTY	PART NAME 1 2 3 4 5 6 (PRODUCT LEVEL)	SEE PAGE
	1	1	**262-4748**	1	PAWL	
	2	1	**273-4890**	1	LATCH AS	
M		1	**5C-2890**	4	NUT (M6X1-THD)	
		1	**8C-3398**	4	LOCKWASHER	
M		1	**160-8503**	2	NUT (M10X1.15-THD)	
	3	1	**282-7962**	1	DOOR AS-ACCESS	
	4	1	**289-3109**	1	PLATE AS	
	5	1	**8T-4121**	3	WASHER-HARD (11X21X2.5-MM THK)	
M	6	1	**8T-4136**	3	BOLT (M10X1.5X25-MM)	
D	7	1	**5P-8309**		SEAL (0.4-M EACH)	
E	8	1	**7X-7898**		TRIM (25-CM)	

D-ORDER BY THE METER
E-ORDER BY THE CENTIMETER
M-METRIC PART

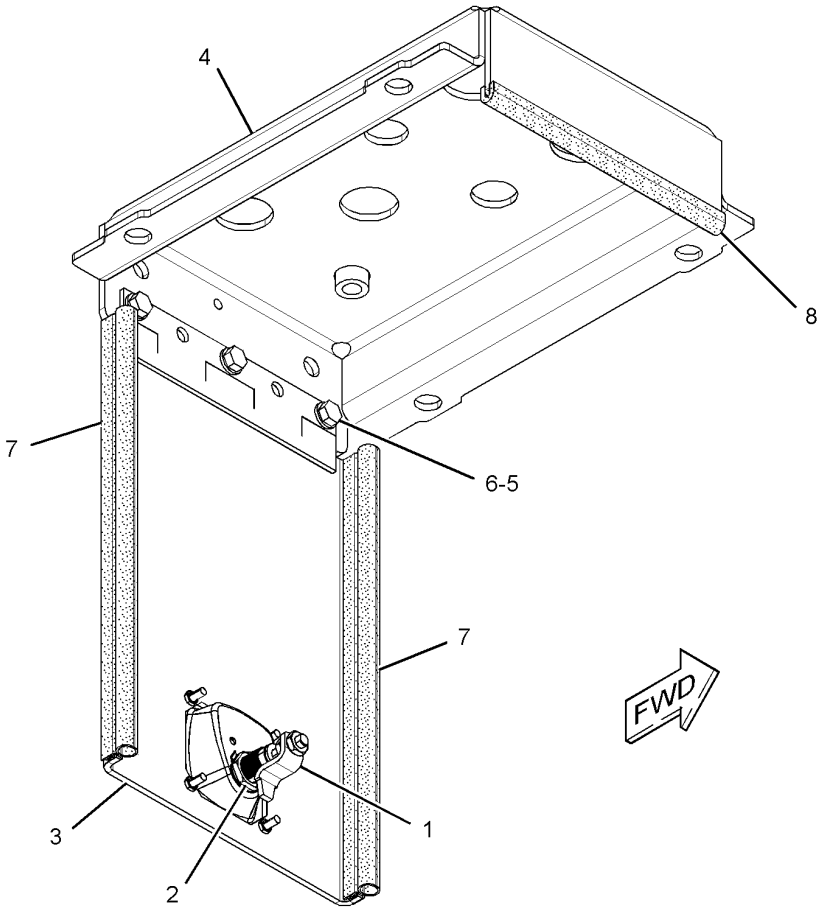

GRAPHIC #1 **<END>** g01447847

SERVICE EQUIPMENT AND SUPPLIES

269-4795 FILM GP

S/N: 2211-UP

PART OF 262-2081 CHASSIS AR

SMCS-7405, 7557 **i02894342**

NOTE	REF NO	GRAPHIC REF	PART NUMBER	QTY	PART NAME 1 2 3 4 5 6 (PRODUCT LEVEL)	SEE PAGE
	1	1	**292-2322**	1	FILM-IDENTIFICATION (CATERPILLAR) (FRONT)	
	2	1	**292-2323**	1	FILM-IDENTIFICATION (CATERPILLAR) (REAR)	
	3	1	**292-2324**	1	FILM-IDENTIFICATION (CAT 854K, LH)	
	4	1	**292-2325**	1	FILM-IDENTIFICATION (CAT 854K, RH)	
	5	1	**294-4772**	2	FILM-STRIPE (ROPS)	
	6	1	**302-3428**	1	FILM-IDENTIFICATION (CAT, LH)	
	7	1	**302-3424**	1	FILM-IDENTIFICATION (CAT, RH)	
	8	1	**302-3425**	1	FILM-STRIPE (RH)	
	9	1	**302-3426**	1	FILM-STRIPE (RH)	
	10	1	**302-3429**	1	FILM-STRIPE (LH)	
	11	1	**302-3431**	1	FILM-STRIPE (LH)	
	12	1	**136-2186**	1	FILM-WINDOW (FRONT)	
	13	1	**205-1774**	1	FILM-WINDOW (REAR)	

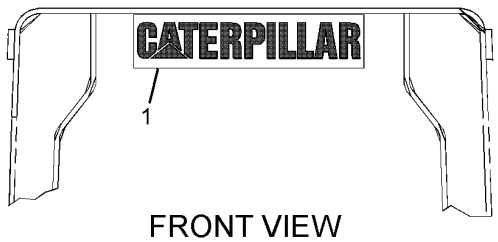

FRONT VIEW
(ROPS)

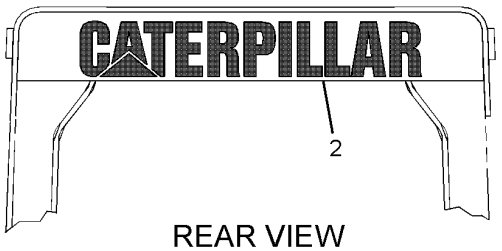

REAR VIEW
(ROPS)

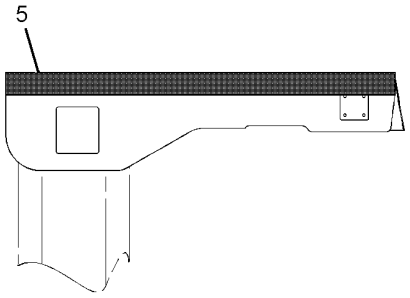

RIGHT SIDE VIEW
(ROPS)

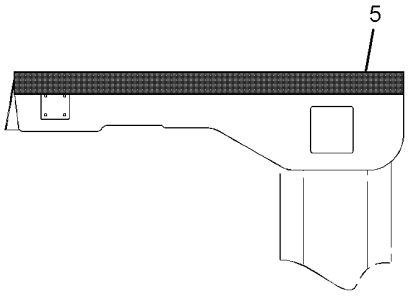

LEFT SIDE VIEW
(ROPS)

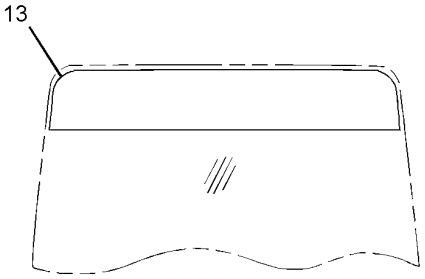

FRONT VIEW
(FRONT WINDSHIELD)

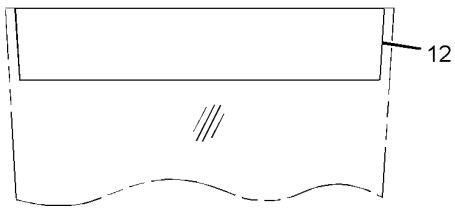

REAR VIEW
(REAR WINDSHIELD)

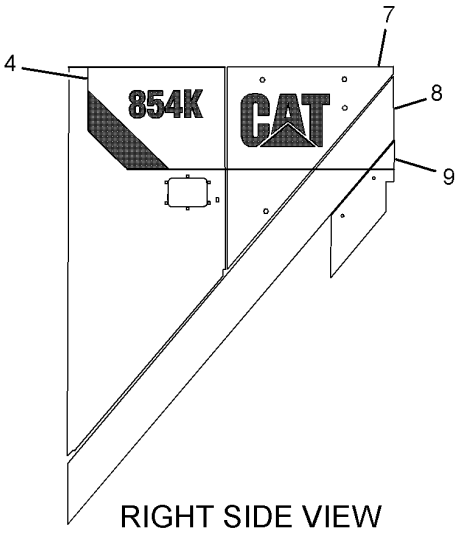

RIGHT SIDE VIEW
(HOOD)

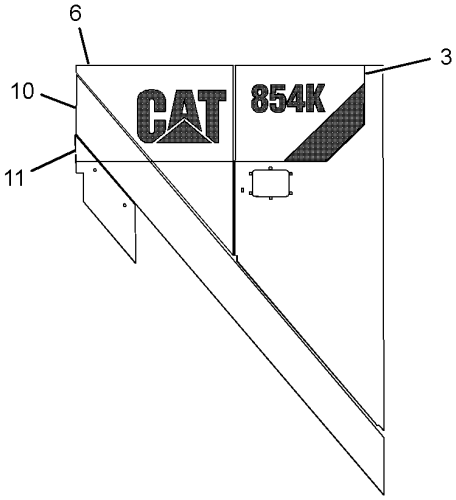

LEFT SIDE VIEW
(HOOD)

GRAPHIC #1 **<END>** g01449214

SERVICE EQUIPMENT AND SUPPLIES

293-6470 FILM GP

S/N: 2211-UP

PART OF 262-2081 CHASSIS AR

SMCS-7405, 7557 **i02874936**

NOTE	PART NUMBER	QTY	PART NAME 1 2 3 4 5 6 (PRODUCT LEVEL)	SEE PAGE
	247-3079	1	FILM-CERTIFICATION (OPS, READ OMM)	
			(CENTER ON OUTSIDE OF LH POST)	
	307-9916	1	FILM-IDENTIFICATION (FUSE)	
			(ON BOTTOM SIDE OF THE PLATFORM DOOR NEXT TO EBAY & ORIENT THE FILM SO THE SYMBOLS ARE RIGHT SIDE UP WHEN THE DOOR IS	
			OPENED)	
	3E-8102	1	FILM-IDENTIFICATION (STEERING OIL FILTER)	
			(ON UNDERSIDE OF STEERING TANK DOOR)	
	5P-1175	1	FILM-IDENTIFICATION (ENGINE OIL FILL)	
			(ON OIL FILLER CAP ON OIL FILL TUBE)	
	130-5623	1	FILM-IDENTIFICATION (TRANSMISSION OIL LEVEL)	
			(BY TRANSMISSION FILLER SIGHT GAUGE)	
	190-5386	2	FILM-STRIPE (ROUND RED REFLECTIVE)	
			(ON REAR OUTSIDE SURFACE OF BUMPER, 75-MM FROM EACH SIDE, CENTERED VERTICALLY ON FLAT SURFACE)	
	316-9078	1	FILM-IDENTIFICATION (GREASE POINTS, READ OMM)	
			(ON FRONT FRAME RIGHT HAND SIDE NEXT TO LUBE BLOCK)	
	131-8787	1	FILM-INFORMATION (FUEL FILTER IDENTIFICATION)	
			(ON FUEL FILTER AT FRONT RH CORNER OF ENGINE)	
	134-7258	1	FILM-INFORMATION (EXTENDED LIFE COOLANT,READ OMM)	
			(NEXT TO RADIATOR FILL CAP ON UNDERSIDE OF FILL CAP DOOR)	
	146-6747	1	FILM-INFORMATION (24-VOLT)	
			(ON UNDERSIDE OF BATTERY BOX DOOR)	
	209-5776	1	FILM-INFORMATION (ENGINE COOLANT)	
			(NEXT TO SIGHT GLASS ON FRONT OF FIREWALL)	
	253-0861	2	FILM-INFORMATION (CAT POWER, ACERT TECHNOLOGY)	
			(ON LH SIDE OF MACHINE, IN LOWER RIGHT CORNER OF THE GUARD GP RADIATOR 150-MM AWAY FROM THE BOTTOM EDGE OF THE GUARD,	
			& 150-MM AWAY FROM THE BACK EDGE OF THE GUARD)	
			(ON RIGHT SIDE OF MACHINE, IN LOWER LEFT CORNER OF THE GUARD GP RADIATOR 150-MM AWAY FROM THE BOTTOM EDGE OF THE GUARD,	
			& 150-MM AWAY FROM THE BACK EDGE OF THE GUARD)	
	7X-3229	4	FILM-INSTRUCTION (LIFT EYE, TIE-DOWN LOCATION)	
			(ON REAR FRAME NEXT TO LIFTING/TIE DOWN EYES & ON FRONT FRAME NEXT TO LIFTING/TIE DOWN EYES)	
	124-2456	1	FILM-INSTRUCTION (NO STEP)	
			(ON TOP OF DRIVE SHAFT GUARD)	
	166-8119	1	FILM-INSTRUCTION (FRESH AIR FILTER)	
			(CENTER ON FRESH AIR INTAKE FILTER DOOR)	
	316-6353	1	FILM-INSTRUCTION (BELT ROUTING)	
			(ON METAL PLATE ABOVE THE RIGHT HAND REAR SIDE OF FIBERGLASS SOUNDWALL)	
	219-0305	1	FILM-WARNING (NO WELD, NO DRILL, READ OMM)	
			(CENTER ON OUTSIDE OF LH POST)	
	128-8007	1	FILM-IDENTIFICATION (GREASE)	
			(ON FRONT OF REAR FRAME, LEFT SIDE, NEXT TO LUBE BLOCK)	
	239-6986	1	PLATE-IDENTIFICATION (MACHINE)	

293-6470 **FILM GP** ***(contd.)*** **i02874936**

NOTE	PART NUMBER	QTY	PART NAME 1 2 3 4 5 6 (PRODUCT LEVEL)	SEE PAGE
			(TOP OF PLATE 30-MM BELOW CENTER OF OPENING FOR STEERING LINES ON THE LH LOADER FRAME SIDE PLATE)	

<END>

279-4546 FILM GP-INTERNATIONAL

S/N: 2211-UP
AN ATTACHMENT

SMCS-7405, 7557 **i02876759**

NOTE	PART NUMBER	QTY	PART NAME 1 2 3 4 5 6 (PRODUCT LEVEL)	SEE PAGE
	221-8045	1	FILM-WARNING (SEAT BELT, INTERNATIONAL)	
			CENTER BELOW ROCKER SWITCH CLUSTER ON INSTRUMENT PANEL GP	
	222-7944	1	FILM-WARNING (DO NOT OPERATE, READ OMM, INTL)	
			ON ECM ON THE LH SIDE OF THE ENGINE	
	225-0312	1	FILM-WARNING (JUMP START, READ OMM, INTL)	
			ON UNDERSIDE OF BATTERY BOX DOOR	
	225-4257	1	FILM-WARNING (HOT FLUID UNDER PRESS, INTL)	
			NEXT TO RADIATOR FILL CAP	
	226-1240	2	FILM-WARNING (CRUSH HAZARD, STAY BACK, INTL)	
			AT EYE LEVEL HEIGHT, WHILE STANDING, ON BOTH SIDES OF THE LOADER FRAME ASSEMBLY AT ARTICULATED HITCH	
	226-1274	1	FILM-WARNING (CRUSH HAZARD, READ OMM, INTL)	
			AT EYE LEVEL ON THE LOADER FRAME ASSEMBLY ON SIDE WITH ARTICULATED LOCK	
	228-2616	1	FILM-WARNING (UNIVERSAL, READ OMM, INTL)	
			ON FRONT DOOR JAM, 340-MM TO TOP OF WARNING FILM FROM JOINT BETWEEN CAB & PLATFORM	
	236-7227	1	FILM-WARNING (PARKING BRAKE, INTERNATIONAL)	
			PART OF PARKING BRAKE GP	
	314-3986	2	FILM-WARNING (FALLING HAZARD, READ OMM)	
			CENTERED SIDE TO SIDE NEAR THE TOP EDGE OF THE ANGLED FACE OF THE FRONT FENDERS	

<END>

SERVICE EQUIPMENT AND SUPPLIES

309-6594 FILM GP-SERVICE CENTER

S/N: 2211-UP

PART OF 286-0856 SERVICE CENTER AR

AN ATTACHMENT

SMCS-7405, 7557 **i02902169**

NOTE	REF NO	GRAPHIC REF	PART NUMBER	QTY	PART NAME 1 2 3 4 5 6 (PRODUCT LEVEL)	SEE PAGE
	1	1	**294-0949**	1	FILM-IDENTIFICATION (SERVICE CENTER RECEIVERS, REAR)	

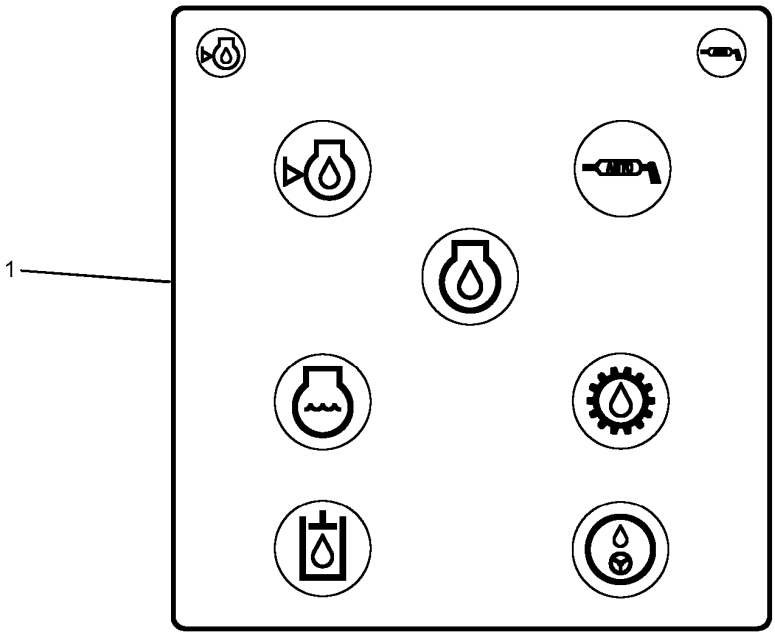

GRAPHIC #1 **<END>** g01446737

SERVICE EQUIPMENT AND SUPPLIES

279-4544 FILM GP-U.S.

S/N: 2211-UP

AN ATTACHMENT

SMCS-7405, 7557 **i02876760**

NOTE	PART NUMBER	QTY	PART NAME 1 2 3 4 5 6 (PRODUCT LEVEL)	SEE PAGE
	224-7717	1	FILM-WARNING (SEAT BELT, U.S.)	
			(CENTER BELOW ROCKER SWITCH CLUSTER ON INSTRUMENT PANEL GP)	
	225-0313	1	FILM-WARNING (JUMP START, READ OMM, U.S.)	
			(ON UNDERSIDE OF BATTERY BOX DOOR)	
	225-4256	1	FILM-WARNING (HOT FLUID UNDER PRESSURE, U.S.)	
			(NEXT TO RADIATOR FILL CAP)	
	226-1242	2	FILM-WARNING (CRUSH HAZARD, STAY BACK, U.S.)	
			(AT EYE LEVEL HEIGHT, WHILE STANDING, ON BOTH SIDES OF THE LOADER FRAME ASSEMBLY AT ARTICULATED HITCH)	
	226-1275	1	FILM-WARNING (CRUSH HAZARD, READ OMM, U.S.)	
			(AT EYE LEVEL ON THE LOADER FRAME ASSEMBLY ON SIDE WITH ARTICULATED LOCK)	
	228-2615	1	FILM-WARNING (UNIVERSAL, U.S.)	
			(ON FRONT DOOR JAM, 340-MM TO TOP OF WARNING FILM FROM JOINT BETWEEN CAB & PLATFORM)	
	228-3581	1	FILM-WARNING (DO NOT OPERATE, READ OMM)	
			(ON ECM ON THE LH SIDE OF THE ENGINE)	
	236-7226	1	FILM-WARNING (PARK BRAKE, WHEEL CHOCK, U.S.)	
			(PART OF PARKING BRAKE GP)	
	314-3985	2	FILM-WARNING (FALLING HAZARD, READ OMM)	
			(CENTERED SIDE TO SIDE NEAR THE TOP EDGE OF THE ANGLED FACE OF THE FRONT FENDERS)	

<END>

SERVICE EQUIPMENT AND SUPPLIES

280-9638 LINES GP-DIAGNOSTIC—REMOTE PRESSURE TAPS

S/N: 2211-UP

PART OF 279-9400 HYDRAULIC AR

SMCS-7554 **i02902914**

NOTE	REF NO	GRAPHIC REF	PART NUMBER	QTY	PART NAME 1 2 3 4 5 6 (PRODUCT LEVEL)	SEE PAGE
	1	1	**6V-0852**	18	CAP-DUST	
	2	2,3	**118-9901**	2	SPACER (12X20X10-MM THK)	
	3	3	**124-1718**	1	SLEEVE	
	4	2	**124-3019**	1	BRACKET AS	
M		2	**8T-3490**	1	NUT-WELD (M10X1.5-THD)	
	5	1	**185-6250**	18	FITTING AS	
	6	1	*192-3668*	2	REDUCER AS	
					(EACH INCLUDES)	
		1	**4J-5477**	1	SEAL-O-RING	
		1	**6V-8940**	1	REDUCER-O-RING	
	7	1	**193-1034**	1	BRACKET AS	
	8	3	**204-2281**	4	STRAP-TIE	
	9	3	**204-8000**	4	ANCHOR-TIE	
	10	2	**292-2597**	1	HOSE AS	
	11	1	**292-6044**	1	BRACKET	
	12	3	**296-5780**	4	GROMMET	
	13	2	**314-8059**	1	HOSE AS (FRONT AXLE OIL COOLER PRESSURE)	
	14	2	**314-8060**	1	HOSE AS (REAR AXLE OIL COOLER PRESSURE)	
	15	2	**314-8061**	1	HOSE AS (TRANSMISSION LUBRICATION PRESS)	
	16	2	**314-8062**	1	HOSE AS (AXLE OIL COOLER PRESS SUPPLY)	
	17	2	**314-8063**	1	HOSE AS (BRAKE SHUTTLE PRESSURE)	
	18	2	**314-9344**	1	HOSE AS (TC IMPELLER CLUTCH PRESSURE)	
	19	2	**314-9345**	1	HOSE AS (RIGHT STEERING CYLINDER PRESS)	
	20	2	**314-9347**	1	HOSE AS (LEFT STEERING CYLINDER PRESS)	
	21	1	**314-9348**	1	HOSE AS (STEERING PILOT PRESSURE SUPPLY)	
	22	1	**314-9673**	1	HOSE AS (STEERING PUMP PRESSURE)	
	23	1	**316-3385**	1	HOSE AS (REAR BRAKE ACCUMULATOR PRESS)	
	24	1	**316-3386**	1	HOSE AS (FRONT BRAKE ACCUMULATOR PRESS)	
	25	1	**316-3387**	1	HOSE AS (FRONT BRAKE PRESSURE)	
	26	1	**316-3388**	1	HOSE AS (REAR BRAKE PRESSURE)	
	27	2	**316-3389**	1	HOSE AS	
	28	1	**316-5249**	1	HOSE AS	
	29	1	**316-5250**	1	HOSE AS	
	30	2	**067-3045**	1	CLIP	
	31	3	**097-4896**	1	SPACER (12X20X23-MM THK)	
	33	2	**130-3374**	1	CLIP	
	34	2	*148-8316*	2	CONNECTOR AS	
					(EACH INCLUDES)	
		2	**3J-7354**	1	SEAL-O-RING	
		2	**4J-5477**	1	SEAL-O-RING	
		2	**6V-8647**	1	CONNECTOR	
	35	1	*148-8325*	5	CONNECTOR AS	
					(EACH INCLUDES)	
		1	**3J-1907**	1	SEAL-O-RING	
		1	**4J-5477**	1	SEAL-O-RING	
		1	**6V-8641**	1	CONNECTOR	
	36	1,2	*148-8368*	7	ELBOW AS	
					(EACH INCLUDES)	
		1,2	**3J-1907**	1	SEAL-O-RING	
		1,2	**4J-5477**	1	SEAL-O-RING	
		1,2	**6V-8627**	1	ELBOW	
	37	1	*148-8413*	1	REDUCER AS	
		1	**4J-5477**	1	SEAL-O-RING	
		1	**6V-8934**	1	ADAPTER AS	
	38	1	*150-3033*	1	ELBOW AS	
		1	**3J-1907**	1	SEAL-O-RING	

280-9638 **LINES GP-DIAGNOSTIC** *(contd.)* **i02902914**

NOTE	REF NO	GRAPHIC REF	PART NUMBER	QTY	PART NAME 1 2 3 4 5 6 (PRODUCT LEVEL)	SEE PAGE
		1	**4J-5477**	1	SEAL-O-RING	
		1	**8T-0164**	1	ELBOW	
	39	1	**170-4735**	18	RING-RETAINING	
	40	3	**4D-8123**	1	CLIP	
	41	1	**4J-5477**	18	SEAL-O-RING	
	42	2	**5K-9660**	1	CLIP	
	43	2,3	**5P-2369**	2	CLIP	
	44	3	**5P-7470**	2	CLIP (SLOT)	
	45	3	**5P-7471**	2	CLIP (TAB)	
	46	3	**5P-8182**	2	GROMMET	
	47	1,2,3	**5P-9085**	8	CLIP	
	48	3	**6V-1572**	1	CLIP (SLOT)	
	49	3	**6V-1573**	1	CLIP (TAB)	
	50	3	**6V-1574**	1	GROMMET	
	51	2	**6V-2235**	1	CLIP	
	52	3	**7S-4244**	1	CLIP	
	53	2,3	**7W-8106**	3	SPACER (11.13X19.05X15-MM THK)	
	54	3	**7X-7729**	3	WASHER (11X25X3-MM THK)	
	55	3	**8J-1329**	1	CLIP	
	56	1	**8M-8788**	1	CLIP	
	57	1,2,3	**8T-4121**	26	WASHER-HARD (11X21X2.5-MM THK)	
M	58	1,2,3	**8T-4133**	12	NUT (M10X1.5-THD)	
M	59	1,2	**8T-4136**	5	BOLT (M10X1.5X25-MM)	
M	60	2	**8T-4137**	1	BOLT (M10X1.5X20-MM)	
M	61	1	**8T-4139**	3	BOLT (M12X1.75X30-MM)	
M	62	2	**8T-4182**	1	BOLT (M10X1.5X45-MM)	
M	63	3	**8T-4183**	1	BOLT (M12X1.75X40-MM)	
M	64	3	**8T-4185**	1	BOLT (M10X1.5X50-MM)	
M	65	1,2,3	**8T-4195**	4	BOLT (M10X1.5X30-MM)	
M	66	3	**8T-4196**	1	BOLT (M10X1.5X35-MM)	
	67	1,3	**8T-4223**	6	WASHER-HARD (13.5X25.5X3-MM THK)	
M	68	3	**8T-4244**	1	NUT (M12X1.75-THD)	
M	69	3	**8T-4956**	1	BOLT (M12X1.75X35-MM)	
M	70	3	**8T-5005**	2	BOLT (M10X1.5X70-MM)	
M	71	3	**8T-6466**	2	BOLT (M10X1.5X60-MM)	
	72	1	**9X-6580**	2	NUT (1-3/16-12-THD)	
	73	1,2,3	**9X-8582**	14	CLIP	

M-METRIC PART

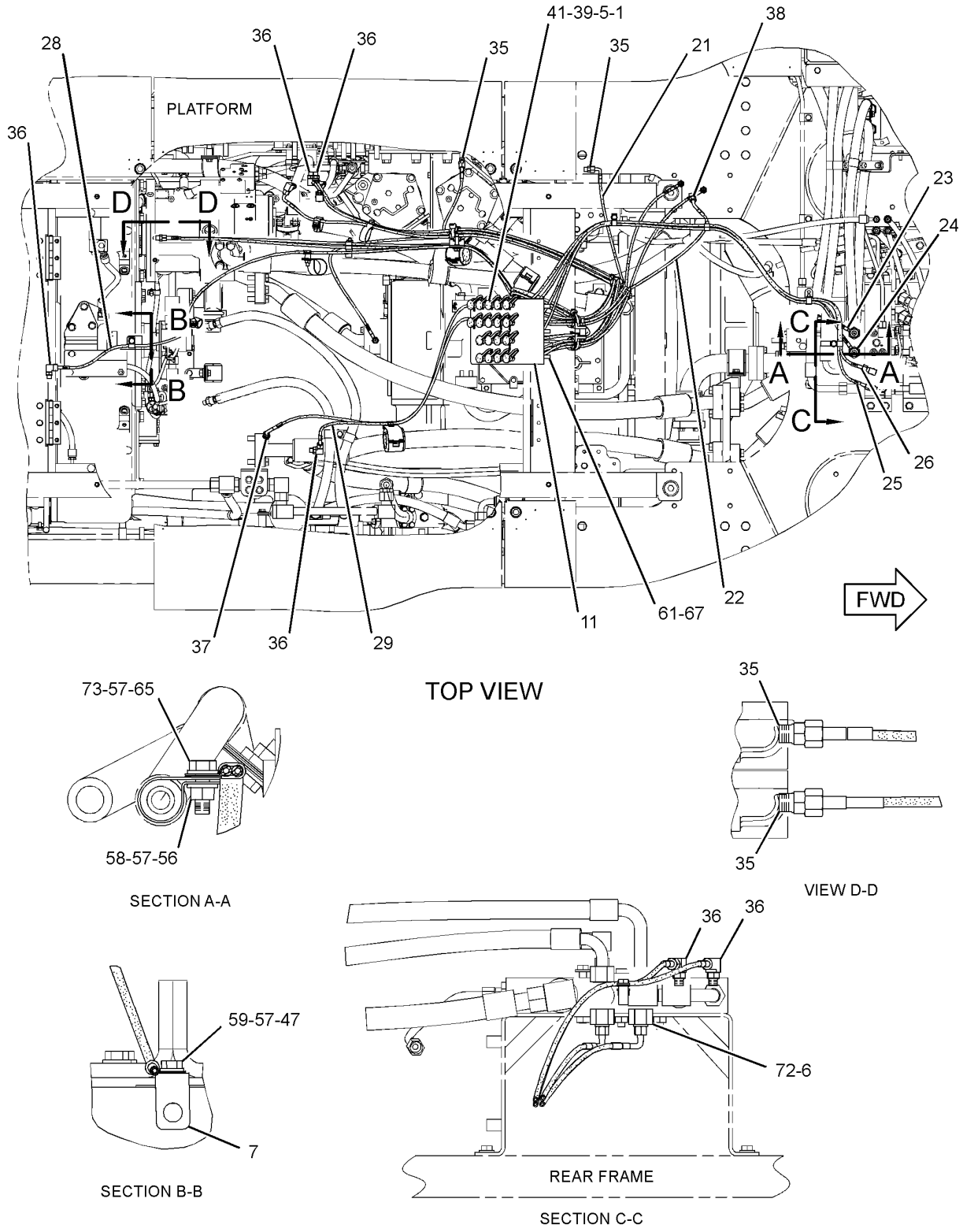

GRAPHIC #1 g01446190

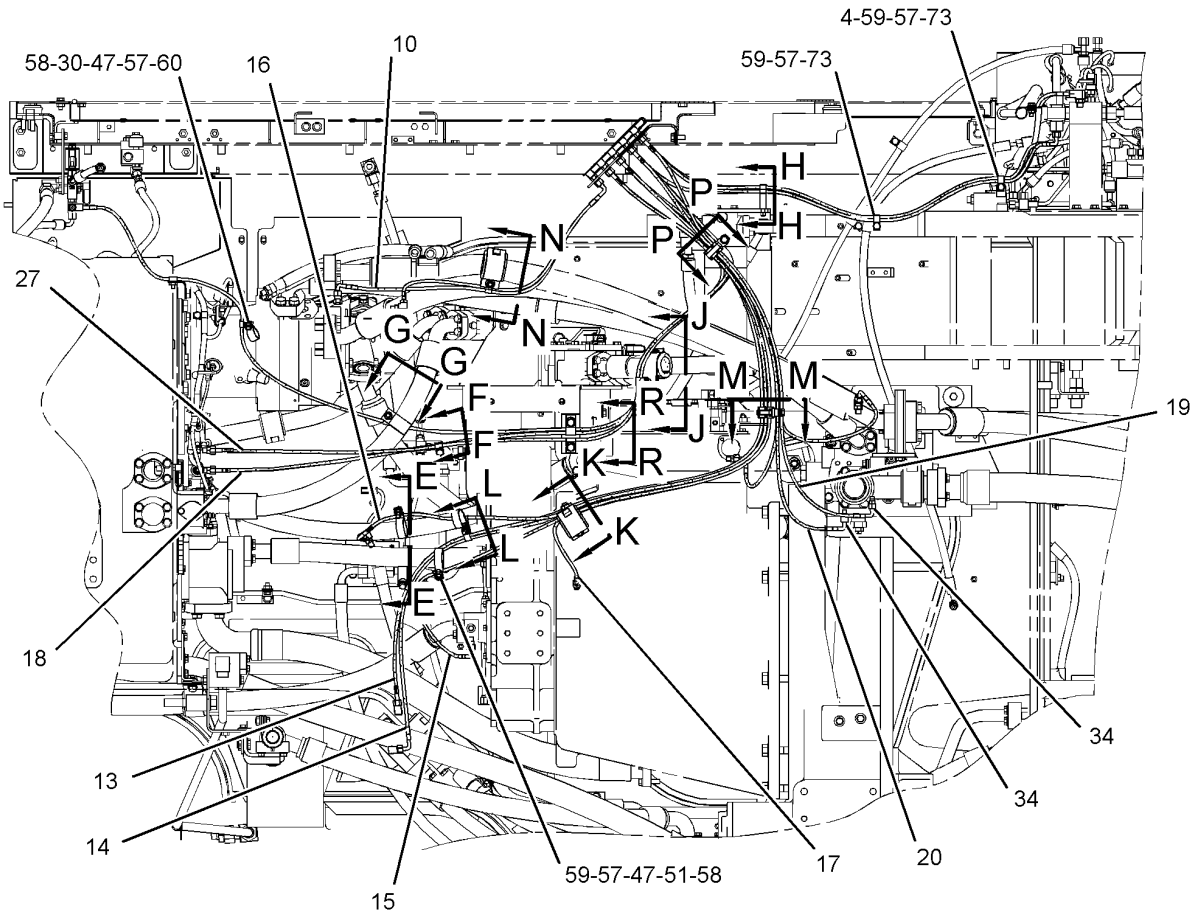

FRONT VIEW

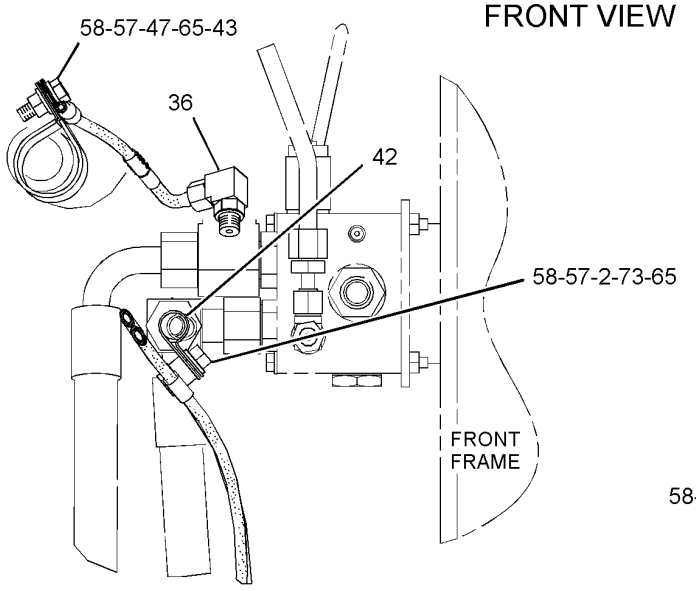

SECTION E-E

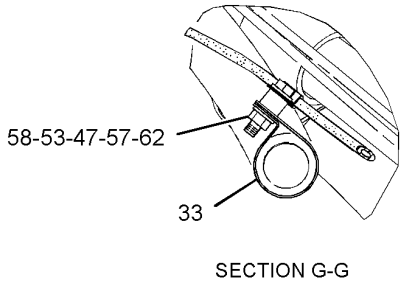

SECTION G-G

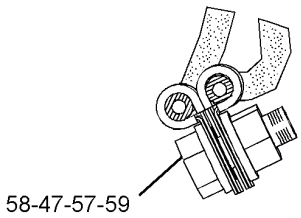

SECTION F-F

REFER TO ALL ILLUSTRATIONS OF THIS GROUP FOR AUXILIARY VIEWS.

GRAPHIC #2

g01446191

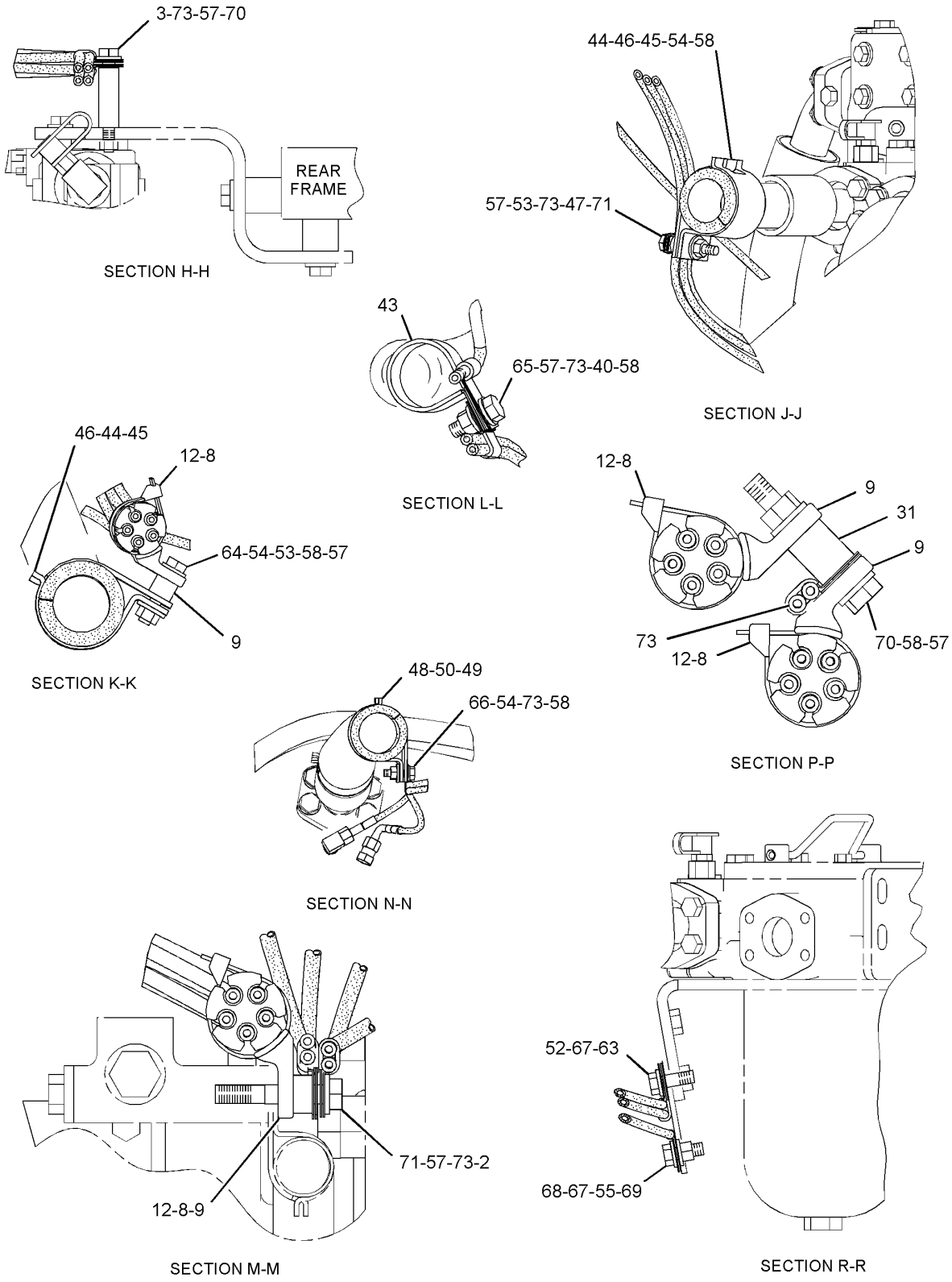

GRAPHIC #3 **<END>** g01446189

SERVICE EQUIPMENT AND SUPPLIES

266-9848 PLATE GP-ENGINE IDENTIFICATION

S/N: LJW2195-UP
PART OF 246-4283 ENGINE AR-COMPLETE
AN ATTACHMENT

SMCS-7557 **i02748053**

NOTE	REF NO	GRAPHIC REF	PART NUMBER	QTY	PART NAME 1 2 3 4 5 6 (PRODUCT LEVEL)	SEE PAGE
	1	1	**294-0537**	2	PLATE-IDENTIFICATION (CAT C32, ACERT)	

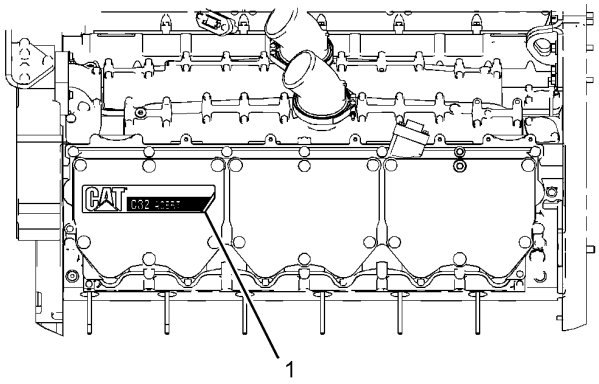

LEFT SIDE VIEW OF ENGINE

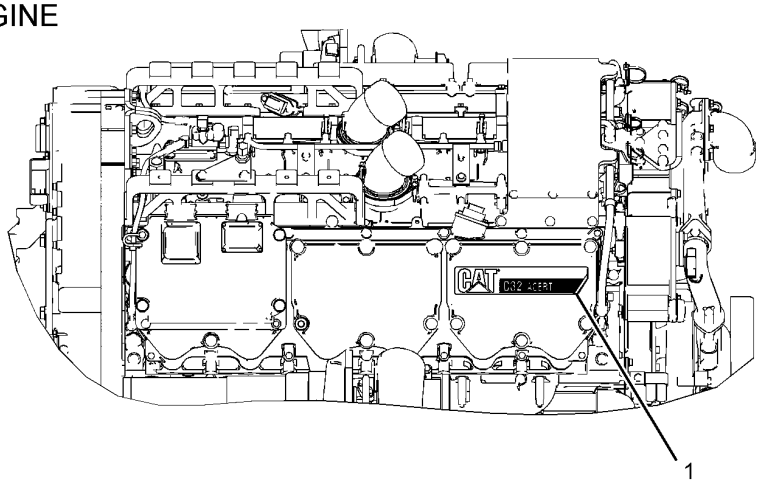

RIGHT SIDE VIEW OF ENGINE

GRAPHIC #1 **<END>** g01378485

SERVICE EQUIPMENT AND SUPPLIES

1N-4296 PROTECTION GP-VANDALISM

S/N: 2211-UP

CAP

PART OF 268-8200 LINES GP-POWER TRAIN OIL

SMCS-1273, 3005, 3030, 5056, 7315 **i02741391**

NOTE	REF NO	GRAPHIC REF	PART NUMBER	QTY	PART NAME 1 2 3 4 5 6 (PRODUCT LEVEL)	SEE PAGE
	1	1	**5P-8502**	1	PADLOCK GP	
		1	**5P-8500**	1	KEY	
		1	**8Y-6364**	1	SLEEVE	
	2	1	**8S-4212**	2	RIVET	
	3	1	**8S-3746**	2	COVER-FILLER CAP	
	4	1	**7W-1484**	1	CAP AS-OIL FILLER (POWER TRAIN)	
		1	**6H-0411**	1	WASHER (32.5X50.8X1.6-MM THK)	

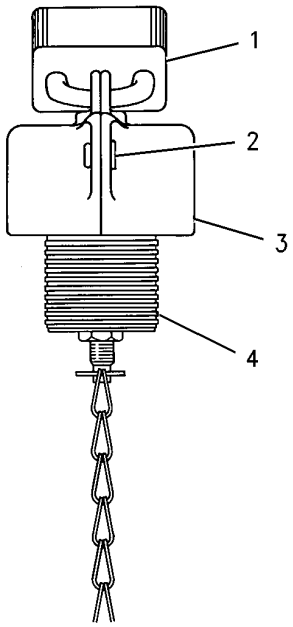

GRAPHIC #1 **<END>** g00775220

SERVICE EQUIPMENT AND SUPPLIES

6G-8390 PROTECTION GP-VANDALISM

S/N: 2211-UP

PART OF 283-4413 TANK & MTG GP-HYDRAULIC

SMCS-1273, 3005, 3030, 5056, 7315 **i01669798**

NOTE	REF NO	GRAPHIC REF	PART NUMBER	QTY	PART NAME 1 2 3 4 5 6 (PRODUCT LEVEL)	SEE PAGE
	1	1	**1M-8649**	1	RING-RETAINING	
	2	1	**5D-1901**	1	WASHER (106.5X126.5X2.5-MM THK)	
	3	1	**5P-8502**	1	PADLOCK GP (HYDRAULIC TANK CAP)	
		1	**5P-8500**	1	KEY	
		1	**8Y-6364**	1	SLEEVE	
	4	1	**1L-5072**	1	DOWEL	
	5	1	**9M-7394**	1	LEVER (LOCKING)	
	6	1	**116-4681**	1	COVER-HYDRAULIC CAP	

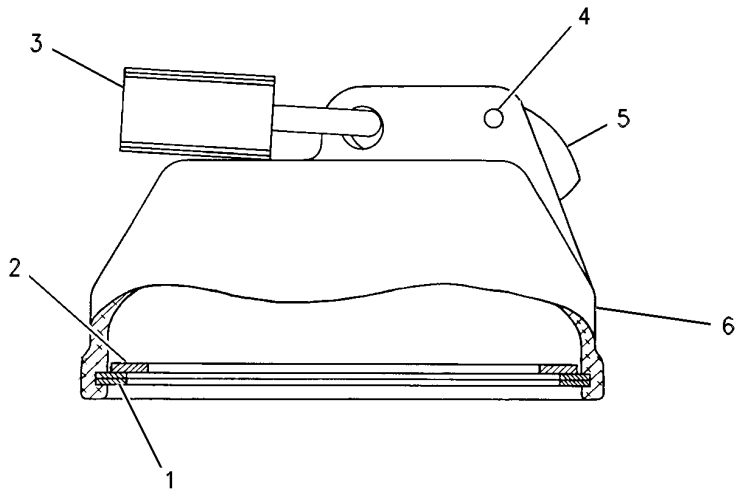

GRAPHIC #1 **<END>** g00523850

SERVICE EQUIPMENT AND SUPPLIES

286-0856 SERVICE CENTER AR

S/N: 2211-UP

AN ATTACHMENT

SMCS-7513 **i02902963**

NOTE	PART NUMBER	QTY	PART NAME 1 2 3 4 5 6 (PRODUCT LEVEL)	SEE PAGE
Y	*309-6594*	1	FILM GP-SERVICE CENTER	907
			(ON INSIDE OF DOOR AS ON BOTTOM OF RH ENCLOSURE)	
Y	*279-5292*	1	SERVICE CENTER GP	918
Y	*283-2516*	1	SERVICE CENTER GP	919
Y	*282-9066*	1	WIRING GP-SERVICE CENTER (OIL RENEWAL)	357

Y-SEPARATE ILLUSTRATION

<END>

SERVICE EQUIPMENT AND SUPPLIES

279-5292 SERVICE CENTER GP

S/N: 2211-UP

PART OF 286-0856 SERVICE CENTER AR

AN ATTACHMENT

SMCS-7513 **i02901611**

NOTE	REF NO	GRAPHIC REF	PART NUMBER	QTY	PART NAME 1 2 3 4 5 6 (PRODUCT LEVEL)	SEE PAGE
	1	1	**282-8539**	1	PLATE	
Y	2	1	*292-0668*	1	ENCLOSURE GP-SERVICE CENTER	902
M	3	1	**7X-2553**	8	BOLT (M16X2X40-MM)	
	4	1	**9X-8257**	8	WASHER (17.5X30X3.5-MM THK)	

M-METRIC PART
Y-SEPARATE ILLUSTRATION

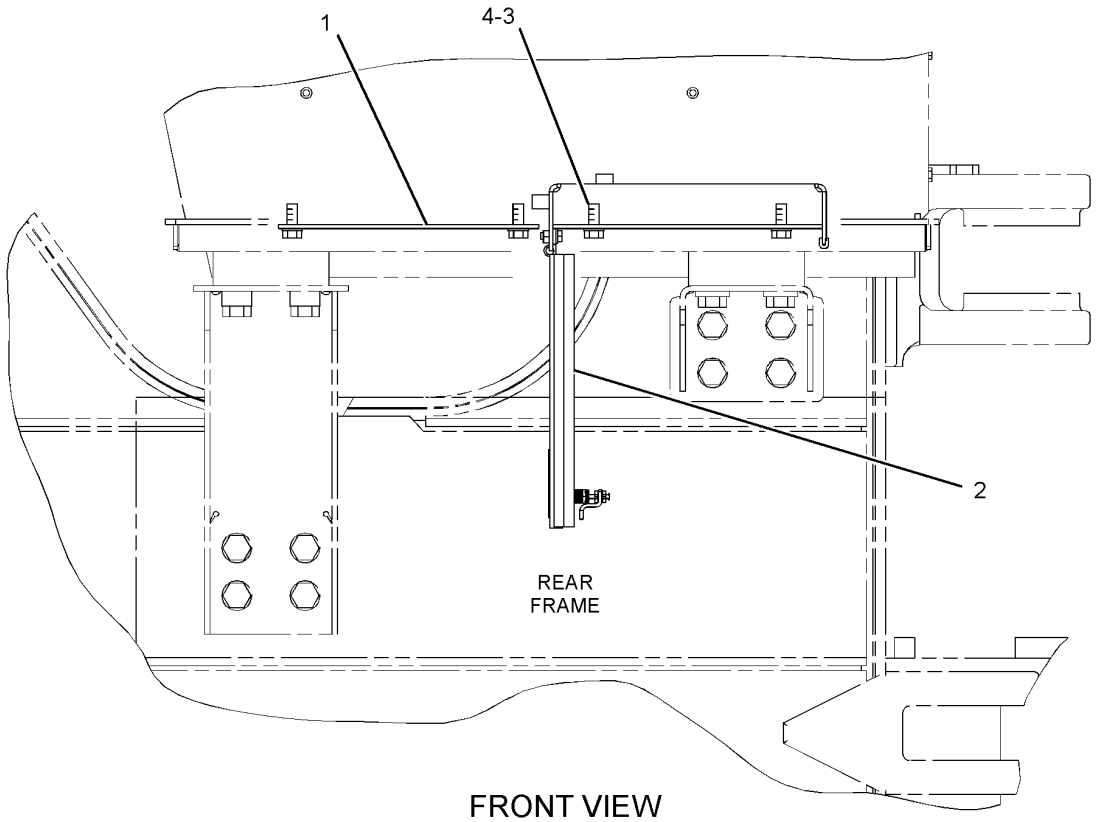

FRONT VIEW

GRAPHIC #1 **<END>** g01445865

SERVICE EQUIPMENT AND SUPPLIES

283-2516 SERVICE CENTER GP

S/N: 2211-UP

PART OF 286-0856 SERVICE CENTER AR

AN ATTACHMENT

SMCS-7513 **i02902941**

NOTE	REF NO	GRAPHIC REF	PART NUMBER	QTY	PART NAME 1 2 3 4 5 6 (PRODUCT LEVEL)	SEE PAGE
	1	2	**2P-1286**	1	LOCKNUT-BULKHEAD (1-5/16-12-THD)	
I	2	2	**2T-1888**	1	HOSE AS	
I	3	2	**2T-2446**	1	HOSE AS	
	4	2	**2V-2043**	1	LOCKNUT-FLARED (1-5/8-12-THD)	
	9	2	**110-8319**	1	FITTING AS (QUICK DISCONNECT)	
	10	2	**110-8827**	1	FITTING AS (QUICK DISCONNECT)	
I	11	1	**111-4178**	1	HOSE AS	
	12	2	**118-0164**	1	FITTING AS (QUICK DISCONNECT)	
	13	2	**118-0166**	2	FITTING AS (QUICK DISCONNECT)	
	14	1	**165-8764**	1	BRACKET AS	
I	15	2	**175-4750**	1	HOSE AS	
I	16	2	**311-5959**	1	HOSE AS	
I	17	2	**275-4084**	1	HOSE AS	
I	18	2	**275-4085**	1	HOSE AS	
I	19	2	**279-6547**	1	HOSE AS	
	20	2	**279-6548**	1	PLATE AS	
	21	2	**311-4930**	1	TUBE AS	
I	22	1	**284-6996**	1	HOSE AS	
	23	2	**311-4931**	1	TUBE AS	
	24	2	**311-4932**	1	TUBE AS	
	25	2	**311-4933**	1	TUBE AS	
	26	1	**285-0962**	1	TUBE AS	
	27	1	**285-0963**	1	TUBE AS	
	28	2	**285-0964**	1	TUBE AS	
	29	2	**285-0965**	1	TUBE AS	
	30	2	**285-0966**	1	TUBE AS	
	31	2	**286-9814**	1	TUBE AS	
	32	2	**117-8568**	2	NUT-BULKHEAD (1-7/8-12-THD)	
	33	1	*148-8335*	1	CONNECTOR AS	
		1	**5K-9090**	1	SEAL-O-RING	
		1	**6V-8635**	1	CONNECTOR	
		1	**7M-8485**	1	SEAL-O-RING	
	34	2	*148-8345*	1	CONNECTOR AS	
		2	**2M-9780**	1	SEAL-O-RING	
		2	**6V-8398**	1	SEAL-O-RING	
		2	**6V-8638**	1	CONNECTOR	
	35	2	*148-8347*	2	ELBOW AS	
					(EACH INCLUDES)	
		2	**3D-2824**	1	SEAL-O-RING	
		2	**6V-9007**	1	ELBOW	
		2	**6V-9746**	1	SEAL-O-RING	
	36	2	*148-8356*	2	ELBOW AS	
					(EACH INCLUDES)	
		2	**2S-4078**	1	SEAL-O-RING	
		2	**6V-8400**	1	SEAL-O-RING	
		2	**6V-9009**	1	ELBOW	
	37	2	*148-8357*	1	ELBOW AS	
		2	**5K-9090**	1	SEAL-O-RING	
		2	**6V-9008**	1	ELBOW	
		2	**7M-8485**	1	SEAL-O-RING	
	38	2	*148-8392*	1	ELBOW AS	
		2	**6V-9746**	1	SEAL-O-RING	
		2	**6V-9853**	1	ELBOW	
	39	2	*148-8455*	1	UNION AS	
		2	**6V-8997**	1	UNION	

SERVICE EQUIPMENT AND SUPPLIES

283-2516 **SERVICE CENTER GP** *(contd.)* **i02902941**

NOTE	REF NO	GRAPHIC REF	PART NUMBER	QTY	PART NAME 1 2 3 4 5 6 (PRODUCT LEVEL)	SEE PAGE
		2	**6V-9746**	2	SEAL-O-RING	
	40	2	*155-2026*	1	UNION AS	
		2	**5K-9090**	2	SEAL-O-RING	
		2	**6V-8998**	1	UNION	
	41	2	*250-1423*	1	ELBOW AS (90-DEG)	
		2	**6V-8400**	2	SEAL-O-RING	
		2	**6V-8985**	1	ELBOW (90-DEG)	
	42	2	**1P-4579**	10	FLANGE-HALF	
	43	2	**1S-6420**	1	CLIP	
	44	2	**2P-1293**	2	LOCKNUT (1-3/16-12-THD)	
	45	2	**3F-5792**	1	SEAL-O-RING	
	46	2	**4J-0524**	5	SEAL-O-RING	
	47	1	**4J-5267**	1	SEAL-O-RING	
	48	1	**5K-3294**	1	CLIP	
	49	1	**5K-9090**	2	SEAL-O-RING	
	50	1,2	**5P-7462**	3	CLIP (SLOT)	
	51	1,2	**5P-7463**	3	CLIP (TAB)	
	52	1	**5P-7464**	6	CLIP (SLOT)	
	53	1	**5P-7465**	6	CLIP (TAB)	
	54	1,2	**5P-7468**	3	CLIP (SLOT)	
	55	1,2	**5P-7469**	3	CLIP (TAB)	
	56	1,2	**5P-8444**	3	GROMMET	
	57	1	**5P-9299**	3	CLIP	
	58	2	**6D-4246**	1	CLIP	
	59	1,2	**6V-0683**	3	GROMMET	
	60	1	**6V-1249**	2	GROMMET	
	61	1	**6V-7359**	4	GROMMET	
	62	1,2	**6V-8398**	3	SEAL-O-RING	
	63	2	**6V-9169**	1	NUT-BULKHEAD (13/16-16-THD)	
	64	2	**6V-9172**	1	NUT (1-7/16-12-THD)	
	65	2	**6V-9173**	1	NUT-BULKHEAD (1-11/16-12-THD)	
	66	1	**8C-3205**	2	FLANGE-HALF	
	67	1	**7X-7729**	4	WASHER (11X25X3-MM THK)	
	68	2	**8K-2665**	6	CLAMP-HALF	
	69	2	**8S-0023**	1	CLIP (SLOT)	
	70	2	**8S-0024**	1	CLIP (TAB)	
M	71	2	**8T-4136**	1	BOLT (M10X1.5X25-MM)	
	72	1,2	**8T-4121**	14	WASHER-HARD (11X21X2.5-MM THK)	
M	73	1,2	**8T-4133**	2	NUT (M10X1.5-THD)	
M	74	1	**8T-4139**	2	BOLT (M12X1.75X30-MM)	
M	75	2	**8T-4183**	2	BOLT (M12X1.75X40-MM)	
M	76	2	**8T-4184**	20	BOLT (M12X1.75X45-MM)	
M	77	2	**8T-4195**	4	BOLT (M10X1.5X30-MM)	
M	78	1	**8T-4196**	8	BOLT (M10X1.5X35-MM)	
	79	1,2	**8T-4223**	37	WASHER-HARD (13.5X25.5X3-MM THK)	
M	80	2	**8T-4244**	2	NUT (M12X1.75-THD)	
M	81	1,2	**8T-4956**	10	BOLT (M12X1.75X35-MM)	
	82	2	**6V-9746**	1	SEAL-O-RING	
	83	1	**4D-7388**	1	CLIP	
	84	1	**9X-8250**	1	CLIP	

I-REFER TO HYDRAULIC INFORMATION SYSTEM
M-METRIC PART

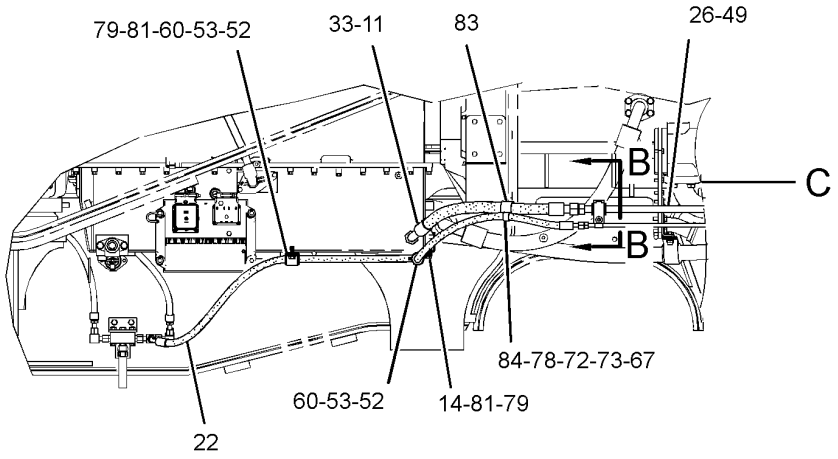

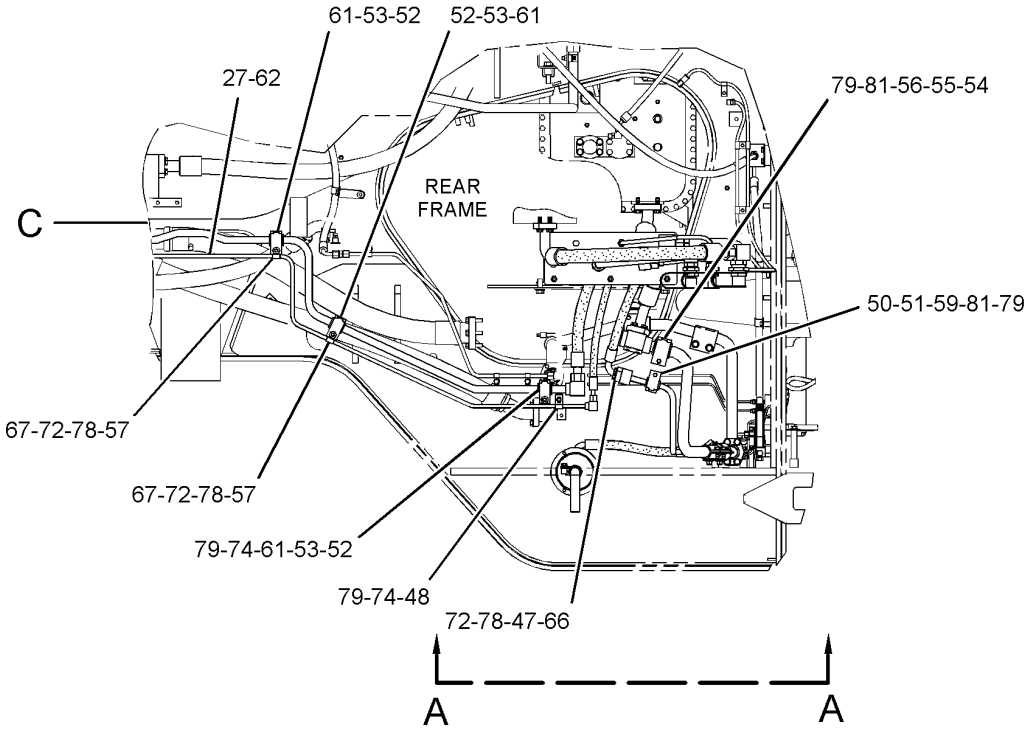

RIGHT SIDE VIEW

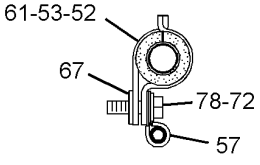

SECTION B-B

REFER TO ALL ILLUSTRATIONS OF THIS GROUP FOR AUXILIARY VIEWS

GRAPHIC #1

g01446454

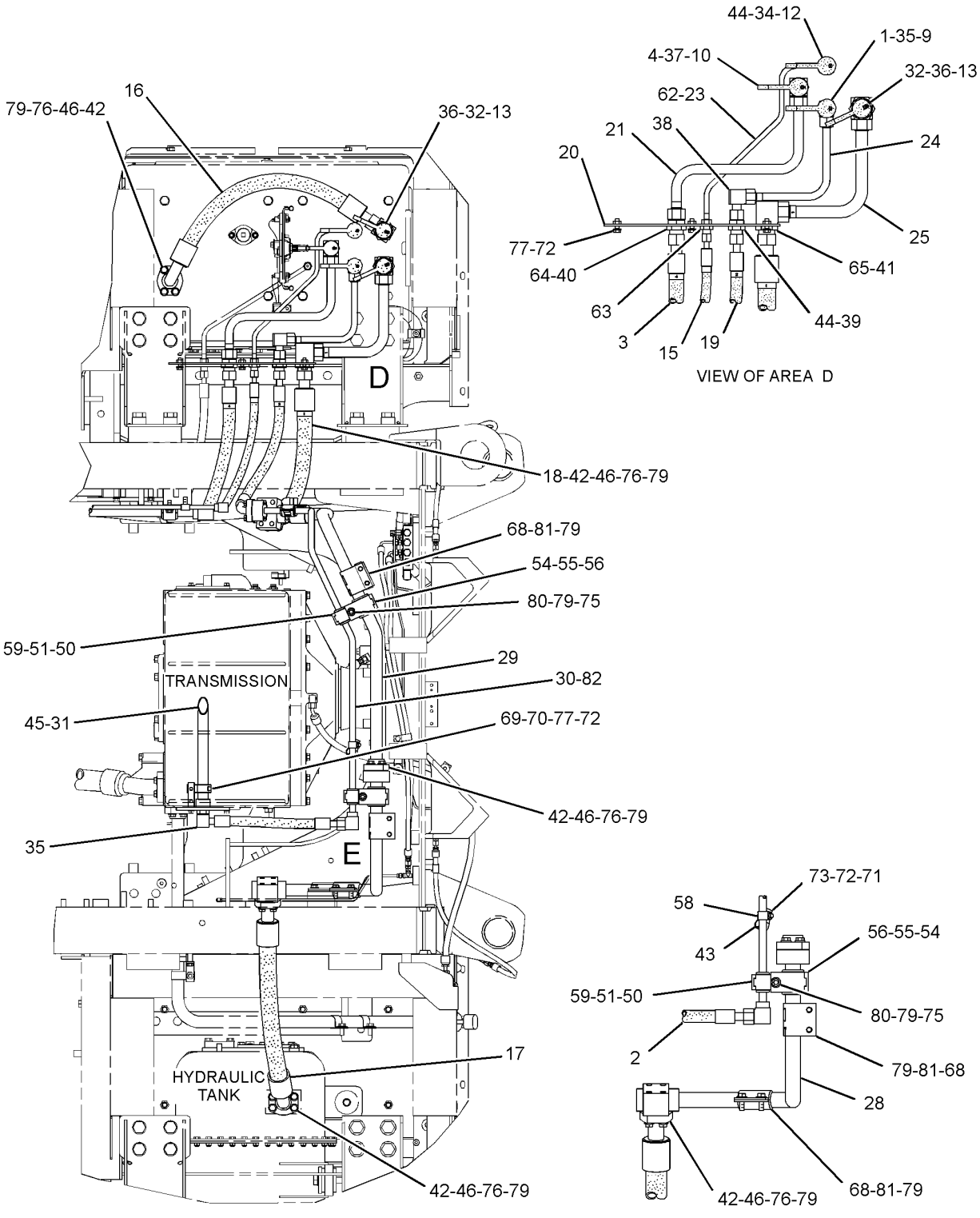

GRAPHIC #2 **<END>** g01449240

PART NUMBER INDEX

Part	Page
0	
0A-3721	294
0L-1143	34
	82
	112
0L-1329	668
	669
0L-1351	88
	89
	166
	172
	319
	366
0L-1352	63
0L-2070	90
	92
	94
0S-0509	36
	57
	88
	89
	166
	168
	172
	238
	241
	319
	325
	416
	442
	773
	775
	776
0S-1566	389
0S-1571	57
	69
	84
	88
	89
	90
	92
	94
	112
	168
	172
	176
	179
	773
	775
	776
0S-1585	32
	388
0S-1587	112
	371
	374
	389
0S-1588	30
	33
	34
	83
	87
	90
	92
	94
0S-1590	30
	34
	166
	168
	172
	319
	416
0S-1591	34
	36
	69
	116
	166
	168
	172
	238
	319
0S-1594	30
	32
	33
	83
	86
	90
	92
	94
	112
	176
	179
	238
	388
	415
	452
	459
0S-1595	389
	442
	626
	668
	669
0S-1608	90
	92
	94
	112
	366
0S-1616	64
0S-1617	319
0S-1618	442
0S-1619	30
	32
	34
	61
	82
	112
	166
	168
	172
0T-0055	112
	99
	112
	161
	163
	176
	179
	461
	773
	775
	776
0T-0065	90
	92
	94
	366
0T-0102	146
	147
0T-0244	873
	877
0T-0573	112
0T-0772	90
	92
	94
1	
1A-1135	116
1A-1460	90
	92
	94
	361
	368
	389
1A-2029	32
	59
	88
	89
	90
	92
	94
	112
	117
	172
	369
	386
	388
1A-3103	388
1A-4790	589
1A-5183	61
	166
	168
	172
1A-9579	25
	28
1B-2524	415
1B-2578	166
1B-2886	112
	626
1B-3908	725
1B-3909	725
1B-6577	510
1B-7182	116
	586
1B-7709	386
1B-8705	57
	59
1B-8714	423
1B-8736	424
1C-2251	112
1C-7826	721
1C-7827	721
1C-7958	681
	►721
1D-4539	176
	179
1D-4540	461
1D-4569	416
1D-4608	361
1D-4626	361
	371
	374
1D-4641	664
	666
1D-4642	466
1D-4706	34
1D-5117	194
1F-0750	30
	34
	88
	90
	92
	94
	179
	366
1F-1006	439
1F-1609	570
1G-5928	644
1G-8878	600
1H-1023	272
	275
1H-2629	272
	275
1H-3244	315
1H-3338	285
	286
1H-5728	742
1H-6227	721
1H-7339	732
1H-8128	153
	186
	382
	588
	612
	633
1H-8278	428
1H-8296	893
1H-8306	186
1H-9689	732
1H-9696	732
	734
1J-2192	664
	666
1J-2919	539
1J-5304	763
	765
	767
	770
1J-5799	890
1J-8569	716
1J-9671	153
	560
	561
1K-6853	431
1K-6932	496
1K-8850	854
1L-3162	452
1L-5072	734
	916
1L-5081	461
1M-0644	103

► **PRIMARY REFERENCE**

PART NUMBER INDEX

Part	Page	Part	Page	Part	Page	Part	Page
1M-3909	424		406		275	1W-1038	168
1M-5123	406		602	1S-8241	664		172
1M-6119	193		606		666	1W-1116	90
1M-6120	193		612	1S-8560	586		92
1M-6298	660		691	1S-9110	416		94
1M-6573	371		704	1S-9593	456	1W-3136	61
	374		734		457	1W-5040	612
1M-6718	654		920		458		
	751	1P-4582	153		758		
1M-8649	734		406	1T-0766	415		
	916		684	1T-0808	416		
1M-9968	273		686	1T-0936	655	2A-1314	348
	276	1P-4584	406	1T-1209	441		406
1M-9971	272		684	1T-1232	441	2A-3746	416
	275		686	1T-1235	441	2A-4429	50
1N-4296	405		691	1T-1244	441	2A-4639	176
	►915	1P-4585	406	1T-1248	441		179
1N-5410	415		683	1T-1253	441	2B-0941	193
1N-5998	668	1P-4693	386	1T-1254	441		524
	669	1P-4694	386	1T-1257	441		528
1N-5999	461	1P-4695	388	1T-1365	442		827
1P-0810	322	1P-4696	388	1T-1566	441	2B-2695	57
1P-1376	172	1P-5411	660	1T-1646	441		453
1P-3703	612	1P-5412	660	1T-1754	441		454
	691	1P-5767	606	1T-1821	441		461
	704		609	1T-1855	441	2D-2508	426
1P-3704	395		612	1T-1897	441	2D-6235	784
	406		615	1T-1898	441	2D-6392	272
	606		655	1T-1925	441		275
	609		668	1T-2042	441		586
	612		669	1T-2043	441	2D-6506	371
	615		688	1T-2044	441		374
	688		691	1U-0322	655	2D-6642	386
	691		697		746		459
	697		699	1U-0323	655	2D-8009	424
	699	1P-6356	827		746	2D-9535	884
1P-3705	583	1P-7016	612	1U-1799	741	2F-6678	273
	609		683	1U-2164	741		276
	612	1P-7017	612	1U-2247	765	2F-9064	376
	615	1P-7326	301	1U-2248	767	2G-8767	193
	668	1P-7346	57	1U-2532	670	2H-2255	442
	669	1P-7404	461		672	2H-2665	564
	684	1P-9699	459	1U-2827	732	2H-3429	272
	686	1R-0716	84		734		275
	691	1R-0755	176	1U-3658	670		750
	699		179		672		751
1P-3958	416	1R-0770	159	1U-8846	464	2H-3755	238
1P-4278	118	1S-0994	97	1V-0061	428		241
	121		126	1V-0134	471	2H-3920	290
	126		295	1V-1122	702		299
1P-4576	710		322		799	2H-3922	280
	712		350	1V-1123	702	2H-3924	783
	760		406		799	2H-3925	783
1P-4577	364		602	1V-2718	371	2H-3932	371
	365		606		374		374
	686		612	1V-3593	237		716
	710		680	1V-6137	359	2H-3934	386
	760	1S-1668	134	1V-6341	818	2H-3935	629
1P-4578	90	1S-4295	150	1V-6659	464	2H-6338	683
	395	1S-6420	406	1V-7750	371	2H-9445	416
	406		920		374	2J-0157	388
	691	1S-7251	193		392	2J-1410	498
	719		194	1V-7753	395	2J-2152	510
1P-4579	378	1S-7252	193	1V-8279	564	2J-3507	359
	395	1S-7446	272	1V-8443	510		361

► PRIMARY REFERENCE

PART NUMBER INDEX

Part	Page	Part	Page	Part	Page	Part	Page
	414	2P-1293	334	2V-2043	97		279
	762		573		919		366
	773		621	2V-2072	428		380
2J-6089	741		691	2V-2076	388		382
2J-7137	371		920	2V-2077	428		392
	374	2P-1974	30	2V-2755	361		393
2J-7138	371		34	2V-2757	361		394
	374	2P-2508	131	2V-2761	361		401
2J-8163	272	2P-2772	32	2V-3216	899		403
	275		33	2V-3726	811		415
	370	2P-3203	70		816		439
	373	2P-3205	70	2V-4387	807		461
2K-0337	423		103	2V-7859	589		571
2K-2140	884	2P-3210	168	2V-8259	841		572
2K-4472	380		172	2W-4474	141		573
	382	2P-3213	139		143		581
2K-4973	63	2P-4303	84	2W-5331	702		583
	780	2P-4304	84				611
	893	2P-4305	84				620
2K-9062	359		90	**3**			621
	361		92				655
2L-0041	723		94	3B-0622	112		659
2L-2685	612	2P-4339	299	3B-0623	48		680
2L-5893	865	2P-4538	452	3B-0645	46		690
2L-6679	272	2P-5711	452		48		691
	275	2P-7213	166		75		703
2M-0849	361		168	3B-1915	99		704
2M-1538	30		172		112		712
	34	2P-7557	139		148		725
	389	2P-8421	101		149		730
2M-3340	371		366		183		731
	374		691		325		742
	439		703	3B-2225	441		829
2M-4009	816	2R-1230	586	3B-2968	366		919
2M-6102	827	2R-2376	794	3B-4501	783	3D-4603	442
2M-7041	459		816	3B-4607	589	3D-6678	732
2M-9780	97	2R-6806	168	3B-4610	811		734
	176		172		854	3D-8317	454
	179	2S-0115	361	3B-6494	524		459
	238		416	3B-6552	524	3D-9799	315
	346	2S-0696	454		528	3E-0075	▶284
	347	2S-2596	655		537		315
	395	2S-2760	103		557	3E-0109	299
	403	2S-3440	129		558	3E-0155	▶290
	571	2S-4078	415	3B-7285	524		299
	572		464		528	3E-0400	783
	651		655	3B-8453	386	3E-0417	784
	653		691		416	3E-2310	589
	675		742	3B-8488	557		737
	680		746		558	3E-2333	589
	714		919	3B-8489	428		704
	715	2S-4762	395		431	3E-3000	793
	742	2S-4872	453		524		813
	754		454		528	3E-3212	388
	756	2S-7010	368		536	3E-3362	199
	919	2S-8924	416		558	3E-3365	192
2N-2107	232	2S-9750	459		670		258
2N-2765	150	2T-1888	919		672		265
2N-2766	141	2T-2141	570	3C-6969	295		279
	143	2T-2171	126	3D-2435	315		457
	150	2T-2446	919	3D-2824	92	3E-3368	248
2N-7007	389	2U-7345	655		94		249
	624	2U-7354	656		97	3E-3371	199
2N-7029	741	2V-0099	299		126		247
2P-1286	919	2V-1771	194		186		289

▶ **PRIMARY REFERENCE**

PART NUMBER INDEX

Part	Page	Part	Page	Part	Page	Part	Page
	294	3E-8581	758		585		581
	300	3E-9205	▶758		586		583
	605		760		589		602
3E-3377	282	3F-4479	742		599		605
	333	3F-5792	389		601		606
	589		920		602		617
	758	3F-6156	83		605		638
	832	3G-0053	765		611		640
3E-3383	294		767		612		641
	299	3G-2292	57		615		649
3E-3389	290	3G-2683	655		617		650
	805		746		620		675
3E-3584	745	3G-3721	586		621		691
3E-4051	827	3G-4711	890		639		703
3E-4057	827	3G-5336	763		652		704
3E-4066	827	3G-5423	592		654		719
3E-4352	166	3G-6251	765		655		741
3E-4353	241	3G-6623	765		675		750
3E-4371	415	3G-7426	586		678		751
3E-5165	299	3G-7961	670		679		799
3E-5169	294		672		690		802
3E-5239	299	3G-8047	704		703		829
	315	3G-8054	704		704	3K-0715	625
3E-5275	299	3G-8057	704		718		629
3E-5276	241	3G-8163	741		725	3K-0835	300
3E-5464	784	3G-8164	742		737		805
3E-6144	783	3G-8165	741		741	3K-1470	172
3E-6145	783	3G-8607	675		742	3K-2518	564
3E-6147	783	3G-9401	762		753	3K-2556	564
3E-6277	784	3H-5932	176		799	3K-2559	416
3E-6280	783		179		909	3K-3256	30
3E-6282	783	3H-8726	660	3J-4278	34		34
3E-6328	▶192	3J-1907	126	3J-4818	893		63
	299		129	3J-6899	598	3K-4897	886
3E-6367	569		136	3J-7354	107	3K-8460	61
3E-6389	▶220		270		126	3K-8692	716
	299		310		136	3K-9770	413
	794		328		334		773
3E-6602	816		334		378		775
3E-6747	586		348		380		776
3E-6761	623		364		382	3L-1824	442
3E-6772	51		366		394	3L-3380	272
3E-6900	205		378		439		275
3E-6908	807		380		573	3L-7634	193
3E-6909	168		382		621		194
	172		384		655	3N-3763	273
3E-6924	818		386		704		276
3E-7252	783		388		748	3N-4809	816
3E-7253	783		392		909	3P-0647	461
3E-7255	783		393	3K-0360	126		592
3E-7256	783		394		364	3P-0650	89
3E-7257	783		403		365		90
3E-7258	783		405		378		92
3E-7277	286		406		380		94
3E-7403	394		439		382	3P-1155	439
	602		450		386	3P-1323	43
	605		451		389	3P-1669	441
3E-7447	131		452		393	3P-1932	176
3E-7771	273		459		395		179
	276		461		401	3P-2404	573
3E-8020	820		464		406		612
3E-8025	646		570		566		691
3E-8060	799		571		570		704
3E-8102	905		572		571	3P-4053	459
3E-8320	193		573		572	3P-7006	415

▶ **PRIMARY REFERENCE**

PART NUMBER INDEX

Part	Page
3P-7149	416
3P-7447	416
3P-7558	415
3P-7563	416
3P-7564	415
3P-7566	415
3P-7570	415
3P-7575	416
3P-7576	416
3P-7584	415
3P-7586	416
3P-7601	416
3P-7612	416
3P-7613	415
3P-7832	415
3P-8485	454
3P-9497	441
3P-9847	524
	528
3P-9900	893
3R-2299	773
	775
	776
3R-2300	670
	672
3R-8797	272
	275
3R-8801	273
	276
3R-9322	854
3S-0004	366
	424
3S-0036	415
3S-0127	64
3S-0142	442
3S-1262	564
3S-1282	442
3S-1546	168
	172
3S-2093	21
	101
	136
	158
	176
	179
	193
	238
	241
	299
	325
	569
	783
	784
	794
	839
	848
	859
	896
3S-2708	416
3S-3875	388
3S-7023	844
3S-8035	416
3S-8664	126
	334
	612
3S-8665	301
3S-9557	301
3S-9643	112
3S-9847	382
3T-2662	315
3T-3418	272
	275
3T-3422	272
	275
3T-3423	272
	273
	275
	276
3T-3424	272
	273
	275
3T-3434	272
	275
3T-3454	348
3T-3622	348
3T-4709	272
	275
3T-4710	272
	275
3T-6774	784
3T-9494	272
	273
	275
	276
3T-9524	273
	276
3T-9525	272
	275
3V-2431	760
3V-2695	426
3V-3263	899
3V-4694	794
3V-7689	788
	816
3W-3465	816
3Y-2888	270

4

Part	Page
4B-0418	86
	87
	403
4B-1218	832
4B-1240	315
4B-2041	832
4B-2049	273
	276
4B-2913	589
4B-4158	564
4B-4274	237
	315
	486
4B-4276	890
4B-4278	85
4B-4550	893
	510
	524
	528
4B-4863	315
	784
4B-8440	536
4B-9302	573
4B-9782	76
	655
4B-9784	439
4B-9880	24
	454
	459
4C-9612	64
4D-1736	723
4D-2212	424
4D-2886	406
4D-3704	56
4D-7388	126
	334
	573
	829
	920
4D-7534	376
4D-7536	376
4D-7735	322
	395
4D-7794	301
	807
4D-8123	310
	328
	334
	357
	524
	528
	602
	606
	910
4D-8148	415
	416
4D-9128	884
4D-9517	118
	121
	126
	270
	310
	322
	330
	334
4E-0019	334
	488
	498
4E-0289	602
	605
4E-0339	793
4E-1384	820
4E-1411	794
4E-3439	802
4E-3440	799
4E-3441	802
4E-3445	799
4E-4377	428
4E-4450	811
4E-5662	867
4E-5705	813
4E-5718	813
4E-5719	813
4E-5720	813
4E-5722	813
4E-5724	813
4E-5725	820
4E-5726	820
4E-6335	890
4E-6401	►569
	792
4E-6439	890
4E-6444	890
4E-6445	890
4E-6446	890
4E-6509	790
4E-6510	790
4E-6523	886
	890
4E-6526	886
4E-6867	802
4E-7163	890
4E-7204	794
4E-7205	794
4E-7412	816
4E-7449	813
4E-7450	813
4E-7451	820
4E-7520	804
4E-7627	804
4E-7628	804
4E-7748	820
4E-7749	820
4E-7839	820
4E-8035	818
4E-8038	818
4E-8078	491
	598
4E-8079	491
4E-8080	597
4E-8152	510
4E-8153	510
4E-8154	510
4E-8155	510
4E-8156	510
4E-8157	510
4E-8158	510
4E-8160	510
4E-8161	510
4E-8162	510
4E-8266	211
4E-8293	823
4E-8318	884
4E-8319	884
4E-8320	884
4E-8325	884
4E-8329	884
4E-8338	884
4E-8340	884
4E-8413	792
	►804
4E-8537	850
4E-8540	564
4E-8557	807
4E-8560	807
4E-8561	807
4E-8722	823
	886
	890

► **PRIMARY REFERENCE**

PART NUMBER INDEX

Part	Page	Part	Page	Part	Page	Part	Page
4E-8917	818		688	4K-2039	750	4N-0848	59
4E-8937	850		691		751	4N-0861	90
4E-8940	850		697	4K-3026	531		92
4E-8975	236		719	4K-5175	442		94
4E-8976	236		742	4K-8302	328	4N-0864	112
4E-8984	809		760	4K-8501	854	4N-0865	90
4E-8995	853	4J-0523	742	4K-8864	101		92
4E-8996	809	4J-0524	378		325		94
4E-9055	299		395		328	4N-0913	88
4E-9056	809		406		335		89
4E-9151	818		602		350	4N-0914	88
4E-9152	815		606	4K-9429	846		89
4E-9173	886		612		847	4N-1059	278
	890		691	4L-2729	273	4N-1650	46
4E-9174	886		704		276	4N-1683	33
	890		920	4L-3395	441	4N-1946	112
4E-9536	820	4J-0527	153	4L-4986	380	4N-1948	116
4E-9537	820		406	4L-6454	765	4N-2198	112
4E-9625	229		684		767	4N-2199	112
4E-9640	794		686	4L-6944	586	4N-2357	7
4E-9664	562		734	4L-9337	101		8
	563	4J-3754	732		319		11
4E-9716	433		734		710		14
4E-9924	236	4J-3815	732		742		►84
4E-9925	236		734	4L-9564	388	4N-2380	112
4F-2294	287	4J-3816	732		428	4N-6658	43
4F-2926	586		734	4M-1336	116	4N-7082	84
4F-4879	881	4J-4606	598	4M-1708	415	4N-8227	217
	882	4J-5267	573	4M-1827	272	4N-8411	90
4F-5192	92		710		275		92
	94		712	4M-1828	272		94
4F-7957	26		773		275	4N-8452	112
	27		775	4M-1831	272	4N-8600	90
4H-1225	333		776		275		92
	512		920	4M-1853	272		94
	545	4J-5477	101		275	4N-8770	90
	547		107	4M-1854	272		92
4H-3820	884		126		275		94
4H-6112	405		136	4M-1896	273	4P-0519	70
4H-7655	621		524		276	4P-2289	80
4H-9105	612		572	4M-2381	454	4P-7428	328
	683		909		459	4P-7581	179
4I-5228	491		910	4M-5016	416		301
4I-5956	631	4J-5573	714	4M-5227	442		312
4I-5957	631	4J-7083	662	4M-5282	841		319
4I-6289	491	4J-7533	412	4M-5317	524		322
4I-6602	686		591	4M-5397	415		325
4J-0519	602		741	4M-5942	617		335
	606		742	4M-6425	202		353
4J-0520	395	4J-8224	655		865		839
	573	4J-8996	773	4M-6582	784	4P-7582	325
	602		775	4M-8239	452	4P-7820	30
	606		776	4M-8973	524		34
	684	4J-9208	773		528	4P-7882	81
	686	4K-0684	371	4N-0205	70	4P-8134	295
	691		374	4N-0342	57		301
	710		413	4N-0683	46		316
	765		670		64		325
	767		672		80	4S-1936	335
4J-0521	454		773	4N-0684	42	4S-1962	161
4J-0522	395		775		57		163
	406		776		59		194
	650	4K-1388	366	4N-0685	43		238
	684		571	4N-0794	33		301
	686		742		112		335

► **PRIMARY REFERENCE**

PART NUMBER INDEX

Part	Page
	621
4S-5898	386
4S-8537	415
4S-8541	415
4S-9134	423
4T-0925	654
4T-1860	▶654
	655
4T-1897	586
4T-1901	586
4T-1902	586
4T-1904	586
4T-1905	586
4T-1906	586
4T-1907	586
4T-1908	586
4T-1909	586
	▶592
4T-1910	592
4T-1911	592
4T-1913	592
4T-1914	592
4T-1915	586
4T-1916	586
4T-2576	670
	672
4T-2578	716
4T-2770	650
4T-3766	765
	767
4T-3797	763
4T-4073	741
	▶757
4T-5173	598
4T-5255	762
4T-6767	765
	767
4T-8698	734
4T-8729	723
4T-8761	626
4T-9176	723
4T-9298	626
4T-9425	723
4T-9426	723
4V-1074	471
4V-1541	589
4V-4885	361
4V-8256	780
4V-8577	893
4V-9803	550
4W-0419	▶108
	112
4W-3034	37
	39
4W-5698	42
4W-5699	42
4W-5700	42
4W-5701	42
4Y-5812	650
4Z-6291	721
	▶722

5

Part	Page
5B-0213	59
5B-1983	94
5B-2183	589
5B-6565	784
5B-9192	569
5C-2873	623
5C-2874	569
5C-2890	236
	281
	285
	286
	301
	316
	350
	467
	469
	569
	589
	717
	783
	816
	820
	823
	893
	902
5C-6565	232
	739
5C-7261	156
	227
	228
	229
	231
	281
	569
	807
	809
	820
	884
	886
	890
5C-7423	807
5C-8465	301
5C-9553	106
	301
	335
	498
	807
	820
	823
	850
	886
5C-9855	211
5D-1026	815
5D-1901	734
	916
5D-6428	415
5D-7449	510
5E-8771	57
	59
5F-1248	510
5F-3144	389
5F-3999	388
	439
	631
5F-4899	30
5F-9035	659
5F-9144	310
	384
	599
	678
	679
5G-3676	512
5G-6397	214
5G-6504	90
	92
	94
5G-6505	194
5H-1504	51
	723
5H-2824	442
5H-3252	631
5H-3701	564
	566
5H-4018	712
5H-4744	405
5H-4909	629
5H-5672	416
5H-6555	281
5H-6734	153
	186
5H-8848	742
5H-8853	394
5I-3333	491
5I-4277	601
5I-4341	601
5I-4376	333
5J-1193	664
	666
5J-3419	655
5J-4776	655
5J-5314	272
	275
5J-5365	662
5J-5794	68
5K-3294	301
	335
	920
5K-4778	335
5K-5068	524
5K-7696	464
5K-7792	721
5K-8451	617
5K-8454	371
	374
5K-9090	364
	365
	392
	393
	394
	395
	571
	572
	573
	620
	642
	674
	675
	684
	686
	691
	919
	920
5K-9107	368
5K-9242	531
5K-9243	531
5K-9660	161
	163
	213
	214
	395
	573
	621
	910
5L-1100	586
5L-1761	461
5L-5772	388
5L-5773	388
5L-6766	794
5M-2057	732
	734
5M-2894	30
	32
	33
	34
	61
	63
	69
	82
	83
	84
	86
	87
	88
	89
	90
	92
	94
	99
	103
	112
	141
	143
	166
	168
	172
	176
	179
	183
	238
	241
	319
	325
	366
	368
	369
	371
	374
	386
	388
	416
	452
	459
	461

▶ **PRIMARY REFERENCE**

PART NUMBER INDEX

Part	Page	Part	Page	Part	Page	Part	Page
	773		612	5P-5824	886		328
	775		615	5P-5846	99		395
	776		660	5P-5874	646		406
	865		684	5P-5908	784		509
5M-3034	272		686	5P-5926	783		602
	275		691	5P-5952	295		606
5M-3062	21		697	5P-5969	815		612
	238		854	5P-6008	333		692
	322		857		589		704
	325	5P-1175	905	5P-6010	893		830
	560	5P-1259	85	5P-6129	815		920
	561	5P-1404	176	5P-6261	453	5P-7469	161
5M-3320	424		179		454		163
5M-6200	566		238	5P-6298	272		328
5M-6214	108		403		275		395
	361	5P-1471	134	5P-6408	442		406
	431	5P-1669	415	5P-6414	431		509
5M-6755	563	5P-1670	416	5P-6619	112		602
5M-7925	415	5P-2228	348	5P-6651	416		606
5M-9548	452		765	5P-6670	783		612
5M-9622	454		767	5P-6724	589		692
5M-9623	452	5P-2369	910	5P-6726	416		704
	454	5P-2424	692	5P-6727	416		830
5M-9624	452	5P-2566	719	5P-6879	830		920
	454	5P-2618	153	5P-6944	378	5P-7470	85
	459	5P-2673	510	5P-7070	783		395
5N-9016	741	5P-2861	361	5P-7174	118		406
5P-0076	760		386		121		573
5P-0372	884	5P-3087	428	5P-7211	109		688
5P-0537	26	5P-3088	428		118		692
	27	5P-3422	524		121		704
	57		528		124		910
	64		557		498	5P-7471	85
	820		558		513		395
	823	5P-3603	388		545		406
	846	5P-3723	439		547		573
	847	5P-3928	783	5P-7213	626		688
5P-0597	85	5P-3929	778	5P-7462	168		692
	134	5P-3945	783		172		704
5P-0764	111	5P-3948	778		194		910
5P-0767	829		827		395	5P-7483	469
5P-1046	620	5P-3950	783		573		513
5P-1075	201	5P-4055	441		920	5P-7684	742
	227	5P-4115	467	5P-7463	168	5P-7701	70
	228		469		172	5P-7703	85
5P-1076	109		498		194		406
	144	5P-4116	21		395		573
	186		156		573		704
	395		319		920	5P-7782	109
	475		783	5P-7464	573	5P-7813	136
	477		853		704	5P-7814	61
	482	5P-4295	602		920	5P-7843	371
	498		606	5P-7465	573		374
	500	5P-4423	893		704	5P-7854	335
	505	5P-4484	359		920	5P-7958	1
	507		361	5P-7466	395		294
	508	5P-4536	152		573		300
	509	5P-4961	158		692	5P-8068	89
	512	5P-5296	416		712		90
	519	5P-5454	886	5P-7467	395		92
	521	5P-5623	294		573		94
	541		350		692	5P-8077	609
	573	5P-5672	783		712		615
	581	5P-5677	282	5P-7468	161		684
	583	5P-5777	571		163		686

► **PRIMARY REFERENCE**

PART NUMBER INDEX

Part	Page	Part	Page	Part	Page	Part	Page
	699		294	5S-7018	653		295
	719		512	5S-7348	198		395
	742		541	5S-7379	322		524
5P-8112	395		915	5S-7382	712		573
	573		916		760		920
	692	5P-8502	915	5S-7383	194	6D-4247	802
	712		916		865	6D-4636	301
5P-8182	395	5P-8525	896	5S-7816	454		322
	406	5P-8823	775	5T-2471	109	6D-7690	439
	688		776	5T-5185	376	6D-7889	348
	692	5P-8874	602	5T-6374	168		449
	910		605		172	6D-9157	380
5P-8211	37	5P-8939	194	5T-9482	431		382
	39	5P-9035	439	5T-9797	426	6E-0381	640
	439	5P-9085	295	5T-9866	426		641
5P-8244	90		322	5V-1496	871		757
	92		328		875	6E-0382	757
	94		335	5V-1498	497	6E-0763	644
	168		348	5V-3854	512	6E-0770	645
	172		350	5V-5669	371	6E-0804	488
5P-8245	32		406		374		598
	61		524	5V-5670	371	6E-0923	890
	65		528		374	6E-1024	629
	70		910	5V-7095	611		►646
	80	5P-9186	725			6E-1127	650
	90	5P-9297	136			6E-1249	598
	92		176	**6**		6E-1250	598
	94		295			6E-1443	716
	371		328	6A-7844	849	6E-1444	716
	374		335	6B-1557	369	6E-1454	642
	388		348	6B-2882	141	6E-1607	647
	416		357		143	6E-1682	715
	428		617		477	6E-1687	727
	442		899		482	6E-1688	727
	668	5P-9299	325	6B-3156	55	6E-1704	727
	669		335	6B-4196	818	6E-1705	727
	867		350	6B-4540	301	6E-2943	626
5P-8247	386		617	6B-6205	512		723
	389		704	6B-6682	723	6E-3078	602
	510		920	6C-3060	186		605
5P-8248	366	5P-9609	510	6C-5303	510		►653
	388		662	6C-9083	392	6E-3337	631
5P-8249	371	5P-9617	393	6D-1004	585	6E-3369	594
	374		571	6D-1641	829	6E-3767	644
	395		703	6D-2667	827	6E-3769	644
5P-8250	414	5P-9757	621	6D-3479	118	6E-3775	655
	664	5P-9890	90		121	6E-3779	655
	666		92		136	6E-3780	655
	773		94		166	6E-3840	631
5P-8309	902	5R-0939	692		301	6E-3850	646
5P-8356	46	5R-0940	692		330		►647
	592	5R-3768	541		335	6E-3851	647
	644	5R-5927	486		348	6E-3852	647
5P-8429	32		512	6D-3886	884	6E-3855	647
5P-8439	335	5S-0003	166	6D-4244	161	6E-3861	648
5P-8444	328		461		163	6E-3866	601
	395	5S-0581	116		322	6E-3869	593
	406	5S-2256	723		335	6E-3872	595
	603	5S-3618	388		353	6E-3873	601
	606	5S-4245	301		395	6E-3874	601
	612	5S-4246	805		524	6E-3914	664
	704	5S-4437	459		528		666
	920	5S-4455	721	6D-4246	127	6E-3917	664
5P-8500	1	5S-5880	416		166		666
	160	5S-7001	653		194	6E-3985	655

► **PRIMARY REFERENCE**

PART NUMBER INDEX

Part	Page
6E-3986	►649
	655
6E-4286	656
6E-4287	656
6E-4288	656
6E-4499	655
6E-4500	656
6E-4513	655
6E-4514	655
6E-4729	734
6E-4753	649
6E-4922	734
6E-5098	732
6E-5101	732
6E-5102	732
6E-5412	646
6E-5510	650
6E-5582	647
6E-5583	647
6E-6138	650
6E-6259	734
6E-6549	734
6F-0155	416
6F-0253	300
	805
6F-0612	592
6F-3930	426
6F-4718	625
	719
6F-6673	454
6F-7035	371
	374
6F-7045	280
6G-2168	92
	94
6G-2256	193
6G-2263	193
6G-8390	730
	►916
6G-9333	83
	106
6H-0411	915
6H-3956	469
6I-0213	184
6I-0928	50
6I-1418	202
	203
	315
6I-1458	67
	68
6I-2431	118
	121
6I-2435	118
	121
6I-4025	51
6I-8055	368
6I-8490	366
6I-8563	405
	►459
6I-8564	459
6I-8597	441
6I-8849	386
6I-8860	386
6I-9519	453
	454
6I-9790	388
	415
6J-2386	626
	723
6J-2419	453
6J-2561	741
6J-2680	684
	686
	692
6J-3134	426
	742
6J-3913	59
6J-4568	659
6J-5985	763
6J-5986	763
6K-2430	428
6K-3274	784
6K-5290	830
6K-5291	830
6K-6307	656
	668
	669
	742
6K-6967	524
	528
6K-8178	827
6L-2479	126
	172
6L-3005	139
6L-3616	524
	528
	536
6L-4428	46
6L-7159	783
6L-8598	807
6L-8617	126
6M-1622	361
	541
6M-5062	750
	751
6M-6853	386
6M-7476	166
	168
	172
6M-9155	566
6N-0008	112
6N-1050	88
6N-1127	176
	179
6N-1396	70
6N-1604	216
	217
6N-3279	272
	275
6N-3356	131
6N-3826	272
	275
6N-7654	54
6N-8744	155
	156
6N-9533	146
	147
6N-9590	129
6P-3236	299
6P-3313	388
6P-4213	388
6P-4467	232
6P-4940	454
6P-4943	454
6P-4977	369
6P-4978	454
6P-8855	783
6P-9592	602
	605
6P-9783	454
6P-9784	454
6P-9785	454
6P-9786	454
6R-7653	886
6S-1179	734
6S-6251	109
	392
6T-0363	272
	275
6T-0371	272
	275
6T-0372	272
	275
6T-0465	193
6T-1698	730
	731
6T-1740	439
6T-3631	289
	333
6T-3632	289
	333
6T-3633	289
	333
6T-3642	316
6T-5545	464
6T-7061	389
6T-7695	818
6T-9222	380
	382
6T-9244	758
6V-0128	26
	27
6V-0352	813
	816
6V-0400	612
6V-0439	464
6V-0484	459
6V-0675	129
6V-0683	168
	172
	194
	395
	573
	920
6V-0826	322
	581
	583
6V-0852	333
	348
	366
	378
	392
	439
	449
	452
6V-0885	►272
	278
6V-1175	386
6V-1179	386
6V-1249	704
	920
6V-1322	272
	275
6V-1572	609
	612
6V-1573	609
	612
	688
	910
6V-1574	699
	910
6V-1614	282
6V-1625	737
6V-1635	555
6V-1668	783
	816
6V-1722	829
6V-1734	413
6V-1746	464
6V-1820	241
6V-1867	684
	686
	704
6V-1868	684
	686
	704
6V-1869	704
6V-1874	395
	509
	830
6V-1875	609
	612
	688
	699
6V-1889	186
	395
	573
	603
	606
	612
6V-1949	659
6V-1970	1
6V-2235	910
6V-2313	839
6V-2317	852
6V-2370	469
	811
	812
6V-2383	310
	459
	570
	611
	620
	675
	690
	702
	737
	909

► **PRIMARY REFERENCE**

PART NUMBER INDEX

Part	Page	Part	Page	Part	Page	Part	Page
	335	6V-5048	61		712		737
6V-2406	439		64		920		799
6V-2491	544		90	6V-7419	896		802
	819		92		899	6V-8398	126
6V-2624	371		94	6V-7611	732		129
	374		136	6V-7636	820		394
6V-2687	301		139	6V-7646	871		401
	314		176		875		403
	818		179	6V-7687	135		405
	823		238		512		406
6V-2689	748		241		550		524
6V-3265	126		254		748		570
	292		255		804		571
	310		257	6V-7727	186		572
	335	6V-5049	51	6V-7728	783		581
	348		61	6V-7732	734		583
	357		136	6V-7744	131		589
	896		166		469		602
	899		168		732		605
6V-3319	59		179		734		617
6V-3510	335		238		879		675
6V-3822	732		256	6V-8001	406		703
	734	6V-5050	46	6V-8004	428		704
	867		61	6V-8076	179		719
6V-3830	70		101	6V-8097	734		799
6V-3922	647	6V-5063	112	6V-8149	389		802
	648	6V-5064	112		428		919
6V-3965	335		216	6V-8187	315		920
	366		217	6V-8188	194	6V-8400	406
	378	6V-5142	752		273		690
	394	6V-5220	807		276		691
	439	6V-5324	654		471		692
	450	6V-5341	586	6V-8189	884		919
	451	6V-5553	718	6V-8197	500		920
	452	6V-5696	564	6V-8198	376	6V-8455	734
	459	6V-5758	645	6V-8210	793	6V-8490	312
	461	6V-5839	732	6V-8225	787	6V-8554	524
	573		734		898	6V-8625	126
	611		850	6V-8260	719		406
	620		867	6V-8362	299		572
	675		879	6V-8369	290		581
	690	6V-5851	896		299		583
	704	6V-6317	241	6V-8376	315		617
	737		386		316		675
6V-3987	823	6V-6353	139	6V-8397	126		703
6V-4349	161	6V-6457	299		334		802
	163	6V-6458	415		385	6V-8626	161
	573	6V-6609	51		394		214
	692		112		401		572
6V-4356	692		266		405	6V-8627	101
6V-4357	692	6V-6640	361		406		136
6V-4368	406		389		571		909
6V-4589	74		564		589	6V-8628	136
	139	6V-6716	294		602	6V-8629	161
	168		333		605	6V-8633	403
	172		353		611		581
	176	6V-6923	190		612		583
	179		651		617	6V-8634	401
	190		754		621		638
	238	6V-7238	829		638		802
	241	6V-7351	727		639	6V-8635	393
	288	6V-7357	281		675		684
	335		884		690		686
	346		896		691		919
	347	6V-7359	573		704	6V-8636	394

► **PRIMARY REFERENCE**

PART NUMBER INDEX

Part	Page	Part	Page	Part	Page	Part	Page
	405	6V-8988	703		818	6V-9852	161
	571	6V-8989	161		820		163
	589		163		849	6V-9853	365
	612	6V-8990	621		850		394
	617	6V-8991	675		889		572
	737	6V-8994	334		890		919
	799	6V-8995	703	6V-9671	295	6V-9854	365
6V-8637	186	6V-8997	572	6V-9746	97		393
	393		621		186		675
	571		919		364	6V-9855	691
	611	6V-8998	920		365	6V-9873	129
	620	6V-9001	406		392		394
	703		571		393		403
6V-8638	919	6V-9002	703		394		572
6V-8639	571	6V-9003	97		395		704
	617		99		570	6V-9874	364
	799		680		571		365
	802	6V-9004	394		572		393
6V-8640	213		572		573	6W-1140	464
	214		621		605	6W-2342	405
6V-8641	909	6V-9007	186		611	6W-8259	376
6V-8642	99		393		620	6W-8399	371
	156		919		621		374
	213	6V-9008	393		674	6W-8400	371
	571		572		675		374
6V-8647	107		620		684	6W-8401	371
	909		674		686		374
6V-8675	428		675		690	6W-8906	853
	867		691		691	6W-9117	570
6V-8713	97		919		692	6Y-0724	454
	680	6V-9009	691		702	6Y-0725	453
6V-8716	393		919		703		454
	571	6V-9027	112		712	6Y-0726	453
	684	6V-9168	335		714		454
	686		385		718	6Y-0727	454
	703		612		919	6Y-0728	454
6V-8722	572	6V-9169	524		920	6Y-0729	453
6V-8723	617		704	6V-9808	524	6Y-0744	454
	675		920	6V-9828	573	6Y-0789	461
6V-8724	334	6V-9170	97	6V-9830	126	6Y-2090	81
	406		161	6V-9832	395	6Y-2736	725
6V-8731	704		163	6V-9833	675	6Y-2737	725
6V-8777	572		784	6V-9836	617	6Y-5877	416
6V-8781	394	6V-9172	675		691	6Y-6370	441
6V-8784	621		920		799	6Y-6966	▶415
6V-8801	147	6V-9173	920	6V-9837	129		445
	201	6V-9182	97		703	6Y-6967	▶366
	227		394	6V-9839	394		445
	228		611		572	6Y-7198	441
	316		703		605	6Y-7260	415
	820		712	6V-9840	675	6Y-7269	415
6V-8837	783	6V-9189	223	6V-9843	406	6Y-8112	702
6V-8928	794	6V-9327	886		621	6Y-8167	441
6V-8934	909		890	6V-9845	101	6Y-9347	423
6V-8935	524	6V-9343	704	6V-9846	394	6Y-9816	424
6V-8937	101	6V-9497	299	6V-9849	101	6Y-9980	81
6V-8940	909	6V-9505	301	6V-9850	589		433
6V-8941	691	6V-9632	179		617		
6V-8942	572		211		638		
6V-8969	846		231		675		
	847		281		799		
6V-8981	703		295	6V-9851	126	7B-2805	732
6V-8983	621		312		572		734
	691		330		581	7B-3028	388
6V-8985	920		784		583	7B-3039	732

7

▶ PRIMARY REFERENCE

PART NUMBER INDEX

Part	Page	Part	Page	Part	Page	Part	Page
	734	7H-7539	765	7M-0327	272	7S-8767	112
7B-3235	59		767		275	7S-8920	668
	65	7I-1024	827	7M-4298	723		669
	70	7I-3652	315	7M-5130	415	7S-8921	668
	416	7I-4078	589		655		669
7B-5684	650	7I-7555	725	7M-5839	366	7T-0020	220
7C-0145	112	7J-0204	107		368	7T-1099	34
7C-0307	113		348	7M-8480	415		179
7C-1511	103		461	7M-8485	97		227
7C-1512	103		592		126		228
7C-9010	90		750		186		229
	92		751		359		784
	94	7J-1089	655		361		818
7C-9452	90	7J-2656	734		371	7T-3264	497
7C-9614	46	7J-2927	655		374	7T-3974	272
7C-9770	131	7J-2966	773		377		275
7D-1553	335	7J-5225	401		393	7T-4083	439
7D-1649	65		403		394	7T-4306	794
	583	7J-7423	655		406		815
7D-1728	524		746		439	7T-4532	796
	531	7J-9108	97		570	7T-4925	193
7D-7233	335		571		571	7T-4971	762
	395		572		572	7T-6799	294
7D-8635	486		680		611		300
7E-6455	144	7J-9250	670		620	7T-8331	105
7E-6508	25		672		621		126
	28	7K-1181	237		629		130
7E-8630	135		299		642		512
7E-9171	129		314		650		519
7E-9227	90		838		674		521
7E-9898	612		841		675		635
7F-0560	194	7K-1401	612		684		854
	316	7K-1402	611		686	7T-8890	895
7F-1585	741	7K-1972	488		690	7T-9123	273
7F-2050	166	7K-3116	57		691		276
	168	7K-3176	783		703	7T-9302	290
	172		827		712		299
7F-3488	272	7K-3262	794		919	7T-9745	740
	275	7K-3304	827	7M-8651	273	7T-9988	193
7F-3491	272	7K-3971	702		276	7U-1903	830
	275		799	7M-8798	573	7V-0445	886
7F-3525	272	7K-3972	702	7M-9918	151	7V-0638	186
	275		799		152	7V-5231	564
7F-7983	586	7K-3974	702	7N-0719	193	7V-6571	168
7F-8268	668		799		►280		172
	669	7K-3975	702	7N-1637	148		328
7F-8607	778		799	7N-2059	270		531
	827	7K-6413	662	7N-2156	103	7V-8346	566
7F-9090	84	7K-8876	389	7N-2443	57	7V-8532	719
	176	7K-8877	389	7N-3718	899	7V-9275	315
	179	7K-9204	564	7N-9008	99	7V-9514	371
7F-9223	467	7L-2894	272	7N-9801	291		374
7G-3467	415		275	7N-9943	220	7W-1484	915
7G-3468	416	7L-3385	442	7P-4937	884	7W-5300	214
7G-3470	416	7L-6463	621	7S-1801	405	7W-6492	43
7G-4842	454	7L-8227	134	7S-2962	388	7W-6534	74
7G-7741	415	7L-9061	288	7S-4002	564	7W-7381	348
7G-7744	416		439	7S-4244	910		570
7G-7745	415	7L-9198	769	7S-5005	42	7W-8106	294
7G-8839	130	7M-0324	272	7S-6892	442		910
	395		275	7S-6997	453	7X-0288	101
	635	7M-0325	273	7S-7018	415	7X-0297	742
7H-3579	765		276	7S-8491	656	7X-0300	742
	767	7M-0326	272		746	7X-0313	719
7H-5569	56		275	7S-8553	653	7X-0326	389

► **PRIMARY REFERENCE**

PART NUMBER INDEX

Part	Page
7X-0344	348
7X-0346	414
	683
	719
7X-0347	85
	97
	680
	742
7X-0349	442
7X-0353	406
7X-0379	763
	765
	767
7X-0380	765
	767
7X-0383	765
	767
7X-0389	497
7X-0390	395
7X-0394	662
7X-0406	769
7X-0418	762
7X-0440	37
	39
	202
7X-0490	783
7X-0515	97
	109
	500
	680
	742
7X-0525	662
7X-0531	692
7X-0540	109
7X-0546	820
7X-0562	273
	276
7X-0563	830
7X-0572	765
	767
7X-0575	886
7X-0583	510
7X-0589	316
	581
7X-0590	105
	109
	126
	130
	395
	512
	519
	521
	660
	854
7X-0595	496
7X-0599	624
7X-0603	517
	518
7X-0608	780
7X-0613	176
	179
7X-0616	541
7X-0632	155
	156
7X-0750	334
	361
	491
7X-0752	491
7X-0766	469
7X-0818	316
	439
7X-0820	611
7X-0871	581
	583
7X-0873	702
7X-1548	388
7X-2438	725
7X-2459	675
	690
7X-2465	433
7X-2478	784
7X-2489	81
	598
7X-2495	439
7X-2497	820
7X-2534	524
	528
	890
7X-2535	395
	816
7X-2538	21
7X-2539	395
7X-2542	21
7X-2545	21
7X-2546	424
7X-2549	406
	660
	692
7X-2550	395
	573
	660
7X-2552	500
7X-2553	118
	121
	439
	496
	500
	739
	918
7X-2554	521
7X-2555	109
7X-2558	564
7X-2563	439
	481
	625
	719
7X-2564	81
	730
	731
7X-2576	472
	475
	486
7X-2578	81
7X-3229	905
7X-3310	820
	886
	890
7X-3319	850
7X-3373	272
	275
7X-3391	617
7X-3392	395
	406
	692
	714
7X-4756	670
	672
7X-4776	649
7X-4780	118
	121
	350
7X-4803	597
7X-6085	198
7X-6315	205
7X-7656	295
7X-7700	153
	160
7X-7729	21
	109
	118
	121
	144
	194
	213
	295
	309
	328
	335
	350
	378
	469
	477
	482
	486
	498
	505
	508
	512
	519
	545
	547
	559
	573
	606
	612
	617
	674
	676
	704
	778
	797
	811
	816
	830
	839
	854
	910
	920
7X-7816	439
7X-7898	902
7X-7910	778
7X-7911	778
7Y-0467	725
7Y-1030	81
	433
7Y-1976	127
7Y-2522	488
7Y-3173	805
	818
7Y-5233	81
7Y-5756	573
7Y-6371	730
	731
7Y-7256	301
	850
7Y-7992	668
	669
7Y-8763	491
7Y-9099	853
	8
8B-4884	524
	528
8B-6349	433
8B-6375	415
8B-9294	690
8B-9424	166
	168
	172
8C-0569	392
8C-3089	139
	183
	272
	275
8C-3097	649
8C-3205	573
	920
8C-3206	395
	573
	603
	606
	656
	684
	692
	704
8C-3210	820
8C-3236	844
8C-3370	364
	365
	395
8C-3398	902
8C-3442	807
8C-3445	90
	92
	94
8C-3446	90
	92
	94
	378
	394
	621
	704
8C-3447	378
8C-3451	392
	620
	702
8C-3468	486
	542

► **PRIMARY REFERENCE**

PART NUMBER INDEX

Part	Page	Part	Page	Part	Page	Part	Page
8C-4586	784	8E-7253	366		241		406
8C-5607	312	8E-7683	382	8L-2746	99	8M-8489	103
	841	8E-7841	461	8L-2777	77		424
8C-5608	312	8E-7842	461		79	8M-8659	368
	841	8E-8292	895		757	8M-8788	406
8C-6354	294	8E-8310	416	8L-2779	454		910
	300	8E-8316	416	8L-2786	61	8M-8997	388
8C-6358	194	8E-8328	441		136	8M-9024	88
8C-6364	316	8E-9571	464		166		89
8C-6712	621	8E-9727	405		168		386
8C-6867	101		▶452		172	8M-9124	319
8C-6869	126	8F-0492	392		176	8N-0869	193
8C-6871	524		611		179		194
8C-6876	145		830		267	8N-0879	141
	203	8F-1434	273		439		143
8C-6959	158		276		442	8N-1725	193
8C-7329	294	8F-4225	388		748	8N-2104	88
	357	8F-6230	371	8L-4743	668		89
8C-7508	805		374		669	8N-5001	884
8C-7529	820		415	8L-5008	524	8N-7294	586
8C-7562	376	8F-6711	742		528	8P-3133	416
	566	8F-8513	161	8L-5922	369	8P-3134	416
8C-8400	703		163	8L-8413	893	8P-3251	388
8C-8431	392		213	8L-9241	670	8P-5141	783
	611		214		672	8P-5696	441
8C-8451	312		573	8M-0505	168	8P-5839	415
8C-8988	691	8F-9206	778		172	8P-6048	488
8C-8989	602	8G-0841	486	8M-1013	454		770
	605		512		459		771
	704	8G-5258	510	8M-1679	741	8P-6222	416
8C-9101	598	8H-1603	612	8M-2537	452	8P-6292	415
8C-9660	272	8H-3127	26	8M-2770	310	8P-6302	416
	275		27		322	8P-7242	416
	805	8H-3532	650		328	8P-7243	416
8C-9987	457	8H-5303	280		335	8P-7246	415
8D-9537	294	8H-5306	280		348	8P-9296	454
8E-0985	415	8H-9189	453		353	8P-9569	415
8E-1717	366	8H-9513	459		401	8R-0126	815
8E-3026	454	8I-4505	702	8M-2772	153	8R-0739	793
8E-4198	775	8J-0331	650		270	8R-2014	620
	776	8J-1329	910		281	8R-6128	853
8E-4199	775	8J-1665	664		309	8R-6359	212
	776		666		461	8R-7034	432
8E-4295	441	8J-1688	598		524	8R-7036	431
8E-4320	461	8J-1689	598		531		▶432
8E-4387	461	8J-2357	281	8M-2773	328	8R-7102	231
8E-4928	366	8J-3146	765		335	8R-7723	690
8E-4929	366		767		348	8R-8087	573
8E-5050	388	8J-4437	741		350	8R-8513	428
8E-5051	388	8J-6273	587		353	8R-9137	234
8E-5052	388	8J-6815	439		617	8R-9312	388
8E-5055	388	8J-8621	741	8M-4432	369		428
8E-5056	388		760	8M-4443	406	8S-0023	126
8E-5117	368	8J-8782	732	8M-4446	459		395
8E-5641	389		734	8M-4986	406		406
8E-5920	388	8J-8783	732		452		603
8E-6255	453		734	8M-4992	366		606
8E-6398	▶453	8J-8905	670	8M-5127	406		692
	461		672	8M-5249	459		920
8E-6433	454	8J-9348	457	8M-5254	406	8S-0024	126
8E-6678	389	8J-9990	333	8M-6755	56		395
8E-6830	389	8K-2665	920	8M-6802	643		406
8E-7003	388	8K-2692	386	8M-7066	129		603
8E-7184	415	8K-4691	692	8M-7160	388		606
8E-7249	366	8K-4739	238	8M-8157	366		692

▶ **PRIMARY REFERENCE**

PART NUMBER INDEX

Part	Page	Part	Page	Part	Page	Part	Page
	920		172		890		328
8S-0490	564		395		896		330
8S-0617	389		512		899		335
8S-2225	563		581		909		346
8S-2332	278		583	8T-3518	315		347
8S-2634	194	8T-2223	656	8T-3519	194		348
8S-3746	915	8T-2275	732	8T-3597	211		350
8S-4212	915		734		378		353
8S-4784	382	8T-2362	136		393		357
8S-6109	778	8T-2501	765		405		364
8S-6110	778		767		472		365
8S-6511	103	8T-2561	559		519		386
8S-7499	717		827		521		395
8S-9089	54	8T-2899	562		559		401
8S-9191	61	8T-3298	732		634		403
	69		734		660		406
	166	8T-3311	572		688		467
	168	8T-3490	21		811		474
	172		30		843		486
	184		33	8T-3611	691		498
8T-0078	573		34	8T-3612	348		512
8T-0083	620		61		820		524
8T-0122	140		85	8T-3635	211		528
8T-0164	910		97		491		531
8T-0249	704		101	8T-3647	884		549
8T-0265	295		144	8T-3851	491		566
8T-0269	804		179	8T-4121	21		573
	823		193		85		581
8T-0273	153		194		97		583
8T-0281	430		211		101		585
	448		214		109		603
	510		227		118		606
8T-0285	705		228		121		609
8T-0288	237		231		126		612
8T-0328	273		238		129		617
	276		241		131		621
	316		294		136		656
	871		295		155		660
	875		299		156		676
8T-0389	194		310		161		680
	830		319		163		684
8T-0439	683		322		179		686
8T-0722	566		325		186		688
	732		328		194		692
8T-0723	804		330		212		705
8T-0741	589		333		213		712
8T-0788	704		334		214		734
8T-1482	472		348		227		737
	475		353		228		739
8T-1685	394		366		229		778
	703		378		231		783
8T-1686	602		405		232		788
	605		467		234		790
8T-1703	113		524		236		794
8T-1789	664		528		270		799
	666		559		292		802
8T-1796	670		581		295		811
	672		583		301		812
8T-1889	168		660		309		813
	172		680		310		815
	395		688		312		818
	512		690		316		823
	581		702		319		827
	583		789		322		829
8T-1890	168		811		325		839

► **PRIMARY REFERENCE**

PART NUMBER INDEX

Part	Page	Part	Page	Part	Page	Part	Page
	841		163		124		890
	854		179		127	8T-4139	109
	884		194		131		212
	889		231		161		335
	896		232		163		396
	899		270		194		407
	902		292		212		439
	910		301		227		472
	920		309		228		475
8T-4122	85		310		229		477
	348		312		234		482
	406		319		270		486
	414		322		292		500
	510		325		295		505
	699		328		301		507
	719		330		309		508
	742		335		310		509
8T-4123	81		346		312		512
	433		347		322		521
	439		348		325		564
	497		350		328		574
	510		353		330		581
	625		357		335		583
	719		396		346		603
	721		403		347		612
	730		407		348		615
	731		423		350		617
8T-4128	524		477		353		621
8T-4133	127		482		357		625
	213		486		396		660
	214		512		401		676
	232		525		407		684
	270		528		467		686
	301		531		474		688
	328		545		498		692
	348		547		512		697
	350		573		525		705
	395		581		528		854
	406		583		531		910
	467		612		545		920
	477		621		547	8T-4140	348
	482		660		552		407
	505		674		574		519
	508		676		583		521
	524		692		612		612
	528		705		617		615
	573		732		621		686
	603		734		680		699
	606		797		705		843
	612		802		734	8T-4141	497
	692		811		739		498
	705		812		783	8T-4157	820
	794		816		788	8T-4158	820
	807		827		813	8T-4167	81
	827		829		815		433
	829		839		827		472
	884		854		841		475
	896		884		899		486
	899		902		910		598
	910		910	8T-4138	316		843
	920		920		335	8T-4171	784
8T-4134	890	8T-4137	97		467	8T-4172	21
8T-4136	109		101		804		603
	127		118		841		606
	161		121		849		660

► **PRIMARY REFERENCE**

PART NUMBER INDEX

Part	Page
8T-4176	574
	692
8T-4177	281
	807
8T-4178	396
	407
	574
	692
8T-4180	820
8T-4181	820
8T-4182	136
	401
	467
	525
	528
	574
	705
	827
	910
8T-4183	135
	212
	348
	378
	396
	407
	505
	507
	508
	509
	512
	519
	521
	541
	550
	574
	581
	583
	615
	617
	660
	662
	684
	686
	692
	705
	734
	794
	910
	920
8T-4184	396
	513
	574
	597
	603
	606
	612
	684
	686
	692
	920
8T-4185	21
	161
	163
	194
	213
	214
	467
	705
	788
	830
	910
8T-4186	109
	118
	121
	124
	155
	156
	396
	498
	513
	603
	606
	612
	621
	692
	712
	827
8T-4187	498
8T-4189	232
	270
	301
	348
	589
	783
	788
	794
	815
	886
	890
8T-4191	790
	794
	815
	818
	823
	850
	896
	899
8T-4192	186
	194
	407
	574
	581
	583
	597
8T-4193	407
	433
	439
	612
	683
	712
	714
	718
8T-4194	144
	396
	407
	505
	513
	519
	550
	606
	609
	612
	615
	656
	660
	668
	669
	688
	692
	697
	699
	705
	712
8T-4195	85
	124
	127
	129
	136
	144
	155
	156
	161
	163
	186
	194
	213
	214
	236
	270
	316
	378
	403
	407
	469
	477
	482
	498
	505
	508
	513
	519
	545
	547
	549
	559
	574
	585
	606
	621
	692
	705
	799
	802
	829
	830
	886
	890
	910
	920
8T-4196	136
	295
	328
	364
	365
	378
	396
	407
	422
	525
	528
	574
	581
	583
	603
	606
	612
	617
	656
	684
	686
	688
	705
	712
	778
	790
	794
	797
	813
	899
	910
	920
8T-4198	21
	692
8T-4200	301
	809
	890
8T-4205	186
	236
	272
	275
	301
	315
	316
	783
	820
	823
	849
	850
	871
	875
	884
	886
	890
8T-4222	109
	124
	155
	156
	301
	547
	552
	789
	874
	884
	899
8T-4223	109
	135
	194
	212
	232

► **PRIMARY REFERENCE**

PART NUMBER INDEX

Part	Page	Part	Page	Part	Page	Part	Page
	301		194		692		910
	316		202		712		920
	328		203		854	8T-4970	469
	335		223	8T-4649	433	8T-4971	136
	348		227		843		469
	378		228	8T-4657	626		589
	396		229	8T-4766	884	8T-4986	186
	407		231	8T-4779	712	8T-5001	407
	439		232	8T-4834	392		564
	464		237	8T-4835	232	8T-5004	467
	471		270		407	8T-5005	136
	472		281		692		396
	475		301	8T-4896	21		424
	486		348		101		513
	500		396		147		660
	505		439		194		692
	507		449		201		910
	508		525		316	8T-5027	794
	509		528		319	8T-5041	635
	510		569		322	8T-5050	704
	513		589		442	8T-5089	386
	519		618		464	8T-5360	719
	521		788		655		739
	564		793		710	8T-5379	472
	574		799		742		475
	581		807		760	8T-5389	161
	583		809		794		163
	597		852	8T-4908	194		714
	603		865		281	8T-5400	896
	606		884		439	8T-5412	628
	609		886		884		722
	612		890	8T-4910	109	8T-5414	389
	615	8T-4226	513		396	8T-5429	401
	618		545		407		583
	621		547		500	8T-5677	333
	625		797		513		589
	635	8T-4244	109		519	8T-5878	541
	656		212		521		598
	662		316		612	8T-5912	101
	668		396		635	8T-5913	895
	669		407		692	8T-5914	895
	676		500		854	8T-6356	394
	684		509		857		674
	686		574	8T-4935	491	8T-6385	564
	688		603	8T-4944	629	8T-6408	21
	692		606		686	8T-6411	236
	697		612	8T-4956	109		295
	699		624		380	8T-6430	81
	705		634		382		433
	712		686		396		497
	719		692		407		721
	721		705		475	8T-6453	571
	734		712		498	8T-6466	129
	739		890		510		194
	794		910		583		513
	816		920		603		574
	820	8T-4648	105		606		603
	854		127		612		606
	874		378		684		618
	910		396		686		621
	920		513		688		705
8T-4224	21		519		692		737
	37		521		705		827
	39		574		714		910
	145		612		721	8T-6684	394

► **PRIMARY REFERENCE**

PART NUMBER INDEX

Part	Page	Part	Page	Part	Page	Part	Page
	572		237		229		276
8T-6685	621		268		896	9G-4191	237
8T-6696	602		269		899	9G-5127	106
	605		290	8Y-3966	469	9G-9558	415
8T-6703	405		299	8Y-3998	469	9H-1031	43
8T-6757	46		832	8Y-3999	469		361
	48		834	8Y-4501	820		376
	74		835	8Y-5743	498	9H-3757	272
8T-6764	116		836	8Y-5748	820		275
8T-6868	130		837	8Y-5749	820	9H-5537	416
	186	8T-8827	322	8Y-6335	299	9H-6832	439
	396	8T-8874	211	8Y-6352	794		464
	407	8T-8899	573	8Y-6364	915	9J-0513	664
	486	8T-8901	690		916		666
	513	8T-8916	874	8Y-6388	794	9J-0520	664
8T-6869	156	8T-8917	464	8Y-8294	820		666
	227		763	8Y-8296	820	9J-0523	664
	228	8T-8919	407	8Y-8318	820		666
	229		684	8Y-8320	820	9J-0711	664
	231		686				666
	316	8T-9005	815			9J-1159	670
	348	8T-9023	573	**9**			672
	449	8T-9082	848			9J-1433	765
	618		871	9B-7233	299		767
8T-6870	799	8T-9101	101		315	9J-1709	741
8T-6871	348	8T-9371	893		316	9J-1716	741
	407	8T-9377	85	9B-7237	147	9J-1722	741
	719	8T-9380	739		442		760
	742	8T-9382	168		710	9J-2364	763
8T-6876	126		173		742	9J-2365	763
	589	8T-9383	328	9C-2372	333		765
	602	8T-9398	769	9C-4935	491		767
	605	8T-9518	161		843	9J-2366	765
	703		163	9C-6034	407		767
8T-6895	703	8T-9527	715	9C-6809	488	9J-2587	762
8T-6907	620	8T-9655	176		491	9J-2593	763
8T-7004	136		179	9C-7863	491	9J-2606	488
8T-7058	714		202	9C-7929	491	9J-2607	488
8T-7062	23		203		811	9J-4688	723
8T-7087	612		315	9C-9458	346	9J-5499	741
8T-7338	510	8U-7051	631		347	9J-5942	662
8T-7529	612	8V-1715	497	9D-0630	153	9J-6001	662
8T-7538	664	8V-3609	566	9D-1024	765	9J-7031	732
	666	8V-7010	788		767		734
	670	8W-0225	702	9D-3767	823	9J-7271	741
	672	8W-3796	570	9D-4439	315	9J-8752	741
8T-7546	126	8W-9815	570	9D-6877	597	9J-9821	656
8T-7547	525	8X-0432	432	9F-2167	741	9K-4454	371
	528		446	9F-5599	272		374
	568		447		275	9K-7951	426
	886	8X-1091	427	9F-5644	280	9L-5854	45
8T-7566	846	8X-3467	634	9F-6304	90	9M-0853	90
	847	8X-4711	491		92		92
8T-7927	691	8X-5027	392		94		94
8T-7930	510	8X-5271	427	9F-6641	643	9M-1974	25
8T-8376	598	8X-5562	570	9F-9327	316		28
8T-8380	664	8X-5802	299	9G-0003	193		166
	666	8X-5952	491	9G-0004	193		238
8T-8442	631	8X-5963	488	9G-0647	415		241
8T-8729	199		491	9G-1950	784		461
	599	8X-9227	617	9G-2776	467	9M-2001	415
	805	8X-9391	570	9G-3695	282	9M-2092	612
	833		609		333	9M-2564	99
8T-8730	199		690	9G-4101	272	9M-2744	371
8T-8737	26	8Y-3925	70		275		374

► **PRIMARY REFERENCE**

PART NUMBER INDEX

Part	Page
9M-2828	359
	361
	413
	466
9M-2904	55
9M-4007	386
9M-4136	194
9M-4313	452
9M-4594	498
9M-4972	301
9M-5884	854
9M-5892	566
9M-6527	116
9M-7394	734
	916
9M-7609	272
	275
9M-8406	97
	101
	161
	163
	166
	168
	173
	301
	348
	350
9N-0575	59
9N-0720	136
9N-0869	176
	179
	202
	203
	316
9N-1713	896
9N-1941	140
9N-2038	151
	152
9N-5253	216
9P-3041	454
9P-7121	186
9R-2216	570
9R-2613	144
	295
	488
	491
	517
	545
	811
9R-2640	488
	491
9R-3845	491
9R-4595	70
	491
9R-5008	884
9R-5383	899
9R-7216	521
9R-8538	469
9S-1018	366
9S-1351	371
	374
9S-1366	113
9S-2544	272
	275
9S-4180	741
9S-4181	70
	359
	361
	406
	439
9S-4182	378
	380
	382
	655
9S-4183	92
	94
	380
	382
9S-4185	365
	439
	442
	566
	691
	799
9S-4188	742
9S-4190	176
	179
	347
	680
	714
9S-4191	310
	334
	364
	378
	380
	382
	386
	388
	439
	585
	586
	652
	655
	737
	741
	753
9S-8001	412
	591
	742
9S-8002	61
	64
	113
	136
	139
	655
	748
9S-8004	51
	61
	573
	601
	615
	655
	723
	725
	741
9S-8005	51
	61
	113
	166
	168
	173
	176
	180
	380
	382
	439
	566
	741
9S-8006	74
	139
	176
	179
	715
9S-8007	461
	592
9S-8008	46
	61
	113
	380
	382
	415
	442
	655
	712
	725
9S-8010	415
	655
	742
9S-8752	30
	34
	83
	84
	86
	87
	90
	92
	94
	99
	117
	166
	169
	173
	238
	388
9S-9334	113
	186
	371
	374
9S-9739	442
9T-1013	570
9T-2654	723
9T-3096	611
	▶636
	639
9T-3717	672
9T-3718	670
9T-3745	727
9T-3928	629
9T-3940	601
9T-4219	586
	▶587
9T-4226	592
9T-4536	587
9T-4537	587
9T-4538	587
9T-4539	587
9T-4540	587
9T-4541	587
9T-5663	491
9T-5734	742
9T-5982	741
9T-6001	144
9T-6905	723
9T-6906	723
9T-6907	723
9T-6909	723
9T-6910	723
9T-6913	723
9T-6943	491
9T-8684	741
9T-8685	741
9T-9226	734
9T-9227	732
	734
9U-0124	899
9U-0125	899
9U-0178	569
9U-0200	569
9U-0830	569
9U-0833	229
9U-0838	896
9U-0853	488
9U-0952	886
9U-0953	886
9U-0954	886
9U-0955	886
9U-1168	854
9U-1169	811
	854
9U-1217	823
9U-1301	794
9U-1399	194
9U-1598	193
9U-1734	566
9U-1738	566
9U-1739	566
9U-1741	566
9U-1742	566
9U-1793	491
9U-1860	823
9U-1866	823
9U-2327	818
9U-2328	818
9U-2329	818
9U-2330	794
9U-2331	794
9U-2332	794
9U-2334	838
9U-2670	794
9U-2675	792
	▶838
9U-3238	389
9U-3295	376
9U-3663	867
9U-3925	886
	890
9U-3926	886
	890
9U-3927	890
9U-4149	617

▶ **PRIMARY REFERENCE**

PART NUMBER INDEX

Part	Page	Part	Page	Part	Page	Part	Page
9U-4551	886		712	9X-6165	312	9X-7384	778
9U-4989	299		886		350		783
9U-4990	299	9X-2032	850		813	9X-7385	796
9U-8263	818	9X-2038	789		841		827
9U-9498	416		799	9X-6258	281	9X-7430	48
9V-4373	376		890	9X-6395	650	9X-8216	794
9V-9840	376	9X-2039	301	9X-6458	30		816
9W-0852	290		874		34	9X-8250	301
	299	9X-2040	789		36		335
	783		823		113		350
9W-2939	763	9X-2041	823		146		353
9W-4361	227	9X-2042	301		147		581
	228		316		148		583
9W-5531	388		794		149		920
9W-5567	454		816		166	9X-8256	106
9W-5568	454		820		169		136
9W-5570	767		823		173		301
9W-5571	767		850		176		312
9W-6657	775		853		180		316
	776		859		319		330
9W-6658	775		899	9X-6480	428		335
	776	9X-2043	890		431		350
9W-7385	81	9X-2044	301		446		525
	433		316		447		528
	843		799	9X-6497	715		816
9W-7388	81		813	9X-6574	727		839
	433		820	9X-6580	574		841
	843		823		692	9X-8257	407
9W-8095	81		849		910		433
9W-9143	416		886	9X-6581	101		439
9W-9941	843	9X-2045	301	9X-6772	232		564
9W-9958	81		789		238		609
9X-0261	335		794		270		612
9X-0262	176		799		294		615
	179		809		309		683
	238		820		310		684
	241		850		312		686
	570	9X-2046	850		315		712
9X-0941	382	9X-2185	784		319		714
9X-1046	794	9X-2205	153		322		718
9X-1386	21		160		328		739
	258	9X-2297	394		330		843
	282		612		333		918
	589	9X-2299	811		346	9X-8403	238
9X-1813	199		812		347	9X-8487	361
	248	9X-2349	620		348		491
	249	9X-2379	55		350	9X-8582	910
	252	9X-2488	620		353	9X-8600	153
	253		783		570		160
	268		829		602	9X-8872	53
	269	9X-2492	719		605	9X-8873	389
	279	9X-2546	820		841		442
	285	9X-2616	237	9X-7317	184	9X-8875	65
	286	9X-3401	26	9X-7344	350		389
	288		283	9X-7371	117	9X-8876	442
	310	9X-3402	248	9X-7378	21	9X-8878	80
	350	9X-3463	221	9X-7380	827	9X-8883	442
	389		222	9X-7381	778	9X-8885	366
	599		223		783	9X-8896	359
	602		224		827		361
	605		225	9X-7382	783		664
	678	9X-3994	793		827		666
	679	9X-4244	223	9X-7383	778	9X-8898	414
9X-2027	603	9X-4519	193		783	9X-8917	805
	606	9X-4611	683		827	9X-9120	193

► **PRIMARY REFERENCE**

PART NUMBER INDEX

Part	Page
9X-9365	214
9X-9825	193
9Y-7770	80
9Y-9236	106
	126
0	
001-5600	586
008-2103	741
008-3214	626
009-3101	562
	563
012-0380	285
	286
013-8502	890
014-0816	299
030-1708	322
030-7937	166
	168
030-7942	166
030-7946	64
030-7947	166
	386
030-7948	179
030-7949	176
	179
030-9613	301
031-0214	865
031-5085	57
	59
031-9295	193
032-3237	21
033-6031	37
	39
	405
033-6033	86
	87
	190
	651
	754
033-6039	725
	757
033-7291	784
033-8248	328
	330
	334
	353
	899
034-3557	371
	374
	464
034-4160	464
036-9821	272
	275
036-9823	272
	275
037-4838	783
045-4065	273
	276
053-2294	64
061-7538	101
061-7540	90
	92
061-8639	64
	78
	86
	87
067-2551	325
067-3045	333
	827
	909
069-2535	560
	561
077-3241	377
077-4639	626
077-4643	626
077-4652	723
081-5622	107
081-6344	691
085-7356	570
	690
087-3533	510
087-4588	737
087-4772	601
090-4808	794
090-8247	491
	498
090-8635	168
	172
091-0081	524
	528
	571
092-0596	541
092-3635	802
095-0758	890
095-0843	871
	875
095-0929	631
095-0939	729
095-0942	725
095-1519	645
095-1751	756
096-0067	569
096-4883	124
096-4884	301
	820
096-5962	295
	805
096-6166	301
	703
096-8058	629
096-9986	393
097-4896	909
098-5747	890
098-6814	802
099-0169	609
	615
	684
099-3095	628
	722
099-3607	319
099-5845	629
1	
100-4083	456
100-4335	►650
	655
100-4982	496
100-5072	184
100-5218	26
100-5219	26
	27
100-5568	850
100-5725	201
100-7418	371
	374
101-0003	893
101-2867	865
101-3374	57
101-4007	624
	►626
101-4183	469
101-6603	201
101-7402	583
101-7404	186
101-9012	714
	►746
101-9083	570
101-9613	586
102-1384	611
102-2828	679
102-5861	59
102-8801	26
	841
102-8802	21
	192
	258
	265
	279
	283
	285
	286
	291
	299
	301
	310
	350
	389
	457
	458
	599
	678
	679
	748
	783
	796
	831
	841
	859
	893
102-8803	198
	199
	220
	226
	246
	247
	253
	281
	289
	294
102-8804	237
	282
	294
	300
	333
	357
	589
	602
	605
102-8805	294
	299
	831
	833
	834
	835
	836
	837
	841
102-8806	290
	841
103-0126	53
103-1739	617
103-1743	126
103-2529	158
103-2543	316
	794
103-2554	790
	820
103-3587	589
103-6318	645
103-6319	643
	645
103-7407	644
103-7410	644
103-8134	26
104-2091	794
104-3895	588
	633
104-4255	643
104-4256	643
104-4270	643
104-4271	643
104-4272	643
104-4273	643
104-4274	643
104-5060	586
104-5061	586
104-5967	586
104-6729	369
104-6730	369
104-7006	359
	361
	566
104-7376	746
105-1482	103
105-6117	562
105-7704	136
105-8029	805
105-9073	805
105-9639	416

► **PRIMARY REFERENCE**

PART NUMBER INDEX

Part	Page	Part	Page	Part	Page	Part	Page
105-9788	416	108-5204	617	111-0897	464	113-8491	315
106-0553	461	108-5471	820	111-0898	464	113-8492	315
106-0933	448	108-7930	116	111-1275	441	113-9789	884
106-1774	589	108-9422	328	111-1503	464	114-2368	227
	▶591	109-0074	112	111-2721	116	114-3676	186
106-1792	51	109-0075	112	111-4178	919	114-4672	702
106-1793	141	109-0076	88	111-4374	112		▶753
	143		112	111-4486	439	114-5333	21
106-3973	133	109-0077	112	111-4627	794	114-9114	388
106-4143	▶830	109-0078	88	111-6261	386	114-9223	141
	831	109-0361	294	111-7759	464		143
106-4175	510	109-1641	628	111-7775	▶637		150
106-4454	299		722		638	115-0761	416
106-4572	118	109-1645	294	111-8076	124	115-0762	416
	121		333	111-9110	560	115-0764	416
106-5673	51		353		561	115-1816	389
106-8715	703	109-3416	57	111-9177	464	115-2054	423
106-9036	769	109-3482	441	111-9265	727	115-2129	▶599
106-9037	769	109-5825	620	111-9266	715		620
106-9586	99	109-5839	70	112-1817	702	115-2247	562
107-0689	464	109-5840	70		▶747	115-2516	570
107-0691	464	109-6511	611	112-2165	464	115-3070	739
107-0692	464	109-6839	1	112-2470	466	115-3580	509
107-0695	464		▶539	112-3540	99	115-4696	611
107-0696	359	109-6845	1	112-3927	428	115-4831	392
	361		▶481	112-4055	670	115-5324	690
107-0698	464	109-6852	1		672	115-5658	566
107-0700	358		▶843	112-4558	550	115-5875	732
	▶359	109-6861	1	112-4630	629	115-7077	424
107-0701	▶464		▶433	112-4811	420	115-7087	151
	466	109-6869	▶414		▶449		152
107-0704	464		420	112-5282	450	115-8035	570
107-1964	301	109-6908	1	112-5452	420	115-8388	793
107-2884	626		▶472		▶428	115-8389	793
107-2885	626	109-6945	820	112-5460	428	115-8390	793
107-2886	626	109-7389	386	112-5727	425	115-8391	793
107-2887	626	109-7390	386		▶426	115-9461	368
107-2888	626	109-9940	439	112-5728	427	115-9863	597
107-2889	626	110-0045	439	112-6192	433	116-1979	103
107-2890	626	110-0288	439	112-7057	843	116-1980	17
107-2891	626		719	112-7058	843		18
107-2892	626	110-0289	439	112-7250	109		▶103
107-2893	626	110-2079	299	112-8372	330	116-2012	366
107-2894	626	110-2133	441	112-8633	386	116-2699	88
107-2895	626	110-2135	441	112-9217	57		89
107-3203	586	110-2136	439	112-9486	118	116-2886	635
107-3727	315	110-2137	439		121	116-3800	602
107-4393	783	110-2138	441	112-9645	386	116-3801	602
	827	110-2141	441	112-9646	386		605
107-4394	783	110-2142	441	112-9861	747	116-3802	611
	827	110-2144	441	113-1747	359	116-4084	611
107-4395	783	110-2145	441	113-4388	598	116-4491	193
107-4396	783	110-7524	794	113-4391	598		241
107-4397	778	110-7886	290	113-4418	727		319
107-4399	778	110-7887	294	113-5122	361		325
	827	110-8319	919	113-5945	442		333
107-5769	112	110-8403	386	113-6003	811	116-4527	751
107-7373	103	110-8827	97	113-6026	854	116-4681	734
107-7523	769		919	113-6027	854		916
107-8611	456	110-8839	441	113-6030	854	116-4797	617
108-1554	464	110-8849	441		857	116-5792	839
108-1615	793	110-8850	441	113-6064	854	116-6763	570
108-3612	141	110-8852	441	113-6304	854	116-7471	315
	143	111-0343	456	113-7147	702	116-7486	186
108-3866	653		457	113-8490	315	116-8716	497

▶ **PRIMARY REFERENCE**

PART NUMBER INDEX

Part	Page	Part	Page	Part	Page	Part	Page
116-9331	617	122-0447	48	124-4330	854		435
116-9333	617	122-1133	458	124-4331	854		436
116-9353	570	122-1671	569	124-4834	854		437
117-0292	510	122-4594	124	124-6348	442		438
117-0307	471	122-4681	763	124-8149	366	127-2967	▶414
117-1385	241	122-5855	161	124-8402	434		425
117-1410	792		163	124-9536	371	127-2973	434
	▶869	122-6872	129		374	127-4832	725
117-2311	299	122-7375	48	124-9633	353	127-4988	563
117-2983	450	122-8612	48	124-9913	727	127-5447	168
117-3158	854	122-8863	▶258	124-9932	727		172
117-3335	129		386	124-9933	727	127-6356	103
117-4491	873	122-9088	395	124-9934	727	127-9015	718
117-4492	780		675	124-9935	727	127-9258	168
117-4729	854	122-9799	727	124-9936	727		172
117-5716	629	122-9943	103	124-9937	727	127-9504	464
117-5860	▶454	122-9978	442	125-0053	850	127-9799	464
	461	123-3154	793	125-0054	850	128-0317	116
117-5899	648	123-3202	26	125-0368	832	128-0606	563
117-5992	570		27	125-0971	737	128-0607	563
117-6715	620	123-3363	488	125-2706	570	128-1663	442
117-7524	648	123-4934	415	125-3295	562	128-4859	617
117-7734	620	123-5255	441		563	128-6157	299
117-8568	919	123-6383	299	125-5835	238	128-6757	549
117-8721	144	123-8681	299		241	128-6758	549
117-8801	57	123-8685	823	125-6535	273	128-8007	905
	59	123-8687	823		276	128-8678	617
117-8929	859	123-8690	823	125-6536	273		702
117-9712	57	123-8696	823		276	129-3172	386
118-0164	919	123-8701	790	125-6537	273	129-3178	295
118-0166	919		▶813		276		816
118-1045	570	123-8702	823	125-7874	282	129-5096	21
118-1277	193	123-8703	823	125-8176	486	129-6425	371
118-4728	166	123-8715	815		542		374
	168	123-8716	815	125-8534	193	129-7700	850
	172	123-8721	794	125-9530	427	129-7701	299
	176	123-8722	794	125-9794	30	130-1673	715
118-6878	333	123-8724	794		34	130-2372	428
118-8078	334	123-8725	794	126-0182	▶199		▶446
118-8310	588	124-0174	232		294	130-2373	447
118-8606	519		334	126-0559	37	130-2374	428
118-8693	734	124-0312	784		39		▶447
118-9446	472	124-0665	385	126-1767	26	130-2375	446
118-9732	▶413	124-0689	385		796	130-3304	784
	420	124-1479	301	126-1774	841	130-3307	783
118-9901	570		334	126-1817	599	130-3374	909
	737	124-1718	909	126-2702	99	130-3590	783
	909	124-1854	51	126-3508	126	130-3639	441
119-1151	811	124-1855	51	126-5859	464	130-3640	441
	812	124-2413	385	126-5860	464	130-5300	21
119-5708	334	124-2456	905	126-5948	758		179
119-8583	17	124-3019	21	126-6872	602		232
	18		101		605		270
	▶82		179	126-7168	467		292
120-0241	723		299	126-8181	371		295
120-0550	371		319		374		301
	374		322	126-8182	371		310
	▶376		325		374		319
120-0551	376		333	127-0929	139		322
120-4394	646		348	127-1647	126		325
	725		366	127-1958	660		328
121-1340	241		909	127-2170	823		330
121-1343	524	124-3080	541	127-2964	▶434		334
	528	124-3819	539	127-2966	▶425		346
121-7848	193	124-3820	539		434		347

▶ **PRIMARY REFERENCE**

PART NUMBER INDEX

Part	Page	Part	Page	Part	Page	Part	Page
	348		▶634	137-3566	497	143-4536	83
	350	133-8528	380	137-6841	890		126
	353	133-8649	▶385	137-9755	748	143-7857	710
	357		405	138-0444	186	143-7858	710
	386	133-9399	816	138-1240	214	143-7861	684
	602	133-9660	270	138-1509	▶377		686
	605	133-9926	441		388	143-7862	699
130-5301	310	134-4126	205	138-1510	377	143-7864	712
	334	134-7258	905	138-1916	690	143-7867	712
130-5456	570	134-7435	524	138-3815	652	143-7868	712
130-5623	905	134-8297	294		753	143-7869	712
130-8433	691	135-0426	▶226	138-4409	85	143-8378	424
131-0167	424		236	138-6744	116	143-8480	205
131-0722	838	135-0611	834	138-7500	21	144-0195	896
131-1296	464		836	138-8630	794		899
131-3718	388	135-3311	299	138-8698	414	144-1636	282
131-7123	57	135-3489	628	139-1398	301		288
131-8125	▶471		722		334	144-3004	424
	541	135-3490	628	139-6118	88	144-3935	393
131-8787	905		722	139-6366	469		602
132-0338	780	135-3573	722	140-1088	227		605
132-0348	370	135-4928	116		228	144-4306	7
	373	135-5154	550		231		▶88
132-1183	370	135-7123	560	140-2802	386	144-4613	168
	373		561	140-2978	319		172
	431	135-7896	570	140-5856	126		322
132-2453	611	135-9668	773	140-7447	388		328
132-3726	675		775	140-7770	491		330
132-5789	176		776	141-0408	441		333
	179	135-9671	773	141-0409	441		524
	238	135-9672	773	141-0410	442		528
	241	135-9673	773	141-4852	748		829
	319	135-9941	439	141-5950	441	144-7766	807
	322	135-9991	629	141-7280	214	145-0326	893
	325	136-0853	348	141-8143	850	145-0487	315
	841	136-0871	▶434	141-8144	850	145-2334	748
132-6532	566	136-0872	▶434	141-8145	850	145-3169	629
132-6597	388	136-0874	434	141-8146	850	145-3171	629
132-6598	388	136-0875	434	141-8205	441	145-3773	631
132-7168	133	136-1107	116	141-8387	441	145-7226	496
132-8876	380	136-1543	846	141-8466	369	145-8951	807
	382		847	141-8570	371	145-8952	807
132-9875	366	136-1544	780		374	146-2614	823
132-9877	366	136-1953	783	141-8571	371	146-3095	823
133-0260	259	136-2186	903		374	146-3096	823
133-0992	566	136-3188	787	142-1657	179	146-3728	759
133-1276	380		898		299	146-3748	564
133-1295	378	136-3190	787		333	146-4251	431
	▶380		898	142-3331	193	146-4325	106
133-1299	380	136-3607	802		605		513
133-1643	517	136-3842	628	142-5867	42	146-5067	109
	518		722	142-5868	61	146-5230	348
133-1645	517	136-3965	625	142-7073	464	146-5616	617
	518		▶628	142-7074	413	146-6315	717
133-2199	380	136-5490	862	142-8165	611	146-6316	751
	382		863	142-9681	860	146-6317	717
133-3260	620		864		861	146-6319	750
133-3489	315	136-7227	99		862		751
133-3780	415		166		863	146-6747	905
133-4296	371	136-7334	▶434	143-1288	871	146-7453	127
	374	136-7403	794		875	146-7571	617
	388	136-7406	794	143-3604	1		▶659
133-7104	617	136-9297	748		▶831	147-0319	▶221
	▶638	136-9298	748	143-4535	83		228
133-7107	617	136-9699	328		126	147-0385	232

▶ **PRIMARY REFERENCE**

PART NUMBER INDEX

Part	Page	Part	Page	Part	Page	Part	Page
	295		737	148-8374	617	149-2052	519
	310		799		675		521
	334	148-8339	393	148-8375	703		559
147-1237	643		571	148-8376	620	149-5452	334
	▶644		684		691	149-5470	748
147-1238	643		686	148-8378	334	149-5628	456
	▶645		703		406	149-6371	21
147-3019	820	148-8340	571	148-8380	703	149-7738	334
147-3061	644		617	148-8381	401		394
147-3150	366		799		583		572
147-5399	▶456		802	148-8387	691	149-8720	702
	461	148-8341	97	148-8390	572	150-1156	71
147-6603	654		680	148-8392	365		72
147-6604	654	148-8345	919		394	150-1280	472
147-6605	654	148-8346	602		572		475
147-9631	435		605		919	150-1293	748
147-9632	▶435	148-8347	186	148-8395	741	150-3028	704
148-2565	517		393	148-8407	310	150-3033	909
	545		919		334	150-3058	392
148-3458	435	148-8352	365		364	150-3745	719
148-3460	▶435		393		378	150-3748	739
148-5581	563		675		585	150-4027	589
148-5652	510	148-8353	405		655		737
148-6559	416		571		741	150-4033	394
148-8240	517	148-8354	703	148-8409	655	150-4043	129
	518	148-8356	691		712		394
148-8305	393		919	148-8410	347		403
	571	148-8357	393		714		572
	703		571	148-8411	365		704
148-8306	571		620		691	150-4046	403
148-8307	602		674	148-8413	909	150-4048	572
	605		675	148-8417	691	150-4050	704
148-8309	691		691	148-8418	572	150-5030	136
	703		919	148-8419	524	150-8380	310
148-8313	378	148-8360	97	148-8422	394	151-1702	519
148-8315	571		394		674		521
148-8316	909		611	148-8423	572	151-2823	392
148-8318	401		703	148-8425	392	151-5145	90
	638		712	148-8426	602		92
	802	148-8362	394		605		94
148-8324	364		572	148-8427	703	151-5216	761
	365	148-8364	406	148-8429	675		▶765
	393		572	148-8430	702	151-5217	761
148-8325	909		581	148-8433	617		▶767
148-8327	186		583		691	151-5218	765
	393		617	148-8434	406	151-5219	767
	571		675		621	151-5220	761
	611		703	148-8435	394		▶769
	620	148-8365	126	148-8440	392	151-6427	807
	703		589	148-8442	394	151-6929	702
148-8328	403		602		703	151-8098	741
	581		605	148-8443	675	152-0110	734
	583		703		690	152-2698	▶740
148-8329	571	148-8367	589	148-8444	129		799
148-8331	270		617		703	152-5559	741
148-8333	691		638	148-8449	394	152-7041	741
148-8334	691		675		572	152-7554	670
148-8335	393	148-8368	136		605		672
	684		909	148-8455	572	152-8383	457
	686	148-8369	136		621	152-8385	▶457
	919	148-8370	126		919		740
148-8336	405		572	148-8457	703	152-9074	602
	571		581	148-9562	748		605
	589		583		▶798	152-9840	690
	617	148-8371	691	148-9643	415	153-0310	761

▶ **PRIMARY REFERENCE**

PART NUMBER INDEX

Part	Page
	▶762
153-0312	762
153-1229	388
153-1256	116
153-2073	▶222
	231
153-2112	▶775
153-2113	▶773
153-3734	193
153-4906	573
153-5043	265
153-5710	193
153-6237	394
	572
	621
153-6241	602
	605
	704
153-6244	714
153-6246	611
153-6257	524
153-6258	704
153-6259	572
153-6261	620
153-6273	562
	563
153-6972	770
	771
153-6974	773
	775
	776
153-7023	50
153-7024	50
153-7738	702
153-7954	769
153-7955	769
153-8925	750
	751
153-8926	750
	751
153-9270	773
	775
	776
153-9271	770
153-9272	770
153-9921	664
	666
153-9938	▶664
	669
153-9939	▶666
	668
154-1924	364
154-3031	421
154-5231	675
154-6626	33
	322
154-9023	112
154-9716	405
	581
	583
155-0809	45
155-0810	45
155-2026	920
155-2260	198
	248
	249
	250
	251
	252
	300
	310
	556
155-2265	299
	841
155-2270	107
	199
	287
	456
	784
	841
155-2271	784
155-2274	784
	841
155-2276	250
	251
155-2478	557
	558
155-2793	45
155-3502	394
	602
	605
155-3504	97
	680
155-3624	378
	655
155-5285	521
155-5293	441
155-5622	702
155-5715	441
155-5716	441
	442
155-5779	896
155-5784	▶834
	896
155-6189	442
155-6258	126
155-6344	675
155-6602	▶770
	775
155-6603	▶770
	773
155-7321	829
155-7327	394
155-7505	741
155-9574	770
156-4253	753
	▶754
156-5545	780
156-5970	458
156-6175	841
156-9096	186
156-9099	186
157-0305	▶224
	229
157-0670	112
157-1352	597
	▶598
157-2017	556
157-2152	750
	751
157-2284	758
157-7190	357
157-7191	294
157-7244	670
	672
158-0248	221
	222
158-0249	224
158-0250	221
	222
	224
	225
158-0252	221
	222
	224
	225
158-4534	▶776
158-6634	333
158-8732	771
158-8733	771
158-8734	771
158-8735	771
158-8736	771
158-8737	771
158-8738	771
158-8739	▶771
	776
159-2791	512
159-3781	717
159-7166	714
	▶715
159-7630	405
159-8047	322
159-8049	193
	194
159-8050	193
	194
159-8053	193
159-8054	193
	194
159-8329	126
159-8664	805
159-8665	805
160-0012	699
160-0013	699
160-0564	348
	350
	570
160-1023	469
160-2243	799
	802
160-3518	805
	862
	863
	864
160-4001	405
160-4891	▶205
	315
160-5843	758
160-5844	758
160-6328	469
160-7555	▶549
160-7689	841
160-8503	902
160-8708	61
161-0908	▶225
	227
161-6154	640
	641
161-6958	151
	152
161-6963	151
	152
161-7293	64
161-8900	501
161-9901	501
162-0177	615
	655
	741
	760
162-2077	225
162-5709	611
162-7210	664
	666
162-7757	664
	666
162-8304	464
162-9245	353
162-9733	564
162-9969	386
163-1201	232
163-1485	702
163-1876	299
163-1878	299
163-1883	294
163-1884	357
163-2478	50
163-3926	562
163-5512	748
163-6591	186
163-6593	186
163-7882	238
	▶245
163-8811	799
	802
164-0427	788
164-0431	788
164-1234	893
164-2108	450
164-3417	186
164-4180	406
164-4531	780
164-4883	846
	847
164-5486	585
	▶586
164-5544	589
	704
164-5562	620
164-5567	378
	394
	573
	611
	620
	675
	690
	704
	737
164-5572	704

▶ **PRIMARY REFERENCE**

PART NUMBER INDEX

Part	Page	Part	Page	Part	Page	Part	Page
164-5574	621	165-9361	596	170-1112	780	172-8037	862
164-5586	581	165-9362	596	170-1114	780	172-8039	862
	583	165-9363	596	170-1115	780	172-8660	238
164-5590	378	165-9383	647	170-1312	300		▶283
	394	165-9399	594	170-1633	555		346
	621	165-9402	595	170-1821	300	172-9287	611
	704	165-9403	595	170-1931	1	173-1028	▶780
164-5606	573	165-9404	595		▶541		871
164-5640	718	165-9405	595	170-4735	910		875
164-6426	716	166-2904	48	170-4870	389	173-3993	742
164-6497	670	166-4647	▶600	170-6101	232		760
	672		611	170-6712	564	173-5787	881
164-6709	384		674	170-7325	436		882
	600		675	170-7326	▶436	173-7035	881
164-6874	570	166-4731	890	170-8003	436		882
	690	166-4732	890	170-8004	▶436	173-8481	294
164-6938	629	166-6928	300	170-8513	748	173-9725	392
	▶631		▶833		▶750	174-1485	510
164-6939	▶601	166-7209	469	170-8540	890	174-1530	668
	629	166-8119	905	170-8590	865		669
164-6941	▶593	166-8497	412	170-9900	629	174-3016	300
	594	167-1709	▶248	170-9901	631	174-3469	406
164-6944	629		348	170-9907	629	174-4312	589
164-6983	631	167-2209	598	171-1230	871	174-4502	615
164-6987	▶596	167-2216	670		875		▶633
	631		672	171-1391	564		686
164-7083	601	167-2320	598	171-2212	315	174-4613	348
164-7084	601	167-2331	670	171-3759	▶282	174-5807	477
164-7141	593		672		300		482
164-7142	593	167-4348	563	171-3897	792		878
164-7143	593	167-7691	121		▶890		880
164-7144	593	167-8130	54	171-4812	771	174-5907	166
164-7145	593	167-8712	841	171-5349	258		301
164-7474	620	167-8984	▶198		389		899
	▶639		330	171-5995	727	174-6381	486
164-7556	223	167-9524	450	171-6682	871		542
164-7577	▶279		451		875	174-7580	300
	333	168-1793	475	171-6723	573	174-7594	229
164-7900	94	168-1916	428	171-6728	704	174-7875	232
164-7908	126		▶431	171-6731	524	174-9570	▶159
164-8165	596	168-1917	431	171-6803	370		191
164-9422	737	168-1968	602		373	175-2322	284
164-9869	394		605	171-6804	370		▶285
164-9904	395	168-4510	889		373	175-2324	284
	675	168-6355	611	171-7085	589		▶286
165-4925	126	168-6827	690	171-8772	458	175-2620	415
165-4933	621	168-6890	699	171-8862	488	175-2621	415
165-5030	133	168-6891	699		491	175-3244	333
165-5970	▶289	169-1616	756	171-8868	557	175-4291	223
	333	169-4670	564		558	175-4292	223
165-6168	435	169-5862	621	171-8869	557	175-4750	919
165-6169	435	169-6326	862		558	175-4862	21
165-6170	86	169-7055	416	171-8870	557	175-6364	361
	87	169-7380	893		558	175-6365	361
165-6171	▶435	169-7394	364	171-9683	889	176-3894	886
165-6175	▶435		365	172-0844	564	176-3895	886
165-6365	570		395	172-2416	871	176-4161	▶227
165-6974	727	169-9508	570		875		232
165-8718	330	170-0456	807	172-3511	300	176-5647	101
165-8764	919	170-0493	560	172-4211	166	176-5667	570
165-9354	631		561		168	176-6668	232
165-9356	631	170-0696	890		172	176-7507	725
165-9357	631	170-0971	890	172-5277	690	176-7511	725
165-9359	596	170-0977	890	172-5667	570	176-7512	725
165-9360	596	170-0979	890	172-5745	741	176-7513	725

▶ **PRIMARY REFERENCE**

PART NUMBER INDEX

Part	Page
176-7517	725
176-7518	725
176-7520	725
	▶752
176-7521	725
176-7692	725
176-7696	725
176-9369	637
	▶640
176-9371	637
	▶641
177-0359	629
177-1483	564
177-1744	773
	775
	776
177-1862	865
177-1863	871
	875
177-2374	805
177-3203	488
177-4112	805
177-4113	804
	▶805
177-4122	316
177-4937	873
	877
178-0711	491
178-2312	741
178-3904	792
	▶889
178-3905	889
178-3995	727
178-3997	727
178-3998	727
178-4005	715
	▶727
178-4323	823
178-7910	▶871
	873
179-1247	581
179-1730	300
	▶831
179-2805	238
179-6922	648
179-6970	524
179-9392	294
	300
180-1465	531
180-1466	531
180-1467	531
180-1468	531
180-1469	531
180-1470	531
180-1471	531
180-1472	531
180-1473	531
180-1474	531
180-1475	531
180-1476	531
180-1477	531
180-1478	531
180-1479	531
180-1480	531
180-2431	531
180-2433	531
180-2434	531
180-2436	727
180-3377	378
	▶382
180-7154	741
180-7180	827
180-7350	71
	72
180-9339	253
	263
	264
180-9340	250
	251
	252
	310
180-9900	294
	300
183-3241	629
183-3407	573
183-4403	166
183-5512	538
183-7262	655
	742
183-7263	655
	748
183-7595	745
	▶759
184-2298	871
	875
184-2299	871
	875
184-2472	205
185-1497	59
185-1721	211
	519
	521
185-2154	▶835
	896
185-2155	896
185-2271	573
185-6250	909
185-6350	620
185-6371	583
185-6690	281
185-9357	620
	▶642
	690
185-9726	▶873
	881
185-9956	496
186-1654	500
	854
186-1681	831
186-1723	854
186-2001	50
186-3735	21
	192
	220
	226
	237
	246
	258
	265
	269
	279
	281
	285
	286
	289
	290
	291
	294
	299
	300
	310
	333
	350
	357
	389
	457
	458
	589
	602
	605
	678
	679
	748
	758
	798
	832
	834
	835
	836
	837
	859
186-3736	107
	287
	299
	300
	456
186-5107	893
187-1679	186
187-2017	371
	374
187-2710	451
187-6415	315
187-7423	392
187-8001	629
187-8191	759
187-8567	623
187-8674	315
187-8675	315
188-0556	300
188-0869	550
188-2048	807
188-2595	442
188-3983	300
188-3984	300
188-5095	153
188-8849	221
	222
	224
	225
188-9429	259
189-0189	457
189-0852	260
189-1707	778
189-1899	322
189-1987	886
189-3761	322
189-7535	524
	537
189-7540	524
	528
189-7541	537
189-7542	537
189-7543	537
189-7546	537
189-7547	537
189-7552	538
189-8069	556
190-0642	21
190-3445	▶836
	899
190-3446	▶837
	899
190-4375	161
	163
190-5386	905
190-6404	427
190-7625	660
191-1782	176
	179
191-1783	176
	179
191-3028	751
191-3029	751
191-5592	631
191-6265	464
191-7587	729
191-7594	729
191-7596	729
191-7597	729
191-7607	752
191-7815	111
191-8735	737
	▶745
191-8920	717
191-8921	748
	787
	898
192-1023	377
192-3668	909
192-4151	78
192-5017	531
192-7054	860
	861
	862
	863
192-7752	893
192-7755	893
192-7760	893
192-7767	893
192-7783	893
192-7787	893
192-7790	893
192-7795	893
192-7799	893
192-7805	893
192-7810	893
192-7812	893
192-7820	893
192-7822	893
192-7848	893

▶ **PRIMARY REFERENCE**

PART NUMBER INDEX

Part	Page
193-1034	348
	909
193-2120	684
	686
193-5576	333
194-3285	752
194-3286	▶623
	752
194-3287	752
194-3288	752
194-3289	752
194-5226	249
	251
194-6725	▶249
	254
194-6849	623
195-2150	▶265
	348
195-2251	281
195-2271	281
195-3324	623
195-3325	623
195-3495	464
195-7430	458
196-1185	389
196-2036	719
196-3617	126
196-4225	472
196-5069	78
196-5070	78
196-9655	472
197-0018	633
197-0024	633
197-0027	588
	633
197-1932	859
197-3295	392
	405
	690
	714
197-5035	741
197-6453	333
198-4419	823
198-4769	481
198-4775	395
198-4777	136
	422
	486
	512
198-4778	395
198-4780	118
	121
198-6068	99
198-6570	300
198-6571	300
199-6253	620
199-7834	717
199-7856	816
200-2217	562
200-2218	562
200-2219	562
200-2220	562
200-5003	748
200-5728	862
	863
	864
200-5729	862
200-6283	756
200-6345	322
	328
200-6410	112
200-7914	563
201-0950	412
	▶458
201-1424	564
201-1425	564
201-1426	564
201-3300	859
201-4340	176
	179
201-4748	474
201-4750	474
201-4768	472
	▶474
201-6615	▶259
	261
201-6616	▶260
	262
202-0671	747
202-0673	747
202-0674	747
202-6614	223
202-8058	382
202-9702	380
202-9708	382
202-9728	378
203-0328	886
203-1095	725
203-3312	748
	▶751
203-3313	751
203-6650	748
203-7703	881
	882
203-7945	392
204-0317	802
204-1455	648
204-1611	241
204-2281	322
	328
	348
	909
204-3561	899
204-3611	807
204-5116	741
204-5117	741
204-5118	741
204-5119	741
204-5120	741
204-5121	741
204-8000	348
	909
204-9240	436
204-9241	▶436
205-0162	426
	▶427
205-1774	903
205-3076	794
205-3582	563
205-6388	873
	877
205-7299	353
205-8125	238
	241
205-8347	361
206-1749	874
206-2737	396
	407
206-2800	748
206-5017	403
206-5086	7
	▶86
206-5088	86
	87
206-5089	86
	87
206-5090	86
206-5095	83
206-5823	834
	836
	837
206-7316	562
207-1810	702
207-5035	678
207-7899	742
208-1015	886
208-5021	350
208-7448	135
209-0381	300
	314
209-3299	702
209-4588	111
209-4981	712
209-5776	905
209-8622	59
209-9723	717
210-2262	865
210-2263	865
210-2266	865
210-2270	▶865
	871
	875
210-2665	1
	▶467
210-2667	467
210-2668	467
210-2671	467
210-3226	467
210-7334	477
	482
210-7337	477
	482
210-7339	477
	482
210-7690	477
	482
210-7694	477
	482
210-7696	477
	482
210-7698	477
	482
210-7701	477
	482
210-7710	521
	854
210-7715	477
	482
210-7716	477
	482
210-7718	477
	482
210-7720	477
	482
211-0592	42
211-3070	712
211-3122	50
211-4337	477
	482
211-4338	477
	482
211-4942	886
	890
211-5358	893
211-8705	712
211-8723	712
211-9294	893
211-9917	712
212-2293	481
212-2294	481
212-3181	477
	482
212-3183	477
	482
212-3184	477
	482
212-3185	477
	482
212-3451	699
212-5023	416
212-7728	37
	39
212-7785	686
212-8739	439
213-3056	849
213-3057	849
213-3217	71
	72
213-3272	▶710
	761
213-4262	794
213-7542	761
213-9100	350
213-9182	748
214-1727	63
214-1728	46
214-7136	2
	▶761
214-7568	101
	168
	172
	176
	348
	612
	737
214-7635	▶787

2

▶ **PRIMARY REFERENCE**

PART NUMBER INDEX

Part	Page	Part	Page	Part	Page	Part	Page
	896	219-0944	827		11		▶760
214-7636	▶898	219-2913	570		14	225-3099	51
	899	219-4455	116		▶183	225-3100	46
214-7893	761	219-4456	116	223-7629	629	225-3101	46
	▶763	219-4458	71	223-8425	589	225-3285	598
214-9429	690		72	223-8470	589	225-3287	670
215-1851	477	219-5878	130	223-8969	300		672
	482		392	223-8970	300	225-4256	908
215-1852	477	219-6485	▶223	223-8973	300	225-4257	906
	482		231	223-8975	301	225-5965	43
215-1854	477		234	223-8977	301	225-5966	43
	482	219-6923	148	223-8982	300	225-6309	202
215-1855	477		149	223-9135	42	225-9618	90
	482	219-8090	792	223-9137	57		92
215-3210	467		▶881	223-9159	71		94
215-3212	467	219-9533	300		72	225-9619	7
215-7183	454	220-0812	401	223-9743	442		▶90
215-7636	723		403	224-1219	59		▶92
215-9632	401		730	224-1220	59	226-0291	486
216-0273	386		731	224-1221	59	226-0322	486
216-0657	▶116	220-2718	▶560	224-2561	▶594	226-0916	43
	117		570		629	226-1240	906
216-2211	111	220-2719	▶561	224-2562	594	226-1242	908
216-4826	625	220-6079	501	224-3156	144	226-1274	906
	▶629	220-8678	159	224-3157	144	226-1275	908
216-5342	449	221-1460	19	224-3158	148	226-4927	25
	▶450		▶81		149		▶26
216-5582	48	221-2389	827	224-3170	11	226-5561	48
217-0751	48	221-2616	202		14	226-5613	139
217-0752	48	221-3405	310		▶30	226-6036	59
217-1601	135	221-3406	▶250	224-3242	185	226-6052	59
217-2708	348		333	224-3250	17	226-9622	450
	▶451	221-3415	▶251		18	227-0159	59
217-5293	737		333		▶42	227-3015	▶228
217-5672	7	221-7693	153	224-3252	42		232
	8	221-8045	906	224-3956	537	227-3282	537
	11	222-0345	▶870	224-3957	538		▶557
	14		873	224-3983	48	227-3284	531
	▶80		877	224-4819	388	227-3292	524
217-5675	176	222-4737	741	224-4820	388		528
	179	222-5376	837	224-5006	▶651		▶556
217-5676	176	222-6456	26		652	227-5444	228
	179		27	224-5322	64	227-5538	32
217-5677	7	222-6713	384	224-5332	57	227-7392	787
	8	222-6953	26		59		898
	11		27	224-5741	620	227-9383	719
	14	222-7944	906		▶652		▶723
	▶99	222-9151	612	224-7506	37	228-2615	908
217-5678	99	223-1993	37		39	228-2616	906
217-5680	99		39	224-7680	497	228-2826	498
217-5681	99	223-1998	139	224-7717	908	228-3581	908
217-5684	139	223-4443	760	224-8496	▶252	228-4947	261
217-5696	19	223-4445	760		333		262
	▶140	223-4889	467		570	228-5813	59
217-5697	140	223-5120	118	224-8497	▶253	228-7089	612
217-5698	140		121		333	228-7091	101
217-7742	778	223-6407	7	224-9270	333		156
217-7933	865		8	224-9657	59		161
217-8946	139		11	224-9664	59		163
217-8947	139		14	224-9907	37		213
217-9049	871		▶75		39		214
218-0861	871	223-6408	17	225-0312	906	228-7092	161
218-4935	300		▶25	225-0313	908		163
218-9901	456	223-6421	7	225-1242	61		213
219-0305	905		8	225-2321	739		214

▶ **PRIMARY REFERENCE**

PART NUMBER INDEX

Part	Page
	737
228-7381	166
	168
	172
	▶190
228-8989	348
228-9093	30
	34
229-1494	873
	877
229-1663	59
229-3177	294
	333
	353
229-5133	333
229-5371	▶364
	392
229-5373	▶365
	392
229-6259	71
230-1294	112
230-1296	112
230-1302	112
230-1550	65
	439
230-2569	71
	72
230-3379	405
230-3525	216
230-3633	▶384
	392
230-3728	184
230-3775	184
230-4011	288
230-4012	263
	264
230-4172	7
	8
	11
	14
	▶117
230-5771	602
	605
230-6202	59
230-7149	238
	▶261
230-7181	▶43
	45
230-7679	570
230-7680	570
230-8152	236
230-9446	24
230-9447	24
230-9715	236
230-9804	333
231-3518	634
231-3805	365
231-4470	61
231-4471	61
231-4708	112
231-6574	662
231-9531	723
231-9532	723
231-9533	723
232-1693	203
232-1767	153
232-2597	858
	▶859
232-3226	71
	72
232-3232	71
	72
232-3643	64
232-6553	71
232-7607	43
232-9783	168
	172
233-0891	202
	203
233-2462	17
	18
	▶64
233-4877	112
233-8350	136
234-1579	▶53
	57
234-3438	112
234-3441	30
	34
234-4279	64
234-4919	19
	▶145
234-5012	238
	241
	▶266
234-5013	176
	179
	238
	241
	▶267
234-5913	7
	▶148
234-5925	315
	333
234-6902	43
234-8937	32
	33
234-9505	23
234-9508	23
235-0266	101
	▶107
235-0595	166
235-0599	168
	172
235-0658	23
235-0993	17
	18
	▶57
235-1088	23
235-1089	23
235-1401	17
	18
	▶184
235-1861	65
235-2014	7
	8
	11
	14
	▶65
235-2477	405
235-2761	294
235-3583	621
235-3584	621
235-4753	112
235-6103	189
235-6104	189
235-6114	▶153
	160
235-6115	153
235-6116	186
235-6117	186
235-6118	186
235-8668	361
236-2502	112
236-4136	57
236-4185	166
	168
	172
236-5197	865
236-5224	792
	▶849
236-5240	792
	▶802
236-5241	792
	▶807
236-5417	792
	▶899
236-7226	908
236-7227	906
236-8722	300
237-1962	▶275
	278
237-2502	109
237-2508	109
237-3943	893
237-3970	▶781
	893
237-4895	166
237-7944	▶559
237-7952	559
237-9307	176
	179
237-9323	176
	179
237-9382	145
238-0281	112
238-0292	112
238-0293	112
238-0994	112
238-1825	734
238-2707	71
	72
238-5080	737
238-5081	156
	161
238-5508	454
238-6475	▶216
238-8388	19
	▶158
238-8988	732
238-9083	792
	▶886
238-9085	886
238-9087	886
238-9088	799
238-9089	799
238-9091	886
238-9850	37
	39
238-9860	63
238-9861	63
238-9862	17
	18
	▶63
239-1134	270
	▶291
239-1139	30
	34
239-1388	141
	143
239-1418	30
	34
239-1419	30
	34
239-2396	176
	179
	▶254
239-2397	238
	▶262
239-3200	99
239-4058	792
	▶852
239-5225	112
239-5535	784
239-5571	33
239-5572	33
	83
	101
239-6144	18
	▶71
239-6986	905
239-7904	202
239-8051	217
239-9368	784
239-9781	702
240-5283	841
240-7649	799
240-7650	799
240-7651	799
240-9543	46
241-0072	8
	11
	14
	▶202
241-2631	741
241-4854	300
241-4936	▶860
	862
241-5785	▶848
	875
241-6151	611
241-6416	849
241-8244	849
241-8368	▶287
	315
241-8636	566
241-9265	140

▶ **PRIMARY REFERENCE**

PART NUMBER INDEX

Part	Page	Part	Page	Part	Page	Part	Page
242-0315	497	245-9778	7	249-5616	643	251-8326	294
242-0340	790		8	249-7280	439	251-8327	294
	▶853		11	249-7805	702	252-0560	664
242-0389	▶809		14	249-8716	▶27		666
	845		▶32		28	252-1363	176
242-1901	792	246-2641	153	249-8717	18		179
	▶896		160		▶28		▶191
242-1903	▶788		294	250-0765	823	252-1763	294
	792		512	250-0767	823	252-1765	294
242-1912	896		541	250-0769	820	252-6241	664
242-1913	896	246-4283	6	250-0770	820		666
242-1914	896		▶7	250-0771	820	252-6457	219
242-1915	▶895	246-4284	2	250-0775	793		▶841
	896		▶19	250-0776	793	252-6959	333
242-1921	895	246-4304	848	250-0777	793	252-6961	334
242-2455	784	246-4306	848	250-1423	920	252-8014	330
242-2527	853	246-4307	848	250-1457	620	252-8538	334
242-3360	151	246-5659	71		675	252-8716	19
	152		72	250-1458	620		▶278
242-3488	809	246-6042	81		675	252-9529	200
242-3489	809	246-6155	81	250-1812	853		▶237
242-3493	788	246-8228	4	250-1817	237	253-0615	184
242-3494	788		▶8	250-2298	294	253-0861	905
242-3633	512	246-8811	61	250-2980	790	253-0907	581
242-5331	815	246-9919	32	250-4568	820		583
242-5333	782	247-0345	784	250-4570	823	253-0980	131
	▶815	247-0837	101	250-4628	846	253-1466	136
242-8026	▶782	247-3066	1		847	253-1752	42
	792		▶866	250-6239	141	253-2111	315
242-9508	820	247-3069	1		143	253-2587	330
243-2289	797		▶844	250-9205	141	253-2633	11
243-2746	405	247-3076	866		143		14
243-3565	141		▶867	250-9207	141		▶141
	143	247-3078	867		143	253-2640	101
243-3566	141	247-3079	905	250-9306	792	253-2673	310
	143	247-3309	437		▶820		599
243-3864	11	247-3310	▶437	250-9378	24		678
	14	247-3761	725	250-9873	792		679
	▶146	247-4285	223		▶884	253-4331	168
243-4507	269	247-4951	782	250-9876	884		172
244-3712	737		▶783	250-9976	792	253-5236	166
244-8840	797	247-6050	191		▶874		168
245-1093	566	247-7789	71	251-0123	789		172
245-1435	841	247-9908	50	251-0124	788	253-7801	294
245-3078	371	248-0036	51		▶789	253-8766	45
	374	248-3329	92	251-2308	56	253-9882	17
245-3804	59		94	251-4157	237		18
245-5771	436	248-4228	729	251-4160	309		▶46
245-5772	▶436	248-5513	112	251-4162	309	253-9883	▶45
245-7465	451	248-7500	▶878	251-4243	237		46
245-9775	7		879	251-4245	794	254-1776	7
	8	248-7505	878	251-4630	568		8
	11	248-7508	878	251-4645	794		11
	14	248-7509	879	251-4646	794		14
	▶61	248-7511	874	251-6484	789		▶33
245-9776	7		▶879	251-6492	794	254-2298	461
	8	248-7513	879	251-6499	789	255-2712	880
	11	249-0926	559	251-6556	816	255-2713	879
	14	249-0927	559	251-6557	816		▶880
	▶59	249-0945	133	251-7428	7	255-2714	880
245-9777	7	249-4488	▶595		8	255-7955	18
	8		629		11		▶23
	11	249-4489	595		14	255-8001	18
	14	249-5615	▶643		▶201		▶67
	▶56		802	251-8248	309	256-2454	790

▶ **PRIMARY REFERENCE**

PART NUMBER INDEX

Part	Page	Part	Page	Part	Page	Part	Page
256-3366	166	261-3853	660	267-3445	790		156
256-6453	266	261-5694	846		▶793	271-1751	437
	267		847	267-3532	793	271-4249	617
256-6802	168	261-6847	241	267-5292	▶790	272-1777	101
	172		245		792		319
256-7941	7	261-6848	241	267-6732	232		325
	▶176	261-6916	660	268-1565	270	272-1889	21
257-3227	778	261-8033	69	268-2960	151	272-5903	570
257-3880	34	261-8340	7		152	272-5911	570
257-3882	36		11	268-3688	21	272-5912	570
257-3883	36		14	268-5964	437	273-0213	491
257-5613	392		▶83	268-5965	▶437	273-0225	1
	▶412	261-8342	7	268-6320	206		▶488
257-7676	591		8		▶212	273-1643	7
257-7857	564		11	268-6322	193		8
257-8730	7		14	268-6323	193		▶34
	8		▶69	268-6325	193	273-3191	19
	11	261-9576	54	268-6326	193		▶55
	14	262-0483	135	268-6327	193	273-3992	109
	▶54	262-1352	848	268-6345	206	273-4890	902
257-8731	54	262-2077	▶2		▶210	273-5012	361
258-0959	▶858	262-2081	▶1	268-6591	▶206	273-6250	681
258-4142	315		2	268-6592	▶206		▶690
258-4524	151	262-2085	2	268-6593	▶207	273-6265	681
	152		▶420	268-6594	▶207		▶714
258-8721	77	262-2876	203	268-6595	▶207	273-6270	681
	79	262-4748	902	268-6596	▶207		▶718
259-0509	751	262-5778	852	268-6597	▶208	273-6275	▶674
259-3001	▶717	262-8513	392	268-6598	▶208		690
	748	263-1029	186	268-6599	▶208	273-6296	611
259-3142	5	263-4920	48	268-6600	▶209	273-7110	▶617
	▶11	263-9088	▶204	268-6601	▶209		681
259-3143	3		312	268-6602	▶209	273-7120	▶620
	▶14	263-9998	583	268-6603	▶210		681
259-8137	405	264-0544	59	268-6604	▶210	273-7130	▶611
259-9094	680	264-7786	260	268-6645	219		681
260-3789	392	264-8082	570		▶312	273-7143	570
260-6707	879	264-8084	570	268-6646	312		▶589
260-7491	▶748	264-8086	570	268-8078	206	273-7144	571
	799	264-8087	570		▶229	273-7150	▶570
260-7652	219	264-8088	570	268-8165	681		681
260-7653	219	264-8340	8		▶688	273-7152	571
260-8636	732	265-3698	270	268-8170	▶581	273-7160	1
	734	265-4465	500		681		▶829
260-9143	620	265-4466	500	268-8176	405	273-7395	▶422
260-9203	570	265-4468	500	268-8190	▶609		681
260-9204	570	266-1466	▶247		681	273-7398	392
260-9234	176		562	268-8200	▶405	273-7399	392
	179	266-3155	879		420	273-7400	▶392
260-9307	17	266-3597	823	269-0105	334		681
	18	266-3600	823	269-1983	852	273-7425	136
	▶29	266-8650	238	269-3289	570	273-8703	32
260-9631	17		241	269-4795	1	273-8708	270
	▶68		▶255		▶903	273-8710	270
261-2303	7	266-8653	437	269-5922	574	273-8751	571
	11	266-8654	▶437	270-5320	159	274-2350	▶585
	▶17	266-9281	848	270-7020	8		681
261-2304	8	266-9378	330		11	274-4051	30
	14	266-9843	270		14		34
	▶18	266-9848	7		▶89	274-4491	77
261-3223	309		▶914	270-7021	89		79
261-3429	48	266-9850	7	270-7022	89	274-5909	778
261-3430	48		▶37	270-7627	574	274-6717	136
261-3647	166	266-9851	7	270-8544	312		256
261-3648	166		▶203	271-0277	155	274-6719	257

▶ **PRIMARY REFERENCE**

PART NUMBER INDEX

Part	Page	Part	Page	Part	Page	Part	Page
274-9446	►217	277-8995	439		►486	280-3583	►358
275-0080	466	278-1363	78	279-5281	1		420
	►566	278-4944	21		►496	280-4340	682
275-1232	19	278-7103	319	279-5282	1		►697
	►144	278-8389	491		►512	280-6943	72
275-1233	19	278-9838	415	279-5283	160	280-7083	1
	►131	279-0103	85		►161		►845
275-1234	19		97	279-5284	1	280-7084	►792
	►134		680		►854		845
275-1237	19	279-0143	156	279-5286	►160	280-7144	512
	►136	279-0361	498	279-5288	6	280-7145	512
275-1253	176	279-0365	118		►551	280-8706	263
	179	279-0367	121	279-5290	104	280-8707	264
	►288	279-0376	126		►105	280-8832	681
275-3638	792	279-0383	1	279-5292	917		►683
	►823		►130		►918	280-8833	►675
275-3639	1	279-0384	1	279-5295	315		681
	►794		►797	279-5297	160	280-8930	►104
275-4082	583	279-0385	1		►213	280-9035	109
275-4083	583		►660	279-5626	879	280-9037	109
275-4084	919	279-0386	1	279-6542	581	280-9038	109
275-4085	919		►109		583	280-9055	109
275-7766	799	279-0387	1	279-6543	571	280-9638	681
275-7768	799		►498	279-6544	571		►909
275-7769	401	279-0388	1	279-6547	919	280-9826	►299
	799		►111	279-6548	919		792
275-7771	799	279-0389	1	279-6750	405	281-0017	►160
275-7847	602		►135		►423	281-0018	►160
	605	279-0390	►545	279-6751	423	281-0019	►155
275-7852	238		551		►424		160
276-2332	294	279-0391	1	279-6752	424	281-0020	►156
276-3097	176		►126	279-6757	424		160
	179	279-0392	►118	279-7397	109	281-0799	646
276-3464	►437	279-0393	►121	279-9397	681		►648
276-5317	77	279-0394	1		►739	281-2211	439
	79		►124	279-9400	2	281-4036	552
276-5416	368	279-0398	660		►681	281-4037	552
276-6793	255	279-0399	660	279-9405	681	281-4038	552
276-7550	491	279-0400	392		►702	281-4039	552
276-8548	238	279-0401	111	279-9490	►3	281-4040	551
	241	279-0402	111	279-9491	►4		►552
	►256	279-0408	126	279-9828	241	281-4041	552
276-8951	731	279-0409	118		►263	281-4042	552
	►732	279-0410	109	279-9829	241	281-4043	552
276-8953	732	279-0411	118		►264	281-4047	486
276-9067	238	279-0415	124	280-0002	405	281-4050	►547
	241	279-0417	109	280-0027	686		551
	►257	279-0425	118	280-0035	684	281-4051	►517
277-5566	718	279-0427	498		686		547
	►725	279-0430	124	280-0068	684	281-4052	►518
277-5739	439	279-0434	660		686		547
277-5743	420	279-0436	660	280-0111	130	281-4053	547
	►439	279-0437	498	280-1698	690	281-4055	517
277-5745	439	279-0438	498		►737	281-4056	517
277-6297	7	279-0439	797	280-1706	681	281-4057	517
	8	279-0440	797		►712	281-4058	517
	11	279-4544	►908	280-1708	►625	281-4059	517
	14	279-4546	►906		681	281-4065	486
	►74	279-5276	1	280-2690	237	281-4067	486
277-7245	21		►270	280-3444	►678	281-4072	518
	►796	279-5277	1		690	281-4073	518
277-8032	881		►555	280-3580	358	281-4074	518
	882	279-5278	1		►466	281-4075	552
	►893		►475	280-3582	►358	281-4076	552
277-8099	54	279-5280	1		420	281-4077	552

► **PRIMARY REFERENCE**

PART NUMBER INDEX

Part	Page
281-4078	552
281-4079	552
281-4090	3
	5
	▶551
281-4780	166
281-4781	166
281-5975	161
	214
281-5976	161
281-5977	156
	213
281-5978	213
	214
281-5983	161
	163
281-5984	161
	163
281-8977	334
281-9571	101
282-0832	555
282-0835	405
282-0839	▶378
	405
282-0841	405
282-0842	405
282-0843	405
282-2424	442
282-2828	792
	▶818
282-2829	818
282-3057	730
	▶734
282-3058	734
282-3252	531
282-3253	531
282-3254	531
282-3255	531
282-3256	531
282-3268	536
282-3269	536
282-3279	524
	528
282-3280	524
	528
282-4332	3
	4
	▶281
282-4352	210
282-4353	210
282-4890	200
	▶309
282-4892	219
	▶330
282-5010	206
282-5011	206
282-5012	206
282-5013	206
282-5014	207
282-5015	207
282-5016	207
282-5017	207
282-5018	207
282-5019	207
282-5020	207
282-5021	207
282-5022	208
282-5023	208
282-5024	208
282-5025	208
282-5026	208
282-5027	208
282-5028	209
282-5029	209
282-5030	209
282-5031	209
282-5032	209
282-5033	209
282-5034	210
282-5035	210
282-5036	210
282-5037	210
282-5107	▶353
	866
282-5120	206
	▶231
282-5158	206
	▶232
282-5173	▶294
	555
282-5330	▶200
282-5331	▶219
282-7962	902
282-8539	918
282-8749	17
	18
282-8858	131
282-9036	206
	▶234
282-9064	▶104
282-9066	▶357
	917
282-9087	▶219
282-9089	▶219
282-9105	37
	39
283-0135	1
	▶827
283-1980	161
	163
283-1981	161
	163
283-1983	161
	163
283-1984	161
283-1985	161
283-1986	161
	163
283-1987	161
	163
283-1990	161
	163
283-1991	161
	163
283-1992	161
	163
283-1993	161
	163
283-2516	917
	▶919
283-2520	▶681
283-2522	681
	▶684
283-2523	▶583
	682
283-2524	▶615
	682
283-2525	▶682
283-4409	▶597
	681
283-4411	681
	▶699
283-4412	▶662
	681
283-4413	681
	▶730
283-4414	681
	▶731
283-4860	357
283-5248	300
283-6455	1
	▶519
283-6456	▶500
283-6467	▶482
283-6468	▶477
283-6469	477
	▶521
283-6480	300
283-7188	314
283-7683	▶388
	445
283-7684	▶368
	388
283-7685	368
283-7688	386
283-7689	▶386
	445
283-7702	420
	▶445
284-0613	477
	482
284-0614	477
	482
284-0615	477
	482
284-0616	477
	482
284-0617	477
	482
284-0618	477
	482
284-1145	▶469
	512
284-1146	469
284-1147	469
284-1148	512
284-1149	512
284-1150	512
284-1151	512
284-1152	544
284-1153	544
284-1154	512
284-1155	512
284-1177	▶314
284-1453	439
	▶441
284-2786	48
284-2787	▶48
	50
284-2809	512
284-2855	▶540
284-2859	1
	▶531
284-2860	▶536
284-2861	▶540
284-3334	475
284-3335	475
284-3350	475
284-4680	▶602
	681
284-6996	919
284-7623	571
	581
	583
284-8516	194
284-8892	▶50
	51
284-8895	17
	18
	▶51
284-8954	863
284-8955	▶861
	864
284-9055	839
285-0957	97
285-0961	524
285-0962	919
285-0963	919
285-0964	919
285-0965	919
285-0966	919
285-2067	697
285-2157	697
285-3328	▶624
	681
285-3338	319
285-3789	688
285-4085	475
285-6531	7
	▶238
285-6532	7
	8
	11
	14
	▶139
285-6534	7
	▶166
285-6583	737
285-6647	26
285-8414	690
285-8423	▶875
	877
285-8424	▶877
	882
285-8425	▶882
	883
285-9305	690
285-9347	486
285-9348	486
285-9349	486

▶ **PRIMARY REFERENCE**

PART NUMBER INDEX

Part	Page	Part	Page	Part	Page	Part	Page
285-9353	106	288-5769	583	288-9220	571	290-0451	725
285-9354	512		▶588	288-9221	571		▶729
285-9362	135		605	288-9222	571	290-0453	729
286-0182	674		697	288-9223	571	290-0460	729
	675	288-5860	538	288-9226	571	290-0461	729
286-0856	▶917		▶558	288-9228	571	290-0689	▶186
286-0906	690	288-5863	524	288-9759	214		555
286-1579	617		528	288-9760	213	290-0690	186
286-2247	136		▶537	288-9761	214		▶189
286-2531	183	288-5864	524	288-9762	213	290-0824	725
	▶185		528	288-9763	156	290-0842	725
286-3055	315		▶538	288-9764	156	290-2227	312
286-3056	315	288-5869	538	288-9965	105	290-2690	1
286-4537	512	288-7135	▶605		▶106		▶491
286-4538	512		682	289-0439	212	290-2691	1
286-7231	792	288-7136	609	289-0672	348		▶510
	▶850	288-7137	615	289-0781	213	290-2752	353
286-7260	475	288-7138	605		▶214	290-3977	496
286-9751	697	288-7139	605	289-1509	519	290-4058	232
286-9814	919	288-7140	▶635		521	290-4175	725
287-0426	392		681	289-1512	519	290-4178	512
	▶755		682	289-1513	521	290-4179	512
287-0428	755	288-7141	611	289-2013	519	290-4621	17
287-1502	588	288-7142	611		521		18
287-1731	310	288-7143	615	289-2229	7		▶150
287-2118	512	288-8390	▶268		8	290-4798	702
287-2119	512		328		▶36	290-4799	702
287-2120	512		334	289-2763	512	290-4801	702
287-2121	512		348	289-2984	519	290-4803	702
287-2122	512	288-8802	854		▶550	290-4804	702
287-2124	512	288-8819	702	289-2985	550	290-4806	702
287-4006	617	288-8825	620	289-2986	189	290-4807	702
287-4007	617		702	289-3109	902	290-4808	702
287-7911	512	288-8826	620	289-3240	▶524	290-4809	702
287-8187	330	288-8829	620		540	290-4810	702
287-8307	617	288-8830	620	289-3241	▶528	290-4811	702
287-8402	▶679	288-8833	620		540	290-4812	702
	702	288-8837	702	289-3480	521	290-4813	702
288-1019	732	288-8838	683	289-3806	521	290-4814	702
288-1743	▶862	288-8839	702		854	290-4816	702
288-1744	▶862	288-8840	702	289-3809	▶811	290-4817	702
288-1745	▶862	288-8841	675		854	290-4818	702
288-2730	420	288-8843	675	289-3810	811	290-4819	702
	▶430	288-8844	675	289-4129	827	290-4820	702
288-2731	430	288-8845	683	289-4130	827	290-4829	392
	▶448	288-8846	684	289-4799	500	290-5761	662
288-2732	448	288-8848	684		521		▶668
288-2734	106		686	289-8459	854	290-5762	662
288-4419	7	288-8849	686	289-9139	126		▶669
	8	288-8850	682	289-9287	155	290-5763	668
	11		▶686		156		669
	14	288-8854	684	289-9352	439	290-5764	668
	▶112	288-8859	686	289-9496	792	290-5765	669
288-4778	517	288-8860	686		▶799	290-5766	699
	545	288-8861	684	289-9640	755	290-5767	699
288-4779	518	288-8862	684		▶756	290-5768	699
	545	288-8863	686	289-9691	160	290-5769	699
288-4781	545	288-8864	684		▶163	290-5770	712
	547	288-9063	475	289-9692	163	290-6187	605
288-4782	545	288-9154	854	289-9693	163	290-6188	615
	547	288-9204	819	290-0106	309	290-6192	611
288-4783	545	288-9214	571	290-0107	602	290-6193	611
	547	288-9217	571		605	290-6194	611
288-4883	48	288-9218	571	290-0346	▶292	290-6195	611
288-4884	48	288-9219	571		540	290-6196	611

▶ **PRIMARY REFERENCE**

PART NUMBER INDEX

Part	Page	Part	Page	Part	Page	Part	Page
290-6197	611	292-2325	903	299-4790	147	301-5806	504
290-6198	611	292-2351	778	299-9606	168	301-5807	504
290-6869	▶97	292-2597	909		172	301-6820	101
	104	292-2929	778			301-7454	29
290-6870	104	292-2931	778			301-7457	29
	▶680	292-2932	▶778			301-7791	395
290-7380	97		827				691
290-7381	97	292-2956	596	300-1180	879	301-7792	395
291-0426	524	292-2957	631	300-2477	136		691
291-0433	524	292-4307	655	300-3620	206	301-9799	▶421
	528	292-6044	909		▶322		422
291-0530	104	292-6097	846	300-3621	322	302-1409	151
	▶346	292-6107	847	300-3685	83		152
291-1072	104	292-8434	136	300-3696	147	302-3424	903
	▶347	292-9241	▶846	300-5575	57	302-3425	903
291-1432	7		871	300-6343	501	302-3426	903
	8	292-9253	27	300-6344	501	302-3428	903
	11	292-9604	136	301-0414	832	302-3429	903
	14	292-9802	562	301-2979	294	302-3431	903
	▶70		563	301-4162	▶847	302-5176	867
291-2165	300		852		875	302-7437	150
291-2275	126	293-2911	865	301-4186	19		▶151
291-2636	684	293-3334	421		▶85	302-7439	150
291-2666	681	293-3533	841	301-4187	85		▶152
	▶719	293-3537	841	301-4188	85	303-2218	8
291-2837	7	293-5426	70	301-4616	635		11
	▶319	293-6470	1		▶655		14
291-2838	7		▶905	301-5154	886		▶325
	19	294-0537	914	301-5349	67	303-2219	8
	▶21	294-0949	907		68		11
291-2998	498	294-0990	▶863		▶76		14
291-3010	378	294-0991	▶864	301-5350	76		▶241
291-3011	405	294-4772	903		▶77	303-6329	▶438
291-5614	392	294-5042	871	301-5351	77	303-6330	438
291-5615	392		875	301-5352	76	304-1247	168
291-5619	392	294-7730	420		▶78	304-1248	168
291-5620	392		▶564	301-5354	76	304-3587	168
291-5621	392	294-7765	512		▶79	304-3588	168
291-5622	392	294-7766	512	301-5355	79		172
291-5623	392	294-9301	214	301-5788	▶501	304-4238	8
291-5624	392	295-0647	7		519		11
291-5625	392		8	301-5789	▶505		14
291-5631	392		▶143		519		▶39
291-5633	392	295-5522	111	301-5790	501	304-9379	421
291-5634	392	295-6903	▶369	301-5791	503	304-9553	23
291-6076	166		445	301-5792	501	305-0015	562
291-6164	674	295-6904	369	301-5793	501		563
291-6404	392		▶461	301-5794	501	305-3139	421
291-6712	144	296-3999	▶883	301-5795	501	305-3143	421
291-6773	392	296-5780	909	301-5796	501	305-3144	421
291-6801	131	296-6055	206	301-5797	501	305-3449	839
	▶133		▶236		503	305-5531	▶568
291-6802	136	296-7575	839	301-5798	503		792
291-9150	392	297-0831	498	301-5799	501	305-5532	▶562
292-0668	▶902	297-1401	301	301-5800	500		568
	918		▶832		▶507	305-5533	▶563
292-0681	392	297-3032	464	301-5801	500		568
292-1163	37	297-4803	675	301-5802	▶503	305-5629	300
	39	297-7913	690		521	306-0310	841
292-2257	7	297-7998	737	301-5803	▶508	306-1767	194
	8	297-9731	620		521	306-2134	▶101
	▶147	298-3617	322	301-5804	▶504		104
292-2322	903	299-2277	846		559	306-3011	562
292-2323	903		847	301-5805	▶509	306-3012	563
292-2324	903	299-2430	504		559	306-3998	272

3

▶ **PRIMARY REFERENCE**

PART NUMBER INDEX

Part	Page	Part	Page	Part	Page	Part	Page
	275	310-7911	348	313-4411	405	314-8059	909
306-6837	405	310-7915	295	313-4443	334	314-8060	909
306-6871	405	310-7923	292	313-4622	23	314-8061	909
306-6875	241	310-7924	330		▶24	314-8062	909
	▶246	311-0812	690	313-5299	405	314-8063	909
	334	311-2118	690	313-5403	405	314-8800	87
	346	311-3669	620	313-5460	393	314-8801	8
	347	311-3670	620	313-5461	393		11
306-8156	278	311-3898	869	313-5835	737		14
307-0047	219	311-4119	8	313-5836	393		▶87
307-0144	486		11	313-5837	690	314-9344	909
307-6306	611		14	313-5838	690	314-9345	909
307-6350	812		▶149	313-5840	690	314-9347	909
307-6457	655	311-4930	919	313-5841	690	314-9348	909
307-6458	655	311-4931	919	313-5842	690	314-9673	909
307-6567	▶812	311-4932	919	313-5843	690	315-1263	144
	854	311-4933	919	313-5844	690	315-4137	393
307-7490	126	311-4935	620	313-5847	690	315-4138	393
307-8352	▶211	311-5959	919	313-6401	690	315-4139	690
	315	311-6177	690	313-6402	690	315-4141	690
307-9914	206	311-6178	690	313-7574	328	315-4144	▶403
	▶315	311-7583	194	313-7575	328		420
307-9915	315	311-7584	194	313-9448	690	315-4145	403
307-9916	905	311-7585	194	314-2843	611	315-4146	405
308-2031	512	311-7651	438	314-3063	48	315-5866	620
308-2032	512	311-7827	812	314-3064	48	315-6119	97
308-2035	512	311-8376	312	314-3065	48		680
308-2036	542	311-8377	204	314-3066	48	315-6120	97
308-2462	▶670	311-9319	664	314-3067	48	315-6123	161
	767		666	314-3068	48		163
308-2464	▶672	311-9320	664	314-3069	48	315-6643	348
	765		666	314-3173	168	315-8429	518
308-3103	552	311-9321	664		172	315-9894	816
308-3543	438		666	314-3174	168	315-9896	782
308-3544	▶438	312-1121	270		172		▶816
308-8448	▶269	312-1122	270	314-3254	295	315-9897	816
	334	312-1123	270	314-3985	908	315-9970	819
309-1271	315	312-1124	270	314-3986	906	315-9971	544
309-1272	315	312-2019	92	314-4018	796	316-0025	512
309-1273	315		94	314-4075	571		▶819
309-3568	353	312-2921	405	314-5456	827	316-0026	512
309-5553	512	312-2932	611	314-5457	827		▶544
	▶542	312-2933	611	314-5809	545	316-1927	783
309-5554	552	312-2935	611		547	316-1967	512
309-5555	552	312-2937	611	314-5810	545	316-3297	393
309-5556	552	312-3386	206		547	316-3298	702
309-6594	▶907		▶310	314-6153	405	316-3385	909
	917	312-3529	▶401	314-6482	393	316-3386	909
309-7748	126		420	314-6934	▶839	316-3387	909
309-8767	741	312-3531	401	314-7594	357	316-3388	909
310-2391	312		403	314-7595	334	316-3389	909
310-4073	552	312-3552	401	314-7616	611	316-4915	827
310-4074	552	312-3571	405	314-7649	697	316-4947	300
310-4075	552	312-7680	405	314-7650	697	316-4948	300
310-5654	739	312-9081	328	314-7651	688	316-4949	300
	▶741	313-1313	295	314-7652	688	316-4950	300
310-7896	310	313-1581	392	314-7943	571	316-4951	300
310-7898	334	313-1582	392	314-8002	690	316-5208	620
310-7899	334	313-1585	392	314-8003	393	316-5249	909
310-7900	334	313-2482	620	314-8004	393	316-5250	909
310-7901	334	313-2483	620	314-8005	393	316-5686	8
310-7902	334	313-2606	392	314-8006	393		11
310-7903	334	313-4085	76	314-8007	393		14
310-7908	350	313-4121	▶438	314-8008	690		▶94
310-7910	348	313-4134	334	314-8009	690	316-5711	315

▶ **PRIMARY REFERENCE**

PART NUMBER INDEX

Part	Page	Part	Page	Part	Page	Part	Page
316-6089	691		▶497				
316-6353	905	317-9135	8				
316-6386	670		11				
	672		14				
	▶716		▶168				
316-6980	206		▶172				
	▶328	317-9193	497				
316-6982	206	318-1933	491				
	▶333	318-1934	491				
316-6983	206	318-2082	273				
	▶350		276				
316-6984	206	318-4247	405				
	▶348	318-4637	361				
316-6985	▶193	318-4913	691				
	206	318-6975	325				
316-6986	194	318-8251	602				
316-6993	2		605				
	▶206	318-8319	393				
316-7311	469	319-6714	17				
316-8323	358		▶72				
	▶370	319-6716	72				
316-8324	370	320-6751	361				
	▶371	320-7137	388				
316-8326	371	320-7496	7				
	374		8				
316-8335	358		11				
	▶373		14				
316-8336	373		▶179				
	▶374	321-6115	552				
316-8693	405	322-3621	315				
316-8694	405	322-7615	172				
316-8695	405	322-7616	172				
316-8727	827	322-7617	172				
316-9078	905	322-8285	135				
316-9310	300	322-8286	135				
316-9360	361	322-8287	135				
316-9362	358	322-8288	135				
	▶361						
317-1596	620						
317-1600	620						
317-1621	675						
317-2688	405						
317-2718	1						
	▶857						
317-2730	194						
317-2743	393						
317-2876	393						
317-3794	691						
317-5414	393						
317-5602	393						
317-5832	620						
317-6095	393						
317-6104	405						
317-6512	691						
317-7016	▶5						
317-7017	▶6						
317-7081	334						
317-7082	334						
317-7089	393						
317-7393	547						
317-7394	547						
317-7744	126						
	▶129						
317-8732	734						
317-9133	1						

▶ **PRIMARY REFERENCE**

MEMORANDA



© 2008 Caterpillar
All Rights Reserved

Printed in U.S.A.