MARÇO 1971

CLARK EQUIPMENT

RUTHZIL TRATOR COMERCIAL DE PEÇAS LTDA 11 97083-6812 ROLANDO

MICHIGAN

TRADEMARK OF CLARK EQUIPMENT CO. U.S.A.

PARTS MANUAL
Publication No. 99
Model 85IIIA Articulated Tractor Shovel

SERIAL

4129 B101 EN Thru

85IIIA Articulated Tractor Shovel

MANUFACTURED UNDER LICENCE BY

CLARK EQUIPMENT LIMITED

P.O.BOX 3 · YORKTOWN WORKS CAMBERLEY · SURREY ENGLAND

TEL CAMBERLEY 63421



TECHNICAL PUBLICATIONS RELEASE

30th March, 1971

Michigan - TPR. 55

Subject: Michigan Parts Manual - Publication No. 99
Model 85IIIA (Articulated) Michigan Tractor Shovel

Enclosed is one (1) Distributor/Agency issue copy of 85IIIA (Articulated) Michigan Tractor Shovel Parts Manual - Publication No. 99, to be added to your Master Library.

This is a new Parts Manual covering the following machine serial number range.

85IIIA	4129B101EN Thru.	Leyland	UE-680PP

Note: Use Michigan Parts Manual - Publication No. 83 for Machines prior to above Serial Number.

All Distributors will receive sufficient copies of Michigan Parts Manual No. 99 to cover the quota of machines shipped to Customers in their territory.

Additional copies are available on a chargeable basis upon receipt of your order to:

REPLACEMENT PARTS DEPARTMENT

ENGLISH — Information contained in this Parts Manual pertains to Machine Serial Numbers listed below.

FRANCAIS — Les informations contenues dans ce manual des pièces de rechange se réfèrent aux numeros de serie donnes ci-apres.

DEUTSCH — In diesem Ersatzteilkatalog enthaltenen Angaben beziehen sich auf die unten angefuhrten Maschinen-Seriennummern.

ITALIANO — L'informazione contenuta in questo manuale di accessori si riferisce ai numeri di macchine di serie qui sotto descritti.

ESPAÑOL — La información contenida en este Manual de Repuestos se refiere a los números de serie de las máquinas que se dan a continuación.

85IIIA	4129B101EN Thru.	Leyland UE-680PP.

PARTS MANUAL

TECHNICAL PUBLICATIONS

ABOUT THIS PARTS BOOK

This book is arranged in Sections or Groups. Those shown at the Basic Group Number Index are Main Groups, which are in turn divided into the Sub Groups that appear in the Contents List Index.

Page numbers are made up as follows:

PAGE NUMBER (00E - 001)

BASIC GROUP	COUNTRY OF ORIGIN	PAGE NUMBER (WITHIN GROUP)
00	E	001

The Basic Group Index is presented in five languages and is accompanied by an exploded drawing of a typical machine. The Contents List Index shows every page that is contained in this book.

Illustrations used, are not always an exact representation of the actual machine sections but they are typical.

Before using the book become thoroughly conversant with its layout.

HOW TO USE THIS BOOK

Let us assume that you are replacing a Hydraulic Pump (Main).

(1) Refer to the PICTORIAL INDEX in conjunction with the BASIC GROUP NUMBER INDEX.

(2) Select the number of the BASIC GROUP containing the parts required :-

Group Number 18 - Hydraulic Pumps

(3) Turn to the CONTENTS LISTS and refer to the Page Number Column. All page numbers in which the first two digits coincide with the selected Basic Group Number are pages within that same group :-
e.g. 18E - 000, 18E - 001, 18E - 111.

(4) Determine from the designation column the page or pages containing the part required.

In this example :-
Page Number 18E - 001 Pump hydraulic - Main

(5) Turn to page or pages selected and check page heading for specific model number and or machine serial number application. In conjunction with the associated illustration read off the required part number.

(6) Transmit the correct part number, description and quantity of the part required, together with the machine serial number to your Distributor.

SPECIAL SYMBOLS

The following symbols are used throughout the book :

\+ Not illustrated. No pictorial reference exists for this item.
\# Not sold separately. This item sold only as part of an assembly.
* See Makers List. For this item, see individual makers list.

* Footnote 1.
** Footnote 2.
*** Footnote 3.

Used for various footnotes as necessary.

SERIAL NUMBERS

The machine serial number plate illustrated in use is located in the operators compartment on the cowling and the information stamped on the plate identifies the machine model and serial number.



It is important to quote the complete serial number to your distributor when ordering replacement parts for your machine.

IMPORTANT :- Your only source of supply for genuine Clark replacement parts is your authorised Clark distributor.

ORDERING REPLACEMENT PARTS

To be complete, your order to the distributor must include :-

(1) Part Number
(2) Description of part
(3) Machine serial number
(4) Quantity required.

WHEN PARTS ARE RECEIVED

Check immediately for correctness, condition and quantity. Advise your Clark distributor of any errors. Claims for damage during shipment should be made to the carrier immediately.

A PROPOS DE CE MANUEL DE PIECES DETACHEES

Ce manuel est disposé en Sections ou Groupes-Clés qui sont repris dans l'Index de Numéros de Groupes de Base sont les Groupes Principaux, qui, à leur tour, sont divisés en Sous-Groupes apparaissant dans la Table des Matières.

La numération des pages est agencée comme suit:

PART NUMBER 906-011

GROUPE DE BASE	PAYS D'ORIGINE	NUMERO DE PAGE DANS LE GROUPE
(a)	E	001

L'index des groupes de base est présenté en cinq langues et accompagné par une vue éclatée d'une pièce typique. L'index de la table des matières répertorie toutes les pages comprises dans ce manuel.

Les illustrations ne sont pas toujours une représentation exacte des secteurs réelles de l'engin, mais elles sont typiques.

Avant d'utiliser le manuel, familiarisez-vous à fond avec sa disposition.

COMMENT UTILISER CE MANUEL

Supposons que vous remplacez la pompe Hydraulique (Principal).

(1) Referez-vous à L'INDEX ILLUSTRE en même temps qu'à L'INDEX DES NUMEROS DE GROUPES DE BASE.

(2) Sélectionnez le numéro de GROUPE DE BASE concernant la pièce recherchée.

Groupe No. 15 - Pompes Hydrauliques

(3) Passez à la TABLE DES MATIERES et référez-vous à la colonne des numéros de pages. Trouvez les numéros de pages dont les deux premiers chiffres sont les mêmes que le numéro de Groupe de Base choisi fait partie du même groupe.

15 - 000, 15E - 001, 15E - 011

(4) Déterminez de la colonne désignation la page ou les pages qui contient la pièce requise.

Dans cet exemple Page Numéro 15E - 001 Pompe Hydraulique - Principal

(5) Tournez à la page ou aux pages choisies et sélectionnez l'article de la page par le numéro de modèle spécifique et/ou l'application du numéro de série de la machine correspondant avec l'illustration associée donnant le numéro de pièce requis.

(6) Transmettez à votre distributeur le numéro de pièce correct, la description et la quantité, ainsi que le numéro ou série de l'engin.

SYMBOLES SPECIAUX

Les symboles suivants sont utilisés si nécessaire:

\- Pas illustré
Il n'y a pas de référence illustrée pour cet article
= Sur vend. séparément
Cette pièce est uniquement vendue comme partie d'une ensemble
♣ Voir liste du fabricant
Pour cette pièce, voir liste individuelle du fabricant

* Note 1. ** Note 2. *** Note 3.

Outils pour les différentes pièces selon besoins

NUMEROS DE SERIE

La plaque portant le numéro de série de la machine est située dans le compartiment de l'opérateur au poste de stationnement et les renseignements repris sur la plaque servent à identifier le modèle et le numéro de série de la machine.

Il est important de donner le numéro de série complet à votre distributeur lorsque vous passez une commande de pièces détachées pour votre machine.



IMPORTANT: Votre usine pourra vous offrir un service d'échange. Si cet engin CLARK est vendu par votre distributeur, la marque CLARK.

COMMANDE DES PIECES DE RECHANGE

Pour être complet, votre bon de commande au distributeur doit comprendre les points suivants:

(1) Numéro de pièce (3) Numéro de série de l'engin
(2) Description de la pièce (4) Quantité nécessaire

LORS DE LA RECEPTION DES PIECES

Contrôler immédiatement l'état, la quantité et l'exactitude des pièces. Aviser immédiatement votre distributeur Clark de toute erreur. Les plaintes relatives à des dégâts pendant le transport doivent immédiatement être adressées au transporteur.

ÜBER DEN VORLIEGENDEN ERSATZTEILKATALOG

Dieser Katalog ist in Abschnitte und Gruppen unterteilt. Die im Hauptgruppen-Nummernregister enthaltenen Hauptgruppen sind wiederum in Untergruppen eingeteilt, die in der Inhaltsverzeichnisliste aufgeführt sind.

Seitennummern setzen sich wie folgt zusammen: SEITENNUMMER 00E - 001.

HAUPTGRUPPE	URSPRUNGSLAND	SEITENNUMMER (INNERHALB DER GRUPPE)
00	E	001

Das Hauptgruppenregister ist fünfsprachig und enthält ein Montagebild eines typischen Maschinen. Im Inhaltsverzeichnis ist jede Seite des Buches aufgeführt.

Die verwendeten Illustrationen sind typische Abbildungen und nicht immer exakte Darstellungen des wirklichen Maschinenteiles.

Machen Sie sich mit der allgemeinen Aufmachung des Kataloges gründlich vertraut, bevor Sie die benutzen.

HINWEISE FÜR DIE BENUTZUNG DES KATALOGES

Nehmen wir einmal an, Sie wollen eine Hydraulikpumpe (Haupt).

(1) Schlagen Sie das BILDVERZEICHNIS in Verbindung mit dem HAUPTGRUPPEN-NUMMERNREGISTER auf.

(2) Suchen Sie die Nummer der HAUPTGRUPPE, die die benötigten Teile enthält.

Gruppe Nr. 15 - Hydraulikpumpen.

(3) Schlagen Sie die Spalte der Seitennummern im INHALTSVERZEICHNIS auf. Alle Seitennummern, deren ersten zwei Ziffern mit der Hauptgruppen-Nummer übereinstimmen, befinden sich innerhalb dieser selben Gruppe.

z.B. 15E - 000, 15E - 001, 18E - 011.

(4) Aus der Spalte mit den Bezeichnungen die Seite bzw. Seiten herausstechen auf welchen das gewünschte Teil zu finden ist.

In diesem Beispiel:
Seite Nr. 15E - 001 - Hydraulikpumpe - Haupt.

(5) Dann die betreffende Seite bzw. Seiten aufschlagen und anhand der Titelzeile der Seite feststellen für welche Modell- und Fabriknummern-serien das Teil Anfrage kommt. Anschliessend unter Bezugnahme auf die entsprechende Abbildung die betreffenden Teilnummer ausser.

(6) Die richtige Teilnummer, Bezeichnung und Stückzahl des benötigten Teiles zusammen mit der Motornummer dem Händler mitteilen.

BESONDERE ZEICHEN

Die folgenden Zeichen werden im Katalog verwendet:

- Nicht abgebildet.
  Für dieses Teil liegt kein Bildmaterial vor.
- Einzeln nicht lieferbar.
  Dieses Teil wird nur als Bestandteil einer kompletten Sonne verkauft.
- Siehe Herstellerliste.
  Dieses Teil der betreffenden Herstellerliste entnehmen.

* Fußnote 1, ** Fußnote 2, *** Fußnote 3.

Nach Bedarf für verschiedene Fußnoten verwendet.



MICHIGAN
TRADE MARK OF CLARK EQUIPMENT COMPANY U.S.A.
MODEL SERIAL NO.
MANUFACTURED UNDER LICENCE BY
CLARK EQUIPMENT LIMITED
CAMBERLEY SURREY - ENGLAND

SERIENNUMMERN

Das hier abgebildete Typenschild des Fahrzeuges ist im bzw. in der Nähe des Fahrerstandes angebracht. Auf dieses sind Modell und Fabriknummer des Fahrzeuges eingestanzt.

Bei Bestellungen von Ersatzteilen von Ihrem Grosshändler ist stets die vollständige Fabriknummer der Maschine mitzugeben.

WICHTIGER HINWEIS: Die Original-Clark Austauschteile erhalten Sie nur bei Ihrem Clark Vertragshändler.

BESTELLUNG VON AUSTAUSCHTEILEN

Ein vollständiger Auftrag für Ihren Händler muß folgende Angaben enthalten.

(1) Teilnummer (3) Maschinenseriennummer

(2) Bezeichnung der Teile (4) Benötigte Stückzahl

BEI EINGANG DER TEILE

Sofort Richtigkeit, Zustand und Stückzahl überprüfen. Jeden Fehler dem Clark Händler mitteilen.
Kostenerstattungsansprüche für Transportschäden sind sofort an die Sachlieferfirma zu richten.

DESCRIZIONE DEL CATALOGO PARTI DI RICAMBIO

Il catalogo è ordinato in Sezioni. Quelle indicate nell'Indice Numerico Sezione-Base sono le Sezioni principali, a loro volta suddivise nelle Sottosezioni dell'Indice Descrittivo.

I numeri di pagina sono così composti:

NUMERO DI PAGINA 00 - 001

SEZIONE-BASE	FASE DI ORIGINE	NUMERO DI PAGINA (PER SEZIONE)
00	E	001

L'Indice Numerico per le Sezioni-Base è in cinque lingue e vi è allegato un disegno con parti esplose dell'macchina cui si riferisce. L'Indice Descrittivo indica tutte le pagine da cui il catalogo è composto.

Le Illustrazioni non sempre forniscono un disegno preciso dei vari complessivi della macchina, ma ne danno l'idea.

Prima di consultare il catalogo è bene avere una conoscenza completa onde di rendersi conto di come base è ordinato.

USO DEL CATALOGO

Facciamo il caso che occorra sostituire una Pompa Idraulica (Principale).

(1) Andare a vedere l'INDICE ILLUSTRATO assieme all'INDICE NUMERICO DELLE SEZIONE-BASE.

(2) Rilevare il numero della SEZIONE-BASE in cui è compresa la parte che occorre sostituire:

Sezione Numero 18 - Pompa Idraulica

(3) Consultare l'INDICE DESCRITTIVO alla Colonna Numeri di Pagina. Tutti i numeri di pagina in cui le prime due cifre coincidono con le corrispondenti della Sezione-Base sono le pagine che riguardano una medesima sezione.

Per le Pompe Idrauliche: 18F - 000, 18F - 001, 18F - 111.

(4) Dalla colonna delle designazioni determinare la pagina o le pagine che contengono la parte richiesta.

Per il caso scelto ad esempio:

Pagina Numero 18E - 001 - Pompa Idraulica - Principale

(5) Aprire la pagina o le pagine così trovate e controllare che l'illustrazione corrisponda al numero di modello e al numero di serie della macchina in questione. Con l'aiuto dell'Illustrazione trovare il numero di ricambio della parte richiesta.

(6) Trasmettere al Proprio Distributore l'esatto numero di parte trovato, la relativa descrizione e la quantità richiesta, assieme al numero di serie della macchina.

SIMBOLI SPECIALI

Nel corso del catalogo possono trovarsi i seguenti simboli:

i Non Illustrato.
Non vi è alcun riferimento illustrativo per questo particolare.

ii Non venduto separatamente.
Questo particolare viene fornito soltanto con l'intero complessivo.

iii Vedere Illustrazione Fabbricante.
Per questo particolare consultare l'elenco della specifica casa fornitrice.

* Nota 1 a piè di pagina. ** Nota 2 a piè di pagina. *** Nota 3 a piè di pagina.

Simboli usati quando occorrono delle note a piè di pagina.

NUMERI DI SERIE

La targhetta di numero serie macchina qui illustrata si trova nello scompartimento dell'operatore o nelle sue vicinanze e contiene informazione per identificare il modello di macchina e il numero di serie.



All'atto dell'ordinazione di parti di ricambio, è indispensabile comunicare il numero di serie al completo della macchina in questione.

IMPORTANTE: L'unica fonte di fornitura delle parti di ricambio originali CLARK è il vostro Distributore Autorizzato CLARK.

ORDINAZIONE DELLE PARTI DI RICAMBIO

L'ordinazione da inoltrare al Distributore, per risultare completa, deve comprendere:

(1) Numero di Parte (2) Numero di serie della macchina

(3) Descrizione della parte (4) Quantità richiesta.

ALL'ARRIVO DELLE PARTI

Controllare immediatamente l'esattezza, la quantità e lo stato delle parti. Per gli eventuali errori, tenere subito informato il proprio Distributore Clark. I reclami per eventuali danni avvenuti durante il trasporto devono essere presentati immediatamente allo spedizioniere.

MICHIGAN
TRADE MARK OF CLARK EQUIPMENT CORPORATION
MODEL SERIAL NO
MANUFACTURED UNDER LICENCE BY
CLARK EQUIPMENT LIMITED
CAMBERLEY - SURREY - ENGLAND.

COMO SE EMPLEA ESTE LIBRO

Este libro está clasificado y ordenado en Grupos llamados Grupos. En el Indice de Grupos Básicos aparecen los números de los grupos principales y los que a su vez se dividen en Sub Grupos que aparecen en el Indice del Contenido.

El pie de cada página se ha numerado así: PAGINA No. 18E - 001

GRUPO BASICO	PAIS DE ORIGEN	No DE LA PAGINA (EN CADA GRUPO)
00	E	001

El Indice de Grupos Básicos se presenta en orden alfabético y está ilustrado por una vista de las partes que forman una máquina típica, separadas para mayor claridad de identificación. El Indice del Contenido indica todas las páginas de este libro.

Las partes que se ilustran no son siempre una representación exacta de las que realmente puede tener una máquina determinada, sino de un componente típico.

Antes de usar este libro familiarícese con su ordenación y empleo.

EJEMPLO DEL EMPLEO DE ESTE LIBRO

Supongamos que usted desea pedir una bomba hidráulica para el sistema principal.

(1) En la ILUSTRACION De LA MAQUINA y con la ayuda del INDICE De GRUPOS BASICOS haga lo siguiente

(2) Seleccione el GRUPO BASICO que comprenda la parte que necesita. En este caso
Grupo No. 18 - Bombas Hidráulicas

(3) Ahora diríjase al INDICE DEL CONTENIDO y busque allí, en la Columna de Nos. de Página, la que corresponde a la parte que desea. Todos los números de las páginas cuyas primeras dos cifras son iguales a los del Grupo básico seleccionado, corresponden a dicho Grupo
p.ej. 18E - 001, 18E - 001, 18E - 011.

(4) En la columna de títulos determine la página o páginas que contienen la parte requerida.
En este ejemplo,
Página No. 18E - 001 Bomba Hidráulica - Principal.

(5) Vuelva a la página o Páginas seleccionadas y compruebe el título para el número del modelo específico y la aplicación del número de serie de la máquina. Junto con la ilustración apropiada hallará el número de la pieza requerida.

(6) Envíe su pedido al Distribuidor de CLARK con la siguiente información: Pieza No., denominación y cantidad que necesita de la serie de la máquina.

SIMBOLOS ESPECIALES

En este libro se usan los siguientes símbolos.

– No se ilustra.
No existe dibujo o fotografía de esta parte en el libro.

⅋ No se suministra por separado.
Esta parte se vende solamente como parte de un conjunto.

★ Vea la Lista de Repuestos del Fabricante.
Para pedir esta parte debe consultarse la Lista de Repuestos de la empresa que la fabrica.

* Nota 1. ** Nota 2. *** Nota 3.

Usados para las notas al pie de una página, según sea necesario.



NUMERO DE SERIE

La placa del número de serie de la máquina ilustrada aquí, está situada en el compartimiento del conductor y la información impresa identifica el modelo y número de serie de la máquina.

Es importante indicar el número de serie completo al hacer pedidos de recambios para su máquina, a su distribuidor.

IMPORTANTE: Los repuestos legítimos CLARK sólo se obtienen de los Distribuidores Autorizados CLARK.

REQUISITOS PARA HACER LOS PEDIDOS

Un pedido para ser completo y por lo tanto, agilizar su despacho, debe contener

(1) El No. de la pieza. (3) El No. de serie de la máquina.

(2) La denominación de la pieza pedida. (4) La cantidad de unidades que se necesitan.

CUANTO SE RECIBEN LAS PIEZAS

Verifique de inmediato que son las partes pedidas, su condición en no se encuentran y que la cantidad es correcta. Las reclamaciones por daños durante el transporte deben hacerse de inmediato a la empresa de transporte.

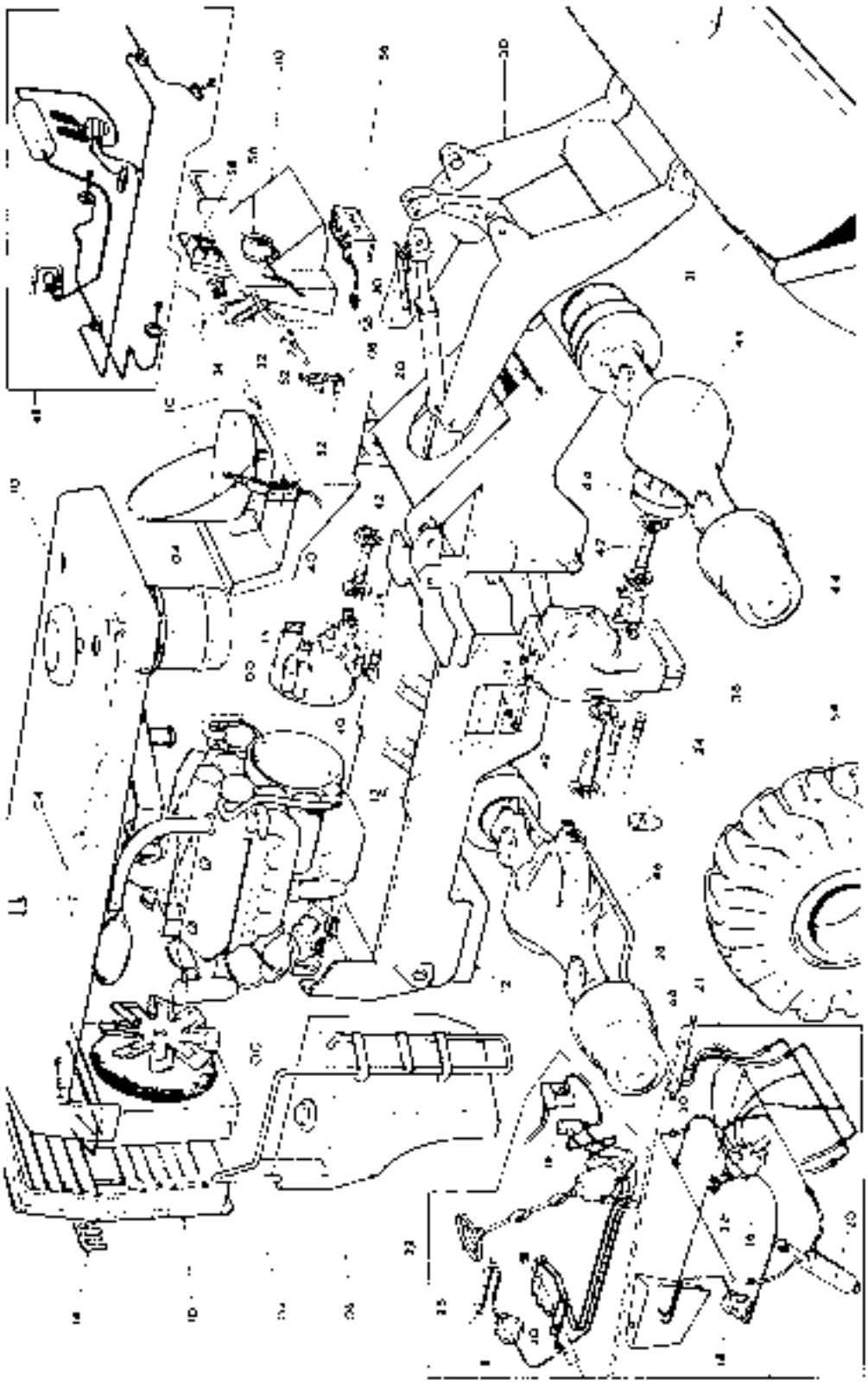

TYPICAL ARTICULATED TRACTOR SHOVEL BASIC GROUPS

ENGLISH	FRANÇAIS	DEUTSCH	ITALIANO	ESPAÑOL
BASIC GROUP NUMBER INDEX	RÉPERTOIRE NUMÉRIQUE DES GROUPES DE BASE	GRUNDBAUGRUPPE SYSTEMTECHNIK	INDICE NUMERICO DEI GRUPPI DI BASE	INDICE DE NUMERO DE GRUPO BASICO
01 Engine	Moteur	01 Motor	Motore	01 Motor
02 Engine Cooling System	Système de refroidissement du moteur	02 Kühlsystem	Impianto di raffreddamento	02 Sistema de refrigeración
04 Air Intake & Exhaust System	Admission d'air et système d'échappement	04 Ablaufleitung und Luftansaug	Scarico e aspirazione	04 Admisión de aire y sistema de escape
06 Fuel System	Système d'alimentation du carburant	06 Kraftstoffsystem	Sistema di alimentazione	06 Sistema de combustible
08 Engine Control System	Système de commande du moteur	08 Motorsteuerung	Sistema di controllo motore	08 Sistema de mando del motor
10 Superstructure	Superstructure	10 Aufbau	Sovrastruttura	10 Superestructura
12 Frame	Châssis	12 Chassis	Telaio	12 Bastidor
14 Nacle Fluids & Decals	Propres de structuration et décalcomanies	14 Typenschilder und Aufkleber	Targhe di rilievo e decalcomanie	14 Placas identificadoras de fábrica y calcomanías
16 Hydraulic Valves	Soupapes hydrauliques	16 Hydraulikventile	Valvole idrauliche	16 Válvulas hidráulicas
18 Hydraulic Pump	Pompes hydrauliques	18 Hydraulikpumpen	Pompa idraulica	18 Bombas hidráulicas
20 Hydraulic Cylinders	Cylindres hydrauliques	20 Hydraulische Zylinder	Cilindri idraulici	20 Cilindros hidráulicos
21 Hydraulic System Main	Système hydraulique Principal	21 Hydraulische Hauptanlage	Impianto idraulico Principale	21 Sistema hidráulico principal
22 Hydraulic System Steering	Système de direction hydraulique	22 Hydraulik-Steuerung	Servosterzo idraulico	22 Dirección de sistema hidráulico
24 Hydraulic System Transmission	Système de transmission hydraulique	24 Hydraulische Kraftübertragung	Trasmissione idraulica	24 Transmisión de sistema hidráulico
26 Steering	Direction	26 Lenkung	Sterzo	26 Dirección
32 Truck End Equipment	Equipement arrière	30 Vorderausrüstung	Equipaggiamento anteriore	30 Equipo frontal
32 Front End Attachments	Accessoires d'équipement arrière	31 Anbaugeräte Vorderer Ende	Attacchi Frontali	31 Adaptación delantera
32 Front End Equipment Controls	Commandes pour équipement arrière	32 Vorderseitige Steuerungen	Comando equipaggiamento anteriore	32 Control de equipo delantero
34 Transmission Controls	Commandes de transmission	34 Gaumenstreuerung	Comando transmissione	34 Mandos de la transmisión
36 Transmission Assembly	Boîte de vitesses	36 Schaltgetriebe	Cambio di velocità	36 Cambio
40 Torque Converter	Convertisseur de couple	40 Drehmomentwandler	Convertitore di coppia	40 Convertidor de par motor
42 Propeller Shafts	Arbres de transmission	42 Kardanwellen	Alberi di trasmissione	42 Árbol de transmisión
44 Front Axle	Pont avant	44 Vorderachse	Assale anteriore	44 Eje anterior
46 Rear Axle	Pont arrière	46 Hinterachse	Assale posteriore	46 Eje trasero
48 Brake System Main	Système de freinage Principal	48 Bremsystem Hauptanlage	Impianto Frenos Principale	48 Sistema principal de frenos
52 Brake Controls	Commandes de frein	52 Bremse Gestänge	Freno di Costante	52 Controles del freno
54 Wheels & Tires	Roues et pneus	54 Räder und Reifen	Ruote e pneumatici	54 Ruedas y neumáticos
56 Electrical Equipment & Wiring	Equipement électrique et cablage	56 Elektrische Ausrüstung und Verkabelung	Equipaggiamento elettrico e Cavi	56 Equipo eléctrico y cableado
58 Instrument Panel	Tableau de bord	58 Instrumentenfeld	Quadro Strumenti	58 Tableau de instrumentos

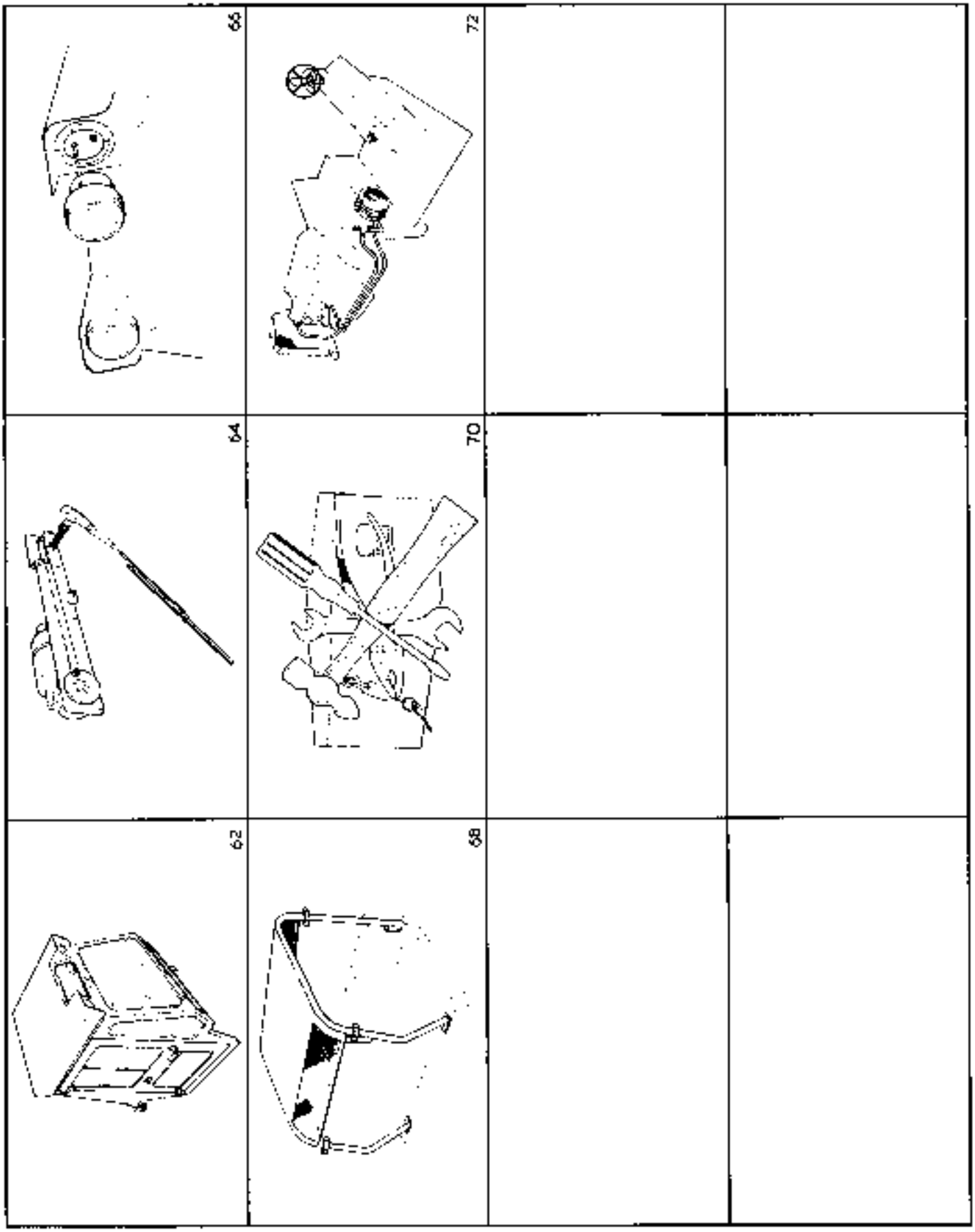
66
72
64
70
62
68

BASIC GROUPS – TRACTOR ACCESSORIES

ENGLISH	FRANCAIS	DEUTSCH	ITALIANO	ESPANOL
BASIC GROUP NUMBER	REPERTOIRE NUMERIQUE DES GROUPES DE BASE	GRUNDBAUGRUPPENVERZEICHNIS	INDICE NUMERICO DEI GRUPPI DI BASE	INDICE DE NUMERO DE GRUPO BASICO
62 Cab	Cabine	62 Fahrerhaus	Cabina	62 Cabina
64 Windscreen Wipers	Essuie Glace	64 Scheibenwischer	Tergicristallo	64 Limpiaparabrisas
66 Lamps	Phares	66 Scheinwerfer	Proiettori	66 Faros
68 Canopy	Toit	68 Dach	Tetto	68 Techo
70 Tools	Outils	70 Werkzeugausrüstung	Dotazione di Attrezzi	70 Juego de Herramientas
72 Heater and Demister	Appareil de Chauffage	72 Heizung	Riscaldatore	72 Calefaccion

PAGE NO.	DESIGNATION	REVISED
00E000	Engine & Mountings	Nov. 70
01E000	Radiator Connections	Nov. 70
02E001	Radiator & Mountings	Nov. 70
04E000	Air Cleaner Connections	Nov. 70
04E001	Air Cleaner Assembly	Nov. 70
04E041	Exhaust System	Nov. 70
06E000	(Illustration) Fuel Tank & Lines	Nov. 70
06E001	Fuel Tank & Lines	Nov. 70
08E000	(Illustration) Engine Controls	Nov. 70
08E001	Engine Controls	Nov. 70
10E000	(Illustration) Hood, Shroud & Grille	Nov. 70
10E001	Hood, Shroud & Grille	Nov. 70
10E021	Operators Compartment	Nov. 70
10E041	Seat Assembly	Nov. 70
12E000	(Illustration) Frame & Axle Cradle	Nov. 70
12E001	Frame, Axle Cradle & Counterweight	Nov. 70
14E000	Nameplates & Decals	Nov. 70
14E040	Nameplates & Decals (Continued)	Nov. 70
15E000	(Illustration) Control Valve Valve - Main Hydraulic	Nov. 70
15E001	Control Valve - Main Hydraulic	Nov. 70
16E000	Control Valve - Main Hydraulic (Continued)	Nov. 70
16E021	Pressure Relief Valve - Steering	Nov. 70
18E041	Valve - Run Around	Nov. 70
18E000	(Illustration) Pump - Main Hydraulic	Nov. 70
18E001	Pump - Main Hydraulic	Nov. 70
18E041	Pump - Steering Hydraulic	Nov. 70
20E001	Cylinder - Boom	Nov. 70
20E020	(Illustration) Cylinder - Bucket	Nov. 70
20E021	Cylinder - Bucket	Nov. 70
20E040	(Illustration) Cylinder - Steering	Nov. 70
20E041	Cylinder - Steering	Nov. 70
21E000	(Illustration) Hydraulic Lines - Main	Nov. 70
21E001	Hydraulic Lines - Main	Nov. 70
21E040	Hydraulic Lines - Main (Continued)	Nov. 70
21E060	Hydraulic Lines - Main (Continued)	Nov. 70
31E020	(Illustration) Reservoir - Hydraulic	Nov. 70
31E021	Reservoir - Hydraulic	Nov. 70

PAGE NO.	DESIGNATION	REVISED
22E000	(Illustration) Hydraulic Lines - Steering	Nov. 70
22E001	Hydraulic Lines - Steering	Nov. 70
24E000	(Illustration) Hydraulic Lines - Transmission	Nov. 70
24E001	Hydraulic Lines - Transmission	Nov. 70
28E001	Steering Linkage	Nov. 70
28E020	(Illustration) Steering Gear Assembly	Nov. 70
28E021	Steering Gear Assembly	Nov. 70
28E041	Steering Drag Link	Nov. 70
30E000	(Illustration) Front End Equipment	Nov. 70
30E001	Front End Equipment	Nov. 70
30E021	Bucket Leveller Lines	Nov. 70
30E041	Bucket Leveller Valve	Nov. 70
32E000	(Illustration) Bucket Assembly	Nov. 70
32E001	Bucket Assembly Data	Nov. 70
34E021	Controls - Front End Equipment	Nov. 70
36E000	(Illustration) Controls - Transmission	Nov. 70
36E001	Controls - Transmission	Nov. 70
36E020	(Illustration) Transmission Assembly Gear Groups	Nov. 70
36E021	Transmission Assembly Gear Groups	Nov. 70
36E040	Transmission Assembly Gear Groups (Continued)	Nov. 70
36E020	(Illustration) Transmission Case & Cover Group	Nov. 70
36E021	Transmission Case & Cover Group	Nov. 70
36E040	Transmission Case & Cover Group (Continued)	Nov. 70
36E041	Clutch Group - Forward & Second	Nov. 70
36E061	Clutch Group - Reverse & Third	Nov. 70
36E081	Clutch Group - Low	Nov. 70
36E101	Control Valve - Transmission	Nov. 70
40E000	(Illustration) Torque Converter Assembly	Nov. 70
40E001	Torque Converter & Mountings	Nov. 70
40E020	Torque Converter & Mountings (Continued)	Nov. 70
40E041	Pressure Regulating Valve - Torque Converter	Nov. 70
42E001	Propeller Shaft - Converter to Transmission	Nov. 70
42E021	Propeller Shaft - Transmission to Mid-Mount Bearing	Nov. 70
42E041	Propeller Shaft - Mid-Mount to Front Axle	Nov. 70
42E061	Propeller Shaft - Transmission to Rear Axle	Nov. 70
42E080	(Illustration) Mid-Mount Bearing Assembly	Nov. 70
42E081	Mid-Mount Bearing Assembly	Nov. 70

CONTENTS LIST INDEX 600 (Articulated) TRACTOR SHOVEL - MODEL 4120D

PAGE NO.	DESIGNATION	REVISED
44E000	(Illustration) Axle Assembly - Front	Nov. 70
41E001	Axle Assembly - Front	Nov. 70
41E020	(Illustration) Differential & Carrier Assembly - Front	Nov. 70
441021	Differential & Carrier Assembly - Front	Nov. 70
442041	Planet Carrier Assembly - Front	Nov. 70
14E061	Brake Assembly - Front	Nov. 70
14E081	Parking Brake Assembly	Nov. 70
46E000	(Illustration) Axle Assembly - Rear	Nov. 70
462001	Axle Assembly - Rear	Nov. 70
46E020	(Illustration) Differential & Carrier Assembly - Rear	Nov. 70
461021	Differential & Carrier Assembly - Rear	Nov. 70
461041	Planet Carrier Assembly - Rear	Nov. 70
46E061	Brake Assembly - Rear	Nov. 70
48E000	(Illustration) Brake Lines - Main	Nov. 70
48E001	Brake Lines - Main	Nov. 70
48E020	(Illustration) Brake Foot Valve	Nov. 70
48E021	Brake Foot Valve	Nov. 70
48E040	(Illustration) Brake Power Cluster Assembly	Nov. 70
48E.041	Brake Power Cluster Assembly	Nov. 70
48E.060	(Illustration) Brake Unloader Valve Assembly	Nov. 70
48E061	Brake Unloader Valve Assembly	Nov. 70
52E.C1	Parking Brake Linkage	Nov. 70
52E021	Parking Brake Lever Assembly	Nov. 70
52E041	Foot Brake Controls	Nov. 70
54E.C0	(Illustration) Wheel & Tyre Assembly	Nov. 70
54E.C1	Wheel & Tyre Assembly - rear	Nov. 70
56E.C0	(Illustration) Electrical Equipment	Nov. 70
56E.C1	Electrical Equipment	Nov. 70
561.C2	Circuit Wiring Diagram	Nov. 70
58E000	(Illustration) Instrument Panel	Nov. 70
58L.01	Instrument Panel	Nov. 70
62L000	(Illustration) Cab Assembly	Nov. 70
62E001	Cab Assembly	Nov. 70
62EC03	Cab Assembly (Continued)	Nov. 70
64E001	Windscreen Wiper Kit	Nov. 70
66L001	Cab Lights	Nov. 70
68E001	Canopy Kit	Nov. 70

PAGE NO.	DESIGNATION	REVISED
70E001	Tool Kit - Basic	Nov. 70
70E021	Tool Kit - Comprehensive	Nov. 70
72E001	Heater & Demister Kit	Nov. 70

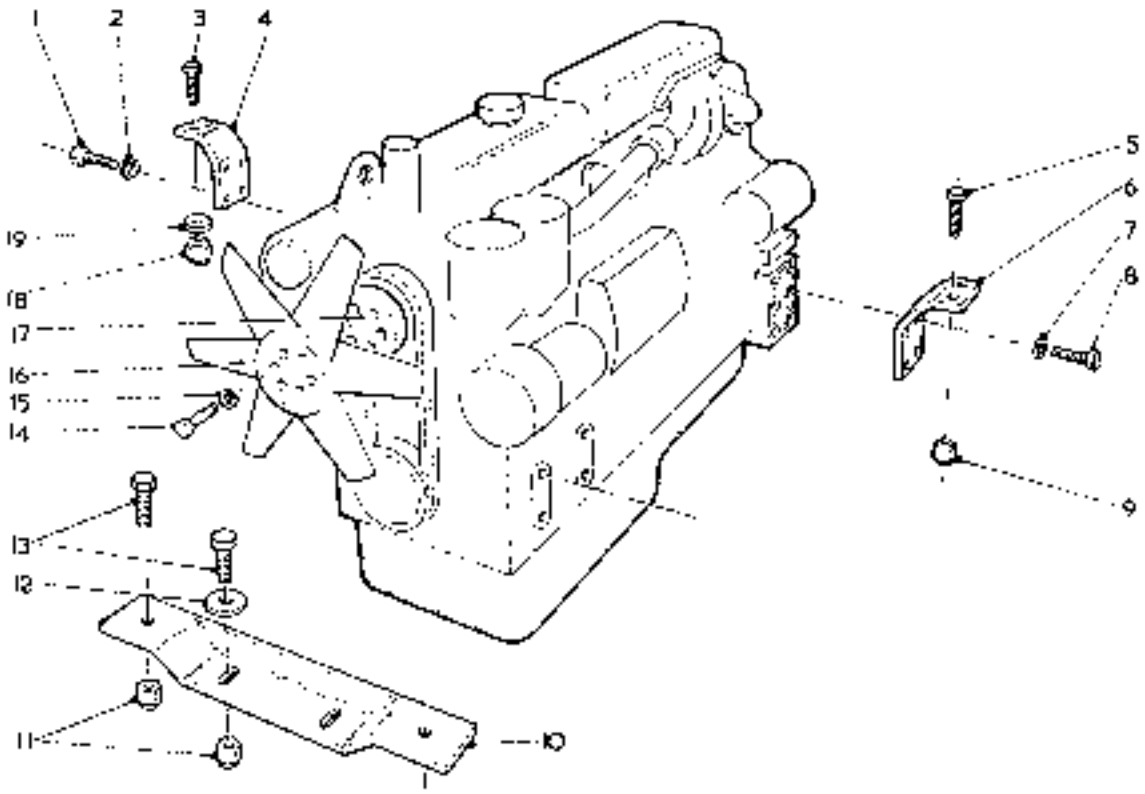

ENGINE MOUNTINGS TP3101

ITEM	PART		DESCRIPTION	QTY.
A	3235140		ENGINE LEYLAND 6A0 PP	1
1	3222251		BOLT BRACKET TO ENGINE	4
2	46-08		LOCKWASHER	6
3	180-1240		BOLT BRACKET TO FRAME	2
4	3228021		BRACKET ENGINE MTG	1
4A	3235645	*	PAD	1
5	180-1230		BOLT BRACKET TO FRAME	2
6	3228020		BRACKET ENGINE MOUNTING	1
6A	3235635	*	PAD	1
7	46-08		LOCKWASHER	4
8	3222251		BOLT BRACKET TO ENGINE	4

ITEM	PART		DESCRIPTION	QTY.
9	180-12		LOCKNUT	2
10	320/329		SUPPORT BRIDGE	1
11	180-10		LOCKNUT	4
12	619036		WASHER	2
14	181-1032		BOLT	4
14	3221799		BOLT FAN	6
15	45-06		LOCKWASHER	6
16	3215056		FAN	1
17	3215009		SPACER FAN	1
18	180-12		NUT	2
19	616804		WASHER	2

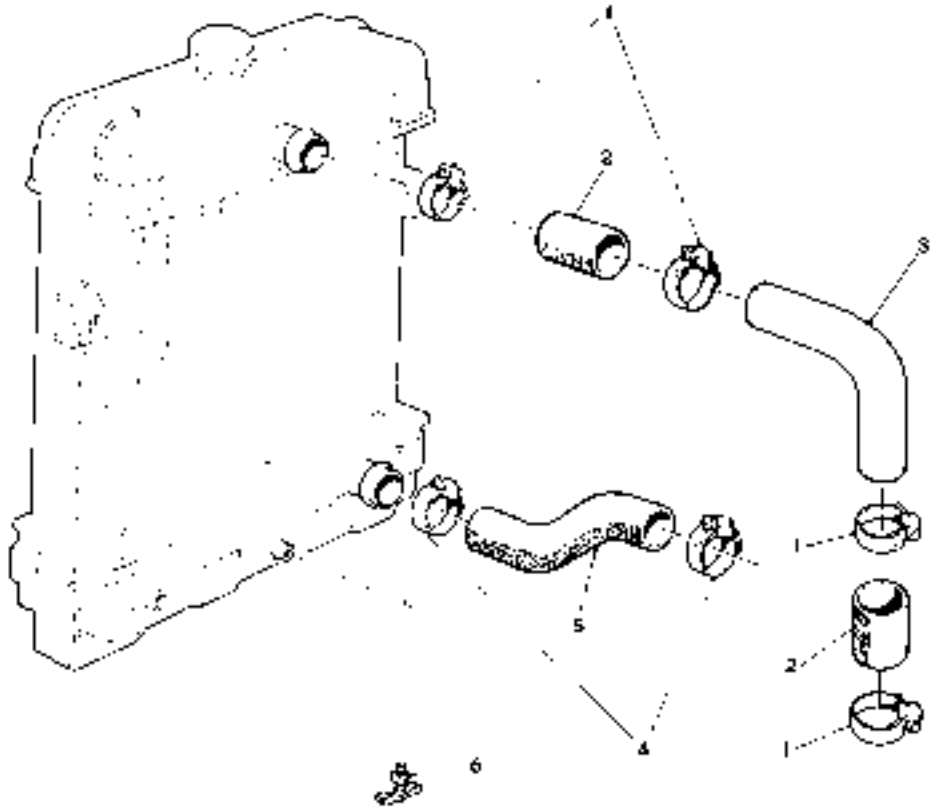

RADIATOR CONNECTIONS TP3555

ITEM	PART	DESCRIPTION	QTY.	ITEM	PART	DESCRIPTION	QTY.
1	3221045	CLAMP UPPER HOSE	4	4	3221645	CLAMP LOWER HOSE	2
2	3222321	HOSE UPPER TUBE	2	5	3227949	HOSE LOWER	1
3	3235404	TUBE RADIATOR UPPER	1	6	72F-2	COCK DRAIN	1

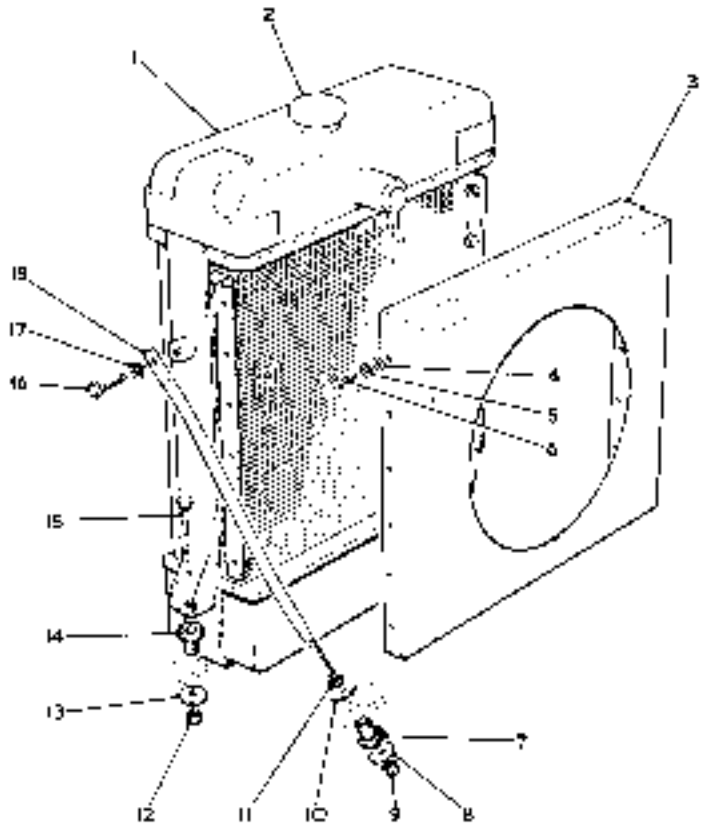

RADIATOR AND MOUNTINGS TP3153

ITEM	PART	DESCRIPTION	QTY.	ITEM	PART	DESCRIPTION	QTY.
1	4235343	RADIATOR ASSEMBLY INC 2	1	10	616796	WASHER	2
2	3213420	CAP	1	11	MD-08	NUT JAM	2
3	3235416	SHROUD FAN	1	12	18D-08	LOCKNUT	2
4	644422	WASHER	12	13	616796	WASHER	2
5	4E-05	LOCKWASHER	12	14	569734	DAMPENER VIBRATION	2
6	2E-510	BOLT SHROUD TO RADIATOR	12	15	2C-644	BOLT RADIATOR TO FRAME	2
7	569739	DAMPENER VIBRATION	2	16	2C-820	BOLT ROD TO RADIATOR	2
8	616796	WASHER	2	17	4E-06	LOCKWASHER	2
9	18D-06	LOCKNUT	2	18	1531786	ROD RADIATOR SUPPORT	2

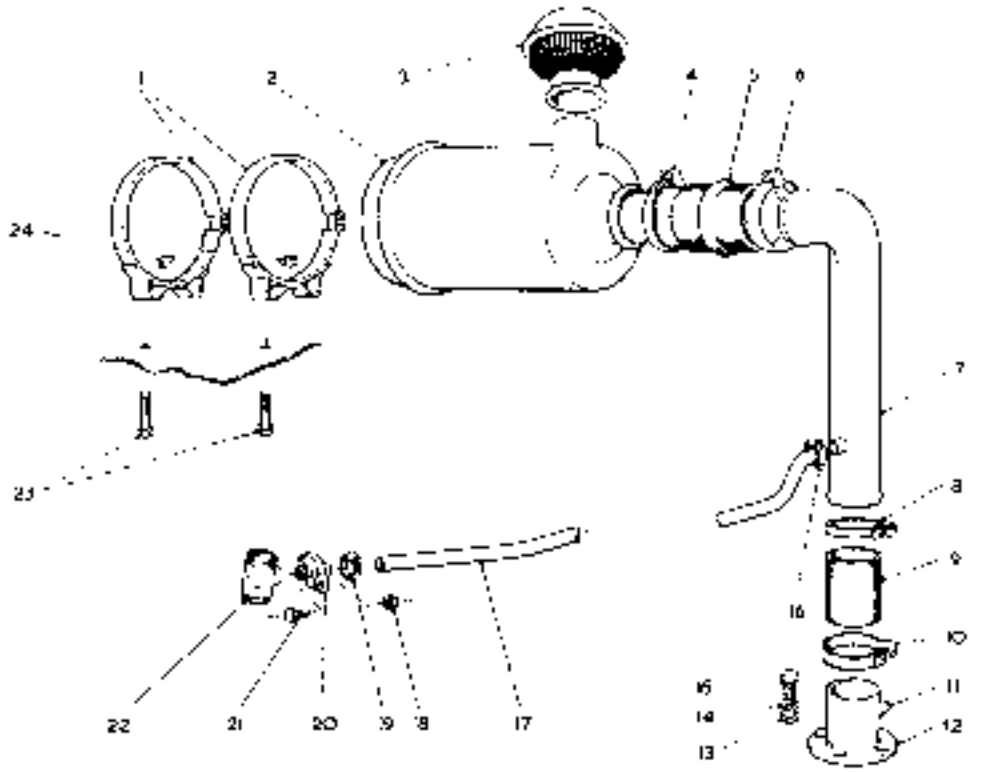

AIR CLEANER CONNECTIONS TP0591

ITEM	PART	DESCRIPTION	QTY.	ITEM	PART	DESCRIPTION	QTY.
1	948474	BAND BRACKET	2	13	614019	WASHER	4
2		AIR CLEANER SEE INDEX	1	14	4E-05	LOCKWASHER	4
3	1523649	CAP	1	15	3226577	BOLT FLANGE TO ENGINE	4
4	3233183	CLAMP HOSE	1	16	3220661	CLAMP HOSE	1
5	1522451	HOSE	1	17	3234297	HOSE	1
6	3221851	CLAMP HOSE	1	18	180-04	NUT	2
7	3233349	TUBE ASSEMBLY	1	19	3220883	CLAMP HOSE	1
8	3221851	CLAMP HOSE	1	20	3454359	FLANGE INDICATOR MTG	1
9	514429	HOSE	1	21	2C-410	BOLT	2
10	3221851	CLAMP HOSE	1	22	3454355	RESTRICTION INDICATOR	1
11	3209384	PLUG	1	23	2C-426	BOLT AIR CLEANER MOUNT	4
12	3220659	WASHER	1	24	120-06	LOCKNUT	4
12	3226577	FLANGE INTAKE PIPE	1				

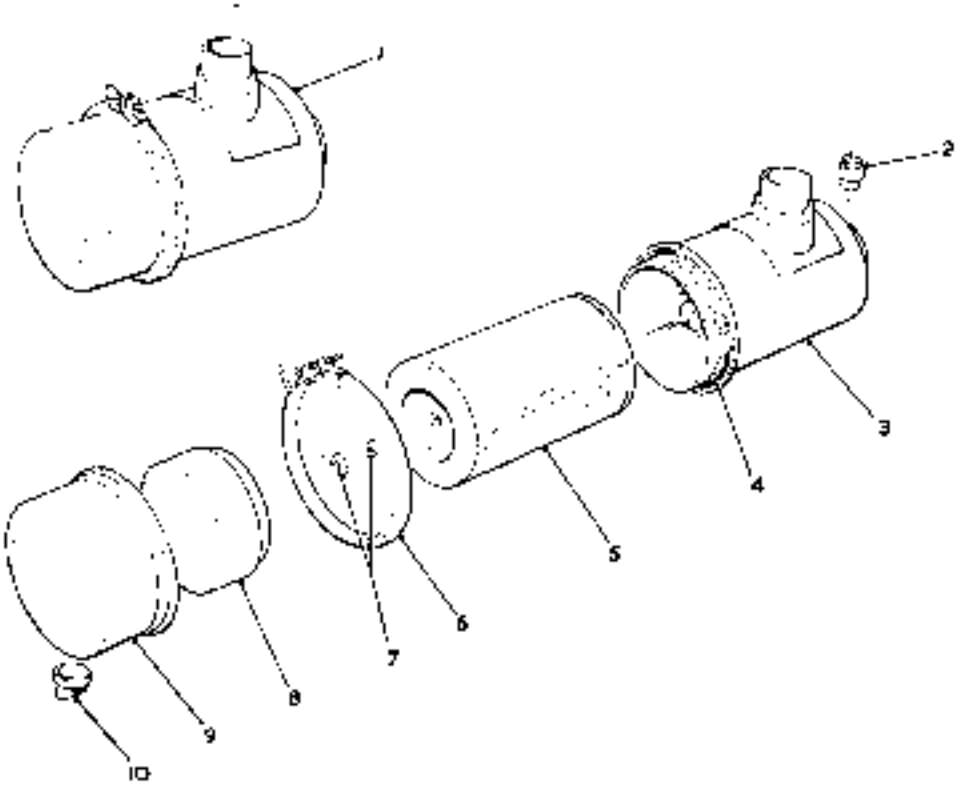

AIR CLEANER TP2864

ITEM	PART	DESCRIPTION	QTY	ITEM	PART	DESCRIPTION	QTY
1	1906090	AIR CLEANER ASSY INC 3-15	1	7	886527	WASHER	1
2	1721428	INDICATOR AIR CLEANER	1	7A	886526	NUT	1
3		▫ BODY SEL 1	1	8	547630	BAFFLE	3
4	886298	O RING DUST CAP	1	9	547637	CAP DUST	1
5	1990248	ELEMENT	1	10	546363	VACUATOR	1
6	945060	CLAMP	1				

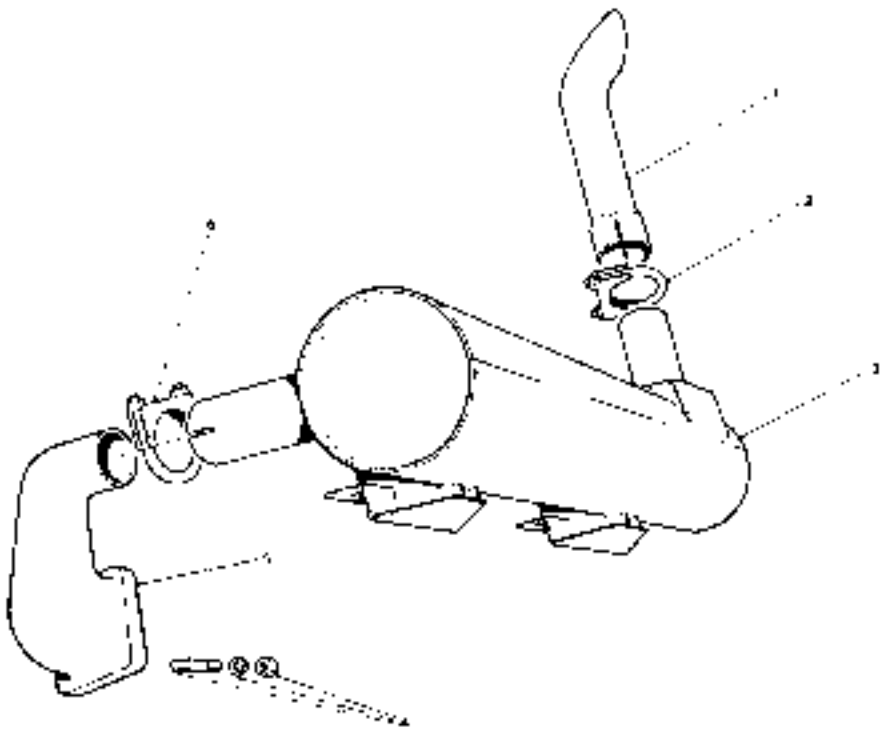

MUFFLER EXHAUST TP2453

ITEM	PART	DESCRIPTION	QTY.	ITEM	PART	DESCRIPTION	QTY.
1	3226481	TAILPIPE	1	4A	3228604	NUT	4
2	3226554	CLAMP TAILPIPE	1	4B	4E-08	LOCKWASHER	4
3	3219071	MUFFLER	1	5	3213593	ELBOW EXHAUST PIPE	1
4	3206946	STUD ELBOW TO MANIFOLD	4	6	940282	CLAMP	1

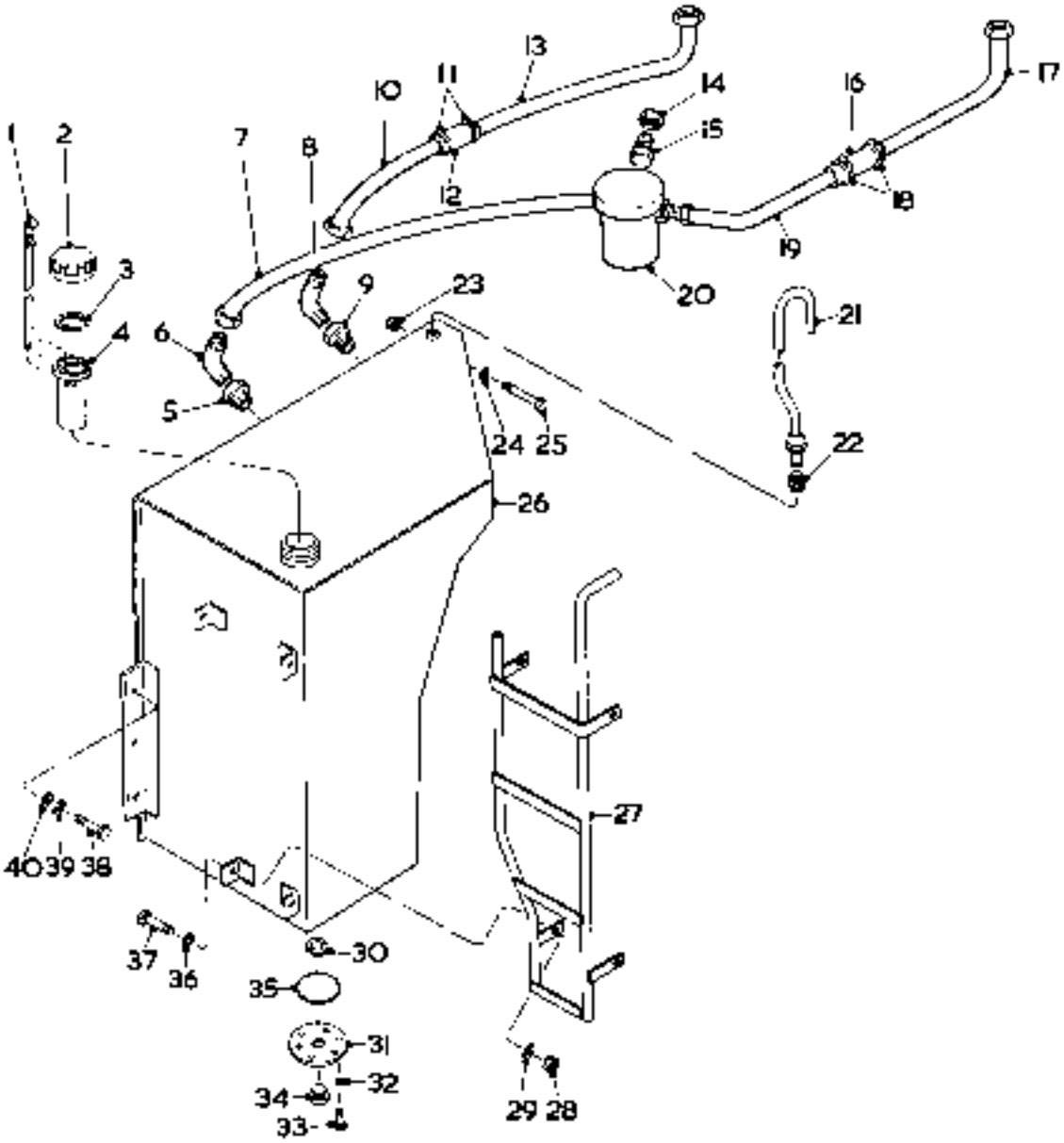

FUEL TANK & LINES

TP3533

FUEL TANK AND LINES

ITEM	PART		DESCRIPTION	QTY
1	1531783		DIPSTICK	1
2	3237250		CAP FUEL INC 2A & 3	1
2A	3237251		PLATE BACKING	1
3	3220936		RING SEAL	1
4	9-395T		SCREEN	1
5	19F-6		BUSHING REDUCING	1
6	521-9		ELBOW	1
7	3236254		PIPE FUEL FEED	1
8	42F-6		ELBOW	1
9	191-3		BUSHING REDUCING	1
10	3236253		PIPE FUEL RETURN	1
11	3220861		CLIP HOSE	2
12	3203482		HOSE CONNECTING	1
13	3229423		PIPE FUEL RETURN	1
14	180-06		LOCKNUT	2
15	20-620		BOLT FILTER MOUNTING	2
16	3224062		HOSE CONNECTING	1
17	3229424		PIPE FUEL FEED	1
18	3220863		CLIP HOSE	2
19	3236255		PIPE FUEL FEED	1
20	3223365		PRE-FILTER ASSY INC 20A&B	1
20A	3290476		BODY GLASS	1
20B	3290477	*	RING SEALING	1
21	1503579		TUBE BREATHER	1
21A	6H-4	*	CLIP	1
21B	20-612	*	HOSE	1
21C	180-06	*	LOCKNUT	1
22	32F-4		CONNECTOR	1
23	180-10		LOCKNUT	1
24	61A400		WASHER	1
25	20-1032		BOLT TANK TO FRAME	1
26	1531710		FUEL TANK	1
27	1531714		STRAP ASSEMBLY	1
28	180-08		LOCKNUT	4
29	61A024		WASHER	4
30	525293		MAGNET	1
31	587613		COVER INSPECTION	1
32	4L-08		LOCKWASHER	6
33	20-612		BOLT COVER TO TANK	6
34	4DK-16		PLUG	1
35	23K-40428		O-RING	1
36	619029		WASHER	4
37	20-620		BOLT STRAP TO TANK	4
38	20-1024		BOLT TANK TO FRAME	5
39	4E-10		LOCKWASHER	5
40	61A800		WASHER	5

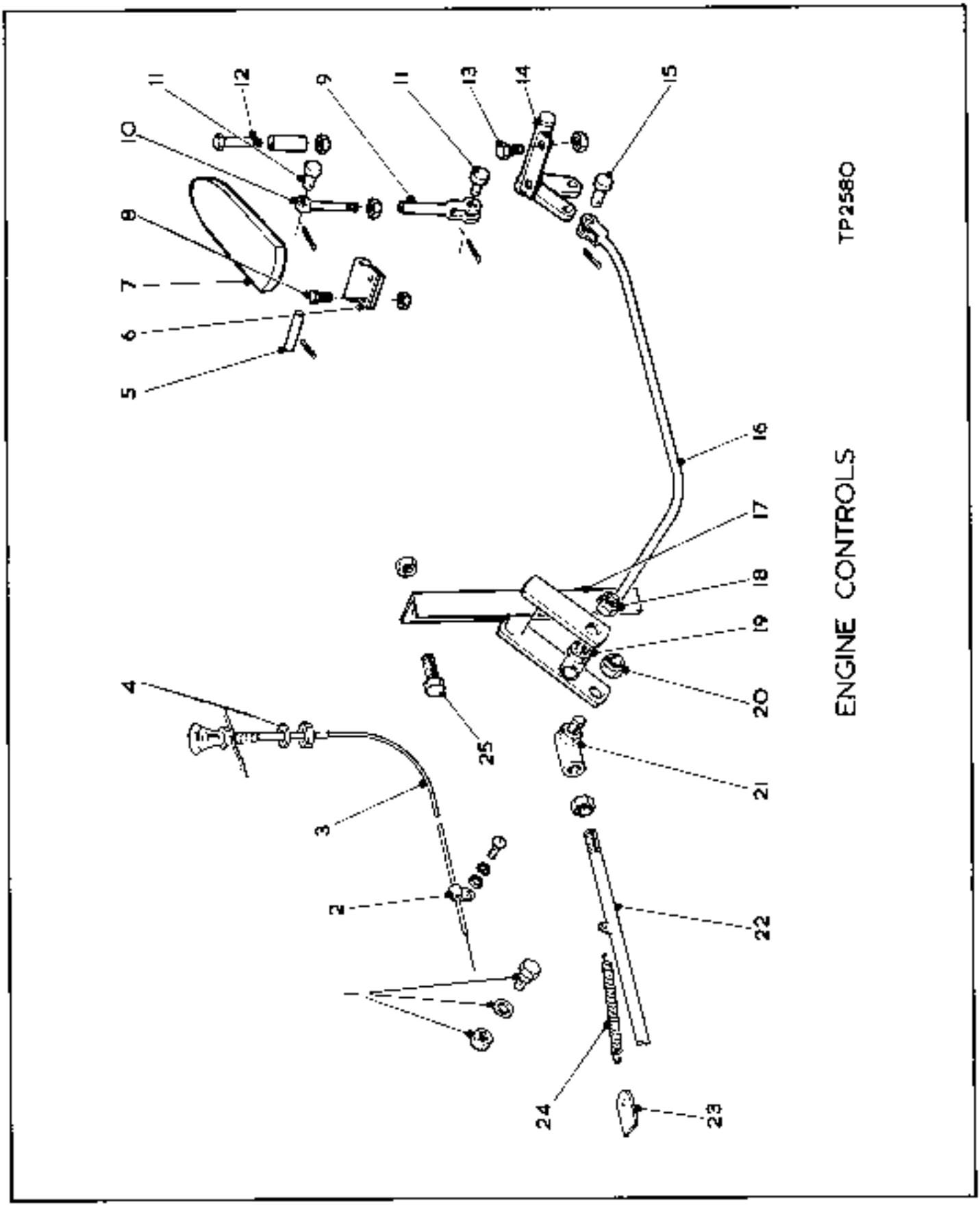
TP2580
ENGINE CONTROLS
1
2
3
4
5
6
7
8
9
10
11
12
13
14
15
16
17
18
19
20
21
22
23
24
25

ENGINE CONTROLS

ITEM	PART	DESCRIPTION	QTY.
1	3208284	ADAPTOR CABLE ENGINE STOP	1
1A	3220459	NUT	1
1B	664419	WASHER	1
1C	17E-10	* LOCKWASHER	1
2	3207293	CLIP CABLE ENGINE STOP	1
2A	3220451	SCREW	1
2B	17E-10	LOCKWASHER	1
2C	664423	WASHER	1
3	562122	CABLE	1
4	664423	WASHER ENGINE STOP	2
5	1F-316	COTTER PEDAL PIVOT	1
5A	623762	PIN	1
6	623760	BRACKET	1
6A	572554	SPACER	1
7	623829	PEDAL ACCELERATOR	1
8	2C-416	BOLT BRACKET PEDAL PIVOT	2
8A	10D-04	NUT	2
9	2J-4200	CLEVIS	1
9A	8D-04	NUT	1
10	550619	ROD PEDAL LINKAGE	1
11	4F-04051	PIN CLEVIS	2
11A	1F-708	PIN COTTER	2
12	24C-448	BOLT PEDAL STOP	1
12A	551016	STOP PEDAL	1
12B	15D-04	LOCKNUT	1
13	2C-416	BOLT	2
13A	18D-04	LOCKNUT	2
14	549941	BELLCRANK ASSEMBLY	1
15	4F-04051	PIN CLEVIS	1
15A	1F-208	PIN COTTER	1
16	3229410	ROD CONTROL	1
17	3229406	BELLCRANK REAR	1
18	66D-05	NUT RETAINER	1
19	1301361	BALLJOINT CONTROL ROD	1
19A	8D-05	NUT	1
20	66D-05	LOCKNUT RETAINER	1
21	1301360	BALLJOINT	1
21A	8D-05	NUT	1
22	3229441	ROD CONTROL REAR	1
23	3229430	ANCHOR THROTTLE SPRING	1
24	551090	SPRING THROTTLE	1
25	2C-616	BOLT BELLCRANK REAR	2
25A	18D-06	NUT	2

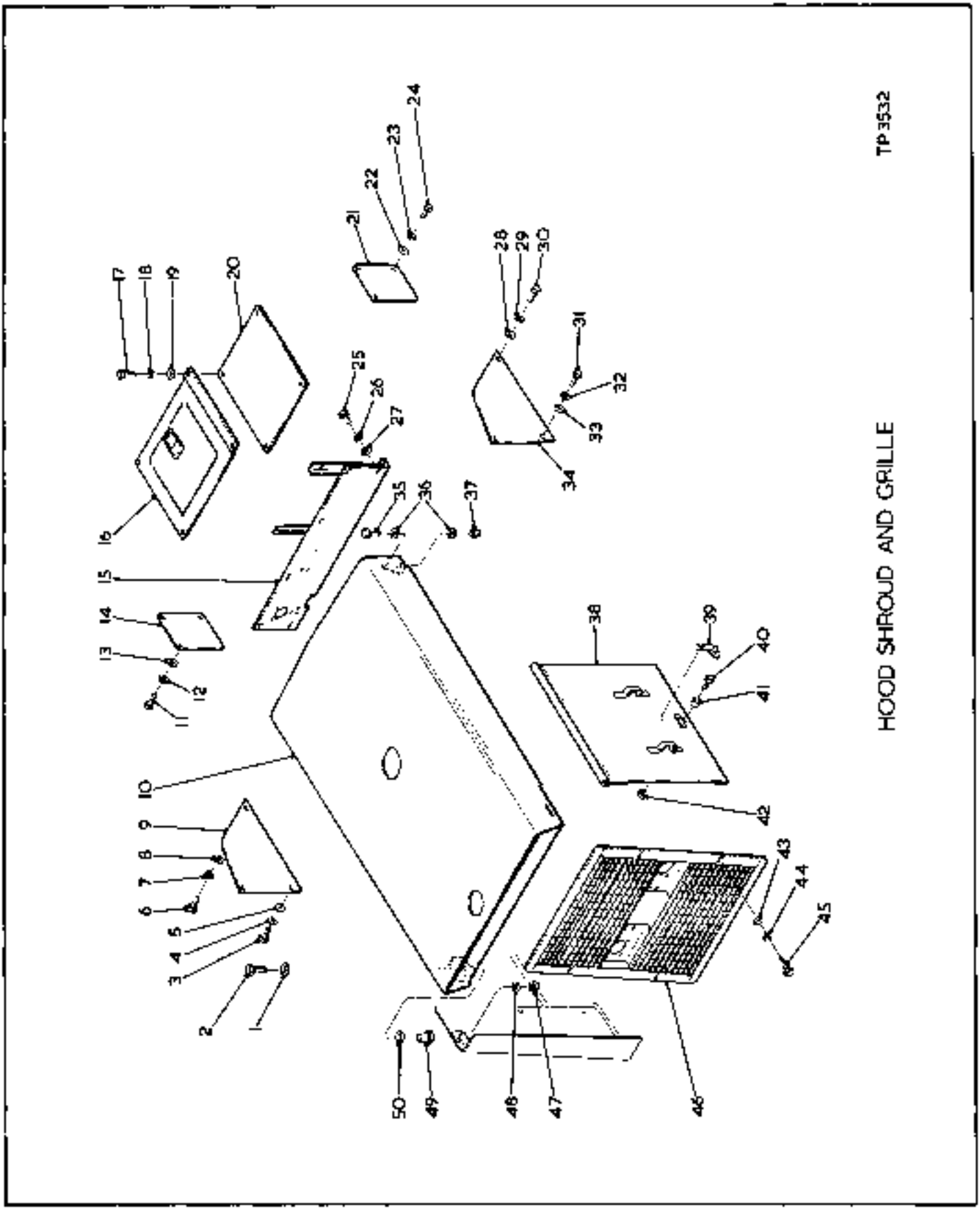
TP3532
HOOD SHROUD AND GRILLE

HOOD, SHROUD AND GRILLE

ITEM	PART	DESCRIPTION	QTY.
1	615021	WASHER	2
2	2C-632	BOLT HOOD MOUNTING	2
3	1C-616	BOLT PLATE TO FRAME	2
4	4E-06	LOCKWASHER	2
5	656672	WASHER	2
6	2C-620	BOLT PLATE TO FRAME	1
7	4E-06	LOCKWASHER	1
8	656672	WASHER	1
9	1531803	PLATE ACCESS	1
10	3235318	HOOD ASSEMBLY	1
11	1C-616	BOLT PLATE TO COCKPIT	3
12	4E-06	LOCKWASHER	3
13	656672	WASHER	3
14	1532766	PLATE COCKPIT	1
15	3235320	PLATE ASSEMBLY	1
16	1531801	PLATE COVER LH	1
17	1C-616	BOLT COVER PLATES / FRAME	6
18	4E-06	LOCKWASHER	6
19	656672	WASHER	6
20	1531804	PLATE COVER RH	1
21	1532746	PLATE COCKPIT	1
22	656672	WASHER	3
23	4E-06	LOCKWASHER	3
24	1C-616	BOLT PLATE TO COCKPIT	3
25	1C-620	BOLT PLATE TO FRAME	6
26	4E-06	LOCKWASHER	6
27	656672	WASHER	6
28	656672	WASHER	1
29	4E-06	LOCKWASHER	1
30	2C-620	BOLT PLATE TO FRAME	1
31	1C-616	BOLT PLATE TO FRAME	2
32	4E-06	LOCKWASHER	2
33	656672	WASHER	2
34	1531803	PLATE ACCESS	1
35	2C-624	BOLT HOOD MOUNTING	2
36	615021	WASHER	4
37	18C-06	LOCKNUT	2
38	3235346	PANEL SIDE	4
39	3215086	CATCH ASSEMBLY	4
40	3220858	SCREW BUMPER TO PANEL	4
41	3215486	BUMPER	4
42	3220859	NUT	4
43	635642	WASHER	4
44	4E-08	LOCKWASHER	4
45	2C-624	BOLT GRILLE MOUNTING	4
46	3227303	GRILLE ASSEMBLY	1
47	18C-06	LOCKNUT	2
48	615021	WASHER	2
49	568276	DAMPENER VIBRATION	2
50	615021	WASHER	2

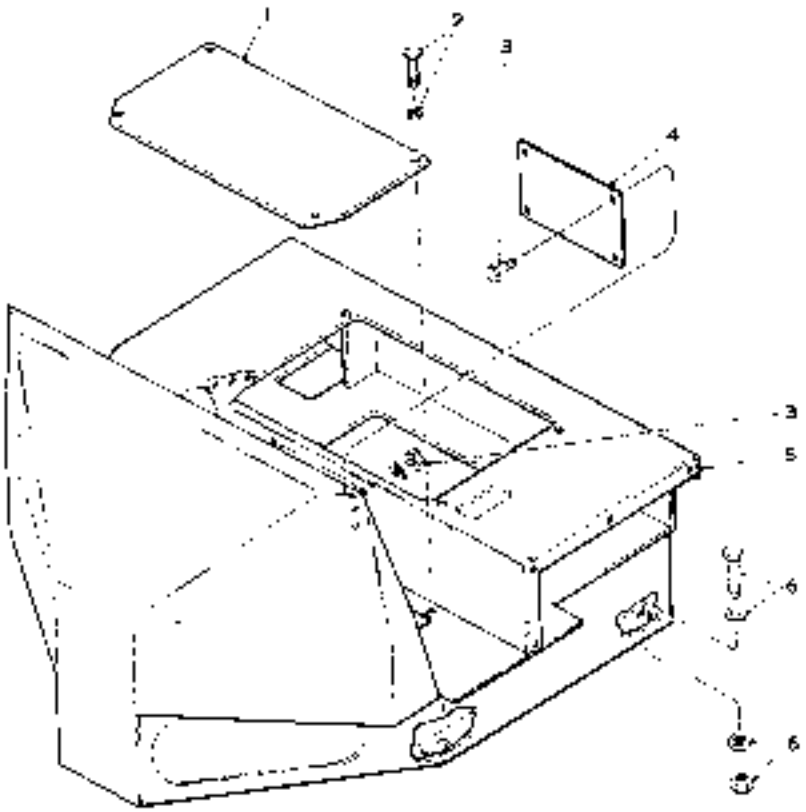

OPERATORS COMPARTMENT TP2595

ITEM	PART	DESCRIPTION	QTY.
1	568946	PLATE FLOORBOARD	1
2	24-816	BOLT FLOORBOARD PLATE	4
2A	46-08	LOCKWASHER	4
3	20-612	BOLT HEATER COVER PLATE	4
3A	180-04	LOCKNUT	4
4	557057	PLATE HEATER COVER	1
5	3237652	CockPIT ASSEMBLY	1
6	20-840	BOLT COCKPIT TO FRAME	4
6A	619029	WASHER	4
6B	180-08	LOCKNUT	4
7	3229225	GROMMET	1

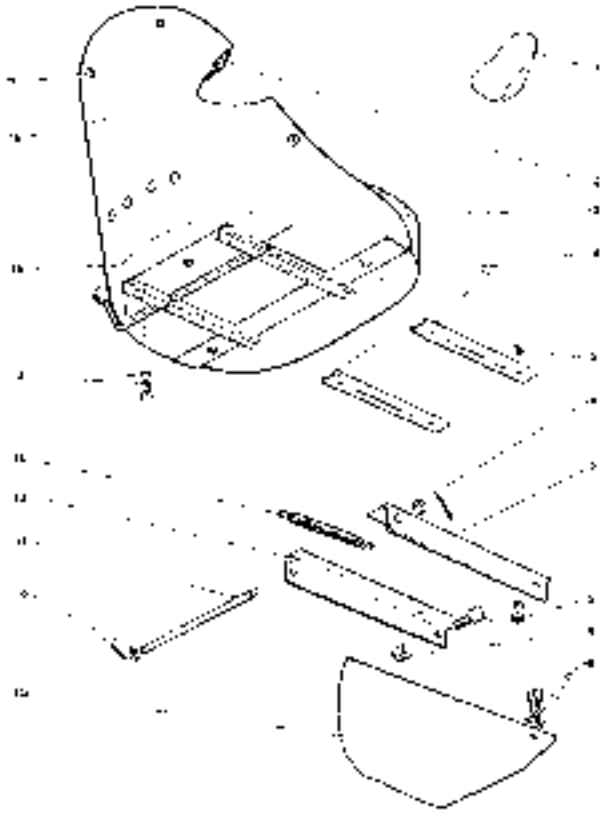

ITEM	PART	DESCRIPTION	QTY.	ITEM	PART	DESCRIPTION	QTY.
1	3209873	SEAT & SLIDE INC 4-14&1A	1	9B	619029	WASHER	5
2	3203876	CUSHION BACKREST	1	10	566701	SEAT BASE ASSY	1
3	3203875	CUSHION SEAT	1	11	557458	BAR SEAT MOUNTING	1
4	9205427	SLIDE SET	1	12	558879	ANGLE L H	1
5	86-518	SCREW SLIDE SET TO ANGLE	4	13	550301	SPRING	1
5A	619019	WASHER	4	14	2C-512	BOLT SLIDE SET TO SEAT	4
5B	670-05	LOCKNUT	4	14A	5L-05	LOCKWASHER	4
6	1F-920	PIN SOTTLR MTG BAR	2	15	2C-412	BOLT SEAT CUSHION	3
6A	666406	WASHER	2	15A	619018	WASHER	3
7	558272	ANGLE R H	1	16	3203874	SEAT ASST INC 2+3,15-17	1
8	2C-824	BOLT ANGLE TO BRACKET	2	16A	3203874	SEAT PAN	1
8A	680-06	LOCKNUT	2	17	2C-408	BOLT BACKREST CUSHION	5
9	1C-820	BOLT BASE TO COCKPIT	5	17A	619018	WASHER	5
9A	4E-08	LOCKWASHER	5				

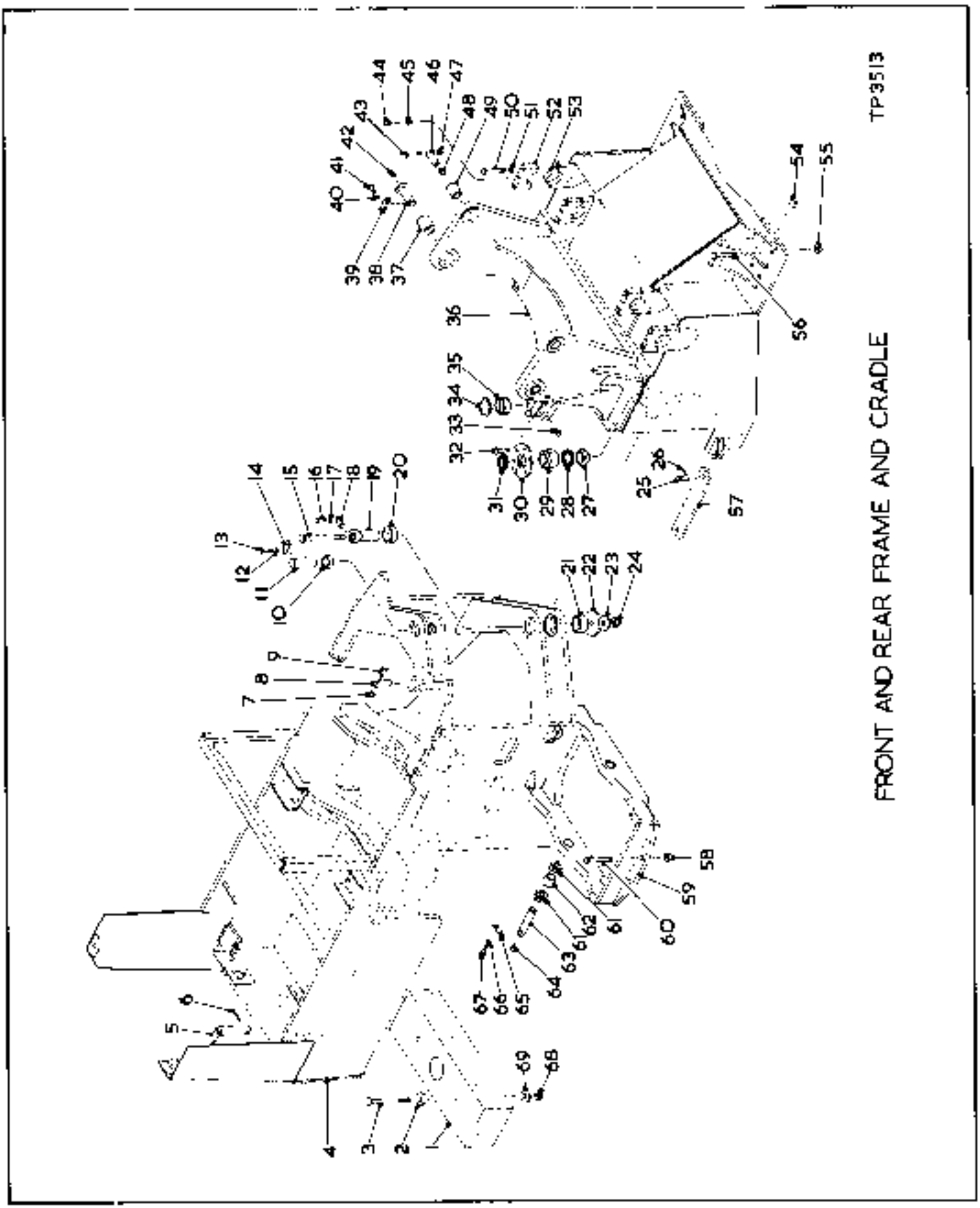
TP3513
FRONT AND REAR FRAME AND CRADLE

FRAME, AXLE CRADLE AND COUNTERWEIGHT

ITEM	PART	DESCRIPTION	QTY.
1	1546420	COUNTERWEIGHT	1
2	1506751	WASHER	2
3	2C-12184	BOLT COUNTERWEIGHT MOUNT	2
4	3237622	FRAME ASSEMBLY REAR	
		INC 10,20 & 21	1
5	1506618	PIN DRAWBAR	1
6	LF-1252	SPLIT PIN	1
7	660-08	NUT	4
8	1506539	PIN STEERING CYLINDER	4
9	2C-864	BOLT	4
10	1522035	BUSHING UPPER HINGE	2
11	1530845	PIN UPPER HINGE	1
12	4E-08	LOCKWASHER	2
13	2C-820	BOLT	2
14	1532917	LOCKPLATE	1
15	24C-20164	BOLT LOWER HINGE	1
16	2C-820	BOLT	2
17	4E-08	LOCKWASHER	4
18	1532917	LOCKPLATE	1
19	1507654	PIN LOWER HINGE	1
20	1531727	BUSHING LOWER HINGE	1
21	572818	BUSHING LOWER HINGE	1
22	1522429	PLATE BUSHING RETAINING	1
23	1522428	WASHER	1
24	160-20	LOCKNUT	1
25	1502700	COTTER PIN	2
26	1F-424	SPLIT PIN	2
27	1531573	SPACER	1
28	1530842	SEAL	1
29	1501478	BUSHING	1
30	1507655	CAP,BUSHING RETAINING	1
31	1530843	SEAL	1
32	24C-1032	BOLT CAP TO FRAME	6
33	10H-25	GREASE FITTING	2
34	710943	RING BUSHING RETAINING	1
35	669896	BUSHING	1
36	3235034	FRAME ASSEMBLY MOUNT	
		INC 37+45+52	1
37	1544027	BUSHING BOOM PIVOT	2
38	1535876	PIN	2
38A	1540168	SPACER BOOM TO FRAME	AR
39	540594	LOCKPLATE	4
40	4E-20	LOCKWASHER	8
41	2C-1024	BOLT	8
42	10H-25	GREASE FITTING	2
43	2C-880	BOLT	2
44	10H-6	GREASE FITTING	4
45	1506645	BOLT	4
46	568649	PIN BUCKET CYLINDER	2
47	1MD-08	NUT	2
48	10H-25	GREASE FITTING	2
49	1531945	BUSHING	2
50	24C-1272	BOLT	8
51	4E-32	LOCKWASHER	8
52	1544350	CAP BOOM CYLINDER ANCHOR	4
53	1530949	BUSHING	4
54	675316	RECTANGULAR FLAT	4
55	660-20	NUT AXLE MOUNTING FRONT	8
56	24C-20128	BOLT AXLE MOUNTING FRONT	8
57	1531954	LINK SAFETY	1
58	660-16	NUT AXLE MOUNTING REAR	8
59	1531775	CRADLE ASSY AXLE INC 62	1
60	24C-1672	BOLT AXLE MOUNTING REAR	8
61	552146	WASHER	AR
61A	552147	WASHER	AR
62	1542804	BUSHING	2
63	1531783	PIN CRADLE TO FRAME	2
64	11H-16	GREASE FITTING	2
65	568259	LOCKPLATE	2
66	4E-08	LOCKWASHER	4
67	2C-820	BOLT	4
68	1MD-12	NUT COUNTERWEIGHT MOUNT	2
69	1506753	WASHER	2

NAMEPLATES AND DECALS (Not Illustrated)

ENGLISH

ITEM	PART	DESCRIPTION	QTY.	ITEM	PART	DESCRIPTION	QTY.
1	3235258	PLATE SERIAL NUMBER	1	9	1509581	DECAL SAFETY WIRING	1
1A	6C-605	SCREW	4	10	1505537	DECAL SAFETY WARNING	1
2	564011	NAMEPLATE CASTING GRILLE	1	11	3230534	DECAL ALTERNATOR WARNING	1
2A	63C-418	SCREW	4	12	542740	DECAL ARTIC WARNING	2
3	547851	DECAL CLARK EQUIPMENT	2	13	1527436	PLATE RESERVOIR SERVICE	1
4	547852	DECAL MICHIGAN	3	14	1505536	DECAL WARM UP WARNING	1
5	1541706	DECAL MODEL	2	15	3208202	NAMEPLATE ENGINE TEMP	1
6	3236929	DECAL LEVER MOVEMENT	1	16	3208204	NAMEPLATE CONVERTER TEMP	1
7	548074	PLATE OPERATING PRECAUTION	1	17	3232792	NAMEPLATE STARTER SWITCH	1
7A	65G-406	SCREW	4	18	3220676	NAMEPLATE HEAD/TAIL LAMP	1
8	537256	DECAL GRAIN	1	19	3220677	NAMEPLATE REVERSE LAMP	1

FRENCH

ITEM	PART	DESCRIPTION	QTY.	ITEM	PART	DESCRIPTION	QTY.
1	3235258	PLATE SERIAL NUMBER	1	9	3238021	DECAL SAFETY WIRING	1
1A	6C-605	SCREW	4	10	3238011	DECAL SAFETY WARNING	1
2	564011	NAMEPLATE CASTING GRILLE	1	11	3238024	DECAL ALTERNATOR WARNING	1
2A	63G-418	SCREW	4	12	3238025	DECAL ARTIC WARNING	2
3	547851	DECAL CLARK EQUIPMENT	2	13	3238022	PLATE RESERVOIR SERVICE	1
4	547852	DECAL MICHIGAN	3	14	3238014	DECAL WARM UP WARNING	1
5	1541706	DECAL MODEL	2	15	3238004	NAMEPLATE ENGINE TEMP	1
6	3236929	DECAL LEVER MOVEMENT	1	16	3237999	NAMEPLATE CONVERTER TEMP	1
7	3238023	PLATE OPERATING PRECAUTION	1	17	3238010	NAMEPLATE STARTER SWITCH	1
7A	65G-406	SCREW	4	18	3238016	NAMEPLATE HEAD/TAIL LAMP	1
8	3237998	DECAL GRAIN	1	19	3238009	NAMEPLATE REVERSE LAMP	1

(Continued)

NAME PLATES AND DECALS (Continued)

SPANISH

ITEM	PART	DESCRIPTION	QTY.	ITEM	PART	DESCRIPTION	QTY.
1	3235258	PLATE SERIAL NUMBER	1	9	3238074	DECAL SAFETY WIRING	1
1A	6C-605	SCREW	4	10	3238068	DECAL SAFETY WARNING	1
2	544011	NAMEPLATE CASTING GRILLE	1	11	3238081	DECAL ALTERNATOR WARNING	1
2A	43G-418	SCREW	4	12	3238041	DECAL ARTIC WARNING	2
3	547851	DECAL CLARK EQUIPMENT	2	13	3238075	PLATE RESERVOIR SERVICE	1
4	547852	DECAL MICHIGAN	3	14	3238071	DECAL WARM UP WARNING	1
5	1541706	DECAL MODEL	2	15	3238061	NAMEPLATE ENGINE TEMP	1
6	3236929	DECAL LEVER MOVEMENT	1	16	3238056	NAMEPLATE CONVERTER TEMP	1
7	3238080	PLATE OPERATING PRECAUTION	1	17	3238067	NAMEPLATE STARTER SWITCH	1
7A	65G-406	SCREW	4	18	3238074	NAMEPLATE HEAD/TAIL LAMP	1
8	3238055	DECAL DRAIN	1	19	3238064	NAMEPLATE REVERSE LAMP	1

GERMAN

ITEM	PART	DESCRIPTION	QTY.	ITEM	PART	DESCRIPTION	QTY.
1	3235258	PLATE SERIAL NUMBER	1	9	3238050	DECAL SAFETY WIRING	1
1A	6C-605	SCREW	4	10	3238039	DECAL SAFETY WARNING	1
2	544011	NAMEPLATE CASTING GRILLE	1	11	3238053	DECAL ALTERNATOR WARNING	1
2A	43G-418	SCREW	4	12	3238054	DECAL ARTIC WARNING	2
3	547851	DECAL CLARK EQUIPMENT	2	13	3238051	PLATE RESERVOIR SERVICE	1
4	547852	DECAL MICHIGAN	3	14	3238042	DECAL WARM UP WARNING	1
5	1541706	DECAL MODEL	2	15	3238032	NAMEPLATE ENGINE TEMP	1
6	3236929	DECAL LEVER MOVEMENT	1	16	3238027	NAMEPLATE CONVERTER TEMP	1
7	3238052	PLATE OPERATING PRECAUTION	1	17	3238038	NAMEPLATE STARTER SWITCH	1
7A	65G-406	SCREW	4	18	3238046	NAMEPLATE HEAD/TAIL LAMP	1
8	3238026	DECAL DRAIN	1	19	3238037	NAMEPLATE REVERSE LAMP	1

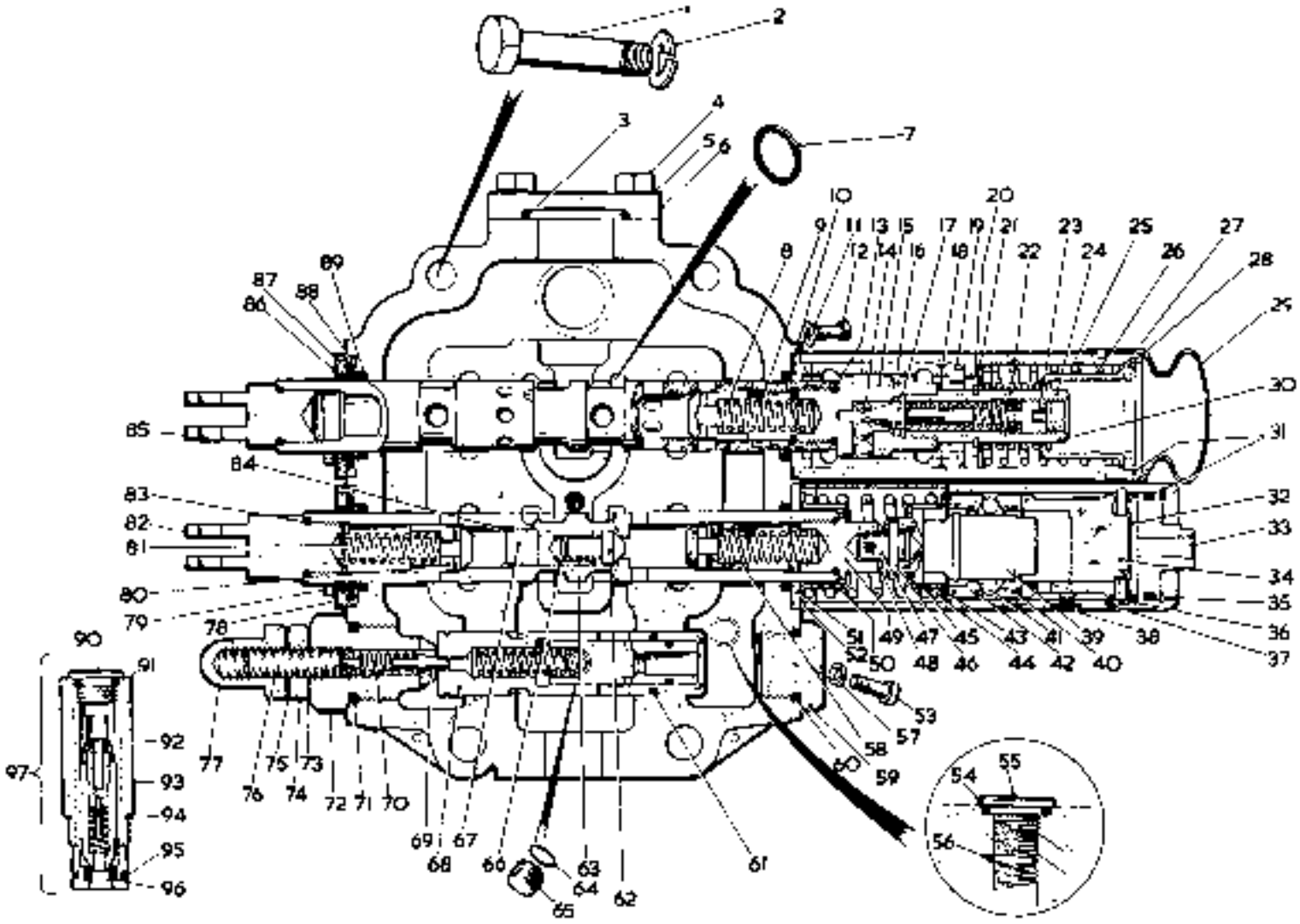

CONTROL VALVE MAIN HYDRAULIC

TP 3546

CONTROL VALVE—MAIN HYDRAULIC

ITEM	PART	DESCRIPTION	QTY.
A	3237046	CONTROL VALVE ASSEMBLY	
		LNG J-97	1
1	20-366	BOLT VALVE MOUNTING	8
2	46-08	LOCKWASHER	8
3	25K-40116	O RING	1
4	EC-720	BOLT COVER TO VALVE	4
5	3240979	WASHER	4
6	945064	COVER VALVE HOUSING	1
7	25K-40112	O RING	1
8	946464	VALVE CHECK	1
9	3213910	SPRING CHECK	1
10	3291759	RETAINER O RING	1
11	3242340	WASHER	2
12	10-314	BOLT DETENT COVER	2
13	25K-40028	O RING	2
14	BCJ-12	BALL DETENT	6
15	3292608	CAP POPPET	1
16	3292607	SLEEVE DETENT	1
17	3292609	POPPET	1
18	945079	O RING	1
19	3290247	SPACER	1
20	703742	RING SNAP	1
21	3292611	RETAINER SPRING	1
22	3293610	SPRING	1
23	3292613	SCREW ADJUSTING	1
24	3292612	CAP	1
25	3291760	COVER DETENT	1
26	3290447	SPRING RETAIN	1
27	3290460	RETAINER SPRING	1
28	3291763	PLUG	1
29	3291764	COVER RUBBER	1
30	3292606	SPRING SECONDARY RETURN	1
31	1302113	RING SNAP	2
32	947214	DIAPHRAGM	1
33	3291754	ADAPTER PLUG	1
34	3291756	SPACER	1
35	25K-40128	O RING	1
36	3291755	SPACER	1
37	3291752	COVER DETENT	1
38	3213907	PLUG BLEED	1
39	945072	CAP DETENT	1
40	3290323	RETAINER BALL	1
41	BCJ-08	BALL DETENT	18
42	3290329	RETAINER BALL	1
43	1302114	RING SNAP	1
44	3290647	SPRING RETURN	1
45	3213853	RETAINER SPRING	1
46	3213846	SPOOL	1
47	3213646	PIN	1
48	3213847	HOUSING	1
49	3213845	CAP PLUNGER	1
50	3291757	RETAINER SPRING	1
51	3213839	RETAINER SEAL	1
52	3291758	SPACER	1
53	10-414	BOLT	2
54	25K-30026	O RING	1
55	3290224	PLUG AUXILIARY	1
56	25K-70024	O RING	1
57	3242344	WASHER	2
58	3213510	SPRING CHECK	1
59	886294	CAP	1
60	25K-40104	O RING	1
61	25K-30030	O RING	1
62	3291763	VALVE CHECK	1
63	946766	SPRING CHECK	1
64	25K-3	PLUG	1
65	91F-3	O RING	1
66	899787	PLUG PRESSURE	1
67	3291760	CAP	1
68	3213845	CARTRIDGE ASSEMBLY	1
69	886732	POPPET	1
70	3213745	SPRING	1
71	25K-30106	O RING	1
72	3292186	CAP	1

(Continued)

CONTROL VALVE—MAIN HYDRAULIC (Continued)

ITEM	PART	DESCRIPTION	QTY.
73	3213840	WASHER	1
74	6C-08	NUT JAM	1
75	3211840	WASHER	1
76	944835	SCREW ADJUSTING	1
77	944853	NUT ACORN	1
78	3292349	WASHER	4
79	1C-510	BOLT WIPER RETAINER	4
80	941463	VALVE CH LX	2
81	3290326	SPRING CHECK	1
82	946265	EYE	1
83	25K-40023	O RING	2
84	25K-30010	O RING	1
85	946265	EYE	1
86	3290218	RETAINER WIPER	2
87	888257	WIPER	2
88	3215838	RETAINER O RING	2
89	25K-40112	O RING	4
90		■ CAP SEE 97	1
91	25K-30016	O RING	1
92		■ CARTRIDGE ASSEMBLY	1
93		■ SLEEVE	1
94	25K-30026	O RING	1
95	25K-20024	O RING	1
96		■ SEAT SEE 97	1
97	3252305	RELIEF VALVE ASSY DUMP INC 90-96	1

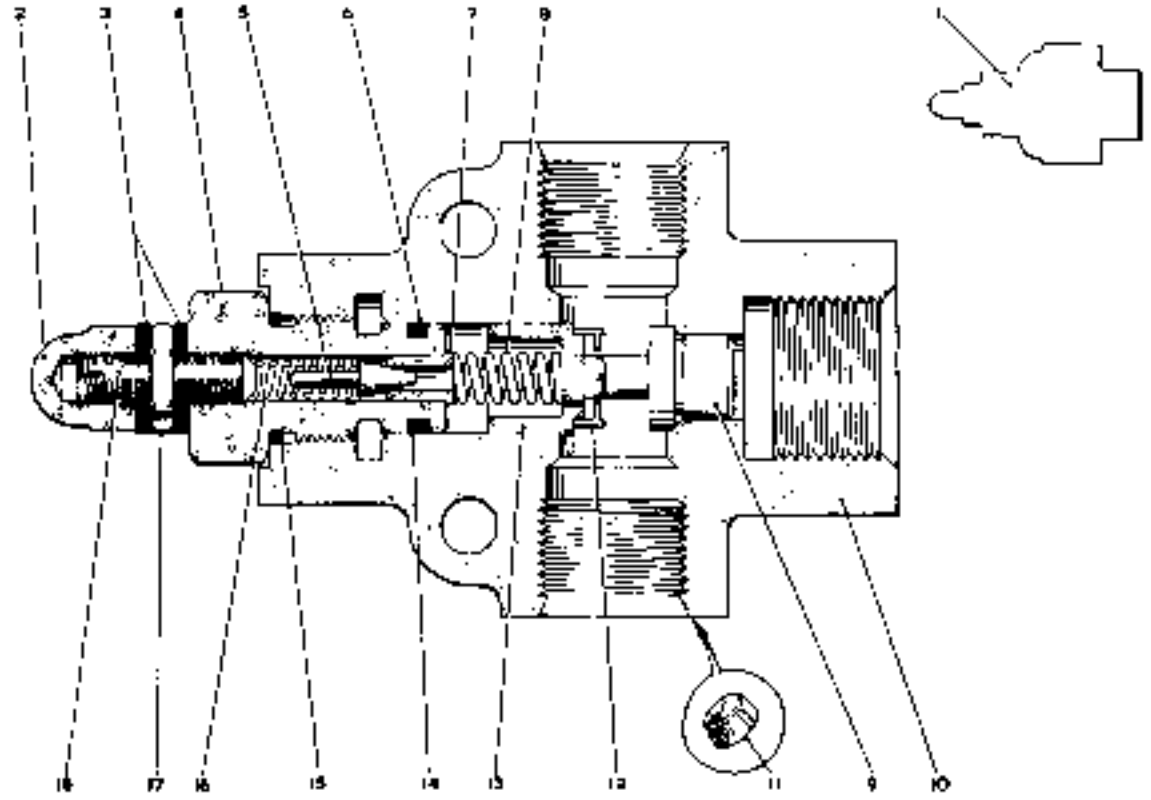

PRESSURE RELIEF VALVE STEERING TE2079

ITEM	PART	DESCRIPTION	QTY.
1	536539	VALVE RELIEF INC 2-18	1
2	470-05	NUT ACORN	1
3	6637W	WASHER SEAL	2
4	944667	CAP VALVE	1
5	883334	PLUNGER PILOT	1
6	899034	O RING	1
7	944669	SEAT PILOT	1
8	944646	SPRING	1
9	944643	SEAT	1
10		* HOUSING SEC 1	1
100	40K-02	* PLUG	1
11	40K-02	PLUG	1
12		* SCREEN SEE 13	1
13	944643	POPPET ASSY INC 12	1
14	899038	RING BACK UP	1
15	92F-6	O RING	1
16	944671	SPRING	1
17	80-05	NUT	1
18	33G-514	SCREW ADJUSTING	1

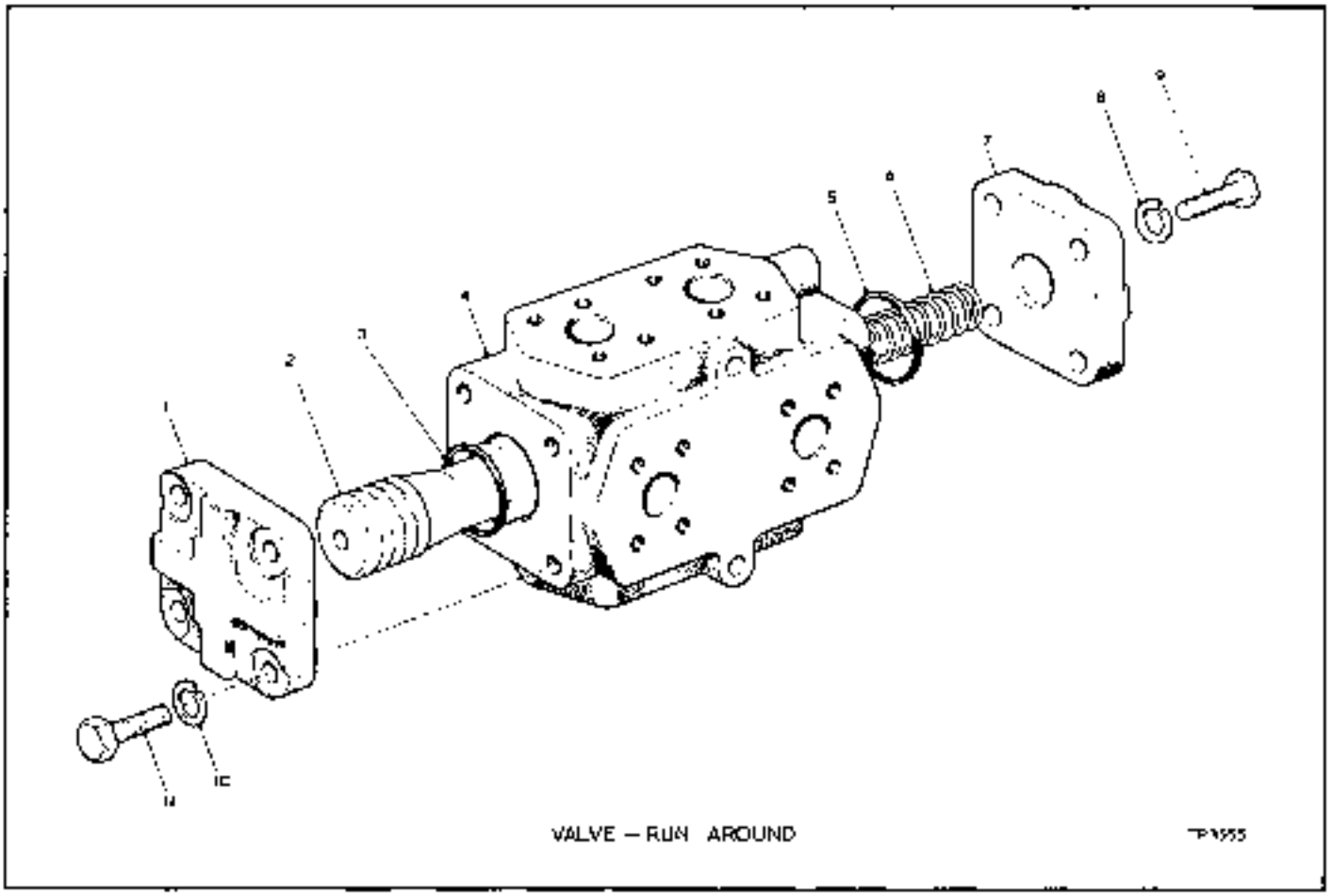

VALVE — RUN AROUND

ITEM	PART		DESCRIPTION	QTY
A	1502670		VALVE ASSY INC 2-11	1
1	947835		COVER	1
2		#	PLUNGER SEE A	1
3	25N-40124		O RING	1
4		#	HOUSING SEE A	1
5	25N-40174		O RING	1
6	947836		SPRING	1

ITEM	PART		DESCRIPTION	QTY
7	947835		COVER	1
8	46-06		LOCKWASHER	4
9	LC-420		BOLT COVER TO HOUSING	4
10	46-08		LOCKWASHER	4
11	LC-820		BOLT COVER TO HOUSING	4
12	24-788	*	BOLT VALVE MOUNTING	2
12A	1NC-07	*	LOCKNUT	2

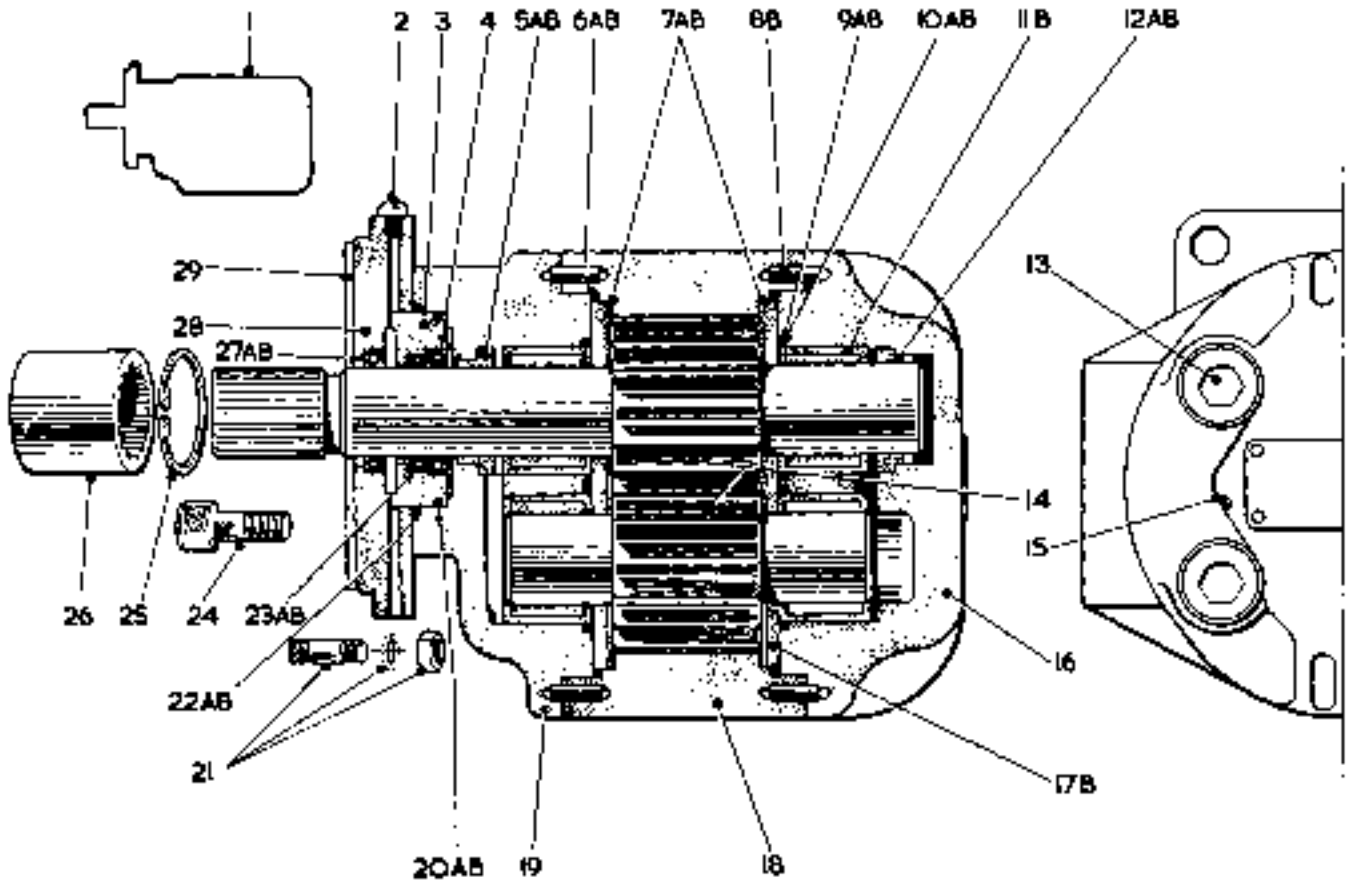

MINOR REPAIR KIT
INCLUDES ALL ITEMS
SUFFIXED 'A'

30

MAJOR REPAIR KIT
INCLUDES ALL ITEMS
SUFFIXED 'B'

31

PUMP HYDRAULIC FRONT END

TP 2882

PUMP—MAIN HYDRAULIC

ITEM	PART	DESCRIPTION	QTY.
1	3229948	PUMP ASSY INC 2-20 22-24 & 27	1
2	3212072	SCREW	1
3	3212281	RETAINER SEAL	1
4		■ SEAL SEE 30 & 31	1
5		■ BUSH SEE 30 & 31	1
6		■ O RING SEE 30 & 31	2
7		■ SHIM SEE 30 & 31	2
8		■ DOWEL SEE 31	4
9		■ BACK UP RING SEE 30 & 31	4
10		■ O RING SEE 30 & 31	4
11		■ BEARING SEE 31	4
12		■ BUSH SEE 30 & 31	1
13	3251229	CAPSCREW	4
14	3291215	GEAR SET	1
15	16F-02	PLUG	2
16	3291216	COVER	1
17		■ WEAR PLATE SEE 31	2
18	3291469	HOUSING	1
19	3251218	ADAPTOR	1
20		■ O RING SEE 30 & 31	1
21	571511	STUD PUMP MOUNTING	4
21A	2D-08	NUT	4
21B	4E-08	LOCKWASHER	4
22		■ SEAL SEE 30 & 31	1
23		■ SEAL WIPER SEE 30 & 31	1
24	3290673	SCREW FLANGE	8
25		UNIT	
26	219413	DRIVE SLEEVE	1
27		■ SEAL SEE 30 & 31	1
28	3216652	FLANGE	1
29	552161	GASKET	1
30	3291323	REPAIR KIT MINOR INC 4-7 9,10,12,20,22,23 & 27	1
31	3291324	REPAIR KIT MAJOR INC 4-12 17,20,22,23 & 27	1

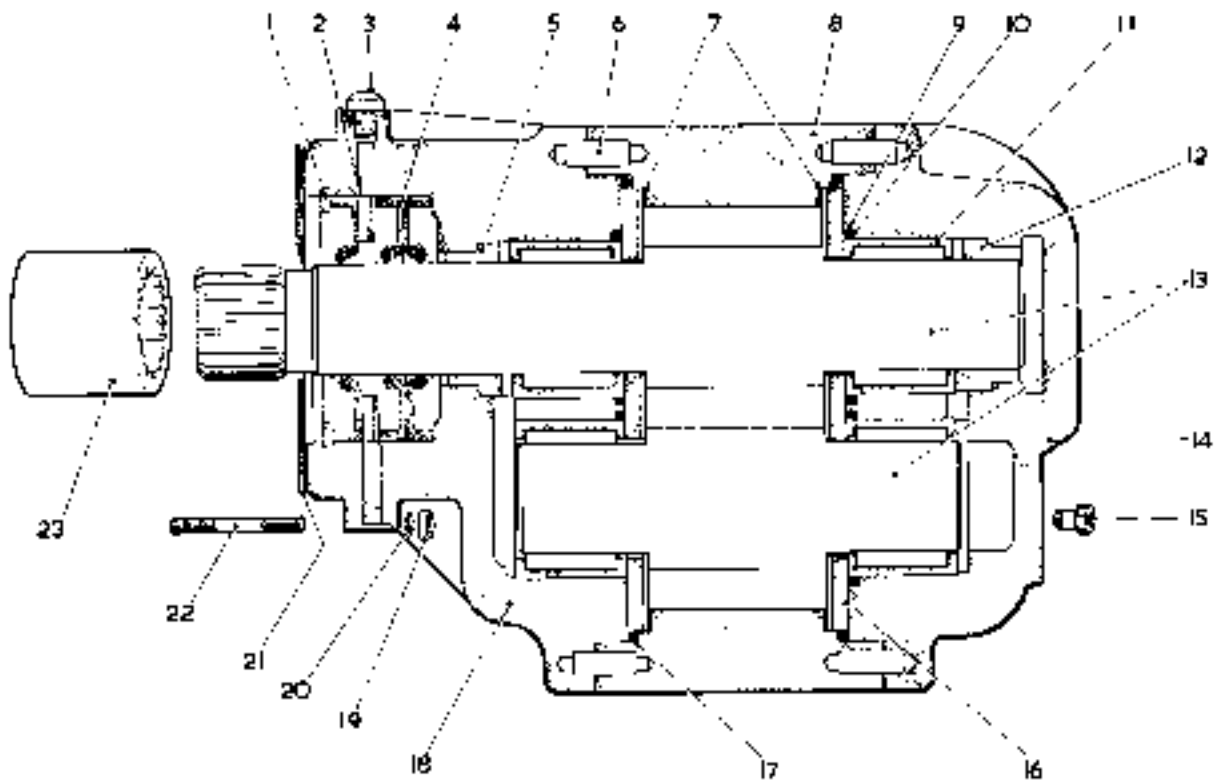

PUMP – STEERING HYDRAULIC

TP 3186

ITEM	PART		DESCRIPTION	QTY
A	3215760		PUMP INC 2-16	1
1			UNIT	
2	3212071		SPACER	1
3	4120090		SCREW	1
4		■	SEAL SEE 24 & 25	3
5		■	BUSH SEE 24 & 25	1
6	214165		DOWEL	4
7		■	SHIM SEE 24 & 25	2
8	3290645		HOUSING	1
9		■	RING BACK-UP SEE 24 & 25	4
10		■	RING SEAL SEE 24 & 25	4
11		■	BEARING SEE 25	4
12		■	BUSH SEE 24 & 25	1
13	3212087		GEAR SET	1
14	3292404		COVER	1
15	3290475		CAPSCREW	4
16			PLATE WEAR SEE 25	2
17			O RING SEE 24 & 25	2
18	3292309		ADAPTOR	1
19	40-06		NUT	3
20	4L-06		LOCKWASHER	3
20A	615023	+	WASHER	3
21	551906		GASKET	1
22	207647		STUD PUMP TO CONVERTER	3
23	3210068		SLEEVE	1
23A	225390	+	SNAP RING	1
24	3292314		REPAIR KIT MINOR INC 4,5, 7,9,10,12 & 17	AR
25	3292320		REPAIR KIT MAJOR INC 4,5, 7,9-12,16 & 17	AR

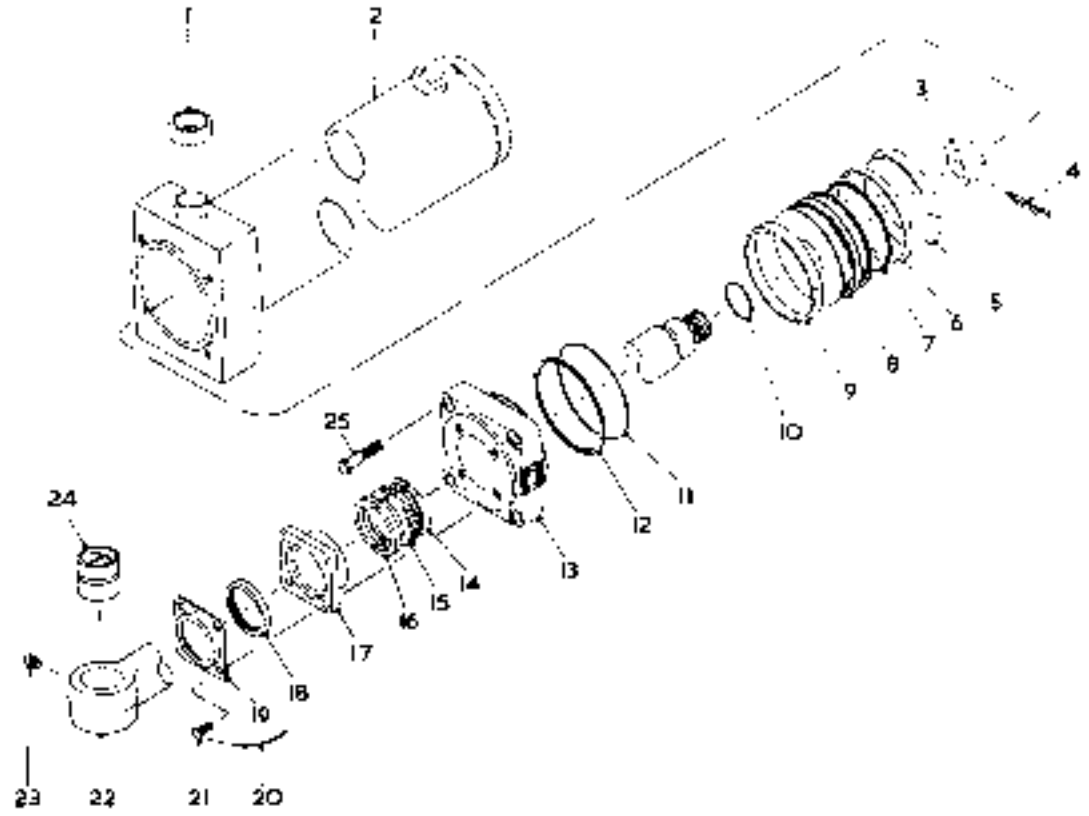

CYLINDER ASSEMBLY – BOOM TP 3558

ITEM	PART	DESCRIPTION	QTY.
A	3235120	CYLINDER ASSY BOOM LH	
		INC 1-25	1
B	3235121	CYLINDER ASSY BOOM RH	
		INC 1-25	1
		QUANTITIES INDICATED	
		ARE FOR ONE ASSEMBLY	
1	1530772	BUSHING	2
2	1502451	CYLINDER INC 1	1
3	1502530	NUT PISTON ROD	1
4	16-852	SPLIT PIN	1
5	1503013	RING WEAR	1
6	1502845	RING SEAL OUTER	1
7	1503467	RING SEAL INNER	1
8	1502846	PISTON	1
9	1503033	RING WEAR	1
10	258-6012U	O RING PISTON ROD	1
11	258-6012U	O RING CYLINDER CAP	1
12	532565	RING BACKUP CYLINDER CAP	1
13	545934	CAP CYLINDER	1
14	3211897	ADAPTOR MALE	2
15	3220163	PACKING CHEVRON	1
16	3211711	ADAPTER FEMALE	2
17	1520109	GLAND PACKING	1
18	550450	SEAL	1
19	522617	RETAINER SEAL	1
20	28H-16310	LOCKNUT	2
21	30-820	BOLT SEAL RETAINER	4
22	1502848	PISTON ROD INC 24	1
23	10H-425	GREASE FITTING	1
24	556060	BUSHING	1
25	24L-1056	BUILT CYLINDER CAP	4

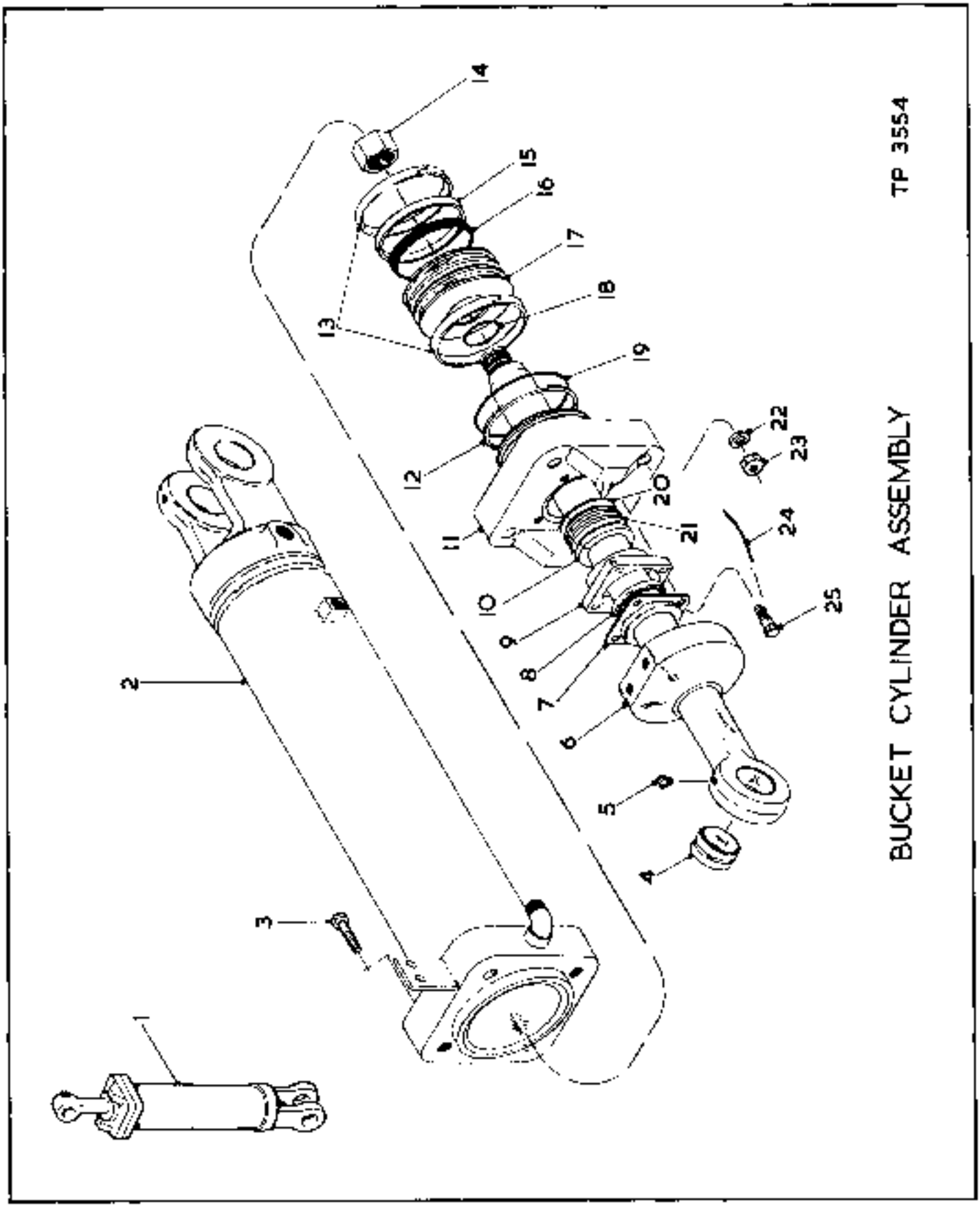
BUCKET CYLINDER ASSEMBLY
TP 3554
1
2
3
4
5
6
7
8
9
10
11
12
13
14
15
16
17
18
19
20
21
22
23
24
25

CYLINDER—BUCKET

ITEM	PART		DESCRIPTION	QTY.
1	3235114		CYLINDER ASSY BUCKET	
			INC 2-28	2
			QUANTITIES INDICATED	
			ARE FOR ONE ASSEMBLY	
2	1509412		CYLINDER	1
3	1509548		BOLT CYLINDER CAP	4
4	567956		BUSHING	1
5	32M-15		GREASE FITTING	1
6	567989		ROD PISTON INC 4	1
7	562701		RETAINER SEAL TO GLAND	1
8	561525		SEAL PISTON TO GLAND	1
9	562700		GLAND PACKING	1
10	3226196		ADAPTOR FEMALE	2
11	565996		CAP CYLINDER	1
12	548577		BACK UP RING CYL CAP	1
13	1545263		RING WEAR	2
14	1535217		NUT PISTON ROD	1
14A	16-868	*	SPLIT PIN	1
15	1546074		SEAL RING OUTER	1
16	1503464		SEAL RING INNER	1
17	1503026		PISTON	1
18	25K-40412		O RING PISTON ROD	1
19	25K-40403		O RING CYLINDER CAP	1
20	3226195		ADAPTOR MALE	2
21	3226193		PACKING CHEVRON	1
22	573525		WASHER	4
23	18D-10		LOCKNUT CYLINDER CAP	4
24	28M-16250		LOCKWIRE	2
25	40-616		BOLT	4
26	3226192		PACKING ASSY GLAND	
			INC 19,20 & 21	1
27	566644	*	PIN CYLINDER TO FRAME	1
27A	2C-880	*	BOLT	1
27B	18D-90	*	NUT	1
28	1530442	*	PIN CYLINDER TO BELLCRANK	1
28A	2C-886	*	BOLT	1
28B	18D-88	*	NUT	1

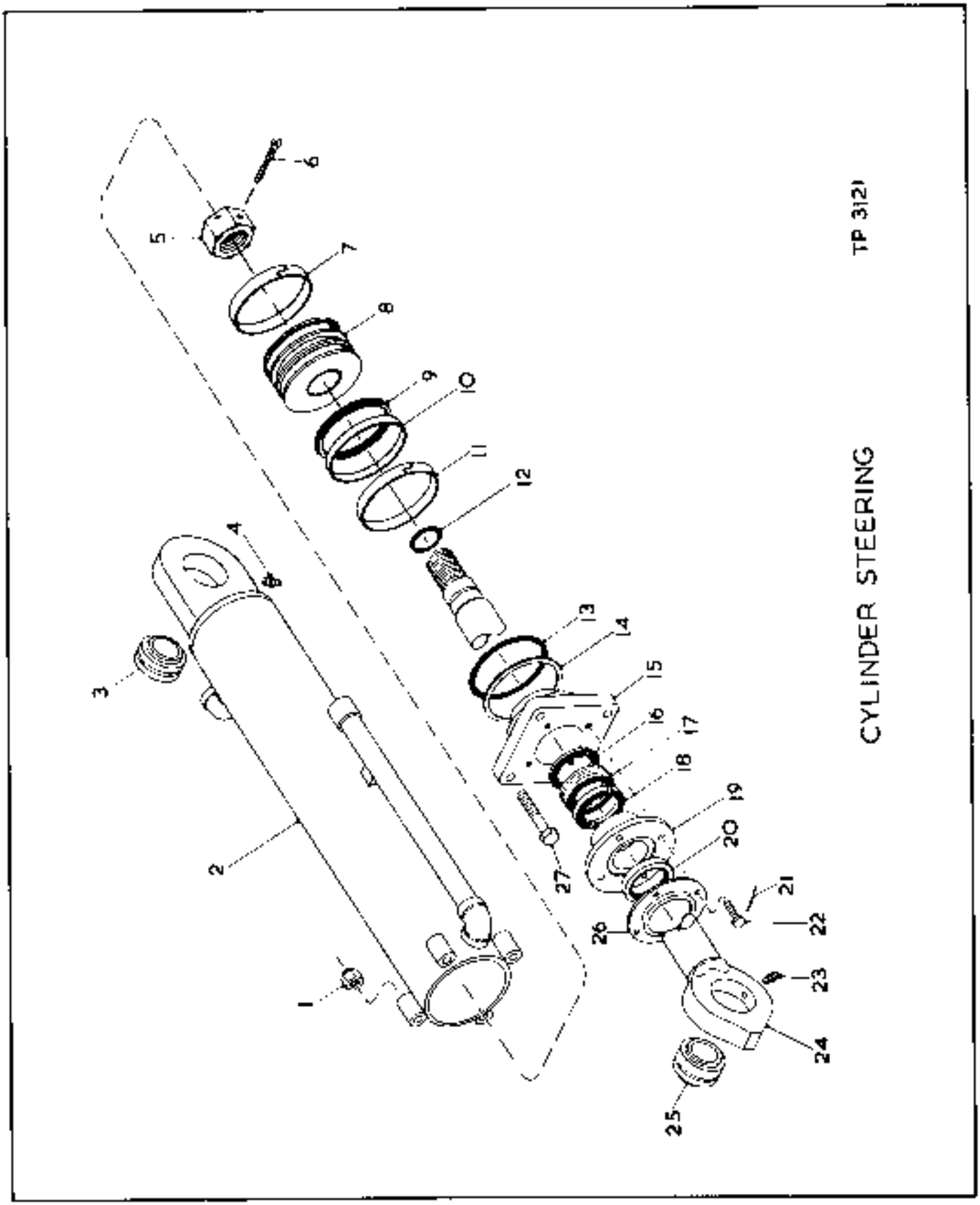
CYLINDER STEERING
TP 3121
1
2
3
4
5
6
7
8
9
10
11
12
13
14
15
16
17
18
19
20
21
22
23
24
25
26
27

CYLINDER–STEERING

ITEM	PART	DESCRIPTION	QTY.
A	3235115	CYLINDER ASSEMBLY	
		INC 1-3 5-22 24-28	2
		QUANTITIES INDICATED	
		ARE FOR ONE ASSEMBLY	
1	180-07	LOCKNUT	4
2	1531549	CYLINDER	1
3	713418	BUSHING	1
4	11H-15	GREASE FITTING	2
5	1503715	NUT PISTON ROD	1
6	1F-640	SPLIT PIN	1
7	1530264	RING WEAR	1
8	1503639	PISTON	1
9	1503629	RING SEAL INNER	1
10	1503631	RING SEAL OUTER	1
11	1530264	RING WEAR	1
12	25K-40104	O RING	1
13	25K-40306	O RING	1
14	332517	RING BACK UP	1
15	562319	CAP CYLINDER	1
16	520400	ADAPTOR MALE	2
17	3207889	PACKING CHEVRON	4
18	3207888	ADAPTOR FEMALE	2
19	526451	GLAND PACKING	1
20	941568	SEAL	1
21	28H-16200	LOCKWIRE	2
22	40-620	BOLT GLAND TO CAP	4
23	11H-15	GREASE FITTING	1
24	1531942	ROD PISTON	1
25	713418	BUSHING	1
26	512797	RETAINER SEAL	1
27	240-748	BOLT CAP TO CYLINDER	4
28	3207887	PACKING ASSY GLAND	
		INC 16-18	1
29	1506939	* PIN CYLINDER MOUNTING	2
29A	20-864	* BOLT	2
29B	660-08	* NUT	2

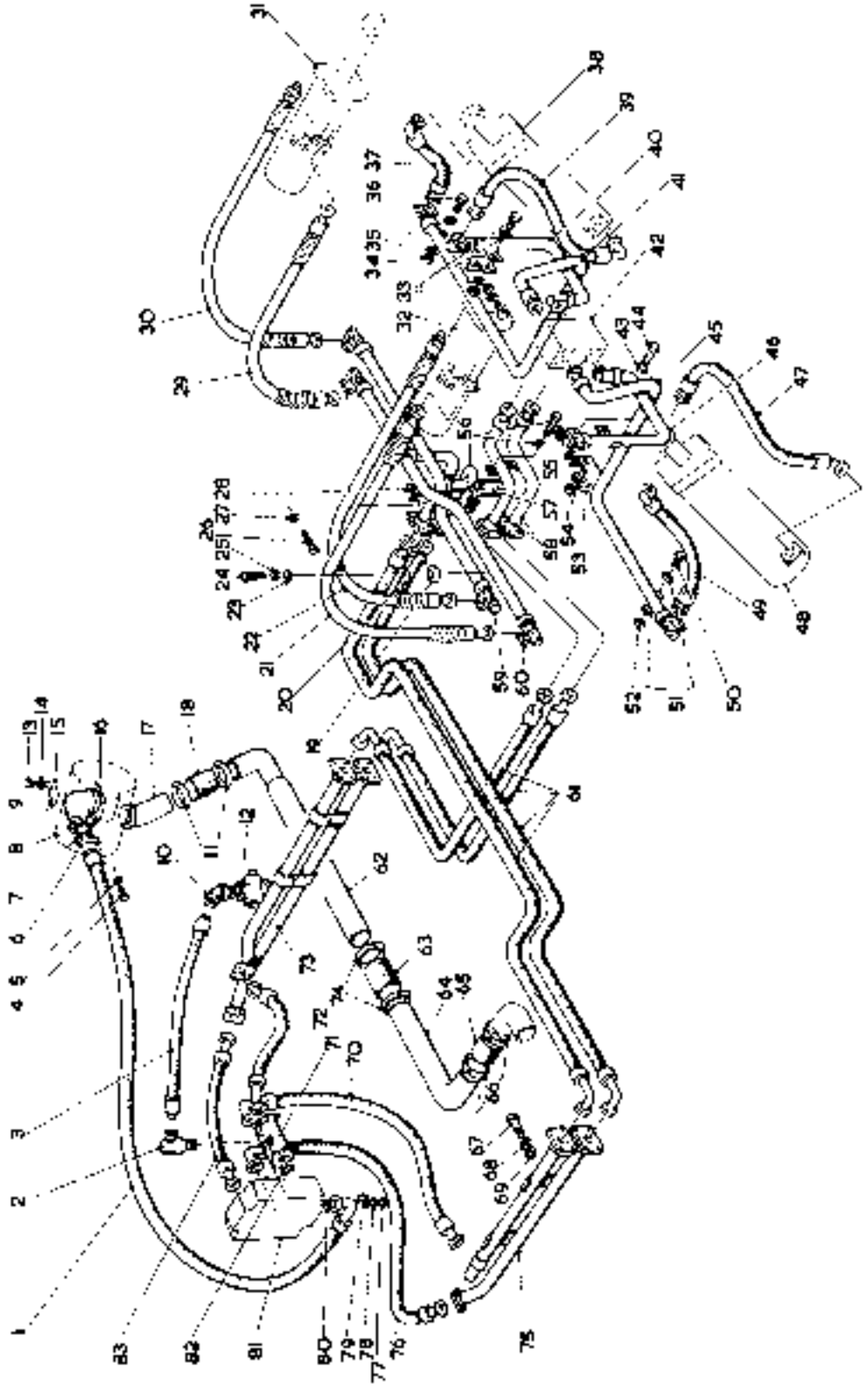

HYDRAULIC LINES MAIN

HYDRAULIC LINES—MAIN

ITEM	PART		DESCRIPTION	QTY.
1	3506d92		HOSE PUMP TO VALVE	1
2	31F-5		ADAPTER	1
5	554062		HOSE	1
4	10-224		BOLT	4
5	4L-07		LOCKWASHER	4
6	663094		FLANGE HALF	2
7	1306623		O RING	1
8			PUMP MAIN SEE INDEX	1
9	3236164		ELBOW	1
10	554854		ADAPTER	1
11	3221647		CLAMP HOSE	2
12			RELIEF VALVE SEE INDEX	1
13	10-824		BOLT	4
14	4B-08		LOCKWASHER	4
15	663095		FLANGE HALF	2
16	1306624		O RING	1
17	3235580		STEM SECTION	1
17A	663097	*	FLANGE HALF	2
17B	846851	*	O RING	2
17C	10-829	*	BOLT	4
17D	4E-08	*	LOCKWASHER	4
18	5N5487		HOSE	1
19	3504856		SPACER	2
20	1502596		CLAMP TUBE MOUNTING	2
21	1536854		HOSE TUBE TO CYLINDER	1
21A	663092	*	FLANGE HALF	4
21B	791533	*	O RING	2
21C	10-620	*	BOLT	8
21D	4E-06	*	LOCKWASHER	8
22	1536855		HOSE TUBE TO CYLINDER	1
22A	663092	*	FLANGE HALF	4
22B	791533	*	O RING	2
22C	10-620	*	BOLT	8
22D	4E-06	*	LOCKWASHER	8
23	656472		WASHER	2
24	20-624		BOLT	2
25	4E-06		LOCKWASHER	2
26	20-628		BOLT	2
27	625682		WASHER	2
28	160-04		NUT	2
29	1536854		HOSE TUBE TO CYLINDER	1
29A	663092	*	FLANGE HALF	4
29B	791533	*	O RING	2
29C	10-620	*	BOLT	8
29D	4E-06	*	LOCKWASHER	8
30	1536855		HOSE TUBE TO CYLINDER	1
30A	663092	*	FLANGE HALF	4
30B	791533	*	O RING	2
30C	10-620	*	BOLT	8
30D	4E-06	*	LOCKWASHER	8
31			CYLINDER BRACKET SEE INDEX	1
32			CYLINDER BRACKET SEE INDEX	1
33	20-828		BOLT	1
33A	625682		WASHER	2
33B	160-08		NUT	1
34	160-06		NUT	1
35	625682		WASHER	2
36	20-828		BOLT	1
37	1502645		HOSE TUBE TO CYLINDER	1
37A	663093	*	FLANGE HALF	4
37B	1306622	*	O RING	2
37C	10-620	*	BOLT	8
37D	4E-06	*	LOCKWASHER	8
38			CYLINDER BOOM SEE INDEX	1
39	1536847		HOSE TUBE TO CYLINDER	1
39A	663093	*	FLANGE HALF	4
39B	1306622	*	O RING	2
39C	10-620	*	BOLT	8
39D	4E-06	*	LOCKWASHER	8
40	1502975		TUBE VALVE TO HOSE LH	1
40A	663093	*	FLANGE HALF VALVE END	2
40B	1306622	*	O RING	2
40C	10-620	*	BOLT	4
40D	4E-06	*	LOCKWASHER	4
41	1502988		TUBE VALVE TO HOSE LH	1
41A	663093	*	FLANGE HALF VALVE END	2
41B	1306622	*	O RING	2
41C	10-620	*	BOLT	4
41D	4E-06	*	LOCKWASHER	4
42			VALVE RUN AROUND SEE INDEX	1
42A	20-788	*	BOLT VALVE MOUNTING	2
42B	160-07	*	LOCKNUT	2

(Continued)

HYDRAULIC LINES–MAIN (Continued)

ITEM	PART		DESCRIPTION	QTY.
43	635682		WASHER	1
44	2C-828		BOLT	1
45	1502983		TUBE VALVE TO HOSE RH	1
45A	663095	*	FLANGE HALF VALVE END	2
45B	1306622	*	O RING	1
45C	1C-620	*	BOLT	4
45D	4E-06	*	LOCKWASHER	4
46	1502978		TUBE VALVE TO HOSE LH	1
46A	663095	*	FLANGE HALF VALVE END	2
46B	1306622	*	O RING	1
46C	1C-620	*	BOLT	4
46D	4E-06	*	LOCKWASHER	4
47	1516747		HOSE TUBE TO CYLINDER	1
47A	663095	*	FLANGE HALF	4
47B	1306622	*	O RING	2
47C	1C-620	*	BOLT	4
47D	4E-06	*	LOCKWASHER	8
48			CYLINDER BOOM SEE INDEX	1
49	1502645		HOSE TUBE TO CYLINDER	1
49A	663095	*	FLANGE HALF	4
49B	1306622	*	O RING	2
49C	1C-620	*	BOLT	8
49D	4E-06	*	LOCKWASHER	2
50	2C-828		BOLT	1
51	635682		WASHER	2
52	120-06		NUT	1
53	1506747		BRACKET TUBE MOUNTING	2
54	180-08		NUT	1
54A	635682		WASHER	1
55	2C-820		BOLT	2
55A	4E-08		LOCKWASHER	2
55B	635682		WASHER	2
56	2C-828		BOLT	3
56A	635682		WASHER	3
56B	180-08		NUT	3
57	1516455		BRACKET TUBE MOUNTING	1
58	1502978		TUBE HOSE TO VALVE	2
58A	663093	*	FLANGE HALF VALVE END	2
58B	1306622	*	O RING	1
58C	1C-620	*	BOLT	4
58D	4E-06	*	LOCKWASHER	4
59	1502980		HOSE	1
59A	663095	*	FLANGE HALF	2
59B	1306622	*	O RING	1
59C	1C-620	*	BOLT	4
59D	4E-06	*	LOCKWASHER	4
60	1502983		TUBE	1
60A	663095	*	FLANGE HALF	2
60B	1306622	*	O RING	1
60C	1C-620	*	BOLT	4
60D	4E-06	*	LOCKWASHER	4
61	1516478		HOSE TUBE TO TUBE	6
61A	663093	*	FLANGE HALF	16
61B	1306622	*	O RING	8
61C	1C-620	*	BOLT	32
61D	4E-06	*	LOCKWASHER	32
62	1506252		TUBE SUCTION	1
63	543139		HOSE	1
64	1506253		TUBE SUCTION	1
65	538434		HOSE	1
66	1721696		CLAMP HOSE	2
67	2C-820		BOLT TUBE MOUNTING	4
68	4E-08		LOCKWASHER	4
69	618029		WASHER	4
70	1502629		HOSE TUBE TO VALVE	1
70A	663093	*	FLANGE HALF	4
70B	1306622	*	O RING	2
70C	1C-620	*	BOLT	8
70D	4E-06	*	LOCKWASHER	8

(Continued)

HYDRAULIC LINES—MAIN (Continued)

ITEM	PART		DESCRIPTION	QTY.
71	1309155		TEE HOSE TO VALVE	1
71A	10-620	*	BOLT TEE TO VALVE	4
71B	46-06	*	LOCKWASHER	4
72	1537313		HOSE TEE TO HOSE	1
72A	663093	*	FLANGE HALF	4
72B	1306622	*	O RING	2
72C	10-620	*	BOLT	8
72D	46-06	*	LOCKWASHER	8
74	1536538		TUBE ASSY	1
74	3221868		CLAMP HOSE	2
75	1541037		TUBE ASSY	1
76	567671		HOSE VALVE TO HOSE	1
76A	663093	*	FLANGE HALF	4
76B	1306622	*	O RING	1
76C	10-620	*	BOLT	8
76D	46-06	*	LOCKWASHER	4
77	10-620		BOLT	4
78	46-06		LOCKWASHER	4
79	663093		FLANGE HALF	2
80	1306622		O RING	1
81			VALVE MAIN SEC INDEX	1
82	1306622		O RING	5
83	1536556		HOSE VALVE TO TUBE	1
83A	663093	*	FLANGE HALF	4
83B	1306622	*	O RING	2
83C	10-620	*	BOLT	8
83D	46-06	*	LOCKWASHER	8

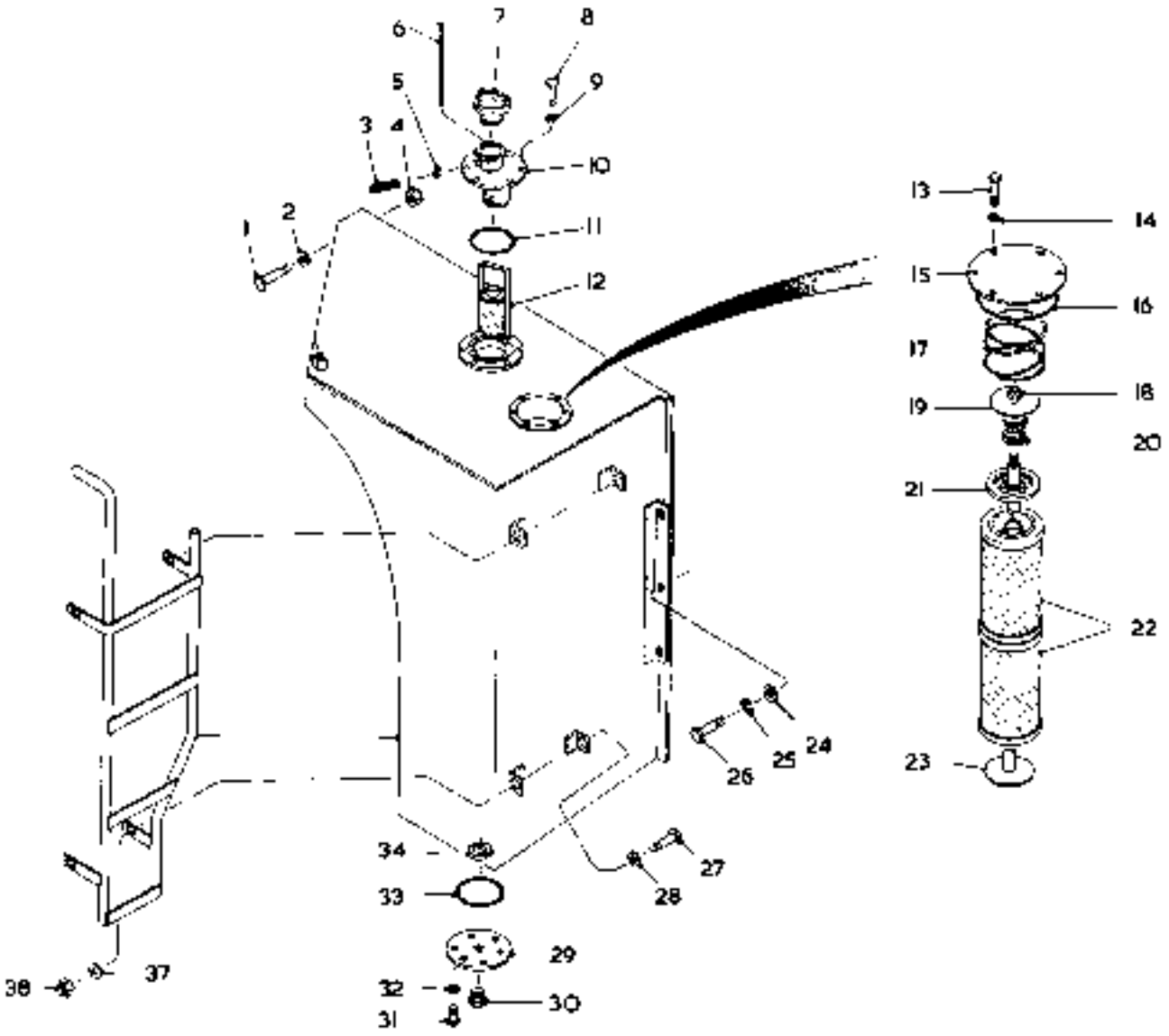

RESERVOIR - HYDRAULIC

TP3559

RESERVOIR—HYDRAULIC

ITEM	PART	DESCRIPTION	QTY.
1	24C-1032	BOLT RESERVOIR MOUNTING	1
2	616800	WASHER	1
3	743565	HOSE	1
4	100-10	LOCKNUT	1
5	3220863	CLAMP HOSE	1
6	1521875	DIPSTICK	1
7	554343	CAP FILLER	1
8	2C-612	BOLT FILLER NECK	6
9	4E-06	LOCKWASHER	6
10	567742	NECK FILLER	1
11	25K-40424	O RING	1
12	1532445	FILTER SUCTION	1
13	2C-614	BOLT COVER PLATE	6
14	4E-06	LOCKWASHER	6
15	3234665	COVER PLATE	1
15A	11H-04	* PLUG	1
16	25K-40803	O RING	1
17	1543734	SPRING	1
18	180-06	LOCKNUT	1
19	1529706	WASHER	1
20	1530495	SPRING	1
21	1529679	RETAINER	1
22	945989	CARTRIDGE KIT	1
23	1529702	ROD	1
24	616800	WASHER	5
25	4E-10	LOCKWASHER	5
26	2C-1024	BOLT RESERVOIR TO FRAME	5
27	2C-828	BOLT STEP TO RESERVOIR	4
28	619029	WASHER	4
29	527613	PLATE COVER	1
30	40K-16	PLUG	1
31	2C-612	BOLT COVER PLATE	6
32	4E-06	LOCKWASHER	6
33	25K-40428	O RING	1
34	525293	MAGNET	1
35	1531600	RESERVOIR ASSEMBLY	1
36	1531593	STEP KIT	1
37	619029	WASHER	4
38	180-08	LOCKNUT	4

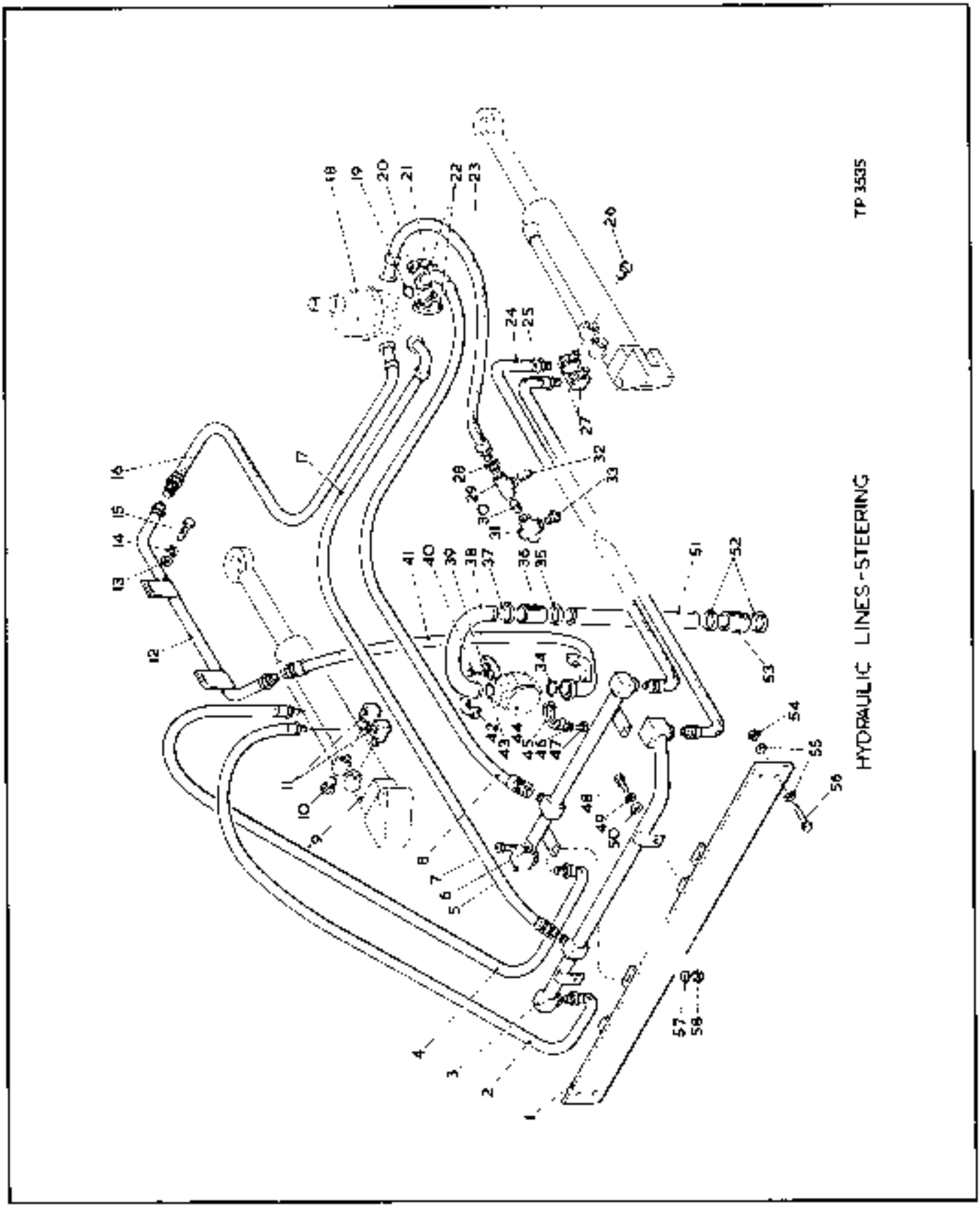
HYDRAULIC LINES-STEERING
TP 3535

HYDRAULIC LINES—STEERING

ITEM	PART	DESCRIPTION	QTY.
1	1538288	PLATE TUBE MOUNTING	1
2	610975	HOSE TUBE TO CYLINDER	1
3	1531928	TUBE ASSEMBLY	1
4	1531929	HOSE TUBE TO CYLINDER	1
5	1538289	TUBE ASSY	1
6	656672	WASHER	2
7	2C-624	BOLT TUBE TO PLATE	2
8	1541431	HOSE TUBE TO VALVE	1
9		CYLINDER STEERING	
		SEE INDEX	2
10	40K-08	PLUG	2
11	25F-3	ELBOW HOSE TO CYLINDER	2
11A	81F-3	ELBOW HOSE TO ELBOW	1
12	1538252	TUBE HOSE TO HOSE	1
13	656672	WASHER	2
14	4E-06	LOCKWASHER	2
15	2C-620	BOLT TUBE MOUNTING	2
16	1538254	HOSE TUBE TO VALVE	1
17	1538256	HOSE TUBE TO VALVE	1
18		STEERING GEAR ASSEMBLY	
		SEE INDEX	1
19	1306622	O RING	4
20	4E-06	LOCKWASHER	16
21	1C-620	BOLT	16
22	663093	FLANGE HALF	8
23	1528177	HOSE VALVE TO TANK	1
24	604617	HOSE TUBE TO CYLINDER	1
25	610975	HOSE TUBE TO CYLINDER	1
26	40K-06	PLUG	4
27	81F-3	ELBOW HOSE TO CYLINDER	2
28	36F-5	ADAPTOR	1
29	18F-5	TEE	1
30	5K-611	NIPPLE	1
31		RELIEF VALVE SEE INDEX	1
32	5K-624	NIPPLE	1
33	24K-7	PLUG	1
34	1306623	O RING	1
35	540130	CLAMP HOSE	1
36	585883	HOSE	1
37	540130	CLAMP HOSE	1
38	3235576	STEM ASSY PUMP TO HOSE	1
39	4E-08	LOCKWASHER	4
40	1C-624	BOLT	4
41	1538257	HOSE PUMP TO TUBE	1
42	663095	FLANGE HALF	2
43	1306624	O RING	1
44		PUMP STEERING SEE INDEX	1
45	663094	FLANGE HALF	2
46	4E-07	LOCKWASHER	4
47	1C-724	BOLT	4
48	2C-620	BOLT TUBE TO PLATE	2
49	4E-06	LOCKWASHER	2
50	656672	WASHER	2
51	1506256	TUBE SUCTION	1
52	540130	CLAMP HOSE	1
53	585883	HOSE	1
54	180-06	LOCKNUT	4
55	656672	WASHER	8
56	2C-624	BOLT PLATE TO FRAME	4
57	656672	WASHER	2
58	180-06	LOCKNUT	2

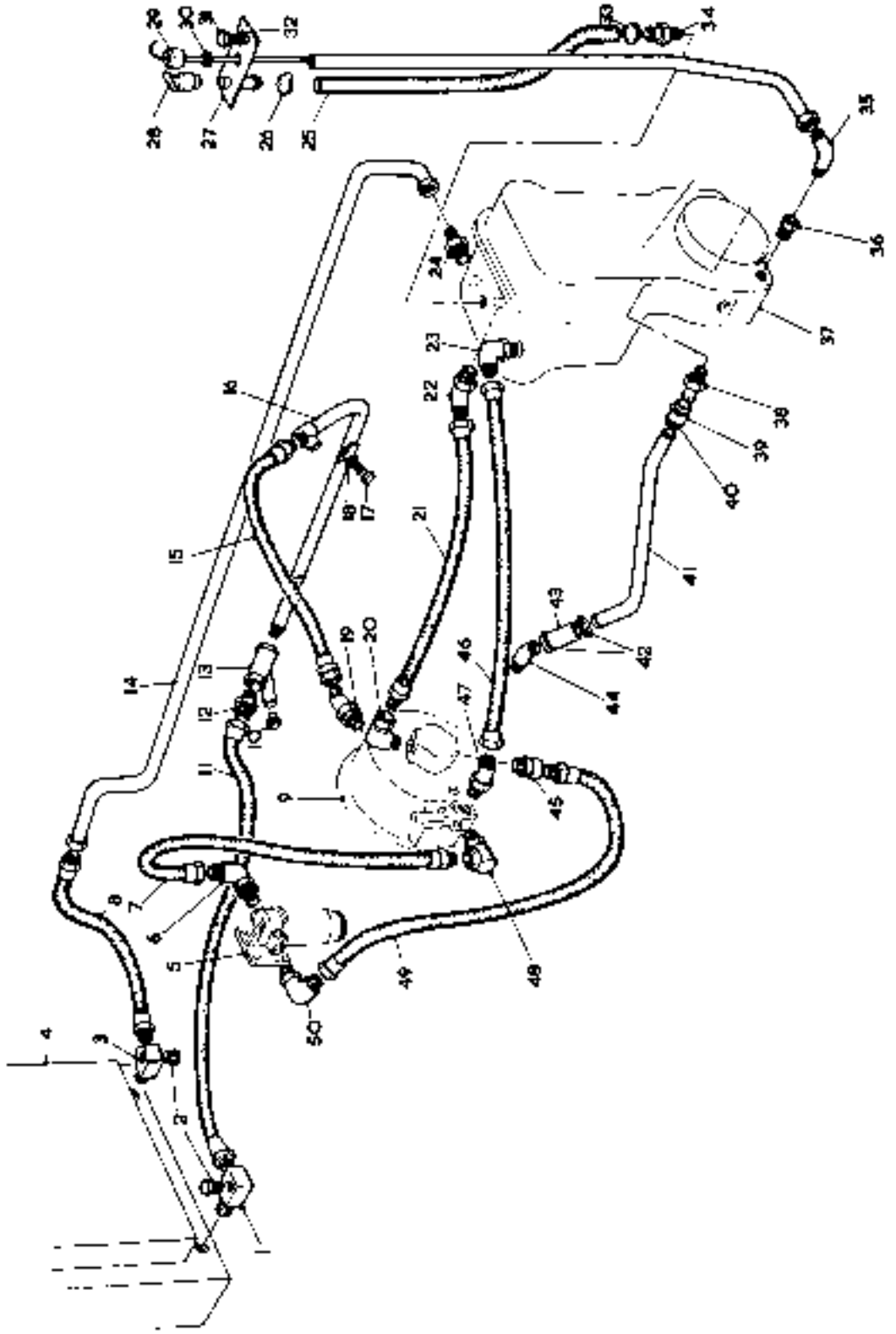
TP3567
HYDRAULIC LINES TRANSMISSION

HYDRAULIC LINES—TRANSMISSION

ITEM	PART		DESCRIPTION	QTY.
1	1525948		ELBOW	1
2	408-07		PLUG	4
3	1525944		ELBOW	1
4			RADIATOR SEE INDEX	1
5	1730851		FILTER ASS'Y	1
5A	1290500	*	ELEMENT	1
5B	20-828		BOLT FILTER MOUNTING	4
5C	186-16	*	NUT	4
5D	023	*	WASHER	4
6	17A-8		ADAPTOR ENL 6A	1
6A	91F-8	*	O RING	1
7	1531419		HOSE FILTER TO CONVERTER	1
8	1531401		HOSE RADIATOR TO TUBE	1
9			TORQUE CONVERTER ASSY	
9			SEE INDEX	1
10	404-08		PLUG	1
11	1521065		HOSE RADIATOR TO STRAINER	1
12	89F-8		CONNECTOR	1
13	1532819		STRAINER INC 13A	1
13A	944943	*	SCREEN STRAINER	1
14	3236601		TUBE HOSE TO TRANSMISSION	1
15	1531419		HOSE TUBE TO CONVERTER	1
16	1730304		TUBE HOSE TO HOSE	1
17	20-820		BOLT	2
18	519024		WASHER	2
18A	41-08	*	LOCKWASHER	2
19	10A-8		ADAPTOR	1
20	31F-6		ADAPTOR	1
21	1531408		HOSE	1
22	17A-10		ELBOW INC 22A	1
22A	91F-10	*	O RING	1
23	17A-6		PLUG	1
24A	91F-6	*	O RING	1
24	15K-8		ADAPTOR INC 24A	1
24A	91F-6	*	O RING	1
25	1541400		HOSE	1
26	540103		CLAMP HOSE	1
27	568807		FILLER PLATE	1
28	568824		PLUG	1
29	1504638		DIPSTICK	1
30	568040		GROMMET	1
31	20-810		BOLT	2
32	41-06		LOCKWASHER	2
33	540103		CLAMP HOSE	4
34	8872-8		NIPPLE HOSE	1
35	031-6		ELBOW	1
36	35-818		REDUCING BUSHING	1
37			TRANSMISSION SEE INDEX	1
38	667289		NIPPLE HOSE	1
39	520929		HOSE	1
40	540103		CLAMP HOSE	2
41	1509284		TUBE HOSE TO HOSE	1
42	540103		CLAMP HOSE	2
43	524-76		HOSE	1
44	666846		NIPPLE HOSE	1
45	3AF-6		ADAPTOR	1
46	1540076		HOSE	1
47	10A-6		ADAPTOR INC 47A	1
47A	91F-6		O RING	1
48	526676		ADAPTOR	1
49	1504892		HOSE FILTER TO CONVERTER	1
50	17A-8		ELBOW INC 50A	1
50A	91F-8	*	O RING	1

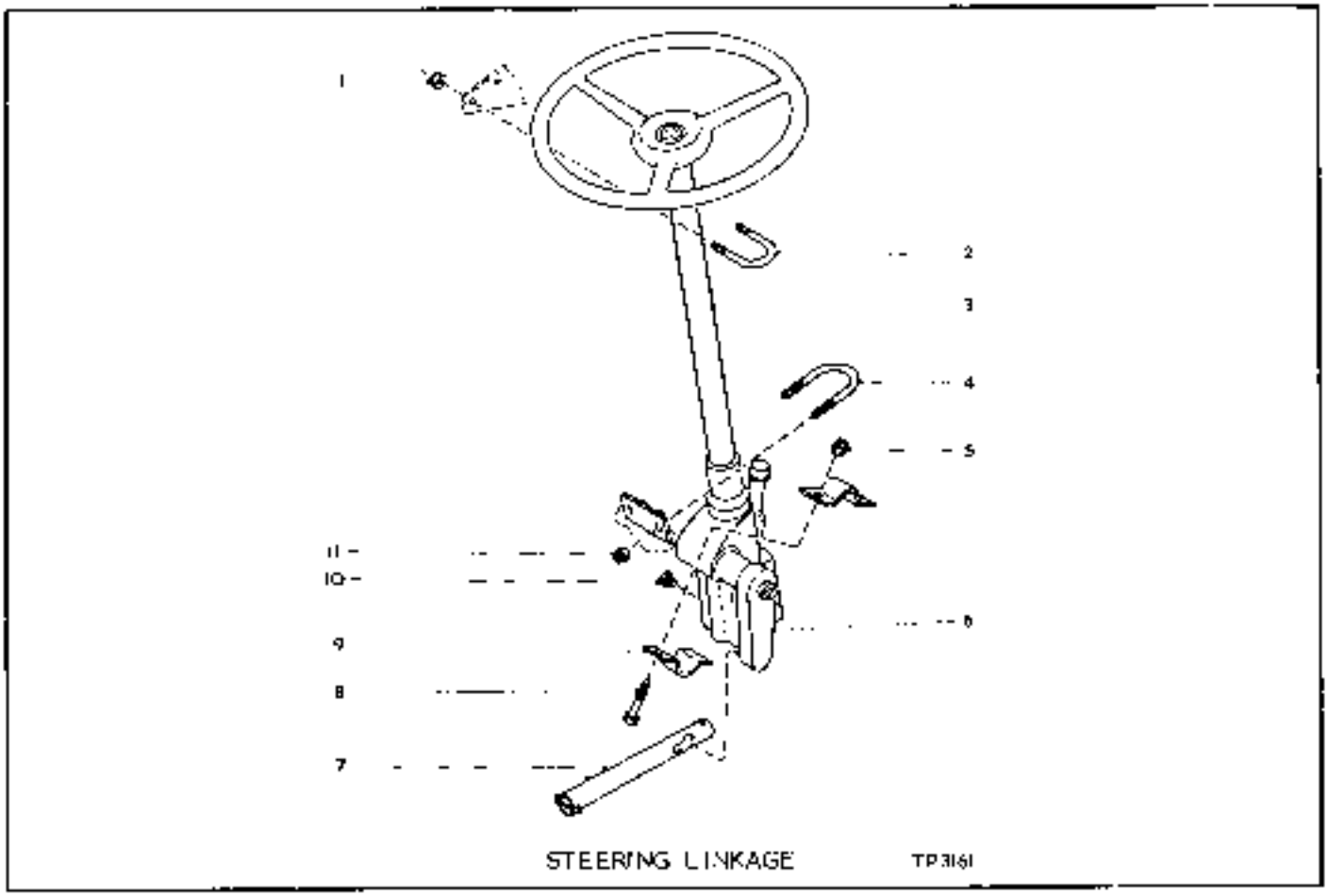

STEERING LINKAGE TP3161

ITEM	PART	DESCRIPTION	QTY.	ITEM	PART	DESCRIPTION	QTY.
1	180-06	LOCKNUT	2	7		DRAG LINK SEE INDEX	1
2	571441	U BOLT STEERING COLUMN	1	8	20-836	BOLT CLAMP TO BRACKET	2
3		GEAR STEERING SEE INDEX	1	9	550044	CLAMP STEERING GEAR	1
4	540941	U BOLT STEERING GEAR	1	10	40K-02	PLUG	1
5	180-08	LOCKNUT	4	11	180-08	LOCKNUT	4
6	1525481	PITMAN ARM ASSEMBLY	1				

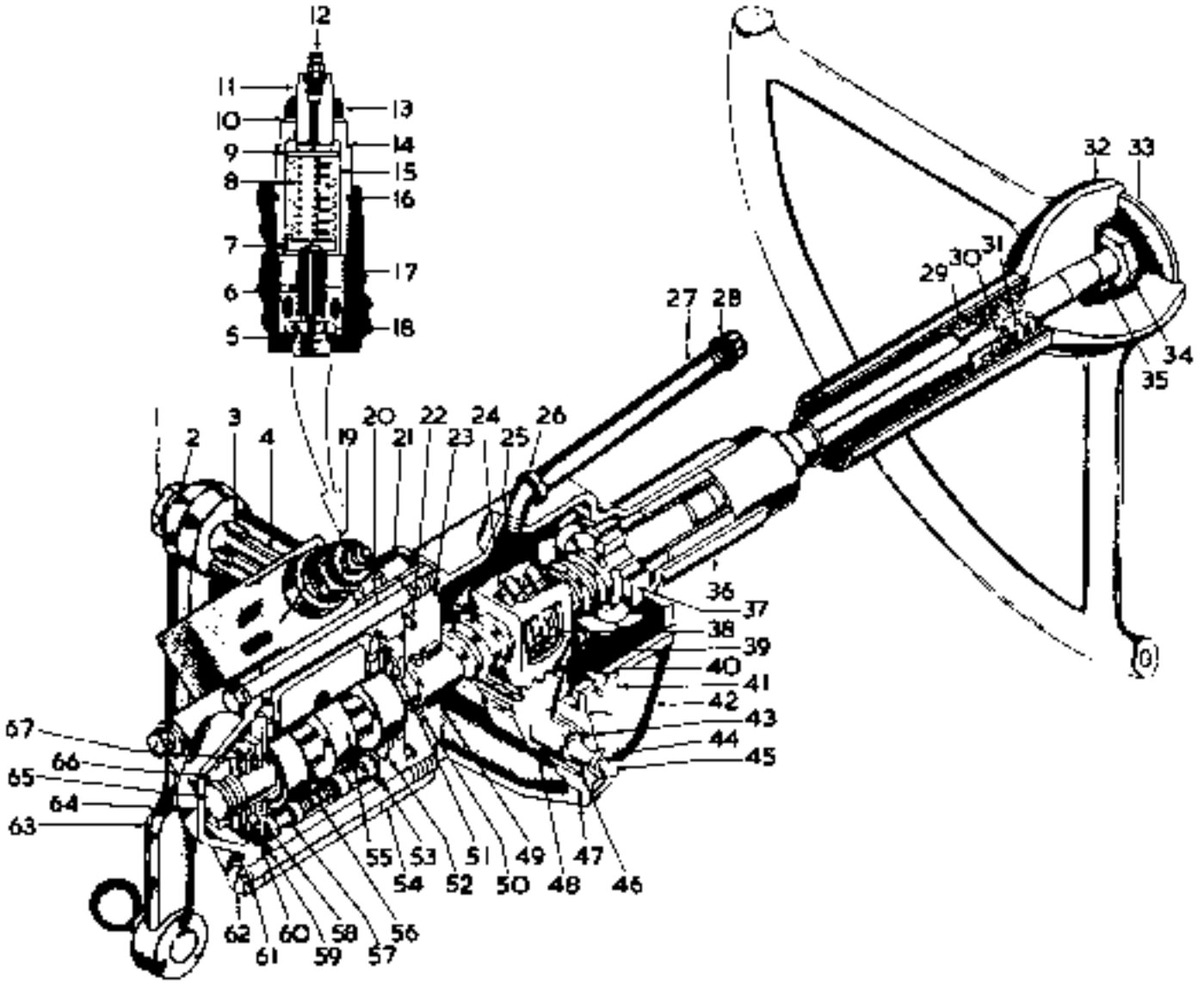

STEERING GEAR ASSEMBLY

TP 3429

STEERING GEAR ASSEMBLY

ITEM	PART	DESCRIPTION	QTY.
A	1525890	STEERING GEAR INC 1-31, 34-62,64-67	1
1	850756	NUT PITMAN ARM	1
2	4E-13	LOCKWASHER	1
3	853391	SEAL GREASE PITMAN SHAFT	1
4	853367	BUSHING PITMAN SHAFT	1
5	91F-6	O RING	1
6	946601	PLUNGER RELIEF VALVE	1
7	946609	WASHER RELIEF VALVE	1
8	946606	SPRING RELIEF VALVE-INNER	1
9	946605	SEAT SPRING	1
10	946606	WASHER	1
11	946603	SCREW ADJUSTING	1
12	946602	SCREW BLEEDER	1
13	660-12	NUT ADJUSTING SCREW	1
14	946599	HOUSING RELIEF VALVE	1
15	946607	SPRING RELIEF VALVE-OUTER	1
16	25K-40108	O RING	1
17	946590	GUIDE PLUNGER	1
18	946604	SEAT PLUNGER	1
19	946834	VALVE RELIEF INC 5-18,55, 56,57	1
20	T3G-728	BOLT ADAPTER TO HOUSING	4
20A	4E-07	* LOCKWASHER	4
21	944106	ADAPTER VALVE TO HOUSING INC 45,50	1
22	886851	O RING SPACER TO ADAPTER	1
23	853380	GASKET ADAPTOR	1
24	851702	BOLT & WASHER ASSY CLAMP	3
25	853527	CLAMP BALL RETURN GUIDE	1
26	25F-4	ELBOW FILLER	1
27	5K-432	PIPE FILLER	1
28	22F-4	CAP FILLER PIPE	1
29	857729	BEARING UPPER	1
30	861768	WASHER UPPER BEARING	1
31	853395	SPRING UPPER BEARING	1
32	518331	WHEEL STEERING	1
33	541074	PLATE OPERATING INSTR	1
33A	65G-436	* SCREW PLATE ATTACHING	4
34	648534	NUT STEERING WHEEL	1
35	653389	KEY STEERING WHEEL	1
36	946138	HOUSING ASSY INC 4,37	1
37	730145	BEARING RETURN	1
38	10J-09	BALL	106
38A	853526	* GUIDE BALL RETURN	4
39	853525	NUT BALL	1
40	4G-06	LOCKWASHER SIDE COVER	3
41	1E-612	BOLT SIDE COVER	3
42	853182	COVER HOUSING SIDE INC 46	1
43	851161	SHIM KIT LASH ADJUSTER	1
44	8Q-07	NUT LASH ADJUSTER	1
45	851710	ADJUSTER LASH	1
46		* BUSHING SIDE COVER SEE 42	
47	851756	GASKET SIDE COVER	1
48	940113	GEAR PITMAN SHAFT	1
49	851741	BEARING ADAPTER	1
50	25K-40108	O RING ADAPTER	1
51	860997	BEARING WORM THRUST	1
52	943438	WASHER WORM THRUST	1
53	1306626	O RING VALVE TO SPACER	1
54	944197	SPACER VALVE	1
55		* SPOOL VALVE SEE 19	1
56	944195	SPRING CENTERING	2
57	944192	PLUNGER	4
58	943438	WASHER BEARING THRUST	1
59	1306626	O RING END COVER	1
60	860997	BEARING WORM THRUST	1
61	3E-09	LOCKWASHER END COVER	4
62	944198	BOLT END COVER	4
63	1525483	ARM PITMAN	1
64	944667	COVER STEERING GEAR END	1
65	946437	SHAFT ASSY INC 24,25,38, 38A,39	1
66	813250	NUT WORM BEARING	1
67	25K-30114	O RING	1

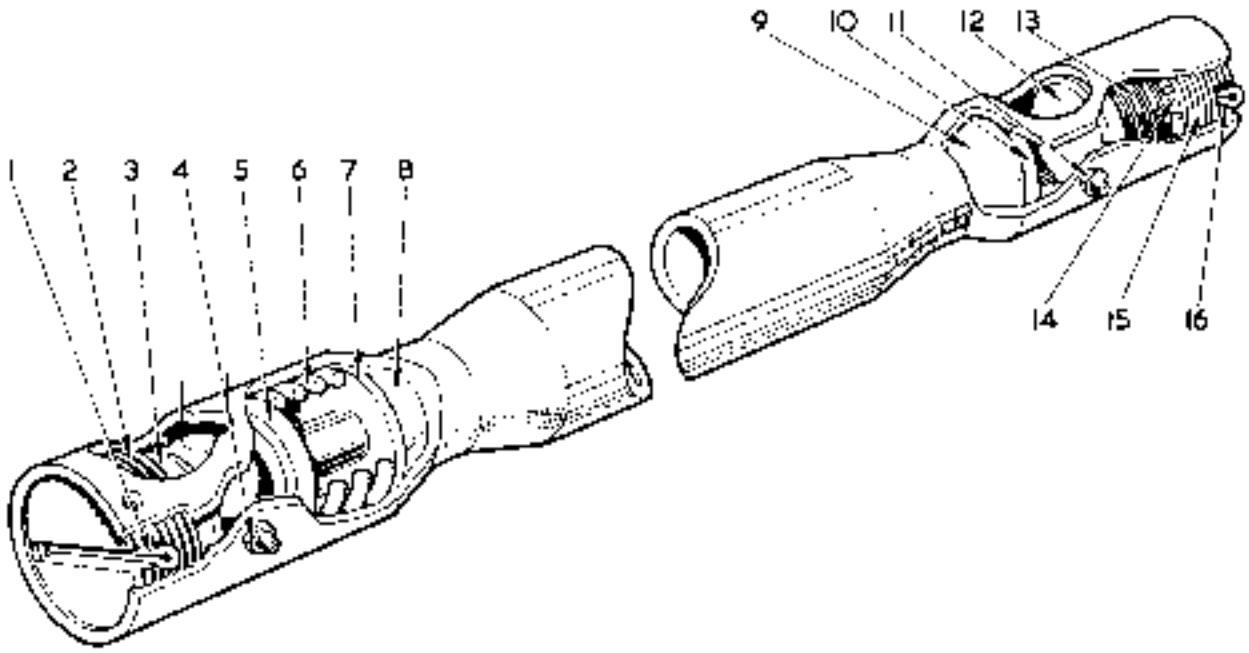

STEERING DRAG LINK

TP1114

ITEM	PART	DESCRIPTION	QTY.
4	568270	DRAG LINK ASSY INC 2,3	
		5=10, 12=15	1
1	1F-432	PIN CUTTER	1
2	940604	PLUG ADJUSTING	1
3	940015	SEAT BALL STUD	1
4	12H-15	FITTING GREASE	1
5	940015	SEAT BALL STUD	1
6	940605	SPRING	1
7	3229708	PLUG SAFETY	1
8		OMIT	
9		OMIT	
10	940015	SEAT BALL STUD	1
11	10H-25	FITTING GREASE	1
12	940015	SEAT BALL STUD	1
13	940605	SPRING	1
14	3229708	PLUG SAFETY	1
15	940604	PLUG ADJUSTING	1
16	1F-432	PIN CUTTER	1

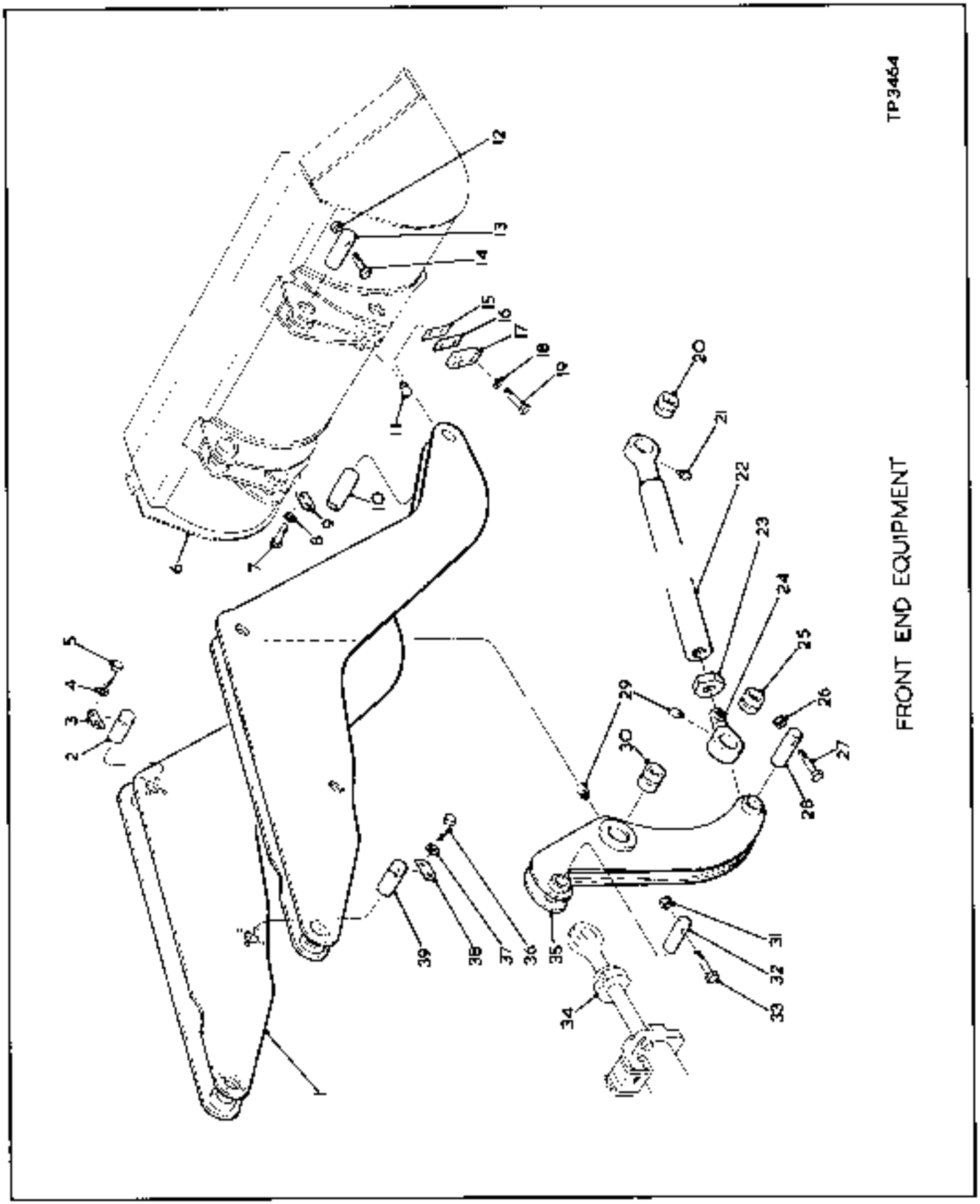
TP3464
FRONT END EQUIPMENT

FRONT END EQUIPMENT

ITEM	PART	DESCRIPTION	QTY.
1	1538636	BOOM ASSEMBLY	1
2	1530623	PIN BELLCRANK TO BOOM	2
3	568292	LOCKPLATE	4
4	46-30	LOCKWASHER	6
5	20-1324	BOLT	6
6		BUCKET See INDEX	1
7	20-820	BOLT	6
8	46-60	LOCKWASHER	6
9	568259	LOCKPLATE	4
10	1538623	PIN BOOM TO BUCKET	2
10A	1547503	SPACER BOOM TO BUCKET	AR
11	10H-25	GREASE FITTING BUCKET	2
12	10C-DH	NUT	2
13	1530446	PIN PUSHROD TO BUCKET	2
14	20-820	BOLT	2
15	1503591	SPACER BUCKET STOP .0625	AR
16	1503592	SPACER BUCKET STOP .125	AR
17	1503594	STOP BUCKET	2
18	46-36	LOCKWASHER	4
19	20-632	BOLT STOP TO BUCKET	4
20	568290	HOUSING	2
21	10H-25	GREASE FITTING	2
22	1538438	PUSHROD ENG PD	2
23	565563	NUT JAM	2
24	570131	END SHIELD ADJUSTING	
		JAC 25	2
25	566750	HOUSING	2
26	10C-C8	NUT	2
27	20-816	BOLT	2
28	1538464	PIN PUSHROD TO BELLCRANK	2
29	10H-25	GREASE FITTING	4
30	1506958	BUSHING	2
31	10C-D8	NUT	2
32	1530442	PIN CYLINDER TO BELLCRANK	2
33	20-826	BOLT	2
34		CYLINDER BUCKET See INDEX	2
35	1530456	BELLCRANK ASSEMBLY	2
35A	1561450	WASHER BELLCRANK TO BOOM	AR
36	20-1024	BOLT	4
37	46-30	LOCKWASHER	4
38	568594	LOCKPLATE	2
39	1546597	PIN BOOM TO CYLINDER	2

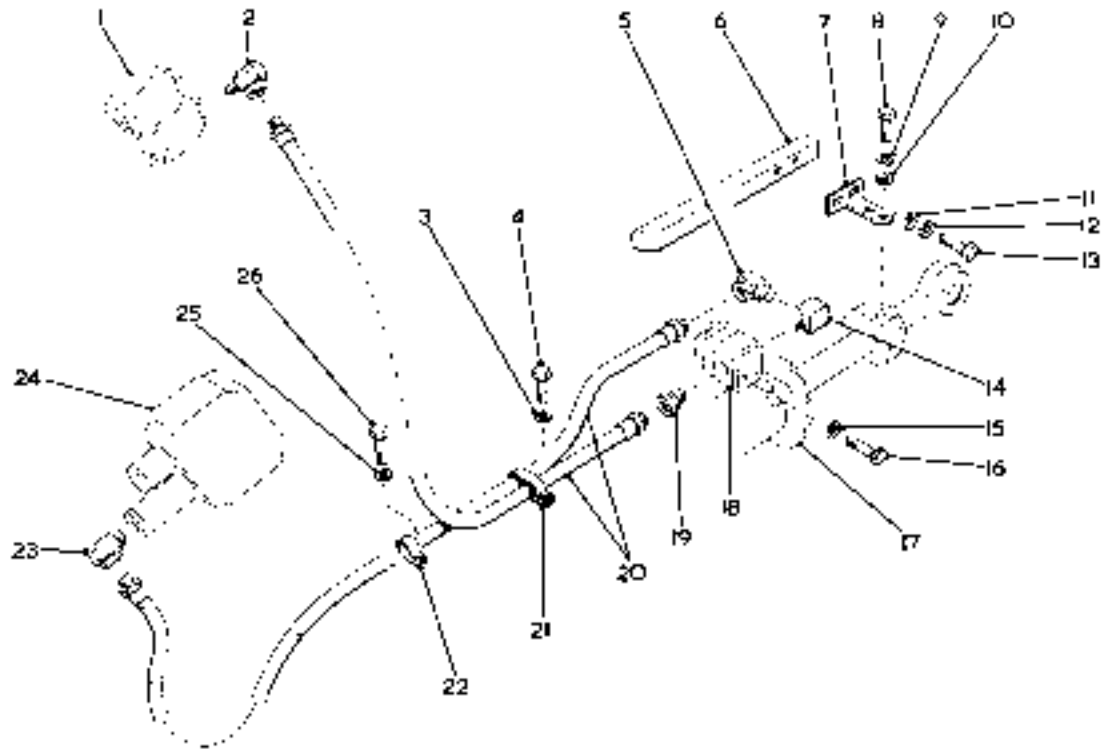

BUCKET LEVELLER LINES

TP3475

ITEM	PART	DESCRIPTION	QTY.
1		BRAKE FOOT VALVE	
		SEE INDEX	1
2	31F-2	ADAPTOR UNION	1
3	4L-06	LOCKWASHER	4
4	2C-612	BOLT CLIP	4
5	31F-2	ADAPTOR UNION	1
6	1528617	CAM BUCKET LEVELLER	1
7	1528618	BRACKET CAM	1
8	2C-616	BOLT BRACKET TO CYLINDER	2
9	4E-06	LOCKWASHER	2
10	519021	WASHER	2
11	619021	WASHER	2
12	4E-06	LOCKWASHER	2
13	2C-616	BOLT CAM TO BRACKET	2
14	24F-1	ADAPTOR UNION	1
15	12E-10	LOCKWASHER	4
16	2G-1010	SCREW VALVE MOUNTING	4
17		CYLINDER BUCKET SEE INDEX	1
18		LEVELLER VALVE SEE INDEX	1
19	36F-2	ADAPTOR UNION	1
20	1541550	HOSE ASSEMBLY	2
21	31H-42	CLIP	4
22	30H-45	CLIP	6
23	31F-2	ADAPTOR UNION	1
24		CONTROL VALVE SEE INDEX	1
25	4L-06	LOCKWASHER	5
26	2C-612	BOLT CLIP	5

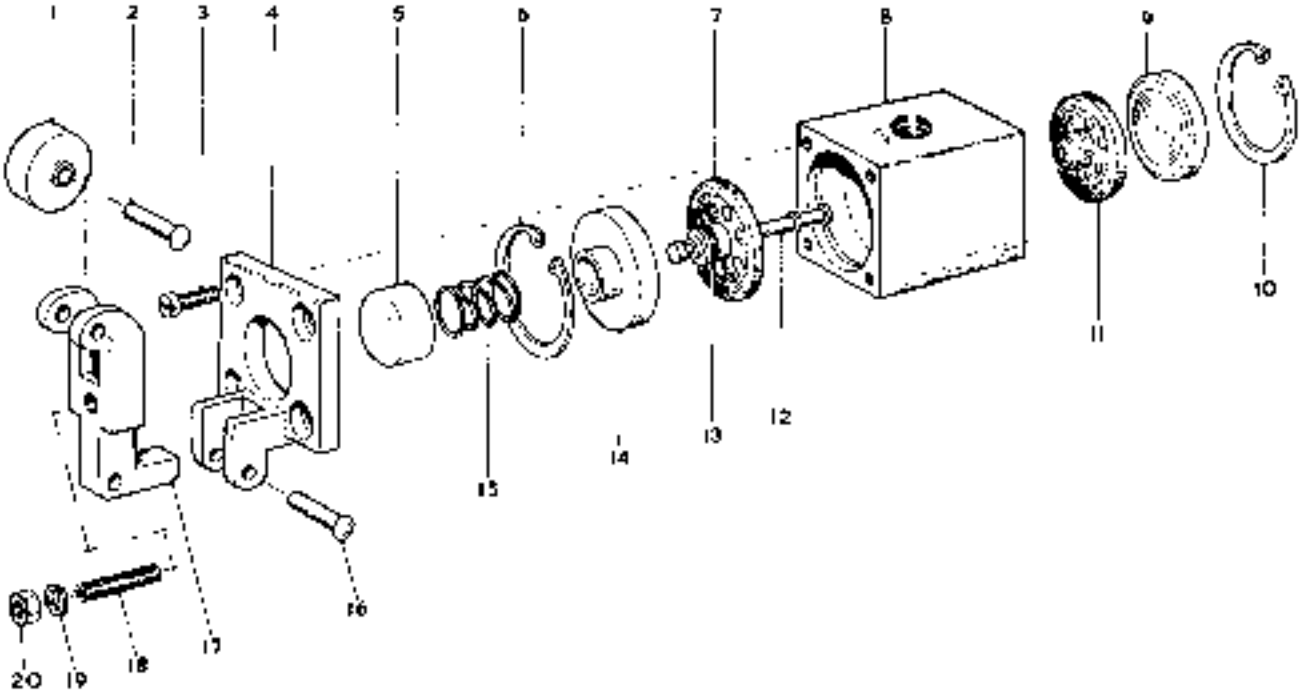

BUCKET LEVELLER VALVE

TP 3158

ITEM	PART	DESCRIPTION	QTY.
1	555784	VALVE ASSY INC 1-20	1
1	947176	ROLLER	1
2	947179	PIN PIVOT	1
3	420-1008	SCREW BRACKET	4
4	947176	BRACKET COVER	1
5	947177	BUTTON ASSY INC 15	1
6	1303319	RING SNAP	1
7	889239	DIAPHRAGM	1
8		* ALOY SET 8	1
9	947226	CAP	1
10	1303319	RING SNAP	1
11	859239	DIAPHRAGM	1
12	947165	BUTTON & STEM ASSEMBLY INC 5 & 15	1
13	25X-20012	O RING	1
14	947225	CAP	1
15	889242	SPRING	1
16	947179	PIN PIVOT	1
17	947175	LEVER	1
18	150-416	SCREW ADJUSTING	1
19	4E-04	LOCKWASHER	1
20	1E-04	NUT	1
21	894689	* KIT REPAIR INC 5,7,11-13 & 15	1
22	2E-1010	* SCREW VALVE MOUNTING	4
22A	121-10	* LOCKWASHER	4

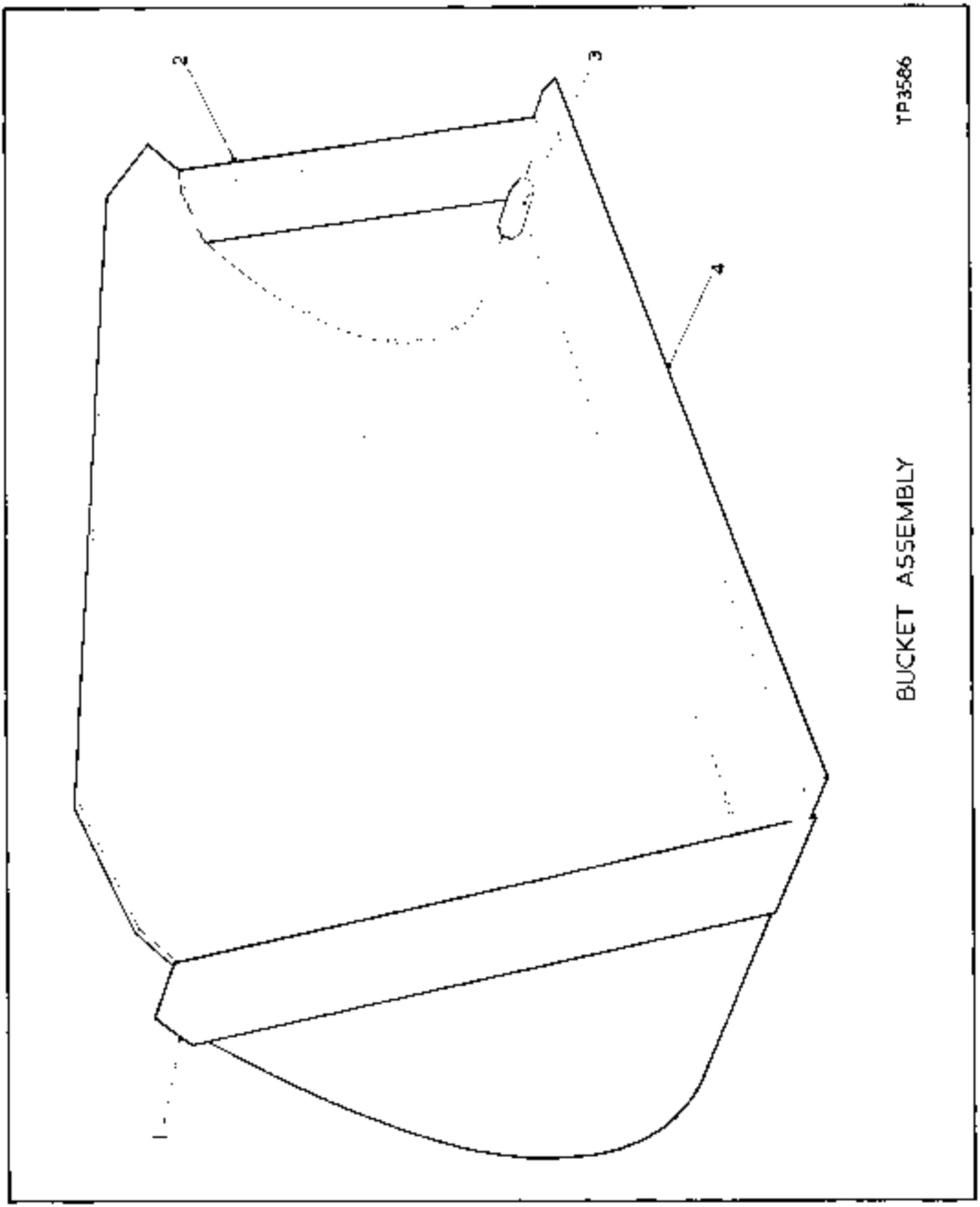
2
3
4
TP3586
BUCKET ASSEMBLY

BUCKET ASSEMBLY—DATA

BUCKET 3 CUBIC YARDS (2294 LITRES)

ITEM	PART	DESCRIPTION	QTY.
A	1503047	BUCKET 3 CUBIC YARDS (2294 LITRES) INC 1-4 REF-PL 1503036	1
1	1503484	CUTTING EDGE RH	1
2	1503493	CUTTING EDGE LH	1
3	1536060	CLOSED CORNER	2
4	1503736	CUTTING EDGE MAIN	1

BUCKET 3·5 CUBIC YARDS (2676 LITRES)

ITEM	PART	DESCRIPTION	QTY.
A	1503141	BUCKET 3.5 CUBIC YARDS (2676 LITRES) INC 1-4 REF-PL 1503130	1
1	1503494	CUTTING EDGE RH	1
2	1503493	CUTTING EDGE LH	1
3	1536060	CLOSED CORNER	2
4	1503736	CUTTING EDGE MAIN	1

BUCKET 4 CUBIC YARDS (3058 LITRES)

ITEM	PART	DESCRIPTION	QTY.
A	1503760	BUCKET 4 CUBIC YARDS (3058 LITRES) INC 1-4 REF-PL 1503700	1
1	1503746	CUTTING EDGE RH	1
2	1503745	CUTTING EDGE LH	1
3	1536060	CLOSED CORNER	2
4	1503736	CUTTING EDGE MAIN	1

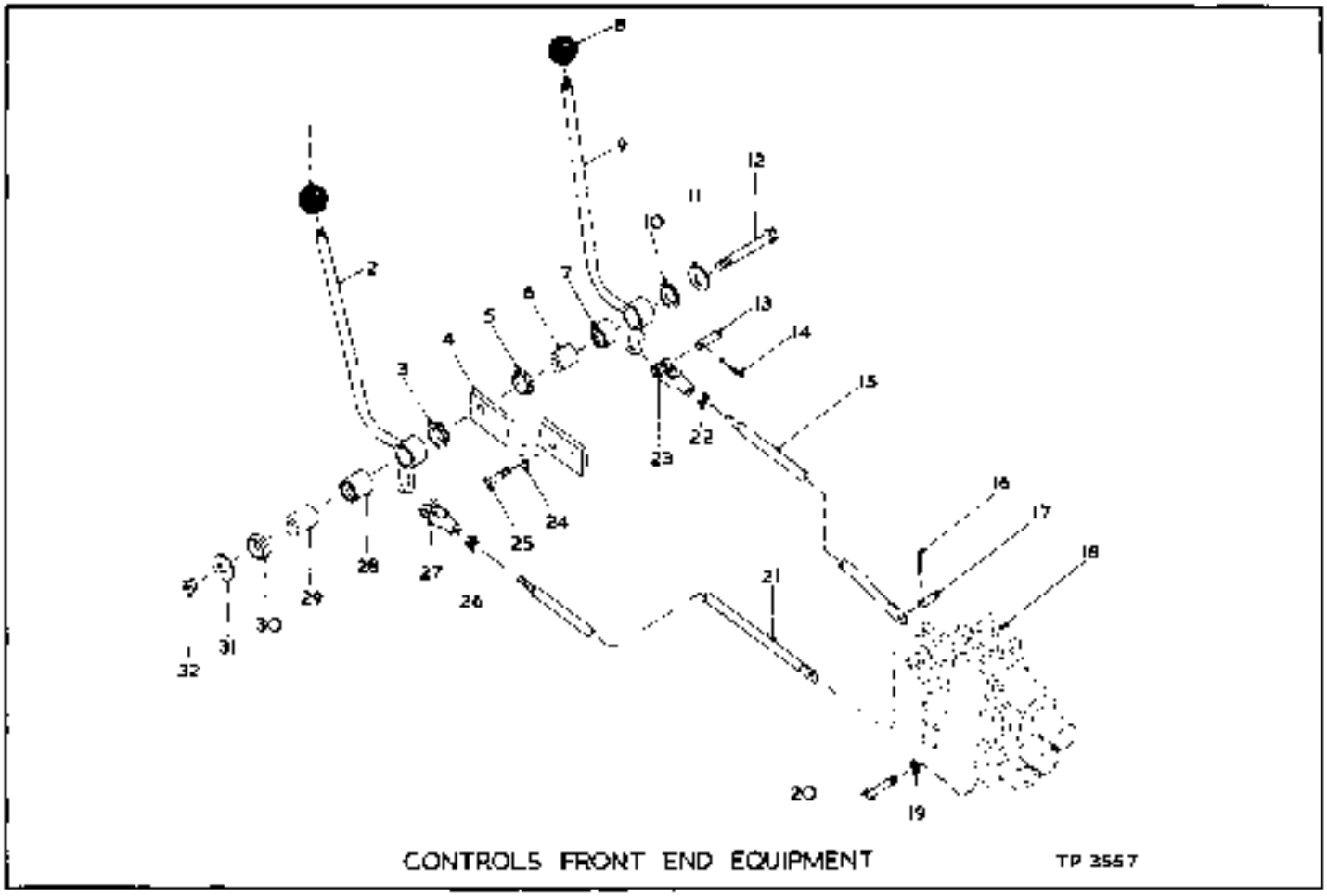

CONTROLS FRONT END EQUIPMENT TP 3567

ITEM	PART	DESCRIPTION	QTY.	ITEM	PART	DESCRIPTION	QTY.
1	5e5389	KNOB	1	17	44-08127	CLEVIS PIN	2
2	1508476	LEVER HOUN CONTROL	1	18		CONTROL VALVE SEE INDEX	1
3	1522535	SEAL	1	19	4E-08	LOCKWASHER	3
4	1531554	BRACKET,LEVER MOUNTING	1	20	2C-664	BOLT VALVE MOUNTING	3
5	169/555	SEAL	1	21	1531555	ROD BOOM CONTROL	
6	1503251	SLEEVE	1			INC 22 & 23	1
7	07522T	BEARING	1	22	60-08	NUT CLEVIS	1
8	566359	KNOB	1	23	2J-8300	CLEVIS	1
9	1508479	LEVER BUCKET CONTROL	1	24	4E-06	LOCKWASHER	2
10	1522535	SEAL	1	25	2C-024	BOLT BRACKET MOUNTING	2
11	569509	WASHER LEVER MOUNTING	1	26	80-06	NUT CLEVIS	1
12	2C-680	BOLT LEVER MOUNTING	1	27	2J-8300	CLEVIS	1
13	44-08127	CLEVIS PIN	2	28	07522T	BEARING	1
14	CP-414	SPLIT PIN	2	29	1503251	SLEEVE	1
15	1531557	ROD BUCKET CONTROL		30	1522535	SEAL	1
		INC 22 & 23	1	31	566509	WASHER LEVER MOUNTING	1
16	CP-414	SPLIT PIN	2	32	180-08	NUT LEVER MOUNTING	1

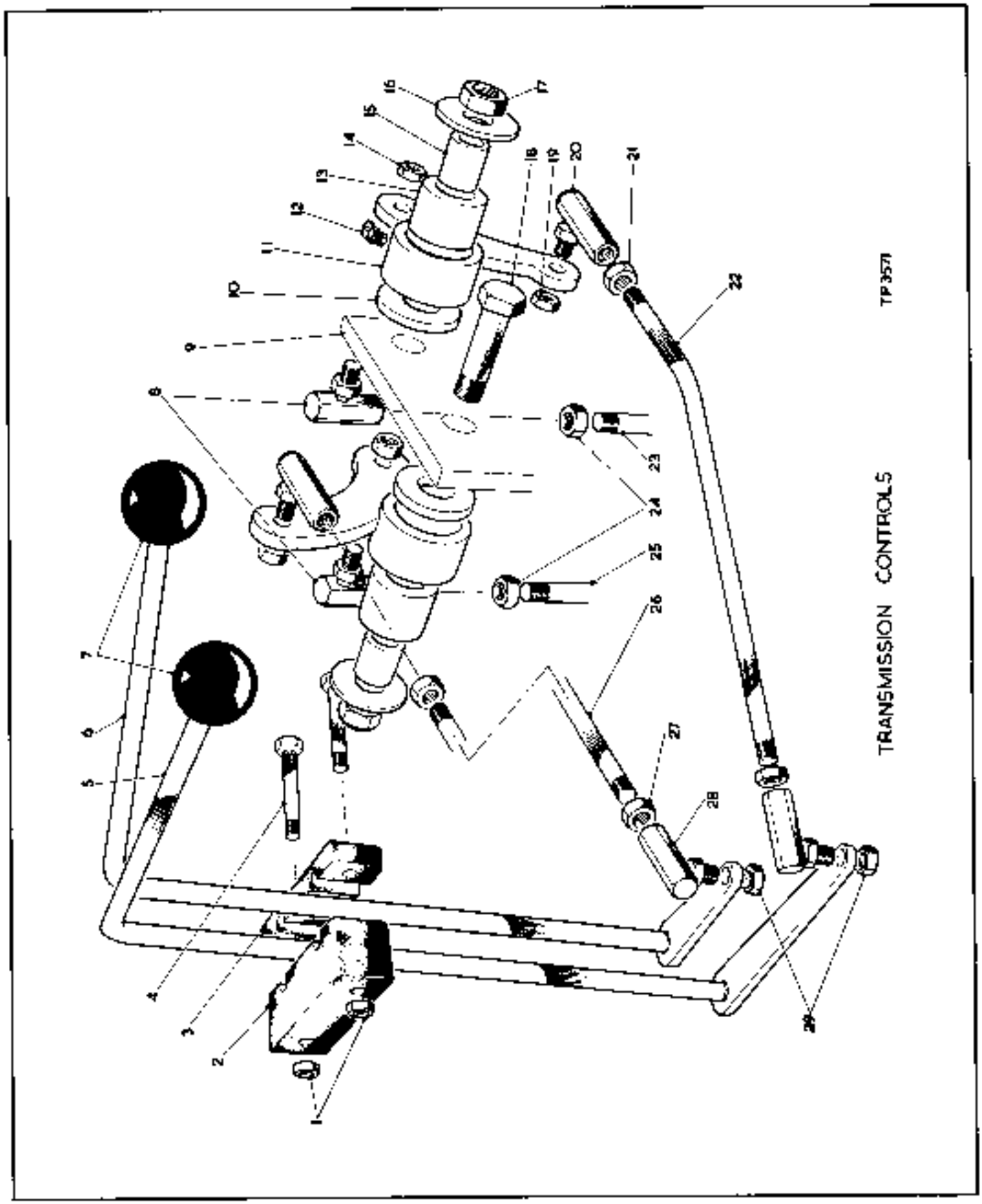
TRANSMISSION CONTROLS
TP3571

CONTROLS—TRANSMISSION

ITEM	PART	DESCRIPTION	QTY.
1	180-05	NUT CONTROL LEVER SUPPORT	4
2	566478	SUPPORT LEVER	2
3	568479	SUPPORT LEVERS	2
4	2C-536	BOLT	4
5	1565883	LEVER FORWARD & REVERSE	1
6	1564038	LEVER HIGH & LOW	1
7	5C9772	KNOB	2
8	1303361	BALLJOINT	4
9	1541805	MOUNTING BRACKET	1
9A	2C-620	BOLT BRACKET MOUNTING	2
9B	180-08	NUT	2
9C	6J4024	WASHER	4
10	452461	WASHER	2
11	585500	BELLCRANK ASSY	2
12	12A-15	GREASE FITTING	2
13	585596	SLEEVE	2
14	660-05	NUT	4
15	585557	BUSHING	2
16	6J6795	WASHER	2
17	180-08	NUT	2
18	2C-840	BOLT	2
19	660-05	LOCKNUT	2
20	1401361	BALLJOINT	2
21	80-05	NUT	2
22	1509268	CONTROL ROD INC 20 & 21	1
23	1541804	CONTROL ROD INC 8 & 24	1
24	80-05	NUT	4
25	1541804	CONTROL ROD INC 6 & 24	1
26	1541803	CONTROL ROD INC 27 & 28	1
27	80-05	NUT	2
28	1301361	BALLJOINT	2
29	660-05	LOCKNUT	2

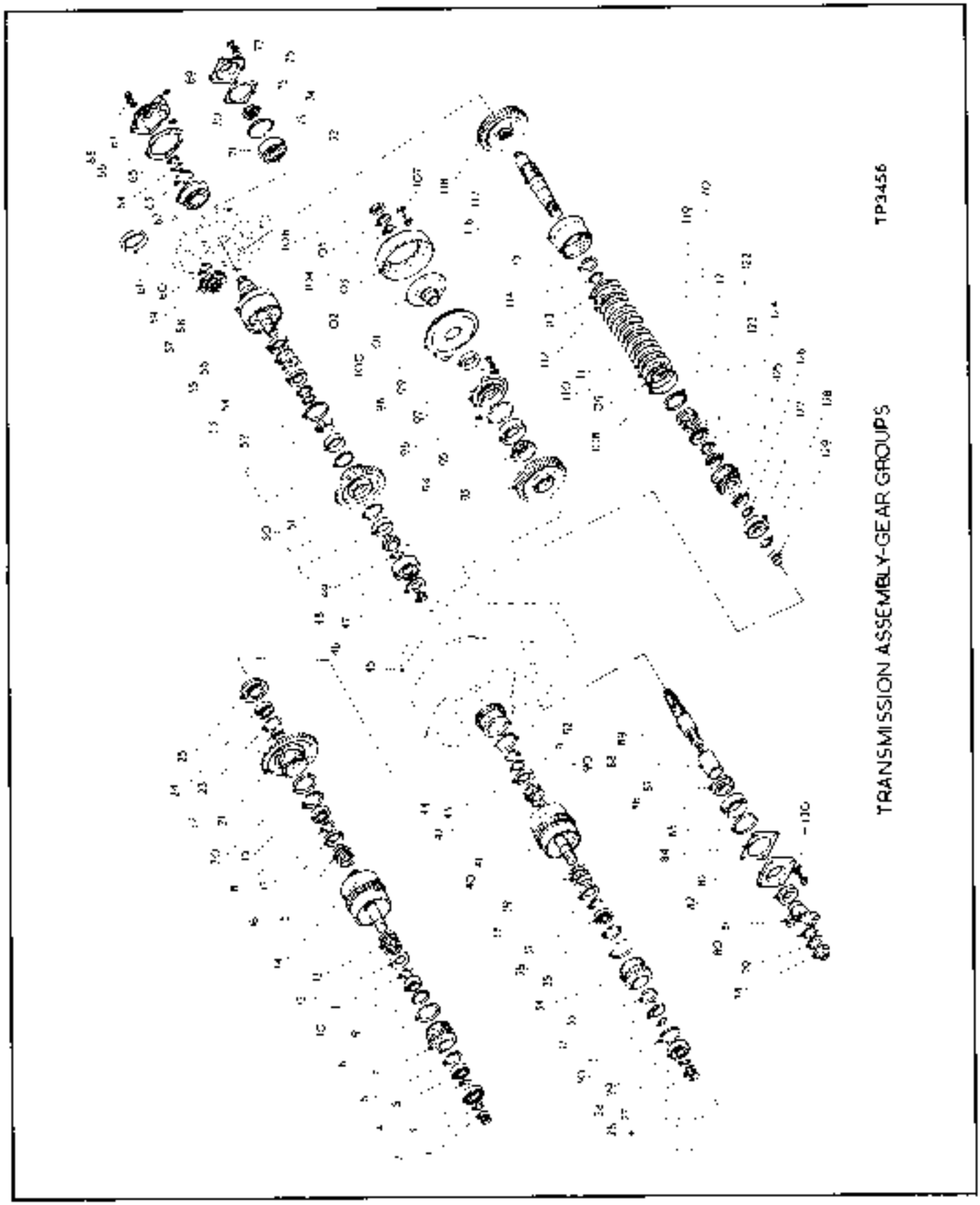
TP3456
TRANSMISSION ASSEMBLY-GEAR GROUPS

TRANSMISSION ASSEMBLY GEAR GROUPS

ITEM	PART	DESCRIPTION	QTY.
A	265172	TRANSMISSION ASSEMBLY	
		R-20420-2 ENG 1-130	1
1	215183	RING PISTON	3
2	224083	RING RETAINING	1
3	223849	BEARING FRONT	1
4	224083	RING RETAINING	1
5	230829	BEARING GEAR	1
6	223877	RING SNAP	1
7	231097	GEAR DRIVE CLUTCH	1
8	731160	OIL BAFFLE RING	1
9	223877	RING SNAP	1
10	230829	BEARING GEAR	1
11	654613	RING SNAP	1
12	232089	RETAINER SPRING	1
13	230822	SPRING PISTON RETURN	1
14		CLUTCH ASSEMBLY REVERSE	
		& 3RD SEE INDEX	1
15	230822	SPRING PISTON RETURN	1
16	232089	RETAINER SPRING	1
17	654613	RING SNAP	1
18	230860	BEARING 3RD GEAR	1
19	223874	RING SNAP	1
20	731160	RING BAFFLE	1
21	231252	GEAR 3RD	1
22	230906	SPACER	1
23	223874	RING SNAP	1
24	230860	BEARING 3RD GEAR	1
25	658038	BEARING REAR	1
26		COVER FRONT SEE INDEX	
27	215183	RING PISTON	3
28	224083	RING RETAINING	1
29	223849	BEARING	1
30	230869	RING BEARING LOCATING	1
31	224083	RING RETAINING	1
32	230829	BEARING GEAR	1
33	223877	RING SNAP	1
34	231097	GEAR DRIVE CLUTCH	1
35	731160	RING BAFFLE	1
36	223877	RING SNAP	1
37	230829	BEARING GEAR	1
38	654613	RING RETAINER	1
39	232085	RETAINER SPRING	1
40	230822	SPRING PISTON RETURN	1
43		CLUTCH ASSEMBLY FORWARD	
		& SECOND SEE INDEX	1
42	230822	SPRING PISTON RETURN	1
43	232089	RETAINER SPRING	1
44	654613	RING RETAINING	1
45		TRANSMISSION CASE ASSY	
		SEE ENGRA	1
46	230866	BEARING	1
47	231775	END PLATE	1
48	231779	BEARING 2ND GEAR	1
49*	231776	RING RETAINING	AR
49A	231777	RING RETAINING	AR
49B	232046	RING RETAINING	AR
50	231780	BEARING LOW SPEED GEAR	1
51	231246	GEAR LOW SPEED	1
52	731160	RING BAFFLE	1
53	232076	RING RETAINING	1
54	654613	RING SNAP	1
55	232089	RETAINER SPRING	1
56	230822	SPRING PISTON RETURN	1
57*	232088	RETAINER SPRING	1
58		CLUTCH ASSEMBLY LOW SPEED	
		SEE INDEX	1
59	232459	GEAR DRIVE	1
60	224106	RING RETAINER	1
61		GAGE	
62	230868	BEARING REAR	1
63	232081	RING RETAINER	1
64	220075	RING PISTON CLUTCH SHAFT	1
65	220079	RING PISTON CLUTCH SHAFT	1
66	231193	GASKET REAR END CAP	1
67	231176	CAP REAR BEARING	1
68	41-06	LOCKWASHER	5
68A	LC-612	BOLT	5

(Continued)

TRANSMISSION ASSEMBLY GEAR GROUPS (Continued)

ITEM	PART	DESCRIPTION	QTY.
69	16C-02	PLUG REAR BEARING CAP	1
70	25K-30016	O RING	1
71	10J-15	BALL REAR BEARING LOCK	1
72	231646	BEARING IDLER SHAFT REAR	1
73	230552	RING LOCATING	1
74	215634	NUT IDLER SHAFT	1
75	230918	GASKET BEARING CAP	1
76	231412	BEARING CAP	1
77	1C-520	SCREW BEARING CAP	4
77A	4E-09	LOCKWASHER	4
78	222960	NUT FLANGE	1
79	222179	WASHER FLANGE NUT	1
80	25K-60116	O RING	1
81	231749	FLANGE OUTPUT	1
82	230954	SEAL OIL	1
83	231818	CAP FRONT BEARING	1
84	231048	SHIM .004	AR
84A	231849	SHIM .007	AR
84B	231850	SHIM .010	AR
84C	231851	SHIM .020	AR
85	25K-40400	O RING	1
86	666697	CAP BEARING	1
87	1314713	CONE OUTPUT SHAFT GEAR	1
88	231405	SPACER OUTPUT SHAFT GEAR	1
89	231406	SHAFT OUTPUT	1
90	654611	RING RETAINING	1
91	731160	RING BAFFLE	1
92	231239	GEAR 2ND	1
93	232450	GEAR OUTPUT	1
94	742240	CUP REAR BEARING	1
95	1315447	CONE REAR BEARING	1
96	25K-40416	O RING	1
97	25K-30026	O RING	1
98	231817	CAP REAR BEARING	1
99	1C-928	BOLT CAP REAR BEARING	4
99A	4E-09	LOCKWASHER	4
100	225823	SEAL OIL	1
101		SEE INDEX PARKING BRAKE	
102	274234	FLANGE BRAKE	1
103	215160	DRUM BRAKE	1
104	25K-60116	O RING FLANGE	1
105	222179	WASHER FLANGE	1
106	222960	NUT FLANGE	1
107	2C-612	BOLT FLANGE	6
107A	4E-06	LOCKWASHER	6
108	215190	RING RETAINER	1
109	224774	END PLATE CLUTCH DISC	1
110	226114	DISC CLUTCH INNER	6
111	224772	DISC CLUTCH OUTER	6
112	230850	PISTON CLUTCH	1
113	224771	RING SEAL OUTER	1
114	230857	RING SEAL INNER	1
115	224065	RING RETAINER	1
116	231241	DRUM 4TH CLUTCH	1
117	231623	SHAFT IDLER	1
118	230989	GEAR IDLER SHAFT	1
119	731160	RING BAFFLE	1
120	230827	SPRING RETURN	1
121	232089	RETAINER SPRING	1
122	230888	RING RETAINER	1
123	231624	BEARING 4TH GEAR	1
124	232452	GEAR 4TH	1
124A	232405	* SPACER BEARING	1
125	231624	BEARING 4TH GEAR	1
126	230880	RING RETAINER	1
127	231687	BEARING FRONT	1
128	230888	RING RETAINER	1
129	209560	RING PISTON	3
130	1C-520	BOLT CAP FRONT BEARING	4
130A	4E-09	LOCKWASHER	4
131	1540889	* MOUNTING BRACKET FRONT	2
131A	1540891	* MOUNTING BRACKET REAR	2
132	23C-1228	* BOLT TRANSMISSION TO BRKT	8
132A	4E-12	* LOCKWASHER	8
133	24C-1257	BOLT BRACKET TO FRAME	4
133A	680-12	NUT	4
133B	565972	WASHER	2

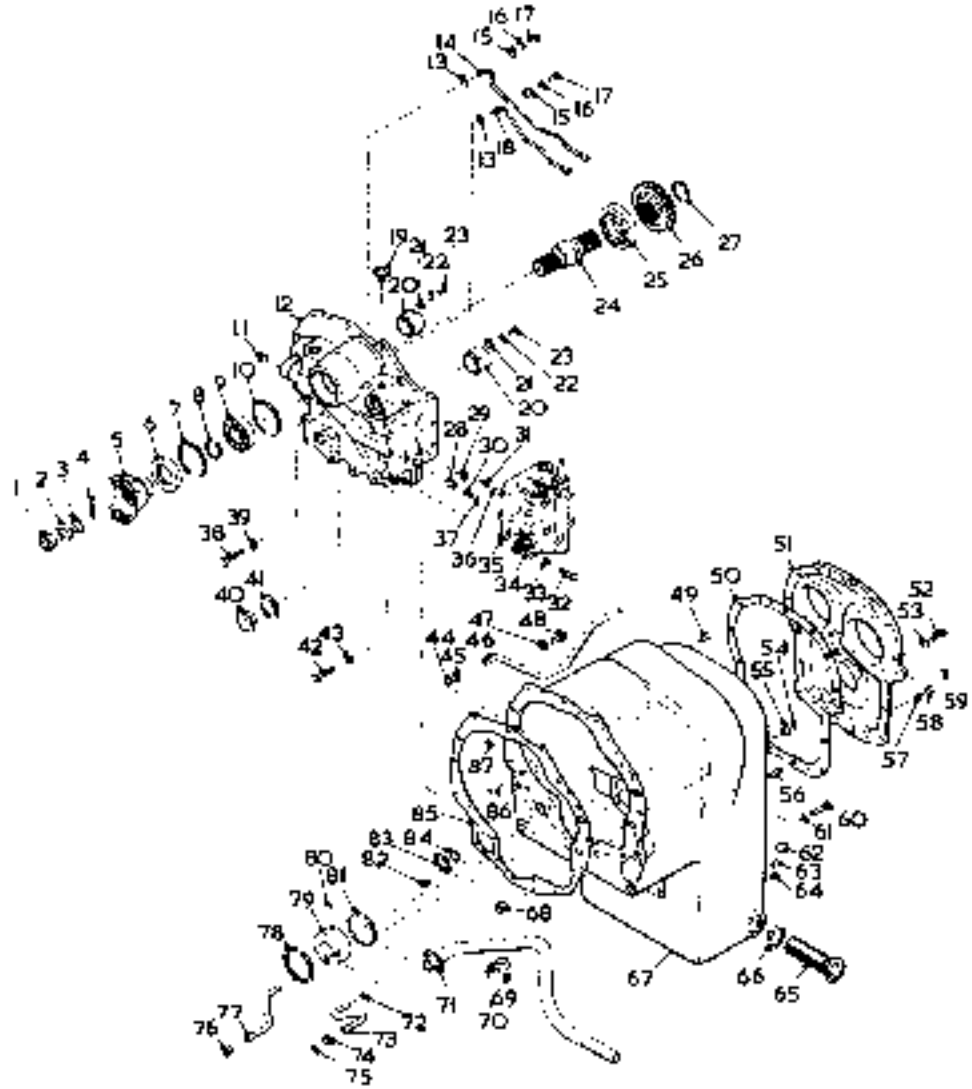

TRANSMISSION CASE & COVER GROUP

TP3455

TRANSMISSION CASE AND COVER GROUP

ITEM	PART	DESCRIPTION	QTY.
1	201951	NUT INPUT FLANGE	1
2	102745	WASHER FLANGE	1
3	25K-40112	O RING FLANGE	1
4	1F-428	COTTER FLANGE NUT	1
5	214945	FLANGE INPUT	1
6	231798	OIL SEAL INPUT FLANGE	1
7	223901	CIRCLIP FRONT BEARING	1
8	224083	LOCATING RING FRONT BRG	1
9	225603	FRONT BEARING	1
10	223901	CIRCLIP FRONT BEARING	1
11	13F-16	PLUG PIPE	1
12	231626	FRONT COVER & TUBE ASSY	1
		INC 13-18,20-23,28A/V	
13	25K-30012	O RING	2
14	231629	TUBE ASSY 3RD SPEED	1
15	231048	CLIP TUBE	2
16	4E-05	LOCKWASHER CLIP	2
17	1C-510	SCREW CLIP	2
18	231622	TUBE ASSY REVERSE	1
19	211433	BREATHER ASSEMBLY	1
20	231056	SLEEVE FRONT COVER	2
21	230851	LOCK SLEEVE	2
22	4E-05	LOCKWASHER	2
23	1C-510	SCREW SLEEVE LOCK	2
24	231782	SHAFT INPUT	1
25	231054	REAR BEARING INPUT SHAFT	1
26	214935	GEAR INPUT SHAFT	1
27	224026	CIRCLIP GEAR	1
28	222067	SLEEVE TUBE	1
29	222067	SLEEVE TUBE	1
30	232147	SPRING DETENT	1
31	232147	SPRING DETENT	1
32	1C-632	SCREW VALVE TO HOUSING	9
33	4E-06	LOCKWASHER	9
34	231168	CONTROL VALVE ASSEMBLY	1
		LESS HYDRAULIC ACTUATOR	
35	231161	GASKET CONTROL VALVE	1
36	10J-12	BALL DETENT	1
37	10J-12	BALL DETENT	1
38	1E-744	SCREW COVER TO CASE	4
39	4E-07	LOCKWASHER	4
40	219370	PLUG FRONT COVER	1
41	219373	GASKET PLUG	1
42	1C-728	SCREW COVER TO CASE	4
43	4E-07	LOCKWASHER	4
44	25K-40024	O RING	1
45	222067	SLEEVE TUBE	1
46	230900	TUBE	1
47	4E-07	LOCKWASHER COVER TO CASE	5
48	1C-720	SCREW COVER TO CASE	5
49	214118	PIN	2
50	231761	GASKET REAR COVER TO CASE	1
51	231192	REAR COVER	1
52	1C-720	SCREW REAR COVER TO CASE	13
53	4E-07	LOCKWASHER	13
54	25K-40026	O RING	1
55	222067	SLEEVE TUBE	1
56	224442	STUD COVER TO CASE	2
57	4E-07	LOCKWASHER	2
58	2D-07	NUT	2
59	16F-02	PLUG PIPE	1
60	1C-720	SCREW	5
61	4E-07	LOCKWASHER	5
62	215157	PLUG DRAIN MAGNET	1
63	40K-04	PLUG OIL LEVEL	1
64	40K-04	PLUG OIL LEVEL	1
65	231390	SCREEN ASSEMBLY	1
66	219373	GASKET SCREEN	1
67	231618	TRANSMISSION CASE	1
68	215757	PLUG	1
69	615018	WASHER	1
70	6H-36	CLIP	1
71	231612	SUCTION TUBE ASSEMBLY	1
72	25K-20012	O RING PRESSURE TUBE	1

(Continued)

TRANSMISSION CASE AND COVER GROUP (Continued)

ITEM	PART	DESCRIPTION	QTY.
71	231619	TUBE PRESSURE 4TH SPEED	1
74	222067	SLEEVE TUBE	1
75	25R-4622	O RING	1
76	222067	SLEEVE TUBE	1
77	231623	TUBE LUBE 4TH SPEED	1
78	223501	CIRCLIP OIL DISTRIBUTOR	1
79	231621	OIL DISTRIBUTOR	1
80	104-08	BALL LOCKING	1
81	227401	CIRCLIP	1
82	6D-814	SCREW SUCTION LINE	2
83	230921	WASHER	1
84	25R-4604	O RING	1
85	231606	GASKET FRONT COVER	1
86	214295	PIN DOWEL FRONT COVER	2
87	1M-415	BOLT	1

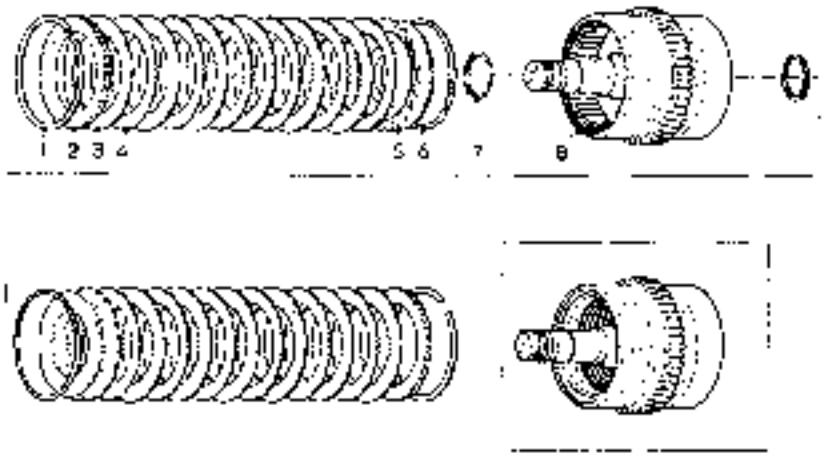

FORWARD & 2 ND CLUTCH GROUP TP3534

ITEM	PART	DESCRIPTION	QTY.	ITEM	PART	DESCRIPTION	QTY.
A		* CLUTCH GROUP	1	5	230450	PISTON CLUTCH	2
1	815190	SINGLE END PLATE	4	6	224771	RING SEAL OUTER	4
2	224774	END PLATE	2	7	230852	RING SEAL INNER	2
3	228114	DISC CLUTCH INNER	12	8	231040	DRUM & SHAFT FORWARD & 2ND CLUTCH	1
4	224772	DISC CLUTCH OUTER	12				

* NOTE. NOT SOLD AS AN ASSEMBLY

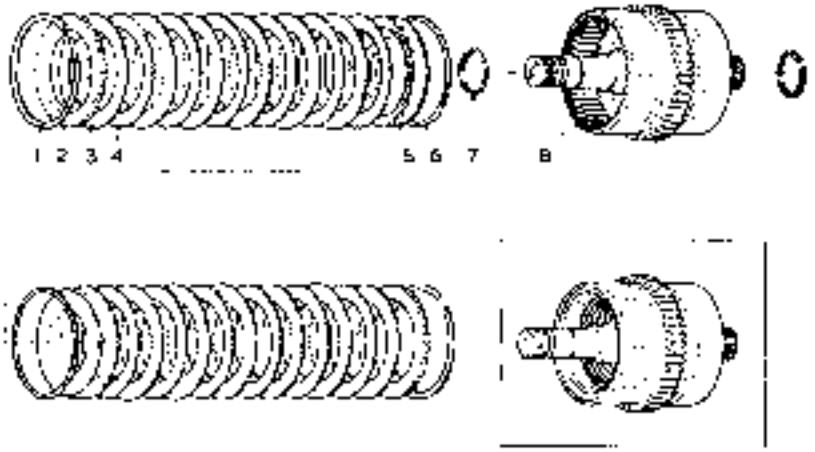

REVERSE & 3 RD CLUTCH GROUP

TP3457

ITEM	PART	DESCRIPTION	QTY.	ITEM	PART	DESCRIPTION	QTY.
a		* CLUTCH GROUP	1	5	230350	PISTON CLUTCH	2
1	215190	CAPLUP END PLATE	2	6	224771	RING SEAL OUTER	2
2	224774	END PLATE	2	7	240657	RING SEAL INNER	2
3	228114	DISC CLUTCH INNER	12	8	233485	DRUM & SHAFT REVERSE & 3RD CLUTCH	1
4	224772	DISC CLUTCH OUTER	12				

* NOTE, NOT SOLD AS AN ASSEMBLY

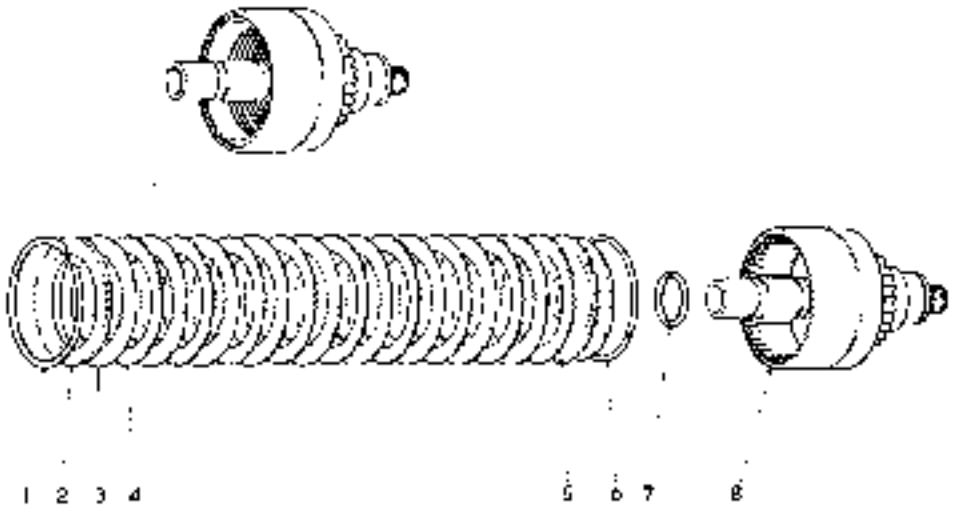

LOW CLUTCH GROUP TP3453

ITEM	PART	DESCRIPTION	QTY.	ITEM	PART	DESCRIPTION	QTY.
A		* CLUTCH GROUP	1	5	210H5U	PISTON CLUTCH	1
1	215190	CIRCLIP END PLATE	1	6	224771	RING SEAL OUTER	2
2	224774	END PLATE	1	7	210857	RING SEAL INNER	2
3	230911	DISC CLUTCH INNER	5	8	212449	GROUP A SHAFT 4TH SPEED	1
4	224772	DISC CLUTCH OUTER	5				

* NOTE: NOT SOLD AS AN ASSEMBLY

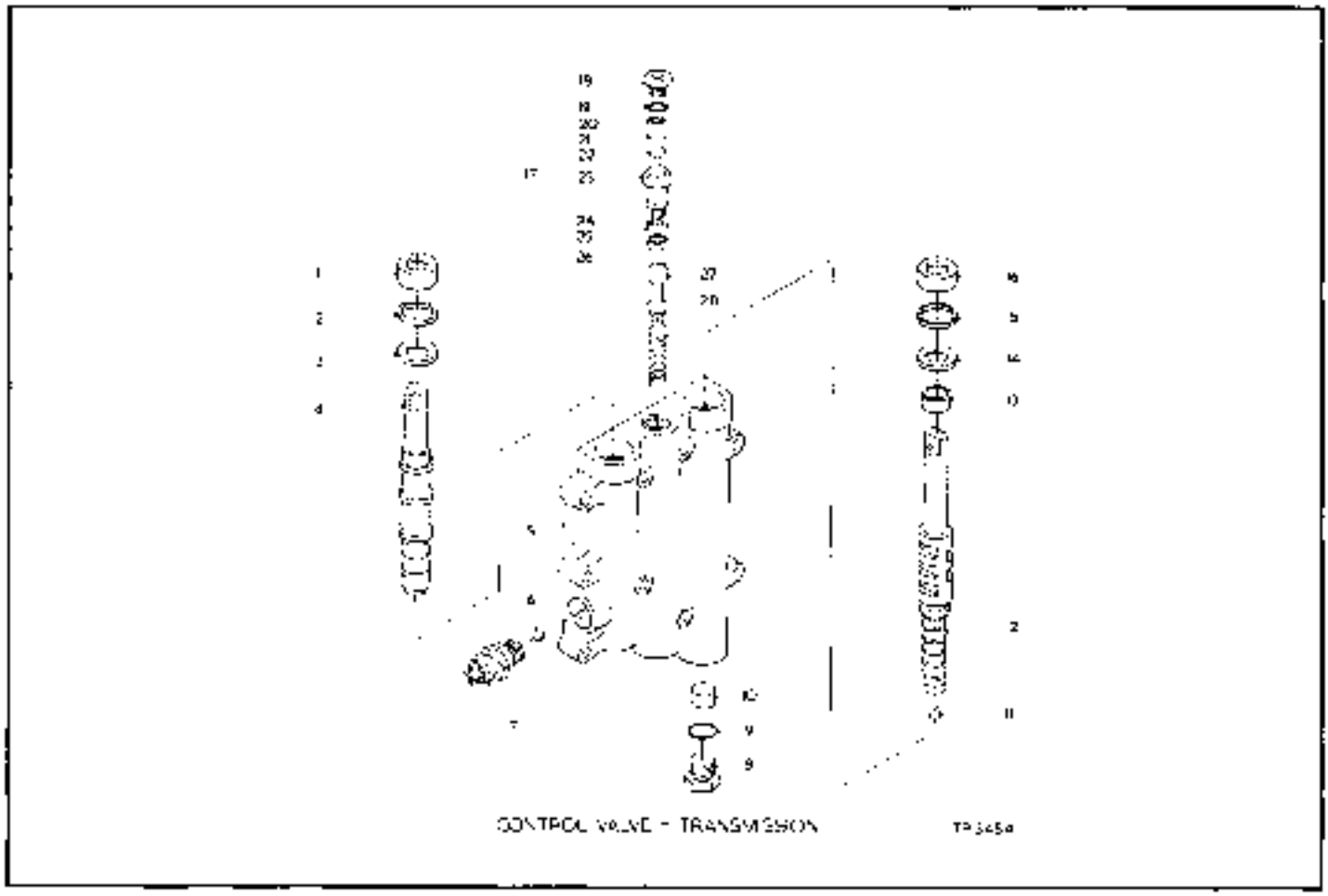

CONTROL VALVE - TRANSMISSION TP3458

ITEM	PART	DESCRIPTION	QTY.
A	231108	CONTROL VALVE ASSEMBLY	
		INC 1-9,11,12,14,15,16	1
1	225856	OIL SEAL	1
2	864140	RING OIL SEAL RETAINER	1
3	217653	WASHER	1
4	231158	VALVE FORWARD & REVERSE	1
5		# HOUSING SEE ITEM 1	
6	10J-12	BALL DETENT	1
7	229729	SWITCH NEUTRAL	1
8	24N-7	PLUG VALVE HOUSING	1
9	9JF-7	O RING	1
10		OMIT	
11	16F-91	PLUG SELECTOR SPOOL	1
12	231140	SPOOL SPEED SELECT INC 18	1
13	231440	SPACER DIAPHRAGM	1
14	217657	WASHER OIL SEAL RETAINER	1
15	864140	RING OIL SEAL RETAINER	1
16	225056	OIL SEAL	1
17	219342	PISTON ASSEMBLY INC 18-26	1
18	217928	CAP	1
19	91F-8	O RING	1
20	25K-30020	O RING PISTON	1
21	227672	GYLO RING	1
22	227674	PISTON	1
23	217424	HOUSING	1
24	224315	OIL SEAL	1
25	228931	BAND SEAL	1
26	25K-30022	O RING	1
27	231134	SPOOL VALVE	1
28	231164	SPRING VALVE SPOOL	1

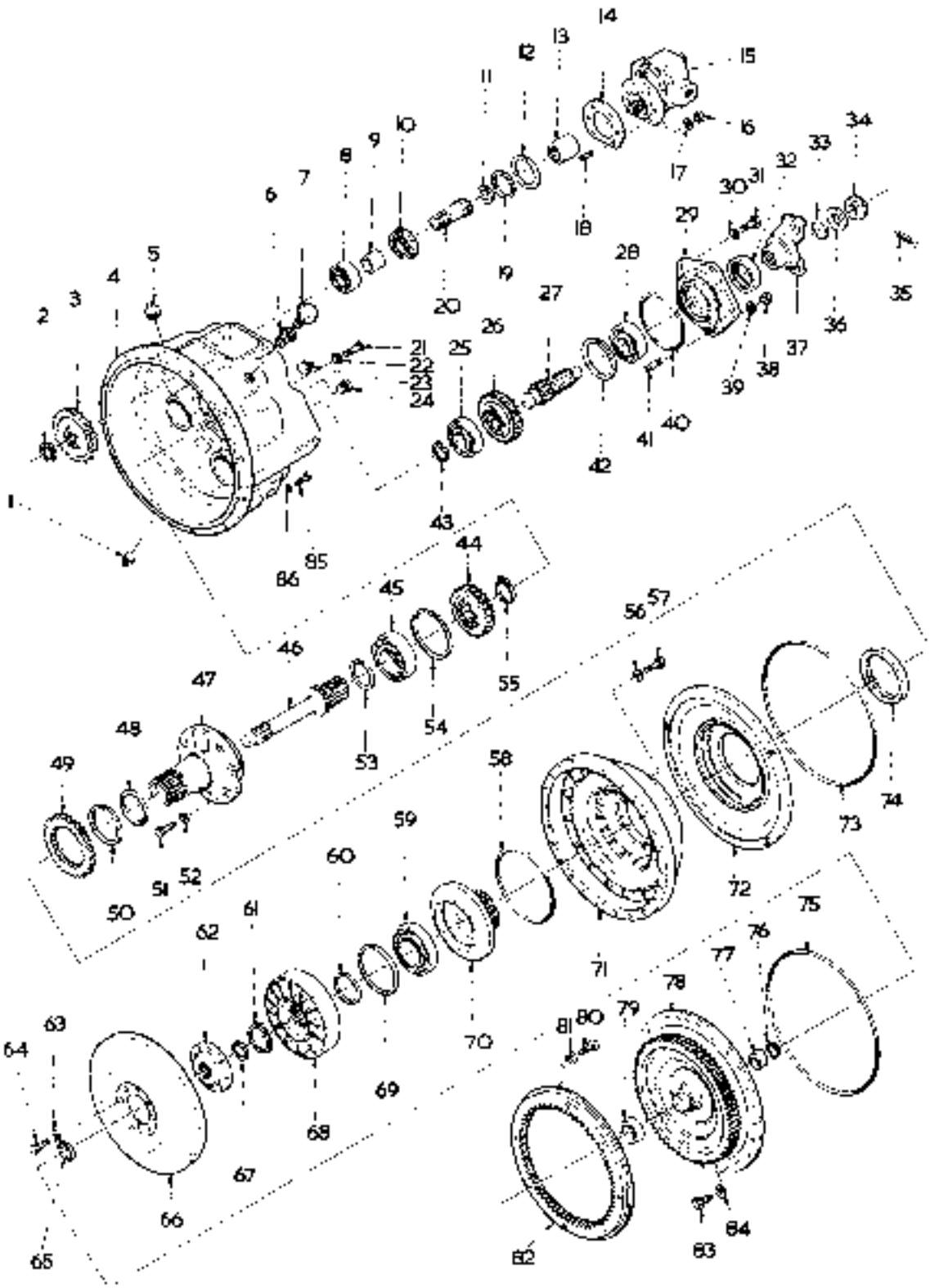

TORQUE CONVERTER ASSEMBLY TP 3038

TORQUE CONVERTER AND MOUNTINGS

ITEM	PART		DESCRIPTION	QTY.
A	283173		CONVERTER C273T464	
			INC 1-5,8-79,82-84	1
1	13F-20		PLUG HOUSING	1
2	716298		RING SNAP GLAR	3
3	214931		GEAR PUMP DRIVE	3
4	801546		KIT CONVERTER HOUSING	1
5	10H-16		PLUG HOUSING	2
6	227265		VALVE CHECK AIR BREATHER	1
7	214423		BREATHER AIR	1
8	214936		BEARING DRIVE SHAFT	3
9	214930		SPACER PUMP SHAFT	3
10	214956		BEARING DRIVE SHAFT	3
10A	214954	*	RING SNAP BEARING	3
11	224039		RING RETAINING	3
12	781186		RING SNAP WASHER	3
13	214961		SLEEVE PUMP TO CONVERTER	1
14	551906		GASKET	1
15	450230	*	PUMP CONVERTER CHARGING	1
16	8C-06		JAM NUT PUMP TO CONVERTER	6
17	4E-06		LOCKWASHER	6
18	707647		STUD PUMP MOUNTING	6
19	214529		BASHUK PUMP SHAFT	3
20	214928		SHAFT PUMP DRIVE	3
21	1C-628		BOLT OIL BAFFLE	3
22	4E-06		LOCKWASHER	3
23	16F-08		PLUG HOUSING	1
24	40K-02		PLUG HOUSING	1
25	742156		BEARING OUTPUT SHAFT	1
26	214538		GEAR OUTPUT SHAFT	1
27	214931		SHAFT OUTPUT	1
28	743439		BEARING OUTPUT SHAFT	1
29	214945		RETAINER BEARING INC 32	1
30	4E-07		LOCKWASHER	3
31	1C-720		BOLT BEARING RETAINER	3
32	206864		SEAL OIL	1
33	25K-40222		O RING COMPANION FLANGE	1
34	204951		NUT OUTPUT SHAFT	1
35	16F-424		PIN LOCK	1
36	102345		WASHER OUTPUT SHAFT	1
37	214985		FLANGE COMPANION	1
38	8C-07		NUT BEARING RETAINER	2
39	4E-07		LOCKWASHER	2
40	25K-40512		O RING BEARING RETAINER	1
41	214730		STUD	2
42	220901		RING SNAP BEARING	1
43	214955		RING SNAP BEARING	1
44	214935		GEAR TURBINE SHAFT	1
45	142002		BEARING TURBINE SHAFT	1
46	214953		SHAFT TURBINE	1
47	214532		SUPPORT STATOR	1
48	221693		RING PISTON	1
49	214951		GEAR IMPELLER HUB	1
50	226009		RING SNAP GEAR	1
51	1C-628		BOLT STATOR SUPPORT	6
52	FL-08		LOCKWASHER	6
53	222079		RING PISTON	1
54	214953		RING SNAP BEARING	1
55	224026		RING SNAP GEAR	1
56	619025		WASHER	8
57	4C-714		BOLT HUB TO IMPELLER	8
58	25K-40616		O RING IMPELLER HUB	1
59	214596		BEARING IMPELLER HUB	1
60	214934		SPACER REACTION MEMBER	1
61	743045		RING REACTION MEMBER	1
62	214526		HUB TURBINE	1
63	619023		WASHER	8
64	209313		BOLT TURBINE TO HUB	8
65	459069		RING SNAP TURBINE HUB	1
66	223633		TURBINE	1
67	659065		RING SNAP TURBINE HUB	1
68	8D160H		MEMBER REACTION	1
A69	459244	*	PIN MEMBER TO SPACER	1
69	214953		RING SNAP BEARING	1
70	214954		HUB IMPELLER	1
71	214959		IMPELLER	1
72	214925		BAFFLE OIL	1

(Continued)

TORQUE CONVERTER AND MOUNTINGS (Continued)

ITEM	PART	DESCRIPTION	QTY.	ITEM	PART	DESCRIPTION	QTY.
73	214939	O RING OIL BAFFLE	1	80	214795	BOLT RING GEAR	8
	214939	O RING OIL BAFFLE	1	81	215909	WASHER	8
74	214941	SEAL OIL BAFFLE	1	82	215264	GEAR RING	1
75	214939	O RING IMPELLER TO COVER	1	83	1L-616	BOLT IMPELLER TO COVER	24
76	666542	RING SNAP BEARING	1	84	4E-06	LOCKWASHER	24
77	214984	BEARING IMPELLER COVER	1	85	23C-620	+ BOLT CONVERTER TO ENGINE	12
78	214922	COVER IMPELLER	1	86	4E-06	+ LOCKWASHER	12
79	227006	SLEEVE IMPELLER COVER	1	87	24M-18200	+ LOCKWIRE	4

* NOTE: WHEN CONVERTER CHARGING PUMP REPLACEMENT IS REQUIRED, ONLY A NEW FACTORY BUILT AND TESTED PUMP SHOULD BE USED. PROPER OPERATION OF CONVERTER AND TRANSMISSION IS DEPENDENT ON AN EFFICIENT CHARGING PUMP. MANAGE POSSIBLE BY USE OF A FIELD REBUILT PUMP CAN RESULT IN REPAIR COST EXCEEDING COST OF NEW PUMP ALONE.

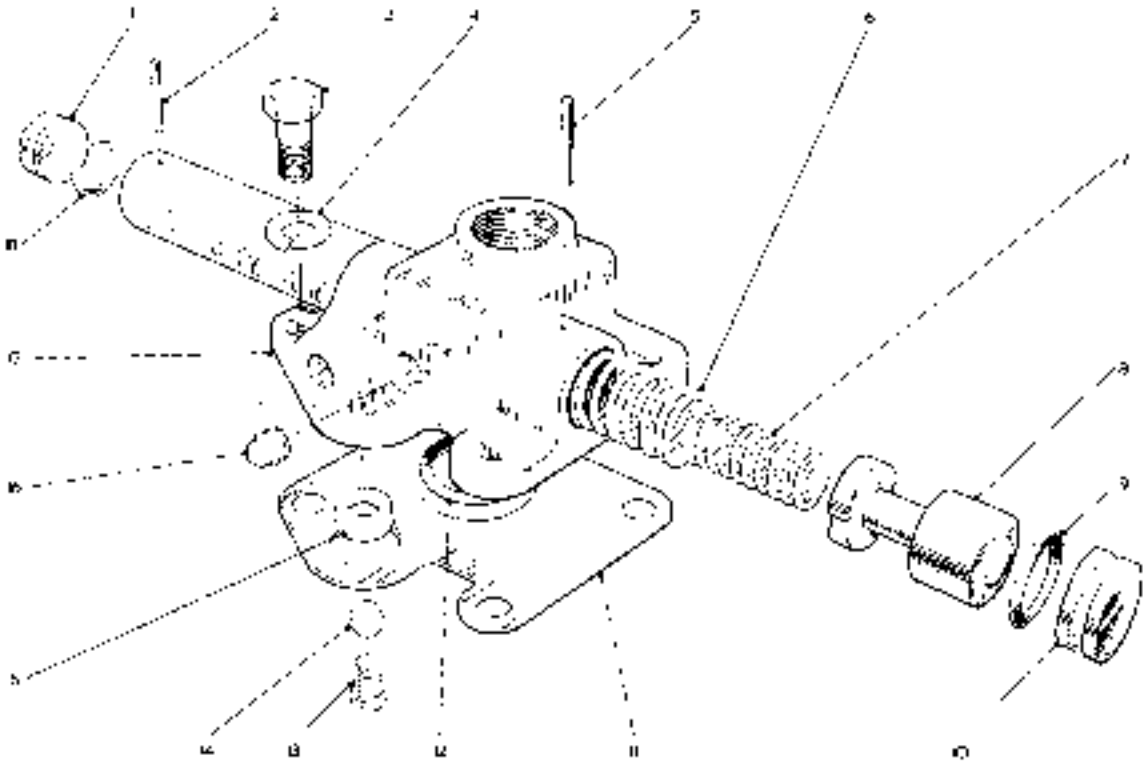

PRESSURE REGULATING VALVE ASSEMBLY TP299e

ITEM	PART	DESCRIPTION	QTY.
A	214543	VALVE ASSY INC 1,2,3,4,5,6,10, 15,17,18.	1
1	220983	STOP PISTON	1
2	660178	PIN PISTON STOP	1
3	10-616	BOLT VALVE TO CONVERTER	4
4	46-06	LOCKWASHER	4
5	660178	PIN PISTON STOP	1
6	224369	SPRING VALVE OUTER	1
7	224368	SPRING VALVE INNER	1
8		ø PISTON SEE A	1
9	25K-30018	O RING PISTON STOP	1
10	220983	STOP PISTON	1
11	214949	GASKET VALVE TO CONVERTER	1
12	25K-60104	O RING VALVE TO CONVERTER	1
13	222312	SPRING SAFETY VALVE	1
14	222318	PLUNGER SAFETY VALVE	1
15	214966	SEAT SAFETY VALVE	1
15	214946	SEAT SAFETY VALVE	1
16	40M-02	PLUG HOUSING	2
17		ø BODY SEE A	1
18	25K-30018	O RING PISTON STOP	1

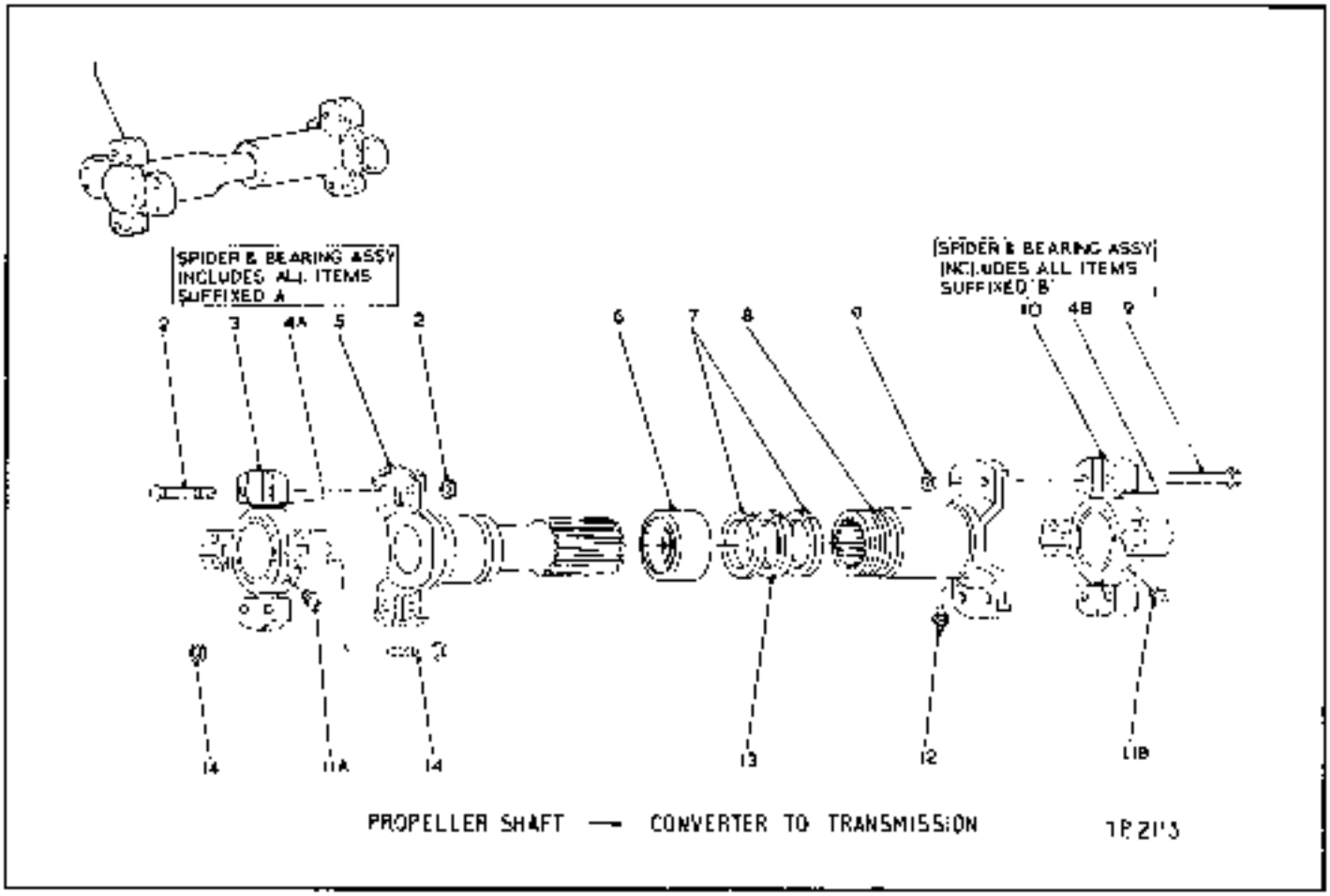

PROPELLER SHAFT — CONVERTER TO TRANSMISSION 1P2113

ITEM	PART	DESCRIPTION	QTY.	ITEM	PART	DESCRIPTION	QTY.
1	562694	SHAFT PROPELLER INC 2=13	1	9	940089	BOLT SPIDER & BEARING	4
2	940089	BOLT SPIDER & BEARING	4	9A	BC=06	NUT	4
2A	BC=06	NUT	4	10	944862	SPIDER & BEARING INC 4&11	1
3	944862	SPIDER & BEARING INC 4&11	1	11	10M=35	FITTING GREASE	2
4	944861	SEAL	4	12	10M=25	FITTING GREASE	1
5	946109	TUBE	1	13	940092	WASHER FELT	1
6	940090	RETAINER	1	14	940089	BOLT SHAFT ATTACHING	8
7		UNIT		14A	BC=06	NUT	8
8	946110	YOKE SLIP INC 12	1	14B	4E=06	+ LOCKWASHER	8

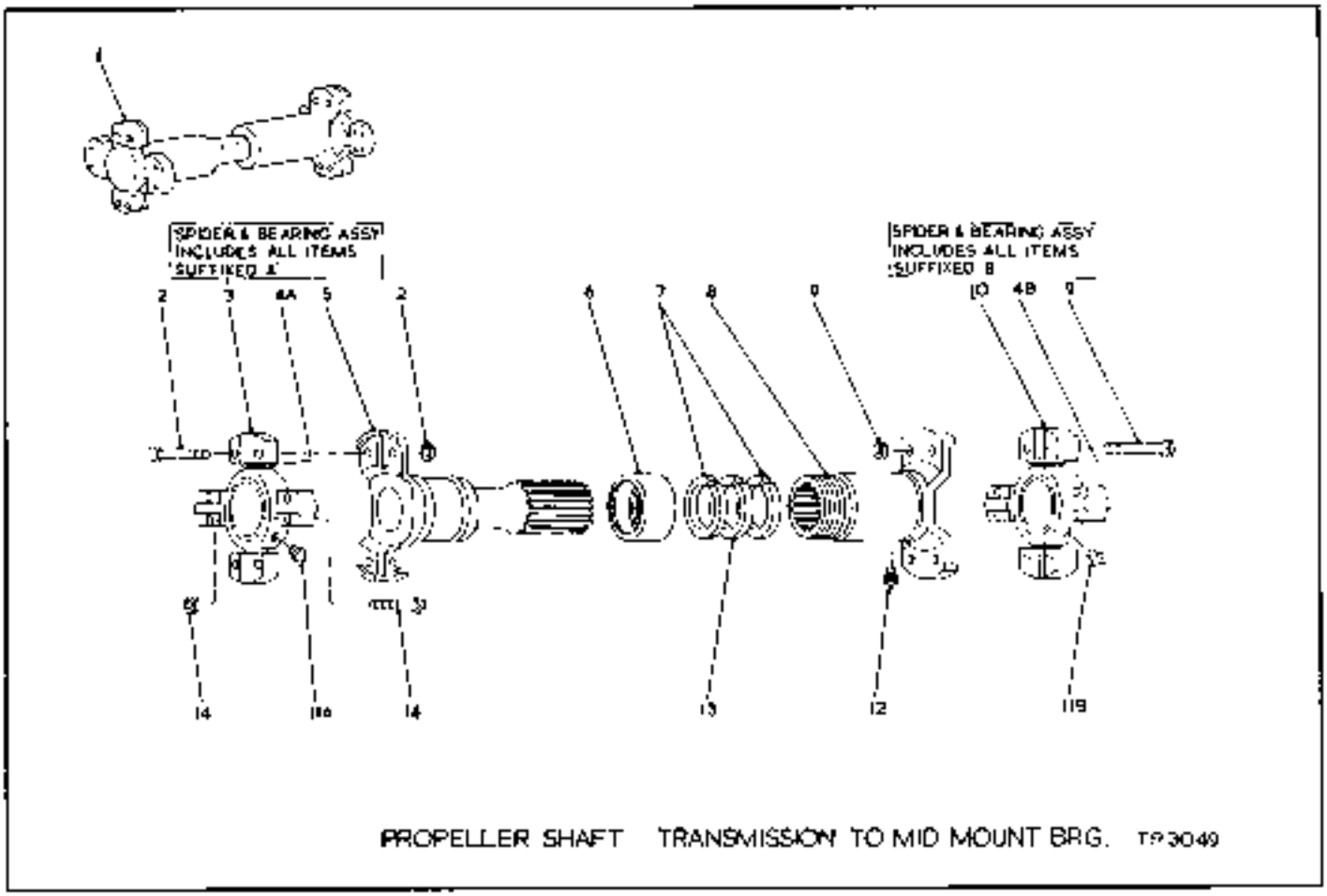

PROPELLER SHAFT TRANSMISSION TO MID MOUNT BRG. TP3049

ITEM	PART	DESCRIPTION	QTY
1	513528	SHAFT PROPELLER INC 2=33	1
2	940225	BOLT SPIDER & BEARING	4
2A	80-08	NUT	4
3	942735	SPIDER & BEARING INC 4A11	1
4	941509	SEAL	4
5	946101	TUBE	1
6	940250	ADAPTER	1
7	940251	WASHER	2
8	942754	YOKE SLIP INC 12	1
9	940229	BOLT SPIDER & BEARING	4
10	80-08	NUT	4
10	942735	SPIDER & BEARING INC 4A11	1
11	10H-35	FITTING GREASE	2
12	10H-29	FITTING GREASE	1
13	942749	WASHER THRU	1
14	940229	BOLT SHAFT ATTACHING	8
14A	80-08	NUT MID-MOUNT END	4
14B	46-08	† LOCKWASHER TRANS END	4

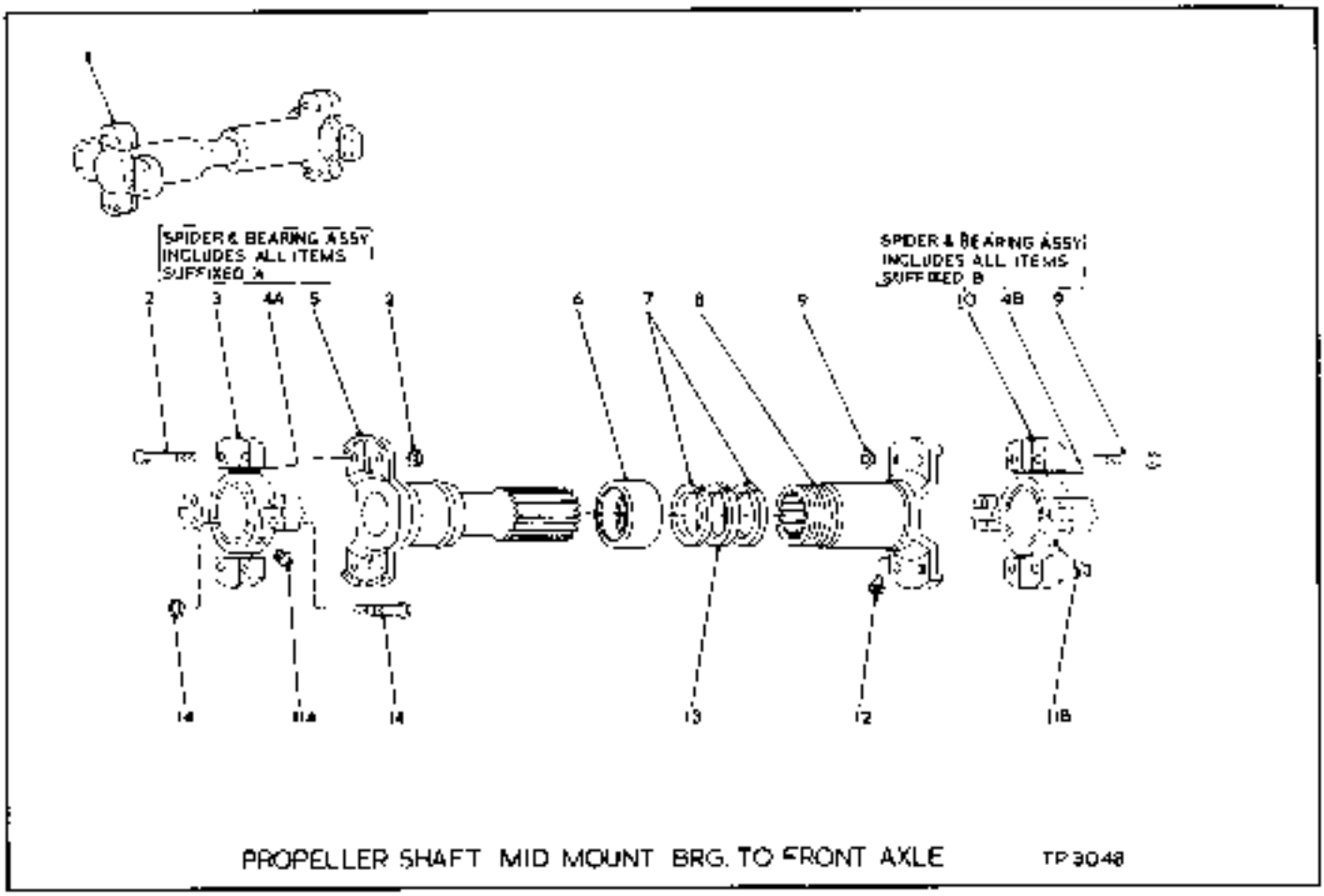

PROPELLER SHAFT MID MOUNT BRG. TO FRONT AXLE TP3048

ITEM	PART	DESCRIPTION	QTY.	ITEM	PART	DESCRIPTION	QTY.
1	513928	SHAFT PROPELLER INC 2-13	1	9	940229	BOLT SPIDER & BEARING	4
2	940229	BOLT SPIDER & BEARING	4	9A	60-08	NUT	4
2A	60-06	NUT	4	10	942735	SPIDER & BEARING INC 4&11	1
3	942735	SPIDER & BEARING INC 4&11	1	11	10H-35	FITTING GREASE	2
4	941509	SEAL	8	12	10H-25	FITTING GREASE	1
5	946101	TUBE	1	13	942749	WASHER FELT	1
6	940450	RETAINER	1	14	940429	BOLT SHAFT ATTACHING	8
7	940251	WASHER	2	14A	60-08	NUT	8
8	942734	YOKE SLIP INC 12	1				

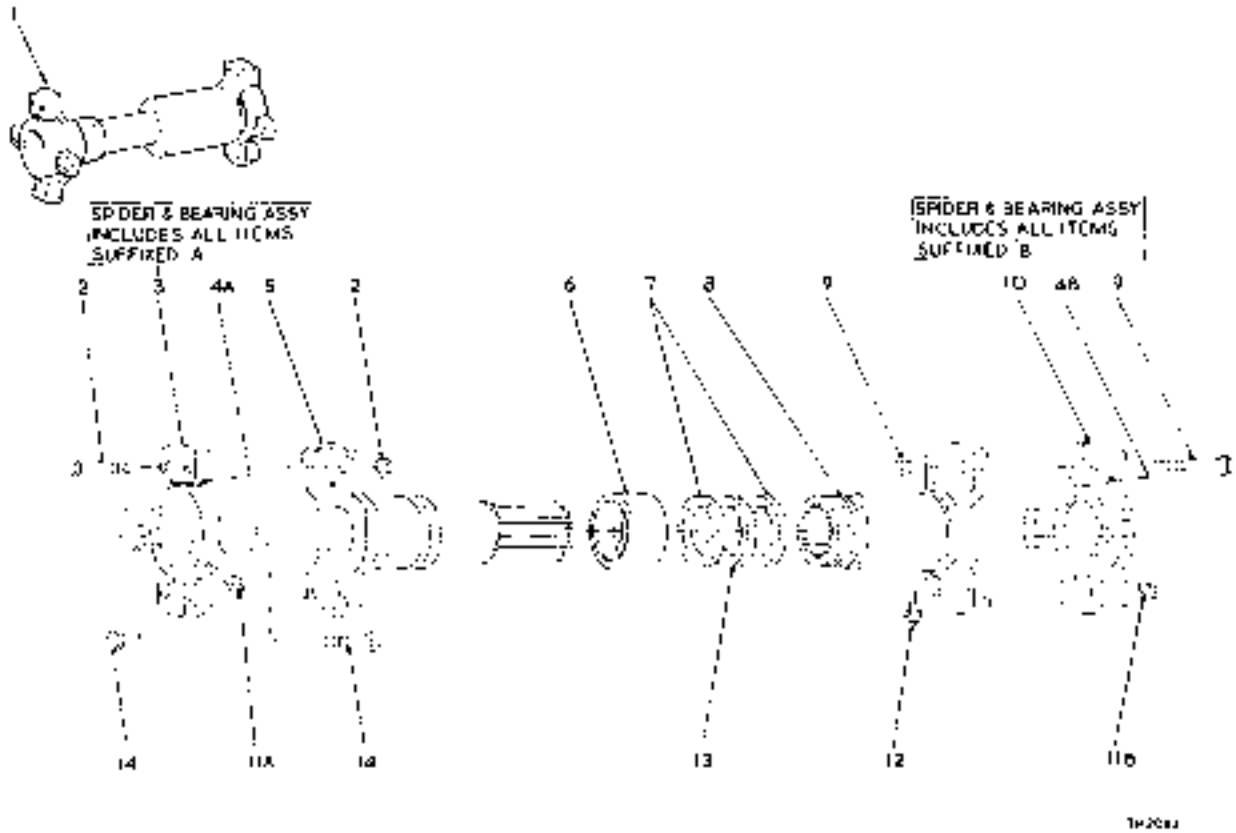

PROPELLER SHAFT - TRANSMISSION TO REAR AXLE

ITEM	PART	DESCRIPTION	QTY.	ITEM	PART	DESCRIPTION	QTY.
1	513928	SHAFT PROPELLER INC 2-13	1	9	940229	BOLT SPIDER & BEARING	4
2	940225	BOLT SPIDER & BEARING	4	9A	8D-08	NUT	4
2A	8D-06	NUT	4	10	942735	SPIDER & BEARING INC 4&11	1
3	942735	SPIDER & BEARING INC 4&11	1	11	10H-35	FITTING GREASE	2
4	941309	SEAL	6	12	10H-25	FITTING GREASE	1
5	946101	FUEL	1	13	942749	WASHER FELT	1
6	940250	RETAINER	1	14	940229	BOLT SHAFT ATTACHING	8
7	940251	WASHER	2	14A	8D-08	NUT	8
8	942736	YOKE SLIP INC 12	1	14B	4E-06	LOCKWASHER	8

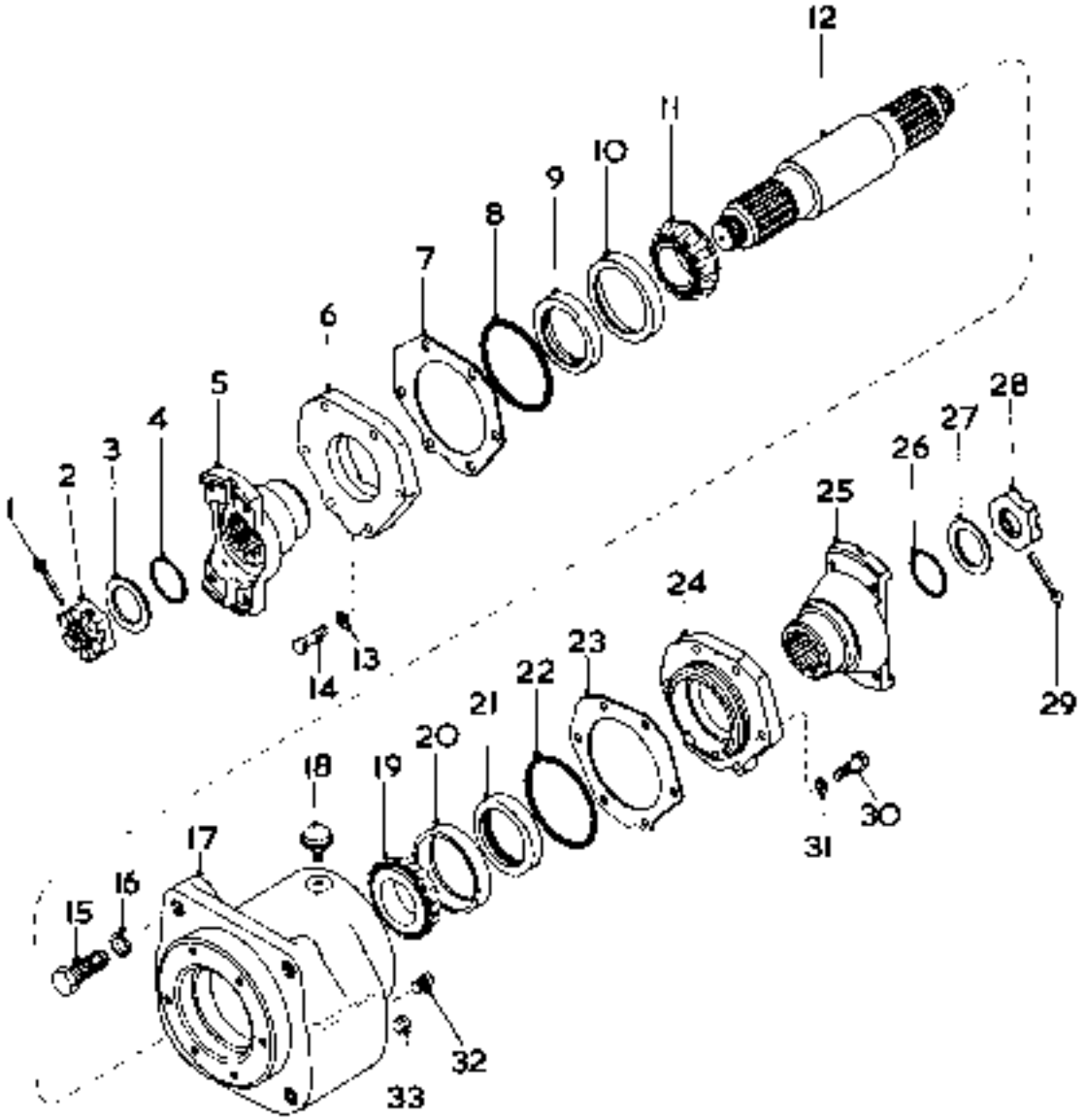

MID - MOUNT BEARING ASSEMBLY

TP 3192

MID-MOUNT BEARING ASSEMBLY

ITEM	PART	DESCRIPTION	QTY.
A	230551	BEARING ASSY (INC. 1-14, 17-35	1
1	12-436	PIN COTTER	1
2	205928	NUT	1
3	222179	WASHER	1
4	256-60116	O RING COMPANION FLANGE	1
5	222233	FLANGE COMPANION	1
6	230690	CAP BEARING	1
7	217566	SHIM BEARING CAP .004	AR
7A	217567	SHIM BEARING CAP .003	AR
7B	217568	SHIM BEARING CAP .010	AR
8	256-40308	O RING BEARING CAP	1
9	229623	SEAL OIL	1
10	656250	CUP BEARING	1
11	654141	CONE BEARING	1
12	218504	SHAFT	1
13	4E-07	LOCKWASHER	4
14	2C-722	BOLT BEARING CAP	4
15	210-1040	AXLE HEARING TO FRAME	4
16	4E-10	LOCKWASHER	4
16A	942139	FLATWASHER	4
17	230529	HOUSING	1
18	211443	BREATHER ASM	1
19	654141	CONE BEARING	1
20	656250	CUP BEARING	1
21	229823	SEAL OIL	1
22	256-40308	O RING BEARING CAP	1
23	217566	SHIM BEARING CAP .004	AR
23A	217567	SHIM BEARING CAP .003	AR
23B	217568	SHIM BEARING CAP .010	AR
24	217565	CAP BEARING	1
25	222233	FLANGE COMPANION	1
26	256-60116	O RING COMPANION FLANGE	1
27	222179	WASHER	1
28	205928	NUT	1
29	12-436	PIN COTTER	1
30	2C-722	BOLT BEARING CAP	4
31	4E-07	LOCKWASHER	4
32	13F-12	PLUG HOUSING	1
33	219757	PLUG DRAIN	1

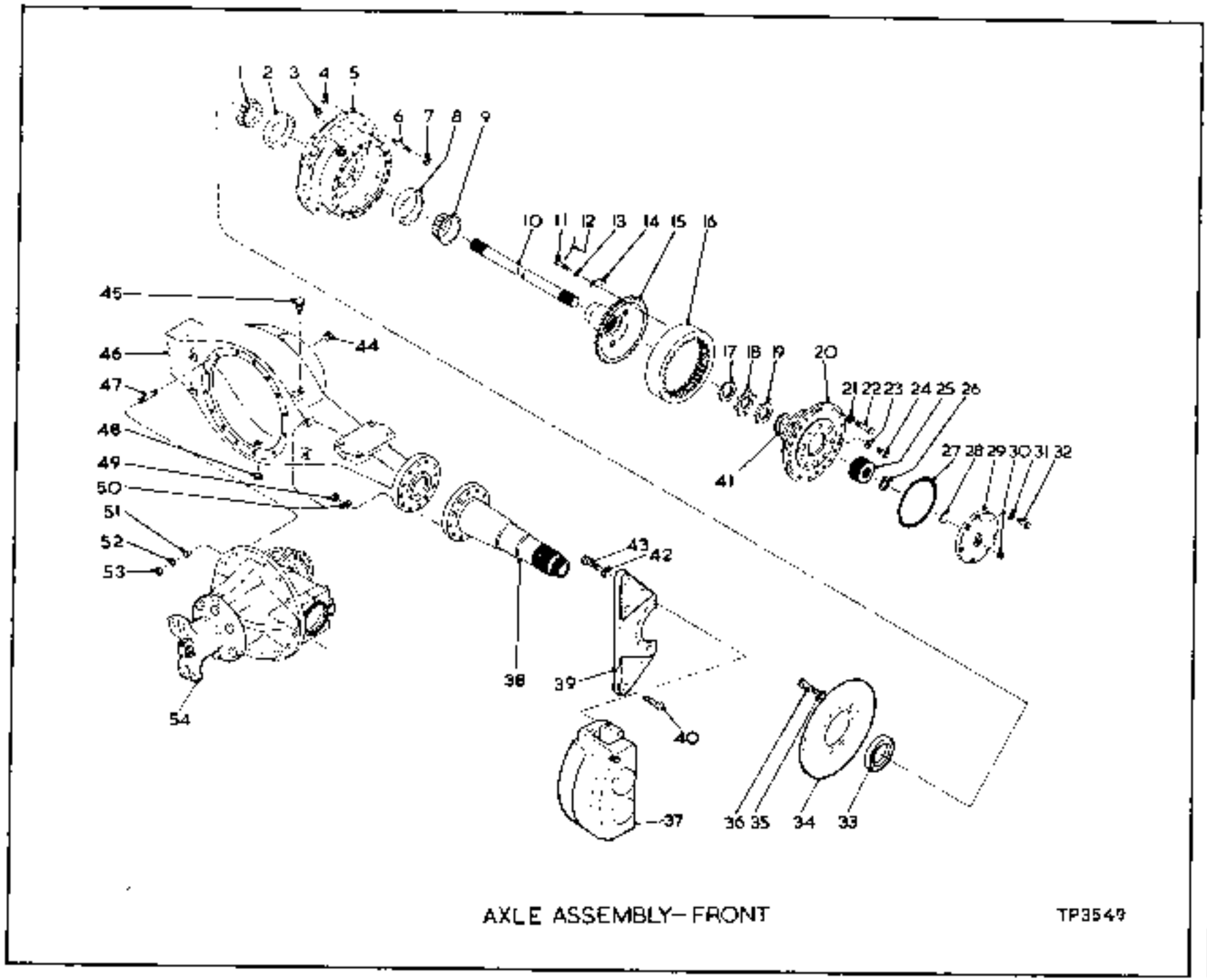

AXLE ASSEMBLY– FRONT

TP3549

AXLE ASSEMBLY—FRONT

ITEM	PART	DESCRIPTION	QTY.
A	140929	AXLE ASSEMBLY FRONT	
		INC 1-54	1
1	734025	CONE INNER HUB BEARING	2
2	774024	CUP INNER HUB BEARING	2
3	115469	PLUG HUB FILLER	2
4	121062	NUT WHEEL STUD	20
5	126773	HUB ASSY INC 2&8	2
6	129218	WHEEL STUD	20
7	103522	NUT WHEEL STUD	20
8	742267	CUP OUTER HUB BEARING	2
9	742263	CONE OUTER HUB BEARING	2
10	116916	SHAFT AXLE	2
11	40-820	BOLT GEAR TO HUB	24
12		OMIT	
13	48-408	LOCKWASHER	24
14	117214	PLATE GEAR TO HUB	12
15	119213	HUB INTERNAL GEAR	2
16	116211	GEAR INTERNAL	2
17	110554	NUT SPINDLE	2
18	120786	LOCK SPINDLE NUT	2
19	110559	NUT SPINDLE	2
20		CARRIER PLANET SEE INDEX	2
21	100547	WASHER	40
22	117225	BOLT CARRIER TO HUB	40
23	38-09	LOCKWASHER	6
24	10-408	BOLT PLANET PULLER HOLE	6
25	117448	GEAR SUN	2
26	224023	RING SUN GEAR RETAINING	2
27	113292	U RING CAP TO CARRIER	2
28	106457	WASHER THRUST CAP	2
29	115289	SUN GEAR THRUST CAP ASSY	
		INC 28	2
30	116-12	PLUG THRUST CAP	2
31	31278	LOCKWASHER	12
32	10-720	BOLT THRUST CAP	12
33	132412	SEAL HUB OIL	2
34	121776	DISC BRAKE	4
35	204412	WASHER	16
36	110894	BOLT	16
37		BRAKE HEAD ASSY SEE INDEX	4
38	121780	SPINDLE AXLE	2
39	126782	PLATE DISC BRAKE ADAPTOR	4
40	121781	BOLT BRAKE ATTACHING	32
41	119054	RING SUN GEAR THRUST	2
42	111656	WASHER	24
43	110405	BOLT BRAKE HEAD ATTACHING	24
44	118-12	PLUG HOUSING FILLER	1
45	121214	BREATHER	1
46	121574	HOUSING	1
47	112687	STUD	10
47A	119889	STUD	2
47B	112587	STUD	2
48	119469	PLUG HOUSING DRAIN	1
49	10a998	NUT	32
50	104412	WASHER	32
51	112295	DOWEL	3
52	106547	WASHER	14
53	640-09	NUT	14
54		DIFF & CARRIER SEE INDEX	1
55	240-20128	BOLT AXLE TO FRAME	8
56	680-20	LOCKNUT	8

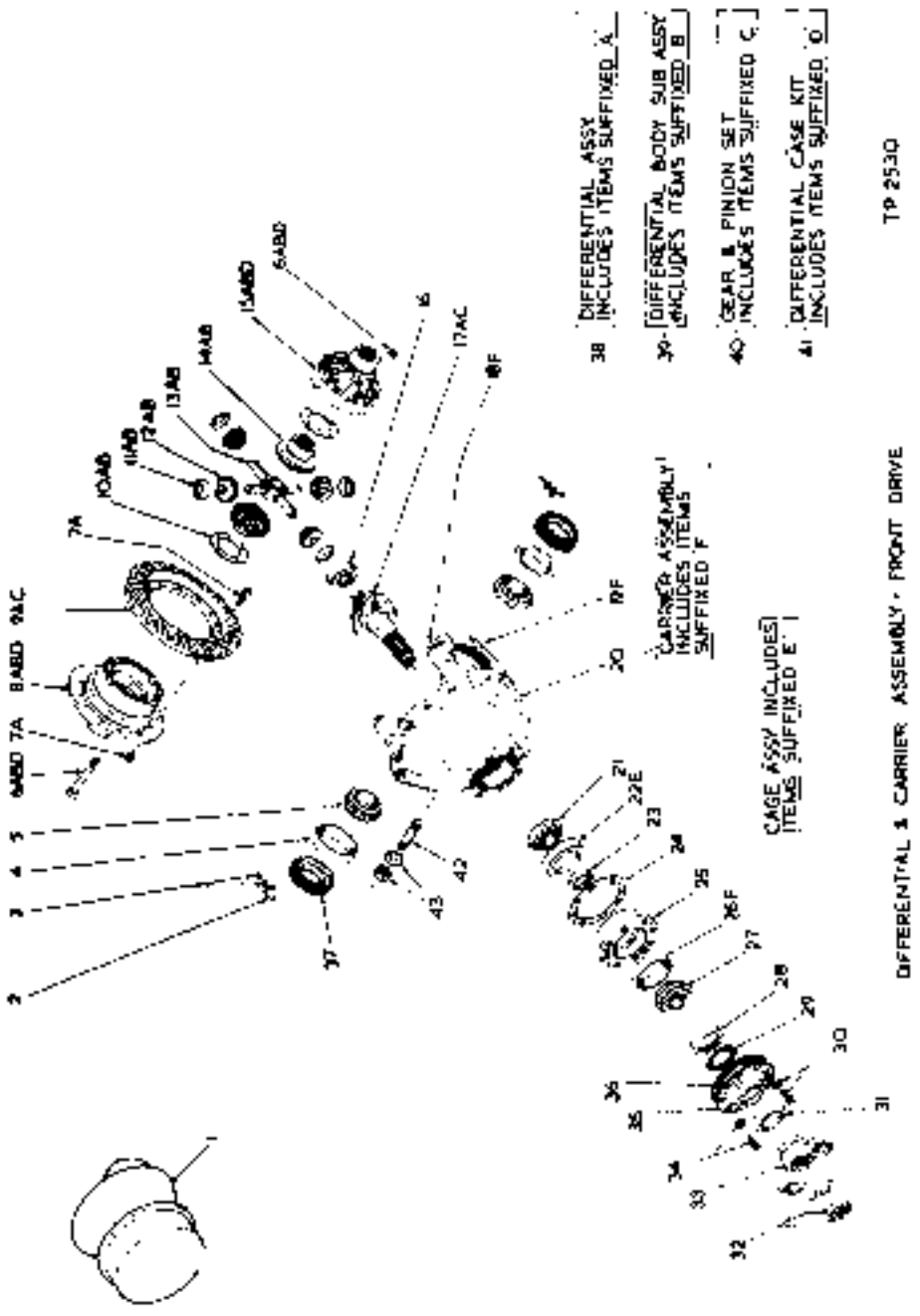
DIFFERENTIAL & CARRIER ASSEMBLY - FRONT DRIVE
TP 2530
38 DIFFERENTIAL ASSY INCLUDES ITEMS SUFFIXED A
39 DIFFERENTIAL BODY SUB ASSY INCLUDES ITEMS SUFFIXED B
40 GEAR & PINION SET INCLUDES ITEMS SUFFIXED C
41 DIFFERENTIAL CASE KIT INCLUDES ITEMS SUFFIXED D
CARRIER ASSEMBLY INCLUDES ITEMS SUFFIXED F
CAGE ASSY INCLUDES ITEMS SUFFIXED E

DIFFERENTIAL AND CARRIER–FRONT

ITEM	PART		DESCRIPTION	QTY.
1	118959		DIFF & CARRIER ASSY INC 2=37,42 & 43	1
2	100941		LOCK ADJUSTING NUT	2
3	3C-614		BOLT ADJUSTING NUT LOCK	2
3A	46-06		LOCKWASHER	2
4	675252		CUP DIFFERENTIAL BRG	2
5	675254		CONE DIFFERENTIAL BRG	2
6	118479		BOLT DIFFERENTIAL CASE	8
6A	110523		NUT	8
7	101196		BOLT RING GEAR	12
7A	104168		NUT	12
8		D	DIFF CASE SEE 41	1
9		D	RING GEAR SEE 40	1
10	118478		WASHER SIDE GEAR THRUST	2
11	101204		WASHER PINION THRUST	4
12	815794		KIT PINION DIFFERENTIAL	1
13	117105		SPIDER DIFFERENTIAL	1
14	106206		GEAR DIFFERENTIAL SIDE	2
15		D	DIFF CASE SEE 41	1
16	675265		BEARING INNER PINION	1
17		D	PINION SEE 40	1
18	101210		BOLT CARRIER CAP	4
18A	111658	+	WASHER	4
19		D	CAP CARRIER SEE 20	2
20	815521	+	CARRIER ASSY INC 18 & 19	1
21	675263		CONE CENTRE PINION BRG	1
22	675262		CUP CENTRE PINION BRG	1
23	815200		KIT SPACER	1
24	101218		SHIM BEARING CAGE .004	AR
24A	101219		SHIM BEARING CAGE .007	AR
24B	101220		SHIM BEARING CAGE .010	AR
25	101211		CAGE BEARING INC 22 & 26	1
26	675254		CUP OUTER PINION BRG	1
27	675260		CONE OUTER PINION BRG	1
28	111721		SEAL PINION OIL	1
29	101217		GASKET PINION OIL SEAL	1
30	1C-828		BOLT RETAINER LOCATING	1
30A	46-08		LOCKWASHER	1
31	101222		SHIELD DUST	1
32	101223		NUT PINION SHAFT	1
32A	101224		WASHER	1
32B	1F-740		PIN COTTER	1
33	108871		FLANGE COMPANION	1
34	1C-828		BOLT OIL SEAL RETAINER	7
34A	46-08		LOCKWASHER	7
35	101214		RETAINER PINION OIL SEAL	1
36	107483		GASKET OIL SEAL RETAINER	1
37	101213		NUT ADJUSTING	2
38	121243	+	DIFFERENTIAL ASSY INC 6-15 & 17	1
39	121237	+	DIFFERENTIAL BODY SUB-ASSY INC 6,8 & 10-15	1
40	117693	+	GEAR & PINION SET INC 9 & 17	1
41	815737	+	DIFFERENTIAL CASE KIT INC 6,8,10,11 & 15	1
42	121241		SCREW THRUST	1
43	121242		NUT THRUST SCREW	1

* NOTE: 815521 DIFFERENTIAL & CARRIER ASSY ALSO INCLUDES 1=101226 THRUST SCREW,1=101227 THRUST SCREW LOCK 1-BD-5R THRUST SCREW NUT,3=640-09 STUD NUT,7-17C-928 CARRIER BOLT,7-17C-932 CARRIER BOLT,2=17C-940 CARRIER BOLT 3=112774 CARRIER STUD,3-113795 TAPER DOWEL & 15=106547 CARRIER WASHER.

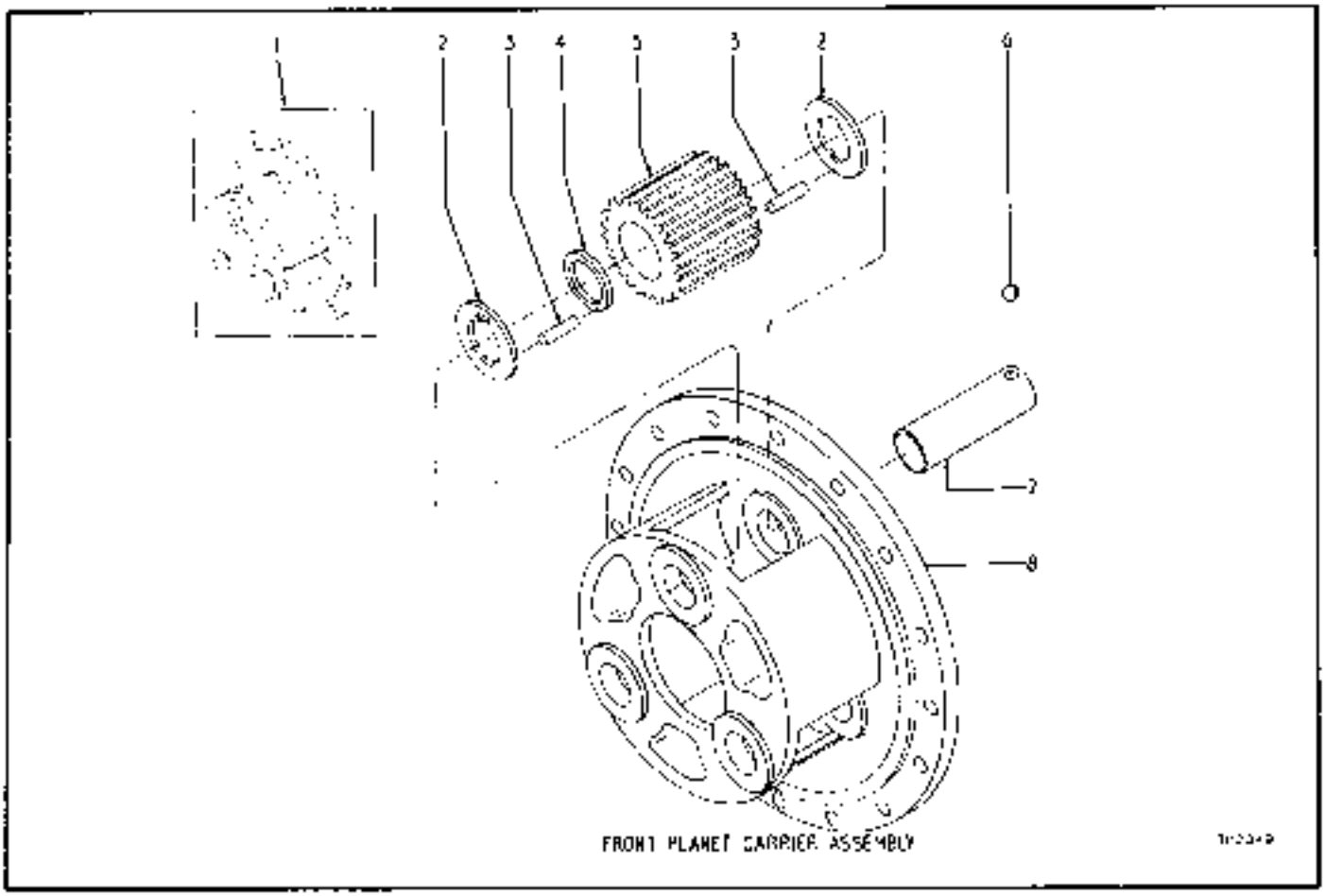

FRONT PLANET CARRIER ASSEMBLY

ITEM	PART	DESCRIPTION	QTY.	ITEM	PART	DESCRIPTION	QTY.
1	119021	CARRIER ASSY INC 2-8	2	4	106359	SPACER PINION ROLLER	3
		QUANTITIES INDICATED		5	114584	PINION PLANET	3
		ARE FOR ONE ASSEMBLY		6	10J-12	BALL PINION SHAFT	3
2	106357	WASHER PINION THRUST	6	7	106355	SHAFT PINION	3
3	106351	ROLLER PINION	150	8	113505	SPIDER PLANET	1

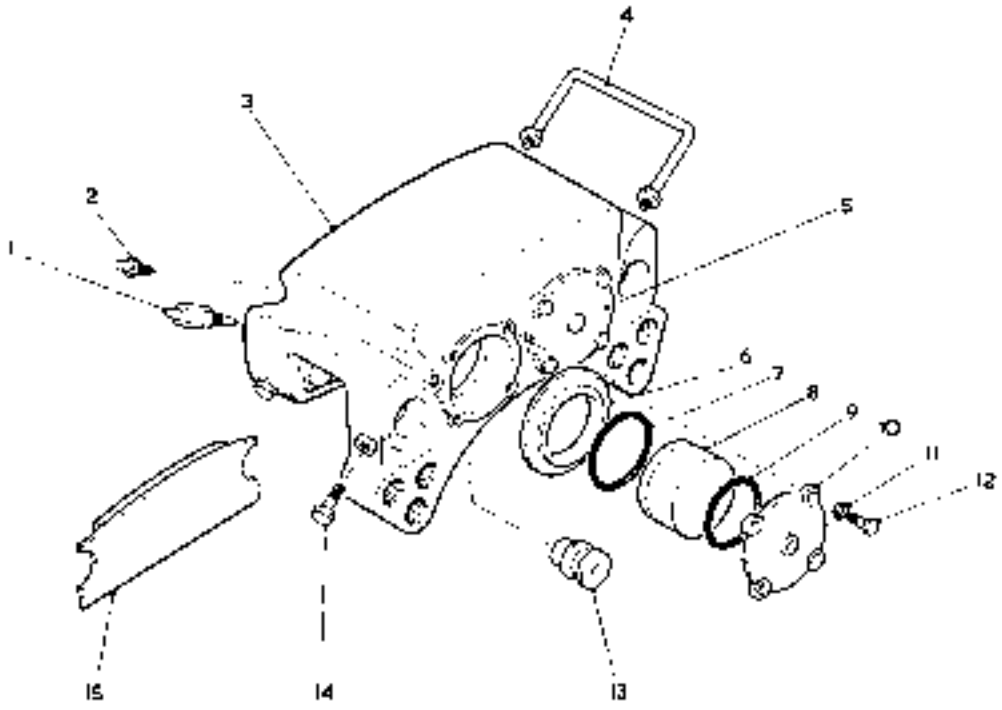

BRAKE CALIPER ASSEMBLY FRONT

TP 3462

ITEM	PART		DESCRIPTION	QTY.
1			BRAKE HEAD ASSY INC 1-15	
	121777		BRAKE LH & RH ASSY	2
	121778	*	BRAKE LH & RH ASSY	2
			QUANTITIES INDICATED	
			ARE FOR ONE ASSEMBLY	
1	947928		VALVE HYDRAULIC BLEEDER	1
2	947927		VALVE HYDRAULIC BLEEDER	1
3	947936		TORQUE PLATE LH & RH	1
	947940	*	TORQUE PLATE LH & RH	1
4	947926		TUBE & NUT ASSY	1
5	947933		CAP LH & RH	1
	947934	*	CAP LH & RH	1
6		*	ROUT SEE 16	4

ITEM	PART		DESCRIPTION	QTY.
7		*	PACKING SEE 16	4
8	947935		PISTON	4
9		*	PACKING SEE 16	2
10	947936		CAP LH & RH	1
	947933	*	CAP LH & RH	1
11	103291		WASHER	8
12	10-420		BOLT	8
13	947931		PIN RETAINING	4
14	947930		BOLT	4
15	947932		CARRIER & LINING ASSY	2
16	947939	*	REPAIR KIT INC 6,7 & 9	1
17	121776	*	BRAKE DISC	1

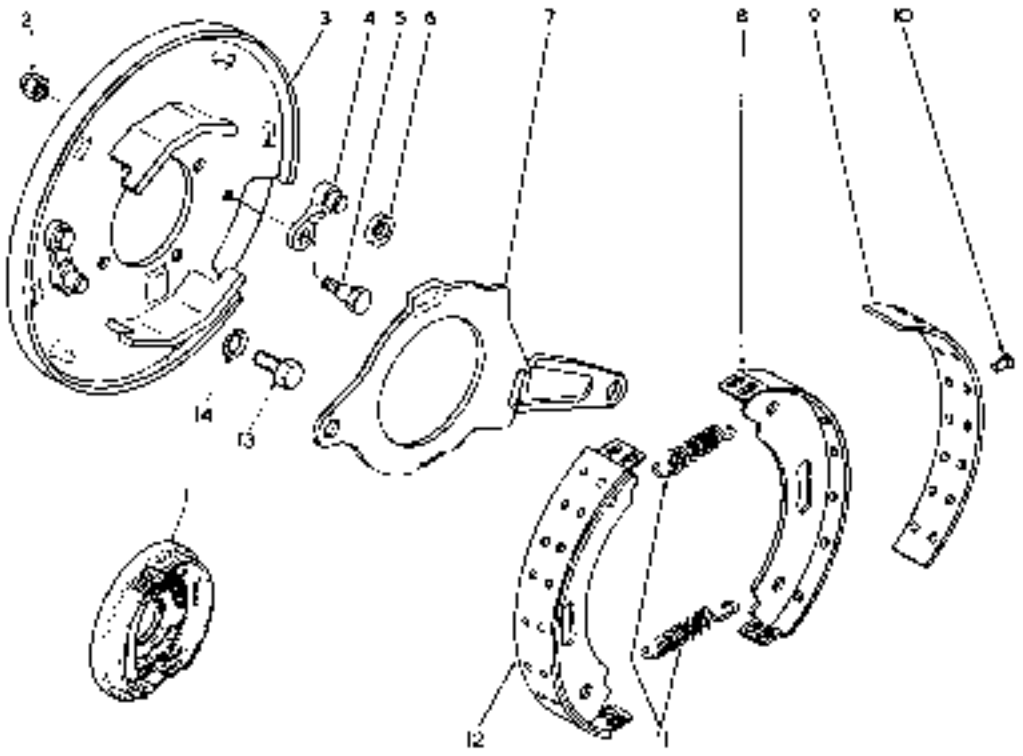

PARKING BRAKE ASSEMBLY TP354C

ITEM	PART	DESCRIPTION	QTY.
1	230864	BRAKE ASSEMBLY INC 2-14	1
2	430-06	NUT PAWL TO PLATE	2
3	801715	PLATE BACKING INC 2 & 4-6	1
4	801213	PAWL KIT INC 2 5 & 6	2
5	846718	BOLT PAWL TO PLATE	2
6	801215	ROLLER	1
7	801216	LEVER OPERATING CAM	1
8		SHOE BRAKE SEE 12	
9	801214	LINING KIT INC 10	1
10	23h-504	RIVET	20
11	801193	SPRING SHOE RETURN	2
12	801192	SHOE ASSY INC 8-10	2
13	1C-916	BOLT BRAKE MOUNTING	4
14	56-09	LOCKWASHER	4

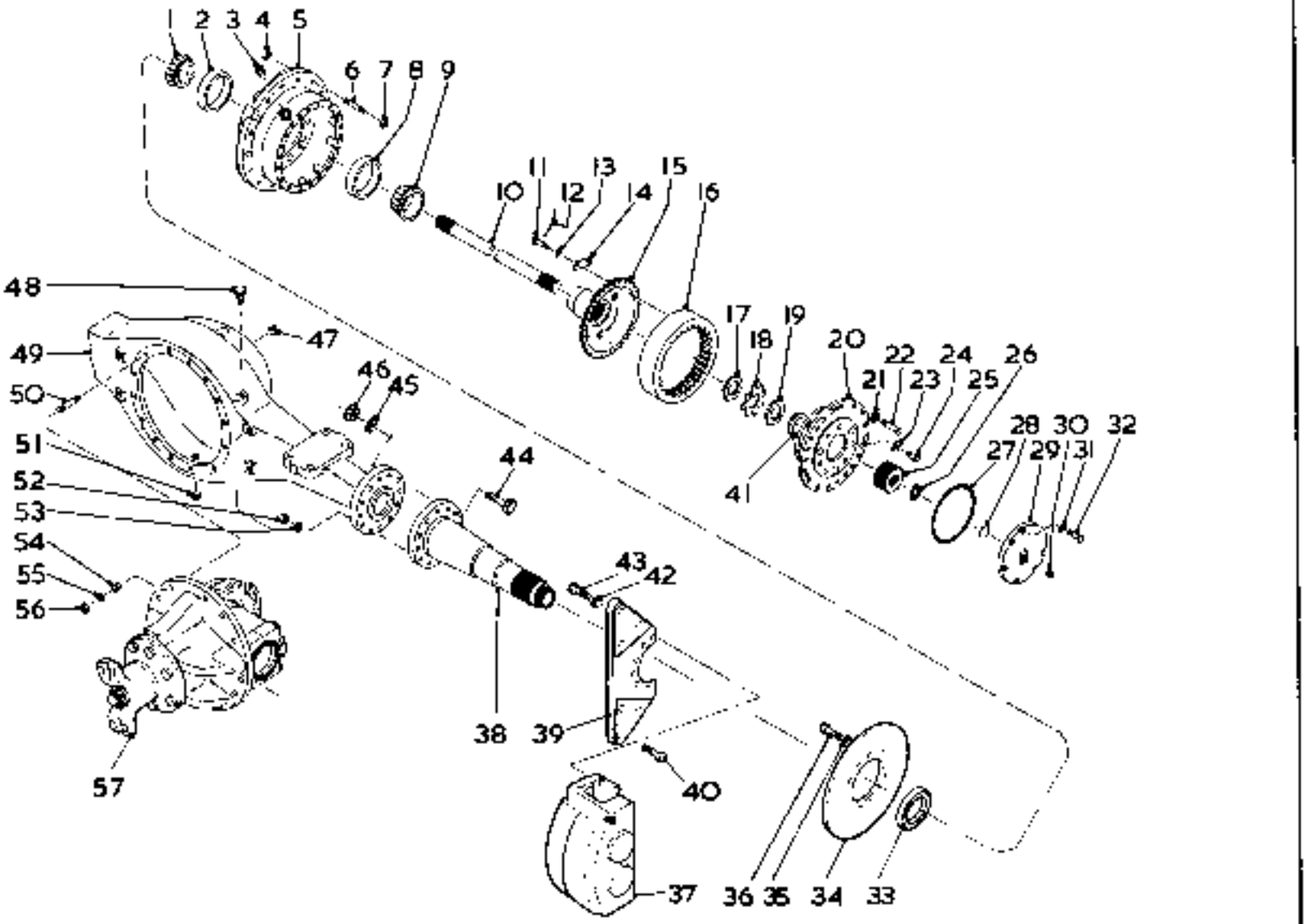

AXLE ASSEMBLY – REAR

TP 3544

AXLE ASSEMBLY—REAR

ITEM	PART	DESCRIPTION	QTY.
A	190990	AXLE ASSEMBLY REAR	
		INC 1-57	1
1	774025	CONE INNER HUB BEARING	2
2	774024	CUP INNER HUB BEARING	2
3	119469	PLUG HUB FILLER	2
4	121062	NUT WHEEL STUD	20
5	121773	HUB ASSY INC 2AB	2
6	120216	WHEEL STUD	20
7	103522	NUT WHEEL STUD	20
8	742262	CUP OUTER HUB BEARING	2
9	742263	CONE OUTER HUB BEARING	2
10	116916	SHAFT AXLE	2
11	40-320	BOLT GEAR TO HUB	24
12		DRIT	
13	4E-08	LOCKWASHER	24
14	119214	PLATE GEAR TO HUB	12
15	119213	HUB INTERNAL GEAR	2
16	119211	GEAR INTERNAL	2
17	110559	NUT SPINDLE	2
18	118186	LOCK SPINDLE NUT	2
19	110559	NUT SPINDLE	2
20		CARRIER PLANET SEE INDEX	2
21	106547	WASHER	40
22	117225	BOLT CARRIER TO HUB	40
23	3E-09	LOCKWASHER	6
24	10-908	BOLT PLANET PULLER HOLE	6
25	117446	GEAR SUN	2
26	224023	RING SUN GEAR RETAINING	2
27	113292	O RING CAP TO CARRIER	2
28	106457	WASHER THRUST CAP	2
29	113289	SUN GEAR THRUST CAP ASSY	
		INC 2B	2
30	11F-12	PLUG THRUST CAP	2
31	112278	LOCKWASHER	12
32	10-720	BOLT THRUST CAP	12
33	117412	SEAL HUB OIL	2
34	121776	DISC BRAKE	2
35	104412	WASHER	16
36	110894	BOLT	16
37		BRAKE HEAD ASSY SEE INDEX	4
38	121740	SPINDLE AXLE	2
39	121782	PLATE DISC BRAKE ADAPTOR	4
40	121781	BOLT BRAKE ATTACHING	16
41	119853	RING SUN GEAR THRUST	2
42	111656	WASHER	12
43	110404	BOLT BRAKE HEAD ATTACHING	12
44	106733	BOLT SPINDLE ATTACHING	16
45	104412	WASHER	16
46	106998	NUT	16
47	11F-12	PLUG HOUSING FILLER	1
48	121214	BREATHER	1
49	121579	HOUSING	1
50	112547	STUD	10
50A	119489	STUD	2
50B	112587	STUD	2
51	119469	PLUG HOUSING DRAIN	1
52	106598	NUT	16
53	104412	WASHER	16
54	112295	DOWEL	4
55	106547	WASHER	14
56	64D-09	NUT	14
57		DIFF & CARRIER SEE INDEX	1
58	24C-1672	BOLT AXLE TO FRAME	8
59	64D-16	LOCKNUT	8

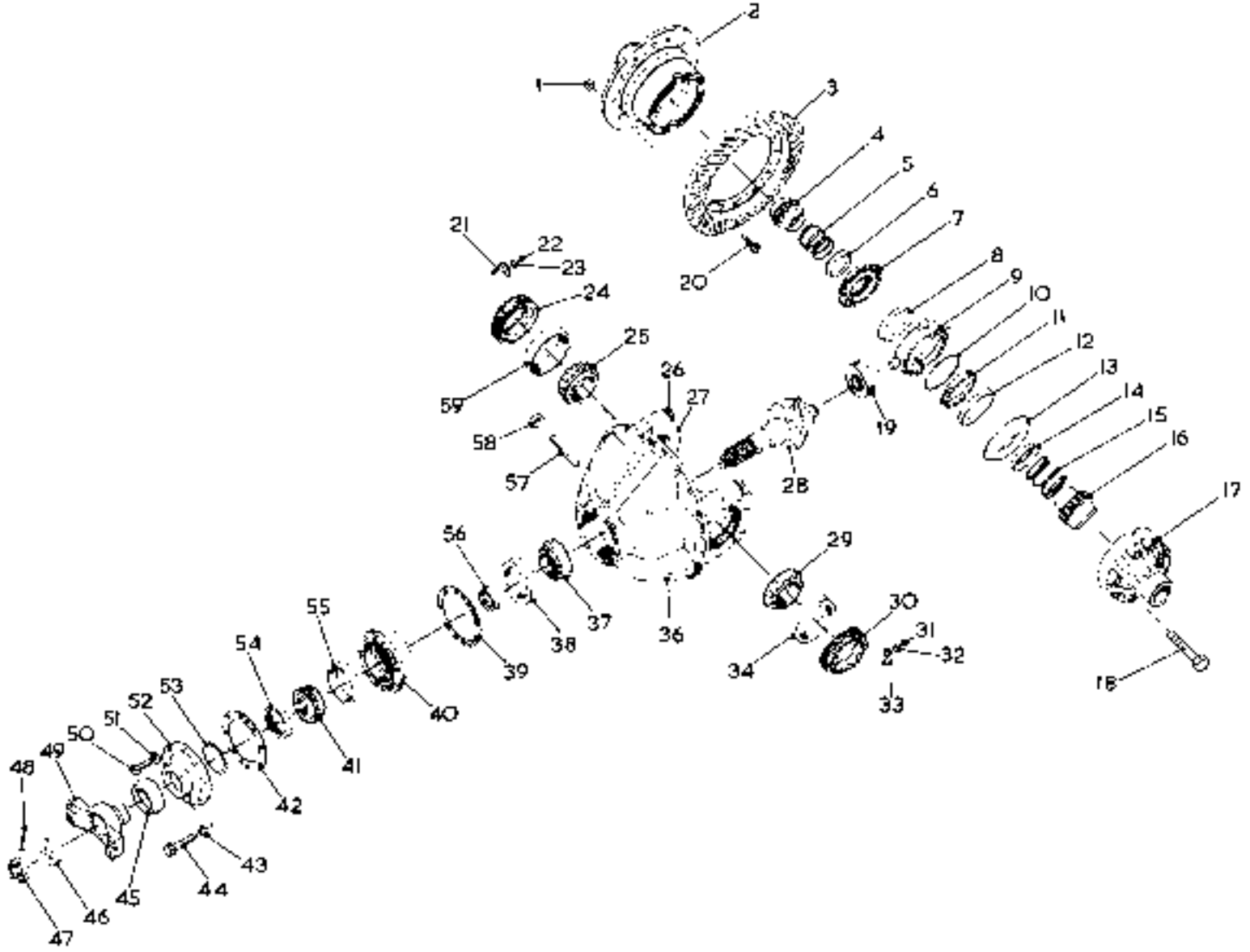

DIFFERENTIAL AND CARRIER ASSEMBLY — REAR AXLE

TP 3512

DIFFERENTIAL AND CARRIER—REAR

ITEM	PART		DESCRIPTION	QTY.
1	119152		DIFF & CARRIER ASSY INC	
			1-58	1
	104160		NUT RING GEAR BOLT	12
2		P	DIFF CASE SEE 62	1
3		P	RING GEAR SEE 61	1
4	882199		GEAR DIFFERENTIAL SIDE	1
5	882197		SPRING	1
6	882198		RETAINER SPRING	1
7	882196		CAM & CLUTCH ASSEMBLY	1
8	941793		HOLD OUT RING	1
9	941790		SPIDER DIFFERENTIAL	1
10	941792		RING SNAP	1
11	941794		CENTRE CAM	1
12	941793		HOLD OUT RING	1
13	882196		CAM & CLUTCH ASSEMBLY	1
14	882198		RETAINER SPRING	1
15	882197		SPRING	1
16	882199		GEAR DIFFERENTIAL SIDE	1
17		P	DIFF CASE SEE 62	1
18	118479		BOLT DIFFERENTIAL CASE	6
18A	110523	*	NUT	8
19	675265		BEARING INNER PINION	1
20	101196		BOLT RING GEAR	12
21	100941		LOCK ADJUSTING NUT	1
22	3C-614		BOLT ADJUSTING LOCK NUT	1
23	4E-06		LOCKWASHER	1
24	101214		NUT ADJUSTING	1
25	675254		CONE DIFFERENTIAL BRG	1
26	101210		BOLT CARRIER CAP	4
26A	111658	*	WASHER	4
27		G	CAP CARRIER SEE 36	1
28		P	PINION SEE 61	1
29	675254		CONE DIFFERENTIAL BRG	1
30	101213		NUT ADJUSTING	1
31	3C-614		BOLT ADJUSTING LOCK NUT	1
32	4E-06		LOCKWASHER	1
33	100941		LOCK ADJUSTING NUT	1
34	675252		CUP DIFFERENTIAL BEARING	1
35			NOT USED	
36	112292		CARRIER ASSY INC 26 & 27	1
37	675263		CONE CENTRE PINION BRG	1
38	675262		CUP CENTRE PINION BRG	1
39	114351		SHIM BEARING CAGE .004	AR
39A	114352		SHIM BEARING CAGE .007	AR
39B	114353		SHIM BEARING CAGE .010	AR
40	101211		CAGE BEARING INC	1
41	675260		CONE OUTER PINION BRG	1
42	107483		GASKET OIL SEAL RETAINER	1
43	4E-08		LOCKWASHER	1
44	1C-828		BOLT RETAINER LOCATING	1
45	101222		SHIELD PINION DUST	1
46	101224		WASHER	1
47	101223		NUT PINION SHAFT	1
48	1F-740		PT CUTTER	1
49	108871		FLANGE COMPANION	1
50	1C-1032		BOLT OIL SEAL RETAINING	7
51	4E-10		LOCKWASHER	7
52	101214		RETAINER PINION OIL SEAL	1
53	101217		GASKET PINION OIL SEAL	1
54	111724		SEAL PINION OIL	1
55	675259		CUP OUTER PINION BRG	1
56	815200		KIT SPACER	1
57	121241		SCREW THRUST	1
58	1180-18		NUT SCREW THRUST	1
59	121245		DIFFERENTIAL ASSY INC 1,	
			4-16,18 & 20	1
60	120236		DIFFERENTIAL BODY SUB-	
			ASSY INC 4-16 & 18	1
61	116632		GEAR & PINION SET	
			INC 3 & 28	1
62	120240		DIFFERENTIAL CASE KIT INC	
			2,17 & 18	1
63	110344		AD SPIN UNIT INC 4-16	1

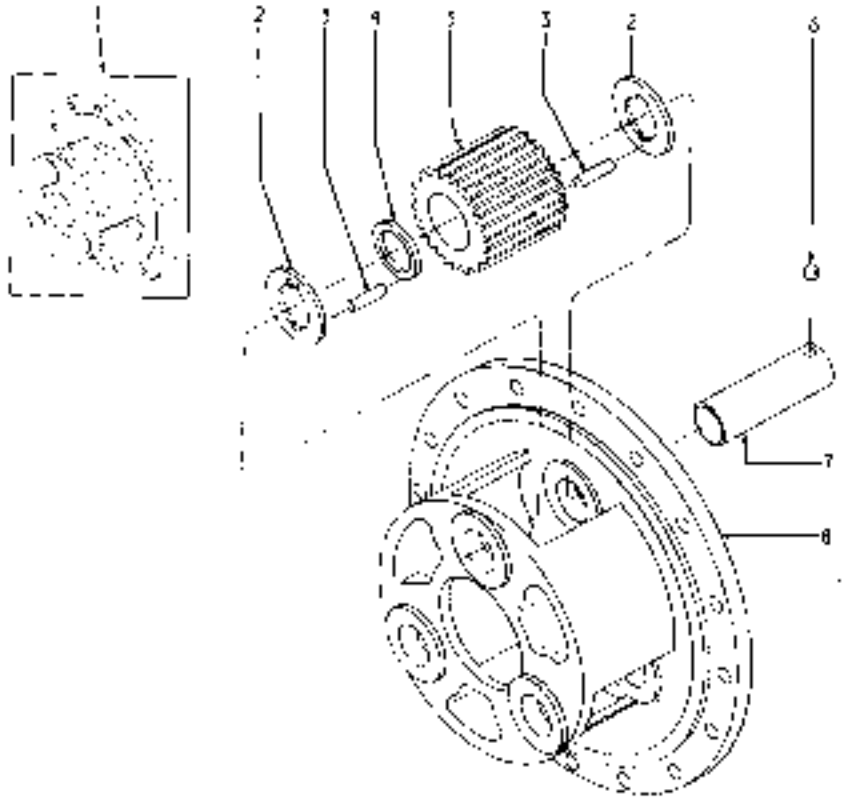

PLANET CARRIER ASSEMBLY — REAR TP2060

ITEM	PART	DESCRIPTION	QTY.	ITEM	PART	DESCRIPTION	QTY.
1	[illegible]	CARRIER ASSY INC 2-8	2	4	L06359	SPACER PINION ROLLER	3
		QUANTITIES INDICATED		5	L06364	PINION PLANET	3
		ARE FOR ONE ASSEMBLY		6	L00-12	DALE PINION SHAFT	3
2	L06352	WASHER PINION THRUST	6	7	L06355	SHAFT PINION	3
3	L06356	ROLLER PINION	150	8	[illegible]	SPIDER PLANET	1

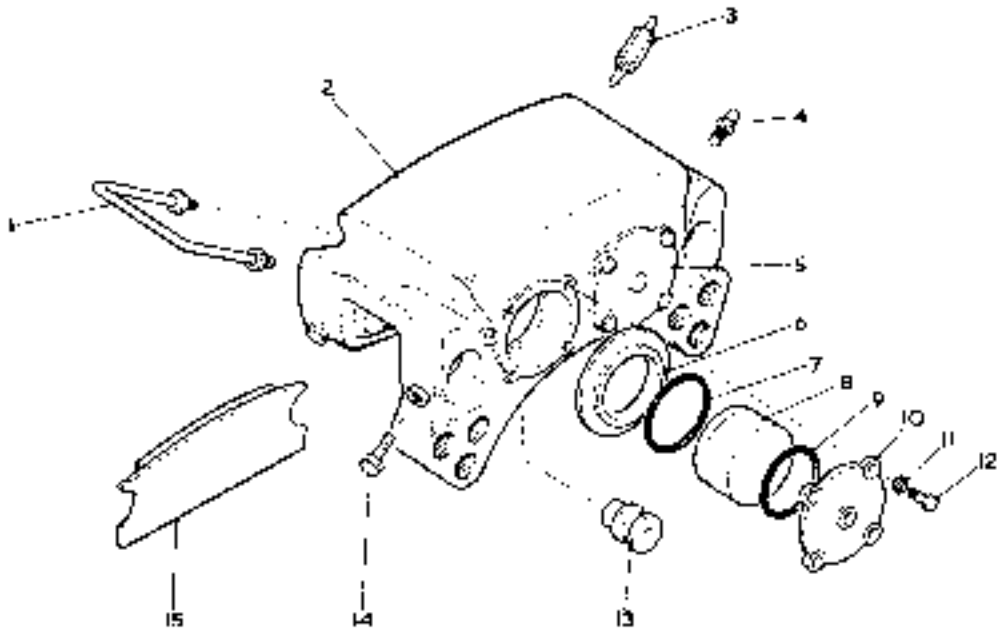

BRAKE CALIPER ASSEMBLY — REAR TP3463

ITEM	PART		DESCRIPTION	QTY.
A			BRAKE HEAD ASSY INC 1-15	
	121278		BRAKE RH ASSEMBLY	1
	121277	*	BRAKE LH ASSEMBLY	1
			QUANTITIES INDICATED	
			ARE FOR ONE ASSEMBLY	
1	947926		TUBE & NUT ASSY	
2	947938	*	TORQUE PLATE LH	1
	947940		TORQUE PLATE RH	1
3	947928		VALVE HYDRAULIC BLEEDER	1
4	947927		VALVE HYDRAULIC BLEEDER	1
5	947934		CAP RH ASSY	1
	947933		CAP LH ASSY	1
6		D	BOOT SEE 16	4
7		D	PACKING SEE 16	4
8	947935		PISTON	4
9		D	PACKING SEE 16	2
10	947933		CAP RH ASSY	1
	947934		CAP LH ASSY	1
11	103293		WASHER	8
12	10-620		BOLT	8
13	947931		PIN Retaining	4
14	947930		BOLT	4
15	947932		CARRIER & LINING ASSY	2
16	947939	*	REPAIR KIT INC 6,7 & 9	1
17	L21776	*	BRAKE DISC	1

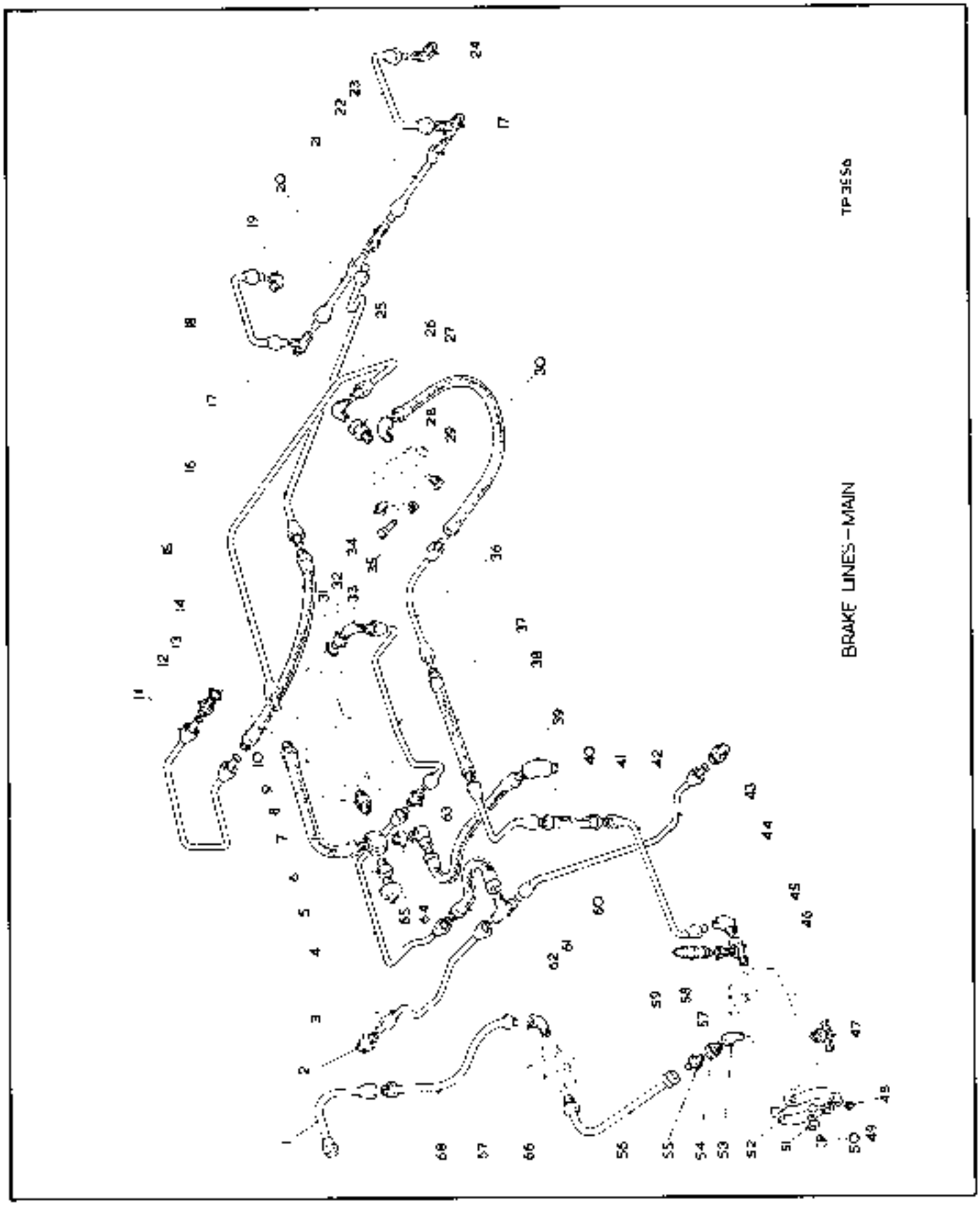
BRAKE LINES—MAIN
TP3556

BRAKE LINES—MAIN

ITEM	PART	DESCRIPTION	QTY.
1	3235271	TUBE COMPRESSOR TO VALVE	1
1A	3201766	+ ADAPTOR TUBE / COMPRESSOR	1
1B	3200261	+ WASHER	1
2	15K-4	CONNECTOR	1
3	1544105	TUBE TEE TO BRAKE	1
4	1538402	TUBE HOSE TO TUBE	1
5	636260	PRESSURE SWITCH	1
6	19F-4	REDUCING BUSHING	1
7	21F-4	CROSS PIPE	1
8	546276	HOSE	1
9	19F-6	REDUCING BUSHING	1
9A	5K-306	+ NIPPLE	1
10		POWER CLUSTER SEE INDEX	1
11	1538406	TUBE	1
12	61F-4	ADAPTOR	1
13	613750	O RING	1
14	1538407	TUBE HOSE TO VALVE	1
15	1538399	HOSE	1
16	1538410	TUBE	1
17	21K-4	TEE	2
18	1538401	TUBE BRAKE LH	1
19	17K-4	ELBOW	1
20	1544104	TUBE LH FRONT	1
21	10K-4	TEE	1
22	1544103	TUBE RH FRONT	1
23	1538401	TUBE BRAKE RH	1
24	17K-4	ELBOW	1
25	1535135	ELBOW	1
26	16F-4	ADAPTOR UNION	1
27	26F-4	ELBOW	1
28		BRAKE VALVE SEE INDEX	1
29	13F-08	PLUG	4
30	571695	HOSE	1
31	619750	O RING	1
32	1543879	ADAPTOR	1
33	8K-4	ELBOW	1
34	13F-04	PLUG	1
35	26-520	BOLT VALVE MOUNTING	3
35A	18D-05	LOCKNUT	3
36	568581	TUBE HOSE TO HOSE	1
37	1538408	TUBE ASSY	1
38	1531983	HOSE ASSY	1
39	31F-1	ELBOW	1
40	1531856	TUBE ASSY	1
41	531802	HOSE ASSY	1
42	1531857	TUBE ASSY	1
43	15K-4	CONNECTOR	1
44	1544106	TUBE ASSY TEE TO BRAKE	1
45	42F-9	ELBOW	1
46	17F-4	TEE	1
47	72F-4	DRAIN COCK	1
48	18D-06	LOCKNUT	4
49	26-620	BOLT BRACKET MOUNTING	4
50	1534135	PRESSURE SENDER UNIT	1
51	19F-4	REDUCING BUSHING	1
52	941613	MOUNTING BRACKET ASSEMBLY	2
53	25F-4	ELBOW	1
54		OPIT	
55	36F-10	CONNECTOR	1
56	3236194	TUBE ASSY	1
57	549717	RESERVOIR AIR	1
58	19F-5	REDUCING BUSHING	1
59	507015	VALVE SAFETY	1
60	1541553	HOSE ASSY	1
61	10K-4	TEE	1
62	1538398	HOSE ASSY	1
63	67F-4	ADAPTOR	1
64	31F-1	ADAPTOR	1
65	15F-4	REDUCING BUSHING	1
66		VALVE UNLOADER SEE INDEX	1
66A	26-414	+ BOLT VALVE MOUNTING	1
66B	18D-04	+ LOCKNUT	1
67	26F-4	ELBOW	1
68	548305	TUBE ASSY	1

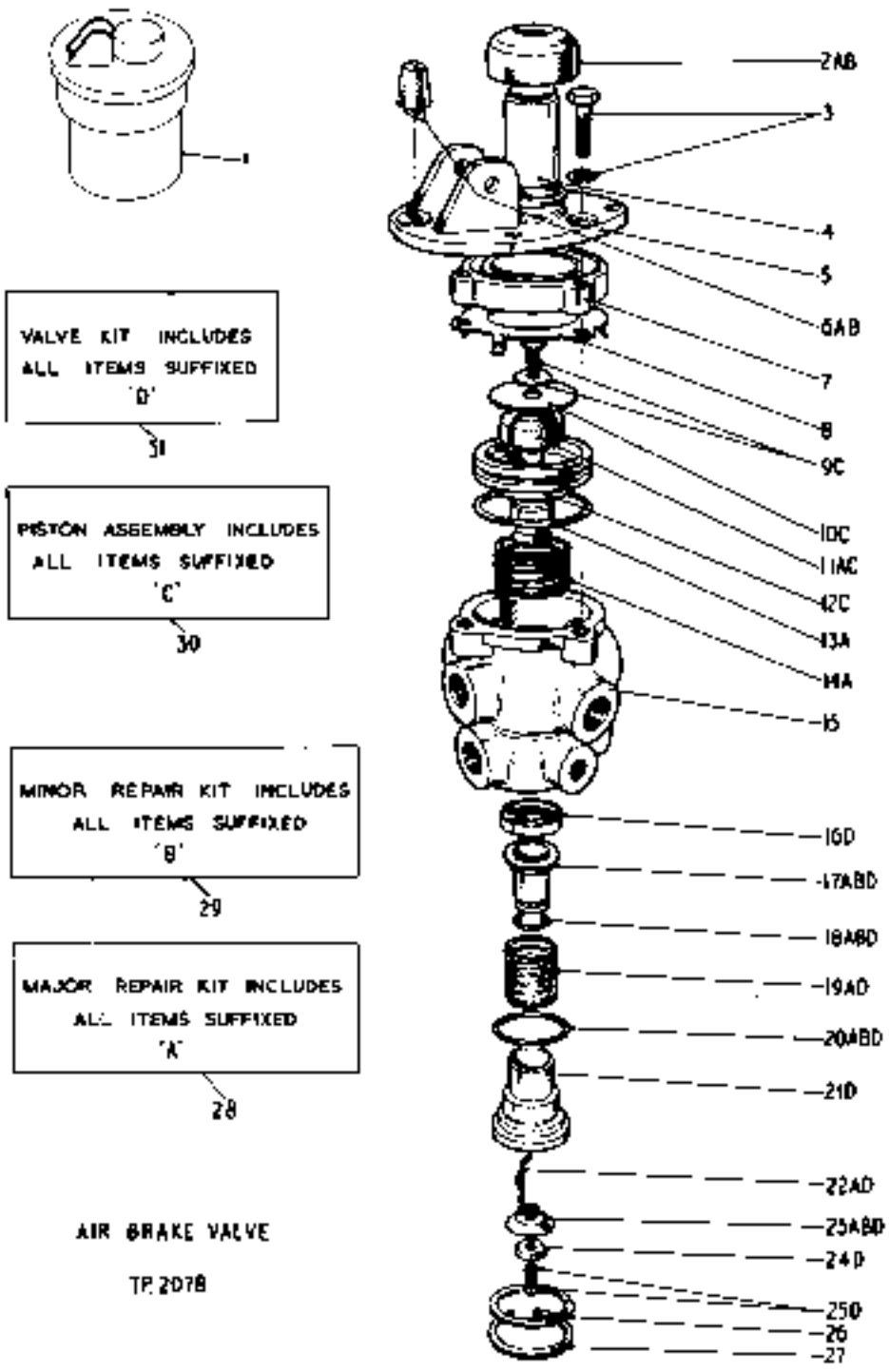

AIR BRAKE VALVE

TP 2078

BRAKE FOOT VALVE

ITEM	PART		DESCRIPTION	QTY.
4	556562		VALVE ASSY DM 277472 INC 1-29	1
1		■	BODY SEE 30 & 31	1
2	3290121		BOLT MOUNTING PLATE	3
3	3206401		LOCKWASHER	3
4	3290122		PLUNGER	1
5	3206400		PLATE MOUNTING	1
6		■	STOP SEE 30 & 31	1
7	3290123		SPACER MOUNTING PLATE	1
8	3290131		RETAINER SPACER	1
9	3290102		BOLT PISTON ASSY	1
10	3290103		WASHER	1
11	3290101		SEAT SPRING	1
12		■	SPRING RUBBER SEE 30 & 32	1
13	3290100		PISTON	1
14		■	O RING PISTON SEE 30	1
15		■	SPRING PISTON SEE 30	1
16	3290105		BODY VALVE	1
17	3290107		RETAINER VALVE	1
18		■	VALVE SEE 30,31 & 33	1
19		■	O RING SEE 30,31 & 33	1
20		■	SPRING SEE 30 & 33	1
21		■	O RING SEE 30,31 & 33	1
22	3290110		SEAT EXHAUST CHECK VALVE	1
23		■	SPRING SEE 30 & 33	1
24		■	DIAPHRAGM SEE 30,31 & 33	1
25	3290115		WASHER DIAPHRAGM	1
26	3290116		SCREW DIAPHRAGM	1
27	3290117		LOCKWASHER	1
28	3290120		WASHER	1
29	3290119		CIRCLIP	1
30	3290125	+	KIT MAJOR REPAIR INC 1,6, 12,14,15,18-21,23 & 24	AR
31	3290124	+	KIT MINOR REPAIR INC 1,6, 14,19,21 & 24	AR
32	3290099	+	PISTON ASSY INC 9-13	AR
33	3290106	+	VALVE ASSY INC 17-22	AR

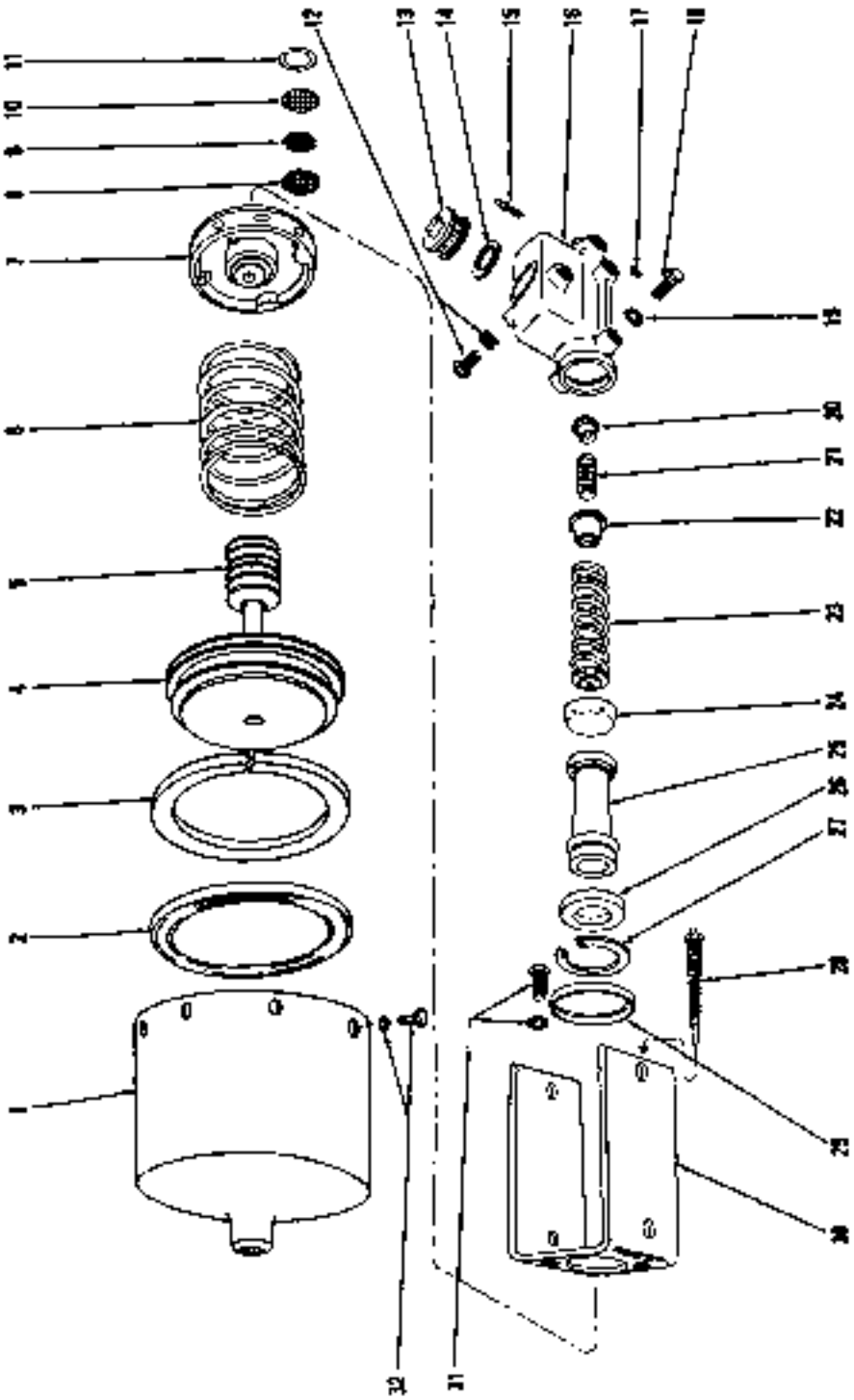

POWER CLUSTER ASSEMBLY

BRAKE POWER CLUSTER

ITEM	PART		DESCRIPTION		QTY.
A	940999		POWER CLUSTER ASSY		
			INC 1-32		1
1	945033		SHELL AUX CYLINDER		1
2		B	CUP PISTON	SEE 33	1
3		B	WIPER PISTON	SEE 33	1
4	945032		PISTON AUX CYLINDER		1
5		B	RIVET PISTON	SEE 33	1
6	945031		SPRING PISTON RETURN		1
7	945028		HEAD ASSY AUX CYLINDER		
7A			INC 8-12		1
8	945029		SCRUBBER FILTERING		1
9	945044		HAIR FILTERING		1
10	945029		SURFACE FILTERING		1
11	945043		RING FILTER RETAINING		1
12	2C-714		BOLT CYLINDER TO BRACKET		2
12A	4L-07		LOCKWASHER		2
13	660265		CAP FILLER		1
14	650287		GASKET FILLER CAP		1
15	651H06		SCREW CYLINDER BLEEDER		1
16		C	CASTING MASTER CYL	SEE 34	1
17	10F-07		PLUG MASTER CYLINDER		1
18	2C-314		BOLT CYL TO BRACKET		2
19	4L-07		LOCKWASHER		2
20		B	VALVE CHECK	SEE 33	1
21	945026		SPRING CHECK VALVE		1
22	945042		BLEEDER CHECK VALVE		1
23	874001		SPRING PISTON RETURN		1
24		B	CUP PISTON	SEE 33	1
25		C	PISTON MASTER CYL	SEE 34	1
26	874003		PLATE PISTON STOP		1
27	874028		RING STOP PLATE LOCK		1
28	945030		INJECTION STROKE		1
29	945023		BAND MASTER CYL		1
30	945024		BRACKET		1
31	1C-616		BOLT BRACKET TO HEAD		3
31A	4L-06		LOCKWASHER		4
32	1C-510		BOLT HEAD TO CYLINDER		8
32A	4L-05		LOCKWASHER		8
33	945025		REPAIR KIT		1
34	945800	*	HYDRAULIC CYLINDER ASSY		
			INC 13-17 20-27		1

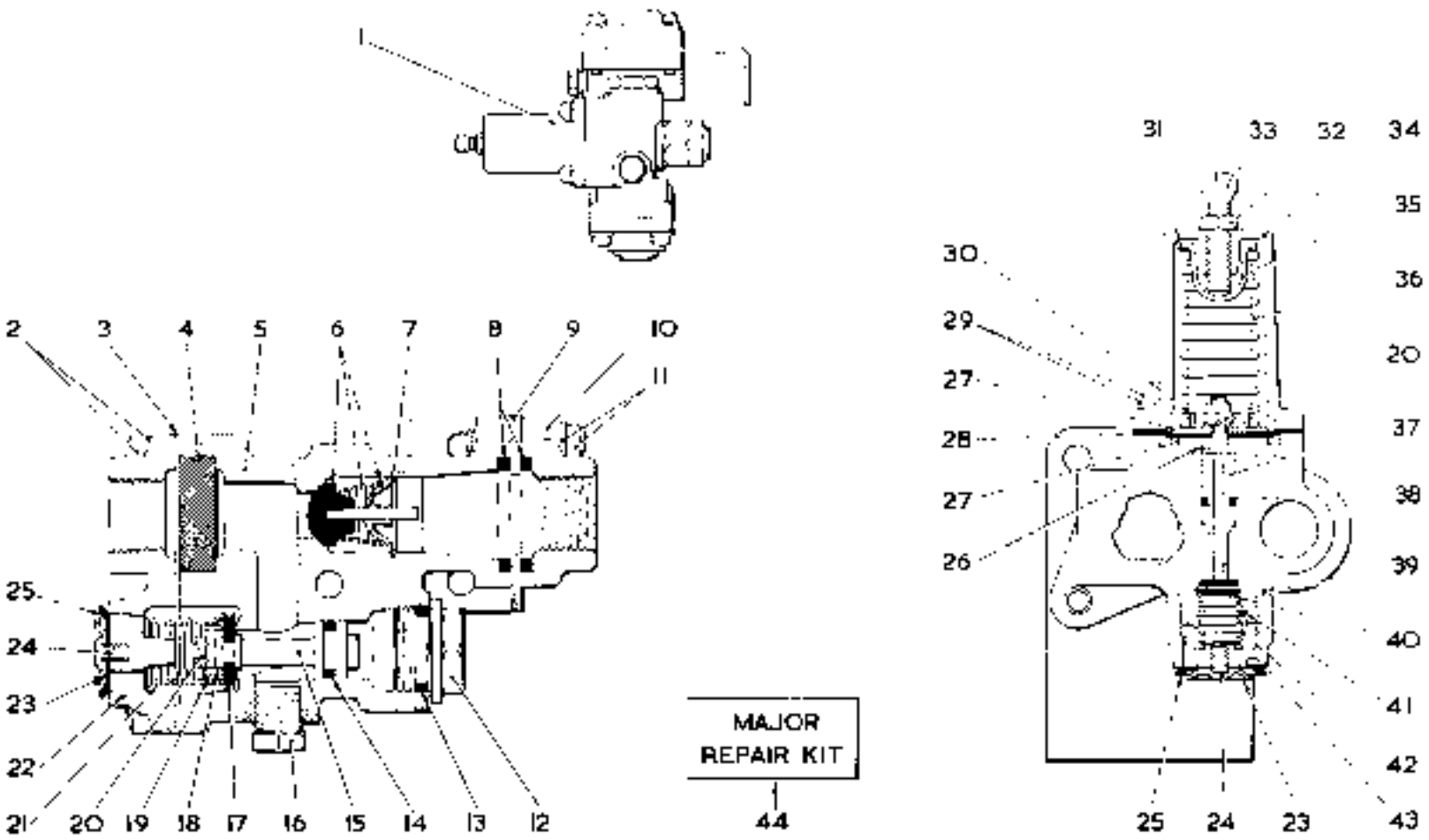

UNLOADER VALVE ASSEMBLY

TP 2789

BRAKE UNLOADER VALVE

ITEM	PART	DESCRIPTION	QTY.
1	3229416	VALVE ASSY INC 2-43	1
2	3291273	SCREW COVER TO BODY	6
2A	3291190	LOCKWASHER	6
3		▫ JOINT SEE 44	
4		▫ FILTER SEE 44	
5	3291201	BODY VALVE	1
6		▫ VALVE NON RETURN SEE 44	
7		▫ CIRCLIP SEE 44	
8		▫ RING SEAL SEE 44	
9	3291193	BRACKET VALVE MOUNTING	1
10	3291194	COVER DELIVERY	1
11	3291196	SCREW COVER TO BODY	2
11A	3291190	LOCKWASHER	2
12	3291191	PLUG	1
13		▫ SEAL PLUG SEE 44	
14		▫ O RING SEE 44	
15	3291200	PLUNGER UNLOADER	1
16	40K-04	PLUG	1
17		▫ VALVE UNLOADER SEE 44	
18		▫ WASHER SEE 44	
19	3291204	GUIDE SPRING	1
20	3291173	LOCKNUT VALVE TO PLUNGER	2
21		▫ SPRING SEE 44	
22	3291206	COVER INLET	1
23	3291186	WASHER DIAPHRAGM	2
24	3291187	SCREW DIAPHRAGM	2
25		▫ DIAPHRAGM SEE 44	
26		▫ SHIM FABRIC SEE 44	
27	3291174	FOLLOWER UPPER	1
27A	3291176	FOLLOWER LOWER	1
28		▫ DIAPHRAGM SEE 44	
29	3291189	SCREW TOP COVER	4
29A	3291190	LOCKWASHER	4
30	3291172	GUIDE SPRING	1
31	3291169	WASHER	1
32	3291167	JAM NUT	1
33	3291166	SCREW ADJUSTING	1
34	3221168	COVER TOP	1
35	3291170	SEAT SPRING	1
36	3291171	SPRING	1
37	3291178	PLUNGER VALVE	1
38		▫ SEAL SEE 44	
39		▫ WASHER SEE 44	
40		▫ VALVE SEE 44	
41		▫ GUIDE SEE 44	
42		▫ SPRING SEE 44	
43	3291184	NUT CAP EXHAUST	1
44	3291210	* KIT MAJOR REPAIR INC 3,4, 6-7,13,14,17,18,21,25, 26,28,38-42	AR
45	20-414	* BOLT VALVE MOUNTING	2
45A	120-04	* LOCKNUT	2

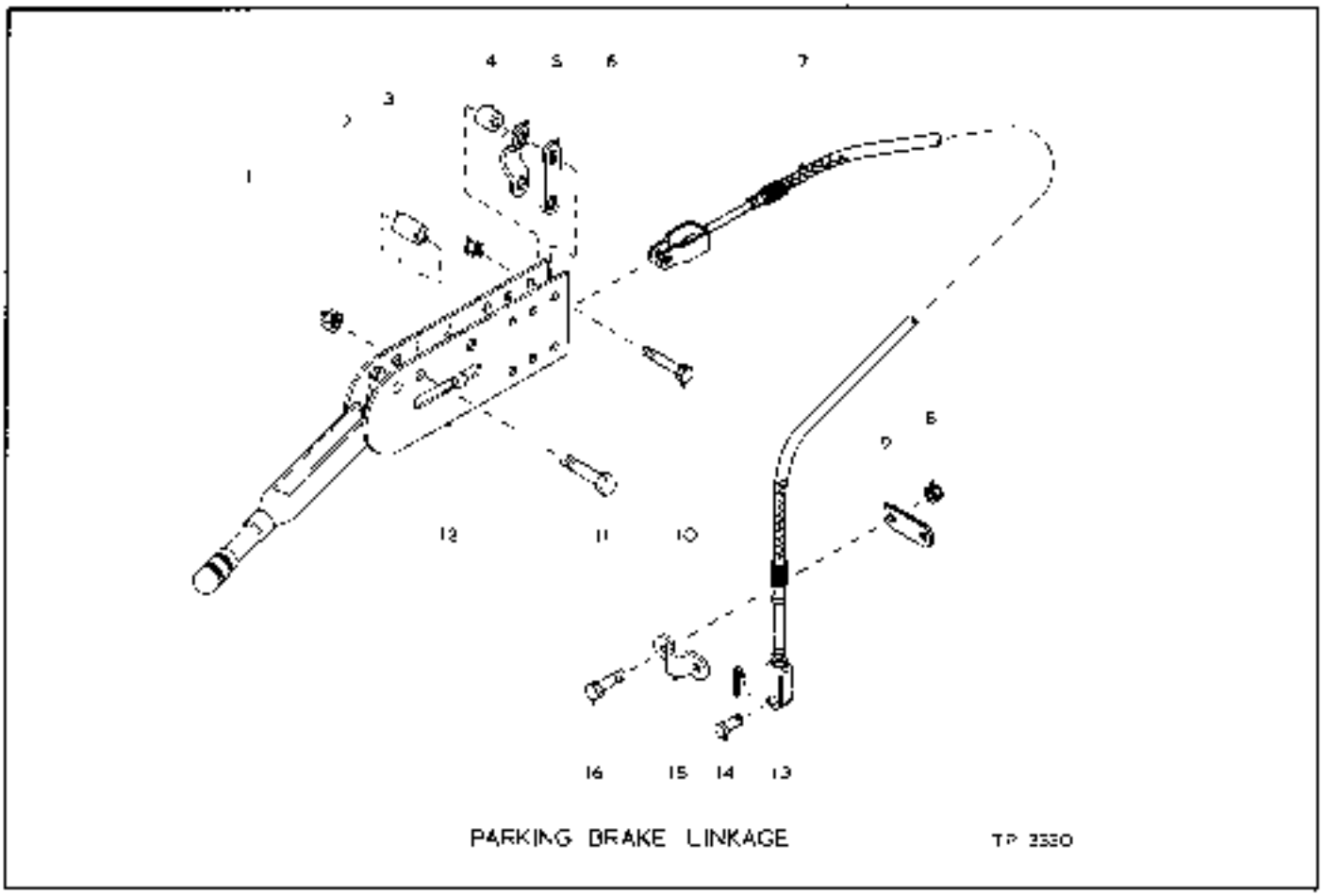

PARKING BRAKE LINKAGE TP 3330

ITEM	PART		DESCRIPTION	QTY.
1	18D-06		NUT LEVER MOUNTING	2
1A	545006	*	SPACER LEVER MOUNTING	1
2	545005		SPACER LEVER MOUNTING	2
3	18D-05		NUT CABLE MOUNTING	2
3A	545006	*	SPACER LEVER MOUNTING	1
4	545006		SPACER CABLE MOUNTING	2
5	544512		CLAMP CABLE	1
6	645092		LINK CABLE CLAMP	1
7	1531660		CABLE PARKING BRAKE	1
8			UNIT	
9	645092		LINK CABLE CLAMP	1
10	2C-528		BOLT CABLE MOUNTING	2
11	2C-544		BOLT LEVER MOUNTING	2
12			LINKAGE ASSEMBLY SEE INDEX	1
13	HF-312		SPLIT PIN	1
14	4F-0610		CLEVIS PIN	1
15	544512		CLAMP CABLE	1
16	2C-512		BOLT CLAMP	2

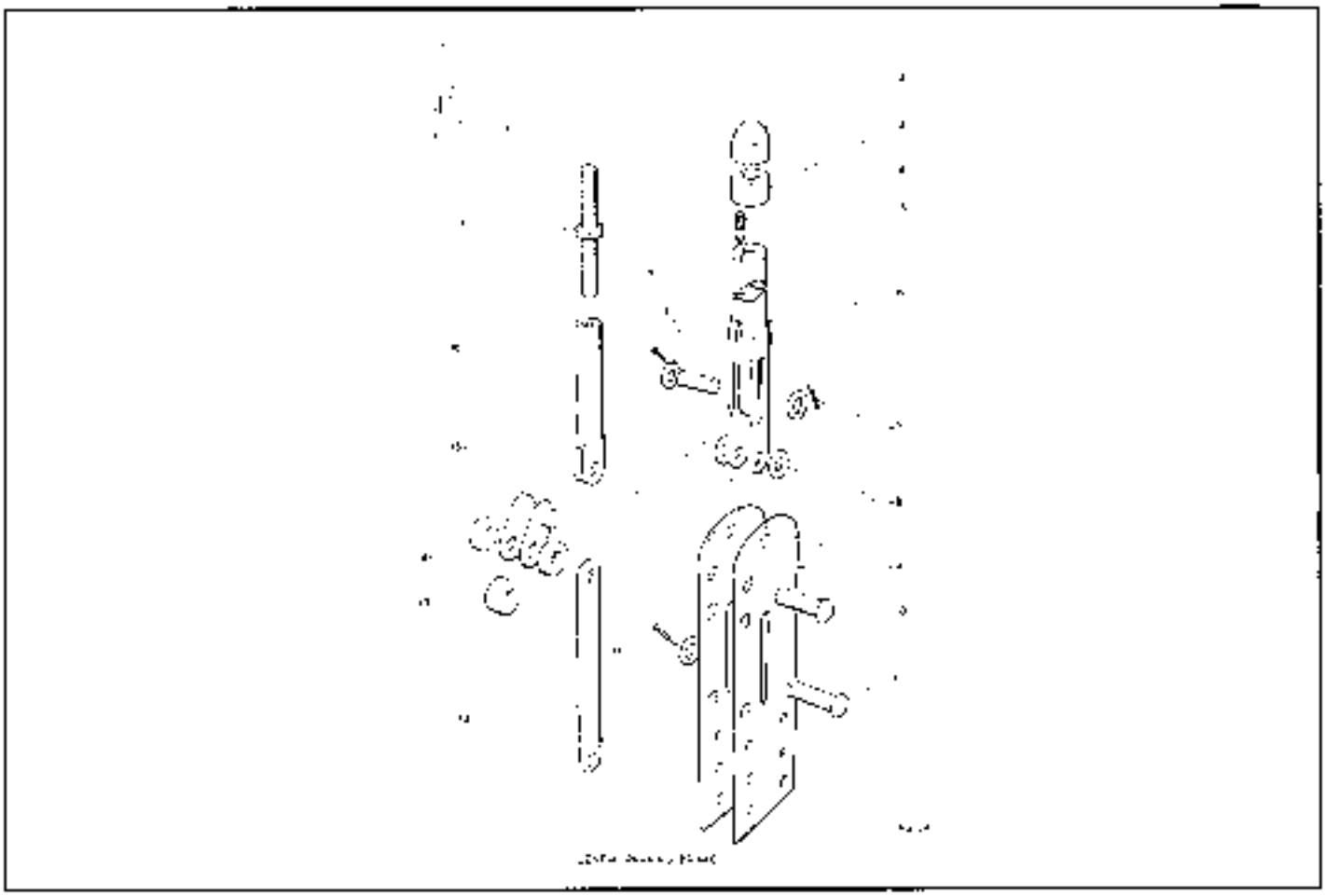

ITEM	PART	DESCRIPTION	QTY.	ITEM	PART	DESCRIPTION	QTY.
1	3219830	LEVER ASSY ENG 2-17	1	10	3290398	RIVET	1
2	3290407	CAM ADJUSTING KNOB	1	11	3290394	PIN CLEVIS	1
3	3290406	HOUSING SPRING BALL	1	11A	3290404	WASHER	1
4	3290392	SPRING	1	11B	3290403	PIN SPLIT	1
5	3290391	BALL BEARING	1	12	3290402	LINK ADJUSTING SCREW	1
6	3290405	BUSH & BUSH ASSY	1	13	3290395	SPACER PIVOT CENTRE	1
7	3290400	PIN LINK TO TUBE	1	14	3290396	SPACER PIVOT OUTER	2
7A	3290404	WASHER	2	15	3290397	BRACKET PIVOT	2
7B	3290403	PIN SPLIT	2	16	3290401	CLEVIS TUBE	1
8	3290399	WASHER HOLE TO BRACKET	2	17	3290390	SCREW ADJUSTING	1
9	3290393	BRACKET LEVER MOUNTING	2				

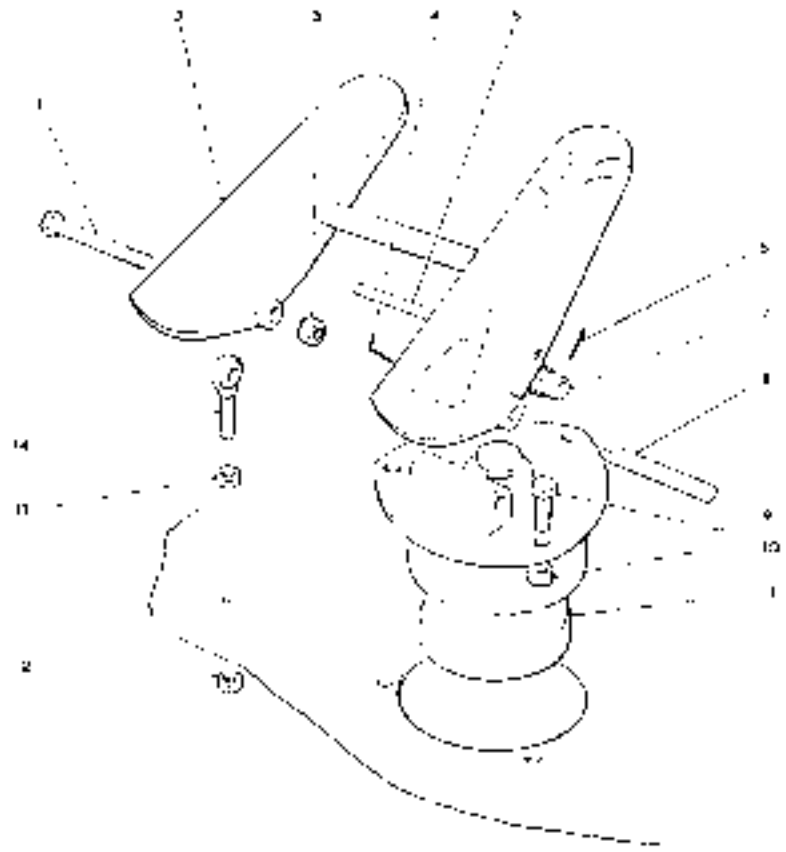

BRAKE FOOT CONTROLS TP3065

ITEM	PART	DESCRIPTION	QTY.	ITEM	PART	DESCRIPTION	QTY.
1	24C-664	BOLT PEDAL TO BEARING	1	8	875767	PIN PEDAL TO VALVE	1
2	546A59	PEDAL ASSEMBLY	1	9	2C-620	BOLT VALVE MOUNTING	3
3	660-06	LOCKNUT	1	10	1A0-05	LOCKNUT	3
4	1F-320	PIN LOWER	1	11		VALVE AIR BRAKE SEE INDEX	1
5	875766	PIN PEDAL TO ROLLER	1	12	660-06	NUT BEARING MOUNTING	1
6	1F-312	PIN CENTER	1	13	80-06	NUT BEARING JAM	1
7	516259	ROLLER PEDAL	1	14	1S2S049	BEARING SPHERICAL	1

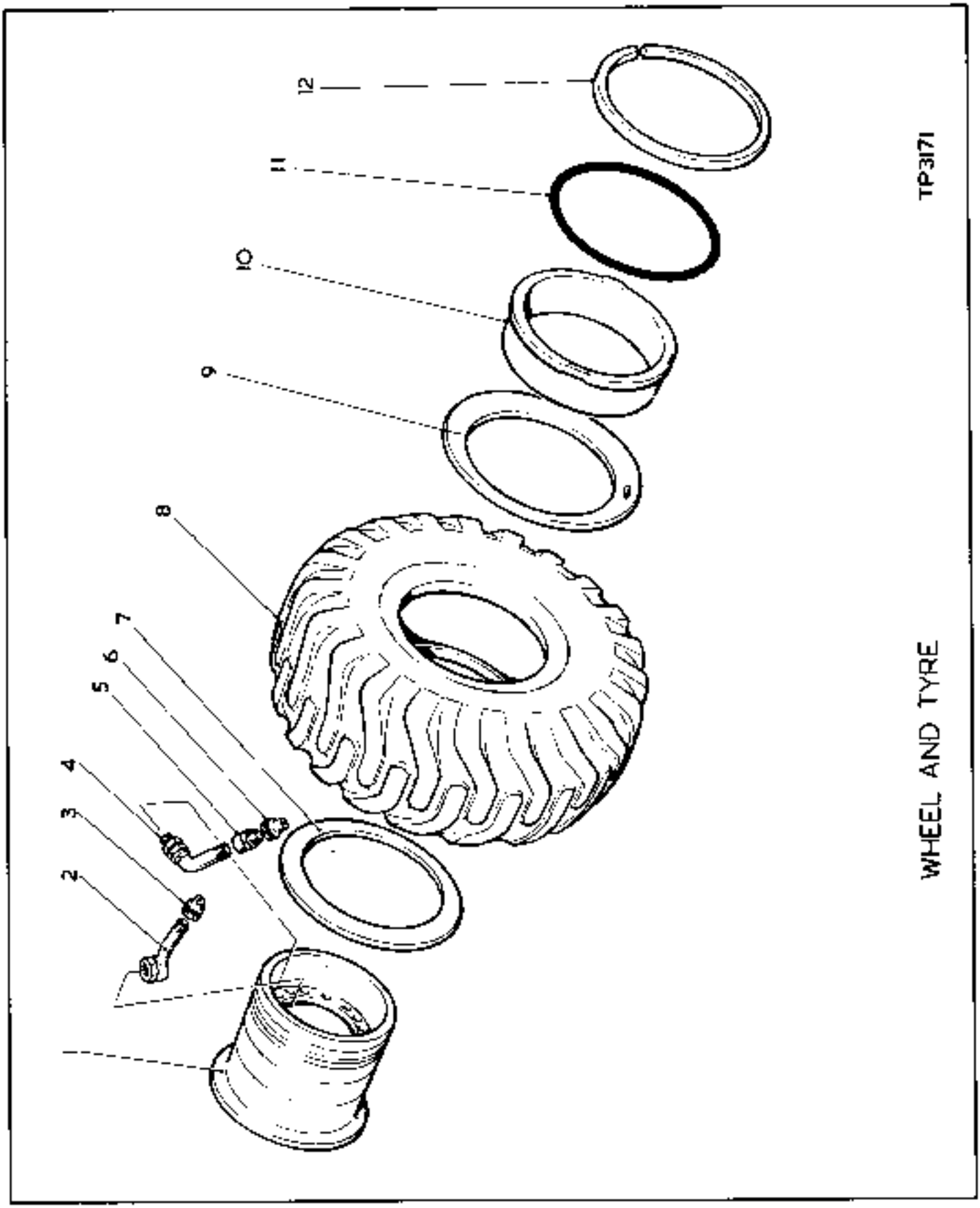
12
11
10
9
8
7
6
5
4
3
2
TP3171
WHEEL AND TYRE

WHEEL & TYRE—DATA

WHEEL ASSY., 20·5 x 25 TUBELESS

ITEM	PART	DESCRIPTION	QTY.
A	3229155	WHEEL ASSY FOR 20.5 X 25 TUBELESS TYRES INC 1, 7 & 9=12 REF PL 1527689	4
1	538560	WHEEL	4
2		OMIT	
3		OMIT	
4	509445	STEM VALVE INC 5 & 6	4
5	551684	ADAPTOR	4
6	551685	CAP VALVE	4
7	424564	FLANGE	4
8		□ TYRE	
9	474964	FLANGE	4
10	553956	BAND BEAD SEAT	4
11	580278	O RING	4
12	580274	LOCK RING	4

WHEEL ASSY., 23·5 x 25 & 23·5 x 25 (XR) TUBELESS

ITEM	PART	DESCRIPTION	QTY.
A	3234162	WHEEL ASSY FOR 23.5 X 25 & 23.5 X 25 (XR) TUBELESS TYRES INC 1, 7,9=12 REF PL 1527691/1531609	4
1	509440	WHEEL	4
2	531112	STEM WAFER INC 2A,2B & 3	4
2A	529605	+ NUT	4
2B	529606	+ GROMMET	4
3	531111	CAP	4
4	509445	STEM VALVE INC 5 & 6	4
5	551684	ADAPTOR	4
6	551685	CAP VALVE	4
7	551341	FLANGE	4
8		□ TYRE	
9	551341	FLANGE	4
10	553956	BAND BEAD SEAT	4
11	580278	O RING	4
12	580274	LOCK RING	4
13	573266	* SEAL BEAD FLANGE XR ONLY	8

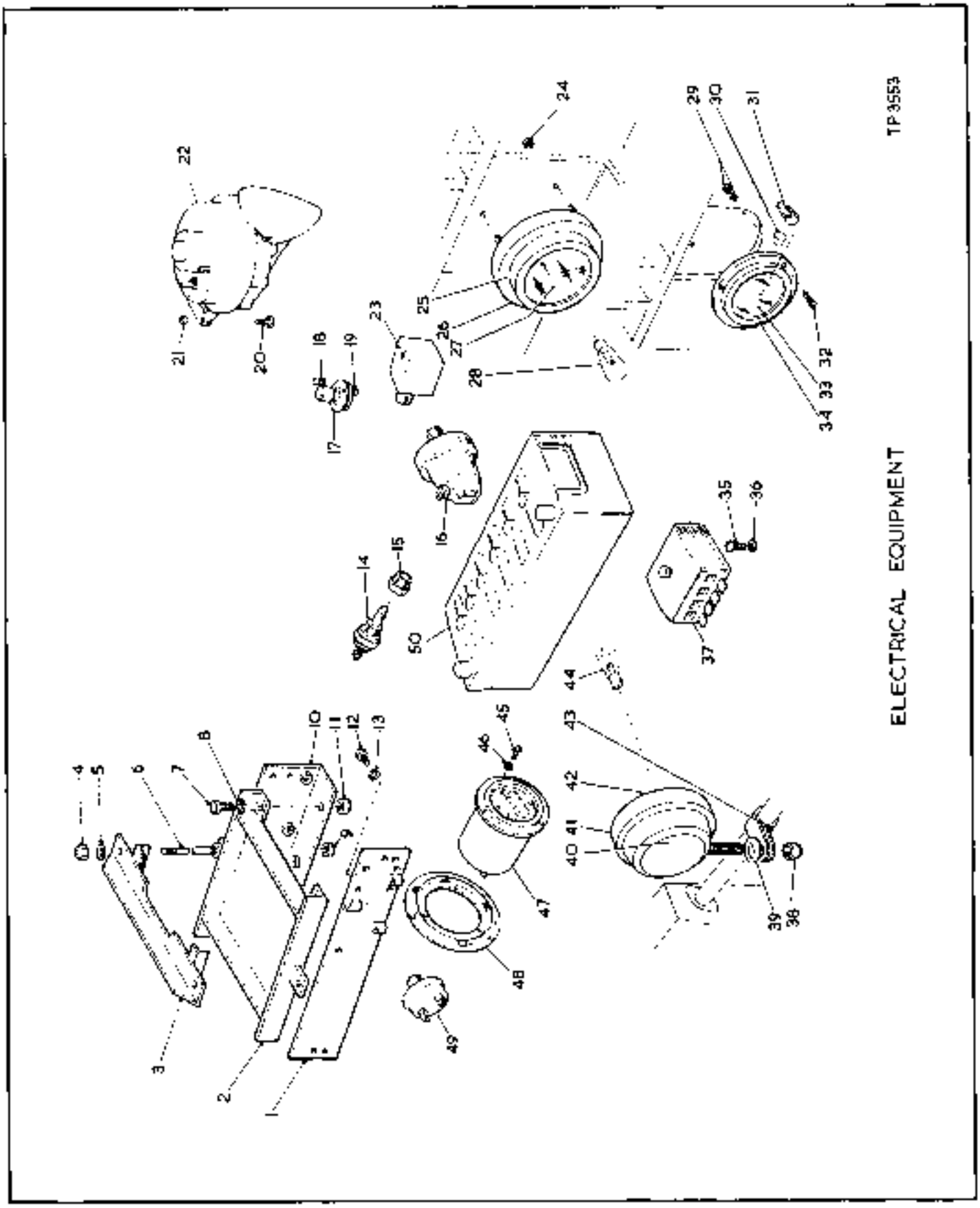
TP3553
ELECTRICAL EQUIPMENT

ELECTRICAL EQUIPMENT

ITEM	PART	DESCRIPTION	QTY.
1	1531795	CARRIER REAR	1
2	1531789	BATTERY BOX	1
3	3229206	HOLD DOWN	1
4	170-2	LOCKNUT	2
5	664422	WASHER	4
6	3229477	STUD	2
7	20-620	BOLT BOX TO CARRIER	4
8	679024	WASHER	4
9	70-05	NUT	4
10	1541436	CARRIER FRONT	1
11	160-06	LOCKNUT	4
12	10-416	BOLT CARRIER MOUNTING	8
13	4E-06	LOCKWASHER	4
14	3200221	SENDER UNIT TEMPERATURE	2
14A	140-10	NUT SENDER UNIT	2
14B	14E-10	* WASHER SENDER UNIT	2
14C	3454560	* FIBRE WASHER	2
15	3200337	ADAPTOR CONVERTER SENDER	
15A	3210339	ADAPTOR ENGINE SENDER	
16	1610574	SENDER UNIT OIL PRESSURE	1
16A	140-10	NUT SENDER UNIT	1
16B	14E-10	* WASHER SENDER UNIT	1
17	774570	SWITCH HORN FOOT	1
18	20-414	BOLT SWITCH TO FLOOR	2
19	180-06	LOCKNUT	2
20	10-418	BOLT HORN MOUNTING	2
21	170-1	LOCKNUT	2
22	3215046	HORN	1
23	3224305	ADAPTOR ENGINE	1
23A	3220867	* COPPER WASHER	1
24	560-10	NUT LAMP MOUNTING	6
25	3224356	LAMP ASSY INC 26 & 27	2
26	3290414	RETAINER	2
27	3290413	LIGHT UNIT	2
28	3224545	BULB	2
29	140-10	NUT LAMP MOUNTING	6
29A	17E-10	WASHER	6
30		UNIT	
31	3220984	BULB	2
32	20-1017	SCREW LAMP MOUNTING	6
33	1101480	LENS	2
34	562641	LAMP TAIL & STOP INC 33	2
35	3220851	SCREW FUSEBOX MOUNTING	2
36	14E-10	LOCKWASHER	2
37	3222535	FUSE BOX INC 37A & 37B	1
37A	3290724	* FUSE 0 AMP	1
37B	3290726	* FUSE 25 AMP	3
37C	3233983	* MOUNTING INSULATED	1
38	180-08	LOCKNUT	2
39	652442	SPACER	2
40	3224357	LAMP ASSY INC 41 & 42	2
41	3290414	RETAINER	2
42	3290413	LIGHT UNIT	2
43	563994	CLAMP	2
44	3224545	BULB	2
45	30-606	SCREW HOURMETER MOUNTING	3
46	12E-6	LOCKWASHER	3
47	1554134	HOURMETER	1
48	551255	DAMPENER VIBRATION	1
49	512421	SWITCH PRESSURE	
50	3220948	BATTERY	2
51	3229459	* CABLE BATTERY TO BATTERY	1
52	3221171	* CABLE STARTER TO EARTH	1
53	3221121	* CABLE BATTERY TO EARTH	1
54	3229465	* CABLE BATTERY TO STARTER	1
55	3236451	* WIRING HARNESS ENGINE	1
56	3238254	* WIRING HARNESS COCKPIT	1
57	3229376	* SUB-LOOM ASSY	1

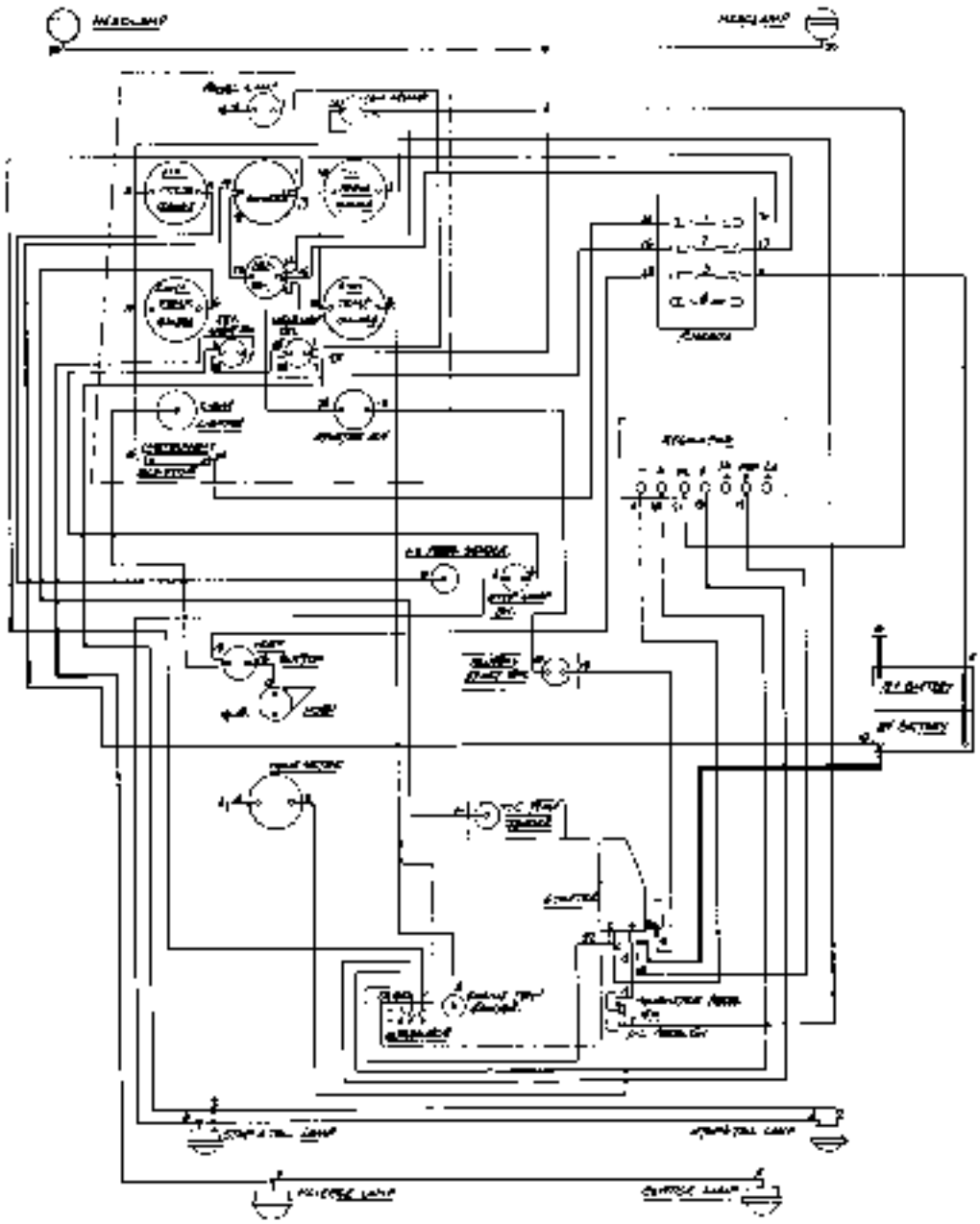

No.	SIZE	COLOUR	No.	SIZE	COLOUR
1	0.85/0.13	RED & BLUE	13	2.5/0.13	WHITE & BLACK
2	1.4/0.13	BLUE & WHITE	14	2.5/0.13	BROWN & WHITE
3	2.5/0.13	GREEN	15	2.5/0.13	BLUE
4	2.5/0.13	BLACK	16	2.5/0.13	BLACK & RED
5	2.5/0.13	BLUE & RED	17	2.5/0.13	RED & BLUE
6	1.4/0.13	BROWN & BLUE	18	2.5/0.13	YELLOW & GREEN
7	1.4/0.13	RED & YELLOW	19	2.5/0.13	WHITE & BLACK
8	1.4/0.13	YELLOW & RED	20	2.5/0.13	BLUE & WHITE
9	1.4/0.13	YELLOW	21	2.5/0.13	BROWN & GREEN
10	0.85/0.13	RED	22	2.5/0.13	BLACK
11	2.5/0.13	RED & GREEN	23	2.5/0.13	RED & BLACK
12	2.5/0.13	GREEN & RED	24		

FUSE	CIRCUITS
1	INSTRUMENTS
2	LIGHTS
3	HORN & LIGHTER
4	SPARE

TP3562

CIRCUIT WIRING DIAGRAM

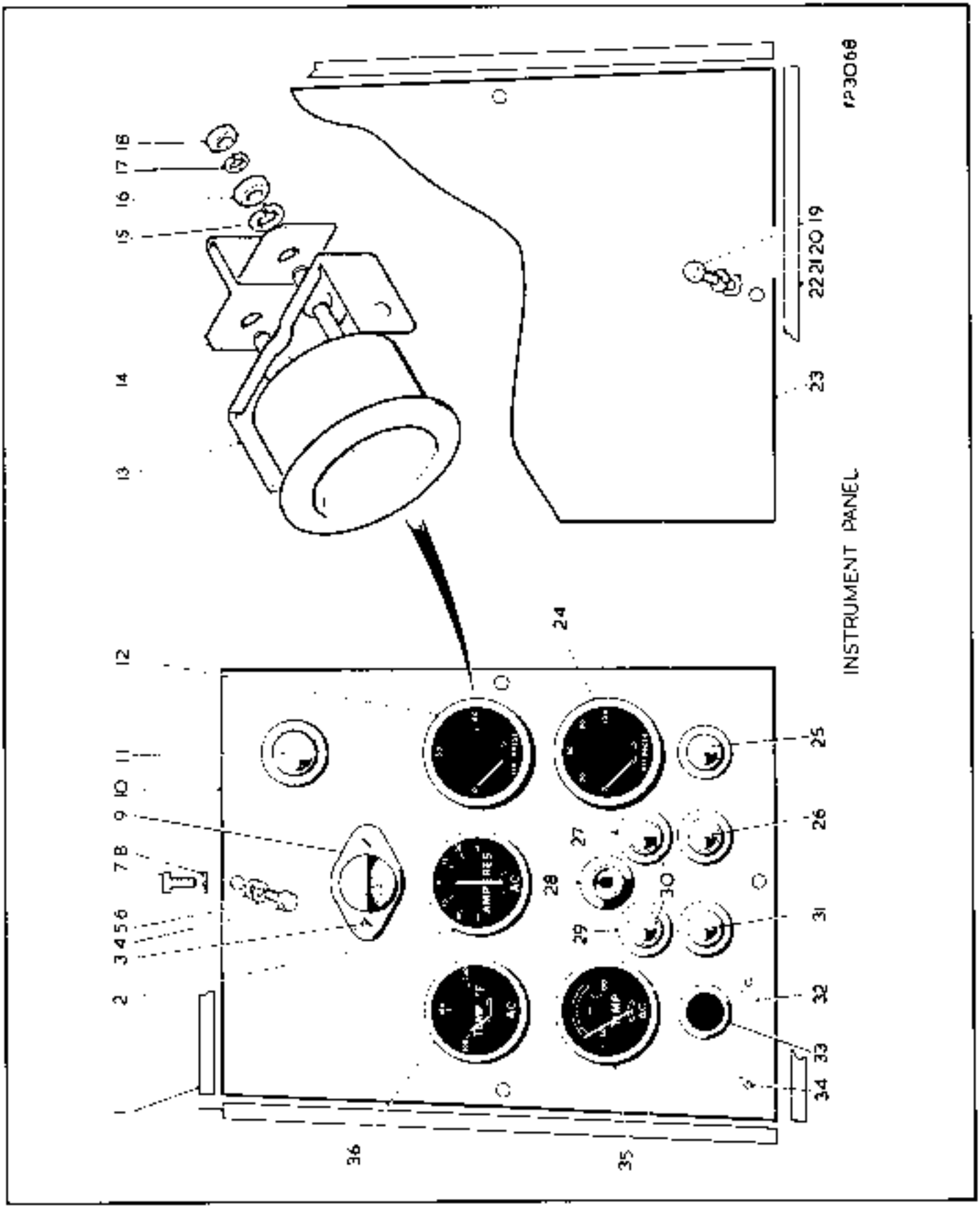
INSTRUMENT PANEL
AMPERES
AC
TEMP
AC
AMP
AC
1
2
3
4
5
6
7
8
9
10
11
12
13
14
15
16
17
18
19
20
21
22
23
24
25
26
27
28
29
30
31
32
33
34
35
36

INSTRUMENT PANEL

ITEM	PART		DESCRIPTION	QTY.
1	3229503		STRIP SEALING LH PANEL	AR
2	3224162		AMMETER	1
3	3220881		SCREW PANEL LIGHT	2
3A	3220897	+	LOCKNUT	2
4	10-416		BOLT PANEL TO COCKPIT	4
5	4E-04		LOCKWASHER	4
6	664421		WASHER	4
7	10-612		BOLT SEALING CAB MTG HOLE	2
8	3220838		WASHER FIBRE	2
9	3214208		LIGHT PANEL	1
9A	3220954	+	BULB 24V	3
10	3232919		PANEL INSTRUMENT LH	1
11	3224675		IGNITION WARNING LAMP	1
11A	3209965	+	BULB 24V	1
12	1534159		GAUGE OIL PRESSURE	1
13	1534156		CLAMP GAUGE TO PANEL	2
14			UNIT	
15	12E-10		LOCKWASHER	4
16	14D-10		NUT TERMINAL TO GAUGE	4
17	12E-06		LOCKWASHER	4
18	12D-06		NUT TERMINAL TO GAUGE	4
19	10-416		BOLT PANEL TO COCKPIT	2
20	41-04		LOCKWASHER	2
21	564421		WASHER	2
22	3229503		STRIP SEALING RH PANEL	AR
23	3224040		PANEL INSTRUMENT RH	1
24	1534140		GAUGE AIR PRESSURE	1
25	3232829		SWITCH STARTER	1
26			UNIT	
27		*	NAMEPLATE HEAD/TAIL	1
28	3222520		SWITCH IGNITION	1
29		*	NAMEPLATE REVERSE	1
30	3227780		SWITCH LIGHTS	2
31			UNIT	
32	556489		RESISTOR	1
33	3209569		RECEPTACLE LIGHTER	1
33A	3209565	+	ELEMENT	1
34	10-600		SCREW	2
34A	17E-6	+	LOCKWASHER	2
34B	12D-6	+	NUT	1
35	3200105		GAUGE CONVERTER TEMP	1
36	3200107		GAUGE ENGINE TEMP	1
37	562435	+	GROMMET	1
38	3221997	+	GROMMET	1

* NOTE: SEE INDEX NAMEPLATES & DECALS

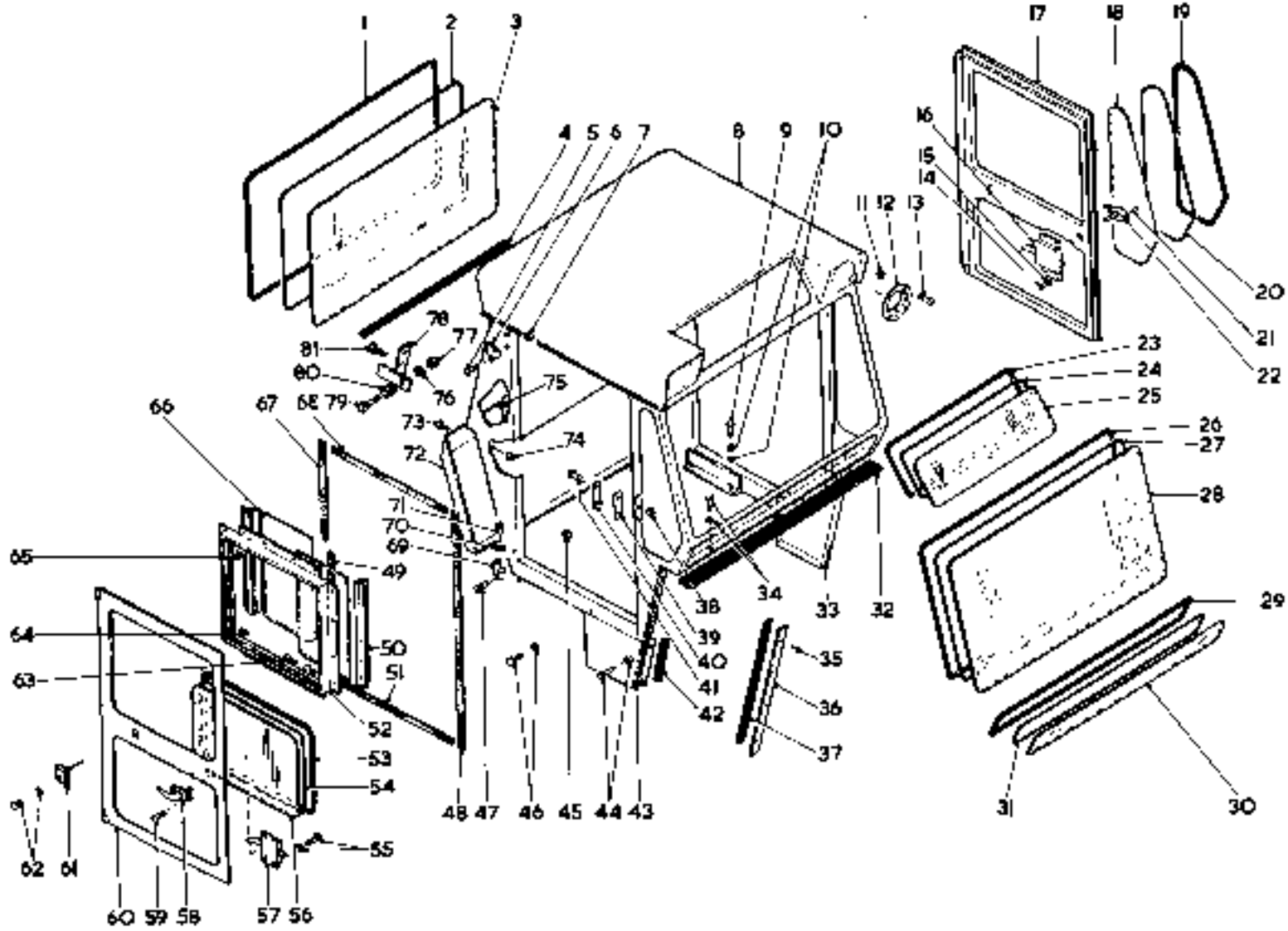

CAB ASSEMBLY–FULLY ENCLOSED

TP3570

CAB ASSEMBLY

ITEM		PART		DESCRIPTION	QTY.
A	P4	3286561		CAB ENCLOSED INC 1=62	1
		3236907		CAB ASSY INC 1=3 5=9 11=	
				31,36=41 45=71 & 75=81	1
1		3223805		MOULDING REAR WINDOW	1
2		3223811		STRIP FILLER	1
3			B	GLASS PATTERN SEE B2	
4		3227459		STRIP SEALING	1
5		HA=516		SCREW UPPER HINGE	4
6		3223813		HINGE UPPER INC 71	2
7		180=05		LOCKNUT UPPER HINGE	4
8			A	CAB SEE A	
9		10=620		BOLT CAB TO CRICKPIT	4
10		3221750		LOCKWASHER	4
10A		6156073		WASHER	4
11		510=10		LOCKNUT ADAPTOR	8
12		368679		ADAPTOR HEADLIGHT	2
13		26=J018		SCREW ADAPTOR	8
14		3220852		SCREW DOOR LOCK	4
15		LTE=10		LOCKWASHER	4
16		3224425		LOCK DOOR RH	1
16A		3224429	+	PACKER	1
17		3236080		DOOR LH INC 1=16 21,22,	
17				42,51,53,54,58,63,62,	
17				67 & 61	1
18			B	GLASS PATTERN SEE B2	
19		3223807		MOULDING QUARTER WINDOW	2
20		3223813		STRIP FILLER	2
21		3220881		SCREW DOOR HANDLE	2
22		3232358		HANDLE DOOR RH	1
23		3223806		MOULDING ROOF WINDOW	1
24		3223812		STRIP FILLER	1
25			D	GLASS PATTERN SEE B2	
26		3223808		MOULDING FRONT WINDOW	1
27		3223814		STRIP FILLER	1
28			C	GLASS PATTERN SEE B2	
29		3223809		MOULDING LOWER WINDOW	1
30			B	GLASS PATTERN SEE B2	
31		3223815		STRIP FILLER	1
32		3224813		STRIP SEALING	1
33		3226959		PANEL LOWER QUARTER RH	1
34		10=532		BOLT CAB TO COCKPIT	2
34A		6249029		WASHER	2
34B		3221750	+	LOCKWASHER	2
35		180=406		SCREW RETAINER	10
36		3227461		RETAINER SEALING STRIP	2
37		3227460		STRIP SEALING	2
38		180=04		LOCKNUT DOOR STRIKE	4
39		3226424		COCKPEAK DOOR STRIKE	2
40		9455?6		STRIKE DOOR LOCK	2
41		2C=412		BOLT LOCK STRIKE	4
42				UNIT	
43		3226496		PANEL LOWER QUARTER RH	1
44		10=412		BOLT PANEL TO COCKPIT	8
44A		370=1		LOCKNUT	8
45		180=05		LOCKNUT LOWER HINGE	4
46		10=410		BOLT PANEL TO CAB	4
46A		AE=04		LOCKWASHER	4
47		86=516		SCREW LOWER HINGE	4
48		368667		SEAL DOOR FRONT	2
49		3292483		STRIP SEALING	2
50		3292462		HANDLE SLIDING GLASS	4
51		368468		SEAL DOOR BOTTOM	2
52		3236561		WINDOW UNIT INC 44,50 A	
52				63=66	2
52A		J06=406	+	SCREW WINDOW UNIT	32
53		3233093		MOULDING DOOR WINDOW	2
54		3232690		STRIP FILLER	2
55		3220852		SCREW DOOR LOCK	4
55A		LTE=10		LOCKWASHER	4
56			B	GLASS PATTERN SEE B2	
57		3224425		LOCK DOOR RH	1
58		3216358		HANDLE DOOR RH	1
59		3220881		SCREW DOOR HANDLE	2
60		3236075		DOOR RH INC 48,51,54=57	
				67 & 68	1

(Continued)

CAB ASSEMBLY (Continued)

ITEM	PART		DESCRIPTION	QTY.
61	3227351		LATCH ASSY DOOR	2
62	3220551		SCREW DOOR LATCH	8
62A	173-10		LOCKWASHER	6
63	3292456		LOCK SLIDING GLASS	4
64	3292460		RUBBER STOP	8
65	3292457		BRACKET WINDOW FRAME	2
65A	3292458		SCREW BRACKET TO FRAME	4
66		*	GLASS PATTERN SEL 62	
67	3226563		SEAL DOOR REAR	2
68	568668		SEAL DOOR TOP	2
69	3224064		HINGE LOWER INC 71	2
70	669423		WASHER DOOR HINGE	4
71	568700		BUSHING DOOR HINGE	6
72	3224597		PANEL REAR	1
73	10-616		BOLT PANEL TO COCKPIT/CAB	7
73A	619023	*	WASHER	7
74	170-3		LOCKNUT	7
75	3237000		PLATE	2
76	616776		WASHER	2
77	3220859		NUT	2
78	3233107		STRIKE ASSY LATCH RH	1
78A	3225148	+	STRIKE ASSY LATCH LH	1
79	3221865		SCREW BUMPER	2
80	3215446		BUMPER RUBBER	2
81	20-416		BOLT STRIKE TO CAB	4
81A	48-04	+	LOCKWASHER	4
81B	619010	+	WASHER	4
82	3227458	+	STRIP SEALING	2
82A	3227462		RETAINER SEALING STRIP	2
83	3240116	+	DECAL LEVER MOVEMENT	1
84			KIT GLASS PATTERN INC + 18 25 28 30 56 & 46	1

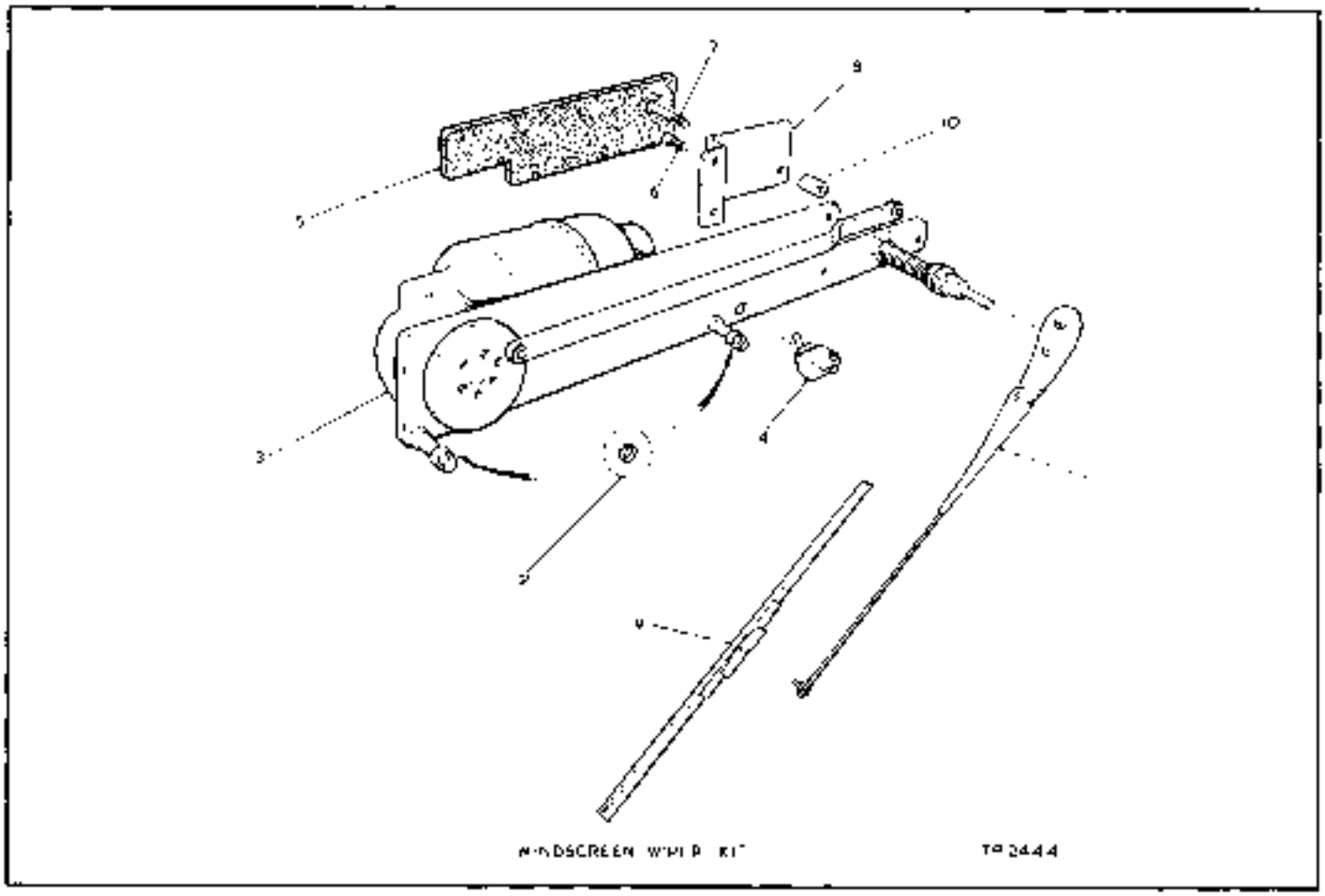

ITEM	PART	DESCRIPTION	QTY	ITEM	PART	DESCRIPTION	QTY
6	PL 3224476	WIPER KIT FRONT 24V		4	3204336	SWITCH TOGGLE	1
		INC 1-4,6-11	1	5	3224555	STRIP RUBBER REAR	1
	PL 3224477	WIPER KIT REAR 24V		6	666-1006	SCREW COVER PLATE	2
		INC 1-10	1	7	666-1010	SCREW COVER PLATE	1
1	3223817	WIPER ARM FRONT	1	8	3224925	PLATE COVER	1
1A	3223818	WIPER ARM REAR	1	9	3213498	BLADE WIPER	1
2	41-34	LOCKWASHER BOLT TO CAB	2	10	3224524	SPACER COVER PLATE	1
3	3225032	MOTOR ASSY 24V	1	11	3221427	* GROMMET WIRING FRONT	1

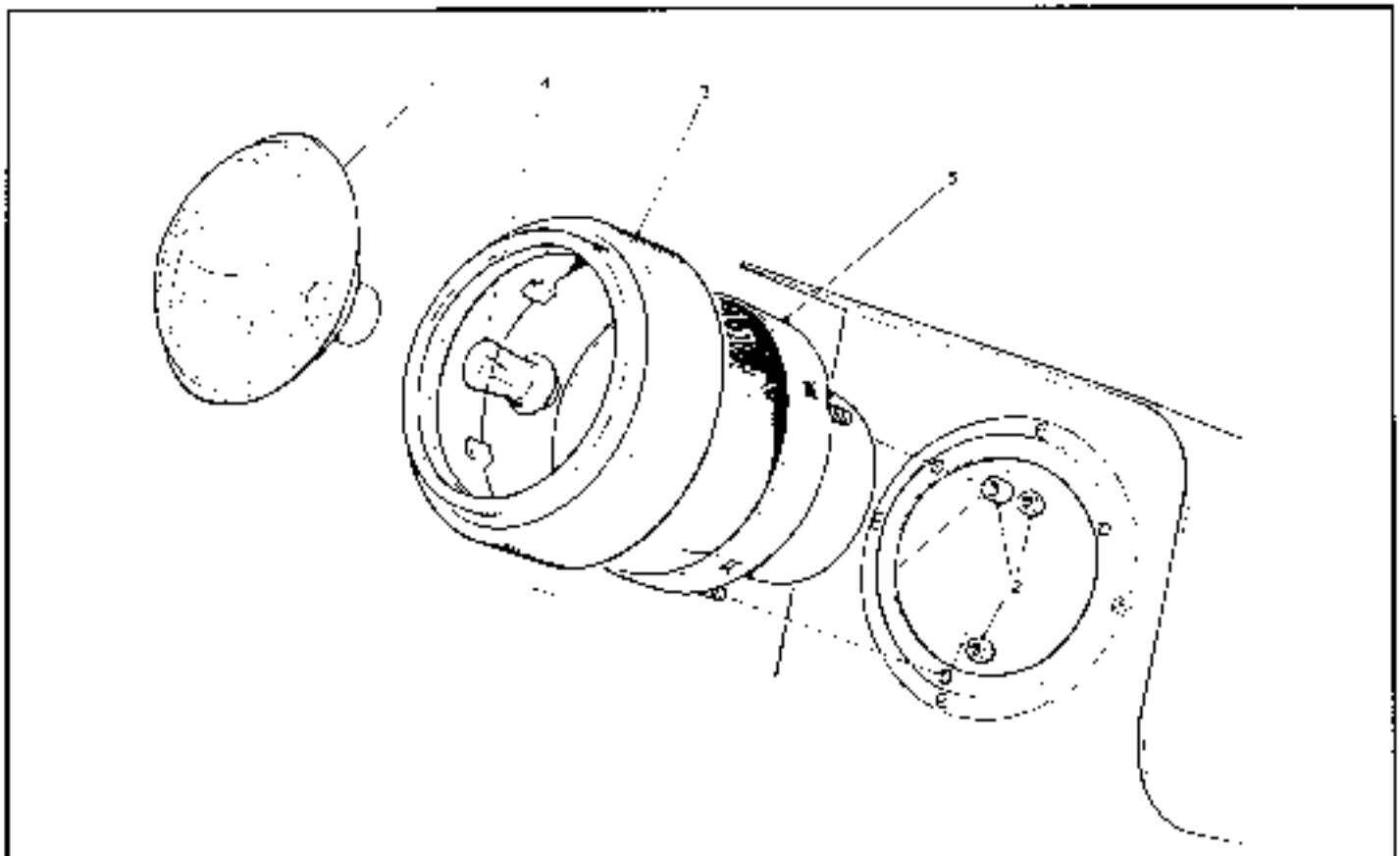

CAB LIGHT KIT

TF 2440

ITEM	PART	DESCRIPTION	QTY	ITEM	PART	DESCRIPTION	QTY
4	Pr 3224911	CAB LIGHT KIT INC 1-5	1	2H	664419	WASHER	4
1	3224356	LAMP ASSY INC 3 & 5	2	3	3290414	RETAINER	2
2	500-10	LOCANUT LAMP TO CAB	6	4	3224545	BULB 24V	2
2A	3225666	SPACER	4	5	3290413	LIGHT UNIT	2

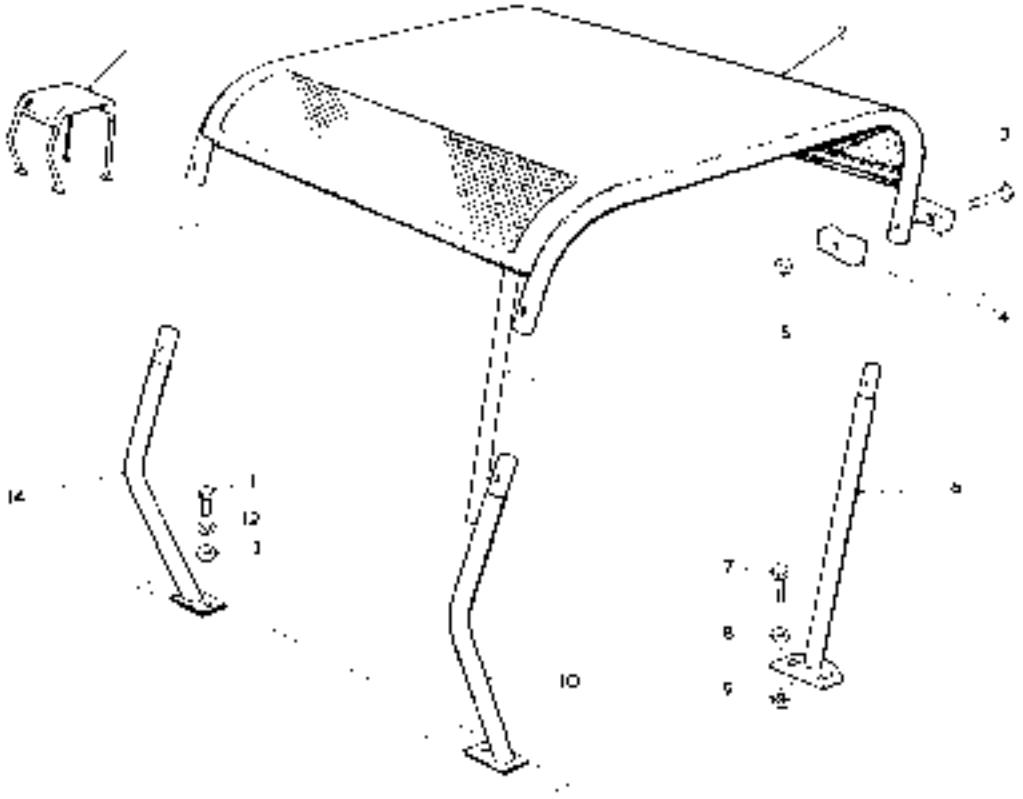

CANOPY KIT

TP 3'19

ITEM	PART	DESCRIPTION	QTY.	ITEM	PART	DESCRIPTION	QTY.
1	PL 3285383	CANOPY KIT INC 1,7-9, 11-13	1	7	20-616	BOLT REAR POST ATTACHING	4
1	3232484	CANOPY ASSY INC 2-6,10&14	1	8	619025	WASHER	4
2	3232531	ROOF ASSEMBLY	1	9	150-06	LOCKNUT	4
3	20-644	BOLT ROOF ATTACHING	4	10	1232533	POST ASSY FRONT R H	1
4	3225168	SADDLE	8	11	16-614	BOLT FRONT POST ATTACHING	2
5	180-06	LOCKNUT	4	12	48-06	LOCKWASHER	2
6	3232532	POST ASSY REAR	1	13	619025	WASHER	2
				14	3232534	POST ASSY FRONT RH	1

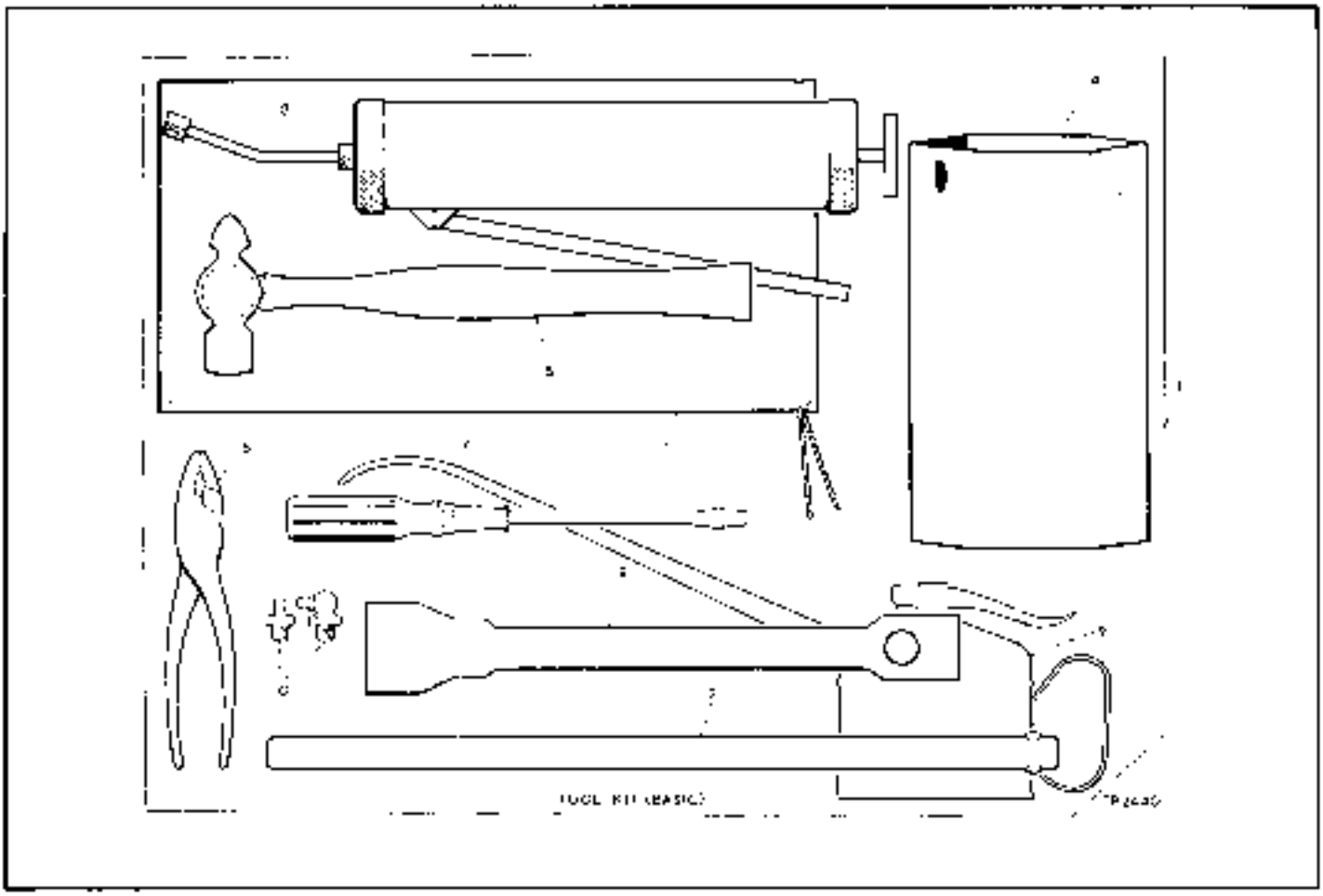

ITEM	PART	DESCRIPTION	QTY.	ITEM	PART	DESCRIPTION	QTY.
1	PL 3226185	TOOL KIT INC 2-11	1	7	552167	SCREWDRIVER	1
2	553412	WRENCH WHEEL	1	8	516597	GREASE GUN	1
3	552164	HANDLE WHEEL WRENCH	1	9A	3234383	EXTENSION GREASER	1
4	541908	WRENCH HUB BEARING	1	9	3201709	OIL CAN	1
5	552165	HAMMER	1	10	1044-2	FITTING GREASE	6
6	552166	PLIERS	1	11	552131	BAG TUBE	1

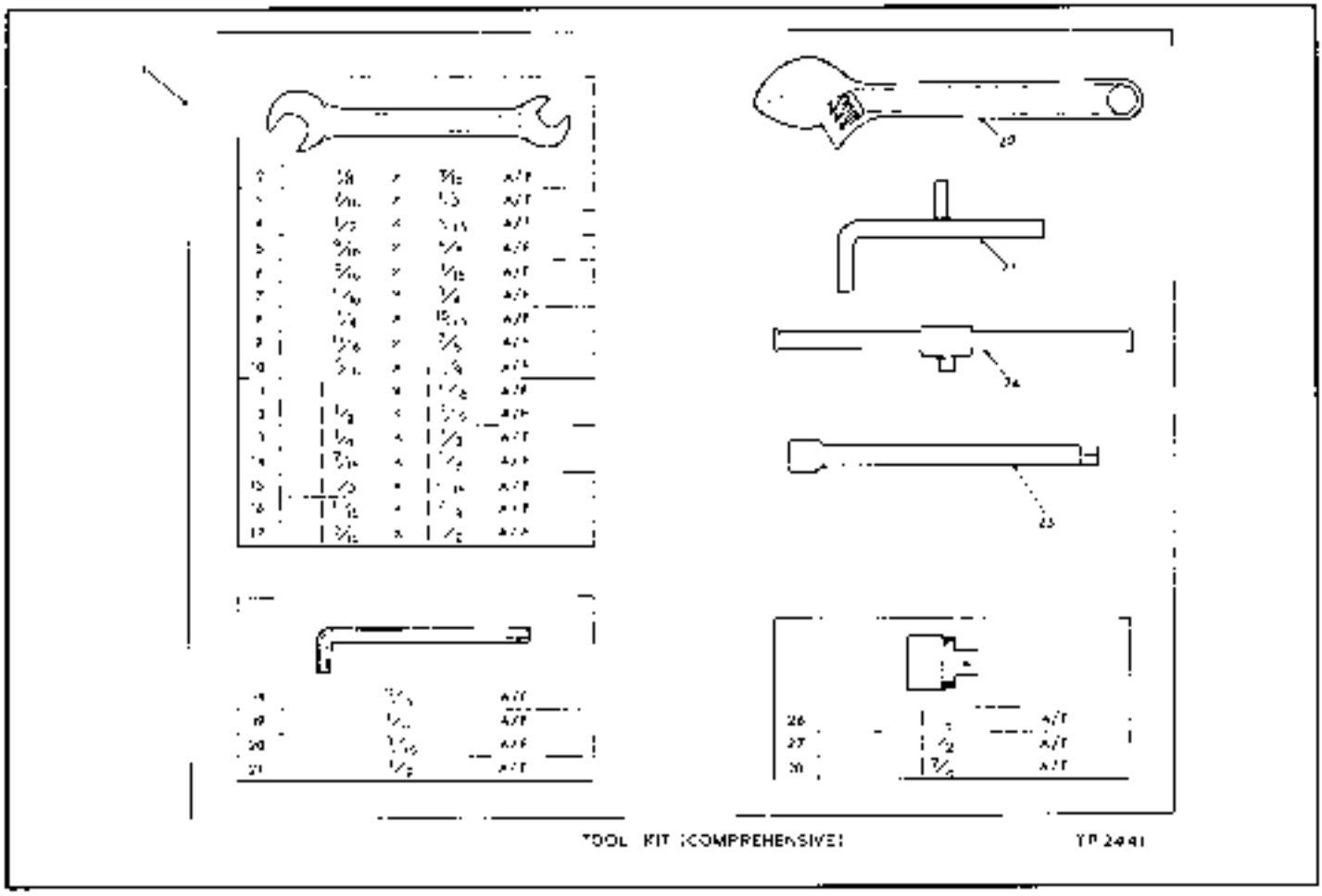

TOOL KIT (COMPREHENSIVE) TP 2441

ITEM	PART	DESCRIPTION	QTY.	ITEM	PART	DESCRIPTION	QTY.
1	PL 3285362	TOOL KIT INC 2-7.9428	1	16	3221786	SPANNER 1.6875 X 1.875 AF	1
2	3226040	SPANNER .375 X .4375 AF	1	17	3221784	SPANNER 1.3125 X 1.500 AF	1
3	3221777	SPANNER .4375 X .500 AF	1	18	3221991	WRENCH HEX .1875 AF	1
4	3221778	SPANNER .500 X .5625 AF	1	19	3225945	WRENCH HEX .250 AF	1
5	3221779	SPANNER .5625 X .625 AF	1	20	3225946	WRENCH HEX .3125 AF	1
6	3221786	SPANNER .5625 X .6875 AF	1	21	3221992	WRENCH HEX .375 AF	1
7	3225946	SPANNER .6875 X .750 AF	1	22	3201707	SPANNER ADJUSTABLE 12 IN	1
8		UNIT		23	3201660	KEY AXLE DRAIN PLUG	1
9	3221789	SPANNER .9375 X .875 AF	1	24	3226041	BAR SETTING TEE	1
10	3226758	SPANNER .9375 X 1.125 AF	1	25	3226045	BAR EXTENSION	1
11	3221790	SPANNER 1.000 X 1.0625 AF	1	26		UNIT	
12	3221793	SPANNER 1.125 X 1.3125 AF	1	27	3226043	SOCKET 1.500 AF	1
13	3221791	SPANNER 1.250 X 1.375 AF	1	27A	3232354	SOCKET 1.0125 AF	1
14	3221792	SPANNER 1.4375 X 1.625 AF	1	28	3232992	SOCKET 1.875 AF	1
15	3221785	SPANNER 1.500 X 1.6875 AF	1				

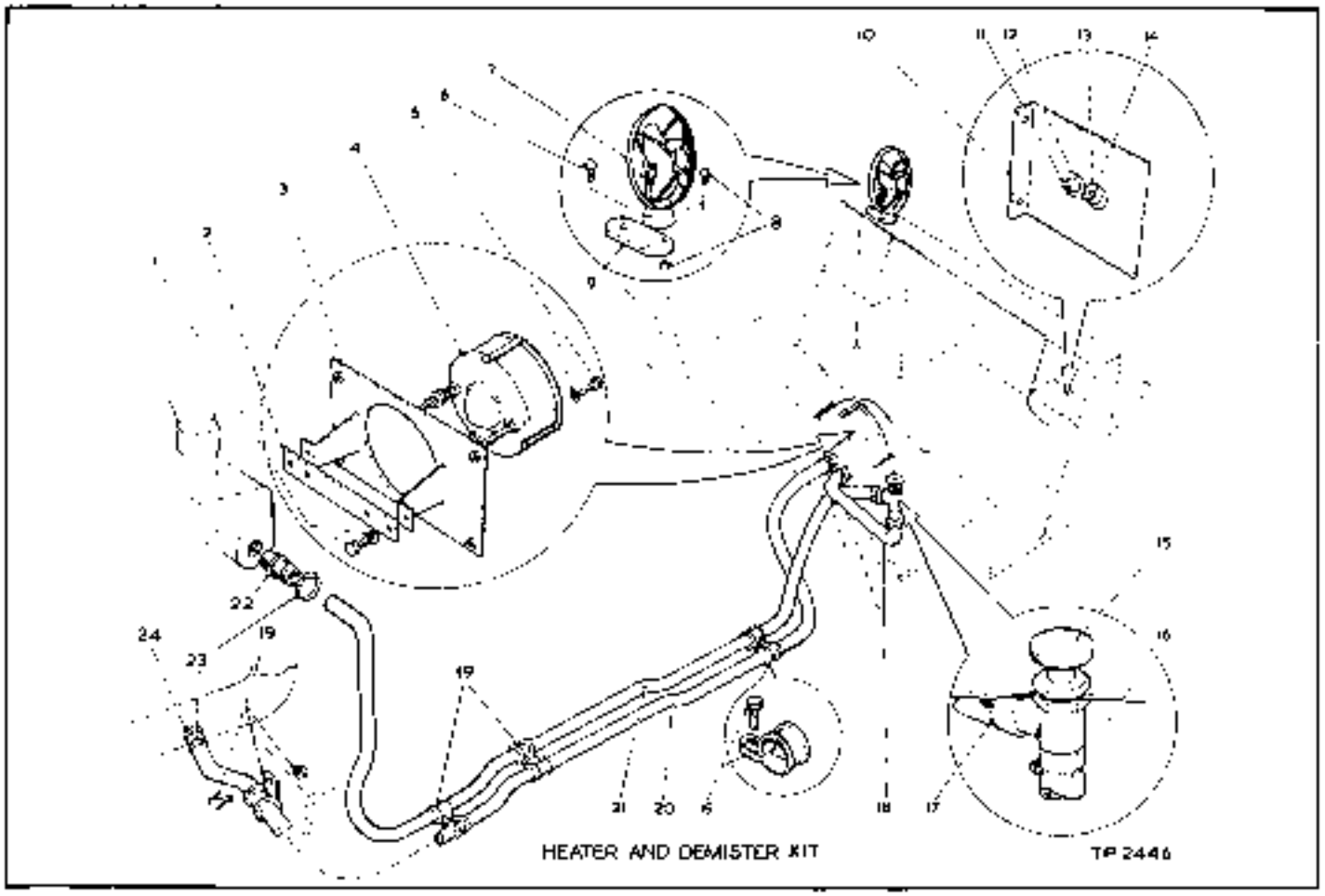

ITEM	PART	DESCRIPTION	QTY.	ITEM	PART	DESCRIPTION	QTY.
6	PL 3226590	CAB HEATER KIT INC 1-5		11	3204336	SWITCH HEATER	1
		10-12,15-24	1	12	3225254	NAMEPLATE HEATER SWITCH	1
8	PL 3225213	CAB DEMISTER KIT INC 6-10		13	3225255	NAMEPLATE DEMISTER SWITCH	1
		13 & 14	1	14	3204336	SWITCH DEMISTER	1
1	10-614	BOLT STRAP TO RIG BRACKET	2	15	3224669	STOPCOCK	1
1A	3221750	LOCKWASHER	2	16	3220865	CLAMP HOSE	2
2	3224654	STRAP HEATER MOUNTING	1	17	3220865	CLAMP HOSE	2
3	3224651	BRACKET HEATER MOUNTING	1	18	3228573	HOSE STOPCOCK TO HEATER	1
4	3224736	HEATER ASSEMBLY	1	19	300-49	CLIP HOSE	1
5	10-414	BOLT BRACKET TO COLUMPIT	4	19A	316-46	CLIP HOSE	2
5A	3221745	LOCKWASHER	4	20	3225217	HOSE RAD PIPE TO HEATER	1
6	10-634	BOLT BRACKET TO CAB	1	21	3225630	HOSE STOPCOCK TO ENGINE	1
7	3225208	DEMISTER FAN ASSEMBLY	1	22	3211390	ADAPTER HOSE TO ENGINE	1
8	3220851	BOLT FAN TO BRACKET	2	22A	3221357	+ WASHER	1
8A	3220855	LOCKNUT	2	23	3220865	CLAMP HOSE	2
9	3225201	BRACKET FAN MOUNTING	1	24	3211390	ADAPTER HOSE TO RAD PIPE	1
10	3233786	PANEL INSTRUMENT A B	1	24A	3221357	+ WASHER	1

NUMERICAL INDEX

Part No.	Page No.
1C-410	62E-003
1C-412	62L-001
1C-414	72F-003
1C-416	58E-001
1C-416	50E-003
1C-510	10E-003
1C-510	36E-021
1C-510	48E-041
1C-514	16F-001
1C-516	16E-001
1C-612	25E-021
1C-612	55K-041
1C-614	65E-004
1C-614	72E-001
1C-616	10E-001
1C-616	24E-003
1C-616	40C-004
1C-616	40E-021
1C-616	40E-041
1C-616	56C-001
1C-616	62E-003
1C-618	34E-001
1C-620	19L-001
1C-620	72E-001
1C-620	21E-003
1C-620	21L-005
1C-620	22E-001
1C-620	44C-001
1C-620	40E-041
1C-620	62E-001
1C-624	21E-005
1C-626	40E-001
1C-632	36E-021
1C-632	62E-001
1C-634	72L-001
1C-720	16E-001
1C-720	34E-021
1C-720	40E-001
1C-720	44E-001
1C-720	46E-003
1C-722	42E-041
1C-724	21E-001
1C-724	22E-001
1C-728	36L-021
1C-744	36E-021
1C-816	10E-021
1C-820	10L-041
1C-820	16E-043
1C-820	40L-001
1C-824	22L-001
1C-826	21E-001
1C-828	44L-021
1C-828	46E-021
1C-908	44E-001
1C-908	46E-001
1C-916	44E-081
1C-920	36L-003
1C-926	16E-003
1C-1032	46E-021
2C-408	19L-043
2C-410	04F-003
2C-412	10E-021
2C-412	10L-043
2C-412	62E-001
2C-414	48E-001
2C-414	48F-061
2C-414	56E-001
2C-416	05E-001
2C-416	02L-001
2C-510	02E-021
2C-512	10E-041
2C-512	52C-001
2C-520	48E-001
2C-520	52E-041
2C-528	52C-003
2C-510	54E-001
2C-612	36L-001
2C-612	21E-021
2C-612	30E-021
2C-612	36E-003
2C-614	21F-021
2C-616	04E-001
2C-616	08E-001

Part No.	Page No.
2C-616	10E-021
2C-616	08E-001
2C-620	06L-001
2C-620	10E-001
2C-620	24E-001
2C-620	14L-001
2C-620	56E-001
2C-624	10E-001
2C-624	21E-001
2C-624	22E-003
2C-628	24C-001
2C-632	10E-003
2C-632	40E-001
2C-644	52C-003
2C-644	68E-001
2C-714	48E-041
2C-788	16L-041
2C-788	21E-001
2C-820	02E-021
2C-820	12L-001
2C-820	22E-003
2C-820	30E-001
2C-824	14E-001
2C-824	10E-041
2C-824	32E-001
2C-828	06E-001
2C-828	21E-001
2C-828	21E-003
2C-828	21E-021
2C-836	28E-001
2C-840	21L-021
2C-840	14E-001
2C-844	02E-021
2C-864	12L-001
2C-864	16E-001
2C-864	20E-041
2C-864	32E-001
2C-876	20E-021
2C-876	30E-001
2C-890	20E-021
2C-880	32F-003
2C-1024	06E-001
2C-1024	12L-001
2C-1024	21E-021
2C-1024	30E-001
2C-1032	06L-001
2C-12144	12F-001
3C-614	44E-021
3C-614	40F-021
3C-820	20E-031
4C-514	30E-021
4C-610	20E-021
4C-620	20E-041
4C-724	40L-001
4C-820	44E-001
4C-820	40E-001
5C-605	14E-001
6C-605	14E-003
18C-1032	06E-001
10C-1240	00L-001
23L-520	46E-003
23C-1640	42L-041
23C-1276	36F-003
24C-448	06E-001
24C-664	52L-041
24C-748	20F-041
24C-1332	12E-001
24C-1032	21E-021
24C-1056	20E-003
24C-1252	36E-003
24C-1272	12L-001
24C-1672	12E-001
24C-1672	46E-001
24C-20120	12L-001
24C-20128	44E-001
24C-20168	12E-001
1D-04	16E-041
2D-07	36E-021
2D-08	16E-001
7D-05	40E-001
5D-04	08E-001
8D-05	08E-001
8D-05	16E-021

Part No.	Page No.
8D-05	34E-001
8D-06	16E-021
8D-06	40F-001
8D-06	42E-001
8D-06	42L-041
8D-06	42E-061
8D-06	52E-041
8D-07	20L-021
8D-07	40E-001
8D-08	02E-021
8D-06	14L-031
8D-09	32E-001
8D-08	42C-021
8D-06	47C-041
8D-08	42E-061
12D-06	50E-001
14D-10	56E-001
14D-10	58E-001
17D-1	56L-001
17D-1	62E-001
17D-2	56E-001
17D-3	62L-003
18D-04	04E-001
18D-04	08E-001
18D-04	10E-021
18D-04	46E-001
15D-04	40E-001
18D-04	56E-001
15D-04	62E-001
18D-05	34E-001
18D-05	48E-001
18D-05	52E-001
18D-05	52E-041
18D-05	62E-001
18D-06	04E-001
18D-06	06L-001
18D-06	08E-001
18D-06	10E-001
18D-06	21L-021
18D-06	22F-001
18D-06	24E-001
18D-06	20L-001
18D-06	34E-001
18D-06	48E-001
18D-06	52L-001
18D-06	56E-001
18D-06	68E-001
18D-07	16F-041
18D-07	20E-041
18D-07	21E-001
18D-08	02F-021
18D-08	06E-001
18D-08	10E-021
18D-08	10E-041
18D-08	12E-001
18D-08	20E-021
18D-08	21E-001
15D-06	21E-003
14D-06	21F-021
18D-08	28E-001
18D-06	30E-001
18D-08	32E-001
18D-08	34E-003
16D-06	56E-001
14D-10	08E-001
18D-10	06E-001
16D-10	20E-021
16D-10	21E-021
12D-12	00E-001
10D-12	12L-001
18D-18	40E-021
18D-26	12L-001
43D-06	44F-041
47D-05	16E-021
50D-10	50L-001
50D-10	60L-001
51D-10	62E-001
64D-09	44E-001
64D-09	46L-001
66D-05	06E-001
66D-05	34C-001
69D-06	32C-043
66D-06	12E-001

Part No.	Page No.
56D-08	20E-041
66D-12	25L-021
67D-05	30L-041
66D-12	36E-003
69D-16	12L-001
68D-18	46F-001
68D-20	12E-001
68D-20	44L-001
3E-09	29F-021
3E-05	44E-041
3E-09	44L-001
4E-04	30E-041
4E-04	50C-001
4E-04	62F-001
4E-04	67C-003
4E-04	64E-001
4E-05	00L-001
4E-05	02E-021
4E-05	04E-001
4E-05	36L-021
4E-05	06E-001
4E-06	10E-001
4E-06	18F-021
4E-06	21E-001
4E-06	21E-003
4E-06	21L-005
4E-06	21E-021
4E-06	22L-001
4E-06	24F-031
4E-06	29E-021
4E-06	30L-001
4E-06	30E-021
4E-06	36E-001
4E-06	36E-021
4E-06	40E-004
4E-06	40E-021
4E-06	42C-001
4E-06	44L-021
4E-06	46E-021
4E-06	48E-041
4E-06	56E-001
4E-06	60E-001
4E-07	21L-001
4E-07	22E-003
4E-07	28E-021
4E-07	36L-021
4E-07	40E-003
4E-07	42E-001
4E-07	40L-041
4E-08	50E-004
4E-08	02E-021
4E-08	04L-041
4E-08	10E-001
4E-08	16L-023
4E-05	10E-041
4E-08	12E-001
4E-08	16L-003
4E-08	16E-043
4E-08	18E-001
4E-08	21E-003
4E-08	21E-003
4E-08	22E-001
4E-08	30E-001
4E-08	32E-001
4E-08	42E-021
4E-08	42F-061
4E-08	44E-001
4E-08	44L-021
4E-08	46F-001
4E-06	46E-021
4E-09	30C-003
4E-10	60F-001
4E-10	12E-001
4E-10	21E-021
4E-10	30E-001
4E-10	42E-061
4E-10	40E-021
4E-12	12E-001
4E-12	36E-003
4E-12	20E-021
5E-05	10E-041
5E-05	44C-041
6E-05	44E-041

NUMERICAL INDEX

Part No.	Page No.
7E-0A	40E-001
12F-8	5GE-001
12E-06	5BL-001
12L-10	30E-021
12E-10	30E-041
12E-10	5BE-001
13E-10	5BE-001
17E-10	40L-1101
17L-10	5GE-001
17E-10	62E-001
17E-10	62L-001
1F-04	08E-001
1F-208	08E-001
1F-312	52E-001
1F-312	52E-041
1F-316	0HE-001
1F-320	52E-041
1F-414	32L-001
1F-414	32E-001
1F-420	10E-041
1F-424	12L-001
1F-624	40E-001
1F-628	34E-021
1F-632	20E-041
1F-636	42E-021
1F-640	20E-041
1F-740	44E-021
1F-748	40E-021
1F-1148	20E-021
1F-1152	20L-001
1F-1252	12E-001
4F-04051	08E-001
4F-06148	52E-001
4F-06127	32E-001
10F-02	48E-041
11F-04	21L-021
11F-12	44E-001
13F-12	46L-001
13F-04	4HE-041
13F-0H	48E-001
13F-12	42E-061
13F-16	36E-1121
13F-16	40E-001
13F-20	40E-001
16F-01	36L-141
16F-02	34E-021
16F-02	36E-003
16F-02	36L-021
16F-08	40E-021
17F-4	48E-001
1HF-5	22E-001
19F-3	06E-001
19F-4	40L-011
19F-5	06E-001
19F-5	48E-001
1W-6	48E-1113
21F-4	48E-001
22F-4	26E-021
25F-4	2HE-021
25F-4	48E-001
26F-4	48L-001
29F-4	10F-1121
29F-5	22E-001
31F-4	48E-001
31F-2	30F-021
31F-5	21E-001
34F-6	24E-001
36F-2	30E-021
36F-4	48E-001
36F-5	22E-001
36F-5	24E-001
36F-4	06E-001
3N-410	40L-001
42F-8	06E-001
42F-9	48E-001
51F-2	30F-1101
72F-2	02E-001
74F-4	48L-001
81F-3	22L-001
83F-4	48E-001
83F-6	24E-001
87F-4	42F-001
89F-8	24F-001
92F-3	18E-001
91F-8	18E-021
91F-6	24E-001
91F-6	28E-021
91F-7	38E-1101
91H-0	26E-001
91F-H	36E-1101
91F-10	24F-001
26-1008	62E-001
24-1010	36E-021
26-1010	40F-1141
46-1012	56E-001
36-60H	50E-001
36-608	5HE-001
06-510	62E-001
8G-51H	10L-041
15G-41B	52F-041
4HH-406	62E-001
16G-40H	62E-001
336-514	16E-021
426-1008	30E-041
456-414	14E-001
436-418	14E-005
650-406	14E-001
656-406	14E-005
656-406	28E-021
6GH-1006	64E-001
666-1010	64E-001
736-726	26E-021
1H-418	36E-043
6H-4	06E-001
6H-36	36E-021
10H-2	TCE-001
10H-3	32L-001
10H-23	32E-001
10H-25	20L-001
10H-25	28E-1141
10H-25	30E-001
10H-25	42E-001
10H-25	42L-021
10H-25	42E-041
10H-25	42L-061
10H-36	42E-1101
10H-35	42E-021
10H-35	42L-041
10H-35	42E-1161
11H-15	32E-001
11H-15	20L-041
12H-15	20E-021
12H-15	25E-041
12H-15	34L-001
23H-504	44E-061
28H-16150	20E-021
28H-16200	20L-041
28H-16310	20E-1101
28H-18200	40E-001
30H-46	20L-021
30H-49	72E-001
41H-42	30E-021
31H-46	72E-001
2J-4200	03E-001
2J-4300	24L-021
10J-08	16E-001
10J-08	30E-023
10J-09	2HL-021
10J-12	16F-001
10J-12	30E-021
10J-12	18L-101
10J-12	44E-041
10J-12	46E-041
10J-15	30L-001
5K-508	46E-001
5K-412	28E-021
5K-611	24F-001
5K-624	22F-001
10K-4	45E-001
15K-4	48L-001
15K-6	24E-001
17K-4	24E-001
17K-8	24E-001
17K-10	24E-001
1HK-6	24L-001
18K-8	24E-001
21K-4	68E-001
24K-2	22L-001
24K-7	38E-101
25K-3	10E-001
25A-20012	50F-041
25K-20012	38E-021
25A-20024	26L-001
25K-20024	36E-001
25A-30012	30E-021
25K-30016	16E-001
25A-30016	36F-001
25K-30016	18E-005
25K-30016	40L-021
25A-30020	38E-10.
25K-30022	36L-101
25K-30026	36E-001
25K-30026	18E-005
25K-30026	36E-003
25K-30030	16L-001
25A-30036	18F-001
25K-30036	28E-021
25K-40026	36E-021
25K-40028	18L-001
25K-40028	18F-005
25K-40104	16E-001
25K-40106	20L-041
25K-40106	38L-023
25K-40106	40E-021
25K-40108	28L-021
25K-40112	18L-001
25K-40112	16L-005
25K-40112	20L-021
25K-40112	32E-021
25K-40112	40E-001
25K-40116	16L-001
25K-40124	16E-041
25K-40128	16E-001
25K-40106	20E-041
25K-40308	42L-001
25K-40400	38E-1103
25K-40408	20E-021
25K-40410	38F-001
25K-40426	06E-001
25K-40426	20L-021
25K-40512	40E-021
25K-40626	40E-001
25K-40624	21E-021
25K-40808	22E-021
25K-60116	36L-065
25K-60116	42F-001
25K-60120	20E-001
25K-60516	20E-001
40K-02	16E-021
40K-02	24E-001
40K-02	2HL-001
40K-02	48E-1101
40K-02	40E-021
40K-04	32E-021
40K-04	46E-061
40K-06	24L-001
40K-06	20L-001
40K-06	06E-001
40K-16	21E-021
100941	44F-021
100941	48E-021
101196	64E-021
10119a	46L-021
101206	44E-021
101210	44E-021
101210	46L-021
101211	44E-021
101211	46L-021
101213	48F-1121
101213	48E-021
101214	44L-021
101214	44E-021
101215	46E-021
101217	44E-021
101217	46E-021
101216	44E-021
101217	44L-021
101220	44E-021
101222	44E-021
101222	46L-021
101223	44E-021
101223	46E-021
101224	44E-021
101224	46E-021
102745	3GE-021
102745	40L-001
103293	44E-061
103293	46E-061
103522	44L-001
103522	46E-001
104166	46L-021
104412	44F-001
104412	46E-001
104700	64L-021
106351	44E-041
106351	46E-041
106353	44L-041
106355	46E-041
106357	44E-041
106357	46F-041
106359	44E-041
106359	46E-041
106447	44F-001
106457	46E-001
106547	44L-001
106547	46F-001
106735	46E-001
106990	44E-001
106990	46L-001
107483	44E-021
107483	46E-021
108871	44F-021
108871	46E-021
110395	44E-001
110394	46E-021
110523	44E-021
110523	46E-021
110554	44F-001
110554	46E-001
110605	46L-001
110694	44E-001
110694	46E-001
111656	44E-001
111656	46E-001
111658	46E-021
111658	46L-021
111721	44E-021
111721	46E-021
111776	44L-001
112278	46E-1101
112282	46E-021
112295	44F-001
112295	46E-001
112412	44E-001
112412	46E-001
112587	44E-001
112587	46E-001
113269	44F-1101
113269	46E-001
113492	44E-001
113252	46F-001
114351	46E-021
114352	46E-021
114353	46E-021
114584	44E-041
114584	47L-041
116682	46E-021
117105	44E-021
117225	44L-001
117225	46E-001
117448	44E-001
117448	46F-001
117505	44E-041
117505	46E-041
117693	44L-021
118476	44E-021
118476	46E-021
118477	46F-021
119780	44E-001
11c766	46E-001
115916	44E-001

NUMERICAL INDEX

Part No.	Page No.
118916	46E-001
118959	44E-021
119021	44L-041
119021	46E-041
119152	46E-021
119211	44E-001
119211	46E-001
119213	44E-001
119213	44L-001
119214	44E-001
119214	46E-001
119469	44L-001
119469	46E-001
119651	44E-001
119675	44L-001
119689	44E-001
119689	46E-001
120216	44L-001
120218	46E-001
120240	46E-021
121062	44L-001
121062	46E-001
121214	44E-001
121214	46E-001
121236	46E-021
121237	44E-021
121241	44L-021
121241	46E-021
121242	44E-021
121243	44L-021
121245	46E-021
121773	44E-001
121774	46E-001
121776	44E-001
121776	44E-061
121776	46E-061
121776	46E-061
121777	44E-061
121777	46E-061
121778	44E-061
121778	46E-061
121780	44L-001
121780	46E-001
121781	44L-001
121781	46E-001
121782	44E-001
121782	44L-001
121974	44E-001
121974	46E-001
190929	44E-001
190990	46E-001
201951	36E-021
201951	40E-001
205928	42E-021
206864	40E-001
207647	18E-021
207647	40E-001
209514	40E-001
209560	36E-003
211433	36E-021
211433	40E-001
211433	42E-061
214116	34L-021
214165	22L-021
214295	26E-023
214396	40L-001
214730	40E-001
214522	40E-003
214924	40E-001
214925	46E-001
214928	40E-001
214929	40L-001
214930	40E-001
214931	46E-001
214932	40E-001
214933	40E-001
214934	40E-001
214935	36E-021
214935	40E-001
214936	40E-001
214937	40E-001
214938	40E-001
214939	40L-003
214939	40E-001
214941	40E-003
214943	40E-021
214945	40E-011
214946	40E-021
214946	40E-021
214949	40E-021
214951	40E-001
214953	40E-001
214954	40E-001
214955	40E-001
214956	40E-001
214958	40E-001
214959	40E-001
214961	40L-001
214965	36E-021
214965	40E-001
214966	40L-001
215160	36E-003
215165	36L-001
215190	36E-003
215190	36E-041
215190	36E-061
215190	36E-061
215264	40E-003
215634	36E-003
215757	36E-021
215757	42E-081
215505	40E-003
217565	42L-021
217566	42E-081
217567	42L-061
217566	42E-061
217657	36E-101
217926	36E-101
217929	36E-101
218504	42E-081
219142	34L-101
219370	36E-021
219375	36E-021
219375	36L-021
219413	12E-001
220079	36E-001
220983	40E-021
221653	40E-001
222036	40L-003
222063	36L-021
222079	46E-001
222179	36E-003
222179	36L-003
222179	42E-081
222213	42E-081
222312	40E-021
222318	40E-021
222960	36L-001
222963	36E-003
223349	34E-001
223649	40L-031
223874	36E-003
223877	34E-001
223880	18E-021
223901	36E-021
223901	40E-001
224304	40E-001
224023	44E-001
224023	46E-001
224026	36E-021
224026	46E-001
224039	40L-001
224065	36E-003
224003	36L-001
224084	36E-021
224106	36L-001
224315	36E-101
224368	46E-021
224369	40E-021
224771	36E-003
224771	36E-041
224771	36L-001
224771	36E-081
224772	36E-003
224772	36L-041
224772	36E-061
224772	36E-061
224774	36L-003
224774	36E-041
224774	36E-061
224774	36L-021
224795	40E-003
224803	34L-001
225603	36L-021
225623	36E-005
225623	42E-061
225655	36E-101
226862	36E-021
227265	40E-001
227672	36E-101
227674	36E-101
228114	36E-003
228114	36E-041
228114	36E-061
228214	36L-001
228931	36E-101
229729	36E-101
230529	42E-011
230535	42E-061
230643	42E-021
230677	36L-001
230822	36E-005
230829	36E-001
230850	36E-003
230850	36E-041
230850	36E-061
230850	36L-061
230851	36E-021
230857	36E-003
230857	36E-041
230857	36E-061
230857	36L-061
230863	36E-001
230865	44E-061
230866	34L-001
230868	36E-001
230869	36E-001
230900	36E-021
230906	36E-001
230911	36E-081
230918	36L-003
230921	36E-003
230952	36E-003
230954	35L-003
230968	36E-001
230984	36E-003
231048	36L-021
231056	36E-021
231054	34E-021
231065	36E-061
231090	36E-041
231097	36L-031
231146	36E-101
231154	36E-101
231154	34L-101
231161	36E-021
231164	36E-101
231166	36E-021
231164	36E-101
231176	36E-001
231192	35E-021
231193	36E-001
231239	34L-003
231241	36E-001
231244	36E-001
231252	34L-001
231390	36E-021
231405	36E-003
231406	35E-003
231427	36E-001
231606	36E-023
231612	31E-021
231613	36E-021
231619	36E-023
231620	36L-023
231621	36E-021
231623	36E-003
231624	36L-003
231626	36E-061
231626	36E-021
231627	34L-021
231646	36E-003
231687	36E-003
231749	34L-003
231775	36E-004
231776	36E-001
231777	34L-001
231779	36E-004
231780	36E-001
231781	34L-021
231782	36E-021
231790	36E-021
231817	36E-003
231818	36E-003
231840	36L-101
231846	34L-001
231849	36E-003
231850	34E-003
231851	36E-003
232076	36E-001
232076	36L-001
232081	16E-001
232088	36E-001
232089	36E-001
232089	36E-003
232147	36E-021
232405	36L-001
232449	36E-081
232450	36E-003
232452	36E-003
232453	36E-001
283172	36E-001
283177	40L-001
356612	24E-001
424506	34E-001
450750	40L-001
507315	48E-011
509440	34E-001
509445	54E-001
509772	34E-001
512791	26E-041
513926	42L-021
513926	42E-041
513928	42E-061
515424	09E-001
518259	52E-041
519331	28E-021
519697	21E-001
520400	26E-041
522617	20E-001
525293	08E-001
525293	21E-021
526451	20E-041
526676	24E-001
529605	54E-001
529606	54L-001
529974	24E-001
531111	54L-001
531112	54E-001
532563	20E-001
532917	20L-041
533139	21E-003
534894	21E-001
540735	16L-021
535706	24E-001
538256	14E-001
540566	54E-001
540103	24L-001
540130	22E-001
541551	48E-041
541706	21E-001
545512	52E-001
545005	52L-001
545006	52E-001
545941	28E-001
547051	14L-001
547051	14L-003
547352	14E-001
547652	14L-003
548074	14E-001
548074	26E-021
548577	20L-021

NUMERICAL INDEX

Part No	Page No.	Part No.	Page No.	Part No.	Page No.	Part No.	Page No.
944717	40E-001	574556	09E-001	664419	08E-001	853526	26E-021
550044	20E-001	577740	14F-011	644419	01L-001	853527	14F-011
550102	10E-041	532818	12E-001	664421	58F-001	856750	42E-001
550411	20F-001	573564	54E-001	664422	02E-021	857729	28F-021
550419	06E-001	574924	21H-021	664442	54L-001	860205	48C-041
551010	08E-001	580274	54E-001	664443	11E-001	860947	26L-021
551190	01K-001	580218	54E-001	664423	08E-001	861741	21F-021
551251	56E-001	580282	04F-041	664423	62E-009	861768	26E-021
551341	54L-001	585530	34E-001	664542	40F-003	871470	26E-021
551444	54F-001	585596	34L-001	664697	56E-003	874000	41L-041
551465	54E-001	585591	34E-001	666846	24E-001	874009	45E-041
551906	13E-021	585863	22E-001	667289	24F-001	874028	46L-041
551906	48E-001	586607	21E-001	667289	24E-001	875766	52L-041
552146	12E-001	586972	36E-003	669846	12E-001	875767	52E-041
552147	42L-001	587414	01E-001	675271	32F-001	882146	46L-041
552181	13F-001	587611	21L-021	675252	45E-021	882157	42F-021
552184	70E-001	588251	31E-001	675252	46L-021	892198	46E-021
552185	70L-001	588292	30L-001	675254	46E-021	882199	40E-041
552186	70F-001	588305	40E-001	675254	40E-021	883734	18E-021
552187	70E-001	591525	20L-021	675254	46E-021	886280	04E-021
552171	70L-001	594917	21L-001	675259	44E-021	886526	04L-021
553412	70E-001	604617	22E-001	675259	40E-021	886527	04E-021
553956	54E-001	610975	22E-001	675260	44E-021	890710	44E-001
554043	21E-041	611750	44F-001	675260	45E-021	888139	44L-001
556060	20E-001	611778	42E-001	675262	44E-021	886851	21E-001
556489	58E-001	616795	34E-001	675262	46F-021	888491	29E-021
556562	48L-021	616794	11E-021	675263	44E-021	888294	18F-001
557057	10E-021	616800	04F-041	675264	40E-021	886297	18E-003
557458	10E-041	616800	21E-021	675265	44E-021	888419	30E-041
557477	10L-041	616809	03E-001	675265	48E-021	889247	50F-041
558179	11E-041	619043	11F-041	675316	12L-001	850888	30E-041
559784	50E-041	619016	34E-021	710945	17E-111	890938	16E-021
560144	12E-111	619018	07E-063	711298	40E-001	899039	16L-021
560344	30E-001	619019	04E-001	713186	40E-001	940015	28E-041
560411	10E-021	619019	10E-041	713418	20L-041	940059	42E-001
560411	14L-063	619021	10C-063	731143	28E-021	940059	42F-011
560589	32E-001	619021	30E-021	731160	36L-001	940090	42E-061
560934	20E-001	619023	18E-021	731160	36E-001	940092	42E-001
560776	46F-011	619023	46L-001	742006	40E-001	940111	28E-021
560790	30E-001	619024	62E-001	742056	40E-001	940229	42E-021
560781	21E-005	619023	62E-005	742241	38F-011	940229	42E-041
560747	21F-021	619023	46L-001	742262	44E-001	940229	42F-061
560989	20E-021	619024	24F-001	742262	40E-001	940250	42E-021
561954	20E-021	619024	34E-001	742263	44E-001	940250	42E-041
560910	20E-021	619024	36F-041	742263	46E-001	940250	42E-061
560710	26E-041	619025	40E-001	743035	40E-001	940251	42E-021
560289	12L-011	619029	06E-001	743434	41E-011	940251	42E-041
560259	30E-001	619029	18E-021	743563	21E-021	940251	42F-061
560276	10E-001	619029	14H-021	763782	16L-001	940604	22E-041
560434	34E-001	619029	21E-001	774024	44E-001	940811	28E-041
560479	34E-001	619029	21E-021	774024	40E-001	941465	16E-001
560481	40L-001	619031	40F-001	774025	44L-001	941467	14L-001
560788	22E-001	623761	05E-101	774025	40E-001	941474	04L-001
560789	20E-021	623762	08E-001	778580	50E-001	941509	42E-021
560789	20E-021	623879	08E-001	781543	21L-001	941509	42E-041
560789	20E-021	625082	10E-001	801192	44E-081	941509	42L-041
560770	26E-041	625082	21L-001	801193	44E-081	941548	20E-041
560770	12L-011	625082	21E-003	801213	44E-081	941740	44L-021
560259	30E-001	626260	48E-001	801214	44E-021	941752	40F-021
560776	10E-001	629092	52L-001	801215	44E-041	941793	46E-021
560479	34E-001	648504	28E-021	801216	44F-081	941794	46L-021
560481	40L-001	652448	50E-001	801946	40E-001	941813	48E-001
560849	12E-001	652441	34F-001	801900	40L-001	941814	42E-041
560849	20E-021	654141	42E-041	801915	44F-081	942734	42F-021
560659	52C-041	654613	36E-001	815260	44E-021	942734	42E-041
560861	42E-001	656672	10E-001	815290	44L-021	942734	42E-041
560868	42E-001	656672	21E-001	815291	44E-021	942735	42F-021
560860	42E-001	656672	22E-001	815292	44E-021	942735	42E-041
560875	42E-001	658018	36F-111	815746	44L-021	942735	42E-041
560700	62E-009	658244	40E-001	815747	44E-021	942749	42E-041	942749	42E-041
560781	111-041	659065	40L-001	820287	40F-041	942744	42E-041
560817	26E-001	661176	40C-021	850756	28E-021	942744	42E-041
560824	24E-001	663092	21E-001	851756	28C-021	943938	28E-021
560941	08L-001	663093	21E-001	851762	28F-021	943938	28E-021
560946	10F-021	663093	21E-001	851770	28E-021	943957	06E-001
560739	02E-021	663093	21E-005	851806	44L-041	944106	27L-021
560939	32L-001	663093	22E-001	851862	28E-021	944192	28F-021
560965	30F-001	663094	21E-111	851867	28E-021	944195	20E-021
570131	30E-001	663094	22E-001	851867	28E-021	944197	28E-021
571441	28L-001	663095	22E-001	852260	28E-021	944198	28E-021
571511	18E-001	663097	21E-111	852284	28L-021	944407	16E-021
571695	40E-001	663792	10E-021	852911	28E-021	944409	16E-021
571186	41E-001	664140	16L-101	853455	28E-021	944431	14L-021
572421	58E-001	664406	10C-041	853525	28E-021	944643	16E-021

NUMERICAL INDEX

Part No.	Page No.
944645	16E-021
944646	16E-021
944657	20L-021
944853	16E-003
944855	16E-005
944861	42L-001
944862	42E-001
945023	46E-041
945024	46L-041
945025	46E-041
945026	46E-041
945028	48E-041
945029	46E-041
945030	46E-041
945031	48L-041
945032	48E-041
945033	46E-041
945042	48E-041
945043	49E-041
945044	48E-041
945060	04E-021
945064	16E-001
945072	16E-001
945119	16E-001
945576	02E-001
945800	40L-041
945989	27E-021
946101	42E-021
946103	42E-041
946108	42E-041
946109	42E-001
946110	42E-001
946140	24E-021
946265	10E-003
946437	28E-021
946590	23E-021
946595	28E-021
946601	28L-021
946602	25E-021
946603	28E-021
946604	23E-021
946605	28E-021
946606	23E-021
946607	20E-021
946608	28E-021
946609	28E-021
946834	28E-021
946860	04E-021
946943	24E-001
947165	30L-041
947175	30E-041
947176	30E-041
947177	30E-041
947178	30E-041
947179	30E-041
947224	16E-035
947225	30E-041
947226	30E-041
947835	16E-041
947836	16E-041
947837	04E-021
947838	04E-021
947920	44E-061
947926	46E-061
947927	44E-061
947927	46E-061
947928	44E-061
947928	46E-061
947930	44L-061
947930	46E-061
947931	44E-061
947931	46L-061
947932	44E-061
947932	46E-061
947933	44E-061
947933	46E-061
947934	44E-061
947934	46E-061
947935	44E-061
947935	46E-061
947936	44E-061
947938	46E-061
947939	44E-061

Part No.	Page No.
947939	46E-061
947940	44E-061
947940	40E-001
1103680	50E-001
1301360	40E-001
1301361	04E-001
1301361	34E-001
1301470	12L-001
1302111	40E-001
1302100	12L-001
1303319	30L-041
1306622	21E-001
1306622	25E-003
1306622	21F-005
1306622	22E-001
1306623	21E-001
1306623	22E-001
1306624	22E-001
1306626	25E-021
1314713	34L-001
1315447	56E-003
1502570	16E-045
1502645	24L-001
1502645	21F-003
1502845	20E-001
1502846	20L-001
1502848	20E-001
1502851	20E-001
1502540	20L-004
1502976	21E-005
1502576	21E-003
1502579	21E-001
1502981	21E-001
1502983	21E-003
1502987	21E-003
1502990	21E-003
1502956	21E-001
1503013	20L-001
1503026	20E-021
1503047	31E-001
1503141	31E-001
1503251	32E-001
1503464	20E-021
1503467	20E-001
1503579	06E-001
1503591	30E-001
1503592	40L-001
1503593	30E-001
1503625	20E-041
1503631	20E-041
1503639	20E-041
1503715	20E-041
1503755	31L-003
1504638	24E-001
1505536	14L-001
1505531	14E-001
1505581	14E-001
1506090	04E-021
1506252	21E-003
1506253	21E-005
1506256	22E-001
1506741	21E-001
1506753	12E-001
1506834	12E-001
1506842	21E-001
1506855	21E-003
1506856	21F-001
1506892	24F-001
1506938	30E-001
1506939	12L-001
1506135	20E-041
1507349	31E-001
1507442	31E-001
1507654	12E-001
1507655	12E-001
1508475	32E-001
1508479	32E-001
1508481	31L-001
1508484	31E-001
1508493	31E-001
1508494	31L-001
1508565	12E-001
1509155	21E-007

Part No.	Page No.
1509284	24E-001
1509286	24E-001
1509590	20E-021
1509612	20L-021
1520129	20E-001
1521063	24E-001
1521604	12E-001
1521835	21E-021
1522035	12E-001
1522420	12L-001
1522429	12E-001
1522451	04E-001
1522535	32E-001
1523149	04E-001
1523263	20E-021
1525089	52L-041
1525483	28E-001
1525463	29E-021
1525629	27E-003
1527430	14E-001
1528177	22E-001
1528637	30E-021
1528638	50E-021
1529679	21E-021
1529702	21E-021
1529704	22E-021
1529870	20E-021
1529948	24E-001
1529949	24E-001
1530264	20E-041
1530438	30E-001
1530441	30E-001
1530442	20L-021
1530442	30E-001
1530450	30E-001
1530598	21E-021
1530621	30E-001
1530623	30E-001
1530636	30E-001
1530746	31E-001
1530777	20E-001
1530842	12E-001
1530843	12E-001
1530845	12E-001
1530949	12E-001
1531345	12E-001
1531491	24E-001
1531416	21E-003
1531419	24E-001
1531554	32E-001
1531555	32E-001
1531557	32E-001
1531573	12E-001
1531595	21E-021
1531600	21E-021
1531660	32E-001
1531710	06E-001
1531714	06E-001
1531719	06E-001
1531727	27E-001
1531775	12E-001
1531783	12E-001
1531786	02E-021
1531789	56E-001
1531798	50E-001
1531804	10E-001
1531803	10E-001
1531804	10E-001
1531856	40L-001
1531857	43E-001
1531928	22E-001
1531929	27E-001
1531937	21E-005
1531938	21E-005
1531942	20E-041
1531949	20E-041
1531954	12E-001
1531983	40E-001
1532445	21E-021
1532700	10E-001
1532819	24E-001
1532917	12E-001
1534134	56E-001

Part No.	Page No.
1534135	46E-001
1534136	53E-001
1534139	52E-001
1534140	52E-001
1535217	20E-021
1535735	44E-001
1536073	20E-021
1536084	31E-001
1536556	21E-005
1536854	21E-001
1536855	21L-001
1536947	21E-001
1536947	21E-005
1537514	21F-005
1538252	27E-001
1538254	22E-001
1538256	27E-001
1538257	22E-001
1538260	22E-001
1538269	22L-001
1538358	40E-001
1538359	45E-001
1538401	48E-001
1538402	45E-001
1538406	48E-001
1538407	48E-001
1538408	48E-001
1538410	48E-001
1539874	12E-001
1540070	24E-001
1540168	12E-001
1540889	36E-003
1540891	35E-003
1541400	24L-001
1541431	27E-001
1541438	56E-001
1541450	30L-001
1541553	48E-001
1541706	14E-001
1541706	14E-003
1541803	34E-001
1541804	34E-001
1541805	34L-001
1542597	36E-001
1543236	21E-021
1543379	40E-001
1543683	34E-001
1544037	34E-001
1544103	40E-001
1544104	43E-001
1544105	46E-001
1544106	40E-001
1544450	12E-001
1544827	12L-001
1546420	12L-001
1547550	40E-021
1547963	30E-001
1618534	56E-001
1721628	04E-021
1790248	04E-021
3200105	54L-001
3200107	55E-001
3200221	54E-001
3200347	56L-001
3201412	06E-001
3201660	70E-021
3201707	70L-021
3201706	70E-001
3201766	45E-001
3203873	40L-041
3203874	10E-041
3203875	10E-041
3203976	10E-041
3203877	10E-041
3203871	10E-041
3204336	04E-001
3204336	32E-001
3204963	53E-001
3204400	40E-021
3204401	48E-021
3206946	04E-041
3207029	06E-001
3207299	08E-001

NUMERICAL INDEX

Part No.	Page No.
3207807	20L-041
3207888	20E-041
3207889	20E-041
3208202	14L-001
3208204	14F-001
3208284	80C-001
3209364	C4L-001
3209369	50F-001
3209389	50E-001
3210060	16E-021
3210419	56F-001
3211393	04E-041
3211711	20L-041
3211890	72F-001
3211897	20E-001
3212071	18C-021
3212072	18E-021
3212087	10E-021
3212761	10E-001
3213160	02E-001
3213420	02E-021
3213494	04F-001
3213775	16E-001
3213830	52E-021
3213868	32F-001
3213869	18E-001
3213870	18E-001
3213943	36F-001
3213990	18E-001
3213996	16E-001
3213997	14L-001
3214184	36E-001
3214854	16E-001
3214907	16L-001
3214910	16E-001
3214962	54E-001
3214980	58F-001
3215046	56E-001
3215073	04L-041
3215084	00F-001
3215088	10E-001
3215085	00E-001
3215406	10F-001
3215486	02E-001
3216652	18E-001
3220164	22F-001
3220180	32E-001
3220239	04L-001
3220254	08F-001
3220631	56E-001
3220651	02F-001
3220852	02E-001
3220858	10E-001
3220859	58L-001
3220859	02E-001
3220864	32E-001
3220865	04F-001
3220867	08E-001
3220868	14E-001
3220877	14L-001
3220881	58E-001
3220881	02E-001
3220881	72L-001
3220948	08F-001
3220948	54C-001
3220954	58F-001
3220984	58E-001
3221121	50E-001
3221162	48C-001
3221171	58E-001
3221357	72E-001
3221451	32F-001
3221429	64E-001
3221748	72L-001
3221758	82E-001
3221760	72E-001
3221770	70E-021
3221770	70E-021

Part No.	Page No.
3221775	70E-021
3221780	70L-021
3221784	70E-021
3221785	70E-021
3221786	70L-021
3221788	70F-021
3221789	70E-021
3221790	70L-021
3221791	70F-021
3221792	70E-021
3221799	00L-001
3221845	02E-001
3221847	21E-001
3221848	21L-001
3221848	21C-001
3221851	04E-001
3221865	02E-001
3221891	70F-021
3221992	70E-021
3221997	50E-001
3222251	30F-001
3222321	02E-001
3222580	58L-001
3222585	58E-001
3223005	00E-001
3223005	02L-001
3223806	02F-001
3223807	04C-001
3223808	02L-001
3223809	02E-001
3223811	02E-001
3223812	04L-001
3223813	02E-001
3223814	02E-001
3223815	02C-001
3223816	04E-001
3223817	04E-001
3223818	02L-001
3224062	04C-001
3224084	00C-001
3224102	50C-001
3224303	56E-001
3224356	50E-001
3224356	04C-001
3224357	54C-001
3224424	02E-001
3224425	02F-001
3224429	02C-001
3224470	04E-001
3224479	04F-001
3224545	58E-001
3224545	00L-001
3224564	02F-001
3224613	02C-001
3224691	32C-001
3224854	72E-001
3224869	32L-001
3224914	32F-001
3224975	54C-001
3225044	10E-001
3225161	04E-001
3225524	04E-001
3225525	04C-001
3225525	04E-001
3225532	14L-001
3225542	02F-001
3225586	68E-001
3225587	72E-001
3225588	72E-001
3225613	72C-001
3225617	72L-001
3225734	32L-001
3225755	72E-001
3225830	72C-001
3225844	68F-001
3225944	70E-021
3225945	70F-021
3225946	70E-021
3226040	30C-021
3226041	30E-021
3226043	70E-021
3226045	70E-021
3226105	70F-001
3226152	20C-021

Part No.	Page No.
3226193	20E-021
3226194	20L-021
3226196	20F-021
3226481	04E-041
3226554	04L-041
3226577	04E-001
3226758	70L-021
3226777	62L-001
3226978	62E-021
3226995	62E-001
3227303	14F-001
3227351	62E-001
3227458	62E-003
3227459	62E-001
3227460	62F-001
3227461	62E-001
3227462	62E-003
3227780	58E-001
3227965	02E-001
3228020	00E-001
3228021	00C-001
3228573	72E-001
3228590	72E-001
3228804	04F-041
3229048	58E-001
3229104	54C-001
3229106	58E-001
3229125	10E-021
3229175	56F-001
3229406	08E-001
3229410	08L-001
3229416	40C-001
3229423	08E-001
3229424	06E-001
3229430	06L-001
3229459	56E-001
3229465	50E-001
3229477	56F-001
3229505	58E-001
3229708	28L-041
3229908	35F-001
3230118	62E-001
3230516	14L-001
3230851	24F-001
3230854	70E-021
3231484	04L-001
3232681	03E-001
3232832	68E-001
3232915	68L-001
3232934	68C-001
3232792	14E-001
3232829	56L-001
3232939	58E-001
3232990	62E-001
3233007	70F-021
3233090	62E-001
3233107	03E-001
3233153	04E-001
3233583	50E-001
3233806	72E-001
3234384	72E-001
3234405	21E-021
3234859	12L-001
3235114	20F-021
3235115	20E-041
3235140	20E-001
3235210	30E-001
3235258	14E-001
3235268	14E-003
3235271	48E-001
3235318	10L-001
3235320	10E-001
3235386	10L-001
3235389	04F-001
3235393	02E-021
3235409	02E-001
3235416	02E-021
3235431	02E-001
3235550	22L-001
3235610	21E-001
3235655	02E-021
3235700	10F-021

Part No.	Page No.
3235837	42L-001
3236079	62E-001
3236080	62E-001
3236108	21F-001
3236194	48E-001
3236253	06E-001
3236254	06C-001
3236265	06E-001
3236304	24E-001
3236451	58E-001
3236503	62E-001
3236927	14E-001
3236929	14C-001
3237040	16E-001
3237230	06E-001
3237241	02F-001
3237622	12E-001
3237652	10L-021
3237688	62E-001
3237698	14E-001
3237699	14L-001
3238034	24E-001
3238035	14E-001
3238044	14E-001
3238045	14E-001
3238046	14E-001
3238047	14E-001
3238048	14E-001
3238049	14E-001
3238050	14E-001
3238051	14E-001
3238052	14E-001
3238053	14E-001
3238054	14E-001
3238055	14E-001
3238056	14E-001
3238057	14E-001
3238058	14E-001
3238059	14E-001
3238060	14E-001
3238061	24E-001
3238062	14E-001
3238063	14E-001
3238064	14E-001
3238065	14E-001
3238066	14E-001
3238067	14E-001
3238068	14E-001
3238069	14E-001
3238070	14E-001
3238071	14E-001
3238072	14E-001
3238073	14E-001
3238074	14E-001
3238075	14E-001
3238080	14E-001
3238081	14F-001
3238082	14E-001
3238083	14E-001
3238084	14E-001
3238085	14E-001
3238086	14E-001
3238087	14E-001
3238088	14E-001
3238089	14E-001
3238090	14E-001
3238091	14E-001
3238092	14E-001
3238093	14E-001
3238094	14E-001
3238095	14E-001
3238096	14E-001
3238097	14E-001
3238098	14E-001
3238099	14E-001
3238100	14E-001
3238101	14E-001
3238102	14E-001
3238103	14E-001
3238104	14E-001
3238105	14E-001
3238106	14E-001
3238107	14E-001
3238108	14E-001
3238109	14E-001
3238110	14E-001
3238111	14E-001
3238112	14E-001
3238113	14E-001
3238114	14E-001
3238115	14E-001
3238116	14E-001
3238117	14E-001
3238118	14E-001
3238119	14E-001
3238120	14E-001
3238121	14E-001
3238122	14E-001
3238123	14E-001
3238124	14E-001
3238125	14E-001

NUMERICAL INDEX

Part No.	Page No.
3290131	48E-021
3290224	16E-001
3290278	16E-003
3290279	16E-001
3290287	16E-001
3290323	16E-001
3290326	16E-003
3290390	52E-021
3290391	52E-021
3290392	52E-021
3290393	52E-021
3290394	52E-021
3290395	52E-021
3290396	52E-021
3290397	52E-021
3290398	52E-021
3290399	52E-021
3290400	52E-021
3290401	52E-021
3290402	52E-021
3290403	52E-021
3290404	52E-021
3290405	52E-021
3290406	52E-021
3290407	52E-021
3290413	56E-001
3290413	66E-001
3290414	56E-001
3290414	66E-001
3290473	06E-001
3290476	06E-001
3290647	16E-001
3290665	18E-021
3290673	18E-001
3290675	18E-021
3290724	56E-001
3290726	58E-001
3290860	16E-001
3290900	24E-001
3291166	48E-061
3291167	48E-061
3291169	48E-061
3291170	48E-061
3291171	48E-061
3291172	48E-061
3291173	48E-061
3291174	48E-061
3291176	48E-061
3291178	48E-061
3291184	48E-061
3291186	48E-061
3291187	48E-061
3291189	48E-061
3291190	48E-061
3291193	48E-061
3291194	48E-061
3291196	48E-061
3291197	48E-061
3291200	48E-061
3291201	48E-061
3291204	48E-061
3291206	48E-061
3291210	48E-061
3291215	18E-001
3291216	18E-001
3291218	18E-001
3291219	18E-001
3291273	48E-061
3291323	18E-001
3291324	18E-001
3291465	18E-001
3291752	16E-001
3291754	16E-001
3291755	16E-001
3291756	16E-001
3291757	16E-001
3291758	16E-001
3291759	16E-001
3291760	16E-001
3291763	16E-001
3291764	16E-001
3291765	16E-001
3291766	16E-001
3291767	16E-001
3291768	16E-001
3292186	16E-001
3292303	16E-003
3292306	18E-021
3292309	18E-021
3292318	18E-021
3292320	18E-021
3292344	16E-001
3292344	16E-003
3292456	62E-003
3292457	62E-003
3292458	62E-003
3292460	62E-003
3292461	62E-001
3292462	52E-001
3292606	16E-001
3292607	16E-001
3292608	16E-001
3292609	16E-001
3292610	16E-001
3292611	16E-001
3292612	16E-001
3292613	16E-001
3454336	04E-001
3454350	04E-001
3454560	56E-001
4120090	18E-021