RUTHZIL TRATOR COMERCIAL DE PEÇAS LTDA 11 97083-6812 ROLANDO CITRANGULO

DEZEMBRO 2001

863

Bobcat®

G-Series

Parts Manual

S/N 5144 40001 & Above
S/N 5145 40001 & Above
S/N 5146 40001 & Above

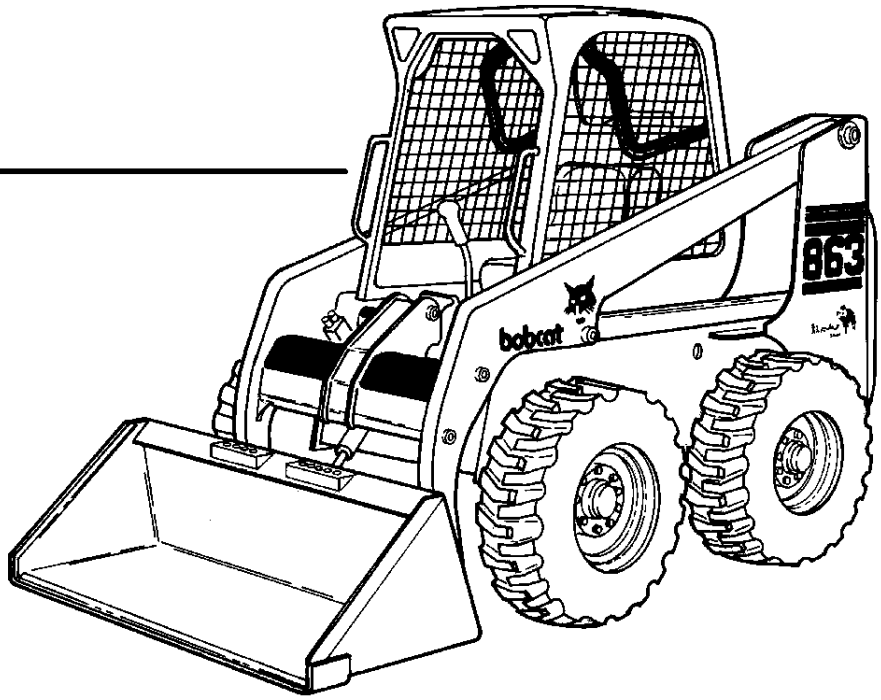

EQUIPPED WITH BOBCAT INTERLOCK CONTROL SYSTEM (BICS™)

6900954 (11-00) Revised (12-01)

IR Bobcat

Printed in U.S.A.

© Bobcat Company 2001

863 G-SERIES CONTENTS

MAIN FRAME 11-34
- MAIN FRAME 11-12
- OPERATOR CAB 13-16
- SEAT & SEAT BAR 17-18
- SEAT 19-20
- REAR DOOR 21-22
- * REAR DOOR 23-24
- LIFT ARM & BOB-TACH 25-26
- BOB-TACH 27-28
- PANELS 29-30
- FUEL SYSTEM 31-34

DRIVE SYSTEM 35-44
- DRIVE TRAIN 35-36
- MOTOR CARRIER 37-38
- DISC BRAKE 39-40
- * DISC BRAKE 41-42
- AXLE 43-44

HYDRAULIC SYSTEM 45-90
- HYDRAULIC CIRCUITRY 45-50
- * HYDRAULIC CIRCUITRY 51-58
- MANUAL LIFT RELEASE SYSTEM 59-60
- AUXILIARY HYDRAULICS 61-64
- TILT CYLINDER 65-66
- LIFT CYLINDER 67-68
- MANUAL LIFT RELEASE VALVE 69-70
- CONTROL PEDALS 71-72
- HYDRAULIC CONTROL VALVE 73-82
- * HYDRAULIC CONTROL VALVE 83-86
- BICS CONTROL VALVE 87-88
- BUCKET POSITIONING VALVE 89-90

HIGH HORSEPOWER HYDRAULICS 91-102
- HIGH HORSEPOWER HYDRAULICS 91-98
- * HIGH HORSEPOWER HYDRAULICS 99-100
- HIGH HORSEPOWER HYDRAULICS (CONTROL VALVE) 101-102

HYDROSTATIC SYSTEM 103-158
- HYDROSTATIC CIRCUITRY 103-116
- * HYDROSTATIC CIRCUITRY 117-118
- HYDROSTATIC CIRCUITRY (2-SPEED OPTION) 119-120
- HAND CONTROLS 121-124
- HYDROSTATIC MOTOR 125-126
- HYDROSTATIC MOTOR & BRAKE 127-130
- HYDROSTAIC PUMP 131-146
- GEAR PUMP 147-148
- * GEAR PUMP 149-150
- 2-SPEED VALVE 151-152
- * 2-SPEED VALVE 153-154
- HYDROSTATIC OIL FILTER 155-158

ELECTRICAL SYSTEM 159-192
- ELECTRICAL CONTROLS 159-170
- * CONTROLS ELECTRICAL 171-178
- CAB ELECTRICAL CIRCUITRY 179-182
- ENGINE ELECTRICAL 183-186
- ALTERNATOR 187-190
- STARTER 191-192

863 G-SERIES CONTENTS (Cont'd)

POWER UNIT 193-234
COOLING SYSTEM 193-198
ENGINE & ATTACHING PARTS 199-206
THROTTLE 207-208
COOLING FAN DRIVE ASSY. 209-210
ENGINE & GASKET KITS 211-212
MANIFOLDS 213-214
CYLINDER HEAD & COVER 215-216
CAMSHAFT 217-218
FRONT COVER 219-220
CRANKCASE & OIL PAN 221-224
PISTON & CRANKSHAFT 225-226
FUEL INJECTION SYSTEM 227-230
OIL PUMP 231-232
AIR CLEANER 233-234
ACCESSORIES & OPTIONS 238-405
ACCESS COVER 238-239
ACCESSORIES HARNESS 240-241
BACK-UP ALARM 242-243
BEACON 244-245
BLOCK HEATER 246-251
BOB-TACH LEVERS 252-253
BUCKET POSITIONING KIT 254-255
* BUCKET POSITIONING KIT 256-257
CAB DOOR 258-271
CAB ENCLOSURE 272-275
CAB WINDOWS 276-281
CLOSED ALTERNATOR 282-283
COUNTERWEIGHT KIT 284-285
DECALS 286-289
DELUXE CAB 290-293
ELECTRICAL CONTROLS KIT 294-299
EUROPEAN ACCESSORIES 300-301
* EUROPEAN ACCESSORIES 302-303
EUROPEAN ACCESSORIES (MASTER CYLINDER) 304-305
EUROPEAN ACCESSORIES (INSULATION & HYDRAULIC MUFFLER) 306-307
FIRE EXTINGUISHER 308-309
FLASHER LIGHTS 310-311
* FOOT CONTROL KIT 312-313
F.O.P.S. KIT 314-315
HAND CONTROL KIT 316-319
HEATER & A/C 320-345
HORN KIT 346-347
LIFT KIT 348-351
LIGHT KIT 352-353
POWER BOB-TACH KIT 354-355
* POWER BOB-TACH KIT 356-357
POWER BOB-TACH (CYLINDER) 358-359
* POWER BOB-TACH (CYLINDER) 360-361
POWER BOB-TACH (VALVE ASSEMBLY) 362-365
* POWER BOB-TACH (VALVE ASSEMBLY) 366-367
PURIFIER 368-369
REAR AUXILIARY HYDRAULICS KIT 370-373
REAR AUXILIARY VALVE 374-375
REAR DOOR LOCK 376-377

863 G-SERIES CONTENTS (Cont'd)

ACCESSORIES & OPTIONS (CONT'D) 238-405

REAR WIPER 378-379
SEAT 380-383
SEAT BELT 384-389
SEVEN PIN CONNECTOR KIT 390-391
SOUND OPTION 392-395
STROBE LIGHT 396-397
TIRES & RIMS 398-403
BULK ITEMS 404-405

NUMERICAL INDEX 406-463

NUMERICAL INDEX 406-463

863 G-SERIES CONTENTS

MAIN FRAME 11-34
- MAIN FRAME 11-12
- OPERATOR CAB 13-16
- SEAT & SEAT BAR 17-18
- SEAT 19-20
- REAR DOOR 21-22
- * REAR DOOR 23-24
- LIFT ARM & BOB-TACH 25-26
- BOB-TACH 27-28
- PANELS 29-30
- FUEL SYSTEM 31-34

DRIVE SYSTEM 35-44
- DRIVE TRAIN 35-36
- MOTOR CARRIER 37-38
- DISC BRAKE 39-40
- * DISC BRAKE 41-42
- AXLE 43-44

HYDRAULIC SYSTEM 45-90
- HYDRAULIC CIRCUITRY 45-50
- * HYDRAULIC CIRCUITRY 51-58
- MANUAL LIFT RELEASE SYSTEM 59-60
- AUXILIARY HYDRAULICS 61-64
- TILT CYLINDER 65-66
- LIFT CYLINDER 67-68
- MANUAL LIFT RELEASE VALVE 69-70
- CONTROL PEDALS 71-72
- HYDRAULIC CONTROL VALVE 73-82
- * HYDRAULIC CONTROL VALVE 83-86
- BICS CONTROL VALVE 87-88
- BUCKET POSITIONING VALVE 89-90

HIGH HORSEPOWER HYDRAULICS 91-102
- HIGH HORSEPOWER HYDRAULICS 91-98
- * HIGH HORSEPOWER HYDRAULICS 99-100
- HIGH HORSEPOWER HYDRAULICS (CONTROL VALVE) 101-102

HYDROSTATIC SYSTEM 103-158
- HYDROSTATIC CIRCUITRY 103-116
- * HYDROSTATIC CIRCUITRY 117-118
- HYDROSTATIC CIRCUITRY (2-SPEED OPTION) 119-120
- HAND CONTROLS 121-124
- HYDROSTATIC MOTOR 125-126
- HYDROSTATIC MOTOR & BRAKE 127-130
- HYDROSTAIC PUMP 131-146
- GEAR PUMP 147-148
- * GEAR PUMP 149-150
- 2-SPEED VALVE 151-152
- * 2-SPEED VALVE 153-154
- HYDROSTATIC OIL FILTER 155-158

ELECTRICAL SYSTEM 159-192
- ELECTRICAL CONTROLS 159-170
- * CONTROLS ELECTRICAL 171-178
- CAB ELECTRICAL CIRCUITRY 179-182
- ENGINE ELECTRICAL 183-186
- ALTERNATOR 187-190
- STARTER 191-192

863 G-SERIES CONTENTS (Cont'd)

POWER UNIT 193-234
COOLING SYSTEM 193-198
ENGINE & ATTACHING PARTS 199-206
THROTTLE 207-208
COOLING FAN DRIVE ASSY. 209-210
ENGINE & GASKET KITS 211-212
MANIFOLDS 213-214
CYLINDER HEAD & COVER 215-216
CAMSHAFT 217-218
FRONT COVER 219-220
CRANKCASE & OIL PAN 221-224
PISTON & CRANKSHAFT 225-226
FUEL INJECTION SYSTEM 227-230
OIL PUMP 231-232
AIR CLEANER 233-234
ACCESSORIES & OPTIONS 238-405
ACCESS COVER 238-239
ACCESSORIES HARNESS 240-241
BACK-UP ALARM 242-243
BEACON 244-245
BLOCK HEATER 246-251
BOB-TACH LEVERS 252-253
BUCKET POSITIONING KIT 254-255
* BUCKET POSITIONING KIT 256-257
CAB DOOR 258-271
CAB ENCLOSURE 272-275
CAB WINDOWS 276-281
CLOSED ALTERNATOR 282-283
COUNTERWEIGHT KIT 284-285
DECALS 286-289
DELUXE CAB 290-293
ELECTRICAL CONTROLS KIT 294-299
EUROPEAN ACCESSORIES 300-301
* EUROPEAN ACCESSORIES 302-303
EUROPEAN ACCESSORIES (MASTER CYLINDER) 304-305
EUROPEAN ACCESSORIES (INSULATION & HYDRAULIC MUFFLER) 306-307
FIRE EXTINGUISHER 308-309
FLASHER LIGHTS 310-311
* FOOT CONTROL KIT 312-313
F.O.P.S. KIT 314-315
HAND CONTROL KIT 316-319
HEATER & A/C 320-345
HORN KIT 346-347
LIFT KIT 348-351
LIGHT KIT 352-353
POWER BOB-TACH KIT 354-355
* POWER BOB-TACH KIT 356-357
POWER BOB-TACH (CYLINDER) 358-359
* POWER BOB-TACH (CYLINDER) 360-361
POWER BOB-TACH (VALVE ASSEMBLY) 362-365
* POWER BOB-TACH (VALVE ASSEMBLY) 366-367
PURIFIER 368-369
REAR AUXILIARY HYDRAULICS KIT 370-373
REAR AUXILIARY VALVE 374-375
REAR DOOR LOCK 376-377

863 G-SERIES CONTENTS (Cont'd)

ACCESSORIES & OPTIONS (CONT'D) 238-405
REAR WIPER 378-379
SEAT 380-383
SEAT BELT 384-389
SEVEN PIN CONNECTOR KIT 390-391
SOUND OPTION 392-395
STROBE LIGHT 396-397
TIRES & RIMS 398-403
BULK ITEMS 404-405
NUMERICAL INDEX 406-463
NUMERICAL INDEX 406-463

MAINTENANCE ITEMS
MODEL 863 G-Series

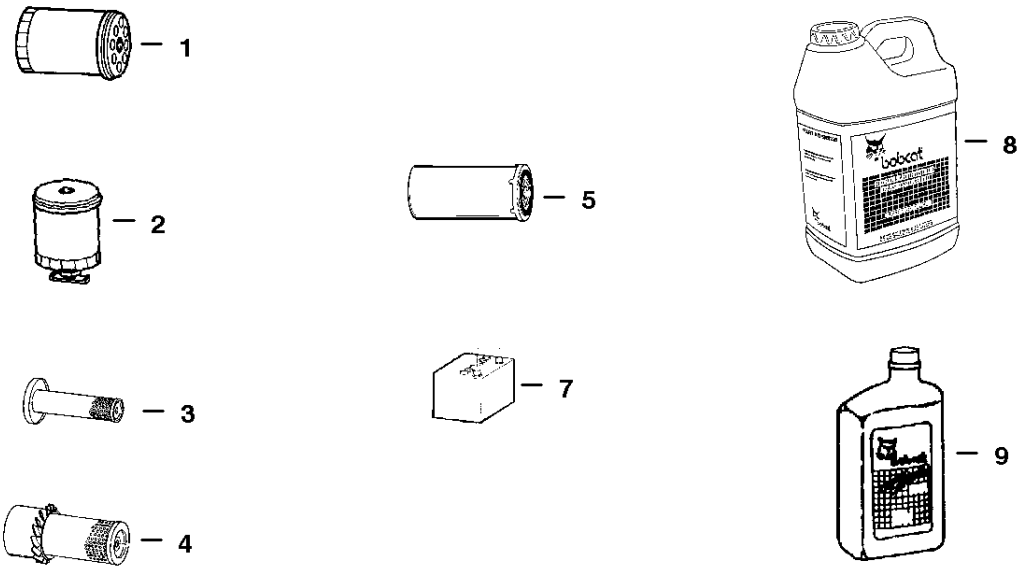

Ref.	Part Number	Description	Remarks	Page
1	6665603	FILTER	Engine Oil (6 Pack)	222
2	6667352	ELEMENT	Fuel	32
3	6666376	CARTRIDGE	Inner Air Cleaner	234
4	6666375	CARTRIDGE	Outer Air Cleaner	234
5	6661248	ELEMENT	Hydrostatic # 3 Media	158
6	6661807	FILTER	inline	156
7	6665427	BATTERY	950 AMP	184
	(HYDRAULIC RESERVOIR CAPACITY) ..... 16 QTS. (15,1 L.)			
	(HYDRAULIC / HYDROSTATIC SYSTEM) ..... 40 QTS. (38 L.)			
8	6563328	FLUID	Hyd./Hydro. - (2) 2.5 Gal. - (5 Gal.)	405
	6722344	FLUID	Hyd./Hydro. - (5 Gal.)	405
	6563330	FLUID	Hyd./Hydro. - 55 Gallon Drum	405
	(ENGINE / COOLING OIL W/FILTER CAPACITY) ..... 16 QTS. (15,1 L.)			
9	6657301	MOTOR OIL	10W30 CE/SG - 1 Qt.	405
	6657299	MOTOR OIL	15W40 CE/SG - 1 Qt.	405
	6657303	MOTOR OIL	30 CE/SG - 1 Qt.	405
	6724558	MOTOR OIL	15W40 CE/SG - 1 Gallon	405
	6724557	MOTOR OIL	10W30 CE/SG - 1 Gallon	405
	6724559	MOTOR OIL	30 CE/SG - 1 Gallon	405
	6674205	MOTOR OIL	10W30 CE/SG - 2.5 Gal.	405
	6674204	MOTOR OIL	15W40 CE/SG - 2.5 Gal.	405
	6674206	MOTOR OIL	30 CE/SG - 2.5 Gal.	405

(HYDRAULIC RESERVOIR CAPACITY) ..... 21 QTS. (19,9 L)

(HYDRAULIC / HYDROSTATIC SYSTEM) ..... 13 GALS. (49,3 L)

(CHAINCASE RESERVOIR) ..... 10 GALS. (37,9 L)

(ENGINE OIL W/FILTER CAPACITY) ..... 10 QTS. (23,7 L)

(ENGINE LUBRICATION / COOLING SYSTEM) ..... 16 QTS. (15,1 L)

GENERAL INFORMATION

When using the machine serial number, use the complete number.

Some Serial Number breaks are not available at time of printing. These are listed as & Below or & Above.

The number shown in the quantity column in this manual is the number of parts needed for the illustration on the page. For some parts an "x" will be shown in the quantity column. This "x" indicates that the quantity to be used is "As Needed".

When references L.H. and R.H. are used in this manual, it is done from the operator's seat in the forward operating position.

To find the size and kind of bolt use the Bobcat Standard Microfiche (P/N 6566077).

Some of the illustrations and information found in this parts manual were supplied to Bobcat by machine component companies.

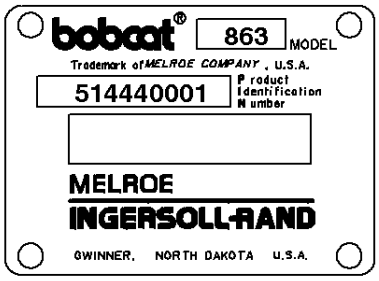

DOMESTIC

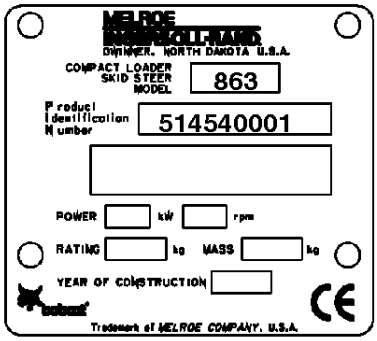

EXPORT

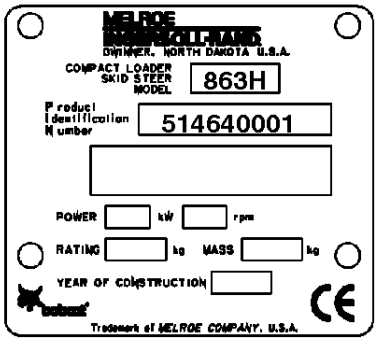

H.H. EXPORT

ABBREVIATIONS & SYMBOLS

SALES = Order from Gwinner Sales Department

NSS = Not Serviced Seperately

NAP = Not Available as Parts

*** = Changed or Added Sections, Pages or Part Numbers**

Disposition Code Definition (Found in the Remarks Column)

[A] = Use Up

[B] = Use Up on Other Appplication (See PNI)

[C] = File PDR Report With Bobcat Parts Sales

[D] = Part Number Error

Explications en francais	Grid Nb	3
Erklärungen auf deutsch	Grid Nb	4
Spiegazioni in italiano	Grid Nb	5
Explicaciones en espanol	Grid Nb	6
Verklaring in het Nederlands	Grid Nb	7

NOTE D'INFORMATION

Pour toute référence au numéro de série de l'engin, toujours donner le numéro complet.

Le chiffré apparaissant dans la colonne des quantités de ce manuel représentent le nombre de pièces nécessaires pour l'illustration reprise sur la page. Dans certains cas, on lira un "x" dans la colonne des quantités. Cet "x" indique que la quantité nécessaire est "selon besoin".

Pour toute référence vers la GAUCHE ou la DROITE dans ce manuel, considérer que la personne se trouve assise dans le siège de l'opérateur, en position de fonctionnement en marche avant.

Certaines illustrations et informations reprises dans ce manuel de pièces de rechange ont été fournies à Bobcat par des fabricants de composants.

ABREVIATIONS & SYMBOLES

SALES	= Commander au Service Ventes à Bruxelles
NSS	= Pas vendu séparément
NAP	= Non disponible comme pièce de rechange
*	= Chapitre, page ou numéro de pièce modifié ou supplémentaire
BTI	= Bobcat Technical Information Bulletin : voir à la fin de la microfiché du modèle concerné ou la microfiche générale reprenant l' ensemble des "BTI".
was 6535403	= était avant 6535403
adj. (adjustment)	= réglage
Assembly	= ensemble
available W/Ref.	= disponible avec réf.
bulk/sold per foot	= en vrac/vendu par pied
does not include	= ne comprend pas
included with	= compris dans
I.D.	= D.I. (diamètre intérieur)
O.D.	= D.E. (diamètre extérieur)
not in kit	= pas en kit
W/ - WO/	= inclus/ - non inclus/
Qty	= quantité requise
see page/ref.	= voir page/réf.
used with ref/	= utilisé avec réf.
0,05 inch thickness	= 0,05 pouce d'épaisseur (un pouce = 25.4 mm)
weld on	= à souder

ALLGEMEINE INFORMATIONEN

Bei Angabe der Maschinen-Seriennummer stets die komplette Nummer angeben.

Bei der in der Mengenspalte (Anzahl) in diesem Handbuch angegebenen Zahl handelt es sich um die Anzahl von Teilen, die für die Abbildung auf der betreffenden Seite benötigt werden. Bei manchen Teilen in der Mengenspalte ist ein “x” angegeben. Dieses “x” weist darauf hin, dass sich die Anzahl der verwendeten Teile auf den “Bedarf” bezieht.

Bei Verwendung der Seitenangaben links und rechts in diesem Handbuch gelten diese für die Blickrichtung vom Fahrersitz aus, und zwar in Vorwärts-Betriebsrichtung.

Einige der in diesem Ersatzteilhandbuch aufgeführten Abbildungen und Informationen wurden der Bobcat von den Herstellern von Maschinenbauteilen zur Verfügung gestellt.

ABKÜRZUNGEN UND SYMBOLE

SALES	= Bestellung bei der Verkaufsabteilung in Brüssel
NSS	= Nicht einzeln erhältlich
NAP	= Nicht als Ersatzteil erhältlich
*	= Geänderte oder hinzugefügte Abschnitte, Seiten oder Teilenummern
BTI	= Bobcat Technical Information Bulletin : Siehe am Ende der Mikrokarte des jeweiligen Modells oder der allgemeinen Mikrokarte der BTI.
was 6535403	= War 6535403
adj.	= Einstellung
Assembly	= Baugruppe
available W/Ref.	= erhältlich mit der Referenz
bulk/sold per foot	= Mengenabnahme / Verkauf pro Fuss
does not include	= beinhaltet nicht
included with	= enthalten in
I.D.	= Innendurchmesser
O.D.	= Aussendurchmesser
not in kit	= nicht in Bausatz
W/ - WO/	= mit/ - ohne/
Qty	= Anzahl
see page/ref.	= Siehe Seite / Referenz
used with ref.	= verwendet mit Referenz
0.05 inch thickness	= Dicke : 0.05 Zoll (ein Zoll = 25.4 mm)
weld on	= anschweissen

INFORMAZIONI GENERALI

Quando si usa il numero di serie della macchina usare il numero completo.

Il numero mostrato nella colonna della quantità di questo manuale corrisponde al numero di componenti necessari per l'illustrazione della pagina. Per alcuni componenti appare "X" nella colonna delle quantità. Questa "X" indica che la quantità da usare è "come necessario".

See in questo manuale si fa riferimento alla parte destra o sinistra, si intende dal sedile dell'operatore nella posizione in avanti di funzionamento.

Alcune delle illustrazioni e informazioni trovate in questo manuale di componenti sono state fornite alla Bobcat da società di componenti di macchine.

SIMBOLI E ABBREVIAZIONI

SALES	= Ordinare al servizio vendite di Bruxelles
NSS	= Non vendute separatamente
NAP	= Non disponibile come componente
*	= Sezioni, pagine o numeri di componente cambiati o aggiunti
BTI	= (Bobcat Technical information) Ved. al termine del microfiche del modello relativo oppure microfiche generale
was 6535403	= era 6535403
adj. (adjustment)	= regol. (regolazione)
Assembly	= Complessivo
available W/ref.	= disponibile con rif.
bulk/sold per foot	= alla rinfusa/venduto al piede
does not include	= non comprende
Included with	= compreso con
I.D.	= d. i.
O.D.	= d. e.
not in kit	= non fa parte del kit
W/ - WO/	= con - senza
Qty	= Qtà
see page/ref	= ved. pagina/rif.
used with ref.	= usato con il rif.
0,05 inch thickness	= spessore 0,05 pollici (un pollice = 25,4 mm)
weld on	= a saldare

INFORMACION GENERAL

Al utilizar el número de serie de la máquina, debe emplearse el número completo.

El número que figura en la columna de “Unidades” en este manual es el número de piezas que se necesitan para la ilustración que consta en la página. En algunas piezas aparece una “x” en la columna de “Unidades”. Esta “x” indica que las unidades a utilizar son “según sea necesario”.

Cuando se empleen las referencias izq. y dcha., éstas se entienden mirando desde el asiento del conductor, en posición de marcha adelante.

Algunas de las ilustraciones y la información que figuran en este manual de piezas han sido facilitadas a Bobcat por empresas de componentes de máquinas.

ABREVIATURAS Y SIMBOLOS

VENTAS	= Pedido al Departamento de Ventas de Bruselas
NSS	= No se vende por separado
NAP	= No disponible como pieza de repuesto
*	= Secciones, páginas o referencias modificadas o añadidas
BTI	= (Bobcat Tecnical Information) Ver al final de la microficha del modelo afectado o en la microficha general “Boletín de Información Técnica Bobcat”.
was 6535403	= era anteriormente el 6535403
adj. (adjustment)	= ajuste
assembly	= conjunto
available W/Ref.	= disponible con la ref.
bulk/sold per foot	= a granel/vendido por pies
does not include	= no incluye
included with	= incluido en
I.D.	= diámetro interior
O.D.	= diámetro exterior
not in kit	= no en el kit
W/ - WO/	= con/ - sin
Qty	= Unidades
see page /ref.	= ver página/ref.
used with ref.	= empleado con la ref.
0,05 inch thickness	= 0,05 pulgadas de espesor (1 pulgada = 25,4 mm)
weld on	= debe ser soldado

ALGEMENE INFORMATIE

Als u het serienummer van de machine gebruikt, geef dan het gehele serienummer.

Het cijfer dat voorkomt in de kolom “Aantal”, in deze handleiding, is het aantal onderdelen dat nodig is van de illustratie op de pagina. Voor sommige onderdelen staat er een “x” in de kolom “Aantal”. Deze “x” betekent dat er een aantal “zoals nodig” vereist is.

Wanneer er in deze handleiding naar “links” en naar “rechts” gerefereerd wordt, moet dit verstaan worden voor een bestuurder die in de bestuurdersstoel zit in de voorwaartse bedrijfsstand.

Sommige van de illustraties en informatie in deze onderdelen-handleiding werden door firma’s van machine-componenten geleverd aan Bobcat.

AFKORTINGEN EN SYMBOLEN

SALES	= Bestellen bij de Verkoopafdeling te Brussel
NSS	= Niet afzonderlijk te verkrijgen
NAP	= Niet beschikbaar als onderdeel
*	= Gewijzigde of toegevoegde paragrafen, pagina’s of onderdeelnummers
BTI	= Bobcat Technical Information Bulletin : Zie einde van de microfiche van het desbetreffende model of einde van de algemene microfiche die het geheel van alle “BTI” herneemt.
was 6535403	= was vroeger 6535403
adj. (adjustment)	= afstelling
Assembly	= geheel
available W/Ref.	= beschikbaar met ref.
bulk/sold per foot	= bulk/aan de meter verkocht
does not include	= bevat niet
includes with	= is bevat in
I.D.	= ϕ inw. (inwendige diameter)
O.D.	= ϕ uitw. (uitwendige diameter)
not in kit	= niet in de kit
W/ - WO/	= met/ - zonder/
Qty	= vereiste aantal
see page/ref.	= zie pagina/ref.
used with ref/	= gebruikt met ref.
0,05 inch thickness	= 0.05 inch dik (een inch = 25.4 mm)
weld on	= te lassen

MAIN FRAME

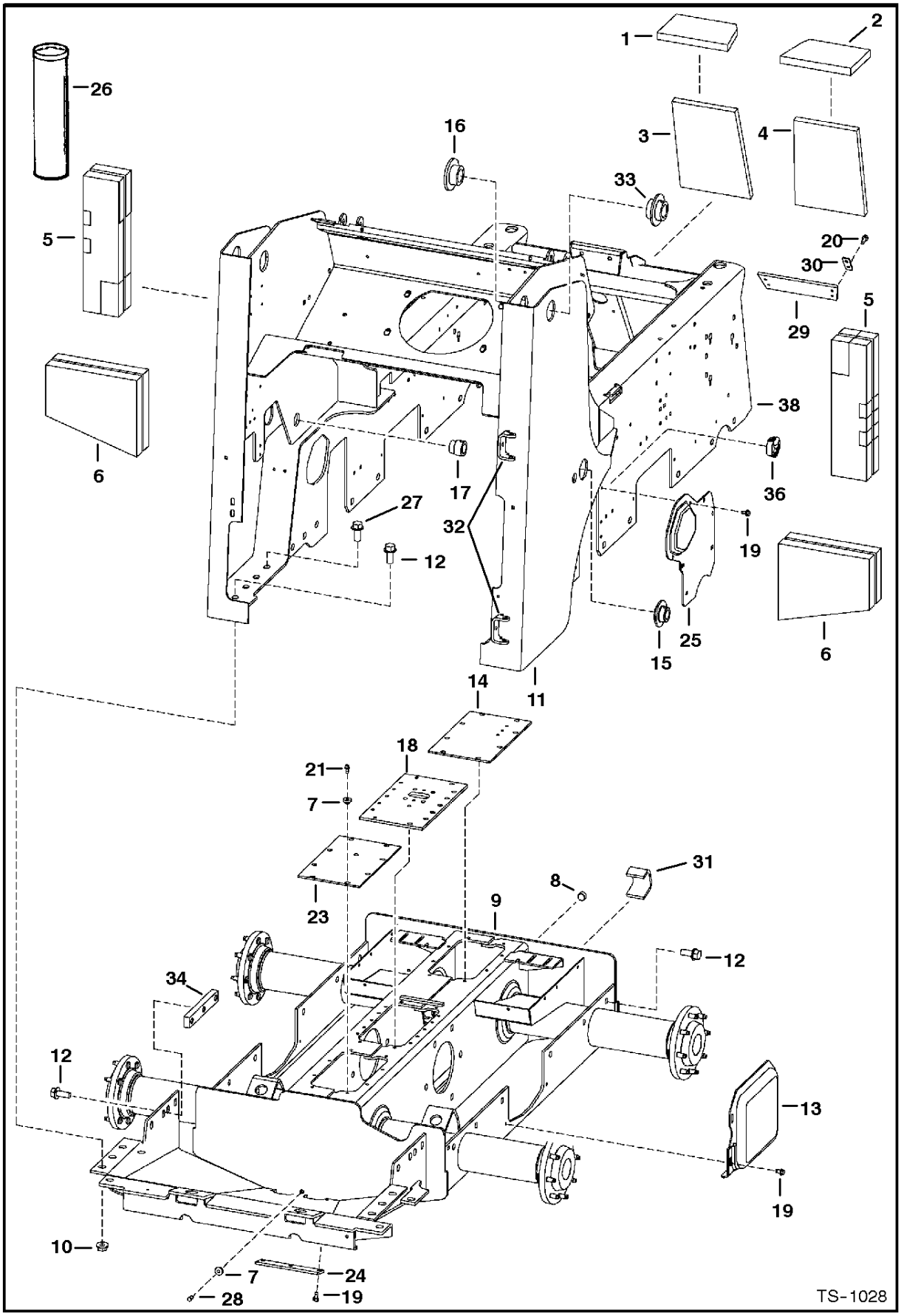
1
2
26
3
4
16
33
5
20
30
29
5
6
38
17
36
27
32
19
12
25
15
6
14
11
18
21
7
31
8
23
9
12
34
12
13
19
10
7
24
28
19
TS-1028

MAIN FRAME

Ref.N°	Part N°	Description	Remarks	Serial N°	Qty.
1	6703963	INSULATION	crossmember		1
2	6703964	INSULATION	crossmember		1
3	6703965	INSULATION	crossmember		1
4	6703969	INSULATION	crossmember		1
5	6703967	INSULATION	fender		2
6	6703968	INSULATION	transmission		2
7	6553411	BUSHING			1
8	6731121	PLUG	Was 11F-12 [A]		1
9	6719225	CHAINCASE	(See Page DRIVE TRAIN(6) - Was 6709771 [B]		1
10	53D-12	NUT	Was 83D-12 [B]		18
11	NAP	MAIN FRAME	Order 6725574, also Order 6726451 cover, 6726452 cover, Ref. MAIN FRAME(19) (8) & Ref. MAIN FRAME(27) (4) Was 6718303 [B]	& Bel.	1
11	6725574	MAIN FRAME		& Abv.	1
12	31C-1228	BOLT			20
13	6719168	COVER	Was 6719201 [A]		2
14		COVER	See Page DISC BRAKE(1) & * DISC BRAKE(2)		1
15	6705047	BUSHING	weld on		2
16	6718544	BUSHING	weld on - Was 6710744 [B]		2
17	6713823	BUSHING	weld on		2
18		COVER	See Page DISC BRAKE(1) & * DISC BRAKE(2)		1
19	84G-3712	BOLT			27
20	84G-3716	BOLT			8
21	6670627	BREATHER			1
22	6719333	INSULATION	blower housing		1
23		COVER	See Page DISC BRAKE(1) & * DISC BRAKE(2)		1
24	6700182	COVER			1
25	6719086	COVER	pump - right - Was 6717110 [B]	& Bel.	1
25	6726451	COVER	pump - right	& Abv.	1
25	6719085	COVER	pump - left - Was 6717111 [B]	& Bel.	1
25	6726452	COVER	pump - left	& Abv.	1
26	6633583	SEALANT	chaincase cover		x
27	6730078	COVER	cylinder hole	& Abv.	4
28	6599645	PLUG			1
29	6702164	SPACER	flexible		2
30	6579106	SHIM			4
31	6706485	HOOK	tie down - weldAon		2
32	6708987	BRACKET	weldAon		2
33	6718545	BUSHING	weldAon - Was 6710745 [B]		2
34	6706867	TUBELINE	Was 6706857 [B,D]		2
35	6718486	PLUG			2
36	6718796	PLUG	front crossmember & right fender - Was 6660646 [A]		2
37	6719332	INSULATION	blower housing		1
38	6731939	BRACE			2

OPERATOR CAB

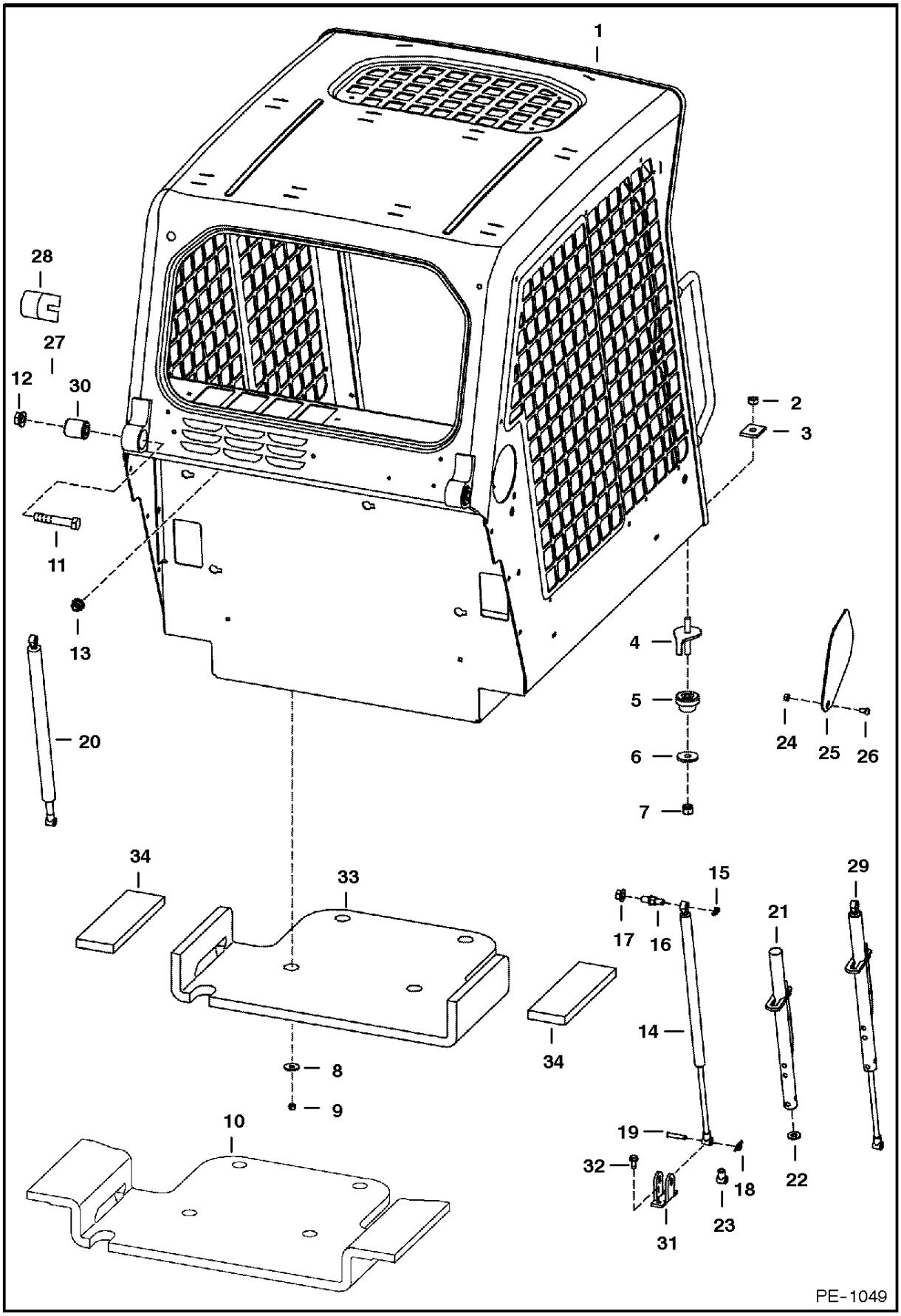

OPERATOR CAB

Ref.N°	Part N°	Description	Remarks	Serial N°	Qty.
1	6719672	OPERATOR CAB	does not include cab decals		1
2	59D-8	NUT			2
3	6553709	WASHER	rectangular		2
4	6702971	BOLT			2
5	6560633	MOUNT			2
6	6515817	WASHER			2
7	85D-8	NUT			2
8	619021	WASHER			4
9	59D-5	NUT			4
10	NAP	INSULATION	seat pan - Order 6729013 insulation & 6729012 (2) insulation - Was 6706982 [A]		1
11	17C-1056	BOLT			2
12	53D-10	NUT			2
13	53D-6	NUT			4
14	6675135	GAS SPRING	R.H.		1
15	6675140	SNAP RING			2
16	6719064	MOUNT	Was 6719005 [B,D]		2
17	83D-8	NUT			2
18	6631418	PIN	ring		2
19	6567743	PIN			2
20	6675134	GAS SPRING	L.H.		1
20	6675136	GAS SPRING	L.H. - for a cab W/ enclosure		1
21	6708189	TUBE	stop - R.H.		1
22	6701174	WASHER			1
23	6675257	ROD END			1
24	95D-5	NUT			2
25	6718784	COVER			2
26	25G-512	BOLT	Was 25G-510 [B]		2
27	6675033	INSERT			1
28	6579613	STOP			2
29	NAP	GAS SPRING	R.H. - W/ latch - Order Ref. OPERATOR CAB(14) & OPERATOR CAB(21)-OPERATOR CAB(23) - Was 6719072 [A]		1
30	6562602	BUSHING			2
31	6706349	MOUNT	gas spring		2
32	84G-3112	BOLT			4
33	6729013	INSULATION	seat pan		1
34	6729012	INSULATION	seat pan		2

OPERATOR CAB

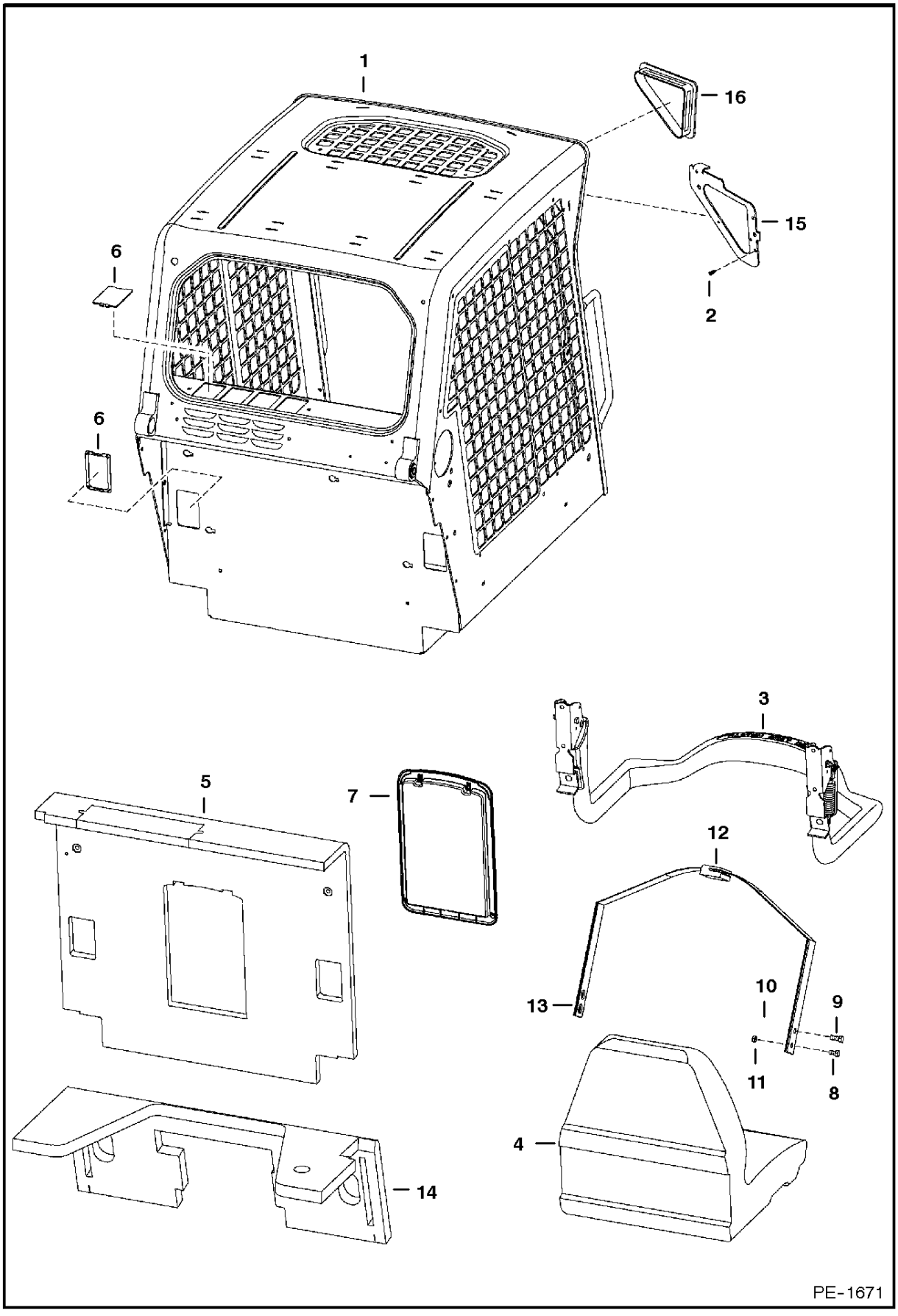

OPERATOR CAB

Ref.N°	Part N°	Description	Remarks	Serial N°	Qty.
1	6719672	OPERATOR CAB	does not include cab decals		1
2	6675033	INSERT			6
3		SEAT BAR	See Page SEAT & SEAT BAR(2)		1
4		SEAT	See Page SEAT & SEAT BAR(2)		1
5	6717516	INSULATION			1
6	6718101	COVER			6
7	6719503	CONTAINER	manuals - Was 6718508 [A]		1
7	6675524	CLIP			2
7	6725301	COVER			1
7	6725303	FRAME			1
8	17C-612	BOLT			2
9	17C-716	BOLT			2
10	85D-7	NUT			2
11	85D-6	NUT			2
12	NAP	SEAT BELT	Order 6675074 seat belt & Ref. OPERATOR CAB(13) (2) (6725373 spring plate) - Was 6667875 [A]		1
12	NAP	SEAT BELT	W/spring plates - Order 6675074 seat belt & Ref. OPERATOR CAB(13) (2) (6725373 spring plate) - Was 6725403 [A]		1
12	6675074	SEAT BELT	W/O spring plates		1
13	NAP	GUIDE	Order 6711908 spring plate, 6565355 guide & 6630207 rivet (2) - Was 6711907 [A]		2
13	6711908	SPRING PLATE	use W/Ref. OPERATOR CAB(12) (NAP/ 6667875 seat belt)		2
13	6725373	SPRING PLATE	use W/Ref. OPERATOR CAB(12) (6675074 seat belt)		2
14	6727299	INSULATION	Was 6719406 [A]		1
15	NSS	FRAME	L.H. - weldAon		1
15	NSS	FRAME	R.H. - weldAon		1
16	6674403	COVER	no lights		2

SEAT & SEAT BAR

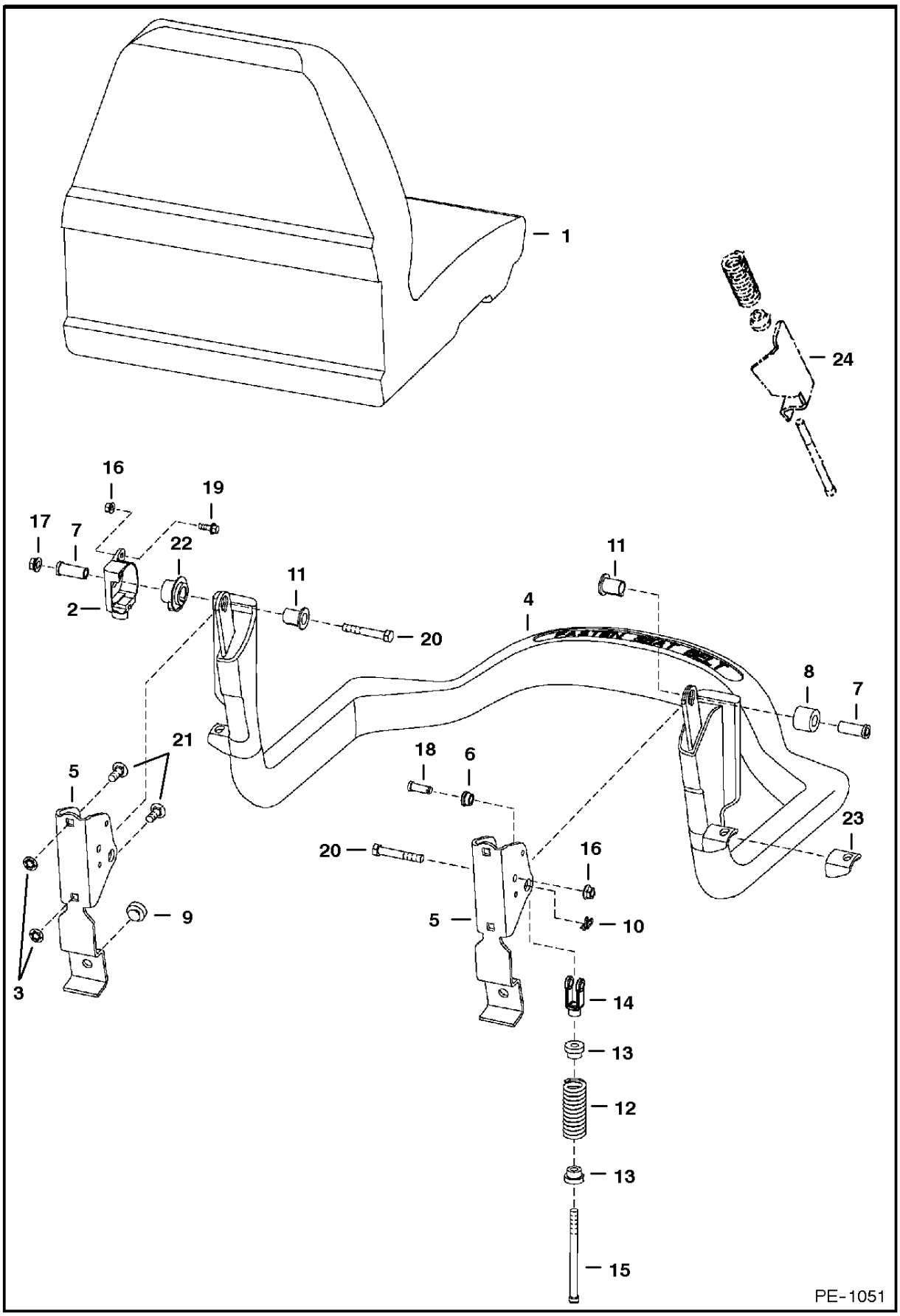

SEAT & SEAT BAR

Ref.N°	Part N°	Description	Remarks	Serial N°	Qty.
1		SEAT	See Page SEAT(1)		1
2	6674406	SENSOR			1
3	6674894	NUT			4
4	6715860	SEAT BAR			1
5	6715863	BRACKET			1
6	6715864	BUSHING			2
7	6715865	BUSHING			2
8	6715866	BUSHING			1
9	6519178	BUMPER			2
10	6631418	PIN	ring		2
11	6664882	BUSHING	keyed		2
12	6701535	SPRING			2
13	6710659	BUSHING			2
14	6713589	CLEVIS			2
15	6713887	BOLT			2
16	83D-4	NUT			1
17	53D-6	NUT			2
18	4F-6106	PIN			2
19	35C-412	BOLT			1
20	17C-640	BOLT			2
21	10C-616	BOLT			4
22	6674405	BUSHING			1
23	NAP	MOUNT	Order Ref. SEAT & SEAT BAR(4)	S/N & Abv.	2
24	NAP	MOUNT	Order Ref. SEAT & SEAT BAR(4)	S/N & Bel.	2

SEAT
(Michigan)

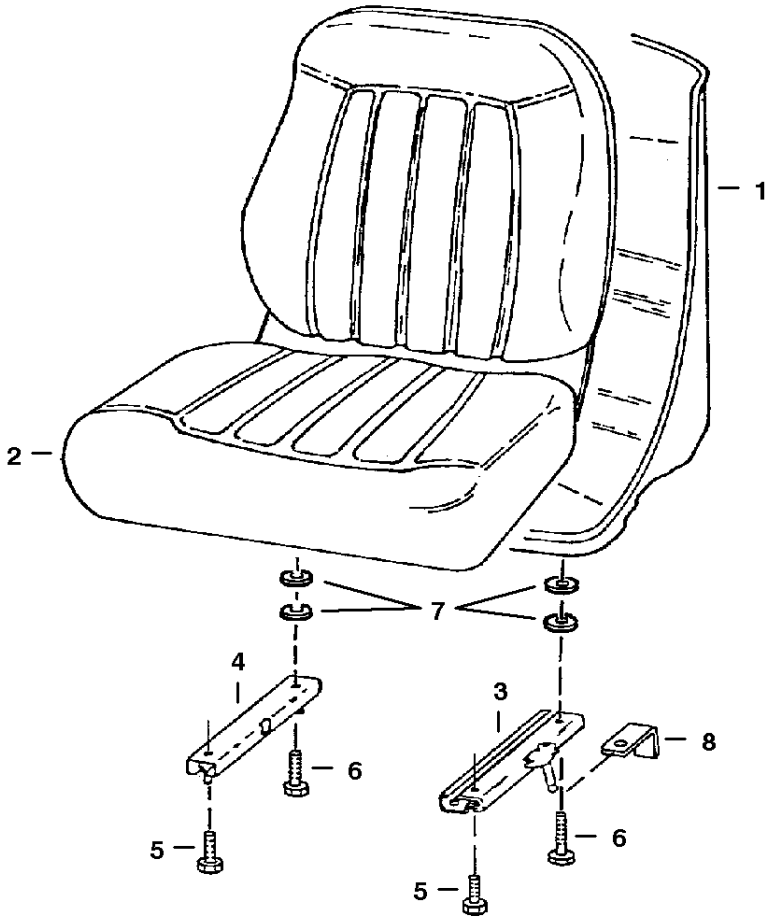

B-14720

SEAT

Ref.N°	Part N°	Description	Remarks	Serial N°	Qty.
1	6669135	SEAT	W/Ref. SEAT(2)-SEAT(7)		1
2	6670160	CUSHION	W/ edging, clip & (2) grommets		1
2	NSS	EDGING			1
2	NSS	CLIP			1
3	6674013	TRACK	L.H. - W/ latch		1
4	6669089	TRACK	R.H. - W/O latch		1
5	25G-512	BOLT			2
6	25G-520	BOLT			2
7	6672715	SPACER	Was 7000010 [A]		4
8	6668953	BRACKET			2

REAR DOOR
(S/N 5144 40001-49208, 5145 40001-41068, 5146 40001-41166)

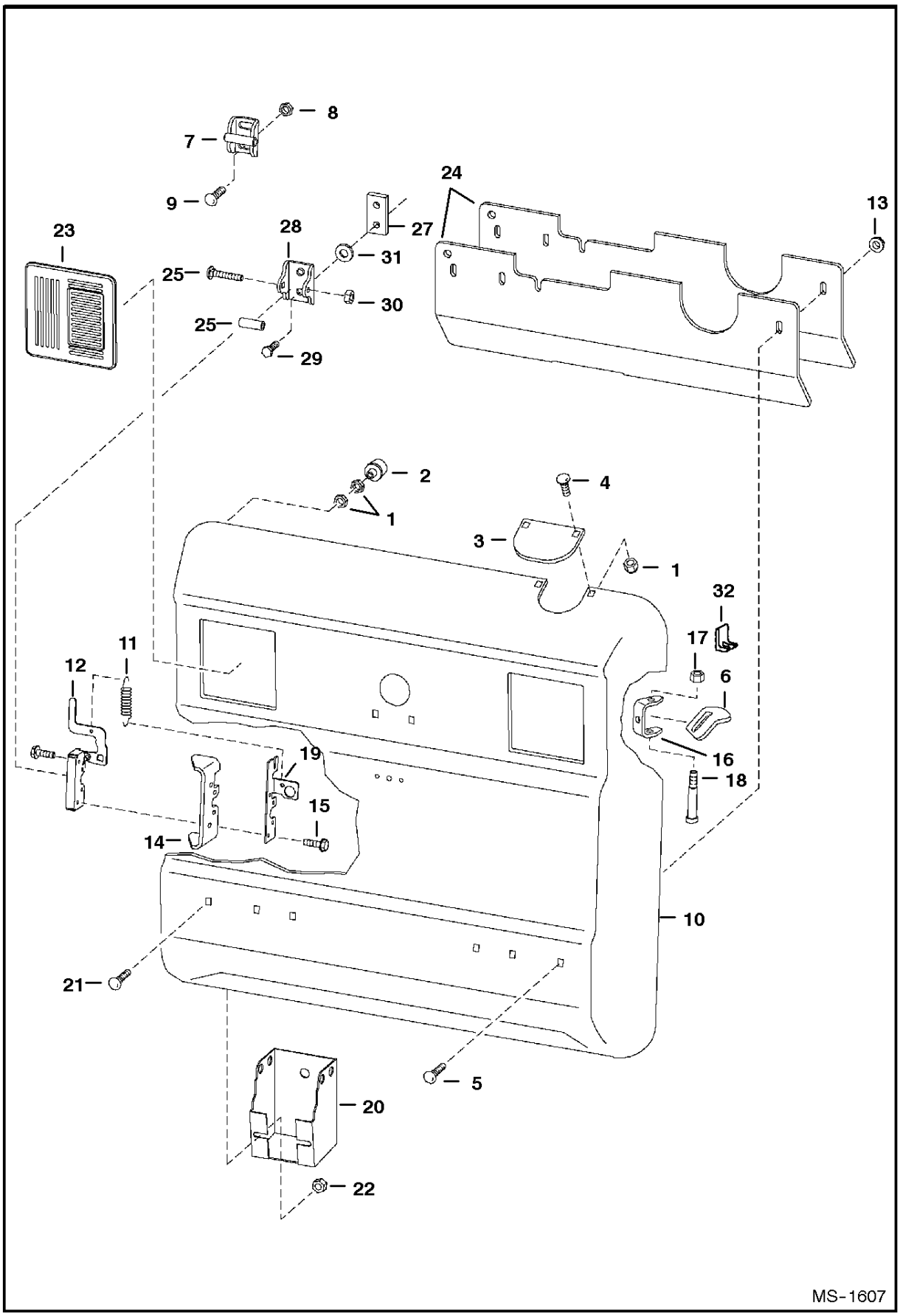

REAR DOOR

Ref.N°	Part N°	Description	Remarks	Serial N°	Qty.
1	61D-5	NUT			6
2	6655399	BUMPER	Was 6714454 [B]		2
3	6714509	COVER	exhaust		1
4	37C-512	BOLT			2
5	37C-628	BOLT			2
6	6714126	DOOR STOP			1
7	6715157	STRIKER ASSY.			1
8	83D-8	NUT			2
9	37C-820	BOLT	carriage		2
9	25G-820	BOLT	hex socket		2
10	6711524	REAR DOOR			1
11	6714210	SPRING			1
12	6670867	LATCH			1
13	57D-6	NUT			2
14	6711527	LATCH PLATE	weldAon		1
15	31C-420	BOLT			4
16	6711526	HINGE	weldAon		2
17	59D-6	NUT			2
18	38C-856	BOLT			2
19	6711664	GUIDE	latch		1
20	6715318	TOOL HOLDER			1
21	37C-612	BOLT			2
22	55D-6	NUT			2
23	6670287	COVER			2
24	6725256	WEIGHT	Was 6714053 [A]		2
25	6719550	TUBE	striker		1
26	6719524	STRIKER			1
27	6719525	BAR	threaded striker		1
28	37C-644	BOLT	carriage		1
29	17C-820	BOLT			2
30	61D-6	NUT			2
31	6675273	WASHER	lock		2
32	6719766	STOP			1

* REAR DOOR
(S/N 5144 49209, 5145 41069, 5146 41167 & Above)

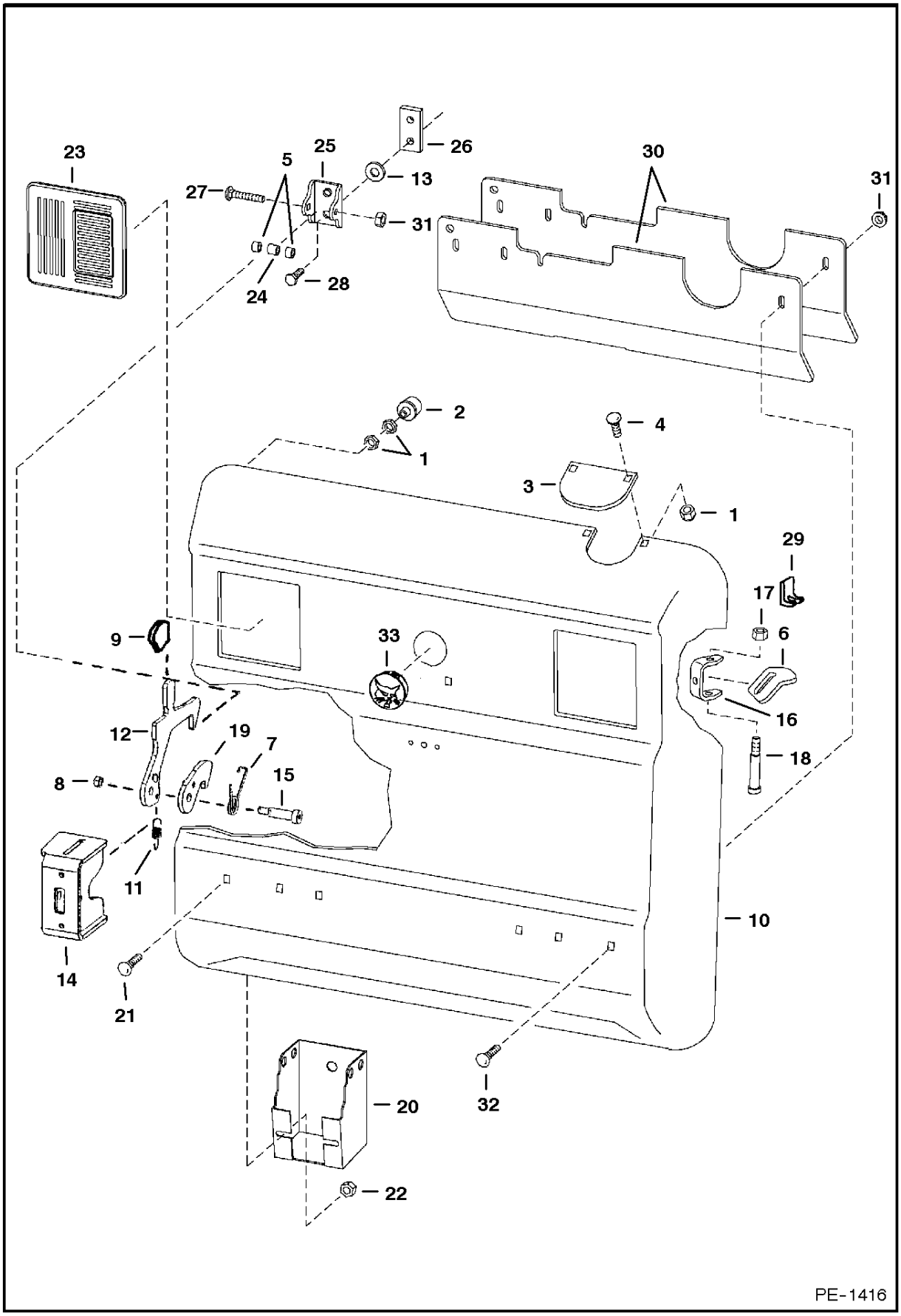

* REAR DOOR

Ref.N°	Part N°	Description	Remarks	Serial N°	Qty.
1	61D-5	NUT			6
2	6655399	BUMPER			2
3	6714509	COVER	exhaust		1
4	37C-512	BOLT			2
5	6809726	ROLLER			2
6	6714126	DOOR STOP			1
7	6810132	SPRING			1
8	85D-6	NUT			1
9	6564452	GRIP			1
10	6729991	REAR DOOR			1
11	6810141	SPRING			1
12	6729685	LATCH			1
13	6675273	WASHER	lock		2
14	6729939	LATCH PLATE	weldAon		1
15	38C-824	SCREW			1
16	6711526	HINGE	weldAon		2
17	59D-6	NUT			3
18	38C-856	BOLT			2
19	6811910	LATCH			1
20	6715318	TOOL HOLDER	Europe		1
21	37C-612	BOLT			2
22	55D-6	NUT			2
23	6670287	COVER			2
24	6809734	BUSHING			1
25	6809727	CHANNEL			1
26	6719525	BAR	threaded striker		1
27	38C-840	BOLT	carriage		1
28	17C-820	BOLT			2
29	6719766	STOP			1
30	6725256	WEIGHT			2
31	57D-6	NUT			2
32	37C-628	BOLT			2
33	6718796	PLUG	backAup alarm		1

LIFT ARM & BOB-TACH

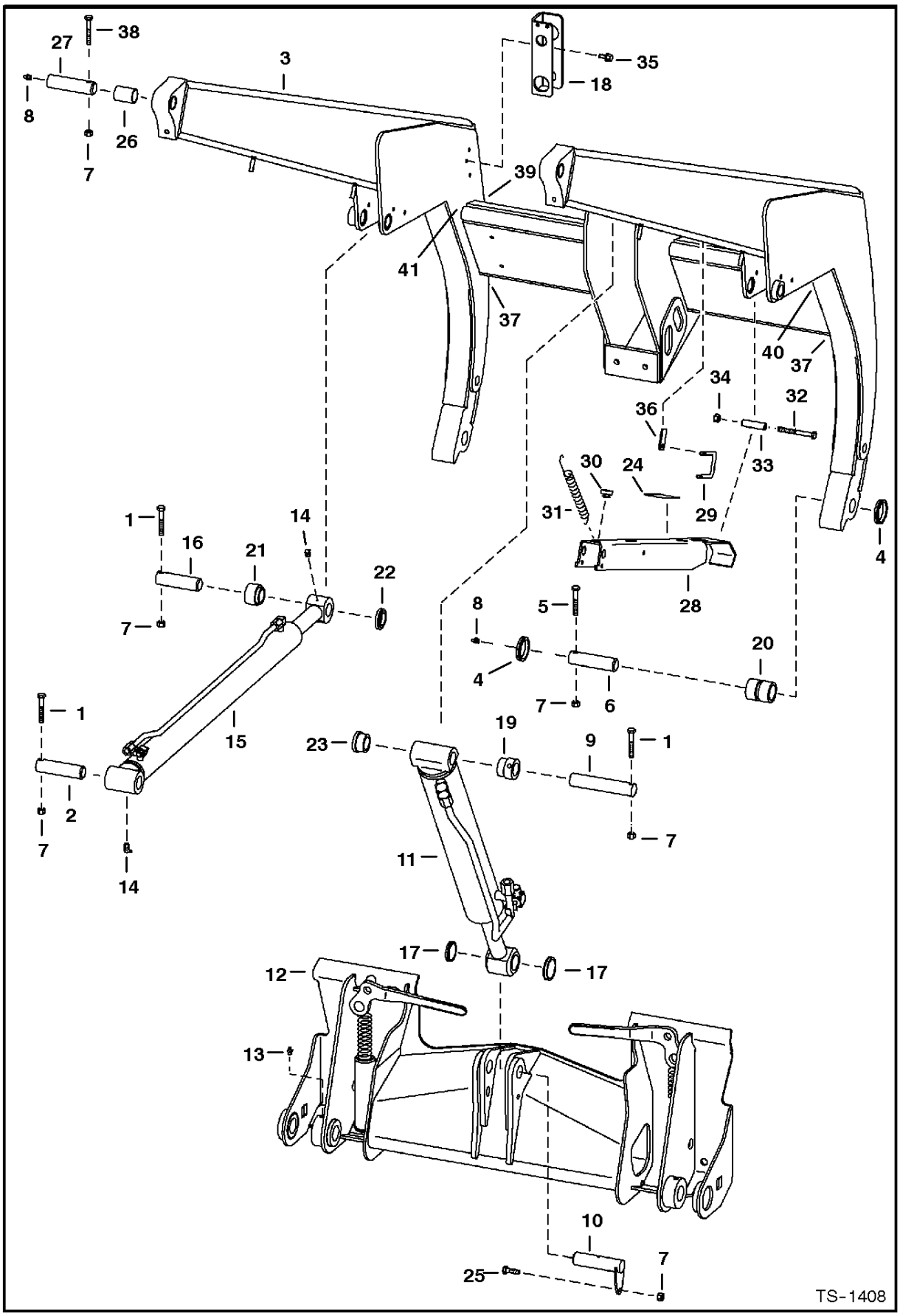

LIFT ARM & BOB-TACH

Ref.N°	Part N°	Description	Remarks	Serial N°	Qty.
1	17C-640	BOLT			5
2	6702935	PIN			2
3	6719265	LIFT ARM	Was 6709984 [B]		1
4	6631067	SEAL			4
5	17C-656	BOLT			2
6	6711334	PIN			2
7	85D-6	NUT			10
8	10H-25	GREASE ZERK			4
9	6704288	PIN			1
10	6716601	PIN	W/O grease zerk hole		1
11		CYLINDER	tilt - See Page TILT CYLINDER(3)		1
12		BOB-TACH	See Page BOB-TACH(3)		1
13	743332	GREASE ZERK			2
14	11H-15	GREASE ZERK			4
15		CYLINDER	lift - See Page LIFT CYLINDER(1)		2
16	6547593	PIN			2
17	225855	SEAL			2
18	6714665	MOUNT	See Page AUXILIARY HYDRAULICS(1)		1
19	6704287	BUSHING	weldAon		1
20	6708517	BUSHING	wear		2
21	6555987	BUSHING	weldAon		2
22	6558991	BUSHING	weldAon		2
23	6703363	BUSHING	weldAon		1
24	6704436	PAD	rubber - self adhesive		1
25	17C-620	BOLT			1
26	6718538	BUSHING	Was 6703448 [B]		2
27	6725597	PIN	Was 6718539 [B]		2
28	6710166	LIFT ARM STOP	assy		1
29	6714810	PIN	retainer		1
30	6519178	BUMPER			3
31	6579072	SPRING			1
32	17C-660	BOLT			1
33	6700533	SPACER			1
34	61D-6	NUT			1
35	84G-3716	BOLT	Was 84G-3712 [B]		2
36	6705091	TAB	weldAon		1
37	6719304	GUSSET	weldAon		2
38	17C-652	BOLT			2
39	6719215	BRACE	L.H. - weldAon		1
40	6719216	BRACE	R.H. - weldAon		1
41	6719231	PLATE	boom - weldAon		2

BOB-TACH

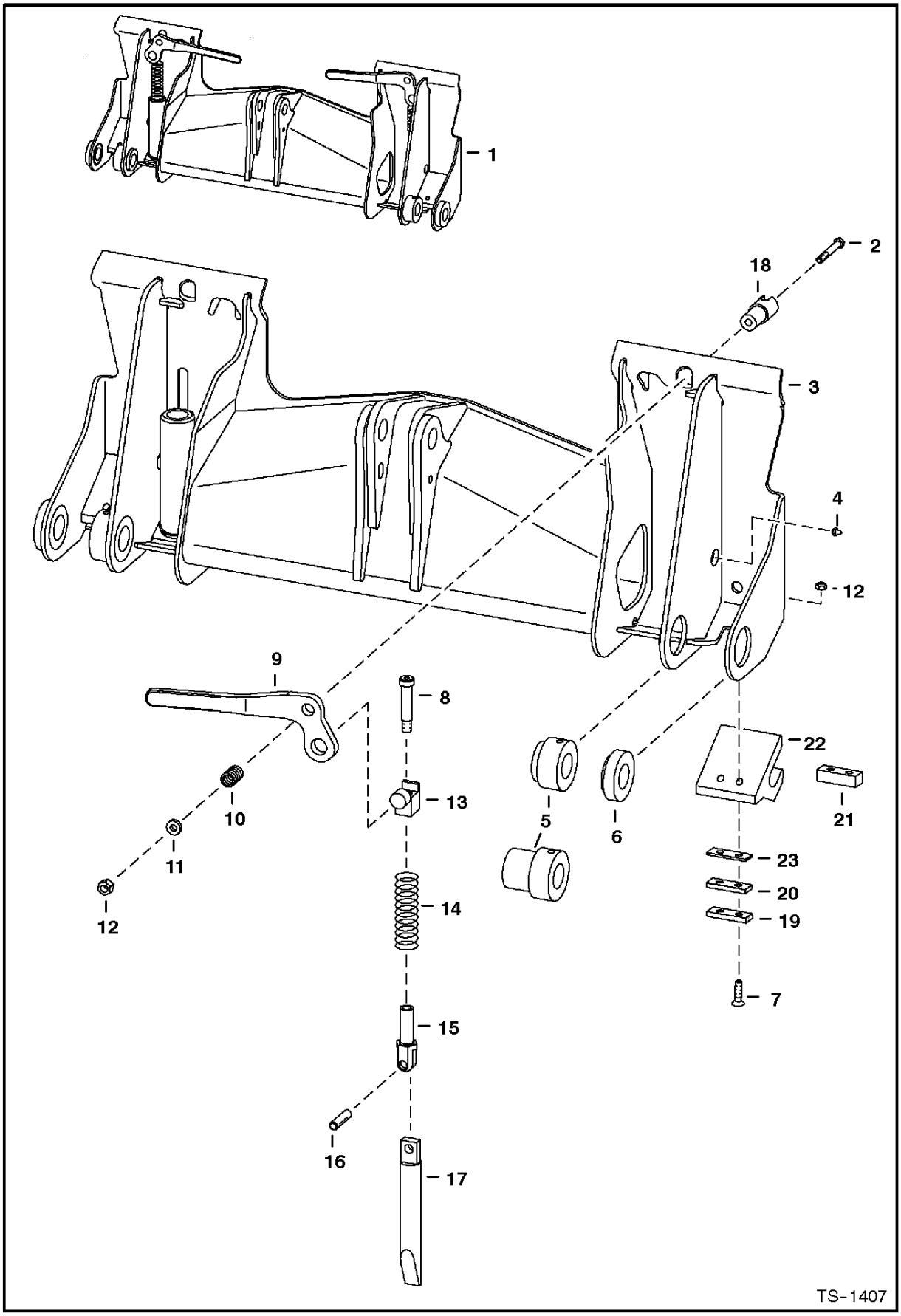

BOB-TACH

Ref.N°	Part N°	Description	Remarks	Serial N°	Qty.
1	6718752	BOB-TACH	Was SALES		2
2	17C-660	BOLT			2
3	NSS	FRAME	Order Ref. BOB-TACH(1)		1
4	10H-35	GREASE ZERK			2
5	6713156	BUSHING	weldAon - 5.7' (145mm) long		2
6	6711404	BUSHING	weldAon		2
7	9G-620	BOLT			4
8	6728473	SCREW	shoulder - Was 38C-1036 [A]		2
9	6702904	LEVER	R.H.		1
9	6702903	LEVER	L.H.		1
10	6713040	SPRING			2
11	619021	WASHER			2
12	85D-6	NUT			2
13	6714576	PIVOT	Was 6704240 [A]		2
14	6562018	SPRING			2
15	6704248	PIVOT	wedge		2
16	14J-5032	PIN			2
17	6704242	WEDGE ASSY.			2
18	6702958	BUSHING	weldAon		2
19	6579104	SHIM	.25'		2
20	6579106	SHIM	.125'		2
21	6711516	STOP	weldAon		2
22	6713526	STOP	weldAon		2
23	6707514	SHIM	.06' thick		2

PANELS

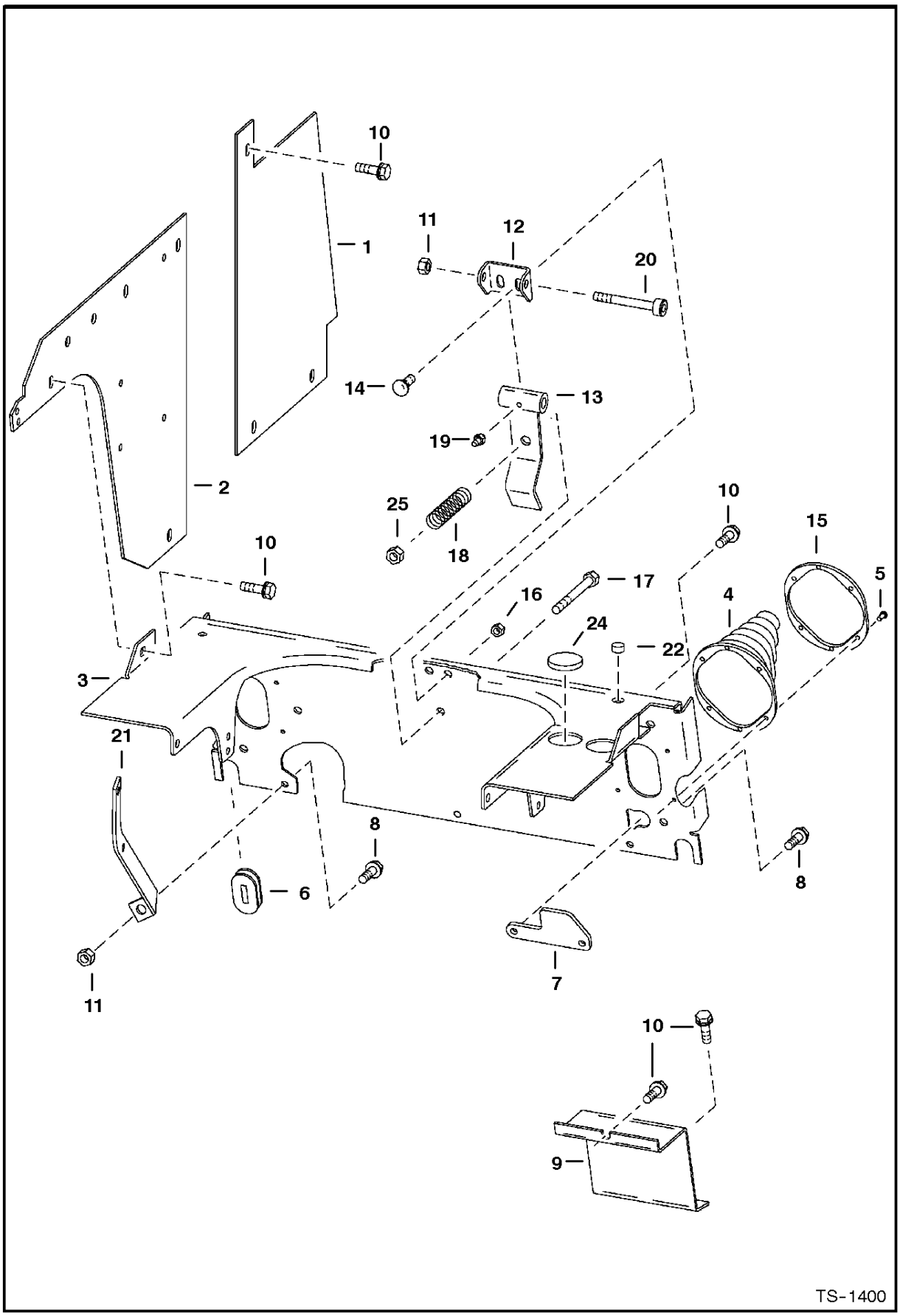
10
1
11
12
20
14
13
19
2
25
18
10
10
15
5
16
17
4
24
22
3
21
8
6
8
11
7
10
9
TS-1400

PANELS

Ref.N°	Part N°	Description	Remarks	Serial N°	Qty.
1	6729786	PANEL	Was 6718487 [A]		2
2	6729787	PANEL	Was 6719376 [A]		2
3	6718305	SHIELD	Was 6716681 [B]		1
4	6532127	BOOT	W/Ref. PANELS(15)		2
5	6630207	RIVET			8
6	6577961	GROMMET			2
7	com32-}H~10{ M				x
8	84G-3716	BOLT			2
9	6700772	PANEL			2
10	84G-3712	BOLT		& Bel.	21
10	84G-3712	BOLT		& Abv.	23
11	95D-6	NUT			1
12	6701951	MOUNT			1
13	6701950	SPRING PLATE			1
14	10C-512	BOLT			2
15	NAP	PLATE	Order Ref. PANELS(4)		2
16	59D-5	NUT			2
17	17C-664	BOLT			1
18	6505082	SPRING			1
19	10H-25	GREASE ZERK			1
20	38C-836	BOLT			1
21	6703551	BRACE			1
22	6649949	PLUG			2
23	616783	WASHER			2
24	6707674	PLUG		S/N & Bel.	1
25	59D-6	NUT			1
26	6718915	PANEL	Was 6716865 [B]		1
27	6716800	INSULATION	panel		1
28	6701674	INSULATION	panel		1
29	6729774	COVER		& Abv.	2

FUEL SYSTEM

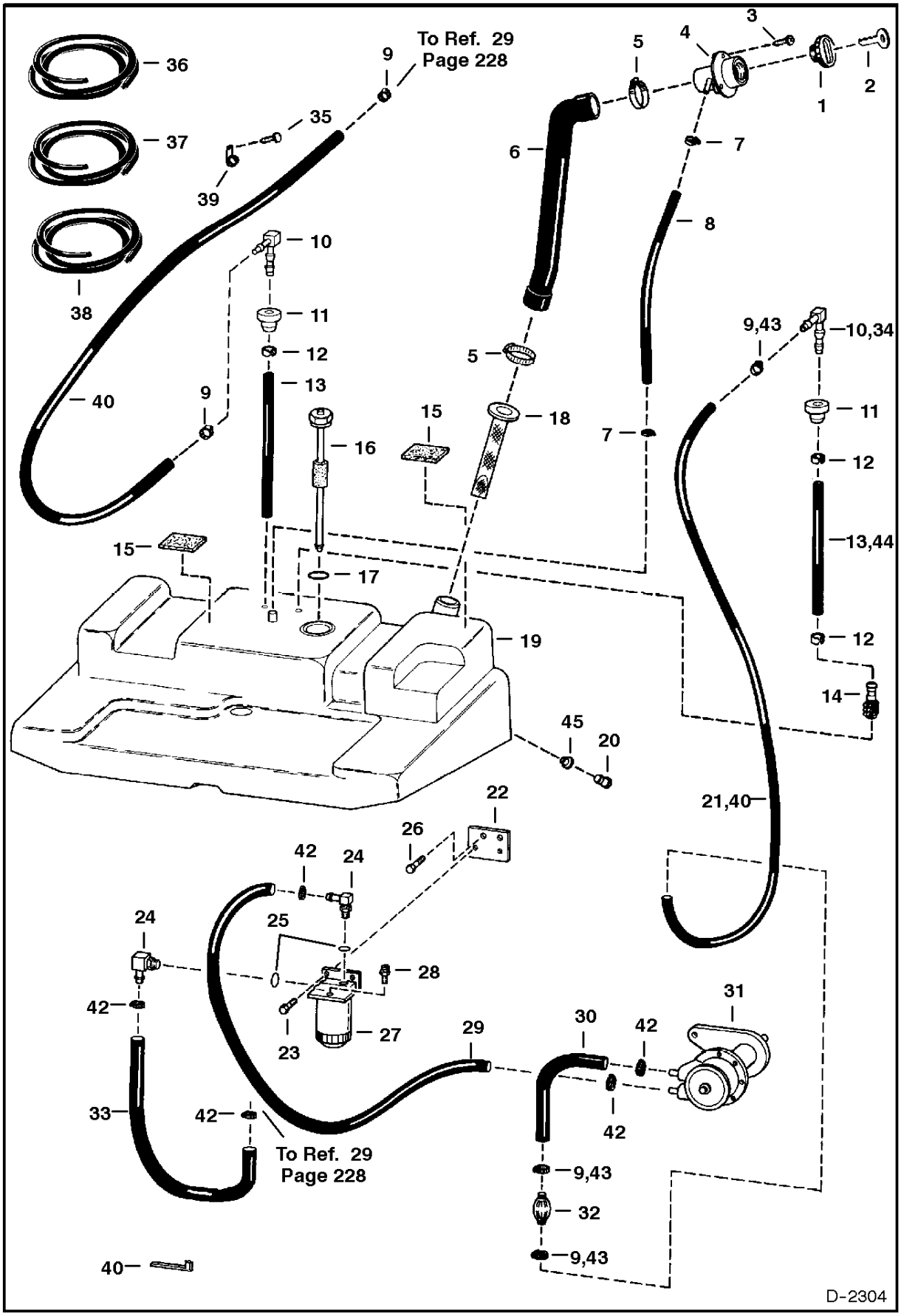
To Ref. 29
Page 228
36
37
38
39
35
9
40
10
11
12
13
16
15
17
18
5
6
4
3
2
1
7
8
9,43
10,34
11
12
13,44
12
14
19
45
20
21,40
22
26
42
24
25
28
27
23
29
30
31
33
To Ref. 29
Page 228
9,43
32
9,43
D-2304

FUEL SYSTEM

Ref.N°	Part N°	Description	Remarks	Serial N°	Qty.
1	6661114	CAP	green fuel fill - W/Ref. FUEL SYSTEM(2)		1
1	6661696	FUEL CAP	locking - W/Ref. FUEL SYSTEM(2) - code PK510		1
2	6587458	KEY SET	code PK510		1
3	6706517	SCREW			3
4	6701449	FILLER TUBE			1
5	42H-32	CLAMP	Was 42H-24 [B]		2
6	6710277	HOSE			1
7	42H-10	CLAMP			2
8	NAP	HOSE	38" (965,2 mm) long - Order Ref. FUEL SYSTEM(36)		1
9	5HM-13	CLAMP	Was 6515575 [A]		10
10	6598908	ELBOW		& Bel.	1
10	6598908	ELBOW		& Abv.	2
11	6553411	BUSHING			1
12	6661213	CLAMP		& Bel.	3
13	6579554	HOSE		& Bel.	2
13	6579554	HOSE		& Abv.	1
14	6650239	SCREEN		& Bel.	1
15	6578278	PAD	self adhesive one side		2
16	NAP	SENSOR	fuel - W/Ref. FUEL SYSTEM(17) - See Page ENGINE ELECTRICAL(5) - Was 6669642 [A]		1
16	6674209	SENSOR	fuel - W/Ref. FUEL SYSTEM(17) - See Page ENGINE ELECTRICAL(5)		1
17	6717579	GASKET	rubber		1
18	6569219	SCREEN			1
19	6708527	TANK			1
20	6717401	PLUG	.75' (19mm) shoulder		1
21	NAP	HOSE	(30" (762 mm) long - Order Ref. FUEL SYSTEM(37)	& Bel.	1
22	6710488	MOUNT			1
23	53CM-830	BOLT			2
24	6715183	ELBOW	W/Ref. FUEL SYSTEM(25) - tapered boss face		2
25	99K-5	O-RING	tapered boss face		2
26	43C-512	BOLT			2
27	6667353	FILTER ASSY			1
27	6667352	FILTER			1
27	72F-1	DRAIN COCK			1
28	6658180	PLUG	plug		1
29	NAP	HOSE	(14" (356mm) long - Order Ref. FUEL SYSTEM(37)	& Bel.	1
29	NAP	HOSE	(13" (330mm) long - Order Ref. FUEL SYSTEM(37)	& Abv.	1
30	NAP	HOSE	(9.5" (241mm) long - Order Ref. FUEL SYSTEM(37)	& Bel.	1
30	NAP	HOSE	(9.25" (235mm) long - Order Ref. FUEL SYSTEM(38)	& Abv.	1
31	6666522	FUEL PUMP	See Page FUEL INJECTION SYSTEM(9)		1
32	6667170	PUMP	hand primer	& Bel.	1
32	6657734	PUMP	hand primer	& Abv.	1
33	NAP	HOSE	17.5" (445mm) long - Order Ref. FUEL SYSTEM(37)		1
34	6726567	ELBOW	Was 6666302 [B]	& Bel.	1
35	1CM-816	BOLT			1
36	6578172	HOSE	bulk - sold per foot		x
37	6577822	HOSE	.375 I.D. - bulk - sold per foot		x
38	6577821	HOSE	.25" I.D. - bulk - sold per foot		x
39	30H-30	CLAMP			1
40	6610510	NYLON TIE			1
41	NAP	HOSE	29.5' (749mm) long - Order Ref. FUEL SYSTEM(38)	& Bel.	1
41	NAP	HOSE	29.5' (749mm) long - Order Ref. FUEL SYSTEM(38)	& Abv.	2
42	5HM-14	CLAMP			5
43	5HM-15	CLAMP			3
44	6729854	HOSE	12.5' (318mm) long	& Abv.	1

FUEL SYSTEM

Ref.N°	Part N°	Description	Remarks	Serial N°	Qty.
45	6717402	BUSHING			1

DRIVE TRAIN

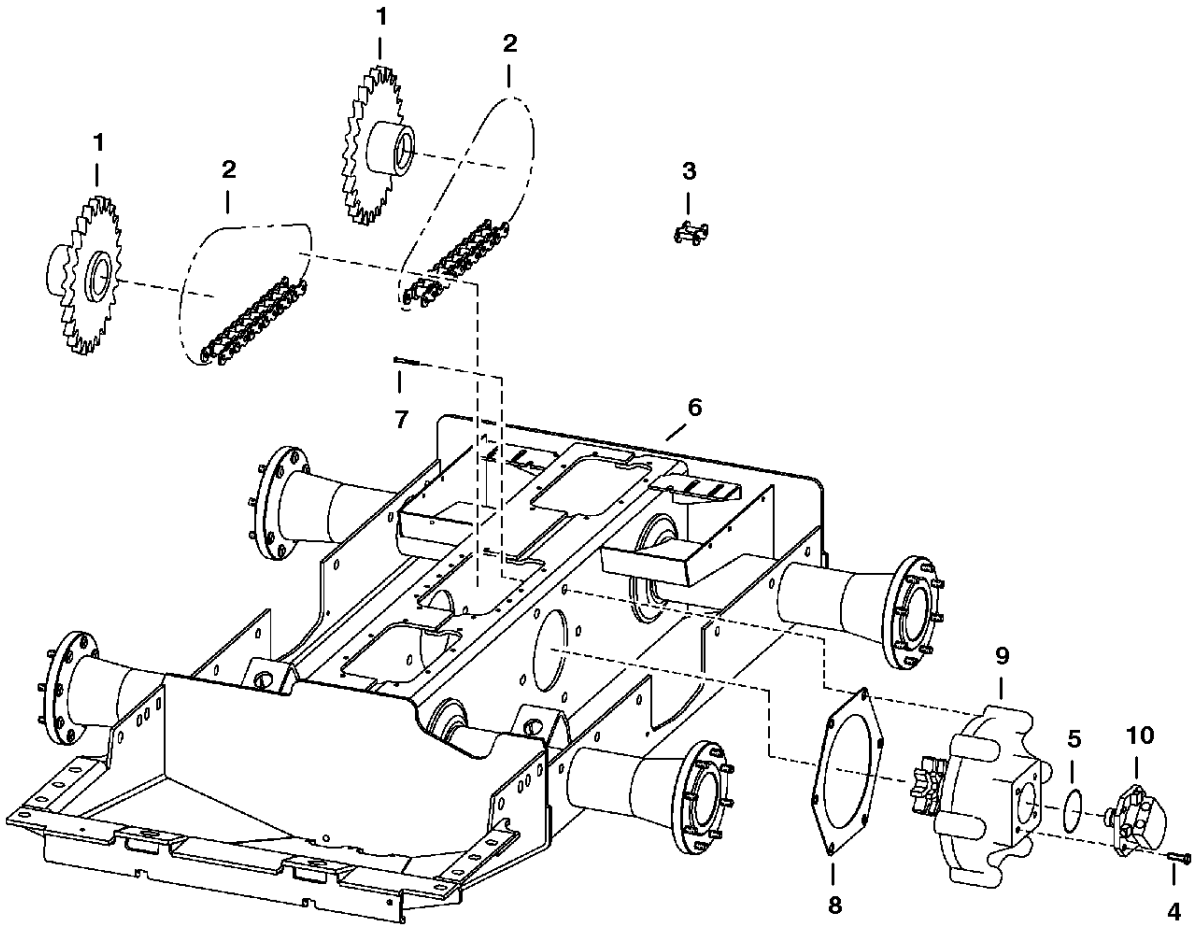

TS-1425

DRIVE TRAIN

Ref.N°	Part N°	Description	Remarks	Serial N°	Qty.
1	6568918	SPROCKET			4
2	NAP	CHAIN	endless - 54 pitches - hour glass shaped links - Was 6709823 [A]		4
2	6675327	CHAIN	endless - 54 pitches - oval shaped links		4
3	6510614	LINK	conn. - Diamond - hour glass shape		x
3	6675333	LINK	conn. - Diamond - oval shape		x
4	6717806	BOLT			20
5	25K-30812	O-RING			2
6	6719225	CHAINCASE	Was 6709771 [B]		1
7	6673642	BOLT			12
8	6704879	GASKET			2
9	6717296	MOUNT ASSY.	drive motor - See Page MOTOR CARRIER(1)		2
10		MOTOR	See Page HYDROSTATIC MOTOR(4)		2

MOTOR CARRIER
(Drive Motor Mount Assy.)

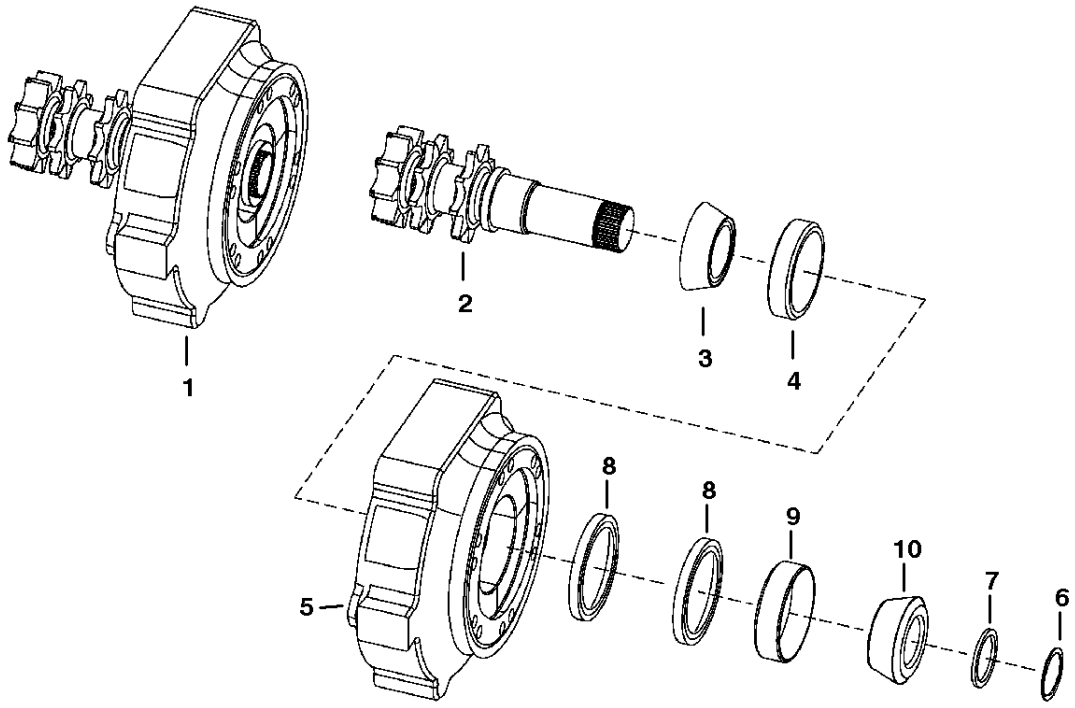

TS-1227

MOTOR CARRIER

Ref.N°	Part N°	Description	Remarks	Serial N°	Qty.
1	6717296	MOUNT ASSY.	drive motor - Ref. MOTOR CARRIER(2)-MOTOR CARRIER(10)		1
2	6706805	SHAFT	W/snap ring groove		1
3	6664845	BEARING			2
4	6650120	RACE			1
5	6717242	HOUSING			1
6	6664848	SNAP RING	.118' (3,0mm) thickness		1
7	6706817	SPACER	.152' (3,86mm) thickness		1
7	6715427	SPACER	.164' (4,16mm) thickness		1
8	6665755	SEAL			2
9	6664847	CUP			1
10	6664846	BEARING			1

DISC BRAKE
(S/N 5144 45999, 5145 40999, 5146 40999 & Below)

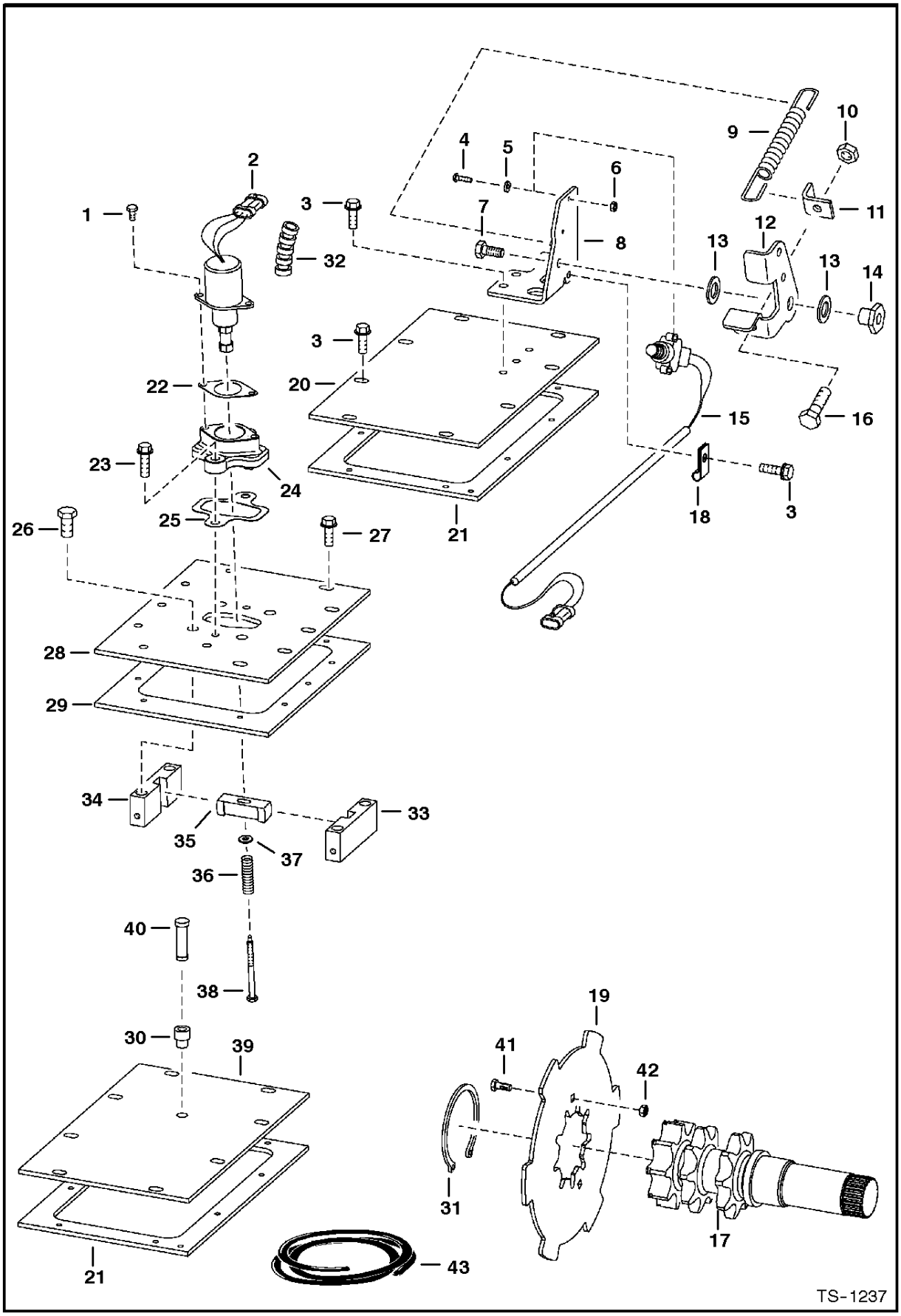

DISC BRAKE

Ref.N°	Part N°	Description	Remarks	Serial N°	Qty.
1	17C-412	BOLT			2
2	6667992	SOLENOID			1
3	84G-3712	BOLT			16
4	23G-812	SCREW			2
5	25E-8	WASHER			2
6	12D-8	NUT			2
7	17C-610	BOLT			1
8	6707313	PEDAL MOUNT			1
9	6585860	SPRING			1
10	95D-6	NUT			1
11	6707315	ANGLE			1
12	6707314	PEDAL	brake		1
13	6700170	WASHER	plastic		2
14	6559479	NUT			1
15	6707337	SWITCH	W/ cover and connector		1
15	6664880	SWITCH			1
16	17C-620	BOLT			1
17	6706805	SHAFT	See Page MOTOR CARRIER(2) - Was 6706310 [B]		2
18	30H-23	CLAMP			1
19	6715630	BRAKE	disc		2
20	6578505	COVER	See Page MAIN FRAME(1)		1
21	6703097	GASKET			2
22	6706737	GASKET			1
23	84G-3720	BOLT			2
24	6706718	MOUNT			1
25	6708016	GASKET			1
26	47C-820	BOLT			4
27	84G-3716	BOLT			18
28	6706683	COVER	single speed - See Page MAIN FRAME(1)		1
28	6725496	COVER	two speed - See Page MAIN FRAME(1)		1
29	6708070	GASKET			1
30	6553411	BUSHING			1
31	6662298	SNAP RING			2
32	NAP	CONDUIT	5' (127mm) long - Order Ref. DISC BRAKE(32)		1
33	6719056	BLOCK	guide - R.H.		1
34	6719057	BLOCK	guide - L.H.		1
35	6714278	WEDGE			1
36	6708018	SPRING			1
37	25E-13	WASHER			1
38	6708267	BOLT			2
39	6700330	COVER	See Page MAIN FRAME(1)		1
40	6670627	BREATHER	See Page MAIN FRAME(1) - Was 6646626 [A]		1
41	37C-512	BOLT			4
42	59D-5	NUT			4
43	6584978	CONDUIT	bulk - sold per foot		x

* DISC BRAKE
(S/N 5144 46001, 5145 41001, 5146 41001 & Above)

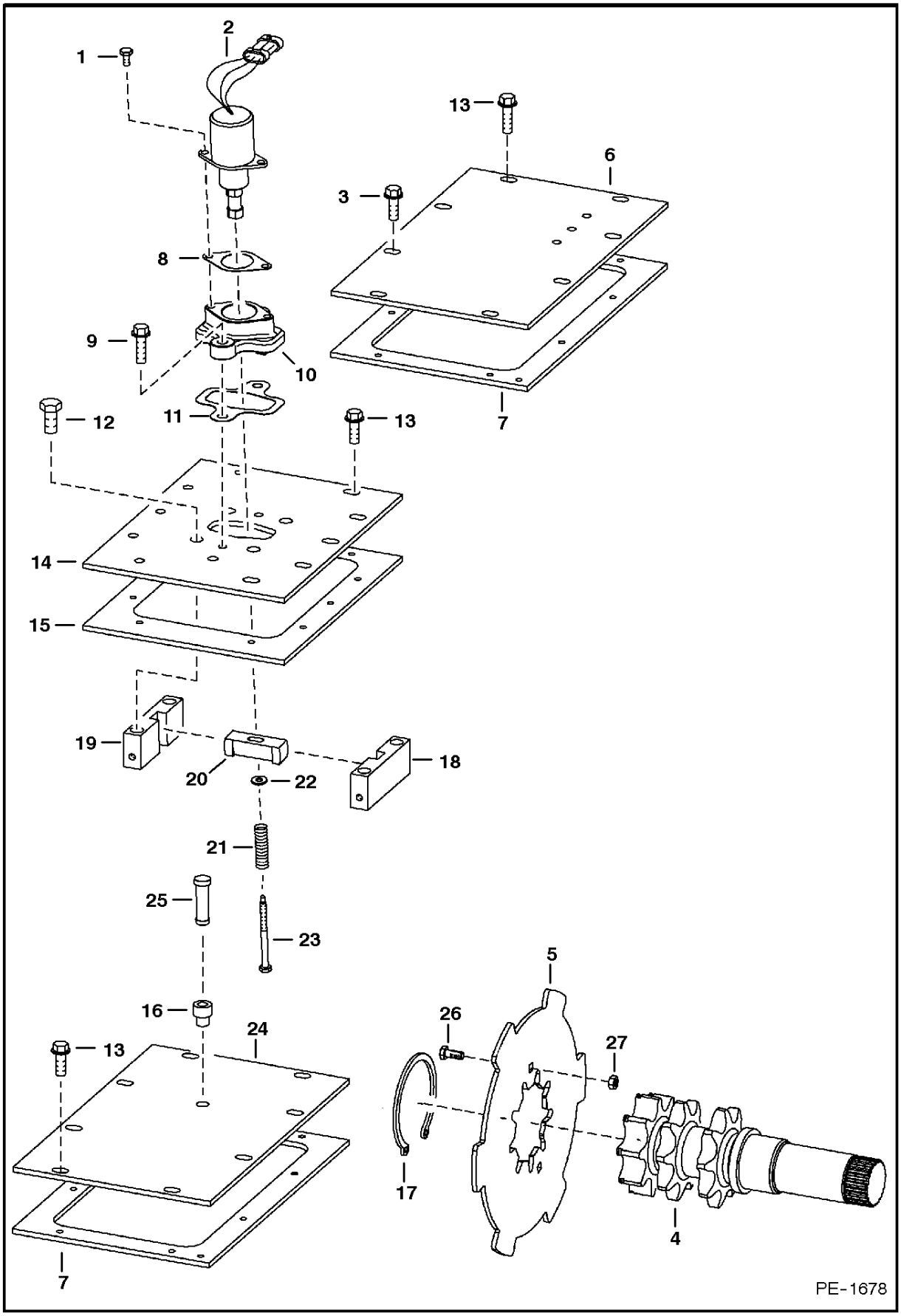

* DISC BRAKE

Ref.N°	Part N°	Description	Remarks	Serial N°	Qty.
1	17C-412	BOLT			2
2	6667992	SOLENOID			1
3	84G-3712	BOLT			12
4	6706805	SHAFT	See Page MOTOR CARRIER(2)		2
5	6715630	BRAKE	disc		2
6	6729173	COVER	See Page MAIN FRAME(1)		1
7	6703097	GASKET			2
8	6706737	GASKET			1
9	84G-3720	BOLT			2
10	6706718	MOUNT			1
11	6708016	GASKET			1
12	47C-820	BOLT			4
13	84G-3716	BOLT			18
14	6706683	COVER	single speed - See Page MAIN FRAME(1)		1
14	6725496	COVER	two speed - See Page MAIN FRAME(1)		1
15	6708070	GASKET			1
16	6553411	BUSHING			1
17	6662298	SNAP RING			2
18	6719056	BLOCK	guide - R.H.		1
19	6719057	BLOCK	guide - L.H.		1
20	6714278	WEDGE	for brake disc		1
21	6708018	SPRING			1
22	25E-13	WASHER			2
23	6708267	BOLT			2
24	6700330	COVER	See Page MAIN FRAME(1)		1
25	6670627	BREATHER	See Page MAIN FRAME(1)		1
26	37C-512	BOLT	carriage		4
27	59D-5	NUT			4

AXLE

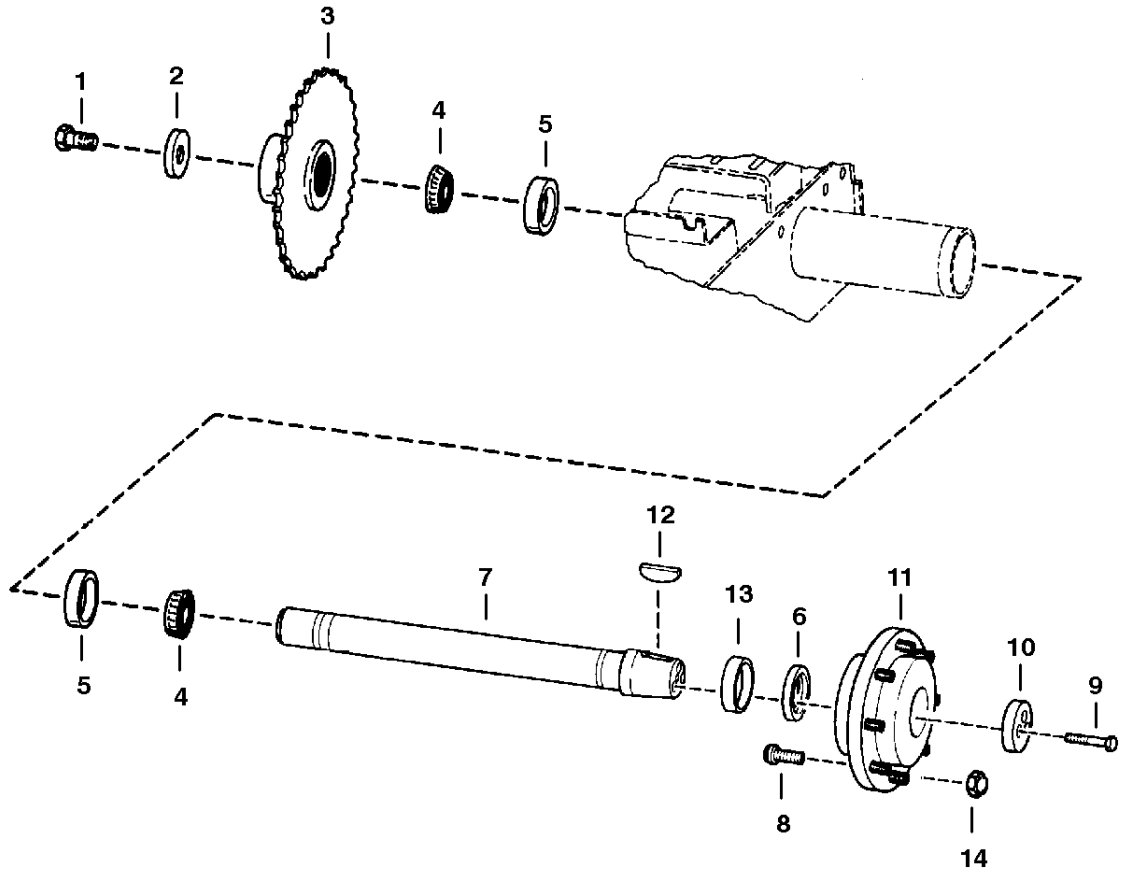

NOTE: Before ordering seal, Ref. 6 determine if axle, Ref. 7, uses wear ring.
W/wear ring Order 6658229
W/O wear ring Order Ref. 6671138

C-3151

AXLE

Ref.N°	Part N°	Description	Remarks	Serial N°	Qty.
1	2C-1626	BOLT			1
2	6558694	WASHER			1
3	6568918	SPROCKET			1
4	1321608	BEARING			2
5	1321607	RACE			2
6	6658229	SEAL	oil - use W/Ref. AXLE(13) - SEE NOTE		1
6	6671138	SEAL	oil - SEE NOTE		1
7	6709757	AXLE	W/O wear ring		1
8	6709170	STUD	wheel		8
9	17C-1024	BOLT			3
10	6565947	CAP	recessed		1
11	6578857	HUB	W/Ref. AXLE(8)		1
12	6J-1664	KEY			1
13	6558693	RING	wear		1
14	6564669	NUT	wheel		8

HYDRAULIC CIRCUITRY
(W/O Bucket Positioning Valve) (S/N 5144 47863, 5145 41045, 5146 41130 & Below)

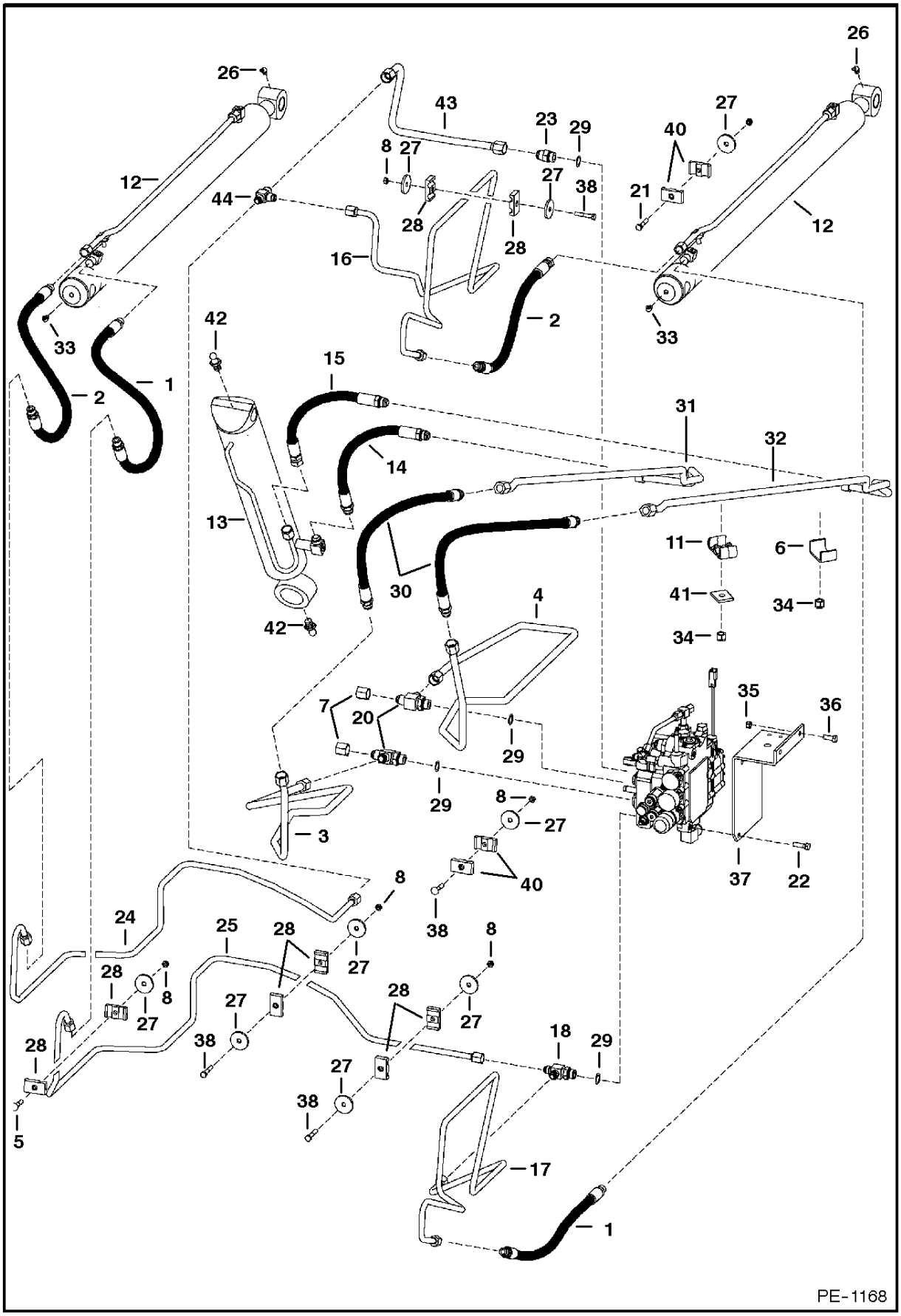

HYDRAULIC CIRCUITRY

Ref.N°	Part N°	Description	Remarks	Serial N°	Qty.
1	6669460	HOSE			1
2	6669461	HOSE			1
3	6719027	TUBE			1
4	6719354	TUBE			1
5	10C-528	BOLT			2
6	6718754	CLAMP			1
7	36K-7	CAP			2
8	85D-5	NUT			5
9	30H-46	CLAMP			1
10	17C-532	BOLT			1
11	6717933	CLAMP	Was 6502203 [B,D]		1
12		CYLINDER	lift - See Page LIFT CYLINDER(1)		2
13		CYLINDER	tilt - See Page TILT CYLINDER(3)		1
14	6578773	HOSE			1
15	6578774	HOSE			1
16	6718971	TUBE			1
17	6718167	TUBE			1
18	6715187	TEE	W/Ref. HYDRAULIC CIRCUITRY(29) - tapered boss face		1
18	97K-8	O-RING	flared end		1
19	83D-5	NUT			2
20	21KN-7	TEE	W/Ref. HYDRAULIC CIRCUITRY(29)		2
20	97K-10	O-RING	flared end		x
21	84G-3728	BOLT			1
22	17C-620	BOLT	Was 6717378 [B]		2
23	15KV-7	ADAPTER	W/Ref. HYDRAULIC CIRCUITRY(29) - tapered boss face		2
23	97K-10	O-RING	flared end		x
24	6718946	TUBE	Was 6719946 [B,D]		1
25	6718947	TUBE	Was 6719947 [B,D]		1
26	12H-15	GREASE ZERK			2
27	872229	WASHER			8
28	6701892	CLAMP			8
29	99K-10	O-RING	tapered boss face		x
30	6669674	HOSE			2
31	6718161	TUBE			1
32	6718162	TUBE			1
33	11H-15	GREASE ZERK			2
34	59D-8	NUT			1
35	85D-6	NUT			2
36	17C-616	BOLT			2
37	6710301	BRACKET			1
38	17C-528	BOLT			3
39	17C-544	BOLT			1
40	6701893	CLAMP			4
41	6553709	WASHER	rectangular		1
42	10H-25	GREASE ZERK			2
43	6718878	TUBE			1
44	6718911	TEE	Was 6716061 [B,D]		1
44	97K-8	O-RING	flared end		1
44	97K-10	O-RING	flared end		x

HYDRAULIC CIRCUITRY
(W/Bucket Positioning Valve) (S/N 5144 47863, 5145 41045, 5146 41130 & Below)

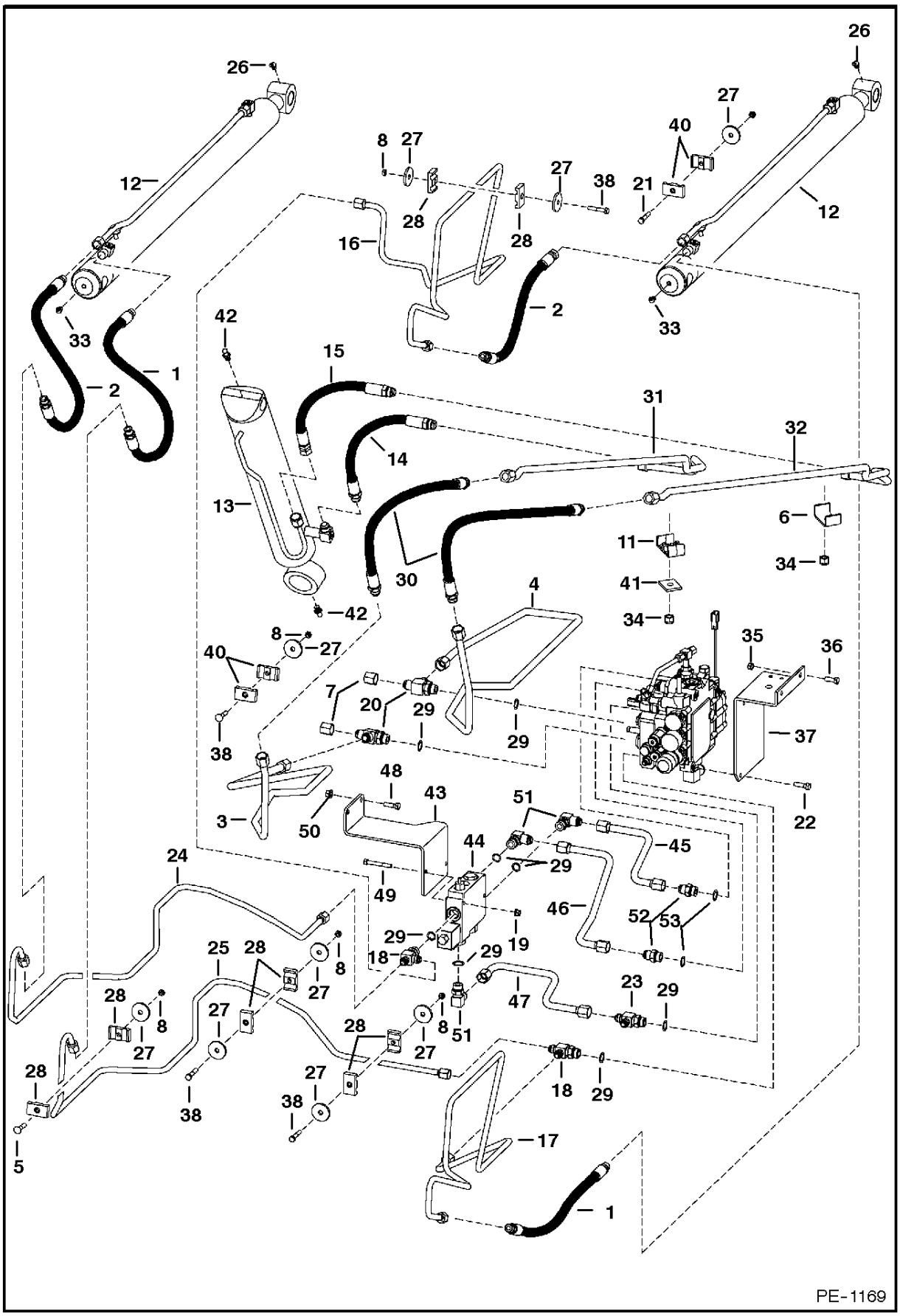

HYDRAULIC CIRCUITRY

Ref.N°	Part N°	Description	Remarks	Serial N°	Qty.
1	6669460	HOSE			1
2	6669461	HOSE			1
3	6719027	TUBE			1
4	6719354	TUBE			1
5	10C-528	BOLT			1
6	6718754	CLAMP	Was 6701893 [B,D]		4
7	36K-7	CAP			2
8	85D-5	NUT			5
9	30H-46	CLAMP			1
10	17C-532	BOLT			1
11	6717933	CLAMP	Was 6502203 [B,D]		1
12		CYLINDER	lift - See Page LIFT CYLINDER(1)		2
13		CYLINDER	tilt - See Page TILT CYLINDER(3)		1
14	6578773	HOSE			1
15	6578774	HOSE			1
16	6718971	TUBE			1
17	6718167	TUBE			1
18	6715187	TEE	W/Ref. HYDRAULIC CIRCUITRY(29) - tapered boss face		2
18	97K-8	O-RING	flared end		x
19	83D-5	NUT			4
20	21KN-7	TEE	W/Ref. HYDRAULIC CIRCUITRY(29)		2
20	97K-10	O-RING	flared end		x
21	84G-3728	BOLT			1
22	6717378	BOLT			2
23	15KV-7	ADAPTER	W/Ref. HYDRAULIC CIRCUITRY(29) - tapered boss face		2
23	97K-10	O-RING	flared end		x
24	6718946	TUBE	Was 6719946 [B,D]		1
25	6718947	TUBE	Was 6719947 [B,D]		1
26	12H-15	GREASE ZERK			2
27	872229	WASHER			4
28	6701892	CLAMP			2
29	99K-10	O-RING	tapered boss face		x
30	6669674	HOSE			2
31	6718161	TUBE	Was 6710193 [B,D]		1
32	6718162	TUBE	Was 6710194 [B,D]		1
33	11H-15	GREASE ZERK			2
34	59D-8	NUT			1
35	85D-6	NUT			2
36	17C-616	BOLT			2
37	6710301	BRACKET			1
38	17C-528	BOLT			1
39	17C-544	BOLT			1
40	6701893	CLAMP			4
41	6553709	WASHER	rectangular		1
42	10H-25	GREASE ZERK			2
43	6718726	MOUNT			1
44		VALVE	bucket positioning - See Page BUCKET POSITIONING VALVE(7)		1
45	6718831	TUBELINE	tilt		1
46	6718832	TUBELINE	tilt		1
47	6718877	TUBELINE	lift		1
48	17C-632	BOLT			2
49	17C-540	BOLT			2
50	83D-6	NUT			2

HYDRAULIC CIRCUITRY

Ref.N°	Part N°	Description	Remarks	Serial N°	Qty.
51	17KV-7	ELBOW	W/Ref. HYDRAULIC CIRCUITRY(29)		3
51	97K-10	O-RING	flared end		x
52	15KN-8	ADAPTER	W/Ref. HYDRAULIC CIRCUITRY(53)		2
52	97K-12	O-RING	flared end		x
53	99K-12	O-RING	tapered boss face		x

* HYDRAULIC CIRCUITRY
(W/O Bucket Positioning Valve) (S/N 5144 47862, 5145 41044, 5146 41129 & Above)

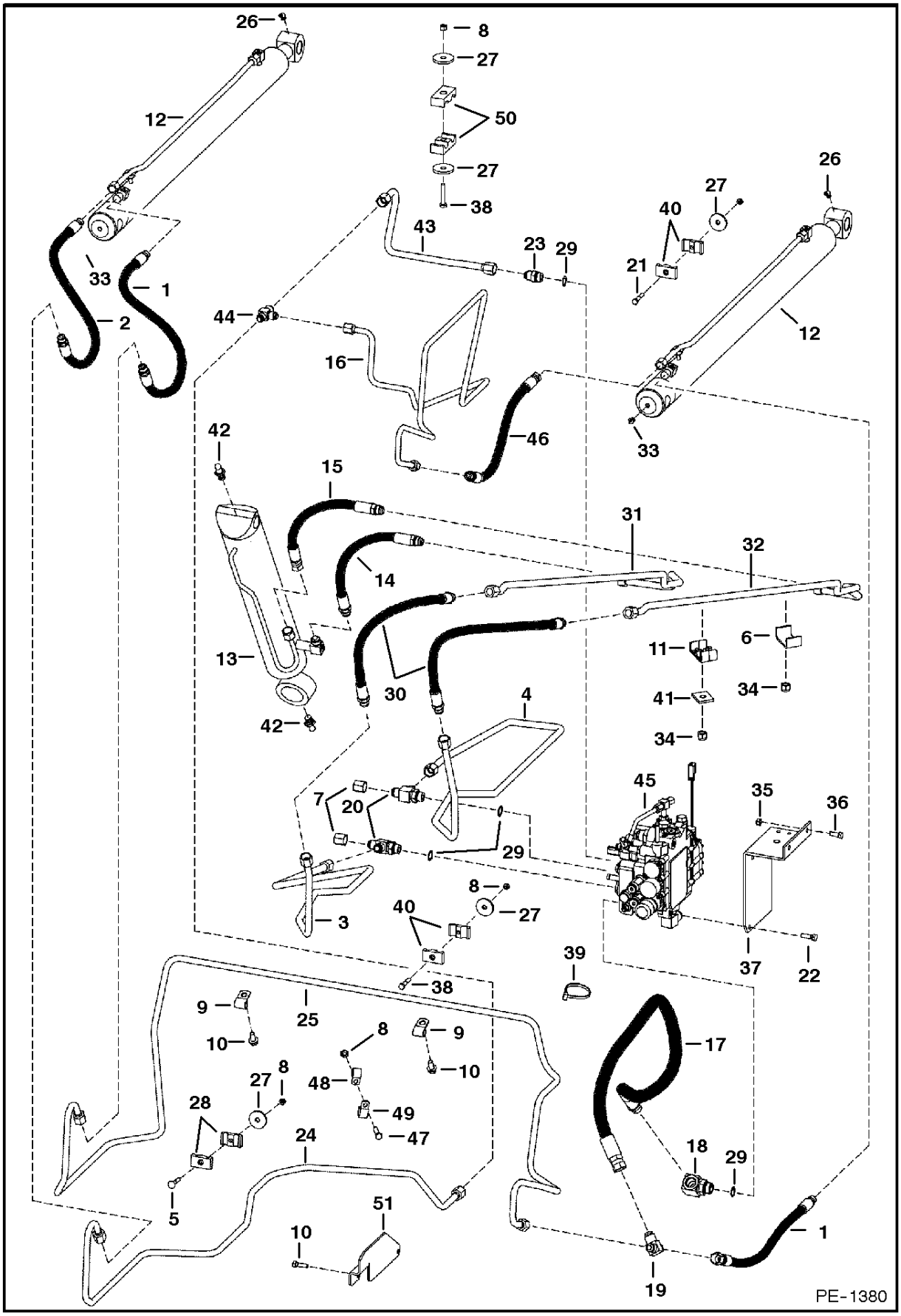

* HYDRAULIC CIRCUITRY

Ref.N°	Part N°	Description	Remarks	Serial N°	Qty.
1	6669460	HOSE			1
2	6669461	HOSE			1
3	6729780	TUBE			1
4	6719354	TUBE			1
5	10C-528	BOLT			2
6	6718754	CLAMP			1
7	36K-7	CAP			2
8	85D-5	NUT			4
9	30H-32	CLAMP			2
10	84G-3712	BOLT			3
11	6717933	CLAMP			1
12		CYLINDER	lift - See Page LIFT CYLINDER(1)		2
13		CYLINDER	tilt - See Page TILT CYLINDER(3)		1
14	6578773	HOSE			1
15	6578774	HOSE			1
16	6729898	TUBELINE	lift		1
17	6729601	HOSE	danger - lift arm		1
17	6809511	DECAL	danger		2
18	6729357	ELBOW	W/Ref. HYDRAULIC CIRCUITRY(29) - tapered boss face		1
19	6716061	TEE			1
20	6715294	TEE	W/Ref. HYDRAULIC CIRCUITRY(29)		1
20	97K-10	O-RING	flared end		x
21	84G-3728	BOLT			1
22	17C-620	BOLT			2
23	15KV-7	ADAPTER	W/Ref. HYDRAULIC CIRCUITRY(29) - tapered boss face		2
23	97K-10	O-RING	flared end		x
24	6729937	TUBELINE	lift		1
25	6729432	TUBELINE	lift		1
26	12H-15	GREASE ZERK			2
27	872229	WASHER			5
28	6701892	CLAMP			4
29	99K-10	O-RING	tapered boss face		x
30	6669674	HOSE			2
31	6718161	TUBE			1
32	6718162	TUBE			1
33	11H-15	GREASE ZERK			2
34	59D-8	NUT			1
35	85D-6	NUT			2
36	17C-616	BOLT			2
37	6727750	BRACKET			1
38	17C-528	BOLT			2
39	6624289	STA-STRAP			3
40	6701893	CLAMP			4
41	6553709	WASHER	rectangular		1
42	10H-25	GREASE ZERK			2
43	6718878	TUBE			1
44	6718911	TEE			1
44	97K-8	O-RING	flared end		1
44	97K-10	O-RING	flared end		x
45		VALVE	control - See Page HYDRAULIC CONTROL VALVE(4)		1
46	6727810	HOSE			1
47	17C-516	BOLT			1
48	30H-30	CLAMP			1
49	30H-64	CLAMP			1

* HYDRAULIC CIRCUITRY

Ref.N°	Part N°	Description	Remarks	Serial N°	Qty.
50	6729605	CLAMP			2
51	6730024	SHIELD			1

* HYDRAULIC CIRCUITRY
(W/Bucket Positioning Valve) (S/N 5144 47862, 5145 41044, 5146 41129 & Above)

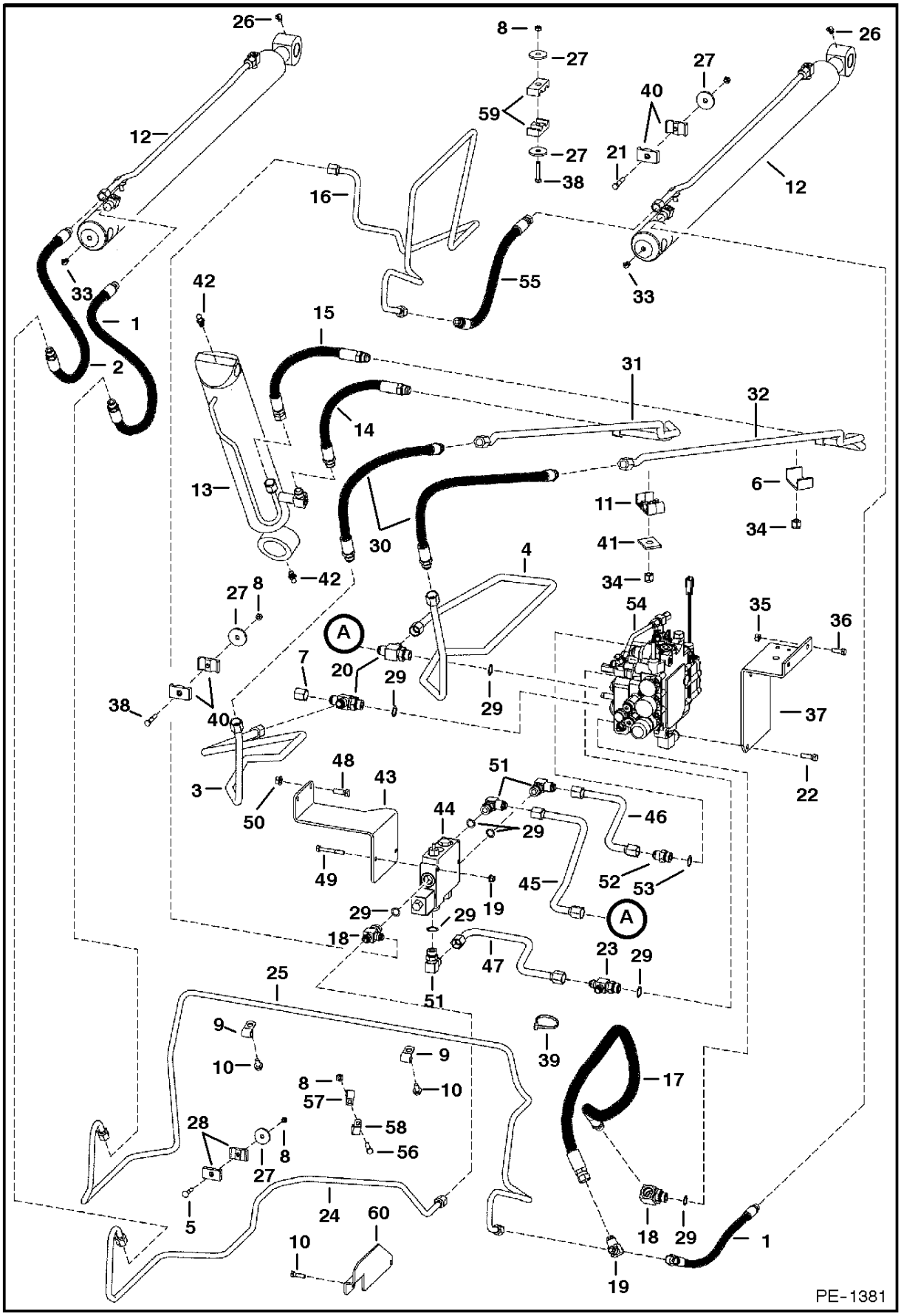

* HYDRAULIC CIRCUITRY

Ref.N°	Part N°	Description	Remarks	Serial N°	Qty.
1	6669460	HOSE			1
2	6669461	HOSE			1
3	6729780	TUBE			1
4	6719354	TUBE			1
5	10C-528	BOLT			1
6	6718754	CLAMP			4
7	36K-7	CAP			2
8	85D-5	NUT			4
9	30H-32	CLAMP			2
10	84G-3712	BOLT			3
11	6717933	CLAMP			1
12		CYLINDER	lift - See Page LIFT CYLINDER(1)		2
13		CYLINDER	tilt - See Page TILT CYLINDER(3)		1
14	6578773	HOSE			1
15	6578774	HOSE			1
16	6729898	TUBELINE			1
17	6729601	HOSE	danger - lift arm		1
17	6809511	DECAL	danger		2
18	6729357	ELBOW	W/Ref. HYDRAULIC CIRCUITRY(29) - tapered boss face		2
19	6716061	TEE			4
20	6715294	TEE	W/Ref. HYDRAULIC CIRCUITRY(29)		2
20	97K-10	O-RING	flared end		x
21	84G-3728	BOLT			1
22	6717378	BOLT			2
23	15KV-7	ADAPTER	W/Ref. HYDRAULIC CIRCUITRY(29) - tapered boss face		2
23	97K-10	O-RING	flared end		x
24	6729937	TUBELINE	lift		1
25	6729432	TUBELINE	lift		1
26	12H-15	GREASE ZERK			2
27	872229	WASHER			5
28	6701892	CLAMP			4
29	99K-10	O-RING	tapered boss face		x
30	6669674	HOSE			2
31	6718161	TUBE			1
32	6718162	TUBE			1
33	11H-15	GREASE ZERK			2
34	59D-8	NUT			1
35	85D-6	NUT			2
36	17C-616	BOLT			2
37	6727750	BRACKET			1
38	17C-528	BOLT			2
39	6624289	STA-STRAP			3
40	6701893	CLAMP			4
41	6553709	WASHER	rectangular		1
42	10H-25	GREASE ZERK			2
43	6718726	MOUNT			1
44		VALVE	bucket positioning - See Page BUCKET POSITIONING VALVE(7)		1
45	6729794	TUBELINE	tilt		1
46	6718832	TUBELINE	tilt		1
47	6718877	TUBELINE	lift		1
48	17C-632	BOLT			2
49	17C-540	BOLT			2
50	83D-6	NUT			2

* HYDRAULIC CIRCUITRY

Ref.N°	Part N°	Description	Remarks	Serial N°	Qty.
51	17KV-7	ELBOW	W/Ref. HYDRAULIC CIRCUITRY(29)		3
51	97K-10	O-RING	flared end		x
52	15KN-8	ADAPTER	W/Ref. HYDRAULIC CIRCUITRY(53) - tapered boss face	& Bel.	2
52	97K-12	O-RING	flared end		x
52	6812646	ADAPTER	W/Ref. HYDRAULIC CIRCUITRY(53) - flat boss face	& Abv.	2
53	99K-12	O-RING	tapered boss face		x
53	79K-12	O-RING	flat boss face		x
54		VALVE	control - See Page HYDRAULIC CONTROL VALVE(4)		1
55	6727810	HOSE			1
56	17C-516	BOLT			1
57	30H-30	CLAMP			1
58	30H-64	CLAMP			1
59	6729605	CLAMP			2
60	6730024	SHIELD			1

MANUAL LIFT RELEASE SYSTEM

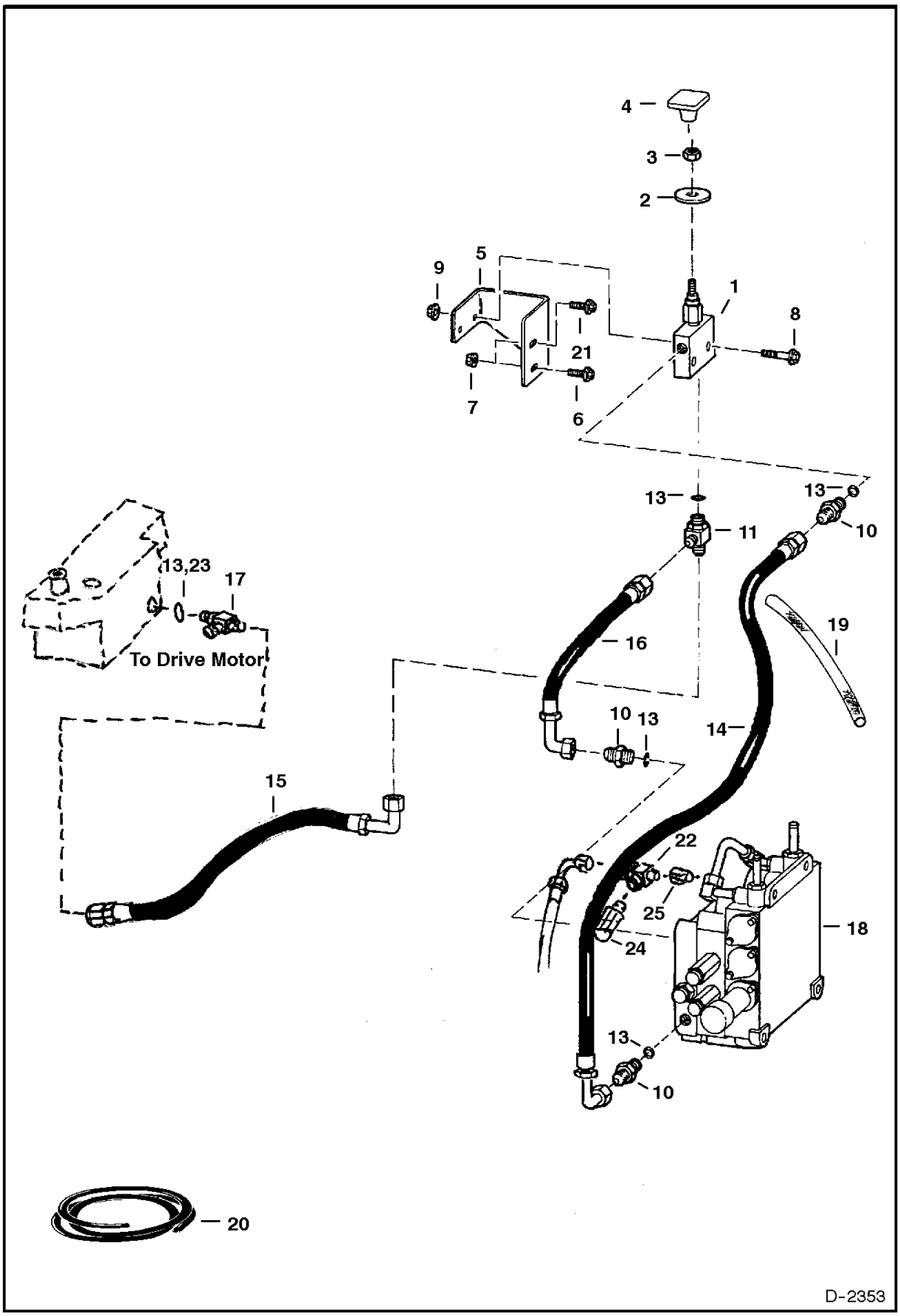

MANUAL LIFT RELEASE SYSTEM

Ref.N°	Part N°	Description	Remarks	Serial N°	Qty.
1	6667844	VALVE	manual lift - See Page MANUAL LIFT RELEASE VALVE(1)		1
2	6707101	WASHER	neoprene		1
3	7D-4	NUT	for 6667874		1
4	6668913	KNOB			1
5	6718881	BRACKET	Was 6716253 [D]		1
6	35C-624	BOLT	Was 35C-620 [B]		1
7	83D-6	NUT			2
8	17C-428	BOLT			2
9	83D-4	NUT			2
10	15KV-5	ADAPTER	W/Ref. MANUAL LIFT RELEASE SYSTEM(13)		3
10	97K-6	O-RING	flared end		x
11	6805241	CROSS	W/Ref. MANUAL LIFT RELEASE SYSTEM(13) - flat boss face	5144 41938 & Bel.	1
11	21KV-5	TEE	W/Ref. MANUAL LIFT RELEASE SYSTEM(13) - tapered boss face	5144 41939 & Abv.	1
12	36K-5	CAP			1
13	79K-6	O-RING	flat boss face		x
13	99K-6	O-RING	tapered boss face		x
14	6714856	HOSE		5144 47863 & Bel.	1
14	6729602	HOSE	W/ danger decals	5144 47864 & Abv.	1
14	6809511	DECAL	danger	5144 47864 & Abv.	2
15	6719555	HOSE		5144 41938 & Bel.	1
15	6725430	HOSE		5144 41939 & Abv.	1
16	6706790	HOSE			1
17	21KV-5	TEE	W/Ref. MANUAL LIFT RELEASE SYSTEM(13) - flat boss face		1
17	97K-6	O-RING	flared end		x
17	21KV-6	TEE	W/Ref. MANUAL LIFT RELEASE SYSTEM(23) - flat boss face		1
17	97K-8	O-RING	flared end		x
18		CONTROL VALVE	See Page HYDRAULIC CONTROL VALVE(4)		1
19	NAP	SHIELD	21' (533mm) long - Order Ref. MANUAL LIFT RELEASE SYSTEM(20)		1
20	6650108	SHIELD	bulk - 1.35' (33,5mm) I.D. - Sold Per foot		x
21	35C-616	BOLT			1
22	6718660	TEE			1
22	97K-6	O-RING	flared end		x
23	99K-8	O-RING			x
24	6563922	SNUBBER			1
25	6672766	CHECK VALVE			1
26	6725090	HOSE			1

AUXILIARY HYDRAULICS
(S/N 5144 49563, 5145 41072, 5146 41175 & Below)

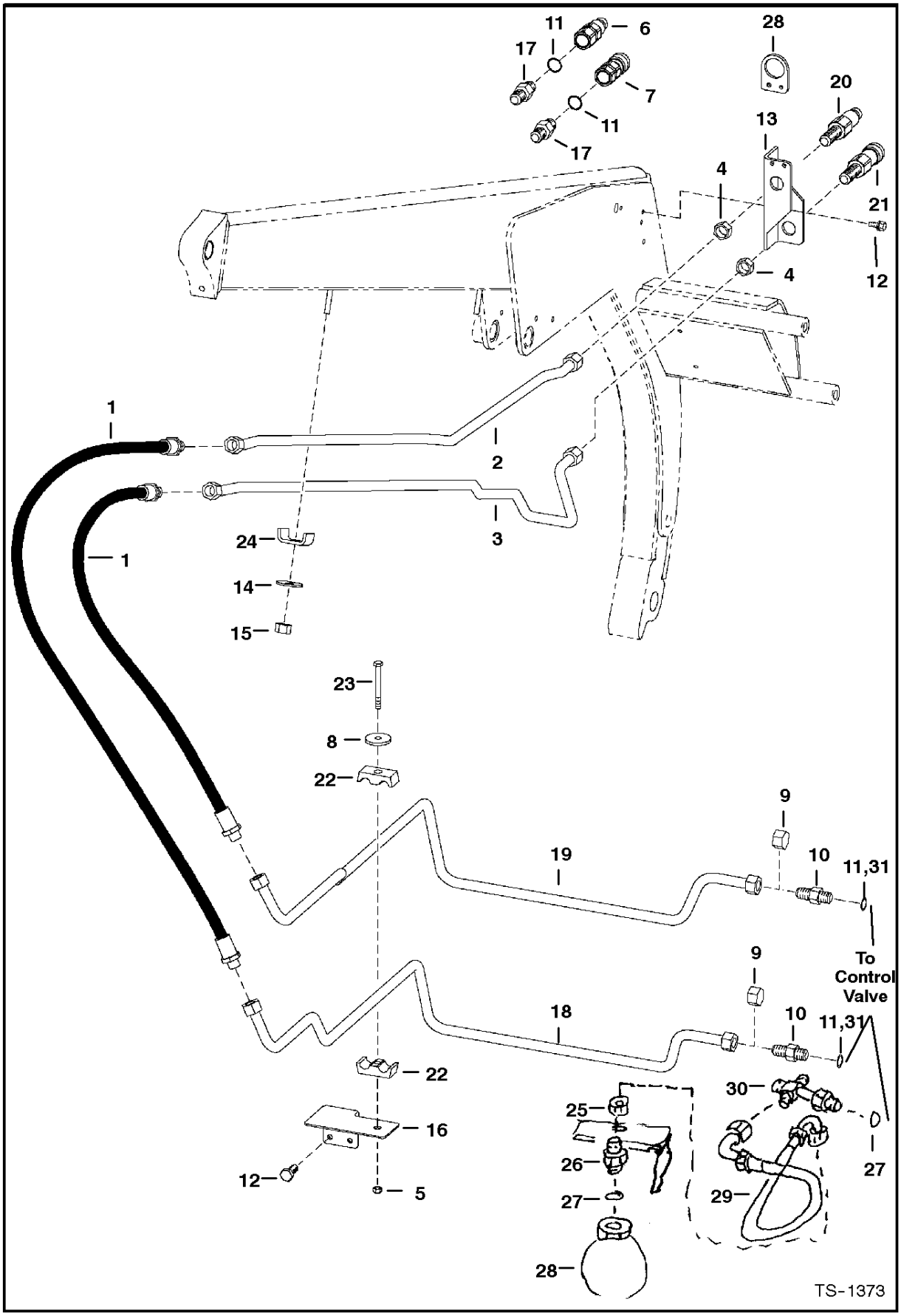

AUXILIARY HYDRAULICS

Ref.N°	Part N°	Description	Remarks	Serial N°	Qty.
1	6729152	HOSE	Was 6714542 [A]		2
2	6718158	TUBELINE			1
3	6718159	TUBELINE			1
4	86F-8	NUT			4
5	85D-6	NUT			1
6	NAP	COUPLER	male - Order Ref. AUXILIARY HYDRAULICS(20) - Was 6667808 [B]	5144 46455 & Bel.	1
6	6672026	O-RING			1
7	NAP	COUPLER	female - Order Ref. AUXILIARY HYDRAULICS(21) - Was 6672960 [B]	5144 46455 & Bel.	1
8	872229	WASHER			1
9	36K-8	CAP	W/O front aux. option		2
10	15KN-8	ADAPTER	W/Ref. AUXILIARY HYDRAULICS(11) - tapered boss face		2
10	97K-12	O-RING	flared end		2
11	99K-12	O-RING	tapered boss face		x
12	84G-3716	BOLT	Was 84G-3712 [B]		4
13	6714665	MOUNT			1
14	6553709	WASHER	rectangular		2
15	59D-6	NUT			2
16	6712599	BRACKET			1
17	6716090	ADAPTER	tapered boss face		2
17	97K-12	O-RING	flared end		2
18	6718792	TUBELINE			1
19	6718793	TUBELINE			1
20	6676445	COUPLER	male	5144 46456 & Abv.	1
21	6676447	COUPLER	female	5144 46456 & Abv.	1
22	6592506	CLAMP			2
23	17C-640	BOLT			1
24	6717933	CLAMP	4 tubes - Was 6717951 [B]		2
25	86F-5	NUT			1
26	6716089	CONNECTOR	W/Ref. AUXILIARY HYDRAULICS(27)		1
26	97K-6	O-RING	flared end		x
27	99K-6	O-RING	tapered boss face		x
28	6676923	ACCUMULATOR			1
29	6727971	HOSE			1
30	6727931	CROSS	W/Ref. AUXILIARY HYDRAULICS(27)		1

AUXILIARY HYDRAULICS
(S/N 5144 49564, 5145 41073, 5146 41176 & Above)

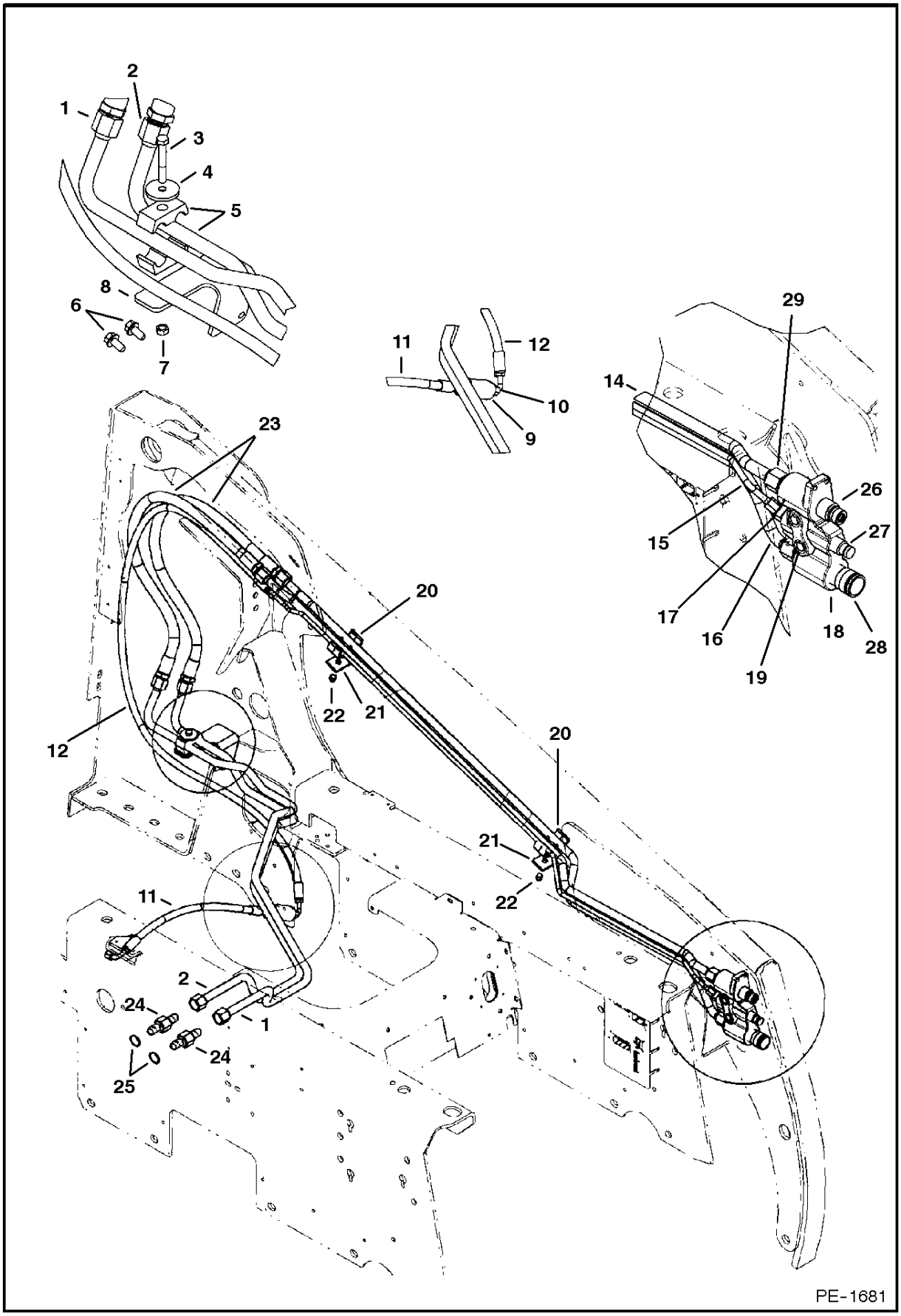

AUXILIARY HYDRAULICS

Ref.N°	Part N°	Description	Remarks	Serial N°	Qty.
1	6718792	TUBELINE			1
2	6718793	TUBELINE			1
3	17C-640	BOLT			1
4	872229	WASHER			1
5	6592506	CLAMP			2
6	84G-3712	BOLT			4
7	85D-6	NUT			1
8	6712599	BRACKET			1
9	6661022	FILTER	See Page		1
10	15KV-5	ADAPTER	W/Ref. AUXILIARY HYDRAULICS(6) - tapered boss face		2
10	97K-6	O-RING	flared end		2
11	6712885	HOSE			1
12	6725424	HOSE			1
13	99K-6	O-RING	tapered boss face		x
14	6730032	TUBELINE			1
15	6730031	TUBELINE			1
16	6730033	TUBELINE			1
17	18KN-5	ELBOW	45 degree - W/Ref. AUXILIARY HYDRAULICS(6)		1
17	97K-6	O-RING	flared end		2
18	6678076	BLOCK ASSY.	coupler		1
19	84G-3740	BOLT			4
20	6717951	CLAMP			2
21	6553709	WASHER			2
22	59D-6	NUT			2
23	6729152	HOSE			2
24	6812646	ADAPTER	W/Ref. AUXILIARY HYDRAULICS(25) - tapered boss face		2
25	99K-12	O-RING			x
26	6679837	KIT	male		1
26	6679841	SEAL KIT			1
27	6679838	KIT	male - casedrain - W/ spring, valve, seal & O-ring		1
27	6679840	SEAL KIT			1
28	6679839	KIT	female		1
29	6679836	KIT	W/ spring & Ref. AUXILIARY HYDRAULICS(25)		2

TILT CYLINDER

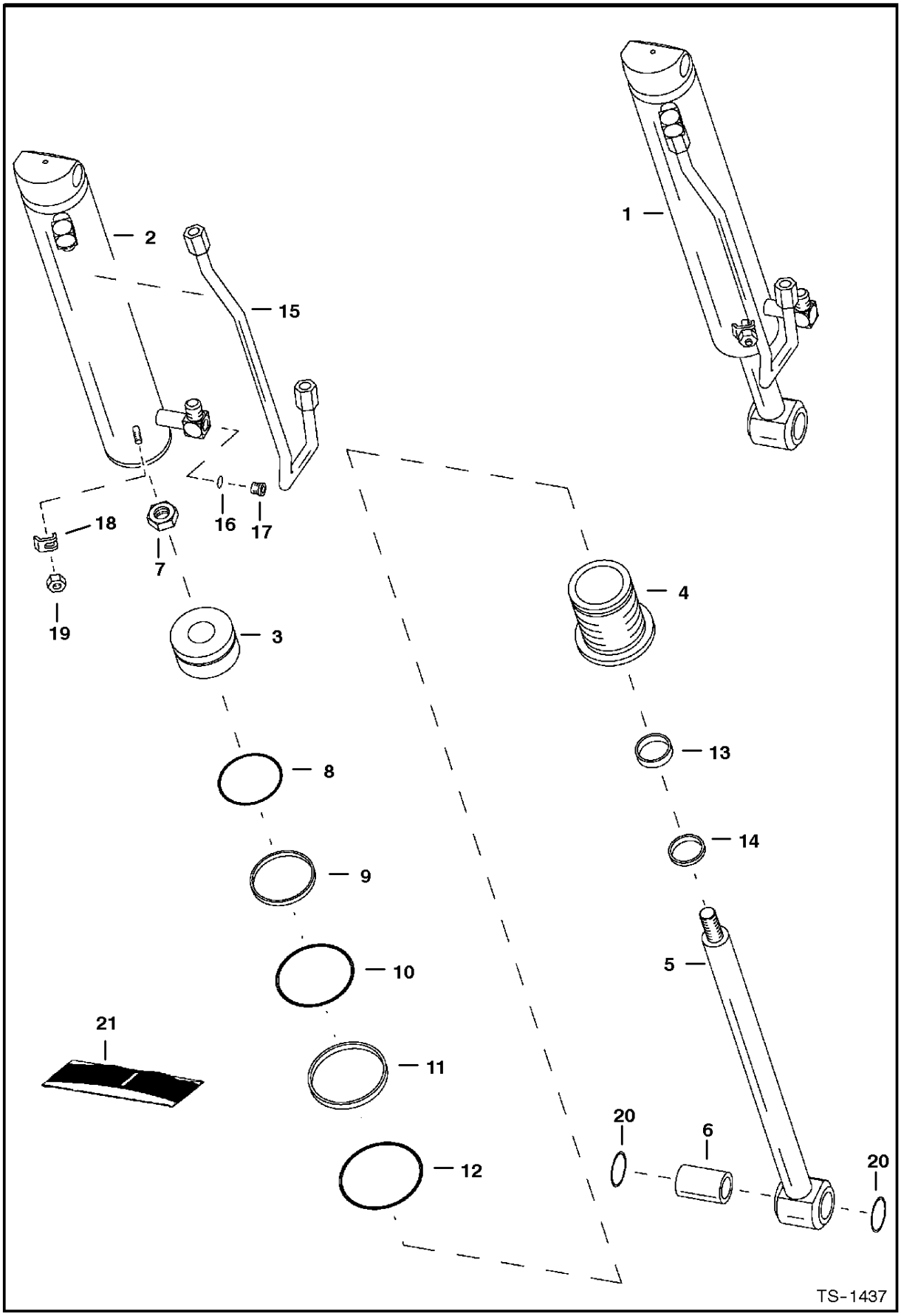

TILT CYLINDER

Ref.N°	Part N°	Description	Remarks	Serial N°	Qty.
1	6804674	CYLINDER	tilt - Ref. TILT CYLINDER(2)-TILT CYLINDER(20)		1
2	6596974	CASE	3.5' (88,9mm) I.D.		1
3	6800468	PISTON			1
4	6800469&	HEAD			1
5	6804678	ROD	W/Ref. TILT CYLINDER(6)		1
6	6805150	BUSHING	W/grease hole		1
7	6804592	NUT			1
8	54K-30300	O-RING			1
9	1530265	SEAL			1
10	54K-60304	O-RING			1
11	73K-338	RING	backAup		1
12	58K-238	O-RING			1
13	6669267	SEAL			1
14	6669268	SEAL	wiper		1
15	6532590	TUBE			1
16	95K-6	O-RING	tapered boss face		2
17	90KV-5	PLUG	W/Ref. TILT CYLINDER(16) - tapered boss face		2
18	6562266	CLAMP			1
19	95D-6	NUT			1
20	225855	SEAL			2
21	6804615	SEAL KIT	Ref. TILT CYLINDER(7)-TILT CYLINDER(14)		1
22	10H-35	GREASE ZERK			1

LIFT CYLINDER

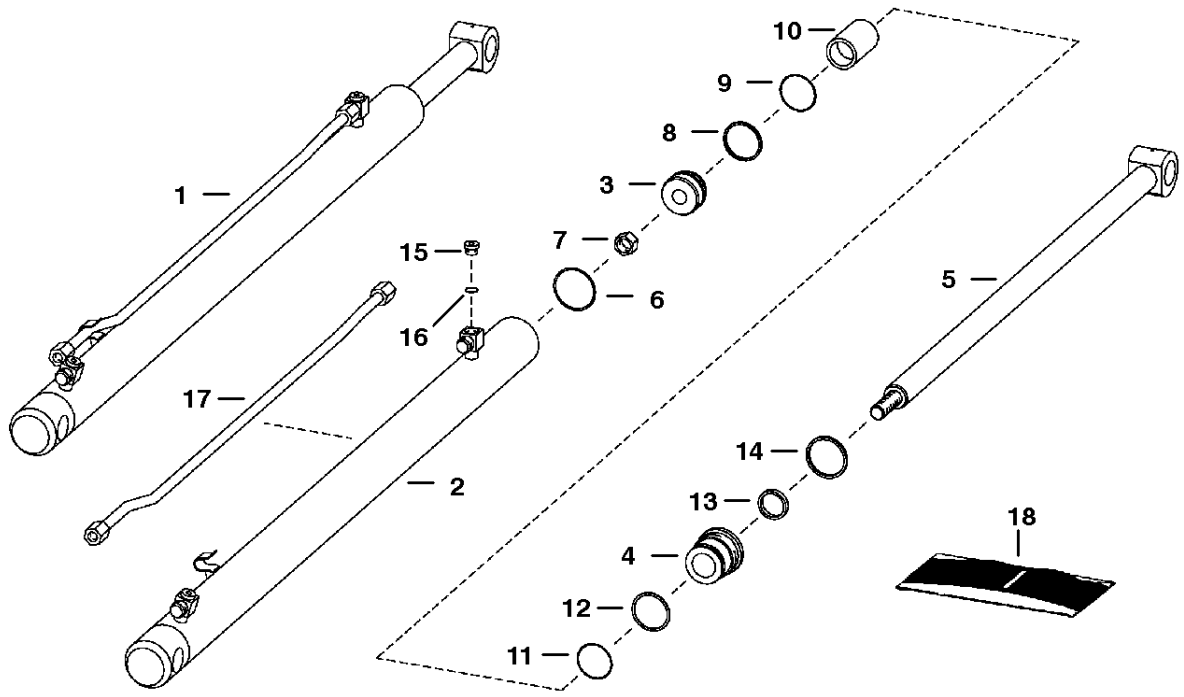

TS-1451

LIFT CYLINDER

Ref.N°	Part N°	Description	Remarks	Serial N°	Qty.
1	'6800973	CYLINDER	'Ref. LIFT CYLINDER(2)-LIFT CYLINDER(6)		1
2	6800975	CASE			1
3	6667291	PISTON	W/Ref. LIFT CYLINDER(8) & LIFT CYLINDER(9) - W/nonAreplaceable wear sleeves		1
4	6597009	HEAD			1
5	6597015	ROD			1
6	58K-230	O-RING			1
7	92D-16	NUT			1
8	1522534	RING			1
9	54K-30202	O-RING			1
10	6592776	SPACER			1
11	54K-40208	O-RING			1
12	80K-228	WASHER	backAup		1
13	6667327	SEAL	rod		1
14	6666544	SEAL	wiper		1
15	90KV-5	PLUG	W/Ref. LIFT CYLINDER(16) - tapered boss face		2
16	95K-6	O-RING	tapered boss face		2
17	6800974	TUBE			1
18	6803312	SEAL KIT	Ref. LIFT CYLINDER(7)-LIFT CYLINDER(14)		1

MANUAL LIFT RELEASE VALVE

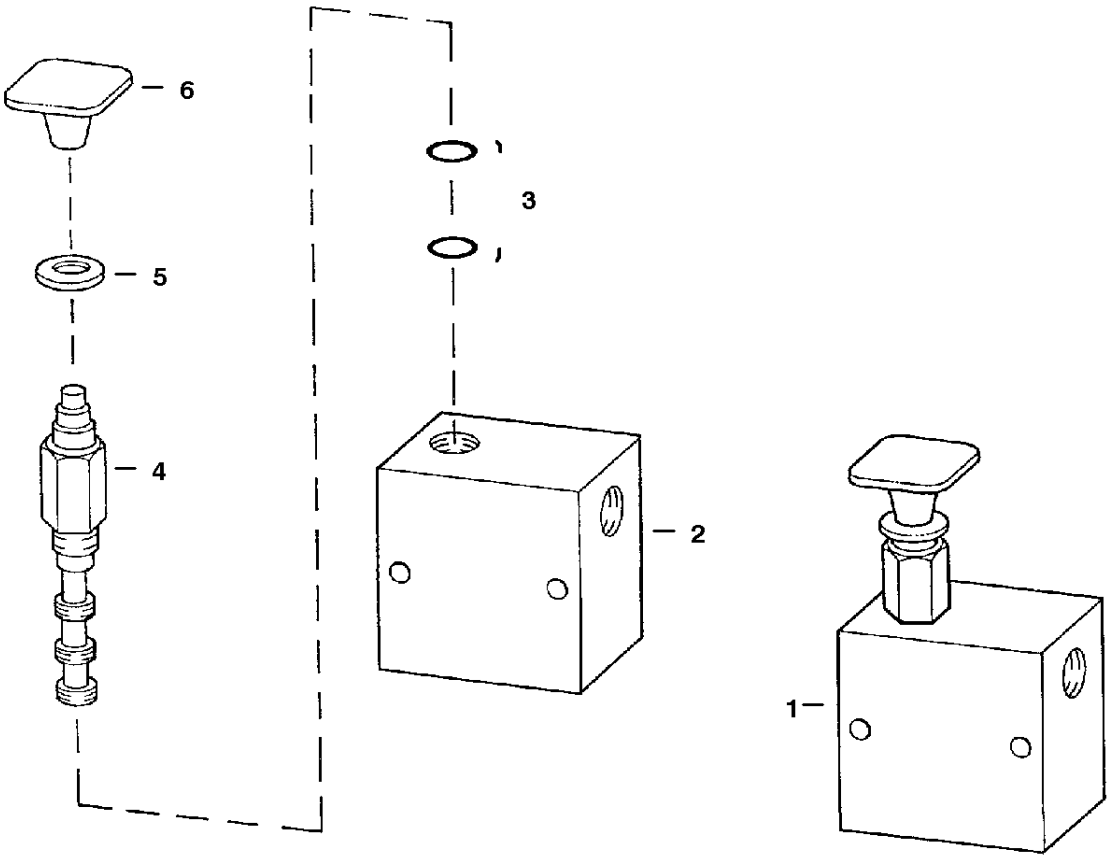

PE-1547

MANUAL LIFT RELEASE VALVE

Ref.N°	Part N°	Description	Remarks	Serial N°	Qty.
1	6667844	VALVE	Ref. MANUAL LIFT RELEASE VALVE(2)-MANUAL LIFT RELEASE VALVE(4)		1
2	NSS	BLOCK			1
3	6669087	SEAL KIT			1
4	6669085	VALVE			1
5	6707101	WASHER	neoprene		1
6	6668913	KNOB	red		1

CONTROL PEDALS

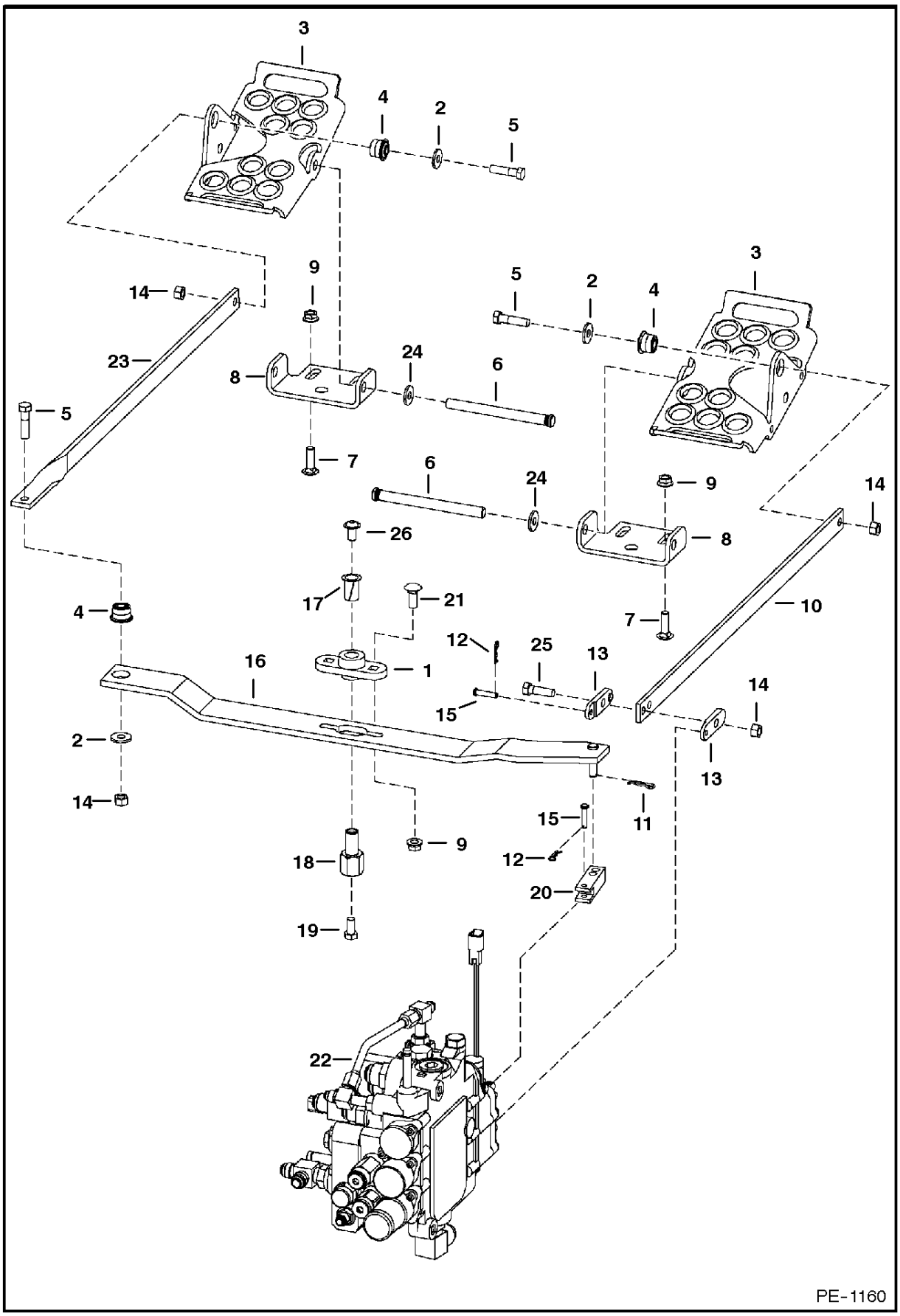

CONTROL PEDALS

Ref.N°	Part N°	Description	Remarks	Serial N°	Qty.
1	6708043	BUSHING			1
2	6563914	WASHER			5
3	6726680	PEDAL	Was 6564656 [B]		2
4	6665701	BUSHING			3
5	17C-624	BOLT			3
6	6564657	PIN			2
7	37C-620	BOLT	Was 7C-620 [B]		4
8	6726679	BRACKET	Was 6564658 [A]		2
9	57D-6	NUT			6
10	6717823	BAR	Was 6710329 [B]		1
11	1306637	PIN			1
12	6513495	COTTER PIN			2
13	6708009	LINK			2
14	95D-6	NUT			4
15	6564654	PIN			2
16	6717825	LEVER	Was 6706108 [B]		1
17	6512026	BUSHING			1
18	6718283	RETAINING NUT	Was 6706104 [B]		1
19	17C-612	BOLT			1
20	6706105	YOKE			1
21	37C-616	BOLT			2
22		VALVE	See Page HYDRAULIC CONTROL VALVE(4)		1
23	6719305	BAR	Was 6710328 [B]		1
24	25E-21	WASHER	Used if serrations on pins are too long		2
25	17C-620	BOLT			1
26	6665839	BOLT			1

HYDRAULIC CONTROL VALVE
(Spool Lock) (W/ BICS Control Valve)

NOTE: Spools are available for service. The boot end of the lift and tilt spool is stamped W/# 1, 2 , 3 or painted red, green or black respectively. Reference S/L Dated 20 Feb. 1995.

NOTE: When replacing 6806150 or 6809267 valve, remove 6727931 cross (Ref. 49) from 6809267 valve & replace W/ existing 6805243 tee. Also remove 6729357 elbow & replace with existing 6715187 tee.

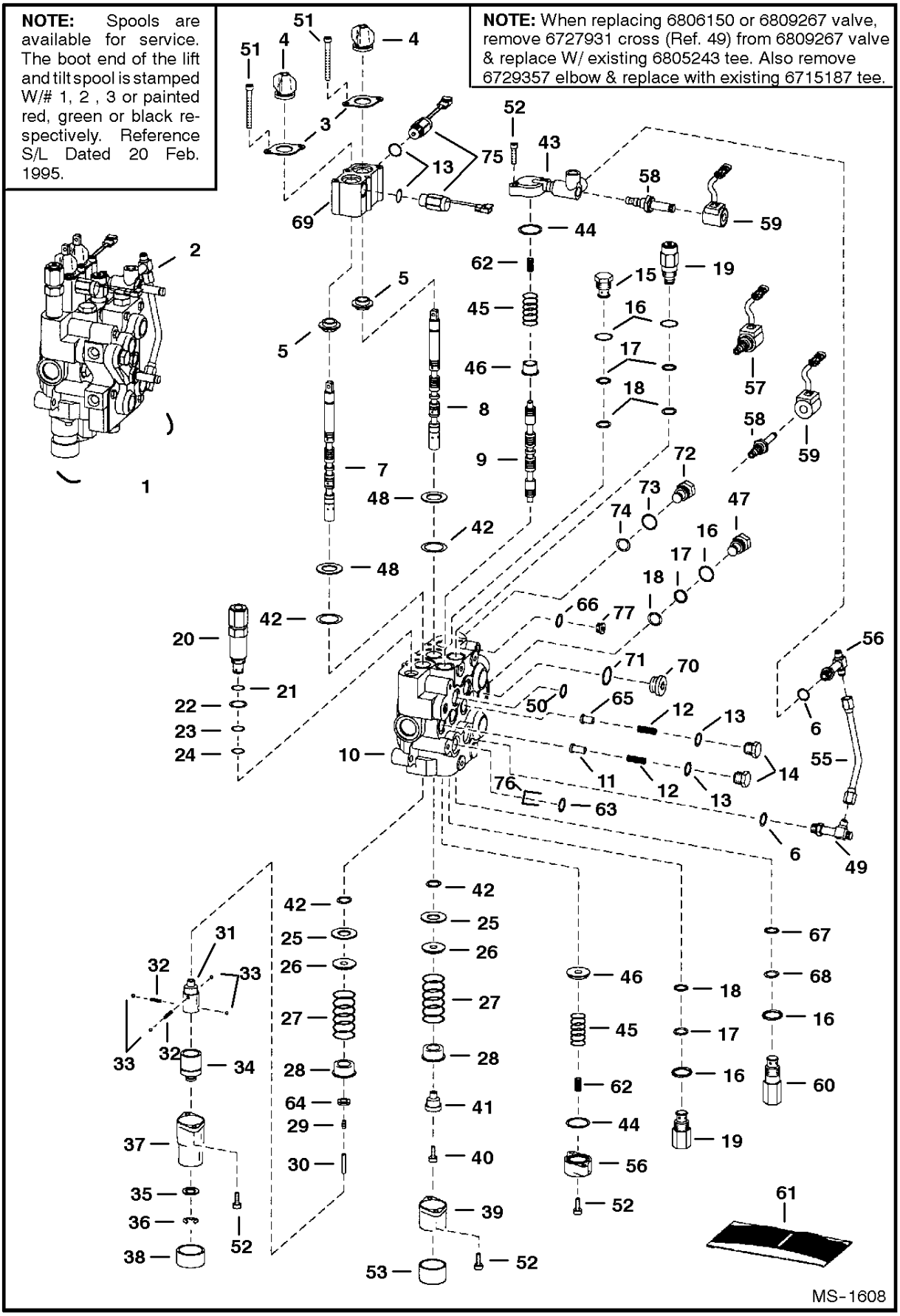

HYDRAULIC CONTROL VALVE

Ref.N°	Part N°	Description	Remarks	Serial N°	Qty.
1	NAP	VALVE	W/ fittings - Ref. HYDRAULIC CONTROL VALVE(2)-HYDRAULIC CONTROL VALVE(71) - Order 6810244 valve - SEE NOTE - Was 6806150 [A]		1
1	NAP	VALVE	W/ fittings - Ref. HYDRAULIC CONTROL VALVE(2)-HYDRAULIC CONTROL VALVE(71) - Order 6810244 valve - SEE NOTE - Was 6809267 [A]		1
1	6810244	VALVE	W/ fittings - Ref. HYDRAULIC CONTROL VALVE(2)-HYDRAULIC CONTROL VALVE(71)		1
2	6628571	VALVE	BICS control - See Page BICS CONTROL VALVE(1)		1
3	6589564	RETAINER			2
4	6587763	BOOT			2
5	6805102	BUSHING	alignment		2
6	99K-6	O-RING			x
7	6674808	SPOOL	lift - # 1 or Red - SEE NOTE		1
7	6674809	SPOOL	lift - # 2 or Green-SEE NOTE		1
7	6674810	SPOOL	lift - # 3 or Black - SEE NOTE		1
8	6674814	SPOOL	tilt - # 1 or Red - SEE NOTE		1
8	6674815	SPOOL	tilt - # 2 or Green - SEE NOTE		1
8	6674816	SPOOL	tilt - # 3 or Black - SEE NOTE		1
9	6588074	SPOOL	auxiliary - SEE NOTE		3
10	NSS	BODY			1
11	6592115	SEAT	load check		2
12	6592117	SPRING			3
13	79K-8	O-RING			3
14	6592116	NUT	load check		3
15	6667549	VALVE	antiAcavity check - W/Ref. HYDRAULIC CONTROL VALVE(16)-HYDRAULIC CONTROL VALVE(18)		1
16	79K-10	O-RING			2
17	80K-14	WASHER	backAup		5
18	58K-14	O-RING	backAup washer required		5
18	6677106	O-RING	backAup washer not required		5
19	6673184	VALVE	port relief - W/Ref. HYDRAULIC CONTROL VALVE(16) -HYDRAULIC CONTROL VALVE(18)		2
20	6676198	VALVE	main relief - W/Ref. HYDRAULIC CONTROL VALVE(21)-HYDRAULIC CONTROL VALVE(24) - Was 6665626 [A]		1
21	58K-17	O-RING			1
22	6665569	WASHER	backAup		1
23	25K-20016	O-RING			1
24	6665570	RING	glide		1
25	6595663	BUSHING			2
26	6587523	WASHER			2
27	6587580	SPRING			2
28	6592100	COLLAR			2
29	6596807	PLUG			1
30	6586918	SCREW			1
31	6587575	ADAPTER			1
32	6592107	SPRING			2
33	6592105	BALL			4
34	6531270	SLEEVE			1
35	6592098	WASHER			1
36	799119	RETAINER			1
37	6589226	BONNET	.625' flange		1
38	6660644	CAP			1
39	6587633	BONNET			1
40	30G-416	SCREW			1
41	6592109	ADAPTER			1
42	6665846	SEAL			4

HYDRAULIC CONTROL VALVE

Ref.N°	Part N°	Description	Remarks	Serial N°	Qty.
43	6805651	BLOCK	aux		2
44	58K-124	O-RING			2
45	6596332	SPRING			2
46	6595951	SLEEVE			2
47	6592720	PLUG	W/Ref. HYDRAULIC CONTROL VALVE(16)-HYDRAULIC CONTROL VALVE(18)		1
48	58K-127	O-RING			2
49	6805243	TEE	W/Ref. HYDRAULIC CONTROL VALVE(6) - for 6806150 valve		1
49	6727931	CROSS	W/Ref. HYDRAULIC CONTROL VALVE(6) - for 6809267 & 6810244 valve		1
50	55K-204	O-RING			1
51	29G-444	BOLT			4
52	29G-416	SCREW	1' long		8
53	6662848	CAP			1
54	6805696	TEE	W/Ref. HYDRAULIC CONTROL VALVE(6) - tapered boss face		2
54	97K-6	O-RING	flared end		x
55	6806496	TUBELINE			1
56	6588781	END CAP			1
57	6677201	SOLENOID	W/Ref. HYDRAULIC CONTROL VALVE(58) & HYDRAULIC CONTROL VALVE(59) - Was 6665084 [B]		2
58	6676249	STEM	Was 6666616 [B]		2
58	6586459	SEAL KIT			x
59	6717706	COIL	W/ nut - 10 volt - pwm		2
59	6676566	NUT			x
60	6671632	VALVE	(port relief & antiAcav. - W/Ref. HYDRAULIC CONTROL VALVE(16) - 3500 PSI - use in tilt cylinder base end port		1
60	6673904	SEAL KIT	W/Ref. HYDRAULIC CONTROL VALVE(16), HYDRAULIC CONTROL VALVE(67) & HYDRAULIC CONTROL VALVE(68)<com3R }H~10{M		x
61	6806941	SEAL KIT	two spool - Ref. HYDRAULIC CONTROL VALVE(4), HYDRAULIC CONTROL VALVE(42) & HYDRAULIC CONTROL VALVE(51)		x
61	6809448	SEAL KIT	complete - Ref. HYDRAULIC CONTROL VALVE(4), HYDRAULIC CONTROL VALVE(13), HYDRAULIC CONTROL VALVE(16)-HYDRAULIC CONTROL VALVE(18)		x
61	6661328	SEAL KIT	main relief - Ref. HYDRAULIC CONTROL VALVE(21)-HYDRAULIC CONTROL VALVE(24)		x
61	6809425	SEAL KIT	upper deck - Ref. HYDRAULIC CONTROL VALVE(13) & HYDRAULIC CONTROL VALVE(16)-HYDRAULIC CONTROL VALVE(18) - Was 6586461 [A]		x
62	6595131	SPRING	.72' O.D.		2
63	55K-212	O-RING			4
64	54K-20002	O-RING			1
65	6596569	SEAT	load check		1
66	95K-6	O-RING			2
67	NSS	O-RING	Order Ref. HYDRAULIC CONTROL VALVE(60) kit		x
68	NSS	O-RING	Order Ref. HYDRAULIC CONTROL VALVE(60) kit		x
69	6812031	BLOCK	'lift and tilt lock - Was 6805657 [A]		1
70	90KV-8	PLUG	W/Ref. HYDRAULIC CONTROL VALVE(71)		1
71	95K-12	O-RING			x
72	6806561	PLUG	W/Ref. HYDRAULIC CONTROL VALVE(73) & HYDRAULIC CONTROL VALVE(74)		1
73	79K-7	O-RING			x
74	58K-12	O-RING			x
75	NAP	SOLENOID	'spool lock - W/Ref. HYDRAULIC CONTROL VALVE(13) - 3' (76,2mm) wire - Order 6677383		2

HYDRAULIC CONTROL VALVE

Ref.N°	Part N°	Description	Remarks	Serial N°	Qty.
75	6677383	SOLENOID	spool lock - W/Ref. HYDRAULIC CONTROL VALVE(13) - 5' (127mm) wire - Was 6674786 [A]		2
76	6668791	ORIFICE	.185		1
77	90KV-5	PLUG	W/Ref. HYDRAULIC CONTROL VALVE(66)		1

HYDRAULIC CONTROL VALVE
(Advanced Hand Control System) (Spool Lock)

NOTE: Spools are available for service. The boot end of the lift and tilt spool is stamped W/# 1, 2 , 3 or painted red, green or black respectively. Reference S/L Dated 20 Feb. 1995.

NOTE: When replacing 6805931 valve on a loader without an accumulator, remove 6727931 cross (Ref. 49) from 6809107 valve & replace W/ existing 6805243 tee.

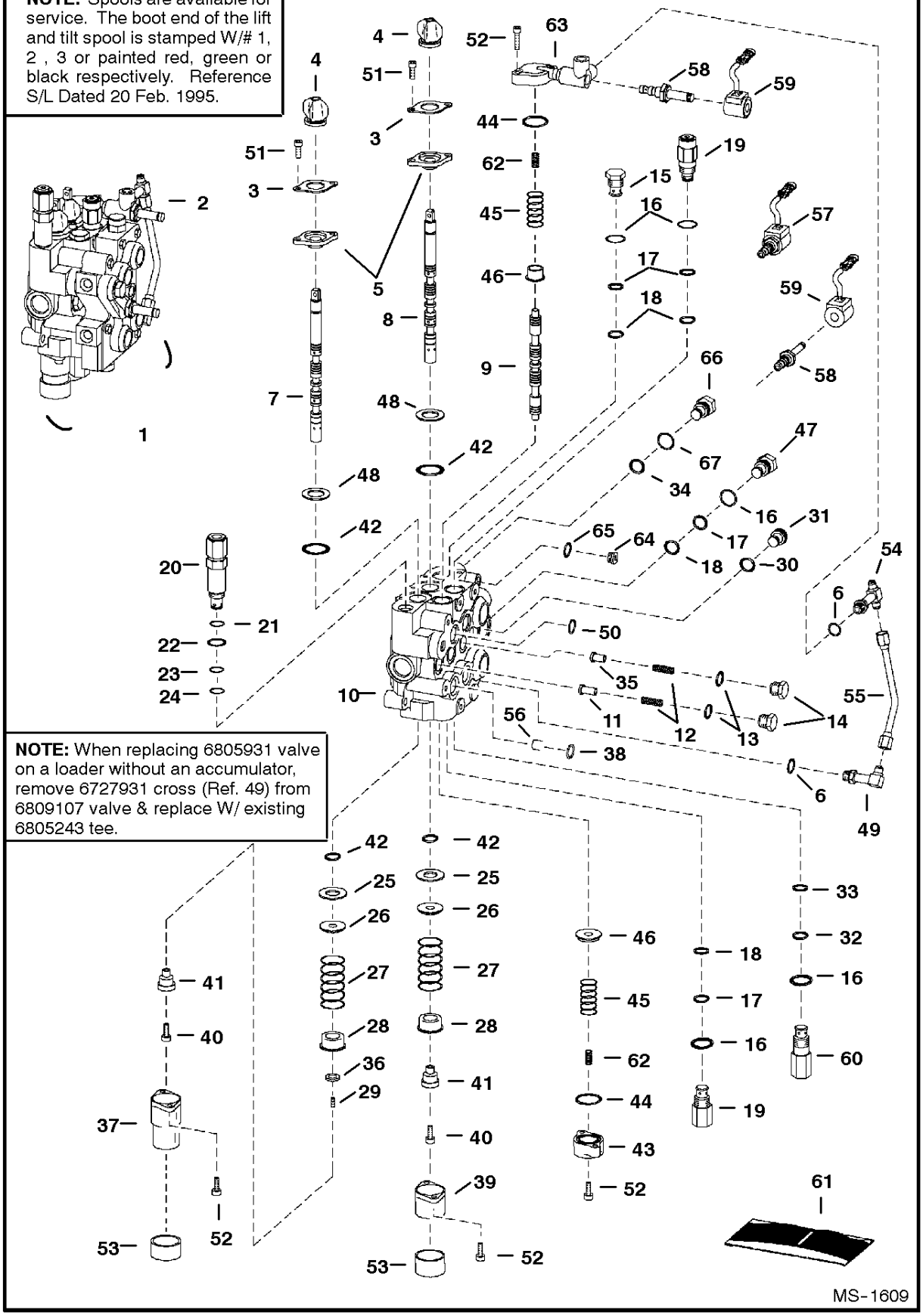

HYDRAULIC CONTROL VALVE

Ref.N°	Part N°	Description	Remarks	Serial N°	Qty.
1	NAP	VALVE	W/ fittings - Ref. HYDRAULIC CONTROL VALVE(2)-HYDRAULIC CONTROL VALVE(56) - Order 6809107 valve - SEE NOTE - Was 6805931 [A]		1
2	6628571	VALVE	AHC - BICS control - See Page BICS CONTROL VALVE(1)		1
3	6589564	RETAINER			2
4	6587763	BOOT			2
5	6589565	RETAINER			2
6	99K-6	O-RING	tapered boss face		x
7	6674297	SPOOL	lift - # 1 or Red - SEE NOTE		1
7	6674298	SPOOL	lift - # 2 or Green-SEE NOTE		1
7	6674299	SPOOL	lift - # 3 or Black - SEE NOTE		1
8	6674300	SPOOL	tilt - # 1 or Red - SEE NOTE		1
8	6674301	SPOOL	tilt - # 2 or Green - SEE NOTE		1
8	6674302	SPOOL	tilt - # 3 or Black - SEE NOTE		1
9	6588074	SPOOL	auxiliary - SEE NOTE		3
10	NSS	BODY			1
11	6592115	SEAT	load check		2
12	6592117	SPRING			3
13	79K-8	O-RING			3
14	6592116	NUT	load check - W/Ref. HYDRAULIC CONTROL VALVE(13)		3
15	6667549	VALVE	antiAcavity check - W/Ref. HYDRAULIC CONTROL VALVE(16)-HYDRAULIC CONTROL VALVE(18)		1
16	79K-10	O-RING			2
17	80K-14	WASHER	backAup		5
18	58K-14	O-RING	backAup washer required		5
18	6677106	O-RING	backAup washer not required		5
19	6673184	VALVE	port relief - W/Ref. HYDRAULIC CONTROL VALVE(16) -HYDRAULIC CONTROL VALVE(18)		2
20	6676198	VALVE	main relief - W/Ref. HYDRAULIC CONTROL VALVE(21)-HYDRAULIC CONTROL VALVE(24) - Was 6665626 [A]		1
21	58K-17	O-RING			1
22	6665569	WASHER	back-up		1
23	25K-20016	O-RING			1
24	6665570	RING	glide		1
25	6595663	BUSHING			2
26	6587523	WASHER			2
27	6587580	SPRING			2
28	6592100	COLLAR			2
29	6801167	PLUG	Spool		1
30	95K-12	O-RING			1
31	90KV-8	PLUG	W/Ref. HYDRAULIC CONTROL VALVE(30) - socket head		1
32	NSS	O-RING	Order Ref. HYDRAULIC CONTROL VALVE(60) - kit		1
33	NSS	O-RING	Order Ref. HYDRAULIC CONTROL VALVE(60) - kit		1
34	58K-12	O-RING			1
35	6596569	SEAT			1
36	54K-20002	O-RING			1
37	6803092	BONNET	.625 flange		1
38	55K-212	O-RING			4
39	6587633	BONNET			1
40	30G-416	SCREW			2
41	6592109	ADAPTER			1
42	6665846	SEAL	lip		4
43	6588781	END CAP	.87' thick		2
44	58K-124	O-RING			2

HYDRAULIC CONTROL VALVE

Ref.N°	Part N°	Description	Remarks	Serial N°	Qty.
45	6596332	SPRING			2
46	6595951	SLEEVE			2
47	6592720	PLUG	W/Ref. HYDRAULIC CONTROL VALVE(16)-HYDRAULIC CONTROL VALVE(18)		1
48	58K-127	O-RING			2
49	6805243	TEE	W/Ref. HYDRAULIC CONTROL VALVE(6) - for loaders W/O an accumulator		1
49	6727931	CROSS	W/Ref. HYDRAULIC CONTROL VALVE(6) - for loaders W/ an accumulator		1
49	97K-6	O-RING	flared end		x
50	55K-204	O-RING			1
51	29G-412	SCREW			4
52	29G-416	SCREW	1' long		8
53	6662848	CAP			2
54	6805696	TEE	W/Ref. HYDRAULIC CONTROL VALVE(6)		2
54	97K-6	O-RING	flared end		x
55	6806496	TUBELINE			1
56	6800124	RESTRICTOR	.183/.187		1
57	6677201	SOLENOID	W/Ref. HYDRAULIC CONTROL VALVE(58) & HYDRAULIC CONTROL VALVE(59) - Was 6665084 [B]		2
58	6676249	STEM	Was 6666616 [B]		2
58	6586459	SEAL KIT			x
59	6717706	COIL	W/ nut - pwm - 10 volt		2
59	6676566	NUT			x
60	6671632	VALVE	(port relief & antiAcavity - W/Ref. HYDRAULIC CONTROL VALVE(16), HYDRAULIC CONTROL VALVE(32), HYDRAULIC CONTROL VALVE(33) - 2500		1
60	6673904	SEAL KIT	W/Ref. HYDRAULIC CONTROL VALVE(16), HYDRAULIC CONTROL VALVE(32) & HYDRAULIC CONTROL VALVE(33)		1
61	6803605	SEAL KIT	one spool - Ref. HYDRAULIC CONTROL VALVE(4), HYDRAULIC CONTROL VALVE(42) & HYDRAULIC CONTROL VALVE(51)		x
61	6809448	SEAL KIT	complete - Ref. HYDRAULIC CONTROL VALVE(4), HYDRAULIC CONTROL VALVE(13), HYDRAULIC CONTROL VALVE(16)-HYDRAULIC CONTROL VALVE(18)		x
61	6661328	SEAL KIT	main relief - Ref. HYDRAULIC CONTROL VALVE(21)-HYDRAULIC CONTROL VALVE(24)		x
61	6809425	SEAL KIT	Ref. HYDRAULIC CONTROL VALVE(13) & HYDRAULIC CONTROL VALVE(16)-HYDRAULIC CONTROL VALVE(18) - Was 6586461 [A]		x
61	6586459	SEAL KIT	W/Ref. HYDRAULIC CONTROL VALVE(16),) HYDRAULIC CONTROL VALVE(32), HYDRAULIC CONTROL VALVE(33))		1
62	6595131	SPRING	.72' O.D.		2
63	6805651	BLOCK	aux		1
64	90KV-5	PLUG	W/Ref. HYDRAULIC CONTROL VALVE(65)		2
65	95K-6	O-RING			2
66	6806561	PLUG	W/Ref. HYDRAULIC CONTROL VALVE(67)-HYDRAULIC CONTROL VALVE(34)		1
67	79K-7	O-RING			1

* HYDRAULIC CONTROL VALVE
(Advanced Hand Control System) (Spool Lock)

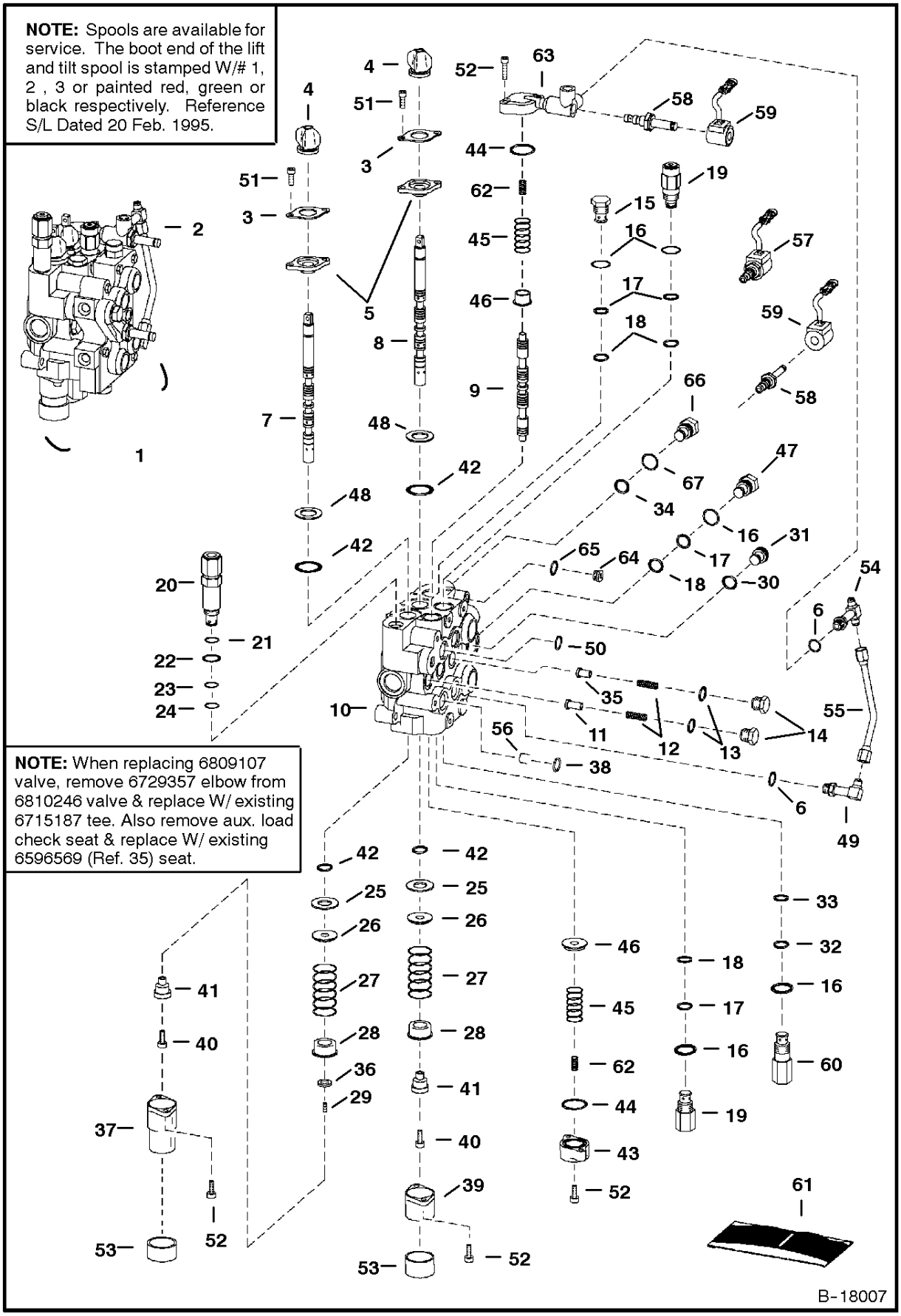

* HYDRAULIC CONTROL VALVE

Ref.N°	Part N°	Description	Remarks	Serial N°	Qty.
1	NAP	VALVE	W/ fittings - Ref. HYDRAULIC CONTROL VALVE(2)-HYDRAULIC CONTROL VALVE(56) - Order 6810246 valve - SEE NOTE - Was 6809107 [A]		1
1	6810246	VALVE	W/ fittings - Ref. HYDRAULIC CONTROL VALVE(2)-HYDRAULIC CONTROL VALVE(56)		1
2	6628571	VALVE	AHC - BICS control - See Page BICS CONTROL VALVE(1)		1
3	6589564	RETAINER			2
4	6587763	BOOT			2
5	6589565	RETAINER			2
6	99K-6	O-RING	tapered boss face		x
7	6677660	SPOOL	lift - # 1 or Red - SEE NOTE		1
7	6677661	SPOOL	lift - # 2 or Green-SEE NOTE		1
8	6677662	SPOOL	tilt - # 1 or Red - SEE NOTE		1
8	6677663	SPOOL	tilt - # 2 or Green - SEE NOTE		1
9	6588074	SPOOL	auxiliary - SEE NOTE		3
10	NSS	BODY			1
11	6592115	SEAT	aux. load check - W/ 6809107		2
11	6592115	SEAT	aux. load check - W/ 6810246		3
12	6592117	SPRING			3
13	79K-8	O-RING			3
14	6592116	NUT	load check - W/Ref. HYDRAULIC CONTROL VALVE(13)		3
15	6667549	VALVE	antiAcavity check - W/Ref. HYDRAULIC CONTROL VALVE(16)-HYDRAULIC CONTROL VALVE(18)		1
16	79K-10	O-RING			2
17	80K-14	WASHER	backAup		5
18	58K-14	O-RING	backAup washer required		5
18	6677106	O-RING	backAup washer not required		5
19	6673184	VALVE	port relief - W/Ref. HYDRAULIC CONTROL VALVE(16)-HYDRAULIC CONTROL VALVE(18)		2
20	6676198	VALVE	main relief - W/Ref. HYDRAULIC CONTROL VALVE(21)-HYDRAULIC CONTROL VALVE(24)		1
21	58K-17	O-RING			1
22	6665569	WASHER	backAup		1
23	25K-20016	O-RING			1
24	6665570	RING	glide		1
25	6595663	BUSHING			2
26	6587523	WASHER			2
27	6587580	SPRING			2
28	6592100	COLLAR			2
29	6801167	PLUG	spool		1
30	95K-12	O-RING			1
31	90KV-8	PLUG	W/Ref. HYDRAULIC CONTROL VALVE(30) - socket head		1
32	NSS	O-RING	Order Ref. HYDRAULIC CONTROL VALVE(60) - kit		1
33	NSS	O-RING	Order Ref. HYDRAULIC CONTROL VALVE(60) - kit		1
34	58K-12	O-RING			1
35	6596569	SEAT	aux. load check - used on 6809107 valve		1
36	54K-20002	O-RING			1
37	6803092	BONNET	.625 flange		1
38	55K-212	O-RING			4
39	6587633	BONNET			1
40	30G-416	SCREW			2
41	6592109	ADAPTER			1
42	6665846	SEAL	lip		4
43	6588781	END CAP	.87' thick		2
44	58K-124	O-RING			2

* HYDRAULIC CONTROL VALVE

Ref.N°	Part N°	Description	Remarks	Serial N°	Qty.
45	6596332	SPRING			2
46	6595951	SLEEVE			2
47	6592720	PLUG	W/Ref. HYDRAULIC CONTROL VALVE(16)-HYDRAULIC CONTROL VALVE(18)		1
48	58K-127	O-RING			2
49	6727931	CROSS	W/Ref. HYDRAULIC CONTROL VALVE(6)		1
49	97K-6	O-RING	flared end		x
50	55K-204	O-RING			1
51	29G-412	SCREW			4
52	29G-416	SCREW	1' long		8
53	6662848	CAP			2
54	6805696	TEE	W/Ref. HYDRAULIC CONTROL VALVE(6)		2
54	97K-6	O-RING	flared end		x
55	6806496	TUBELINE			1
56	6800124	RESTRICTOR	.183/.187		1
57	6677201	SOLENOID	W/Ref. HYDRAULIC CONTROL VALVE(58) & HYDRAULIC CONTROL VALVE(59)		2
58	6676249	STEM			2
58	6586459	SEAL KIT			x
59	6717706	COIL	W/ nut - pwm - 10 volt		2
59	6676566	NUT			x
60	6671632	VALVE	(port relief & antiAcavity - W/Ref. HYDRAULIC CONTROL VALVE(16), HYDRAULIC CONTROL VALVE(32), HYDRAULIC CONTROL VALVE(33) - 2500		1
60	6673904	SEAL KIT	W/Ref. HYDRAULIC CONTROL VALVE(16), HYDRAULIC CONTROL VALVE(32) & HYDRAULIC CONTROL VALVE(33)		1
61	6803605	SEAL KIT	one spool - Ref. HYDRAULIC CONTROL VALVE(4), HYDRAULIC CONTROL VALVE(42) & HYDRAULIC CONTROL VALVE(51)		x
61	6809448	SEAL KIT	complete - Ref. HYDRAULIC CONTROL VALVE(4), HYDRAULIC CONTROL VALVE(13), HYDRAULIC CONTROL VALVE(16)-HYDRAULIC CONTROL VALVE(18)		x
61	6661328	SEAL KIT	main relief - Ref. HYDRAULIC CONTROL VALVE(21)-HYDRAULIC CONTROL VALVE(24)		x
61	6809425	SEAL KIT	Ref. HYDRAULIC CONTROL VALVE(13) & HYDRAULIC CONTROL VALVE(16)-HYDRAULIC CONTROL VALVE(18)		x
61	6586459	SEAL KIT	W/Ref. HYDRAULIC CONTROL VALVE(16),) HYDRAULIC CONTROL VALVE(32), HYDRAULIC CONTROL VALVE(33))		1
62	6595131	SPRING	.72' O.D.		2
63	6805651	BLOCK	aux		1
64	90KV-5	PLUG	W/Ref. HYDRAULIC CONTROL VALVE(65)		2
65	95K-6	O-RING			2
66	6806561	PLUG	W/Ref. HYDRAULIC CONTROL VALVE(67)-HYDRAULIC CONTROL VALVE(34)		1
67	79K-7	O-RING			1
68	58K-12	O-RING			1

BICS CONTROL VALVE

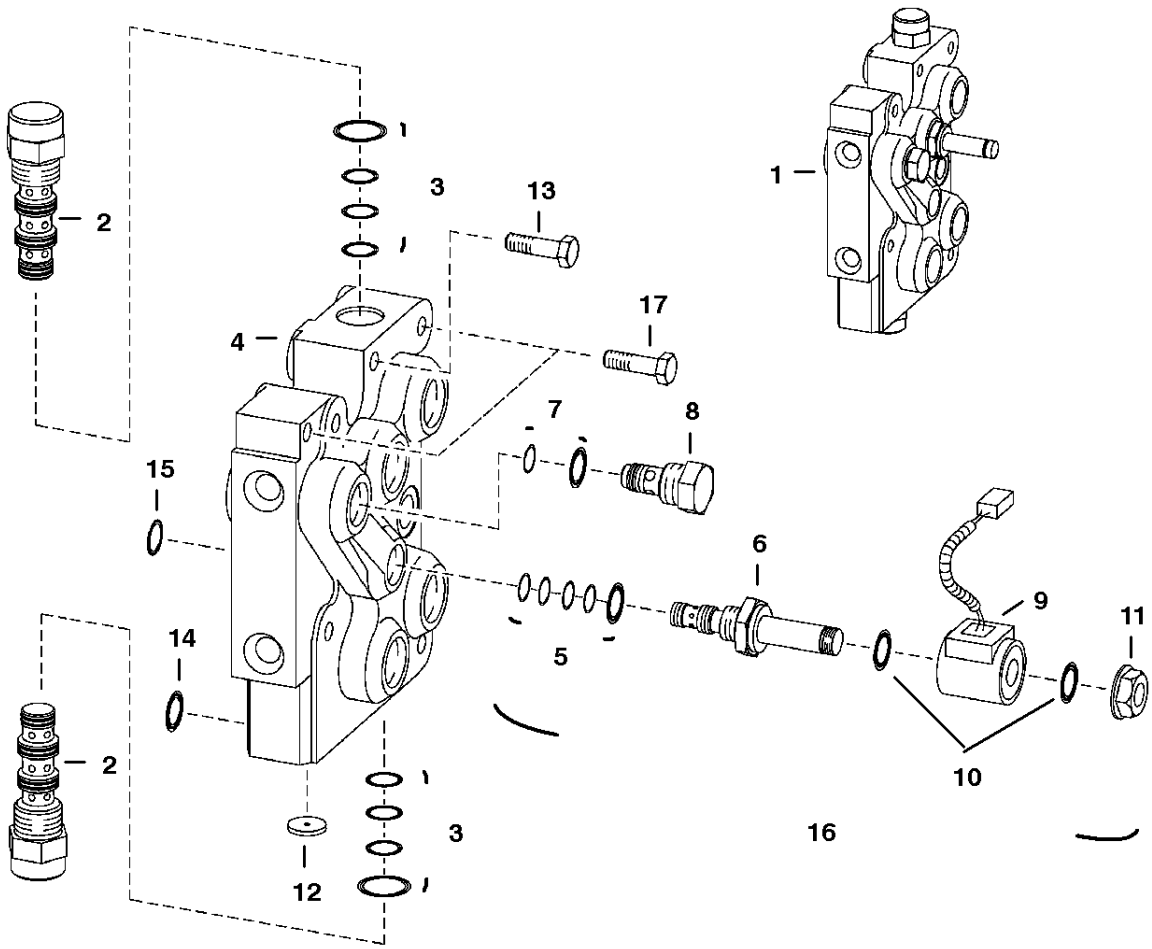

TS-1365

BICS CONTROL VALVE

Ref.N°	Part N°	Description	Remarks	Serial N°	Qty.
1	6628571	VALVE	Ref. BICS CONTROL VALVE(2)-BICS CONTROL VALVE(6)		1
2	6668765	VALVE	pilot operated		2
3	6669734	SEAL KIT			x
4	NSS	BODY			1
5	6669732	SEAL KIT			x
6	6667687	STEM	solenoid valve		1
7	6669733	SEAL KIT			x
8	6669057	CHECK VALVE	filter		1
9	6671025	COIL			1
10	54K-20028	O-RING			2
11	6668820	NUT			1
12	6668791	ORIFICE			1
13	43C-532	BOLT			4
14	55K-212	O-RING			4
15	55K-204	O-RING			1
16	6672471	SOLENOID	'assy. Ref. BICS CONTROL VALVE(5)-BICS CONTROL VALVE(11)		1
17	43C-524	BOLT			2

BUCKET POSITIONING VALVE

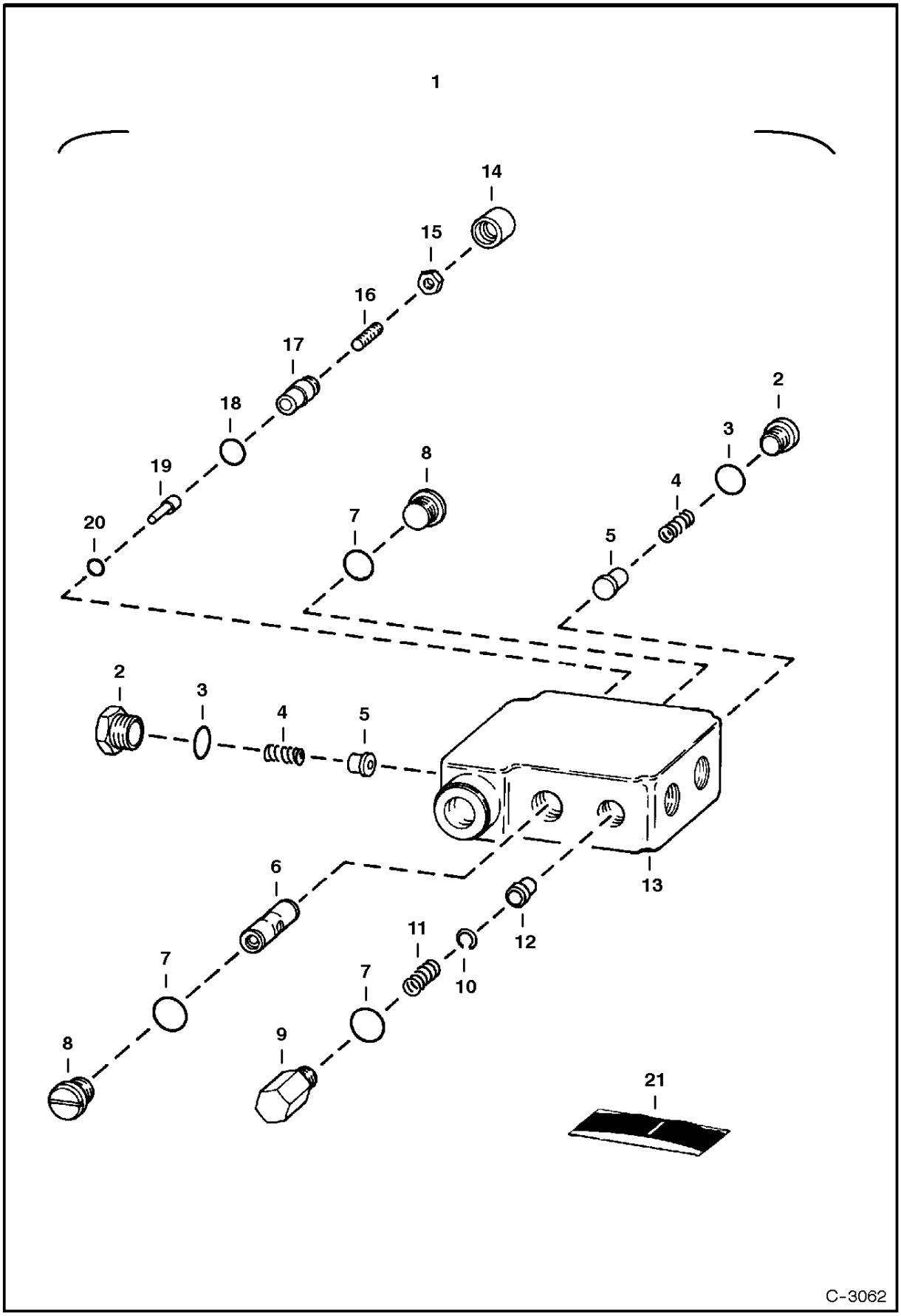

BUCKET POSITIONING VALVE

Ref.N°	Part N°	Description	Remarks	Serial N°	Qty.
1	6666341	VALVE	Ref. BUCKET POSITIONING VALVE(2)-BUCKET POSITIONING VALVE(20)		1
2	6647784	PLUG	W/Ref. BUCKET POSITIONING VALVE(3)		2
3	79K-8	O-RING			2
4	6647785	SPRING			2
5	6647783	LOAD CHECK			2
6	NSS	SPOOL			1
7	58K-116	O-RING	backAup - Was 80K-116 [B]		3
8	6647780	PLUG	W/Ref. BUCKET POSITIONING VALVE(7)		2
9	6667176	PLUG	W/Ref. BUCKET POSITIONING VALVE(7)		1
10	6667680	SNAP RING			1
11	6648294	SPRING			1
12	NSS	SPOOL			1
13	NSS	BODY			1
14	6667676	COVER			1
15	6631561	NUT			1
16	6648293	SCREW			1
17	6647778	CAP			1
18	6634874	O-RING			1
19	6647777	PIN			1
20	6667677	O-RING			1
21	6647786	SEAL KIT	Ref. BUCKET POSITIONING VALVE(3), BUCKET POSITIONING VALVE(7), BUCKET POSITIONING VALVE(14), BUCKET POSITIONING VALVE(18) & BUCK		1

HIGH HORSEPOWER HYDRAULICS
(Auxiliary Hydraulics)

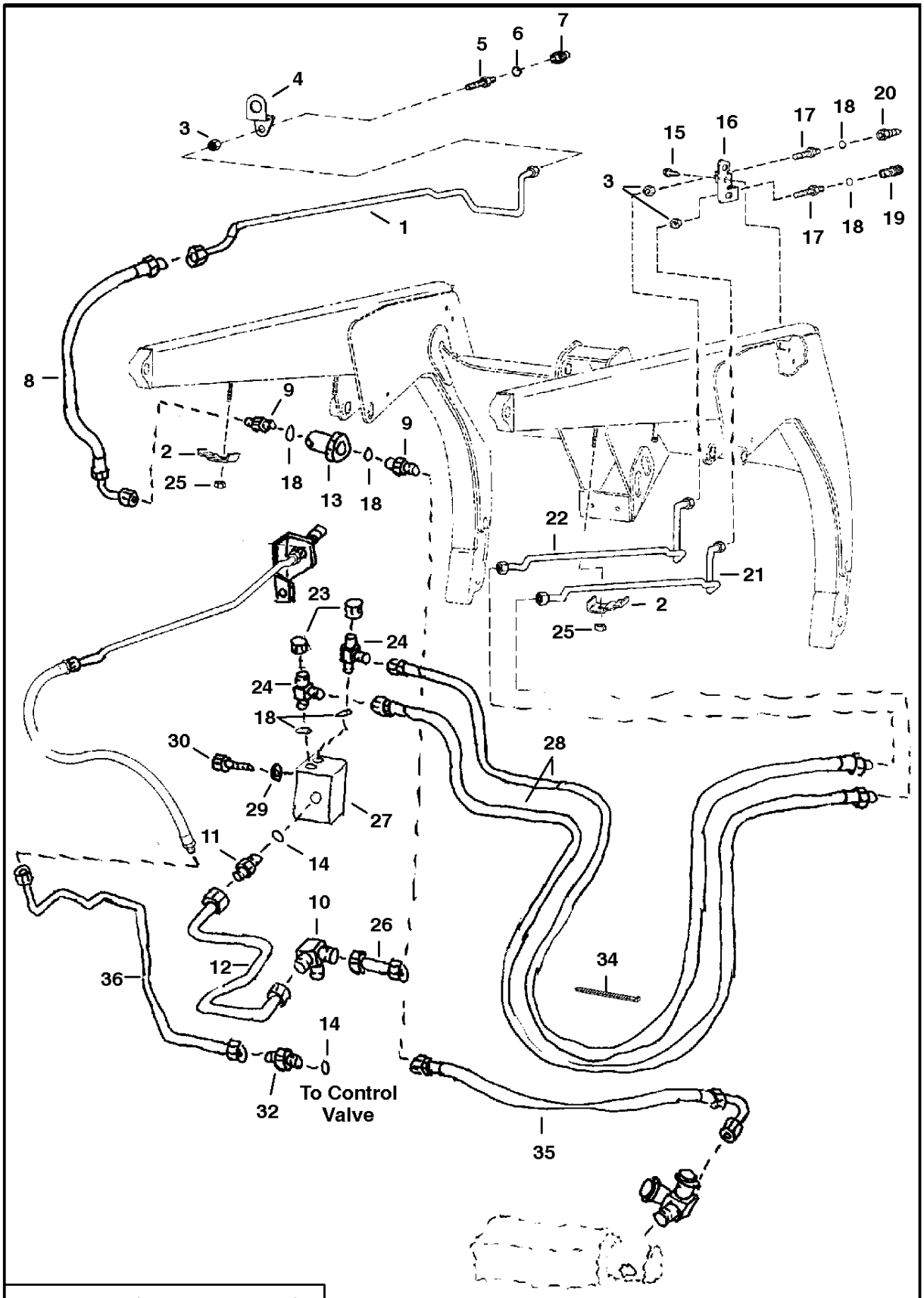

NOTE: Electrical Attachment Kit Standard on all High Flow Models.

E-2375

HIGH HORSEPOWER HYDRAULICS

Ref.N°	Part N°	Description	Remarks	Serial N°	Qty.
1	6718253	TUBELINE		& Bel.	1
2	6703216#	CLAMP			4
3	86F-5	NUT		& Bel.	3
3	86F-5	NUT		& Abv.	2
4	6711913	BRACKET		& Bel.	1
5	6711628	ADAPTER	W/Ref. HIGH HORSEPOWER HYDRAULICS(6) - flat boss face	& Bel.	1
5	6726479	ADAPTER	W/Ref. HIGH HORSEPOWER HYDRAULICS(6) - tapered boss face	-	1
5	97K-6	O-RING	flared end		x
6	79K-8	O-RING	flat boss face		x
6	99K-8	O-RING	tapered boss face	& Bel.	x
7	6667806	QUICK COUPLER	male - F.F.	& Bel.	1
7	6669659	O-RING		& Bel.	1
8	6719531	HOSE		& Bel.	1
8	6725424	HOSE		-	1
9	15KV-5	ADAPTER	W/Ref. HIGH HORSEPOWER HYDRAULICS(18)	& Bel.	2
9	97K-6	O-RING	flared end	& Bel.	x
10	6719053	TEE			1
10	97K-10	O-RING	flared end		x
11	6655572	VALVE	check - W/Ref. HIGH HORSEPOWER HYDRAULICS(14)		1
12	6719069	TUBELINE			1
13	6661022	FILTER	inAline - See Page HYDROSTATIC OIL FILTER(1)	& Bel.	1
14	79K-12	O-RING	flat boss face		x
14	99K-12	O-RING	tapered boss face		x
15	84G-3716	BOLT			2
16	6711674	BRACKET			1
17	6716089	CONNECTOR	tapered boss face - W/Ref. HIGH HORSEPOWER HYDRAULICS(18)		2
17	97K-6	O-RING	flared end		2
18	99K-6	O-RING	tapered boss face		x
19	6667803	QUICK COUPLER	female		1
20	6667804	QUICK COUPLER	male		1
21	6719165	TUBELINE			1
22	6719166	TUBELINE			1
23	36K-5	CAP			2
24	21KV-5	TEE	W/Ref. HIGH HORSEPOWER HYDRAULICS(18) - tapered boss face		2
24	97K-6	O-RING	flared end		x
25	59D-6	NUT			x
26	6719067	TUBELINE			1
27	6669203	VALVE	Control - See Page HIGH HORSEPOWER HYDRAULICS(1)		1
28	6719266	HOSE			2
29	25E-17	WASHER			2
30	17C-612	BOLT			2
31		VALVE	See Page HYDRAULIC CONTROL VALVE(4)		1
32	15KN-8	ADAPTER	W/Ref. HIGH HORSEPOWER HYDRAULICS(14) - tapered boss face	& Bel.	1
32	97K-12	O-RING	flared end		1
32	6812646	ADAPTER	W/Ref. HIGH HORSEPOWER HYDRAULICS(14) - flat boss face	& Abv.	1
33	79K-10	O-RING			x
34	6624289	STA-STRAP			4
35	6702079	HOSE		& Bel.	1
36	6719068	TUBELINE			1

HIGH HORSEPOWER HYDRAULICS

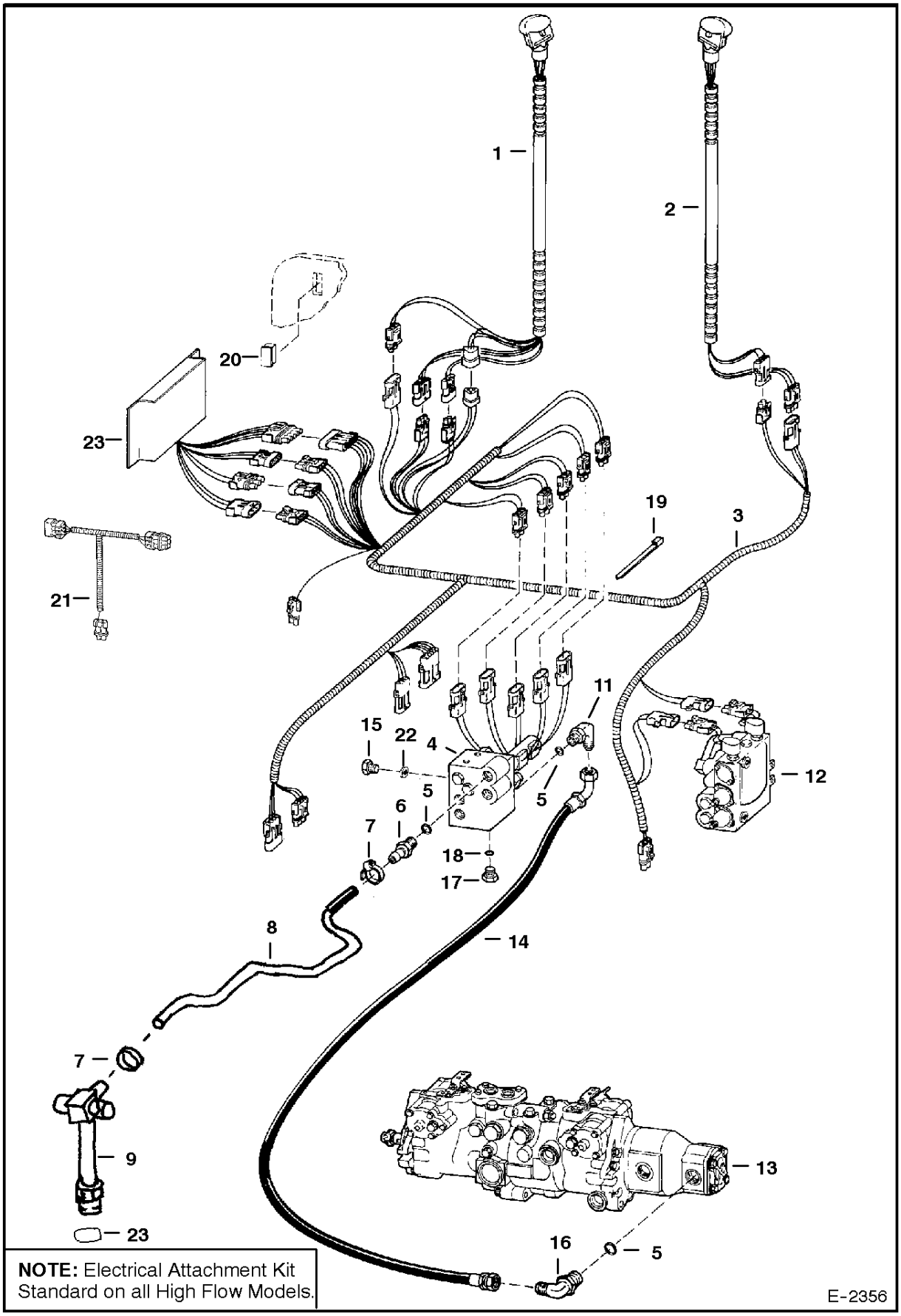

NOTE: Electrical Attachment Kit Standard on all High Flow Models.

HIGH HORSEPOWER HYDRAULICS

Ref.N°	Part N°	Description	Remarks	Serial N°	Qty.
1	6706568	KIT	L.H. Multi-Switch Handle		1
2	6706735	KIT	R.H. Multi-Switch Handle		1
3	6712524	HARNESS			1
4		VALVE	See Page HIGH HORSEPOWER HYDRAULICS(1)		1
5	79K-10	O-RING	flat boss face		x
6	1316263	ADAPTER	W/Ref. HIGH HORSEPOWER HYDRAULICS(5)		1
7	5HM-27	CLAMP	constant tension - Was 5HM-29 [B]		2
8	6719103	HOSE			1
9	6718949	TEE	W/Ref. HIGH HORSEPOWER HYDRAULICS(23)		1
10	6673757	CONTROLLER	PWM		1
11	6714134	ELBOW	W/Ref. HIGH HORSEPOWER HYDRAULICS(5) - flat boss face		1
12		VALVE	control - See Page HYDRAULIC CONTROL VALVE(4)		1
13		PUMP	See Page NO PAGE		1
14	6715459	HOSE			1
15	17C-612	BOLT			2
16	6719054	ELBOW	W/Ref. HIGH HORSEPOWER HYDRAULICS(5) - flat boss face		1
16	97K-10	O-RING	flared end		1
17	90KV-5	PLUG	W/Ref. HIGH HORSEPOWER HYDRAULICS(18) - tapered boss face - Was 24KN-5 [B]		1
18	99K-6	O-RING	tapered boss face		1
19		HARNESS	attachment control		1
20	6668813	SWITCH			1
21	6710435	HARNESS	adapter bleed		1
22	25E-17	WASHER			2
23	99K-16	O-RING			x

HIGH HORSEPOWER HYDRAULICS
(Manual Lift Release System)

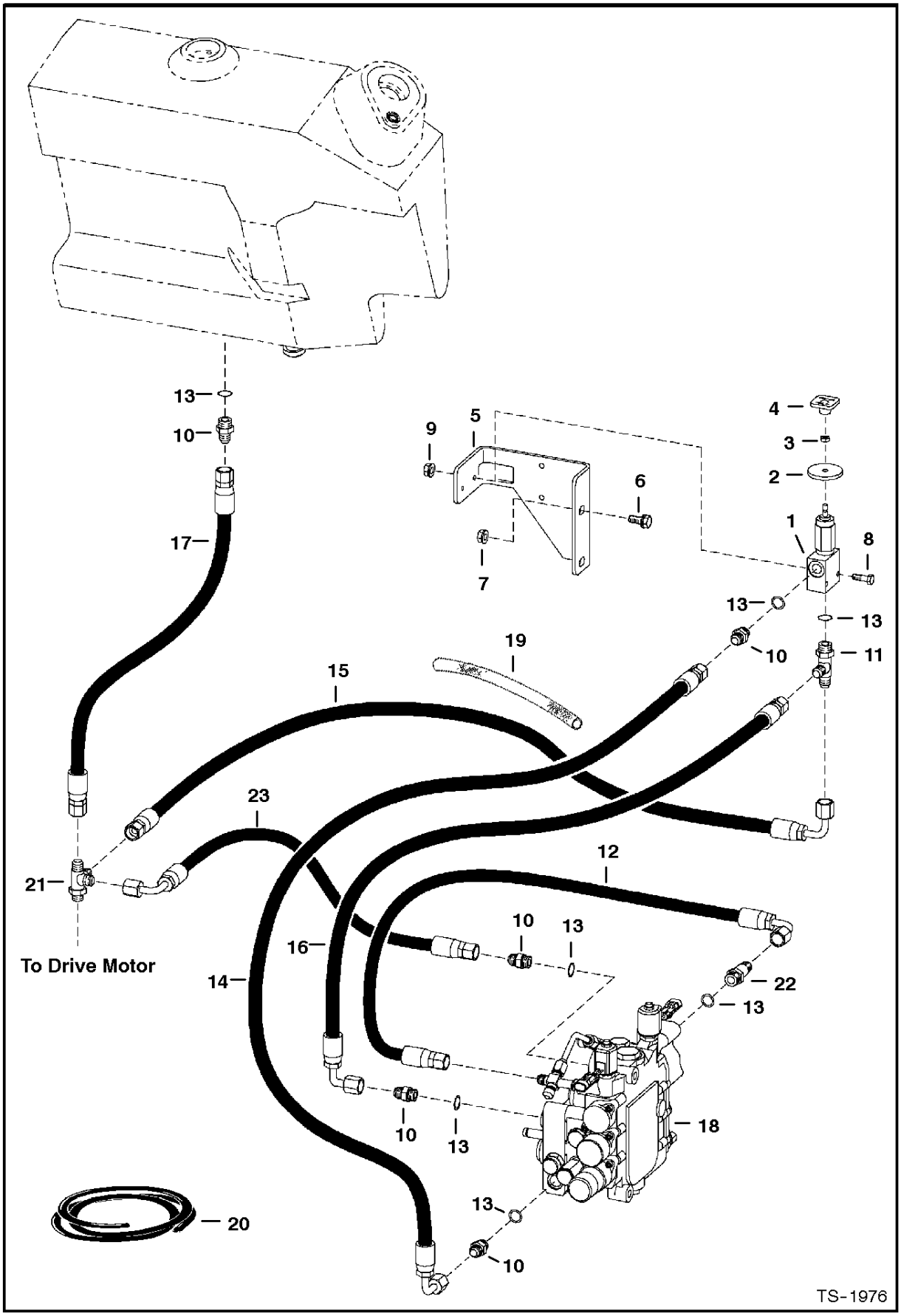

HIGH HORSEPOWER HYDRAULICS

Ref.N°	Part N°	Description	Remarks	Serial N°	Qty.
1	6667844	VALVE	manual lift - See Page MANUAL LIFT RELEASE VALVE(1)		1
2	6707101	WASHER	neoprene		1
3	7D-4	NUT	for 6664858		1
4	6668913	KNOB			1
5	6718881	BRACKET			1
6	35C-620	BOLT			2
7	83D-6	NUT			2
8	17C-428	BOLT			2
9	83D-4	NUT			2
10	15KV-5	ADAPTER	W/Ref. MANUAL LIFT RELEASE SYSTEM(13) - tapered boss face		5
10	97K-6	O-RING	flared end		x
11	21KV-5	TEE	W/Ref. MANUAL LIFT RELEASE SYSTEM(13) - tapered boss face		1
11	97K-6	O-RING	flared end		x
12	6801712	HOSE			1
13	99K-6	O-RING	tapered boss face		x
14	6714856	HOSE		5144 47863 & Bel.	1
14	6729602	HOSE	W/ danger decals	5144 47864 & Abv.	1
14	6809511	DECAL	danger	5144 47864 & Abv.	2
15	6716464	HOSE			1
16	6706790	HOSE			1
17	6716000	HOSE			1
18		CONTROL VALVE	See Page - HYDRAULIC CONTROL VALVE(4)		1
19	NAP	SHIELD	21' (533mm) long - Order Ref. MANUAL LIFT RELEASE SYSTEM(20)		1
20	6650108	SHIELD	bulk - 1.35' (34mm) I.D. - Sold Per foot		x
21	6718031	CROSS			1
22	16KN-5	CONNECTOR	W/Ref. MANUAL LIFT RELEASE SYSTEM(13)		1
22	97K-6	O-RING	flared end		x
23	6802851	HOSE			1

HIGH HORSEPOWER HYDRAULICS
(Double Gear Pump) (S/N & Below)

NOTE: S/N 5144 46823, 5146 41075 & Above this pump became standard on loaders equipped W/ high flow option. S/N 5144 46822, 5146 41074 & Below it was standard on loaders W/ 2-speed & high flow option.

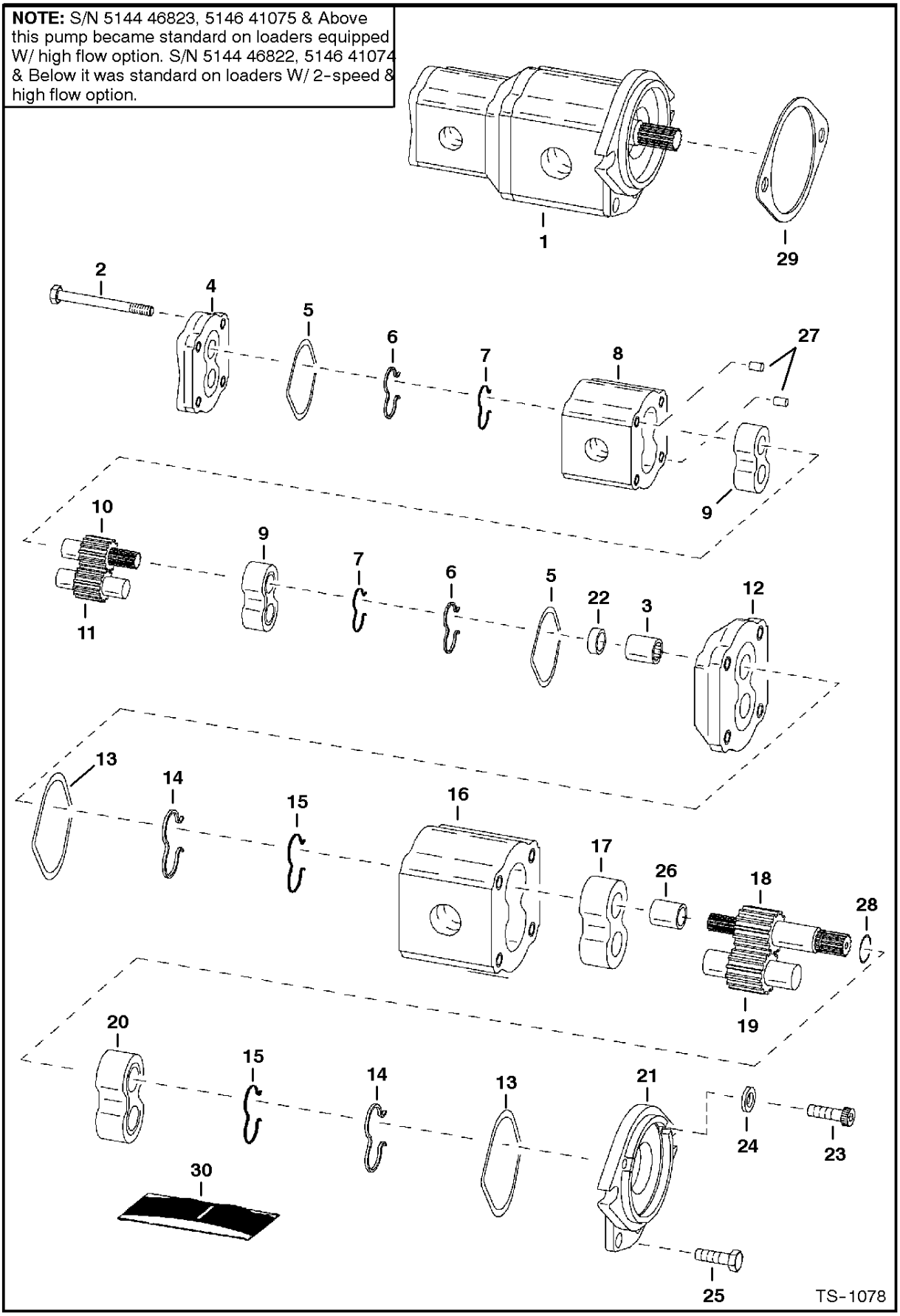

HIGH HORSEPOWER HYDRAULICS

Ref.N°	Part N°	Description	Remarks	Serial N°	Qty.
1	6673913	PUMP	B550137254 - 4bolt flange -& Ref. HIGH HORSEPOWER HYDRAULICS(2)-HIGH HORSEPOWER HYDRAULICS(27) - SEE NOTE	5144 46864 & Bel.	1
1	6675661	GEAR PUMP	B550138097 - 4bolt flange -& Ref. HIGH HORSEPOWER HYDRAULICS(2)-HIGH HORSEPOWER HYDRAULICS(27)	SEE NOTE	1
2	NSS	BOLT			4
3	NSS	COUPLER			1
4	NSS	COVER			1
5	NSS	O-RING	seal		2
6	NSS	SEAL			2
7	NSS	RING			2
8	NSS	BODY			1
9	NSS	BEARING			2
10	NSS	GEAR	drive		1
11	NSS	GEAR			1
12	NSS	COVER			1
13	NSS	O-RING	seal		2
14	NSS	SEAL			2
15	NSS	RING			2
16	NSS	BODY			1
17	NSS	BEARING			1
18	NSS	GEAR	drive		1
19	NSS	GEAR	idler		1
20	NSS	BEARING			1
21	NSS	COVER			1
22	NSS	BUSHING			1
23	NSS	BOLT			2
24	NSS	SEAL			2
25	NSS	BOLT			2
26	NSS	SPACER			1
27	NSS	DOWEL			2
28	NSS	RING	retaining		1
29	6660339	GASKET			1
30	6674370	SEAL KIT	Ref. 5-7, 13-15, HIGH HORSEPOWER HYDRAULICS(24) & HIGH HORSEPOWER HYDRAULICS(28) - for B550137254		1
30	6678853	SEAL KIT	Ref. 5-7, 13-15, HIGH HORSEPOWER HYDRAULICS(24) & HIGH HORSEPOWER HYDRAULICS(28) - for B550138097		1

* HIGH HORSEPOWER HYDRAULICS
(Cast Iron) (Double Gear Pump) (S/N & Above)

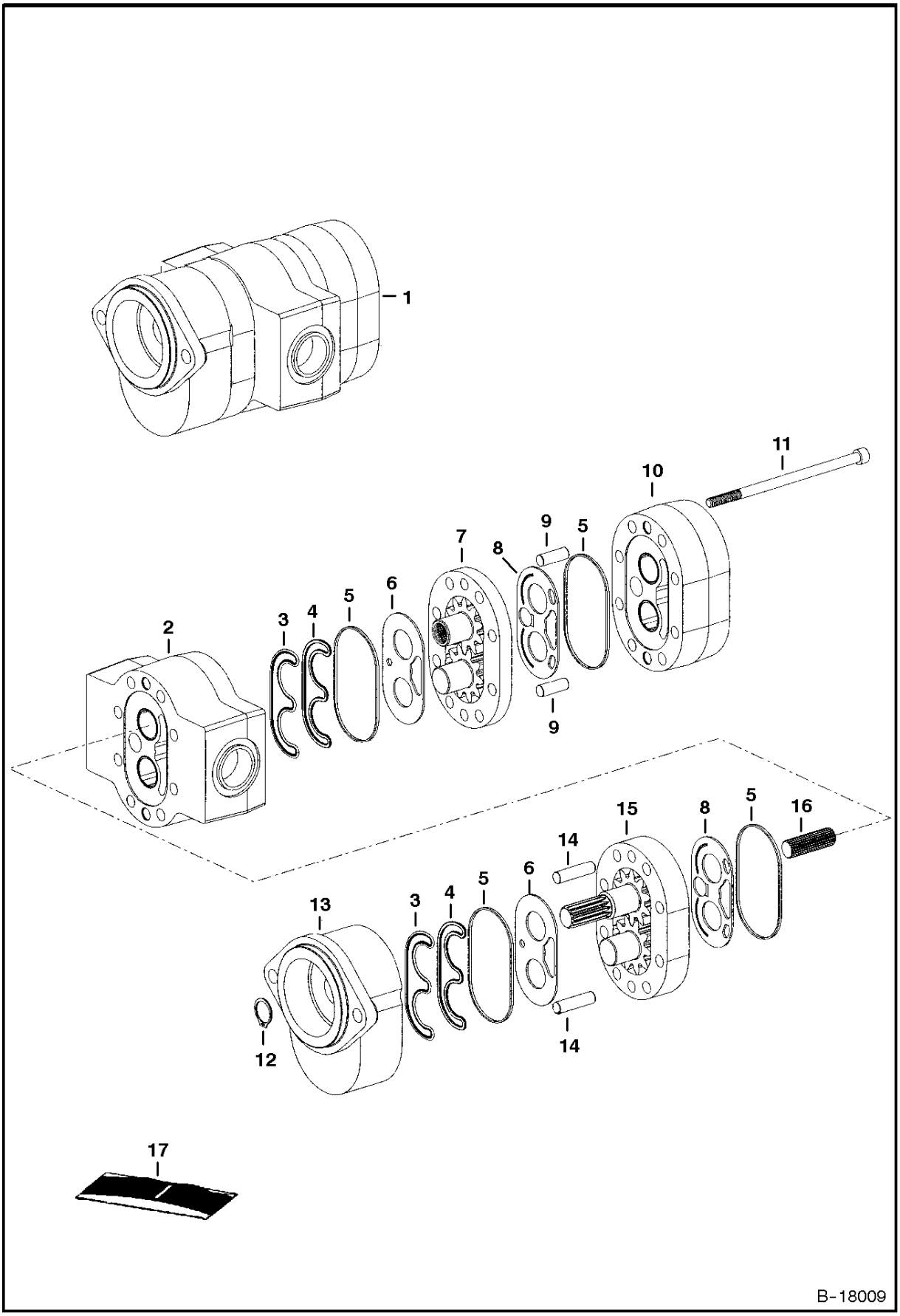

* HIGH HORSEPOWER HYDRAULICS

Ref.N°	Part N°	Description	Remarks	Serial N°	Qty.
1	6678225	PUMP	163D1186 - 4bolt flange -& Ref. HIGH HORSEPOWER HYDRAULICS(2)-* HIGH HORSEPOWER HYDRAULICS(16) - for 4445099		1
2	NSS	BODY			1
3	NSS	SEAL			2
4	NSS	SEAL			2
5	NSS	SEAL	seal		4
6	NSS	WEAR PLATE			2
7	NSS	RING			1
8	NSS	WEAR PLATE			2
9	NSS	PIN			2
10	NSS	SECTION	drive		1
11	NSS	BOLT			8
12	NSS	SNAP RING			1
13	NSS	COVER	seal		1
14	NSS	PIN			2
15	NSS	SECTION			1
16	NSS	SHAFT			1
17	6678733	SEAL KIT	Ref. * HIGH HORSEPOWER HYDRAULICS(3)-* HIGH HORSEPOWER HYDRAULICS(6) & * HIGH HORSEPOWER HYDRAULICS(8)		1

HIGH HORSEPOWER HYDRAULICS
(Control Valve)

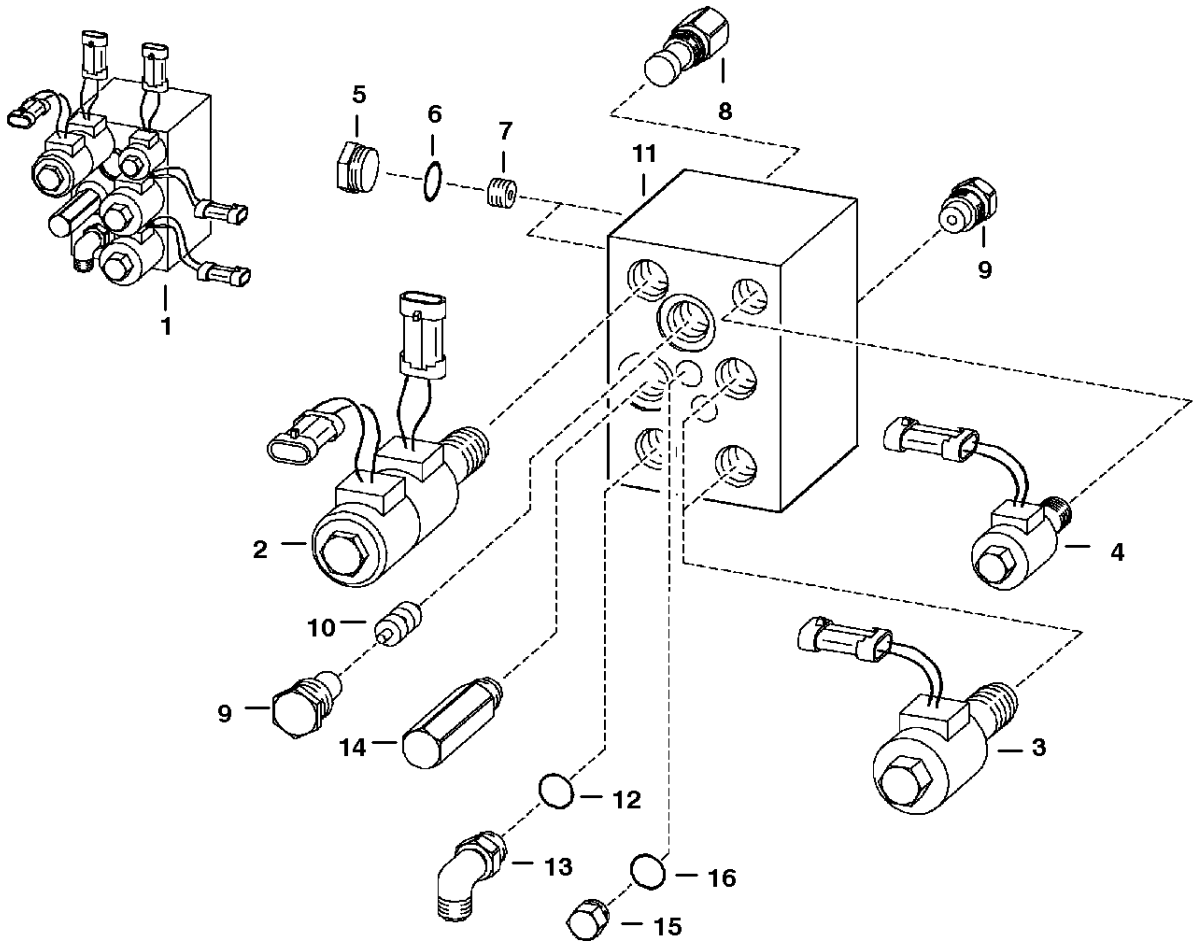

TS-1434

HIGH HORSEPOWER HYDRAULICS

Ref.N°	Part N°	Description	Remarks	Serial N°	Qty.
1	6669203	VALVE	Ref. HIGH HORSEPOWER HYDRAULICS(2)-HIGH HORSEPOWER HYDRAULICS(12)		1
2	6672450	VALVE ASSY.	solenoid		1
2	6664025	STEM			1
2	6671026	COIL	&W/ connector		2
2	6671628	NUT			1
2	6679068	SPACER			1
2	6661448	SEAL KIT			1
3	6672449	VALVE ASSY.	solenoid		1
3	6664024	STEM			2
3	6671026	COIL	W/ connector		2
3	6671629	NUT			2
3	6664032	SEAL KIT			2
4	6672448	VALVE ASSY.	solenoid		1
4	6665702	STEM			1
4	6671025	COIL	W/ connector		2
4	6671628	NUT			1
4	6664033	SEAL KIT			1
5	6665719	PLUG			10
6	79K-5	O-RING			x
7	6669615	ORIFICE	.020		2
8	6669729	SHUTTLE VALVE			1
8	6669736	SEAL KIT			1
9	6669728	CHECK VALVE			2
9	6670635	SEAL KIT			1
10	6673990	PISTON	Was 6664028 [A]		1
11	NSS	BLOCK	Order Ref. HIGH HORSEPOWER HYDRAULICS(1)		1
12	99K-10	O-RING	tapered boss face		1
13	17KV-7	ELBOW	W/Ref. HIGH HORSEPOWER HYDRAULICS(12) - tapered boss face		1
13	97K-10	O-RING	flared end		1
14	NAP	RELIEF VALVE	2850 PSI - Order 6676155 - Was 6672451 [A]		1
14	6676155	RELIEF VALVE	3300 PSI		1
14	6669737	SEAL KIT			1
15	6665719	PLUG			11
16	99K-5	O-RING			x

HYDROSTATIC CIRCUITRY
(S/N 5144 41938, 5145 40073, 5146 40147 & Below)

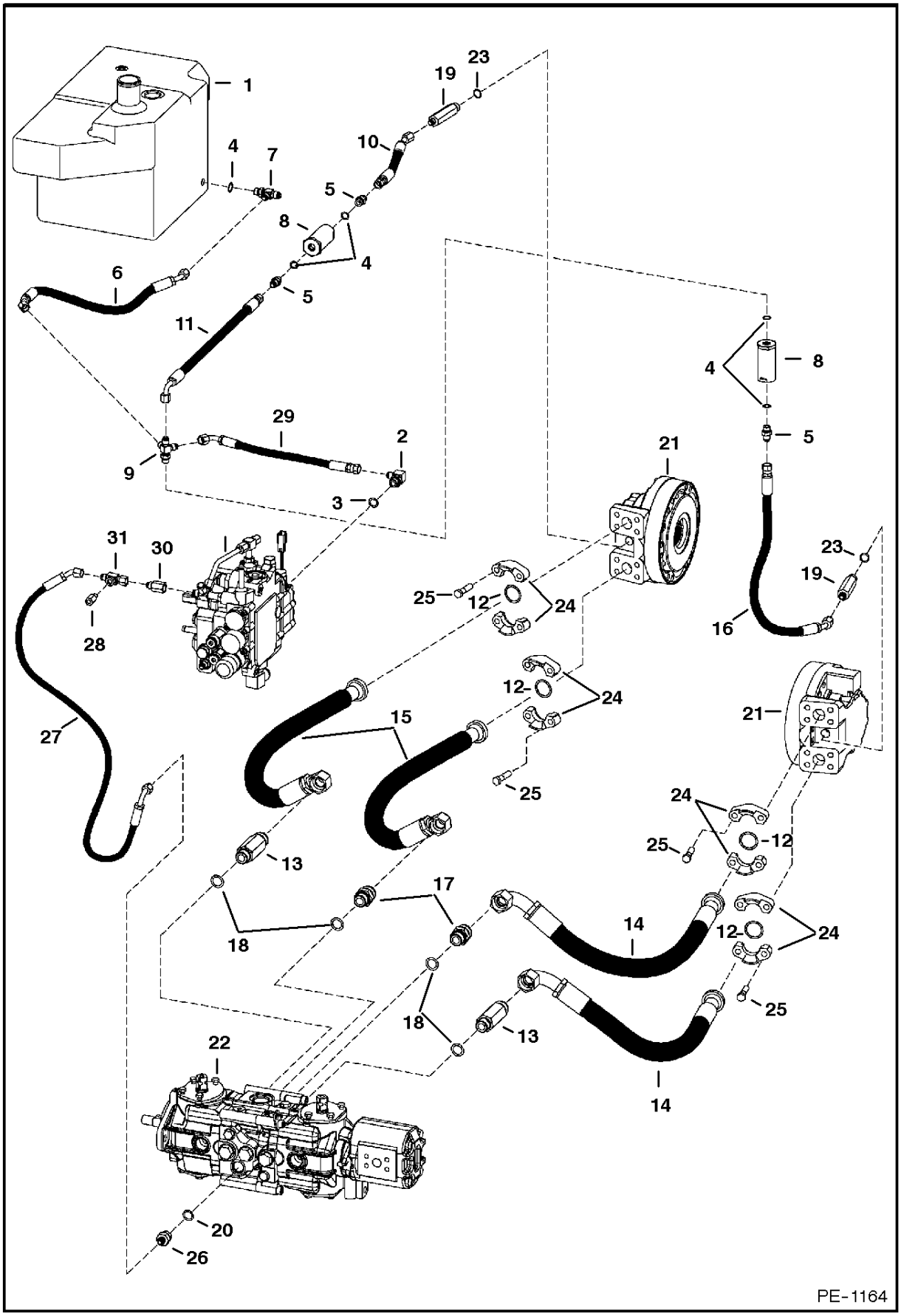

HYDROSTATIC CIRCUITRY

Ref.N°	Part N°	Description	Remarks	Serial N°	Qty.
1	NAP	TANK	#hydraulic oil - See Page HYDROSTATIC CIRCUITRY(1)		1
2	97K-6	O-RING	flared end		x
2	17K-5	ELBOW	W/Ref. HYDROSTATIC CIRCUITRY(3) - Was 6806680 [A]		1
3	79K-6	O-RING			1
4	99K-6	O-RING	tapered boss face		x
5	15KV-5	ADAPTER	W/Ref. HYDROSTATIC CIRCUITRY(4) - tapered boss face		6
5	97K-6	O-RING	flared end		6
6	6715251	HOSE			1
7	21KV-5	TEE	W/Ref. HYDROSTATIC CIRCUITRY(4) - tapered boss face		2
7	97K-6	O-RING	flared end		2
8	6661022	FILTER	inAline - See Page HYDROSTATIC OIL FILTER(1)		2
9	6718031	CROSS	W/Ref. HYDROSTATIC CIRCUITRY(4)		1
9	97K-6	O-RING	flared end		6
10	6728079	HOSE	Was 6717332 [A]		1
11	6719555	HOSE			1
12	55K-219	O-RING			4
13	6716243	CONNECTOR	W/Ref. HYDROSTATIC CIRCUITRY(18)		2
14	6673954	HOSE			2
15	6673955	HOSE			2
16	6717370	HOSE			1
17	6715878	CONNECTOR	W/Ref. HYDROSTATIC CIRCUITRY(18)		2
18	75K-12	O-RING			x
19	6717306	ADAPTER	W/Ref. HYDROSTATIC CIRCUITRY(23)		2
19	97K-6	O-RING	flared end		x
20	75K-10	O-RING			2
21		MOTOR	See Page HYDROSTATIC MOTOR(4) & HYDROSTATI C MOTOR & BRAKE(5)		2
22		PUMP	See Page NO PAGE		1
23	99K-8	O-RING			x
24	20J-16	CLAMP			8
25	17C-728	BOLT			16
26	6717173	ADAPTER	W/Ref. HYDROSTATIC CIRCUITRY(20)		1
27	6725090	HOSE	Was 6801931 [A]		1
28	6718948	ADAPTER	assy - W/filter		1
28	6675278	FILTER			x
29	6707758	HOSE			1
30	6672766	CHECK VALVE			1
31	6718660	TEE			1
31	97K-6	O-RING	flared end		x

HYDROSTATIC CIRCUITRY
(S/N 5144 41938, 5145 40073, 5146 40147 & Below)

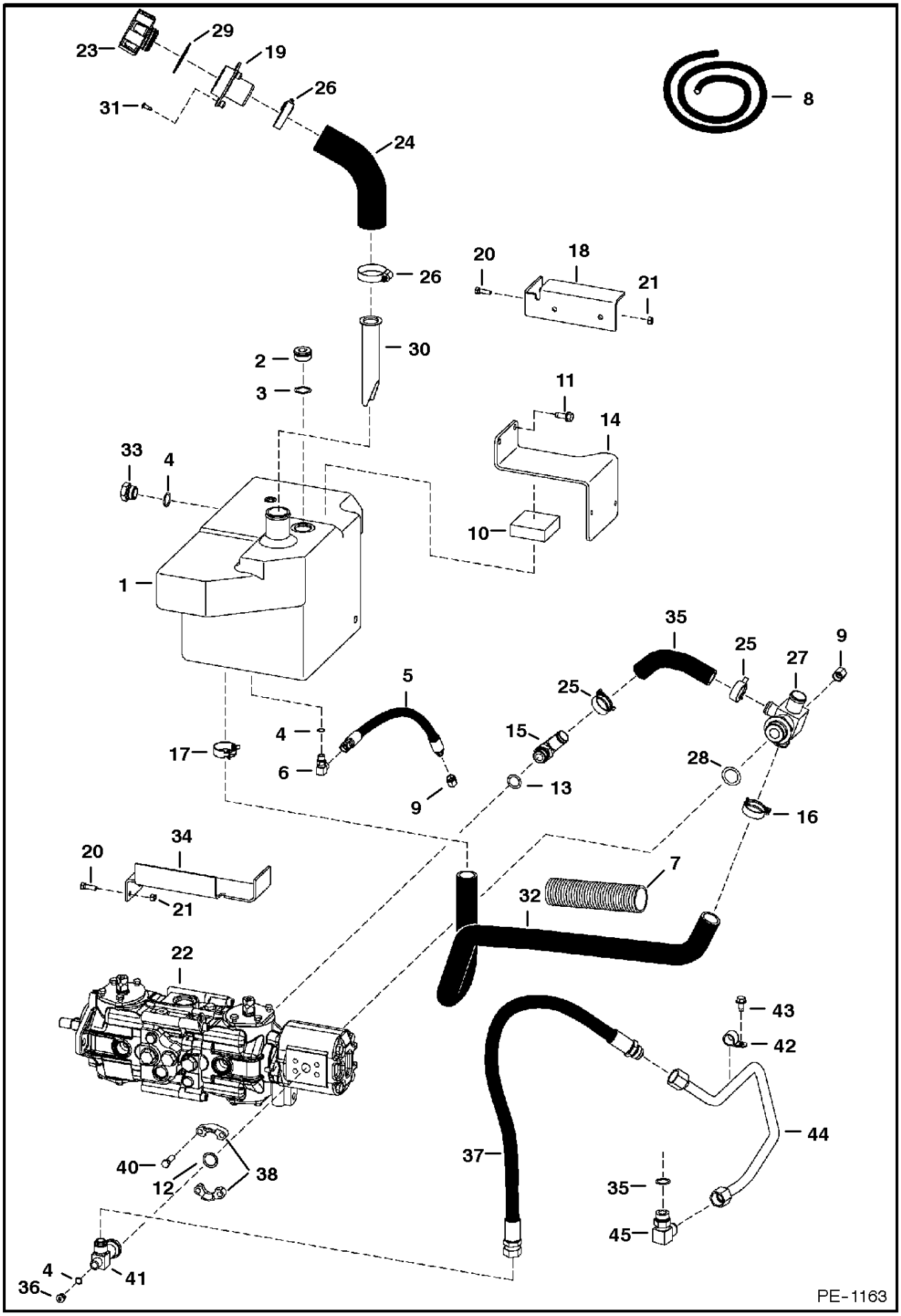

HYDROSTATIC CIRCUITRY

Ref.N°	Part N°	Description	Remarks	Serial N°	Qty.
1	NAP	TANK	#hydraulic oil - W/ 9/16' port - Order 6727265 tank & 6727175 tee, also Order 6727475 cap, 6727354 inlet, 6727318 hose, 6727313		1
2	47K-10	PLUG	W/Ref. HYDROSTATIC CIRCUITRY(3)		1
3	79K-16	O-RING			1
4	99K-6	O-RING	tapered boss face		x
5	6530859	HOSE	tank drain		1
6	18KN-5	ELBOW	45 degree - W/Ref. HYDROSTATIC CIRCUITRY(4)		1
7	NAP	SHIELD	#10' (254mm) long - Order Ref. HYDROSTATIC CIRCUITRY(8)		1
8	6705749	COVER	bulk - sold per foot		x
9	36K-5	CAP			3
10	6716449				1
11	17C-632	BOLT			2
12	83D-6	NUT			2
13	99K-12	O-RING	tapered boss face		x
14	6718726	MOUNT			1
15	6715718	ELBOW	W/Ref. HYDROSTATIC CIRCUITRY(35)		1
16	5HM-42	CLAMP			3
17	6672281	CLAMP	constant tension		4
18	6718851	BRACKET	front		1
19	6706354	INLET			1
20	35C-616	BOLT	Was 35C-512 [B]		4
21	61D-5	NUT			4
22		PUMP	See Page NO PAGE		1
23	6727475	CAP	%breather & fill - also Order Ref. HYDROSTATIC CIRCUITRY(29) - Was 6577785 [A]		1
24	6718576	HOSE			1
25	5HM-35	CLAMP			3
26	42HL-250	CLAMP	Was 6513595 [A]		2
27	6718882	TEE	W/Ref. HYDROSTATIC CIRCUITRY(28)		1
28	75K-16	O-RING			x
29	6700631	GASKET			1
30	6569219	SCREEN			1
31	6706517	SCREW			3
32	6718503	HOSE			1
33	6665915	SIGHT GAUGE	sight - W/Ref. HYDROSTATIC CIRCUITRY(4)		1
34	6718850	BRACKET	rear		1
35	99K-12	O-RING	tapered boss face		x
36	24KN-5	PLUG	W/Ref. HYDROSTATIC CIRCUITRY(4) - tapered boss face		1
37	6725425	HOSE	Was 6716551 [A]		1
38	19J-12	CLAMP			2
39	55K-214	O-RING			1
40	17C-620	BOLT			4
41	6717662	TEE	4bolt flange		1
41	97K-12	O-RING	flared end		1
42	30H-46	CLAMP			1
43	84G-3712	BOLT			1
44	6716506	TUBELINE			1
45	17KV-8	ELBOW	W/Ref. HYDROSTATIC CIRCUITRY(35) - tapered boss face		1
45	97K-12	O-RING	flared end		1

HYDROSTATIC CIRCUITRY
(S/N 5144 41939, 5145 40074, 5146 40148 & Above)

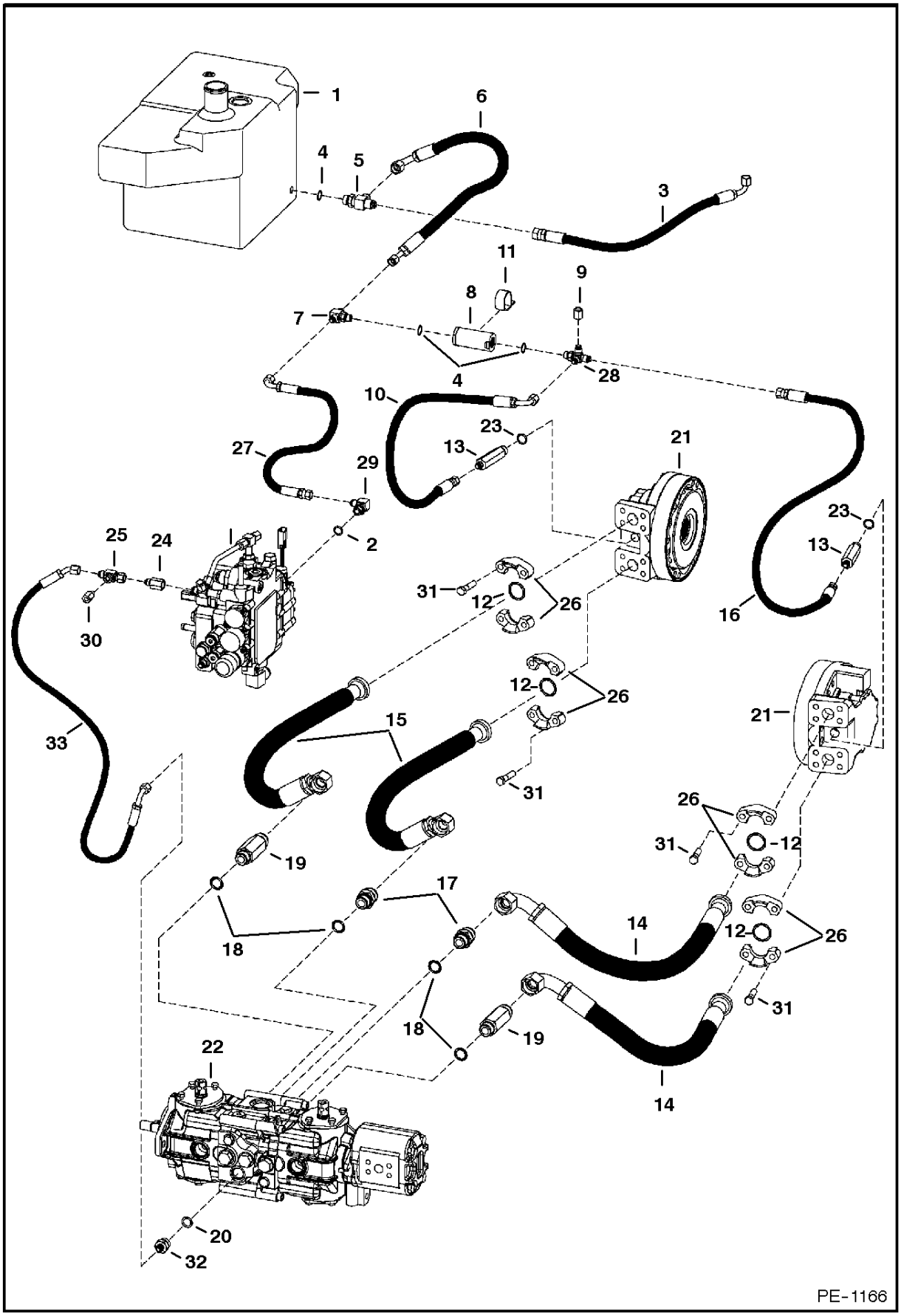

HYDROSTATIC CIRCUITRY

Ref.N°	Part N°	Description	Remarks	Serial N°	Qty.
1	NAP	TANK	hydraulic oil - See Page HYDROSTATIC CIRCUITRY(2)		1
2	79K-6	O-RING			1
3	6725430	HOSE			1
4	99K-6	O-RING	tapered boss face		x
5	21KN-6	TEE	W/Ref. HYDROSTATIC CIRCUITRY(23)		1
5	97K-8	O-RING	flared end		x
6	6726453	HOSE			1
7	19KV-5	TEE	W/Ref. HYDROSTATIC CIRCUITRY(4)		1
7	97K-6	O-RING	flared end		x
8	6661022	FILTER	inAline - See Page HYDROSTATIC OIL FILTER(1)		1
9	36K-5	CAP			3
10	6725433	HOSE			1
11	30H-60	CLIP			1
12	55K-219	O-RING			4
13	6717306	ADAPTER	W/Ref. HYDROSTATIC CIRCUITRY(23)		2
13	97K-6	O-RING	flared end		x
14	6673954	HOSE			2
15	6673955	HOSE			1
16	6725432	HOSE			1
17	6715878	CONNECTOR	W/Ref. HYDROSTATIC CIRCUITRY(18)		2
18	75K-12	O-RING			x
19	6716243	CONNECTOR	W/Ref. HYDROSTATIC CIRCUITRY(18)		2
20	75K-10	O-RING			2
21		MOTOR	See Page HYDROSTATIC MOTOR(4) & HYDROSTATIC MOTOR & BRAKE(5)		2
22		PUMP	See Page NO PAGE		1
23	99K-8	O-RING			x
24	6672766	CHECK VALVE			1
25	6718660	TEE			1
25	97K-6	O-RING	flared end		x
26	20J-16	CLAMP			8
27	6725431	HOSE			1
28	6718031	CROSS	W/Ref. HYDROSTATIC CIRCUITRY(4) - Was 21KV-5 [B]		1
28	97K-6	O-RING	flared end		x
29	17K-5	ELBOW	W/Ref. HYDROSTATIC CIRCUITRY(3) - Was 6806680 [A]		1
29	97K-6	O-RING	flared end		x
30	6718948	ADAPTER	assy - W/ filter		1
30	6675278	FILTER			x
31	17C-728	BOLT			16
32	6717173	ADAPTER	W/Ref. HYDROSTATIC CIRCUITRY(20)		1
33	6725090	HOSE			1

HYDROSTATIC CIRCUITRY
(S/N 5144 41939, 5145 40074, 5146 40148 & Above)

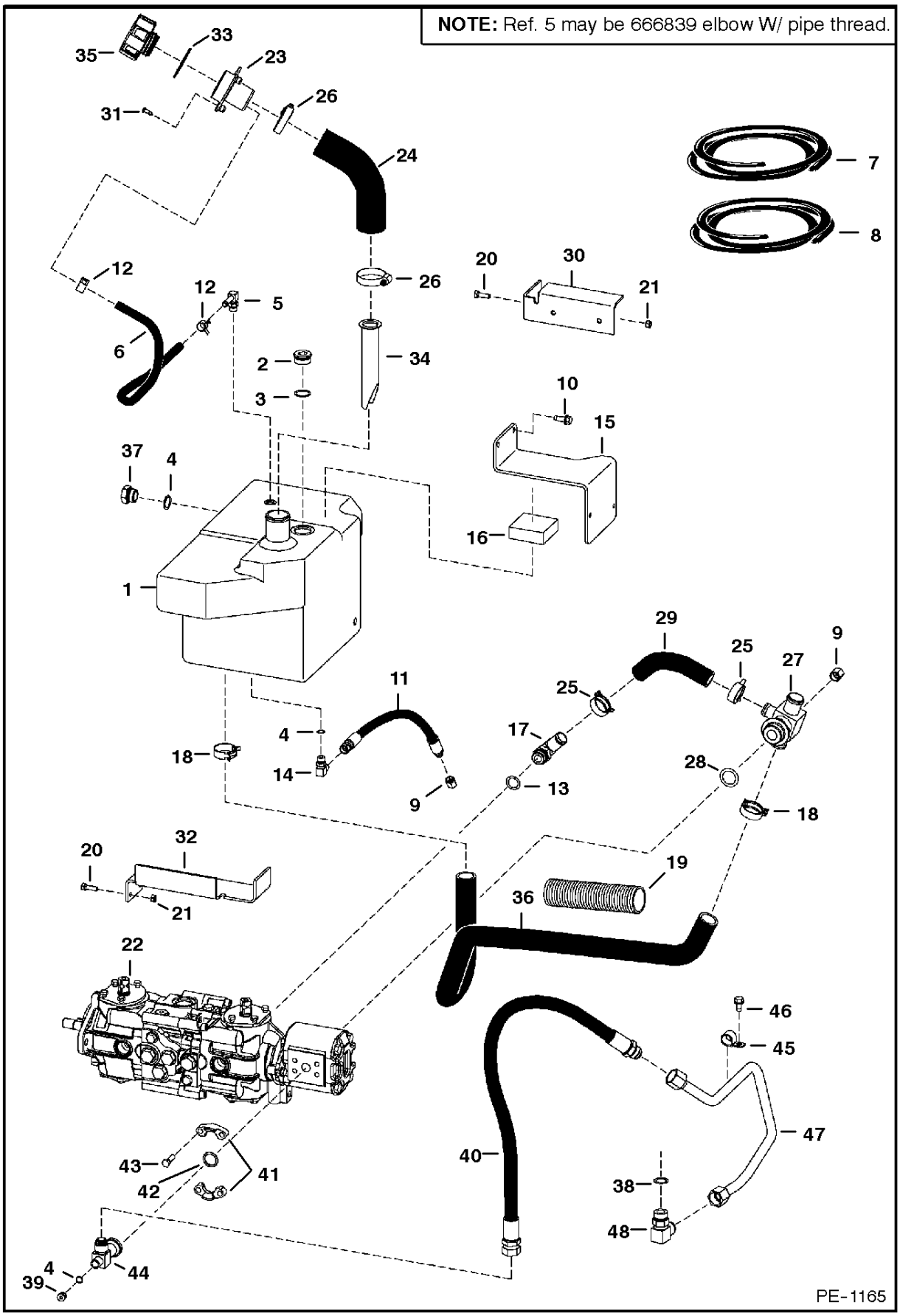

HYDROSTATIC CIRCUITRY

Ref.N°	Part N°	Description	Remarks	Serial N°	Qty.
1	NAP	TANK	hydraulic oil - Order 6727265, also Order 6727475 cap, 6727354 inlet, 6727318 hose, 6727313 fitting, 5HM-15 (2) clamp & 23' (5	& Bel.	1
1	6727265	TANK	hydraulic oil	& Abv.	1
2	47K-10	PLUG	W/Ref. HYDROSTATIC CIRCUITRY(3)		1
3	79K-16	O-RING			1
4	99K-6	O-RING	tapered boss face		x
5	6727313	FITTING	W/Ref. HYDROSTATIC CIRCUITRY(4) - SEE NOTE	& Abv.	1
6	NAP	HOSE	23' (584mm) long - Order Ref. HYDROSTATIC CIRCUITRY(7)	& Abv.	1
7	6586251	HOSE	bulk - sold per foot	& Abv.	x
8	6705749	COVER	bulk - order per foot		x
9	36K-5	CAP			3
10	84G-3716	BOLT			2
11	6530859	HOSE	tank drain		1
12	5HM-15	CLAMP		& Abv.	2
13	99K-12	O-RING	tapered boss face		x
14	17KV-5	ELBOW	W/Ref. HYDROSTATIC CIRCUITRY(4)		1
15	6718726	MOUNT			1
16	6716449				1
17	6715718	ELBOW	W/Ref. HYDROSTATIC CIRCUITRY(13)		1
18	5HM-42	CLAMP			4
19	NAP	SHIELD	#10' (254mm) long - Order Ref. HYDROSTATIC CIRCUITRY(8)		1
20	35C-516	BOLT	Was 17C-516 [B]		4
21	61D-5	NUT	Was 83D-5 [B]		4
22		PUMP	See Page NO PAGE		1
23	6706354	INLET		& Bel.	1
23	6727354	INLET	W/nipple	& Abv.	1
24	6718576	HOSE		& Bel.	1
24	6727318	HOSE		& Abv.	1
25	5HM-35	CLAMP			3
26	42HL-250	CLAMP	Was 6513595 [A]		2
27	6718882	TEE	W/Ref. HYDROSTATIC CIRCUITRY(28)	5144 46864 & Bel.	1
27	6719378	TEE	W/Ref. HYDROSTATIC CIRCUITRY(28)	5144 46865 & Abv.	1
27	97K-6	O-RING	flared end		x
28	75K-16	O-RING			x
29	6718885	HOSE			1
29	6729487	HOSE	cast iron gear pump		1
30	6718851	BRACKET	front		1
31	6706517	SCREW			3
32	6718850	BRACKET	rear		1
33	6700631	GASKET			1
34	6569219	SCREEN			1
35	6727475	CAP	%breather & fill - also Order Ref. HYDROSTATIC CIRCUITRY(29) - Was 6577785 [A]		1
36	6718503	HOSE			1
36	6731044	HOSE	cast iron gear pump		1
37	6665915	SIGHT GAUGE	sight - W/Ref. HYDROSTATIC CIRCUITRY(4)		1
38	99K-12	O-RING	tapered boss face		x
39	90KV-5	PLUG	W/Ref. HYDROSTATIC CIRCUITRY(4) - tapered boss face		1
40	6725425	HOSE			1
41	19J-12	CLAMP			2
42	55K-214	O-RING			1
43	17C-620	BOLT			4
44	6717662	TEE	W/Ref. HYDROSTATIC CIRCUITRY(39) - 4bolt flange		1

HYDROSTATIC CIRCUITRY

Ref.N°	Part N°	Description	Remarks	Serial N°	Qty.
44	97K-12	O-RING	flared end		1
45	30H-46	CLAMP			1
46	84G-3712	BOLT			1
47	6716506	TUBELINE			1
48	17KV-8	ELBOW	W/Ref. HYDROSTATIC CIRCUITRY(35) - tapered boss face		1
48	97K-12	O-RING	flared end		1

HYDROSTATIC CIRCUITRY
(S/N 5144 47220, 5145 41039, 5146 41098 & Below)

NOTE: The S/N for domestic high flow machines is 5144 46824-47220

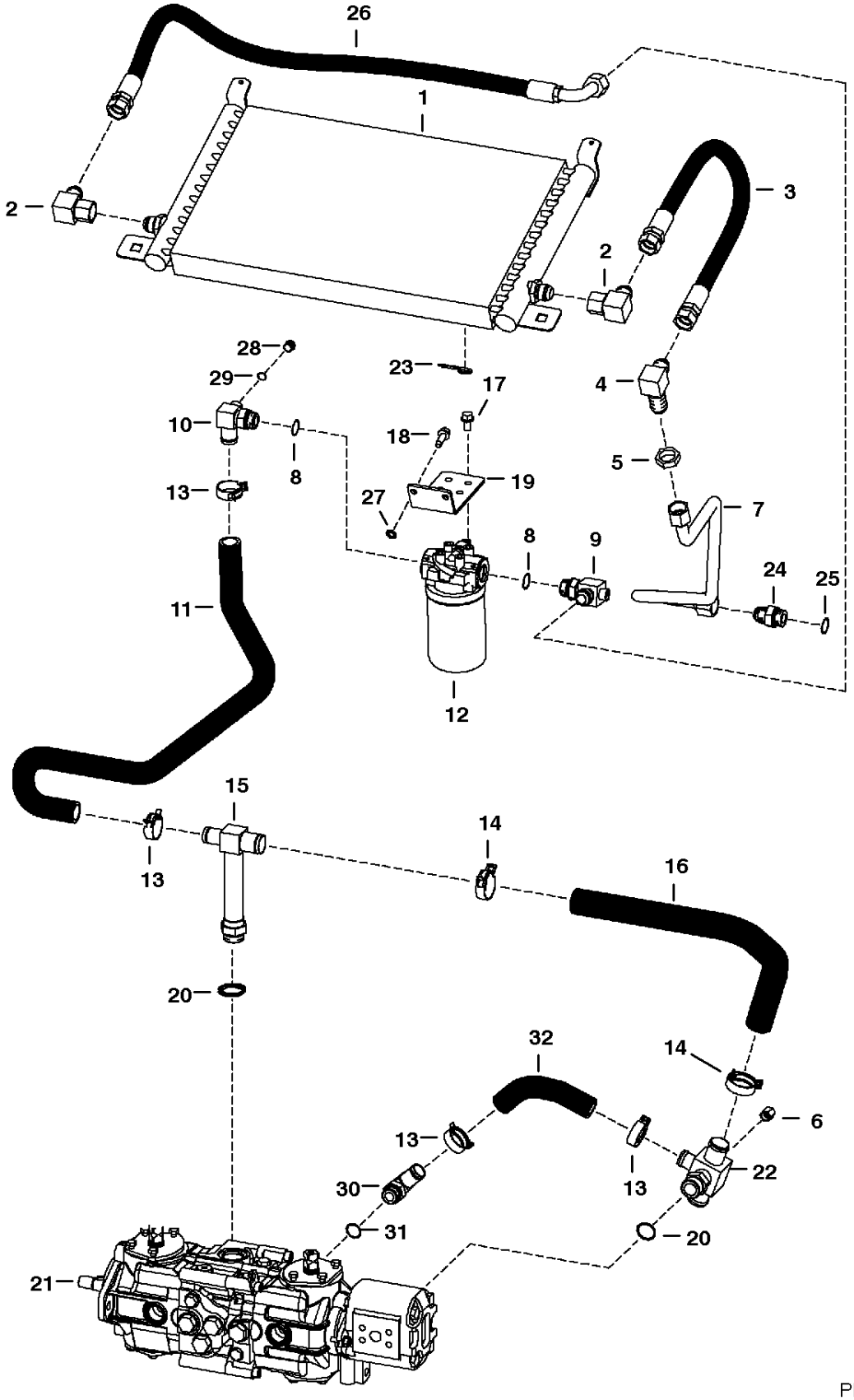

HYDROSTATIC CIRCUITRY

Ref.N°	Part N°	Description	Remarks	Serial N°	Qty.
1	6667896	COOLER			1
2	11KN-8	ELBOW			2
3	6719267	HOSE			2
4	88FN-8	ELBOW			2
5	86F-8	NUT			2
6	36K-5	CAP			1
7	6719286	TUBELINE			1
8	79K-12	O-RING			x
9	6700599	ELBOW	W/Ref. HYDROSTATIC CIRCUITRY(8) - Was 6715714 [B,D]		1
10	6725032	ELBOW	Was 6715718 [B]		1
11	6718773	HOSE			1
12	6661247	FILTER ASSY.			1
12	6661248	ELEMENT			1
13	5HM-35	CLAMP			4
14	5HM-42	CLAMP			3
15	6716471	TEE	W/Ref. HYDROSTATIC CIRCUITRY(20)		1
16	6716176	HOSE			1
17	35C-612	BOLT			4
18	84G-3716	BOLT	Was 84G-3712 [B]		2
19	6719446	MOUNT			1
20	99K-16	O-RING			x
21		PUMP	See Page NO PAGE		2
22	6718882	TEE	W/Ref. HYDROSTATIC CIRCUITRY(20)	5144 46864 & Bel.	1
22	6719378	TEE	SEE NOTE - W/Ref. HYDROSTATIC CIRCUITRY(20)	5144 46865-47220	1
22	97K-6	O-RING	flared end		x
23	1318565	PIN			1
24	15KN-8	ADAPTER	W/Ref. HYDROSTATIC CIRCUITRY(25)		1
25	79K-12	O-RING			1
26	6719268	HOSE			1
27	6E-6	WASHER			1
28	90KV-5	PLUG	W/Ref. HYDROSTATIC CIRCUITRY(29)		1
29	95K-6	O-RING			x
30	6715718	ELBOW	W/Ref. HYDROSTATIC CIRCUITRY(31)		1
31	99K-12	O-RING			x
32	6718885	HOSE			1

* HYDROSTATIC CIRCUITRY
(S/N 5144 47221, 5145 41040, 6146 41099 & Above)

NOTE: The S/N for domestic high flow machines is 5144 46824 & Abv.

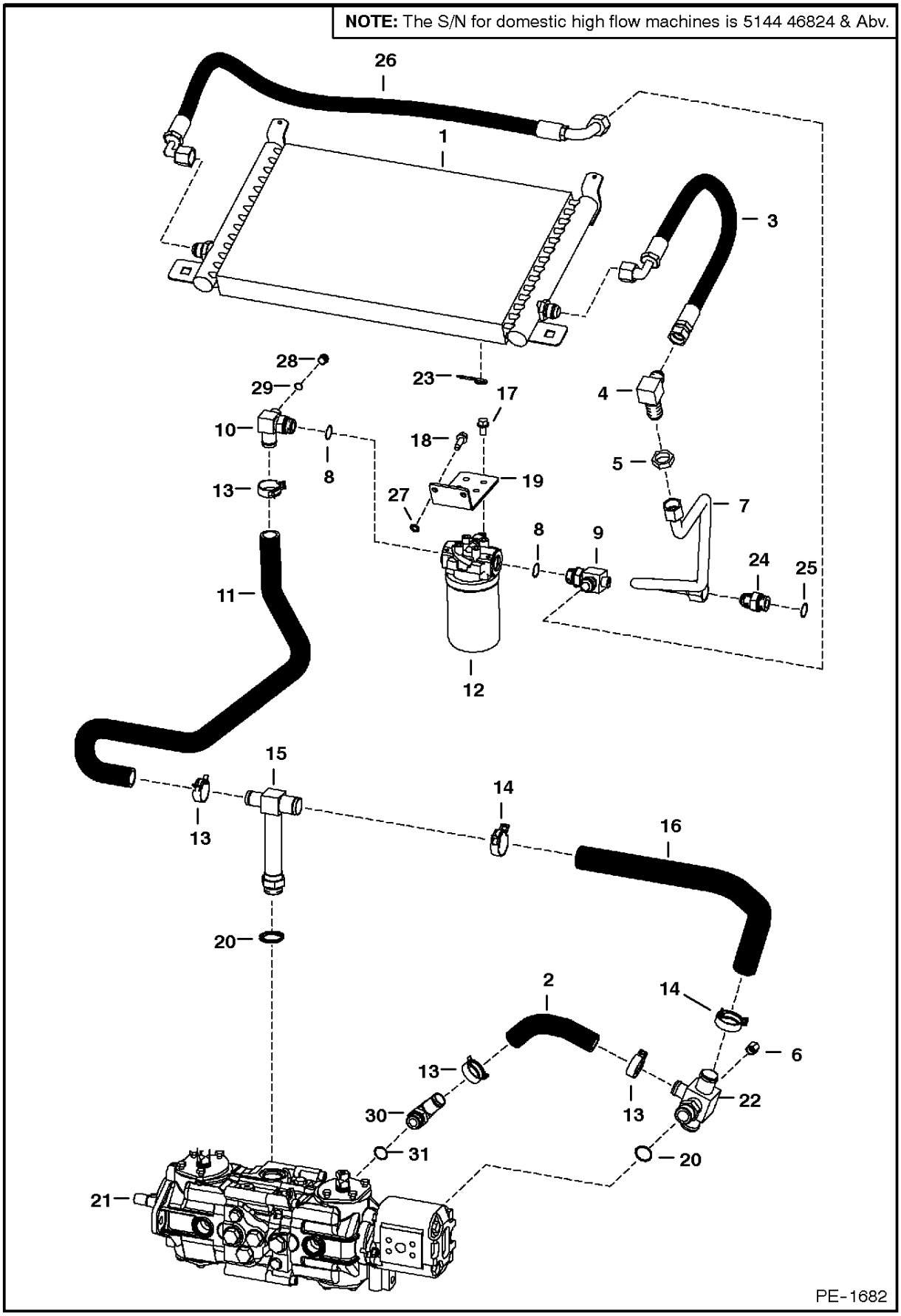

* HYDROSTATIC CIRCUITRY

Ref.N°	Part N°	Description	Remarks	Serial N°	Qty.
1	6675587	COOLER			1
2	6674798	REPAIR KIT	for Ref. * HYDROSTATIC CIRCUITRY(1), * HYDROSTATIC CIRCUITRY(4) & * HYDROSTATIC CIRCUITRY(9) - seal for one fitting only		x
3	6675829	HOSE			2
4	6670831	ELBOW			2
5	86F-8	NUT			2
6	36K-5	CAP			1
7	6719286	TUBELINE			1
8	79K-12	O-RING			x
9	6675778	TEE	W/Ref. * HYDROSTATIC CIRCUITRY(8)		1
10	6725032	ELBOW			1
11	6718773	HOSE			1
12	6661247	FILTER ASSY.			1
12	6661248	ELEMENT			1
13	5HM-35	CLAMP			4
14	5HM-42	CLAMP			3
15	6716471	TEE	W/Ref. * HYDROSTATIC CIRCUITRY(20)		1
16	6716176	HOSE			1
17	35C-612	BOLT			4
18	84G-3716	BOLT			2
19	6719446	MOUNT			1
20	99K-16	O-RING			x
21		PUMP	See Page NO PAGE		2
22	6719378	TEE	W/Ref. * HYDROSTATIC CIRCUITRY(20) - for aluminum pump	& Bel.	1
22	6718882	TEE	W/Ref. * HYDROSTATIC CIRCUITRY(20) - for cast iron pump	& Abv.	1
22	97K-6	O-RING	flared end		x
23	1318565	PIN			1
24	15KN-8	ADAPTER	W/Ref. * HYDROSTATIC CIRCUITRY(25)	& Bel.	1
24	6812646	ADAPTER	W/Ref. * HYDROSTATIC CIRCUITRY(25)	& Abv.	1
25	79K-12	O-RING			1
26	6675830	HOSE			1
27	6E-6	WASHER			1
28	90KV-5	PLUG	W/Ref. * HYDROSTATIC CIRCUITRY(29)		1
29	95K-6	O-RING			x
30	6715718	ELBOW	W/Ref. * HYDROSTATIC CIRCUITRY(31)		1
31	99K-12	O-RING			x
32	6718885	HOSE	for aluminum pump	& Bel.	1
32	6729487	HOSE	for cast iron pump	& Abv.	1

HYDROSTATIC CIRCUITRY
(2-Speed Option)

NOTE: Option also includes vinyl suspension seat 6718868 & threee point seat belt 6725168.

NOTE: Ref. 1, 3, 5-7 & 9 became standard at S/N 5144 46865, 5145 41035, 5146 41075 & Above.

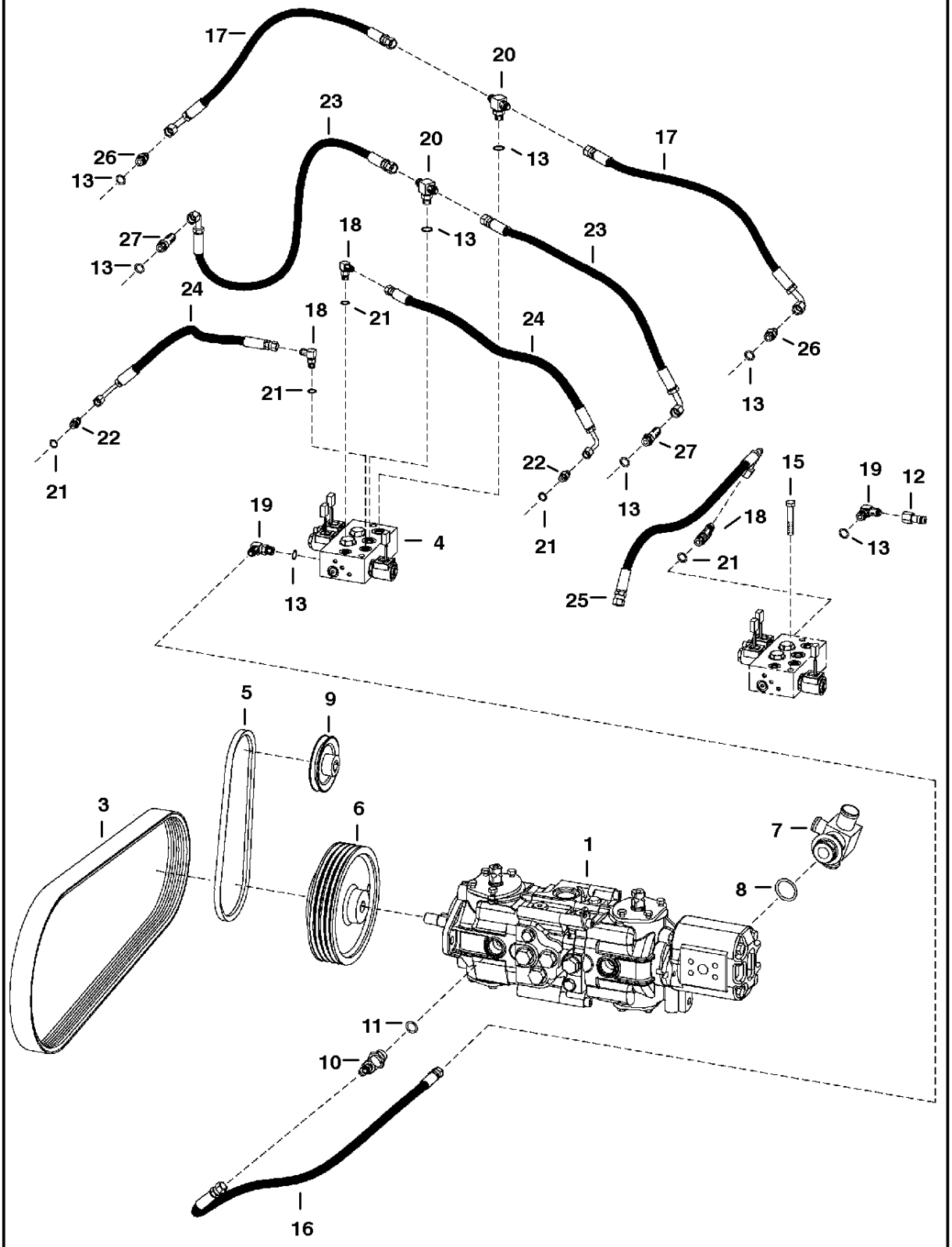

PE-1070

HYDROSTATIC CIRCUITRY

Ref.N°	Part N°	Description	Remarks	Serial N°	Qty.
1		PUMP	See Page HYDROSTATIC PUMP(8)		1
2		MOTOR	See Page HYDROSTATIC MOTOR & BRAKE(5)		2
3	6662855	BELT	drive		1
4		VALVE	2speed - See Page 2-SPEED VALVE(1)		1
5	6707648	BELT	fan	5144	1
5	6676345	BELT	fan	5145, 5146	1
6	6713287	PULLEY	pump		1
7	6719378	TEE	W/Ref. HYDROSTATIC CIRCUITRY(8)		1
7	97K-6	O-RING	flared end		x
8	79K-20	O-RING			x
9	6725130	PULLEY		5144	1
9	6712971	PULLEY		5145 & 5146	1
10	6717503	TEE	W/Ref. HYDROSTATIC CIRCUITRY(11)		1
10	97K-6	O-RING	flared end		x
11	99K-10	O-RING			x
12	6661753	PLUG	diagnostic - loaders W/ 6676417 2speed valve	& Bel.	1
13	99K-6	O-RING			x
14	6725496	COVER			1
15	17C-636	BOLT			2
16	6534012	HOSE			1
17	6716391	HOSE			2
18	17KV-3	ELBOW	W/Ref. HYDROSTATIC CIRCUITRY(21)		2
18	97K-4	O-RING	flared end		x
19	17KV-5	ELBOW	W/Ref. HYDROSTATIC CIRCUITRY(13) - loaders W/ 6676417 2speed valve	& Bel.	3
19	17KV-5	ELBOW	W/Ref. HYDROSTATIC CIRCUITRY(13) - loaders W/ 6678102 2speed valve	& Abv.	2
19	97K-6	O-RING	flared end		x
20	19KV-5	TEE	W/Ref. HYDROSTATIC CIRCUITRY(13)		2
20	97K-6	O-RING	flared end		x
21	99K-4	O-RING			x
22	15KN-3	CONNECTOR	W/Ref. HYDROSTATIC CIRCUITRY(21)		2
22	97K-4	O-RING	flared end		x
23	6725899	HOSE			2
24	6725900	HOSE			2
25	6725902	HOSE			1
26	15KV-5	ADAPTER	W/Ref. HYDROSTATIC CIRCUITRY(13)		2
26	97K-6	O-RING	flared end		x
27	16KN-5	CONNECTOR	W/Ref. HYDROSTATIC CIRCUITRY(13)		2
27	97K-6	O-RING	flared end		x
28	6803932	DECAL	2speed valve		1
29	6729078	DECAL	2speed		2

HAND CONTROLS

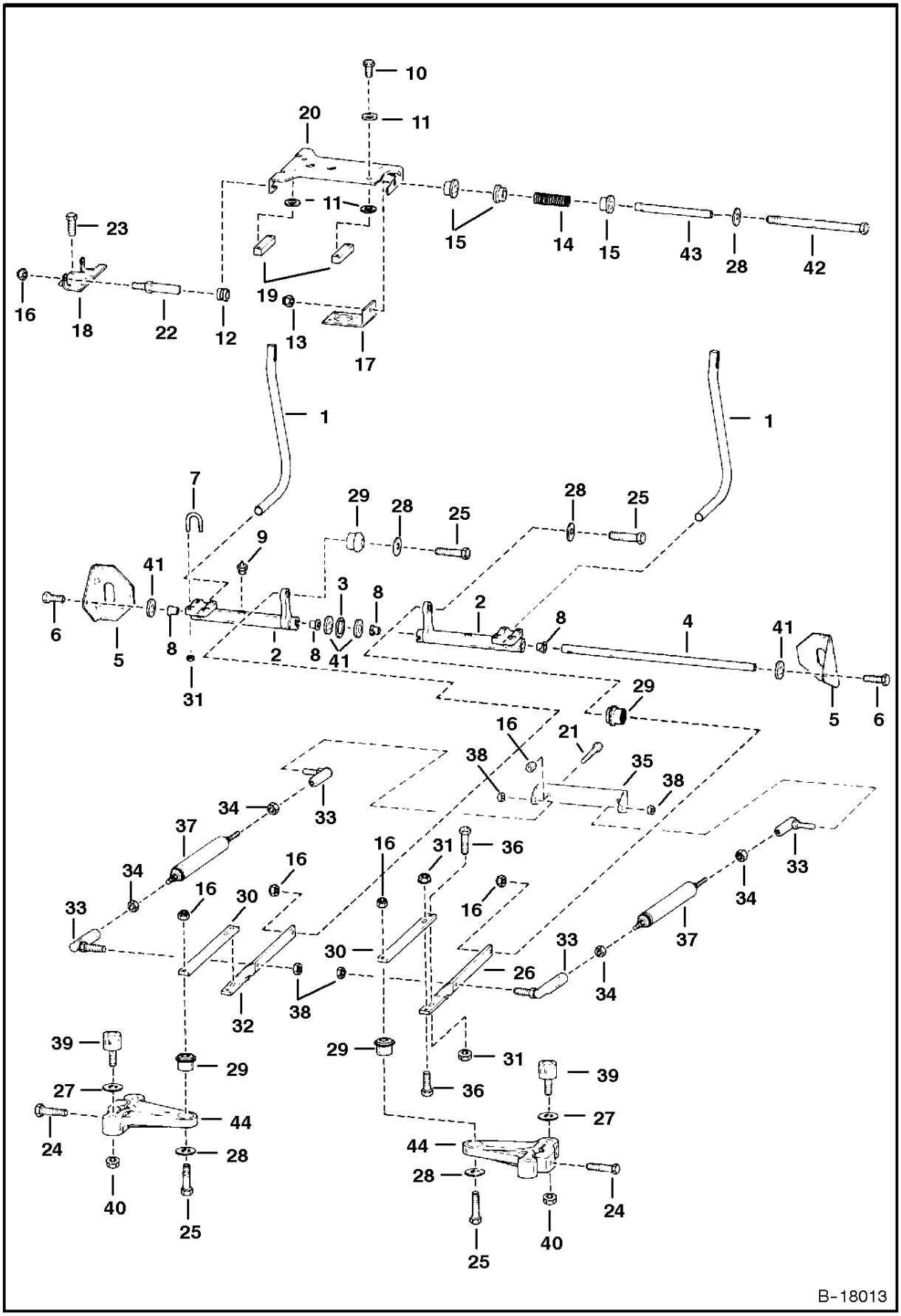

HAND CONTROLS

Ref.N°	Part N°	Description	Remarks	Serial N°	Qty.
1	6702543	LEVER			2
2	NAP	BELLCRANK	W/ notch for bushing tab - Order 6730122 bellcrank, Ref. HAND CONTROLS(28) (619021washer) & Ref. HAND CONTROLS(29) (6678067 bush		2
2	6730122	BELLCRANK	W/O notch for bushing tab		2
3	6599741	WASHER	wave		1
4	6716545	ROD			1
5	6577230	MOUNT			2
6	45C-620	BOLT			2
7	6700768	U-BOLT			4
8	6673710	BEARING	needle		4
9	6518200	GREASE ZERK			2
10	8C-616	BOLT			4
11	6557831	WASHER			8
12	6706098	GUIDE			2
13	57D-6	NUT			1
14	6701535	SPRING			1
15	6715163	BUSHING			3
16	95D-6	NUT			14
17	6576196	BRACKET			1
18	6706096	MOUNT			1
19	6702716	BLOCK			2
20	6716116	MOUNT			1
21	17C-612	BOLT			2
22	6577058	PIN			2
23	1CM-820	BOLT			8
24	35C-624	BOLT			2
25	17C-626	BOLT			4
26	NAP	LINK	Order 6716117 link Ref. HAND CONTROLS(32) - Was 6716231 [A]		1
27	25E-17	WASHER			8
28	6563914	WASHER	1.00' (25,4mm) O.D.		4
28	619021	WASHER	1.25' (31,8mm) O.D.		4
29	6665701	BUSHING	neoprene - .885' (22,5mm) O.D.		4
29	6678067	BUSHING	torsion - 1.055' (26,8mm) O.D.		4
30	6716286	LINK			2
31	83D-6	NUT			12
32	6716117	LINK		& Bel.	1
32	6716117	LINK		& Abv.	2
33	6599744	BALL JOINT			4
34	8D-6	NUT			4
35	6706106	MOUNT			1
36	17C-620	BOLT			4
37	6649551	DAMPENER			2
38	96D-6	NUT			2
39	6673789	BEARING			4
40	98D-6	NUT			4
41	6716916	WASHER	plastic		4
42	17C-680	BOLT			1
43	6715164	SLEEVE			1
44	NAP	LEVER	.8725' (22,2mm) I.D. hole for Ref. HAND CONTROLS(29) - Order 6729956 lever, Ref. HAND CONTROLS(28) (619021 washer) & Ref. HAND		2
44	6729956	LEVER	1.0425' (26,5mm) I.D. hole for Ref. HAND CONTROLS(29)pro1Page		x

HYDROSTATIC MOTOR
(Rexroth)

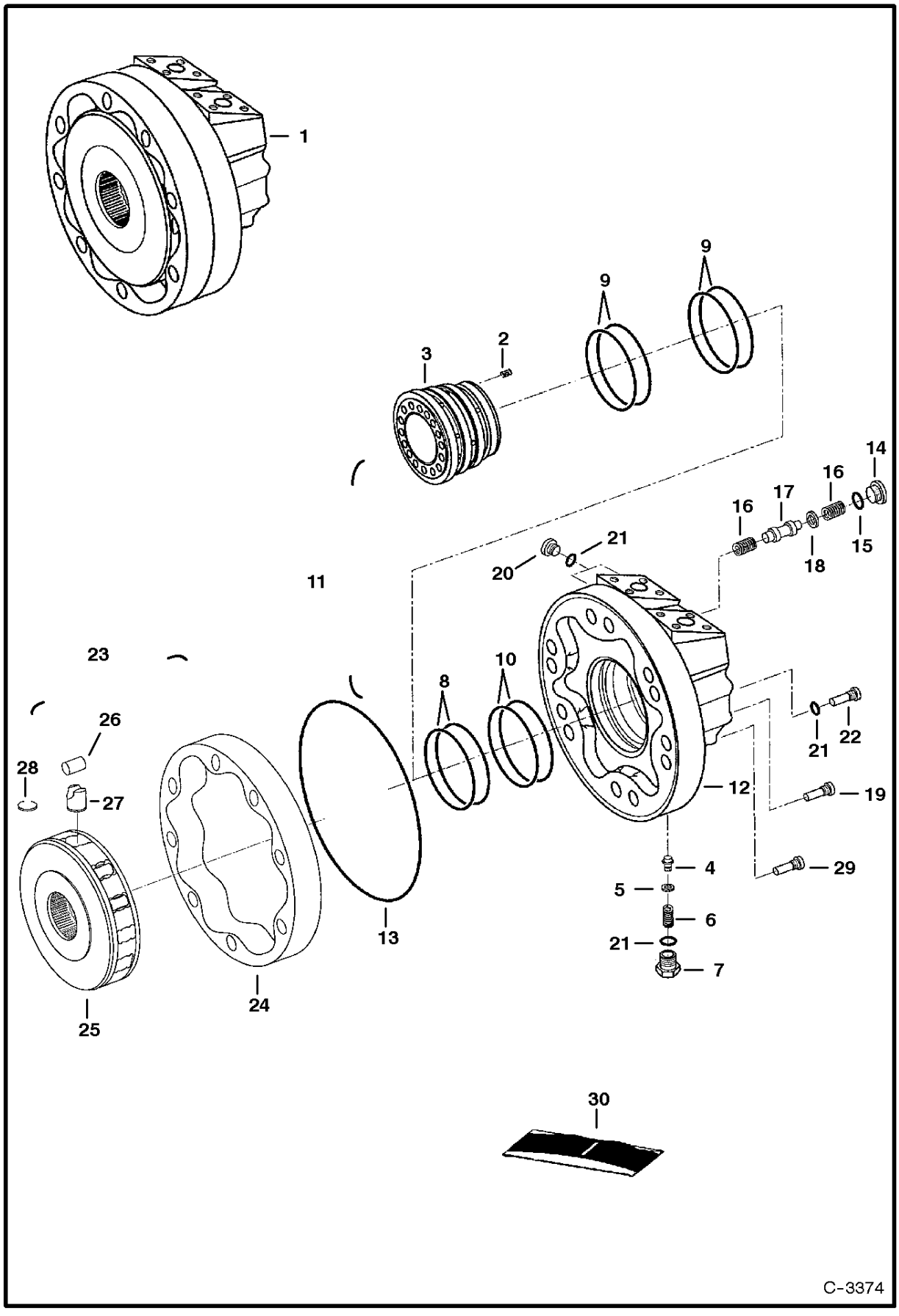

HYDROSTATIC MOTOR

Ref.N°	Part N°	Description	Remarks	Serial N°	Qty.
1	6672821	MOTOR	4bolt flange ports - Ref. HYDROSTATIC MOTOR(2)-HYDROSTATIC MOTOR(28)		1
2	6674037	SPRING			6
3	6674184	DISTRIBUTOR			1
4	6675868	POPPET	Was 6674342 [B]		1
5	6674343	SHIM			1
6	6674344	SPRING			1
7	6674345	PLUG			1
8	6675227	SEAL	W/ O-ring - Was 6674038 [B]		1
9	6675228	SEAL	W/ O-ring - Was 6674336 [B]		2
10	6676022	SEAL	W/ O-ring - Was 6674040 [B]		1
11	6674335	HOUSING ASSY.	rear - Ref. HYDROSTATIC MOTOR(2)-HYDROSTATIC MOTOR(10),HYDROSTATIC MOTOR(14)-HYDROSTATIC MOTOR(18) & HYDROSTATIC MOTOR(20)-HYDRO		1
12	6674341	HOUSING	rear		1
13	6674029	O-RING			1
14	6671845	PLUG	W/Ref. HYDROSTATIC MOTOR(15) - Was 6671759 [B]		1
15	6676023	O-RING	Was 6671749 [B]		1
16	6674339	SPRING			2
17	6674337	SPOOL			1
18	6674338	WASHER			1
19	6675021	BOLT	Was 6674030 [B]		2
20	6676024	PLUG	W/Ref. HYDROSTATIC MOTOR(15) - Was 6671783 [B]		1
21	6675869	O-RING	Was 6671784 [B]		3
22	6674340	PIN	locating		1
23	6674218	ROTARY GROUP	Ref. HYDROSTATIC MOTOR(24)-HYDROSTATIC MOTOR(27)		1
24	6675024	CAM	Was 6674182 [B]		1
25	6674219	BLOCK			1
26	NSS	ROLLER	Order Ref. HYDROSTATIC MOTOR(23) - Was 6666358 [B]		8
27	NSS	PISTON	W/Ref. HYDROSTATIC MOTOR(28) - Order Ref. HYDROSTATIC MOTOR(23) - Was 6660026 [A]		8
28	NSS	RING	keeper - Order Ref. HYDROSTATIC MOTOR(23)		8
29	6675020	BOLT	Was 6717806 [B]		10
30	6676021	SEAL KIT	Ref. HYDROSTATIC MOTOR(8) - HYDROSTATIC MOTOR(10), HYDROSTATIC MOTOR(13), HYDROSTATIC MOTOR(15) & HYDROSTATIC MOTOR(21) - Was 66		1

HYDROSTATIC MOTOR & BRAKE
(2-Speed Option)

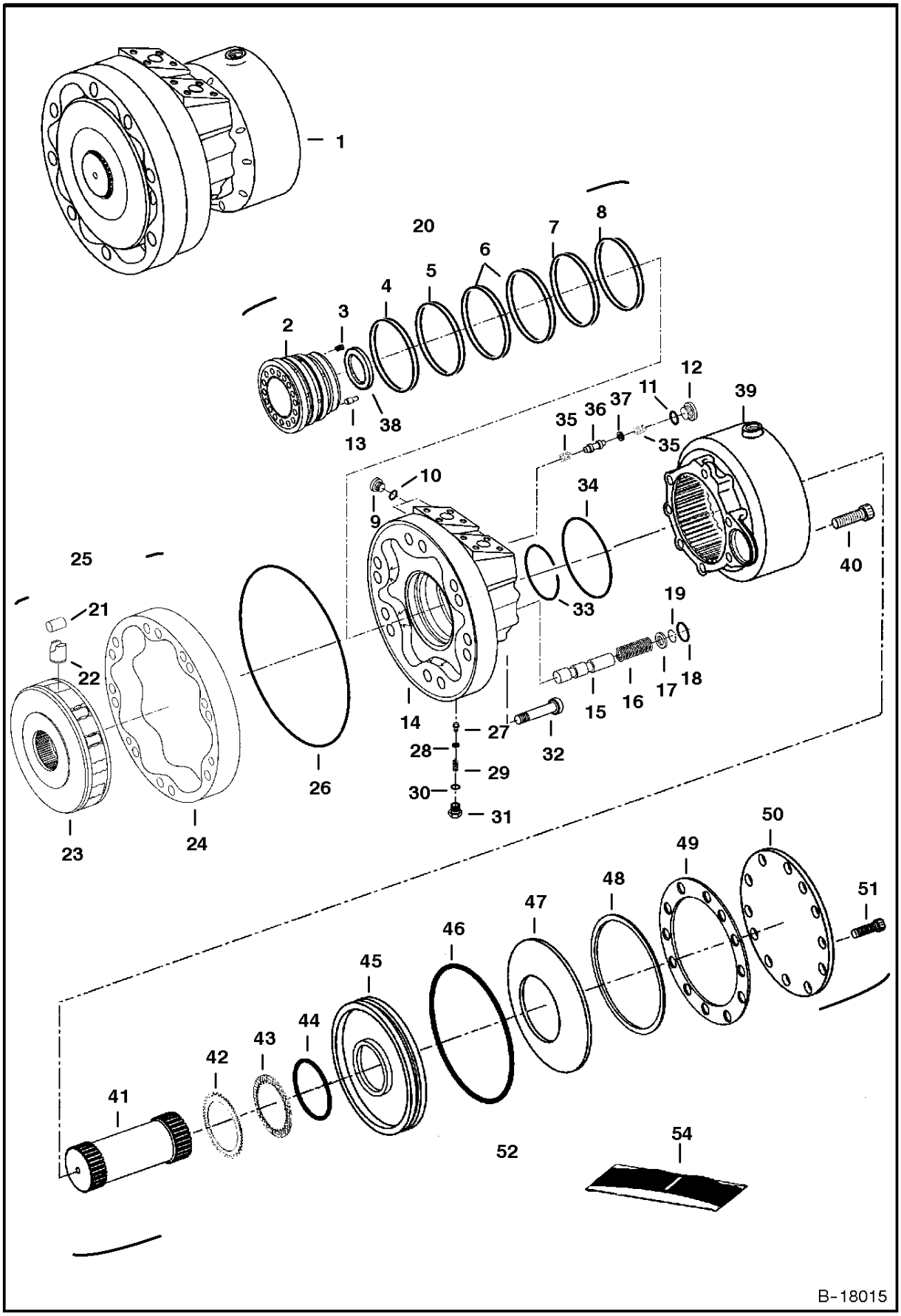

HYDROSTATIC MOTOR & BRAKE

Ref.N°	Part N°	Description	Remarks	Serial N°	Qty.
1	6674738	MOTOR	Ref. HYDROSTATIC MOTOR & BRAKE(2)-HYDROSTATIC MOTOR & BRAKE(52)		1
2	6675876	DISTRIBUTOR			1
3	6674037	SPRING			12
4	6675877	SEAL	W/ O-ring		1
5	6675878	SEAL	W/ O-ring		1
6	6675879	SEAL	W/ O-ring		2
7	6675880	SEAL	W/ O-ring		1
8	6675881	SEAL	W/ O-ring		1
9	90KV-3	PLUG	W/Ref. HYDROSTATIC MOTOR & BRAKE(10)		2
10	95K-4	O-RING			2
11	95K-6	O-RING			1
12	90KV-5	PLUG	W/Ref. HYDROSTATIC MOTOR & BRAKE(11)		1
13	6675189	PIN			1
14	6675875	HOUSING	rear		1
15	6675882	SPOOL			1
16	6676643	SPRING	red		1
16	6676644	SPRING	yellow		1
16	6676645	SPRING	green		1
16	6676646	SPRING	blue		1
17	NAP	WASHER	2,14mm - for red spring - Order Ref. HYDROSTATIC MOTOR & BRAKE(54) - Was 6676709 [A]		1
17	NAP	WASHER	2,38mm - for yellow spring - Order Ref. HYDROSTATIC MOTOR & BRAKE(54) - Was 6676710 [A]		1
17	NAP	WASHER	2,62mm - for green spring - Order Ref. HYDROSTATIC MOTOR & BRAKE(54) - Was 6676711 [A]		1
17	NAP	WASHER	2,86mm - for blue spring - Order Ref. HYDROSTATIC MOTOR & BRAKE(54) - Was 6676712 [A]		1
18	6675886	QUAD RING			1
19	6675885	SNAP RING			1
20	6675861	REAR HOUSING	assy. - Ref. HYDROSTATIC MOTOR & BRAKE(2)-HYDROSTATIC MOTOR & BRAKE(19)		1
21	NSS	ROLLER	Order Ref. HYDROSTATIC MOTOR & BRAKE(25)		8
22	NSS	PISTON	Order Ref. HYDROSTATIC MOTOR & BRAKE(25)		8
23	NSS	BLOCK	Order Ref. HYDROSTATIC MOTOR & BRAKE(25)		1
24	6675874	CAM			1
25	6675860	ROTARY GROUP	Ref. HYDROSTATIC MOTOR & BRAKE(21)-HYDROSTATIC MOTOR & BRAKE(24)		1
26	6675864	QUAD RING			1
27	6675868	POPPET	1,5mm orifice		1
28	6674343	SHIM	0,6mm		1
29	6674344	SPRING			1
30	6675869	O-RING			1
31	6674345	PLUG			1
32	6675021	BOLT	holds rotary group		2
33	6675865	SNAP RING			1
34	6675863	QUAD RING			1
35	6674841	SPRING			2
36	6675866	SPOOL			1
37	6675867	WASHER			1
38	6675898	BUSHING			1
39	6675887	HOUSING			1
40	6675896	BOLT			8
41	6675888	SHAFT			1
42	6674192	DISC	outer		14
43	6674193	DISC	inner		13
44	6675894	SEAL			1

HYDROSTATIC MOTOR & BRAKE

Ref.N°	Part N°	Description	Remarks	Serial N°	Qty.
45	6675889	PISTON	brake		1
46	6675893	O-RING			1
47	6675897	WASHER			1
48	6676647	WASHER	0,8mm		1
48	6676648	WASHER	1,05mm		1
48	6676649	WASHER	1,9mm		1
48	6676650	WASHER	2,3mm		1
48	6676651	WASHER	2,5mm		1
48	6676652	WASHER	2,9mm		1
49	6675892	GASKET			1
50	6675890	COVER			1
51	6675895	BOLT			12
52	6675862	BRAKE	Ref. HYDROSTATIC MOTOR & BRAKE(38)-HYDROSTATIC MOTOR & BRAKE(51)		1
53	6675870	SEAL KIT	Ref. HYDROSTATIC MOTOR & BRAKE(4)-HYDROSTATIC MOTOR & BRAKE(8), HYDROSTATIC MOTOR & BRAKE(18), HYDROSTATIC MOTOR & BRAKE(26), HY		1
54	6678204	KIT			x

HYDROSTATIC PUMP
(M44 - Non-Servo Assisted Steering) (Left Half)

NOTE: Domestic high flow machine S/N is 5144 46822 & Below

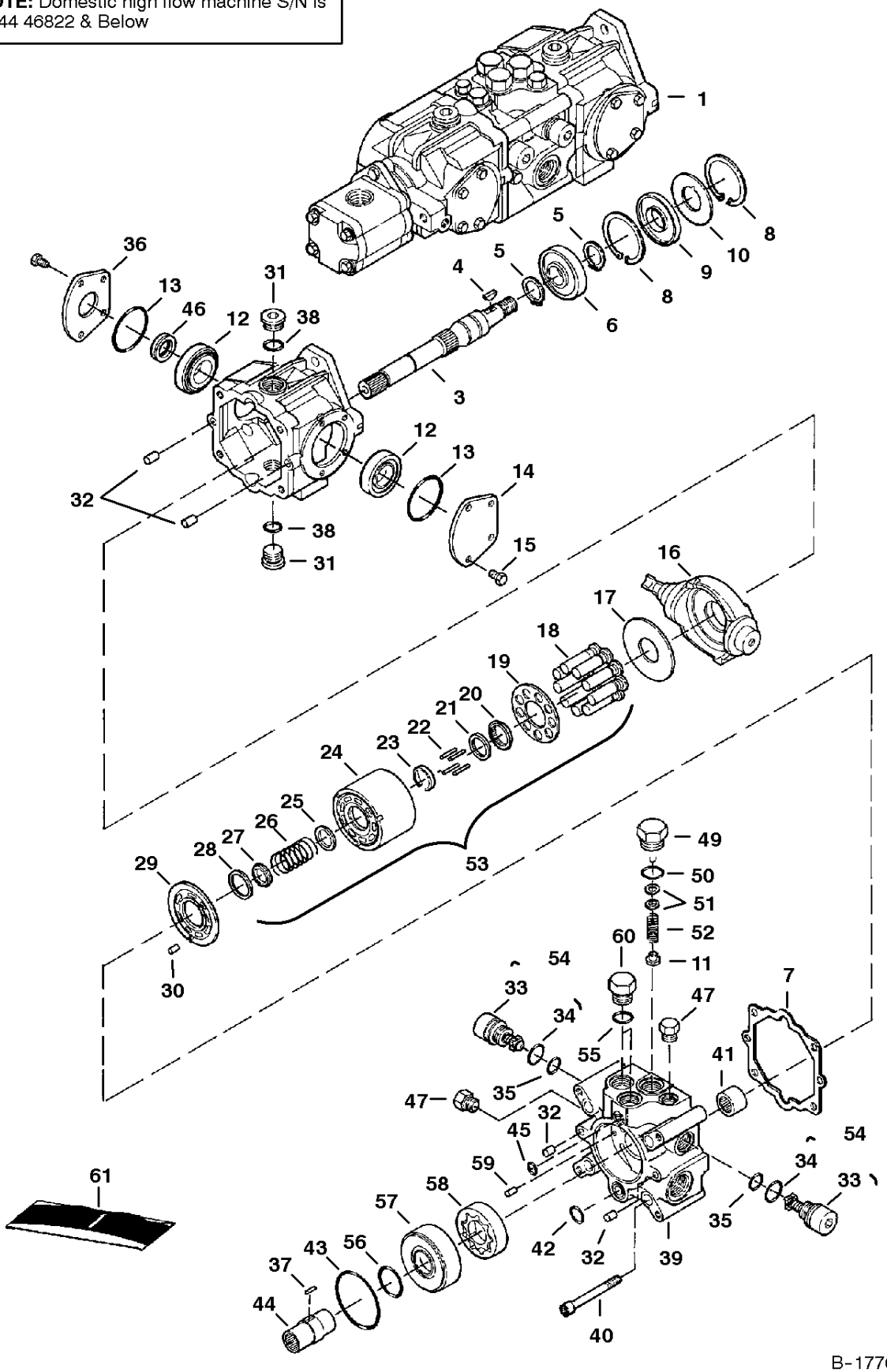

B-17765

HYDROSTATIC PUMP

Ref.N°	Part N°	Description	Remarks	Serial N°	Qty.
1	6673910	PUMP	complete W/ 4bolt flange gear pump - model 4445060 - standard flow		1
1	6673912	PUMP	#complete W/ 4bolt flange gear pump - model 4445061 - high flow - SEE NOTE		1
2	6669402	HOUSING			1
3	6669408	SHAFT			1
4	6J-807	KEY			1
5	658128	SNAP RING			2
6	654299	BEARING			1
7	6650634	GASKET			1
8	669863	SNAP RING			2
9	6645090	SEAL			1
10	6669409	WASHER			1
11	6650652	RELIEF	charge relief		1
12	6669411	BEARING			2
13	6660814	O-RING			2
14	6657068	COVER			2
15	6650668	BOLT			4
16	6671513	SWASH PLATE			1
17	6650627	PLATE			1
18	NAP	PISTON ASSY.	Order Ref. HYDROSTATIC PUMP(53)		1
19	NAP	RETAINER	Order Ref. HYDROSTATIC PUMP(53)		1
20	NAP	RETAINER	guide - Order Ref. HYDROSTATIC PUMP(53)		1
21	6666338	WASHER			1
22	6650629	PIN			4
23	6650630	RETAINER			1
24	NAP	BLOCK	Order Ref. HYDROSTATIC PUMP(53)		1
25	NAP	WASHER	Order Ref. HYDROSTATIC PUMP(53)		1
26	NAP	SPRING	Order Ref. HYDROSTATIC PUMP(53)		1
27	NAP	WASHER	Order Ref. HYDROSTATIC PUMP(53)		1
28	NAP	WASHER	Order Ref. HYDROSTATIC PUMP(53)		1
29	6671515	VALVE PLATE			1
30	6650636	PIN			1
31	47K-8	PLUG	W/Ref. HYDROSTATIC PUMP(38)		2
32	6518460	PIN			4
33	NAP	PLUG	Order Ref. HYDROSTATIC PUMP(54)		2
34	6657028	O-RING			2
35	79K-8	O-RING			2
36	6657067	COVER			1
37	6673885	PIN			1
38	79K-12	O-RING			2
39	6673878	END PLATE			1
40	6673886	BOLT			4
41	6650635	BEARING			1
42	6650647	O-RING			1
43	6673884	O-RING			1
44	6673877	COUPLER			1
45	6650646	O-RING			1
46	6673881	SEAL			1
47	6645086	PLUG			2
48	6671518	BOLT			4
49	6650648	PLUG	charge relief - W/Ref. HYDROSTATIC PUMP(50)		1
50	79K-10	O-RING			1
51	6669410	SHIM KIT	charge relief		1
52	6673882	SPRING			1

HYDROSTATIC PUMP

Ref.N°	Part N°	Description	Remarks	Serial N°	Qty.
53	6671512	BLOCK ASSY	W/Ref. HYDROSTATIC PUMP(18) - HYDROSTATIC PUMP(28)		1
54	6672535	RELIEF VALVE	4712 PSI (325 bar)		2
55	79K-14	O-RING			2
56	6673880	OARING			1
57	6673879	SPACER			1
58	6673883	GEROTOR			1
59	3974795	PIN			1
60	24K-7	PLUG			2
61	6671516	SEAL KIT	Ref. HYDROSTATIC PUMP(7), HYDROSTATIC PUMP(9), HYDROSTATIC PUMP(13), HYDROSTATIC PUMP(34), HYDROSTATIC PUM		1

HYDROSTATIC PUMP
(M44 - Non-Servo Assisted Steering) (Right Half)

NOTE: Domestic high flow machine S/N is 5144 46822 & Below

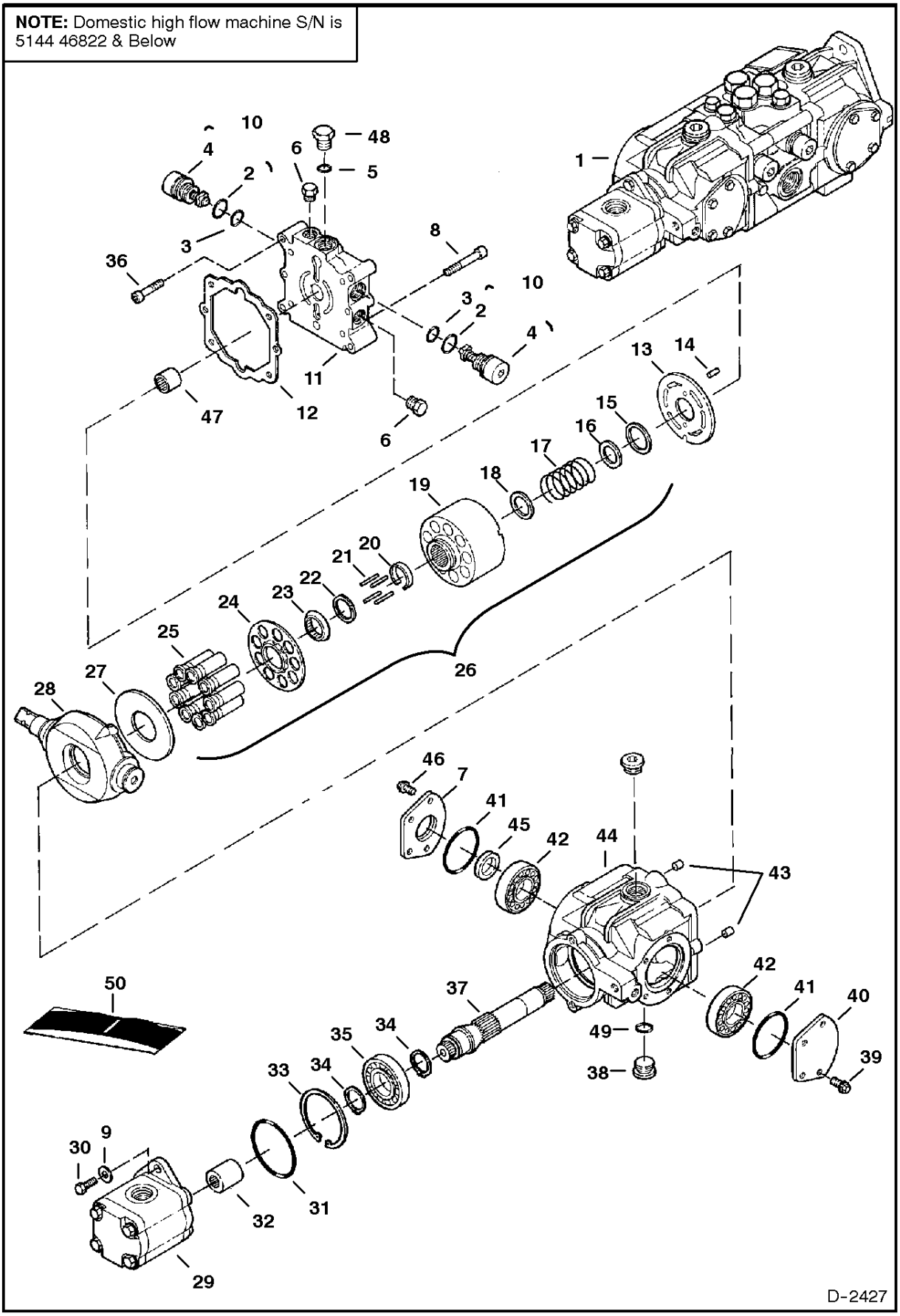

HYDROSTATIC PUMP

Ref.N°	Part N°	Description	Remarks	Serial N°	Qty.
1	6673910	PUMP	#complete W/4bolt flange gear pump - model 4445060 - standard flow		1
1	6673912	PUMP	#complete W/4bolt flange gear pump - model 4445061 - high flow - SEE NOTE		1
2	6657028	O-RING			2
3	79K-8	O-RING			2
4	NAP	PLUG	Order Ref. HYDROSTATIC PUMP(10)		2
5	79K-14	O-RING			2
6	6645086	PLUG			4
7	6657067	COVER			1
8	6650637	BOLT			2
9	6518483	WASHER			2
10	6672535	RELIEF VALVE	4712 PSI (325 bar)		2
11	6669405	END CAP			1
12	6650634	GASKET			1
13	6671514	VALVE PLATE			1
14	6650636	PIN			2
15	NAP	RETAINER	Order Ref. HYDROSTATIC PUMP(26)		1
16	NAP	WASHER	Order Ref. HYDROSTATIC PUMP(26)		1
17	NAP	SPRING	Order Ref. HYDROSTATIC PUMP(26)		1
18	NAP	WASHER	Order Ref. HYDROSTATIC PUMP(26)		1
19	NAP	BLOCK	Order Ref. HYDROSTATIC PUMP(26)		1
20	6650630	RETAINER			1
21	6650629	PIN			4
22	6666338	WASHER			1
23	NAP	RETAINER	Order Ref. HYDROSTATIC PUMP(26)		1
24	NAP	RETAINER	Order Ref. HYDROSTATIC PUMP(26)		1
25	NAP	PISTON ASSY.	Order Ref. HYDROSTATIC PUMP(26)		1
26	6671512	BLOCK ASSY	Ref. HYDROSTATIC PUMP(15) - HYDROSTATIC PUMP(25)		1
27	6650627	PLATE			1
28	6671513	SWASH PLATE			1
29		GEAR PUMP	See Page GEAR PUMP(10) - standard flow		1
29		GEAR PUMP	See Page HIGH HORSEPOWER HYDRAULICS(1) - high flow		1
30	17C-620	BOLT			2
31	6645080	O-RING			1
32	6671509	COUPLER			1
33	669863	SNAP RING			1
34	658128	SNAP RING			2
35	654299	BEARING			1
36	6652018	BOLT			4
37	6669407	SHAFT			1
38	47K-8	PLUG	W/Ref. HYDROSTATIC PUMP(49)		1
39	6650668	BOLT			4
40	6657068	COVER			1
41	6660814	O-RING			2
42	6669411	BEARING			2
43	6518460	PIN			2
44	6669403	HOUSING			1
45	6673881	SEAL			1
46	1CM-820	BOLT			4
47	6650635	BEARING			1
48	24K-7	PLUG	W/Ref. HYDROSTATIC PUMP(5)		1
49	79K-12	O-RING			1

HYDROSTATIC PUMP

Ref.N°	Part N°	Description	Remarks	Serial N°	Qty.
50	6671516	SEAL KIT	Ref. HYDROSTATIC PUMP(2), HYDROSTATIC PUMP(3), HYDROSTATIC PUMP(12) & HYDROSTATIC PUMP(41) - Also includes HYDROSTATIC PUMP(7),		1

HYDROSTATIC PUMP
(2-Speed) (Left Half)

NOTE: At S/N 5144 46865, 5145 41035, 5146 41075 & Above, standard flow pump 6674692 became standard. High flow pump 6674693 became standard at S/N 5144 46823, 5145 41035, 5146 41075 & Above.

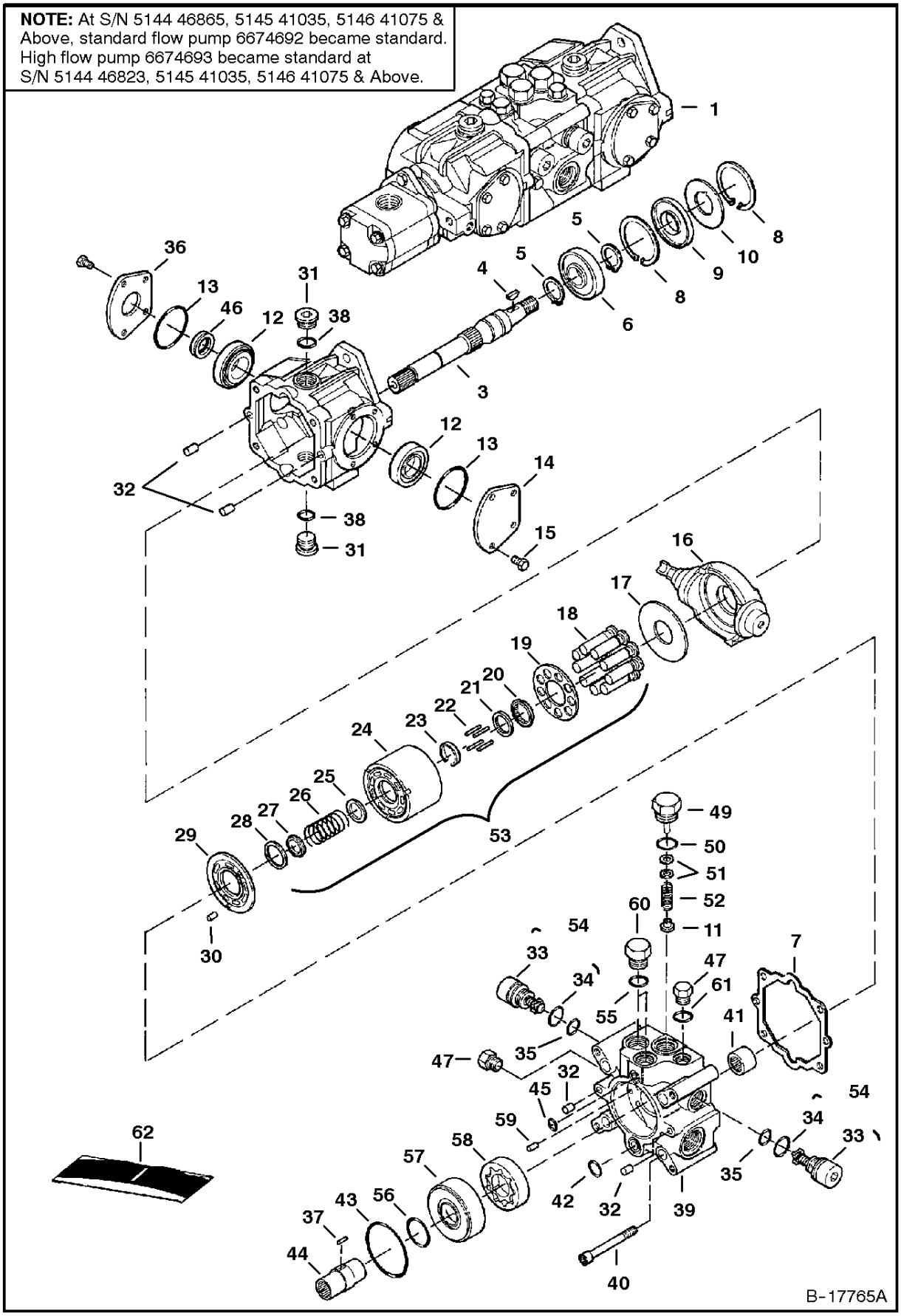

HYDROSTATIC PUMP

Ref.N°	Part N°	Description	Remarks	Serial N°	Qty.
1	6674692	PUMP	complete W/ aluminum gear pump - Model 4445066 - standard flow - SEE NOTE	5144 41001-49259	1
1	6677649	PUMP	complete W/ cast iron gear pump - Model 4445098 - standard flow	5144 49260 & Abv.	1
1	6674693	PUMP	#complete W/ aluminum gear pump - Model 4445067 - high flow - SEE NOTE	5144 41001-	1
1	6677657	PUMP	#complete W/ cast iron gear pump - Model 4445099 - high flow	5144 & Abv.	1
2	6669402	HOUSING			1
3	6669408	SHAFT			1
4	6J-807	KEY			1
5	658128	SNAP RING			2
6	654299	BEARING			1
7	6650634	GASKET			1
8	669863	SNAP RING			2
9	6645090	SEAL			1
10	6669409	WASHER			1
11	6650652	RELIEF	charge relief		1
12	6669411	BEARING			2
13	6660814	O-RING			2
14	6657068	COVER			2
15	6650668	BOLT			4
16	6671513	SWASH PLATE			1
17	6650627	PLATE			1
18	NAP	PISTON ASSY.	Order Ref. HYDROSTATIC PUMP(53)		1
19	NAP	RETAINER	Order Ref. HYDROSTATIC PUMP(53)		1
20	NAP	RETAINER	guide - Order Ref. HYDROSTATIC PUMP(53)		1
21	6666338	WASHER			1
22	6650629	PIN			4
23	6650630	RETAINER			1
24	NAP	BLOCK	Order Ref. HYDROSTATIC PUMP(53)		1
25	NAP	WASHER	Order Ref. HYDROSTATIC PUMP(53)		1
26	NAP	SPRING	Order Ref. HYDROSTATIC PUMP(53)		1
27	NAP	WASHER	Order Ref. HYDROSTATIC PUMP(53)		1
28	NAP	WASHER	Order Ref. HYDROSTATIC PUMP(53)		1
29	6676147	VALVE PLATE			1
30	6650636	PIN			1
31	47K-8	PLUG	W/Ref. HYDROSTATIC PUMP(38)		2
32	6675342	PIN			4
33	NAP	PLUG	Order Ref. HYDROSTATIC PUMP(54)		2
34	6657028	O-RING			2
35	79K-8	O-RING			2
36	6657067	COVER			1
37	6673885	PIN			1
38	79K-12	O-RING			2
39	6673878	END PLATE			1
40	6673886	BOLT			4
41	6650635	BEARING			1
42	6650647	O-RING			1
43	6673884	O-RING			1
44	6673877	COUPLER			1
45	6650646	O-RING			1
46	6678226	SEAL	Was 6673881 [B]		1
47	6645086	PLUG	W/Ref. HYDROSTATIC PUMP(61)		2
48	6671518	BOLT			4
49	6650648	PLUG	charge relief - W/Ref. HYDROSTATIC PUMP(50)		1

HYDROSTATIC PUMP

Ref.N°	Part N°	Description	Remarks	Serial N°	Qty.
50	79K-10	O-RING			1
51	6669410	SHIM KIT	charge relief		1
52	6673882	SPRING			1
53	6675341	BLOCK ASSY.	W/Ref. HYDROSTATIC PUMP(18)-HYDROSTATIC PUMP(28)		1
54	6670685	RELIEF VALVE	5000 PSI (345 bar)		2
55	79K-14	O-RING			2
56	6673880	OARING			1
57	6676145	SPACER			1
58	6676144	GEROTOR			1
59	3974795	PIN			1
60	24K-7	PLUG			2
61	6661481	O-RING			x
62	6671516	SEAL KIT	Ref. HYDROSTATIC PUMP(7), HYDROSTATIC PUMP(9), HYDROSTATIC PUMP(13), HYDROSTATIC PUMP(34), HYDROSTATIC PUM		1

HYDROSTATIC PUMP
(2-Speed) (Right Half)

NOTE: At S/N 5144 46865, 5145 41035, 5146 41075 & Above, standard flow pump 6674692 became standard. High flow pump 6674693 became standard at S/N 5144 46823, 5145 41035, 5146 41075 & Above.

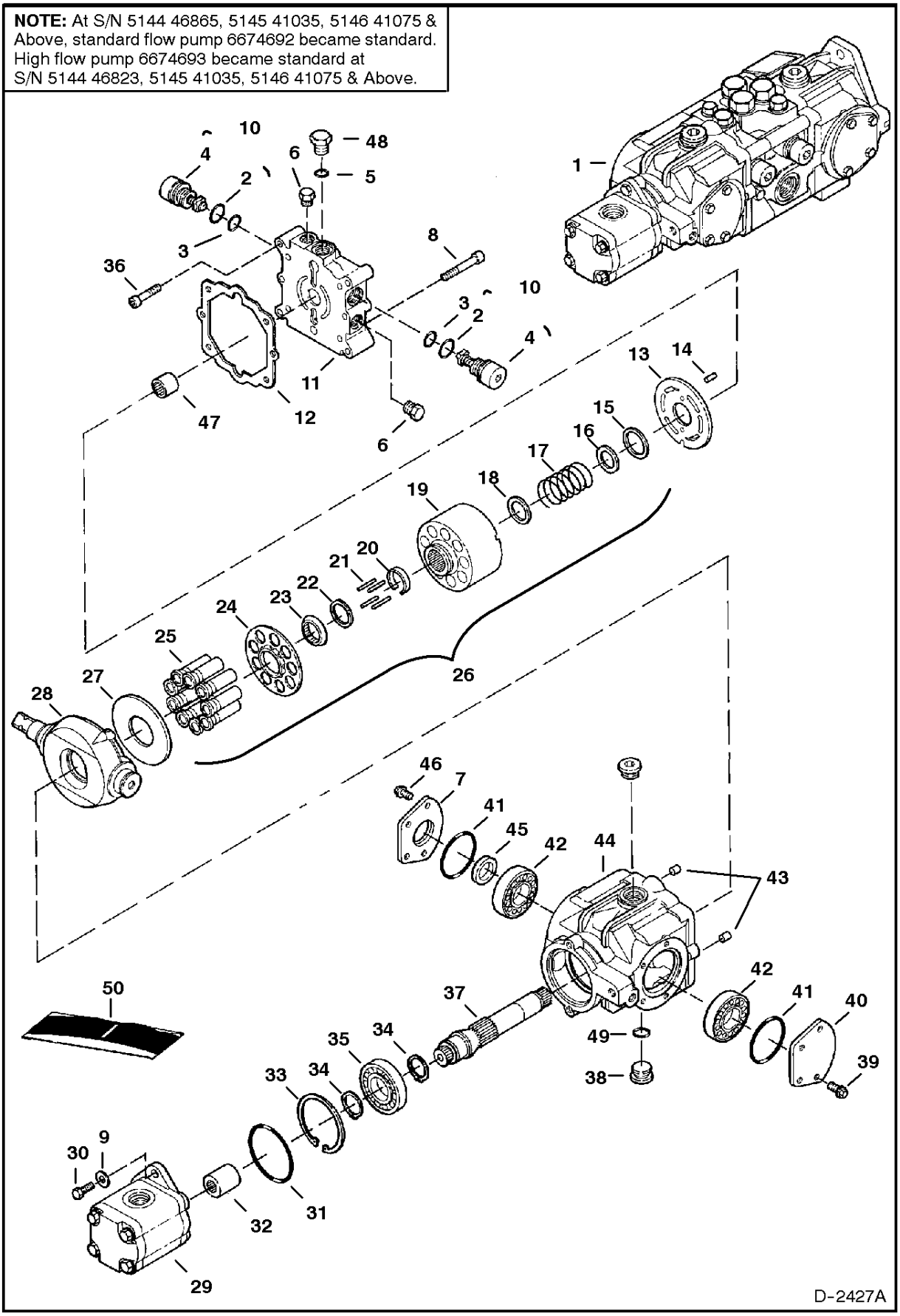

HYDROSTATIC PUMP

Ref.N°	Part N°	Description	Remarks	Serial N°	Qty.
1	6674692	PUMP	complete W/ aluminum gear pump - Model 4445066 - standard flow - SEE NOTE	5144 41001-49259	1
1	6677649	PUMP	complete W/ cast iron gear pump - Model 4445098 - standard flow	5144 49260 & Abv.	1
1	6674693	PUMP	#complete W/ aluminum gear pump - Model 4445067 - high flow - SEE NOTE	5144 41001-	1
1	6677657	PUMP	#complete W/ cast iron gear pump - Model 4445099 - high flow	5144 & Abv.	1
2	6657028	O-RING			2
3	79K-8	O-RING			2
4	NAP	PLUG	Order Ref. HYDROSTATIC PUMP(10)		2
5	79K-14	O-RING			2
6	6645086	PLUG			4
7	6657067	COVER			1
8	6650674	BOLT			2
9	6518483	WASHER			2
10	6670685	RELIEF VALVE	5000 PSI (345 bar)		2
11	6669405	END CAP			1
12	6650634	GASKET			1
13	6676148	VALVE PLATE			1
14	6650636	PIN			2
15	NAP	RETAINER	Order Ref. HYDROSTATIC PUMP(26)		1
16	NAP	WASHER	Order Ref. HYDROSTATIC PUMP(26)		1
17	NAP	SPRING	Order Ref. HYDROSTATIC PUMP(26)		1
18	NAP	WASHER	Order Ref. HYDROSTATIC PUMP(26)		1
19	NAP	BLOCK	Order Ref. HYDROSTATIC PUMP(26)		1
20	6650630	RETAINER			1
21	6650629	PIN			4
22	6666338	WASHER			1
23	NAP	RETAINER	Order Ref. HYDROSTATIC PUMP(26)		1
24	NAP	RETAINER	Order Ref. HYDROSTATIC PUMP(26)		1
25	NAP	PISTON ASSY.	Order Ref. HYDROSTATIC PUMP(26)		1
26	6675341	BLOCK ASSY.	Ref. HYDROSTATIC PUMP(15) - HYDROSTATIC PUMP(25)		1
27	6650627	PLATE			1
28	6671513	SWASH PLATE			1
29		GEAR PUMP	See Page GEAR PUMP(10) & * GEAR PUMP(12) - standard flow		1
29		GEAR PUMP	See Page HIGH HORSEPOWER HYDRAULICS(1) & * HIGH HORSEPOWER HYDRAULICS(2) - high flow		1
30	17C-620	BOLT			2
31	6645080	O-RING			1
32	6676146	COUPLING			1
33	669863	SNAP RING			1
34	658128	SNAP RING			2
35	654299	BEARING			1
36	6652018	BOLT			4
37	6669407	SHAFT			1
38	47K-8	PLUG	W/Ref. HYDROSTATIC PUMP(49)		1
39	6650668	BOLT			4
40	6657068	COVER			1
41	6660814	O-RING			2
42	6669411	BEARING			2
43	6675342	PIN			2
44	6669403	HOUSING			1
45	6678226	SEAL	Was 6673881 [B]		1
46	1CM-820	BOLT			4

HYDROSTATIC PUMP

Ref.N°	Part N°	Description	Remarks	Serial N°	Qty.
47	6650635	BEARING			1
48	24K-7	PLUG	W/Ref. HYDROSTATIC PUMP(5)		1
49	79K-12	O-RING			1
50	6671516	SEAL KIT	Ref. HYDROSTATIC PUMP(2), HYDROSTATIC PUMP(3), HYDROSTATIC PUMP(12) & HYDROSTATIC PUMP(41) - also includes HYDROSTATIC PUMP(7),		1

GEAR PUMP
(Aluminum) (S/N 5144 49259, 5145 41068 & Below)

NOTE: S/N 5144 46865-49259, 5145 41035-41068 this gear pump was standard. S/N 5144 46864, 5145 41034 & Below this pump was used with the 2-speed option.

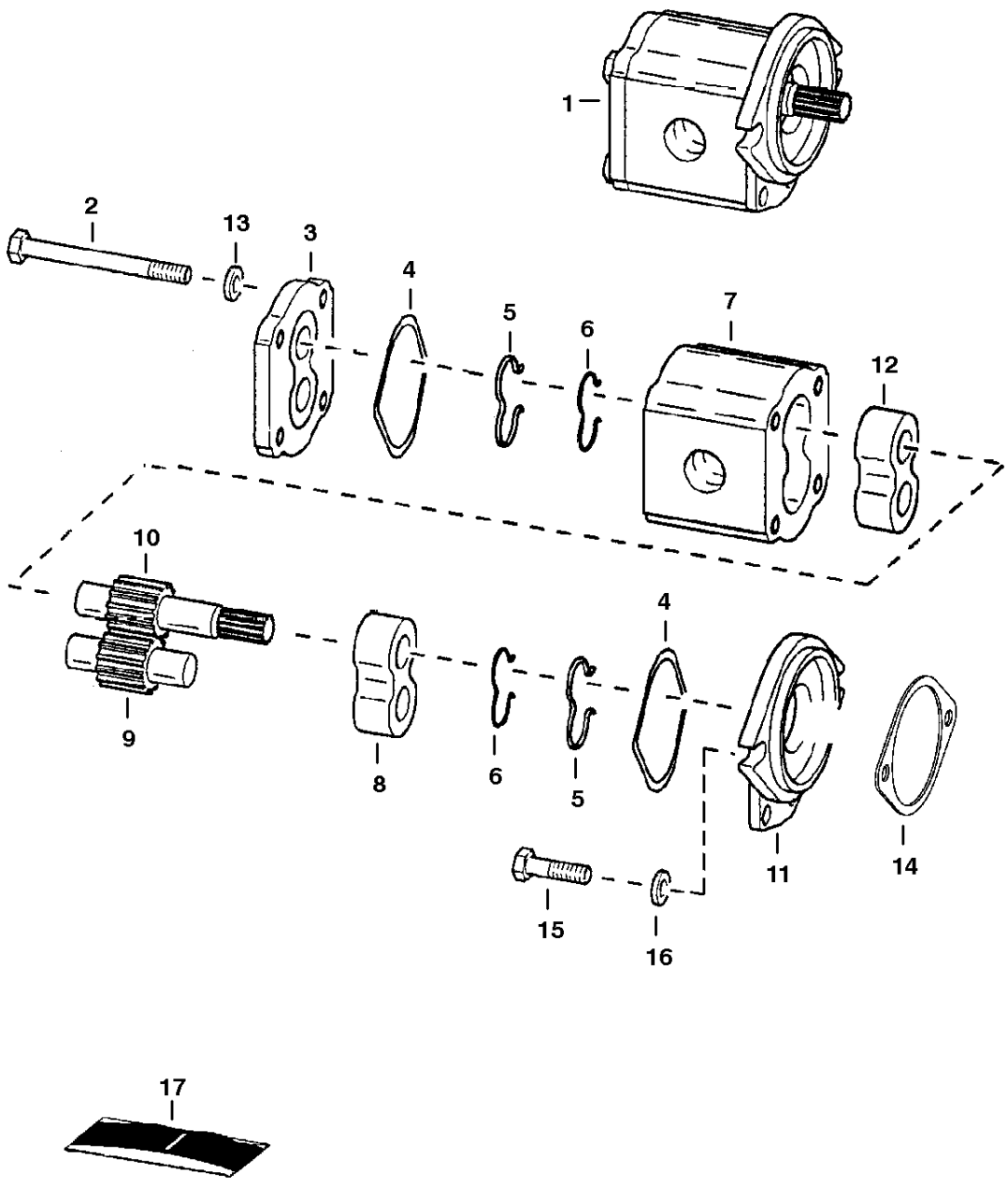

B-18016

GEAR PUMP

Ref.N°	Part N°	Description	Remarks	Serial N°	Qty.
1	6673911	PUMP	B550137255 - W/Ref. GEAR PUMP(2)-GEAR PUMP(13) - for model 4445060	5144 46864 & Bel.	1
1	6675660	GEAR PUMP	B550138094 - W/Ref. GEAR PUMP(2)-GEAR PUMP(13) - for model 4445066	SEE NOTE	1
2	NSS	BOLT			4
3	6658123	COVER			1
4	NSS	O-RING	seal		2
5	NSS	SEAL			2
6	NSS	BUSHING			2
7	NSS	BODY			1
8	NSS	BEARING			1
9	NSS	GEAR	idler		1
10	NSS	GEAR	drive		1
11	6658122	COVER			1
12	NSS	BEARING			2
13	NSS	WASHER			4
14	6660339	GASKET			1
15	6645088	BOLT			2
16	6518483	WASHER			2
17	6674371	SEAL KIT	Ref. 4-6 - for B550137255		1
17	6678852	SEAL KIT	Ref. 4-6 - for B550138094		1

* GEAR PUMP
(Cast Iron) (S/N 5144 49260, 5145 41069 & Above)

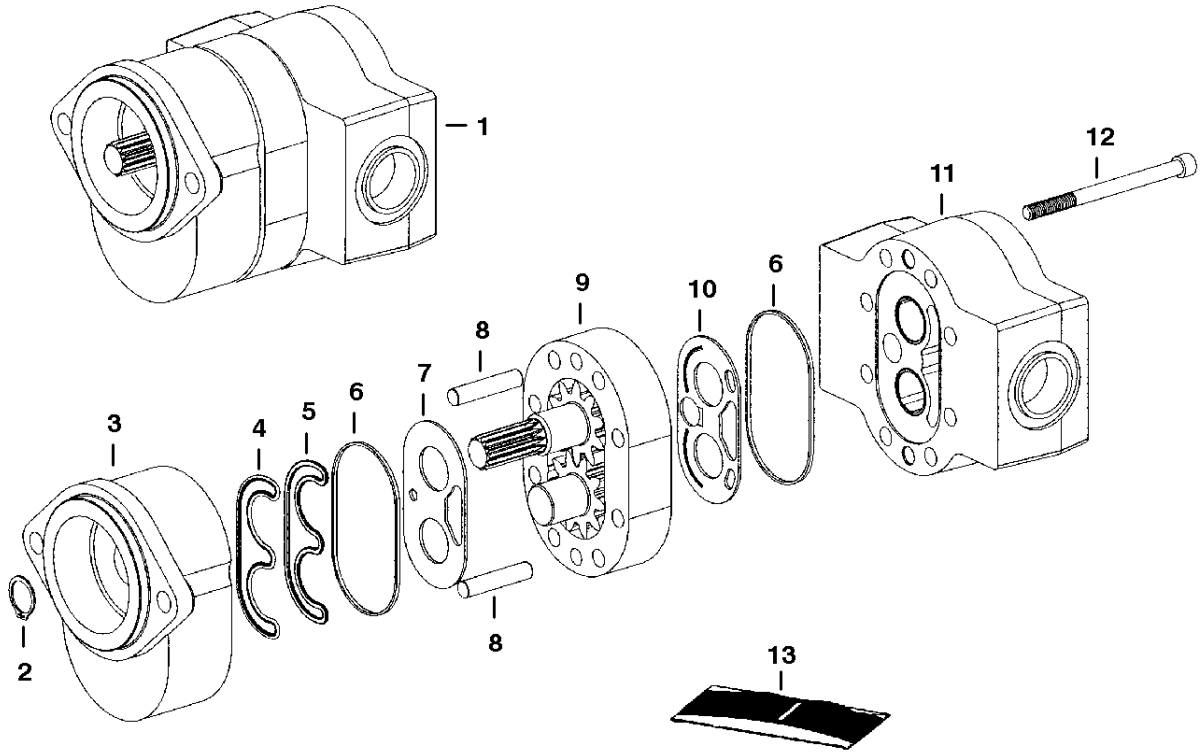

B-16398

* GEAR PUMP

Ref.N°	Part N°	Description	Remarks	Serial N°	Qty.
1	6678224	GEAR PUMP	standard flow - model 163D1185		1
2	NSS	COVER			1
3	NSS	SNAP RING			1
4	NSS	SEAL	backAup		1
5	NSS	SEAL	load		1
6	NSS	SEAL			2
7	NSS	WEAR PLATE			1
8	NSS	PIN			2
9	NSS	SECTION			1
10	NSS	WEAR PLATE			1
11	NSS	BODY			1
12	NSS	BOLT			8
13	6678732	SEAL KIT	Ref. * GEAR PUMP(4)-* GEAR PUMP(7) & * GEAR PUMP(10)		1

2-SPEED VALVE

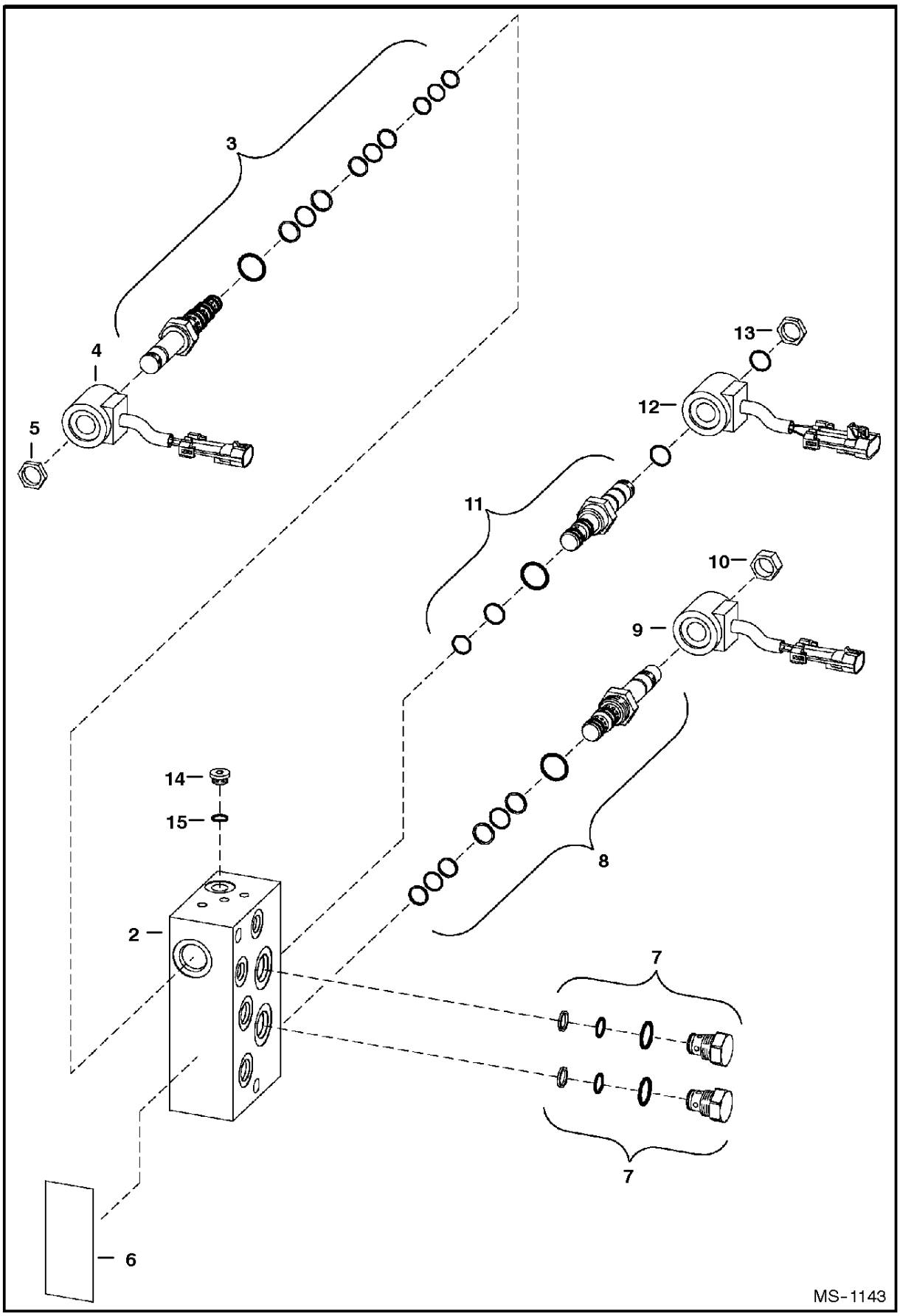

2

Ref.N°	Part N°	Description	Remarks	Serial N°	Qty.
1	NAP	VALVE	assy. - Ref. 2-SPEED VALVE(2)-2-SPEED VALVE(16) - Was 6675334 [A]	5144 43351 & Bel.	1
1	NAP	VALVE	assy. - Ref. 2-SPEED VALVE(2)-2-SPEED VALVE(16) - Was 6676417 [A]	5144 43352-	1
2	NSS	BLOCK	Order Ref. 2-SPEED VALVE(1)		1
3	6677982	CARTRIDGE	makeAup valve - W/Ref. 2-SPEED VALVE(5) - Was 6676241 [A]		1
3	6672756	SEAL KIT			x
4	6676243	COIL			1
5	6668820	NUT	Was 6676246 [B]		1
6	6673185	DECAL	warning		1
7	6675265	VALVE	W/ seals		2
7	6669087	SEAL KIT			x
8	6677981	CARTRIDGE	brake valve - W/Ref. 2-SPEED VALVE(10) - Was 6676240 [A]		1
8	6673188	SEAL KIT			x
9	6676242	COIL			1
10	6677980	NUT	Was 6675663 [B]		1
11	6676239	CARTRIDGE	2speed valve - PWM - W/Ref. 2-SPEED VALVE(13)		1
11	6676205	SEAL KIT			x
12	6676244	COIL			1
13	6676247	NUT			1
14	6672762	PLUG	W/Ref. 2-SPEED VALVE(15)		1
15	75K-4	O-RING			x
16	6676245	PLUG	brass	5144 43351 & Bel.	5
16	6677177	PLUG		5144 43352 & Abv.	5

* 2-SPEED VALVE

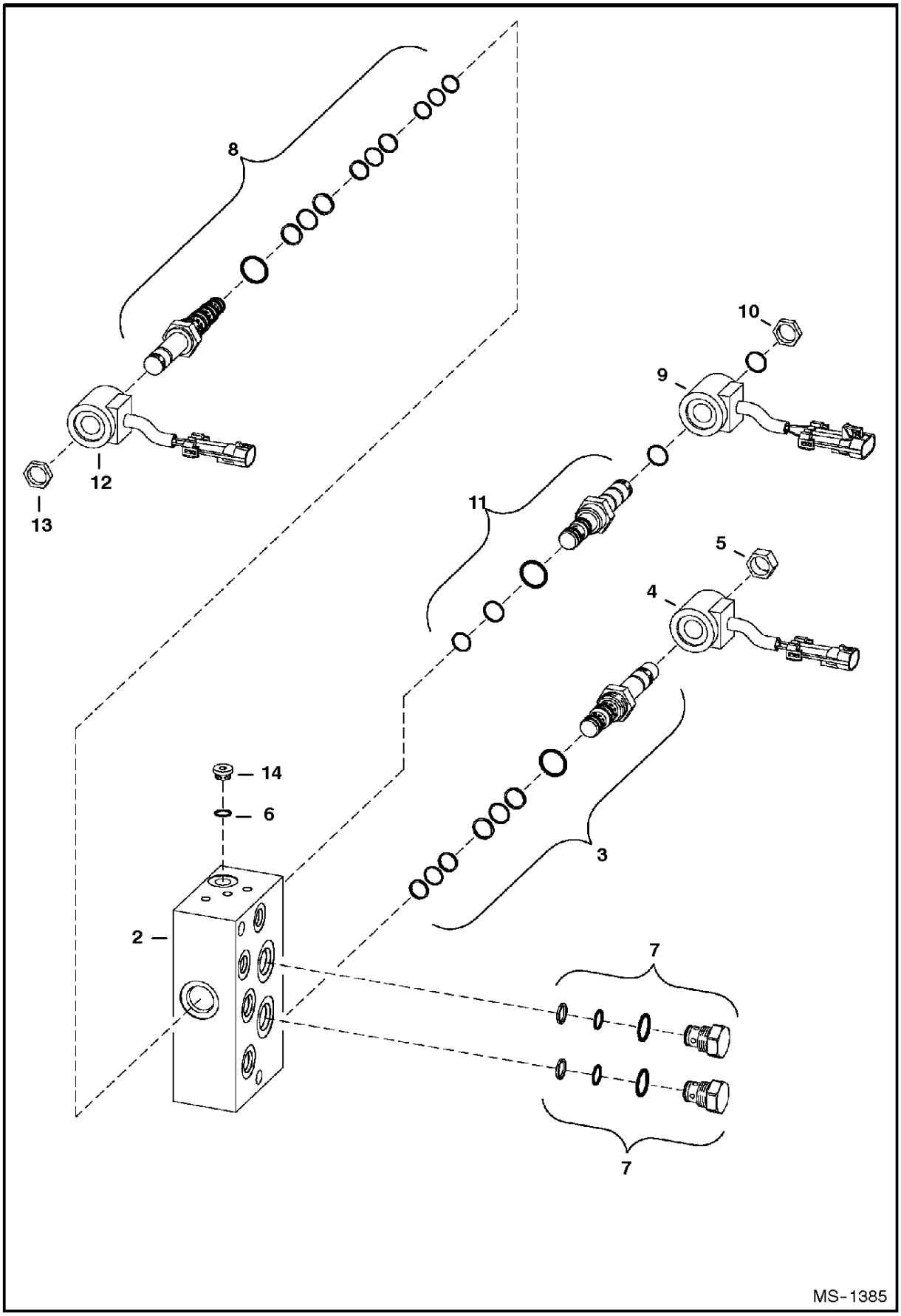

* 2

Ref.N°	Part N°	Description	Remarks	Serial N°	Qty.
1	6679102	VALVE	assy.		1
2	NSS	BLOCK	Order Ref. 2-SPEED VALVE(1)		1
3	6677982	CARTRIDGE	make up valve - W/Ref. * 2-SPEED VALVE(5)		1
3	6672756	SEAL KIT			x
4	6676243	COIL			1
5	6668820	NUT			1
6	75K-4	O-RING			x
7	6675265	VALVE			2
7	6669087	SEAL KIT			x
8	6676239	CARTRIDGE	brake valve - W/Ref. * 2-SPEED VALVE(10)		1
8	6673188	SEAL KIT			x
9	6676242	COIL			1
10	6677980	NUT			1
11	6680120	CARTRIDGE	two speed valve - PWM - W/Ref. * 2-SPEED VALVE(13)		1
11	6676205	SEAL KIT			x
12	6676244	COIL			1
13	6676247	NUT			1
14	6672762	PLUG	W/Ref. * 2-SPEED VALVE(6)		1

HYDROSTATIC OIL FILTER
(In-Line)

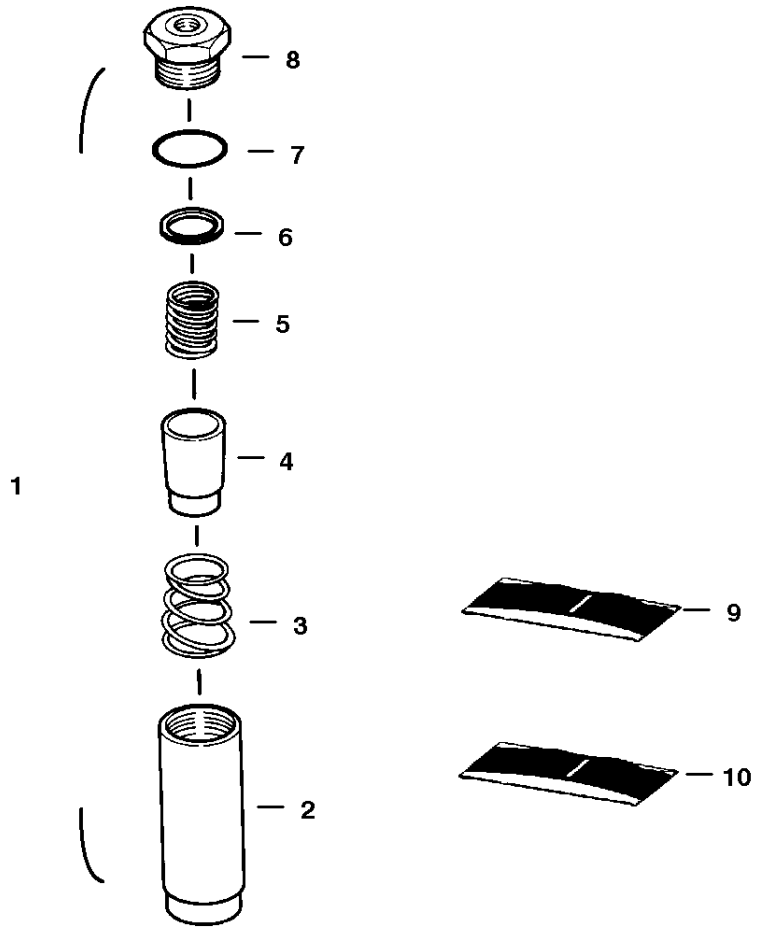

B-13527

HYDROSTATIC OIL FILTER

Ref.N°	Part N°	Description	Remarks	Serial N°	Qty.
1	6661022	FILTER	Ref. HYDROSTATIC OIL FILTER(2) - HYDROSTATIC OIL FILTER(8)		1
2	NSS	HOUSING			1
3	NSS	SPRING			1
4	NSS	ELEMENT			1
5	NSS	SPRING			1
6	NSS	GASKET			1
7	NSS	O-RING			1
8	NSS	PLUG			1
9	6661807	KIT	element - Ref. HYDROSTATIC OIL FILTER(4), HYDRO STATIC OIL FILTER(6) & HYDROSTATIC OIL FILTER(7)		1
10	6661808	KIT	spring - Ref. HYDROSTATIC OIL FILTER(3) & HYDRO STATIC OIL FILTER(5)		1

HYDROSTATIC OIL FILTER

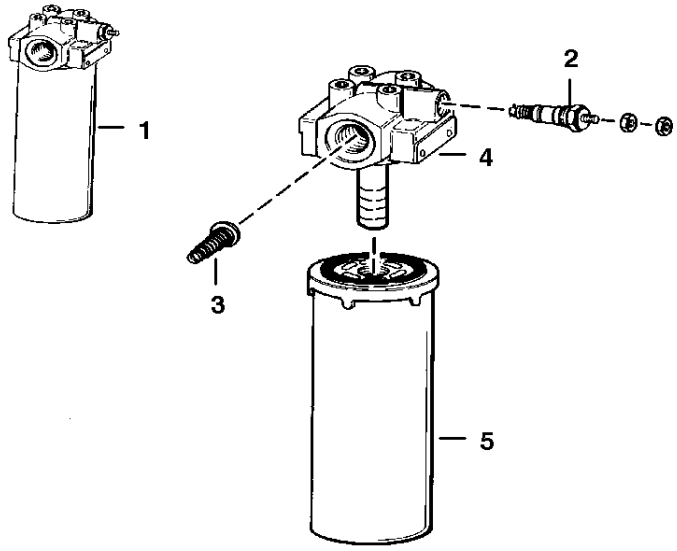

C-2818

HYDROSTATIC OIL FILTER

Ref.N°	Part N°	Description	Remarks	Serial N°	Qty.
1	6661247	FILTER ASSY.	W/Ref. HYDROSTATIC OIL FILTER(2)-HYDROSTATIC OIL FILTER(5) (50 PSI byApass & switch)		1
2	6660260	SWITCH	pressure - normally closed		1
2	6599365	KIT	nut, washer & OArings for switch		1
3	NSS	VALVE	byApass (50 PSI - Order Ref. HYDROSTATIC OIL FILTER(1))		1
4	NSS	HEAD	W/ internal check valve Check Valve' printed on head - Order 6661282 filter assy.		1
5	6661248	ELEMENT			1

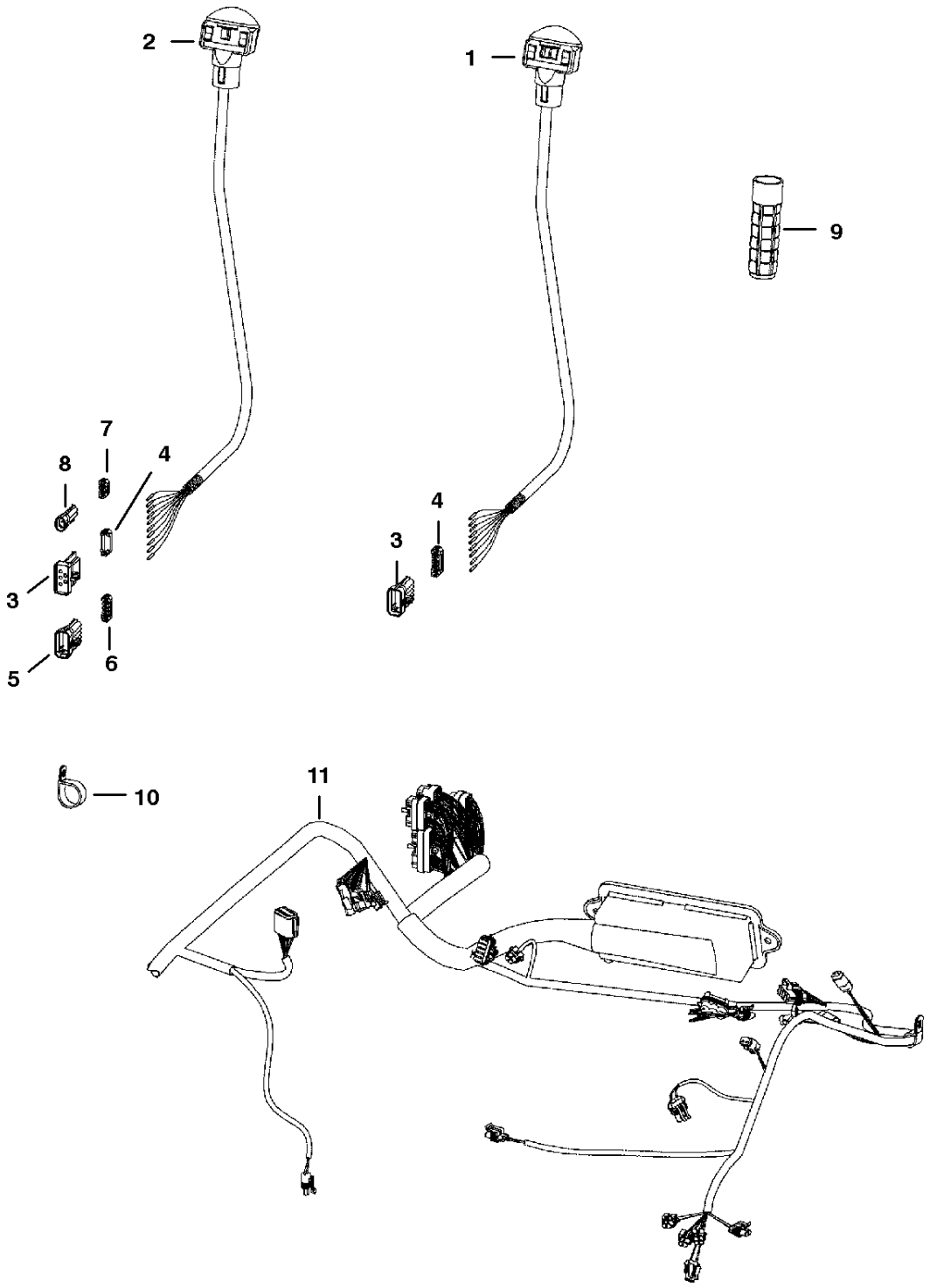
2
1
9
7
8
4
3
5
6
4
3
10
11
PE-1041

ELECTRICAL CONTROLS

Ref.N°	Part N°	Description	Remarks	Serial N°	Qty.
1	6675468	HANDLE ASSY	R.H. - a#lso Order Ref. ELECTRICAL CONTROLS(4) & ELECTRICAL CONTROLS(3)		1
1	6640690	PIN			9
1	6641176	SEAL			9
2	6674450	HANDLE ASSY.	L.H. - also Order Ref. ELECTRICAL CONTROLS(4)-ELECTRICAL CONTROLS(8)		1
2	6640690	PIN			10
2	6641176	SEAL			10
2	6677370	DECAL			1
3	6640692	CONNECTOR	10in		1
4	6640694	LOCK	10pin		1
5	6667144	CONNECTOR	5way		1
6	6667145	LOCK	5way		1
7	6641180	LOCK	2pin		1
8	6641179	CONNECTOR	2pin		2
9	6702621	GRIP			2
10	6674000	CLAMP			2
11	6705920	HANDLE			2

ELECTRICAL CONTROLS
(Advanced Hand Control Option - W/O Push Button Float)

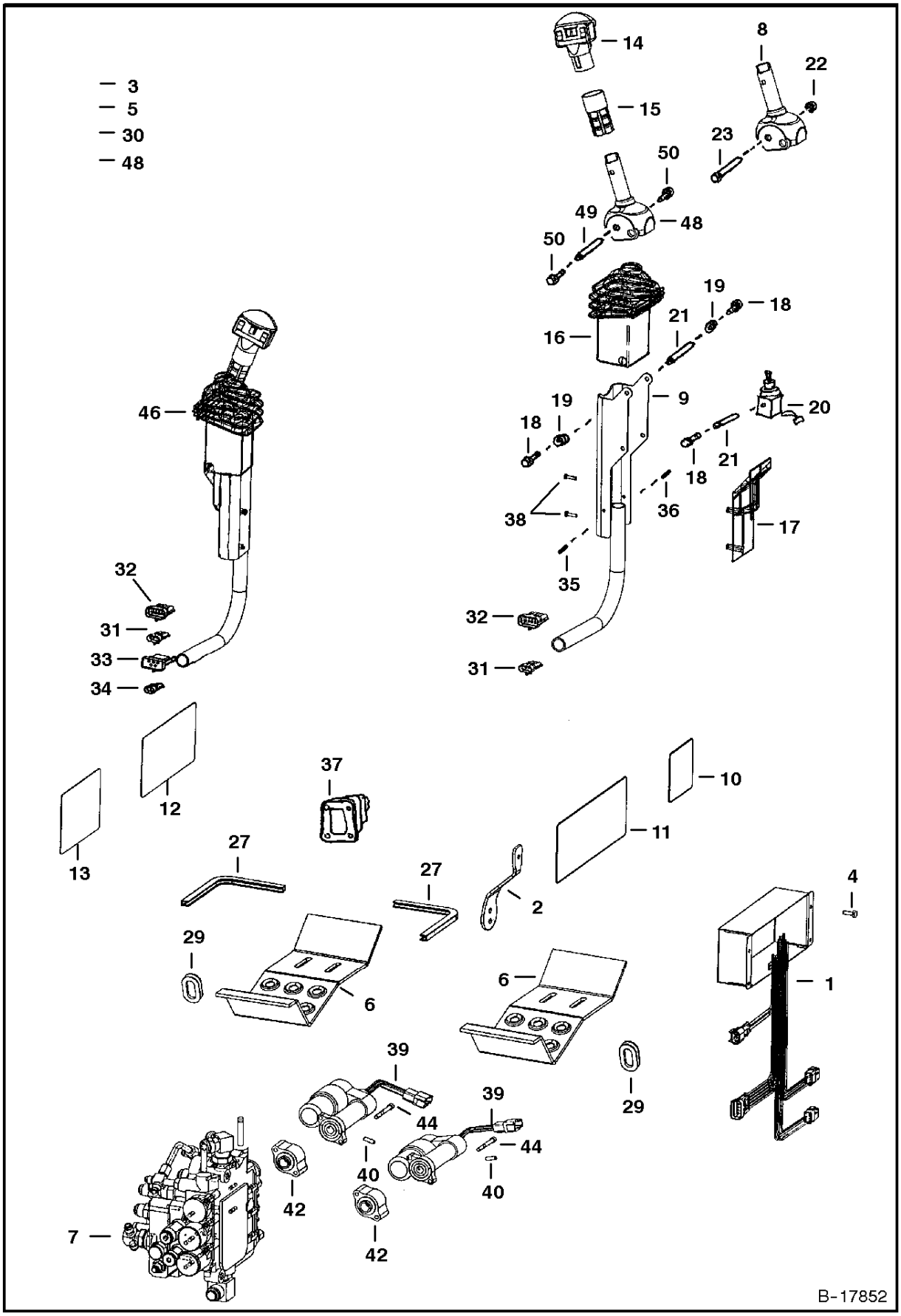

ELECTRICAL CONTROLS

Ref.N°	Part N°	Description	Remarks	Serial N°	Qty.
1	6674804	CONTROLLER			1
2	6717393	LEVER	throttle		1
3	6670707	CONNECTOR	3way		2
3	6670710	LOCK	3way		2
4	17C-412	BOLT			4
5	6646582	PLUG			4
6	6712365	STEP			2
7		VALVE	AHC - See Page HYDRAULIC CONTROL VALVE(5)		1
8	NAP	HANDLE	R.H. - tilt - Order Ref. ELECTRICAL CONTROLS(48)-ELECTRICAL CONTROLS(50) - Was 6597774 [A]	& Bel.	1
8	NAP	HANDLE	L.H. - lift - Order Ref. ELECTRICAL CONTROLS(48)-ELECTRICAL CONTROLS(50) - Was 6717163 [A]	& Bel.	1
9	6597775	LEVER	R.H. - tilt		1
9	6597776	LEVER	L.H. - lift		1
10	6718706	DECAL	warning		1
11	6718699	DECAL	warning		1
12	6718702	DECAL	operation		1
13	6718704	DECAL	operation		1
14	NAP	HANDLE ASSY	#R.H. - tilt - also Order Ref. ELECTRICAL CONTROLS(31) & ELECTRICAL CONTROLS(32) - See BTI 335 - Was 6675469 [A]		1
14	6640690	PIN			11
14	6670715	SOCKET			3
14	6641176	SEAL			11
14	6675250	HANDLE ASSY	L.H. - lift #- also Order Ref. ELECTRICAL CONTROLS(31)-ELECTRICAL CONTROLS(34)		1
14	6640690	PIN			13
14	6670715	SOCKET			3
14	6641176	SEAL			13
14	6677370	DECAL			1
15	6713349	GRIP			2
16	6713898	COVER			2
17	6715957	COVER			2
18	25GT-410	BOLT			8
19	6702990	BUSHING			4
20	NAP	CONTROL	R.H. - tilt - Order 6727298 AHC kit - See Page HAND CONTROL KIT(8) - Was 6712398 [A]		1
20	NAP	CONTROL	L.H. - lift - Order 6727298 AHC kit - See Page HAND CONTROL KIT(8) - Was 6712397 [A]		1
21	6713043	SPACER			4
22	12D-10	NUT		& Bel.	2
23	6716826	BOLT		& Bel.	2
24	58K-120	O-RING			2
25	17C-620	BOLT			3
26	25E-24	WASHER			1
27	NAP	MOULDING	10.5' (266mm) long - Order Ref. ELECTRICAL CONTROLS(28)		2
28	6654139	MOULDING	bulk - Sold Per Foot		x
29	6714726	PLUG			2
30	6665000	CLIP			2
31	6640699	CONNECTOR			1
31	6640700	LOCK			1
32	6640692	CONNECTOR			2
32	6640694	LOCK			2
33	6667144	CONNECTOR			1
33	6667145	LOCK			1
34	6641179	CONNECTOR			1

ELECTRICAL CONTROLS

Ref.N°	Part N°	Description	Remarks	Serial N°	Qty.
34	6641180	LOCK			1
35	6665322	RIVET	female		2
36	6665321	RIVET	male		2
37	6532127	BOOT			2
38	6669224	BOLT			4
39	6678775	ACTUATOR	Was 6674838 [A]		2
40	6718506	PIN			2
41	6725257	ADAPTER	spacer		2
42	6725128	ADAPTER			2
43	6719113	HARNESS	main frame/controls w/AHC	5144 45999 & Bel.	1
43	6730297	HARNESS	loader - Was 6729057 [A]	5144 46001 & Abv.	1
43	6654806	FUSE	15 amp		x
43	6702444	FUSE	25 amp		x
43	6718034	FUSE	30 amp		x
43	6670707	CONNECTOR	3-way		2
43	6670711	LOCK	3-way		2
44	69G-436	BOLT			4
45	6725246	PLATE			2
46	NAP	LEVER ASSY	R.H. - tilt - Order 6727298 AHC kit - Was 6718201 [A]		1
46	NAP	LEVER ASSY	L.H. - lift - Order 6727298 AHC kit - Was 6718202 [A]		1
47	6670711	LOCK	3-way		2
48	6729594	HANDLE	R.H.	& Abv.	1
48	6729595	HANDLE	L.H.	& Abv.	1
49	6729600	SPACER			1
50	6727065	BOLT			2

ELECTRICAL CONTROLS
(Advanced Hand Control Option - W/ Push Button Float)

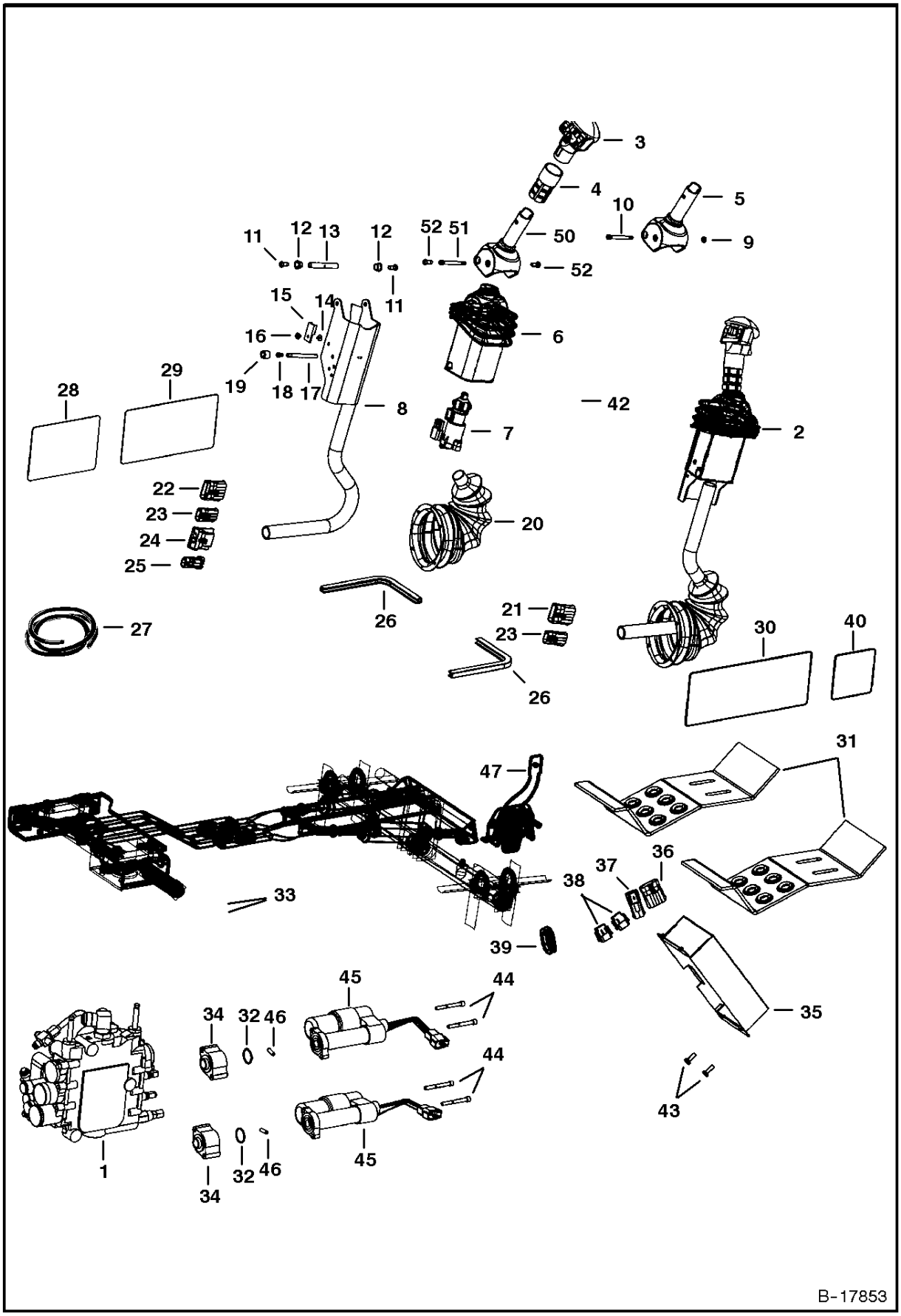

B-17853

ELECTRICAL CONTROLS

Ref.N°	Part N°	Description	Remarks	Serial N°	Qty.
1		VALVE	See Page HYDRAULIC CONTROL VALVE(5)		1
2	6675742	LEVER	tilt - R.H.		1
2	6675750	LEVER	lift - L.H.		1
3	NAP	HANDLE	lift - R.H. - See BTI 335 - Was 6675469 [A]		1
3	6675749	HANDLE	lift - L.H. - W/ push button		1
4	6713349	GRIP			2
5	NAP	HANDLE	R.H. - tilt - Order Ref. ELECTRICAL CONTROLS(50)-ELECTRICAL CONTROLS(52) - Was 6597774 [A]	& Bel.	1
5	NAP	HANDLE	L.H. - lift - Order Ref. ELECTRICAL CONTROLS(50)-ELECTRICAL CONTROLS(52) - Was 6717163 [A]	& Bel.	1
6	6713898	COVER			2
7	6675741	SENSOR			2
7	6670706	CONNECTOR	3pin		1
7	6670714	PIN			3
7	6670710	LOCK			1
8	6719712	CHANNEL	R.H.		1
8	6719711	CHANNEL	L.H.		1
9	12D-10	NUT		& Bel.	2
10	6716826	BOLT		& Bel.	2
11	25GT-410	BOLT			4
12	6702990	BUSHING			4
13	6713043	SPACER			4
14	6665321	RIVET	male		2
15	6665000	CLIP			2
16	6665322	RIVET	female		2
17	6719834	SPACER	threaded		2
18	6727065	BOLT			4
19	6719835	SLEEVE			4
20	6532127	BOOT			2
21	6640692	CONNECTOR	10pin		1
21	6640690	PIN			8
21	6640694	LOCK			1
21	6641176	SEAL			8
21	6646582	PLUG	cavity		2
22	6640692	CONNECTOR	10pin		1
22	6640690	PIN			6
22	6640694	LOCK			1
22	6641176	SEAL			6
22	6646582	PLUG	cavity		4
23	6640699	CONNECTOR	3pin		2
23	6640690	PIN			3
23	6641176	SEAL			3
23	6640700	LOCK			3
24	6667144	CONNECTOR	5pin		1
24	6640690	PIN			3
24	6641176	SEAL			3
24	6646582	PLUG	cavity		1
24	6667145	LOCK			1
25	6641179	CONNECTOR	2pin		1
25	6640690	PIN			2
25	6641176	SEAL			2
25	6641180	LOCK			1
26	NAP	MOULDING	#10.5'(267mm) long - Order Ref. HAND CONTROL KIT(27)		2
27	6654139	MOULDING	bulk - Sold Per Foot		x
28	6718704	DECAL			1

ELECTRICAL CONTROLS

Ref.N°	Part N°	Description	Remarks	Serial N°	Qty.
29	6727155	DECAL		5144 45999 & Bel.	1
29	6728328	DECAL		5144 46001 & Abv.	1
30	6718699	DECAL			1
31	6712365	STEP			2
32	58K-120	O-RING			2
33	25E-22	WASHER			8
34	6725128	ADAPTER			2
35	6676153	CONTROLLER	metal	5144 46746 & Bel.	1
35	6676337	CONTROLLER	plastic	5144 46747 & Abv.	1
36	6640692	CONNECTOR	10pin		1
36	6640690	PIN			9
36	6640694	LOCK			1
36	6641176	SEAL			9
36	6646582	PLUG	cavity		1
37	6648307	CONNECTOR	2pin		1
38	6670709	CONNECTOR	8pin		2
39	6714726	PLUG			2
40	6718706	DECAL			1
41	6727131	HARNESS		5144 45999 & Bel.	1
41	6729023	HARNESS	Was 6726925 [A]	5144 46001 & Abv.	1
42	6670707	CONNECTOR	3pin		1
42	6670715	SOCKET			3
42	6670711	LOCK			1
43	17C-412	BOLT			4
44	69G-436	BOLT			4
45	6678775	ACTUATOR	Was 6674838 [A]		2
46	6718506	PIN			2
47	6717393	LEVER	throttle		1
48	6728742	HARNESS	jumper - to enhance boom lift		1
49	6729054	HARNESS	W/ capacitor - used W/Ref. ELECTRICAL CONTROLS(35)	5144 46001-46746	1
50	6729594	HANDLE	R.H.	& Abv.	1
50	6729595	HANDLE	L.H.	& Abv.	1
51	6729600	SPACER		& Abv.	1
52	6727065	BOLT		& Abv.	2

* CONTROLS ELECTRICAL
(AHC & ACS Options)

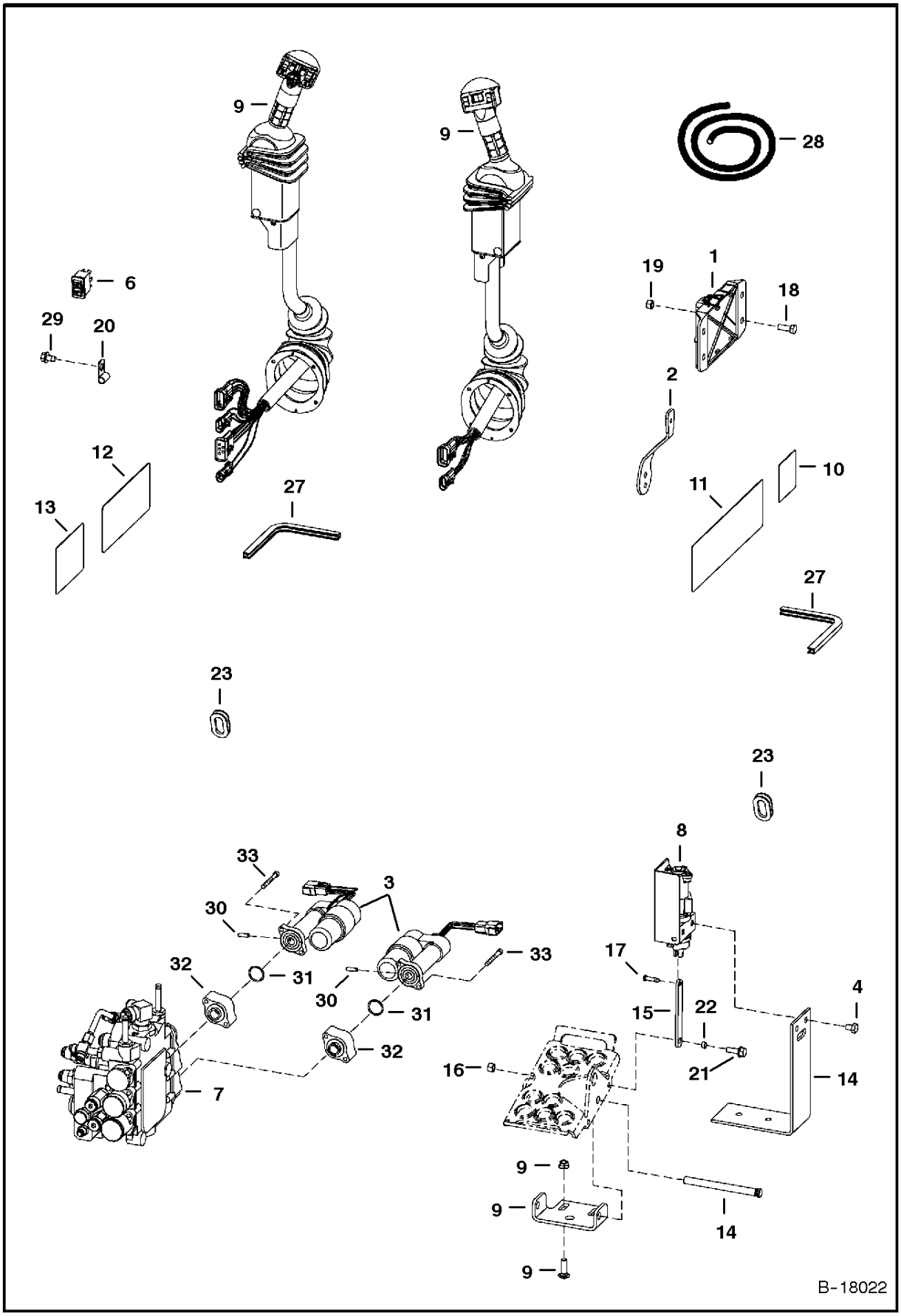

* CONTROLS ELECTRICAL

Ref.N°	Part N°	Description	Remarks	Serial N°	Qty.
1	6676337	CONTROLLER	metal		1
2	6717393	LEVER	throttle		1
3	6678775	ACTUATOR			2
4	17C-608	BOLT			4
5	6726925	HARNESS			1
6	6676537	SWITCH			2
7		VALVE	See Page HYDRAULIC CONTROL VALVE(5)		1
8	6676493	SENSOR	foot pedal - R.H. - See Page * CONTROLS ELECTRICAL(3)		1
8	6676029	SOLENOID			1
8	6676492	SENSOR	foot pedal - L.H. - See Page * CONTROLS ELECTRICAL(3)		1
8	6676029	SOLENOID			1
9		LEVER	tilt - R.H. - See Page * CONTROLS ELECTRICAL(1)		1
9		LEVER	lift - L.H. - See Page * CONTROLS ELECTRICAL(1)		1
10	6718706	DECAL	warning		1
11	6728539	DECAL	warning		1
12	6727926	DECAL	operations		1
13	6727941	DECAL	operations		1
14	6726573	BRACKET			2
15	6726681	LINK			2
16	95D-5	NUT			2
17	6727496	PIN			2
18	17C-616	BOLT			2
19	95D-6	NUT			2
20	30H-62	CLIP			2
21	35C-514	BOLT			2
22	6729467	SPACER			2
23	6714726	PLUG			2
24	6727231	SHIELD	R.H.		1
24	6727284	SHIELD	L.H.		1
25	43C-408	BOLT			4
26	25E-22	WASHER			1
27	NAP	MOULDING	#10.5' (267mm) long - Order Ref. * CONTROLS ELECTRICAL(28)		2
28	6654139	MOULDING	bulk - Sold Per Foot		x
29	84G-3710	BOLT			2
30	6718506	PIN			2
31	58K-120	O-RING			2
32	6725128	ADAPTER			2
33	69G-436	BOLT			4

* CONTROLS ELECTRICAL
(AHC) (ACS) (Handle Assembly)

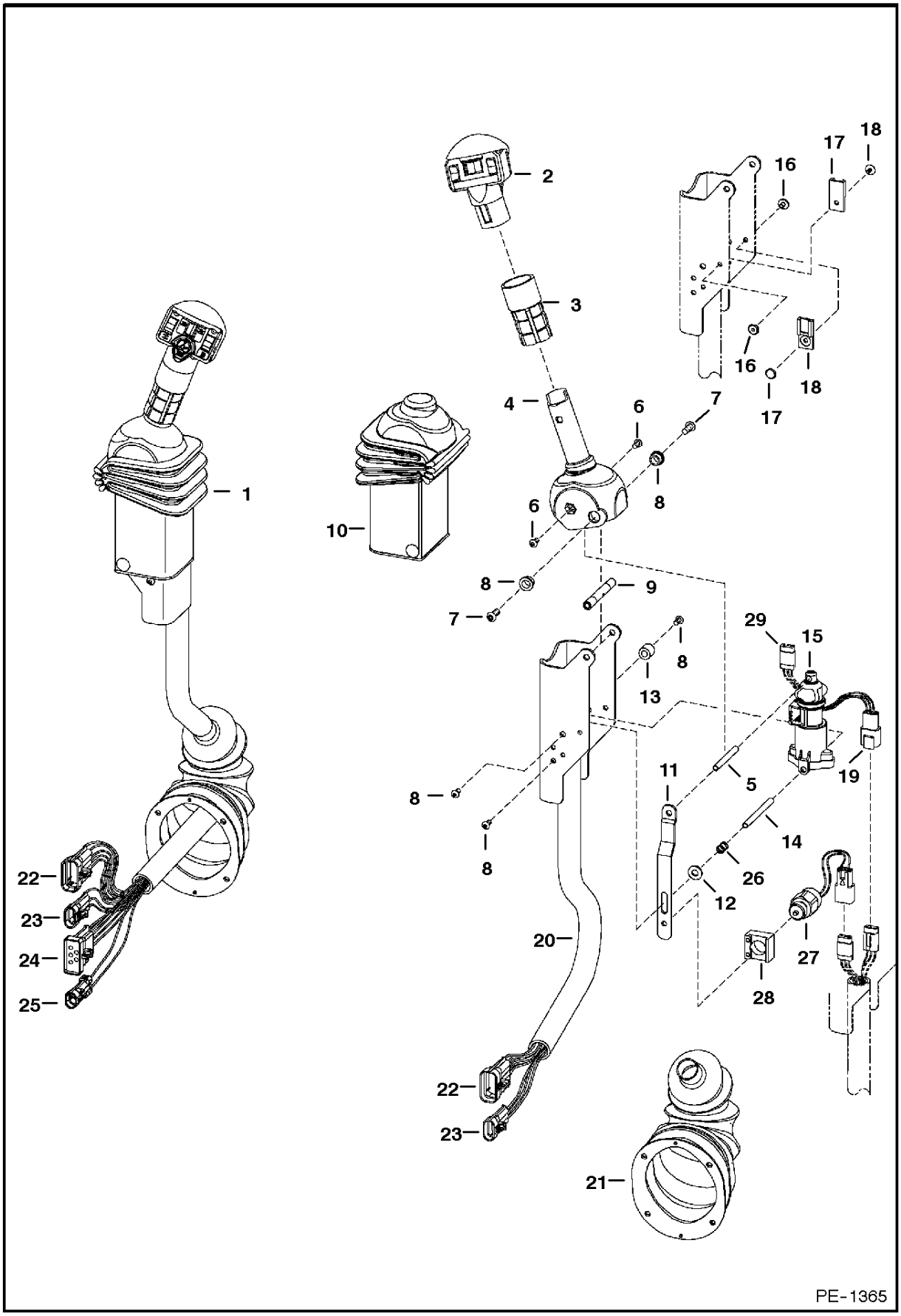

* CONTROLS ELECTRICAL

Ref.N°	Part N°	Description	Remarks	Serial N°	Qty.
1	6676333	LEVER	tilt - R.H.		1
1	6676497	LEVER	lift - L.H.		1
2	6677536	HANDLE	lift - R.H.		1
2	6675749	HANDLE	lift - L.H.		1
3	6713349	GRIP			2
4	6729594	HANDLE	R.H.		2
4	6729595	HANDLE	L.H.		1
5	6729600	SPACER	threaded		1
6	6727065	BOLT			6
7	25GT-410	BOLT			8
8	6702990	BUSHING			4
9	6713043	SPACER			4
10	6713898	COVER			2
11	6719715	STRAP	stop		1
12	25E-13	WASHER			1
13	6719835	SLEEVE			4
14	6719834	SPACER	threaded		2
15	6675741	SENSOR			2
15	6670706	CONNECTOR			1
15	6670715	SOCKET			3
15	6670710	LOCK			1
16	6665322	RIVET	female		2
17	6665321	RIVET	male		2
18	6665000	CLIP			2
19	6670707	CONNECTOR			1
19	6670715	SOCKET			3
19	6670711	LOCK			1
20	6719712	CHANNEL	R.H.		1
20	6719711	CHANNEL	L.H.		1
21	6532127	BOOT			2
22	6640692	CONNECTOR	10pin		1
22	6640690	PIN			8
22	6640694	LOCK			1
22	6641176	SEAL			8
22	6646582	PLUG	cavity		1
23	6640699	CONNECTOR	3pin		2
23	6640690	PIN			3
23	6641176	SEAL			3
23	6640700	LOCK			3
24	6667144	CONNECTOR	5pin		2
24	6640690	PIN			3
24	6641176	SEAL			3
24	6646582	PLUG	cavity		1
24	6641180	LOCK			1
25	6641179	CONNECTOR	2pin		1
25	6640690	PIN			2
25	6641176	SEAL			2
25	6641180	LOCK			1
26	6675745	SPRING			1
27	6676029	SOLENOID			1
28	6719716	MOUNT			1
29	6676870	CONNECTOR	3pin		1
29	6670711	LOCK			1
29	6670715	SOCKET			1
29	6676640	SEAL			5

* CONTROLS ELECTRICAL
(ACS) (Foot Pedal Assemblies)

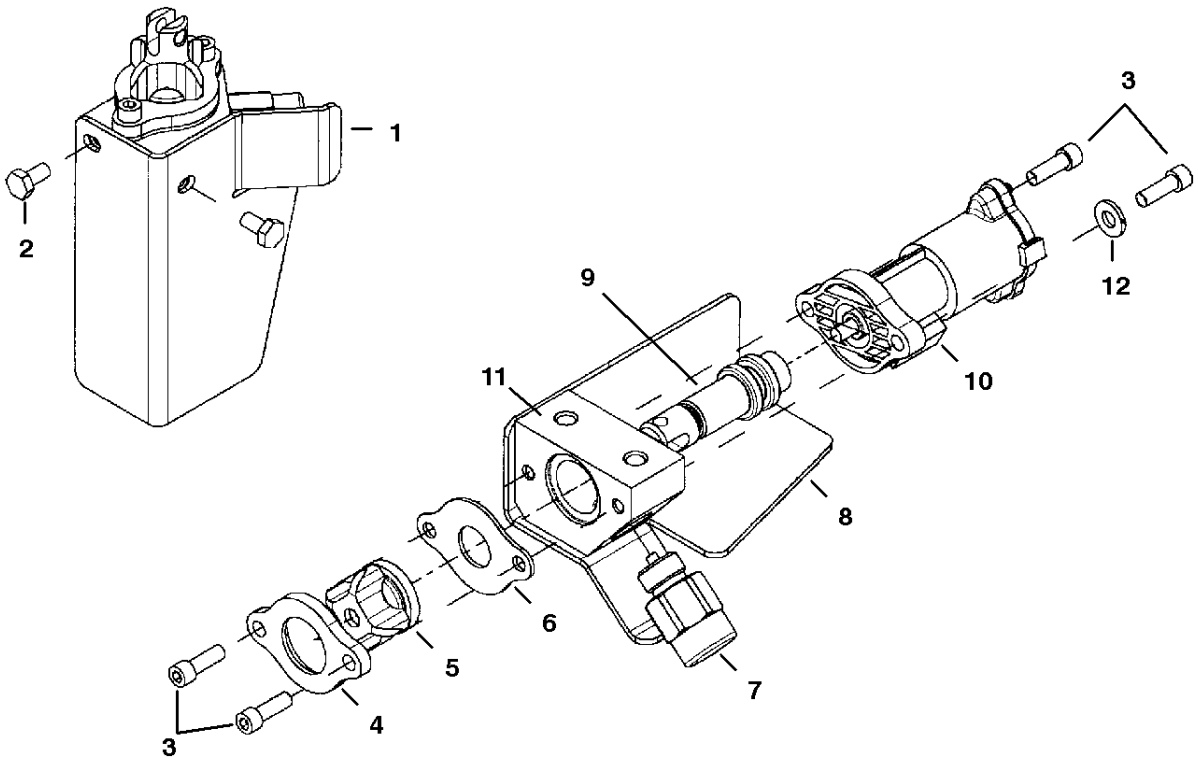

PE-1553

* CONTROLS ELECTRICAL

Ref.N°	Part N°	Description	Remarks	Serial N°	Qty.
1	6676493	SENSOR	foot pedal - R.H.		1
1	6676492	SENSOR	foot pedal - L.H.		1
2	43C-408	BOLT			2
3	98G-412	BOLT			4
4	6726574	RETAINER	boot		1
5	6587763	BOOT			1
6	6726695	STOP PLATE			1
7	6676029	SOLENOID			1
8	6727231	SHIELD	R.H.		1
8	6727284	SHIELD	L.H.		1
9	NSS	SPOOL			1
10	NSS	SENSOR			1
11	NSS	BLOCK			1
12	25E-13	WASHER			2

CAB ELECTRICAL CIRCUITRY
(S/N 5144 40001-45999, 5145 40001-40999, 5146 40001-40999)

NOTE: Front & Rear Light Kit located on Page 353

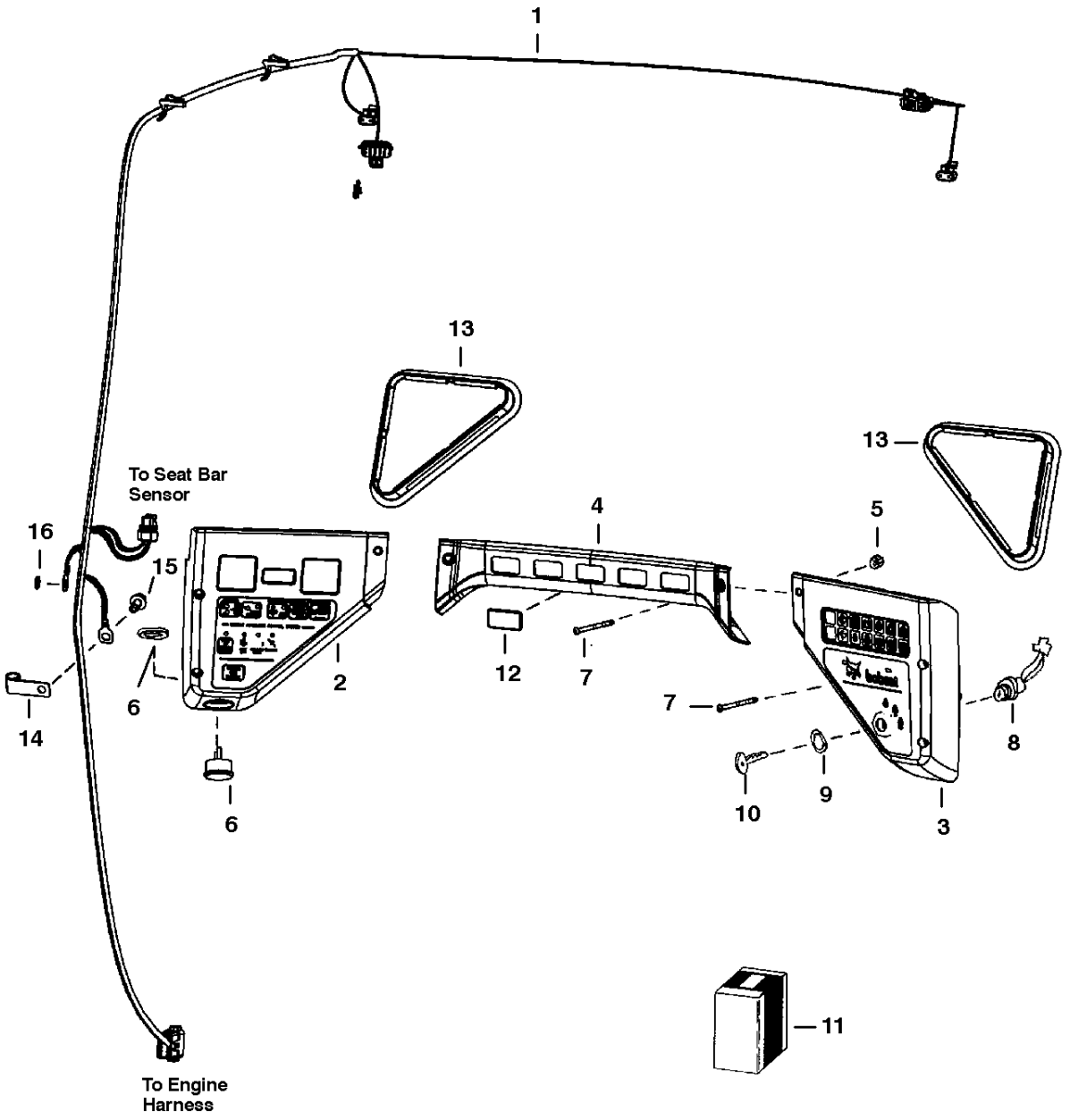

CAB ELECTRICAL CIRCUITRY

Ref.N°	Part N°	Description	Remarks	Serial N°	Qty.
1	6718870	HARNESS			1
2	6672346	PANEL	L.H.		1
2	6675982	PLUG	service part - covers the backlighting service hole		1
2	6675337	BULB			2
3	6677175	PANEL	R.H. - keyed - Was 6672347 [A]		1
3	6678682	PANEL	R.H. - deluxe - keyless - Was 6672348 [A]		1
3	NAP	INSTRUCTIONS	for deluxe panel - SEE SERVICE MANUAL		1
4	NAP	CROSSMEMBER	Order 6676723 crossmember - See Page CAB ELECTRICAL CIRCUITRY(4) - Was 6674317 [A]		1
5	6675033	INSERT	threaded		6
6	6675390	ALARM	W/nut		1
7	6719084	BOLT			6
8	6675470	SWITCH	ignition - W/Ref. CAB ELECTRICAL CIRCUITRY(9) & CAB ELECTRICAL CIRCUITRY(10)		1
9	6674202	NUT			2
10	6709527	KEY	ignition		1
11	NAP	KIT	keyless ignition - Order 6672348 panel - SEE SERVICE MANUAL		1
12	6719038	PLUG			5
13	6674403	COVER			2
14	6675171	CLAMP			1
15	84G-3712	BOLT			1
16	6E-5	WASHER			1

CAB ELECTRICAL CIRCUITRY
(S/N 5144 46001 & Above, 5145 41001 & Above, 5146 41001 & Above)

NOTE: Front & Rear Light Kit located on Page 353

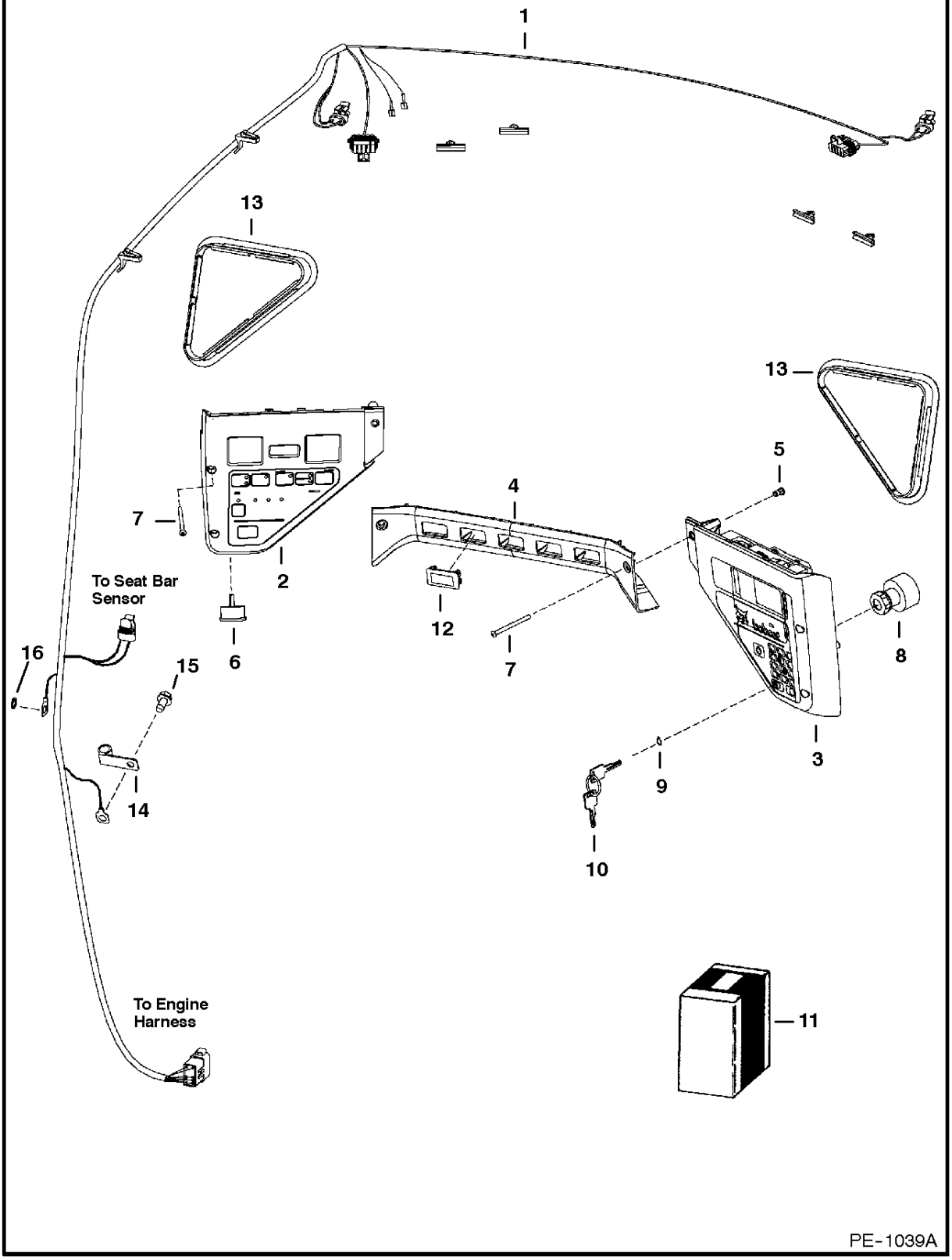

CAB ELECTRICAL CIRCUITRY

Ref.N°	Part N°	Description	Remarks	Serial N°	Qty.
1	6727178	HARNESS			1
2	6672346	PANEL	L.H.		1
2	6675982	PLUG	service part - covers the backlighting service hole		1
2	6675337	BULB			2
3	6677175	PANEL	R.H. - keyed		1
3	6678682	PANEL	R.H. - deluxe - keyless - Was 6672348 [A]		1
4	6676723	CROSSMEMBER			1
5	6675033	INSERT	threaded		6
6	6675390	ALARM	W/nut		1
7	6719084	BOLT			6
8	6675470	SWITCH	ignition - W/Ref. CAB ELECTRICAL CIRCUITRY(9) & CAB ELECTRICAL CIRCUITRY(10)		1
9	6674202	NUT			2
10	6709527	KEY	ignition		1
11	NAP	KIT	keyless ignition - Order 6672348 panel - See Service Manual for proper instructions		1
12	6719038	PLUG			x
13	6674403	COVER			2
14	6675171	CLAMP			1
15	84G-3712	BOLT			1
16	6E-5	WASHER			1
17	6676536	SWITCH	park brake		1

ENGINE ELECTRICAL
(S/N5144 40001-45999, 5145 40001-40999, 5146 40001-40999)

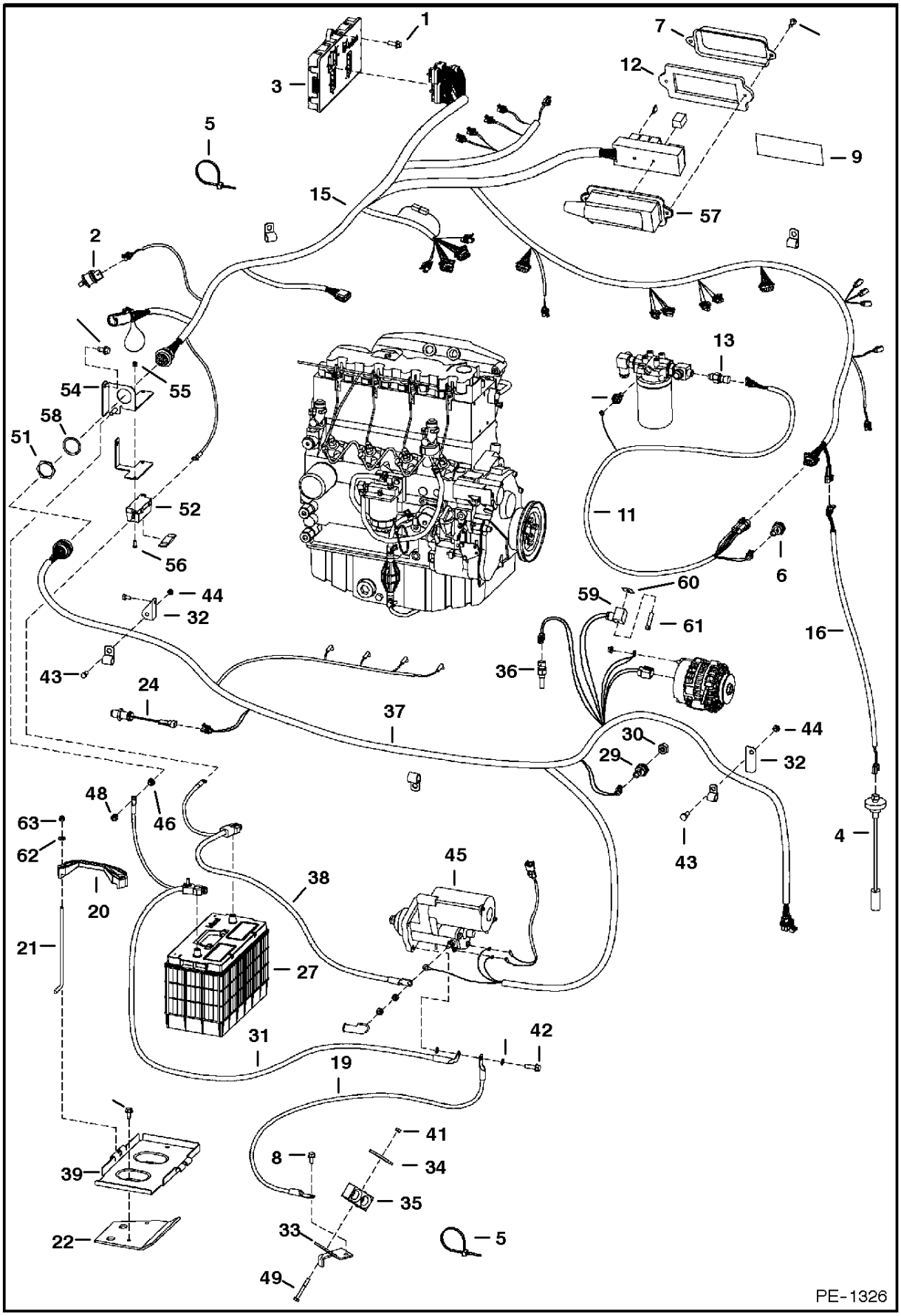

ENGINE ELECTRICAL

Ref.N°	Part N°	Description	Remarks	Serial N°	Qty.
1	43C-616	BOLT			3
2	6665371	SWITCH	vacuum		1
3	6678068	CONTROLLER	Was 6676553 [A]		1
4	6674209	SENSOR	fuel - W/gasket		1
4	6717579	GASKET			1
5	6624289	STA-STRAP			3
6	6674316	SWITCH	hyd pressure		1
7	6716621	COVER	fuse box		1
8	84G-3712	BOLT			2
9	NAP	DECAL	fuse/relay - 2.10' x 9.40' (53,3mm x 238,8mm) - Order 6718774 decal - Was 6718774 [A]		1
9	6718774	DECAL	fuse/relay - 2' x 7' (50,8mm x 177,8mm)		1
10	35C-616	BOLT			1
11	6717247	HARNESS	filter		1
12	6725302	GASKET	fuse cover		1
13	6718417	SENDER	hyd temp		1
14	6718948	ADAPTER			1
14	6675278	FILTER			1
15	6719112	HARNESS	main frame - W/Ref. ENGINE ELECTRICAL(46) & ENGINE ELECTRICAL(51)-ENGINE ELECTRICAL(58)	5144 45999 & Bel.	1
15	6719113	HARNESS	main frame - AHC	5144 45999 & Bel.	1
15	6730297	HARNESS	loader - Was 6729057 [A]	5144 46001 & Abv.	1
16	6719422	HARNESS	fuel sender		1
17	85D-6	NUT			2
18	6560172	COVER	terminal		1
19	6565170	CABLE	negative		1
20	6569203	CLAMP	battery		1
21	6576280	BOLT	battery hold down		2
22	6579989	BRACKET			1
23	6610510	NYLON TIE			2
24	6658260	SENSOR	rpm		1
25		ALTERNATOR	See Page ALTERNATOR(6)		1
26	6718796	PLUG	horn		2
27	6665427	BATTERY			1
28	6670287	COVER	light		2
29	6674315	SWITCH	engine pressure		1
30	6708580	ADAPTER			1
30	6666699	SEAL RING	brass - 10mm x 15mm		1
31	6713670	CABLE	negative		1
32	6714979	BRACKET	harness		2
33	6715131	BRACE			1
34	6715132	RETAINER			1
35	6715197	CLAMP			1
36	6718416	SENDER	engine temp		1
37	6719082	HARNESS	engine - W/Ref. ENGINE ELECTRICAL(32), ENGINE ELECTRICAL(43) & ENGINE ELECTRICAL(44)	5144 45999 & Bel.	1
38	6719141	CABLE	positive		1
39	6712536	MOUNT	battery		1
40	6726504	BRACKET	harness		1
41	95D-5	NUT			1
42	35C-620	BOLT	battery pan		1
43	17C-512	BOLT			2
44	85D-5	NUT			2
45		STARTER	See Page STARTER(8)		1
46	53D-6	NUT			1
47	4DM-5	NUT			1

ENGINE ELECTRICAL

Ref.N°	Part N°	Description	Remarks	Serial N°	Qty.
48	59D-6	NUT			1
49	17C-540	BOLT			1
50	6513763	WASHER	Was 6676172 [A]		1
51	6664972	NUT			1
52	6675154	HOLDER	fuse		1
53	6675155	FUSE	100 amp		1
54	6726504	BRACKET			1
55	59D-4	NUT			2
56	25G-410	BOLT			2
57	6718659	HOUSING	fuse		1
57	6654806	FUSE	15 amp		x
57	6702444	FUSE	25 amp		x
57	6718034	FUSE	30 amp		x
57	6674376	SWITCH	switch		7
58	6664971	WASHER			1
59	6665659	CONNECTOR	fuel shutdown		1
60	6668760	SEAL			1
61	6668761	BOLT			1

ALTERNATOR

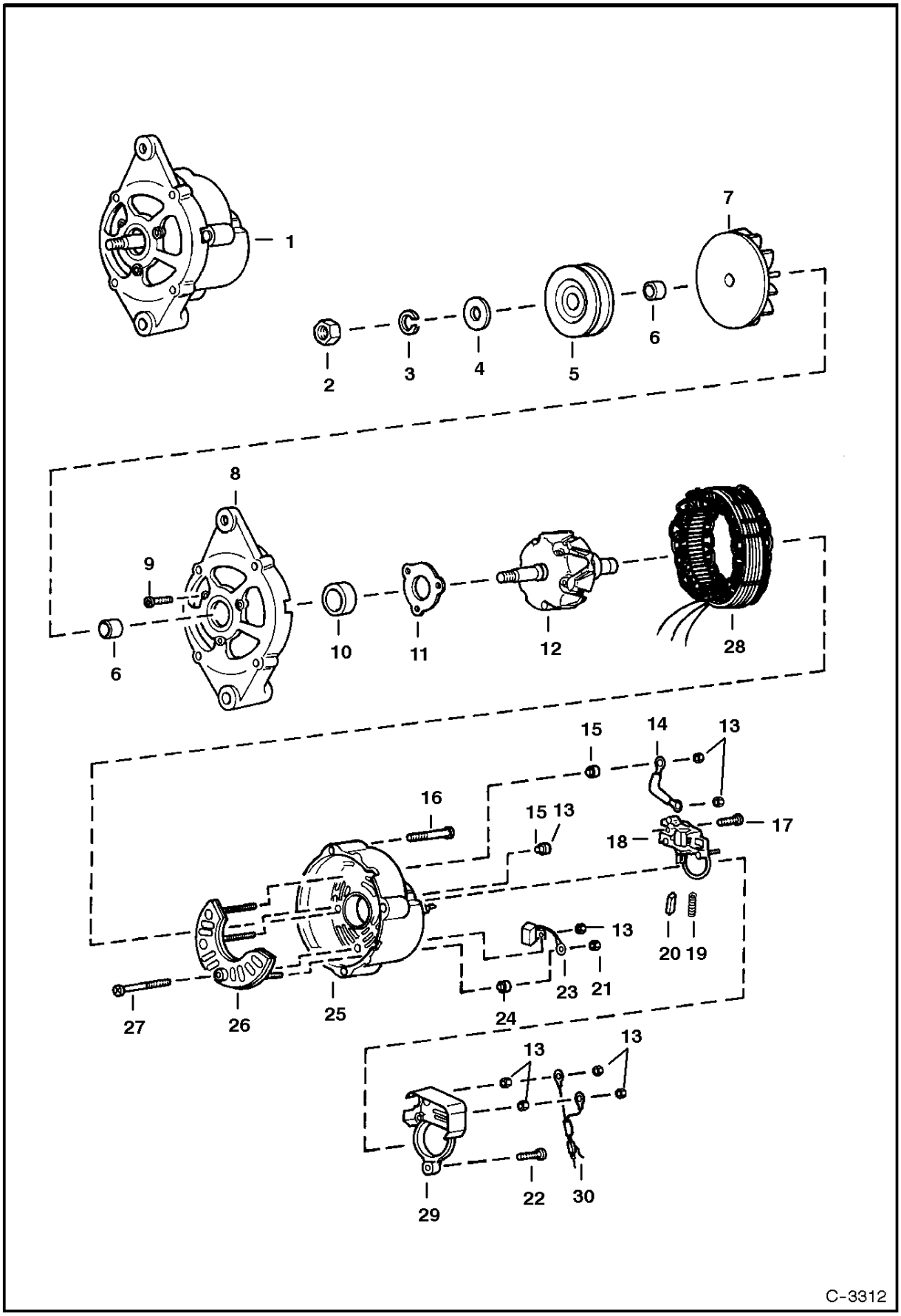
1
2
3
4
5
6
7
8
9
10
11
12
28
13
14
15
16
17
18
19
20
21
22
23
24
25
26
27
29
30
C-3312

ALTERNATOR

Ref.N°	Part N°	Description	Remarks	Serial N°	Qty.
1	6661611	ALTERNATOR	less fan & pulley		1
2	6659371	NUT			1
3	6659372	WASHER			1
4	6632323	WASHER			1
5	6571536	PULLEY	Was 6579830 [B]		1
6	6659374	SPACER			2
7	6659375	FAN			1
8	6659376	BRACKET	W/Ref. ALTERNATOR(9)-ALTERNATOR(11)		1
9	6659378	BOLT			3
10	6659379	BEARING			1
11	6632228	RETAINER			1
12	6659380	ROTOR			1
13	6659387	NUT			7
14	6659397	TERMINAL			1
15	6659386	HOLDER			2
16	6659392	BOLT			3
17	6659396	SCREW			2
18	6659393	REGULATOR	W/Ref. ALTERNATOR(19) & ALTERNATOR(20)		1
19	6659395	SPRING			2
20	6659394	BRUSH			2
21	6659391	NUT			1
22	6659399	SCREW			1
23	6659388	CONDENSER			1
24	6659390	HOLDER			1
25	6659382	BRACKET	rear - W/Ref. ALTERNATOR(13), ALTERNATOR(15), ALTERNATOR(21) & ALTERNATOR(23)-ALTERNATOR(27)		1
26	6659384	RECTIFIER			1
27	6659385	SCREW			1
28	6659381	STATOR			1
29	6659398	COVER			1
30	6659400	CONNECTOR	assy.		1

ALTERNATOR
(90 Amp)

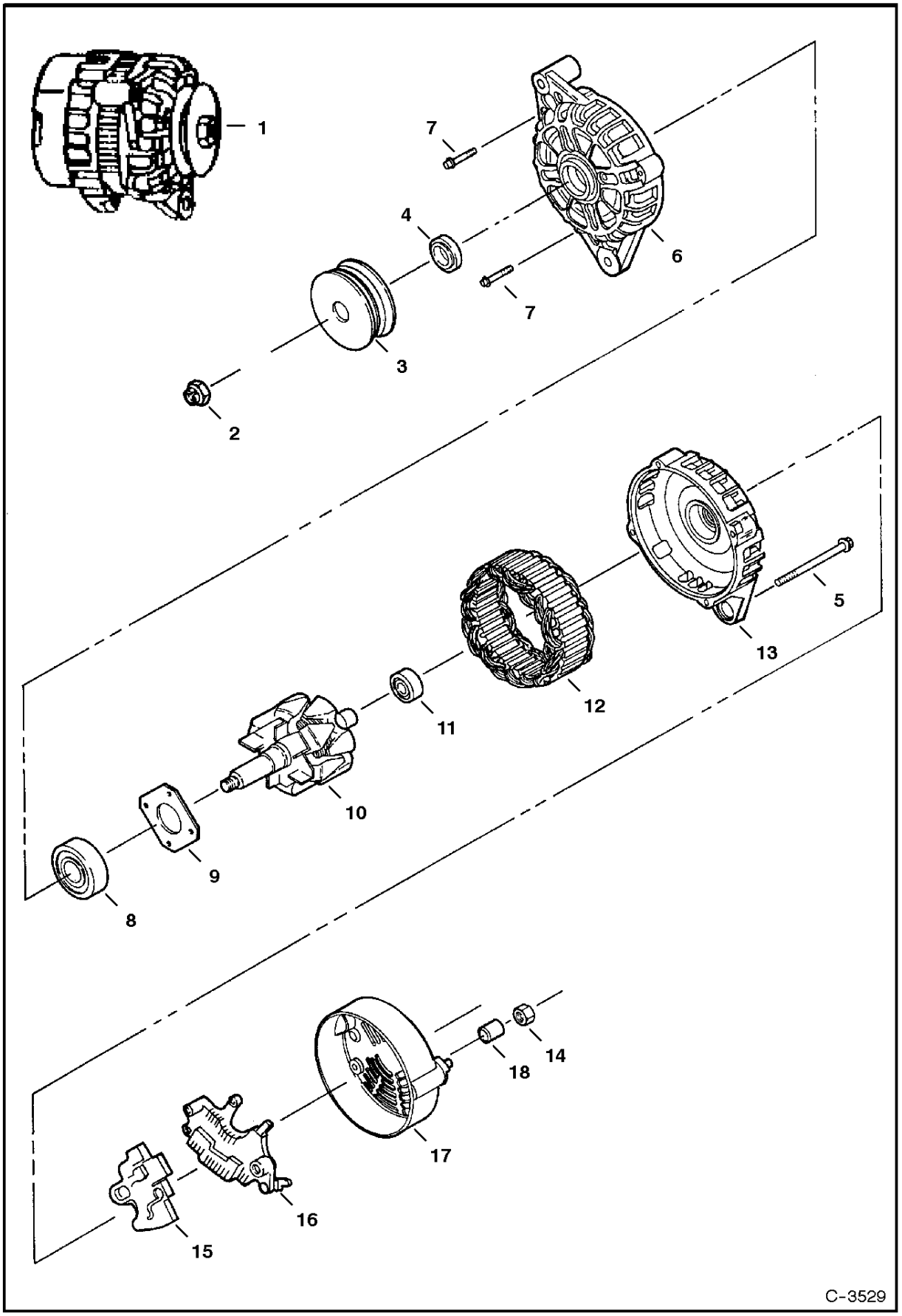

ALTERNATOR

Ref.N°	Part N°	Description	Remarks	Serial N°	Qty.
1	6678205	ALTERNATOR	90 amp - Ref. ALTERNATOR(2)-ALTERNATOR(19) - Was 6675292 [A]		1
2	6677497	NUT			1
3	6677496	PULLEY			1
4	6677495	SPACER			1
5	6677494	BOLT			4
6	6677491	BRACKET	front		1
7	6677817	BOLT			4
8	6677818	BEARING			1
9	6677819	RETAINER			1
10	6677492	ROTOR ASSY			1
11	6677820	BEARING			1
12	6677493	STATOR ASSY			1
13	6677490	BRACKET			1
14					x
15	NSS	'REGULATOR	Order Ref. ALTERNATOR(1)		1
16	6677488	RECTIFIER ASSY			1
17	6677487	COVER			1
18	6677485	SPACER			1
19	6677486	NUT			1

STARTER
(Nippondenso)

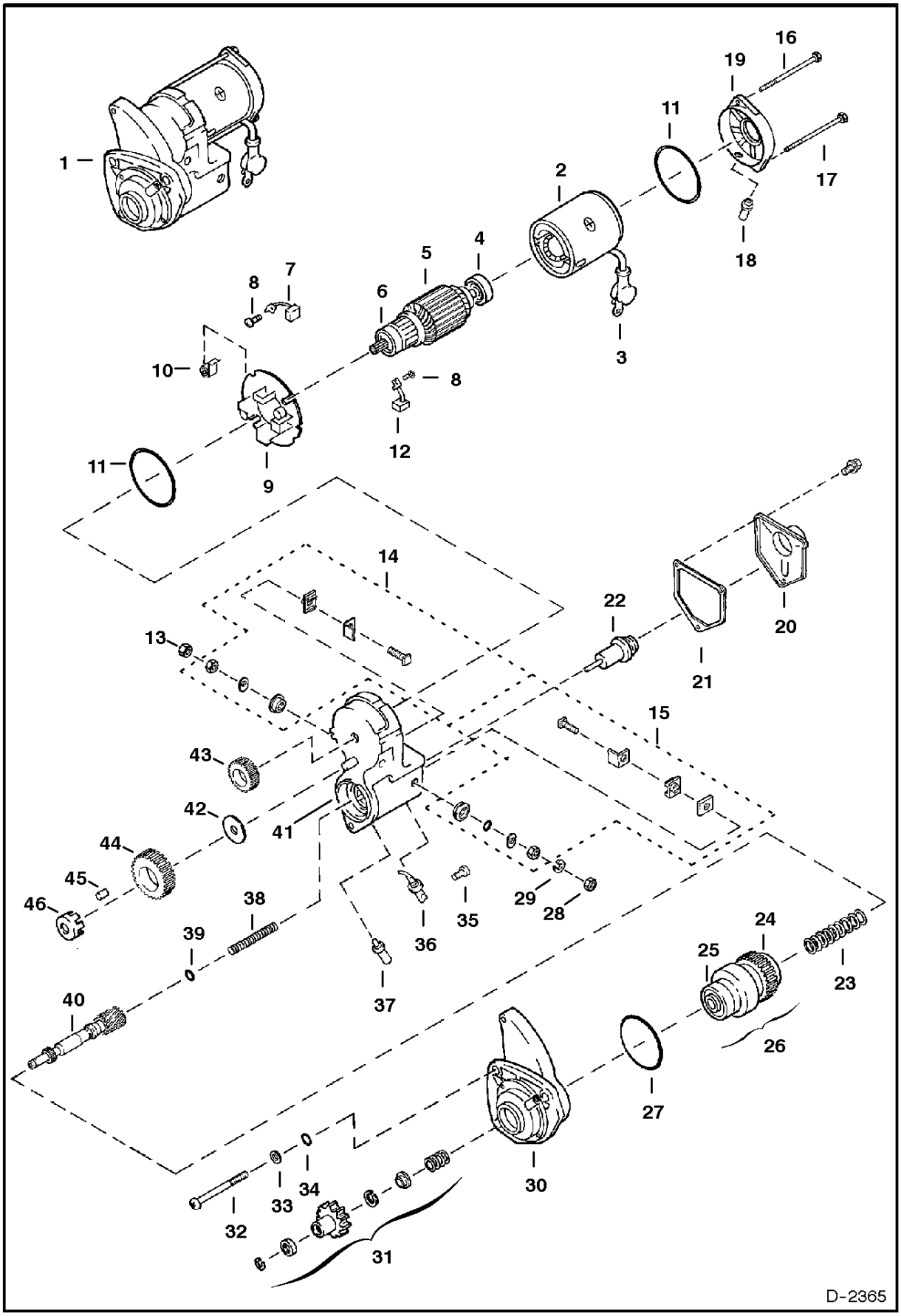

STARTER

Ref.N°	Part N°	Description	Remarks	Serial N°	Qty.
1	6667825	STARTER			1
2	6669345	YOKE			1
3	6669365	BOOT			1
4	6669349	BEARING			1
5	6669346	ARMATURE ASSY.	W/Ref. STARTER(4) & STARTER(6)		1
6	6669347	BEARING			1
6	6669348	BEARING			1
7	6669371	BRUSHES			2
8	6666634	BOLT	W/washer		4
9	6669361	HOLDER	brush - W/Ref. STARTER(10)		1
10	6669362	SPRING	brush		4
11	6669368	O-RING			2
12	6669370	BRUSHES			2
13	6666637	NUT			1
14	6669358	KIT	starter		1
15	6669357	KIT	starter		1
16	6669367	BOLT			1
17	6669366	BOLT			1
18	6669372	COVER			1
19	6669363	FRAME	end		1
20	6632434	COVER	solenoid		1
21	6632433	GASKET	switch		1
22	6632432	PLUNGER			1
23	6632441	SPRING	compresssion		1
24	NAP	BEARING	Order Ref. STARTER(26)		1
25	NAP	BEARING	Order Ref. STARTER(26)		1
26	6666622	DRIVE	Ref. STARTER(23)-STARTER(25), STARTER(31) & STARTER(40)		1
27	6666632	O-RING			1
28	6666628	NUT			1
29	6666630	WASHER			1
30	6669355	HOUSING			1
31	6669350	KIT	starter		1
32	6666633	BOLT			3
33	6666629	WASHER			3
34	6666631	O-RING			3
35	6666635	BOLT	W/washer		1
36	6669359	TERMINAL			1
37	6669360	BUSHING	drain		1
38	6632436	SPRING	compression oil		1
39	6632435	BALL	steel		1
40	6669354	SHAFT			1
41	6669356	SWITCH ASSY.	magnetic		1
42	6666624	SNAP RING			1
43	6669369	PINION			1
44	6669364	PINION			1
45	6632430	ROLLER	clutch		5
46	6632429	RETAINER			1

COOLING SYSTEM

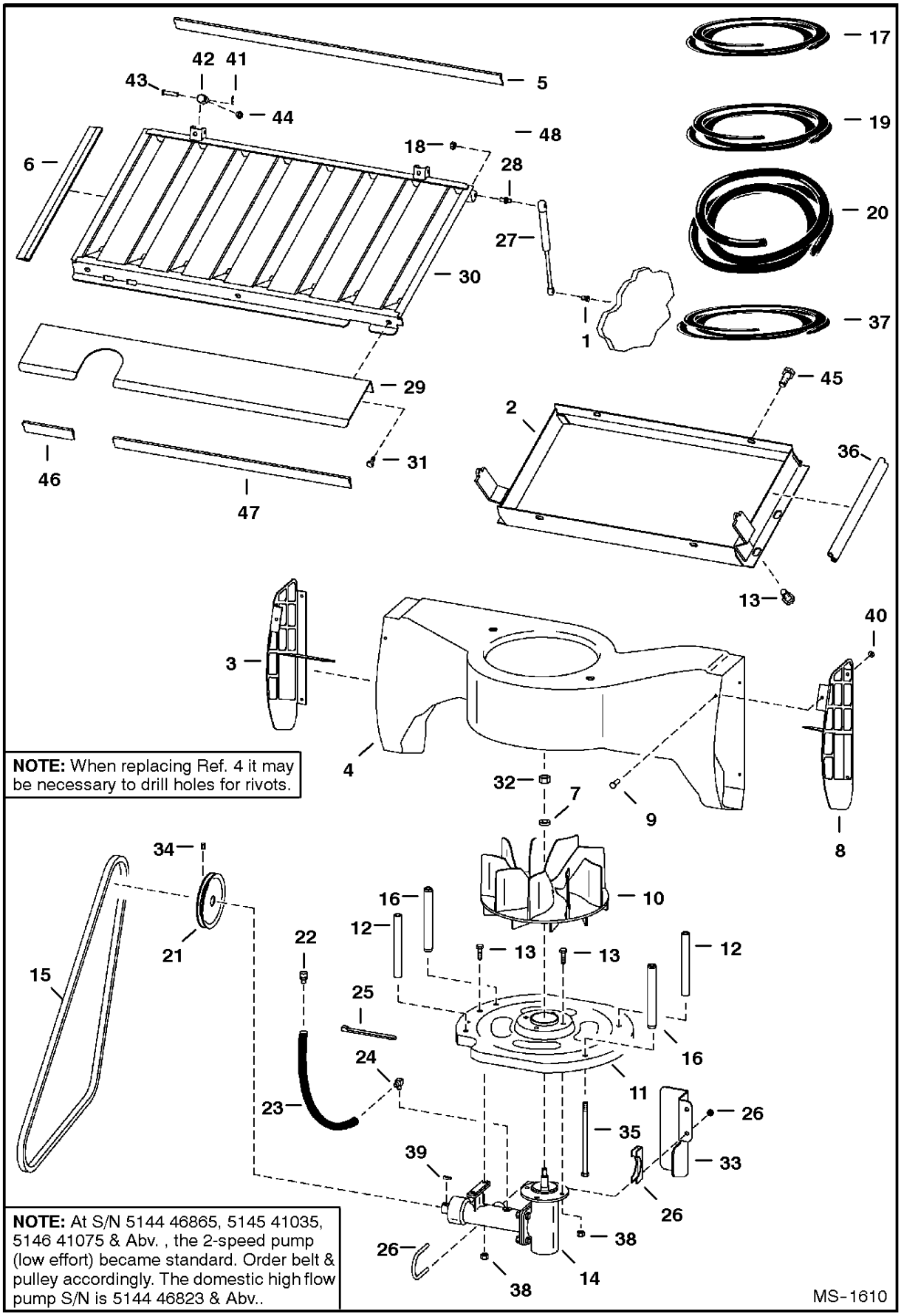

COOLING SYSTEM

Ref.N°	Part N°	Description	Remarks	Serial N°	Qty.
1	6705052	BALL STUD	weld-on		1
2	6718757	HOUSING	plenum - Was 6711630 [B]		1
3	6716574	LOUVER	(L.H. - plastic - Was 6716571 [B]		1
4	6718562	HOUSING	Was 6717635 [B]		1
5	NAP	MOULDING	34.5" (876mm) long - Order Ref. COOLING SYSTEM(19)		1
6	NAP	MOULDING	(19' (483mm) long - Order Ref. COOLING SYSTEM(17)		2
7	6701097	WASHER	Was 6803867 [A]		1
8	6716572	LOUVER	R.H. - plastic		1
9	6706517	SCREW			8
10	6715142	FAN			1
11	6717478	INLET	4 Slot		1
12	6577382	SPACER			2
13	17C-616	BOLT			10
14	6707519	HOUSING ASSY.	See Page COOLING FAN DRIVE ASSY.(3)		1
15	6713382	BELT	44.75' (1137mm) long	5144 - SEE NOTE	1
15	6707648	BELT	two speed - 43.75'(1111mm) long - See Page HYDROS TATIC CIRCUITRY(3)	5144 - SEE NOTE	1
15	6676345	BELT	standard & two speed - 44.5' (1130mm) long - See Page HYDROSTATIC CIRCUITRY(3)	S/N 5145 & 5146	1
16	6704907	SPACER			2
17	6646705	MOULDING	bulk - Sold Per Foot		x
18	61D-5	NUT			1
19	6511855	FOAM STRIP	bulk - Sold Per Foot		x
20	6577822	HOSE	bulk - Sold Per Foot		x
21	6712970	PULLEY	4.75' (120,7 mm) O.D.	5144 - SEE NOTE	1
21	6725130	PULLEY	4' (101,6mm) O.D. - two speed - See Page HYDROSTA TIC CIRCUITRY(3)	5144 - SEE NOTE	1
21	6703483	PULLEY	5.25' (133,4 mm) O.D.	5145 41034 & Bel.	1
21	6712971	PULLEY	5' (127mm) O.D. - two speed - See Page HYDROSTATI C CIRCUITRY(3)	5145 & 5146 -	x
22	6670627	BREATHER	Was 6646626 [B]		1
23	NAP	HOSE	19.5' (495mm) long - Order Ref. COOLING SYSTEM(2 0)		1
24	6657376	ELBOW			1
25	6610510	NYLON TIE			1
26	6626631	CLAMP			1
27	6674285	GAS SPRING	Was 6673758 [B]		1
28	6649244	BALL STUD			1
29	6717731	SHIELD			1
30	6717730	GRILL			1
31	84G-3112	BOLT			3
32	96D-8	NUT			1
33	6719429	SHIELD	belt - Was 6708886 [B]		1
34	6715143	SET SCREW			2
35	17C-6116	BOLT			4
36	NAP	SEAL	14.5' (368mm) long - Order Ref. COOLING SYSTEM(3 7)		2
37	6513152	SEAL	bulk - Sold Per Foot		x
38	61D-6	NUT			6
39	7J-2208	KEY			1
40	6579613	STOP			2
41	6631418	PIN			2
42	6579326	MOUNT			2
43	6567743	PIN			2
44	17C-608	BOLT			2
45	35C-612	BOLT			4

COOLING SYSTEM

Ref.N°	Part N°	Description	Remarks	Serial N°	Qty.
46	NAP	SEAL	5.25' (133mm) long - Order Ref. COOLING SYSTEM(19)		1
47	NAP	SEAL	(23.5' (597mm) long -Order Ref. COOLING SYSTEM(19)		1

COOLING SYSTEM

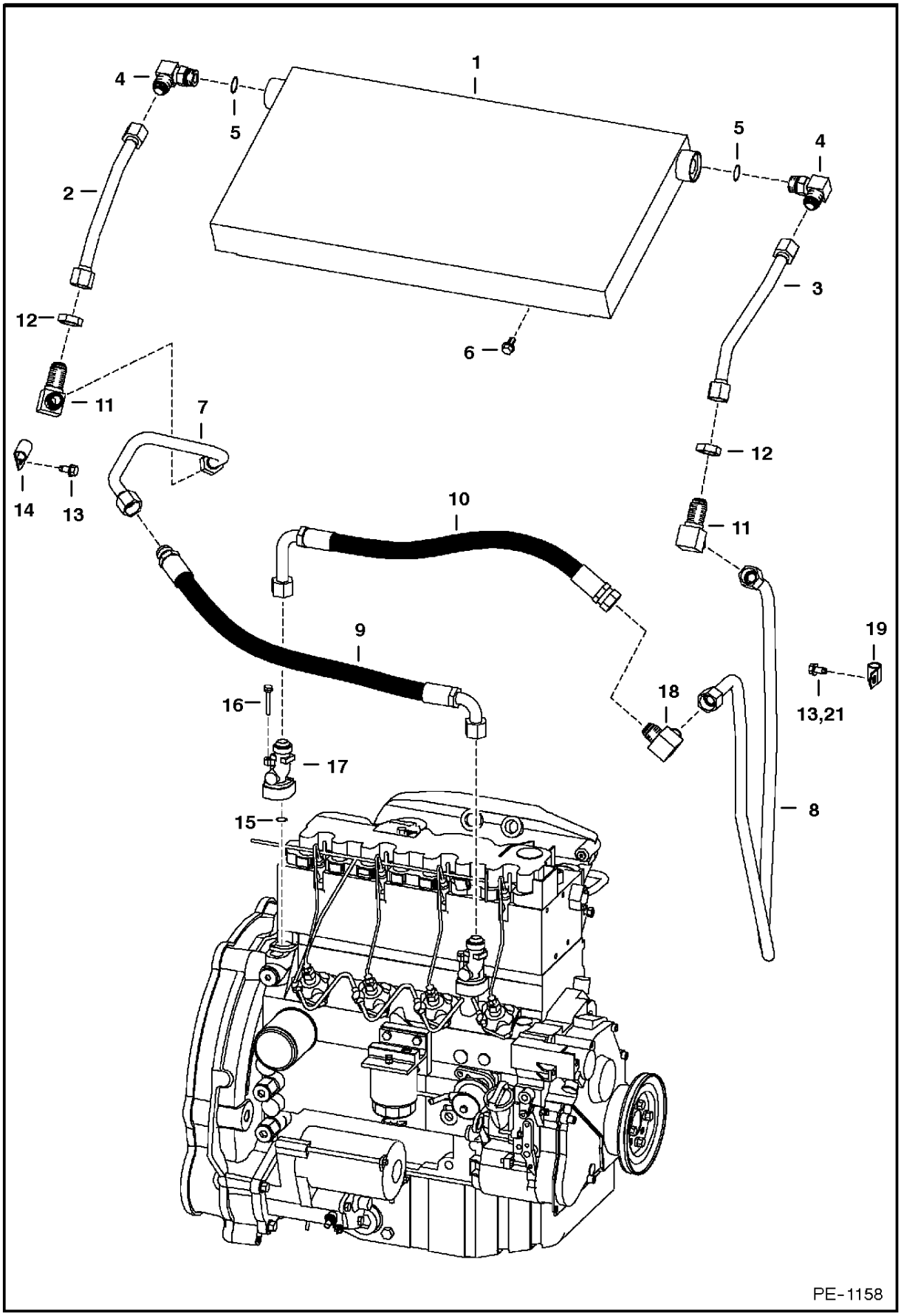

COOLING SYSTEM

Ref.N°	Part N°	Description	Remarks	Serial N°	Qty.
1	6710791	COOLER	oil		1
2	6719206	TUBE			1
3	6719207	TUBE			1
4	17KV-8	ELBOW	W/Ref. COOLING SYSTEM(5) - tapered boss face		2
4	97K-12	O-RING	flared end		2
5	99K-12	O-RING	tapered boss face		x
6	35C-612	BOLT			4
7	6709914	TUBE			1
8	6719394	TUBELINE		5144 47863 & Bel.	1
8	6729985	TUBELINE		5144 47864 & Abv.	1
9	6712143	HOSE			1
10	6712144	HOSE			1
11	88FN-8	ELBOW	tapered boss face		2
11	97K-12	O-RING	flared end		x
12	86F-8	NUT			2
13	84G-3712	BOLT			2
14	30H-44	CLAMP	Was 30H-42 [B]	& Bel.	2
14	30H-44	CLAMP		& Abv.	1
15	6666712	O-RING			1
16	6666696	BOLT			1
17	6666762	ADAPTER			2
18	77F-8	ELBOW			1
19	30H-65	CLIP		5144 47864 & Abv.	1
20	6725969	SPACER		5144 47864 & Abv.	1

ENGINE & ATTACHING PARTS
(Air Cleaner, Muffler)

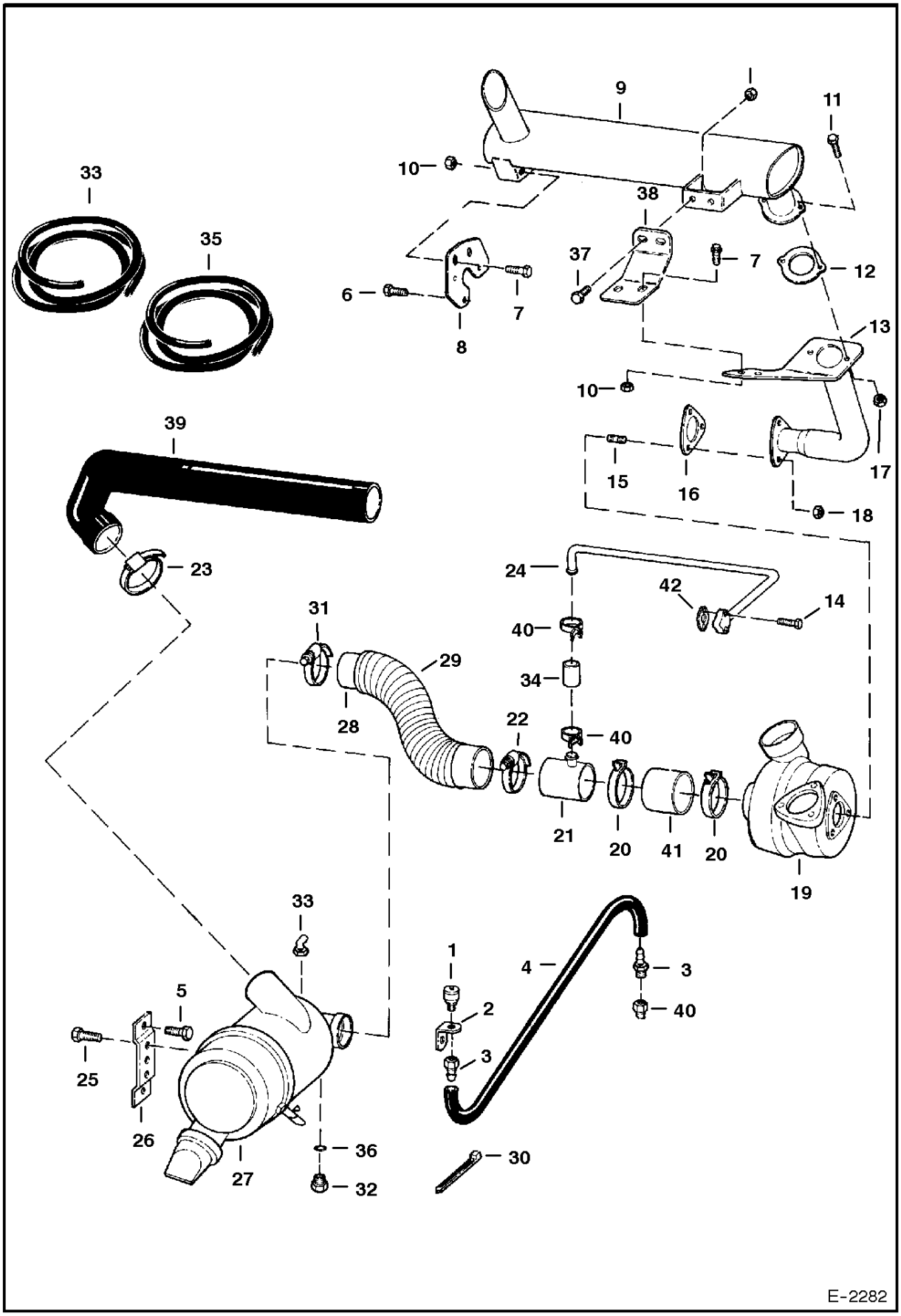

ENGINE & ATTACHING PARTS

Ref.N°	Part N°	Description	Remarks	Serial N°	Qty.
1	6515007	INDICATOR	dust	S/N & Below	1
2	6704823	BRACKET		S/N & Below	1
3	6505813	ADAPTER	barbed	S/N & Below	2
4	NAP	HOSE	18' (457 mm) long - Order Ref. ENGINE & ATTACHING PARTS(35)	S/N & Below	1
5	84G-3712	BOLT			2
6	55CM-825	BOLT			3
7	45C-620	BOLT			2
8	6717351	SHIELD	muffler		1
9	6732069	MUFFLER	Was 6675324 [A]		1
10	83D-6	NUT			6
11	17C-616	BOLT			2
12	6713653	GASKET	exhaust		1
13	6717352	TUBE	exhaust		1
14	6672887	BOLT			2
15	6666407	STUD			3
16	6665910	GASKET			1
17	85D-6	NUT			3
18	6666398	NUT			3
19		TURBOCHARGER	See Page CRANKCASE & OIL PAN(8)		1
20	6666419	CLAMP			2
21	6673966	TEE			1
22	42HC-300	CLAMP			1
23	42H-52	CLAMP			1
24	6671625	TUBELINE			1
25	55CM-816	BOLT	Was 53CM-816 [B]		2
26	6707582	BRACKET			1
27		AIR CLEANER	See Page AIR CLEANER(1)		1
28	6717495	HOSE			1
29	6717498	HOSE			1
30	6610510	NYLON TIE			2
31	42HC-350	CLAMP			1
32	24KN-5	PLUG	W/Ref. ENGINE & ATTACHING PARTS(36) - tapered boss face		1
33	25F-1	ELBOW		S/N & Above	1
34	6673962	HOSE			1
35	6557720	HOSE	bulk - Sold Per Foot		x
36	99K-6	O-RING	tapered boss face	S/N & Below	x
37	45C-616	BOLT			4
38	6713787	BRACKET			1
39	6709958	HOSE			1
40	6673963	CLAMP			2
41	6673964	HOSE			1
42	6672885	GASKET			1

ENGINE & ATTACHING PARTS
(Belt Drive System)

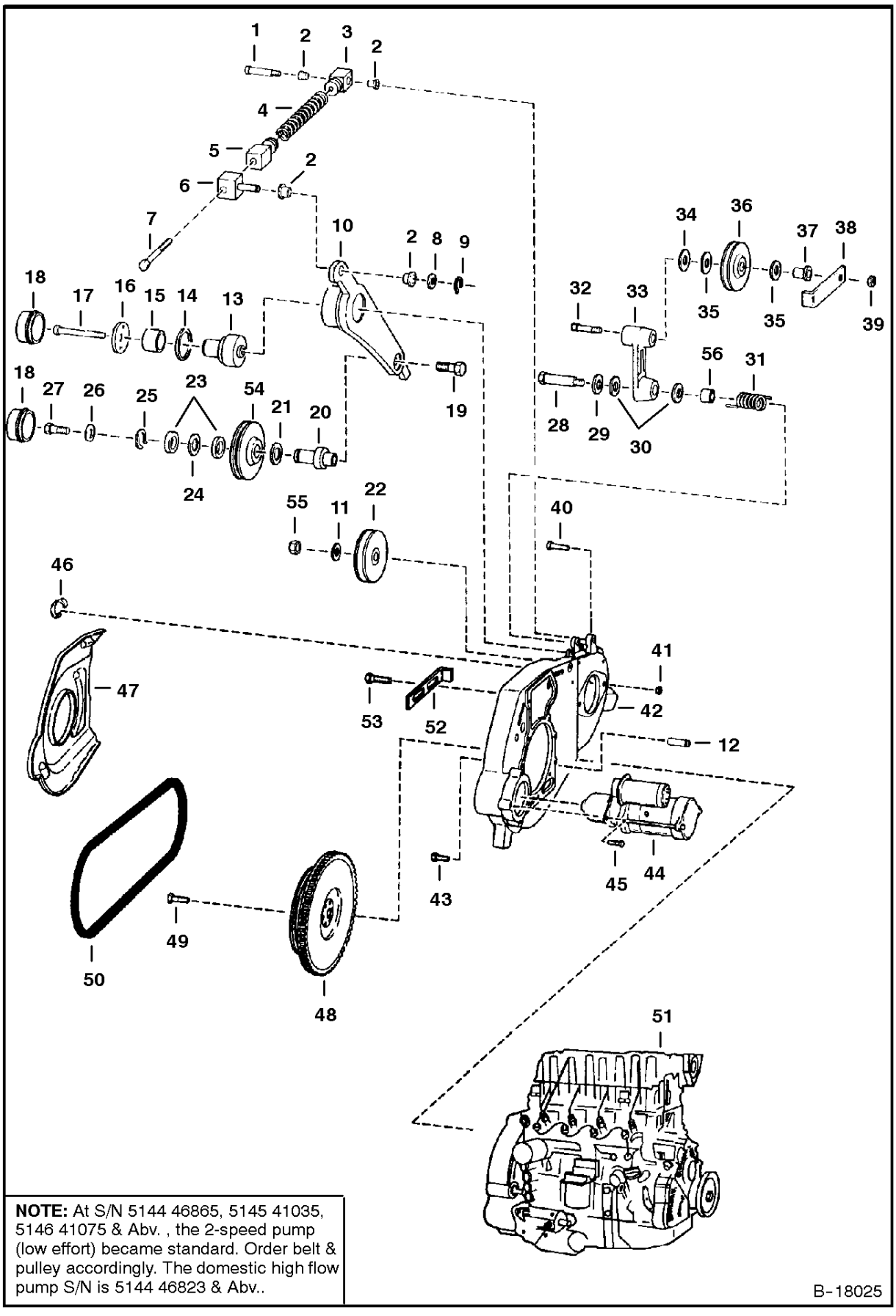

NOTE: At S/N 5144 46865, 5145 41035, 5146 41075 & Abv. , the 2-speed pump (low effort) became standard. Order belt & pulley accordingly. The domestic high flow pump S/N is 5144 46823 & Abv..

B-18025

ENGINE & ATTACHING PARTS

Ref.N°	Part N°	Description	Remarks	Serial N°	Qty.
1	38C-828	BOLT	shoulder		1
2	1313116	BUSHING			4
3	6568424	ADAPTER			1
4	6569498	SPRING ASSY			1
5	6568425	STOP			1
6	6587182	PIN			1
7	6586710	BOLT			1
8	25E-21	WASHER			1
9	6518955	RETAINER			1
10	6707607	IDLER			1
11	6576033	WASHER			1
12	4JM-1216	ROLL PIN			2
13	6707699	PIVOT			1
14	6661377	SEAL			1
15	6587765	BUSHING			1
16	6707698	WASHER			1
17	17C-872	BOLT			1
18	6660967	CAP	grease		2
19	17C-816	BOLT			1
20	6707654	IDLER			1
21	6665307	SEAL			1
22	6713342	PULLEY	pump - Was 6713287 [B]	5144 - SEE NOTE	1
22	6713287	PULLEY	pump	SEE NOTE	1
23	6661229	BEARING			2
24	6701159	SHIM			1
25	6665308	RETAINER			1
26	6707697	WASHER			1
27	17C-612	BOLT			1
28	38C-820	BOLT			1
29	6655781	BEARING	thrust		1
30	6704820	O-RING			2
31	6700115	SPRING			1
32	73G-656	BOLT			1
33	6725212	IDLER ARM	W/Ref. ENGINE & ATTACHING PARTS(56) - Was 6707637 [A]		1
34	6704444	WASHER			1
35	6660995	RING			2
36	6662997	PULLEY	cooling fan idler		1
37	6704443	BUSHING			1
38	6702474	RETAINER			1
39	61D-6	NUT			1
40	17C-832	BOLT	hydrostatic pump mounting		2
41	85D-8	NUT	hydrostatic pump mounting		2
42	6715380	MOUNT	See Page ENGINE & ATTACHING PARTS(2)		1
43	53CM-1230	BOLT			6
44		STARTER	See Page STARTER(8)		1
45	35C-620	BOLT			3
46	6701160	CLIP			3
47	6709921	SHIELD			1
48	6707642	FLYWHEEL ASSY.	W/ ring gear - Was 6715216 [B]		1
48	6665222	RING GEAR			1
49	6666452	BOLT			6
50	6670690	BELT	pump drive - Was 6672129 [B]	5144 - SEE NOTE	1
50	6662855	BELT	pump drive - 2 speed	SEE NOTE	1
51		ENGINE	See Page ENGINE & GASKET KITS(4)		1

ENGINE & ATTACHING PARTS

Ref.N°	Part N°	Description	Remarks	Serial N°	Qty.
52	6707714	STOP			1
53	35C-612	BOLT			2
54	6708445	PULLEY	drive idler		1
55	92D-12	NUT			1
56	6670682	BEARING	nylon		1

ENGINE & ATTACHING PARTS
(Engine Mounts)

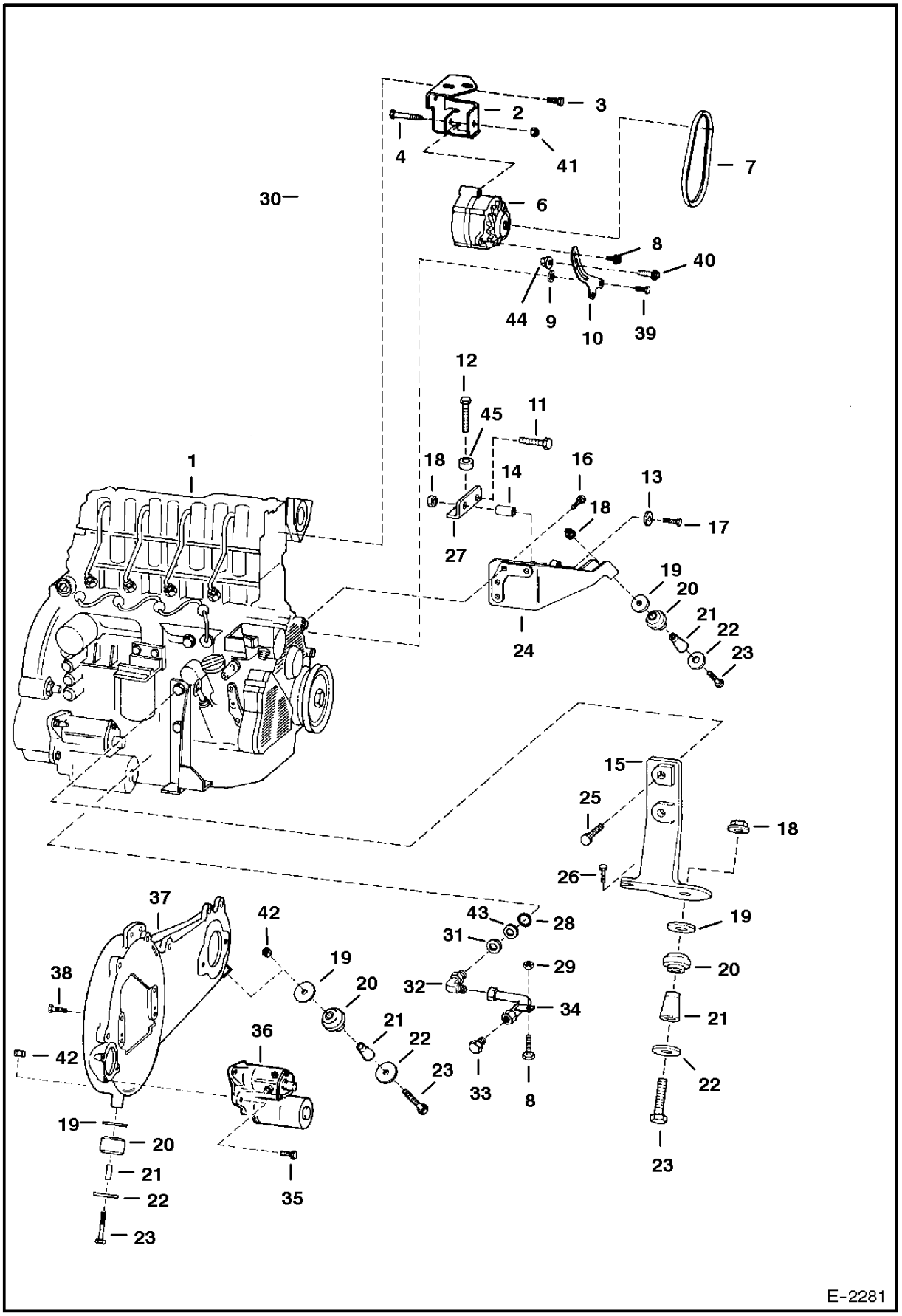

E-2281

ENGINE & ATTACHING PARTS

Ref.N°	Part N°	Description	Remarks	Serial N°	Qty.
1		ENGINE	See Page ENGINE & GASKET KITS(4)		1
2	6713893	MOUNT			1
2	6725429	MOUNT	90 amp alternator		1
3	55CM-816	BOLT			4
3	55CM-825	BOLT	90 amp alternator		4
4	17C-652	BOLT			1
4	1CM-8100	BOLT	90 amp alternator		1
5	81D-6	NUT			1
6		ALTERNATOR	See Page ALTERNATOR(6) & ALTERNATOR(7)		1
7	6534779	BELT	alternator - Was 6713901 [A]		1
7	6675839	BELT	alternator - 90 amp alternator		1
8	35C-512	BOLT			2
9	25E-17	WASHER			2
10	6713843	BRACKET			1
10	6726485	BRACKET	90 amp alternator		1
11	17C-820	BOLT			1
12	17C-824	BOLT			1
13	742640	WASHER			1
14	6716225	SPACER			1
15	6717858	MOUNT	cast		1
16	53CM-1440	BOLT			4
17	17C-864	BOLT	hyd. pump mounting		1
18	83D-8	NUT			2
19	6705106	WASHER			4
20	6668104	MOUNT			4
21	6715287	SPACER	tapered		4
22	6661787	WASHER			4
23	43C-852	BOLT			4
24	6707757	MOUNT			1
25	53CM-1440	BOLT			2
26	17C-516	BOLT			1
27	6716226	BRACKET			1
28	58K-114	O-RING			x
29	97D-5	NUT			1
30	6729354	SHIELD	90 amp alternator		1
31	NSS	WASHER	Was 6669067 [A]		1
32	6709168	ELBOW	W/Ref. ENGINE & ATTACHING PARTS(28) & ENGINE & ATTACHING PARTS(43)-ENGINE & ATTACHING PARTS(30)		1
33	6518121	PLUG			1
34	6714500	TUBE			1
35	35C-620	BOLT			3
36		STARTER	See Page STARTER(8)		1
37	6715380	MOUNT	See Page ENGINE & ATTACHING PARTS(1)		1
38	17C-828	BOLT	hyd. pump mount		2
39	1CM-1030	BOLT			2
40	35C-516	BOLT			1
41	85D-6	NUT			1
41	53DM-8	NUT	90 amp alternator		1
42	6652918	NUT			2
43	6669066	SEAL RING			1
44	57D-5	NUT			1
45	6716408	WASHER			1

THROTTLE

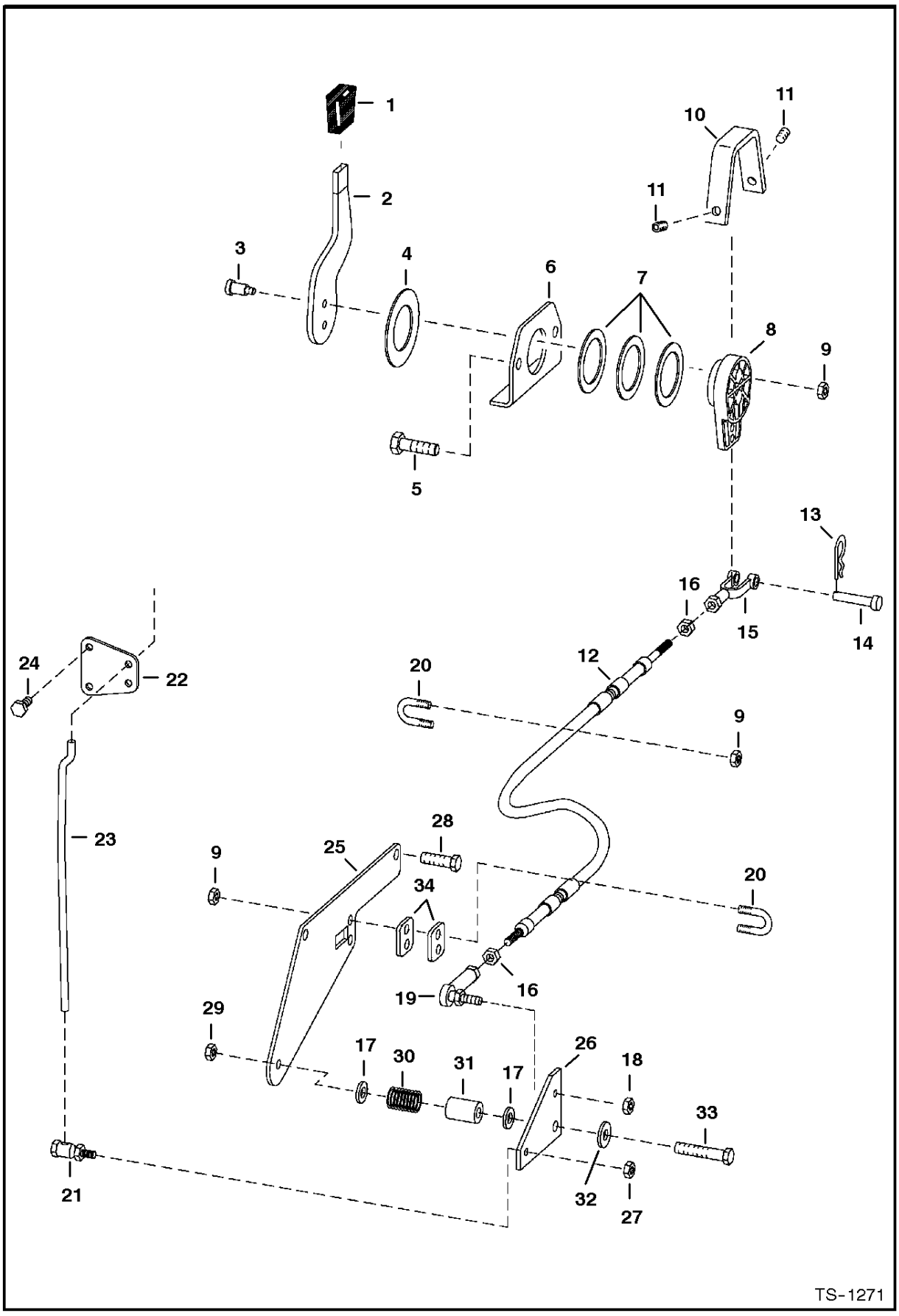
1
2
3
4
5
6
7
8
9
10
11
11
12
13
14
15
16
16
17
17
18
19
20
20
21
22
23
24
25
26
27
28
29
30
31
32
33
34
TS-1271

THROTTLE

Ref.N°	Part N°	Description	Remarks	Serial N°	Qty.
1	6564452	GRIP			1
2	6705452	LEVER			1
3	38C-610	BOLT	shoulder		2
4	6567962	WASHER			1
5	84G-3724	BOLT			2
6	6576262	MOUNT			1
7	6630945	WASHER			3
8	6709022	LEVER			1
9	85D-5	NUT			6
10	6576261	COVER			1
11	6706572	SET SCREW			2
12	6709959	CABLE			1
13	6513495	COTTER PIN			1
14	2F-4051	PIN			1
15	2J-4200	CLEVIS			1
16	8D-4	NUT			2
17	6700170	WASHER	plastic		2
18	86D-4	NUT			1
19	6631036	BALL JOINT			1
20	6592766	U-BOLT			2
21	6557291	BALL JOINT			1
22	6707903	LEVER			1
23	6707904	ROD			1
24	53CM-616	BOLT			2
25	6709052	MOUNT			1
26	6701187	BELLCRANK			1
27	85D-4	NUT			1
28	53CM-820	BOLT			2
29	85D-6	NUT			1
30	6704453	SPRING			1
31	6708314	BUSHING			1
32	25E-18	WASHER			1
33	84G-3728	BOLT			1
34	6713920	SHIM	.0528' thick		2

COOLING FAN DRIVE ASSY.

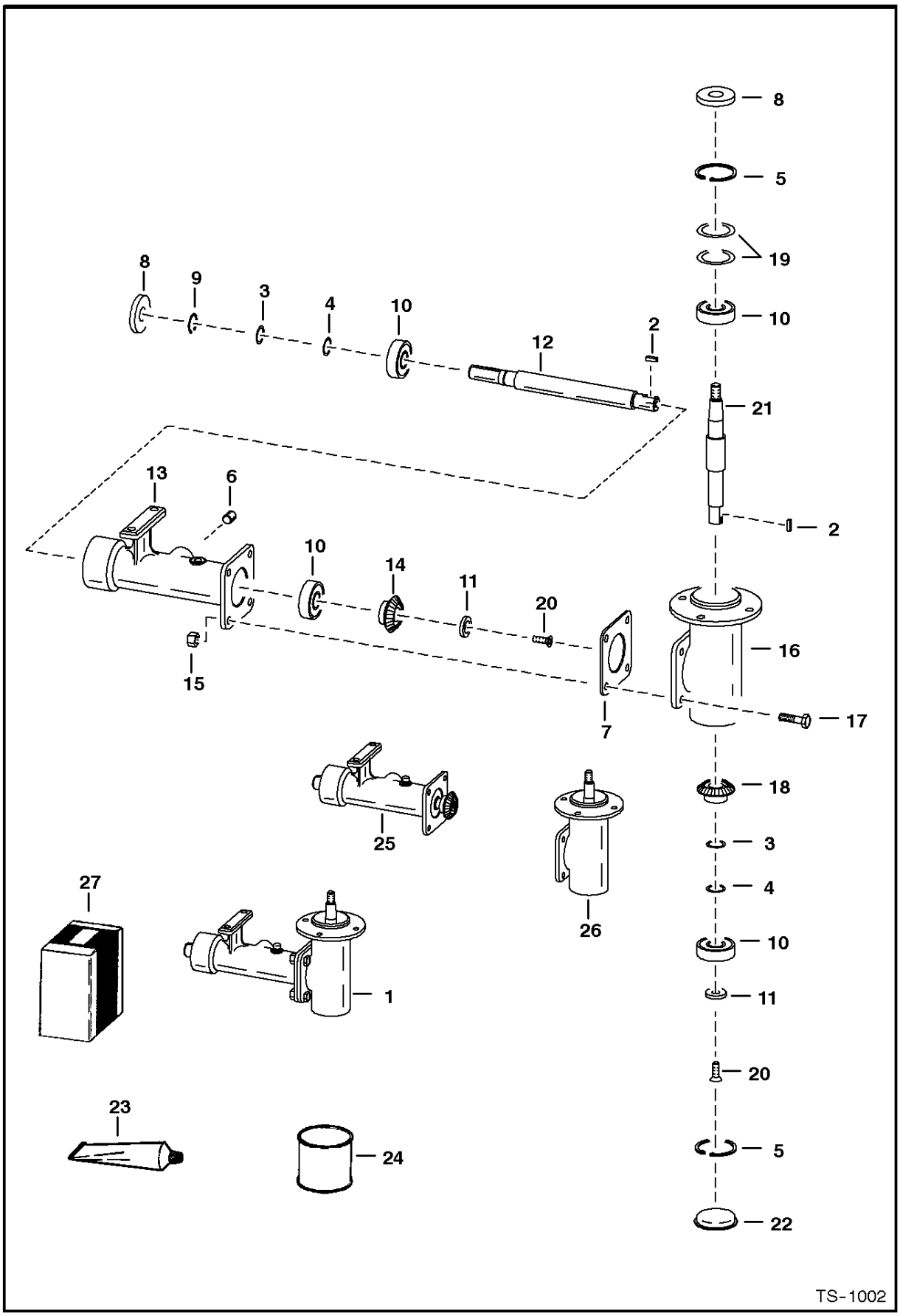

COOLING FAN DRIVE ASSY.

Ref.N°	Part N°	Description	Remarks	Serial N°	Qty.
1	6707519	HOUSING ASSY.	Ref. COOLING FAN DRIVE ASSY.(2) - COOLING FAN DRIVE ASSY.(22)		1
2	7J-2010	KEY			2
3	6702165	SHIM	.002'(0,05 mm) thickness - 1'(25,4 mm) O.D.		x
4	6701159	SHIM	.005'(0,13 mm) thickness - 1'(25,4 mm) O.D.		x
5	6653758	SNAP RING			2
6	16F-8	PLUG			1
7	6578284	SHIM	.003" (0,08 mm) thickness		x
8	6653702	SEAL			2
9	6653757	SNAP RING			1
10	6646627	BEARING			4
11	6702140	WASHER	countersink		2
12	6707518	SHAFT	keyed		1
13	6579641	HOUSING			1
14	6702103	GEAR	keyed		1
15	95D-6	NUT			4
16	NSS	HOUSING	(Order 6702138 housing or Ref. COOLING FAN DRIVE ASSY.(26)		1
17	17C-620	BOLT			4
18	6702102	GEAR	keyed		1
19	6702166	SHIM	.002" (0,05 mm) thickness - 2'(50,8 mm) O.D.		x
19	6702144	SHIM	.005" (0,13 mm) thickness - 2'(50,8 mm) O.D.		x
20	9G-512	SCREW			2
21	6702135	SHAFT	keyed		1
22	6700782	CAP	grease		1
23	6672486	SEALANT	polyurethane - Use W/Ref. COOLING FAN DRIVE ASSY.(7) & COOLING FAN DRIVE ASSY.(22)		x
24	6634393	LUBRICANT	gear - 1 pint		x
25	6708642	HOUSING ASSY.	half		1
26	6707077	HOUSING ASSY.	half		1
27	6669384	SPEEDY SLEEVE	repair kit		1

ENGINE & GASKET KITS

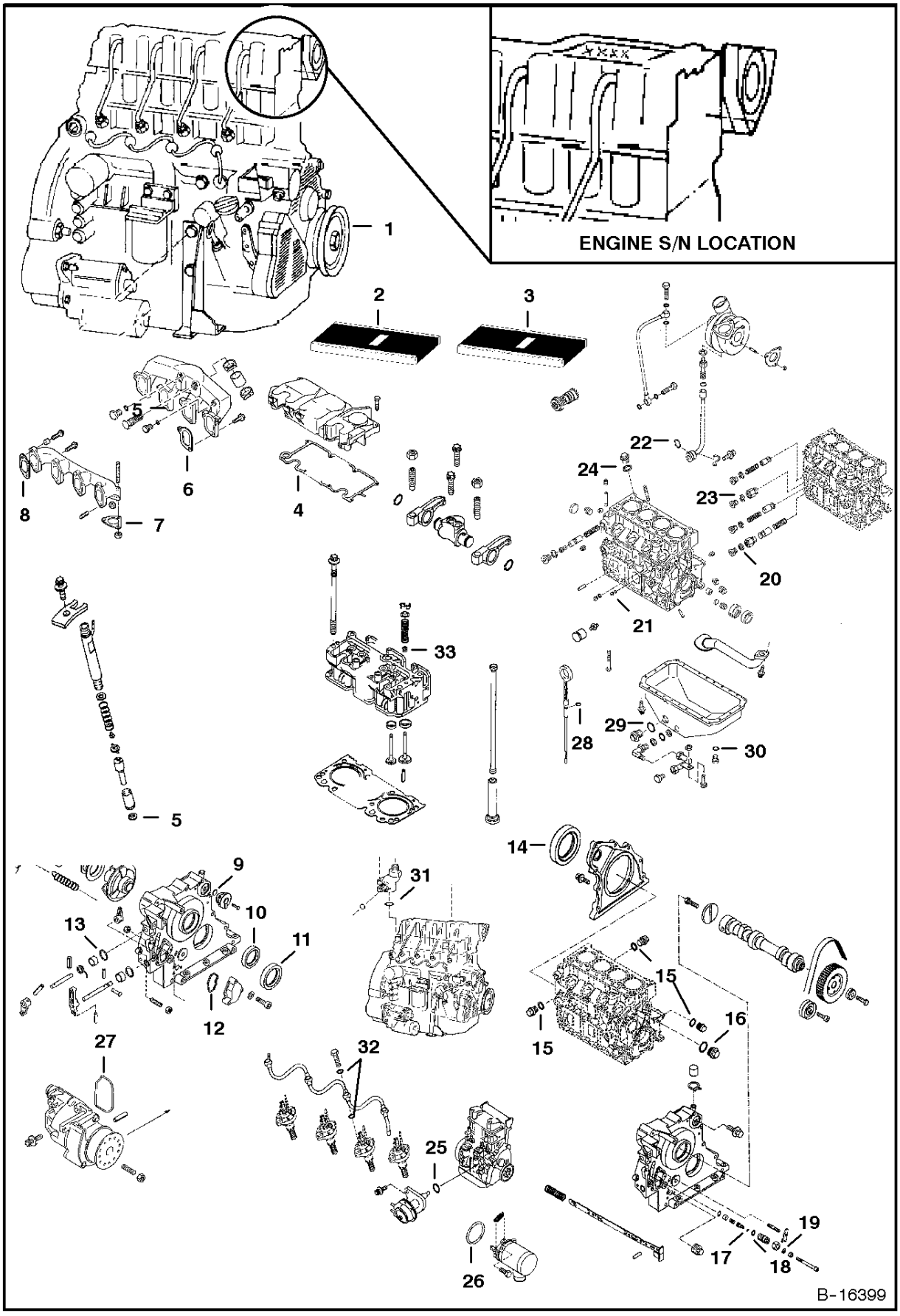

ENGINE & GASKET KITS

Ref.N°	Part N°	Description	Remarks	Serial N°	Qty.
1	6672128	ENGINE	(Does not include starter, alternator, flywheel, or flywhee l housing		1
2	6679134	GASKET KIT	upper - Ref. ENGINE & GASKET KITS(4)-ENGINE & GASKET KITS(9) - does not include head gasket - Was 6668898 [B,D]		1
3	6668899	GASKET KIT	lower - Ref. ENGINE & GASKET KITS(10)-ENGINE & GASKET KITS(33)		1
4	6672489	GASKET	See Page CYLINDER HEAD & COVER(5) - Was 66667 39 [B,D]		1
5	6666492	SEAL RING			1
6	6670315	GASKET	See Page MANIFOLDS(1)		1
7	6666473	GASKET	See Page MANIFOLDS(1)		1
8	6666472	GASKET	See Page MANIFOLDS(1)		4
9	6669643	O-RING	See Page FRONT COVER(7)		1
10	6666731	SEAL	front main - See Page FRONT COVER(7)		1
11	6666730	SEAL	front main - See Page FRONT COVER(7)		1
12	6666753	WASHER	See Page FRONT COVER(7)		1
13	6666714	O-RING	See Page FRONT COVER(7)		2
14	6666490	SEAL	lip - rear main - See Page CAMSHAFT(6)		1
15	6666393	SEAL RING	See Page CYLINDER HEAD & COVER(5)		3
16	6666394	SEAL RING	See Page CAMSHAFT(6)		1
17	6666410	O-RING	See Page CAMSHAFT(6)		1
18	6666408	O-RING	See Page CAMSHAFT(6)		1
19	6666426	SEAL RING	See Page CAMSHAFT(6)		1
20	6668887	O-RING			2
21	6666699	SEAL RING			1
22	6666401	O-RING			1
23	6666395	SEAL RING			4
24	6666393	SEAL RING			3
25	6666420	O-RING			1
26	6666409	O-RING			1
27	6666760	SEAL RING			1
28	6666439	O-RING			2
29	6668694	SEAL			1
30	6666394	SEAL RING			3
31	6666712	O-RING			2
32	6668935	SEAL RING			8
33	6666460	SEAL			8

MANIFOLDS

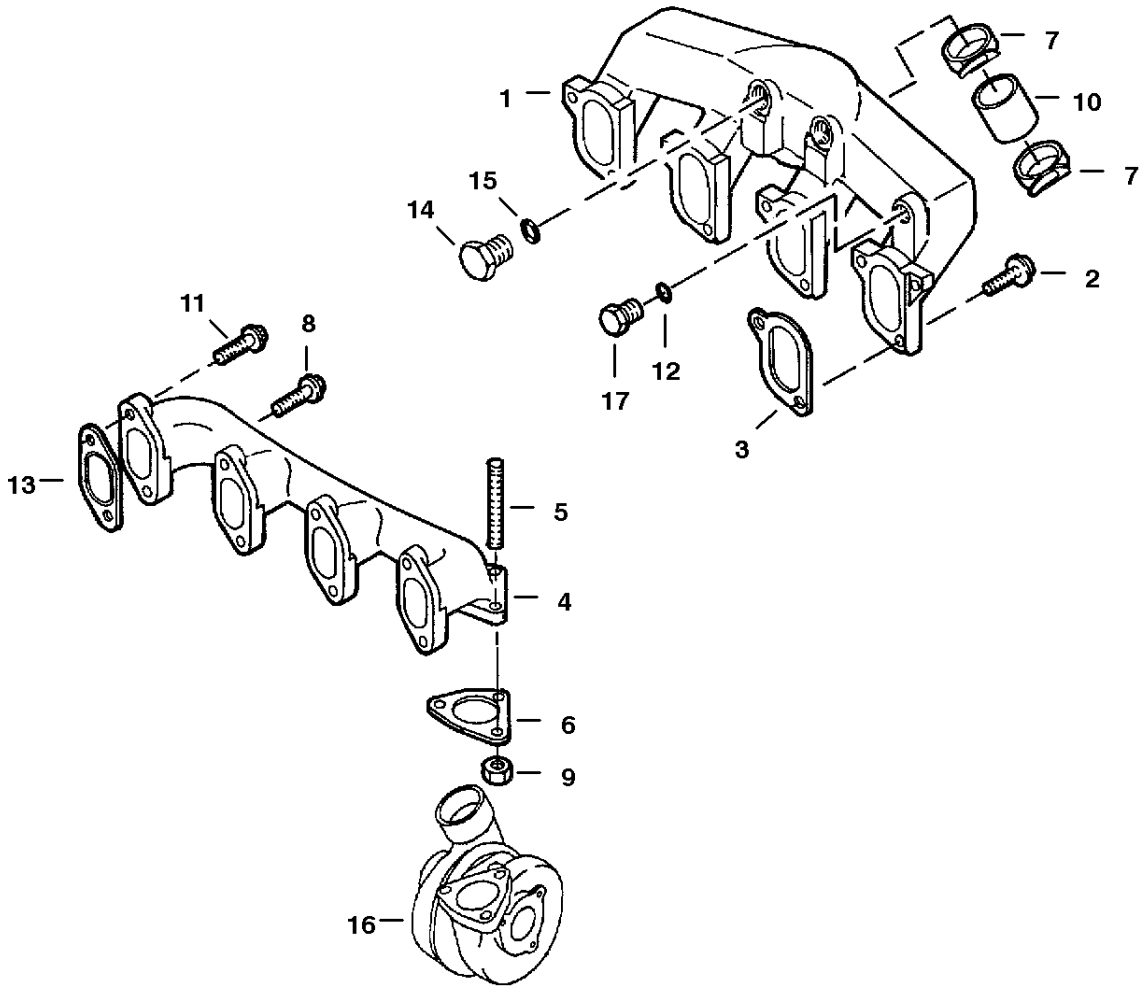

B-17422

MANIFOLDS

Ref.N°	Part N°	Description	Remarks	Serial N°	Qty.
1	6670316	MANIFOLD	intake		1
2	6670313	BOLT			8
3	6670315	GASKET			4
4	6673170	MANIFOLD	exhaust		1
5	6672947	STUD			3
6	6666473	GASKET			1
7	6666419	CLAMP			2
8	6673172	BOLT			1
9	6672948	NUT			3
10	6670314	HOSE	3.25' (82,6 mm) long		7
11	6673171	BOLT			7
12	6672939	O-RING			1
13	6666472	GASKET			4
14	6666397	PLUG			1
15	6668888	O-RING			1
16	6673173	TURBOCHARGER	See Page CRANKCASE & OIL PAN(8)		1
17	6672938	PLUG			1

CYLINDER HEAD & COVER

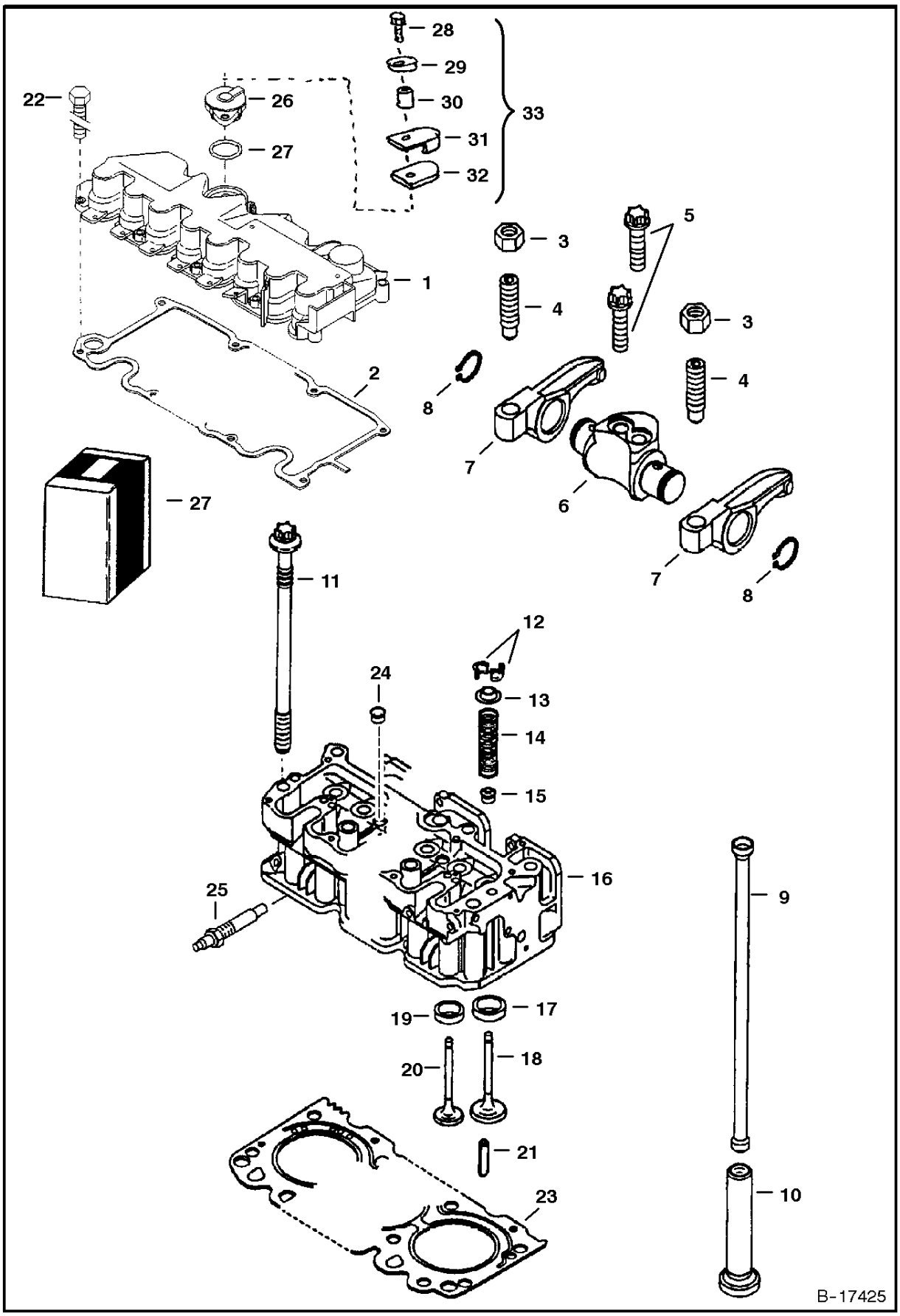

CYLINDER HEAD & COVER

Ref.N°	Part N°	Description	Remarks	Serial N°	Qty.
1	6672770	COVER			1
2	6672489	GASKET			1
3	6666450	NUT			8
4	6666449	SCREW	adjusting		8
5	6672900	BOLT			8
6	6666474	ARM	rocker - W/Ref. CYLINDER HEAD & COVER(3), CYLINDER HEAD & COVER(4), CYLINDER HEAD & COVER(7) & CYLINDER HEAD & COVER(8)		4
7	6666448	ARM	rocker		8
8	6666388	SNAP RING			8
9	6666447	PUSH ROD			8
10	6666504	TAPPET			8
11	6670820	BOLT	fully threaded		10
12	6666443	COLLAR			16
13	6668940	CAP	spring		8
14	6668944	SPRING			8
15	6666460	SEAL			8
16	6672714	HEAD	cylinder - W/Ref. CYLINDER HEAD & COVER(12)-CYLINDER HEAD & COVER(20)	S/N 462225 & Bel.	1
16	6676567	HEAD	cylinder - W/Ref. CYLINDER HEAD & COVER(12)-CYLINDER HEAD & COVER(20)	S/N 465575 & Abv.	1
17	6666505	INSERT	valve seat - intake		4
18	6666526	VALVE	intake		4
19	6666481	INSERT	valve seat - exhaust		4
20	6666466	VALVE	exhaust		4
21	6666519	PIN			2
22	6672771	BOLT			10
23	6666754	GASKET	1 notch	S/N 462225 & Bel.	1
23	6676568	GASKET	1 notch	S/N 465575 & Abv.	1
23	6666755	GASKET	2 notch	S/N 462225 & Bel.	1
23	6676571	GASKET	2 notch	S/N 465575 & Abv.	1
23	6672713	GASKET	3 notch	S/N 462225 & Bel.	1
23	6676572	GASKET	3 notch	S/N 465575 & Abv.	1
24	6666697	PLUG	soft		3
25	6670989	GLOW PLUG			4
26	6666749	BREATHER			1
27	6669643	O-RING			1
28	6666695	BOLT			1
28	NSS	BOLT	Order Ref. CYLINDER HEAD & COVER(33)		1
29	NSS	WASHER	Order Ref. CYLINDER HEAD & COVER(33)		1
30	NSS	SPACER	Order Ref. CYLINDER HEAD & COVER(33)		1
31	NSS	SHIELD	Order Ref. CYLINDER HEAD & COVER(33)		1
32	NSS	INSULATION	Order Ref. CYLINDER HEAD & COVER(33)		1
33	6673967	KIT	Ref. CYLINDER HEAD & COVER(28)-CYLINDER HEAD & COVER(32)		1

CAMSHAFT

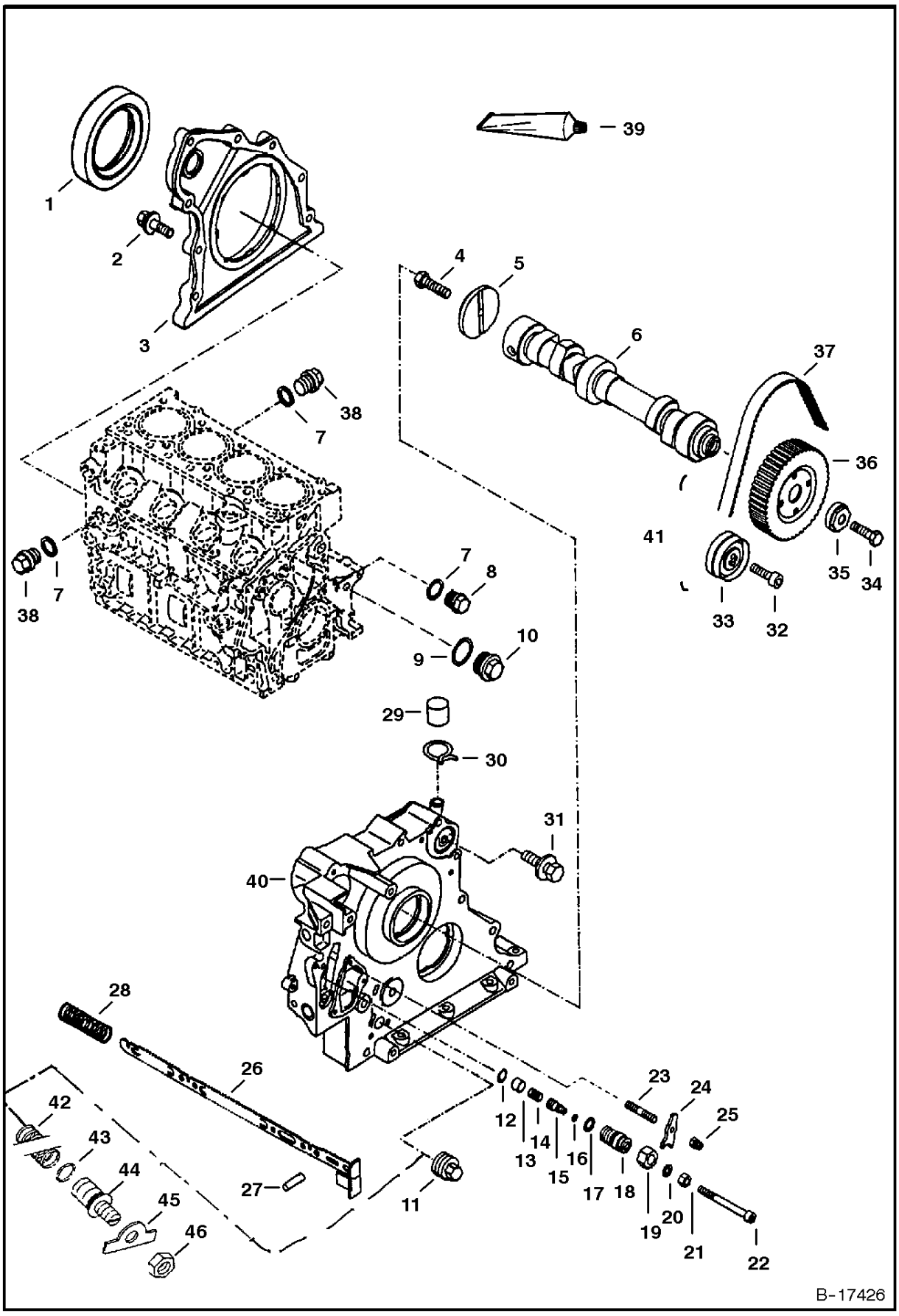
1
2
3
39
4
5
6
37
36
41
35
34
33
32
38
7
7
38
7
8
9
10
29
30
31
40
28
26
42
43
44
45
46
27
11
12
13
14
15
16
17
18
19
20
21
22
23
24
25
B-17426

CAMSHAFT

Ref.N°	Part N°	Description	Remarks	Serial N°	Qty.
1	6666490	SEAL	lip - rear main		1
2	6666412	BOLT			8
3	6666491	COVER	rear - use W/Ref. CAMSHAFT(39)		1
4	6666402	BOLT			1
5	6666469	WASHER	thrust		1
6	6673154	CAMSHAFT			1
7	6666393	SEAL RING			3
8	1KM-10	PLUG			1
9	6666394	SEAL RING			1
10	com36,}H~10{ M				x
11	6666421	PLUG			1
12	6666389	CIR CLIP			1
13	6666476	STOP	limit		1
14	6666483	SPRING			1
15	6666489	SCREW			1
16	6666410	O-RING			1
17	6666408	O-RING			1
18	6666480	SCREW	adjusting		1
19	6666450	NUT			1
20	6666426	SEAL RING			1
21	6673162	NUT			1
22	6672942	SET SCREW			1
23	6666406	STUD			1
24	6666475	CLAW			1
25	6513908	NUT			1
26	6673163	ROD			1
27	6666496	PIN	locating		1
28	6666465	SPRING			1
29	6666761	CAP			1
30	6666701	CLAMP			1
31	6666707	BOLT			11
32	6666715	BOLT			1
33	NAP	PULLEY	tension - Order Ref. CAMSHAFT(41)		1
34	6666711	BOLT			1
35	6666720	WASHER			1
36	6666725	PULLEY			1
37	NAP	BELT	Order Ref. CAMSHAFT(41)		1
38	6666690	PLUG			2
39	6632823	GASKET	liquid - between Ref. CAMSHAFT(3) & block also between Ref. CAMSHAFT(40) & block		x
40	6666748	COVER	front - See Page FRONT COVER(7)		1
41	6670555	REPAIR KIT	Ref. CAMSHAFT(32), CAMSHAFT(33) & CAMSHAFT(37)		1
42	6673167	SPRING			1
43	6673165	O-RING			1
44	6673164	CAPSULE			1
45	6673166	WASHER			1
46	6513908	NUT			1

FRONT COVER

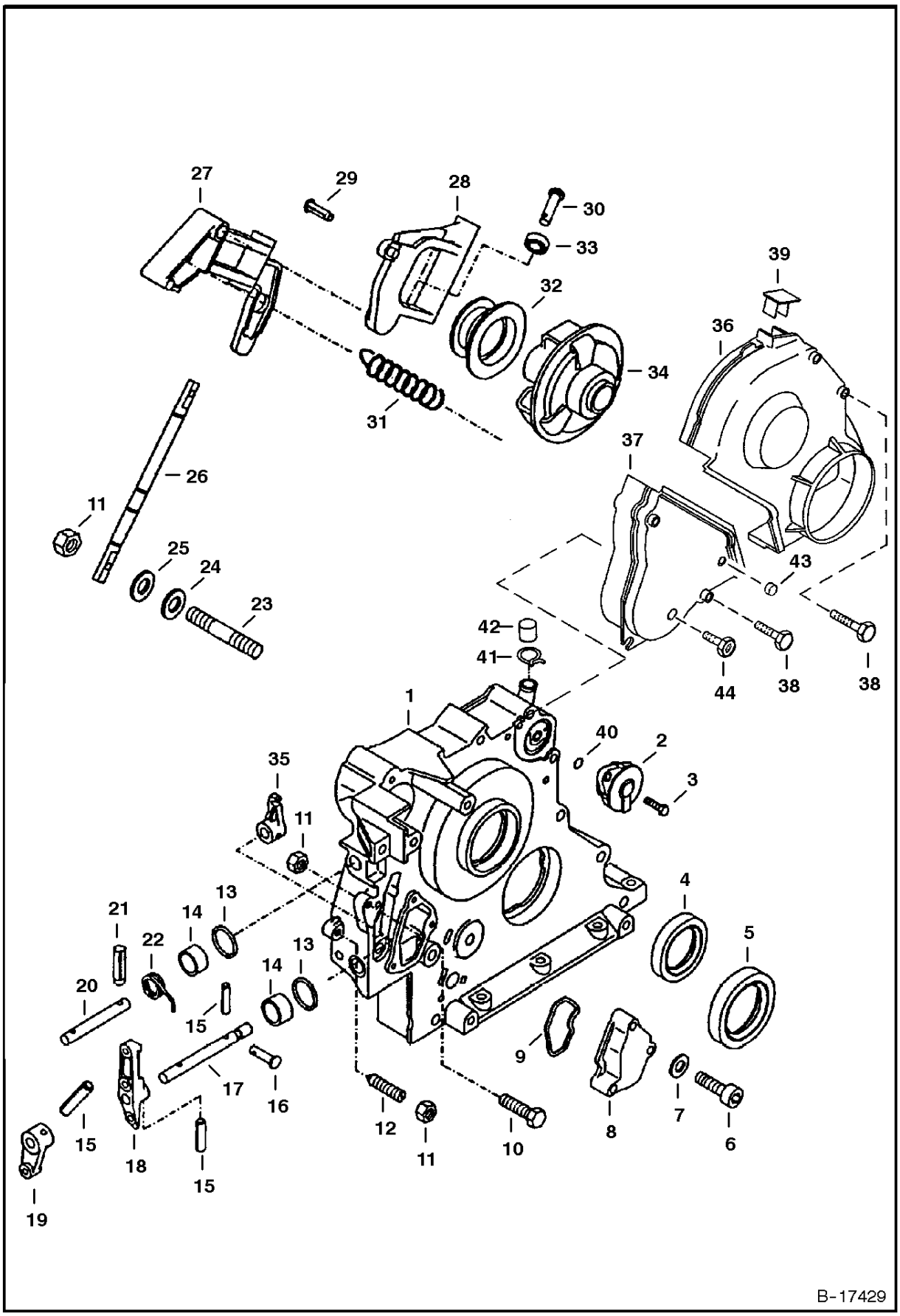
27
29
28
30
33
39
32
36
34
31
37
26
11
25
24
23
43
42
41
44
38
38
1
40
2
3
35
11
4
21
14
13
22
20
14
13
5
15
9
17
16
12
11
10
8
7
6
15
18
15
19
B-17429

FRONT COVER

Ref.N°	Part N°	Description	Remarks	Serial N°	Qty.
1	6666748	COVER	front		1
2	6666749	BREATHER	vent - W/Ref. FRONT COVER(40)		1
3	6666695	BOLT			1
4	6666731	SEAL	camshaft		1
5	6666730	SEAL	crankshaft		1
6	6666710	SCREW			3
7	6672943	WASHER			3
8	6666757	COVER			1
9	6666753	WASHER			1
10	6666684	BOLT			1
11	1DM-6	NUT			2
12	6666698	SET SCREW			1
13	6666714	O-RING			2
14	6666732	SLEEVE			2
15	6666688	PIN			3
16	6666694	PIN	clevis		1
17	6666729	SHAFT	lever		1
18	6672945	ARM	lever		1
19	6666721	LEVER	shutAoff		1
20	6666726	SHAFT	lever		1
21	6666686	PIN	notched		1
22	6666727	SPRING			1
23	6666700	STUD			2
24	6666717	WASHER			2
25	6666723	WASHER			3
26	6666740	SHAFT			1
27	6672946	ARM	lever		1
28	6666745	LEVER	roller - W/Ref. FRONT COVER(29) - FRONT COVER(33)		1
29	6666687	NAIL	notched		1
30	6666713	PIN			2
31	6673168	SPRING			1
32	6679571	SLEEVE	Was 6666744 [A]		1
33	6666692	BEARING	ball		2
34	6672705	METER	(unit		1
35	6666733	ARM	lever		1
36	6668763	SHIELD			1
37	6673153	SHIELD	W/Ref. FRONT COVER(43)		1
38	6672898	BOLT			4
39	6668904	CAP			1
40	6669643	O-RING			1
41	6672886	CAP			1
42	6666701	CLAMP			1
43	6672899	PLUG			1
44	6679667	SCREW	tamper proof		1

CRANKCASE & OIL PAN

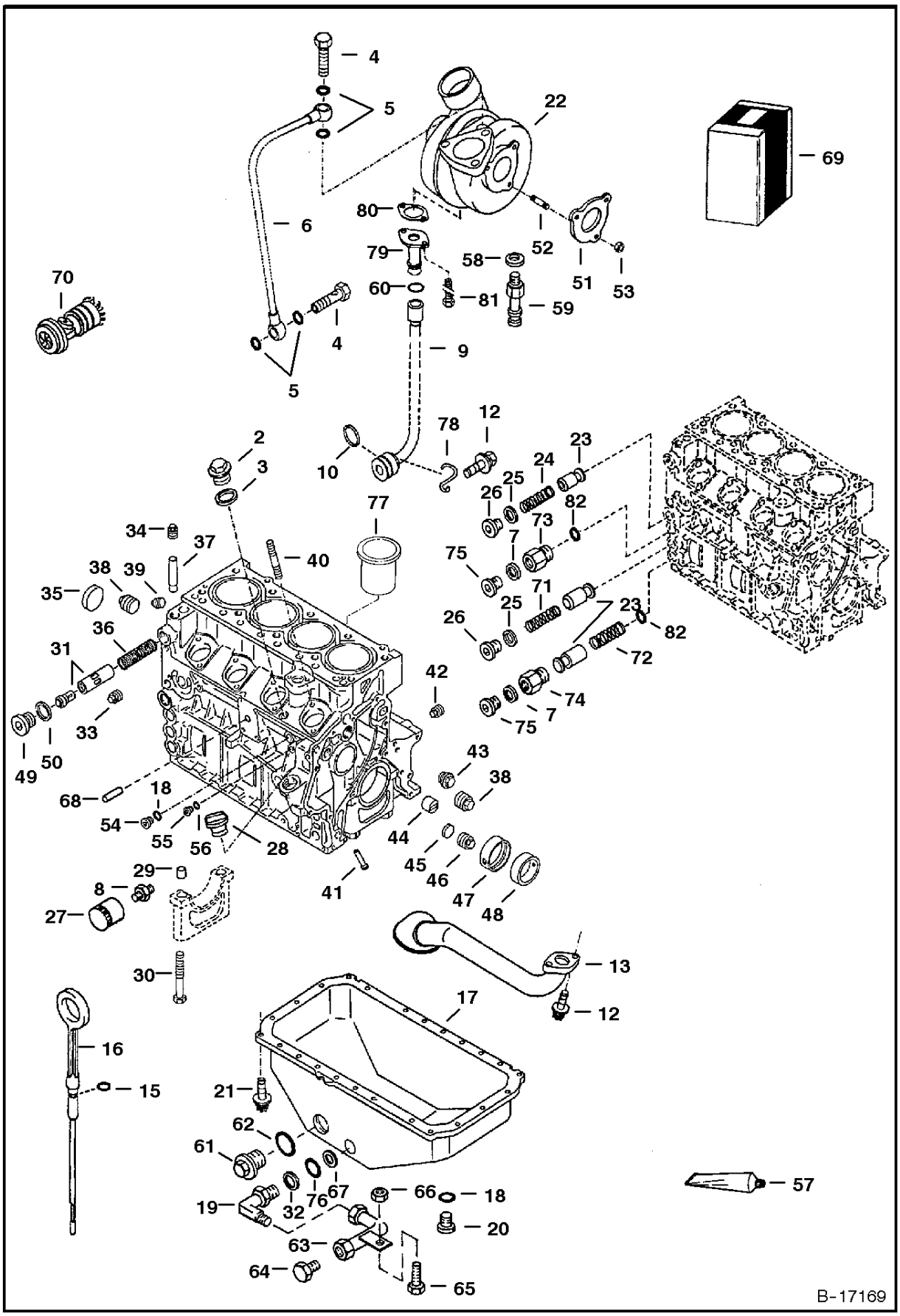

CRANKCASE & OIL PAN

Ref.N°	Part N°	Description	Remarks	Serial N°	Qty.
1	NAP	BLOCK	Order complete engine - See Page ENGINE & GASKET KITS(4) - Was 6672880 [A]		1
2	6666690	PLUG			1
3	6666393	SEAL RING			1
4	6666396	SCREW			2
5	2FM-12155	SEAL RING			4
6	6668948	TUBE	oil lubricating		1
7	6668887	O-RING			2
8	6668897	ADAPTER			1
9	6668106	TUBE	oil return		1
10	6666401	O-RING			1
11	6673169	FLANGE			1
12	6668938	BOLT			3
13	6666508	TUBE	oil suction		1
14	NSS	NUT			1
15	6666439	O-RING	.315'(8mm) O.D.		2
15	25K-30012	O-RING	.55' (14mm) O.D.		2
16	6666528	DIPSTICK	W/.315'(8mm) O.D. O-ring		1
16	6669531	DIPSTICK	W/.55'(14mm) O.D. O-ring		1
17	6670866	OIL PAN(	W/Ref. CRANKCASE & OIL PAN(18), CRANKCASE & OIL PAN(20) & CRANKCASE & OIL PAN(61)-CRANKCASE & OIL PAN(62)	S/N 502302 & Bel.	1
17	6677832	OIL PAN&	(W/Ref. CRANKCASE & OIL PAN(18), CRANKCASE & OIL PAN(20), CRANKCASE & OIL PAN(21) & CRANKCASE & OIL PAN(61)-CRANKCASE & OIL PAN(	S/N 502303 & Abv.	1
18	6666394	SEAL RING			3
19	6709168	ELBOW	W/Ref. CRANKCASE & OIL PAN(67) & CRANKCASE & OIL PAN(76)-CRANKCASE & OIL PAN(14)		1
20	6666400	PLUG			1
21	6666434	BOLT		S/N 502302 & Bel.	26
21	6677831	BOLT		S/N 502303 & Abv.	26
22	NAP	TURBOCHARGER	Order 6677575, Also Order Ref. CRANKCASE & OIL PAN(79)-CRANKCASE & OIL PAN(81) - Was 6673173 [A]	S/N 526322 & Bel.	1
22	6677575	TURBOCHARGER		S/N 526323 & Abv.	1
23	6666510	VALVE			3
24	6668941	SPRING	Yellow - .047" (1.2mm) dia. wire 3.15" (80mm) long		1
25	6666395	SEAL RING			2
26	6666387	PLUG			4
27	6665603	OIL FILTER	engine		1
28	6666530	CAP	oil fill		1
29	6666722	DOWEL			10
30	6666719	BOLT			10
31	6668945	THERMOSTAT	eng. oil temp.		1
32	6669067	WASHER			1
33	6666703	PLUG			1
34	6666702	PLUG			1
35	6666716	PLUG	soft		1
36	6668941	SPRING			1
37	6666741	TUBE			1
38	6672873	PLUG			2
39	6672874	PLUG			1
40	6666709	STUD			8
41	6666746	NOZZLE	piston cooling		8
42	6672872	PLUG			1
43	6666751	PLUG			1
44	6666718	SLEEVE	guide		2

CRANKCASE & OIL PAN

Ref.N°	Part N°	Description	Remarks	Serial N°	Qty.
45	6666697	PLUG	soft		1
46	6672878	PLUG			1
47	6666738	BEARING	wrapped bushing		2
48	6666737	BEARING	wrapped bushing		3
49	6672877	PLUG			1
50	6666395	SEAL RING			1
51	6665910	GASKET			1
52	6666407	STUD			3
53	6666398	NUT			3
54	6666689	PLUG			1
55	6666690	PLUG			1
56	6666699	SEAL RING			1
57	6632823	GASKET	liquid - use between Ref. CRANKCASE & OIL PAN(17) & (block also between Ref. CRANKCASE & OIL PAN(13) & block		x
58	6668108	WASHER	for 6673173 turbocharger	S/N 526322 & Bel.	1
59	6668107	ADAPTER	for 6673173 turbocharger	S/N 526322 & Bel.	1
60	6668109	O-RING			1
61	6668693	PLUG		S/N 502302 & Bel.	1
61	6666397	PLUG		S/N 502303 & Abv.	1
62	6668694	SEAL		S/N 502302 & Bel.	1
62	2FM-22270	SEAL		S/N 502303 & Abv.	1
63	6714500	TUBE	oil drain - Was 6709822 [A]		1
64	6518121	PLUG	oil drain		1
65	35C-512	BOLT			1
66	97D-5	NUT			1
67	58K-114	O-RING			1
68	6668905	PIN			1
69	6668895	REPAIR KIT	turbocharger - includes clip, O-ring, (3) bolts & bracket		1
70	NAP	CORE	turbocharger - Order Ref. CRANKCASE & OIL PAN(22)		1
71	6668903	SPRING	Red - .055" (1.4mm) dia. wire 3.07 (78mm) long		1
72	6668902	SPRING	Blue - .039"(1.0mm) dia. wire 2.44" (62mm) long		1
73	6668900	ADAPTER	W/Ref. CRANKCASE & OIL PAN(82)		1
74	6668901	ADAPTER	W/Ref. CRANKCASE & OIL PAN(82)		1
75	6666400	PLUG	Was 6668889 [A]		2
76	6669066	SEAL RING			1
77	6672879	LINER	for blocks W/liners		1
78	6666509	RETAINER	Was 6673155 [A]		1
79	6677576	FLANGE		S/N 526323 & Abv.	1
80	6677577	GASKET		S/N 526323 & Abv.	1
81	6677578	BOLT		S/N 526323 & Abv.	2
82	NSS	SEAL			x

PISTON & CRANKSHAFT

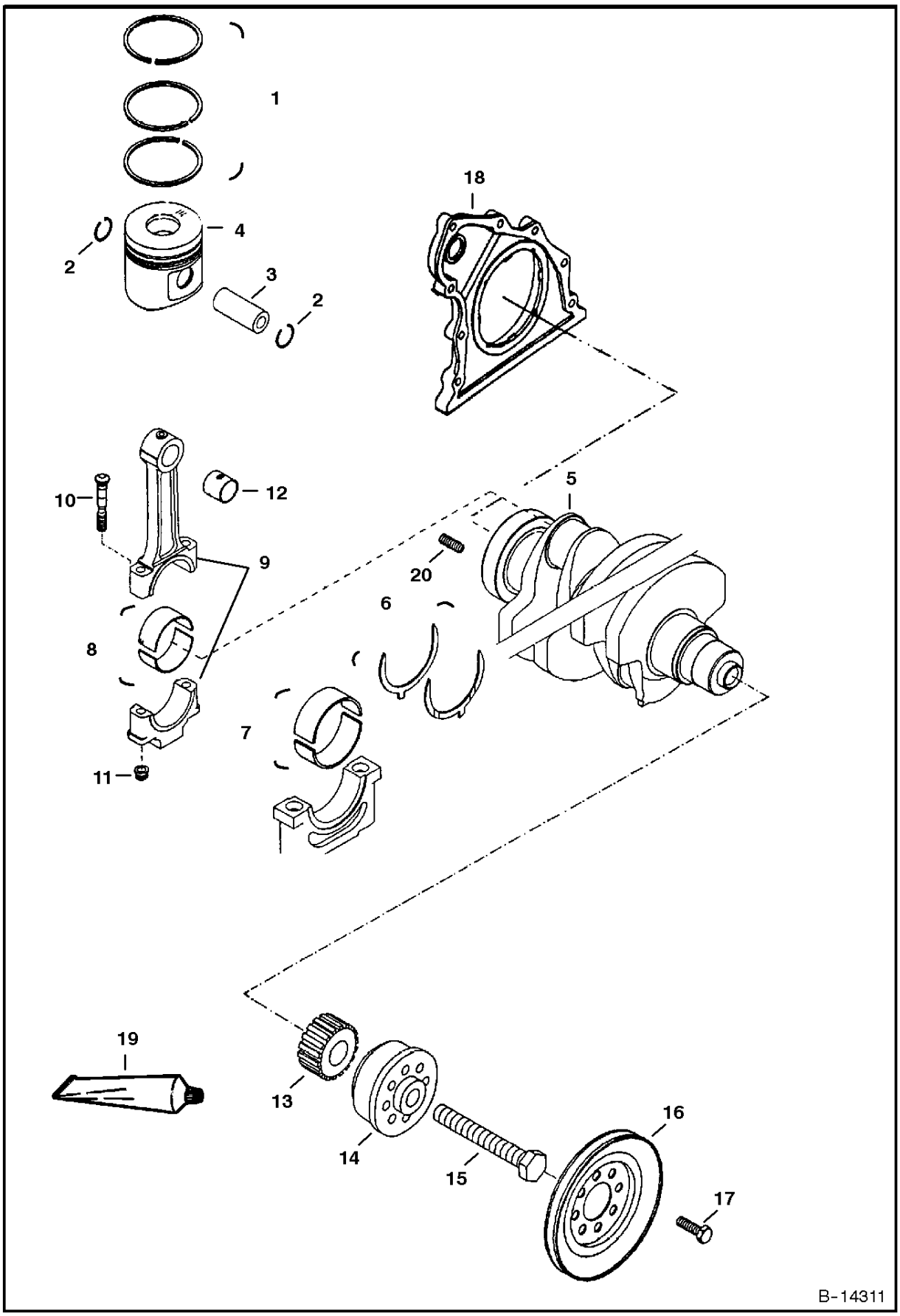

PISTON & CRANKSHAFT

Ref.N°	Part N°	Description	Remarks	Serial N°	Qty.
1	6672896	RING SET			4
2	6666404	SNAP RING			8
3	6666470	PIN			4
4	6673152	PISTON	W/Ref. PISTON & CRANKSHAFT(1) - PISTON & CRANKSHAFT(3)		4
5	6673150	CRANKSHAFT			1
6	6666456	WASHER			1
7	6669395	MAIN BEARING	2.7559' (70,00mm)		5
7	6669396	MAIN BEARING	1st undersized - 2.7657' (70,25mm)		5
7	6669397	MAIN BEARING	2nd undersized - 2.7755' (70,50mm)		5
8	6672889	BEARING	2.165' (55,00mm)		4
8	6666458	BEARING	1st undersized - 2.155' (54,75mm)		4
8	6672894	BEARING	2nd undersized - 2.145' (54,50mm) - Was 6666459 [A]		4
9	6668943	ROD	connecting - W/Ref. PISTON & CRANKSHAFT(10) - PISTON & CRANKSHAFT(12)		4
10	6668942	BOLT			8
11	6666442	NUT			8
12	6666463	BUSHING			4
13	6666471	PULLEY			1
14	6666482	FLANGE			1
15	6666444	BOLT			1
16	6666446	PULLEY			1
17	6666433	BOLT			4
18	6666491	COVER	rear		x
19	6632823	GASKET	liquid - use between Ref. PISTON & CRANKSHAFT(18) & block		x
20	6672890	INSERT			1

FUEL INJECTION SYSTEM

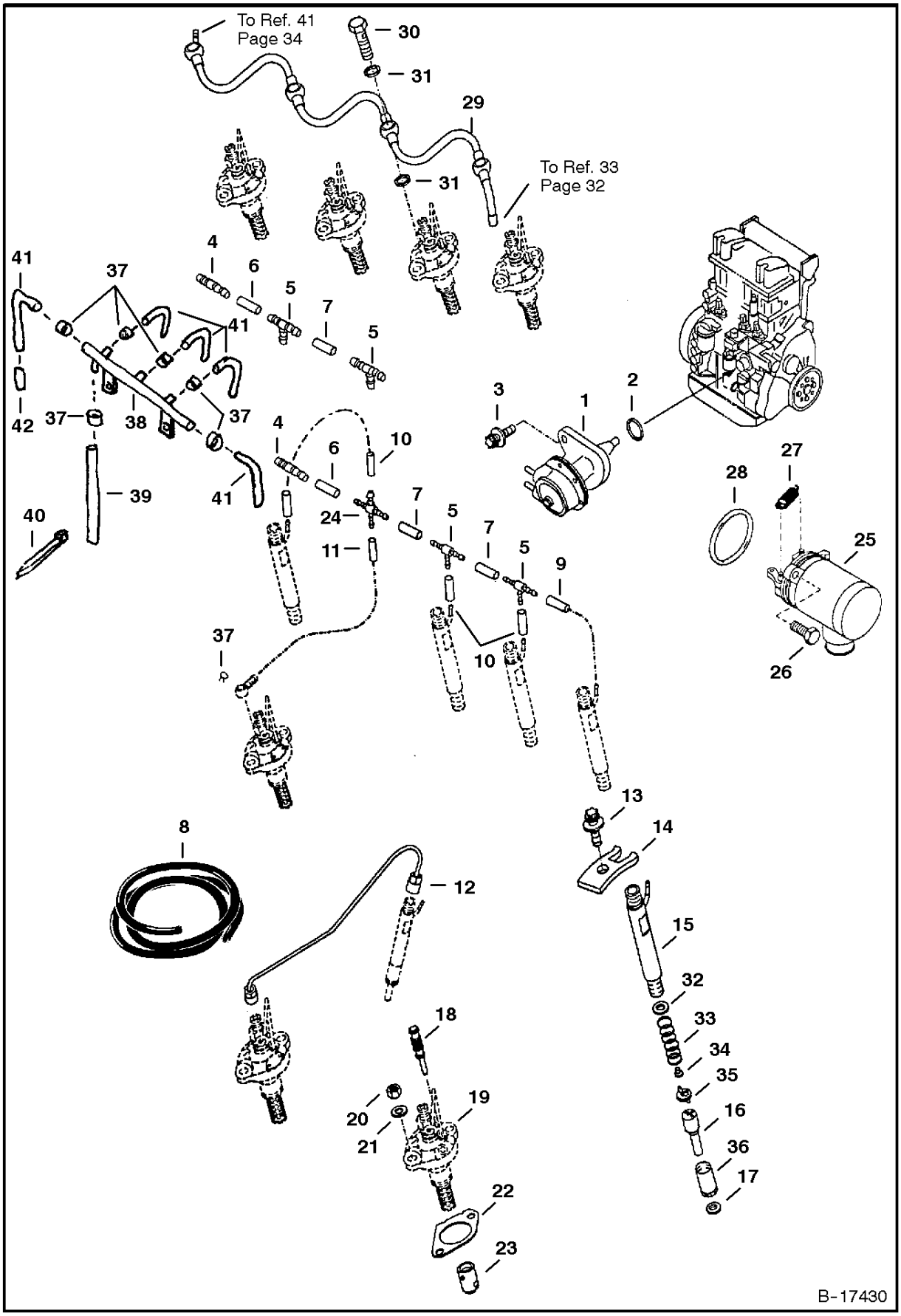

FUEL INJECTION SYSTEM

Ref.N°	Part N°	Description	Remarks	Serial N°	Qty.
1	6677830	PUMP	fuel - Was 6666522 [A]		1
1	6668906	REPAIR KIT	(fuel pump - screen, OAring, screw		1
2	6666420	O-RING			1
3	6673159	BOLT			2
4	NSS	ADAPTER	Order Ref. FUEL INJECTION SYSTEM(38) - Was 6666418 [C]		1
5	NSS	TEE	Order Ref. FUEL INJECTION SYSTEM(38) - Was 6666422 [C]		4
6	NAP	HOSE	Order Ref. FUEL INJECTION SYSTEM(8)		1
7	NAP	HOSE	Order Ref. FUEL INJECTION SYSTEM(8)		2
8	6666416	HOSE	1 meter long (39')		1
9	NAP	HOSE	Order Ref. FUEL INJECTION SYSTEM(8)		1
10	NAP	HOSE	Order Ref. FUEL INJECTION SYSTEM(8)		3
11	NAP	HOSE	Order Ref. FUEL INJECTION SYSTEM(8)		1
12	6666531	TUBE			4
13	6672902	BOLT			4
14	6666501	CLAMP			4
15	6673157	INJECTOR	includes Ref. FUEL INJECTION SYSTEM(16), FUEL INJECTION SYSTEM(17) & FUEL INJECTION SYSTEM(32)-FUEL INJECTION SYSTEM(36)		4
16	6673158	NOZZLE			4
17	6666492	SEAL RING			4
18	6666527	ADAPTER			4
19	6673156	INJECTOR	pump		4
19	6679668	PIN			1
20	1DM-8	NUT			8
21	6666453	WASHER			8
22	6666512	SHIM	.2 mm		x
22	6666513	SHIM	.3 mm		x
22	6666514	SHIM	.4 mm		x
22	6666515	SHIM	.5 mm		x
22	6666516	SHIM	.6 mm		x
22	6666517	SHIM	.7 mm		x
22	6666518	SHIM	.8 mm		x
23	6666493	TAPPET			4
24	NSS	CONNECTOR	Order Ref. FUEL INJECTION SYSTEM(38) - Was 6670681 [C]		4
25	6668950	SOLENOID	shutAoff - W/Ref. FUEL INJECTION SYSTEM(27)		1
26	6666403	BOLT			2
27	6666495	SPRING			1
28	6666409	O-RING			1
29	6666763	FUEL LINE			1
30	6514745	SCREW	hollow		4
31	6672933	SEAL RING	brass		8
32	6668890	SHIM			x
33	6668891	SPRING			1
34	6668892	BOLT	thrust		1
35	6668893	SPACER			1
36	6668894	NUT	nozzle cap		1
37	6673160	CLAMP			6
38	6675461	FUEL LINE	assy. - Ref. FUEL INJECTION SYSTEM(37) & FUEL INJECTION SYSTEM(39)-FUEL INJECTION SYSTEM(41)	5144 40142 & Abv.	1
39	6675460	HOSE		5144 40142 & Abv.	1
40	6672934	STA-STRAP		5144 40142 & Abv.	1
41	NSS	HOSE	Order Ref. FUEL INJECTION SYSTEM(8)	5144 40142 & Abv.	5
42	6666418	ADAPTER	use W/Ref. FUEL INJECTION SYSTEM(41)		1

OIL PUMP

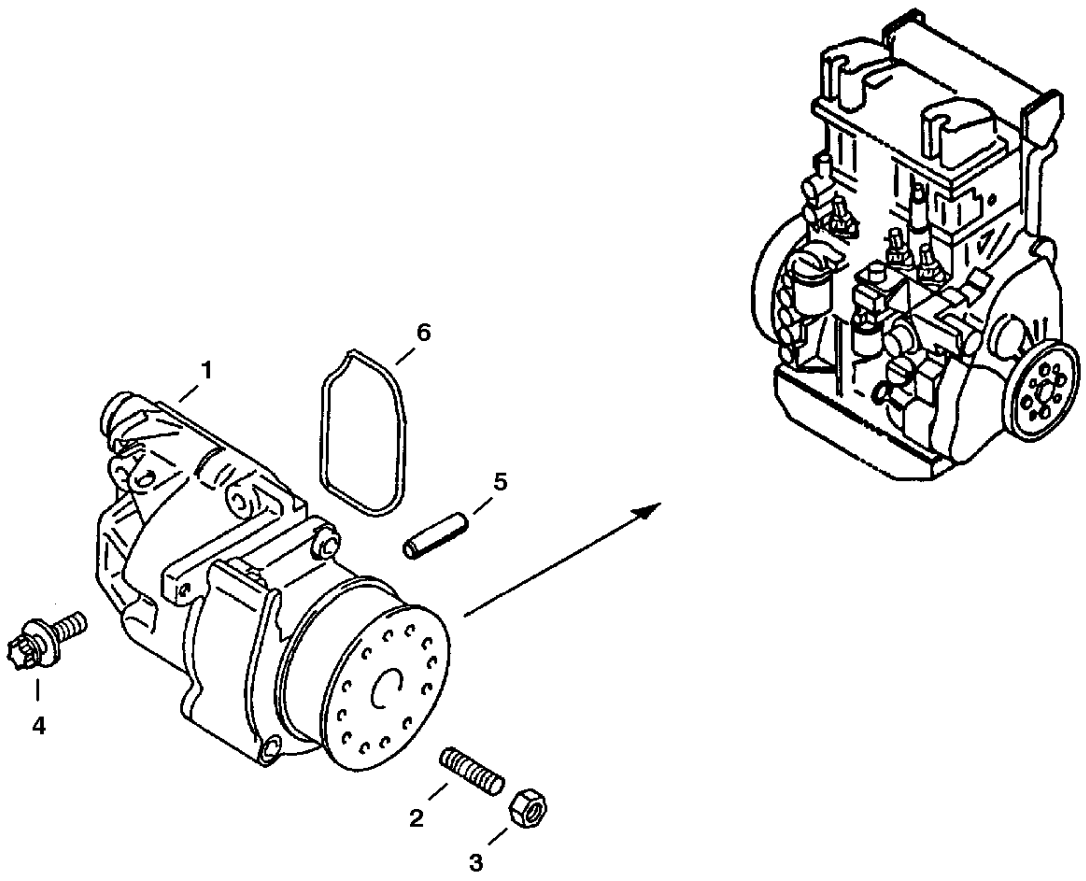

B-14320

OIL PUMP

Ref.N°	Part N°	Description	Remarks	Serial N°	Qty.
1	6669530	PUMP	oil - W/.55'(14mm) dipstick hole I.D. - W/Ref. OIL PUMP(2) & OIL PUMP(3)		1
2	6668936	SET SCREW			1
3	1DM-6	NUT			1
4	6666708	BOLT			4
5	6666750	PIN			2
6	6666760	SEAL RING			1
7		DIPSTICK	See Page CRANKCASE & OIL PAN(8)		1

AIR CLEANER

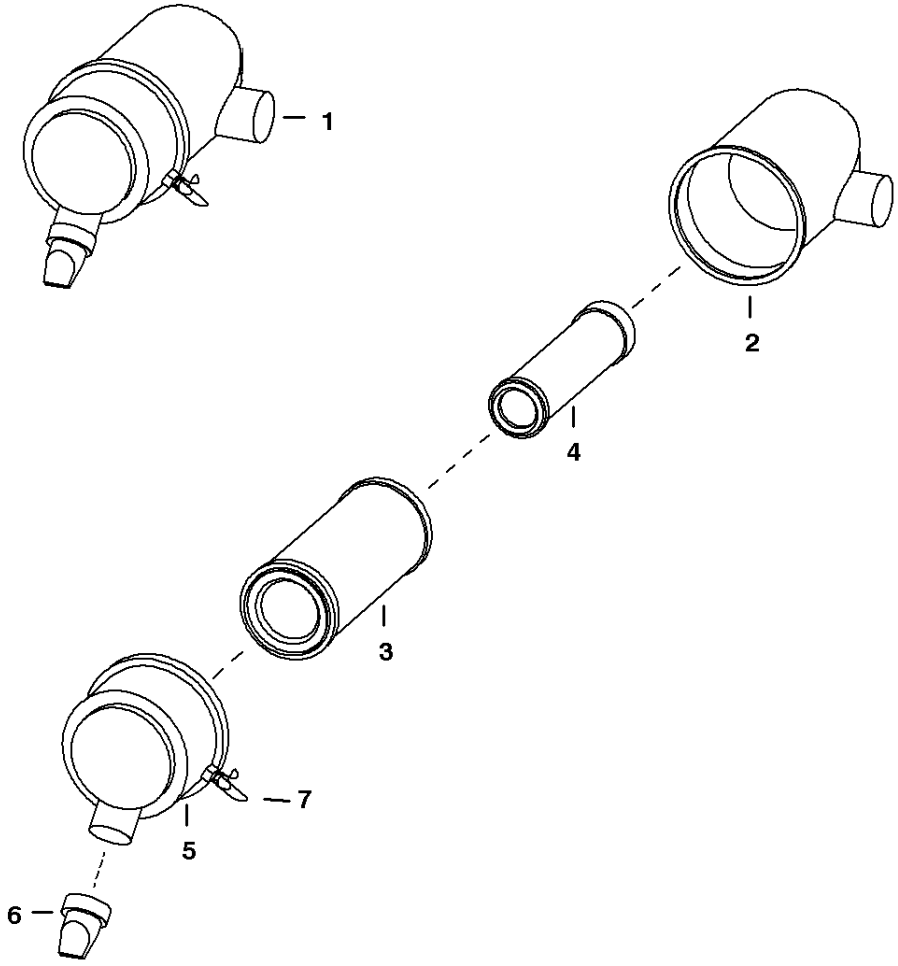

TS-1241

AIR CLEANER

Ref.N°	Part N°	Description	Remarks	Serial N°	Qty.
1	6674837	AIR CLEANER			1
2	NSS	TANK	Order Ref. AIR CLEANER(1)		1
3	6666375	CARTRIDGE	outer		1
4	6666376	CARTRIDGE	inner		1
5	6666377	COVER	W/Ref. AIR CLEANER(7)		1
6	6666378	VALVE	evacuator - 2' I.D.		1
7	6670298	CLIP			3

ACCESS COVER
(Cleanout - Lower Front of Chaincase)

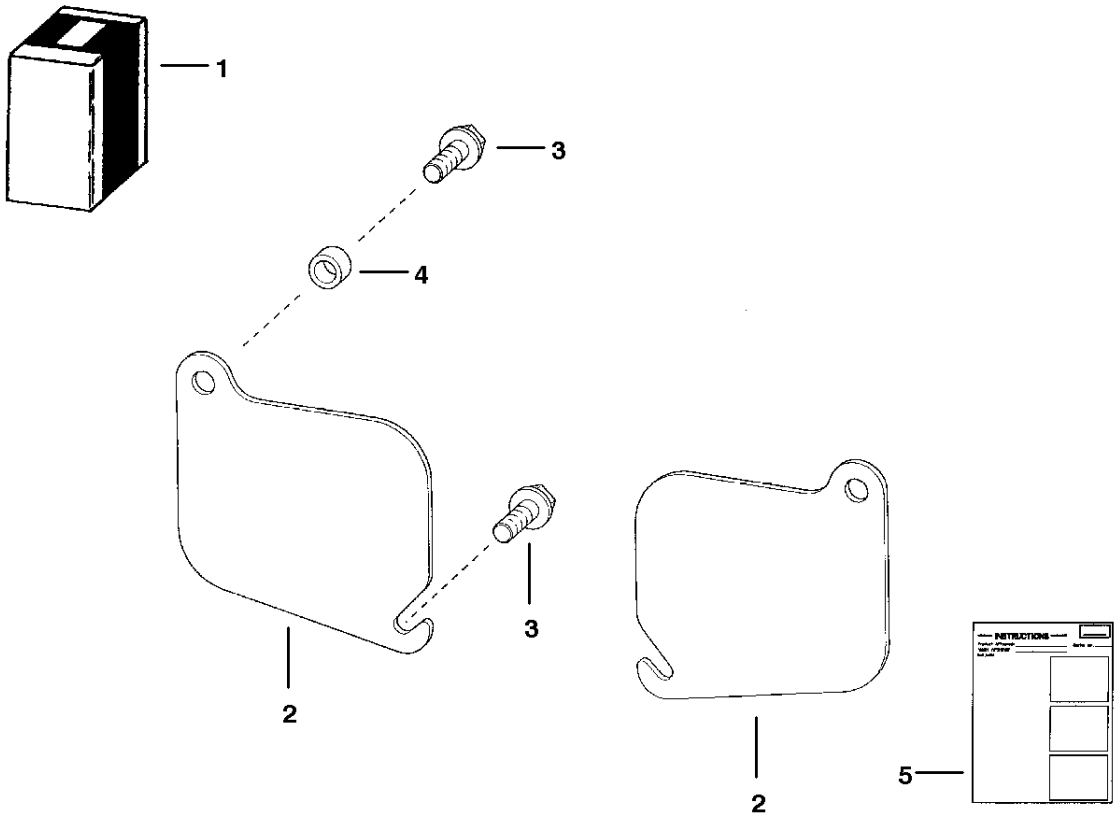

TS-1049

ACCESS COVER

Ref.N°	Part N°	Description	Remarks	Serial N°	Qty.
1	6577880	KIT	Ref. ACCESS COVER(2)-ACCESS COVER(5)		1
2	6577812	COVER			2
3	84G-3720	BOLT			4
4	6562619	BUSHING			2
5	6570931	INSTRUCTIONS			1

ACCESSORIES HARNESS
(Standard - Non Deluxe Cab)

NOTE: If loader is not equipped with Deluxe Cab Option, this harness must be used to run Flasher Lights, Turn Indicators, Hazard LIghts, Rotating Beacon and/or Strobe Lights.

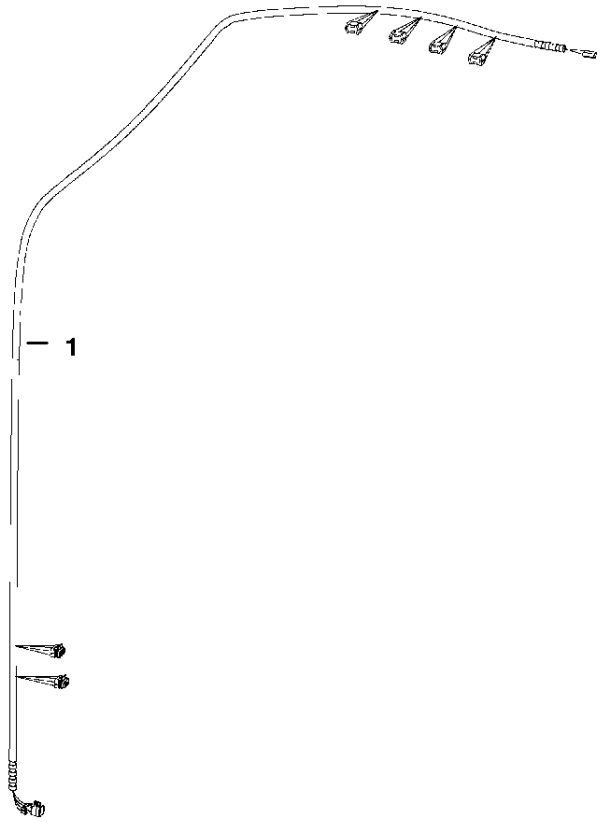

PE-1557

ACCESSORIES HARNESS

Ref.N°	Part N°	Description	Remarks	Serial N°	Qty.
1	6727468	HARNESS	SEE NOTE		1

BACK-UP ALARM

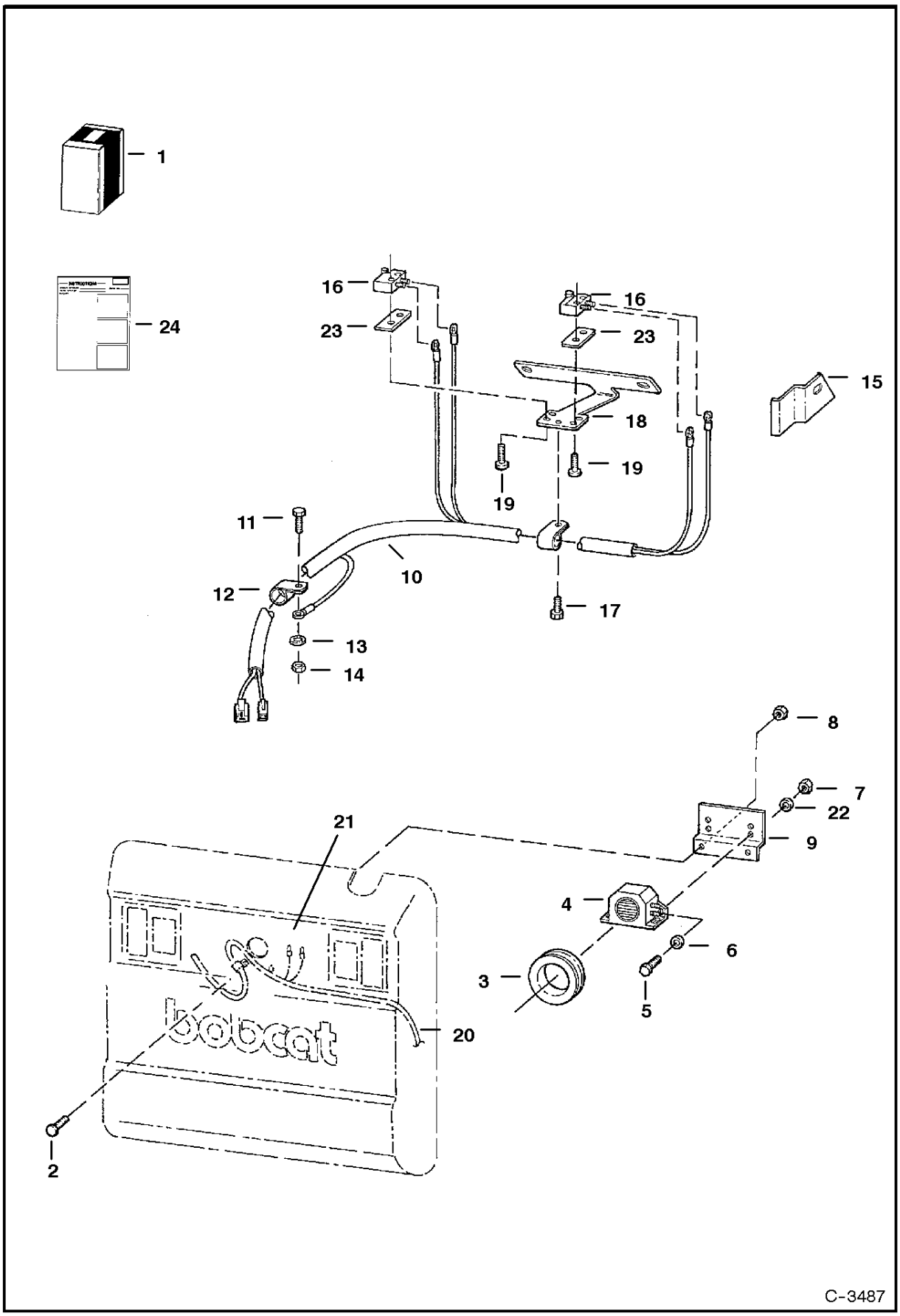

BACK-UP ALARM

Ref.N°	Part N°	Description	Remarks	Serial N°	Qty.
1	6718822	KIT	backup alarm - Ref. BACK-UP ALARM(2)-BACK-UP ALARM(24)		1
2	37C-512	BOLT			2
3	6577545	GROMMET			1
4	6668879	DECAL			1
4	6599931	ALARM	backup		1
5	17C-410	BOLT			2
6	25E-13	WASHER			2
7	61D-5	NUT			2
8	83D-4	NUT			2
9	6707726	MOUNT			1
10	6718820	HARNESS			1
11	17C-412	BOLT			1
12	30H-19	CLAMP	insulated - Was 30H-21 [B]		2
13	6E-4	WASHER			1
14	61D-4	NUT			1
15	6713793	BRACKET	switch		2
16	6646781	SWITCH	alarm		2
17	84G-3112	BOLT			1
18	6713792	MOUNT	switch		1
19	59G-616	BOLT			4
20	6715659	HARNESS	used on loaders W/O rear lights - comes W/Ref. BACK-UP ALARM(21)		1
21	6672492	RETAINER			1
22	774220	NUT			2
23	6702593	SPACER			2
24	6900857	INSTRUCTIONS			1

BEACON

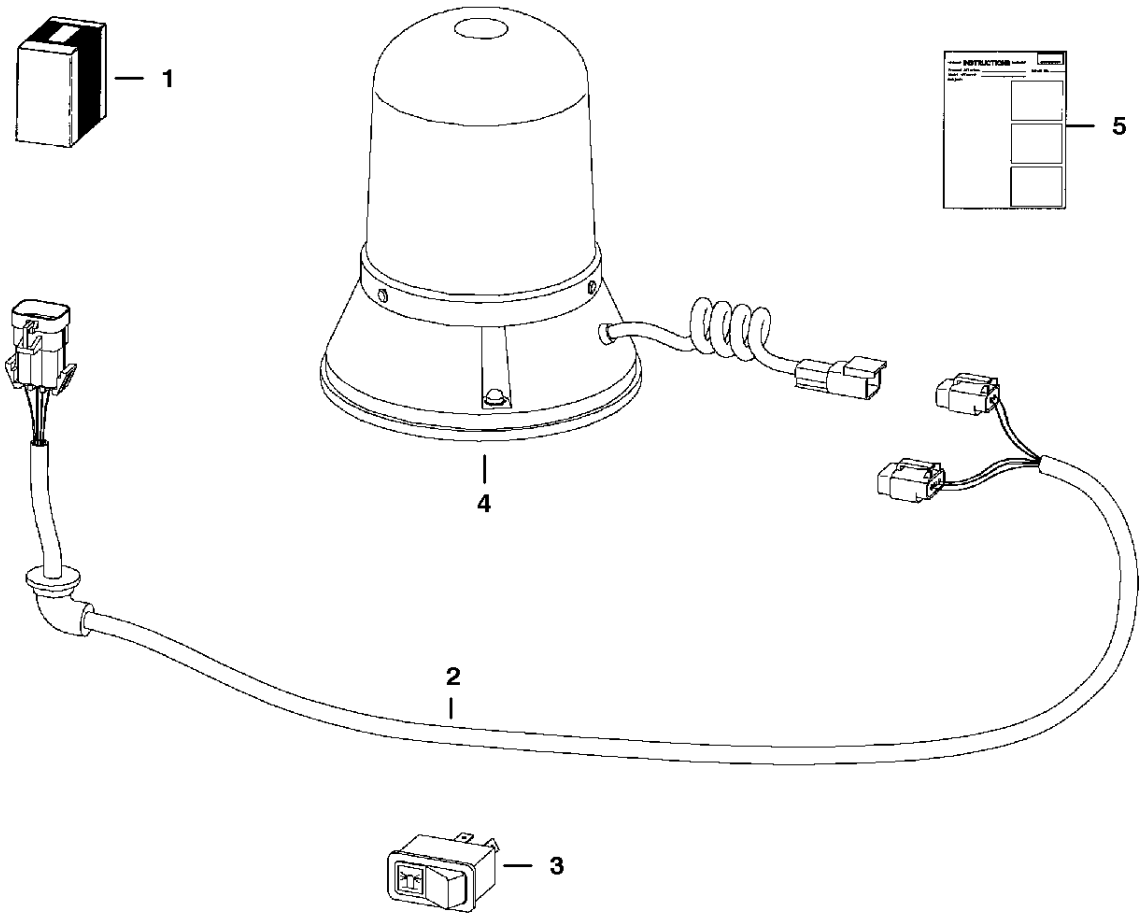

NOTE: If loader is not equipped with Deluxe Cab Option, also order 6727468 Harness. See Page 241

TS-1978

BEACON

Ref.N°	Part N°	Description	Remarks	Serial N°	Qty.
1	6719854	KIT	rotating beacon		1
2	6718872	HARNESS			1
3	6665317	SWITCH	horizontal		1
3	6668816	SWITCH	vertical		1
4	6675523	BEACON			1
4	6666571	BULB			1
5	6900991	INSTRUCTIONS			1

BLOCK HEATER
(Oil Pan Installed) (120 Volt) (Engine S/N 502302 & Below)

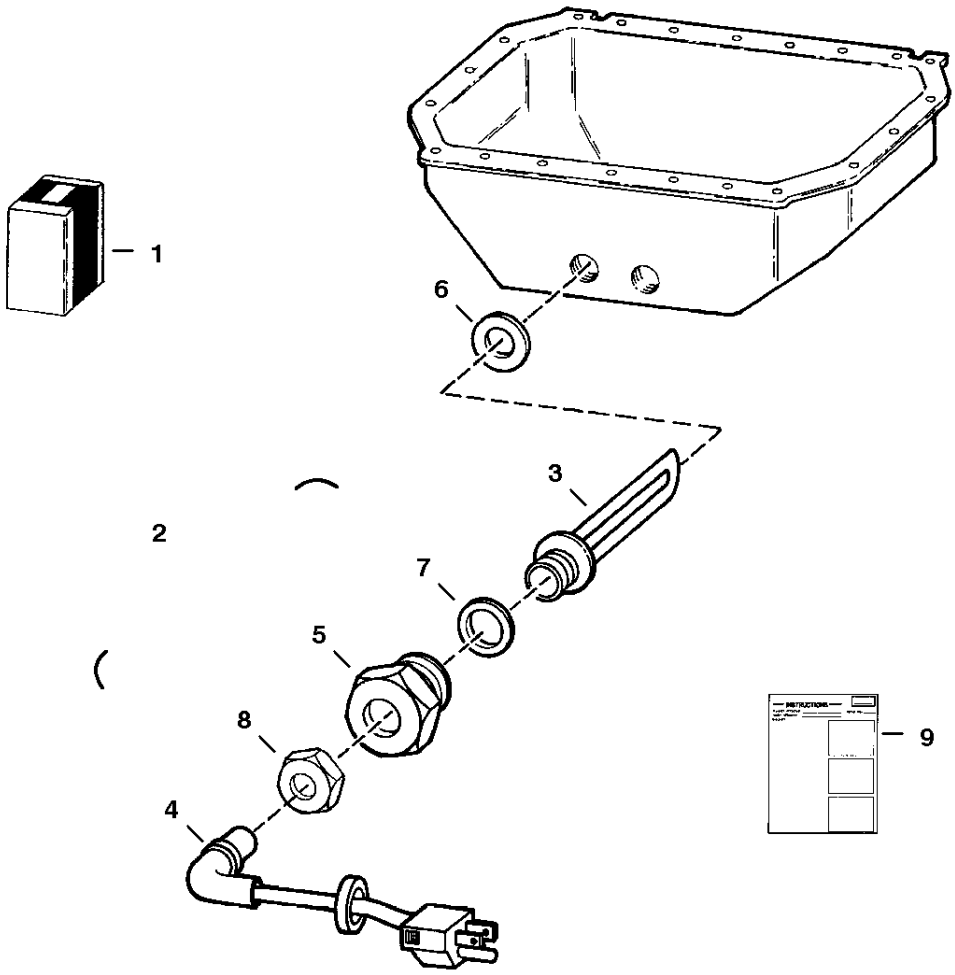

BLOCK HEATER

Ref.N°	Part N°	Description	Remarks	Serial N°	Qty.
1	6710192	KIT	Ref. BLOCK HEATER(2) & BLOCK HEATER(9)		1
2	6709514	HEATER ASSY.	Ref. BLOCK HEATER(3) - BLOCK HEATER(8)		1
3	6709508	ELEMENT	150 Watts		1
4	6709509	CORD SET			1
5	6709510	ADAPTER	48mm thread		1
6	6709511	WASHER	sealing		1
7	6709513	GASKET			1
8	6709840	NUT			1
9	6724397	INSTRUCTIONS			1

BLOCK HEATER
(Oil Pan Installed) (120 Volt) (Engine S/N 502303 & Above)

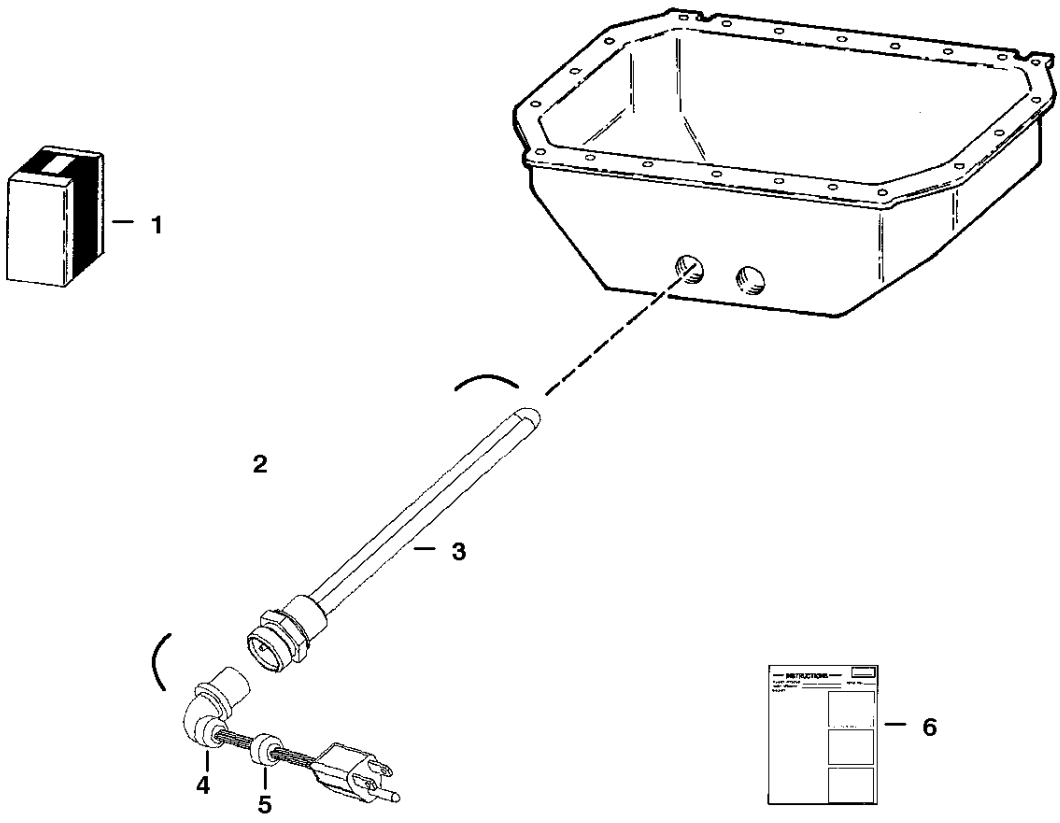

MS-1323

BLOCK HEATER

Ref.N°	Part N°	Description	Remarks	Serial N°	Qty.
1	6725971	KIT	Ref. BLOCK HEATER (2) & BLOCK HEATER (6)		1
2	6675695	HEATER ASSY	Ref. BLOCK HEATER (3)-BLOCK HEATER (5)		1
3	6675708	ELEMENT	W/ 22mm thread		1
4	6709509	CORD SET			1
5	NSS	NUT			1
6	6724397	INSTRUCTIONS			1

BLOCK HEATER
(Oil Pan Installed) (240 Volt) (Engine S/N 502302 & Below)

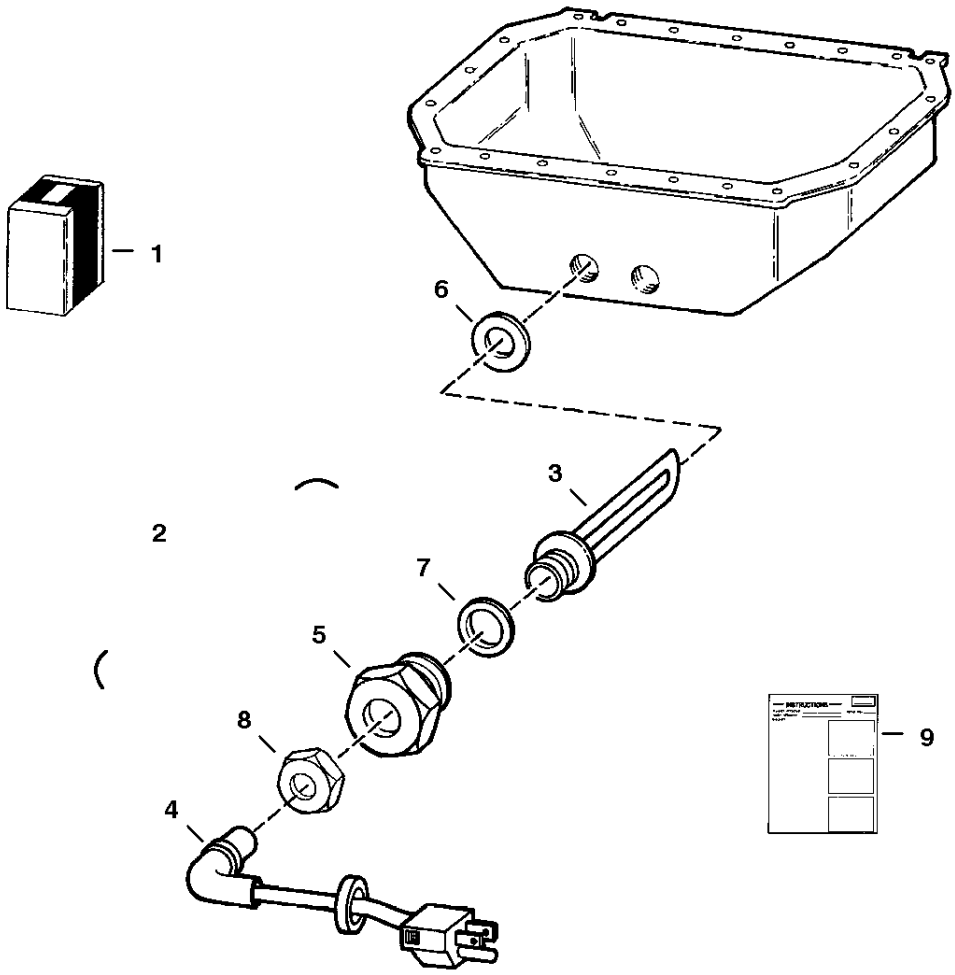

BLOCK HEATER

Ref.N°	Part N°	Description	Remarks	Serial N°	Qty.
1	6711873	KIT	Ref. BLOCK HEATER(2) & BLOCK HEATER(9)		1
2	6711721	HEATER ASSY.	Ref. BLOCK HEATER(3)-BLOCK HEATER(8)		1
3	6711718	ELEMENT	150 Watts		1
4	6711720	CORD SET	European stlye outlet		1
5	6709510	ADAPTER	48mm O.D. thread		1
6	6709511	WASHER	sealing		1
7	6709513	GASKET			1
8	6709840	NUT			1
9	6724515	INSTRUCTIONS			1

BOB-TACH LEVERS
(For Use W/Industrial Grapple Fork)

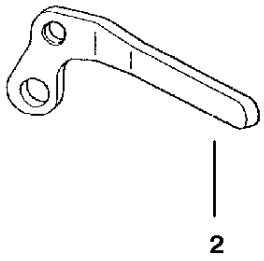

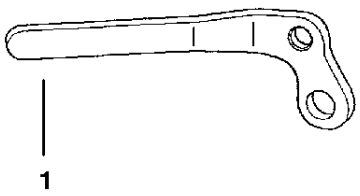

TS-1019

BOB-TACH LEVERS

Ref.N°	Part N°	Description	Remarks	Serial N°	Qty.
1	6578139	LEVER	R.H.		1
2	6578140	LEVER	L.H.		1

BUCKET POSITIONING KIT
(S/N 5144 47863, 5145 41045, 5146 41130 & Below)

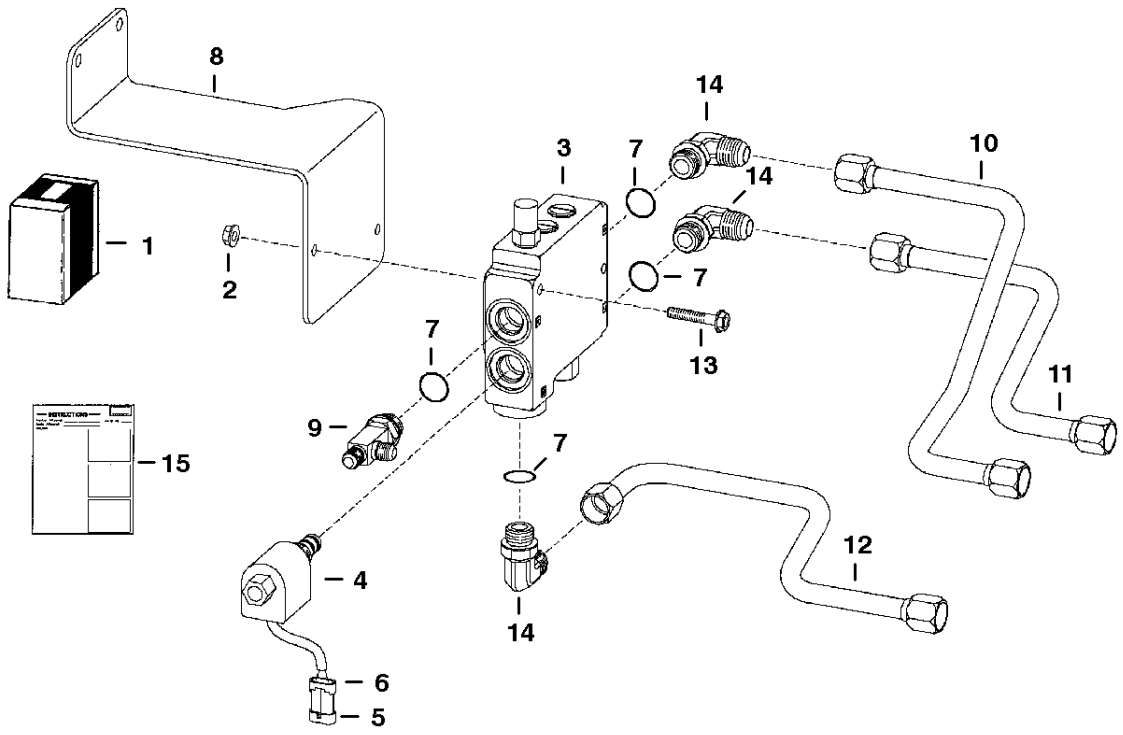

B-18028

BUCKET POSITIONING KIT

Ref.N°	Part N°	Description	Remarks	Serial N°	Qty.
1	6718993	KIT	Ref. BUCKET POSITIONING KIT(2)-BUCKET POSITIONING KIT(4) & BUCKET POSITIONING KIT(9)-BUCKET POSITIONING KIT(15)		1
2	83D-5	NUT			2
3	6666341	VALVE	BPV - See Page BUCKET POSITIONING VALVE(7)		1
4	6672863	SOLENOID	W/Ref. BUCKET POSITIONING KIT(5) & BUCKET POSITIONING KIT(6)		1
4	6671527	NUT			1
4	6670634	SEAL KIT			1
5	6641179	CONNECTOR	2pin		1
6	6641180	LOCK	2pin		1
7	99K-10	O-RING			x
8	6718726	MOUNT	BPV - not in kit		1
9	6715187	TEE	W/Ref. BUCKET POSITIONING KIT(7)		1
9	97K-10	O-RING	flared end		x
10	6718831	TUBELINE			1
11	6718832	TUBELINE			1
12	6718877	TUBELINE			1
13	17C-540	BOLT			2
14	17KV-7	ELBOW	90		3
14	97K-10	O-RING	flared end		x
15	6900880	INSTRUCTIONS			1

* BUCKET POSITIONING KIT
(S/N 5144 47864, 5145 41046, 5146 41131 & Above)

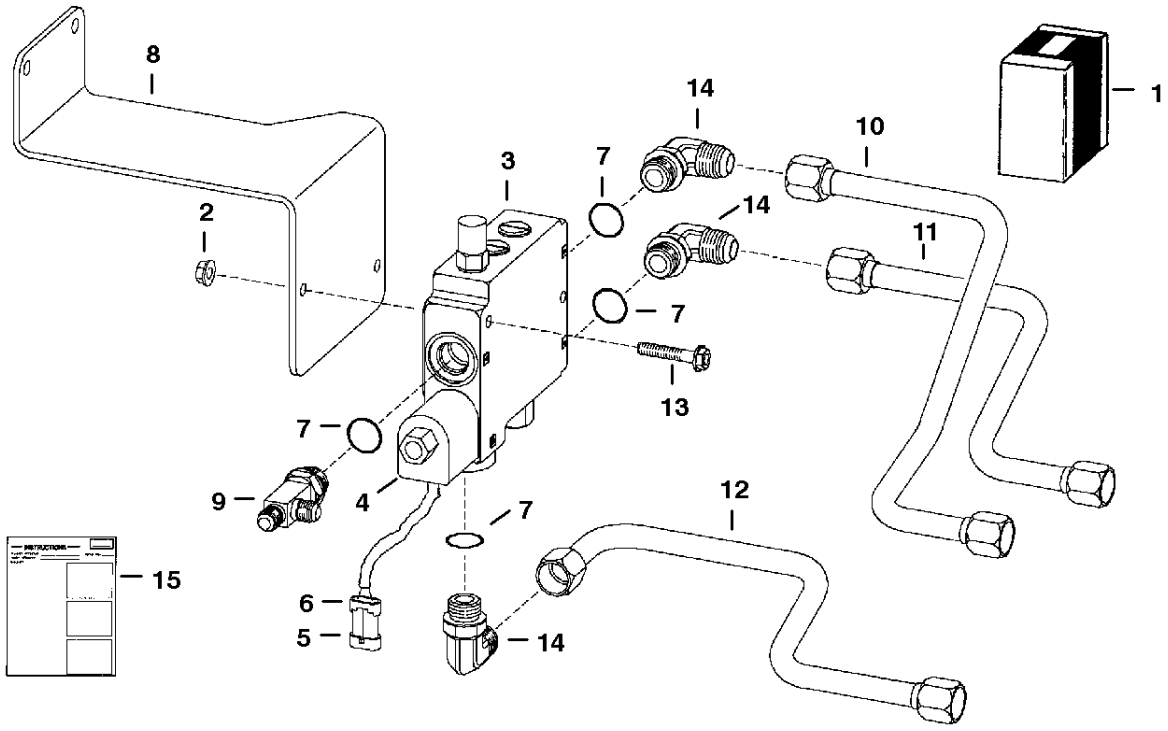

* BUCKET POSITIONING KIT

Ref.N°	Part N°	Description	Remarks	Serial N°	Qty.
1	6730045	KIT	Ref. * BUCKET POSITIONING KIT(2)-* BUCKET POSITIONING KIT(4) & * BUCKET POSITIONING KIT(9)-* BUCKET POSITIONING KIT(15)		1
2	83D-5	NUT			2
3	6666341	VALVE	BPV - See Page BUCKET POSITIONING VALVE(7)		1
4	6672863	SOLENOID	W/Ref. * BUCKET POSITIONING KIT(5) & * BUCKET POSITIONING KIT(6)		1
4	6671527	NUT			1
4	6670634	SEAL KIT			1
5	6641179	CONNECTOR	2pin		1
6	6641180	LOCK	2pin		1
7	99K-10	O-RING			x
8	6718726	MOUNT	BPV - not in kit		1
9	6715187	TEE	W/Ref. * BUCKET POSITIONING KIT(7)		1
9	97K-10	O-RING	flared end		x
10	6729794	TUBELINE			1
11	6718832	TUBELINE			1
12	6718877	TUBELINE			1
13	17C-540	BOLT			2
14	17KV-7	ELBOW	90 degree		3
14	97K-10	O-RING	flared end		x
15	6900880	INSTRUCTIONS			1

CAB DOOR

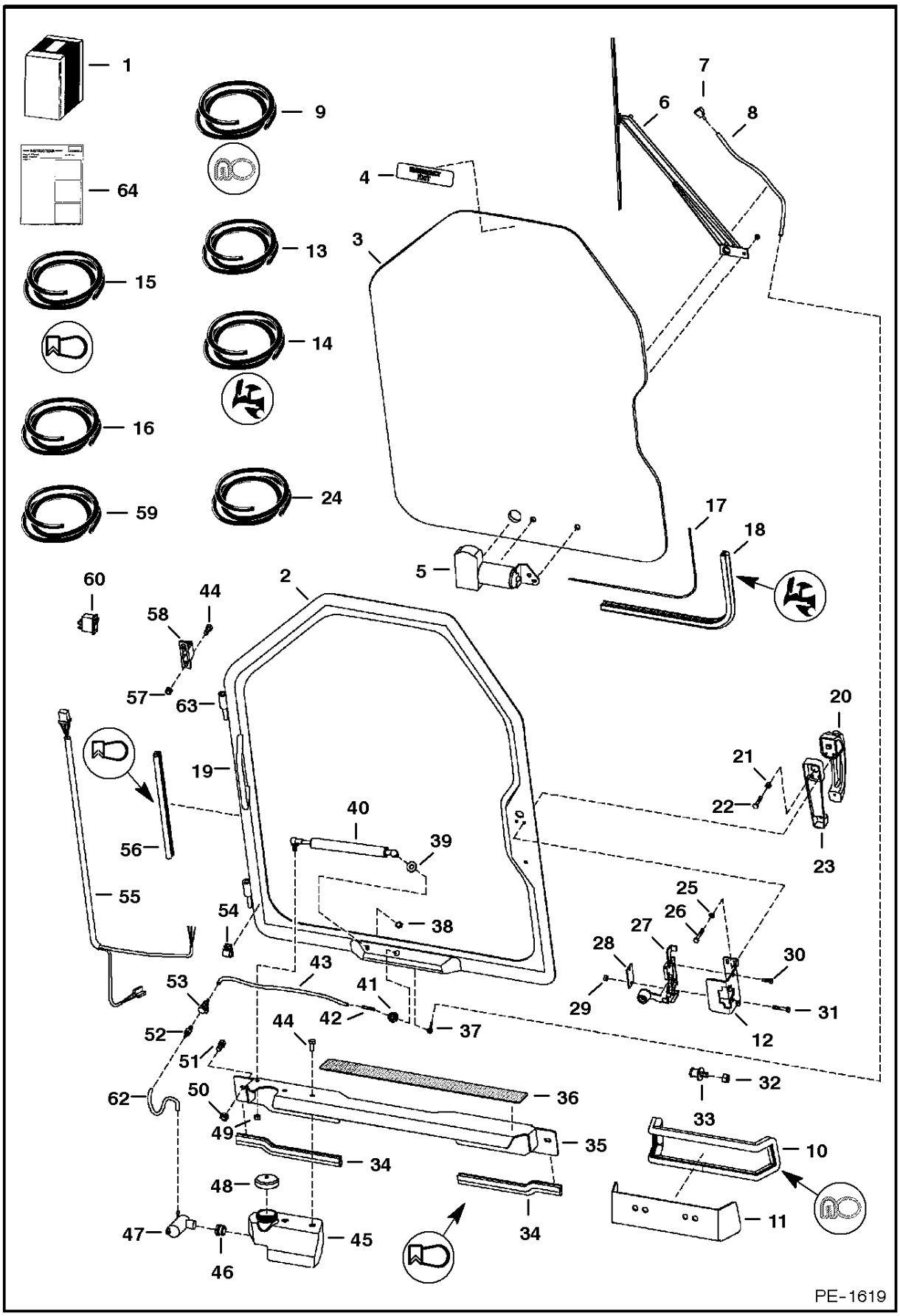
1
9
64
13
15
14
16
24
59
4
3
7
6
8
5
17
18
60
44
58
2
57
63
20
21
19
22
40
39
56
23
55
54
38
25
26
27
28
30
43
53
41
29
31
52
44
42
37
12
51
32
62
50
36
33
49
35
10
34
48
11
47
45
34
46
PE-1619

CAB DOOR

Ref.N°	Part N°	Description	Remarks	Serial N°	Qty.
1	6718808	KIT	door		1
2	NAP	DOOR	.5' longer than 6726435 door - Was 6717590 [A]Zcom3 A }H~10{M		x
2	6726435	DOOR	4.5' shorter than NAP/6717590 door		1
3	6717360	WINDOW	.25' thick - glass - See Page CAB DOOR(1)		1
4	6707852	DECAL	exit		1
5		MOTOR	See Page CAB DOOR(1)		1
6		ARM	wiper - See Page CAB DOOR(1)		1
7		NOZZLE	See Page CAB DOOR(1)		1
8		HOSE	See Page CAB DOOR(1)		1
9	6555351	SEAL	bulk - Sold Per Foot		x
10	NAP	SEAL	440' (1016mm) long - Order Ref. CAB DOOR(9)		1
11	6725200	PLATE			1
12	6717369	BRACKET	latch		1
13	6676918	HOSE	450' (15,240mm) long roll - .125' I.D. - black		x
14	6665568	SEAL	bulk - Sold Per Foot		x
15	6675558	SEAL	bulk - Sold Per Foot		x
16	6554149	CORD	bulk - Sold Per Foot		x
17	NAP	CORD	window - 113.3' (2878mm) - Order Ref. CAB DOOR(16)		1
18	NAP	SEAL	window - 113.3' (2878mm) - Order Ref. CAB DOOR(14)		1
19	6718521	HANDLE	grab		1
20	6674667	HANDLE			1
20	6709527	KEY	ignition & rear door		1
21	61D-4	NUT			1
22	17C-420	BOLT			1
23	6717146	SPACER	handle		1
24	6708310	HOSE	bulk - Sold Per Foot - .149' I.D. - clear		x
25	6EM-60	WASHER			3
26	1CM-640	BOLT			3
27	6674666	LATCH			1
28	6718520	COVER	latch		1
29	4DM-6	NUT			2
30	1CM-620	BOLT			2
31	1CM-635	BOLT			2
32	91D-7	NUT			1
33	6654170	STRIKER BOLT			1
34	NAP	SEAL	threshold - 11' (279mm) - Order Ref. CAB DOOR(15)		2
35	6725042	SHIELD			1
36	6542731	SAFETY TREAD			1
37	6676500	ELBOW			1
38	46D-5	NUT	acorn		1
39	25E-16	WASHER			1
40	6674938	GAS SPRING			1
40	6678548	SOCKET	ball		2
40	6649244	BALL STUD			2
40	6649245	CLIP	spring		2
41	6676499	GROMMET	wiper		1
42	6676917	ELBOW			1
43	NAP	HOSE	18.25' (464mm) long - Order Ref. CAB DOOR(59)		1
44	17C-512	BOLT			6
45	6730830	TANK	washer - Was 6718627 [A]		1
46	6666766	GROMMET			1
47	6664554	PUMP	washer bottle		1
48	6674993	CAP	vented		1

CAB DOOR

Ref.N°	Part N°	Description	Remarks	Serial N°	Qty.
49	61D-5	NUT			5
50	61D-6	NUT			2
51	17C-612	BOLT			2
52	6675299	COUPLER	insert		1
53	6675298	COUPLER	body		1
54	6675378	CLIP			1
55	6718295	HARNESS	wiper - W/ 18' (457mm) long 3pin connector extension - use W/NAP (6668137) motortcom3|< }H~10{M		x
55	6729739	HARNESS	wiper - use W/6677835 motor		1
56	NAP	SEAL	127.3' (3233mm) - Order Ref. CAB DOOR(15)		1
57	59D-5	NUT			4
58	6717593	HINGE	base		2
59	6676003	HOSE	bulk - Sold Per Foot - .109' I.D. - black		x
60	6665707	SWITCH	front wiper		1
61	6664097	COVER	wiper		1
62	NAP	HOSE	washer - 4.25' (108mm) long - Order Ref. CAB DOOR(24)		1
63	6718376	HINGE	door		2
64	6901013	INSTRUCTIONS			1

CAB DOOR
(Window & Wiper)

NOTE: It is necessary to identify the correct style of wiper motor before ordering wiper replacement parts. Components for wipers W/threaded shaft ends & built in fuse are shown on the upper half ot this page. Components for wipers W/knurled shaft ends are shown on the lower half of this page.

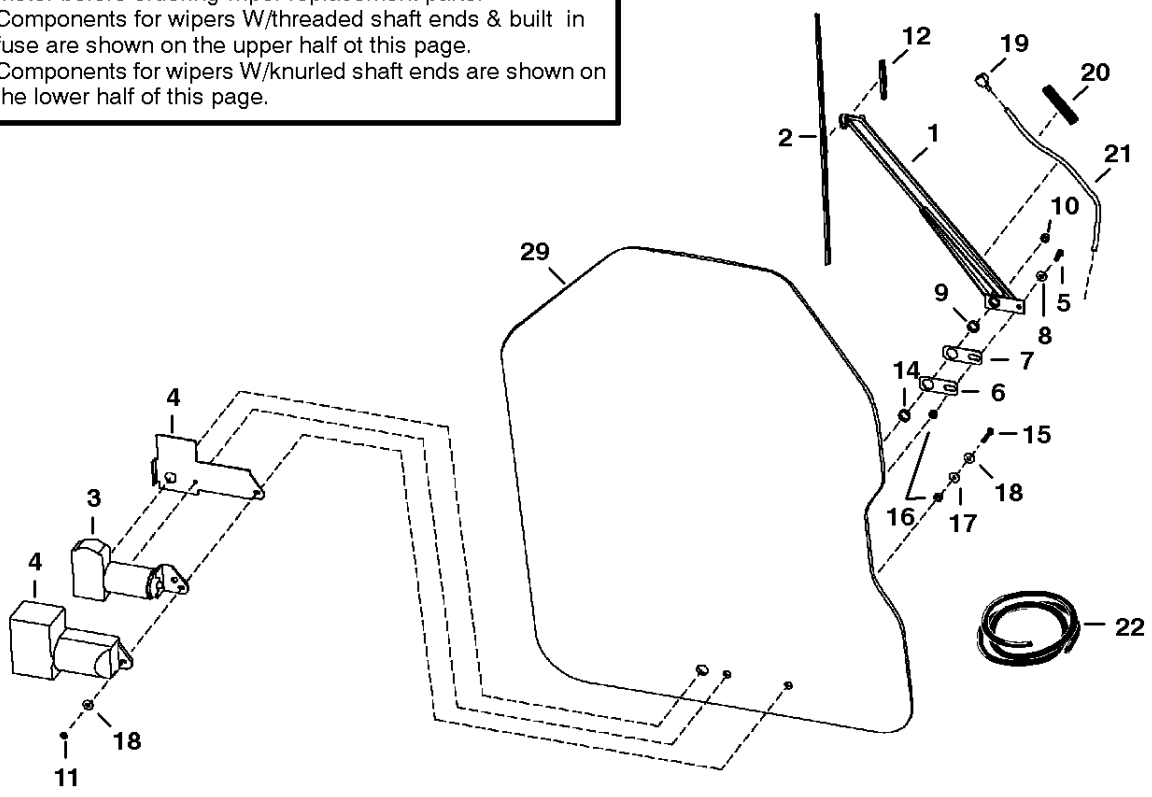

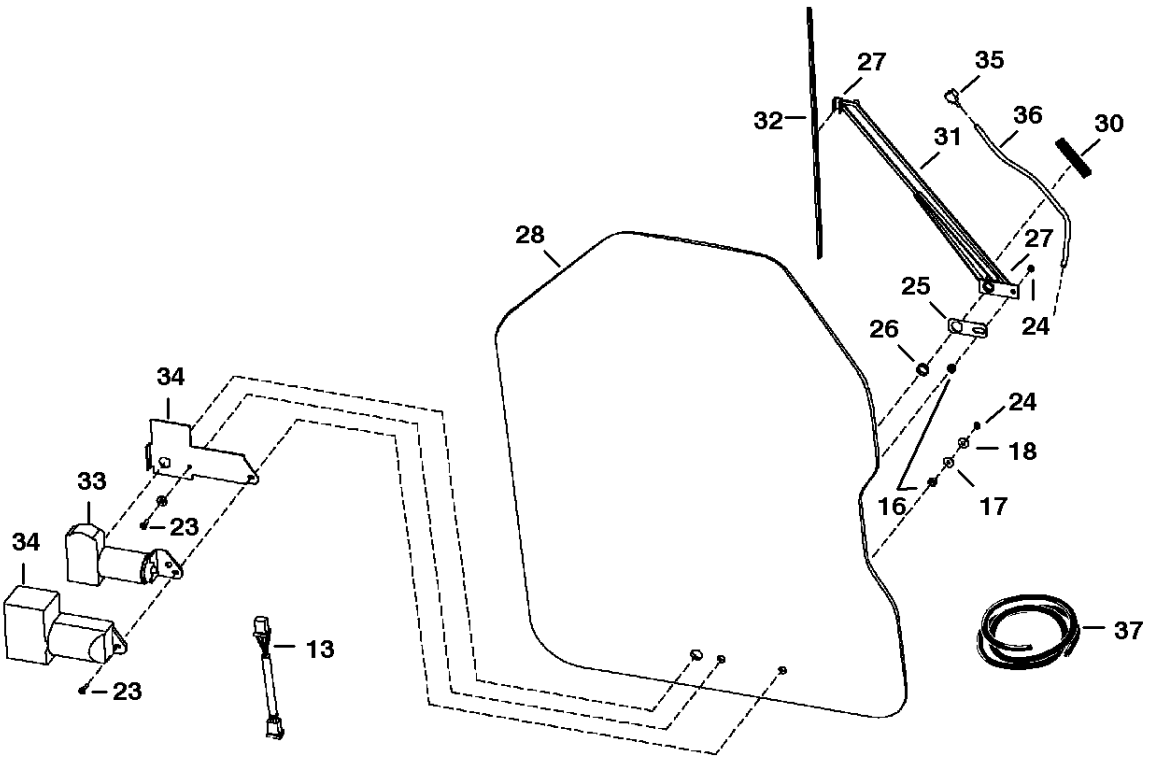

MS-1205

CAB DOOR

Ref.N°	Part N°	Description	Remarks	Serial N°	Qty.
1	6677833	ARM ASSY	W/Ref. CAB DOOR(19)-CAB DOOR(21)		1
2	6677834	BLADE			1
3	6677835	COVER	W/ threaded shaft end & built in fuse - SEE NOTE		1
4	6677836	MOTOR			1
5	6677837	BOLT			1
6	6677839	GASKET			1
7	6677840	SWIVEL ASSY			1
8	6677841	WASHER	tooth lock		1
9	6677842	NUT			1
10	6677843	NUT			1
11	6677844	NUT			2
12	6677845	ADAPTER	arm		1
13	6730123	HARNESS	7' (178mm) long wiper jumper - W/ fuse - Use W/Ref. CAB DOOR(33)		1
14	6677848	SLEEVE	rubber - Use W/Ref. CAB DOOR(3) & Ref. CAB DOOR(28)		1
14	6677847	GROMMET	rubber - Use W/Ref. CAB DOOR(3) & Ref. CAB DOOR(29)		1
15	6678198	BOLT			1
16	6664085	BUSHING	nylon		2
17	6801059	WASHER	neoprene		1
18	6678739	WASHER	steel - Was 6664065 [A]		2
19	6678920	NOZZLE	For Ref. CAB DOOR(1)		1
20	6678921	GUIDE	hose		1
21	NAP	HOSE	18' (457mm) long -Order Ref. CAB DOOR(22)		x
22	6676003	HOSE	bulk - Sold Per Foot - .109' I.D. - black		x
23	6664566	SCREW			2
24	6664103	NUT	acorn		2
25	6664178	GASKET			1
26	6667201	SPACER	nylon - use W/Ref. CAB DOOR(28) & Ref. CAB DOOR(33)		1
27	6670288	END	plastic		2
28	NAP	WINDOW	.25' thick glass W/ .77' dia. wiper motor shaft hole - Order Ref. CAB DOOR(14) (6677847 grommet) & Ref. CAB DOOR(29) - Was 671		1
29	6729776	WINDOW	.25' thick glass W/ 1.00' dia. wiper motor shaft hole		1
30	6676501	CLIP			1
31	6664095	ARM	W/Ref. CAB DOOR(27) & CAB DOOR(30)		1
32	6664096	BLADE			1
33	6668137	MOTOR	wiper - W/ knurled shaft end - use W/Ref. CAB DOOR(13) - SEE NOTE - SEE BTlinD1}; 337		1
33	6631928	SHAFT			1
33	6631927	GEAR			1
33	6670164	LINK			1
33	961528	HARDWARE			1
34	6664097	COVER			1
35	6676498	NOZZLE	for Ref. CAB DOOR(31)		1
36	NAP	HOSE	10.25' (260mm) long - Order Ref. CAB DOOR(37)		1
37	6676918	HOSE	50' (15,24meter) long roll - .125' I.D. - black		x

CAB DOOR
(Special Applications)

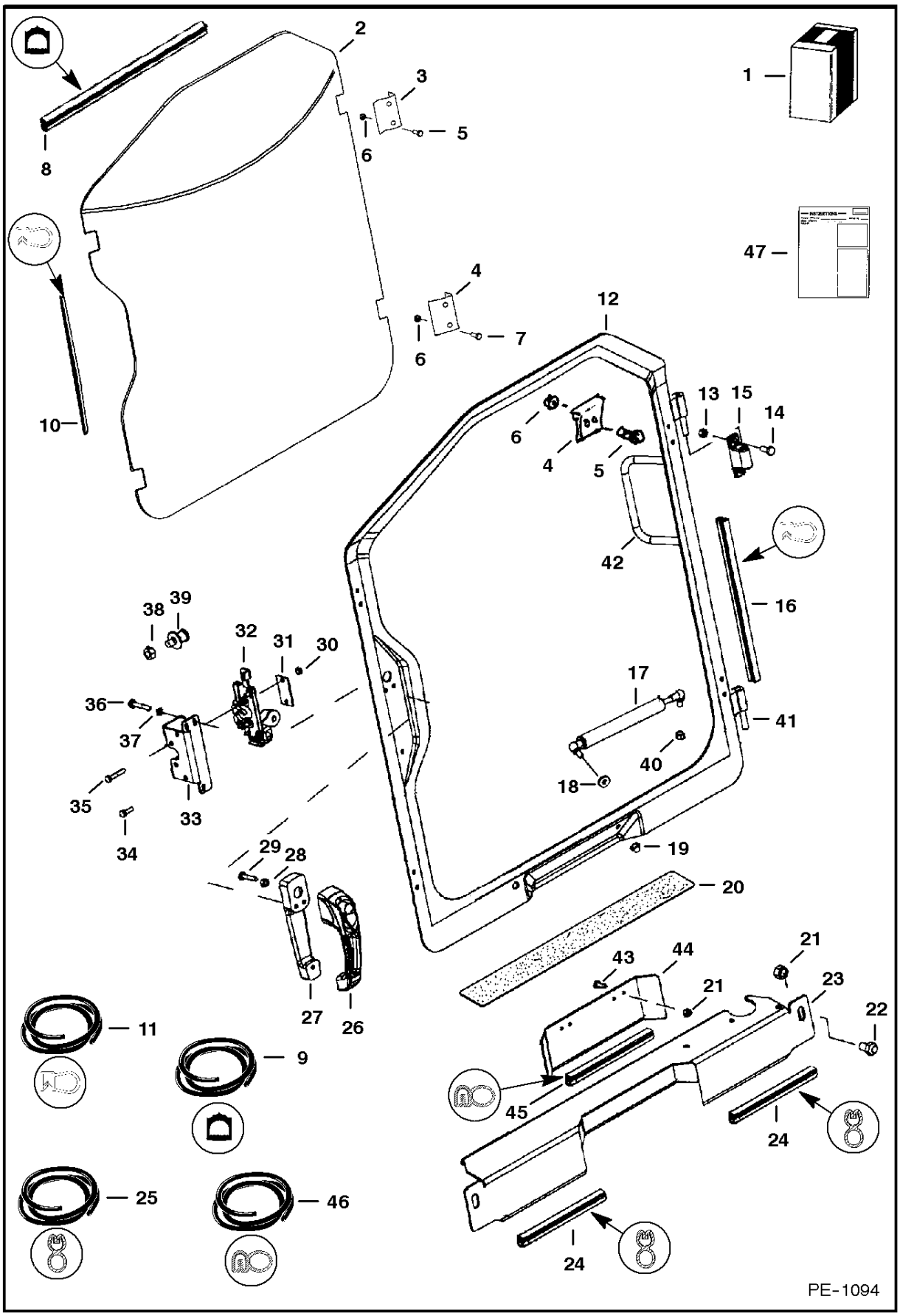

CAB DOOR

Ref.N°	Part N°	Description	Remarks	Serial N°	Qty.
1	6725941	KIT	door		1
2	NAP	WINDOW	.5' thick polycarbonate - W/O top notch - Order 6725935 window, Ref. CAB DOOR(4) & (2) each of Ref. CAB DOOR(5) & CAB DOOR(6) -		1
2	6725935	WINDOW	.5' thick polycarbonate - W/top notch		1
3	6725938	CLAMP			2
4	6725937	CLAMP			3
5	17C-628	BOLT			6
6	95D-6	NUT			10
7	17C-624	BOLT			4
8	NAP	SEAL	412'(304,8 mm) long - Order Ref. CAB DOOR(9) - used W/Ref. CAB DOOR(2) W/O top notch		1
9	6670759	SEAL	bulk - Sold Per Foot		x
10	NAP	SEAL	4115'(2921 mm) long -Order Ref. CAB DOOR(11)		1
11	6675558	SEAL	bulk - Sold Per Foot		x
12	6726932	DOOR	W/Ref. CAB DOOR(41) & CAB DOOR(42)		1
13	59D-5	NUT			4
14	17C-512	BOLT			6
15	6717593	HINGE	base		2
16	NAP	SEAL	127.3'(3233,4 mm) long - Order Ref. CAB DOOR(11)		1
17	6674938	GAS SPRING			1
17	6678548	SOCKET	ball		2
17	6649245	CLIP	spring		2
18	25E-16	WASHER			1
19	46D-5	NUT	acorn		1
20	6542731	SAFETY TREAD			1
21	55D-6	NUT			4
22	17C-612	BOLT			2
23	6725042	SHIELD			1
24	NAP	SEAL	411'(279,4 mm) long -Order Ref. CAB DOOR(25)		2
25	6513152	SEAL	bulk - Sold Per Foot		x
26	6674667	HANDLE			1
26	6709527	KEY	ign. & rear door		1
27	6717146	SPACER	handle		1
28	61D-4	NUT			1
29	17C-420	BOLT			1
30	4DM-6	NUT			2
31	6718520	COVER	latch		1
32	6674666	LATCH			1
33	6717369	BRACKET	latch		1
34	1CM-620	BOLT			2
35	1CM-635	BOLT			2
36	1CM-640	BOLT			3
37	6EM-60	WASHER			3
38	91D-7	NUT			1
39	6654170	STRIKER BOLT			1
40	61D-5	NUT			5
41	6718376	HINGE	door		2
42	6718521	HANDLE	grab		1
43	35C-620	BOLT			2
44	6725200	PLATE			1
45	NAP	SEAL	440'(1016 mm) long - Order Ref. CAB DOOR(46)		1
46	6555351	SEAL	bulk - Sold Per Foot		x
47	6901013	INSTRUCTIONS			1

CAB DOOR
(Lexan Window)

NOTE: This Lexan window is NOT approved as a Special Applications Kit. This window does not provide additional protection from materials entering cab openings.

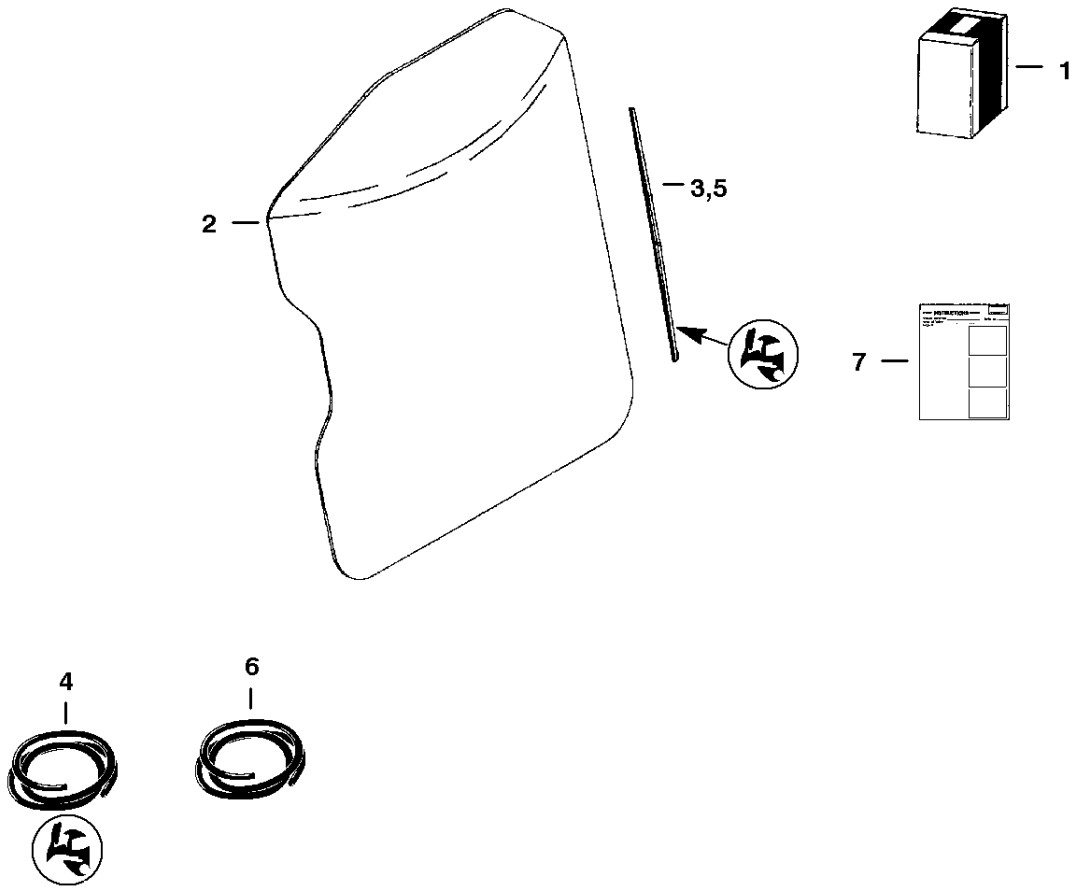

PE-1558

CAB DOOR

Ref.N°	Part N°	Description	Remarks	Serial N°	Qty.
1	6726427	KIT	Ref. CAB DOOR(2)-CAB DOOR(7)		1
2	6675215	WINDOW	lexan - .236' thick		1
3	NAP	SEAL	113.3'(2877,8 mm) long - Order Ref. CAB DOOR(4)		1
4	6665568	SEAL	bulk - Sold Per Foot		x
5	NAP	CORD	113.3'(2877,8 mm) long - Order Ref. CAB DOOR(6)		1
6	6554149	CORD	bulk - Sold Per Foot		x
7	6901036	INSTRUCTIONS			1

CAB ENCLOSURE

NOTE: For Cab Enclosure Kit Order from Gwinner SALES # 6719667.
For Special Applications Kit Order from Gwinner SALES # 6719390.

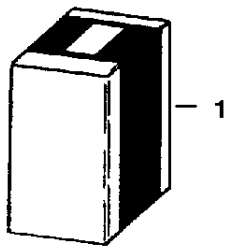

B-16410

CAB ENCLOSURE

Ref.N°	Part N°	Description	Remarks	Serial N°	Qty.
1	SALES	KIT	4cab enclosure - SEE NOTE - includes items on Page CAB DOOR(1) & CAB WINDOWS(4)		1
1	SALES	KIT	special applications cab enclosure- SEE NOTE - include s items on Page CAB DOOR(3) & CAB WINDOWS(4)		1

CAB ENCLOSURE
(Envelope)

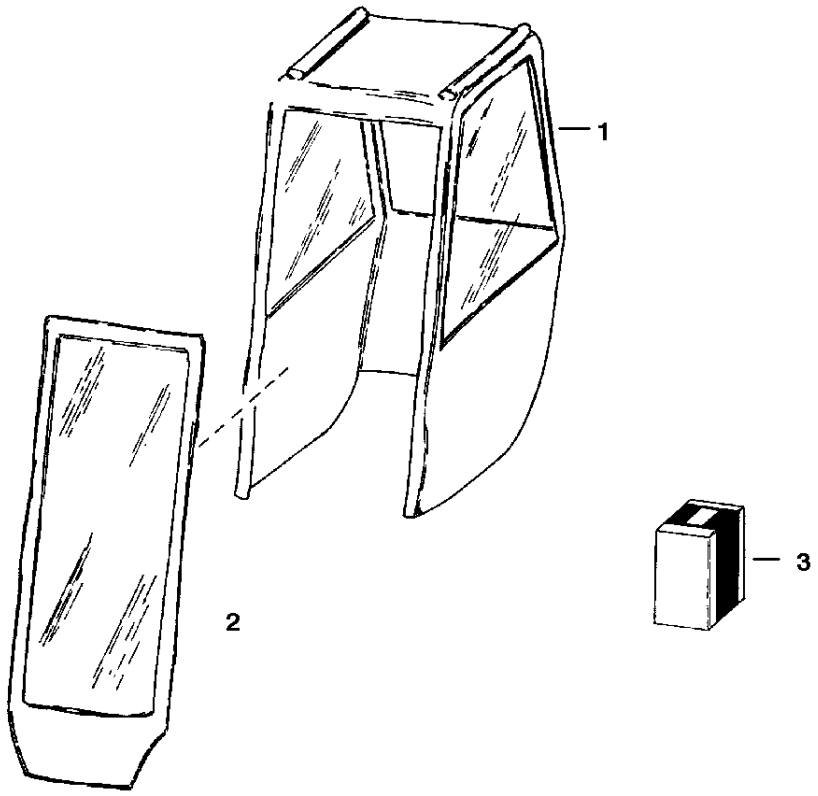

B-1413

CAB ENCLOSURE

Ref.N°	Part N°	Description	Remarks	Serial N°	Qty.
1	6675544	VINYLCAB	fits over cab - W/Ref. CAB ENCLOSURE(2) & CAB ENCLOSURE(3)		1
2	6675590	DOOR	vinyl		1
3	6675591	HINGE KIT			1

CAB WINDOWS
(External Window Removal Kit)

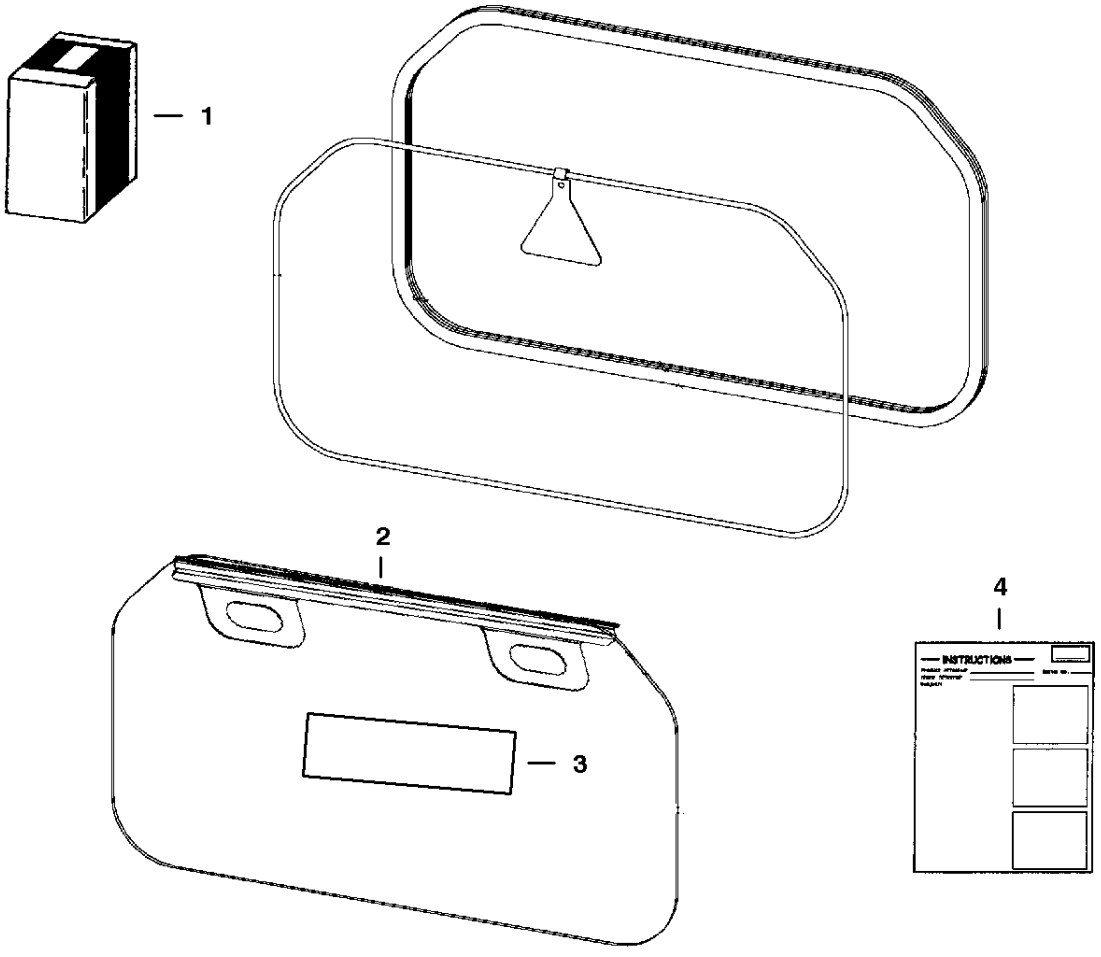

TS-2006

CAB WINDOWS

Ref.N°	Part N°	Description	Remarks	Serial N°	Qty.
1	6725946	KIT	Ref. CAB WINDOWS(2) - CAB WINDOWS(4)		1
2	6725421	HANDLE			1
3	6726303	DECAL			1
4	6901029	INSTRUCTIONS			1

CAB WINDOWS
(Top, Rear & Side)

NOTE: Order Top & Rear WIndow Kit from Gwinner Sales # 6718805.
Order Side Window Kit from Gwinner Sales # 6718806.

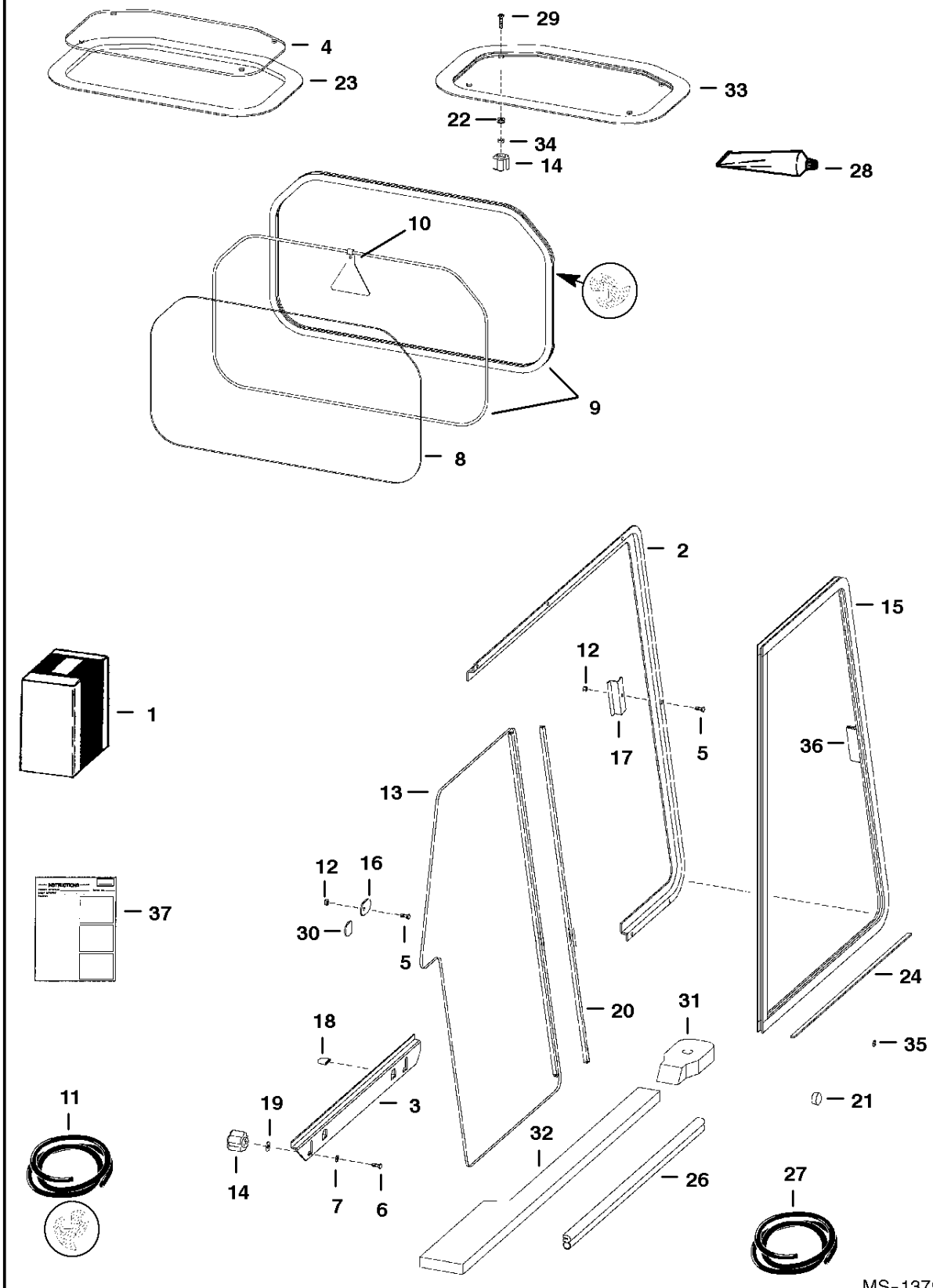

CAB WINDOWS

Ref.N°	Part N°	Description	Remarks	Serial N°	Qty.
1	SALES	KIT	Top & Rear Window - SEE NOTE		1
1	SALES	KIT	Side Window - SEE NOTE		1
2	6717870	TRACK	L.H. side		1
2	6717872	TRACK	R.H. side		1
3	6717871	TRACK	L.H. bottom		1
3	6717873	TRACK	R.H. bottom		1
4	NAP	WINDOW	top - Order Ref. CAB WINDOWS(33) - Was 6725360 [A]		1
5	10C-410	BOLT	carriage		18
6	10C-416	BOLT	carriage		4
7	25E-14	WASHER			4
8	6717874	WINDOW	rear		1
8	6719413	WINDOW	rear - lexan		1
9	NAP	SEAL	75.75'(1924 mm) long - Order Ref. CAB WINDOWS(11)		x
9	NAP	CORD	75.75'(1924 mm) long - Order Ref. CAB WINDOWS(11)		x
10	6731478	EXIT TAG	Was 6559515 [A]		1
11	6675387	SEA;	bulk - Sold Per Foot - Was 6674524 [A]		x
11	6554149	CORD	bulk - Sold Per Foot		x
12	59D-4	NUT			18
13	6674520	WINDOW	L.H. rear		1
13	6674522	WINDOW	R.H. rear		1
14	6674741	KNOB			8
15	6674519	WINDOW	L.H. front		1
15	6674521	WINDOW	R.H. front		1
16	6719063	STOP			2
17	6719037	STRIKER			2
18	6719065	COVER	tab		4
19	6675212	RETAINER	bolt		4
20	6675833	SEAL	rear window dual wiper W/tape		2
21	6657719	PLUG	for .75' dia. hole		2
22	6675545	GROMMET			4
23	NAP	SEAL	Order Ref. CAB WINDOWS(33) - Was 6675546 [A]		x
24	6676927	FELT STRIP	20.38' (517,7mm) long		2
25	NAP	SEAL	55.25' (1403mm) long - Order Ref. CAB WINDOWS(23)		1
26	NAP	SEAL	24' (610mm) long - Order Ref. CAB WINDOWS(27)	& Bel.	2
27	6555351	SEAL	bulk - sold per foot	& Bel.	x
28	NAP	ADHESIVE	1 oz. - for top window seal Ref. CAB WINDOWS(23) - Was 6675694 [A]		1
29	91G-416	BOLT			4
30	6677198	CAP	tab		2
31	6729011	SEAL	cab mount	& Abv.	2
32	6729010	SEAL	L.H. - cab/mainframe - foam	& Abv.	1
32	6729009	SEAL	R.H. - cab/mainframe - foam	& Abv.	1
33	6728629	WINDOW	assy. - W/ seal & grommets - lexan		1
34	6664085	BUSHING	nylon		4
35	6677973	PLUG	for .22' dia. hole		2
36	6678283	HANDLE	side window - W/ tape & instructions		2
37	6901013	INSTRUCTIONS	Top & Rear Window - Was 6900852 [A]		1
37	6900853	INSTRUCTIONS	Side Windows		1

CLOSED ALTERNATOR
(30 Amp. Motorola or Prestolite)

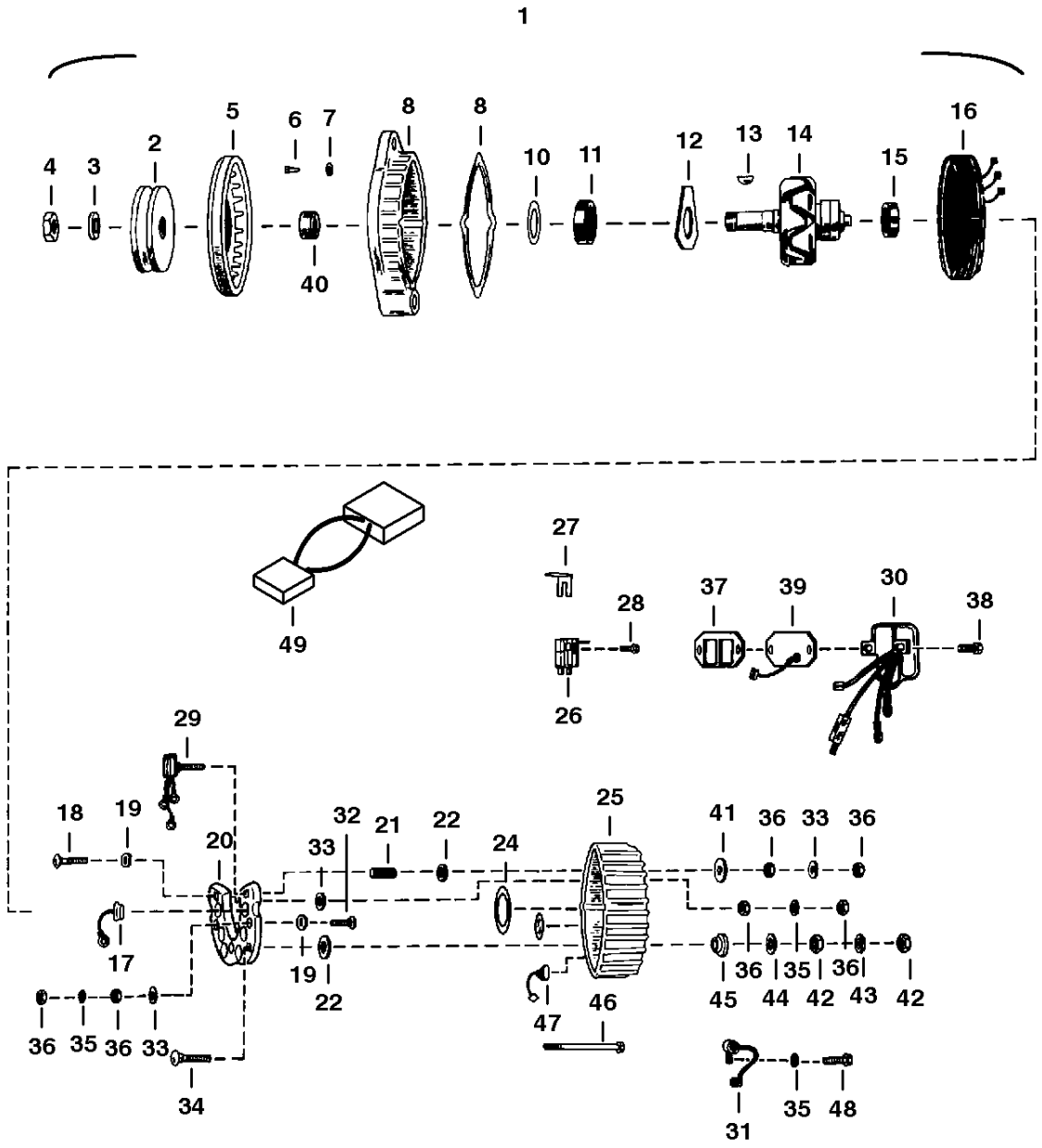

CLOSED ALTERNATOR

Ref.N°	Part N°	Description	Remarks	Serial N°	Qty.
1	NAP	ALTERNATOR	Ref. CLOSED ALTERNATOR(3)-CLOSED ALTERNATOR(29) & CLOSED ALTERNATOR(31)-CLOSED ALTERNATOR(48) - Order 6630098 alternator - See B		x
2	6630164	PULLEY			1
3	6635557	WASHER			1
4	896979	NUT			1
5	899157	FAN			1
6	41G-806	SCREW			3
7	17E-8	WASHER			3
8	6630340	HOUSING			1
9	6630345	GASKET			1
10	899374	SEAL			1
11	889163	BEARING			1
12	6630343	RETAINER			1
13	6J-405	KEY			1
14	899163	ROTOR			1
15	1991038	BEARING			1
16	6630341	STATOR			1
17	899375	DIODE			3
18	7C-322	BOLT			1
19	897245	INSULATOR			4
20	899167	SINK	heat		1
21	897239	SLEEVE			1
22	899376	WASHER			2
23	899165	INSULATOR			3
24	896992	RETAINER			1
25	6630342	HOUSING			1
26	6630344	BRUSH ASSY.			1
27	899169	INSULATOR			1
28	84G-1608	SCREW			2
29	6630350	DIODE	field		1
30	6630349	REGULATOR	voltage		1
31	6630348	CAPACITOR			1
32	7C-312	BOLT			3
33	896996	WASHER			5
34	899377	BOLT			1
35	17E-10	WASHER			5
36	12D-10	NUT			10
37	899170	GASKET			1
38	84G-1910	SCREW			2
39	6630346	COVER			1
40	6649459	SPACER			1
41	896990	WASHER			1
42	62D-4	NUT			2
43	4E-4	WASHER			1
44	897732	WASHER			1
45	897719	INSULATOR			1
46	896984	BOLT	thru		4
47	899378	DIODE			3
48	84G-1906	SCREW			1
49	6713803	HARNESS			1

COUNTERWEIGHT KIT
(2000 lb. Rear Axle)

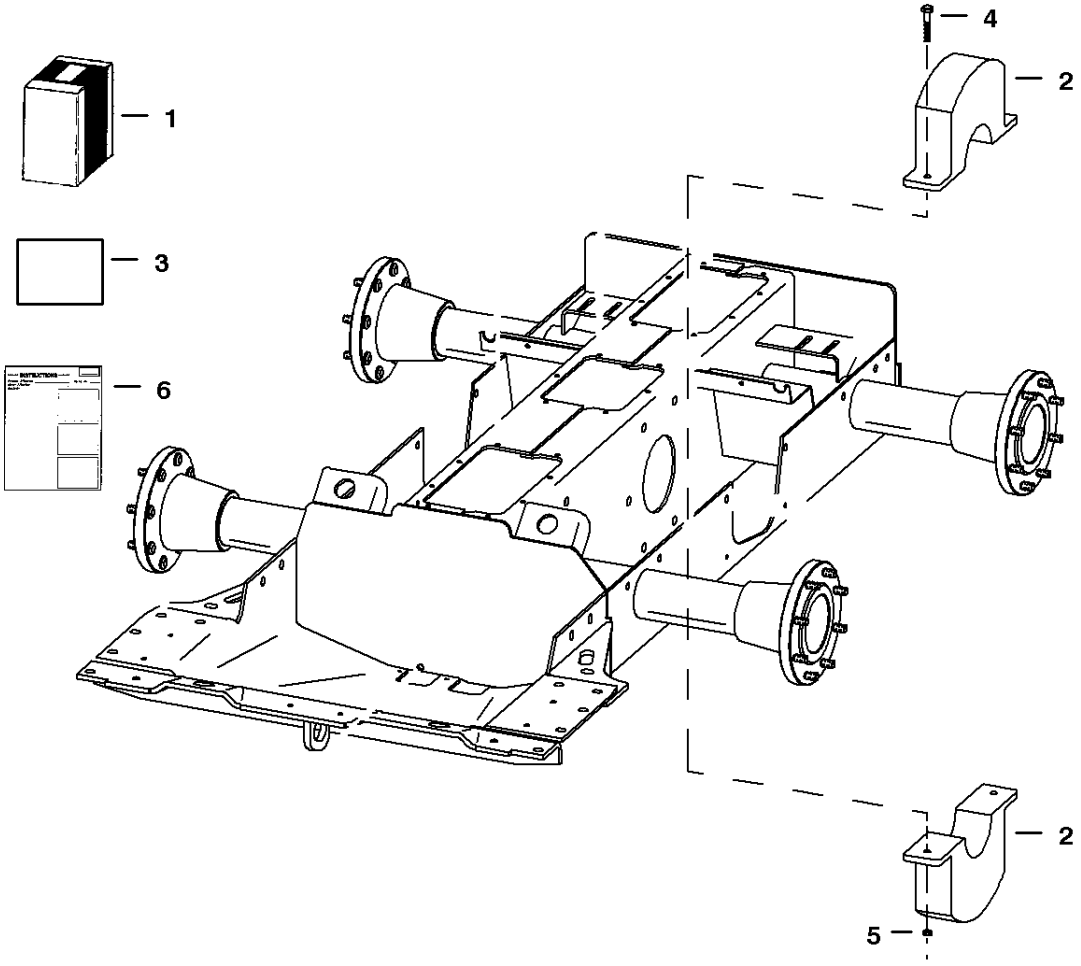

NOTE: Order Counterweight Kit from Gwinner Sales # 671291

TS-1295

COUNTERWEIGHT KIT

Ref.N°	Part N°	Description	Remarks	Serial N°	Qty.
1	SALES	KIT	counterweight - SEE NOTE		1
2	6714362	WEIGHT	rear axle - 42.8 lbs. (19,3 kg) - 4.5' (114,3 mm) wide		4
3	6712912	DECAL			1
4	17C-640	BOLT			x
5	61D-6	NUT			x
6	6900366	INSTRUCTIONS			1

DECALS

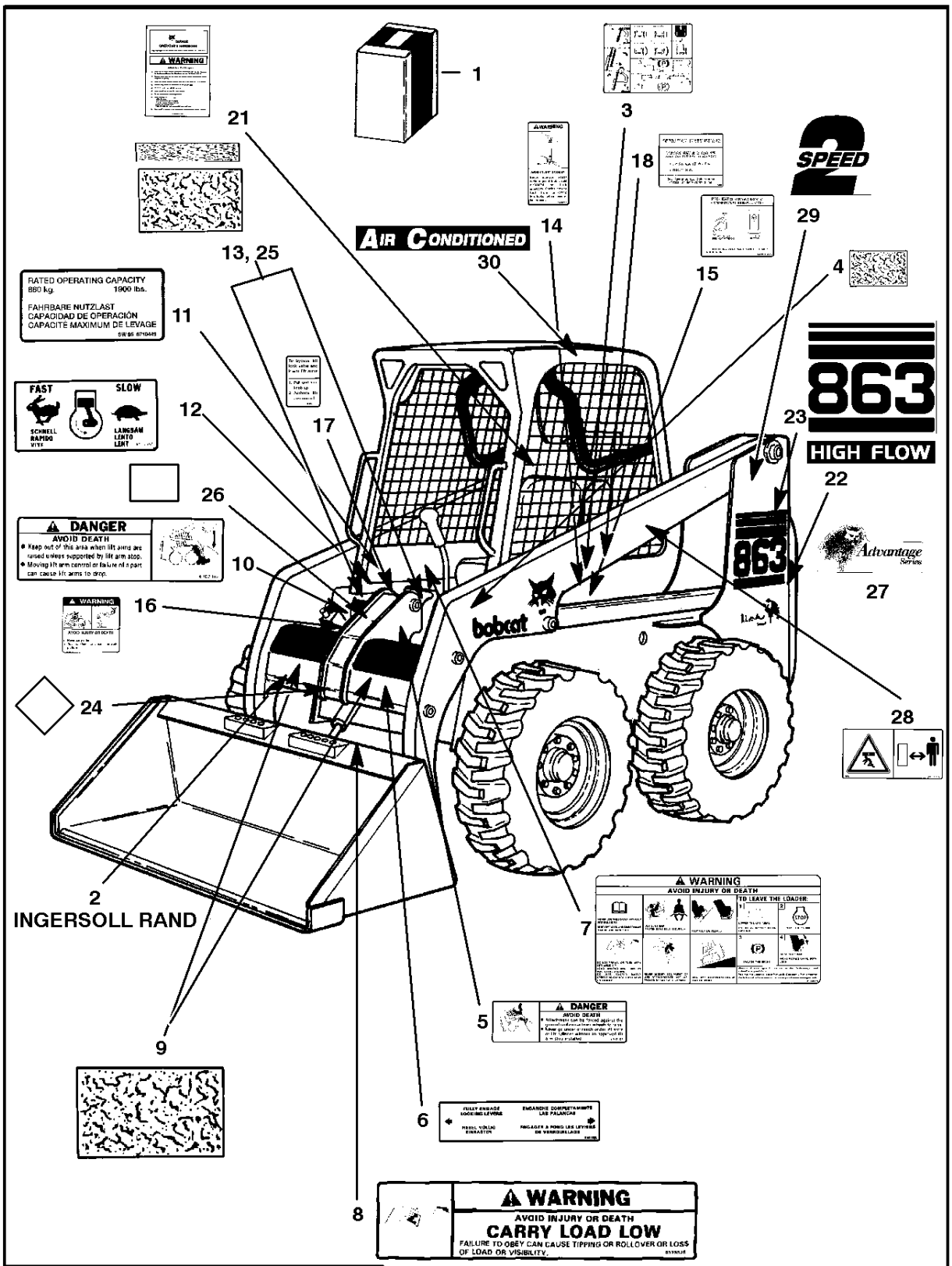

NOTE: AR = Spanish (Argentine)
BR = Portugese (Brazil)
JP = Japanese (Japan)
Translation kit includes Safety Manual, Operators Manual & Decal Kit.

B-18036

DECALS

Ref.N°	Part N°	Description	Remarks	Serial N°	Qty.
1	6901376	KIT	decal		1
1	6725187AR	KIT	translation - SEE NOTE		1
1	6725187BR	KIT	translation - SEE NOTE		1
1	6725033AR	KIT	decal - SEE NOTE		1
1	6725033BR	KIT	decal - SEE NOTE		1
1	6725033JP	KIT	decal - SEE NOTE		1
2	6727310	DECAL	IR Bobcat - Was 6711329 [A]		1
3	6728327	DECAL	operating - Was 6718701 [A]		1
4	6554100	SAFETY TREAD	6' x 3' (152mm x 76mm)		4
5	6702301	DECAL	danger		1
6	6561383	DECAL	Bob-tach		1
7	6718698	DECAL	warning		1
8	6579528	DECAL	carry load low		1
9	6577947	SAFETY TREAD	7.5' x 15' (191mm x 381mm)		2
10	6702302	DECAL	danger		1
11	6710449	DECAL	capacity - 1900 lbs.		1
12	6557565	DECAL	throttle		1
13	6577949	SAFETY TREAD	6.8' x 8.75' - (173mm x 222mm)		2
14	6705720	DECAL	lock shield		1
15	6713715	DECAL	pre heat		1
16	6710358	DECAL	warning		1
17	6711840	DECAL	lift lock		1
18	6718703	DECAL	seat & seat bar operating		1
19	6565990	DECAL	hydraulic fluid		1
20	6804790	DECAL	capacity		1
21	6719563	KIT	handbook - W/ wire rope		1
21	6558309	WIRE ROPE	33' (838mm) long - Bulk - sold per foot - also Order (2) of 6558310 sleeve		x
21	6558310	SLEEVE	wire rope		2
22	6727913	DECAL	high flow - not in kit - Was 6714534 [A]		2
23	6714536	DECAL	model no. 863		2
24	6718275	DECAL	Bobcat advantage		1
25	6710746	SAFETY TREAD	1.5' x 15' (38mm x 381mm)		2
26	6717343	DECAL	danger		2
27	6718271	DECAL	4advantage series - L.H. - not in kit		1
28	6713507	DECAL	stay clear - Europe only		2
29	6729078	DECAL	2 speed - not in kit		2
30	6729077	DECAL	air conditioned - not in kit		2

DECALS

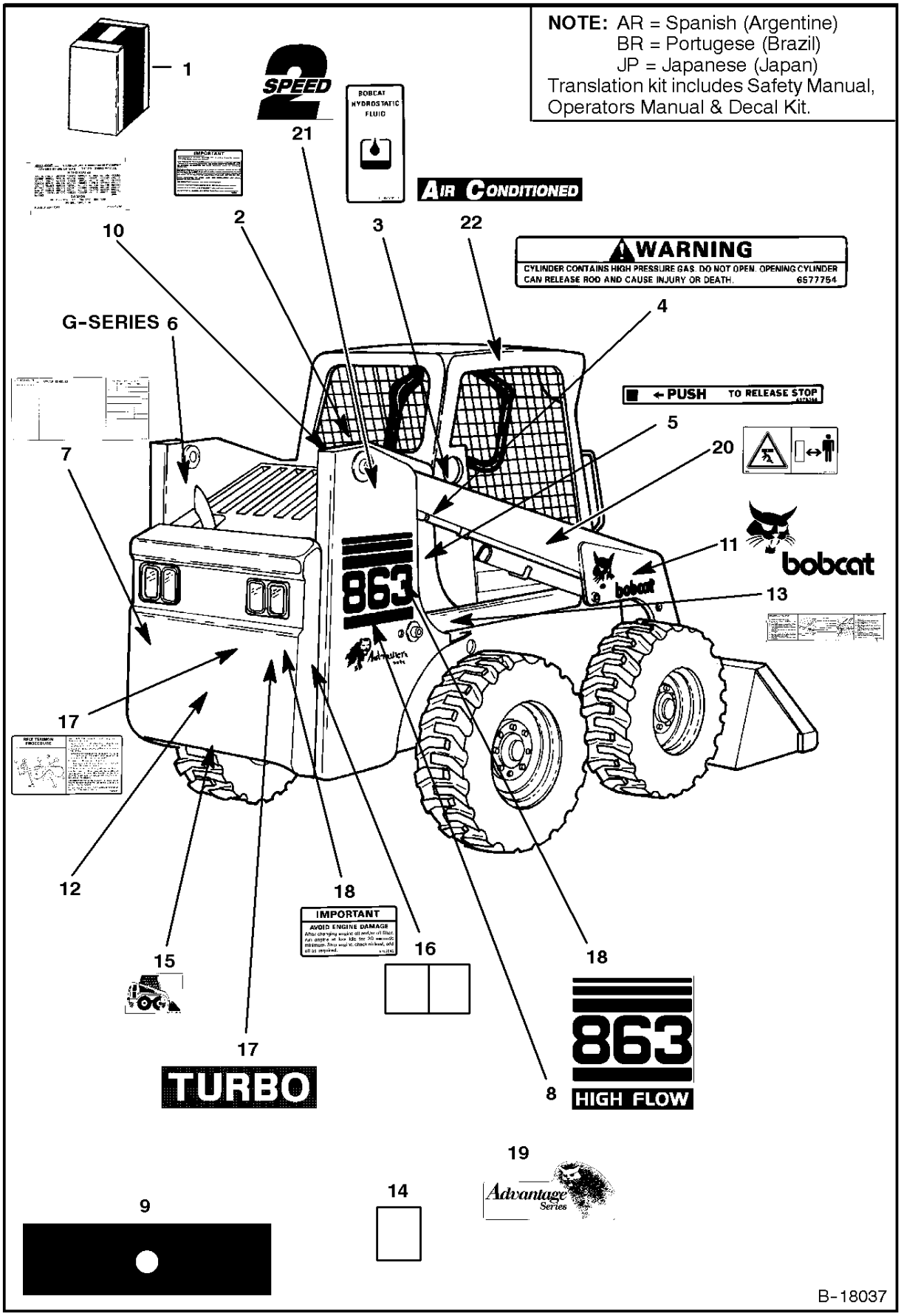
NOTE: AR = Spanish (Argentine)
BR = Portugese (Brazil)
JP = Japanese (Japan)
Translation kit includes Safety Manual, Operators Manual & Decal Kit.
1
2 SPEED
21
BOBCAT HYDROSTATIC FLUID
AIR CONDITIONED
2
3
22
10
WARNING
CYLINDER CONTAINS HIGH PRESSURE GAS. DO NOT OPEN. OPENING CYLINDER CAN RELEASE ROD AND CAUSE INJURY OR DEATH. 6577754
4
G-SERIES
6
PUSH TO RELEASE STOP
5
7
20
11
bobcat
863
13
17
12
18
IMPORTANT
AVOID ENGINE DAMAGE
16
15
18
17
TURBO
863
HIGH FLOW
8
19
Advantage Series
14
9
B-18037

DECALS

Ref.N°	Part N°	Description	Remarks	Serial N°	Qty.
1	6901376	KIT	decal		1
1	6725187AR	KIT	translation - SEE NOTE		1
1	6725187BR	KIT	translation - SEE NOTE		1
1	6725033AR	KIT	decal - SEE NOTE		1
1	6725033BR	KIT	decal - SEE NOTE		1
1	6725033JP	KIT	decal - SEE NOTE		1
2	6708937	DECAL	spark arrestor		1
3	6565990	DECAL	hydraulic fluid		1
4	6577754	DECAL	warning		2
5	6578368	DECAL	push		1
6	6717907	DECAL	'G' series		1
7	6718398	DECAL	service/warning/filters		1
8	6714534	DECAL	highAflow - not in kit		2
9	6714242	DECAL	tailgate		1
10	6557224	DECAL	patent		1
11	6727309	DECAL	R.H. - Bobcat head - Was 6702826 [A]		1
11	6727308	DECAL	L.H. - Bobcat head - Was 6702827 [A]		1
12	6727311	DECAL	IR/Bobcat logo - Was 6714139 [A]		1
13	6706558	DECAL	boom stop		1
14	6565200	DECAL	oil filter		1
15	6707867	DECAL	tow hook		1
16	6715991	DECAL	fuse		1
17	6727912	DECAL	turbo - Was 6714526 [A]		2
18	6714536	DECAL	model no. 863		2
19	6718272	DECAL	4advantage series - R.H. - not in kit		1
20	6713507	DECAL	stay clear - Europe only		2
21	6729078	DECAL	2 speed - not in kit		2
22	6729077	DECAL	air conditioned - not in kit		2

DELUXE CAB

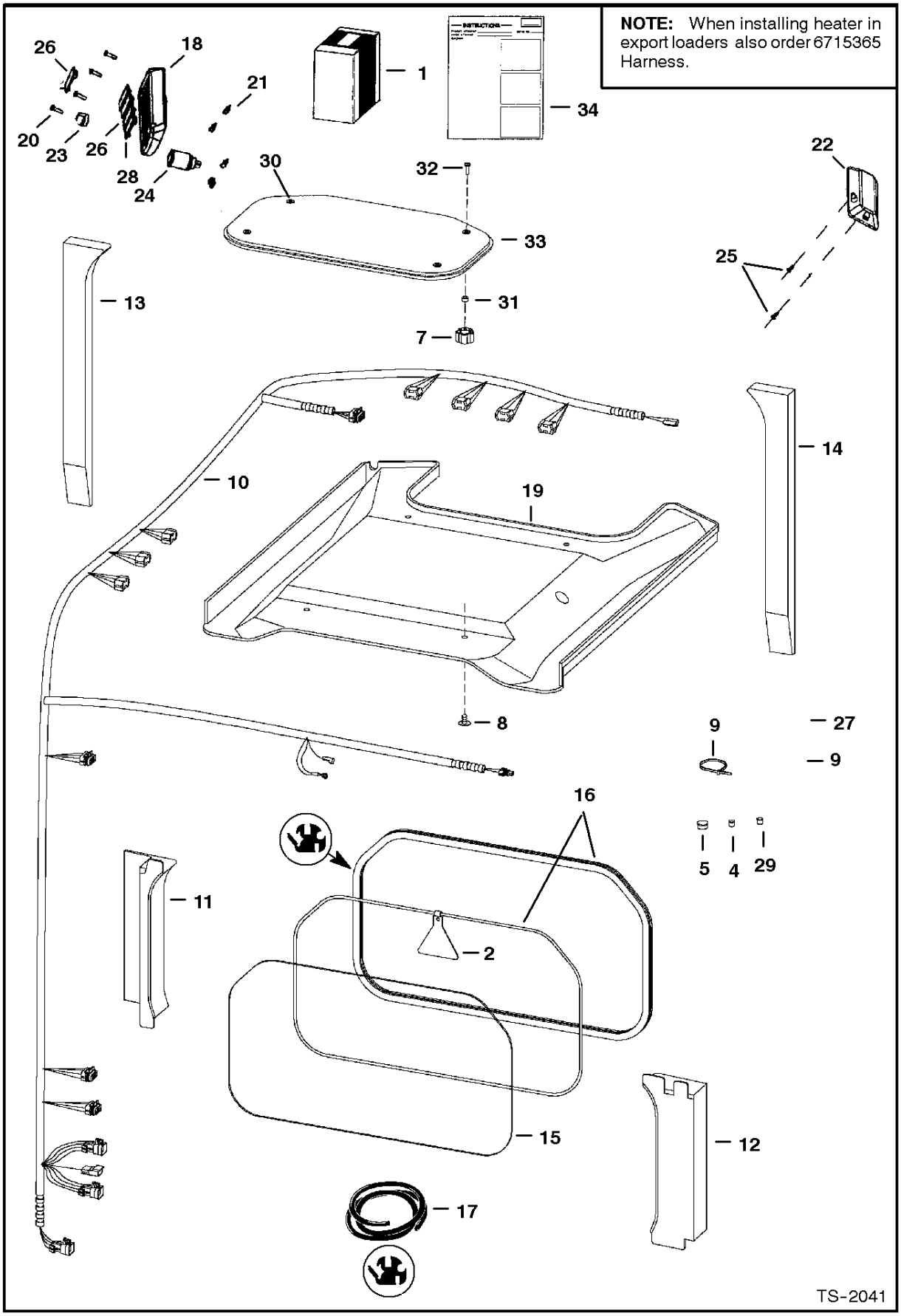
NOTE: When installing heater in export loaders also order 6715365 Harness.
1
34
26
18
21
20
23
26
28
24
30
32
33
31
7
22
25
13
14
10
19
8
9
27
9
16
5
4
29
11
2
15
12
17
TS-2041

DELUXE CAB

Ref.N°	Part N°	Description	Remarks	Serial N°	Qty.
1	6718804	KIT		5144 45999 & Bel.	1
1	6729233	KIT	deluxe cab	5144 40001 & Abv.	1
2	6731478	EXIT TAG	Was 6559515 [A]		1
3	6610510	NYLON TIE			6
4	6649949	PLUG	1/2' hole		2
5	6657719	PLUG	3/4' hole		1
6	NAP	WINDOW	4top - Order Ref. DELUXE CAB(33) - Was 6725360 [A]		1
7	6674741	KNOB			4
8	6674895	RETAINER	snap in		4
9	6727299	INSULATION	cab back		1
10	NAP	HARNESS	Order 6725273 & 6725933 harness - Was 6715366 [A]	5144 40001-	1
10	6725273	HARNESS	part of 6718804 kit	5144 - 45999	1
10	6727190	HARNESS	deluxe accessories - part of 6729233 kit	5144 46001 & Abv.	1
10	6715365	HARNESS	accessories - export - not in kit		1
11	6717517	INSULATION			1
12	6717518	INSULATION			1
13	6717519	INSULATION			1
14	6717520	INSULATION			1
15	6717874	WINDOW	rear		1
16	NAP	EXTRUSION	75.75' (1924mm) long - Order Ref. DELUXE CAB(17)		x
16	NAP	CORD	75.75' (1924mm) long - Order Ref. DELUXE CAB(17)		x
17	6675387	SEA;	bulk - Sold Per Foot		x
17	6554149	CORD	bulk - Sold Per Foot		x
18	6718580	PANEL			1
19	6717515	INSULATION	headliner		1
20	6669224	BOLT			4
21	6669091	CLIP			4
22	6664368	DOME LIGHT	dome		1
22	6665367	BULB			1
23	6664224	CAP			1
24	6664223	OUTLET			1
25	6664221	RETAINER	snap in		2
26	6719038	PLUG	switch		5
27	6678682	PANEL	R.H. - deluxe - keyless - not in kit - export - Was 6672348 [A]		1
28	6668742	SWITCH	travel control - export		1
29	5289686	PLUG	black - 3/8' hole		1
30	6675545	GROMMET			4
31	6664085	BUSHING	nylon		4
32	91G-416	BOLT	Was 88G-1216 [B,D]		4
33	6728629	WINDOW	assy. - W/ seal & grommets		1
34	6900851	INSTRUCTIONS			1

ELECTRICAL CONTROLS KIT
(Electrical Attachments)

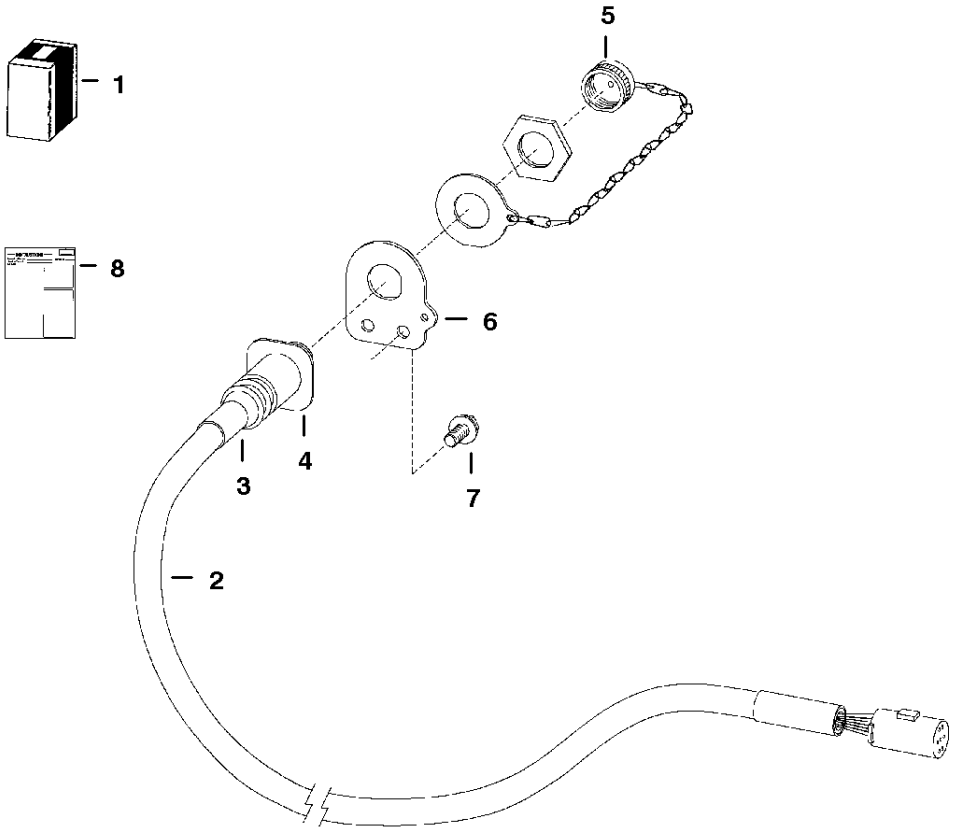

NOTE: This kit will be used for chipper and mixer attachments.

TS-1935

ELECTRICAL CONTROLS KIT

Ref.N°	Part N°	Description	Remarks	Serial N°	Qty.
1	6718812	KIT	Ref. ELECTRICAL CONTROLS KIT(2)-ELECTRICAL CONTROLS KIT(8)		1
2	6718426	HARNESS			1
3	6674799	ADAPTER	heat shrink		1
4	6674802	CONNECTOR	7pin - See Page SEVEN PIN CONNECTOR KIT(24)		1
4	6669549	SOCKET	small		4
4	6677136	SOCKET	large - 12 ga.		3
5	6675026	CAP			1
6	6718750	MOUNT			1
7	84G-3112	BOLT			2
8	6900855	INSTRUCTIONS			1

ELECTRICAL CONTROLS KIT
(To Run "G" Series Attachments & Old Attachments) (W/Toggle Switch)

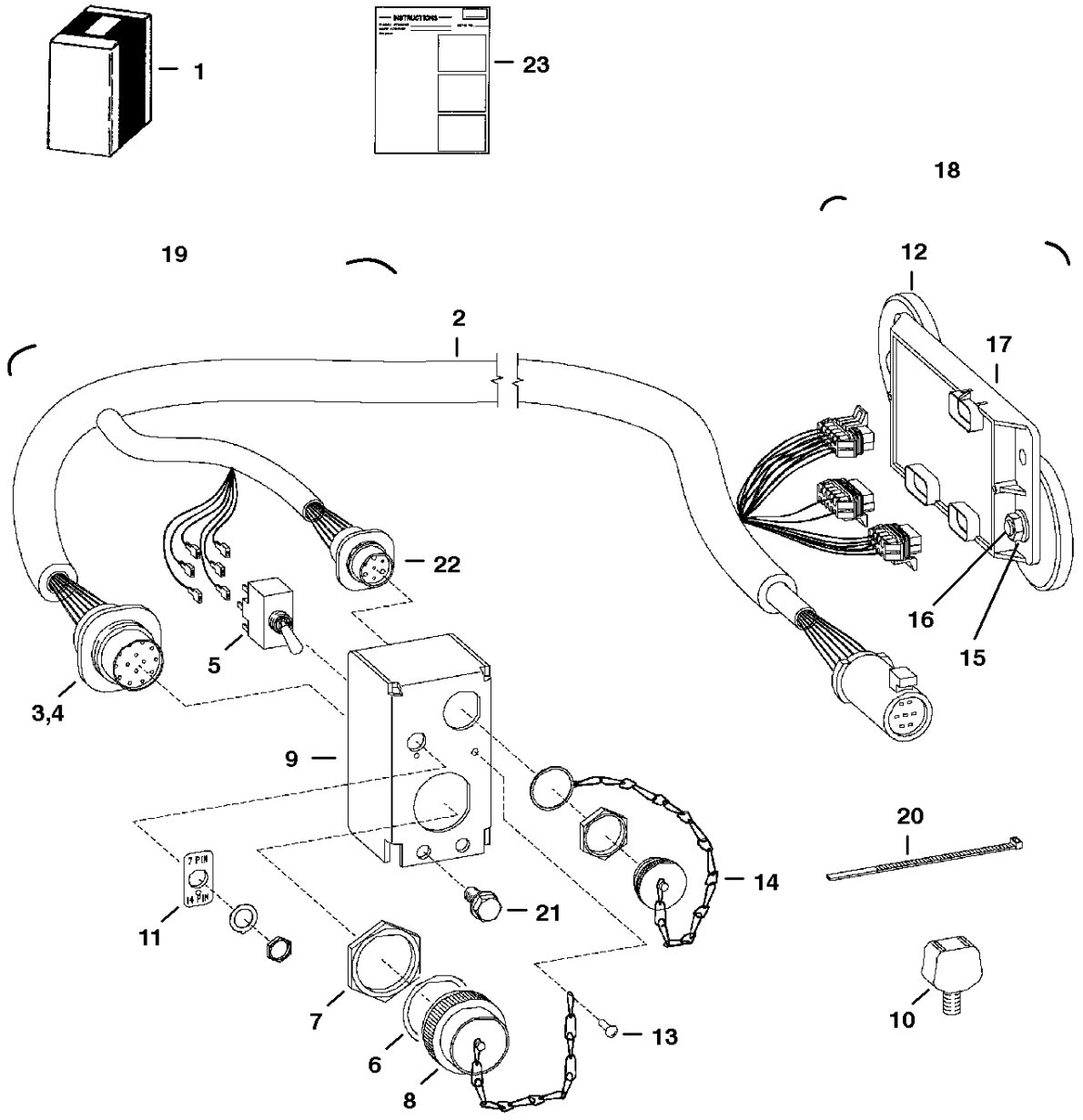

TS-1955

ELECTRICAL CONTROLS KIT

Ref.N°	Part N°	Description	Remarks	Serial N°	Qty.
1	NAP	KIT	Order 6727739 kit - See Page ELECTRICAL CONTROL S KIT(7) - Was 6719431 [A]		1
2	6719434	HARNESS	W/Ref. ELECTRICAL CONTROLS KIT(3), ELECTRICA L CONTROLS KIT(4), ELECTRICAL CONTROLS KIT(6)-ELECTRICAL CONTROLS KIT(8) & ELECTRICA		1
3	6667569	CONNECTOR	also Order (14) of Ref. ELECTRICAL CONTROLS KIT(4)		1
4	6664040	PIN	male		x
5	6675389	SWITCH	Was 6675246 [A]		1
6	6664037	WASHER			2
7	6664036	NUT			2
8	6664035	CAP			2
9	6719442	MOUNT			2
10	6675281	MOUNT			1
11	6719441	DECAL			1
12	6719448	MAGNET	100 lb. force		4
13	6704892	RIVET	Was 84G-1908 [B]		1
14	6675026	CAP			2
15	83D-6	NUT			2
16	25G-612	BOLT			2
17	6676514	CONTROLLER	Was 6674943 [A]		1
18	NAP	CONTROLLER	assy - Ref. ELECTRICAL CONTROLS KIT(12) & ELECTRICAL CONTROLS KIT(15)-ELECTRICAL CONTROLS KIT(17) - Order Ref. ELECTRICAL CONTRO		1
19	NAP	CONTROL	assy - Order Ref. ELECTRICAL CONTROLS KIT(2), ELECTRICAL CONTROLS KIT(5), ELECTRICAL CONTROLS KIT(9), ELECTRICAL CONTROLS KIT(11		1
20	6624289	STA-STRAP			8
21	84G-3112	BOLT			2
22	6674802	CONNECTOR	7pin - See Page SEVEN PIN CONNECTOR KIT(24)		1
22	6669549	SOCKET	small		4
22	6677136	SOCKET	large - 12 ga.		3
23	6900921	INSTRUCTIONS			1

ELECTRICAL CONTROLS KIT
(To Run "G" Series Attachments & Old Attachments) (W/O Toggle Switch)

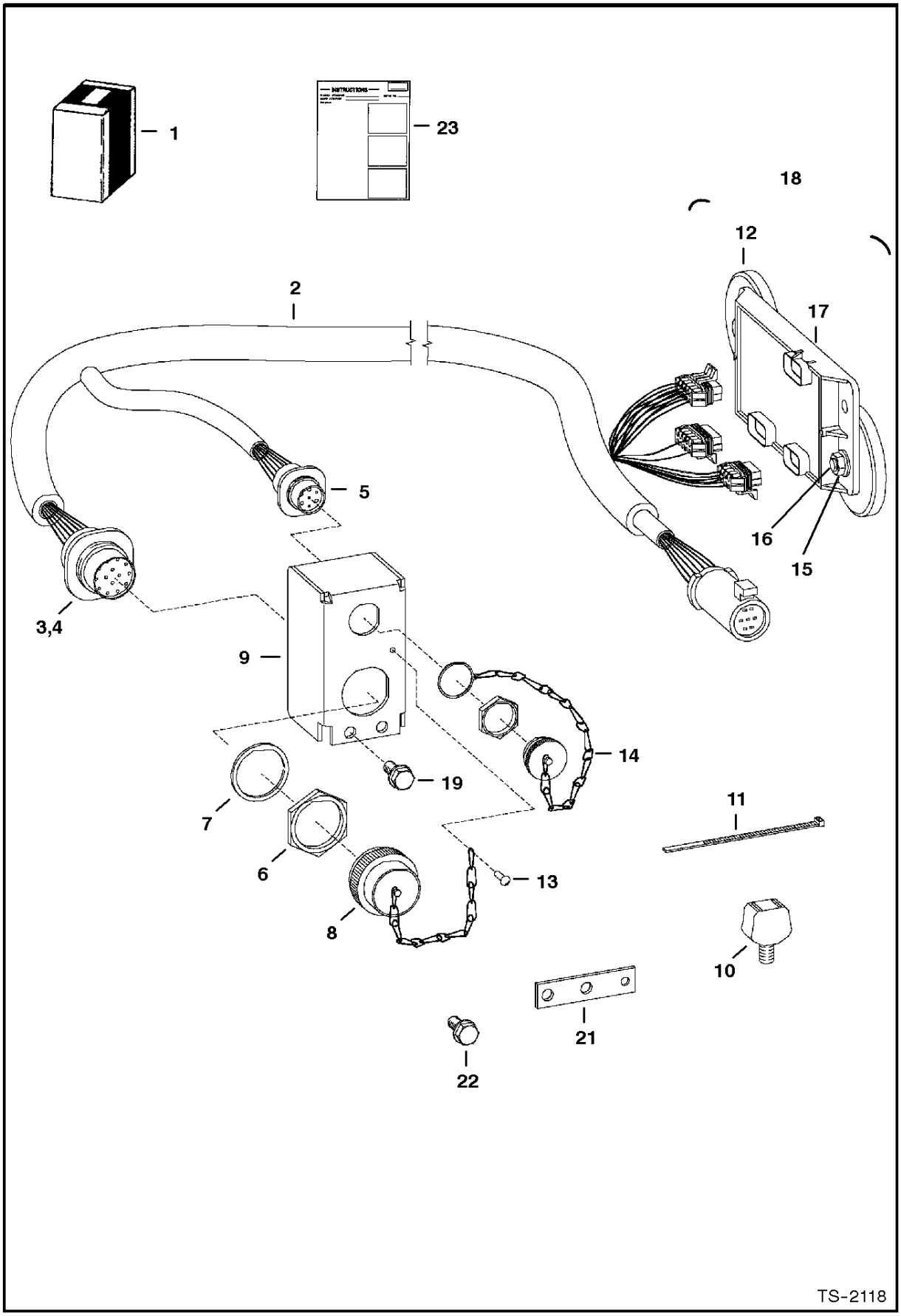

ELECTRICAL CONTROLS KIT

Ref.N°	Part N°	Description	Remarks	Serial N°	Qty.
1	6727739	KIT	Was 6729187 [A]		1
2	6729380	HARNESS	W/Ref. ELECTRICAL CONTROLS KIT(3)-ELECTRICAL CONTROLS KIT(8) & ELECTRICAL CONTROLS KIT(14) - Was 6727177 [A]		1
3	6667569	CONNECTOR	also Order Ref. ELECTRICAL CONTROLS KIT(4) (14)		1
4	6664040	PIN	male		x
5	6674802	CONNECTOR	7pin - See Page SEVEN PIN CONNECTOR KIT(24)		1
5	6669549	SOCKET	small		4
5	6677136	SOCKET	large - 12 ga.		3
6	6664037	WASHER			2
7	6664036	NUT			2
8	6664035	CAP			1
9	6726945	MOUNT			1
10	6675281	MOUNT	773G only		1
11	6624289	STA-STRAP			8
12	6719448	MAGNET	100 lb. force		4
13	6704892	RIVET			1
14	6675026	CAP			2
15	83D-6	NUT			2
16	25G-612	BOLT			2
17	6678675	CONTROLLER	Was 6676514 [A]		1
18	NAP	CONTROLLER	assy - Order Ref. ELECTRICAL CONTROLS KIT(17) & (2) of Ref. ELECTRICAL CONTROLS KIT(12), ELECTRICAL CONTROLS KIT(15) & ELECTRICA		1
19	84G-3112	BOLT			2
20	6729090	HARNESS	extension		1
21	6730291	BRACKET	873G & 883 only		1
22	35C-512	BOLT			2
23	6901116	INSTRUCTIONS			1

EUROPEAN ACCESSORIES
(Caliper Brake Kit) (S/N & Below)

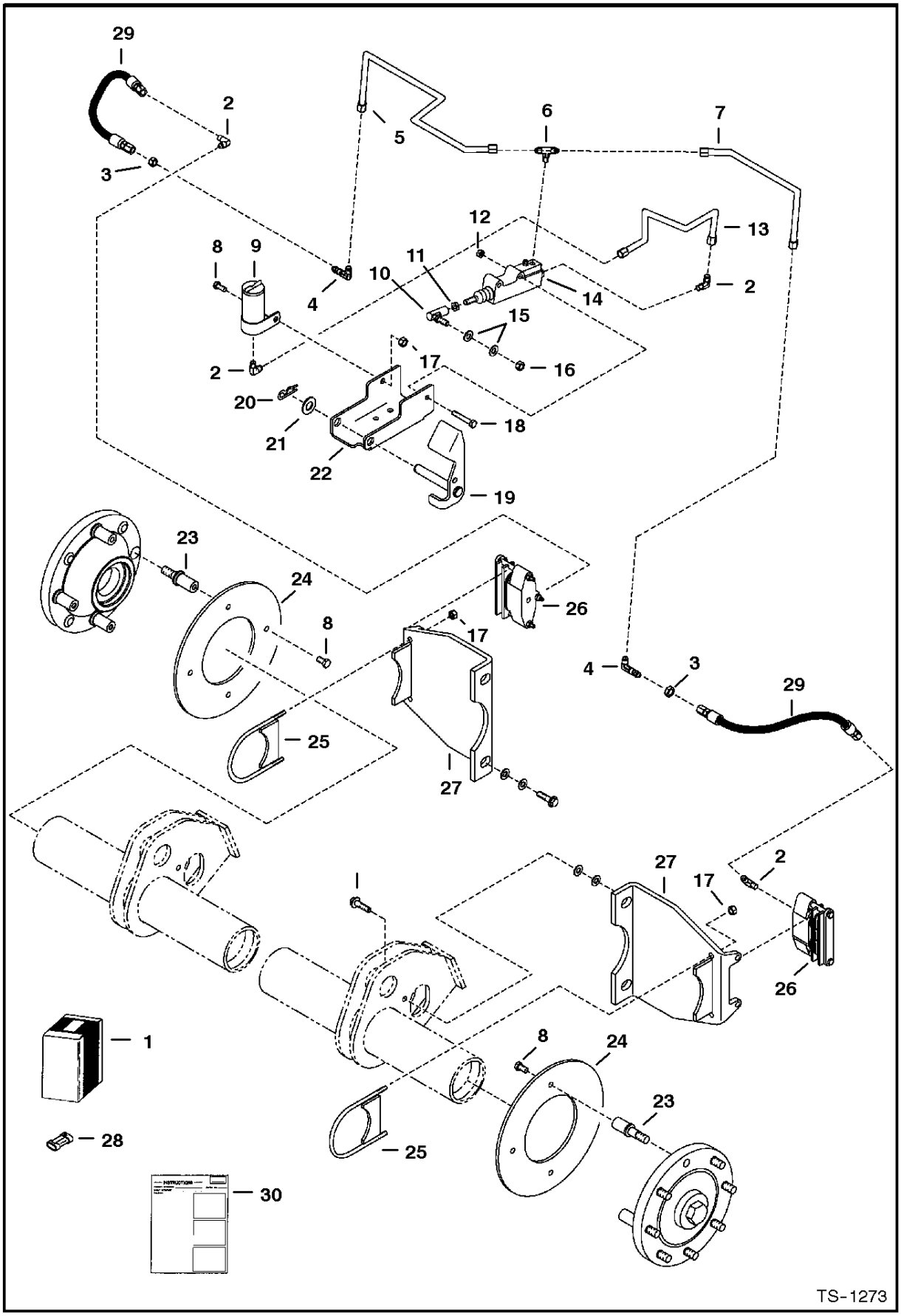

EUROPEAN

Ref.N°	Part N°	Description	Remarks	Serial N°	Qty.
1	NAP	KIT	Ref. EUROPEAN(2)-EUROPEAN(30) - Was 6713519 [A]		1
2	83F-3	ELBOW			4
3	86F-3	NUT			2
4	88F-3	ELBOW			2
5	6709398	TUBELINE			1
6	98F-3	TEE			1
7	6709399	TUBELINE			1
8	17C-612	BOLT			9
9	6661117	TANK			1
10	6599744	BALL JOINT			1
11	8D-6	NUT			1
12	91D-5	NUT			2
13	6709400	TUBE			1
14	6666933	CYLINDER	See Page EUROPEAN(1)		1
15	25E-17	WASHER			2
16	62D-6	NUT			1
17	95D-6	NUT			5
18	17C-532	BOLT			2
19	6709239	PEDAL ASSY			1
20	1318565	PIN			1
21	25E-25	WASHER			1
22	6709236	PEDAL MOUNT	pedal		1
23	6709229	BOLT			8
24	6709234	DISC			2
25	6709361	CLAMP			2
26	6666932	BRAKE ASSY	See Page EUROPEAN(1)		2
27	6713517	MOUNT	caliper		2
28	6667139	CAP			1
29	6713518	HOSE			2
30	6724380	INSTRUCTIONS			1

* EUROPEAN ACCESSORIES
(Caliper Brake Kit) (S/N & Above)

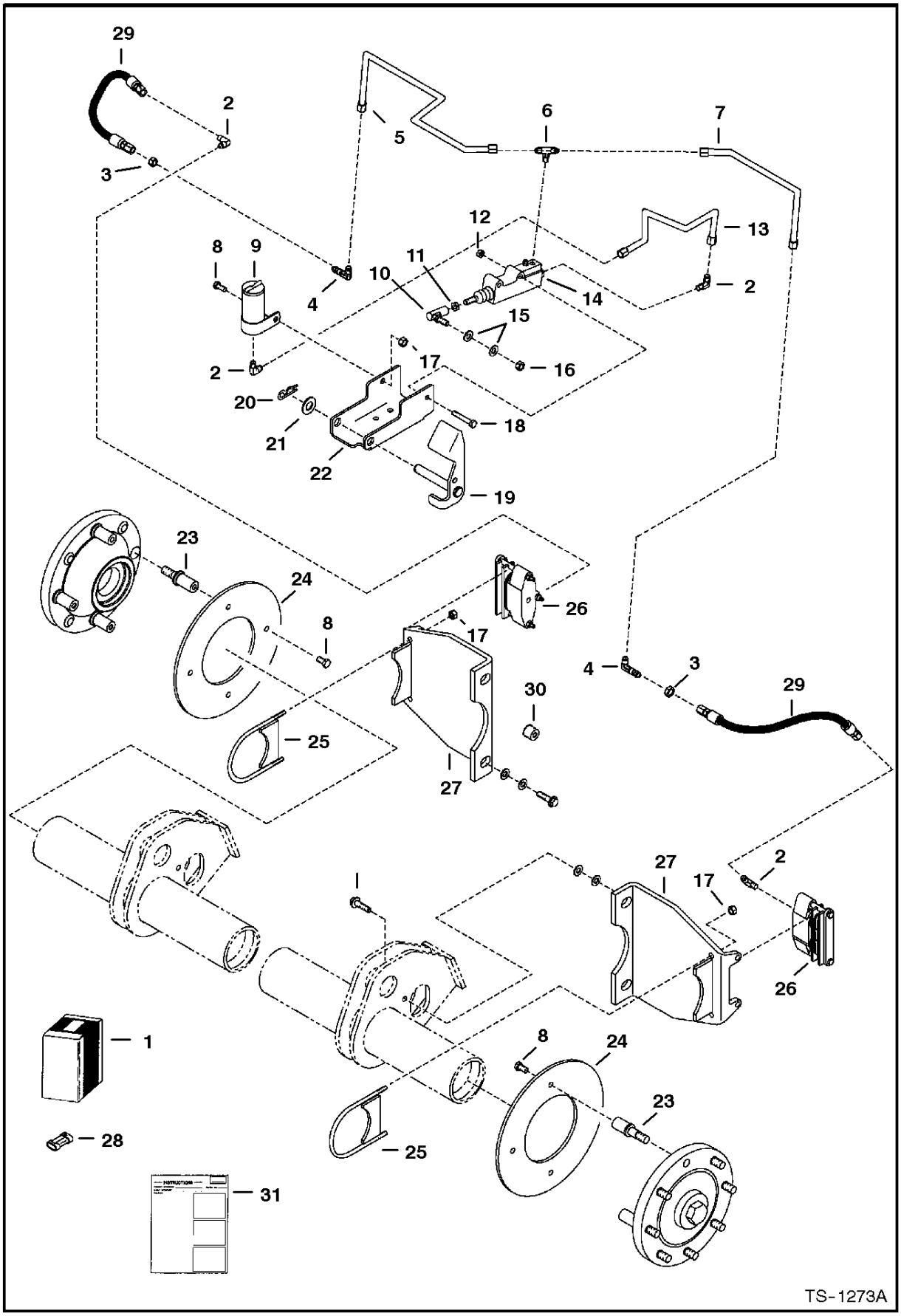

* EUROPEAN

Ref.N°	Part N°	Description	Remarks	Serial N°	Qty.
1	6732096	KIT	Ref. EUROPEAN(2)-EUROPEAN(30)		1
2	83F-3	ELBOW			4
3	86F-3	NUT			2
4	88FN-3	ELBOW			2
5	6709398	TUBELINE			1
6	98F-3	TEE			1
7	6709399	TUBELINE			1
8	17C-612	BOLT			9
9	6661117	TANK			1
10	6599744	BALL JOINT			1
11	8D-6	NUT			1
12	91D-5	NUT			2
13	6709400	TUBE			1
14	6666933	CYLINDER	See Page EUROPEAN(1)		1
15	25E-17	WASHER			8
16	62D-6	NUT			1
17	95D-6	NUT			5
18	17C-532	BOLT			2
19	6709239	PEDAL ASSY			1
20	1318565	PIN			1
21	25E-25	WASHER			1
22	6709236	PEDAL MOUNT	pedal		1
23	6709229	BOLT			8
24	6709234	DISC			2
25	6709361	CLAMP			2
26	6666932	BRAKE ASSY	See Page EUROPEAN(1)		2
27	6732070	MOUNT	caliper		2
28	6667139	CAP			1
29	6713518	HOSE			2
30	6732072	SPACER			2
31	6724380	INSTRUCTIONS			1

EUROPEAN ACCESSORIES
(Master Cylinder - Caliper Brakes)

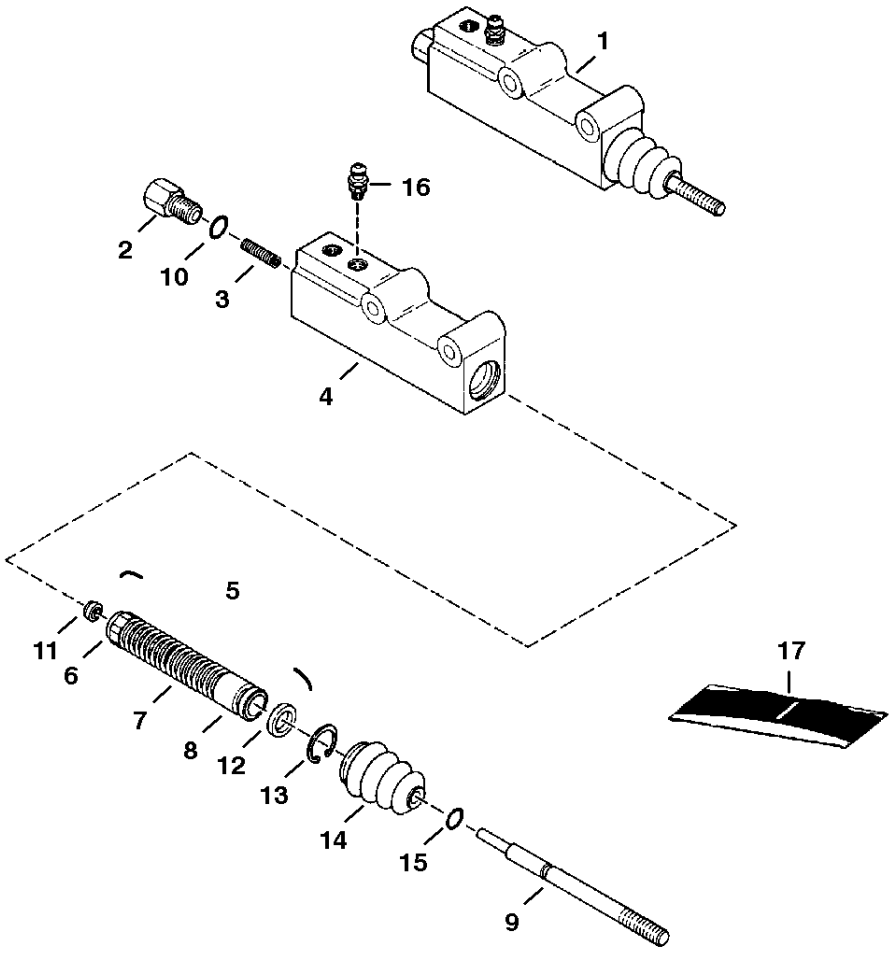

C-3403

EUROPEAN

Ref.N°	Part N°	Description	Remarks	Serial N°	Qty.
1	6666933	CYLINDER	master brake - Ref. EUROPEAN(2)-EUROPEAN(16)		1
2	NSS	ADAPTER			1
3	NSS	SPRING			1
4	NSS	BODY			1
5	NSS	SPRING ASSY.	Ref. EUROPEAN(6)-EUROPEAN(8) & EUROPEAN(11)		1
6	NSS	RETAINER			1
7	NSS	SPRING			1
8	NSS	PISTON			1
9	NSS	PUSH ROD			1
10	NSS	O-RING			1
11	NSS	SEAT			1
12	NSS	CUP			1
13	NSS	SNAP RING			1
14	NSS	BOOT			1
15	NSS	O-RING			1
16	6668097	SCREW	bleeder		1
17	6661608	SEAL KIT	Ref. EUROPEAN(10)-EUROPEAN(15) - Was 6668098 [A]		1

EUROPEAN ACCESSORIES
(Insulation & Hydraulic Muffler)

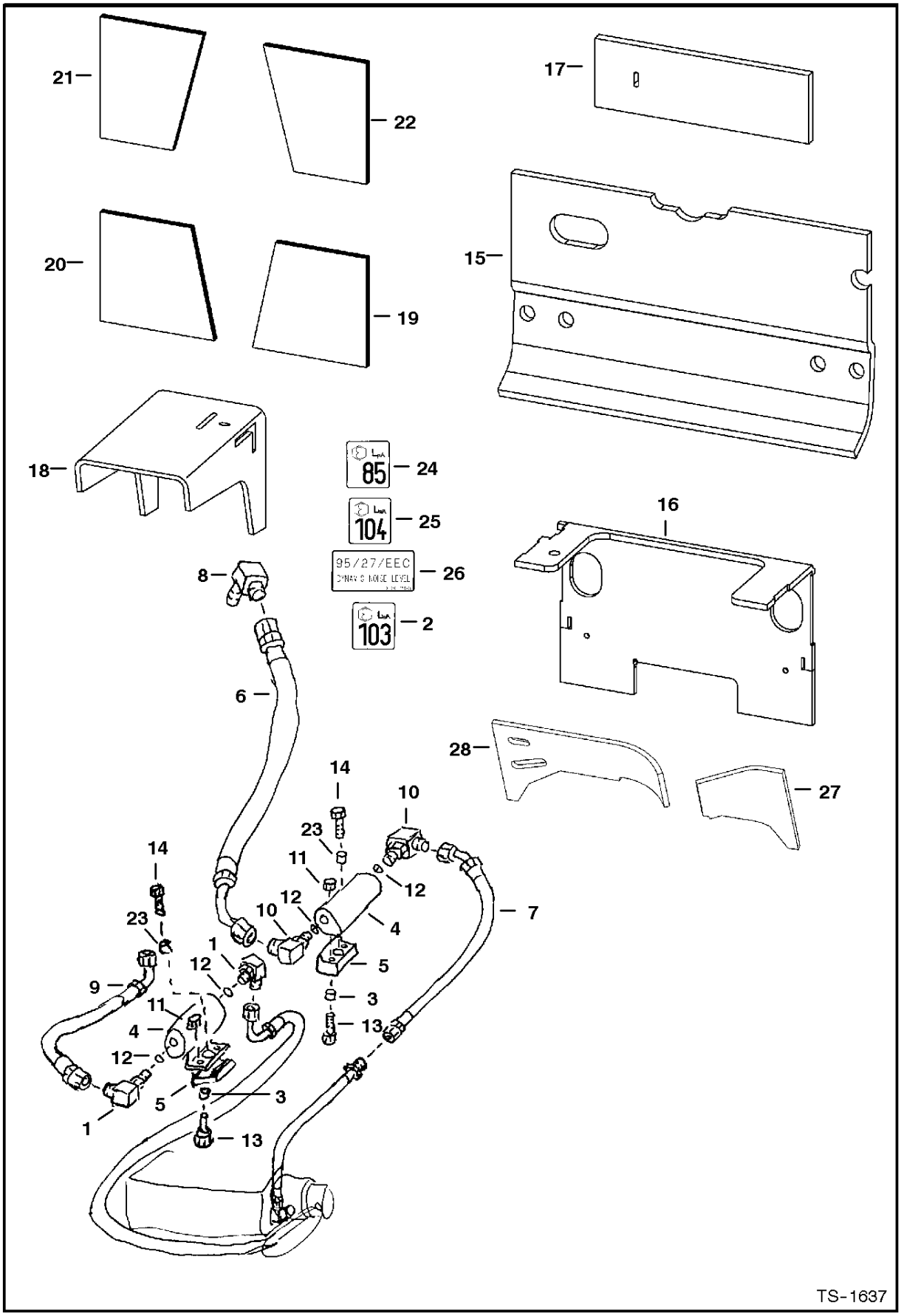

EUROPEAN ACCESSORIES

Ref.N°	Part N°	Description	Remarks	Serial N°	Qty.
1	6715651	ELBOW	W/Ref. EUROPEAN ACCESSORIES(12) - high flow		2
1	97K-10	O-RING	flared end		x
2	6579403	DECAL	noise level - Europe		1
3	6562619	BUSHING	throttle - standard flow		2
3	6562619	BUSHING	throttle - high flow		4
4	6659982	MUFFLER	standard flow		1
4	6659982	MUFFLER	high flow		2
5	6705333	MOUNT	standard flow		1
5	6705333	MOUNT	high flow		2
6	6719480	HOSE	Was 6718073 [A]		1
7	6719481	HOSE	Was 6718072 [A]		1
8	77FN-8	ELBOW	W/Ref. EUROPEAN ACCESSORIES(12) - tapered boss face		1
8	97K-12	O-RING	flared end		x
9	6719482	HOSE	high flow - Was 6715436 [A]		1
10	17KV-8	ELBOW	W/Ref. EUROPEAN ACCESSORIES(12) - tapered boss face		2
10	97K-12	O-RING	flared end		x
11	85D-6	NUT	standard flow		2
11	85D-6	NUT	high flow		4
12	99K-12	O-RING	tapered boss face		x
13	35C-616	BOLT	standard flow		2
13	35C-616	BOLT	high flow		4
14	84G-3724	BOLT	standard flow		1
14	84G-3724	BOLT	high flow		2
15	6715106	INSULATION	rear door		1
16	6715195	INSULATION	steering		1
17	6715389	INSULATION	pedal		2
18	6715390	INSULATION	trans		1
19	6715391	INSULATION	panel		1
20	6715393	INSULATION	panel		1
21	6715434	INSULATION	panel		1
22	6715435	INSULATION	panel		1
23	6715744	BUSHING	standard flow		1
23	6715744	BUSHING	high flow		2
24	6579385	DECAL	noise level - Europe		1
25	6731994	DECAL	noise level - Europe		1
26	6715428	DECAL	dynamic noise level - Europe		1
27	6719333	INSULATION	blower housing		1
28	6719332	INSULATION	blower housing		1

FIRE EXTINGUISHER

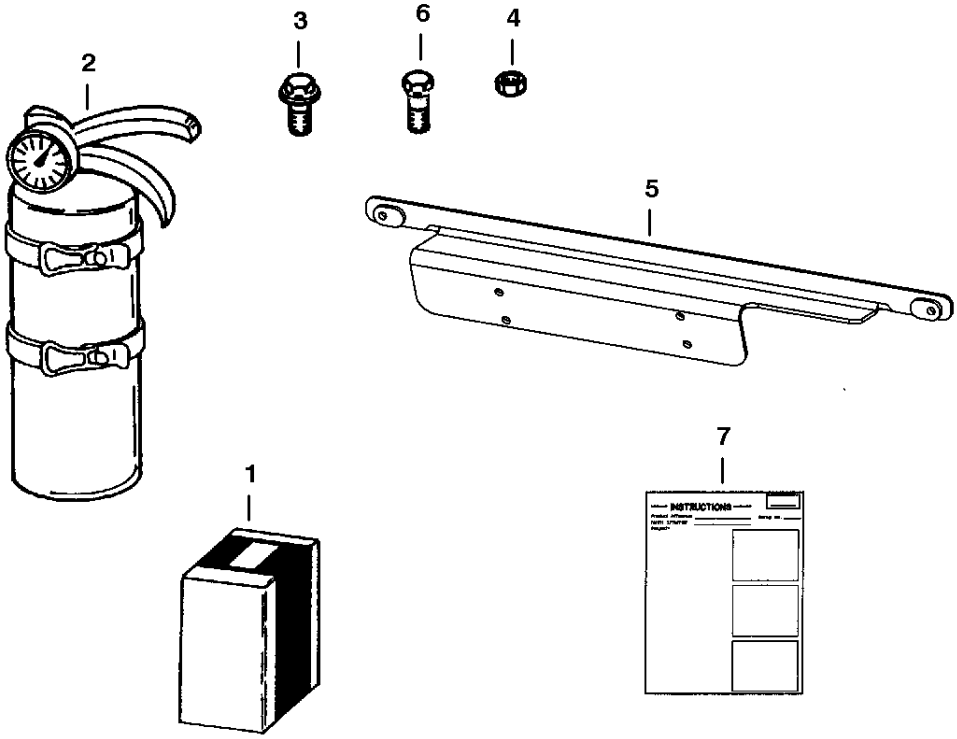

A-2386

FIRE EXTINGUISHER

Ref.N°	Part N°	Description	Remarks	Serial N°	Qty.
1	6725898	KIT	fire extinguisher - Ref. FIRE EXTINGUISHER(2)-FIRE EXTINGUISHER(7)		1
2	6675581	EXTINGUISHER			1
3	45G-1006	BOLT			4
4	12D-10	NUT			4
5	6725906	BRACKET			1
6	31C-410	BOLT			2
7	6901025	INSTRUCTIONS			1

FLASHER LIGHTS
(4-Way / Turn Indicators)

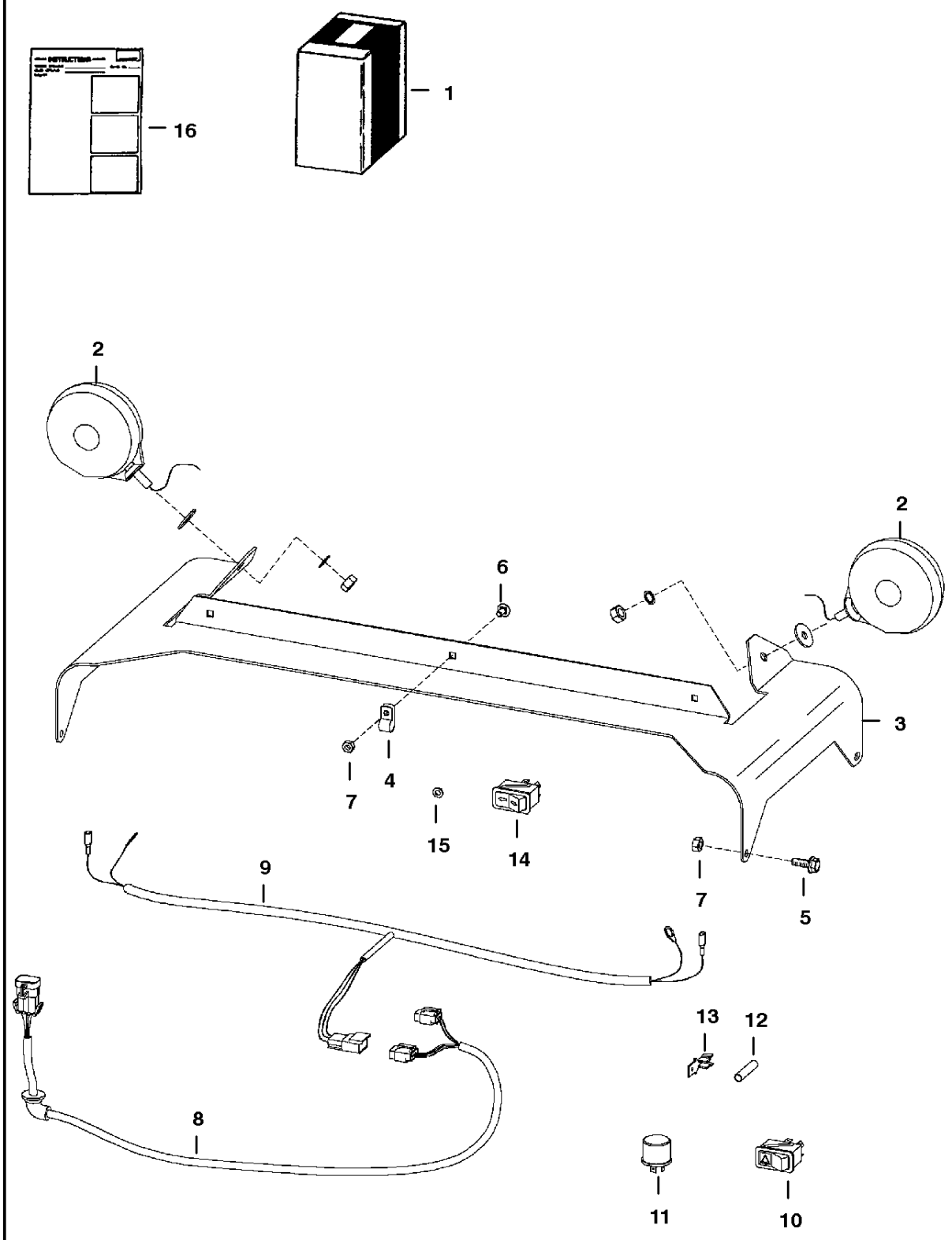

NOTE: If loader is not equipped with Deluxe Cab Option, also order 6727468 Harness. See Page 241

PE-1559

FLASHER LIGHTS

Ref.N°	Part N°	Description	Remarks	Serial N°	Qty.
1	6718411	KIT	Ref. FLASHER LIGHTS (2), FLASHER LIGHTS (3) & FLASHER LIGHTS (5)-FLASHER LIGHTS (16)		1
2	6517516	LIGHT			2
3	6718326	MOUNT			1
4	30H-21	CLAMP	not in kit		3
5	35C-412	BOLT			4
6	37C-412	BOLT			3
7	59D-4	NUT			7
8	6718872	HARNESS	ext. cab		1
9	6718873	HARNESS	4-way flasher		1
10	6665316	SWITCH	horizontal		1
10	6668815	SWITCH	vertical		1
11	6557904	FLASHER			1
12	614142	SLEEVE			1
13	6515131	TERMINAL			1
14	6675835	TURN SIGNAL	horizontal		1
14	6676872	TURN SIGNAL	vertical		1
15	6E-5	WASHER	lock		2
16	6900848	INSTRUCTIONS			1

* FOOT CONTROL KIT
(S/N 5144 46747, 5145 41028, 5146 41069 & Above)

NOTE: Loader must be equipped W/Advanced Hand Control Option for this kit to function.

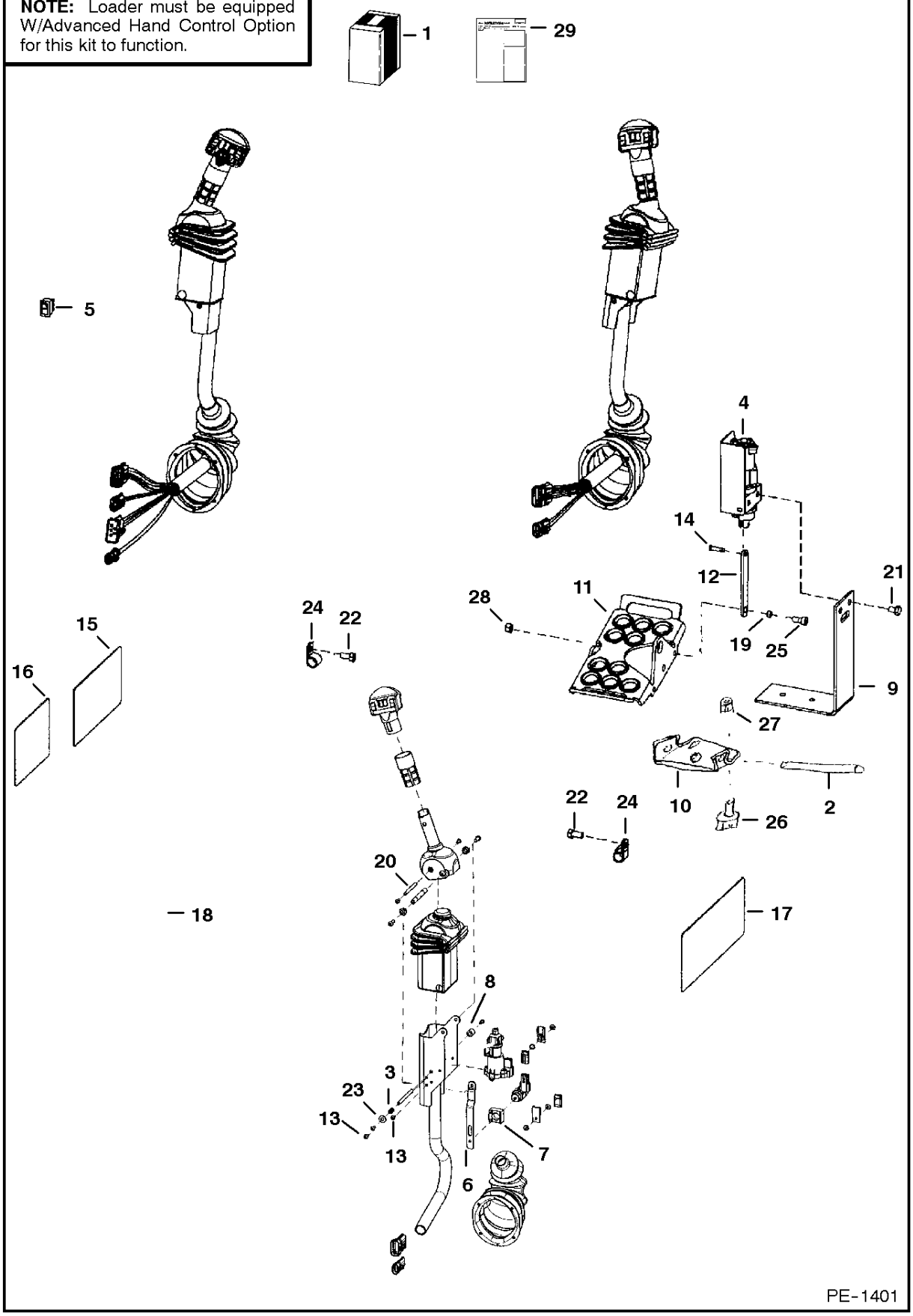

* FOOT CONTROL KIT

Ref.N°	Part N°	Description	Remarks	Serial N°	Qty.
1	6731151	KIT	foot control - SEE NOTE		1
2	6564657	PIN			2
3	6675745	SPRING			2
4	6676493	SENSOR	foot pedal - R.H.		1
4	6676029	SOLENOID			1
4	6676492	SENSOR	foot pedal - L.H.		1
4	6676029	SOLENOID			1
5	6676537	SWITCH			2
6	6719715	STRAP			2
7	6719716	MOUNT	solenoid		2
8	6719835	SLEEVE			2
9	6726573	BRACKET			2
10	6726679	BRACKET	pedal		2
11	6726680	PEDAL			2
12	6726681	LINK			2
13	6727065	BOLT			12
14	6727496	PIN			2
15	6727926	DECAL	operations - 773G, 863G, 873G, 883, 963G		1
15	6728045	DECAL	operations - T190, T200		1
16	6727941	DECAL	ACS operations		1
17	6728539	DECAL	warning - 773G, 863G, 873G, 883, 963G		1
17	6728540	DECAL	warning - T190, T200		1
18	6624289	STA-STRAP			2
19	6729467	SPACER			2
20	6729600	SPACER	threaded		2
21	17C-608	BOLT			4
22	84G-3710	BOLT			2
23	25E-13	WASHER			2
24	30H-62	CLIP			2
25	17C-514	BOLT			2
26	37C-620	BOLT			4
27	95D-5	NUT			2
28	6901492	INSTRUCTIONS			1

F.O.P.S. KIT

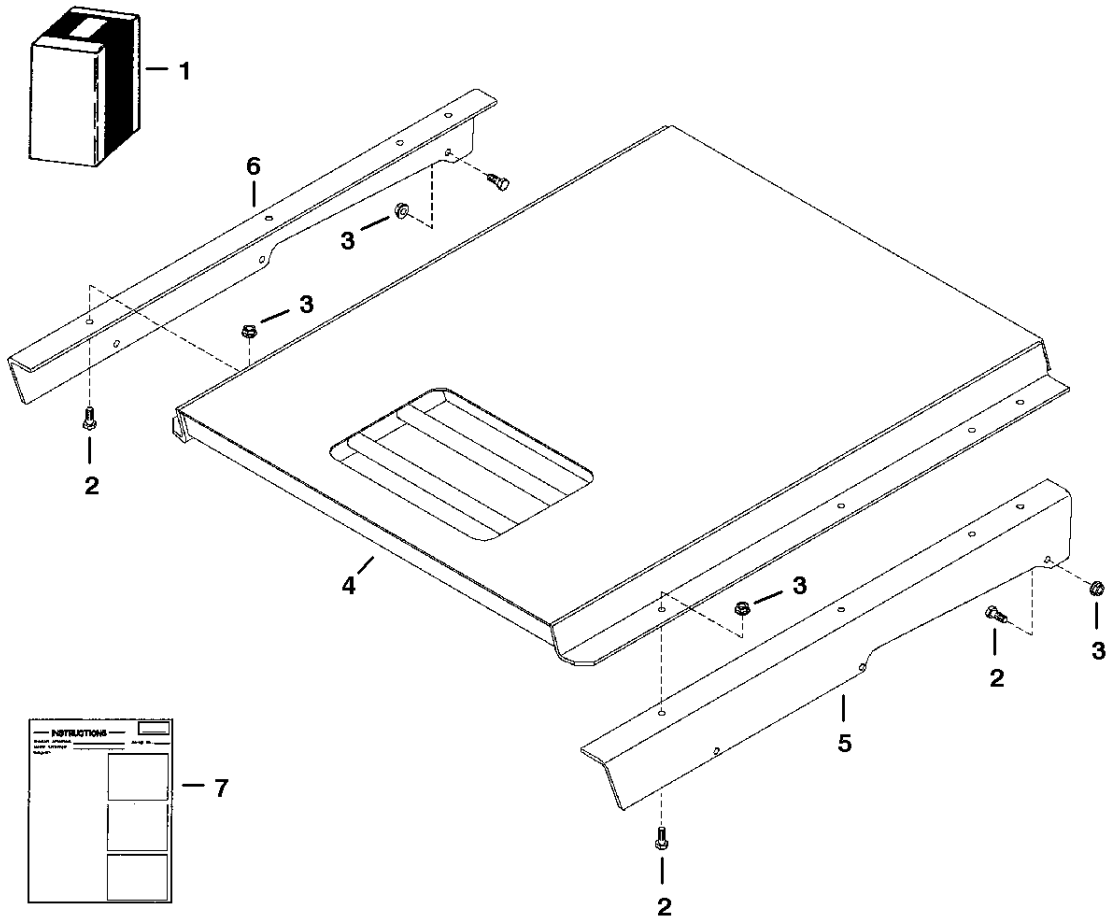

TS-2052

F.O.P.S. KIT

Ref.N°	Part N°	Description	Remarks	Serial N°	Qty.
1	6718924	KIT	Ref. F.O.P.S. KIT(2)-F.O.P.S. KIT(7)		1
2	17C-616	BOLT			14
3	83D-6	NUT			14
4	6702402	SHIELD			1
5	6718833	BRACKET	L.H.		1
6	6718834	BRACKET	R.H.		1
7	6720592	INSTRUCTIONS			1

HAND CONTROL KIT
(W/ Push Button Float)

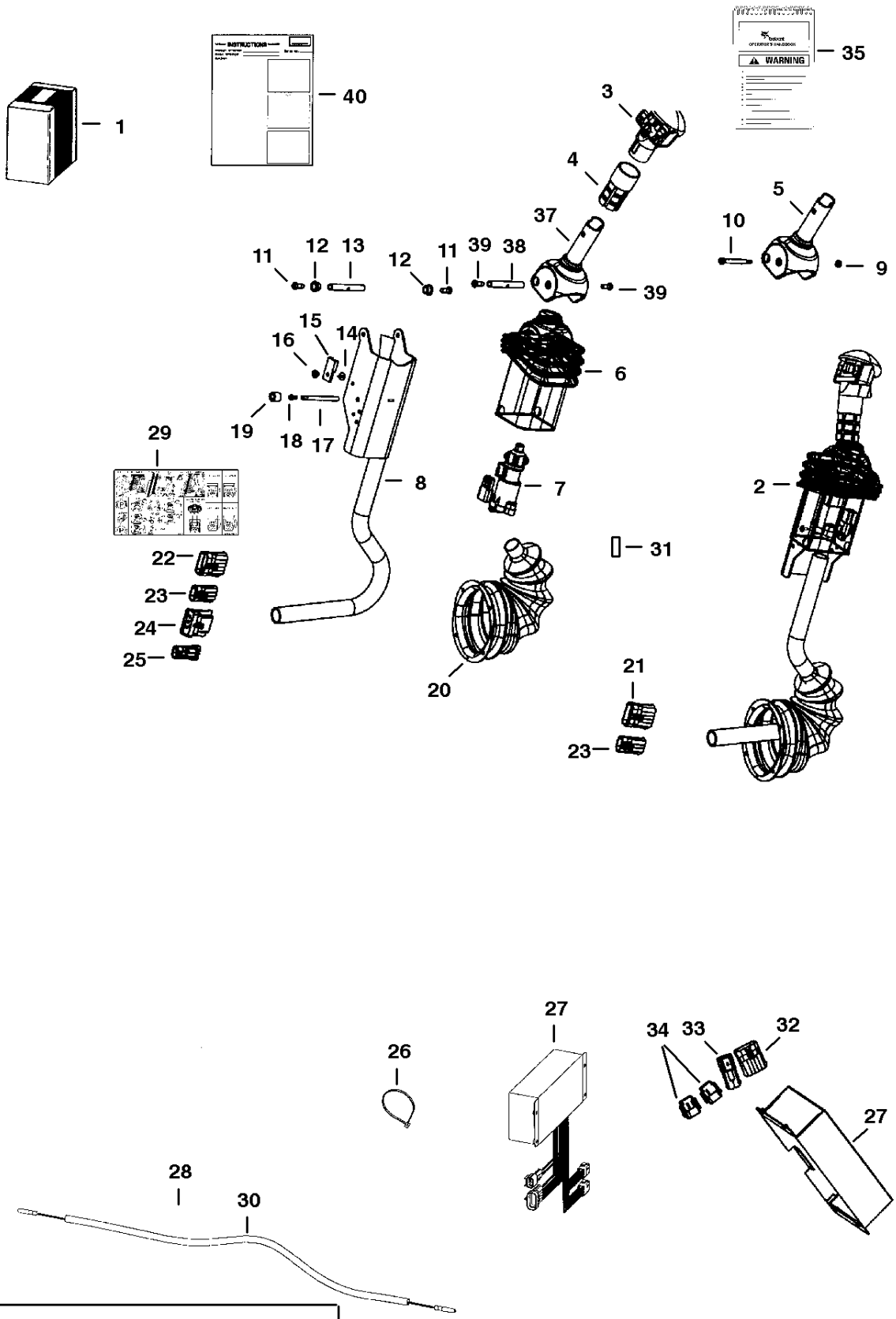

NOTE: Also Order 6900937 O/M manual W/revised date of (6-00) or newer

PE-1046

HAND CONTROL KIT

Ref.N°	Part N°	Description	Remarks	Serial N°	Qty.
1	6727298	KIT	SEE NOTE		1
2	6675742	LEVER	tilt - R.H.		1
2	6675750	LEVER	lift - L.H.		1
3	NAP	HANDLE	lift - R.H. - SEE BTI 335 - Was 6675469 [A]		1
3	6675749	HANDLE	lift - L.H.		1
4	6713349	GRIP			2
5	NAP	HANDLE	R.H. - Order Ref. HAND CONTROL KIT(37)-HAND CONTROL KIT(39) - Was 6597774 [A]	& Bel.	1
5	NAP	HANDLE	L.H. - Order Ref. HAND CONTROL KIT(37)-HAND CONTROL KIT(39) - Was 6717163 [A]	& Bel.	1
6	6713898	COVER			2
7	6675741	SENSOR			2
7	6670706	CONNECTOR	3pin		1
7	6670714	PIN			3
7	6670710	LOCK			1
8	6719712	CHANNEL	R.H.		1
8	6719711	CHANNEL	L.H.		1
9	12D-10	NUT		& Bel.	2
10	6716826	BOLT		& Bel.	2
11	25GT-410	BOLT			8
12	6702990	BUSHING			4
13	6713043	SPACER			4
14	6665321	RIVET	male		2
15	6665000	CLIP			2
16	6665322	RIVET	female		2
17	6719834	SPACER	threaded		2
18	6727065	BOLT			4
19	6719835	SLEEVE			4
20	6532127	BOOT			2
21	6640692	CONNECTOR	10pin		1
21	6640690	PIN			8
21	6640694	LOCK			1
21	6641176	SEAL			8
21	6646582	PLUG	cavity		2
22	6640692	CONNECTOR	10pin		1
22	6640690	PIN			6
22	6640694	LOCK			1
22	6641176	SEAL			6
22	6646582	PLUG	cavity		4
23	6640699	CONNECTOR	3pin		2
23	6640690	PIN			3
23	6641176	SEAL			3
23	6640700	LOCK			3
24	6667144	CONNECTOR	5pin		1
24	6640690	PIN			3
24	6641176	SEAL			3
24	6646582	PLUG	cavity		1
24	6667145	LOCK			1
25	6641179	CONNECTOR	2pin		1
25	6640690	PIN			2
25	6641176	SEAL			2
25	6641180	LOCK			1
26	6610510	NYLON TIE			11
27	6676153	CONTROLLER			1
28	6727155	DECAL			1
29	6727243	DECAL			1

HAND CONTROL KIT

Ref.N°	Part N°	Description	Remarks	Serial N°	Qty.
30	6727328	HARNESS			1
31	6670707	CONNECTOR	3pin		1
31	6670715	SOCKET			3
31	6670711	LOCK			1
32	6640692	CONNECTOR	10pin		1
32	6640690	PIN			9
32	6640694	LOCK			1
32	6641176	SEAL			9
32	6646582	PLUG	cavity		1
33	6648307	CONNECTOR	2pin		1
34	6670709	CONNECTOR	8pin		2
35	6719563	KIT			1
36	6728742	HARNESS	W/ capacitor		1
37	6729594	HANDLE	R.H.	& Abv.	1
37	6729595	HANDLE	L.H.	& Abv.	1
38	6729600	SPACER		& Abv.	1
39	6727065	BOLT		& Abv.	2
40	6901100	INSTRUCTIONS			1

HEATER & A/C
(Heater Plumbing Kit)

NOTE: For Heater Kit See Page 322.

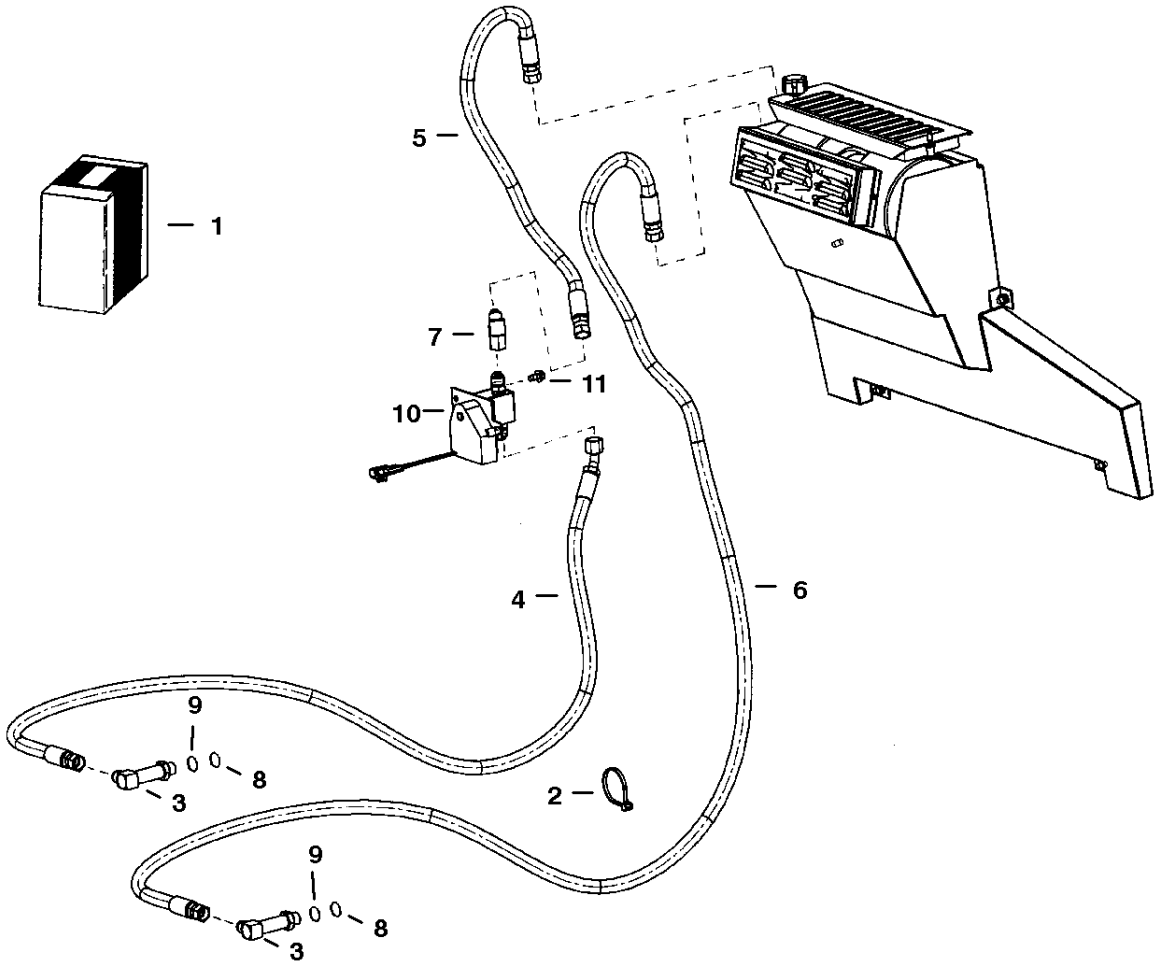

PE-1555

HEATER & A/C

Ref.N°	Part N°	Description	Remarks	Serial N°	Qty.
1	6718810	KIT	Ref. HEATER & A/C(2)-HEATER & A/C(7)		1
2	6624289	STA-STRAP			3
3	6719395	CONNECTOR	W/Ref. HEATER & A/C(8) & HEATER & A/C(9)		2
4	6719914	HOSE	Was 6719533 [A]		1
5	6719514	HOSE	Was 6719534 [A]		1
6	6719515	HOSE	Was 6719535 [A]		1
7	12KN-6	ELBOW			1
8	6676540	O-RING			x
9	NSS	BACKAUP RING			x
10		VALVE	heater - not in kit - See Page HEATER & A/C(9)		1
11	84G-3110	BOLT	not in kit		2

HEATER & A/C
(Heater Kit)

NOTE: For loaders S/N 5144 40001-40450, 5145 40001- 40002, 5146 40001 W/deluxe cab, also Order Ref. 30. Relocates the power source.

NOTE: If loader is not equipped with deluxe cab headliner, also order Deluxe Cab Kit 6718804 on Page NO TAG.

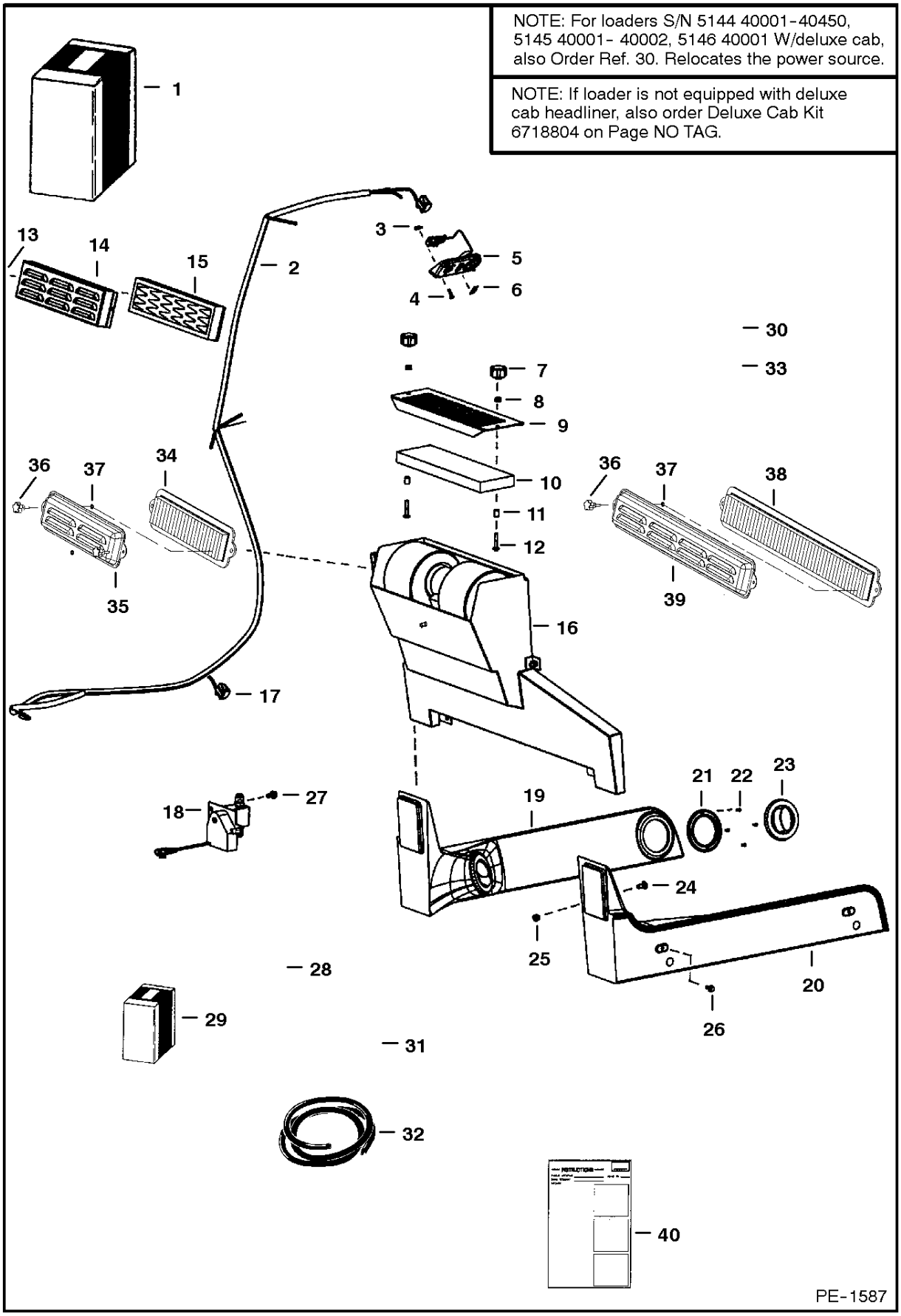

HEATER & A/C

Ref.N°	Part N°	Description	Remarks	Serial N°	Qty.
1	6718803	HEATER KIT	Ref. HEATER & A/C(2)-HEATER & A/C(28) & HEATER & A/C(38) - SEE NOTE		1
2	NAP	HARNESS	HVAC - Order 6725933inD1}] Harness - Was 6725275 [A]	& Bel	1
2	6725933	HARNESS	HVAC - W/Ref. HEATER & A/C(17) - Was 6717877 [A]	& Abv	1
3	6669091	CLIP	retainer		3
4	6669224	BOLT			3
5	6674228	PANEL	control		1
5	6640699	CONNECTOR			1
5	6718579	DECAL			1
5	6718887	PANEL	A/C		1
5	6675176	SWITCH	blower		1
5	6675177	KNOB			2
5	6675846	POTENTIOMETER	Was 6675178 [A]		1
6	6675181	PLUG	switch hole		1
7	6674741	KNOB			2
8	83D-4	NUT			2
9	6718175	SCREEN	filter		1
10	6674229	FILTER	recirculation		1
11	6718837	SPACER			2
12	37C-424	BOLT			2
13	87G-1008	SCREW			2
14	NAP	COVER	filter - Order Ref. HEATER & A/C(31), HEATER & A/C(32) & (2) ea. of Ref. HEATER & A/C(33) & HEATER & A/C(34) - Was 6674236 [A]		1
15	NAP	FILTER	Order Ref. HEATER & A/C(31), HEATER & A/C(32) & (2) ea. of Ref. HEATER & A/C(33) & HEATER & A/C(34) - Was 6674230 [A]		1
16		HEATER	See Page HEATER & A/C(10)		1
17	6670312	SOLENOID	relay		1
18	NAP	VALVE	Order 6675684inD1}g Valve & 6725936 harness - Was 6674227 [A]		1
18	6675684	VALVE			1
18	6640699	CONNECTOR			1
18	6675175	BRACKET			1
18	6675172	BRACKET			1
18	6675173	ACTUATOR			1
18	6675174	BODY			1
18	6677628	SHAFT ADAPTER	adapter		1
19	6717644	DUCT	L.H.		1
20	6717643	DUCT	R.H.		1
21	6675179	FLANGE			4
22	57G-608	SCREW			16
23	6674231	VENT	round		4
23	6675180	VENT			4
24	37C-512	BOLT			4
25	59D-5	NUT			4
26	35C-410	BOLT			4
27	84G-3110	BOLT			2
28	774220	NUT	spring		2
29	6725513	DECAL PACKAGE	decal		1
30	6725390	HARNESS	jumper - HVAC to deluxe accessory harness - SEE NOTE - 72' (1829mm) long		1
31	6727140	FILTER			1
32	6726608	COVER			1
33	6726386	KNOB			2
34	6676516	NUT	push		2

HEATER & A/C

Ref.N°	Part N°	Description	Remarks	Serial N°	Qty.
35	6725934	HARNESS	jumper - 4' (101,6 mm) long - connects 4Ref. HEATER & A/C(2) (6725933 Harness) to Ref. HEATER & A/C(18) (NAP/6674227 4Valve)		1
35	6725936	HARNESS	jumper - 8' (203,2 mm) long - connects 4Ref. HEATER & A/C(2) (NAP/6725275 Harness or NAP/6717877 Harness) to Ref. HEATER & A/C(		x
36	6677983	FILTER			1
37	6727847	COVER			1
38	6900850	INSTRUCTIONS			1

HEATER & A/C
(Heater Assembly) (S/N & Below)

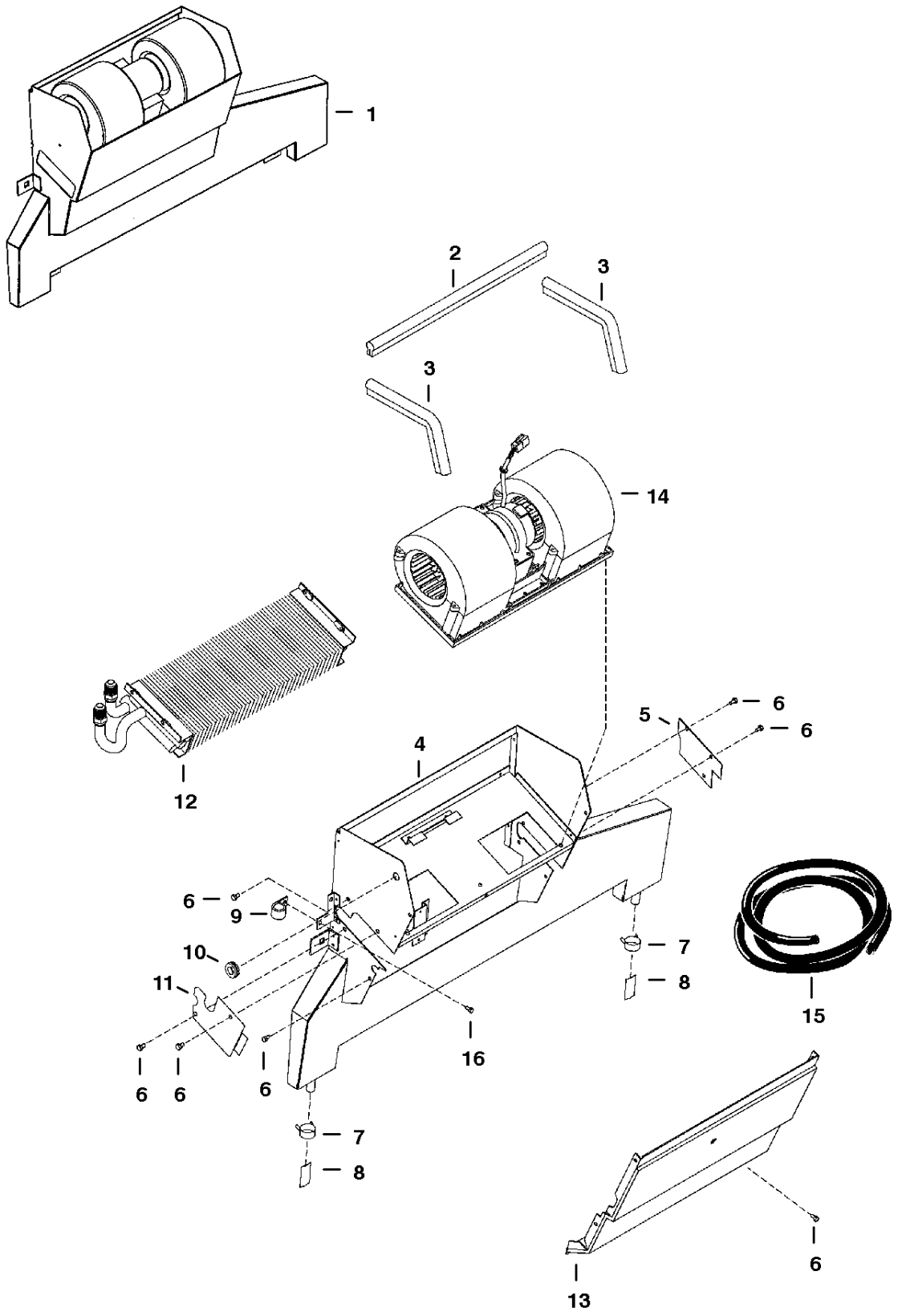

NOTE: See Page 335 for insulation

PE-1141

HEATER & A/C

Ref.N°	Part N°	Description	Remarks	Serial N°	Qty.
1	NAP	HEATER	Ref. HEATER & A/C(2)-HEATER & A/C(16) - Order 6676562 - See Page HEATER & A/C(11) - Was 66749 33 [A]		1
2	NAP	SEAL	14.75'(375 mm) long - Order Ref. HEATER & A/C(15)4		1
3	NAP	SEAL	8.5'(215 mm) long - Order Ref. HEATER & A/C(15)		2
4	6675499	HOUSING	SEE NOTE		1
5	6675502	PLATE	cover		1
6	6677580	SCREW			13
7	6675510	CLAMP			2
8	6675511	DRAIN VALVE			2
9	6675512	CLAMP			2
10	6675513	GROMMET			2
11	6675501	PLATE	cover		1
12	NAP	COIL	See Page HEATER & A/C(1) - Was 6675498 [A]		1
13	6675500	COVER	SEE NOTE		1
14	6675497	BLOWER	See Page HEATER & A/C(13)		1
15	6675514	SEAL	bulk - sold per foot - See Page HEATER & A/C(15)		x
16	6677118	SCREW			2

HEATER & A/C
(Heater Assembly) (S/N & Above)

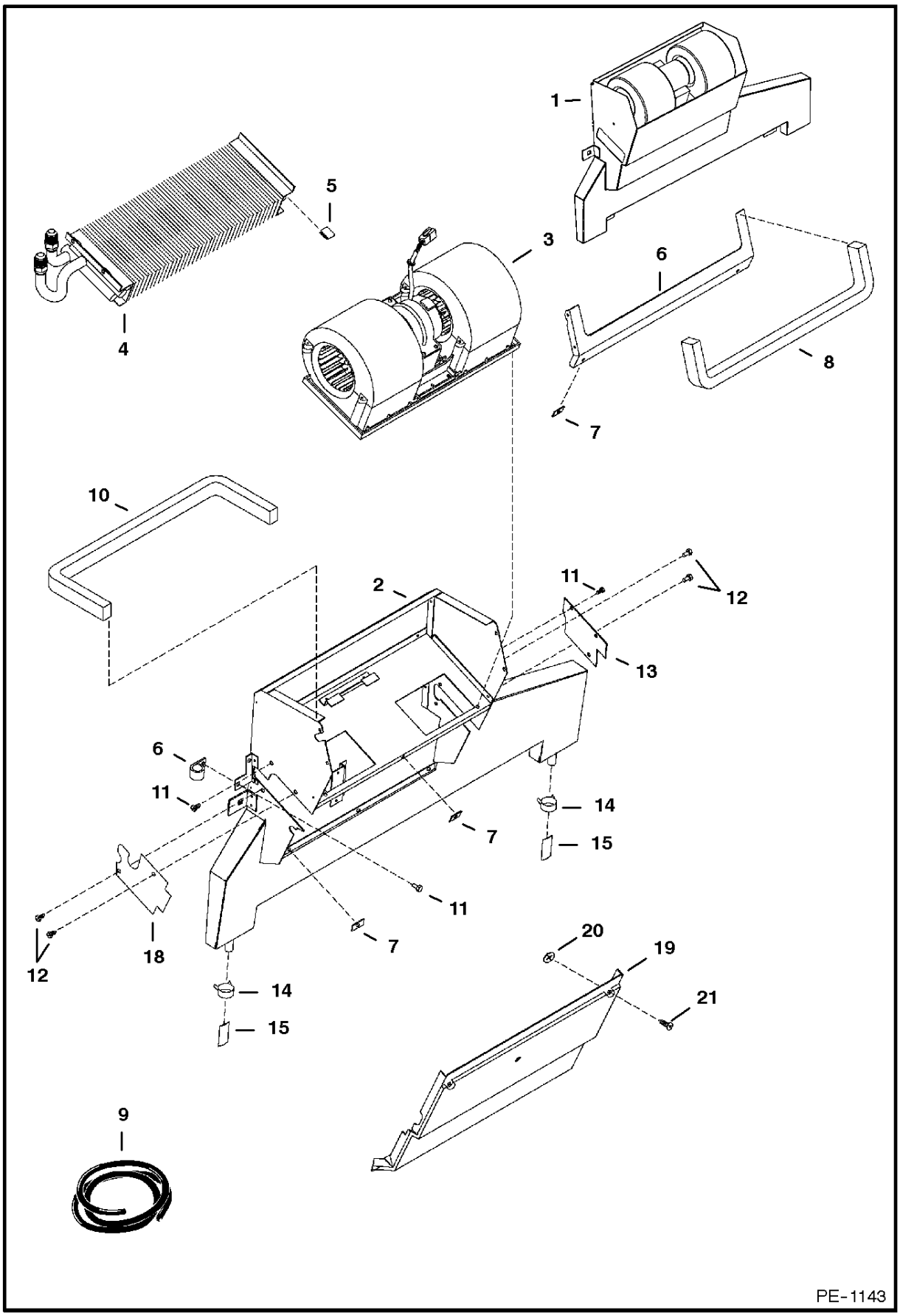

HEATER & A/C

Ref.N°	Part N°	Description	Remarks	Serial N°	Qty.
1	6676562	HEATER	assy - Ref. HEATER & A/C(2)-HEATER & A/C(12)		1
2	6677108	HOUSING			1
3	6675497	BLOWER	assy - See Page HEATER & A/C(13)		1
4	NAP	COIL	heater - See Page HEATER & A/C(1) - Was 6676603 [A]		1
5	6676539	CLIP			1
6	NAP	FLANGE	Order 6678152 & Ref. HEATER & A/C(19) (6678151 cover) - Was 6677114 [A]		1
6	6678152	SEAL			1
7	6677115	RECEPTACLE			6
8	NAP	SEAL	822.6'(575mm) long - Order Ref. HEATER & A/C(9)		1
9	6677111	SEAL	bulk - Sold Per Foot		x
10	NAP	SEAL	25'(635mm) long - Order Ref. HEATER & A/C(9)		1
11	6726621	SCREW	sheetmetal		7
12	6677118	SCREW	w/washer		4
13	6677120	COVER			1
14	6675510	CLAMP	drain hose		2
15	6675511	DRAIN VALVE			2
16	6675512	CLAMP	hose		2
17	6675573	DISC			1
18	6677504	COVER	Was 6676604 [A]		1
19	NAP	COVER	Order 6678151 & Ref. HEATER & A/C(6) (6678152 flange) - Was 6677109 [A]		1
19	6678151	COVER			1
20	6677116	RETAINER			6
21	6677117	SCREW	captive		6

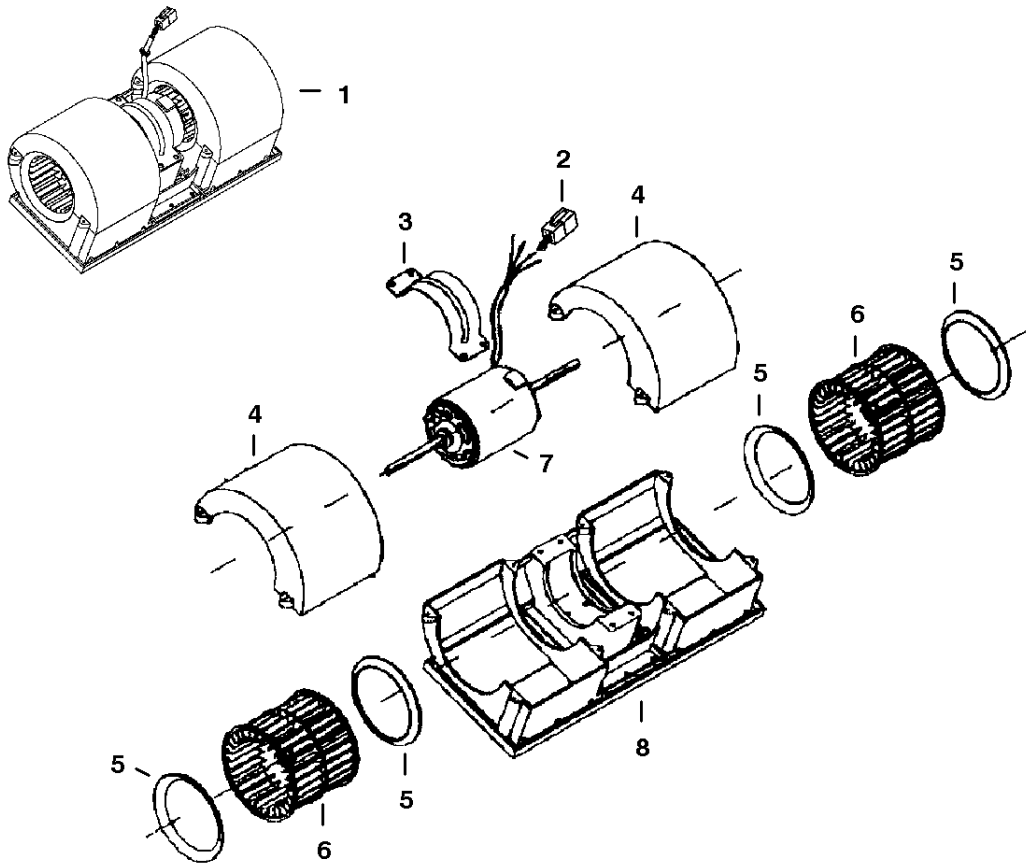
1
2
3
4
5
6
7
8
B-16401

HEATER & A/C

Ref.N°	Part N°	Description	Remarks	Serial N°	Qty.
1	6675497	BLOWER	Ref. HEATER & A/C(2)-HEATER & A/C(8)		1
2	6662246	CONNECTOR	6pin - Was 6728567 [B,D]		1
2	6662252	LOCK	6pin		1
2	6662257	PIN			4
2	6665370	PLUG			2
3	6675506	MOUNT			1
4	6675507	COVER			2
5	6675504	RING			4
6	6675505	BLOWER WHEEL			2
6	6676618	CLIP			2
7	6675509	MOTOR	W/Ref. HEATER & A/C(2)		1
8	6675503	HOUSING			1

HEATER & A/C
(Blower Seal Kit)

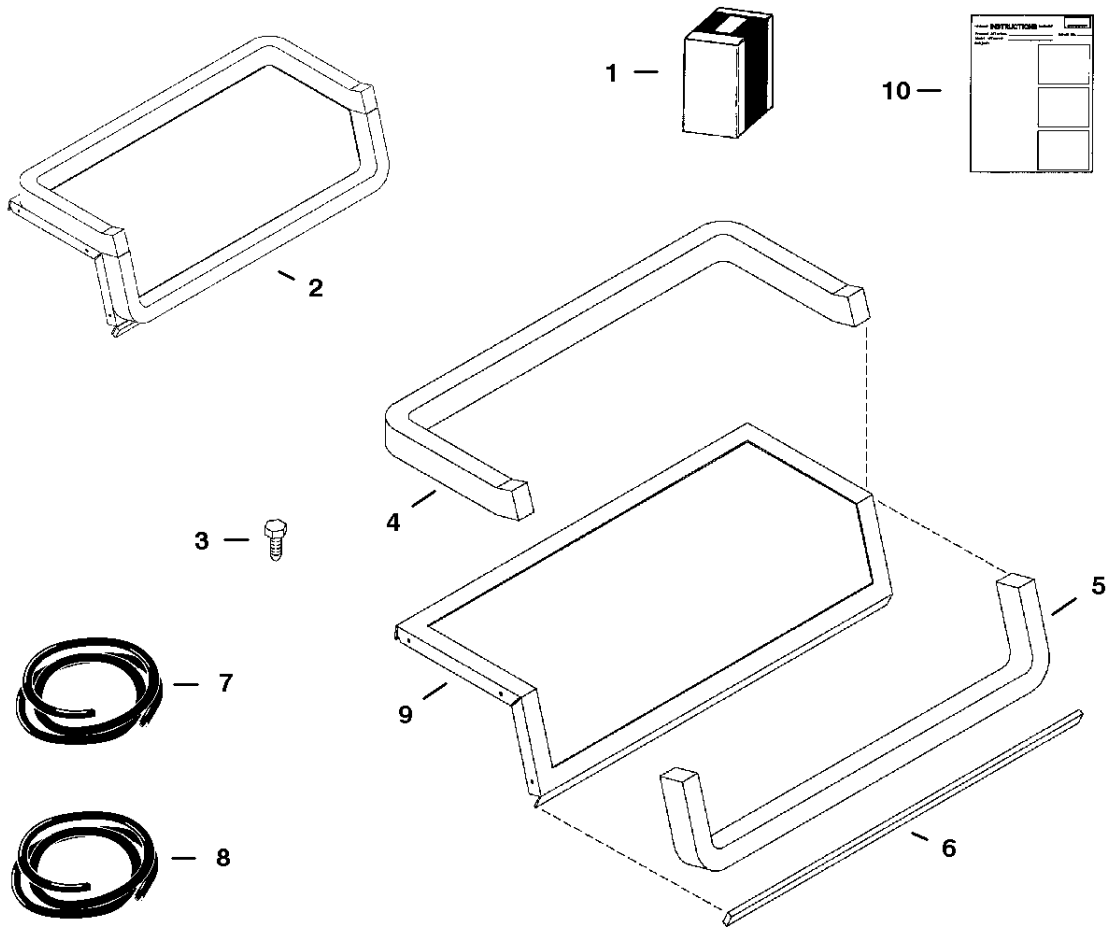

PE-1151

HEATER & A/C

Ref.N°	Part N°	Description	Remarks	Serial N°	Qty.
1	6728567	KIT	blower seal - W/Ref. HEATER & A/C(2), HEATER & A/C(3) & HEATER & A/C(10)		1
2	NSS	FLANGE SEAL	assy - Ref. HEATER & A/C(4), HEATER & A/C(5), HEATER & A/C(6) & HEATER & A/C(9) - Order Ref. HEATER & A/C(1)		1
3	6726621	SCREW			7
4	NAP	SEAL	27' (686mm) long - Order Ref. HEATER & A/C(8)		1
5	NAP	SEAL	21' (534mm) long - Order Ref. HEATER & A/C(8)		1
6	NAP	SEAL	15' (384mm) long - Order Ref. HEATER & A/C(7)		1
7	6675611	SEAL	bulk - sold per foot		x
8	6677111	SEAL	bulk - sold per foot		x
9	NSS	FLANGE	Order Ref. HEATER & A/C(1)		1
10	6901213	INSTRUCTIONS			1

HEATER & A/C
(Insulation)

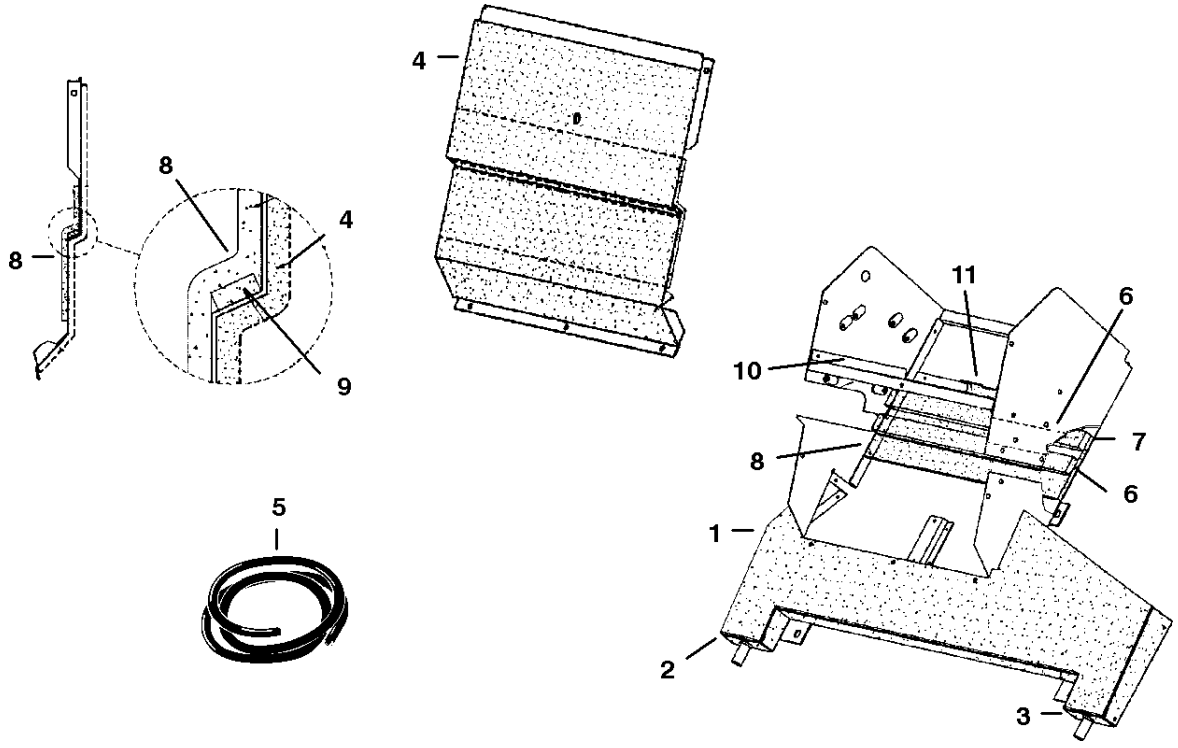

B-16402

HEATER & A/C

Ref.N°	Part N°	Description	Remarks	Serial N°	Qty.
1	6675607	INSULATION			1
2	6675608	INSULATION			1
3	6675609	INSULATION			1
4	6675610	INSULATION			1
5	6675611	SEAL	bulk - Sold Per Foot		x
6	6675612	INSULATION			2
7	6675613	INSULATION			1
8	6675614	INSULATION			2
9	NAP	SEAL	15' (381mm) long - Order Ref. HEATER & A/C(5)		1
10	NAP	SEAL	5.5' (140mm) long - Order Ref. HEATER & A/C(5)		1
11	NAP	SEAL	4' (101,6mm) long - Order Ref. HEATER & A/C(5)		1

HEATER & A/C
(Heater Coil Kit)

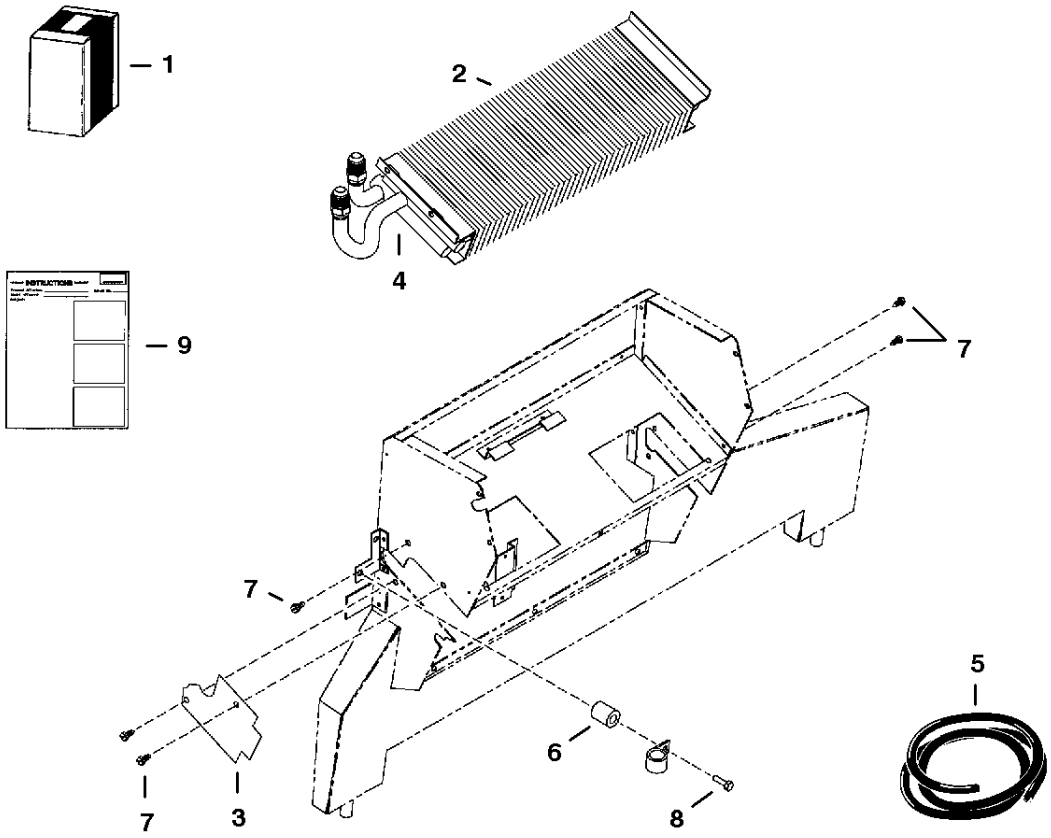

PE-1228

HEATER & A/C

Ref.N°	Part N°	Description	Remarks	Serial N°	Qty.
1	6728990	KIT	heater coil - W/Ref. HEATER & A/C(2)-HEATER & A/C(9)		1
2	6677394	HEATER COIL			1
3	6677504	COVER	.279' (7,1mm) thick - Was 6676604 [A]		1
4	NAP	INSULATION	6 (152mm) long - Order Ref. HEATER & A/C(5)		1
5	6676538	INSULATION	bulk - sold per foot		x
6	6676606	SPACER			1
7	6677579	SCREW			4
8	6676653	SCREW			1
9	6901120	INSTRUCTIONS			1

HEATER & A/C
(A/C Kit)

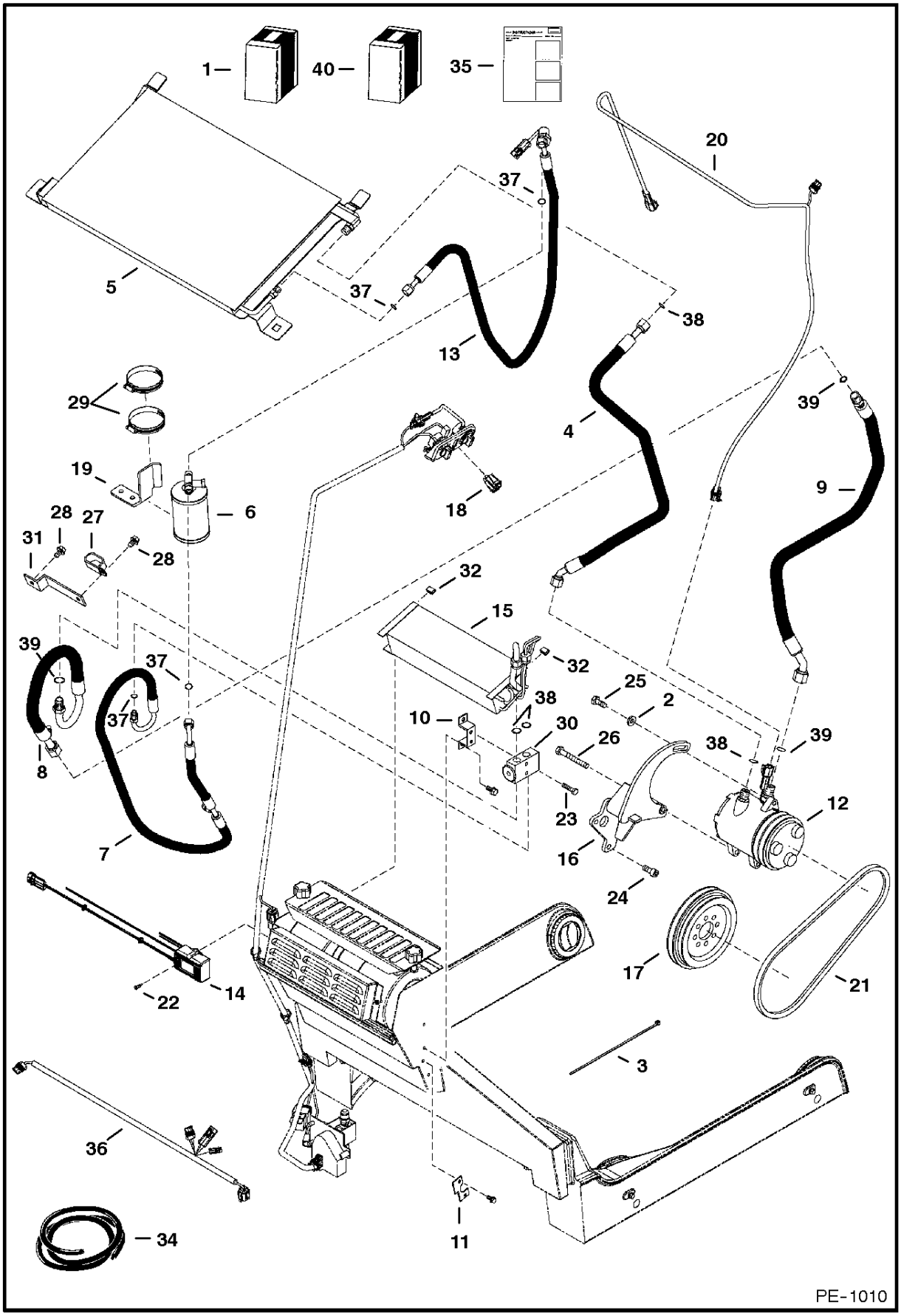

HEATER & A/C

Ref.N°	Part N°	Description	Remarks	Serial N°	Qty.
1	6726490	KIT	Ref. HEATER & A/C(2) - HEATER & A/C(35)		1
2	6557831	WASHER			1
3	6624289	STA-STRAP			1
4	6674232	HOSE	A/C - W/Ref. HEATER & A/C(38)		1
5	6674234	CONDENSER			1
6	6674235	RECEIVER DRIER	reciever		1
6	6676062	RELIEF VALVE	relief		1
7	6675075	HOSE	A/C - W/Ref. HEATER & A/C(37)		1
7	6677122	CAP	plastic		1
8	6675076	HOSE	A/C - W/Ref. HEATER & A/C(39)		1
8	6677121	CAP	plastic		1
9	6675270	HOSE	A/C - W/Ref. HEATER & A/C(39)		1
10	6676984	BRACKET	valve - Was 6675536 [A]		1
11	6677105	COVER	plate - Was 6675537 [A]		1
12	6675667	COMPRESSOR			1
12	6675828	CLUTCH			1
13	6675685	HOSE	A/C - W/Ref. HEATER & A/C(37)		1
13	6675779	SWITCH	pressure - W/ harness		1
13	6676399	VALVE CORE			1
14	6675790	THERMOSTAT			1
15	6675533	COIL	evaporator		1
16	6717375	MOUNT	compressor		1
17	6718310	PULLEY	engine		1
18	6719176	SWITCH	rocker		1
19	6719459	MOUNT	reciever drier		1
20	6719630	HARNESS	A/C		1
21	6725943	BELT	compressor		1
22	6726621	SCREW			2
23	1CM-635	BOLT			2
24	3GM-1025	SCREW			3
25	5CM-1025	BOLT			1
26	5CM-1080	BOLT			1
27	31H-46	CLAMP	Was 31H-42 [B]		1
28	84G-3710	BOLT			2
29	6515576	CLAMP			2
30	6675534	BLOCK VALVE			1
31	6727326	MOUNT	clamp	5144 43289 & Abv.	1
32	6676539	CLIP			2
33	NAP	INSULATION	tape - 6' (152,4mm) long - Order Ref. HEATER & A/C(34)		1
34	6676538	INSULATION	bulk - sold per foot		x
35	6901039	INSTRUCTIONS			1
36	6726357	HARNESS	4HVAC jumper - connects the HVAC harness (6725275 or 6717877) to the AC harness	5144 41581 & Bel.	1
37	6675824	O-RING	#6		x
38	6675538	O-RING	#8		x
39	6675825	O-RING	#10		x
40	6676063	KIT	fitting caps		1

HEATER & A/C
(HVAC Assembly) (S/N & Below)

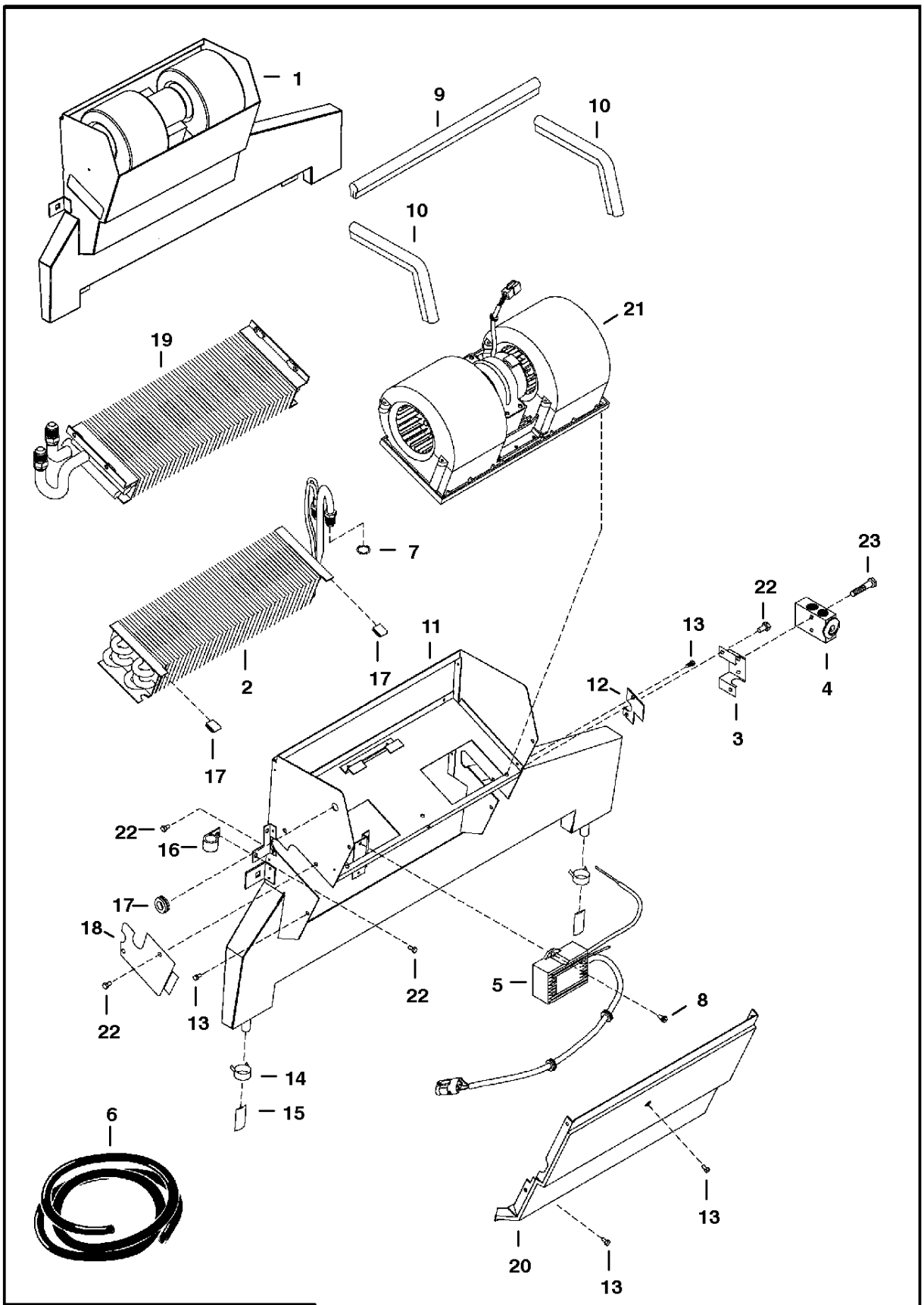

NOTE: See Page 335 for insulation

PE-1140

HEATER & A/C

Ref.N°	Part N°	Description	Remarks	Serial N°	Qty.
1	NAP	HEATER/AC	Ref. HEATER & A/C(2)-HEATER & A/C(23) - Order 6676561 - See Page HEATER & A/C(18) - Was 6674226 [A]		1
2	6675533	COIL	evaporator		1
3	6676984	BRACKET	valve support - Was 6675536 [A]		1
4	6675534	BLOCK VALVE			1
5	6675790	THERMOSTAT	Was 6675535 [A]		1
6	6675514	SEAL	bulk - Sold Per Foot - See Page HEATER & A/C(15)		x
7	6675538	O-RING			2
8	6726621	SCREW	for mounting thermostat		2
9	NAP	SEAL	14.75'(375 mm) long - Order Ref. HEATER & A/C(6)4		1
10	NAP	SEAL	8.5'(215 mm) long - Order Ref. HEATER & A/C(6)		2
11	6675499	HOUSING	SEE NOTE		1
12	6677105	COVER	cover - Was 6675537 [A]		1
13	6677580	SCREW			10
14	6675510	CLAMP			2
15	6675511	DRAIN VALVE			2
16	6675512	CLAMP			2
17	6675513	GROMMET			2
18	6675501	PLATE	cover		1
19	NAP	COIL	See Page HEATER & A/C(1) - Was 6675498 [A]		1
20	6675500	COVER	SEE NOTE		1
21	6675497	BLOWER	See Page HEATER & A/C(13)		1
22	6677118	SCREW			7
23	1CM-635	BOLT			2

HEATER & A/C
(HVAC Assembly) (S/N & Above)

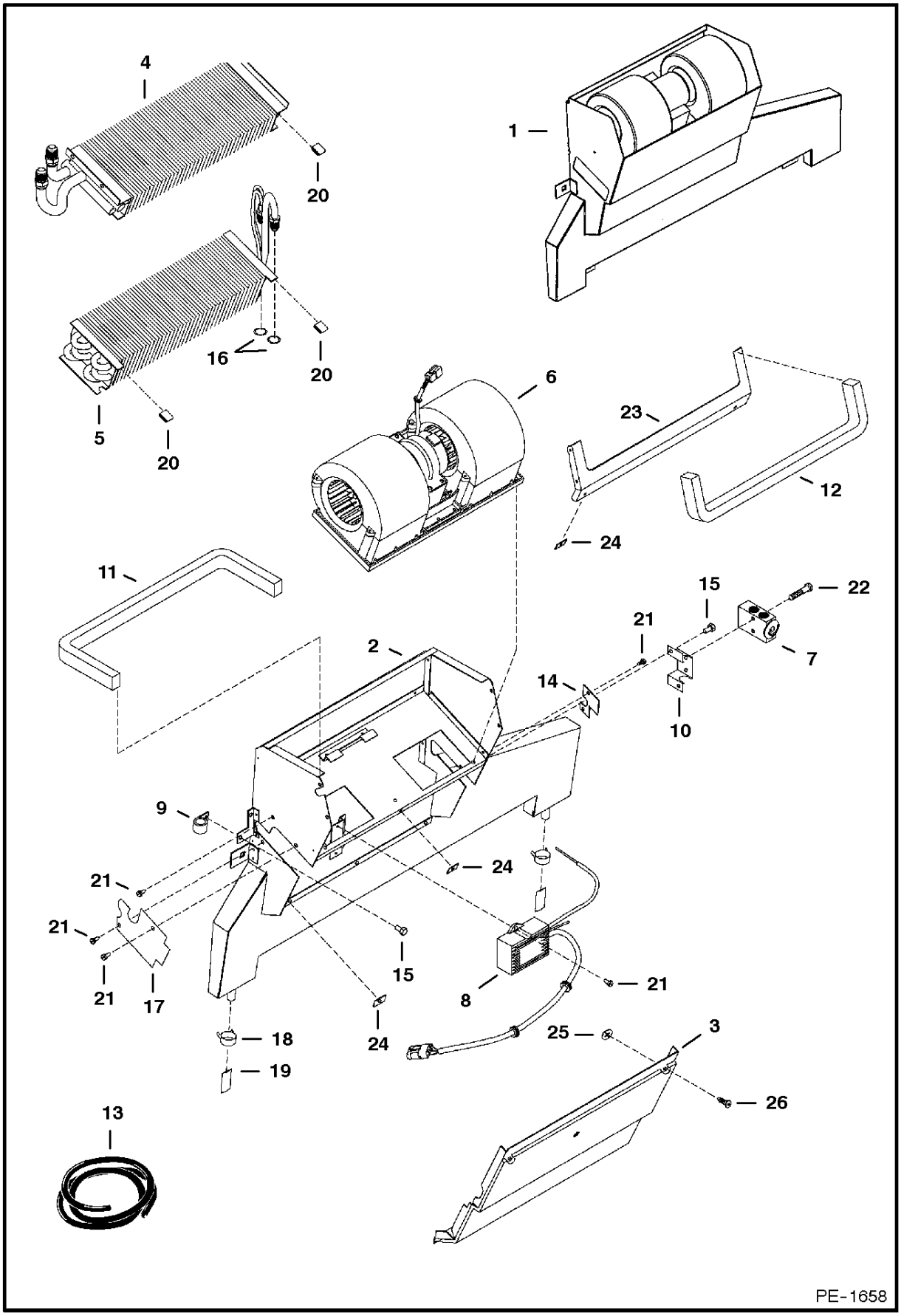

HEATER & A/C

Ref.N°	Part N°	Description	Remarks	Serial N°	Qty.
1	6676561	HVAC ASSY	assy - Ref. HEATER & A/C(2)-HEATER & A/C(26)		1
2	6677108	HOUSING			1
3	6677109	COVER			1
4	NAP	COIL	heater - See Page HEATER & A/C(1) - Was 6676603 [A]		1
5	6675533	COIL	evaporator		1
6	6675497	BLOWER	assy - See Page HEATER & A/C(13)		1
7	6675534	BLOCK VALVE			1
8	6675790	THERMOSTAT			1
9	6675512	CLAMP	hose		2
10	6676984	BRACKET	valve		1
11	NAP	SEAL	25' (635mm) long - Order Ref. HEATER & A/C(13)		1
12	NAP	SEAL	422.6' (575mm) long - Order Ref. HEATER & A/C(13)		1
13	6677111	SEAL	bulk - Sold Per Foot		x
14	6677105	COVER			1
15	6677118	SCREW	w/washer		4
16	6675538	O-RING			2
17	6677504	COVER	cover - Was 6676604 [A]		1
18	6675510	CLAMP	drain hose		2
19	6675511	DRAIN VALVE			2
20	6676539	CLIP			3
21	6726621	SCREW	sheet metal		7
22	1CM-635	BOLT			2
23	6677114	SEAL			1
24	6677115	RECEPTACLE			6
25	6677116	RETAINER			6
26	6677117	SCREW	captive		6

HORN KIT

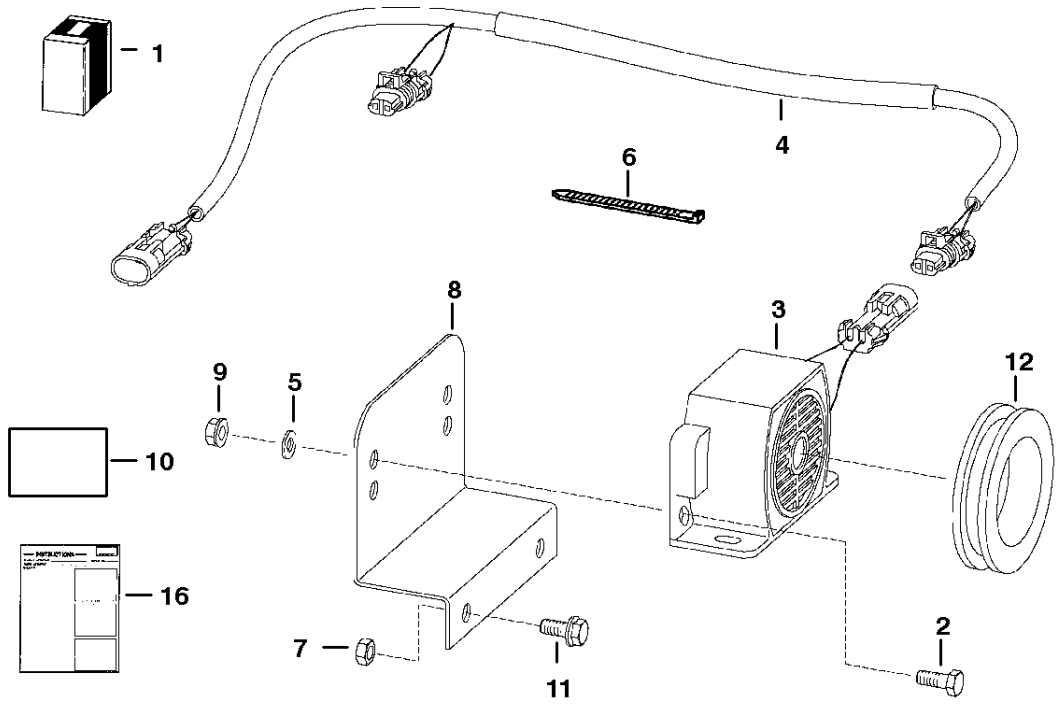

TS-1987

HORN KIT

Ref.N°	Part N°	Description	Remarks	Serial N°	Qty.
1	NAP	HORN KIT	Ref. HORN KIT(2)-HORN KIT(16) - Was 6719043 [A]		1
1	6727995	HORN KIT	Ref. HORN KIT(2)-HORN KIT(16)		1
2	17C-410	BOLT			2
3	6675099	HORN			1
4	6719151	HARNESS	W/ metal tube - for kit 6719043		1
4	6727498	HARNESS	W/O metal tube - for kit 6727995		1
5	25E-13	WASHER			1
6	6610510	NYLON TIE	Was 30H-23 [B]		3
7	83D-5	NUT	Was 61D-5 [B]		2
8	6707726	MOUNT			1
9	83D-4	NUT			2
10	6703727	DECAL			1
11	35C-512	BOLT			2
12	6577545	GROMMET			1
13	6705921	HANDLE ASSY.			1
13	6640690	PIN			5
13	6641176	SEAL			5
14	6641180	LOCK	2pin		2
14	6640700	LOCK	3pin		2
15	6641179	CONNECTOR	2pin		2
15	6640699	CONNECTOR	3pin		2
16	6901146	INSTRUCTIONS	Was 6900913 [B]		1

LIFT KIT
(Four Point - .75" Thick Lift Eyes)

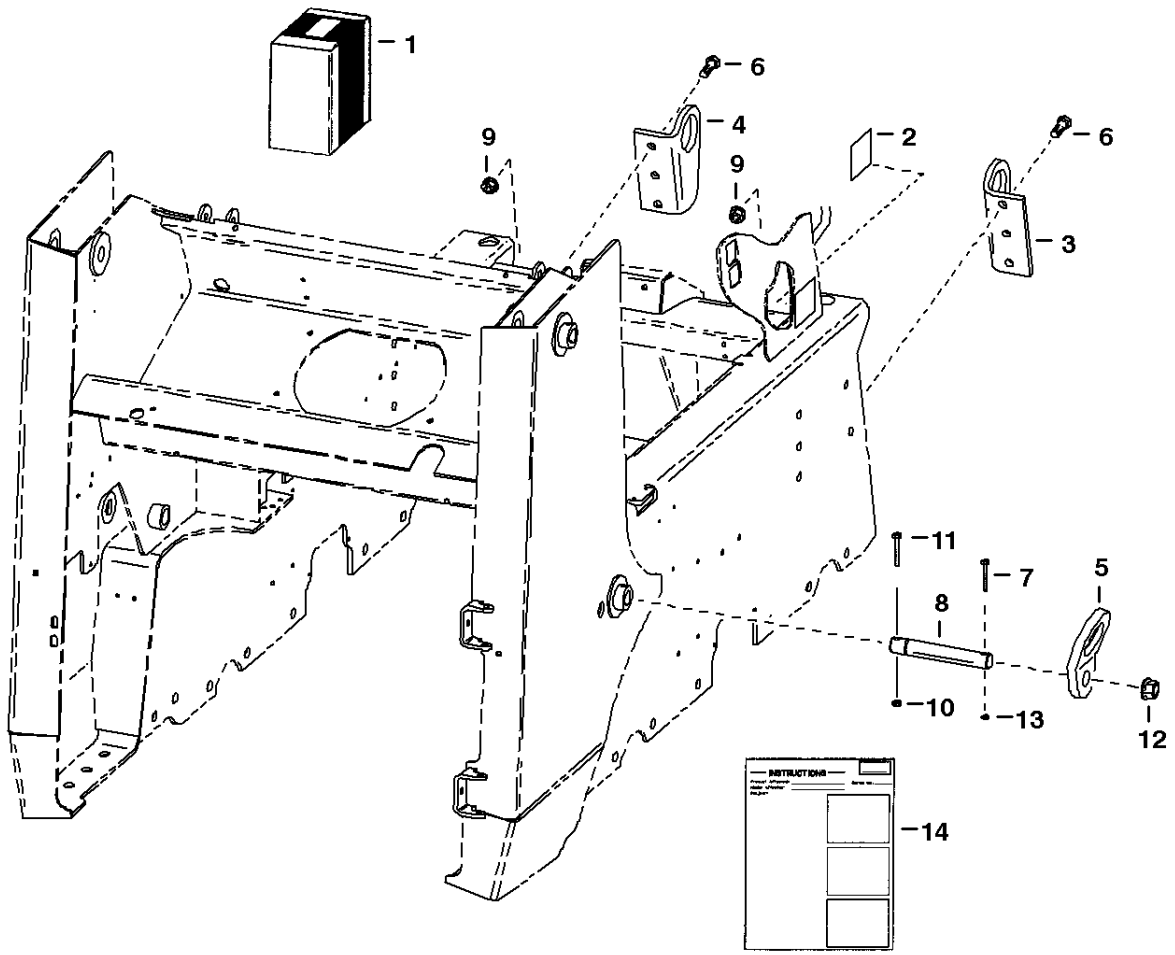

MC-1986

LIFT KIT

Ref.N°	Part N°	Description	Remarks	Serial N°	Qty.
1	6707002	KIT	Ref. LIFT KIT(2)-9 & LIFT KIT(12)-LIFT KIT(14)		1
2	6726423	DECAL	Was 6702916 [A]		2
3	6701573	LIFT EYE	front - R.H.		1
4	6701574	LIFT EYE	front - L.H.		1
5	6706825	LIFT EYE	rear		2
6	17C-1028	BOLT			6
7	17C-540	BOLT			2
8	6706807	PIN			2
9	83D-10	NUT			6
10	85D-6	NUT	Not in Kit		2
11	17C-640	BOLT	Not in Kit		2
12	4D-20	NUT			2
13	87D-5	NUT			2
14	6722873	INSTRUCTIONS			1

LIFT KIT
(Single Point)

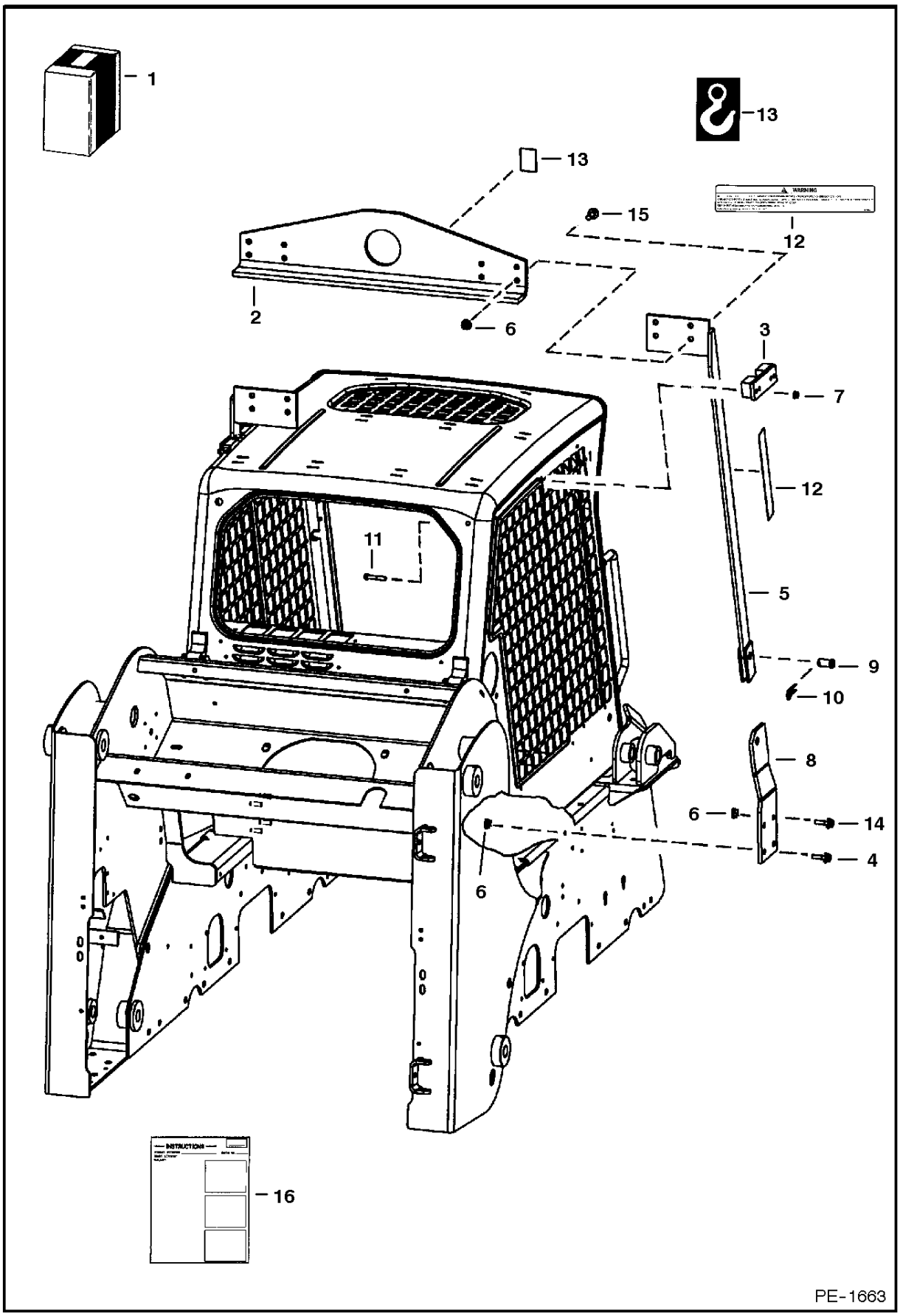

LIFT KIT

Ref.N°	Part N°	Description	Remarks	Serial N°	Qty.
1	6719664	KIT	Ref. LIFT KIT(2)-LIFT KIT(16)		1
2	6567827	ANGLE			2
3	6719184	BRACKET	L.H.		1
3	6719185	BRACKET	R.H.		1
4	31C-824	BOLT			6
5	6704146	BRACKET	R.H.		1
5	6704147	BRACKET	L.H.		1
6	57D-8	NUT			16
7	57D-6	NUT			8
8	6719485	BRACKET	R.H.		1
8	6719484	BRACKET	L.H.		1
9	6567838	PIN			2
10	1320075	COTTER PIN			2
11	17C-632	BOLT			8
12	6704786	DECAL	warning		2
13	6533898	DECAL	hook		1
14	17C-824	BOLT			2
15	31C-832	BOLT			8
16	6900888	INSTRUCTIONS			1

LIGHT KIT

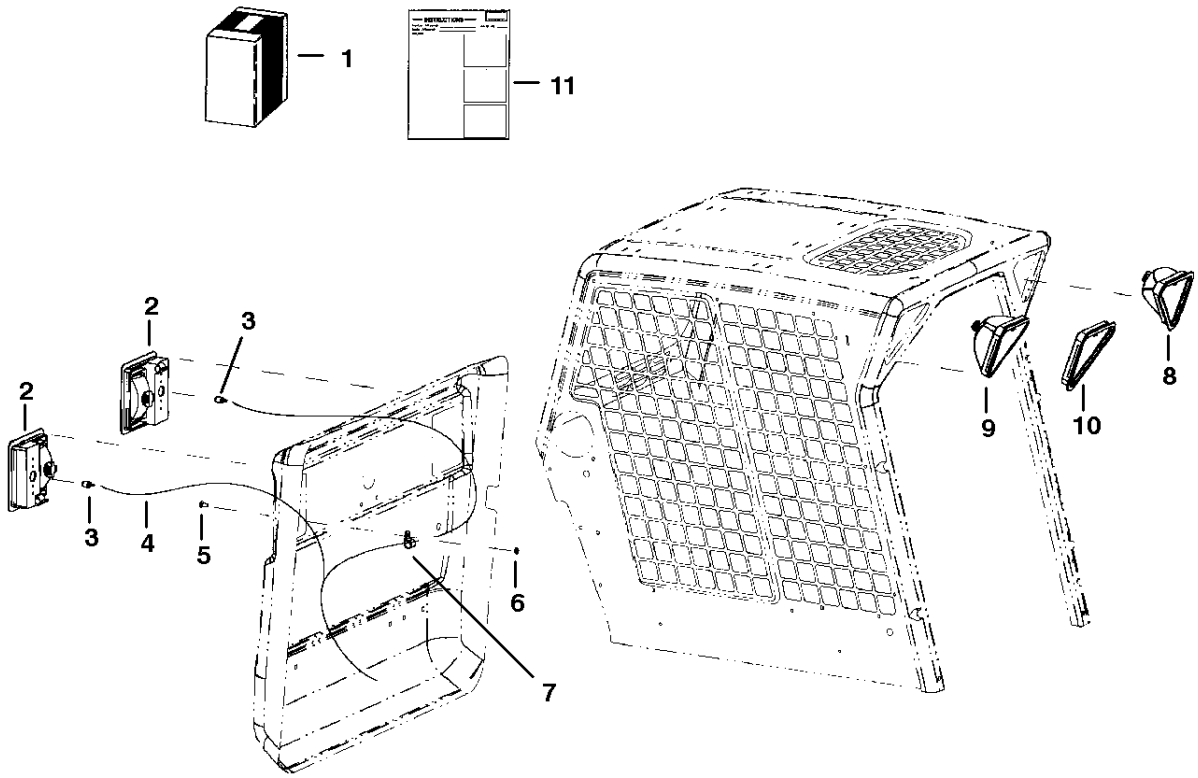

PE-1062

LIGHT KIT

Ref.N°	Part N°	Description	Remarks	Serial N°	Qty.
1	NAP	KIT	order components		1
2	6670284	LIGHT	rear		2
3	6649481	BULB			2
4	6716419	HARNESS			1
5	37C-512	BOLT			1
6	85D-5	NUT			1
7	30H-42	CLAMP			1
8	NAP	LIGHT ASSY	R.H. - Ref. LIGHT KIT(9) & LIGHT KIT(10)		1
8	NAP	LIGHT ASSY	L.H. - Ref. LIGHT KIT(9) & LIGHT KIT(10)		1
9	6674401	HOUSING	R.H.		1
9	6675336	BULB	55 watt		1
9	6674400	HOUSING	L.H.		1
9	6675336	BULB	55 watt		1
10	6674402	MOUNT			1
11	6672279	MOUNT	rubber		2
12	6672276	LENS	red		2
13	6672274	SCREW			4
14	6672273	SCREW			2
15	6672275	GASKET			2
16	6672277	BRACKET			2
17	6672272	WASHER			4
18	6661353	LIGHT ASSY	W/ bulb - white		2
18	898731	LIGHT BULB			2
19	NAP	INSTRUCTIONS			1

POWER BOB-TACH KIT
(Hydraulic Assisted) (Aluminum Gear Pump)

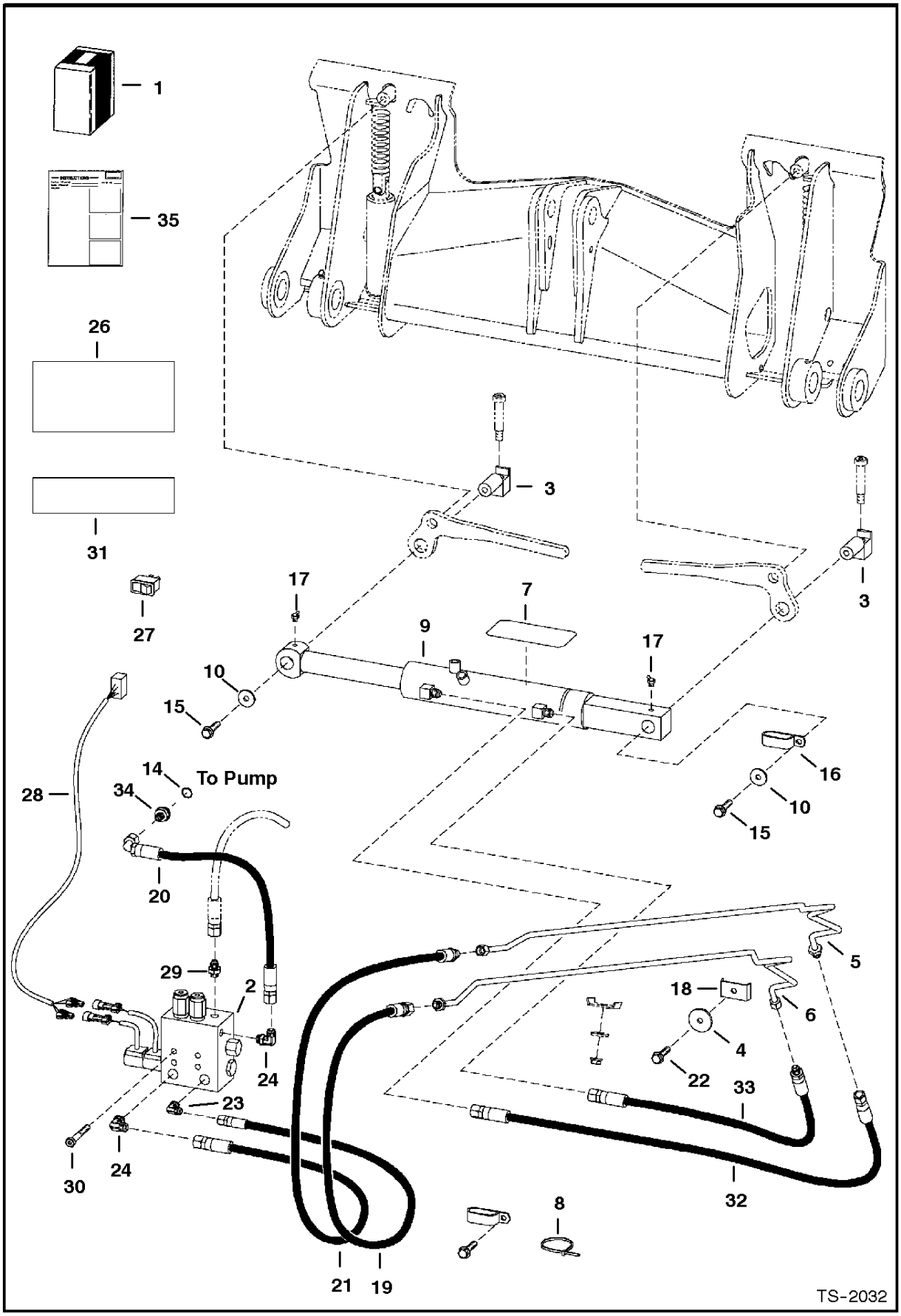

POWER BOB-TACH KIT

Ref.N°	Part N°	Description	Remarks	Serial N°	Qty.
1	6719841	KIT	Ref. POWER BOB-TACH KIT (2)-POWER BOB-TACH KIT (35)		1
2		VALVE	See Page POWER BOB-TACH(19)		1
3	6714576	PIVOT			2
4	872229	WASHER			1
5	6719164	TUBE			1
6	6719167	TUBE			1
7	6554100	SAFETY TREAD			1
8	6624289	STA-STRAP			3
9		CYLINDER	See Page POWER BOB-TACH(1)		1
10	619021	WASHER			2
11	NAP	COVER	32' (813mm) long - Order Ref. POWER BOB-TACH KIT (12)		1
12	6656155	COVER	1.25' I.D. - bulk - sold per foot		x
13	99K-6	O-RING			x
14	99K-12	O-RING			x
15	35C-616	BOLT			2
16	31H-42	CLAMP			1
17	11H-15	GREASE ZERK		& Bel.	2
17	10H-35	GREASE ZERK		& Abv.	2
18	6502203	CLAMP			1
19	6726987	HOSE			1
20	6719605	HOSE			1
21	6726986	HOSE			1
22	84G-3724	BOLT			1
23	17KV-3	ELBOW	W/Ref. POWER BOB-TACH KIT (25)		1
23	97K-4	O-RING	flared end		x
24	17KV-5	ELBOW	W/Ref. POWER BOB-TACH KIT (13)		2
24	97K-6	O-RING	flared end		x
25	99K-4	O-RING			x
26	6717842	DECAL			1
27	6674585	SWITCH	horizontal		1
27	6676732	SWITCH	vertical		1
28	6718652	HARNESS			1
29	15KV-8	ADAPTER	W/Ref. POWER BOB-TACH KIT (14)		1
29	97K-12	O-RING	flared end		3
30	73G-656	BOLT			4
31	6719888	DECAL	power bobAtach		1
32	6725198	HOSE			1
33	6725199	HOSE			1
34	6715186	ADAPTER	W/Ref. POWER BOB-TACH KIT (14)		1
34	97K-6	O-RING	flared end		x
35	6900951	INSTRUCTIONS			1

* POWER BOB-TACH KIT
(Hydraulic Assisted) (Cast Iron Gear Pump)

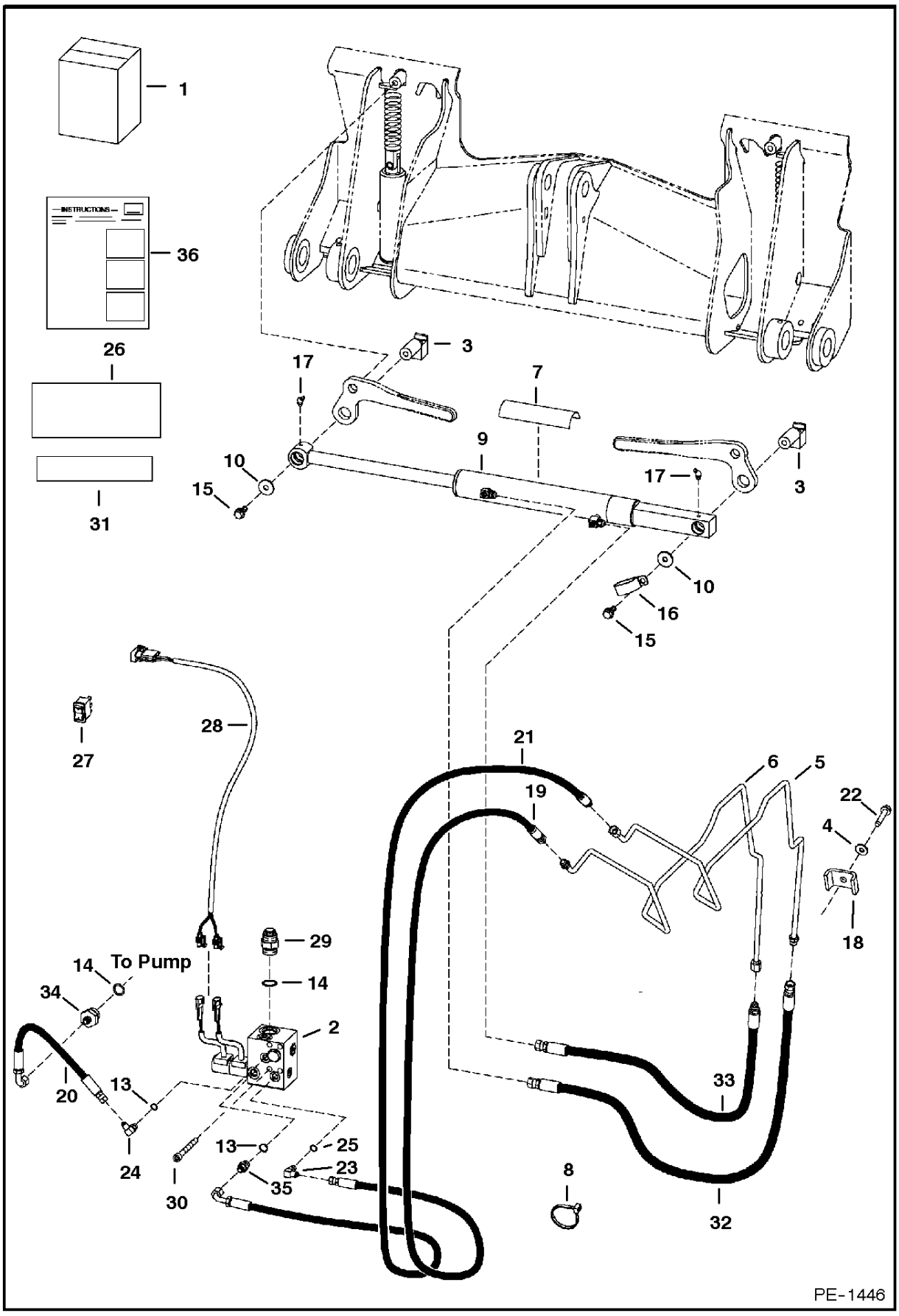

* POWER BOB-TACH KIT

Ref.N°	Part N°	Description	Remarks	Serial N°	Qty.
1	6731092	KIT	Ref. POWER BOB-TACH KIT (2)-POWER BOB-TACH KIT (35)		1
2		VALVE	See Page POWER BOB-TACH(19)		1
3	6714576	PIVOT			2
4	872229	WASHER			1
5	6719164	TUBE			1
6	6719167	TUBE			1
7	6554100	SAFETY TREAD			1
8	6624289	STA-STRAP			3
9		CYLINDER	See Page POWER BOB-TACH(1)		1
10	619021	WASHER			2
11	NAP	COVER	32' (813mm) long - Order Ref. POWER BOB-TACH KIT (12)		1
12	6656155	COVER	1.25' I.D. - bulk - sold per foot		x
13	99K-6	O-RING			x
14	99K-12	O-RING			x
15	35C-616	BOLT			2
16	31H-42	CLAMP			1
17	11H-25	GREASE ZERK			2
18	6502203	CLAMP			1
19	6726987	HOSE			1
20	6806403	HOSE			1
21	6731082	HOSE			1
22	84G-3724	BOLT			1
23	17KV-3	ELBOW	W/Ref. POWER BOB-TACH KIT (25)		1
23	97K-4	O-RING	flared end		x
24	17KV-5	ELBOW	W/Ref. POWER BOB-TACH KIT (13)		1
24	97K-6	O-RING	flared end		x
25	99K-4	O-RING			x
26	6717842	DECAL			1
27	6676732	SWITCH	vertical		1
28	6730770	HARNESS			1
29	15KN-8	ADAPTER	W/Ref. POWER BOB-TACH KIT (14)		1
29	97K-12	O-RING	flared end		3
30	73G-656	BOLT			4
31	6719888	DECAL	power bobAtach		1
32	6725198	HOSE			1
33	6725199	HOSE			1
34	6715186	ADAPTER	W/Ref. POWER BOB-TACH KIT (14)		1
34	97K-6	O-RING	flared end		x
35	15KV-5	ADAPTER	W/Ref. POWER BOB-TACH KIT (13)		1
35	97K-6	O-RING	flared end		x
36	6901483	INSTRUCTIONS			1

POWER BOB-TACH
(Cylinder)

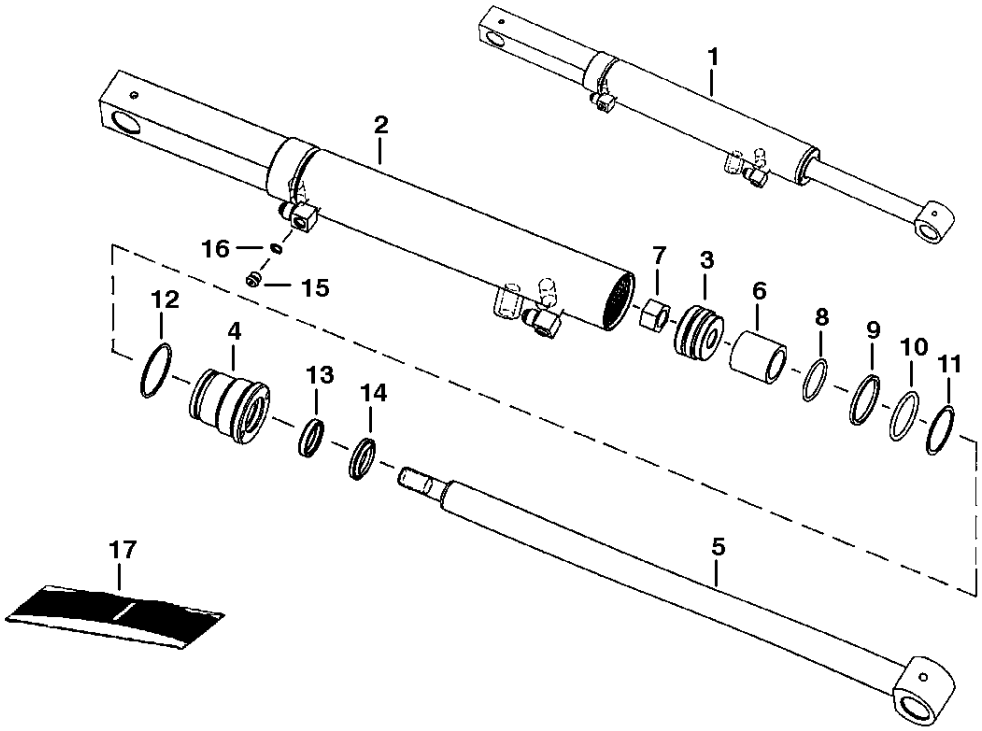

PE-1064

POWER BOB-TACH

Ref.N°	Part N°	Description	Remarks	Serial N°	Qty.
1	NAP	CYLINDER	Ref. POWER BOB-TACH(2)-POWER BOB-TACH(16) - Order 6810611 cylinder & 10H-35 (2) grease zerk - Was 6805158 [A]		1
2	6805160	CASE	1.75' I.D.		1
3	6586543	PISTON			1
4	6586542	HEAD			1
5	6810126	SHAFT	1' O.D. - 19.7' (500mm) long - Was 6807508 [A]		1
6	6807092	SPACER			1
7	92D-10	NUT			1
8	54K-30110	O-RING			1
9	6532453	RING			1
10	54K-40116	O-RING			1
11	73K-222	WASHER	back-up		1
12	58K-132	O-RING			1
13	6667323	SEAL	rod		1
14	6666542	SEAL	wiper		1
15	90KV-2	PLUG	W/Ref. POWER BOB-TACH(16)		2
16	79K-3	O-RING			2
17	6803473	SEAL KIT	Ref. POWER BOB-TACH(7) - POWER BOB-TACH(14)		1

* POWER BOB-TACH
(Cylinder)

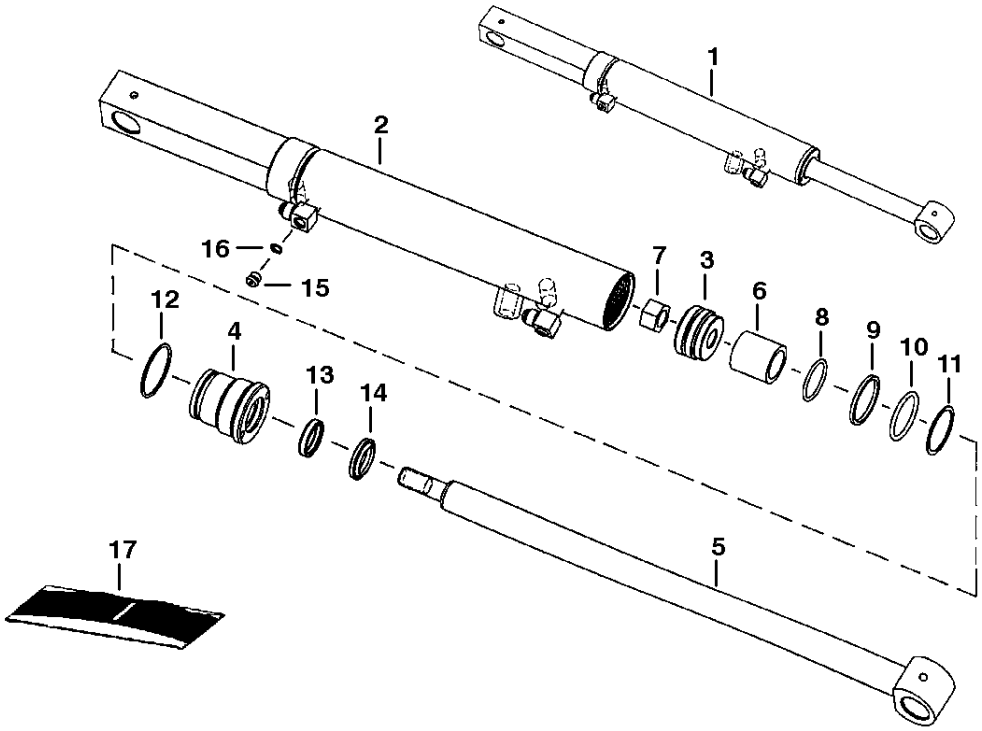

PE-1064A

* POWER BOB-TACH

Ref.N°	Part N°	Description	Remarks	Serial N°	Qty.
1	NAP	CYLINDER	Ref. POWER BOB-TACH(2)-POWER BOB-TACH(16) - Order 6810611 cylinder & 10H-35 (2) grease zerk - Was 6810350 [A]		1
1	6810611	CYLINDER	Ref. POWER BOB-TACH(2)-POWER BOB-TACH(16)		1
2	6810349	CASE	1.75' I.D.		1
3	6586543	PISTON			1
4	6586542	HEAD			1
5	NAP	ROD	18.6' (472mm) long - W/ 1/8-27 NPT grease zerk hole - Order 6810612 rod, also Order 10H-35 (2) grease zerk - Was 6810351 [A]		1
5	6810612	ROD	18.6' (472mm) long - W/ .25' grease zerk hole		1
6	6810356	SPACER			1
7	92D-10	NUT			1
8	54K-30110	O-RING			1
9	6532453	RING			1
10	54K-40116	O-RING			1
11	73K-222	WASHER	backAup		1
12	58K-132	O-RING			1
13	6667323	SEAL	rod		1
14	6666542	SEAL	wiper		1
15	90KV-2	PLUG	W/Ref. POWER BOB-TACH(16)		2
16	79K-3	O-RING			2
17	6803473	SEAL KIT	Ref. POWER BOB-TACH(7)-POWER BOB-TACH(14)		1

POWER BOB-TACH
(Valve Assembly) (5144 46045, 5146 41004 & Below)

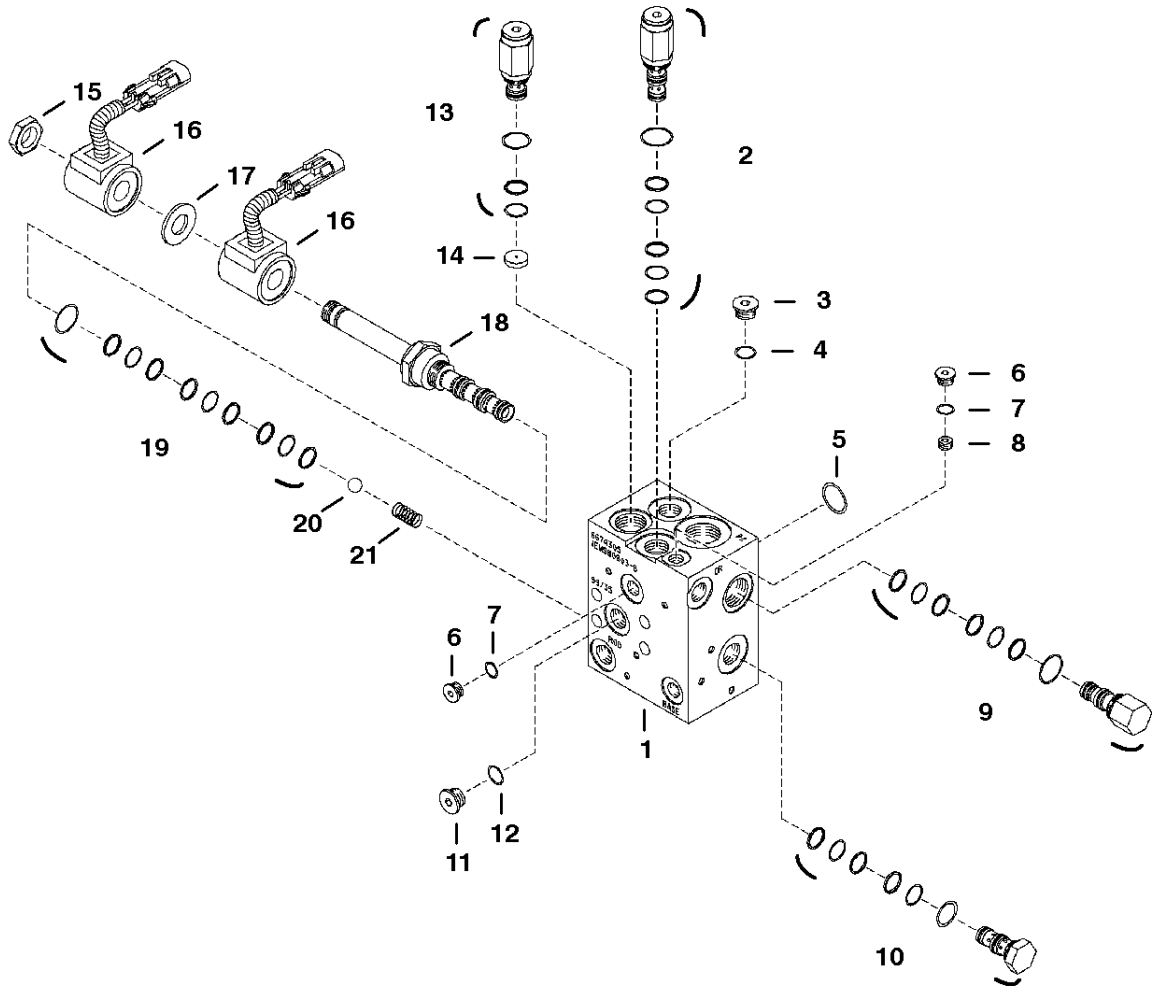

TS-2051

POWER BOB-TACH

Ref.N°	Part N°	Description	Remarks	Serial N°	Qty.
1	NAP	VALVE	Ref. POWER BOB-TACH(2)-POWER BOB-TACH(21) - Order 6676547 valve - See Page POWER BOB-TACH(20) - Was 6674305 [A]		1
2	6676073	RELIEF VALVE			1
2	6676074	SEAL KIT			1
3	6674548	PLUG	W/Ref. POWER BOB-TACH(4)		1
4	79K-8	O-RING			x
5	6676071	O-RING			1
6	6665719	PLUG	W/Ref. POWER BOB-TACH(7)		2
7	99K-5	O-RING			x
8	6676347	ORIFICE	screw in plug W/ screen - Was 6669615 [A]		1
9	6676064	VALVE			1
9	6676065	SEAL KIT			1
10	6669616	CHECK VALVE			1
10	6669622	SEAL KIT			1
11	90KV-5	PLUG	W/Ref. POWER BOB-TACH(12)		1
12	95K-6	O-RING			x
13	6676068	VALVE			1
13	6676069	SEAL KIT			1
14	6676070	ORIFICE			1
15	7D-8	NUT			1
16	6671025	COIL			2
17	6674445	SPACER			1
18	6661443	STEM	W/Ref. POWER BOB-TACH(19)		1
19	6667180	SEAL KIT			1
20	6676066	BALL			1
21	6676067	SPRING			1

POWER BOB-TACH
(Valve Assembly) (5144 46046, 5146 41005 & Above)

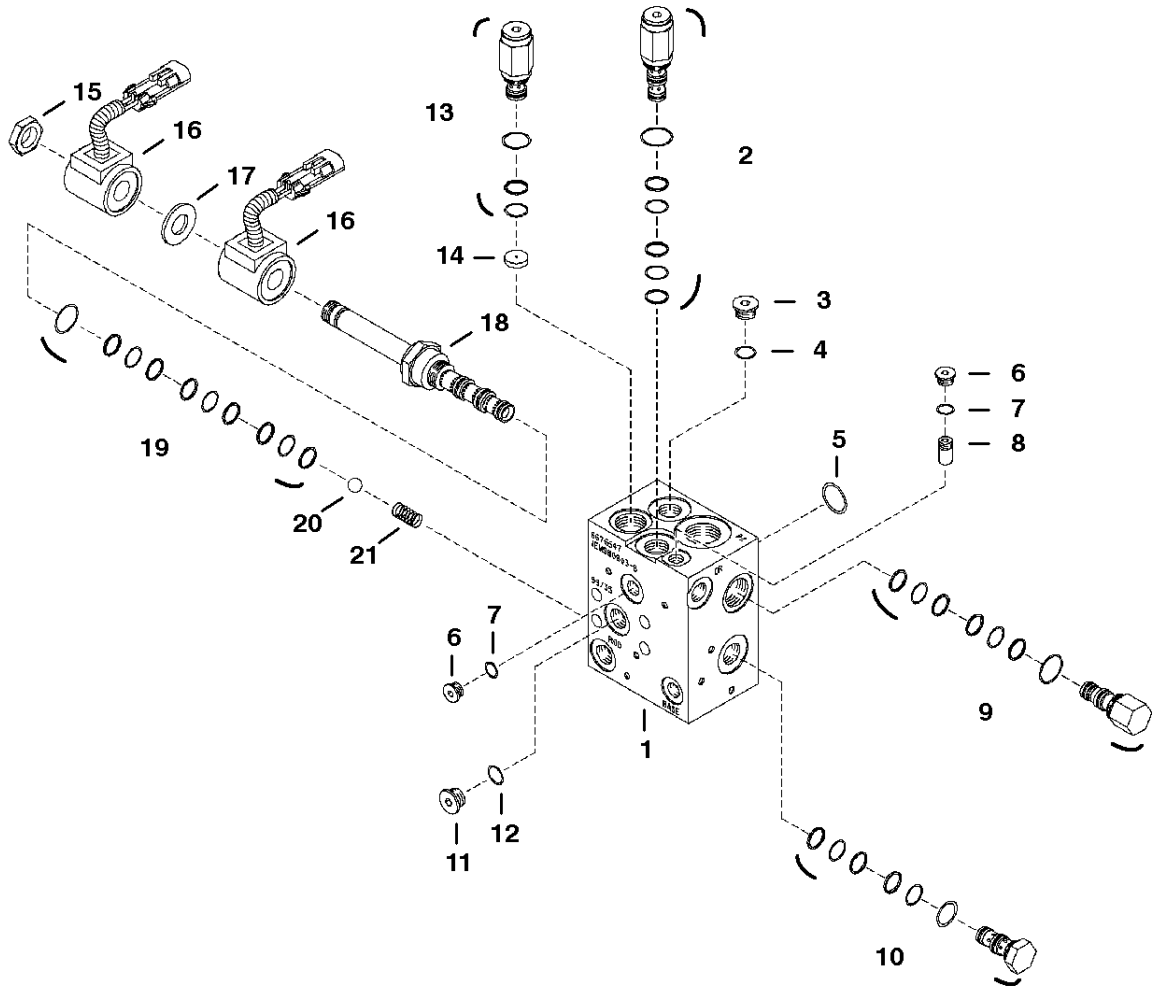

TS-2051

POWER BOB-TACH

Ref.N°	Part N°	Description	Remarks	Serial N°	Qty.
1	6676547	VALVE	Ref. POWER BOB-TACH(2)-POWER BOB-TACH(21)		1
2	6677147	RELIEF VALVE			1
2	6677148	SEAL KIT			1
3	6677158	PLUG	W/Ref. POWER BOB-TACH(4)		1
4	79K-8	O-RING			x
5	6677157	O-RING			1
6	6677159	PLUG	W/Ref. POWER BOB-TACH(7)		2
7	99K-5	O-RING			x
8	6676347	ORIFICE	screw in plug W/screen		1
9	6677155	VALVE			1
9	6677156	SEAL KIT			1
10	6677149	CHECK VALVE			1
10	6677150	SEAL KIT			1
11	90KV-5	PLUG	W/Ref. POWER BOB-TACH(12)		1
12	95K-6	O-RING			x
13	6677151	VALVE			1
13	6677152	SEAL KIT			1
14	6676070	ORIFICE			1
15	6671628	NUT	Was 7D-8 [B]		1
16	6671025	COIL			2
17	6679068	SPACER	Was 6674445 [B,D]		1
18	6677153	STEM	W/Ref. POWER BOB-TACH(19)		1
19	6672756	SEAL KIT			1
20	6676066	BALL			1
21	6676067	SPRING			1

* POWER BOB-TACH
(Valve Assembly) (S/N & Above)

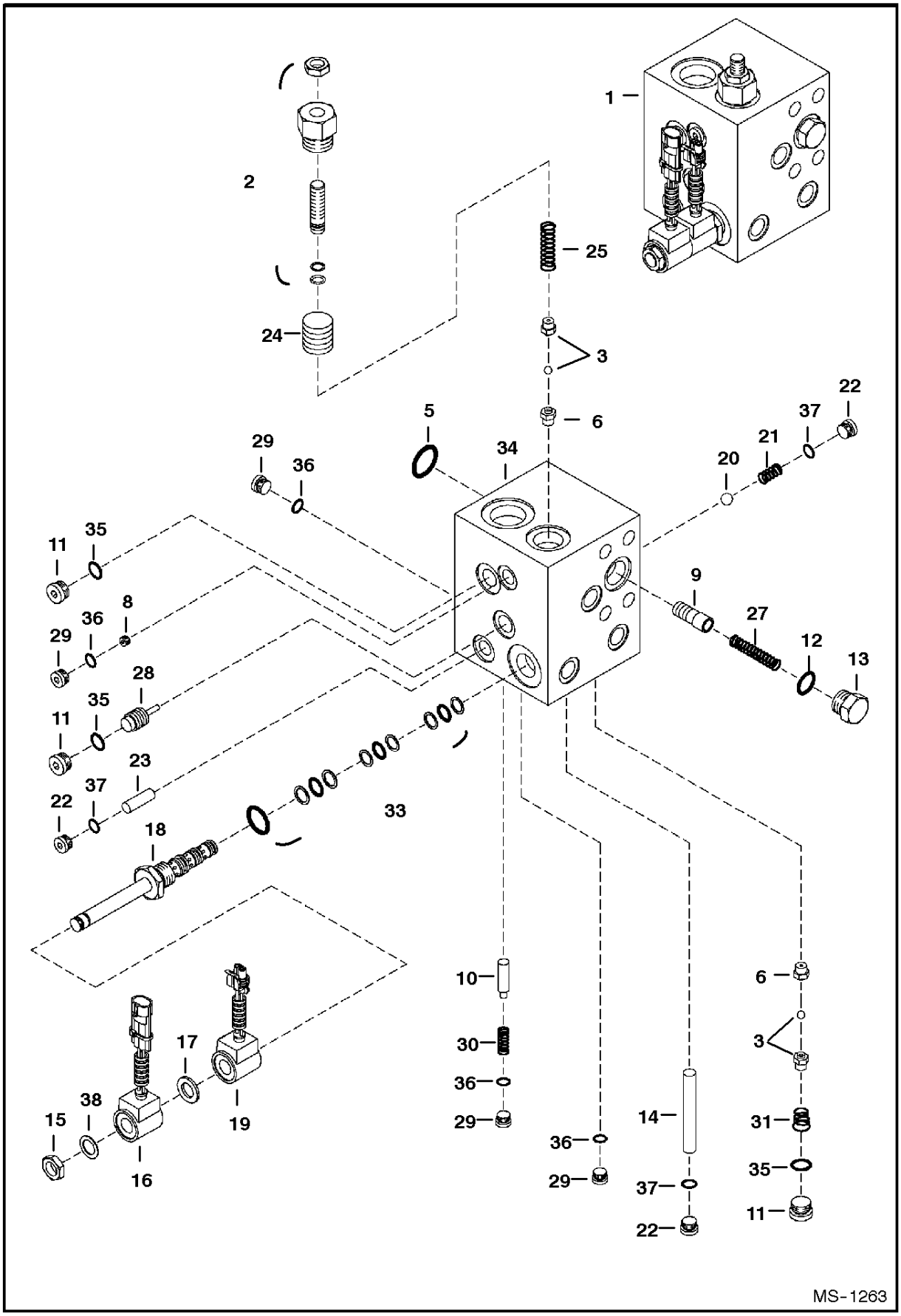

* POWER BOB-TACH

Ref.N°	Part N°	Description	Remarks	Serial N°	Qty.
1	NAP	VALVE	Ref. POWER BOB-TACH(2)-* POWER BOB-TACH(31) - Order 6678554 valve & 6730770 harness - Was 6678206 [A]		1
1	6678554	VALVE			1
2	6679245	RELIEF VALVE			1
3	6679244	BALL ASSY.			2
4	6678709	O-RING			x
5	6678695	O-RING			1
6	NSS	SEAT	relief loctited		2
7	99K-5	O-RING			x
8	6678701	ORIFICE	screw in plug W/ screen		1
9	6678708	COMPENSATOR			1
10	6678694	FLOW CONTROL			1
10	6677150	SEAL KIT			1
11	6678698	PLUG	W/Ref. POWER BOB-TACH(12)		3
12		O-RING			x
13	6678706	PLUG	W/Ref. POWER BOB-TACH(12)		1
14	6678702	ORIFICE			1
15	6671628	NUT			1
16	6678696	COIL			2
17	6678711	SPACER			1
18	6678697	STEM	W/Ref. * POWER BOB-TACH(33)		1
19	NSS	COIL	W/ tie - use W/Ref. * POWER BOB-TACH(1) (NAP/667 8206 valve) - Order 6678712 & Ref. * POWER BOB-TACH(26)		1
19	6678712	COIL	W/ male connector - use W/Ref. * POWER BOB-TACH(1) (6678554 valve)		1
20	6678705	BALL			1
21	6678704	SPRING			1
22	6677159	PLUG	W/Ref. * POWER BOB-TACH(7)		3
23	6678703	SHUTTLE			1
24	6678717	PISTON			1
25	6678718	SPRING			1
26	6678710	TIE			1
27	6678707	SPRING			1
28	6678700	PISTON			1
29	6678699	PLUG			4
30	6678692	SPRING			1
31	6678693	SPRING			1
32	6679246	SEAL KIT	complete		1
33	6672756	SEAL KIT			1
34	NSS	BLOCK			1
35		O-RING			x
36		O-RING			x
37		O-RING			x
38		WASHER			1

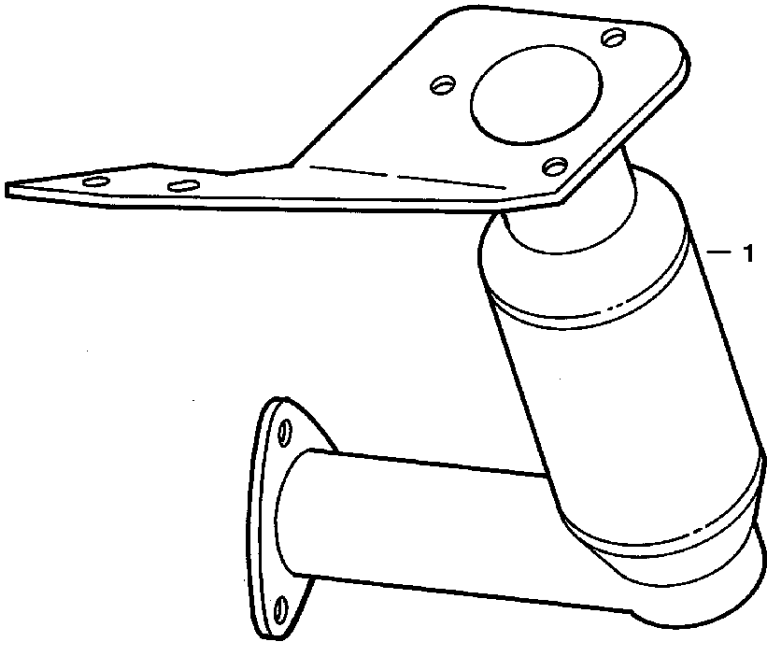

B-13643

PURIFIER

Ref.N°	Part N°	Description	Remarks	Serial N°	Qty.
1	6673826	PURIFIER	42 hole mounting - replaces exhaust tube - uses existing hardware & gasket		1

REAR AUXILIARY HYDRAULICS KIT

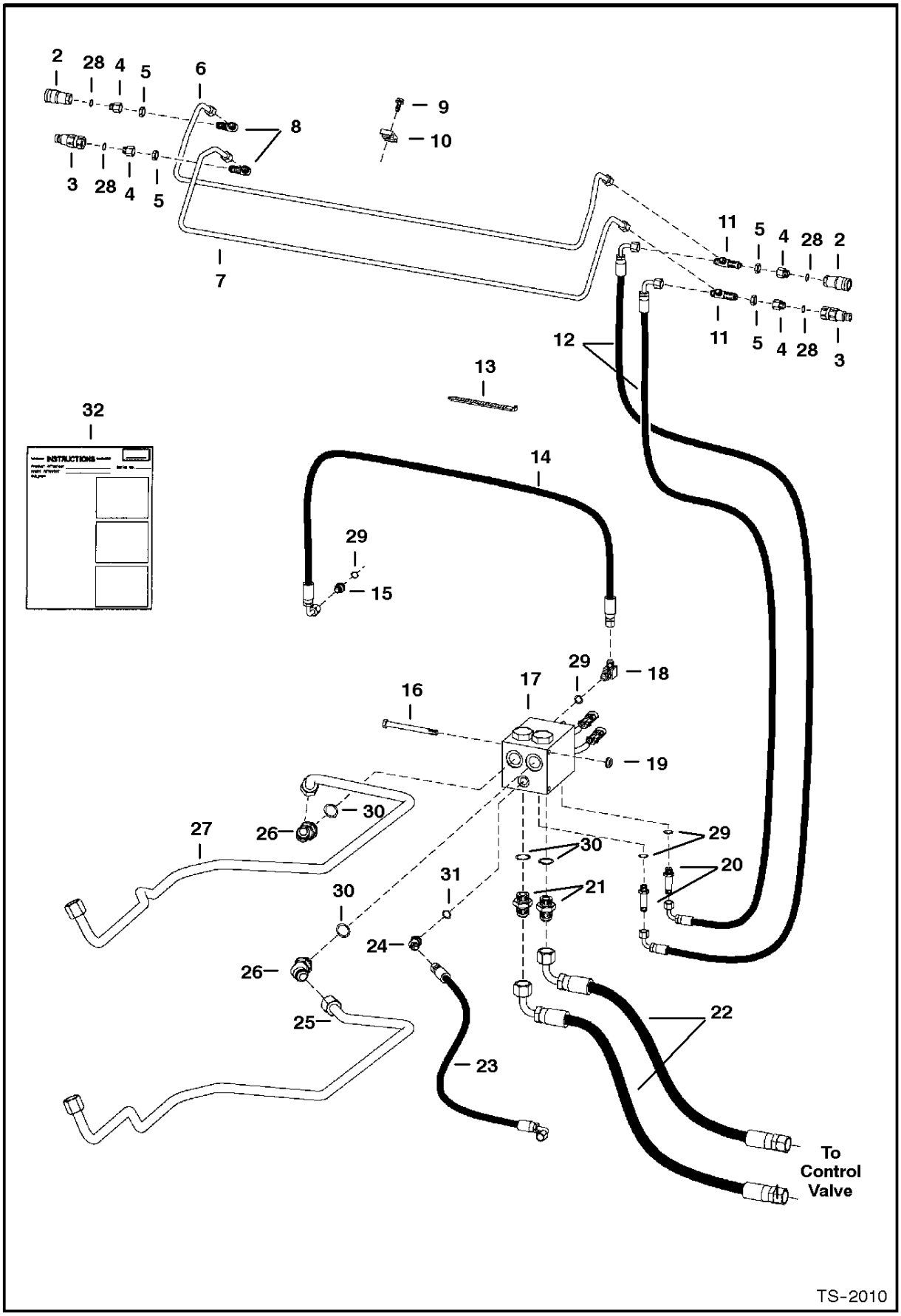

REAR AUXILIARY HYDRAULICS KIT

Ref.N°	Part N°	Description	Remarks	Serial N°	Qty.
1	SALES	KIT	Ref. REAR AUXILIARY HYDRAULICS KIT(2)-REAR AUXILIARY HYDRAULICS KIT(27) & REAR AUXILIAR Y HYDRAULICS KIT(32) - Order 6719601 from		1
2	6667803	QUICK COUPLER	female		1
3	6667804	QUICK COUPLER	male		1
4	6706633	CONNECTOR	W/Ref. REAR AUXILIARY HYDRAULICS KIT(28)		4
5	86F-5	NUT			4
6	6719296	TUBELINE			1
7	6719297	TUBELINE			1
8	88FN-5	ELBOW			2
8	97K-6	O-RING	flared end		x
9	84G-3716	BOLT			1
10	6500989	CLAMP			1
11	6719298	TEE			2
11	97K-6	O-RING	flared end		x
12	6719847	HOSE			2
13	6624289	STA-STRAP	Was 6610510 [A]		2
14	6537283	HOSE			1
15	15KV-5	ADAPTER	W/Ref. REAR AUXILIARY HYDRAULICS KIT(29)		1
15	97K-6	O-RING	flared end		x
16	17C-680	BOLT			2
17	6665572	VALVE	See Page REAR AUXILIARY VALVE(22)		1
18	17KV-5	ELBOW	W/Ref. REAR AUXILIARY HYDRAULICS KIT(29)		1
18	97K-6	O-RING	flared end		x
19	83D-6	NUT			2
20	16KN-5	CONNECTOR	W/Ref. REAR AUXILIARY HYDRAULICS KIT(29)		2
20	97K-6	O-RING	flared end		x
21	15KN-8	ADAPTER	W/Ref. REAR AUXILIARY HYDRAULICS KIT(30)		2
21	97K-12	O-RING	flared end		x
22	6725311	HOSE			2
23	6587291	HOSE			1
24	18KN-3	ELBOW	4595 - W/Ref. REAR AUXILIARY HYDRAULICS KIT(31)		1
24	97K-4	O-RING	flared end		x
25	6719849	TUBELINE			1
26	18KN-8	ELBOW	4595 - W/Ref. REAR AUXILIARY HYDRAULICS KIT(30)		2
26	97K-12	O-RING	flared end		x
27	6719850	TUBELINE			1
28	79K-6	O-RING			x
29	99K-6	O-RING			x
30	99K-12	O-RING			x
31	99K-4	O-RING			x
32	6900935	INSTRUCTIONS			1

REAR AUXILIARY HYDRAULICS KIT
(High Horsepower)

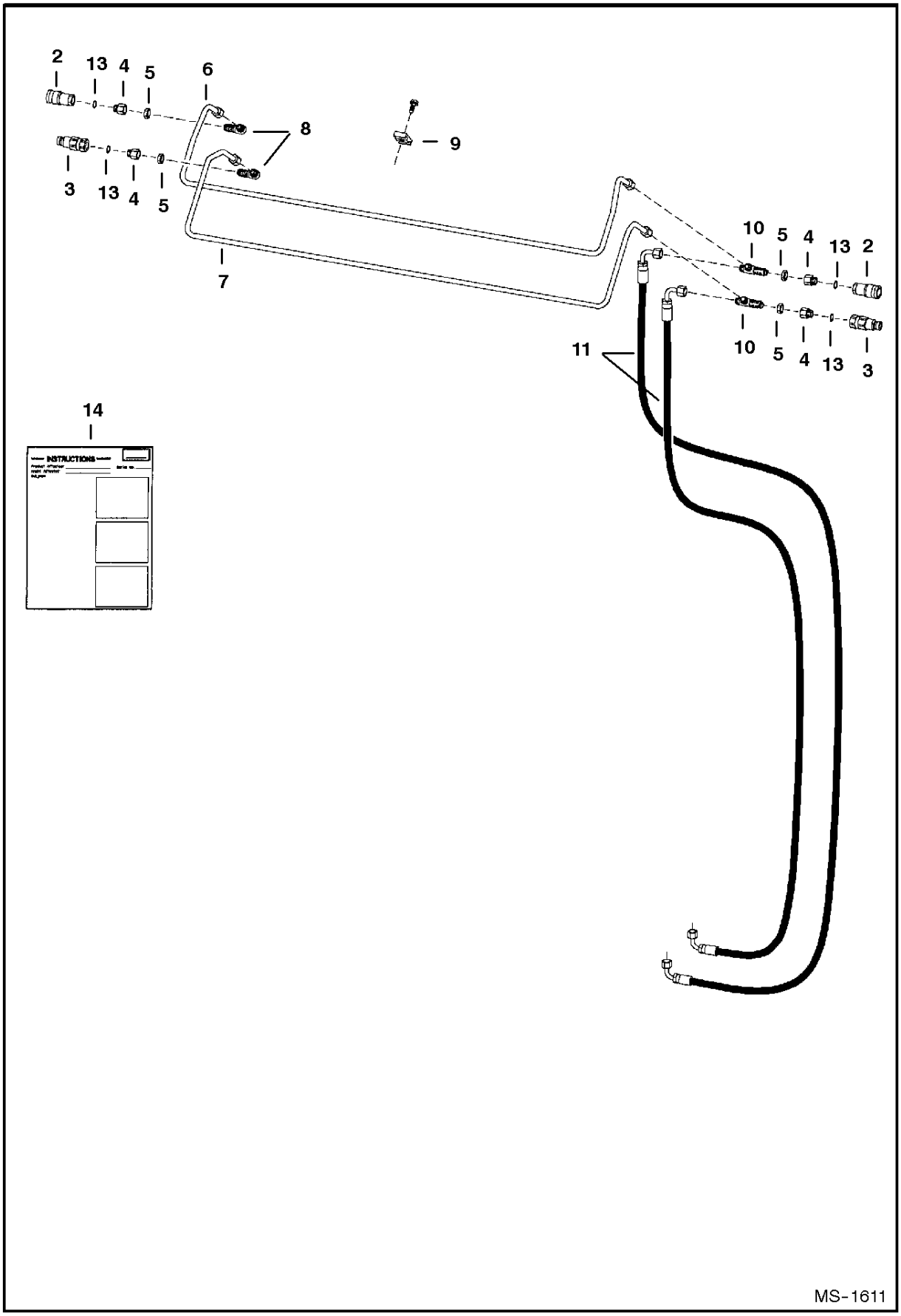

REAR AUXILIARY HYDRAULICS KIT

Ref.N°	Part N°	Description	Remarks	Serial N°	Qty.
1	SALES	KIT	Ref. REAR AUXILIARY HYDRAULICS KIT(2)-REAR AUXILIARY HYDRAULICS KIT(12) & REAR AUXILIAR Y HYDRAULICS KIT(14) - Order 6719627 from		1
2	6667803	QUICK COUPLER	female		1
3	6667804	QUICK COUPLER	male		1
4	6706633	CONNECTOR	W/Ref. REAR AUXILIARY HYDRAULICS KIT(13)		4
5	86F-5	NUT			4
6	6719296	TUBELINE			1
7	6719297	TUBELINE			1
8	88FN-5	ELBOW			2
8	97K-6	O-RING	flared end		x
9	6500989	CLAMP			1
10	6719298	TEE			2
10	97K-6	O-RING	flared end		x
11	6719847	HOSE			2
12	84G-3716	BOLT			1
13	79K-6	O-RING			x
14	6900941	INSTRUCTIONS			1

REAR AUXILIARY VALVE

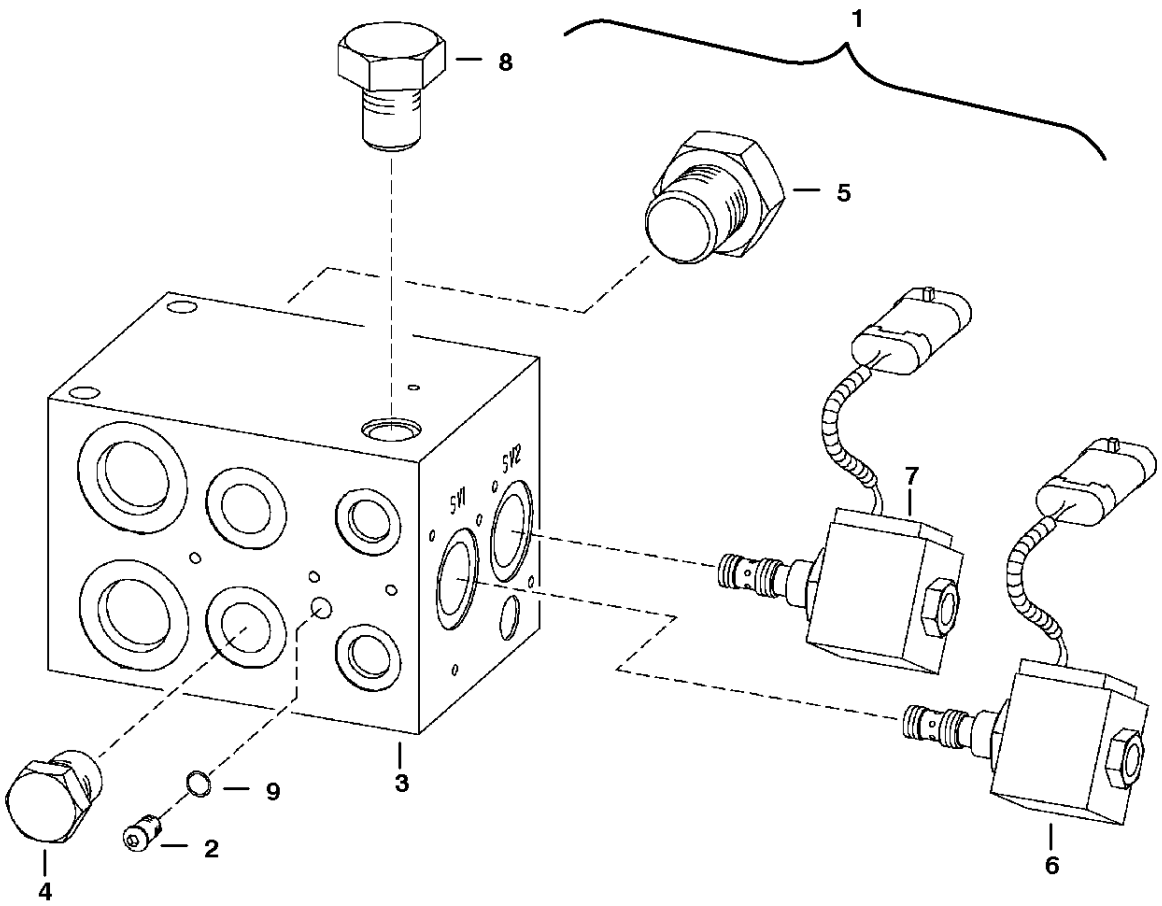

REAR AUXILIARY VALVE

Ref.N°	Part N°	Description	Remarks	Serial N°	Qty.
1	6665572	VALVE	diverter		1
2	6676152	PLUG	W/Ref. REAR AUXILIARY VALVE(9) - Was 6653490 [A]		18
3	NSS	BODY			1
4	6664212	CHECK VALVE			2
4	6653487	SEAL KIT			2
5	6653484	VALVE			2
5	6653485	SEAL KIT			2
6	6669218	VALVE	4solenoid W/Connector SV2 port		1
6	6669190	COIL			1
6	6669188	STEM			1
6	6669217	SEAL KIT			1
7	6669219	VALVE	4solenoid W/Connector SV1 port		1
7	6669190	COIL			1
7	6669189	STEM			1
7	6669216	SEAL KIT			1
8	6669187	VALVE			1
8	6653487	SEAL KIT			1
9	79K-2	O-RING			x

REAR DOOR LOCK

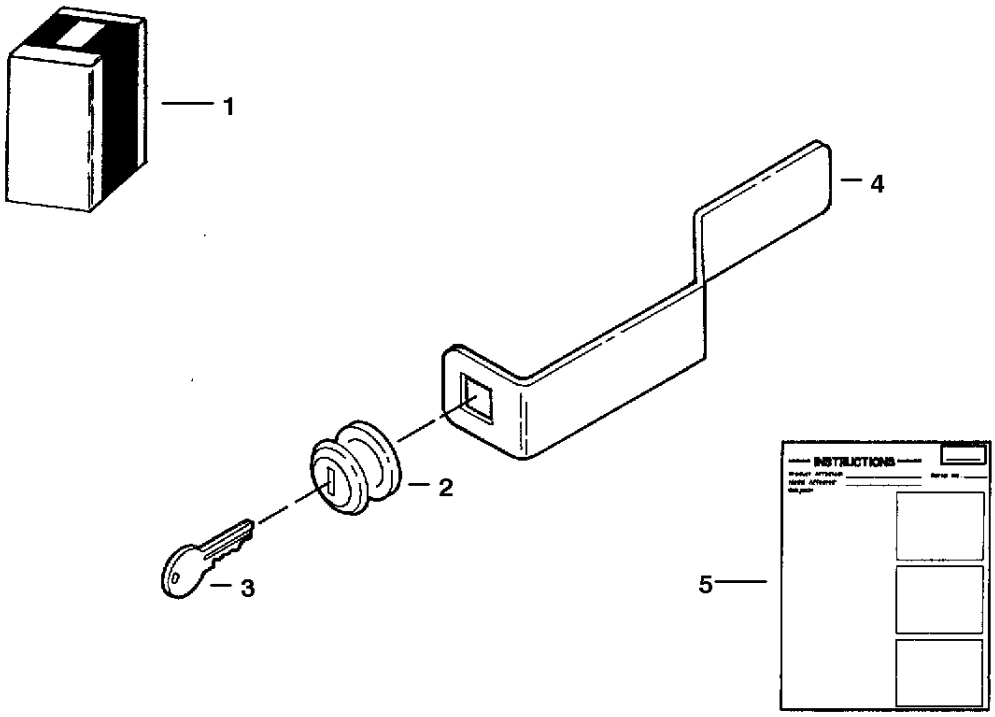

B-15018

REAR DOOR LOCK

Ref.N°	Part N°	Description	Remarks	Serial N°	Qty.
1	6732001	KIT	lock - Ref. REAR DOOR LOCK(2)-REAR DOOR LOCK(5) - Was 6714973 [A]		1
2	6670726	LOCK			1
3	6672345	KEY			1
4	6714037	LATCH	use W/ 6711524 rear door		1
4	6729688	LATCH	use W/ 6729991 rear door		1
5	6901656	INSTRUCTIONS	Was 6570762 [A]		1

REAR WIPER

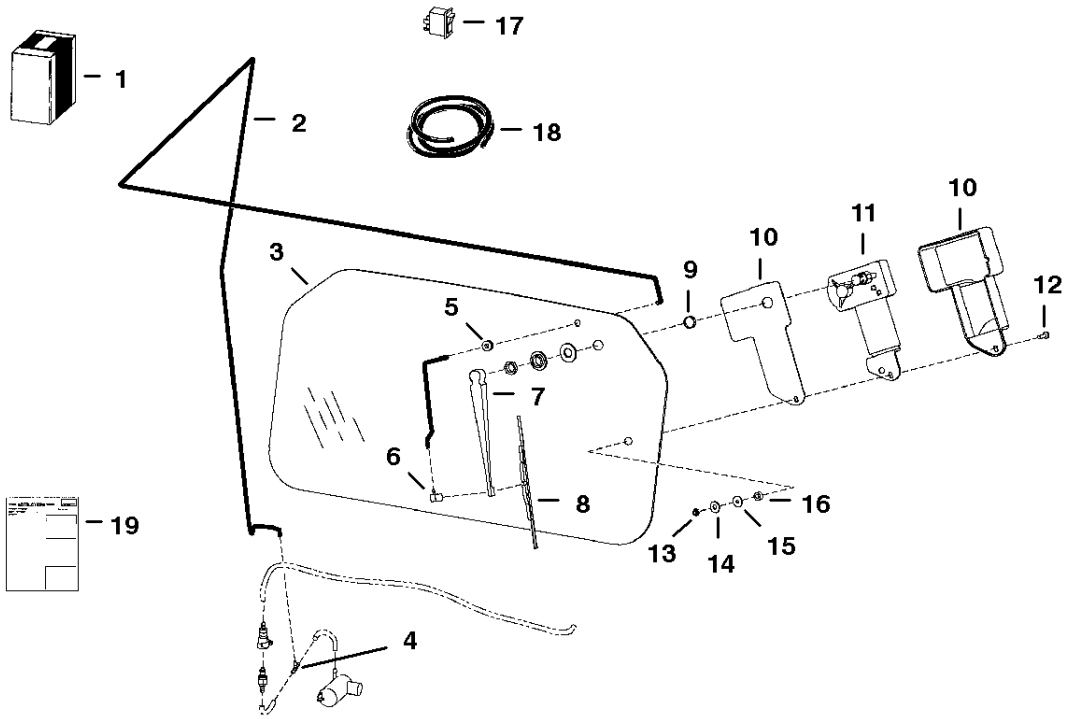

MS-1043

REAR WIPER

Ref.N°	Part N°	Description	Remarks	Serial N°	Qty.
1	6726655	KIT	rear wiper		1
2	NAP	HOSE	96' (2438mm) long - Order Ref. REAR WIPER(18)		1
3	6719317	WINDOW			1
4	6676000	TEE			1
5	6557493	GROMMET			1
6	6676028	NOZZLE			1
7	6676001	ARM			1
8	6676002	BLADE			1
9	6667201	SPACER	nylon		1
10	6664097	COVER	wiper		1
11	6665602	MOTOR			1
12	6664566	SCREW			1
13	6664103	NUT			1
14	6664065	WASHER	nylon		1
15	6801059	WASHER	neoprene		1
16	6664085	BUSHING	nylon		1
17	6675999	SWITCH			1
18	6676003	HOSE	bulk - sold per foot		x
19	6901061	INSTRUCTIONS			1

SEAT
(Suspension - Sears)

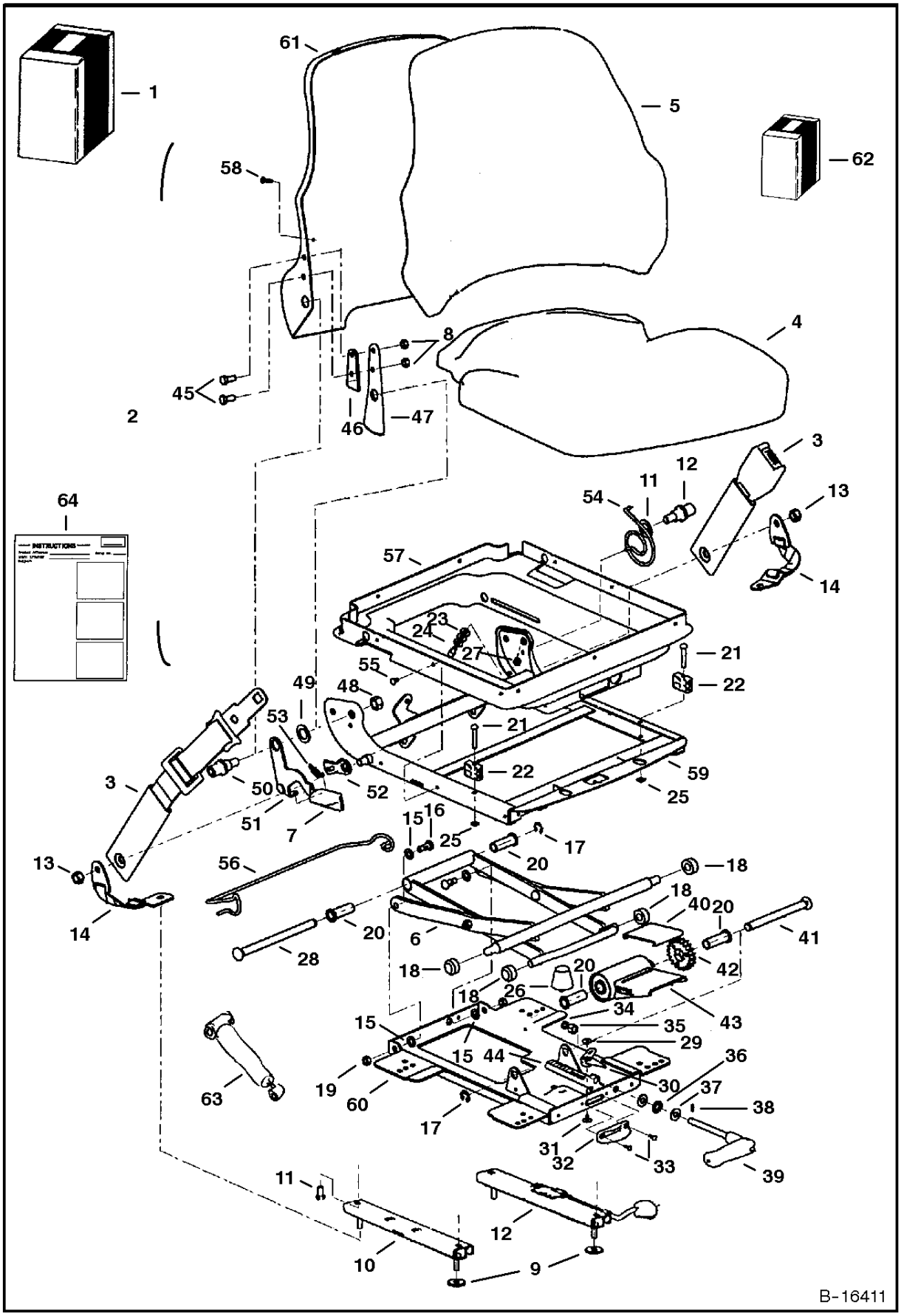

SEAT

Ref.N°	Part N°	Description	Remarks	Serial N°	Qty.
1	NAP	KIT	vinyl seat - Order Ref. SEAT(2), SEAT(3) & SEAT(64) - Was 6718868 [A]		1
1	NAP	KIT	fabric seat - Order Ref. SEAT(2), SEAT(3) & SEAT(64) - Was 6718869 [A]Wcom3|j }H~10{M		x
2	NAP	SEAT	vinyl - R.H. recliner lever - Order 6675595 seat - Was 6674896 [A]		1
2	6675595	SEAT	vinyl - L.H. recliner lever		1
2	NAP	SEAT	4fabric - R.H. recliner lever - Order 6675596 seat - Was 6674404 [A]		1
2	6675596	SEAT	fabric - L.H. recliner lever		1
3	6675170	SEAT BELT	lap		1
4	6675320	SEAT	seat - fabric		1
4	6675322	SEAT	seat - vinyl		1
5	6675319	SEAT	backrest - fabric - W/Ref. SEAT(58)		1
5	6675321	SEAT	backrest - vinyl - W/Ref. SEAT(58)		1
6	6675317	SCISSORS			1
7	6675323	KNOB	recliner		1
8	NSS	NUT			6
9	619021	WASHER			4
10	NSS	SLIDE	slave		1
11	NSS	BOLT			4
12	NSS	SLIDE	locking		1
13	NSS	NUT			2
14	NSS	BELT	tether		2
15	NSS	WASHER	cross pivot		4
16	NSS	BOLT	pivot		2
17	NSS	RING	retaining		2
18	NSS	ROLLER			4
19	NSS	NUT			2
20	NSS	BUSHING	weight adjustment		4
21	NSS	RIVET			2
22	NSS	BLOCK	up stop		2
23	NSS	WASHER			3
24	NSS	STOP	armrest		1
25	NSS	PUSHNUT			2
26	NSS	BUMPER			1
27	NSS	NUT			1
28	NSS	SHAFT	bearing		1
29	NSS	RIVET	female snap		1
30	NSS	INDICATOR	weight		1
31	NSS	RIVET	male snap		1
32	NSS	DIAL	weight indicator		1
33	NSS	POP RIVET			2
34	NSS	SPACER			1
35	NSS	NUT			1
36	NSS	BEARING	thrust		1
37	NSS	RACE	thrust		2
38	NSS	SHEAR PIN			1
39	NSS	HANDLE	weight adjustment		1
40	NSS	PLATE	wear		1
41	NSS	SHAFT	torsion		1
42	NSS	DRIVE GEAR			1
43	NSS	BUSHING	torsion		1
44	NSS	RACK	weight adjustment		1
45	NSS	BOLT			2
46	NSS	SPACER	recliner		1

SEAT

Ref.N°	Part N°	Description	Remarks	Serial N°	Qty.
47	NSS	BRACKET	back tilt		1
48	NSS	NUT			2
49	NSS	WASHER	plastic		2
50	NSS	BOSS	back pan pivot		2
51	NSS	HANDLE	recliner (RH)		1
52	NSS	LATCH	recliner		1
53	NSS	SPRING	extension		1
54	NSS	SPRING	tilt latch		1
55	NSS	CLIP			6
56	NSS	WIRE	boot support		1
57	NSS	SUSPENSION	boot		1
58	NSS	SCREW			2
59	NSS	HOUSING	upper		1
60	NSS	HOUSING	lower		1
61	NSS	BACK PAN			1
62	6675309	KIT	slides - W/Ref. SEAT(8)-SEAT(12)		1
62	6675310	KIT	tether belt - W/Ref. SEAT(9), SEAT(13) & SEAT(14)		1
62	6675311	KIT	suspension rollers & bearings - W/Ref. SEAT(15)-SEAT(20)		1
62	6675312	KIT	suspension bumpers & stops - W/Ref. SEAT(21)-SEAT(27)		1
62	6675313	KIT	rear tube - W/Ref. SEAT(17), SEAT(20) & SEAT(28)		1
62	6675314	KIT	weight adjustment indicator - W/Ref. SEAT(29)-SEAT(33)		1
62	6675315	KIT	weight adjustment handle - W/Ref. SEAT(34)-SEAT(39)		1
62	6675316	KIT	weight adjustment - W/Ref. SEAT(17), SEAT(20) & SEAT(40)-SEAT(44)		1
62	6675318	KIT	R.H. recliner - W/Ref. SEAT(7),SEAT(8) & SEAT(45)-SEAT(54)		1
62	6676034	KIT	L.H. recliner - W/Ref. SEAT(7),SEAT(8) & SEAT(45)-SEAT(54)		1
62	6675308	KIT	suspension boot - W/Ref. SEAT(55)-SEAT(57)		1
63	6676338	GAS SPRING			1
64	6900861	INSTRUCTIONS			1

SEAT BELT
(Three Point Retractable)

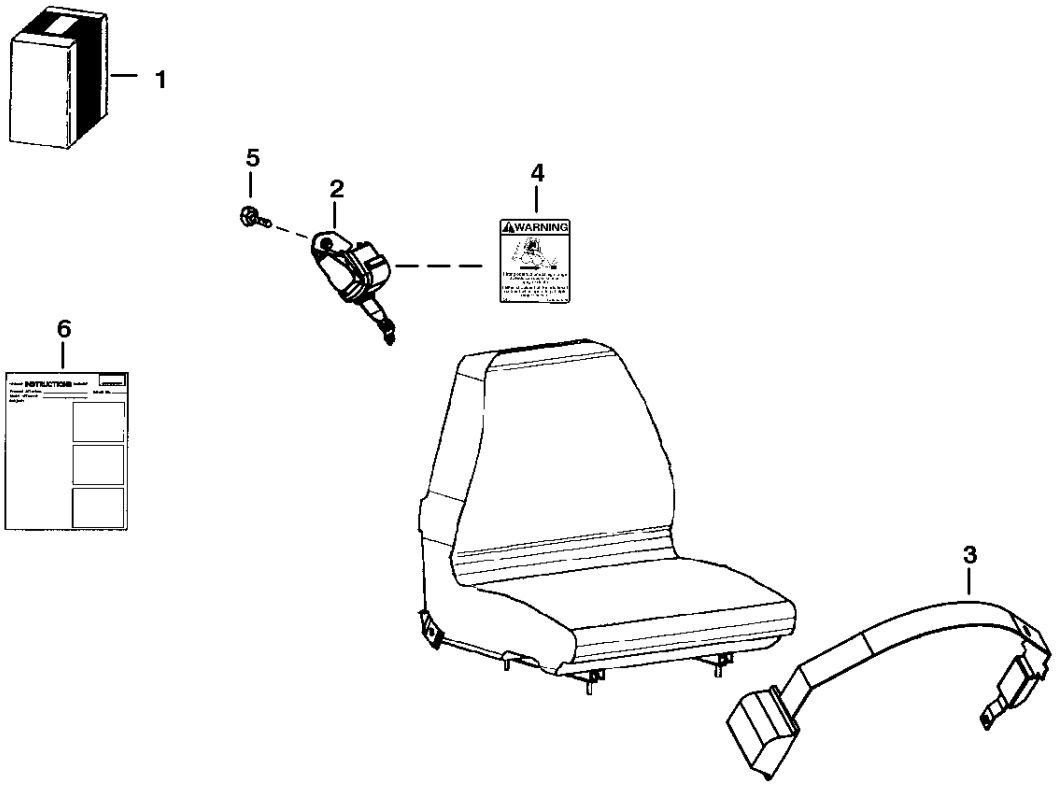

NOTE: This Seat Belt Kit is released for Sears brand Suspension Seats with a L.H. recliner lever. See Page 380.

PE-1507

SEAT BELT

Ref.N°	Part N°	Description	Remarks	Serial N°	Qty.
1	6732219	KIT	three point retractable seat belt - Was 6725168 [A]		1
2	6674407	SHOULDER BELT			1
3	6679308	SEAT BELT	Was 6674408 [A]		1
4	6725370	DECAL			1
5	35C-612	BOLT			1
6	6901010	INSTRUCTIONS			1

SEAT BELT
(3" Wide Retractable)

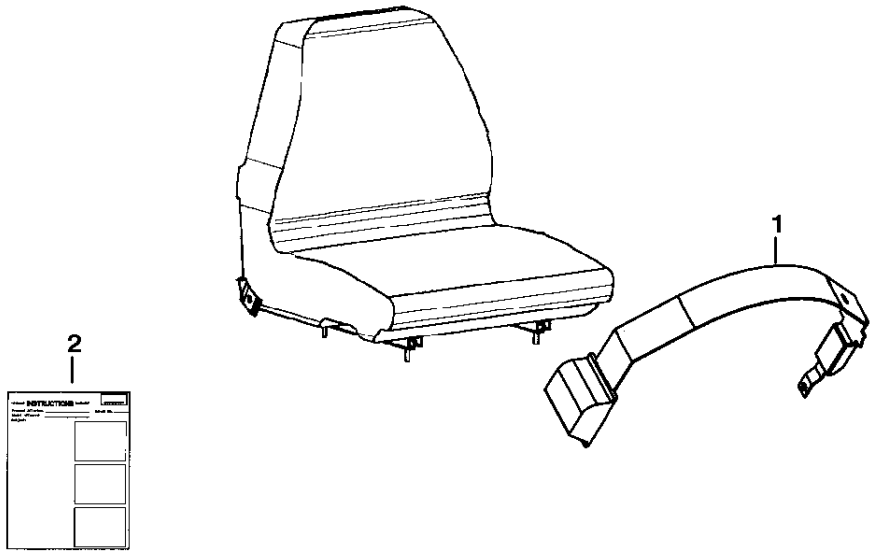

NOTE: This Seat Belt is released for Sears brand Suspension Seats with a L.H. recliner lever. See Page 380.

PE-1508

SEAT BELT

Ref.N°	Part N°	Description	Remarks	Serial N°	Qty.
1	6675562	SEAT BELT	3' wide retractable		1
2	6901011	INSTRUCTIONS			1

SEAT BELT
(3" Wide)

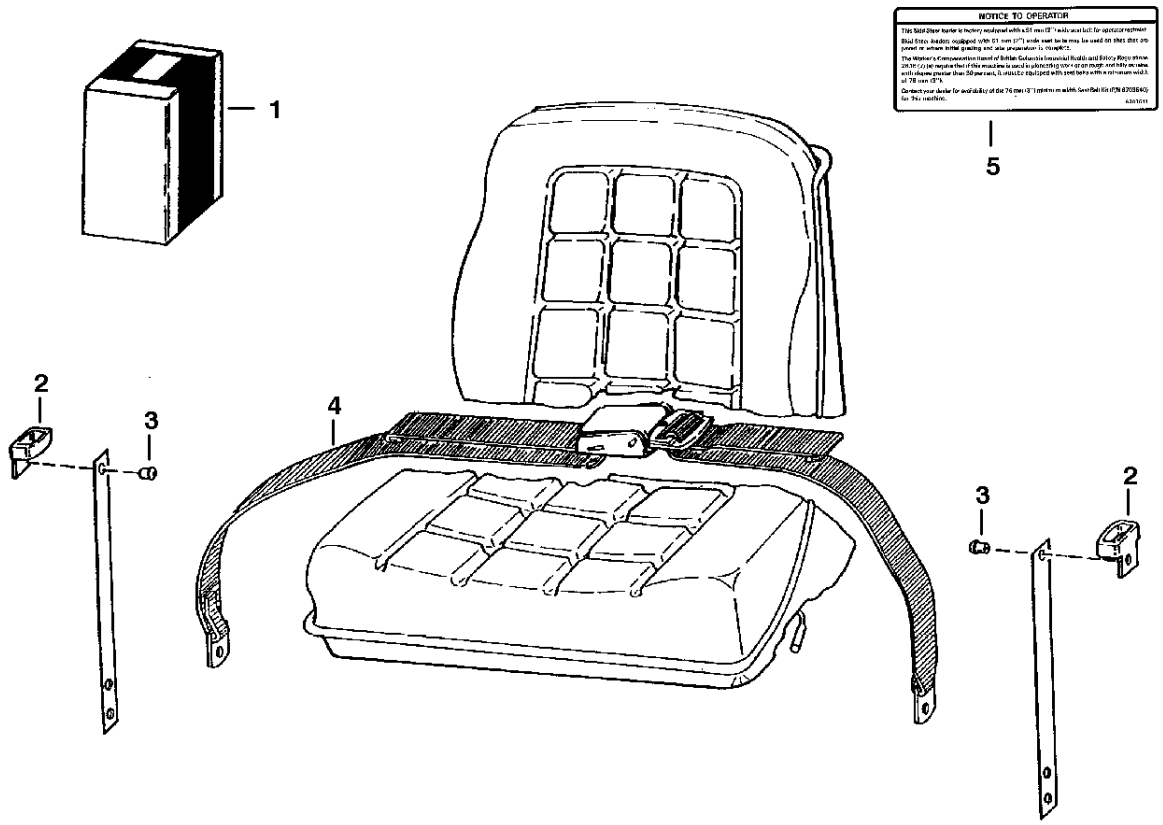

NOTE: Complies with British Columbia Industrial Health and Safety Regulations 26.16 (7) (a).

B-13601

SEAT BELT

Ref.N°	Part N°	Description	Remarks	Serial N°	Qty.
1	6703640	KIT	W/Ref. 2-5		1
2	6703703	GUIDE			2
3	6630207	RIVET			4
4	6659999	BELT			1
5	6703641	DECAL			x

SEVEN PIN CONNECTOR KIT

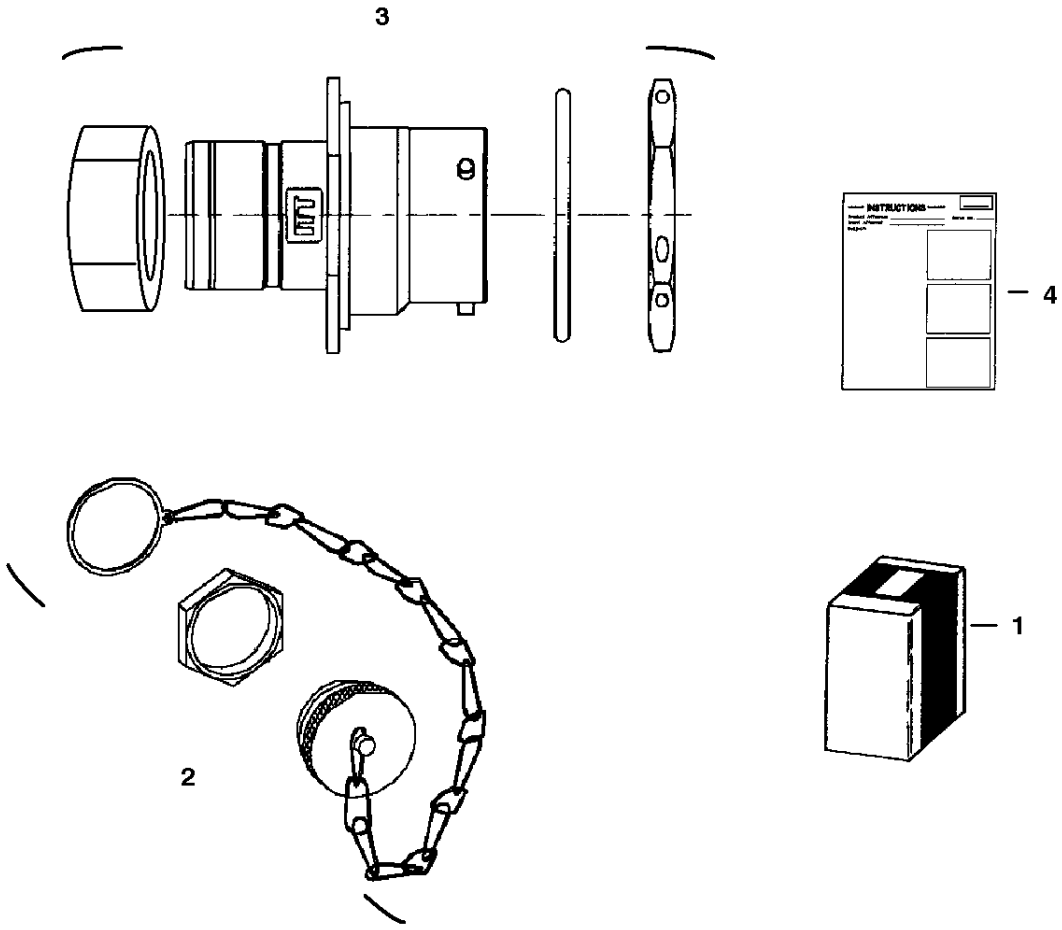

P-16385

SEVEN PIN CONNECTOR KIT

Ref.N°	Part N°	Description	Remarks	Serial N°	Qty.
1	6727176	KIT	Ref. SEVEN PIN CONNECTOR KIT(2)-SEVEN PIN CONNECTOR KIT(4)		1
2	6675026	CAP			1
3	6674802	CONNECTOR	7pin		1
4	6901076	INSTRUCTIONS			1

SOUND OPTION
(Domestic) (85 db)

DRAWING NOT AVAILABLE AT TIME OF PRINTING

PE-1682

SOUND OPTION

Ref.N°	Part N°	Description	Remarks	Serial N°	Qty.
1	6562619	BUSHING	throttle		2
1	6562619	BUSHING	throttle - high flow		4
2	6579399	DECAL	noise warning	5144 46864 & Bel.	1
2	6579385	DECAL	noise warning	5144 46865 & Abv.	1
3	6579403	DECAL	noise warning	5144 46864 & Bel.	1
3	6579404	DECAL	noise warning	5144 46865 & Abv.	1
4	6703483	PULLEY	fan	5144 46864 & Bel.	1
4	6712971	PULLEY	fan	5144 46865 & Abv.	1
5	6715428	DECAL	dynamic noise level		1
6	6676345	BELT	fan		1
7	6659982	MUFFLER			1
7	6659982	MUFFLER	high flow		2
8	6705333	MOUNT			1
8	6705333	MOUNT	high flow		2
9	6715744	BUSHING			1
9	6715744	BUSHING	high flow		2
10	6719480	HOSE			1
11	6719481	HOSE		5144 46864 & Bel.	1
12	17KV-8	ELBOW			2
12	97K-12	O-RING	flared end		x
13	35C-616	BOLT			2
13	35C-616	BOLT	high flow		4
14	77FN-8	ELBOW			1
15	84G-3724	BOLT			1
15	84G-3724	BOLT	high flow		2
16	85D-6	NUT			2
16	85D-6	NUT	high flow		4
17	6715651	ELBOW	high flow		2
18	6719482	HOSE	high flow		1
19	6719332	INSULATION	blower housing		1
20	6703963	INSULATION	crossmember		1
21	6703964	INSULATION	crossmember		1
22	6703965	INSULATION	crossmember		1
23	6703967	INSULATION	fender		2
24	6703968	INSULATION	transmission		2
25	6703969	INSULATION	crossmember		1
26	6715195	INSULATION	steering panel		1
27	6719333	INSULATION	blower housing		1
28	6715106	INSULATION	rear door		1
29	6715389	INSULATION	pedal shield		2
30	6715390	INSULATION	transmission		1
31	6715391	INSULATION	panel shield		1
32	6715393	INSULATION	panel shield		1
33	6715434	INSULATION	panel shield		1
34	6715435	INSULATION	panel shield		1

STROBE LIGHT

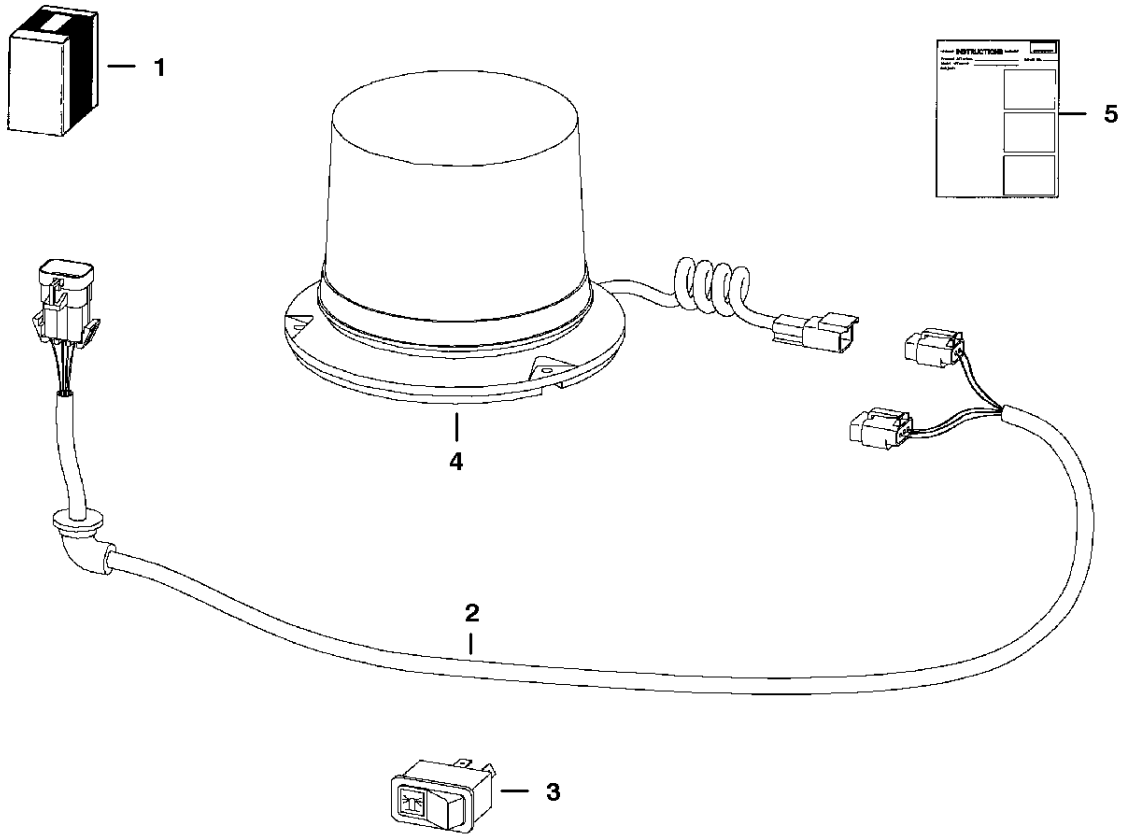

NOTE: If loader is not equipped with Deluxe Cab Option, also order 6727468 Harness. See Page 241

TS-1977

STROBE LIGHT

Ref.N°	Part N°	Description	Remarks	Serial N°	Qty.
1	6719857	KIT	strobe light		1
2	6718872	HARNESS			1
3	6665317	SWITCH	horizontal		1
3	6668816	SWITCH	vertical		1
4	6675522	STROBE			1
4	6675858	FLASH TUBE			1
5	6900992	INSTRUCTIONS			1

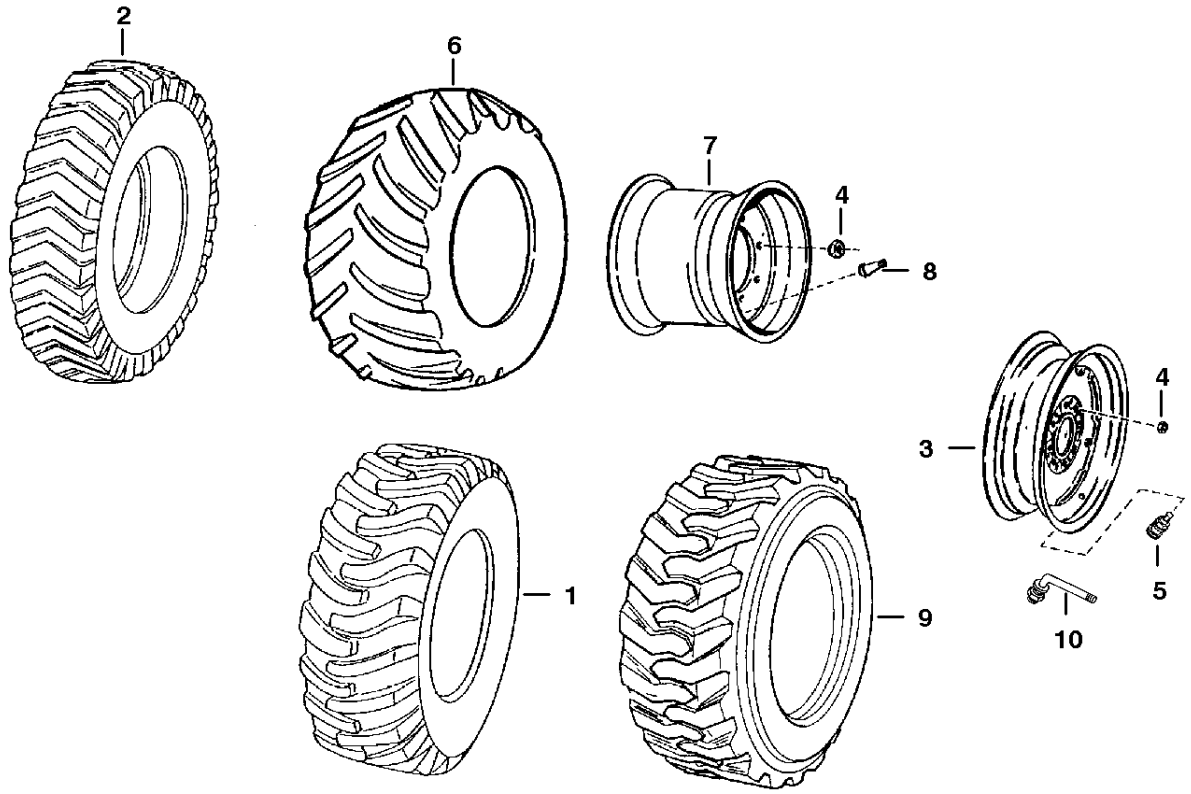
2
6
7
4
8
3
4
1
9
5
10
B-16412

TIRES & RIMS

Ref.N°	Part N°	Description	Remarks	Serial N°	Qty.
1	6519249	TIRE	12 x 16.5 6 Ply - Goodyear		4
1	6670145	TIRE	12 x 16.5 8 Ply - Firestone		4
1	6590832	TIRE	12 x 16.5 8 Ply - Goodyear		4
1	6662754	TIRE	12 x 16.5 8 Ply - Trac 2 - Dico		4
2	6665725	TIRE	8.25 x 15 6 Ply IDT - Dico		4
3	6730772	RIM	used W/Ref. TIRES & RIMS(1) & TIRES & RIMS(9) - Was 6565240 [A]		4
3	6562498	RIM	used W/Ref. TIRES & RIMS(2)		4
3	6730776	RIM	used W/Ref. TIRES & RIMS(9) - for 67' wide - inverted - also Order Ref. TIRES & RIMS(10) - Was 6669060 [A]		4
4	6564669	NUT	wheel		32
5	1614765	VALVE	valve - used on 6565240 & 6728991 rims		4
6	NAP	TIRE	31 x 15.5 8 Ply Terra Grip - purchase locally - Was 6513971 [A]		4
6	NAP	TIRE	31 x 15.5 8 Ply Terra Grip - Dico - purchase locally - Was 6667892 [A]		4
6	NAP	TIRE	31 x 15.5 8 Ply Ultra Grip - Goodyear - purchase locally - Was 6666668 [A]		4
7	6658846	RIM	use W/Ref. TIRES & RIMS(6)		4
8	6591447	STEM	valve - Use W/Ref. TIRES & RIMS(7)		4
9	6667888	TIRE	heavy duty - 12 x 16.5 10 Ply - Dico		4
10	6669244	STEM	valve - use W/6669060		4
11	6728991	RIM	used W/Ref. TIRES & RIMS(12)		4
12	6730110	TIRE	33 x 15.5 x 16.5 14 Ply - Bulky Hulk - Galaxy		4
12	6730109	TIRE	33 x 15.5 x 16.5 14 Ply - Hippo - Galaxy		4

TIRES & RIMS
(Solid Tire - Iatco)

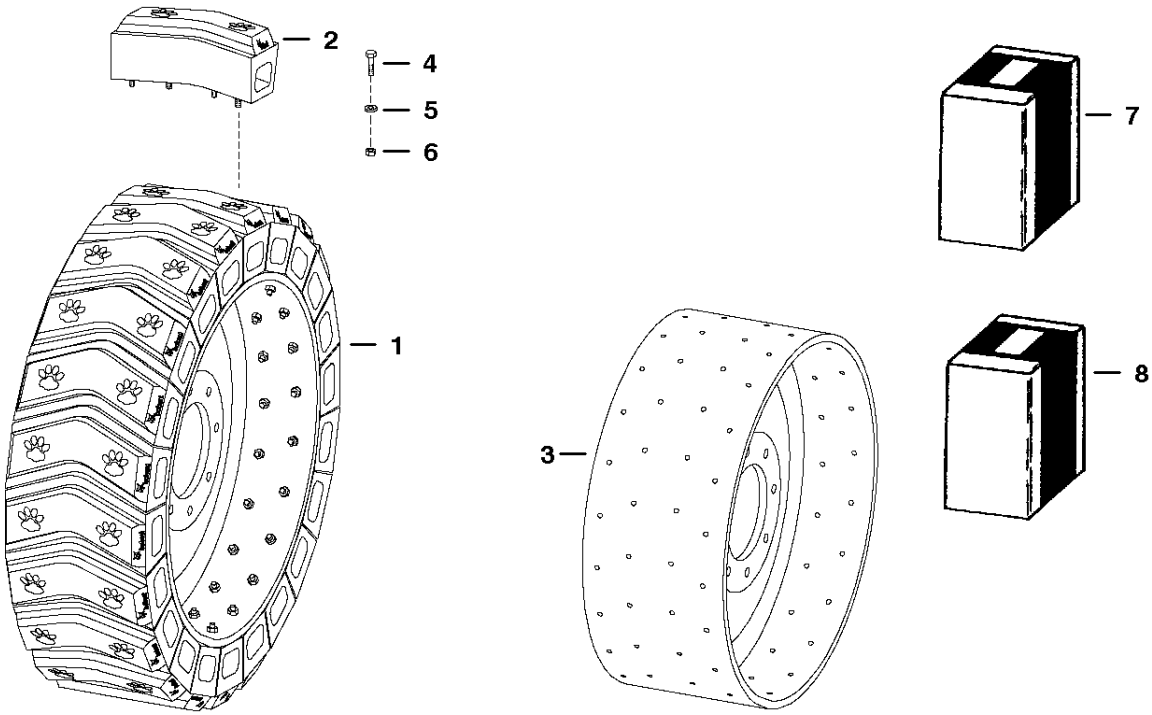

TS-1937

TIRES & RIMS

Ref.N°	Part N°	Description	Remarks	Serial N°	Qty.
1	6664990	TIRE & RIM	assy. - R.H. - 8.25 x 16.5 - Was 6670616 [A]		2
1	6664991	TIRE & RIM	assy. - L.H. - 8.25 x 16.5 - Was 6670617 [A]		2
1	6674009	TIRE & RIM	assy. - R.H. - 12 x 16.5		2
1	6674008	TIRE & RIM	assy. - L.H. - 12 x 16.5		2
2	6670618	KIT	box of (10) segments - 8.25 x 16.5 W/Ref. TIRES & RIMS(4)-TIRES & RIMS(6) (20) segments/tire		x
2	6674012	KIT	box of (11) segments - 12 x 16.5 W/Ref. TIRES & RIMS(4)-TIRES & RIMS(6) (22) segments/tire		x
3	NAP	RIM	4R.H. - 8.25 x 16.5 - Order 6670616		2
3	NAP	RIM	4L.H. - 8.25 x 16.5 - Order 6670617		2
3	NAP	RIM	R.H. - 12 x 16.5 - Order 6669041		2
3	NAP	RIM	L.H. - 12 x 16.5 - Order 6669042		2
4	1CM-830	BOLT			x
5	25E-15	WASHER			x
6	40DM-8	NUT			x
7	6713885	KIT	wheel - set of (4) tire & rim assemblies - 6670616 (2) R.H. & 6670617 (2) L.H. - 10 x 16.5		1
8	6718304	KIT	wheel - set of (4) tire & rim assemblies - 6674009 (2) R.H. & 6674008 (2) L.H. - 12 x 16.5		1

TIRES & RIMS
(Solid Tire - Setco)

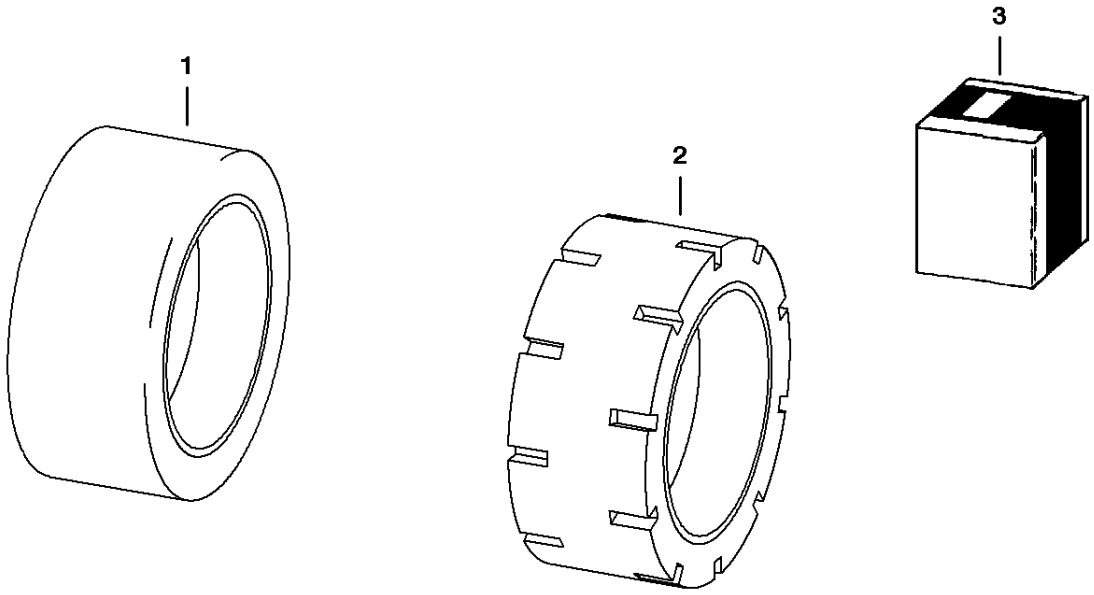

TS-1086

TIRES & RIMS

Ref.N°	Part N°	Description	Remarks	Serial N°	Qty.
1	6704169	TIRE & RIM	10 X 33 slick with wire		4
2	6704170	TIRE & RIM	10 X 33 staggered Gear Lug		4
3	NAP	TIRE & RIM	10 X 33 slick with wire - set of (4) - Order 6704169 - Was 6722151 [A]		1
3	NAP	TIRE & RIM	10 X 33 staggered gear lug - set of (4) - Order 6704170 [A] - Was 6722152 [A]		1

BULK ITEMS
(See Note)

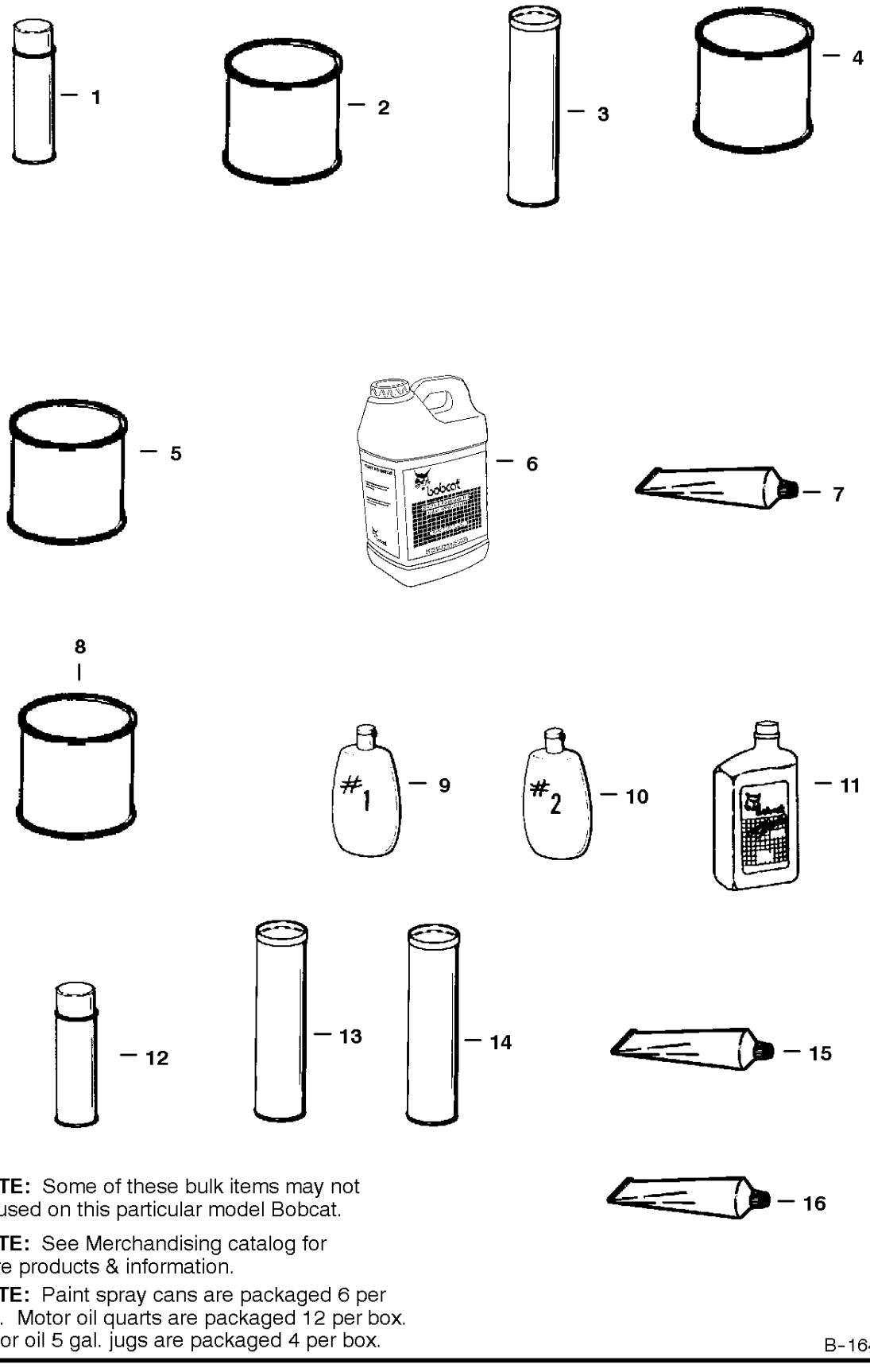

NOTE: Some of these bulk items may not be used on this particular model Bobcat.

NOTE: See Merchandising catalog for more products & information.

NOTE: Paint spray cans are packaged 6 per box. Motor oil quarts are packaged 12 per box. Motor oil 5 gal. jugs are packaged 4 per box.

B-16413

BULK ITEMS

Ref.N°	Part N°	Description	Remarks	Serial N°	Qty.
1	6722783	PAINT	orange - spray can - SEE NOTE		x
1	6722786	PAINT	4charcoal - spray can - SEE NOTE		x
1	6722789	PAINT	white - spray can - SEE NOTE		x
1	6722790	PAINT	red - spray can - SEE NOTE		x
2	6722781	PAINT	4orange - gallon - also Order Ref. BULK ITEMS(4)		x
2	6722782	PAINT	orange - Qt. - also Order Ref. BULK ITEMS(4)		x
2	6722784	PAINT	charcoal - gallon - also Order Ref. BULK ITEMS(4)		x
2	6722785	PAINT	<charcoal - Qt. - also Order Ref. BULK ITEMS(4)		x
2	6722787	PAINT	4white - gallon - also Order Ref. BULK ITEMS(4)		x
2	6722788	PAINT	white - Qt. also Order Ref. BULK ITEMS(4)		x
3	6633583	SEALANT	chaincase covers		x
4	6653517	REDUCER	gallon		x
5	6653518	PRIMER	gallon		x
5	6657743	PRIMER	spray can		x
6	6563328	BLACK GOLD	hydraulic/hydrostatic transmission fluid - 5 gallon - (2) 2 1/2 gallon containers		x
6	6722344	BLACK GOLD	hydraulic/hydrostatic transmission fluid - 5 gallon contai ner		x
6	NAP	BLACK GOLD	30 gallon drum		x
6	6563330	BLACK GOLD	55 gallon drum		x
7	6599360	SEALANT	electrical - 3 oz. tube		x
8	6634393	LUBRICANT	90 wt. gear - pint - for use in cooling fan drive assy.		x
9	6630188	POLISH	window1 (8 oz.)		x
10	6630189	POLISH	window2 (8 oz.) - scratch remover		x
11	6657303	MOTOR OIL	30 CE/SG - 1 Qt. - SEE NOTE		x
11	6657301	MOTOR OIL	410W30 CE/SG - 1 Qt. - SEE NOTE		x
11	6657299	MOTOR OIL	415W40 CE/SG - 1 Qt. - SEE NOTE		x
11	6724557	MOTOR OIL	SAE 10W30 - 1 gallon		x
11	6724558	MOTOR OIL	SAE 15W40 - 1 gallon		x
11	6724559	MOTOR OIL	SAE 30 - 1 gallon		x
11	6674204	MOTOR OIL	15W-40 - 2.5 gallon		x
11	6674205	MOTOR OIL	10W-30 - 2.5 gallon		x
11	6674206	MOTOR OIL	30W - 2.5 gallon		x
12	6652818	ADHESIVE	insulation - spray can		x
13	6658266	GREASE	general purpose		x
14	6599719	GREASE	14.5 oz. cartridge - for fan idler bearing		x
15	6650407	ADHESIVE	1 oz. tube		x
16	6650388	SEALANT	flange		x

NUMERICAL INDEX

	Part No.	Description	Was	Code	Page
	225855	SEAL			26, 64
	614142	SLEEVE			288
	616783	WASHER			30
*	619021	WASHER			118, 348
	619021	WASHER			14, 28, 326, 328
	654299	BEARING			128, 132, 136, 142
	658128	SNAP RING			128, 132, 136, 140
	669863	SNAP RING			128, 132, 136, 140
	742640	WASHER			198
	743332	GREASE ZERK			26
	774220	NUT			230, 300
	799119	SNAP RING			70
	872229	WASHER			44, 46, 50, 54, 60, 62, 326, 328
	889163	BEARING			260
	896979	NUT			259
	896984	BOLT			260
	896990	WASHER			260
	896992	RETAINER			260
	896996	WASHER			260
	897239	SLEEVE			260
	897245	INSULATOR			260
	897719	INSULATOR			260
	897732	WASHER			260
	898731	BULB			323
	899157	FAN			259
	899163	ROTOR			260
	899165	INSULATOR			260
	899167	SINK			260
	899169	INSULATOR			260
	899170	GASKET			260
	899374	SEAL			260
	899375	DIODE			260
	899376	WASHER			260
	899377	BOLT			260
	899378	DIODE			260
	961528	HARDWARE			244
	1306637	COTTER PIN			68
	1313116	BUSHING			194
	1316263	ADAPTER			90
	1318565	COTTER PIN			112, 114, 278, 280
	1320075	COTTER PIN			322
	1321607	RACE			41
	1321608	BEARING			41
	1522534	RING			65
	1530265	SEAL			64
	1614765	STEM			361
	1991038	BEARING			260
*	3974795	PIN			130
	3974795	PIN			138
	5289686	PLUG			270
*	6500989	CLAMP			342

Code for disposition of old part number

A — Use up

B — Use on other application (See PNI)

C — File PDR Report with Melroe Parts Sales

D — Part Number Error

	Part No.	Description	Was	Code	Page
	6500989	CLAMP			340
	6502203	CLAMP			326, 328
	6505082	SPRING			30
	6505813	ADAPTER			192
	6510614	LINK			35
	6511855	MOULDING			186
	6512026	BUSHING			68
	6513152	SEAL			188, 248, 302
	6513495	COTTER PIN			68, 200
*	6513763	WASHER	6676172	A	178
	6513908	NUT			210
	6514745	SCREW			220
	6515007	INDICATOR			192
	6515131	TERMINAL			288
	6515576	CLAMP			312
	6515817	WASHER			14
	6517516	LIGHT			288
	6518121	PLUG			198, 216
	6518200	GREASE ZERK			118
	6518460	PIN			134
	6518483	WASHER			132, 140, 144
	6518955	SNAP RING			194
	6519178	BUMPER			18, 26
	6519249	TIRE			361
	6530859	HOSE			102, 108
	6531270	SLEEVE			70
	6532127	BOOT			30, 156, 158, 166, 294
	6532453	RING SEAL			329, 330
	6532590	TUBE			64
	6533898	DECAL			322
	6534012	HOSE			116
	6534779	BELT	6713901	A	198
	6537283	HOSE			340
	6542731	SAFETY TREAD			240, 248
	6547593	PIN			26
*	6553411	BUSHING			32
	6553411	BUSHING			12, 38, 40
*	6553709	WASHER			44, 46, 50, 54
	6553709	WASHER			14, 60, 62
	6554100	SAFETY TREAD			264, 326, 328
	6554149	CORD			240, 251, 256, 268
	6555351	SEAL			240, 250, 256
	6555987	BUSHING			26
	6557224	DECAL			266
	6557291	BALL JOINT			200
	6557493	GROMMET			346
	6557565	DECAL			264
	6557720	HOSE			192
	6557831	WASHER			118, 312
	6557904	FLASHER			288
	6558309	WIRE ROPE			264

Code for disposition of old part number

A — Use up

B — Use on other application (See PNI)

C — File PDR Report with Melroe Parts Sales

D — Part Number Error

	Part No.	Description	Was	Code	Page
	6558310	SLEEVE			264
	6558693	RING			41
	6558694	WASHER			41
	6558991	BUSHING			26
	6559479	NUT			38
	6560172	COVER			176
	6560633	DAMPENER			14
	6561376	DECAL			264
	6561383	DECAL			264
	6562018	SPRING			28
	6562266	CLAMP			64
	6562498	RIM			361
*	6562602	BUSHING			14
	6562619	BUSHING			227, 284, 356
	6563328	BLACK GOLD			366
	6563330	BLACK GOLD			366
	6563914	WASHER			68, 118
	6563922	SNUBBER			58
*	6564452	GRIP			24
	6564452	GRIP			200
	6564654	PIN			68
*	6564657	PIN			290
	6564657	PIN			68
	6564669	NUT			41, 361
	6565170	CABLE			176
	6565200	DECAL			266
	6565947	WASHER			41
	6565990	DECAL			264, 266
	6567743	PIN			14, 188
	6567827	ANGLE			322
	6567838	PIN			322
	6567962	WASHER			200
	6568424	ADAPTER			194
	6568425	ADAPTER			194
	6568918	SPROCKET			35, 41
	6569203	CLAMP			176
	6569219	SCREEN			32, 102, 108
	6569498	SPRING ASSY			194
	6570931	INSTRUCTIONS			227
	6571536	PULLEY	6579830	B	180
	6576033	WASHER			194
	6576196	BRACKET			118
	6576261	COVER			200
	6576262	MOUNT			200
	6576280	BOLT			176
	6577058	PIN			118
	6577230	MOUNT			118
	6577382	SPACER			186
	6577545	GROMMET			230, 319
	6577754	DECAL			266
	6577812	COVER			227

Code for disposition of old part number

A — Use up

B — Use on other application (See PNI)

C — File PDR Report with Melroe Parts Sales

D — Part Number Error

	Part No.	Description	Was	Code	Page
	6577821	HOSE			32
	6577822	HOSE			32, 186
	6577880	KIT			227
	6577947	SAFETY TREAD			264
	6577949	SAFETY TREAD			264
	6577961	GROMMET			30
	6578139	LEVER			236
	6578140	LEVER			236
	6578172	HOSE			32
	6578278	PAD			32
	6578284	SHIM			202
	6578368	DECAL			266
	6578505	COVER			38
	6578773	HOSE			44, 46, 50, 54
	6578774	HOSE			44, 46, 50, 54
	6578857	HUB			41
	6579072	SPRING			26
	6579104	STOP			28
	6579106	SHIM			12, 28
	6579326	MOUNT			188
*	6579385	DECAL			356
	6579385	DECAL			284
	6579399	DECAL			356
	6579403	DECAL			284, 356
*	6579404	DECAL			356
	6579528	DECAL			264
	6579554	HOSE			32
*	6579613	STOP			188
	6579613	STOP			14
	6579641	HOUSING			202
	6579989	BRACKET			176
	6584978	CONDUIT			38
	6585860	SPRING			38
	6586251	HOSE			108
	6586459	SEAL KIT			72, 78, 82
	6586542	HEAD			329, 330
	6586543	PISTON			329, 330
	6586710	BOLT			194
	6586918	SCREW			70
	6587182	SWIVEL PIN			194
	6587291	HOSE			340
	6587458	KEY			32
	6587523	WASHER			70, 76, 80
	6587575	ADAPTER			70
	6587580	SPRING			70, 76, 80
	6587633	BONNET			72, 76, 80
*	6587763	BOOT			169
	6587763	BOOT			70, 76, 80
	6587765	BUSHING			194
	6588074	SPOOL			70, 76, 80
	6588781	END CAP			72, 78, 82

Code for disposition of old part number

A — Use up

B — Use on other application (See PNI)

C — File PDR Report with Melroe Parts Sales

D — Part Number Error

	Part No.	Description	Was	Code	Page
	6589226	BONNET			70
	6589564	WASHER			70, 76, 80
	6589565	BUSHING			76, 80
	6590832	TIRE			361
	6591447	STEM			361
	6592098	WASHER			70
	6592100	COLLAR			70, 76, 80
	6592105	BALL			70
	6592107	SPRING			70
	6592109	ADAPTER			72, 76, 80
	6592115	SEAT			70, 76, 80
	6592116	NUT			70, 76, 80
	6592117	SPRING			70, 76, 80
	6592506	CLAMP			60, 62
	6592720	PLUG			72, 78, 82
	6592766	U-BOLT			200
	6592776	SPACER			65
	6595131	SPRING			72, 78, 82
	6595663	BUSHING			70, 76, 80
	6595951	SLEEVE			72, 78, 82
	6596332	SPRING			72, 78, 82
	6596569	SEAT			72, 76, 80
	6596807	PLUG			70
	6596974	CASE			64
	6597009	HEAD			65
	6597015	ROD			65
	6597775	LEVER			154
	6597776	LEVER			154
	6598908	ELBOW			32
	6599360	SEALANT			366
	6599365	KIT			150
	6599645	PLUG			12
	6599719	GREASE			366
	6599741	WASHER			118
	6599744	BALL JOINT			118, 278, 280
	6599931	ALARM			230
*	6610510	TIE	30H-23	B	319
	6610510	TIE			34, 176, 186, 192, 268, 296
*	6624289	TIE			50, 54, 290
	6624289	TIE			88, 176, 274, 276, 297, 312, 326, 328
	6624289	TIE	6610510	A	340
	6626631	CLAMP			186
	6628571	VALVE ASSY			70, 76, 80, 84
	6630164	PULLEY			259
	6630188	POLISH			366
	6630189	POLISH			366
	6630207	RIVET			30, 353
	6630340	HOUSING			259
	6630341	STATOR			260
	6630342	HOUSING			260
	6630343	RETAINER			260

Code for disposition of old part number

A — Use up

B — Use on other application (See PNI)

C — File PDR Report with Melroe Parts Sales

D — Part Number Error

Part No.	Description	Was	Code	Page
6630344	BRUSH ASSY			260
6630345	GASKET			260
6630346	COVER			260
6630348	CAPICITOR			260
6630349	REGULATOR			260
6630350	DIODE			260
6630945	WASHER			200
6631036	BALL JOINT			200
6631067	SEAL			26
6631418	PIN			14, 18, 188
6631561	NUT			86
6631927	GEAR			244
6631928	SHAFT			244
6632228	RETAINER			180
6632323	WASHER			180
6632429	RETAINER			184
6632430	ROLLER			184
6632432	PLUNGER			184
6632433	GASKET			184
6632434	COVER			184
6632435	BALL			184
6632436	SPRING			184
6632441	SPRING			184
6632823	GASKET			210, 216, 218
6633583	SEALANT			12, 366
6634393	LUBRICANT			202, 366
6634874	O-RING			86
6635557	WASHER			259
6640690	PIN			152, 154, 158, 160, 166, 294, 296, 319
6640692	CONNECTOR			152, 156, 158, 160, 166, 294, 296
6640694	CAP			152, 156, 158, 160, 166, 294, 296
6640699	CONNECTOR			156, 158, 166, 294, 300, 319
6640700	LOCK			156, 158, 166, 294, 319
6641176	SEAL			152, 154, 158, 160, 166, 294, 296, 319
6641179	CONNECTOR			152, 156, 160, 166, 237, 238, 296, 319
6641180	LOCK			152, 156, 160, 166, 237, 238, 296, 319
6645080	O-RING			132, 140
6645086	PLUG			130, 132, 138, 140
6645088	BOLT			144
6645090	SEAL			128, 136
6646582	PLUG			152, 154, 158, 160, 166, 294, 296
6646627	BEARING			202
6646705	MOULDING			186
6646781	SWITCH			230
6647777	PIN			86
6647778	CAP			86
6647780	PLUG			86
6647783	LOAD CHECK			86
6647784	PLUG			86
6647785	SPRING			86
6647786	SEAL KIT			86

Code for disposition of old part number

A — Use up

B — Use on other application (See PNI)

C — File PDR Report with Melroe Parts Sales

D — Part Number Error

	Part No.	Description	Was	Code	Page
	6648293	SCREW			86
	6648294	SPRING			86
	6648307	CONNECTOR			160, 296
	6649244	BALL STUD			186, 240
*	6649245	RETAINER			248
	6649245	RETAINER			240
	6649459	SPACER			260
	6649481	BULB			323
	6649551	SHOCK			118
	6649949	PLUG			30, 268
	6650108	SHIELD			58, 92
	6650120	RACE			36
	6650239	SCREEN			32
	6650388	SEALANT			366
	6650407	ADHESIVE			366
	6650627	PLATE			128, 132, 136, 140
	6650629	PIN			128, 132, 136, 140
	6650630	RETAINER			128, 132, 136, 140
	6650634	GASKET			128, 132, 136, 140
	6650635	BEARING			128, 134, 138, 142
	6650636	PIN			128, 132, 136, 140
	6650637	BOLT			132
	6650646	O-RING			130, 138
	6650647	O-RING			128, 138
	6650648	PLUG ASSY			130, 138
	6650652	POPPET			128, 136
	6650668	BOLT			128, 132, 136, 142
	6650674	BOLT			140
	6652018	BOLT			132, 142
	6652818	ADHESIVE			366
	6652918	NUT			198
	6653484	VALVE			343
	6653485	SEAL KIT			343
	6653487	SEAL KIT			343
	6653517	REDUCER			366
	6653518	PRIMER			366
	6653702	SEAL			202
	6653757	SNAP RING			202
	6653758	SNAP RING			202
	6654139	MOULDING			154, 160, 164
	6654170	BOLT			240, 248
	6654806	FUSE			156, 178
	6655399	BUMPER			24
	6655399	BUMPER	6714454	B	22
	6655572	VALVE			88
	6655781	BEARING			194
	6656155	COVER			326, 328
	6657028	O-RING			128, 132, 136, 140
	6657067	COVER			128, 132, 136, 140
	6657068	PLATE			128, 132, 136, 142
	6657299	OIL			366

Code for disposition of old part number

A — Use up

B — Use on other application (See PNI)

C — File PDR Report with Melroe Parts Sales

D — Part Number Error

	Part No.	Description	Was	Code	Page
	6657301	OIL			366
	6657303	OIL			366
	6657376	ELBOW			186
	6657719	PLUG			256, 268
*	6657734	PUMP	6667170	B	32
	6657743	PRIMER			366
	6658122	COVER			144
	6658123	COVER			144
	6658180	BREATHER			32
	6658229	SEAL			41
	6658260	SENSOR			176
	6658266	GREASE			366
	6658460	PIN			128
	6658846	RIM			361
	6659371	NUT			180
	6659372	WASHER			180
	6659374	SPACER			180
	6659375	FAN			180
	6659376	BRACKET			180
	6659378	BOLT			180
	6659379	BEARING			180
	6659380	ROTOR			180
	6659381	STATOR			180
	6659382	BRACKET			180
	6659384	RECTIFIER			180
	6659385	SCREW			180
	6659386	HOLDER			180
	6659387	NUT			180
	6659388	CONDENSER			180
	6659390	HOLDER			180
	6659391	NUT			180
	6659392	BOLT			180
	6659393	REGULATOR			180
	6659394	BRUSH			180
	6659395	SPRING			180
	6659396	SCREW			180
	6659397	TERMINAL			180
	6659398	COVER			180
	6659399	SCREW			180
	6659400	CONNECTOR			180
	6659982	MUFFLER			284, 356
	6659999	BELT			353
	6660260	SWITCH			150
	6660339	GASKET			94, 144
	6660644	CAP			70
	6660814	O-RING			128, 132, 136, 142
	6660967	CAP			194
	6660995	GREASE RING			194
	6661022	FILTER			62, 88, 100, 106, 149
	6661114	CAP			32
	6661117	TANK			278, 280

Code for disposition of old part number

A — Use up

B — Use on other application (See PNI)

C — File PDR Report with Melroe Parts Sales

D — Part Number Error

	Part No.	Description	Was	Code	Page
	6661213	CLAMP			32
	6661229	BEARING			194
	6661247	FILTER ASSY			112, 114, 150
	6661248	ELEMENT			112, 114, 150
	6661328	SEAL KIT			72, 78, 82
	6661353	LIGHT ASSY			323
	6661377	SEAL			194
	6661443	STEM			332
	6661448	SEAL KIT			97
*	6661481	O-RING			138
	6661608	SEAL KIT	6668098	A	281
	6661611	ALTERNATOR			180
	6661696	CAP			32
	6661753	PLUG			116
	6661787	WASHER			198
	6661807	FILTER			149
	6661808	KIT			149
*	6662246	CONNECTOR	6728567	B	307
	6662252	LOCK			307
	6662257	PIN			307
	6662298	SNAP RING			38, 40
	6662754	TIRE			361
	6662848	CAP			72, 78, 82
	6662855	BELT			116, 196
	6662997	PULLEY			194
	6664024	STEM			97
	6664025	STEM			97
	6664032	SEAL KIT			97
	6664033	SEAL KIT			98
	6664035	CAP			274, 276
	6664036	NUT			274, 276
	6664037	WASHER			274, 276
	6664040	PIN			274, 276
	6664065	WASHER			346
*	6664085	SPACER			256, 270
	6664085	BUSHING			244, 346
	6664095	ARM			244
	6664096	BLADE			244
	6664097	COVER			242, 244, 346
	6664103	NUT			244, 346
	6664178	GASKET			244
	6664212	CHECK VALVE			343
	6664221	RETAINER			268
	6664223	OUTLET			268
	6664224	CAP			268
	6664368	LIGHT			268
	6664554	PUMP			242
	6664566	SCREW			244, 346
	6664845	BEARING			36
	6664846	BEARING			36
	6664847	RACE			36

Code for disposition of old part number

A — Use up

B — Use on other application (See PNI)

C — File PDR Report with Melroe Parts Sales

D — Part Number Error

Part No.	Description	Was	Code	Page
6664848	SNAP RING			36
6664880	SWITCH			38
6664882	BUSHING			18
6664971	WASHER			178
6664972	NUT			178
6664990	TIRE & RIM	6670616	A	363
6664991	TIRE & RIM	6670617	A	363
6665000	CLIP			154, 158, 166, 294
6665222	RING GEAR			196
6665307	SEAL			194
6665308	SNAP RING			194
6665316	SWITCH			288
6665317	SWITCH			231, 360
6665321	RIVET			156, 158, 166, 294
6665322	RIVET			156, 158, 166, 294
6665367	BULB			268
6665370	PLUG			307
6665371	SWITCH			176
6665427	BATTERY			176
6665568	SEAL			240, 251
6665569	WASHER			70, 76, 80
6665570	WASHER			70, 76, 80
6665572	VALVE			340, 343
6665602	MOTOR			346
6665603	OIL FILTER			214
* 6665659	CONNECTOR			178
6665701	BUSHING			68, 118
6665702	STEM			98
6665707	SWITCH			242
6665719	PLUG			97, 98, 332
6665725	TIRE			361
6665755	SEAL			36
6665839	BOLT			68
6665846	SEAL			72, 76, 80
6665910	GASKET			192, 216
6665915	GAUGE			102, 110
6666338	WASHER			128, 132, 136, 140
6666341	VALVE			86, 237, 238
6666375	CARTRIDGE			224
6666376	CARTRIDGE			224
6666377	COVER			224
6666378	VALVE			224
6666387	PLUG			214
6666388	SNAP RING			208
6666389	CIR CLIP			210
6666393	SEAL RING			204, 210, 214
6666394	SEAL RING			204, 210, 214
6666395	SEAL RING			204, 214, 216
6666396	SCREW			214
* 6666397	PLUG			216
6666397	PLUG			205

Code for disposition of old part number

A — Use up

B — Use on other application (See PNI)

C — File PDR Report with Melroe Parts Sales

D — Part Number Error

	Part No.	Description	Was	Code	Page
	6666398	NUT			192, 216
*	6666400	PLUG	6668889	A	216
	6666400	PLUG			214
	6666401	O-RING			204, 214
	6666402	BOLT			210
	6666403	BOLT			220
	6666404	SNAP RING			218
	6666406	STUD			210
	6666407	STUD			192, 216
	6666408	O-RING			204, 210
	6666409	O-RING			204, 220
	6666410	O-RING			204, 210
	6666412	BOLT			210
	6666416	HOSE			220
*	6666418	ADAPTER			222
	6666419	CLAMP			192, 205
	6666420	O-RING			204, 220
	6666421	PLUG			210
	6666426	SEAL RING			204, 210
	6666433	BOLT			218
	6666434	BOLT			214
	6666439	O-RING			204, 214
	6666442	NUT			218
	6666443	COLLAR			208
	6666444	BOLT			218
	6666446	PULLEY			218
	6666447	PUSH ROD			208
	6666448	ARM			208
	6666449	SCREW			208
	6666450	NUT			208, 210
	6666452	BOLT			196
	6666453	WASHER			220
	6666456	WASHER			218
	6666458	BEARING			218
	6666460	SEAL			204, 208
	6666463	BUSHING			218
	6666465	SPRING			210
	6666466	VALVE			208
	6666469	WASHER			210
	6666470	PIN			218
	6666471	PULLEY			218
	6666472	GASKET			204, 205
	6666473	GASKET			204, 205
	6666474	ARM			208
	6666475	CLAW			210
	6666476	STOP			210
	6666480	SCREW			210
	6666481	INSERT			208
	6666482	FLANGE			218
	6666483	SPRING			210
	6666489	SCREW			210

Code for disposition of old part number

A — Use up

B — Use on other application (See PNI)

C — File PDR Report with Melroe Parts Sales

D — Part Number Error

Part No.	Description	Was	Code	Page
6666490	SEAL			204, 210
6666491	COVER			210, 218
6666492	GASKET			204, 220
6666493	TAPPET			220
6666495	SPRING			220
6666496	PIN			210
6666501	CLAMP			220
6666504	TAPPET			208
6666505	INSERT			208
6666508	TUBE			214
6666509	RETAINER	6673155	A	216
6666510	VALVE			214
6666512	SHIM			220
6666513	SHIM			220
6666514	SHIM			220
6666515	SHIM			220
6666516	SHIM			220
6666517	SHIM			220
6666518	SHIM			220
6666519	PIN			208
6666522	FUEL PUMP			32
6666526	VALVE			208
6666527	ADAPTER			220
6666528	DIPSTICK			214
6666530	CAP			214
6666531	TUBE			220
6666542	SEAL			329, 330
6666544	SEAL			65
6666571	BULB			231
6666622	CLUTCH			184
6666624	SNAP RING			184
6666628	NUT			184
6666629	WASHER			184
6666630	WASHER			184
6666631	O-RING			184
6666632	O-RING			184
6666633	BOLT			184
6666634	SCREW			184
6666635	SCREW			184
6666637	NUT			184
6666684	BOLT			212
6666686	PIN			212
6666687	NAIL			212
6666688	PIN			212
6666689	PLUG			216
6666690	PLUG			210, 214, 216
6666692	BEARING			212
6666694	PIN			212
6666695	BOLT			208, 212
6666696	BOLT			190
6666697	PLUG			208, 216

Code for disposition of old part number

A — Use up

B — Use on other application (See PNI)

C — File PDR Report with Melroe Parts Sales

D — Part Number Error

Part No.	Description	Was	Code	Page
6666698	SET SCREW			212
6666699	SEAL RING			204, 216
6666700	STUD			212
6666701	CLAMP			210, 212
6666702	PLUG			214
6666703	PLUG			214
6666707	BOLT			210
6666708	BOLT			223
6666709	STUD			214
6666710	SCREW			212
6666711	BOLT			210
6666712	O-RING			190, 204
6666713	PIN			212
6666714	O-RING			204, 212
6666715	BOLT			210
6666716	PLUG			214
6666717	WASHER			212
6666718	SLEEVE			216
6666719	BOLT			214
6666720	WASHER			210
6666721	LEVER			212
6666722	DOWEL			214
6666723	WASHER			212
6666725	PULLEY			210
6666726	SHAFT			212
6666727	SPRING			212
6666729	SHAFT			212
6666730	SEAL			204, 212
6666731	SEAL			204, 212
6666732	SLEEVE			212
6666733	ARM			212
6666737	BEARING			216
6666738	BEARING			216
6666740	SHAFT			212
6666741	TUBE			214
6666745	LEVER			212
6666746	NOZZLE			214
6666748	COVER			210, 212
6666749	BREATHER			208, 212
6666750	PIN			223
6666751	PLUG			214
6666753	WASHER			204, 212
6666754	GASKET			208
6666755	GASKET			208
6666757	COVER			212
6666760	SEAL RING			204, 223
6666761	CAP			210
6666762	ADAPTER			190
6666763	FUEL LINE			220
6666766	GROMMET			242
6666932	BRAKE			278, 280

Code for disposition of old part number

A — Use up

B — Use on other application (See PNI)

C — File PDR Report with Melroe Parts Sales

D — Part Number Error

	Part No.	Description	Was	Code	Page
	6666933	MASTER CYLINDER			278, 280, 281
	6667139	CAP			278, 280
	6667144	CONNECTOR			152, 156, 158, 166, 294
	6667145	LOCK			152, 156, 158, 294
	6667170	PUMP			32
	6667176	PLUG			86
	6667180	SEAL KIT			332
	6667201	SPACER			244, 346
	6667291	PISTON			65
	6667323	SEAL			329, 330
	6667327	SEAL			65
	6667352	ELEMENT			32
	6667353	FILTER ASSY			32
	6667549	VALVE			70, 76, 80
	6667569	CONNECTOR			274, 276
	6667676	COVER			86
	6667677	O-RING			86
	6667680	SNAP RING			86
	6667687	VALVE			84
*	6667803	COUPLER			342
	6667803	COUPLER			88, 340
*	6667804	COUPLER			342
	6667804	COUPLER			88, 340
	6667806	COUPLER			88
	6667825	STARTER			184
	6667844	VALVE ASSY			58, 66, 92
	6667888	TIRE			362
	6667896	COOLER			112
	6667992	SOLENOID			38, 40
	6668097	SCREW			281
	6668104	MOUNT			198
	6668106	TUBE			214
	6668107	ADAPTER			216
	6668108	WASHER			216
	6668109	O-RING			216
	6668137	MOTOR			244
	6668693	PLUG			216
	6668694	SEAL			204, 216
*	6668742	SWITCH			268
*	6668760	SEAL			178
*	6668761	BOLT			178
	6668763	SHIELD			212
	6668765	VALVE			84
	6668791	ORIFICE			74, 84
*	6668813	SWITCH			90
*	6668815	SWITCH			288
*	6668816	SWITCH			231, 360
*	6668820	NUT	6676246	B	147
	6668820	NUT			84
	6668879	DECAL			230
	6668887	O-RING			204, 214

Code for disposition of old part number

A — Use up

B — Use on other application (See PNI)

C — File PDR Report with Melroe Parts Sales

D — Part Number Error

Part No.	Description	Was	Code	Page
6668888	O-RING			205
6668890	SHIM			220
6668891	SPRING			220
6668892	BOLT			220
6668893	SPACER			220
6668894	NUT			220
6668895	REPAIR KIT			216
6668897	ADAPTER			214
6668899	GASKET KIT			204
6668900	ADAPTER			216
6668901	ADAPTER			216
6668902	SPRING			216
6668903	SPRING			216
6668904	CAP			212
6668905	PIN			216
6668906	REPAIR KIT			220
6668913	KNOB			58, 66, 92
6668935	SEAL RING			204
6668936	SET SCREW			223
6668938	BOLT			214
6668940	CAP			208
6668941	SPRING			214
6668942	BOLT			218
6668943	ROD			218
6668944	SPRING			208
6668945	THERMOSTAT			214
6668948	TUBE			214
6668950	SOLENOID			220
6668953	BRACKET			19
6669057	CHECK VALVE			84
6669066	SEAL RING			198, 216
6669067	WASHER			214
6669085	VALVE			66
6669087	SEAL KIT			66, 148
6669089	TRACK			19
6669091	CLIP			268, 300
6669135	SEAT			19
6669187	VALVE			343
6669188	STEM			343
6669189	STEM			343
6669190	COIL			343
6669203	VALVE			88, 97
6669216	SEAL KIT			343
6669217	SEAL KIT			343
6669218	VALVE			343
6669219	VALVE			343
6669224	BOLT			156, 268, 300
6669244	STEM			362
6669267	SEAL			64
6669268	SEAL			64
6669345	YOKE			184

Code for disposition of old part number

A — Use up

B — Use on other application (See PNI)

C — File PDR Report with Melroe Parts Sales

D — Part Number Error

Part No.	Description	Was	Code	Page
6669346	ARMATURE			184
6669347	BEARING			184
6669348	BEARING			184
6669349	BEARING			184
6669350	KIT			184
6669354	SHAFT			184
6669355	HOUSING			184
6669356	SWITCH ASSY			184
6669357	KIT			184
6669358	KIT			184
6669359	BOLT			184
6669360	BUSHING			184
6669361	HOLDER			184
6669362	SPRING			184
6669363	FRAME			184
6669364	PINION			184
6669365	BOOT			184
6669366	BOLT			184
6669367	BOLT			184
6669368	O-RING			184
6669369	PINION			184
6669370	BRUSHES			184
6669371	BRUSHES			184
6669372	COVER			184
6669384	SPEEDY SLEEVE			202
6669395	MAIN BEARING			218
6669396	MAIN BEARING			218
6669397	MAIN BEARING			218
6669402	HOUSING			128, 136
6669403	HOUSING			134, 142
6669405	END CAP			132, 140
6669407	SHAFT			132, 142
6669408	SHAFT			128, 136
6669409	WASHER			128, 136
6669410	SHIM KIT			130, 138
6669411	BEARING			128, 132, 136, 142
6669460	HOSE			44, 46, 50, 54
6669461	HOSE			44, 46, 50, 54
6669530	PUMP			223
6669531	DIPSTICK			214
6669549	SOCKET			272, 274, 276
6669615	ORIFICE			97
6669616	CHECK VALVE			332
6669622	SEAL KIT			332
6669643	O-RING			204, 208, 212
6669659	SEAL KIT			88
6669674	HOSE			44, 46, 50, 54
6669728	CHECK VALVE			98
6669729	SHUTTLE VALVE			97
6669732	SEAL KIT			84
6669733	SEAL KIT			84

Code for disposition of old part number

A — Use up

B — Use on other application (See PNI)

C — File PDR Report with Melroe Parts Sales

D — Part Number Error

	Part No.	Description	Was	Code	Page
	6669734	SEAL KIT			84
	6669736	SEAL KIT			97
	6669737	SEAL KIT			98
	6670145	TIRE			361
	6670160	CUSHION			19
	6670164	LINK			244
	6670284	LIGHT			323
	6670287	COVER			22, 24, 176
	6670288	END			244
	6670298	CLIP			224
	6670312	SOLENOID			300
	6670313	BOLT			205
	6670314	SLEEVE			205
	6670315	GASKET			204, 205
	6670316	MANIFOLD			205
	6670555	REPAIR KIT			210
	6670618	KIT			363
	6670627	BREATHER			12, 40
	6670627	BREATHER	6646626	A	38
	6670627	BREATHER	6646626	B	186
	6670634	SEAL KIT			237, 238
*	6670635	SEAL KIT			98
	6670682	BEARING			196
	6670685	RELIEF VALVE			138, 140
	6670690	BELT	6672129	B	196
	6670706	CONNECTOR			158, 166, 294
	6670707	CONNECTOR			154, 156, 160, 166, 296
	6670709	CONNECTOR			160, 296
	6670710	LOCK			154, 158, 166, 294
	6670711	LOCK			156, 160, 166, 168, 296
	6670714	PIN			158, 294
	6670715	PIN			154, 160, 166, 168, 296
	6670726	LOCK			344
	6670759	SEAL			248
	6670820	BOLT			208
*	6670831	ELBOW			114
	6670866	OIL PAN			214
	6670867	LATCH			22
	6670989	GLOW PLUG			208
	6671025	COIL			84, 98, 332, 334
	6671026	COIL			97
	6671138	SEAL			41
	6671509	COUPLING			132
	6671512	BLOCK ASSY			130, 132
	6671513	SWASH PLATE			128, 132, 136, 140
	6671514	VALVE PLATE			132
	6671515	VALVE PLATE			128
	6671516	SEAL KIT			130, 134, 138, 142
	6671518	BOLT			130, 138
	6671527	NUT			237, 238
	6671625	TUBELINE			192

Code for disposition of old part number

A — Use up

B — Use on other application (See PNI)

C — File PDR Report with Melroe Parts Sales

D — Part Number Error

	Part No.	Description	Was	Code	Page
*	6671628	NUT			336
*	6671628	NUT	7D-8	B	334
	6671628	NUT			97, 98
	6671629	NUT			97
	6671632	VALVE			72, 78, 82
	6671845	PLUG	6671759	B	122
	6672026	SEAL KIT			60
	6672128	ENGINE			204
	6672173	GASKET			208
	6672272	WASHER			323
	6672273	SCREW			323
	6672274	SCREW			323
	6672275	GASKET			323
	6672276	LENS			323
	6672277	BRACKET			323
	6672279	MOUNT			323
	6672281	CLAMP			102
	6672345	KEY			344
	6672346	PANEL			172, 174
	6672448	VALVE ASSY			98
	6672449	VALVE ASSY			97
	6672450	VALVE ASSY			97
	6672471	VALVE			84
	6672486	SEALANT			202
*	6672489	GASKET	6666739	B,D	204
	6672489	GASKET			208
	6672492	RETAINER			230
	6672535	RELIEF VALVE			130, 132
	6672705	METER			212
	6672714	HEAD			208
*	6672715	SPACER	7000010	A	19
*	6672756	SEAL KIT			336
	6672756	SEAL KIT			147, 334
	6672757	CONTROLLER			90
	6672762	PLUG			148
	6672766	CHECK VALVE			58, 100, 106
	6672770	COVER			208
	6672771	BOLT			208
	6672821	MOTOR			122
	6672863	SOLENOID			237, 238
	6672872	PLUG			214
	6672873	PLUG			214
	6672874	PLUG			214
	6672877	PLUG			216
	6672878	PLUG			216
	6672879	LINER			216
	6672885	GASKET			192
	6672886	CAP			212
	6672887	BOLT			192
	6672889	BEARING			218
	6672890	INSERT			218

Code for disposition of old part number

A — Use up

B — Use on other application (See PNI)

C — File PDR Report with Melroe Parts Sales

D — Part Number Error

	Part No.	Description	Was	Code	Page
*	6672894	BEARING	6666459	A	218
	6672896	RING SET			218
	6672898	BOLT			212
	6672899	PLUG			212
	6672900	BOLT			208
	6672902	BOLT			220
	6672933	SEAL RING			220
	6672934	STA-STRAP			222
	6672938	PLUG			205
	6672939	O-RING			205
	6672942	SET SCREW			210
	6672943	WASHER			212
	6672945	ARM			212
	6672946	ARM			212
	6672947	STUD			205
	6672948	NUT			205
	6673150	CRANKSHAFT			218
	6673152	PISTON			218
	6673153	SHIELD			212
	6673154	CAMSHAFT			210
	6673156	INJECTOR			220
	6673157	INJECTOR			220
	6673158	NOZZLE			220
	6673159	BOLT			220
	6673160	CLAMP			220
	6673162	NUT			210
	6673163	ROD			210
	6673164	CAPSULE			210
	6673165	O-RING			210
	6673166	WASHER			210
	6673167	SPRING			210
	6673168	SPRING			212
	6673169	FLANGE			214
	6673170	MANIFOLD			205
	6673171	BOLT			205
	6673172	BOLT			205
	6673173	TURBOCHARGER			205
	6673184	VALVE			70, 76, 80
	6673185	DECAL			148
	6673188	SEAL KIT			148
	6673642	BOLT			35
	6673789	CAM			118
	6673826	PURIFIER			337
	6673877	COUPLER			130, 138
	6673878	END PLATE			128, 138
	6673879	SPACER			130
	6673880	O-RING			130, 138
	6673881	SEAL			130, 134
	6673882	SPRING			130, 138
	6673883	GEROTOR			130
	6673884	O-RING			128, 138

Code for disposition of old part number

A — Use up

B — Use on other application (See PNI)

C — File PDR Report with Melroe Parts Sales

D — Part Number Error

Part No.	Description	Was	Code	Page
6673885	PIN			128, 138
6673886	BOLT			128, 138
6673904	SEAL KIT			72, 78, 82
6673910	PUMP			128, 132
6673911	GEAR PUMP			144
6673912	PUMP			128, 132
6673913	PUMP			94
6673954	HOSE			100, 106
6673955	HOSE			100, 106
6673962	HOSE			192
6673963	CLAMP			192
6673964	HOSE			192
6673966	TEE			192
6673967	KIT			208
6673990	PISTON	6664028	A	97
6674000	CLAMP			152
6674008	TIRE & RIM			363
6674009	TIRE & RIM			363
6674012	KIT			363
6674013	TRACK			19
6674029	O-RING			122
6674037	SPRING			122, 124
6674184	DISTRIBUTOR			122
6674192	BRAKE DISC			126
6674193	BRAKE DISC			126
6674202	NUT			172, 174
6674204	OIL			366
6674205	OIL			366
6674206	OIL			366
6674209	SENSOR			32, 176
6674218	ROTARY GROUP			122
6674219	BLOCK			122
6674228	PANEL			300
6674229	FILTER			300
6674231	VENT			300
6674232	HOSE			312
6674234	CONDENSER			312
6674235	DRIER			312
6674285	GAS SPRING	6673758	B	186
6674297	SPOOL			76
6674298	SPOOL			76
6674299	SPOOL			76
6674300	SPOOL			76
6674301	SPOOL			76
6674302	SPOOL			76
6674315	SENSOR			176
6674316	SENSOR			176
6674335	HOUSING ASSY			122
6674337	SPOOL			122
6674338	WASHER			122
6674339	SPRING			122

Code for disposition of old part number

A — Use up

B — Use on other application (See PNI)

C — File PDR Report with Melroe Parts Sales

D — Part Number Error

	Part No.	Description	Was	Code	Page
	6674340	PIN			122
	6674341	HOUSING			122
	6674343	SHIM			122, 124
	6674344	SPRING			122, 124
	6674345	PLUG			122, 124
	6674370	SEAL KIT			94
	6674371	SEAL KIT			144
	6674376	RELAY			178
	6674400	HOUSING			324
	6674401	HOUSING			324
	6674402	MOUNT			324
	6674403	COVER			16, 172, 174
	6674405	BUSHING			18
	6674406	SENSOR			18
	6674407	SHOULDER BELT			351
	6674445	SPACER			332
	6674450	HANDLE ASSY			152
	6674519	WINDOW			256
	6674520	WINDOW			256
	6674521	WINDOW			256
	6674522	WINDOW			256
	6674548	PLUG			332
	6674585	SWITCH			326
	6674666	LATCH			240, 248
	6674667	HANDLE			240, 248
	6674692	PUMP			136, 140
	6674693	PUMP			136, 140
	6674738	MOTOR			124
	6674741	KNOB			256, 268, 300
*	6674798	REPAIR KIT			114
	6674799	ADAPTER			272
	6674802	CONNECTOR			272, 274, 276, 354
	6674804	CONTROLLER			154
	6674808	SPOOL			70
	6674809	SPOOL			70
	6674810	SPOOL			70
	6674814	SPOOL			70
	6674815	SPOOL			70
	6674816	SPOOL			70
	6674837	AIR CLEANER			224
	6674841	SPRING			124
	6674894	NUT			18
	6674895	REATAINER			268
	6674938	GAS SPRING			240, 248
	6674993	CAP			242
	6675020	BOLT	6717806	B	122
	6675021	BOLT			124
	6675021	BOLT	6674030	B	122
	6675024	CAM	6674182	B	122
	6675026	CAP			272, 274, 276, 354
	6675033	INSERT			16, 172, 174

Code for disposition of old part number

A — Use up

B — Use on other application (See PNI)

C — File PDR Report with Melroe Parts Sales

D — Part Number Error

Part No.	Description	Was	Code	Page
6675074	SEAT BELT			16
6675075	HOSE			312
6675076	HOSE			312
6675099	HORN			319
6675134	GAS SPRING			14
6675135	GAS SPRING			14
6675136	GAS SPRING			14
6675140	SNAP RING			14
6675154	HOLDER			178
6675155	FUSE			178
6675170	SEAT BELT			348
6675171	CLAMP			172, 174
6675172	BRACKET			300
6675173	ACTUATOR			300
6675174	BODY			300
6675175	BRACKET			300
6675176	SWITCH			300
6675177	KNOB			300
6675179	FLANGE			300
6675180	VENT			300
6675181	PLUG			300
6675189	PIN			124
6675212	RETAINER			256
6675215	WINDOW			251
6675227	SEAL	6674038	B	122
6675228	SEAL	6674336	B	122
6675250	HANDLE ASSY			154
6675257	BUSHING			14
6675263	WASHER			22, 24
6675265	PLUG			148
6675270	HOSE			312
6675278	FILTER			100, 106, 176
6675281	MOUNT			274, 276
6675298	COUPLER			242
6675299	COUPLER			242
6675308	KIT			350
6675309	KIT			350
6675310	KIT			350
6675311	KIT			350
6675312	KIT			350
6675313	KIT			350
6675314	KIT			350
6675315	KIT			350
6675316	KIT			350
6675317	SCISSORS			348
6675318	KIT			350
6675319	SEAT			348
6675320	SEAT			348
6675321	SEAT			348
6675322	SEAT			348
6675323	KNOB			348

Code for disposition of old part number

A — Use up

B — Use on other application (See PNI)

C — File PDR Report with Melroe Parts Sales

D — Part Number Error

Part No.	Description	Was	Code	Page
6675327	CHAIN			35
6675333	LINK			35
6675336	BULB			324
6675337	BULB			172, 174
6675341	BLOCK ASSY			138, 140
6675342	PIN			136, 142
6675378	CLIP			242
6675387	SEAL			268
6675387	SEAL	6674524	A	256
6675389	SWITCH	6675246	A	274
6675390	ALARM			172, 174
6675460	HOSE			220
6675461	FUEL LINE			220
6675468	HANDLE ASSY			152
6675470	SWITCH			172, 174
6675497	BLOWER			304, 306, 307, 316, 318
6675499	HOUSING			304, 316
6675500	COVER			304, 316
6675501	PLATE			304, 316
6675502	PLATE			304
6675503	HOUSING			307
6675504	RING			307
6675505	BLOWER WHEEL			307
6675506	MOUNT			307
6675507	COVER			307
6675509	MOTOR			307
6675510	CLAMP			304, 306, 316, 318
6675511	DRAIN VALVE			304, 306, 316, 318
6675512	CLAMP			304, 306, 316, 318
6675513	GROMMET			304, 316
6675514	SEAL			304, 316
6675522	STROBE			360
6675523	BEACON			231
6675524	CLIP			16
6675533	COIL			312, 316, 318
6675534	BLOCK VALVE			312, 316, 318
6675537	COVER			316
6675538	O-RING			312, 316, 318
6675544	CANVAS CAB			253
6675545	GROMMET			256, 270
6675558	SEAL			240, 248
6675562	SEAT BELT			352
6675581	EXTINGUISHER			285
6675587	COOLER			114
6675590	DOOR			253
6675591	HINGE KIT			253
6675595	SEAT			348
6675596	SEAT			348
6675607	INSULATION			309
6675608	INSULATION			309
6675609	INSULATION			309

Code for disposition of old part number

A — Use up

B — Use on other application (See PNI)

C — File PDR Report with Melroe Parts Sales

D — Part Number Error

	Part No.	Description	Was	Code	Page
	6675610	INSULATION			309
	6675611	SEAL			308, 309
	6675612	INSULATION			309
	6675613	INSULATION			309
	6675614	INSULATION			309
	6675660	GEAR PUMP			144
*	6675661	PUMP			94
	6675667	COMPRESSOR			312
	6675684	VALVE			300
	6675685	HOSE			312
	6675695	HEATER ASSY			233
	6675708	ELEMENT			233
	6675741	SENSOR			158, 166, 294
	6675742	LEVER			158, 294
*	6675745	SPRING			166, 290
	6675749	HANDLE			158, 166, 294
	6675750	LEVER			158, 294
*	6675778	TEE			114
	6675779	HARNESS			312
	6675790	THERMOSTAT			312, 318
	6675790	THERMOSTAT	6675535	A	316
	6675824	O-RING			312
	6675825	O-RING			314
	6675828	CLUTCH			312
*	6675829	HOSE			114
*	6675830	HOSE			114
	6675833	SEAL			256
*	6675835	TURN SIGNAL			288
	6675839	BELT			198
	6675846	POTENTIOMETER	6675178	A	300
	6675858	FLASH TUBE			360
	6675860	ROTARY GROUP			124
	6675861	REAR HOUSING			124
	6675862	BRAKE			126
	6675863	QUAD RING			124
	6675864	QUAD RING			124
	6675865	SNAP RING			124
	6675866	SPOOL			124
	6675867	WASHER			124
	6675868	POPPET			124
	6675868	POPPET	6674342	B	122
	6675869	O-RING			124
	6675869	O-RING	6671784	B	122
	6675870	SEAL KIT			126
	6675874	CAM			124
	6675875	HOUSING			124
	6675876	DISTRIBUTOR			124
	6675877	SEAL			124
	6675878	SEAL			124
	6675879	SEAL			124
	6675880	SEAL			124

Code for disposition of old part number

A — Use up

B — Use on other application (See PNI)

C — File PDR Report with Melroe Parts Sales

D — Part Number Error

	Part No.	Description	Was	Code	Page
	6675881	SEAL			124
	6675882	SPOOL			124
	6675885	SNAP RING			124
	6675886	QUAD RING			124
	6675887	HOUSING			124
	6675888	SHAFT			124
	6675889	PISTON			126
	6675890	COVER			126
	6675892	GASKET			126
	6675893	O-RING			126
	6675894	SEAL			126
	6675895	BOLT			126
	6675896	BOLT			124
	6675897	WASHER			126
	6675898	BUSHING			124
	6675982	PLUG			172, 174
	6675999	SWITCH			346
	6676000	TEE			346
	6676001	ARM			346
	6676002	BLADE			346
	6676003	HOSE			242, 244, 346
	6676021	SEAL KIT	6674201	B	122
	6676022	SEAL	6674040	B	122
	6676023	O-RING	6671749	B	122
	6676024	PLUG	6671783	B	122
	6676028	NOZZLE			346
*	6676029	SOLENOID			164, 166, 169, 290
	6676034	KIT			350
	6676062	VALVE			312
	6676063	KIT			314
	6676064	VALVE			332
	6676065	SEAL KIT			332
	6676066	BALL			332, 334
	6676067	SPRING			332, 334
	6676068	VALVE			332
	6676069	SEAL KIT			332
	6676070	ORIFICE			332, 334
	6676071	O-RING			332
	6676073	RELIEF VALVE			332
	6676074	SEAL KIT			332
	6676144	GEROTOR			138
	6676145	SPACER			138
	6676146	COUPLING			140
	6676147	VALVE PLATE			136
	6676148	VALVE PLATE			140
	6676152	PLUG	6653490	A	343
	6676153	CONTROLLER			160, 296
	6676155	RELIEF VALVE			98
	6676198	VALVE			80
	6676198	VALVE	6665626	A	70, 76
	6676205	SEAL KIT			148

Code for disposition of old part number

A — Use up

B — Use on other application (See PNI)

C — File PDR Report with Melroe Parts Sales

D — Part Number Error

	Part No.	Description	Was	Code	Page
	6676239	CARTRIDGE			148
	6676242	COIL			148
	6676243	COIL			147
	6676244	COIL			148
	6676245	PLUG			148
	6676247	NUT			148
	6676249	STEM			82
	6676249	STEM	6666616	B	72, 78
*	6676333	LEVER			166
*	6676337	CONTROLLER			160, 164
	6676338	GAS SPRING			350
*	6676345	BELT			186
	6676345	BELT			116, 356
	6676347	ORIFICE			334
	6676347	ORIFICE	6669615	A	332
	6676399	VALVE CORE			312
*	6676417	VALVE			147
	6676445	COUPLER			60
	6676447	COUPLER			60
*	6676492	SENSOR			164, 169, 290
*	6676493	SENSOR			164, 169, 290
*	6676497	LEVER			166
	6676498	NOZZLE			244
	6676499	GROMMET			242
	6676500	ELBOW			240
	6676501	CLIP			244
*	6676514	CONTROLLER	6674943	A	274
	6676516	NUT			302
	6676536	SWITCH			174
*	6676537	SWITCH			164, 290
	6676538	INSULATION			310
	6676539	CLIP			306, 318
	6676540	O-RING			297
	6676547	VALVE			334
	6676561	HVAC ASSEMBLY			318
	6676562	HEATER ASSEMBLY			306
*	6676566	NUT			72, 78, 82
	6676567	HEAD			208
	6676568	GASKET			208
	6676571	GASKET			208
	6676572	GASKET			208
	6676606	SPACER			310
*	6676618	CLIP			307
*	6676640	SEAL			168
	6676643	SPRING			124
	6676644	SPRING			124
	6676645	SPRING			124
	6676646	SPRING			124
	6676647	WASHER			126
	6676648	WASHER			126
	6676649	WASHER			126

Code for disposition of old part number

A — Use up

B — Use on other application (See PNI)

C — File PDR Report with Melroe Parts Sales

D — Part Number Error

	Part No.	Description	Was	Code	Page
	6676650	WASHER			126
	6676651	WASHER			126
	6676652	WASHER			126
	6676653	SCREW			310
	6676723	CROSSMEMBER			174
*	6676732	SWITCH			326, 328
*	6676870	CONNECTOR			168
*	6676872	TURN SIGNAL			288
	6676917	ELBOW			242
	6676918	HOSE			240, 246
	6676923	ACCUMULATOR			60
	6676927	FELT STRIP			256
*	6676984	BRACKET	6675536	A	312, 316
	6676984	BRACKET			318
*	6677105	COVER	6675537	A	312
	6677105	COVER			318
*	6677106	O-RING			70, 76, 80
	6677108	HOUSING			306, 318
	6677109	COVER			318
*	6677111	SEAL			306
	6677111	SEAL			308, 318
	6677114	FLANGE			318
*	6677115	RECEPTACLE			306
	6677115	RECEPTACLE			318
*	6677116	RETAINER			306
	6677116	RETAINER			318
*	6677117	SCREW			306
	6677117	SCREW			318
*	6677118	SCREW			306
	6677118	SCREW			304, 316, 318
*	6677120	COVER			306
	6677121	CAP			312
	6677122	CAP			312
	6677136	SOCKET			272, 274, 276
	6677147	RELIEF VALVE			334
	6677148	SEAL KIT			334
	6677149	CHECK VALVE			334
	6677150	SEAL KIT			334, 336
	6677151	VALVE			334
	6677152	SEAL KIT			334
	6677153	STEM			334
	6677155	VALVE			334
	6677156	SEAL KIT			334
	6677157	O-RING			334
	6677158	PLUG			334
*	6677159	PLUG			336
	6677159	PLUG			334
	6677175	PANEL			174
	6677175	PANEL	6672347	A	172
	6677177	PLUG			148
	6677198	CAP			256

Code for disposition of old part number

A — Use up

B — Use on other application (See PNI)

C — File PDR Report with Melroe Parts Sales

D — Part Number Error

	Part No.	Description	Was	Code	Page
	6677201	SOLENOID			82
	6677201	SOLENOID	6665084	B	72, 78
	6677370	DECAL			152, 154
*	6677383	SOLENOID	6674786	A	74
	6677394	HEATER COIL			310
	6677485	SPACER			182
	6677486	NUT			182
	6677487	COVER			182
	6677488	RECTIFER			182
	6677490	BRACKET			182
	6677491	BRACKET			182
	6677492	ROTOR			182
	6677493	STATOR			182
	6677494	BOLT			182
	6677495	SPACER			182
	6677496	PULLEY			182
	6677497	NUT			182
*	6677504	COVER	6676604	A	306, 310, 318
	6677536	HANDLE			166
	6677575	TURBOCHARGER			214
	6677576	FLANGE			216
	6677577	GASKET			216
	6677578	BOLT			216
	6677579	SCREW			310
	6677580	SCREW			304, 316
*	6677649	PUMP			136, 140
*	6677657	PUMP			136, 140
*	6677660	SPOOL			80
*	6677661	SPOOL			80
*	6677662	SPOOL			80
*	6677663	SPOOL			80
	6677817	BOLT			182
	6677818	BEARING			182
	6677819	RETAINER			182
	6677820	BEARING			182
*	6677830	PUMP	6666522	A	220
*	6677831	BOLT			214
*	6677832	OIL PAN			214
*	6677833	ARM ASSY			244
*	6677834	BLADE			244
*	6677835	MOTOR			244
*	6677836	COVER			244
	6677837	BOLT			244
*	6677839	GASKET			244
	6677840	SWIVEL ASSY			244
	6677841	WASHER			244
	6677842	NUT			244
	6677843	NUT			244
	6677844	NUT			244
	6677845	ADAPTER			244
	6677847	GROMMET			244

Code for disposition of old part number

A — Use up

B — Use on other application (See PNI)

C — File PDR Report with Melroe Parts Sales

D — Part Number Error

	Part No.	Description	Was	Code	Page
	6677848	SLEEVE			244
*	6677973	PLUG			258
*	6677980	NUT	6675663	B	148
*	6677981	CARTRIDGE	6676240	A	148
*	6677982	CARTRIDGE	6676241	A	147
*	6677983	FILTER			302
*	6678067	BUSHING			118
*	6678068	CONTROLLER	6676553	A	176
	6678076	BLOCK			62
*	6678151	COVER			306
*	6678152	FLANGE			306
	6678198	BOLT			244
*	6678205	ALTERNATOR	6675292	A	182
*	6678224	GEAR PUMP			145
	6678225	PUMP			96
*	6678226	SEAL	6673881	B	138, 142
*	6678283	HANDLE			258
*	6678548	STUD			248
	6678548	SOCKET			240
*	6678554	VALVE			336
*	6678675	CONTROLLER	6676514	A	276
*	6678682	PANEL	6672348	A	172, 174, 268
*	6678692	SPRING			336
*	6678693	SPRING			336
*	6678694	FLOW CONTROL			336
*	6678695	O-RING			336
*	6678696	COIL			336
*	6678697	STEM			336
*	6678698	PLUG			336
*	6678699	PLUG			336
*	6678700	PISTON			336
*	6678701	ORIFICE			336
*	6678702	ORIFICE			336
*	6678703	SHUTTLE			336
*	6678704	SPRING			336
*	6678705	BALL			336
*	6678706	PLUG			336
*	6678707	SPRING			336
*	6678708	COMPENSATOR			336
*	6678709	O-RING			336
*	6678710	TIE			336
*	6678711	SPACER			336
*	6678712	COIL			336
*	6678717	PISTON			336
*	6678718	SPRING			336
*	6678732	SEAL KIT			145
	6678733	SEAL KIT			96
*	6678739	WASHER	6664065	A	244
*	6678775	ACTUATOR			164
*	6678775	ACTUATOR	6674838	A	156, 160
*	6678853	SEAL KIT			94

Code for disposition of old part number

A — Use up

B — Use on other application (See PNI)

C — File PDR Report with Melroe Parts Sales

D — Part Number Error

	Part No.	Description	Was	Code	Page
*	6678920	NOZZLE			244
*	6678921	GUIDE			244
*	6679068	SPACER			97
*	6679068	SPACER	6674445	B	334
*	6679134	GASKET KIT	6668898	B,D	204
*	6679244	BALL ASSY			336
*	6679245	RELIEF VALVE			336
*	6679246	SEAL KIT			336
*	6679308	SEAT BELT	6674408	A	351
*	6679571	SLEEVE	6666744	A	212
*	6679667	SCREW			212
*	6679668	PIN			220
*	6679836	ADAPTER			62
*	6679837	COUPLER			62
*	6679838	COUPLER			62
*	6679839	COUPLER			62
*	6679840	SEAL			62
*	6679841	SEAL			62
	6700115	SPRING			194
	6700170	WASHER			38, 200
	6700182	COVER			12
	6700330	COVER			38, 40
	6700533	SPACER			26
	6700599	TEE	6515714	B	112
	6700631	GASKET			102, 108
	6700768	U-BOLT			118
	6700772	PANEL			30
	6700782	CAP			202
	6701097	WASHER	6803867	A	186
	6701159	SHIM			194, 202
	6701160	CLIP			194
	6701174	WASHER			14
	6701187	BELLCRANK			200
	6701449	FILLER TUBE			32
	6701535	SPRING			18, 118
	6701573	LIFT EYE			320
	6701574	LIFT EYE			320
	6701674	INSULATION			30
	6701892	CLAMP			44, 46, 50, 54
*	6701893	CLAMP			44, 46, 50, 54
	6701950	SPRING PLATE			30
	6701951	MOUNT			30
	6702079	HOSE			88
	6702102	GEAR			202
	6702103	GEAR			202
	6702135	SHAFT			202
	6702140	WASHER			202
	6702144	SHIM			202
	6702164	SPACER			12
	6702165	SHIM			202
	6702166	SHIM			202

Code for disposition of old part number

A — Use up

B — Use on other application (See PNI)

C — File PDR Report with Melroe Parts Sales

D — Part Number Error

Part No.	Description	Was	Code	Page
6702301	DECAL			264
6702302	DECAL			264
6702402	SHIELD			292
6702444	FUSE			156, 178
6702474	RETAINER			194
6702543	LEVER			118
6702593	SPACER			230
6702621	GRIP			152
6702716	BLOCK			118
6702903	LEVER			28
6702904	LEVER			28
6702935	PIN			26
6702958	BUSHING			28
6702971	BOLT			14
6702990	BUSHING			154, 158, 166, 294
6703097	GASKET			38, 40
6703216	CLAMP			88
6703349	GRIP			154
6703363	BUSHING			26
6703483	PULLEY			186, 356
6703551	BRACE			30
6703640	KIT			353
6703641	DECAL			353
6703703	GUIDE			353
6703727	DECAL			319
6703879	BUSHING			118
6703963	INSULATION			12, 356
6703964	INSULATION			12, 356
6703965	INSULATION			12, 356
6703967	INSULATION			12, 356
6703968	INSULATION			12, 356
6703969	INSULATION			12, 356
6704146	BRACKET			322
6704147	BRACKET			322
6704169	TIRE & RIM			364
6704170	TIRE & RIM			364
6704242	WEDGE			28
6704248	PIVOT			28
6704287	BUSHING			26
6704288	PIN			26
6704436	PAD			26
6704443	BUSHING			194
6704444	WASHER			194
6704453	SPRING			200
6704786	DECAL			322
6704820	O-RING			194
6704823	BRACKET			192
6704879	GASKET			35
6704892	RIVET			276
6704892	RIVET	84G-1908	B	274
6704907	SPACER			186

Code for disposition of old part number

A — Use up

B — Use on other application (See PNI)

C — File PDR Report with Melroe Parts Sales

D — Part Number Error

	Part No.	Description	Was	Code	Page
	6705047	BUSHING			12
	6705052	BALL STUD			186
	6705091	TAB			26
	6705106	WASHER			198
	6705333	MOUNT			284, 356
	6705452	LEVER			200
	6705720	DECAL			264
	6705749	SHIELD			102, 108
	6705921	HANDLE ASSY			319
	6706096	BRACKET			118
	6706098	GUIDE			118
	6706105	YOKE			68
	6706106	MOUNT			118
	6706349	MOUNT			14
	6706354	INLET			102, 108
	6706485	HOOK			12
	6706517	SCREW			32, 102, 108, 186
	6706558	DECAL			266
	6706568	KIT			90
	6706572	SET SCREW			200
*	6706633	CONNECTOR			342
	6706633	CONNECTOR			340
	6706683	COVER			38, 40
	6706718	MOUNT			38, 40
	6706735	KIT			90
	6706737	GASKET			38, 40
	6706790	HOSE			58, 92
	6706805	SHAFT			36, 40
	6706805	SHAFT	6706310	B	38
	6706807	PIN			320
	6706817	SPACER			36
	6706825	LIFT EYE			320
*	6706867	BLOCK	6706857	B,D	12
	6707002	KIT			320
	6707077	HOUSING ASSY			202
	6707101	SEAL			58, 66, 92
	6707313	PEDAL MOUNT			38
	6707314	PEDAL			38
	6707315	ANGLE			38
	6707337	SWITCH			38
	6707514	SHIM			28
	6707518	SHAFT			202
	6707519	HOUSING ASSY			186, 202
	6707582	BRACKET			192
	6707607	IDLER			194
	6707642	FLYWHEEL ASSY			196
*	6707648	BELT			186
	6707648	BELT			116
	6707654	SPINDLE			194
	6707674	PLUG			30
	6707697	WASHER			194

Code for disposition of old part number

A — Use up

B — Use on other application (See PNI)

C — File PDR Report with Melroe Parts Sales

D — Part Number Error

	Part No.	Description	Was	Code	Page
	6707698	WASHER			194
	6707699	PIVOT			194
	6707714	STOP			196
	6707726	MOUNT			230, 319
	6707757	MOUNT			198
	6707758	HOSE			100
	6707852	DECAL			240
	6707867	DECAL			266
	6707903	LEVER			200
	6707904	ROD			200
	6708009	LINK			68
	6708016	GASKET			38, 40
	6708018	SPRING			38, 40
*	6708043	BUSHING			68
	6708070	GASKET			38, 40
	6708189	TUBE			14
	6708267	BOLT			38, 40
	6708310	HOSE			240
	6708314	BUSHING			200
	6708445	PULLEY			196
	6708517	BUSHING			26
	6708527	TANK			32
	6708580	ADAPTER			176
	6708642	HOUSING ASSY			202
	6708937	DECAL	6710456	A	266
	6708987	HINGE			12
	6709022	LEVER			200
	6709052	MOUNT			200
	6709168	ELBOW			198, 214
	6709170	STUD			41
	6709229	BOLT			278, 280
	6709234	DISC			278, 280
	6709236	MOUNT			278, 280
	6709239	PEDAL			278, 280
	6709361	CLAMP	6709237	A	278, 280
	6709398	TUBELINE			278, 280
	6709399	TUBELINE			278, 280
	6709400	TUBELINE			278, 280
	6709508	ELEMENT			232
	6709509	CORD SET			232, 233
	6709510	ADAPTER			232, 234
	6709511	WASHER			232, 234
	6709513	GASKET			232, 234
	6709514	HEATER ASSY			232
	6709527	KEY			172, 174, 240, 248
	6709757	AXLE			41
	6709840	NUT			232, 234
	6709914	TUBELINE			190
	6709921	SHIELD			194
	6709958	HOSE			192
	6709959	CABLE			200

Code for disposition of old part number

A — Use up

B — Use on other application (See PNI)

C — File PDR Report with Melroe Parts Sales

D — Part Number Error

	Part No.	Description	Was	Code	Page
	6710166	BOOM STOP			26
	6710192	KIT			232
	6710277	HOSE			32
	6710301	BRACKET			44, 46
	6710358	DECAL			264
	6710435	HARNESS			90
	6710488	MOUNT			32
	6710659	BUSHING			18
	6710746	SAFETY TREAD			264
	6710791	COOLER			190
	6711334	PIN			26
	6711404	BUSHING			28
	6711516	STOP			28
	6711524	REAR DOOR			22
	6711526	HINGE			22, 24
	6711527	LATCH PLATE			22
	6711628	ADAPTER			88
	6711664	GUIDE			22
	6711674	BRACKET			88
	6711718	ELEMENT			234
	6711720	CORD SET			234
	6711721	HEATER ASSY			234
	6711840	DECAL			264
	6711873	KIT			234
	6711908	SPRING PLATE			16
	6711913	BRACKET			88
	6712143	HOSE			190
	6712144	HOSE			190
	6712365	STEP			154, 160
	6712524	HARNESS			90
	6712536	PAN			178
	6712599	BRACKET			60, 62
	6712885	HOSE			62
	6712912	DECAL			261
	6712970	PULLEY			186
*	6712971	PULLEY			186, 356
	6712971	PULLEY			116
	6713040	SPRING			28
	6713043	SPACER			154, 158, 166, 294
	6713156	BUSHING			28
*	6713287	PULLEY			116, 194
	6713342	PULLEY	6713287	B	194
	6713349	GRIP			158, 166, 294
	6713382	BELT			186
*	6713507	DECAL			264, 266
	6713517	MOUNT	6710472	A	278
	6713518	HOSE	6710415	A	278, 280
	6713526	STOP			28
	6713589	CLEVIS			18
	6713653	GASKET			192
	6713670	CABLE			176

Code for disposition of old part number

A — Use up

B — Use on other application (See PNI)

C — File PDR Report with Melroe Parts Sales

D — Part Number Error

	Part No.	Description	Was	Code	Page
	6713715	DECAL			264
	6713787	BRACKET			192
	6713792	MOUNT			230
	6713793	BRACKET			230
	6713803	HARNESS			260
	6713823	BUSHING			12
	6713843	BRACKET			198
	6713885	KIT			363
	6713887	BOLT			18
	6713893	MOUNT			198
	6713898	COVER			154, 158, 166, 294
	6713920	SHIM			200
	6714037	LATCH			344
	6714126	DOOR STOP			22, 24
	6714134	ELBOW			90
	6714210	SPRING			22
	6714242	DECAL			266
	6714278	GUIDE			38, 40
	6714362	WEIGHT			261
	6714500	TUBE			198
	6714500	TUBE	6709822	D	216
	6714509	COVER			22, 24
	6714534	DECAL			266
	6714536	DECAL			264, 266
*	6714576	PIVOT ASSY	6704240	A	28
	6714576	PIVOT			326, 328
	6714665	MOUNT			26, 60
*	6714726	PLUG			164
	6714726	PLUG			154, 160
	6714810	PIN			26
	6714856	HOSE			58
	6714856	HOSE	6713084	A	92
	6714979	BRACKET			176
	6715106	INSULATION			284, 358
	6715131	BRACE			176
	6715132	RETAINER			176
	6715142	FAN			186
	6715143	SET SCREW			186
	6715157	STRIKER ASSY			22
	6715163	BUSHING			118
	6715164	SLEEVE			120
	6715183	ELBOW			32
*	6715186	ADAPTER			326, 328
	6715187	TEE			44, 46, 237, 238
	6715195	INSULATION			284, 356
	6715197	CLAMP			176
	6715251	HOSE			100
	6715287	BUSHING			198
*	6715294	TEE			50, 54
	6715318	TOOL HOLDER			22, 24
	6715365	HARNESS			267, 268, 269

Code for disposition of old part number

A — Use up

B — Use on other application (See PNI)

C — File PDR Report with Melroe Parts Sales

D — Part Number Error

	Part No.	Description	Was	Code	Page
	6715380	MOUNT			194, 198
	6715389	INSULATION			284, 358
	6715390	INSULATION			284, 358
	6715391	INSULATION			284, 358
	6715393	INSULATION			284, 358
	6715427	SPACER			36
	6715428	DECAL			284, 356
	6715434	INSULATION			284, 358
	6715435	INSULATION			284, 358
	6715459	HOSE			90
	6715597	PIN	6718539	B	26
	6715630	BRAKE			38, 40
	6715651	ELBOW			284, 356
	6715659	HARNESS			230
*	6715718	ELBOW			112, 114
	6715718	ELBOW			102, 108
	6715744	BUSHING			284, 356
	6715860	SEAT BAR			18
	6715863	BRACKET			18
	6715864	BUSHING			18
	6715865	BUSHING			18
	6715866	BUSHING			18
	6715878	CONNECTOR			100, 106
	6715957	COVER			154
	6715991	DECAL			266
	6716000	HOSE			92
*	6716061	TEE			50, 54
	6716089	ADAPTER			60, 88
	6716090	ADAPTER			60
	6716116	MOUNT			118
	6716117	LINK			118
	6716176	HOSE			112, 114
	6716225	SPACER			198
	6716226	BRACKET			198
	6716243	CONNECTOR			100, 106
	6716286	LINK			118
	6716391	HOSE			116
	6716408	SPACER			198
	6716419	HARNESS			323
	6716449	BUMPER			102, 108
	6716464	HOSE			92
	6716471	TEE			112, 114
	6716506	TUBELINE			104, 110
	6716545	ROD			118
	6716572	LOUVER			186
	6716574	LOUVER	6716571	B	186
	6716601	PIN			26
	6716621	COVER			176
	6716800	INSULATION			30
	6716826	BOLT			154, 158, 294
	6716916	WASHER			118

Code for disposition of old part number

A — Use up

B — Use on other application (See PNI)

C — File PDR Report with Melroe Parts Sales

D — Part Number Error

	Part No.	Description	Was	Code	Page
	6717146	SPACER			240, 248
	6717173	REDUCER			100, 106
	6717242	HOUSING			36
	6717247	HARNESS			176
	6717296	MOUNT ASSY			35, 36
	6717306	ADAPTER			100, 106
	6717343	DECAL			264
	6717351	SHIELD			192
	6717352	TUBE			192
	6717360	WINDOW			240
	6717369	BRACKET			240, 248
	6717370	HOSE			100
	6717375	MOUNT			312
	6717378	BOLT			46, 54
*	6717393	LEVER			164
	6717393	LEVER			154, 160
	6717401	PLUG			32
	6717402	BUSHING			34
	6717478	INLET			186
	6717495	HOSE			192
	6717498	HOSE			192
*	6717503	TEE			116
	6717515	INSULATION			268
	6717516	INSULATION			16
	6717517	INSULATION			268
	6717518	INSULATION			268
	6717519	INSULATION			268
	6717520	INSULATION			268
	6717579	GASKET			32, 176
	6717593	HINGE			242, 248
	6717643	DUCT			300
	6717644	DUCT			300
	6717662	TEE			102, 110
	6717706	COIL			72, 78, 82
	6717730	GRILL			186
	6717731	SHIELD			186
	6717806	BOLT			35
	6717823	BAR	6710329	B	68
	6717825	LEVER	6706108	B	68
	6717842	DECAL			326, 328
	6717858	MOUNT			198
	6717870	TRACK			256
	6717871	TRACK			256
	6717872	TRACK			256
	6717873	TRACK			256
	6717874	WINDOW			256, 268
	6717907	DECAL			266
	6717933	CLAMP			44, 46, 50, 54
	6717933	CLAMP	6717951	B	60
	6717951	CLAMP			62
*	6718031	CROSS			100

Code for disposition of old part number

A — Use up

B — Use on other application (See PNI)

C — File PDR Report with Melroe Parts Sales

D — Part Number Error

	Part No.	Description	Was	Code	Page
	6718031	CROSS			92, 106
	6718034	FUSE			156, 178
	6718101	COVER			16
	6718158	TUBELINE			60
	6718159	TUBELINE			60
	6718161	TUBE			44, 46, 50, 54
	6718162	TUBELINE			44, 46, 50, 54
	6718167	TUBE			44, 46
	6718175	SCREEN			300
	6718253	TUBELINE			88
	6718271	DECAL			264
	6718272	DECAL			266
	6718275	DECAL			264
	6718283	RETAINING NUT	6706104	B	68
	6718304	KIT			363
	6718305	PANEL	6716681	B	30
	6718310	PULLEY			312
	6718326	MOUNT			288
	6718376	HINGE			242, 248
	6718398	DECAL			266
	6718411	KIT			288
	6718416	SENDER			178
	6718417	SENDER			176
	6718426	HARNESS			272
	6718486	PLUG			12
	6718503	HOSE			102, 110
*	6718506	PIN			164
	6718506	PIN			156, 160
	6718520	COVER			240, 248
	6718521	HANDLE			240, 250
	6718538	BUSHING	6703448	B	26
	6718544	BUSHING	6710744	B	12
	6718545	BUSHING	6710745	B	12
	6718562	HOUSING	6717635	B	186
	6718576	HOSE			102, 108
	6718579	DECAL			300
	6718580	PANEL			268
	6718652	HARNESS			326
	6718659	HOUSING			178
*	6718660	TEE			58
	6718660	TEE			100, 106
	6718698	DECAL			264
	6718699	DECAL			154, 160
	6718702	DECAL			154
	6718703	DECAL			264
	6718704	DECAL			154, 160
	6718706	DECAL			154, 160, 164
	6718726	MOUNT			46, 54, 102, 108, 237, 238
	6718750	MOUNT			272
	6718752	BOB-TACH			28
	6718754	CLAMP			44, 46, 50, 54

Code for disposition of old part number

A — Use up

B — Use on other application (See PNI)

C — File PDR Report with Melroe Parts Sales

D — Part Number Error

	Part No.	Description	Was	Code	Page
*	6718757	HOUSING	6711630	A	186
	6718773	HOSE			112, 114
	6718774	DECAL			176
	6718784	COVER			14
	6718792	TUBELINE			60, 62
	6718793	TUBELINE			60, 62
*	6718796	PLUG	6660646	A	12
	6718796	PLUG			24, 176
	6718803	KIT			300
	6718804	KIT			268, 299, 301
	6718808	KIT			240
	6718810	KIT			297
	6718812	KIT			272
	6718820	HARNESS			230
	6718822	KIT			230
	6718831	TUBELINE			46, 237
	6718832	TUBELINE			46, 54, 238
	6718833	BRACKET			292
	6718834	BRACKET			292
	6718837	SPACER			300
	6718850	BRACKET			102, 108
	6718851	BRACKET			102, 108
	6718870	HARNESS			172
	6718872	HARNESS			231, 288, 360
	6718873	HARNESS			288
	6718877	TUBELINE			46, 54, 237, 238
	6718878	TUBELINE			44, 50
	6718881	BRACKET			92
	6718881	BRACKET	6716253	D	58
*	6718882	TEE			114
	6718882	TEE			102, 108, 112
*	6718885	HOSE			112, 114
	6718885	HOSE			108
	6718887	PANEL			300
	6718911	TEE			44, 50
	6718915	PANEL	6716865	B	30
	6718924	KIT			292
	6718946	TUBELINE			44, 46, 50
	6718947	TUBELINE			44, 46
	6718948	SNUBBER			100, 106, 176
	6718949	TEE			90
	6718971	TUBE			44, 46
	6718993	KIT			237
	6719027	TUBELINE			44, 46
	6719037	STRIKER			256
	6719038	PLUG			172, 174, 268
	6719053	TEE			88
	6719054	ELBOW			90
	6719056	BLOCK			38, 40
	6719057	BLOCK			38, 40
	6719063	STOP			256

Code for disposition of old part number

A — Use up

B — Use on other application (See PNI)

C — File PDR Report with Melroe Parts Sales

D — Part Number Error

	Part No.	Description	Was	Code	Page
	6719064	MOUNT			14
	6719065	COVER			256
	6719067	TUBELINE			88
*	6719068	TUBELINE			88
	6719069	TUBELINE			88
	6719082	HARNESS			178
	6719084	BOLT			172, 174
	6719085	COVER	6717111	B	12
	6719086	COVER	6717110	B	12
	6719103	HOSE			90
	6719112	HARNESS			152, 176
	6719113	HARNESS			152, 156, 176
	6719141	CABLE			178
	6719151	HARNESS			319
	6719164	TUBE			326, 328
	6719165	TUBELINE			88
	6719166	TUBELINE			88
	6719167	TUBE			326, 328
	6719168	COVER	6719201	A	12
	6719176	SWITCH			312
	6719184	BRACKET			322
	6719185	BRACKET			322
	6719206	TUBE			190
	6719207	TUBE			190
	6719215	BRACE			26
	6719216	BRACE			26
	6719225	CHAINCASE	6709771	B	12, 35
	6719231	PLATE			26
	6719265	LIFT ARM	6709984	B	26
	6719266	HOSE			88
	6719267	HOSE			112
	6719268	HOSE			112
*	6719286	TUBELINE			112, 114
*	6719296	TUBELINE			342
	6719296	TUBELINE			340
*	6719297	TUBELINE			342
	6719297	TUBELINE			340
*	6719298	TEE			342
	6719298	TEE			340
	6719304	GUSSET			26
	6719305	BAR	6710328	B	68
	6719317	WINDOW			346
*	6719332	INSULATION			284
	6719332	INSULATION			12, 356
	6719333	INSULATION			12, 284, 358
	6719354	TUBELINE			44, 46, 50, 54
*	6719378	TEE			112, 116
	6719378	TEE			114
	6719394	TUBELINE			190
	6719395	CONNECTOR			297
*	6719413	WINDOW			256

Code for disposition of old part number

A — Use up

B — Use on other application (See PNI)

C — File PDR Report with Melroe Parts Sales

D — Part Number Error

	Part No.	Description	Was	Code	Page
	6719422	HARNESS			176
	6719429	SHIELD	6708886	B	186
	6719434	HARNESS			274
	6719441	DECAL			274
	6719442	MOUNT			274
	6719446	MOUNT			112, 114
	6719448	MAGNET			274, 276
	6719459	MOUNT			312
	6719480	HOSE			356
	6719480	HOSE	6718073	A	284
	6719481	HOSE			356
	6719481	HOSE	6718072	A	284
	6719482	HOSE			356
	6719482	HOSE	6715436	A	284
	6719484	BRACKET			322
	6719485	BRACKET			322
	6719503	CONTAINER	6718508	A	16
	6719514	HOSE	6719534	A	297
	6719515	HOSE	6719535	A	297
	6719524	STRIKER			22
	6719525	BAR			22, 24
	6719531	HOSE			88
	6719550	TUBE			22
	6719555	HOSE			58, 100
	6719563	HANDBOOK			264, 296
	6719605	HOSE			326
	6719630	HARNESS			312
	6719664	KIT			322
	6719672	OPERATOR CAB			14, 16
	6719711	CHANNEL			158, 166, 294
	6719712	CHANNEL			158, 166, 294
*	6719715	STRAP			166, 290
*	6719716	MOUNT			166, 290
	6719766	STOP			22, 24
	6719834	SPACER			158, 166, 294
*	6719835	SLEEVE			290
	6719835	SLEEVE			158, 166, 294
	6719841	KIT			326
*	6719847	HOSE			342
	6719847	HOSE			340
	6719849	TUBELINE			340
	6719850	TUBELINE			340
	6719854	KIT			231
	6719857	KIT			360
	6719888	DECAL			326, 328
	6719914	HOSE	6719533	A	297
	6720592	INSTRUCTIONS			292
	6722344	BLACK GOLD			366
	6722781	PAINT			366
	6722782	PAINT			366
	6722783	PAINT			366

Code for disposition of old part number

A — Use up

B — Use on other application (See PNI)

C — File PDR Report with Melroe Parts Sales

D — Part Number Error

	Part No.	Description	Was	Code	Page
	6722784	PAINT			366
	6722785	PAINT			366
	6722786	PAINT			366
	6722787	PAINT			366
	6722788	PAINT			366
	6722789	PAINT			366
	6722790	PAINT			366
	6722873	INSTRUCTIONS			320
	6724380	INSTRUCTIONS			278, 280
	6724397	INSTRUCTIONS			232, 233
	6724515	INSTUCTIONS			234
	6724557	OIL			366
	6724558	OIL			366
	6724559	OIL			366
	6725032	ELBOW			114
	6725032	ELBOW	6715718	B	112
	6725033AR	KIT			264, 266
	6725033BR	KIT			264, 266
	6725033JP	KIT			264, 266
	6725042	SHIELD			240, 248
	6725090	HOSE			58, 106
	6725090	HOSE	6801931	A	100
*	6725128	ADAPTER			164
	6725128	ADAPTER			156, 160
*	6725130	PULLEY			116, 186
	6725187AR	KIT			264, 266
	6725187BR	KIT			264, 266
	6725198	HOSE			326, 328
	6725199	HOSE			326, 328
	6725200	SHIELD			240, 250
	6725212	ARM	6707637	A	194
	6725246	PLATE			156
	6725256	COUNTERWEIGHT			24
	6725256	COUNTERWEIGHT	6714053	A	22
	6725257	ADAPTER			156
	6725273	HARNESS			268
	6725301	COVER			16
	6725302	GASKET			176
	6725303	FRAME			16
	6725311	HOSE			340
	6725370	DECAL			351
	6725373	SPRING PLATE			16
	6725390	HARNESS			302
	6725421	HANDLE			254
	6725424	HOSE			62, 88
	6725425	HOSE			110
	6725425	HOSE	6716551	A	102
	6725429	MOUNT			198
	6725430	HOSE			58, 106
	6725431	HOSE			106
	6725432	HOSE			106

Code for disposition of old part number

A — Use up

B — Use on other application (See PNI)

C — File PDR Report with Melroe Parts Sales

D — Part Number Error

	Part No.	Description	Was	Code	Page
	6725433	HOSE			106
	6725496	COVER			38, 40, 116
	6725513	PACKAGE			300
*	6725574	MAIN FRAME			12
	6725898	KIT			285
	6725899	HOSE			116
	6725900	HOSE			116
	6725902	HOSE			116
	6725906	BRACKET			285
	6725933	HARNESS			300
	6725933	HARNESS	6717877	A	300
	6725934	HARNESS			302
*	6725935	WINDOW			248
	6725936	HARNESS			302
	6725937	CLAMP			248
	6725938	CLAMP			248
	6725941	KIT			248
	6725943	BELT			312
	6725946	KIT			254
*	6725969	SPACER			190
	6725971	KIT			233
	6726303	DECAL			254
	6726357	HARNESS			312
	6726386	KNOB			302
	6726423	DECAL	6702916	A	320
	6726427	KIT			251
	6726435	DOOR			240
*	6726451	COVER			12
*	6726452	COVER			12
	6726453	HOSE			106
	6726479	ADAPTER			88
	6726485	BRACKET			198
	6726490	KIT			312
	6726504	BRACKET			178
	6726567	ELBOW	6666302	B	32
*	6726573	BRACKET			164, 290
*	6726574	RETAINER			169
	6726608	COVER			302
*	6726621	SCREW			306
	6726621	SCREW			308, 312, 316, 318
	6726655	KIT			346
*	6726679	MOUNT			290
	6726679	BRACKET	6564658	A	68
*	6726680	PEDAL			290
	6726680	PEDAL	6564656	B	68
*	6726681	LINK			164, 290
*	6726695	STOP PLATE			169
*	6726925	HARNESS			164
	6726932	DOOR			248
	6726945	MOUNT			276
	6726986	HOSE			326

Code for disposition of old part number

A — Use up

B — Use on other application (See PNI)

C — File PDR Report with Melroe Parts Sales

D — Part Number Error

	Part No.	Description	Was	Code	Page
	6726987	HOSE			326, 328
*	6727065	BOLT			156, 162, 290, 296
	6727065	BOLT			158, 166, 294
	6727131	HARNESS			160
	6727140	FILTER			302
	6727155	DECAL			160, 296
	6727176	KIT			354
	6727178	HARNESS			174
	6727190	HARNESS			268
*	6727231	SHIELD			164, 169
	6727243	DECAL			296
	6727265	TANK			108
*	6727284	SHIELD			164, 169
	6727298	KIT			294
	6727299	INSULATION			268
	6727299	INSULATION	6719406	A	16
	6727308	DECAL	6702827	A	266
	6727309	DECAL	6702826	A	266
	6727310	DECAL	6711329	A	264
	6727311	DECAL	6714139	A	266
	6727313	FITTING			108
	6727318	HOSE			108
	6727326	MOUNT			312
	6727328	HARNESS			296
	6727354	INLET			108
	6727468	HARNESS			228
	6727475	CAP	6577785	A	102, 108
*	6727496	PIN			164, 290
*	6727498	HARNESS			319
*	6727739	KIT	6729187	A	276
*	6727750	BRACKET			50, 54
*	6727810	HOSE			50, 56
*	6727847	COVER			302
	6727912	DECAL	6714526	A	266
	6727913	DECAL	6714534	A	264
*	6727926	DECAL			164, 290
*	6727931	CROSS			60, 72, 78
	6727931	TEE			82
*	6727941	DECAL			164, 290
	6727971	HOSE			60
*	6727995	HORN KIT			319
*	6728045	DECAL			290
	6728079	HOSE	6717332	A	100
*	6728327	DECAL	6718701	A	264
*	6728328	DECAL			160
*	6728473	BOLT	38C-1036	A	28
*	6728539	DECAL			164, 290
*	6728540	DECAL			290
	6728567	KIT			308
*	6728629	WINDOW			256, 270
*	6728742	HARNESS			160

Code for disposition of old part number

A — Use up

B — Use on other application (See PNI)

C — File PDR Report with Melroe Parts Sales

D — Part Number Error

	Part No.	Description	Was	Code	Page
	6728742	HARNESS			296
*	6728990	KIT	6727786	A	310
*	6728991	RIM			361
*	6729009	SEAL			256
*	6729010	SEAL			256
*	6729011	SEAL			256
	6729012	INSULATION			14
	6729013	INSULATION			14
*	6729023	HARNESS	6726925	A	160
*	6729054	HARNESS			160
	6729057	HARNESS			152
*	6729077	DECAL			264, 266
*	6729078	DECAL			116, 264, 266
	6729090	HARNESS			276
*	6729152	HOSE	6714542	A	60
	6729152	HOSE			62
	6729173	COVER			40
*	6729233	KIT			268
*	6729357	ELBOW			50, 54
*	6729380	HARNESS	6727177	A	276
*	6729432	TUBELINE			50, 54
*	6729467	SPACER			164, 290
*	6729487	HOSE			114
*	6729594	HANDLE			156, 162, 166, 296
*	6729595	HANDLE			156, 162, 166, 296
*	6729600	SPACER			156, 162, 166, 290, 296
*	6729601	HOSE			50, 54
*	6729602	HOSE			58, 92
*	6729605	CLAMP			52, 56
*	6729685	LATCH			24
*	6729688	LATCH			344
	6729739	HARNESS			242
*	6729774	COVER			30
	6729776	WINDOW			244
*	6729780	TUBELINE			50, 54
*	6729786	PANEL	6718487	A	30
*	6729787	PANEL	6719376	A	30
*	6729794	TUBELINE			54, 238
*	6729854	HOSE			34
*	6729898	TUBELINE			50, 54
*	6729937	TUBELINE			50, 54
*	6729939	LATCH PLATE			24
*	6729956	LEVER			120
*	6729985	TUBELINE			190
*	6729991	REAR DOOR			24
*	6730024	SHIELD			52, 56
	6730031	TUBELINE			62
	6730032	TUBELINE			62
	6730033	TUBELINE			62
*	6730045	KIT			238
*	6730078	COVER			12

Code for disposition of old part number

A — Use up

B — Use on other application (See PNI)

C — File PDR Report with Melroe Parts Sales

D — Part Number Error

	Part No.	Description	Was	Code	Page
*	6730109	TIRE			362
*	6730110	TIRE			362
*	6730122	BELLCRANK			118
	6730123	HARNESS			244
*	6730291	BRACKET			276
*	6730297	HARNESS	6729057	A	156, 176
*	6730770	HARNESS			328
*	6730772	RIM	6565240	A	361
*	6730776	RIM	6669060	A	361
	6730830	TANK	6718627	A	242
*	6731082	HOSE			328
*	6731092	KIT			328
*	6731121	PLUG	11F-12	A	12
*	6731151	KIT			290
*	6731478	EXIT TAG	6559515	A	256, 268
*	6731939	BRACE			12
	6731994	DECAL			284
*	6732001	KIT	6714973	A	344
*	6732069	MUFFLER	6675324	A	192
*	6732070	MOUNT			280
*	6732072	SPACER			280
*	6732096	KIT			280
*	6732219	KIT	6725168	A	351
	6800124	RESTRICTOR			78, 82
	6800468	PISTON			64
	6800469	HEAD			64
	6800973	CYLINDER			65
	6800974	TUBE			65
	6800975	CASE			65
	6801059	WASHER			244, 346
	6801167	PLUG			76, 80
	6801712	HOSE			92
	6802851	HOSE			92
	6803092	BONNET			76, 80
	6803312	SEAL KIT			65
	6803473	SEAL KIT			329, 330
	6803605	SEAL KIT			78, 82
	6803932	DECAL			116
	6804592	NUT			64
	6804615	SEAL KIT			64
	6804674	CYLINDER			64
	6804678	ROD			64
	6804790	DECAL			264
	6805102	BUSHING			70
	6805150	BUSHING			64
	6805160	CASE			329
	6805241	TEE			58
*	6805243	TEE			72
	6805243	TEE			78
	6805578	SPACER			329
	6805651	BLOCK			72, 78, 82

Code for disposition of old part number

A — Use up

B — Use on other application (See PNI)

C — File PDR Report with Melroe Parts Sales

D — Part Number Error

	Part No.	Description	Was	Code	Page
	6805696	TEE			72, 78, 82
*	6806403	HOSE			328
	6806496	TUBELINE			72, 78, 82
	6806561	PLUG			72, 78, 82
	6806680	ELBOW			106
	6806941	SEAL KIT			72
*	6809425	SEAL KIT			82
*	6809425	SEAL KIT	6586461	A	72, 78
*	6809448	SEAL KIT			82
*	6809448	SEAL KIT	6628835	A	72, 78
*	6809511	DECAL			50, 54, 58, 92
*	6809726	ROLLER			24
*	6809727	CHANNEL			24
*	6809734	BUSHING			24
*	6810126	ROD	6807508	A	329
*	6810132	SPRING			24
*	6810141	SPRING			24
*	6810244	VALVE			70
*	6810246	VALVE			80
*	6810349	CASE			330
*	6810356	SPACER			330
*	6810612	ROD			330
*	6811910	LATCH			24
*	6812031	BLOCK	6805657	A	72
*	6812646	ADAPTER			62, 88, 114
	6900366	INSTRUCTIONS			261
	6900848	INSTRUCTIONS			288
	6900850	INSTRUCTIONS			302
	6900851	INSTRUCTIONS			270
	6900853	INSTRUCTIONS			258
	6900855	INSTRUCTIONS			272
	6900857	INSTRUCTIONS			230
	6900861	INSTRUCTIONS			350
	6900880	INSTRUCTIONS			237, 238
	6900888	INSTRUCTIONS			322
	6900921	INSTRUCTIONS			274
	6900935	INSTRUCTIONS			340
	6900941	INSTRUCTIONS			342
	6900951	INSTRUCTIONS			326
	6900991	INSTRUCTIONS			231
	6900992	INSTRUCTIONS			360
	6901010	INSTRUCTIONS			351
	6901011	INSTRUCTIONS			352
	6901013	INSTRUCTIONS			242, 250
	6901013	INSTRUCTIONS	6900852	A	258
	6901025	INSTRUCTIONS			285
	6901029	INSTRUCTIONS			254
	6901036	INSTRUCTIONS			251
	6901039	INSTRUCTIONS			312
	6901061	INSTRUCTIONS			346
	6901076	INSTRUCTIONS			354

Code for disposition of old part number

A — Use up

B — Use on other application (See PNI)

C — File PDR Report with Melroe Parts Sales

D — Part Number Error

	Part No.	Description	Was	Code	Page
	6901100	INSTRUCTIONS			296
	6901116	INSTRUCTIONS			276
	6901120	INSTRUCTIONS			310
*	6901146	INSTRUCTIONS	6900913	B	319
	6901213	INSTRUCTIONS			308
	6901376	KIT			264, 266
*	6901483	INSTRUCTIONS			328
*	6901492	INSTRUCTIONS			290
*	6901656	INSTRUCTIONS	6570762	A	344

Code for disposition of old part number

A — Use up

B — Use on other application (See PNI)

C — File PDR Report with Melroe Parts Sales

D — Part Number Error

Part No.	Description	Was	Code	Page
1CM-620	BOLT			240, 248
1CM-635	BOLT			240, 248, 312, 316, 318
1CM-640	BOLT			240, 248
1CM-816	BOLT			32
1CM-820	BOLT			118, 134, 142
1CM-830	BOLT			363
1CM-1030	BOLT			198
1CM-8100	BOLT			198
1DM-6	NUT			212, 223
1DM-8	NUT			220
1KM-10	PLUG			210
2C-1626	BOLT			41
2F-4051	PIN			200
2FM-12155	SEAL RING			214
2FM-22270	SEAL			216
2J-4200	ROD END			200
3GM-1025	BOLT			312
4D-20	NUT			320
4DM-5	NUT			178
4DM-6	NUT			240, 248
4E-4	WASHER			260
4F-6106	PIN			18
4JM-1216	ROLL PIN			194
5CM-1025	SCREW			312
5CM-1080	SCREW			312
5HM-13	CLAMP	6515575	A	32
5HM-14	CLAMP			34
5HM-15	CLAMP			34, 108
5HM-27	CLAMP	5HM-29	B	90
5HM-35	CLAMP			102, 108, 112, 114
5HM-42	CLAMP			102, 108, 112, 114
6E-4	WASHER			230
6E-5	WASHER			172, 174, 288
6E-6	WASHER			112, 114
6EM-60	WASHER			240, 248
6J-405	KEY			260
6J-807	KEY			128, 136
6J-1664	KEY			41
7C-312	BOLT			260
7C-322	BOLT			260
7D-4	NUT			58, 92
7D-8	NUT			332
7J-2010	KEY			202
7J-2208	KEY			188
8C-616	BOLT			118
8D-4	NUT			200
8D-6	NUT			118, 278, 280
9G-512	SCREW			202
9G-620	BOLT			28
10C-410	BOLT			256
10C-416	BOLT			256

Code for disposition of old part number

A — Use up

B — Use on other application (See PNI)

C — File PDR Report with Melroe Parts Sales

D — Part Number Error

Part No.	Description	Was	Code	Page
10C-512	BOLT			30
10C-528	BOLT			44, 46, 50, 54
10C-616	BOLT			18
10H-25	GREASE ZERK			26, 30, 44, 46, 50, 54
10H-35	GREASE ZERK			28, 64, 326
11H-15	GREASE ZERK			26, 44, 46, 50, 54, 326
11H-25	GREASE ZERK			328
11KN-8	ELBOW			112
12D-8	NUT			38
12D-10	NUT			154, 158, 260, 285, 294
12H-15	GREASE ZERK			44, 46, 50, 54
12KN-6	ELBOW			297
14J-5032	PIN			28
15KN-3	ADAPTER			116
15KN-8	ADAPTER			48, 56, 60, 88, 112, 114, 328, 340
15KV-5	ADAPTER			58, 62, 88, 92, 100, 116, 328, 340
15KV-7	ADAPTER			44, 46, 50, 54
15KV-8	ADAPTER			326
16F-8	PLUG			202
16KN-5	ADAPTER			92, 116, 340
17C-410	BOLT			230, 319
17C-412	BOLT			38, 40, 154, 160, 230
17C-420	BOLT			240, 248
17C-428	BOLT			58, 92
17C-512	BOLT			178, 242, 248
17C-514	BOLT			290
17C-516	BOLT			52, 56, 198
17C-528	BOLT			44, 46, 50, 54
17C-532	BOLT			44, 46, 278, 280
17C-540	BOLT			48, 56, 178, 237, 238, 320
17C-544	BOLT			44, 46
17C-608	BOLT			164, 188, 290
17C-610	BOLT			38
17C-612	BOLT			16, 68, 88, 90, 118, 194, 242, 248, 278, 280
17C-616	BOLT			44, 46, 50, 54, 164, 186, 192, 292
17C-620	BOLT			26, 38, 50, 68, 102, 110, 118, 132, 140, 154, 202
17C-620	BOLT	6717378	B	44
17C-624	BOLT			68, 248
17C-626	BOLT			118
17C-628	BOLT			248
17C-632	BOLT			46, 54, 102, 322
17C-636	BOLT			116
17C-640	BOLT			18, 26, 60, 62, 261, 320
17C-652	BOLT			26, 198
17C-656	BOLT			26
17C-660	BOLT			26, 28
17C-664	BOLT			30
17C-680	BOLT			118, 340
17C-716	BOLT			16

Code for disposition of old part number

A — Use up

B — Use on other application (See PNI)

C — File PDR Report with Melroe Parts Sales

D — Part Number Error

Part No.	Description	Was	Code	Page
17C-728	BOLT			100, 106
17C-816	BOLT			194
17C-820	BOLT			22, 24, 198
17C-824	BOLT			198, 322
17C-828	BOLT			198
17C-832	BOLT			194
17C-864	BOLT			198
17C-872	BOLT			194
17C-1024	BOLT			41
17C-1028	BOLT			320
17C-1056	BOLT			14
17C-6116	BOLT			186
17E-8	WASHER			259
17E-10	WASHER			260
17K-5	ELBOW	6806680	A	100
17KV-3	ELBOW			116, 326, 328
17KV-5	ELBOW			108, 116, 326, 328, 340
17KV-7	ELBOW			48, 56, 98, 237, 238
17KV-8	ELBOW			104, 110, 190, 284, 356
18KN-3	ELBOW			340
18KN-5	ELBOW			62, 102
18KN-8	ELBOW			340
19J-12	CLAMP			102, 110
19KV-5	TEE			106, 116
20J-16	CLAMP			100, 106
21KN-6	TEE			106
21KN-7	TEE			44, 46
21KV-5	TEE			58, 88, 92, 100
21KV-6	TEE			58
23G-812	SCREW			38
24K-7	PLUG			130, 134, 138, 142
24KN-5	PLUG			102, 192
25E-13	WASHER			38, 40, 166, 169, 230, 290, 319
25E-14	WASHER			256
25E-15	WASHER			363
25E-16	WASHER			240, 248
25E-17	WASHER			88, 90, 118, 198, 278, 280
25E-18	WASHER			200
25E-21	WASHER			68, 194
25E-22	WASHER			160, 164
25E-24	WASHER			154
25E-25	WASHER			278, 280
25E-8	WASHER			38
25F-1	ELBOW			192
25G-410	BOLT			178
25G-512	BOLT			19
25G-512	BOLT	25G-510	B	14
25G-520	BOLT			19
25G-612	BOLT			274, 276
25G-820	BOLT			22
25GT-410	BOLT			154, 158, 166, 294

Code for disposition of old part number

A — Use up

B — Use on other application (See PNI)

C — File PDR Report with Melroe Parts Sales

D — Part Number Error

Part No.	Description	Was	Code	Page
25K-20016	O-RING			70, 76, 80
25K-30012	O-RING			214
25K-30812	O-RING			35
29G-412	SCREW			78, 82
29G-416	SCREW			72, 78, 82
29G-444	SCREW			72
30G-416	BOLT			72, 76, 80
30H-19	CLAMP	30H-21	B	230
30H-21	CLAMP			288
30H-23	CLAMP			38
30H-30	CLAMP			32, 52, 56
30H-32	CLAMP			50, 54
30H-42	CLAMP			323
30H-44	CLAMP			190
30H-44	CLAMP	30H-42	B	190
30H-46	CLAMP			44, 46, 102, 110
30H-60	CLAMP			106
30H-62	CLAMP			164, 290
30H-64	CLAMP			52, 56
30H-65	CLAMP			190
31C-410	BOLT			285
31C-420	BOLT			22
31C-824	BOLT			322
31C-832	BOLT			322
31C-1228	BOLT			12
31H-42	CLAMP			326, 328
31H-46	CLAMP	31H-42	B	312
35C-410	BOLT			300
35C-412	BOLT			18, 288
35C-512	BOLT			198, 216, 276, 319
35C-514	BOLT			164
35C-516	BOLT			198
35C-516	BOLT	17C-516	B	108
35C-612	BOLT			112, 114, 188, 190, 196, 351
35C-616	BOLT			58, 176, 284, 326, 328, 356
35C-616	BOLT	35C-512	B	102
35C-620	BOLT			92, 178, 194, 198, 250
35C-624	BOLT			118
35C-624	BOLT	35C-620	B	58
36K-5	CAP			58, 88, 102, 106, 108, 112, 114
36K-7	CAP			44, 46, 50, 54
36K-8	CAP			60
37C-412	BOLT			288
37C-424	BOLT			300
37C-512	BOLT			22, 24, 38, 40, 230, 300, 323
37C-612	BOLT			22, 24
37C-616	BOLT			68
37C-620	BOLT			290
37C-620	BOLT	7C-620	B	68
37C-628	BOLT			22, 24
37C-644	BOLT			22

Code for disposition of old part number

A — Use up

B — Use on other application (See PNI)

C — File PDR Report with Melroe Parts Sales

D — Part Number Error

Part No.	Description	Was	Code	Page
37C-820	BOLT			22
38C-610	BOLT			200
38C-820	BOLT			194
38C-824	BOLT			24
38C-828	BOLT			194
38C-836	BOLT			30
38C-840	BOLT			24
38C-856	BOLT			22, 24
40DM-8	NUT			363
41G-806	SCREW			259
42H-10	CLAMP			32
42H-32	CLAMP	42H-24	B	32
42H-52	CLAMP			192
42HC-300	CLAMP			192
42HC-350	CLAMP			192
42HL-250	CLAMP	6513595	A	102, 108
43C-408	BOLT			164, 169
43C-512	BOLT			32
43C-524	BOLT			84
43C-532	BOLT			84
43C-616	BOLT			176
43C-852	BOLT			198
45C-616	BOLT			192
45C-620	BOLT			118, 192
45G-1006	BOLT			285
46D-5	NUT			240, 248
47C-820	BOLT			38, 40
47K-8	PLUG			128, 132, 136, 142
47K-10	PLUG			102, 108
53CM-616	BOLT			200
53CM-820	BOLT			200
53CM-830	BOLT			32
53CM-1230	BOLT			194
53CM-1440	BOLT			198
53D-6	NUT			14, 18, 178
53D-10	NUT			14
53D-12	NUT	83D-12	B	12
54K-20002	O-RING			72, 76, 80
54K-20028	O-RING			84
54K-30110	O-RING			329, 330
54K-30202	RING			65
54K-30300	O-RING			64
54K-40116	O-RING			329, 330
54K-40208	O-RING			65
54K-60304	O-RING			64
55CM-816	BOLT			192, 198
55CM-825	BOLT			192, 198
55D-6	NUT			22, 24, 248
55K-204	O-RING			72, 78, 82, 84
55K-212	O-RING			72, 76, 80, 84
55K-214	O-RING			102, 110

Code for disposition of old part number

A — Use up

B — Use on other application (See PNI)

C — File PDR Report with Melroe Parts Sales

D — Part Number Error

Part No.	Description	Was	Code	Page
55K-219	O-RING			100, 106
57D-5	NUT			198
57D-6	NUT			22, 24, 68, 118, 322
57D-8	NUT			322
57G-608	SCREW			300
58K-12	O-RING			72, 76, 80, 82
58K-14	O-RING			70, 76, 80
58K-17	O-RING			70, 76, 80
58K-114	O-RING			198, 216
58K-116	WASHER	80K-116	A	86
58K-120	O-RING			154, 160, 164
58K-124	O-RING			72, 78, 82
58K-127	O-RING			72, 78, 82
58K-132	O-RING			329, 330
58K-230	O-RING			65
58K-238	O-RING			64
59D-4	NUT			178, 256, 288
59D-5	NUT			14, 30, 38, 40, 242, 248, 300
59D-6	NUT			22, 24, 30, 60, 62, 88, 178
59D-8	NUT			14, 44, 46, 50, 54
59G-616	BOLT			230
61D-4	NUT			230, 240, 248
61D-5	NUT			22, 24, 102, 186, 230, 242, 248
61D-5	NUT	83D-5	B	108
61D-6	NUT			22, 26, 188, 194, 242, 261
62D-4	NUT			260
62D-6	NUT			278, 280
69G-436	BOLT			156, 160, 164
72F-1	DRAIN COCK			32
73G-656	BOLT			194, 326, 328
73K-222	WASHER			329, 330
73K-338	WASHER			64
75K-4	O-RING			148
75K-10	O-RING			100, 106
75K-12	O-RING			100, 106
75K-16	O-RING			102, 108
77F-8	ELBOW			190
77FN-8	ELBOW			284, 356
79K-2	O-RING			343
79K-3	O-RING			329, 330
79K-5	O-RING			97
79K-6	O-RING			58, 100, 106, 340, 342
79K-7	O-RING			72, 78, 82
79K-8	O-RING			70, 76, 80, 86, 88, 128, 132, 136, 140, 332, 134
79K-10	O-RING			70, 76, 80, 88, 90, 130, 138
79K-12	O-RING			56, 88, 112, 114, 128, 134, 138, 142
79K-14	O-RING			130, 132, 138, 140
79K-16	O-RING			102, 108
79K-20	O-RING			116
80K-14	RING			70, 76, 80

Code for disposition of old part number

A — Use up

B — Use on other application (See PNI)

C — File PDR Report with Melroe Parts Sales

D — Part Number Error

Part No.	Description	Was	Code	Page
80K-228	WASHER			65
81D-6	NUT			198
83D-4	NUT			18, 58, 92, 230, 300, 319
83D-5	NUT			44, 46, 237, 238
83D-5	NUT	61D-5	B	319
83D-6	NUT			48, 56, 58, 92,
				102, 118, 192, 274, 276, 292, 340
83D-8	NUT			14, 22, 198
83D-10	NUT			320
83F-3	ELBOW			278, 280
84G-1608	BOLT			260
84G-1906	BOLT			260
84G-1910	BOLT			260
84G-3110	BOLT			297
84G-3112	BOLT			14, 186, 230, 272, 274, 276
84G-3710	BOLT			164, 290, 312
84G-3712	BOLT			12, 30, 38, 40, 50, 54, 62,
				102, 110, 172, 174, 176, 190, 192
84G-3716	BOLT			12, 30, 38, 40, 88, 108, 114, 340, 342
84G-3716	BOLT	84G-3712	B	26, 60, 112
84G-3720	BOLT			38, 40, 227
84G-3724	BOLT			200, 284, 326, 328, 356
84G-3728	BOLT			44, 46, 50, 54, 200
84G-3740	BOLT			62
85D-4	NUT			200
85D-5	NUT			44, 46, 50, 54, 178, 200, 323
85D-6	NUT			16, 24, 26, 28, 44, 46, 50, 54, 60, 62,
				176, 192, 198, 200, 284, 320, 356
85D-7	NUT			16
85D-8	NUT			14, 194
86D-4	NUT			200
86F-3	NUT			278, 280
86F-5	NUT			60, 88, 340, 342
86F-8	NUT			60, 112, 114, 190
87D-5	NUT			320
87G-1008	SCREW			300
88F-3	ELBOW			278
88FN-3	ELBOW			280
88FN-5	ELBOW			340, 342
88FN-8	ELBOW			112, 190
90KV-2	PLUG			329, 330
90KV-3	PLUG			124
90KV-5	PLUG			64, 65, 74, 78, 82,
				110, 112, 114, 124, 332, 334
90KV-5	PLUG	24KN-5	B	90
90KV-8	PLUG			72, 76, 80
91D-5	NUT			278, 280
91D-6	NUT			118, 278, 280
91D-7	NUT			240, 248
91G-416	BOLT			256, 270
92D-10	NUT			329, 330

Code for disposition of old part number

A — Use up

B — Use on other application (See PNI)

C — File PDR Report with Melroe Parts Sales

D — Part Number Error

	Part No.	Description	Was	Code	Page
	92D-12	NUT			196
	92D-16	NUT			65
	95D-5	NUT			14, 164, 178, 290
	95D-6	NUT			30, 38, 64, 68, 164, 202, 248
	95K-4	O-RING			124
	95K-6	O-RING			64, 65, 72, 78, 82, 112, 114, 124, 332, 334
	95K-12	O-RING			72, 76, 80
	96D-6	NUT			118
	96D-8	NUT			186
	97D-5	NUT			198, 216
	97K-4	O-RING			116, 326, 328, 340
	97K-6	O-RING			58, 60, 62, 72, 78, 82, 88, 92, 100, 106, 108, 112, 114, 116, 326, 328, 340, 342
	97K-8	O-RING			44, 46, 50, 58, 106
	97K-10	O-RING			44, 46, 48, 50, 54, 56, 88, 90, 98, 237, 238, 284
	97K-12	O-RING			48, 56, 60, 88,102, 104, 110, 190, 284, 326, 328, 340, 356
	98D-6	NUT			118
	98F-3	TEE			278, 280
	98G-412	BOLT			169
	99K-4	O-RING			116, 326, 328, 340
	99K-5	O-RING			32, 98, 332, 334, 336
	99K-6	O-RING			58, 60, 62, 70, 76, 80, 88, 90, 92, 100, 102, 106, 108, 116, 192, 326, 328, 340
	99K-8	O-RING			58, 88, 100, 106
	99K-10	O-RING			44, 46, 50, 54, 98, 116, 237, 238
	99K-12	O-RING			48, 56, 60, 62, 88, 102, 108, 110, 112, 114, 190, 284, 326, 328, 340
	99K-16	O-RING			112, 114
*	NAP	KIT	6718868	A	348
*	NAP	ADHESIVE	6675694	A	256
*	NAP	COIL	6675498	A	304, 316
*	NAP	CONTROL	6712397	A	154
*	NAP	CONTROL	6712398	A	154
*	NAP	CONTROLLER	6675495	A	274
*	NAP	CONTROLLER	6676515	A	276
*	NAP	COVER	6677109	A	306
*	NAP	CROSSMEMBER	6674317	A	172
*	NAP	CYLINDER	6805158	A	329, 330
*	NAP	DOOR	6717590	A	240
*	NAP	FLANGE	6677114	A	306
*	NAP	HANDLE	6597774	A	154, 158, 294
*	NAP	HANDLE	6675469	A	154, 158, 294
*	NAP	HANDLE	6717163	A	154, 158, 294

Code for disposition of old part number

A — Use up

B — Use on other application (See PNI)

C — File PDR Report with Melroe Parts Sales

D — Part Number Error

	Part No.	Description	Was	Code	Page
*	NAP	HEATER	6674933	A	304
*	NAP	HEATER COIL	6676603	A	306, 318
*	NAP	HORN KIT	6719043	A	319
*	NAP	INSULATION	6706982	A	14
*	NAP	KIT	6718869	A	348
*	NAP	LEVER	6711644	A	120
*	NAP	LEVER ASSY	6718201	A	156
*	NAP	LEVER ASSY	6718202	A	156
*	NAP	MAIN FRAME	6718303	A	12
*	NAP	ROD	6810351	A	330
*	NAP	SEAL	675546	A	256
*	NAP	TIRE	6513971	A	362
*	NAP	TIRE	6666668	A	362
*	NAP	TIRE	6667892	A	362
*	NAP	TIRE & RIM	6722151	A	364
*	NAP	TIRE & RIM	6722152	A	364
*	NAP	VALVE	6678206	A	336
*	NAP	VALVE	6805931	A	76
*	NAP	VALVE	6806150	A	70
*	NAP	VALVE	6809107	A	80
*	NAP	WASHER	6676709	A	124
*	NAP	WASHER	6676710	A	124
*	NAP	WASHER	6676711	A	124
*	NAP	WASHER	6676712	A	124
*	NAP	WINDOW	6725360	A	256, 268
	NAP	BELLCRANK	6716977	A	118
	NAP	BLACK GOLD			366
	NAP	BLOCK	6672880	A	214
	NAP	CHAIN	6709823	A	35
	NAP	CONTROL	6725269	A	274
	NAP	COUPLER	6667808	B	60
	NAP	COUPLER	6672960	B	60
	NAP	COVER	6674236	A	300
	NAP	DECAL	6718774	A	176
	NAP	FILTER	6674230	A	300
	NAP	GAS SPRING	6719072	A	14
	NAP	GUIDE	6711907	A	16
	NAP	HARNESS	6715366	A	268
	NAP	HARNESS	6725275	A	300
	NAP	HEATER/AC	6674226	A	316
	NAP	KIT	6713519	A	278
	NAP	KIT	6719431	A	274
	NAP	LINK	6716231	A	118
	NAP	RELIEF VALVE	6672451	A	98
	NAP	SEAT	6674404	A	348
	NAP	SEAT	6674896	A	348
	NAP	SEAT BELT	6667875	A	16
	NAP	SEAT BELT	6725403	A	16
	NAP	SENSOR	6658958	A	32
	NAP	TANK	6718502	A	100, 102
	NAP	TANK	6725422	A	106, 108

Code for disposition of old part number

A — Use up

B — Use on other application (See PNI)

C — File PDR Report with Melroe Parts Sales

D — Part Number Error

	Part No.	Description	Was	Code	Page
	NAP	TURBOCHARGER	6673173	A	214
	NAP	VALVE	6674227	A	300
	NAP	VALVE	6674305	A	332
	NAP	VALVE	6675334	A	147
	NAP	WINDOW	6725935	A	248
*	NSS	WASHER	6669067	A	198
	NSS	ADAPTER	6666418	C	220
	NSS	CONNECTOR	6670681	C	220
	NSS	PISTON	6660026	A	122
	NSS	ROLLER	6666358	B	122
	NSS	TEE	6666422	C	220

Code for disposition of old part number

A — Use up

B — Use on other application (See PNI)

C — File PDR Report with Melroe Parts Sales

D — Part Number Error